PROJECT ID: 5680-04-60
WITH:

COUNTY: SAUK

STATE PROJECT	FEDERAL PROJECT	
	PROJECT	CONTRACT
5680-04-60		

ORDER OF SHEETS

TOTAL SHEETS =

STATE OF WISCONSIN
DEPARTMENT OF TRANSPORTATION

PLAN OF PROPOSED IMPROVEMENT

SPRING GREEN - SAUK CITY

USH 14 TO FOX RD

STH 60
SAUK COUNTY

STATE PROJECT NUMBER
5680-04-60

APPROVED FOR
UTILITY ADJUSTMENTS
3/5/2019

N

DESIGN DESIGNATION 5680-04-30

A.A.D.T.	2017	=	1,500 VPD
A.A.D.T.	2039	=	1,800 VPD
D.H.V.		=	
D.D.		=	
T.		=	10.6%
DESIGN SPEED		=	55 MPH
ESALS		=	380,000

BEGIN PROJECT LIMITS:
STA. 0+93
Y: 134,803.52
X: 563,670.34

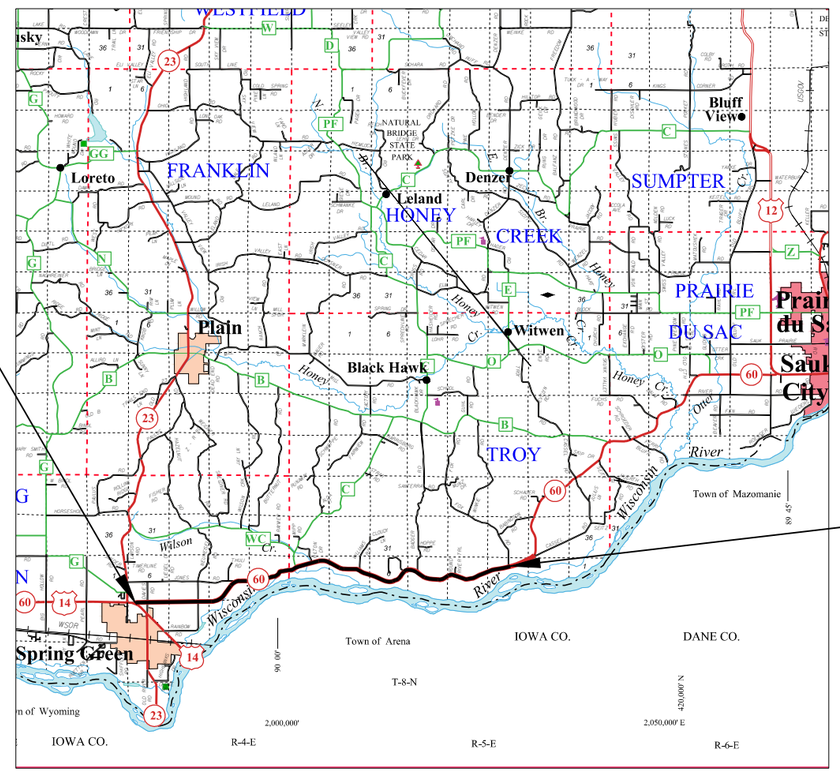

END PROJECT LIMITS:
STA. 549+61

LAYOUT
SCALE 0 2 MI

TOTAL NET LENGTH OF CENTERLINE = 10.340 MILES

HORIZONTAL POSITIONS SHOWN ON THIS PLAN ARE WISCONSIN COUNTY COORDINATES, SAUK COUNTY, NAD83 (2011), IN U.S. SURVEY FEET. VALUES ARE GRID COORDINATES, GRID BEARINGS, AND GRID DISTANCES. GRID DISTANCES MAY BE USED AS GROUND DISTANCES.

CONVENTIONAL SYMBOLS

PLAN
- CORPORATE LIMITS
- PROPERTY LINE
- LOT LINE
- LIMITED HIGHWAY EASEMENT
- EXISTING RIGHT OF WAY
- PROPOSED OR NEW R/W LINE
- SLOPE INTERCEPT
- REFERENCE LINE (300'EB')
- EXISTING CULVERT
- PROPOSED CULVERT (Box or Pipe)
- COMBUSTIBLE FLUIDS (CAUTION)
- MARSH AREA
- WOODED OR SHRUB AREA

PROFILE
- GRADE LINE
- ORIGINAL GROUND
- MARSH OR ROCK PROFILE (To be noted as such) (ROCK)
- SPECIAL DITCH (LABEL)
- GRADE ELEVATION (95.36)
- CULVERT (Profile View)

UTILITIES
- ELECTRIC (E)
- FIBER OPTIC (FO)
- GAS (G)
- SANITARY SEWER (SAN)
- STORM SEWER (SS)
- TELEPHONE (T)
- WATER (W)
- UTILITY PEDESTAL
- POWER POLE
- TELEPHONE POLE

STATE OF WISCONSIN
DEPARTMENT OF TRANSPORTATION

PREPARED BY

Surveyor	WISDOT
Designer	NATHANIEL SCHUMAKER
Project Manager	DANIEL KLEINERTZ
Regional Examiner	SW REGION
Regional Supervisor	JOSEPH GREGAS

APPROVED FOR THE DEPARTMENT

DATE: _____ _____ (Signature)

E

GENERAL NOTES

- THE LOCATIONS OF EXISTING AND PROPOSED UTILITY INSTALLATIONS AS SHOWN ON THE PLANS ARE APPROXIMATE. THERE MAY BE OTHER UTILITY INSTALLATIONS WITHIN THE PROJECT AREA THAT ARE NOT SHOWN.
- RIGHT OF WAY LINES SHOWN ON THE CROSS SECTIONS ARE APPROXIMATE.
- PRIOR TO THE PLACEMENT OF STEEL PLATE BEAM GUARD OR MGS GUARDRAIL, THE SHOULDERS SHALL BE IN PLACE, SHAPED AND COMPACTED UNLESS SHOWN OTHERWISE.
- THE CONTRACTOR'S PAVING OPERATIONS SHALL BE CONSISTENT WITH THE PLAN TYPICAL SECTIONS AND CONSTRUCTED TO PREVENT HMA LONGITUDINAL JOINTS FROM BEING LOCATED WITHIN A DRIVING OR TURNING LANES.
- CONTRACTOR WILL BE RESPONSIBLE FOR RESHAPING AND SEEDING ANY PREVIOUSLY GRASSED AREAS WHICH ARE DISTURBED BY HIS OPERATION OUTSIDE OF THE NORMAL CONSTRUCTION LIMITS.

DIGGERS HOTLINE

Dial 811 or (800) 242-8511

www.DiggersHotline.com

UTILITY CONTACTS

MIKE OLSEN
ATC MANAGEMENT, INC. - ELECTRICITY TRANSMISSION
801 O'KEEFE RD
P.O. BOX 6113
DE PERE, WI 54115-6113
(920) 338-6582
molsen@atcllc.com

MICHAEL BROLIN
ALLIANT ENGERY - ELECTRICITY
4902 NORTH BILTMORE LN
MADISON, WI 53713
(608) 458-4871
MichaelBrolin@alliantenergy.com

MICHAEL BROLIN
ALLIANT ENERGY - GAS/PETROLEUM
4902 NORTH BILTMORE LN
MADISON, WI 53713
(608) 458-4871
MichaelBrolin@alliantenergy.com

BRANDON STORM
CHARTER COMMUNICATIONS - COMM. LINE
2701 DANIELS ST.
MADISON, WI 53718
(608) 274-3822
brandon.storm@charter.com

RUSS RYAN
FRONTIER COMMUNICATIONS OF WI LLC - COMMUNICATION LINE
107 PLEASANTVIEW DR.
PLYMOUTH, WI 53073
(920) 893-7212
Russell.w.ryan@ftr.com

TOM DICKSON
NORTHERN NATURAL GAS COMPANY-GAS/PETRO.
1120 CENTRE POINTE DR. SUITE 400
MENDOTA HEIGHTS, MN 55120
(651) 456-1777
tom.dickson@nngco.com

DOUGLAS FEINER
PRAIRIE SANITARY DISTRICT-SEWER
506 N. BALTIMORE ST.
SPRING GREEN, WI 53588-0734
(608) 279-0385
doujay@frontier.com

IAN CRAMMOND
SAUK COUNTY BUILDING SURVICES - COMM. LINE
510 BROADWAY
BARABOO, WI 53913
(608) 355-4415
icrammond@co.sauk.wi.us

IAN CRAMMOND
SAUK COUNTY BUILDING SURVICES - COMMUNICATION TOWER
510 BROADWAY
BARABOO, WI 53913
(608) 355-4415
icrammond@co.sauk.wi.us

JOHN HESS
SPRING GREEN GOLF CLUB SANITARY DISTRICT #2 - SEWER
5851 COUNTY ROAD Z
SPRING GREEN, WI 53588
(608) 588-7082
johnhesswyoming@gmail.com

GREG WIPPERFURTH
VILLAGE OF SPRING GREEN - SEWER AND WATER
154 NORHT LEXINGTON ST.
P.O. BOX 158
SPRING GREEN, WI 53588
(608) 588-7065
gwwwtp@yahoo.com

KEVIN PARRIS
WINDSTREAM KDL, LLC COMMUNICATION LINE
1858 WRIGHT ST
MADISON, WI 53704
608) 819-5016
kevin.j.parris@windstream.com

STANDARD ABBREVIATIONS

AC	ACRE
AGG	AGGREGATE
<	ANGLE
AE, AEW	APRON ENDWALL
ASPH.	ASPHALTIC
A.D.T.	AVERAGE DAILY TRAFFIC
A.A.D.T.	ANNUAL AVERAGE DAILY TRAFFIC
B.F.	BACK FACE
BM	BENCHMARK
BTWN	BETWEEN
CTR.	CENTER
C/L	CENTER LINE
Δ	CENTRAL ANGLE OR DELTA
C.E.	COMMERCIAL ENTRANCE
CONST.	CONSTRUCTION
CMCP	CORRUGATED METAL CULVERT PIPE
CMP	CORRUGATED METAL PIPE
CO.	COUNTY
CTH	COUNTY TRUNK HIGHWAY
CR.	CREEK
CABC	CRUSHED AGGREGATE BASE COURSE
CY	CUBIC YARD
CP	CONTROL POINT OR CULVERT PIPE
C&G	CURB AND GUTTER
D	DEGREE OF CURVE
D.H.V.	DESIGN HOURLY VOLUME
DIA.	DIAMETER
D.D.	DIRECTIONAL DISTRIBUTION
DISCH.	DISCHARGE
DMS	DYNAMIC MESSAGE SIGN
EA	EACH
E	EAST
EB	EASTBOUND
ELEC.	ELECTRIC(AL), ELEC. CABLE
EL., ELEV.	ELEVATION
ESALS	EQUIVALENT SINGLE AXLE LOADS
EXC.	EXCAVATION
EXIST	EXISTING
F.F.	FACE TO FACE
FERT.	FERTILIZER
F.E.	FIELD ENTRANCE
F/L, F.L.	FLOW LINE
GALV.	GALVANIZE
H.S.	HIGH STRENGTH
CWT	HUNDRED WEIGHT
INL	INLET
INTER.	INTERSECTION
IH	INTERSTATE HIGHWAY
JT.	JOINT
LT	LEFT
L.H.F.	LEFT HAND FORWARD
L.	LENGTH OF CURVE
L.F.	LINEAR FOOT(FEET)
LC.	LONG CHORD
LS	LUMP SUM
M.P.	MARKER POST
MGAL	1000 GALLONS
N.C.	NORMAL CROWN
N	NORTH
NB	NORTHBOUND
NOR	NORMAL
NO.	NUMBER
PAV'T	PAVEMENT
P.L.E.	PERMANENT LIMITED EASEMENT
P.C.	POINT OF CURVATURE
P.I.	POINT OF INTERSECTION
P.T.	POINT OF TANGENCY
PCC	PORTLAND CEMENT CONCRETE
P.E.	PRIVATE ENTRANCE
PGL	PROFILE GRADE LINE
P.L.	PROPERTY LINE
R	RADIUS OR RANGE
R/L	REFERENCE LINE
R.C.C.P.	REINFORCED CONCRETE CULVERT PIPE
REQ'D	REQUIRED
RT	RIGHT
R.H.F.	RIGHT HAND FORWARD
R/W	RIGHT OF WAY
RD.	ROAD
SHLD.	SHOULDER(S)
SHR.	SHRINKAGE
S	SOUTH
SB	SOUTHBOUND
S.F.	SQUARE FOOT (FEET)
SDD	STANDARD DETAIL DRAWING(S)
STH	STATE TRUNK HIGHWAY
STA.	STATION
S.E.	SUPERELEVATION
S/L	SURVEY LINE
SYM	SYMMETRICAL
T.	PERCENT TRUCKS
TEL.	TELEPHONE
TEMP.	TEMPORARY
T.L.E.	TEMPORARY LIMITED EASEMENT
T.O.C.	TOP OF CURB
TYP	TYPICAL
UNCL.	UNCLASSIFIED
U.G.	UNDERGROUND (CABLE)
VAR	VARIABLE
V.C.	VERTICAL CURVE
V.P.C.	VERTICAL POINT OF CURVATURE
V.P.I.	VERTICAL POINT OF INTERSECTION
V.P.T.	VERTICAL POINT OF TANGENCY
Wt.	WEIGHT
W	WEST
WB	WESTBOUND

DNR LIAISON

ANDY BARTA
ENVIRONMENTAL ANALYSIS & REVIEW SPECIALIST
WISCONSIN DNR
SOUTH CENTRAL REGION
3911 FISH HATCHERY ROAD
FITCHBURG, WI 53711
608-275-3308

DESIGN CONTACTS

DANIEL KLEINERTZ
PROJECT MANAGER
WISDOT SW REGION
3550 MORMON COULDEE ROAD
LA CROSSE, WI 54601
(608) 789-5709
daniel.kleinertz@dot.wi.gov

ORDER OF SECTION 2 SHEETS

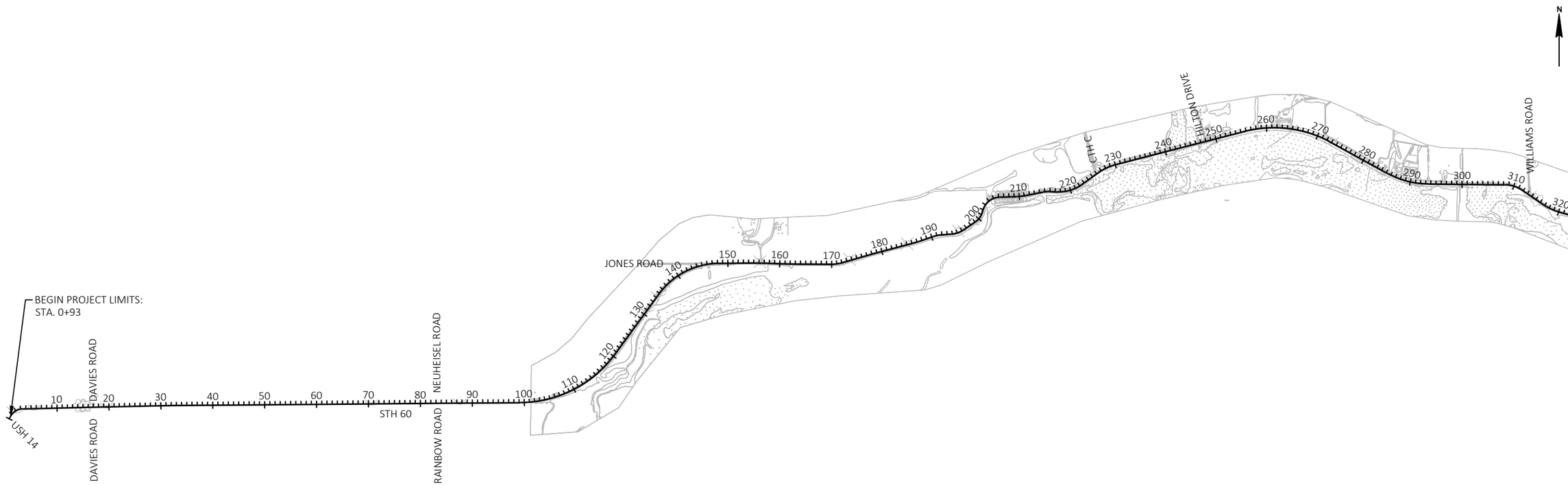

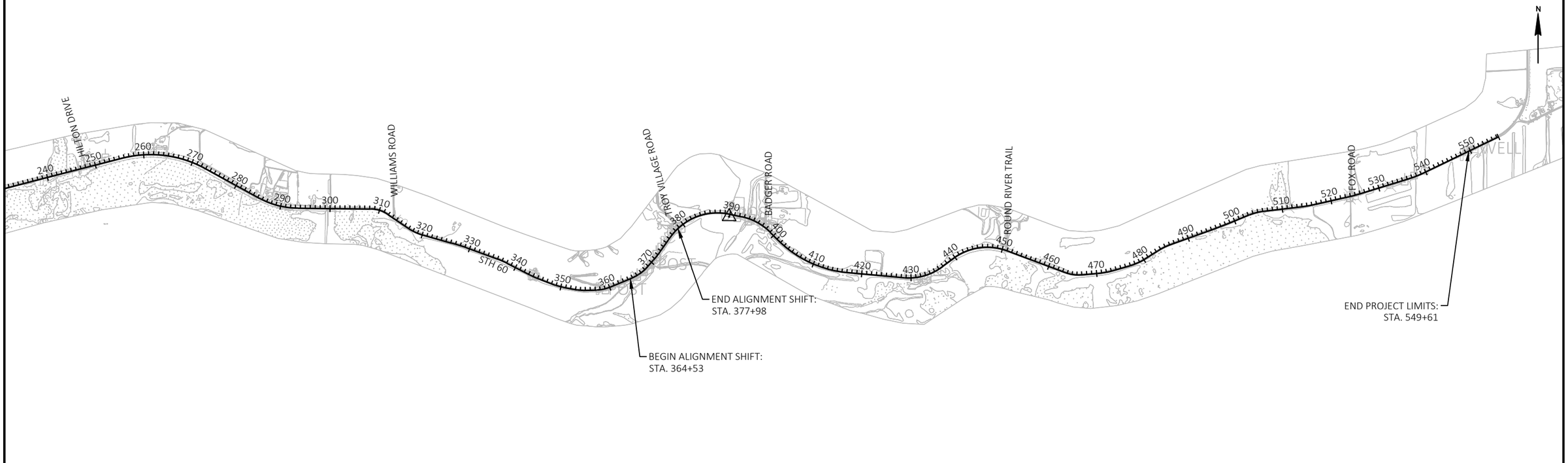

PROJECT NO: 5680-04-60	HWY: STH 60	COUNTY: SAUK	PROJECT OVERVIEW	SHEET	E

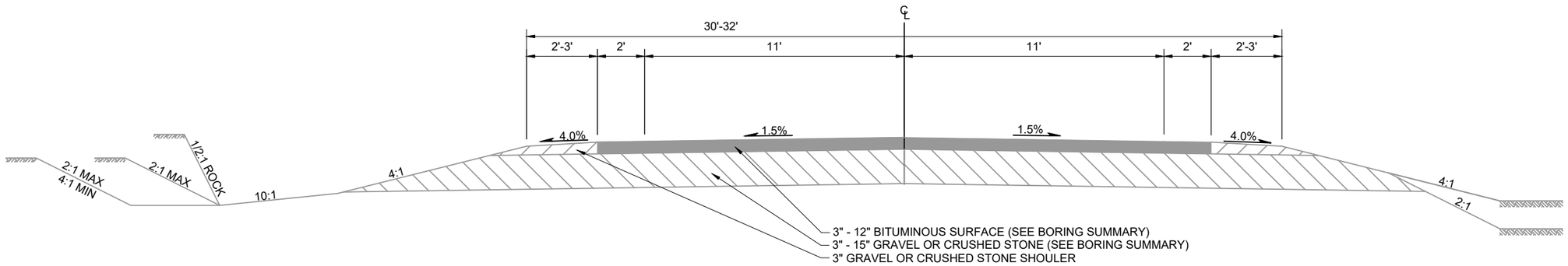

STANDARD 1/2 SECTION IN CUT

STANDARD 1/2 SECTION IN FILL

STH 60 EXISTING TYPICAL SECTION

STA. 0+93 TO STA. 205+00
STA. 218+00 TO STA. 245+37
STA. 247+84 TO STA. 314+00
STA. 416+00 TO STA. 550+00

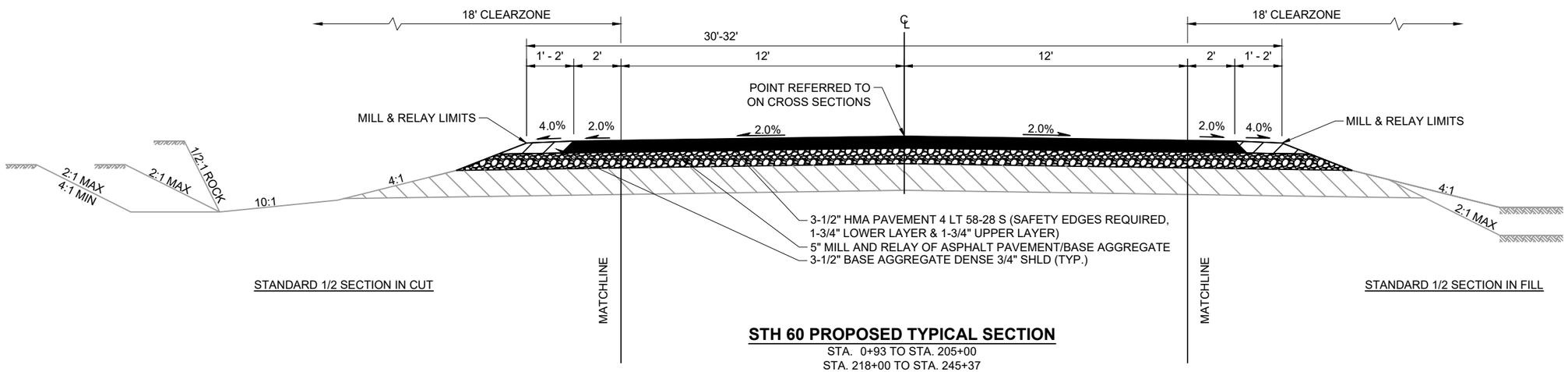

STANDARD 1/2 SECTION IN CUT

STANDARD 1/2 SECTION IN FILL

STH 60 PROPOSED TYPICAL SECTION

STA. 0+93 TO STA. 205+00
STA. 218+00 TO STA. 245+37
STA. 247+84 TO STA. 314+00
STA. 416+00 TO STA. 550+00

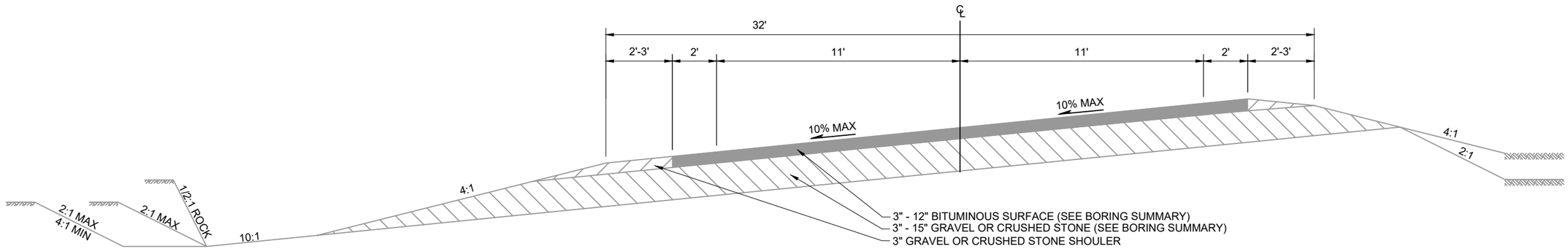

STANDARD 1/2 SECTION IN CUT

STANDARD 1/2 SECTION IN FILL

STH 60 EXISTING SUPER-ELEVATED TYPICAL SECTION

STA. 0+93 TO STA. 205+00
STA. 218+00 TO STA. 245+37
STA. 247+84 TO STA. 314+00
STA. 416+00 TO STA. 550+00

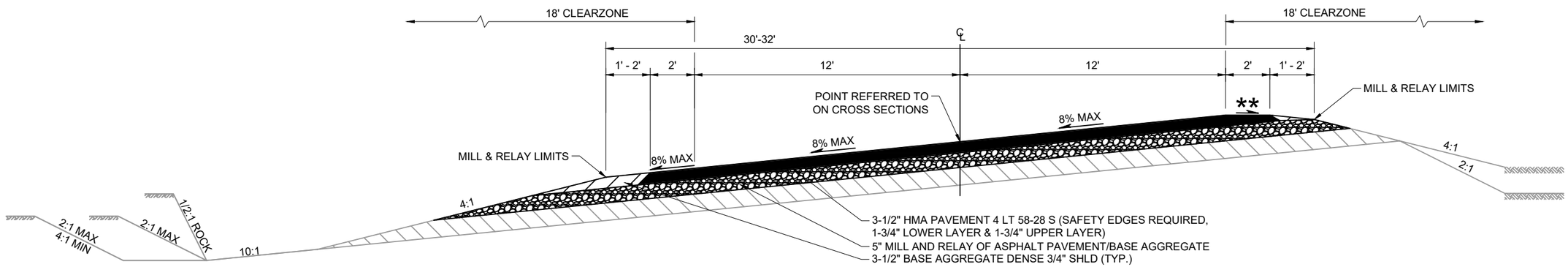

STH 60 PROPOSED SUPER-ELEVATED TYPICAL SECTION

STA. 0+93 TO STA. 205+00
STA. 218+00 TO STA. 245+37
STA. 247+84 TO STA. 314+00
STA. 416+00 TO STA. 550+00

** 8% MAXIMUM ROLL-OVER RATE

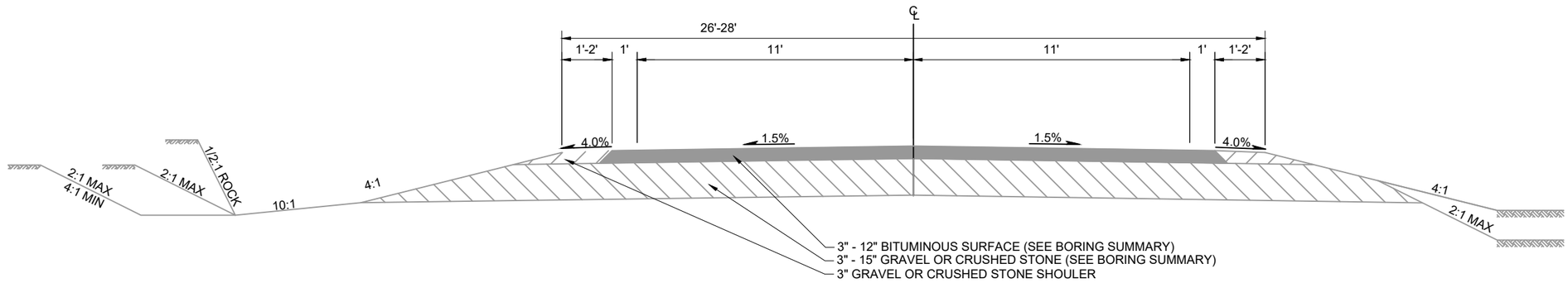

STANDARD 1/2 SECTION IN CUT

STANDARD 1/2 SECTION IN FILL

STH 60 EXISTING TYPICAL SECTION

STA. 205+00 TO STA. 218+00
STA. 314+00 TO STA. 392+67
STA. 395+07 TO STA. 416+00

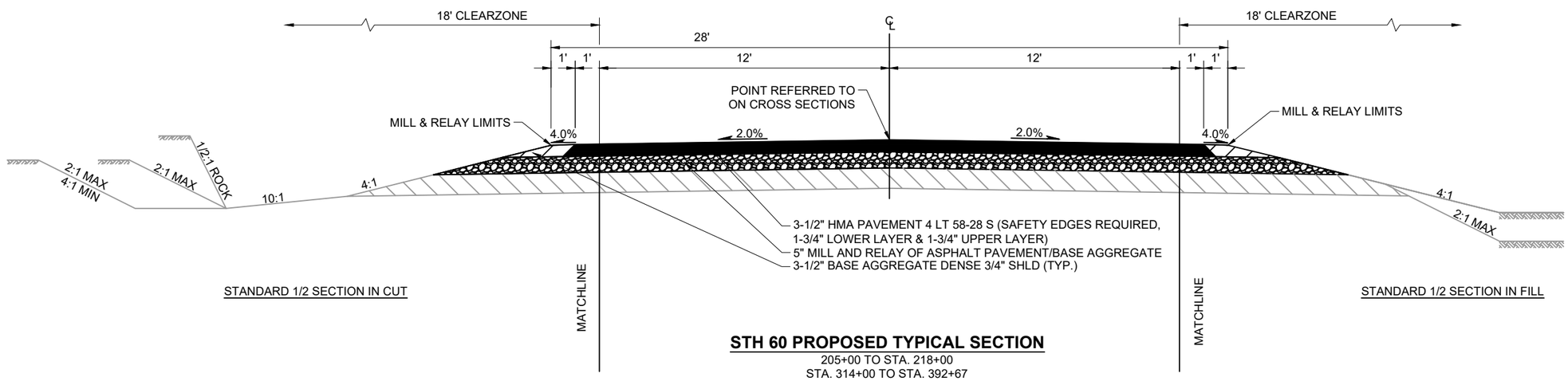

STANDARD 1/2 SECTION IN CUT

STANDARD 1/2 SECTION IN FILL

STH 60 PROPOSED TYPICAL SECTION

205+00 TO STA. 218+00
STA. 314+00 TO STA. 392+67
STA. 395+07 TO STA. 416+00

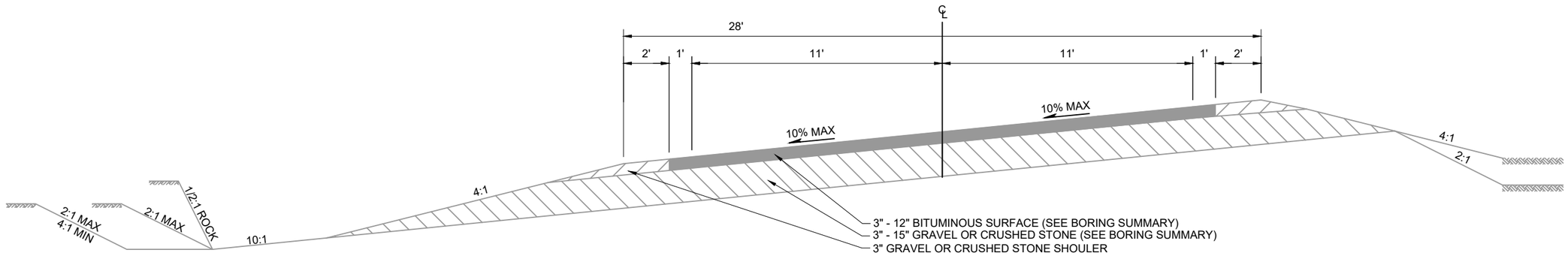

STANDARD 1/2 SECTION IN CUT

STANDARD 1/2 SECTION IN FILL

STH 60 EXISTING SUPER-ELEVATED TYPICAL SECTION

STA. 205+00 TO STA. 218+00
STA. 314+00 TO STA. 392+67
STA. 395+07 TO STA. 416+00

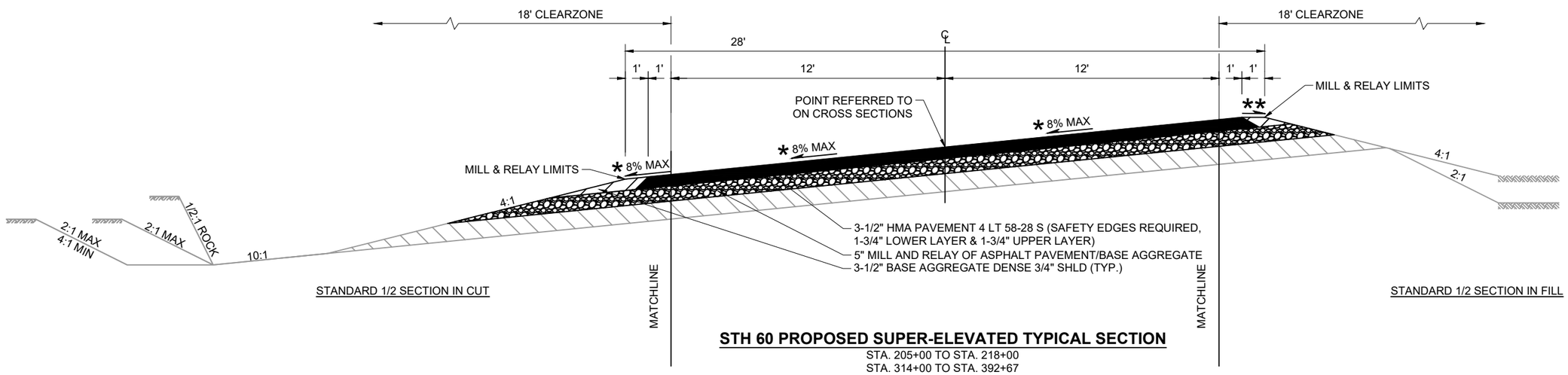

STANDARD 1/2 SECTION IN CUT

STANDARD 1/2 SECTION IN FILL

STH 60 PROPOSED SUPER-ELEVATED TYPICAL SECTION

STA. 205+00 TO STA. 218+00
STA. 314+00 TO STA. 392+67
STA. 395+07 TO STA. 416+00

* 10% SUPER-ELEVATION FROM STA. 392+43 TO STA. 395+989 TO MATCH B-56-0022.

** 8% MAXIMUM ROLL-OVER RATE

PROJECT NO: 5680-04-60	HWY: STH 60	COUNTY: SAUK	TYPICAL SECTIONS	SHEET	E

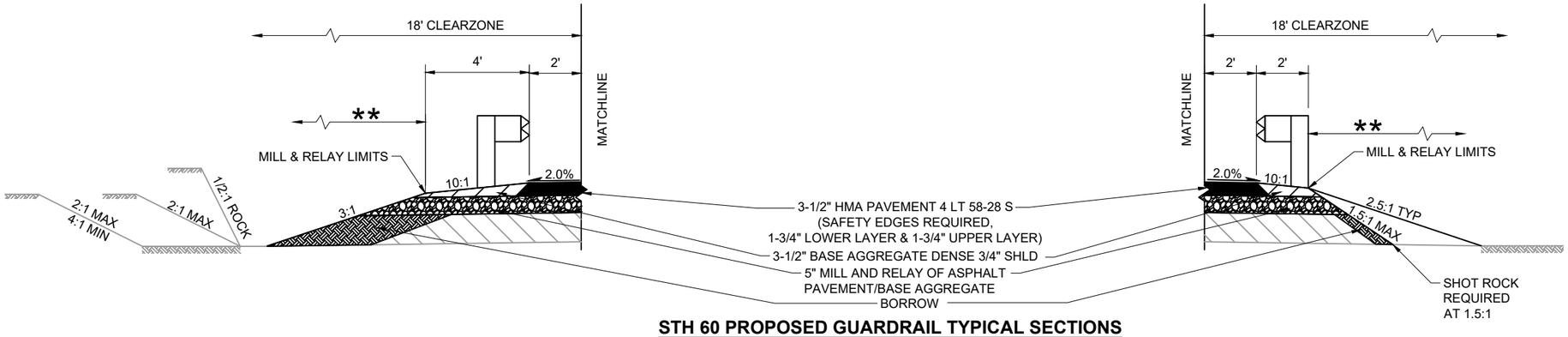

STH 60 PROPOSED GUARDRAIL TYPICAL SECTIONS

STA. 204+47 TO STA. 213+11

STA. 361+97 TO STA. 376+53

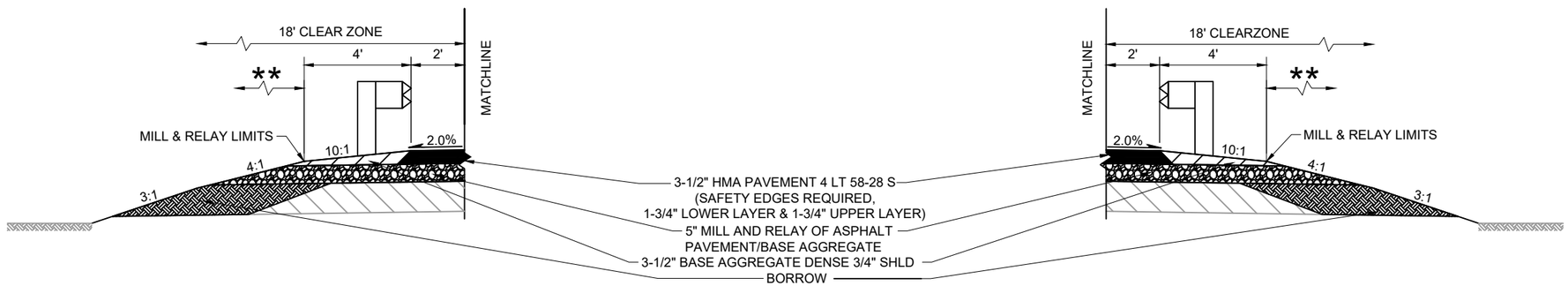

STH 60 PROPOSED GUARDRAIL TYPICAL SECTIONS

STA. 245+37 TO STA. 247+84
STA. 392+67 TO STA. 395+07

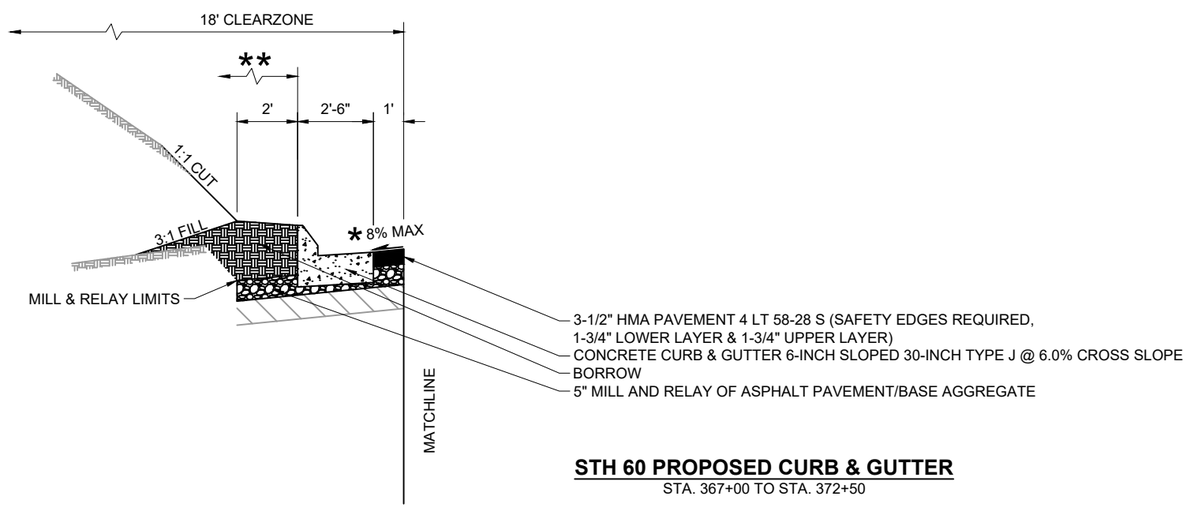

STH 60 PROPOSED CURB & GUTTER

STA. 367+00 TO STA. 372+50

** LIMITS OF TOPSOIL OVER BORROW (4" MIN.), SEEDING, FERTILIZER, AND EMAT END 5 FEET BEYOND TOE OF SLOPE.

2

Boring Summary (Page 1 of 2)

BORING NUMBER	LOG MILE	STATION	OFFSET	EXISTING ASPHALT DEPTH	BASE AGGREGATE DEPTH	SUBGRADE DEPTH	SUBGRADE TYPE	COMMENT
	0.00	0+00						STH 60/USH 14 INTERSECTION
B-1	0.11	5+81	6' RT	10"	5"	15"	SAND	
B-2	0.35	18+48	9' RT	10"	5"	15"	SILT	
B-3	0.55	29+04	6' LT	9"	5"	14"	SAND	
B-4	0.79	41+71	5' LT	8.5"	5.5"	14"	SAND	
B-5	1.00	52+80	9' LT	9"	5"	14"	SILT	
B-6	1.24	65+47	6' RT	5"	7"	12"	SAND	
B-7	1.46	77+09	9' RT	9"	6"	15"	SAND	
	1.56	82+37						NEUHIESL ROAD
B-8	1.68	88+70	5' RT	5"	10"	15"	SAND	
B-9	1.93	101+90	6' RT	11"	-	11"	SAND	
B-10	2.19	115+63	6' LT	8.5"	5"	13.5"	SAND	
B-11	2.42	127+78	9' LT	10"	6"	16"	SAND	
B-12	2.69	142+03	5' LT	11"	4"	15"	SAND	
B-13	2.87	151+54	6' RT	12"	3"	15"	SAND	
B-14	3.08	162+62	9' RT	10"	-	10"	SAND	
B-15	3.29	173+71	5' RT	11"	6"	17"	SILT	
B-16	3.53	186+38	4' LT	9.5"	7"	16.5"	SILT	
B-17	3.80	200+64	9' RT	10"	4"	14"	SILT	
B-18	3.99	210+67	6' LT	9.5"	4"	13.5"	SILT	
B-19	4.25	224+40	9' LT	9.5"	-	9.5"	SAND	
	4.28	225+98						CTH C
B-20	4.46	235+49	6' RT	10"	4"	14"	SAND	
B-21	4.71	248+69	9' RT	10"	4"	14"	SILT	
B-22	4.92	259+78	5' RT	8"	6"	14"	SAND	
B-23	5.14	271+39	6' LT	4.5"	7.5"	12"	SAND	
B-24	5.32	280+90	8' LT	4.5"	7"	11.5"	SAND	
B-25	5.52	291+46	4' LT	5.5"	5"	10.5"	SAND	
B-26	5.73	302+54	6' RT	4"	8"	12"	SAND	
	5.92	312+58						WILLIAMS ROAD

Boring Summary (Page 2 of 2)

BORING NUMBER	LOG MILE	STATION	OFFSET	EXISTING ASPHALT DEPTH	BASE AGGREGATE DEPTH	SUBGRADE DEPTH	SUBGRADE TYPE	COMMENT
B-27	6.00	316+80	9' RT	10"	3"	13"	SAND	
B-28	6.20	327+36	5' RT	11"	4"	15"	SILT	
B-29	6.41	338+45	8' LT	8"	6"	14"	SAND	
B-30	6.61	349+01	6' LT	8.5"	3.5"	12"	SAND	
B-31	6.83	360+62	5' LT	12"	4"	16"	SILT	
B-32	7.05	372+24	6' RT	5"	7"	12"	SAND	
	7.18	379+10	14' RT	3"	15"	18"	SILT	TROY VILLAGE ROAD
B-33	7.26	383+33	9' RT	5"	7"	12"	SAND	
	7.52	397+06						BADGER ROAD
B-34	7.56	399+17	5' RT	5.5"	6"	11.5"	SAND	
B-35	7.77	410+26	6' LT	5"	12"	17"	SAND	
B-36	7.99	421+87	9' LT	5"	7"	12"	SAND	
B-37	8.21	433+49	5' LT	5"	7"	12"	SAND	
B-38	8.45	446+16	12' RT	10"	6"	16"	SAND	
	8.53	450+38						ROUND RIVER ROAD
B-39	8.67	457+78	6' RT	6"	7"	13"	SAND	
B-40	8.93	471+50	9' RT	7"	2"	9"	SAND	
B-41	9.14	482+59	5' RT	11"	3"	14"	SAND	
B-42	9.37	494+74	6' LT	10"	4"	14"	SILT	
B-43	9.58	505+82	9' LT	7"	5"	12"	SAND	
B-44	9.82	518+50	5' LT	7"	7"	14"	SILT	
	9.92	523+78						FOX ROAD
B-45	10.06	531+17	6' RT	7.5"	5"	12.5"	SAND	

2

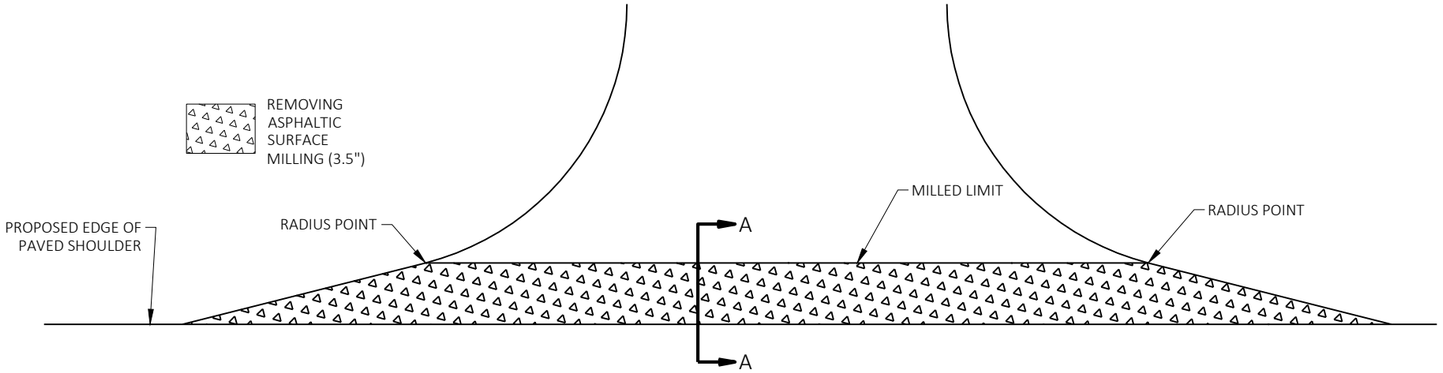

INTERSECTION MILLING LIMITS DETAIL

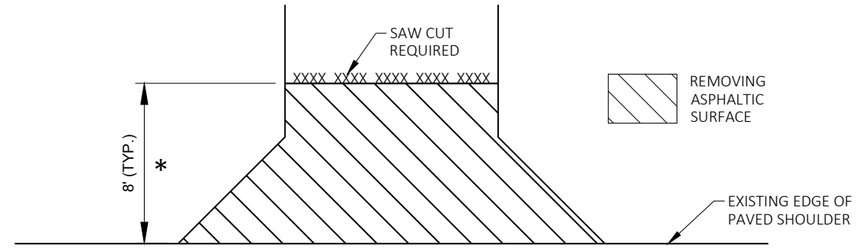

ASPHALT DRIVEWAY REMOVAL DETAIL

*SETBACK MAY NEED TO LONGER TO CONNECT EXISTING DRIVEWAYS TO EXPANDED PROPOSED EDGE OF SHOULDER.

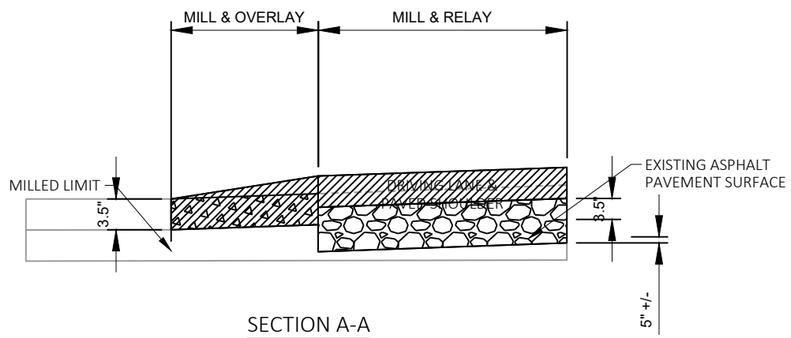

SECTION A-A

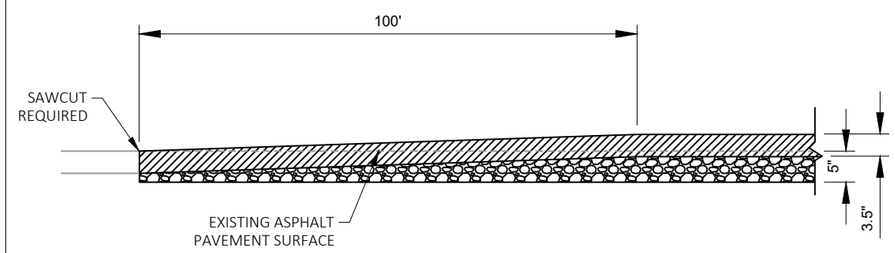

CENTERLINE PROFILE BUTT JOINT REQUIRED AT BEGINNING & END OF PROJECT LIMITS

CENTERLINE PROFILE BUTT JOINT AT STRUCTURES

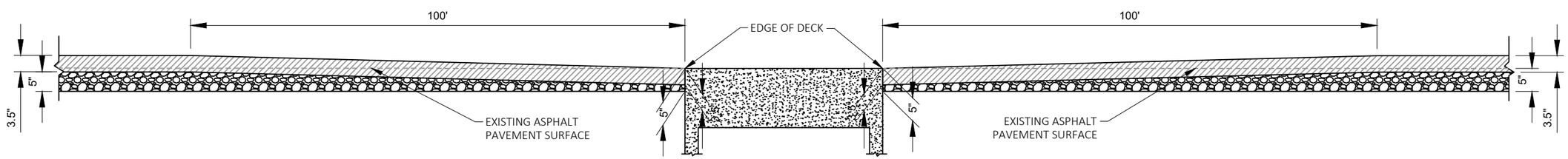

PROJECT NO: 5680-04-60	HWY: STH 60	COUNTY: SAUK	CONSTRUCTION DETAILS	SHEET	E

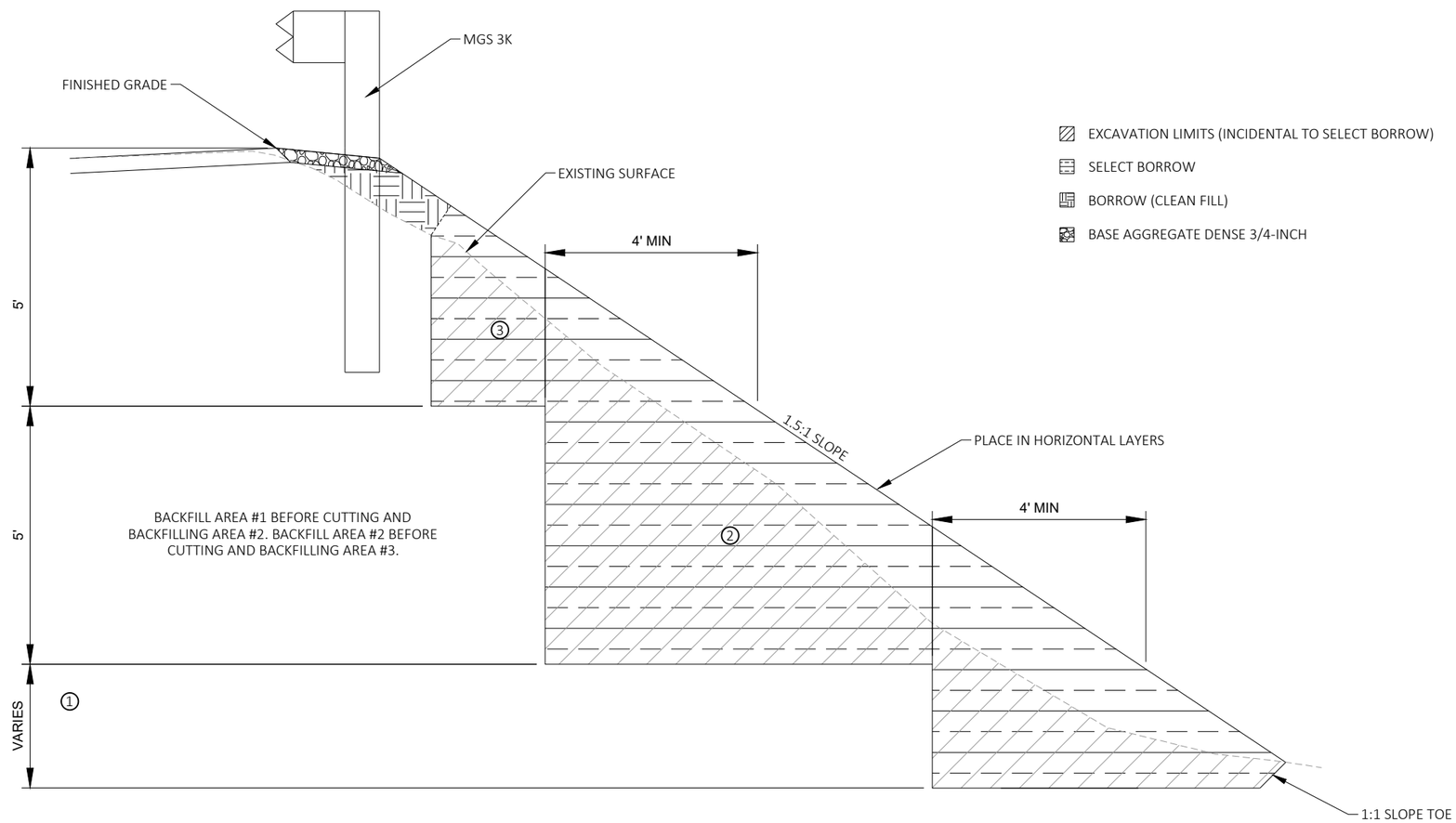

SELECT BORROW BACKFILLING DETAIL

STA. 366+00 TO STA. 370+00
STA. 371+50 TO STA. 373+25

2

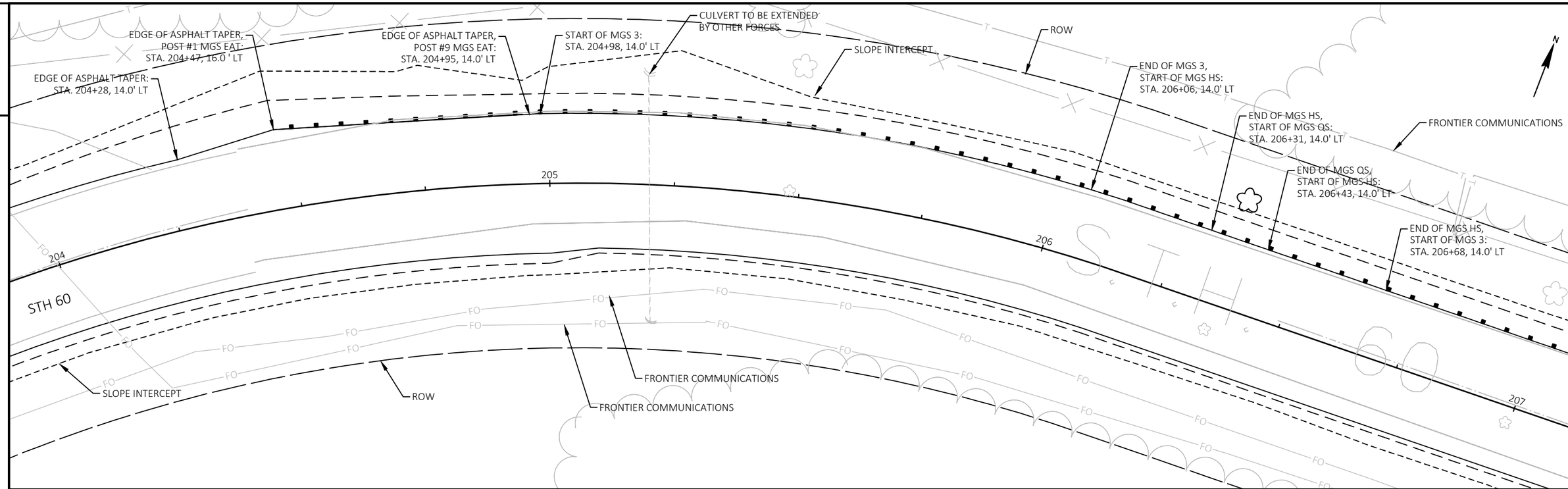

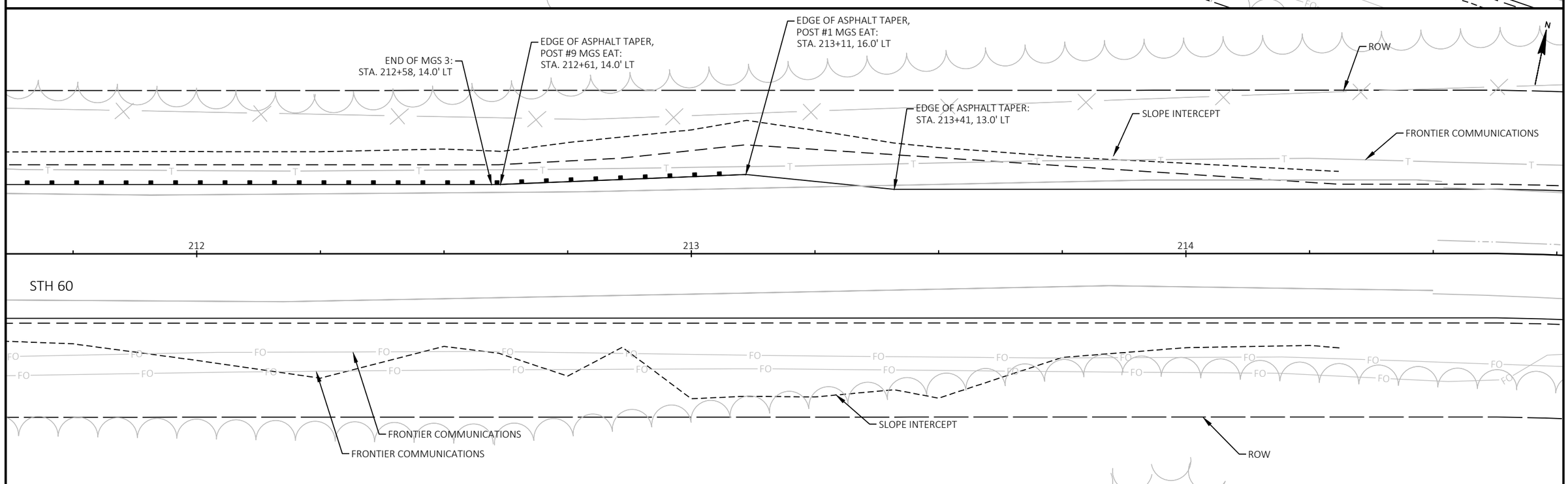

2

PROJECT NO: 5680-04-60	HWY: STH 60	COUNTY: SAUK	CONSTRUCTION DETAIL	SHEET	E

FILE NAME : N:\PDS\C3D\56800430\SHEETSPLAN\021002_CD.DWG
LAYOUT NAME - STA. 205-213
PLOT DATE : 3/4/2019 8:36 AM
PLOT BY : SCHUMAKER, NATHANIEL
PLOT NAME :
PLOT SCALE : 1IN 20FT

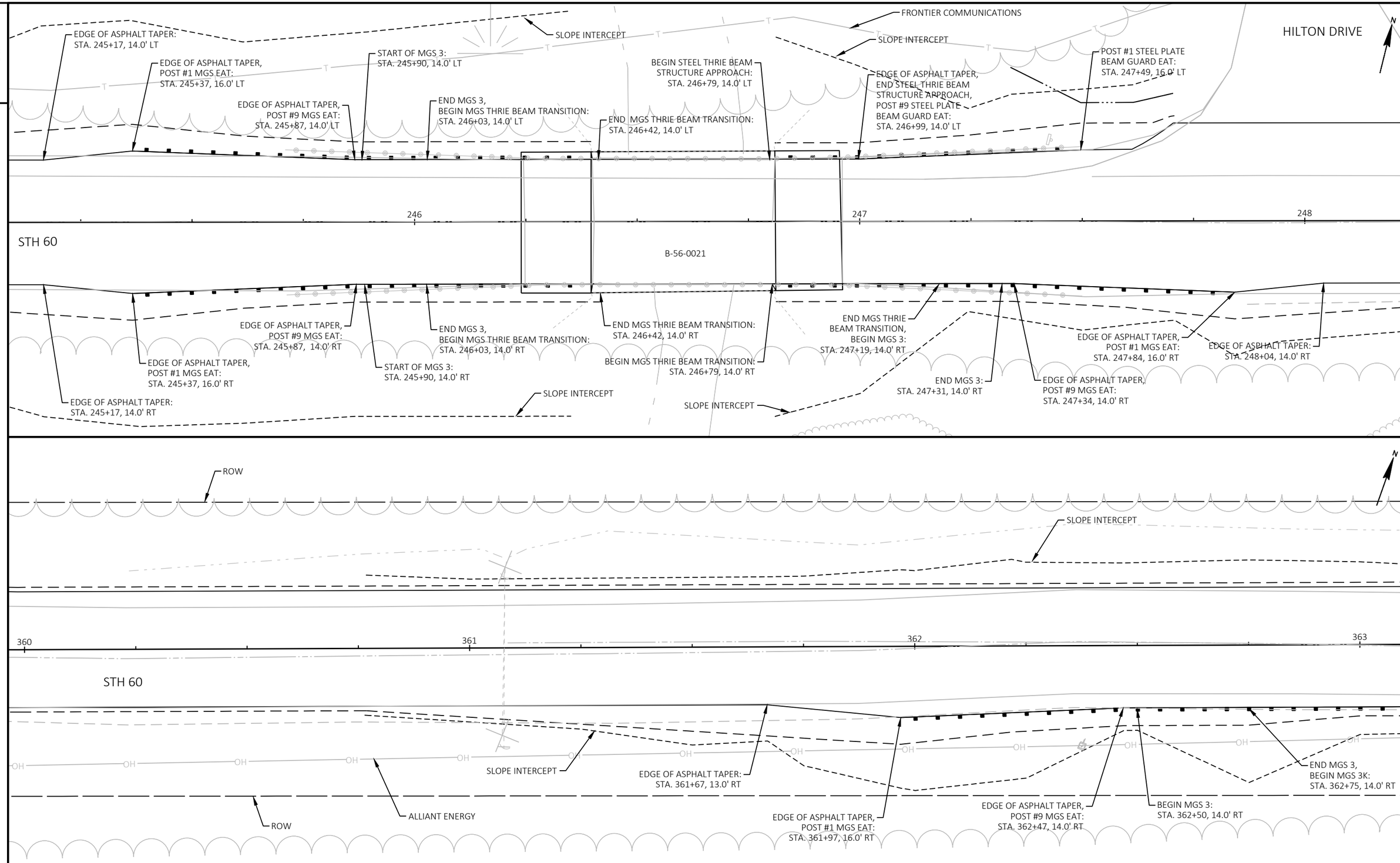

PROJECT NO: 5680-04-60	HWY: STH 60	COUNTY: SAUK	CONSTRUCTION DETAIL	SHEET	E

FILE NAME : N:\PDS\C3D\56800430\SHEETSPLAN\021002_CD.DWG
LAYOUT NAME - B-56-21
PLOT DATE : 3/4/2019 8:36 AM
PLOT BY : SCHUMAKER, NATHANIEL
PLOT NAME :
PLOT SCALE : 1IN 20FT

2

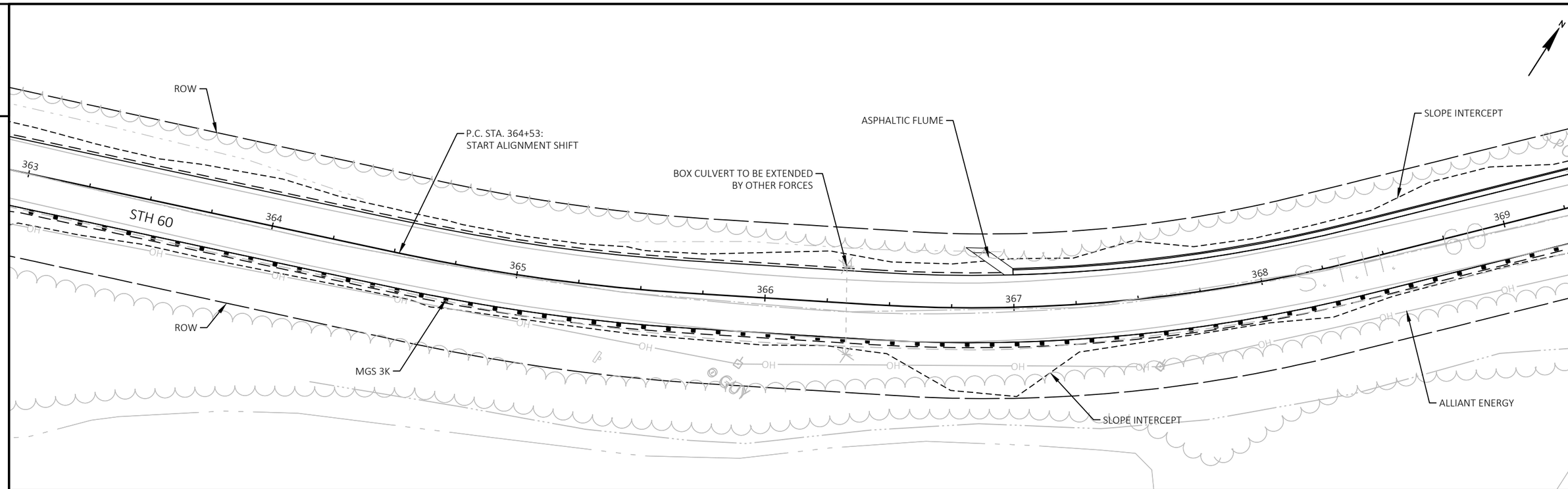

2

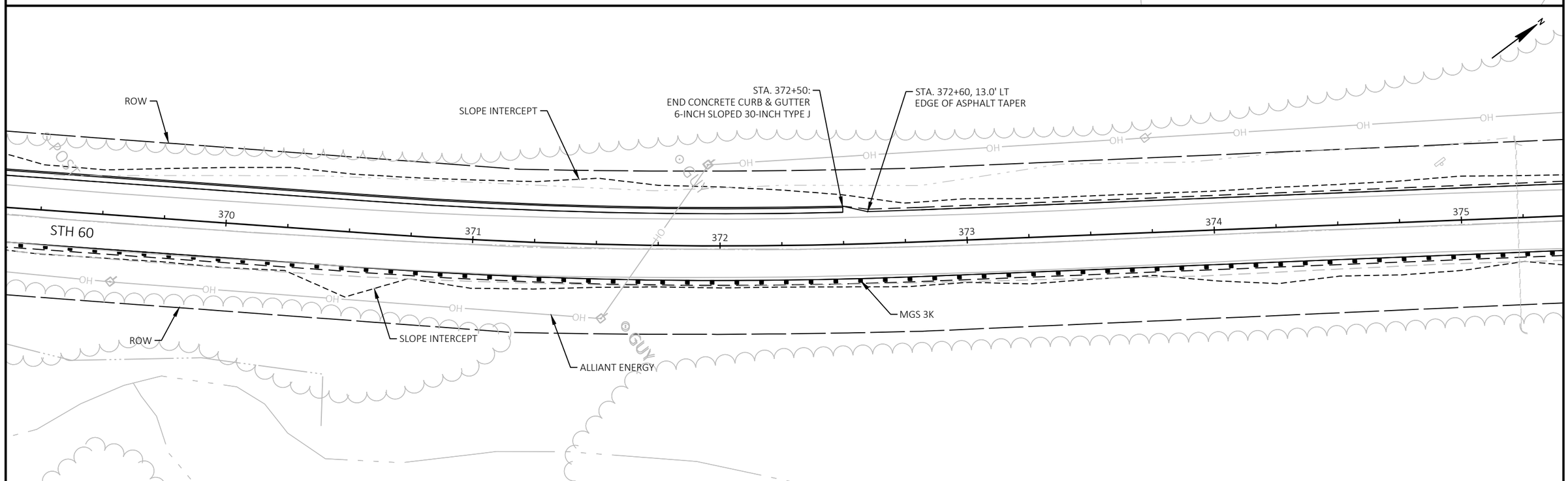

PROJECT NO: 5680-04-60	HWY: STH 60	COUNTY: SAUK	CONSTRUCTION DETAIL	SHEET	E

FILE NAME : N:\PDS\C3D\56800430\SHEETSPLAN\021002_CD.DWG
LAYOUT NAME - STA.362
PLOT DATE : 3/4/2019 8:37 AM
PLOT BY : SCHUMAKER, NATHANIEL
PLOT NAME :
PLOT SCALE : 1IN 20FT

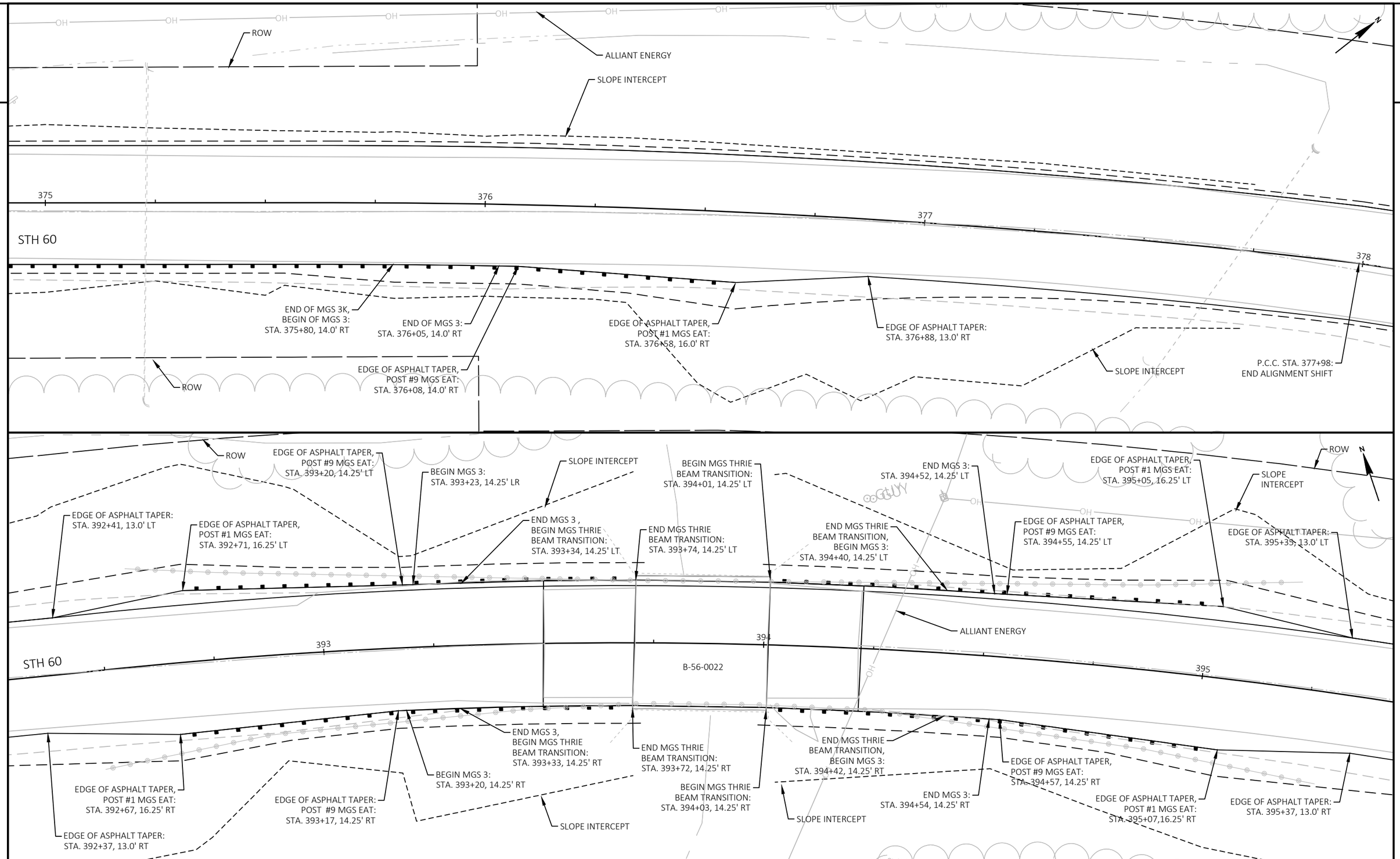

PROJECT NO: 5680-04-60	HWY: STH 60	COUNTY: SAUK	CONSTRUCTION DETAIL	SHEET	E

FILE NAME : N:\PDS\C3D\56800430\SHEETSPLAN\021002_CD.DWG
LAYOUT NAME - B-56-22
PLOT DATE : 3/4/2019 8:37 AM
PLOT BY : SCHUMAKER, NATHANIEL
PLOT NAME :
PLOT SCALE : 1IN 20FT

PROJECT NO: 5680-04-60	HWY: STH 60	COUNTY: SAUK	PLAN DETAILS	SHEET	E

FILE NAME : N:\PDS\C3D\56800430\SHEETSPLAN\021201_PD.DWG
LAYOUT NAME - 01
PLOT DATE : 3/4/2019 8:41 AM
PLOT BY : SCHUMAKER, NATHANIEL
PLOT NAME :
PLOT SCALE : 1 IN:200 FT

PROJECT NO: 5680-04-60	HWY: STH 60	COUNTY: SAUK	PLAN DETAILS	SHEET	E

FILE NAME : N:\PDS\C3D\56800430\SHEETSPLAN\021201_PD.DWG
LAYOUT NAME - 02
PLOT DATE : 3/4/2019 8:41 AM
PLOT BY : SCHUMAKER, NATHANIEL
PLOT NAME :
PLOT SCALE : 1 IN:200 FT
WISDOT/CADDS SHEET 44

2

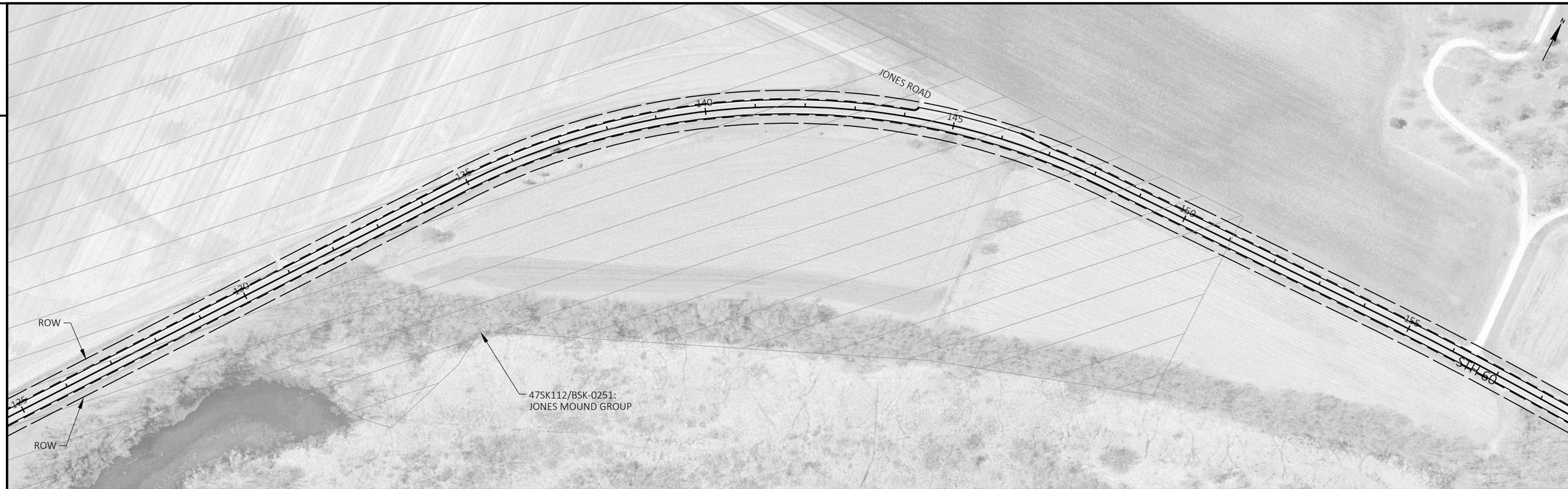

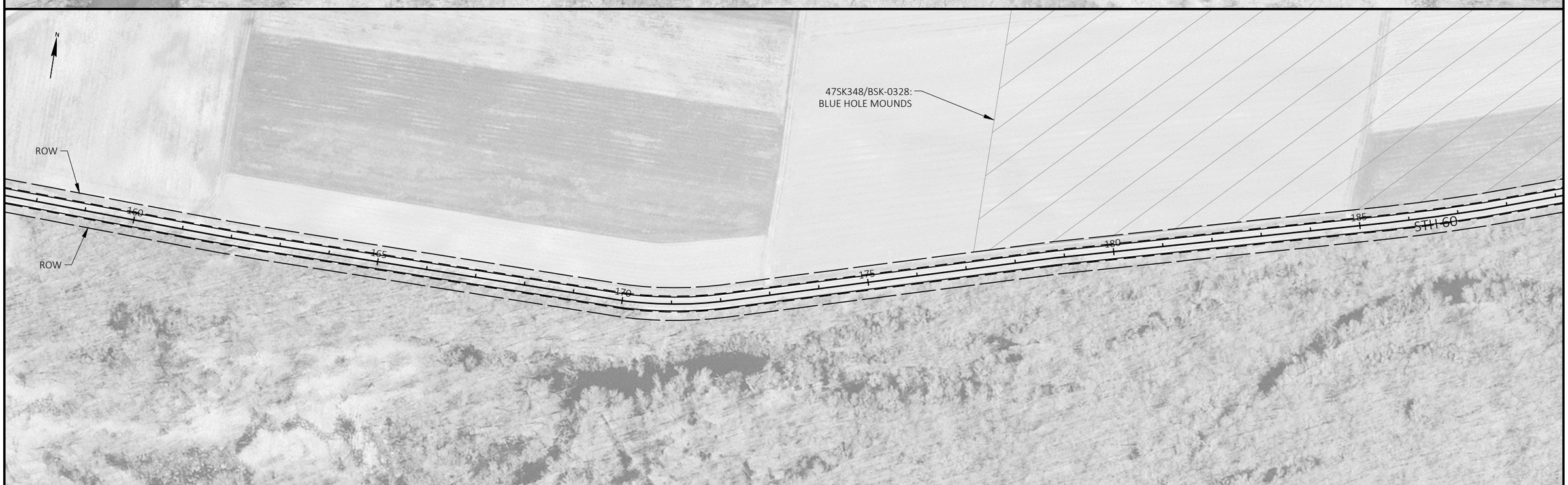

2

PROJECT NO: 5680-04-60	HWY: STH 60	COUNTY: SAUK	PLAN DETAILS	SHEET	E

FILE NAME : N:\PDS\C3D\56800430\SHEETSPLAN\021201_PD.DWG
LAYOUT NAME - 03
PLOT DATE : 3/4/2019 8:41 AM
PLOT BY : SCHUMAKER, NATHANIEL
PLOT NAME :
PLOT SCALE : 1 IN:200 FT

WISDOT/CADDS SHEET 44

2

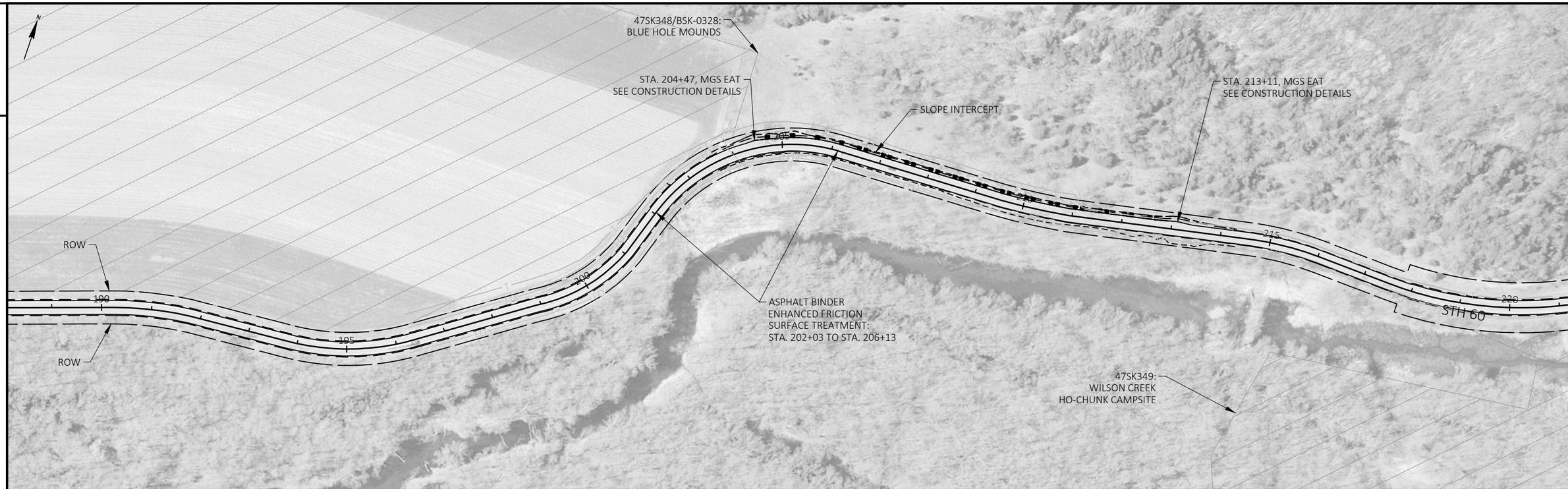

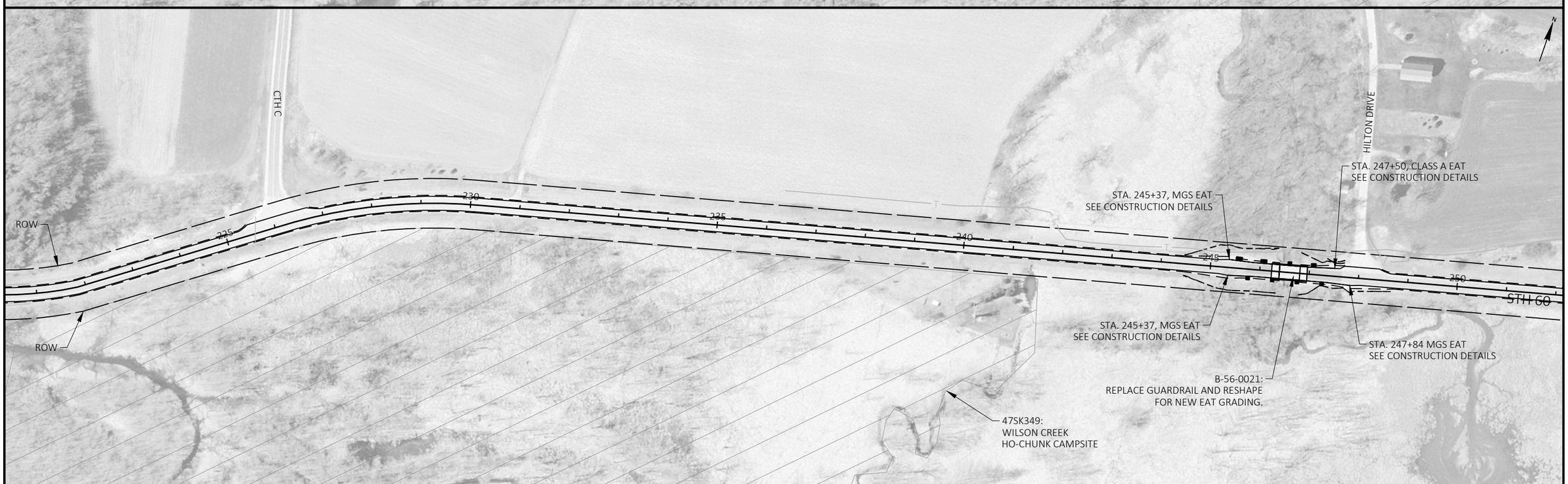

2

PROJECT NO: 5680-04-60	HWY: STH 60	COUNTY: SAUK	PLAN DETAILS	SHEET	E

FILE NAME : N:\PDS\C3D\56800430\SHEETSPLAN\021201_PD.DWG
LAYOUT NAME - 04
PLOT DATE : 3/4/2019 8:41 AM
PLOT BY : SCHUMAKER, NATHANIEL
PLOT NAME :
PLOT SCALE : 1 IN:200 FT

2

PROJECT NO: 5680-04-60	HWY: STH 60	COUNTY: SAUK	PLAN DETAILS	SHEET	E

2

2

PROJECT NO: 5680-04-60	HWY: STH 60	COUNTY: SAUK	PLAN DETAILS	SHEET	E

FILE NAME : N:\PDS\C3D\56800430\SHEETSPLAN\021201_PD.DWG
LAYOUT NAME - 06
PLOT DATE : 3/4/2019 8:42 AM
PLOT BY : SCHUMAKER, NATHANIEL
PLOT NAME :
PLOT SCALE : 1 IN:200 FT

WISDOT/CADDS SHEET 44

2

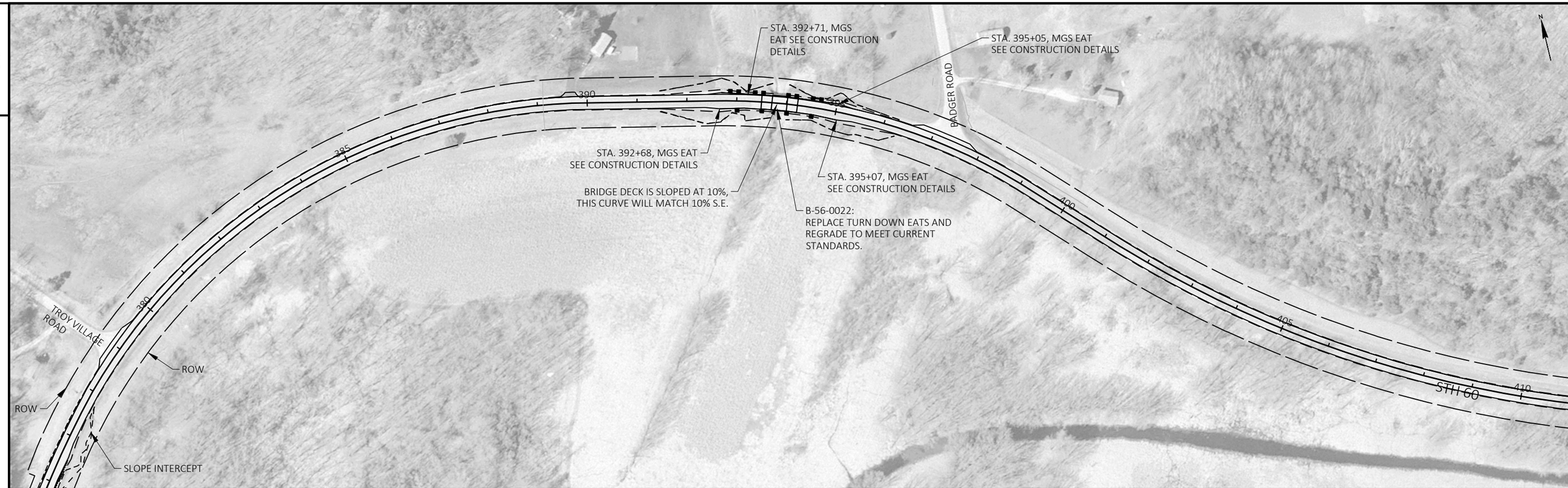

2

PROJECT NO: 5680-04-60	HWY: STH 60	COUNTY: SAUK	PLAN DETAILS	SHEET	E

FILE NAME : N:\PDS\C3D\56800430\SHEETSPLAN\021201_PD.DWG
LAYOUT NAME - 07
PLOT DATE : 3/4/2019 8:42 AM
PLOT BY : SCHUMAKER, NATHANIEL
PLOT NAME :
PLOT SCALE : 1 IN:200 FT

2

PROJECT NO: 5680-04-60	HWY: STH 60	COUNTY: SAUK	PLAN DETAILS	SHEET	E

2

2

PROJECT NO: 5680-04-60	HWY: STH 60	COUNTY: SAUK	PLAN DETAILS	SHEET	E

FILE NAME : N:\PDS\C3D\56800430\SHEETSPLAN\021201_PD.DWG
LAYOUT NAME - 09
PLOT DATE : 3/4/2019 8:42 AM
PLOT BY : SCHUMAKER, NATHANIEL
PLOT NAME :
PLOT SCALE : 1 IN:200 FT
WISDOT/CADDS SHEET 44

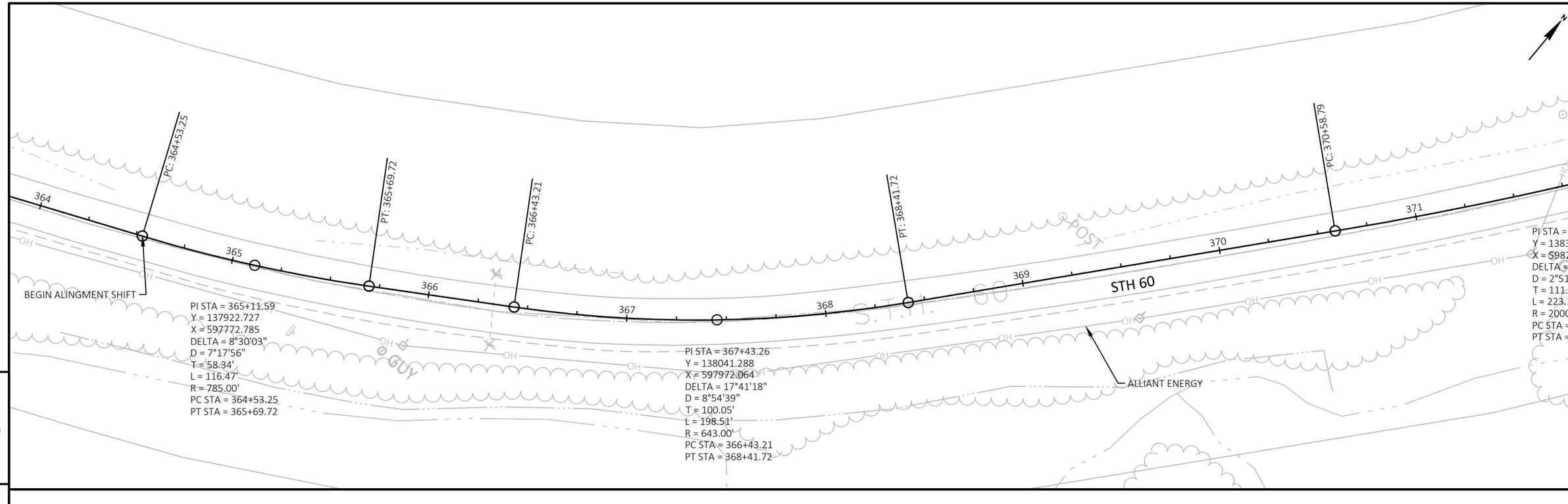

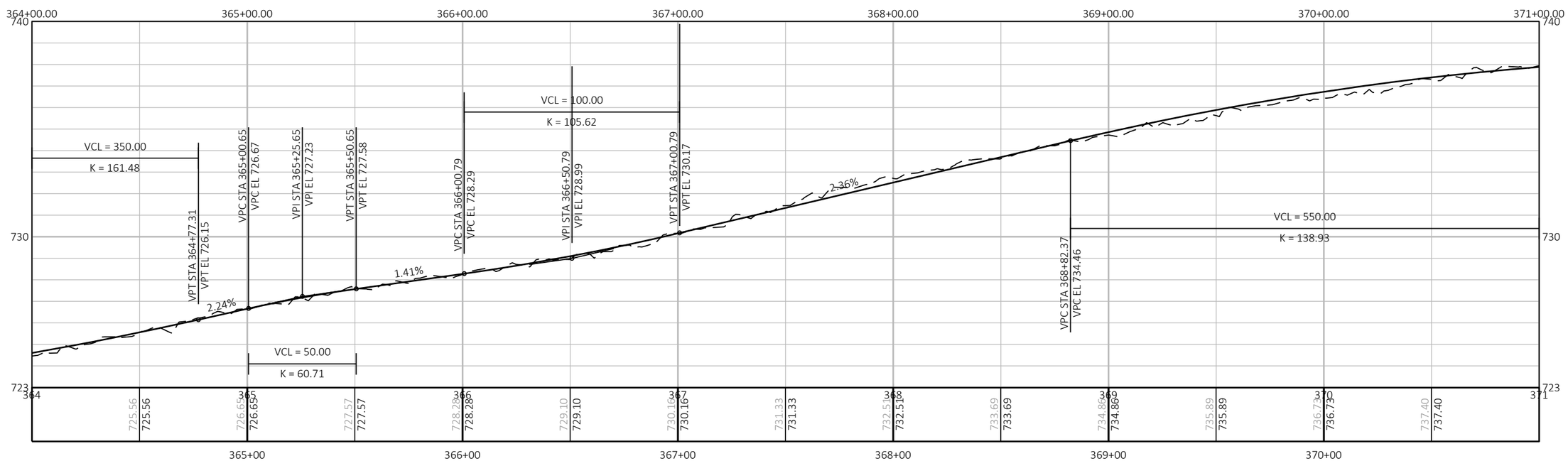

PROJECT NO: 5680-04-60	HWY: STH 60	COUNTY: SAUK	PLAN & PROFILE	SHEET	E

FILE NAME : N:\PDS\C3D\56800430\SHEETSPLAN\050101_PP.DWG
LAYOUT NAME - 01
PLOT DATE : 3/4/2019 10:01 AM
PLOT BY : SCHUMAKER, NATHANIEL
PLOT NAME :
PLOT SCALE : 1 IN:50 FT

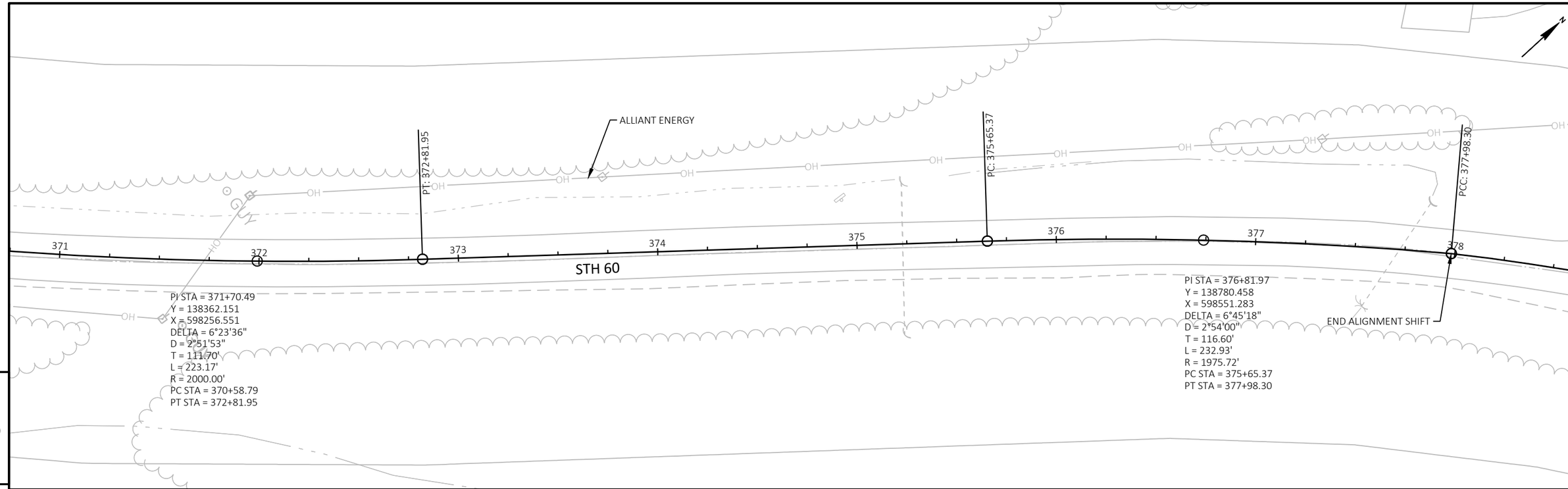

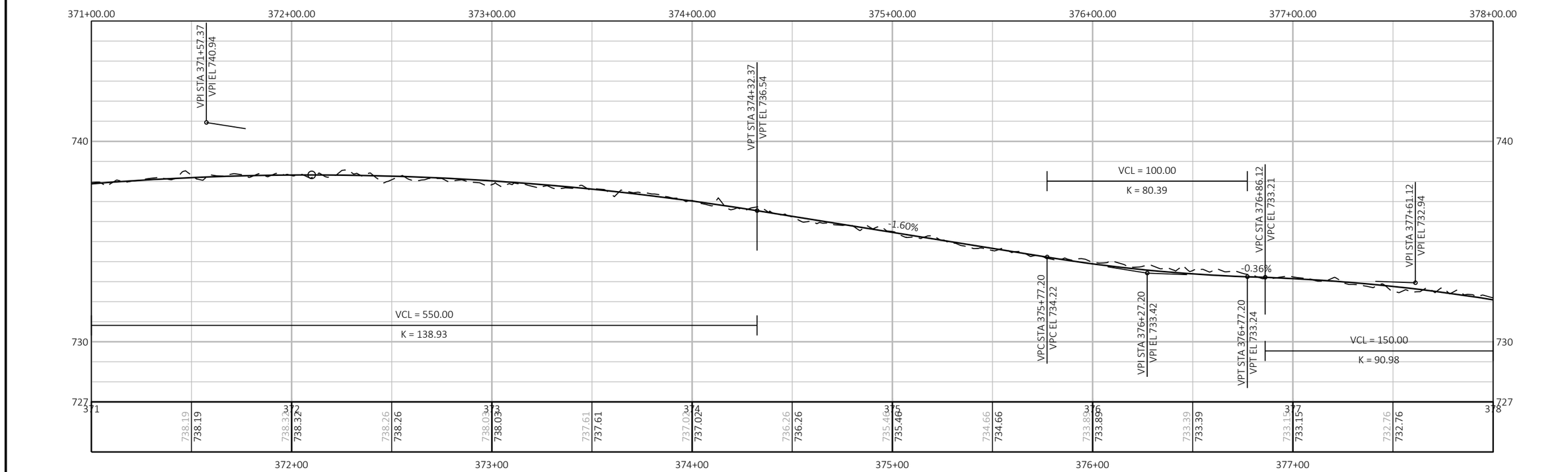

PROJECT NO: 5680-04-60	HWY: STH 60	COUNTY: SAUK	PLAN & PROFILE	SHEET	E

FILE NAME : N:\PDS\C3D\56800430\SHEETSPLAN\050101_PP.DWG
LAYOUT NAME - 02
PLOT DATE : 3/4/2019 10:02 AM
PLOT BY : SCHUMAKER, NATHANIEL
PLOT NAME :
PLOT SCALE : 1 IN:50 FT

SDD 14b15-a Steel Plate Beam Guard, Class "A", Installation and Elements

GENERAL NOTES

1. W6 X 9 OR W6 X 8.5 STEEL POSTS AND NOTCHED PLASTIC BLOCKOUTS ARE ACCEPTABLE ALTERNATIVES FOR 6" X 8" WOOD POSTS WITH WOOD OR PLASTIC BLOCKOUTS. USE APPROVED NOTCHED PLASTIC BLOCKOUTS WITH STEEL POSTS. APPROVED PLASTIC BLOCKOUT DESIGNS MAY VARY FROM THIS TYPICAL DETAIL WHEN USED IN CONJUNCTION WITH STEEL POSTS.

   DO NOT MIX STEEL POSTS AND WOOD POSTS IN A SINGLE INSTALLATION.
2. USE STRUCTURAL STEEL POSTS CONFORMING TO ASTM A 36. GALVANIZED POSTS ACCORDING TO AASHTO M 111. EITHER SET THE POSTS IN DRILLED HOLES OR DRIVE TO GRADE. REMOVE MUSHROOMING CAUSED BY DRIVING AND REPAIR DAMAGED SPELTER COATING ON GALVANIZED POSTS.
3. INSTALL STEEL POSTS WITH HOLES ON APPROACHING TRAFFIC SIDE.
4. USE EITHER WOOD OR APPROVED PLASTIC BLOCKOUTS ON WOOD POSTS.
5. IF THE DISTANCE FROM BACK OF POST TO SHOULDER HINGE POINT IS LESS THAN 2 FEET INSTALL LONGER POST AT HALF POST SPACING, W BEAM (LHW).
6. IF ROCK IS ENCOUNTERED DURING EXCAVATION, THE ENGINEER MAY APPROVE USING A 12 INCH DIAMETER POST HOLE EXTENDING 20 INCHES DEEP INTO THE ROCK. PLACE GRANULAR MATERIAL IN THE BOTTOM OF THE HOLE APPROXIMATELY 2½ INCHES DEEP. CUT THE POSTS TO LENGTH AND PLACE IN YHE HOLE. BACKFILL WITH MATERIAL EXCAVATED FROM THE HOLE AND COMPACT ADEQUATEY.
7. WHEN USING STEEL POSTS AND WOOD BLOCKOUTS INSTALL FOUR 16D GALVANIZED NAILS. INSTALL NAILS AT THE BACK CORNERS OF THE BLOCK AND BEND THE NAILS OVER THE FLANGE OF THE STEEL POST.

INSTALL BEAM GUARD SECTIONS AND ALL NECESSARY HARDWARE ACCORDING TO THE APPLICABLE PLAN AND CURRENT STANDARD AND SUPPLEMENTAL SPECIFICATIONS.

ALL DIMENSIONS ARE SUBJECT TO MANUFACTURER'S TOLERANCES EXCEPT WHERE ALLOWABLE TOLERANCES ARE SHOWN.

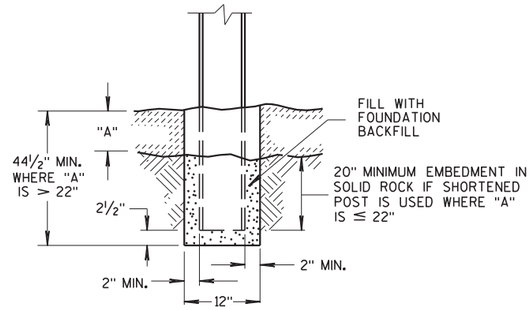

END VIEW
SETTING STEEL OR WOOD POST IN ROCK (6)

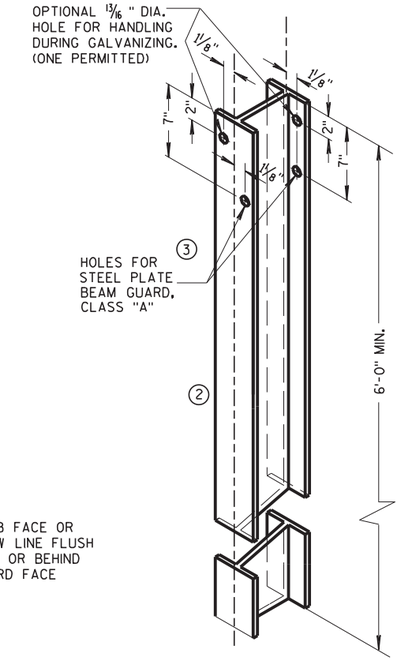

STEEL POST & HOLE PUNCHING DETAIL (W6 X 9) (1)

ALL HOLES 13/16" DIAMETER EXCEPT AS NOTED

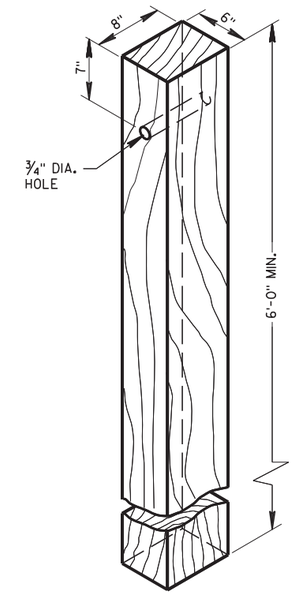

WOOD POST (6"X8") NOMINAL

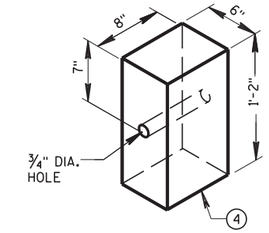

WOOD OR PLASTIC BLOCKOUT FOR WOOD POSTS

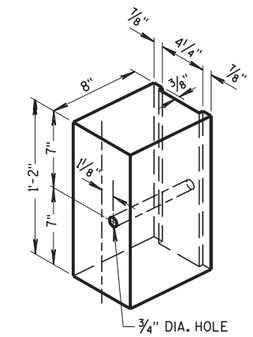

TYPICAL NOTCHED PLASTIC BLOCKOUT FOR STEEL POSTS (1)

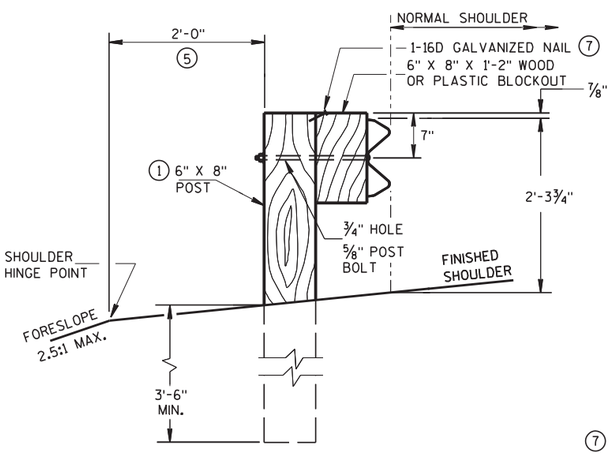

END VIEW
LOCATED ALONG A ROADWAY SHOULDER
STANDARD INSTALLATION

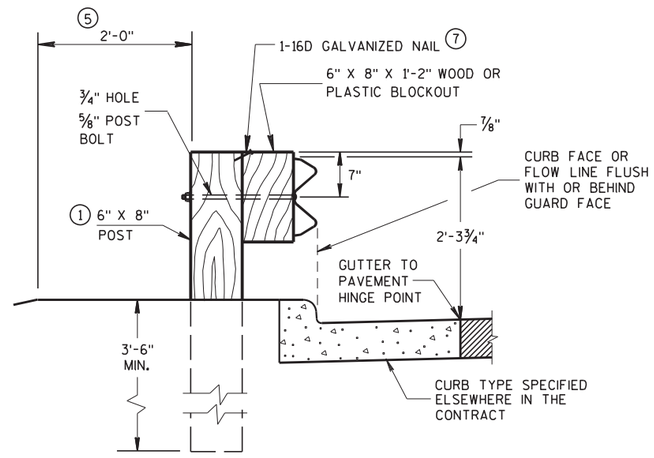

END VIEW
LOCATED ALONG A CURBED ROADWAY

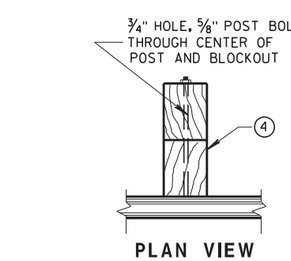

PLAN VIEW
WOOD POST, BLOCKOUT & BEAM

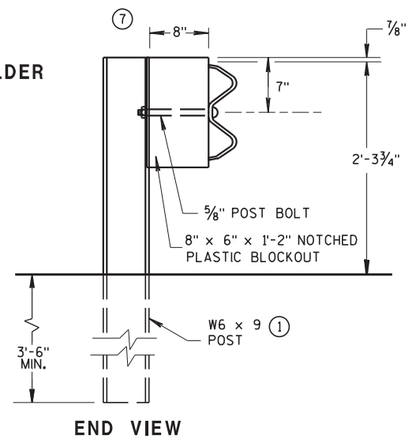

END VIEW
STEEL POST & NOTCHED
PLASTIC BLOCKOUT ALTERNATIVE
STANDARD INSTALLATION

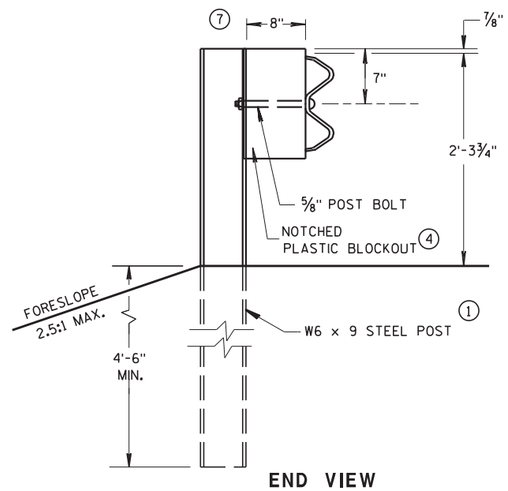

END VIEW
LONGER POST AT HALF
POST SPACING W BEAM
(LHW)

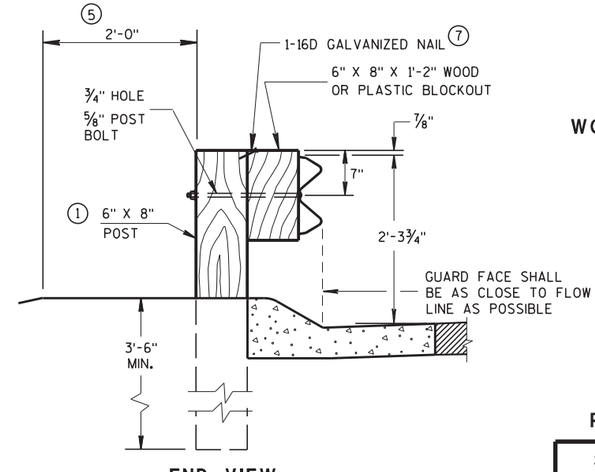

END VIEW
LOCATED ALONG A
MOUNTABLE CURBED ROADWAY

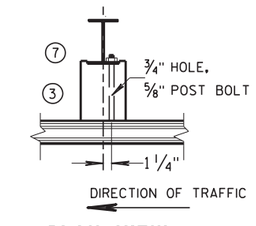

PLAN VIEW
STEEL POST, NOTCHED
PLASTIC BLOCKOUT & BEAM

TYPICAL INSTALLATION OF STEEL PLATE BEAM GUARD

STEEL PLATE BEAM GUARD, CLASS "A" INSTALLATION & ELEMENTS

STATE OF WISCONSIN
DEPARTMENT OF TRANSPORTATION

6

S.D.D. 14 B 15-11a

6

S.D.D. 14 B 15-11a

SDD 14b15-b Steel Plate Beam Guard, Class "A", Installation and Elements

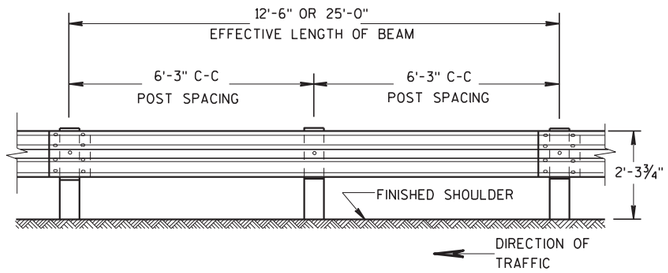

FRONT VIEW

POST SPACING STANDARD INSTALLATION

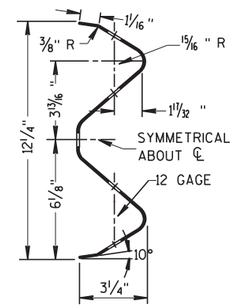

SECTION THRU W BEAM

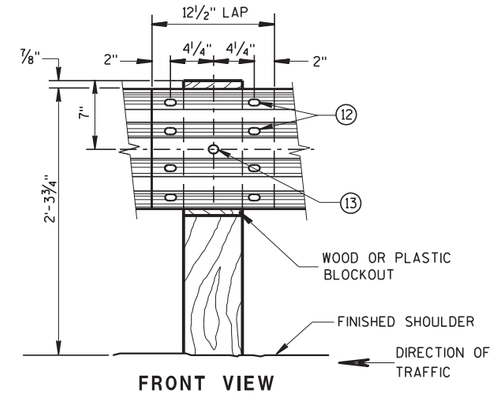

FRONT VIEW

BEAM SPLICE AT WOOD POST AND POST MOUNTING DETAIL

GENERAL NOTES

FURNISH GUARDRAIL DEFLECTORS FROM APPROVED PRODUCTS LIST.

(9) DO NOT INSTALL REFLECTORS ON THE FIRST 50 FEET OF THE APPROACH END OF THE ENERGY ABSORBING TERMINA. START REFLECTORS AT POST #9 AND SPACE EVENLY EVERY 100 FEET (MAX.) TO THE END OF GUARDRAIL RUN, USING A MINIMUM OF 3 REFLECTORS.

(12) 8 -⅝" ϕ X 2" BUTTON HEAD BOLTS WITH OVAL SHOULDERS & RECESS NUTS.

(13) ⅝" DIA. BUTTON HEAD BOLT AND RECESS NUT WITH ⅝" DIA. F844 FLAT WASHER UNDER NUT.

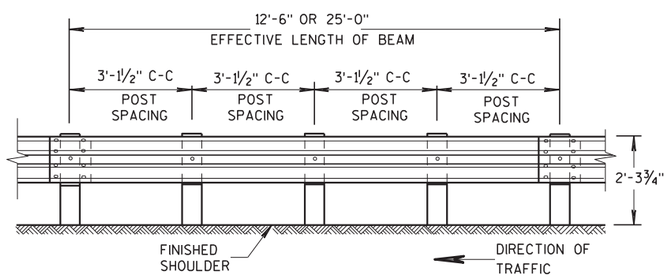

FRONT VIEW

POST SPACING FOR LONGER POST AT HALF POST SPACING W BEAM (LHW)

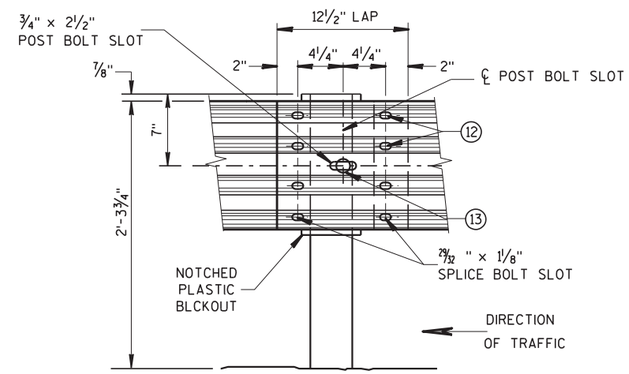

FRONT VIEW
BEAM SPLICE AT STEEL POST

TYPICAL SPLICING DETAILS OF STEEL PLATE BEAM GUARD

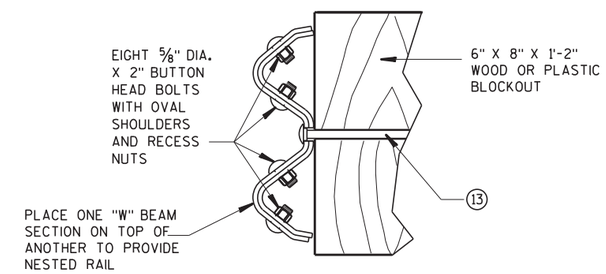

NESTED W BEAM (NW)

USE ALL OTHER STANDARD BEAM GUARD DETAILS FOR CONSTRUCTING NESTED W BEAM (NW)

* USE DOUBLE SIDED WHITE GUADRAIL REFLECTORS ON ROADWAYS WITH BI-DIRECTIONAL TRAFFIC (NO MEDIAN). USE SINGLE SIDED WHITE (RIGHT SIDE) AND SINGLE SIDED YELLOW (LEFT SIDE) ON ROADWAYS WITH MEDIAN SEPARATION.

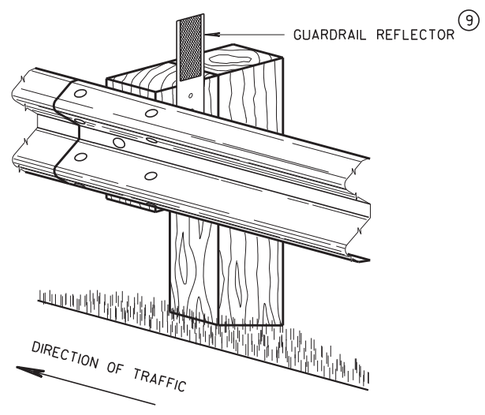

4" X 12" GUARDRAIL REFLECTOR DETAIL AND TYPICAL INSTALLATION *

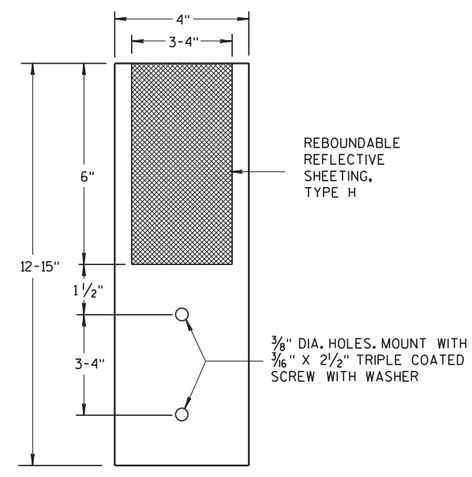

4"x 12" GUARDRAIL REFLECTOR

STEEL PLATE BEAM GUARD,
CLASS "A",
INSTALLATION & ELEMENTS

STATE OF WISCONSIN
DEPARTMENT OF TRANSPORTATION

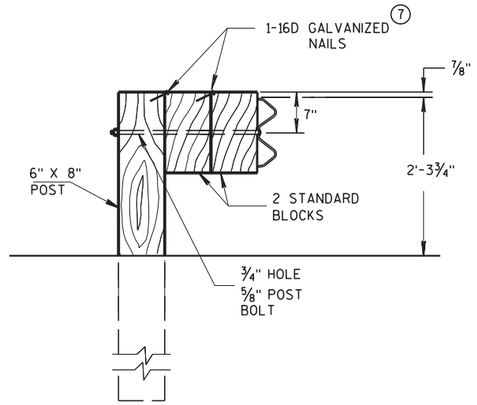

DETAIL FOR DOUBLE BLOCKS

THE NUMBER OF DOUBLE BLOCK POSTS WITHIN A BARRIER RUN IS UNLIMITED

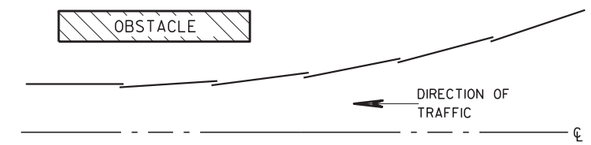

PLAN VIEW
BEAM LAPPING DETAIL

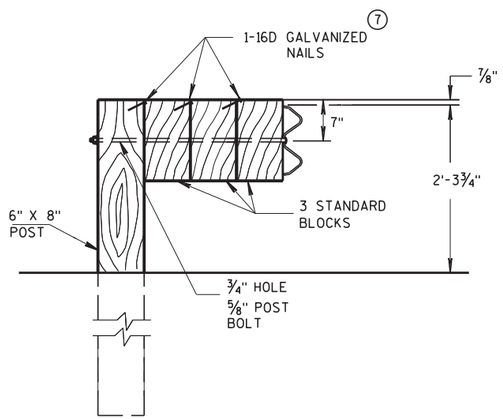

DETAIL FOR TRIPLE BLOCKS

TRIPLE BLOCK DETAIL IS LIMITED TO ONE LOCATION WITHIN A BEAM GUARD RUN.

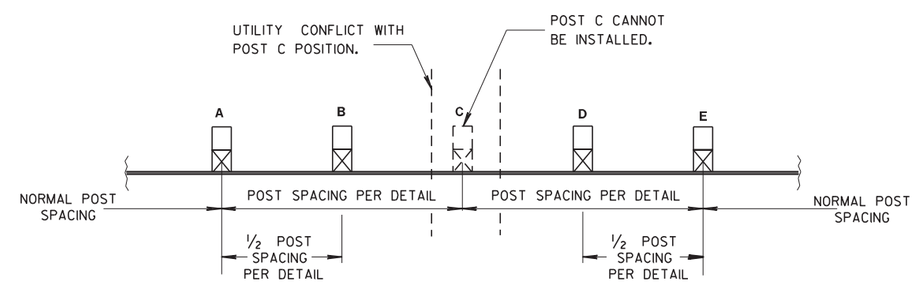

POST DRIVING FOR CONTINUOUS UNDERGROUND OBSTRUCTION

NOTES: USE DOUBLE OR TRIPLE BLOCKS WHEN UNDERGROUND OBSTACLES PREVENT THE POST FROM BEING INSTALLED.

DO NOT USE EXTRA BLOCKOUTS IF IT CAUSES THE POST TO BE DRIVEN BEYOND SHOULDER HINGE POINT OR CAUSES A FIXED OBJECT TO BE WITHIN THE DEFLECTION DISTANCE OF THE BARRIER.

STEEL PLATE BEAM GUARD, CLASS "A", INSTALLATION & ELEMENTS

STATE OF WISCONSIN
DEPARTMENT OF TRANSPORTATION

APPROVED
June 2017 — DATE
/S/ Rodney Taylor — ROADWAY STANDARDS DEVELOPMENT UNIT SUPERVISOR
FHWA

6
S.D.D. 14 B 15-11c

SDD 14b20-b Steel Thrie Beam Structure Approach, Connection to Square End Parapets

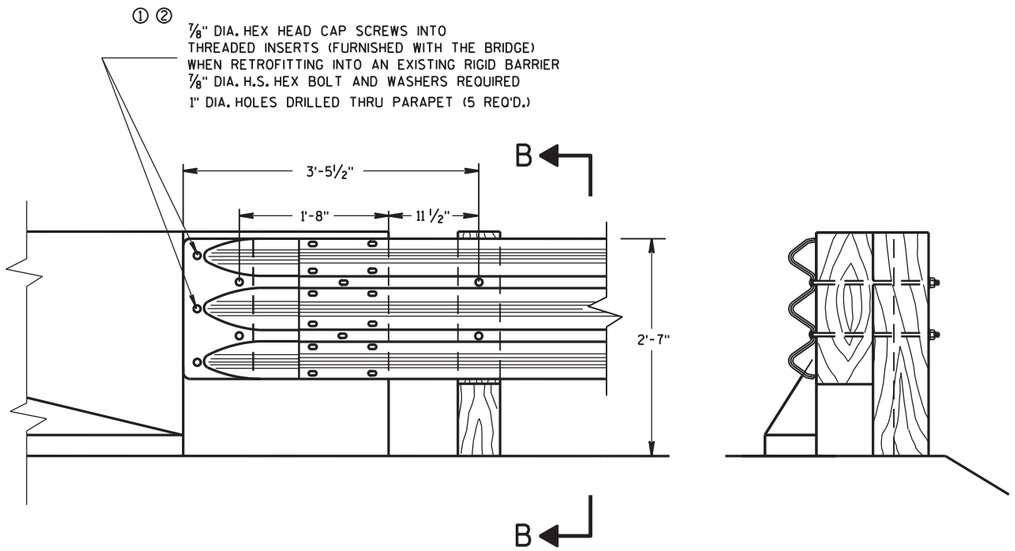

FRONT VIEW

SECTION B-B

THRIE BEAM CONNECTION TO BRIDGE PARAPET WITH SQUARE ENDS

GENERAL NOTES

THESE ARE TYPICAL CONNECTION DETAILS. ADJUST THE POSTION OF CONNECTIONS TO EXISTING BRIDGES TO FIT THE ACTUAL BRIDGE AND SITE DIMENSIONS.

BOLTS, NUTS AND WASHERS SHALL CONFORM TO ASTM A325, A449 AND GALVANIZED PER STANDARD SPECIFICATIONS 614.

① DRILLING BOLT HOLES THROUGH THE PARAPET, BOLTS, NUTS, WASHERS AND REPAIRING DAMAGED CONCRETE ARE INCIDENTAL TO THE CONTRACT.

② BOLTS MAY BE A325 BOLTS OR A449 BOLTS. BOLT LENGTH AND THREADING LENGTH ARE TO ALLOW FOR A TIGHT CONNECTION BETWEEN RIGID BARRIER AND THRIE BEAM CONNECTION PLATE. CONTRACTOR IS TO FIELD VERIFY BOLT LENGTH AND THREAD LENGTH. ONE ROUND WASHER REQUIRED BETWEEN BOLT HEAD AND THRIE BEAM TERMINAL CONNECTOR. BOLTS THAT EXTEND THROUGH THE PARAPET AND OUT THE BACK FACE REQUIRE A HARDENED ROUND STEEL WASHER THAT IS 2" O.D. X ⅝" THICK AND ONE PLATE WASHER. REPAIR ANY DAMAGED CONCRETE FROM BOLT INSTALLATION.

③ THE RECESS FOR A W-BEAM CONNECTION, WHICH EXISTS ON SOME PARAPETS OF THIS TYPE, SHALL BE FILLED WITH A TREATED TIMBER BLOCKOUT. BLOCKOUT SIZE IS 1'-6" X 2'-0" X 3½".

④ W6 X 9 OR W6 X 8.5 STEEL POSTS AND NOTCHED PLASTIC BLOCKOUTS ARE ACCEPTABLE ALTERNATIVES FOR 6" X 8" WOOD POST WITH WOOD OR PLASTIC BLOCKOUTS. USE APPROVED NOTCHED PLASTIC BLOCKOUTS WITH STEEL POSTS.

DO NOT USE STEEL POSTS AND NOTCHED PLASTIC BLOCKOUTS IN THE STEEL THRIE BEAM STRUCTURAL APPROACH AND THE TRANSITION SECTION OF STEEL PLATE BEAM GUARD, CLASS "A" INSTALLATIONS.

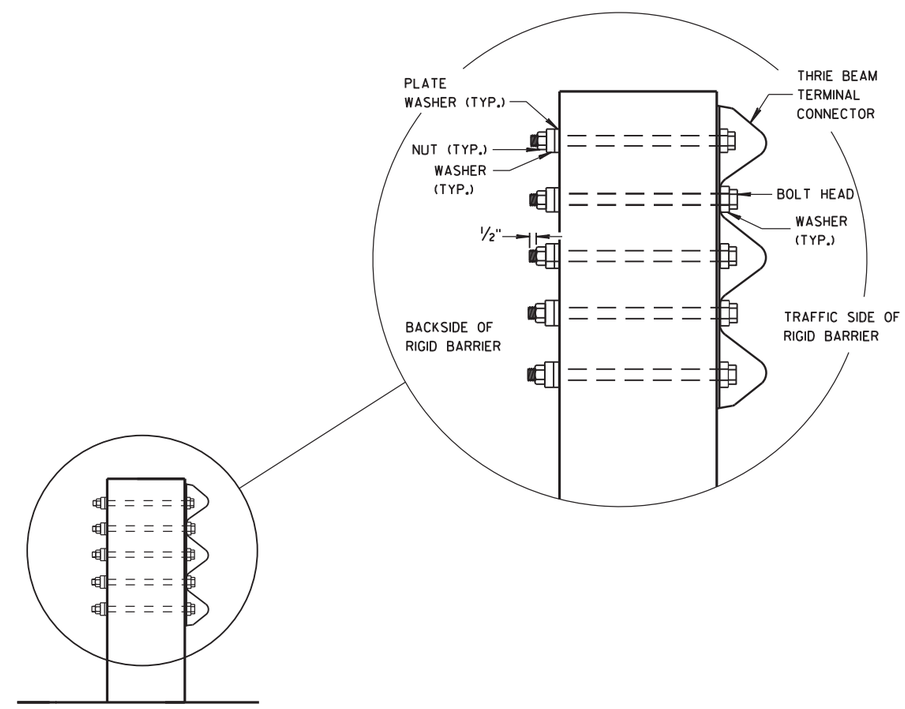

SECTION C-C

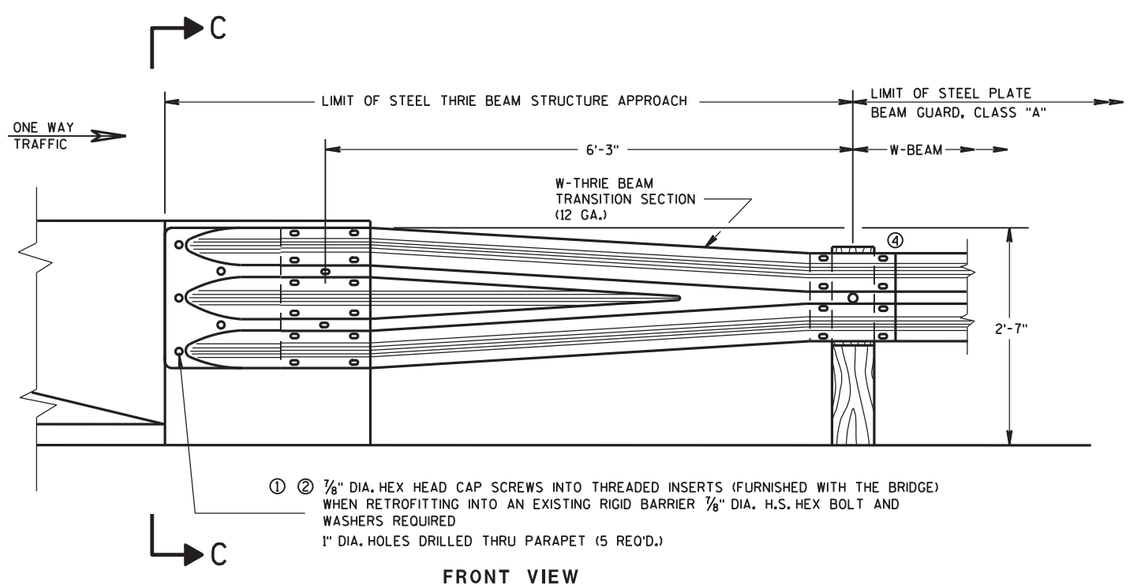

FRONT VIEW

W BEAM TRANSITION AND CONNECTION TO BRIDGE PARAPETS WITH SQUARE ENDS

(USE ONLY ON THE TRAFFIC EXIT END OF ONE WAY BRIDGES)

STEEL THRIE BEAM STRUCTURE APPROACH, CONNECTION TO SQUARE END PARAPETS

STATE OF WISCONSIN
DEPARTMENT OF TRANSPORTATION

APPROVED
8/31/2012 — DATE
/S/ Jerry H. Zogg — ROADWAY STANDARDS DEVELOPMENT ENGINEER
FHWA

6
S.D.D. 14 B 20-11b

GENERAL NOTES

THESE ARE TYPICAL CONNECTION DETAILS. ADJUST THE POSTION OF CONNECTIONS TO EXISTING BRIDGES TO FIT THE ACTUAL BRIDGE AND SITE DIMENSIONS.

BOLTS, NUTS AND WASHERS SHALL CONFORM TO ASTM A325, A449 AND GALVANIZED PER STANDARD SPECIFICATIONS 614.

① DRILLING BOLT HOLES THROUGH THE PARAPET, BOLTS, NUTS, WASHERS AND REPAIRING DAMAGED CONCRETE ARE INCIDENTAL TO THE CONTRACT.

② BOLTS MAY BE A325 BOLTS OR A449 BOLTS. BOLT LENGTH AND THREADING LENGTH ARE TO ALLOW FOR A TIGHT CONNECTION BETWEEN RIGID BARRIER AND THRIE BEAM CONNECTION PLATE. CONTRACTOR IS TO FIELD VERIFY BOLT LENGTH AND THREAD LENGTH. ONE ROUND WASHER REQUIRED BETWEEN BOLT HEAD AND THRIE BEAM TERMINAL CONNECTOR. BOLTS THAT EXTEND THROUGH THE PARAPET AND OUT THE BACK FACE REQUIRE A HARDENED ROUND STEEL WASHER THAT IS 2" O.D. X 5/8" THICK AND ONE PLATE WASHER. REPAIR ANY DAMAGED CONCRETE FROM BOLT INSTALLATION.

③ THE RECESS FOR A W-BEAM CONNECTION, WHICH EXISTS ON SOME PARAPETS OF THIS TYPE, SHALL BE FILLED WITH A TREATED TIMBER BLOCKOUT. BLOCKOUT SIZE IS 1'-6" X 2'-0" X 3 1/2".

④ W6 X 9 OR W6 X 8.5 STEEL POSTS AND NOTCHED PLASTIC BLOCKOUTS ARE ACCEPTABLE ALTERNATIVES FOR 6" X 8" WOOD POST WITH WOOD OR PLASTIC BLOCKOUTS. USE APPROVED NOTCHED PLASTIC BLOCKOUTS WITH STEEL POSTS.

⑤ BOLT, NUT AND WASHERS NOT REQUIRED FOR THIS LOCATION WHEN RETROFITTING AN EXISTING PAPAPET AND THE HOLE IS EITHER ABOVE PARAPET OR WITHIN 4 INCHES OF THE EDGE OF PARAPET.

DO NOT USE STEEL POSTS AND NOTCHED PLASTIC BLOCKOUTS IN THE STEEL THRIE BEAM STRUCTURAL APPROACH AND THE TRANSITION SECTION OF STEEL PLATE BEAM GUARD, CLASS "A" INSTALLATIONS.

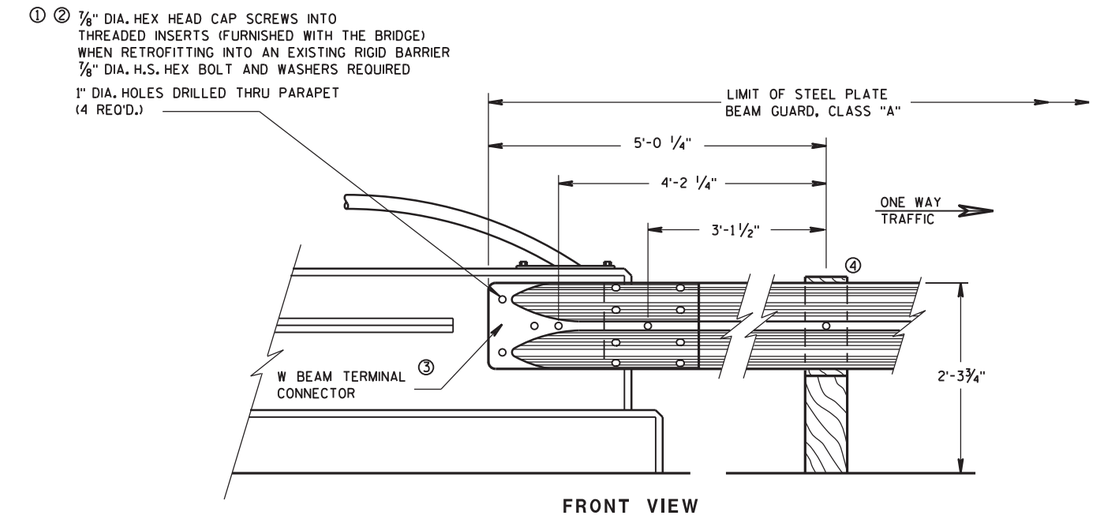

FRONT VIEW

W BEAM CONNECTION TO VERTICAL FACE PARAPET

(USE ONLY ON THE TRAFFIC EXIT END OF ONE WAY BRIDGES)

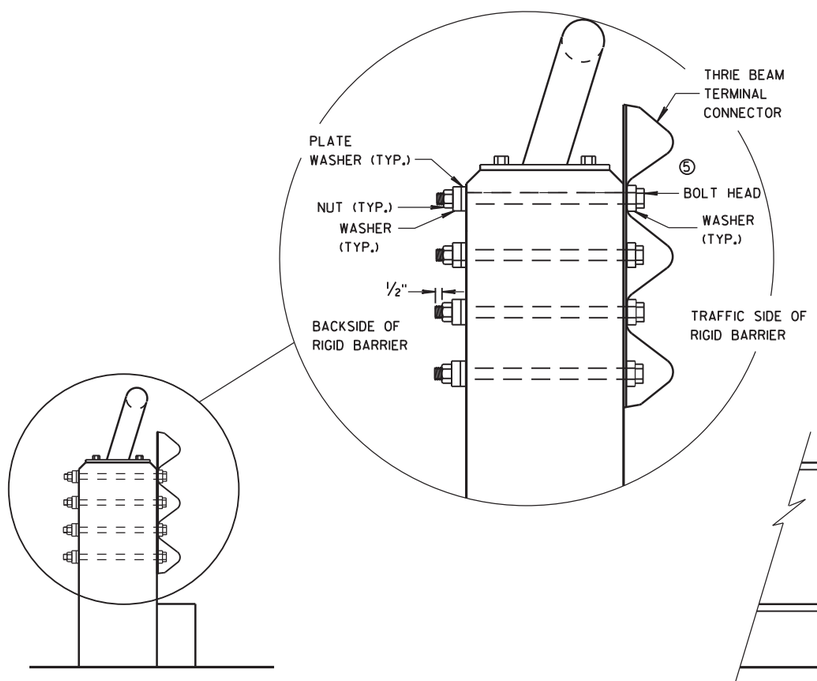

SECTION E-E

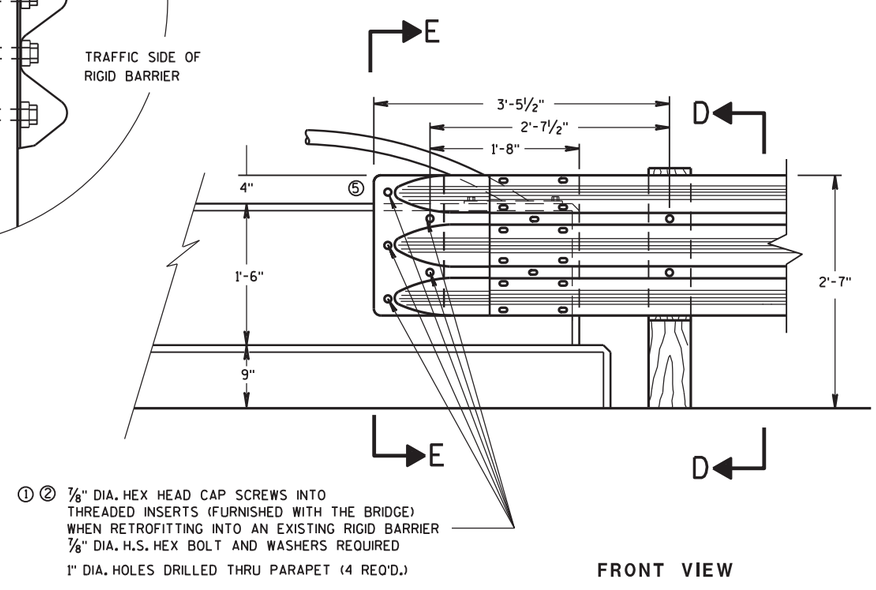

FRONT VIEW

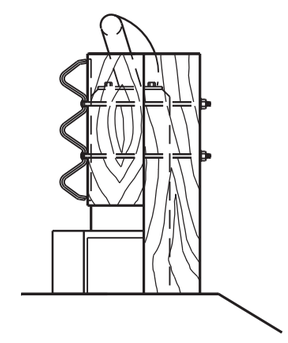

SECTION D-D

THRIE BEAM CONNECTION TO VERTICAL FACED PARAPETS

STEEL THRIE BEAM STRUCTURE APPROACH, CONNECTION TO VERTICAL FACED PARAPETS

STATE OF WISCONSIN
DEPARTMENT OF TRANSPORTATION

APPROVED
8/31/2012 — DATE
/S/ Jerry H. Zogg — ROADWAY STANDARDS DEVELOPMENT ENGINEER
FHWA

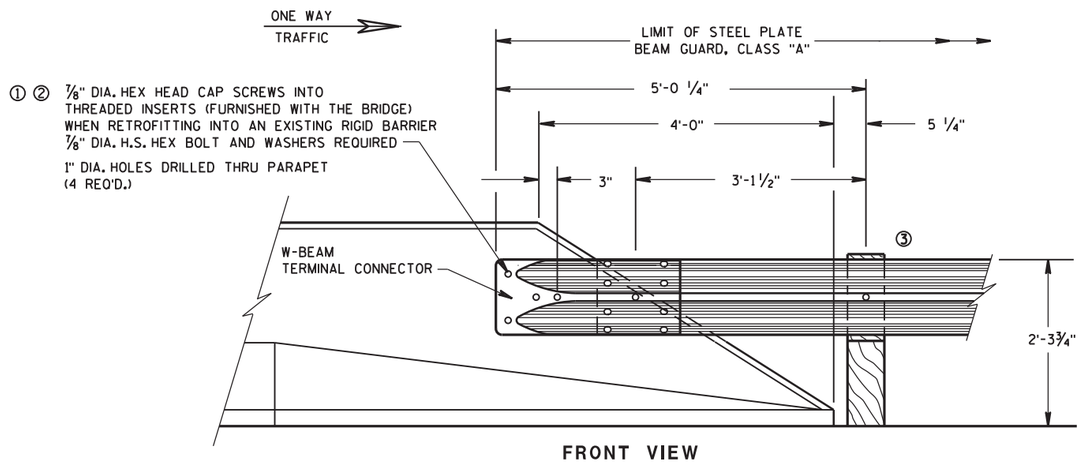

FRONT VIEW

W BEAM CONNECTION TO PARAPETS WITH SLOPED ENDS

(USE ONLY AT TRAFFIC EXIT END OF ONE WAY BRIDGE)

GENERAL NOTES

THESE ARE TYPICAL CONNECTION DETAILS. ADJUST THE POSTION OF CONNECTIONS TO EXISTING BRIDGES TO FIT THE ACTUAL BRIDGE AND SITE DIMENSIONS.

BOLTS, NUTS AND WASHERS SHALL CONFORM TO ASTM A325, A449 AND GALVANIZED PER STANDARD SPECIFICATIONS 614.

① DRILLING BOLT HOLES THROUGH THE PARAPET, BOLTS, NUTS, WASHERS AND REPAIRING DAMAGED CONCRETE ARE INCIDENTAL TO THE CONTRACT.

② BOLTS MAY BE A325 BOLTS OR A449 BOLTS. BOLT LENGTH AND THREADING LENGTH ARE TO ALLOW FOR A TIGHT CONNECTION BETWEEN RIGID BARRIER AND THRIE BEAM CONNECTION PLATE. CONTRACTOR IS TO FIELD VERIFY BOLT LENGTH AND THREAD LENGTH. ONE ROUND WASHER REQUIRED BETWEEN BOLT HEAD AND THRIE BEAM TERMINAL CONNECTOR. BOLTS THAT EXTEND THROUGH THE PARAPET AND OUT THE BACK FACE REQUIRE A HARDENED ROUND STEEL WASHER THAT IS 2" O.D. X 5/8" THICK AND ONE PLATE WASHER. REPAIR ANY DAMAGED CONCRETE FROM BOLT INSTALLATION.

③ W6 X 9 OR W6 X 8.5 STEEL POSTS AND NOTCHED PLASTIC BLOCKOUTS ARE ACCEPTABLE ALTERNATIVES FOR 6" X 8" WOOD POST WITH WOOD OR PLASTIC BLOCKOUTS. USE APPROVED NOTCHED PLASTIC BLOCKOUTS WITH STEEL POSTS.

DO NOT USE STEEL POSTS AND NOTCHED PLASTIC BLOCKOUTS IN THE STEEL THRIE BEAM STRUCTURAL APPROACH AND THE TRANSITION SECTION OF STEEL PLATE BEAM GUARD, CLASS "A" INSTALLATIONS.

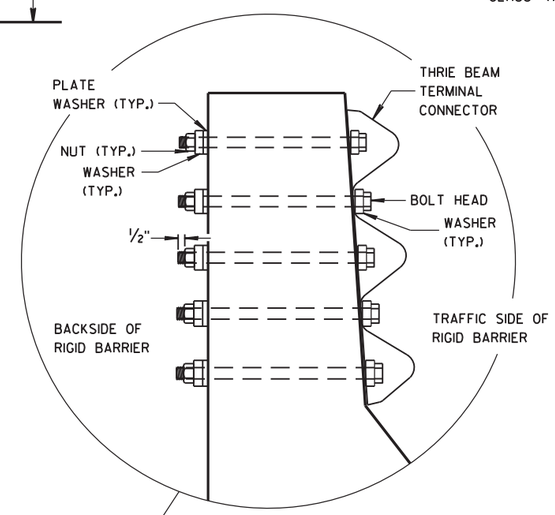

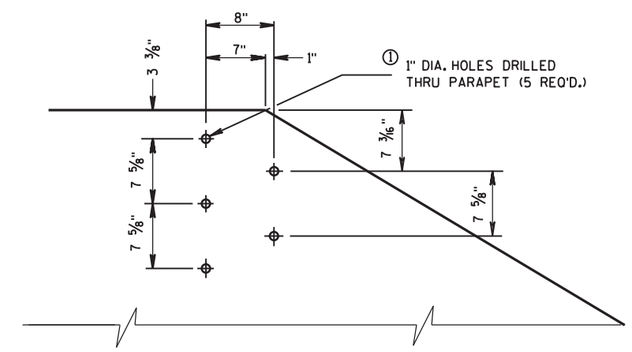

DRILL HOLE LOCATION AND PATTERN FOR THRIE BEAM CONNECTION

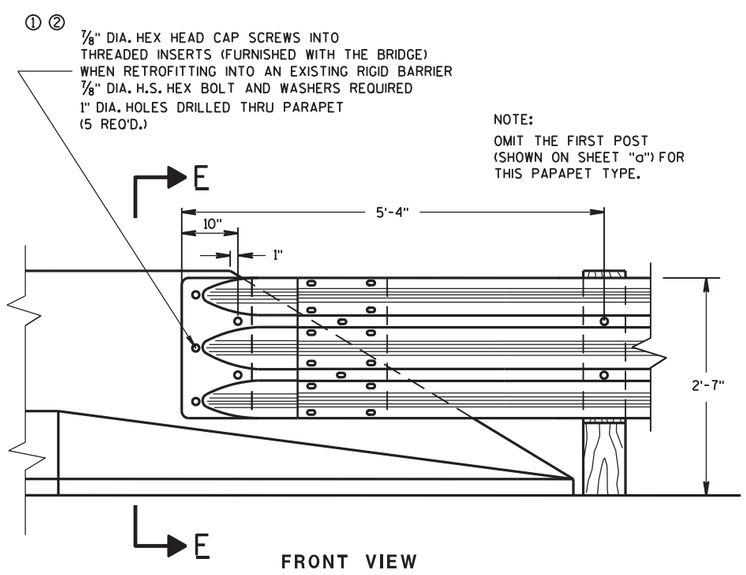

FRONT VIEW

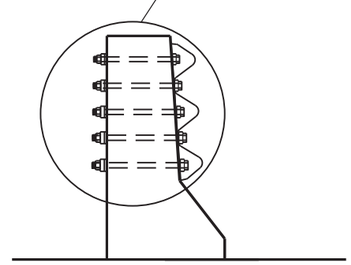

SECTION F-F

THRIE BEAM CONNECTION TO BRIDGE PARAPETS WITH SLOPED ENDS

STEEL THRIE BEAM STRUCTURE APPROACH, CONNECTION TO SLOPED END PARAPETS

STATE OF WISCONSIN
DEPARTMENT OF TRANSPORTATION

APPROVED
8/31/2012
DATE
FHWA

/S/ Jerry H. Zogg
ROADWAY STANDARDS DEVELOPMENT ENGINEER

6
S.D.D. 14 B 20-11d

SDD 14b20-e Steel Thrie Beam Structure Approach, Connection to Bridge Railing Types "F" and "W"

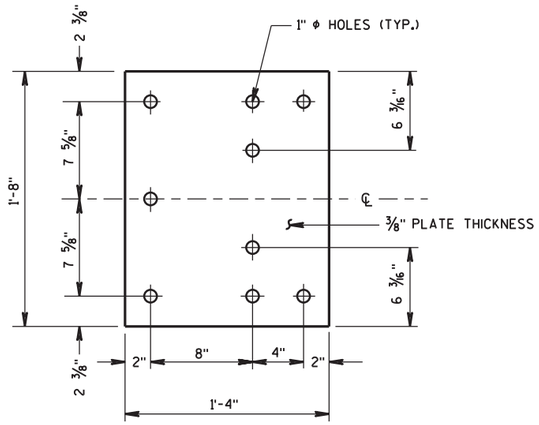

BACK-UP PLATE DETAIL

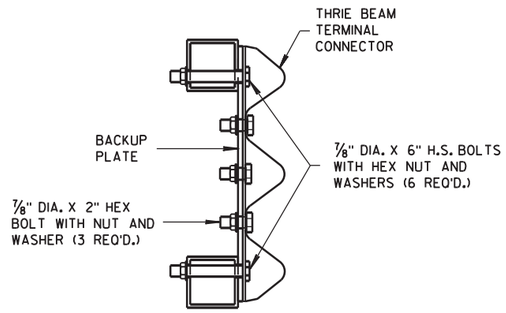

SECTION G-G

GENERAL NOTES

BOLTS, PLATES, NUTS AND WASHERS SHALL CONFORM TO THE REQUIREMENTS OF ASTM SPECIFICATION A 325 AND BE GALVANIZED IN ACCORDANCE WITH ASTM A 153.

① DRILLING BOLT HOLES THROUGH THE PARAPET, BOLTS, NUTS, WASHERS AND REPAIRING DAMAGED CONCRETE ARE INCIDENTAL TO THE CONTRACT.

② VARY THIS DIMENSION DEPENDING ON ABUTMENT TYPE, WINGWALL DETAILS, AND ANGLE OF SKEW. PLACE THE FIRST WOOD POST OFF THE BRIDGE SHALL AS CLOSE AS FEASIBLE TO THE STEEL END POST.

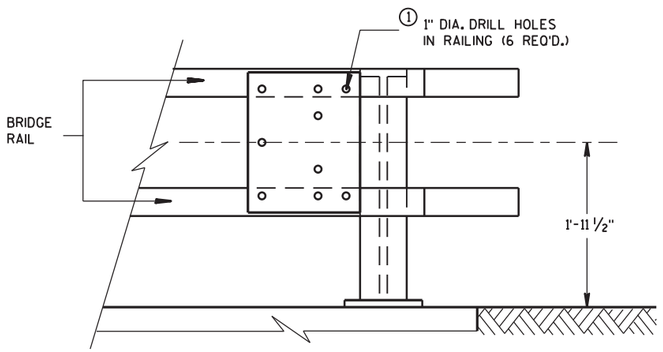

BACK-UP PLATE MOUNTING ONTO BRIDGE RAILING

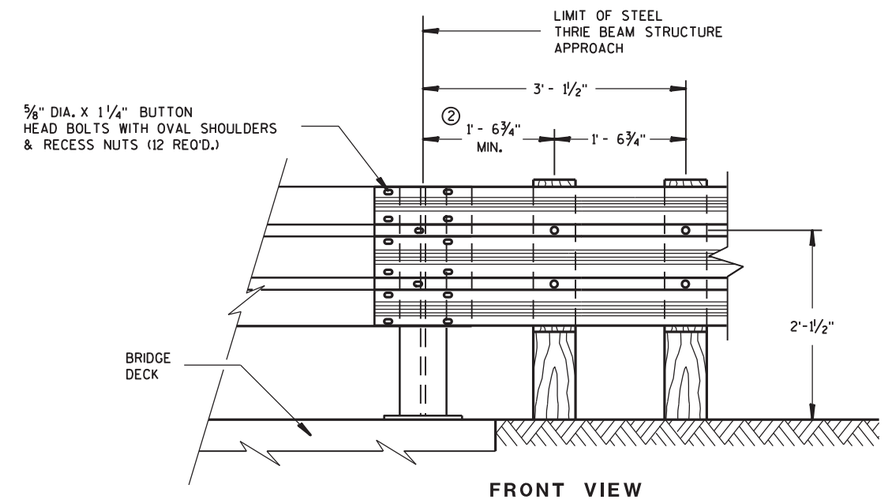

FRONT VIEW

THRIE BEAM CONNECTION TO STEEL RAILING TYPE "W"

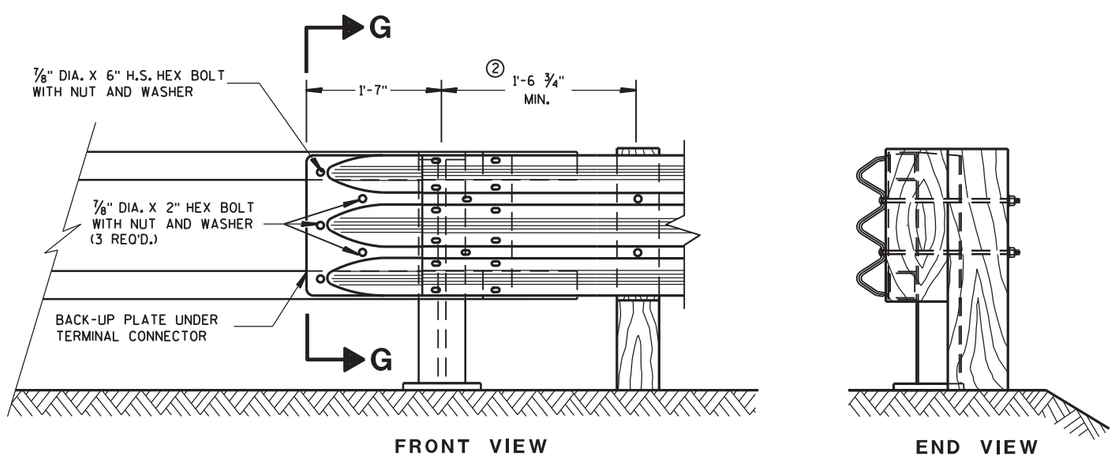

FRONT VIEW

END VIEW

THRIE BEAM CONNECTION TO TUBULAR RAILING TYPE "F"

STEEL THRIE BEAM STRUCTURE APPROACH, CONNECTION TO BRIDGE RAILING TYPES "F" AND "W"

STATE OF WISCONSIN
DEPARTMENT OF TRANSPORTATION

APPROVED

8/31/2012 — DATE

/S/ Jerry H. Zogg — ROADWAY STANDARDS DEVELOPMENT ENGINEER

FHWA

6

S.D.D. 14 B 20-11e

SDD 14b20-f Steel Thrie Beam Structure Approach, Connection to Bridge Railing Type "M"

GENERAL NOTES

① VARY THIS DIMENSION DEPENDING ON ABUTMENT TYPE, WINGWALL DETAILS, AND ANGLE OF SKEW. PLACE THE FIRST WOOD POST OFF THE BRIDGE SHALL BE AS CLOSE AS FEASIBLE TO THE STEEL END POST.

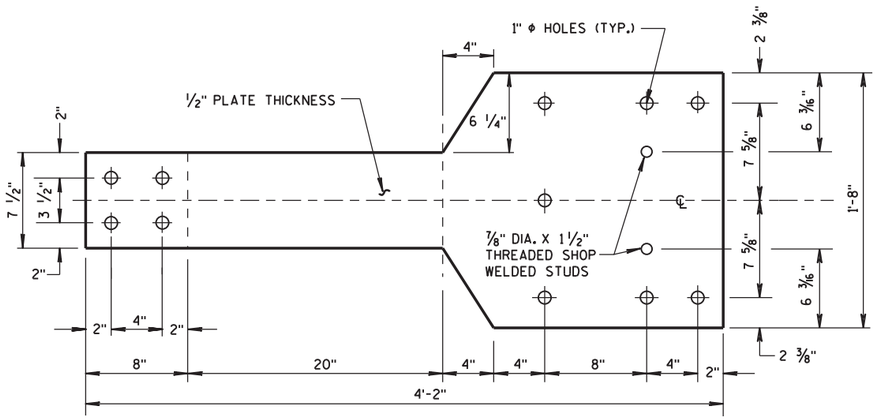

FRONT VIEW

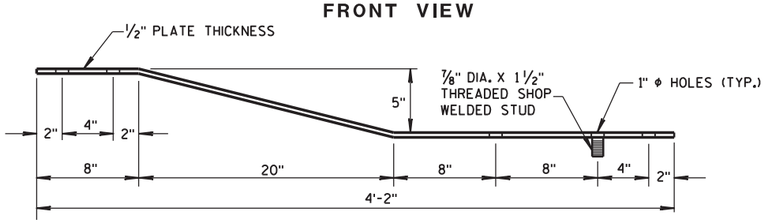

PLAN VIEW

BACK-UP PLATE DETAIL, TYPE "M"

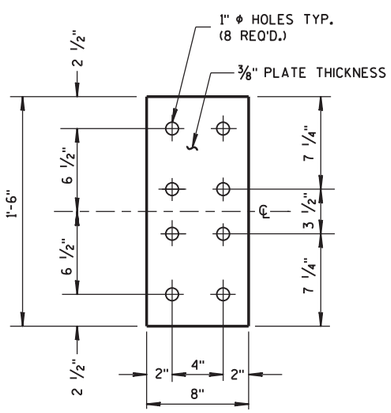

FRONT VIEW

ANCHOR PLATE DETAIL, TYPE "M"

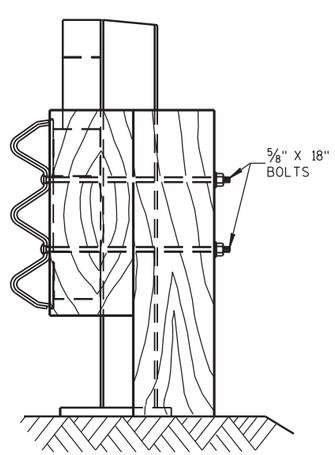

SECTION I-I

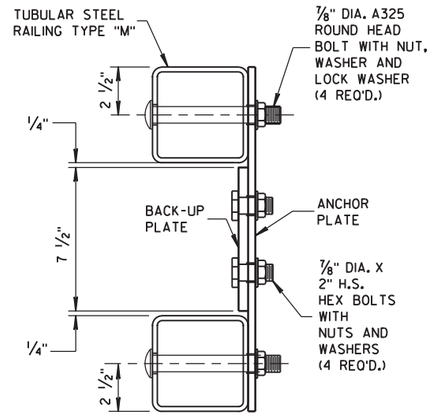

SECTION H-H

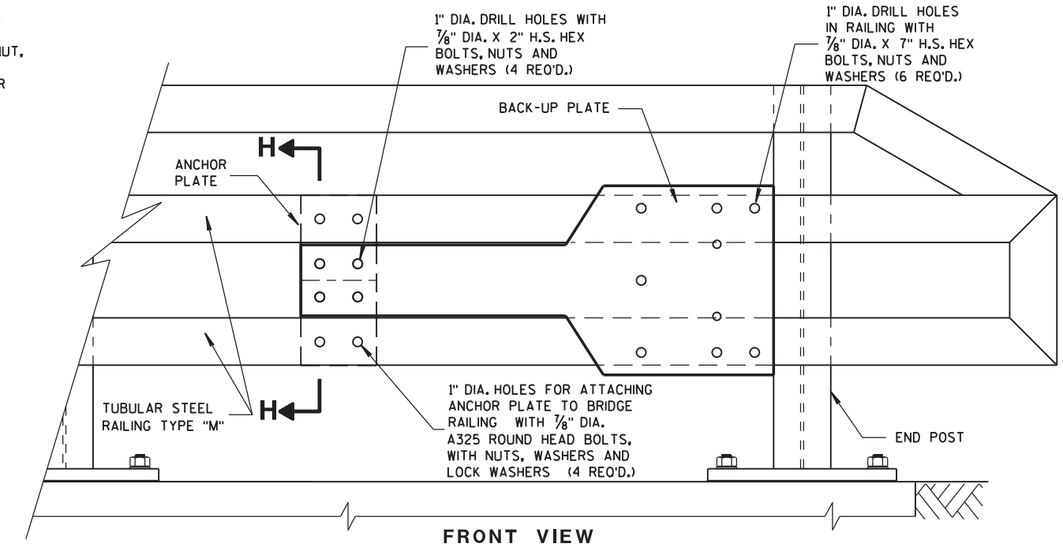

FRONT VIEW

ANCHOR AND BACK-UP PLATE MOUNTING TO BRIDGE RAILING, TYPE "M"

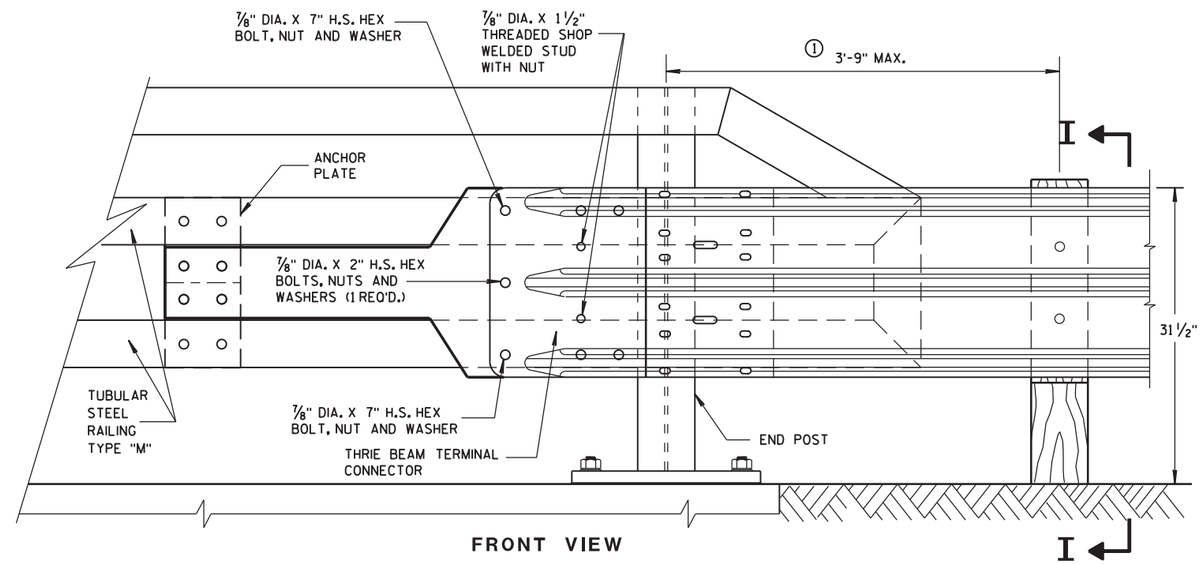

FRONT VIEW

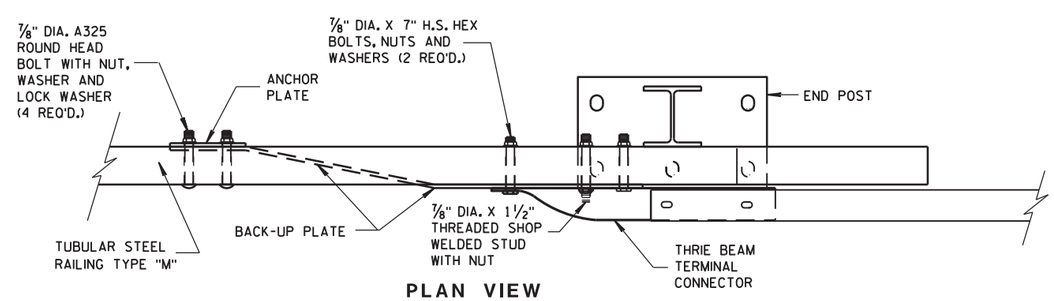

PLAN VIEW

THRIE BEAM CONNECTION TO TUBULAR RAILING, TYPE "M"

STEEL THRIE BEAM STRUCTURE APPROACH, CONNECTION TO BRIDGE RAILING TYPE "M"

STATE OF WISCONSIN
DEPARTMENT OF TRANSPORTATION

APPROVED
8-31-2012 — DATE
/S/ Jerry H. Zogg — ROADWAY STANDARDS DEVELOPMENT ENGINEER
FHWA

6

S.D.D. 14 B 20-11f

GENERAL NOTES

COVER PLATE PANELS ARE 3/16" THICK.

ALL STIFFENERS ARE 1/4" THICK.

CONNECTOR PLATE SHALL BE FABRICATED FROM ASTM GRADE A36 STEEL AND GALVANIZED.

FOR GALVANIZED REQUIREMENTS, SEE SECTION 614 OF THE STANDARD SPECIFICATIONS.

ALL HOLE DIAMETERS SHALL BE 1".

FOR OPPOSITE SIDE INSTALLATION MIRROR DRAWINGS.

(1) STIFFENERS LOCATED AT THE OUTSIDE EDGES OF THE COVER PLATES SHALL BE WELDED AS FOLLOWS:
SINGLE BEVEL GROOVE WELD ON EXTERNAL SIDES AND 3/16" FILLET WELD BY 1" LONG SPACED AT 2" ON INTERNAL SIDES.

(2) STIFFENERS LOCATED ON THE INSIDE OF THE COVER PLATE SHALL BE WELDED AS FOLLOWS:
3/16" FILLET WELD BY 1" LONG SPACED AT 2".

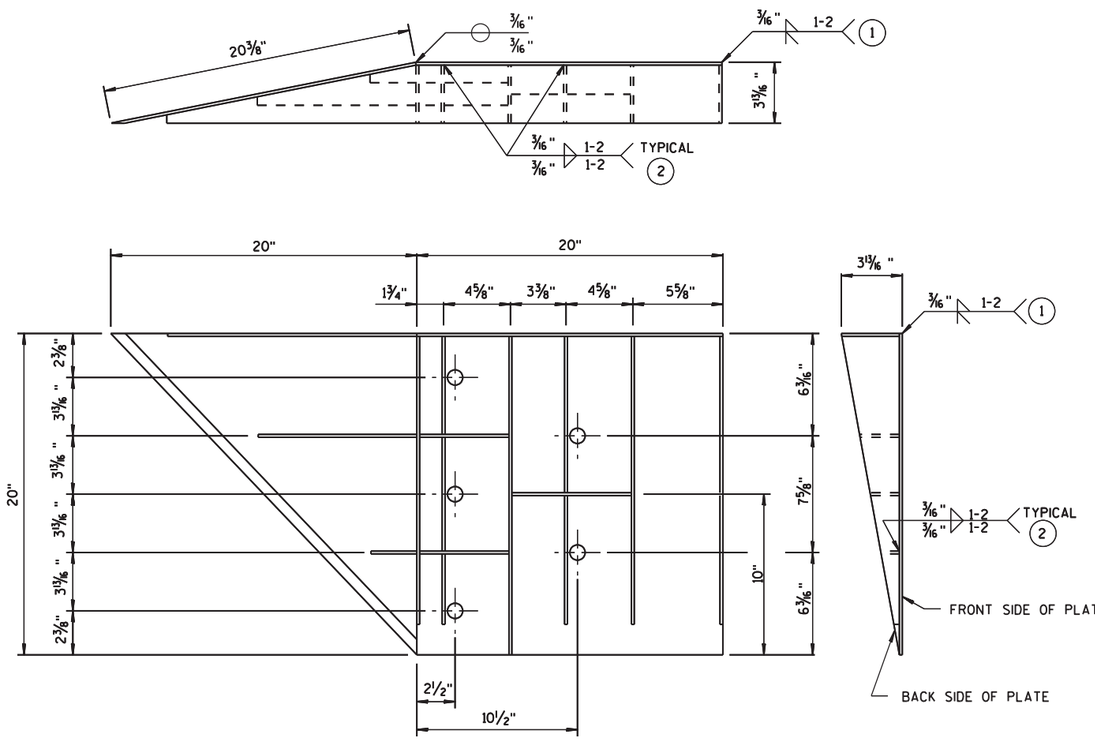

WELDING INSTRUCTION

(VIEWED FROM BACK SIDE OF PLATE)

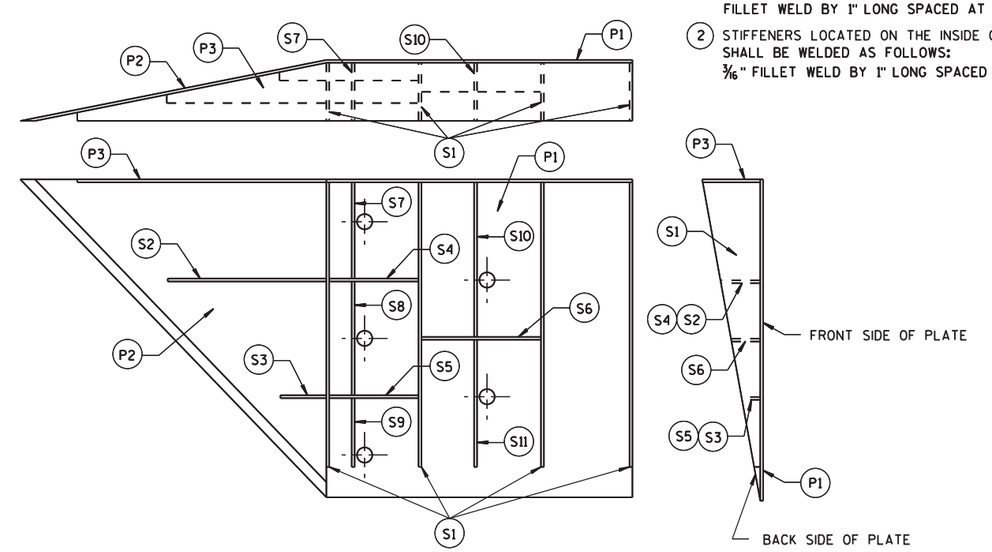

PLATE AND STIFFENER IDENTIFICATION

(VIEWED FROM BACK SIDE OF PLATE)

CONNECTOR PLATE DIMENSION (PER ASSEMBLY)

PLATE	QUANTITY	SHAPE	SIZE (A x B x C x D)	THICKNESS
P1	1		20" x 20"	3/16"
P2	1		20" x 20" x 28 9/16"	3/16"
P3	1		39" x 3 5/8" x 20" x 19 5/16"	3/16"
S1	4		18 7/16" x 3 5/8" x 18 3/4"	1/4"
S2	1		10 1/4" x 2 7/16" x 10 3/8" x 1/2"	1/4"
S3	1		3" x 1 1/16" x 3 1/8" x 1/2"	1/4"
S4	1		6 1/8" x 2 7/16"	1/4"
S5	1		6 1/8" x 1 1/16"	1/4"
S6	1		7 3/4" x 1 3/4"	1/4"
S7	1		2 9/16" x 6" x 3 5/8" x 5 7/8"	1/4"
S8	1		1 5/32" x 7 1/2" x 2 1/2" x 7 3/8"	1/4"
S9	1		6 1/16" x 6 3/16" x 1 3/32"	1/4"
S10	1		1 7/8" x 9 7/8" x 3 5/8" x 9 11/16"	1/4"
S11	1		8 1/2" x 8 3/4" x 1 13/16"	1/4"

STEEL THRIE BEAM STRUCTURE APPROACH

STEEL THRIE BEAM STRUCTURE APPROACH, CONNECTOR PLATE DETAIL

STATE OF WISCONSIN
DEPARTMENT OF TRANSPORTATION

APPROVED
8/31/2012 — DATE
/S/ Jerry H. Zogg — ROADWAY STANDARDS DEVELOPMENT ENGINEER
FHWA

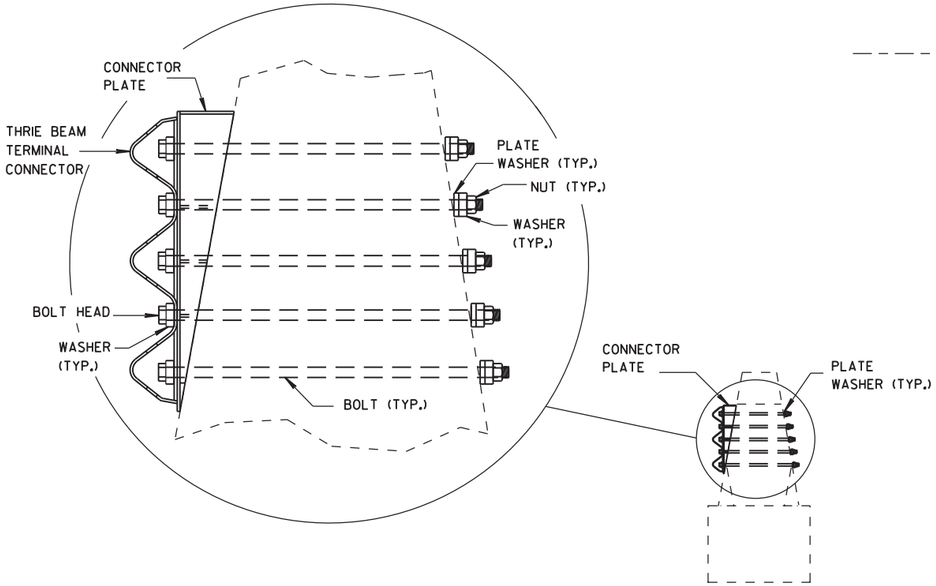

SECTION J-J

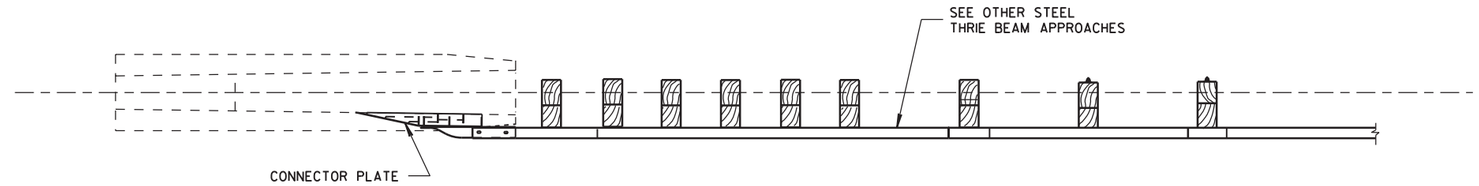

PLAN VIEW

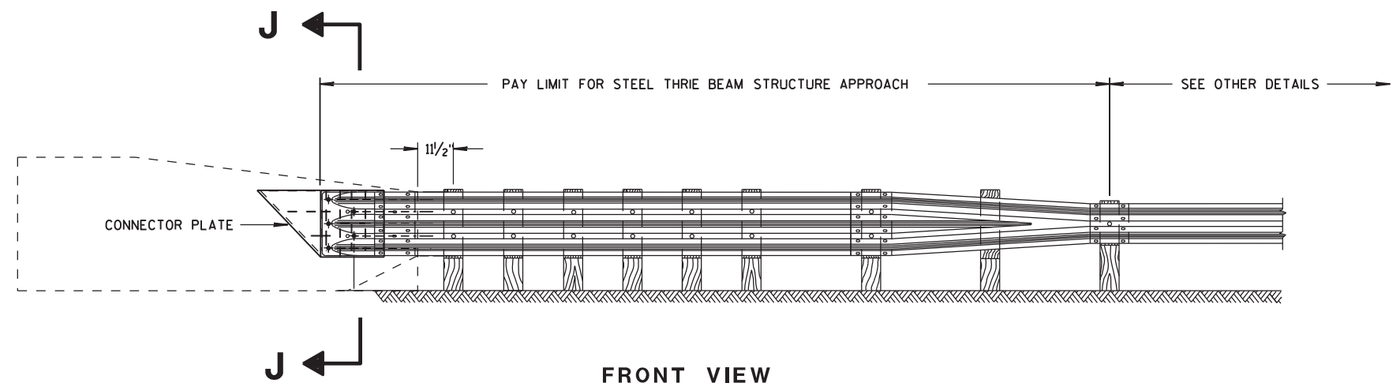

FRONT VIEW

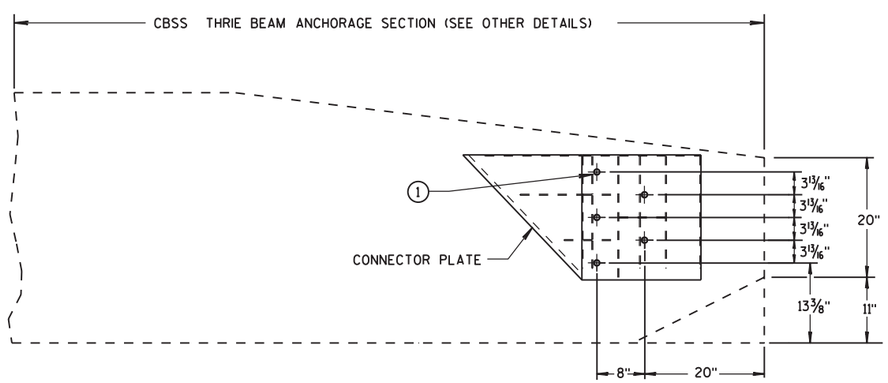

CONNECTOR PLATE LOCATION

GENERAL NOTES

CONSTRUCT PER STANDARD SPECIFICATION 614.

CONNECTOR PLATE, DRILLING HOLES THROUGH PARAPET, BOLTS, NUTS, WASHERS AND REPAIRING DAMAGED CONCRETE ARE INCIDENTAL TO THE CONTRACT.

(1) BOLTS MAY BE A325 BOLTS OR A449 BOLTS. BOLT LENGTH AND THREADING LENGTH ARE TO ALLOW FOR A TIGHT CONNECTION BETWEEN RIGID BARRIER AND THRIE BEAM CONNECTION PLATE. CONTRACTOR IS TO FIELD VERIFY BOLT LENGTH AND THREAD LENGTH. ONE ROUND WASHER REQUIRED BETWEEN BOLT HEAD AND THRIE BEAM TERMINAL CONNECTOR. BOLTS THAT EXTEND THROUGH THE PARAPET AND OUT THE BACK FACE REQUIRE A HARDENED ROUND STEEL WASHER THAT IS 2" O.D. X 5/8" THICK AND ONE PLATE WASHER. REPAIR ANY DAMAGED CONCRETE FROM BOLT INSTALLATION.

STEEL THRIE BEAM STRUCTURE APPROACH

STEEL THRIE BEAM STRUCTURE APPROACH, SINGLE SLOPE ATTACHMENT

STATE OF WISCONSIN
DEPARTMENT OF TRANSPORTATION

APPROVED
8/31/2012 — DATE
/S/ Jerry H. Zogg — ROADWAY STANDARDS DEVELOPMENT ENGINEER
FHWA

6
S.D.D. 14 B 20-11h

SDD 14b42-a Midwest Guardrail System (MGS) - Installation Cross Sections, Post and Block Details

(1) WOOD OR STEEL POSTS (w6X9 OR w6X8.5) MAY BE USED. DO NOT INTERMIX WOOD AND STEEL POSTS. INSTALL STEEL POSTS WITH HOLES ON APPROACHING TRAFFIC SIDE.

(2) USE WOOD OR APPROVED PLASTIC BLOCKOUTS. WOOD BLOCKOUTS MAY BE CONSTRUCTED OUT OF TWO OR MORE WOOD BLOCKOUTS. SEE ALTERNATE WOOD BLOCKOUT DETAIL. DIMENSIONS OF APPROVED PLASTIC BLOCKOUTS MAY VARY.

(3) IF ROCK IS ENCOUNTERED DURING EXCAVATION, PROVIDE A HOLE 12 INCHES IN DIAMETER EXTENDING 20 INCHES DEEP INTO THE ROCK. PLACE APPROXIMATELY 2 1/2" INCHES OF GRANULAR MATERIAL IN THE BOTTOM OF THE HOLE. CUT THE POSTS THE TO LENGTH AMD INSTALL. BACKFILL WITH EXCAVATED MATERIAL AND COMPACT. BACKFILL IS TO BE FREE OF LARGE ROCKS.

(4) WHEN THE DISTANCE FROM BACK OF POST TO SHOULDER HINGE POINT IS LESS THAN 2 FEET INSTALL LONGER POST AT HALF POST SPACING (K).

(5) FOR NEW MGS INSTALLATION TOP OF W-BEAM RAIL TOLERANCE IS ±1". FOR EXISTING MGS INSTALLATION TOP OF W-BEAM IS BETWEEN 27 ¾" TO 32".

(6) WHEN USING STEEL POST AND WOOD BLOCKOUTS INSTALL FOUR 16D GALVANIZED NAILS. INSTALL NAILS AT THE BACK CORNERS OF THE BLOCK AND BEND THE NAILS OVER THE FLANGE OF THE STEEL POST.

(7) TOTAL POST LENGTH FOR TYPE K IS 7' - 0".
TOTAL POST LENGTH FOR OTHER MGS TYPES IS 6' - 0".

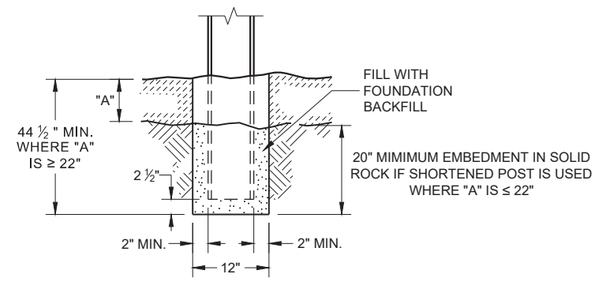

END VIEW
SETTING STEEL OR WOOD POST IN ROCK (3)

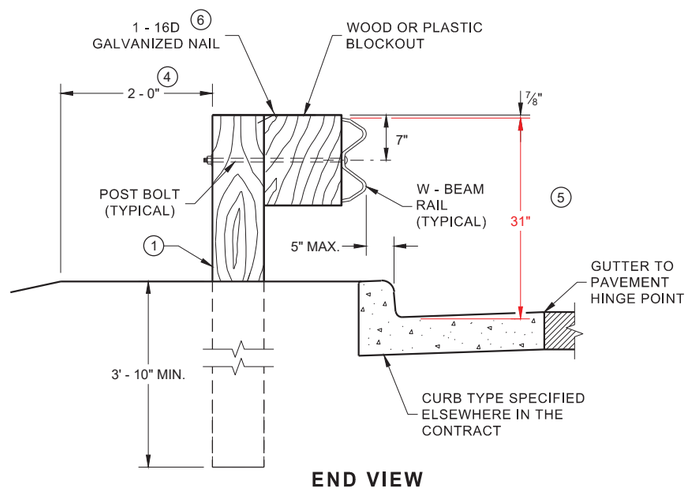

END VIEW
LOCATED ALONG A CURBED ROADWAY

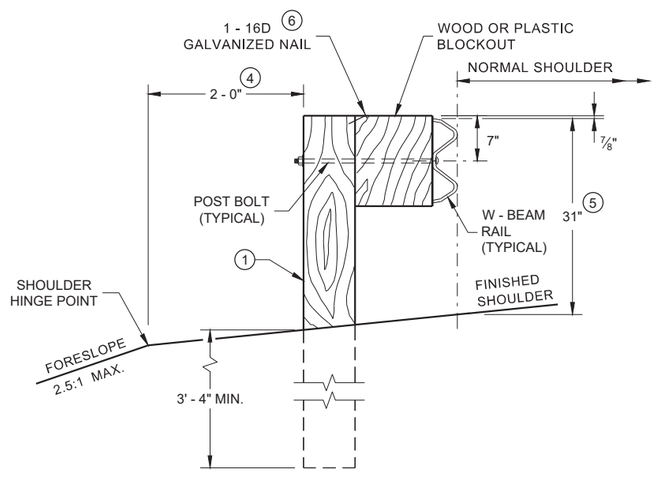

END VIEW
LOCATED ALONG A ROADWAY SHOULDER
STANDARD INSTALLATION

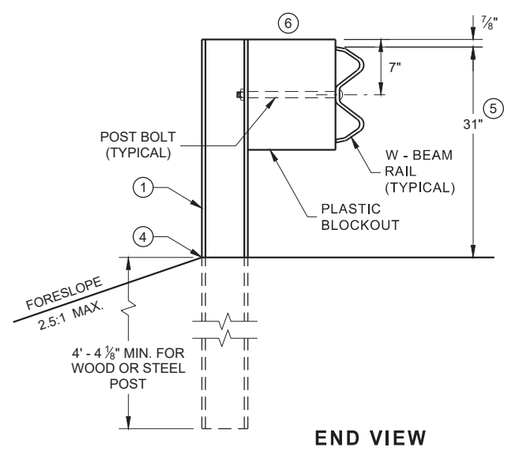

END VIEW
MGS LONGER POST AT HALFPOST
SPACING W BEAM (K)

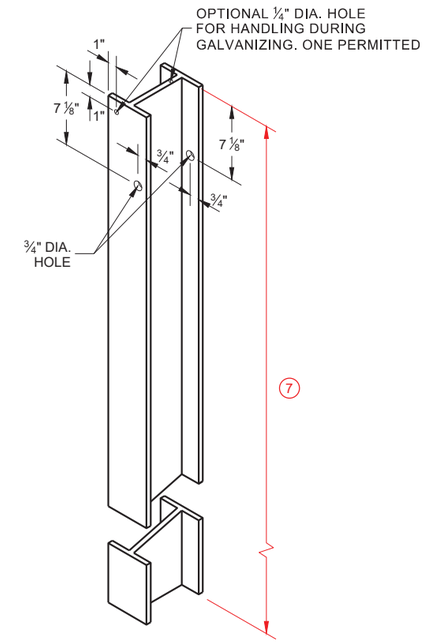

STEEL POST & HOLE
PUNCHING DETAIL
(W 6 X 9) (1)

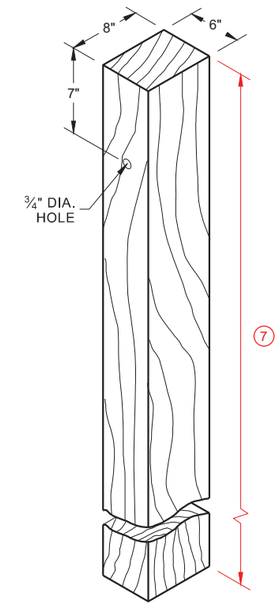

WOOD POST
(6" X 8") NOMINAL (1)

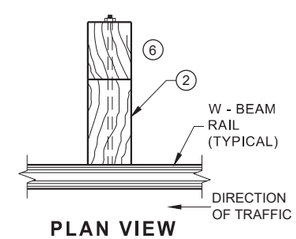

PLAN VIEW
WOOD POST,
BLOCKOUT & BEAM

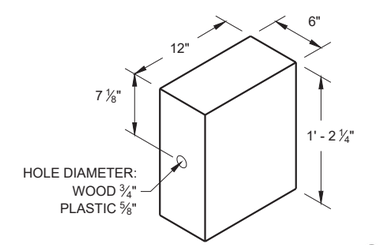

WOOD OR PLASTIC (2)
BLOCKOUT

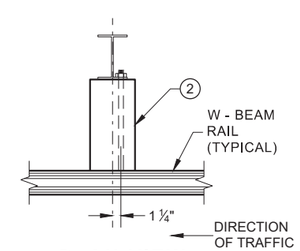

PLAN VIEW
STEEL POST,
PLASTIC BLOCKOUT & BEAM

MIDWEST GUARDRAIL SYSTEM (MGS) GUARDRAIL

STATE OF WISCONSIN
DEPARTMENT OF TRANSPORTATION

6

6

SDD 14B42 - 06a

SDD 14B42 - 06a

SDD 14b42-b MGS - Bolt, Post Spacing, Reflector Detail

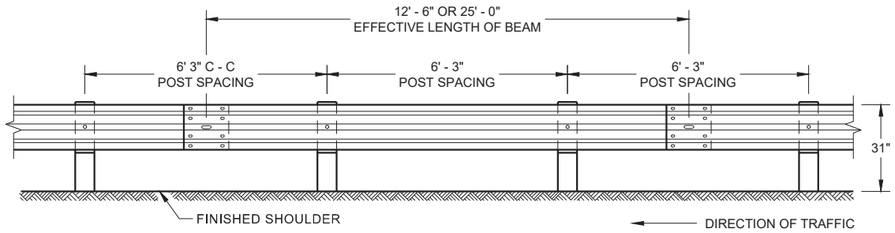

FRONT VIEW
POST SPACING STANDARD INSTALLATION

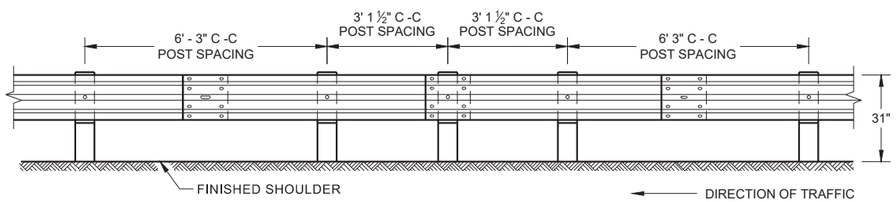

FRONT VIEW
HALF POST SPACING (HS) AND HALF POST SPACING WITH LONGER POSTS (K)

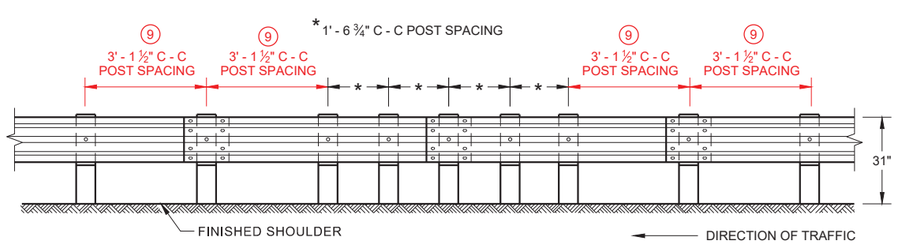

FRONT VIEW
QUARTER POST SPACING (QS)

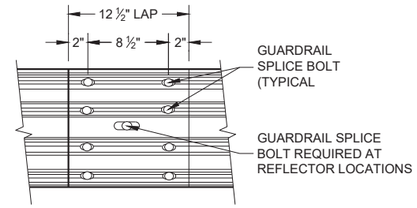

FRONT VIEW
MID-SPAN BEAM SPLICE

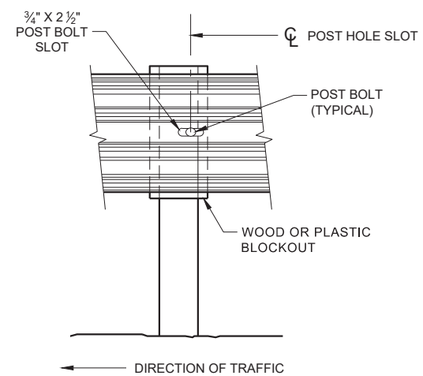

FRONT VIEW AT STEEL POST

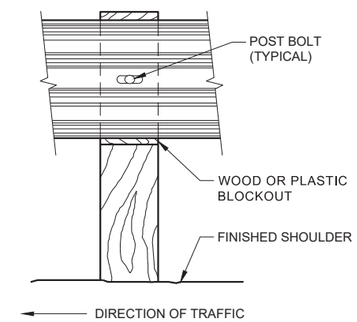

FRONT VIEW AT WOOD POST

GENERAL NOTES

8 DO NOT INSTALL REFLECTORS ON THE FIRST 50 FEET OF THE APPROACH END OF THE ENERGY ABSORBING TERMINAL. RAIL SPLICE LOCATIONS ARE THE ONLY ACCEPTABLE LOCATIONS FOR REFLECTORS.

9 25 FEET OF HALF POST SPACING IS REQUIRED ON APPROACH AND DEPARTURE ENDS OF QUARTER POST SPACING.

POST BOLTS ARE A ⅝" DIAMETER ASTM A307 GUARDRAIL BOLT. A POST BOLT REQUIRES ⅝" DIAMETER A563A DOUBLE RECESSED (DR) HEAVY HEX NUT AND ⅝" DIAMETER F844 FLAT WASHER. POST BOLTS MAY BE LONGER IF MULTIPLE BLOCKOUTS ARE BEING USED.

GUARD RAIL SPLICE BOLTS ARE A ⅝" DIAMETER ASTM A307 GUARDRAIL HEAD BOLT. A GUARDRAIL SPLICE BOLT REQUIRES ⅝" DIAMETER A563A DOUBLE RECESSED (DR) HEAVY HEX NUT.

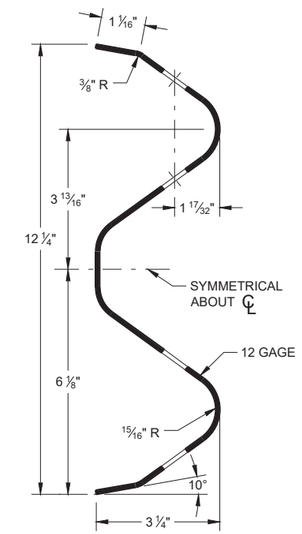

SECTION THRU W-BEAM RAIL

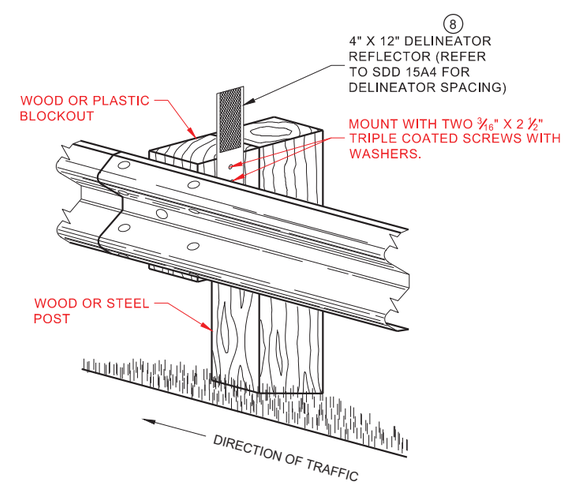

ONE SIDED REFLECTOR DETAIL AND TYPICAL INSTALLATION

MIDWEST GUARDRAIL SYSTEM (MGS) GUARDRAIL

STATE OF WISCONSIN
DEPARTMENT OF TRANSPORTATION

6

6

SDD 14B42 - 06b

SDD 14B42 - 06b

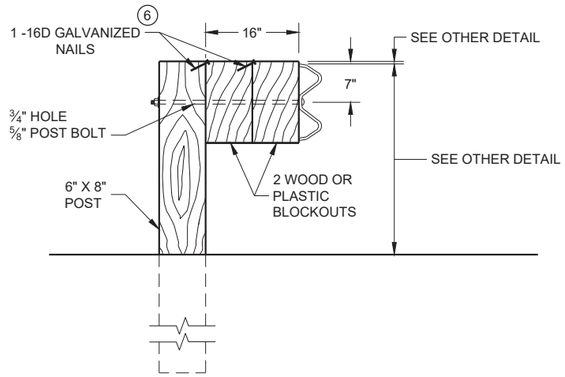

DETAIL FOR 16" BLOCKOUT DEPTH

IT IS ACCEPTABLE TO USE BLOCKOUTS UP TO 16" DEEP TO INCREASE THE POST OFFSET TO AVOID UNDERGROUND OBSTACLES. THERE IS NO LIMIT TO THE NUMBER OF POSTS THAT CAN HAVE ADDITIONAL BLOCKOUTS UP TO 16" DEEP.

NOTE:

1. ALL FILLETS SHALL HAVE A MINIMUM RADIUS OF 3/16".
2. IF THE BOLT EXTENDS MORE THAN ¼" FROM THE NUT THE BOLT SHOULD BE TRIMMED BACK.

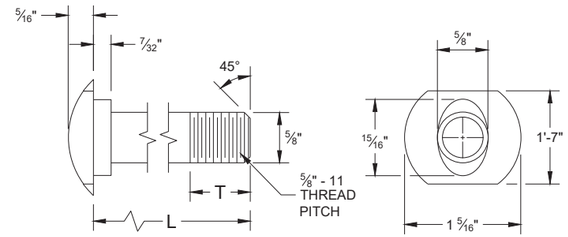

POST BOLT TABLE

L	T (MIN.)
1 ¼"	1 ⅛"
2"	1 ¾"
10"	4"
14"	4 1/16"
18"	4"
21"	4 1/16"
25"	4"

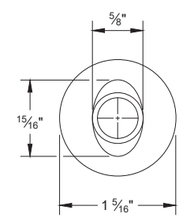

ALTERNATE BOLT HEAD

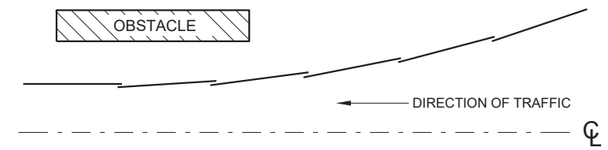

PLAN VIEW
BEAM LAPPING DETAIL

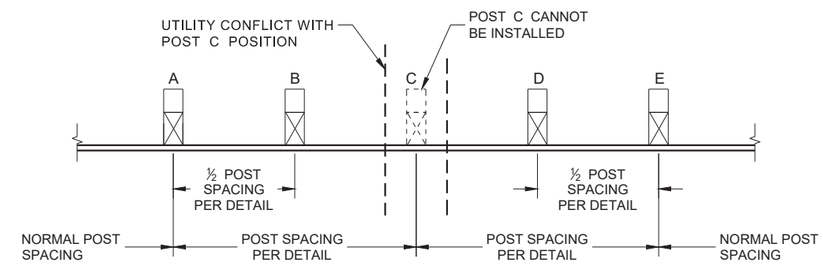

POST DRIVING FOR CONTINUOUS UNDERGROUND OBSTRUCTION

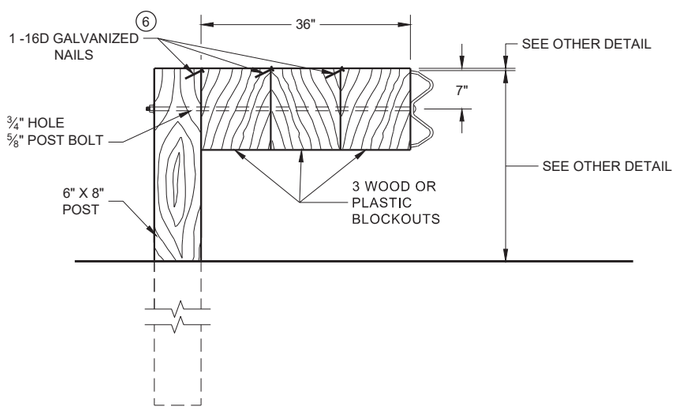

DETAIL FOR 36" BLOCKOUT DEPTH

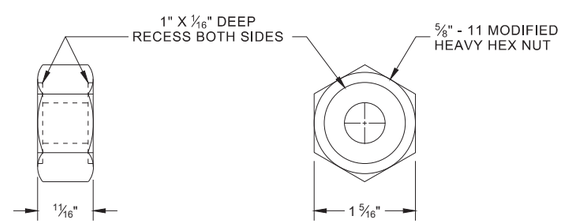

POST BOLT, SPLICE BOLT AND RECESS NUT

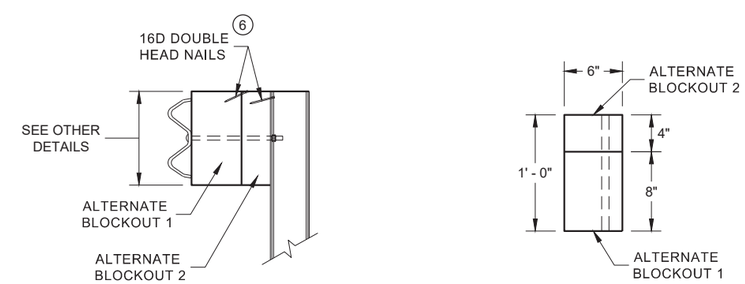

SIDE VIEW

PLAN VIEW

ALTERNATE WOOD BLOCKOUT DETAIL

NOTES: UNDER SPECIAL CIRCUMSTANCES, SUCH AS AVOIDING OBSTACLES THAT ARE NOT RELOCATED, IT IS ACCEPTABLE TO INSTALL ADDITIONAL BLOCKOUTS TO OBTAIN UP TO 36" DEPTH FOR ONE OR TWO POSTS IN A SECTION OF GUARDRAIL.

DO NOT USE 16" OR 36" BLOCKOUTS IF IT CAUSES THE POST TO BE DRIVEN BEYOND SHOULDER HINGE POINT OR CAUSES A FIXED OBJECT TO BE WITHIN THE DEFLECTION DISTANCE OF THE BARRIER.

(6) WHEN USING STEEL POST AD WOOD BLOCKOUTS, INSTALL FOUR 16D GALVANIZED NAILS. INSTALL NAILS AT THE BACK CORNERS OF THE BLOCK AND BEND THE NAILS OVER THE FLANGE OF THE STEEL POST.

MIDWEST GUARDRAIL SYSTEM (MGS) GUARDRAIL

STATE OF WISCONSIN
DEPARTMENT OF TRANSPORTATION

6
SDD 14B42 - 06c

SDD 14b42-d MGS - Missing Post Details

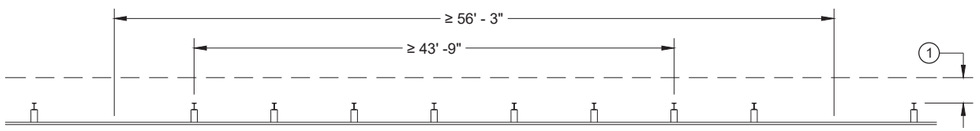

MISSING POST IN NORMAL BEAM GUARD RUN

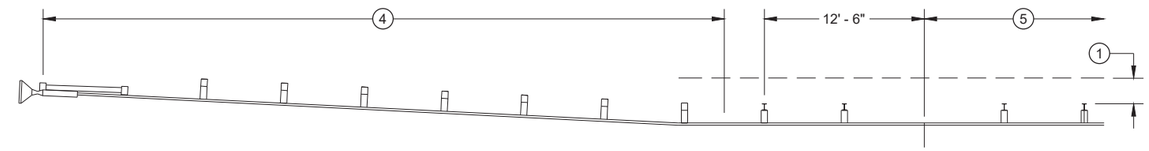

MISSING POST IN NORMAL BEAM GUARD RUN NEAR EAT

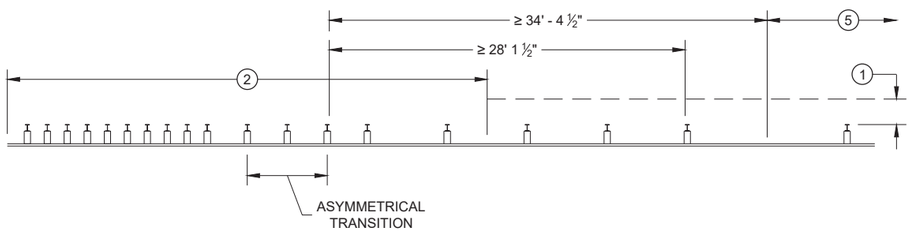

MISSING POST NEAR APPROACH THRIE BEAM TRANSITION

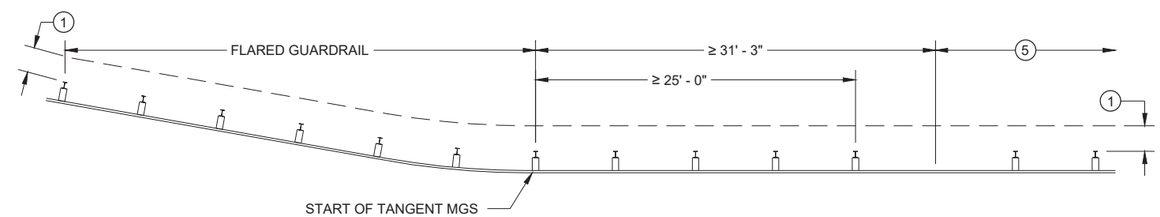

MISSING POST IN NORMAL BEAM GUARD RUN NEAR FLARED BEAM GUARD

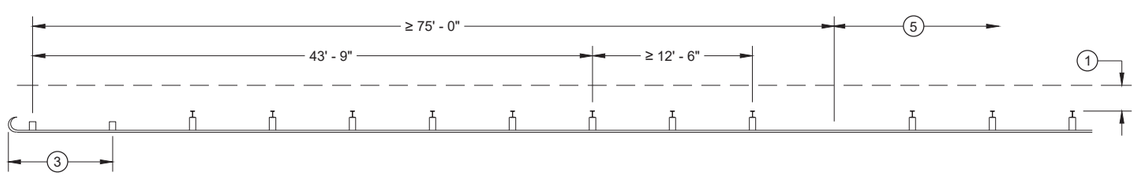

MISSING POST IN NORMAL BEAM GUARD RUN NEAR TYPE 2 TERMINAL

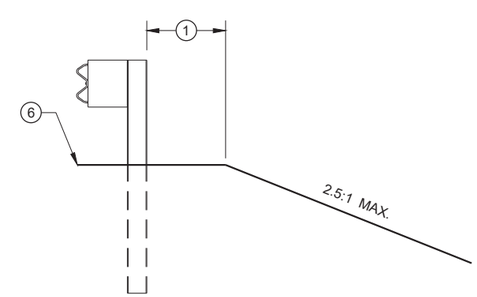

CROSS SECTION VIEW

1. MINIMUM OF 2 FEET OF GRADING BEHIND POST.
2. SEE SDD 14B45 FOR MORE DETAILS.
3. SEE SDD 14B47 FOR MORE DETAILS.
4. SEE SDD 14B44 FOR MORE DETAILS.
5. SEE MISSING POST IN NORMAL BEAM GUARD RUN FOR DISTANCE TO NEXT MISSING POST AND AREA FOR WELL DRAINED, COMPACTED SOILS.
6. SEE PLAN FOR SHOULDER DESIGN.

MIDWEST GUARDRAIL SYSTEM (MGS) GUARDRAIL

STATE OF WISCONSIN
DEPARTMENT OF TRANSPORTATION

APPROVED
7/2018 — DATE
/S/ Rodney Taylor — ROADWAY STANDARDS DEVELOPMENT UNIT SUPERVISOR

FHWA

6

SDD 14B42 - 06d

SDD 14b44-a Midwest Guardrail System (MGS) Energy Absorbing Terminal (EAT) - Layout

GENERAL NOTES

(A) THE SLOPE IN THE AREA BOUNDED BY THE GRADELINE, THE HINGE POINT LINE (HPL) AND THE CLEAR ZONE LIMITS (CZL) SHALL BE 4:1 OR FLATTER.

(B) AFTER FINAL ASSEMBLY, RECHECK CABLE TO BE SURE IT IS TAUT AND HAS NOT RELAXED

(C) DIFFERENT MANUFACTURERS REQUIRE DIFFERENT PERFORATED W - BEAM RAIL END PANELS. SEE MANUFACTURER'S INFORMATION.

(D) ATTACH ALUMINUM SHEET TO E.A.T. HEAD USING 4 STAINLESS STEEL SELF - TAPPING SCREWS. ONE SCREW PER CORNER.

(E) HARDWARE MAY VARY BETWEEN MANUFACTURER. SEE MANUFACTURER'S DRAWING FOR INFORMATION.

(F) DIMENSIONS MAY VARY, MANUFACTURER'S INFORMATION.

SEE SDD 14B42 FOR MORE INFORMATION.

* DO NOT ATTACH BLOCKOUTS TO POST 1 AND 2.

DO NOT INSTALL REFLECTORS ON THE FIRST 50 FEET OF THE APPROACH END OF THE ENERGY ABSORBING TERMINAL.

SEE MANUFACTURER'S DRAWING FOR SPLICE LOCATION, HARDWARE DIMENSIONS AND INSTALLATION INSTRUCTIONS.

THE CENTER OF THE UPPER 3 ½" DIAMETER HOLE ON POST NUMBER 3 THROUGH POST 9 IS TO BE FLUSH WITH THE GROUND LINE UP TO A MAXIMUM OF 2" ABOVE GROUND LINE. WOOD BLOCKS ON POSTS NUMBERED 3 THROUGH 9 MAY BE ADJUSTED UP TO 3" ABOVE THE TOP OF POST.

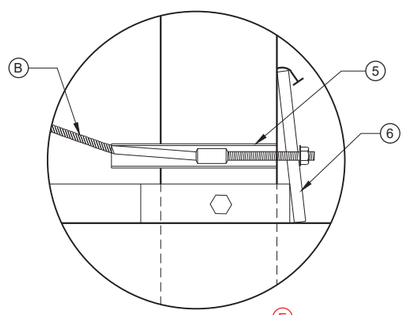

DETAIL "A" (E)

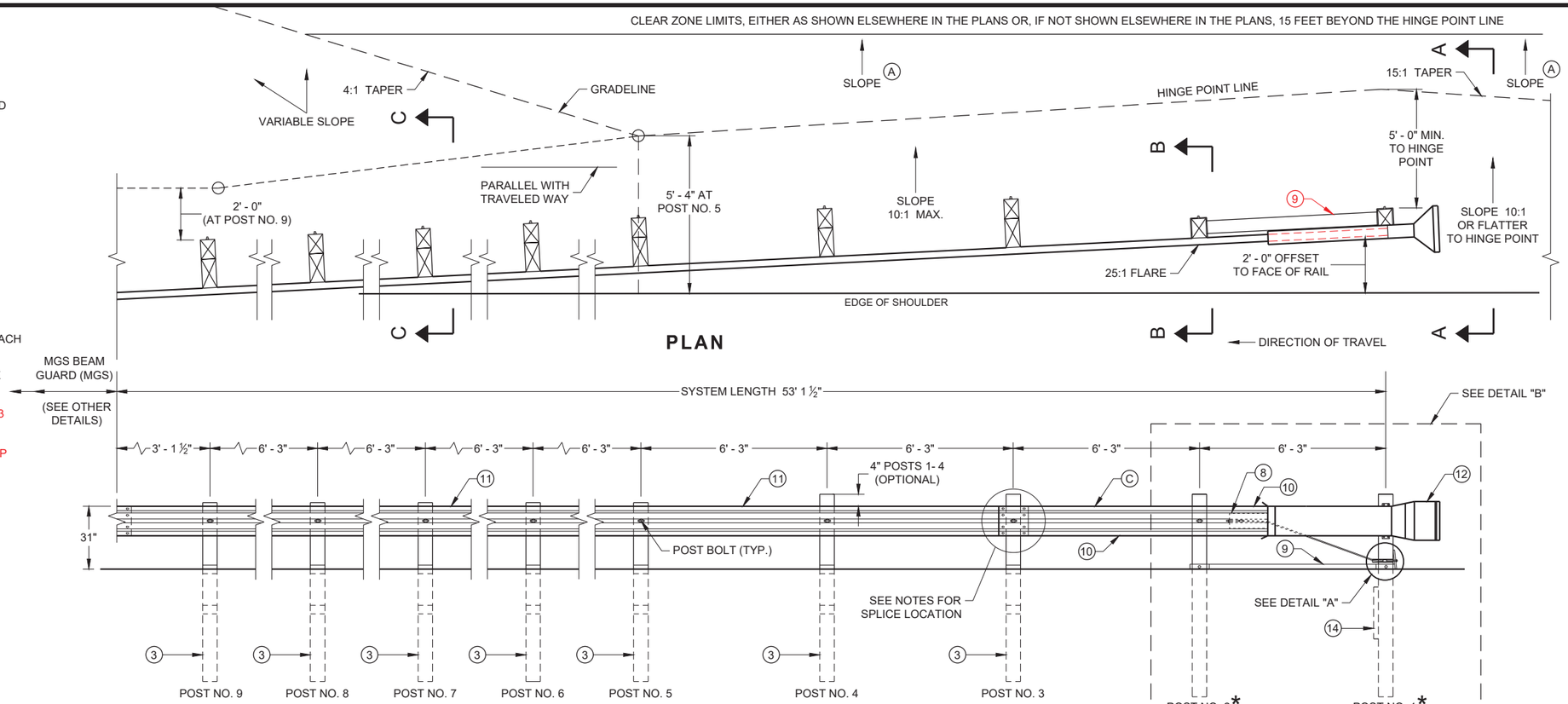

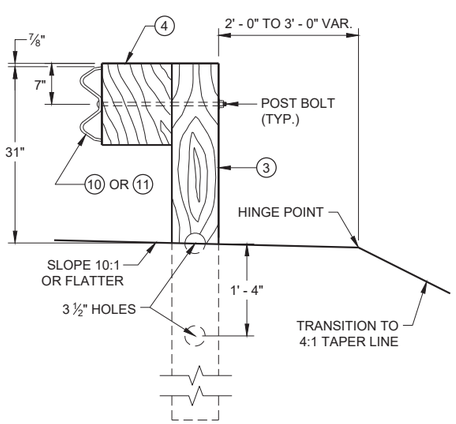

SECTION C - C
TYPICAL AT POST NOS. 3 - 9

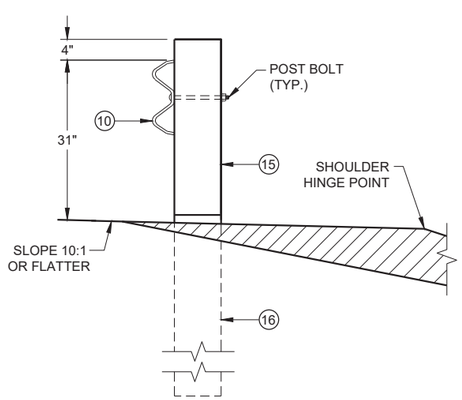

SECTION B - B
TYPICAL AT POST NO. 2*

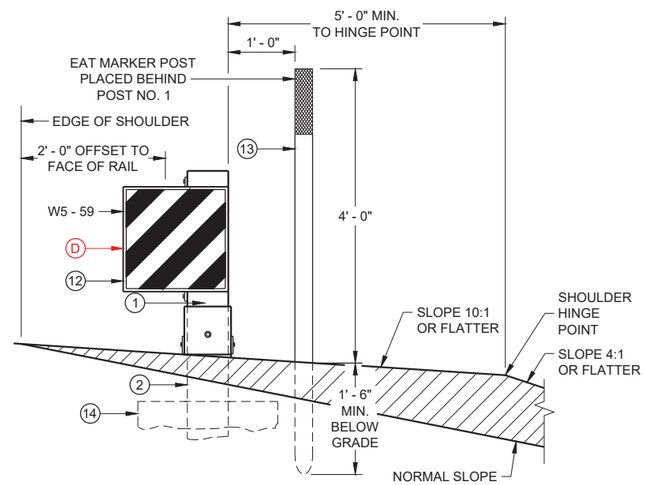

SECTION A - A
TYPICAL AT POST NO. 1*

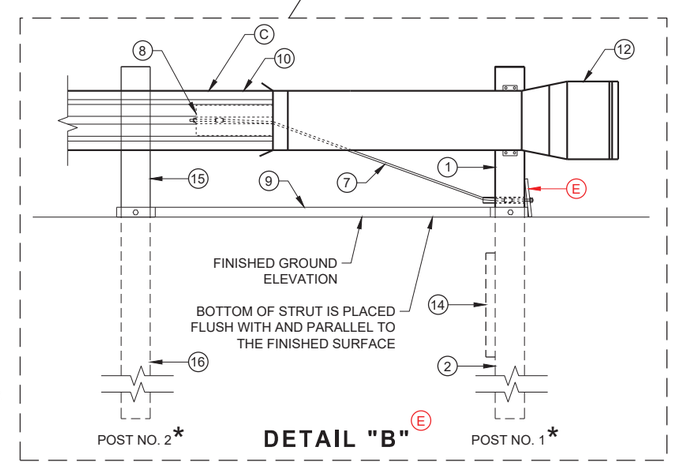

DETAIL "B" (E)

MIDWEST GUARDRAIL SYSTEM ENERGY ABSORBING TERMINAL (MGS)

STATE OF WISCONSIN
DEPARTMENT OF TRANSPORTATION

6

6

SDD 14B44 - 04a

SDD 14B44 - 04a

SDD 14b44-b MGS EAT - Ground Strut, Anchor Cable Box, Bearing Plate

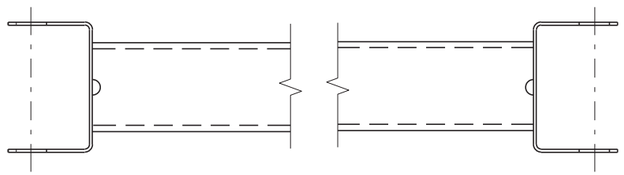

GENERIC GROUND STRUT (9) (E)

BILL OF MATERIALS

PART NO.	DESCRIPTION MATERIALS PROVIDED BY MGS EAT MANUFACTURER. SEE MANUGACTURER'S DETAILS FOR MORE INFORMATION.
1	UPPER POST NO. 1 6" X 6" TUBE
2	LOWER POST NO. 1
3	WOOD CRT
4	WOOD BLOCKOUT
5	PIPE SLEEVE
6	BEARING PLATE
7	BCT CABLE ASSEMBLY
8	ANCHOR CABLE BOX
9	GROUND STRUT
10	PERFORATED W-BEAM RAIL END PANEL, 12'-6" LONG.
11	STANDARD W-BEAM RAIL. MULTIPLE SECTIONS REQUIRED. SECTIONS VARY IN LENGTH.
12	IMPACT HEAD
13	EAT MARKER POST - YELLOW (SEE APPROVED PRODUCTS LIST)
14	SOIL PLATE
15	UPPER POST NO. 2
16	LOWER POST NO. 2

6

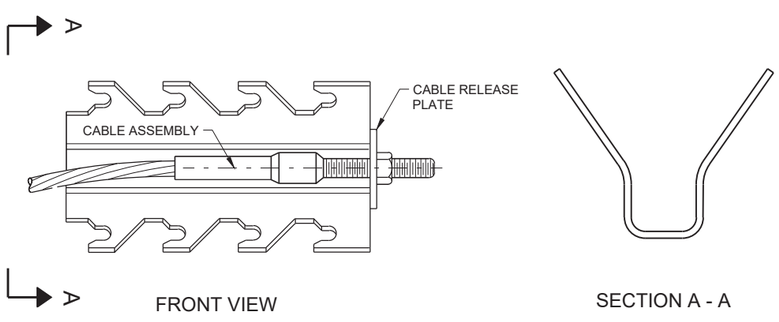

GENERIC ANCHOR CABLE BOX (9) (E)

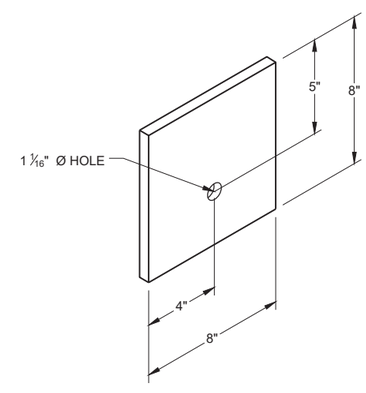

BEARING PLATE (6) (E)

MIDWEST GUARDRAIL SYSTEM ENERGY ABSORBING TERMINAL (MGS)

STATE OF WISCONSIN
DEPARTMENT OF TRANSPORTATION

SDD 14B45 - 04b

SDD 14B45 - 04b

SDD 14b44-c MGS EAT - Post Details, Block Detail, Marker Post Detail, Reflective Sheeting Detail

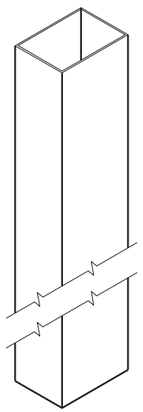

UPPER POST NO. 1 (1) (E)

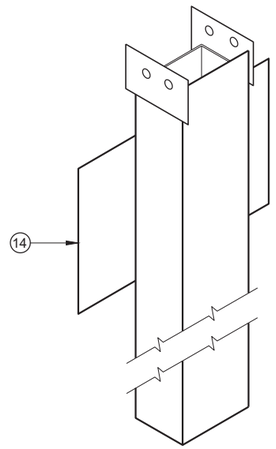

LOWER POST NO. 1 (2) (E)

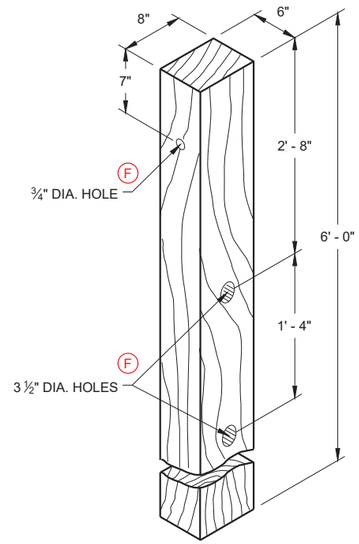

WOOD CRT POST (3) (E)
POSTS NUMBER 3-9

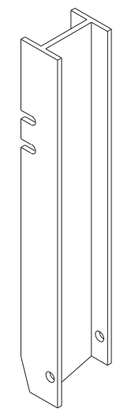

UPPER POST NO. 2 (15) (E)

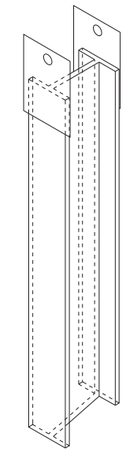

LOWER POST NO. 2 (16) (E)

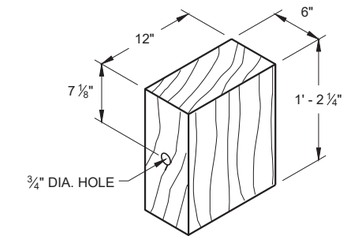

WOOD BLOCKOUT (4)
REQ'D. AT ALL POSTS EXCEPT POST NO'S 1 & 2

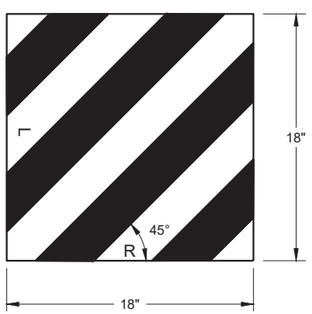

W5 - 59

REFLECTIVE SHEETING DETAIL (E)

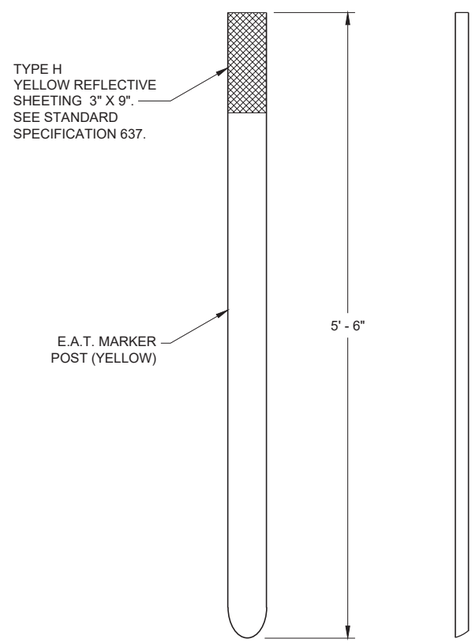

FRONT VIEW SIDE VIEW

E.A.T. MARKER POST (13)

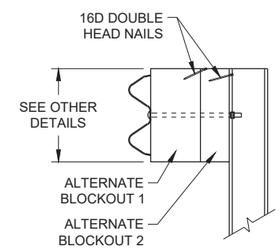

SIDE VIEW

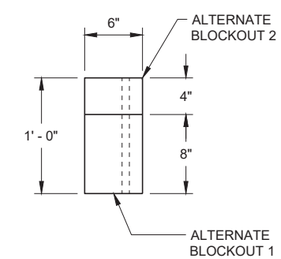

TOP VIEW

ALTERNATE WOOD
BLOCKOUT DETAIL

MIDWEST GUARDRAIL SYSTEM ENERGY ABSORBING TERMINAL (MGS)

STATE OF WISCONSIN
DEPARTMENT OF TRANSPORTATION

APPROVED
7/2018 — DATE
/S/ Rodney Taylor — ROADWAY STANDARDS DEVELOPMENT UNIT SUPERVISOR
FHWA

6

6

SDD 14B44 - 04c

SDD 14B44 - 04c

SDD 14b45-a Midwest Guardrail System (MGS) Thrie Beam Transition - Layout

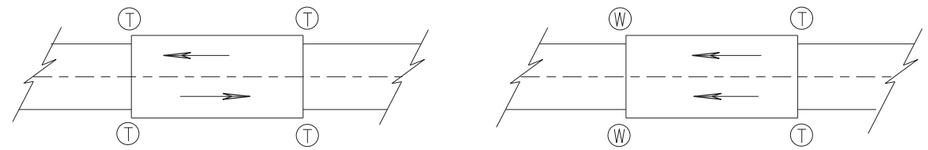

TWO WAY TRAFFIC

ONE WAY TRAFFIC

(T) THRIE BEAM CONNECTION

(W) W-BEAM CONNECTION WHEN REQUIRED

TYPICAL LOCATIONS OF THRIE BEAM AND W-BEAM CONNECTIONS TO BRIDGE

GENERAL NOTES

IF ROCK IS ENCOUNTERED, REMOVE ROCK TO FULL DEPTH OF POST PLUS 2½", AND 12" DIAMETER AROUND POST. SEE 14B42 FOR MORE DETAILS.

TRANSITION USES STEEL POSTS ONLY.

SEE STANDARD DETAIL DRAWING 14 B 42 FOR MORE INFORMATION.

POST 2 THROUGH 17 USES STEEL POST ONLY

(1) BRIDGE RAILING TYPE "W" DOES NOT REQUIRE A TERMINAL CONNECTOR.

(2) OPTIONAL CURB AND GUTTER OR DRAINAGE FEATURE SEE PLAN FOR INFORMATION.

(13) STEEL OR WOOD POST IS ACCEPTABLE AT POST 1. SEE SDD14B42

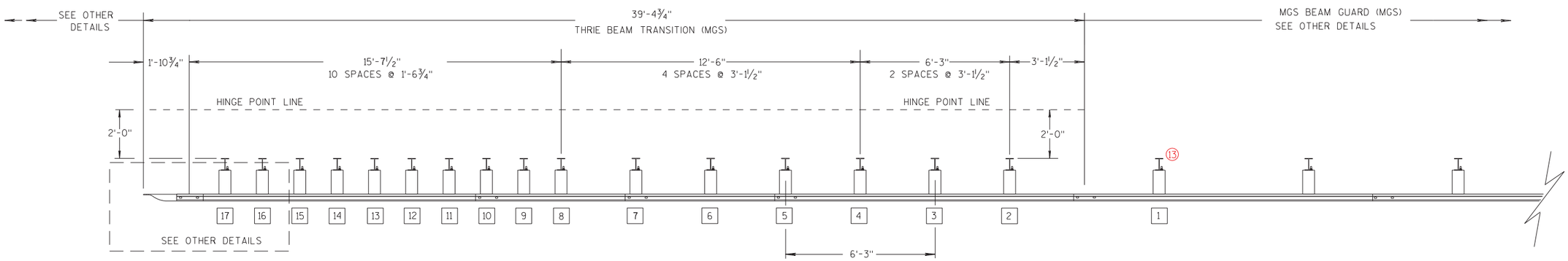

PLAN VIEW

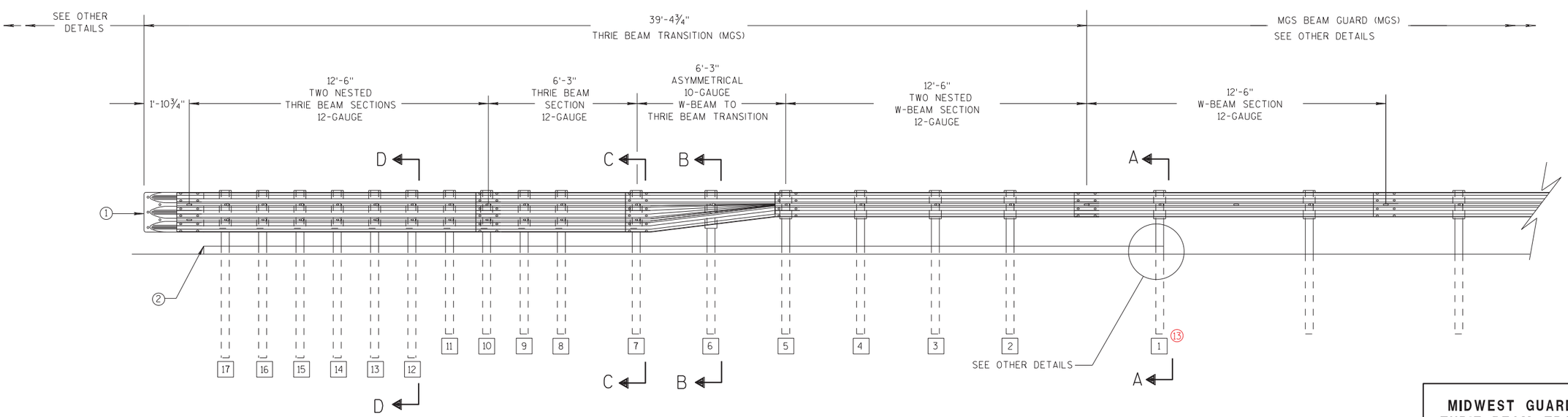

ELEVATION VIEW

MIDWEST GUARDRAIL SYSTEM THRIE BEAM TRANSITION

MIDWEST GUARDRAIL SYSTEM
THRIE BEAM TRANSITION (MGS)

STATE OF WISCONSIN
DEPARTMENT OF TRANSPORTATION

6

S.D.D. 14 B 45-5a

6

S.D.D. 14 B 45-5a

SDD 14b45-b MGS Thrie Beam Transition - Post Details, Thrie Beam Terminal Connector Details, Splice Detail, Cross Section

GENERAL NOTES

(2) OPTIONAL CURB AND GUTTER OR DRAINAGE FEATURE SEE PLAN FOR INFORMATION.

(3) WHEN USING STEEL POSTS AND WOOD BLOCKOUTS INSTALL FOUR 10D GALVANIZED NAILS. INSTALL NAILS AT THE BACK CORNERS OF THE BLOCK AND BEND THE NAILS OVER THE FLANGE OF THE STEEL POST.

(4) TOLERANCE FOR TOP OF W-BEAM RAIL IS ± 1".

(13) STEEL OR WOOD POST IS ACCEPTABLE AT POST 1. SEE SDD 14B42

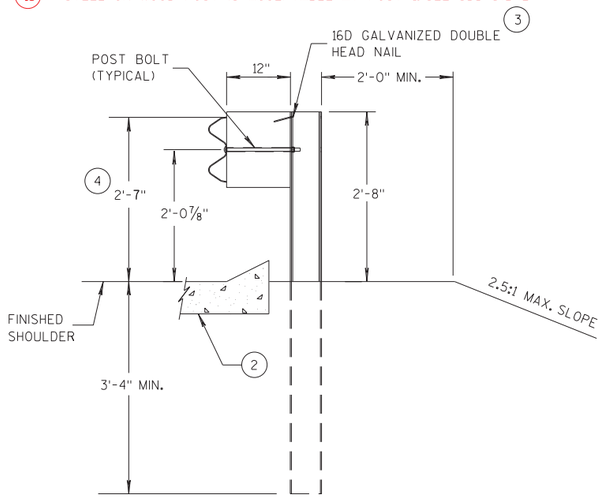

SECTION A-A (13)

POSTS 1-5

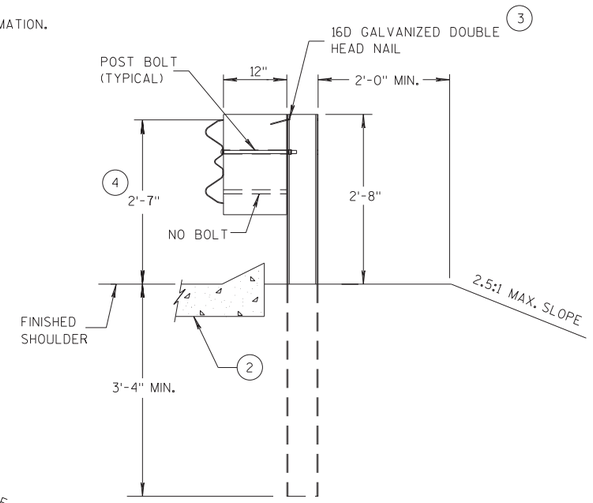

SECTION B-B

POST 6

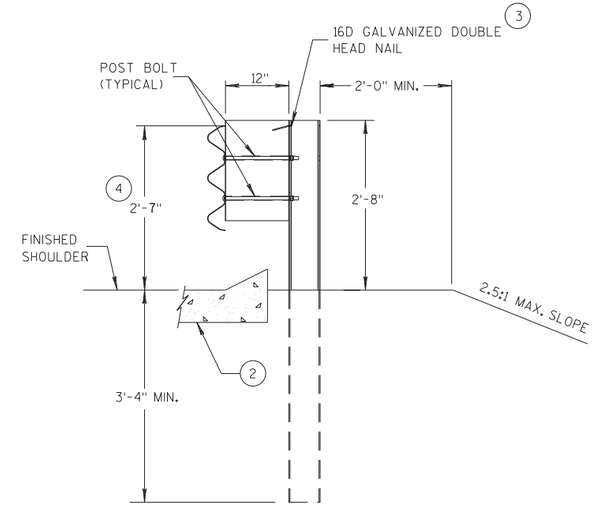

SECTION C-C

POSTS 7-11

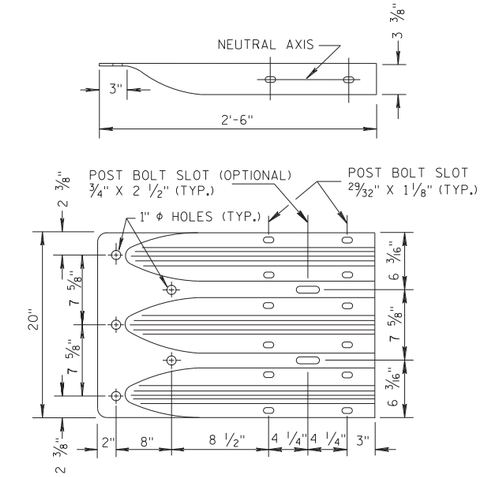

THRIE BEAM TERMINAL CONNECTOR

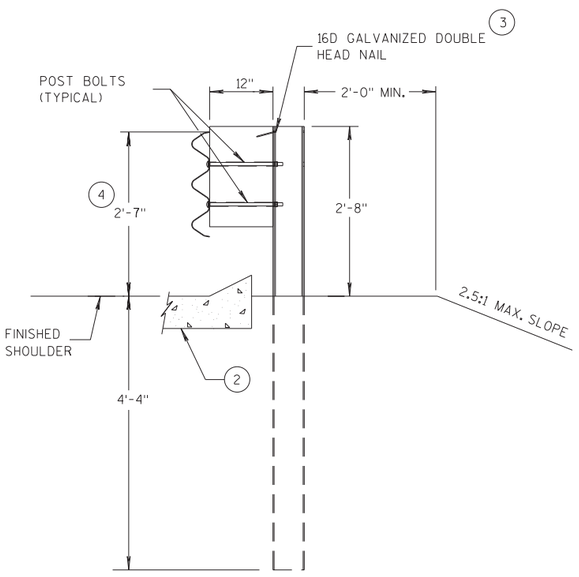

SECTION D-D

POSTS 12-17

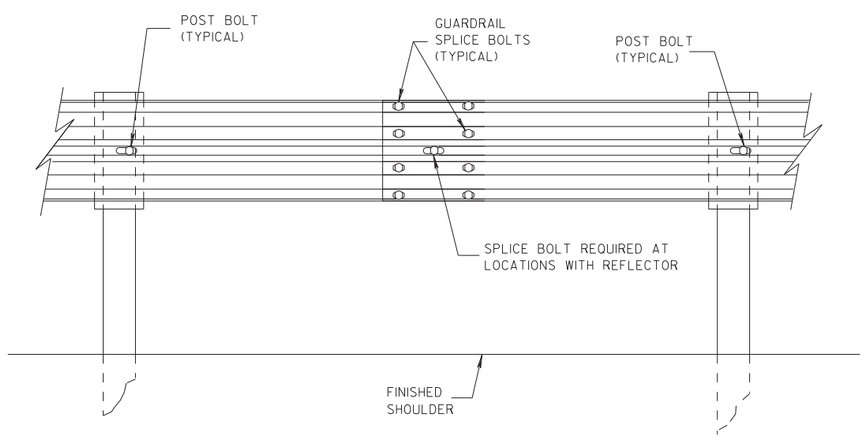

SPLICE DETAIL

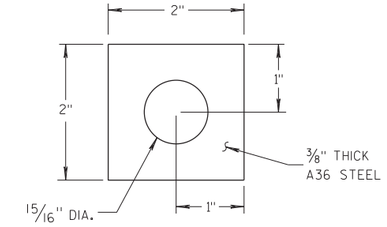

PLATE WASHER DETAIL

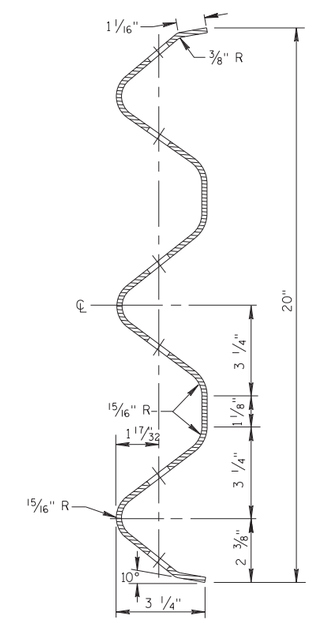

SECTION THRU THRIE BEAM RAIL ELEMENT

MIDWEST GUARDRAIL SYSTEM
THRIE BEAM TRANSITION (MGS)

STATE OF WISCONSIN
DEPARTMENT OF TRANSPORTATION

6

S.D.D. 14 B 45-5b

6

S.D.D. 14 B 45-5b

SDD 14b45-c MGS Thrie Beam Transition - Thrie Beam Details, Post Details, Block Details

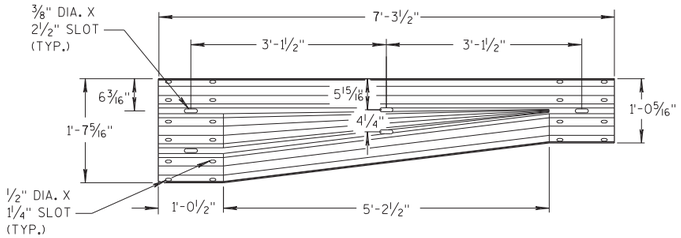

W-BEAM TO THRIE BEAM TRANSITION SECTION

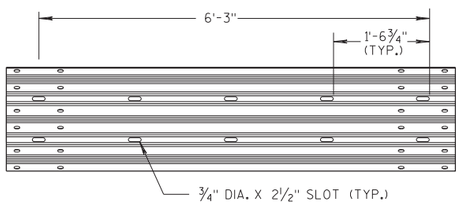

6'-3" THRIE BEAM SECTION

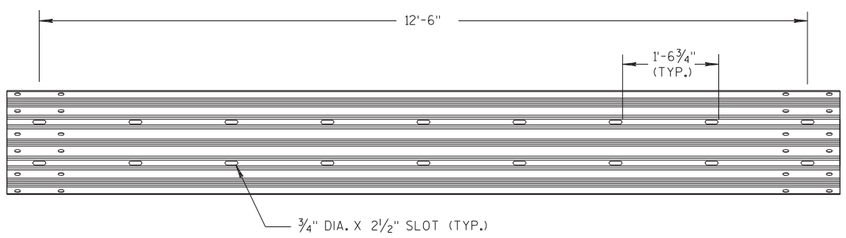

12'-6" THRIE BEAM SECTION

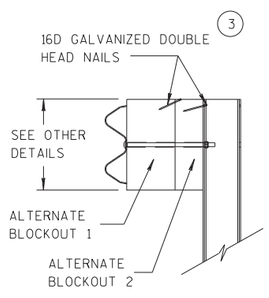

SIDE VIEW

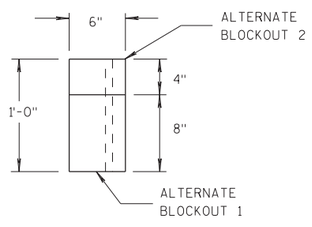

TOP VIEW

ALTERNATE WOOD BLOCKOUT DETAIL

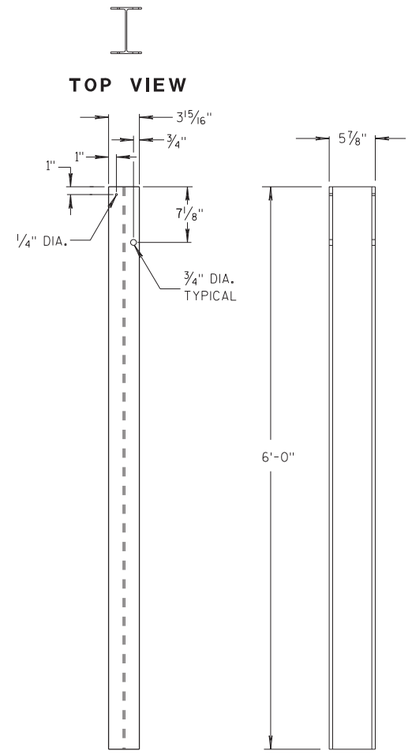

STEEL POSTS 1-5 (13)

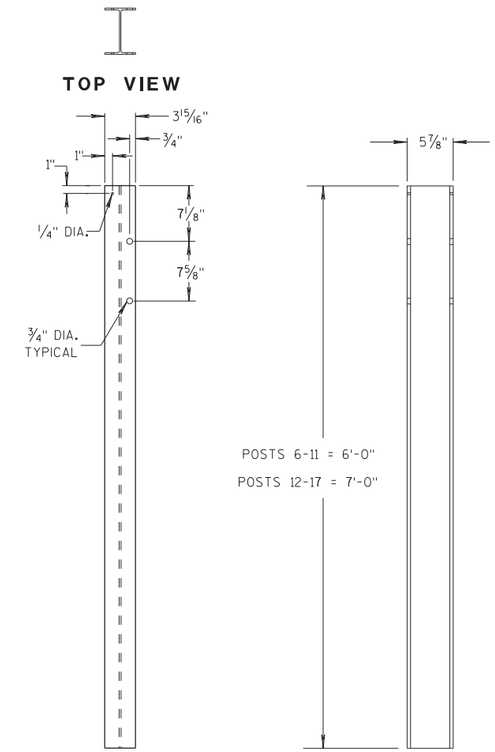

STEEL POSTS 6-17

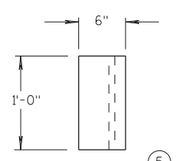

TOP VIEW (5)

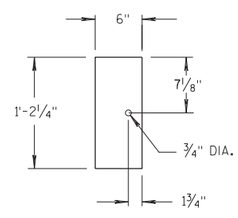

FRONT VIEW

BLOCKOUT POSTS 1-5

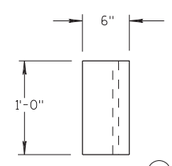

TOP VIEW (5)

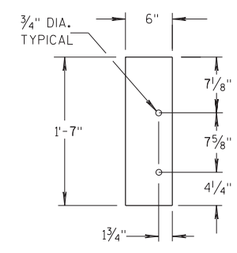

FRONT VIEW

BLOCKOUT POSTS 6-17

GENERAL NOTES

STEEL POSTS ARE W6X9 OR W6X8.5.

BOLT HOLES FOR POST ARE ON FRONT AND OF SIDE OF POST.

(3) WHEN USING STEEL POSTS AND WOOD BLOCKOUTS INSTALL FOUR 16D GALVANIZED NAILS. INSTALL NAILS AT THE BACK CORNERS OF THE BLOCK AND BEND THE NAILS OVER THE FLANGE OF THE STEEL POST.

(5) WOOD BLOCKS MAY BE CONSTRUCTED OUT OF 2 WOOD BLOCKS. SEE ALTERNATE WOOD BLOCK DETAIL.

(13) STEEL OR WOOD POST IS ACCEPTABLE AT POST 1. SEE SDD 14B42.

MIDWEST GUARDRAIL SYSTEM
THRIE BEAM TRANSITION (MGS)

STATE OF WISCONSIN
DEPARTMENT OF TRANSPORTATION

6

6

S.D.D. 14 B 45-5c

S.D.D. 14 B 45-5c

SDD 14b45-d MGS Thrie Beam Transition - W and Thrie Beam Connection to Bridge Parapet with Square Ends

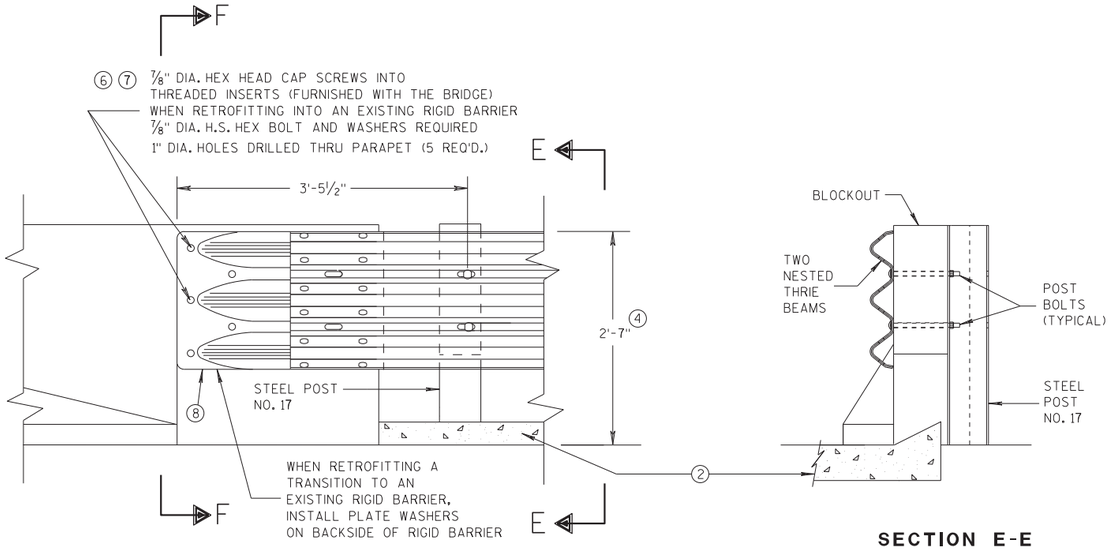

FRONT VIEW

SECTION E-E

THRIE BEAM CONNECTION TO BRIDGE PARAPET WITH SQUARE ENDS

GENERAL NOTES

THESE ARE TYPICAL CONNECTION DETAILS. ADJUST THE POSTION OF CONNECTIONS TO EXISTING BRIDGES TO FIT THE ACTUAL BRIDGE AND SITE DIMENSIONS.

② OPTIONAL CURB AND GUTTER OR DRAINAGE FEATURE SEE PLAN FOR INFORMATION.

④ TOLERANCE FOR TOP OF BEAM IS ± 1".

⑥ DRILLING BOLT HOLES THROUGH THE PARAPET, BOLTS, NUTS, WASHERS AND REPAIRING DAMAGED CONCRETE ARE INCIDENTAL TO THE CONTRACT.

⑦ BOLTS MAY BE A325 BOLTS OR A449 BOLTS. BOLT LENGTH AND THREADING LENGTH ARE TO ALLOW FOR A TIGHT CONNECTION BETWEEN RIGID BARRIER AND THRIE BEAM CONNECTION PLATE. CONTRACTOR IS TO FIELD VERIFY BOLT LENGTH AND THREAD LENGTH. ONE ROUND WASHER REQUIRED BETWEEN BOLT HEAD AND THRIE BEAM CONNECTOR PLATE. BOLTS THAT EXTEND THROUGH THE PARAPET AND OUT THE BACK FACE REQUIRE A HARDENED ROUND STEEL WASHER THAT IS 2" O.D. X 5/8" THICK AND ONE PLATE WASHER. REPAIR ANY DAMAGED CONCRETE FROM BOLT INSTALLATION.

⑧ THE RECESS FOR A W-BEAM CONNECTION, WHICH EXISTS ON SOME PARAPETS OF THIS TYPE, SHALL BE FILLED WITH A TREATED TIMBER BLOCKOUT. BLOCKOUT SIZE IS 1'-6" X 2'-0" X 3 1/2".

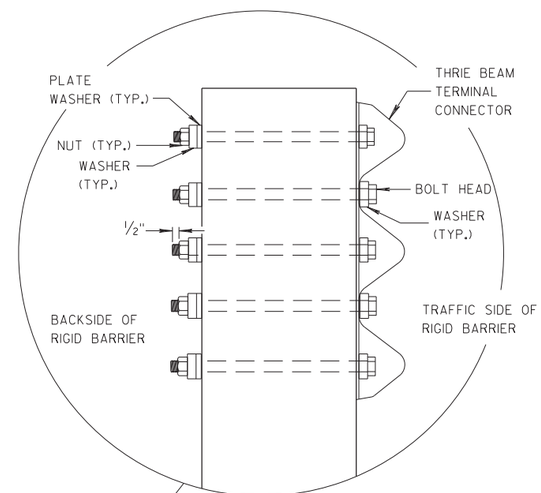

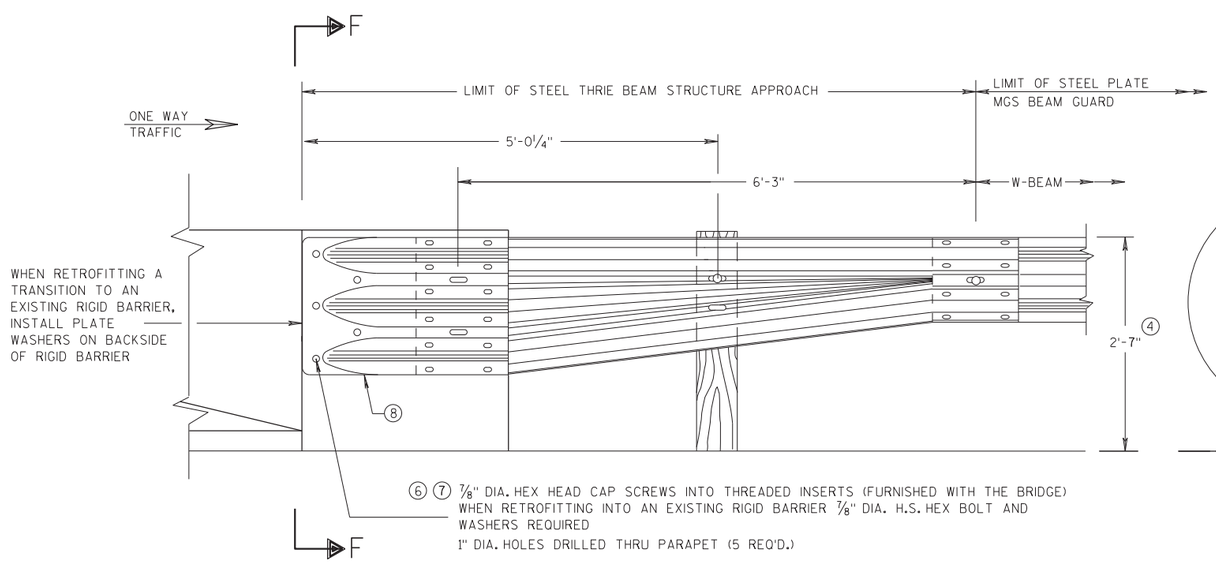

FRONT VIEW

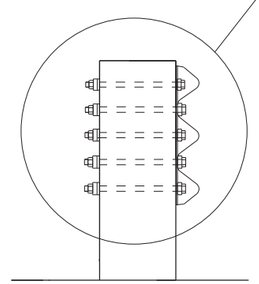

SECTION F-F

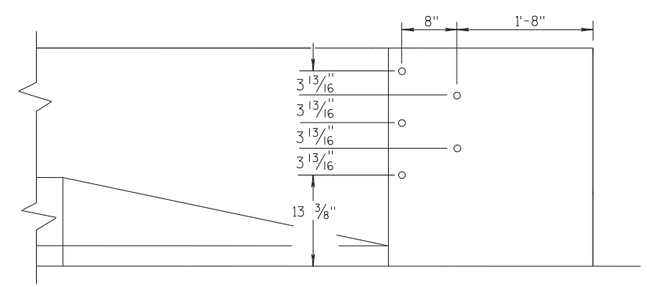

DRILL HOLE LOCATION

W BEAM TRANSITION AND CONNECTION TO BRIDGE PARAPETS WITH SQUARE ENDS

(USE ONLY ON THE TRAFFIC EXIT END OF ONE WAY BRIDGES)

MIDWEST GUARDRAIL SYSTEM THRIE BEAM TRANSITION (MGS)

STATE OF WISCONSIN
DEPARTMENT OF TRANSPORTATION

APPROVED
07/2018
DATE
/S/ Rodney Taylor
ROADWAY STANDARDS DEVELOPMENT UNIT SUPERVISOR
FHWA

6

6

S.D.D. 14 B 45-5d

S.D.D. 14 B 45-5d

SDD 14b45-e MGS Thrie Beam Transition - W and Thrie Beam Connection to Vertical Faced Parapets

GENERAL NOTES

THESE ARE TYPICAL CONNECTION DETAILS. ADJUST THE POSTION OF CONNECTIONS TO EXISTING BRIDGES TO FIT THE ACTUAL BRIDGE AND SITE DIMENSIONS.

(2) OPTIONAL CURB AND GUTTER OR DRAINAGE FEATURE SEE PLAN FOR INFORMATION.

(4) TOLERANCE FOR TOP OF BEAM IS ± 1".

(6) DRILLING BOLT HOLES THROUGH THE PARAPET, BOLTS, NUTS, WASHERS AND REPAIRING DAMAGED CONCRETE ARE INCIDENTAL TO THE CONTRACT.

(7) BOLTS MAY BE A325 BOLTS OR A449 BOLTS. BOLT LENGTH AND THREADING LENGTH ARE TO ALLOW FOR A TIGHT CONNECTION BETWEEN RIGID BARRIER AND THRIE BEAM CONNECTION PLATE. CONTRACTOR IS TO FIELD VERIFY BOLT LENGTH AND THREAD LENGTH. ONE ROUND WASHER REQUIRED BETWEEN BOLT HEAD AND THRIE BEAM CONNECTOR PLATE. BOLTS THAT EXTEND THROUGH THE PARAPET AND OUT THE BACK FACE REQUIRE A HARDENED ROUND STEEL WASHER THAT IS 2" O.D. X 5/8" THICK AND ONE PLATE WASHER. REPAIR ANY DAMAGED CONCRETE FROM BOLT INSTALLATION.

(8) THE RECESS FOR A W-BEAM CONNECTION, WHICH EXISTS ON SOME PARAPETS OF THIS TYPE, SHALL BE FILLED WITH A TREATED TIMBER BLOCKOUT. BLOCKOUT SIZE IS 1'-6" X 2'-0" X 3 1/2".

(9) BOLT, NUT AND WASHERS NOT REQUIRED FOR THIS LOCATION WHEN RETROFITTING AN EXISTING PAPAPET AND THE HOLE IS EITHER ABOVE PARAPET OR WITHIN 4 INCHES OF THE EDGE OF PARAPET.

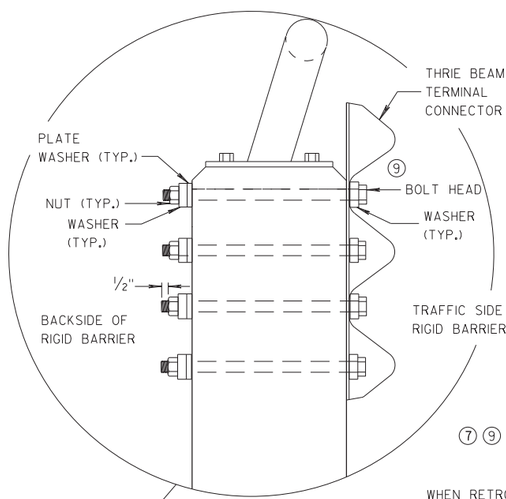

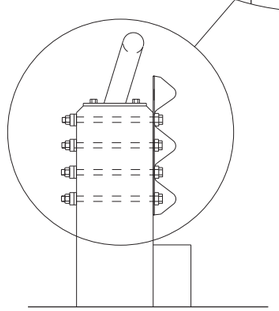

SECTION G-G

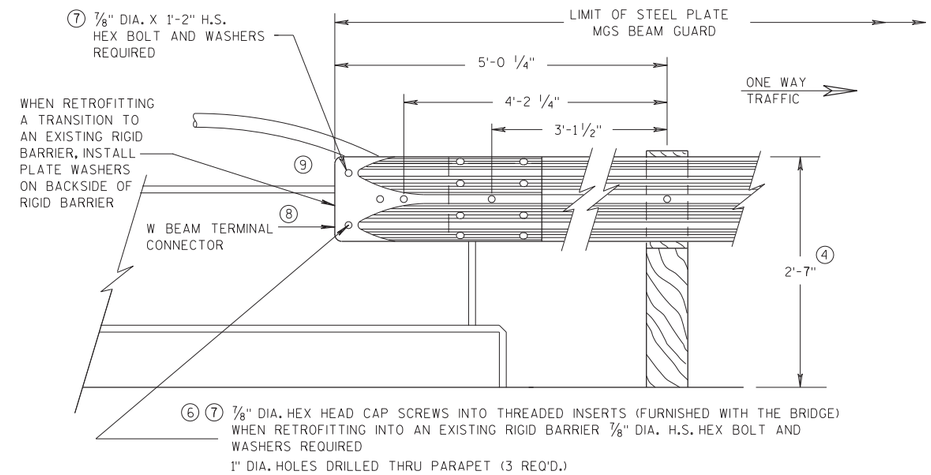

FRONT VIEW

W BEAM CONNECTION TO VERTICAL FACE PARAPET

(USE ONLY ON THE TRAFFIC EXIT END OF ONE WAY BRIDGES)

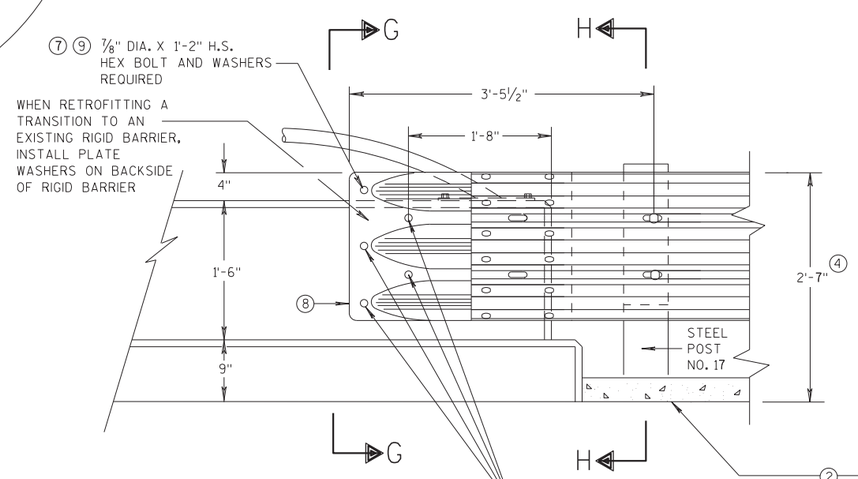

FRONT VIEW

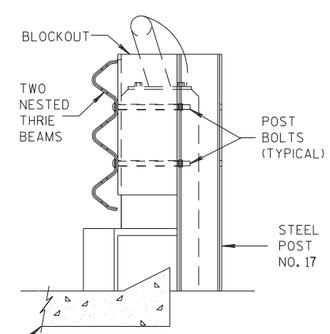

SECTION H-H

THRIE BEAM CONNECTION TO VERTICAL FACED PARAPETS

MIDWEST GUARDRAIL SYSTEM THRIE BEAM TRANSITION (MGS)

STATE OF WISCONSIN
DEPARTMENT OF TRANSPORTATION

APPROVED 07/2018 — DATE
/S/ Rodney Taylor — ROADWAY STANDARDS DEVELOPMENT UNIT SUPERVISOR
FHWA

6

6

S.D.D. 14 B 45-5e

S.D.D. 14 B 45-5e

SDD 14b45-f MGS Thrie Beam Transition - W and Thrie Beam Connection to Bridge Parapets with Sloped Ends

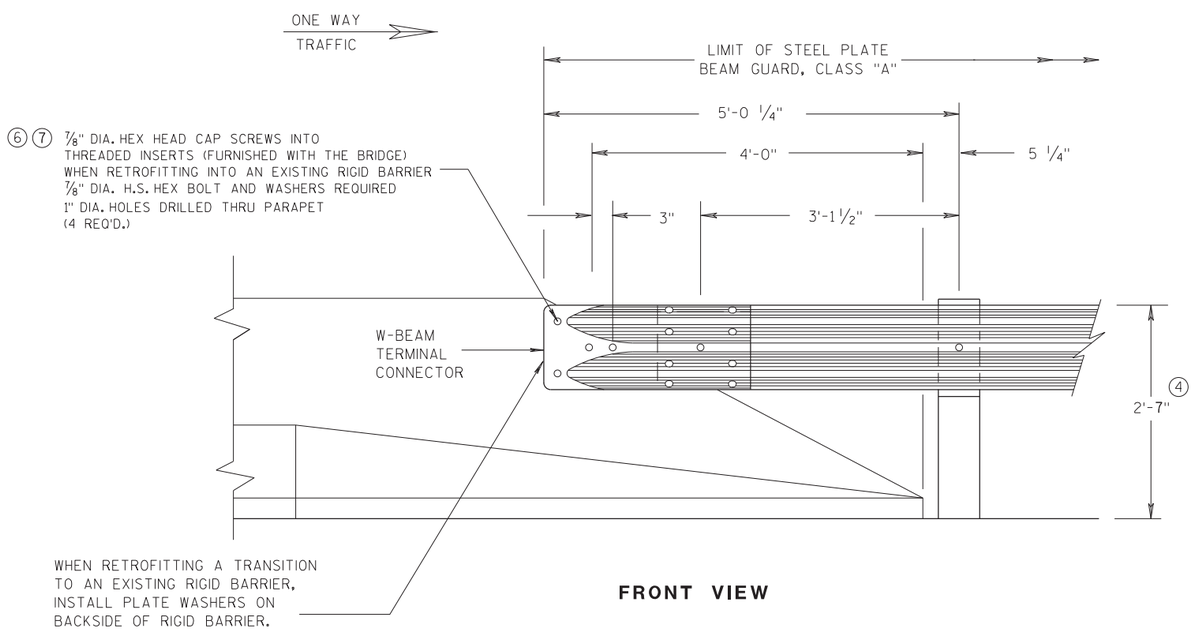

FRONT VIEW

W BEAM CONNECTION TO PARAPETS WITH SLOPED ENDS

(USE ONLY AT TRAFFIC EXIT END OF ONE WAY BRIDGE)

GENERAL NOTES

② OPTIONAL CURB AND GUTTER OR DRAINAGE FEATURE SEE PLAN FOR INFORMATION.

④ TOLERANCE FOR TOP OF BEAM IS ± 1".

⑥ DRILLING BOLT HOLES THROUGH THE PARAPET, BOLTS, NUTS, WASHERS AND REPAIRING DAMAGED CONCRETE ARE INCIDENTAL TO THE CONTRACT.

⑦ BOLTS MAY BE A325 BOLTS OR A449 BOLTS. BOLT LENGTH AND THREADING LENGTH ARE TO ALLOW FOR A TIGHT CONNECTION BETWEEN RIGID BARRIER AND THRIE BEAM CONNECTION PLATE. CONTRACTOR IS TO FIELD VERIFY BOLT LENGTH AND THREAD LENGTH. ONE ROUND WASHER REQUIRED BETWEEN BOLT HEAD AND THRIE BEAM CONNECTOR PLATE. BOLTS THAT EXTEND THROUGH THE PARAPET AND OUT THE BACK FACE REQUIRE A HARDENED ROUND STEEL WASHER THAT IS 2" O.D. X 5/8" THICK AND ONE PLATE WASHER. REPAIR ANY DAMAGED CONCRETE FROM BOLT INSTALLATION.

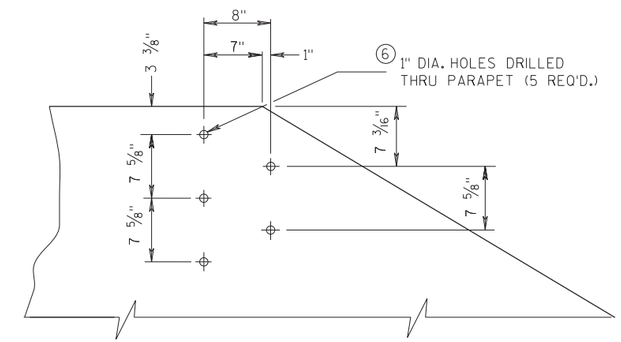

DRILL HOLE LOCATION AND PATTERN
FOR THRIE BEAM CONNECTION

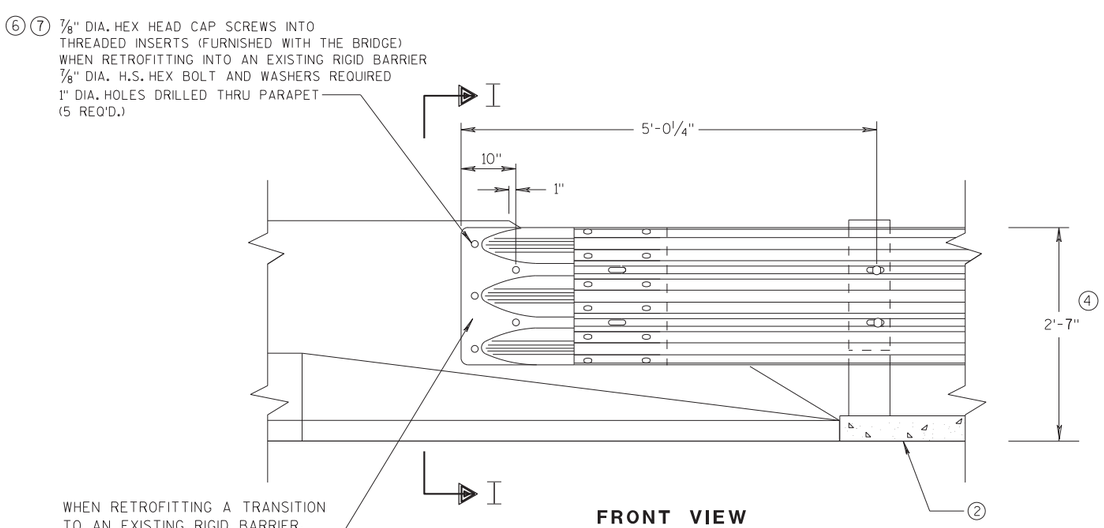

FRONT VIEW

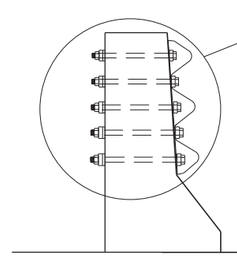

SECTION I-I

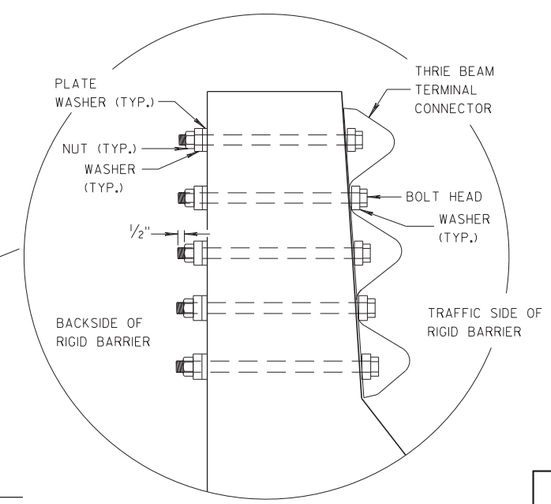

THRIE BEAM CONNECTION TO BRIDGE PARAPETS WITH SLOPED ENDS

6

6

S.D.D. 14 B 45-5f

S.D.D. 14 B 45-5f

MIDWEST GUARDRAIL SYSTEM
THRIE BEAM TRANSITION (MGS)

STATE OF WISCONSIN
DEPARTMENT OF TRANSPORTATION

APPROVED
07/2018
DATE
FHWA

/S/ Rodney Taylor
ROADWAY STANDARDS DEVELOPMENT
UNIT SUPERVISOR

SDD 14b45-g MGS Thrie Beam Transition - Connection to W and F Bridge Parapet

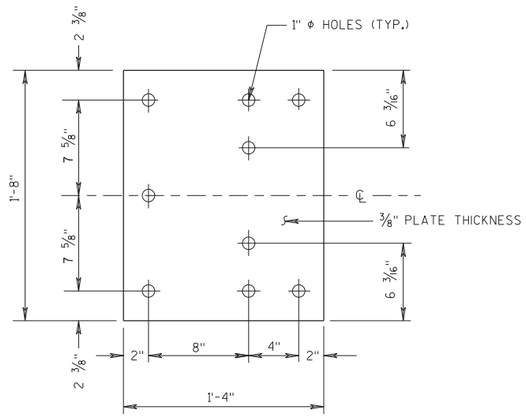

BACK-UP PLATE DETAIL

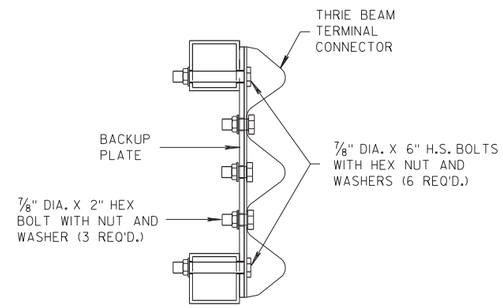

SECTION J-J

GENERAL NOTES

(4) TOLERANCE FOR TOP OF BEAM IS ± 1".

(6) DRILLING HOLES THROUGH THE PAPRPET, BOLTS, NUTS, WASHERS AND REPAIRING DAMAGED CONCRETE ARE INCIDENTAL TO THE CONTRACT.

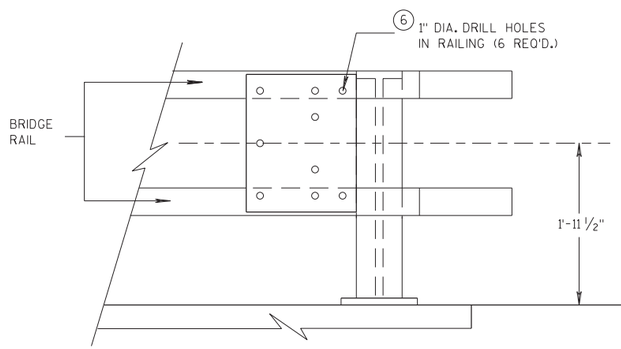

BACK-UP PLATE MOUNTING ONTO BRIDGE RAILING

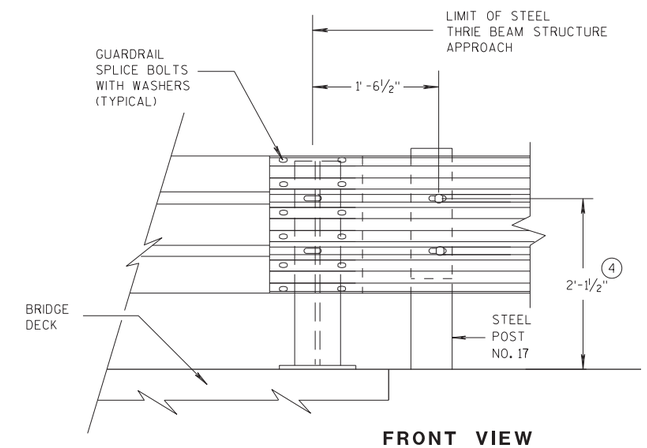

FRONT VIEW

THRIE BEAM CONNECTION TO STEEL RAILING TYPE "W"

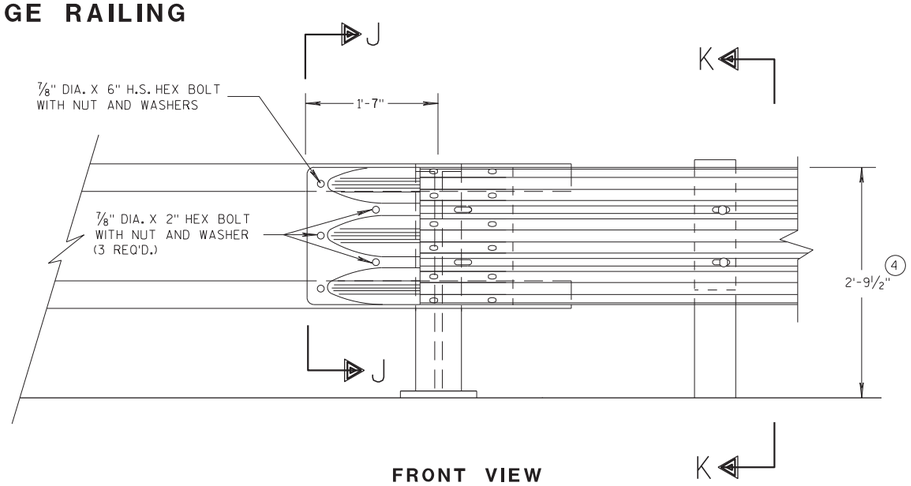

FRONT VIEW

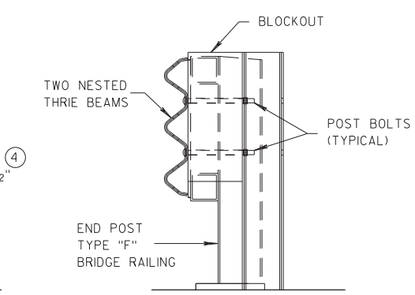

SECTION K-K

THRIE BEAM CONNECTION TO TUBULAR RAILING TYPE "F"

6

6

S.D.D. 14 B 45-5g

S.D.D. 14 B 45-5g

MIDWEST GUARDRAIL SYSTEM THRIE BEAM TRANSITION (MGS)

STATE OF WISCONSIN
DEPARTMENT OF TRANSPORTATION

APPROVED 07/2018 — DATE
/S/ Rodney Taylor — ROADWAY STANDARDS DEVELOPMENT UNIT SUPERVISOR
FHWA

SDD 14b45-h MGS Thrie Beam Transition - Connection to M Bridge Parapet

GENERAL NOTES

(4) TOLERANCE FOR TOP OF W-BEAM RAIL IS ± 1".

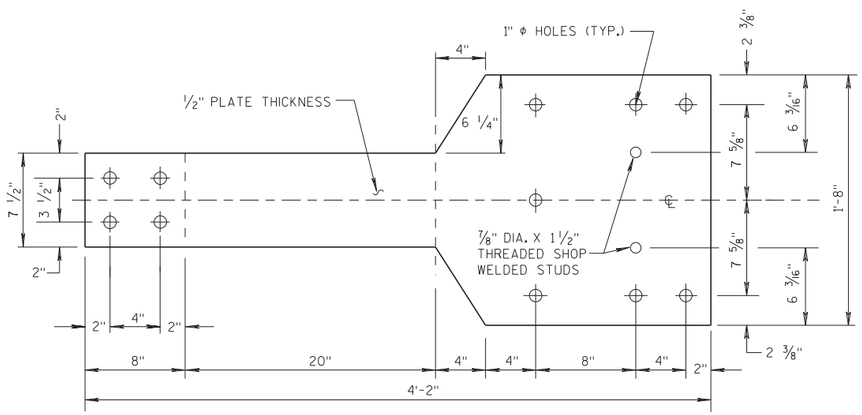

FRONT VIEW

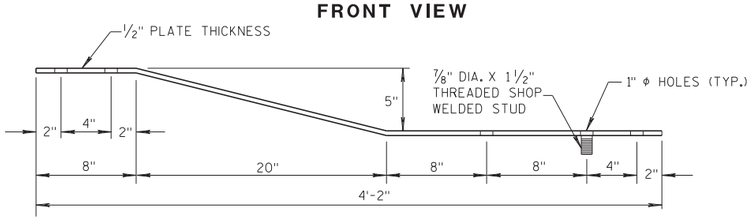

PLAN VIEW

BACK-UP PLATE DETAIL, TYPE "M"

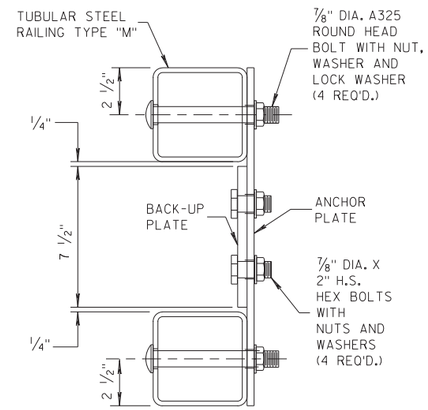

SECTION L-L

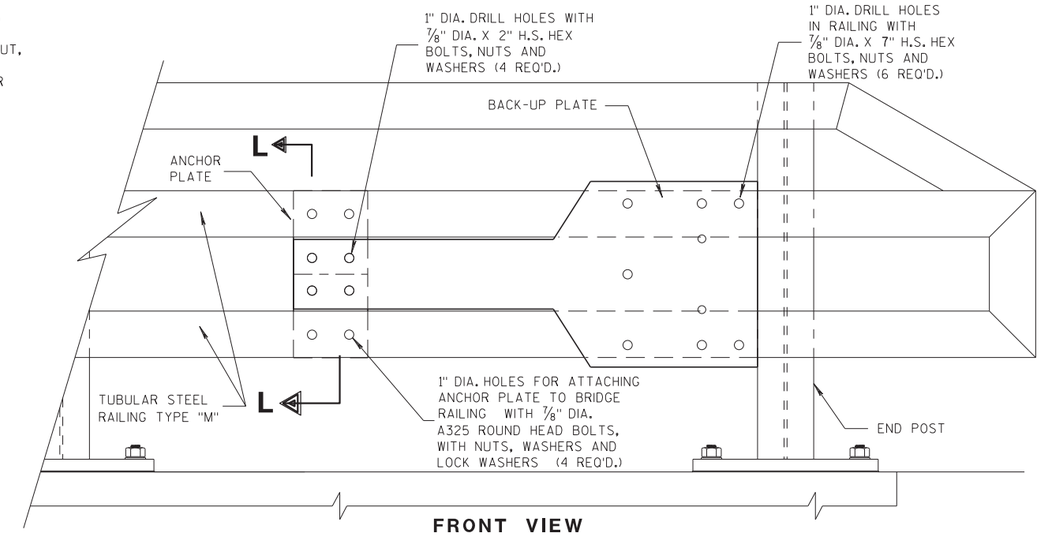

FRONT VIEW

ANCHOR AND BACK-UP PLATE MOUNTING TO BRIDGE RAILING, TYPE "M"

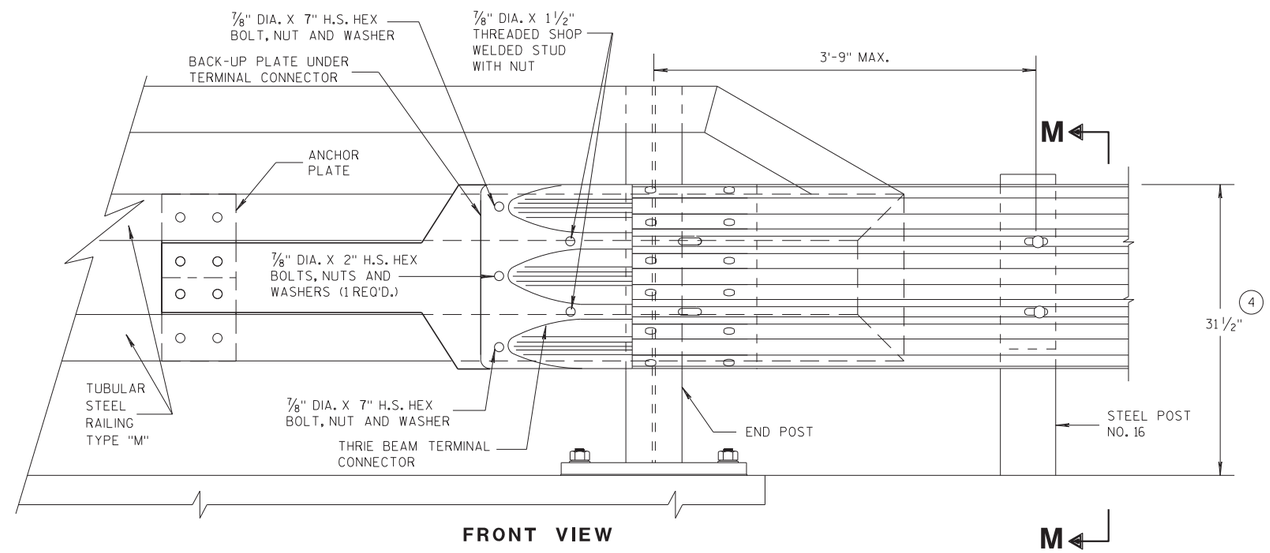

FRONT VIEW

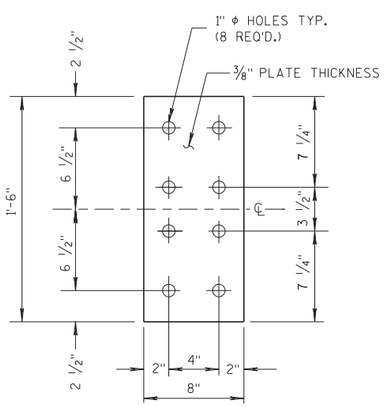

FRONT VIEW

ANCHOR PLATE DETAIL, TYPE "M"

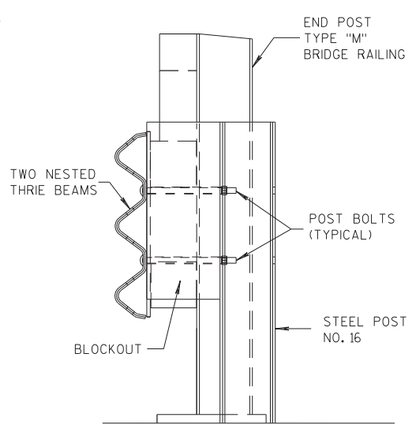

SECTION M-M

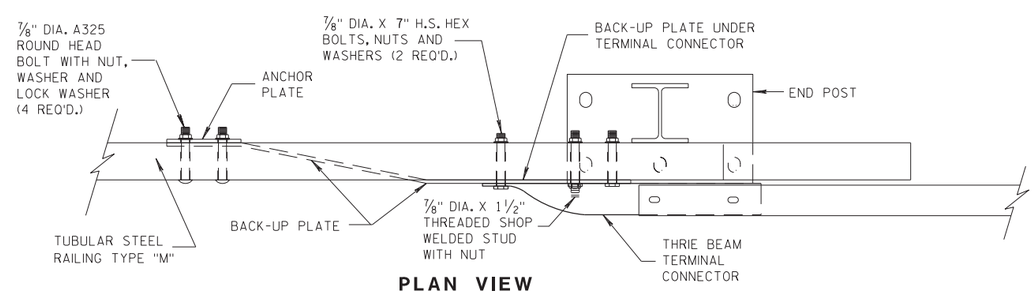

PLAN VIEW

THRIE BEAM CONNECTION TO TUBULAR RAILING, TYPE "M"

MIDWEST GUARDRAIL SYSTEM THRIE BEAM TRANSITION (MGS)

STATE OF WISCONSIN
DEPARTMENT OF TRANSPORTATION

APPROVED
07/2018 — DATE
/S/ Rodney Taylor — ROADWAY STANDARDS DEVELOPMENT UNIT SUPERVISOR
FHWA

6

S.D.D. 14 B 45-5h

SDD 14b45-i MGS Thrie Beam Transition - Single Slope Connection Plate Details

GENERAL NOTES

COVER PLATE PANELS ARE 3/16" THICK.

ALL STIFFENERS ARE 1/4" THICK.

CONNECTOR PLATE SHALL BE FABRICATED FROM ASTM GRADE A36 STEEL AND GALVANIZED.

FOR GALVANIZED REQUIREMENTS, SEE SECTION 614 OF THE STANDARD SPECIFICATIONS.

ALL HOLE DIAMETERS SHALL BE 1".

FOR OPPOSITE SIDE INSTALLATION MIRROR DRAWINGS.

(10) STIFFENERS LOCATED AT THE OUTSIDE EDGES OF THE COVER PLATES SHALL BE WELDED AS FOLLOWS:
SINGLE BEVEL GROOVE WELD ON EXTERNAL SIDES AND 3/16" FILLET WELD BY 1" LONG SPACED AT 2" ON INTERNAL SIDES.

(11) STIFFENERS LOCATED ON THE INSIDE OF THE COVER PLATE SHALL BE WELDED AS FOLLOWS:
3/16" FILLET WELD BY 1" LONG SPACED AT 2".

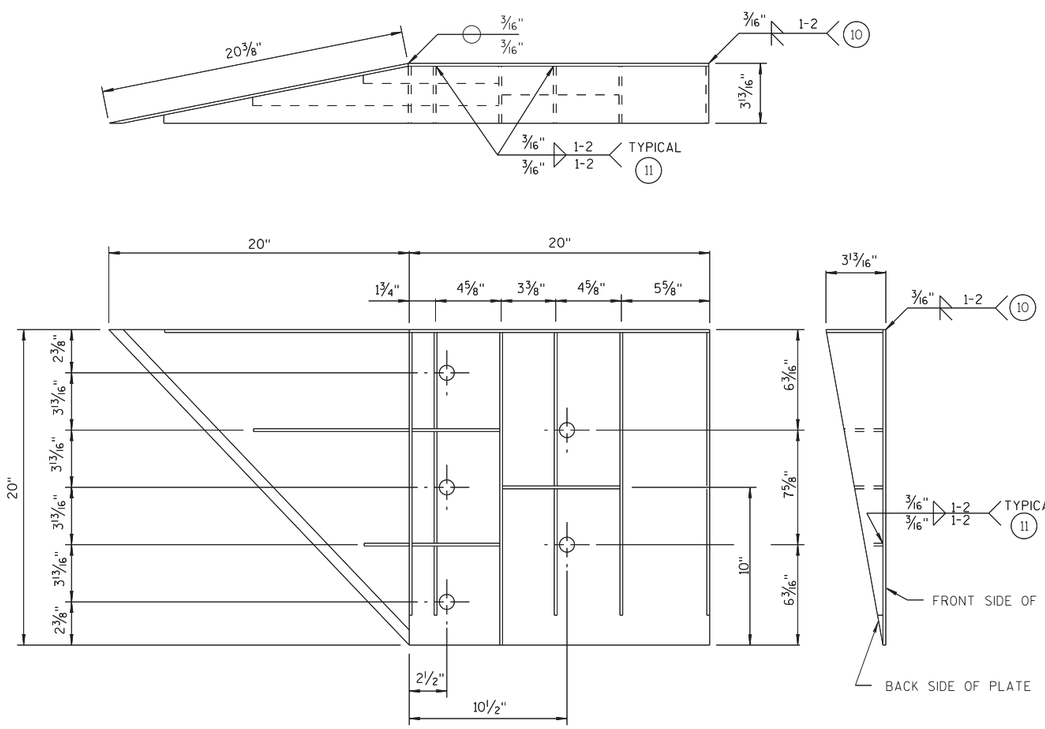

WELDING INSTRUCTION

(VIEWED FROM BACK SIDE OF PLATE)

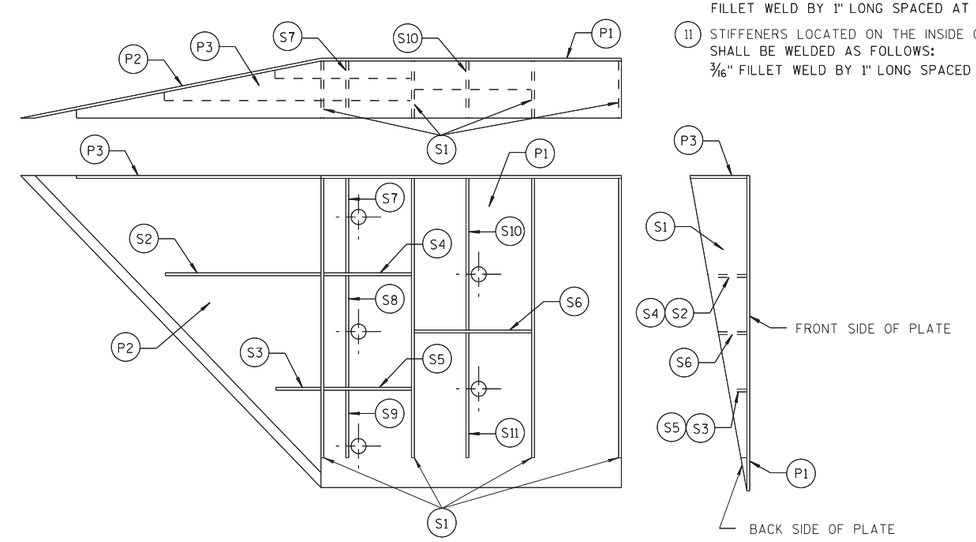

PLATE AND STIFFENER IDENTIFICATION

(VIEWED FROM BACK SIDE OF PLATE)

CONNECTOR PLATE DIMENSION (PER ASSEMBLY)

PLATE	QUANTITY	SHAPE	SIZE (A x B x C x D)	THICKNESS
P1	1		20" x 20"	3/16"
P2	1		20" x 20" x 28 9/16"	3/16"
P3	1		39" x 3 5/8" x 20" x 19 5/16"	3/16"
S1	4		18 7/16" x 3 5/8" x 18 3/4"	1/4"
S2	1		10 1/4" x 2 7/16" x 10 3/8" x 1/2"	1/4"
S3	1		3" x 1 1/16" x 3 1/8" x 1/2"	1/4"
S4	1		6 1/8" x 2 7/16"	1/4"
S5	1		6 1/8" x 1 1/16"	1/4"
S6	1		7 3/4" x 1 3/4"	1/4"
S7	1		2 9/16" x 6" x 3 5/8" x 5 7/8"	1/4"
S8	1		1 5/32" x 7 1/2" x 2 1/2" x 7 3/8"	1/4"
S9	1		6 1/16" x 6 3/16" x 1 3/32"	1/4"
S10	1		1 7/8" x 9 7/8" x 3 5/8" x 9 11/16"	1/4"
S11	1		8 1/2" x 8 3/4" x 1 13/16"	1/4"

SINGLE SLOPE CONNECTION PLATE

MIDWEST GUARDRAIL SYSTEM THRIE BEAM TRANSITION (MGS)

STATE OF WISCONSIN
DEPARTMENT OF TRANSPORTATION

APPROVED
7/2018
DATE
FHWA

/S/ Rodney Taylor
ROADWAY STANDARDS DEVELOPMENT UNIT SUPERVISOR

6

S.D.D. 14 B 45-5i

SDD 14b45-j MGS Thrie Beam Transition - Connection to Single Slope Barrier

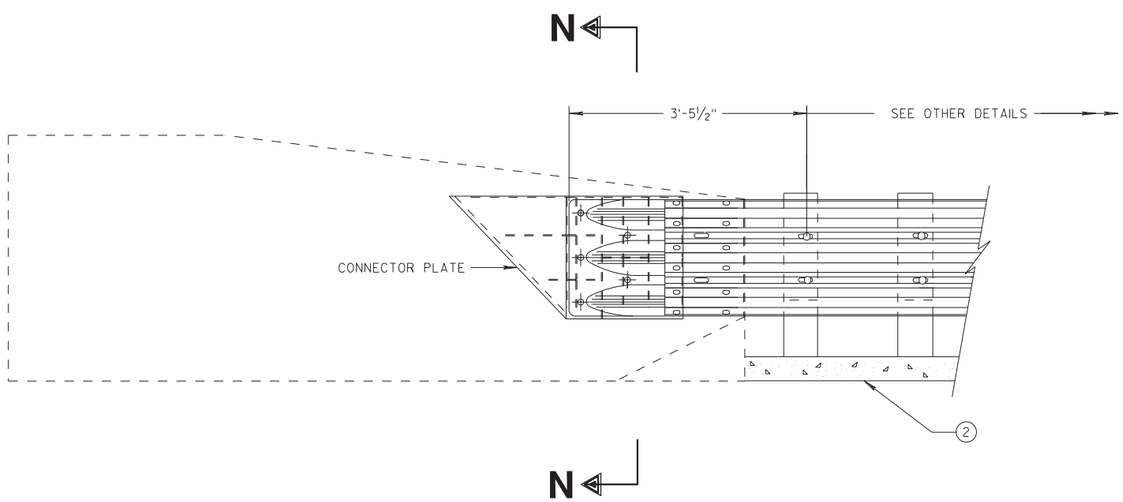

THRIE BEAM CONNECTION TO SINGLE SLOPE BARRIER

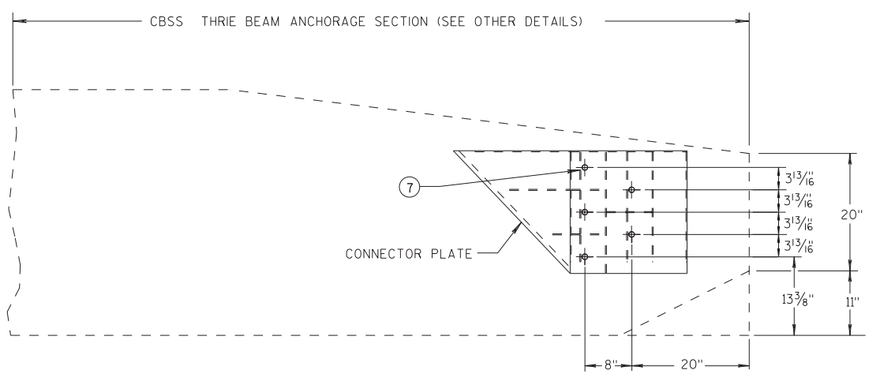

SINGLE SLOPE CONNECTION PLATE PLACEMENT

GENERAL NOTES

CONNECTOR PLATE, DRILLING BOLT HOLES THROUGH THE PARAPET, BOLTS, NUTS, WASHERS AND REPAIRING DAMAGED CONCRETE ARE INCIDENTAL TO THE CONTRACT.

(2) OPTIONAL CURB AND GUTTER OR DRAINAGE FEATURE SEE PLAN FOR INFORMATION.

(7) BOLTS MAY BE A325 BOLTS OR A449 BOLTS. BOLT LENGTH AND THREADING LENGTH ARE TO ALLOW FOR A TIGHT CONNECTION BETWEEN RIGID BARRIER AND THRIE BEAM CONNECTION PLATE. CONTRACTOR IS TO FIELD VERIFY BOLT LENGTH AND THREAD LENGTH. ONE ROUND WASHER REQUIRED BETWEEN BOLT HEAD AND THRIE BEAM CONNECTOR PLATE. BOLTS THAT EXTEND THROUGH THE PARAPET AND OUT THE BACK FACE REQUIRE A HARDENED ROUND STEEL WASHER THAT IS 2" O.D. X 5/8" THICK AND ONE PLATE WASHER. REPAIR ANY DAMAGED CONCRETE FROM BOLT INSTALLATION.

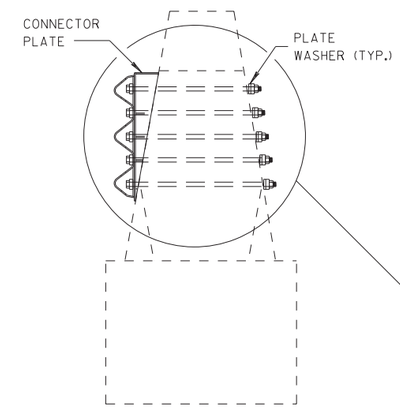

SECTION N-N

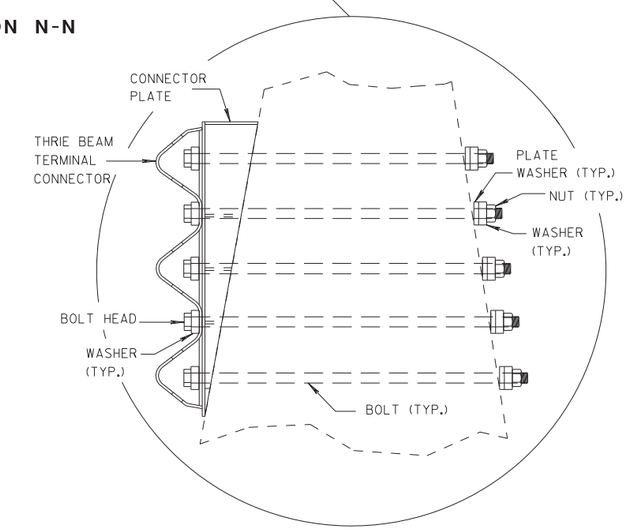

6

6

S.D.D. 14 B 45-5j

S.D.D. 14 B 45-5j

MIDWEST GUARDRAIL SYSTEM THRIE BEAM TRANSITION (MGS)

STATE OF WISCONSIN
DEPARTMENT OF TRANSPORTATION

APPROVED
7/2018
DATE

/S/ Rodney Taylor
ROADWAY STANDARDS DEVELOPMENT UNIT SUPERVISOR

FHWA

SDD 14b45-k MGS Thrie Beam Transition - Approach Connection to NY Bridge Parapets

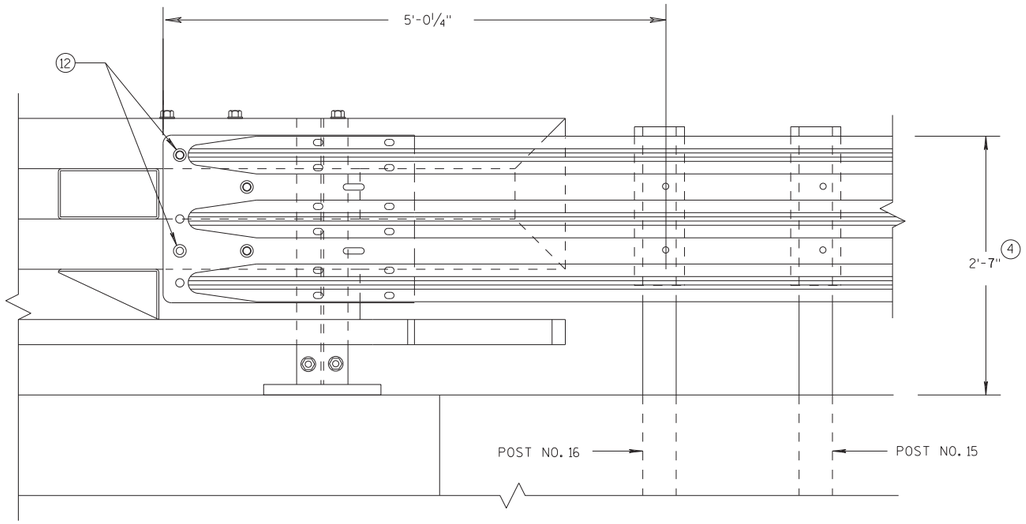

ELEVATION OF DETAIL AT NY3 END POST

THRIE BEAM RAIL ATTACHMENT

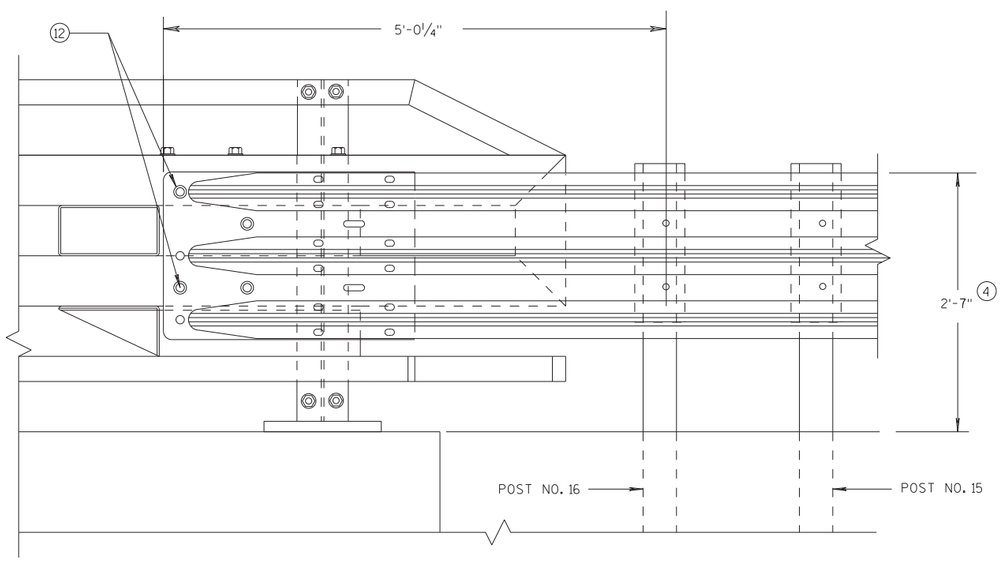

ELEVATION OF DETAIL AT NY4 END POST

THRIE BEAM RAIL ATTACHMENT

GENERAL NOTES

(4) TOLERANCE FOR TOP OF BEAM IS ± 1".

(12) BOLTS MAY BE A325 BOLTS OR A449 BOLTS. BOLT LENGTH AND THREADING LENGTH ARE TO ALLOW FOR A TIGHT CONNECTION BETWEEN RIGID BARRIER AND THRIE BEAM CONNECTION PLATE. CONTRACTOR IS TO FIELD VERIFY BOLT LENGTH AND THREAD LENGTH. ONE ROUND WASHER REQUIRED BETWEEN BOLT HEAD AND THRIE BEAM CONNECTOR PLATE. ON BACKSIDE OF PARAPET ONE ROUND WASHER, AND NUT REQUIRED. BOLT THREAD IS TO EXTEND ½-INCH BEYOND NUT.

MIDWEST GUARDRAIL SYSTEM
THRIE BEAM TRANSITION (MGS)

STATE OF WISCONSIN
DEPARTMENT OF TRANSPORTATION

APPROVED
7/2018
DATE
FHWA

/S/ Rodney Taylor
ROADWAY STANDARDS DEVELOPMENT
UNIT SUPERVISOR

6
S.D.D. 14 B 45-5k

SDD 14b45-I MGS Thrie Beam Transition - Downstream Connection to NY Bridge Parapets

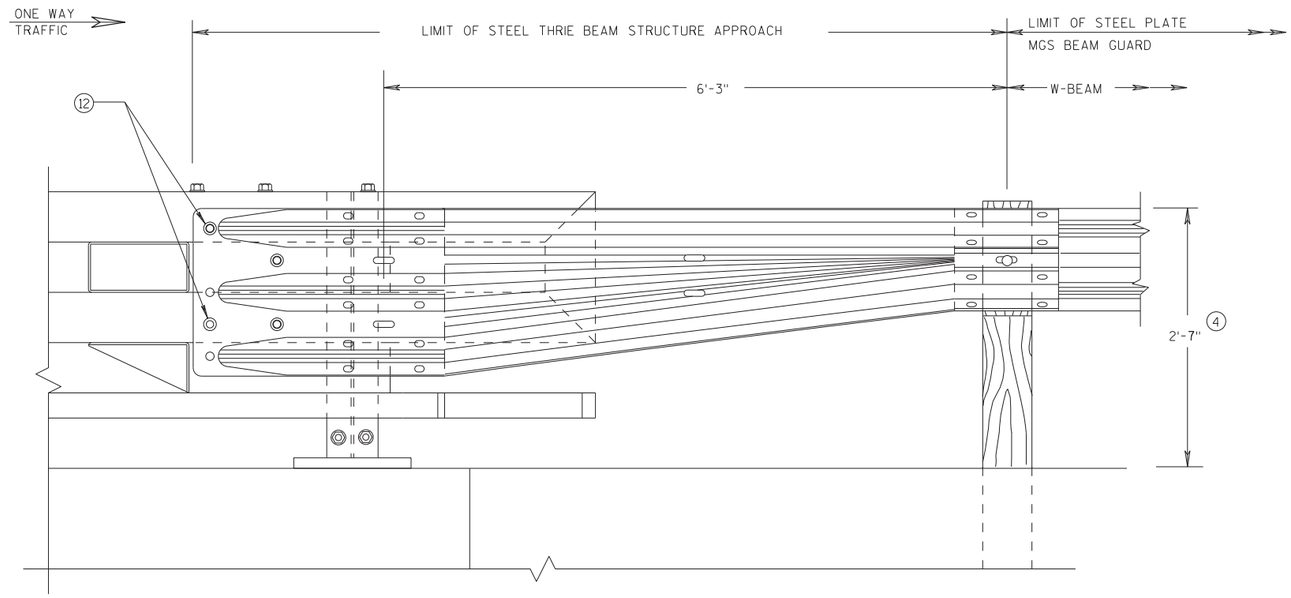

FRONT VIEW

W BEAM TRANSITION AND CONNECTION TO BRIDGE RAILING TYPE "NY3"

(USE ONLY ON THE TRAFFIC EXIT END OF ONE WAY BRIDGES)

GENERAL NOTES

(4) TOLERANCE FOR TOP OF BEAM IS ± 1".

(12) BOLTS MAY BE A325 BOLTS OR A449 BOLTS. BOLT LENGTH AND THREADING LENGTH ARE TO ALLOW FOR A TIGHT CONNECTION BETWEEN RIGID BARRIER AND THRIE BEAM CONNECTION PLATE. CONTRACTOR IS TO FIELD VERIFY BOLT LENGTH AND THREAD LENGTH. ONE ROUND WASHER REQUIRED BETWEEN BOLT HEAD AND THRIE BEAM CONNECTOR PLATE. ON BACKSIDE OF PARAPET ONE ROUND WASHER, AND NUT REQUIRED. BOLT THREAD IS TO EXTEND 1/2-INCH BEYOND NUT.

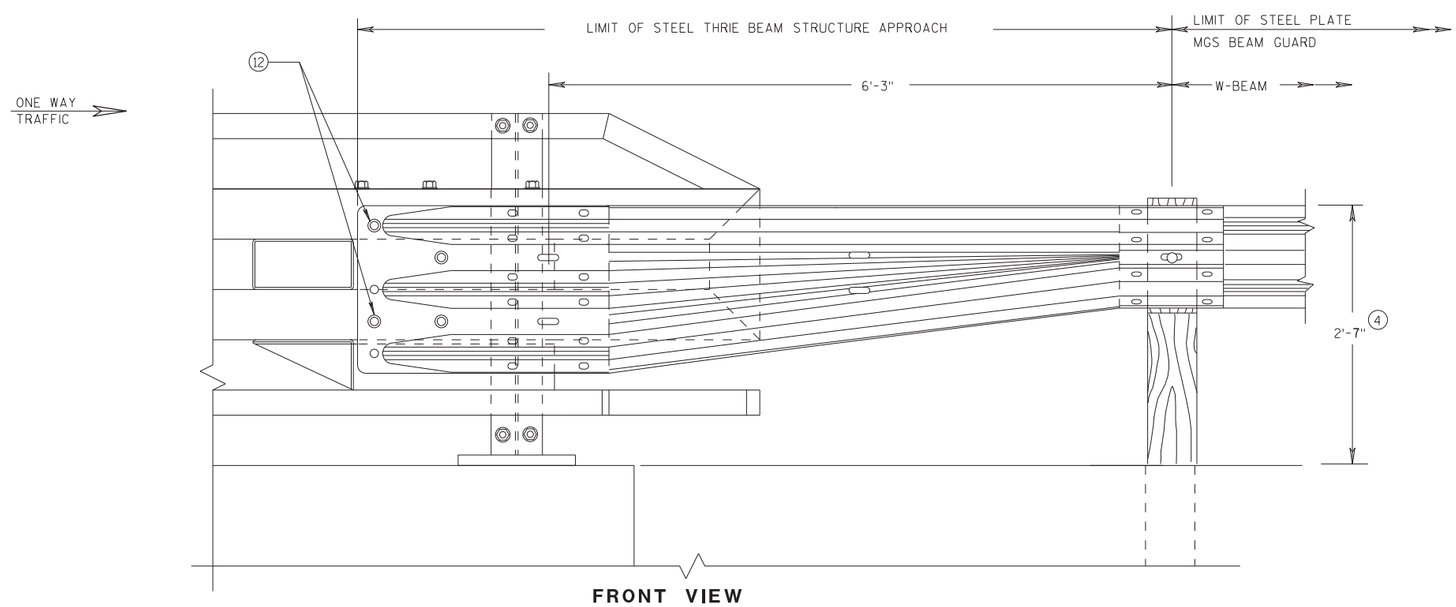

FRONT VIEW

W BEAM TRANSITION AND CONNECTION TO BRIDGE RAILING TYPE "NY4"

(USE ONLY ON THE TRAFFIC EXIT END OF ONE WAY BRIDGES)

MIDWEST GUARDRAIL SYSTEM THRIE BEAM TRANSITION (MGS)

STATE OF WISCONSIN
DEPARTMENT OF TRANSPORTATION

APPROVED
7/2018
DATE
FHWA

/S/ Rodney Taylor
ROADWAY STANDARDS DEVELOPMENT UNIT SUPERVISOR

6

6

S.D.D. 14 B 45-5L

S.D.D. 14 B 45-5L

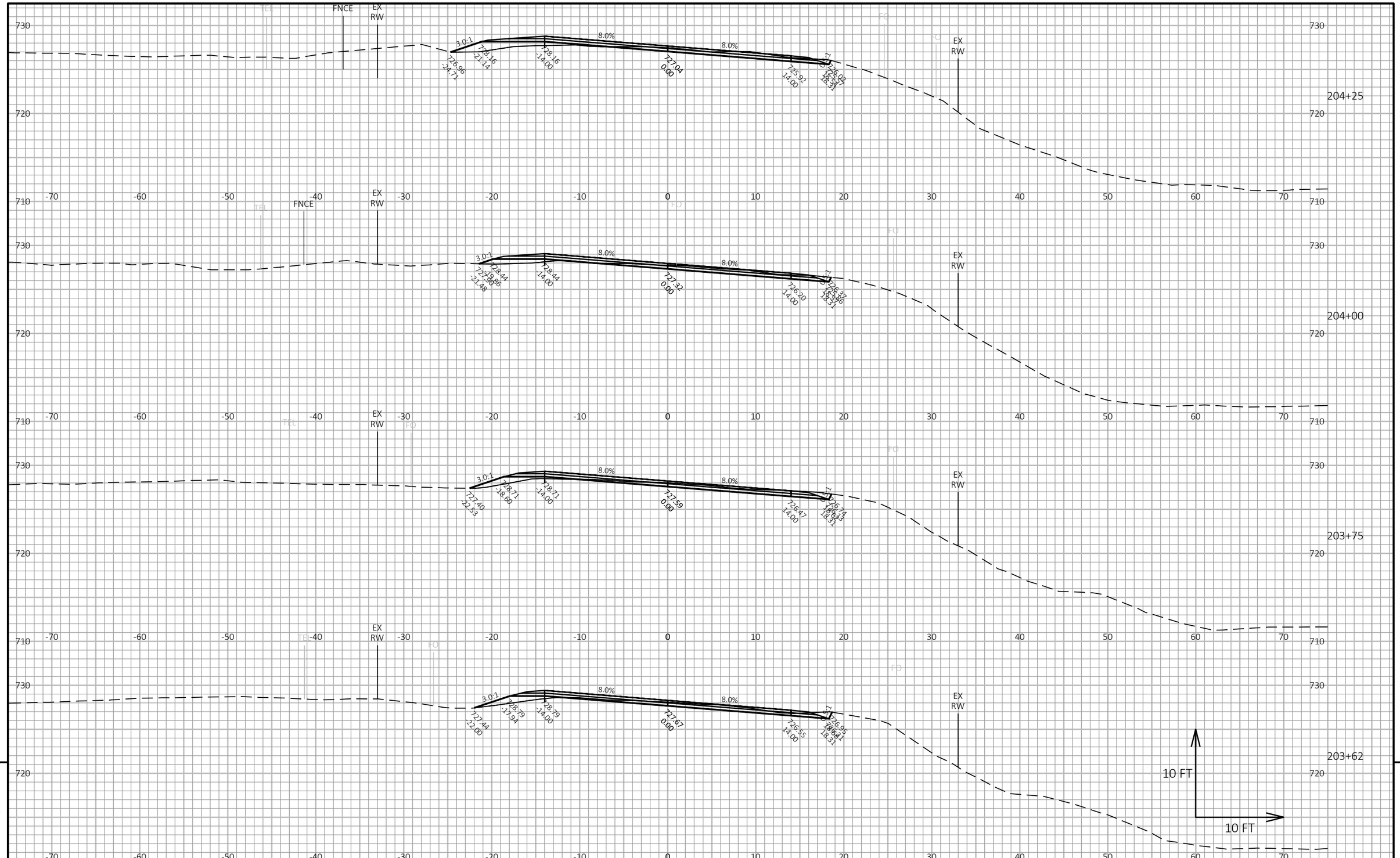

PROJECT NO: 5680-04-60	HWY: STH 60	COUNTY: SAUK	CROSS SECTIONS: STA. 203+62 TO STA. 214+00	SHEET	E

FILE NAME : N:\PDS\C3D\56800430\SHEETSPLAN\090101_XS_TREES.DWG
LAYOUT NAME - 01
PLOT DATE : 2/26/2019 11:12 AM
PLOT BY : SCHUMAKER, NATHANIEL
PLOT NAME :
PLOT SCALE : 1 IN:10 FT HORZ. / 1 IN:10 FT VERT.
WISDOT/CADDS SHEET 49

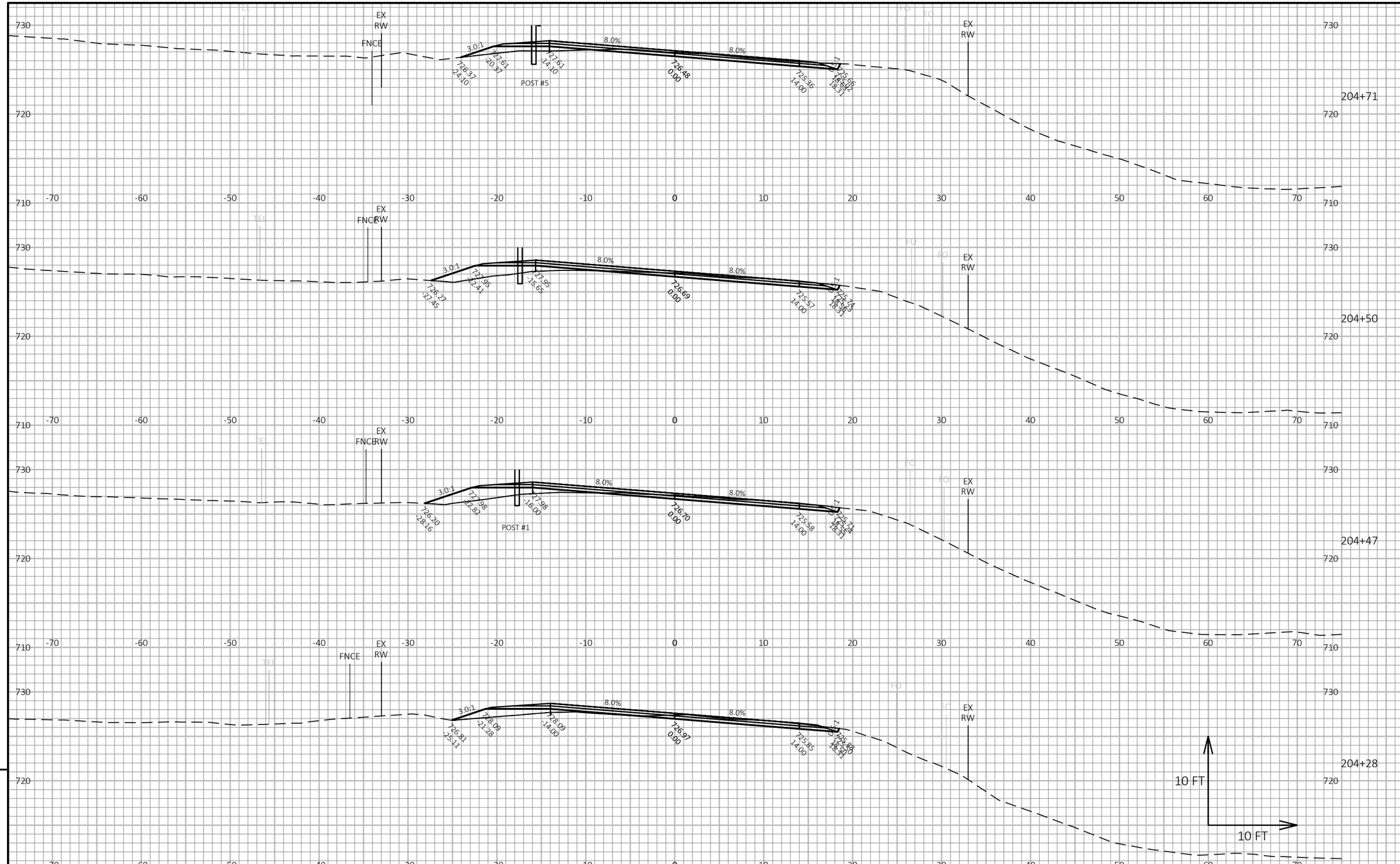

PROJECT NO: 5680-04-60	HWY: STH 60	COUNTY: SAUK	CROSS SECTIONS: STA. 203+62 TO STA. 214+00	SHEET	E

FILE NAME : N:\PDS\C3D\56800430\SHEETSPLAN\090101_XS_TREES.DWG
LAYOUT NAME - 02
PLOT DATE : 2/26/2019 11:12 AM
PLOT BY : SCHUMAKER, NATHANIEL
PLOT NAME :
PLOT SCALE : 1 IN:10 FT HORZ. / 1 IN:10 FT VERT.

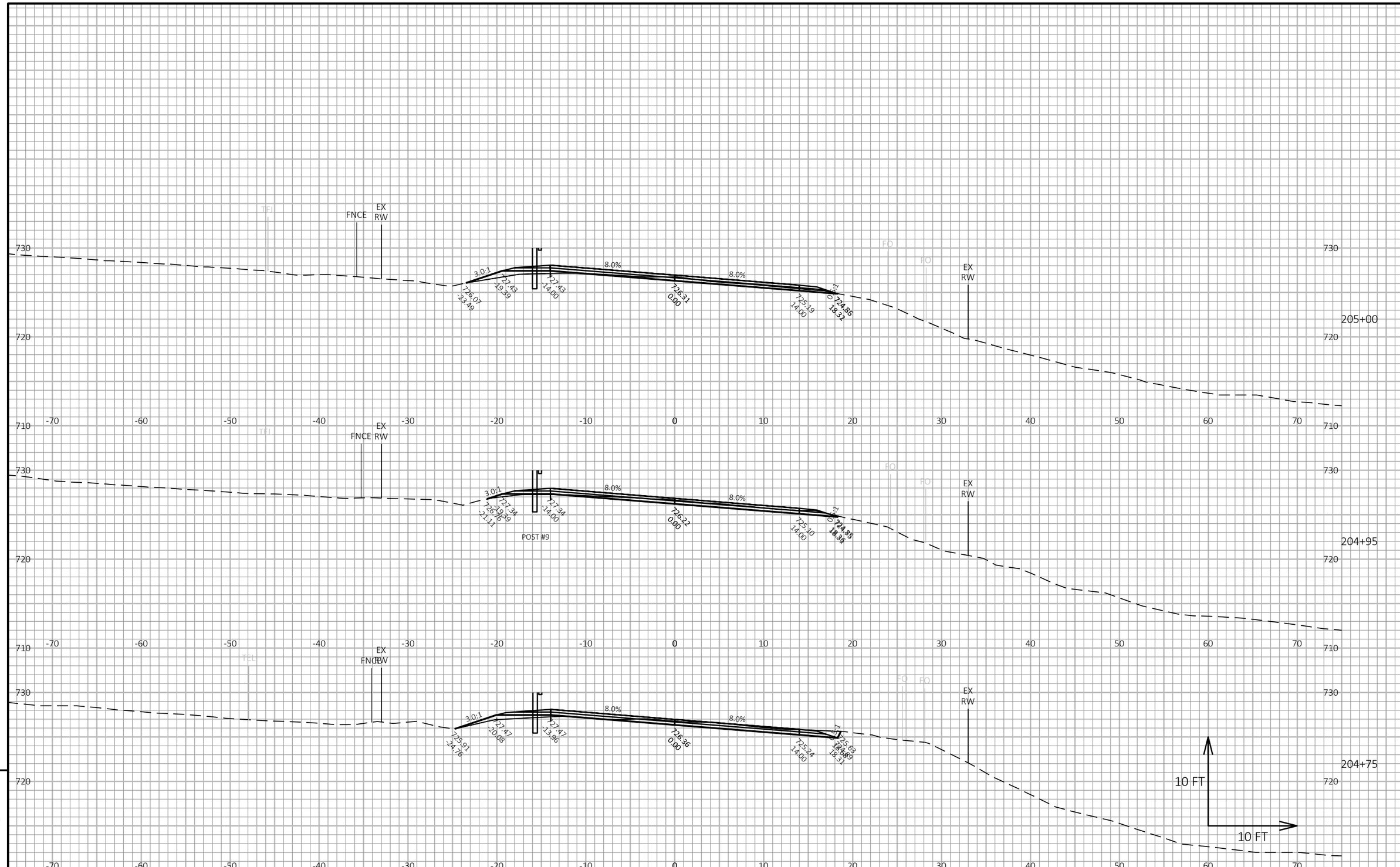

PROJECT NO: 5680-04-60	HWY: STH 60	COUNTY: SAUK	CROSS SECTIONS: STA. 203+62 TO STA. 214+00	SHEET	E

FILE NAME : N:\PDS\C3D\56800430\SHEETSPLAN\090101_XS_TREES.DWG
LAYOUT NAME - 03
PLOT DATE : 2/26/2019 11:12 AM
PLOT BY : SCHUMAKER, NATHANIEL
PLOT NAME :
PLOT SCALE : 1 IN:10 FT HORZ. / 1 IN:10 FT VERT.
WISDOT/CADDS SHEET 49

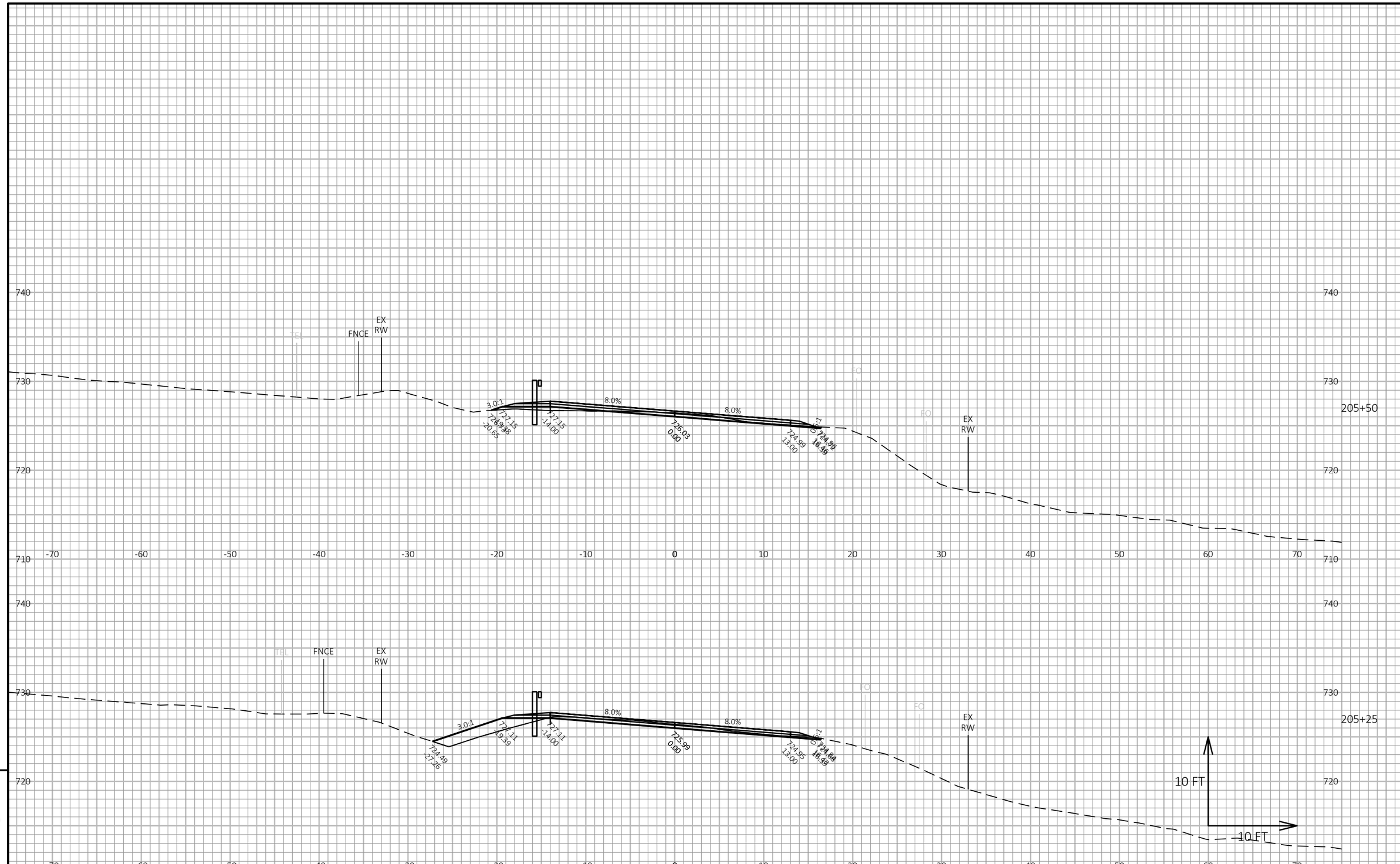

PROJECT NO: 5680-04-60	HWY: STH 60	COUNTY: SAUK	CROSS SECTIONS: STA. 203+62 TO STA. 214+00	SHEET	E

FILE NAME : N:\PDS\C3D\56800430\SHEETSPLAN\090101_XS_TREES.DWG
LAYOUT NAME - 04
PLOT DATE : 2/26/2019 11:12 AM
PLOT BY : SCHUMAKER, NATHANIEL
PLOT NAME :
PLOT SCALE : 1 IN:10 FT HORZ. / 1 IN:10 FT VERT.

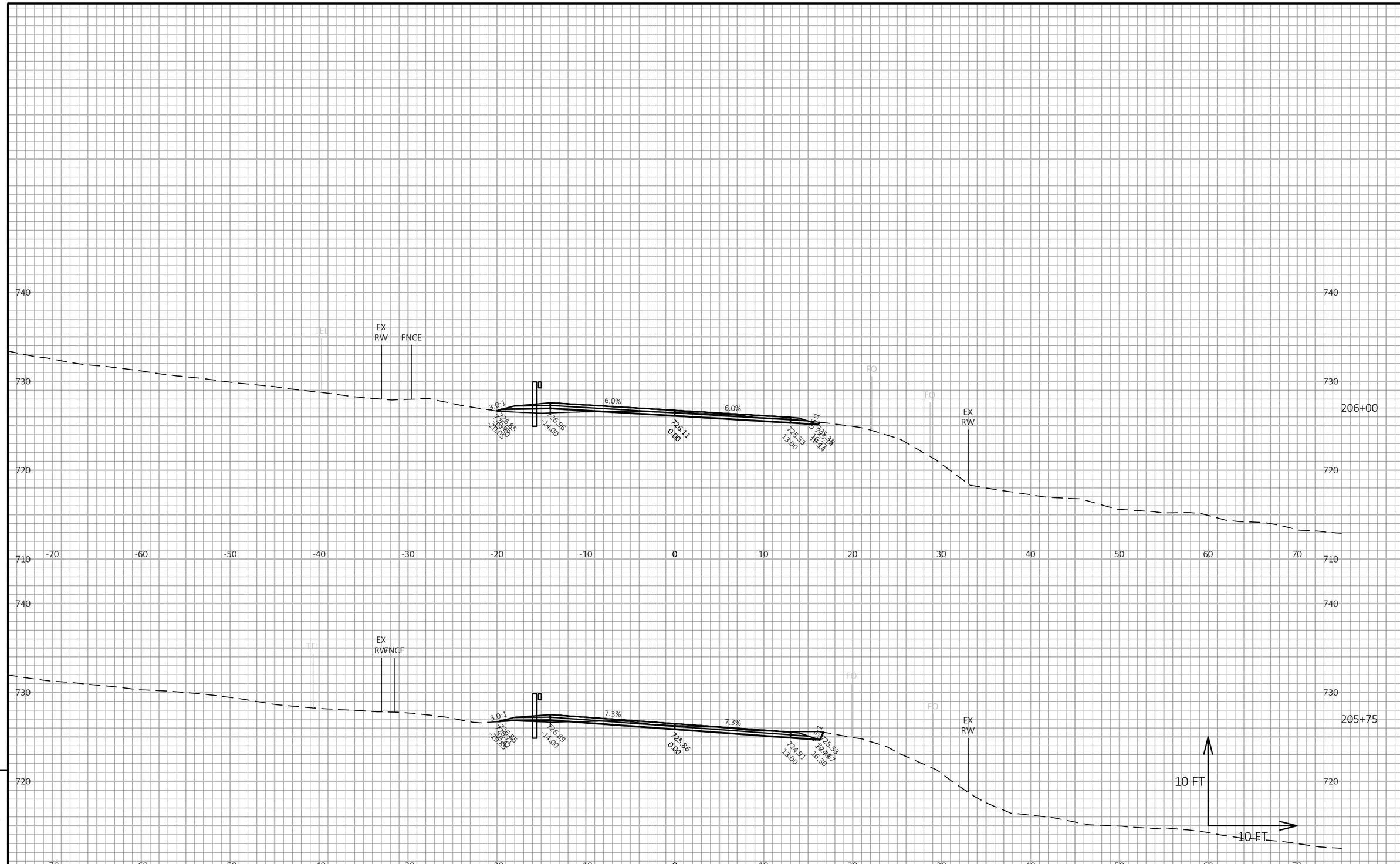

PROJECT NO: 5680-04-60	HWY: STH 60	COUNTY: SAUK	CROSS SECTIONS: STA. 203+62 TO STA. 214+00	SHEET	E

FILE NAME : N:\PDS\C3D\56800430\SHEETSPLAN\090101_XS_TREES.DWG
LAYOUT NAME - 05

PLOT DATE : 2/26/2019 11:13 AM PLOT BY : SCHUMAKER, NATHANIEL PLOT NAME : **PLOT SCALE :** 1 IN:10 FT HORZ. / 1 IN:10 FT VERT.

WISDOT/CADDS SHEET 49

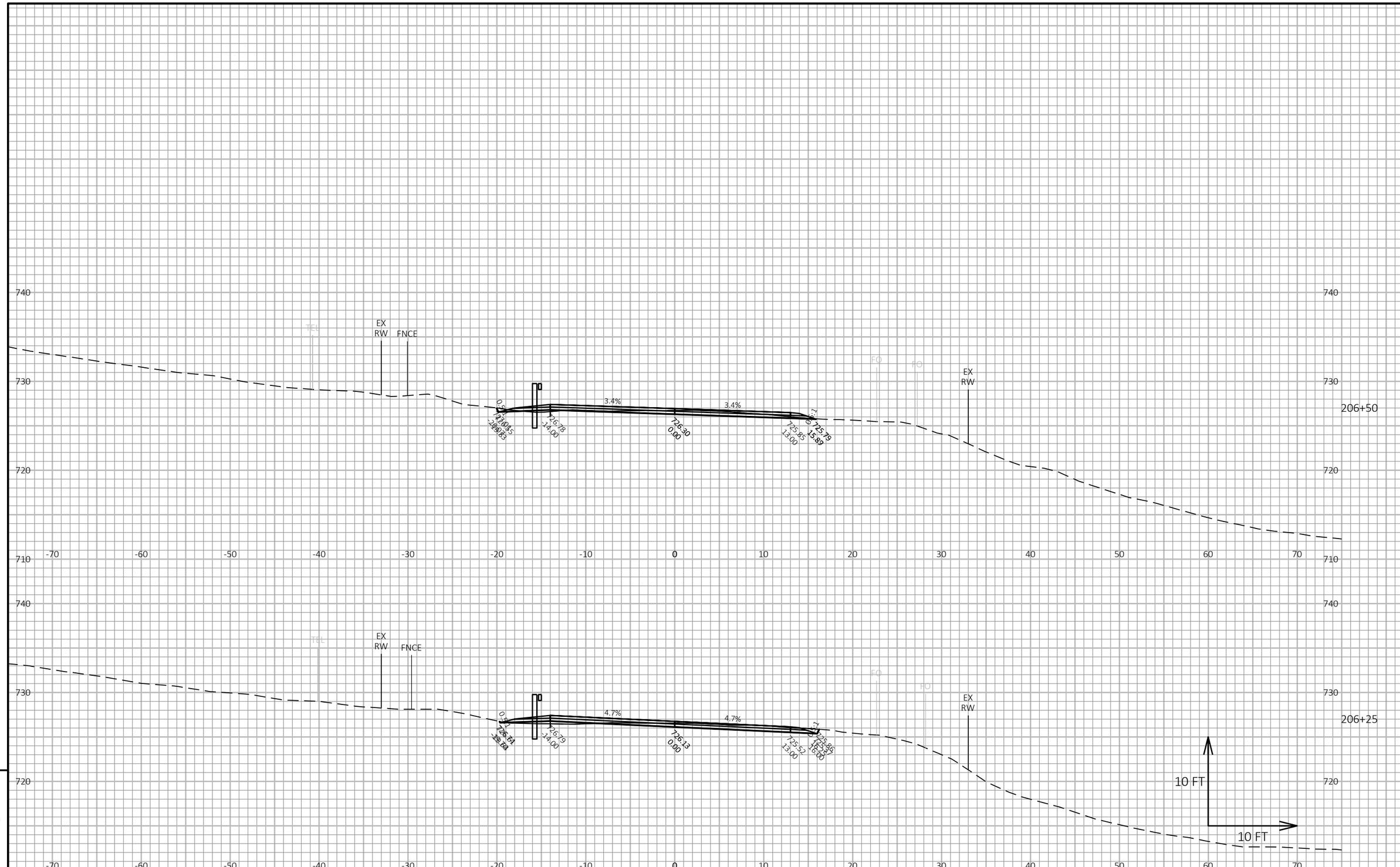

9

9

PROJECT NO: 5680-04-60	HWY: STH 60	COUNTY: SAUK	CROSS SECTIONS: STA. 203+62 TO STA. 214+00	SHEET	E

FILE NAME : N:\PDS\C3D\56800430\SHEETSPLAN\090101_XS_TREES.DWG
LAYOUT NAME - 06

PLOT DATE : 2/26/2019 11:13 AM PLOT BY : SCHUMAKER, NATHANIEL PLOT NAME : **PLOT SCALE :** 1 IN:10 FT HORZ. / 1 IN:10 FT VERT.

WISDOT/CADDS SHEET 49

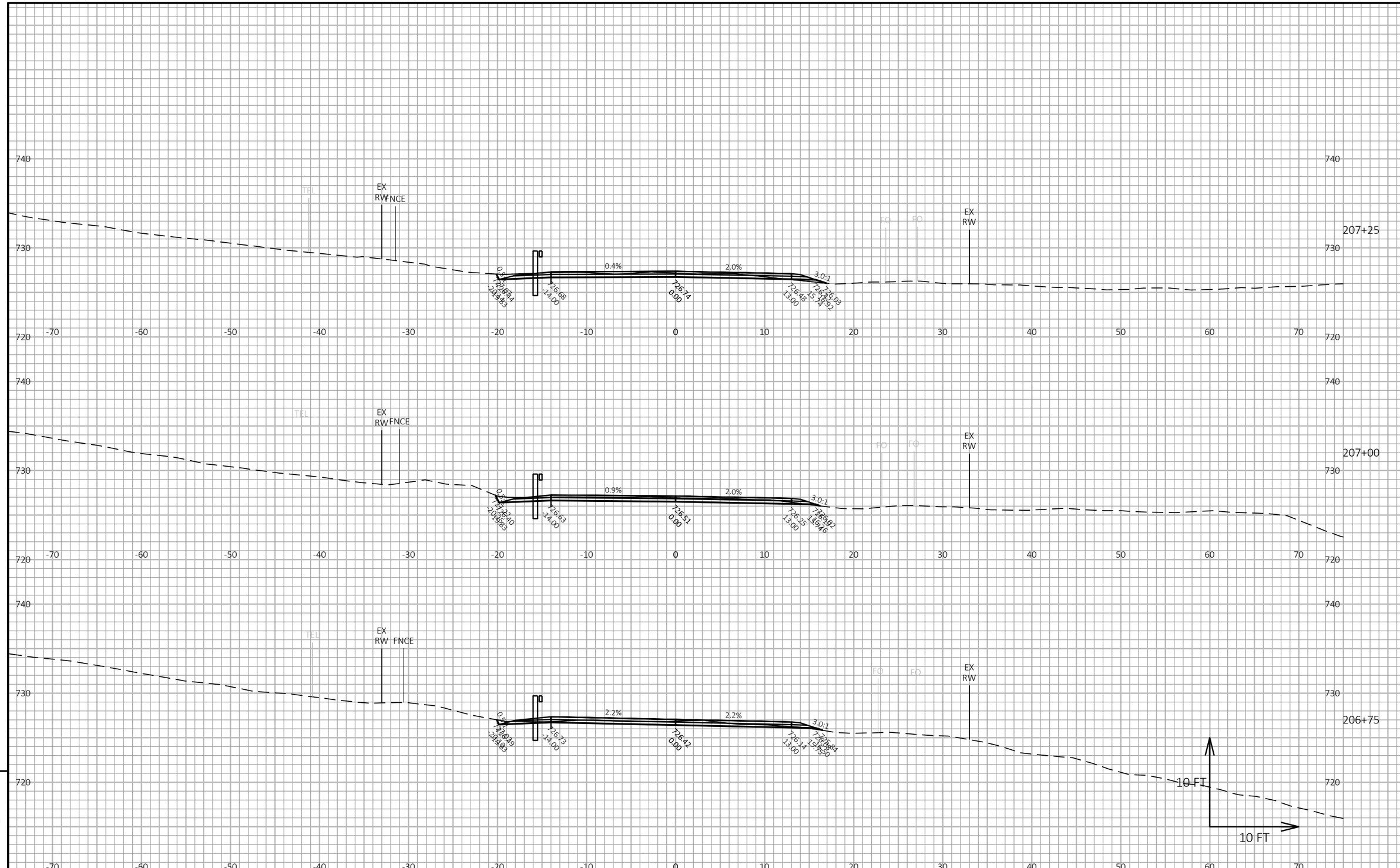

9

PROJECT NO: 5680-04-60	HWY: STH 60	COUNTY: SAUK	CROSS SECTIONS: STA. 203+62 TO STA. 214+00	SHEET	E

FILE NAME : N:\PDS\C3D\56800430\SHEETSPLAN\090101_XS_TREES.DWG
LAYOUT NAME - 07

PLOT DATE : 2/26/2019 11:13 AM PLOT BY : SCHUMAKER, NATHANIEL PLOT NAME : PLOT SCALE : 1 IN:10 FT HORZ. / 1 IN:10 FT VERT.

WISDOT/CADDS SHEET 49

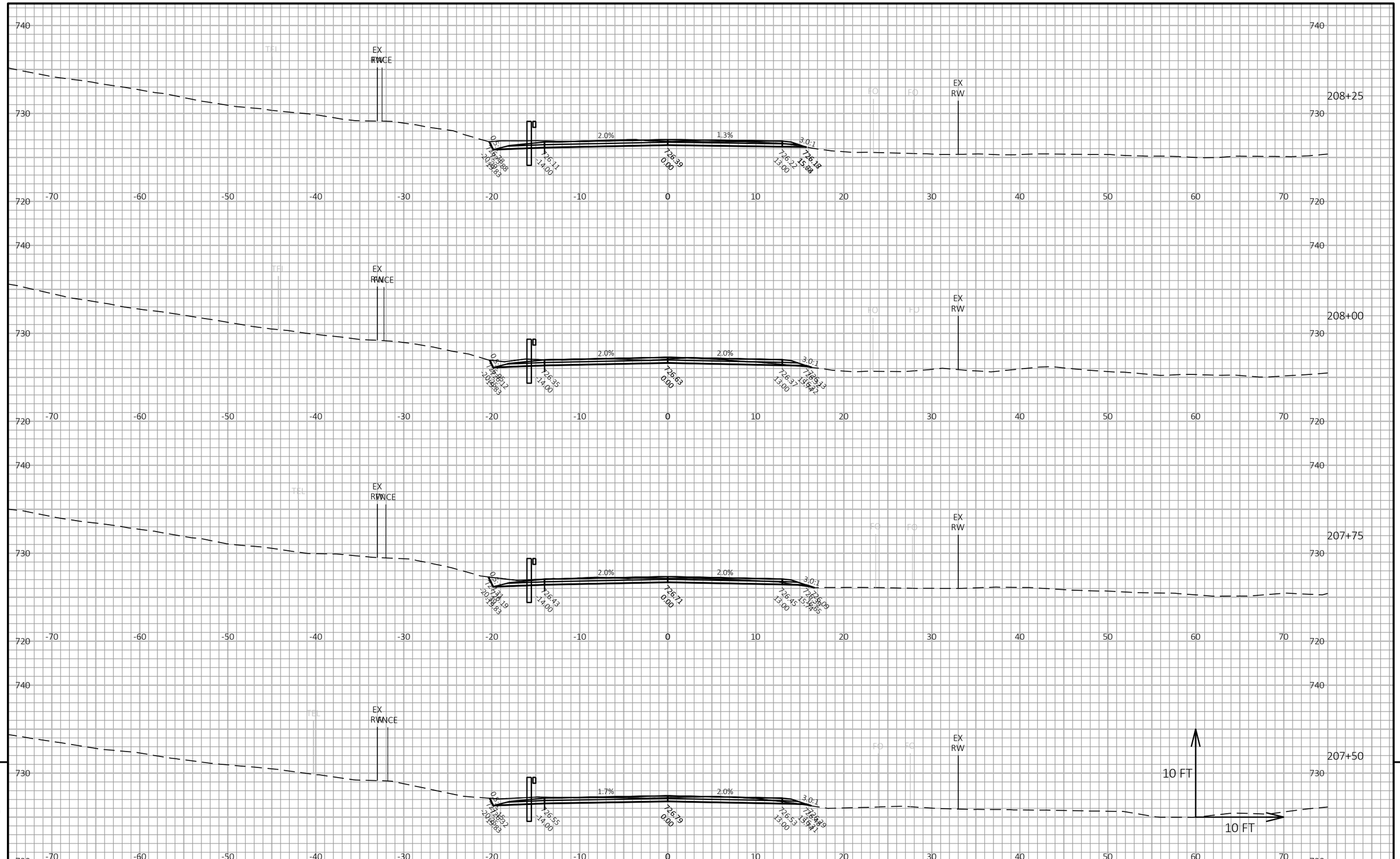

PROJECT NO: 5680-04-60	HWY: STH 60	COUNTY: SAUK	CROSS SECTIONS: STA. 203+62 TO STA. 214+00	SHEET	E

FILE NAME : N:\PDS\C3D\56800430\SHEETSPLAN\090101_XS_TREES.DWG
LAYOUT NAME - 08
PLOT DATE : 2/26/2019 11:13 AM
PLOT BY : SCHUMAKER, NATHANIEL
PLOT NAME :
PLOT SCALE : 1 IN:10 FT HORZ. / 1 IN:10 FT VERT.
WISDOT/CADDS SHEET 49

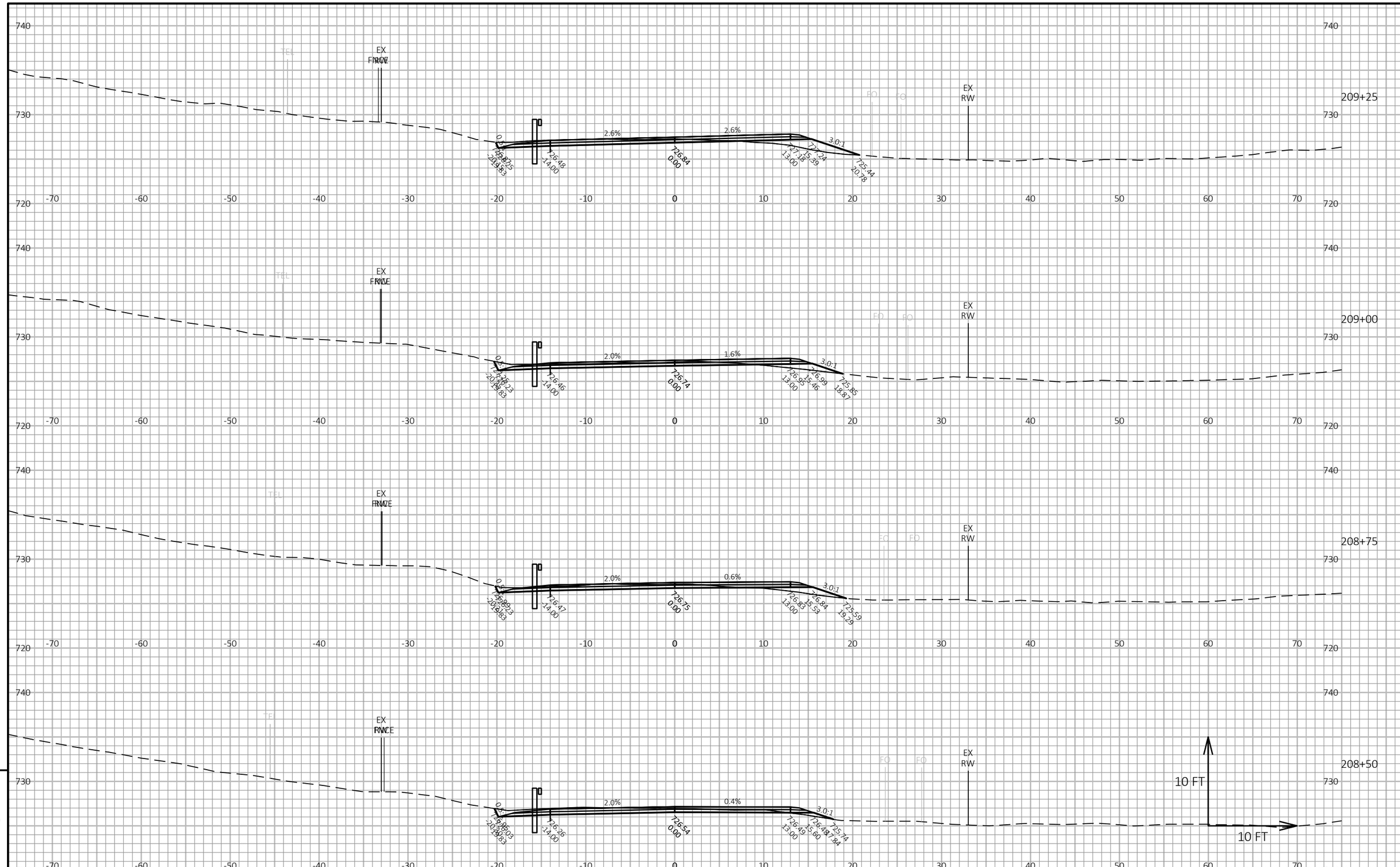

9

PROJECT NO: 5680-04-60	HWY: STH 60	COUNTY: SAUK	CROSS SECTIONS: STA. 203+62 TO STA. 214+00	SHEET	E

FILE NAME : N:\PDS\C3D\56800430\SHEETSPLAN\090101_XS_TREES.DWG
LAYOUT NAME - 09

PLOT DATE : 2/26/2019 11:13 AM PLOT BY : SCHUMAKER, NATHANIEL PLOT NAME : PLOT SCALE : 1 IN:10 FT HORZ. / 1 IN:10 FT VERT.

WISDOT/CADDS SHEET 49

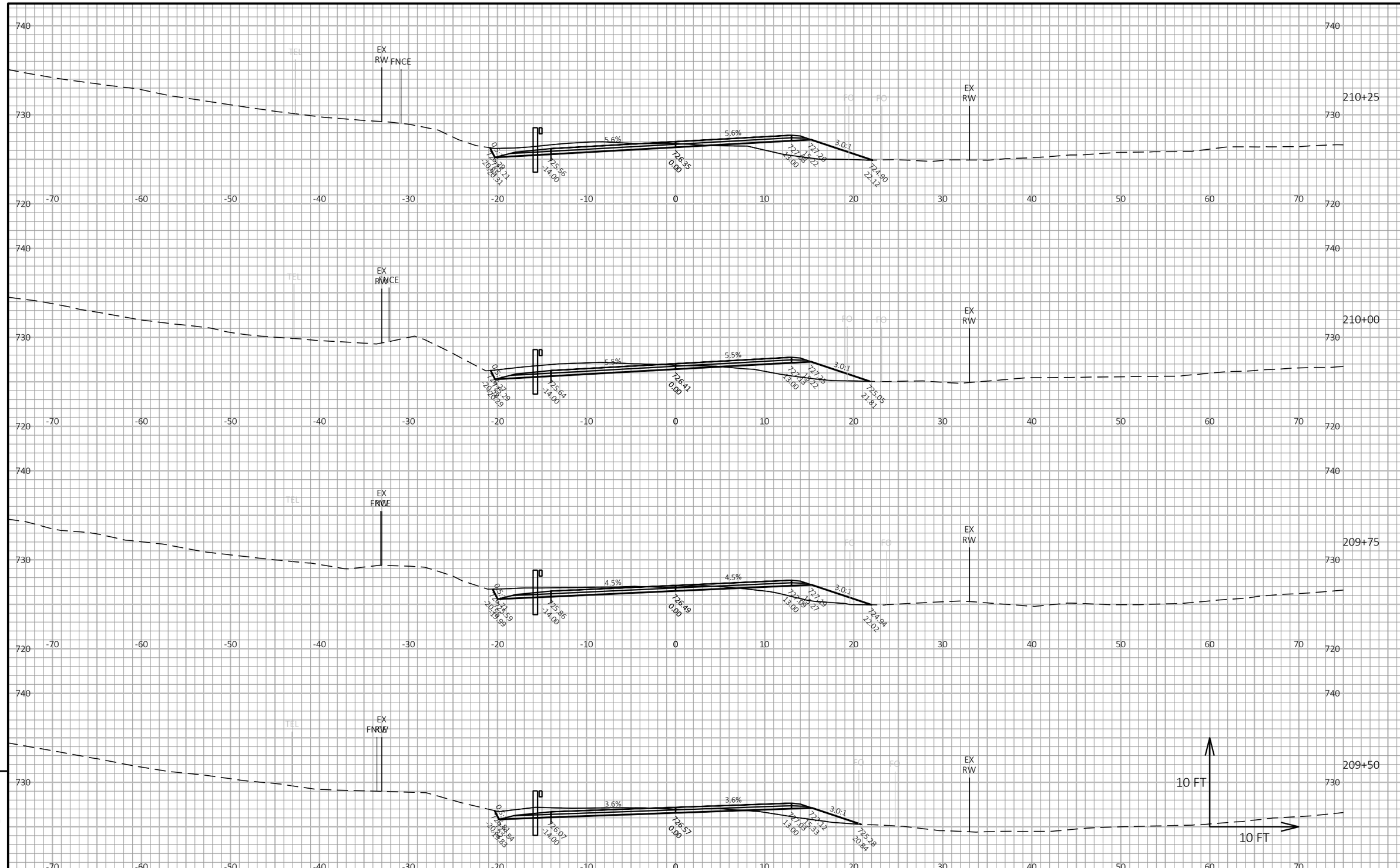

9

9

PROJECT NO: 5680-04-60	HWY: STH 60	COUNTY: SAUK	CROSS SECTIONS: STA. 203+62 TO STA. 214+00	SHEET	E

FILE NAME : N:\PDS\C3D\56800430\SHEETSPLAN\090101_XS_TREES.DWG
LAYOUT NAME - 10

PLOT DATE : 2/26/2019 11:13 AM PLOT BY : SCHUMAKER, NATHANIEL PLOT NAME : PLOT SCALE : 1 IN:10 FT HORZ. / 1 IN:10 FT VERT.

WISDOT/CADDS SHEET 49

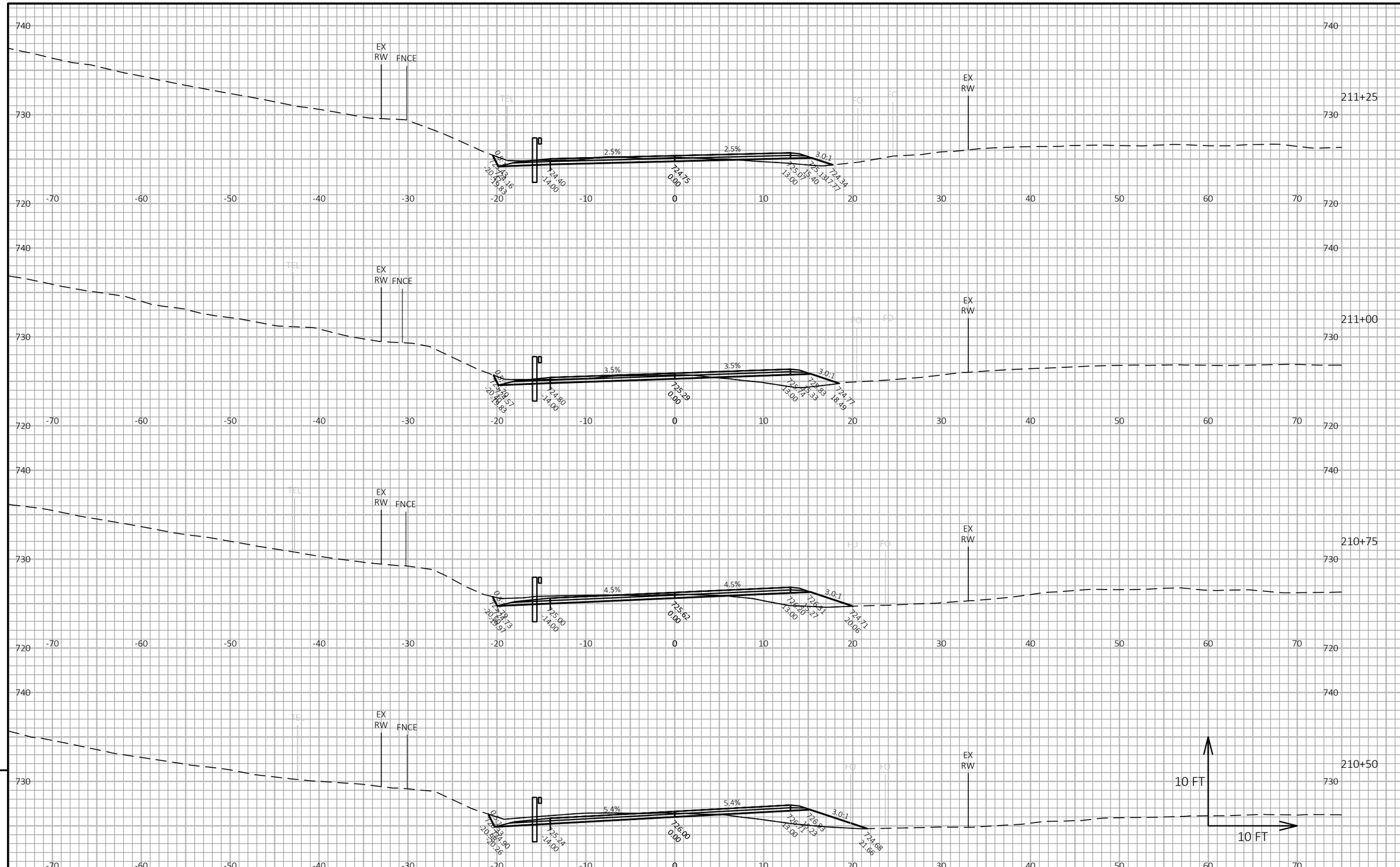

9

PROJECT NO: 5680-04-60	HWY: STH 60	COUNTY: SAUK	CROSS SECTIONS: STA. 203+62 TO STA. 214+00	SHEET	E

FILE NAME : N:\PDS\C3D\56800430\SHEETSPLAN\090101_XS_TREES.DWG
LAYOUT NAME - 11

PLOT DATE : 2/26/2019 11:13 AM PLOT BY : SCHUMAKER, NATHANIEL PLOT NAME : PLOT SCALE : 1 IN:10 FT HORZ. / 1 IN:10 FT VERT.

WISDOT/CADDS SHEET 49

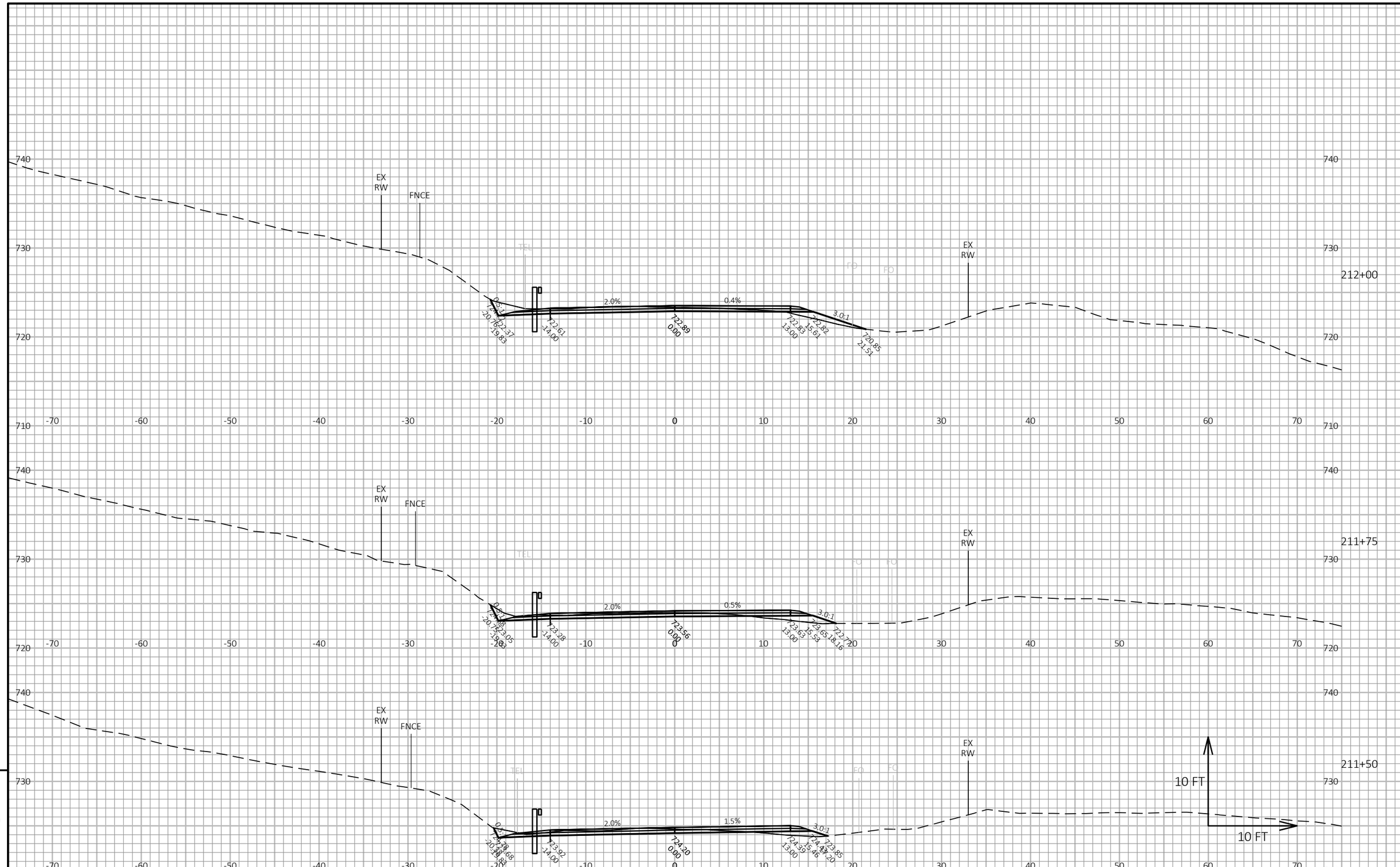

9

PROJECT NO: 5680-04-60	HWY: STH 60	COUNTY: SAUK	CROSS SECTIONS: STA. 203+62 TO STA. 214+00	SHEET	E

FILE NAME : N:\PDS\C3D\56800430\SHEETSPLAN\090101_XS_TREES.DWG
LAYOUT NAME - 12

PLOT DATE : 2/26/2019 11:13 AM PLOT BY : SCHUMAKER, NATHANIEL PLOT NAME : **PLOT SCALE :** 1 IN:10 FT HORZ. / 1 IN:10 FT VERT.

WISDOT/CADDS SHEET 49

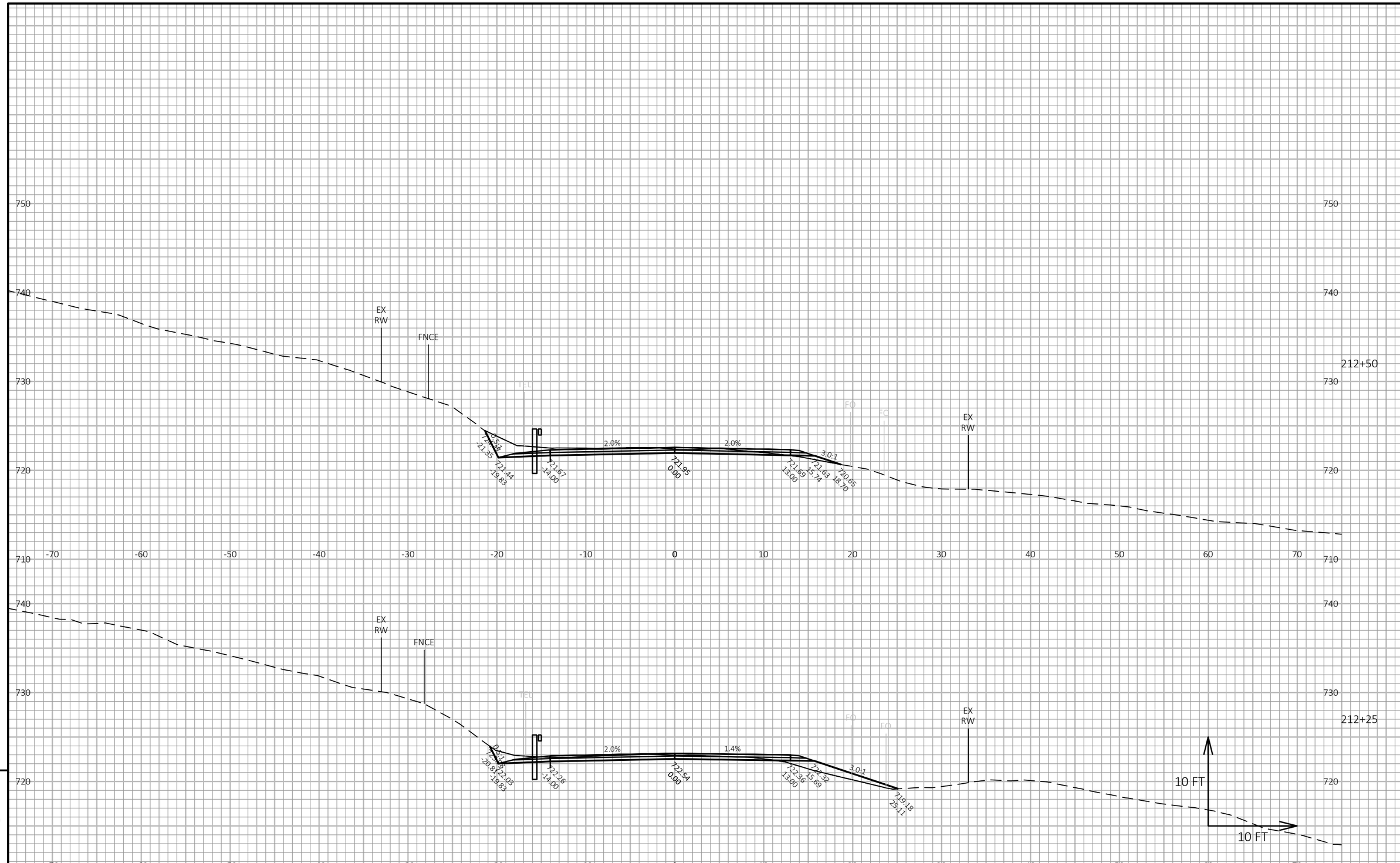

PROJECT NO: 5680-04-60	HWY: STH 60	COUNTY: SAUK	CROSS SECTIONS: STA. 203+62 TO STA. 214+00	SHEET	E

FILE NAME : N:\PDS\C3D\56800430\SHEETSPLAN\090101_XS_TREES.DWG
LAYOUT NAME - 13

PLOT DATE : 2/26/2019 11:13 AM PLOT BY : SCHUMAKER, NATHANIEL PLOT NAME : **PLOT SCALE :** 1 IN:10 FT HORZ. / 1 IN:10 FT VERT.

WISDOT/CADDS SHEET 49

9

9

PROJECT NO: 5680-04-60	HWY: STH 60	COUNTY: SAUK	CROSS SECTIONS: STA. 203+62 TO STA. 214+00	SHEET	E

FILE NAME : N:\PDS\C3D\56800430\SHEETSPLAN\090101_XS_TREES.DWG
LAYOUT NAME - 14

PLOT DATE : 2/26/2019 11:14 AM PLOT BY : SCHUMAKER, NATHANIEL PLOT NAME : PLOT SCALE : 1 IN:10 FT HORZ. / 1 IN:10 FT VERT.

WISDOT/CADDS SHEET 49

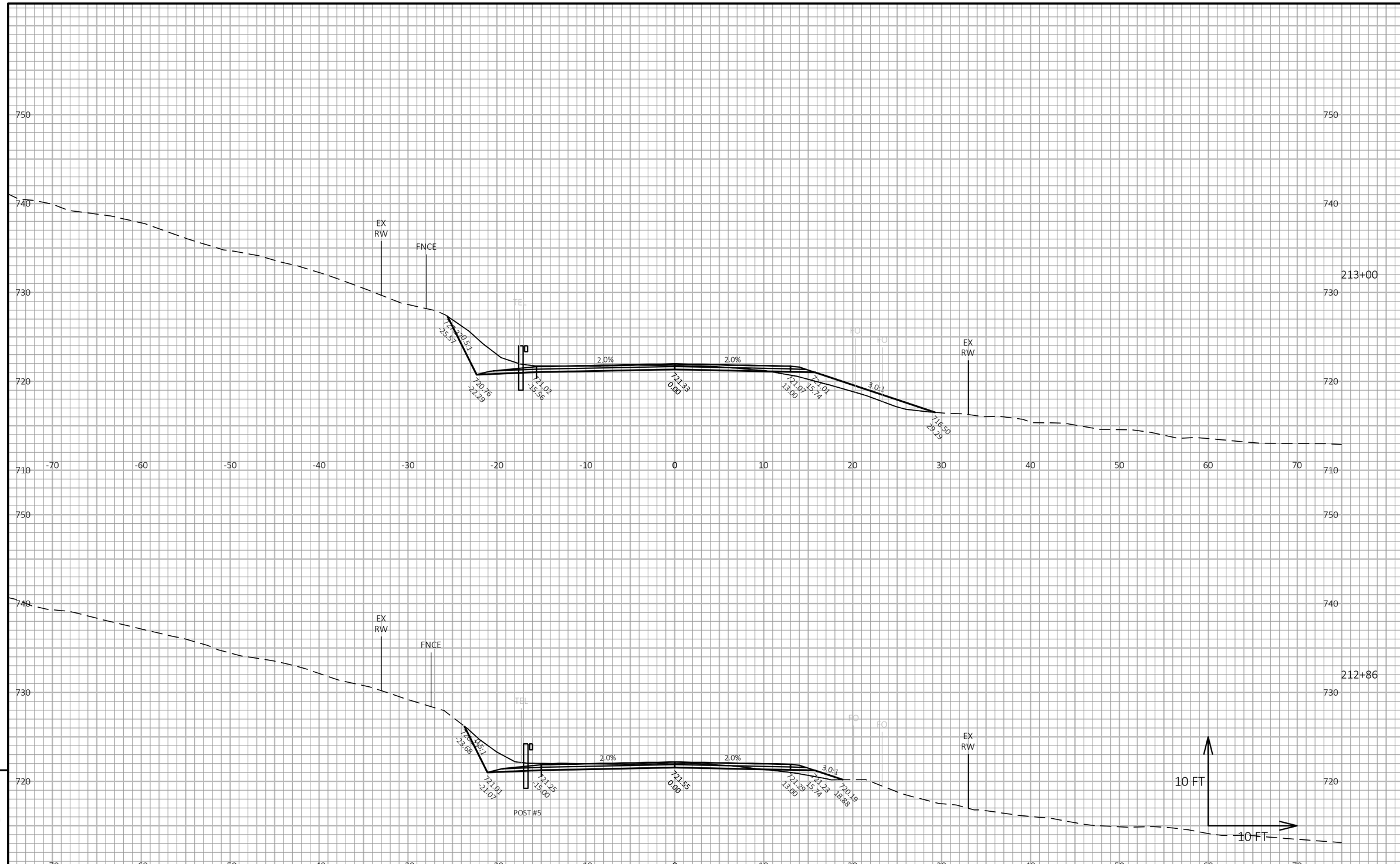

9

9

PROJECT NO: 5680-04-60	HWY: STH 60	COUNTY: SAUK	CROSS SECTIONS: STA. 203+62 TO STA. 214+00	SHEET	E

FILE NAME : N:\PDS\C3D\56800430\SHEETSPLAN\090101_XS_TREES.DWG
LAYOUT NAME - 15

PLOT DATE : 2/26/2019 11:14 AM PLOT BY : SCHUMAKER, NATHANIEL PLOT NAME : PLOT SCALE : 1 IN:10 FT HORZ. / 1 IN:10 FT VERT.

WISDOT/CADDS SHEET 49

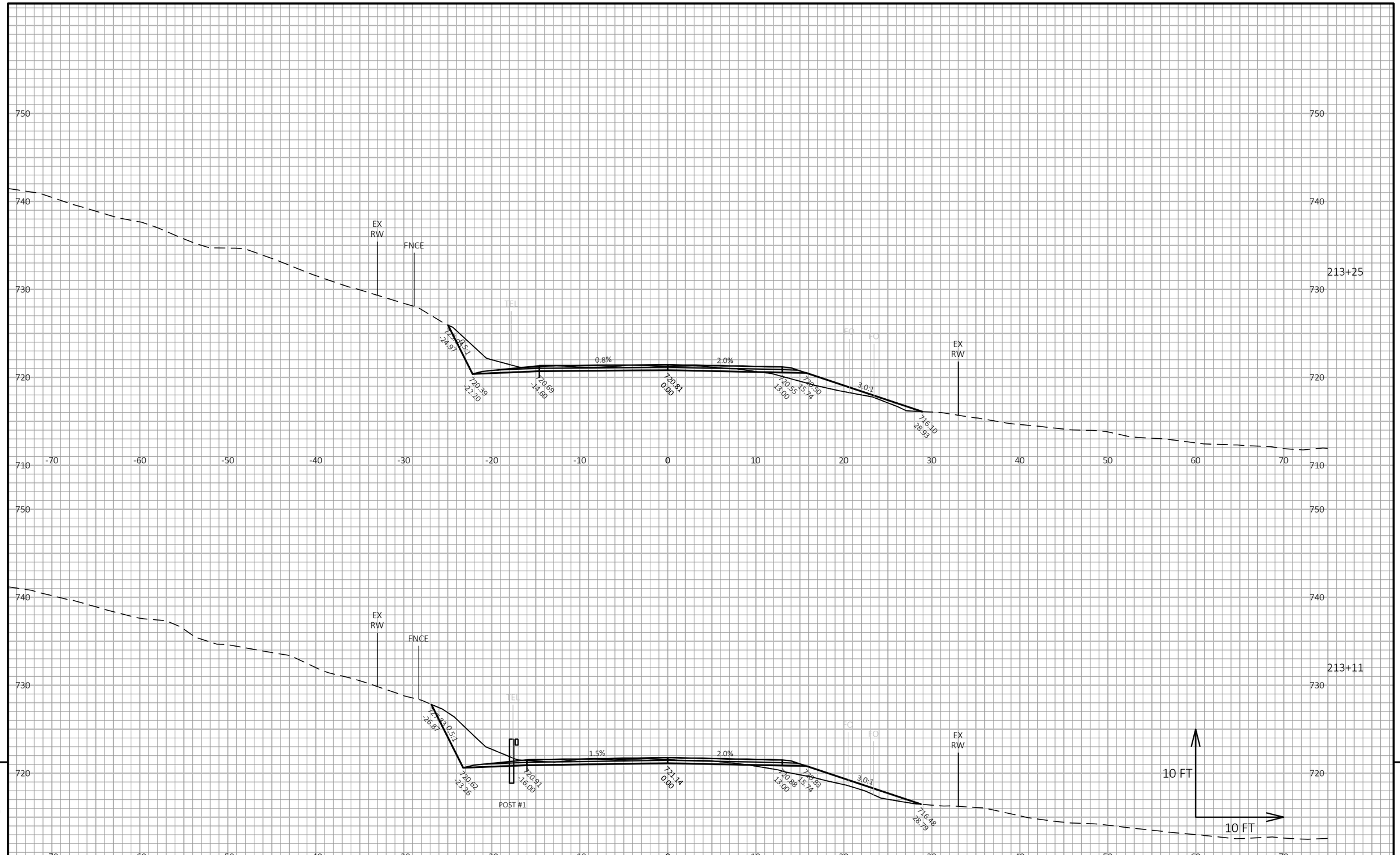

9

9

PROJECT NO: 5680-04-60	HWY: STH 60	COUNTY: SAUK	CROSS SECTIONS: STA. 203+62 TO STA. 214+00	SHEET	E

FILE NAME : N:\PDS\C3D\56800430\SHEETSPLAN\090101_XS_TREES.DWG
LAYOUT NAME - 16

PLOT DATE : 2/26/2019 11:14 AM PLOT BY : SCHUMAKER, NATHANIEL PLOT NAME : **PLOT SCALE :** 1 IN:10 FT HORZ. / 1 IN:10 FT VERT.

WISDOT/CADDS SHEET 49

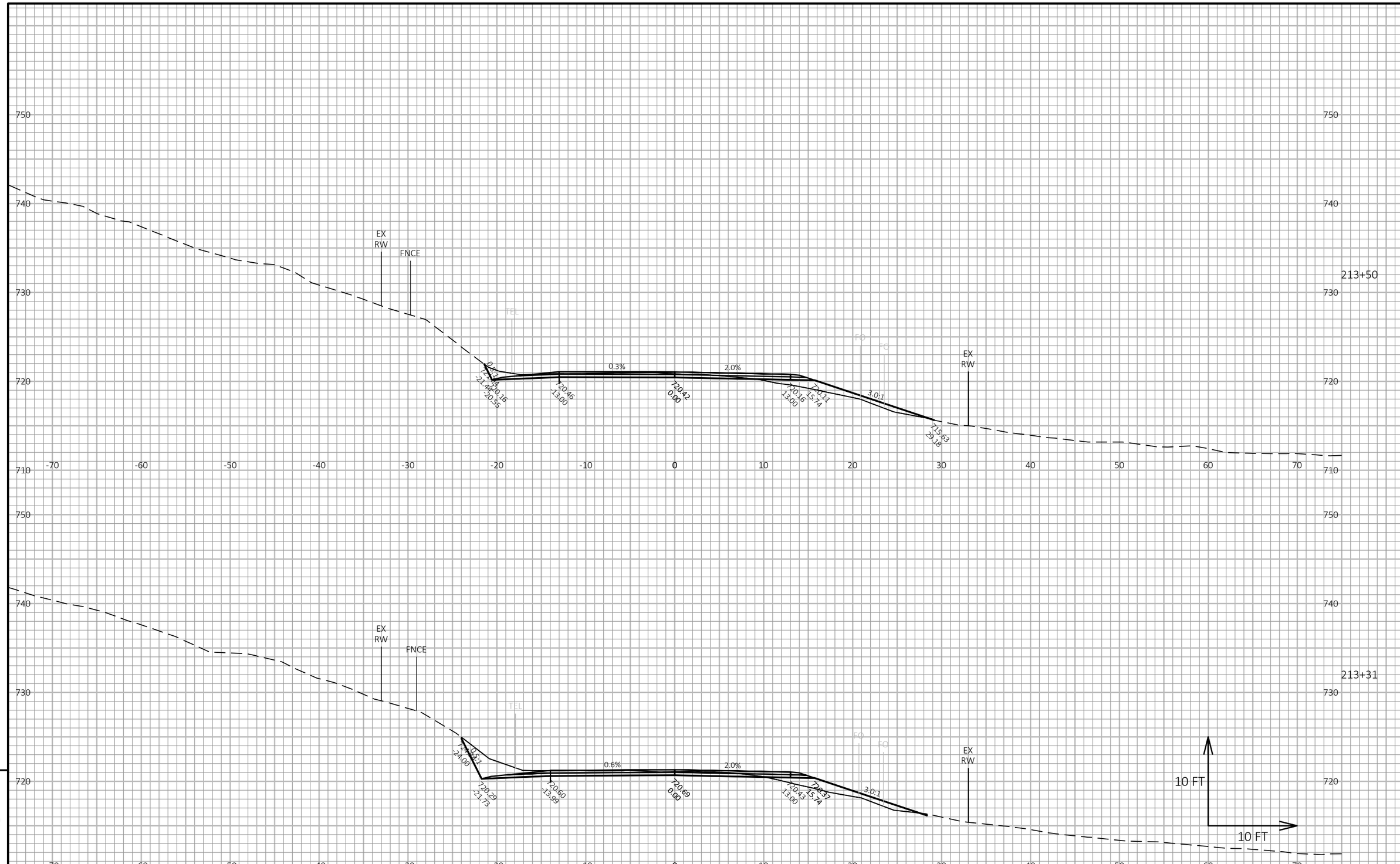

9

9

PROJECT NO: 5680-04-60	HWY: STH 60	COUNTY: SAUK	CROSS SECTIONS: STA. 203+62 TO STA. 214+00	SHEET	E

FILE NAME : N:\PDS\C3D\56800430\SHEETSPLAN\090101_XS_TREES.DWG
LAYOUT NAME - 17

PLOT DATE : 2/26/2019 11:14 AM PLOT BY : SCHUMAKER, NATHANIEL PLOT NAME : **PLOT SCALE :** 1 IN:10 FT HORZ. / 1 IN:10 FT VERT.

WISDOT/CADDS SHEET 49

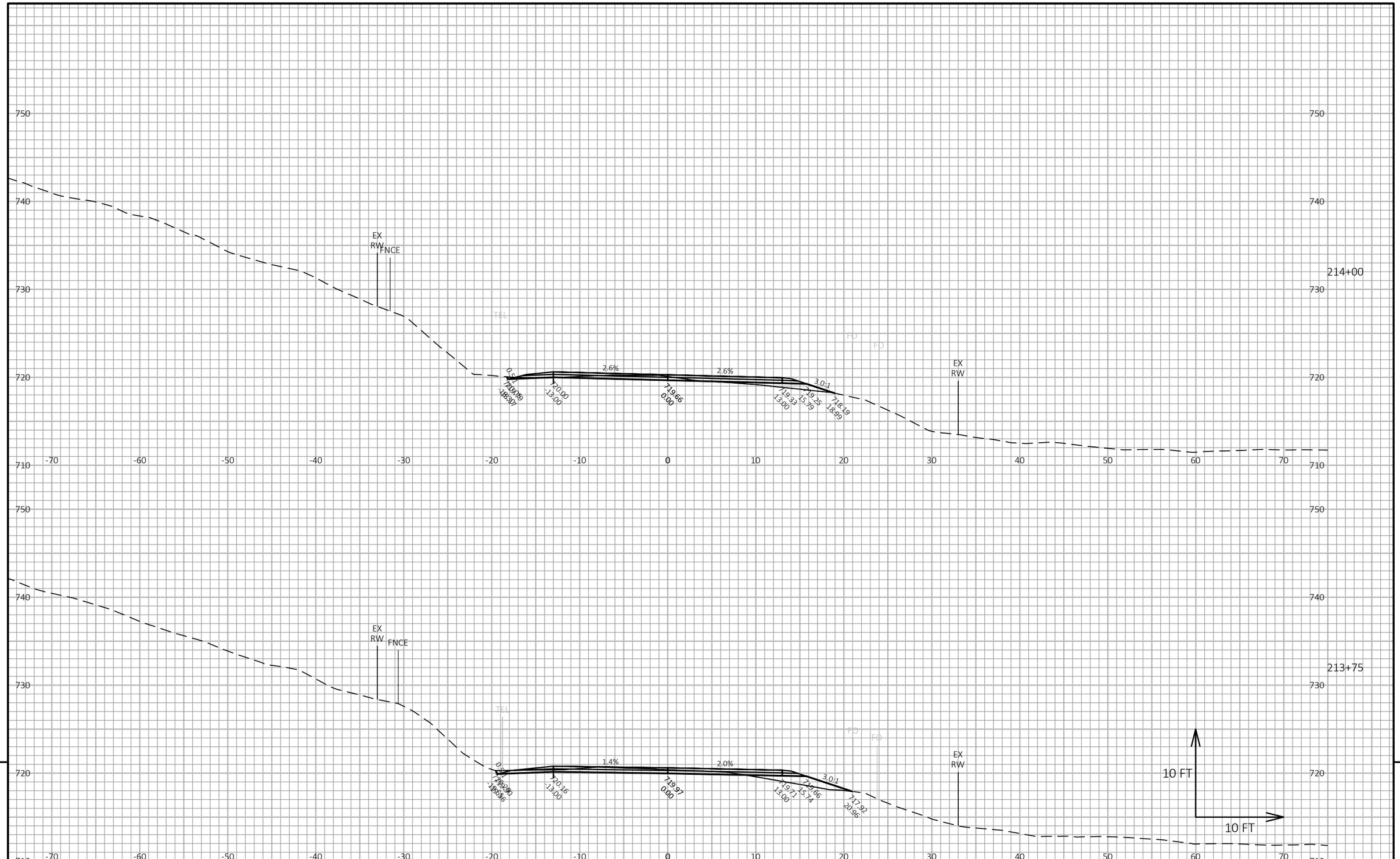

9

9

PROJECT NO: 5680-04-60	HWY: STH 60	COUNTY: SAUK	CROSS SECTIONS: STA. 203+62 TO STA. 214+00	SHEET	E

FILE NAME : N:\PDS\C3D\56800430\SHEETSPLAN\090101_XS_TREES.DWG
LAYOUT NAME - 18

PLOT DATE : 2/26/2019 11:14 AM PLOT BY : SCHUMAKER, NATHANIEL PLOT NAME :

PLOT SCALE : 1 IN:10 FT HORZ. / 1 IN:10 FT VERT.

WISDOT/CADDS SHEET 49

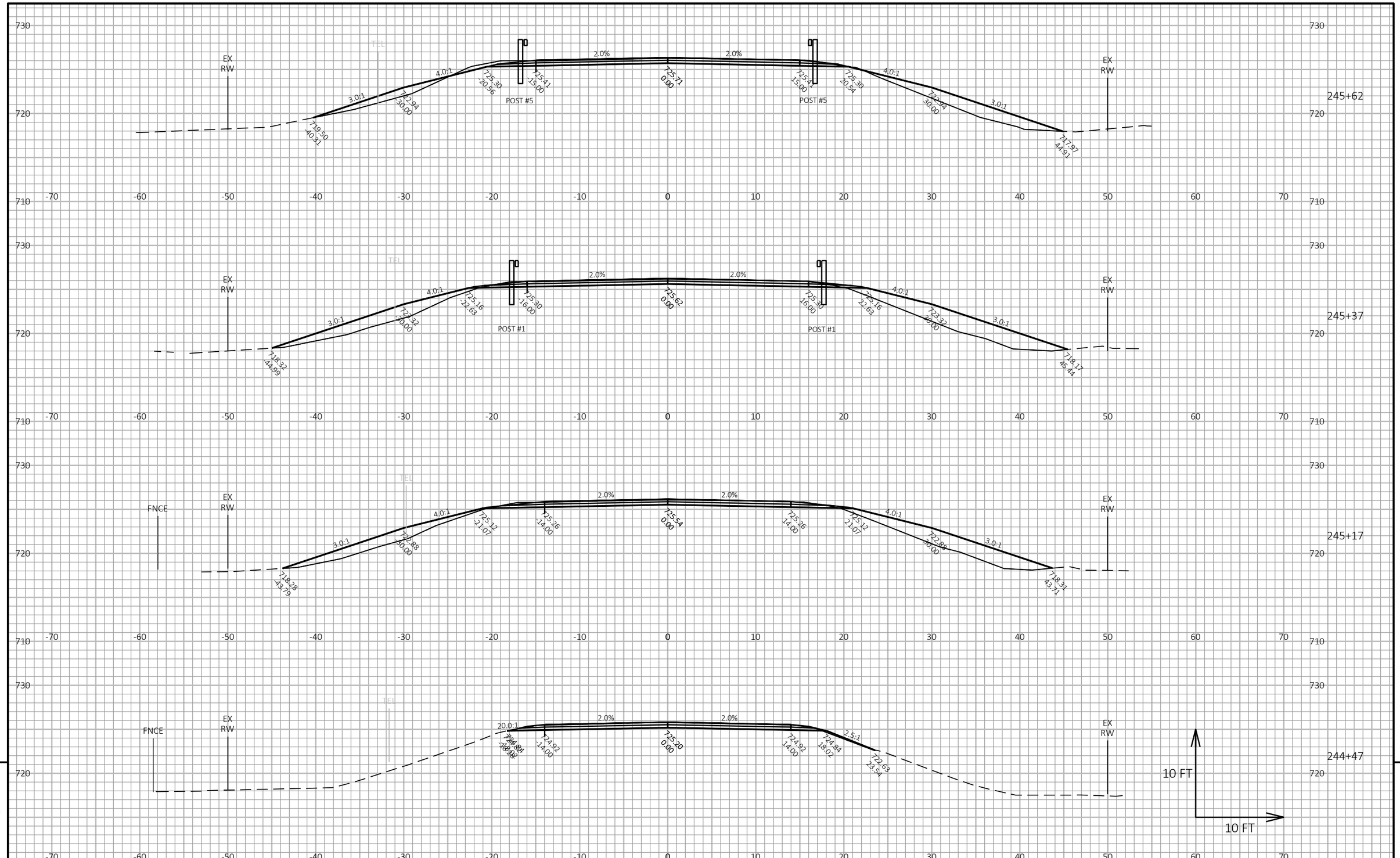

9

9

PROJECT NO: 5680-04-60	HWY: STH 60	COUNTY: SAUK	CROSS SECTIONS: B-56-0021	SHEET	E

FILE NAME : N:\PDS\C3D\56800430\SHEETSPLAN\090102_B-56-0021_XS.DWG
LAYOUT NAME - 01

PLOT DATE : 2/26/2019 11:39 AM

PLOT BY : SCHUMAKER, NATHANIEL

PLOT NAME :

PLOT SCALE : 1 IN:10 FT HORZ. / 1 IN:10 FT VERT.

WISDOT/CADDS SHEET 49

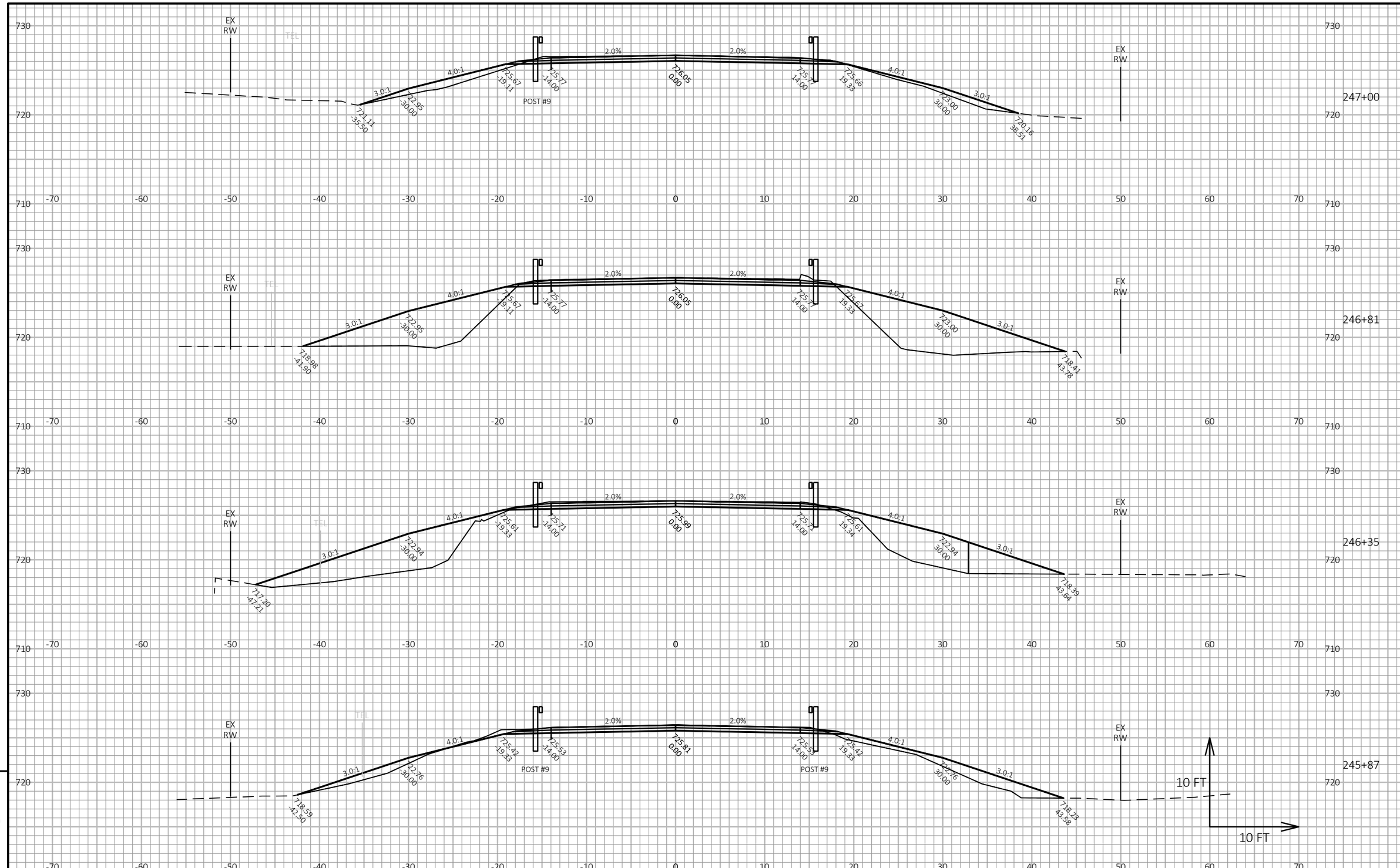

9

PROJECT NO: 5680-04-60	HWY: STH 60	COUNTY: SAUK	CROSS SECTIONS: B-56-0021	SHEET	E

FILE NAME : N:\PDS\C3D\56800430\SHEETSPLAN\090102_B-56-0021_XS.DWG
LAYOUT NAME - 02
PLOT DATE : 2/26/2019 11:40 AM
PLOT BY : SCHUMAKER, NATHANIEL
PLOT NAME :
PLOT SCALE : 1 IN:10 FT HORZ. / 1 IN:10 FT VERT.

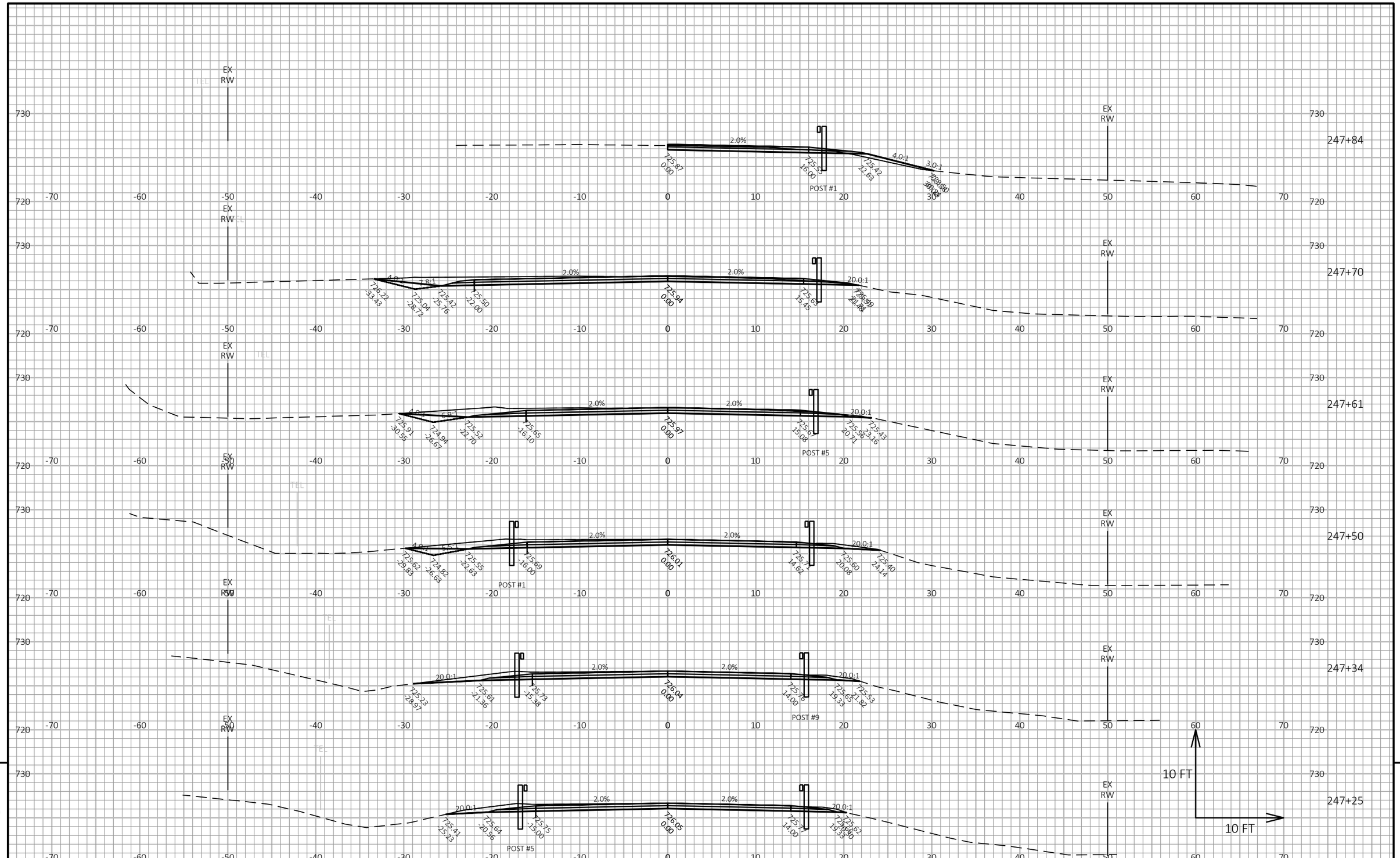

PROJECT NO: 5680-04-60	HWY: STH 60	COUNTY: SAUK	CROSS SECTIONS: B-56-0021	SHEET	E

FILE NAME : N:\PDS\C3D\56800430\SHEETSPLAN\090102_B-56-0021_XS.DWG
LAYOUT NAME - 03
PLOT DATE : 2/26/2019 11:40 AM
PLOT BY : SCHUMAKER, NATHANIEL
PLOT NAME :
PLOT SCALE : 1 IN:10 FT HORZ. / 1 IN:10 FT VERT.

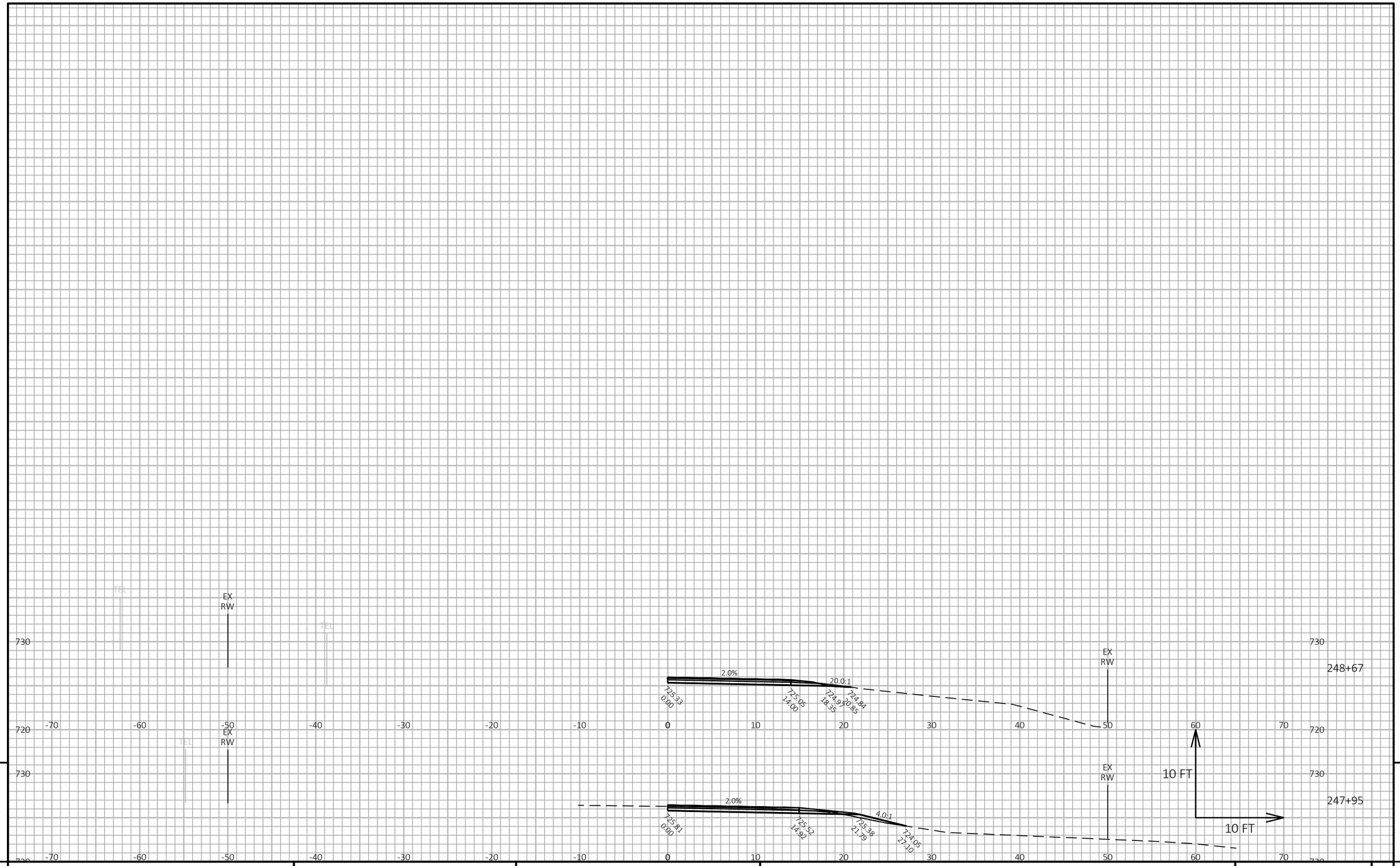

PROJECT NO: 5680-04-60	HWY: STH 60	COUNTY: SAUK	CROSS SECTIONS: B-56-0021	SHEET	E

FILE NAME : N:\PDS\C3D\56800430\SHEETSPLAN\090102_B-56-0021_XS.DWG
LAYOUT NAME - 04
PLOT DATE : 2/26/2019 11:40 AM
PLOT BY : SCHUMAKER, NATHANIEL
PLOT NAME :
PLOT SCALE : 1 IN:10 FT HORZ. / 1 IN:10 FT VERT.
WISDOT/CADDS SHEET 49

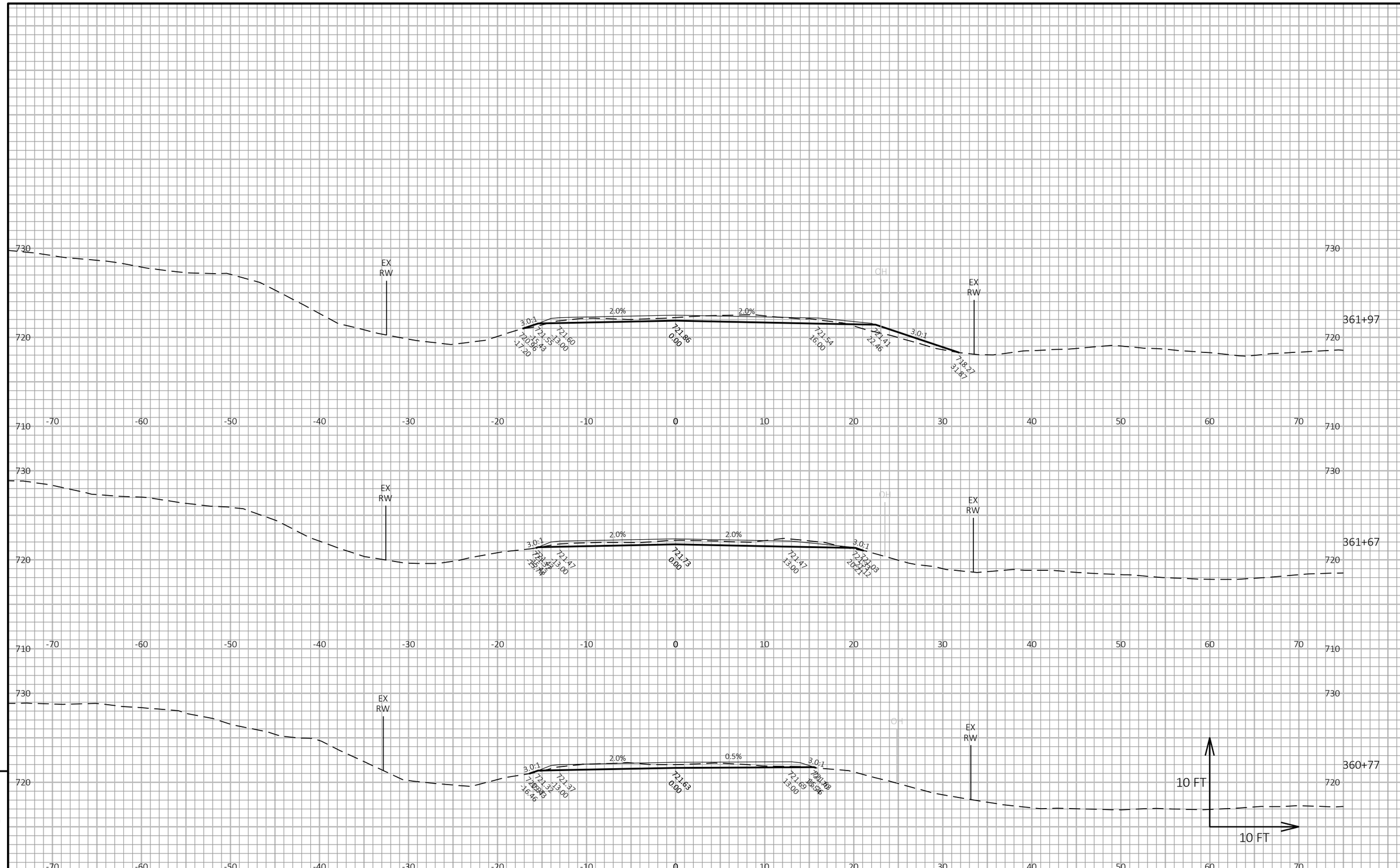

9

PROJECT NO: 5680-04-60	HWY: STH 60	COUNTY: SAUK	CROSS SECTIONS: STA. 360+77 TO STA. 377+74	SHEET	E

FILE NAME : N:\PDS\C3D\56800430\SHEETSPLAN\090103_XS_SHEETS.DWG
LAYOUT NAME - 01
PLOT DATE : 2/27/2019 10:10 AM
PLOT BY : SCHUMAKER, NATHANIEL
PLOT NAME :
PLOT SCALE : 1 IN:10 FT HORZ. / 1 IN:10 FT VERT.
WISDOT/CADDS SHEET 49

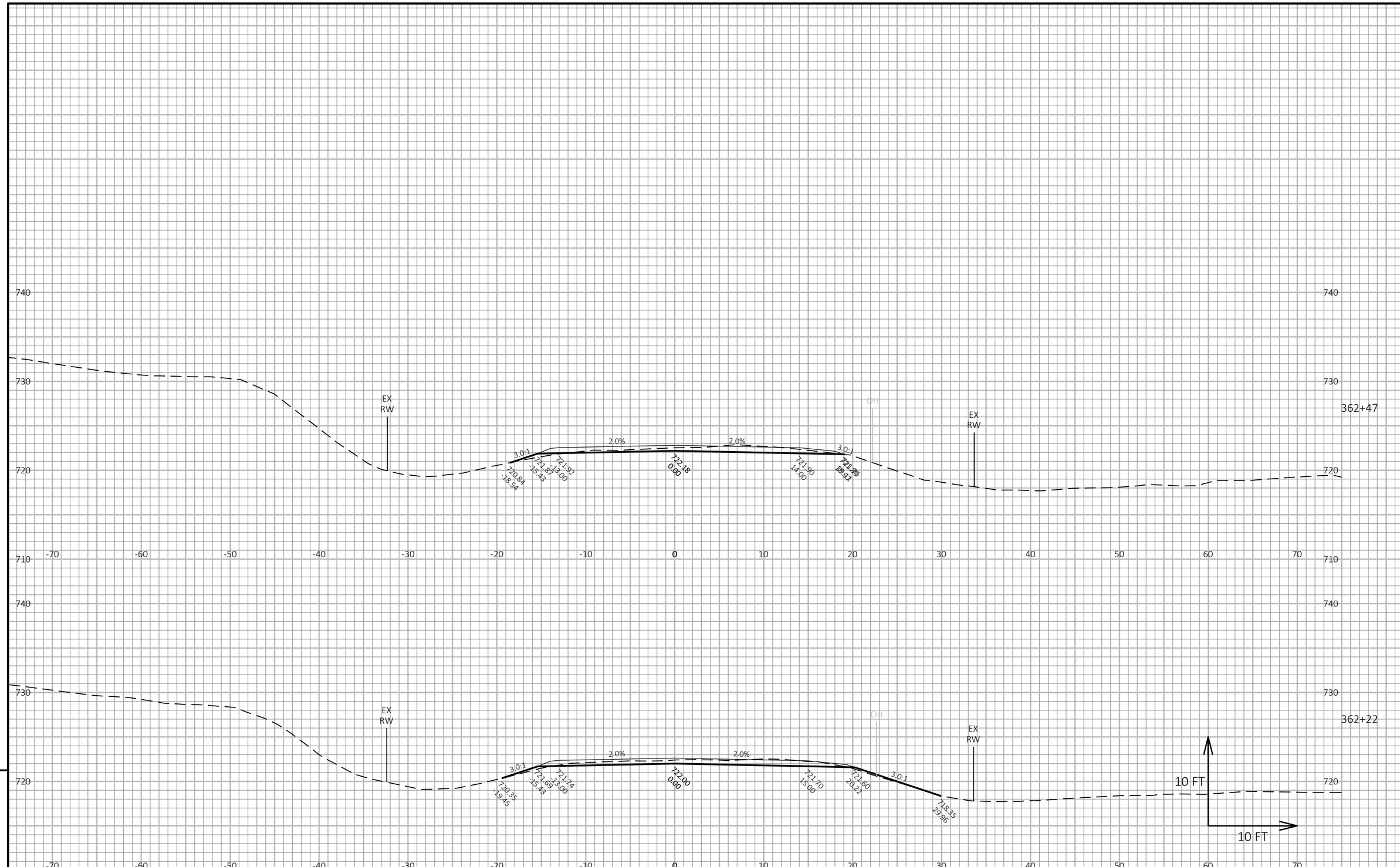

9

PROJECT NO: 5680-04-60	HWY: STH 60	COUNTY: SAUK	CROSS SECTIONS: STA. 360+77 TO STA. 377+74	SHEET	E

FILE NAME : N:\PDS\C3D\56800430\SHEETSPLAN\090103_XS_SHEETS.DWG
LAYOUT NAME - 02
PLOT DATE : 2/27/2019 10:10 AM
PLOT BY : SCHUMAKER, NATHANIEL
PLOT NAME :
PLOT SCALE : 1 IN:10 FT HORZ. / 1 IN:10 FT VERT.
WISDOT/CADDS SHEET 49

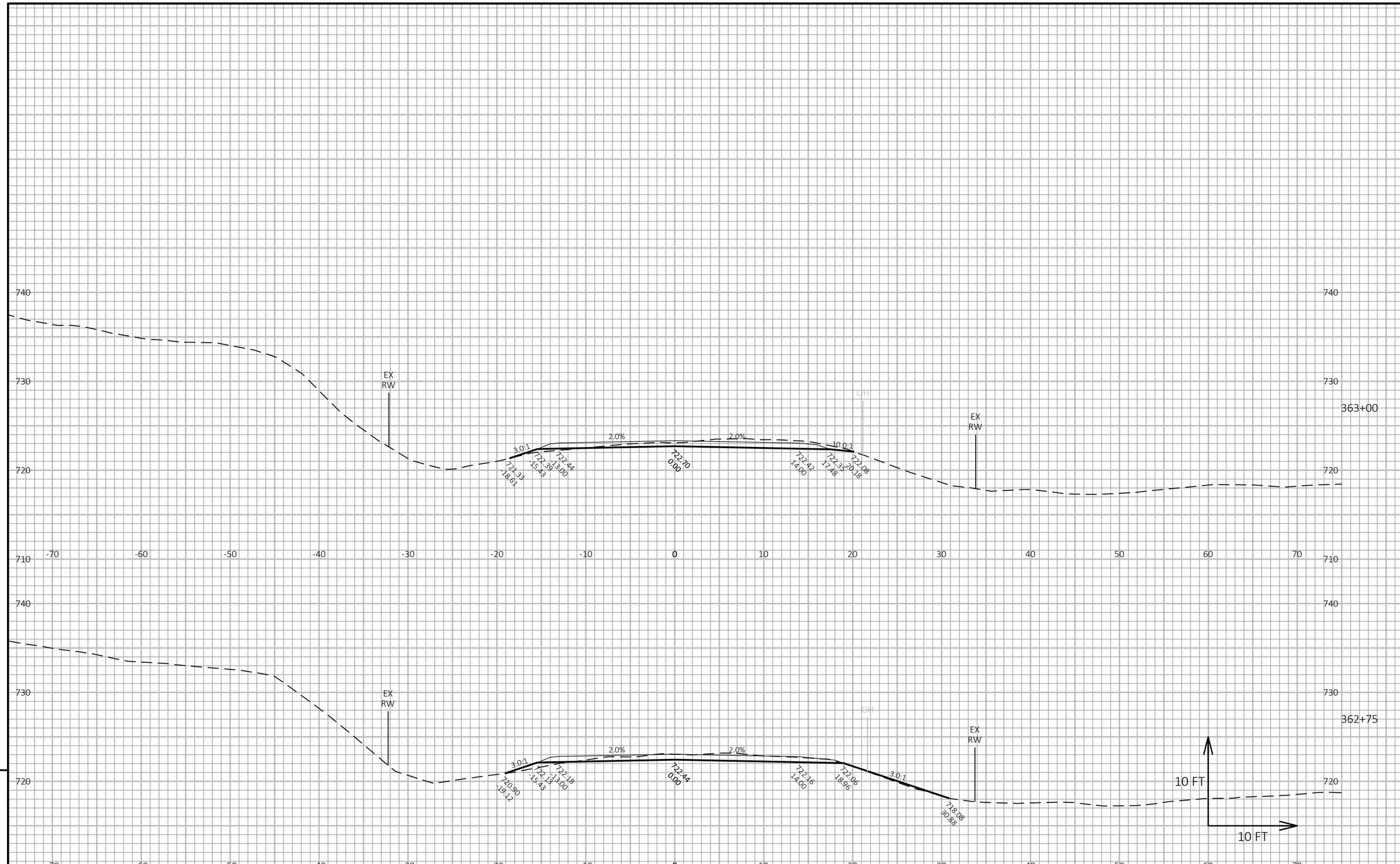

PROJECT NO: 5680-04-60	HWY: STH 60	COUNTY: SAUK	CROSS SECTIONS: STA. 360+77 TO STA. 377+74	SHEET	E

FILE NAME : N:\PDS\C3D\56800430\SHEETSPLAN\090103_XS_SHEETS.DWG
LAYOUT NAME - 03
PLOT DATE : 2/27/2019 10:10 AM
PLOT BY : SCHUMAKER, NATHANIEL
PLOT NAME :
PLOT SCALE : 1 IN:10 FT HORZ. / 1 IN:10 FT VERT.
WISDOT/CADDS SHEET 49

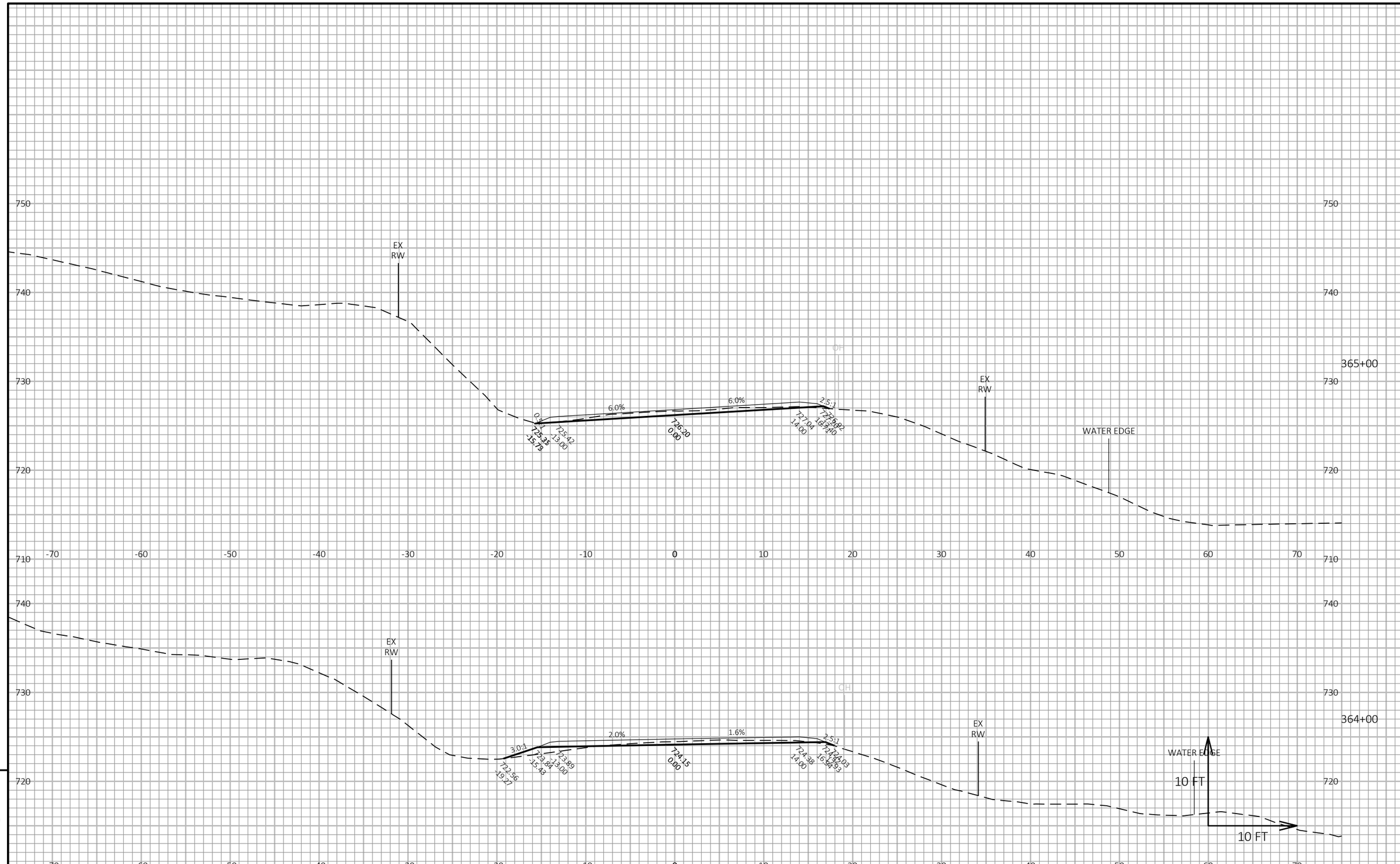

PROJECT NO: 5680-04-60	HWY: STH 60	COUNTY: SAUK	CROSS SECTIONS: STA. 360+77 TO STA. 377+74	SHEET	E

FILE NAME : N:\PDS\C3D\56800430\SHEETSPLAN\090103_XS_SHEETS.DWG
LAYOUT NAME - 04
PLOT DATE : 2/27/2019 10:10 AM
PLOT BY : SCHUMAKER, NATHANIEL
PLOT NAME :
PLOT SCALE : 1 IN:10 FT HORZ. / 1 IN:10 FT VERT.
WISDOT/CADDS SHEET 49

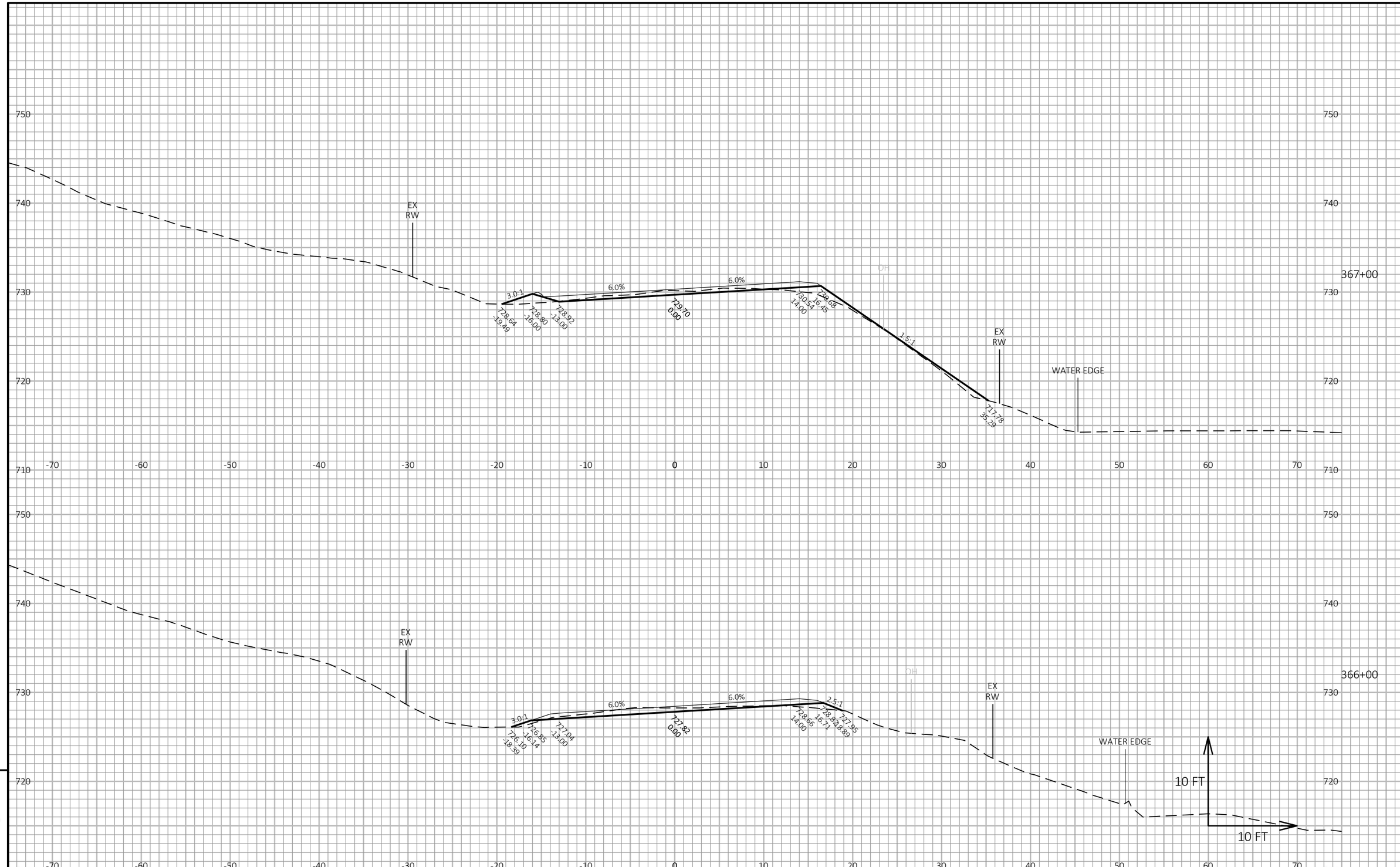

PROJECT NO: 5680-04-60	HWY: STH 60	COUNTY: SAUK	CROSS SECTIONS: STA. 360+77 TO STA. 377+74	SHEET	E

FILE NAME : N:\PDS\C3D\56800430\SHEETSPLAN\090103_XS_SHEETS.DWG
LAYOUT NAME - 05
PLOT DATE : 2/27/2019 10:10 AM
PLOT BY : SCHUMAKER, NATHANIEL
PLOT NAME :
PLOT SCALE : 1 IN:10 FT HORZ. / 1 IN:10 FT VERT.

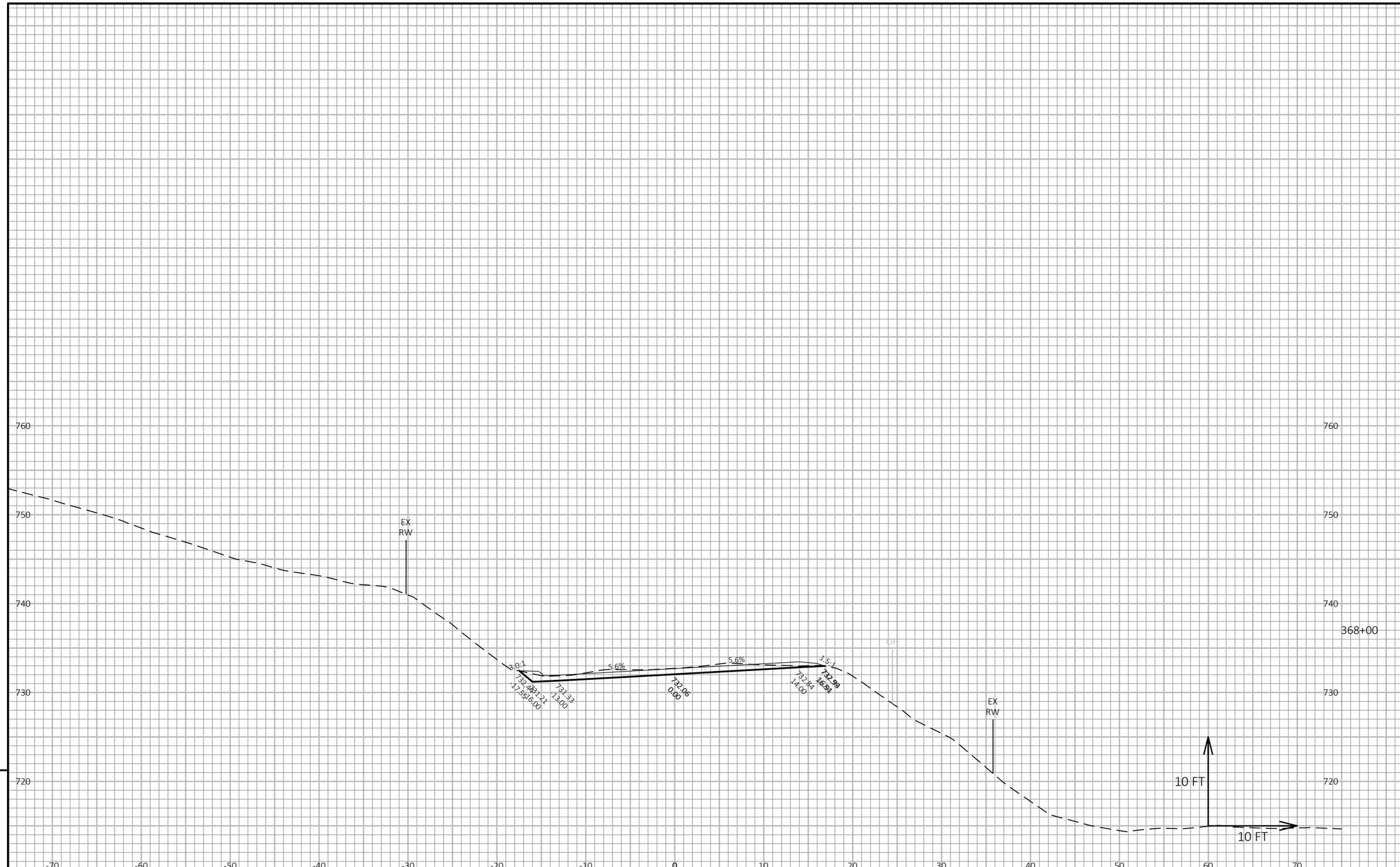

9

9

PROJECT NO: 5680-04-60	HWY: STH 60	COUNTY: SAUK	CROSS SECTIONS: STA. 360+77 TO STA. 377+74	SHEET	E

FILE NAME : N:\PDS\C3D\56800430\SHEETSPLAN\090103_XS_SHEETS.DWG
LAYOUT NAME - 06

PLOT DATE : 2/27/2019 10:10 AM PLOT BY : SCHUMAKER, NATHANIEL PLOT NAME :

PLOT SCALE : 1 IN:10 FT HORZ. / 1 IN:10 FT VERT.

WISDOT/CADDS SHEET 49

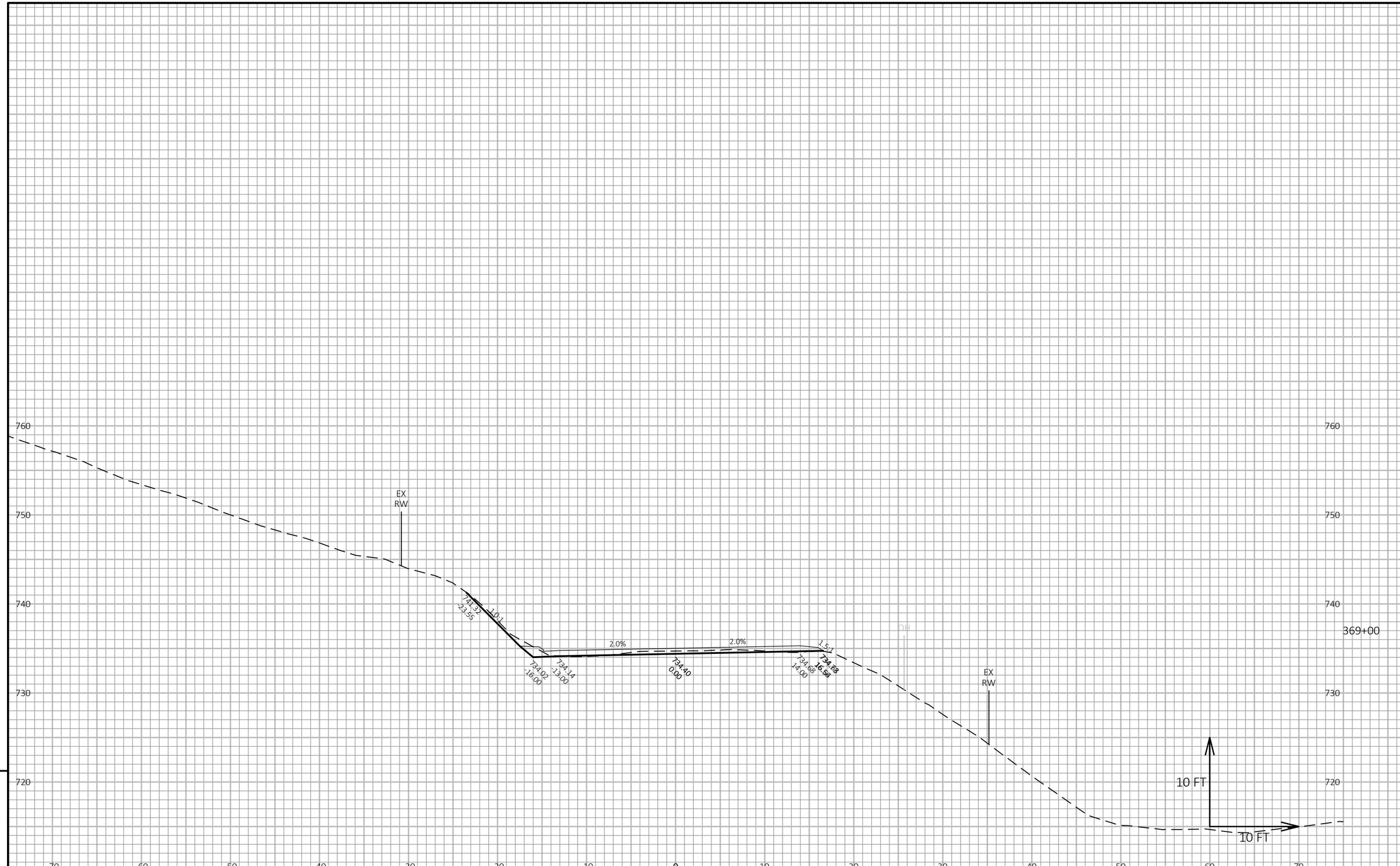

9

9

PROJECT NO: 5680-04-60	HWY: STH 60	COUNTY: SAUK	CROSS SECTIONS: STA. 360+77 TO STA. 377+74	SHEET	E

FILE NAME : N:\PDS\C3D\56800430\SHEETSPLAN\090103_XS_SHEETS.DWG
LAYOUT NAME - 07

PLOT DATE : 2/27/2019 10:10 AM PLOT BY : SCHUMAKER, NATHANIEL PLOT NAME :

PLOT SCALE : 1 IN:10 FT HORZ. / 1 IN:10 FT VERT.

WISDOT/CADDS SHEET 49

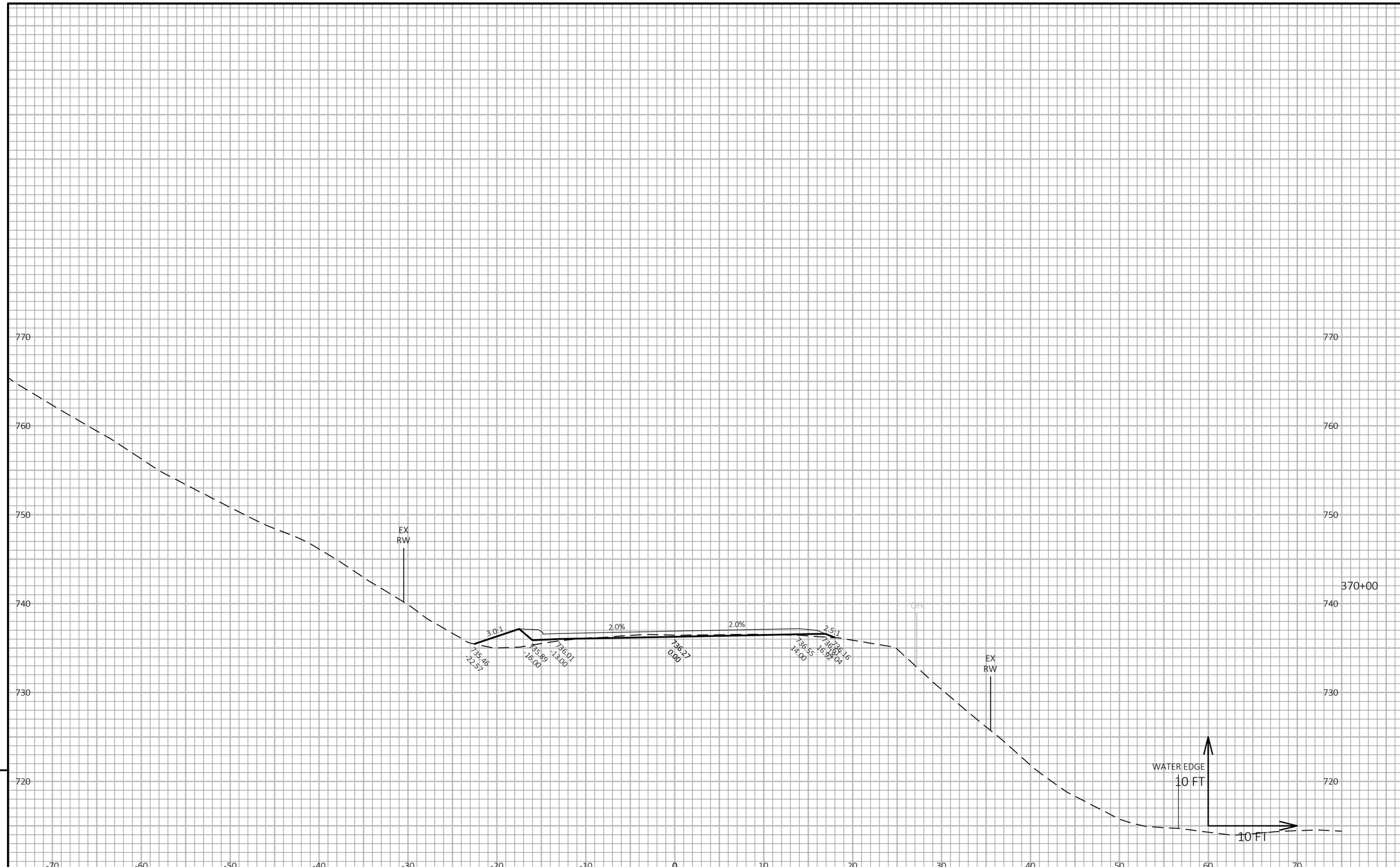

9

9

PROJECT NO: 5680-04-60	HWY: STH 60	COUNTY: SAUK	CROSS SECTIONS: STA. 360+77 TO STA. 377+74	SHEET	E

FILE NAME : N:\PDS\C3D\56800430\SHEETSPLAN\090103_XS_SHEETS.DWG
LAYOUT NAME - 08
PLOT DATE : 2/27/2019 10:10 AM
PLOT BY : SCHUMAKER, NATHANIEL
PLOT NAME :
PLOT SCALE : 1 IN:10 FT HORZ. / 1 IN:10 FT VERT.

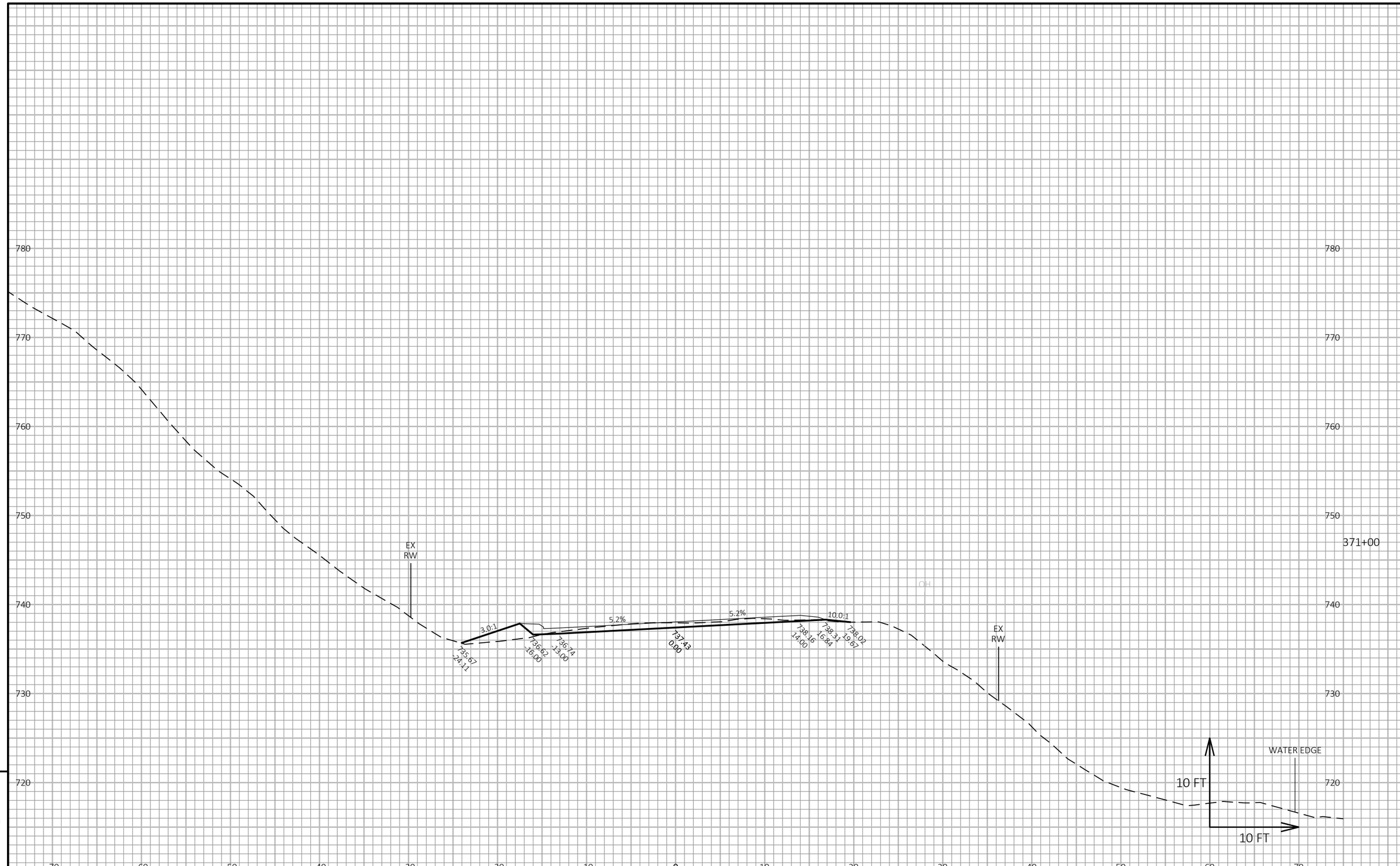

9

9

PROJECT NO: 5680-04-60	HWY: STH 60	COUNTY: SAUK	CROSS SECTIONS: STA. 360+77 TO STA. 377+74	SHEET	E

FILE NAME : N:\PDS\C3D\56800430\SHEETSPLAN\090103_XS_SHEETS.DWG
LAYOUT NAME - 09

PLOT DATE : 2/27/2019 10:10 AM PLOT BY : SCHUMAKER, NATHANIEL PLOT NAME : **PLOT SCALE :** 1 IN:10 FT HORZ. / 1 IN:10 FT VERT.

WISDOT/CADDS SHEET 49

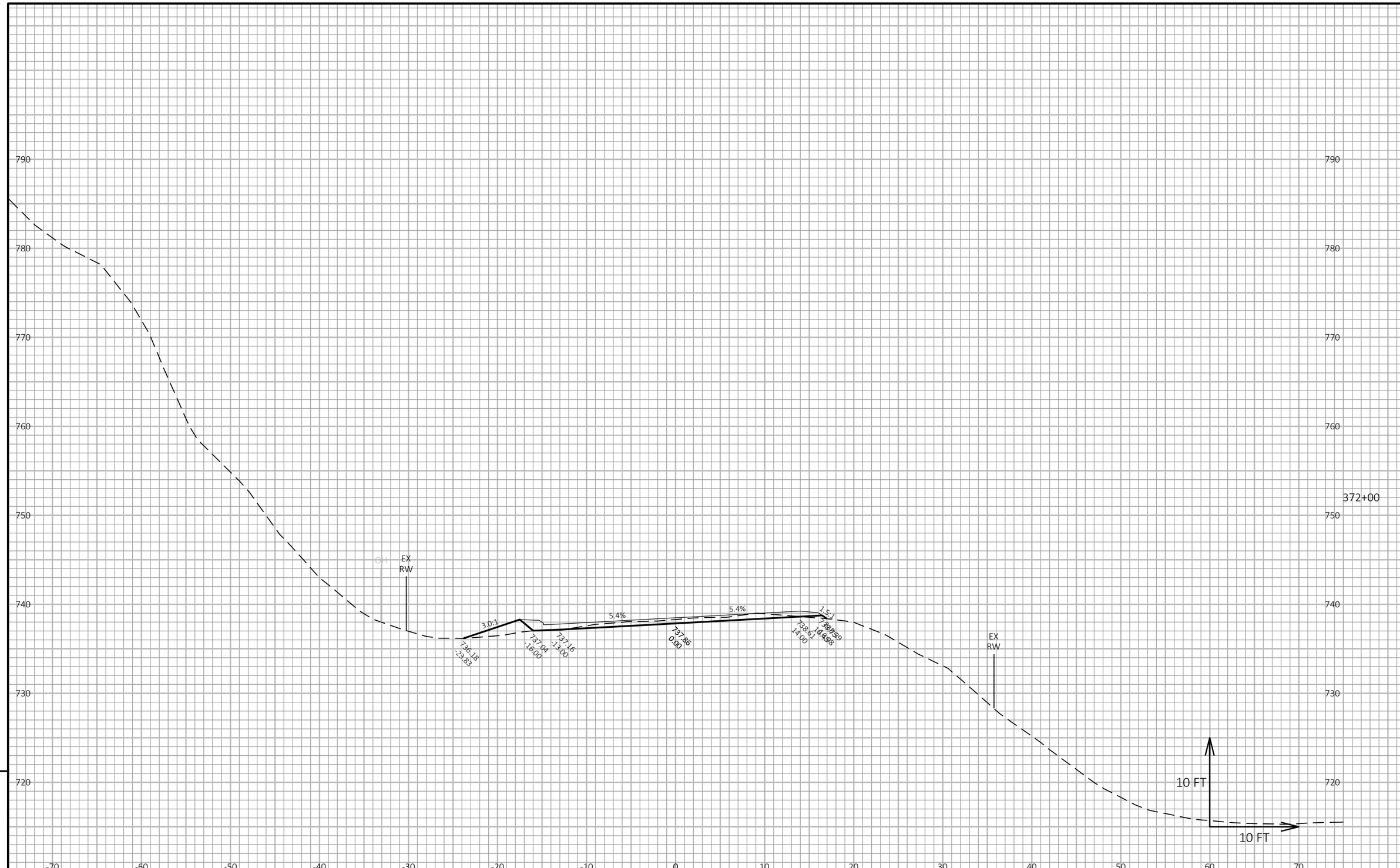

9

9

PROJECT NO: 5680-04-60	HWY: STH 60	COUNTY: SAUK	CROSS SECTIONS: STA. 360+77 TO STA. 377+74	SHEET	E

FILE NAME : N:\PDS\C3D\56800430\SHEETSPLAN\090103_XS_SHEETS.DWG
LAYOUT NAME - 10

PLOT DATE : 2/27/2019 10:10 AM PLOT BY : SCHUMAKER, NATHANIEL PLOT NAME : PLOT SCALE : 1 IN:10 FT HORZ. / 1 IN:10 FT VERT.

WISDOT/CADDS SHEET 49

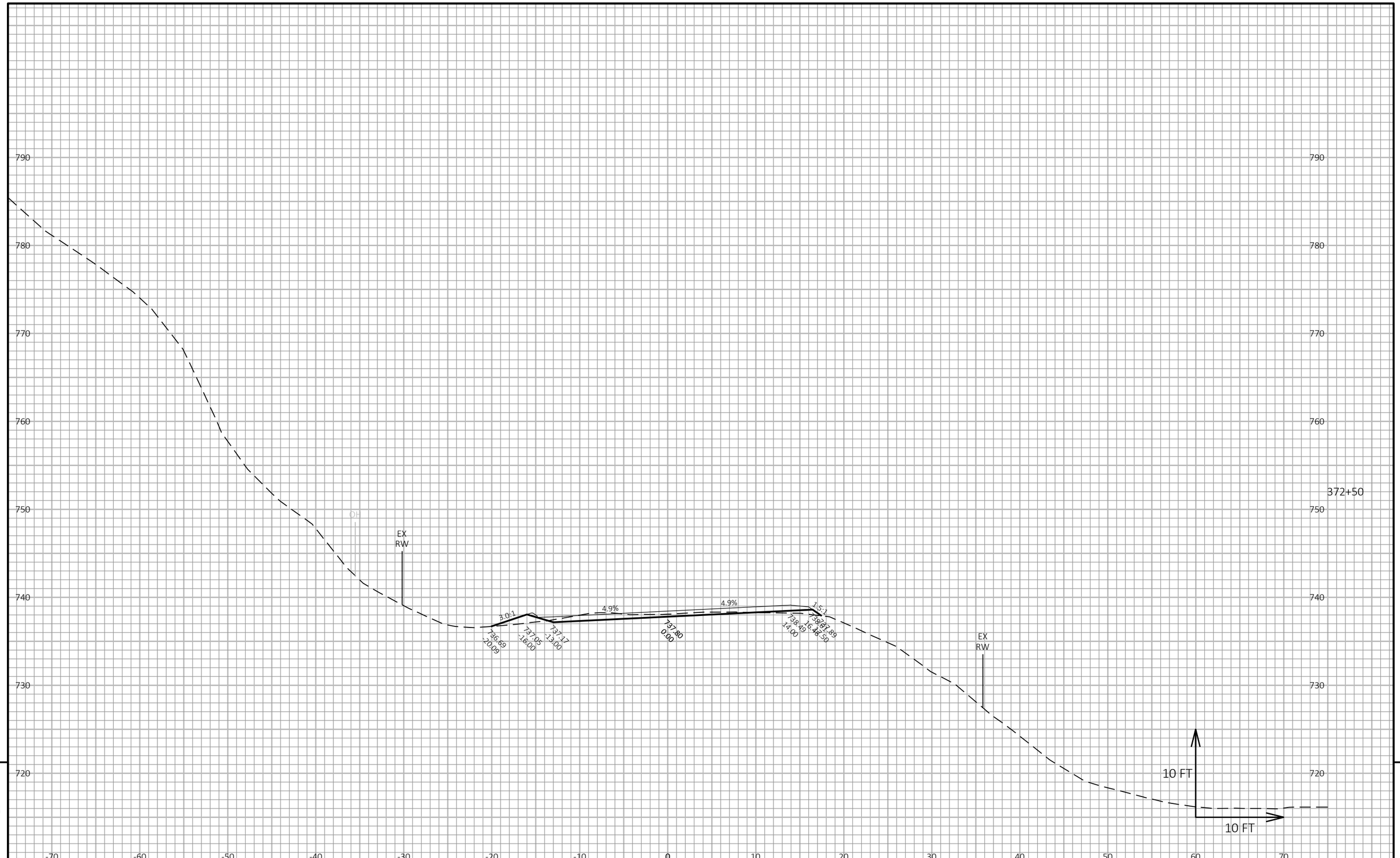

9

9

PROJECT NO: 5680-04-60	HWY: STH 60	COUNTY: SAUK	CROSS SECTIONS: STA. 360+77 TO STA. 377+74	SHEET	E

FILE NAME : N:\PDS\C3D\56800430\SHEETSPLAN\090103_XS_SHEETS.DWG
LAYOUT NAME - 11

PLOT DATE : 2/27/2019 10:10 AM

PLOT BY : SCHUMAKER, NATHANIEL

PLOT NAME :

PLOT SCALE : 1 IN:10 FT HORZ. / 1 IN:10 FT VERT.

WISDOT/CADDS SHEET 49

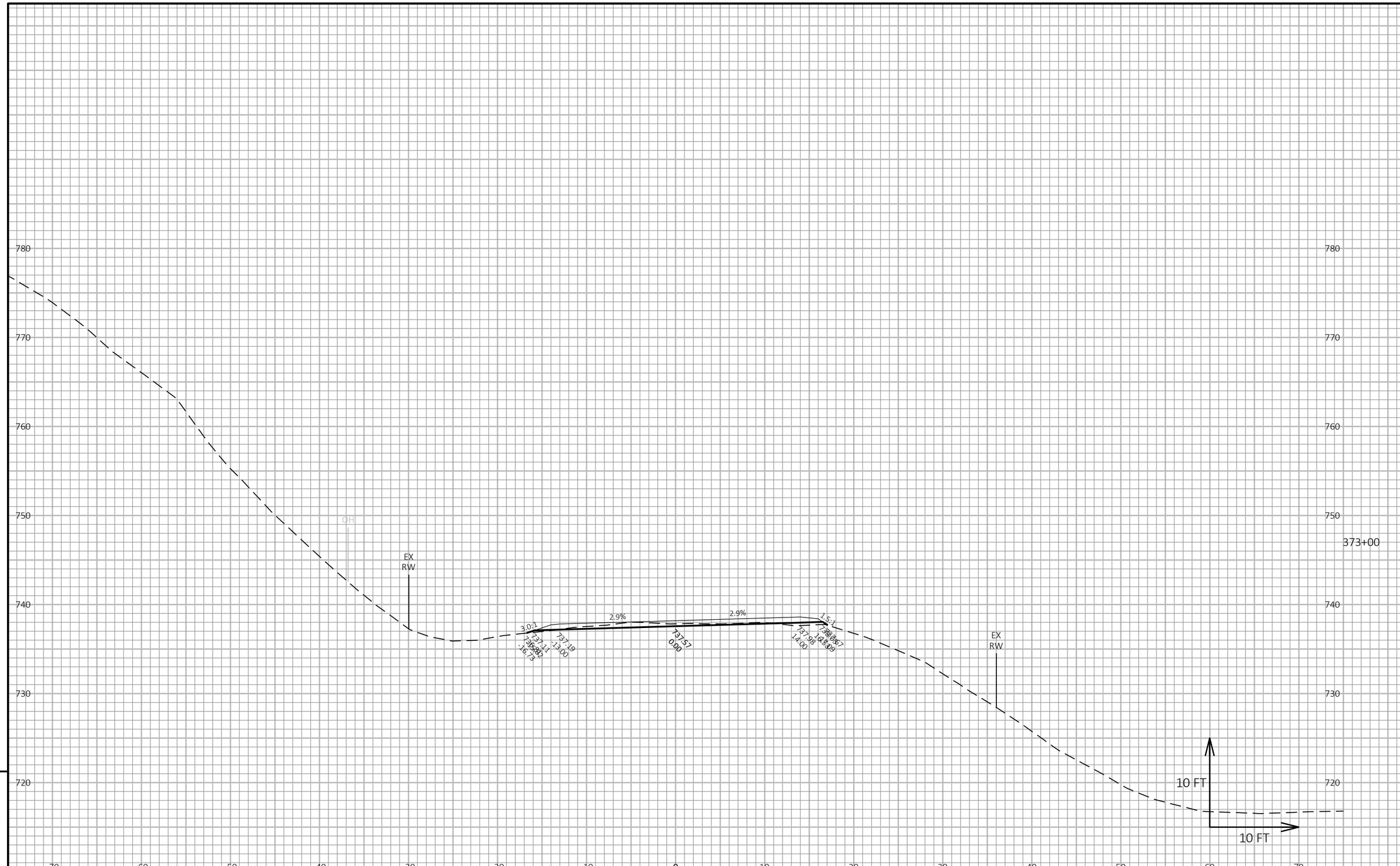

9

9

PROJECT NO: 5680-04-60	HWY: STH 60	COUNTY: SAUK	CROSS SECTIONS: STA. 360+77 TO STA. 377+74	SHEET	E

FILE NAME : N:\PDS\C3D\56800430\SHEETSPLAN\090103_XS_SHEETS.DWG
LAYOUT NAME - 12

PLOT DATE : 2/27/2019 10:10 AM PLOT BY : SCHUMAKER, NATHANIEL PLOT NAME : **PLOT SCALE :** 1 IN:10 FT HORZ. / 1 IN:10 FT VERT.

WISDOT/CADDS SHEET 49

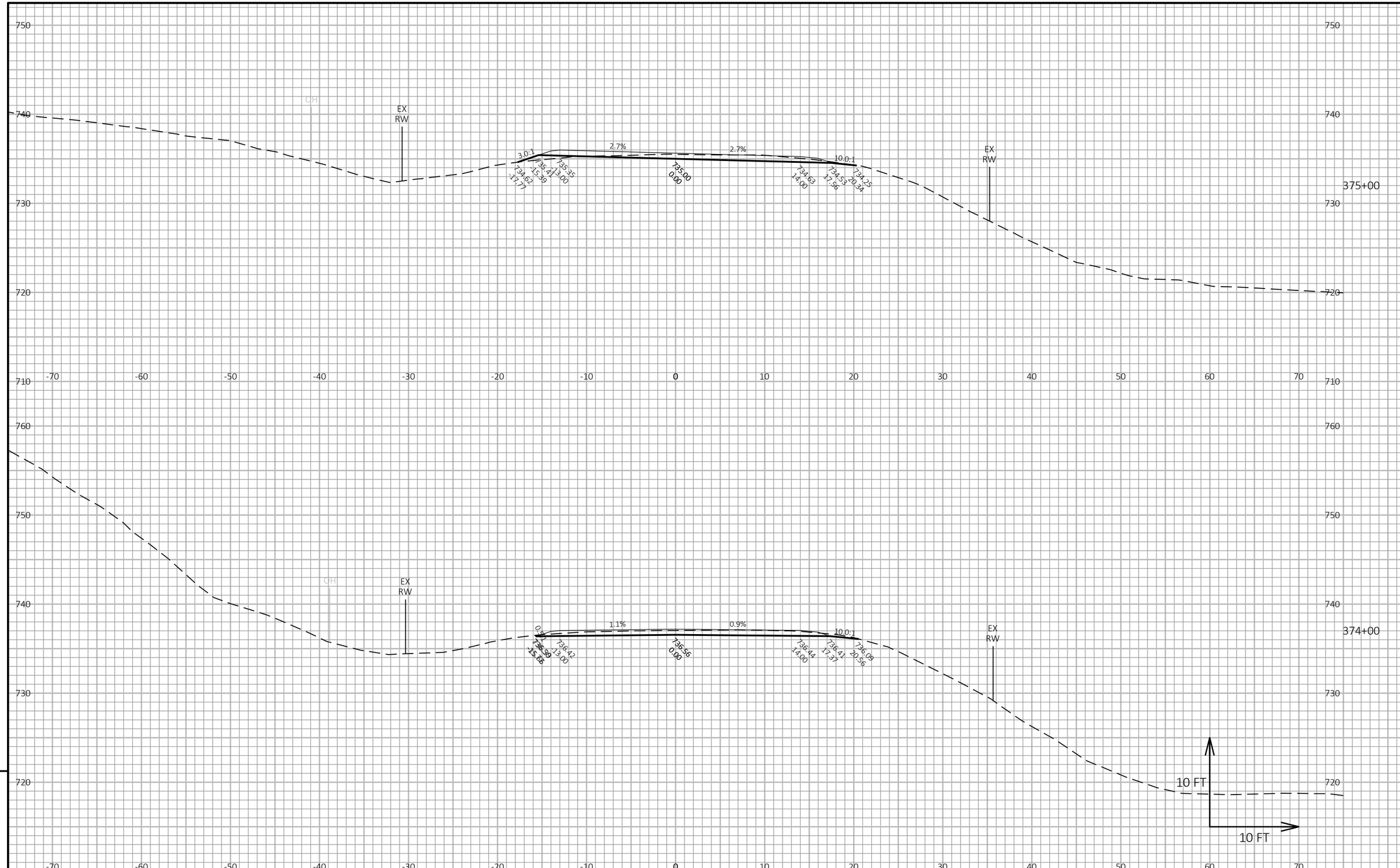

9

PROJECT NO: 5680-04-60	HWY: STH 60	COUNTY: SAUK	CROSS SECTIONS: STA. 360+77 TO STA. 377+74	SHEET	E

FILE NAME : N:\PDS\C3D\56800430\SHEETSPLAN\090103_XS_SHEETS.DWG
LAYOUT NAME - 13
PLOT DATE : 2/27/2019 10:11 AM
PLOT BY : SCHUMAKER, NATHANIEL
PLOT NAME :
PLOT SCALE : 1 IN:10 FT HORZ. / 1 IN:10 FT VERT.
WISDOT/CADDS SHEET 49

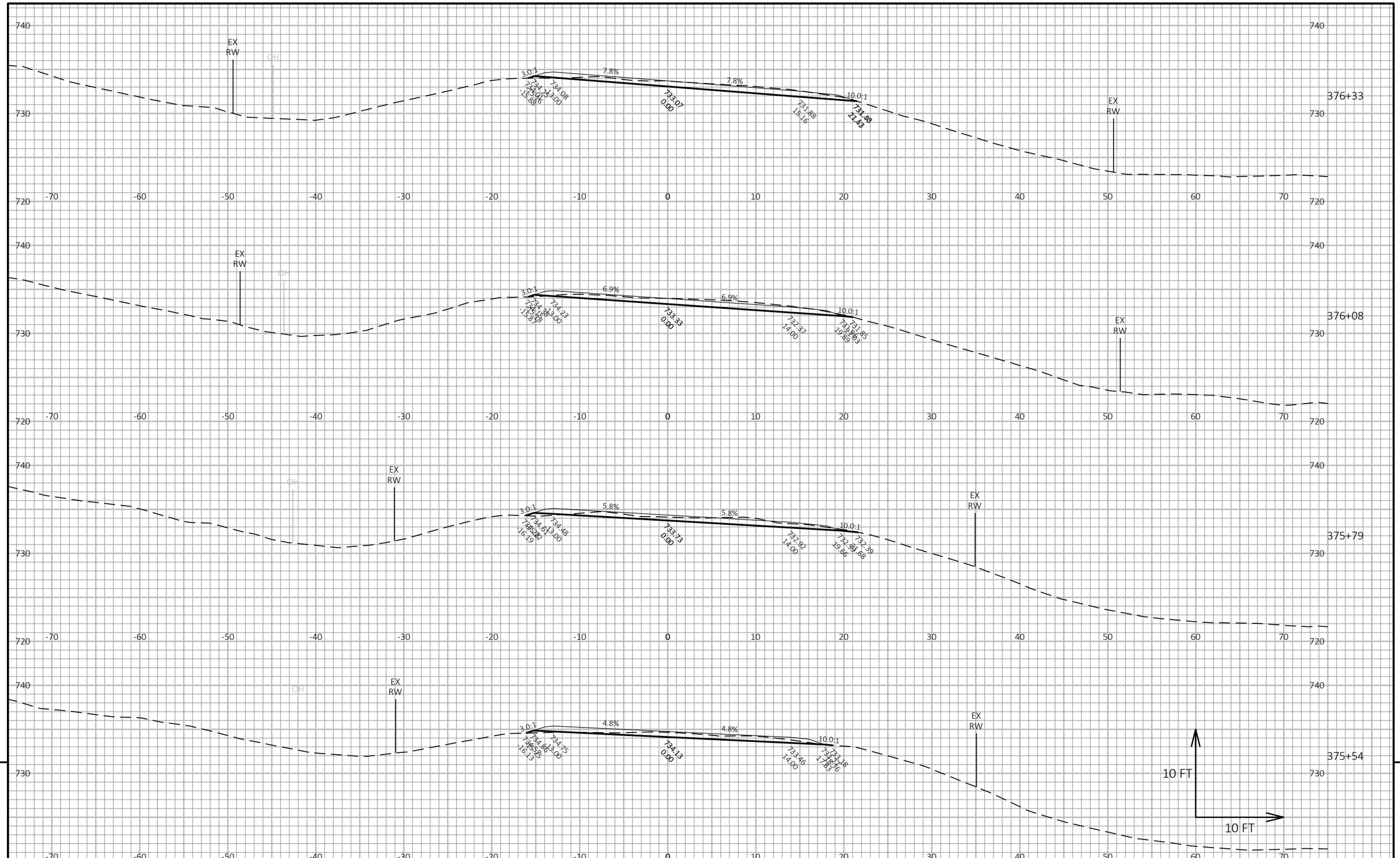

PROJECT NO: 5680-04-60	HWY: STH 60	COUNTY: SAUK	CROSS SECTIONS: STA. 360+77 TO STA. 377+74	SHEET	E

FILE NAME : N:\PDS\C3D\56800430\SHEETSPLAN\090103_XS_SHEETS.DWG
LAYOUT NAME - 14
PLOT DATE : 2/27/2019 10:11 AM
PLOT BY : SCHUMAKER, NATHANIEL
PLOT NAME :
PLOT SCALE : 1 IN:10 FT HORZ. / 1 IN:10 FT VERT.
WISDOT/CADDS SHEET 49

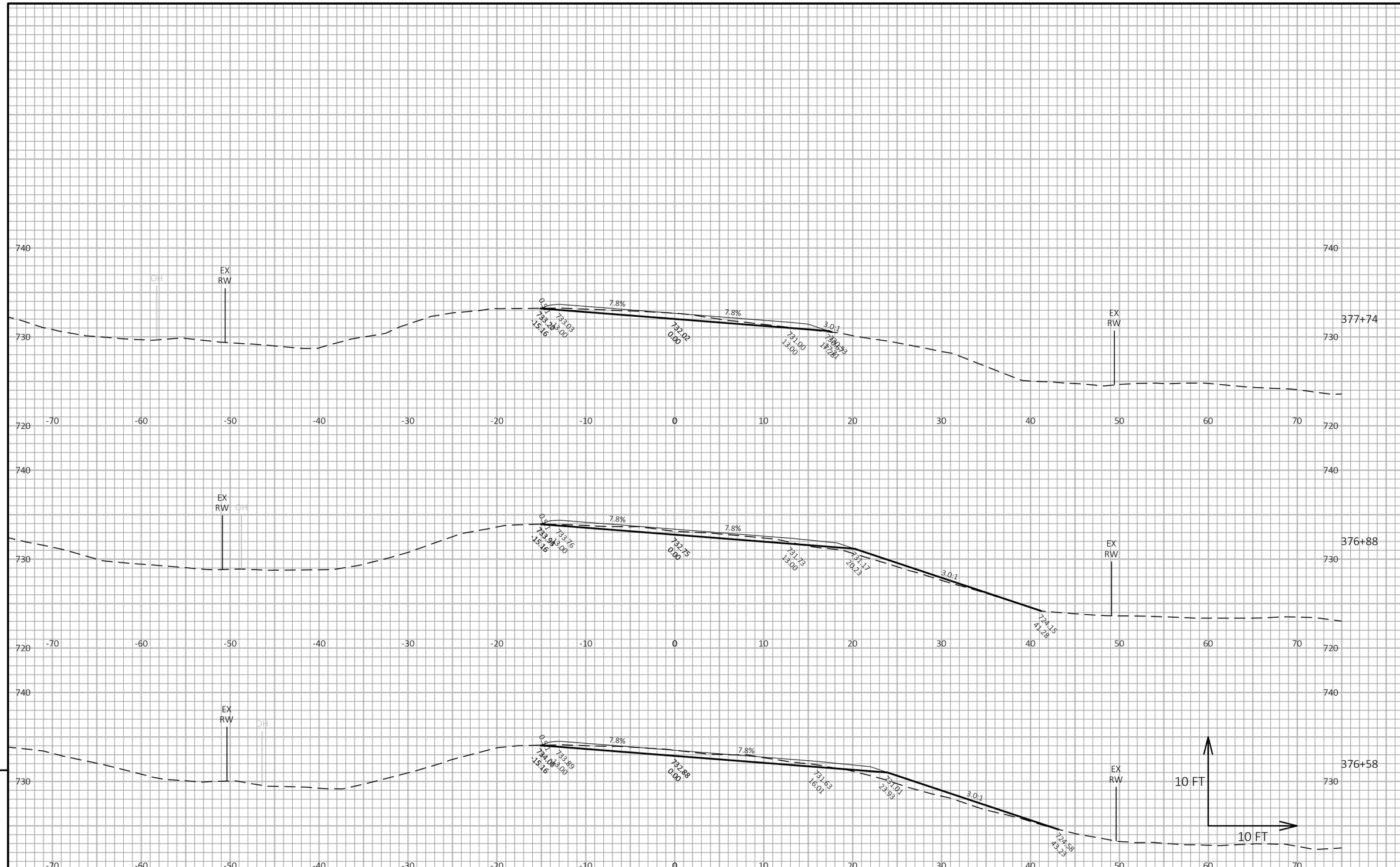

9

PROJECT NO: 5680-04-60	HWY: STH 60	COUNTY: SAUK	CROSS SECTIONS: STA. 360+77 TO STA. 377+74	SHEET	E

FILE NAME : N:\PDS\C3D\56800430\SHEETSPLAN\090103_XS_SHEETS.DWG
LAYOUT NAME - 15

PLOT DATE : 2/27/2019 10:11 AM PLOT BY : SCHUMAKER, NATHANIEL PLOT NAME : PLOT SCALE : 1 IN:10 FT HORZ. / 1 IN:10 FT VERT.

WISDOT/CADDS SHEET 49

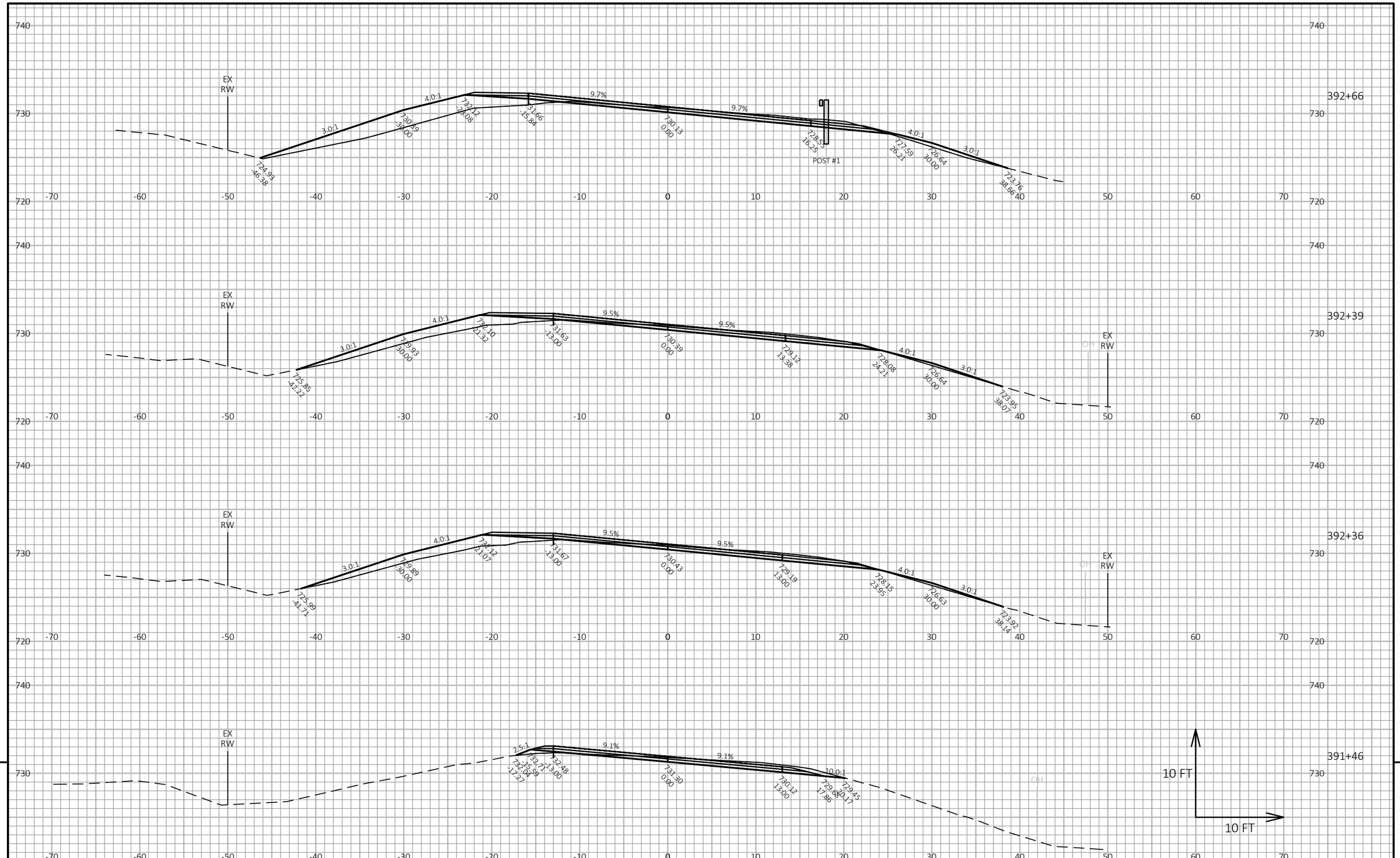

PROJECT NO: 5680-04-60	HWY: STH 60	COUNTY: SAUK	CROSS SECTIONS: B-56-0022	SHEET	E

FILE NAME : N:\PDS\C3D\56800430\SHEETSPLAN\090104_B-56-0022_XS.DWG
LAYOUT NAME - 01
PLOT DATE : 2/26/2019 12:48 PM
PLOT BY : SCHUMAKER, NATHANIEL
PLOT NAME :
PLOT SCALE : 1 IN:10 FT HORZ. / 1 IN:10 FT VERT.
WISDOT/CADDS SHEET 49

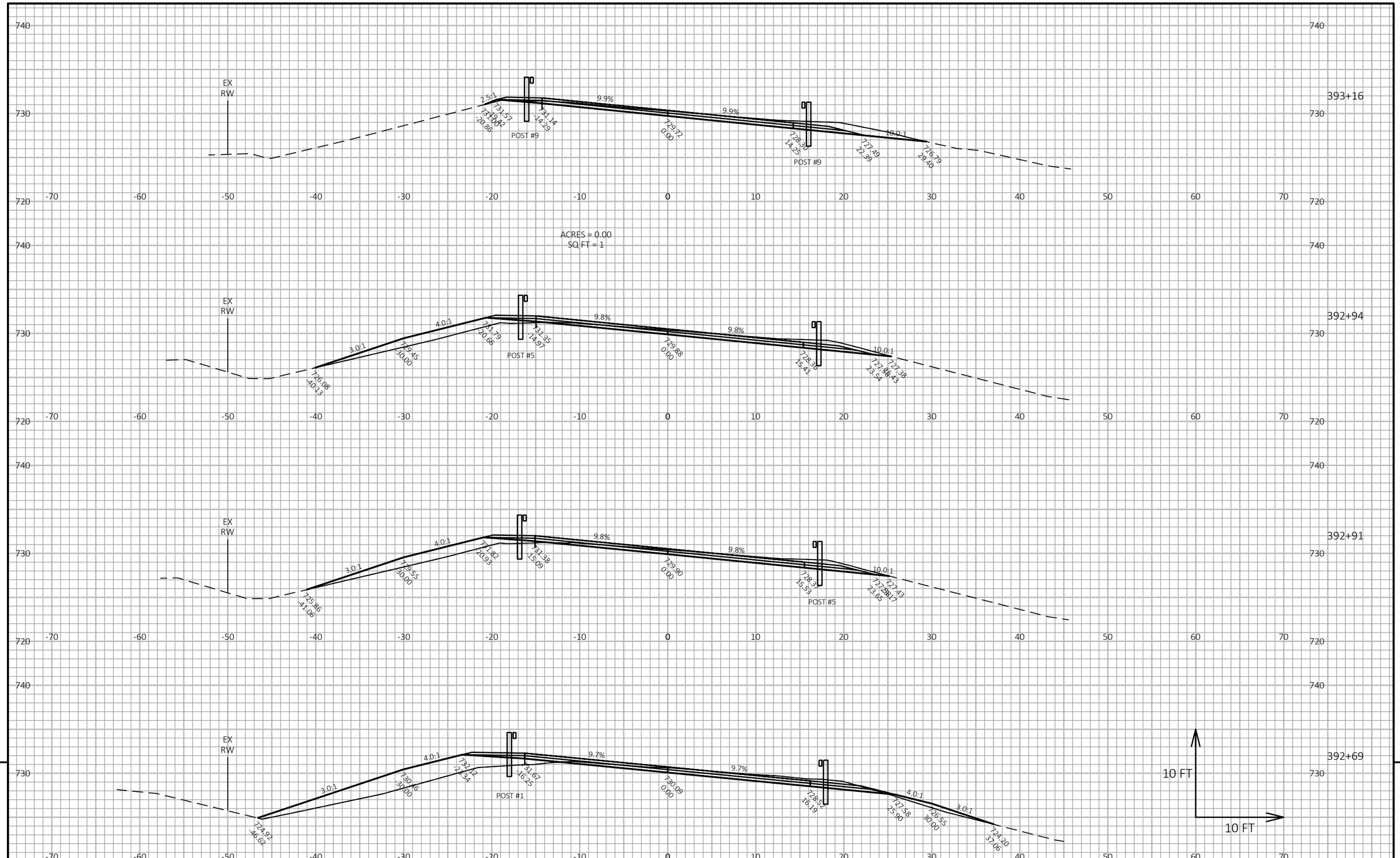

PROJECT NO: 5680-04-60	HWY: STH 60	COUNTY: SAUK	CROSS SECTIONS: B-56-0022	SHEET	E

FILE NAME : N:\PDS\C3D\56800430\SHEETSPLAN\090104_B-56-0022_XS.DWG
LAYOUT NAME - 02
PLOT DATE : 2/26/2019 12:48 PM
PLOT BY : SCHUMAKER, NATHANIEL
PLOT NAME :
PLOT SCALE : 1 IN:10 FT HORZ. / 1 IN:10 FT VERT.
WISDOT/CADDS SHEET 49

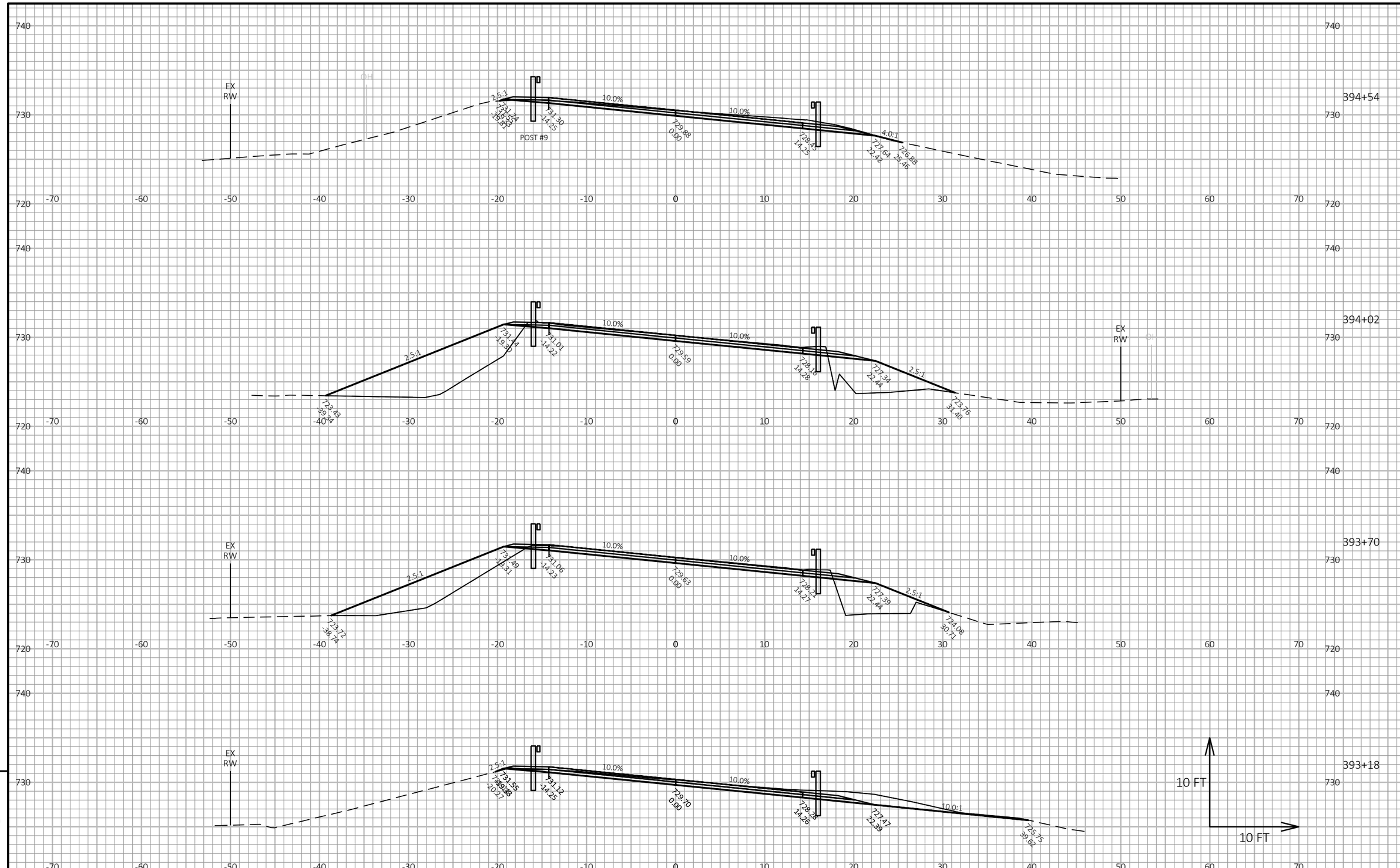

9

9

PROJECT NO: 5680-04-60	HWY: STH 60	COUNTY: SAUK	CROSS SECTIONS: B-56-0022	SHEET	E

FILE NAME : N:\PDS\C3D\56800430\SHEETSPLAN\090104_B-56-0022_XS.DWG
LAYOUT NAME - 03

PLOT DATE : 2/26/2019 12:48 PM

PLOT BY : SCHUMAKER, NATHANIEL

PLOT NAME :

PLOT SCALE : 1 IN:10 FT HORZ. / 1 IN:10 FT VERT.

WISDOT/CADDS SHEET 49

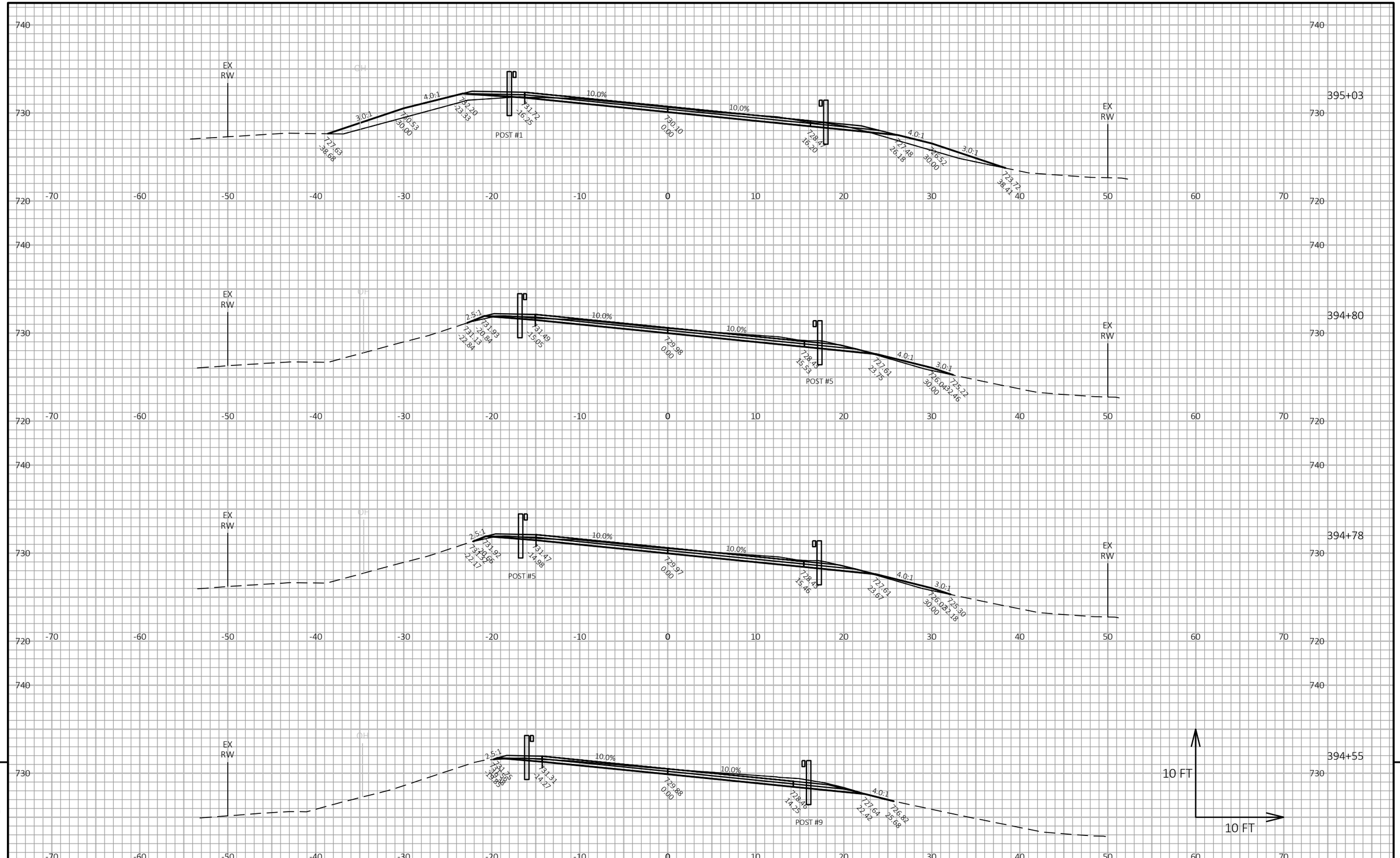

PROJECT NO: 5680-04-60	HWY: STH 60	COUNTY: SAUK	CROSS SECTIONS: B-56-0022	SHEET	E

FILE NAME : N:\PDS\C3D\56800430\SHEETSPLAN\090104_B-56-0022_XS.DWG
LAYOUT NAME - 04
PLOT DATE : 2/26/2019 12:48 PM
PLOT BY : SCHUMAKER, NATHANIEL
PLOT NAME :
PLOT SCALE : 1 IN:10 FT HORZ. / 1 IN:10 FT VERT.
WISDOT/CADDS SHEET 49

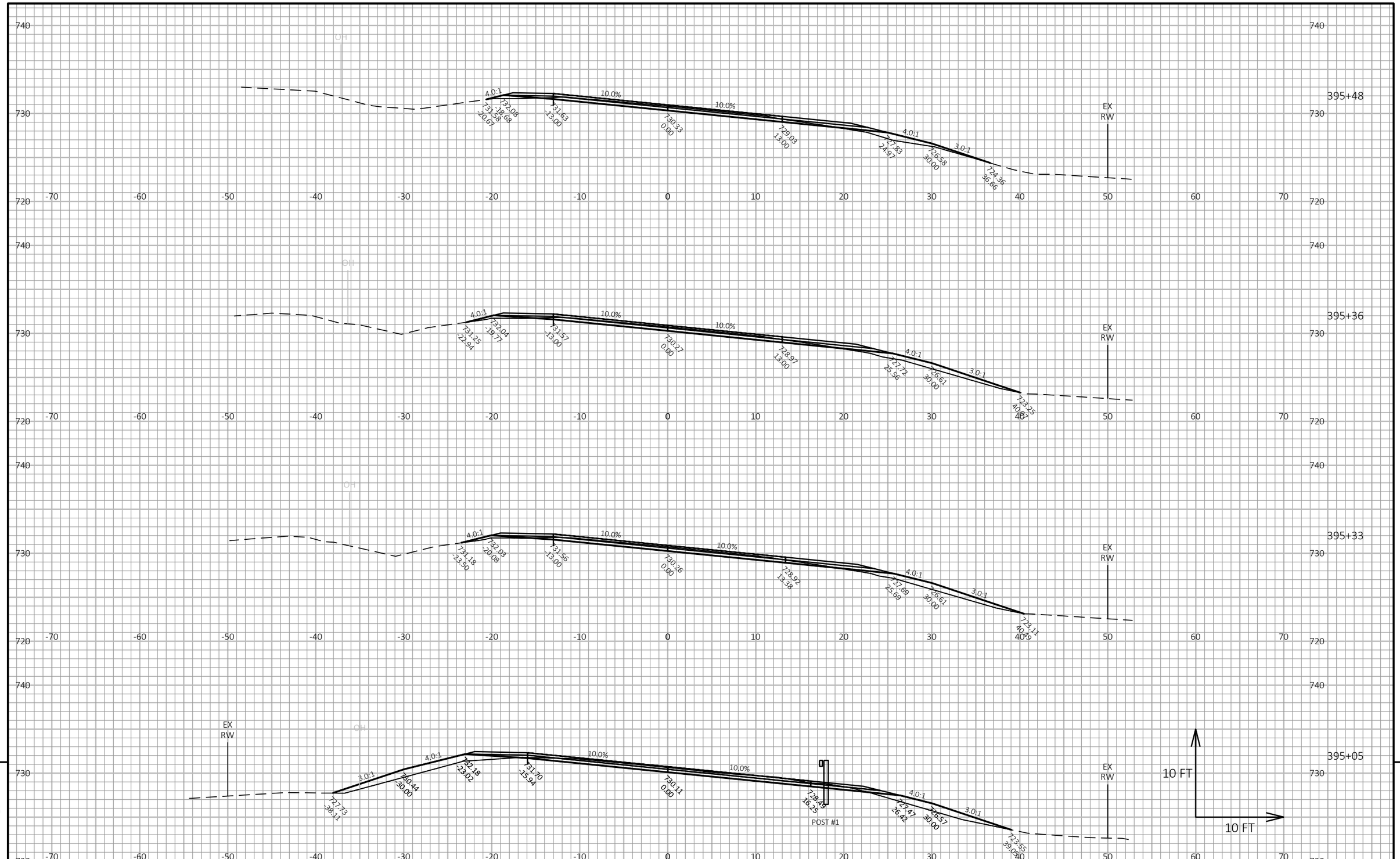

PROJECT NO: 5680-04-60	HWY: STH 60	COUNTY: SAUK	CROSS SECTIONS: B-56-0022	SHEET	E

FILE NAME : N:\PDS\C3D\56800430\SHEETSPLAN\090104_B-56-0022_XS.DWG
LAYOUT NAME - 05
PLOT DATE : 2/26/2019 12:48 PM
PLOT BY : SCHUMAKER, NATHANIEL
PLOT NAME :
PLOT SCALE : 1 IN:10 FT HORZ. / 1 IN:10 FT VERT.

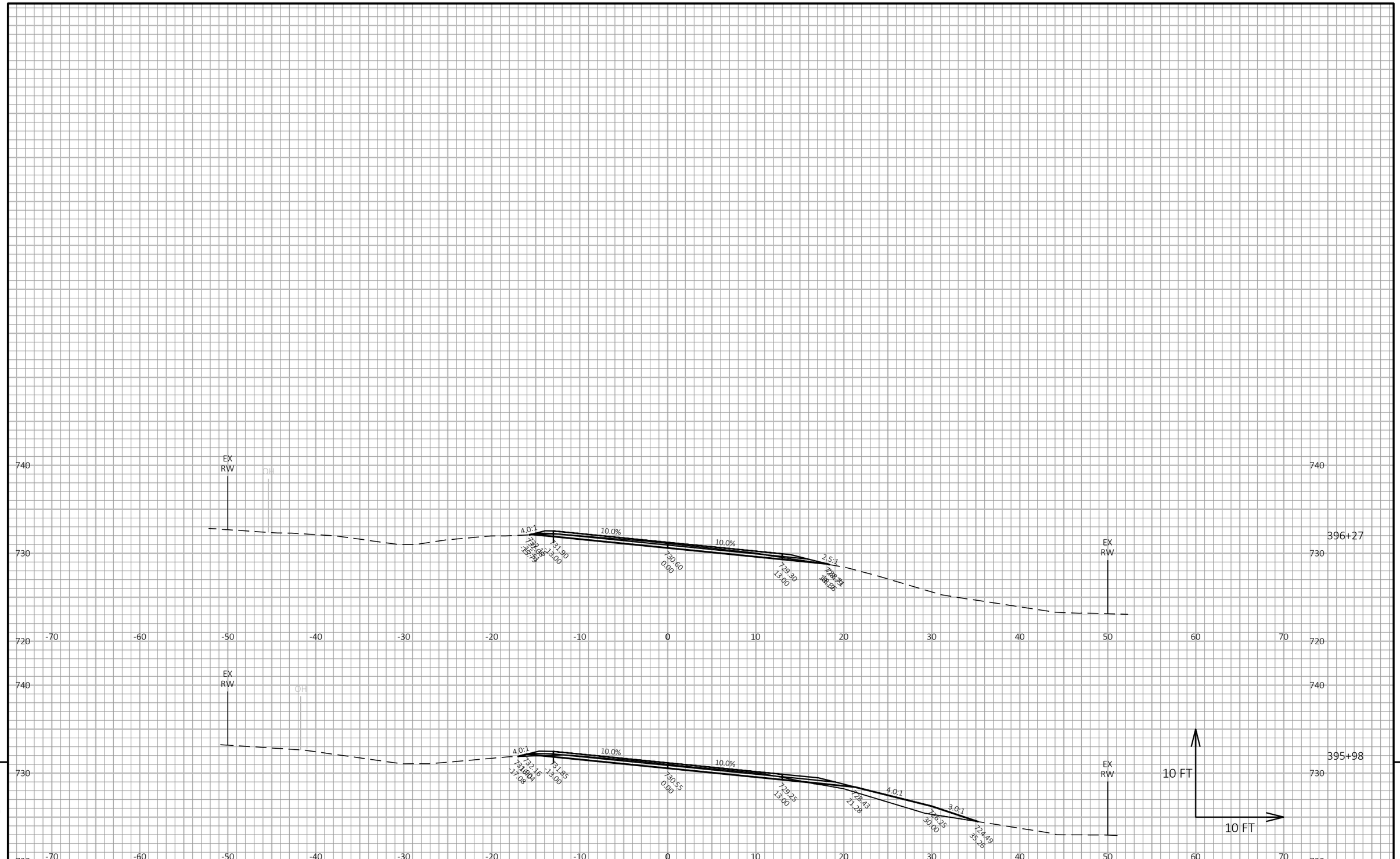

9

9

PROJECT NO: 5680-04-60	HWY: STH 60	COUNTY: SAUK	CROSS SECTIONS: B-56-0022	SHEET	E

FILE NAME : N:\PDS\C3D\56800430\SHEETSPLAN\090104_B-56-0022_XS.DWG
LAYOUT NAME - 06

PLOT DATE : 2/26/2019 12:48 PM

PLOT BY : SCHUMAKER, NATHANIEL

PLOT NAME :

PLOT SCALE : 1 IN:10 FT HORZ. / 1 IN:10 FT VERT.

WISDOT/CADDS SHEET 49