PROJECT ID: 5310-02-76
WITH:

COUNTY: DANE

ORDER OF SHEETS

TOTAL SHEETS =

STATE PROJECT	FEDERAL PROJECT	
	PROJECT	CONTRACT
5310-02-76		

STATE OF WISCONSIN
DEPARTMENT OF TRANSPORTATION

PLAN OF PROPOSED IMPROVEMENT

SPRING GREEN - MADISON

WALTER ROAD TO CTH KP

USH 14

DANE COUNTY

STATE PROJECT NUMBER
5310-02-76

Approved for Design of Utility Adjustments.

June 11, 2019

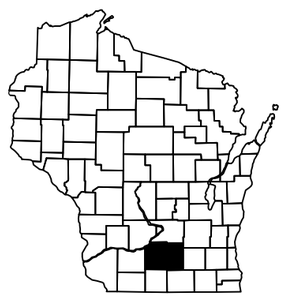

N

DESIGN DESIGNATION

A.A.D.T.	(2017)	=	13,500
A.A.D.T.	(2027)	=	15,200
D.H.V.	(2037)	=	1630
D.D.		=	60/40
T.		=	8.3%
DESIGN SPEED		=	50 MPH/35 MPH
ESALS		=	2,190,000

CONVENTIONAL SYMBOLS

PLAN

CORPORATE LIMITS
PROPERTY LINE
LOT LINE
LIMITED HIGHWAY EASEMENT
EXISTING RIGHT OF WAY
PROPOSED OR NEW R/W LINE
SLOPE INTERCEPT
REFERENCE LINE
EXISTING CULVERT
PROPOSED CULVERT (Box or Pipe)
COMBUSTIBLE FLUIDS — CAUTION
MARSH AREA
WOODED OR SHRUB AREA

PROFILE

GRADE LINE
ORIGINAL GROUND
MARSH OR ROCK PROFILE (To be noted as such) — ROCK
SPECIAL DITCH — LABEL
GRADE ELEVATION — 95.36
CULVERT (Profile View)

UTILITIES

ELECTRIC — E
FIBER OPTIC — FO
GAS — G
SANITARY SEWER — SAN
STORM SEWER — SS
TELEPHONE — T
WATER — W
UTILITY PEDESTAL
POWER POLE
TELEPHONE POLE

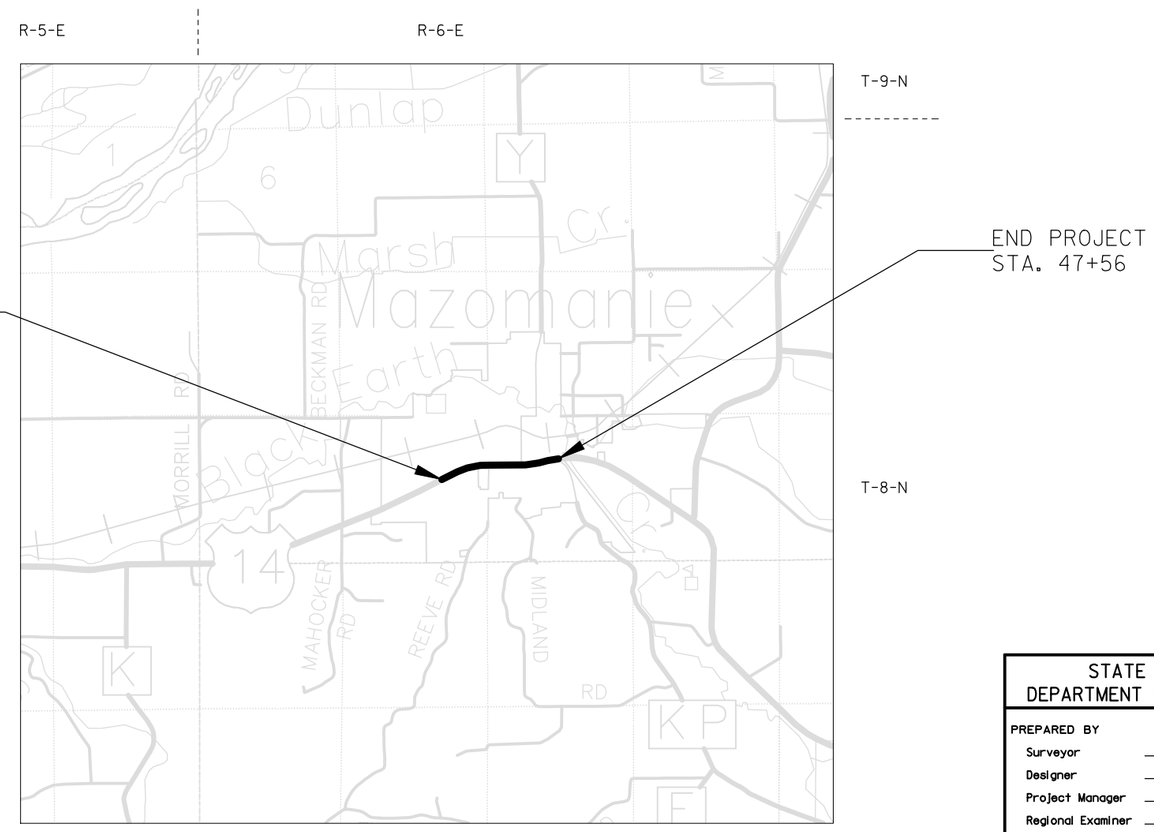

LAYOUT
SCALE 0 1/2 MI.

TOTAL NET LENGTH OF CENTERLINE = 0.797 MILES

HORIZONTAL POSITIONS SHOWN ON THIS PLAN ARE WISCONSIN COUNTY COORDINATES, DANE COUNTY, NAD83 (1991), IN U.S. SURVEY FEET. VALUES ARE GRID COORDINATES, GRID BEARINGS, AND GRID DISTANCES. GRID DISTANCES MAY BE USED AS GROUND DISTANCES.

STATE OF WISCONSIN
DEPARTMENT OF TRANSPORTATION

PREPARED BY

Surveyor	
Designer	PETER FILLIPI
Project Manager	AMY COUGHLIN
Regional Examiner	
Regional Supervisor	BRENDA SCHOENFELD

APPROVED FOR THE DEPARTMENT

DATE: _____ (Signature)

E

GENERAL NOTES:

THE LOCATIONS OF EXISTING AND PROPOSED UTILITY INSTALLATIONS AS SHOWN ON THE PLANS ARE APPROXIMATE. THERE MAY BE OTHER UTILITY INSTALLATIONS WITHIN THE PROJECT AREA THAT ARE NOT SHOWN.

NO TREES OR SHRUBS ARE TO BE REMOVED WITHOUT APPROVAL OF THE ENGINEER

RIGHT OF WAY LINES SHOWN ON THE CROSS SECTIONS ARE APPROXIMATE

ANY EXISTING SIGN REMOVALS NOT CALLED OUT ON THE PERMANENT SIGNING & MARKING DETAILS SHALL BE REMOVED AND SALVAGED BY THE VILLAGE OF MAZOMANIE UPON CLOSURE OF THE STREET.

CONTRACTOR WILL BE RESPONSIBLE FOR RESHAPING AND SEEDING WITH CLASS I URBAN EROSION MAT ANY PREVIOUSLY GRASSED AREAS WHICH ARE DISTURBED BY HIS OPERATION OUTSIDE OF THE NORMAL CONSTRUCTION LIMITS.

THE QUANTITY OF THE ITEMS FOR EROSION PROTECTION INCLUDES AN UNDISTRIBUTED AMOUNT FOR PROTECTION, CONTROL AND ABATEMENT OF WATER POLLUTION RESULTING FROM SOIL EROSION. THE DISTRIBUTION AND LOCATION OF THESE MATERIALS ARE TO BE DETERMINED BY THE ENGINEER.

PRIOR TO THE PLACEMENT OF STEEL PLATE BEAM GUARD OR MGS GUARDRAIL, THE SHOULDERS SHALL BE IN PLACE, SHAPED AND COMPACTED UNLESS SHOWN OTHERWISE.

SIDEWALK REPLACEMENT SHOULD BE TO THE NEAREST JOINT. LIMITS ARE APPROXIMATE AND ARE TO BE VERIFIED IN THE FIELD BY THE ENGINEER. MATCH EXISTING SIDEWALK WIDTH.

CONTRACTOR SHALL VERIFY UTILITY DEPTHS AT ALL PROPOSED CONNECTION POINTS TO EXISTING SYSTEMS.

TEMPORARY PAVEMENT MARKING TO BE PLACED ON ANY SURFACE WHICH WILL NOT BE REMOVED WITH THIS PROJECT SHALL CONSIST OF REMOVABLE TAPE.

THE EROSION CONTROL ITEMS SHOWN ON THE PLANS ARE AT SUGGESTED LOCATIONS. THE ENGINEER SHALL DETERMINE THE EXACT LOCATION. ALL EROSION CONTROL MEASURES SHALL BE MAINTAINED UNTIL SUCH TIME AS THE ENGINEER DETERMINES THE MEASURE IS NO LONGER NECESSARY.

SECTION 2 ORDER OF SHEETS

UTILITIES:

KEVIN ZICKERT
CENTURYLINK - COMMUNICATION LINE
224 INDUSTRIAL DR
NORTH PRAIRIE, WI 53153
(262) 392-5200
KEVIN.ZICKERT@CENTURYLINK.COM

JANE ROSSING
MADISON GAS AND ELECTRIC COMPANY - GAS/PETROLEUM
P.O. BOX 1231
MADISON, WI 53701-1231
(608) 252-7099
GROSSING@MGE.COM

BRANDON STORM
CHARTER COMMUNICATIONS - COMMUNICATION LINE
2701 DANIELS ST
MADISON, WI 53718
(608) 274-3822
BRANDON.STORM@CHARTER.COM

SHAWN DILLEY
VANGUARD ELECTRIC
MAZOMANIE ELECTRIC UTILITY - ELECTRICITY
P.O. BOX 26
MAZOMANIE, WI 53560-0026
(608) 767-2561
SDILLEY@BLACKEARTHWISCONSIN.COM

SUSAN DIETZEN
VILLAGE OF MAZOMANIE - SEWER
133 CRESCENT ST
P.O. BOX 26
MAZOMANIE, WI 53560
(608) 795-2100

SUSAN DIETZEN
VILLAGE OF MAZOMANIE - WATER
133 CRESCENT ST
P.O. BOX 26
MAZOMANIE, WI 53560
(608) 795-2100

OTHER AGENCIES

DNR LIASON

ERIC HEGGELUND
3911 FISH HATCHERY ROAD
MADISON, WI. 53711
(608) 275-3301
ERIC.HEGGELUND@WISCONSIN.GOV

WISDOT REGION CONTACT

AMY COUGHLIN, P.E.
WISDOT SOUTHWEST REGION
MADISON OFFICE
2101 WRIGHT ST.
MADISON, WI. 53704
(608) 245-5358
AMY.COUGHLIN@DOT.WI.GOV

DIGGERS HOTLINE
Dial 811 or (800)242-8511
www.DiggersHotline.com

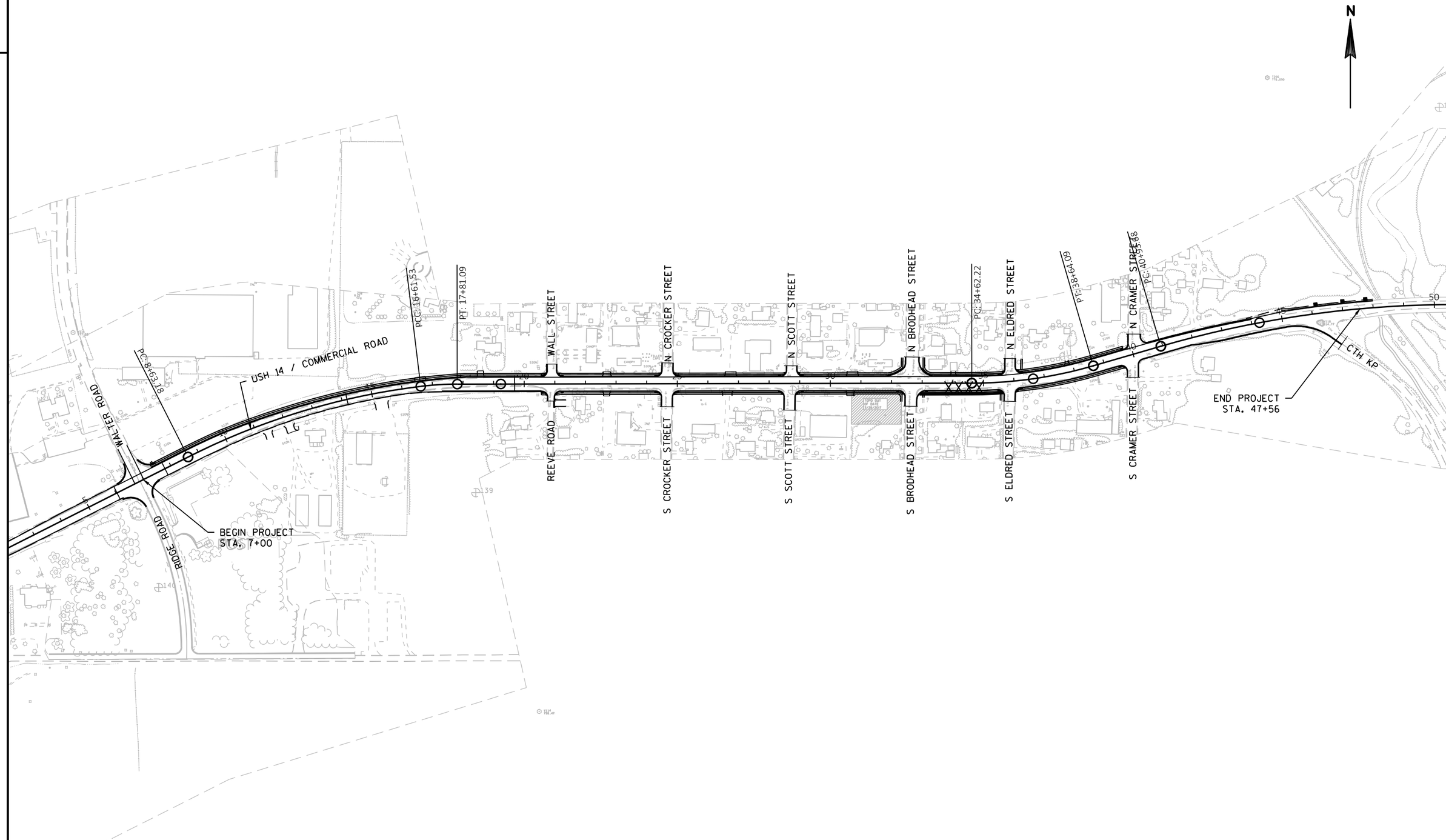

PROJECT NO: 5310-02-67	HWY: USH 14	COUNTY: DANE	PROJECT OVERVIEW	SHEET	E

FILE NAME : N:\PDS\C3D\53100206(14)\SHEETSPLAN\020201_PO.DWG
LAYOUT NAME - PLAN OVERVIEW
PLOT DATE : 6/21/2018 1:27 PM
PLOT BY : SCHMID, CHARLENE
PLOT NAME :
PLOT SCALE : ##########

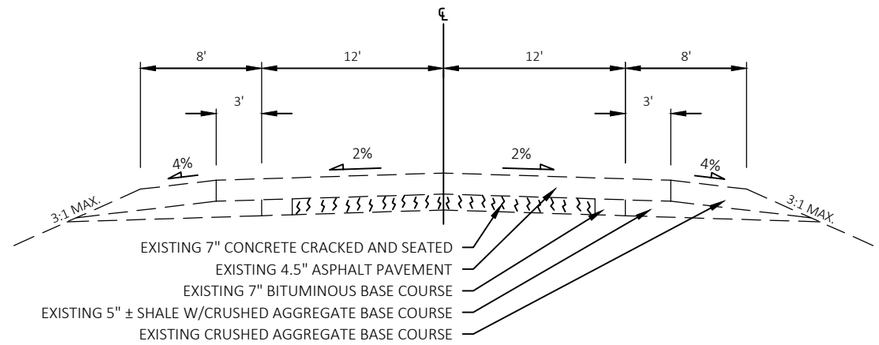

EXISTING TYPICAL SECTION

STA. 5+50 - STA. 20+40

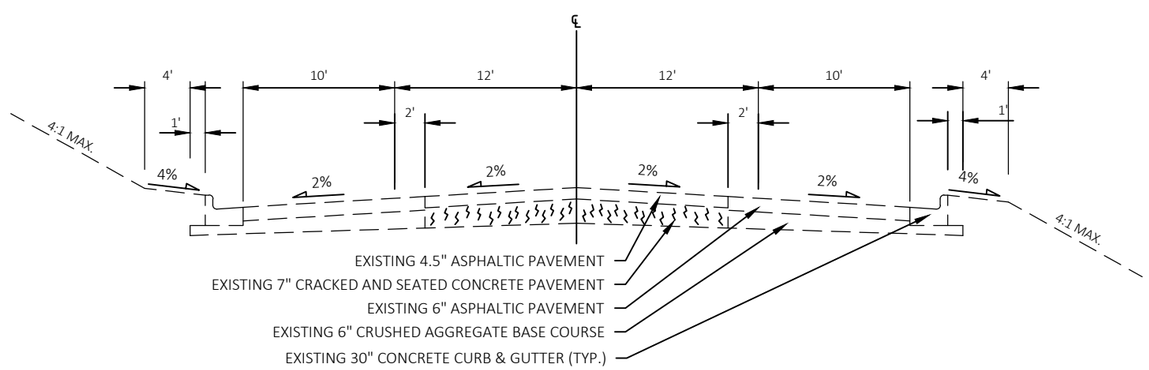

EXISTING TYPICAL SECTION

STA. 20+40 - STA. 40+25

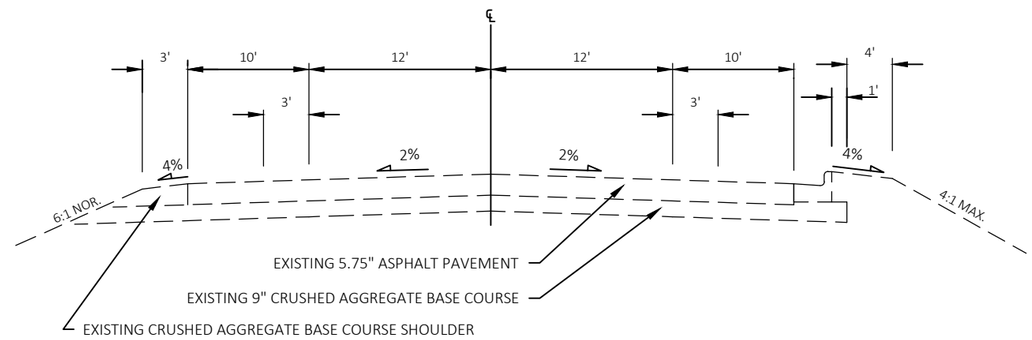

EXISTING TYPICAL SECTION

STA. 45+25 - STA. 47+54

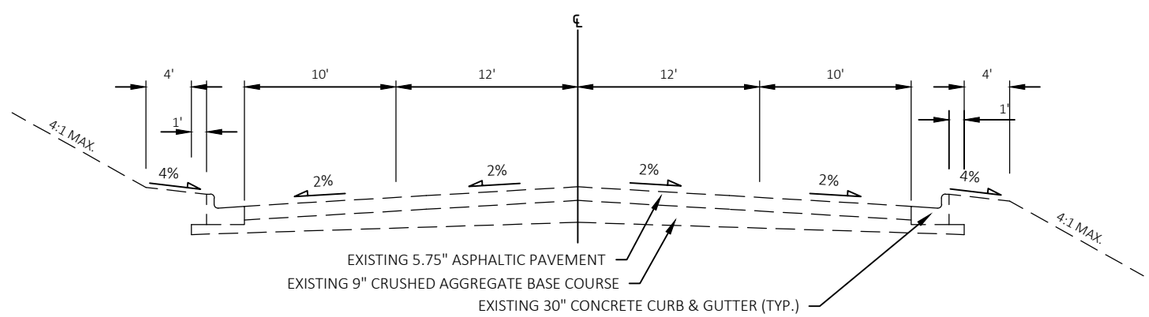

EXISTING TYPICAL SECTION

STA. 40+25 - STA. 45+25

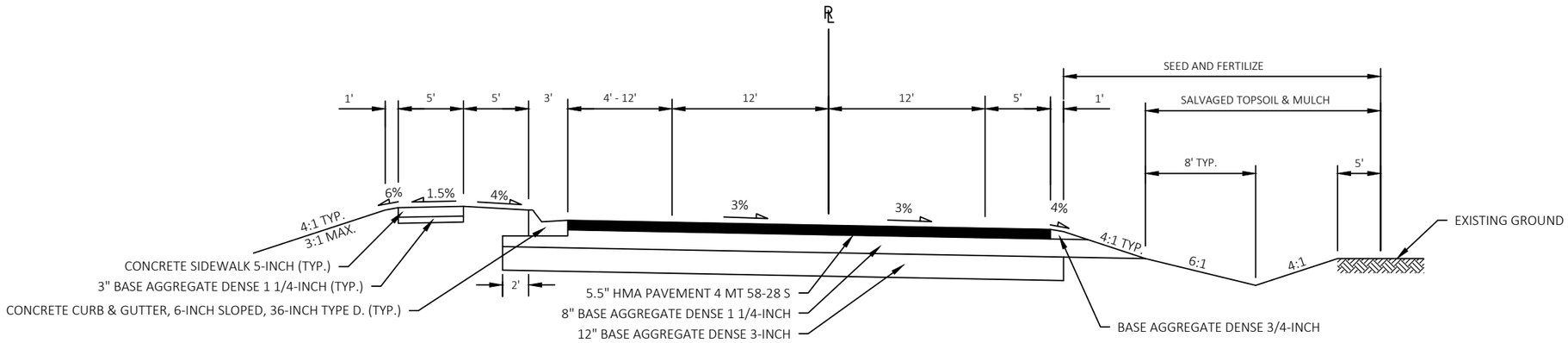

NOTE:
SUPERELEVATION SECTION SHOWN, SEE PAVING DETAILS AND CROSS SECTIONS FOR SUPERELEVATION TRANSITION DETAILS & NORMAL CROWN.

TYPICAL FINISHED SECTION

STA. 7+00 - STA. 16+00

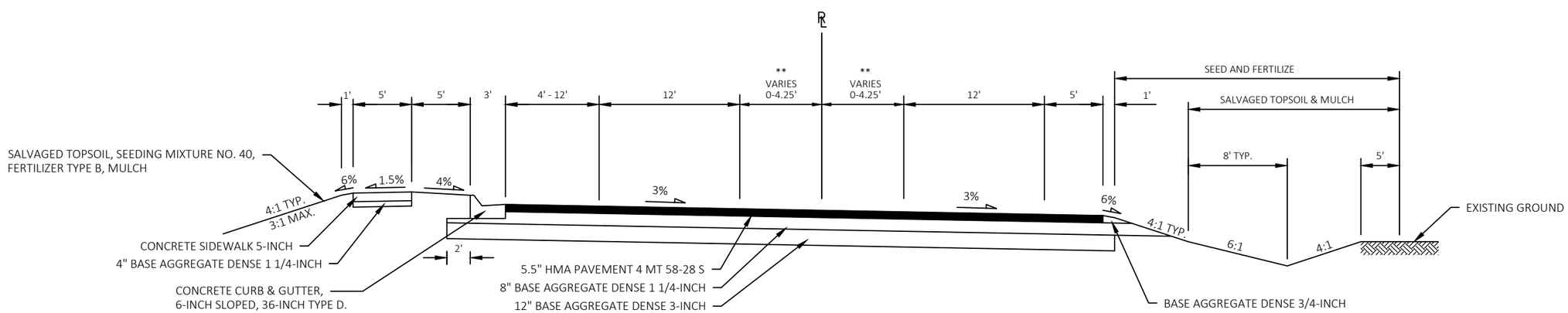

** SEE PAVING DETAILS AND CROSS SECTIONS FOR TRANSITION DETAILS.

TYPICAL FINISHED SECTION

STA. 16+00 - STA. 17+30

NOTE:
SUPERELEVATION SECTION SHOWN, SEE PAVING DETAILS AND CROSS SECTIONS FOR SUPERELEVATION TRANSITION DETAILS & NORMAL CROWN.

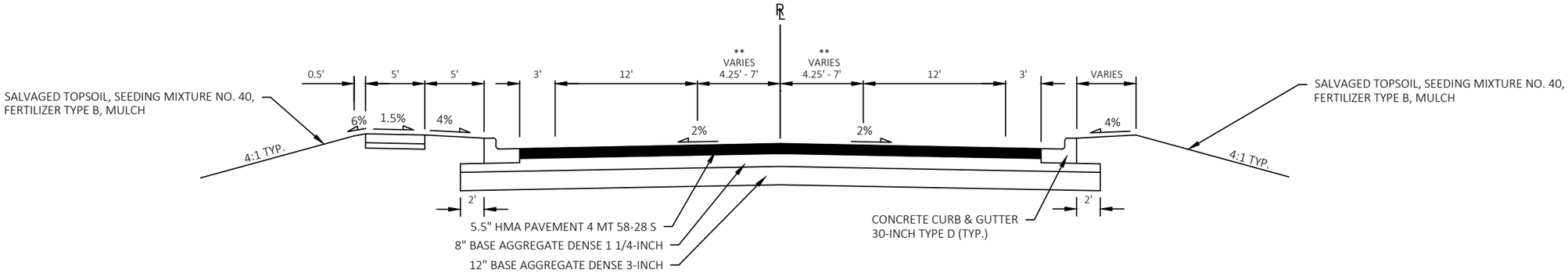

TYPICAL FINISHED SECTION

STA. 17+30 - STA. 20+55

** SEE PAVING DETAILS AND CROSS SECTIONS FOR TRANSITION DETAILS.

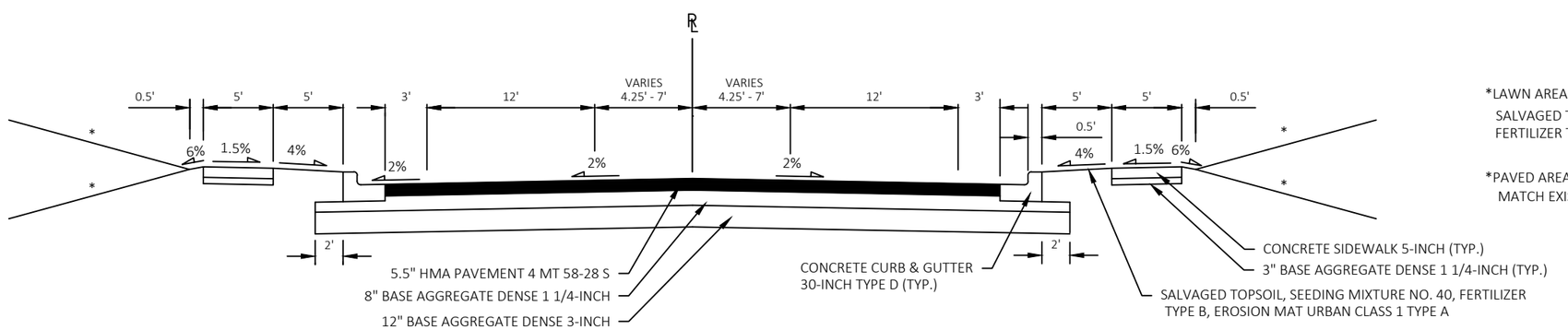

*LAWN AREAS
SALVAGED TOPSOIL, SEEDING MIXTURE NO. 40, FERTILIZER TYPE B, MULCH

*PAVED AREAS
MATCH EXISTING PAVEMENT TYPE

TYPICAL FINISHED SECTION

STA. 20+55 - STA. 40+50

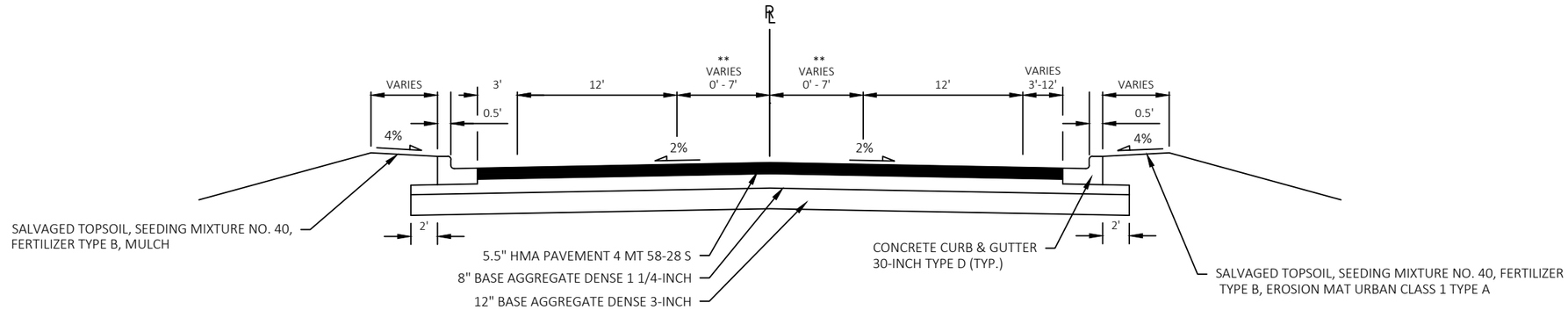

TYPICAL FINISHED SECTION

STA. 40+50 - STA. 44+00

** SEE PAVING DETAILS AND CROSS SECTIONS FOR TRANSITION DETAILS.

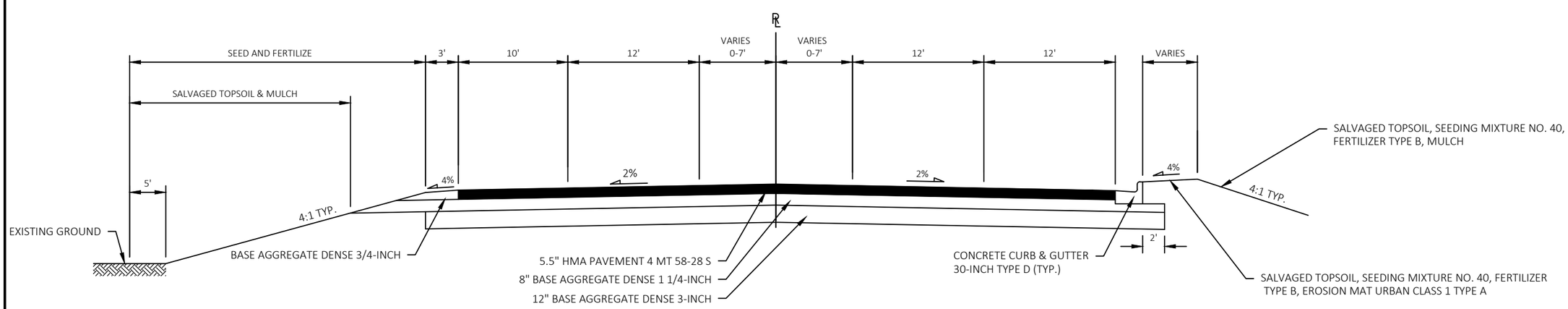

TYPICAL FINISHED SECTION

STA. 44+00 - STA. 47+56

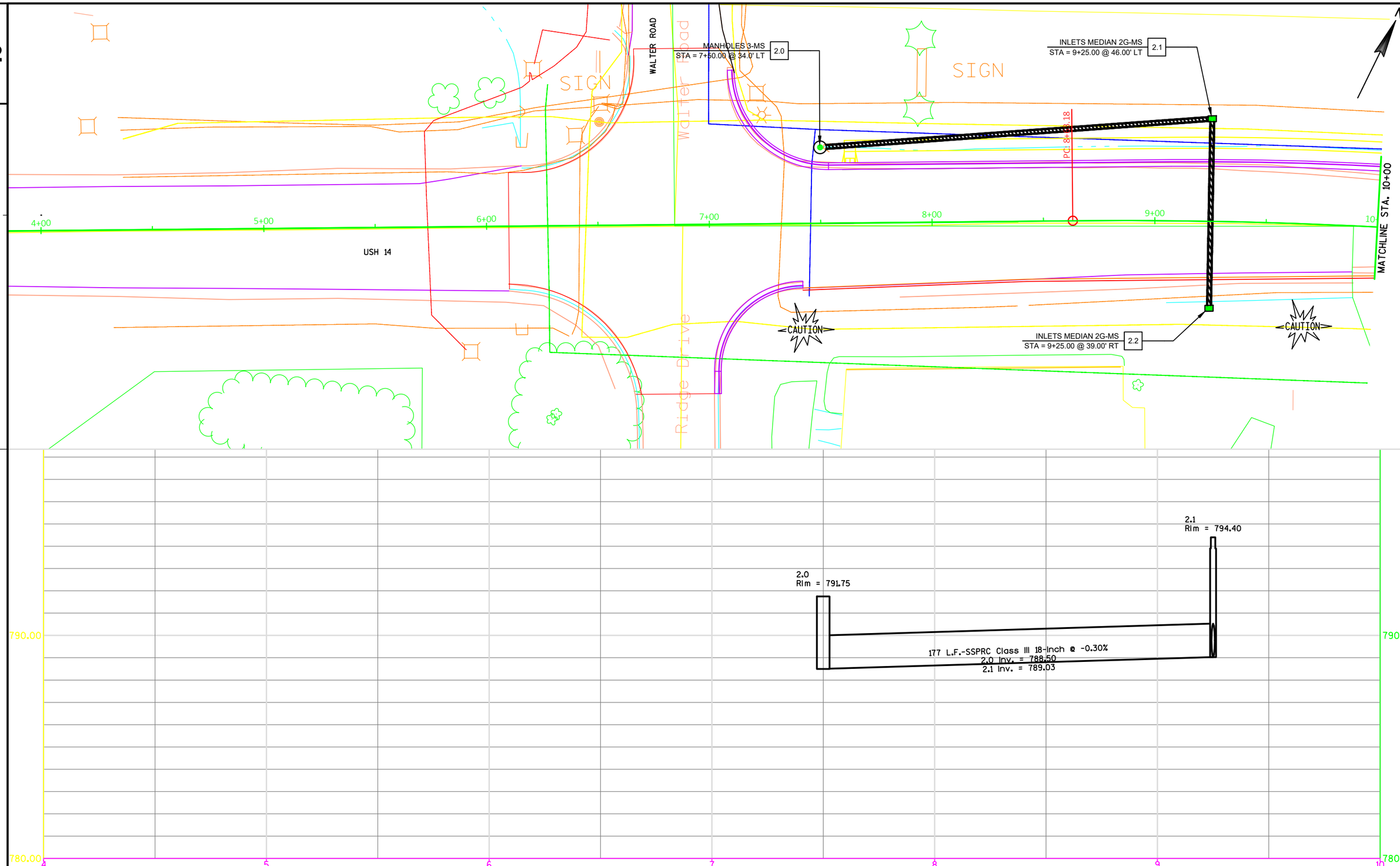

PROJECT NO:5310-02-76	HWY:USH 14	COUNTY:DANE	STORM SEWER	SHEET	E

FILE NAME : C:\USERS\DOTBTH\DOCUMENTS\CIVIL 3D\STORMSEWER LAYOUT FROM MSA 10-21-2015\STORM SEWER_USH 14 - COPY_6_10_19.DWG PLOT DATE : 6/11/2019 11:55 AM PLOT BY : HIELSBERG, BRETT THOPLOT NAME : PLOT SCALE : 1:40_XREF

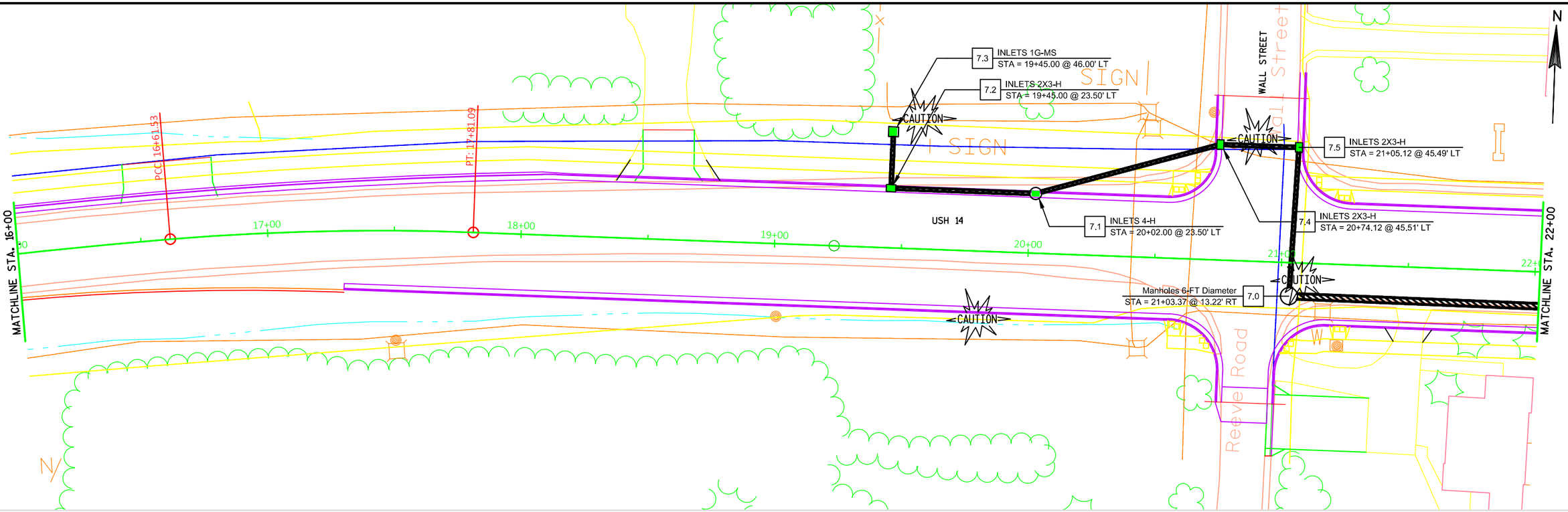

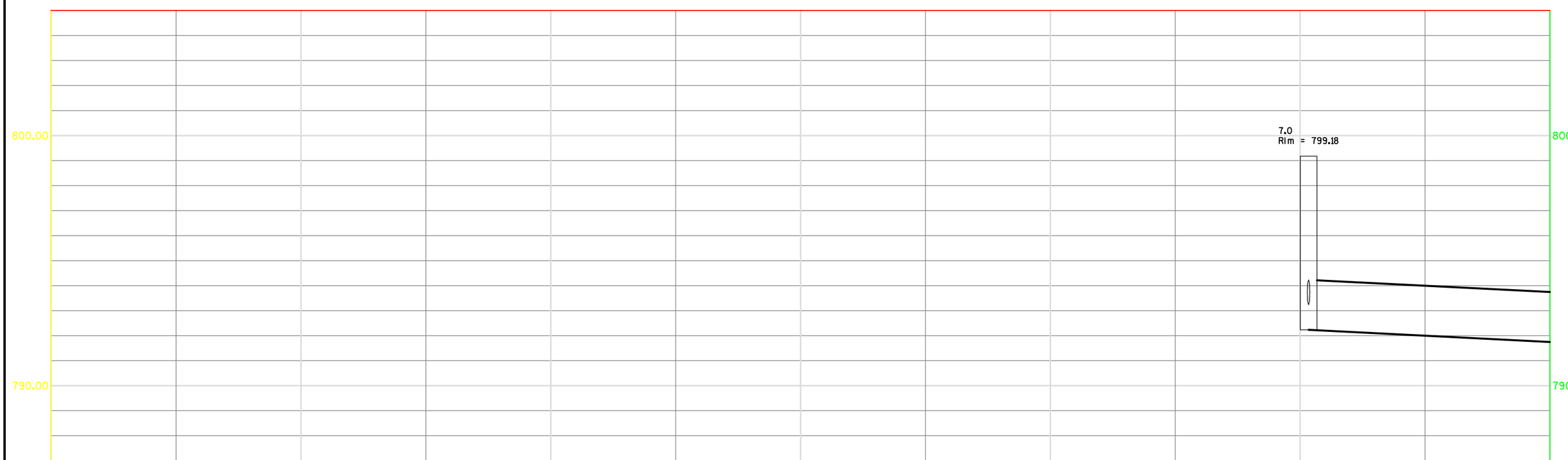

PROJECT NO:5310-02-76	HWY:USH 14	COUNTY:DANE	STORM SEWER	SHEET	E

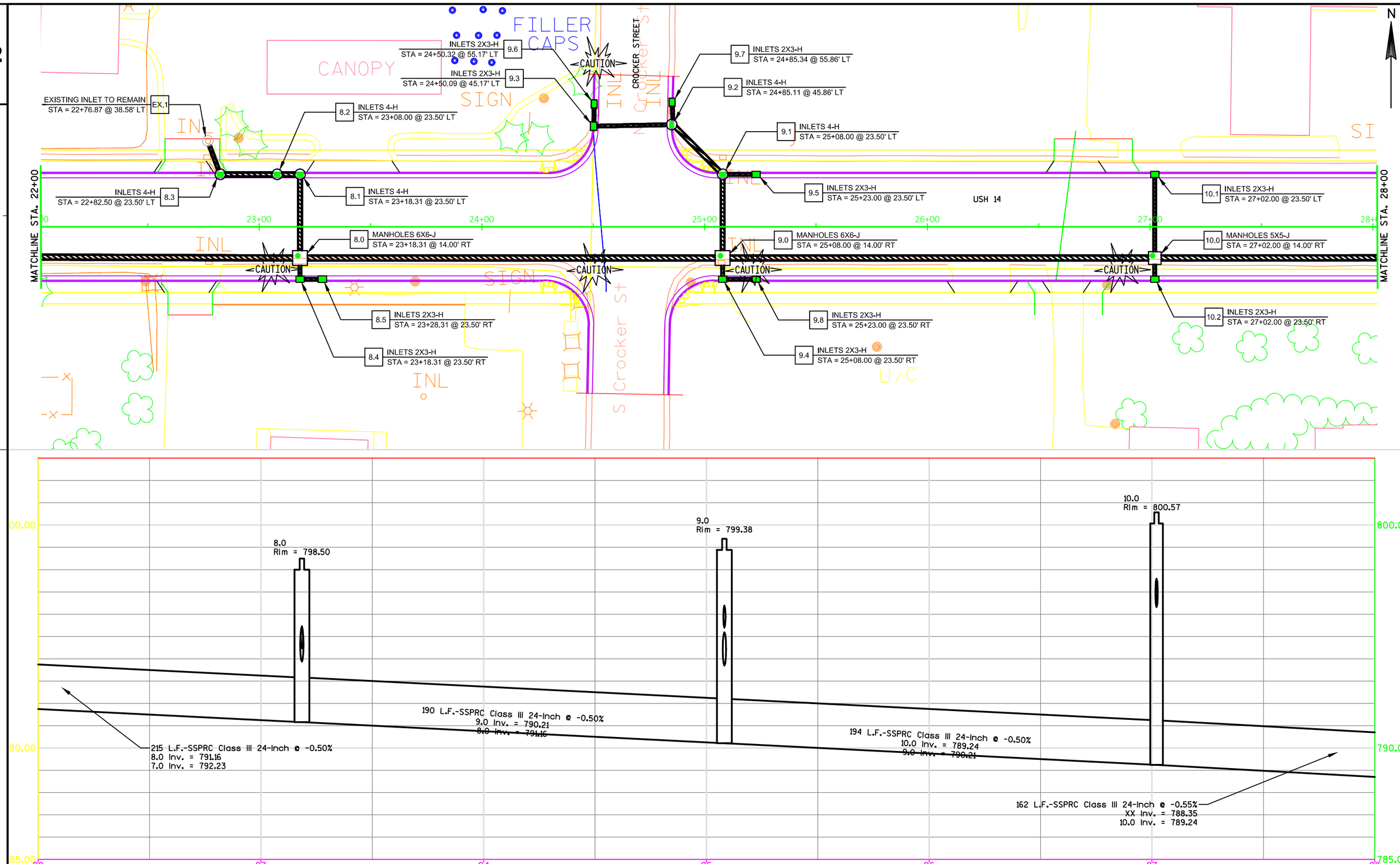

PROJECT NO:5310-02-76	HWY:USH 14	COUNTY:DANE	STORM SEWER	SHEET	E

FILE NAME : C:\USERS\DOTBTH\DOCUMENTS\CIVIL 3D\STORMSEWER LAYOUT FROM MSA 10-21-2015\STORM SEWER_USH 14 - COPY_6_10_19.DWG PLOT DATE : 6/11/2019 11:56 AM PLOT BY : HIELSBERG, BRETT THOPLOT NAME : PLOT SCALE : 1:40_XREF

WISDOT/CADDS SHEET 41

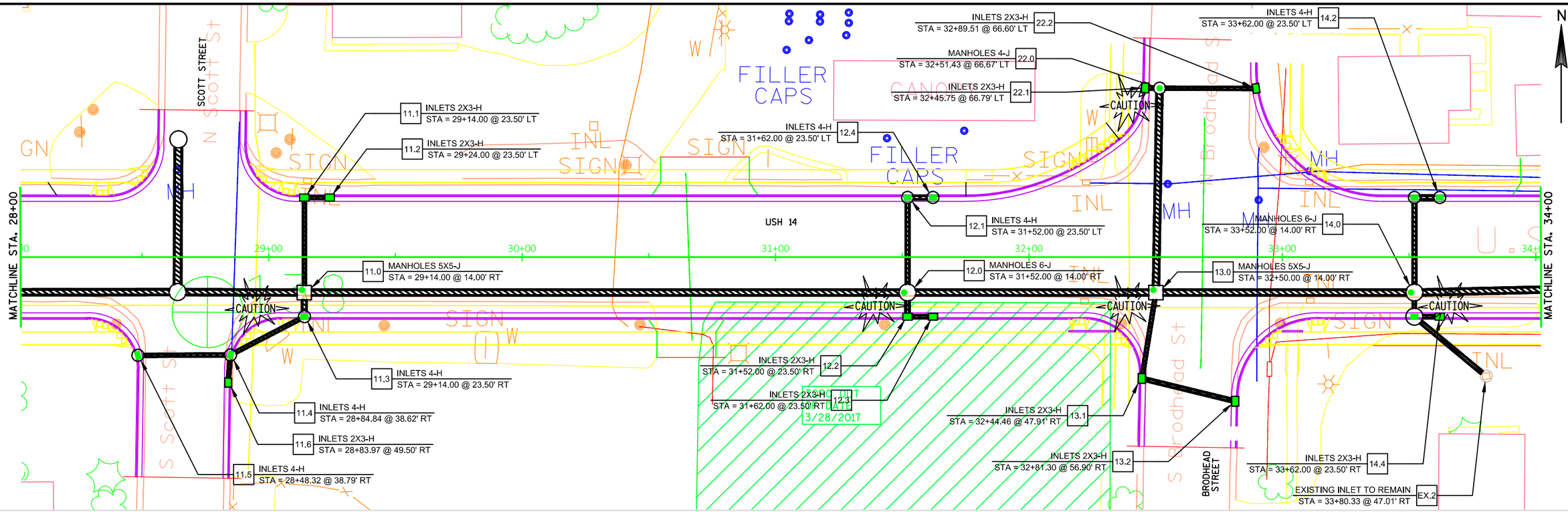

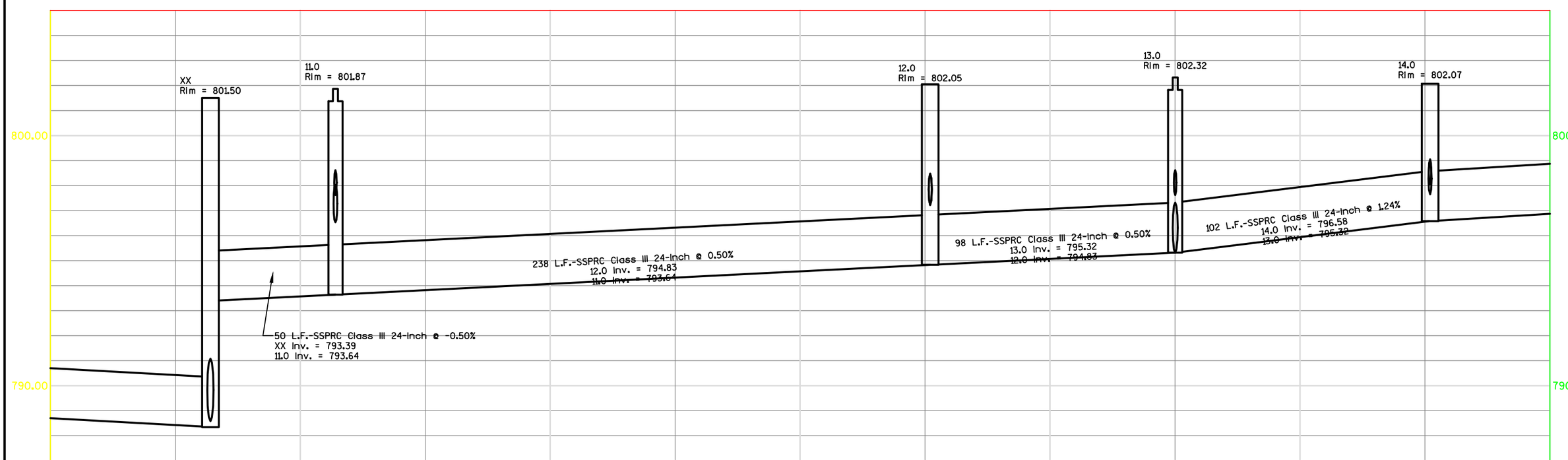

PROJECT NO:5310-02-76	HWY:USH 14	COUNTY:DANE	STORM SEWER	SHEET	E

2

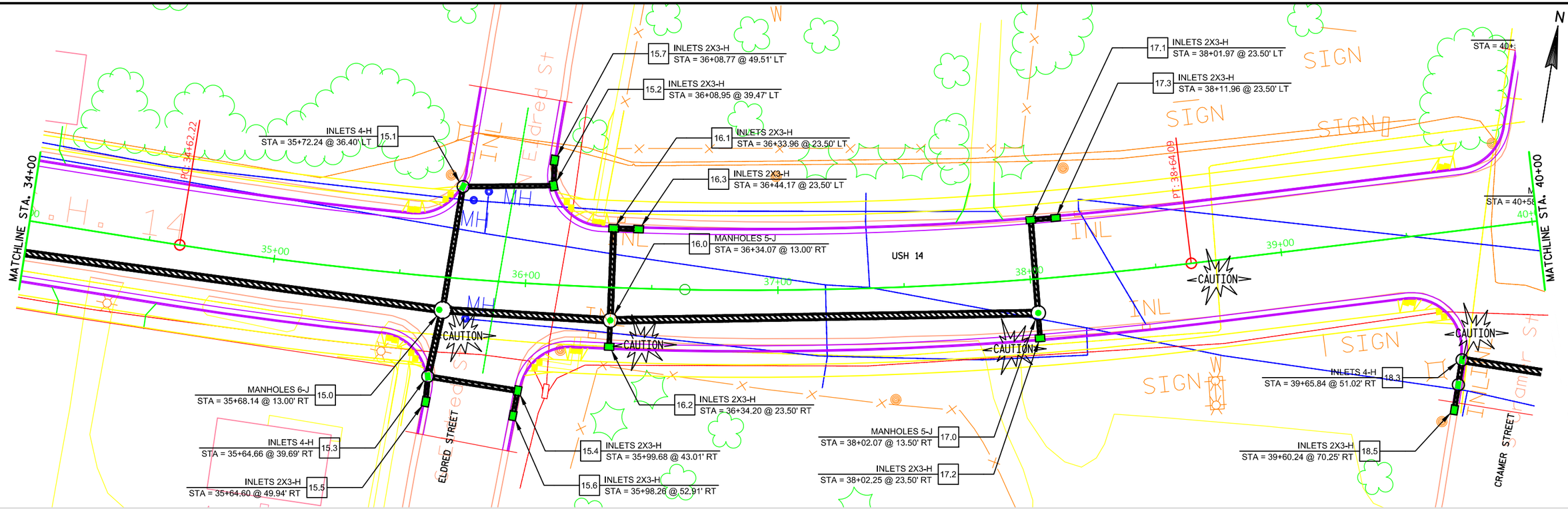

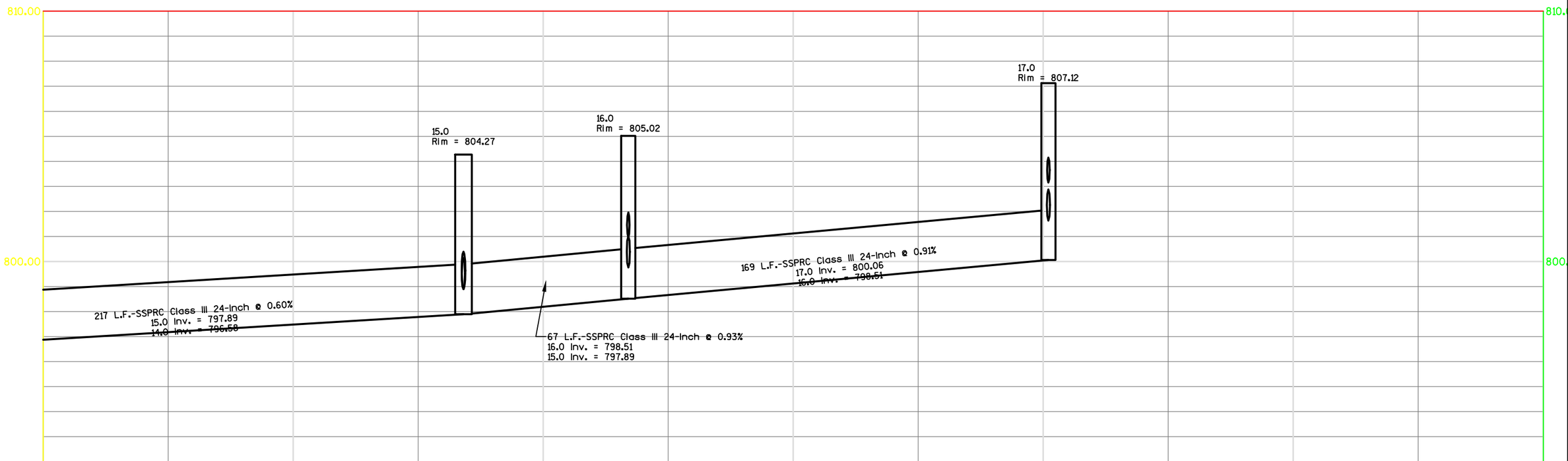

PROJECT NO:5310-02-76	HWY:USH 14	COUNTY:DANE	STORM SEWER	SHEET	E

2

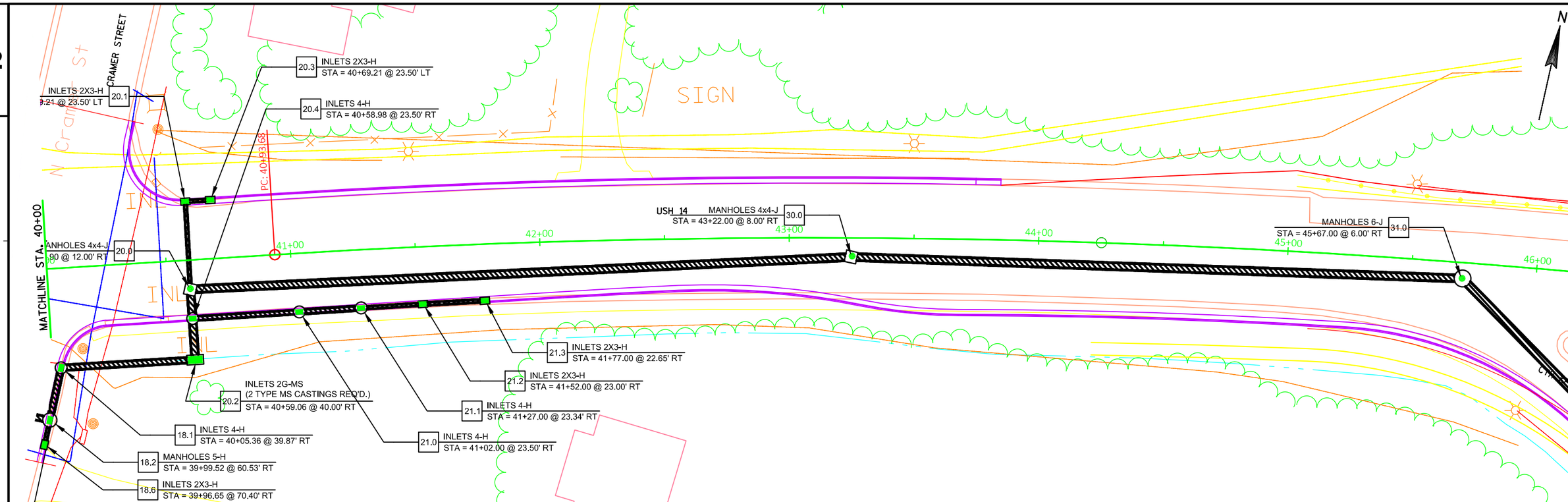

2

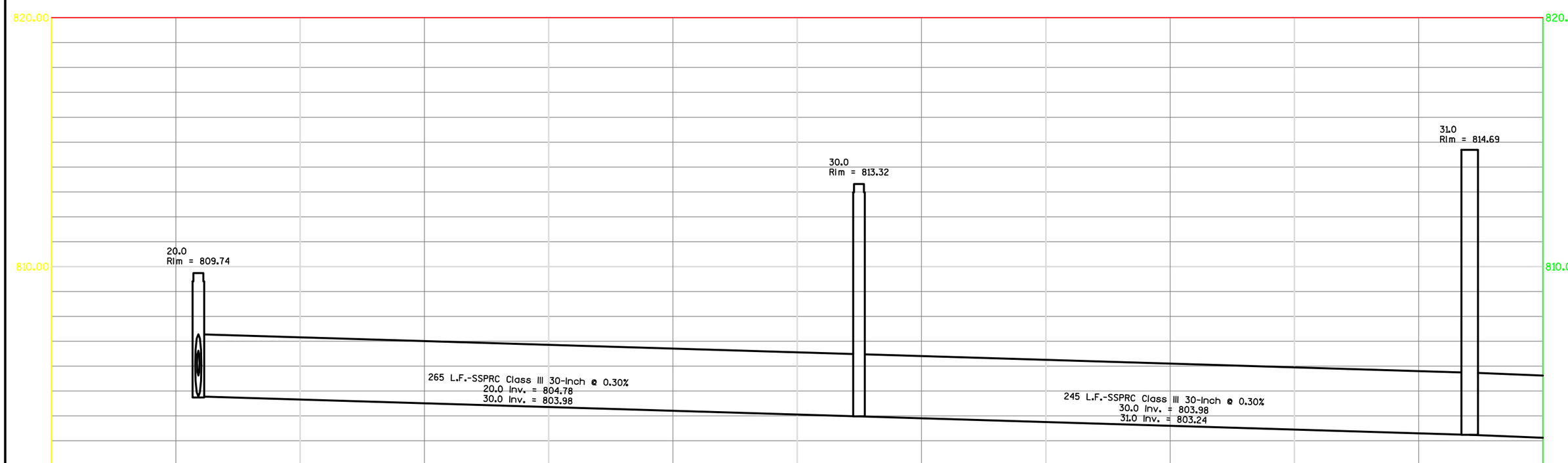

PROJECT NO:5310-02-76	HWY:USH 14	COUNTY:DANE	STORM SEWER	SHEET	E

FILE NAME : C:\USERS\DOTBTH\DOCUMENTS\CIVIL 3D\STORMSEWER LAYOUT FROM MSA 10-21-2015\STORM SEWER_USH 14 - COPY_6_10_19.DWG PLOT DATE : 6/11/2019 11:57 AM PLOT BY : HIELSBERG, BRETT THOPLOT NAME : PLOT SCALE : 1:40_XREF

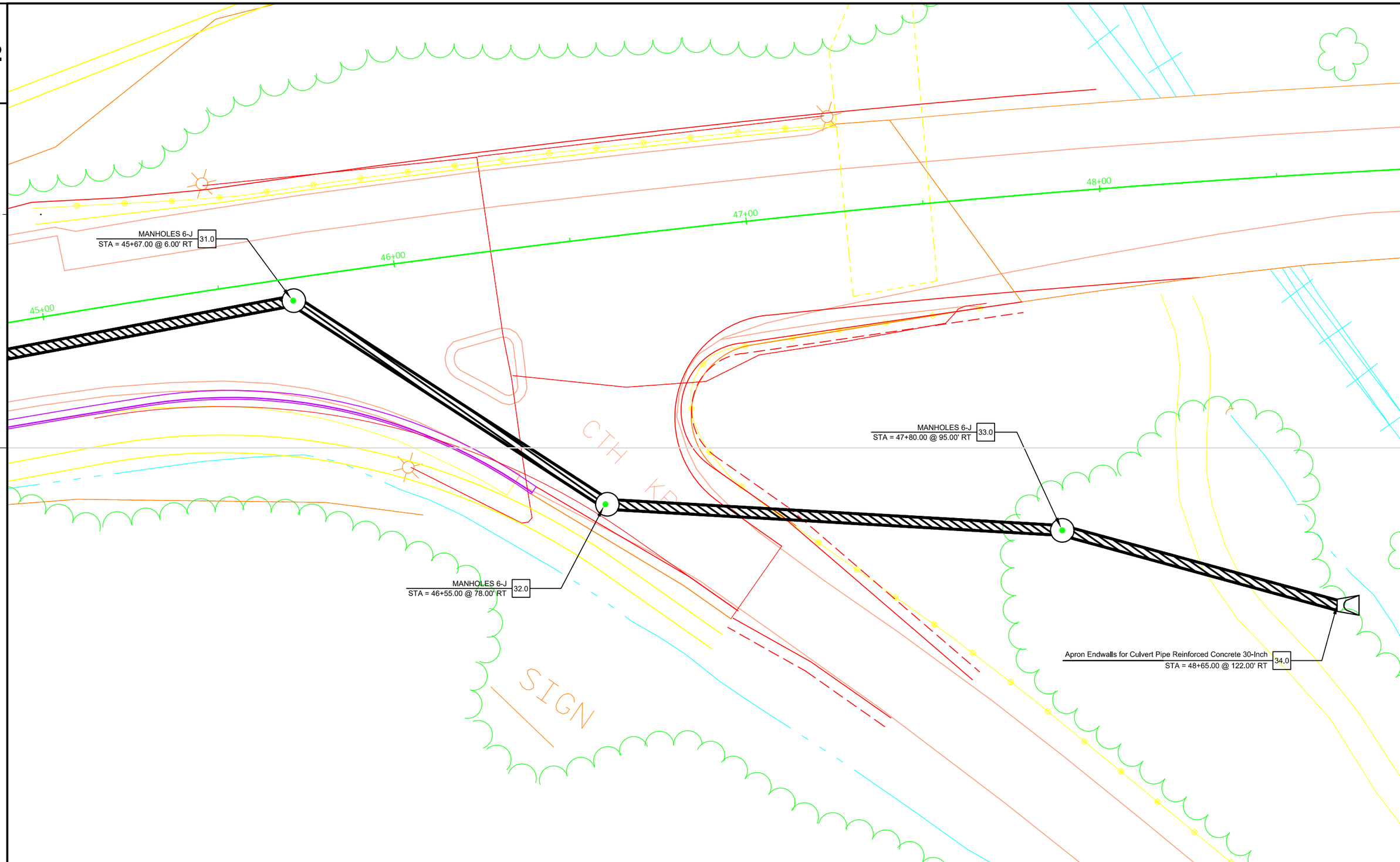
MANHOLES 6-J
STA = 45+67.00 @ 6.00' RT
31.0
45+00
46+00
47+00
48+00
MANHOLES 6-J
STA = 46+55.00 @ 78.00' RT
32.0
MANHOLES 6-J
STA = 47+80.00 @ 95.00' RT
33.0
Apron Endwalls for Culvert Pipe Reinforced Concrete 30-Inch
STA = 48+65.00 @ 122.00' RT
34.0
CTH
KP
SIGN

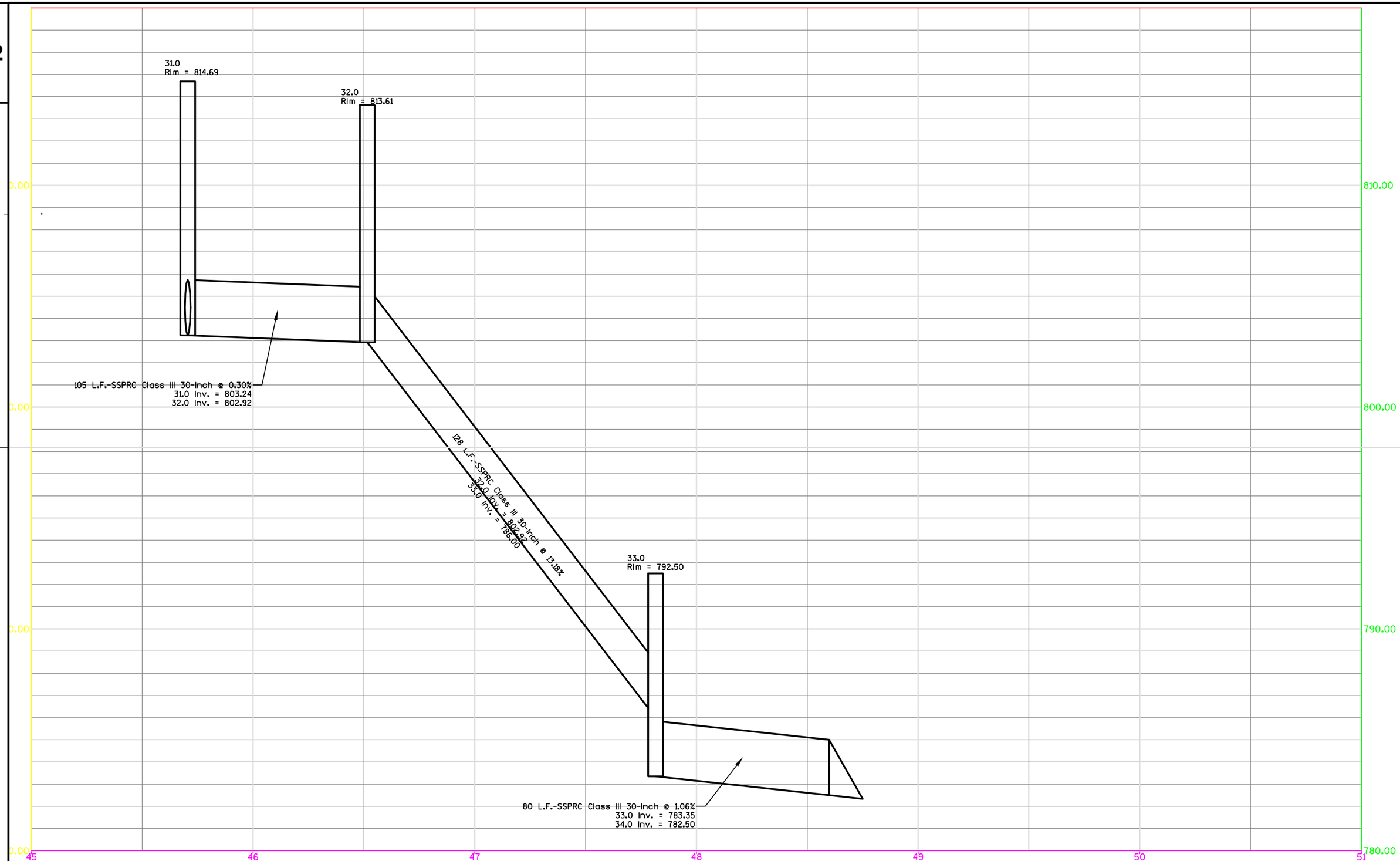

PROJECT NO:5310-02-76	HWY:USH 14	COUNTY:DANE	STORM SEWER	SHEET	E

FILE NAME : C:\USERS\DOTBTH\DOCUMENTS\CIVIL 3D\STORMSEWER LAYOUT FROM MSA 10-21-2015\STORM SEWER_USH 14 - COPY_6_10_19.DWG PLOT DATE : 6/11/2019 11:58 AM PLOT BY : HIELSBERG, BRETT THOPLOT NAME :

2

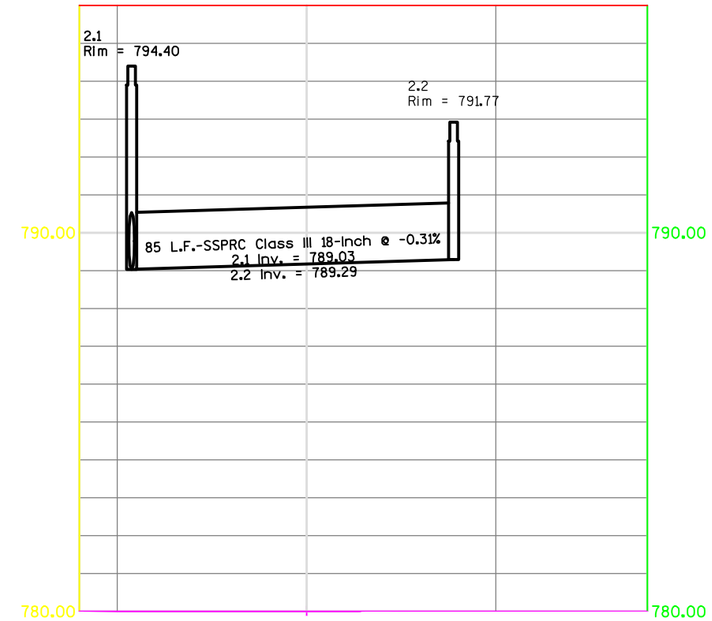

2

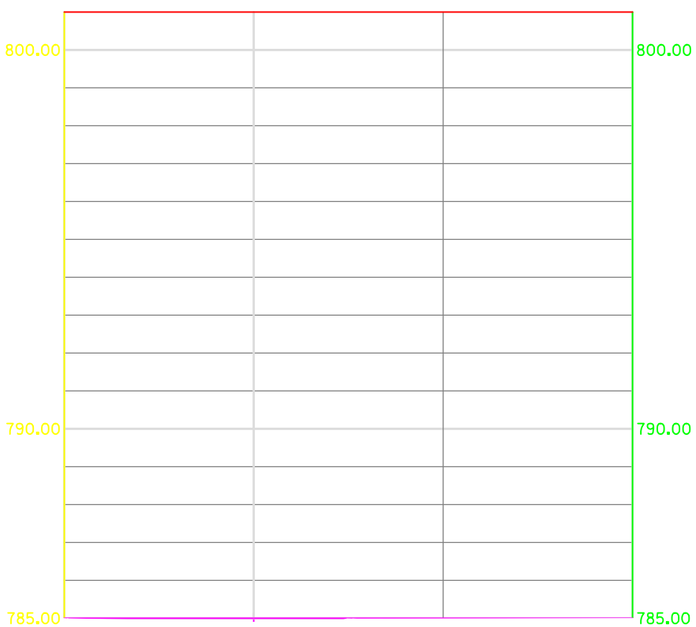

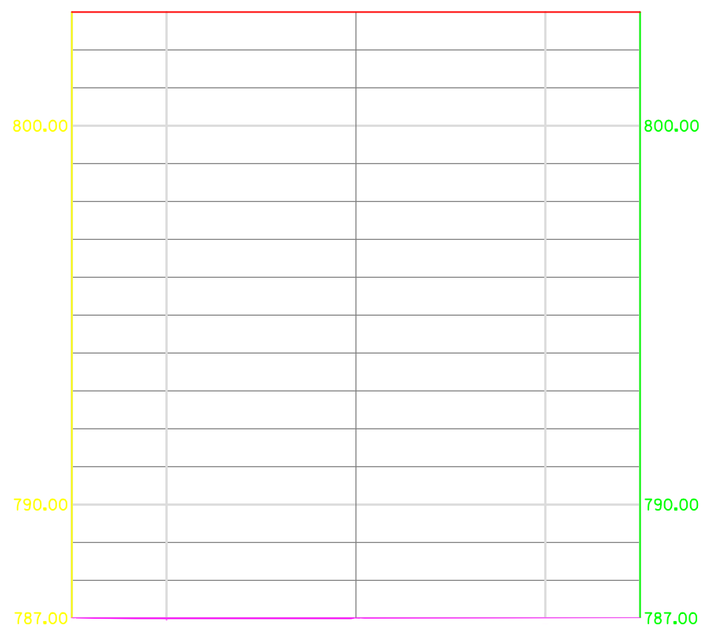

PROJECT NO:5310-02-76	HWY:USH 14	COUNTY:DANE	STORM SEWER	SHEET	E

2

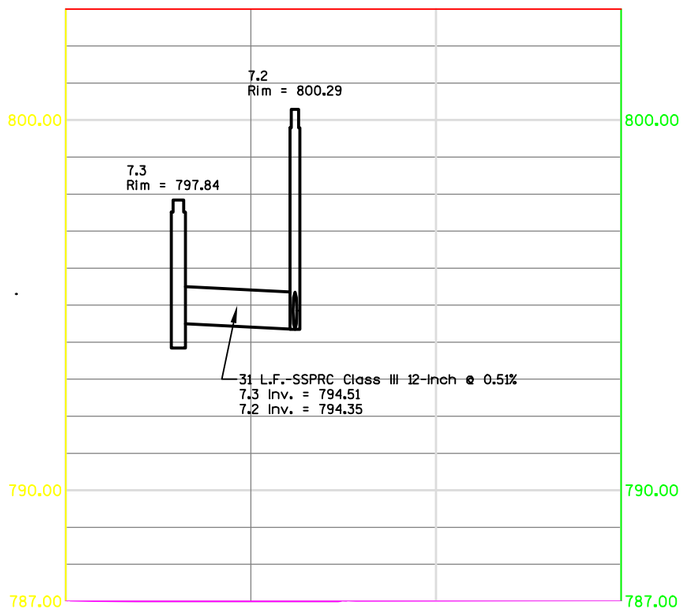

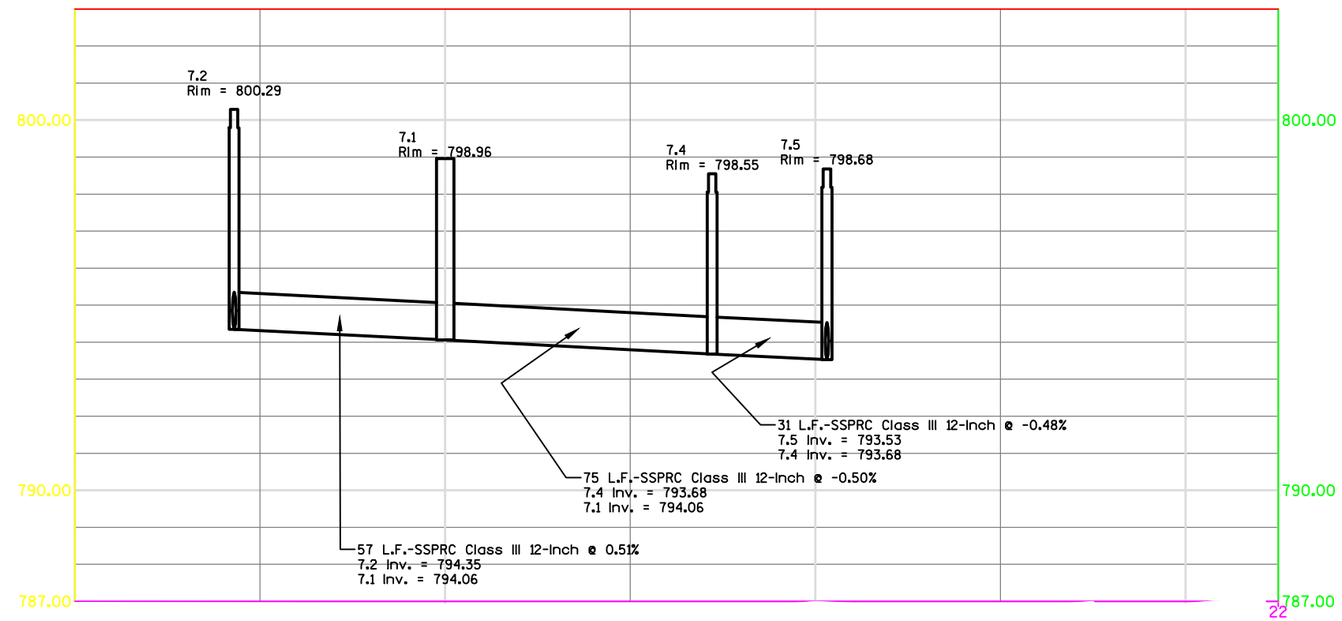

2

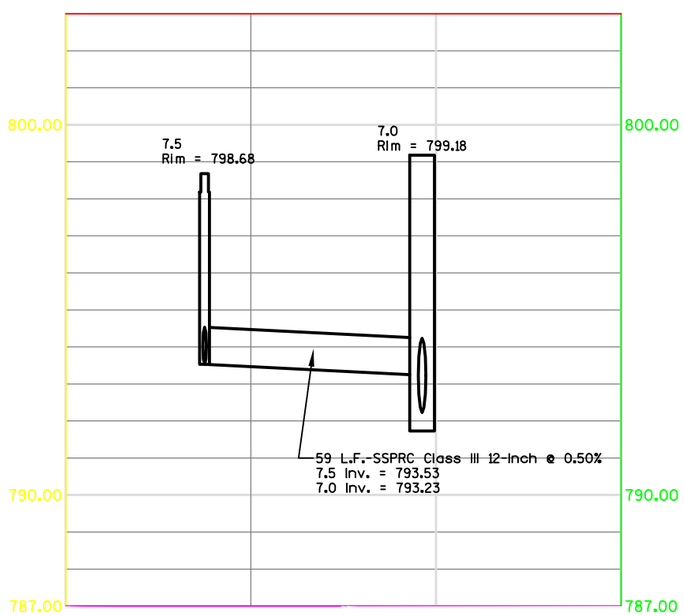

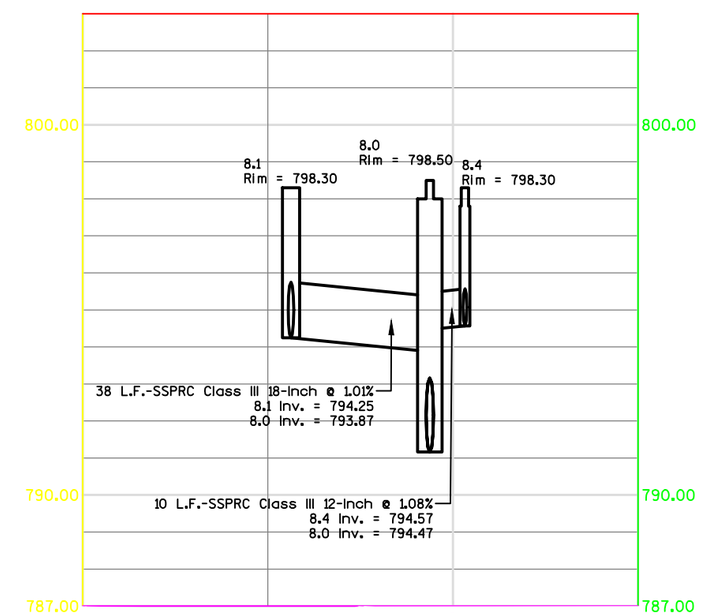

PROJECT NO:5310-02-76	HWY:USH 14	COUNTY:DANE	STORM SEWER	SHEET	E

2

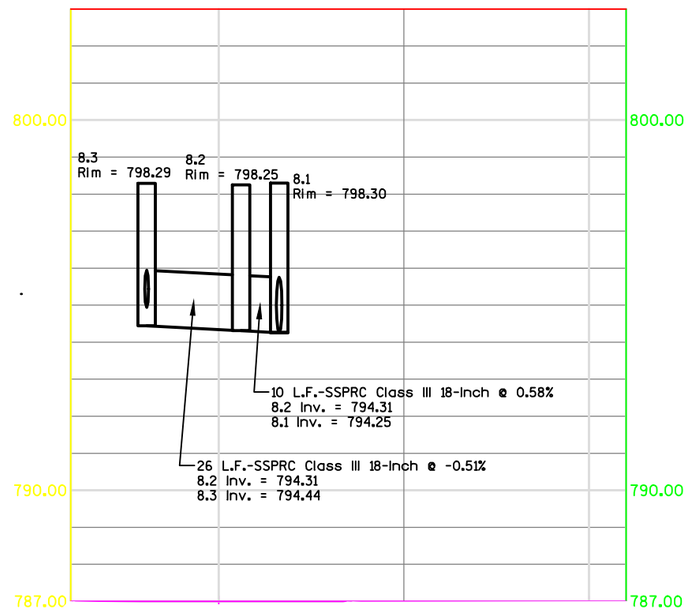

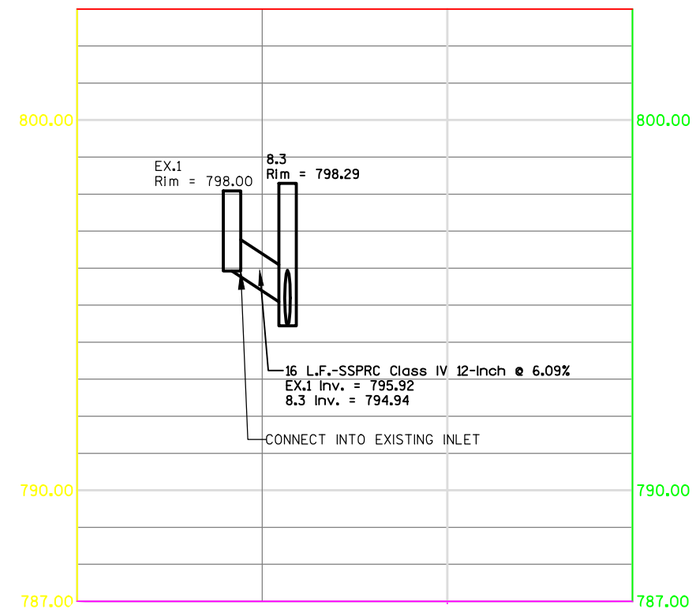

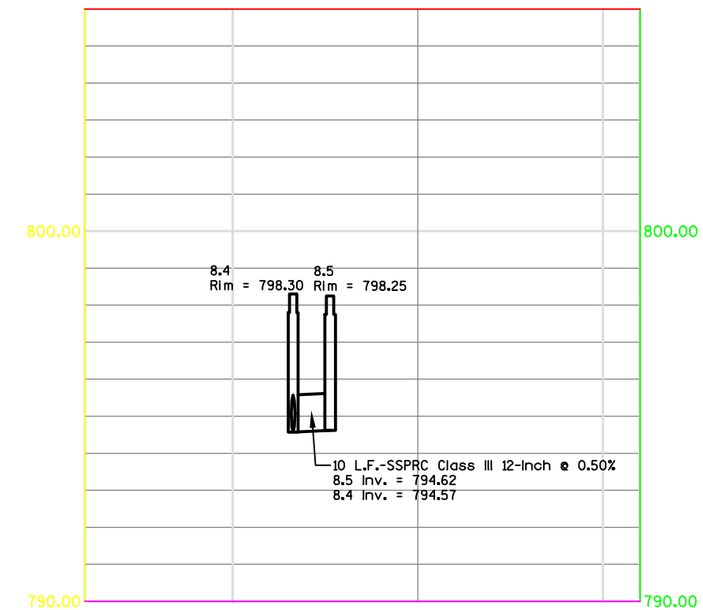

2

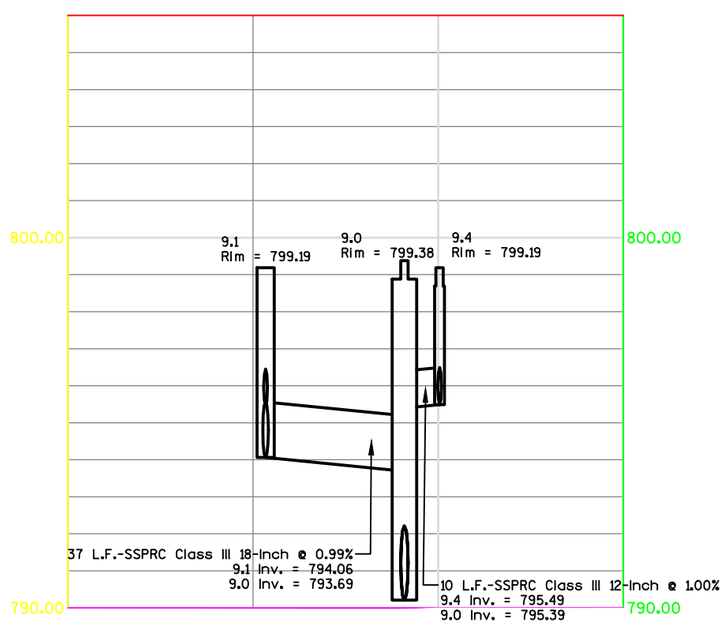

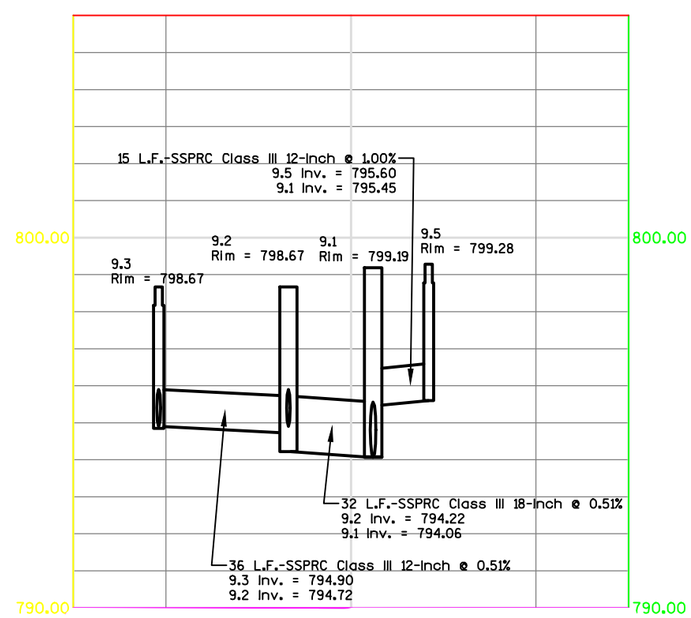

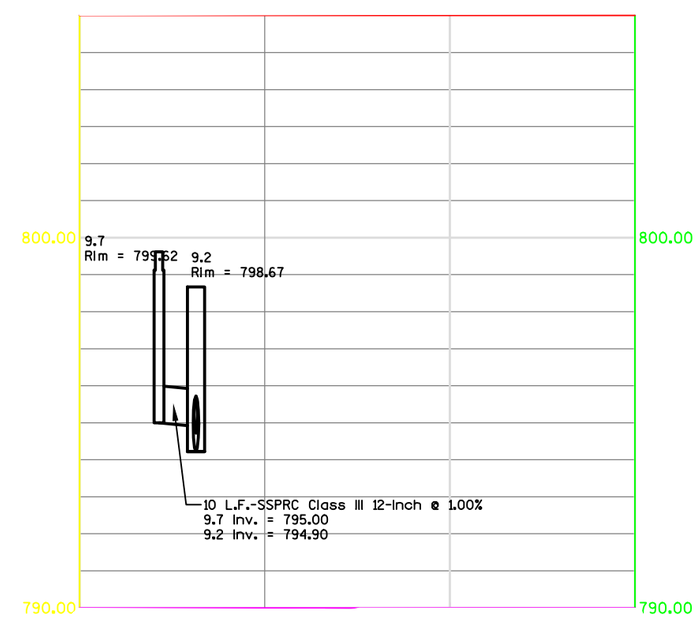

PROJECT NO:5310-02-76	HWY:USH 14	COUNTY:DANE	STORM SEWER	SHEET	E

2

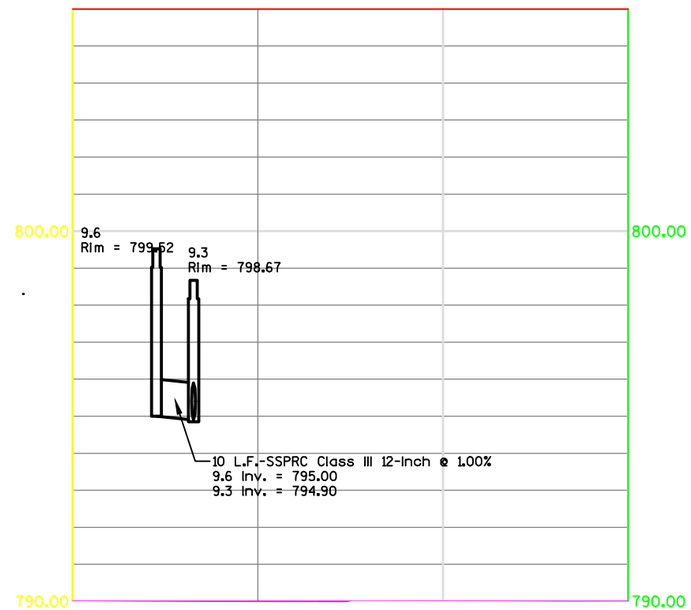

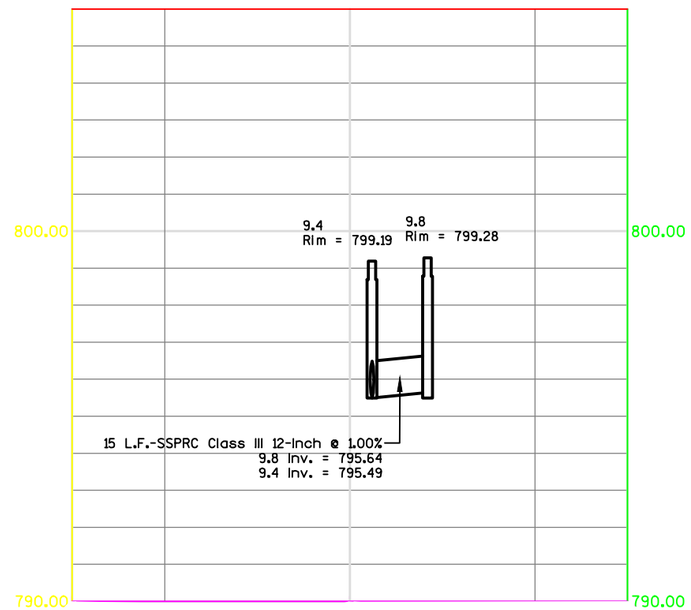

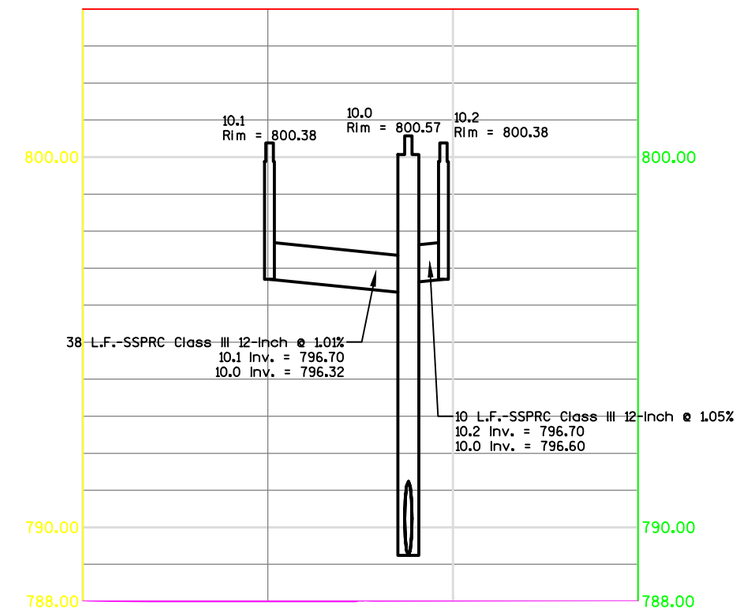

2

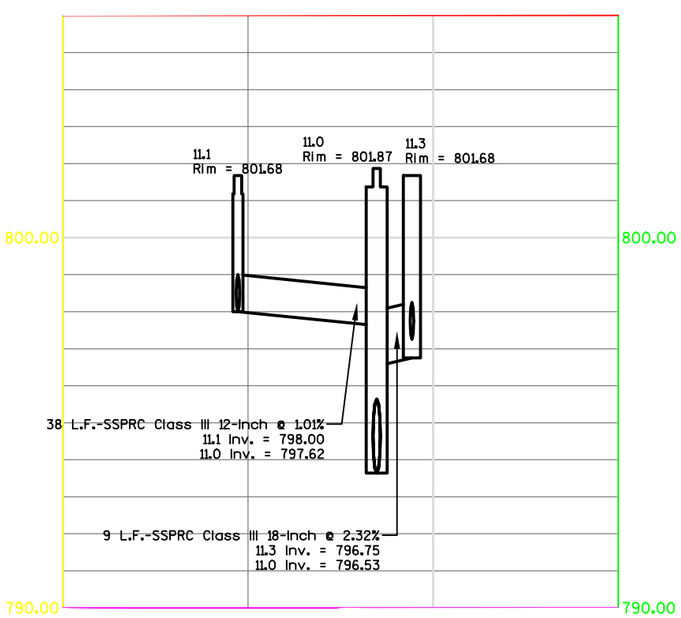

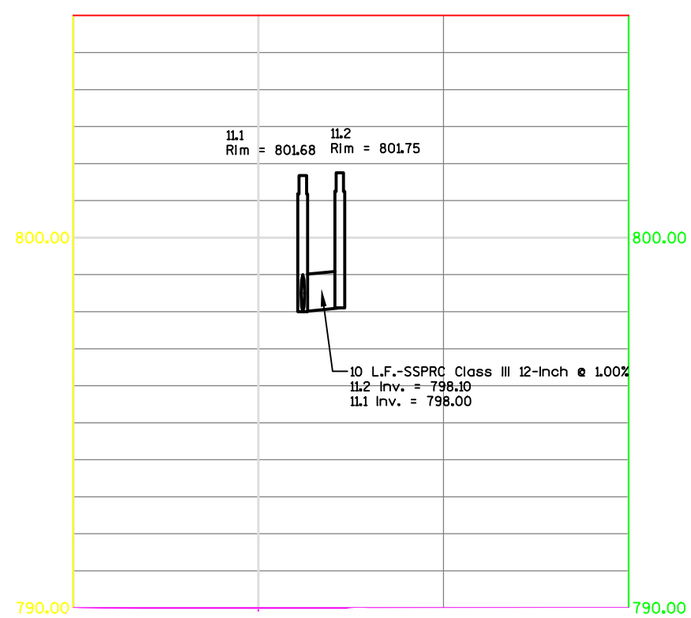

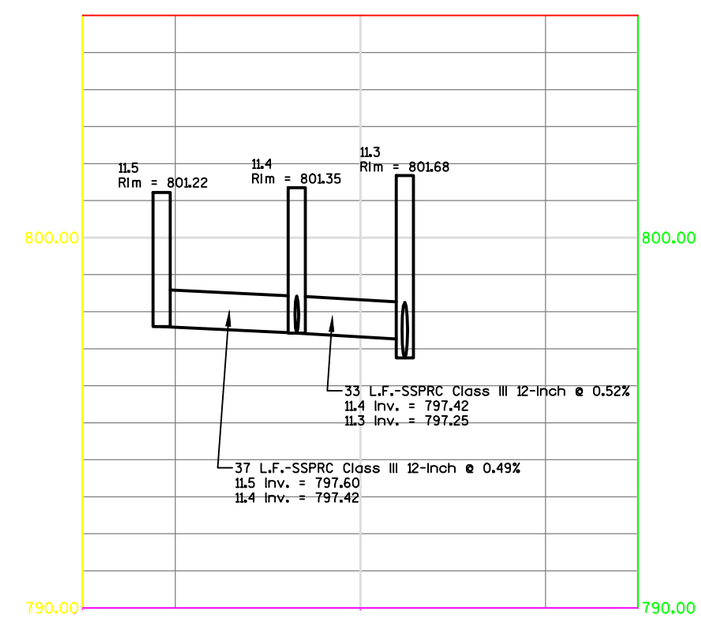

PROJECT NO:5310-02-76	HWY:USH 14	COUNTY:DANE	STORM SEWER	SHEET	E

2

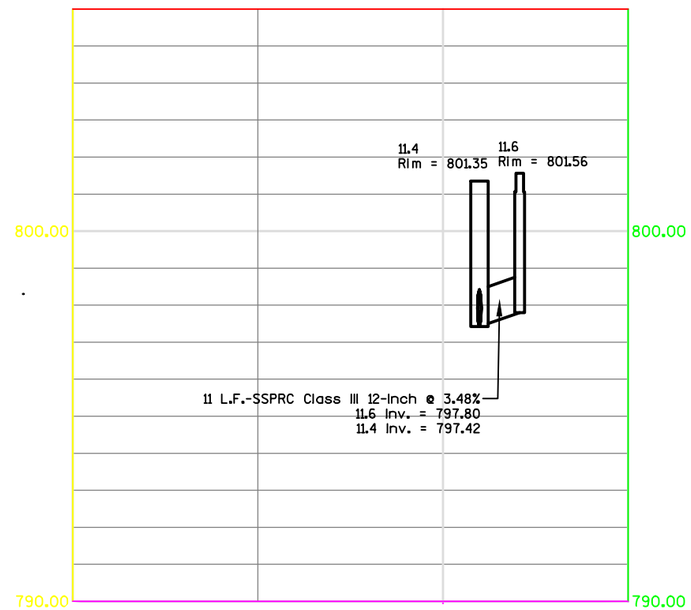

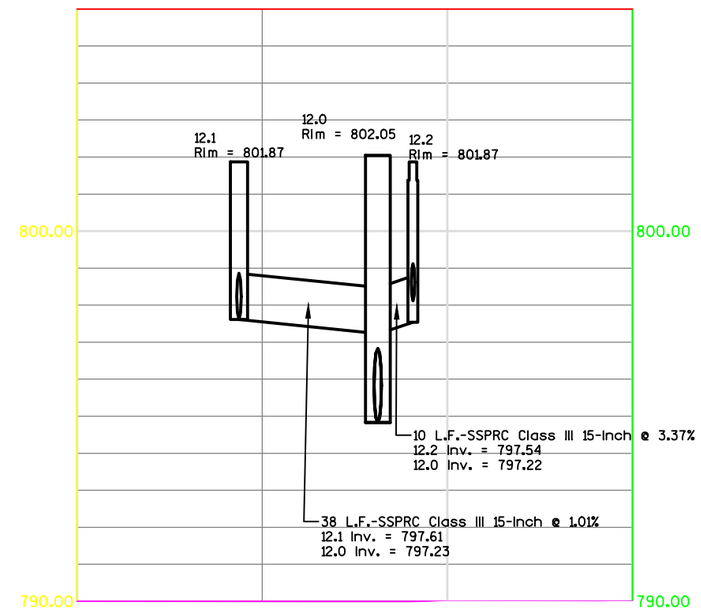

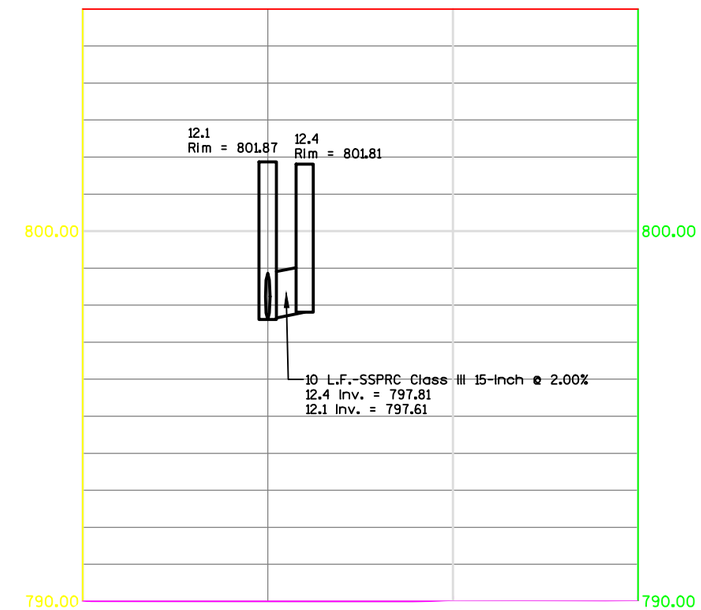

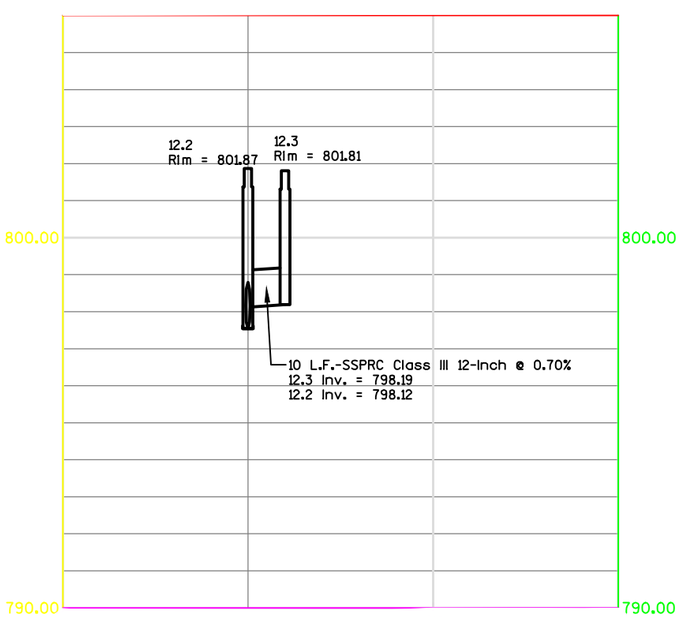

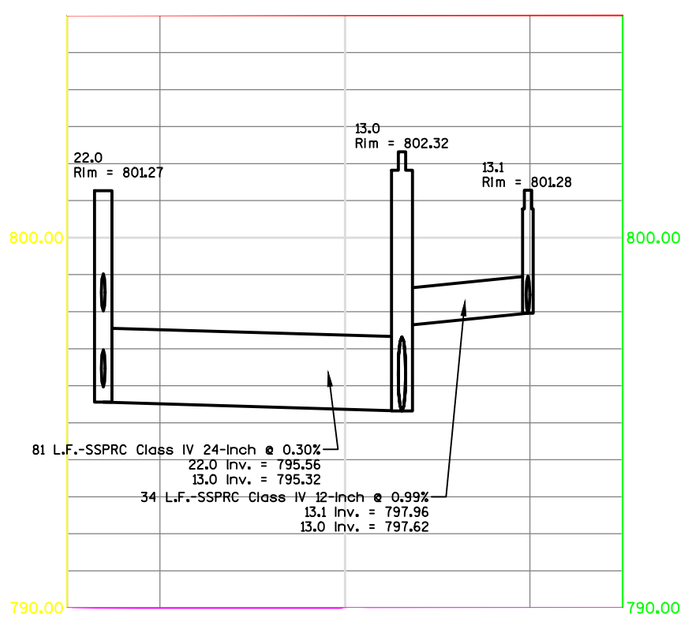

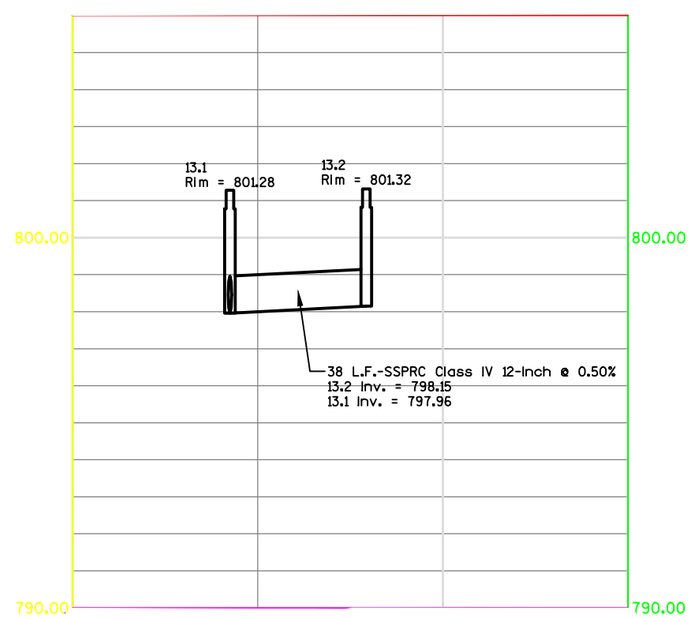

2

PROJECT NO:5310-02-76	HWY:USH 14	COUNTY:DANE	STORM SEWER	SHEET	E

2

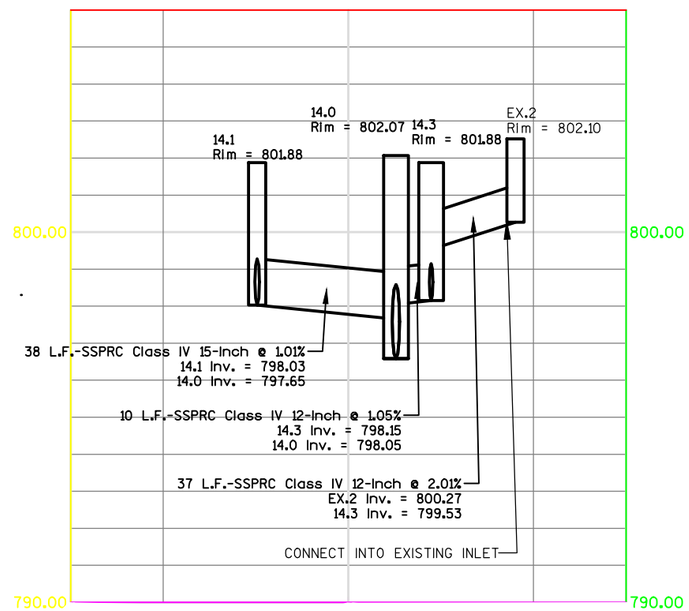

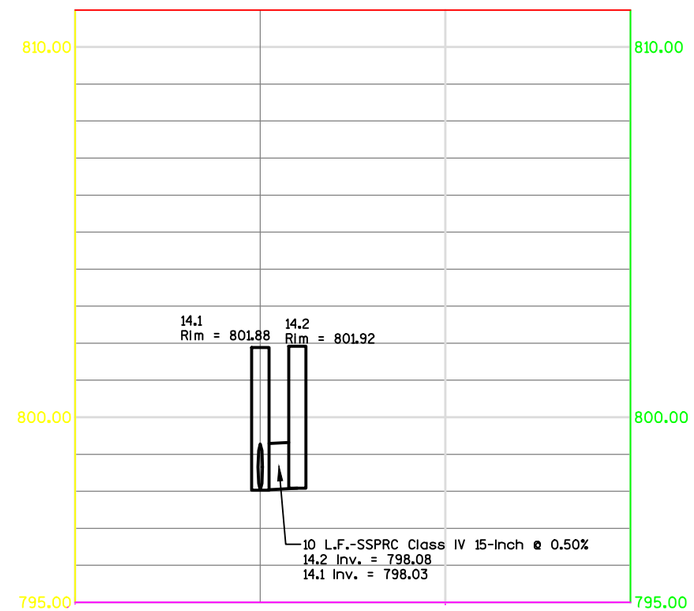

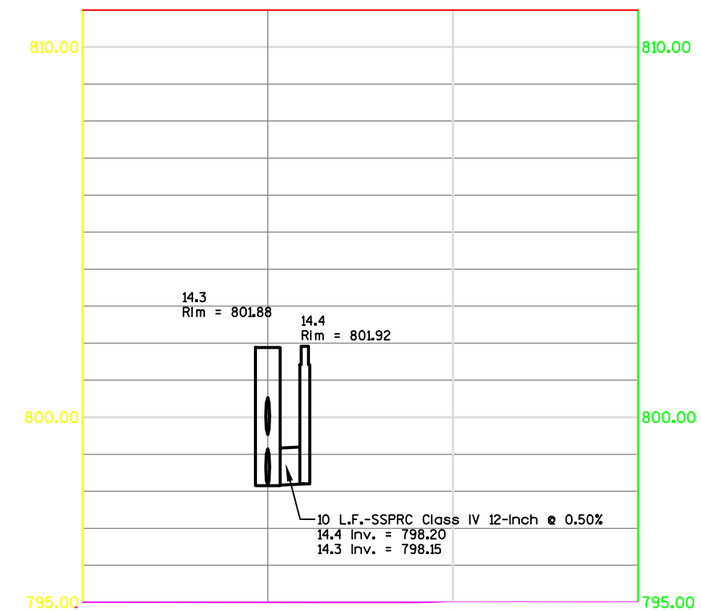

2

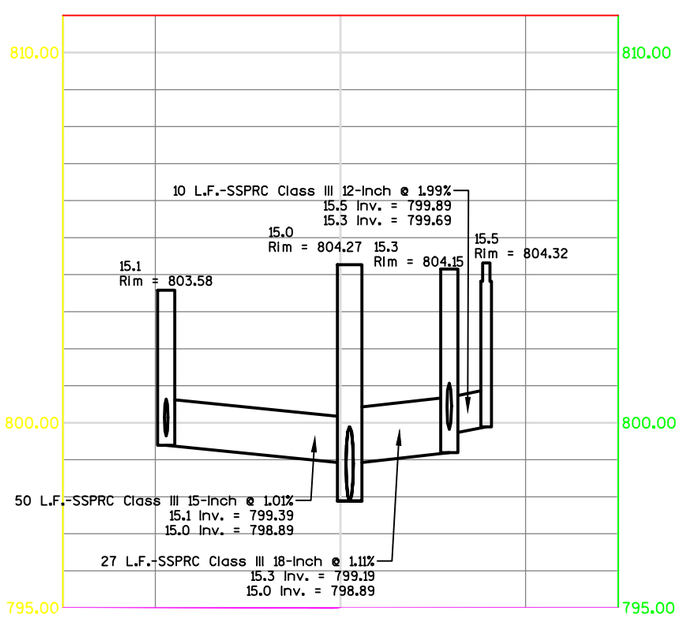

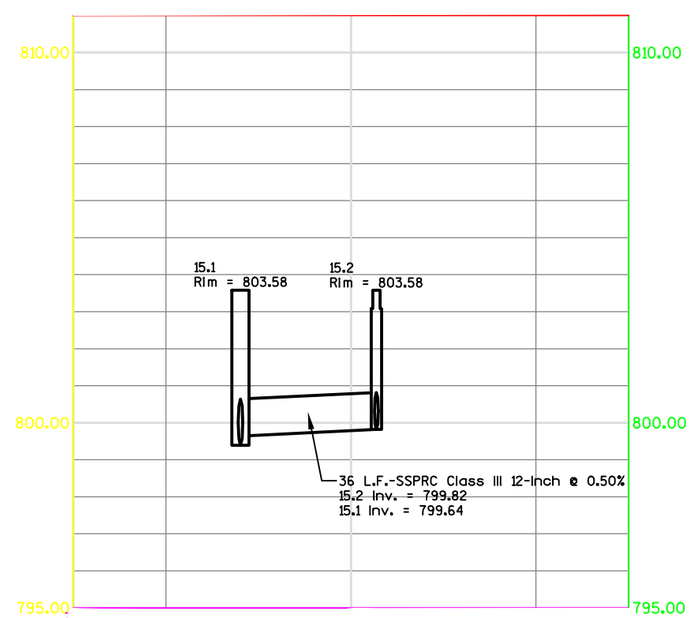

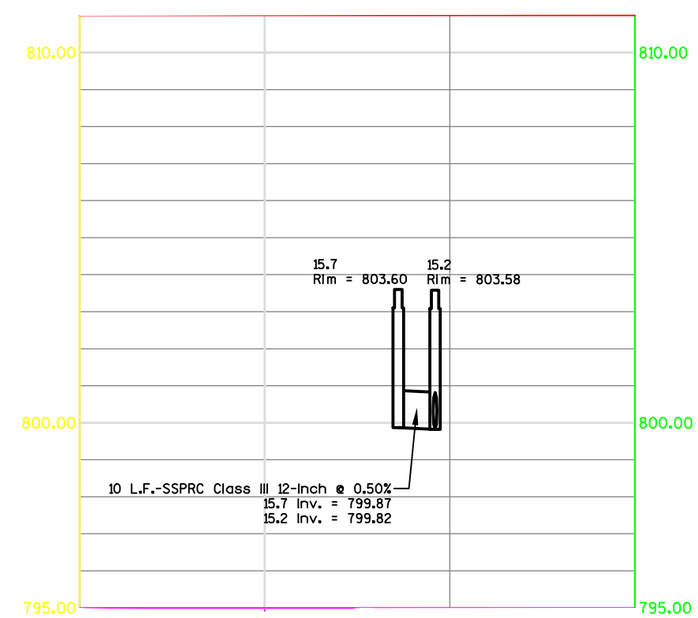

PROJECT NO:5310-02-76	HWY:USH 14	COUNTY:DANE	STORM SEWER	SHEET	E

2

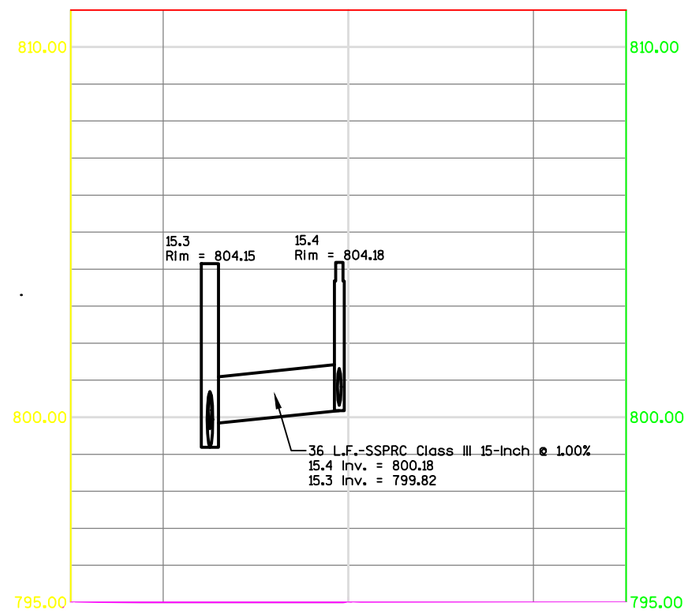

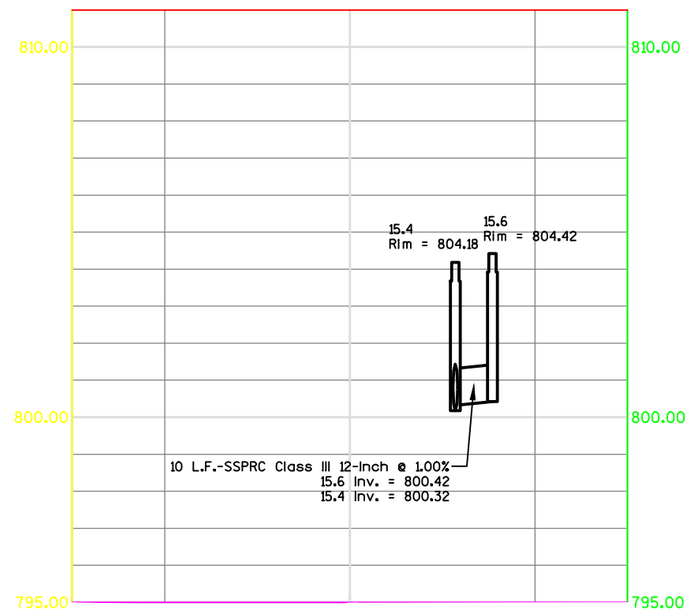

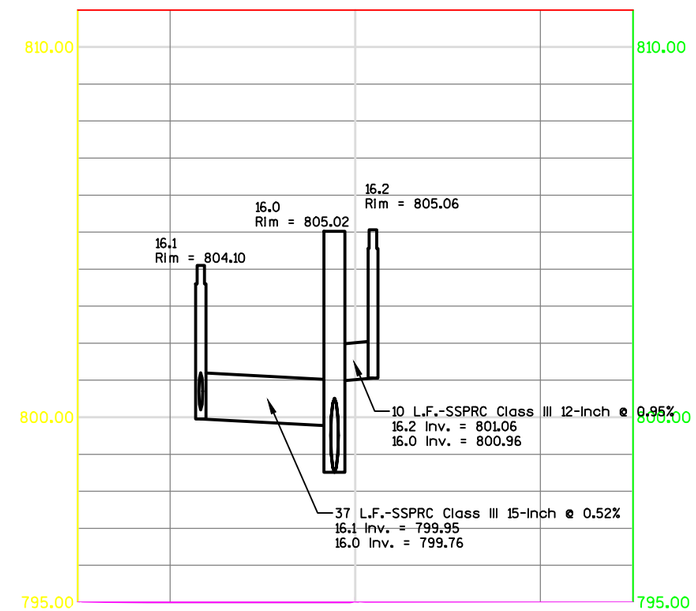

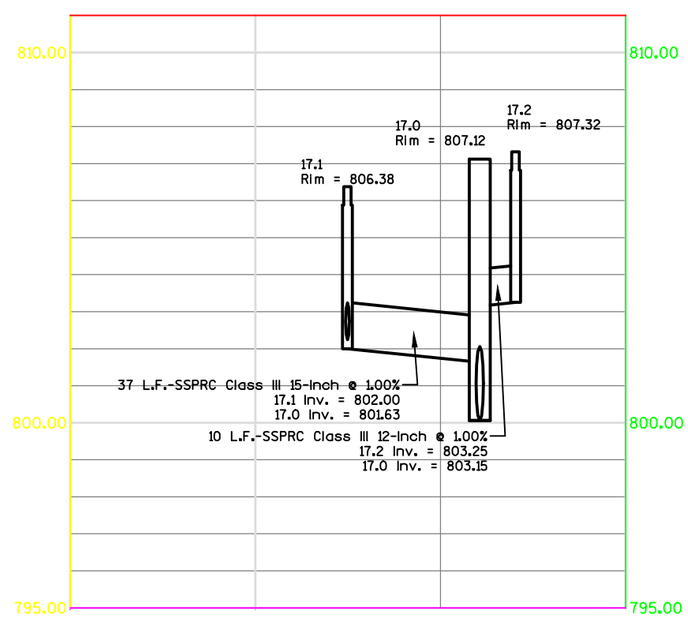

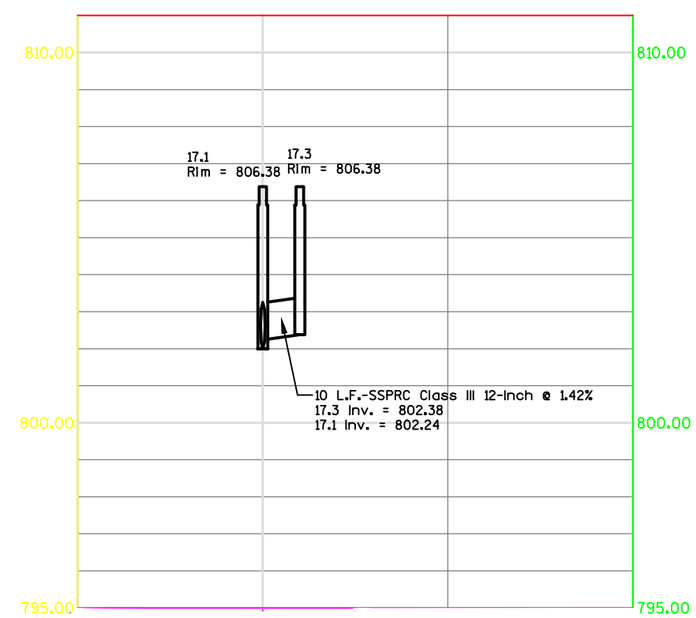

2

PROJECT NO:5310-02-76	HWY:USH 14	COUNTY:DANE	STORM SEWER	SHEET	E

2

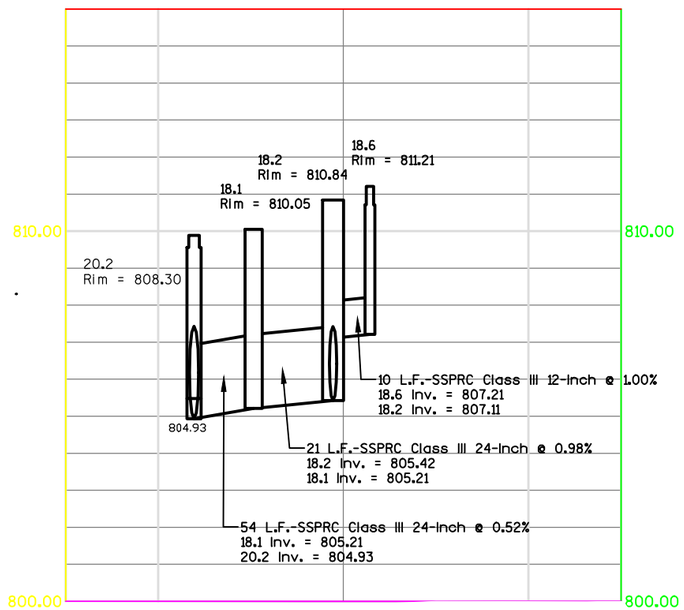

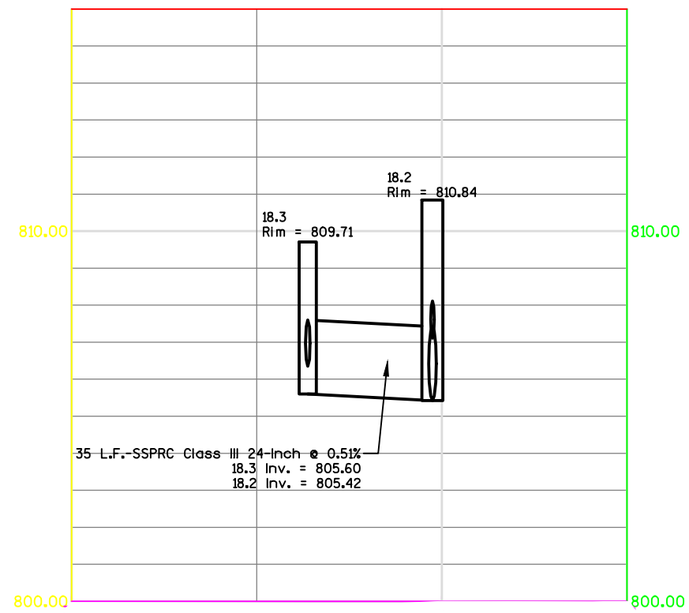

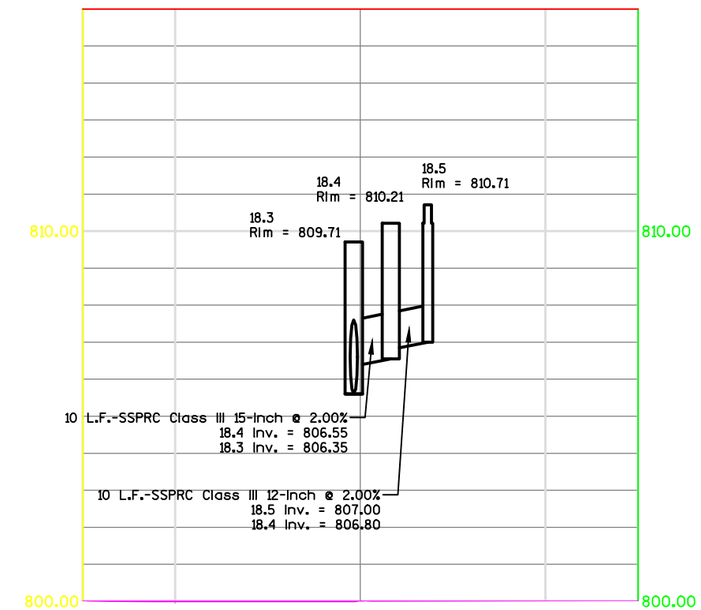

2

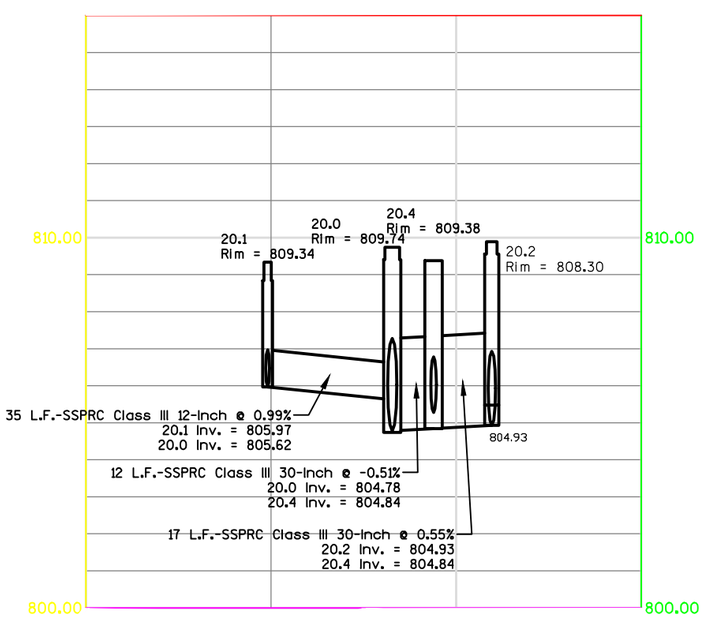

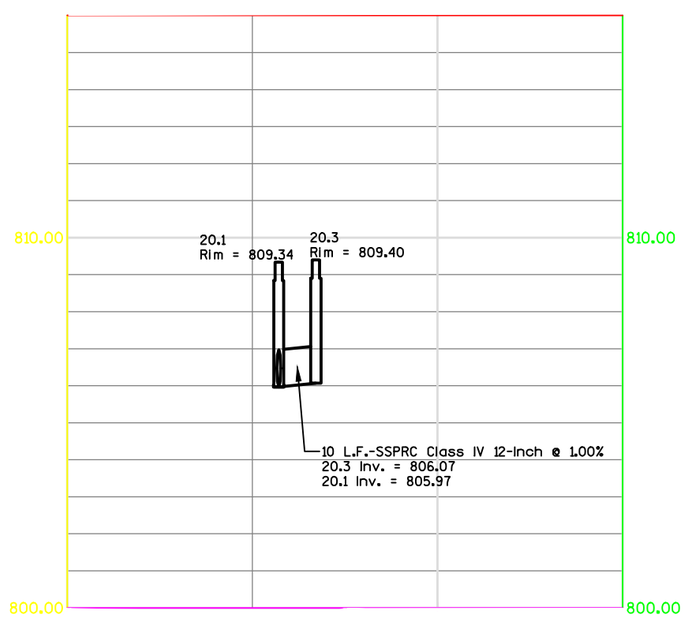

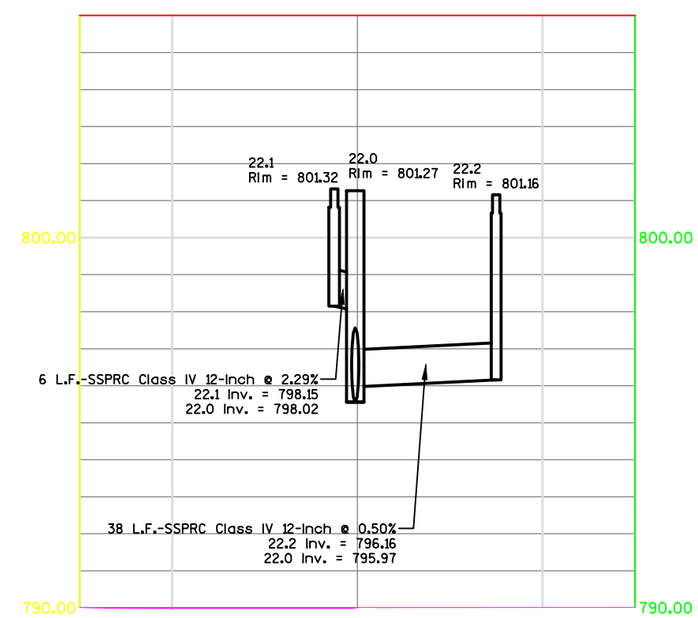

PROJECT NO:5310-02-76	HWY:USH 14	COUNTY:DANE	STORM SEWER	SHEET	E

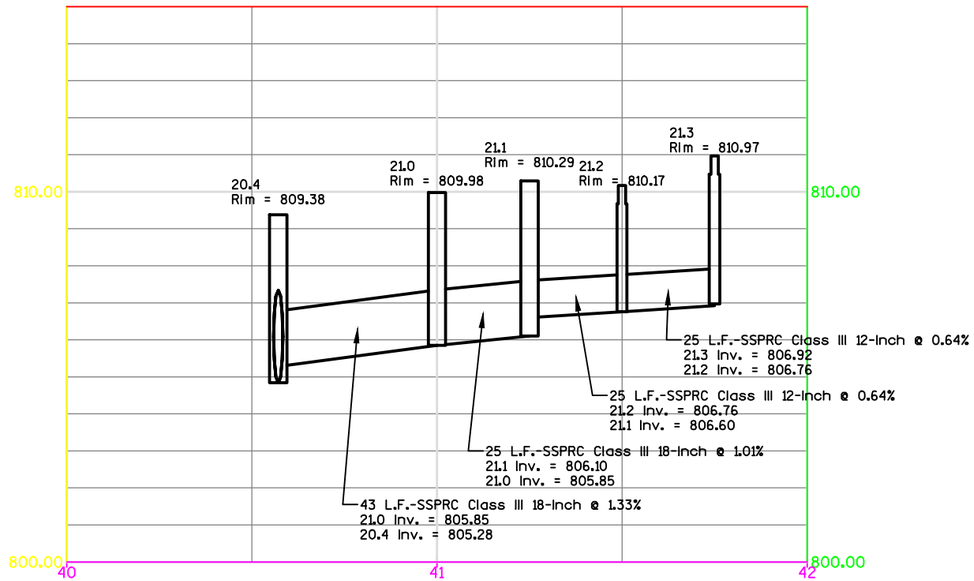

2

PROJECT NO: 5310-02-76	HWY: USH 14	COUNTY: DANE	STORM SEWER	SHEET	E

2020 UTILITY IMPROVEMENTS

USH 14

Village of Mazomanie, Wisconsin

MEMBER ONE CALL SYSTEMS INTERNATIONAL

TO OBTAIN LOCATION OF PARTICIPANTS' UNDERGROUND FACILITIES BEFORE YOU DIG IN WISCONSIN

CALL DIGGERS HOTLINE
1-800-242-8511
TOLL FREE

WIS. STATUTE 182.0175 (1974) REQUIRES MIN. OF 3 WORK DAYS NOTICE BEFORE YOU EXCAVATE.

SHEET INDEX

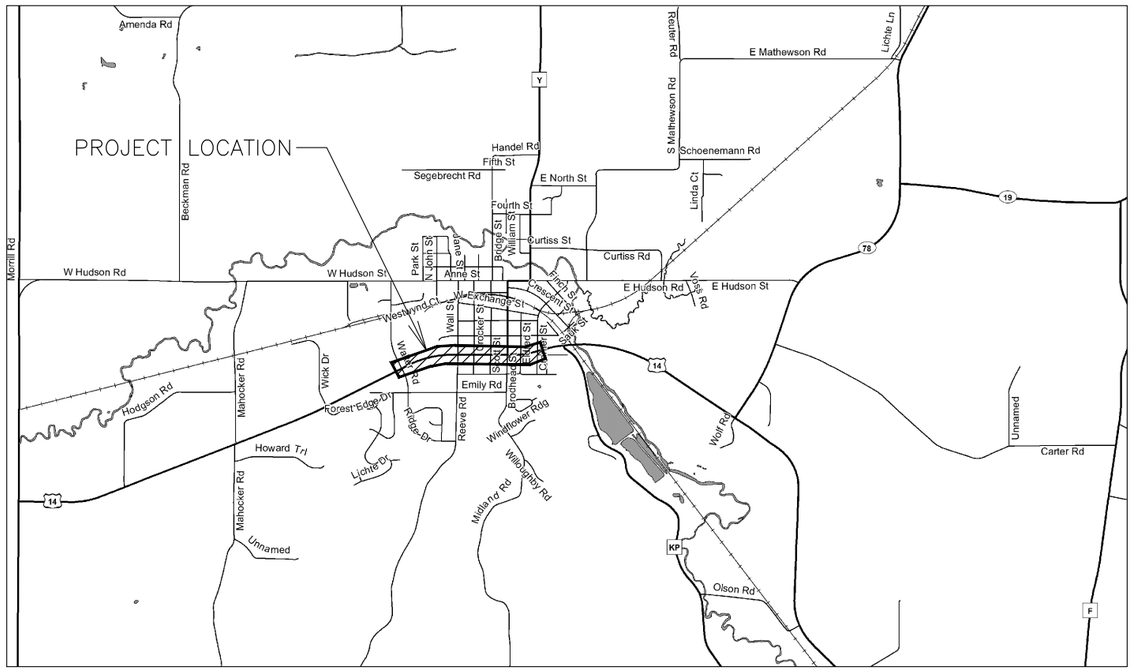

NO SCALE

LEGEND

UNDERGROUND TELE. — UT — UT — UT — UT —
UNDERGROUND CATV. — CBL — CBL — CBL — CBL —
UNDERGROUND ELEC. — UE — UE — UE — UE — UE — UE —
OVERHEAD — OH — OH — OH —
EXISTING GAS
PROPERTY LINE
EXISTING WATER MAIN
EXISTING SANITARY SEWER
EXISTING STORM SEWER
EXISTING FENCE LINE
SAWCUT
NEW STORM SEWER
NEW WATER MAIN
NEW SANITARY SEWER

NEW ITEMS:

WATER VALVE, CURB STOP, HYDRANT, MANHOLE, CURB INLET, ENDWALL, CAUTION GAS WARNING

EXISTING ITEMS:

FLAG POLE, MAILBOX, POWER POLE, LIGHT POLE, LAMP POST, PULL BOX
WATER VALVE, CURB STOP, HYDRANT, WELL, MONITORING WELL, TRACER WIRE
SANITARY MANHOLE, SANITARY VALVE, CLEANOUT, STORM MANHOLE, CURB INLET, CIRCULAR INLET
SQUARE INLET, ENDWALL, STUMP, DECID. TREE (RELATIVE SIZE SHOWN), EVERGREEN, SHRUB OR HEDGE, SIGN
CATV. PED., TELE. PED., ELEC. PED., GAS VALVE, STREET SIGN, IRON PIPE, IRON ROD

NOTES: 1.) EXISTING FEATURES AND LABELS ARE SHOWN WITH SCREENED, LIGHTER LINES.
2.) NEW CONCRETE IS SHOWN SHADED IN PLAN VIEWS
3.) CONCRETE REMOVALS ARE SHOWN BY CROSS-HATCHING

TOWN & COUNTRY ENGINEERING, INC.
2912 Marketplace Drive
Suite 103
Madison, WI 53719
(608) 273-3350
www.tcengineers.net

SHEET	REVISIONS	BY	DATE

2020 UTILITY IMPROVEMENTS
USH 14
Village of Mazomanie, Wisconsin

DRAWN BY: J.R.K.
CHECKED BY: B.R.B.
REV. DATE:

PROJECT NO.: MZ 123
DRAWING FILE: MZ123 DETAILS.DWG
DATE: 5-24-19

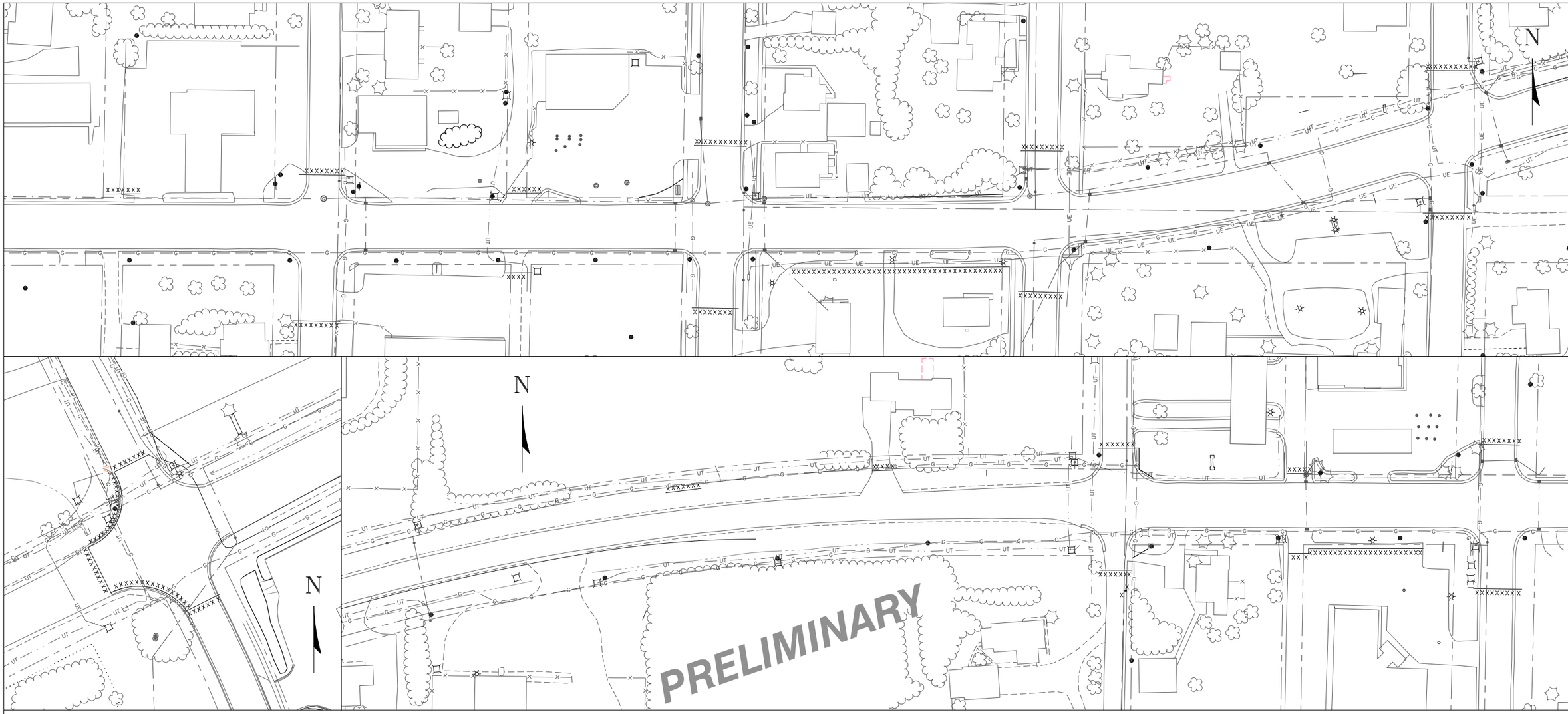

EROSION CONTROL NOTES:

- LOCATIONS MARKED WITH "■" TO RECEIVE INLET FILTER PROTECTION DURING CONSTRUCTION. ALL NEW STREET INLETS MUST ALSO RECEIVE INLET FILTER PROTECTION. IF NO INLET IS AT THE MARKED LOCATION, CONSTRUCT A STONE CHECK DAM IN GUTTER LINE.
- SURFACE FLOW DIRECTION IS INDICATED WITH
- SILT FENCE INSTALLATION IS INDICATED WITH
- POST WDNR CERTIFICATE OF PERMIT COVERAGE ON SITE AND MAINTAIN UNTIL CONSTRUCTION ACTIVITIES HAVE CEASED, THE SITE IS STABILIZED, AND A NOTICE OF TERMINATION IS FILED WITH WDNR.
- KEEP A COPY OF THE CURRENT EROSION CONTROL PLAN ON SITE THROUGHOUT THE DURATION OF THE PROJECT.
- SUBMIT PLAN REVISIONS OR AMENDMENTS TO THE WDNR AT LEAST 5 DAYS PRIOR TO FIELD IMPLEMENTATION.
- THE CONTRACTOR IS RESPONSIBLE FOR ROUTINE SITE INSPECTIONS AT LEAST ONCE EVERY 7 DAYS AND WITHIN 24 HOURS AFTER A RAINFALL EVENT OF 0.5 INCHES OR GREATER. KEEP INSPECTION REPORTS ON-SITE AND MAKE THEM AVAILABLE UPON REQUEST.
- INSPECT AND MAINTAIN ALL INSTALLED EROSION CONTROL PRACTICES UNTIL THE CONTRIBUTING DRAINAGE AREA HAS BEEN STABILIZED.
- WHEN POSSIBLE: PRESERVE EXISTING VEGETATION (ESPECIALLY ADJACENT TO SURFACE WATERS), MINIMIZE LAND-DISTURBING CONSTRUCTION ACTIVITY ON SLOPES OF 20% OR MORE, MINIMIZE SOIL COMPACTION, AND PRESERVE TOPSOIL.
- REFER TO THE WDNR STORMWATER CONSTRUCTION TECHNICAL STANDARDS AT http:dnr.wi.gov/topic/stormwater/standards/const_standards.html.
- INSTALL PERIMETER EROSION CONTROLS AND ROCK TRACKING PAD CONSTRUCTION ENTRANCE(S) PRIOR TO ANY LAND-DISTURBING ACTIVITIES, INCLUDING CLEARING AND GRUBBING. USE WDNR TECHNICAL STANDARD STONE TRACKING PAD AND TIRE WASHING #1057 FOR ROCK CONSTRUCTION ENTRANCE(S).
- INSTALL INLET PROTECTION PRIOR TO LAND-DISTURBING ACTIVITIES IN THE CONTRIBUTING DRAINAGE AREA AND/OR IMMEDIATELY UPON INLET INSTALLATION. COMPLY WITH WDNR TECHNICAL STANDARD STORM DRAIN INLET PROTECTION FOR CONSTRUCTION SITES #1060.
- STAGE CONSTRUCTION GRADING ACTIVITIES TO MINIMIZE THE CUMULATIVE EXPOSED AREA. CONDUCT TEMPORARY GRADING FOR EROSION CONTROL PER WDNR TECHNICAL STANDARD TEMPORARY GRADING PRACTICES FOR EROSION CONTROL #1067.
- NOTIFY THE OWNER IF DEWATERING IS SCHEDULED TO OCCUR IN AREAS OF SOIL AND/OR GROUNDWATER CONTAMINATION, OR IF DEWATERING WILL OCCUR FROM A HIGH CAPACITY WELL (70 GPM OR MORE). DEWATER ONLY AFTER THE APPROPRIATE WDNR DEWATERING DISCHARGE PERMIT HAS BEEN OBTAINED.
- PROVIDE ANTI-SCOUR PROTECTION AND MAINTAIN NON-EROSIVE FLOW DURING DEWATERING. LIMIT PUMPING RATES TO EITHER (A) THE SEDIMENT BASIN/TRAP DESIGN DISCHARGE RATE, OR (B) THE BASIN DESIGN RELEASE RATE WITH THE CORRECTLY-FITTED HOSE AND GEOTEXTILE FILTER BAG. PERFORM DEWATERING OF ACCUMULATED SURFACE RUNOFF IN ACCORDANCE WITH WDNR TECHNICAL STANDARD DE-WATERING #1061.
- INSTALL AND MAINTAIN SILT FENCING PER WDNR TECHNICAL STANDARD SILT FENCE #1056. REMOVE SEDIMENT FROM BEHIND SILT FENCES AND SEDIMENT BARRIERS BEFORE SEDIMENT REACHES A DEPTH THAT IS EQUAL TO ONE-HALF OF THE FENCE AND/OR BARRIER HEIGHT.
- REPAIR BREAKS AND GAPS IN SILT FENCES AND BARRIERS IMMEDIATELY. REPLACE DECOMPOSING STRAW BALES (TYPICAL BALE LIFE IS 3 MONTHS). LOCATE, INSTALL, AND MAINTAIN STRAW BALES PER WDNR TECHNICAL STANDARD DITCH CHECKS #1062.
- INSTALL AND MAINTAIN FILTER SOCKS IN ACCORDANCE WITH WDNR TECHNICAL STANDARD INTERIM MANUFACTURED PERIMETER CONTROL AND SLOPE INTERRUPTION PRODUCTS #1071.
- IMMEDIATELY STABILIZE STOCKPILES AND SURROUND STOCKPILES AS NEEDED WITH SILT FENCE OR OTHER PERIMETER CONTROL IF STOCKPILES WILL REMAIN INACTIVE FOR 7 DAYS OR LONGER.
- IMMEDIATELY STABILIZE ALL DISTURBED AREAS THAT WILL REMAIN INACTIVE FOR 14 DAYS OR LONGER. BETWEEN SEPTEMBER 15 AND OCTOBER 15: STABILIZE WITH MULCH, TACKIFIER, AND A PERENNIAL SEED MIXED WITH WINTER WHEAT, ANNUAL OATS, OR ANNUAL RYE, AS APPROPRIATE FOR REGION AND SOIL TYPE. OCTOBER 15 THROUGH COLD WEATHER: STABILIZE WITH A POLYMER AND DORMANT SEED MIX, AS APPROPRIATE FOR REGION AND SOIL TYPE.
- STABILIZE AREAS OF FINAL GRADING WITHIN 7 DAYS OF REACHING FINAL GRADE.
- SWEEP/CLEAN UP ALL SEDIMENT/TRASH THAT MOVES OFF-SITE DUE TO CONSTRUCTION ACTIVITY OR STORM EVENTS BEFORE THE END OF THE SAME WORKDAY OR AS DIRECTED BY THE OWNER. SEPARATE SWEPT MATERIALS (SOILS AND TRASH) AND DISPOSE OF APPROPRIATELY.
- THE CONTRACTOR IS RESPONSIBLE FOR CONTROLLING DUST PER WDNR TECHNICAL STANDARD DUST CONTROL ON CONSTRUCTION SITES #1068.
- PROPERLY DISPOSE OF ALL WASTE AND UNUSED BUILDING MATERIALS (INCLUDING GARBAGE, DEBRIS, CLEANING WASTES, OR OTHER CONSTRUCTION MATERIALS) AND DO NOT ALLOW THESE MATERIALS TO BE CARRIED BY RUNOFF INTO THE RECEIVING CHANNEL.
- COORDINATE WITH THE OWNER TO UPDATE THE LAND DISTURBANCE PERMIT TO INDICATE THE ANTICIPATED OR LIKELY DISPOSAL LOCATIONS FOR ANY EXCAVATED SOILS OR CONSTRUCTION DEBRIS THAT WILL BE HAULED OFF-SITE FOR DISPOSAL. THE DEPOSITED OR STOCKPILED MATERIAL NEEDS TO INCLUDE PERIMETER SEDIMENT CONTROL MEASURES (SUCH AS SILT FENCE, HAY BALES, FILTER SOCKS, OR COMPACTED EARTHEN BERMS).
- FOR NON-CHANNELIZED FLOW ON DISTURBED OR CONSTRUCTED SLOPES, PROVIDE CLASS I, II OR III TYPE A EROSION CONTROL MATTING. SELECT EROSION MATTING FROM APPROPRIATE MATRIX IN WDOT'S WIDOT PRODUCT ACCEPTABILITY LIST (PAL); INSTALL AND MAINTAIN PER WDNR TECHNICAL STANDARD NON-CHANNEL EROSION MAT #1052.
- FOR CHANNELIZED FLOW ON DISTURBED OR CONSTRUCTED AREAS, PROVIDE CLASS I, II, OR III TYPE B EROSION CONTROL MATTING. SELECT EROSION MATTING FROM APPROPRIATE MATRIX IN WDOT'S WIDOT PRODUCT ACCEPTABILITY LIST (PAL); INSTALL AND MAINTAIN PER WDNR TECHNICAL STANDARD CHANNEL EROSION MAT #1053.
- INSTALL ADDITIONAL EROSION AND SEDIMENT CONTROL MEASURES (SUCH AS TEMPORARY SEDIMENT BASINS, DITCH CHECKS, EROSION CONTROL MATTING, SILT FENCING, FILTER SOCKS, WATTLES, SWALES, ETC.), OR AS DIRECTED BY THE OWNER.
- THE CONTRACTOR IS RESPONSIBLE FOR COMPLYING WITH ALL APPLICABLE WDNR REMEDIATION AND WASTE MANAGEMENT REQUIREMENTS FOR HANDLING AND DISPOSING OF CONTAMINATED MATERIALS. SITE-SPECIFIC INFORMATION FOR AREAS WITH KNOWN OR SUSPECTED SOIL AND/OR GROUNDWATER CONTAMINATION CAN BE FOUND ON WDNR'S BUREAU OF REMEDIATION AND REDEVELOPMENT TRACKING SYSTEM (BRRTS) PUBLIC DATABASE AT: http://dnr.wi.gov/botw/

TOWN & COUNTRY ENGINEERING, INC.
2912 Marketplace Drive
Suite 103
Madison, WI 53719
(608) 273-3350
www.tcengineers.net

EROSION CONTROL PLAN AND GENERAL NOTES

2020 UTILITY IMPROVEMENTS
USH 14
Village of Mazomanie, Wisconsin

PROJECT NO.:	MZ 123
DRAWING FILE:	MZ123 SHEETS.DWG
DRAWN BY:	J.R.K.
CHECKED BY:	B.R.B.
DATE:	5-28-19
REVISIONS:	
SCALE:	0 25 50
SHEET:	1

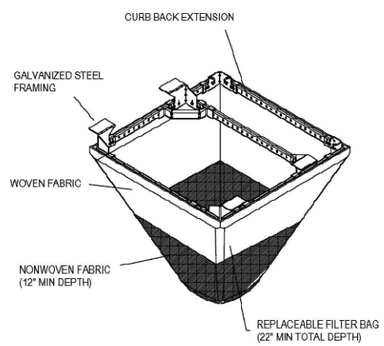

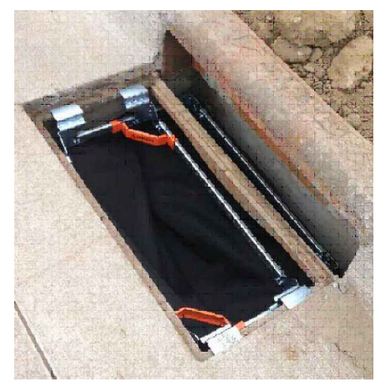

GENERAL NOTES:

WHEN REMOVING OR MAINTAINING INLET PROTECTION, CARE SHALL BE TAKEN SO THAT THE SEDIMENT TRAPPED IN THE GEOTEXTILE FABRIC DOES NOT FALL INTO THE INLET. ANY MATERIAL FALLING INTO THE INLET SHALL BE REMOVED IMMEDIATELY.

FRAMED INLET PROTECTION SHALL BE COMPLIANT WITH ALL ASTM STANDARD D8057–17 REQUIREMENTS, INCLUDING:

A. BYPASS OVERFLOW THAT MEETS OR EXCEEDS INLET DESIGN FLOW
B. FRAME AND BAG STRONG ENOUGH TO HANDLE FULL SEDIMENT LOAD.

INSTALLATION NOTES:

NO PART OF INLET PROTECTION SHALL BE PROJECTING ABOVE THE GRATE.

FOR COMBINATION INLETS, PROTECTION SHALL CAPTURE RUNOFF ENTERING BOTH GRATE AND CURB OPENING.

A DUAL FABRIC FILTER BAG, WITH NON–WOVEN BOTTOM AND WOVEN TOP SHALL BE USED.

THE INSTALLED BAG SHALL HAVE A MINIMUM SIDE CLEARANCE, BETWEEN THE INLET WALLS AND THE BAG, MEASURED AT THE BOTTOM OF THE OVERFLOW HOLES, OF 3". WHERE NECESSARY THE CONTRACTOR SHALL CINCH THE BAG, USING PLASTIC ZIP TIES, TO ACHIEVE THE 3" CLEARANCE. THE TIES SHALL BE PLACED AT A MAXIMUM OF 4" FROM THE BOTTOM OF THE BAG.

FRAMED INLET PROTECTION (WITH CURB BOX)

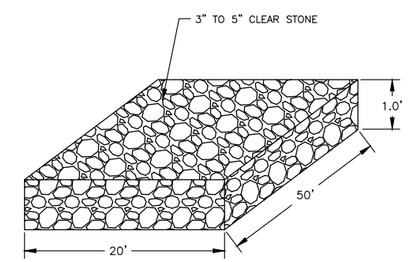

CLEAR STONE TRACKING PAD

TOWN & COUNTRY ENGINEERING, INC.
2912 Marketplace Drive
Suite 103
Madison, WI 53719
(608) 273-3350
www.tcengineers.net

EROSION CONTROL
STANDARD CONSTRUCTION DETAILS

2020 UTILITY IMPROVEMENTS
USH 14
Village of Mazomanie, Wisconsin

PROJECT NO.:	MZ 123
DRAWING FILE:	MZ123 DETAILS
DRAWN BY:	J.R.K.
CHECKED BY:	B.R.B.
DATE:	5–24–19
REVISIONS:	
SCALE:	N.T.S.
SHEET:	2

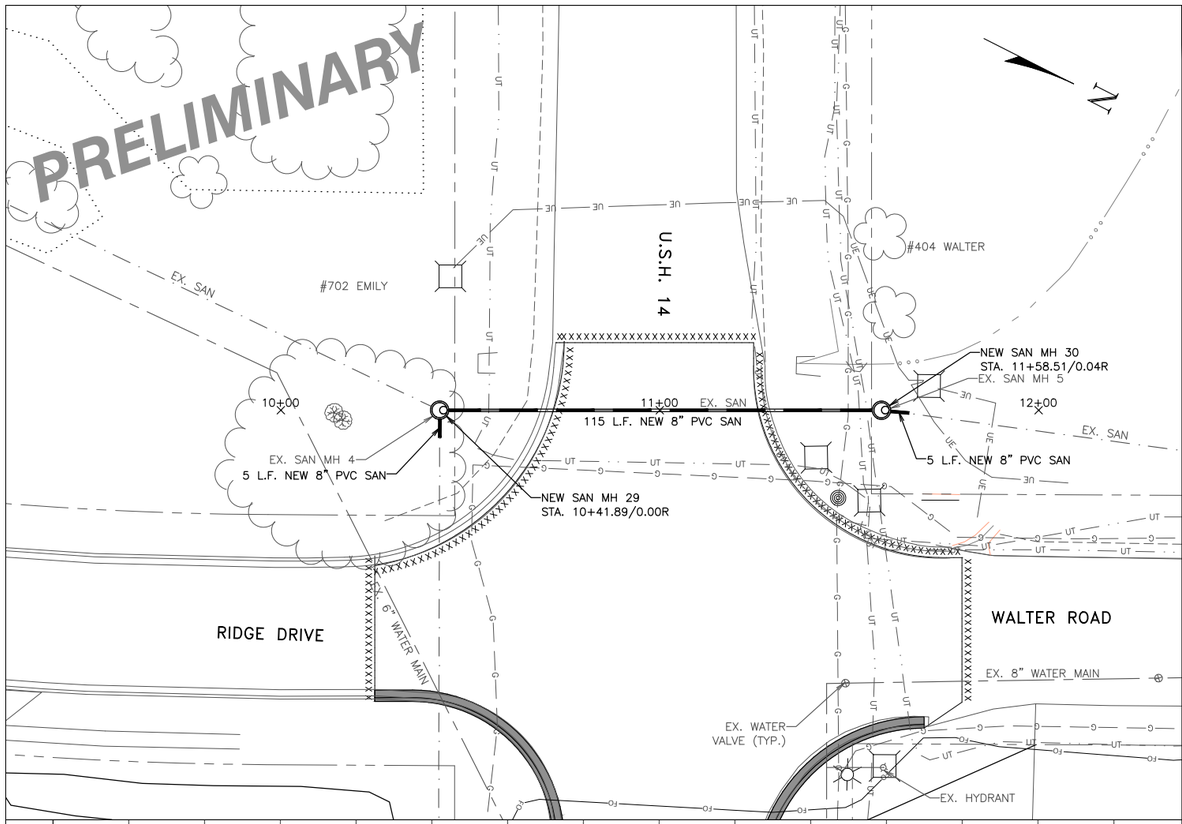

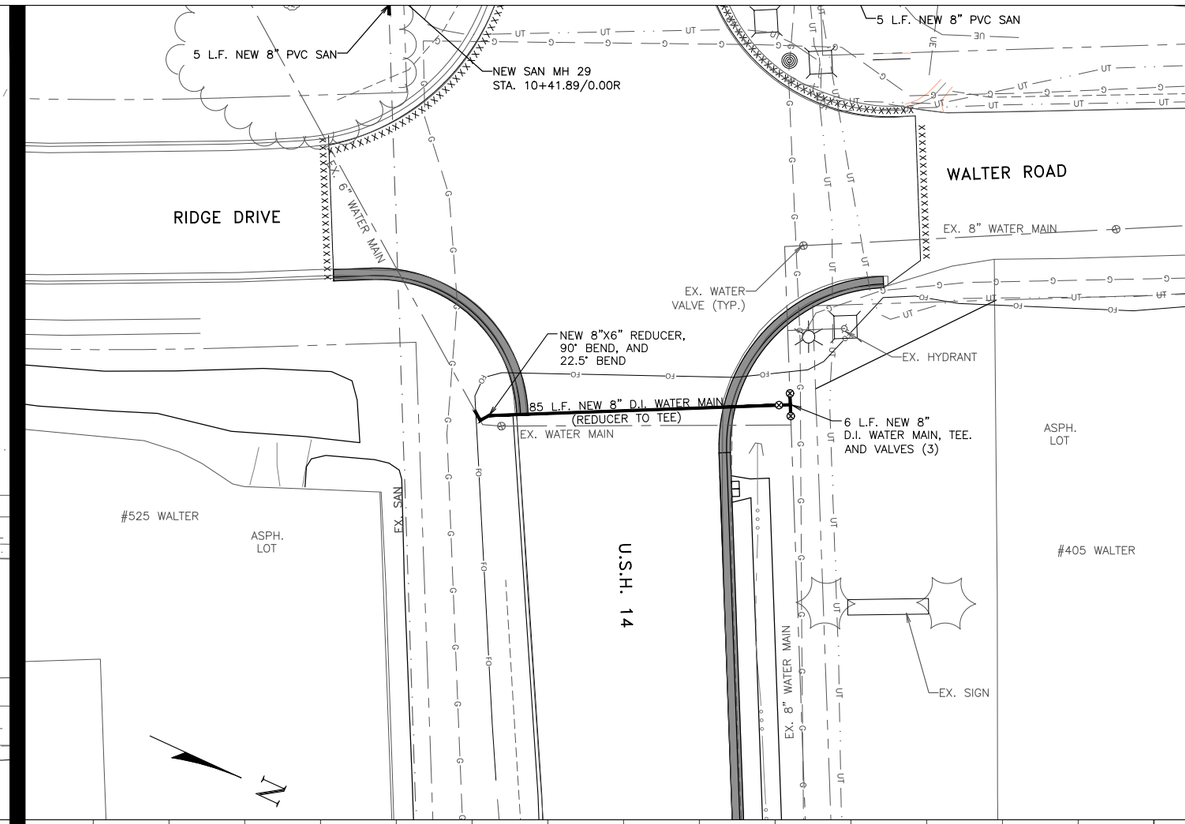

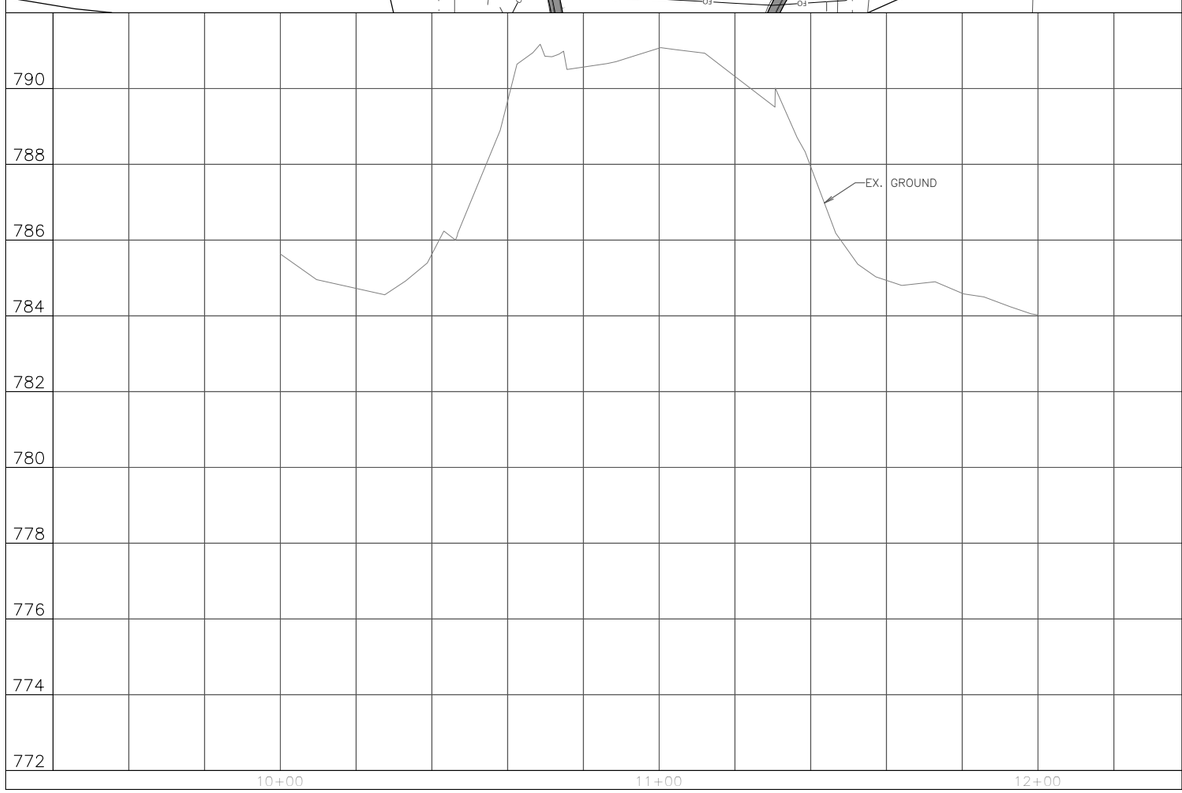

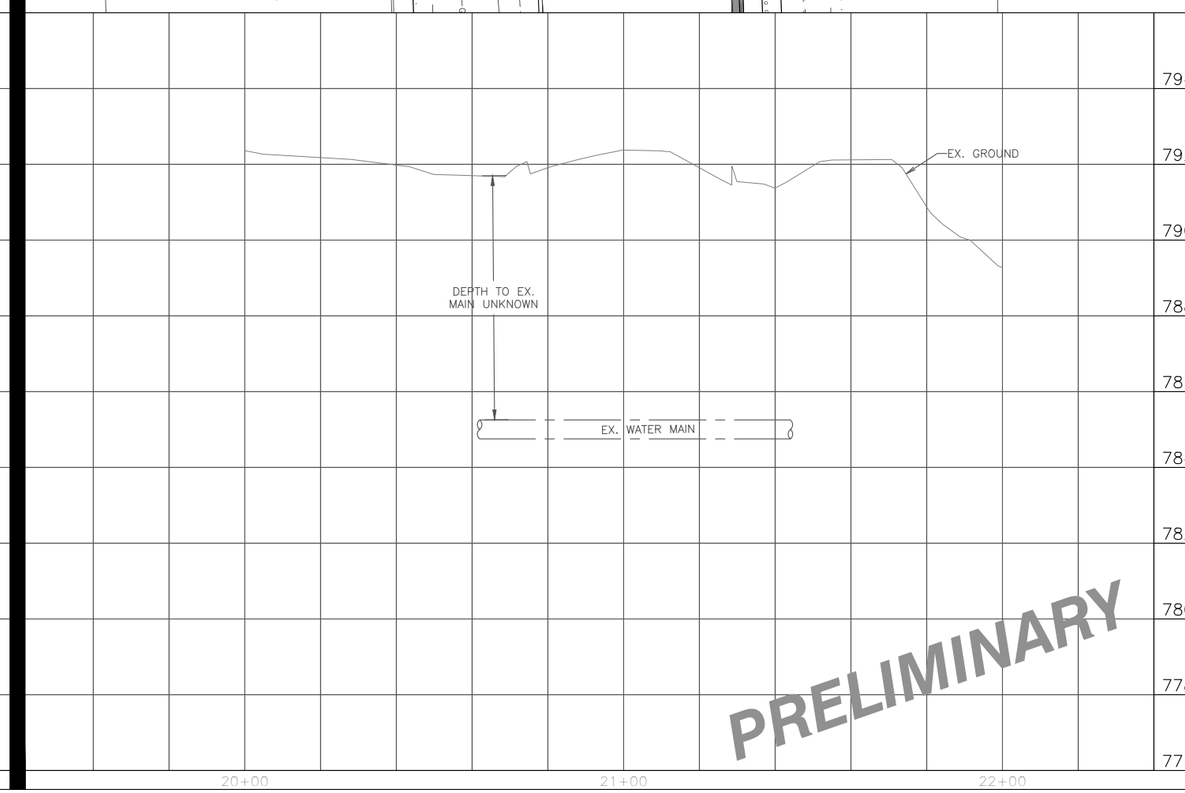

TOWN & COUNTRY ENGINEERING, INC.
2912 Marketplace Drive
Suite 103
Madison, WI 53719
(608) 273-3350
www.tcengineers.net

PLAN & PROFILE
USH 14
Station 10+00 To 12+00
Station 20+00 To 22+00

2020 UTILITY IMPROVEMENTS
USH 14
Village of Mazomanie, Wisconsin

PROJECT NO.:	MZ 123
DRAWING FILE:	MZ123 SHEETS.DWG
DRAWN BY:	J.R.K.
CHECKED BY:	B.R.B.
DATE:	5-28-19
REVISIONS:	
SCALE: HORIZONTAL	0 5 10 20
VERTICAL	1 2
SHEET:	A1

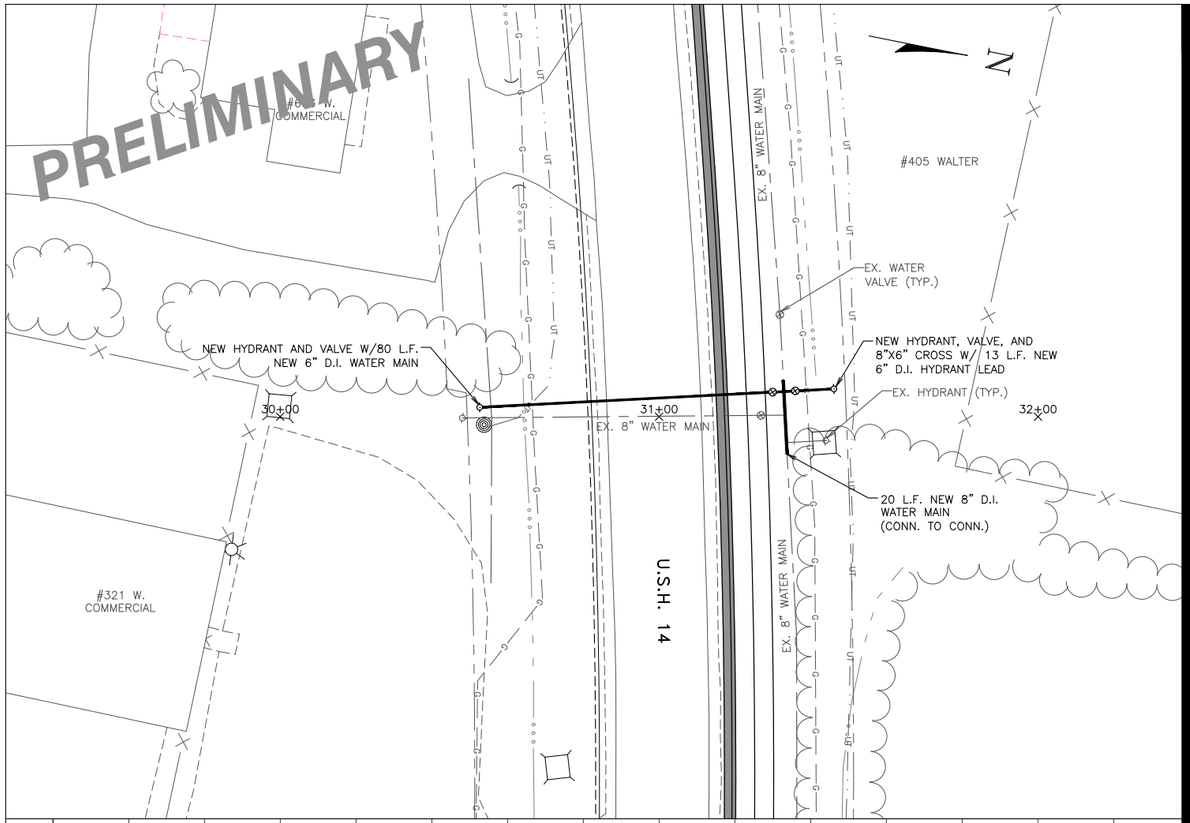

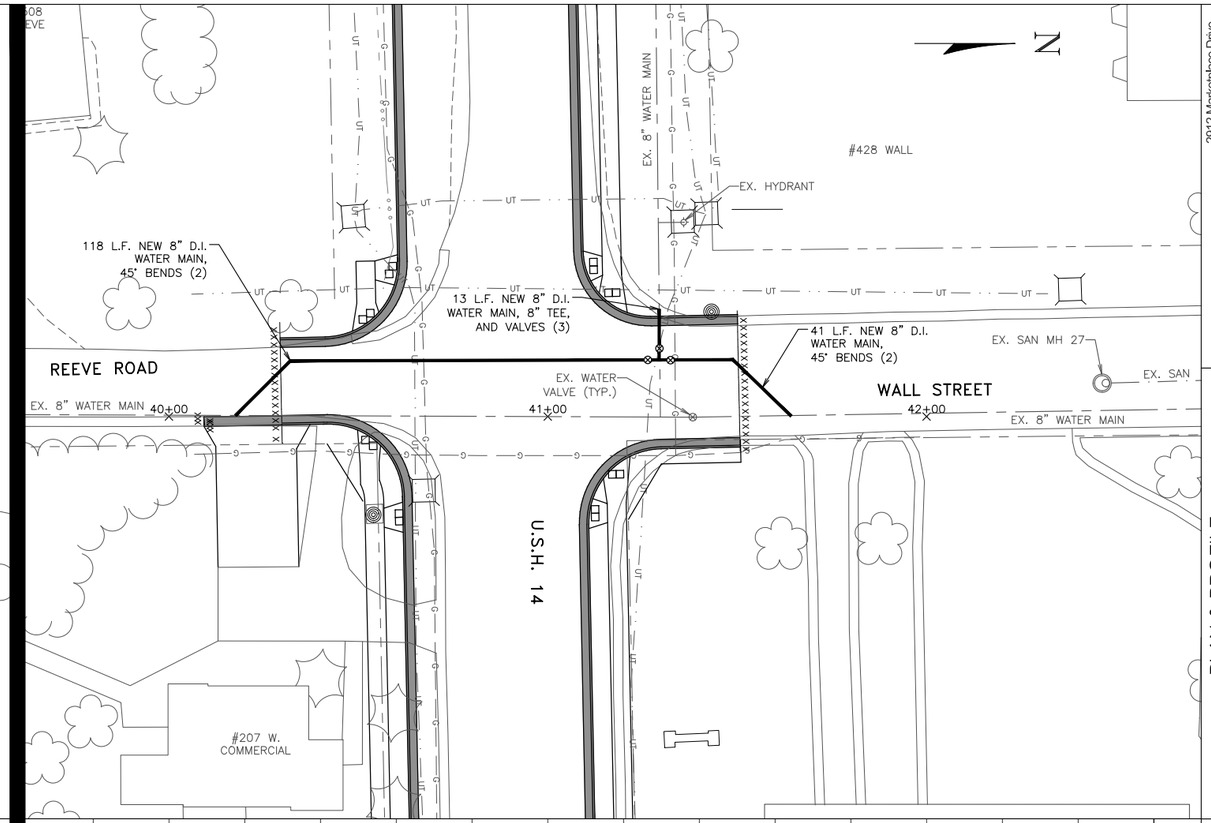

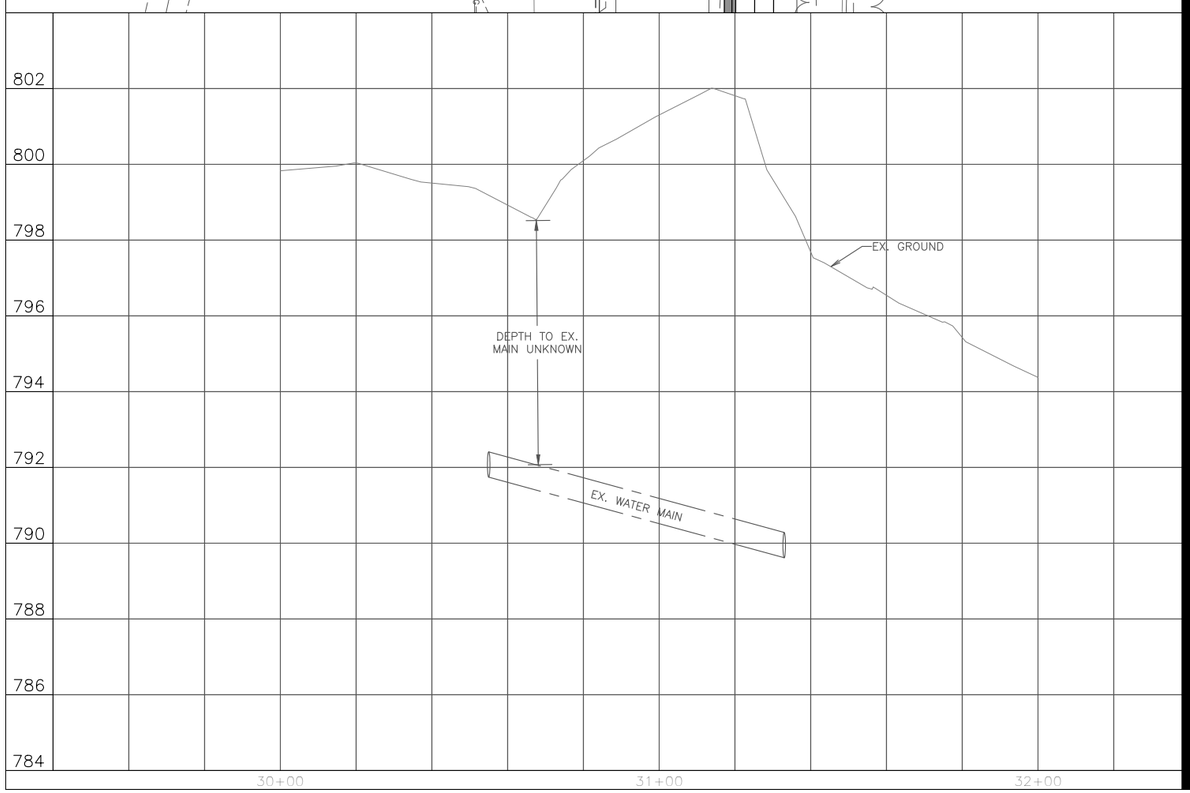

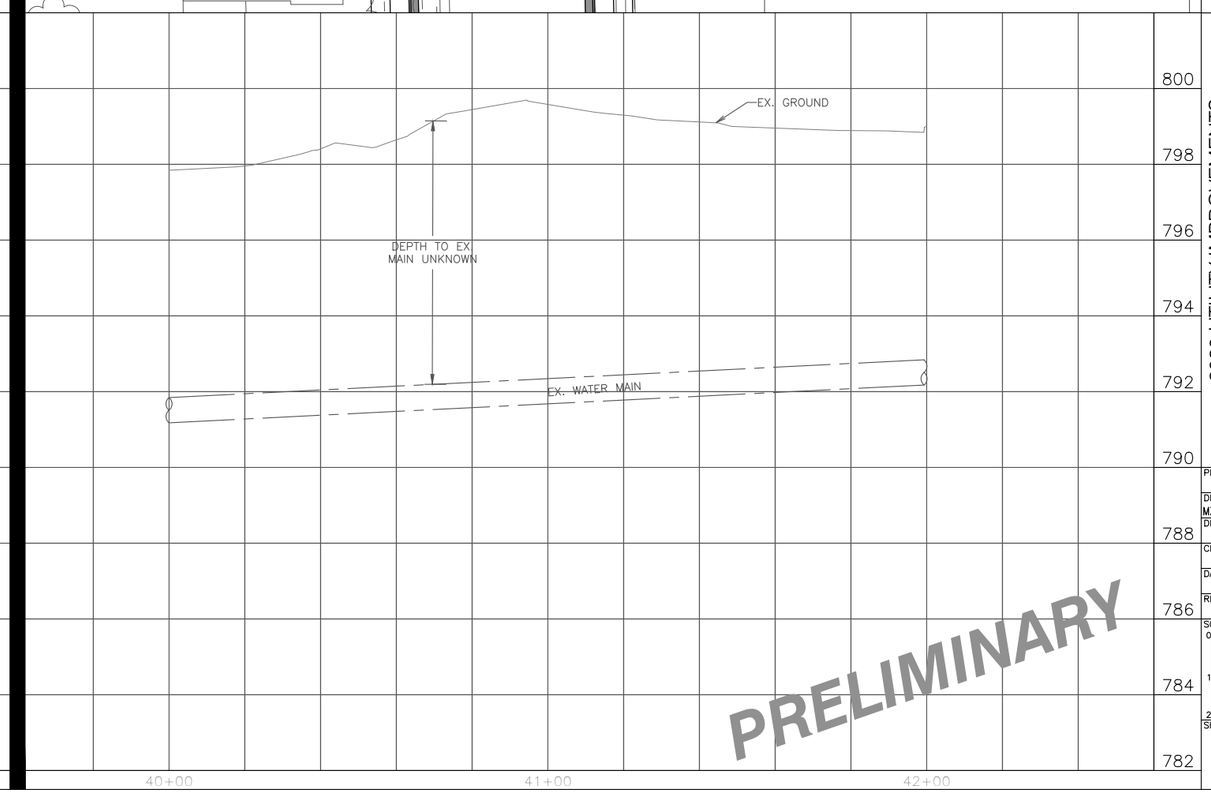

TOWN & COUNTRY ENGINEERING, INC.
2912 Marketplace Drive
Suite 103
Madison, WI 53719
(608) 273-3350
www.tcengineers.net

PLAN & PROFILE
USH 14
Station 30+00 To 32+00
Station 40+00 To 42+00

2020 UTILITY IMPROVEMENTS
USH 14
Village of Mazomanie, Wisconsin

PROJECT NO.:	MZ 123
DRAWING FILE:	MZ123 SHEETS.DWG
DRAWN BY:	J.R.K.
CHECKED BY:	B.R.B.
DATE:	5-28-19
REVISIONS:	
SCALE: HORIZONTAL	0 5 10 20
VERTICAL	1 2
SHEET:	A2

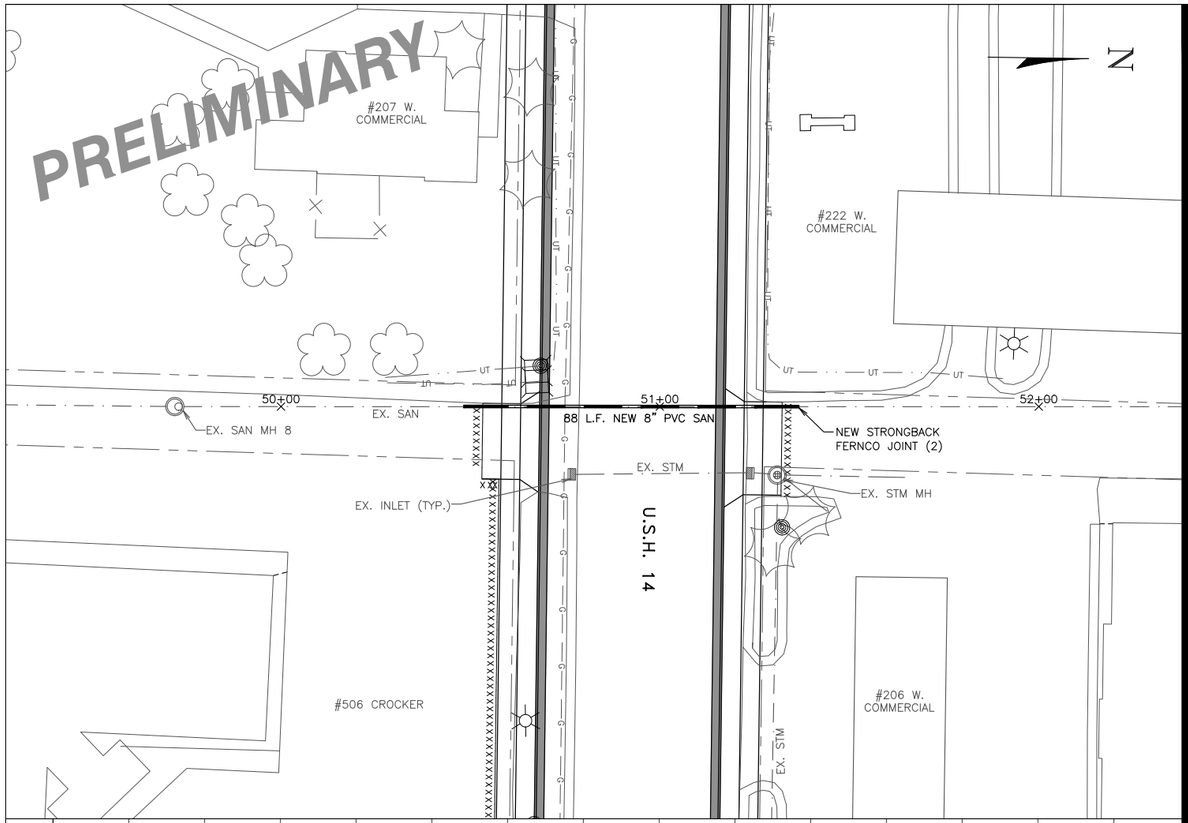

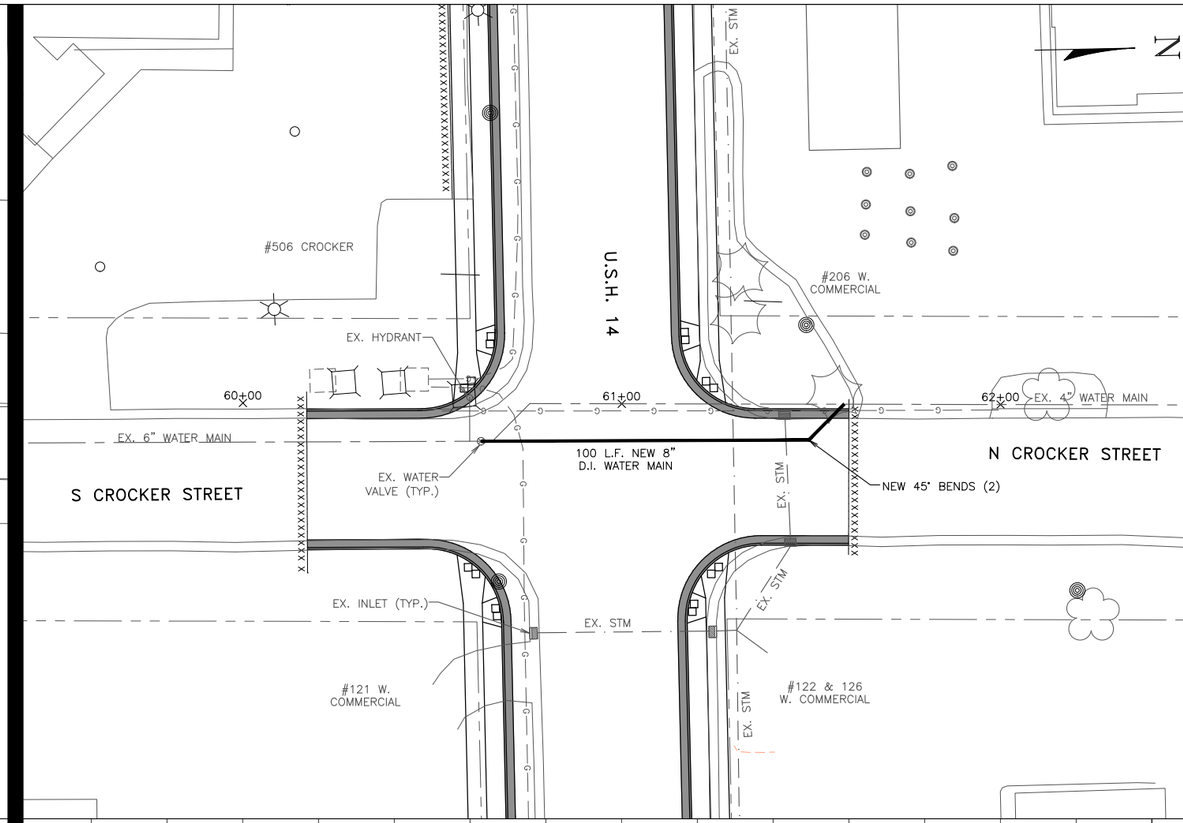

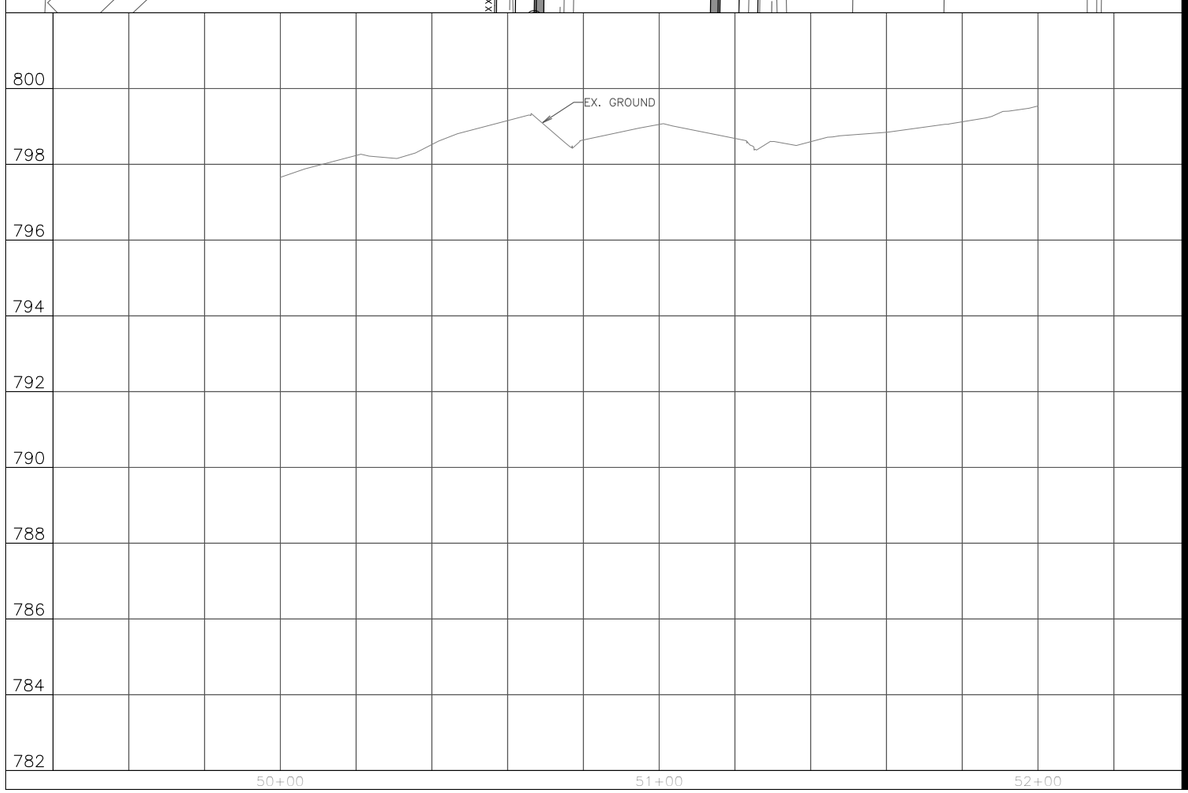

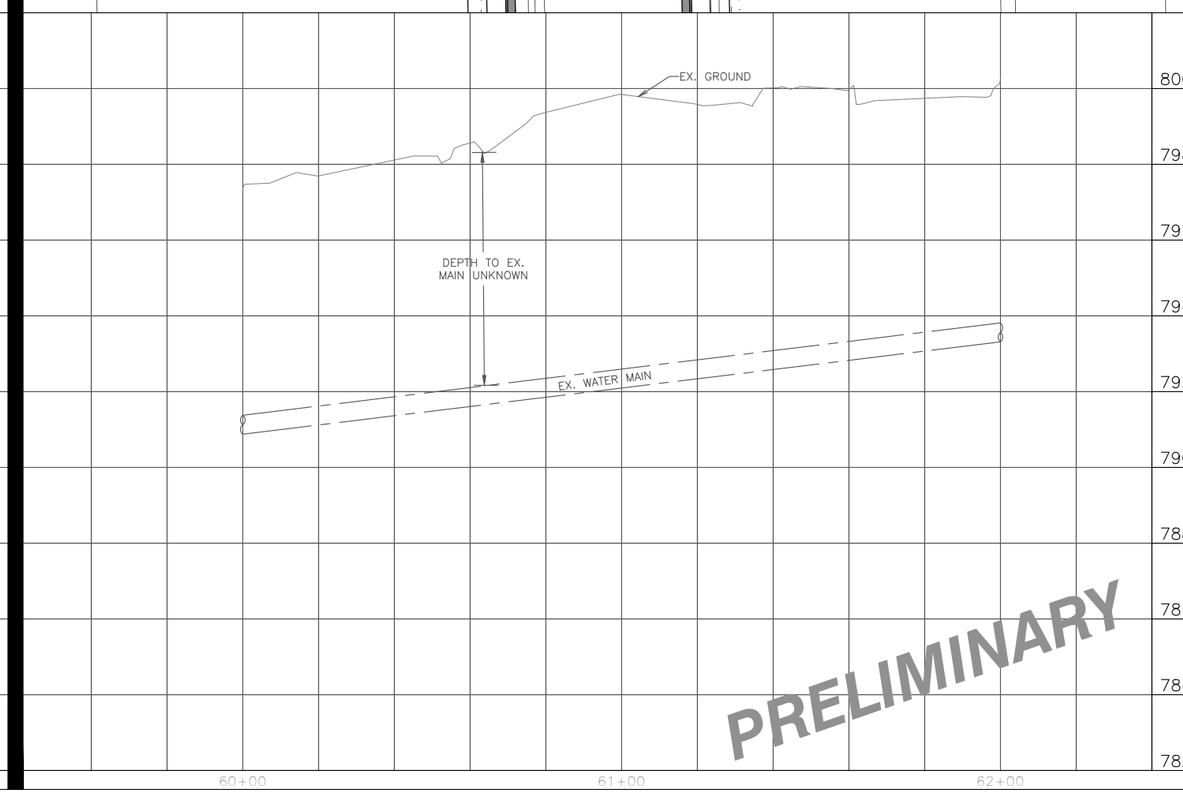

TOWN & COUNTRY ENGINEERING, INC.
2912 Marketplace Drive
Suite 103
Madison, WI 53719
(608) 273-3350
www.tcengineers.net

PLAN & PROFILE
USH 14
Station 50+00 To 52+00
Station 60+00 To 62+00

2020 UTILITY IMPROVEMENTS
USH 14
Village of Mazomanie, Wisconsin

PROJECT NO.: MZ 123
DRAWING FILE: MZ123 SHEETS.DWG
DRAWN BY: J.R.K.
CHECKED BY: B.R.B.
DATE: 5-28-19
REVISIONS:
SCALE: HORIZONTAL 0 5 10 20
VERTICAL 1 2
SHEET: A3

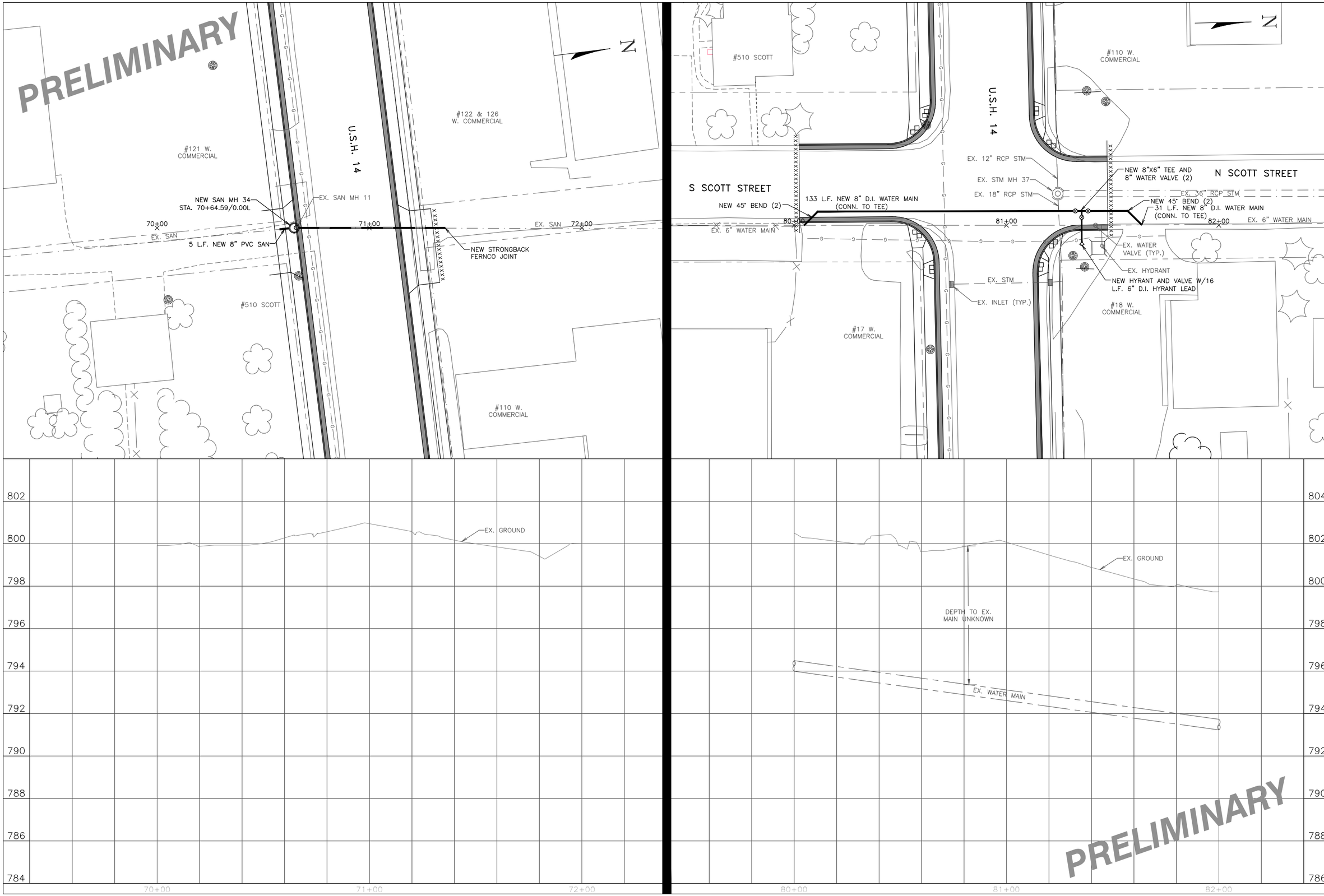

TOWN & COUNTRY ENGINEERING, INC.
2912 Marketplace Drive
Suite 103
Madison, WI 53719
(608) 273-3350
www.tcengineers.net

PLAN & PROFILE
USH 14
Station 70+00 To 72+00
Station 80+00 To 82+00

2020 UTILITY IMPROVEMENTS
USH 14
Village of Mazomanie, Wisconsin

PROJECT NO.: MZ 123
DRAWING FILE: MZ123 SHEETS.DWG
DRAWN BY: J.R.K.
CHECKED BY: B.R.B.
DATE: 5-28-19
REVISIONS:
SCALE: HORIZONTAL 0 5 10 20
VERTICAL 1 2
SHEET: A4

PRELIMINARY

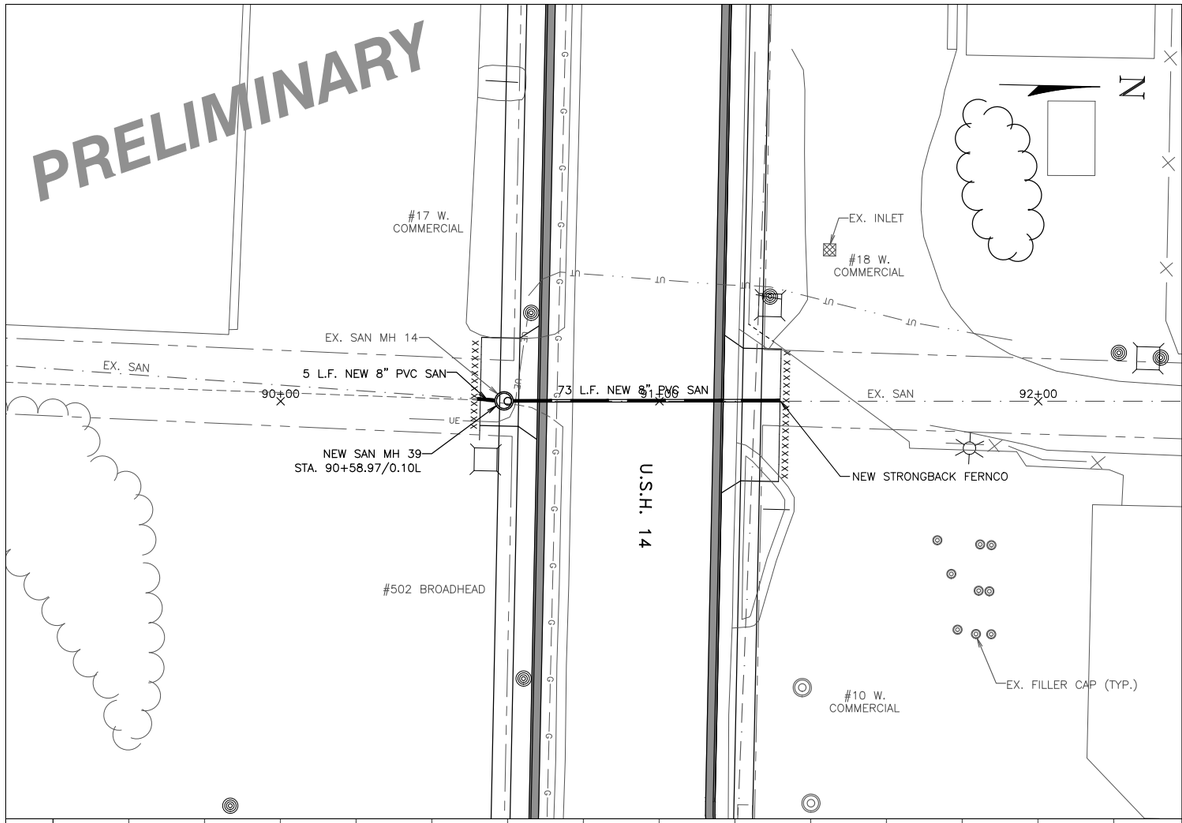

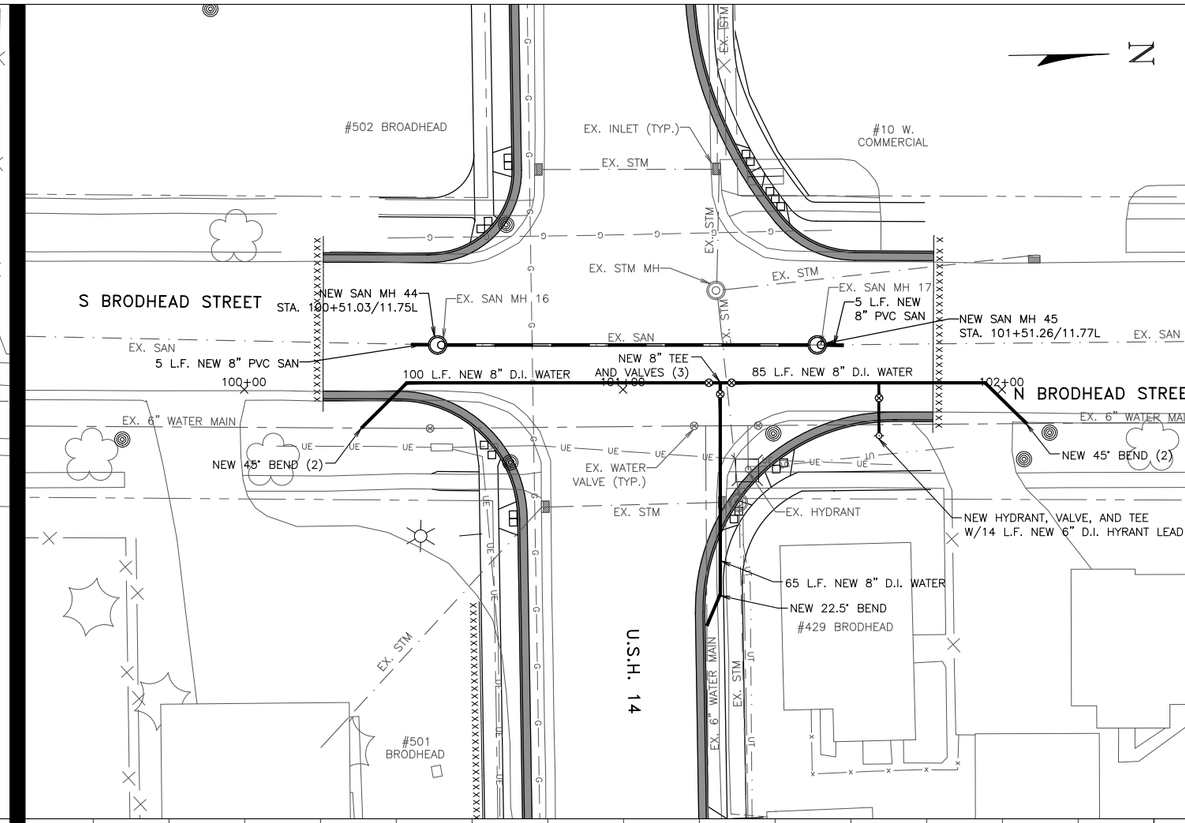

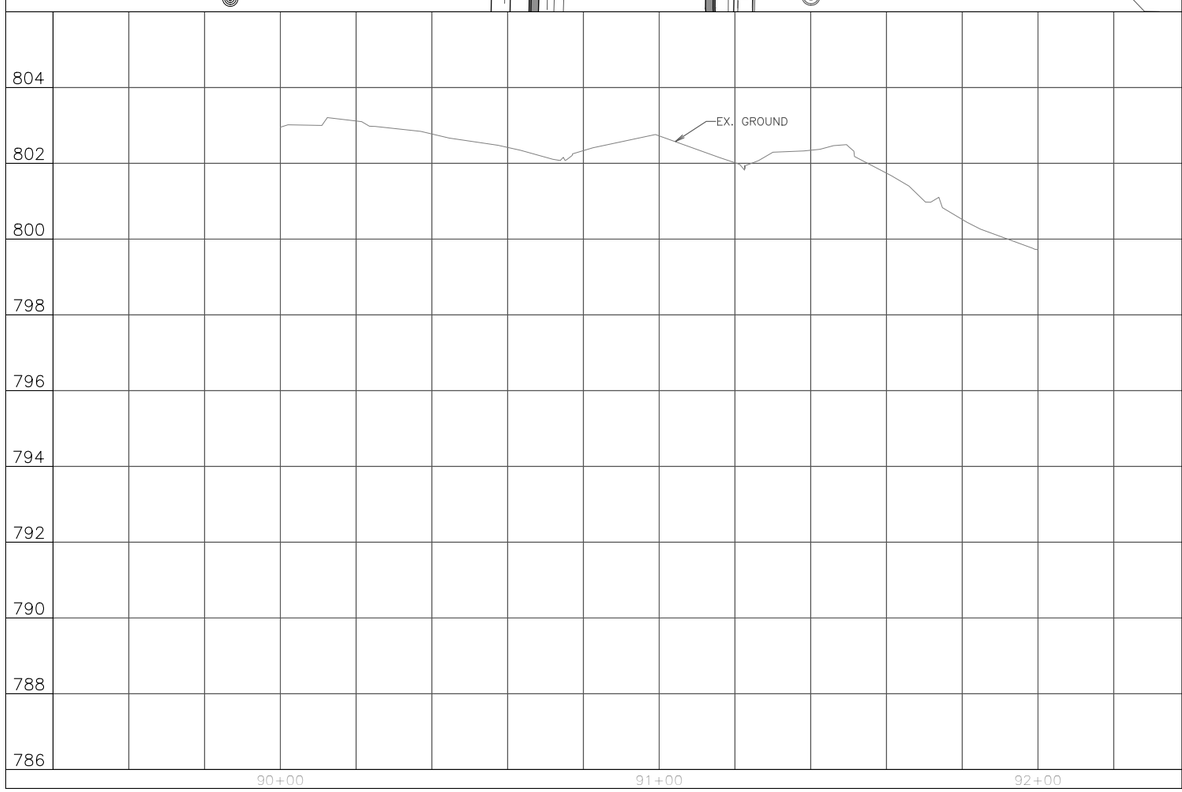

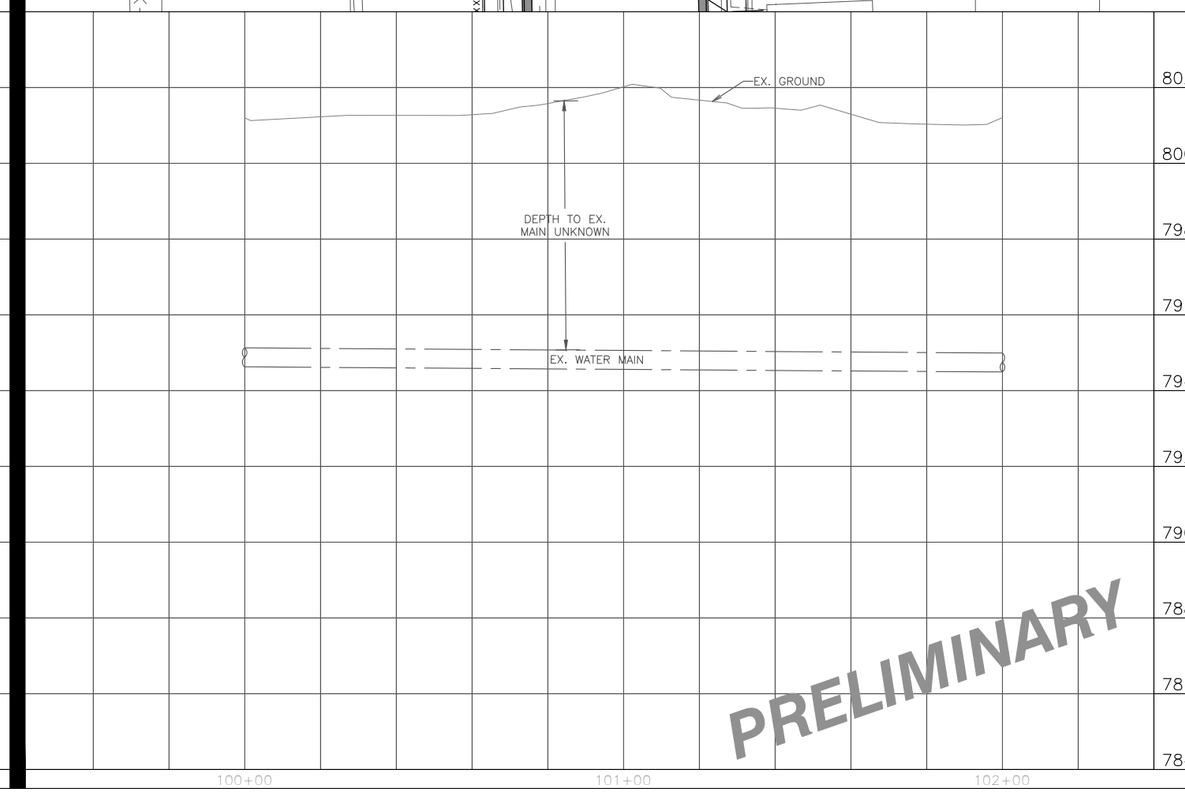

PRELIMINARY

TOWN & COUNTRY ENGINEERING, INC.
2912 Marketplace Drive
Suite 103
Madison, WI 53719
(608) 273-3350
www.tcengineers.net

PLAN & PROFILE
USH 14
Station 90+00 To 92+00
Station 100+00 To 102+00

2020 UTILITY IMPROVEMENTS
USH 14
Village of Mazomanie, Wisconsin

PROJECT NO.:	MZ 123
DRAWING FILE:	MZ123 SHEETS.DWG
DRAWN BY:	J.R.K.
CHECKED BY:	B.R.B.
DATE:	5-28-19
REVISIONS:	
SCALE: HORIZONTAL	0 5 10 20
VERTICAL	1 2
SHEET:	A5

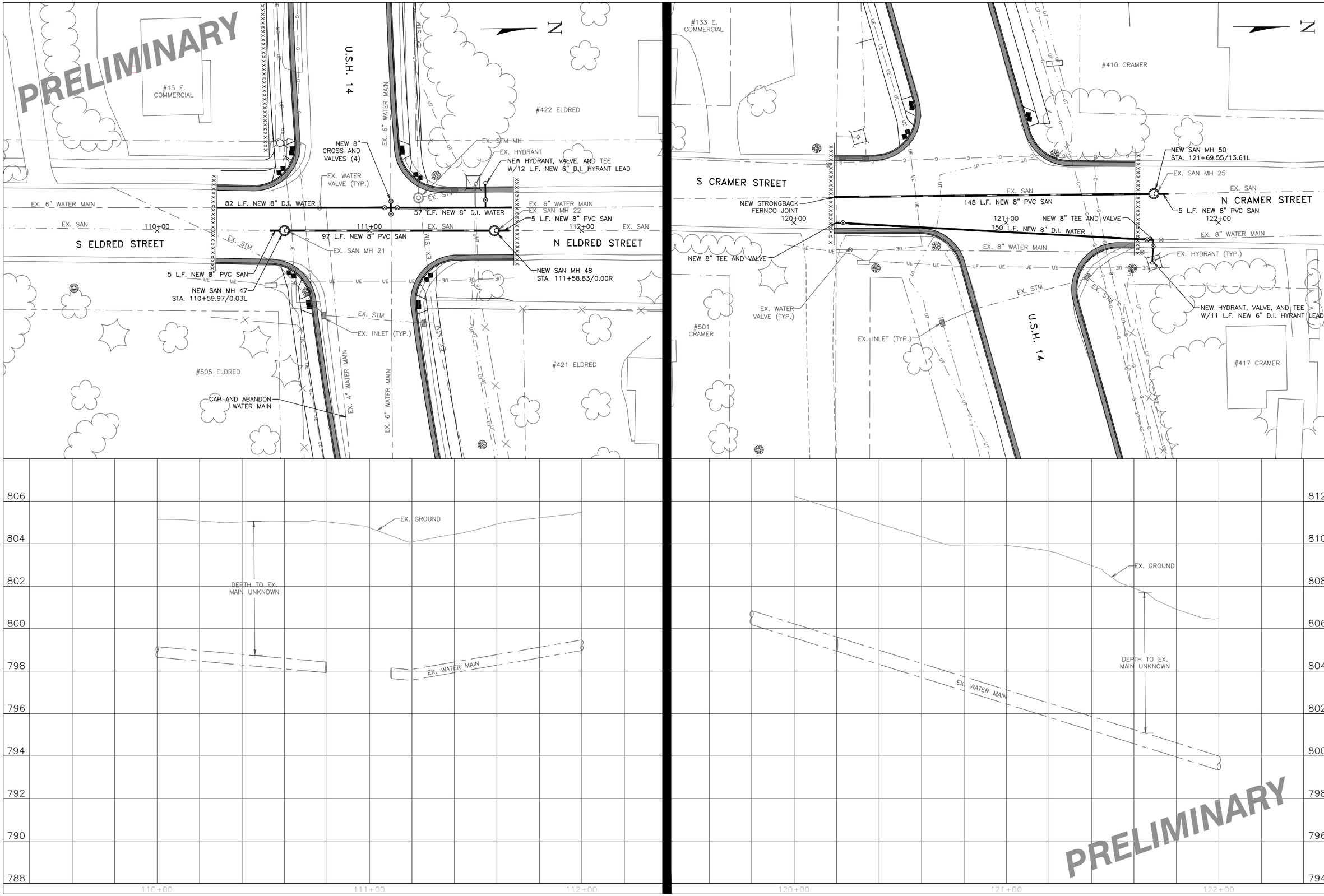

2912 Marketplace Drive
Suite 103
Madison, WI 53719
(608) 273-3350
www.tcengineers.net
TOWN & COUNTRY ENGINEERING, INC.

PLAN & PROFILE
USH 14
Station 110+00 To 112+00
Station 120+00 To 122+00

2020 UTILITY IMPROVEMENTS
USH 14
Village of Mazomanie, Wisconsin

PROJECT NO.: MZ 123
DRAWING FILE: MZ123 SHEETS.DWG
DRAWN BY: J.R.K.
CHECKED BY: B.R.B.
DATE: 5-28-19
REVISIONS:
SCALE: HORIZONTAL 0 5 10 20
VERTICAL 1 2
SHEET: A6

DIMENSIONS:

A: OUTSIDE DIAMETER OF PIPE PLUS 24" MAXIMUM, EXCEPT NEED NOT BE LESS THAN 36". TRENCH SHIELDS NARROWER THAN 4 FEET INSIDE WIDTH WILL NOT BE REQUIRED UNLESS SPECIFICALLY REQUIRED IN THE PROJECT SPECIFICATIONS.

B: FOR ROCK, OUTSIDE DIAMETER OF PIPE PLUS 18" MAXIMUM, EXCEPT NEED NOT BE LESS THAN 36".

C: MINIMUM – 6"

D: MINIMUM 4" BELOW BARREL AND 3" BELOW BELL

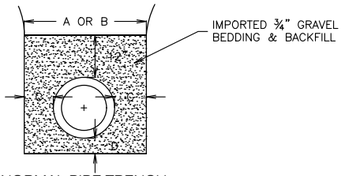

NORMAL PIPE TRENCH

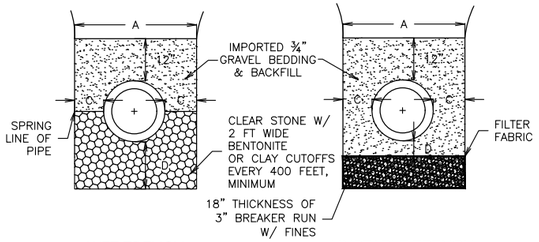

WET TRENCH WITH SUMP DEWATERING

UNSTABLE TRENCH

ALL WATER SERVICE LATERAL BEDDING SHALL BE WITH SAND INSTEAD OF ¾" GRAVEL.

TRENCH WIDTH AND BEDDING DETAILS

DETAIL 02221–A

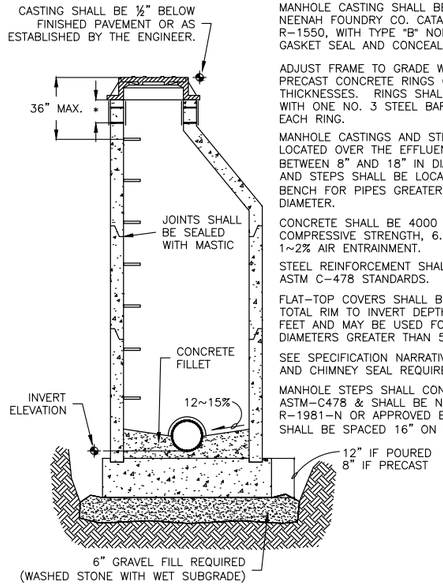

MANHOLE CASTING SHALL BE HEAVY DUTY, NEENAH FOUNDRY CO. CATALOG LISTING NO. R–1550, WITH TYPE "B" NON–ROCKING LID, GASKET SEAL AND CONCEALED PICKHOLES.

ADJUST FRAME TO GRADE WITH AT LEAST TWO PRECAST CONCRETE RINGS OF DIFFERENT THICKNESSES. RINGS SHALL BE REINFORCED WITH ONE NO. 3 STEEL BAR CENTERED WITHIN EACH RING.

MANHOLE CASTINGS AND STEPS SHALL BE LOCATED OVER THE EFFLUENT PIPE FOR PIPES BETWEEN 8" AND 18" IN DIAMETER. CASTINGS AND STEPS SHALL BE LOCATED OVER THE BENCH FOR PIPES GREATER THAN 18" IN DIAMETER.

CONCRETE SHALL BE 4000 PSI, 28 DAY COMPRESSIVE STRENGTH, 6.5 BAG MIX WITH 1~2% AIR ENTRAINMENT.

STEEL REINFORCEMENT SHALL CONFORM TO ASTM C–478 STANDARDS.

FLAT–TOP COVERS SHALL BE USED WHERE THE TOTAL RIM TO INVERT DEPTH IS LESS THAN 6 FEET AND MAY BE USED FOR MANHOLE DIAMETERS GREATER THAN 5 FEET.

SEE SPECIFICATION NARRATIVE FOR PIPE SEAL AND CHIMNEY SEAL REQUIREMENTS.

MANHOLE STEPS SHALL CONFORM TO ASTM–C478 & SHALL BE NEENAH FOUNDRY CO. R–1981–N OR APPROVED EQUAL. STEPS SHALL BE SPACED 16" ON CENTER.

* A MINIMUM OF 3" TO A MAXIMUM OF 9" OF ADJUSTING RINGS SHALL BE USED TO ADJUST THE MANHOLE CASTING TO THE FINISHED GRADE. ALL RINGS SHALL BE SEALED TOGETHER USING MASTIC AND ALL JOINTS SHALL BE BACK PLASTERED INSIDE AND OUT WITH CEMENT MORTAR.

STANDARD MANHOLE DETAIL

DETAIL 02601–A

NOTE:
PIPE DROP TO BE SAME DIAMETER AS INCOMING SEWER

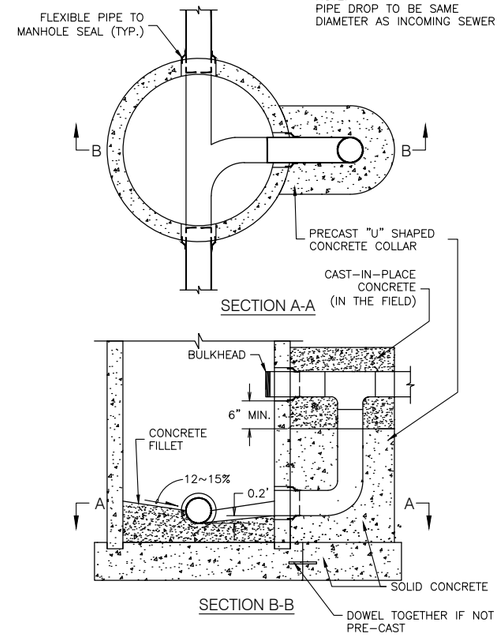

SECTION A-A

SECTION B-B

DROP MANHOLE ENTRANCE

DETAIL 02601–B

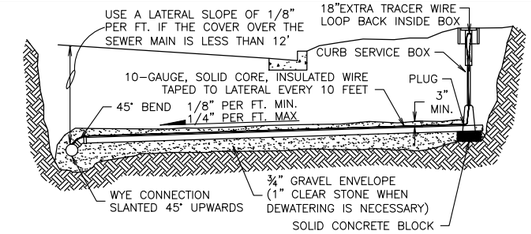

STANDARD INSTALLATION

NOTES:

1. CONSTRUCT LATERALS IN CONFORMANCE WITH CHAPTER SPS 382 OF THE WISCONSIN ADMINISTRATIVE CODE.
2. LATERAL SLOPE SHALL BE ¼" PER FOOT WHERE SUFFICIENT COVER EXISTS
3. CONTRACTOR SHALL VERIFY SIZE, DEPTH, AND LOCATION OF EXISTING LATERALS.

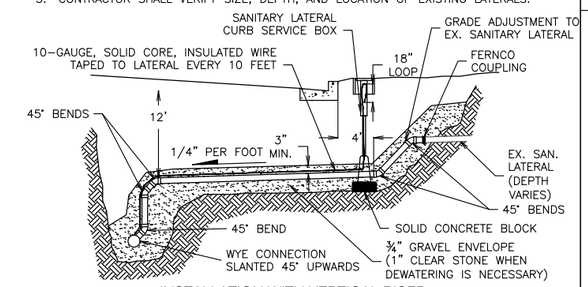

INSTALLATION WITH VERTICAL RISER

SANITARY SEWER LATERAL DETAIL

DETAIL 02722–D

TOWN & COUNTRY ENGINEERING, INC.
2912 Marketplace Drive
Suite 103
Madison, WI 53719
(608) 273-3350
www.tcengineers.net

SANITARY SEWER
STANDARD CONSTRUCTION DETAILS

2020 UTILITY IMPROVEMENTS
USH 14
Village of Mazomanie, Wisconsin

PROJECT NO.:	MZ 123
DRAWING FILE:	MZ123 DETAILS
DRAWN BY:	J.R.K.
CHECKED BY:	B.R.B.
DATE:	5–24–19
REVISIONS:	
SCALE:	N.T.S.
SHEET:	A7

DIMENSIONS:

A: OUTSIDE DIAMETER OF PIPE PLUS 24" MAXIMUM, EXCEPT NEED NOT BE LESS THAN 36". TRENCH SHIELDS NARROWER THAN 4 FEET INSIDE WIDTH WILL NOT BE REQUIRED UNLESS SPECIFICALLY REQUIRED IN THE PROJECT SPECIFICATIONS.

B: FOR ROCK, OUTSIDE DIAMETER OF PIPE PLUS 18" MAXIMUM, EXCEPT NEED NOT BE LESS THAN 36".

C: MINIMUM – 6"

D: MINIMUM 4" BELOW BARREL AND 3" BELOW BELL

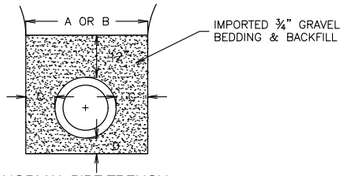

NORMAL PIPE TRENCH

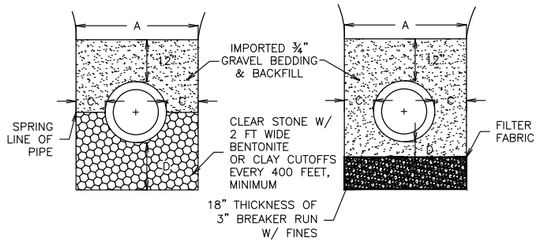

WET TRENCH WITH SUMP DEWATERING

UNSTABLE TRENCH

ALL WATER SERVICE LATERAL BEDDING SHALL BE WITH SAND INSTEAD OF ¾" GRAVEL.

TRENCH WIDTH AND BEDDING DETAILS

DETAIL 02221–A

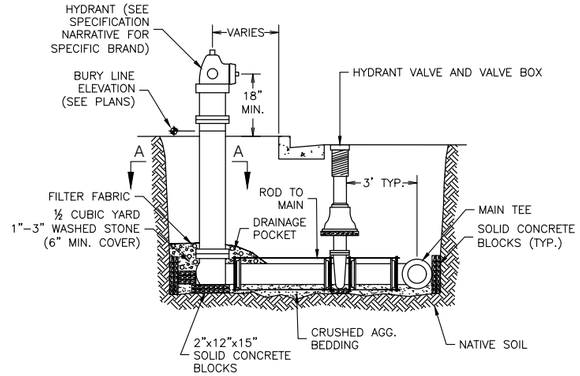

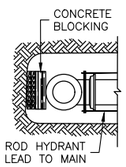

SECTION A-A

NOTES:

– THE HYDRANT AND HYDRANT VALVE SHALL BE CONNECTED TO THE MAIN TEE BY RODDING IN ACCORDANCE WITH DETAIL 02701–C, OR BY MEGA LUGS.

– THE DISTANCE BETWEEN THE HYDRANT AND THE MAIN WILL VARY. OFFSET DISTANCES ARE MARKED ON THE PLANS.

–WHERE THE HYDRANT IS INSTALLED AT THE HIGH POINT OF THE WATER MAIN ON MAINS 10 INCHES IN DIAMETER AND LARGER THE CONTRACTOR SHALL TIP THE MAIN TEE UPWARDS 45 DEGREES AND USE A 45 DEGREE FITTING TO ALLOW AIR TO ESCAPE FROM THE MAIN.

STANDARD HYDRANT SETTING

DETAIL NO. 02701–A

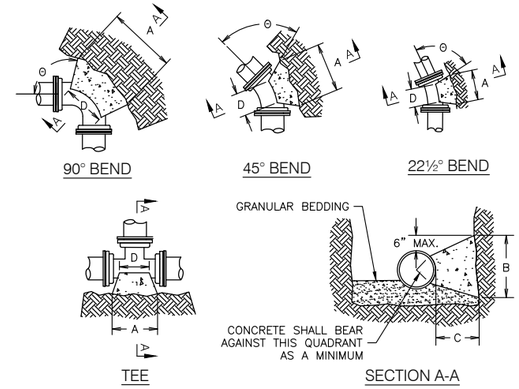

DIMENSION "D" SHALL BE AS LARGE AS POSSIBLE, BUT THE CONCRETE SHALL NOT INTERFERE WITH THE MECHANICAL JOINTS.

DIMENSION "C" SHALL BE AT LEAST 6 INCHES, AND LARGE ENOUGH TO MAKE THE "Θ" ANGLE EQUAL TO OR GREATER THAN 45 DEGREES WITH THE DIMENSION "A" AS SHOWN ON THE TABLE, OR GREATER, AND WITH DIMENSION "D" AS LARGE AS POSSIBLE.

CONCRETE SHALL BE CLASS "CC", SEE SECTION 03301

BUTTRESS DIMENSIONS								
PIPE SIZE *	TEES		22.5° BEND		45° BEND		90° BEND	
	A	B	A	B	A	B	A	B
6	1'–3"	1'–0"	1'–0"	1'–0"	1'–0"	1'–0"	1'–4"	1'–2"
8	1'–6"	1'–4"	1'–0"	1'–0"	1'–4"	1'–2"	1'–10"	1'–6"
10/12	2'–3"	2'–0"	1'–4"	1'–4"	1'–10"	1'–10"	2'–8"	2'–3"
14/16	3'–2"	2'–6"	1'–10"	1'–8"	2'–6"	2'–4"	3'–10"	2'–10"
18/20	4'–0"	3'–0"	2'–4"	2'–0"	3'–3"	2'–10"	5'–0"	3'–4"
22/24	5'–3"	3'–4"	2'–10"	2'–4"	4'–0"	3'–3"	6'–4"	3'–10"
30	6'–3"	4'–3"	3'–6"	3'–0"	5'–4"	3'–10"	8'–0"	4'–8"

* = FOR TEE THIS WILL BE THE BRANCH PIPE

DIMENSIONS IN THE TABLE ARE BASED ON A WATER PRESSURE OF 150 PSI AND SOIL RESISTANCE OF 2000 LBS./SQ.FT.

BUTTRESS DETAILS

DETAIL NO. 02701–B

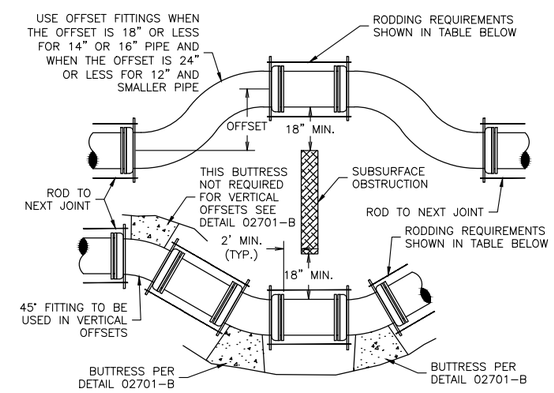

NOMINAL PIPE SIZE	RODS NO.	RODS DIA.	STRAP SIZE	BOLT DIA.	WASHER SIZE
6	3	¾	½ x 2	¾	½ x 3 x 5
8	4	¾	½ x 2	¾	½ x 3 x 5
10	4	¾	½ x 2½	1	½ x 3 x 5
12	4	¾	½ x 2½	1	½ x 3 x 5
14	4	¾	½ x 2½	1	½ x 3 x 5

ALL DIMENSIONS IN THIS TABLE ARE IN INCHES

NOTES:

– RODS AND WASHERS TO BE ASTM A–575 MERCHANT QUALITY 0.17–0.24 CARBON. NUTS TO BE AMERICAN STANDARD HEAVY, NOT PRESSED.

– TIE RODS, BOLTS, NUTS, BANDS AND WASHERS TO BE FURNISHED AND ASSEMBLED BY THE CONTRACTOR.

– ALL STEEL MATERIAL TO BE GALVANIZED OR THOROUGHLY COATED WITH ENGINEER APPROVED COATING.

– OFFSET FITTINGS REQUIRE CONTINUOUS RODDING IN ALL POSITIONS.

– VERTICAL OFFSETS SHALL NOT CREATE A HIGH POINT IN THE WATER MAIN. VERTICAL OFFSETS REQUIRE THE SAME RODDING AND BUTTRESSING AS SHOWN ABOVE.

– MEGALUG RESTRAINTS MAY BE USED IN LIEU OF RODDING.

OFFSET AND RODDING DETAILS

DETAIL 02701–C

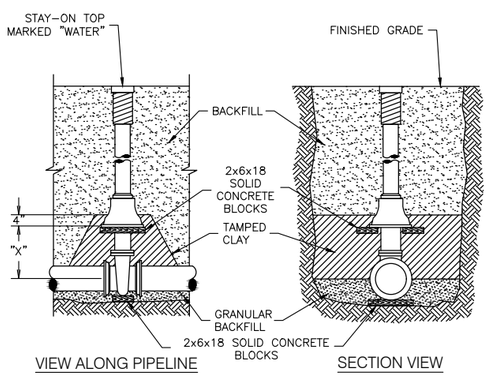

VIEW ALONG PIPELINE

SECTION VIEW

PIPE DIA., INCHES	6	8	10	12	14	16
"X" DIMENSION, INCHES	12	13	17	21	25	30

NOTES:
– VALVES SHALL BE SECURED WITH RODDING OR MEGALUGS TO THE NEAREST "TEE" FITTING OR TO THE FIRST JOINT CONNECTING A FULL SECTION OF WATER MAIN PIPE. SEE RODDING DETAIL 02701–C

STANDARD VALVE BOX SETTING

DETAIL 02701–D

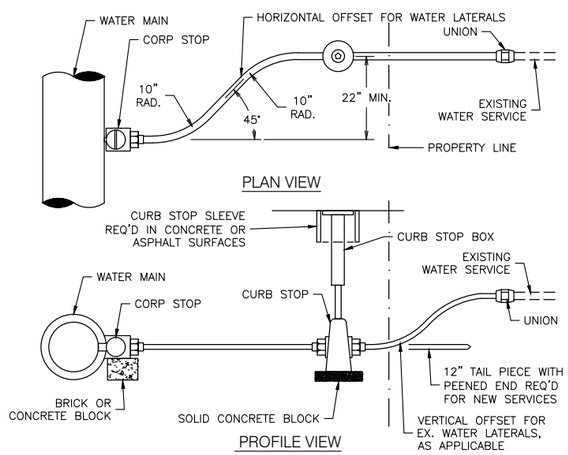

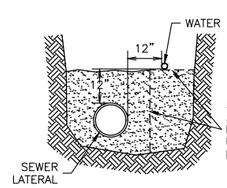

JOINT TRENCH INSTALLATION

NOTES:
– HORIZONTAL AND VERTICAL OFFSETS SHALL BE MADE WITH AN APPROVED PIPE BENDING TOOL. SHARP BENDS OR KINKS IN THE WATER SERVICE ARE NOT ALLOWED.

– VERTICAL OFFSETS SHALL BE MADE ON THE PROPERTY LINE SIDE OF THE CURB STOP.

– PLASTIC OR CAST IRON CURB BOX SLEEVES SHALL BE INSTALLED WHERE CURB BOXES ARE INSTALLED IN CONCRETE OR ASPHALT SURFACES.

WATER SERVICE INSTALLATION DETAIL

DETAIL 02701–F

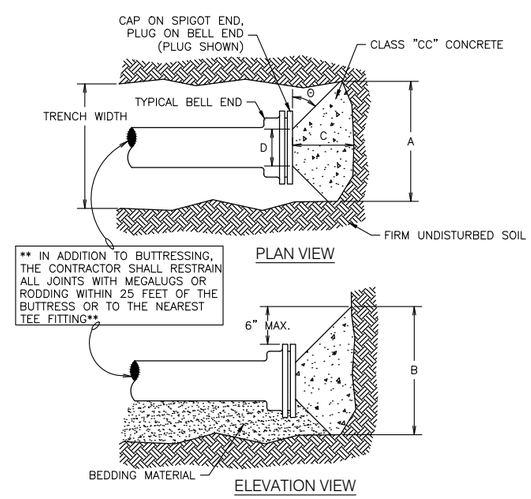

BUTTRESS DIMENSIONS				
DIA.	A	B	C	D
6"	1'–3"	1'–0"	SEE NOTES ABOVE	SEE NOTES ABOVE
8"	1'–8"	1'–6"		
10"	2'–0"	1'–8"		
12"	2'–5"	1'–10"		
16"	3'–4"	2'–4"		
20"	4'–3"	2'–10"		
24"	5'–2"	3'–4"		
30"	6'–9"	4'–0"		

NOTES:
– DIMENSION "C" SHALL BE LARGE ENOUGH TO MAKE ANGLE Θ EQUAL TO OR GREATER THAN 45°.

– DIMENSION "D" EQUALS APPROX. I.D. OF PIPE, LESS 2 INCHES. CONTRACTOR SHALL PROTECT THE MECH. JOINT BOLTS FROM THE CONCRETE BUTTRESS.

– BUTTRESS DIMENSIONS ARE BASED UPON A SOIL RESISTANCE OF 2 TONS PER SQ. FT. AND A WATER PRESSURE OF 150 P.S.I.

BUTTRESS DETAIL FOR DEAD ENDS

DETAIL 02701–H

TOWN & COUNTRY ENGINEERING, INC.
2912 Marketplace Drive
Suite 103
Madison, WI 53719
(608) 273-3350
www.tcengineers.net

WATER MAIN STANDARD CONSTRUCTION DETAILS

2020 UTILITY IMPROVEMENTS
USH 14
Village of Mazomanie, Wisconsin

PROJECT NO.: MZ 123
DRAWING FILE: MZ123 DETAILS
DRAWN BY: J.R.K.
CHECKED BY: B.R.B.
DATE: 5–24–19
REVISIONS:
SCALE: N.T.S.
SHEET: A8

LIGHTING PLANS PREPARED BY:

DATE SIGNATURE

60% REVIEW DRAWINGS

LEGEND:

- SINGLE ARM LIGHTING UNIT – TYPE 6
- LIGHTING CONDUIT (2" SCHEDULE 40 PVC UNLESS NOTED)
- CONCRETE CONTROL CABINET BASE/ELECTRICAL SERVICE
- PULL BOX (24"x42" STEEL)

LIGHTING UNIT LEGEND

STA 20+51.4, 27.0'LT
LED–4–6–6–A–(SL110)

- STATION (LOCATION)
- POLE NUMBER
- CIRCUIT NUMBER
- POLE TYPE
- BASE TYPE
- MAST ARM LENGTH IN FEET
- LUMINAIRE TYPE

CONDUIT/CONDUCTOR LEGEND

CB100	1	2"
A 3 #2	1	#2

- SERVICE CABINET
- NO. OF CONDUITS
- CONDUIT SIZE
- SIZE (AWG) OF EQUIPMENT GROUNDING CONDUCTOR
- QTY. OF EQUIPMENT GROUNDING CONDUCTOR
- SIZE (AWG) OF UNGROUNDED & NEUTRAL CONDUCTORS
- QTY. OF UNGROUNDED AND NEUTRAL CONDUCTORS
- CIRCUIT

ABBREVIATIONS:

PWO = PULL WIRE ONLY

NOTES:

1) WISCONSIN DOT ELECTRICAL UNIT SHALL APPROVE THE FINAL LOCATION FOR ALL CONCRETE BASES AND PULLBOXES IN THE FIELD PRIOR TO INSTALLATION. CONTACT THEM 3 DAYS IN ADVANCE.
2) PITCH ALL CONDUIT TOWARD PULLBOXES. A 2" DRAIN DUCT TO DITCH OR STORM SEWER REQUIRED FOR ALL PULLBOXES IN LOW POINTS. REFER TO THE MISCELLANEOUS QUANTITIES FOR LOCATIONS OF DRAIN DUCT.
3) THE LOCATION OF EXISTING AND PROPOSED UTILITIES AS SHOWN ON THE PLANS ARE APPROXIMATE. IN ADDITION, THERE MAY BE OTHER UTILITIES WITHIN THE PROJECT AREA WHICH ARE NOT SHOWN. THE CONTRACTOR SHALL VERIFY THE LOCATIONS OF ALL UTILITIES PRIOR TO CONSTRUCTION.
4) ALL POLES SHALL BE PLACED A MINIMUM OF 2–3 FEET FROM THE FACE OF CURB.
5) CABINET BASES AND THE PULLBOXES AND CONDUIT WITHIN THE AREA OF CABINET BASES SHALL BE INSTALLED PER FIELD CONDITIONS (WITH ENGINEER APPROVAL). VERIFY THE LOCATION OF ALL ELECTRICAL FACILITIES WITH THE ENGINEER PRIOR TO INSTALLING.
6) ALL STREET LIGHT CIRCUITS TO BE 120/240 SINGLE PHASE. STREET LIGHTS TO OPERATE AT 120 VOLTS, ALTERNATING PHASE CONDUCTORS FROM POLE TO POLE. CONTRACTOR TO BALANCE ELECTRICAL LOADS ON EACH FEEDER.
7) NO SPLICES ALLOWED IN PULLBOXES UNLESS NOTED OTHERWISE.
8) CONDUIT MUST BE PLACED PRIOR TO CURB AND GUTTER AND SIDEWALK CONSTRUCTION.
9) FLASHER ASSEMBLIES TO OPERATE AT 120 VOLTS.
10) FOR ELECTRIC UTILITY ASSISTANCE CONTACT MR. SHAWN DILLEY OF VANGUARD ELECTRIC, AT 608–767–2561.
11) LIGHT FIXTURES AND MASTARMS MOUNTED ON TRAFFIC CONTROL POLES ARE TO BE INSTALLED BY THE TRAFFIC CONTROL POLE INSTALLER ALONG WITH ALL RELATED WIRING AND CONDUIT BACK TO THE RELATED TRAFFIC CONTROL CABINET WITH LIGHT CONTROLS. REFER TO TRAFFIC CONTROL DRAWINGS FOR MORE DETAILS.

HIGHWAY LIGHTING
USH 14 (E COMMERCIAL ST)
CITY OF MAZOMANIE
DANE COUNTY

DESIGN: FORSTER ELECTRICAL ENGINEERING

DATE: 2019–06–06 REV: 0

2

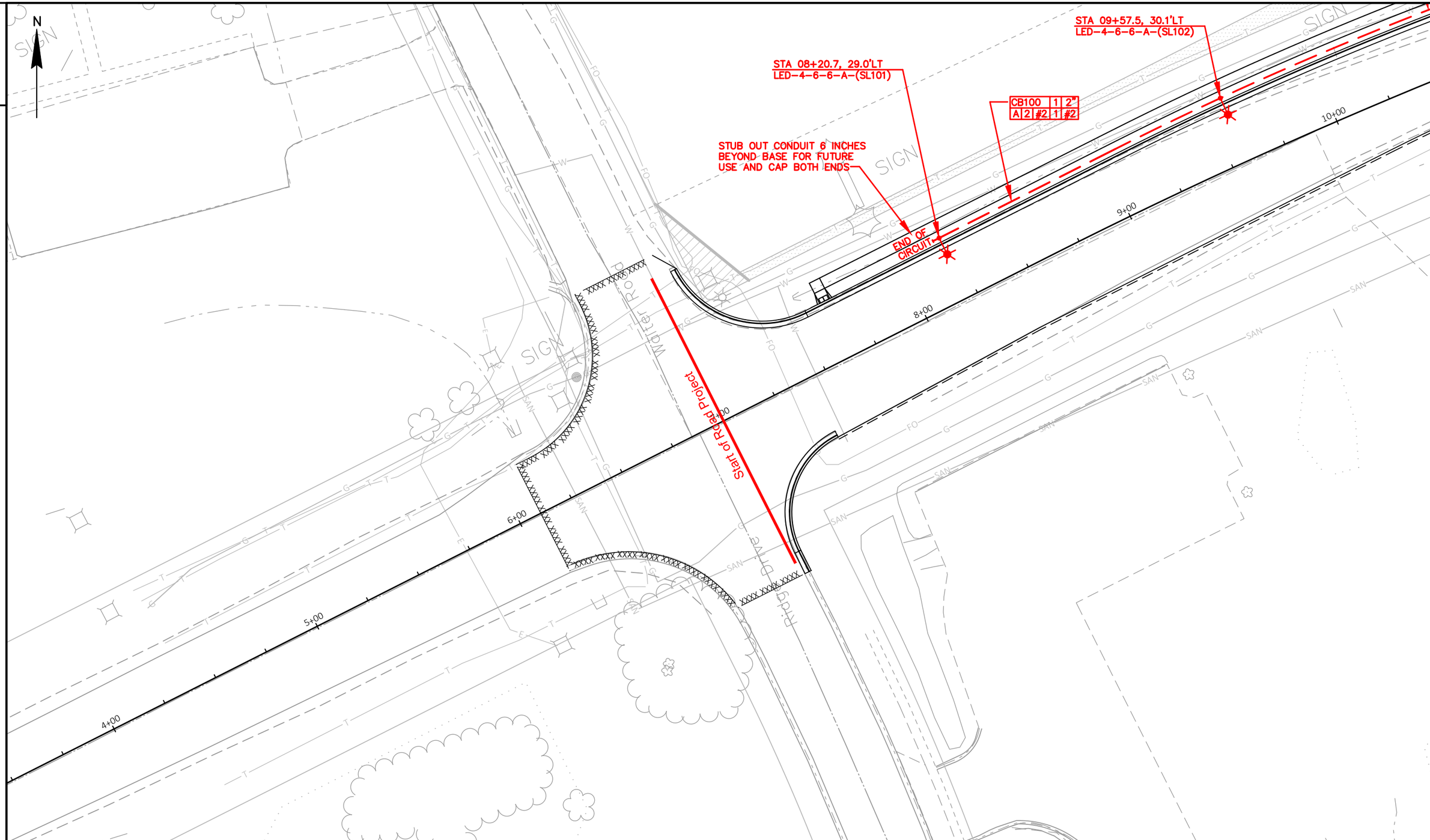

2

Sheet 02 of 09

PROJECT NO: 5310-02-76	HWY: USH 14	COUNTY: DANE	PLAN: LIGHTING PLAN – LAYOUT	SHEET	E

FILE NAME : P:\ENG1\ PROJECT FOLDERS\M3 MAZOMANIE\M3-19 FOLDER\M03-19A DRAFTING\M03-19A-WDOT-5310-02-76-E01.DWG
LAYOUT NAME – SHEET (E1)
PLOT DATE : 6/4/2019 1:49 PM PLOT BY : FORSTER ENGINEERING PLOT NAME : PLOT SCALE : 1" = 40'

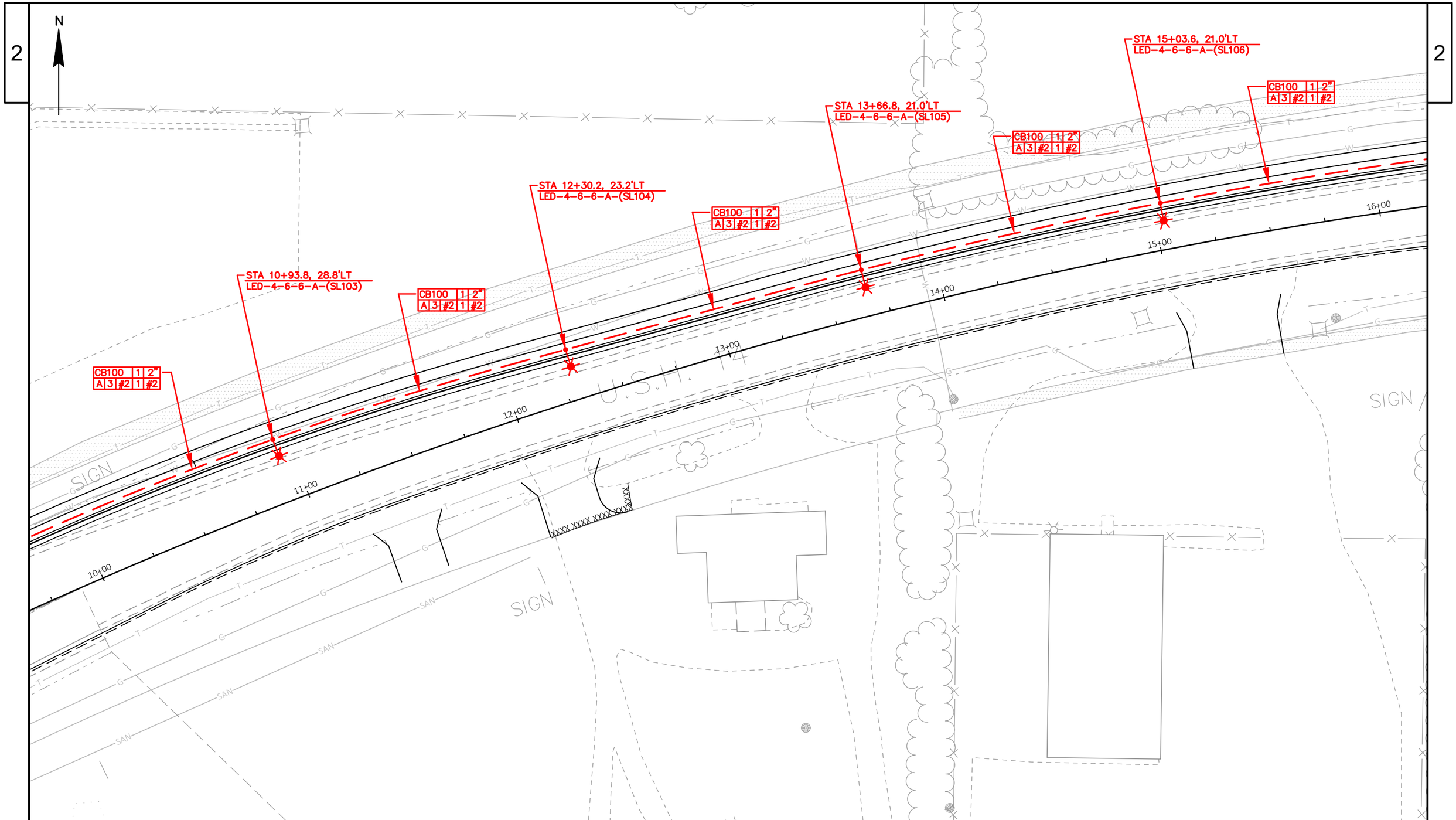

Sheet 03 of 09

PROJECT NO: 5310-02-76	HWY: USH 14	COUNTY: DANE	PLAN: LIGHTING PLAN – LAYOUT	SHEET	E

FILE NAME : P:\ENG1\ PROJECT FOLDERS\M3 MAZOMANIE\M3-19 FOLDER\M03-19A DRAFTING\M03-19A-WDOT-5310-02-76-E01.DWG
LAYOUT NAME – SHEET (E2)
PLOT DATE : 6/4/2019 1:50 PM PLOT BY : FORSTER ENGINEERING PLOT NAME : PLOT SCALE : 1" = 40'

WISDOT/CADDS SHEET 44

Sheet 04 of 09

PROJECT NO: 5310-02-76	HWY: USH 14	COUNTY: DANE	PLAN: LIGHTING PLAN – LAYOUT	SHEET	E

FILE NAME : P:\ENG1\ PROJECT FOLDERS\M3 MAZOMANIE\M3-19 FOLDER\M03-19A DRAFTING\M03-19A-WDOT-5310-02-76-E01.DWG
LAYOUT NAME – SHEET (E3)
PLOT DATE : 6/4/2019 1:50 PM PLOT BY : FORSTER ENGINEERING PLOT NAME : PLOT SCALE : 1" = 40'

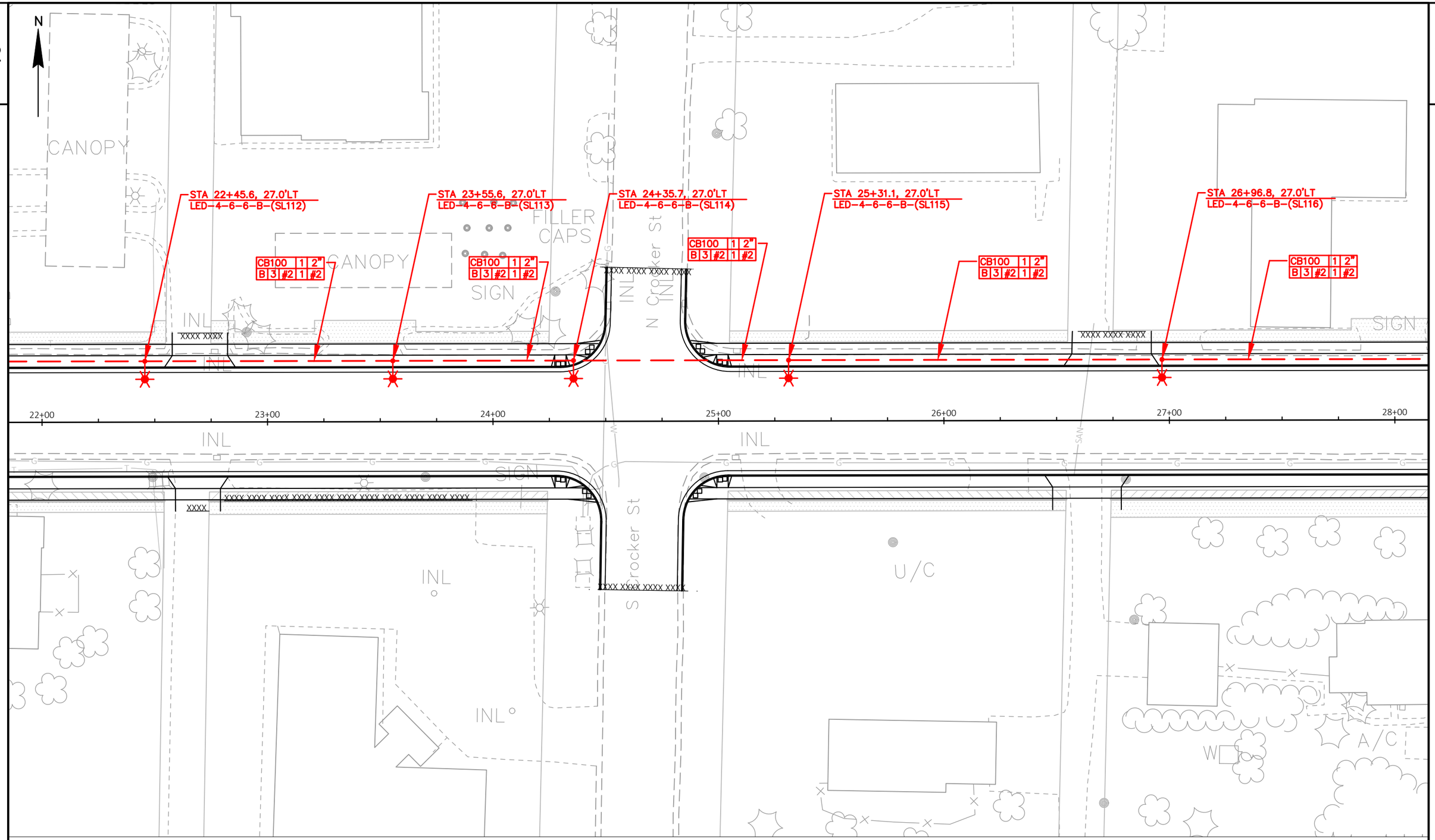

Sheet 05 of 09

PROJECT NO: 5310-02-76	HWY: USH 14	COUNTY: DANE	PLAN: LIGHTING PLAN – LAYOUT	SHEET	E

FILE NAME : P:\ENG1\ PROJECT FOLDERS\M3 MAZOMANIE\M3-19 FOLDER\M03-19A DRAFTING\M03-19A-WDOT-5310-02-76-E01.DWG
LAYOUT NAME – SHEET (E4)
PLOT DATE : 6/4/2019 1:50 PM PLOT BY : FORSTER ENGINEERING PLOT NAME : PLOT SCALE : 1" = 40'

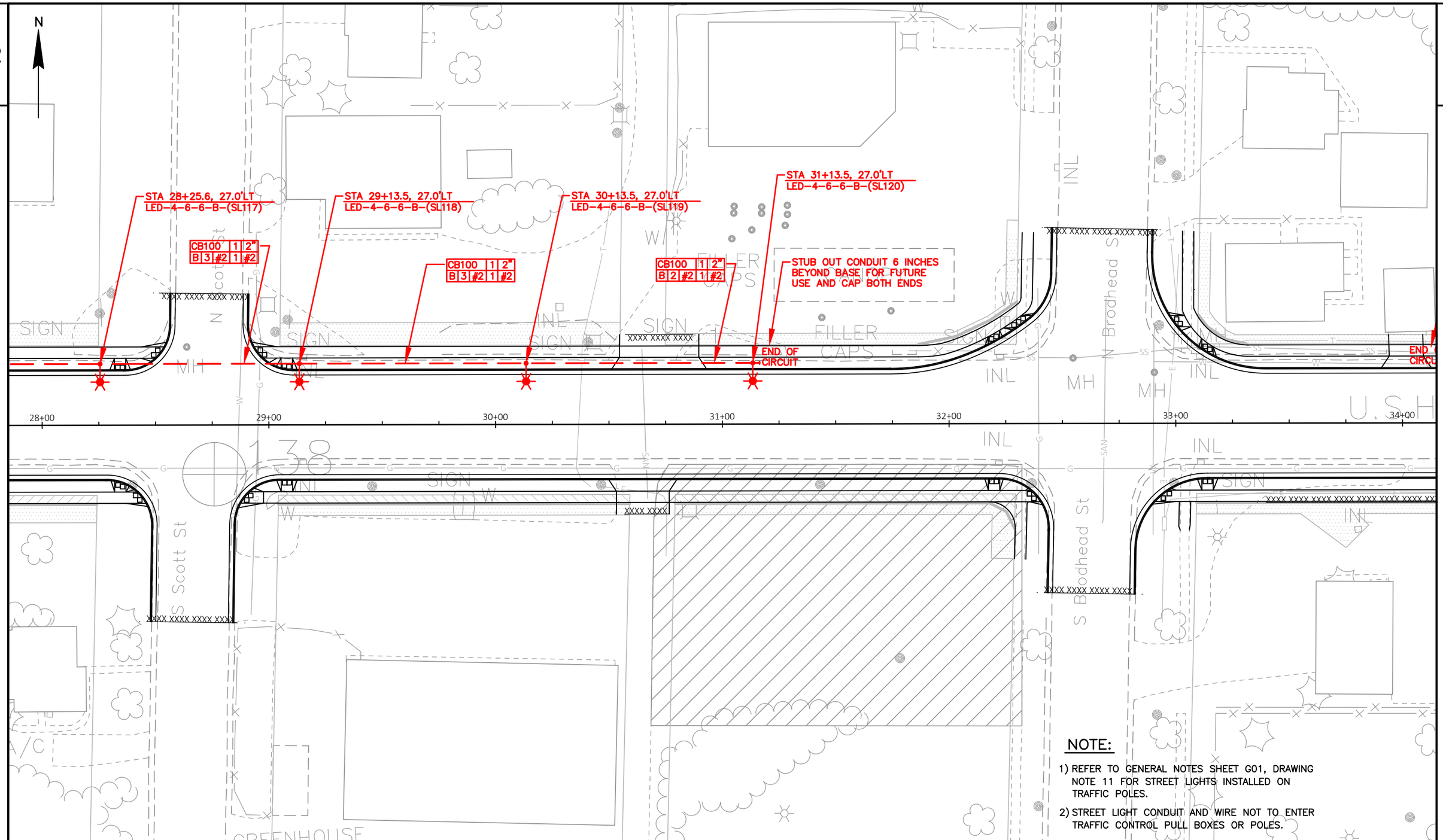

NOTE:

1) REFER TO GENERAL NOTES SHEET G01, DRAWING NOTE 11 FOR STREET LIGHTS INSTALLED ON TRAFFIC POLES.

2) STREET LIGHT CONDUIT AND WIRE NOT TO ENTER TRAFFIC CONTROL PULL BOXES OR POLES.

Sheet 06 of 09

PROJECT NO: 5310-02-76	HWY: USH 14	COUNTY: DANE	PLAN: LIGHTING PLAN – LAYOUT	SHEET	E

FILE NAME : P:\ENG1\ PROJECT FOLDERS\M3 MAZOMANIE\M3-19 FOLDER\M03-19A DRAFTING\M03-19A-WDOT-5310-02-76-E01.DWG
LAYOUT NAME – SHEET (E5)
PLOT DATE : 6/4/2019 1:50 PM PLOT BY : FORSTER ENGINEERING PLOT NAME : PLOT SCALE : 1" = 40'

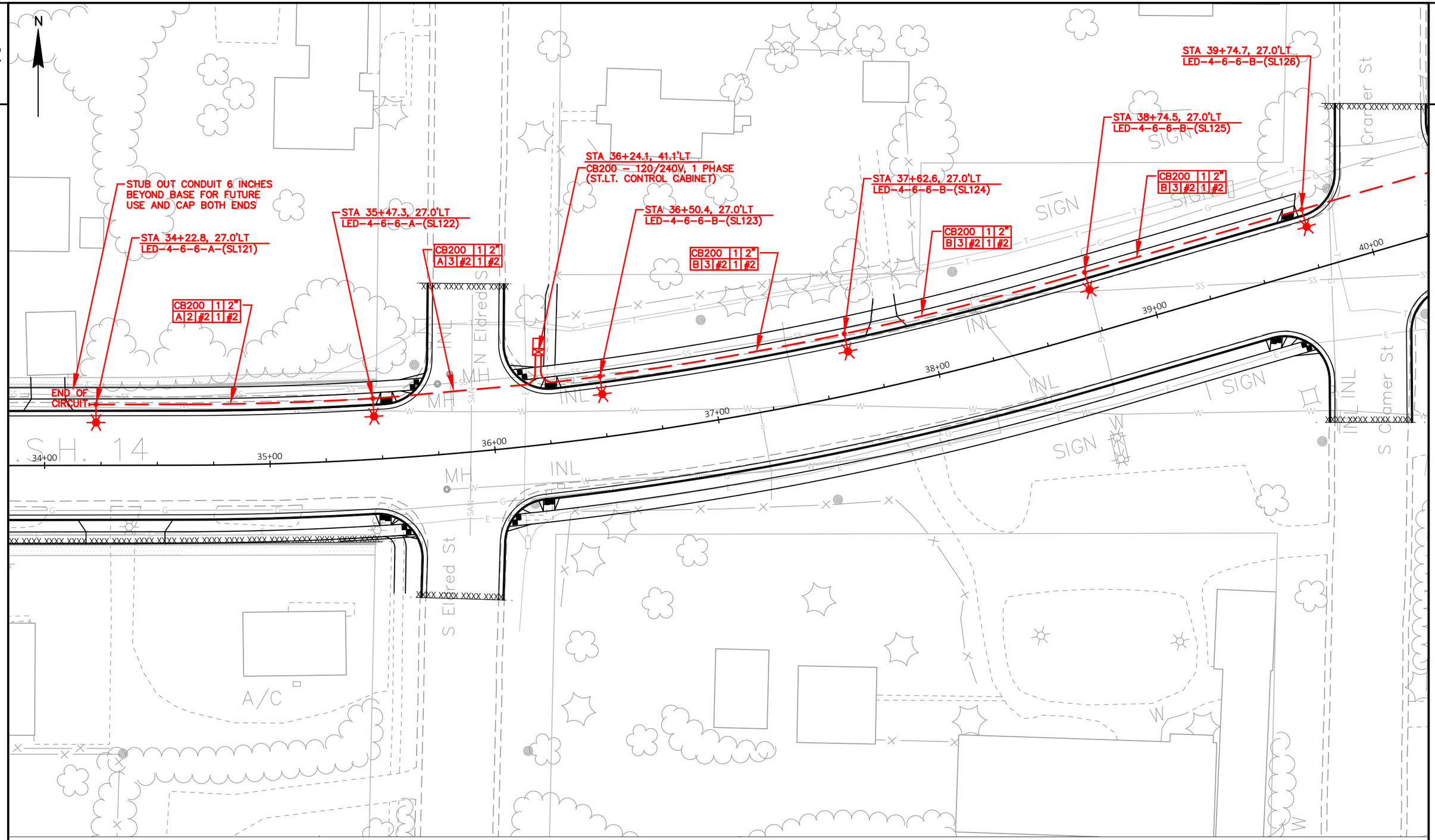

Sheet 07 of 09

PROJECT NO: 5310-02-76	HWY: USH 14	COUNTY: DANE	PLAN: LIGHTING PLAN - LAYOUT	SHEET	E

FILE NAME : P:\ENG1\ PROJECT FOLDERS\M3 MAZOMANIE\M3-19 FOLDER\M03-19A DRAFTING\M03-19A-WDOT-5310-02-76-E01.DWG
LAYOUT NAME - SHEET (E6)
PLOT DATE : 6/4/2019 1:50 PM PLOT BY : FORSTER ENGINEERING PLOT NAME : PLOT SCALE : 1" = 40'

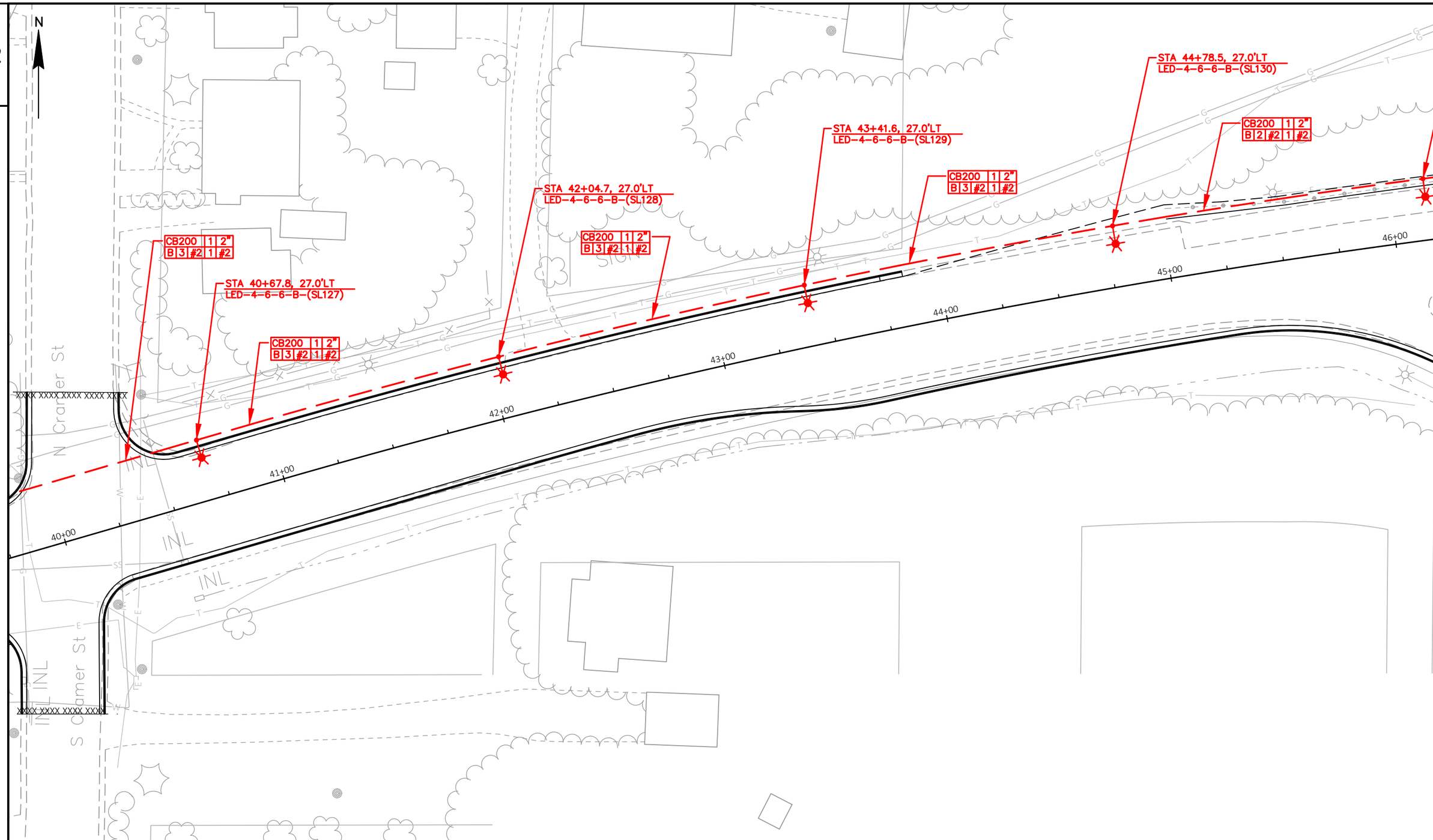

Sheet 08 of 09

PROJECT NO: 5310-02-76	HWY: USH 14	COUNTY: DANE	PLAN: LIGHTING PLAN - LAYOUT	SHEET	E

FILE NAME : D:\ABAUTZ CURRENT WORK\M3 MAZOMANIE\M03-19A DRAFTING\M03-19A-WDOT-5310-02-76-E01.DWG
LAYOUT NAME - SHEET (E7)
PLOT DATE : 6/4/2019 2:27 PM PLOT BY : FORSTER ENGINEERING PLOT NAME : PLOT SCALE : 1" = 40'

2

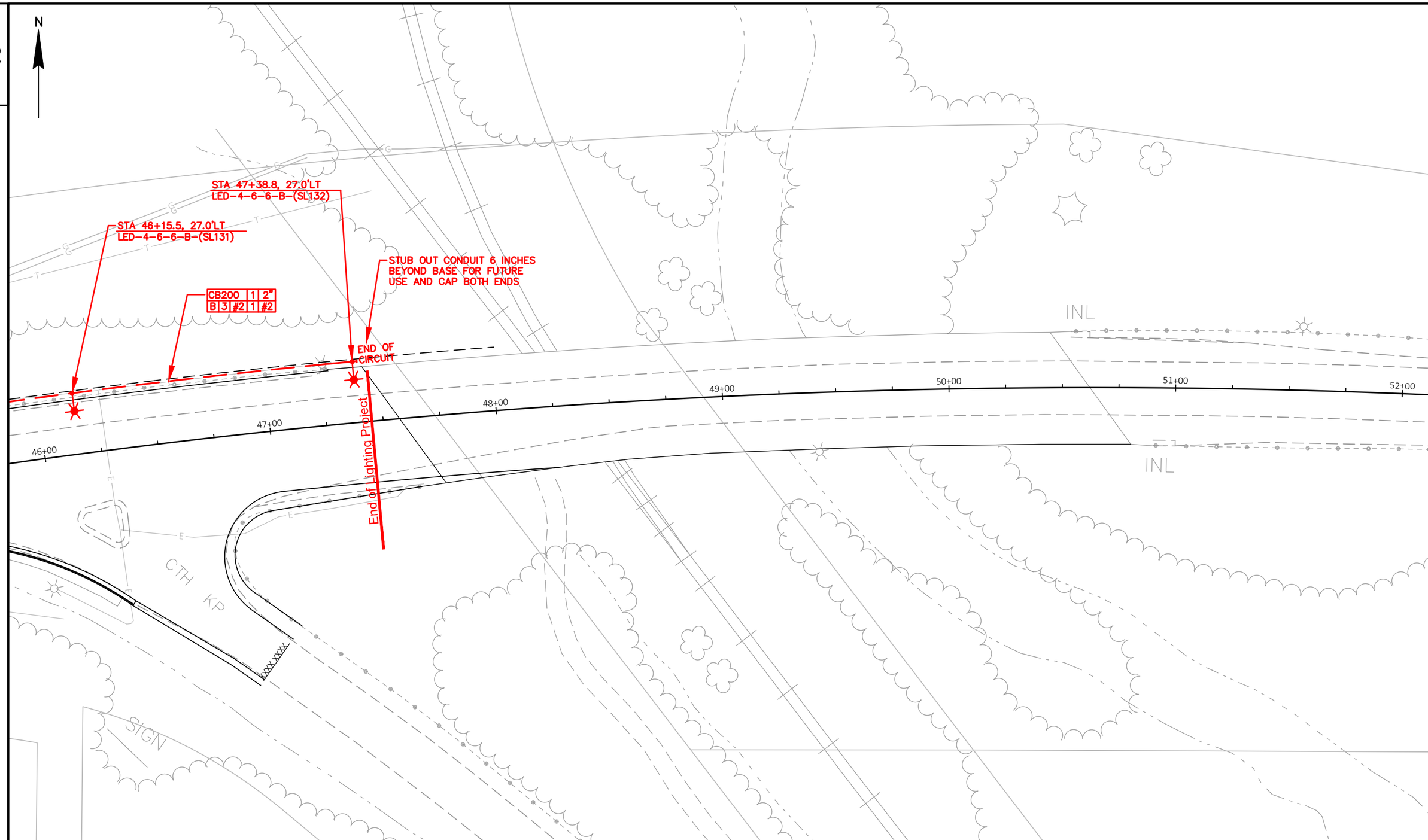

2

Sheet 09 of 09

PROJECT NO: 5310-02-76	HWY: USH 14	COUNTY: DANE	PLAN: LIGHTING PLAN - LAYOUT	SHEET	E

FILE NAME : D:\ABAUTZ CURRENT WORK\M3 MAZOMANIE\M03-19A DRAFTING\M03-19A-WDOT-5310-02-76-E01.DWG
LAYOUT NAME - SHEET (E8)
PLOT DATE : 6/4/2019 2:27 PM PLOT BY : FORSTER ENGINEERING PLOT NAME : PLOT SCALE : 1" = 40'

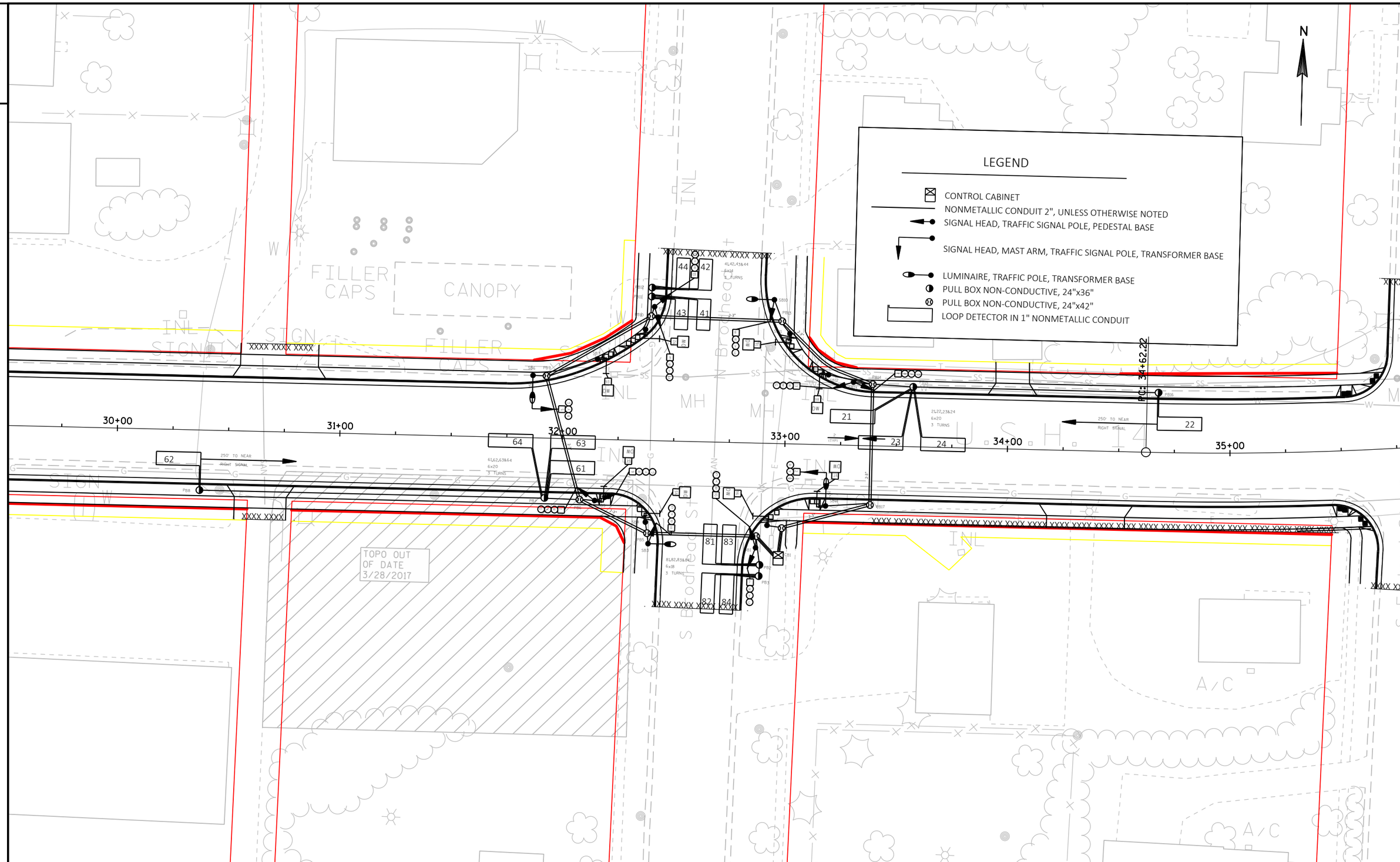

PROJECT NO: 5310-02-76	HWY: USH 14	COUNTY: DANE	SIGNAL PLAN	SHEET	E

FILE NAME : N:\PDS\C3D\53100206(14)\SHEETSPLAN\024201-SP.DWG
LAYOUT NAME - sp - (2)
PLOT DATE : 6/11/2019 3:07 PM
PLOT BY : SCHMID, CHARLENE
PLOT NAME :
PLOT SCALE : 1 IN:40 FT

CONDUIT		652.0225 CONDUIT RIGID NONMETALLIC SCHEDULE 40 2-INCH	652.0235 CONDUIT RIGID NONMETALLIC SCHEDULE 40 3-INCH
FROM STRUCTURE NUMBER	TO STRUCTURE NUMBER	LF	LF
CB-1	PB-1		18.42
CB-1	PB-4		21.99
PB-1	PB-2	8.18	
PB-2	PB-3	5.00	
PB-4	PB-5		117.10
PB-4	PB-17		86.30
PB-4	SB-1	12.95	
PB-4	SB-2	4.86	
PB-5	PB-6		67.88
PB-5	SB-3	4.72	
PB-5	SB-4	5.05	
PB-6	PB-7	15.81	
PB-6	PB-9		114.78
PB-6	SB-5	6.87	
PB-7	PB-8	155.05	
PB-9	PB-10		108.22
PB-9	SB-6	5.93	
PB-9	SB-7	24.19	
PB-10	PB-11	8.74	
PB-10	PB-13		117.98
PB-10	SB-8	6.62	
PB-10	SB-9	4.47	
PB-11	PB-12	4.15	
PB-13	PB-14		98.82
PB-13	SB-10	10.41	
PB-13	SB-11	6.57	
PB-14	PB-15	18.27	
PB-14	PB-17		108.48
PB-14	SB-12	20.15	
PB-14	SB-13	8.77	
PB-15	PB-16	110.27	
PB-17	SB-14	19.96	
	TOTAL =	466.99	859.97

LOOP DETECTOR						652.0800 CONDUIT LOOP DETECTOR	655.0700 LOOP DETECTOR LEAD-IN CABLE	655.0800 LOOP DETECTOR WIRE
LOOP NUMBER	HOME RUN PULL BOX	STATION CENTER FRONT OF LOOP	OFFSET	SIZE LFxLF	NO. OF TURNS	LF	LF	LF
21	PB-13	33+18.05	12.95' L	6x20	3	93.14	119.14	197.14
22	PB-14	34+64.99	12.72' L	6x20	3	73.58	229.41	177.58
23	PB-13	33+30.92	1.42' L	6x20	3	97.86	119.14	201.86
24	PB-13	33+58.92	1.37' L	6x20	3	97.98	119.14	201.98
41	PB-10	32+59.95	50.17' L	6X14	3	81.26	218.01	161.26
42	PB-11	32+60.30	68.17' L	6X14	3	81.22	222.16	161.22
43	PB-10	32+49.95	50.19' L	6X14	3	61.32	218.01	141.32
44	PB-11	32+50.30	68.19' L	6X14	3	61.32	222.16	141.32
61	PB-7	32+12.71	13.00' R	6x20	3	74.06	109.81	178.06
62	PB-8	30+35.72	13.04' R	6x20	3	73.84	264.86	177.84
63	PB-7	32+12.72	1.50' R	6x20	3	97.02	109.81	201.02
64	PB-7	31+84.72	1.50' R	6x20	3	98.34	109.81	202.34
81	PB-2	32+65.40	36.92' R	6X18	3	86.74	20.91	182.74
82	PB-3	32+65.00	58.92' R	6X18	3	86.78	25.91	182.78
83	PB-2	32+73.90	37.08' R	6X18	3	70.14	20.91	166.14
84	PB-3	32+73.50	59.07' R	6X18	3	70.16	25.91	166.16
					TOTAL =	1304.76	2155.10	2840.76

PULL BOXES			653.0154 PULL BOXES NON-CONDUCTIVE 24x36 INCH EACH	653.0164 PULL BOXES NON-CONDUCTIVE 24x42 INCH EACH
NUMBER	STATION	OFFSET		
PB-1	32+95.36	51.75' R		1
PB-2	32+87.74	54.73' R	1	
PB-3	32+87.50	59.73' R	1	
PB-4	32+95.36	38.27' R		1
PB-5	32+36.90	41.66' R		1
PB-6	32+06.17	27.26' R		1
PB-7	31+90.44	26.89' R	1	
PB-8	30+35.41	27.00' R	1	
PB-9	31+90.12	27.97' L		1
PB-10	32+36.57	55.89' L		1
PB-11	32+36.59	64.76' L	1	
PB-12	32+36.67	68.48' L	1	
PB-13	32+95.43	55.02' L		1
PB-14	33+36.73	27.65' L		1
PB-15	33+54.97	26.89' L	1	
PB-16	34+65.28	26.90' L	1	
PB-17	33+36.73	26.62' R		1
		TOTAL =	8	9

CONCRETE BASES			654.0101 CONCRETE BASES TYPE 1 EACH	654.0102 CONCRETE BASES TYPE 2 EACH	654.0217 CONCRETE CONTROL CABINET BASES TYPE 9 SPECIAL EACH
NUMBER	STATION	OFFSET			
CB-1	32+95.40*	45.61' R*			1
SB-1	32+85.82	47.03' R	1		
SB-2	32+90.71	36.84' R	1		
SB-3	32+37.48	46.32' R		1	
SB-4	32+36.04	36.68' R	1		
SB-5	32+13.01	27.50' R	1		
SB-6	31+84.04	28.07' L		1	
SB-7	32+12.88	36.02' L	1		
SB-8	32+34.10	49.90' L	1		
SB-9	32+37.93	60.18' L	1		
SB-10	32+91.67	64.60' L		1	
SB-11	32+99.04	49.57' L	1		
SB-12	33+16.80	31.49' L	1		
SB-13	33+28.07	28.40' L	1		
SB-14	33+16.79	27.50' R		1	
		TOTAL =	10	4	1

* CENTER OF CABINET

TRAFFIC SIGNALS NUMBER	657.0100 PEDESTAL BASES EACH	657.0255 TRANSFORMER BASES EACH	657.0310 POLES TYPE 3 EACH	657.0315 POLES TYPE 4 EACH	657.0420 TRAFFIC SIGNAL STANDARDS ALUMINUM 13-FT EACH	657.0430 TRAFFIC SIGNAL STANDARDS ALUMINUM 10-FT EACH	657.0585 TROMBONE ARMS 15-FT EACH	657.1810 LUMINAIRE ARMS STEEL 10-FT EACH
SB-1	1				1			
SB-2	1					1		
SB-3		1		1				1
SB-4	1					1		
SB-5	1				1			
SB-6		1	1				1	1
SB-7	1					1		
SB-8	1					1		
SB-9	1				1			
SB-10		1		1				1
SB-11	1					1		
SB-12	1					1		
SB-13	1				1			
SB-14		1	1				1	1
TOTAL =	10	4	2	2	4	6	2	4

SIGNAL MOUNTING HARDWARE	
LOCATION	658.5069 SIGNAL MOUNTING HARDWARE LS
USH 14 & CTH Y	1

TRAFFIC SIGNALS BASE NUMBER	SIGNAL HEAD NUMBER	658.0110 TRAFFIC SIGNAL FACE 3-12 INCH VERTICAL EACH	658.0110 TRAFFIC SIGNAL FACE 3-12 INCH HORIZONTAL EACH	658.0416 PEDESTRIAN SIGNAL FACE 16-INCH EACH	658.0500 PEDESTRIAN PUSH BUTTONS EACH
SB-1	7	1			
	12	1			
SB-2	96			1	1
SB-3	11	1			
SB-4	95			1	1
SB-5	1	1			
	6	1			
	94			1	1
SB-6	5		1		
SB-7	93			1	1
SB-8	92			1	1
SB-9	9	1			
	10	1			
SB-10	8	1			
SB-11	91			1	1
SB-12	98			1	1
SB-13	3	1			
	4	1			
SB-14	2		1		
	97			1	1
	TOTAL =	10	2	8	8

LEGEND	
W4	PAVEMENT MARKING EPOXY 4-INCH, WHITE
W8	PAVEMENT MARKING EPOXY 8-INCH, WHITE
Y4	PAVEMENT MARKING EPOXY 4-INCH, YELLOW
DY	PAVEMENT MARKING EPOXY 4-INCH, DOUBLE YELLOW
DIA-Y	PAVEMENT MARKING DIAGONAL EPOXY 12-INCH, YELLOW
CW-12	PAVEMENT MARKING CROSSWALK EPOXY 12-INCH
SL	PAVEMENT MARKING STOP LINE EPOXY 18-INCH
WO	PAVEMENT MARKING WORDS EPOXY
A2	PAVEMENT MARKING ARROWS EPOXY TYPE 2
A3	PAVEMENT MARKING ARROWS EPOXY TYPE 3
A3-R	PAVEMENT MARKING ARROWS EPOXY TYPE 3R

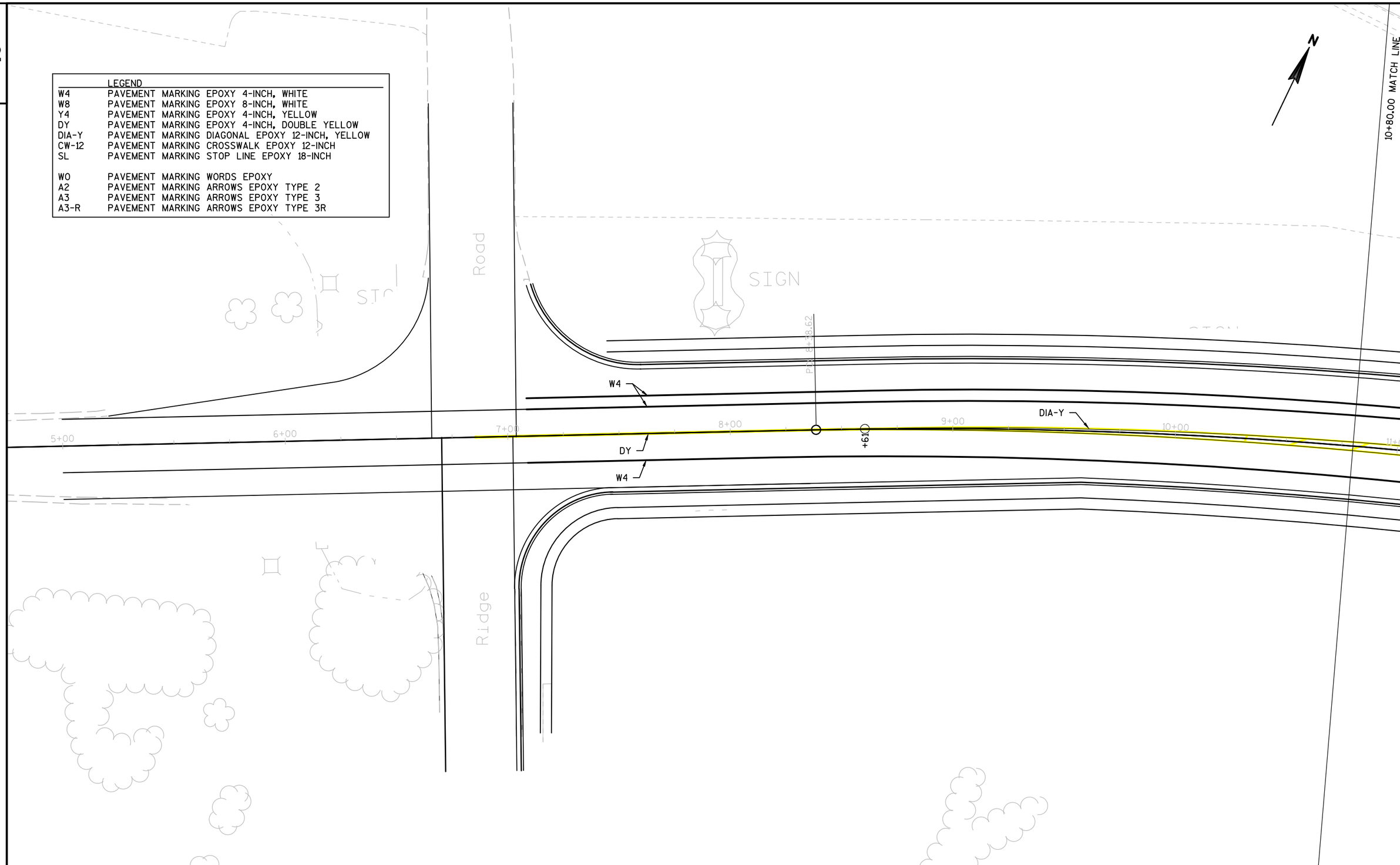

PROJECT NO:5310-02-06	HWY:USH 14	COUNTY:DANE COUNTY	USH 14/MAIN ST	SHEET	E

2

LEGEND	
W4	PAVEMENT MARKING EPOXY 4-INCH, WHITE
W8	PAVEMENT MARKING EPOXY 8-INCH, WHITE
Y4	PAVEMENT MARKING EPOXY 4-INCH, YELLOW
DY	PAVEMENT MARKING EPOXY 4-INCH, DOUBLE YELLOW
DIA-Y	PAVEMENT MARKING DIAGONAL EPOXY 12-INCH, YELLOW
CW-12	PAVEMENT MARKING CROSSWALK EPOXY 12-INCH
SL	PAVEMENT MARKING STOP LINE EPOXY 18-INCH
WO	PAVEMENT MARKING WORDS EPOXY
A2	PAVEMENT MARKING ARROWS EPOXY TYPE 2
A3	PAVEMENT MARKING ARROWS EPOXY TYPE 3
A3-R	PAVEMENT MARKING ARROWS EPOXY TYPE 3R

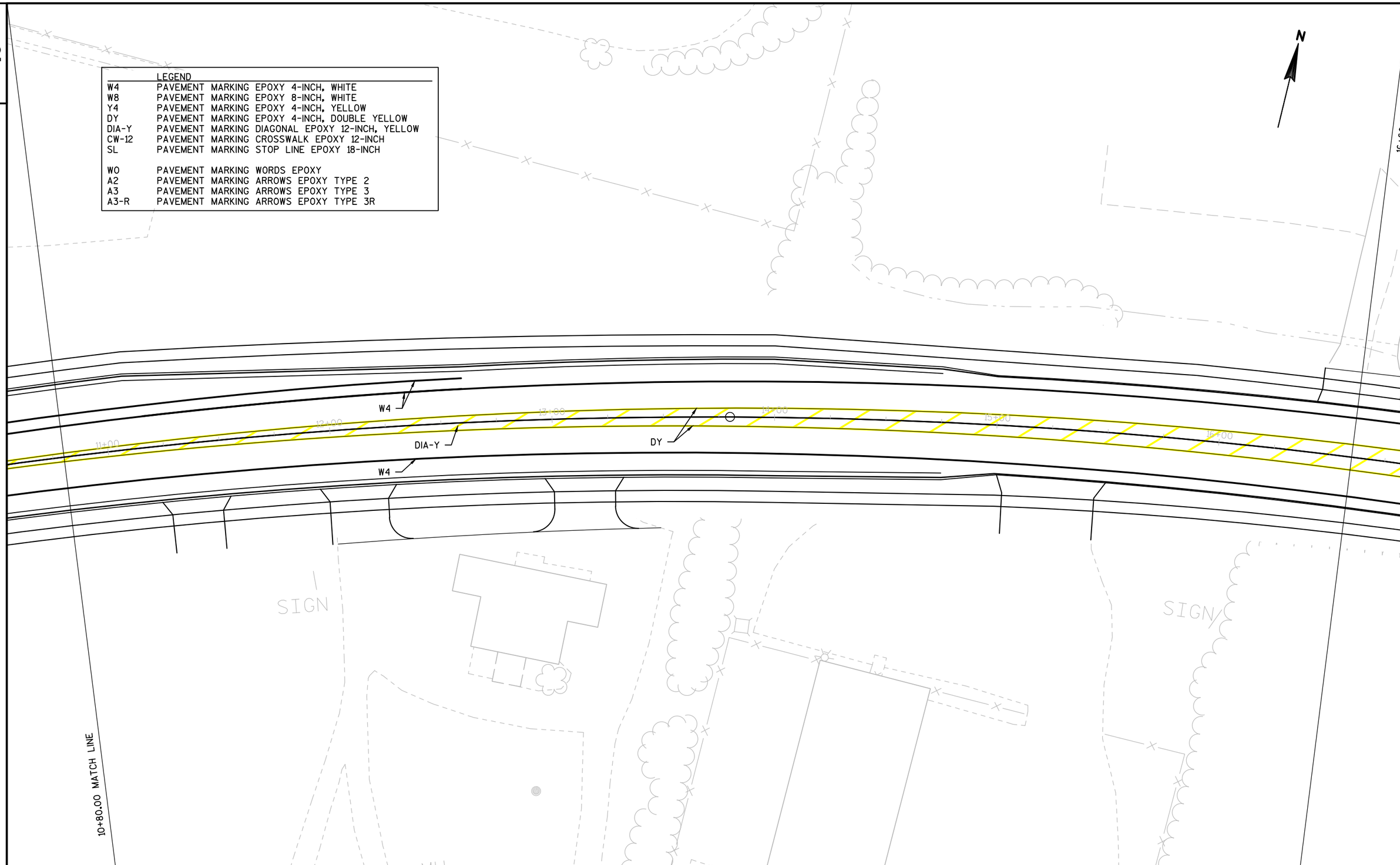

2

PROJECT NO:5310-02-06	HWY:USH 14	COUNTY:DANE COUNTY	USH 14/MAIN ST	SHEET	E

2

LEGEND	
W4	PAVEMENT MARKING EPOXY 4-INCH, WHITE
W8	PAVEMENT MARKING EPOXY 8-INCH, WHITE
Y4	PAVEMENT MARKING EPOXY 4-INCH, YELLOW
DY	PAVEMENT MARKING EPOXY 4-INCH, DOUBLE YELLOW
DIA-Y	PAVEMENT MARKING DIAGONAL EPOXY 12-INCH, YELLOW
CW-12	PAVEMENT MARKING CROSSWALK EPOXY 12-INCH
SL	PAVEMENT MARKING STOP LINE EPOXY 18-INCH
WO	PAVEMENT MARKING WORDS EPOXY
A2	PAVEMENT MARKING ARROWS EPOXY TYPE 2
A3	PAVEMENT MARKING ARROWS EPOXY TYPE 3
A3-R	PAVEMENT MARKING ARROWS EPOXY TYPE 3R

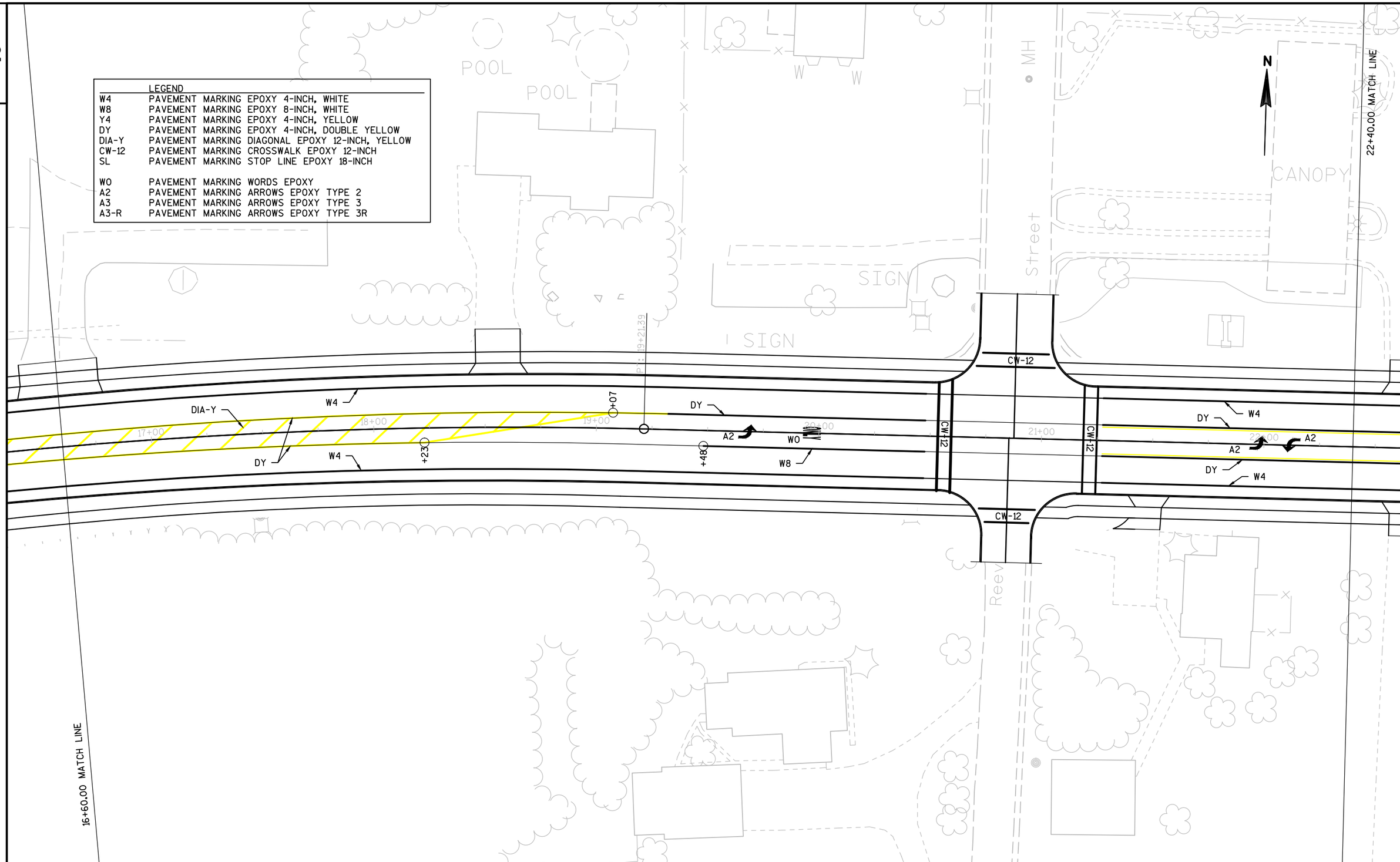

2

PROJECT NO:5310-02-06	HWY:USH 14	COUNTY:DANE COUNTY	USH 14/MAIN ST	SHEET	E

2

LEGEND	
W4	PAVEMENT MARKING EPOXY 4-INCH, WHITE
W8	PAVEMENT MARKING EPOXY 8-INCH, WHITE
Y4	PAVEMENT MARKING EPOXY 4-INCH, YELLOW
DY	PAVEMENT MARKING EPOXY 4-INCH, DOUBLE YELLOW
DIA-Y	PAVEMENT MARKING DIAGONAL EPOXY 12-INCH, YELLOW
CW-12	PAVEMENT MARKING CROSSWALK EPOXY 12-INCH
SL	PAVEMENT MARKING STOP LINE EPOXY 18-INCH
WO	PAVEMENT MARKING WORDS EPOXY
A2	PAVEMENT MARKING ARROWS EPOXY TYPE 2
A3	PAVEMENT MARKING ARROWS EPOXY TYPE 3
A3-R	PAVEMENT MARKING ARROWS EPOXY TYPE 3R

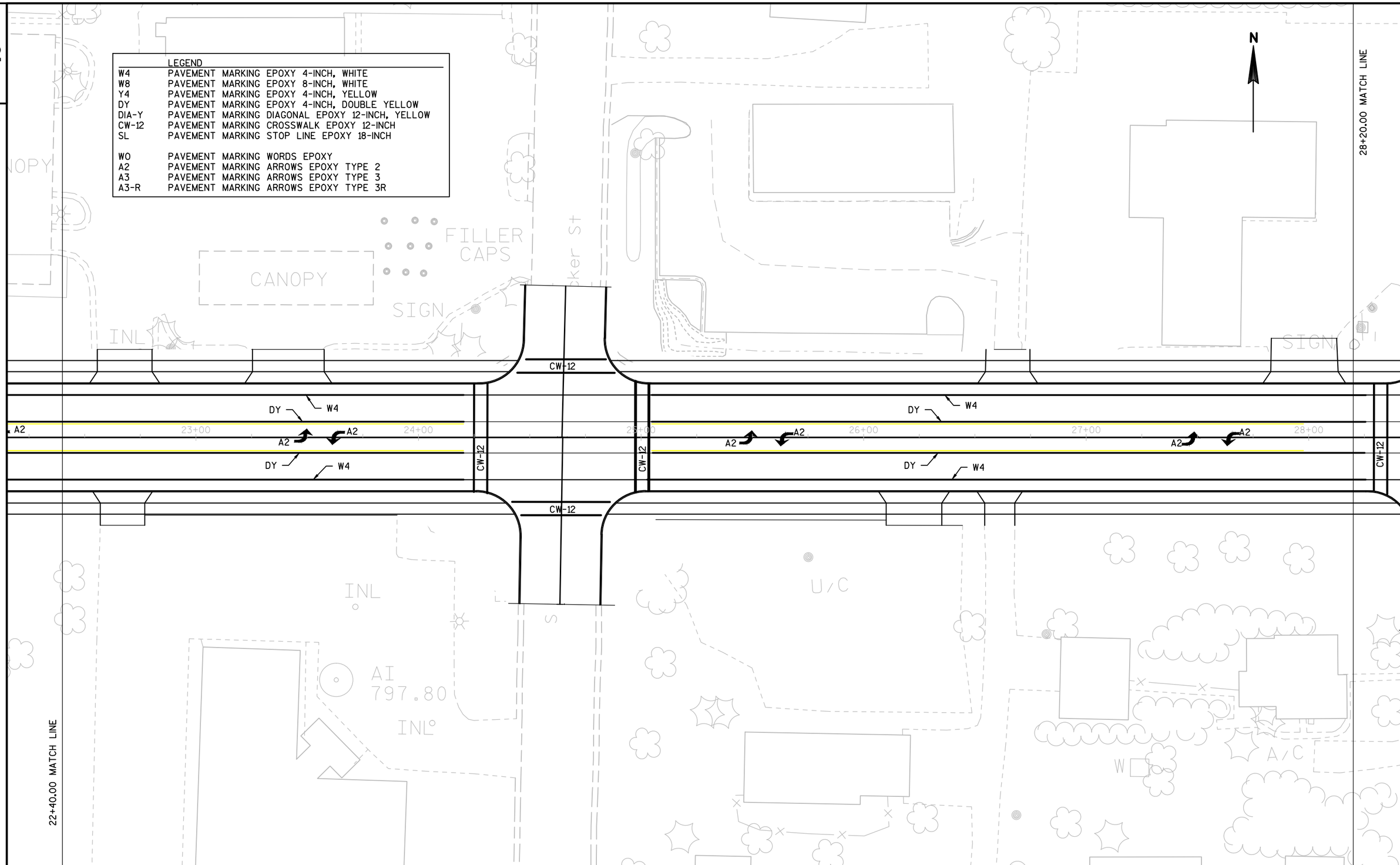

2

PROJECT NO:5310-02-06	HWY:USH 14	COUNTY:DANE COUNTY	USH 14/MAIN ST	SHEET	E

FILE NAME : N:\PDS\C3D\53100206(14)\SHEETSPLAN\024501-PM.DWG
LAYOUT NAME - SHEET - (4)
PLOT DATE : 1/14/2016 3:13 PM PLOT BY : FILLIPI, PETER L PLOT NAME : PLOT SCALE : 1 IN:40 FT

LEGEND	
W4	PAVEMENT MARKING EPOXY 4-INCH, WHITE
W8	PAVEMENT MARKING EPOXY 8-INCH, WHITE
Y4	PAVEMENT MARKING EPOXY 4-INCH, YELLOW
DY	PAVEMENT MARKING EPOXY 4-INCH, DOUBLE YELLOW
DIA-Y	PAVEMENT MARKING DIAGONAL EPOXY 12-INCH, YELLOW
CW-12	PAVEMENT MARKING CROSSWALK EPOXY 12-INCH
SL	PAVEMENT MARKING STOP LINE EPOXY 18-INCH
WO	PAVEMENT MARKING WORDS EPOXY
A2	PAVEMENT MARKING ARROWS EPOXY TYPE 2
A3	PAVEMENT MARKING ARROWS EPOXY TYPE 3
A3-R	PAVEMENT MARKING ARROWS EPOXY TYPE 3R

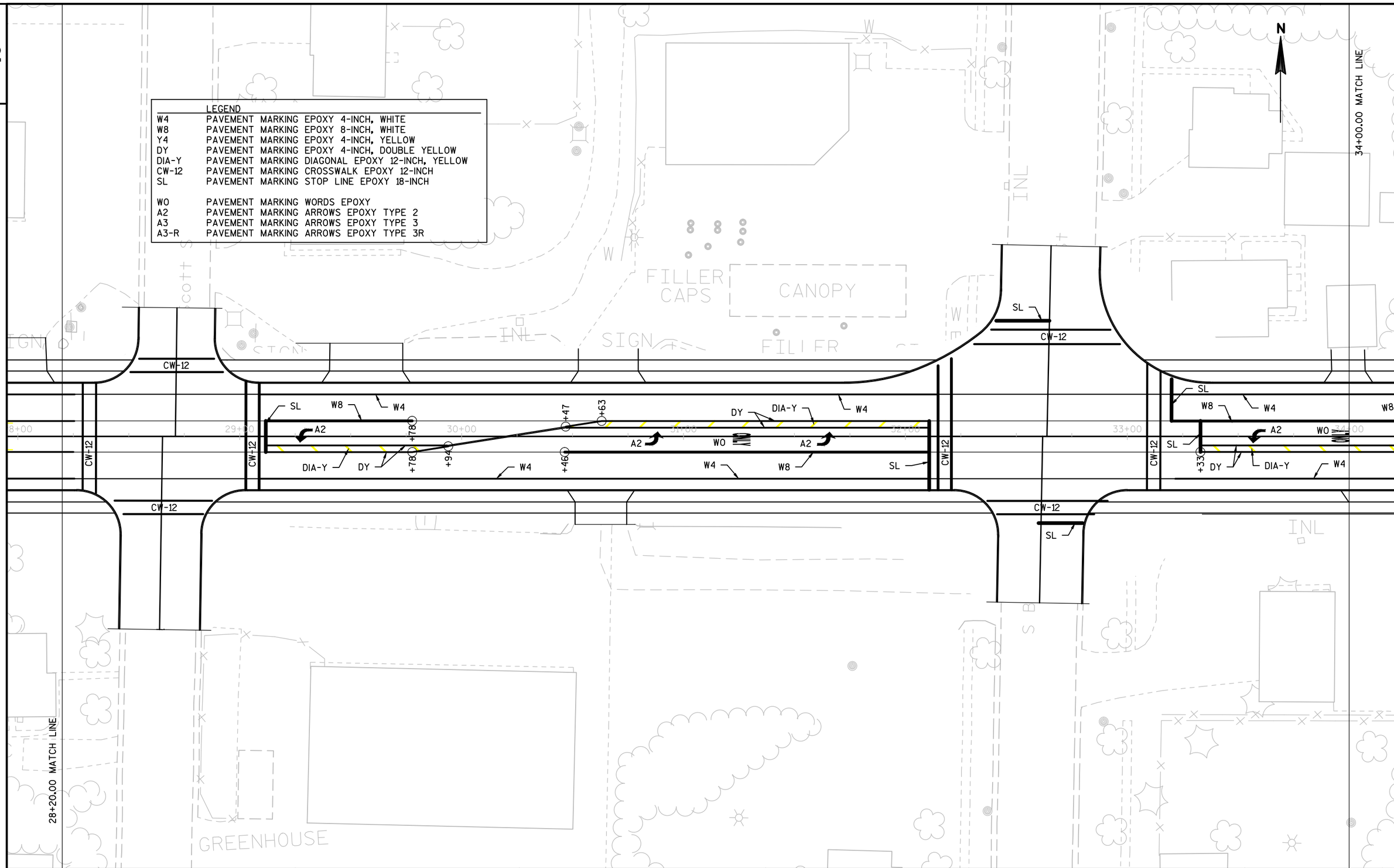

	LEGEND
W4	PAVEMENT MARKING EPOXY 4-INCH, WHITE
W8	PAVEMENT MARKING EPOXY 8-INCH, WHITE
Y4	PAVEMENT MARKING EPOXY 4-INCH, YELLOW
DY	PAVEMENT MARKING EPOXY 4-INCH, DOUBLE YELLOW
DIA-Y	PAVEMENT MARKING DIAGONAL EPOXY 12-INCH, YELLOW
CW-12	PAVEMENT MARKING CROSSWALK EPOXY 12-INCH
SL	PAVEMENT MARKING STOP LINE EPOXY 18-INCH
WO	PAVEMENT MARKING WORDS EPOXY
A2	PAVEMENT MARKING ARROWS EPOXY TYPE 2
A3	PAVEMENT MARKING ARROWS EPOXY TYPE 3
A3-R	PAVEMENT MARKING ARROWS EPOXY TYPE 3R

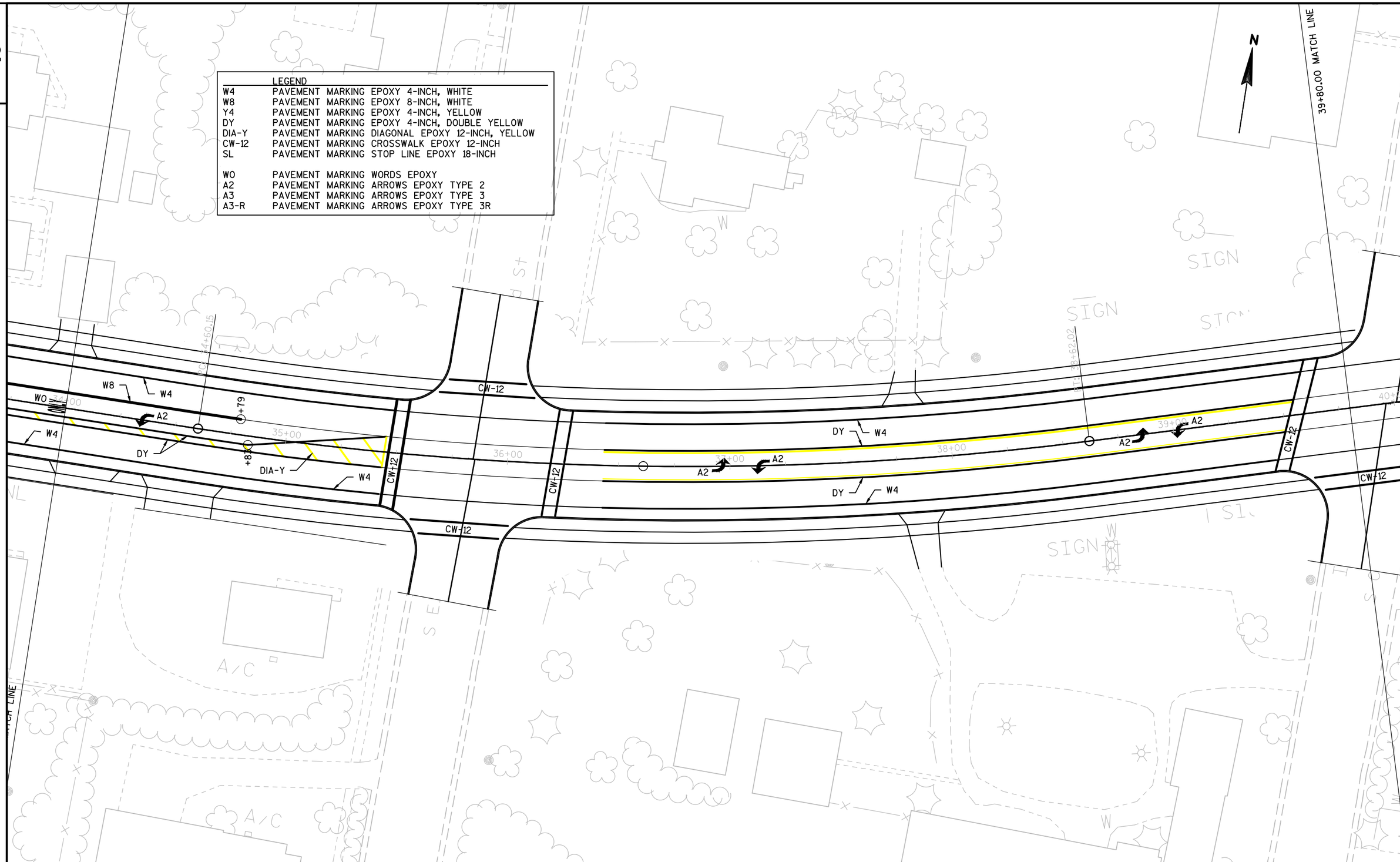

PROJECT NO:5310-02-06	HWY:USH 14	COUNTY:DANE COUNTY	USH 14/MAIN ST	SHEET	E

LEGEND	
W4	PAVEMENT MARKING EPOXY 4-INCH, WHITE
W8	PAVEMENT MARKING EPOXY 8-INCH, WHITE
Y4	PAVEMENT MARKING EPOXY 4-INCH, YELLOW
DY	PAVEMENT MARKING EPOXY 4-INCH, DOUBLE YELLOW
DIA-Y	PAVEMENT MARKING DIAGONAL EPOXY 12-INCH, YELLOW
CW-12	PAVEMENT MARKING CROSSWALK EPOXY 12-INCH
SL	PAVEMENT MARKING STOP LINE EPOXY 18-INCH
WO	PAVEMENT MARKING WORDS EPOXY
A2	PAVEMENT MARKING ARROWS EPOXY TYPE 2
A3	PAVEMENT MARKING ARROWS EPOXY TYPE 3
A3-R	PAVEMENT MARKING ARROWS EPOXY TYPE 3R

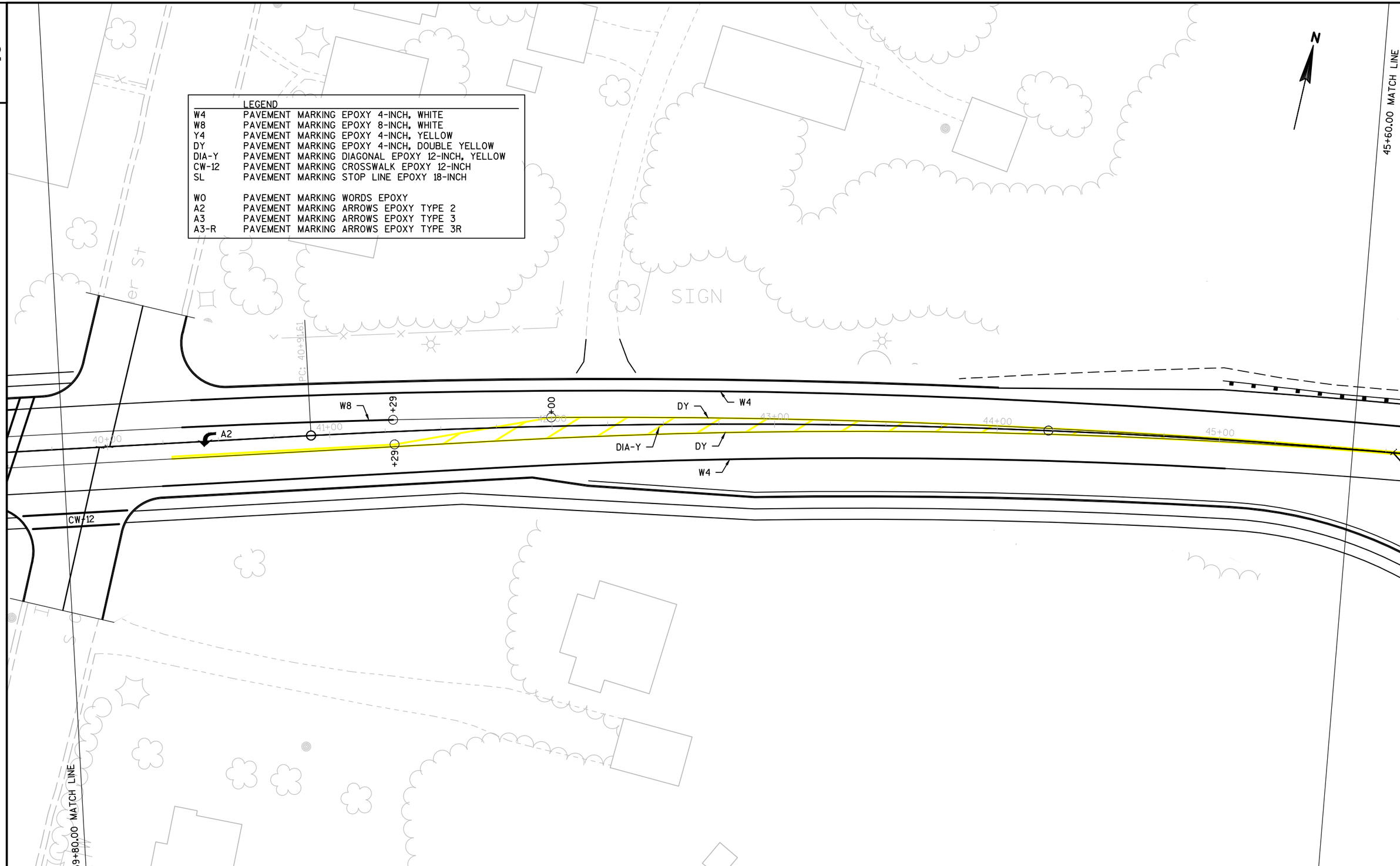

PROJECT NO:5310-02-06	HWY:USH 14	COUNTY:DANE COUNTY	USH 14/MAIN ST	SHEET	E

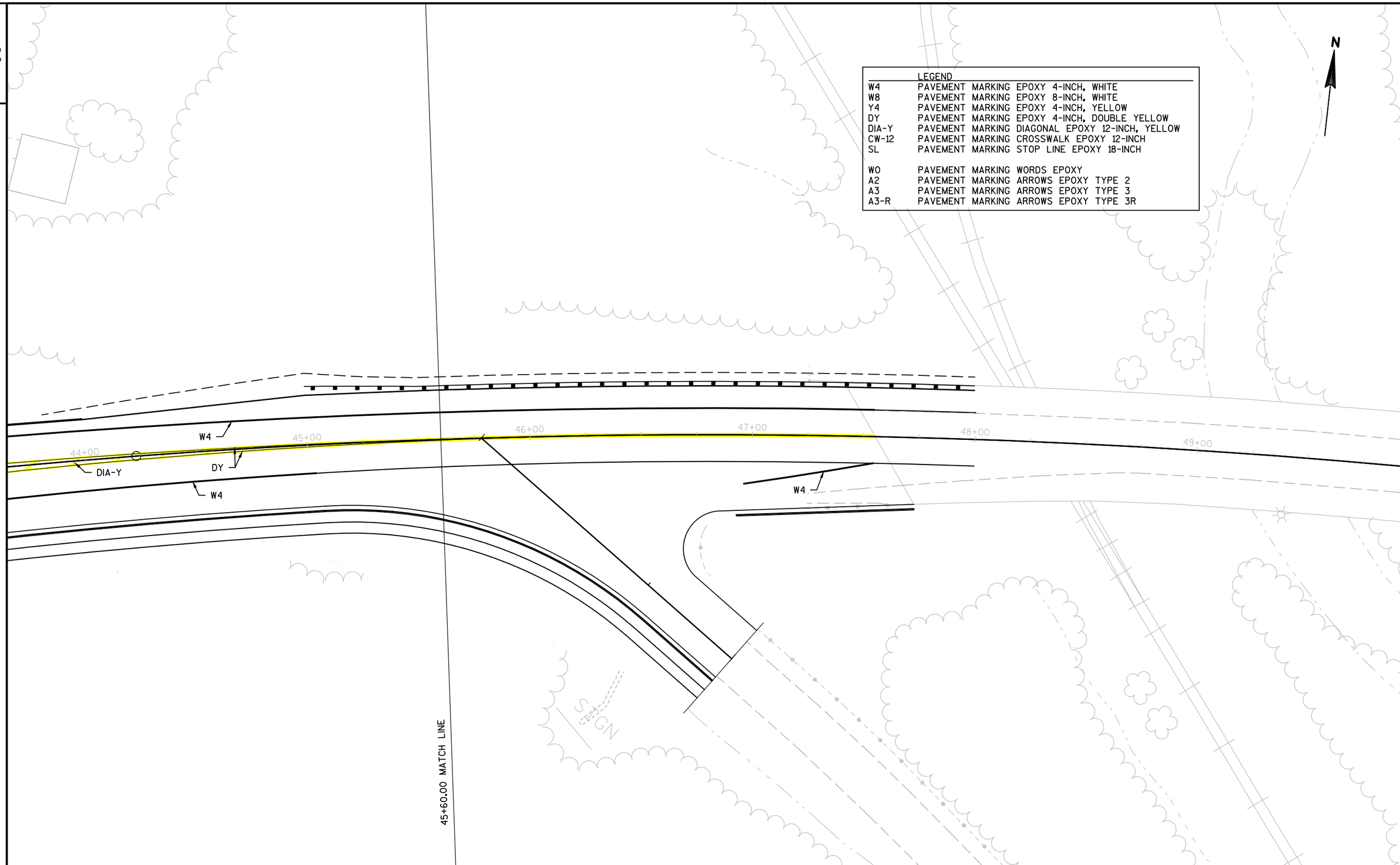

LEGEND	
W4	PAVEMENT MARKING EPOXY 4-INCH, WHITE
W8	PAVEMENT MARKING EPOXY 8-INCH, WHITE
Y4	PAVEMENT MARKING EPOXY 4-INCH, YELLOW
DY	PAVEMENT MARKING EPOXY 4-INCH, DOUBLE YELLOW
DIA-Y	PAVEMENT MARKING DIAGONAL EPOXY 12-INCH, YELLOW
CW-12	PAVEMENT MARKING CROSSWALK EPOXY 12-INCH
SL	PAVEMENT MARKING STOP LINE EPOXY 18-INCH
WO	PAVEMENT MARKING WORDS EPOXY
A2	PAVEMENT MARKING ARROWS EPOXY TYPE 2
A3	PAVEMENT MARKING ARROWS EPOXY TYPE 3
A3-R	PAVEMENT MARKING ARROWS EPOXY TYPE 3R

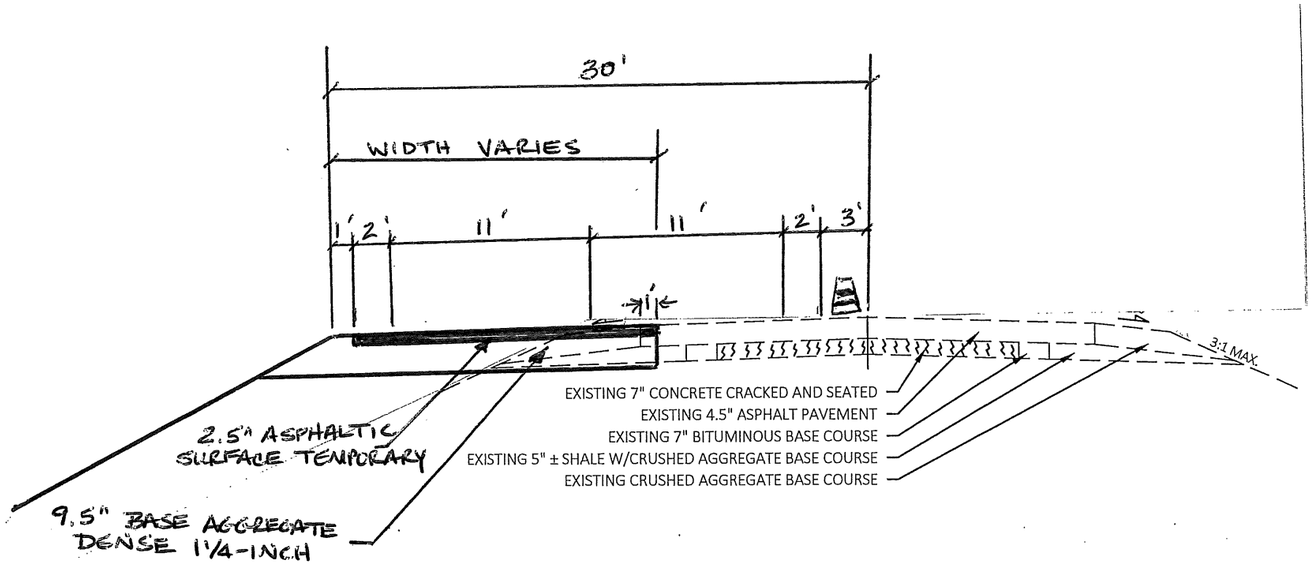

STAGE 1

PROPOSED TYPICAL SECTION FOR TEMPORARY WIDENING

PROJECT NO: 5310-02-06	HWY: USH 14	COUNTY: DANE	TYPICAL SECTIONS	SHEET	E

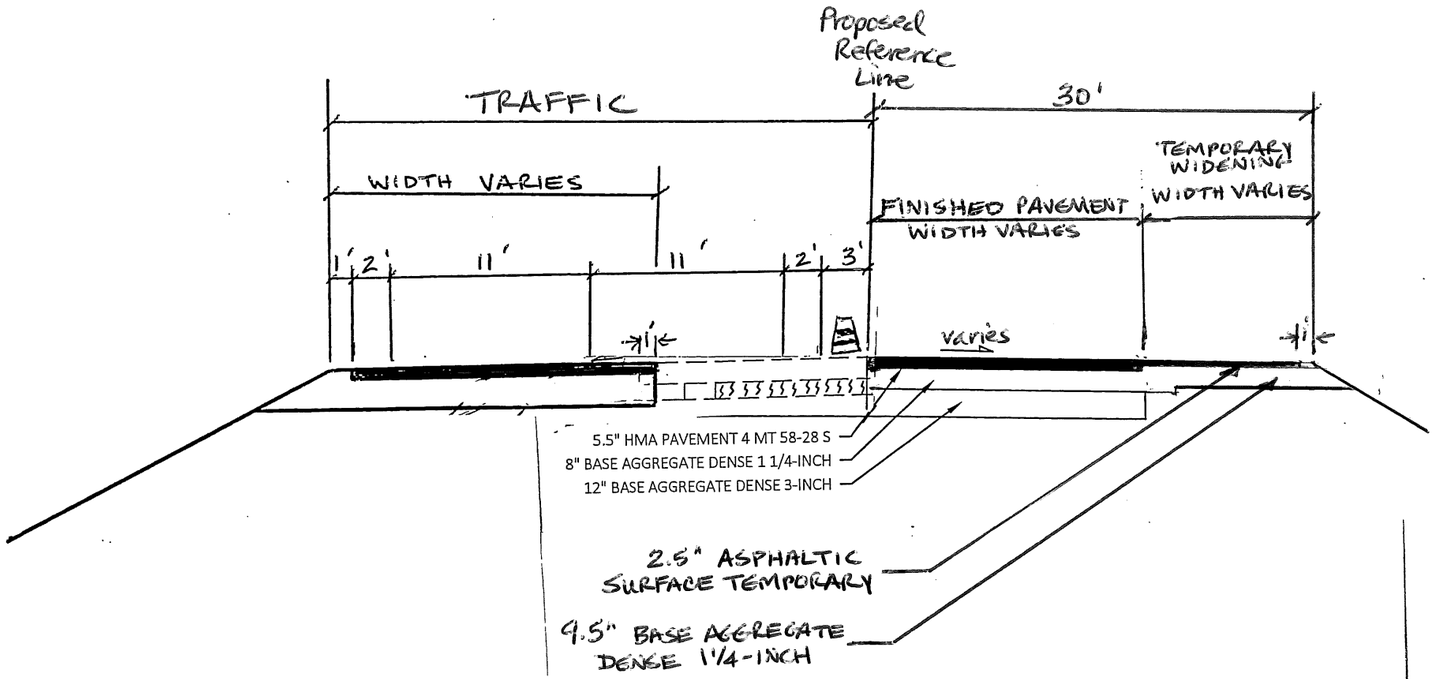

STAGE 2

PROPOSED TYPICAL SECTION FOR TEMPORARY WIDENING

PROJECT NO: 5310-02-06	HWY: USH 14	COUNTY: DANE	TYPICAL SECTIONS	SHEET	E

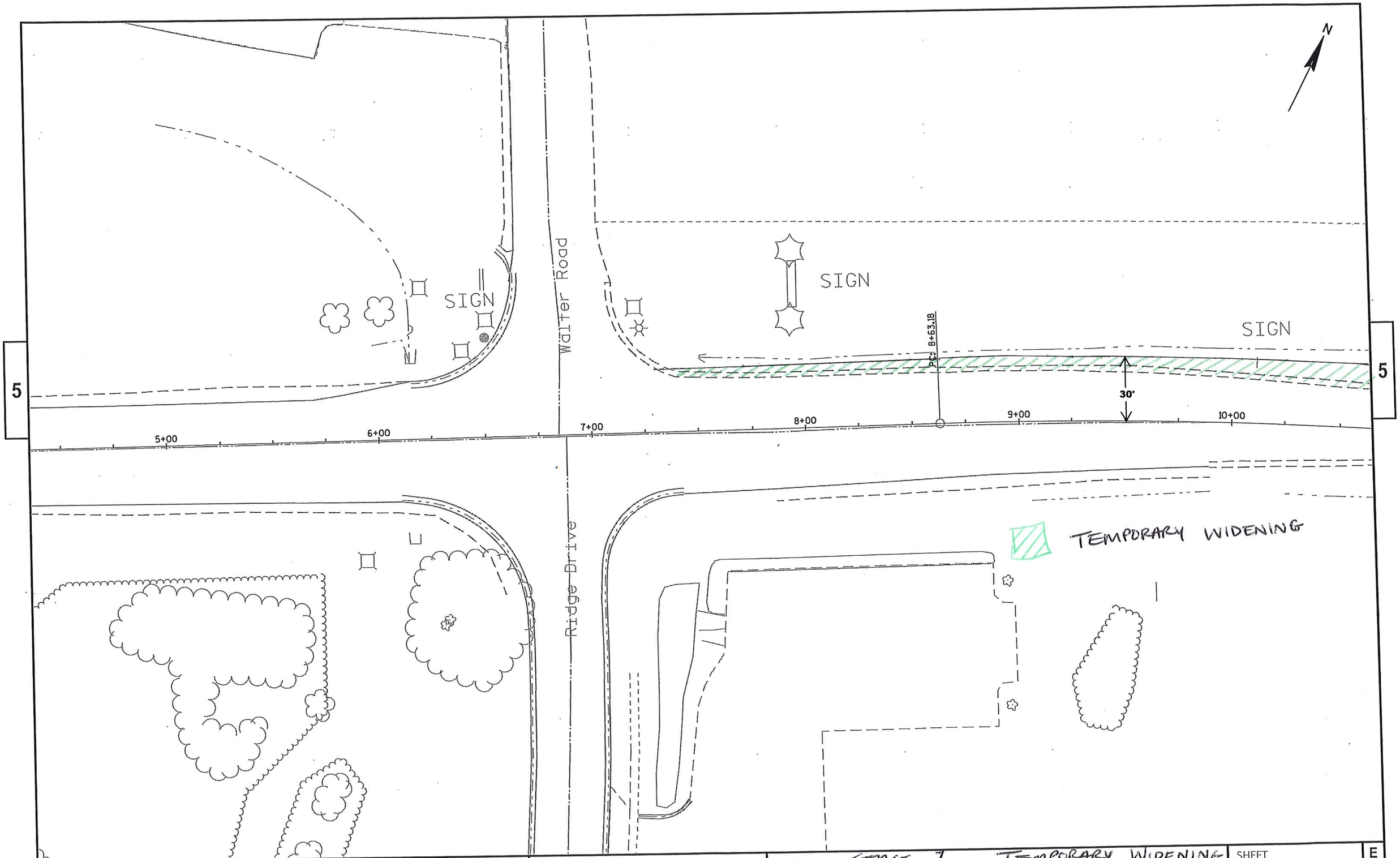

PROJECT NO: 5310-02-06	HWY: USH 14	COUNTY: DANE	PLAN STAGE 1 TEMPORARY WIDENING	SHEET	E

FILE NAME : N:\PDS\C3D\53100206(14)\SHEETSPLAN\050001-PN.DWG
LAYOUT NAME - pn - (01)

PLOT DATE : 6/3/2019 3:58 PM PLOT BY : SCHMID, CHARLENE PLOT NAME : PLOT SCALE : 1 IN:40 FT

WISDOT/CADDS SHEET 44

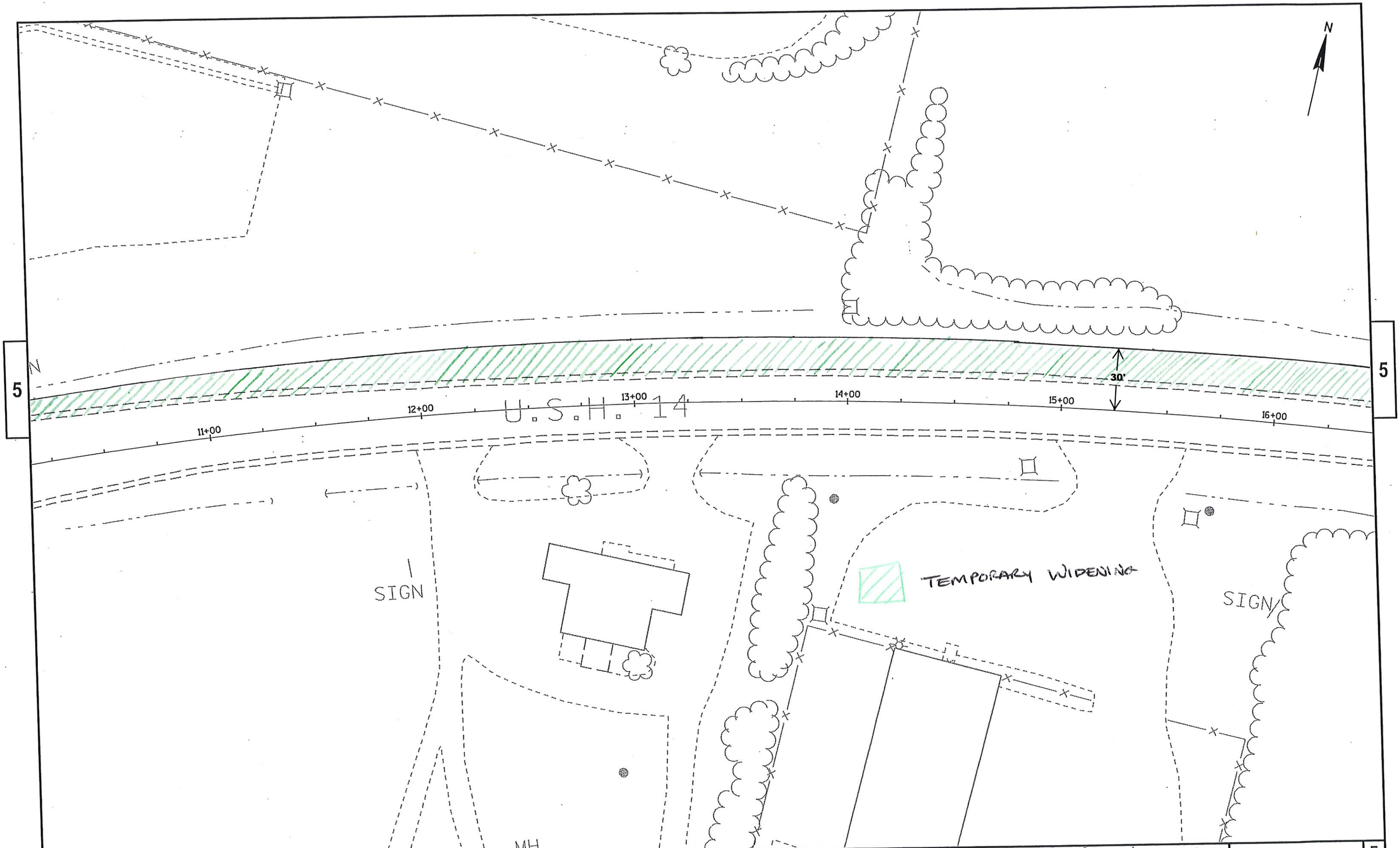

PROJECT NO: 5310-02-06	HWY: USH 14	COUNTY: DANE	PLAN STAGE 1 TEMPORARY WIDENING	SHEET	E

FILE NAME : N:\PDS\C3D\53100206(14)\SHEETSPLAN\050001-PN.DWG
LAYOUT NAME - pn - (02)

PLOT DATE : 6/3/2019 3:58 PM PLOT BY : SCHMID, CHARLENE PLOT NAME : PLOT SCALE : 1 IN:40 FT

WISDOT/CADDS SHEET 44

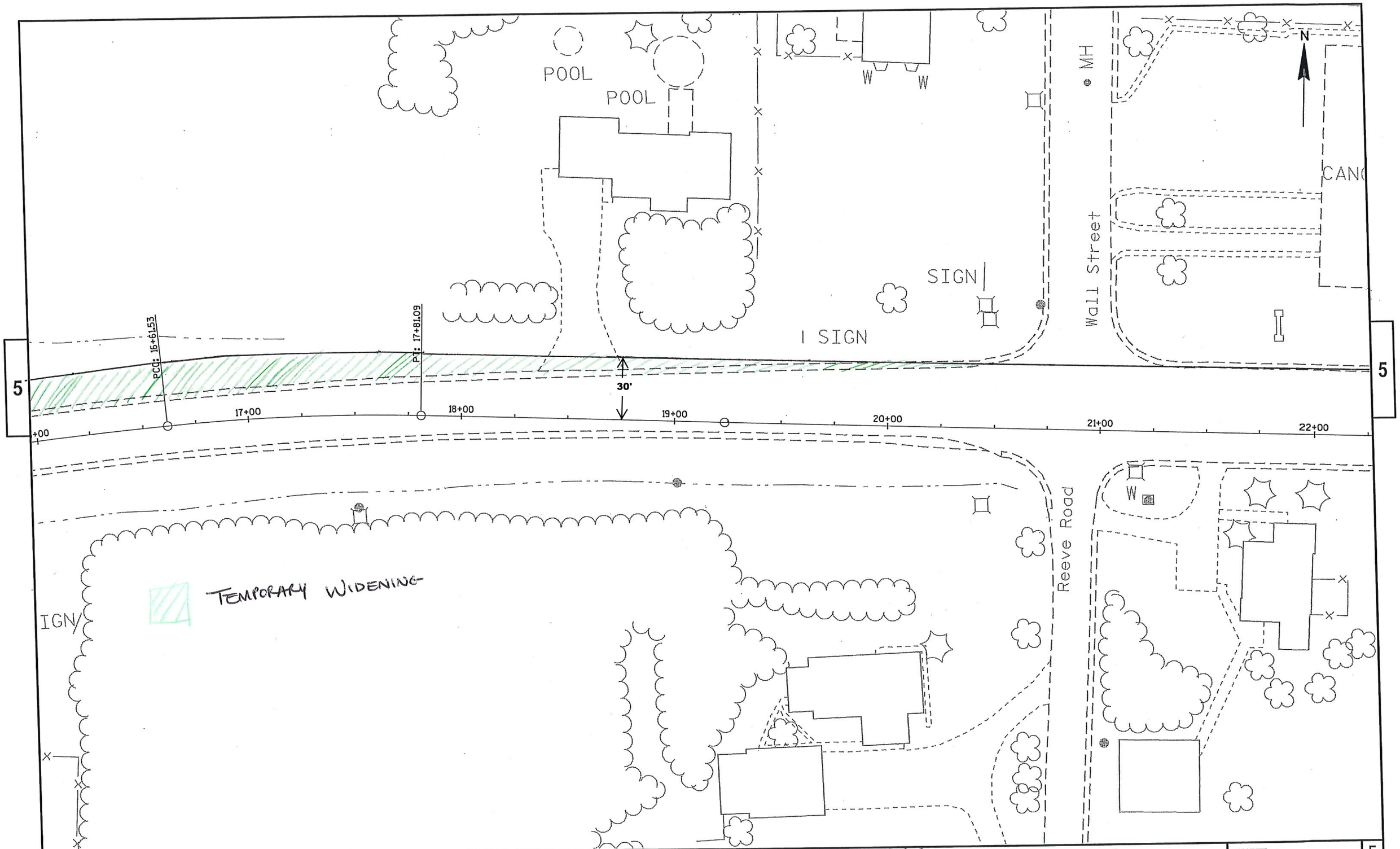

PROJECT NO: 5310-02-06	HWY: USH 14	COUNTY: DANE	PLAN STAGE 1 TEMPORARY WIDENING	SHEET E

FILE NAME : N:\PDS\C3D\53100206(14)\SHEETSPLAN\050001-PN.DWG
LAYOUT NAME - pn - (03)

PLOT DATE : 6/3/2019 3:58 PM PLOT BY : SCHMID, CHARLENE PLOT NAME : PLOT SCALE : 1 IN:40 FT

WISDOT/CADDS SHEET 44

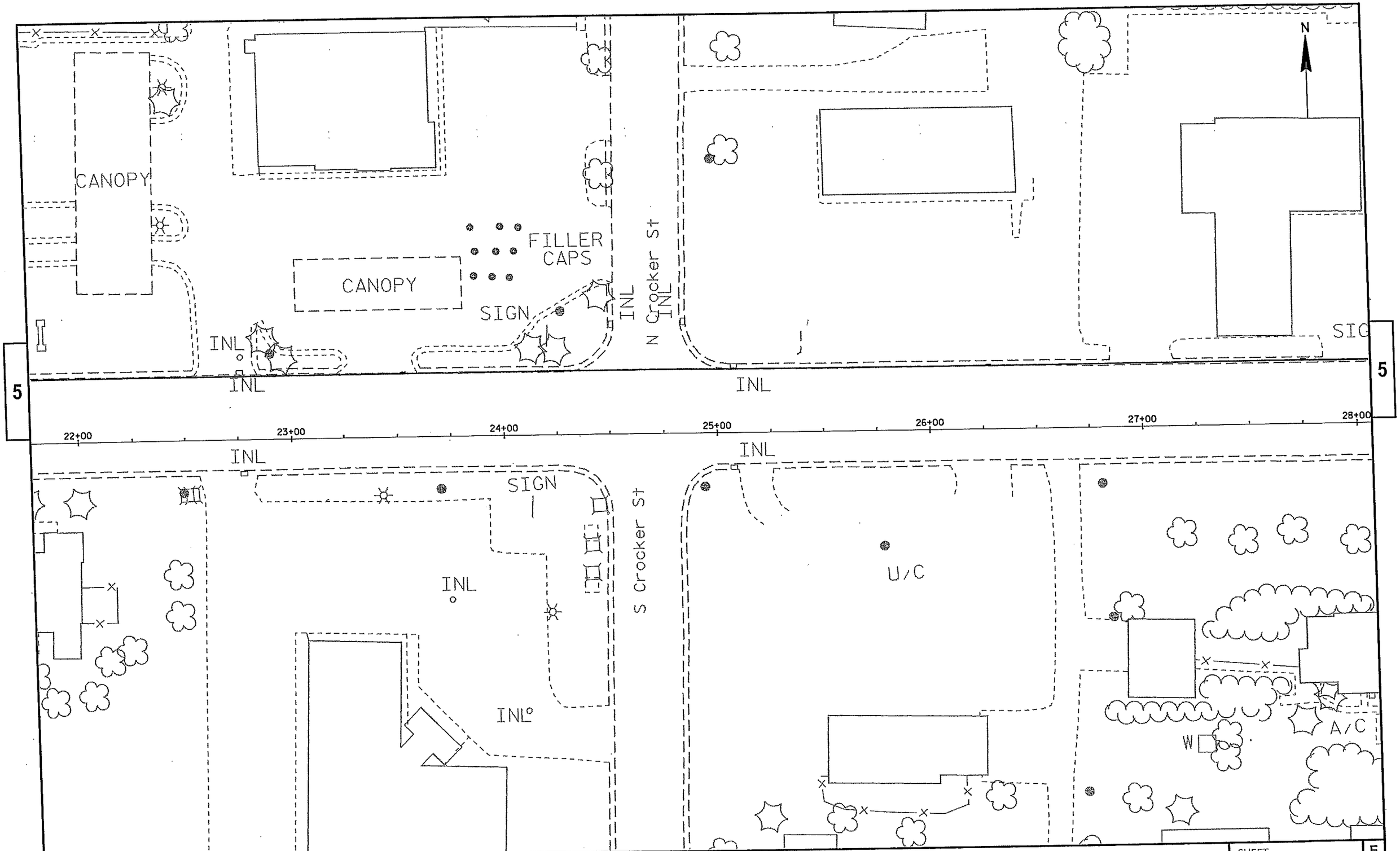

PROJECT NO: 5310-02-06	HWY: USH 14	COUNTY: DANE	PLAN STAGE 1	SHEET	E

FILE NAME : N:\PDS\C3D\53100206(14)\SHEETSPLAN\050001-PN.DWG
LAYOUT NAME - pn - (04)

PLOT DATE : 6/3/2019 3:58 PM PLOT BY : SCHMID, CHARLENE PLOT NAME : PLOT SCALE : 1 IN:40 FT

WISDOT/CADDS SHEET 44

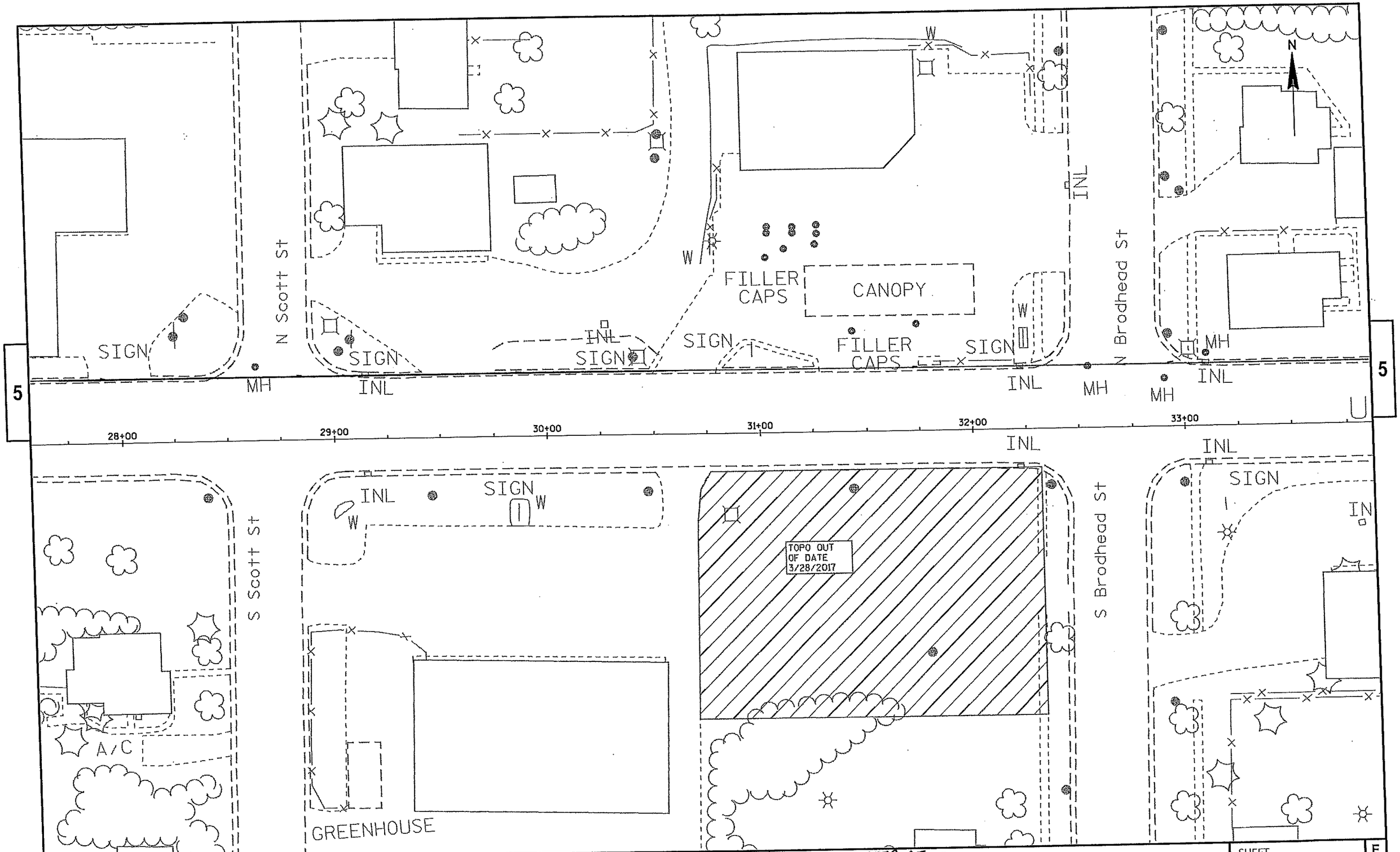

PROJECT NO: 5310-02-06	HWY: USH 14	COUNTY: DANE	PLAN STAGE 1	SHEET E

FILE NAME : N:\PDS\C3D\53100206(14)\SHEETSPLAN\050001-PN.DWG
LAYOUT NAME - pn - (05)
PLOT DATE : 6/3/2019 3:58 PM
PLOT BY : SCHMID, CHARLENE
PLOT NAME :
PLOT SCALE : 1 IN:40 FT
WISDOT/CADDS SHEET 44

PROJECT NO: 5310-02-06	HWY: USH 14	COUNTY: DANE	PLAN STAGE 1 TEMPORARY WIDENING	SHEET	E

FILE NAME : N:\PDS\C3D\53100206(14)\SHEETSPLAN\050001-PN.DWG
LAYOUT NAME - pn - (06)

PLOT DATE : 6/3/2019 3:58 PM PLOT BY : SCHMID, CHARLENE PLOT NAME : PLOT SCALE : 1 IN:40 FT

WISDOT/CADDS SHEET 44

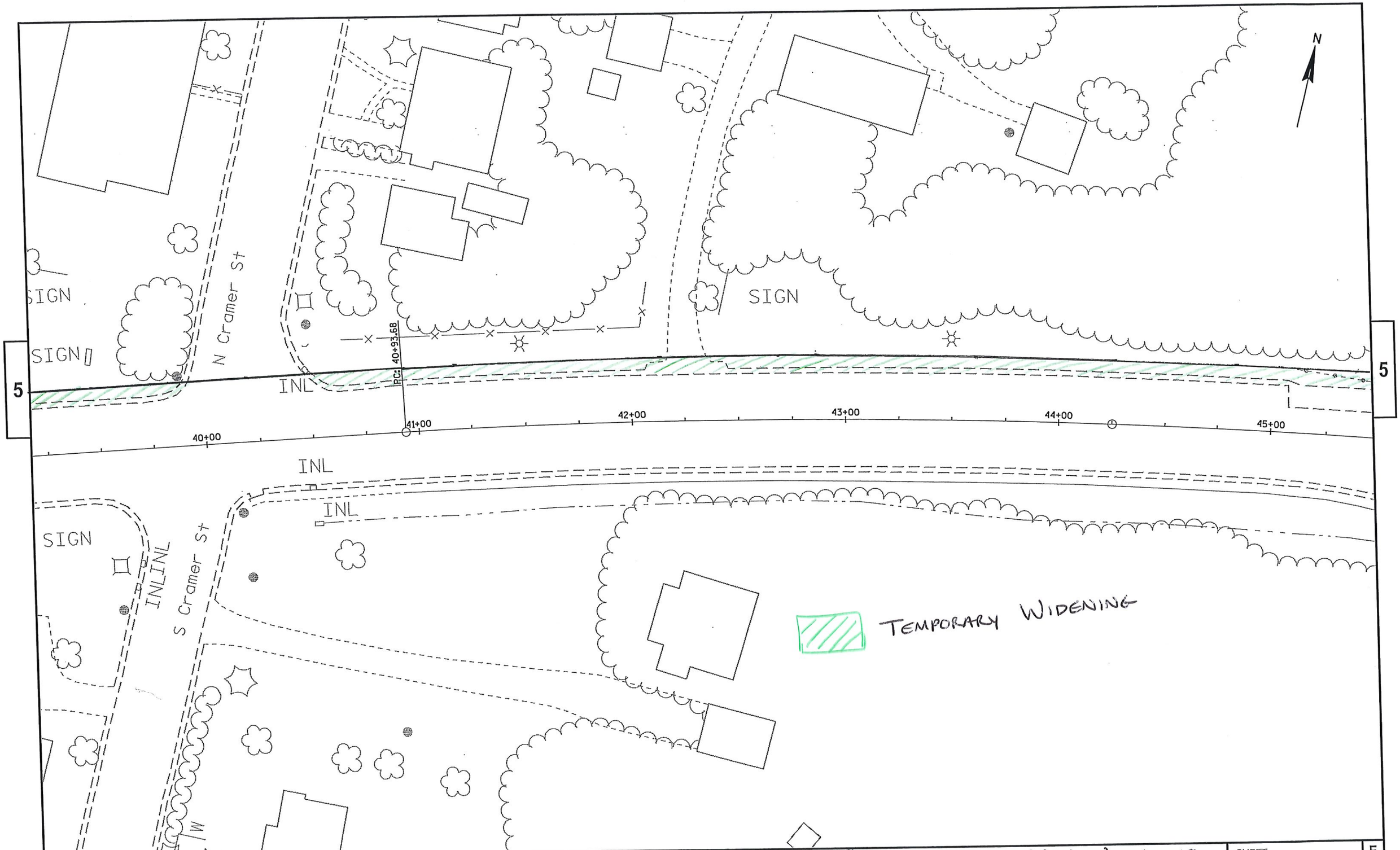

PROJECT NO: 5310-02-06	HWY: USH 14	COUNTY: DANE	PLAN STAGE 1 TEMPORARY WIDENING	SHEET	E

FILE NAME : N:\PDS\C3D\53100206(14)\SHEETSPLAN\050001-PN.DWG
LAYOUT NAME - pn - (07)

PLOT DATE : 6/3/2019 3:58 PM PLOT BY : SCHMID, CHARLENE PLOT NAME : PLOT SCALE : 1 IN:40 FT

WISDOT/CADDS SHEET 44

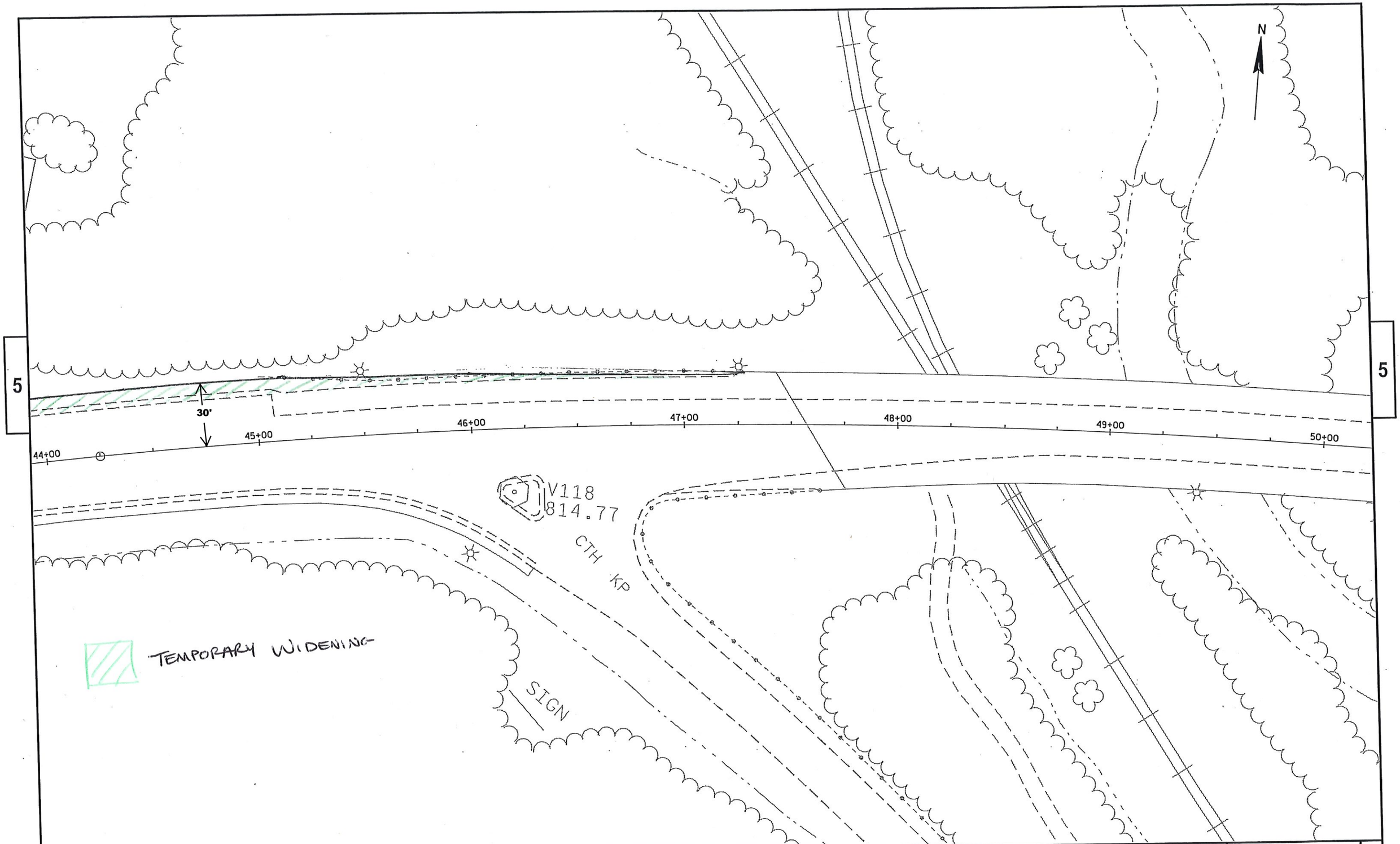

PROJECT NO: 5310-02-06	HWY: USH 14	COUNTY: DANE	PLAN STAGE 1 TEMPORARY WIDENING	SHEET	E

FILE NAME : N:\PDS\C3D\53100206(14)\SHEETSPLAN\050001-PN.DWG
LAYOUT NAME - pn - (08)

PLOT DATE : 6/3/2019 3:58 PM PLOT BY : SCHMID, CHARLENE PLOT NAME : PLOT SCALE : 1 IN:40 FT

WISDOT/CADDS SHEET 44

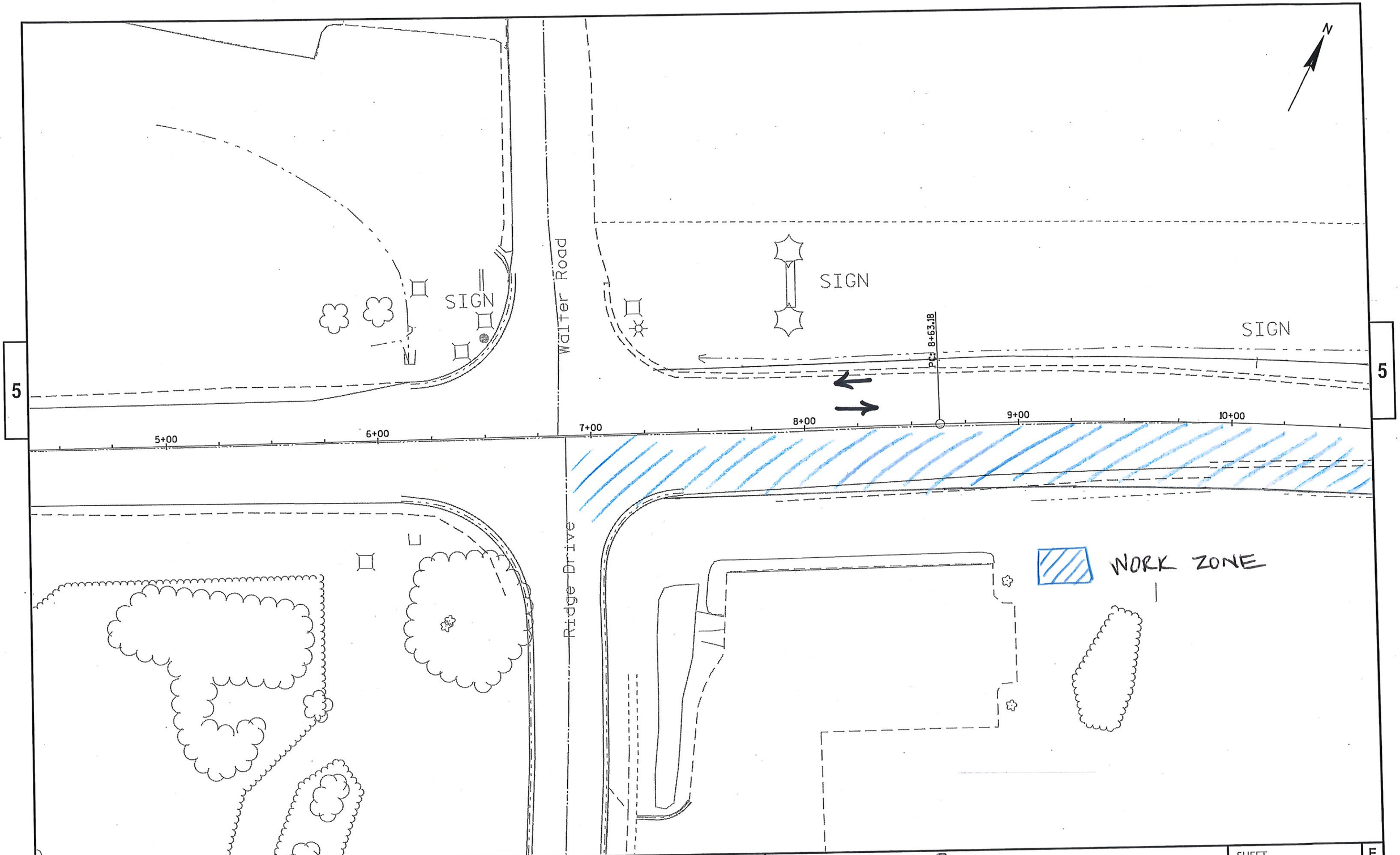

PROJECT NO: 5310-02-06	HWY: USH 14	COUNTY: DANE	PLAN STAGE 2	SHEET	E

FILE NAME : N:\PDS\C3D\53100206(14)\SHEETSPLAN\050001-PN.DWG
LAYOUT NAME - pn - (01)

PLOT DATE : 6/3/2019 3:58 PM PLOT BY : SCHMID, CHARLENE PLOT NAME : PLOT SCALE : 1 IN:40 FT

WISDOT/CADDS SHEET 44

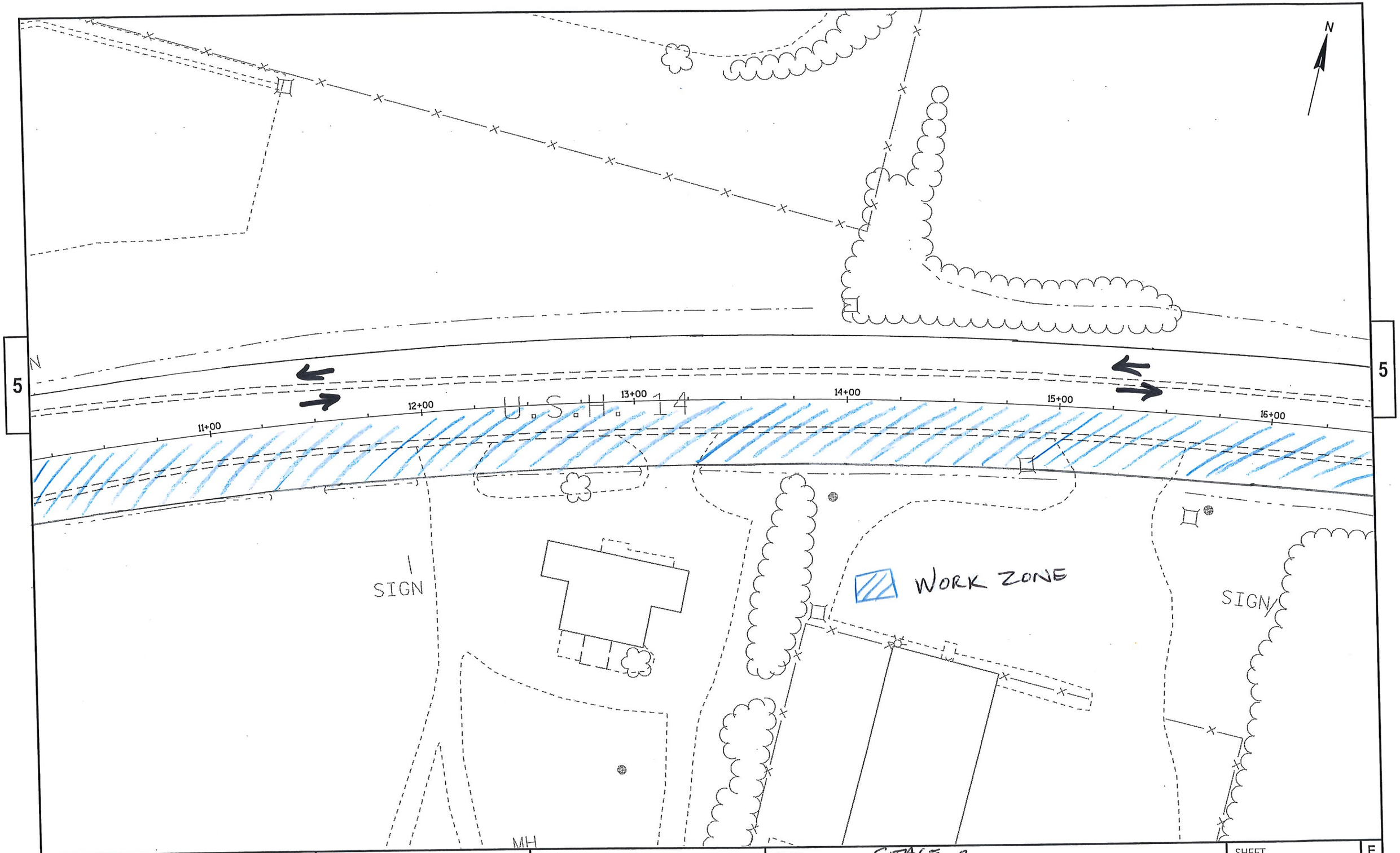

PROJECT NO: 5310-02-06	HWY: USH 14	COUNTY: DANE	PLAN STAGE 2	SHEET	E

FILE NAME : N:\PDS\C3D\53100206(14)\SHEETSPLAN\050001-PN.DWG
LAYOUT NAME - pn - (02)

PLOT DATE : 6/3/2019 3:58 PM PLOT BY : SCHMID, CHARLENE PLOT NAME : PLOT SCALE : 1 IN:40 FT

WISDOT/CADDS SHEET 44

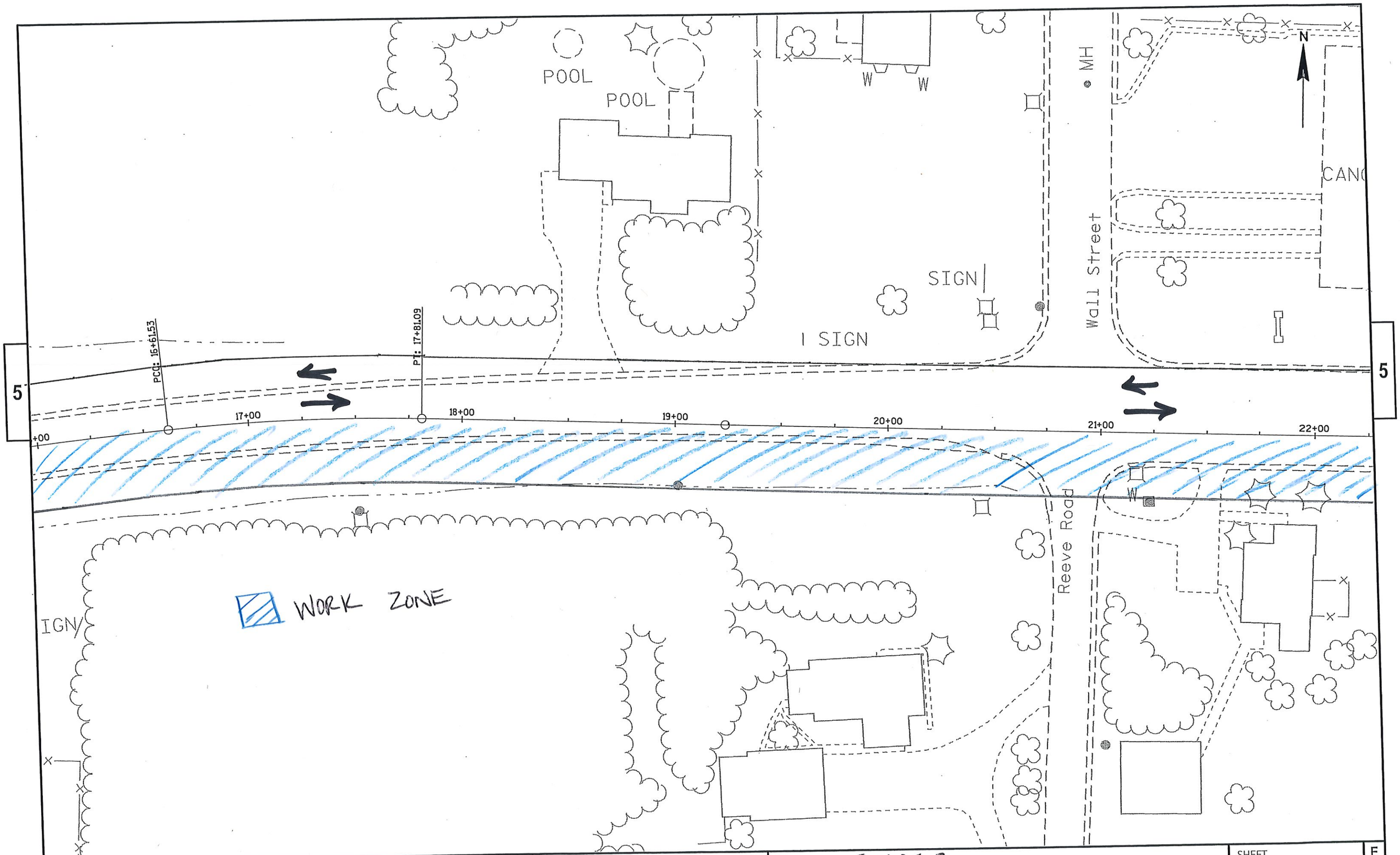

PROJECT NO: 5310-02-06	HWY: USH 14	COUNTY: DANE	PLAN STAGE 2	SHEET	E

FILE NAME : N:\PDS\C3D\53100206(14)\SHEETSPLAN\050001-PN.DWG
LAYOUT NAME - pn - (03)

PLOT DATE : 6/3/2019 3:58 PM PLOT BY : SCHMID, CHARLENE PLOT NAME : PLOT SCALE : 1 IN:40 FT

WISDOT/CADDS SHEET 44

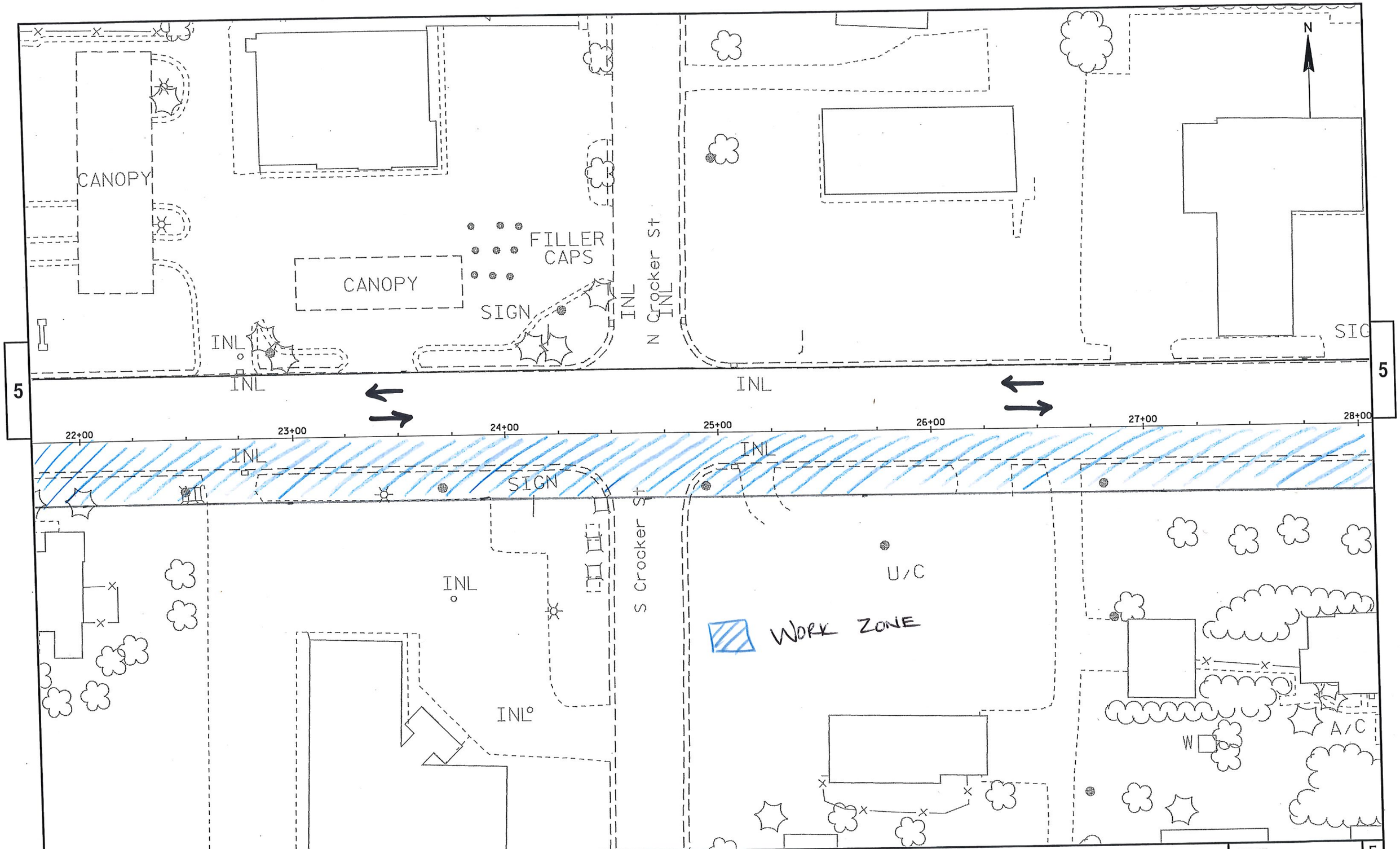

PROJECT NO: 5310-02-06	HWY: USH 14	COUNTY: DANE	PLAN STAGE 2	SHEET	E

FILE NAME : N:\PDS\C3D\53100206(14)\SHEETSPLAN\050001-PN.DWG
LAYOUT NAME - pn - (04)

PLOT DATE : 6/3/2019 3:58 PM PLOT BY : SCHMID, CHARLENE PLOT NAME : PLOT SCALE : 1 IN:40 FT

WISDOT/CADDS SHEET 44

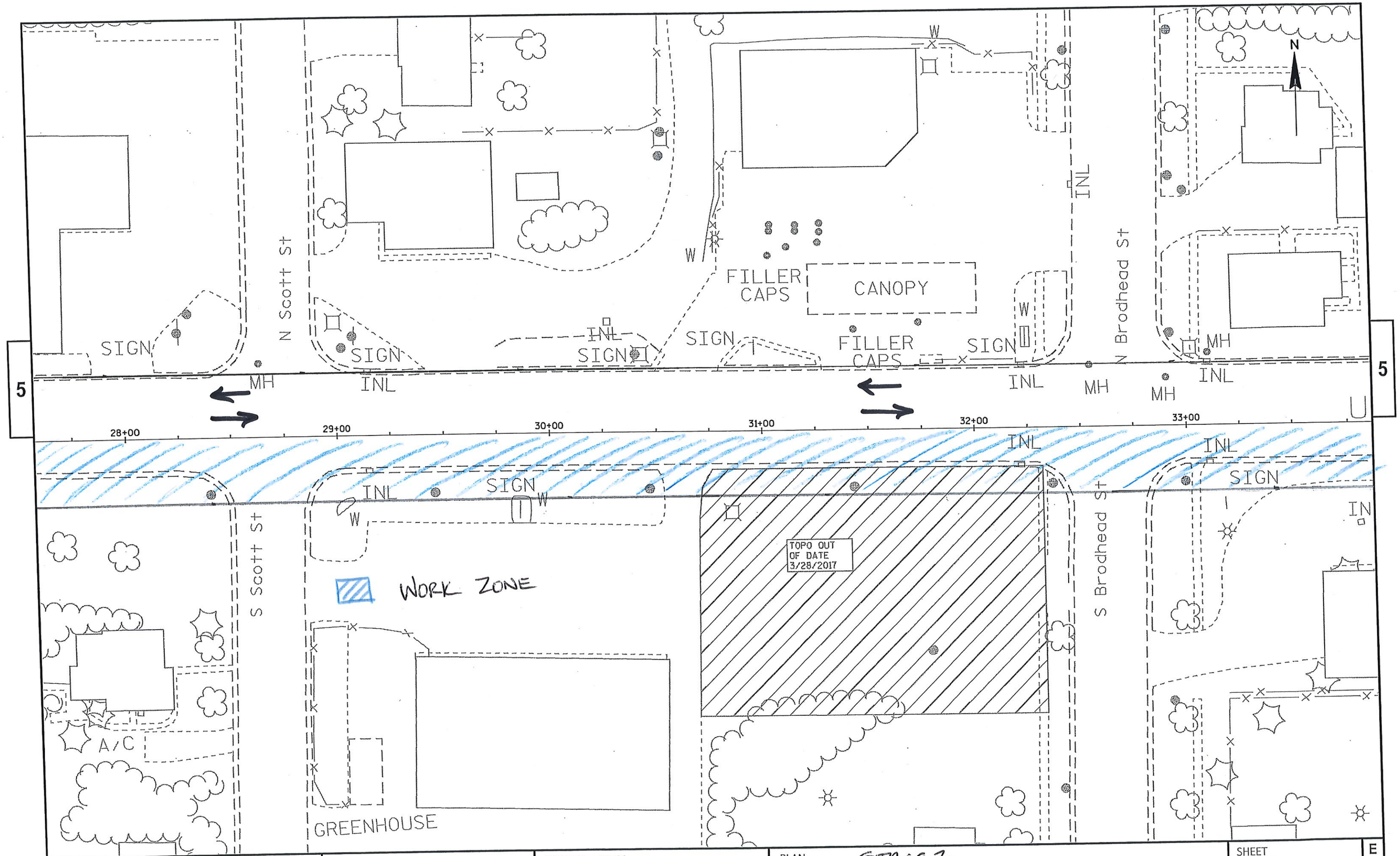

PROJECT NO: 5310-02-06	HWY: USH 14	COUNTY: DANE	PLAN STAGE 2	SHEET	E

FILE NAME : N:\PDS\C3D\53100206(14)\SHEETSPLAN\050001-PN.DWG
LAYOUT NAME - pn - (05)
PLOT DATE : 6/3/2019 3:58 PM
PLOT BY : SCHMID, CHARLENE
PLOT NAME :
PLOT SCALE : 1 IN:40 FT
WISDOT/CADDS SHEET 44

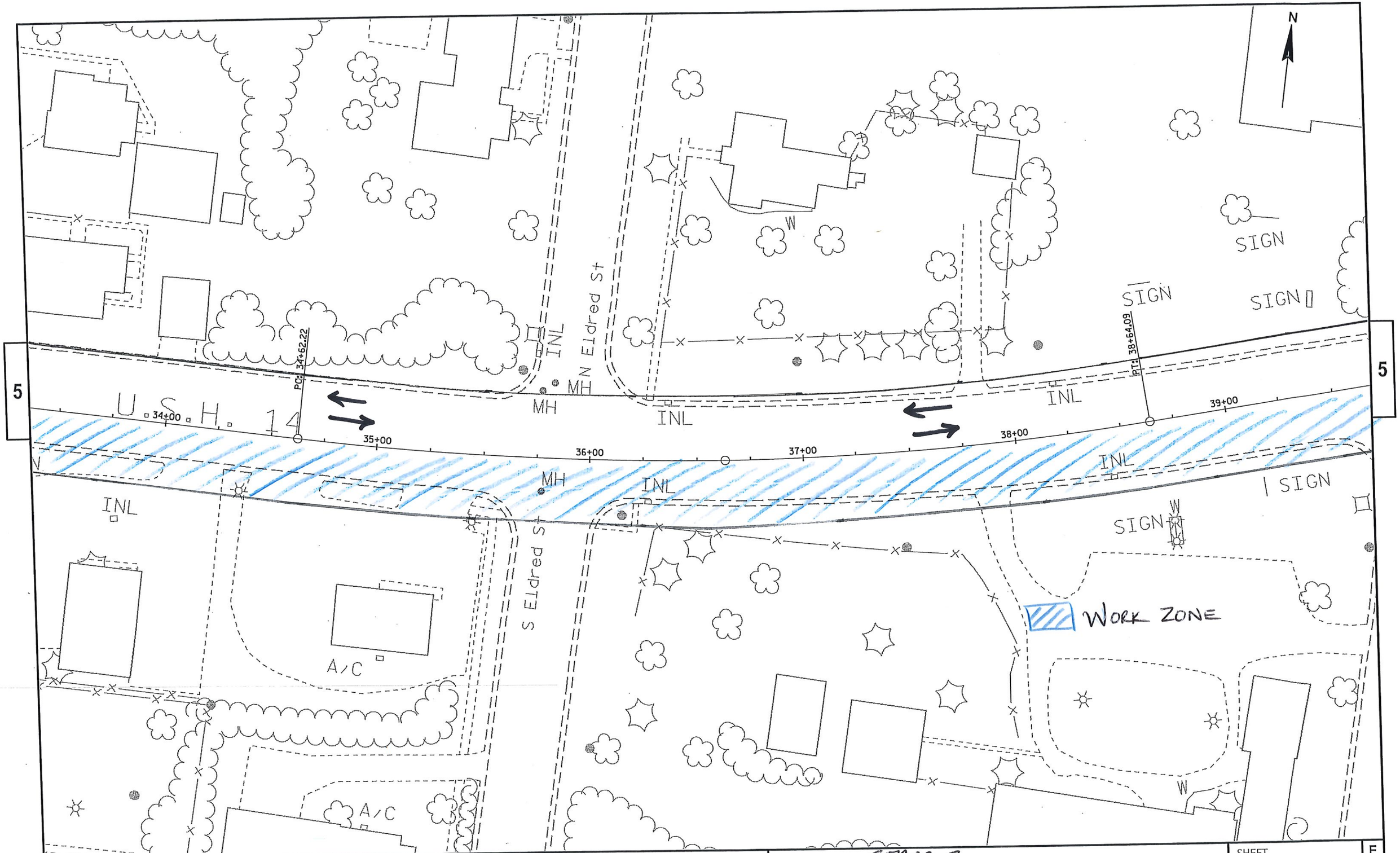

PROJECT NO: 5310-02-06	HWY: USH 14	COUNTY: DANE	PLAN STAGE 2	SHEET	E

FILE NAME : N:\PDS\C3D\53100206(14)\SHEETSPLAN\050001-PN.DWG
LAYOUT NAME - pn - (06)

PLOT DATE : 6/3/2019 3:58 PM PLOT BY : SCHMID, CHARLENE PLOT NAME : PLOT SCALE : 1 IN:40 FT

WISDOT/CADDS SHEET 44

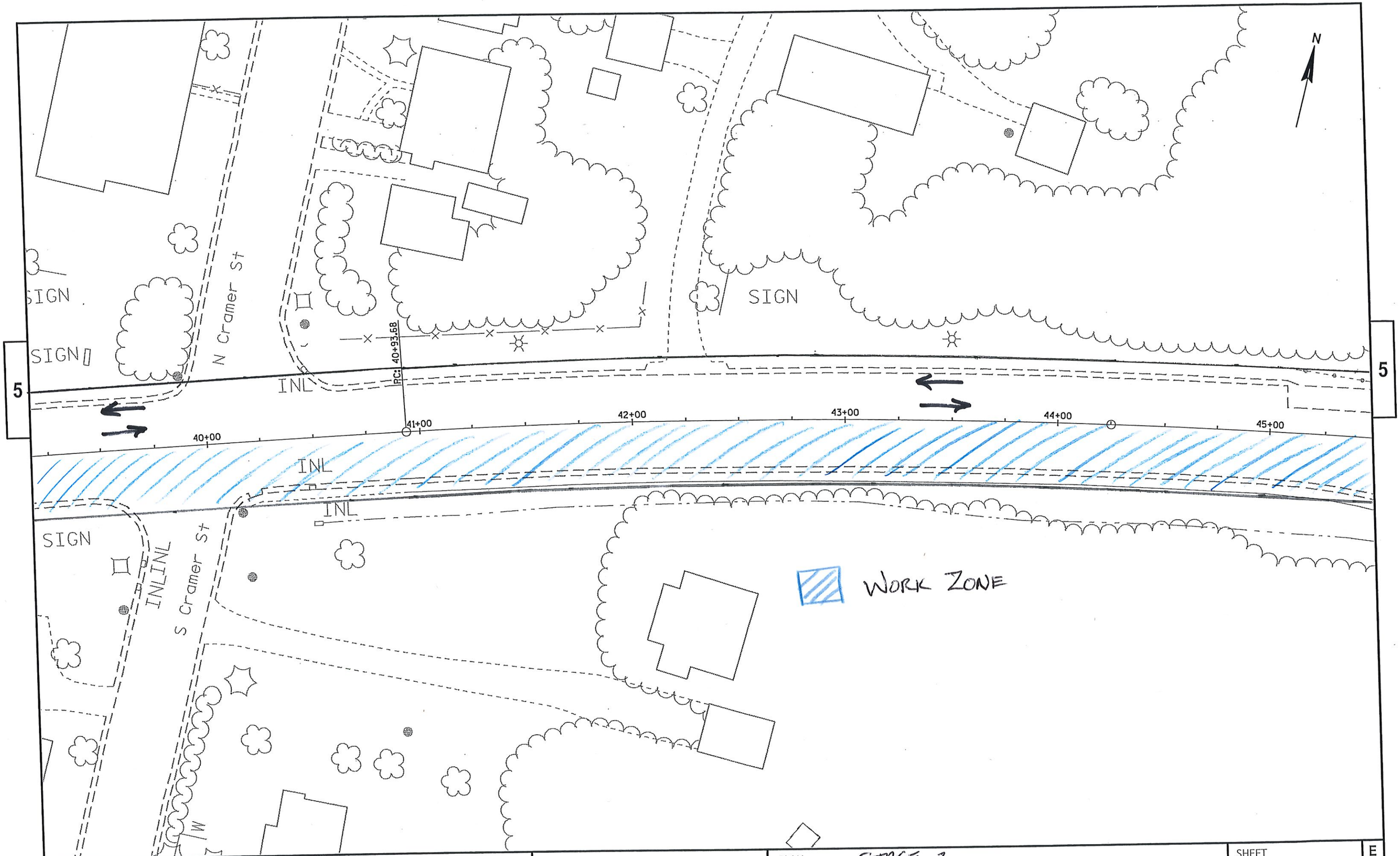

PROJECT NO: 5310-02-06	HWY: USH 14	COUNTY: DANE	PLAN STAGE 2	SHEET	E

FILE NAME : N:\PDS\C3D\53100206(14)\SHEETSPLAN\050001-PN.DWG
LAYOUT NAME - pn - (07)

PLOT DATE : 6/3/2019 3:58 PM PLOT BY : SCHMID, CHARLENE PLOT NAME : PLOT SCALE : 1 IN:40 FT

WISDOT/CADDS SHEET 44

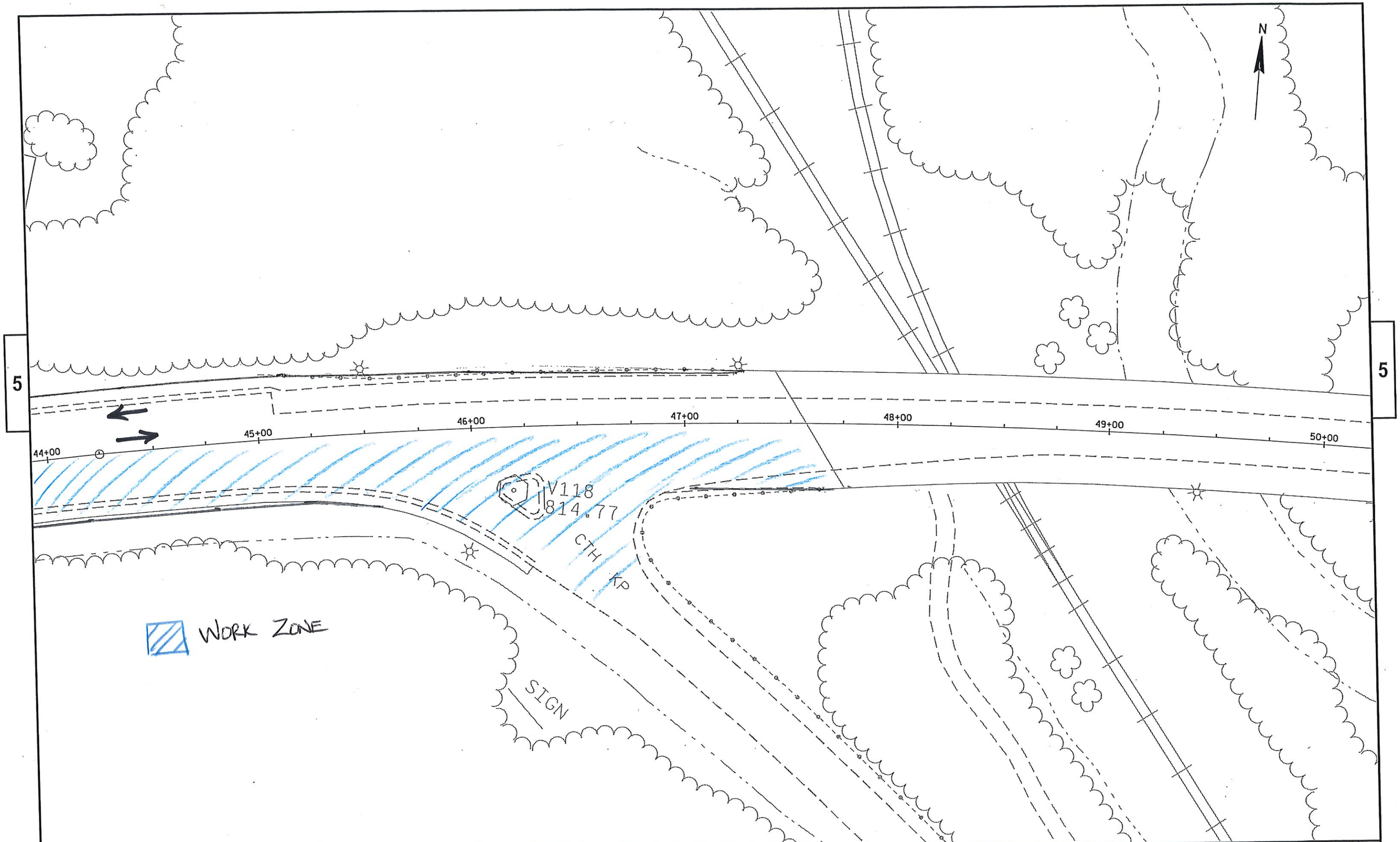

PROJECT NO: 5310-02-06	HWY: USH 14	COUNTY: DANE	PLAN STAGE 2	SHEET	E

FILE NAME : N:\PDS\C3D\53100206(14)\SHEETSPLAN\050001-PN.DWG
LAYOUT NAME - pn - (08)
PLOT DATE : 6/3/2019 3:58 PM
PLOT BY : SCHMID, CHARLENE
PLOT NAME :
PLOT SCALE : 1 IN:40 FT
WISDOT/CADDS SHEET 44

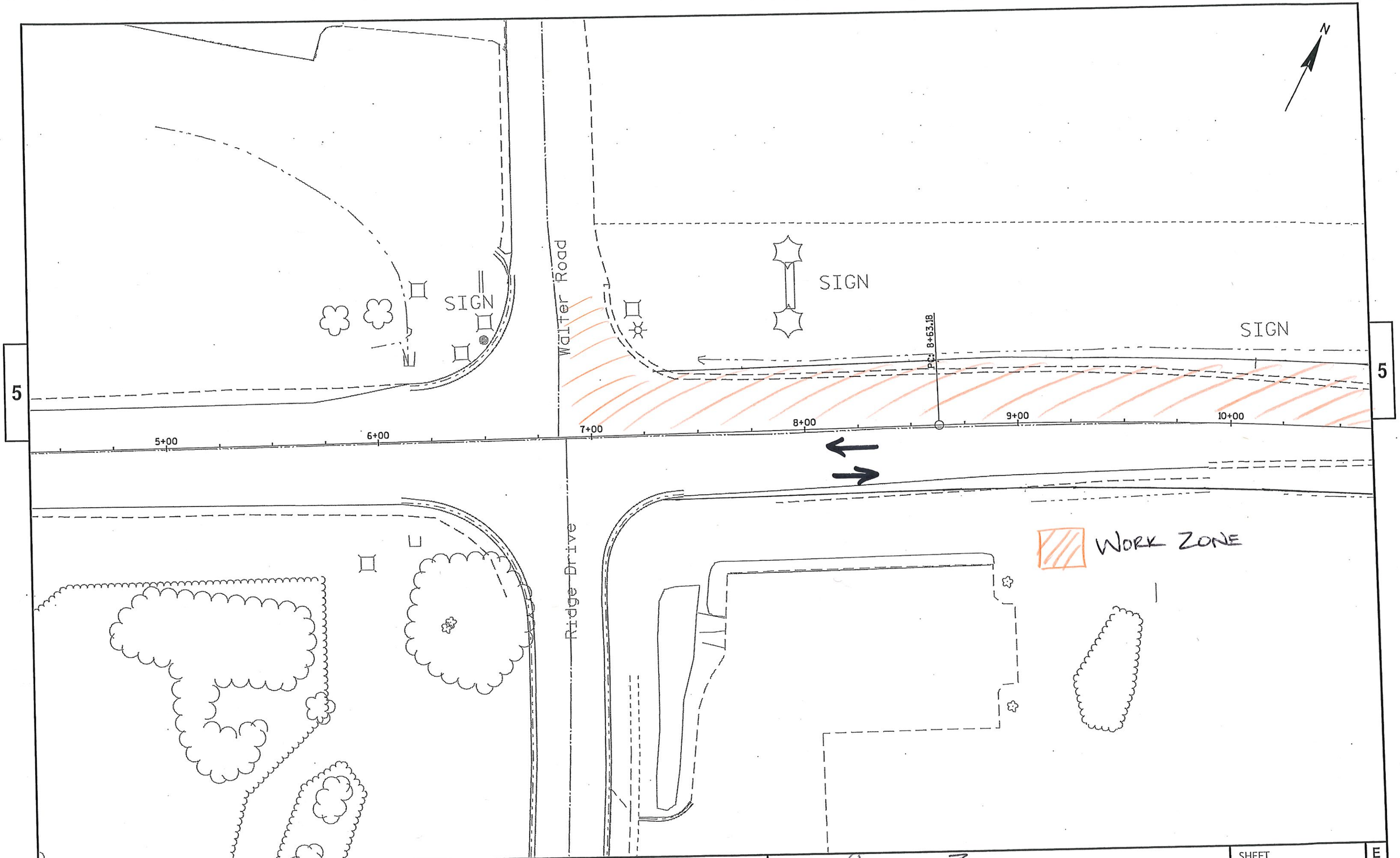

PROJECT NO: 5310-02-06	HWY: USH 14	COUNTY: DANE	PLAN STAGE 3	SHEET	E

FILE NAME : N:\PDS\C3D\53100206(14)\SHEETSPLAN\050001-PN.DWG
LAYOUT NAME - pn - (01)

PLOT DATE : 6/3/2019 3:58 PM PLOT BY : SCHMID, CHARLENE PLOT NAME : PLOT SCALE : 1 IN:40 FT

WISDOT/CADDS SHEET 44

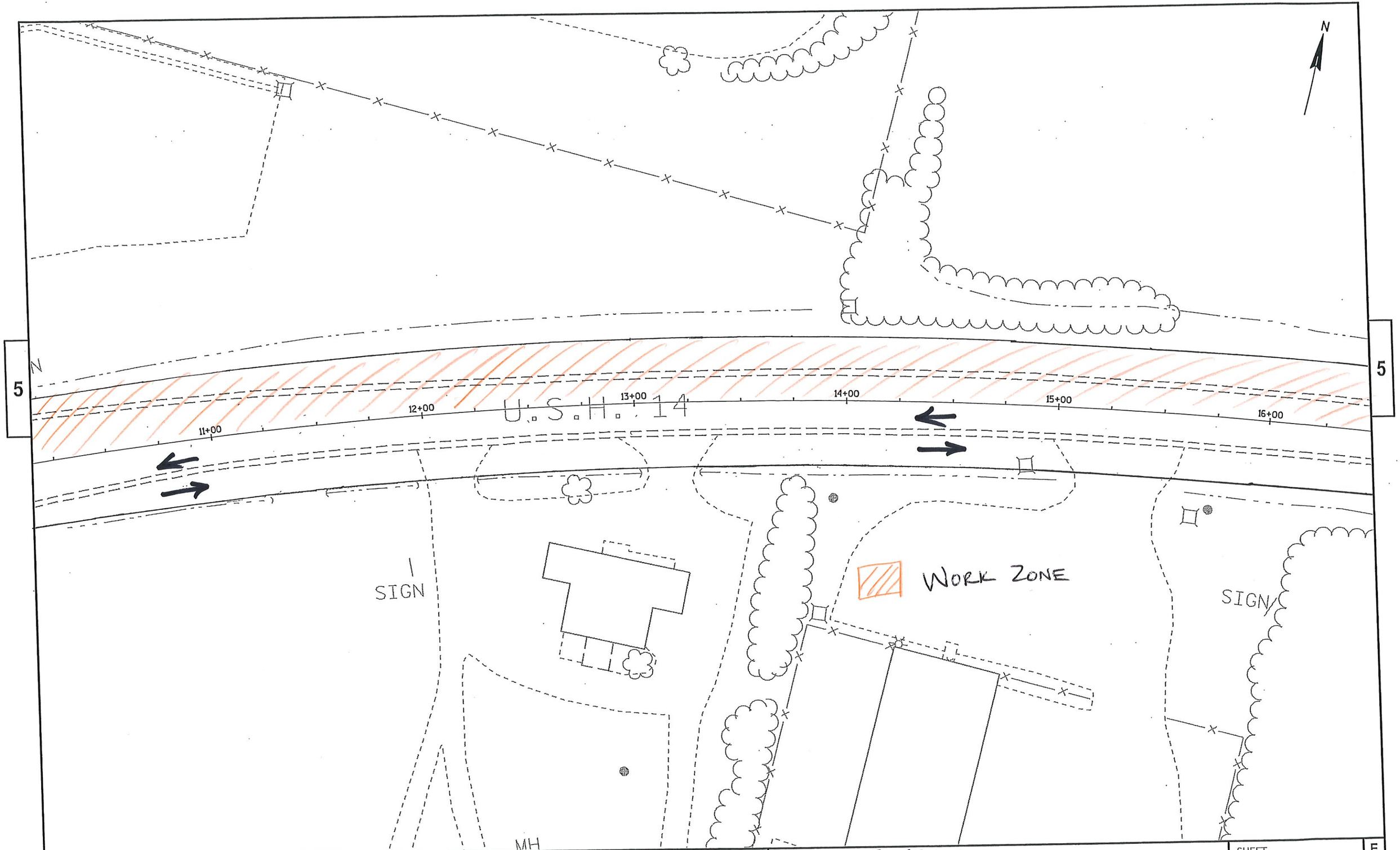

PROJECT NO: 5310-02-06	HWY: USH 14	COUNTY: DANE	PLAN STAGE 3	SHEET	E

FILE NAME : N:\PDS\C3D\53100206(14)\SHEETSPLAN\050001-PN.DWG
LAYOUT NAME - pn - (02)

PLOT DATE : 6/3/2019 3:58 PM PLOT BY : SCHMID, CHARLENE PLOT NAME : PLOT SCALE : 1 IN:40 FT

WISDOT/CADDS SHEET 44

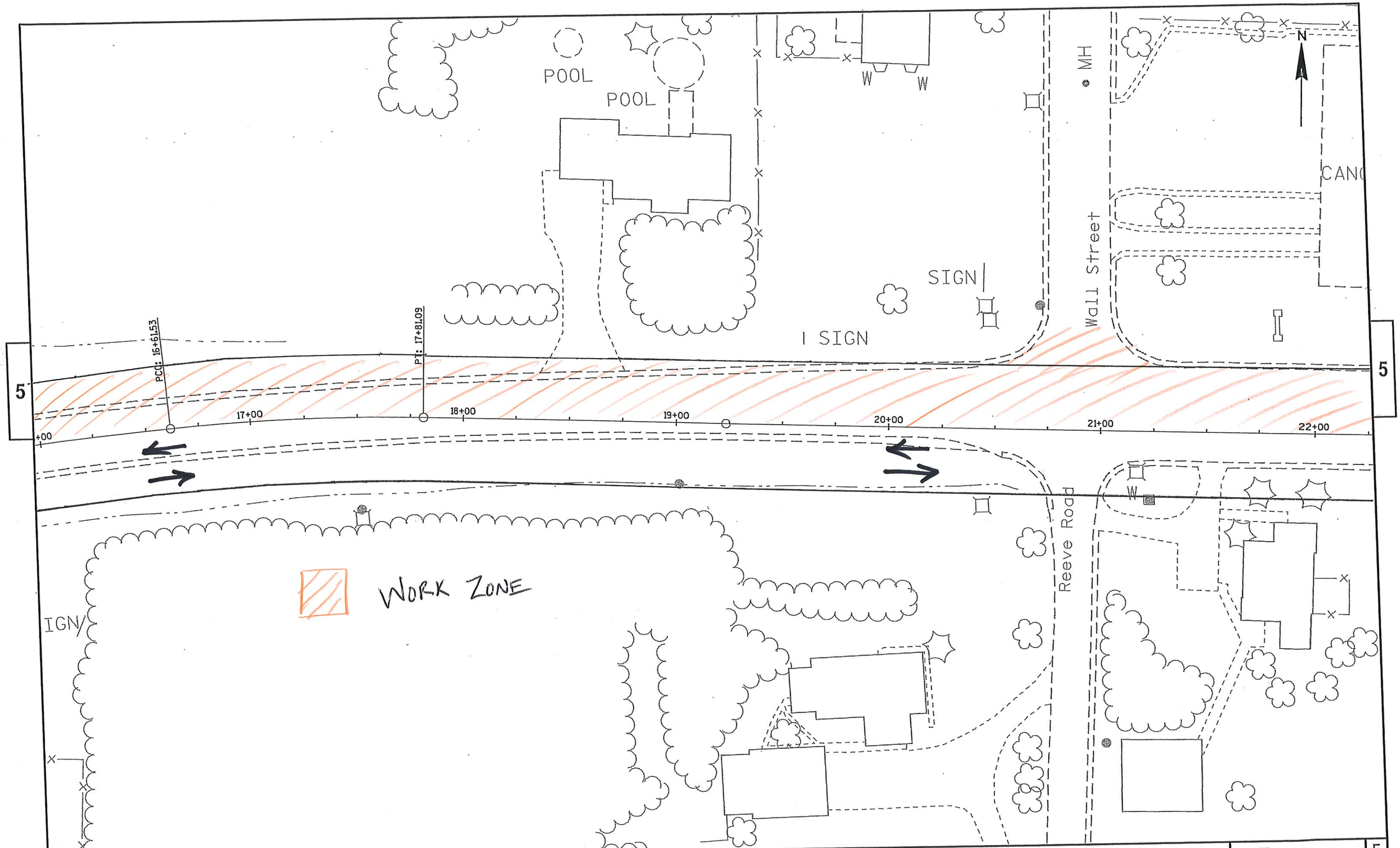

PROJECT NO: 5310-02-06	HWY: USH 14	COUNTY: DANE	PLAN STAGE 3	SHEET	E

FILE NAME : N:\PDS\C3D\53100206(14)\SHEETSPLAN\050001-PN.DWG
LAYOUT NAME - pn - (03)
PLOT DATE : 6/3/2019 3:58 PM
PLOT BY : SCHMID, CHARLENE
PLOT NAME :
PLOT SCALE : 1 IN:40 FT
WISDOT/CADDS SHEET 44

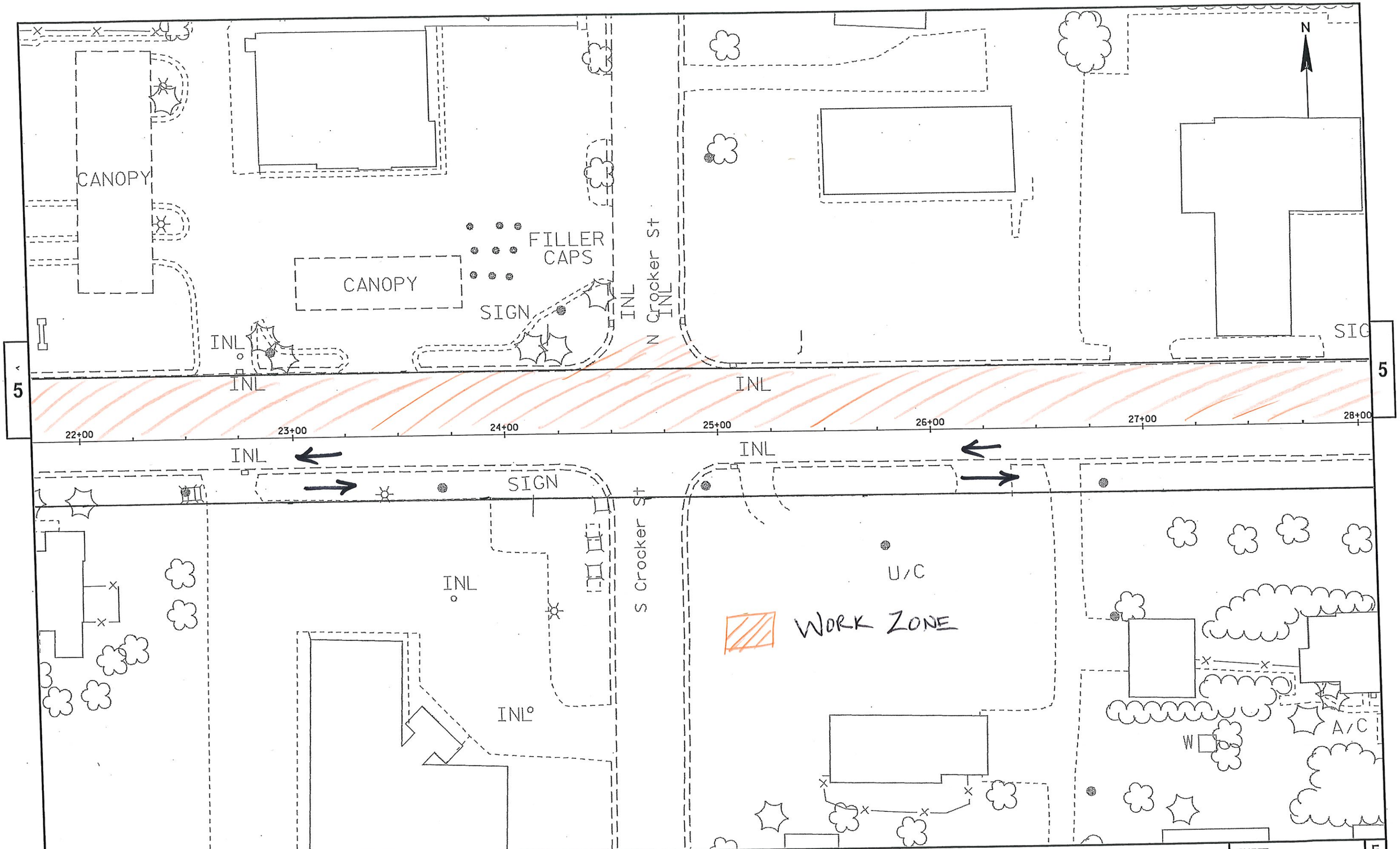

PROJECT NO: 5310-02-06	HWY: USH 14	COUNTY: DANE	PLAN STAGE 3	SHEET	E

FILE NAME: N:\PDS\C3D\53100206(14)\SHEETSPLAN\050001-PN.DWG
LAYOUT NAME - pn - (04)

PLOT DATE: 6/3/2019 3:58 PM PLOT BY: SCHMID, CHARLENE PLOT NAME: PLOT SCALE: 1 IN:40 FT

WISDOT/CADDS SHEET 44

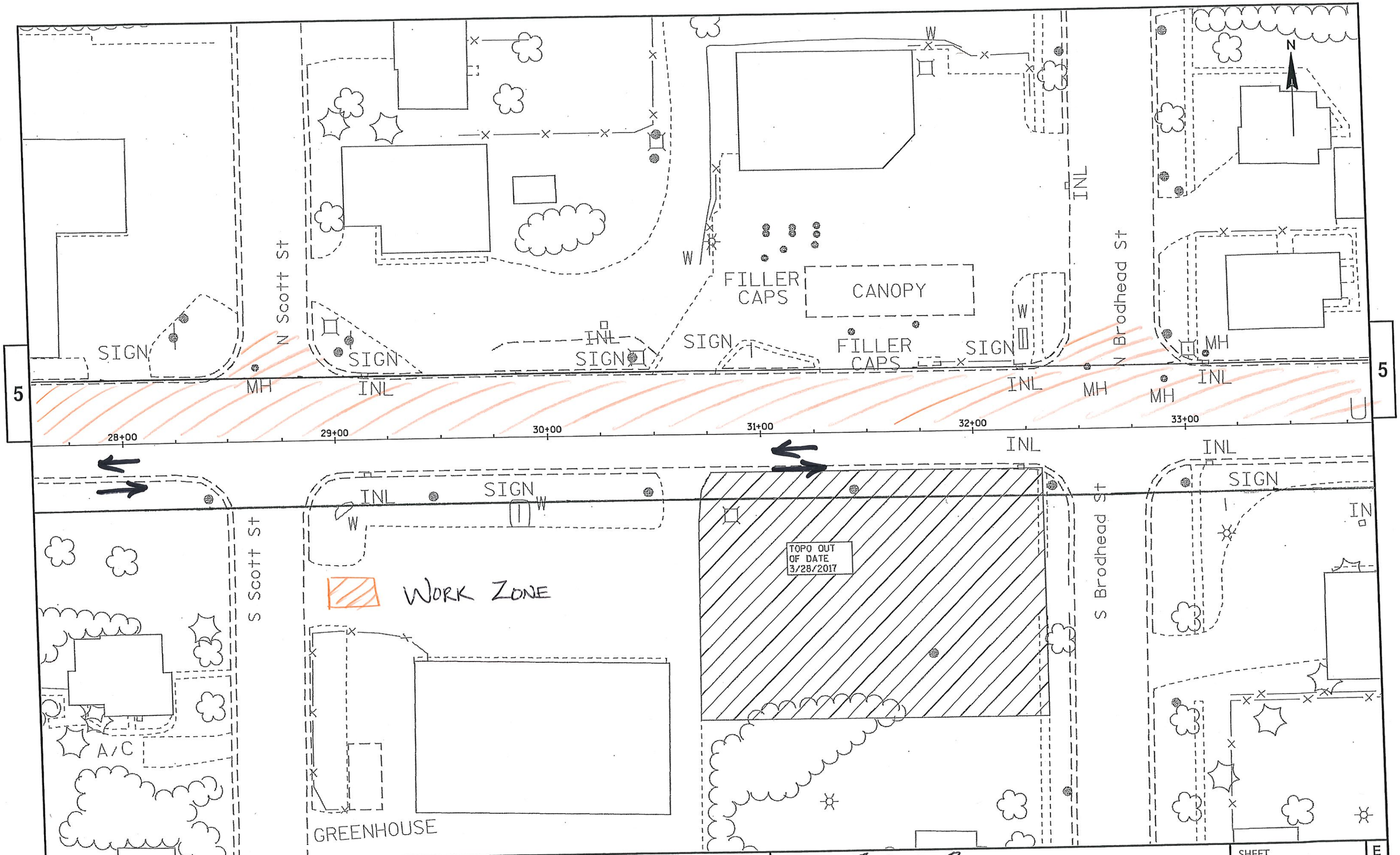

PROJECT NO: 5310-02-06	HWY: USH 14	COUNTY: DANE	PLAN STAGE 3	SHEET E

FILE NAME : N:\PDS\C3D\53100206(14)\SHEETSPLAN\050001-PN.DWG
LAYOUT NAME - pn - (05)

PLOT DATE : 6/3/2019 3:58 PM PLOT BY : SCHMID, CHARLENE PLOT NAME : PLOT SCALE : 1 IN:40 FT

WISDOT/CADDS SHEET 44

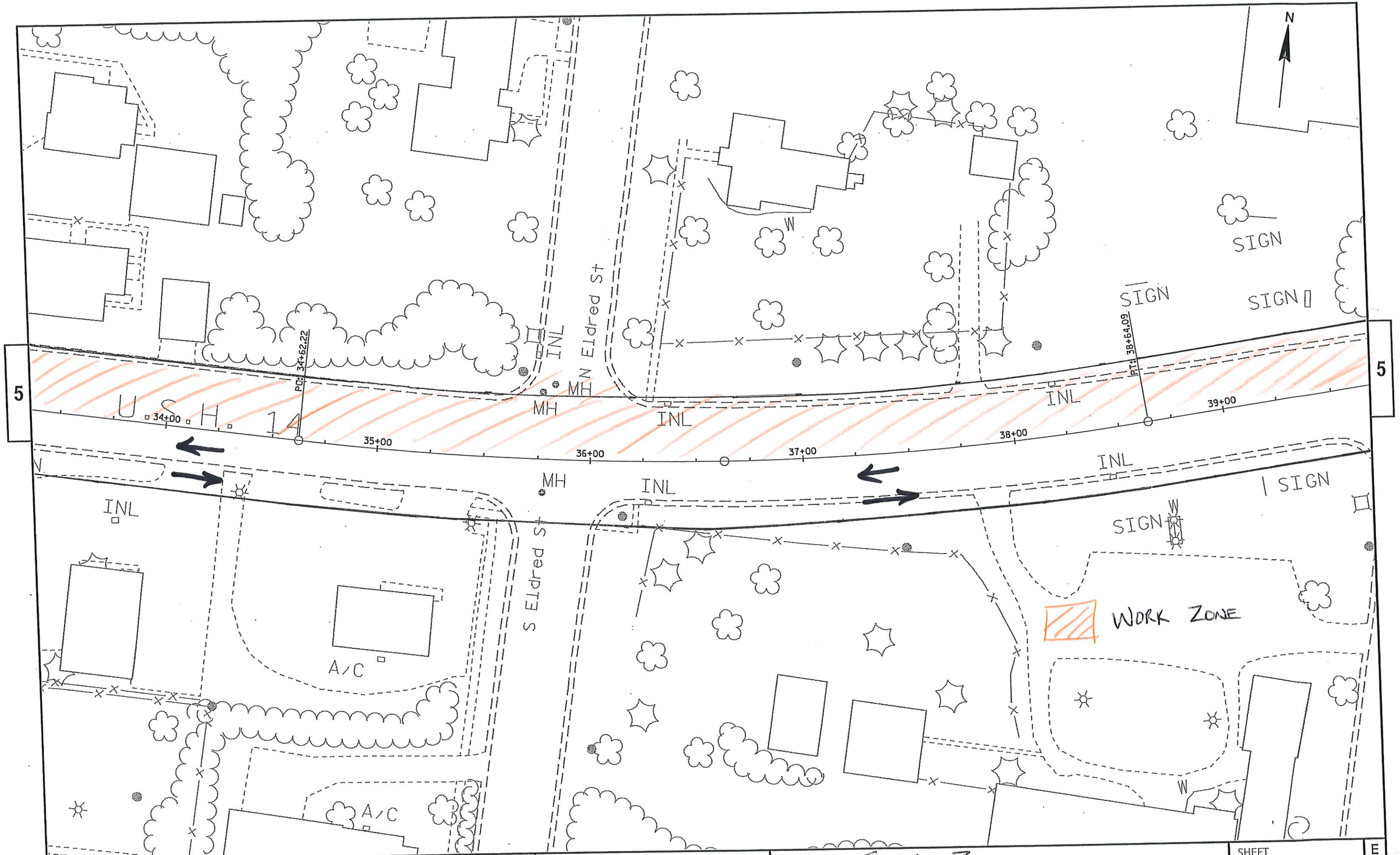

PROJECT NO: 5310-02-06	HWY: USH 14	COUNTY: DANE	PLAN STAGE 3	SHEET E

PLOT DATE : 6/3/2019 3:58 PM PLOT BY : SCHMID, CHARLENE PLOT NAME : PLOT SCALE : 1 IN:40 FT WISDOT/CADDS SHEET 44

FILE NAME : N:\PDS\C3D\53100206(14)\SHEETSPLAN\050001-PN.DWG
LAYOUT NAME - pn - (06)

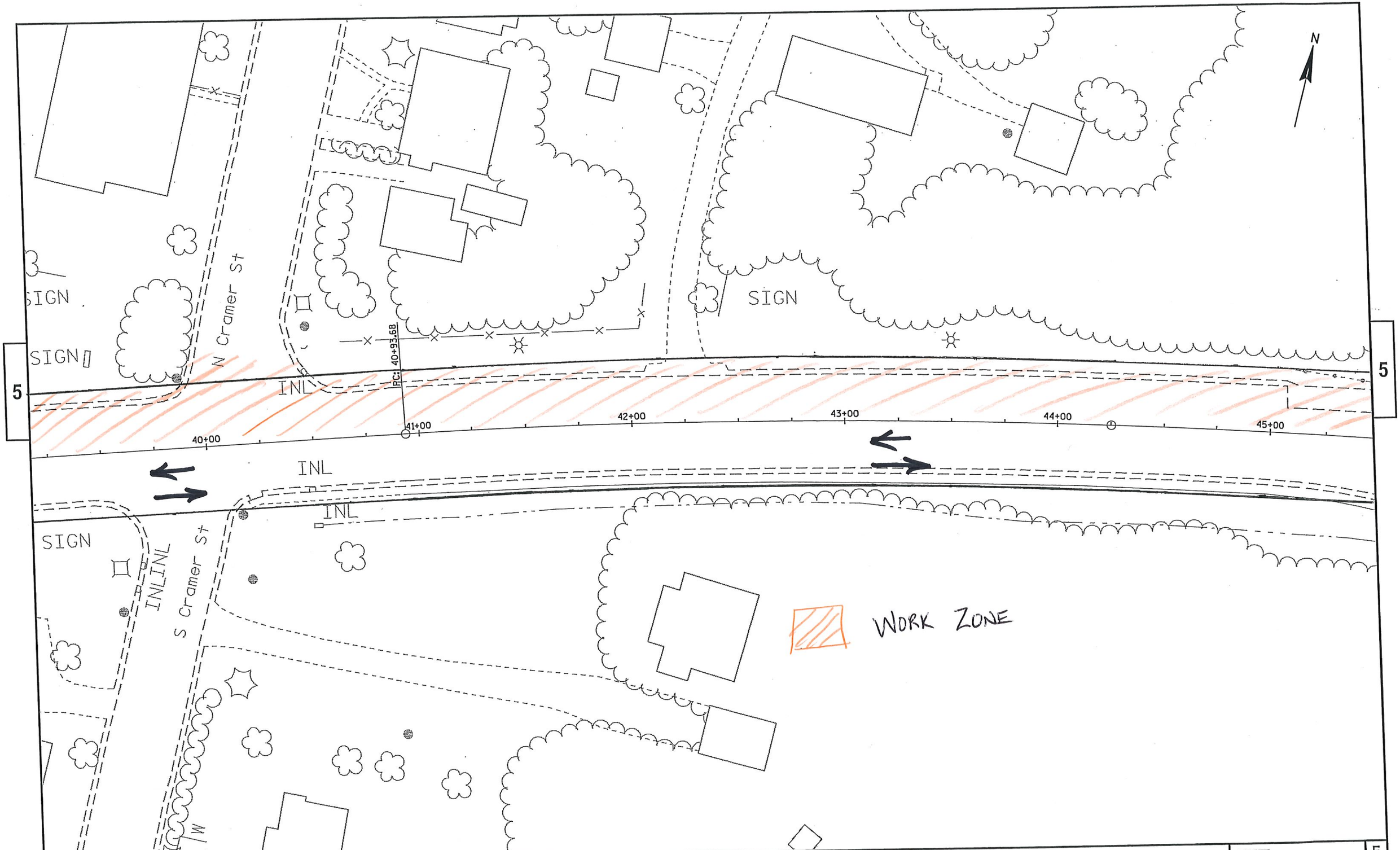

PROJECT NO: 5310-02-06	HWY: USH 14	COUNTY: DANE	PLAN STAGE 3	SHEET	E

FILE NAME : N:\PDS\C3D\53100206(14)\SHEETSPLAN\050001-PN.DWG
LAYOUT NAME - pn - (07)
PLOT DATE : 6/3/2019 3:58 PM
PLOT BY : SCHMID, CHARLENE
PLOT NAME :
PLOT SCALE : 1 IN:40 FT
WISDOT/CADDS SHEET 44

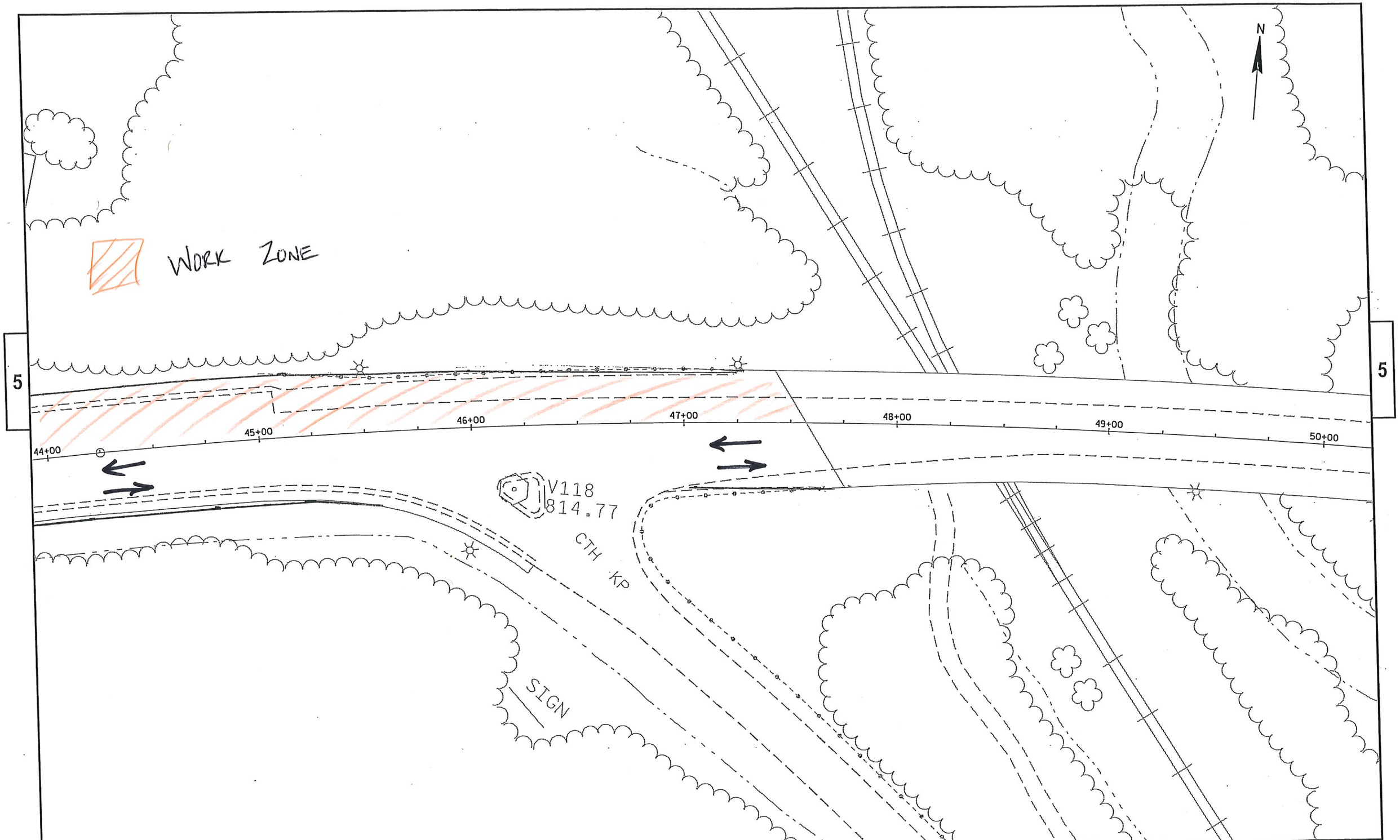

PROJECT NO: 5310-02-06	HWY: USH 14	COUNTY: DANE	PLAN STAGE 3	SHEET	E

FILE NAME : N:\PDS\C3D\53100206(14)\SHEETSPLAN\050001-PN.DWG
LAYOUT NAME - pn - (08)
PLOT DATE : 6/3/2019 3:58 PM
PLOT BY : SCHMID, CHARLENE
PLOT NAME :
PLOT SCALE : 1 IN:40 FT
WISDOT/CADDS SHEET 44

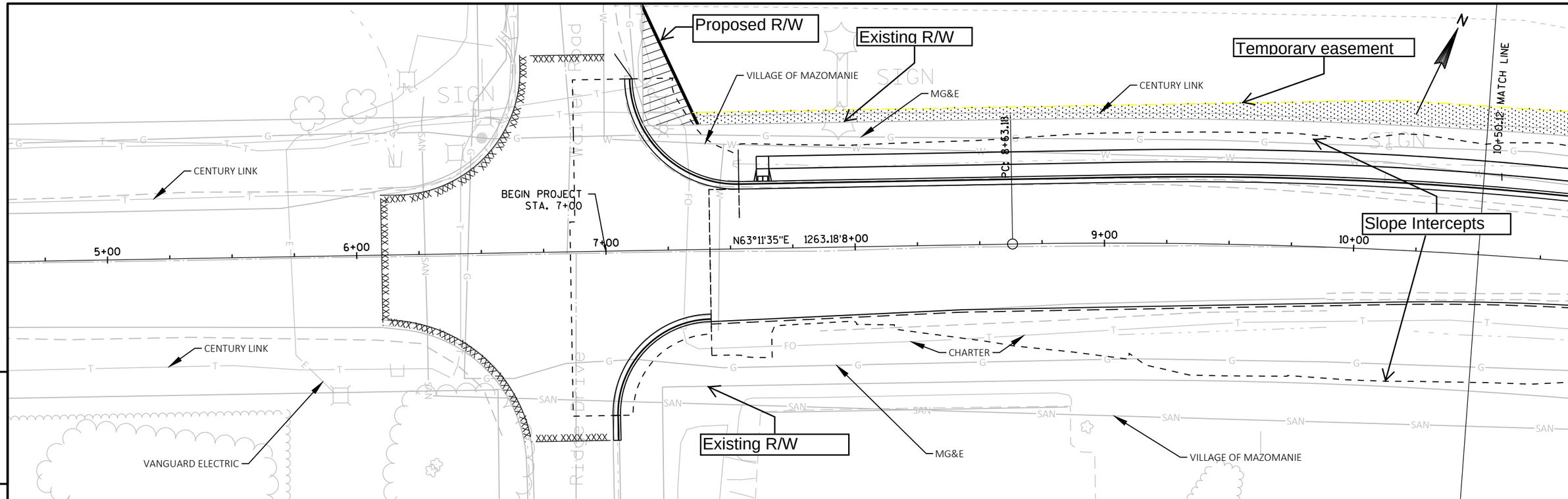

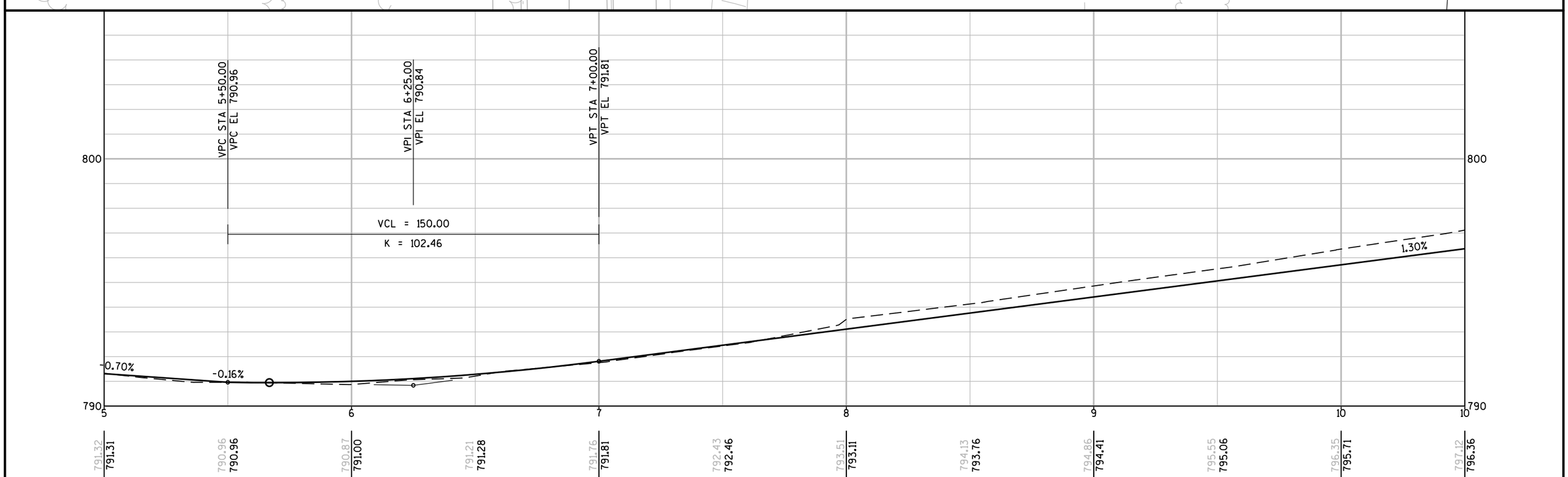

PROJECT NO: 5310-02-76	HWY: USH 14	COUNTY: DANE	PLAN AND PROFILE: USH 14	SHEET	E

FILE NAME : N:\PDS\C3D\53100206(14)\SHEETSPLAN\050101-PP.DWG
LAYOUT NAME - PP - (1)
PLOT DATE : 6/7/2019 8:56 AM
PLOT BY : SHAW, ADAM M
PLOT NAME :
PLOT SCALE : 1 IN:40 FT

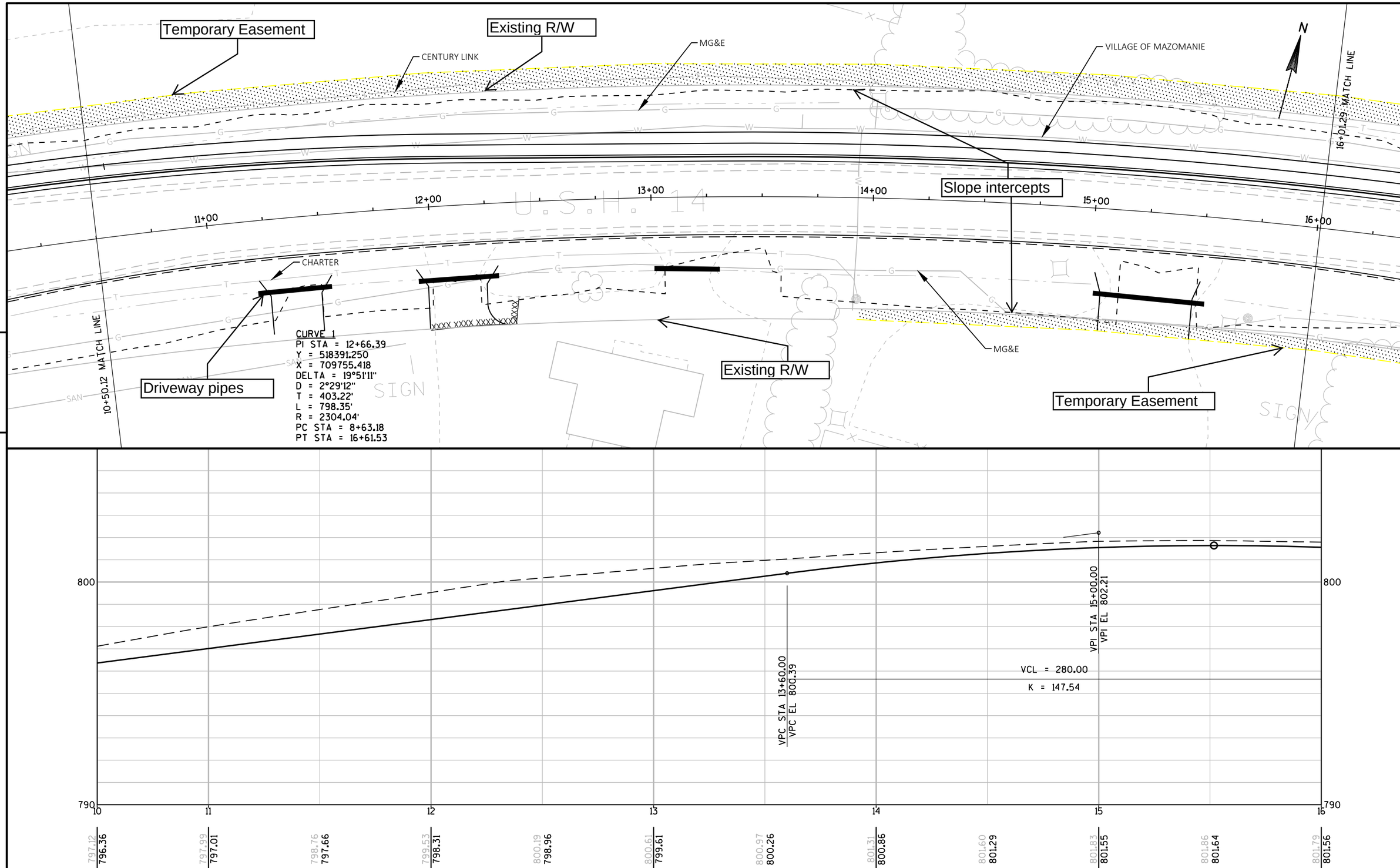

PROJECT NO: 5310-02-76	HWY: USH 14	COUNTY: DANE	PLAN AND PROFILE: USH 14	SHEET	E

FILE NAME : N:\PDS\C3D\53100206(14)\SHEETSPLAN\050101-PP.DWG
LAYOUT NAME - PP - (2)
PLOT DATE : 6/7/2019 8:56 AM
PLOT BY : SHAW, ADAM M
PLOT NAME :
PLOT SCALE : 1 IN:40 FT

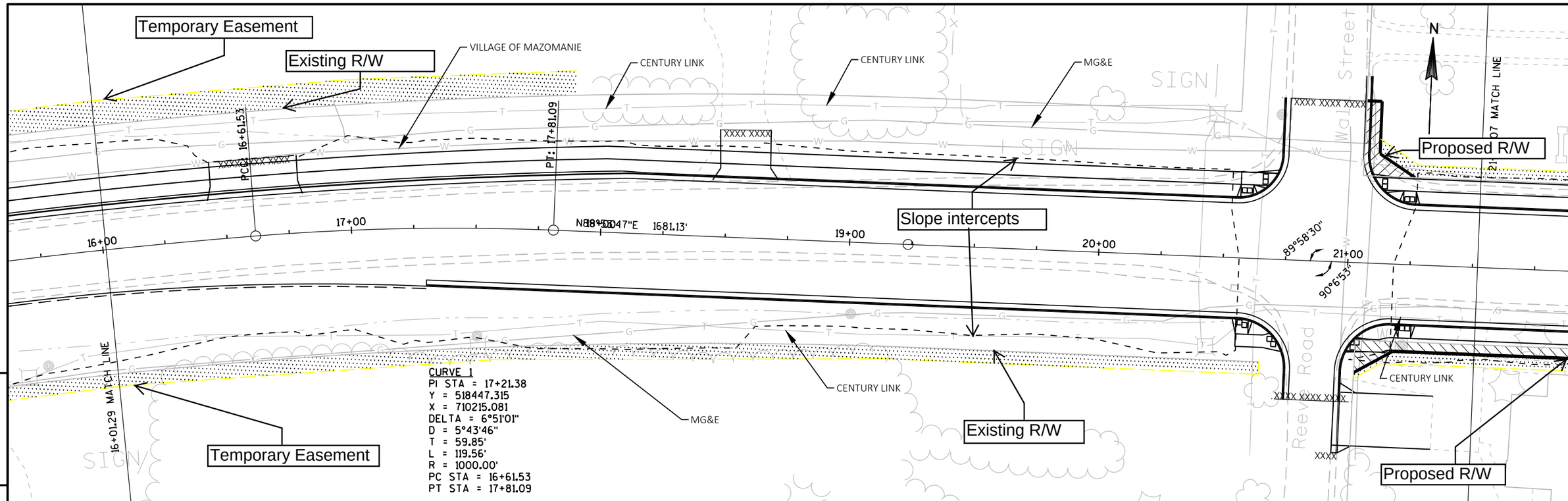

5

5

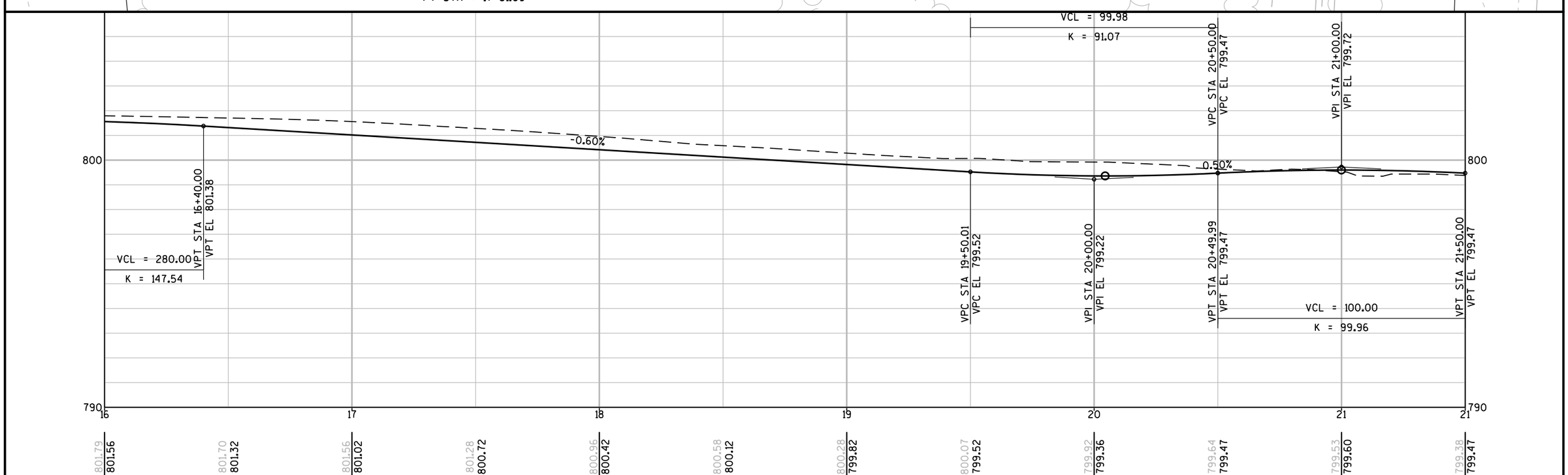

PROJECT NO: 5310-02-76	HWY: USH 14	COUNTY: DANE	PLAN AND PROFILE: USH 14	SHEET	E

FILE NAME : N:\PDS\C3D\53100206(14)\SHEETSPLAN\050101-PP.DWG
LAYOUT NAME - PP - (3)
PLOT DATE : 6/7/2019 8:57 AM
PLOT BY : SHAW, ADAM M
PLOT NAME :
PLOT SCALE : 1 IN:40 FT

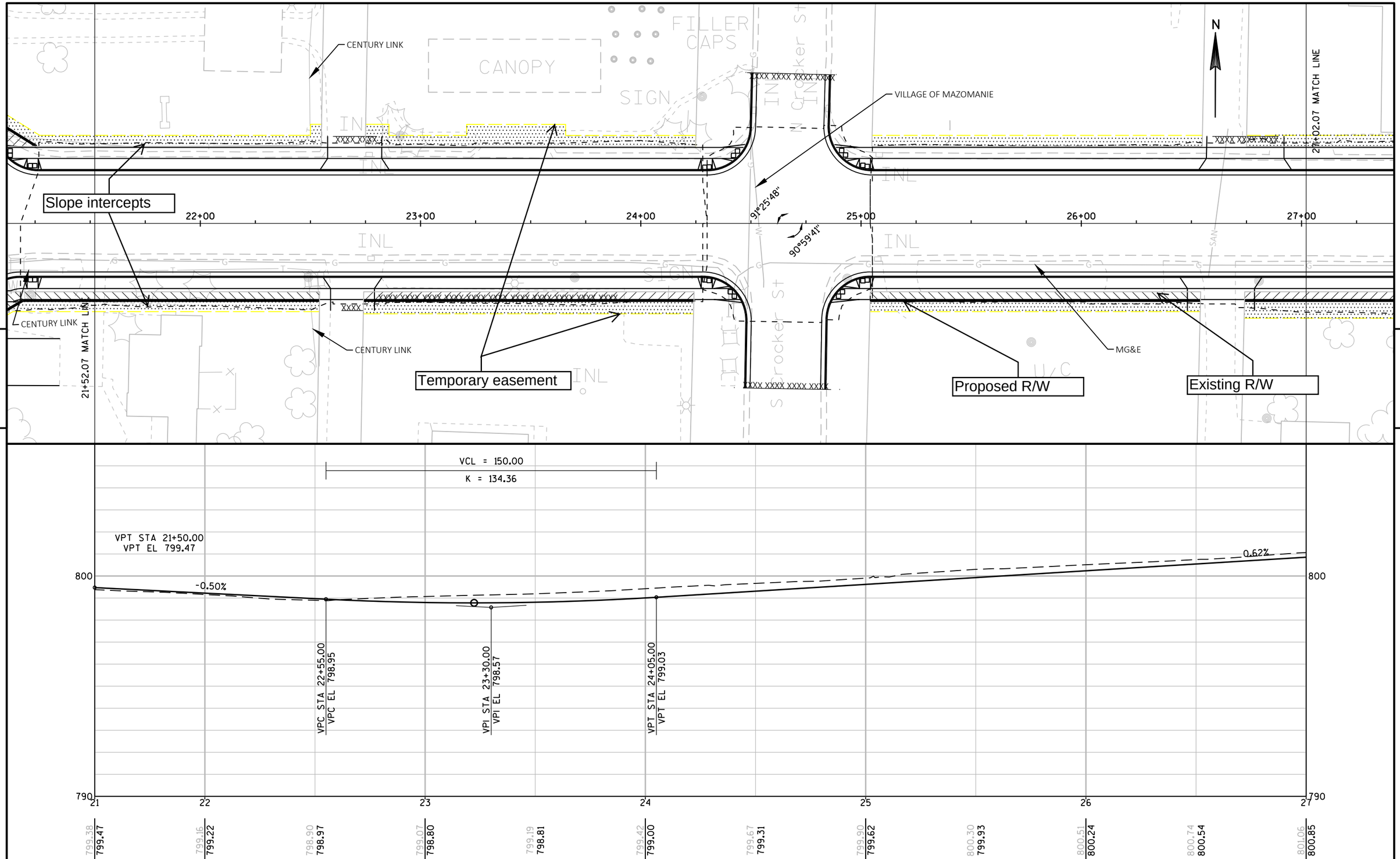

PROJECT NO: 5310-02-76	HWY: USH 14	COUNTY: DANE	PLAN AND PROFILE: USH 14	SHEET	E

FILE NAME : N:\PDS\C3D\53100206(14)\SHEETSPLAN\050101-PP.DWG
LAYOUT NAME - PP - (4)
PLOT DATE : 6/7/2019 8:57 AM
PLOT BY : SHAW, ADAM M
PLOT NAME :
PLOT SCALE : 1 IN:40 FT

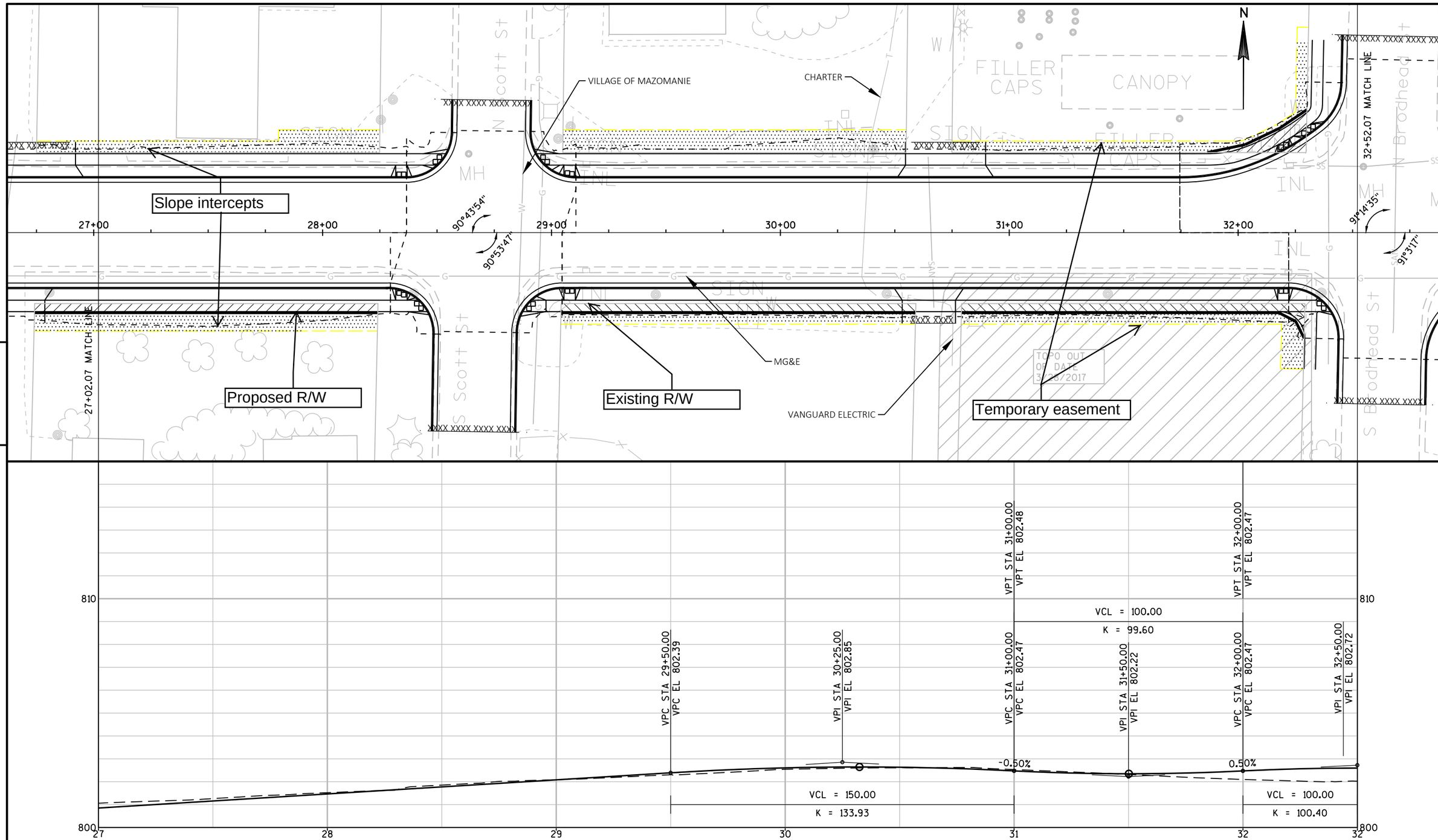

PROJECT NO: 5310-02-76	HWY: USH 14	COUNTY: DANE	PLAN AND PROFILE: USH 14	SHEET	E

FILE NAME : N:\PDS\C3D\53100206(14)\SHEETSPLAN\050101-PP.DWG
LAYOUT NAME - PP - (5)
PLOT DATE : 6/7/2019 8:57 AM
PLOT BY : SHAW, ADAM M
PLOT NAME :
PLOT SCALE : 1 IN:40 FT

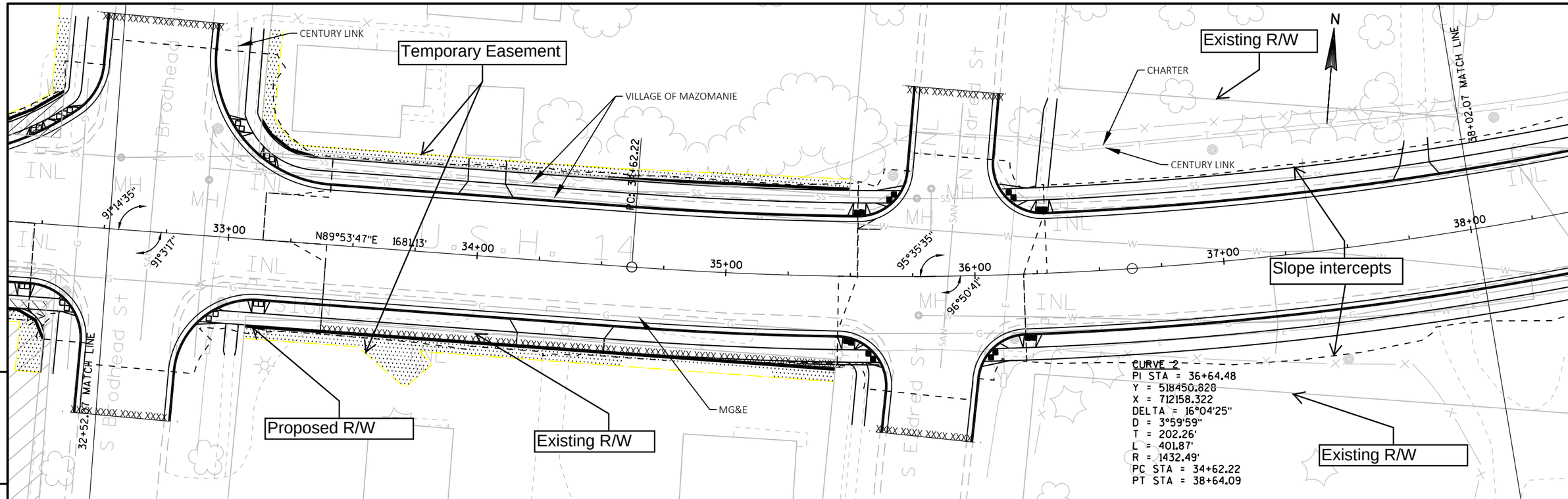

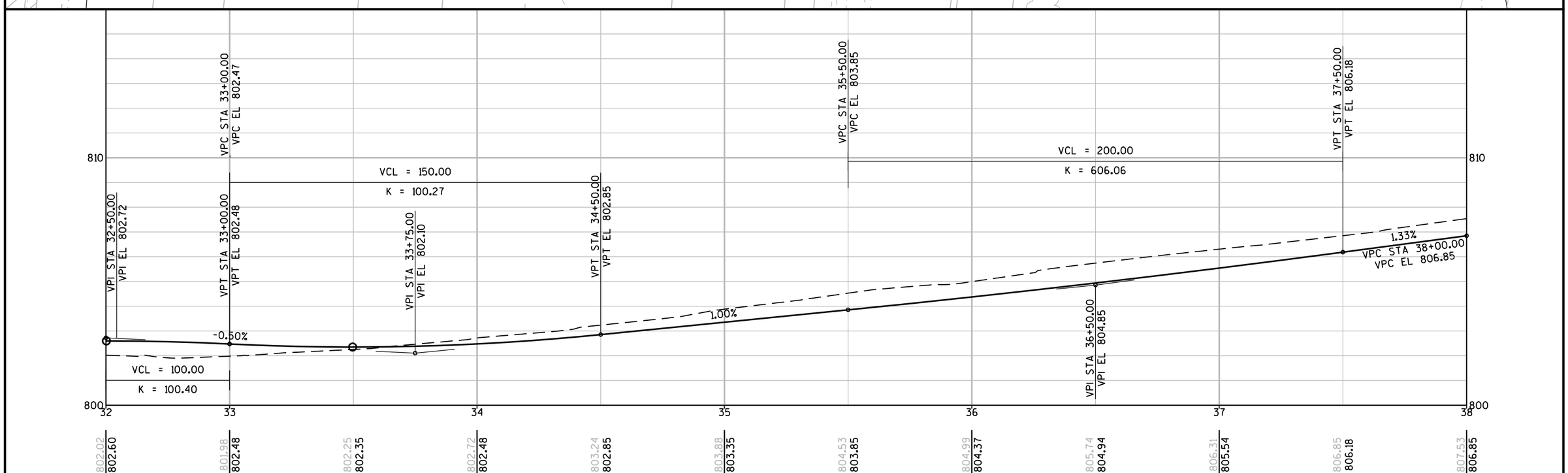

PROJECT NO: 5310-02-76	HWY: USH 14	COUNTY: DANE	PLAN AND PROFILE: USH 14	SHEET	E

FILE NAME : N:\PDS\C3D\53100206(14)\SHEETSPLAN\050101-PP.DWG
LAYOUT NAME - PP - (6)
PLOT DATE : 6/7/2019 8:57 AM
PLOT BY : SHAW, ADAM M
PLOT NAME :
PLOT SCALE : 1 IN:40 FT

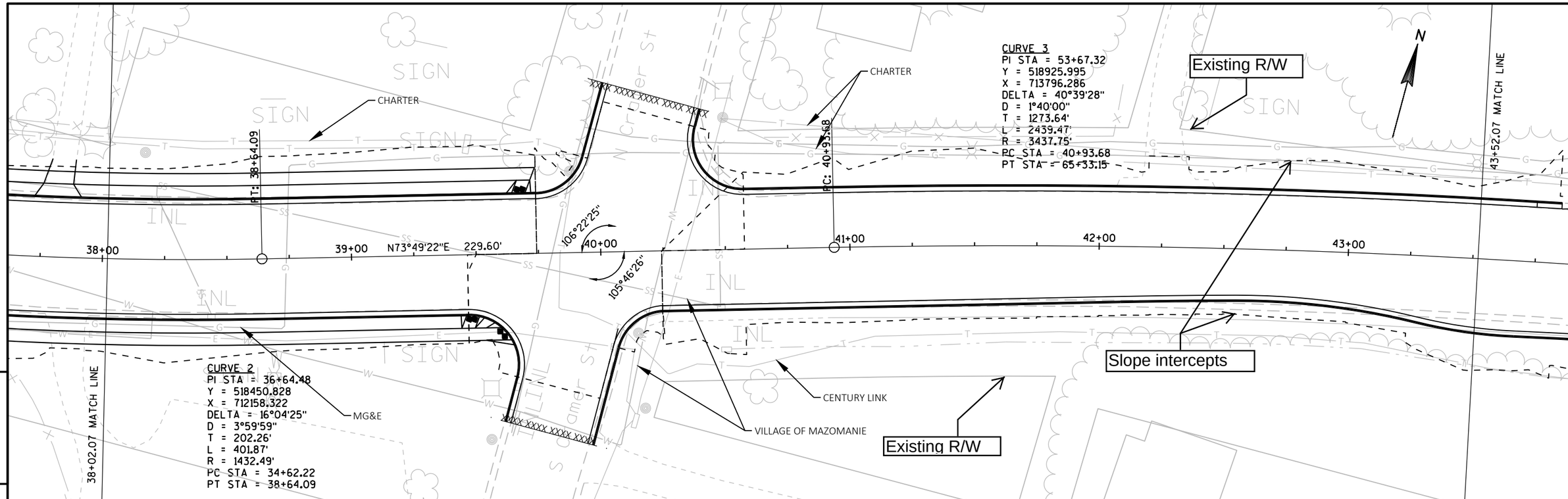

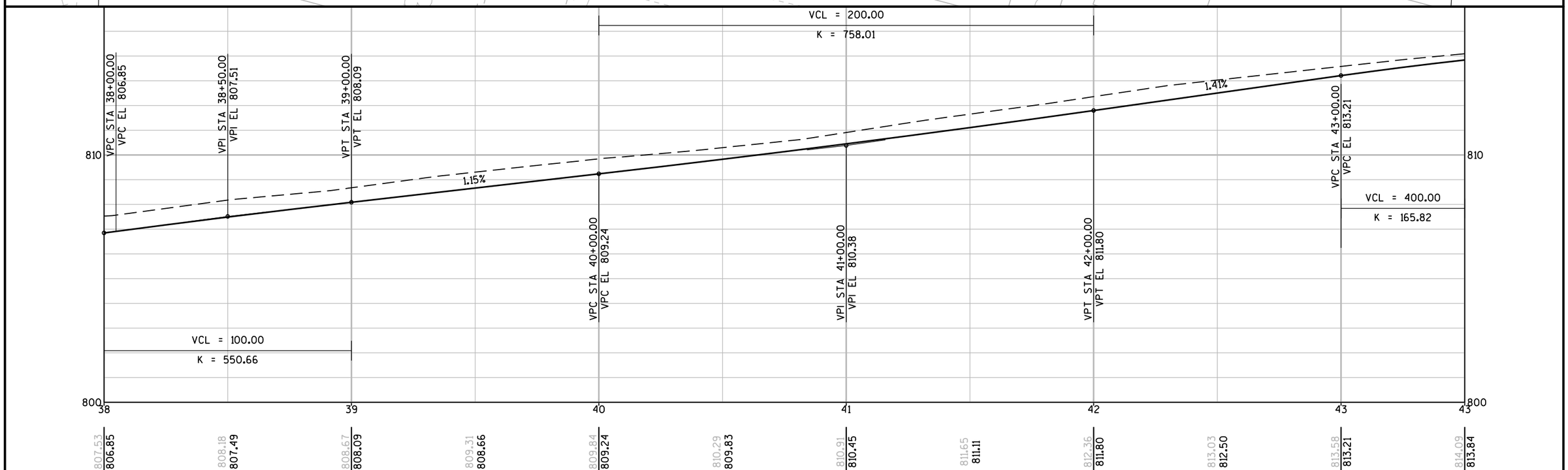

PROJECT NO: 5310-02-76	HWY: USH 14	COUNTY: DANE	PLAN AND PROFILE: USH 14	SHEET	E

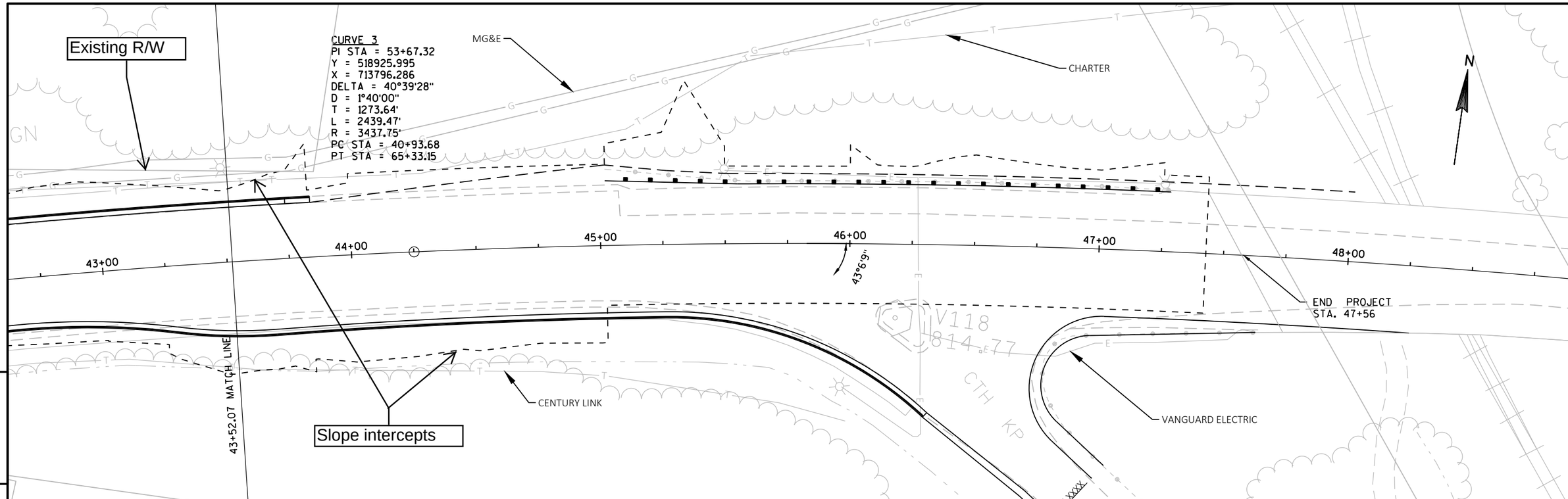

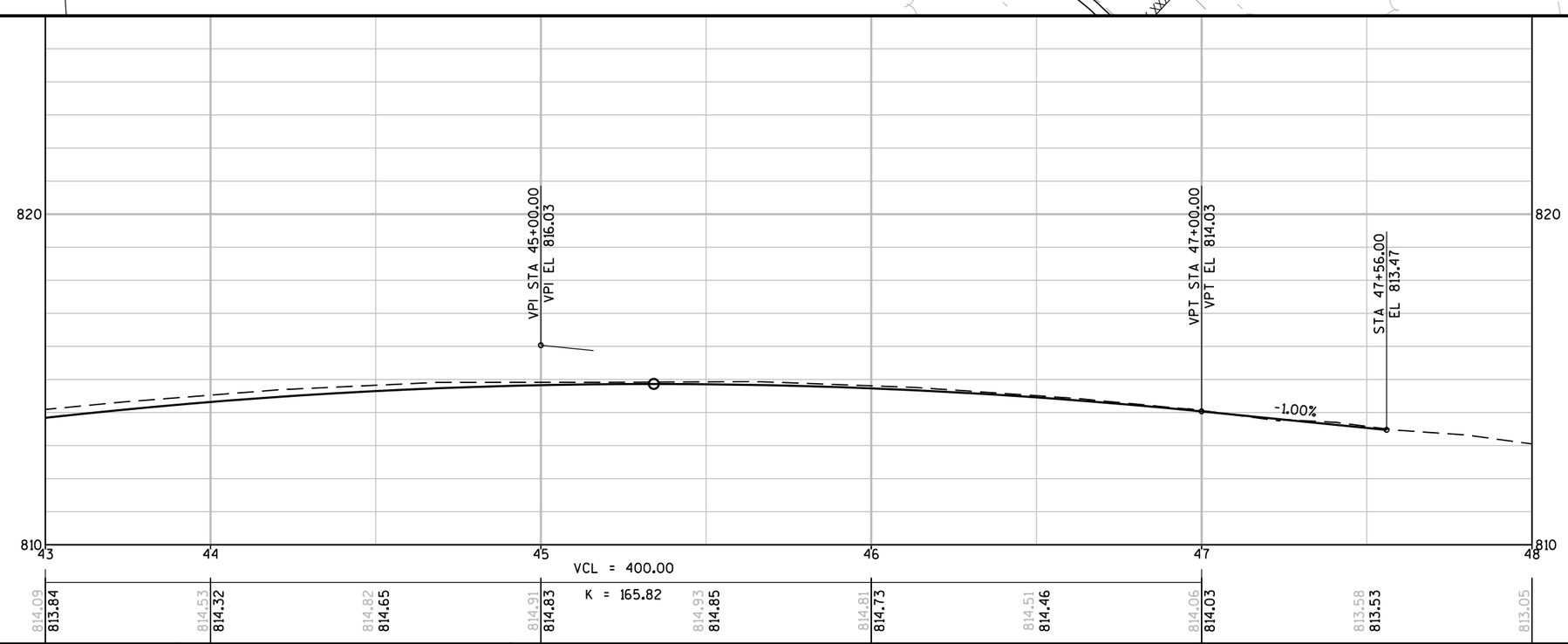

PROJECT NO: 5310-02-76	HWY: USH 14	COUNTY: DANE	PLAN AND PROFILE: USH 14	SHEET	E

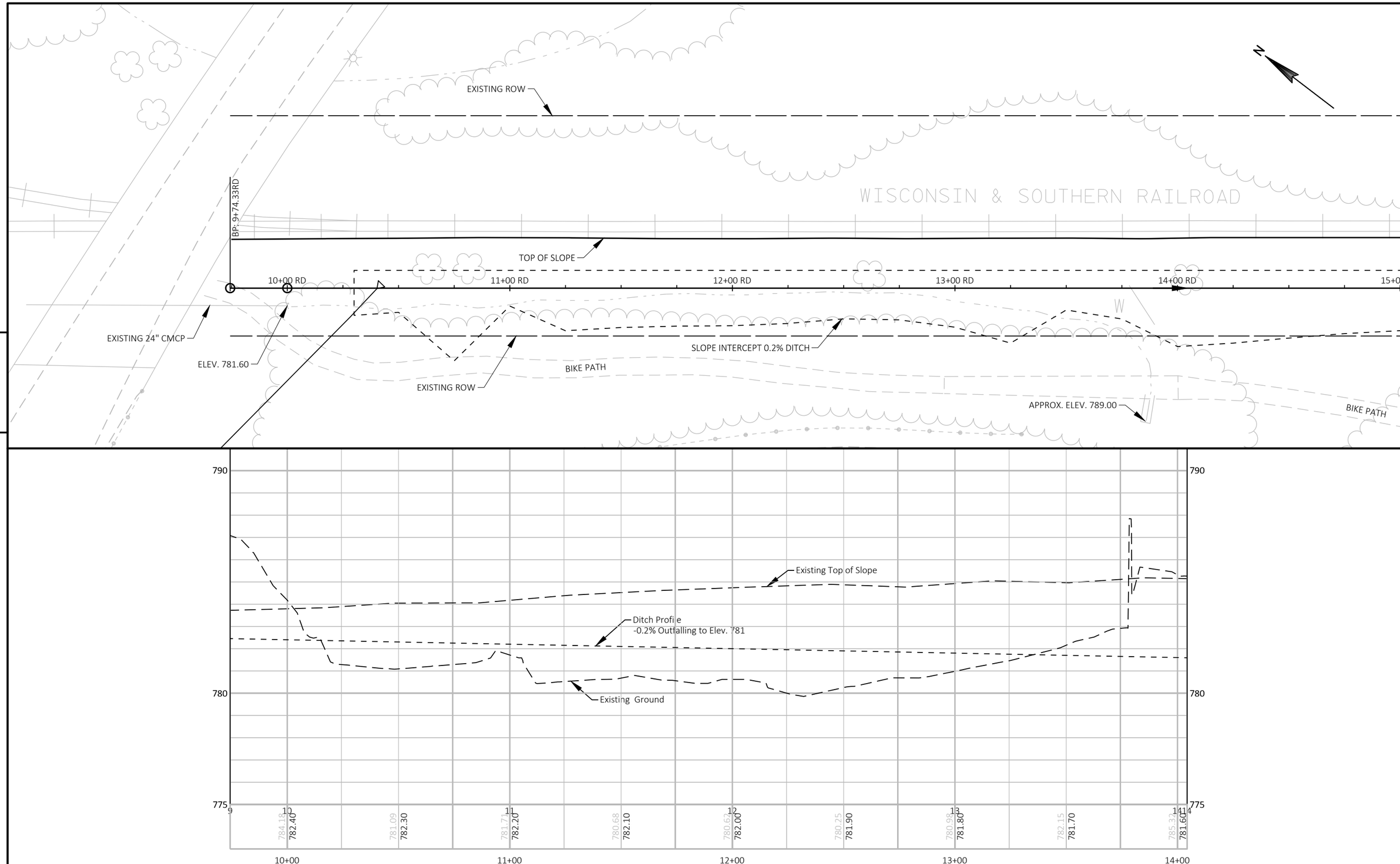

PROJECT NO: 5310-02-67	HWY: USH 14	COUNTY: DANE	PLAN AND PROFILE: RR DITCH - 0.2%	SHEET	E

FILE NAME : N:\PDS\C3D\53100206(14)\SHEETSPLAN\050201-PP-DITCH 0.2%.DWG
LAYOUT NAME - 050201
PLOT DATE : 8/1/2018 4:41 PM
PLOT BY : SCHMID, CHARLENE
PLOT NAME :
PLOT SCALE : 1 IN:40 FT

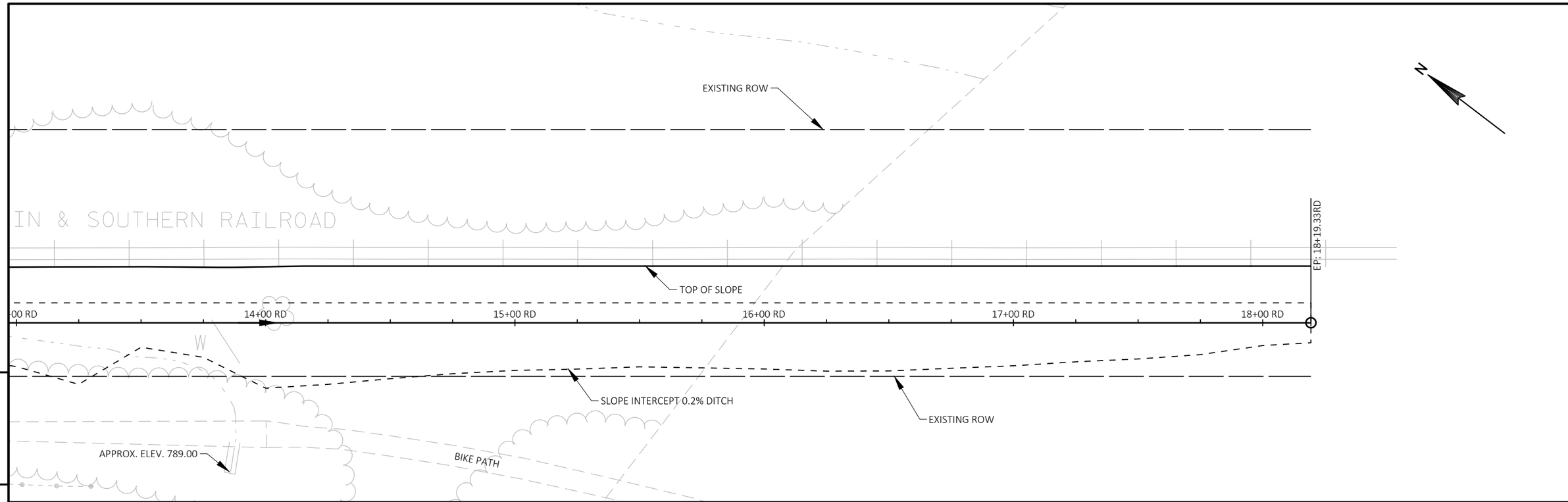

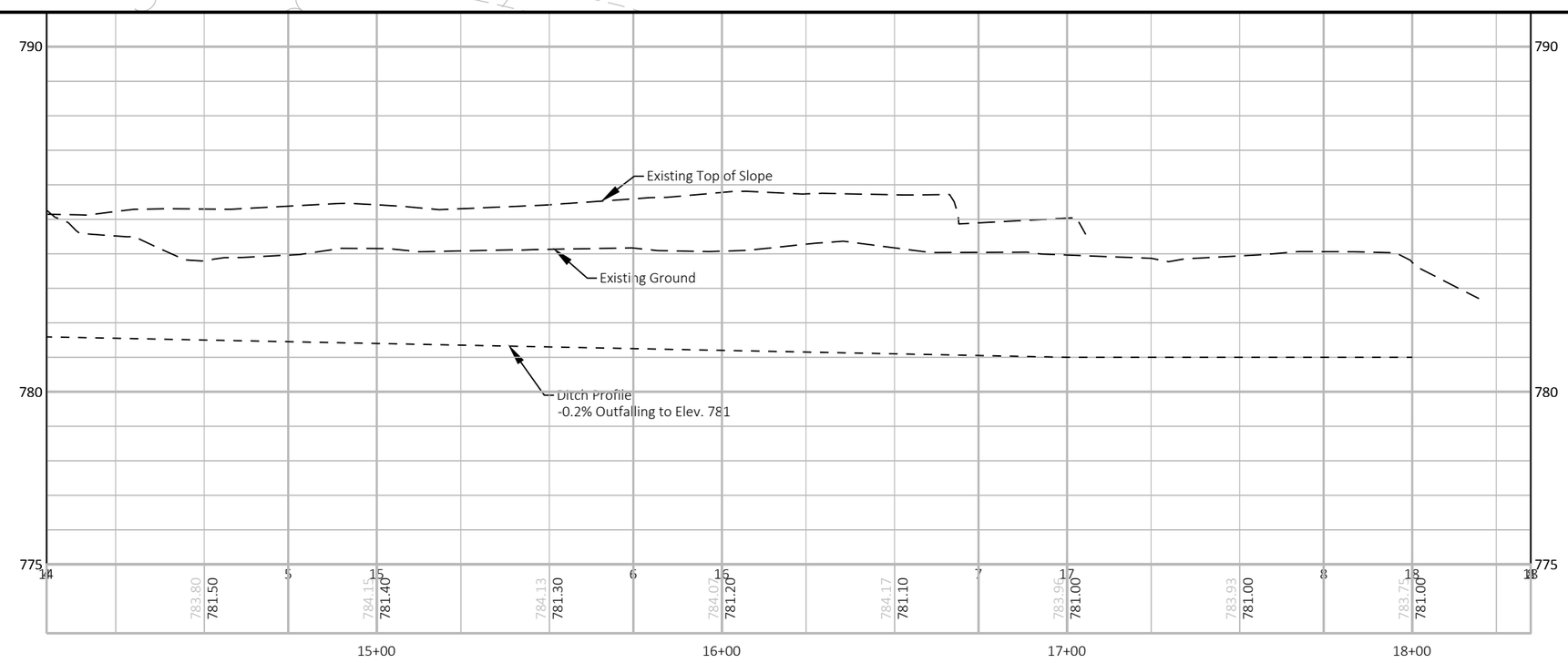

PROJECT NO: 5310-02-67	HWY: USH 14	COUNTY: DANE	PLAN AND PROFILE: RR DITCH - 0.2%	SHEET	E

FILE NAME : N:\PDS\C3D\53100206(14)\SHEETSPLAN\050201-PP-DITCH 0.2%.DWG
LAYOUT NAME - 050202
PLOT DATE : 8/1/2018 4:41 PM
PLOT BY : SCHMID, CHARLENE
PLOT NAME :
PLOT SCALE : 1 IN:40 FT

SDD 8a5-a Inlet Covers Type A, H, A-S, H-S and Z

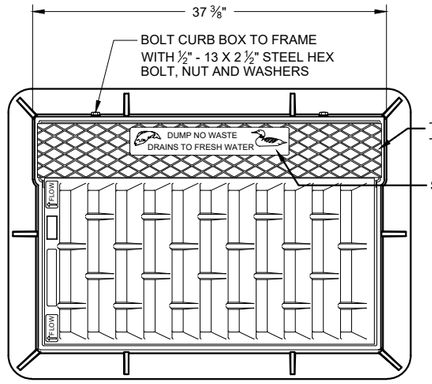

NOTE: EITHER CASTING IS ACCEPTABLE

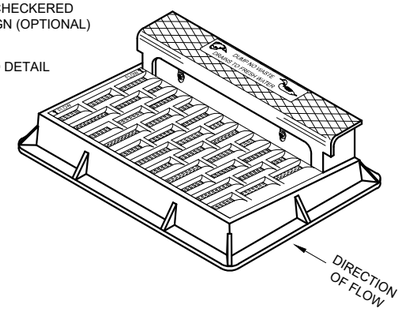

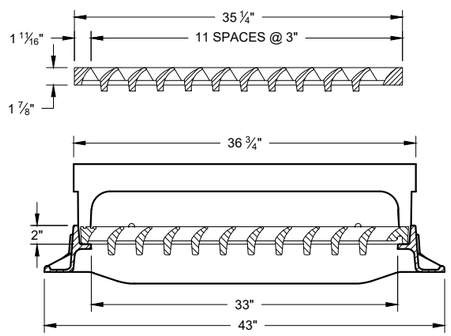

NOTE: CURB BOX HEIGHT ADJUSTABLE 6" - 9"

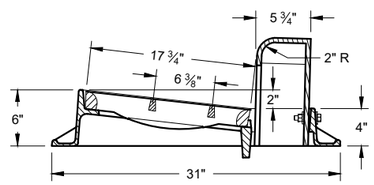

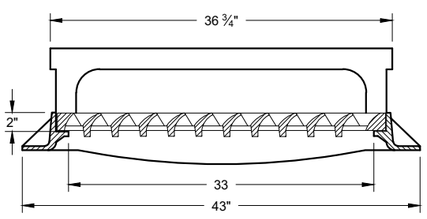

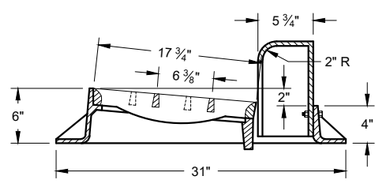

TYPE "H"

NOTE: EITHER CASTING IS ACCEPTABLE

1 1/8" DIAGONAL BARS WITH 1 5/8" OPENINGS

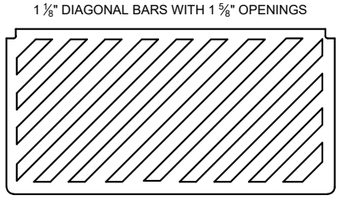

SPECIAL GRATE FOR TYPE "H" COVER

(MEASURES 35" X 17 3/4" X 2")

(NOTED AS TYPE H-S ON DRAINAGE TABLE)

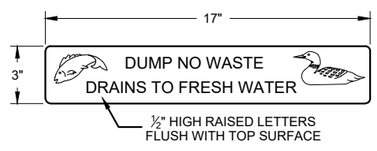

LOGO DETAIL

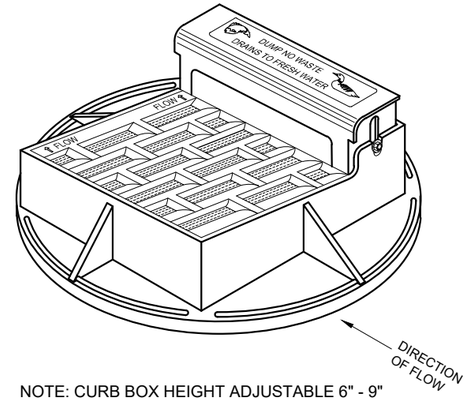

NOTE: CURB BOX HEIGHT ADJUSTABLE 6" - 9"

NOTE: EITHER CASTING IS ACCEPTABLE

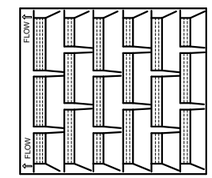

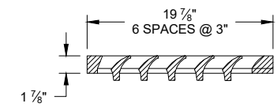

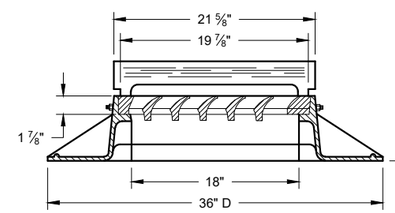

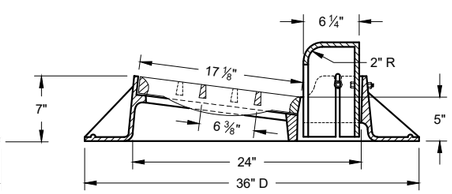

TYPE "A"

1" DIAGONAL BARS WITH 1 1/2" OPENINGS

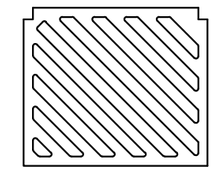

SPECIAL GRATE FOR TYPE "A" COVER

(MEASURES 19 3/4" X 17" X 1 7/8")

(NOTED AS TYPE A-S ON DRAINAGE TABLE)

GENERAL NOTES

DETAILS OF CONSTRUCTION, MATERIALS AND WORKMANSHIP NOT SHOWN ON THIS DRAWING SHALL CONFORM TO THE PERTINENT REQUIREMENTS OF THE STANDARD SPECIFICATIONS AND THE APPLICABLE SPECIAL PROVISIONS.

DETAIL DRAWINGS FOR PROPOSED ALTERNATE DESIGNS FOR CATCH BASIN, MANHOLE AND INLET COVERS SHALL BE SUBMITTED TO THE ENGINEER FOR APPROVAL PROVIDING THAT SUCH ALTERNATE DESIGNS MAKE PROVISION FOR EQUIVALENT CAPACITY AND STRENGTH.

ROUND FRAMES AND COVERS SHALL HAVE CONTINUOUSLY MACHINED BEARING SURFACES TO PREVENT ROCKING AND RATTLING.

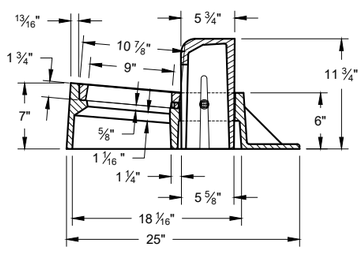

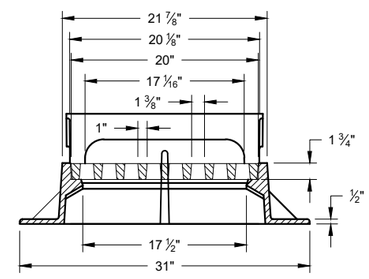

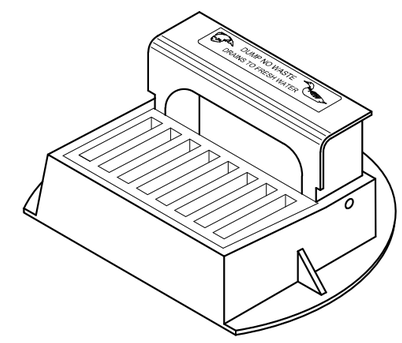

TYPE "Z"

INLET COVERS
TYPE A, H, A-S, H-S & Z

STATE OF WISCONSIN
DEPARTMENT OF TRANSPORTATION

APPROVED
11-27-13 — DATE
/S/ Jerry H. Zogg — APPROVING ENGINEER
FHWA

6

6

SDD 08A05-19a

SDD 08A05-19a

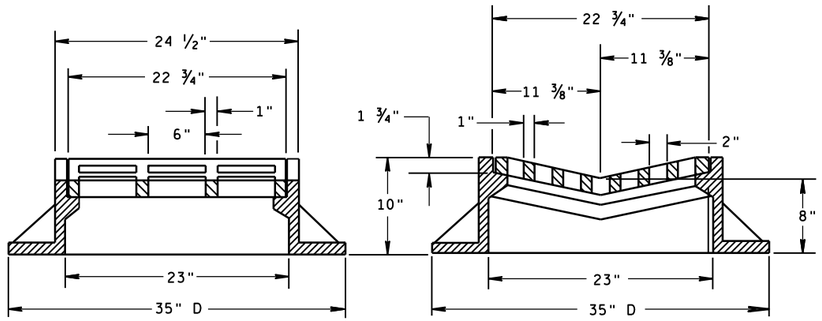

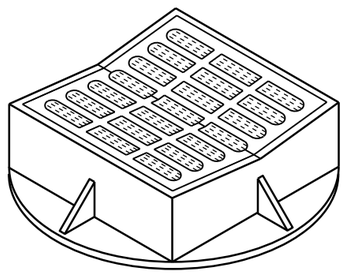

TYPE "B"

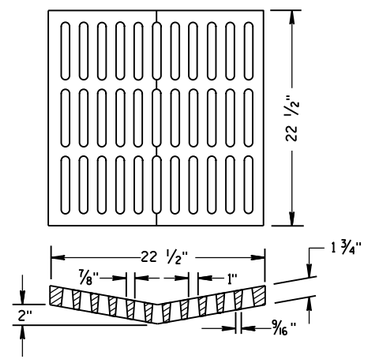

ALTERNATIVE GRATE FOR TYPE "B" COVER

USE WHERE PEDESTRIAN OR BICYCLE TRAFFIC IS POSSIBLE.

NOTED AS TYPE B-A ON THE DRAINAGE TABLE

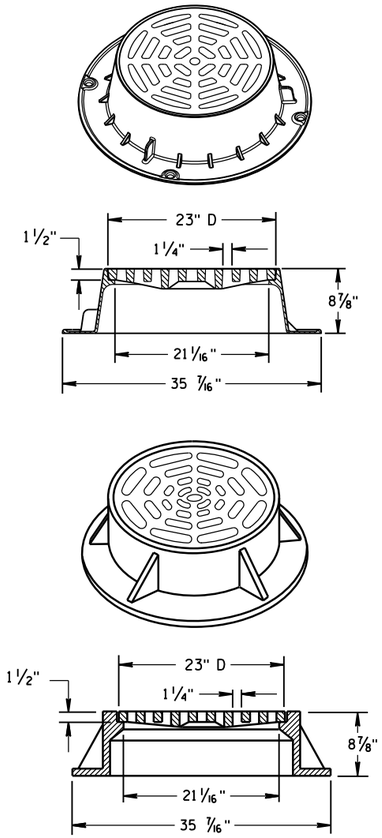

TYPE "C"

NOTE: EITHER CASTING IS ACCEPTABLE

GENERAL NOTES

DETAILS OF CONSTRUCTION, MATERIALS AND WORKMANSHIP NOT SHOWN ON THIS DRAWING SHALL CONFORM TO THE PERTINENT REQUIREMENTS OF THE STANDARD SPECIFICATIONS AND THE APPLICABLE SPECIAL PROVISIONS.

DETAIL DRAWINGS FOR PROPOSED ALTERNATE DESIGNS FOR CATCH BASIN, MANHOLE AND INLET COVERS SHALL BE SUBMITTED TO THE ENGINEER FOR APPROVAL PROVIDING THAT SUCH ALTERNATE DESIGNS MAKE PROVISION FOR EQUIVALENT CAPACITY AND STRENGTH.

ROUND FRAMES AND COVERS SHALL HAVE CONTINUOUSLY MACHINED BEARING SURFACES TO PREVENT ROCKING AND RATTLING.

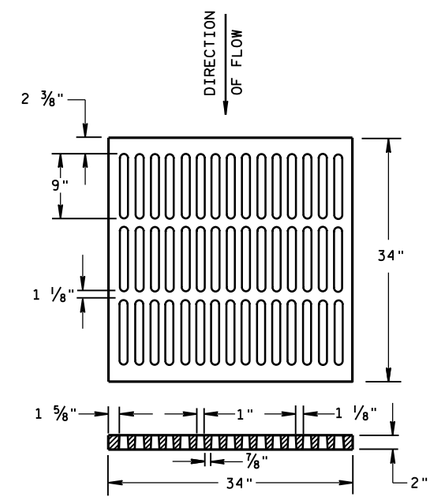

ALTERNATIVE TYPE "MS"

USE WHERE PEDESTRIAN OR BICYCLE TRAFFIC IS PERMITTED

NOTED AS TYPE MS-A ON THE DRAINAGE TABLE

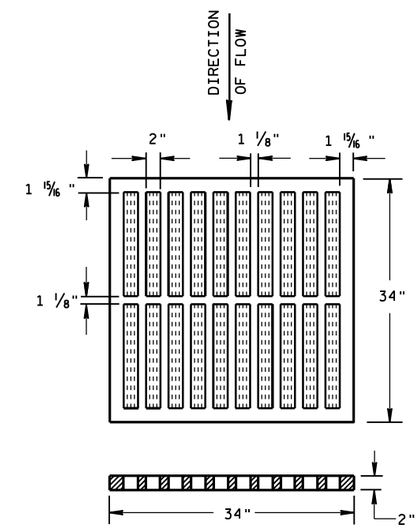

TYPE "MS"

USE ON FREEWAYS AND EXPRESSWAYS

NOTED AS TYPE MS ON DRAINAGE TABLE

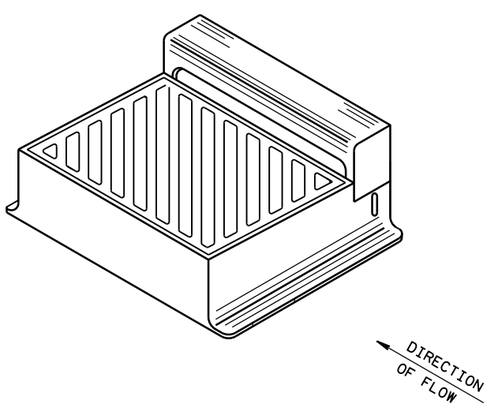

DIAGONAL SLOTS, SHALL BE ORIENTED TO THE DIRECTION OF FLOW AS ILLUSTRATED. GRATES ARE MANUFACTURED TO BE REVERSIBLE.

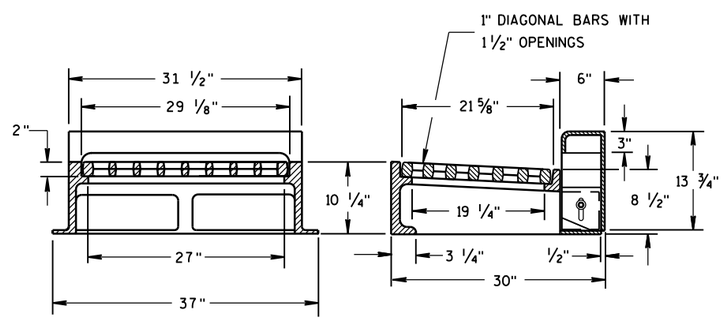

NOTE: CURB BOX HEIGHT ADJUSTABLE 6" TO 9"

TYPE "WM"

6

6

S.D.D. 8 A 5-19b

S.D.D. 8 A 5-19b

INLET COVERS
TYPE B, B-A, C,
MS, MS-A, & WM

STATE OF WISCONSIN
DEPARTMENT OF TRANSPORTATION

APPROVED

11/27/2013
DATE

/S/ Jerry H. Zogg
ROADWAY STANDARDS DEVELOPMENT ENGINEER

FHWA

SDD 8a5-c Inlet Covers Type F, HM, HM-S, S, T, V, HM-GJ, and HM-GJ-S

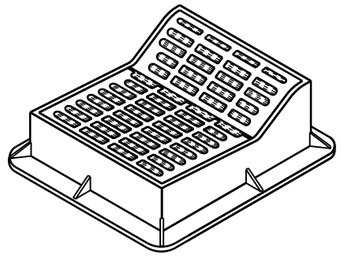

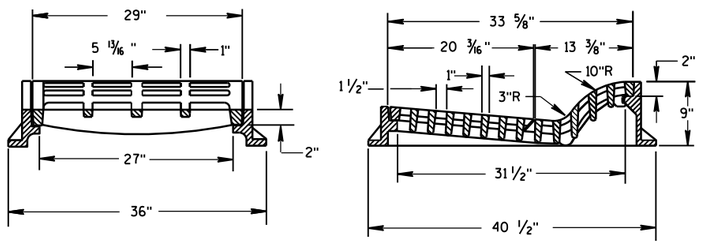

TYPE "F"

USE WITH TYPES A & D CONCRETE CURB & GUTTER, 36 INCH.

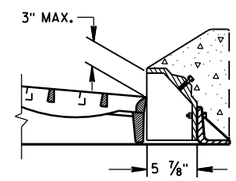

ALTERNATIVE CURB BOX FOR TYPE "HM" COVER

USE WITH TYPES G & J CONCRETE CURB & GUTTER, 30 INCH
NOTED AS TYPE HM-GJ ON DRAINAGE TABLE

NOTE:
SPECIAL GRATE FOR THE
TYPE "H" COVER MAY ALSO BE
USED FOR THE TYPE "HM-GJ" COVER
NOTED AS TYPE HM-GJ-S ON DRAINAGE TABLE

GENERAL NOTES

DETAILS OF CONSTRUCTION, MATERIALS AND WORKMANSHIP NOT SHOWN ON THIS DRAWING SHALL CONFORM TO THE PERTINENT REQUIREMENTS OF THE STANDARD SPECIFICATIONS AND THE APPLICABLE SPECIAL PROVISIONS.

DETAIL DRAWINGS FOR PROPOSED ALTERNATE DESIGNS FOR INLET COVERS SHALL BE SUBMITTED TO THE ENGINEER FOR APPROVAL PROVIDING THAT SUCH ALTERNATE DESIGNS MAKE PROVISION FOR EQUIVALENT CAPACITY AND STRENGTH.

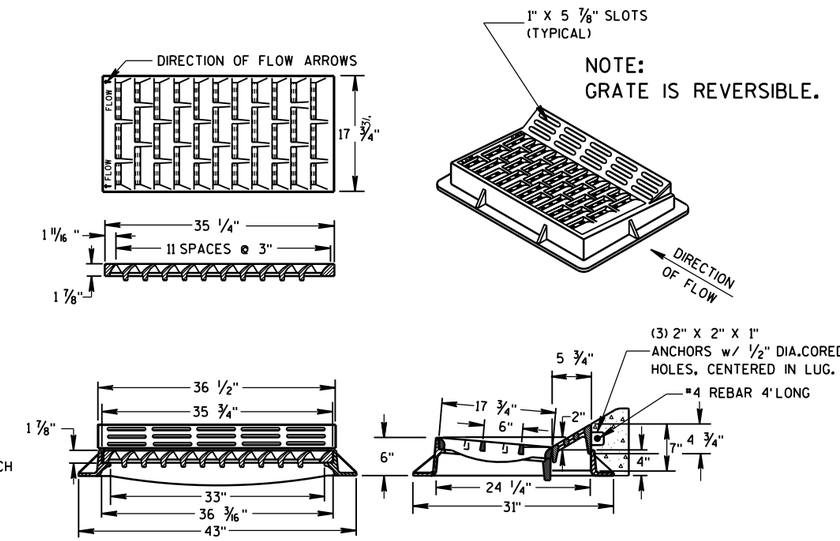

NOTE:
GRATE IS REVERSIBLE.

TYPE "HM"

USE WITH TYPES A & D CONCRETE CURB & GUTTER, 36 INCH.

NOTE:
SPECIAL GRATE FOR THE
TYPE "H" COVER MAY ALSO BE
USED FOR THE TYPE "HM" COVER
NOTED AS TYPE HM-S ON DRAINAGE TABLE

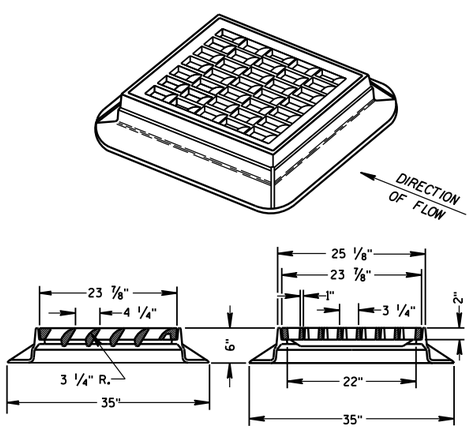

TYPE "S"

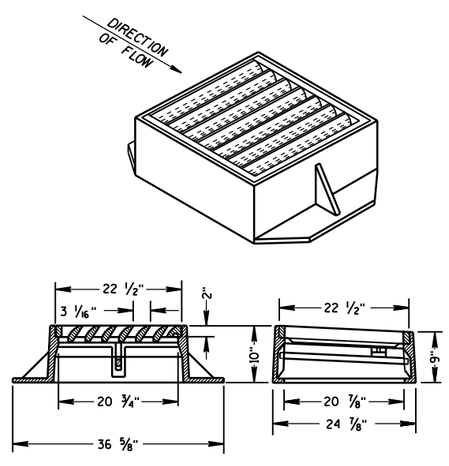

TYPE "V"

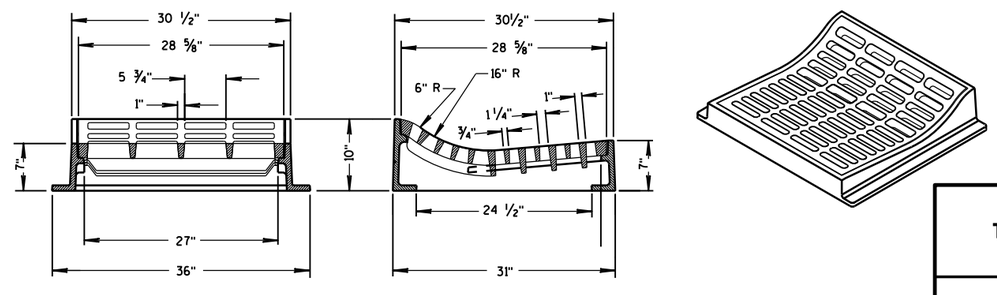

TYPE "T"

USE WITH TYPES R & T CONCRETE CURB & GUTTER, 36 INCH.

INLET COVERS
TYPE F, HM, HM-S, S, T, V,
HM-GJ, & HM-GJ-S

STATE OF WISCONSIN
DEPARTMENT OF TRANSPORTATION

APPROVED
11/27/2013 — DATE
/S/ Jerry H. Zogg — ROADWAY STANDARDS DEVELOPMENT ENGINEER
FHWA

6
S.D.D. 8 A 5-19c

SDD 8a5-d Inlet Covers Type BW; Manhole Covers Type J, J-S, K, L and M

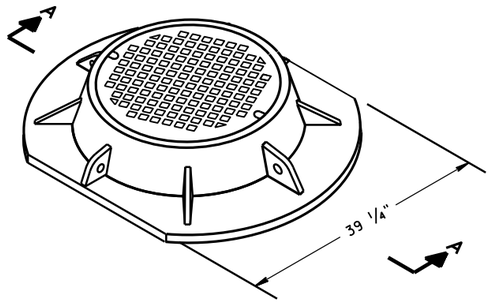

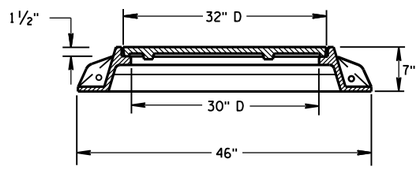

SECTION A-A
TYPE "K"

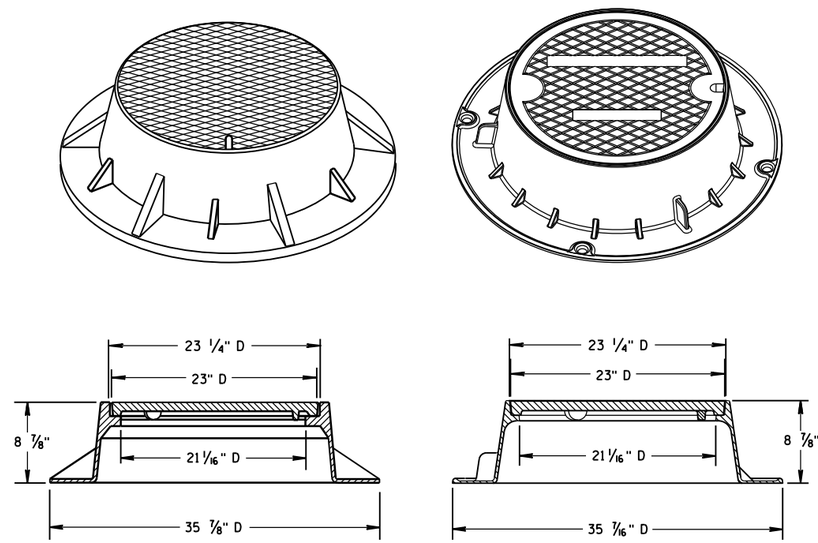

TYPE "J"
NOTE: EITHER CASTING IS ACCEPTABLE

GENERAL NOTES

DETAILS OF CONSTRUCTION, MATERIALS AND WORKMANSHIP NOT SHOWN ON THIS DRAWING SHALL CONFORM TO THE PERTINENT REQUIREMENTS OF THE STANDARD SPECIFICATIONS AND THE APPLICABLE SPECIAL PROVISIONS.

DETAIL DRAWINGS FOR PROPOSED ALTERNATE DESIGNS FOR MANHOLE COVERS SHALL BE SUBMITTED TO THE ENGINEER FOR APPROVAL PROVIDING THAT SUCH ALTERNATE DESIGNS MAKE PROVISION FOR EQUIVALENT CAPACITY AND STRENGTH.

ROUND FRAMES AND COVERS SHALL HAVE CONTINUOUSLY MACHINED BEARING SURFACES TO PREVENT ROCKING AND RATTLING.

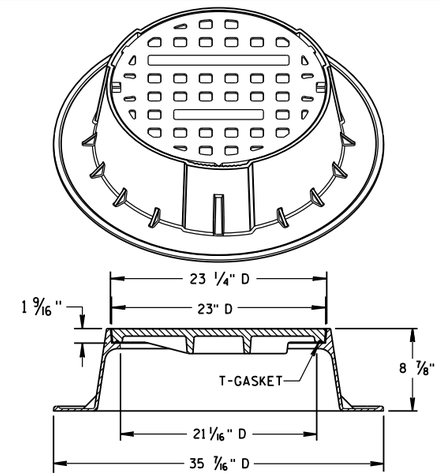

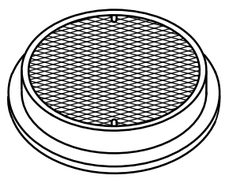

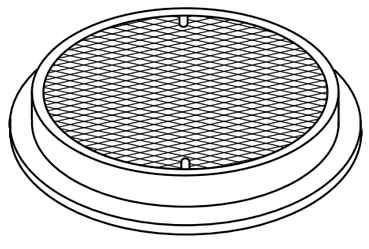

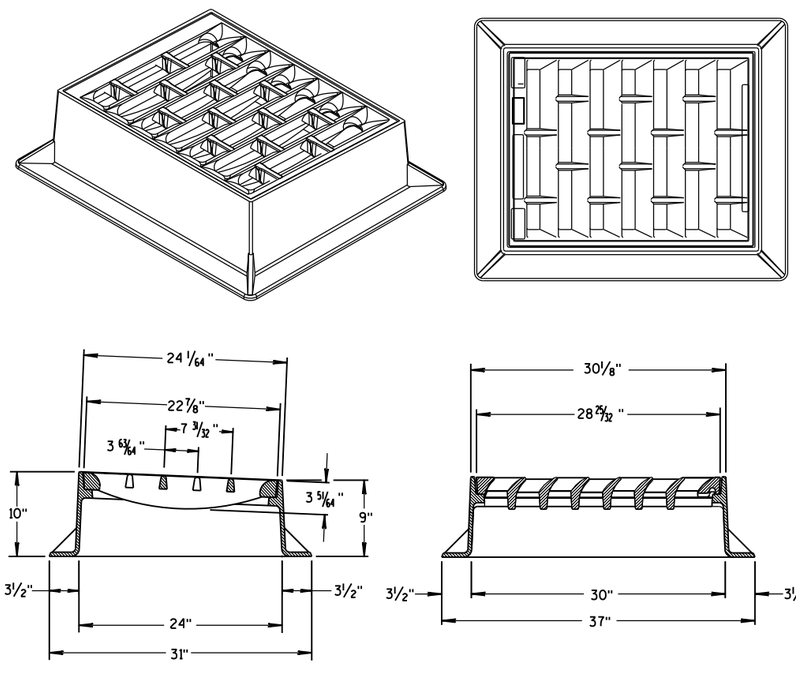

TYPE "L"

TYPE "M"

INLET COVER TYPE "BW"

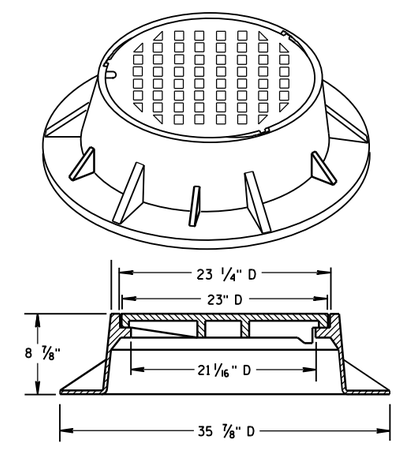

TYPE "J" SPECIAL
TYPE "B" NON-ROCKING SELF-SEAL LID
(NOTED AS TYPE J-S ON THE DRAINAGE TABLE)
NOTE: EITHER CASTING IS ACCEPTABLE

INLET COVER TYPE BW
MANHOLE COVERS, TYPE K, J, J-S, L & M

STATE OF WISCONSIN
DEPARTMENT OF TRANSPORTATION

APPROVED
11/27/2013
DATE
FHWA

/S/ Jerry H. Zogg
ROADWAY STANDARDS DEVELOPMENT ENGINEER

6
S.D.D. 8 A 5-19d

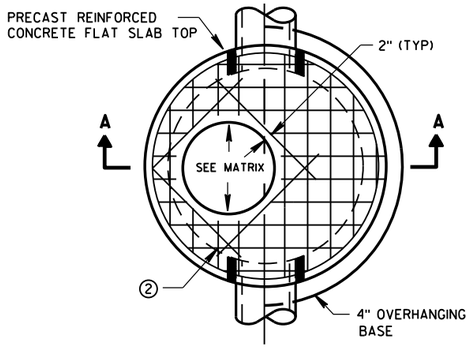

PLAN VIEW CIRCULAR OPENING

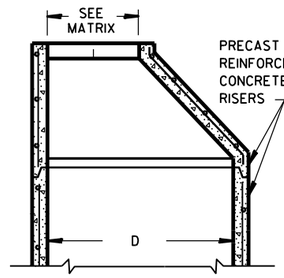

OPTIONAL PRECAST REINFORCED CONCRETE ECCENTRIC TOP

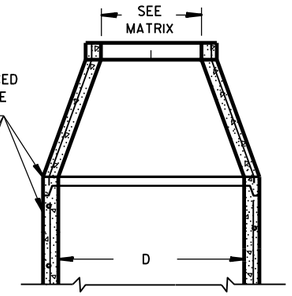

OPTIONAL PRECAST REINFORCED CONCRETE CONCENTRIC TOP

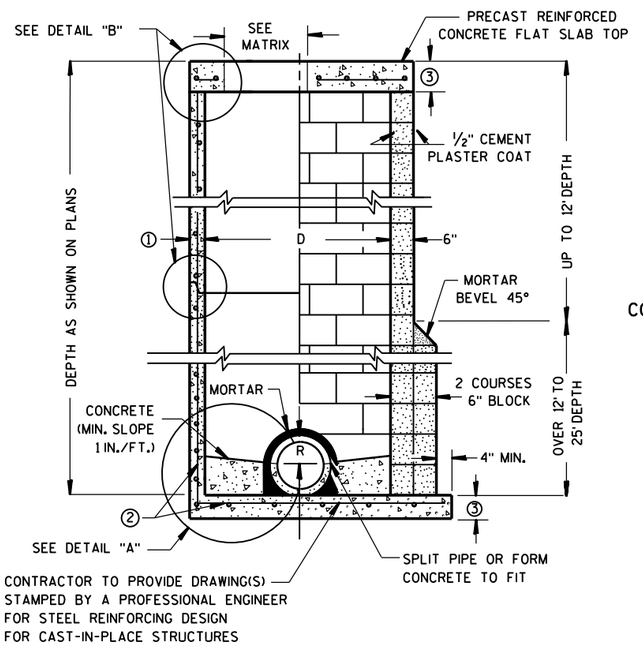

PRECAST REINFORCED CONCRETE WITH MONOLITHIC BASE

CONCRETE BLOCK WITH CAST-IN-PLACE OR PRECAST REINFORCED CONCRETE BASE ②

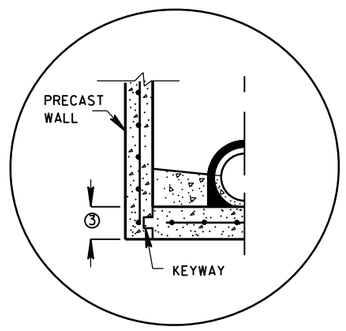

PRECAST REINFORCED CONCRETE WITH INTEGRAL BASE OPTION

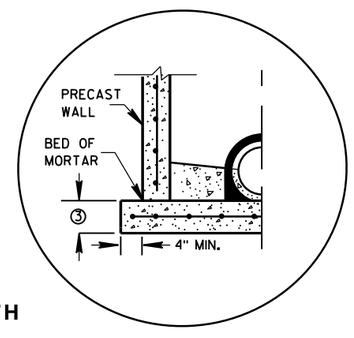

SEPARATE PRECAST REINFORCED CONCRETE BASE OPTION

DETAIL "A"

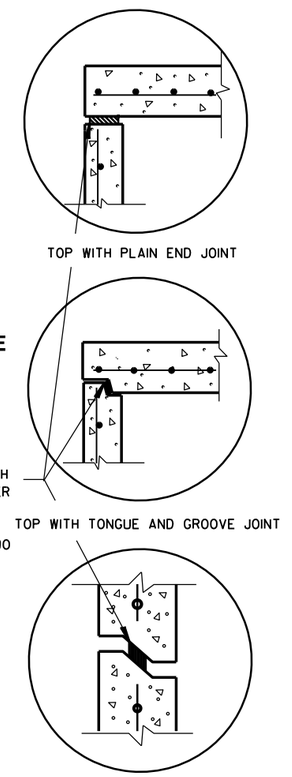

RISER WITH TONGUE AND GROOVE JOINT

DETAIL "B"

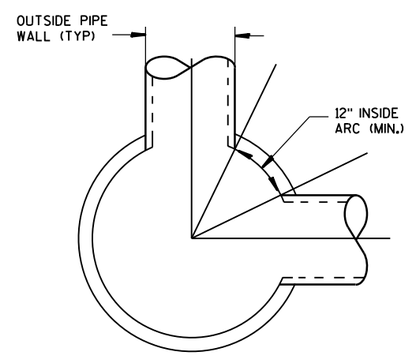

DETAIL "C"

GENERAL NOTES

DETAILS OF CONSTRUCTION, MATERIALS AND WORKMANSHIP NOT SHOWN ON THIS DRAWING SHALL CONFORM TO THE PERTINENT REQUIREMENTS OF THE STANDARD SPECIFICATIONS AND THE APPLICABLE SPECIAL PROVISIONS.

UNLESS OTHERWISE AUTHORIZED IN WRITING BY THE ENGINEER, THE CONTRACTOR SHALL NOT ORDER AND DELIVER PRECAST MANHOLE UNITS REQUIRED FOR THE PROJECT UNTIL A LIST OF SIZES IS FURNISHED BY THE ENGINEER.

DETAILED DRAWINGS FOR PROPOSED ALTERNATE DESIGNS FOR UNDERGROUND DRAINAGE STRUCTURES SHALL BE SUBMITTED TO THE ENGINEER FOR APPROVAL PROVIDING THAT SUCH ALTERNATE DESIGNS MAKE PROVISION FOR EQUIVALENT CAPACITY AND STRENGTH.

ALL DRAINAGE STRUCTURES ARE DESIGNATED ON THE PLANS AS "MANHOLES 3X3-L", "CATCH BASINS 4-B", "INLETS 2X3-H", ETC. THE FIRST NUMBERS DESIGNATE THE SIZE OF THE STRUCTURE, AND THE FOLLOWING LETTER DESIGNATES THE TYPE OF COVER TO BE USED TO COMPRISE THE COMPLETE UNIT.

BASES SHALL BE PLACED ON A BED OF MATERIAL AT LEAST 6 INCHES IN DEPTH, WHICH MEETS THE REQUIREMENTS OF FOUNDATION BACKFILL. THIS BEDDING SHALL BE COMPACTED AND PROVIDE UNIFORM SUPPORT FOR THE ENTIRE AREA OF THE BASE.

PRECAST REINFORCED CONE TOPS (ECCENTRIC OR CONCENTRIC) OR PRECAST REINFORCED FLAT SLAB TOPS MAY BE USED ON CONCRETE BLOCK STRUCTURES.

ECCENTRIC CONE TOPS MAY BE USED ON ALL STRUCTURES, AND CONCENTRIC CONE TOPS SHALL BE USED ONLY ON STRUCTURES 5 FEET OR LESS IN DEPTH, UNLESS OTHERWISE DIRECTED BY THE ENGINEER.

STEPS MEETING AASHTO M199 AND THE FOLLOWING REQUIREMENTS SHALL BE INSTALLED IN ALL STRUCTURES OVER 5 FEET IN DEPTH: 16 INCH C-C MAXIMUM SPACING; PROJECT A MINIMUM CLEAR DISTANCE OF 4 INCHES FROM THE WALL AT THE POINT OF EMBEDMENT; MINIMUM LENGTH OF 10 INCHES; MINIMUM WALL EMBEDMENT OF 3 INCHES. FERROUS METAL STEPS NOT PAINTED OR TREATED TO RESIST CORROSION SHALL HAVE A MINIMUM CROSS SECTIONAL DIMENSION OF 1 INCH.

STEPS OF APPROVED POLYPROPYLENE PLASTIC COATED REINFORCEMENT BAR ARE ACCEPTABLE. REINFORCING BAR MUST BE A MINIMUM OF ½" AND MEET THE REQUIREMENTS OF ASTM A615.

CERTIFICATION SHALL BE PROVIDED THAT INSTALLED STEPS WHEN TESTED IN ACCORDANCE WITH SECTION 10 OF AASHTO T280 CAN WITHSTAND A VERTICAL LOAD OF 800 LBS. AND A HORIZONTAL LOAD OF 400 LBS.

ALL BAR STEEL REINFORCEMENT SHALL BE EMBEDDED 2 INCHES CLEAR UNLESS OTHERWISE SHOWN OR NOTED.

CONCRETE BLOCK WILL NOT BE PERMITED FOR STRUCTURES GREATER THAN 4 FEET IN DIAMETER.

PRECAST REINFORCED RISERS SHALL HAVE A TONGUE AND GROOVE JOINT WITH TONGUE UP OR DOWN.

ALL PRECAST MANHOLE UNITS SHALL CONFORM TO THE PERTINENT REQUIREMENTS OF AASHTO DESIGNATION M 199.

4" OVERHANGING BASES ARE REQUIRED FOR ALL CONCRETE BLOCK INSTALLATIONS. 4" OVERHANG IS REQUIRED WHEN SEPARATE PRECAST BASE IS PROVIDED. OVERHANG IS NOT REQUIRED ON PRECAST STRUCTURES WITH AN INTEGRAL OR MONOLITHIC BASE.

FOR ADDITIONAL CONFIGURATIONS, MAINTAIN A MINIMUM OF 12 INCHES AS MEASURED FROM THE INSIDE OF THE STRUCTURE WALL BETWEEN THE OUTSIDE PIPE WALLS OF ADJACENT PIPES. SEE DETAIL "C".

① MINIMUM WALL THICKNESS SHALL BE 4 INCHES FOR 3-FT, 5 INCHES FOR 4-FT, 6 INCHES FOR 5-FT, 7 INCHES FOR 6-FT, 8 INCHES FOR 7-FT AND 9 INCHES FOR 8-FT DIAMETER PRECAST MANHOLES.

② FOR PRECAST MANHOLES PROVIDE REINFORCING STEEL IN ACCORDANCE TO AASHTO M199.

③ PRECAST FLAT SLAB TOPS AND BASES WITH A DIAMETER OF 48" AND LESS SHALL HAVE A MINIMUM THICKNESS OF 6". PRECAST FLAT SLAB TOPS AND BASES WITH A DIAMETER LARGER THAN 48" SHALL HAVE A MINIMUM THICKNESS OF 8".

MANHOLE COVER OPENING MATRIX

MANHOLE COVER TYPE	C	ALL J'S	K	L	M
OPENING SIZE (FT)					
2 DIA.	X	X		X	
3 DIA.			X		X

PIPE MATRIX

MANHOLE SIZE	MAXIMUM INSIDE PIPE DIAMETER FOR TWO PIPES	
	180° SEPARATION (IN)	90° SEPARATION (IN)
3-FT	15	12
4-FT	24	18
5-FT	36	24
6-FT	42	36
7-FT	48	36
8-FT	60	42

MANHOLES 3-FT, 4-FT, 5-FT, 6-FT, 7-FT AND 8-FT DIAMETER

MANHOLES 3-FT, 4-FT, 5-FT, 6-FT, 7-FT AND 8-FT DIAMETER

STATE OF WISCONSIN
DEPARTMENT OF TRANSPORTATION

APPROVED
Sept., 2016 — DATE
/S/ Rodney Taylor — ROADWAY STANDARDS DEVELOPMENT UNIT SUPERVISOR
FHWA

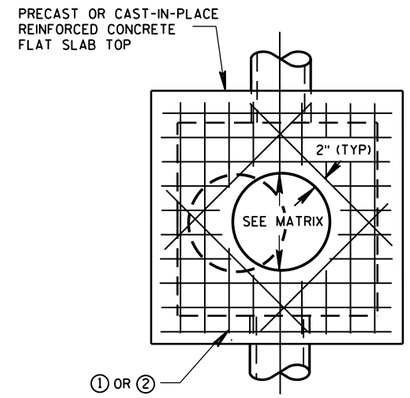

PLAN VIEW
CIRCULAR OPENING

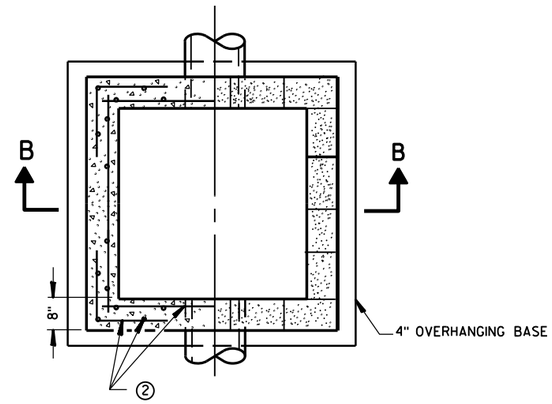

SECTION A-A
PLAN VIEW

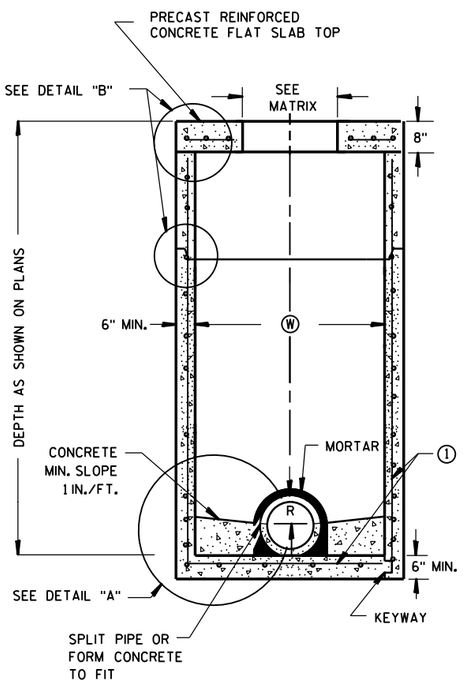

PRECAST REINFORCED CONCRETE WITH MONOLITHIC BASE

PRECAST REINFORCED CONCRETE WITH INTEGRAL BASE

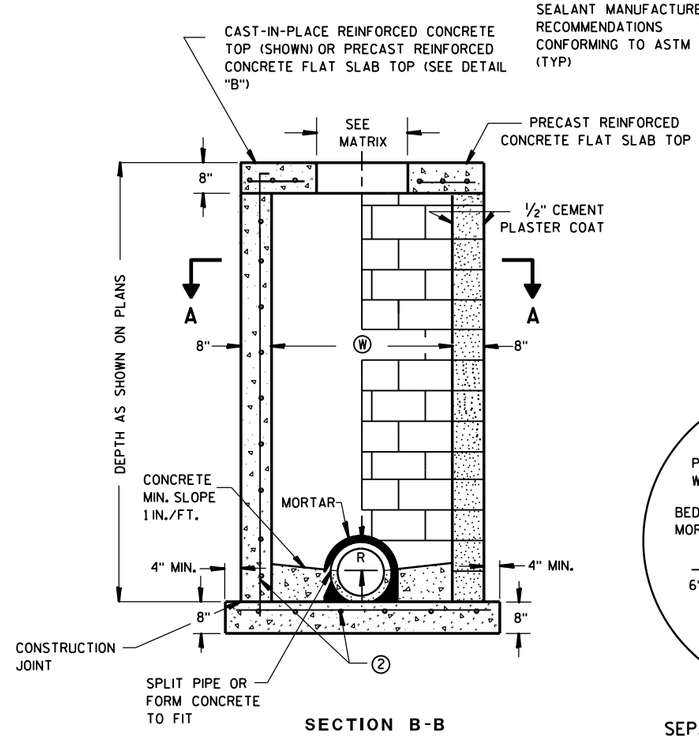

SECTION B-B

CAST-IN-PLACE REINFORCED CONCRETE

CONCRETE BLOCK WITH CAST-IN-PLACE OR PRECAST REINFORCED CONCRETE BASE

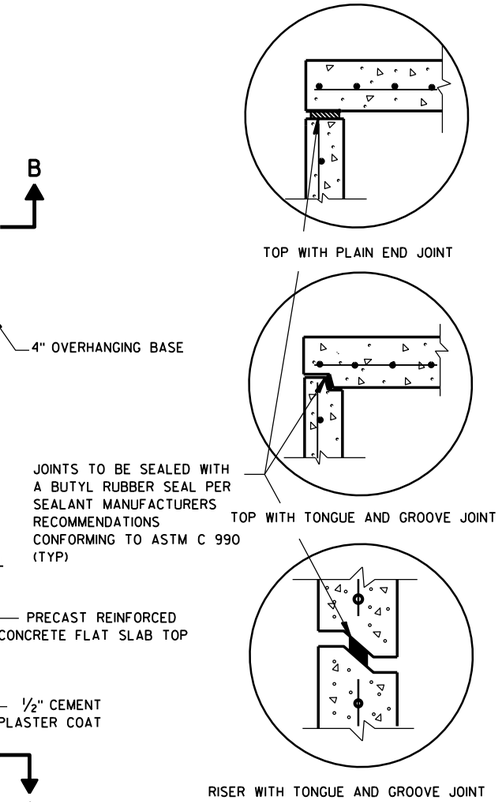

DETAIL "B"

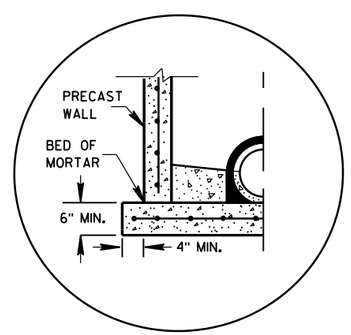

SEPARATE PRECAST REINFORCED CONCRETE BASE OPTION

DETAIL "A"

GENERAL NOTES

DETAILS OF CONSTRUCTION, MATERIALS AND WORKMANSHIP NOT SHOWN ON THIS DRAWING SHALL CONFORM TO THE PERTINENT REQUIREMENTS OF THE STANDARD SPECIFICATIONS AND THE APPLICABLE SPECIAL PROVISIONS.

UNLESS OTHERWISE AUTHORIZED IN WRITING BY THE ENGINEER, THE CONTRACTOR SHALL NOT ORDER AND DELIVER PRECAST MANHOLE UNITS REQUIRED FOR THE PROJECT UNTIL A LIST OF SIZES IS FURNISHED BY THE ENGINEER.

DETAILED DRAWINGS FOR PROPOSED ALTERNATE DESIGNS FOR UNDERGROUND DRAINAGE STRUCTURES SHALL BE SUBMITTED TO THE ENGINEER FOR APPROVAL PROVIDING THAT SUCH ALTERNATE DESIGNS MAKE PROVISION FOR EQUIVALENT CAPACITY AND STRENGTH.

ALL DRAINAGE STRUCTURES ARE DESIGNATED ON THE PLANS AS "MANHOLES 3X3-L", "CATCH BASINS 4-B", "INLETS 2X3-H", ETC. THE FIRST NUMBERS DESIGNATE THE SIZE OF THE STRUCTURE, AND THE FOLLOWING LETTER DESIGNATES THE TYPE OF COVER TO BE USED TO COMPRISE THE COMPLETE UNIT.

BASES SHALL BE PLACED ON A BED OF MATERIAL AT LEAST 6 INCHES IN DEPTH, WHICH MEETS THE REQUIREMENTS OF FOUNDATION BACKFILL. THIS BEDDING SHALL BE COMPACTED AND PROVIDE UNIFORM SUPPORT FOR THE ENTIRE AREA OF THE BASE.

PRECAST REINFORCED FLAT SLAB TOPS MAY BE USED ON CONCRETE BLOCK STRUCTURES.

STEPS MEETING AASHTO M199 AND THE FOLLOWING REQUIREMENTS SHALL BE INSTALLED IN ALL STRUCTURES OVER 5 FEET IN DEPTH: 16 INCH C-C MAXIMUM SPACING; PROJECT A MINIMUM CLEAR DISTANCE OF 4 INCHES FROM THE WALL AT THE POINT OF EMBEDMENT; MINIMUM LENGTH OF 10 INCHES; MINIMUM WALL EMBEDMENT OF 3 INCHES. FERROUS METAL STEPS NOT PAINTED OR TREATED TO RESIST CORROSION SHALL HAVE A MINIMUM CROSS SECTIONAL DIMENSION OF 1 INCH.

STEPS OF APPROVED POLYPROPYLENE PLASTIC COATED REINFORCEMENT BAR ARE ACCEPTABLE. REINFORCING BAR MUST BE A MINIMUM OF ½ INCH AND MEET THE REQUIREMENTS OF ASTM A615.

CERTIFICATION SHALL BE PROVIDED THAT INSTALLED STEPS WHEN TESTED IN ACCORDANCE WITH SECTION 10 OF AASHTO T280 CAN WITHSTAND A VERTICAL LOAD OF 800 LBS. AND A HORIZONTAL LOAD OF 400 LBS.

ALL BAR STEEL REINFORCEMENT SHALL BE EMBEDDED 2 INCHES CLEAR UNLESS OTHERWISE SHOWN OR NOTED.

CONCRETE BLOCK WILL NOT BE PERMITED FOR STRUCTURES GREATER THAN 4 FEET IN WIDTH.

PRECAST REINFORCED RISERS SHALL HAVE A TONGUE AND GROOVE JOINT WITH TONGUE UP OR DOWN.

ALL PRECAST MANHOLE UNITS SHALL CONFORM TO THE PERTINENT REQUIREMENTS OF ASTM C 913.

4" OVERHANGING BASES ARE REQUIRED FOR ALL CONCRETE BLOCK INSTALLATIONS. 4" OVERHANG IS REQUIRED WHEN SEPARATE PRECAST BASE IS PROVIDED. OVERHANG IS NOT REQUIRED ON PRECAST STRUCTURES WITH AN INTEGRAL OR MONOLITHIC BASE.

MAXIMUM PIPE DIAMETER DETERMINED BY 3 INCH CLEARANCE ON EACH SIDE OF THE OUTSIDE WALL OF THE PIPE. SEE DETAIL "C". ASSUMES PIPE ENTERS PERPENDICULAR TO THE STRUCTURE.

① FOR PRECAST MANHOLES PROVIDE REINFORCING STEEL IN ACCORDANCE TO ASTM C 913.

② CONTRACTOR TO PROVIDE DRAWING(S) STAMPED BY A PROFESSIONAL ENGINEER FOR STEEL REINFORCING DESIGN FOR CAST-IN-PLACE STRUCTURES.

MANHOLE COVER OPENING MATRIX

MANHOLE COVER TYPE	C	ALL J'S	K	L	M
OPENING SIZE (FT)					
2 DIA.	X	X		X	
3 DIA.			X		X

PIPE MATRIX

MANHOLE SIZE	MAXIMUM INSIDE PIPE DIAMETER	
	WIDTH (W) (IN)	LENGTH (L) (IN)
3X3-FT	24	24
4X4-FT	30	30
5X5-FT	42	42
6X6-FT	54	54

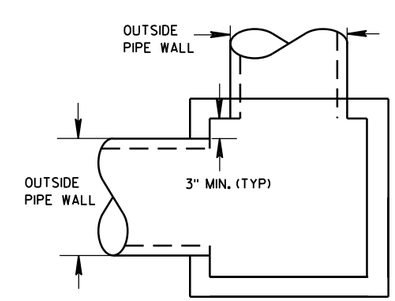

DETAIL "C"

SQUARE MANHOLES W/ FLAT TOP

MANHOLES 3X3-FT, 4X4-FT, 5X5-FT AND 6X6-FT

MANHOLES 3X3-FT, 4X4-FT
5X5-FT AND 6X6-FT

STATE OF WISCONSIN
DEPARTMENT OF TRANSPORTATION

APPROVED
Sept., 2016
DATE
FHWA

/S/ Rodney Taylor
ROADWAY STANDARDS DEVELOPMENT UNIT SUPERVISOR

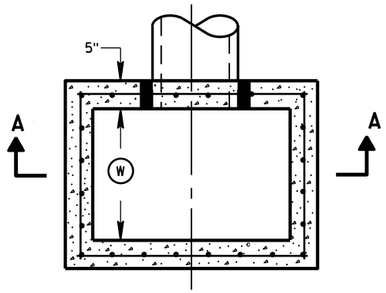

PLAN VIEW

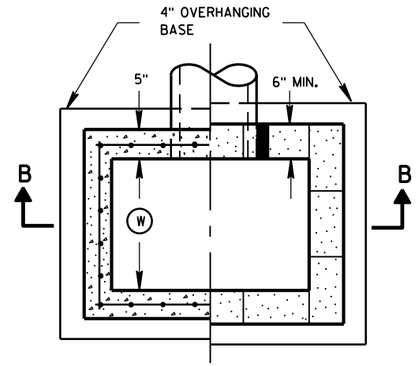

PLAN VIEW

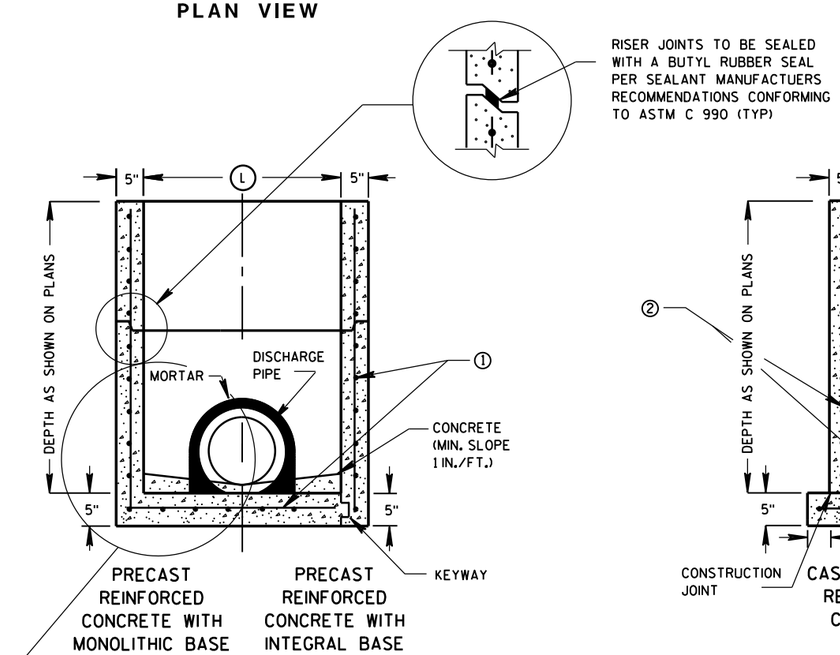

SECTION A-A

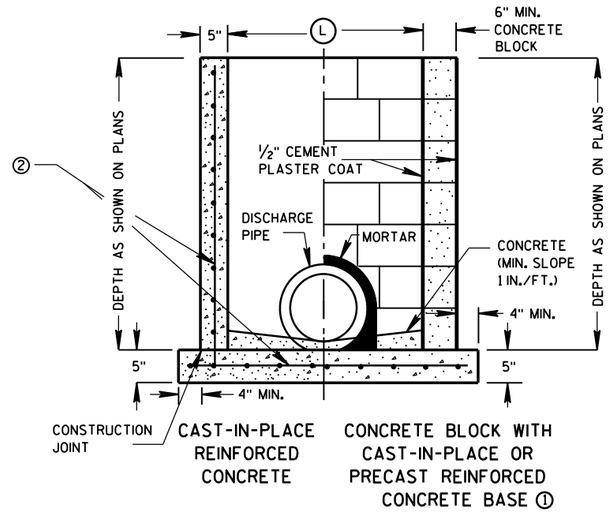

SECTION B-B

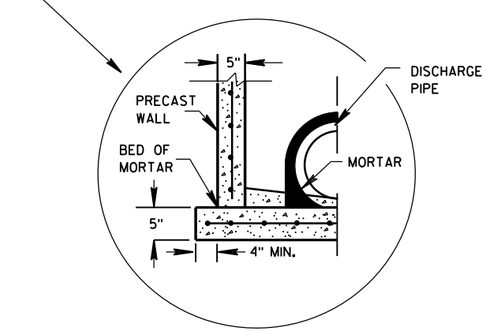

SEPARATE PRECAST REINFORCED CONCRETE BASE OPTION

GENERAL NOTES

DETAILS OF CONSTRUCTION, MATERIALS AND WORKMANSHIP NOT SHOWN ON THIS DRAWING SHALL CONFORM TO THE PERTINENT REQUIREMENTS OF THE STANDARD SPECIFICATIONS AND THE APPLICABLE SPECIAL PROVISIONS.

UNLESS OTHERWISE AUTHORIZED IN WRITING BY THE ENGINEER, THE CONTRACTOR SHALL NOT ORDER AND DELIVER PRECAST INLET UNITS REQUIRED FOR THE PROJECT UNTIL A LIST OF SIZES IS FURNISHED BY THE ENGINEER.

DETAILED DRAWINGS FOR PROPOSED ALTERNATE DESIGNS FOR UNDERGROUND DRAINAGE STRUCTURES SHALL BE SUBMITTED TO THE ENGINEER FOR APPROVAL PROVIDING THAT SUCH ALTERNATE DESIGNS MAKE PROVISION FOR EQUIVALENT CAPACITY AND STRENGTH.

ALL PRECAST INLET UNITS SHALL CONFORM TO THE PERTINENT REQUIREMENTS OF ASTM C 913.

ALL DRAINAGE STRUCTURES ARE DESIGNATED ON THE PLANS AS "MANHOLES 3X3-L", "CATCH BASINS 4-B", "INLETS 2X3-H", ETC. THE FIRST NUMBERS DESIGNATES THE SIZE OF THE STRUCTURE, AND THE FOLLOWING LETTER DESIGNATES THE TYPE OF COVER TO BE USED TO COMPRISE THE COMPLETE UNIT.

BASES SHALL BE PLACED ON A BED OF MATERIAL AT LEAST 6 INCHES IN DEPTH, WHICH MEETS THE REQUIREMENTS OF FOUNDATION BACKFILL. THIS BEDDING SHALL BE COMPACTED AND PROVIDE UNIFORM SUPPORT FOR THE ENTIRE AREA OF THE BASE.

ALL BAR STEEL REINFORCEMENT SHALL BE EMBEDDED 2 INCHES CLEAR UNLESS OTHERWISE SHOWN OR NOTED.

PRECAST REINFORCED RISERS SHALL HAVE A TONGUE AND GROOVE JOINT WITH TONGUE UP OR DOWN.

4" OVERHANGING BASES ARE REQUIRED FOR CAST-IN-PLACE REINFORCED CONCRETE AND CONCRETE BLOCK INSTALLATIONS.
4" OVERHANG IS REQUIRED WHEN SEPARATE PRECAST BASE IS PROVIDED.
OVERHANG IS NOT REQUIRED ON PRECAST STRUCTURES WITH AN INTEGRAL OR MONOLITHIC BASE.

MAXIMUM INSIDE PIPE DIAMETER DETERMINED BY 3 INCH CLEARANCE ON EACH SIDE OF THE OUTSIDE WALL OF THE PIPE. SEE DETAIL "A". ASSUMES PIPE ENTERS PERPENDICULAR TO THE STRUCTURE.

① FOR PRECAST INLETS PROVIDE REINFORCING STEEL IN ACCORDANCE TO ASTM C 913.

② CONTRACTOR TO PROVIDE DRAWING(S) STAMPED BY A PROFESSIONAL ENGINEER FOR STEEL REINFORCING DESIGN FOR CAST-IN-PLACE STRUCTURES.

INLET COVER MATRIX

INLET SIZE		INLET COVER TYPE	ALL A'S	ALL B'S	BW	F	ALL H'S	S	T	V	WM
	WIDTH Ⓦ (FT)	LENGTH Ⓛ (FT)									
2X2-FT	2	2	X	X				X		X	
2X2.5-FT	2	2.5			X			X	X	X	X
2X3-FT	2	3					X				
2.5X3-FT	2.5	3				X					

PIPE MATRIX

INLET SIZE	MAXIMUM INSIDE PIPE DIAMETER	
	WIDTH (IN)	LENGTH (IN)
2X2-FT	12	12
2X2.5-FT	12	18
2X3-FT	12	24
2.5X3-FT	18	24

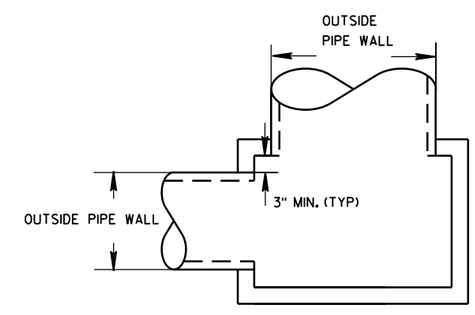

DETAIL "A"

INLETS 2X2-FT, 2X2.5-FT, 2X3-FT AND 2.5X3-FT

INLETS 2X2-FT, 2X2.5-FT, 2X3-FT AND 2.5X3-FT

STATE OF WISCONSIN
DEPARTMENT OF TRANSPORTATION

APPROVED
Sept., 2016 — DATE
/S/ Rodney Taylor — ROADWAY STANDARDS DEVELOPMENT UNIT SUPERVISOR
FHWA

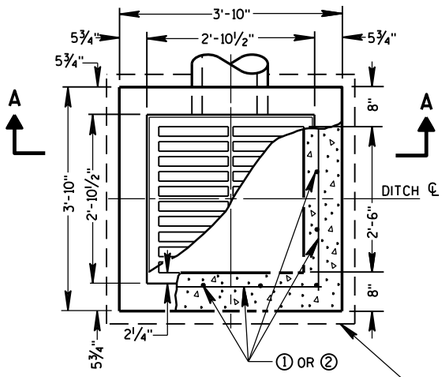

PLAN VIEW

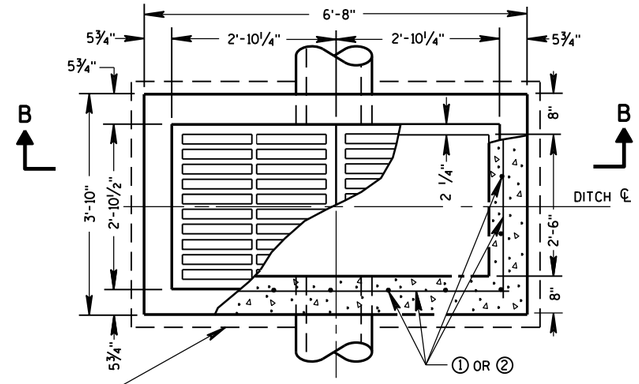

PLAN VIEW

4" OVERHANGING BASE ON REINFORCED CAST-IN-PLACE CONCRETE INLETS

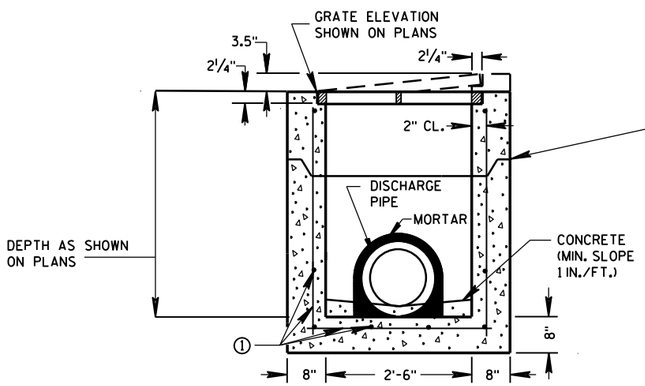

PRECAST REINFORCED CONCRETE SECTION A-A

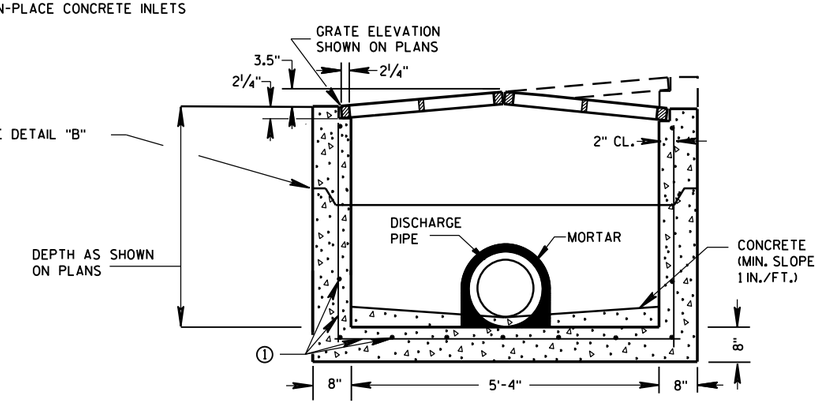

PRECAST REINFORCED CONCRETE SECTION B-B

GENERAL NOTES

DETAILS OF CONSTRUCTION, MATERIALS AND WORKMANSHIP NOT SHOWN ON THIS DRAWING SHALL CONFORM TO THE PERTINENT REQUIREMENTS OF THE STANDARD SPECIFICATIONS AND THE APPLICABLE SPECIAL PROVISIONS.

UNLESS OTHERWISE AUTHORIZED IN WRITING BY THE ENGINEER, THE CONTRACTOR SHALL NOT ORDER AND DELIVER PRECAST INLET UNITS REQUIRED FOR THE PROJECT UNTIL A LIST OF SIZES IS FURNISHED BY THE ENGINEER.

DETAILED DRAWINGS FOR PROPOSED ALTERNATE DESIGNS FOR INLETS WHICH MAY INCLUDE PRECAST REINFORCED CONCRETE INLETS, SHALL BE SUBMITTED TO THE ENGINEER FOR APPROVAL PROVIDING THAT SUCH ALTERNATE DESIGNS MAKE PROVISION FOR EQUIVALENT CAPACITY AND STRENGTH.

ALL MEDIAN INLETS ARE DESIGNATED ON THE PLANS AS "INLETS, 1G-MS", ETC. THE FIRST NUMBER AND LETTER DESIGNATE THE TYPE OF STRUCTURE, AND THE FOLLOWING LETTERS DESIGNATE THE TYPE OF COVER TO BE USED TO COMPRISE THE COMPLETE UNIT.

BASES SHALL BE PLACED ON A BED OF MATERIAL AT LEAST 6 INCHES IN DEPTH, WHICH MEETS THE REQUIREMENTS OF FOUNDATION BACKFILL. THIS BEDDING SHALL BE COMPACTED AND PROVIDE UNIFORM SUPPORT FOR THE ENTIRE AREA OF THE BASE.

ALL BAR STEEL REINFORCEMENT SHALL BE EMBEDDED 2 INCHES CLEAR UNLESS OTHERWISE SHOWN OR NOTED.

PRECAST REINFORCED RISERS SHALL HAVE A TONGUE AND GROOVE JOINT WITH TONGUE UP OR DOWN.

ALL PRECAST INLET UNITS SHALL CONFORM TO THE PERTINENT REQUIREMENTS OF ASTM C 913.

MAXIMUM INSIDE PIPE DIAMETER DETERMINED BY 3" CLEARANCE ON EACH SIDE OF THE OUTSIDE WALL OF THE PIPE. SEE DETAIL "A". ASSUMES PIPE ENTERS PERPENDICULAR TO THE STRUCTURE.

① FOR PRECAST INLETS PROVIDE REINFORCING STEEL IN ACCORDANCE TO ASTM C 913.

② CONTRACTOR TO PROVIDE DRAWING(S) STAMPED BY A PROFESSIONAL ENGINEER FOR STEEL REINFORCING DESIGN FOR CAST-IN-PLACE STRUCTURES.

PIPE MATRIX

	MAXIMUM INSIDE PIPE DIAMETER	
INLET SIZE	WIDTH (IN)	LENGTH (IN)
1 GRATE	18	18
2 GRATE	18	42

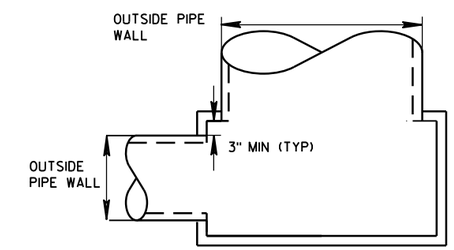

DETAIL "A"

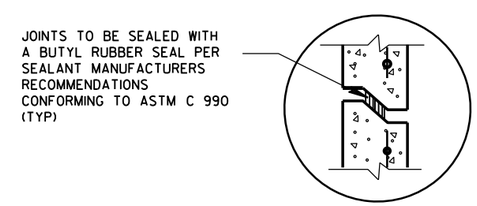

DETAIL "B"

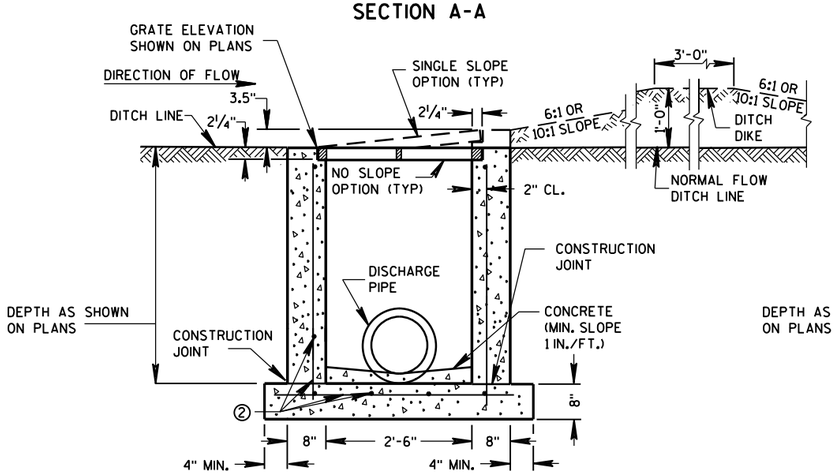

REINFORCED CAST-IN-PLACE CONCRETE SECTION A-A

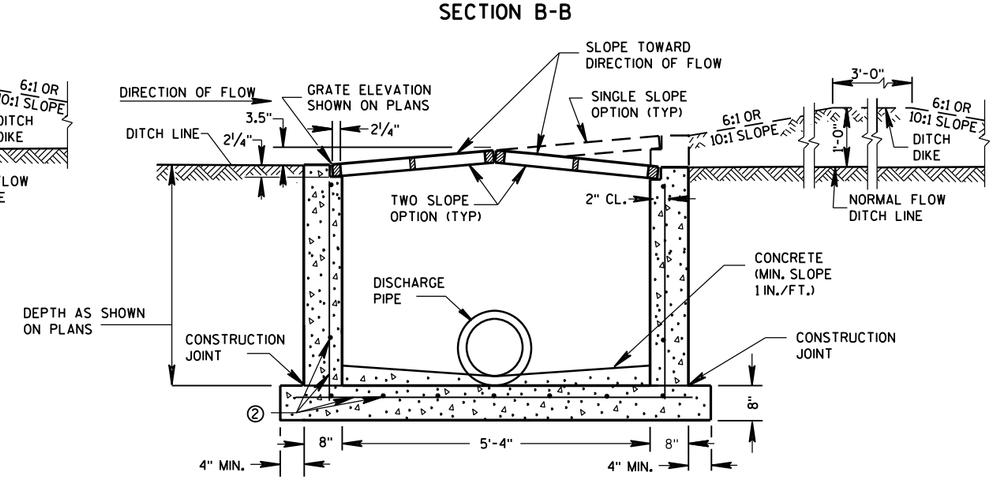

REINFORCED CAST-IN-PLACE CONCRETE SECTION B-B

INLETS MEDIAN 1 GRATE

INLETS MEDIAN 2 GRATE

INLETS MEDIAN 1 AND 2 GRATE

STATE OF WISCONSIN
DEPARTMENT OF TRANSPORTATION

APPROVED
Sept., 2016 — DATE
/S/ Rodney Taylor — ROADWAY STANDARDS DEVELOPMENT UNIT SUPERVISOR
FHWA

6
S.D.D. 8 C 8-2

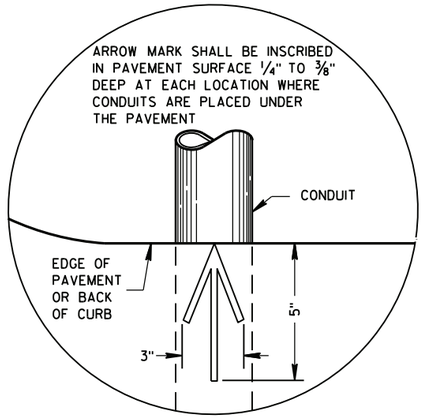

PLAN VIEW

ARROW MARK

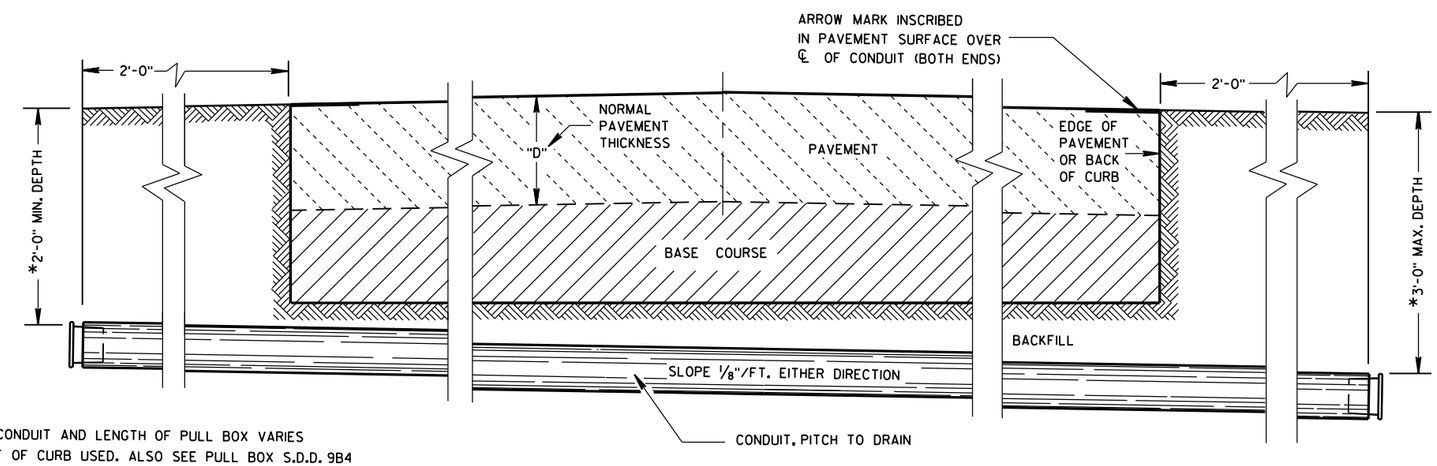

*DEPTH OF CONDUIT AND LENGTH OF PULL BOX VARIES WITH HEIGHT OF CURB USED. ALSO SEE PULL BOX S.D.D. 9B4

SIDE ELEVATION

DETAIL FOR CONDUIT UNDER PAVED HIGHWAYS

GENERAL NOTES

DETAILS OF CONSTRUCTION, MATERIALS AND WORKMANSHIP NOT SHOWN ON THIS DRAWING SHALL CONFORM TO THE PERTINENT REQUIREMENTS OF THE CONTRACT.

METALLIC (STANDARD SPECIFICATION 652.2.2) OR NONMETALLIC (STANDARD SPECIFICATION 652.2.3) CONDUIT SHALL BE FURNISHED AND PLACED AS SHOWN.

DEPTH OF CONDUIT INSTALLED BELOW THE TRAVELED WAY SHALL BE 24 INCHES MINIMUM AND 36 INCHES MAXIMUM.

DEPTH OF CONDUIT INSTALLED THAT IS NOT BELOW THE TRAVELED WAY SHALL BE 18 INCHES MINIMUM AND 36 INCHES MAXIMUM.

ANY EXCEPTION TO THE MAXIMUM DEPTH SHALL BE ONLY WITH THE WRITTEN APPROVAL OF THE ENGINEER.

THE TRENCH SHALL NOT BE BACKFILLED PRIOR TO INSPECTION OF THE CONDUIT.

ALL METALLIC CONDUIT RACEWAY ENDS SHALL BE REAMED AND THREADED.

ALL METALLIC CONDUIT IN WHICH WIRE OR CABLE IS TO BE INSTALLED SHALL BE BUSHED WITH APPROVED THREADED BUSHINGS BEFORE INSTALLATION OF THE WIRE OR CABLE.

ALL METALLIC CONDUITS IN WHICH WIRE OR CABLE IS NOT TO BE INSTALLED SHALL BE CAPPED WITH THREADED PROTECTIVE CAPS, AS APPROVED BY THE ENGINEER.

ALL NONMETALLIC CONDUIT SHALL BE CAPPED OR PLUGGED IMMEDIATELY AFTER INSTALLATION AND SHALL REMAIN CAPPED OR PLUGGED UNTIL WIRE/CABLES ARE INSTALLED.

NONMETALLIC CONDUITS IN WHICH WIRE OR CABLE IS NOT BEING INSTALLED SHALL REMAIN CAPPED OR PLUGGED.

BENDING OF PVC ELECTRICAL CONDUIT SHALL BE ACCOMPLISHED BY USING A BLANKET OR EMERSION TYPE TANK DESIGNED FOR THE PURPOSE OF BENDING PVC ELECTRICAL CONDUIT.

ALL CUT ENDS SHALL BE TRIMMED INSIDE AND OUTSIDE TO REMOVE ALL ROUGH EDGES ON NONMETALLIC CONDUIT. (SEE NEC 347.5)

WHEN REQUIRED TO CONNECT NONMETALLIC CONDUIT TO METALLIC CONDUIT, ONLY U.L. LISTED ADAPTER FITTINGS SHALL BE USED.

PRIOR TO CONDUIT ACCEPTANCE, CONDUIT CAPS OR PLUGS SHALL BE REMOVED, AND THE CAPS, PLUGS AND CONDUIT ENDS SHALL BE THOROUGHLY CLEANED AND THEN THE CAPS OR PLUGS REINSTALLED TO ENSURE THAT THE CAPS OR PLUGS CAN BE EASILY REMOVED IN THE FUTURE.

ALL CONDUIT BEING FURNISHED AND INSTALLED SHALL HAVE THE U.L. LABEL FIRMLY ATTACHED.

CONDUIT RUNS SHALL BE THE SAME SIZE OF CONDUIT FROM ONE END TO THE OTHER (FROM PULL BOX TO PULL BOX-OR-JUNCTION BOX TO JUNCTION BOX-OR-BASE TO BASE, ETC.).

TRACER WIRE SHALL BE INSTALLED AS STATED IN THE STANDARD SPECIFICATION, ITEM 652.3.1.1.

ALL CONDUIT RUNS SHALL BE STRAIGHT (WITHOUT BENDS) FROM PULL BOX TO PULL BOX, PULL BOX TO BASE AND BASE TO BASE AS SHOWN ON THE PLANS.

CONDUIT

STATE OF WISCONSIN
DEPARTMENT OF TRANSPORTATION

APPROVED
March, 2017 — /S/ Ahmet Demirbilek
DATE — STATE ELECTRICAL ENGINEER
FHWA

6
S.D.D. 9 B 2-10

TABLE OF NOMINAL DIMENSIONS AND WEIGHTS

DIMENSION IN INCHES		NON-CONDUCTIVE PULL BOX	
BOX DIAMETER ** (INSIDE)	A	24	24
BOX OVERALL OUTSIDE DIAMETER	B	27	27
BOX LENGTH	C	36	42
FRAME OPENING	D	22 1/2	22 1/2
WEIGHT IN POUNDS *			
COVER		50	50
BOX ONLY		75	85

* THE ACTUAL WEIGHT OF THE COVER OR BOX ONLY MAY VARY NOT TO EXCEED 100 LBS INDIVIDUALLY.

** DIAMETER VARIES FROM TOP TO BOTTOM WITH THE DIAMETER LARGER AT THE BOTTOM TO PREVENT FROST HEAVE

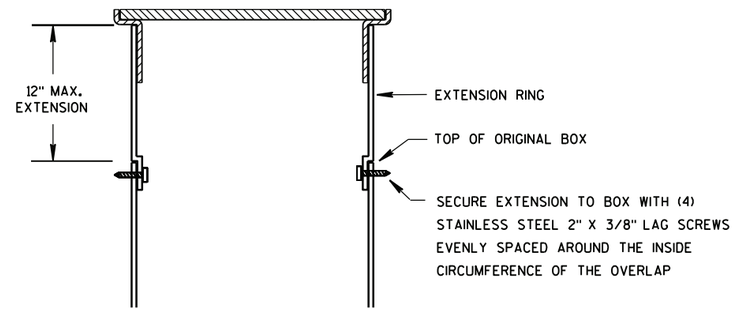

BOX EXTENSION

INSTALLED IN SOD OR CRUSHED AGGREGATE

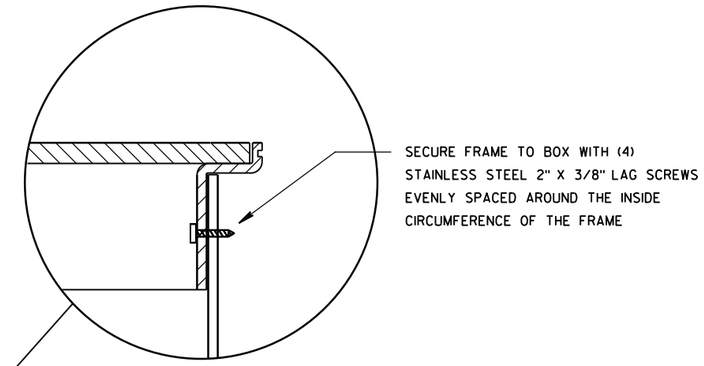

INSTALLED IN SIDEWALK

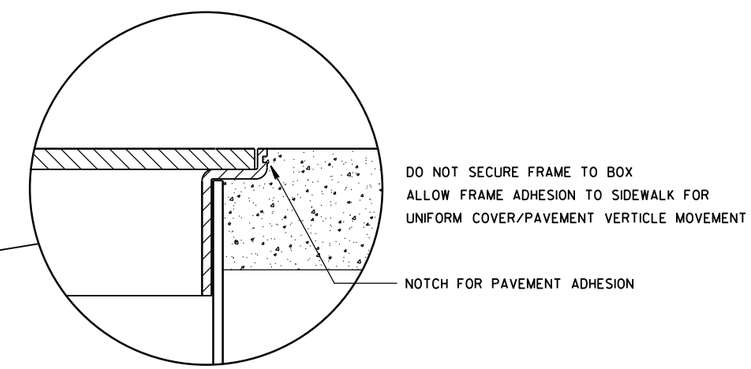

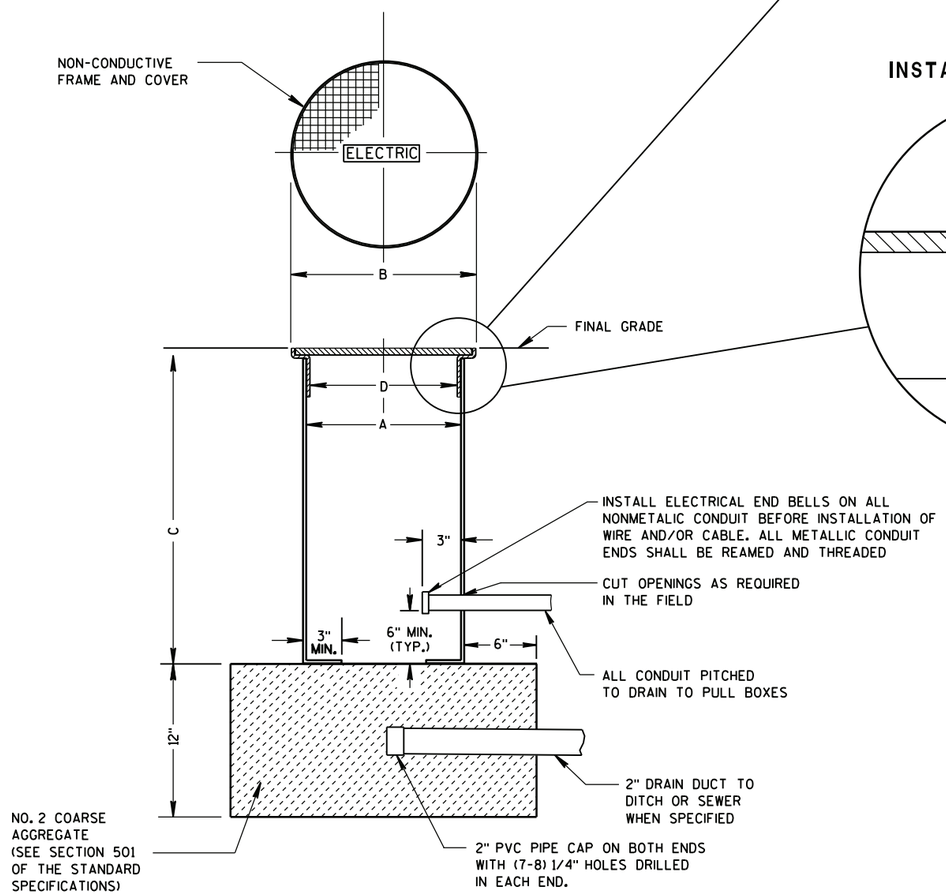

NON-CONDUCTIVE PULL BOX

GENERAL NOTES

DETAILS OF CONSTRUCTION, MATERIALS AND WORKMANSHIP NOT SHOWN ON THIS DRAWING SHALL CONFORM TO THE PERTINENT REQUIREMENTS OF THE CONTRACT.

ALL BOXES, FRAMES AND COVERS SHALL BE SUITABLE FOR TIER 15 LOADING AS SPECIFIED IN ANSI/SCTE 77.

PROVIDE AN OPENING FOR TOOL ASSISTED COVER REMOVAL NOT LARGE ENOUGH TO PERMIT PASSAGE OF A SPHERE MORE THAN 1/2" DIAMETER

ENSURE COVER SURFACE IS SKID RESISTANT WITH A COEFFICIENT OF FRICTION OF AT LEAST 0.5 AND VERTICAL SURFACE DICONTINUITIES LESS THAN 1/4".

COVER SHALL BE MAGNETICALLY LOCATABLE.

BOXES AND EXTENSIONS ARE TRIMMABLE FOR CUSTOM LENGTHS. TRIMMED PIECES SHALL MAINTAIN A UNIFORM LENGTH.

ENTRANCE HOLES INTO PULL BOXES SHALL BE CUT WITH A CIRCULAR HOLE SAW OR HYDRAULIC CONDUIT PUNCH. HOLE SIZE SHALL BE THE OUTSIDE DIAMETER OF THE CONDUIT THAT IS TO FIT IN THE OPENING PLUS NO MORE THAN 1/4".

THE CONTRACTOR SHALL NOT INSTALL WIRE IN ANY PULL BOX UNTIL ITS INSTALLATION HAS BEEN INSPECTED AND ACCEPTED BY THE ENGINEER.

ALL METALLIC CONDUIT IN WHICH WIRE AND/OR CABLE IS TO BE INSTALLED, SHALL BE BUSHED BEFORE INSTALLATION OF THE WIRE AND/OR CABLE.

ENTIRE BOX MUST BE CONSTRUCTED OF NON-CONDUCTIVE MATERIALS WITH THE EXCEPTION OF STAINLESS STEEL FASTENERS AND MAGNETIC LOCATABLE DEVICE.

WHEN A PULL BOX IS INSTALLED IN CRUSHED AGGREGATE SHOULDERS, PLACE IT 2-3 INCHES BELOW GRADE AND COVER IT WITH 2-3 INCHES OF CRUSHED AGGREGATE

LABEL ON COVER SHALL READ "ELECTRIC" FOR SIGNAL AND LIGHTING SYSTEMS, "WISDOT ITS" FOR COMMUNICATIONS AND ITS EQUIPMENT SYSTEMS.

PULL BOX
NON-CONDUCTIVE

STATE OF WISCONSIN
DEPARTMENT OF TRANSPORTATION

APPROVED
May 2017 — DATE
/S/ Ahmet Demirbilek — STATE ELECTRICAL ENGINEER
FHWA

6
S.D.D. 9 B 16-1

SDD 9C2 Concrete Bases, Types 1, 2, 5 & 6

FORM DEPTH SHALL BE NO MORE THAN 6" BELOW GRADE ON THE LOWER SIDE OF BASE

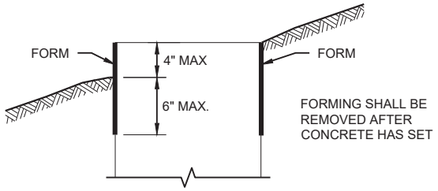

FORMING DETAIL

QUANTITY REQUIREMENTS	CONCRETE BASE TYPE		
	1	2	5 & 6
APPROX. CUBIC YARDS OF CONCRETE	0.40	0.57	0.40
LBS. OF HOOP BAR STEEL	NONE	23	16
LBS. OF VERTICAL BAR STEEL	NONE	60	18

GENERAL NOTES

DETAILS OF CONSTRUCTION, MATERIALS AND WORKMANSHIP NOT SHOWN ON THIS DRAWINGSHALL CONFORM TO THE PERTINENT REQUIREMENTS OF THE CONTRACT.

BASES SHALL BE EXCAVATED BY USE OF A CIRCULAR AUGER.

TOP SURFACES OF CONCRETE BASES SHALL BE TROWEL FINISHED SMOOTH AND LEVEL.

CONDUIT SIZES AND LOCATIONS SHALL BE SHOWN ON THE PLANS

THE FINAL OR TERMINATING CONCRETE BASE IN A CONDUIT RUN SHALL HAVE A 6" EXIT STUB INSTALLED FOR FUTURE CABLING USE. THE EXIT STUB SHALL BE SIZED AS USED THROUGHOUT THE CONDUIT RUN AS SHOWN A THE ENTRANCE OF THE BASE.

ENDS OF CONDUIT INSTALLED BELOW GRADE FRO FUTURE USE SHALL BE CAPPED IF METALLIC OR PLUGGED IF NON-METALLIC.

MINIMUM BENDING RADIUS OF CONDUIT IS EQUAL TO 6X THE DIAMETER.

CONDUIT HEIGHT ABOVE CONCRETE BASES SHALL BE 1 INCH. ALL METALLIC CONDUIT ENDS SHALL BE REAMED AND THREADED.

ALL CONDUIT ENDS AT THE TOP OF CONCRETE BASES SHALL BE CAPPED IF METALLIC OR PLUGGED IF NON-METALLIC IMMEDIATELY AFTER PLACEMENT AND BEFORE CONCRETE IS POURED. CONDUITS IN WHICH WIRE OR CABLE IS NOT INSTALLED SHALL REMAIN CAPPED OR PLUGGED.

BELL BENDS SHALL BE INSTALLED ON ALL PVC CONDUIT EXPOSED AT THE TOP OF CONCRETE BASES BEFORE INSTALLATION.

WHEN REQUIRED TO CONNECT NON-METALLIC CONDUIT TO METALLIC CONDUIT, ONLY ADAPTER FITTINGS, U.L. LISTED FOR ELECTRICAL USE, SHALL BE USED.

IF A BASE REQUIRES A DEEP FORM BECAUSE OF LOOSE DIRT OR FILL, THE FORM SHALL BE REMOVED BEFORE BACKFILLING AROUND THE BASE. BACKFILL SHALL BE TAMPED TIGHT AGAINST THE BARE CONCRETE BASE IN LAYERS OF 1 FOOT OR LESS.

A NO. 4 AWG STRANDED COPPER EQUIPMENT GROUNDING CONDUCTOR SHALL BE EXOTHERMICALLY WELDED TO THE EQUIPMENT GROUNDING ELECTRODE (GROUND ROD) FOR TYPE 2, TYPE 5 AND TYPE 6 BASES.

THE EQUIPMENT GROUNDING CONDUCTOR SHALL BE FURNISHED AND INSTALLED TO ENTER ALL BASE TYPES THROUGH A 1 INCH CONDUIT INSTALLED FOR GROUNDING PURPOSES, LEAVING A 4 FOOT COIL OF WIRE ABOVE THE CONCRETE BASE. THE EQUIPMENT GROUNDING CONDUCTOR SHALL BE NEATLY COILED AND THE COILS TIED TOGETHER.

ANCHOR RODS SHALL BE THREADED 12" IN LENGTH ON EACH END OF THE ROD. ANCHOR RODS SHALL BE MANUFACTURED IN ACCORDANCE WITH SECTION 654.2.1 OF THE STANDARD SPECIFICATIONS.

WASHERS AND LOCK WASHERS ARE REQUIRED ON ALL ANCHOR RODS.

WHEN ANCHOR RODS USING THE ALTERNATE "L" BEND ARE FURNISHED, THE 4 INCH"L" BEND SHALL BE IN ADDITION TO THE SPECIFIED ANCHOR ROD BAR LENGTH. THE "L" BEND SHALL NOT BE THREADED.

ANCHOR RODS SHALL BE INSTALLED WITH MISALIGNMENTS OF LESS THAN 1:40 FROM VERTICAL.

WELDING OF THE ANCHOR RODS TO THE CAGE IS UNACCEPTABLE. TIE WIRES SHALL BE USED.

BAR STEEL REINFORCEMENT SHALL BE COATED WITH POWDERED EPOXY RESIN IN ACCORDANCE WITH SECTION 505 OF THE STANDARD SPECIFICATIONS (LATEST EDITION).

1. THE MINIMUM DEPTH OF CONDUIT EXITING THE CONCRETE BASE AND INSTALLED BELOW THE TRAVELED WAY SHALL BE 24 INCHES. THE MINIMUM DEPTH OF CONDUIT EXITING THE CONCRETE BASE THAT IS NOT INSTALLED BELOW THE TRAVELED WAY SHALL BE 18 INCHES. THE MAXIMUM DEPTH OF ALL CONDUIT SHALL BE 36 INCHES EXCEPT WITH WRITTEN APPROVAL OF THE ENGINEER.
2. (4) 1" DIA. X 3' - 6" ANCHOR RODS.
3. (4) 1" DIA. X 5' - 0" ANCHOR RODS.
4. (6) NO. 6 X 6' - 8" BAR STEEL REINFORCEMENT.
5. (7) NO. 4 X 5' - 1" BAR STEEL REINFORCEMENT @ 1' - 0" C - C.
6. (4) 1" DIA. X 3' - 6" ANCHOR RODS.
7. (6) NO. 4 X 4' - 8" BAR STEEL REINFORCEMENT.
8. (5) NO. 4 X 5' - 1" BAR STELL REINFORCEMENT @ 1' - 0" C -C.
9. EXOTHERMIC CONNECTION TO EUIPMENT GROUNDING CONDUCTOR
10. ⅝" DIA. X 8' -0" COPPERCLAD EQUIPMENT GROUNDING ELECTRODE REQUIRED
11. ANY ANCHOR ROD PROJECTION SHORTER THAN 2 ¾" OR LONGER THAN 3 ¼" SHALL REQUIRE THE BASE TO BE REMOVED AND REPLACED AT THE CONTRACTORS EXPENSE.
12. FOR NON - BREAKAWAY INSTALLATIONS, 4 ½" ± ANCHOR ROD PROJECTION WITH THE USE OF LEVELING NUTS. RODENT SCREEN REQUIRED.

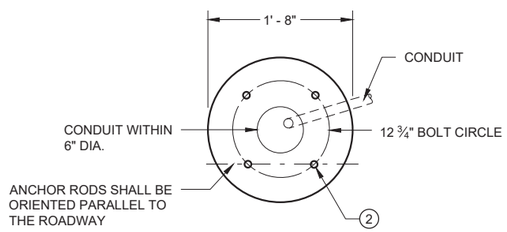

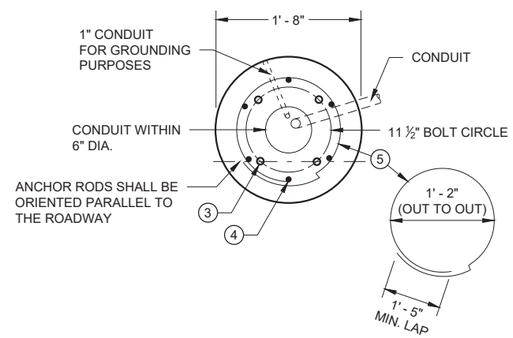

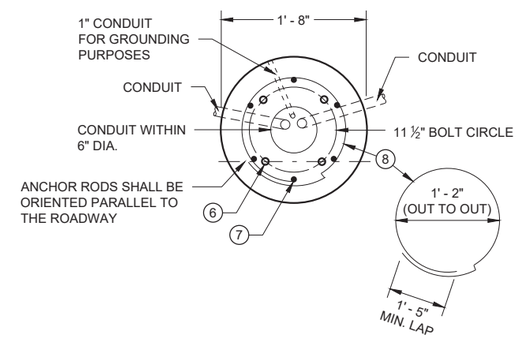

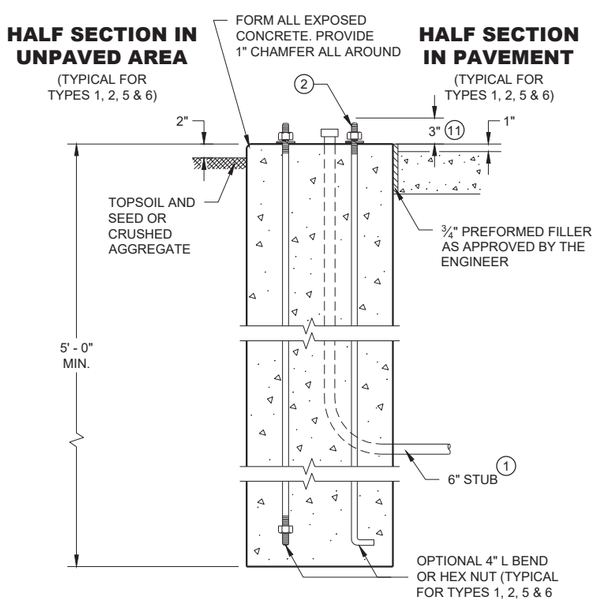

TYPE 1

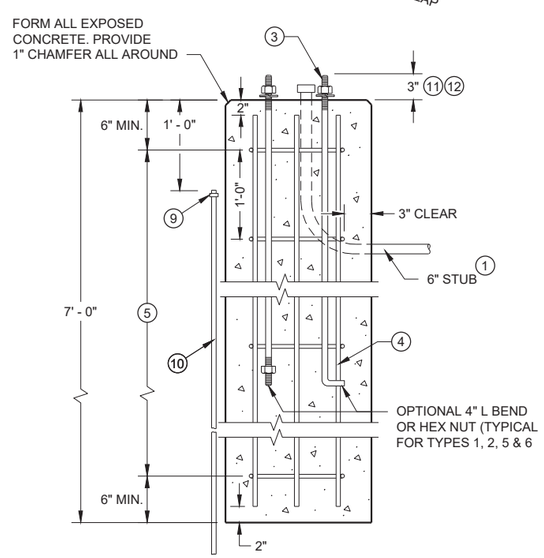

TYPE 2

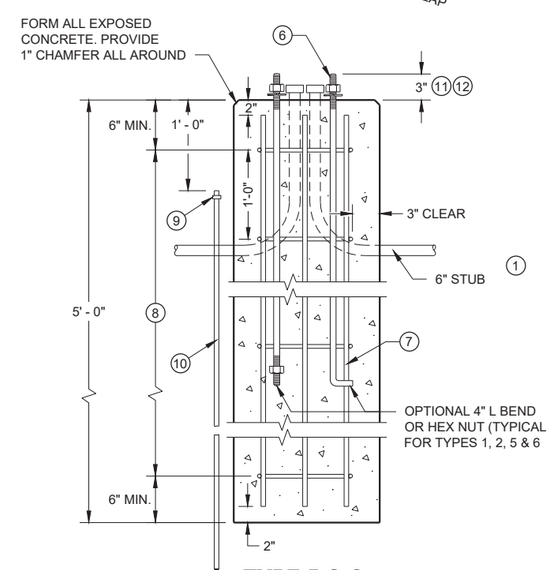

TYPE 5 & 6

CONCRETE BASES

CONCRETE BASES
TYPES 1, 2, 5, & 6

STATE OF WISCONSIN
DEPARTMENT OF TRANSPORTATION

APPROVED
May 2019 — DATE
/S/ Ahmet Demirbilek — STATE ELECTRICAL ENGINEER

FHWA

6

SDD 09C02 - 09

6

SDD 09C02 - 09

GENERAL NOTES

DETAILS OF CONSTRUCTION, MATERIALS AND WORKMANSHIP NOT SHOWN ON THIS DRAWING SHALL CONFORM TO THE PERTINENT REQUIREMENTS OF THE CONTRACT.

FOUR (4) BOLTS SHALL BE FURNISHED WITH EACH TRANSFORMER BASE. BOLTS SHALL BE 1" DIAMETER, 4" IN LENGTH, WITH WASHERS, LOCK WASHERS AND NUTS. BOLTS, NUTS AND WASHERS SHALL BE MANUFACTURED IN ACCORDANCE WITH SECTION 641.2.2 OF THE STANDARD SPECIFICATIONS.

LEVELING SHIMS, IF NEEDED, SHALL BE DESIGNED FOR THE PURPOSE AND USED UNDER CAST BASES WHEN PLUMBING POLES OR STANDARDS DURING INSTALLATION. THE USE OF WASHERS IN LIEU OF PROPER LEVELING SHIMS IS NOT ACCEPTABLE.

SHIM LENGTH SHALL BE LONG ENOUGH TO COMPLETELY COVER THE AREA UNDER THE LENGTH AND WIDTH OF THE BASE MOUNTING FLANGE.

DOUBLE NUTTING IS NOT ACCEPTABLE FOR LEVELING OR MOUNTING PURPOSES.

A NEMA APPROVED, U.L. LISTED, COPPER WITH BRASS OR STAINLESS STEEL SET SCREW, DIRECT BURY RATED, MECHANICAL CONNECTOR (LUG), SIZED TO ACCEPT AWG. #10 TO #4 COPPER STRANDED WIRE SHALL BE FURNISHED AND INSTALLED IN THE PEDESTAL AND TRANSFORMER BASES.

THE MECHANICAL CONNECTOR SHALL BE INSTALLED USING A 1/4" - 20 (TPI) STAINLESS STEEL HEX HEAD BOLT OF SUFFICIENT LENGTH TO FIRMLY ATTACH THE LUG TO THE BASE.

SHOULD THE MANNER OF ATTACHMENT OF THE LUG REQUIRE WASHERS, HEX NUTS, LOCK WASHER - THEY SHALL BE STAINLESS STEEL AS IS THE BOLT. THE MANNER OF ATTACHMENT SHALL NOT BLOCK ACCESSIBILITY TO WIRE PLACEMENT IN THE CONNECTOR.

PEDESTAL BASE COLLAR THREADING SHALL BE TAPERED AND IN ACCORDANCE WITH NATIONAL PIPE THREADING DIMENSIONS.

BASE COLLAR THREADING SHALL EXTEND INTO THE BASE COLLAR WITH SUFFICIENT DEPTH TO ACCEPT THE INSTALLATION OF TRAFFIC SIGNAL STANDARDS TO A DEPTH OF 1 1/2", THEN TIGHTENING TO A POINT OF BEING IMMOVABLE.

THE ACCESS DOOR SHALL BE OF THE SAME MATERIAL AS THE BASE.

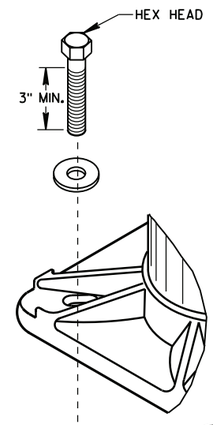

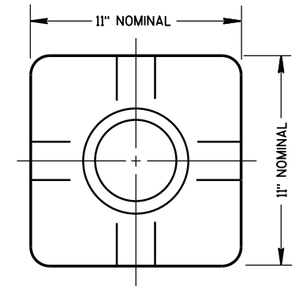

TOP VIEW
(PEDESTAL BASE)

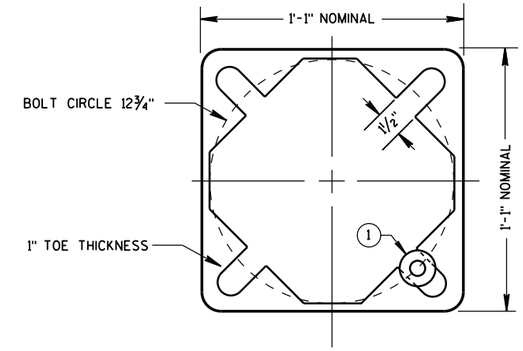

BOTTOM VIEW
(PEDESTAL BASE)

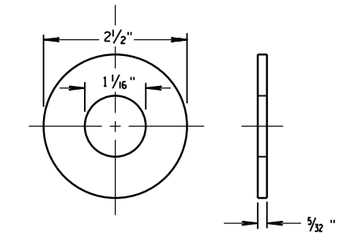

ZINC COATED STEEL WASHER
TO BE PROVIDED BY THE CONTRACTOR

PEDESTAL BASE WASHER (1)

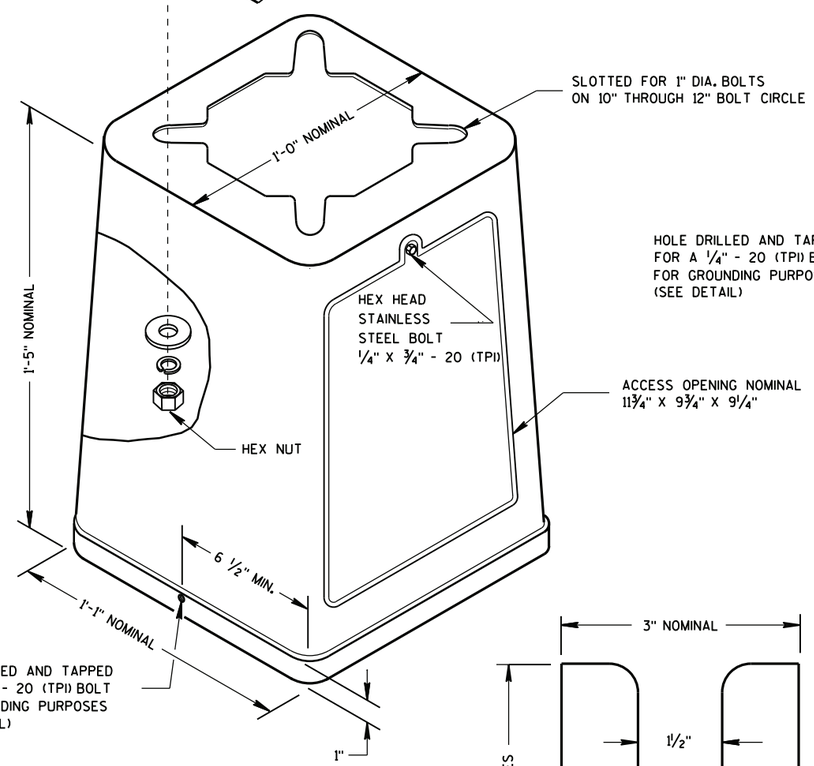

ISOMETRIC VIEW

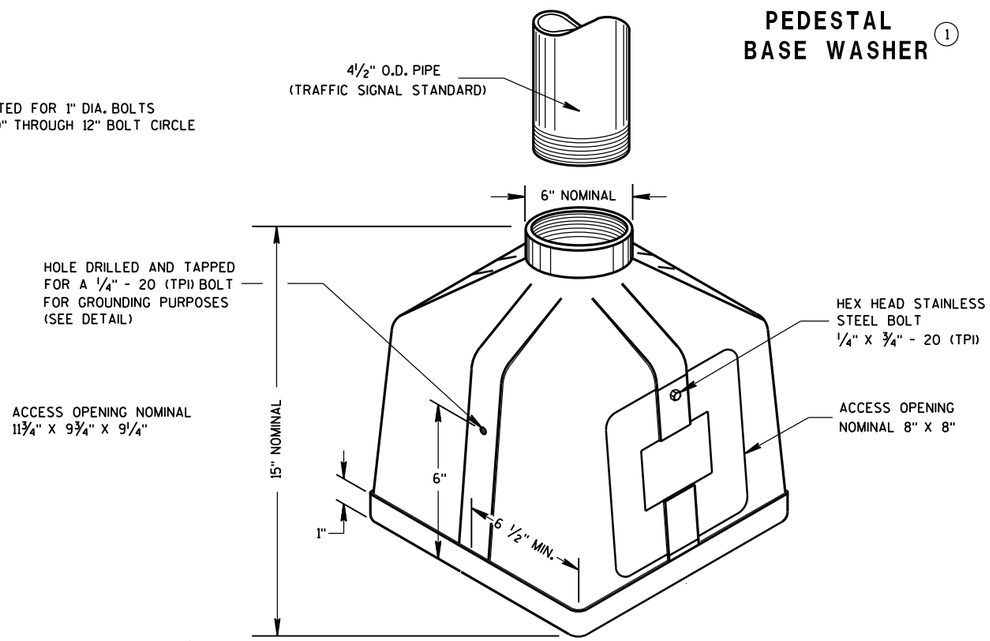

ISOMETRIC VIEW

PEDESTAL BASE

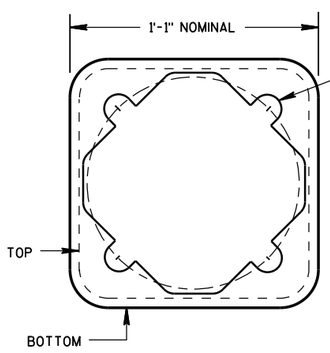

BOTTOM VIEW
(TRANSFORMER BASE)

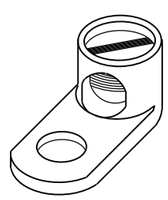

TYPICAL MECHANICAL CONNECTOR LUG

TO BE FURNISHED WITH EACH BASE

TRANSFORMER BASE

INTENDED FOR USE WITH TYPE 2, 3, 4, 5 & 6 POLES

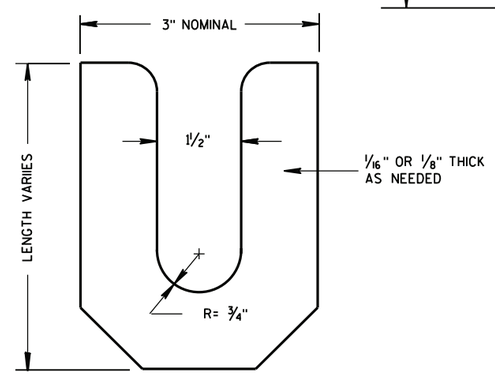

LEVELING SHIM

TRANSFORMER/PEDESTAL BASES	
STATE OF WISCONSIN DEPARTMENT OF TRANSPORTATION	
APPROVED Sept. 2014 DATE FHWA	/S/ Ahmet Demirbilek STATE ELECTRICAL ENGINEER

6

6

S.D.D. 9 C 3-4

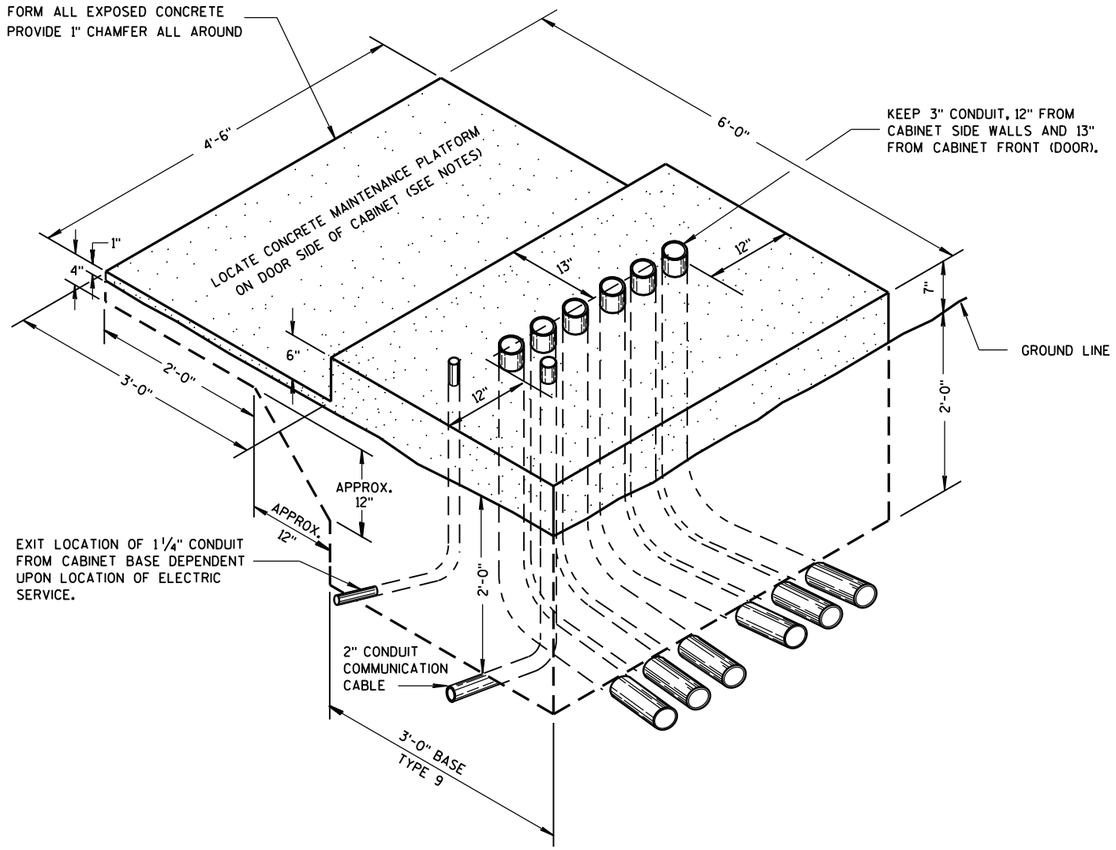

ISOMETRIC VIEW

TYPE 9, SPECIAL

(C.Y. CONCRETE = APPROX. 1.56)

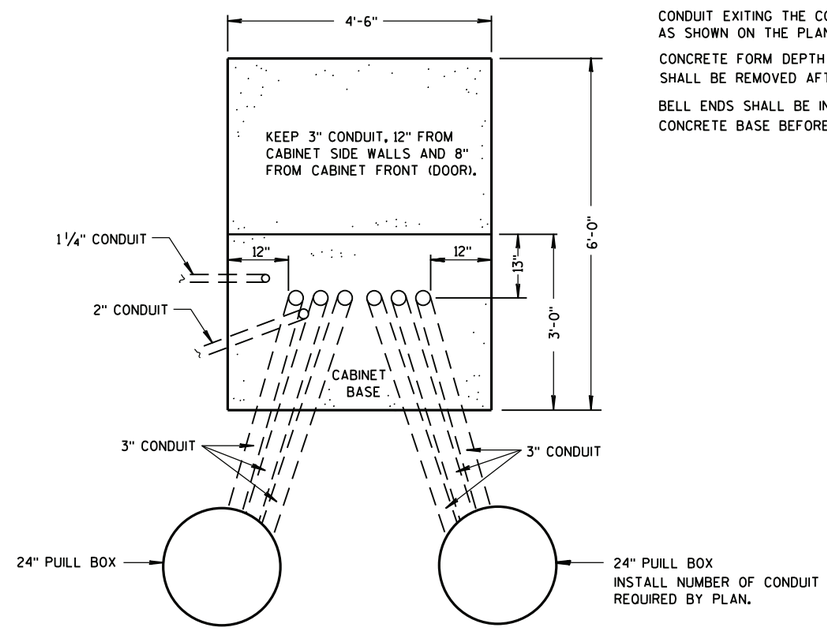

PLAN VIEW

CONCRETE CONTROL CABINET BASE, TYPE 9, SPECIAL

GENERAL NOTES

DETAILS OF CONSTRUCTION, MATERIALS AND WORKMANSHIP NOT SHOWN ON THIS DRAWING SHALL CONFORM TO THE PERTINENT REQUIREMENTS OF THE CONTRACT.

INSTALL FOUR 1/2 INCH MINIMUM DIAMETER X 4 INCH MINIMUM LENGTH STAINLESS STEEL APPROVED CONCRETE MASONRY ANCHORS WITH A PULLOUT STRENGTH OF 9,000 LBS. TO ANCHOR THE CABINET TO TYPE 6, 7, 8, AND 9 BASES. THE ANCHOR STUDS SHALL BE LOCATED AS DIRECTED BY THE ENGINEER TO PROPERLY ANCHOR THE CONTROL CABINET TO THE BASE.

WHEN REQUIRED TO CONNECT NONMETALLIC CONDUIT TO METALLIC CONDUIT, ONLY ADAPTER FITTINGS, U.L. LISTED FOR ELECTRICAL USE, SHALL BE USED.

CONDUIT HEIGHT ABOVE THE CONCRETE BASE SHALL BE 1 INCH.

DEPTH OF CONDUIT INSTALLED BELOW THE TRAVELED WAY SHALL BE 24 INCHES MINIMUM AND 36 INCHES MAXIMUM.

DEPTH OF CONDUIT INSTALLED THAT IS NOT BELOW THE TRAVELED WAY SHALL BE 18 INCHES MINIMUM AND 36 INCHES MAXIMUM.

ANY EXCEPTION TO THE MAXIMUM DEPTH SHALL BE ONLY WITH THE WRITTEN APPROVAL OF THE ENGINEER.

CONTROL CABINET BASE TOP SURFACE SHALL BE TROWEL FINISHED SMOOTH AND LEVEL.

MAINTENANCE PLATFORM SHALL BE FLOAT OR BROOM FINISHED AND BE LEVEL.

MAINTENANCE PLATFORMS ARE NOT REQUIRED WHEN THE SURROUNDING AREA IS PAVED.

MINIMUM BENDING RADIUS OF CONDUIT = 6 X THE DIAMETER.

ALL METALLIC CONDUIT ENDS SHALL BE REAMED AND THREADED.

CAP ALL BELOW GRADE METALLIC CONDUIT ENDS IN WHICH WIRE OR CABLE IS NOT BEING INSTALLED.

PLUG ALL BELOW GRADE NONMETALLIC CONDUIT ENDS IN WHICH WIRE OR CABLE IS NOT BEING INSTALLED.

ALL CONDUIT ENDS AT THE TOP OF CONCRETE BASES SHALL BE CAPPED IF METALLIC OR PLUGGED IF NONMETALLIC IMMEDIATELY AFTER PLACEMENT AND BEFORE CONCRETE IS POURED. CONDUITS IN WHICH WIRE OR CABLE IS NOT BEING INSTALLED SHALL REMAIN CAPPED OR PLUGGED.

CONDUIT EXITING THE CONCRETE BASE (SIX THREE INCH) SHALL TERMINATE IN PULL BOXES AS SHOWN ON THE PLANS.

CONCRETE FORM DEPTH BELOW FINISHED GRADE SHALL BE 6" MAXIMUM. CONCRETE FORMS SHALL BE REMOVED AFTER CONCRETE HAS SET.

BELL ENDS SHALL BE INSTALLED ON ALL PVC CONDUIT EXPOSED AT THE TOP OF THE CONCRETE BASE BEFORE INSTALLATION OF CABLE OR WIRE.

CONCRETE CONTROL CABINET BASE, TYPE 9, SPECIAL

STATE OF WISCONSIN
DEPARTMENT OF TRANSPORTATION

APPROVED
Sept. 2014 — /S/ Ahmet Demirbilek
DATE — STATE ELECTRICAL ENGINEER
FHWA

SDD 09C14 Concrete Control Base, Type-L

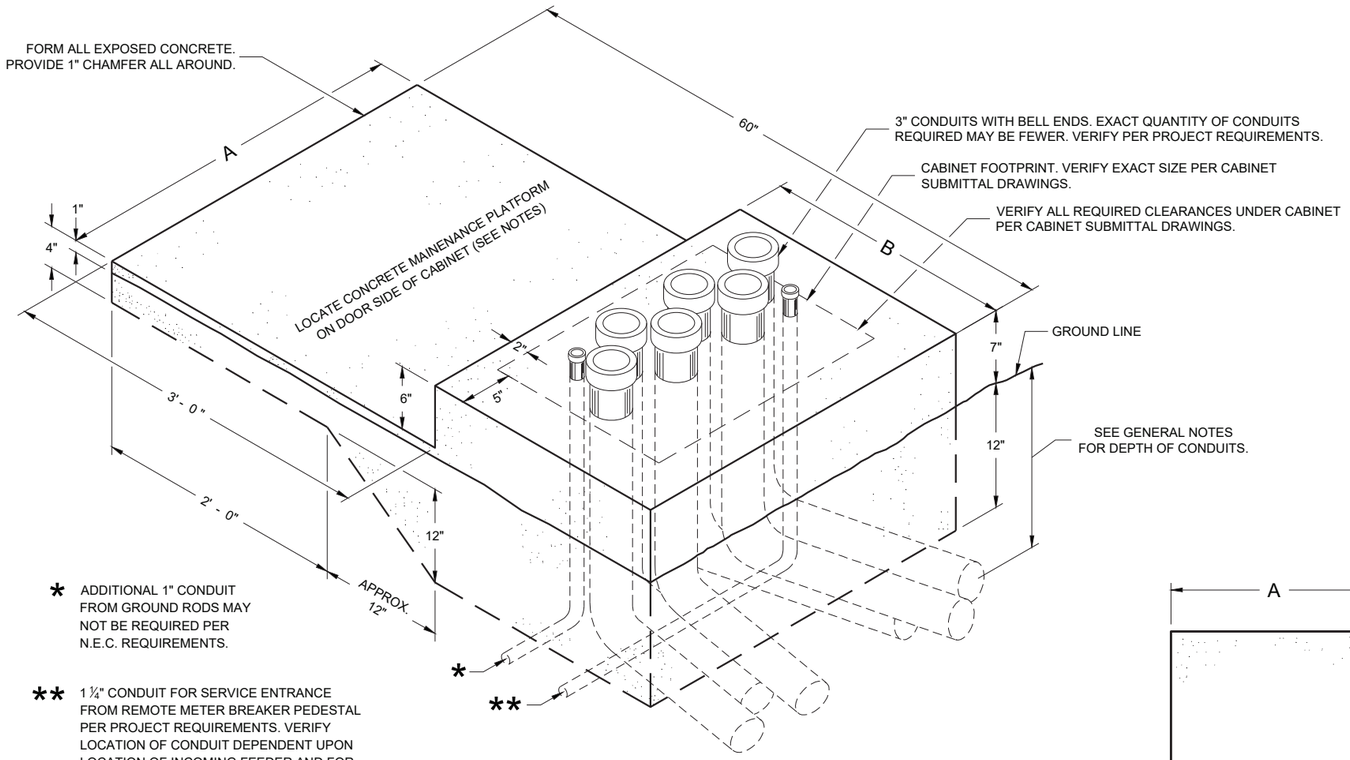

* ADDITIONAL 1" CONDUIT FROM GROUND RODS MAY NOT BE REQUIRED PER N.E.C. REQUIREMENTS.

** 1 ¼" CONDUIT FOR SERVICE ENTRANCE FROM REMOTE METER BREAKER PEDESTAL PER PROJECT REQUIREMENTS. VERIFY LOCATION OF CONDUIT DEPENDENT UPON LOCATION OF INCOMING FEEDER AND FOR EASE OF CONNECTION TO LOAD CENTER.

ISOMETRIC VIEW
CONCRETE CONTROL CABINET BASE, TYPE L

(C.Y. CONCRETE = APPROX. 0.4)

CONCRETE BASE TYPE	CABINET WIDTH	DIMENSIONS		MAXIMUM 3" CONDUITS
		A	B	
L24	24"	34"	24"	4
L30	30"	40"	24"	6

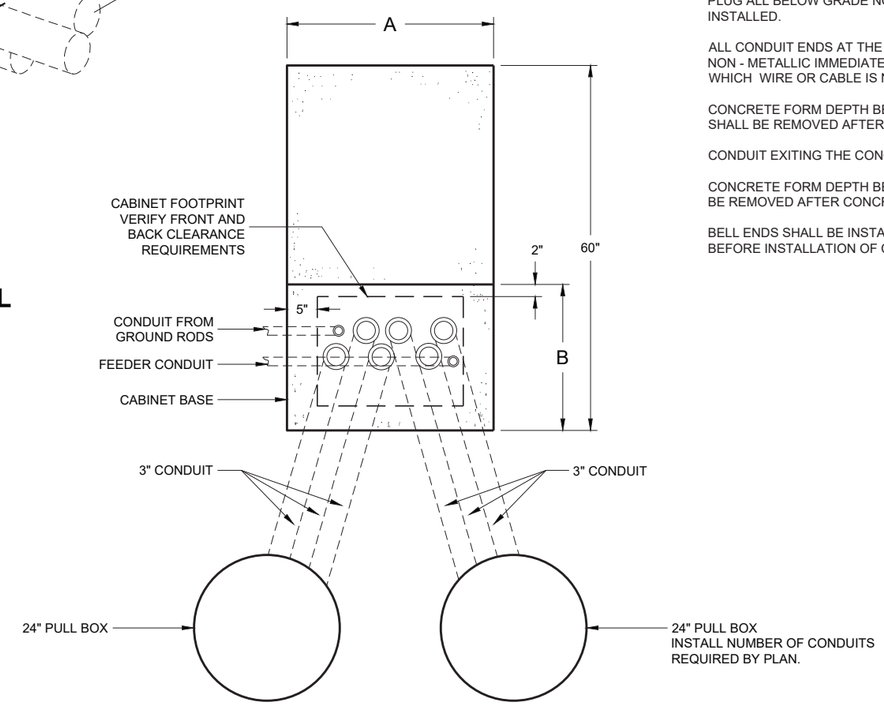

PLAN VIEW
CONCRETE CONTROL CABINET BASE, TYPE L

GENERAL NOTES

DETAILS OF CONSTRUCTION, MATERIALS AND WORKMANSHIP NOT SHOWN ON THIS DRAWING SHALL CONFORM TO THE PERTINENT REQUIREMENTS OF THE CONTRACT.

INSTALL FOUR STAINLESS STEEL APPROVED CONCRETE MASONRY ANCHORS TO ANCHOR THE CABINET BASES. THE ANCHORS SHALL BE LOCATED AS DIRECTED BY THE ENGINEER TO PROPERLY ANCHOR THE CONTROL CABINET TO THE BASE.

WHEN REQUIRED TO CONNECT NON - METALLIC CONDUIT TO METALLIC CONDUIT, ONLY ADAPTER FITTINGS, U. L. LISTED FOR ELECTRICAL USE, SHALL BE USED.

CONDUIT HEIGHT ABOVE THE CONCRETE BASE SHALL BE 1 INCH.

DEPTH OF CONDUIT INSTALLED BELOW THE TRAVELED WAY SHALL BE 24 INCHES MINIMUM AND 36 INCHES MAXIMUM.

DEPTH OF CONDUIT INSTALLED THAT IS NOT BELOW THE TRAVELED WAY SHALL BE 18 INCHES MINIMUM AND 36 INCHES MAXIMUM.

ANY EXCEPTION TO THE MAXIMUM DEPTH SHALL BE ONLY WITH THE WRITTEN APPROVAL OF THE ENGINEER.

LOCATIONS SHALL BE AS SHOWN ON THE PLANS UNLESS DETERMINED BY THE ENGINEER IN THE FIELD.

CONTROL CABINET BASE TOP SURFACE SHALL BE TROWEL FINISHED SMOOTH AND LEVEL.

MAINTENANCE PLATFORM SHALL BE FLOAT OR BROOM FINISHED AND LEVEL.

MAINTENANCE PLATFORMS ARE NOT REQUIRED WHEN THE SURROUNDING AREA IS PAVED.

MINIMUM BENDING RADIUS OF CONDUIT EQUALS 6 TIMES THE DIAMETER.

ALL METALLIC CONDUIT ENDS SHALL BE REAMED AND THREADED.

CAP ALL BELOW GRADE METALLIC CONDUIT ENDS IN WHICH WIRE OR CABLE IS NOT BEING INSTALLED.

PLUG ALL BELOW GRADE NON - METALLIC CONDUIT ENDS IN WHICH WIRE OR CABLE IS NOT BEING INSTALLED.

ALL CONDUIT ENDS AT THE TOP OF CONCRETE BASES SHALL BE CAPPED IF METALLIC OR PLUGGED IF NON - METALLIC IMMEDIATELY AFTER PLACEMENT AND BEFORE CONCRETE IS POURED. CONDUITS IN WHICH WIRE OR CABLE IS NOT BEING INSTALLED SHALL REMAIN CAPPED OR PLUGGED.

CONCRETE FORM DEPTH BELOW FINISHED GRADE SHALL BE 6 INCHES MAXIMUM. CONCRETE FORMS SHALL BE REMOVED AFTER CONCRETE HAS SET.

CONDUIT EXITING THE CONCRETE BASE SHALL TERMINATE IN PULL BOXES AS SHOWN ON THE PLANS.

CONCRETE FORM DEPTH BELOW FINISHED GRADE SHALL BE 6 INCH MAXIMUM. CONCRETE FORMS SHALL BE REMOVED AFTER CONCRETE HAS SET.

BELL ENDS SHALL BE INSTALLED ON ALL PVC CONDUIT EXPOSED AT THE TOP OF THE CONCRETE BASE BEFORE INSTALLATION OF CABLE OR WIRE.

CONCRETE CONTROL CABINET BASE, TYPE L

STATE OF WISCONSIN
DEPARTMENT OF TRANSPORTATION

APPROVED
November 2018 — DATE
/S/ Ahmet Demirbilek — STATE ELECTRICAL ENGINEER

FHWA

6

6

SDD 09C14 - 03

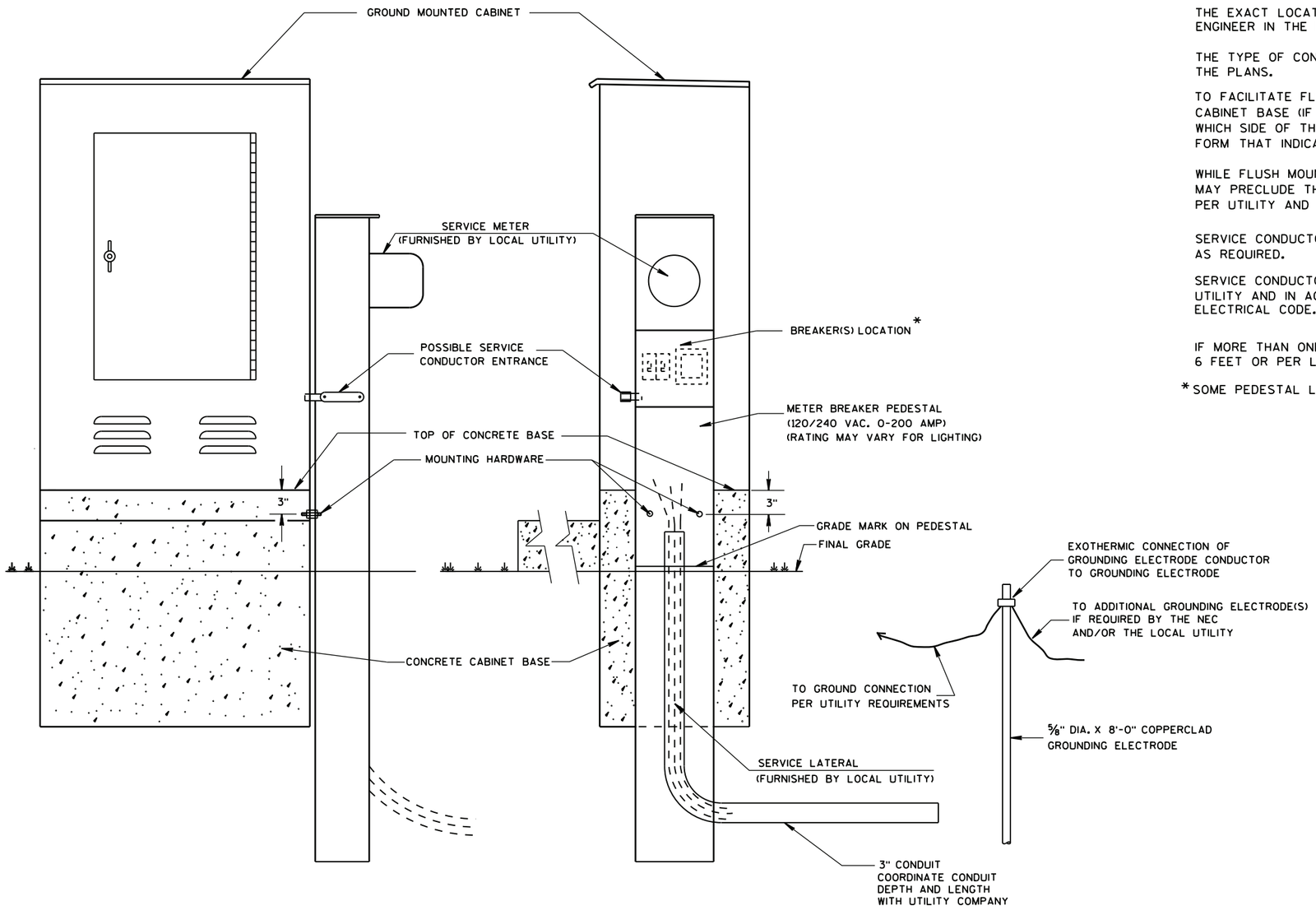

TYPICAL CABINET SERVICE INSTALLATION

GENERAL NOTES

DETAILS OF CONSTRUCTION, MATERIALS AND WORKMANSHIP NOT SHOWN ON THIS DRAWING SHALL CONFORM TO THE PERTINENT REQUIREMENTS OF THE CONTRACT.

THE EXACT LOCATION OF THE METER BREAKER PEDESTAL SHALL BE DETERMINED BY THE ENGINEER IN THE FIELD.

THE TYPE OF CONCRETE CABINET BASE TO BE INSTALLED SHALL BE AS CALLED FOR IN THE PLANS.

TO FACILITATE FLUSH MOUNTING OF THE METER BREAKER PEDESTAL AGAINST THE SIDE OF THE CABINET BASE (IF FLUSH MOUNTING POSSIBLE. CONFER WITH THE LOCAL UTILITY TO DETERMINE WHICH SIDE OF THE CONCRETE BASE THE ELECTRICAL SERVICE LATERAL WILL APPROACH. THEN FORM THAT INDICATED SIDE FOR FULL SIDE DEPTH.

WHILE FLUSH MOUNTING IS THE MOST DESIRABLE MOUNTING CONFIGURATION UTILITY REQUIREMENTS MAY PRECLUDE THIS OPTION. CONTRACTOR MUST PROVIDE UTILITY APPROVED PEDESTAL AND INSTALL PER UTILITY AND MANUFACTURERS REQUIREMENTS.

SERVICE CONDUCTOR ENTRANCES SHALL BE RIGID METALLIC CONDUIT, NIPPLES AND/OR CONDULETS AS REQUIRED.

SERVICE CONDUCTOR ENTRANCES SHALL BE SIZED AND LOCATED AS REQUIRED BY THE LOCAL UTILITY AND IN ACCORDANCE WITH APPROPRIATE ARTICLES OF THE LATEST ACCEPTED NATIONAL ELECTRICAL CODE.

IF MORE THAN ONE GROUNDING ELECTRODE IS REQUIRED, THE DISTANCE APART SHALL BE 6 FEET OR PER LOCAL UTILITY REGULATIONS.

* SOME PEDESTAL LIGHTING PLANS SHOW MAIN LUGS ONLY.

CABINET SERVICE INSTALLATION
(METER BREAKER PEDESTAL)

STATE OF WISCONSIN
DEPARTMENT OF TRANSPORTATION

APPROVED
Sept. 2014 — /S/ Ahmet Demirbilek
DATE — STATE ELECTRICAL ENGINEER
FHWA

6
S.D.D. 9 D 1-5

SDD 09D04 Lighting Control Cabinet 120/240 Volt

FRONT INTERIOR ELEVATION

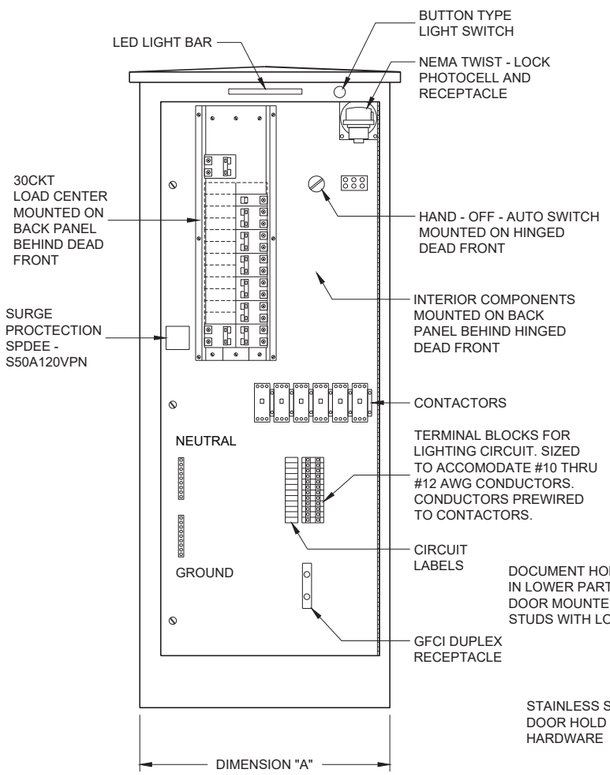

SIDE VIEW

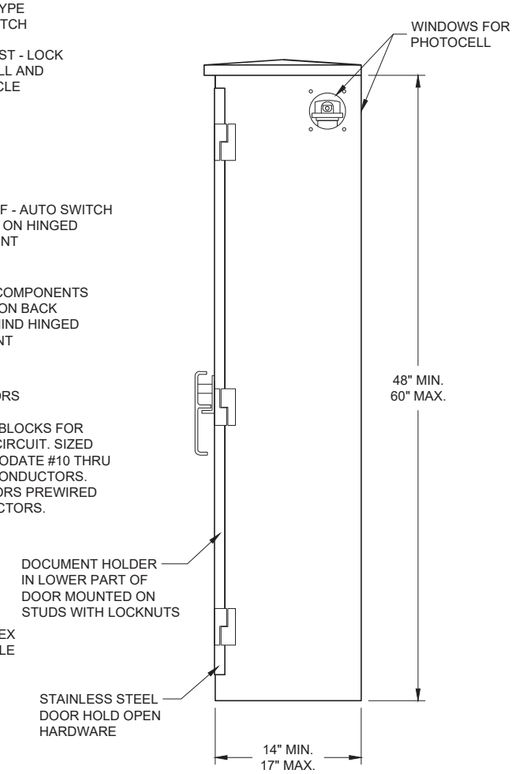

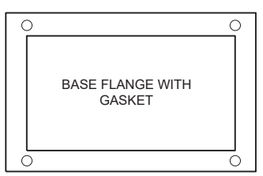

TABLE OF DIMENSIONS (INCHES)		
CONCRETE BASE TYPE	CABINET WIDTH	DIMENSION "A"
L24	24"	24"
L30	30"	30"

LIGHTING CONTROL CABINET

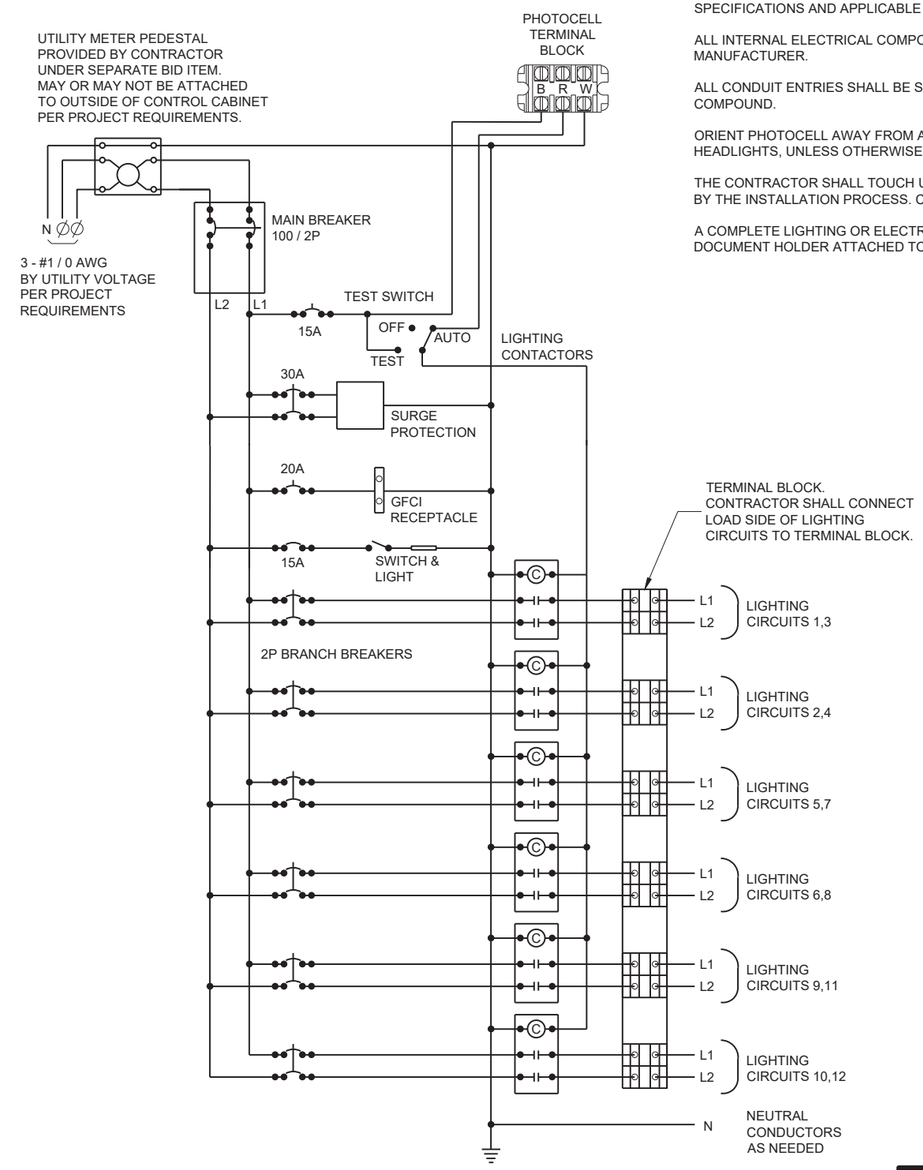

CONTROL CABINET SCHEMATIC

GENERAL NOTES

DETAILS OF CONSTRUCTION, MATERIALS AND WORKMANSHIP NOT SHOWN ON THIS DRAWING SHALL CONFORM TO THE PERTINENT REQUIREMENTS OF THE STANDARD SPECIFICATIONS AND APPLICABLE SPECIAL PROVISIONS.

ALL INTERNAL ELECTRICAL COMPONENTS WILL BE PRE - WIRED BY THE CABINENT MANUFACTURER.

ALL CONDUIT ENTRIES SHALL BE SEALED WITH AN APPROPRIATE DUCT SEALING COMPOUND.

ORIENT PHOTOCELL AWAY FROM AMBIENT LIGHT SOURCES AND ONCOMING TRAFFIC HEADLIGHTS, UNLESS OTHERWISE CALLED FOR IN THE SPECIAL PROVISION.

THE CONTRACTOR SHALL TOUCH UP ANY DAMAGE TO THE ANODIZED FINISH CAUSED BY THE INSTALLATION PROCESS. COLOR MATCH PAINT SHALL BE USED.

A COMPLETE LIGHTING OR ELECTRICAL PLAN SHALL BE SECURELY PLACED IN THE DOCUMENT HOLDER ATTACHED TO THE DOOR.

LIGHTING CONTROL CABINET
120 / 240 VOLT

STATE OF WISCONSIN
DEPARTMENT OF TRANSPORTATION

APPROVED
November 2018
DATE

/S/ Ahmet Demirbilek
STATE ELECTRICAL ENGINEER

FHWA

6
SDD 09D04 - 03

SDD 09E01-b Pole Mountings for Traffic Signals and Lighting Units, Type 3 (Heavy Duty)

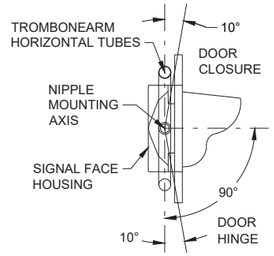

SECTION A-A

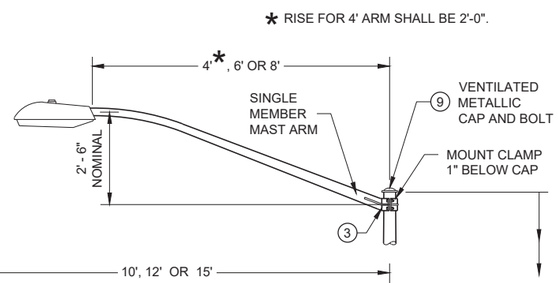

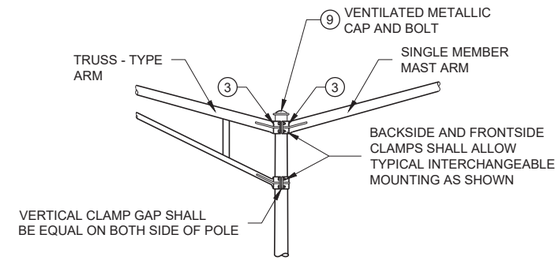

INTERCHANGEABLE MOUNTING DETAIL

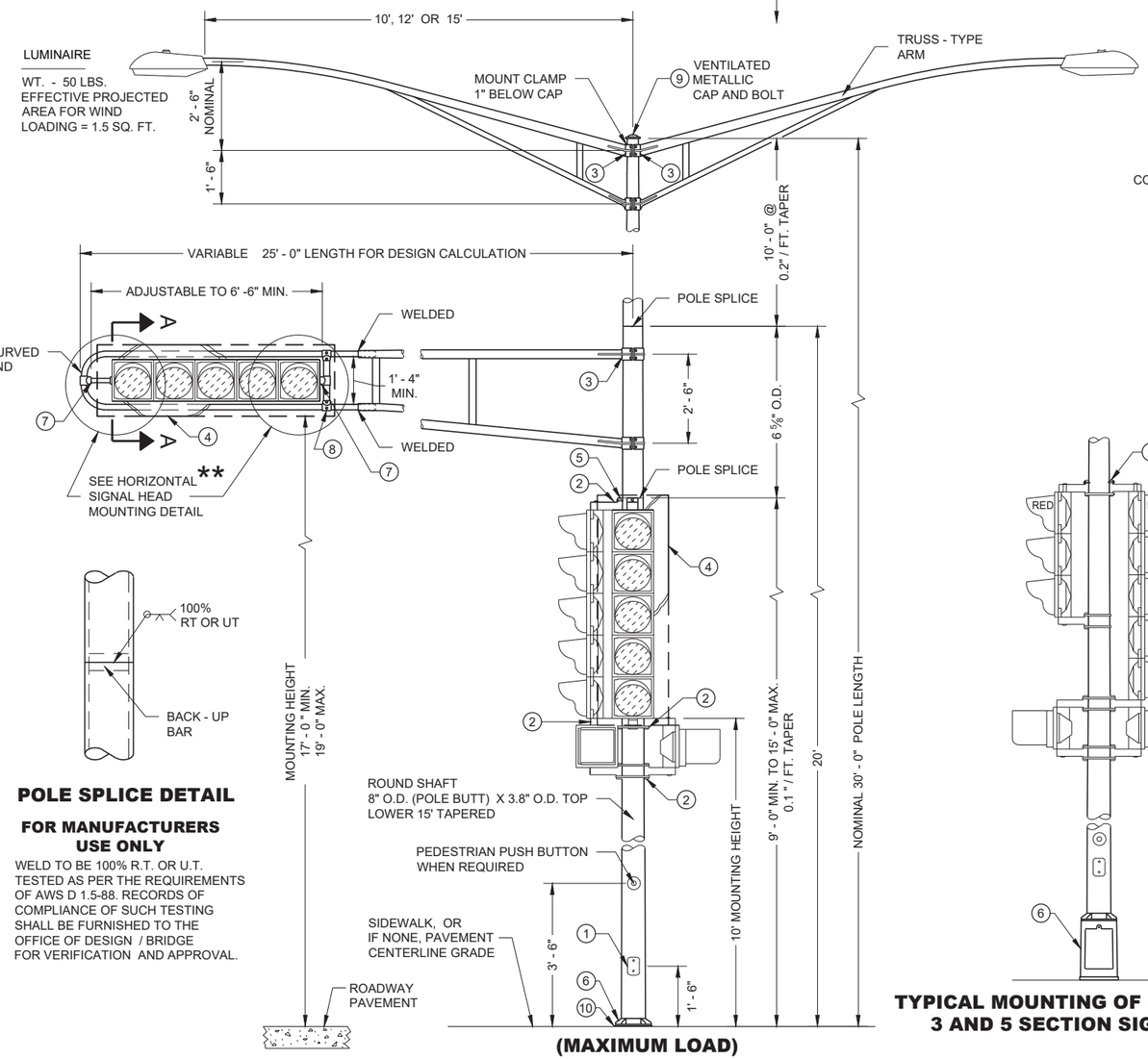

(MAXIMUM LOAD)

TYPE 3 POLE MOUNTING CONFIGURATION

POLE SPLICE DETAIL

FOR MANUFACTURERS USE ONLY

WELD TO BE 100% R.T. OR U.T. TESTED AS PER THE REQUIREMENTS OF AWS D 1.5-88. RECORDS OF COMPLIANCE OF SUCH TESTING SHALL BE FURNISHED TO THE OFFICE OF DESIGN / BRIDGE FOR VERIFICATION AND APPROVAL.

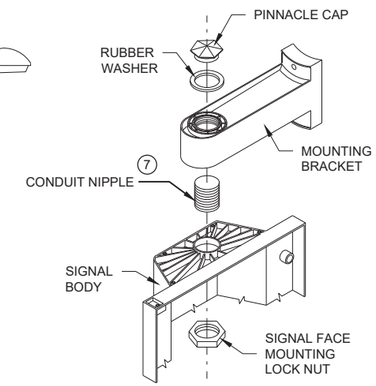

SIGNAL FACE MOUNTING DETAIL

(BANDED)

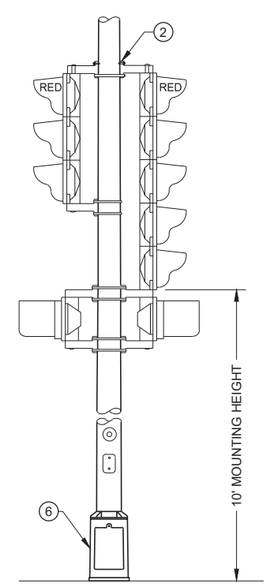

TYPICAL MOUNTING OF BACK TO BACK 3 AND 5 SECTION SIGNAL FACES

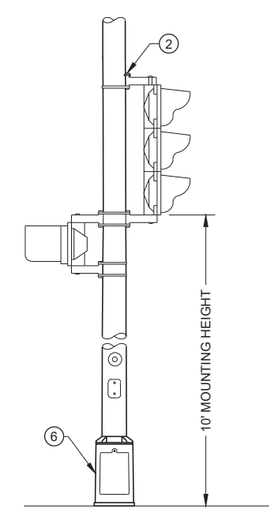

TYPICAL MOUNTING OF 3 SECTION SIGNAL FACE

GENERAL NOTES

DETAILS OF CONSTRUCTION, MATERIALS AND WORKMANSHIP NOT SHOWN ON THIS DRAWING SHALL CONFORM TO THE PERTINENT REQUIREMENTS OF THE CONTRACT.

ALL TYPE 3 POLE MOUNTINGS SHALL BE DESIGNED TO INCLUDE TWIN 15' ARMS WITH LUMINAIRES.

POLES SHALL BE GALVANIZED STEEL.

SECTION 657, POLES, OF THE STANDARD SPECIFICATIONS SHALL APPLY TO THIS DRAWING.

A PULL WIRE / ROPE SHALL BE INSTALLED IN EACH TROMBONE ARM RACEWAY DURING THE MANUFACTURING PROCESS.

THE SLIPFITTER END OF THE LUMINAIRE MAST ARM SHALL BE A NOMINAL 2 ⅜ INCHES IN OUTSIDE DIAMETER. THE STRAIGHT PORTION OF THE SLIPFITTER END OF THE LUMINAIRE MAST ARM SHALL BE A NOMINAL 12 INCHES IN LENGTH.

WHEN TRANSFORMER BASES ARE USED, WIRE CONNECTIONS SHALL BE MADE IN THE TRANSFORMER BASE.

1. 4" X 6" REINFORCED HANDHOLE AND COVER ASSEMBLY WITH TWO (2) ¼" X ¾" - 20 TPI , STAINLESS STEEL, HEX HEAD BOLTS.
2. SIGNAL FACE MOUNTING BRACKETS. MOUNT WITH CAP SCREWS AND BANDING.
3. GROMMETS. 1" CHASE NIPPLES OR 1" CLOSE CONDUIT NIPPLES WITH BUSHINGS SHALL BE PROVIDED FOR 1 ⅜" HOLE IN POLE SHAFT FOR WIRING.
4. SECURELY MOUNT DULL BLACK POLYCARBONATE BACK PLATES, PROJECTING 5" BEYOND ALL SIDES OF THE SIGNAL FACE HOUSING, PER MANUFACTURER'S RECOMMENDATIONS.
5. POLE MOUNTED SIGNAL FACES SHALL REQUIRE ONE OR MORE MOUNTING SPACERS UNDER THE TOP MOUNTING BRACKET(S) AS REQUIRED, TO PLUMB THE SIGNAL FACE.
6. CAST ALUMINUM TRANSFORMER BASE, WHEN REQUIRED. UNDER MAX LOADING, TYPE 3 POLE SHALL BE MOUNTED DIRECTLY TO ITS CONCRETE BASE.
7. USE 1 ½" ID NIPPLES ZINC-COATED RIGID METAL CONDUIT, LONG ENOUGH TO ACCOMMODATE FULL DEPTH THREADING INTO THE HEAD MOUNTING LOCK NUT IN ORDER TO TIGHTEN THE FACE, BUT THAT DO NOT INTERFERE WITH REFLECTOR CLOSURE. THREAD THE NIPPLE INTO THE MOUNTING BRACKET/ELBOW UNTIL TIGHT. USE APPROVED PINNACLE TYPE HARDWARE FROM A DEPARTMENT APPROVED MANUFACTURER TO CLOSE THE UNUSED 1 ½" OPENING IN SIGNAL FACES AND BRACKET ENDS.
8. VERTICAL STRUT (ADJUSTABLE). ONE (1) SET SCREW (¼" X ¾" - 20 TPI STAINLESS STEEL, HEX HEAD) INTO EACH ARM MEMBER IF STRUT IS THE SLIDING TYPE.
9. FURNISH AND INSTALL VENTILATED, CAST METALLIC (ALUMINUM ALLOY) CAPS. FASTEN CAPS WITH ONE (1) ¼" X ¾" - 20 TPI STAINLESS STEEL, HEX HEAD BOLT.
10. SHIMMING, IF NEEDED, SHALL BE LOCATED BETWEEN THE CONCRETE FOUNDATION AND POLE.
11. USE SERRATED LOCK WASHERS WITH NOTCHES BETWEEN END TEE AND SIGNAL HEAD.

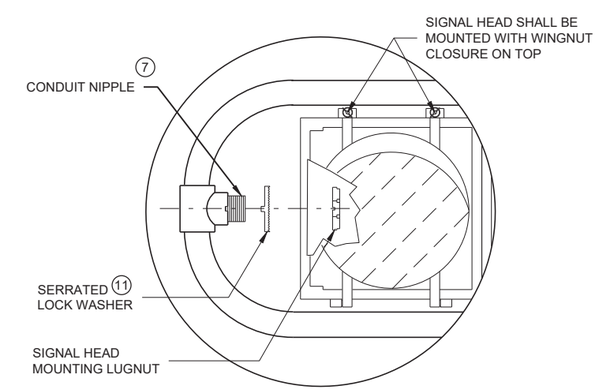

HORIZONTAL SIGNAL HEAD ** MOUNTING DETAIL

** SIGNAL HEAD ATTACHMENT ALSO APPLIES TO MOUNTING AT CROSS BAR

POLE MOUNTINGS FOR TRAFFIC SIGNALS AND LIGHTING UNITS TYPE 3 (HEAVY DUTY)

STATE OF WISCONSIN
DEPARTMENT OF TRANSPORTATION

6
SDD 09E01 - 15b

SDD 09E01-c Pole Mountings for Traffic Signals and Lighting Units, Type 4

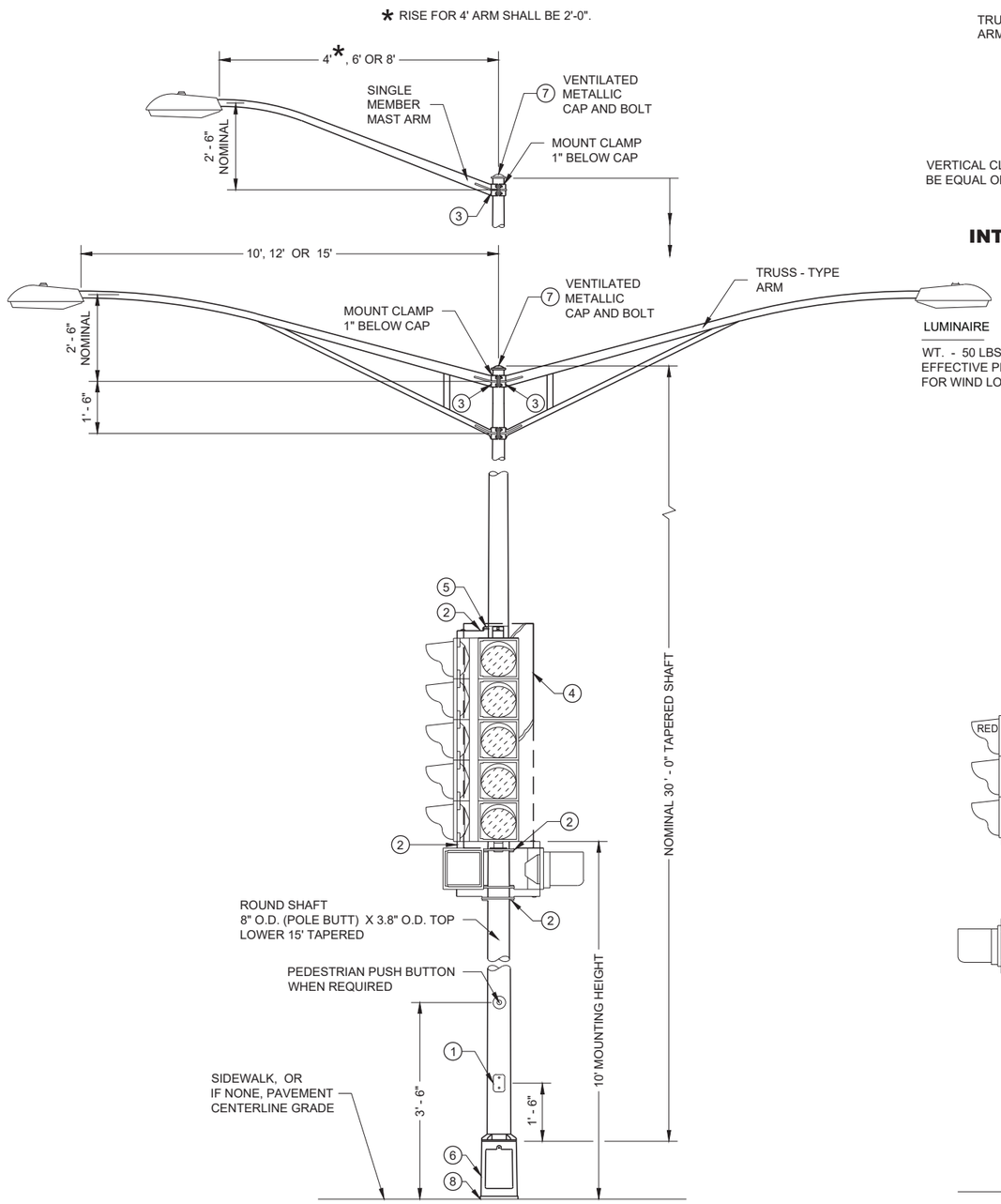

(MAXIMUM LOAD)

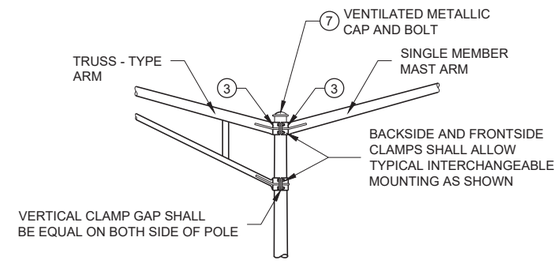

INTERCHANGEABLE MOUNTING DETAIL

LUMINAIRE

WT. - 50 LBS.
EFFECTIVE PROJECTED AREA
FOR WIND LOADING = 1.5 SQ. FT.

GENERAL NOTES

DETAILS OF CONSTRUCTION, MATERIALS AND WORKMANSHIP NOT SHOWN ON THIS DRAWING SHALL CONFORM TO THE PERTINENT REQUIREMENTS OF THE CONTRACT.

ALL TYPE 4 POLE MOUNTINGS SHALL BE DESIGNED TO INCLUDE TWIN 15' ARMS WITH LUMINAIRES.

POLES SHALL BE GALVANIZED STEEL WITH A MINIMUM WALL THICKNESS OF U.S. STANDARD 11 GAGE (.1196").

SECTION 657, POLES, OF THE STANDARD SPECIFICATIONS SHALL APPLY TO THIS DRAWING.

A PULL WIRE / ROPE SHALL BE INSTALLED IN EACH TROMBONE ARM RACEWAY DURING THE MANUFACTURING PROCESS.

THE SLIPFITTER END OF THE LUMINAIRE MAST ARM SHALL BE A NOMINAL 2 ⅜ INCHES IN OUTSIDE DIAMETER. THE STRAIGHT PORTION OF THE SLIPFITTER END OF THE LUMINAIRE MAST ARM SHALL BE A NOMINAL 12 INCHES IN LENGTH.

WHEN TRANSFORMER BASES ARE USED, WIRE CONNECTIONS SHALL BE MADE IN THE TRANSFORMER BASE.

1. 4" X 6" REINFORCED HANDHOLE AND COVER ASSEMBLY WITH TWO (2) ¼" X ¾" - 20 TPI , STAINLESS STEEL, HEX HEAD BOLTS.
2. SIGNAL FACE MOUNTING BRACKETS. MOUNT WITH CAP SCREWS AND BANDING.
3. GROMMETS. 1" CHASE NIPPLES OR 1" CLOSE CONDUIT NIPPLES WITH BUSHINGS SHALL BE PROVIDED FOR 1 ⅜" HOLE IN POLE SHAFT FOR WIRING.
4. SECURELY MOUNT DULL BLACK POLYCARBONATE BACK PLATES, PROJECTING 5" BEYOND ALL SIDES OF THE SIGNAL FACE HOUSING, PER MANUFACTURER'S RECOMMENDATIONS.
5. POLE MOUNTED SIGNAL FACES SHALL REQUIRE ONE OR MORE MOUNTING SPACERS UNDER THE TOP MOUNTING BRACKET(S) AS REQUIRED, TO PLUMB THE SIGNAL FACE.
6. CAST ALUMINUM TRANSFORMER BASE, WHEN REQUIRED.
7. FURNISH AND INSTALL VENTILATED, CAST METALLIC (ALUMINUM ALLOY) CAPS. FASTEN CAPS WITH ONE (1) ¼" X ¾" - 20 TPI STAINLESS STEEL, HEX HEAD BOLT.
8. SHIMMING, IF NEEDED, SHALL BE LOCATED BETWEEN THE CONCRETE FOUNDATION AND POLE.
9. USE 1 ½" ID NIPPLES ZINC-COATED RIGID METAL CONDUIT, LONG ENOUGH TO ACCOMMODATE FULL DEPTH THREADING INTO THE HEAD MOUNTING LOCK NUT IN ORDER TO TIGHTEN THE FACE, BUT THAT DO NOT INTERFERE WITH REFLECTOR CLOSURE. THREAD THE NIPPLE INTO THE MOUNTING BRACKET/ELBOW UNTIL TIGHT. USE APPROVED PINNACLE TYPE HARDWARE FROM A DEPARTMENT APPROVED MANUFACTURER TO CLOSE THE UNUSED 1 ½" OPENING IN SIGNAL FACES AND BRACKET ENDS.

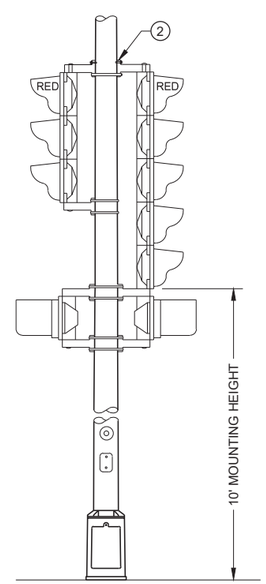

TYPICAL MOUNTING OF BACK TO BACK 3 AND 5 SECTION SIGNAL FACES

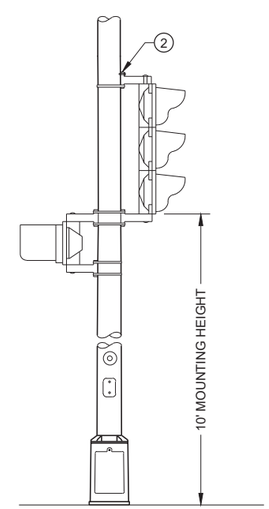

TYPICAL MOUNTING OF 3 SECTION SIGNAL FACE

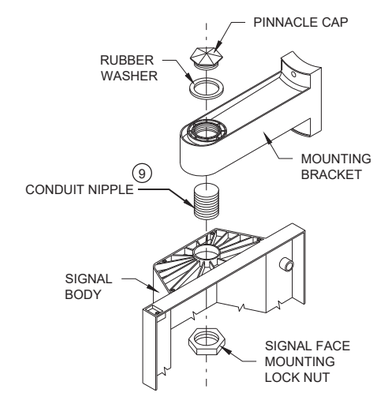

SIGNAL FACE MOUNTING DETAIL
(BANDED)

TYPE 4 POLE MOUNTING CONFIGURATION

POLE MOUNTINGS FOR TRAFFIC SIGNALS AND LIGHTING UNITS, TYPE 4

STATE OF WISCONSIN
DEPARTMENT OF TRANSPORTATION

6
SDD 09E01 - 15c

SDD 09E03 Non-Freeway Lighting Unit Pole Wiring

GENERAL NOTES

DETAILS OF CONSTRUCTION, MATERIALS AND WORKMANSHIP NOT SHOWN ON THIS DRAWING SHALL CONFORM TO THE PERTINENT REQUIREMENTS OF THE CONTRACT.

THE EQUIPMENT GROUND CONNECTOR SHALL BE TAPED WITH 3 WRAPS (MINIMUM) OF APPROVED RUBBER TAPE AND 3 WRAPS (MINIMUM) OF APPROVED VINYL TAPE TO COVER SHARP WIRE ENDS AFTER THE CONNECTION IS COMPLETED.

WHEN TRANSFORMER BASES ARE USED, ALL WIRING CONNECTIONS SHALL OCCUR WITHIN THE TRANSFORMER BASES.

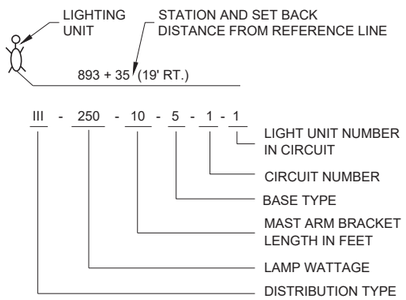

LIGHTING UNIT CODE
(TYPICAL)

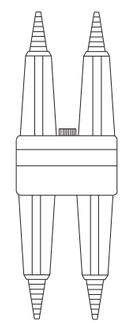

DETAIL "A"
BREAKAWAY DOUBLE POLE WITH WATERPROOF INSULATING BOOT

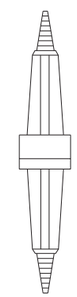

DETAIL "B"
BREAKAWAY SINGLE POLE WITH WATERPROOF INSULATING BOOT

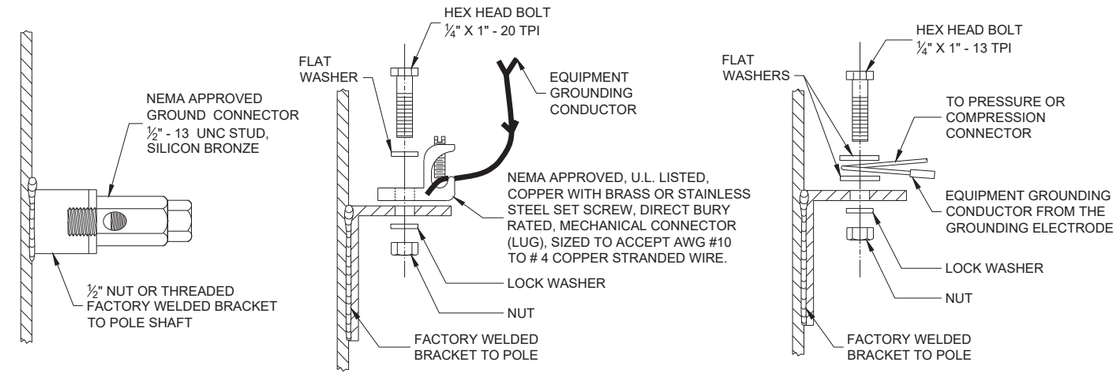

TYPICAL GROUNDING CONNECTIONS
NUT, BOLT AND WASHERS SHALL BE STAINLESS STEEL

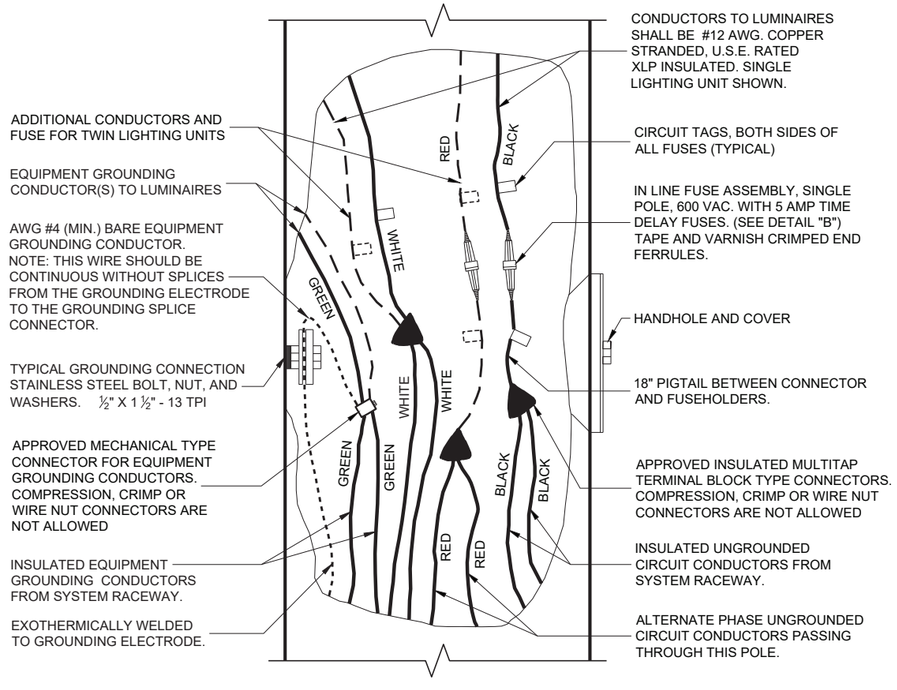

3 WIRE - 120, 240 OR 480 VAC (UNGROUNDED CONDUCTORS) WITH GROUNDING CONDUCTOR AND EQUIPMENT GROUNDING CONDUCTOR

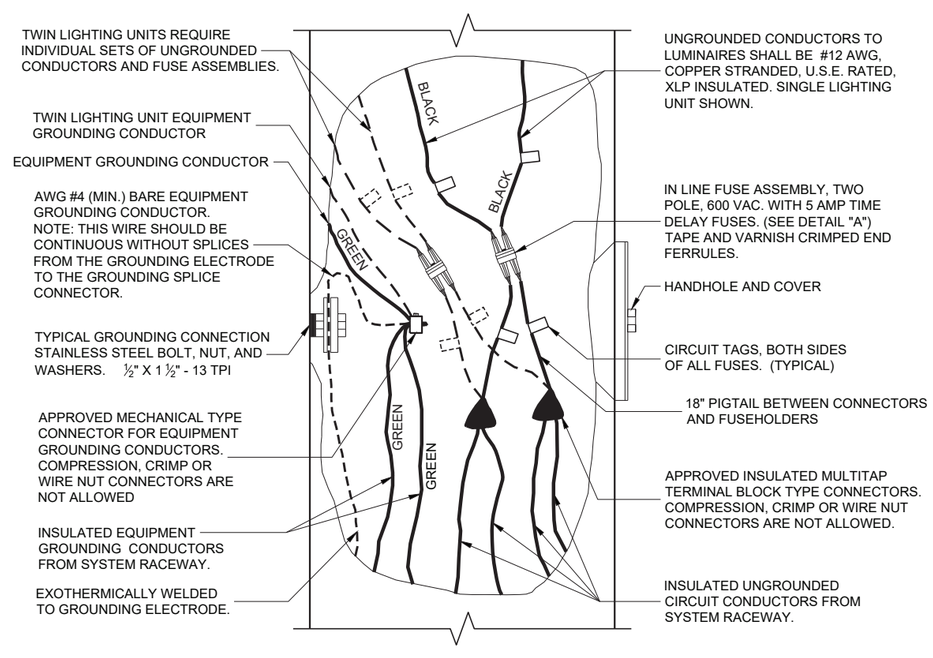

2 WIRE - 240 OR 480 VAC (UNGROUNDED CONDUCTORS) WITH EQUIPMENT GROUNDING CONDUCTOR

NON - FREEWAY LIGHTING UNIT POLE WIRING

STATE OF WISCONSIN
DEPARTMENT OF TRANSPORTATION

APPROVED
November 2018 — /S/ Ahmet Demirbilek
DATE — STATE ELECTRICAL ENGINEER

FHWA

6

SDD 09E03 - 06

SDD 9e6 Traffic Signal Standard Poly Bracket Mountings (Typical) 13 ft. or 15 ft.

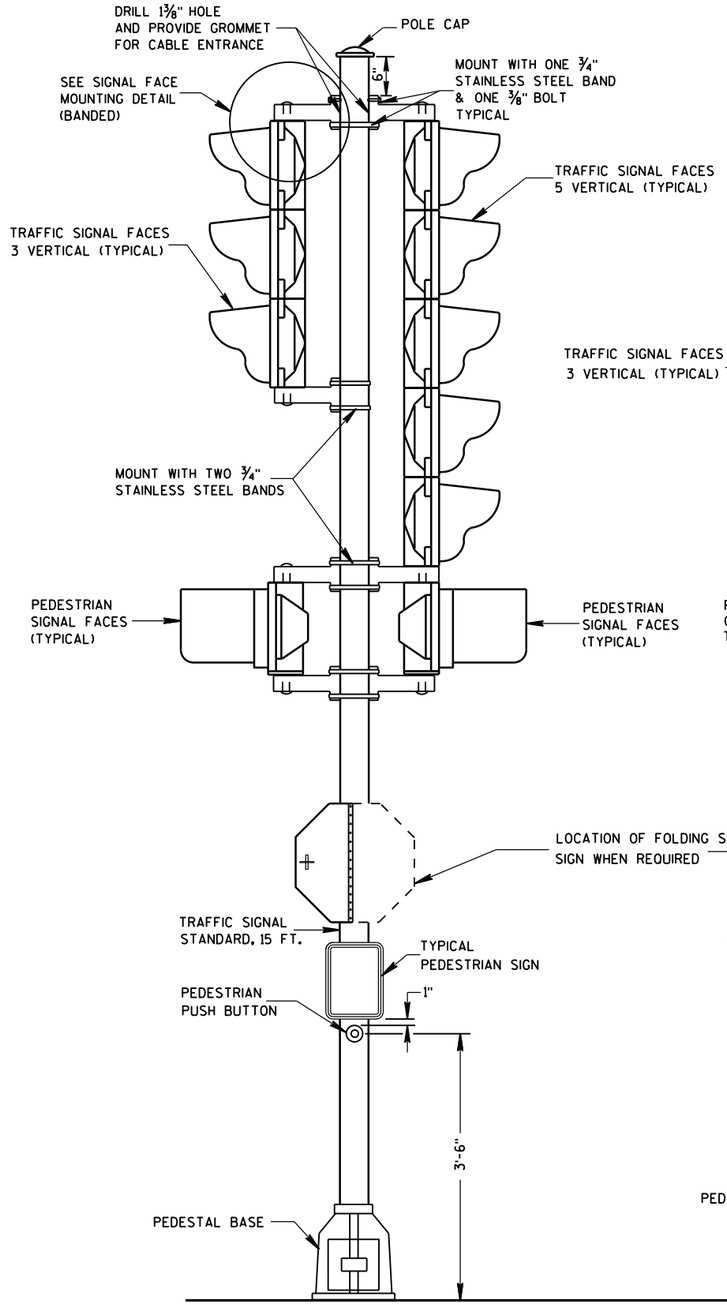

TRAFFIC SIGNAL STANDARD-15 FT.

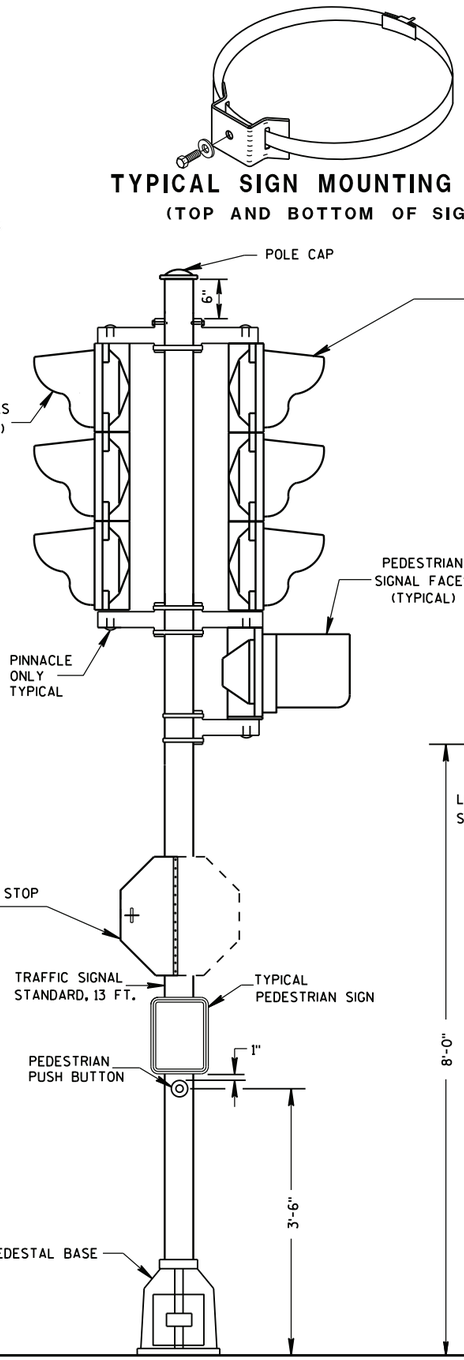

TRAFFIC SIGNAL STANDARD-13 FT.

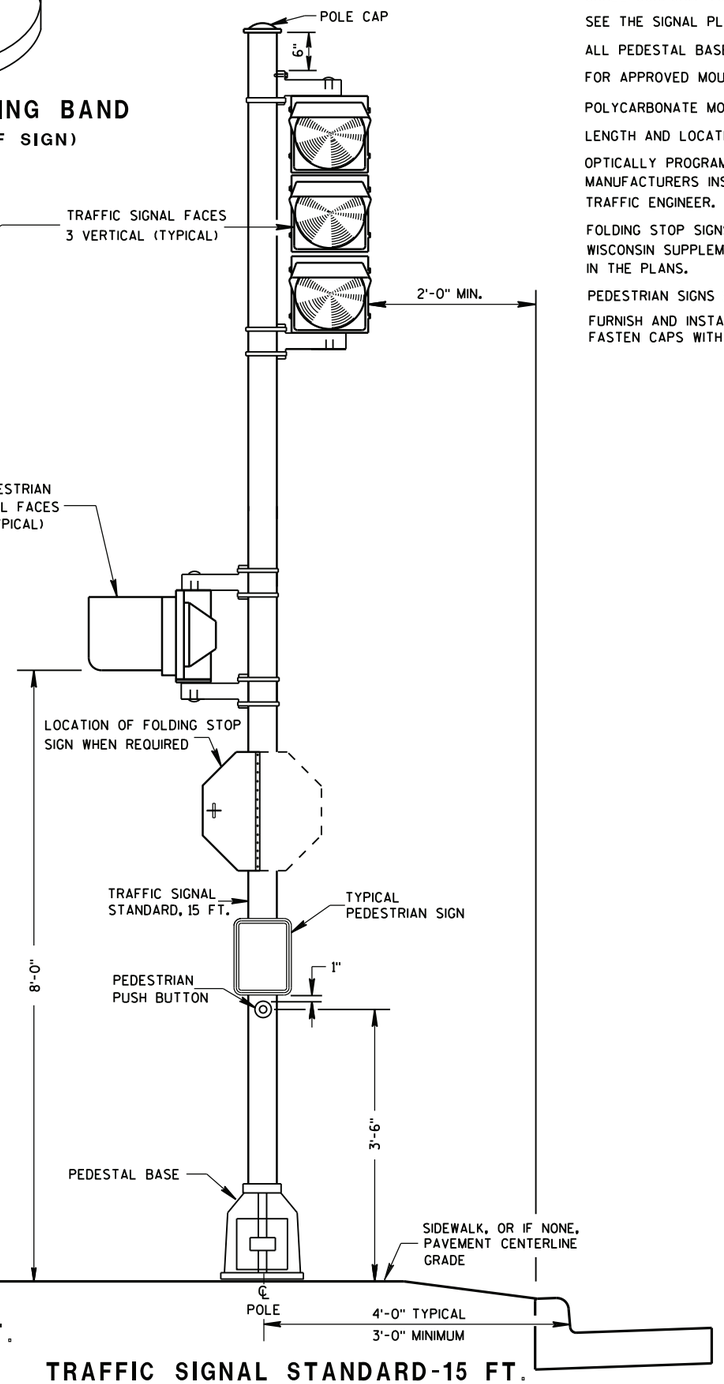

TRAFFIC SIGNAL STANDARD-15 FT.
3M MOUNTING (TYPICAL)

GENERAL NOTES

DETAILS OF CONSTRUCTION, MATERIALS AND WORKMANSHIP NOT SHOWN ON THIS DRAWING SHALL CONFORM TO THE PERTINENT REQUIREMENTS OF THE CONTRACT.

SEE THE SIGNAL PLAN FOR REQUIRED SIGNAL FACE SIZES.

ALL PEDESTAL BASES SHALL BE MOUNTED ON CONCRETE BASE - TYPE 1.

FOR APPROVED MOUNTING HARDWARE, SEE THE CONTRACT SPECIAL PROVISIONS.

POLYCARBONATE MOUNTING BRACKETS SHALL BE USED.

LENGTH AND LOCATION OF TRAFFIC SIGNAL STANDARDS SHALL BE AS SHOWN ON THE PLANS.

OPTICALLY PROGRAMMED SIGNAL FACES SHALL BE MASKED IN ACCORDANCE WITH MANUFACTURERS INSTRUCTIONS, AND UNDER THE DIRECTIONS OF THE REGION TRAFFIC ENGINEER.

FOLDING STOP SIGNS SHALL BE IN ACCORDANCE WITH THE MUTCD AND/OR THE LATEST WISCONSIN SUPPLEMENT. THE SIGNS SHALL BE SIZED AND LOCATED AS CALLED FOR IN IN THE PLANS.

PEDESTRIAN SIGNS SHALL BE AS DESIGNATED IN THE PLANS.

FURNISH AND INSTALL VENTILATED, CAST, METALLIC (ALUMINUM ALLOY) CAPS. FASTEN CAPS WITH ONE (1) ¼" X ¾" - 20 TPI STAINLESS STEEL, HEX HEAD BOLT.

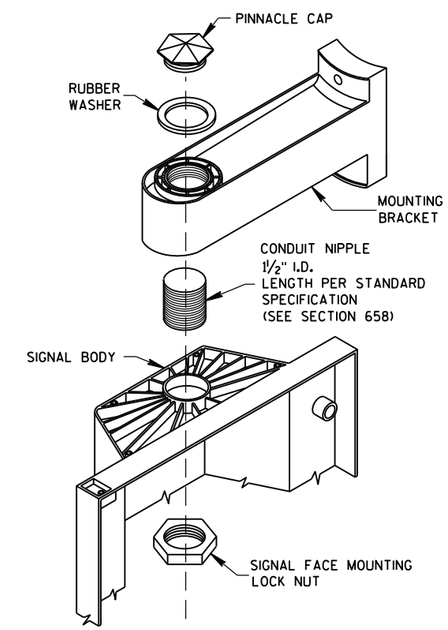

SIGNAL FACE MOUNTING DETAIL
(BANDED)

TRAFFIC SIGNAL STANDARD POLY BRACKET MOUNTINGS (TYPICAL) 13 FT. OR 15 FT.	
STATE OF WISCONSIN DEPARTMENT OF TRANSPORTATION	
APPROVED 2/28/2013 DATE	/S/ Ahmet Demirbilek STATE ELECTRICAL ENGINEER
FHWA	

6

S.D.D. 9 E 6-5

6

S.D.D. 9 E 6-5

SDD 09E01-b Pole Mountings for Traffic Signals and Lighting Units, Type 3 (Heavy Duty)

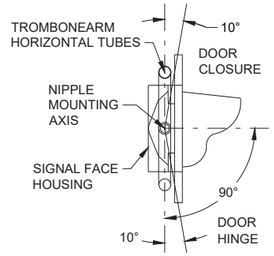

SECTION A-A

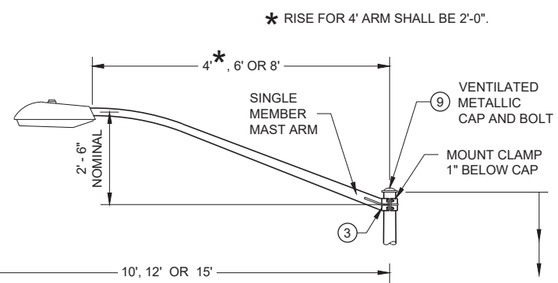

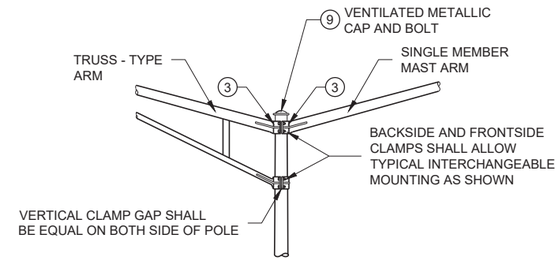

INTERCHANGEABLE MOUNTING DETAIL

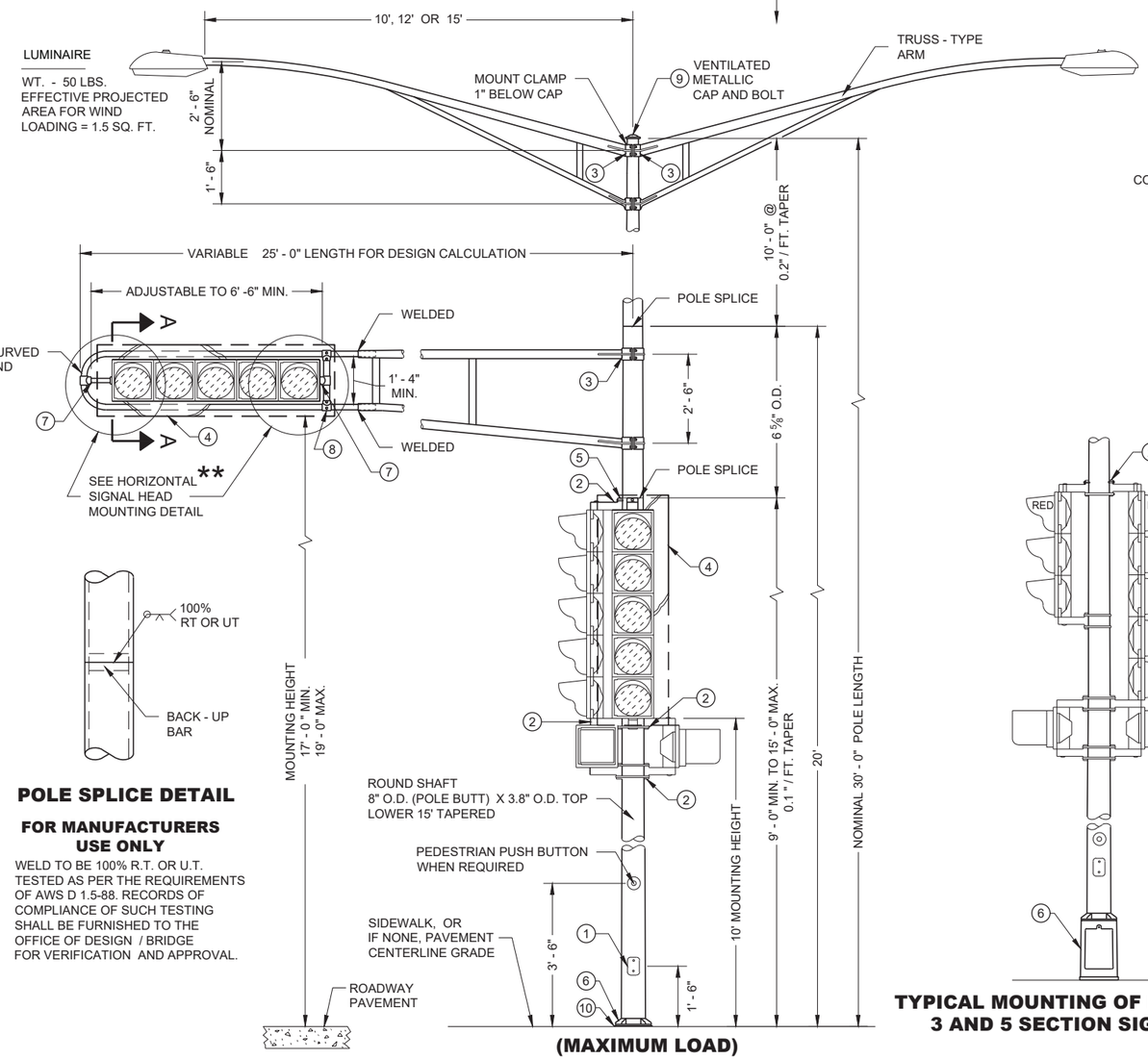

(MAXIMUM LOAD)

TYPE 3 POLE MOUNTING CONFIGURATION

POLE SPLICE DETAIL

FOR MANUFACTURERS USE ONLY

WELD TO BE 100% R.T. OR U.T. TESTED AS PER THE REQUIREMENTS OF AWS D 1.5-88. RECORDS OF COMPLIANCE OF SUCH TESTING SHALL BE FURNISHED TO THE OFFICE OF DESIGN / BRIDGE FOR VERIFICATION AND APPROVAL.

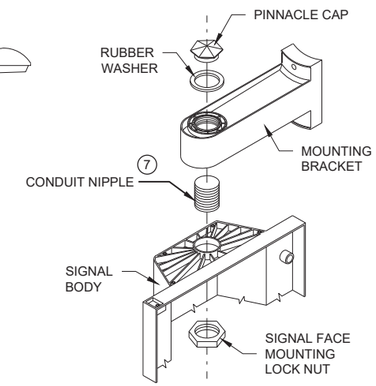

SIGNAL FACE MOUNTING DETAIL

(BANDED)

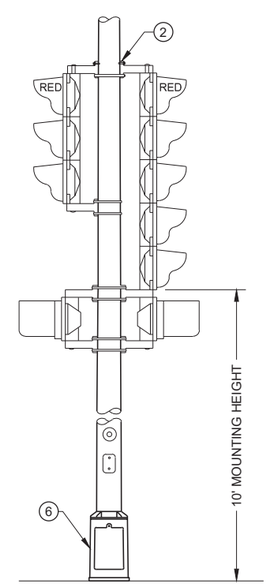

TYPICAL MOUNTING OF BACK TO BACK 3 AND 5 SECTION SIGNAL FACES

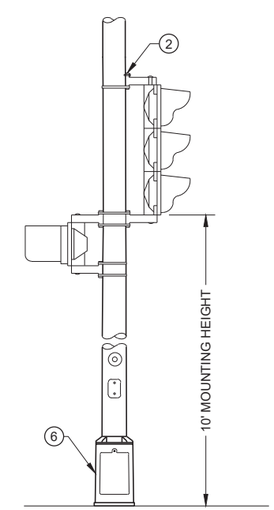

TYPICAL MOUNTING OF 3 SECTION SIGNAL FACE

GENERAL NOTES

DETAILS OF CONSTRUCTION, MATERIALS AND WORKMANSHIP NOT SHOWN ON THIS DRAWING SHALL CONFORM TO THE PERTINENT REQUIREMENTS OF THE CONTRACT.

ALL TYPE 3 POLE MOUNTINGS SHALL BE DESIGNED TO INCLUDE TWIN 15' ARMS WITH LUMINAIRES.

POLES SHALL BE GALVANIZED STEEL.

SECTION 657, POLES, OF THE STANDARD SPECIFICATIONS SHALL APPLY TO THIS DRAWING.

A PULL WIRE / ROPE SHALL BE INSTALLED IN EACH TROMBONE ARM RACEWAY DURING THE MANUFACTURING PROCESS.

THE SLIPFITTER END OF THE LUMINAIRE MAST ARM SHALL BE A NOMINAL 2 ⅜ INCHES IN OUTSIDE DIAMETER. THE STRAIGHT PORTION OF THE SLIPFITTER END OF THE LUMINAIRE MAST ARM SHALL BE A NOMINAL 12 INCHES IN LENGTH.

WHEN TRANSFORMER BASES ARE USED, WIRE CONNECTIONS SHALL BE MADE IN THE TRANSFORMER BASE.

1. 4" X 6" REINFORCED HANDHOLE AND COVER ASSEMBLY WITH TWO (2) ¼" X ¾" - 20 TPI , STAINLESS STEEL, HEX HEAD BOLTS.
2. SIGNAL FACE MOUNTING BRACKETS. MOUNT WITH CAP SCREWS AND BANDING.
3. GROMMETS. 1" CHASE NIPPLES OR 1" CLOSE CONDUIT NIPPLES WITH BUSHINGS SHALL BE PROVIDED FOR 1 ⅜" HOLE IN POLE SHAFT FOR WIRING.
4. SECURELY MOUNT DULL BLACK POLYCARBONATE BACK PLATES, PROJECTING 5" BEYOND ALL SIDES OF THE SIGNAL FACE HOUSING, PER MANUFACTURER'S RECOMMENDATIONS.
5. POLE MOUNTED SIGNAL FACES SHALL REQUIRE ONE OR MORE MOUNTING SPACERS UNDER THE TOP MOUNTING BRACKET(S) AS REQUIRED, TO PLUMB THE SIGNAL FACE.
6. CAST ALUMINUM TRANSFORMER BASE, WHEN REQUIRED. UNDER MAX LOADING, TYPE 3 POLE SHALL BE MOUNTED DIRECTLY TO ITS CONCRETE BASE.
7. USE 1 ½" ID NIPPLES ZINC-COATED RIGID METAL CONDUIT, LONG ENOUGH TO ACCOMMODATE FULL DEPTH THREADING INTO THE HEAD MOUNTING LOCK NUT IN ORDER TO TIGHTEN THE FACE, BUT THAT DO NOT INTERFERE WITH REFLECTOR CLOSURE. THREAD THE NIPPLE INTO THE MOUNTING BRACKET/ELBOW UNTIL TIGHT. USE APPROVED PINNACLE TYPE HARDWARE FROM A DEPARTMENT APPROVED MANUFACTURER TO CLOSE THE UNUSED 1 ½" OPENING IN SIGNAL FACES AND BRACKET ENDS.
8. VERTICAL STRUT (ADJUSTABLE). ONE (1) SET SCREW (¼" X ¾" - 20 TPI STAINLESS STEEL, HEX HEAD) INTO EACH ARM MEMBER IF STRUT IS THE SLIDING TYPE.
9. FURNISH AND INSTALL VENTILATED, CAST METALLIC (ALUMINUM ALLOY) CAPS. FASTEN CAPS WITH ONE (1) ¼" X ¾" - 20 TPI STAINLESS STEEL, HEX HEAD BOLT.
10. SHIMMING, IF NEEDED, SHALL BE LOCATED BETWEEN THE CONCRETE FOUNDATION AND POLE.
11. USE SERRATED LOCK WASHERS WITH NOTCHES BETWEEN END TEE AND SIGNAL HEAD.

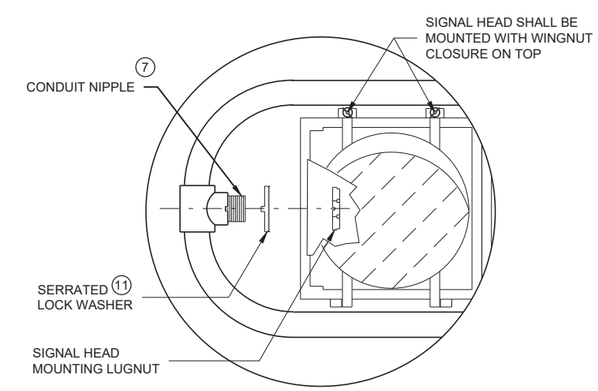

HORIZONTAL SIGNAL HEAD ** MOUNTING DETAIL

** SIGNAL HEAD ATTACHMENT ALSO APPLIES TO MOUNTING AT CROSS BAR

POLE MOUNTINGS FOR TRAFFIC SIGNALS AND LIGHTING UNITS TYPE 3 (HEAVY DUTY)

STATE OF WISCONSIN
DEPARTMENT OF TRANSPORTATION

6
SDD 09E01 - 15b

SDD 09E01-c Pole Mountings for Traffic Signals and Lighting Units, Type 4

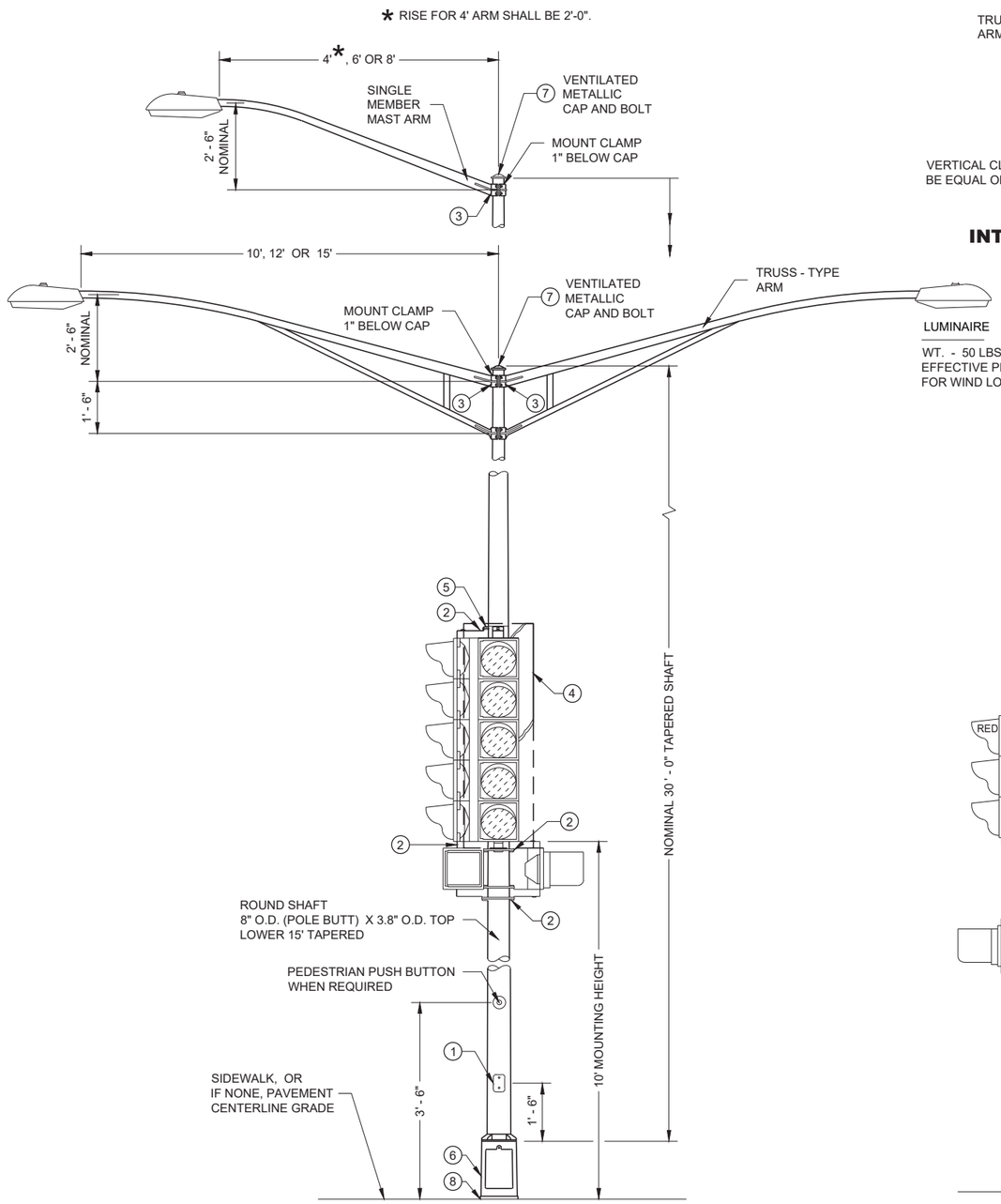

(MAXIMUM LOAD)

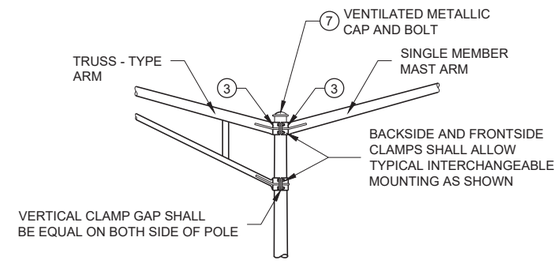

INTERCHANGEABLE MOUNTING DETAIL

LUMINAIRE

WT. - 50 LBS.
EFFECTIVE PROJECTED AREA
FOR WIND LOADING = 1.5 SQ. FT.

GENERAL NOTES

DETAILS OF CONSTRUCTION, MATERIALS AND WORKMANSHIP NOT SHOWN ON THIS DRAWING SHALL CONFORM TO THE PERTINENT REQUIREMENTS OF THE CONTRACT.

ALL TYPE 4 POLE MOUNTINGS SHALL BE DESIGNED TO INCLUDE TWIN 15' ARMS WITH LUMINAIRES.

POLES SHALL BE GALVANIZED STEEL WITH A MINIMUM WALL THICKNESS OF U.S. STANDARD 11 GAGE (.1196").

SECTION 657, POLES, OF THE STANDARD SPECIFICATIONS SHALL APPLY TO THIS DRAWING.

A PULL WIRE / ROPE SHALL BE INSTALLED IN EACH TROMBONE ARM RACEWAY DURING THE MANUFACTURING PROCESS.

THE SLIPFITTER END OF THE LUMINAIRE MAST ARM SHALL BE A NOMINAL 2 ⅜ INCHES IN OUTSIDE DIAMETER. THE STRAIGHT PORTION OF THE SLIPFITTER END OF THE LUMINAIRE MAST ARM SHALL BE A NOMINAL 12 INCHES IN LENGTH.

WHEN TRANSFORMER BASES ARE USED, WIRE CONNECTIONS SHALL BE MADE IN THE TRANSFORMER BASE.

1. 4" X 6" REINFORCED HANDHOLE AND COVER ASSEMBLY WITH TWO (2) ¼" X ¾" - 20 TPI , STAINLESS STEEL, HEX HEAD BOLTS.
2. SIGNAL FACE MOUNTING BRACKETS. MOUNT WITH CAP SCREWS AND BANDING.
3. GROMMETS. 1" CHASE NIPPLES OR 1" CLOSE CONDUIT NIPPLES WITH BUSHINGS SHALL BE PROVIDED FOR 1 ⅜" HOLE IN POLE SHAFT FOR WIRING.
4. SECURELY MOUNT DULL BLACK POLYCARBONATE BACK PLATES, PROJECTING 5" BEYOND ALL SIDES OF THE SIGNAL FACE HOUSING, PER MANUFACTURER'S RECOMMENDATIONS.
5. POLE MOUNTED SIGNAL FACES SHALL REQUIRE ONE OR MORE MOUNTING SPACERS UNDER THE TOP MOUNTING BRACKET(S) AS REQUIRED, TO PLUMB THE SIGNAL FACE.
6. CAST ALUMINUM TRANSFORMER BASE, WHEN REQUIRED.
7. FURNISH AND INSTALL VENTILATED, CAST METALLIC (ALUMINUM ALLOY) CAPS. FASTEN CAPS WITH ONE (1) ¼" X ¾" - 20 TPI STAINLESS STEEL, HEX HEAD BOLT.
8. SHIMMING, IF NEEDED, SHALL BE LOCATED BETWEEN THE CONCRETE FOUNDATION AND POLE.
9. USE 1 ½" ID NIPPLES ZINC-COATED RIGID METAL CONDUIT, LONG ENOUGH TO ACCOMMODATE FULL DEPTH THREADING INTO THE HEAD MOUNTING LOCK NUT IN ORDER TO TIGHTEN THE FACE, BUT THAT DO NOT INTERFERE WITH REFLECTOR CLOSURE. THREAD THE NIPPLE INTO THE MOUNTING BRACKET/ELBOW UNTIL TIGHT. USE APPROVED PINNACLE TYPE HARDWARE FROM A DEPARTMENT APPROVED MANUFACTURER TO CLOSE THE UNUSED 1 ½" OPENING IN SIGNAL FACES AND BRACKET ENDS.

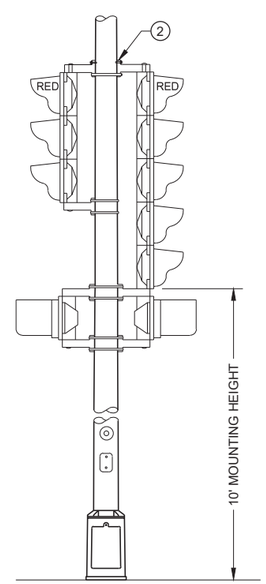

TYPICAL MOUNTING OF BACK TO BACK 3 AND 5 SECTION SIGNAL FACES

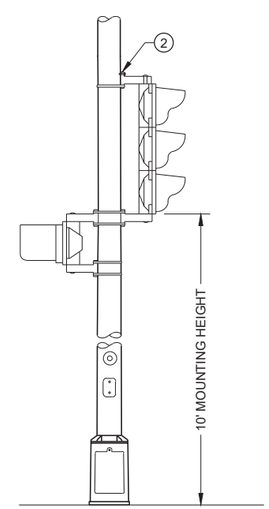

TYPICAL MOUNTING OF 3 SECTION SIGNAL FACE

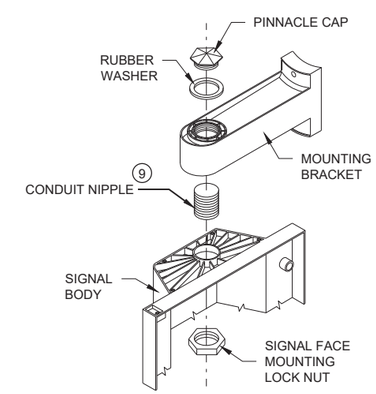

SIGNAL FACE MOUNTING DETAIL
(BANDED)

TYPE 4 POLE MOUNTING CONFIGURATION

POLE MOUNTINGS FOR TRAFFIC SIGNALS AND LIGHTING UNITS, TYPE 4

STATE OF WISCONSIN
DEPARTMENT OF TRANSPORTATION

6
SDD 09E01 - 15c

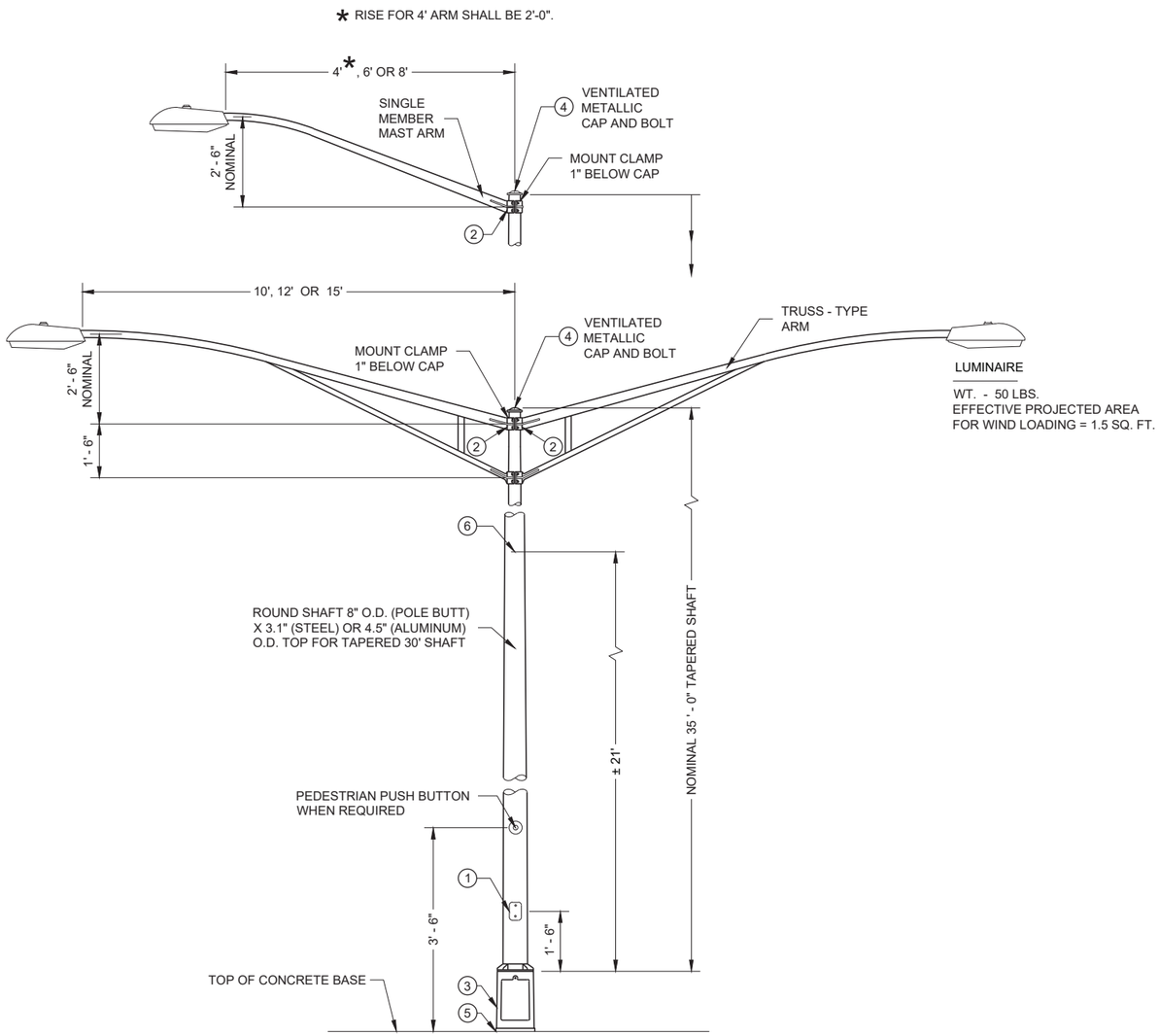

TYPE 6 POLE MOUNTING CONFIGURATION

(MAXIMUM LOAD)

LIGHTING ONLY

GENERAL NOTES

DETAILS OF CONSTRUCTION, MATERIALS AND WORKMANSHIP NOT SHOWN ON THIS DRAWING SHALL CONFORM TO THE PERTINENT REQUIREMENTS OF THE CONTRACT.

SECTION 657, POLES, OF THE STANDARD SPECIFICATIONS SHALL APPLY TO THIS DRAWING.

ALL TYPE 6 POLE MOUNTINGS SHALL BE DESIGNED TO INCLUDE TWIN 15' ARMS WITH LUMINAIRES.

POLES SHALL BE GALVANIZED STEEL OR ALUMINUM, AS CALLED FOR IN THE CONTRACT.

TYPE 6 ALUMINUM POLES SHALL BE CONSTRUCTED OF 6063 - T6 ALUMINUM ALLOY. SLEEVING INSIDE THE POLE IS NOT ACCEPTABLE.

TYPE 6 ALUMINUM POLES SHALL HAVE A MINIMUM WALL THICKNESS OF 0.219".

TYPE 6 STEEL POLES SHALL HAVE A MINIMUM WALL THICKNESS OF U.S. STANDARD 11 GAGE (0.1196").

THE SLIPFITTER END OF THE LUMINAIRE MAST ARM SHALL BE A NOMINAL 2 ⅜ INCHES IN OUTSIDE DIAMETER. THE STRAIGHT PORTION OF THE SLIPFITTER END OF THE LUMINAIRE MAST ARM SHALL BE A NOMINAL 12 INCHES IN LENGTH.

WHEN TRANSFORMER BASES ARE USED, WIRE CONNECTIONS SHALL BE MADE IN THE TRANSFORMER BASE.

1. 4" X 6" REINFORCED HANDHOLE AND COVER ASSEMBLY WITH TWO (2) ¼" X ¾" - 20 TPI , STAINLESS STEEL, HEX HEAD BOLTS.
2. GROMMETS. 1" CHASE NIPPLES OR 1" CLOSE CONDUIT NIPPLES WITH BUSHINGS SHALL BE PROVIDED FOR 1 ⅜" HOLE IN POLE SHAFT FOR WIRING.
3. CAST ALUMINUM TRANSFORMER BASE, WHEN REQUIRED.
4. FURNISH AND INSTALL VENTILATED, CAST METALLIC (ALUMINUM ALLOY) CAPS. FASTEN CAPS WITH ONE (1) ¼" X ¾" - 20 TPI STAINLESS STEEL, HEX HEAD BOLT.
5. SHIMMING, IF NEEDED, SHALL BE LOCATED BETWEEN THE CONCRETE FOUNDATION AND POLE.
6. INTERNAL DUMBBELL - TYPE VIBRATION DAMPER.

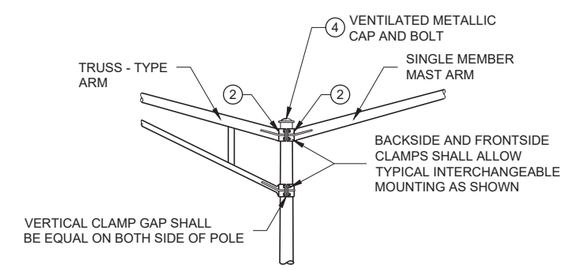

INTERCHANGEABLE MOUNTING DETAIL

POLE MOUNTINGS FOR LIGHTING UNITS, TYPE 6 (35 FEET)

STATE OF WISCONSIN
DEPARTMENT OF TRANSPORTATION

6
SDD 09E01 - 15e

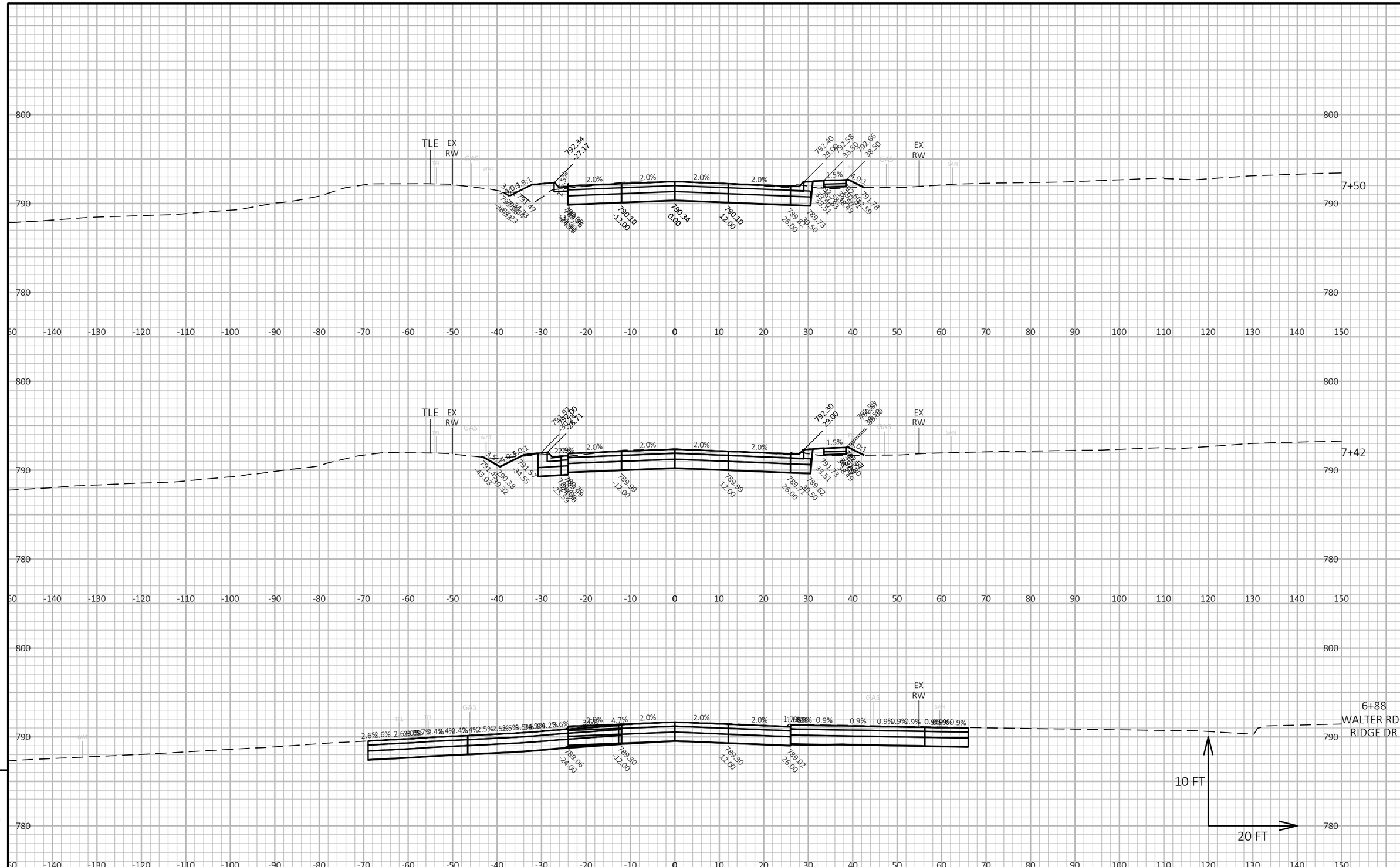

PROJECT NO: 5310-02-76	HWY: USH 14	COUNTY: DANE	CROSS SECTIONS: USH 14	SHEET	E

FILE NAME : N:\PDS\C3D\53100206(14)\SHEETSPLAN\090201-XS-USH 14.DWG
LAYOUT NAME - Section Sheet - (11)
PLOT DATE : 6/6/2019 10:33 AM
PLOT BY : SCHMID, CHARLENE
PLOT NAME :
PLOT SCALE : 1 IN:20 FT HORZ. / 1 IN:10 FT VERT.

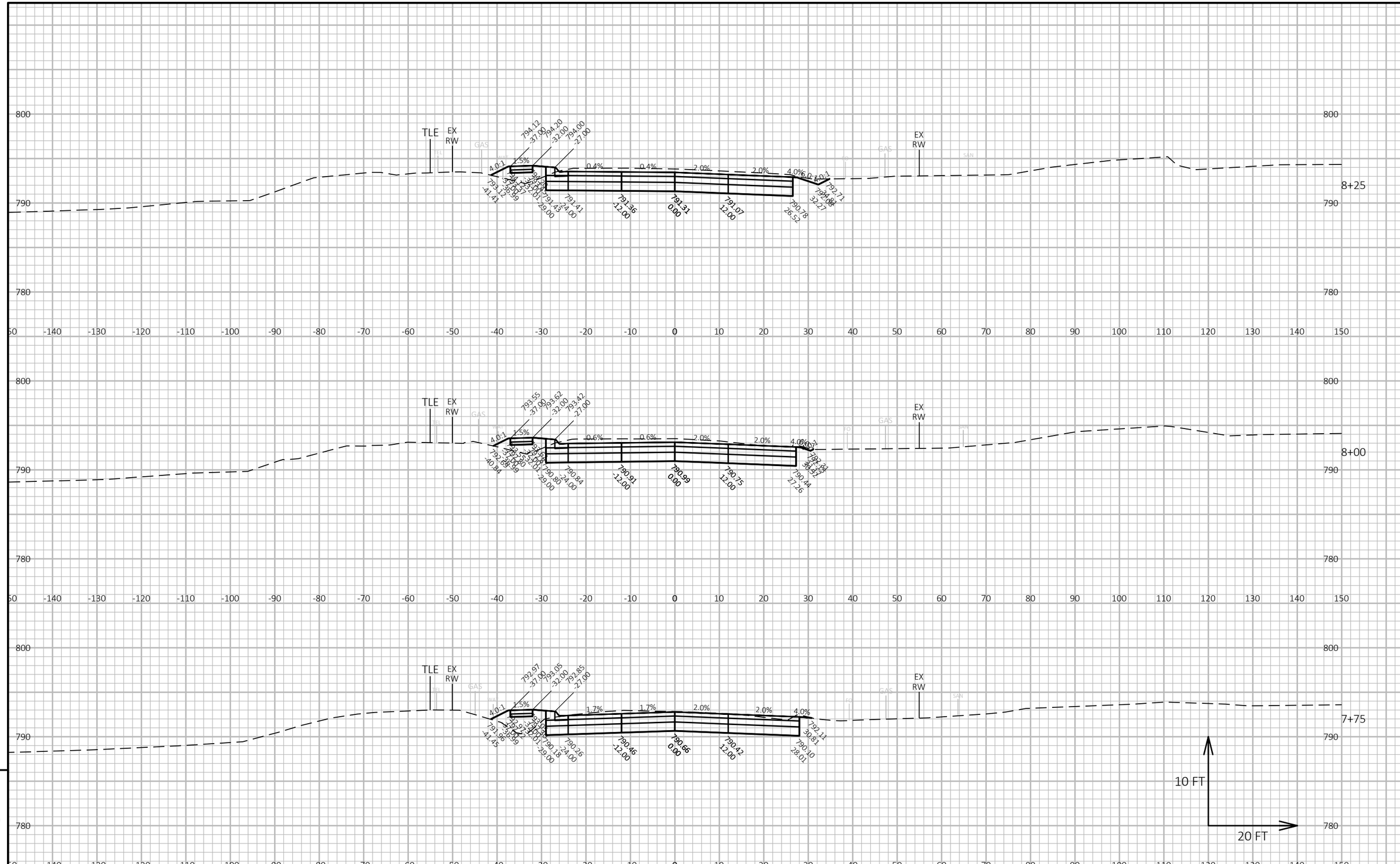

9

9

PROJECT NO: 5310-02-76	HWY: USH 14	COUNTY: DANE	CROSS SECTIONS: USH 14	SHEET	E

FILE NAME : N:\PDS\C3D\53100206(14)\SHEETSPLAN\090201-XS-USH 14.DWG
LAYOUT NAME - Section Sheet - (12)
PLOT DATE : 6/6/2019 10:34 AM
PLOT BY : SCHMID, CHARLENE
PLOT NAME :
PLOT SCALE : 1 IN:20 FT HORZ. / 1 IN:10 FT VERT.

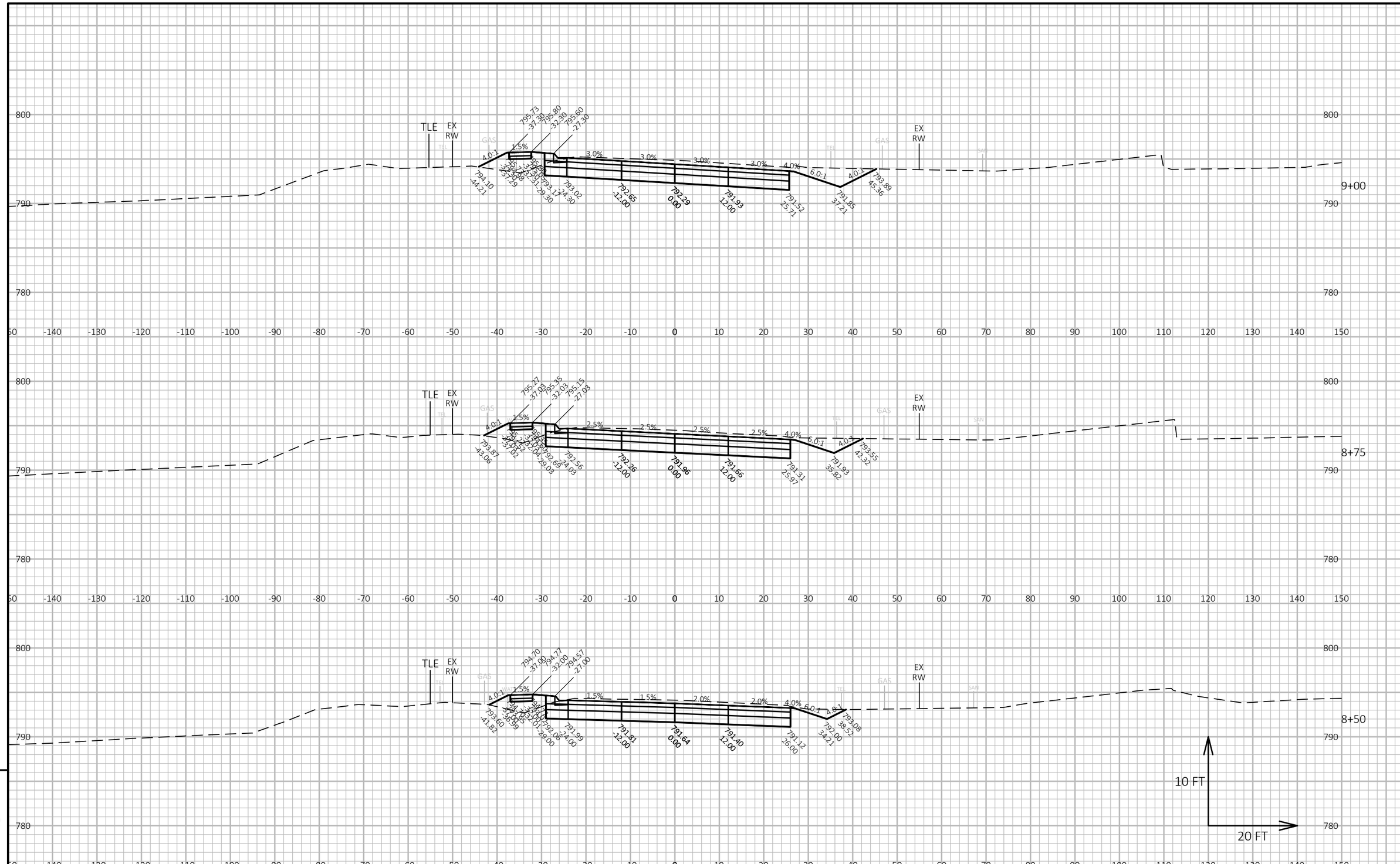

PROJECT NO: 5310-02-76	HWY: USH 14	COUNTY: DANE	CROSS SECTIONS: USH 14	SHEET	E

FILE NAME : N:\PDS\C3D\53100206(14)\SHEETSPLAN\090201-XS-USH 14.DWG
LAYOUT NAME - Section Sheet - (13)
PLOT DATE : 6/6/2019 10:34 AM
PLOT BY : SCHMID, CHARLENE
PLOT NAME :
PLOT SCALE : 1 IN:20 FT HORZ. / 1 IN:10 FT VERT.

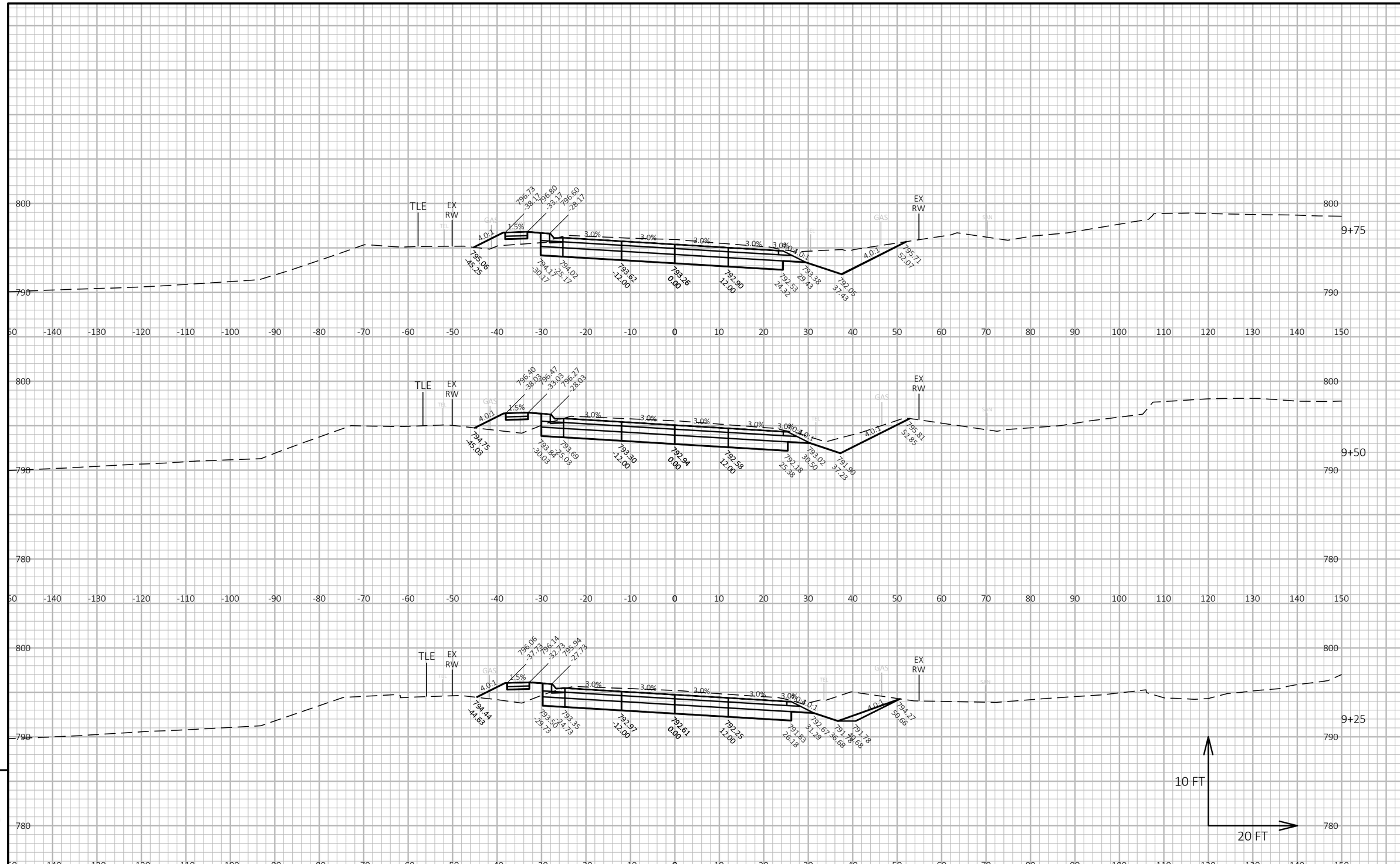

PROJECT NO: 5310-02-76	HWY: USH 14	COUNTY: DANE	CROSS SECTIONS: USH 14	SHEET E

FILE NAME : N:\PDS\C3D\53100206(14)\SHEETSPLAN\090201-XS-USH 14.DWG
LAYOUT NAME - Section Sheet - (14)
PLOT DATE : 6/6/2019 10:34 AM
PLOT BY : SCHMID, CHARLENE
PLOT NAME :
PLOT SCALE : 1 IN:20 FT HORZ. / 1 IN:10 FT VERT.

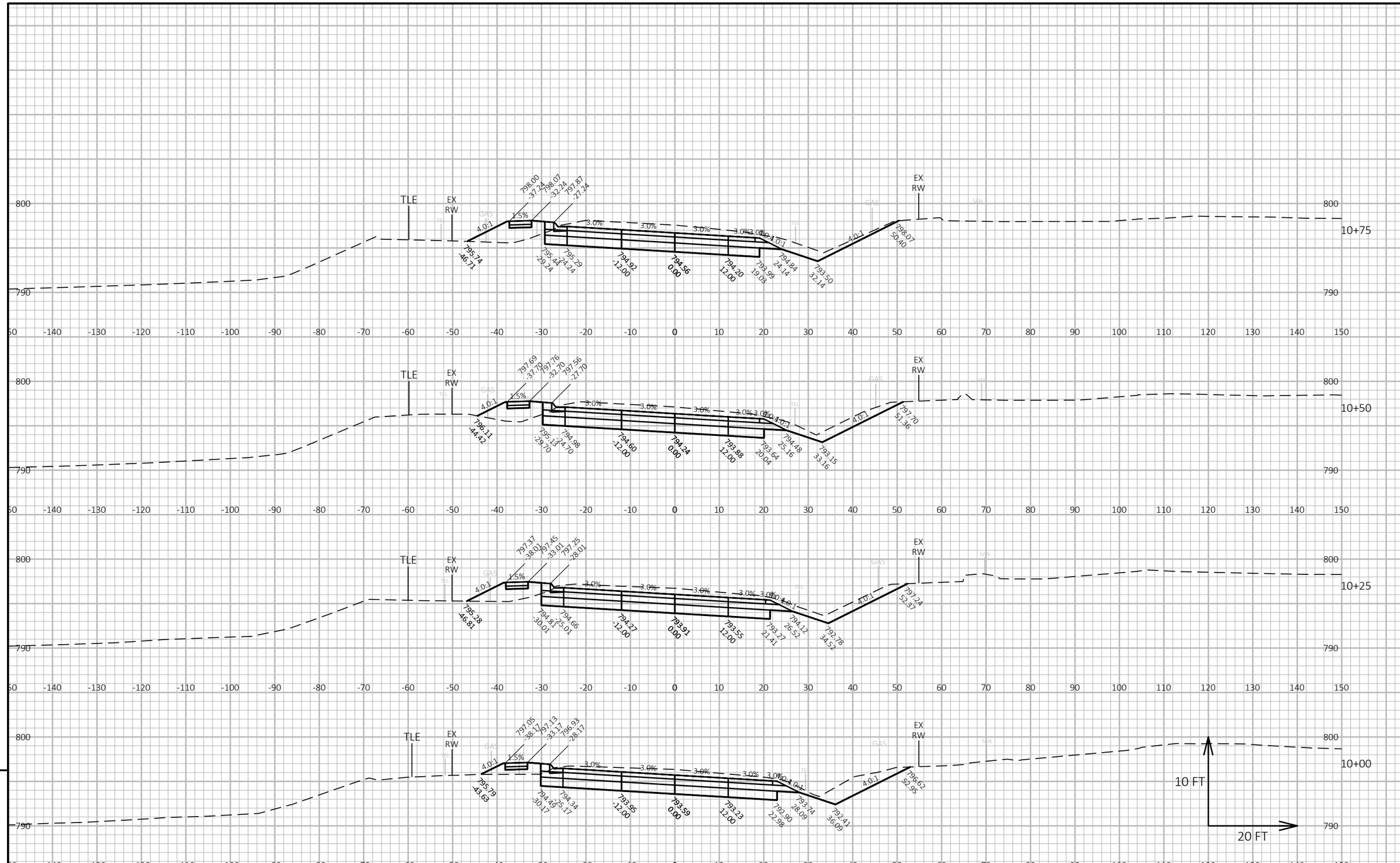

9

9

PROJECT NO: 5310-02-76	HWY: USH 14	COUNTY: DANE	CROSS SECTIONS: USH 14	SHEET	E

FILE NAME : N:\PDS\C3D\53100206(14)\SHEETSPLAN\090201-XS-USH 14.DWG
LAYOUT NAME - Section Sheet - (15)
PLOT DATE : 6/6/2019 10:34 AM
PLOT BY : SCHMID, CHARLENE
PLOT NAME :
PLOT SCALE : 1 IN:20 FT HORZ. / 1 IN:10 FT VERT.

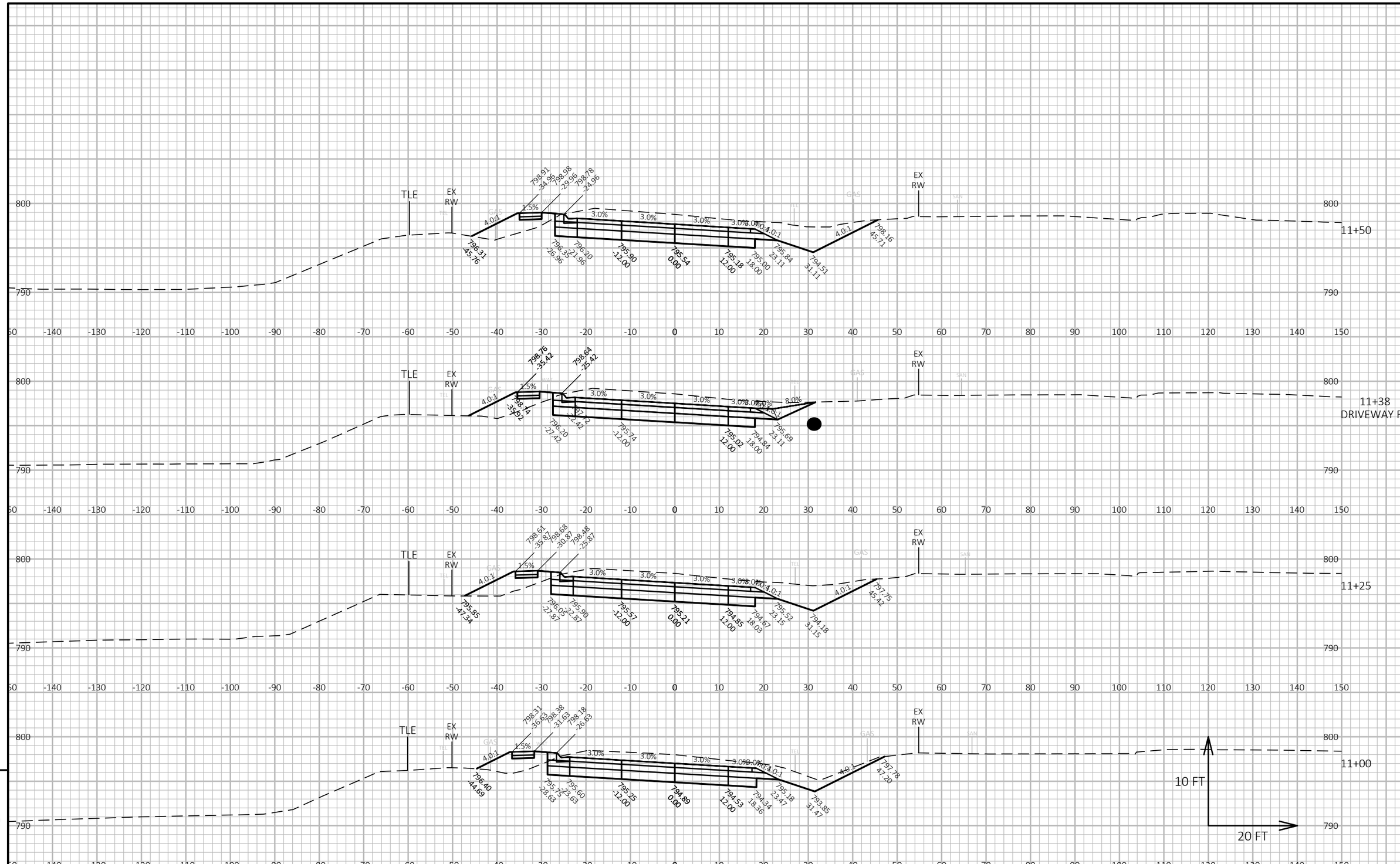

PROJECT NO: 5310-02-76	HWY: USH 14	COUNTY: DANE	CROSS SECTIONS: USH 14	SHEET	E

FILE NAME : N:\PDS\C3D\53100206(14)\SHEETSPLAN\090201-XS-USH 14.DWG
LAYOUT NAME - Section Sheet - (16)
PLOT DATE : 6/6/2019 10:35 AM
PLOT BY : SCHMID, CHARLENE
PLOT NAME :
PLOT SCALE : 1 IN:20 FT HORZ. / 1 IN:10 FT VERT.

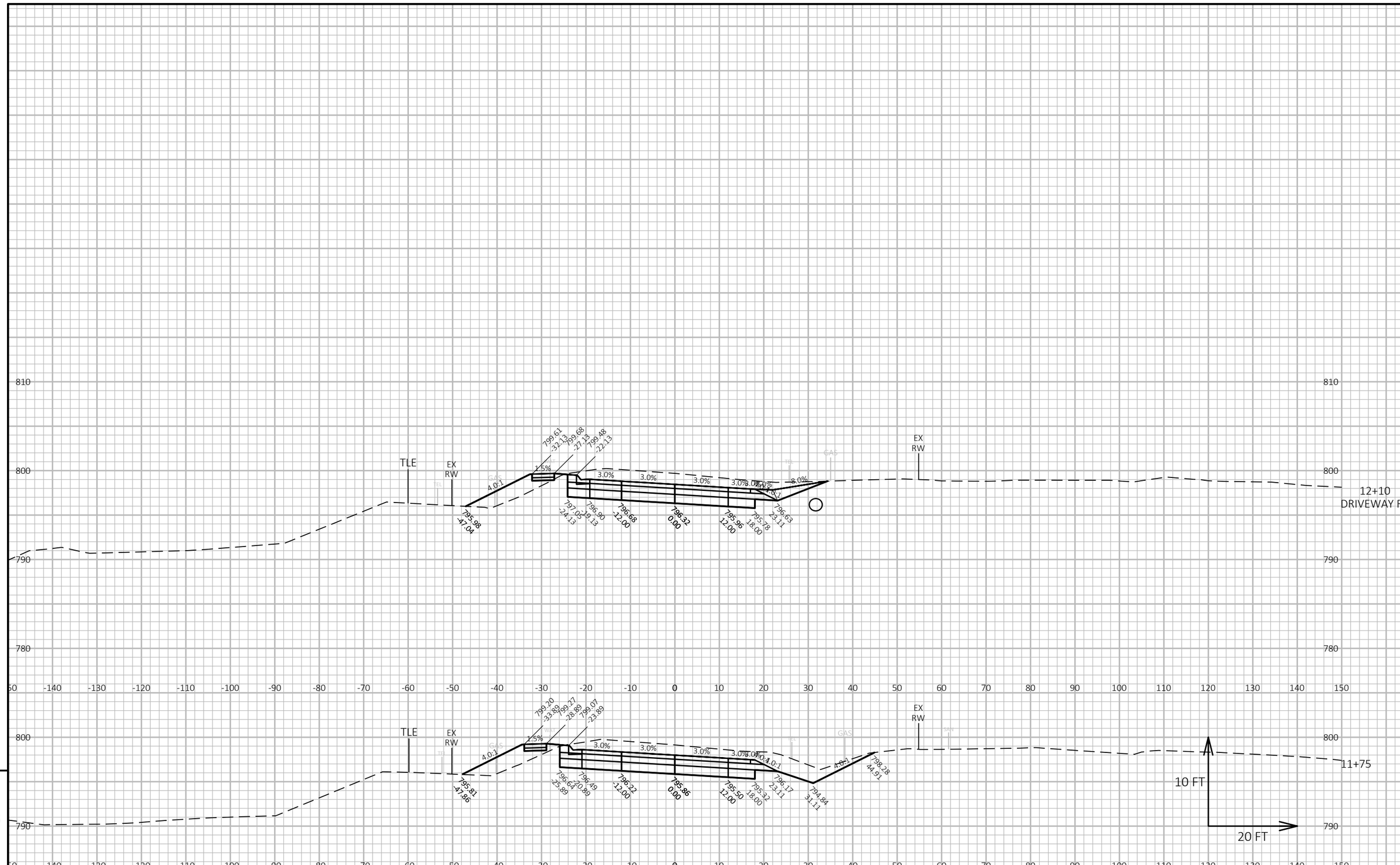

9

9

PROJECT NO: 5310-02-76	HWY: USH 14	COUNTY: DANE	CROSS SECTIONS: USH 14	SHEET	E

FILE NAME : N:\PDS\C3D\53100206(14)\SHEETSPLAN\090201-XS-USH 14.DWG
LAYOUT NAME - Section Sheet - (17)
PLOT DATE : 6/6/2019 10:35 AM
PLOT BY : SCHMID, CHARLENE
PLOT NAME :
PLOT SCALE : 1 IN:20 FT HORZ. / 1 IN:10 FT VERT.

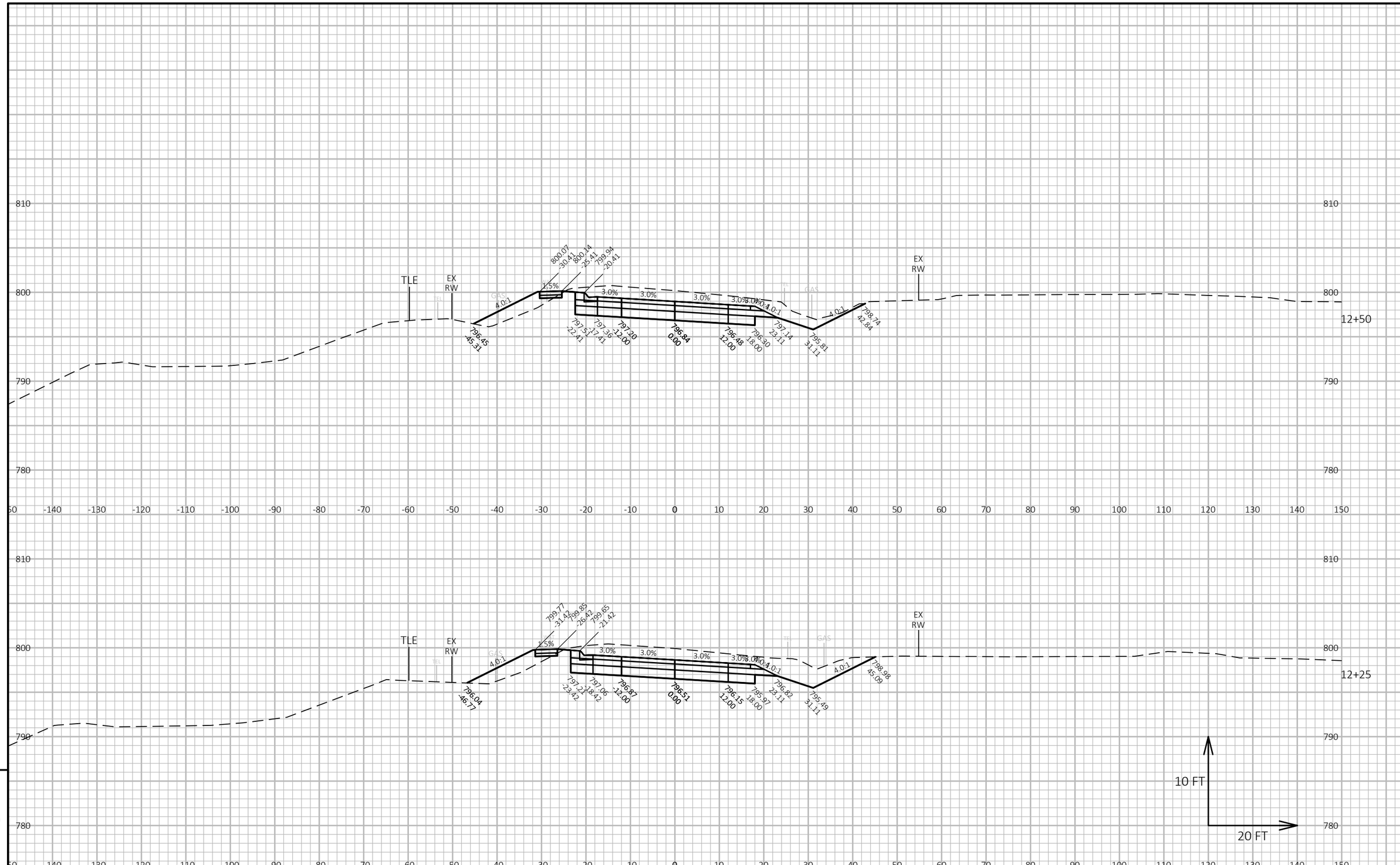

PROJECT NO: 5310-02-76	HWY: USH 14	COUNTY: DANE	CROSS SECTIONS: USH 14	SHEET	E

FILE NAME : N:\PDS\C3D\53100206(14)\SHEETSPLAN\090201-XS-USH 14.DWG
LAYOUT NAME - Section Sheet - (18)
PLOT DATE : 6/6/2019 10:35 AM
PLOT BY : SCHMID, CHARLENE
PLOT NAME :
PLOT SCALE : 1 IN:20 FT HORZ. / 1 IN:10 FT VERT.

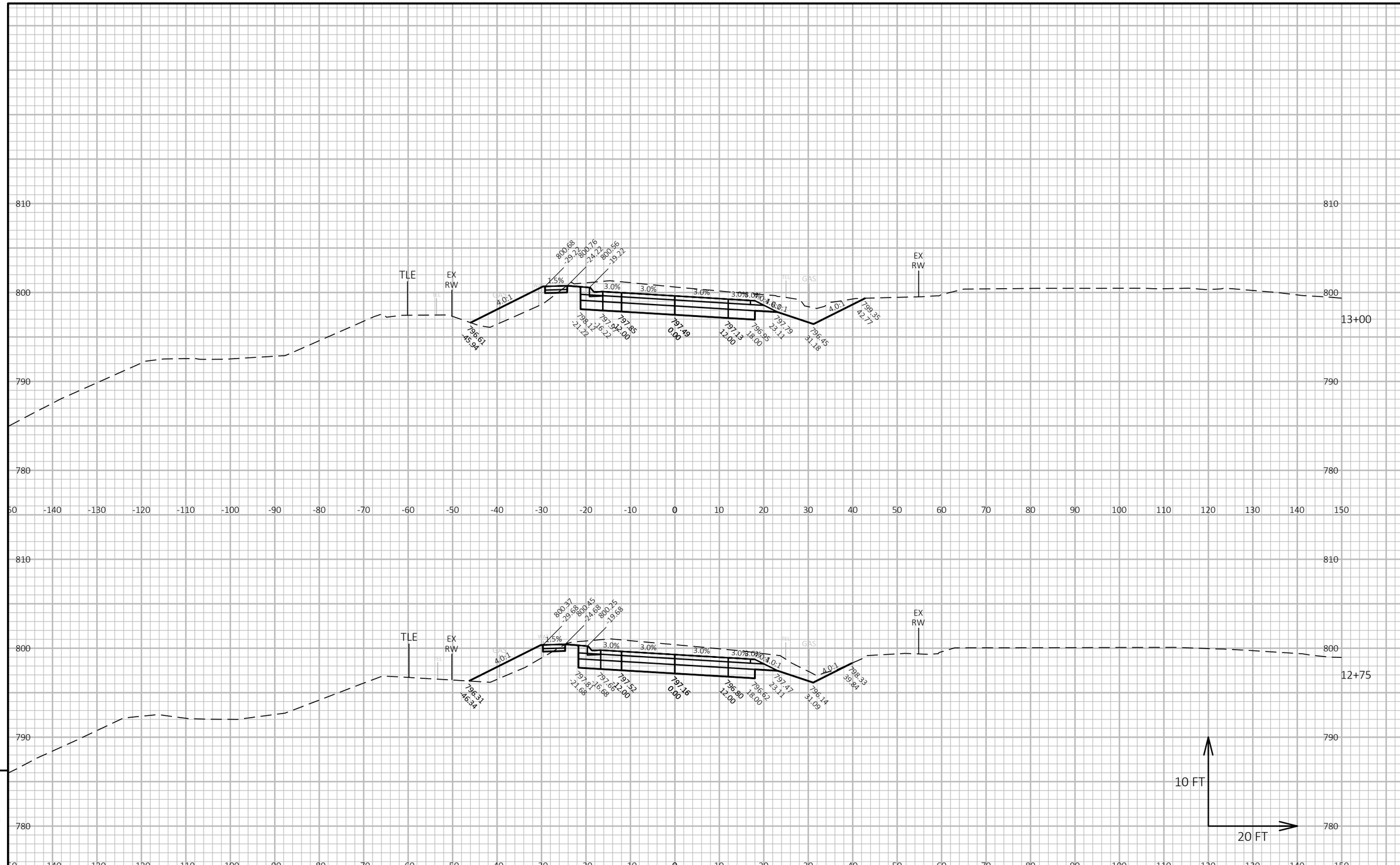

PROJECT NO: 5310-02-76	HWY: USH 14	COUNTY: DANE	CROSS SECTIONS: USH 14	SHEET	E

FILE NAME : N:\PDS\C3D\53100206(14)\SHEETSPLAN\090201-XS-USH 14.DWG
LAYOUT NAME - Section Sheet - (19)
PLOT DATE : 6/6/2019 10:35 AM
PLOT BY : SCHMID, CHARLENE
PLOT NAME :
PLOT SCALE : 1 IN:20 FT HORZ. / 1 IN:10 FT VERT.

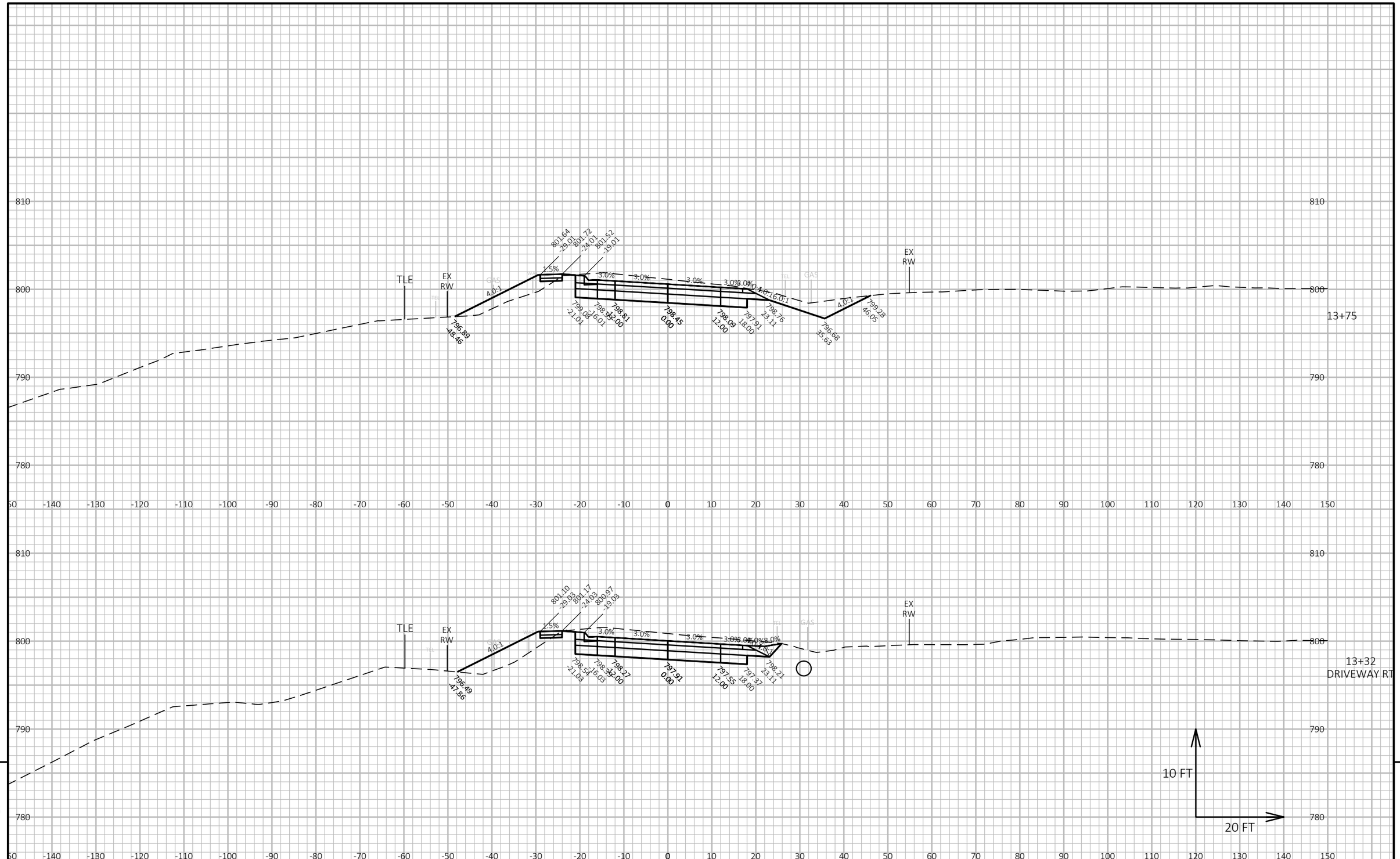

PROJECT NO: 5310-02-76	HWY: USH 14	COUNTY: DANE	CROSS SECTIONS: USH 14	SHEET	E

FILE NAME : N:\PDS\C3D\53100206(14)\SHEETSPLAN\090201-XS-USH 14.DWG
LAYOUT NAME - Section Sheet - (20)
PLOT DATE : 6/6/2019 10:36 AM
PLOT BY : SCHMID, CHARLENE
PLOT NAME :
PLOT SCALE : 1 IN:20 FT HORZ. / 1 IN:10 FT VERT.

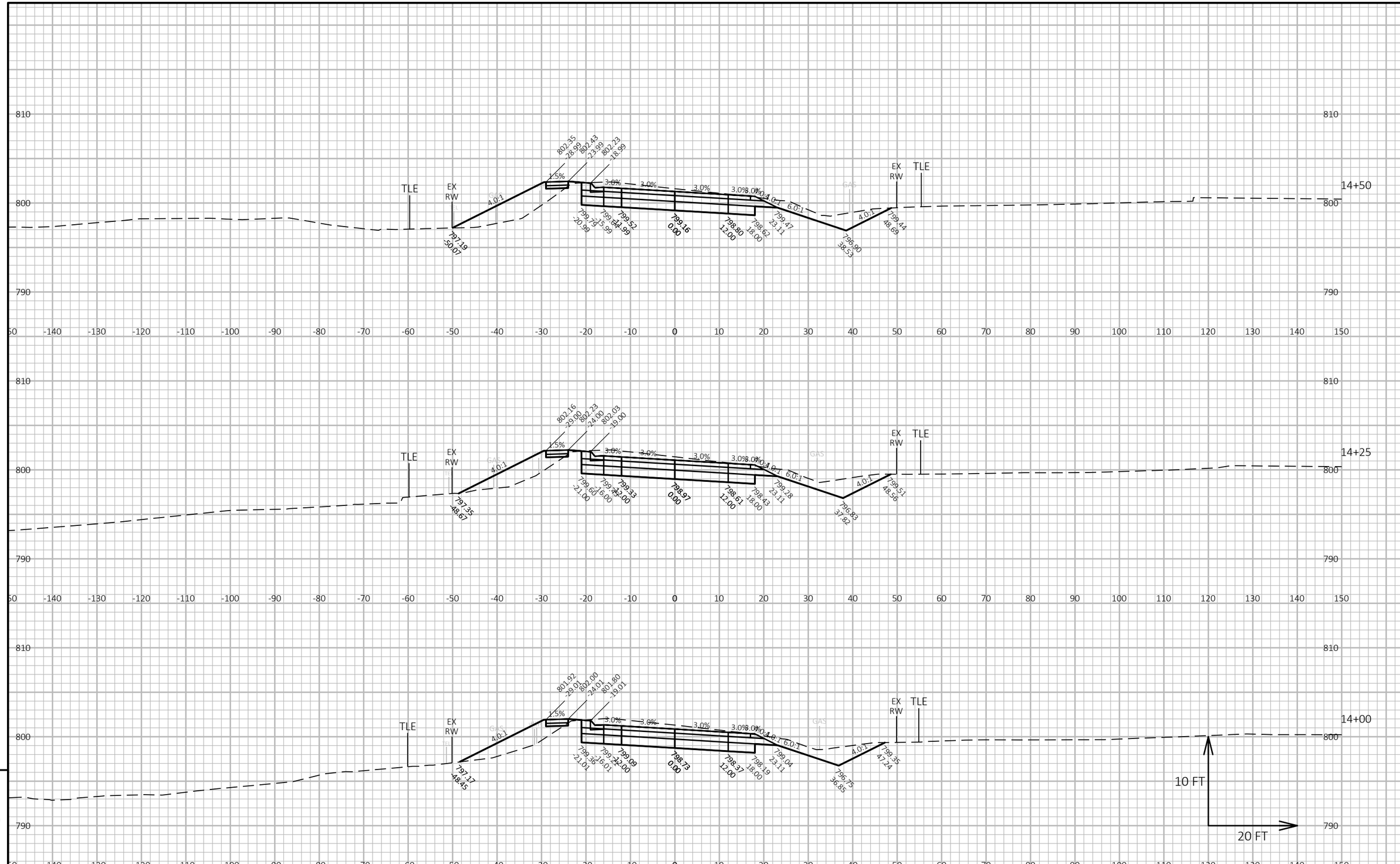

PROJECT NO: 5310-02-76	HWY: USH 14	COUNTY: DANE	CROSS SECTIONS: USH 14	SHEET	E

FILE NAME : N:\PDS\C3D\53100206(14)\SHEETSPLAN\090201-XS-USH 14.DWG
LAYOUT NAME - Section Sheet - (21)
PLOT DATE : 6/6/2019 10:36 AM
PLOT BY : SCHMID, CHARLENE
PLOT NAME :
PLOT SCALE : 1 IN:20 FT HORZ. / 1 IN:10 FT VERT.

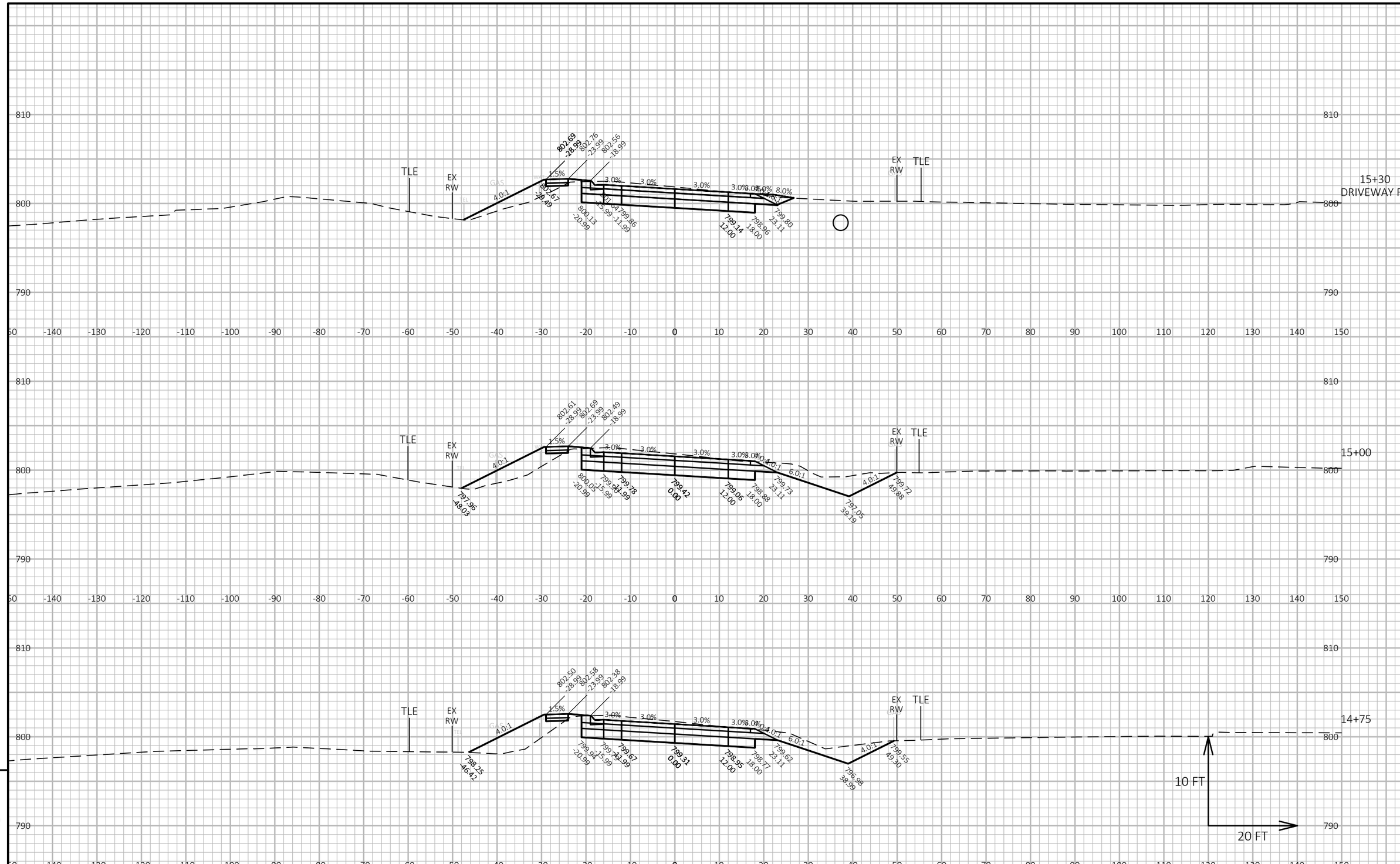

9

PROJECT NO: 5310-02-76	HWY: USH 14	COUNTY: DANE	CROSS SECTIONS: USH 14	SHEET	E

FILE NAME : N:\PDS\C3D\53100206(14)\SHEETSPLAN\090201-XS-USH 14.DWG
LAYOUT NAME - Section Sheet - (22)
PLOT DATE : 6/6/2019 10:36 AM
PLOT BY : SCHMID, CHARLENE
PLOT NAME :
PLOT SCALE : 1 IN:20 FT HORZ. / 1 IN:10 FT VERT.

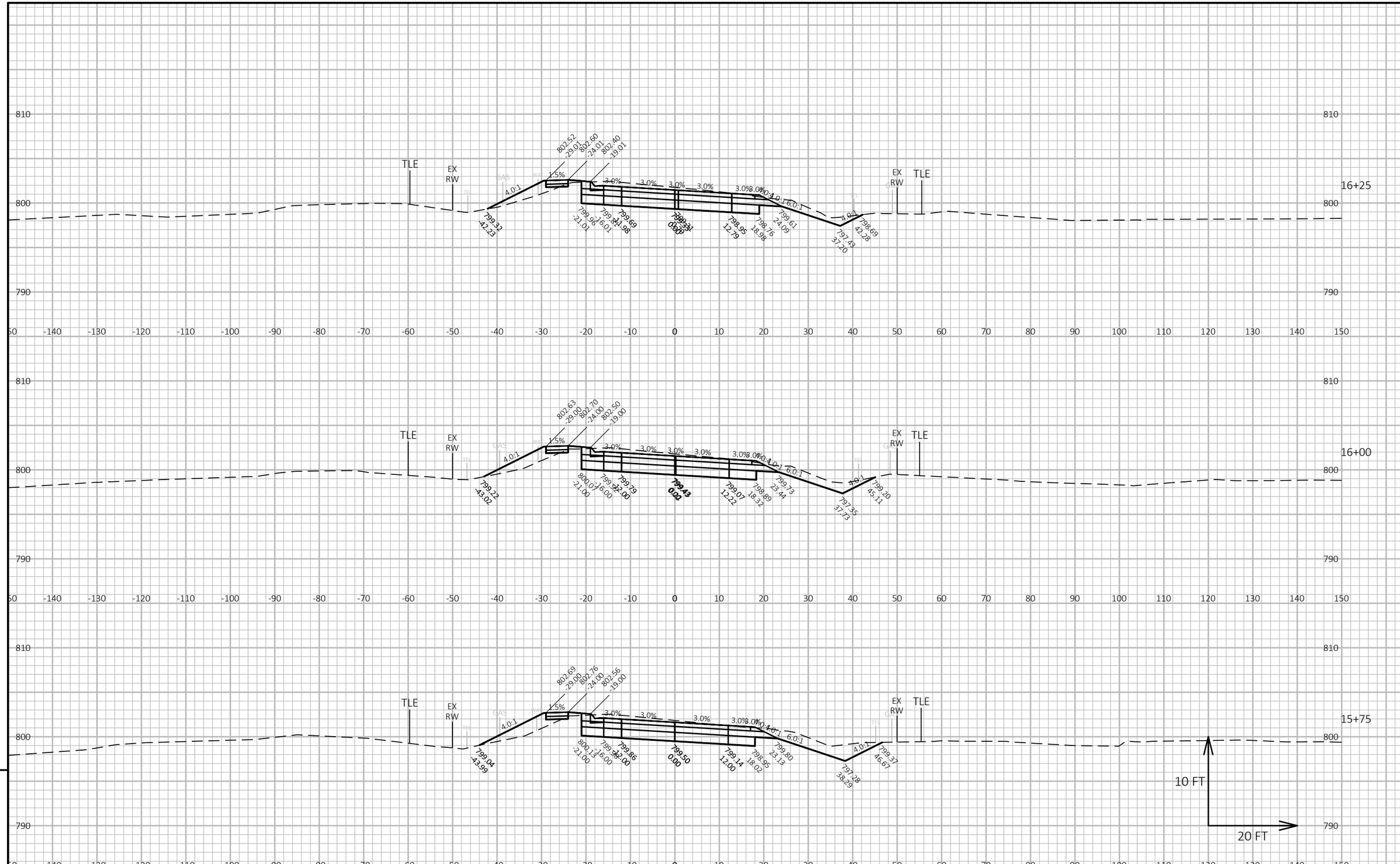

9

9

PROJECT NO: 5310-02-76	HWY: USH 14	COUNTY: DANE	CROSS SECTIONS: USH 14	SHEET	E

FILE NAME : N:\PDS\C3D\53100206(14)\SHEETSPLAN\090201-XS-USH 14.DWG
LAYOUT NAME - Section Sheet - (23)
PLOT DATE : 6/6/2019 10:36 AM
PLOT BY : SCHMID, CHARLENE
PLOT NAME :
PLOT SCALE : 1 IN:20 FT HORZ. / 1 IN:10 FT VERT.

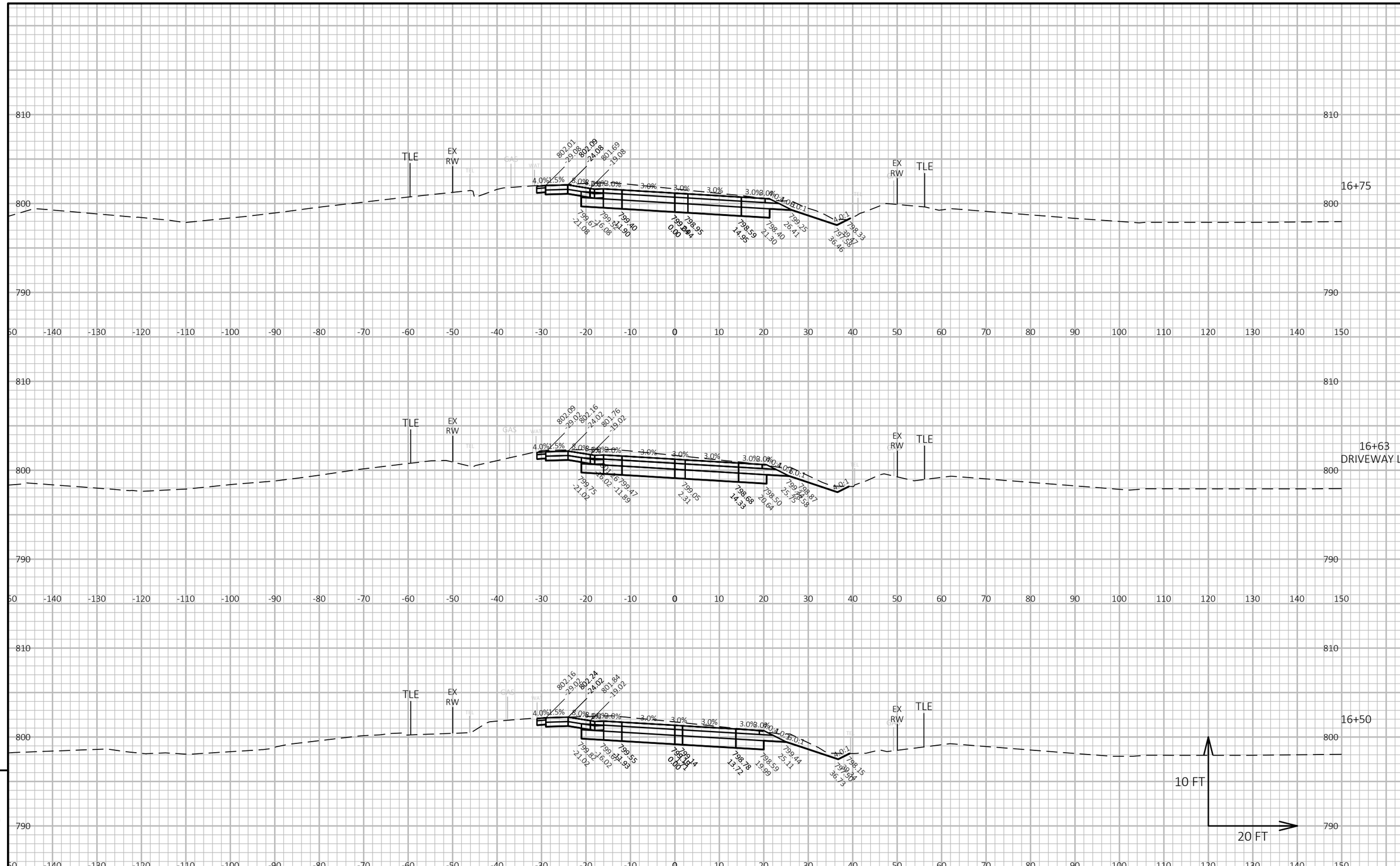

9

9

PROJECT NO: 5310-02-76	HWY: USH 14	COUNTY: DANE	CROSS SECTIONS: USH 14	SHEET	E

FILE NAME : N:\PDS\C3D\53100206(14)\SHEETSPLAN\090201-XS-USH 14.DWG
LAYOUT NAME - Section Sheet - (24)
PLOT DATE : 6/6/2019 10:37 AM
PLOT BY : SCHMID, CHARLENE
PLOT NAME :
PLOT SCALE : 1 IN:20 FT HORZ. / 1 IN:10 FT VERT.

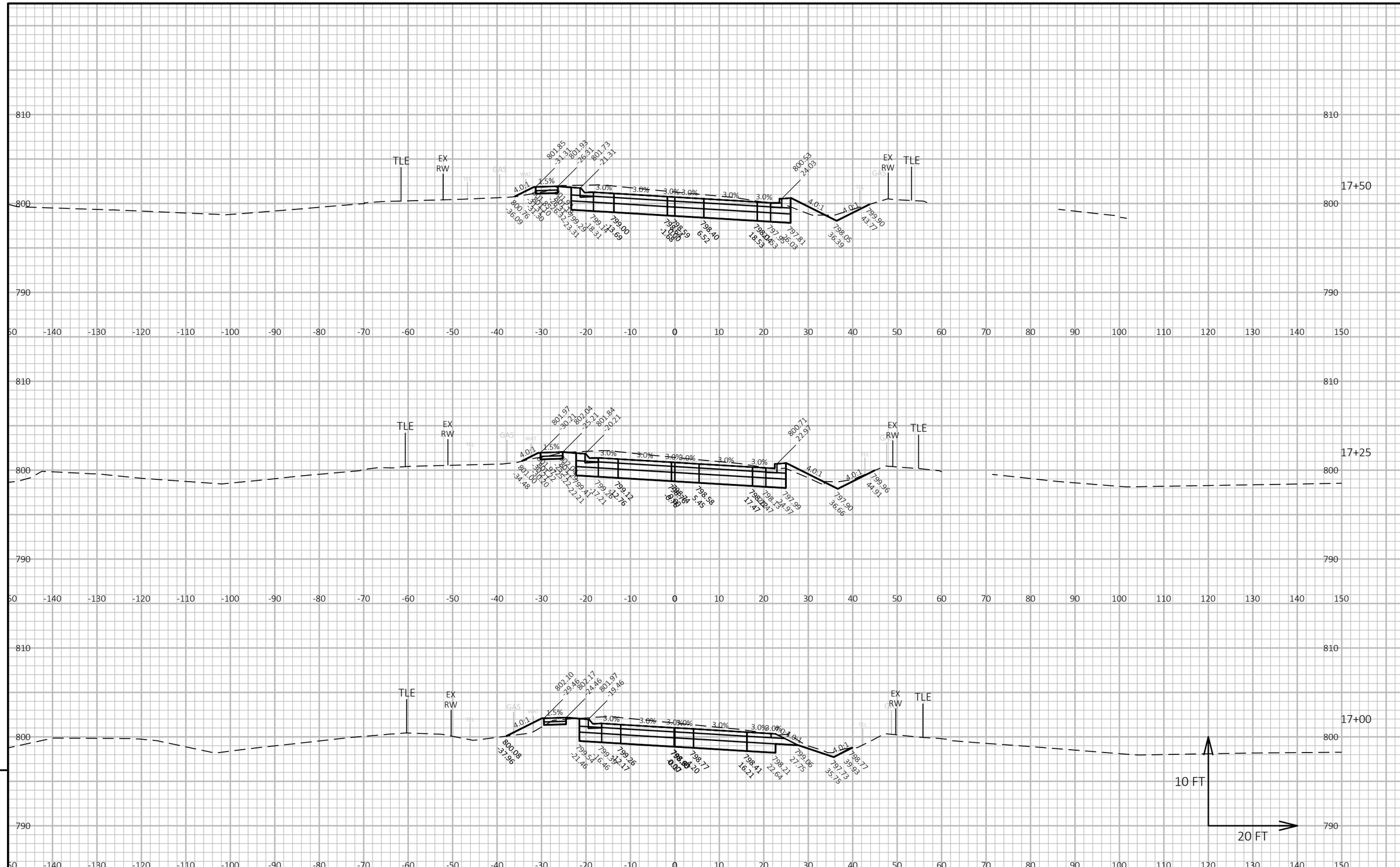

PROJECT NO: 5310-02-76	HWY: USH 14	COUNTY: DANE	CROSS SECTIONS: USH 14	SHEET	E

FILE NAME : N:\PDS\C3D\53100206(14)\SHEETSPLAN\090201-XS-USH 14.DWG
LAYOUT NAME - Section Sheet - (25)
PLOT DATE : 6/6/2019 10:37 AM
PLOT BY : SCHMID, CHARLENE
PLOT NAME :
PLOT SCALE : 1 IN:20 FT HORZ. / 1 IN:10 FT VERT.

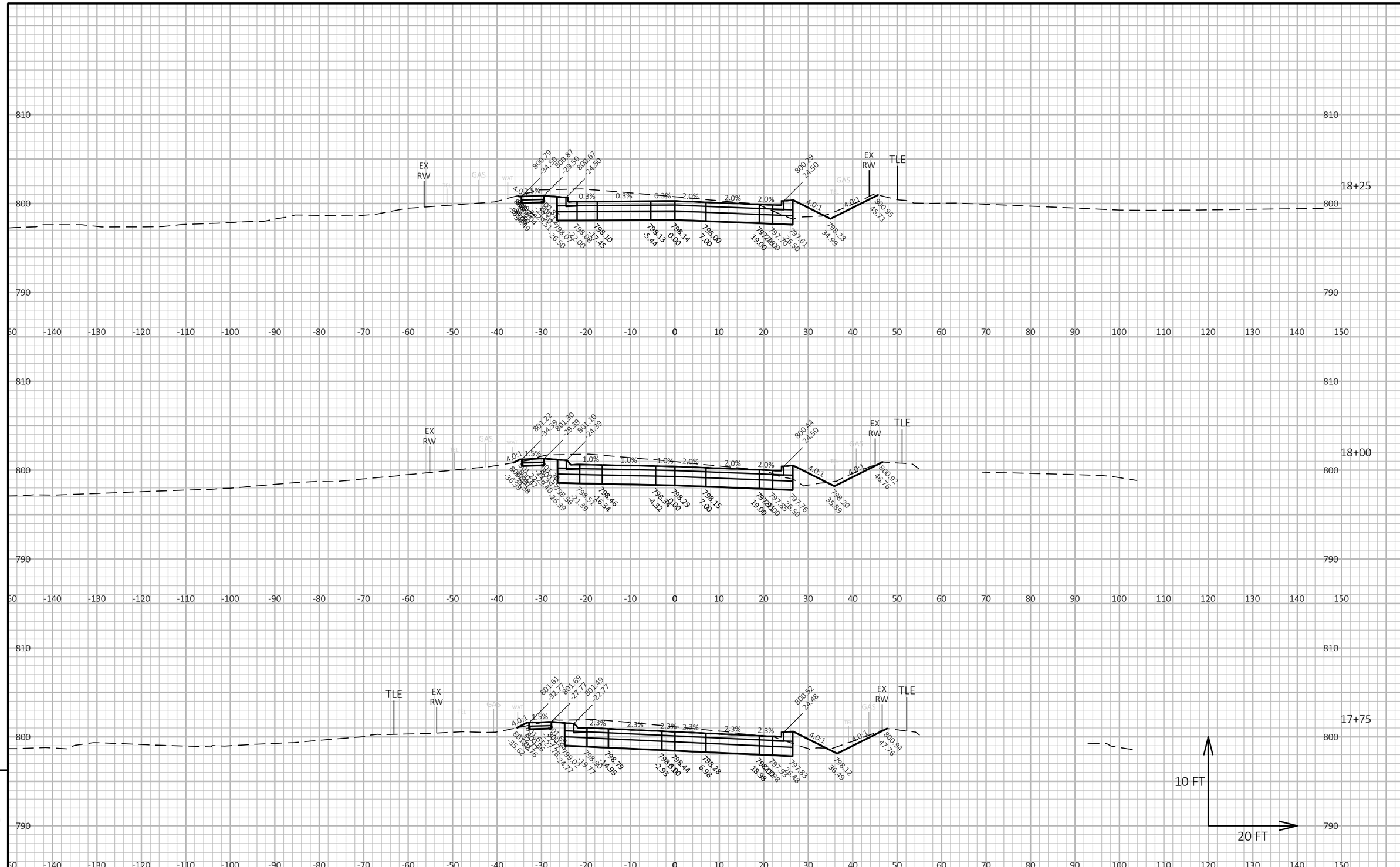

9

PROJECT NO: 5310-02-76	HWY: USH 14	COUNTY: DANE	CROSS SECTIONS: USH 14	SHEET	E

FILE NAME : N:\PDS\C3D\53100206(14)\SHEETSPLAN\090201-XS-USH 14.DWG
LAYOUT NAME - Section Sheet - (26)
PLOT DATE : 6/6/2019 10:37 AM
PLOT BY : SCHMID, CHARLENE
PLOT NAME :
PLOT SCALE : 1 IN:20 FT HORZ. / 1 IN:10 FT VERT.

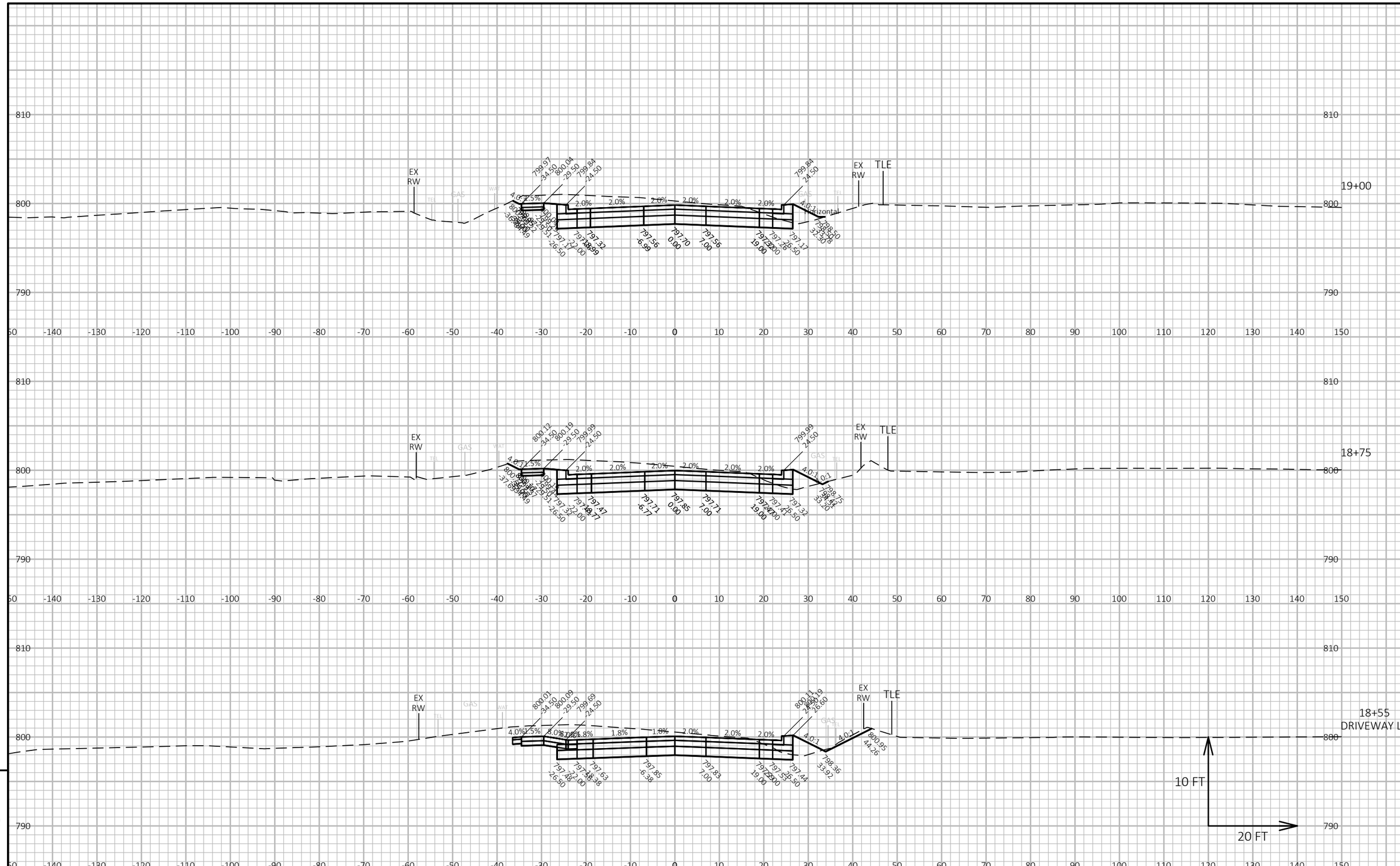

9

9

PROJECT NO: 5310-02-76	HWY: USH 14	COUNTY: DANE	CROSS SECTIONS: USH 14	SHEET	E

FILE NAME : N:\PDS\C3D\53100206(14)\SHEETSPLAN\090201-XS-USH 14.DWG
LAYOUT NAME - Section Sheet - (27)
PLOT DATE : 6/6/2019 10:37 AM
PLOT BY : SCHMID, CHARLENE
PLOT NAME :
PLOT SCALE : 1 IN:20 FT HORZ. / 1 IN:10 FT VERT.

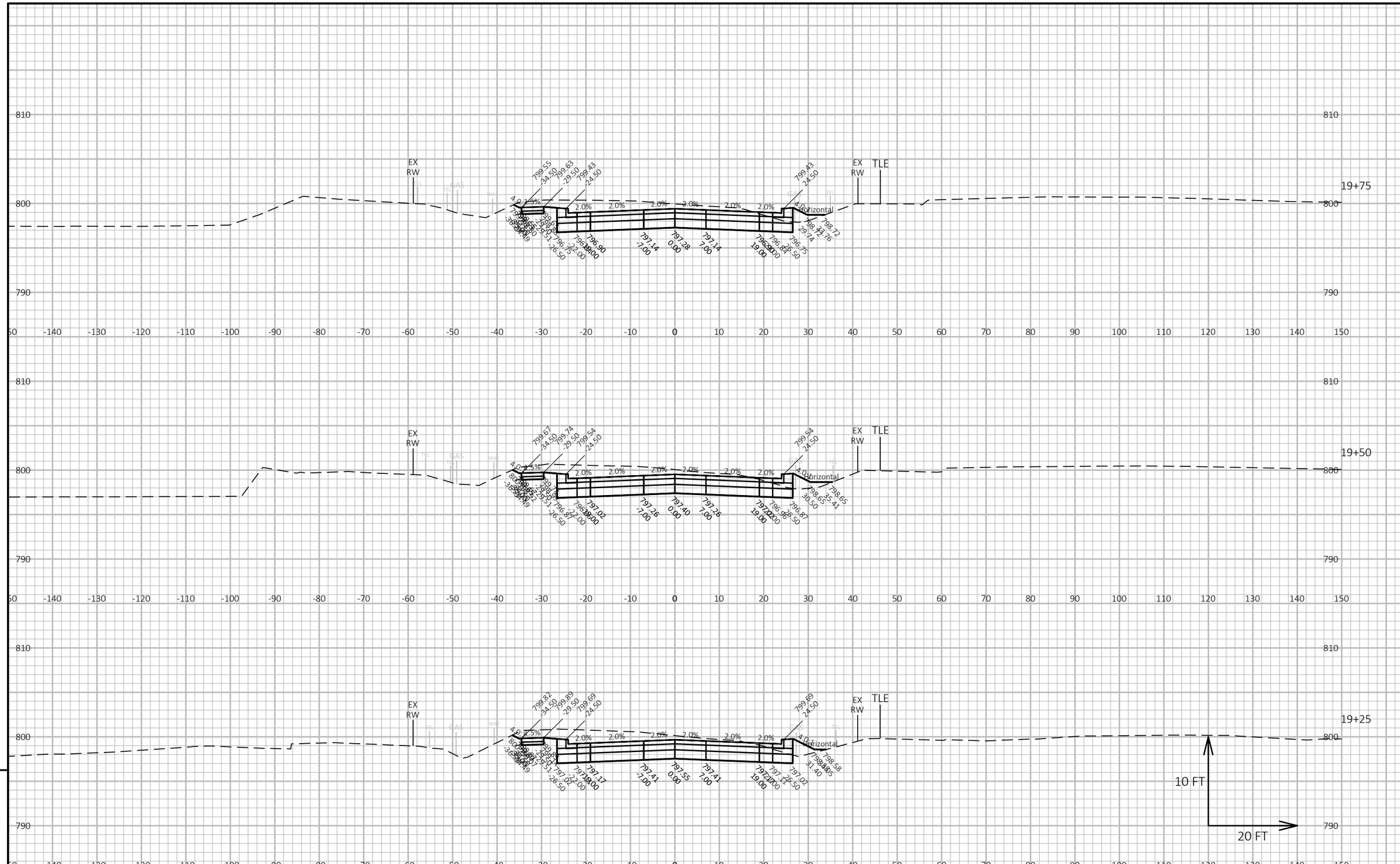

9

PROJECT NO: 5310-02-76	HWY: USH 14	COUNTY: DANE	CROSS SECTIONS: USH 14	SHEET	E

FILE NAME : N:\PDS\C3D\53100206(14)\SHEETSPLAN\090201-XS-USH 14.DWG
LAYOUT NAME - Section Sheet - (28)
PLOT DATE : 6/6/2019 10:38 AM
PLOT BY : SCHMID, CHARLENE
PLOT NAME :
PLOT SCALE : 1 IN:20 FT HORZ. / 1 IN:10 FT VERT.

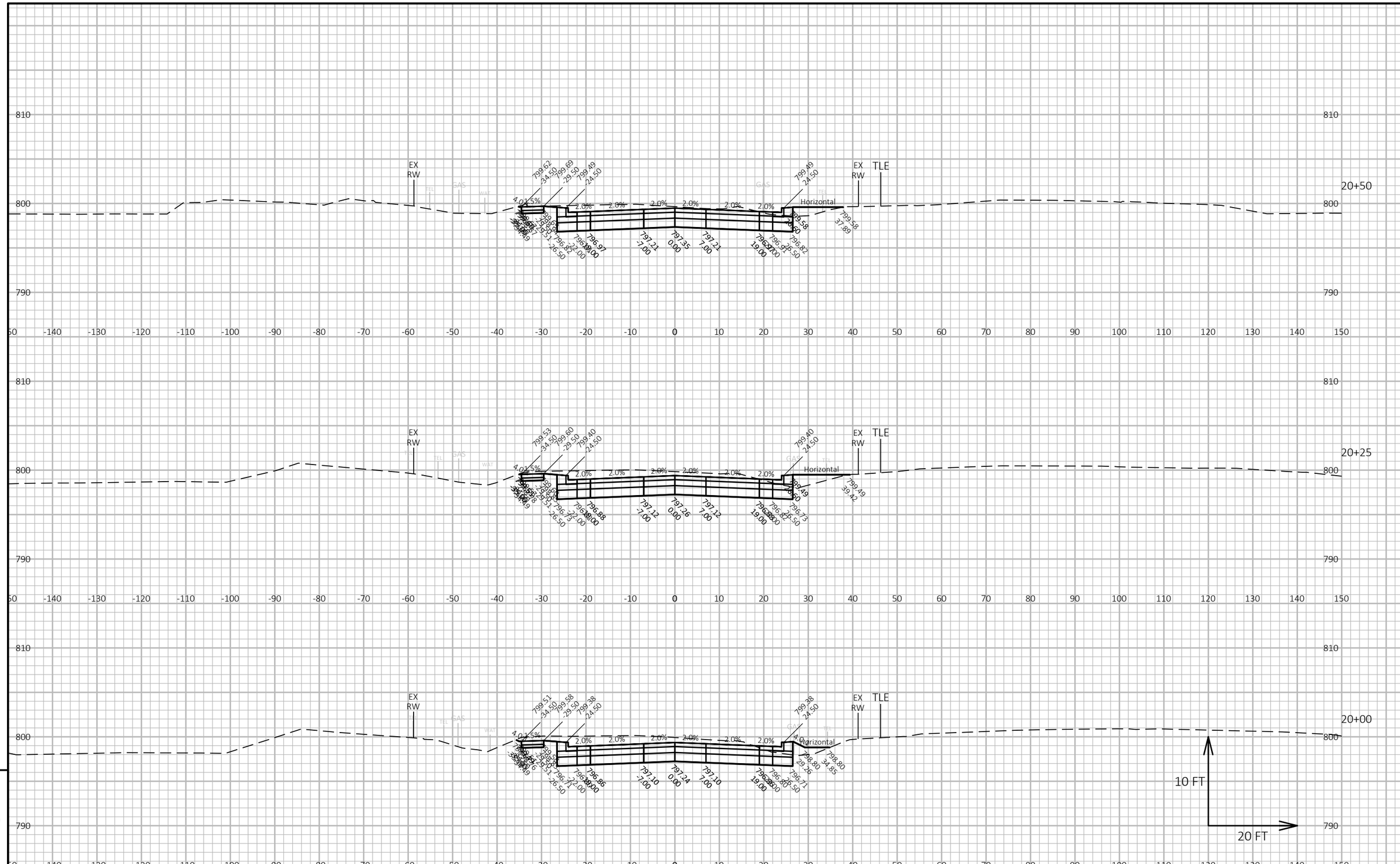

PROJECT NO: 5310-02-76	HWY: USH 14	COUNTY: DANE	CROSS SECTIONS: USH 14	SHEET	E

FILE NAME : N:\PDS\C3D\53100206(14)\SHEETSPLAN\090201-XS-USH 14.DWG
LAYOUT NAME - Section Sheet - (29)
PLOT DATE : 6/6/2019 10:38 AM
PLOT BY : SCHMID, CHARLENE
PLOT NAME :
PLOT SCALE : 1 IN:20 FT HORZ. / 1 IN:10 FT VERT.

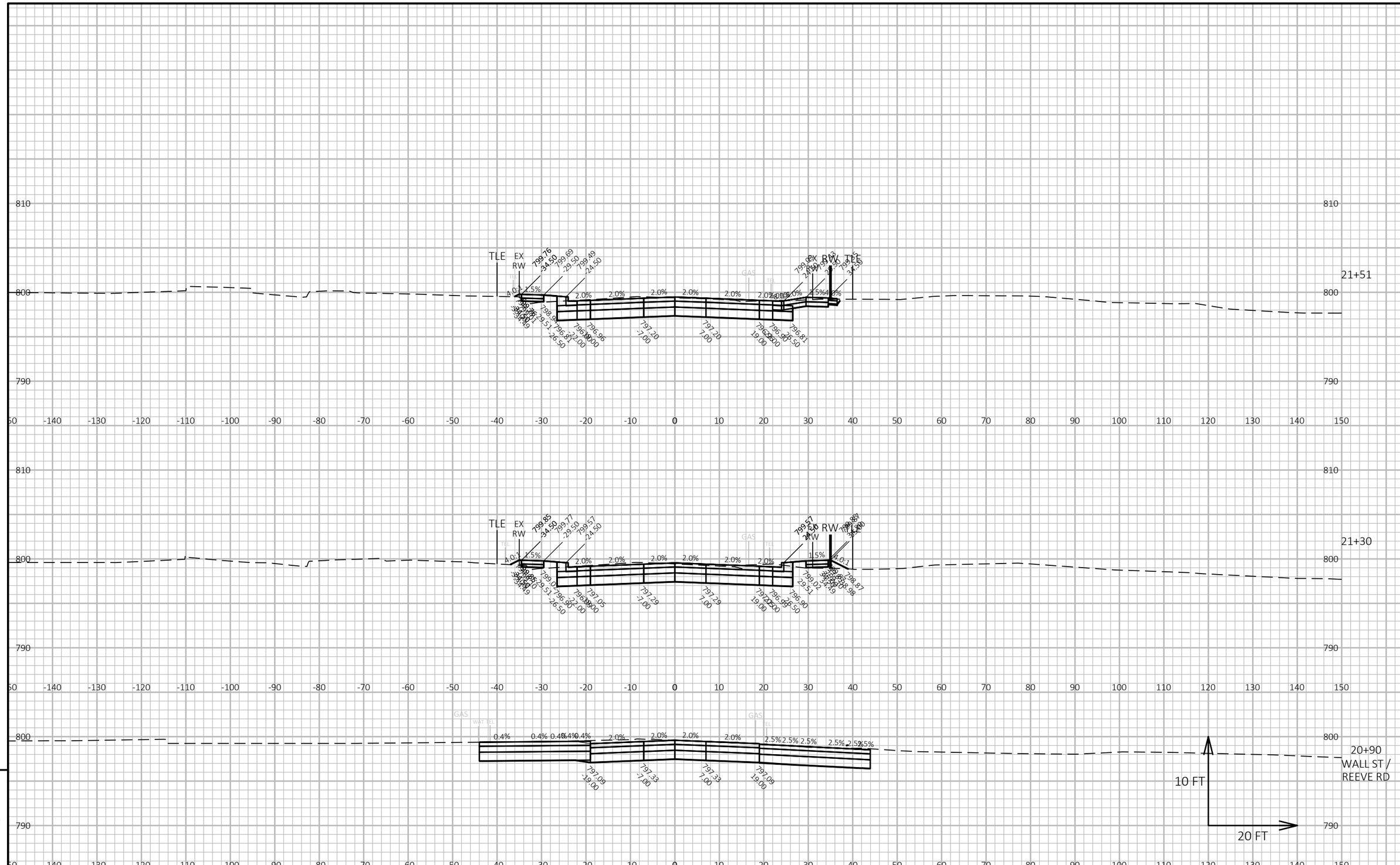

9

PROJECT NO: 5310-02-76	HWY: USH 14	COUNTY: DANE	CROSS SECTIONS: USH 14	SHEET	E

FILE NAME : N:\PDS\C3D\53100206(14)\SHEETSPLAN\090201-XS-USH 14.DWG
LAYOUT NAME - Section Sheet - (30)
PLOT DATE : 6/6/2019 10:38 AM
PLOT BY : SCHMID, CHARLENE
PLOT NAME :
PLOT SCALE : 1 IN:20 FT HORZ. / 1 IN:10 FT VERT.

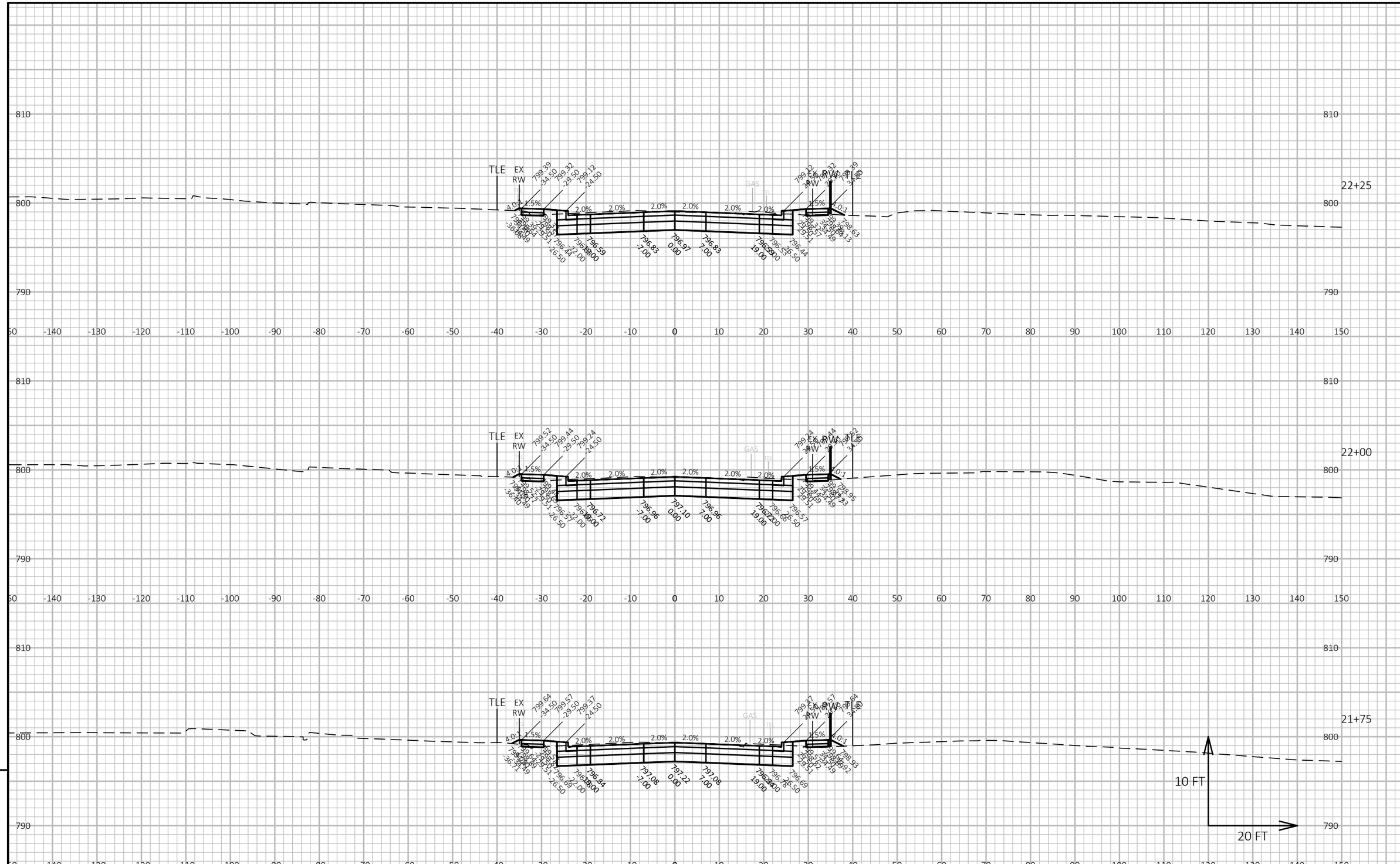

PROJECT NO: 5310-02-76	HWY: USH 14	COUNTY: DANE	CROSS SECTIONS: USH 14	SHEET	E

FILE NAME : N:\PDS\C3D\53100206(14)\SHEETSPLAN\090201-XS-USH 14.DWG
LAYOUT NAME - Section Sheet - (31)
PLOT DATE : 6/6/2019 10:38 AM
PLOT BY : SCHMID, CHARLENE
PLOT NAME :
PLOT SCALE : 1 IN:20 FT HORZ. / 1 IN:10 FT VERT.

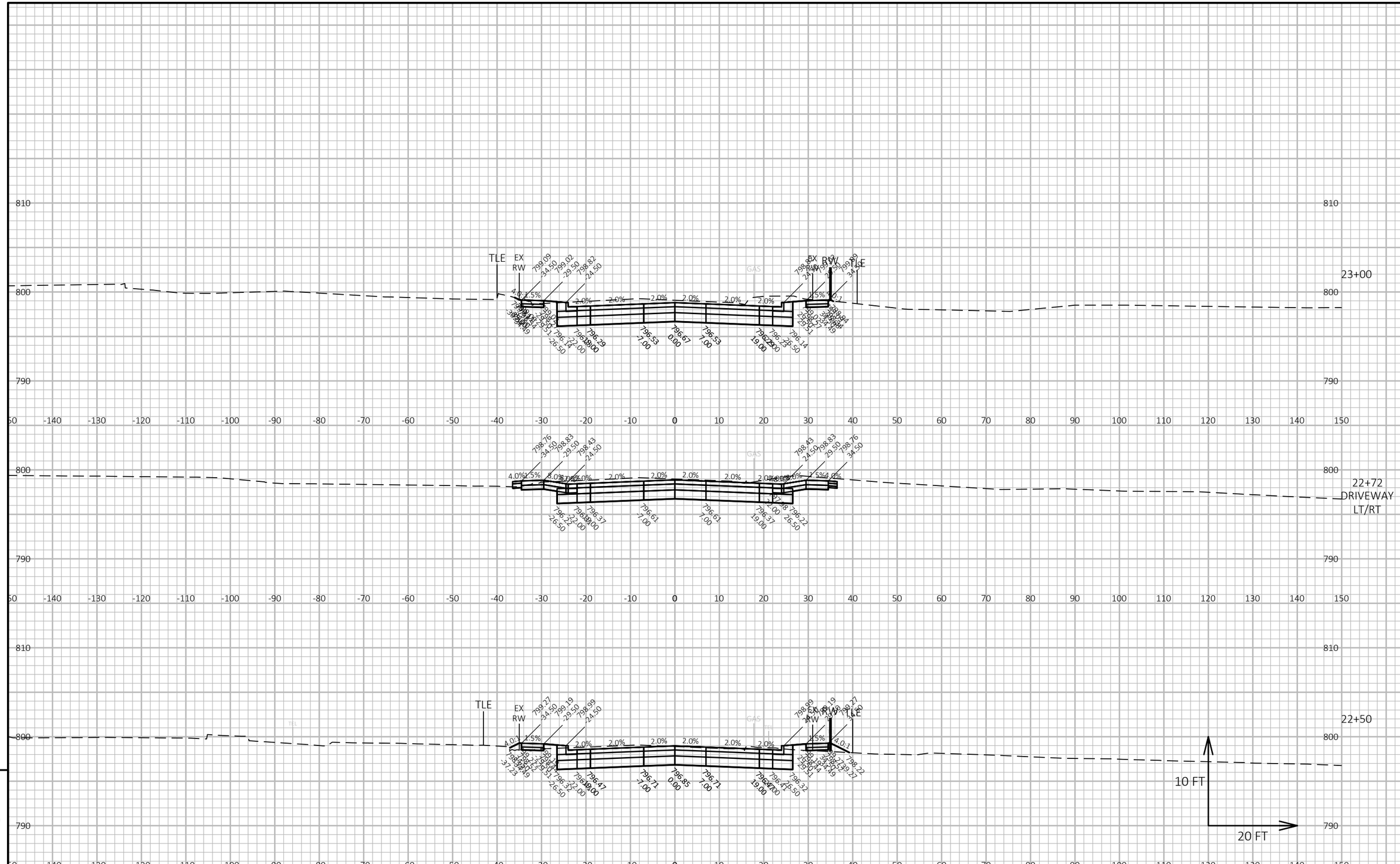

PROJECT NO: 5310-02-76	HWY: USH 14	COUNTY: DANE	CROSS SECTIONS: USH 14	SHEET	E

FILE NAME : N:\PDS\C3D\53100206(14)\SHEETSPLAN\090201-XS-USH 14.DWG
LAYOUT NAME - Section Sheet - (32)
PLOT DATE : 6/6/2019 10:38 AM
PLOT BY : SCHMID, CHARLENE
PLOT NAME :
PLOT SCALE : 1 IN:20 FT HORZ. / 1 IN:10 FT VERT.

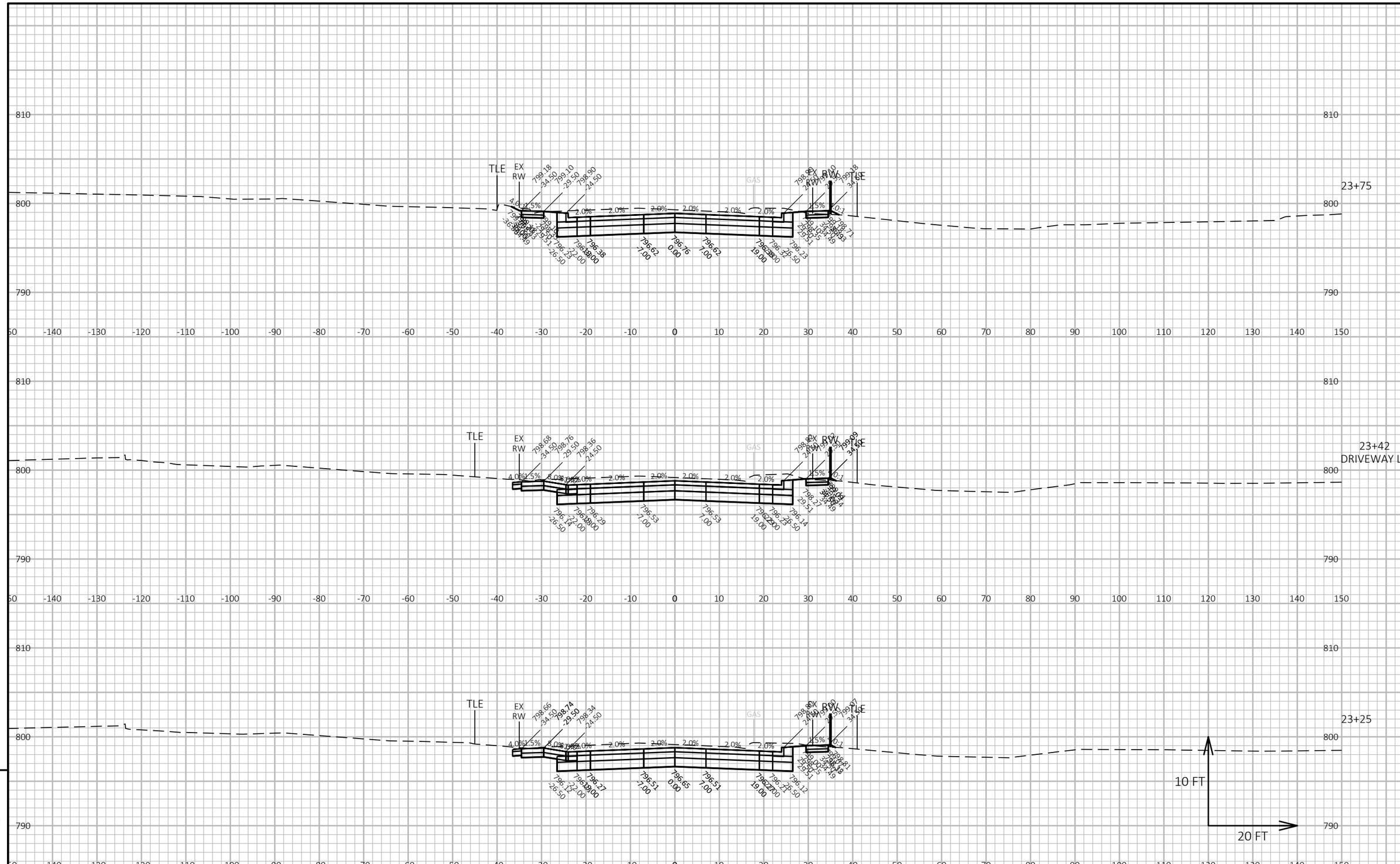

PROJECT NO: 5310-02-76	HWY: USH 14	COUNTY: DANE	CROSS SECTIONS: USH 14	SHEET	E

FILE NAME : N:\PDS\C3D\53100206(14)\SHEETSPLAN\090201-XS-USH 14.DWG
LAYOUT NAME - Section Sheet - (33)
PLOT DATE : 6/6/2019 10:39 AM
PLOT BY : SCHMID, CHARLENE
PLOT NAME :
PLOT SCALE : 1 IN:20 FT HORZ. / 1 IN:10 FT VERT.

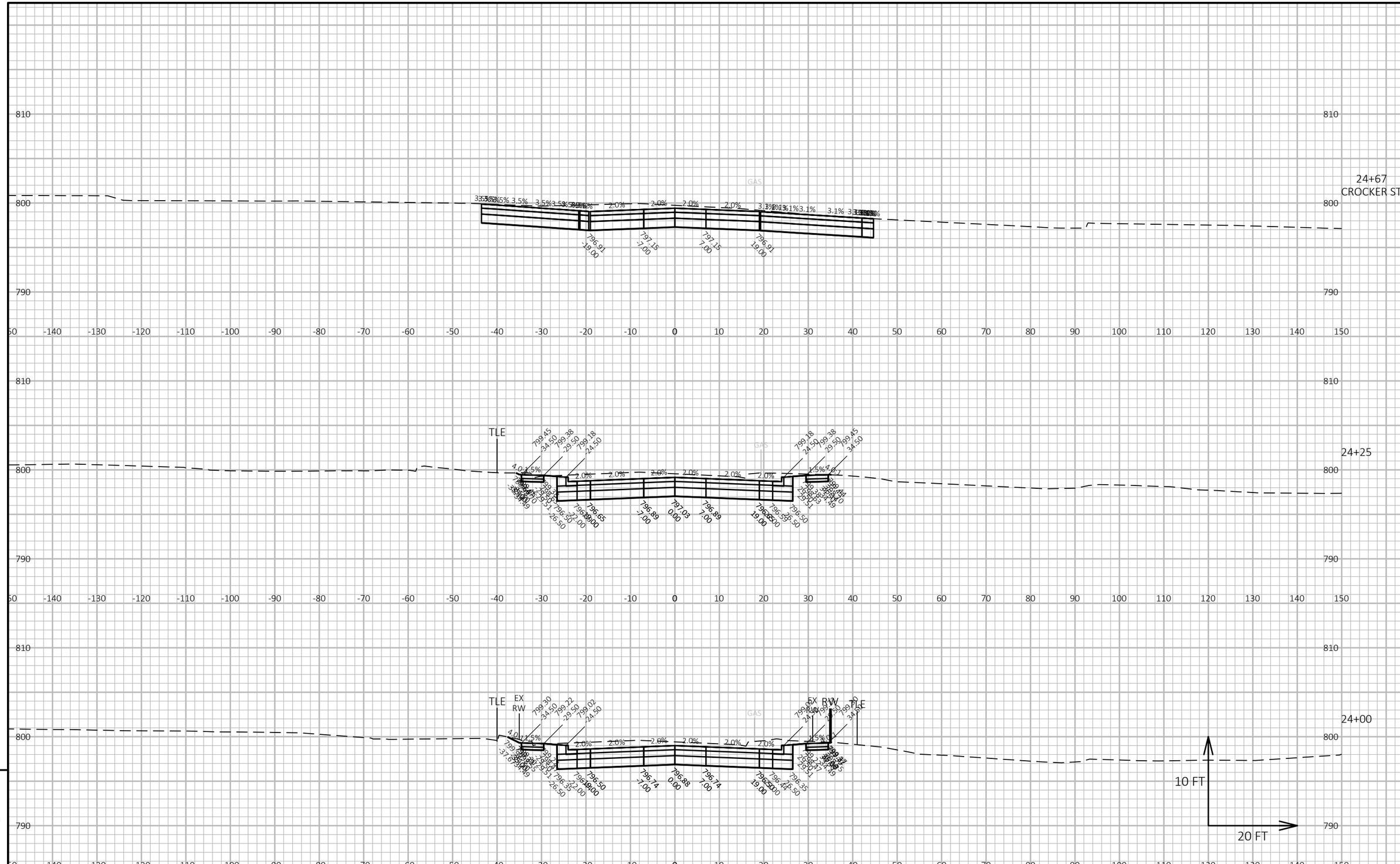

9

9

PROJECT NO: 5310-02-76	HWY: USH 14	COUNTY: DANE	CROSS SECTIONS: USH 14	SHEET	E

FILE NAME : N:\PDS\C3D\53100206(14)\SHEETSPLAN\090201-XS-USH 14.DWG
LAYOUT NAME - Section Sheet - (34)
PLOT DATE : 6/6/2019 10:39 AM
PLOT BY : SCHMID, CHARLENE
PLOT NAME :
PLOT SCALE : 1 IN:20 FT HORZ. / 1 IN:10 FT VERT.

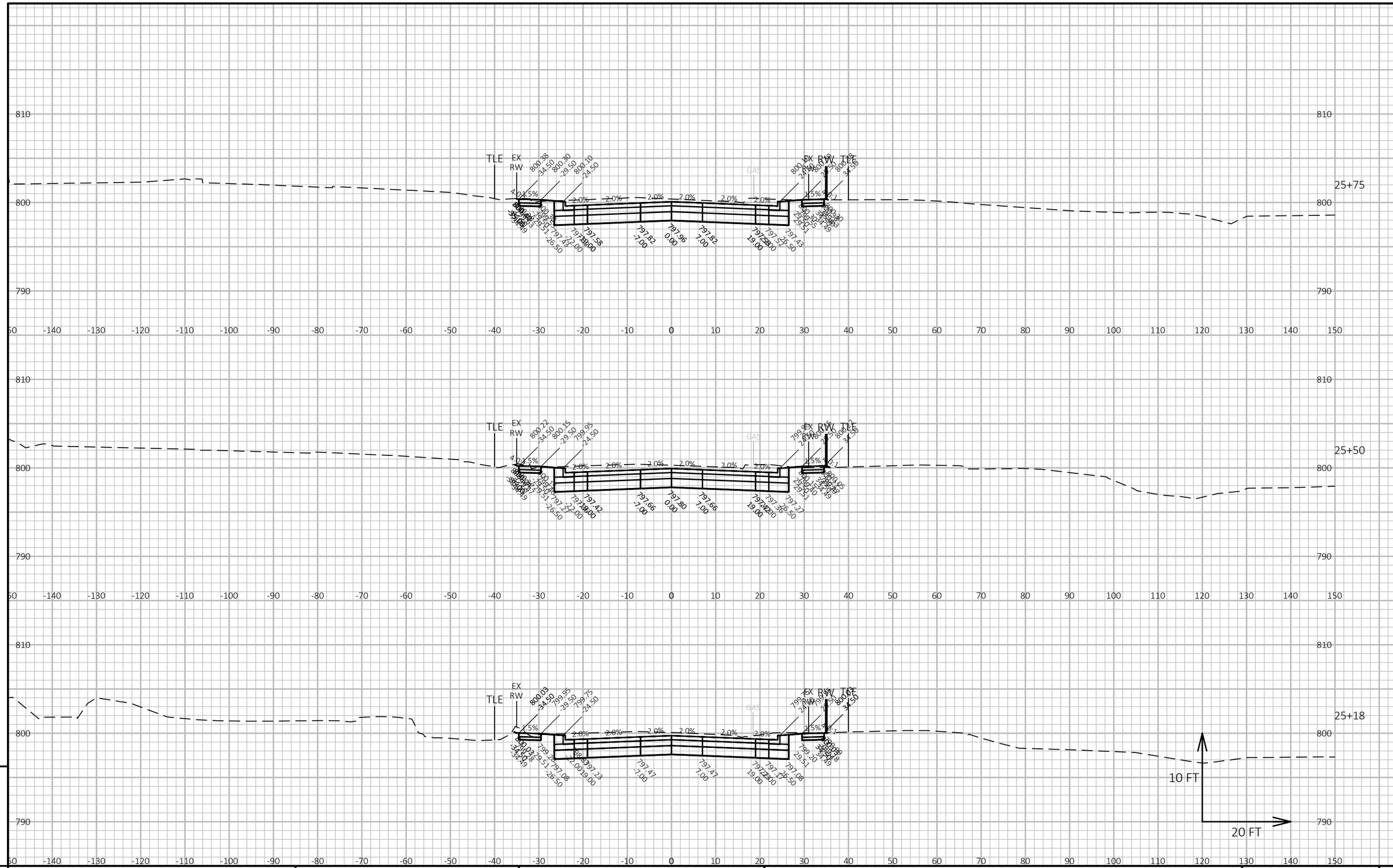

9

9

PROJECT NO: 5310-02-76	HWY: USH 14	COUNTY: DANE	CROSS SECTIONS: USH 14	SHEET	E

FILE NAME : N:\PDS\C3D\53100206(14)\SHEETSPLAN\090201-XS-USH 14.DWG
LAYOUT NAME - Section Sheet - (35)
PLOT DATE : 6/6/2019 10:39 AM
PLOT BY : SCHMID, CHARLENE
PLOT NAME :
PLOT SCALE : 1 IN:20 FT HORZ. / 1 IN:10 FT VERT.

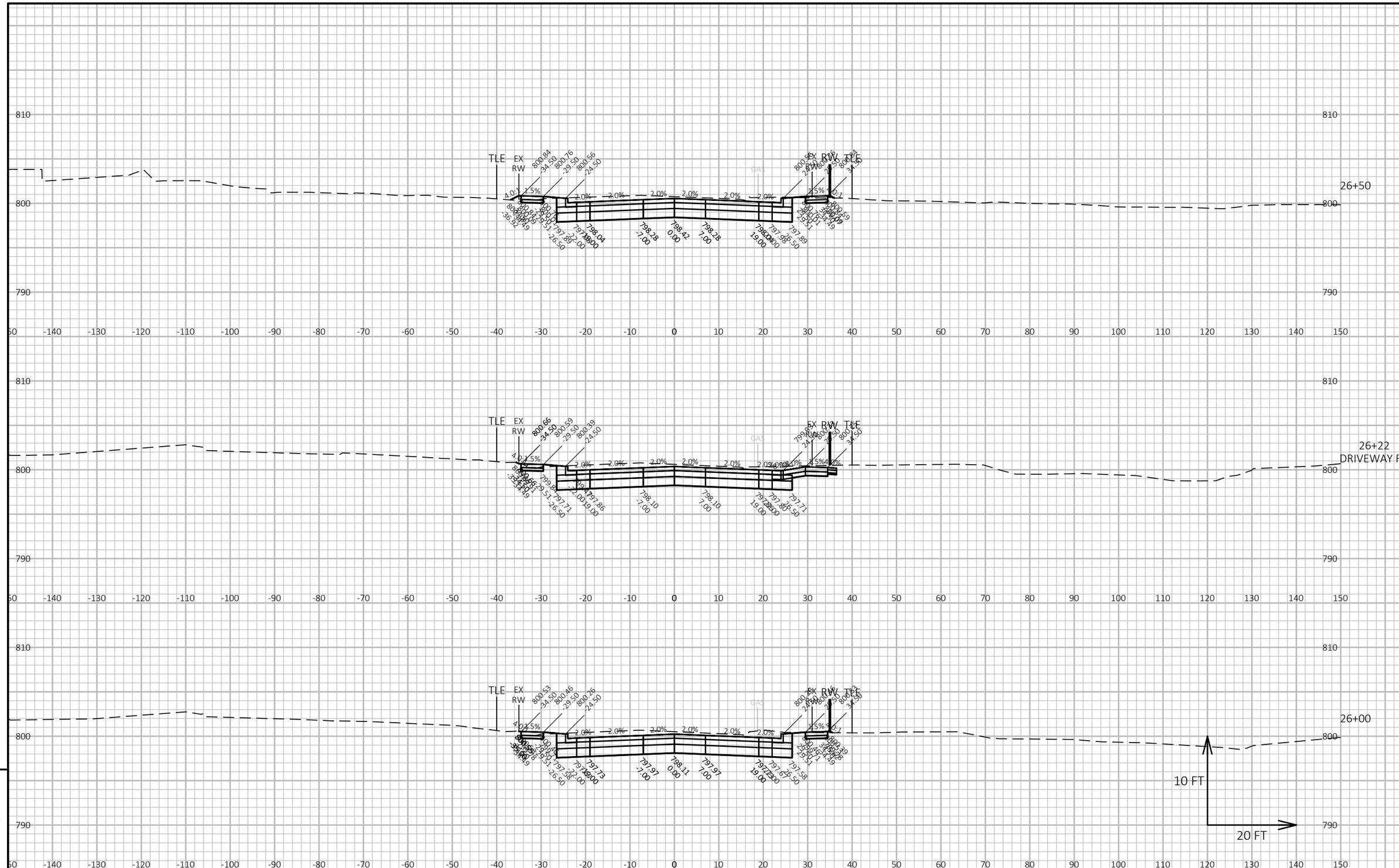

9

9

PROJECT NO: 5310-02-76	HWY: USH 14	COUNTY: DANE	CROSS SECTIONS: USH 14	SHEET	E

FILE NAME : N:\PDS\C3D\53100206(14)\SHEETSPLAN\090201-XS-USH 14.DWG
LAYOUT NAME - Section Sheet - (36)
PLOT DATE : 6/6/2019 10:39 AM
PLOT BY : SCHMID, CHARLENE
PLOT NAME :
PLOT SCALE : 1 IN:20 FT HORZ. / 1 IN:10 FT VERT.

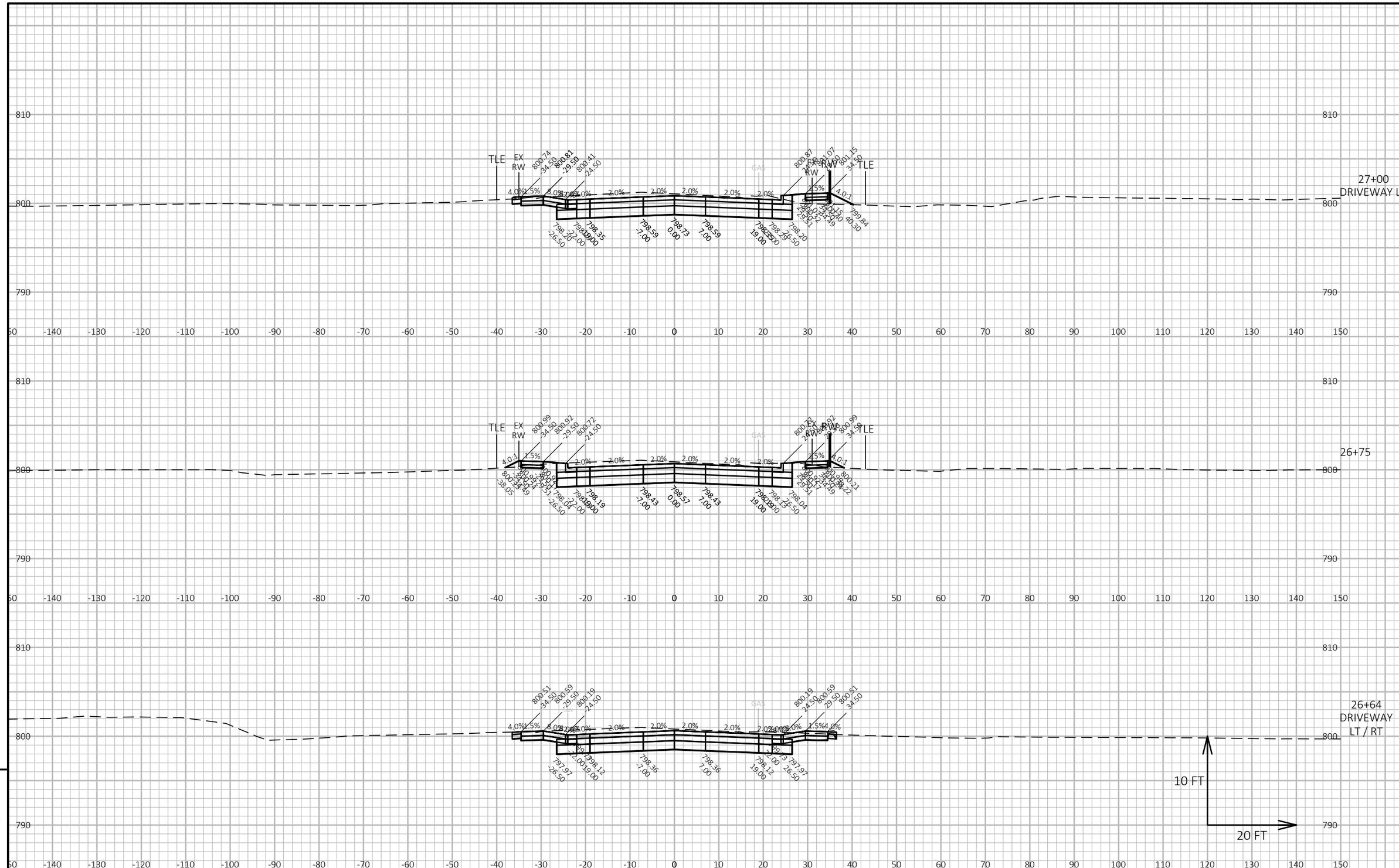

PROJECT NO: 5310-02-76	HWY: USH 14	COUNTY: DANE	CROSS SECTIONS: USH 14	SHEET	E

FILE NAME : N:\PDS\C3D\53100206(14)\SHEETSPLAN\090201-XS-USH 14.DWG
LAYOUT NAME - Section Sheet - (37)
PLOT DATE : 6/6/2019 10:39 AM
PLOT BY : SCHMID, CHARLENE
PLOT NAME :
PLOT SCALE : 1 IN:20 FT HORZ. / 1 IN:10 FT VERT.

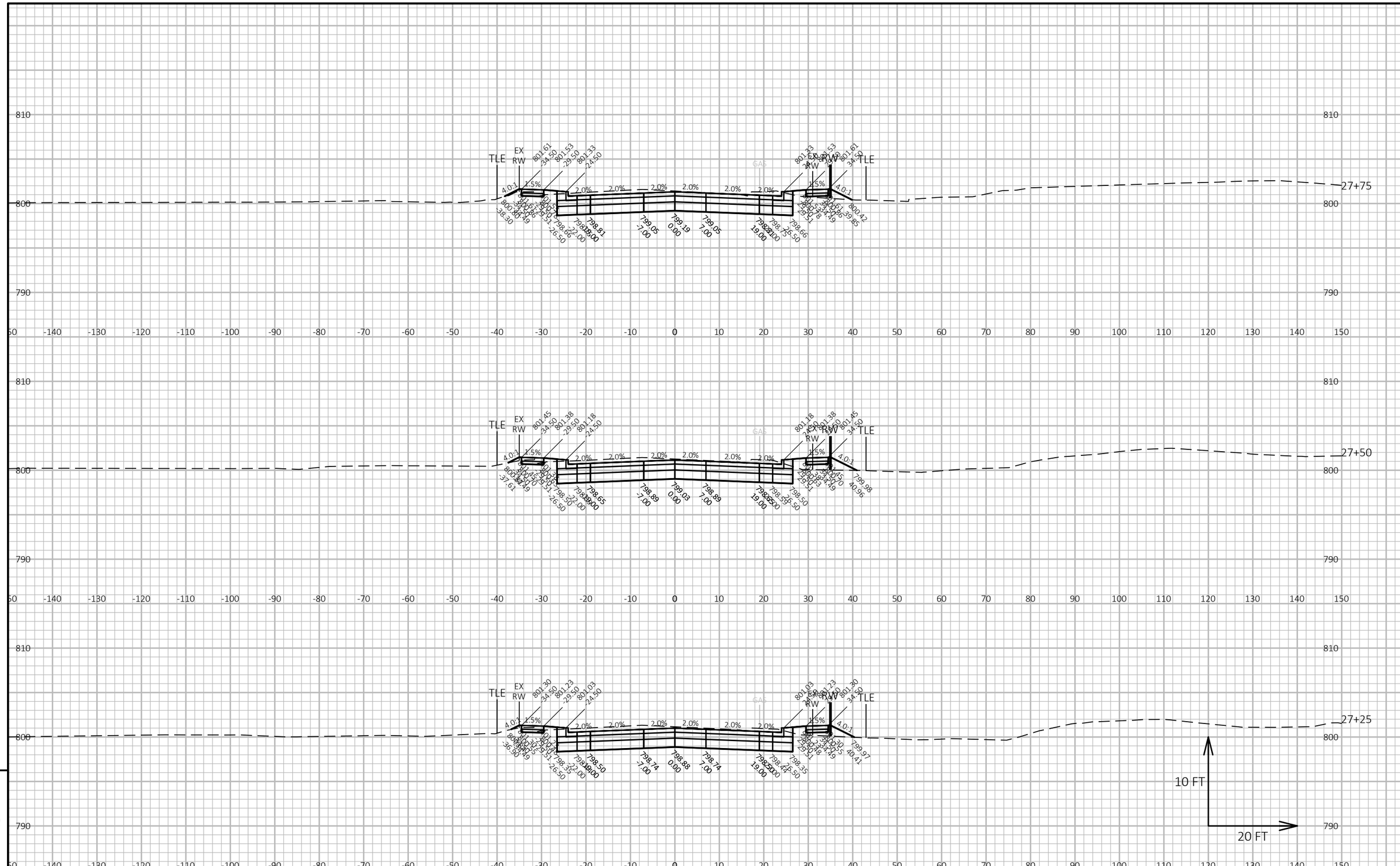

PROJECT NO: 5310-02-76	HWY: USH 14	COUNTY: DANE	CROSS SECTIONS: USH 14	SHEET	E

FILE NAME : N:\PDS\C3D\53100206(14)\SHEETSPLAN\090201-XS-USH 14.DWG
LAYOUT NAME - Section Sheet - (38)
PLOT DATE : 6/6/2019 10:39 AM
PLOT BY : SCHMID, CHARLENE
PLOT NAME :
PLOT SCALE : 1 IN:20 FT HORZ. / 1 IN:10 FT VERT.

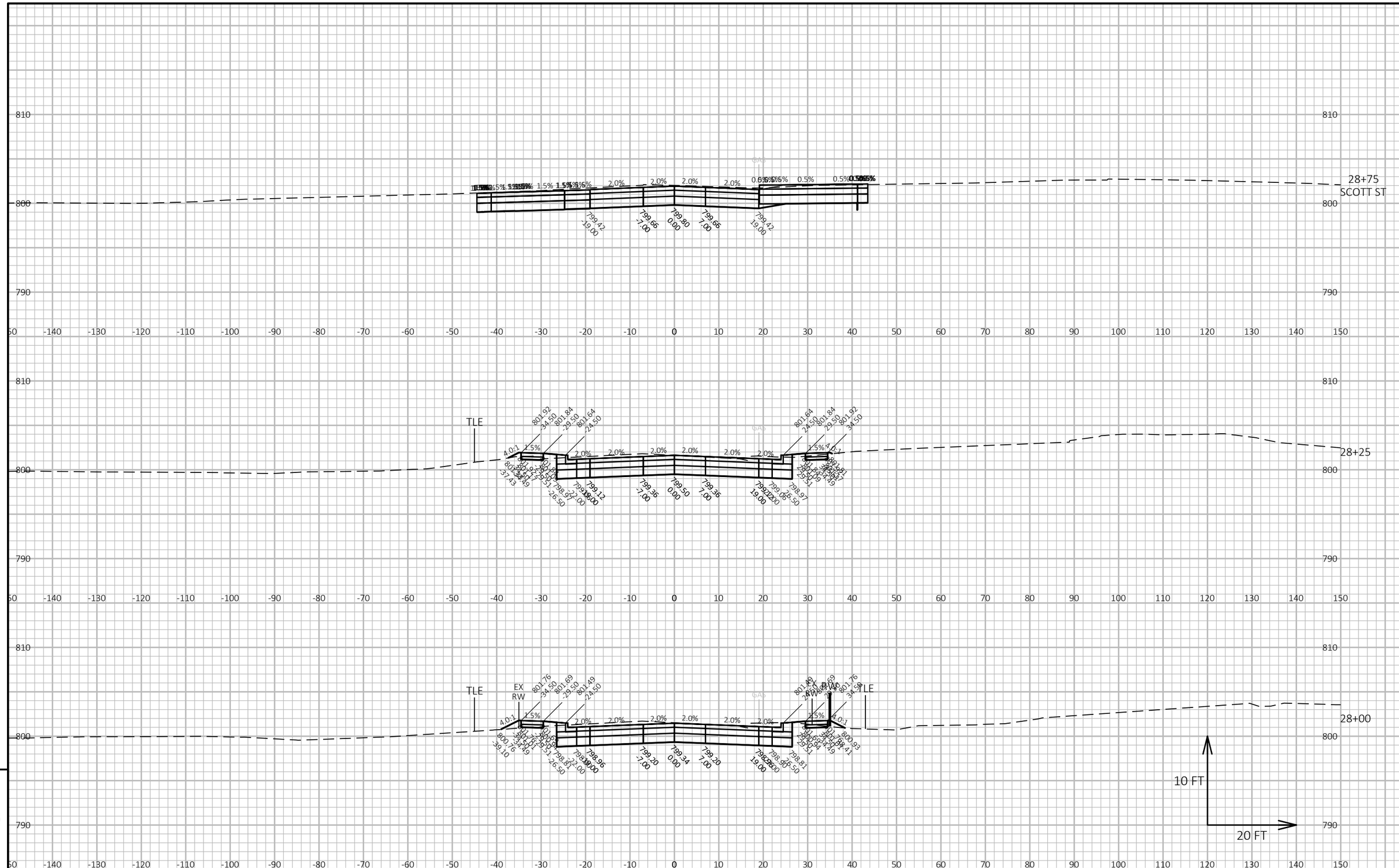

9

9

PROJECT NO: 5310-02-76	HWY: USH 14	COUNTY: DANE	CROSS SECTIONS: USH 14	SHEET	E

FILE NAME : N:\PDS\C3D\53100206(14)\SHEETSPLAN\090201-XS-USH 14.DWG
LAYOUT NAME - Section Sheet - (39)
PLOT DATE : 6/6/2019 10:40 AM
PLOT BY : SCHMID, CHARLENE
PLOT NAME :
PLOT SCALE : 1 IN:20 FT HORZ. / 1 IN:10 FT VERT.

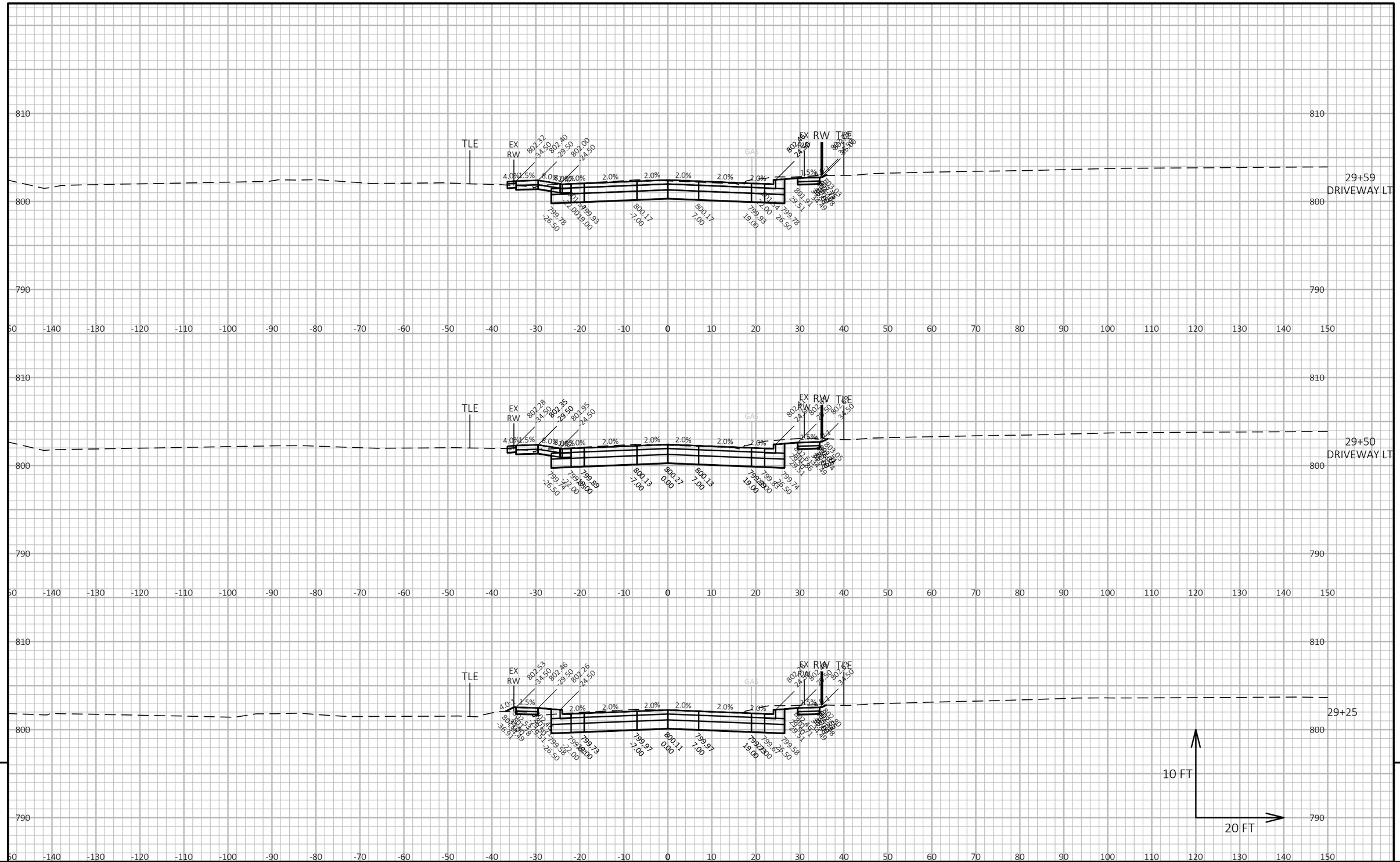

9

9

PROJECT NO: 5310-02-76	HWY: USH 14	COUNTY: DANE	CROSS SECTIONS: USH 14	SHEET	E

FILE NAME : N:\PDS\C3D\53100206(14)\SHEETSPLAN\090201-XS-USH 14.DWG
LAYOUT NAME - Section Sheet - (40)
PLOT DATE : 6/6/2019 10:40 AM
PLOT BY : SCHMID, CHARLENE
PLOT NAME :
PLOT SCALE : 1 IN:20 FT HORZ. / 1 IN:10 FT VERT.

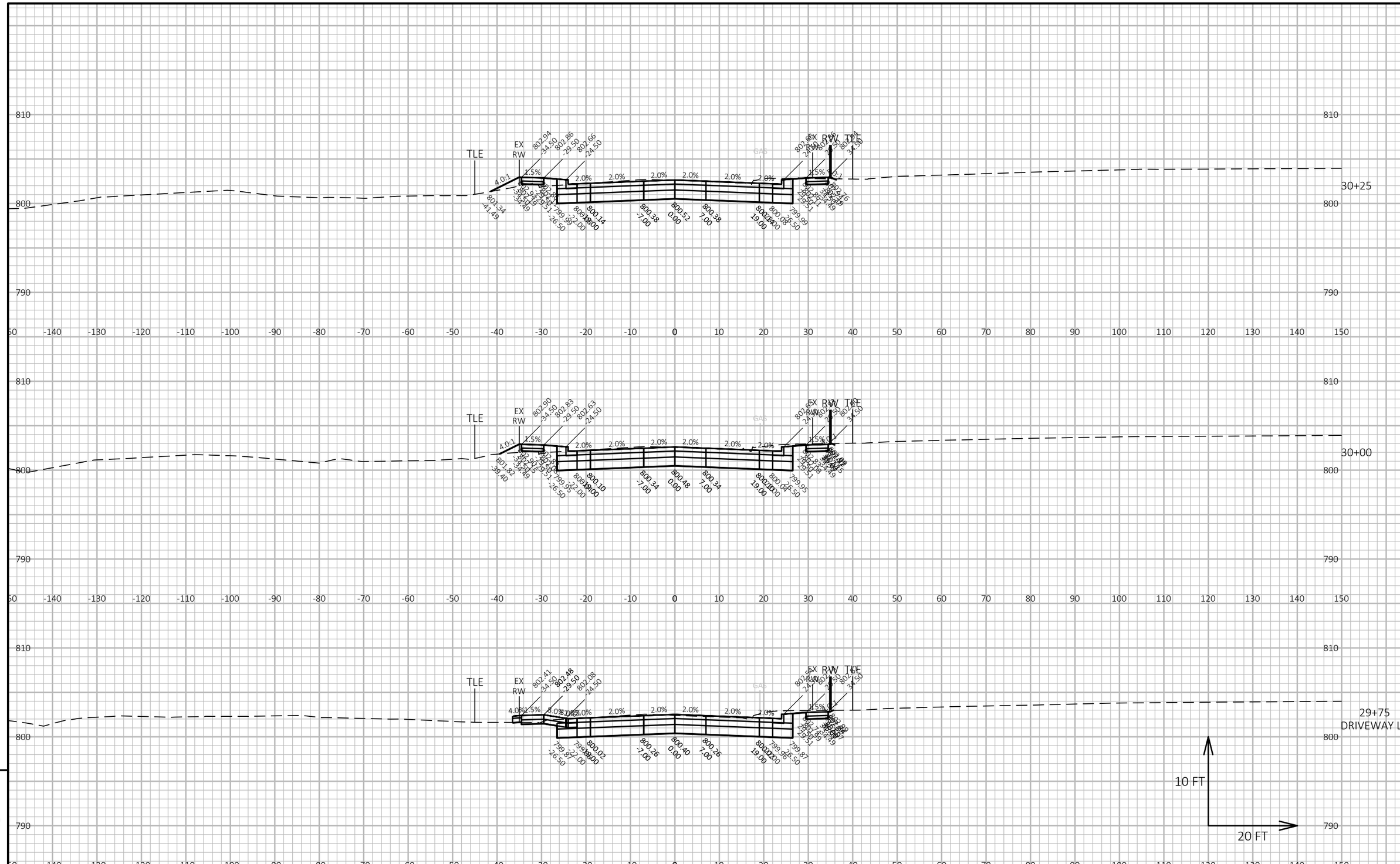

PROJECT NO: 5310-02-76	HWY: USH 14	COUNTY: DANE	CROSS SECTIONS: USH 14	SHEET	E

FILE NAME : N:\PDS\C3D\53100206(14)\SHEETSPLAN\090201-XS-USH 14.DWG
LAYOUT NAME - Section Sheet - (41)
PLOT DATE : 6/6/2019 10:40 AM
PLOT BY : SCHMID, CHARLENE
PLOT NAME :
PLOT SCALE : 1 IN:20 FT HORZ. / 1 IN:10 FT VERT.

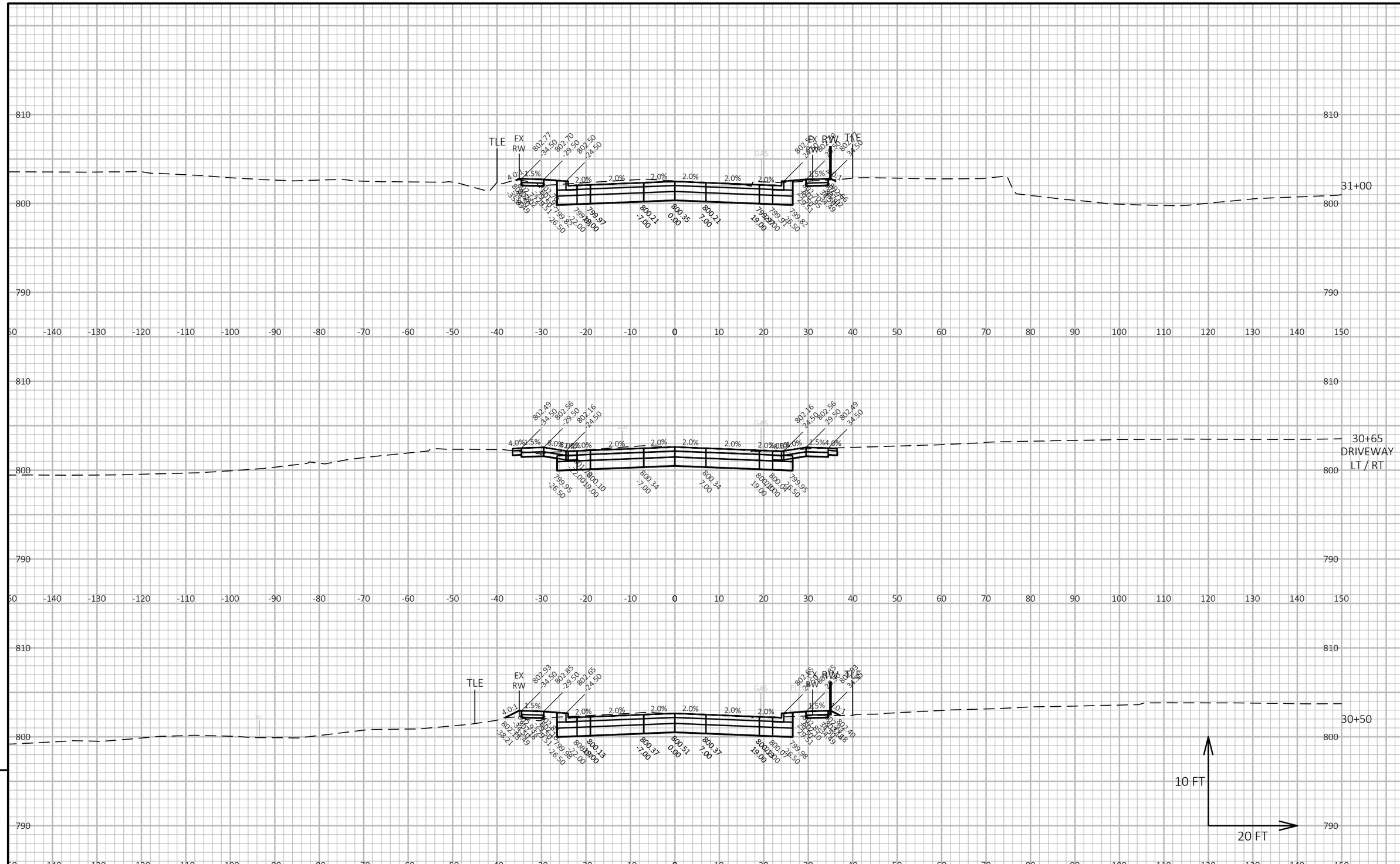

PROJECT NO: 5310-02-76	HWY: USH 14	COUNTY: DANE	CROSS SECTIONS: USH 14	SHEET	E

FILE NAME : N:\PDS\C3D\53100206(14)\SHEETSPLAN\090201-XS-USH 14.DWG
LAYOUT NAME - Section Sheet - (42)
PLOT DATE : 6/6/2019 10:40 AM
PLOT BY : SCHMID, CHARLENE
PLOT NAME :
PLOT SCALE : 1 IN:20 FT HORZ. / 1 IN:10 FT VERT.

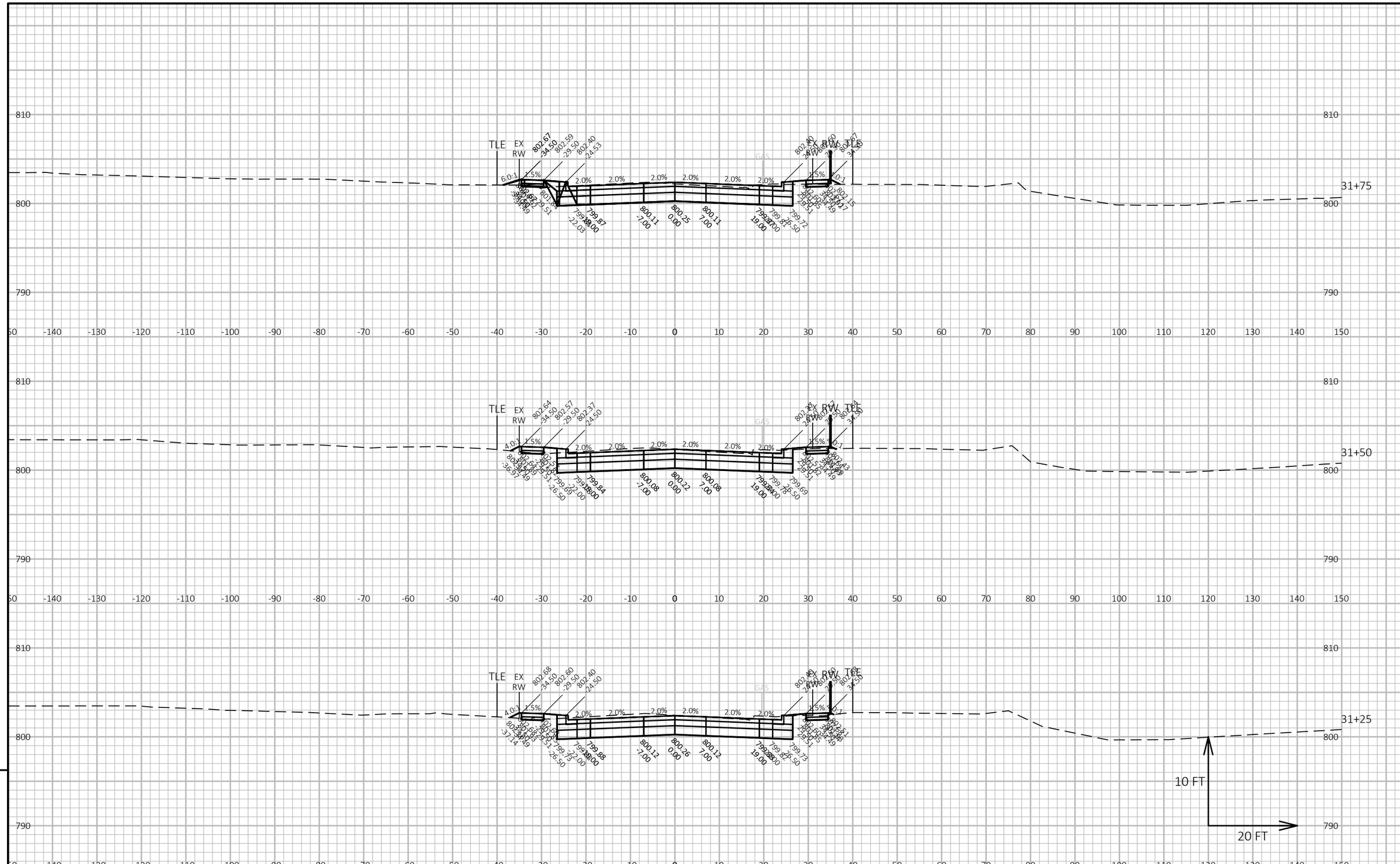

PROJECT NO: 5310-02-76	HWY: USH 14	COUNTY: DANE	CROSS SECTIONS: USH 14	SHEET	E

FILE NAME : N:\PDS\C3D\53100206(14)\SHEETSPLAN\090201-XS-USH 14.DWG
LAYOUT NAME - Section Sheet - (43)
PLOT DATE : 6/6/2019 10:40 AM
PLOT BY : SCHMID, CHARLENE
PLOT NAME :
PLOT SCALE : 1 IN:20 FT HORZ. / 1 IN:10 FT VERT.

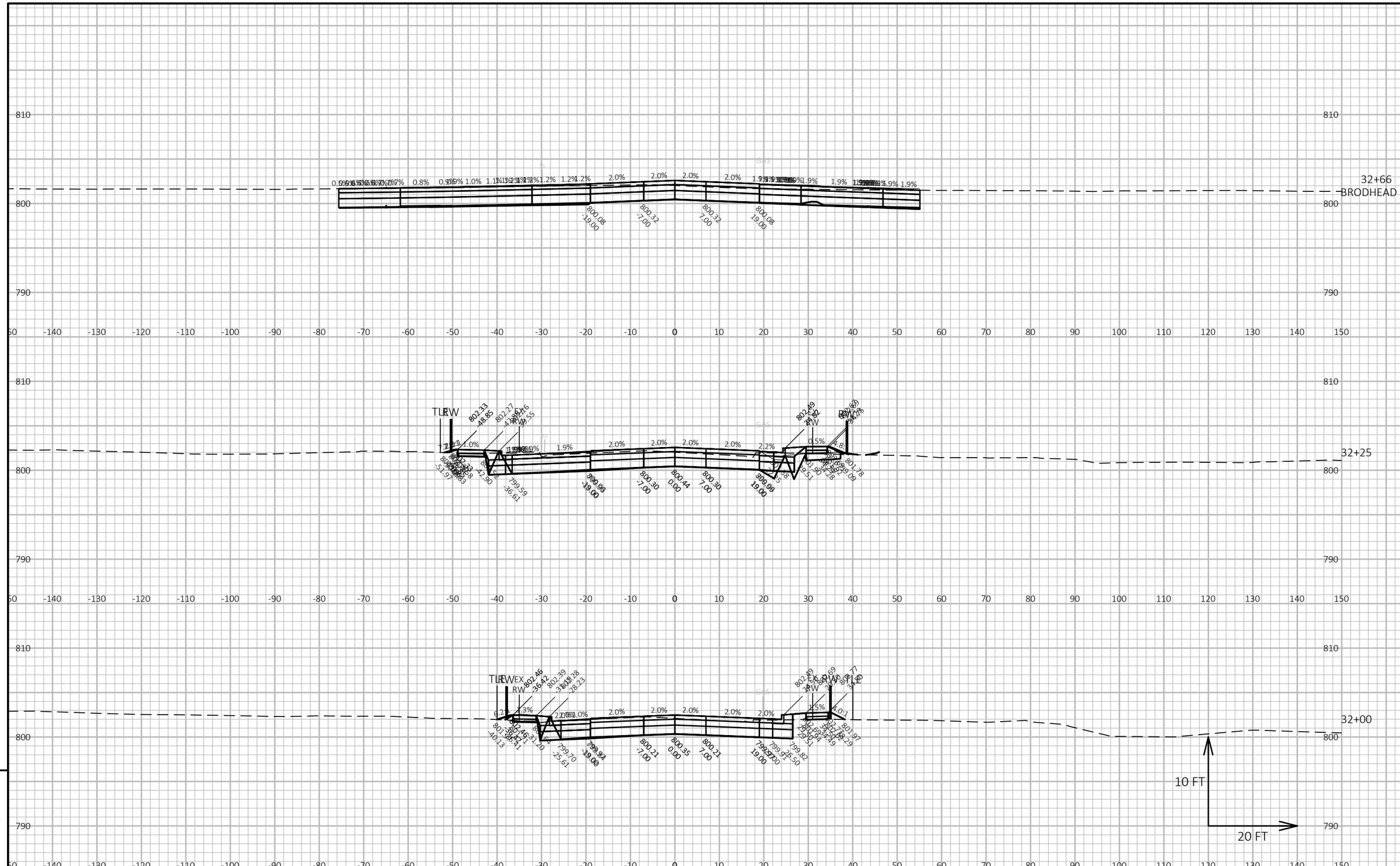

9

9

PROJECT NO: 5310-02-76	HWY: USH 14	COUNTY: DANE	CROSS SECTIONS: USH 14	SHEET	E

FILE NAME : N:\PDS\C3D\53100206(14)\SHEETSPLAN\090201-XS-USH 14.DWG
LAYOUT NAME - Section Sheet - (44)
PLOT DATE : 6/6/2019 10:41 AM
PLOT BY : SCHMID, CHARLENE
PLOT NAME :
PLOT SCALE : 1 IN:20 FT HORZ. / 1 IN:10 FT VERT.

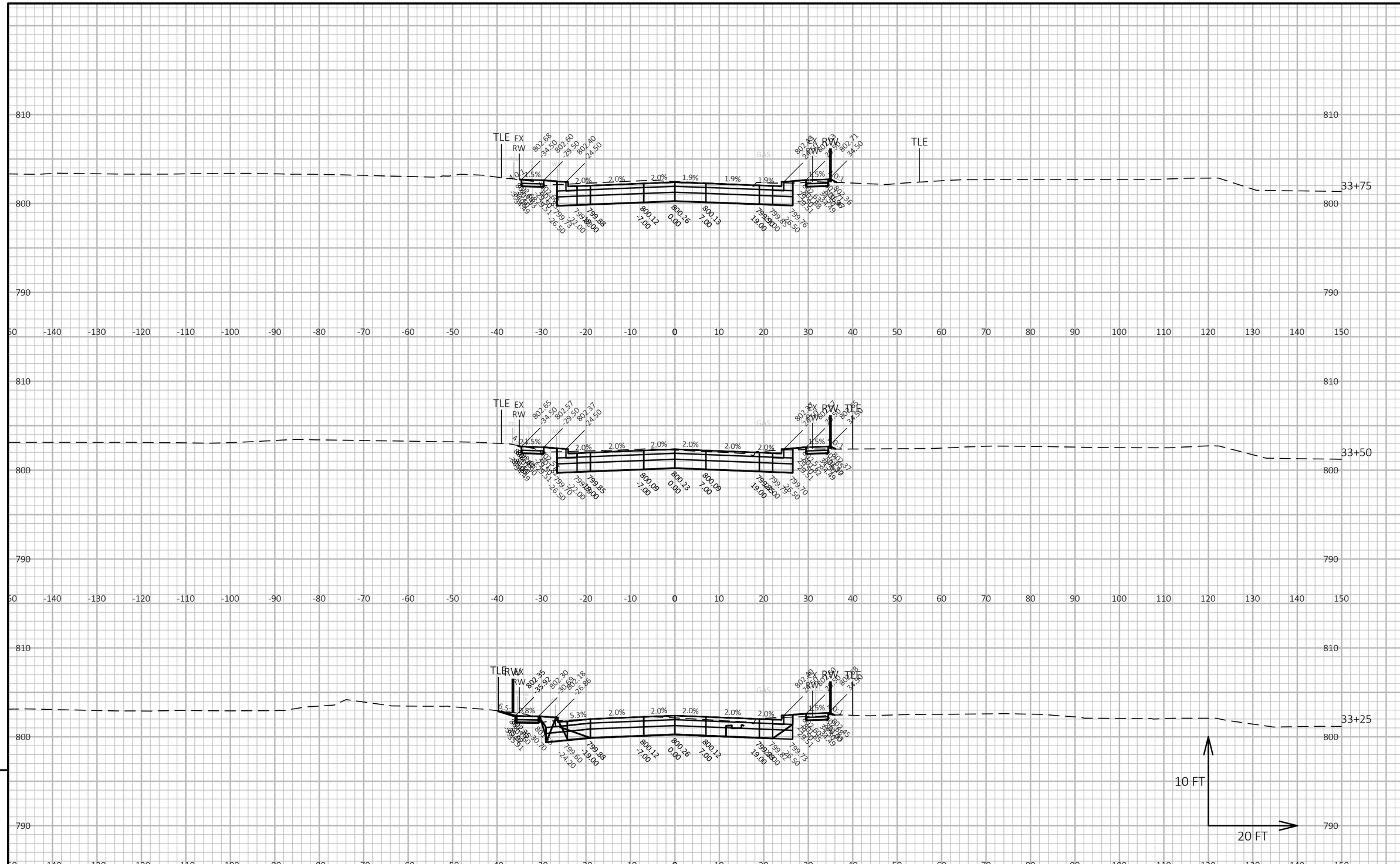

PROJECT NO: 5310-02-76	HWY: USH 14	COUNTY: DANE	CROSS SECTIONS: USH 14	SHEET	E

FILE NAME : N:\PDS\C3D\53100206(14)\SHEETSPLAN\090201-XS-USH 14.DWG
LAYOUT NAME - Section Sheet - (45)
PLOT DATE : 6/6/2019 10:41 AM
PLOT BY : SCHMID, CHARLENE
PLOT NAME :
PLOT SCALE : 1 IN:20 FT HORZ. / 1 IN:10 FT VERT.

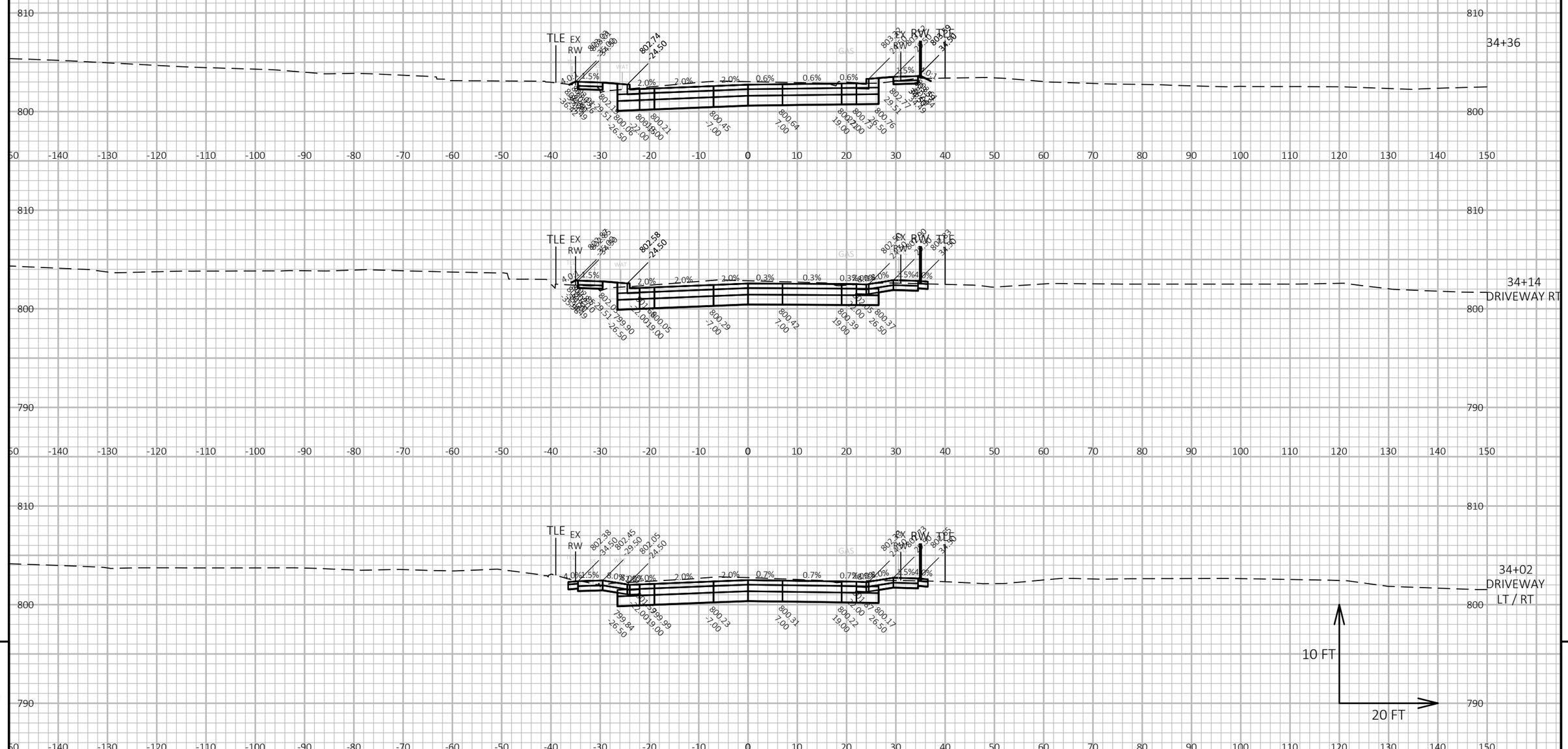

9

9

PROJECT NO: 5310-02-76	HWY: USH 14	COUNTY: DANE	CROSS SECTIONS: USH 14	SHEET	E

FILE NAME : N:\PDS\C3D\53100206(14)\SHEETSPLAN\090201-XS-USH 14.DWG
LAYOUT NAME - Section Sheet - (46)
PLOT DATE : 6/6/2019 10:41 AM
PLOT BY : SCHMID, CHARLENE
PLOT NAME :
PLOT SCALE : 1 IN:20 FT HORZ. / 1 IN:10 FT VERT.

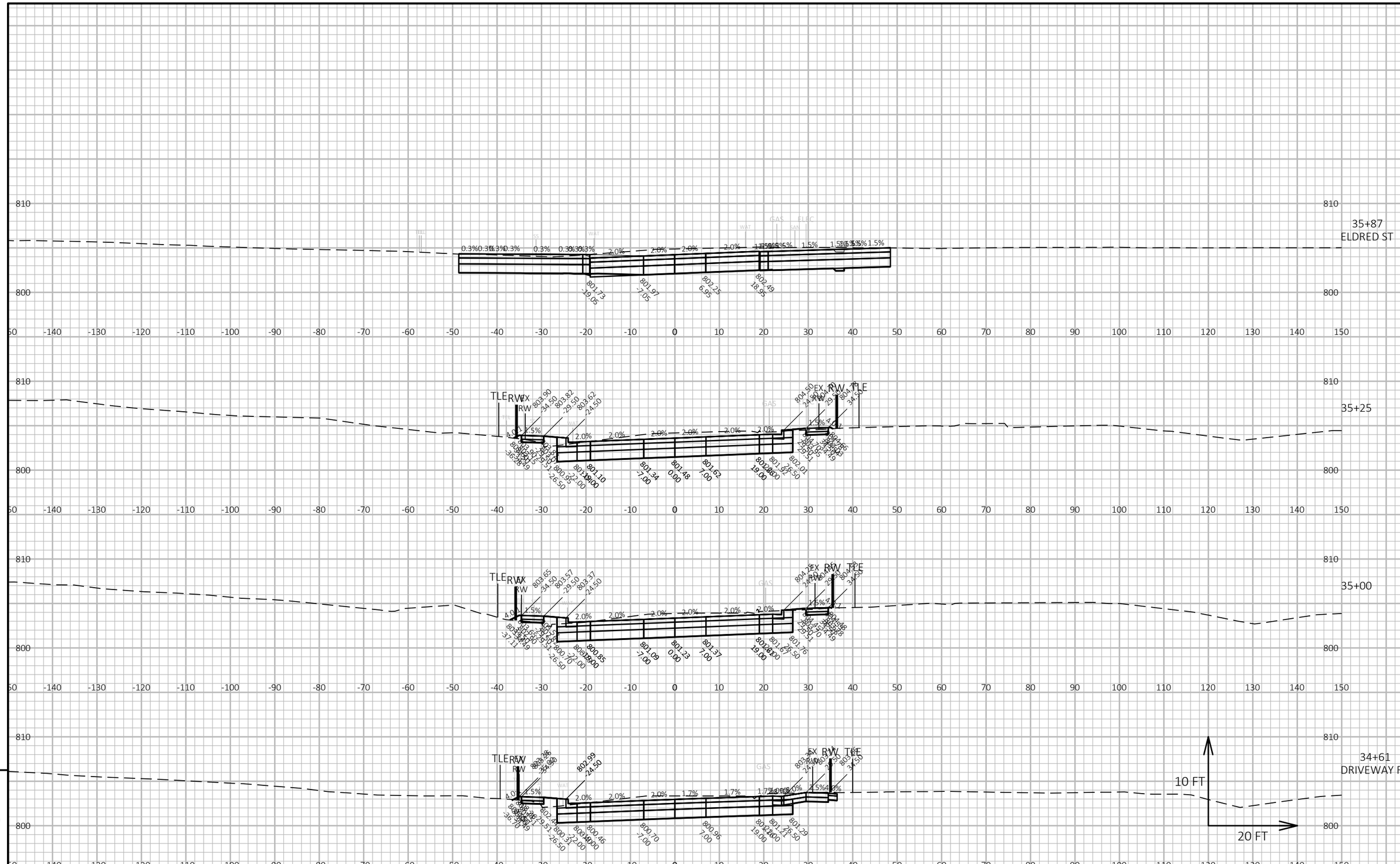

9

9

PROJECT NO: 5310-02-76	HWY: USH 14	COUNTY: DANE	CROSS SECTIONS: USH 14	SHEET	E

FILE NAME : N:\PDS\C3D\53100206(14)\SHEETSPLAN\090201-XS-USH 14.DWG
LAYOUT NAME - Section Sheet - (47)
PLOT DATE : 6/6/2019 10:41 AM
PLOT BY : SCHMID, CHARLENE
PLOT NAME :
PLOT SCALE : 1 IN:20 FT HORZ. / 1 IN:10 FT VERT.

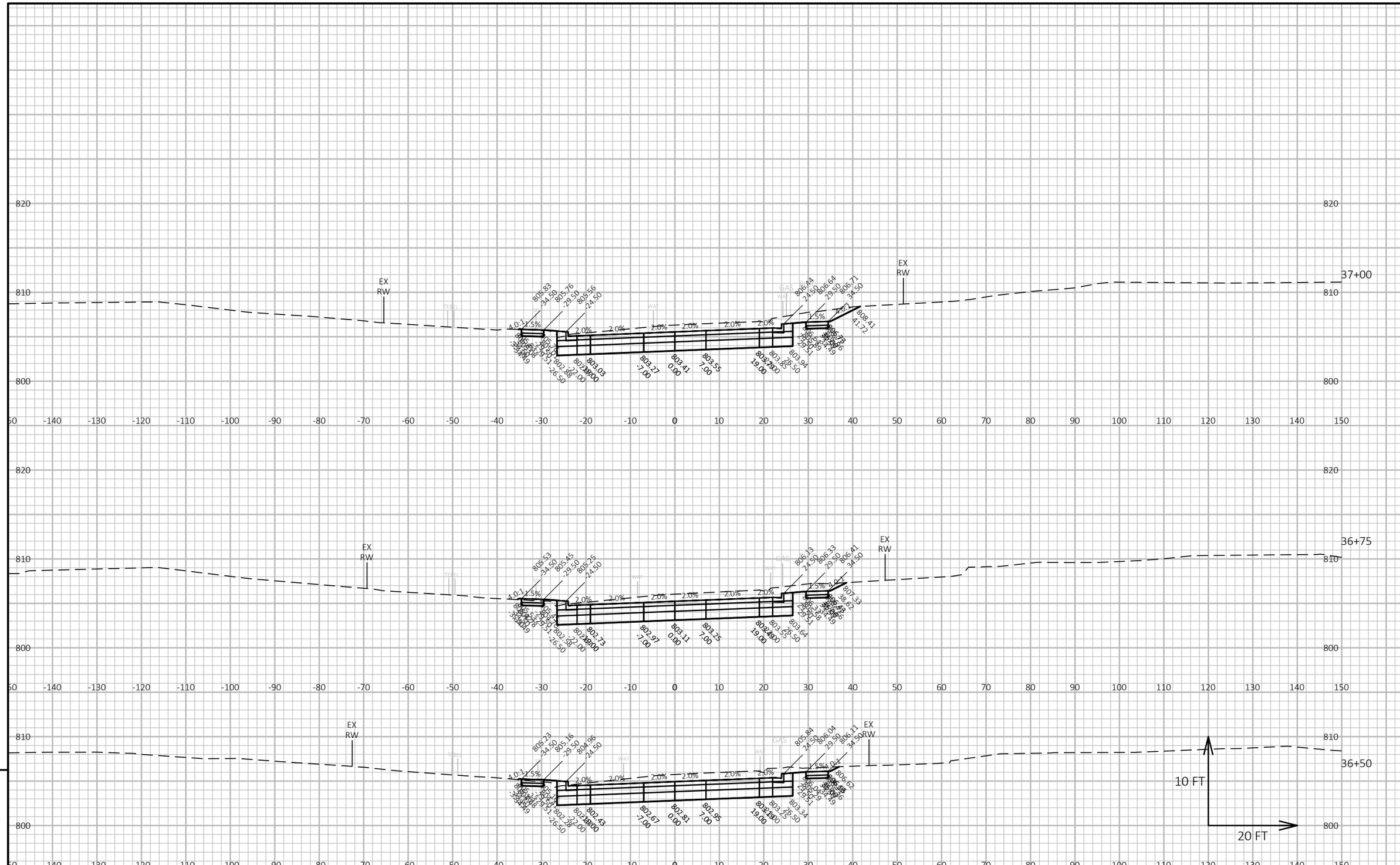

PROJECT NO: 5310-02-76	HWY: USH 14	COUNTY: DANE	CROSS SECTIONS: USH 14	SHEET	E

FILE NAME : N:\PDS\C3D\53100206(14)\SHEETSPLAN\090201-XS-USH 14.DWG
LAYOUT NAME - Section Sheet - (48)
PLOT DATE : 6/6/2019 10:41 AM
PLOT BY : SCHMID, CHARLENE
PLOT NAME :
PLOT SCALE : 1 IN:20 FT HORZ. / 1 IN:10 FT VERT.

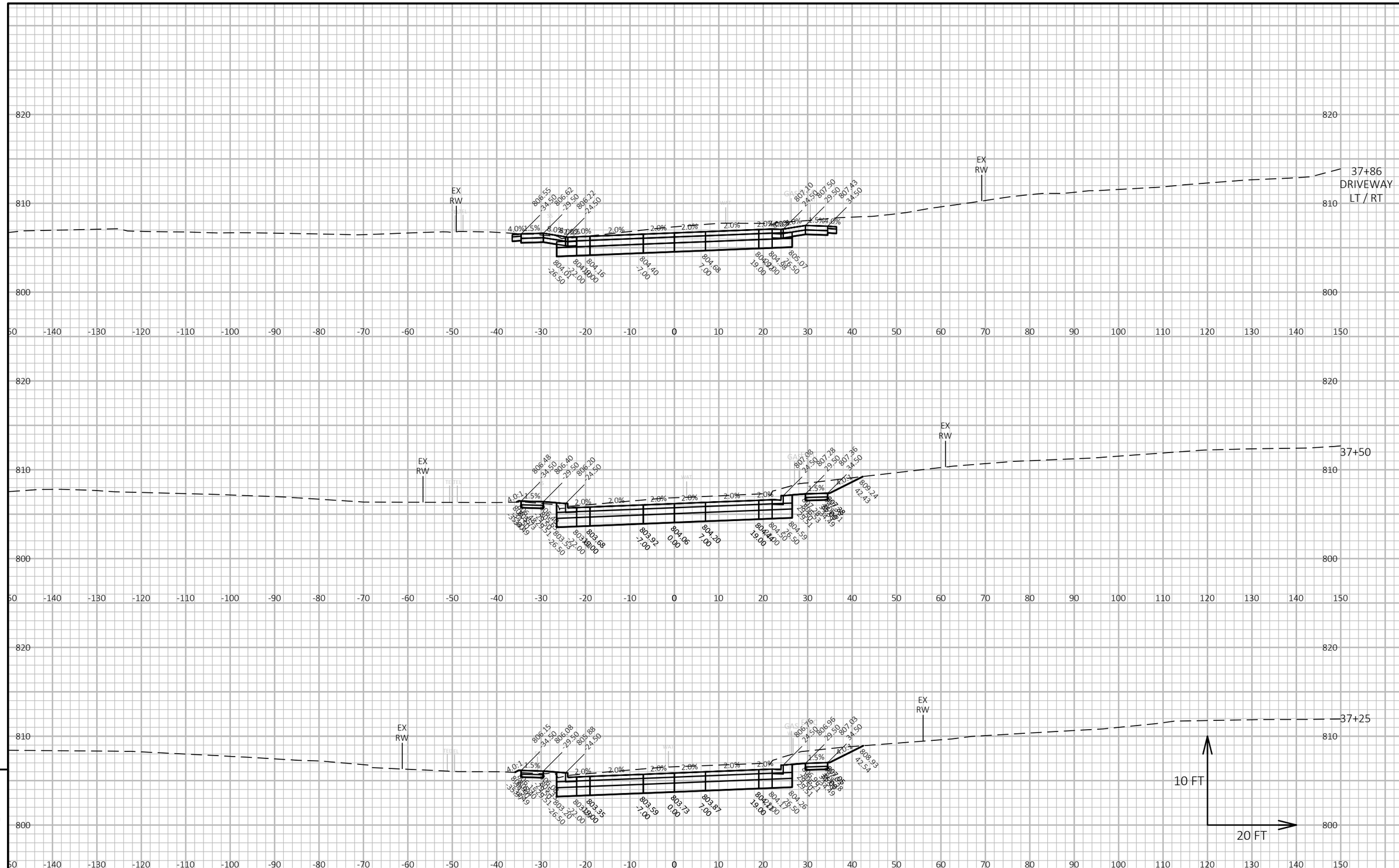

9

9

PROJECT NO: 5310-02-76	HWY: USH 14	COUNTY: DANE	CROSS SECTIONS: USH 14	SHEET	E

FILE NAME : N:\PDS\C3D\53100206(14)\SHEETSPLAN\090201-XS-USH 14.DWG
LAYOUT NAME - Section Sheet - (49)
PLOT DATE : 6/6/2019 10:41 AM
PLOT BY : SCHMID, CHARLENE
PLOT NAME :
PLOT SCALE : 1 IN:20 FT HORZ. / 1 IN:10 FT VERT.

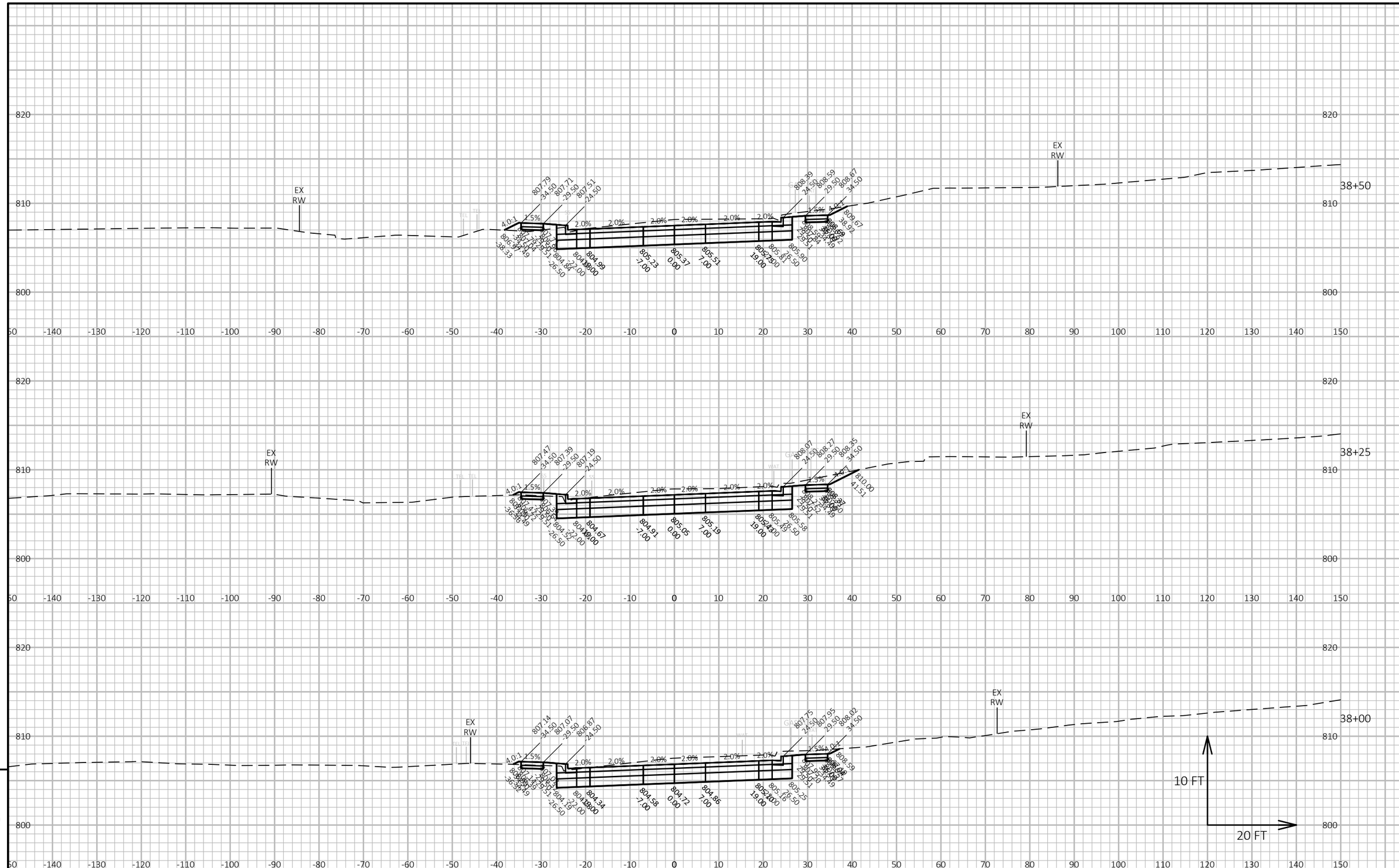

PROJECT NO: 5310-02-76	HWY: USH 14	COUNTY: DANE	CROSS SECTIONS: USH 14	SHEET	E

FILE NAME : N:\PDS\C3D\53100206(14)\SHEETSPLAN\090201-XS-USH 14.DWG
LAYOUT NAME - Section Sheet - (50)
PLOT DATE : 6/6/2019 10:42 AM
PLOT BY : SCHMID, CHARLENE
PLOT NAME :
PLOT SCALE : 1 IN:20 FT HORZ. / 1 IN:10 FT VERT.

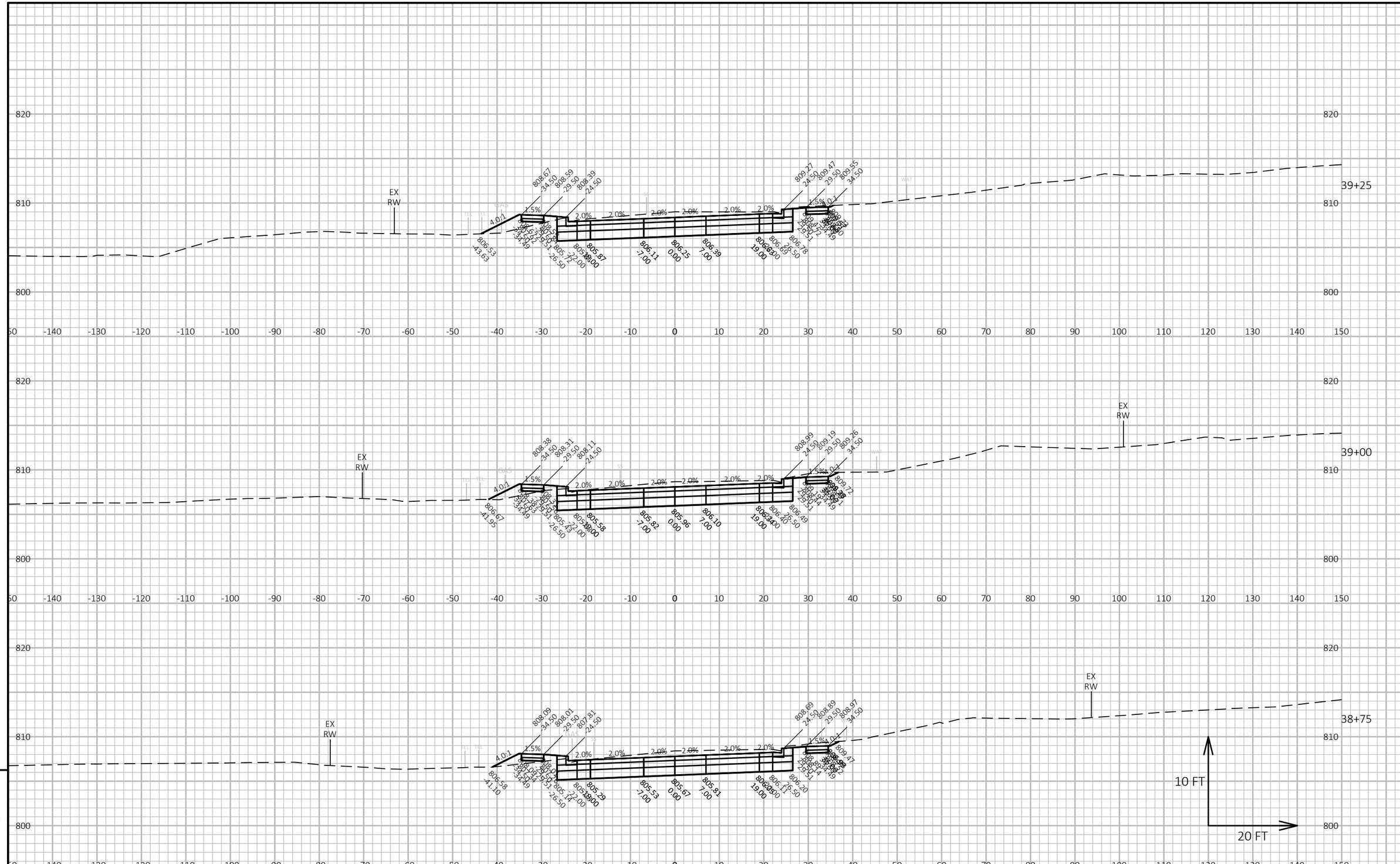

PROJECT NO: 5310-02-76	HWY: USH 14	COUNTY: DANE	CROSS SECTIONS: USH 14	SHEET	E

FILE NAME : N:\PDS\C3D\53100206(14)\SHEETSPLAN\090201-XS-USH 14.DWG
LAYOUT NAME - Section Sheet - (51)
PLOT DATE : 6/6/2019 10:42 AM
PLOT BY : SCHMID, CHARLENE
PLOT NAME :
PLOT SCALE : 1 IN:20 FT HORZ. / 1 IN:10 FT VERT.

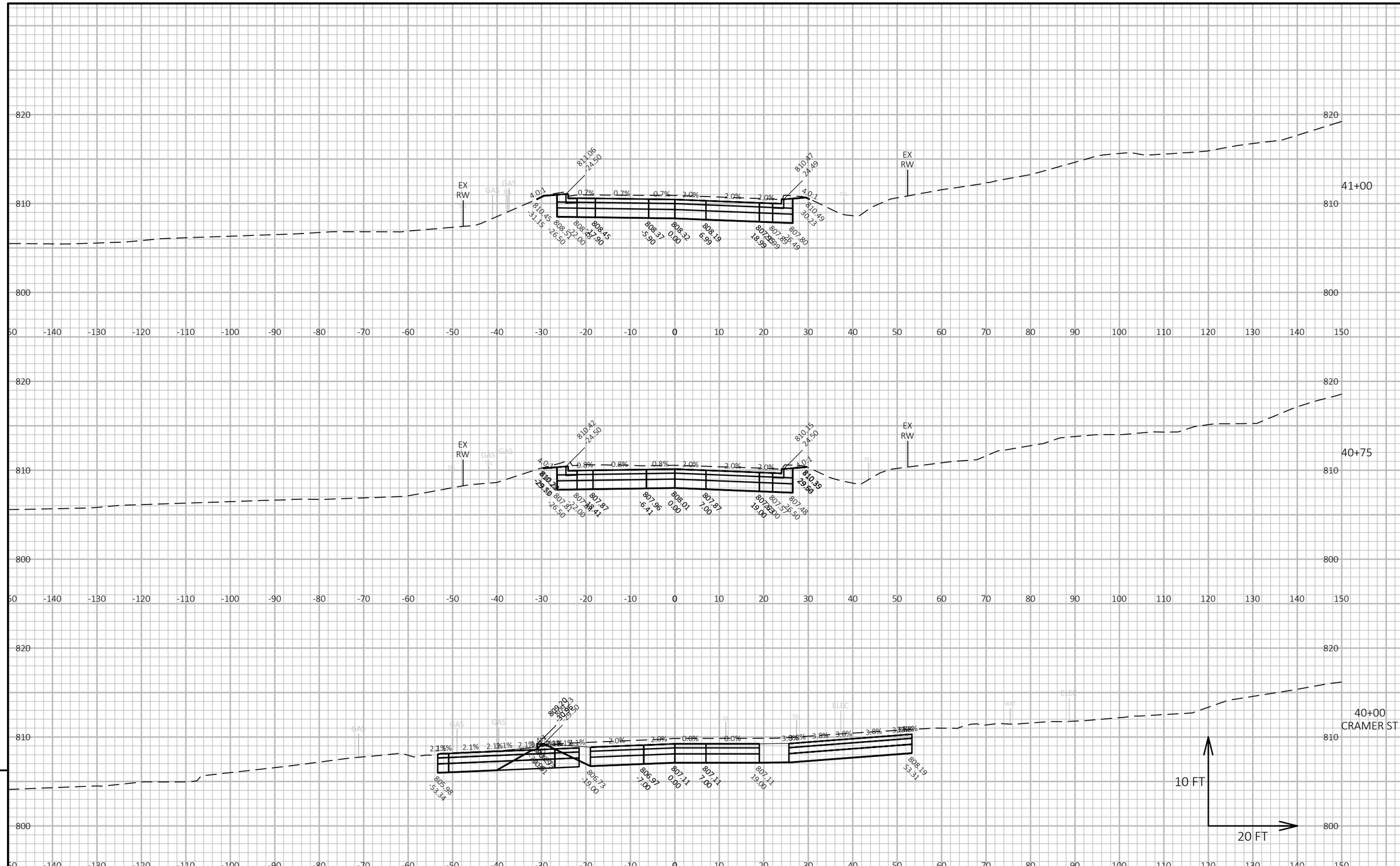

9

9

PROJECT NO: 5310-02-76	HWY: USH 14	COUNTY: DANE	CROSS SECTIONS: USH 14	SHEET	E

FILE NAME : N:\PDS\C3D\53100206(14)\SHEETSPLAN\090201-XS-USH 14.DWG
LAYOUT NAME - Section Sheet - (52)
PLOT DATE : 6/6/2019 10:42 AM
PLOT BY : SCHMID, CHARLENE
PLOT NAME :
PLOT SCALE : 1 IN:20 FT HORZ. / 1 IN:10 FT VERT.

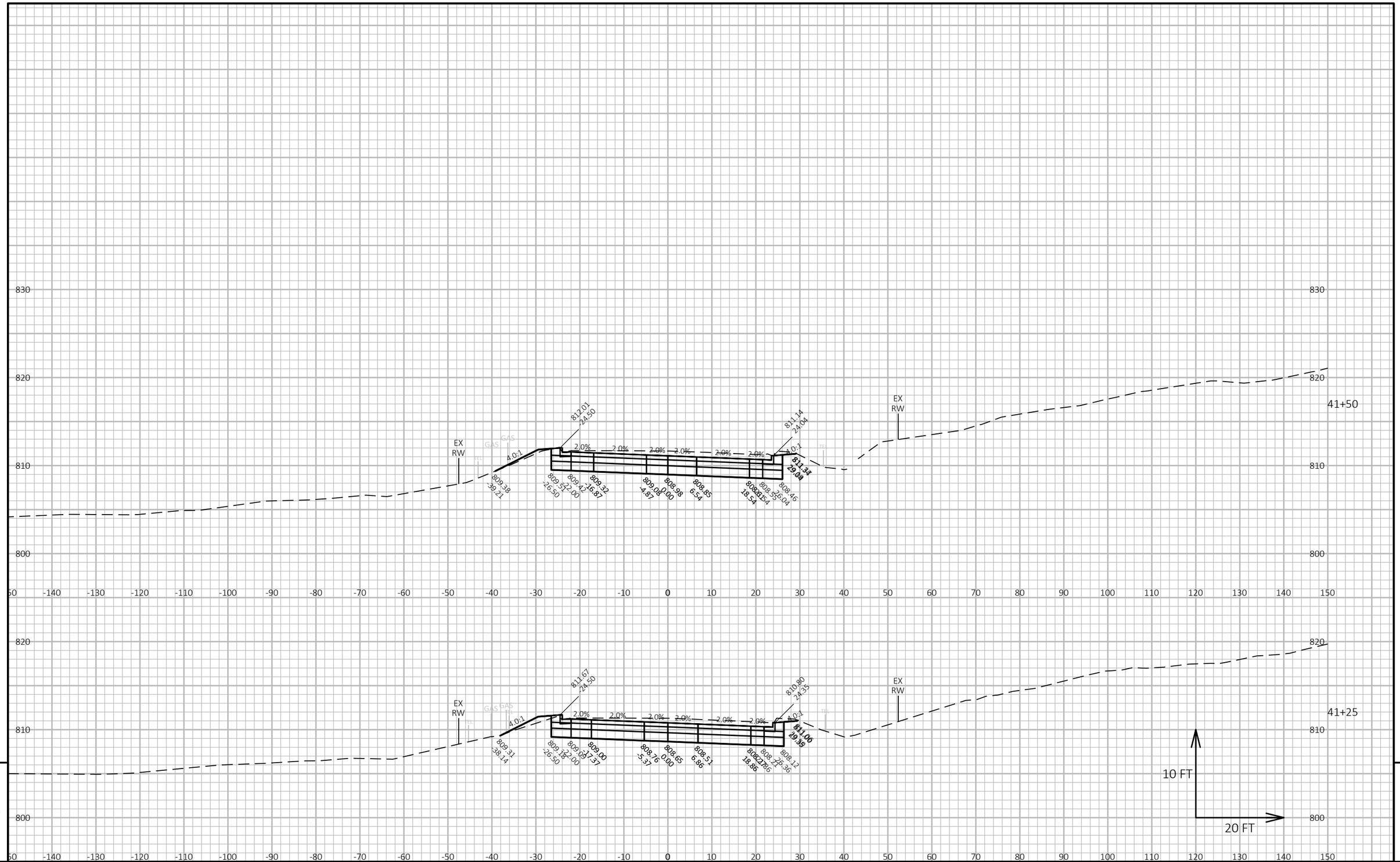

PROJECT NO: 5310-02-76	HWY: USH 14	COUNTY: DANE	CROSS SECTIONS: USH 14	SHEET	E

FILE NAME : N:\PDS\C3D\53100206(14)\SHEETSPLAN\090201-XS-USH 14.DWG
LAYOUT NAME - Section Sheet - (53)
PLOT DATE : 6/6/2019 10:42 AM
PLOT BY : SCHMID, CHARLENE
PLOT NAME :
PLOT SCALE : 1 IN:20 FT HORZ. / 1 IN:10 FT VERT.

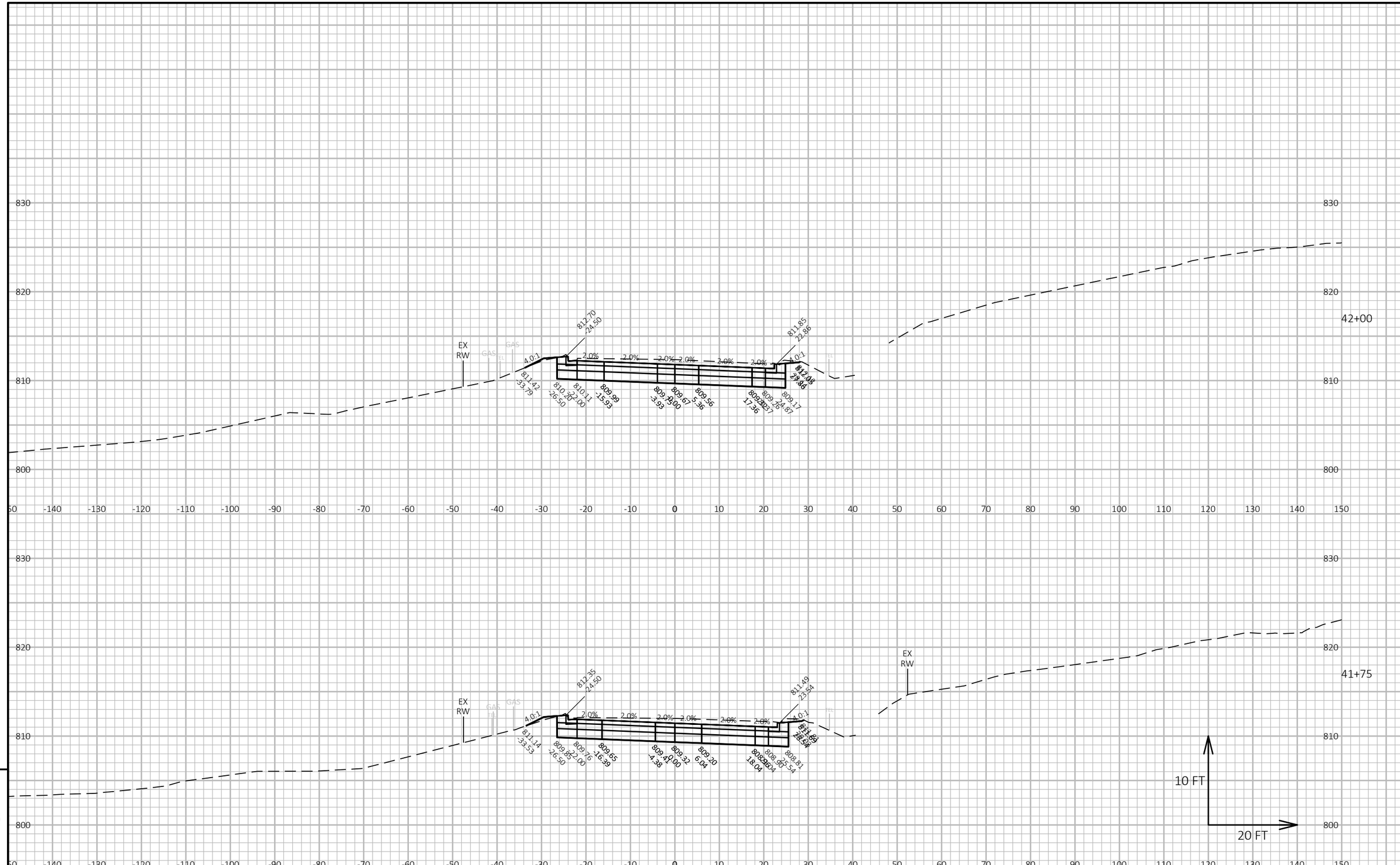

9

PROJECT NO: 5310-02-76	HWY: USH 14	COUNTY: DANE	CROSS SECTIONS: USH 14	SHEET	E

FILE NAME : N:\PDS\C3D\53100206(14)\SHEETSPLAN\090201-XS-USH 14.DWG
LAYOUT NAME - Section Sheet - (54)
PLOT DATE : 6/6/2019 10:42 AM
PLOT BY : SCHMID, CHARLENE
PLOT NAME :
PLOT SCALE : 1 IN:20 FT HORZ. / 1 IN:10 FT VERT.

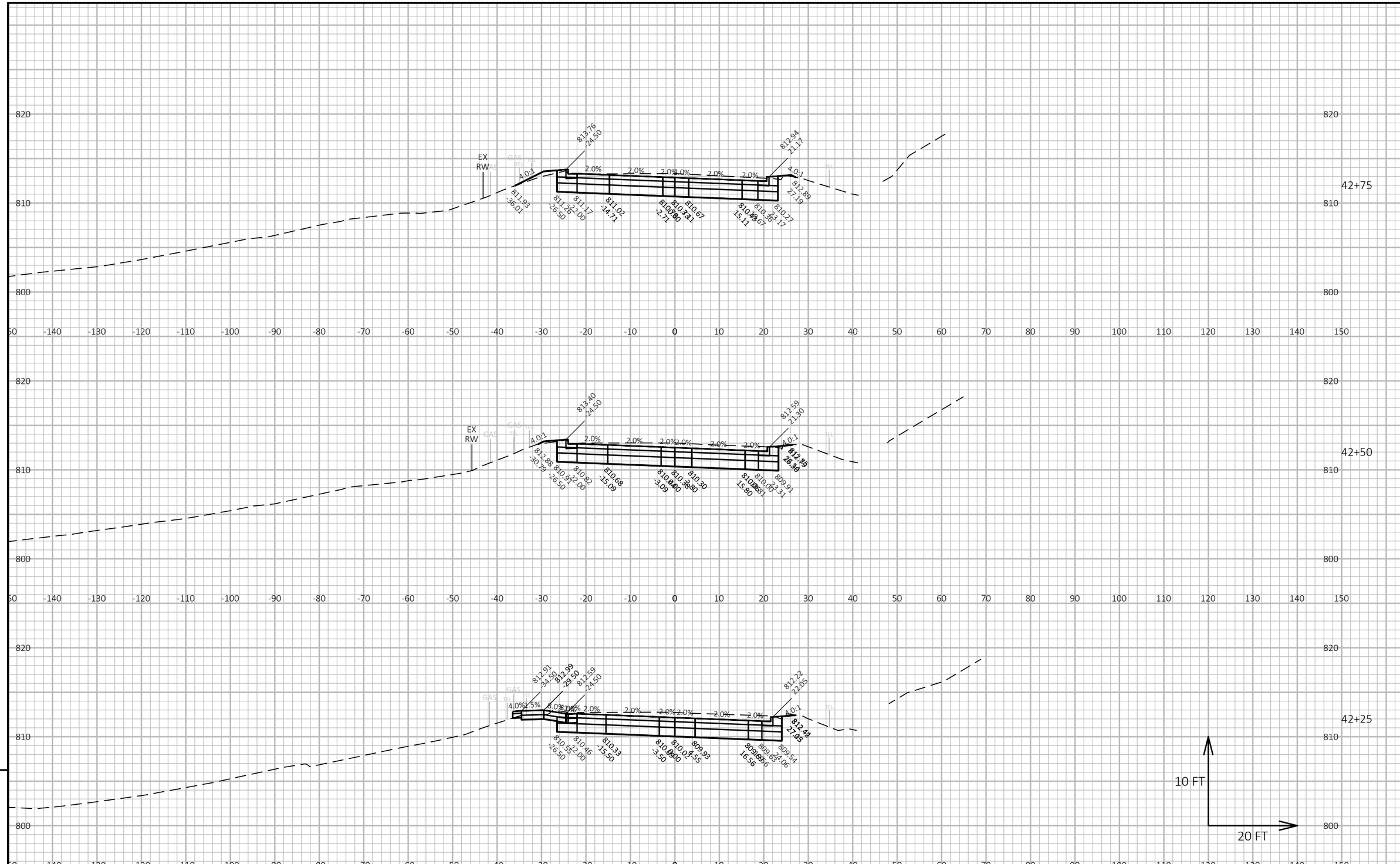

9

PROJECT NO: 5310-02-76	HWY: USH 14	COUNTY: DANE	CROSS SECTIONS: USH 14	SHEET	E

FILE NAME : N:\PDS\C3D\53100206(14)\SHEETSPLAN\090201-XS-USH 14.DWG
LAYOUT NAME - Section Sheet - (55)
PLOT DATE : 6/6/2019 10:43 AM
PLOT BY : SCHMID, CHARLENE
PLOT NAME :
PLOT SCALE : 1 IN:20 FT HORZ. / 1 IN:10 FT VERT.

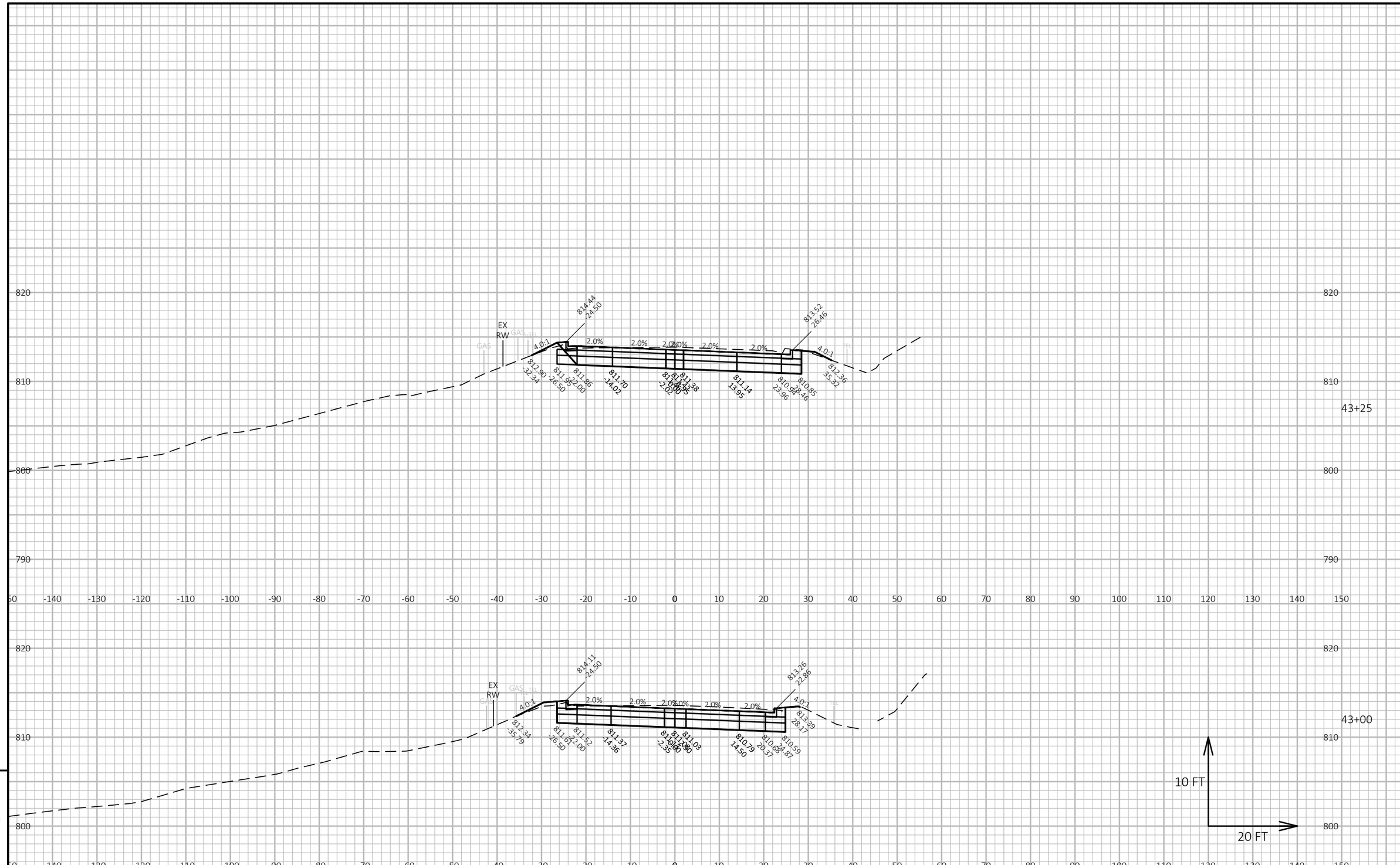

9

9

PROJECT NO: 5310-02-76	HWY: USH 14	COUNTY: DANE	CROSS SECTIONS: USH 14	SHEET	E

FILE NAME : N:\PDS\C3D\53100206(14)\SHEETSPLAN\090201-XS-USH 14.DWG
LAYOUT NAME - Section Sheet - (56)
PLOT DATE : 6/6/2019 10:43 AM
PLOT BY : SCHMID, CHARLENE
PLOT NAME :
PLOT SCALE : 1 IN:20 FT HORZ. / 1 IN:10 FT VERT.

WISDOT/CADDS SHEET 49

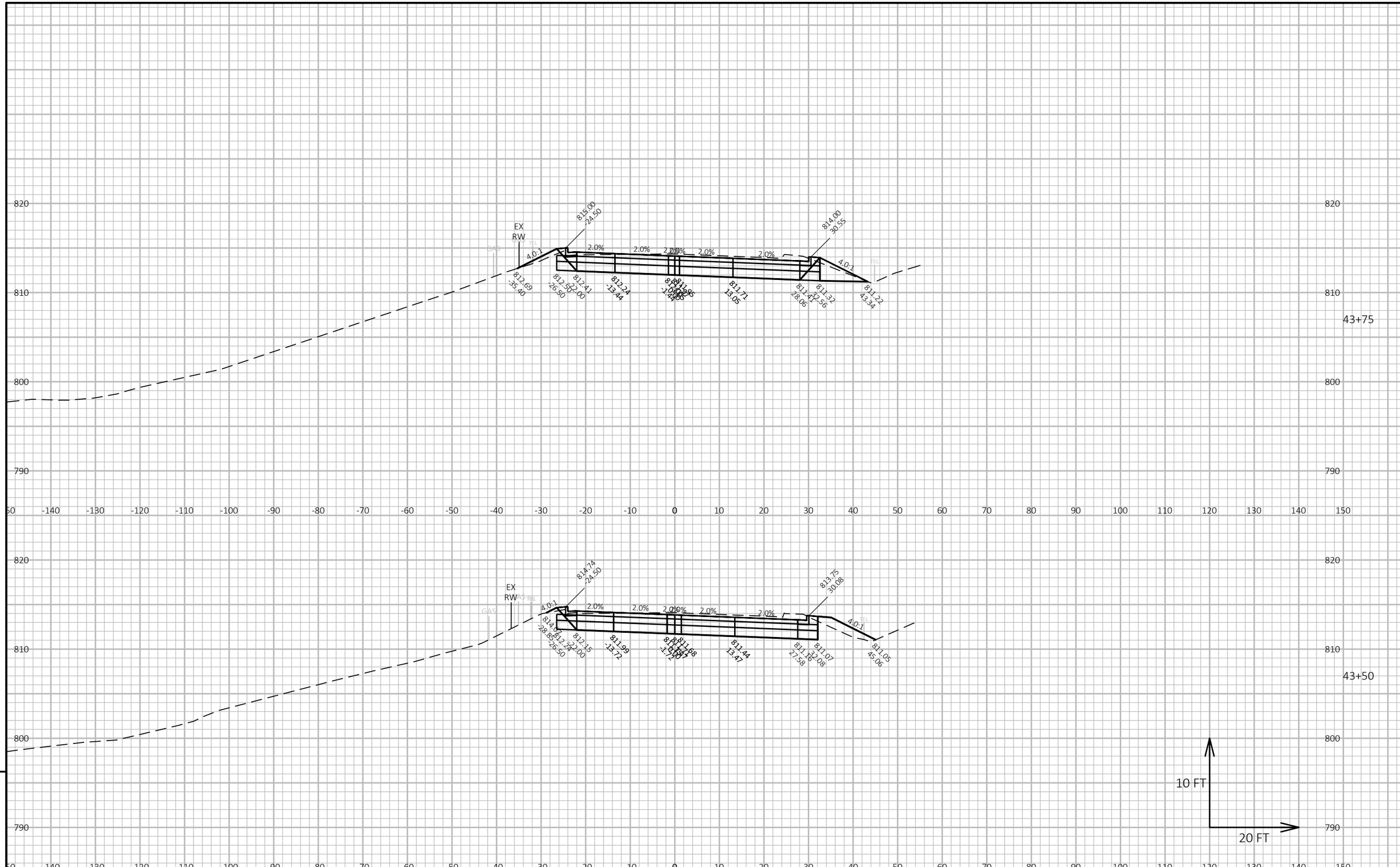

PROJECT NO: 5310-02-76	HWY: USH 14	COUNTY: DANE	CROSS SECTIONS: USH 14	SHEET	E

FILE NAME : N:\PDS\C3D\53100206(14)\SHEETSPLAN\090201-XS-USH 14.DWG
LAYOUT NAME - Section Sheet - (57)
PLOT DATE : 6/6/2019 10:43 AM
PLOT BY : SCHMID, CHARLENE
PLOT NAME :
PLOT SCALE : 1 IN:20 FT HORZ. / 1 IN:10 FT VERT.

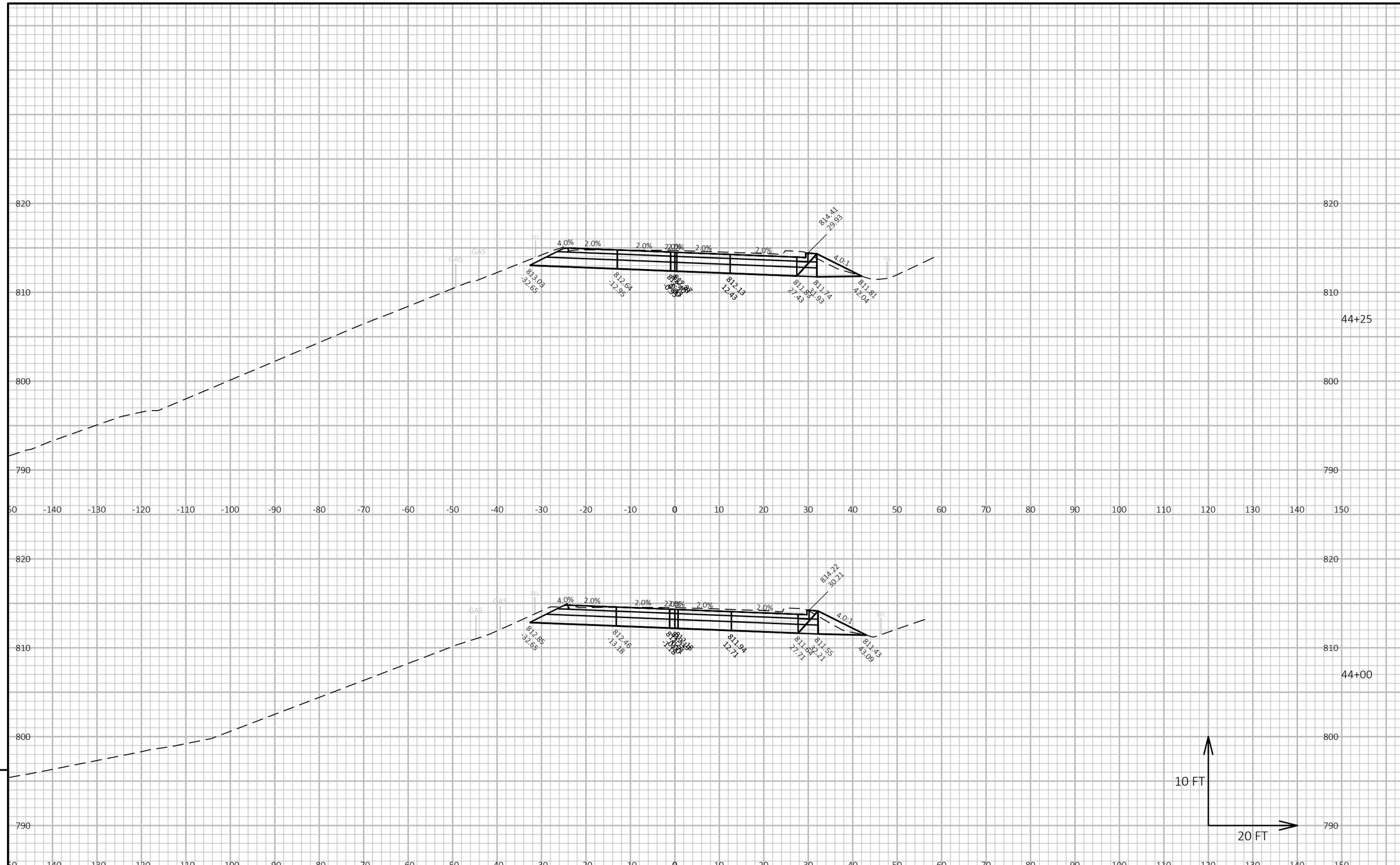

PROJECT NO: 5310-02-76	HWY: USH 14	COUNTY: DANE	CROSS SECTIONS: USH 14	SHEET	E

FILE NAME : N:\PDS\C3D\53100206(14)\SHEETSPLAN\090201-XS-USH 14.DWG
LAYOUT NAME - Section Sheet - (58)
PLOT DATE : 6/6/2019 10:43 AM
PLOT BY : SCHMID, CHARLENE
PLOT NAME :
PLOT SCALE : 1 IN:20 FT HORZ. / 1 IN:10 FT VERT.
WISDOT/CADDS SHEET 49

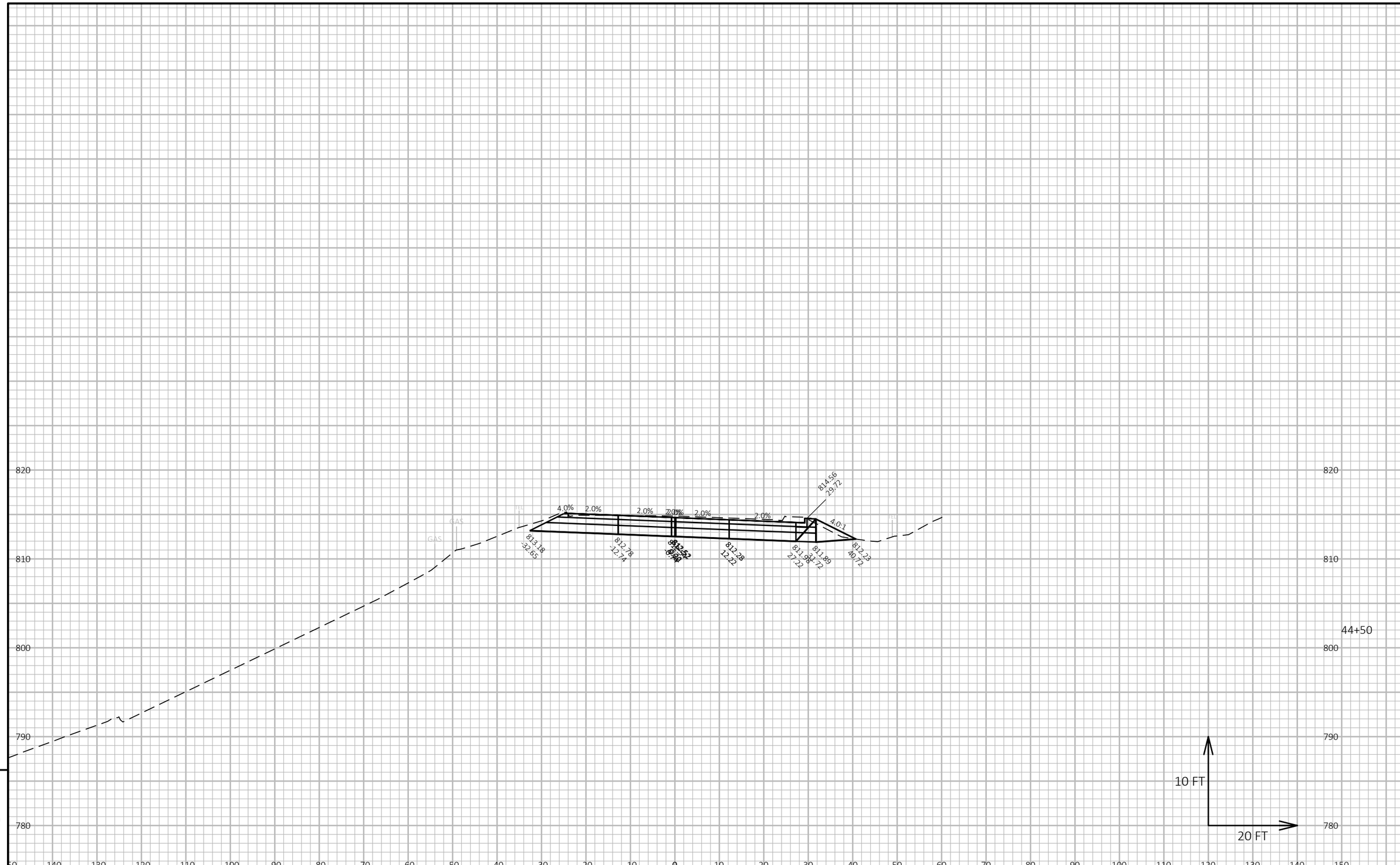

9

9

PROJECT NO: 5310-02-76	HWY: USH 14	COUNTY: DANE	CROSS SECTIONS: USH 14	SHEET	E

FILE NAME : N:\PDS\C3D\53100206(14)\SHEETSPLAN\090201-XS-USH 14.DWG
LAYOUT NAME - Section Sheet - (59)
PLOT DATE : 6/6/2019 10:43 AM
PLOT BY : SCHMID, CHARLENE
PLOT NAME :
PLOT SCALE : 1 IN:20 FT HORZ. / 1 IN:10 FT VERT.

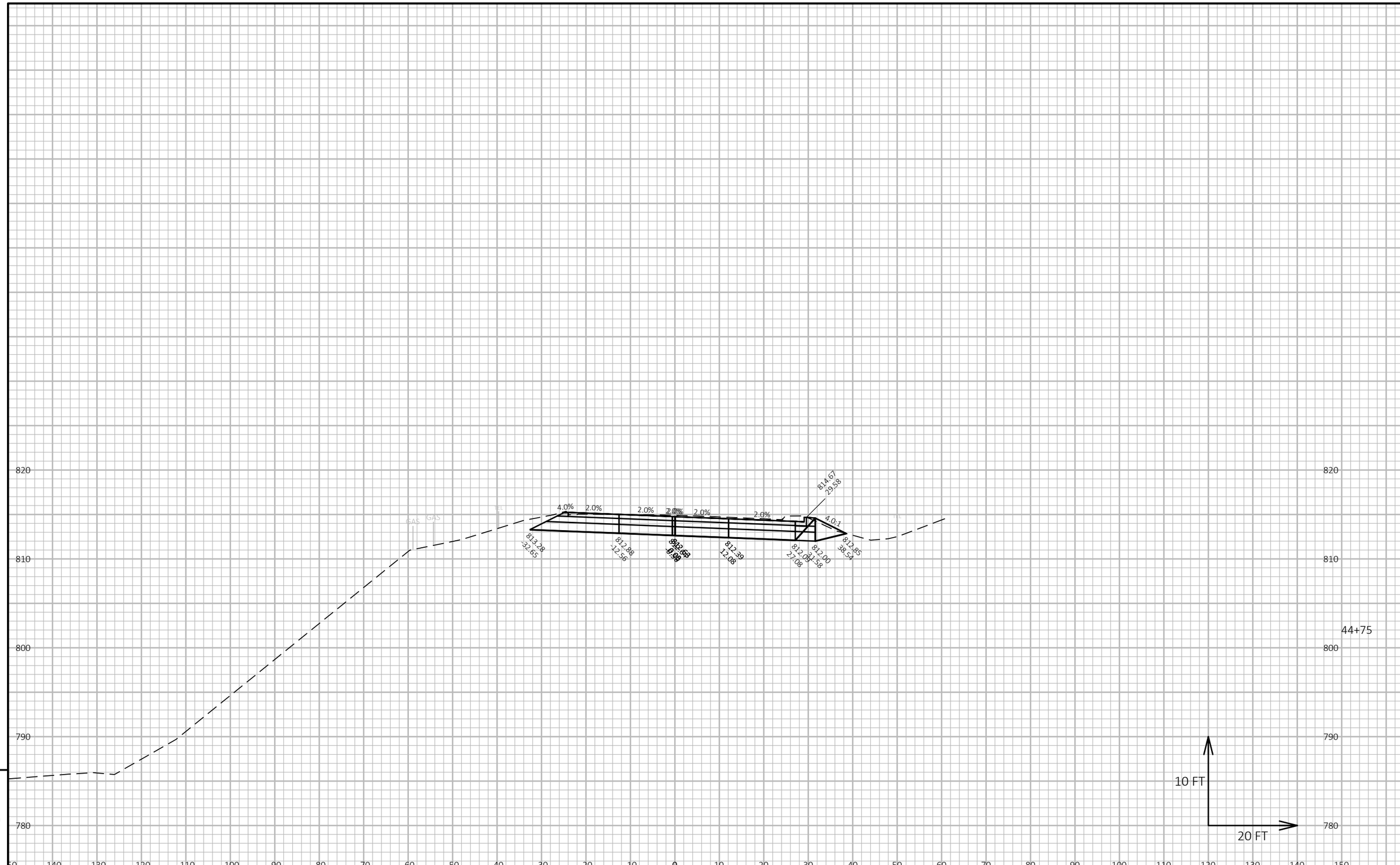

9

9

PROJECT NO: 5310-02-76	HWY: USH 14	COUNTY: DANE	CROSS SECTIONS: USH 14	SHEET	E

FILE NAME : N:\PDS\C3D\53100206(14)\SHEETSPLAN\090201-XS-USH 14.DWG
LAYOUT NAME - Section Sheet - (60)
PLOT DATE : 6/6/2019 10:43 AM
PLOT BY : SCHMID, CHARLENE
PLOT NAME :
PLOT SCALE : 1 IN:20 FT HORZ. / 1 IN:10 FT VERT.

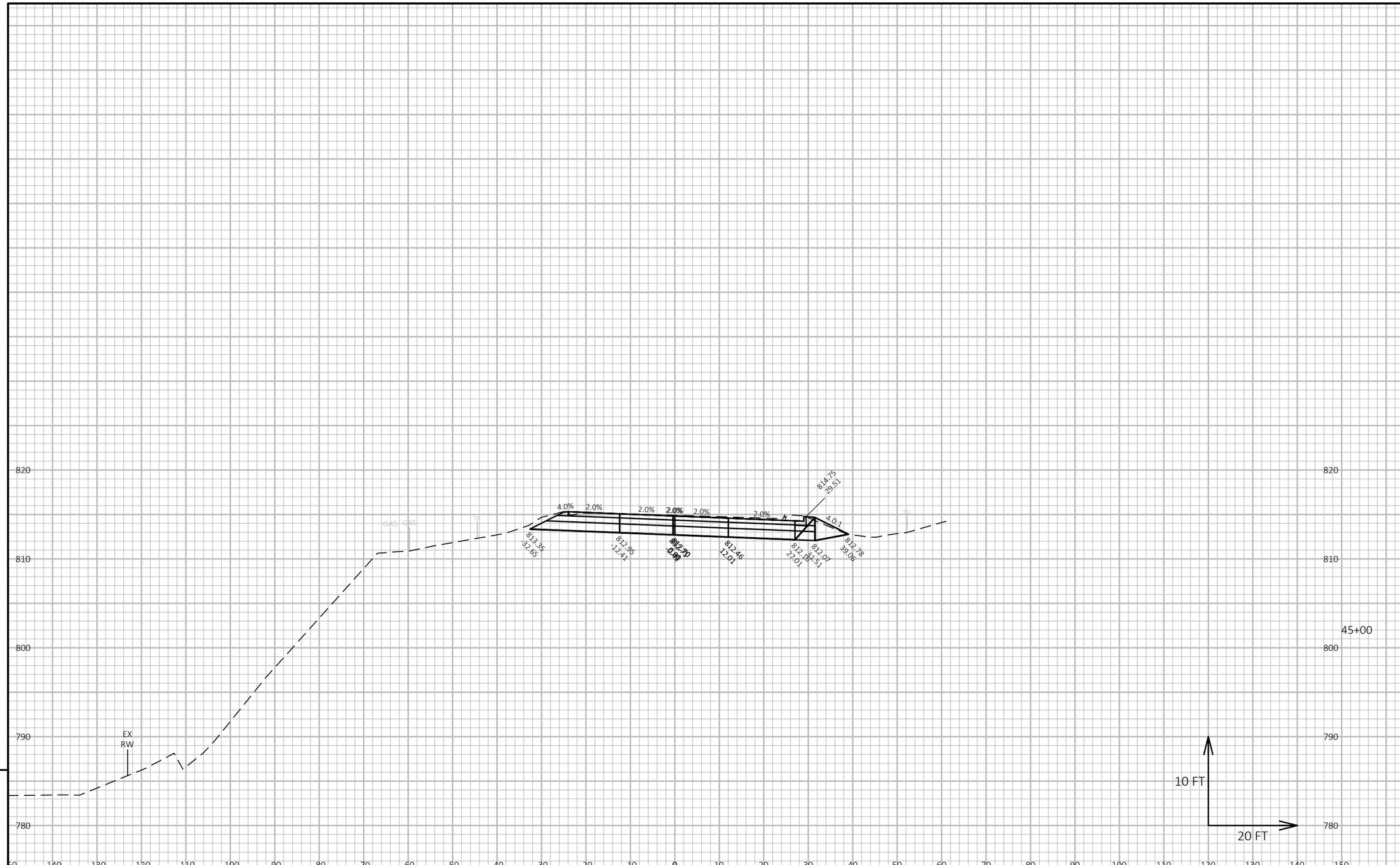

9

9

PROJECT NO: 5310-02-76	HWY: USH 14	COUNTY: DANE	CROSS SECTIONS: USH 14	SHEET	E

FILE NAME : N:\PDS\C3D\53100206(14)\SHEETSPLAN\090201-XS-USH 14.DWG
LAYOUT NAME - Section Sheet - (61)
PLOT DATE : 6/6/2019 10:44 AM
PLOT BY : SCHMID, CHARLENE
PLOT NAME :
PLOT SCALE : 1 IN:20 FT HORZ. / 1 IN:10 FT VERT.

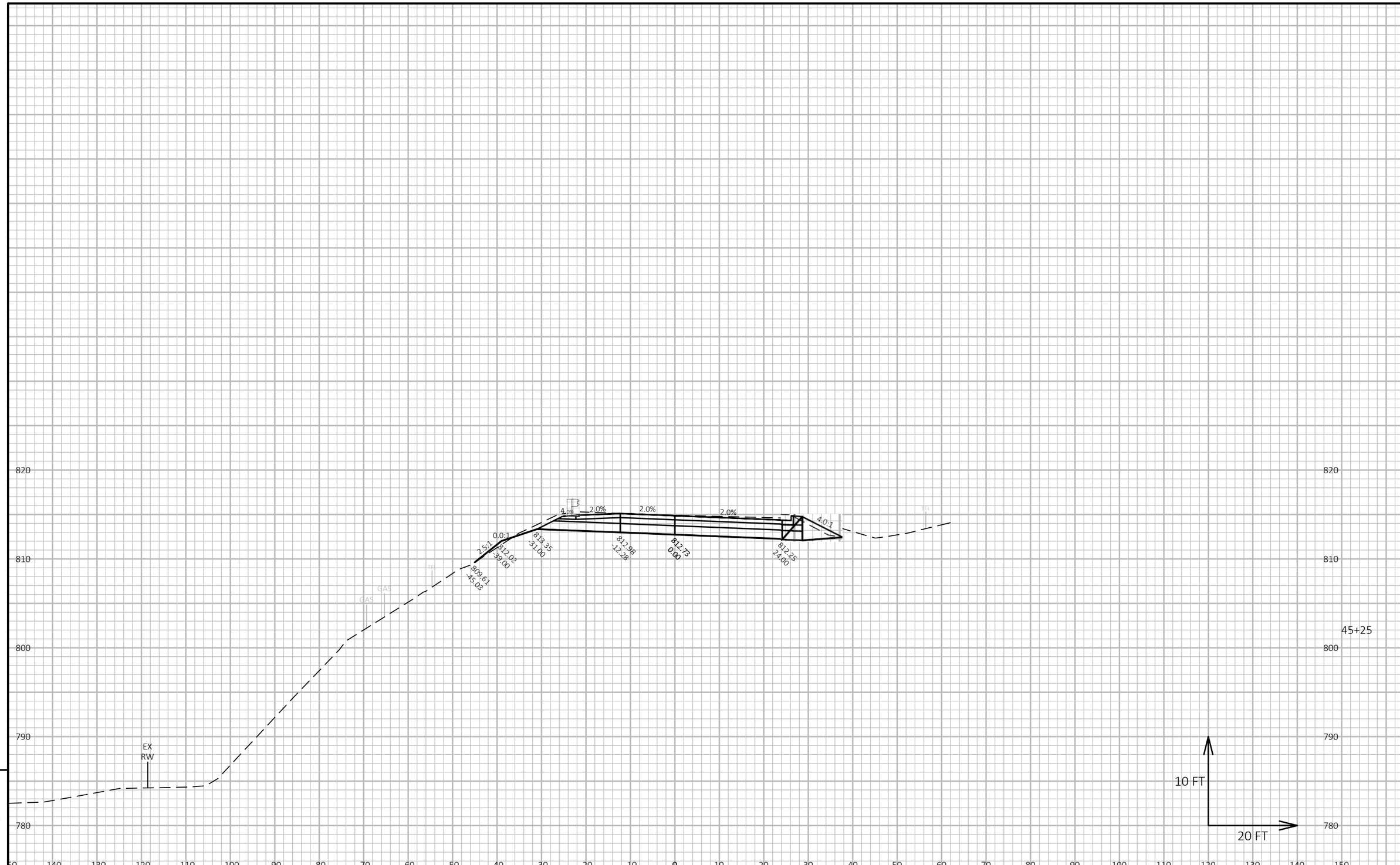

9

9

PROJECT NO: 5310-02-76	HWY: USH 14	COUNTY: DANE	CROSS SECTIONS: USH 14	SHEET	E

FILE NAME : N:\PDS\C3D\53100206(14)\SHEETSPLAN\090201-XS-USH 14.DWG
LAYOUT NAME - Section Sheet - (62)
PLOT DATE : 6/6/2019 10:44 AM
PLOT BY : SCHMID, CHARLENE
PLOT NAME :
PLOT SCALE : 1 IN:20 FT HORZ. / 1 IN:10 FT VERT.

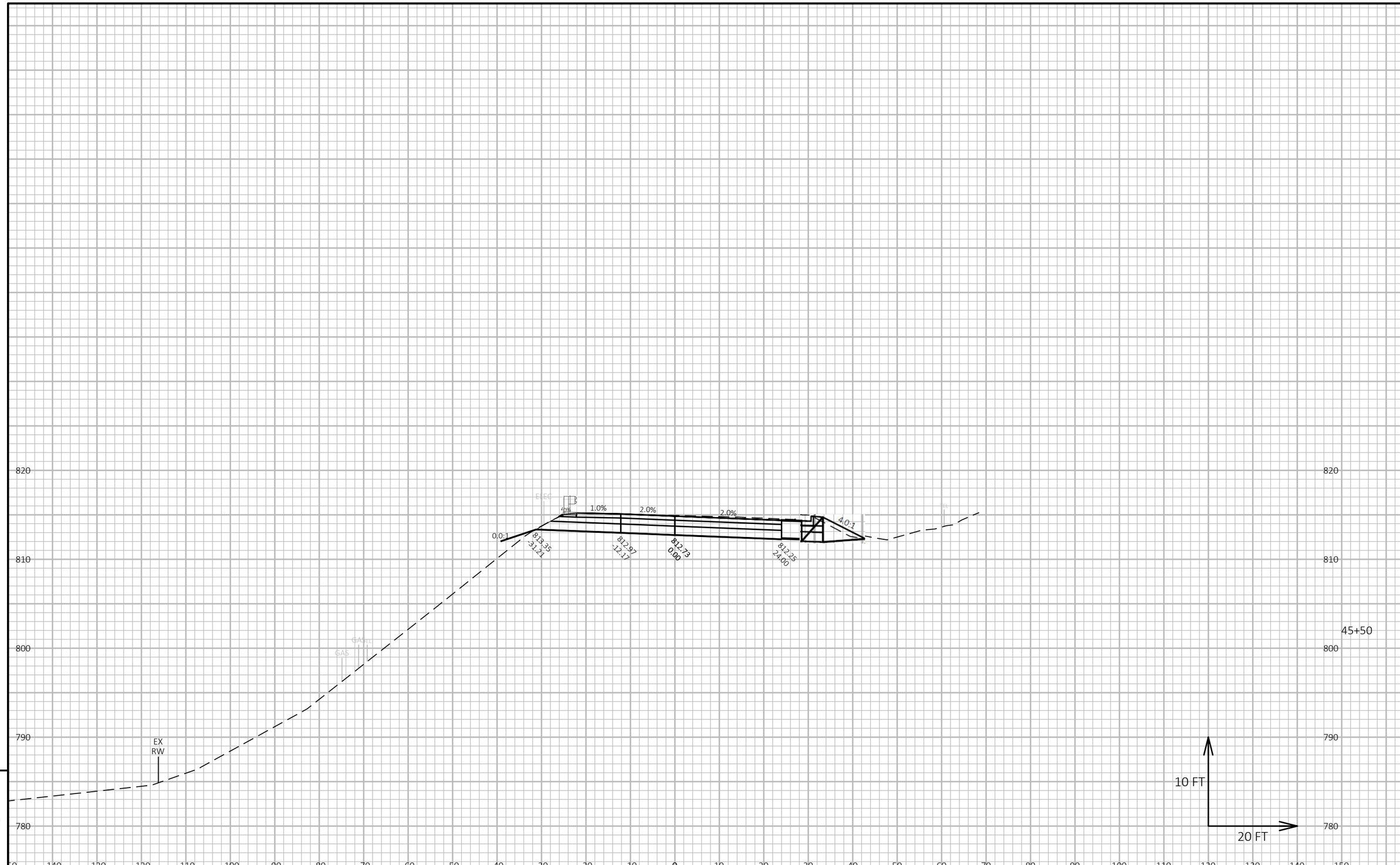

9

9

PROJECT NO: 5310-02-76	HWY: USH 14	COUNTY: DANE	CROSS SECTIONS: USH 14	SHEET	E

FILE NAME : N:\PDS\C3D\53100206(14)\SHEETSPLAN\090201-XS-USH 14.DWG
LAYOUT NAME - Section Sheet - (63)
PLOT DATE : 6/6/2019 10:44 AM
PLOT BY : SCHMID, CHARLENE
PLOT NAME :
PLOT SCALE : 1 IN:20 FT HORZ. / 1 IN:10 FT VERT.

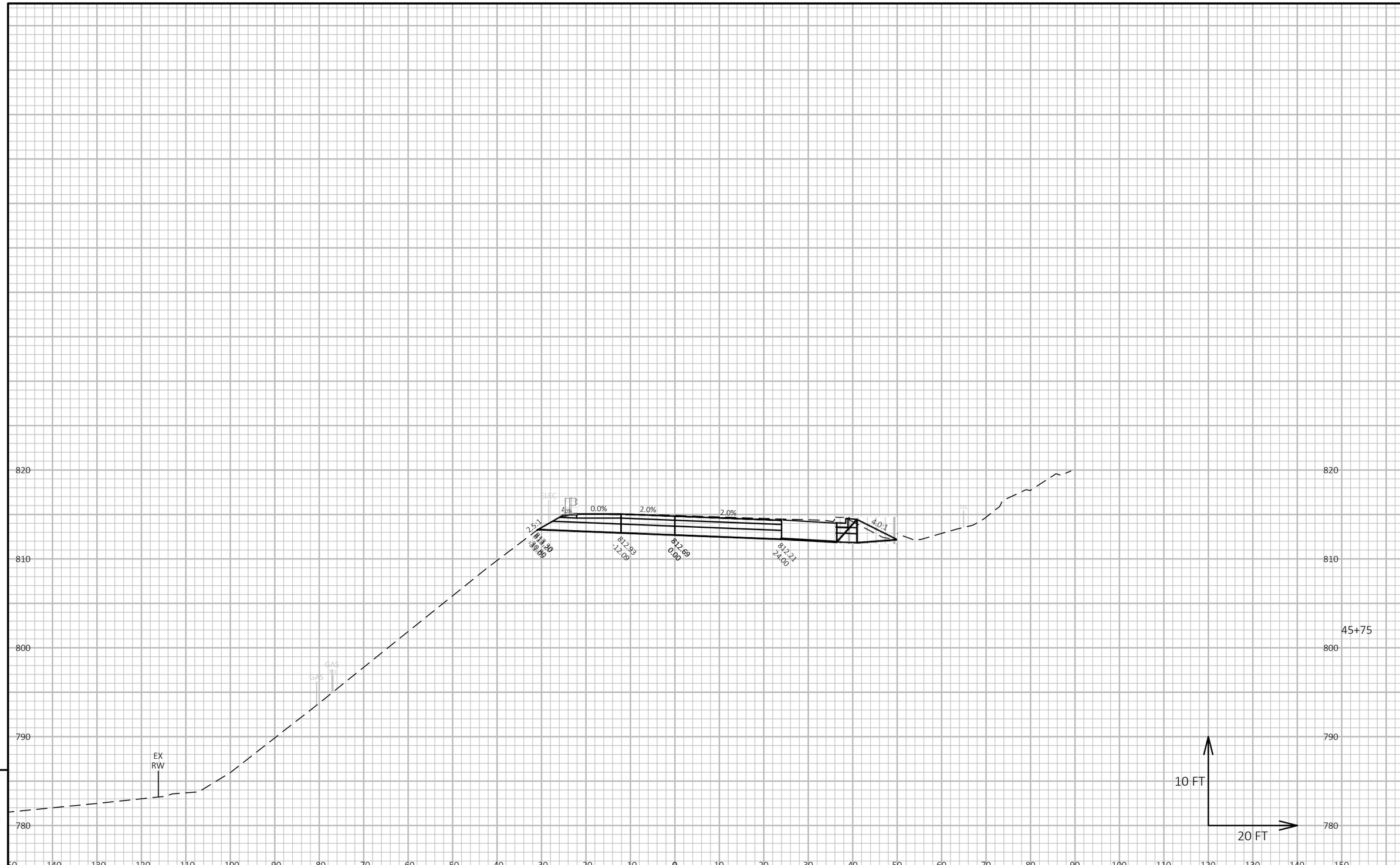

9

9

PROJECT NO: 5310-02-76	HWY: USH 14	COUNTY: DANE	CROSS SECTIONS: USH 14	SHEET	E

FILE NAME : N:\PDS\C3D\53100206(14)\SHEETSPLAN\090201-XS-USH 14.DWG
LAYOUT NAME - Section Sheet - (64)
PLOT DATE : 6/6/2019 10:44 AM
PLOT BY : SCHMID, CHARLENE
PLOT NAME :
PLOT SCALE : 1 IN:20 FT HORZ. / 1 IN:10 FT VERT.

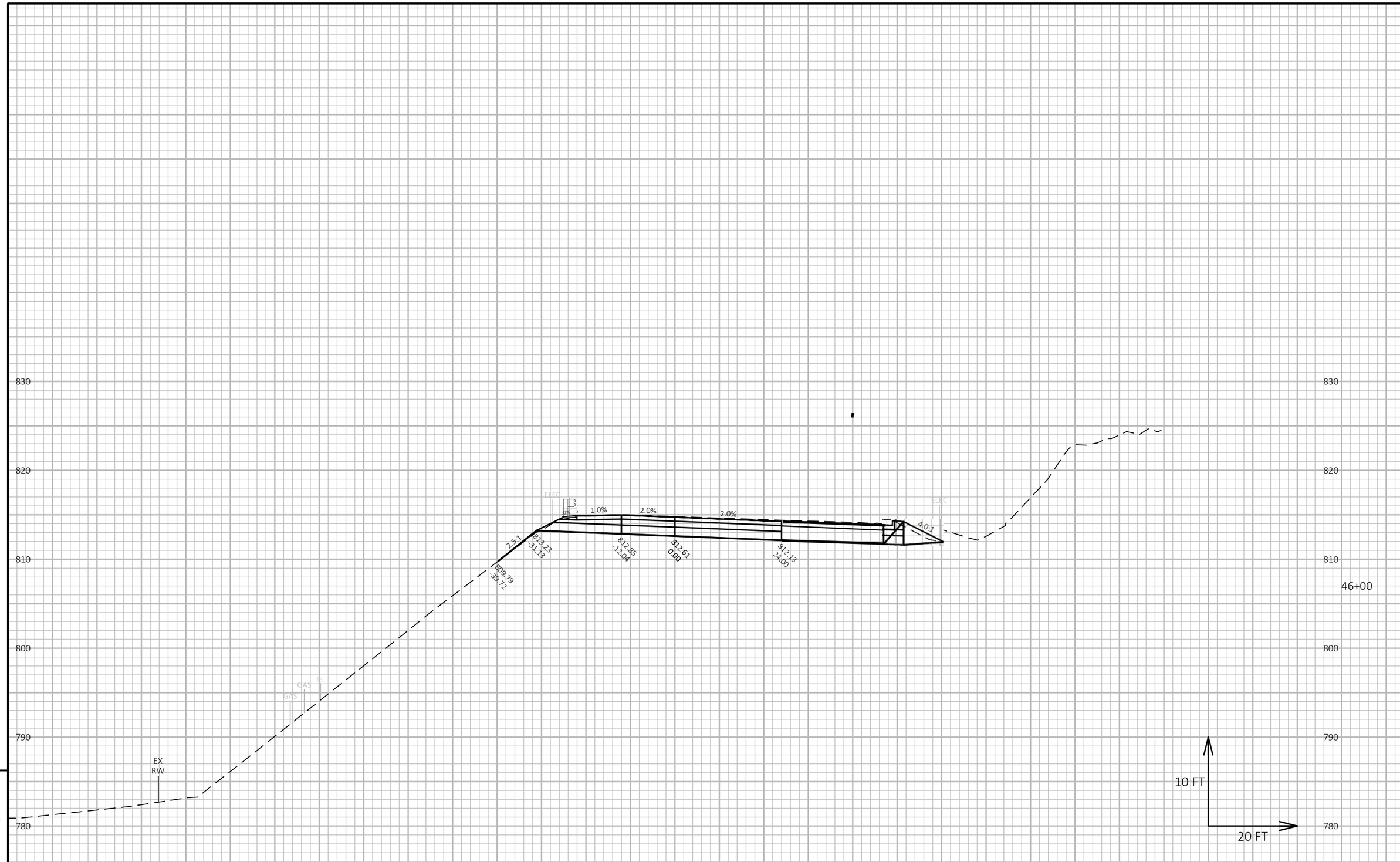

9

9

PROJECT NO: 5310-02-76	HWY: USH 14	COUNTY: DANE	CROSS SECTIONS: USH 14	SHEET	E

FILE NAME : N:\PDS\C3D\53100206(14)\SHEETSPLAN\090201-XS-USH 14.DWG
LAYOUT NAME - Section Sheet - (65)
PLOT DATE : 6/6/2019 10:44 AM
PLOT BY : SCHMID, CHARLENE
PLOT NAME :
PLOT SCALE : 1 IN:20 FT HORZ. / 1 IN:10 FT VERT.

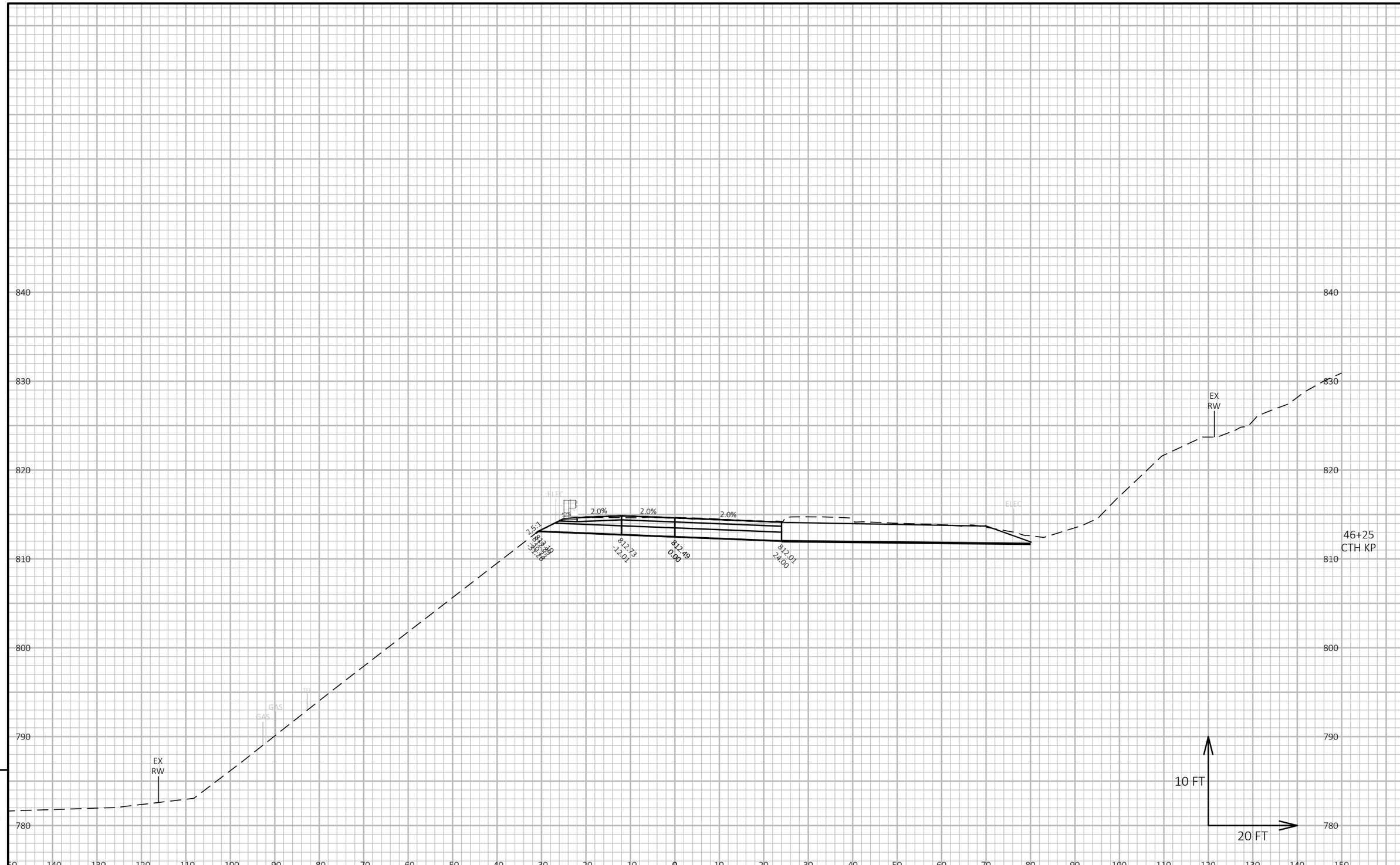

9

9

PROJECT NO: 5310-02-76	HWY: USH 14	COUNTY: DANE	CROSS SECTIONS: USH 14	SHEET	E

FILE NAME : N:\PDS\C3D\53100206(14)\SHEETSPLAN\090201-XS-USH 14.DWG
LAYOUT NAME - Section Sheet - (66)
PLOT DATE : 6/6/2019 10:45 AM
PLOT BY : SCHMID, CHARLENE
PLOT NAME :
PLOT SCALE : 1 IN:20 FT HORZ. / 1 IN:10 FT VERT.

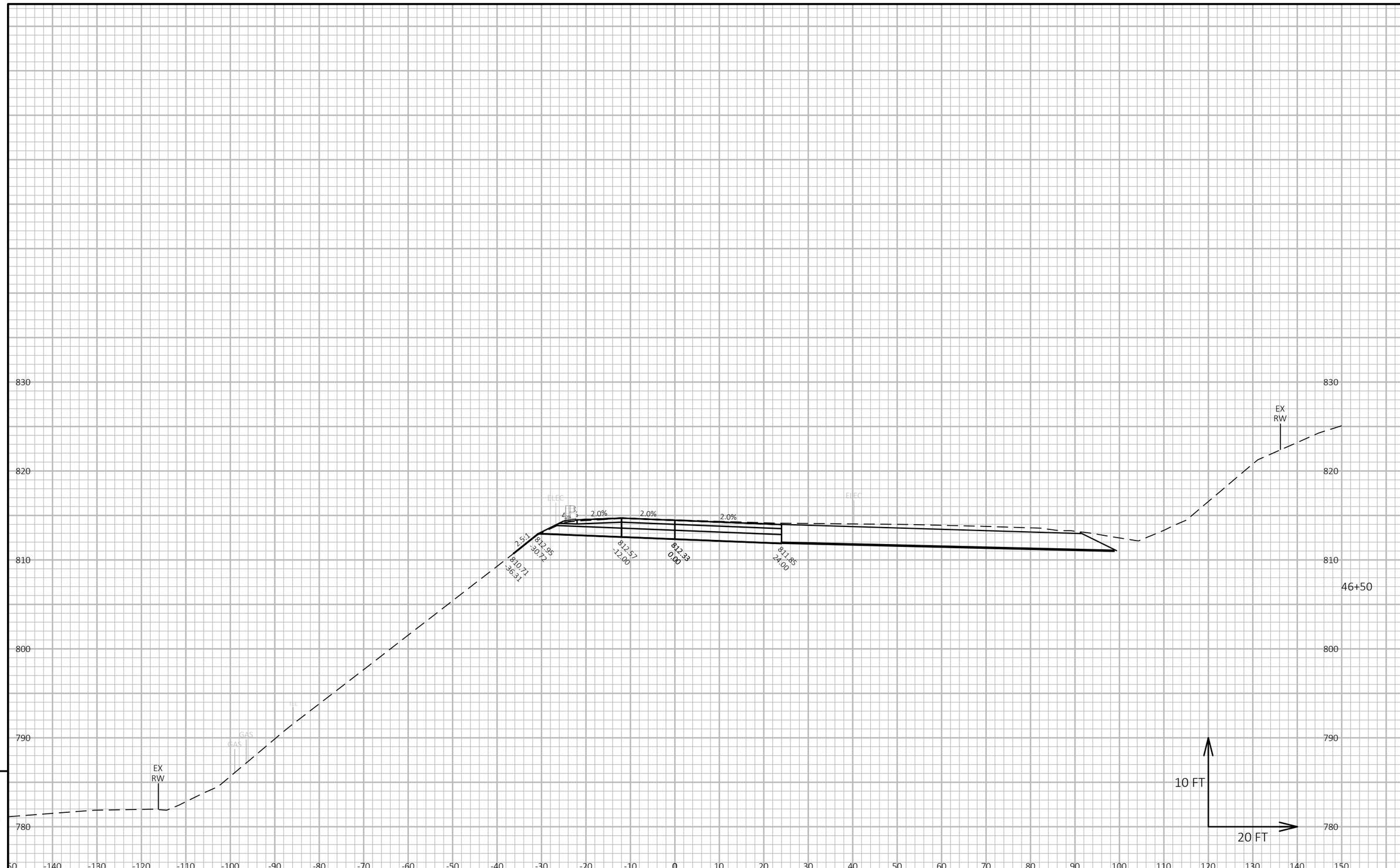

9

9

PROJECT NO: 5310-02-76	HWY: USH 14	COUNTY: DANE	CROSS SECTIONS: USH 14	SHEET	E

FILE NAME : N:\PDS\C3D\53100206(14)\SHEETSPLAN\090201-XS-USH 14.DWG
LAYOUT NAME - Section Sheet - (67)
PLOT DATE : 6/6/2019 10:45 AM
PLOT BY : SCHMID, CHARLENE
PLOT NAME :
PLOT SCALE : 1 IN:20 FT HORZ. / 1 IN:10 FT VERT.
WISDOT/CADDS SHEET 49

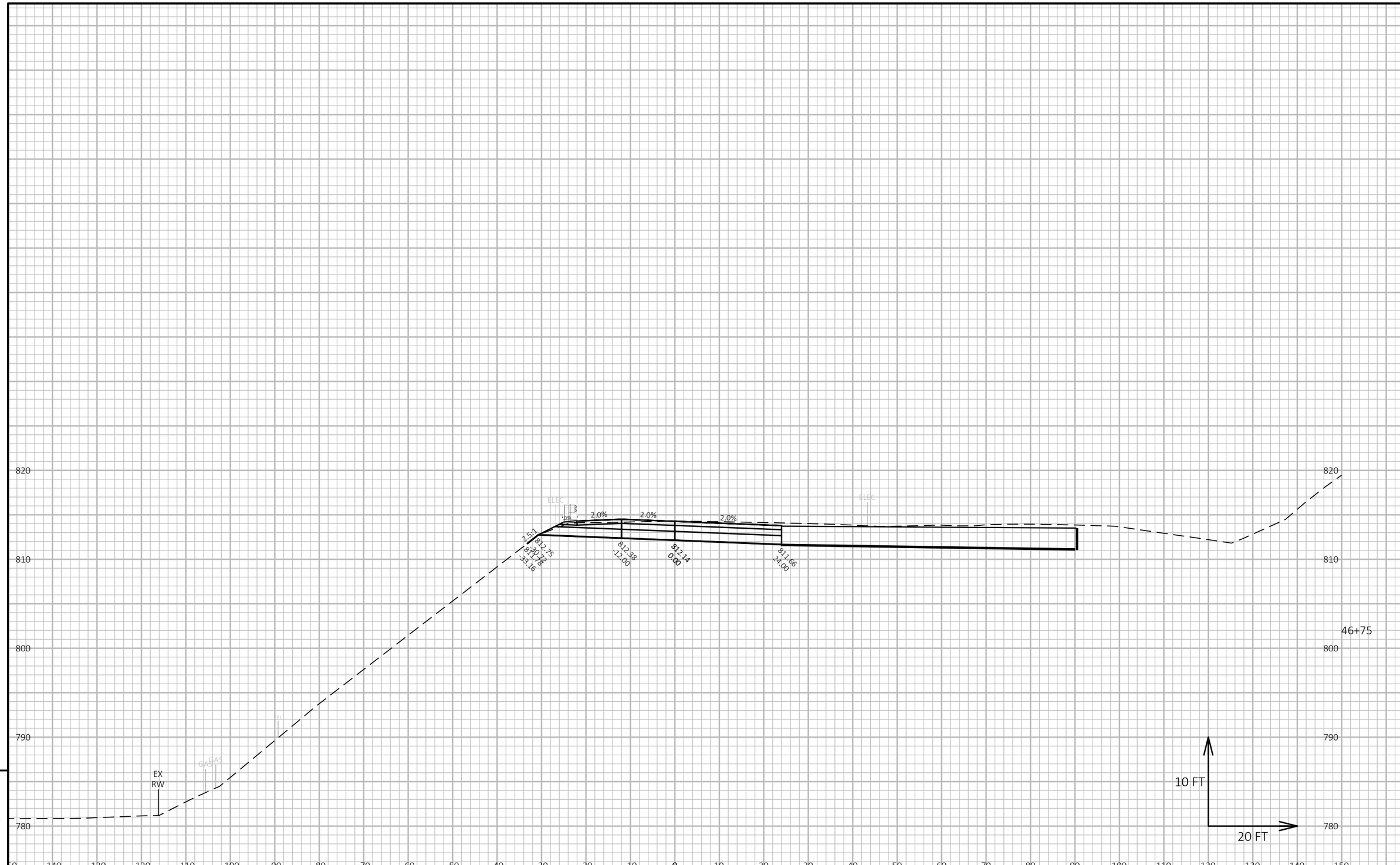

9

9

PROJECT NO: 5310-02-76	HWY: USH 14	COUNTY: DANE	CROSS SECTIONS: USH 14	SHEET	E

FILE NAME : N:\PDS\C3D\53100206(14)\SHEETSPLAN\090201-XS-USH 14.DWG
LAYOUT NAME - Section Sheet - (68)
PLOT DATE : 6/6/2019 10:45 AM
PLOT BY : SCHMID, CHARLENE
PLOT NAME :
PLOT SCALE : 1 IN:20 FT HORZ. / 1 IN:10 FT VERT.

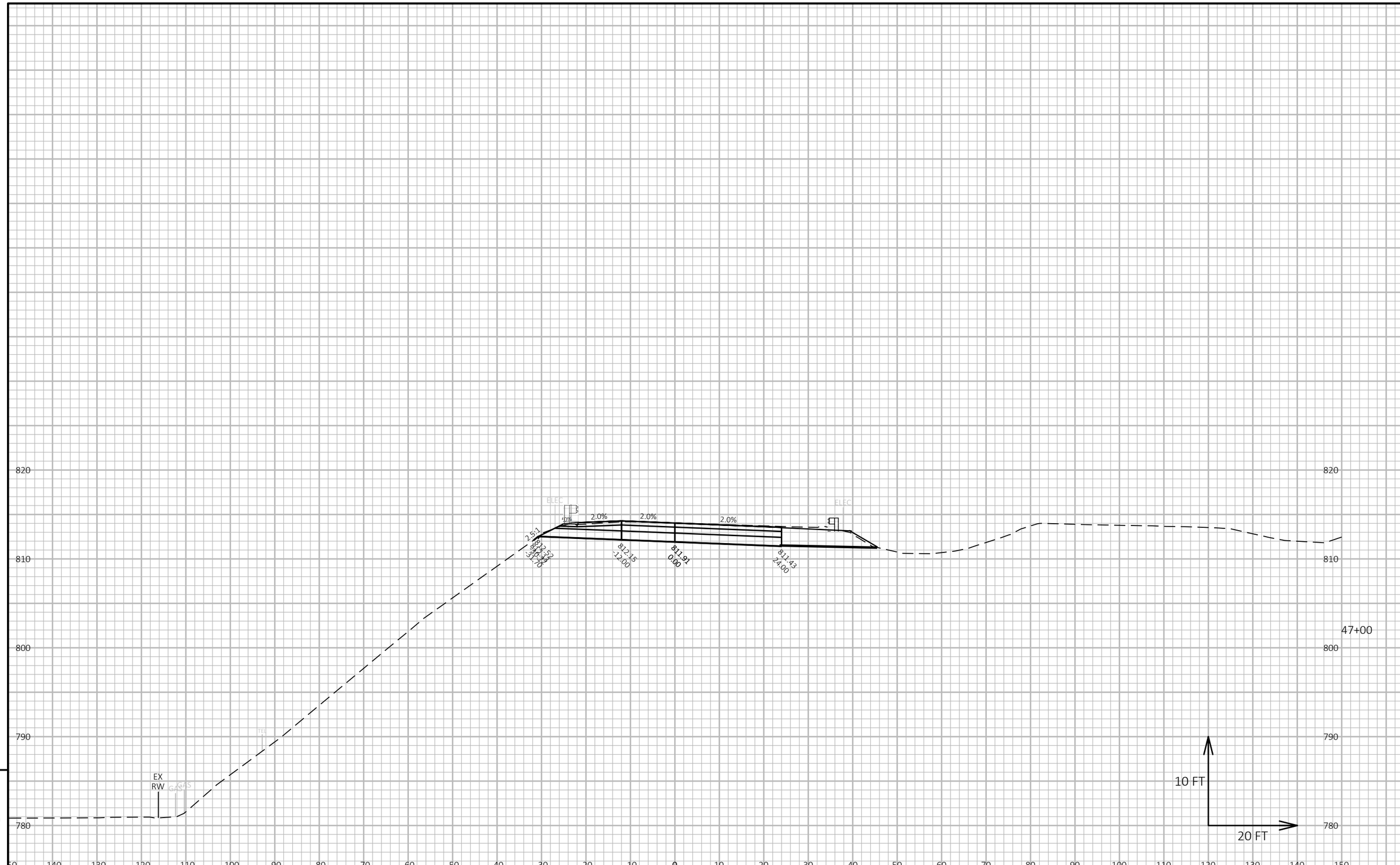

9

9

PROJECT NO: 5310-02-76	HWY: USH 14	COUNTY: DANE	CROSS SECTIONS: USH 14	SHEET	E

FILE NAME : N:\PDS\C3D\53100206(14)\SHEETSPLAN\090201-XS-USH 14.DWG
LAYOUT NAME - Section Sheet - (69)
PLOT DATE : 6/6/2019 10:45 AM
PLOT BY : SCHMID, CHARLENE
PLOT NAME :
PLOT SCALE : 1 IN:20 FT HORZ. / 1 IN:10 FT VERT.

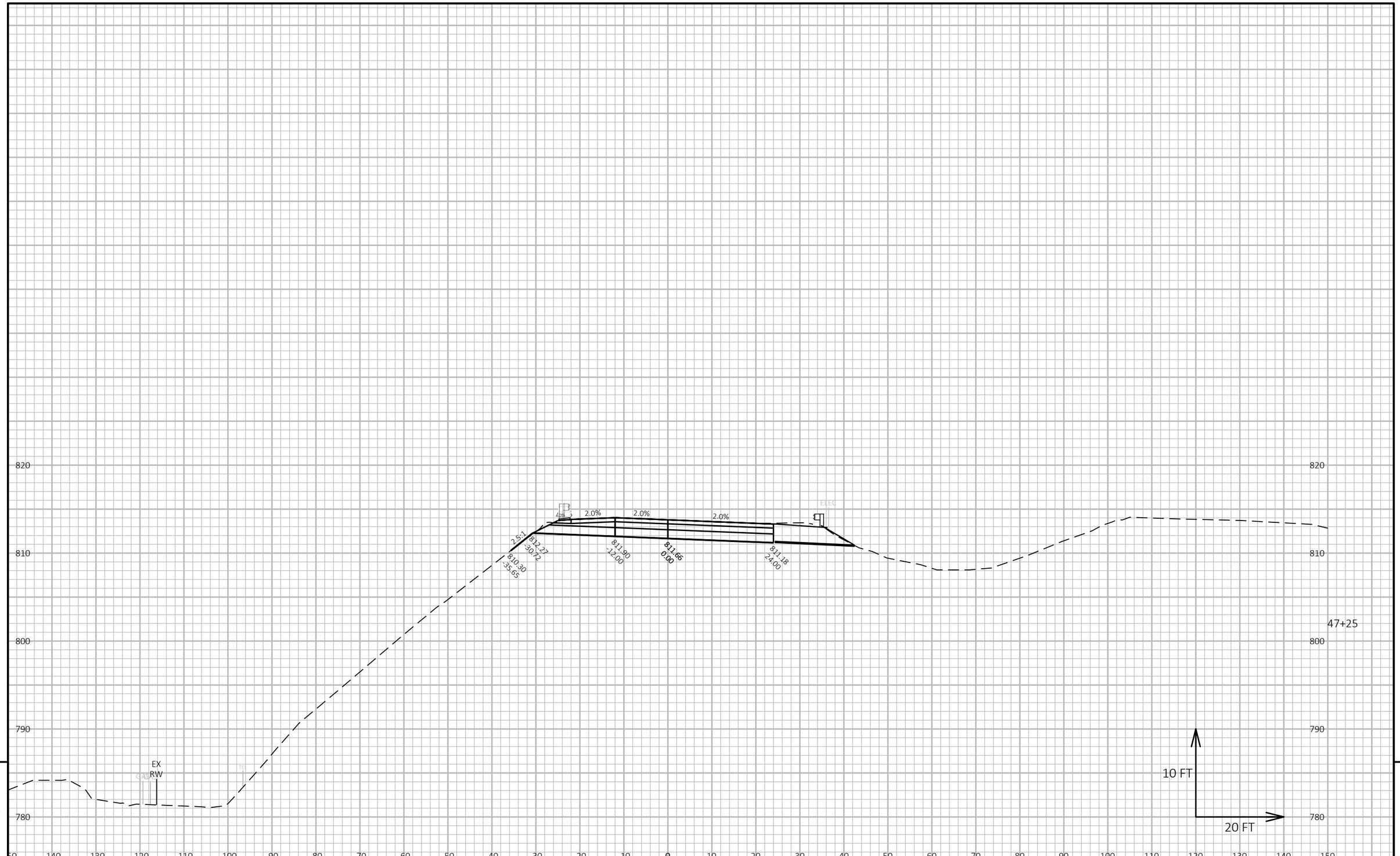

9

9

PROJECT NO: 5310-02-76	HWY: USH 14	COUNTY: DANE	CROSS SECTIONS: USH 14	SHEET	E

FILE NAME : N:\PDS\C3D\53100206(14)\SHEETSPLAN\090201-XS-USH 14.DWG
LAYOUT NAME - Section Sheet - (70)
PLOT DATE : 6/6/2019 10:45 AM
PLOT BY : SCHMID, CHARLENE
PLOT NAME :
PLOT SCALE : 1 IN:20 FT HORZ. / 1 IN:10 FT VERT.

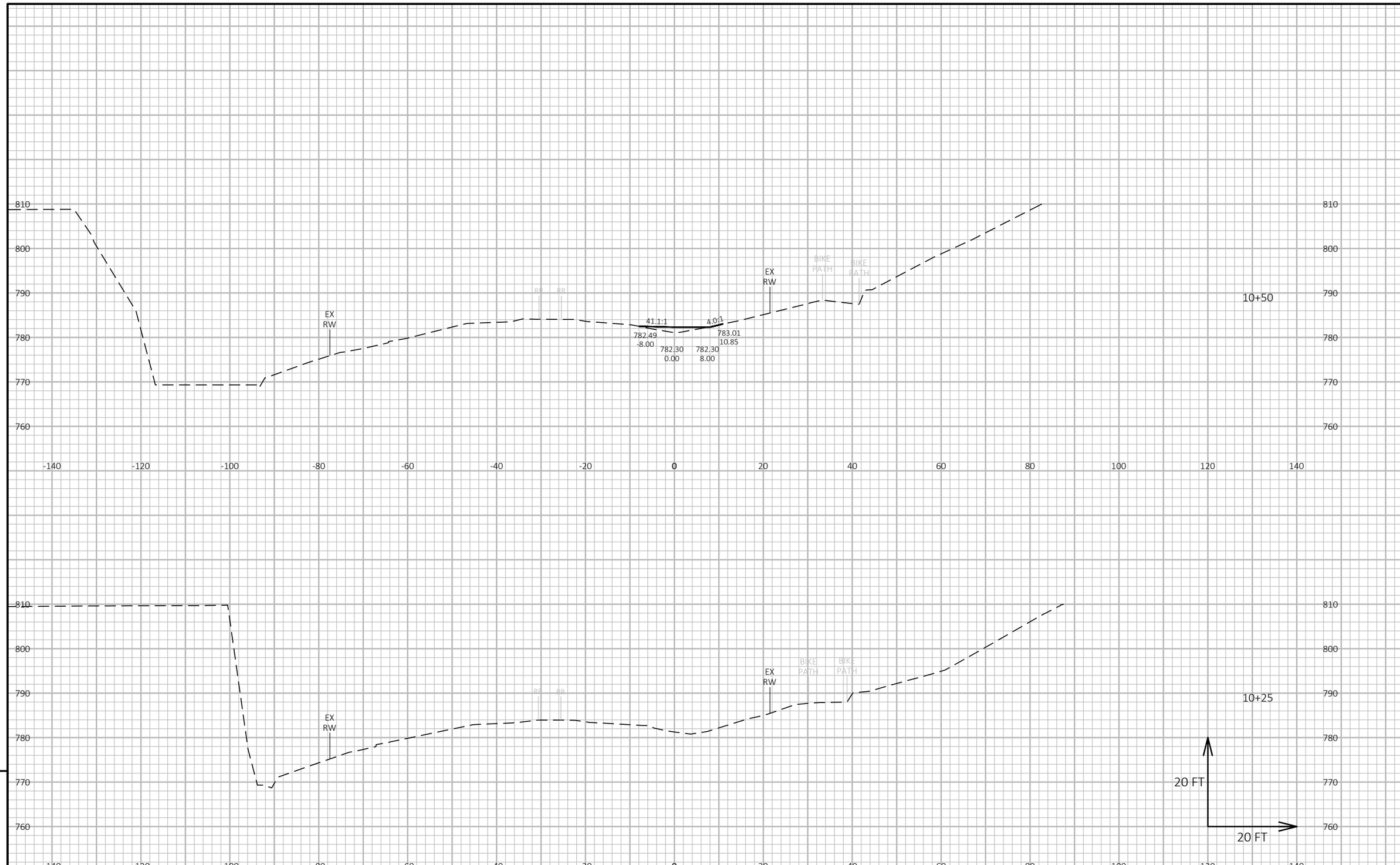

9

9

PROJECT NO: 5310-02-67	HWY: USH 14	COUNTY: DANE	CROSS SECTIONS: RR DITCH - 0.2%	SHEET	E

FILE NAME : N:\PDS\C3D\53100206(14)\DESIGN\CORRIDORS\CRDR-RR DITCH 0.2%.DWG
LAYOUT NAME - RR DITCH 0.2 2

PLOT DATE : 8/1/2018 3:44 PM PLOT BY : SCHMID, CHARLENE PLOT NAME : PLOT SCALE : 1 IN:20 FT HORZ. / 1 IN:20 FT VERT.

WISDOT/CADDS SHEET 49

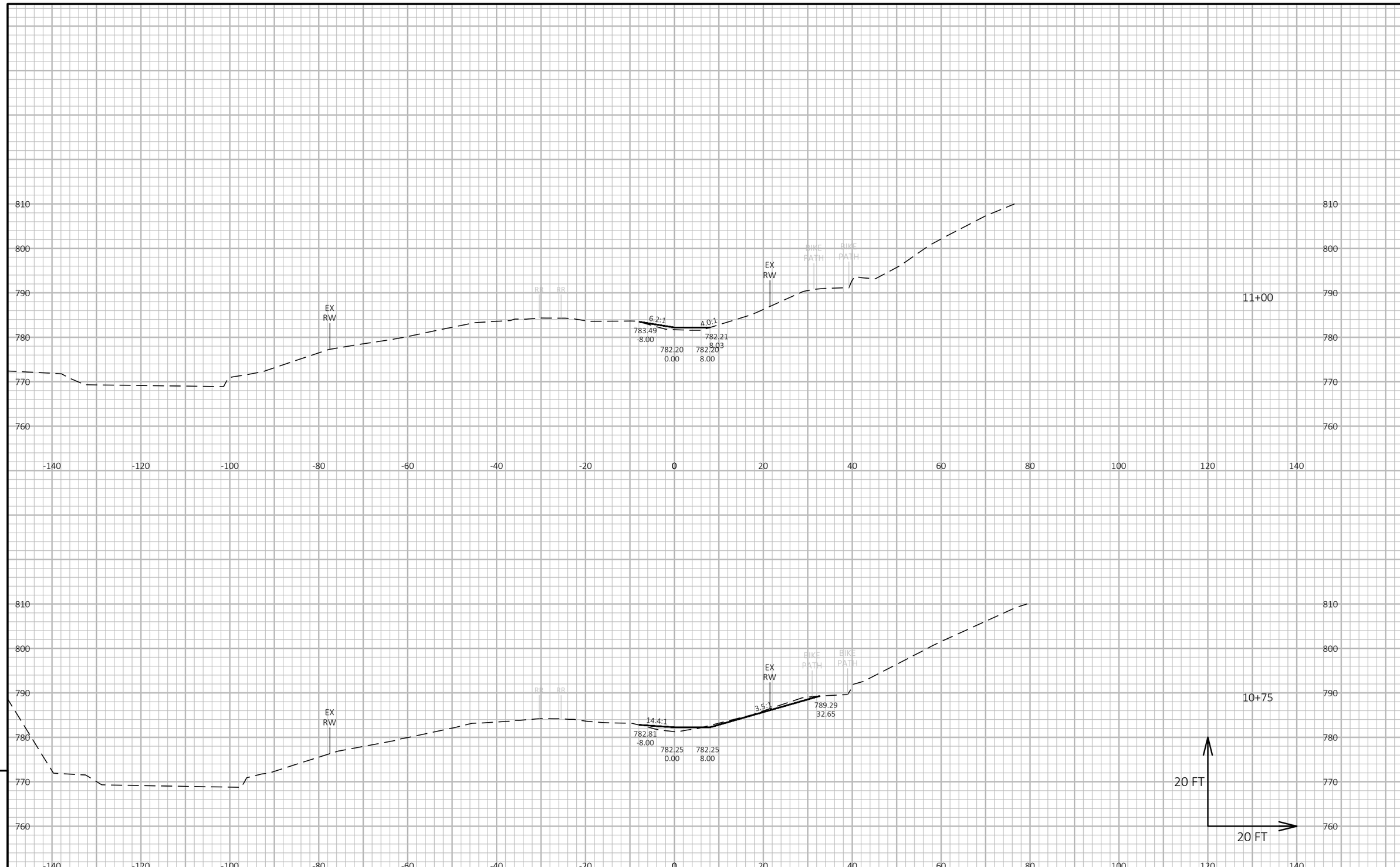

9

9

PROJECT NO: 5310-02-67	HWY: USH 14	COUNTY: DANE	CROSS SECTIONS: RR DITCH - 0.2%	SHEET	E

FILE NAME : N:\PDS\C3D\53100206(14)\DESIGN\CORRIDORS\CRDR-RR DITCH 0.2%.DWG
LAYOUT NAME - RR DITCH 0.2 3

PLOT DATE : 8/1/2018 3:44 PM PLOT BY : SCHMID, CHARLENE PLOT NAME : PLOT SCALE : 1 IN:20 FT HORZ. / 1 IN:20 FT VERT.

WISDOT/CADDS SHEET 49

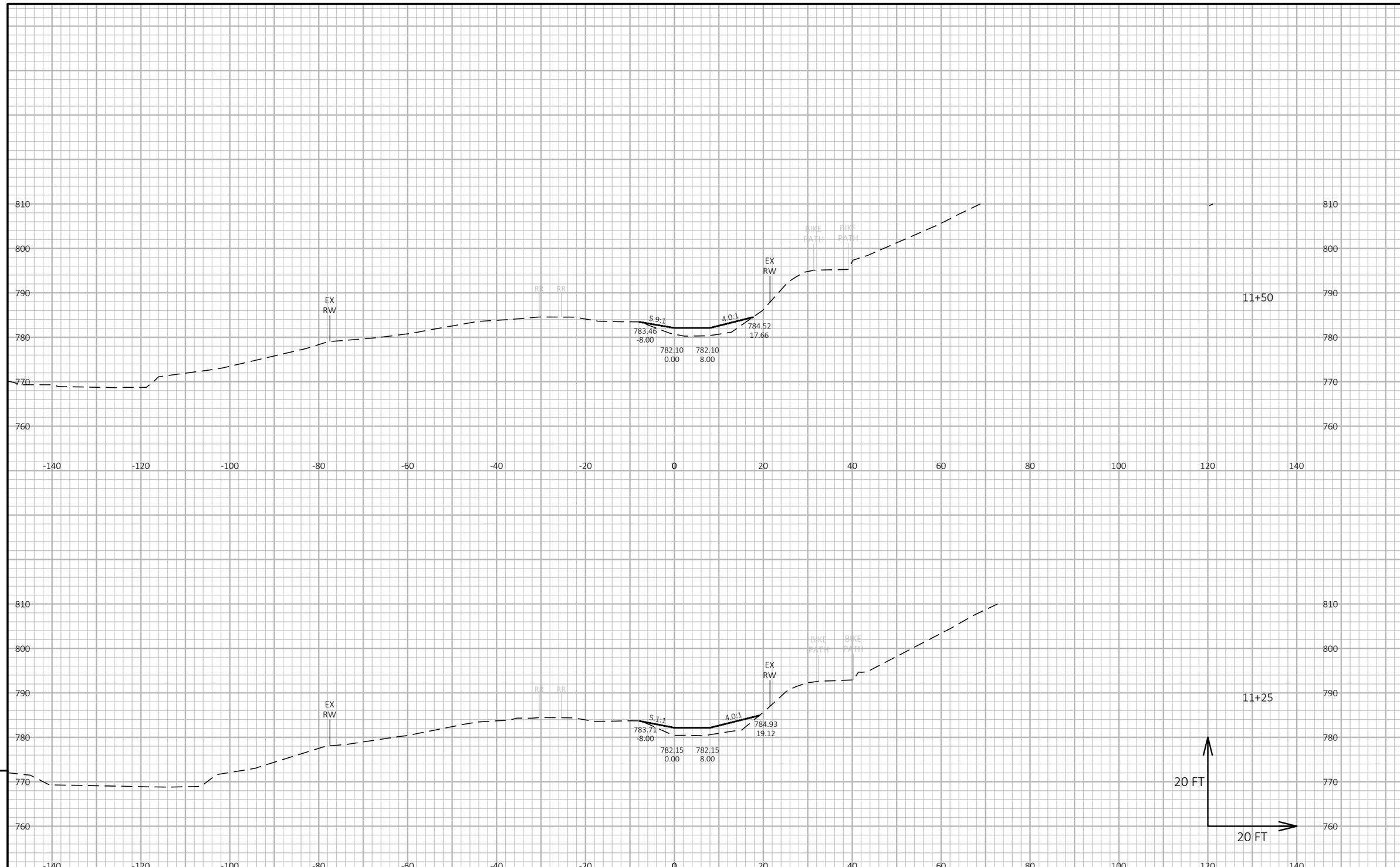

9

9

PROJECT NO: 5310-02-67	HWY: USH 14	COUNTY: DANE	CROSS SECTIONS: RR DITCH - 0.2%	SHEET	E

FILE NAME : N:\PDS\C3D\53100206(14)\DESIGN\CORRIDORS\CRDR-RR DITCH 0.2%.DWG
LAYOUT NAME - RR DITCH 0.2 4

PLOT DATE : 8/1/2018 3:44 PM PLOT BY : SCHMID, CHARLENE PLOT NAME : PLOT SCALE : 1 IN:20 FT HORZ. / 1 IN:20 FT VERT.

WISDOT/CADDS SHEET 49

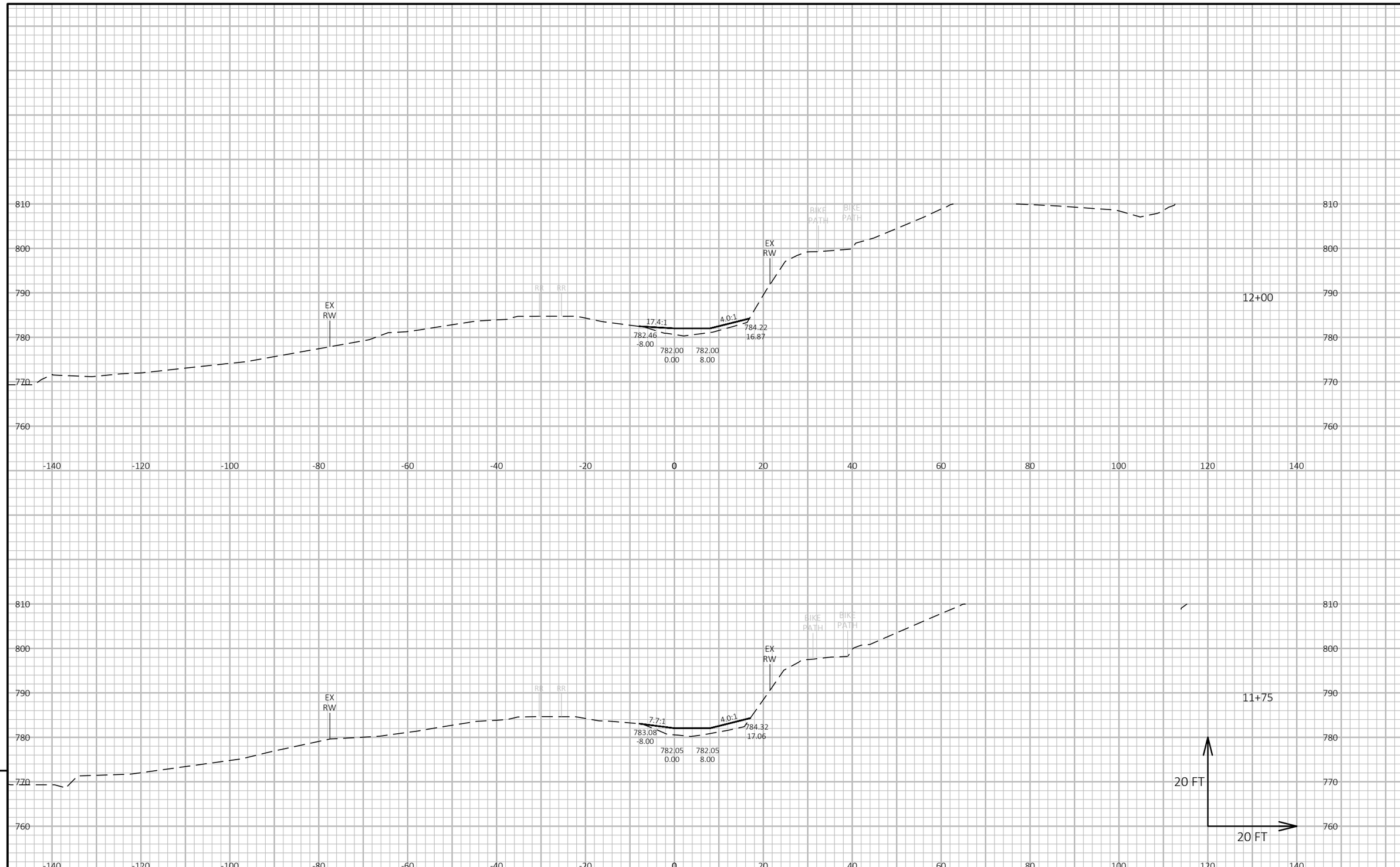

9

9

PROJECT NO: 5310-02-67	HWY: USH 14	COUNTY: DANE	CROSS SECTIONS: RR DITCH - 0.2%	SHEET	E

FILE NAME : N:\PDS\C3D\53100206(14)\DESIGN\CORRIDORS\CRDR-RR DITCH 0.2%.DWG
LAYOUT NAME - RR DITCH 0.2 5

PLOT DATE : 8/1/2018 3:44 PM PLOT BY : SCHMID, CHARLENE PLOT NAME : PLOT SCALE : 1 IN:20 FT HORZ. / 1 IN:20 FT VERT.

WISDOT/CADDS SHEET 49

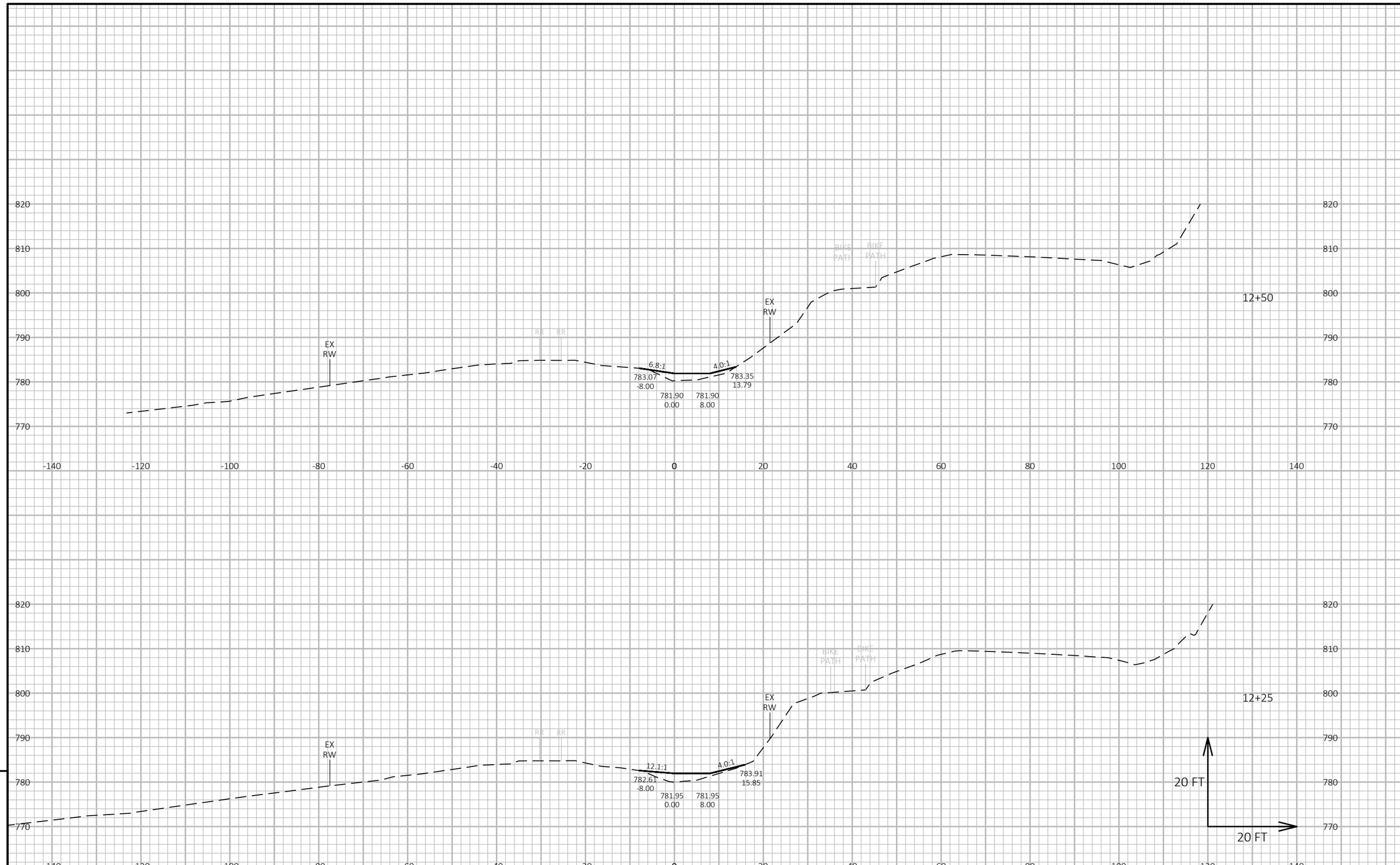

9

9

PROJECT NO: 5310-02-67	HWY: USH 14	COUNTY: DANE	CROSS SECTIONS: RR DITCH - 0.2%	SHEET	E

FILE NAME : N:\PDS\C3D\53100206(14)\DESIGN\CORRIDORS\CRDR-RR DITCH 0.2%.DWG
LAYOUT NAME - RR DITCH 0.2 6

PLOT DATE : 8/1/2018 3:44 PM PLOT BY : SCHMID, CHARLENE PLOT NAME : PLOT SCALE : 1 IN:20 FT HORZ. / 1 IN:20 FT VERT.

WISDOT/CADDS SHEET 49

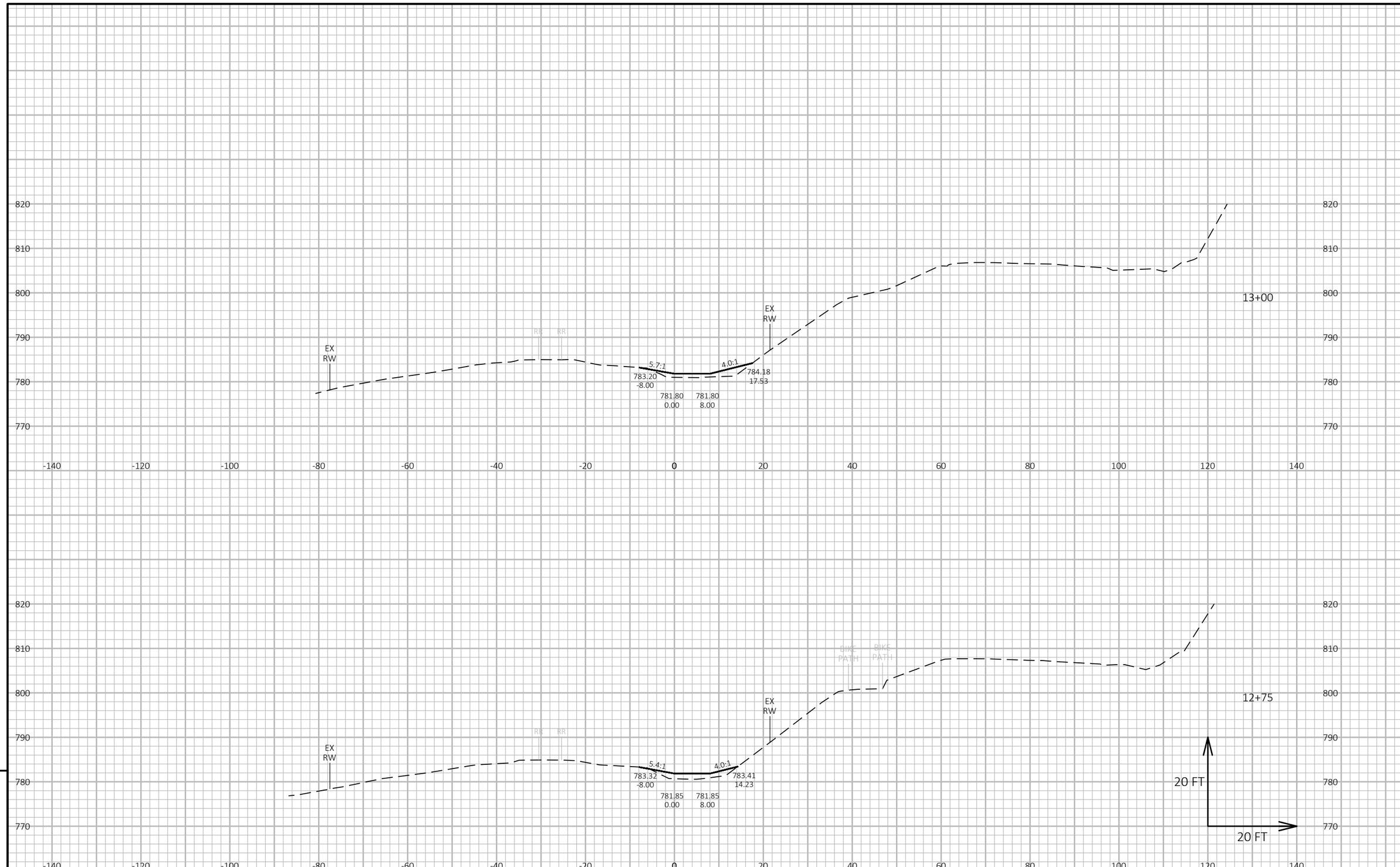

9

9

PROJECT NO: 5310-02-67	HWY: USH 14	COUNTY: DANE	CROSS SECTIONS: RR DITCH - 0.2%	SHEET	E

FILE NAME : N:\PDS\C3D\53100206(14)\DESIGN\CORRIDORS\CRDR-RR DITCH 0.2%.DWG
LAYOUT NAME - RR DITCH 0.2 7

PLOT DATE : 8/1/2018 3:44 PM PLOT BY : SCHMID, CHARLENE PLOT NAME : PLOT SCALE : 1 IN:20 FT HORZ. / 1 IN:20 FT VERT.

WISDOT/CADDS SHEET 49

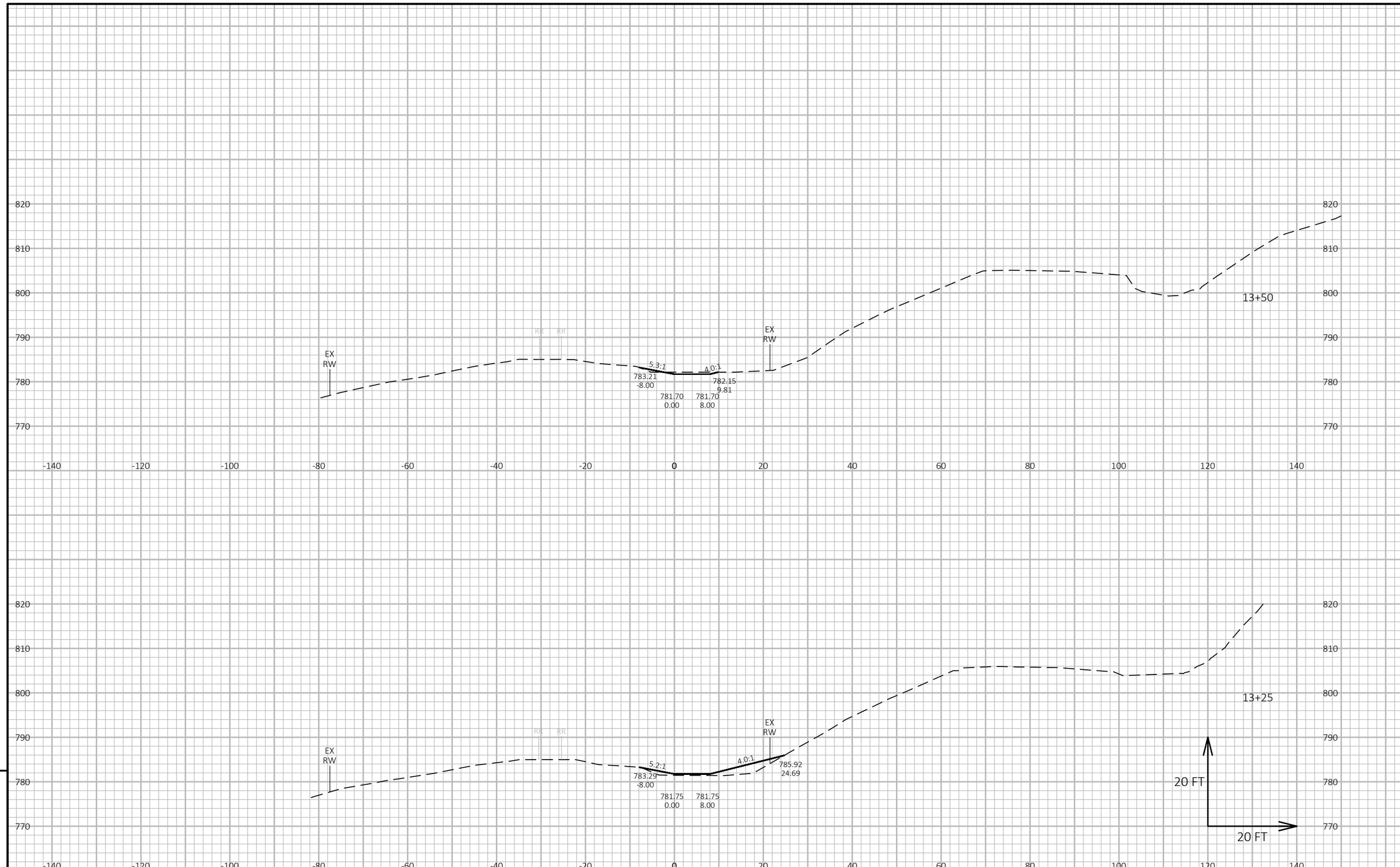

9

9

PROJECT NO: 5310-02-67	HWY: USH 14	COUNTY: DANE	CROSS SECTIONS: RR DITCH - 0.2%	SHEET	E

FILE NAME : N:\PDS\C3D\53100206(14)\DESIGN\CORRIDORS\CRDR-RR DITCH 0.2%.DWG
LAYOUT NAME - RR DITCH 0.2 8

PLOT DATE : 8/1/2018 3:44 PM PLOT BY : SCHMID, CHARLENE PLOT NAME : PLOT SCALE : 1 IN:20 FT HORZ. / 1 IN:20 FT VERT.

WISDOT/CADDS SHEET 49

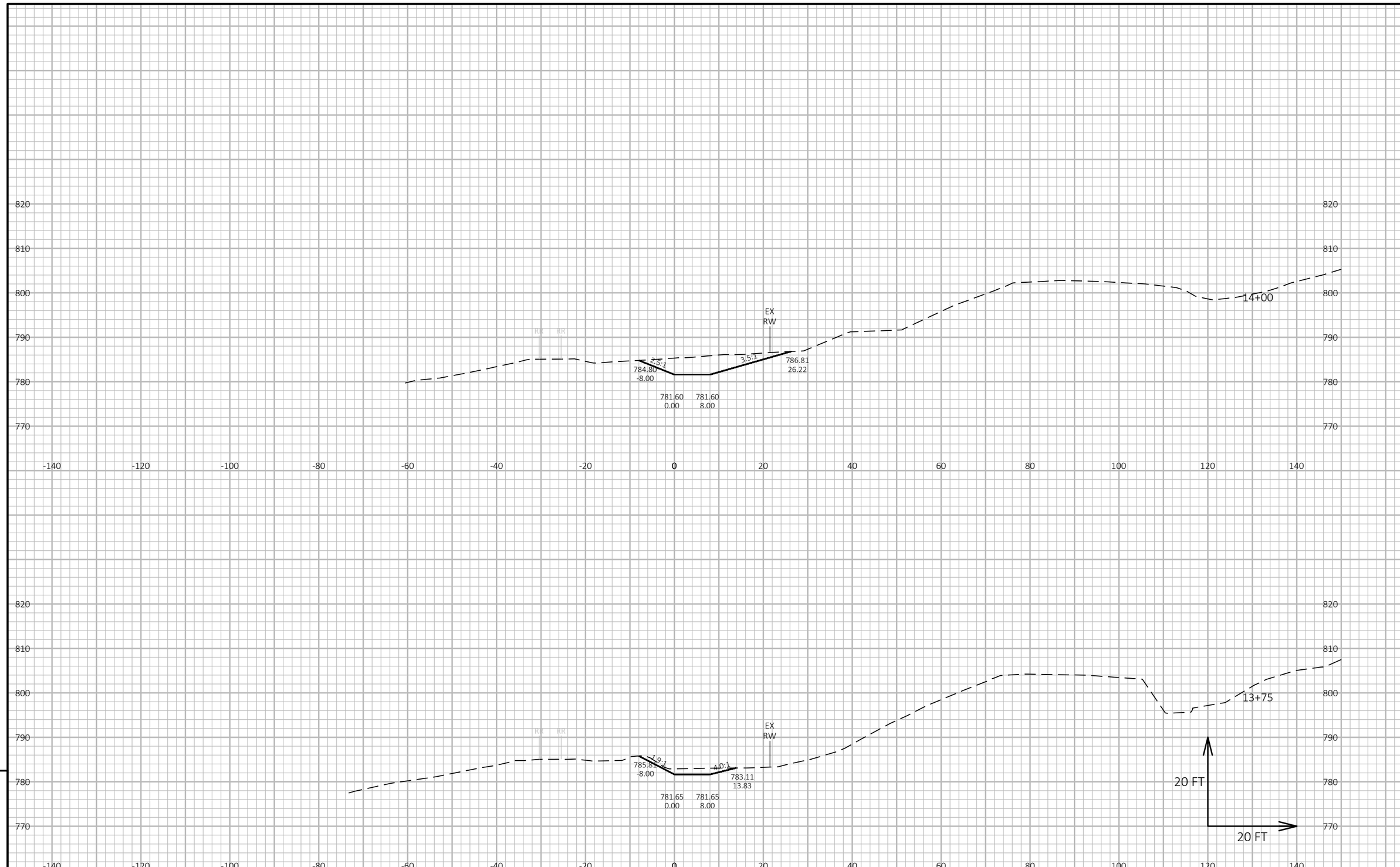

9

9

PROJECT NO: 5310-02-67	HWY: USH 14	COUNTY: DANE	CROSS SECTIONS: RR DITCH - 0.2%	SHEET	E

FILE NAME : N:\PDS\C3D\53100206(14)\DESIGN\CORRIDORS\CRDR-RR DITCH 0.2%.DWG
LAYOUT NAME - RR DITCH 0.2 9

PLOT DATE : 8/1/2018 3:44 PM PLOT BY : SCHMID, CHARLENE PLOT NAME : PLOT SCALE : 1 IN:20 FT HORZ. / 1 IN:20 FT VERT.

WISDOT/CADDS SHEET 49

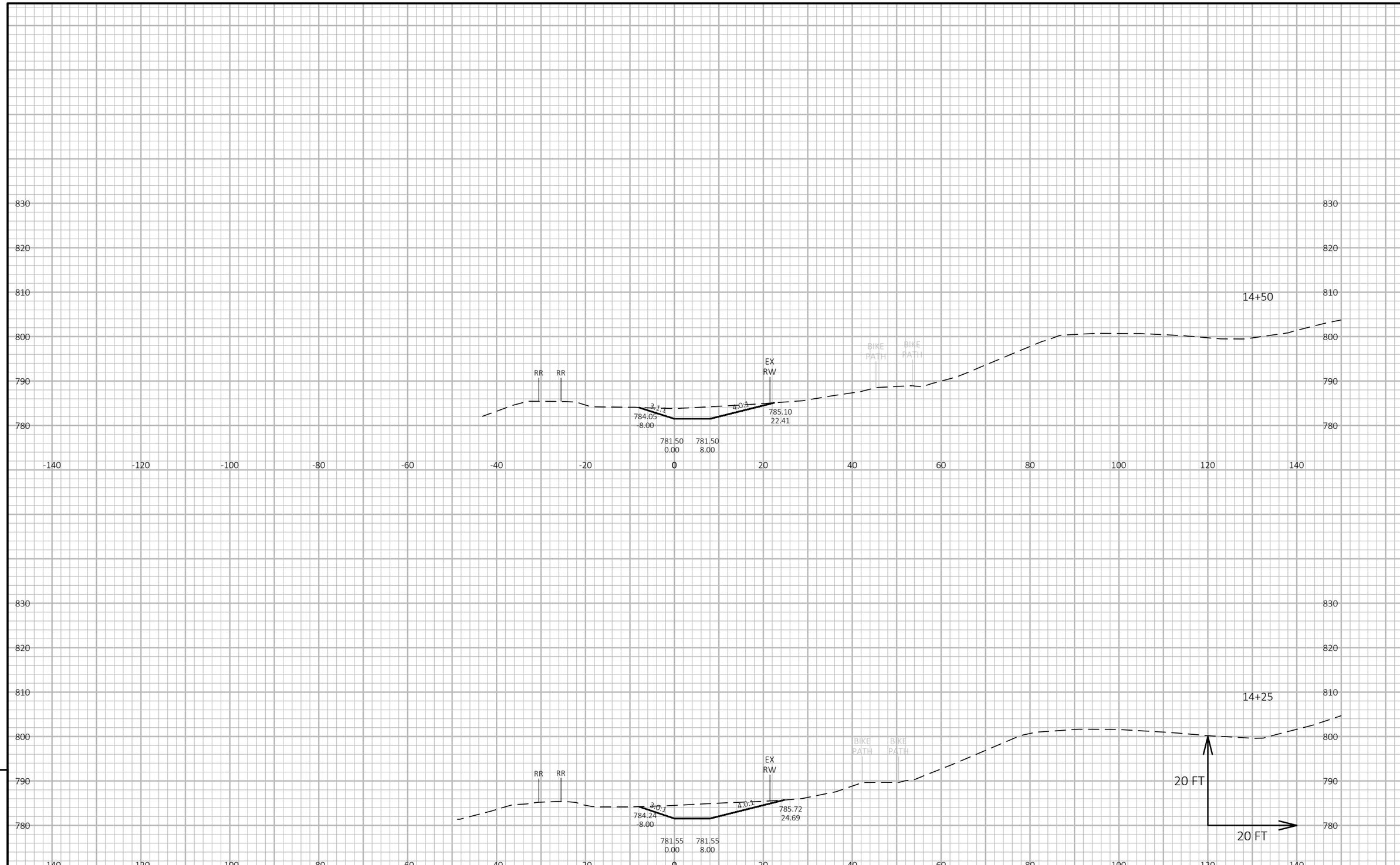

9

9

PROJECT NO: 5310-02-67	HWY: USH 14	COUNTY: DANE	CROSS SECTIONS: RR DITCH - 0.2%	SHEET	E

FILE NAME : N:\PDS\C3D\53100206(14)\DESIGN\CORRIDORS\CRDR-RR DITCH 0.2%.DWG
LAYOUT NAME - RR DITCH 0.2 10

PLOT DATE : 8/1/2018 3:44 PM PLOT BY : SCHMID, CHARLENE PLOT NAME : PLOT SCALE : 1 IN:20 FT HORZ. / 1 IN:20 FT VERT.

WISDOT/CADDS SHEET 49

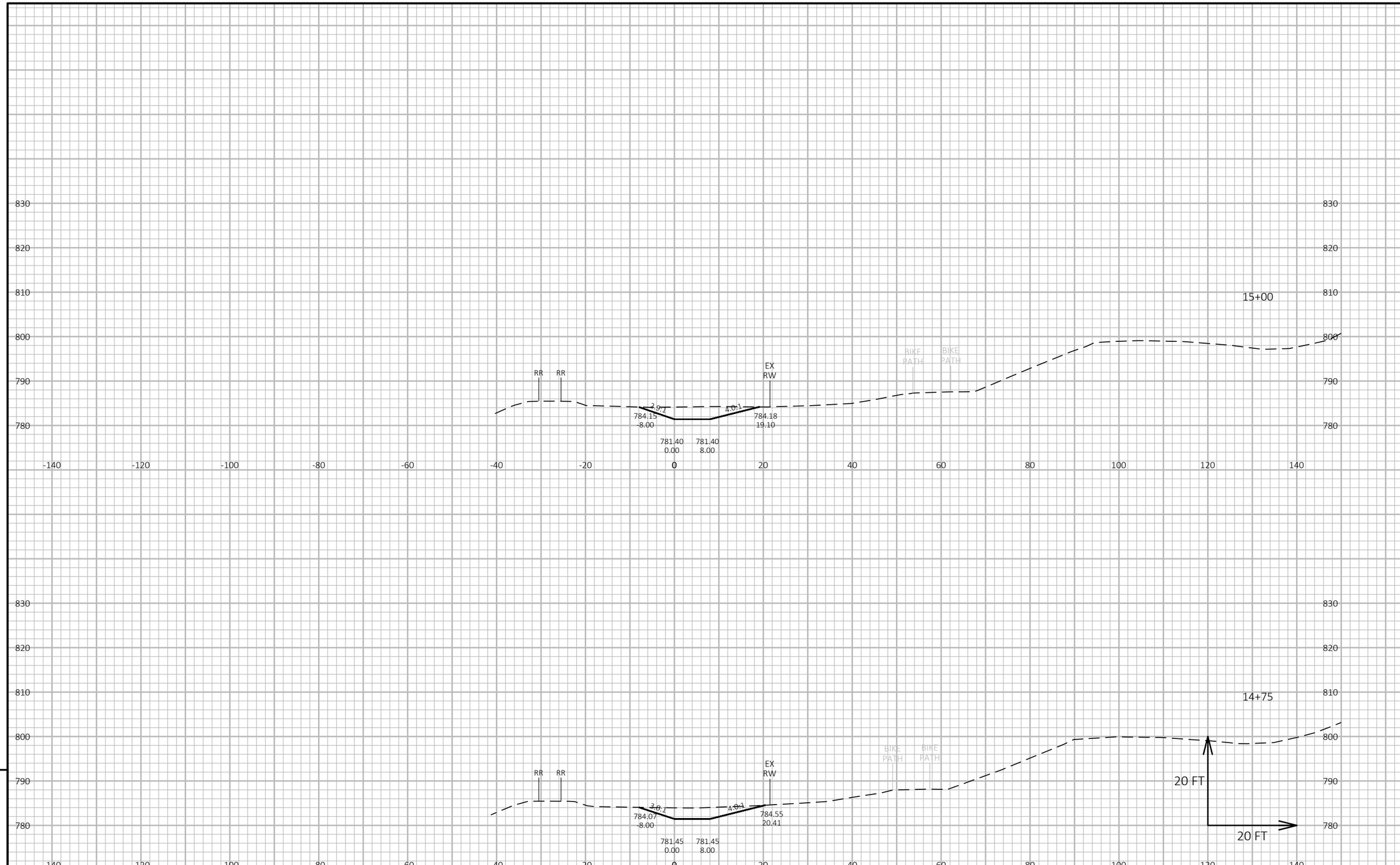

9

9

PROJECT NO: 5310-02-67	HWY: USH 14	COUNTY: DANE	CROSS SECTIONS: RR DITCH - 0.2%	SHEET	E

FILE NAME : N:\PDS\C3D\53100206(14)\DESIGN\CORRIDORS\CRDR-RR DITCH 0.2%.DWG
LAYOUT NAME - RR DITCH 0.2 11

PLOT DATE : 8/1/2018 3:44 PM PLOT BY : SCHMID, CHARLENE PLOT NAME : PLOT SCALE : 1 IN:20 FT HORZ. / 1 IN:20 FT VERT.

WISDOT/CADDS SHEET 49

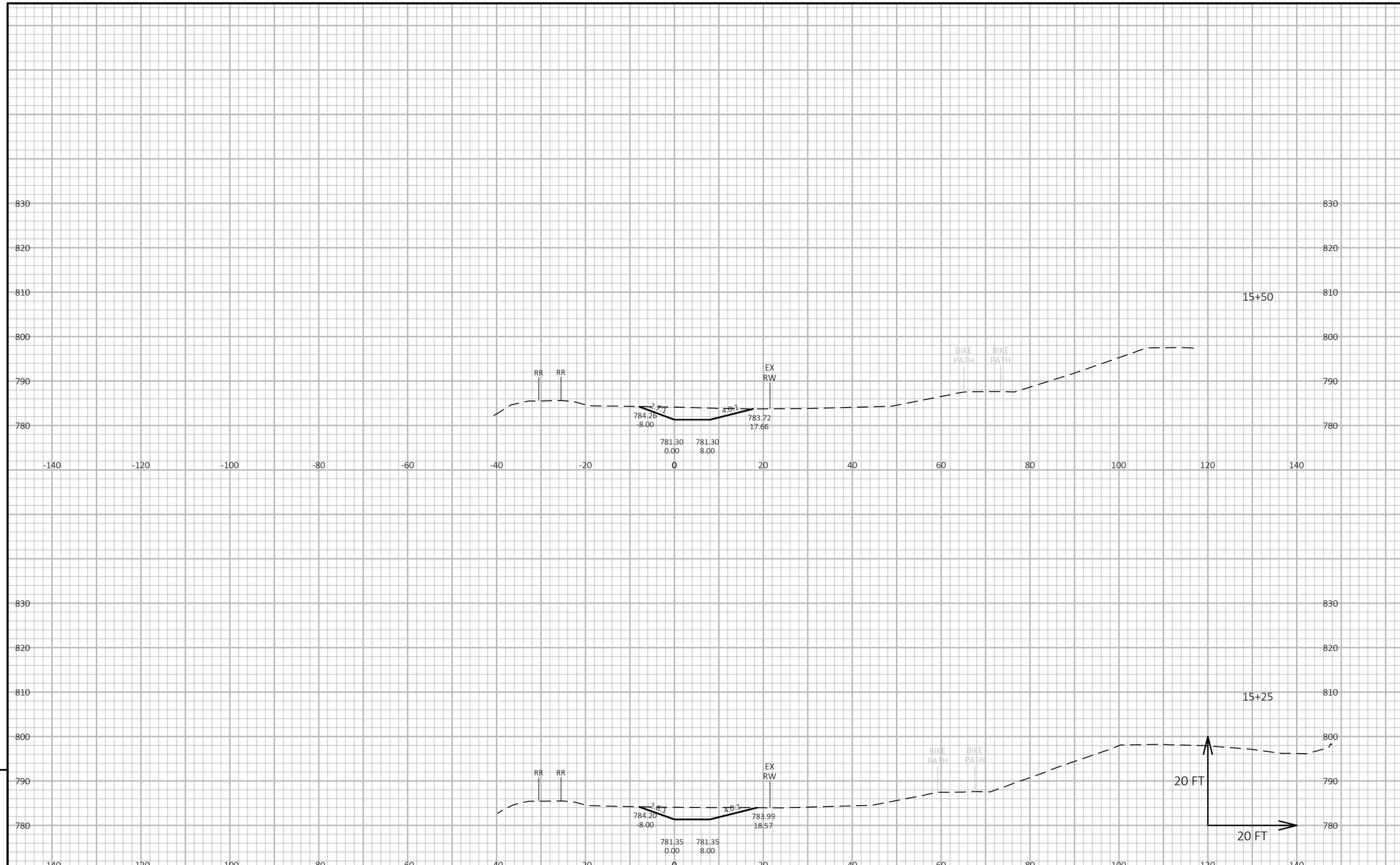

PROJECT NO: 5310-02-67	HWY: USH 14	COUNTY: DANE	CROSS SECTIONS: RR DITCH - 0.2%	SHEET	E

FILE NAME : N:\PDS\C3D\53100206(14)\DESIGN\CORRIDORS\CRDR-RR DITCH 0.2%.DWG
LAYOUT NAME - RR DITCH 0.2 12

PLOT DATE : 8/1/2018 3:44 PM PLOT BY : SCHMID, CHARLENE PLOT NAME : PLOT SCALE : 1 IN:20 FT HORZ. / 1 IN:20 FT VERT.

WISDOT/CADDS SHEET 49

9

9

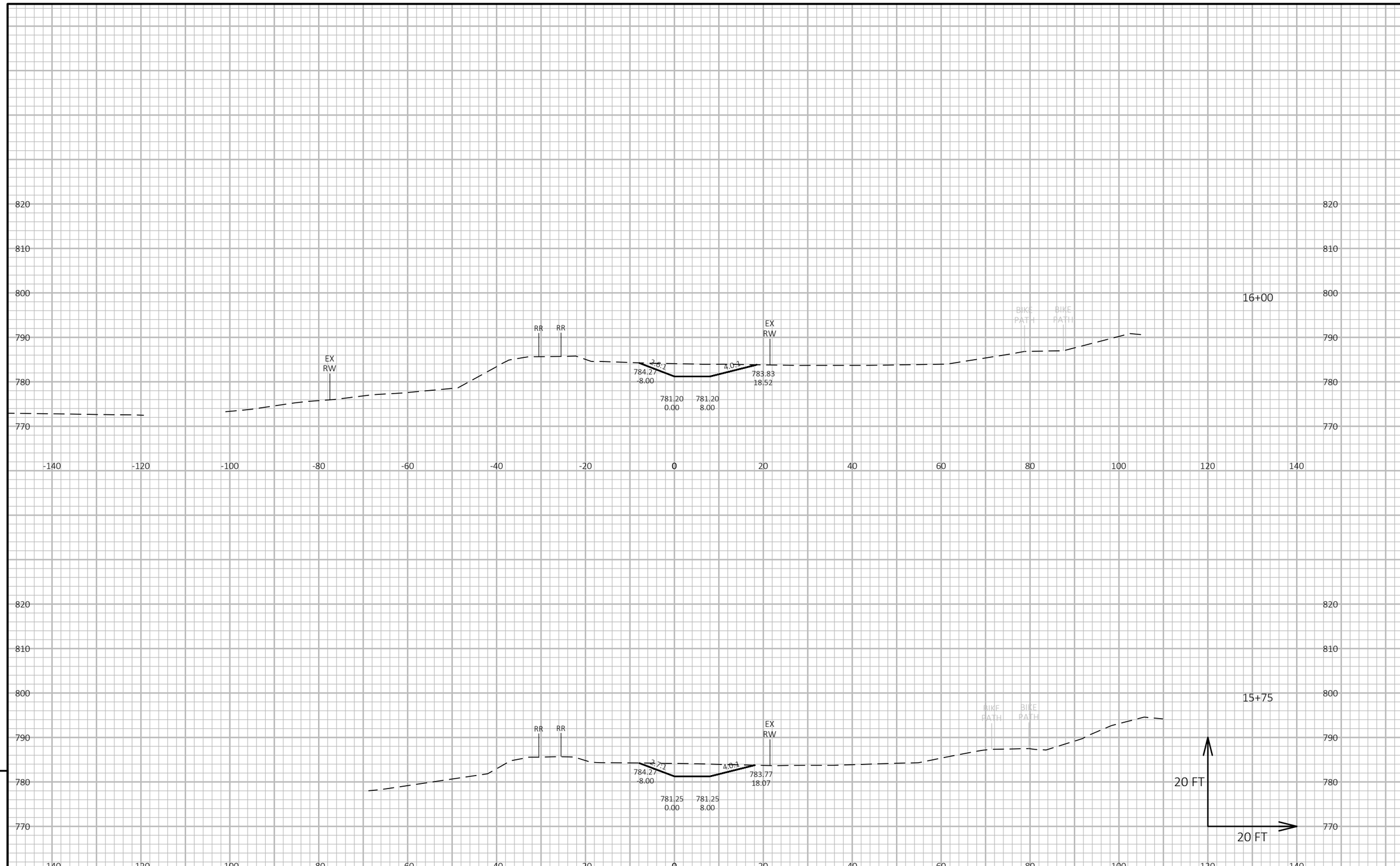

9

9

PROJECT NO: 5310-02-67	HWY: USH 14	COUNTY: DANE	CROSS SECTIONS: RR DITCH - 0.2%	SHEET	E

FILE NAME : N:\PDS\C3D\53100206(14)\DESIGN\CORRIDORS\CRDR-RR DITCH 0.2%.DWG
LAYOUT NAME - RR DITCH 0.2 13

PLOT DATE : 8/1/2018 3:45 PM PLOT BY : SCHMID, CHARLENE PLOT NAME : PLOT SCALE : 1 IN:20 FT HORZ. / 1 IN:20 FT VERT.

WISDOT/CADDS SHEET 49

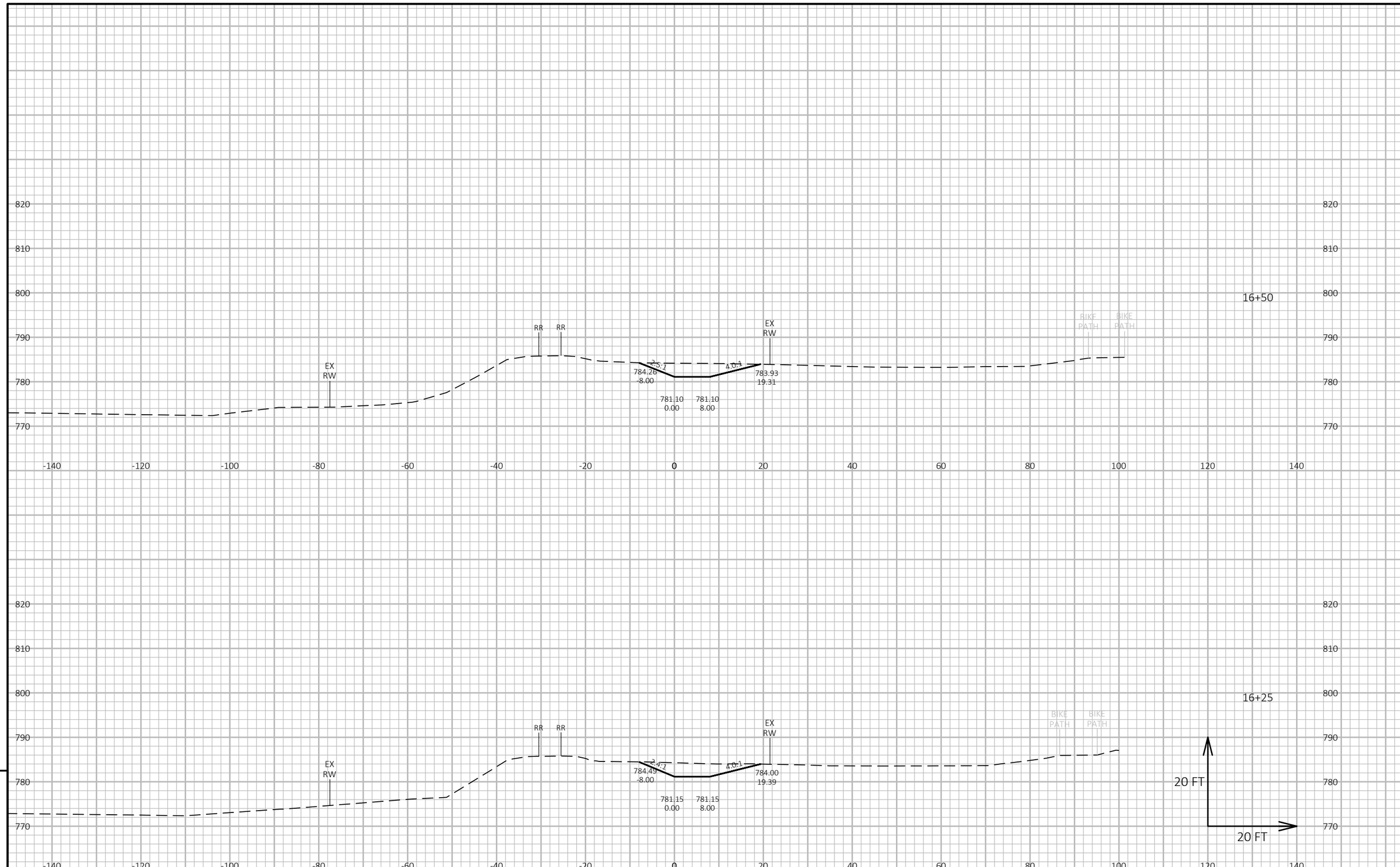

9

9

PROJECT NO: 5310-02-67	HWY: USH 14	COUNTY: DANE	CROSS SECTIONS: RR DITCH - 0.2%	SHEET	E

FILE NAME : N:\PDS\C3D\53100206(14)\DESIGN\CORRIDORS\CRDR-RR DITCH 0.2%.DWG
LAYOUT NAME - RR DITCH 0.2 14

PLOT DATE : 8/1/2018 3:45 PM PLOT BY : SCHMID, CHARLENE PLOT NAME : PLOT SCALE : 1 IN:20 FT HORZ. / 1 IN:20 FT VERT.

WISDOT/CADDS SHEET 49

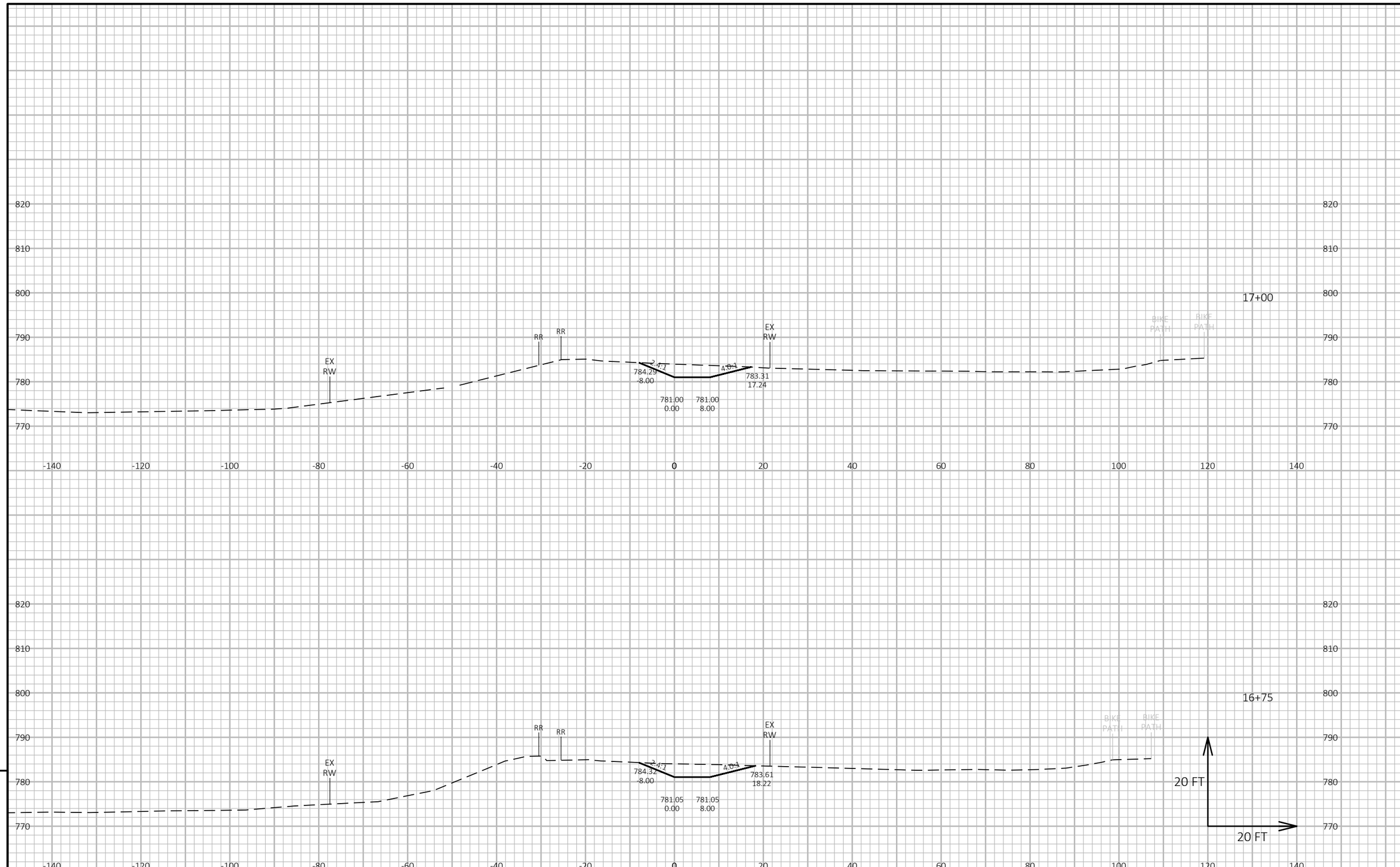

9

9

PROJECT NO: 5310-02-67	HWY: USH 14	COUNTY: DANE	CROSS SECTIONS: RR DITCH - 0.2%	SHEET	E

FILE NAME : N:\PDS\C3D\53100206(14)\DESIGN\CORRIDORS\CRDR-RR DITCH 0.2%.DWG
LAYOUT NAME - RR DITCH 0.2 15

PLOT DATE : 8/1/2018 3:45 PM PLOT BY : SCHMID, CHARLENE PLOT NAME : PLOT SCALE : 1 IN:20 FT HORZ. / 1 IN:20 FT VERT.

WISDOT/CADDS SHEET 49

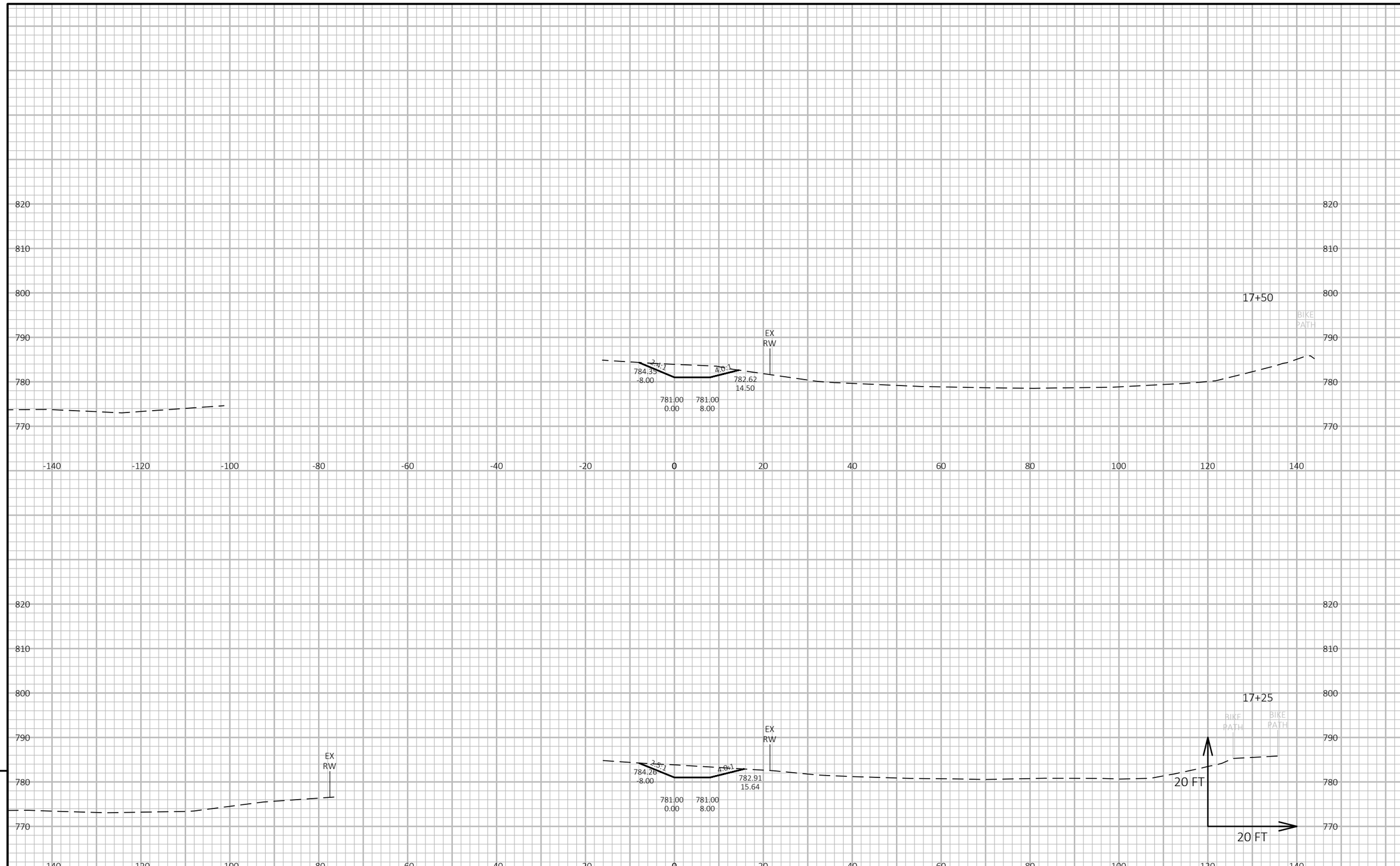

9

9

PROJECT NO: 5310-02-67	HWY: USH 14	COUNTY: DANE	CROSS SECTIONS: RR DITCH - 0.2%	SHEET	E

FILE NAME : N:\PDS\C3D\53100206(14)\DESIGN\CORRIDORS\CRDR-RR DITCH 0.2%.DWG
LAYOUT NAME - RR DITCH 0.2 16

PLOT DATE : 8/1/2018 3:45 PM PLOT BY : SCHMID, CHARLENE PLOT NAME : PLOT SCALE : 1 IN:20 FT HORZ. / 1 IN:20 FT VERT.

WISDOT/CADDS SHEET 49

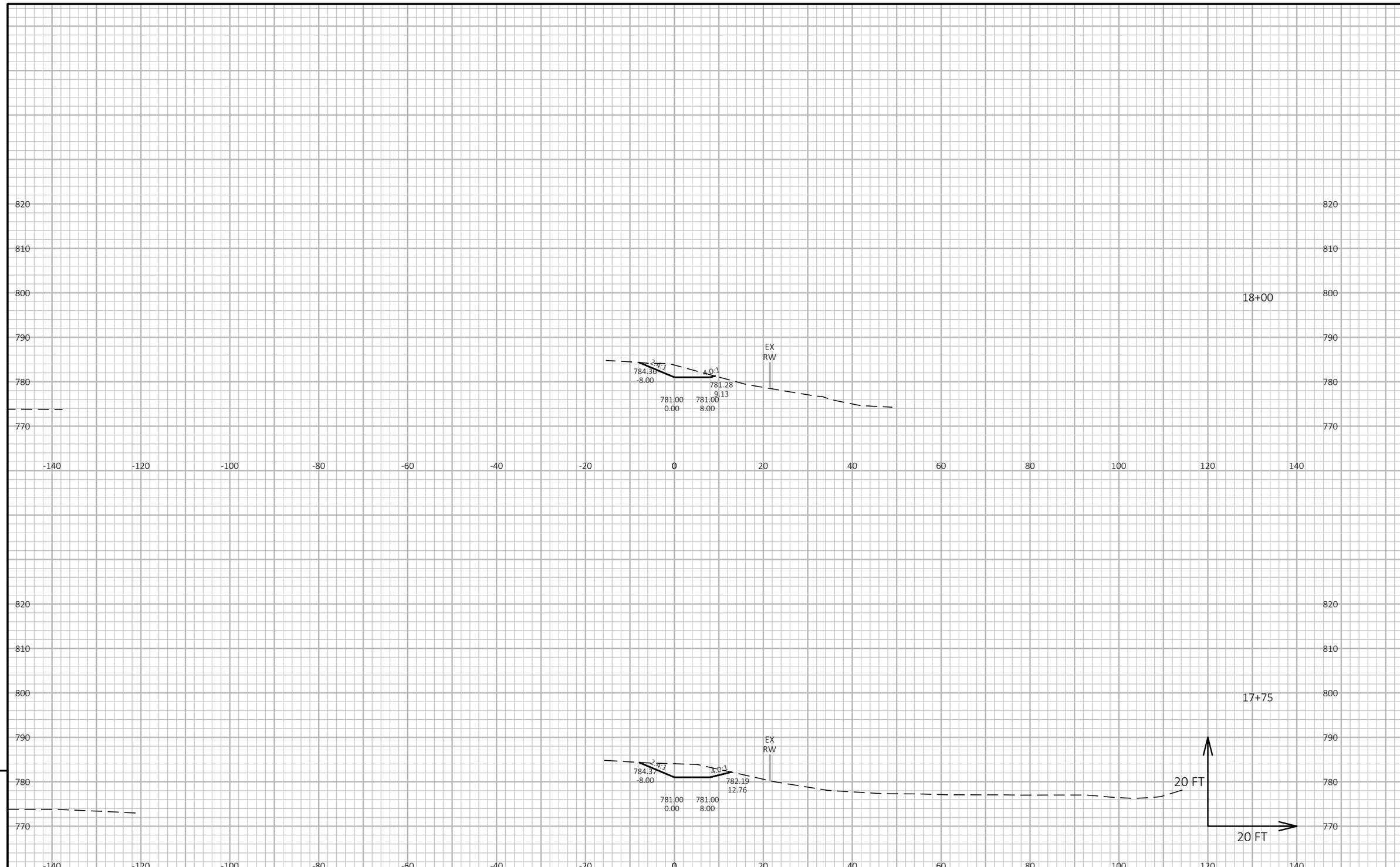

PROJECT NO: 5310-02-67	HWY: USH 14	COUNTY: DANE	CROSS SECTIONS: RR DITCH - 0.2%	SHEET	E

FILE NAME : N:\PDS\C3D\53100206(14)\DESIGN\CORRIDORS\CRDR-RR DITCH 0.2%.DWG
LAYOUT NAME - RR DITCH 0.2 17
PLOT DATE : 8/1/2018 3:45 PM
PLOT BY : SCHMID, CHARLENE
PLOT NAME :
PLOT SCALE : 1 IN:20 FT HORZ. / 1 IN:20 FT VERT.