PROJECT ID: 1706-04-61 & 1706-04-62
WITH:

COUNTY: GREEN

STATE PROJECT	FEDERAL PROJECT	
	PROJECT	CONTRACT
PROJECT ID		
1706-04-61 & 1706-04-62		

STATE OF WISCONSIN
DEPARTMENT OF TRANSPORTATION

PLAN OF PROPOSED IMPROVEMENT

ORDER OF SHEETS

TOTAL SHEETS =

SHULLSBURG - MONROE

W COUNTY LINE TO MONROE CITY LIMITS

STH 11

GREEN COUNTY

STATE PROJECT NUMBER

1706-04-61

MONROE - BRODHEAD

HILTBRAND LANE TO BRODHEAD CITY LIMITS

STH 11

GREEN COUNTY

STATE PROJECT NUMBER

1706-04-62

APPROVED FOR UTILITY ADJUSTMENTS 11/22/2019

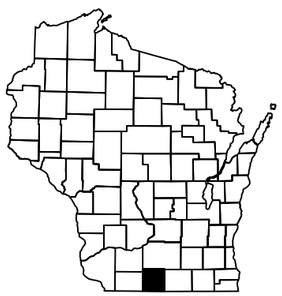

N

DESIGN DESIGNATION			1706-04-61	1706-04-62
A.A.D.T.	(2018)	=	5490	7610
A.A.D.T.	(2028)	=	5910	8210
D.H.V.		=	---	---
D.D.		=	60-40	62-38
T.		=	23.6%	19.1%
DESIGN SPEED		=	60 MPH	60 MPH
ESALS		=	2,800,000	3,100,000

ID: 1706-04-61
END PROJECT
STA 1009+00
X = 601291.8072
Y = 138014.0997

ID: 1706-04-62
BEGIN PROJECT
STA 1170+00
X = 630806.4455
Y = 135091.2032

ID: 1706-04-61
BEGIN PROJECT
STA 529+00
X = 558229,7037
Y = 129761.6298

ID: 1706-04-62
END PROJECT
STA 1730+20
X = 682429.5952
Y = 139269.3544

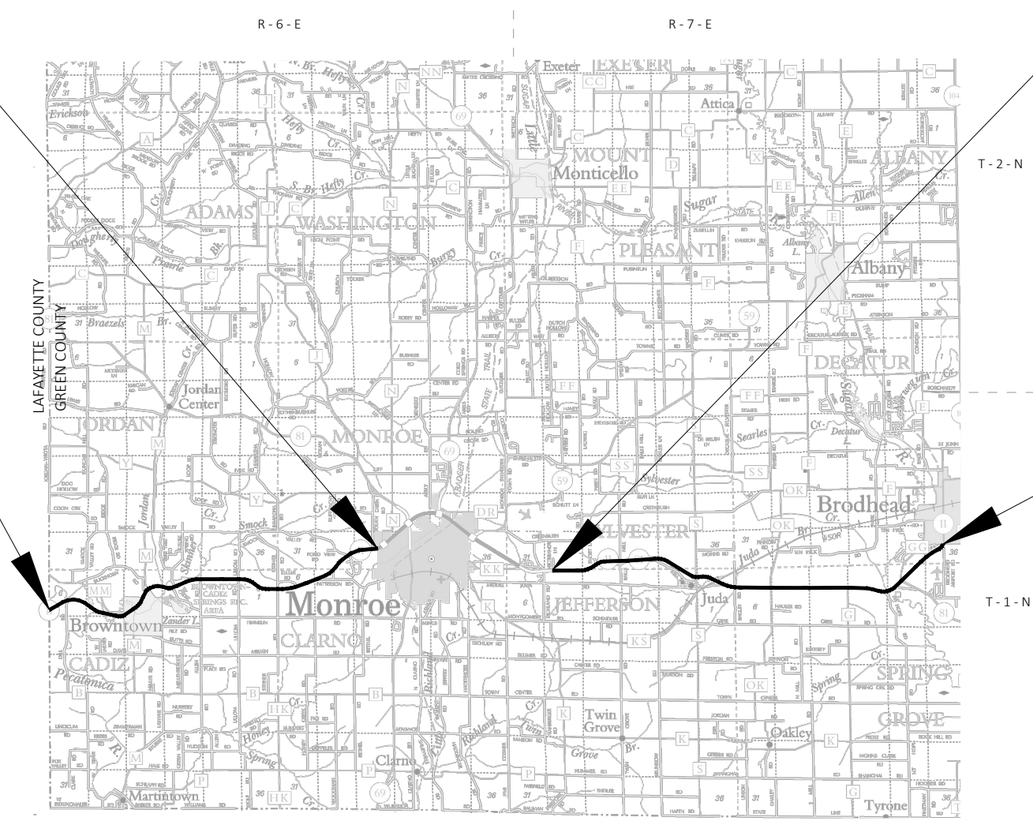

CONVENTIONAL SYMBOLS

PLAN

CORPORATE LIMITS
PROPERTY LINE
LOT LINE
LIMITED HIGHWAY EASEMENT
EXISTING RIGHT OF WAY
PROPOSED OR NEW R/W LINE
SLOPE INTERCEPT
REFERENCE LINE (300'EB')
EXISTING CULVERT
PROPOSED CULVERT (Box or Pipe)
COMBUSTIBLE FLUIDS (CAUTION)
MARSH AREA
WOODED OR SHRUB AREA

PROFILE

GRADE LINE
ORIGINAL GROUND
MARSH OR ROCK PROFILE (To be noted as such) (ROCK)
SPECIAL DITCH (LABEL)
GRADE ELEVATION (95.36)
CULVERT (Profile View)

UTILITIES

ELECTRIC — E
FIBER OPTIC — FO
GAS — G
SANITARY SEWER — SAN
STORM SEWER — SS
TELEPHONE — T
WATER — W
UTILITY PEDESTAL
POWER POLE
TELEPHONE POLE

LAYOUT

SCALE 0 — 2 MI

PROJECT ID: 1706-04-61
TOTAL NET LENGTH OF CENTERLINE = 8.872 MI

PROJECT ID: 1706-04-62
TOTAL NET LENGTH OF CENTERLINE = 10.532 MI.

HORIZONTAL POSITIONS SHOWN ON THIS PLAN ARE WISCONSIN COUNTY COORDINATES, GREEN COUNTY, NAD83 (2011), IN U.S. SURVEY FEET. VALUES ARE GRID COORDINATES, GRID BEARINGS, AND GRID DISTANCES. GRID DISTANCES MAY BE USED AS GROUND DISTANCES.

ELEVATION SHOWN ON THIS PLAN ARE REFERENCE TO THE NORTH AMERICAN VERTIAL DATUM OF 1988, NAVD (2012.)

STATE OF WISCONSIN
DEPARTMENT OF TRANSPORTATION

PREPARED BY

Surveyor	SURVEYOR
Designer	DELLA KOENIG
Project Manager	MARC SCHWEIGER
Regional Examiner	SW REGION
Regional Supervisor	KURT JOHNSON

APPROVED FOR THE DEPARTMENT

DATE: _____ (Signature)

E

2

STANDARD ABBREVIATIONS:

AP	ACCESS POINT
AC	ACRE
ADJ	ADJUST
AECPRC	APRON ENDWALLS FOR CULVERT
AH	AHEAD
AC	ASPHALT CEMENT
ASPH	ASPHALTIC
ACP	ASPHALTIC PAVEMENT CONCRETE
AVG	AVERAGE
ADT	AVERAGE DAILY TRAFFIC
BK	BACK
BAD	BASE AGGREGATE DENSE
BM	BENCH MARK
C/L	CENTER LINE
CONC	CONCRETE
CONST	CONSTRUCTION
CTH	COUNTY TRUNK HIGHWAY
CABC	CRUSHED AGGREGATE BASE COURSE
CWA	HUNDREDWEIGHT
CY	CUBIC YARD
CP	CULVERT PIPE
C & G	CURB AND GUTTER
D	DEGREE OF CURVE
DRV	DESIGN HOUR VOLUME
DIA	DIAMETER
DWY	DRIVEWAY
E	EAST
EB	EASTBOUND
EL	ELEVATION
ESALS	EQUIVALENT SINGLE AXLE LOADS
EXC	EXCAVATION
EBS	EXCAVATION BELOW SUBGRADE
EXIST	EXISTING
FERT	FERTILIZE
FE	FIELD ENTRANCE
FL	FLOW LINE
FT	FOOT
HES	HIGH EARLY STRENGTH
HP	HIGH POINT
HMA	HOT MIX ASPHALT
INL	INLET
ID	INSIDE DIAMETER
I	INTERSECTION ANGLE
INV	INVERT
IP	IRON PIPE OR PIN
JT	JOINT
LB	POUND
LT	LEFT
L	LENGTH OF CURVE
LF	LINEAR FOOT
LP	LOW POINT
LS	LUMP SUM
MH	MANHOLE
MAX	MAXIMUM
Mgal	MEGAGALLON
MPH	MILES PER HOUR
MIN	MINIMUM
MON	MONUMENT
N	NORTH
NB	NORTHBOUND
NC	NORMAL CROWN
NO	NUMBER
NOM	NOMINAL
OD	OUTSIDE DIAMETER
OPT	OPTIONAL
PAVT	PAVEMENT
PC	POINT OF CURVATURE
PCC	PORTLAND CEMENT CONCRETE
PE	PRIVATE ENTRANCE
PGL	PROFILE GRADE LINE
PI	POINT OF INTERSECTION
PL	PROPERTY LINE
PLE	PERMANENT LIMITED EASEMENT
PSI	POUNDS PER SQUARE INCH
PSF	POUNDS PER SQUARE FOOT
PT	POINT
PT	POINT OF TANGENCY
PVC	POINT OF VERTICAL CURVE
PVI	POINT OF VERTICAL INTERSECTION
PVT	POINT OF VERTICAL TANGENCY
R	RADIUS
RD	ROAD
RDWY	ROADWAY
REINF	REINFORCING OR REINFORCEMENT
REQD	REQUIRED
RR	RAILROAD
RT	RIGHT
R/L	REFERENCE LINE
R/W	RIGHT-OF-WAY
S	SOUTH
SB	SOUTHBOUND
SC	SECTION CORNER
SDD	STANDARD DETAIL DRAWINGS
SE	SUPERELEVATION
SF	SQUARE FEET
SHLDR	SHOULDER
SS	STORM SEWER
ST	STREET
STA	STATION
STH	STATE TRUNK HIGHWAYS
STR	STRUCTURE OR STRUCTURAL
SQ	SQUARE
SW	SIDEWALK
SY	SQUARE YARD
T	TANGENT
t	TON
T	TOWN
T	TRUCKS (PERCENT OF)
TEMP	TEMPORARY
TI	TEMPORARY INTEREST
TLE	TEMPORARY LIMITED EASEMENT
TYP	TYPICAL
USH	UNITED STATES HIGHWAY
V	VELOCITY OF DESIGN SPEED
VAR	VARIABLE
VERT	VERTICAL
VC	VERTICAL CURVE
VOL	VOLUME
W	WEST
WB	WESTBOUND
WM	WATER MAIN
WV	WATER VALVE
X	EAST GRID COORDINATE
Y	YARD
Y	NORTH GRID COORDINATE

GENERAL NOTES:

NO TREES OR SHRUBS ARE TO BE REMOVED WITHOUT APPROVAL OF THE ENGINEER.

DISTURBED AREAS WITHIN THE RIGHT-OF-WAY, EXCEPT AREAS WITHIN THE FINISHED SHOULDER POINTS, SHALL BE SEEDED, FERTILIZED, AND MULCHED AS DIRECTED BY THE ENGINEER. ALL OTHER DISTURBED AREAS SHALL BE SEEDED, FERTILIZED, AND MULCHED AT THE CONTRACTORS EXPENSE.

ALL CURB AND GUTTER RADII ARE MEASURED TO THE FLAG OF CURB UNLESS OTHERWISE NOTED.

THE LOCATIONS OF EXISTING AND PROPOSED UTILITY INSTALLATIONS AS SHOWN ON THE PLAN ARE APPROXIMATE. THERE MAY BE OTHER UTILITY INSTALLATIONS WITHIN THE PROJECT AREA THAT ARE NOT SHOWN. THE CONTRACTOR SHALL COORDINATE HIS CONSTRUCTION ACTIVITIES WITH A CALL TO DIGGERS HOTLINE AND/OR A DIRECT CALL TO THE UTILITIES THAT HAVE FACILITIES IN THE AREA. NOT ALL UTILITIES ARE MEMBERS OF DIGGERS HOTLINE.

SAWCUTS AS SHOWN ON THE PLANS ARE AT SUGGESTED LOCATIONS AND MAY BE ADJUSTED AT THE DISCRETION OF THE ENGINEER TO BETTER SUIT FIELD CONDITIONS

ASPHALTIC SURFACE/HMA PAVEMENT WEIGHT CALCULATIONS ARE BASED ON 112 LB/SY/IN PER THE PAVEMENT REPORT.

PLACE 4" HMA ROADS IN TWO LAYERS.
2.25" LOWER LAYER (3 MT58-28 S), 1.75" UPPER LAYER (4 MT 58-28 S)

EROSION CONTROL FEATURES AS SHOWN ON THE PLANS, SHALL BE ADJUSTED TO FIT EXISTING FIELD CONDITIONS AS DIRECTED BY THE ENGINEER.

GRADING IS NOT ALLOWED IN DELINEATED WETLAND AREAS. DO NOT STORE EQUIPMENT OR MATERIAL IN ENVIRONMENTALLY SENSITIVE AREAS, WETLANDS OR WATERWAYS.

NUMBER, LOCATIONS, AND SPACING OF TEMPORARY AND PERMANENT SIGNS AND DEVICES AS SHOWN ON THE PLANS, SHALL BE ADJUSTED TO FIT FIELD CONDITIONS.

UTILITY CONTACTS 1706-04-61:

ATC MANAGEMENT, INC - ELECTRICITY -TRANSMISSION
ANTHONY MARCINIAK
W 234 N 2000 RIDGEVIEW PARKWAY CT
PO BOX 47
WAUKESHA, WI 53187-0047
(262) 506-6814
amarciniak@atcllc.com

ALLIANT ENERGY - ELECTRICITY
MARY MONTGOMERY
200 FIRST ST
CEDAR RAPIDS, IA 52401
(319) 786-4768
MaryMontgomery@alliantenergy.com

TDS TELECOM - COMMUNICATION LINE
JERRY MYERS
525 JUNCTION RD
MADISON, WI 53717
(608) 664-4404
jerry.myers@tdstelecom.com

WE ENERGIES - GAS/PETROLEUM
NICOLE SMULLEN
A299
333 W EVERETT ST
MILWAUKEE, WI 53203
(414) 221-5617
Nicole.Smullen@wecenergygroup.com

WISCONSIN DEPT OF NATURAL RESOURCES CONTACTS:

SHELLEY WARWICK
3911 FISH HATCHERY ROAD
FITCHBURG, WI 53711-5367
608-444-2835
Shelley.Warwick@wisconsin.gov

WISCONSIN DEPT OF TRANSPORTATION CONTACTS:

PROJECT MANAGER
MARC SCHWEIGER, PE
2101 WRIGHT ST
MADISON WI, 53704
608-245-2633
Marc.Schweiger@dot.wi.gov

DESIGN ENGINEER
DELLA KOENIG, PE
2101 WRIGHT ST
MADISON, WI 53704
608-246-7963
della.koenig@dot.wi.gov

UTILITY CONTACTS 1706-04-62:

ALLIANT ENERGY - ELECTRICITY
MARY MONTGOMERY
200 FIRST ST
CEDAR RAPIDS, IA 52401
(319) 786-4768
MaryMontgomery@alliantenergy.com

BRODHEAD AIRPORT - AIRPORT FACILITY
MICHAEL WEEDEN
N3382 MONROE-SYLVESTER RD.
MONROE, WI 53566-9418
(608) 214-6652
blueleader@wekz.net

CHARTER COMMUNICATIONS - COMMUNICATION LINE
LUKAS LACROSSE
2701 DANIELS ST.
MADISON, WI 53718
(608) 709-1562 X 41562
Lukas.LaCrosse@charter.com

CITY OF BRODHEAD WATER AND LIGHT COMMISSION - ELECTRICITY
JEFF PETERSON
507 19TH STREET
PO BOX 227
BRODHEAD, WI 53520
(608) 897-2505
Jpeterson@brodheadwl.com

FRONTIER COMMUNICATIONS OF WI LLC - COMMUNICATION LINE
RUSS RYAN
118 DIVISION STREET
PLYMOUTH, WI 53073
(920) 583-3275
Russell.w.ryan@ftr.com

JUDA SANITARY DISTRICT - SEWER
JUNE KELLY
22934 MILL ST
JUDA, WI 53550
(608) 558-0708
jbugkelly8@gmail.com

TDS TELECOM - COMMUNICATION LINE
JERRY MYERS
525 JUNCTION RD
MADISON, WI 53717
(608) 664-4404
jerry.myers@tdstelecom.com

WE ENERGIES - GAS/PETROLEUM
NICOLE SMULLEN
A299
333 W EVERETT ST
MILWAUKEE, WI 53203
(414)221-5617
Nicole.Smullen@wecenergygroup.com

DIGGERS HOTLINE
Dial 811 or (800)242-8511
www.DiggersHotline.com

2

PROJECT NO: 1706-04-61 & 1706-04-62	HWY: STH 11	COUNTY: GREEN	GENERAL NOTES	SHEET	E

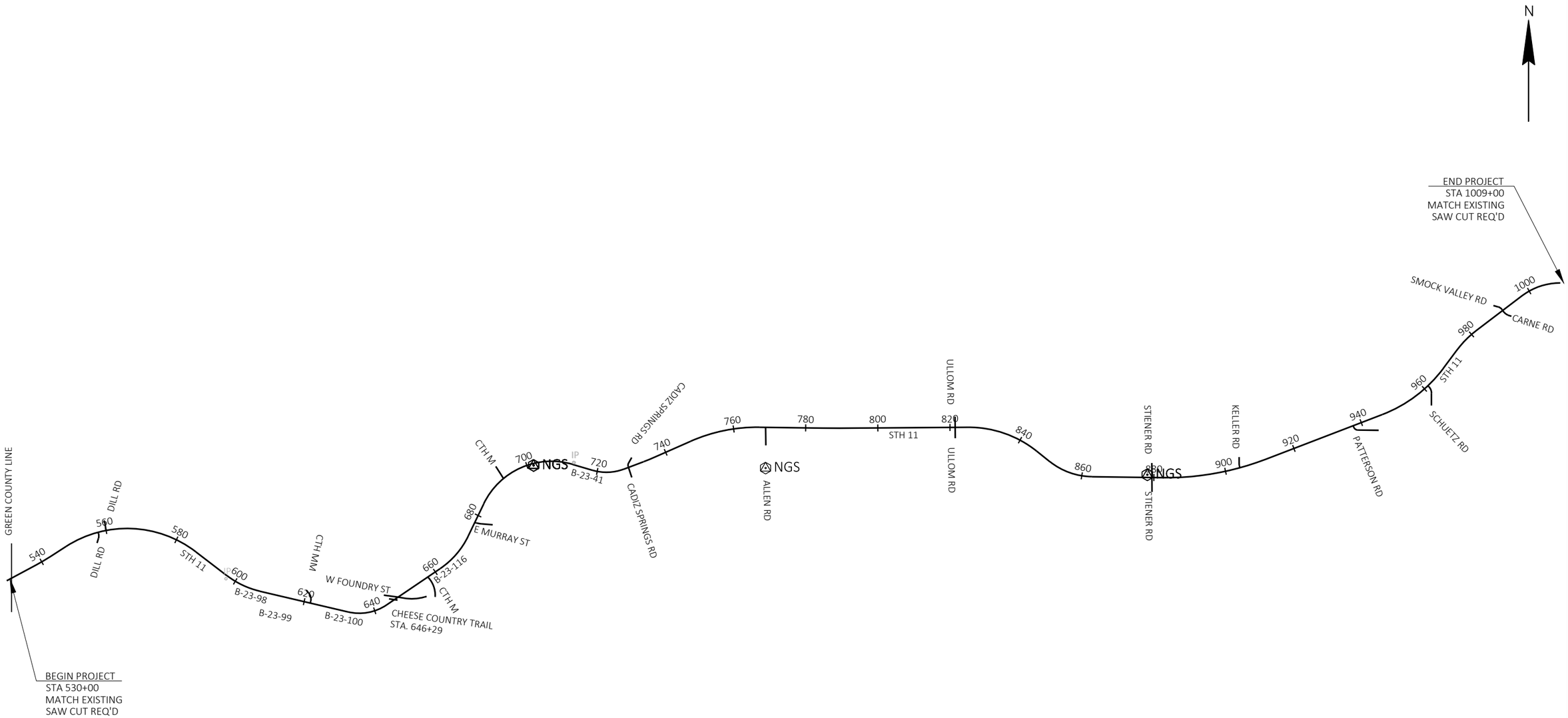
N
END PROJECT
STA 1009+00
MATCH EXISTING
SAW CUT REQ'D
SMOCK VALLEY RD
CARNE RD
1000
980
960
940
920
900
860
840
820
800
780
760
740
720
700
680
660
640
620
600
580
560
540
STH 11
SCHUETZ RD
PATTERSON RD
KELLER RD
STIENER RD
STIENER RD
ULLOM RD
ULLOM RD
ALLEN RD
CADIZ SPRINGS RD
CADIZ SPRINGS RD
CTH M
E MURRAY ST
B-23-116
CTH M
CHEESE COUNTRY TRAIL
STA. 646+29
W FOUNDRY ST
CTH MM
B-23-100
B-23-99
B-23-98
STH 11
DILL RD
DILL RD
GREEN COUNTY LINE
NGS
NGS
NGS
NGS
IP
B-23-41
BEGIN PROJECT
STA 530+00
MATCH EXISTING
SAW CUT REQ'D

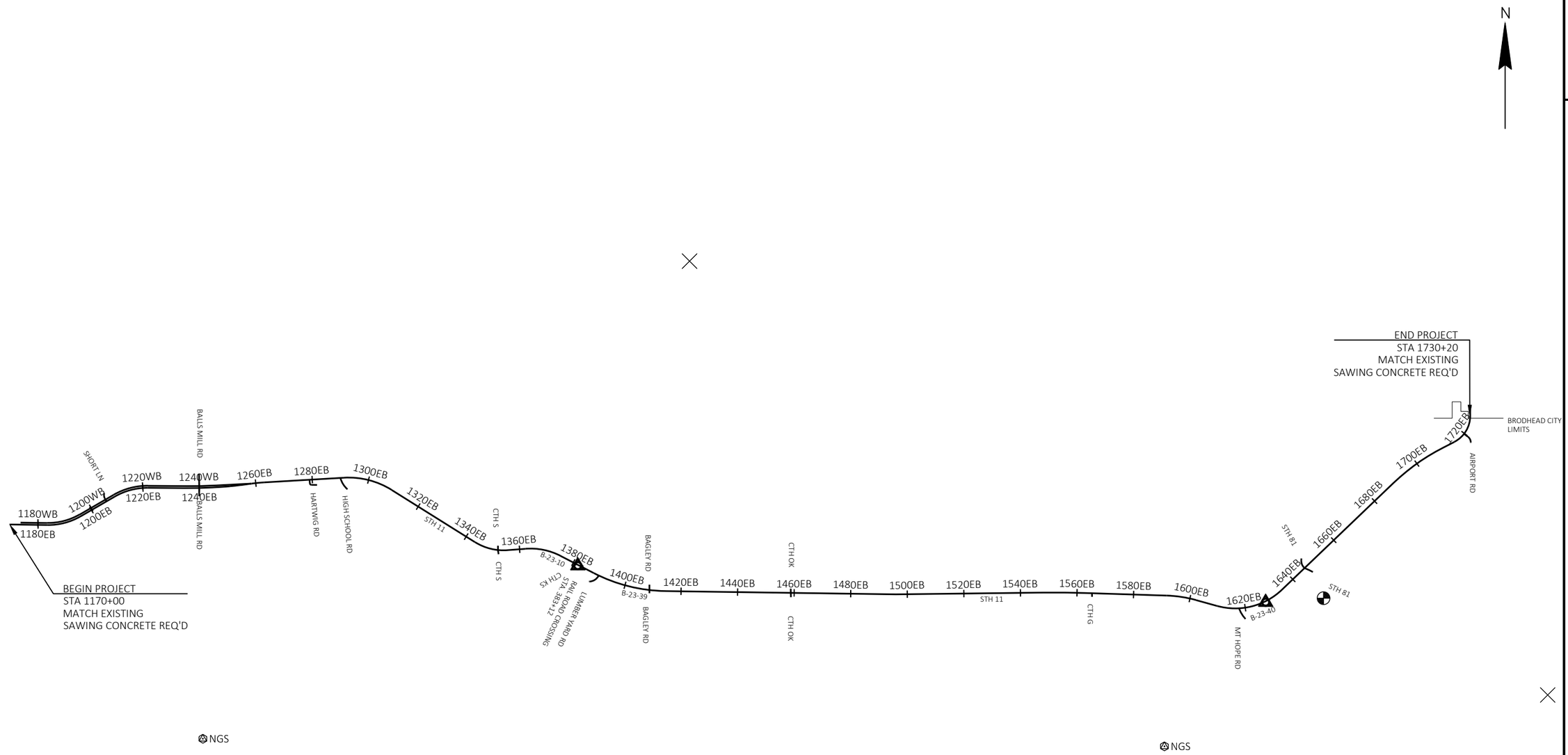

PROJECT NO: 1706-04-62	HWY: STH 11	COUNTY: GREEN	PROJECT OVERVIEW	SHEET	E

FILE NAME : N:\PDS\C3D\17060432\SHEETSPLAN\020201-62_PO.DWG
LAYOUT NAME - 020201_po - 62 PROJECT OVERVIEW
PLOT DATE : 11/13/2019 4:39 PM
PLOT BY : KOENIG, DELLA M
PLOT NAME :
PLOT SCALE : Custom

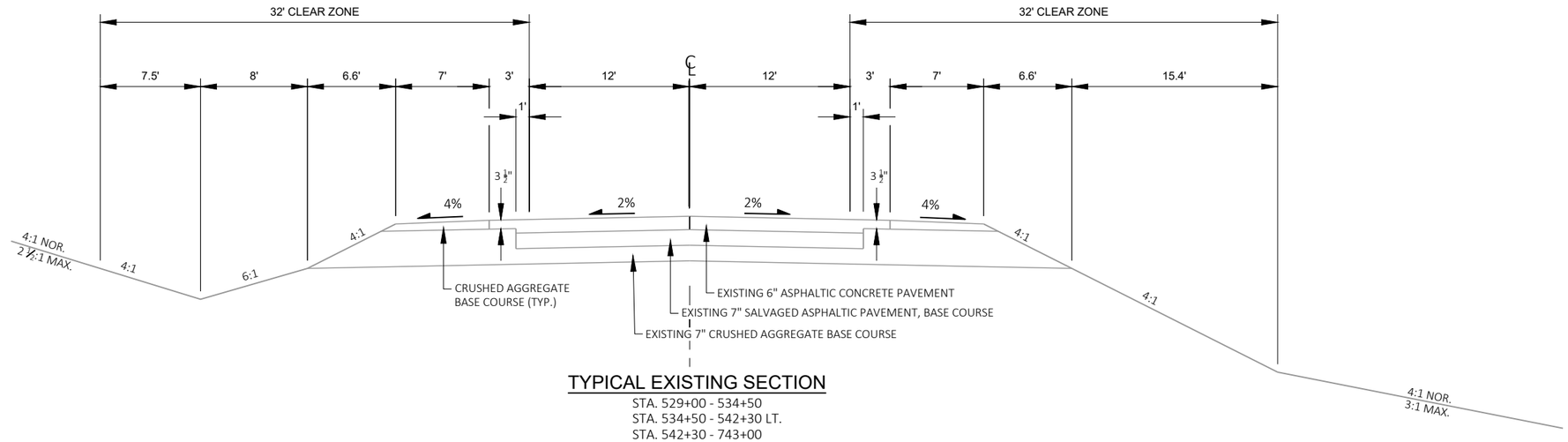

TYPICAL EXISTING SECTION

STA. 529+00 - 534+50
STA. 534+50 - 542+30 LT.
STA. 542+30 - 743+00
STA. 839+00 - 986+00

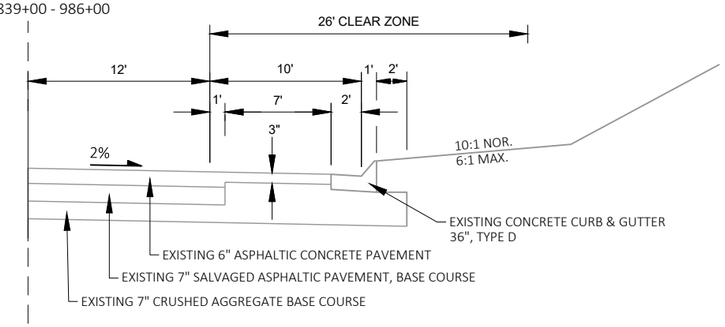

TYPICAL EXISTING HALF SECTION

STA. 534+50 - 542+30 RT.

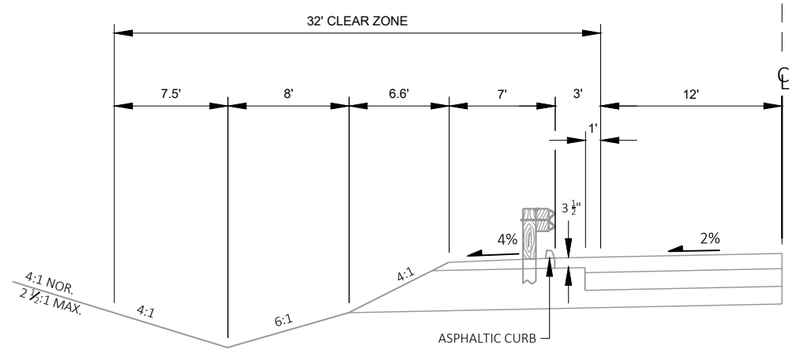

TYPICAL EXISTING SECTION

STA. 542+30 - 547+15

PROJECT NO: 1706-04-61	HWY: STH 11	COUNTY: GREEN	TYPICAL EXISTING SECTIONS	SHEET	E

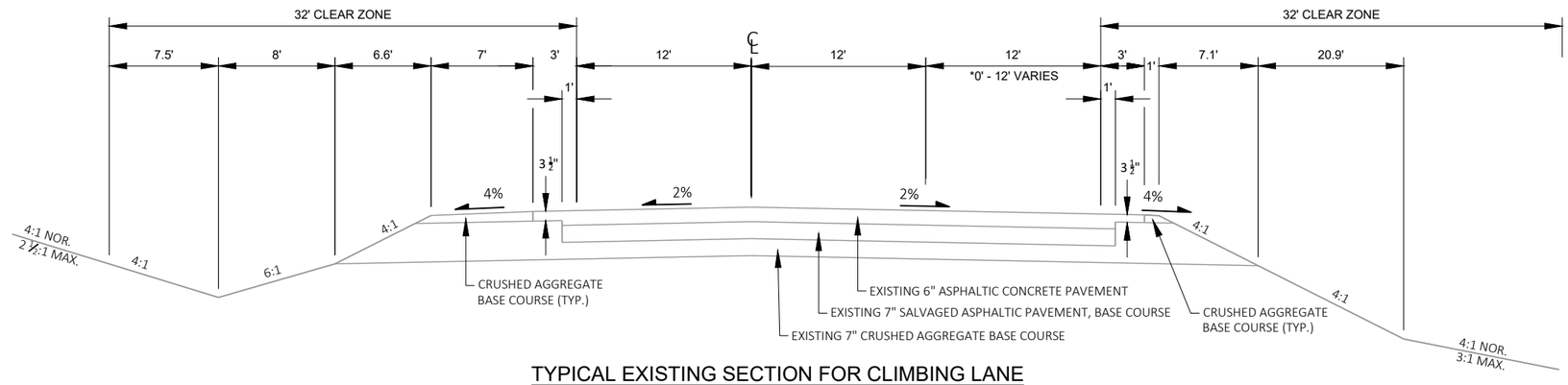

TYPICAL EXISTING SECTION FOR CLIMBING LANE

STA. 743+00 - 839+00
*STA. 743+00 - 745+00
*STA. 833+00 - 839+00

* CLIMBING LANE TAPER

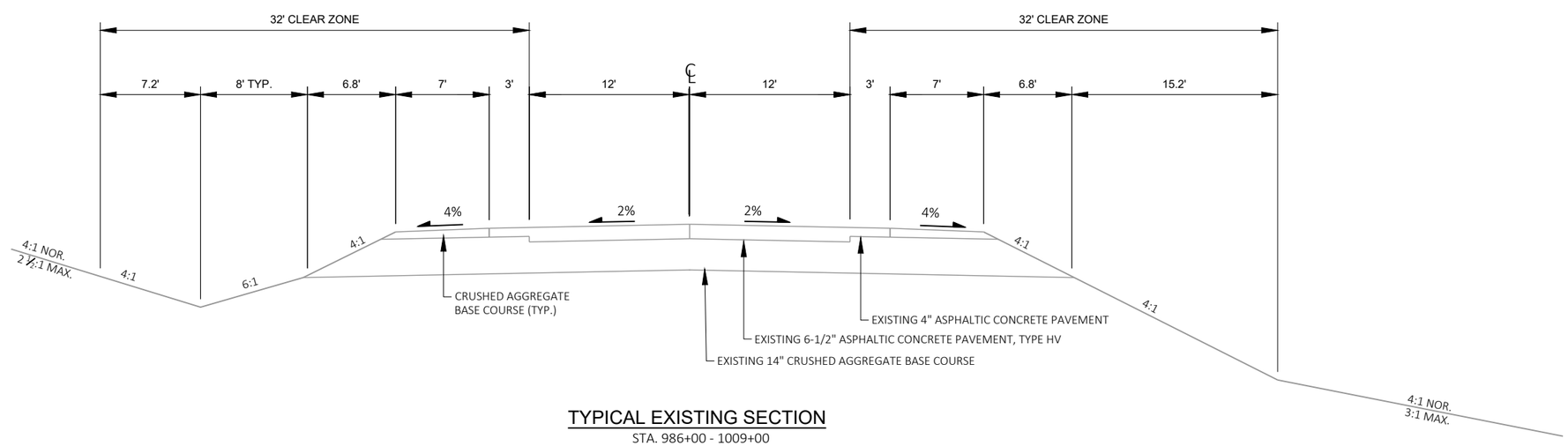

TYPICAL EXISTING SECTION

STA. 986+00 - 1009+00

PROJECT NO: 1706-04-61	HWY: STH 11	COUNTY: GREEN	TYPICAL EXISTING SECTIONS	SHEET	E

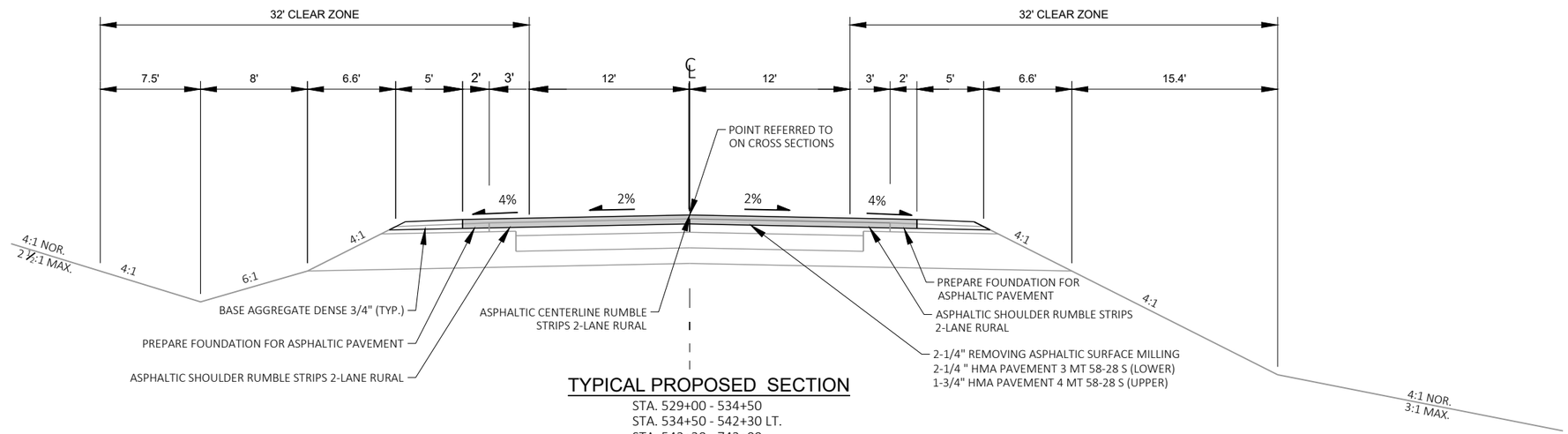

TYPICAL PROPOSED SECTION

STA. 529+00 - 534+50
STA. 534+50 - 542+30 LT.
STA. 542+30 - 743+00
STA. 839+00 - 986+00

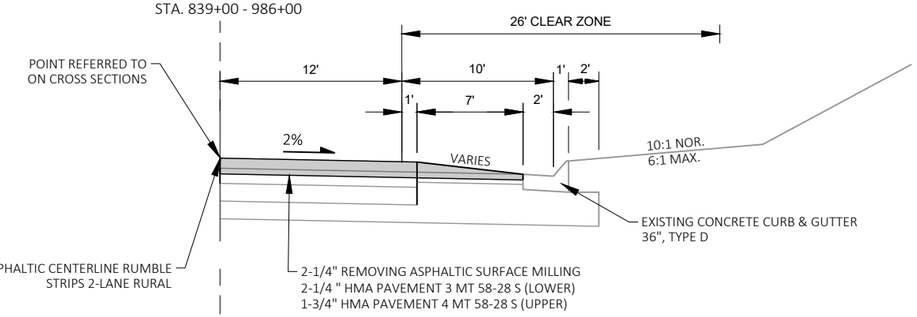

TYPICAL PROPOSED HALF SECTION

STA. 534+50 - 542+30 RT.

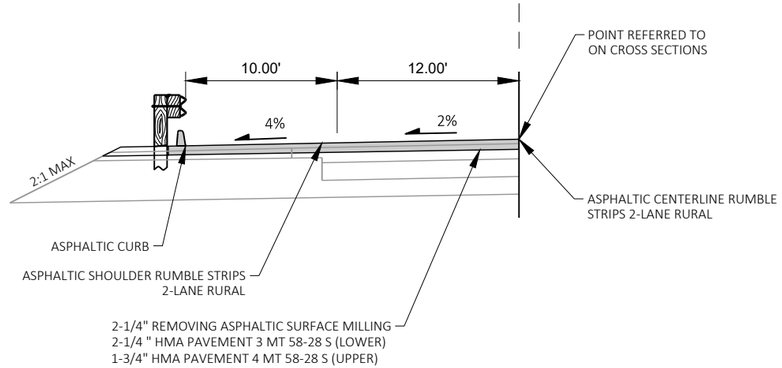

TYPICAL PROPOSED HALF SECTION

STA. 542+30 - 547+15 LT

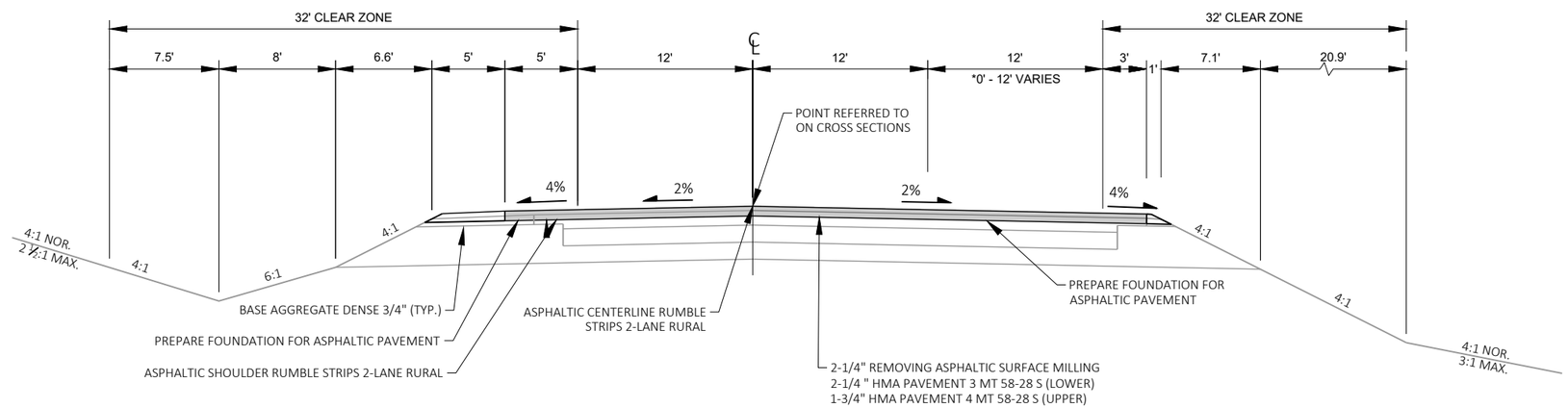

TYPICAL PROPOSED SECTION FOR CLIMBING LANE

STA. 743+00 - 839+00
*STA. 743+00 - 745+00
*STA. 833+00 - 839+00

* CLIMBING LANE TAPER

PROJECT NO: 1706-04-61	HWY: STH 11	COUNTY: GREEN	TYPICAL PROPOSED SECTIONS	SHEET	E

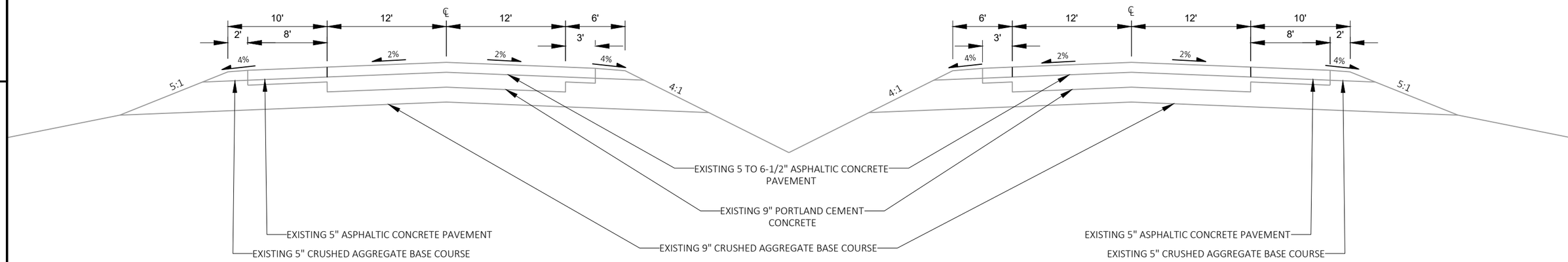

TYPICAL EXISTING SECTION

(4 LANE DIVIDED SECTION)
STA. 1170+00 TO STA. 1262+00

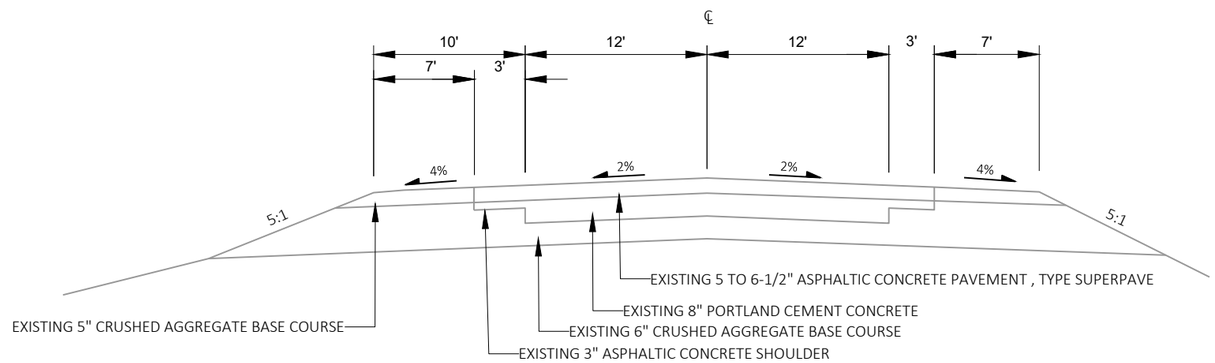

TYPICAL EXISTING SECTION

(2-LANE SECTION)
STA. 1262+00 TO STA. 1562+15

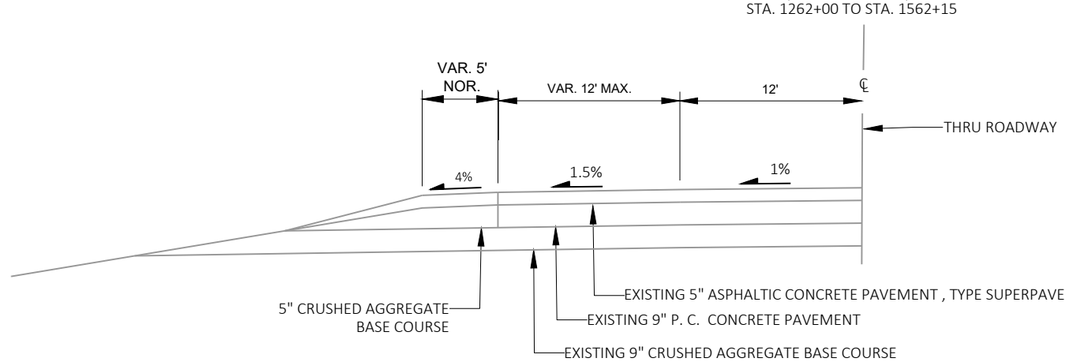

TYPICAL EXISTING SECTION FOR CLIMBING LANE

STA. 1483+00 TO STA. 1527+00

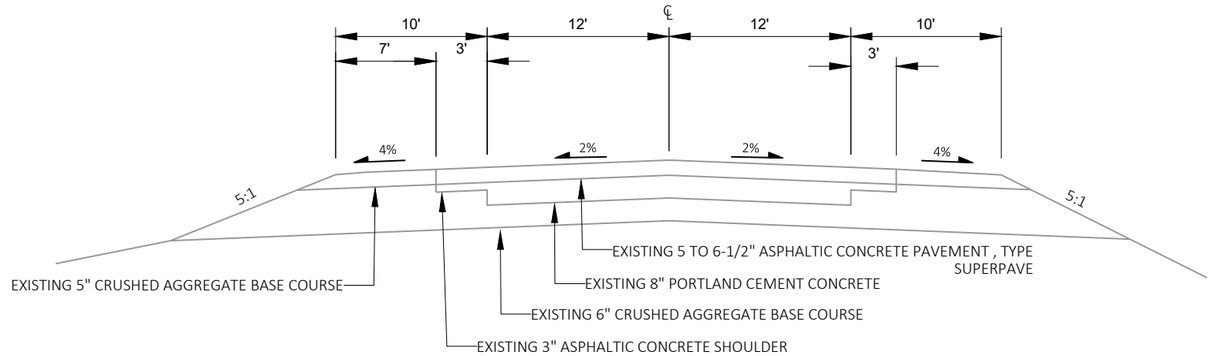

TYPICAL EXISTING SECTION

(2-LANE SECTION)
STA. 1562+15 TO STA. 1711+50

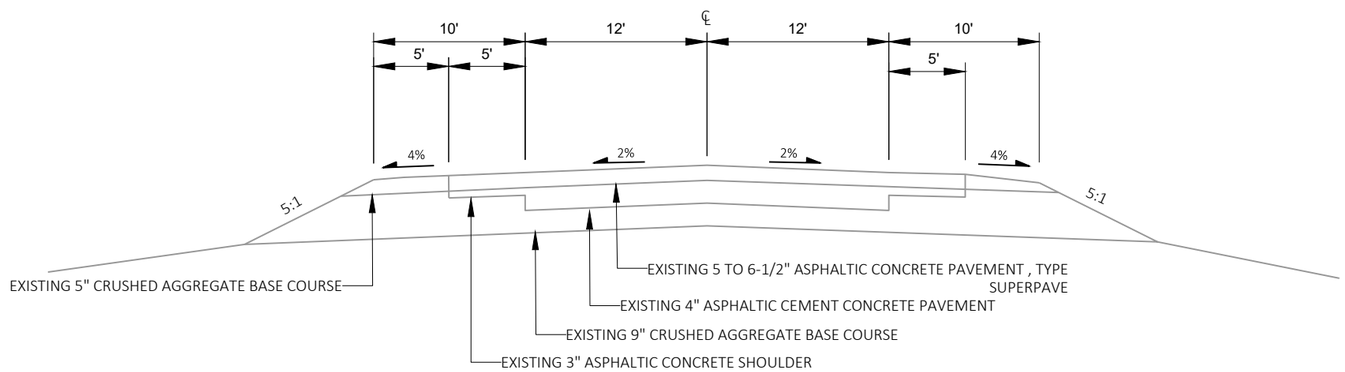

TYPICAL EXISTING SECTION

(2-LANE SECTION)
STA. 1711+50 TO STA. 1727+93

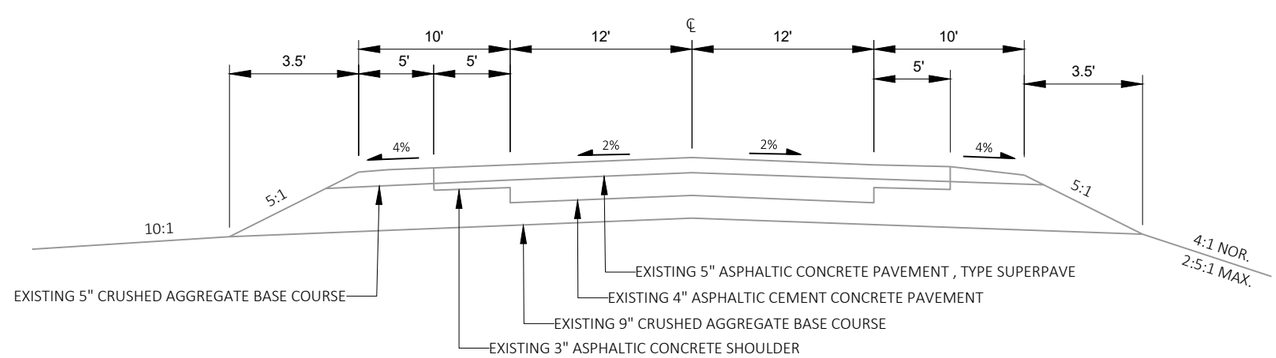

TYPICAL EXISTING SECTION

(2-LANE SECTION)
STA. 1727+93 TO STA. 1730+20

2

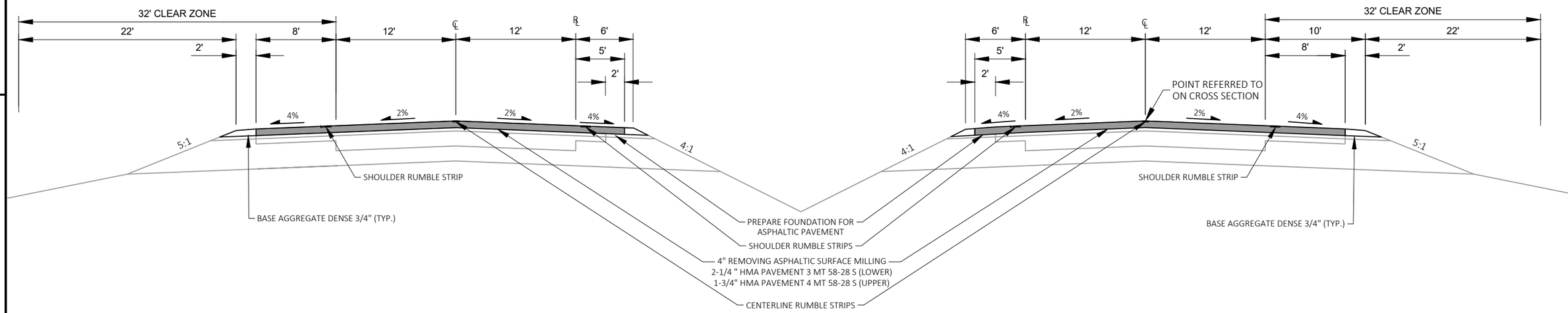

TYPICAL PROPOSED SECTION

(4 LANE DIVIDED SECTION)
STA. 1170+00 TO STA. 1262+00

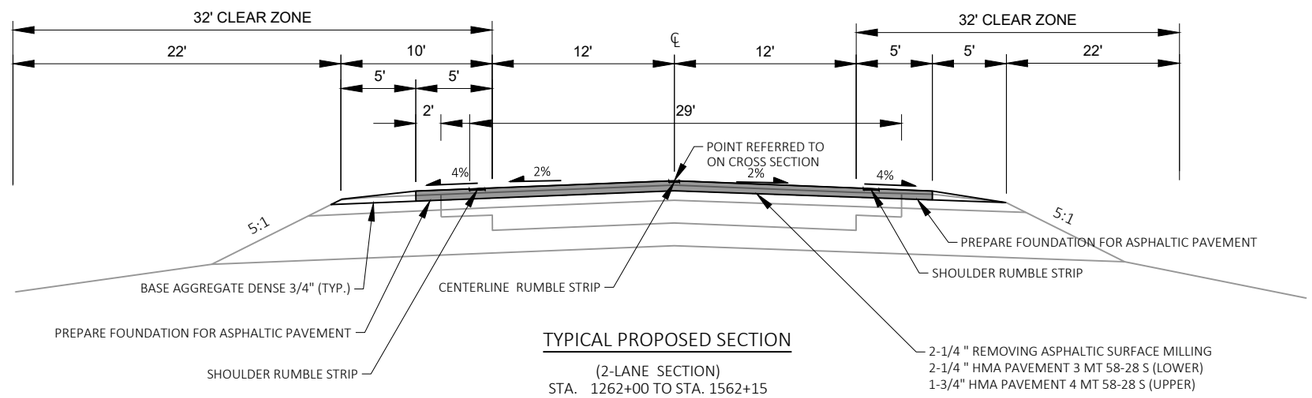

TYPICAL PROPOSED SECTION

(2-LANE SECTION)
STA. 1262+00 TO STA. 1562+15

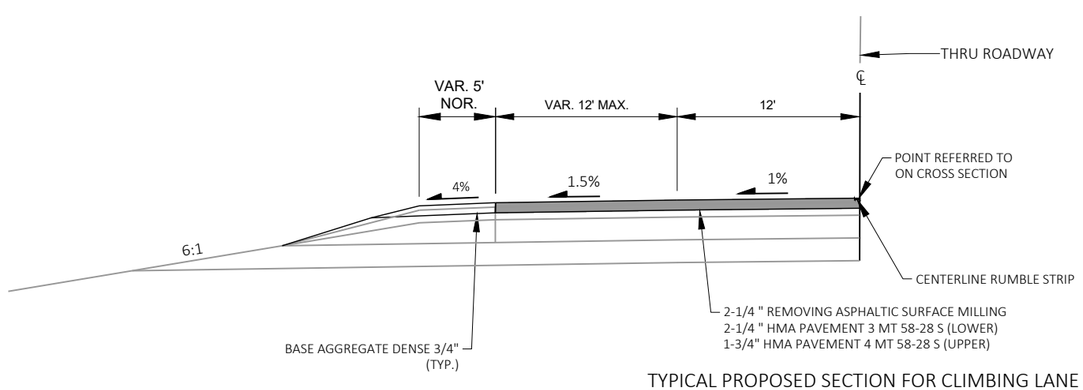

TYPICAL PROPOSED SECTION FOR CLIMBING LANE

STA. 1483+00 TO STA. 1527+00

PROJECT NO: 1706-04-62	HWY: STH 11	COUNTY: GREEN	PROPOSED TYPICAL SECTIONS	SHEET	E

2

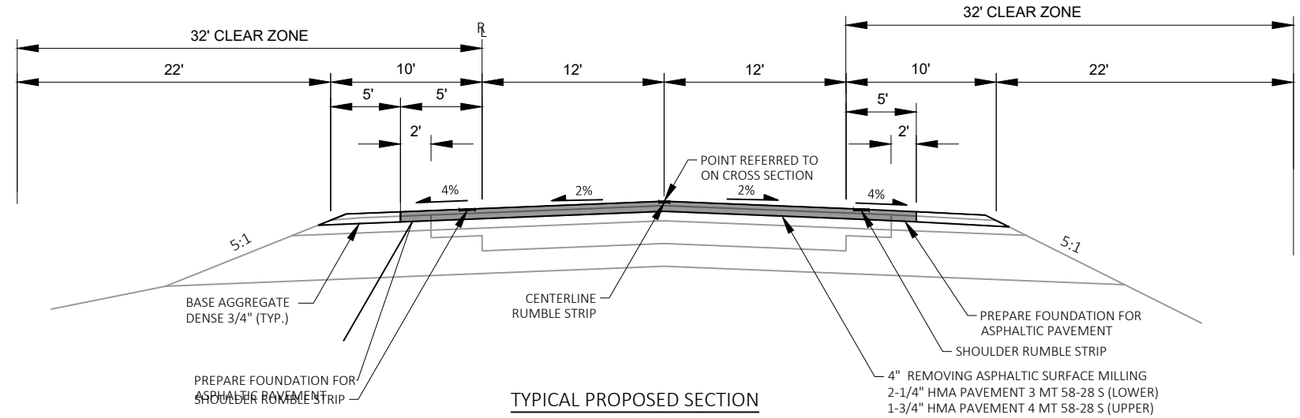

TYPICAL PROPOSED SECTION
(2-LANE SECTION)
STA. 1562+15 TO STA. 1711+50

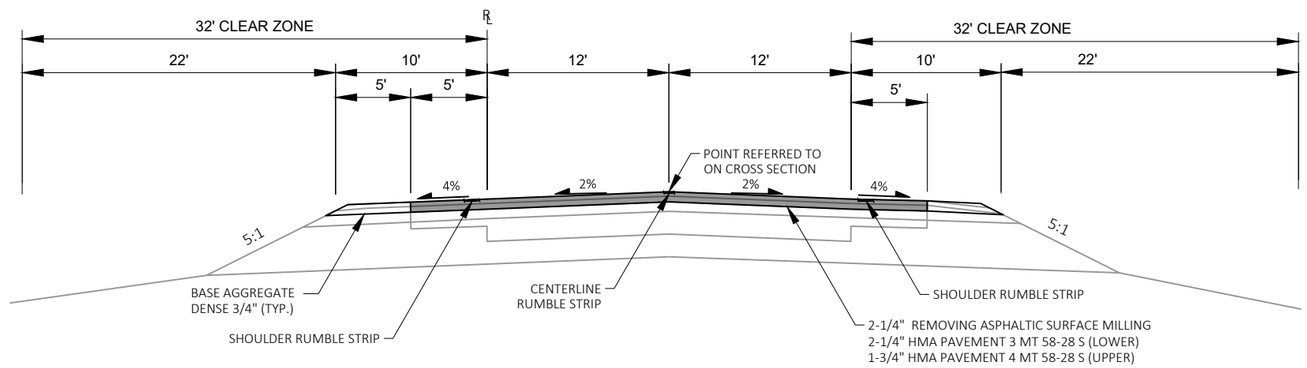

TYPICAL PROPOSED SECTION
(2-LANE SECTION)
STA. 1711+50 TO STA. 1727+93

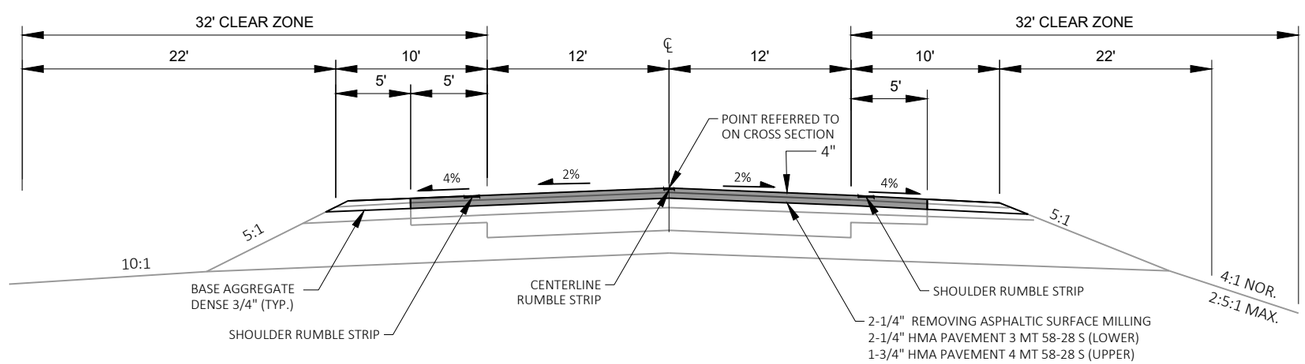

TYPICAL PROPOSED SECTION
(2-LANE SECTION)
STA. 1727+93 TO STA. 1730+20

PROJECT NO: 1706-04-62	HWY: STH 11	COUNTY: GREEN	PROPOSED TYPICAL SECTIONS	SHEET	E

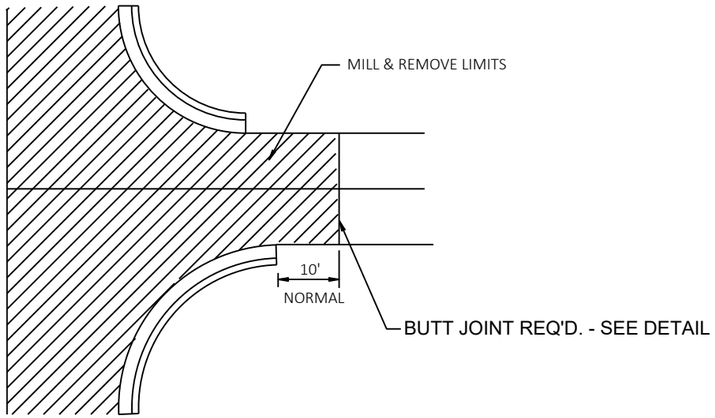

SIDEROAD DETAIL - CURB & GUTTER TO REMAIN

NOT TO SCALE

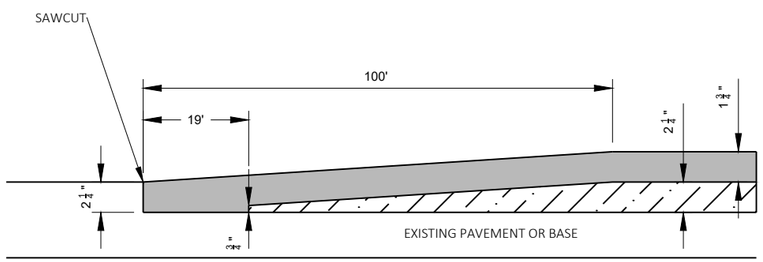

PLACE 1 3/4" HMA PAVEMENT 4 MT 58-28 S

REMOVING ASPHALTIC SURFACE MILLING AND PLACE 2 1/4" HMA PAVEMENT 3 MT 58-28 S

MAINLINE BUTT JOINT

NOT TO SCALE

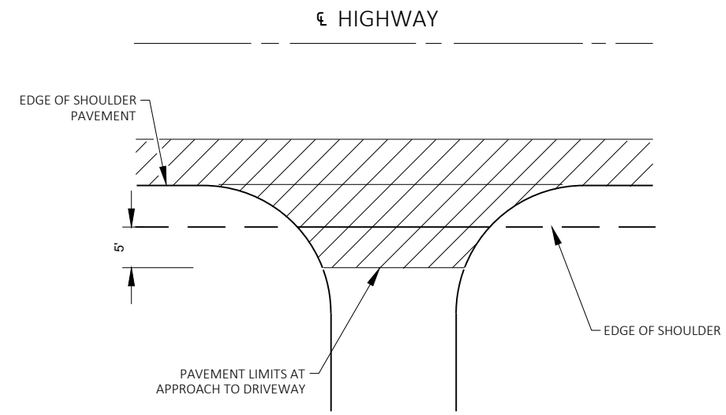

PLAN VIEW

RURAL DRIVEWAY

INTERSECTION DETAIL

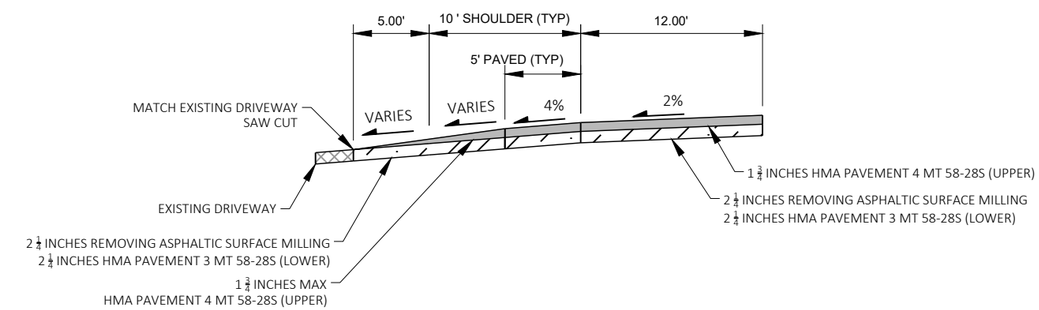

RURAL ENTRANCE WITH PAVED SURFACE

TYPICAL

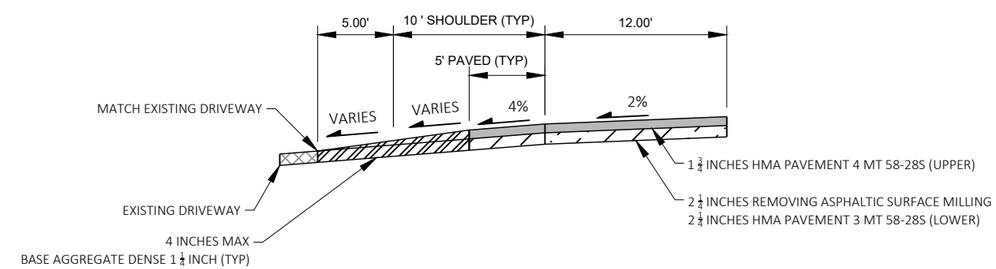

RURAL ENTRANCE WITH AGGREGATE SURFACE

TYPICAL

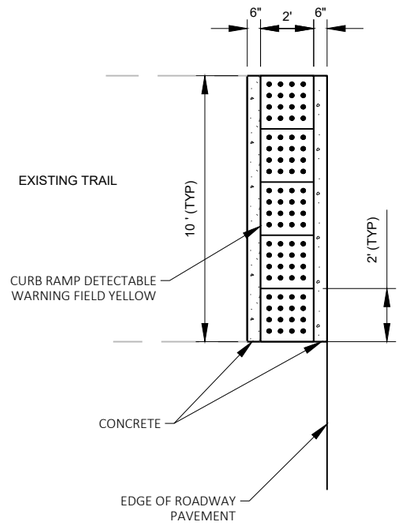

DETECTABLE WARNING FIELD

(SEE PLAN FOR MORE DETAIL)

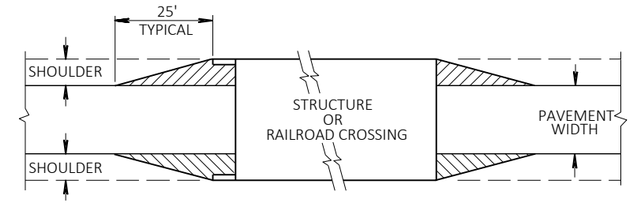

DETAIL FOR ASPHALTIC SURFACE TAPERS AT
STRUCTURES AND R.R. CROSSINGS

2

2

PROJECT NO: 1706-04-61	HWY: STH 11	COUNTY: GREEN	PLAN	SHEET	E

FILE NAME : N:\PDS\C3D\17060431\SHEETSPLAN\050201_PN.DWG
LAYOUT NAME - 050201-61_pn - STH 11- (1)
PLOT DATE : 11/22/2019 8:00 AM
PLOT BY : KOENIG, DELLA M
PLOT NAME :
PLOT SCALE : 1 IN:200 FT

2

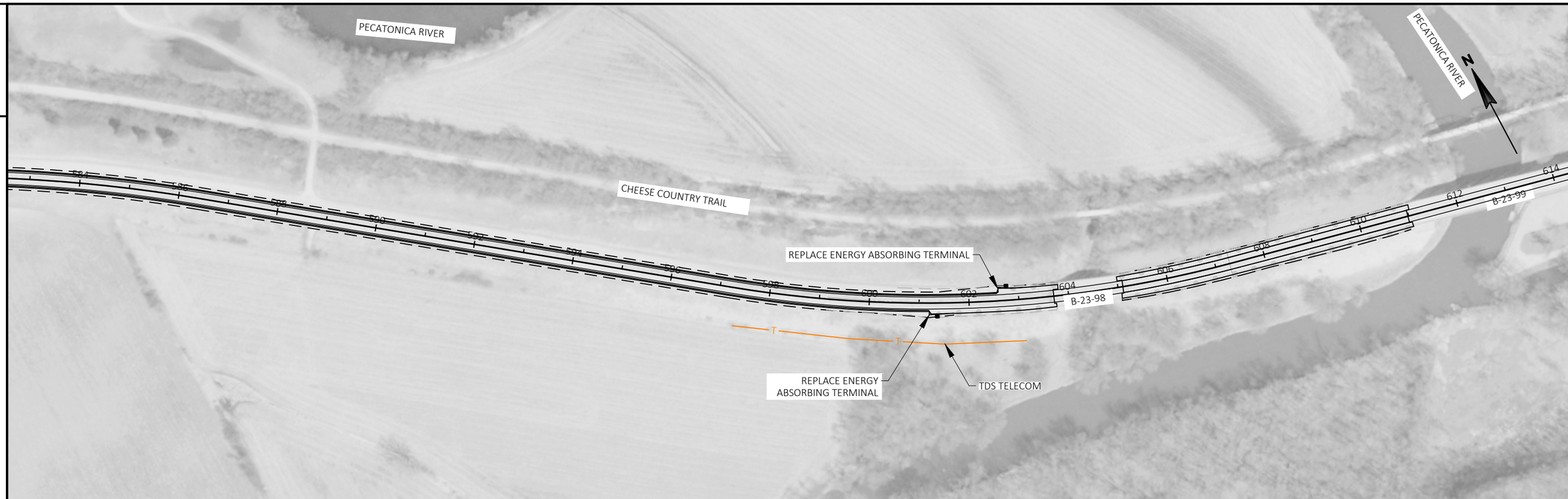

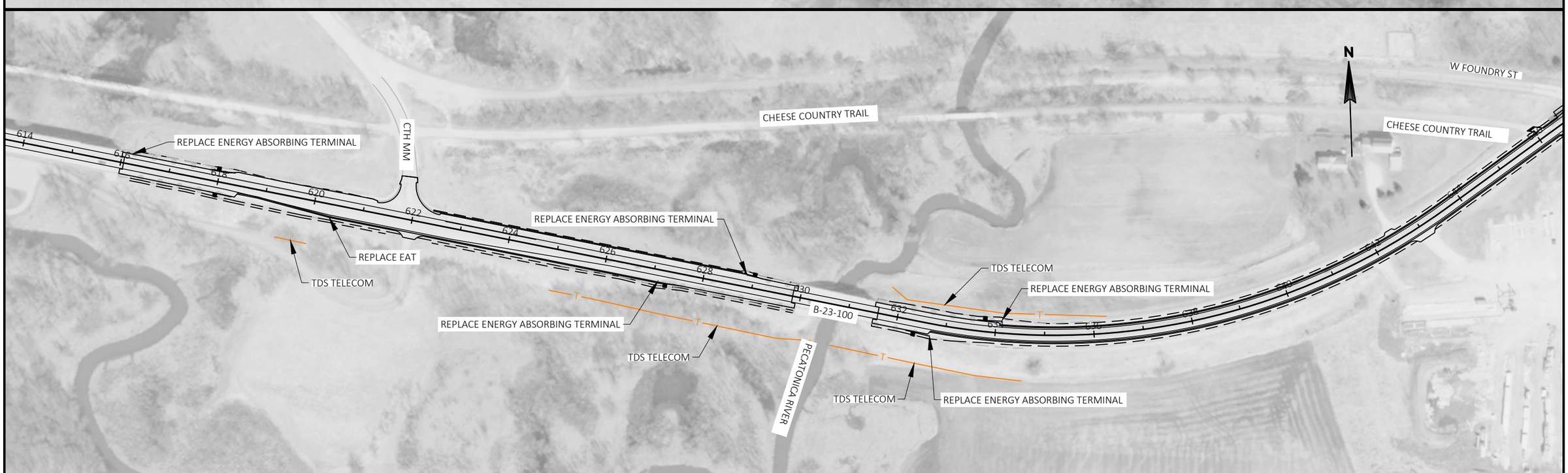

PROJECT NO: 1706-04-61	HWY: STH 11	COUNTY: GREEN	PLAN	SHEET	E

FILE NAME : N:\PDS\C3D\17060431\SHEETSPLAN\050201_PN.DWG
LAYOUT NAME - 050201-61_pn - STH 11- (2)
PLOT DATE : 11/22/2019 8:00 AM PLOT BY : KOENIG, DELLA M PLOT NAME : PLOT SCALE : 1 IN:200 FT

WISDOT/CADDS SHEET 42

2

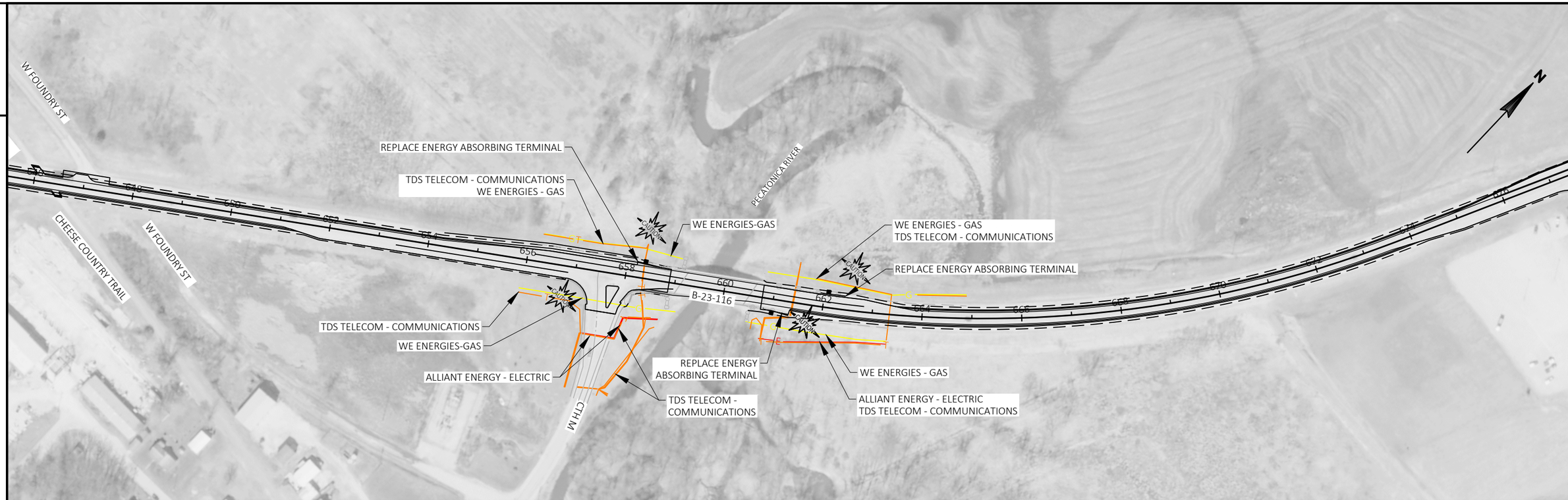

2

PROJECT NO: 1706-04-61	HWY: STH 11	COUNTY: GREEN	PLAN	SHEET	E

FILE NAME : N:\PDS\C3D\17060431\SHEETSPLAN\050201_PN.DWG
LAYOUT NAME - 050201-61_pn - STH 11- (3)
PLOT DATE : 11/22/2019 8:00 AM PLOT BY : KOENIG, DELLA M PLOT NAME : PLOT SCALE : 1 IN:200 FT

WISDOT/CADDS SHEET 42

2

2

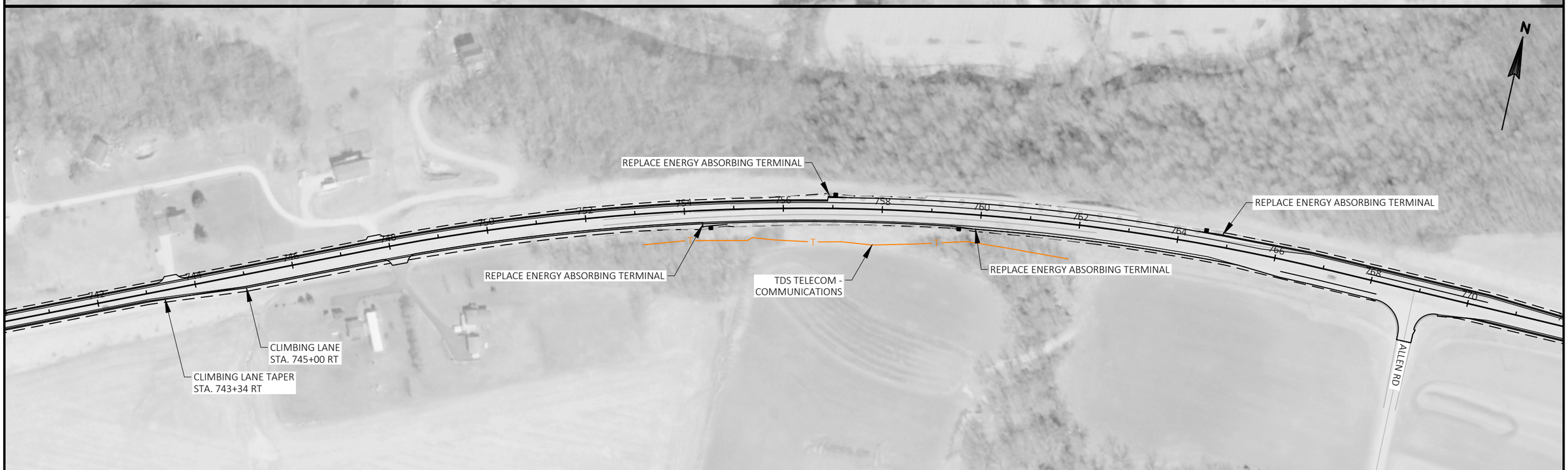

PROJECT NO: 1706-04-61	HWY: STH 11	COUNTY: GREEN	PLAN	SHEET	E

FILE NAME : N:\PDS\C3D\17060431\SHEETSPLAN\050201_PN.DWG
LAYOUT NAME - 050201-61_pn - STH 11- (4)
PLOT DATE : 11/22/2019 8:00 AM
PLOT BY : KOENIG, DELLA M
PLOT NAME :
PLOT SCALE : 1 IN:200 FT
WISDOT/CADDS SHEET 42

2

2

PROJECT NO: 1706-04-61	HWY: STH 11	COUNTY: GREEN	PLAN	SHEET	E

FILE NAME : N:\PDS\C3D\17060431\SHEETSPLAN\050201_PN.DWG
LAYOUT NAME - 050201-61_pn - STH 11- (5)
PLOT DATE : 11/22/2019 8:00 AM
PLOT BY : KOENIG, DELLA M
PLOT NAME :
PLOT SCALE : 1 IN:200 FT

2

2

PROJECT NO: 1706-04-61	HWY: STH 11	COUNTY: GREEN	PLAN	SHEET	E

FILE NAME : N:\PDS\C3D\17060431\SHEETSPLAN\050201_PN.DWG
LAYOUT NAME - 050201-61_pn - STH 11- (6)
PLOT DATE : 11/22/2019 8:00 AM
PLOT BY : KOENIG, DELLA M
PLOT NAME :
PLOT SCALE : 1 IN:200 FT

WISDOT/CADDS SHEET 42

PROJECT NO: 1706-04-61	HWY: STH 11	COUNTY: GREEN	PLAN	SHEET	E

PROJECT NO: 1706-04-61	HWY: STH 11	COUNTY: GREEN	PLAN	SHEET	E

FILE NAME : N:\PDS\C3D\17060431\SHEETSPLAN\050201_PN.DWG
LAYOUT NAME - 050201-61_pn - STH 11- (8)
PLOT DATE : 11/22/2019 8:01 AM
PLOT BY : KOENIG, DELLA M
PLOT NAME :
PLOT SCALE : 1 IN:200 FT

2

2

PROJECT NO: 1706-04-62	HWY: STH 11	COUNTY: GREEN	PLAN	SHEET	E

FILE NAME : N:\PDS\C3D\17060432\SHEETSPLAN\050201-62_PN.DWG
LAYOUT NAME - 050201-62_pn - STH 11 (1)
PLOT DATE : 11/22/2019 8:01 AM
PLOT BY : KOENIG, DELLA M
PLOT NAME :
PLOT SCALE : 1 IN:200 FT
WISDOT/CADDS SHEET 42

2

2

PROJECT NO: 1706-04-62	HWY: STH 11	COUNTY: GREEN	PLAN	SHEET	E

FILE NAME : N:\PDS\C3D\17060432\SHEETSPLAN\050201-62_PN.DWG
LAYOUT NAME - STH 11 - (2)
PLOT DATE : 11/22/2019 8:01 AM
PLOT BY : KOENIG, DELLA M
PLOT NAME :
PLOT SCALE : 1 IN:200 FT

PROJECT NO: 1706-04-62	HWY: STH 11	COUNTY: GREEN	PLAN	SHEET	E

FILE NAME : N:\PDS\C3D\17060432\SHEETSPLAN\050201-62_PN.DWG
LAYOUT NAME - STH 11 - (3)
PLOT DATE : 11/22/2019 8:01 AM
PLOT BY : KOENIG, DELLA M
PLOT NAME :
PLOT SCALE : 1 IN:200 FT

2

2

PROJECT NO: 1706-04-62	HWY: STH 11	COUNTY: GREEN	PLAN	SHEET	E

FILE NAME : N:\PDS\C3D\17060432\SHEETSPLAN\050201-62_PN.DWG
LAYOUT NAME - STH 11 - (4)
PLOT DATE : 11/22/2019 8:01 AM
PLOT BY : KOENIG, DELLA M
PLOT NAME :
PLOT SCALE : 1 IN:200 FT

2

2

PROJECT NO: 1706-04-62	HWY: STH 11	COUNTY: GREEN	PLAN	SHEET	E

FILE NAME : N:\PDS\C3D\17060432\SHEETSPLAN\050201-62_PN.DWG
LAYOUT NAME - STH 11 - (5)
PLOT DATE : 11/22/2019 8:01 AM
PLOT BY : KOENIG, DELLA M
PLOT NAME :
PLOT SCALE : 1 IN:200 FT

WISDOT/CADDS SHEET 42

2

PROJECT NO: 1706-04-61	HWY: STH 11	COUNTY: GREEN	PLAN	SHEET	E

2

PROJECT NO: 1706-04-62	HWY: STH 11	COUNTY: GREEN	PLAN	SHEET	E

2

2

PROJECT NO: 1706-04-62	HWY: STH 11	COUNTY: GREEN	PLAN	SHEET	E

FILE NAME : N:\PDS\C3D\17060432\SHEETSPLAN\050201-62_PN.DWG
LAYOUT NAME - STH 11 - (8)
PLOT DATE : 11/22/2019 8:02 AM
PLOT BY : KOENIG, DELLA M
PLOT NAME :
PLOT SCALE : 1 IN:200 FT

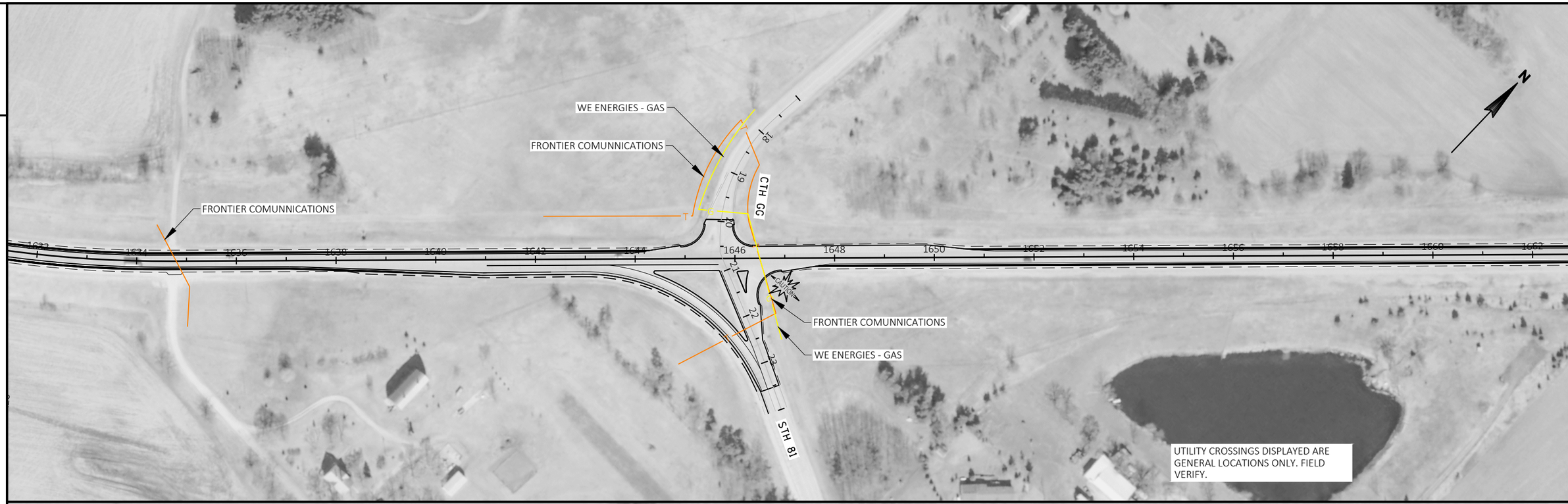

PROJECT NO: 1706-04-62	HWY: STH 11	COUNTY: GREEN	PLAN	SHEET	E

PROJECT NO: 1706-04-62	HWY: STH 11	COUNTY: GREEN	PLAN	SHEET	E

FILE NAME : N:\PDS\C3D\17060432\SHEETSPLAN\050201-62_PN.DWG
LAYOUT NAME - STH 11 - (10)
PLOT DATE : 11/22/2019 8:02 AM PLOT BY : KOENIG, DELLA M PLOT NAME : PLOT SCALE : 1 IN:200 FT

3

REMOVALS

CATEGORY	STATION	TO	STATION	LOCATION	204.0120 REMOVING ASPHALTIC SURFACE MILLING SY	204.0130 REMOVING CURB LF	REMARKS
0010	530+00	-	603+70	-61.00	28,694	61	
	605+10	-	610+98	-61.00	3,010	-	
	616+06	-	629+84	-61.00	8,008	-	
	631+60	-	658+89	-61.00	12,235	-	
	660+81	-	716+80	-61.00	25,603	-	
	718+25	-	1009+00	-61.00	131,369	65	
0010	1170+00	-	1376+50	-62.00	114,618	-	
	1378+09	-	1620+56	-62.00	104,658	-	
	1730+00	-	1822+87	-62.00	47,034	-	
	1176+66			-62 Crossover	193	-	
	1183+05			-62 Crossover	193	-	
	1206+05			-62 Crossover	463	-	
	1217+55			-62 Crossover	193	-	
	1227+48			-62 Crossover	193	-	
	1239+91			-62 Crossover	463	-	
	1253+43			-62 Crossover	57	-	
				TOTAL 0010	476,986	127	

PREPARE FOUNDATION

CATEGORY	STATION	TO	STATION	LOCATION	211.0400 PREPARE FOUNDATION FOR ASPHALTIC SHOULDERS STA	REMARKS
0010	1170+00	-	1730+00	-61.00	923	
0010	530+00	-	1009+00	-62.00	796	
				TOTAL 0010	797	

REMOVING GUARDRAIL

CATEGORY	STATION	LOCATION	204.0165 REMOVING GUARDRAIL LF	REMARKS
0020	542+23	LT	50.00	
	547+01	LT	50.00	
	601+20	RT	50.00	
	602+59	LT	50.00	
	618+32	LT	50.00	
	618+33	RT	50.00	
	627+10	RT	50.00	
	628+85	LT	50.00	
	632+71	RT	50.00	
	634+12	LT	50.00	
	658+20	LT	50.00	
	661+34	RT	50.00	
	662+42	LT	50.00	
	754+36	RT	50.00	
	756+89	LT	50.00	
	759+91	RT	50.00	
	764+88	LT	50.00	
	789+82	RT	50.00	
	792+32	RT	50.00	
	UNDISTRIBUTED		100	
		TOTAL 0020	1,050	

3

3

BASE COURSE ITEMS

CATEGORY	STATION	TO	STATION	LOCATION	305.0110 BASE AGGREGATE DENSE 3/4-INCH TON	305.0120 BASE AGGREGATE DENSE 1 1/4-INCH TON	REMARKS
0010	530+00	-	534+44	RT	43.1	-	-61
	530+00	-	542+23	LT	53.7	26.9	-61
	542+26	-	557+03	RT	141.8	-	-61
	547+01	-	602+57	LT	558.8	65.4	-61
	557+03	-	558+40	RT	376.9	-	-61
	601+00	-	618+33	RT	-	26.0	-61
	618+33	-	627+10	RT	107.7	13.5	-61
	627+10	-	632+71	RT	-	43.4	-61
	602+57	-	621+25	LT	41.3	20.0	-61
	621+25	-	628+85	LT	42.1	10.2	-61
	632+71	-	656+88	RT	92.9	11.2	-61
	628+85	-	656+88	LT	66.1	66.3	-61
	656+88	-	661+34	RT	-	7.5	-61
	656+88	-	662+43	LT	-	58.6	-61
	661+34	-	677+06	RT	152.3	3.2	-61
	662+43	-	671+84	LT	234.9	-	-61
	678+55	-	715+03	RT	353.0	-	-61
	693+30	-	715+64	LT	230.2	-	-61
	719+49	-	728+10	RT	87.8	-	-61
	720+80	-	728+31	LT	80.2	-	-61
	729+41	-	754+36	RT	242.6	-	-61
	754+36	-	759+91	RT	-	16.3	-61
	729+75	-	756+89	LT	257.6	-	-61
	756+89	-	764+88	LT	-	22.9	-61
	759+91	-	768+17	RT	70.9	-	-61
	764+88	-	820+88	LT	447.4	17.8	-61
	769+47	-	790+54	RT	206.3	231.1	-61
	790+54	-	820+69	RT	277.6	105.2	-61
	821+99	-	878+67	RT	538.7	-	-61
	822+18	-	878+86	LT	538.0	-	-61
	879+97	-	936+90	RT	545.1	-	-61
	880+17	-	903+55	LT	220.4	-	-61
	904+90	-	990+31	LT	823.1	-	-61
	938+18	-	960+55	RT	214.4	-	-61
	861+83	-	990+14	RT	357.4	-	-61
	991+44	-	1009+00	RT	168.8	-	-61
	991+81	-	1009+00	LT	166.0	-	-61
				UNDISTRIBUTED	200.0	200.0	-61

3

BASE COURSE ITEMS

CATEGORY	STATION	TO	STATION	LOCATION	305.0110 BASE AGGREGATE DENSE 3/4-INCH TON	305.0120 BASE AGGREGATE DENSE 1 1/4-INCH TON	REMARKS
	CONTINUED						
0010	1170+00	-	1239+71	RT	307.4	-	-62
	1170+00	-	1239+70	LT	455.6	-	-62
	1240+12	-	1260+00	RT	88.4	-	-62
	1240+12	-	1351+56	LT	170.1	-	-62
	1172+02	-	1260+00	WB RT	515.7	-	-62
	1172+02	-	1230+70	WB LT	443.6	-	-62
	1260+00	-	1278+33	RT	171.3	-	-62
	1260+00	-	1351+56	LT	567.5	-	-62
	1279+62	-	1289+35	RT	82.1	-	-62
	1290+72	-	1351+77	RT	575.9	-	-62
	1353+35	-	1376+52	RT	272.8	-	-62
	1352+47	-	1366+21	LT	116.0	-	-62
	1366+76	-	1376+38	LT	125.0	-	-62
	1377+73	-	1380+14	RT	17.7	-	-62
	1377+98	-	1408+17	LT	320.7	-	-62
	1381+59	-	1389+24	RT	33.6	-	-62
	1390+61	-	1408+15	RT	156.9	-	-62
	1409+47	-	1458+24	LT	461.7	-	-62
	1409+42	-	1458+10	RT	460.3	-	-62
	1459+54	-	1620+59	LT	1,540.4	-	-62
	1459+39	-	1564+58	RT	1,011.4	-	-62
	1565+87	-	1581+76	RT	144.5	-	-62
	1582+27	-	1617+23	RT	339.4	-	-62
	1618+63	-	1620+59	RT	25.0	-	-62
	1622+91	-	1625+24	LT	28.9	-	-62
	1622+91	-	1646+51	RT	253.9	-	-62
	1625+64	-	1644+91	LT	205.4	-	-62
	1646+55	-	1719+12	RT	690.8	-	-62
	1646+36	-	1730+21	LT	786.5	-	-62
	1720+33	-	1730+21	RT	95.1	-	-62
				UNDISTRIBUTED	200.0	200.0	-62
				TOTAL 0010	18,601.0	1,146.0	

3

ASPHALTIC ITEMS

CATEGORY	STATION	TO	STATION	LOCATION	455.0605 TACK COAT GAL	460.6223 HMA PAVEMENT 3 MT 58-28 S TON	460.6224 HMA PAVEMENT 4 MT 58-28 S TON	REMARKS
0010	530+00	-	603+70	-61.00	3,740	2,992	2,992	ROADWAY
	605+10	-	610+98	-61.00	421	337	337	ROADWAY
	616+06	-	629+84	-61.00	1,073	858	858	ROADWAY
	631+60	-	658+89	-61.00	1,551	1,241	1,241	ROADWAY
	660+81	-	716+80	-61.00	3,063	2,450	2,450	ROADWAY
	850+38	-	853+22	-61.00	59	47	47	ROADWAY
	718+25	-	1009+00	-61.00	16,711	13,368	13,368	ROADWAY
	735+61	-	738+52	-61.00	50	40	40	ROADWAY
	1170+00	-	1376+50	-62.00	16,125	12,900	12,900	ROADWAY
	1378+09	-	1620+56	-62.00	13,355	10,684	10,684	ROADWAY
	1622+87	-	1730+21	-62.00	6,012	4,810	4,810	ROADWAY
	1176+66	-		-62 Crossover	27	22	22	ROADWAY
	1183+05	-		-62 Crossover	27	22	22	ROADWAY
	1206+05	-		-62 Crossover	65	52	52	ROADWAY
	1217+55	-		-62 Crossover	27	22	22	ROADWAY
	1227+48	-		-62 Crossover	27	22	22	ROADWAY
	1239+91	-		-62 Crossover	65	52	52	ROADWAY
	1253+43	-		-62 Crossover	8	6	6	ROADWAY
				TOTAL 0010	62,407	49,926	49,926	
0020	530+00	-	534+41	-61 RT	17	13	13	SHOULDERS
	530+00	-	542+22	-61 LT	42	34	34	SHOULDERS
	542+26	-	555+94	-61 RT	42	34	34	SHOULDERS
	547+04	-	602+57	-61 LT	176	141	141	SHOULDERS
	559+11	-	601+20	-61 RT	153	122	122	SHOULDERS
	618+43	-	627+28	-61 RT	28	22	22	SHOULDERS
	622+38	-	628+95	-61 LT	20	16	16	SHOULDERS
	632+71	-	651+39	-61 RT	70	56	56	SHOULDERS
	634+10	-	658+20	-61 LT	91	73	73	SHOULDERS
	661+38	-	674+13	-61 RT	48	38	38	SHOULDERS
	663+45	-	691+22	-61 LT	86	69	69	SHOULDERS
	679+13	-	715+03	-61 RT	127	102	102	SHOULDERS
	696+26	-	715+66	-61 LT	60	48	48	SHOULDERS
	719+50	-	725+21	-61 RT	21	17	17	SHOULDERS
	720+80	-	727+72	-61 LT	21	17	17	SHOULDERS
	730+03	-	744+98	-61 RT	51	41	41	SHOULDERS
	732+63	-	756+89	-61 LT	75	60	60	SHOULDERS
	759+91	-	765+28	-61 RT	16	13	13	SHOULDERS
	764+88	-	820+27	-61 LT	172	137	137	SHOULDERS
	770+05	-	790+54	-61 RT	64	51	51	SHOULDERS
	792+32	-	820+69	-61 RT	88	70	70	SHOULDERS
	821+99	-	875+51	-61 RT	164	131	131	SHOULDERS
	825+06	-	877+95	-61 LT	166	133	133	SHOULDERS
	880+58	-	934+13	-61 RT	196	157	157	SHOULDERS
	881+24	-	902+81	-61 LT	66	53	53	SHOULDERS
	906+02	-	989+57	-61 LT	259	207	207	SHOULDERS
	938+77	-	959+83	-61 RT	78	62	62	SHOULDERS
	962+29	-	989+24	-61 RT	100	80	80	SHOULDERS
	992+06	-	1009+00	-61 RT	62	50	50	SHOULDERS
	992+94	-	1009+00	-61 LT	50	40	40	SHOULDERS

CONTINUED

3

ASPHALTIC ITEMS

CATEGORY	STATION	TO	STATION	LOCATION	455.0605 TACK COAT GAL	460.6223 HMA PAVEMENT 3 MT 58-28 S TON	460.6224 HMA PAVEMENT 4 MT 58-28 S TON	REMARKS
0020	1170+00	-	1205+41	-62 RT MEDIAN	104	83	83	SHOULDERS
	1173+56	-	1205+62	-62 LT MEDIAN	98	79	79	SHOULDERS
	1206+92	-	1239+20	-62 RT MEDIAN	100	80	80	SHOULDERS
	1206+66	-	1239+41	-62 LT MEDIAN	103	82	82	SHOULDERS
	1240+67	-	1256+21	-62 RT MEDIAN	48	38	38	SHOULDERS
	1240+36	-	1256+21	-62 LT MEDIAN	48	39	39	SHOULDERS
	1260+38	-	1276+44	-62 RT	49	39	39	SHOULDERS
	1260+60	-	1350+86	-62 LT	280	224	224	SHOULDERS
	1280+32	-	1286+46	-62 RT	18	15	15	SHOULDERS
	1291+43	-	1347+51	-61 RT	174	139	139	SHOULDERS
	1354+00	-	1374+62	-62 RT	64	51	51	SHOULDERS
	1357+40	-	1356+27	-62 LT	24	19	19	SHOULDERS
	1370+09	-	1375+90	-62 LT	18	14	14	SHOULDERS
	1378+58	-	1380+14	-62 RT	4	3	3	SHOULDERS
	1382+35	-	1387+21	-62 RT	15	12	12	SHOULDERS
	1391+22	-	1405+50	-62 RT	44	35	35	SHOULDERS
	1384+39	-	1407+42	-62 LT	71	57	57	SHOULDERS
	1409+98	-	1455+15	-62 RT	140	112	112	SHOULDERS
	1412+67	-	1457+51	-62 LT	139	111	111	SHOULDERS
	1459+96	-	1561+69	-62 RT	316	253	253	SHOULDERS
	1462+41	-	1562+34	-62 LT	310	248	248	SHOULDERS
	1566+51	-	1579+37	-62 RT	39	32	32	SHOULDERS
	1568+21	-	1578+98	-62 LT	32	26	26	SHOULDERS
	1583+12	-	1614+60	-62 RT	97	78	78	SHOULDERS
	1584+64	-	1613+94	-62 LT	90	72	72	SHOULDERS
	1624+14	-	1640+95	-62 RT	49	39	39	SHOULDERS
	1626+68	-	1644+30	-62 LT	54	43	43	SHOULDERS
	1647+57	-	1716+35	-62 RT	213	171	171	SHOULDERS
	1650+58	-	1716+95	-62 LT	205	164	164	SHOULDERS
	1720+90	-	1730+21	-62 RT	29	23	23	SHOULDERS
	1722+91	-	1730+21	-62 LT	22	18	18	SHOULDERS
				TOTAL 0020	5,608	4,487	4,487	
				PROJECT TOTAL	68015	54413	54413	

3

RUMBLE STRIPS

CATEGORY	STATION	TO	STATION	LOCATION	465.0425 ASPHALTIC SHOULDER RUMBLE STRIPS 2-LANE RURAL LF	465.0475 ASPHALT CENTERLINE RUMBLE STRIPS 2-LANE RURAL LF	REMARKS
0020	530+00	-	673+58	LT	12,379	11,390	-61
	673+58	-	679+53	LT	595	-	TYPE 2 SHOULDER RUMBLE STRIP
	680+16	-	1009+00	LT	28,205	22,757	-61
	530+00	-	689+06	RT	11,334	-	-61
	689+06	-	696+35	RT	729	-	TYPE 2 SHOULDER RUMBLE STRIP
	696+35	-	743+00	RT	3,474	-	-61
	743+00	-	747+81	RT	481	-	TYPE 2 SHOULDER RUMBLE STRIP
	748+50	-	764+67	RT	1,617	-	-61
	770+97	-	792+21	RT	2,124	-	TYPE 2 SHOULDER RUMBLE STRIP
	792+21	-	1009+00	RT	18,655	-	-61
	1170+00	-	1730+21		112,283	64,441	-62
				TOTAL 0020	191,876	98,588	

TRAIL CROSSING

CATEGORY	STATION	602.0405 CONCRETE SIDEWALK 4-INCH SF	602.0505 CURB RAMP DETECTABLE WARNING FIELD YELLOW SF	REMARKS
0010	646+29	60	20	
	TOTAL 0010	60	20	

BEAM GUARD

CATEGORY	STATION	´C	STATION	LOCATION	614.0010 BARRIER SYSTEM GRADING SHAPING FINISHING EACH	614.0305 STEEL PLATE BEAM GUARD CLASS A LF	614.0370 STEEL PLATE BEAM GUARD ENERGY ABSORBING TERMINAL EACH	614.0400 ADJUSTING STEEL PLATE BEAM GUARD LF	614.0920 SALVAGED RAIL LF	614.0925 SALVAGED GUARDRAIL END TREATMENTS EACH	REMARKS
0010	542+23			LT	-	-	-	25.0	12.5	1.0	-61
	547+01			LT	-	-	-	25.0	12.5	1.0	-61
	601+20			RT	-	-	-	25.0	12.5	1.0	-61
	602+59			LT	-	-	-	25.0	12.5	1.0	-61
	618+32			LT	-	-	-	25.0	12.5	1.0	-61
	618+33			RT	-	-	-	25.0	12.5	1.0	-61
	627+10			RT	-	-	-	25.0	12.5	1.0	-61
	628+85			LT	-	-	-	25.0	12.5	1.0	-61
	632+71			RT	-	-	-	25.0	12.5	1.0	-61
	634+12			LT	-	-	-	25.0	12.5	1.0	-61
	658+20			LT	-	-	-	25.0	12.5	1.0	-61
	661+34			RT	-	-	-	25.0	12.5	1.0	-61
	662+42			LT	-	-	-	25.0	12.5	1.0	-61
	754+36			RT	-	-	-	25.0	12.5	1.0	-61
	756+89			LT	-	-	-	25.0	12.5	1.0	-61
	759+91			RT	-	-	-	25.0	12.5	1.0	-61
	764+88			LT	-	-	-	25.0	12.5	1.0	-61
	789+82			RT	-	-	-	25.0	12.5	1.0	-61
	790+32	-	791+04	RT	-	75	-	25.0	-	-	-61
	792+32			RT	-	-	-	25.0	12.5	1.0	-61
				UNDISTRIBUTED	-	75	-				
				TOTAL 0010	0	150	0	500.0	237.5	19.0	
											-61
0020	542+23			LT	1	-	1	-	-	-	-61
	547+01			LT	1	-	1	-	-	-	-61
	601+20			RT	1	-	1	-	-	-	-61
	602+59			LT	1	-	1	-	-	-	-61
	618+32			LT	1	-	1	-	-	-	-61
	618+33			RT	1	-	1	-	-	-	-61
	627+10			RT	1	-	1	-	-	-	-61
	628+85			LT	1	-	1	-	-	-	-61
	632+71			RT	1	-	1	-	-	-	-61
	634+12			LT	1	-	1	-	-	-	-61
	658+20			LT	1	-	1	-	-	-	-61
	661+34			RT	1	-	1	-	-	-	-61
	662+42			LT	1	-	1	-	-	-	-61
	754+36			RT	1	-	1	-	-	-	-61
	756+89			LT	1	-	1	-	-	-	-61
	759+91			RT	1	-	1	-	-	-	-61
	764+88			LT	1	-	1	-	-	-	-61
	789+82			RT	1	-	1	-	-	-	-61
	792+32			RT	1	-	1	-	-	-	-61
				TOTAL 0020	19	0	19	0.0	0.0	0.0	

3

3

628- EROSION CONTROL I

CATEGORY	STATION	LOCATION	627.0200 MULCHING SY	628.1504 SILT FENCE LF	628.1520 SILT FENCE MAINTENANCE LF	628.2004 EROSION MAT CLASS I TYPE B SY	REMARKS
0010	UNDISTRIBUTED	-61	500	250	250	250	
0010	UNDISTRIBUTED	-62	500	250	250	250	
		TOTAL 0010	1,000	500	500	500	

EROSION CONTROL MOBILIZATION

CATEGORY	STATION	TO	STATION	LOCATION	628.1905 MOBILIZATIONS EROSION CONTROL EACH	628.1910 MOBILIZATIONS EMERGENCY EROSION CONTROL EACH	REMARKS
0010	530+00	-	1009+00	-61.00	1	1	
	1170+00	-	1730+21	-62.00	1	1	
				TOTAL 0010	2	2	

3

TRAFFIC CONTROL

CATEGORY	STATION	TO	STATION	LOCATION	643.0300 TRAFFIC CONTROL DRUMS DAY	643.0310.S TEMPORARY PORTABLE RUMBLE STRIPS LS	643.0900 TRAFFIC CONTROL SIGNS DAY	643.1050 TRAFFIC CONTROL SIGNS PCMS DAY	REMARKS
0010	530+00	-	1009+00	-61	42	1	210	14	
0010	1170+00	-	1730+21	-62	42	1	200	14	
				TOTAL 0010	84	2	410	28	

PAVEMENT MARKING

CATEGORY	STATION	TO	STATION	LOCATION	646.1040 MARKING LINE GROOVED WET REF EPOXY 4-INCH LF	646.1555 MARKING LINE GROOVED CONTRAST PERMANENT TAPE 4-INCH LF	646.3050 MARKING LINE GROOVED PERMANENT TAPE 8-INCH LF	646.4520 MARKING LINE SAME DAY EPOXY 4-INCH LF	646.4620 MARKING LINE SAME DAY EPOXY 8-INCH LF	646.5020 MARKING ARROW EPOXY EACH	646.5120 MARKING WORD EPOXY EACH	646.5320 MARKING RAILROAD CROSSINGS EPOXY EACH	646.6120 MARKING STOP LINE EPOXY 18-INCH LF	646.7120 MARKING DIAGONAL EPOXY 12-INCH LF	REMARKS
0010	530+00	-	1009+00	-61.00	93,518	-	-	89,182	2,554	22	10	-	36	-	
0010	1170+00		1254+34	-62.00	36,072	4,059	500	-	-	3	-	-	-	535	4 lane
	1170+00	-	1254+34	-62.00	94,425	-	-	60,375	3,572	34	16	2	121	-	2 lane
				TOTAL 0010	224,015	4,059	500	149,557	6,126	59	26	2	157	535	

3

NO PASSING ZONES

CATEGORY	STATION	TO	STATION	LOCATION	648.0100 LOCATING NO-PASSING ZONES MI	REMARKS
0010	530+00	-	1009+00	-61	9.07	
0010	1170+00	-	1730+00	-62	10.61	
				TOTAL 0010	19.68	

TEMPORARY PAVEMENT MARKING

CATEGORY	STATION	TO	STATION	LOCATION	649.0105 TEMPORARY MARKING LINE PAINT 4-INCH LF	649.0120 TEMPORARY MARKING LINE EPOXY 4-INCH LF	REMARKS
0010	530+00	-	1009+00	-61		89,182	
0010	1170+00	-	1254+34	-62		64,434	
				TOTAL 0010	0	153,616	

3

STAKING

CATEGORY	STATION	TO	STATION	LOCATION	650.8000 CONSTRUCTION STAKING RESURFACING REFERENCE LF	650.9000 CONSTRUCTION STAKING CURB RAMPS EACH	650.9910.01 CONSTRUCTION STAKING SUPPLEMENTAL CONTROL (PROJECT) (01. 1706-04-61) LS	650.9910.02 CONSTRUCTION STAKING SUPPLEMENTAL CONTROL (PROJECT) (02. 1706-04-62) LS	REMARKS
0010	530+00	-	1009+00	-61	47900	-	1.00	-	
	646+29			-61	-	2.00	-	-	
0010	1170+00	-	1730+00	-62	56000	-	-	1.00	
				TOTAL 0010	103900	2.00	1.00	1.00	

SAWING

CATEGORY	STATION	TO	STATION	LOCATION	690.0150 SAWING ASPHALT LF	REMARKS
0010	530+00	-	1009+00	-61	1,292	
0010	1170+00	-	1730+00	-62	1,208	
				TOTAL 0010	2,500	

SDD 14b18-a Steel Plate Beam Guard, Class "A" (at Bridges, Obstacles and Sideroads/Driveways)

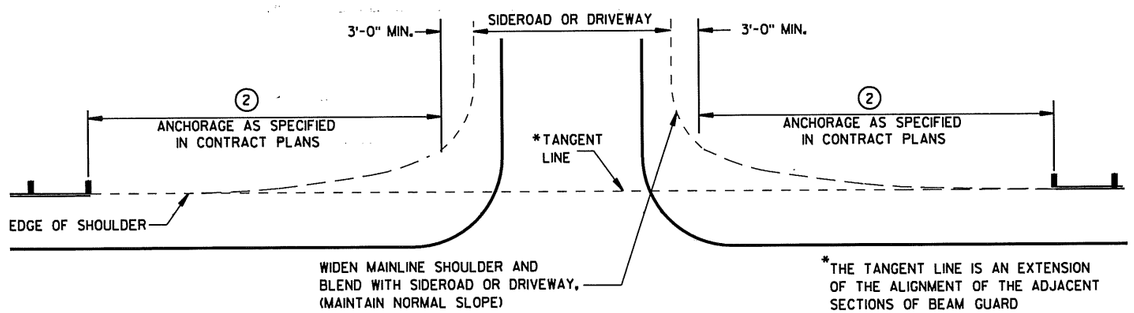

BEAM GUARD AT SIDEROADS OR DRIVEWAYS

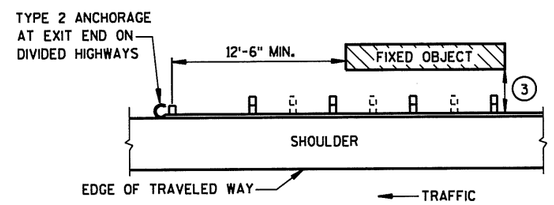

BEAM GUARD AT OBSTACLES
EXIT END - ONE WAY TRAFFIC

GENERAL NOTES

DETAILS OF CONSTRUCTION, MATERIALS AND WORKMANSHIP SHALL CONFORM TO THE PERTINENT STANDARD SPECIFICATIONS AND THE APPLICABLE SPECIAL PROVISIONS.

W6 X 9 OR W6 X 8.5 STEEL POSTS WITH NOTCHED PLASTIC BLOCKOUTS ARE ACCEPTABLE ALTERNATIVES FOR 6" X 8" WOOD POSTS WITH WOOD OR PLASTIC BLOCKOUTS. USE APPROVED NOTCHED PLASTIC BLOCKOUTS WITH STEEL POSTS.

THE LOCATIONS AND LENGTHS OF BEAM GUARD ARE SHOWN ELSEWHERE IN THE PLAN.

1. STEEL THRIE BEAM STRUCTURAL APPROACH (STBSA) - SEE CURRENT SDD 14B20.
2. USE AN APPROVED END TREATMENT FOR THE TRAFFIC APPROACH SIDE OF BRIDGE/OBSTACLES. USE TYPE 2 ANCHORAGE ONLY AT THE DOWNSTREAM ENDS OF BEAM GUARD LOCATED ALONG ROADWAYS WITH ONE WAY TRAFFIC.
3.

MINIMUM LATERAL DISTANCE FROM FACE OF BEAM GUARD TO FIXED OBJECT	POST SPACING
3'-6"	3' - 1½"
4'-6"	6' - 3"

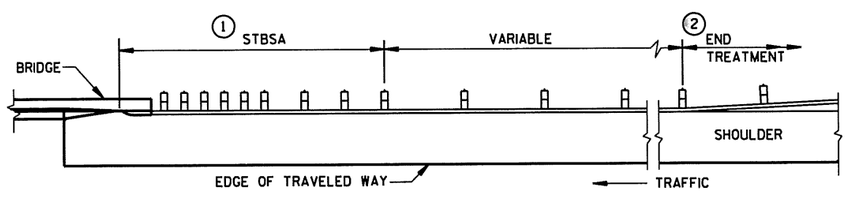

BEAM GUARD AT FULL WIDTH BRIDGES

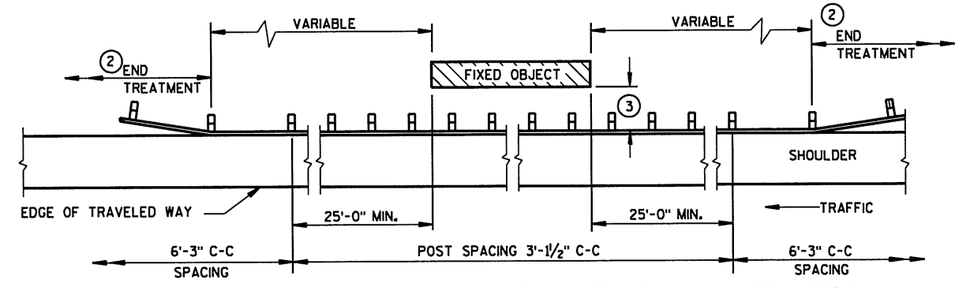

BEAM GUARD AT OBSTACLES - TWO WAY TRAFFIC
(RAIL TO OBSTACLE CLEARANCE 3'-6" TO 4'-6")

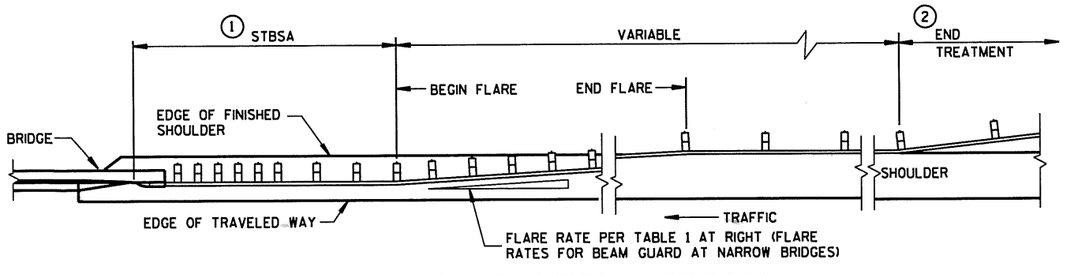

BEAM GUARD AT NARROW BRIDGES
(FLARED TO SHOULDER EDGE, THEN PARALLEL TO ROADWAY)

TABLE 1
FLARE RATES FOR BEAM GUARD AT NARROW BRIDGES

POSTED SPEED (MPH)	FLARE RATE
25	13:1
30	15:1
35	16:1
40	18:1
45	21:1
50	24:1
55	26:1
65	30:1

STEEL PLATE BEAM GUARD
CLASS "A"
AT BRIDGES, OBSTACLES
AND SIDEROADS/DRIVEWAYS

STATE OF WISCONSIN
DEPARTMENT OF TRANSPORTATION

APPROVED
8-21-07 — DATE
/S/ Jerry H. Zogg — ROADWAY STANDARDS DEVELOPMENT ENGINEER
FHWA

6
S.D.D. 14 B 18-6a

SDD 14b24-a Steel Plate Beam Guard Energy Absorbing Terminal

BILL OF MATERIALS

NOTE NO.	DESCRIPTION
1	WOOD BREAKAWAY TERMINAL POST: 5½" X 7½" X 3'-9"
2	STEEL TUBE TS 8" X 6" X 0.188", 6'-0"
4	WOOD BREAKAWAY CRT POST: 6" X 8" X 6'-0"
5	WOOD OFFSET BLOCKS: 6" X 8" X 1'-2"
6	PIPE SLEEVE: 2" X 5 ½" STANDARD PIPE
7	BEARING PLATE
8	BCT CABLE ASSEMBLY
9	CABLE ANCHOR BOX
10	STRUT & YOKE
11	STEEL PLATE BEAM, END PANEL 12 GA.
12	STEEL PLATE BEAM: 12 GA. 13'-6½"
13	IMPACT HEAD
14	0.040" ALUMINUM SHEET WITH REFLECTIVE SHEETING TYPE F PER SECTION 637 OF THE STANDARD SPECIFICATIONS

GENERAL NOTES

FOLLOW MANUFACTURE'S BOLTING RECOMMENDATIONS.

(A) THE SLOPE IN THE AREA BOUNDED BY THE GRADELINE, THE HINGE POINT LINE (HPL), AND THE CLEAR ZONE LIMITS (CZL) SHALL BE 4:1 OR FLATTER.

(B) AFTER FINAL ASSEMBLY, RECHECK CABLE TO BE SURE IT IS TAUT AND HAS NOT RELAXED.

(D) THE TOP OF THE STEEL TUBE ON POSTS 1 AND 2 SHALL NOT BE MORE THAN 3" ABOVE THE FINISH GROUND ELEVATION.

(E) THE CENTER OF THE UPPER 3½" DIAMETER HOLE ON POST 3 THROUGH 8 SHALL BE ¾" ABOVE THE FINISHED GROUND LINE.

(F) ATTACH ALUMINUM SHEET TO E.A.T. HEAD USING 4 STAINLESS STEEL SELF-TAPPING SCREWS. ONE SCREW PER CORNER.

STEEL POSTS SHALL NOT BE ALLOWED FOR USE WITH ENERGY ABSORBING TERMINALS.

DO NOT INSTALL REFLECTORS ON THE FIRST 50 FEET OF THE APPROACH END OF THE ENERGY ABSORBING TERMINAL.

*DO NOT ATTACH BLOCKOUTS TO POSTS 1 AND 2.

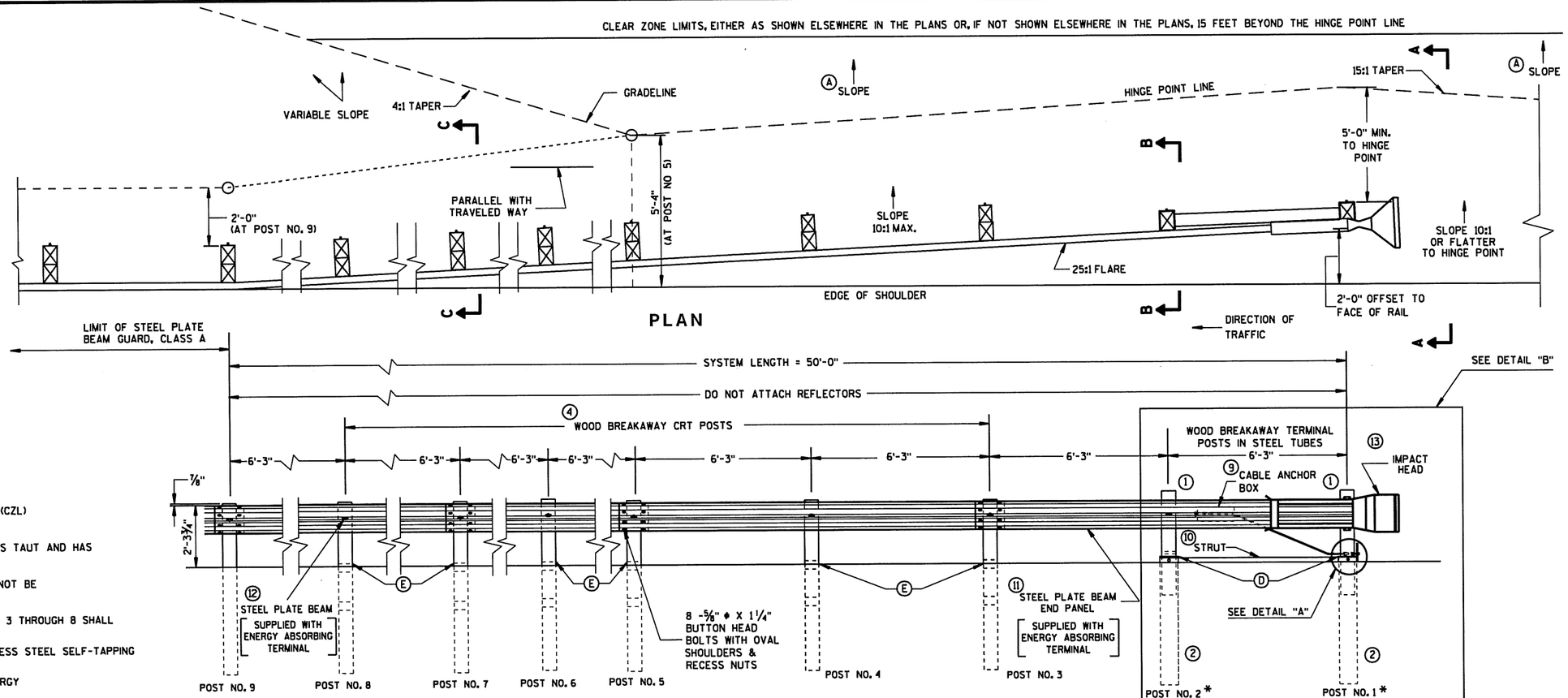

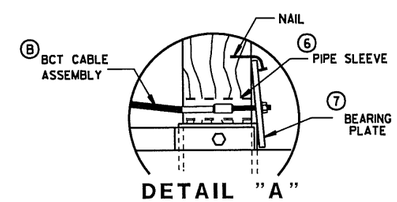

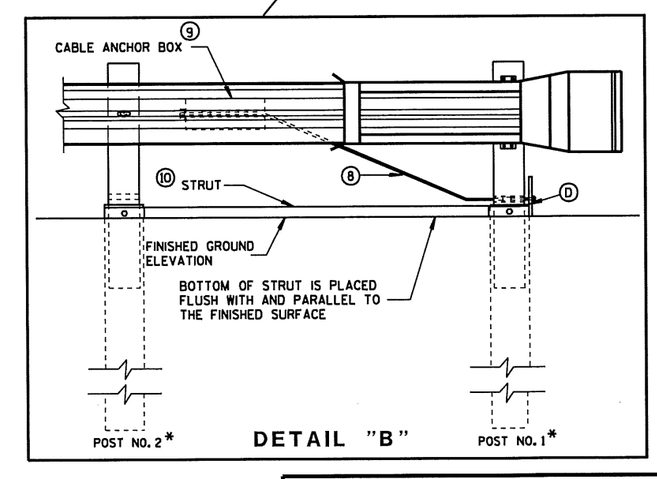

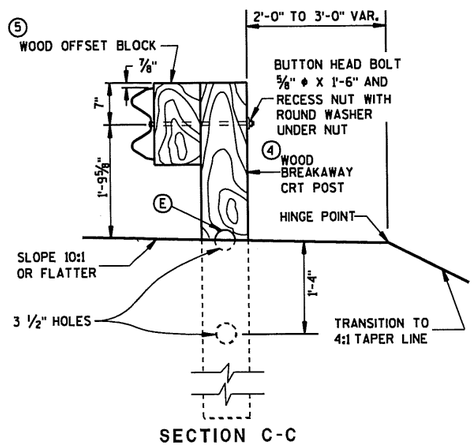

SECTION C-C
TYPICAL AT POST NOS. 6, 8

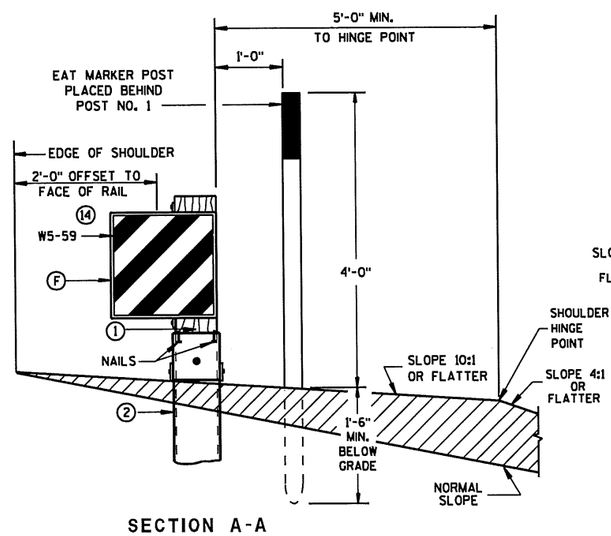

SECTION A-A
TYPICAL AT POST NO. 1*

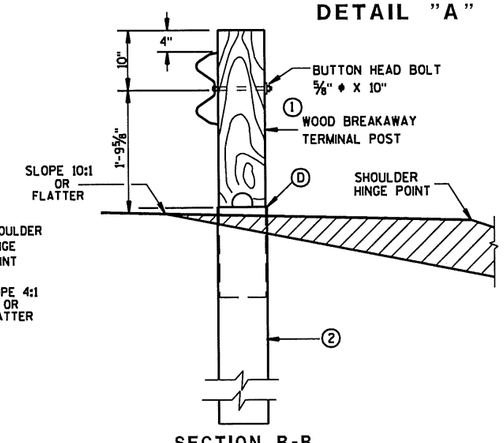

SECTION B-B
TYPICAL AT POST NO. 2*

STEEL PLATE BEAM GUARD
ENERGY ABSORBING TERMINAL

STATE OF WISCONSIN
DEPARTMENT OF TRANSPORTATION

6

6

S.D.D. 14 B 24-9a

S.D.D. 14 B 24-9a

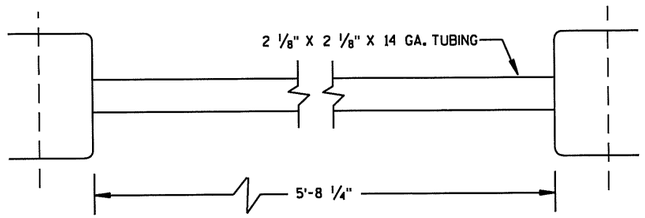

⑩ STRUT DETAIL

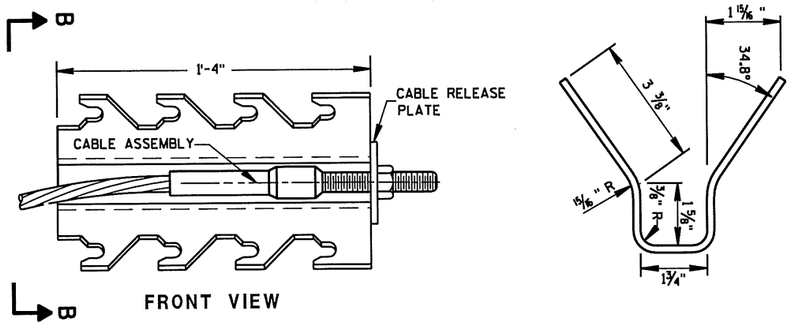

⑨ CABLE ANCHOR BOX

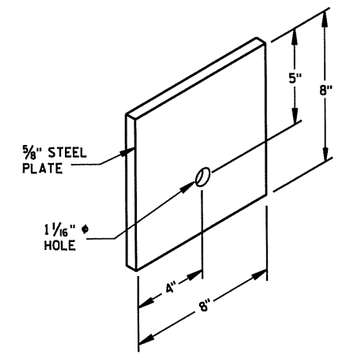

⑦ STEEL BEARING PLATE

6

6

S.D.D. 14 B 24-9b

S.D.D. 14 B 24-9b

STEEL PLATE BEAM GUARD
ENERGY ABSORBING TERMINAL

STATE OF WISCONSIN
DEPARTMENT OF TRANSPORTATION

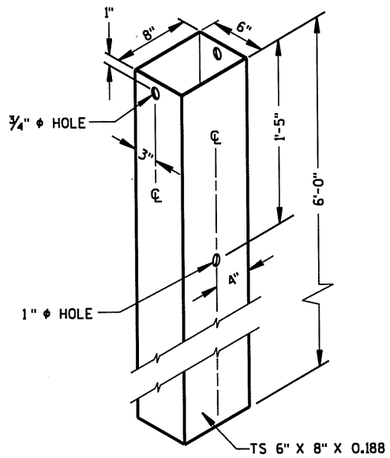

② 72" STEEL TUBE
(POSTS NO. 1-4

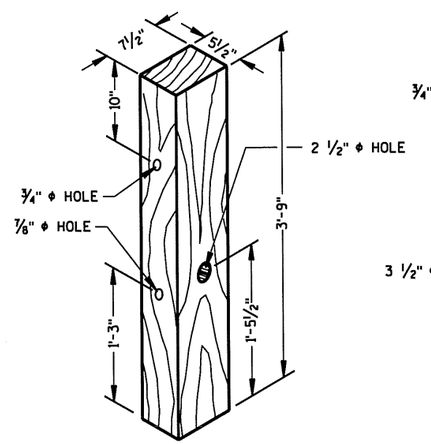

① TERMINAL POST

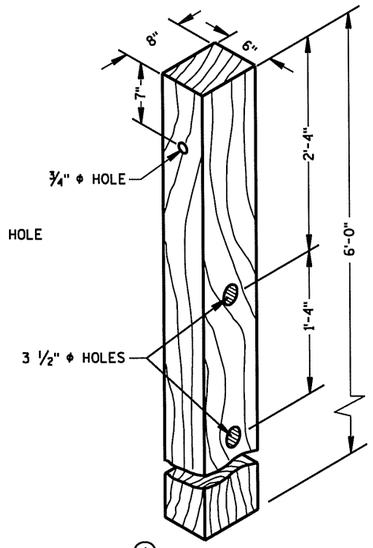

④ CRT POST
(POSTS NO'S 5-8

WOOD BREAKAWAY POSTS

GENERAL NOTES

WHEN ROCK IS ENCOUNTERED DURING EXCAVATION, A 12 INCH DIA. POST HOLE EXTENDING 20 INCHES DEEP INTO THE ROCK MAY BE USED IF APPROVED BY THE ENGINEER. GRANULAR MATERIAL SHALL BE PLACED IN THE BOTTOM OF THE HOLE APPROXIMATELY 2 1/2" INCHES DEEP TO PROVIDE DRAINAGE. THE SOIL TUBES SHALL BE FIELD CUT TO LENGTH, PLACED IN THE HOLE AND BACKFILLED WITH ADEQUATELY COMPACTED MATERIAL EXCAVATED FROM THE HOLE.

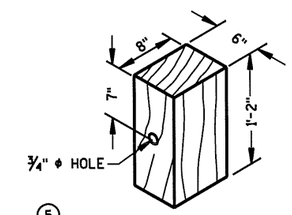

⑤ WOOD OFFSET BLOCK
REQ'D. AT ALL POSTS EXCEPT POST NO'S 1 & 2

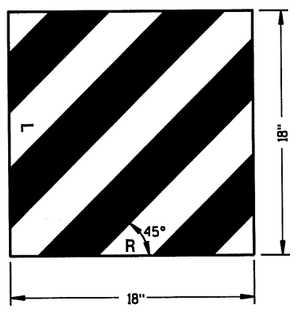

⑭ REFLECTIVE SHEETING DETAILS

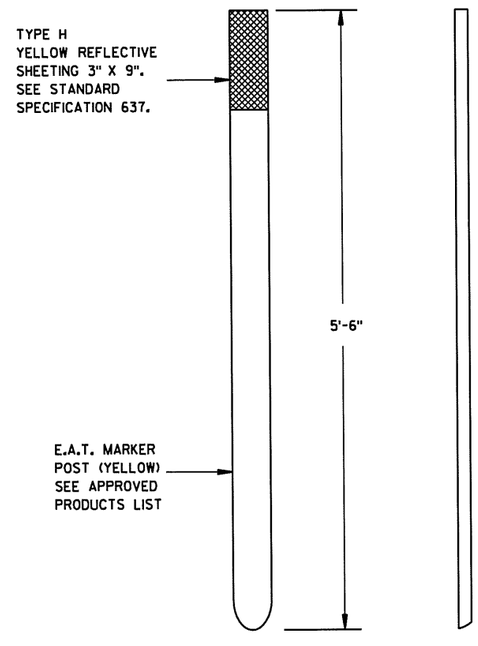

FRONT VIEW SIDE VIEW

E.A.T. MARKER POST

STEEL PLATE BEAM GUARD
ENERGY ABSORBING TERMINAL

STATE OF WISCONSIN
DEPARTMENT OF TRANSPORTATION

APPROVED
June 2017
DATE
FHWA

/S/ Rodney Taylor
ROADWAY STANDARDS DEVELOPMENT
UNIT SUPERVISOR

6
S.D.D. 14 B 24-9c

SDD 15C04 Traffic Control, Advance Warning Signs 45 MPH or Greater Undivided Road Open to Traffic

GENERAL NOTES

THE EXACT NUMBER, LOCATION, AND SPACING OF ALL SIGNS AND DEVICES SHALL BE ADJUSTED TO FIT FIELD CONDITIONS.

THE SPACING BETWEEN TRAFFIC CONTROL SIGNS SHOULD BE ADJUSTED TO NOT CONFLICT WITH AND SHOULD PROVIDE A MINIMUM OF 200 FEET (500 FEET DESIRABLE) CLEARANCE TO EXISTING SIGNS THAT WILL REMAIN IN PLACE.

ALL SIGNS ARE 48" X 48" UNLESS OTHERWISE NOTED.

SIGNS THAT WILL BE IN PLACE LESS THAN SEVEN CONTINUOUS DAYS AND NIGHTS MAY BE MOUNTED ON PORTABLE SUPPORTS.

IF A "STOP" SIGN MUST BE REMOVED FOR A WORK OPERATION, A TEMPORARY "STOP" SIGN SHALL BE PLACED PRIOR TO THE SIGN REMOVAL, OR A FLAGGER SHALL BE PROVIDED UNTIL THE SIGN IS REESTABLISHED.

* OMIT G20-1 SIGNS IF LENGTH OF WORK AREA IS 2 MILES OR LESS

** PLACE AN ADDITIONAL W20-1A "ROAD WORK AHEAD" SIGN IF WORK AREA WITHIN THE PROJECT IS SEPARATED BY MORE THAN 2 MILES FROM PREVIOUS WORK AREA.

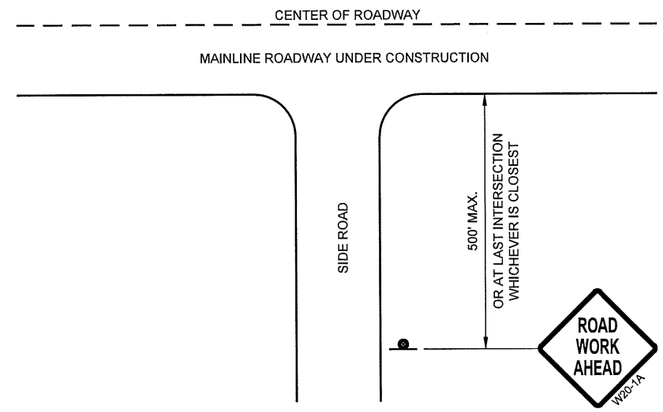

TYPICAL SIDE ROAD APPROACH WARNING SIGN DETAIL

LEGEND

- SIGN ON PERMANENT SUPPORT
- DIRECTION OF TRAFFIC
- WORK AREA

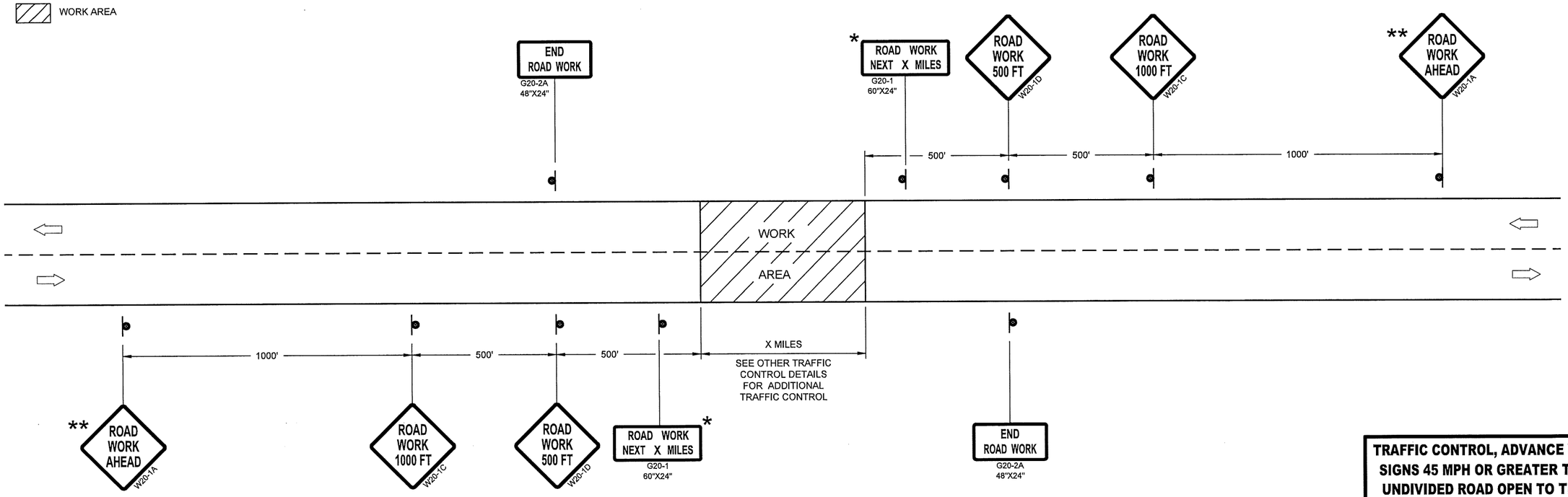

TRAFFIC CONTROL, ADVANCE WARNING SIGNS 45MPH OR GREATER

TRAFFIC CONTROL, ADVANCE WARNING SIGNS 45 MPH OR GREATER TWO-WAY UNDIVIDED ROAD OPEN TO TRAFFICE
STATE OF WISCONSIN DEPARTMENT OF TRANSPORTATION
APPROVED July 2018 — DATE /S/ Andrew Heidtke — WORK ZONE ENGINEER FHWA

6
SDD 15C04 - 05

SDD 15C12 Traffic Control for Lane Closure With Flagging Operation

LEGEND

- SIGN ON PORTABLE OR PERMANENT SUPPORT
- TEMPORARY PORTABLE RUMBLE STRIP ARRAY
- DIRECTION OF TRAFFIC
- WORK AREA
- FLAGGER, EQUIPPED WITH STOP/SLOW PADDLE FASTENED ON SUPPORT STAFF

GENERAL NOTES

DETAILS OF TRAFFIC CONTROL DEVICES AND INSTALLATION NOT SHOWN ON THIS DRAWING SHALL CONFORM TO THE PERTINENT REQUIREMENTS OF THE STANDARD SPECIFICATIONS, THE SPECIAL PROVISIONS, AND THE MANUAL ON UNIFORM TRAFFIC CONTROL DEVICES.

ALL SIGNS ARE 48" X 48" UNLESS OTHERWISE NOTED.

"WO" SIGNS ARE THE SAME AS "W" SIGNS EXCEPT THE BACKGROUND IS ORANGE.

THE EXACT NUMBER, LOCATION AND SPACING OF ALL SIGNS, DEVICES, AND LOCATION OF ALL FLAGGERS SHALL BE ADJUSTED TO FIT FIELD CONDITIONS AS APPROVED BY THE ENGINEER.

THE FIRST ADVANCE WARNING SIGN SHOULD TYPICALLY BE LOCATED IN ADVANCE OF THE ANTICIPATED TRAFFIC BACKUP OR QUEUE.

WHEN A SIDE ROAD OR RAMP INTERSECTS THE FACILITY ON WHICH THE WORK IS BEING PERFORMED, ADDITIONAL TRAFFIC CONTROLS SHALL BE PROVIDED AS SPECIFIED IN THE PLANS AND/OR THE SPECIAL PROVISIONS OR AS APPROVED BY THE ENGINEER.

FLAGGING

FLAGGERS SHALL BE IN SIGHT OF EACH OTHER OR IN DIRECT COMMUNICATION AT ALL TIMES. THEY SHALL BE EQUIPPED WITH STOP/SLOW PADDLES FASTENED ON SUPPORT STAFFS. WHEN THE FLAGGING OPERATION IS NOT IN EFFECT REMOVE TEMPORARY PORTABLE RUMBLE STRIPS PRIOR TO COVERING OR REMOVING ALL ADVANCE SIGNING.

(1) FOR MOVING WORK OPERATIONS, POST ADDITIONAL W20-7A FLAGGER SIGNS AT APPROXIMATELY 3,500' INTERVALS IN THE MOVING WORK OPERATION OR AS APPROVED BY THE ENGINEER.

(2) SIGN NOT REQUIRED IF FLAGGING OPERATION OCCURS WITHIN A SIGNED ROAD WORK ZONE AREA.

WHEN THE DISTANCE BETWEEN FLAGGERS EXCEEDS 2 MILES, A PILOT CAR IS REQUIRED. WHEN CURVES REDUCE SIGHT DISTANCE BELOW 400', A PILOT CAR IS REQUIRED.

TEMPORARY PORTABLE RUMBLE STRIPS

UTILIZE TEMPORARY PORTABLE RUMBLE STRIPS ON ALL FLAGGING OPERATIONS.

(3) EACH TEMPORARY PORTABLE RUMBLE STRIP ARRAY CONSISTS OF THREE RUMBLE STRIPS SPACED ACCORDING TO MANUFACTURER'S RECOMMENDATION, PLACED TRANSVERSE ACROSS THE LANE AT LOCATIONS SHOWN.

ONLY USE TEMPORARY PORTABLE RUMBLE STRIPS FOR THE APPROVED PRODUCTS LIST.

INSTALL TEMPORARY RUMBLE STRIPS PER MANUFACTURER'S RECOMMENDATIONS.

PLACE ADVANCE SIGNING PRIOR TO INSTALLING TEMPORARY RUMBLE STRIPS.

DO NOT INSTALL TEMPORARY PORTABLE RUMBLE STRIPS ON GRAVEL, MILLED SURFACES, OR ASPHALT THAT HAS BEEN PAVED LESS THAN 12 HOURS.

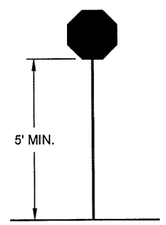

STOP/SLOW PADDLE ON SUPPORT STAFF

SIGN AND TEMPORARY RUMBLE STRIP ARRAY SPACING TABLE

SPEED LIMIT	SPACING "A"
25-30 MPH	200'
35-40 MPH	350'
45-55 MPH	500'

USE OF WO3-4 SIGN IS OPTIONAL. WHEN USED, THIS SIGN SHALL BE LOCATED BETWEEN THE W20-7A AND W20-4A SIGNS, USING SPACING "A".

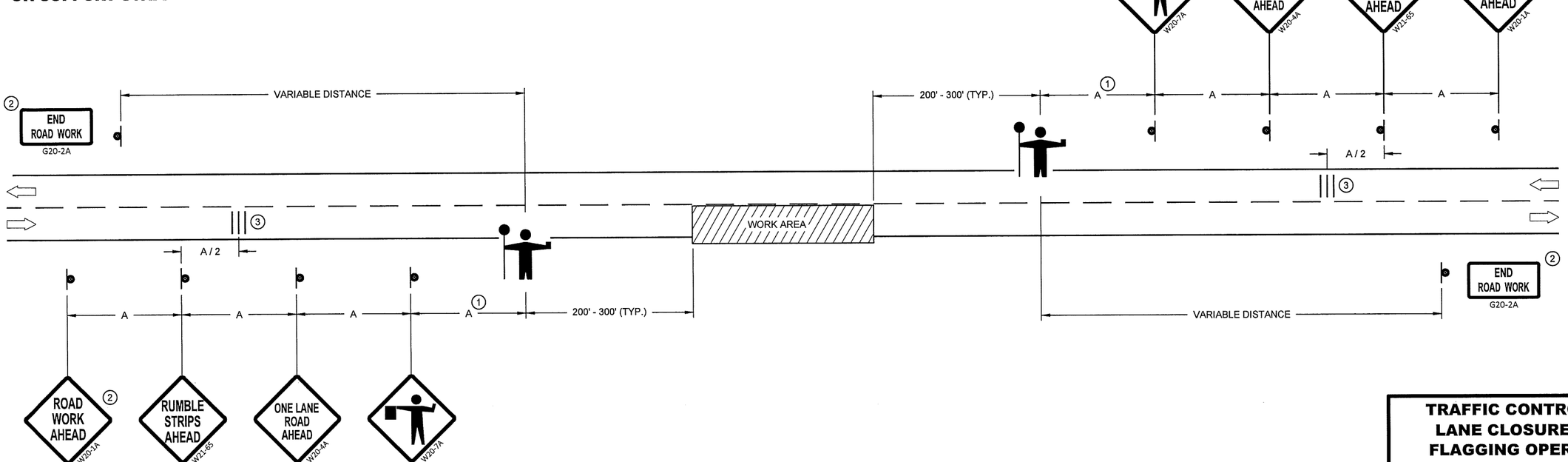

TRAFFIC CONTROL FOR LANE CLOSURE WITH FLAGGING OPERATION

TRAFFIC CONTROL FOR LANE CLOSURE WITH FLAGGING OPERATION

STATE OF WISCONSIN
DEPARTMENT OF TRANSPORTATION

APPROVED
May 2019 — DATE
/S/ Andrew Heidtke — WORK ZONE ENGINEER
FHWA

6
SDD 15C12 - 07

SDD 15D44 Traffic Control, Signing on Roadways With Milled Surfaces

GENERAL NOTES

DRAWING NOT TO SCALE. ALL SIGNS AND POSTS ON THIS SHEET SHALL BE PAID FOR WITH 'TRAFFIC CONTROL SIGNS' BID ITEM. ALL SIDE ROADS WHICH ARE UNDER CONSTRUCTION OF CURB AND GUTTER AND/OR GRADING SHALL BE ADEQUATELY SIGNED.

ALL SIGNS AND DEVICES SHALL BE IN CONFORMANCE WITH THE WISCONSIN MANUAL OF UNIFORM TRAFFIC CONTROL DEVICES (WMUTCD). SIGN LAYOUTS SHALL BE IN ACCORDANCE WITH THE WISDOT STANDARD SIGN PLATES.

"WO" SIGNS ARE THE SAME AS "W" SIGNS EXCEPT THAT THE BACKGROUND IS ORANGE.

ALL SIGNS ARE 48" X 48" UNLESS OTHERWISE NOTED.

THE EXACT NUMBER, LOCATION AND SPACING OF ALL SIGNS AND DEVICES SHALL BE ADJUSTED TO FIT FIELD CONDITIONS AS DIRECTED BY THE ENGINEER.

ALL SIGNS INAPPROPRIATE TO THE STATUS OF THE CONTROL ZONE, INCLUDING PRE-EXISTING SIGNS IN THE VICINITY, SHALL BE COVERED OR REMOVED AS DIRECTED BY THE ENGINEER.

SEE 15C34 FOR ADDITIONAL TRAFFIC CONTROL SIGNING WHEN CENTERLINE PAVEMENT MAKINGS ARE MISSING. 'DO NOT PASS' SIGNS MUST BE INSTALLED ON THE SAME DAY AS MILLING OPERATIONS.

(1) PLACE SIGNS 350' IN ADVANCE OF MILLED SURFACES AND AT 1 MILE INTERVALS, OR AS DIRECTED BY THE ENGINEER.

(2) PLACE SIGN 200' MIN. FROM INTERSECTION AND 200' MIN. AFTER ADVANCE WARNING SIGN SHOWN IN SDD 15C04.

LEGEND

SIGN ON TEMPORARY SUPPORT

DIRECTION OF TRAFFIC

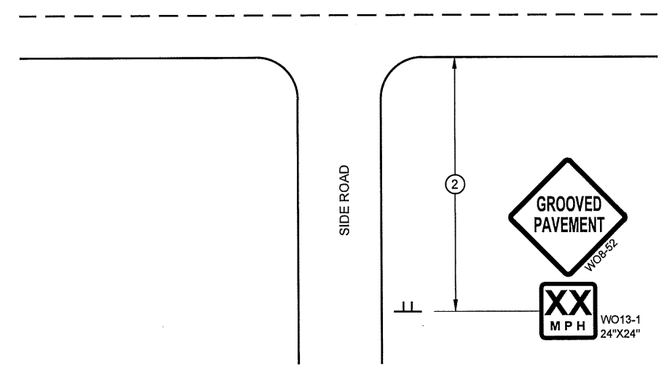

TYPICAL SIDE ROAD APPROACH SIGN DETAIL

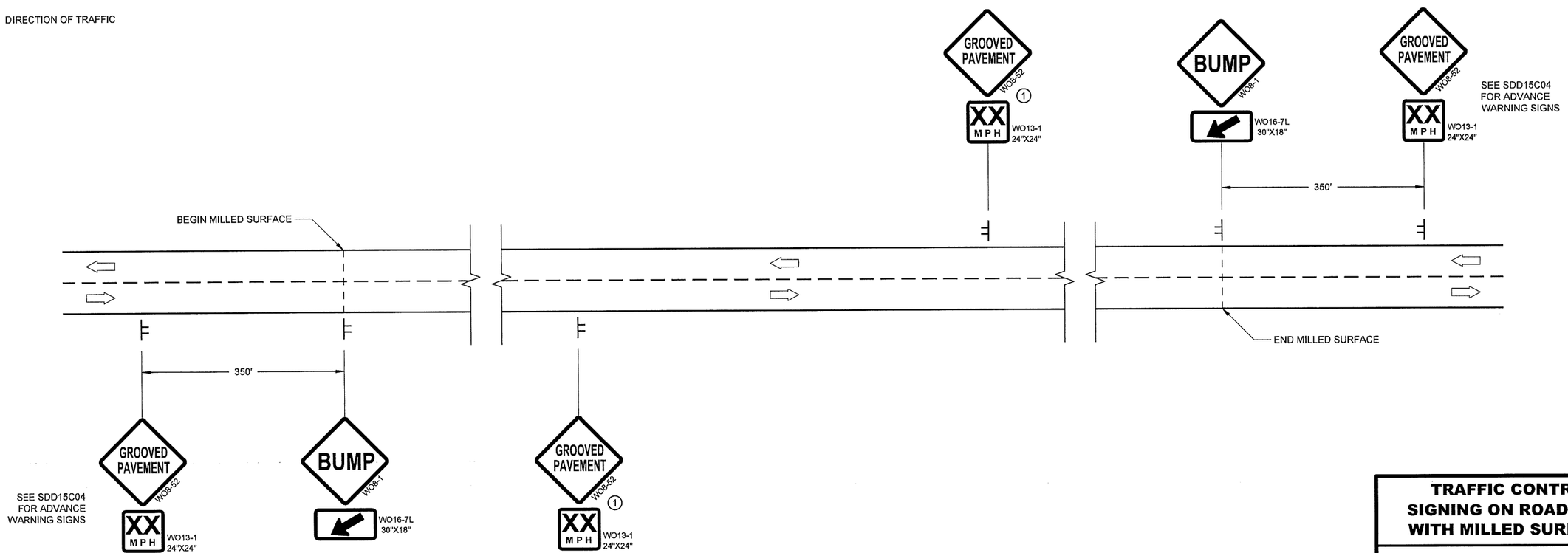

DETAIL FOR SIGNING ON MILLED SURFACES

TRAFFIC CONTROL, SIGNING ON ROADWAYS WITH MILLED SURFACES

STATE OF WISCONSIN
DEPARTMENT OF TRANSPORTATION

APPROVED
August 2019 — DATE
/S/ Andrew Heidtke — WORK ZONE ENGINEER
FHWA

6

SDD 15D44 - 01

6

SDD 15D44 - 01

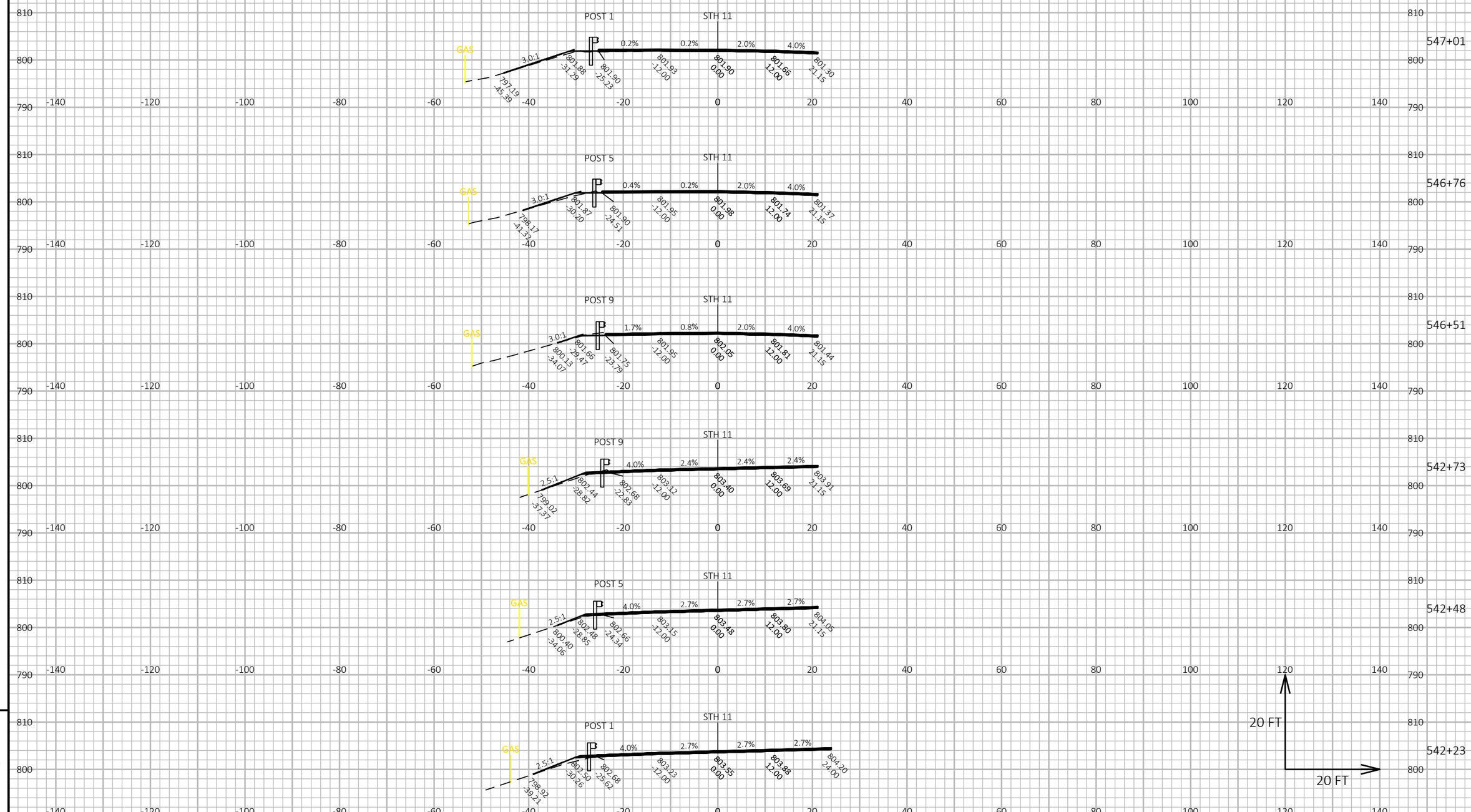

9

9

PROJECT NO: 1706-04-61	HWY: STH 11	COUNTY: GREEN	CROSS SECTIONS: BEAM GUARD	SHEET	E

FILE NAME : N:\PDS\C3D\17060431\SHEETSPLAN\090201_XS.DWG
LAYOUT NAME - STH 11 BEAM GUARD

PLOT DATE : 11/22/2019 8:02 AM PLOT BY : KOENIG, DELLA M PLOT NAME : PLOT SCALE : 1 IN:20 FT HORZ. / 1 IN:20 FT VERT.

WISDOT/CADDS SHEET 49

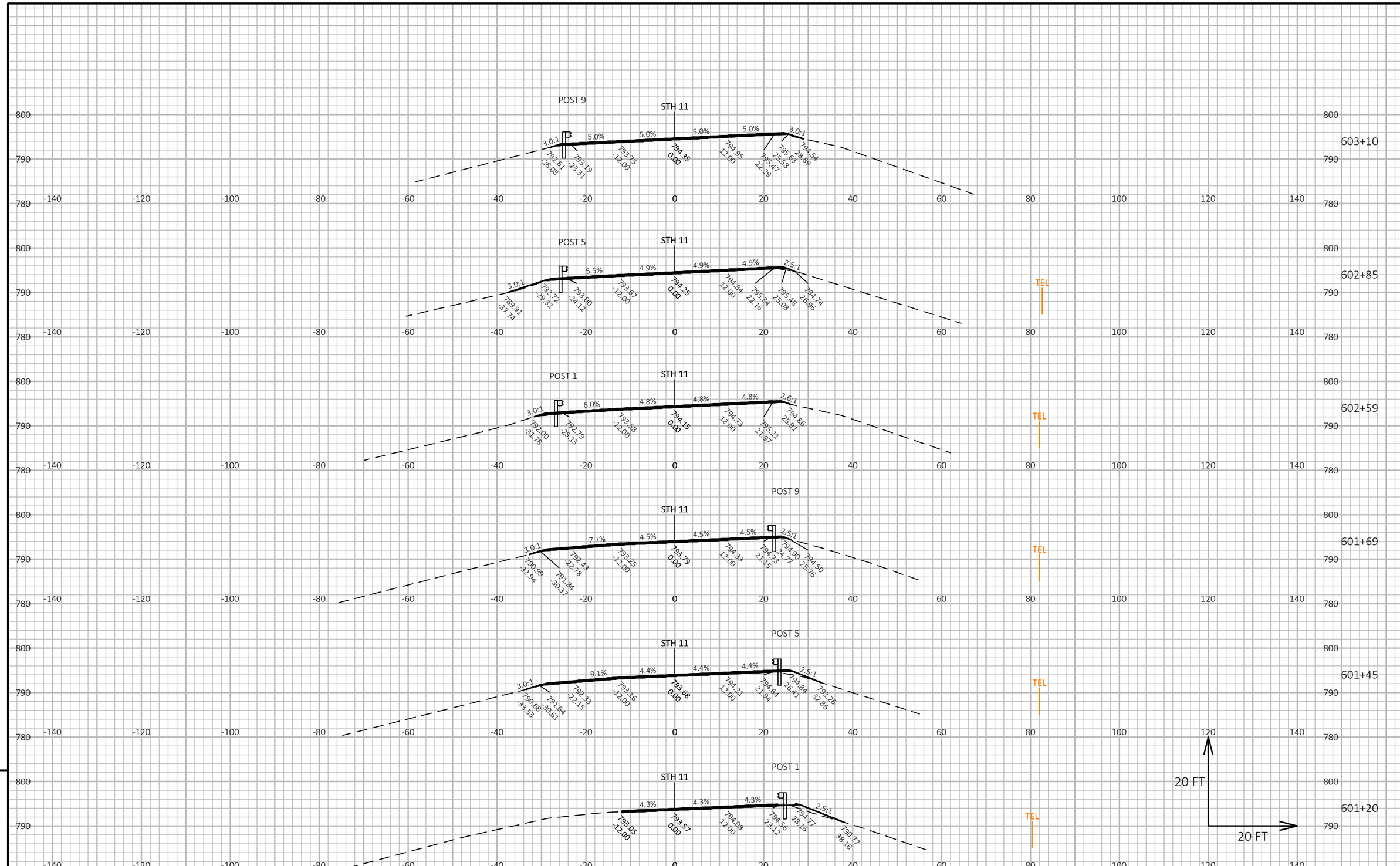

PROJECT NO: 1706-04-61	HWY: STH 11	COUNTY: GREEN	CROSS SECTIONS: BEAM GUARD	SHEET	E

FILE NAME : N:\PDS\C3D\17060431\SHEETSPLAN\090201_XS.DWG
LAYOUT NAME - 19
PLOT DATE : 11/22/2019 8:02 AM
PLOT BY : KOENIG, DELLA M
PLOT NAME :
PLOT SCALE : 1 IN:20 FT HORZ. / 1 IN:20 FT VERT.

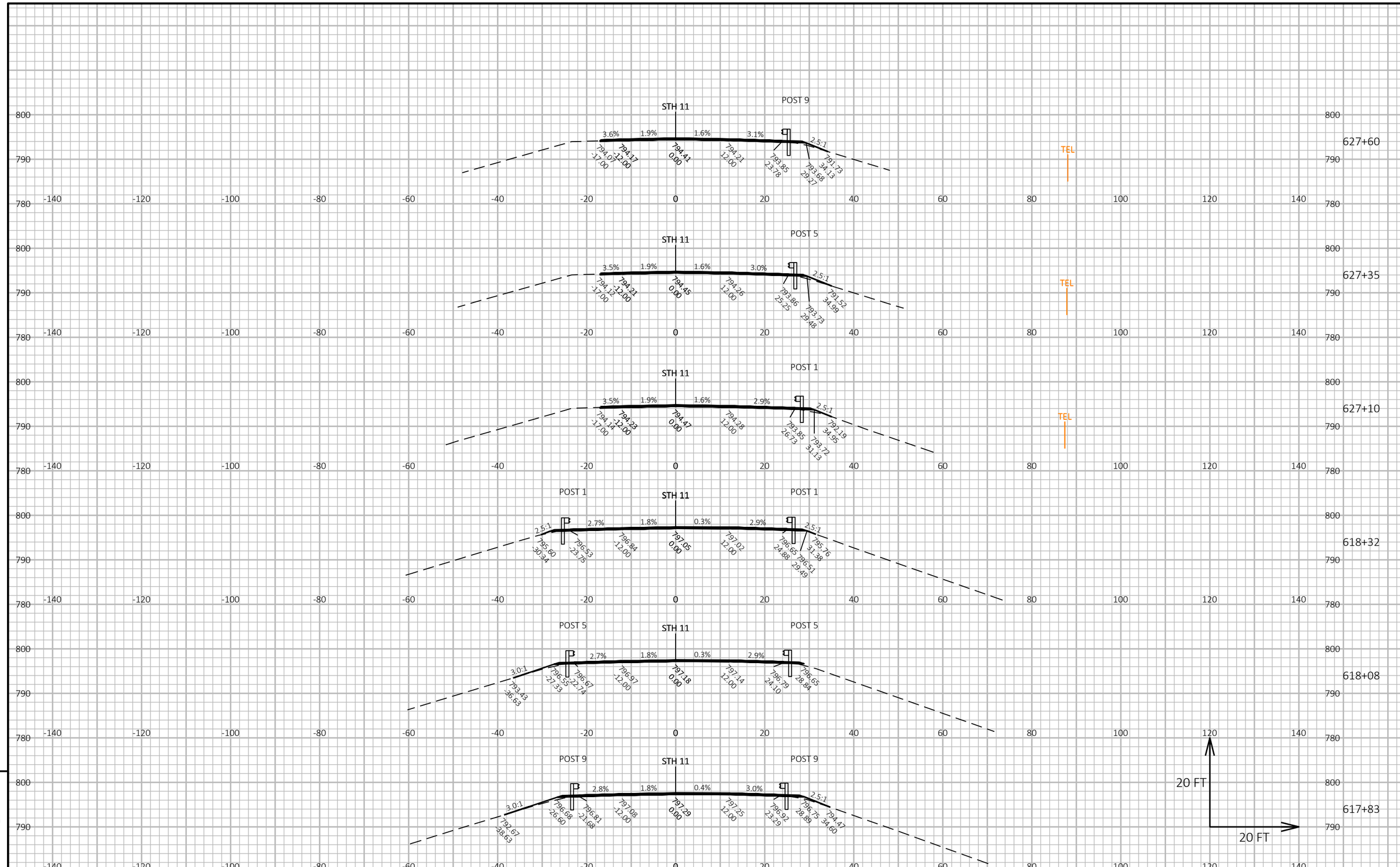

PROJECT NO: 1706-04-61	HWY: STH 11	COUNTY: GREEN	CROSS SECTIONS: BEAM GUARD	SHEET	E

FILE NAME : N:\PDS\C3D\17060431\SHEETSPLAN\090201_XS.DWG
LAYOUT NAME - 20
PLOT DATE : 11/22/2019 8:02 AM
PLOT BY : KOENIG, DELLA M
PLOT NAME :
PLOT SCALE : 1 IN:20 FT HORZ. / 1 IN:20 FT VERT.

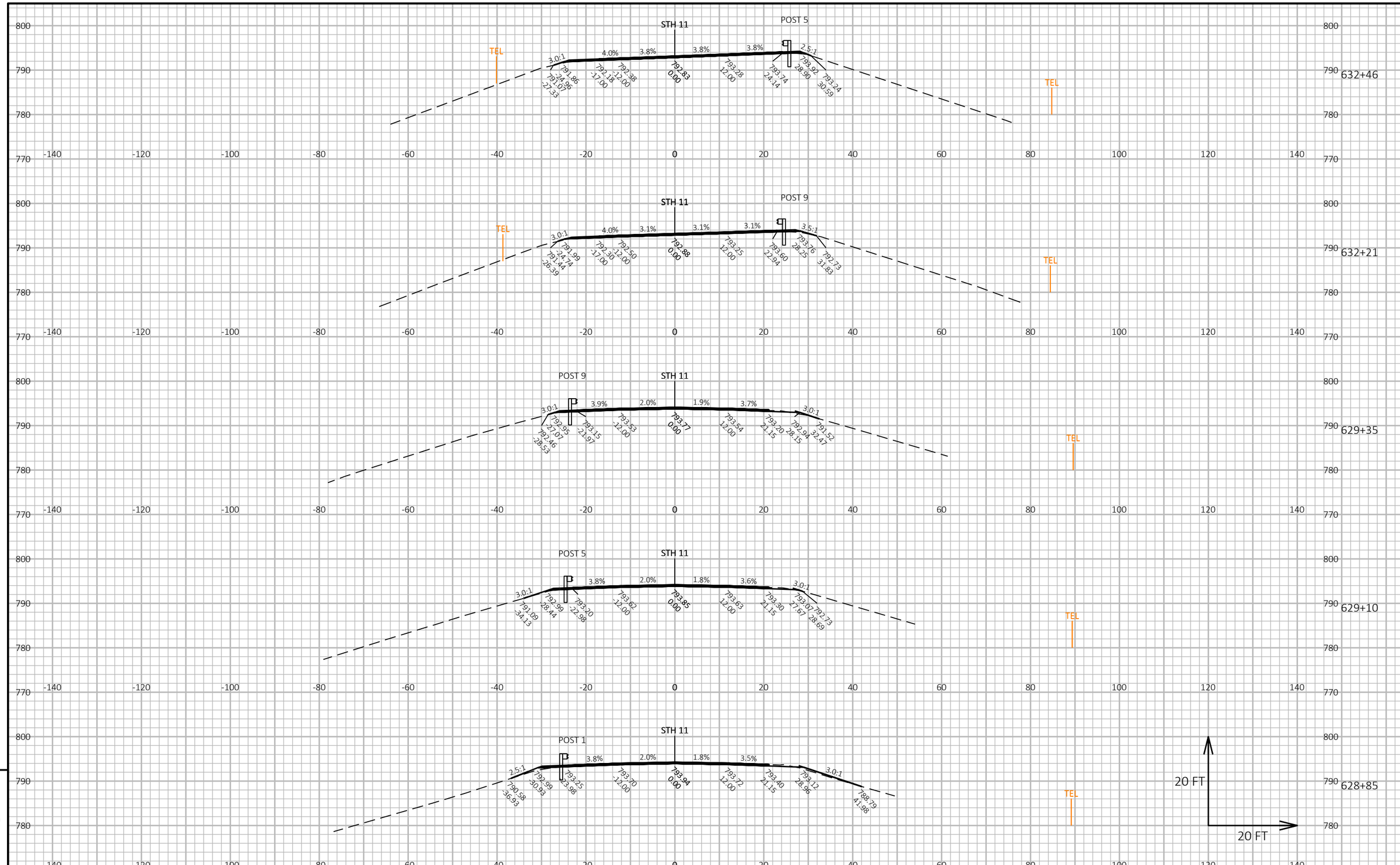

PROJECT NO: 1706-04-61	HWY: STH 11	COUNTY: GREEN	CROSS SECTIONS: BEAM GUARD	SHEET	E

FILE NAME : N:\PDS\C3D\17060431\SHEETSPLAN\090201_XS.DWG
LAYOUT NAME - 21
PLOT DATE : 11/22/2019 8:02 AM
PLOT BY : KOENIG, DELLA M
PLOT NAME :
PLOT SCALE : 1 IN:20 FT HORZ. / 1 IN:20 FT VERT.

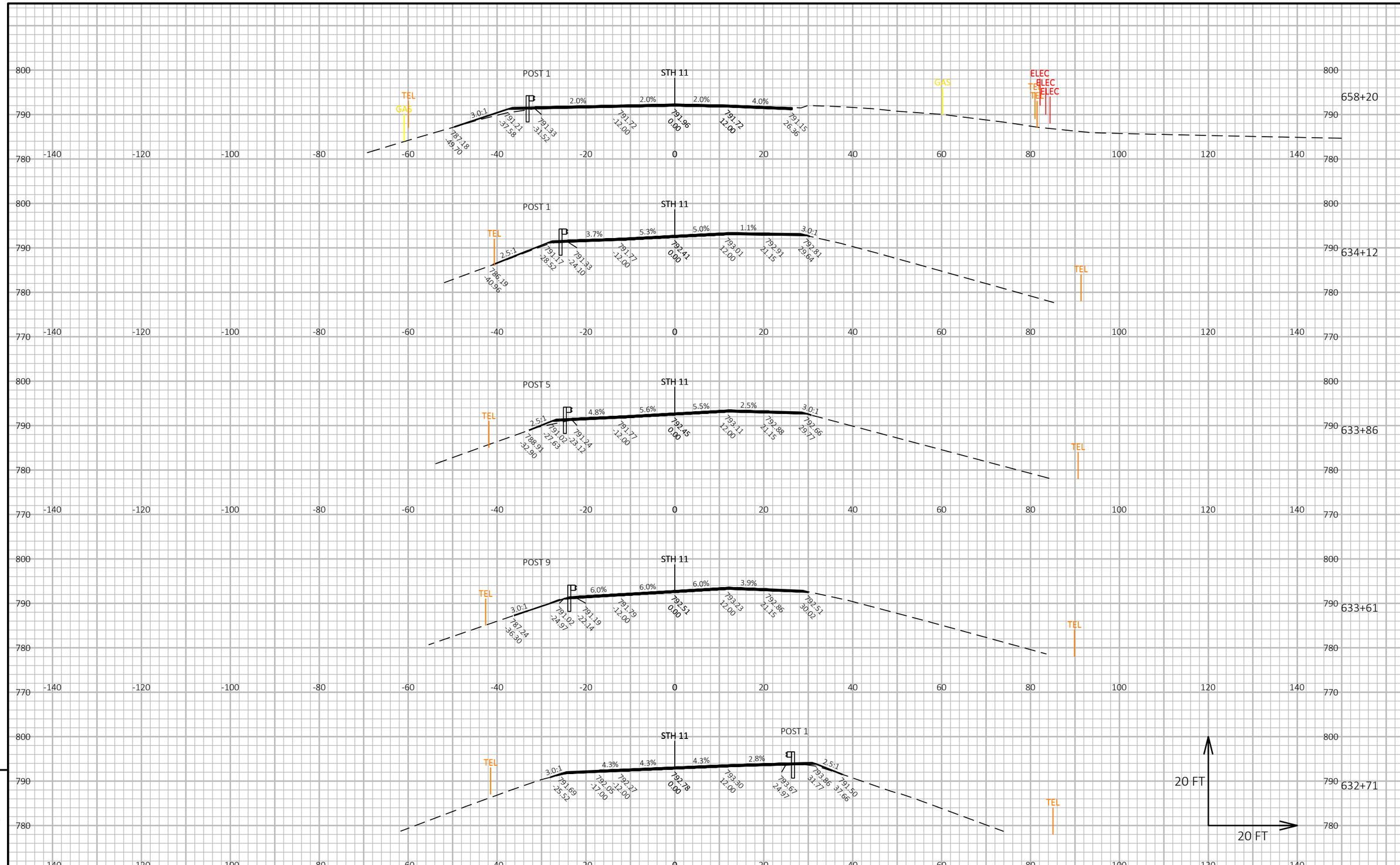

PROJECT NO: 1706-04-61	HWY: STH 11	COUNTY: GREEN	CROSS SECTIONS: BEAM GUARD	SHEET E

FILE NAME : N:\PDS\C3D\17060431\SHEETSPLAN\090201_XS.DWG
LAYOUT NAME - 22
PLOT DATE : 11/22/2019 8:02 AM
PLOT BY : KOENIG, DELLA M
PLOT NAME :
PLOT SCALE : 1 IN:20 FT HORZ. / 1 IN:20 FT VERT.

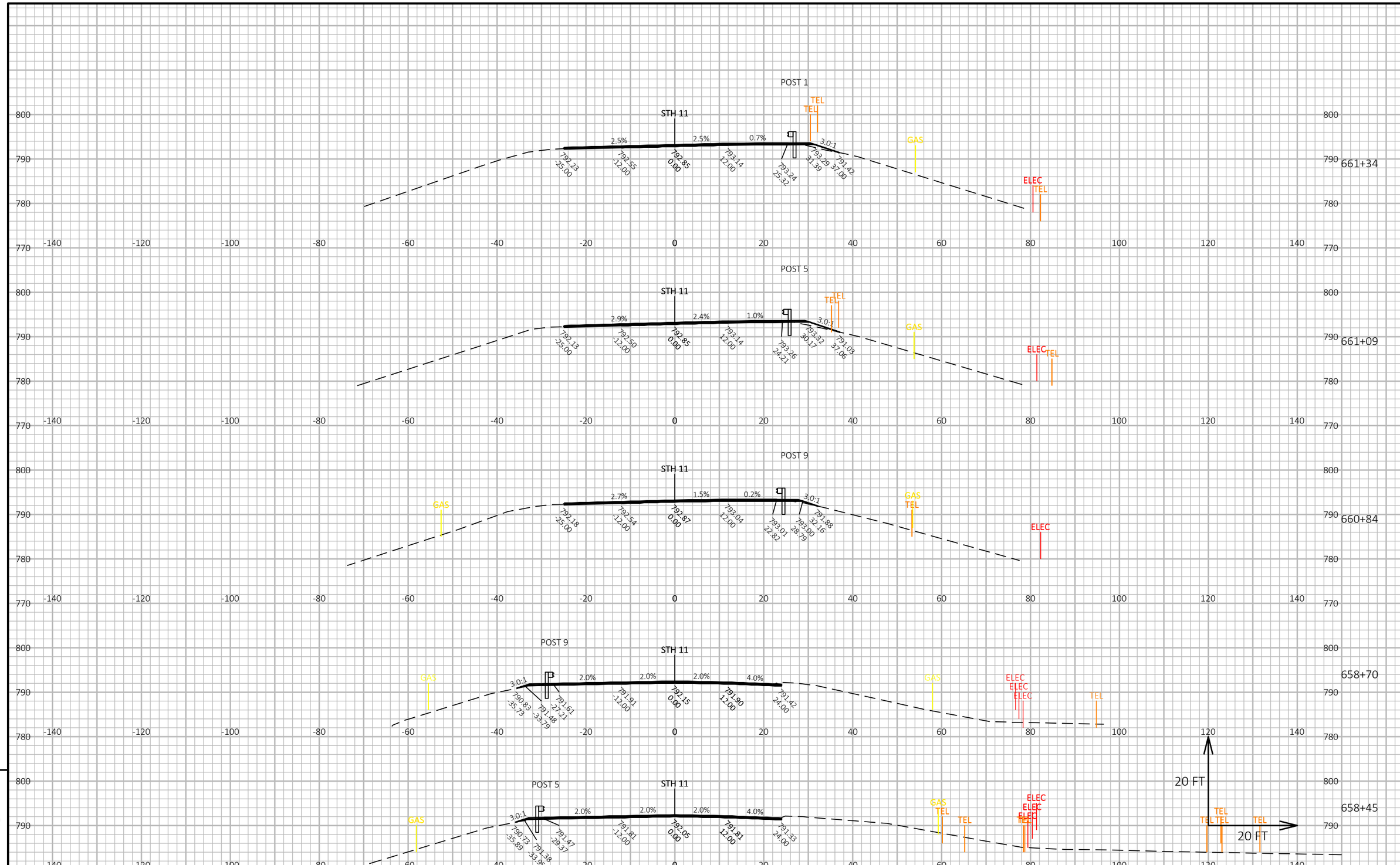

PROJECT NO: 1706-04-61	HWY: STH 11	COUNTY: GREEN	CROSS SECTIONS: BEAM GUARD	SHEET	E

FILE NAME : N:\PDS\C3D\17060431\SHEETSPLAN\090201_XS.DWG
LAYOUT NAME - 23
PLOT DATE : 11/22/2019 8:02 AM
PLOT BY : KOENIG, DELLA M
PLOT NAME :
PLOT SCALE : 1 IN:20 FT HORZ. / 1 IN:20 FT VERT.

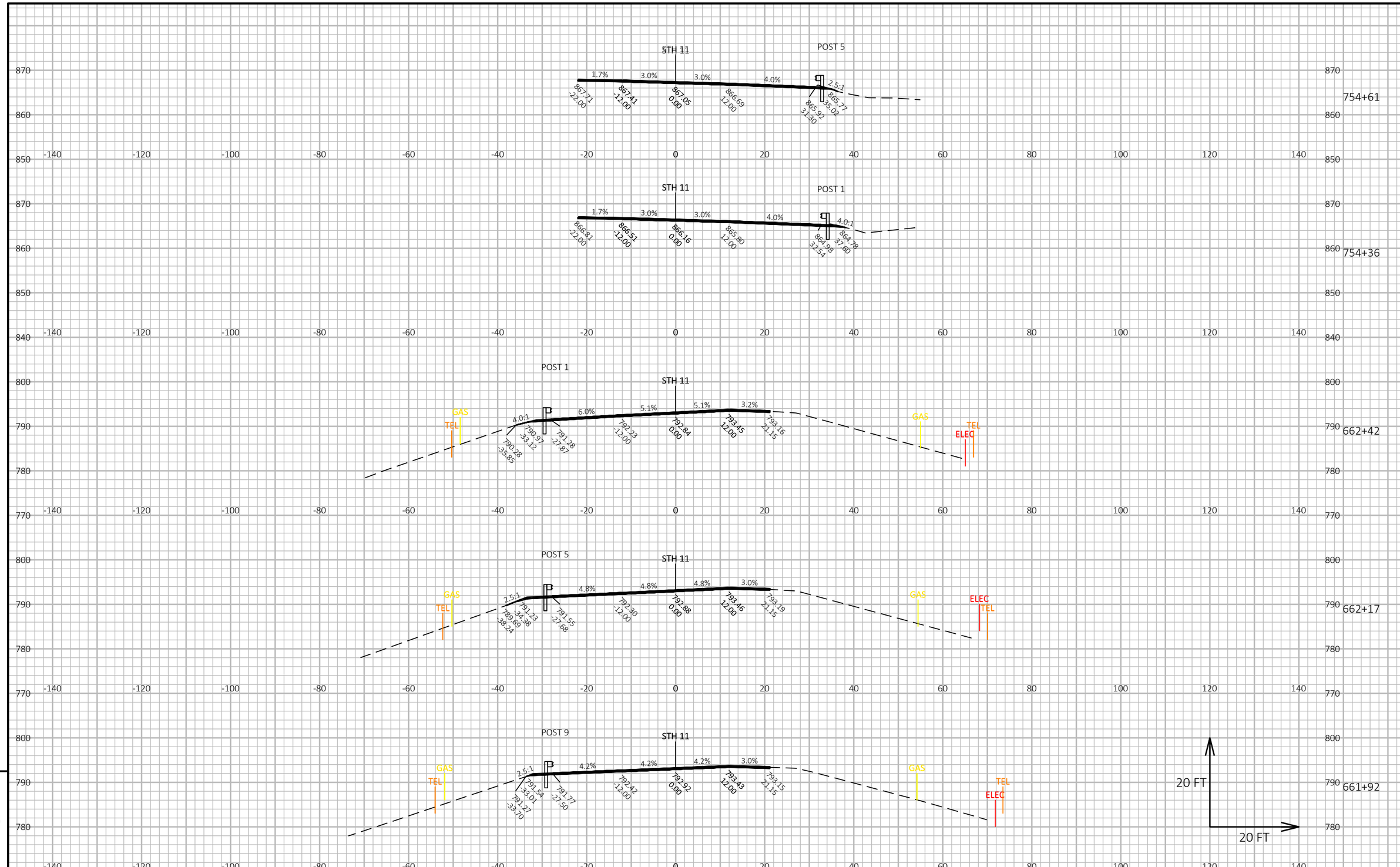

PROJECT NO: 1706-04-61	HWY: STH 11	COUNTY: GREEN	CROSS SECTIONS: BEAM GUARD	SHEET E

FILE NAME : N:\PDS\C3D\17060431\SHEETSPLAN\090201_XS.DWG
LAYOUT NAME - 24
PLOT DATE : 11/22/2019 8:02 AM
PLOT BY : KOENIG, DELLA M
PLOT NAME :
PLOT SCALE : 1 IN:20 FT HORZ. / 1 IN:20 FT VERT.
WISDOT/CADDS SHEET 49

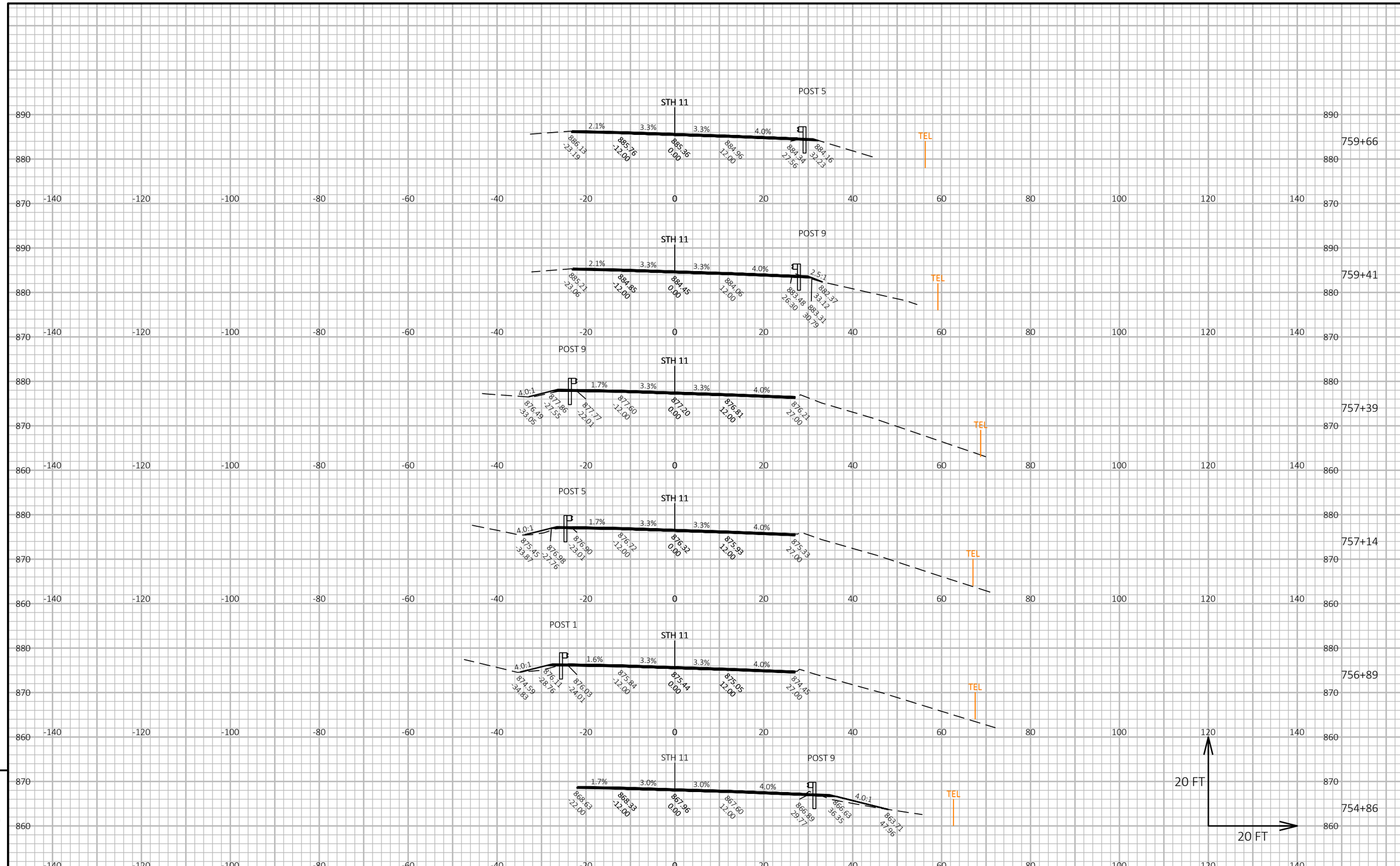

9

9

PROJECT NO: 1706-04-31	HWY: STH 11	COUNTY: GREEN	CROSS SECTIONS: BEAM GUARD	SHEET	E

FILE NAME : N:\PDS\C3D\17060431\SHEETSPLAN\090201_XS.DWG
LAYOUT NAME - 25

PLOT DATE : 11/22/2019 8:02 AM PLOT BY : KOENIG, DELLA M PLOT NAME : PLOT SCALE : 1 IN:20 FT HORZ. / 1 IN:20 FT VERT.

WISDOT/CADDS SHEET 49

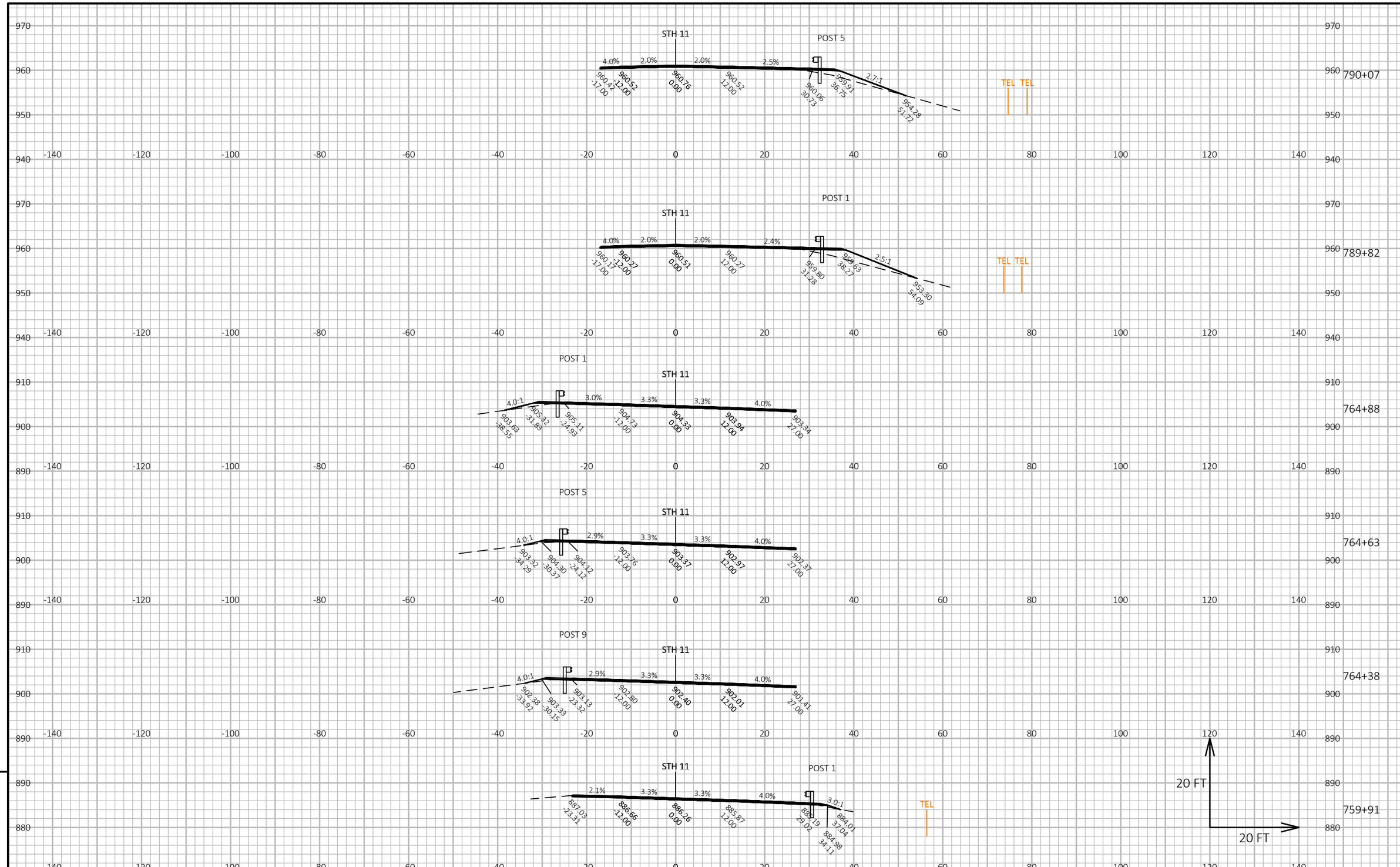

9

9

PROJECT NO: 1706-04-61	HWY: STH 11	COUNTY: GREEN	CROSS SECTIONS: BEAM GUARD	SHEET	E

FILE NAME : N:\PDS\C3D\17060431\SHEETSPLAN\090201_XS.DWG
LAYOUT NAME - 26
PLOT DATE : 11/22/2019 8:02 AM
PLOT BY : KOENIG, DELLA M
PLOT NAME :
PLOT SCALE : 1 IN:20 FT HORZ. / 1 IN:20 FT VERT.

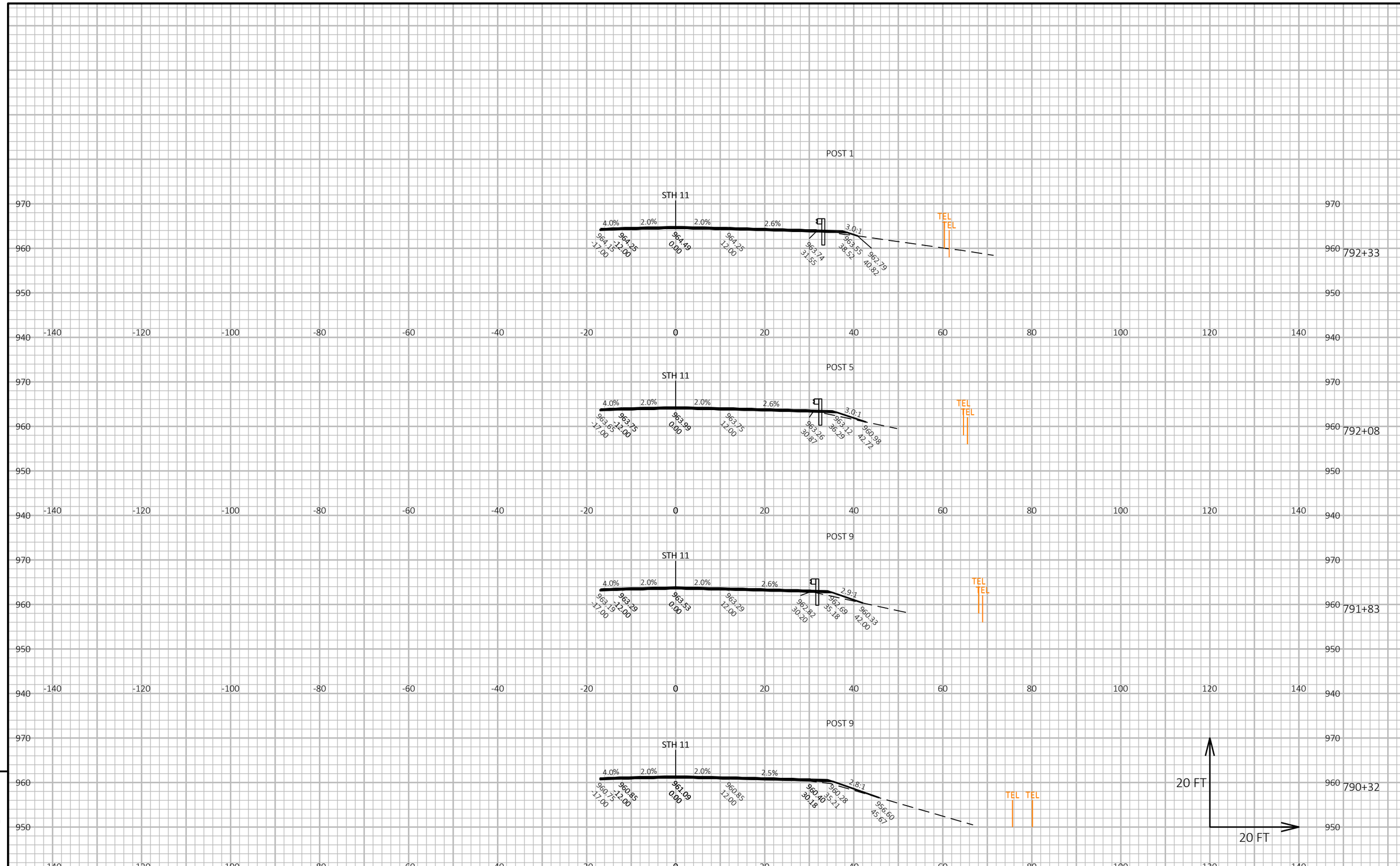

9

9

PROJECT NO: 1706-04-61	HWY: STH 11	COUNTY: GREEN	CROSS SECTIONS: BEAM GUARD	SHEET	E

FILE NAME : N:\PDS\C3D\17060431\SHEETSPLAN\090201_XS.DWG
LAYOUT NAME - 27
PLOT DATE : 11/22/2019 8:02 AM
PLOT BY : KOENIG, DELLA M
PLOT NAME :
PLOT SCALE : 1 IN:20 FT HORZ. / 1 IN:20 FT VERT.