PROJECT ID: 1400-01-73
WITH:

COUNTY: COLUMBIA

STATE PROJECT	FEDERAL PROJECT	
	PROJECT	CONTRACT
1400-01-73		

ORDER OF SHEETS

TOTAL SHEETS =

STATE OF WISCONSIN
DEPARTMENT OF TRANSPORTATION

PLAN OF PROPOSED IMPROVEMENT

PORTAGE - COLUMBUS

USH 51 TO LINCOLN AVE

STH 16
COLUMBIA COUNTY

STATE PROJECT NUMBER
1400-01-73

N

DESIGN DESIGNATION 1400-01-73

A.A.D.T.	2022	=	4,100
A.A.D.T.	2042	=	4,600
D.H.V.		=	535
D.D.		=	65/35
T.		=	12.1%
DESIGN SPEED		=	60 MPH
ESALS		=	1,200,000

BEGIN PROJECT 1400-01-73
STA 19+04.50
X = 551,126.01
Y = 377,964.36

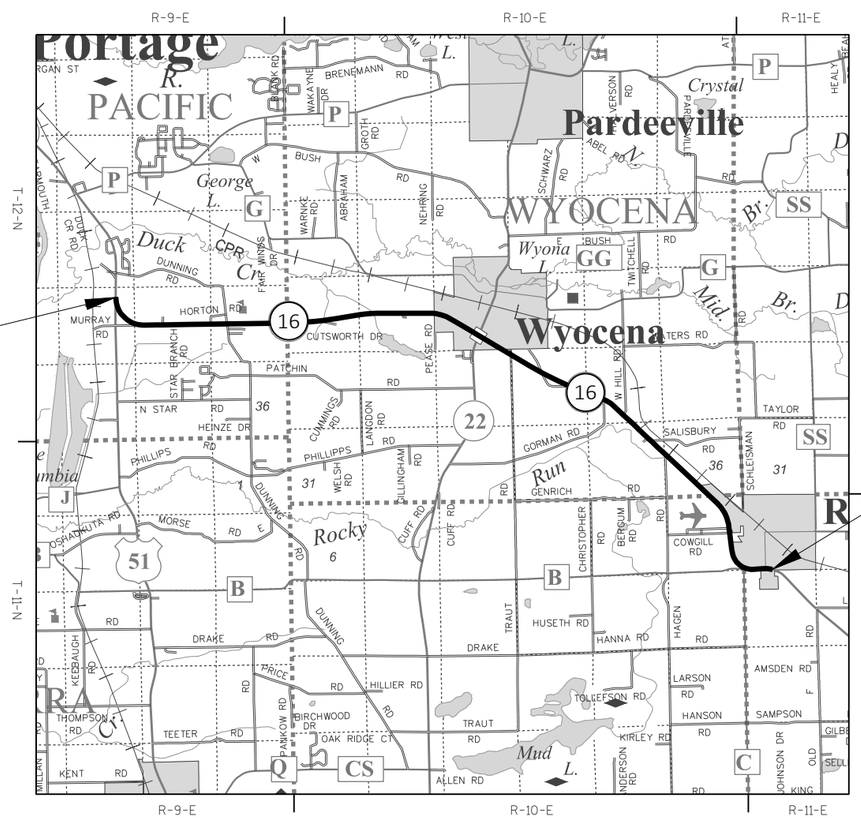

END PROJECT 1400-01-73
STA 561+35

1078 UTILITY PLANS
11/2/2020

CONVENTIONAL SYMBOLS

PLAN
- CORPORATE LIMITS
- PROPERTY LINE
- LOT LINE
- LIMITED HIGHWAY EASEMENT
- EXISTING RIGHT OF WAY
- PROPOSED OR NEW R/W LINE
- SLOPE INTERCEPT
- REFERENCE LINE (300'EB')
- EXISTING CULVERT
- PROPOSED CULVERT (Box or Pipe)
- COMBUSTIBLE FLUIDS (CAUTION)
- MARSH AREA
- WOODED OR SHRUB AREA

PROFILE
- GRADE LINE
- ORIGINAL GROUND
- MARSH OR ROCK PROFILE (To be noted as such) (ROCK)
- SPECIAL DITCH (LABEL)
- GRADE ELEVATION (95.36)
- CULVERT (Profile View)

UTILITIES
- ELECTRIC (E)
- FIBER OPTIC (FO)
- GAS (G)
- SANITARY SEWER (SAN)
- STORM SEWER (SS)
- TELEPHONE (T)
- WATER (W)
- UTILITY PEDESTAL
- POWER POLE
- TELEPHONE POLE

LAYOUT

SCALE 0 — 2 MI

TOTAL NET LENGTH OF CENTERLINE = 10.271 MI

HORIZONTAL POSITIONS SHOWN ON THIS PLAN ARE WISCONSIN COUNTY COORDINATES, COLUMBIA COUNTY, NAD83 (2011), IN U.S. SURVEY FEET. VALUES ARE GRID COORDINATES, GRID BEARINGS, AND GRID DISTANCES. GRID DISTANCES MAY BE USED AS GROUND DISTANCES.

ELEVATION SHOWN ON THIS PLAN ARE IN REFERENCE TO THE NORTH AMERICAN VERTICAL DATUM OF 1988, NAVD88 (2012).

STATE OF WISCONSIN
DEPARTMENT OF TRANSPORTATION

PREPARED BY

Surveyor	SURVEYOR
Designer	JAMES RINZEL
Project Manager	LALITHA BALACHANDRAN, P.E.
Regional Examiner	REGIONAL EXAMINER
Regional Supervisor	WILLIAM STROBEL, P.E.

APPROVED FOR THE DEPARTMENT

DATE: _____ _____ (Signature)

E

2

GENERAL NOTES

THE LOCATIONS OF EXISTING AND PROPOSED UTILITY INSTALLATIONS AS SHOWN ON THE PLANS ARE APPROXIMATE. THERE MAY BE OTHER UTILITY INSTALLATIONS WITHIN THE PROJECT AREA THAT ARE NOT SHOWN. THE CONTRACTOR SHALL COORDINATE THEIR CONSTRUCTION ACTIVITIES WITH A CALL TO DIGGERS HOTLINE AND/OR A DIRECT CALL THE TO UTILITIES THAT HAVE FACILITIES IN THE AREAS. NOT ALL UTILITIES ARE MEMBERS OF DIGGERS HOTLINE.

UTILITY LINES IN THE CROSS SECTIONS ARE FOR HORIZONTAL REFERENCE ONLY.

CONTRACTOR TO VERIFY ELEVATIONS OF THE EXISTING PAVEMENT TO REMAIN IN PLACE, PRIOR TO STAKING.

CONTRACTORS SHALL MAINTAIN ACCESS TO ALL DRIVEWAYS AT ALL TIMES. ACCESS SHALL BE PROVIDED DURING ALL NON-WORKING HOURS.

PRIOR TO THE PLACEMENT OF MGS GUARDRAILS, THE SHOULDERS SHALL BE IN PLACE, SHAPED AND COMPACTED UNLESS SHOWN OTHERWISE.

THE CONTRACTOR'S PAVING OPERATIONS SHALL BE CONSISTENT WITH THE PLAN TYPICAL SECTIONS AND CONSTRUCTED TO PREVENT HMA LONGITUDINAL JOINTS FROM BEING LOCATED WITHIN DRIVING, TURNING, BIKE OR PARKING LANE.

HMA PAVEMENT WEIGHT CALCULATIONS ARE BASED ON 112 LB/SY/IN.

APPLY TACK COAT BETWEEN LAYERS OF ASPHALT PAVEMENT AND TO MILLED SURFACES. THE APPLICATION RATE IS 0.05 GAL/SY BETWEEN LAYERS OF NEW HMA PAVEMENT AND 0.07 GAL/SY PLACED ON EXISTING ASPHALT, MILLED SURFACES AND CONCRETE PAVEMENT OR AS DIRECTED BY THE ENGINEER.

SAWCUTS, AS SHOWN ON THE PLANS, ARE SUGGESTED LOCATIONS AND MAY BE ADJUSTED AT THE DISCRETION OF THE ENGINEER TO BETTER SUIT FIELD CONDITIONS.

CONTRACTOR WILL BE RESPONSIBLE FOR RESHAPING AND SEEDING ANY PREVIOUSLY GRASSED AREAS WHICH ARE DISTURBED BY HIS OPERATION OUTSIDE OF THE NORMAL CONSTRUCTION LIMITS.

THE QUALITY OF THE ITEMS FOR EROSION PROTECTION INCLUDES AN UNDISTURBED AMOUNT FOR PROTECTION, CONTROL AND ABATEMENT OF WATER POLLUTION RESULTING FROM SOIL EROSION. THE DISTRIBUTION AND LOCATION OF THESE MATERIALS ARE TO BE DETERMINED BY THE ENGINEER.

DISTURBED AREAS WITHIN THE RIGHT OF WAY ARE TO BE TOPSOILED (SALVAGED), FERTILIZED, SEEDED, AND MULCHED AS DIRECTED BY THE ENGINEER.

THE EROSION CONTROL DEVICES AS SHOWN ON THE EROSION CONTROL SHEETS ARE AT SUGGESTED LOCATIONS. EXACT LOCATIONS WILL BE DETERMINED BY THE ENGINEER. EROSION CONTROL DEVICES SHALL BE PLACED IN SEQUENCE WITH CONSTRUCTION OPERATIONS OR AS DETERMINED BY THE ENGINEER.

NO TREES OR SHRUBS ARE TO BE REMOVED WITHOUT APPROVAL OF THE ENGINEER.

NUMBER, LOCATION, AND SPACING OF SIGNS AND DEVICES, AS SHOWN IN THE PLANS SHALL BE ADJUSTED TO FIT FIELD CONDITIONS.

EXISTING RIGHT OF WAY LINES SHOWN IN THE PLANS AND CROSS SECTIONS ARE APPROXIMATE.

DRIVEWAY AND ENTRANCE STATIONS AND OFFSETS IN THE PLANS REFER TO THE MATCH-IN LOCATION OF THE EXISTING DRIVEWAY/ENTRANCE.

MAINTAIN EXISTING VERTICAL CLEARANCE UNDER BRIDGE STRUCTURE B-11-72 AT THE STH 22 INTERCHANGE OVERPASS. FIELD ENGINEER WILL RECORD PRE AND POST PROJECT ELEVATIONS FOR PROJECT RECORDS.

MILL AND PAVE ADJACENT TO EXISTING SECTION AND ALUMINUM TIE MONUMENTS WITHOUT DAMAGING THE MONUMENTS. SEE ALIGNMENT DIAGRAM FOR LOCATIONS.

CONTRACTOR TO PROTECT DH5577 GPS AND KEEP CONSTRUCTION EQUIPMENT AT LEAST 10 FEET AWAY FROM DH5577 GPS. SEE ALIGNMENT DIAGRAM FOR LOCATION.

ENSURE THAT DH5577 GPS IS/ARE NOT DISTURBED, BUMPED OR MOVED DURING THE DURATION OF THE PROJECT. NOTIFY JACOB ROCKWEILER IMMEDIATELY IF DH5548 GPS IS/ARE DISTURBED, BUMPED OR MOVED DURING CONSTRUCTION OPERATIONS. CONTACT INFO:

JACOB ROCKWEILER, P.E.
WISCONSIN HEIGHT MODERNIZATION PROGRAM MANAGER WITH THE
WISCONSIN DEPARTMENT OF TRANSPORTATION
PHONE: (608) 516-6362
EMAIL: JACOB.ROCKWEILER@DOT.WI.GOV

DIGGERS HOTLINE

Dial 811 or (800)242-8511

www.DiggersHotline.com

SECTION 2 ORDER OF SHEETS

DESIGN CONTACTS

LALITHA BALACHANDRAN, P.E.
WISDOT SOUTHWEST REGION
MADISON OFFICE
2101 WRIGHT ST.
MADISON, WI 53704
(608) 243-3382
LALITHA.BALACHANDRAN@DOT.WI.GOV

JAMES RINZEL
WISDOT SOUTHWEST REGION
MADISON OFFICE
2101 WRIGHT ST.
MADISON, WI 53704
(608) 245-5343
JAMES.RINZEL@DOT.WI.GOV

DNR LIAISON

ERIC HEGGELUND
3911 FISH HATCHERY ROAD
MADISON, WI 53711-5376
(608) 275-3301
ERIC.HEGGELUND@WISCONSIN.GOV

SURVEYOR CONTACT

BEN MAXWELL
MSA PROFESSIONAL SERVICES
2901 INTERNATIONAL LANE 300
MADISON, WI 53704
(608) 575-3683
BAMAXWELL@MSA-PS.COM

UTILITY CONTACTS

TODD BRISTER
ANR PIPELINE CO - GAS/PETROLEUM
W3925 PIPELINE LANE
EDEN, WI 53019
(920) 477-2235
TODD_BRISTER@TRANSCANADA.COM

TODD MARCINIAK
ATC MANAGEMENT, INC. - ELECTRICITY-TRANSMISSION
W234 N2000 RIDGEVIEW PARKWAY COURT
P.O. BOX 47
WAUKESHA, WI 53187-0047
(262) 506-6814
AMARCINIAK@ATCLLC.COM

MARY MONTGOMERY
ALLIANT ENERGY - ELECTRICITY
200 FIRST ST
CEDAR RAPIDS, IA 52401
(319) 786-4768
MARYMONTGOMERY@ALLIANTENERGY.COM

MARY MONTGOMERY
ALLIANT ENERGY - GAS/PETROLEUM
200 FIRST ST
CEDAR RAPIDS, IA 52401
(319) 786-4768
MARYMONTGOMERY@ALLIANTENERGY.COM

KEVIN ZICKERT
CENTURYLINK - COMMUNICATION LINE
224 INDUSTRIAL DR
NORTH PRAIRIE, WI 53153
(262) 392-5200
RELOCATIONS@LUMEN.COM

RUSS RYAN
FRONTIER COMMUNICATIONS OF WI LLC -
COMMUNICATION LINE
118 DIVISION STREET
PLYMOUTH, WI 53073
(920) 583-3275
RUSSELL.W.RYAN@FTR.COM

SERGIO GONZALEZ
NORTHERN NATURAL GAS COMPANY - GAS/PETROLEUM
SUITE F
8101 BIRCHWOOD CT STE F
JOHNSTON, IA 50131
(402) 530-2026
SERGIO.GONZALEZ@NNGCO.COM

ROBERT LANG
RIO MUNICIPAL SANITARY UTILITY - SANITARY
P.O. BOX 276
RIO, WI 53960-0276
(920) 586-3275
RLANG@RIOWI.US

ROBERT LANG
RIO MUNICIPAL WATER UTILITY - WATER
P.O. BOX 276
RIO, WI 53960-0276
(920) 586-3275
RLANG@RIOWI.US

JARED ANDERSON
VILLAGE OF WYOCENA - SEWER
165 E DODGE ST
WYOCENA, WI 53969
(608) 429-2349
DPWWYOCENA@GMAIL.COM

JARED ANDERSON
VILLAGE OF WYOCENA - WATER
165 E DODGE ST
WYOCENA, WI 53969
(608) 429-2349
DPWWYOCENA@GMAIL.COM

2

ABBREVIATIONS

AC	ACRE
AGG	AGGREGATE
<	ANGLE
AE, AEW	APRON ENDWALL
ASPH	ASPHALTIC
ADT	AVERAGE DAILY TRAFFIC
AADT	ANNUAL AVERAGE DAILY TRAFFIC
BAD	BASE AGGREGATE DENSE
BF	BACK FACE
BM	BENCHMARK
BTWN	BETWEEN
CTR	CENTER
C/L	CENTERLINE
Δ	CENTRAL ANGLE OR DELTA
CE	COMMERCIAL ENTRANCE
CONST	CONSTRUCTION
CMCP	CORRUGATED METAL CULVERT PIPE
CMP	CORRUGATED METAL PIPE
CO	COUNTY
CTH	COUNTY TRUNK HIGHWAYS
CY	CUBIC YARD
CP	CONTROL POINT OR CULVERT PIPE
C&G	CURB AND GUTTER
D	DEGREE OF CURVE
DHV	DESIGN HOUR VOLUME
DIA	DIAMETER
DD	DIRECTIONAL DISTRIBUTION
DISCH	DISCHARGE
DMS	DYNAMIC MESSAGE SIGN
EA	EACH
E	EAST
EB	EASTBOUND
ELEC	ELECTRIC(AL), ELEC. CABLE
EL, ELEV	ELEVATION
ESALS	EQUIVALENT SINGLE AXLE LOADS
EXC	EXCAVATION
EXIST	EXISTING
FF	FACE TO FACE
FERT	FERTILIZER
FE	FIELD ENTRANCE
F/L, FL	FLOW LINE
GALV	GALVANIZE
HS	HIGH STRENGTH
CWT	HUNDRED WEIGHT
INL	INLET
INTER	INTERSECTION
JT	JOINT
LT	LEFT
L	LENGTH OF CURVE
LF	LINEAR FOOT (FEET)
LC	LONG CHORD
LS	LUMP SUM
MP	MARKER POST
MGAL	1000 GALLONS
NC	NORMAL CROWN
N	NORTH
NB	NORTH BOUND
NOR	NORMAL
NO	NUMBER
PAV'T	PAVEMENT
PLE	PERMANENT LIMITED EASEMENT
PC	POINT OF CURVATURE
PI	POINT OF INTERSECTION
PT	POINT OF TANGENCY

ABBREVIATIONS CONT'D

PCC	PORTLAND CEMENT CONCRETE
PE	PRIVATE ENTRANCE
PGL	PROFILE GRADE LINE
PL	PROPERTY LINE
R	RADIUS OR RANGE
R/L	REFERENCE LINE
RCCP	REINFORCED CONCRETE CULVERT PIPE
REQ'D	REQUIRED
RT	RIGHT
R/W	RIGHT OF WAY
RD	ROAD
SHLD	SHOULDER(S)
S	SOUTH
SB	SOUTHBOUND
SF	SQUARE FOOT (FEET)
SDD	STANDARD DETAIL DRAWING(S)
STH	STATE TRUNK HIGHWAYS
SS	STORM SEWER
SSD	STOPPING SIGHT DISTANCE
STA	STATION
SE	SUPERELEVATION
S/L	SURVEY LINE
SYM	SYMMETRICAL
T	TRUCKS (PERCENT OF)
TEL	TELEPHONE
TEMP	TEMPORARY
TLE	TEMPORARY LIMITED EASEMENT
TOC	TOP OF CURB
TYP	TYPICAL
UNCL	UNCLASSIFIED
UG	UNDERGROUND
VAR	VARIABLE
VC	VERTICAL CURVE
VPC	VERTICAL POINT OF CURVATURE
VPI	VERTICAL POINT OF INTERSECTION
VPT	VERTICAL POINT OF TANGENCY
WT	WEIGHT
W	WEST
WB	WEST BOUND

RUNOFF COEFFICIENT TABLE

	HYDROLOGIC SOIL GROUP											
	A			B			C			D		
	SLOPE RANGE (PERCENT)			SLOPE RANGE (PERCENT)			SLOPE RANGE (PERCENT)			SLOPE RANGE (PERCENT)		
LAND USE:	0-2	2-6	6 & OVER	0-2	2-6	6 & OVER	0-2	2-6	6 & OVER	0-2	2-6	6 & OVER
ROW CROPS	.08 .22	.16 .30	.22 .38	.12 .26	.20 .34	.27 .44	.15 .30	.24 .37	.33 .50	.19 .34	.28 .41	.38 .56
MEDIAN STRIP-TURF	.19 .24	.20 .26	.24 .30	.19 .25	.22 .28	.26 .33	.20 .26	.23 .30	.30 .37	.20 .27	.25 .32	.30 .40
SIDE SLOPE: TURF			.25 .32			.27 .34			.28 .36			.30 .38
PAVEMENT:												
ASPHALT	.70 - .95											
CONCRETE	.80 - .95											
BRICK	.70 - .80											
DRIVES, WALKS	.75 - .85											
ROOFS	.75 - .95											
GRAVEL ROADS, SHOULDERS	.40 - .60											

TOTAL PROJECT AREA = 0.0 ACRES
TOTAL AREA EXPECTED TO BE DISTURBED BY CONSTRUCTION ACTIVITIES = 0.0 ACRES

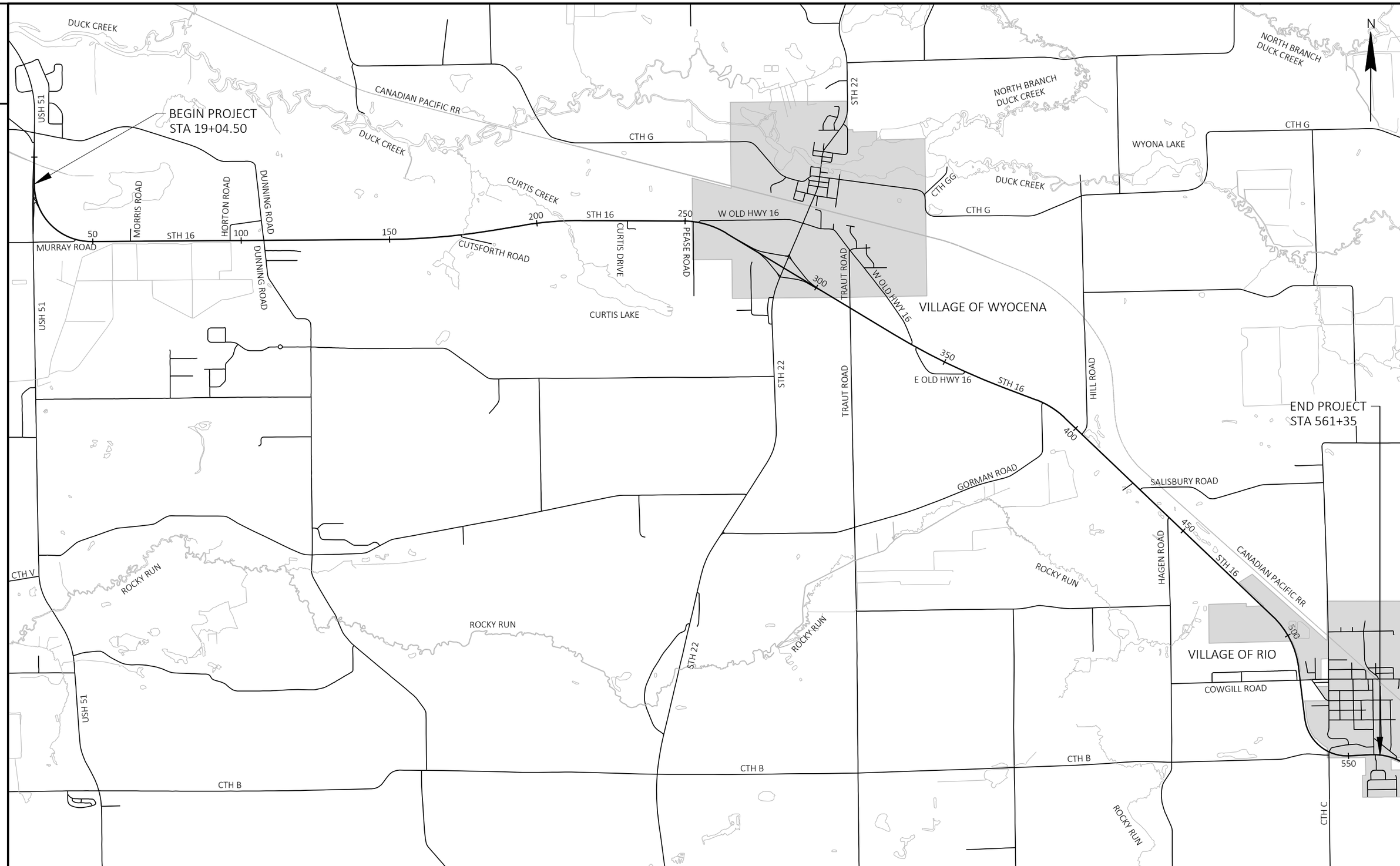

PROJECT NO: 1400-01-73	HWY: STH 16	COUNTY: COLUMBIA	PROJECT OVERVIEW	SHEET	E

FILE NAME : N:\PDS\C3D\14000103\SHEETSPLAN\020201-PO.DWG
LAYOUT NAME - 01
PLOT DATE : 10/22/2020 2:48 PM
PLOT BY : RINZEL, JAMES M
PLOT NAME :
PLOT SCALE : 1 IN:3000 FT

WISDOT/CADDS SHEET 42

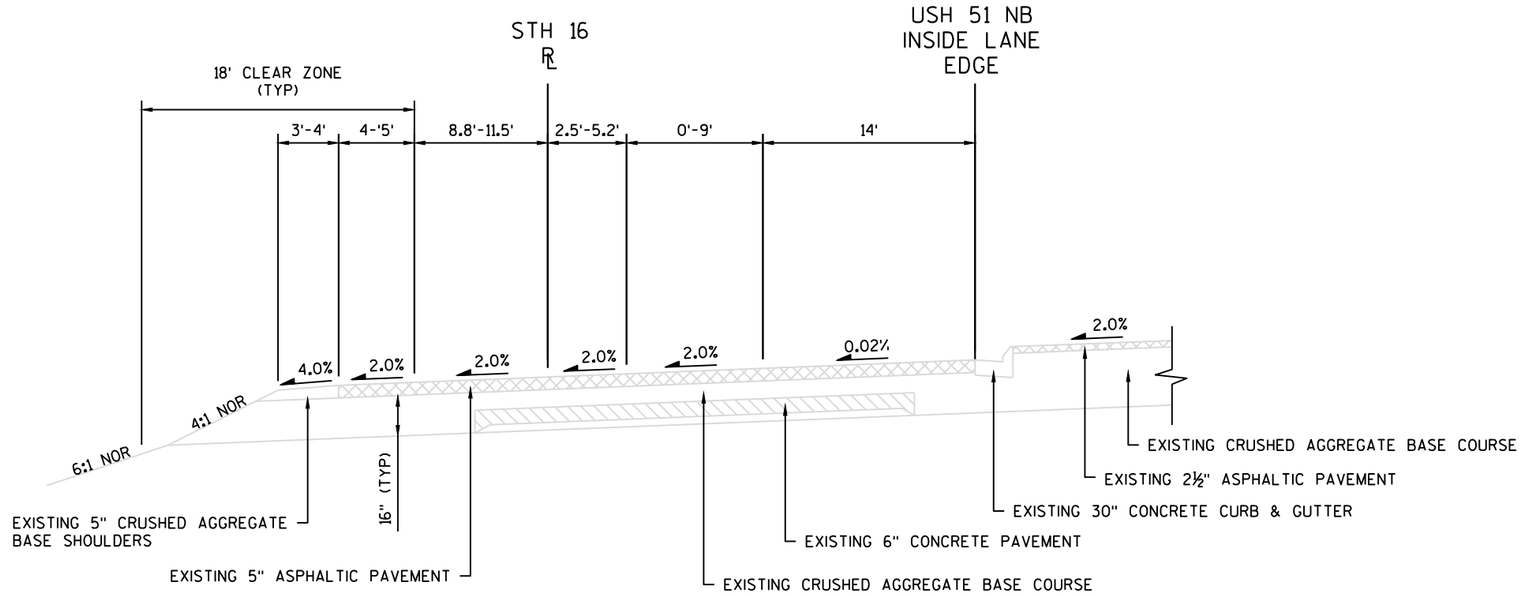

EXISTING TYPICAL SECTION STH 16

STA 19+04.50 TO STA 20+39

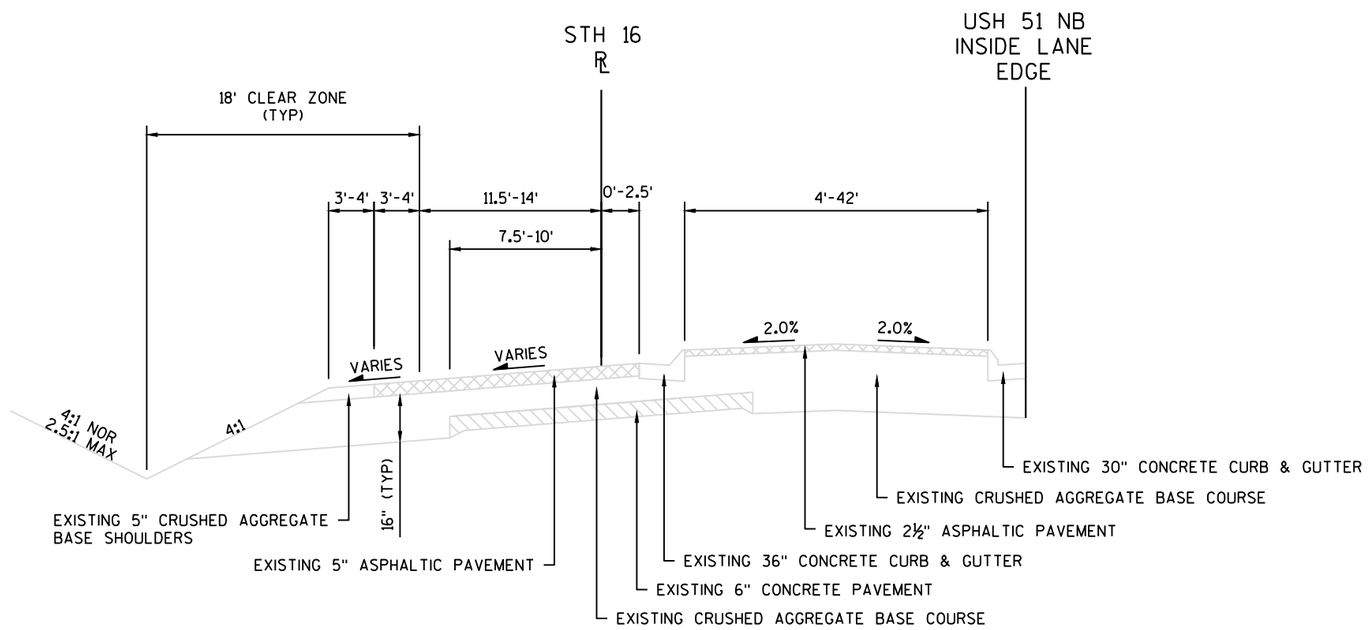

EXISTING TYPICAL SECTION STH 16

STA 20+39 TO STA 25+76.50

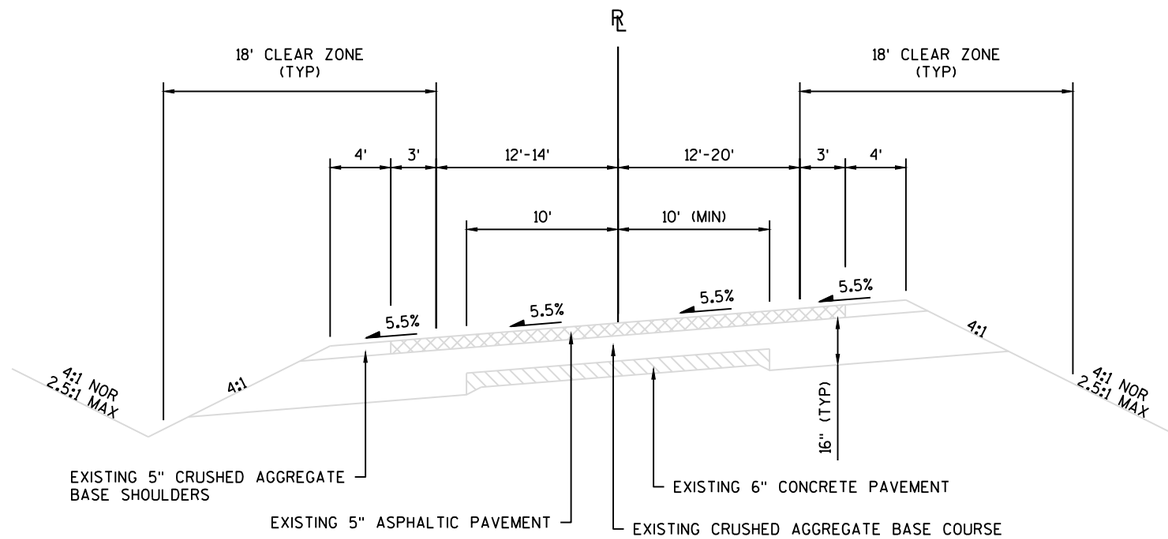

EXISTING TYPICAL SECTION STH 16

STA 25+76.50 TO STA 28+26

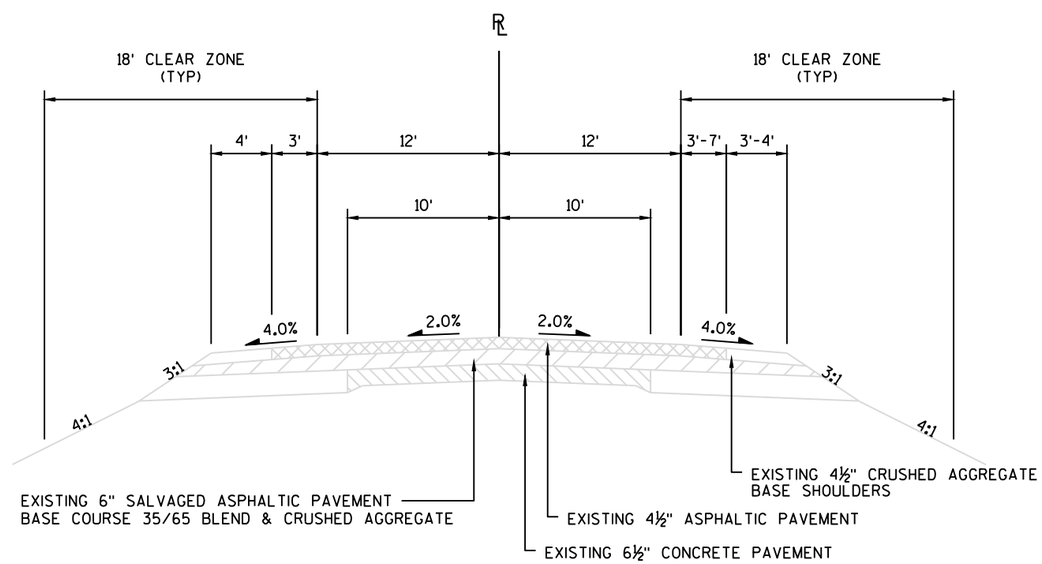

EXISTING TYPICAL SECTION STH 16

STA 28+26 TO STA 534+19

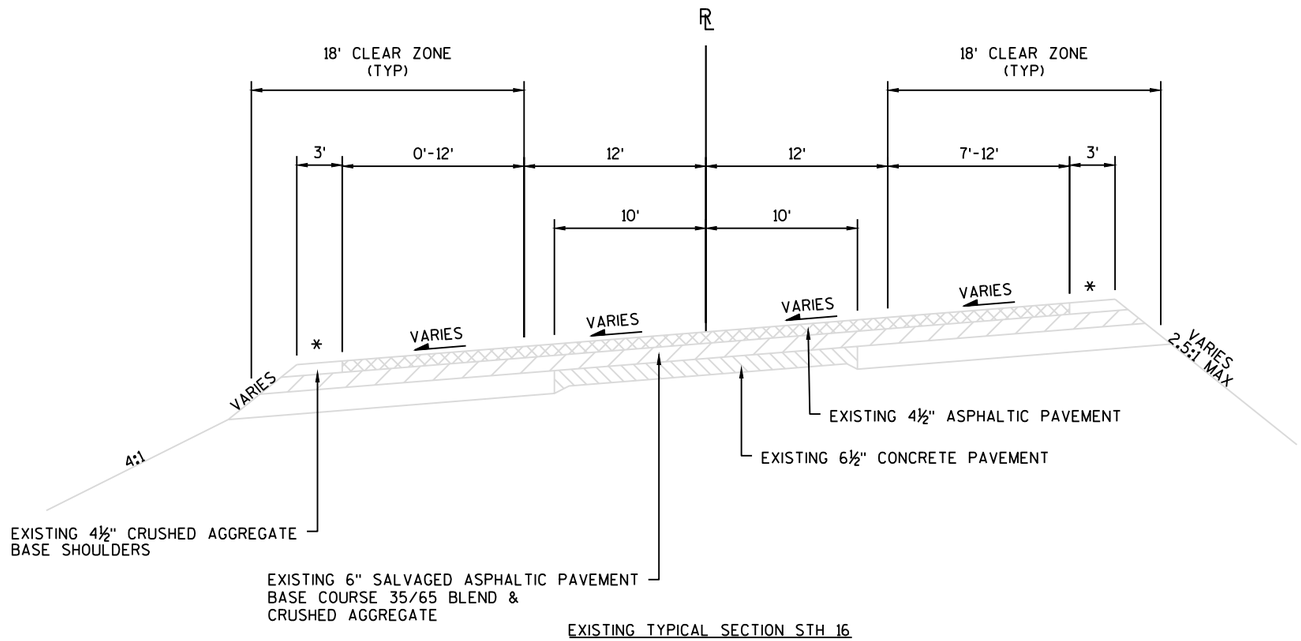

EXISTING TYPICAL SECTION STH 16

STA 534+19 TO STA 548+60

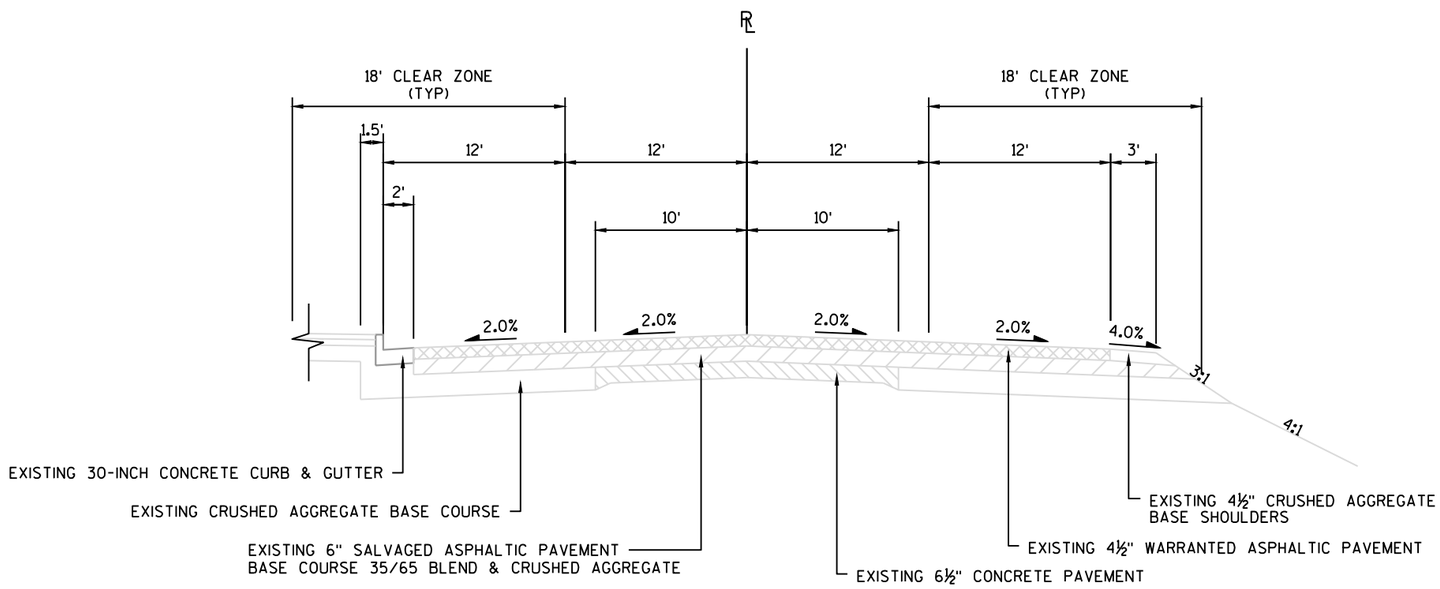

EXISTING TYPICAL SECTION STH 16

STA 548+60 TO STA 561+35

*4% MINIMUM AGGREGATE SHOULDER SLOPE.

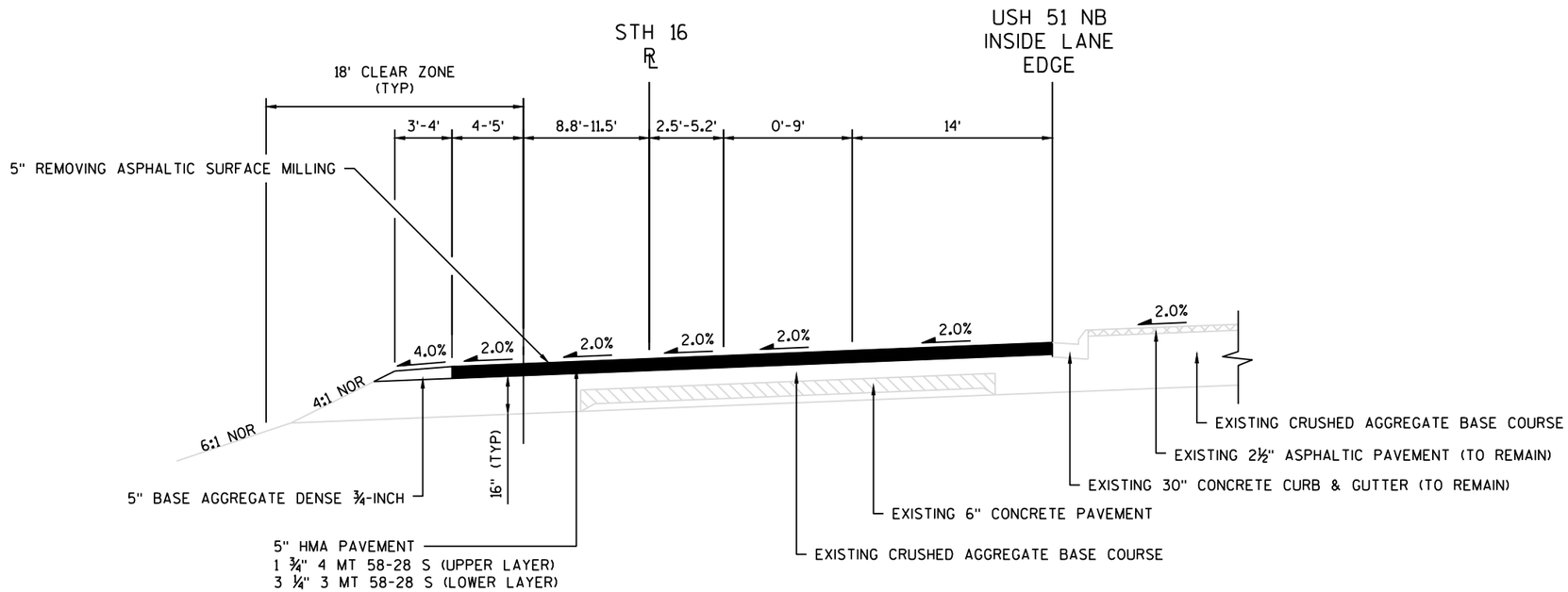

PROPOSED TYPICAL SECTION STH 16

STA 19+04.50 TO STA 20+39

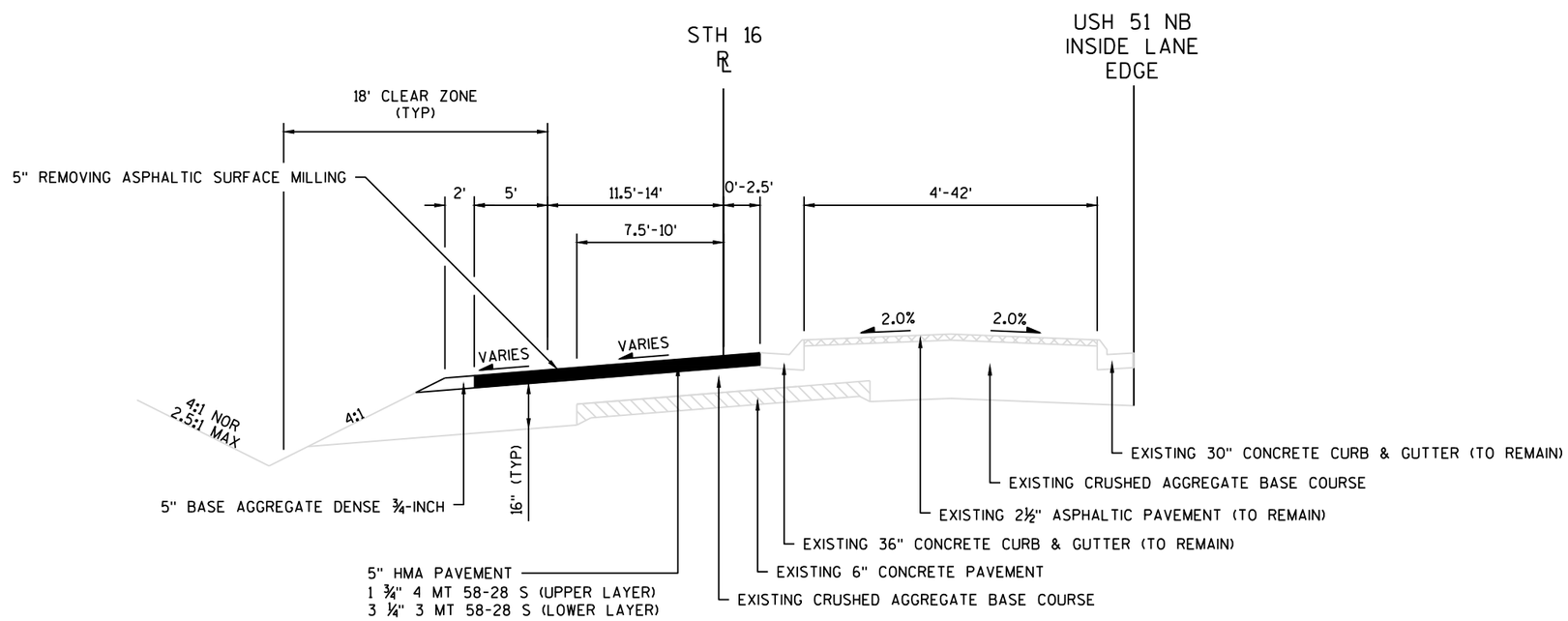

PROPOSED TYPICAL SECTION STH 16

STA 20+39 TO STA 25+76.50

2

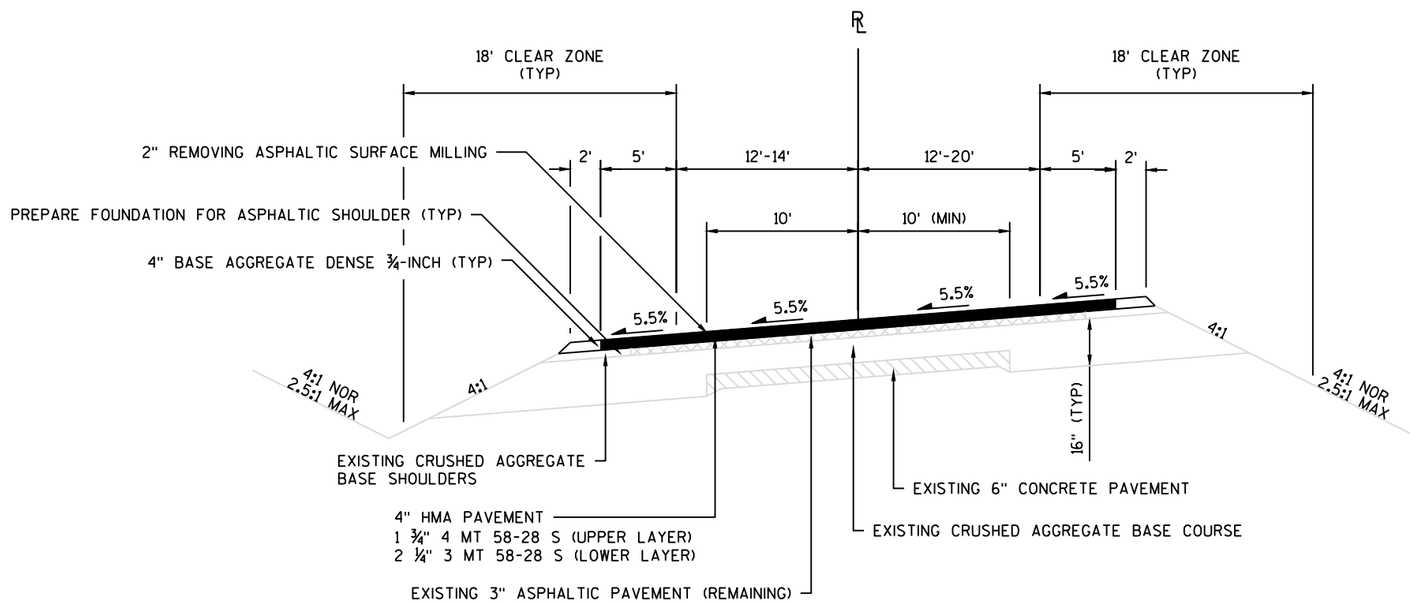

PROPOSED TYPICAL SECTION STH 16

STA 25+76.50 TO STA 28+26

PROJECT NO: 1400-01-73	HWY: STH 16	COUNTY: COLUMBIA	PROPOSED TYPICAL SECTIONS	SHEET	E

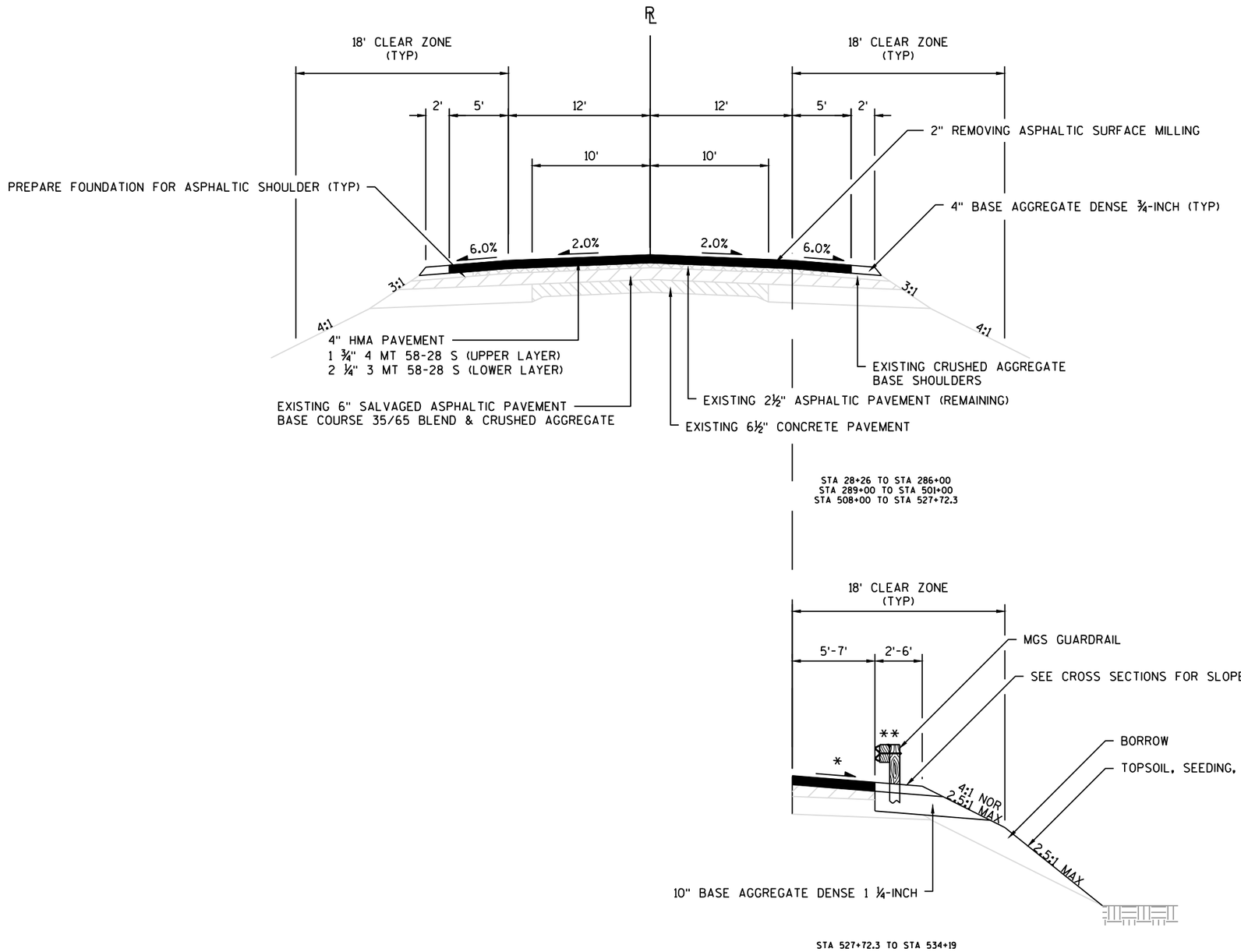

PROPOSED TYPICAL SECTION STH 16

STA 28+26 TO STA 286+00
STA 289+00 TO STA 501+00
STA 508+00 TO STA 534+19

*NOTE - SEE CROSS SECTIONS FOR SLOPES
**NOTE - STA 528+57 - STA 533+57.4 RT

PROJECT NO: 1400-01-73	HWY: STH 16	COUNTY: COLUMBIA	PROPOSED TYPICAL SECTIONS	SHEET	E

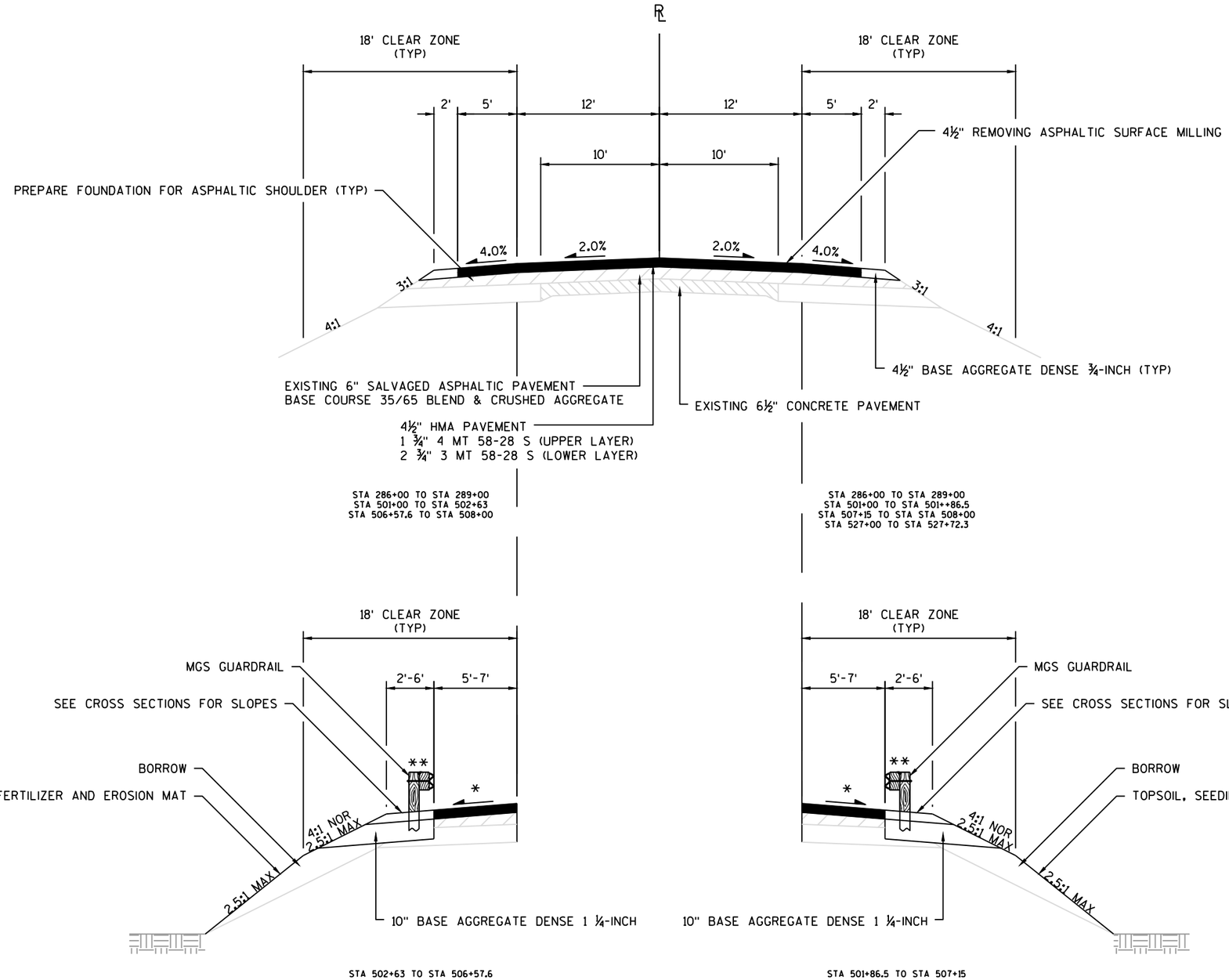

PROPOSED TYPICAL SECTION STH 16

STA 286+00 TO STA 289+00
STA 501+00 TO STA 508+00

*NOTE - SEE CROSS SECTIONS FOR SLOPES
**NOTE - STA 502+01.7 - STA 506+86 RT
STA 502+63 - STA 506+26.1 LT

PROJECT NO: 1400-01-73	HWY: STH 16	COUNTY: COLUMBIA	PROPOSED TYPICAL SECTIONS	SHEET	E

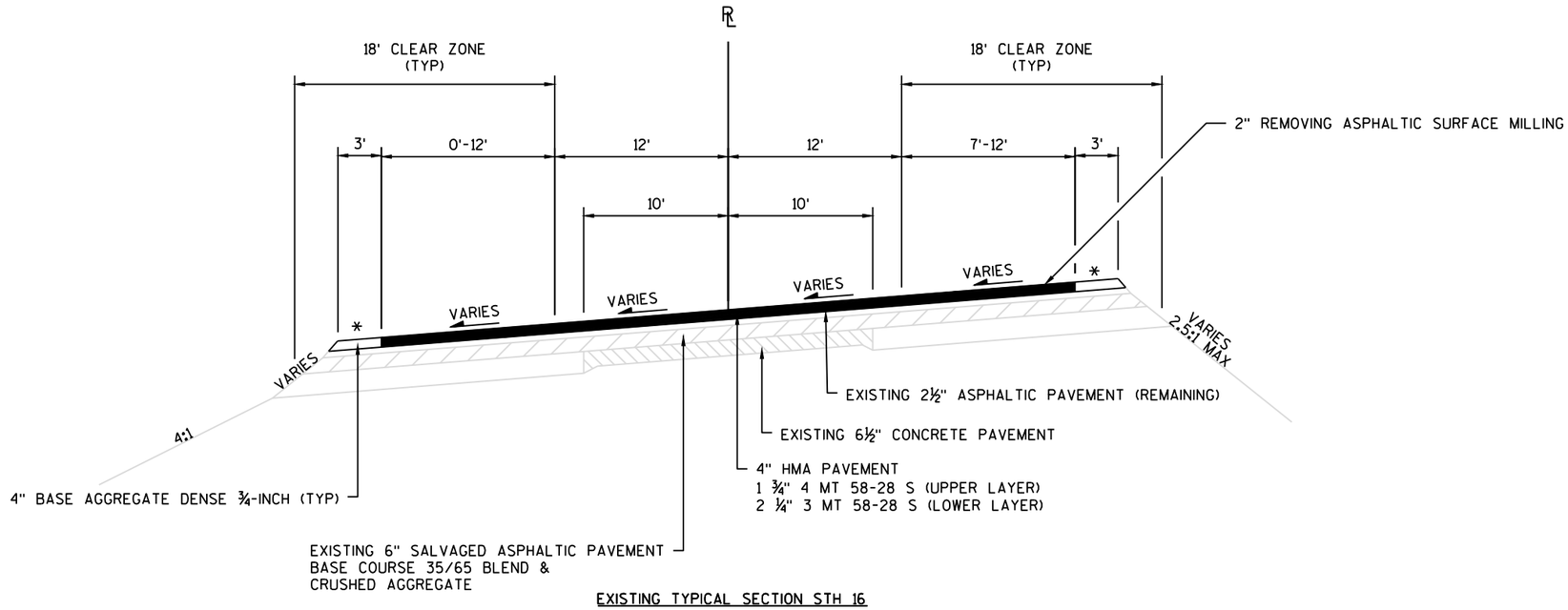

EXISTING TYPICAL SECTION STH 16

STA 534+19 TO STA 548+60

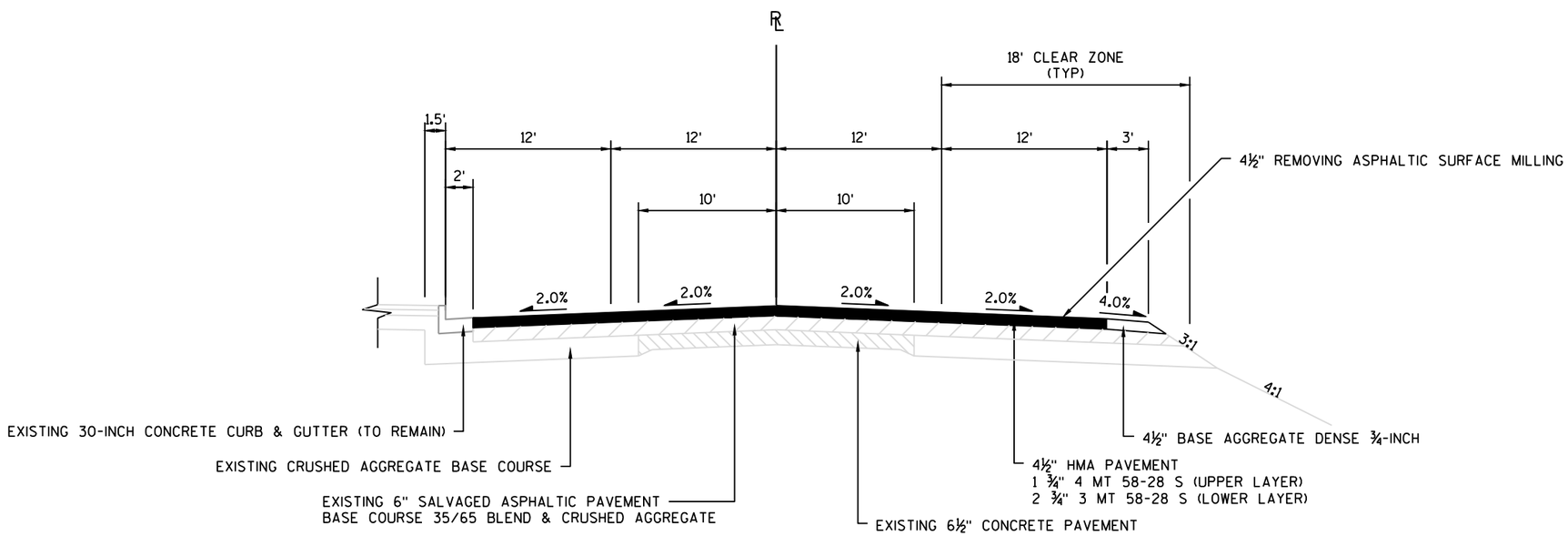

PROPOSED TYPICAL SECTION STH 16

STA 548+60 TO STA 561+35

*4.0% MINIMUM AGGREGATE SHOULDER SLOPE.

PROJECT NO: 1400-01-73	HWY: STH 16	COUNTY: COLUMBIA	PROPOSED TYPICAL SECTIONS	SHEET	E

2

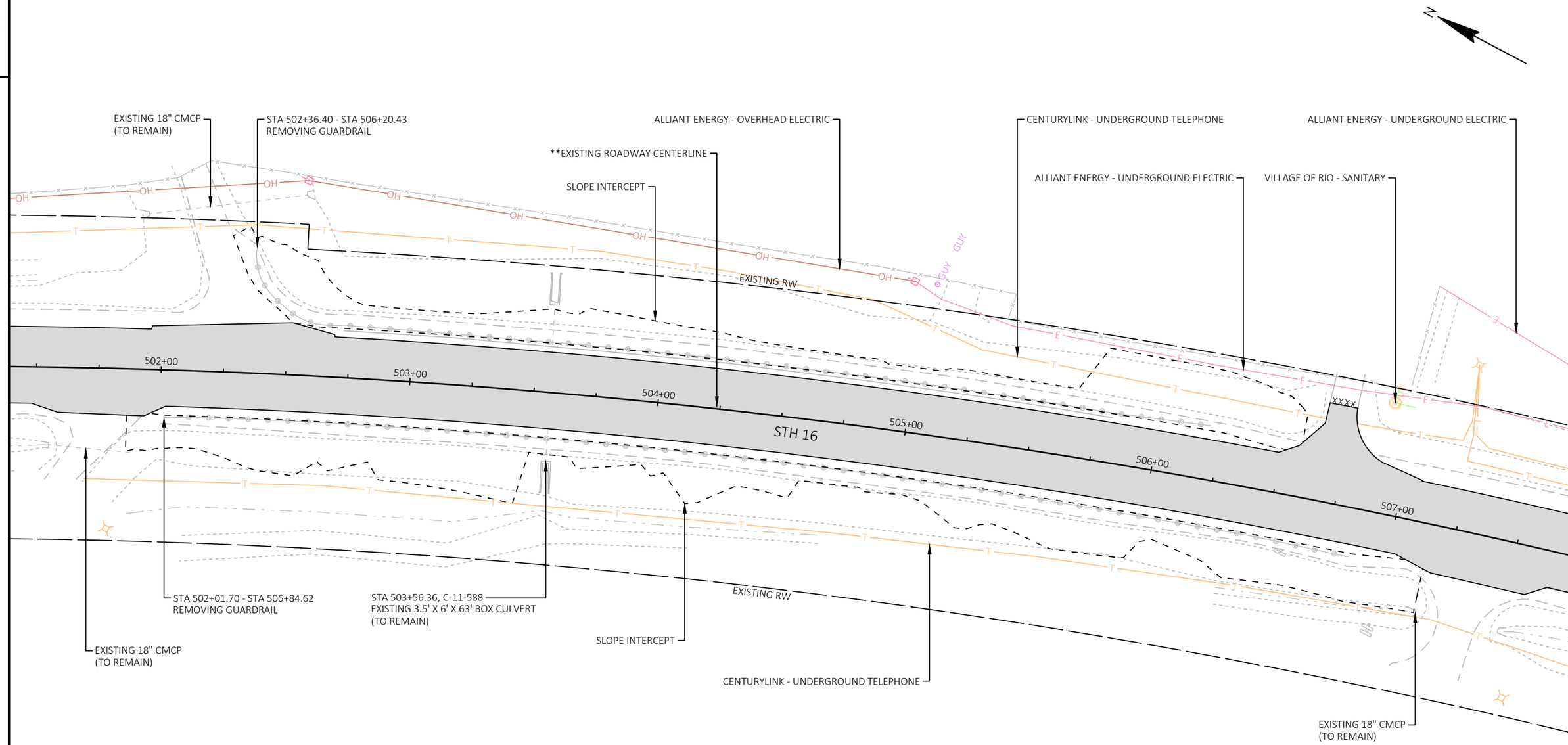

LEGEND

REMOVING ASPHALTIC SURFACE MILLING (FULL DEPTH)

.XXXXXXXXXXX. SAWING ASPHALT

**NOTE: THE EXISTING ROADWAY CENTERLINE IS 0.7'-0.8' LEFT OF THE ROADWAY REFERENCE LINE WITHIN THE ROADWAY CURVE. SEE CROSS SECTIONS FOR MORE INFORMATION.

PROJECT NO: 1400-01-73	HWY: STH 16	COUNTY: COLUMBIA	CONSTRUCTION DETAILS - REMOVALS	SHEET	E

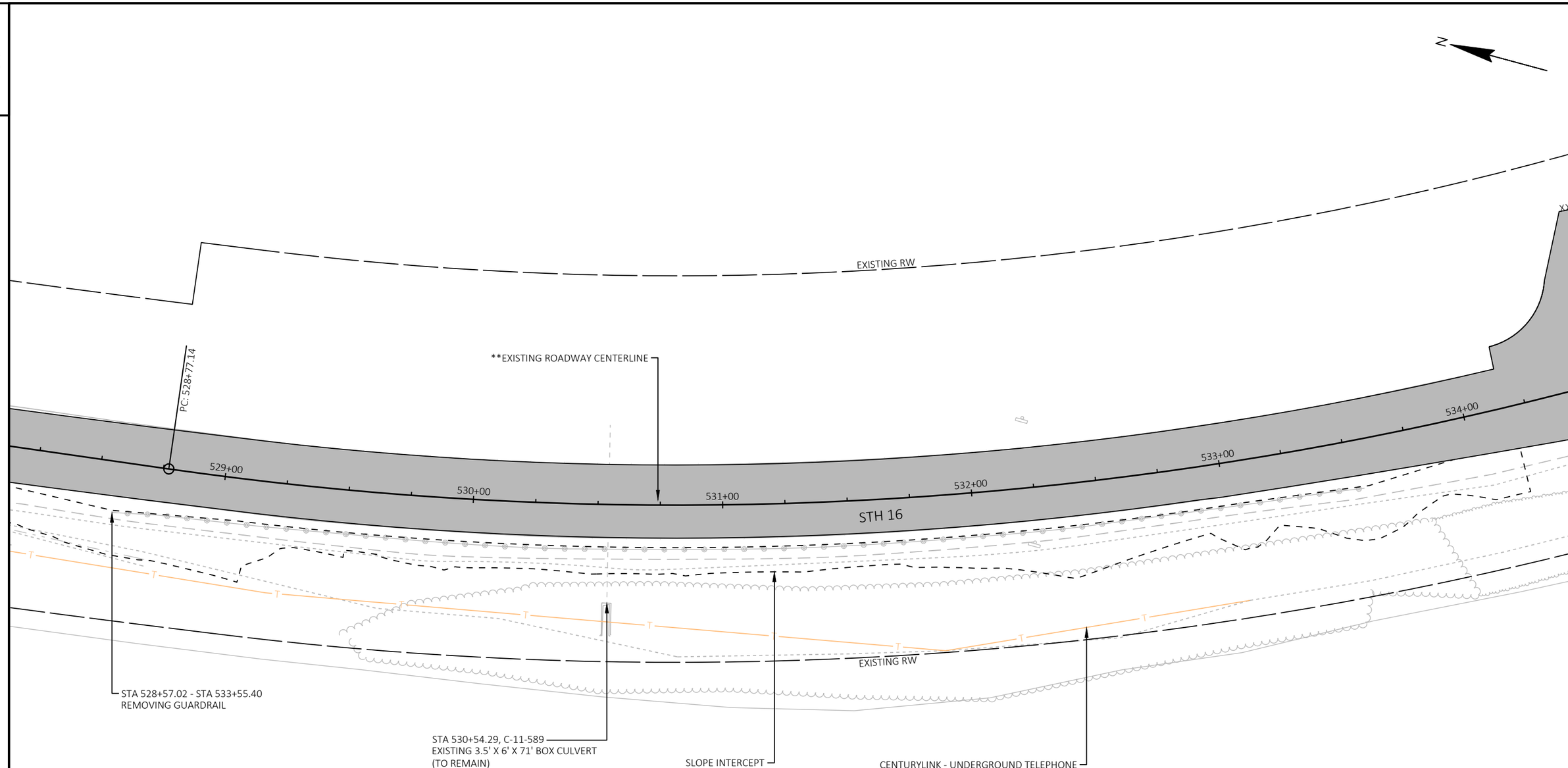

LEGEND

REMOVING ASPHALTIC SURFACE MILLING

xxxxxxxxxxx SAWING ASPHALT

**NOTE: THE EXISTING ROADWAY CENTERLINE IS 1.6'-2' LEFT OF THE ROADWAY REFERENCE LINE WITHIN THE ROADWAY CURVE. SEE CROSS SECTIONS FOR MORE INFORMATION.

PROJECT NO: 1400-01-73	HWY: STH 16	COUNTY: COLUMBIA	CONSTRUCTION DETAILS - REMOVALS	SHEET	E

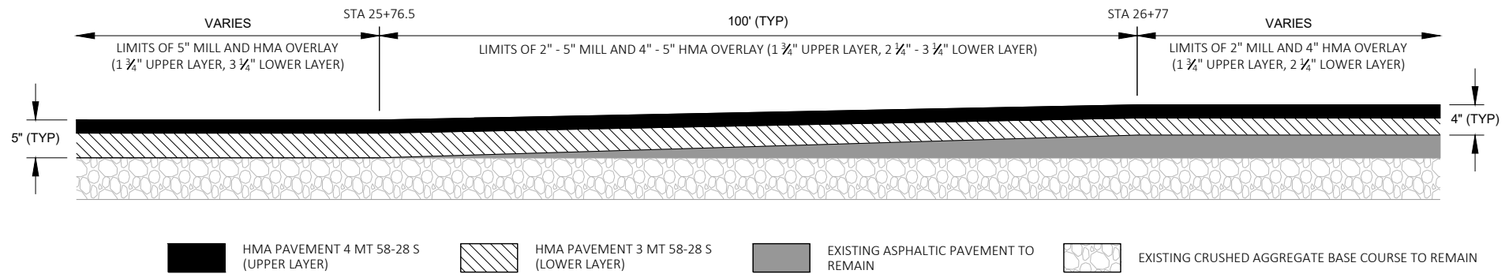

HMA OVERLAY DEPTH TRANSITION DETAIL
ELEVATION VIEW
STA 25+76.50 - STA 26+77

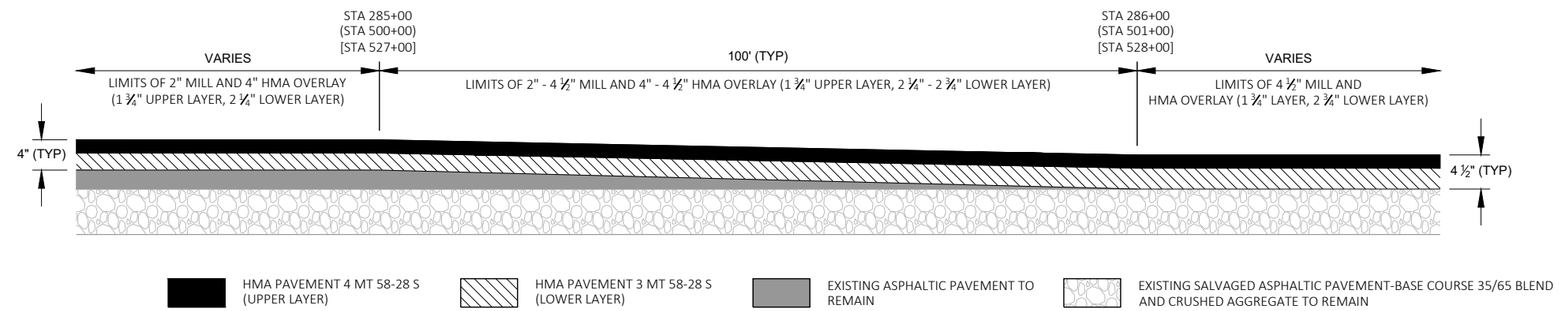

HMA OVERLAY DEPTH TRANSITION DETAIL
ELEVATION VIEW
STA 285+00 - STA 286+00
(STA 500+00 - STA 501+00)
[STA 547+60 - STA 548+60]

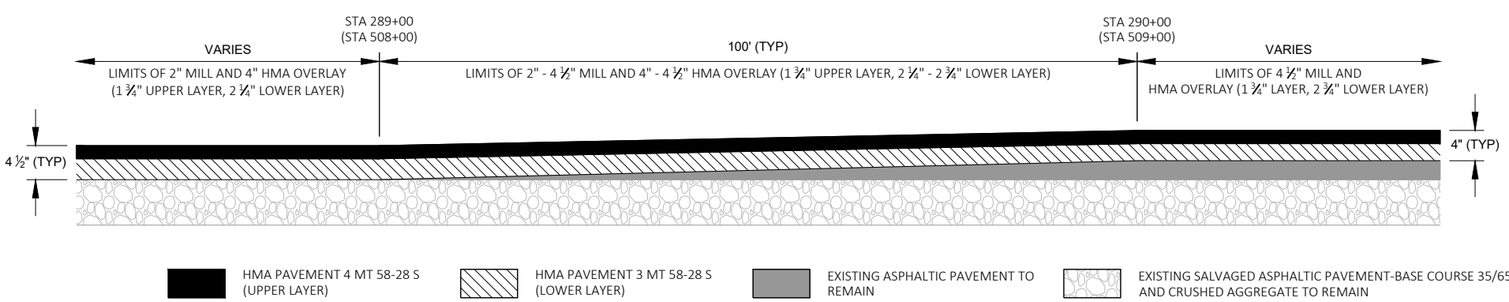

HMA OVERLAY DEPTH TRANSITION DETAIL
ELEVATION VIEW
STA 289+00 - STA 290+00
(STA 508+00 - STA 509+00)

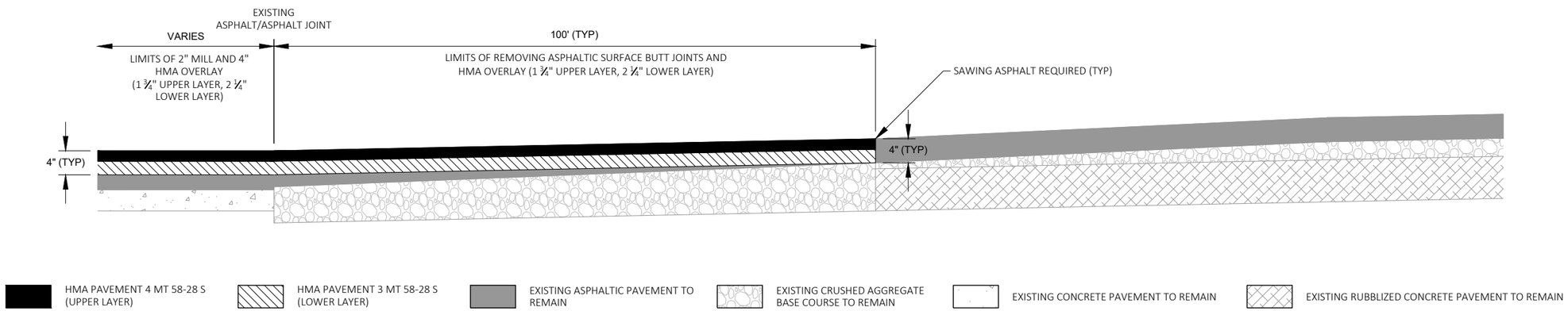

RAMP JOINT DETAIL
ELEVATION VIEW
STH 16 EB OFF RAMP
STH 16 WB ON RAMP

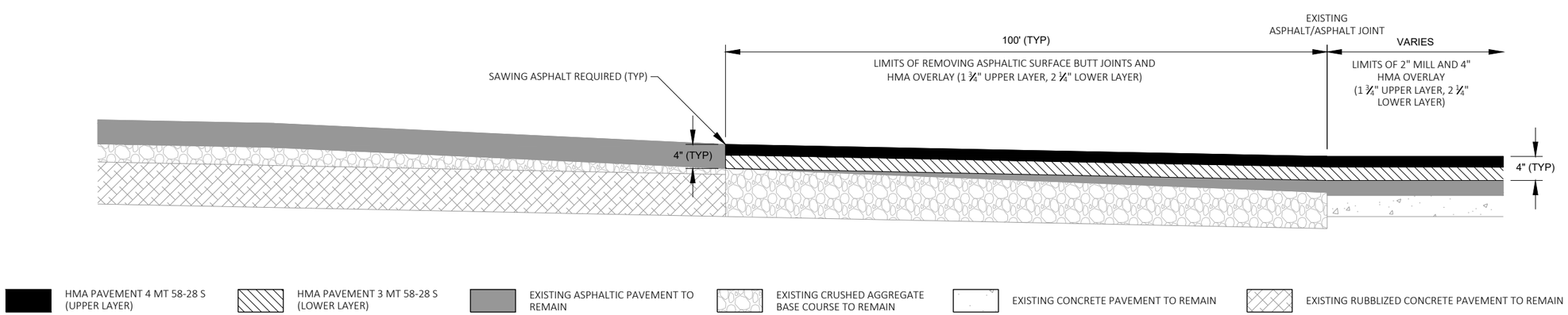

RAMP JOINT DETAIL
ELEVATION VIEW
STH 16 EB ON RAMP
STH 16 WB OFF RAMP

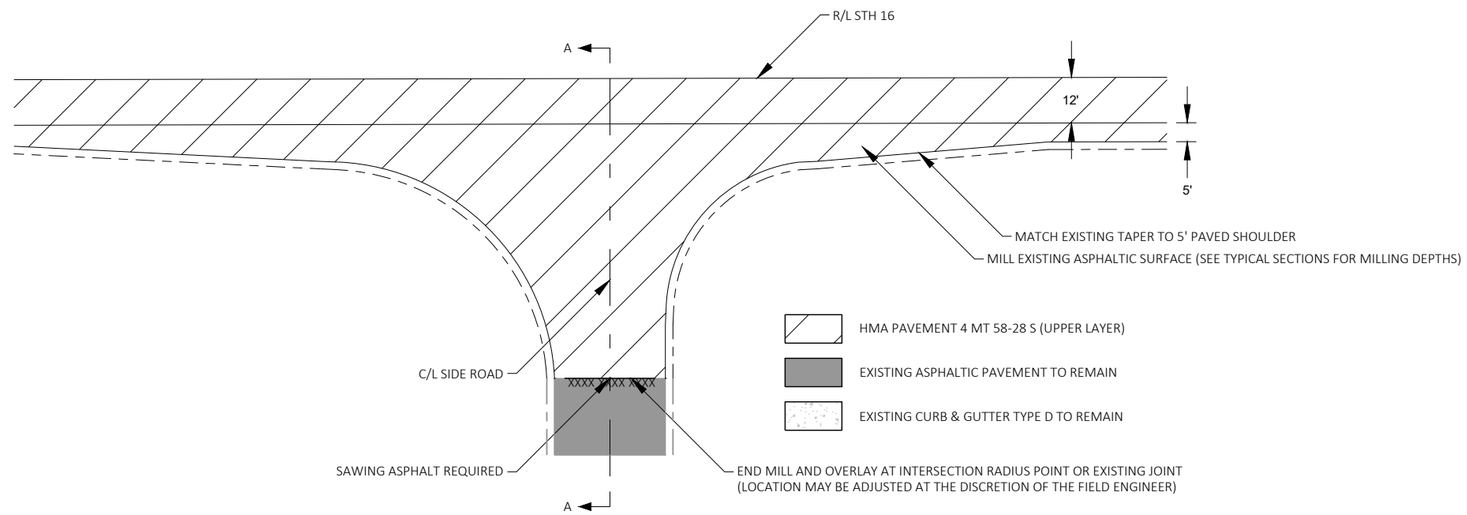

PLAN VIEW

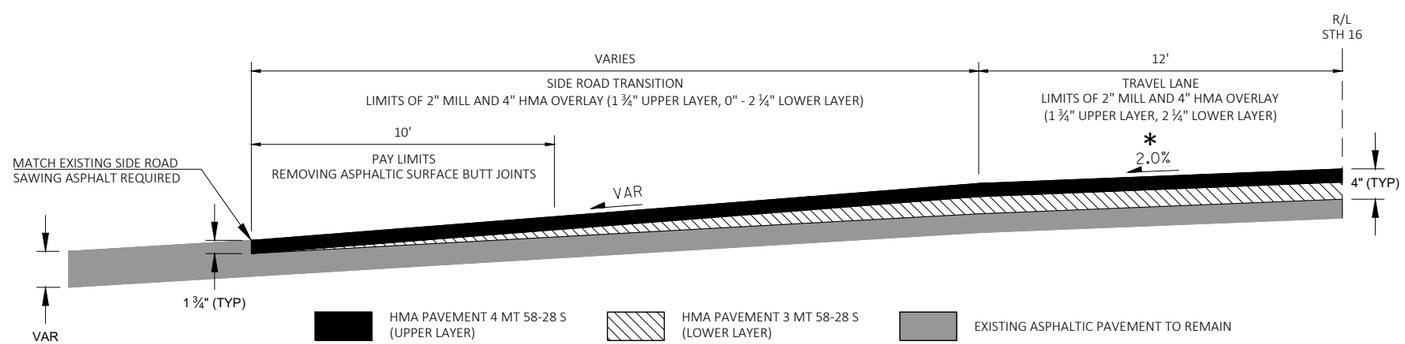

SECTION A-A

SIDE ROAD TRANSITION DETAIL

*2.0% TYPICAL; MATCH EXISTING PAVEMENT CROSS SLOPE ALONG SUPERELEVATED CURVES

MURRAY ROAD	E OLD HWY 16
MORRIS DRIVE	GORMAN ROAD
HORTON ROAD	W HILL ROAD
DUNNING ROAD (NORTH)	SALISBURY ROAD
CUTSFORTH ROAD	HAGEN ROAD
CURTIS DRIVE	
PEASE ROAD	
W OLD HWY 16	
TRAUT ROAD	

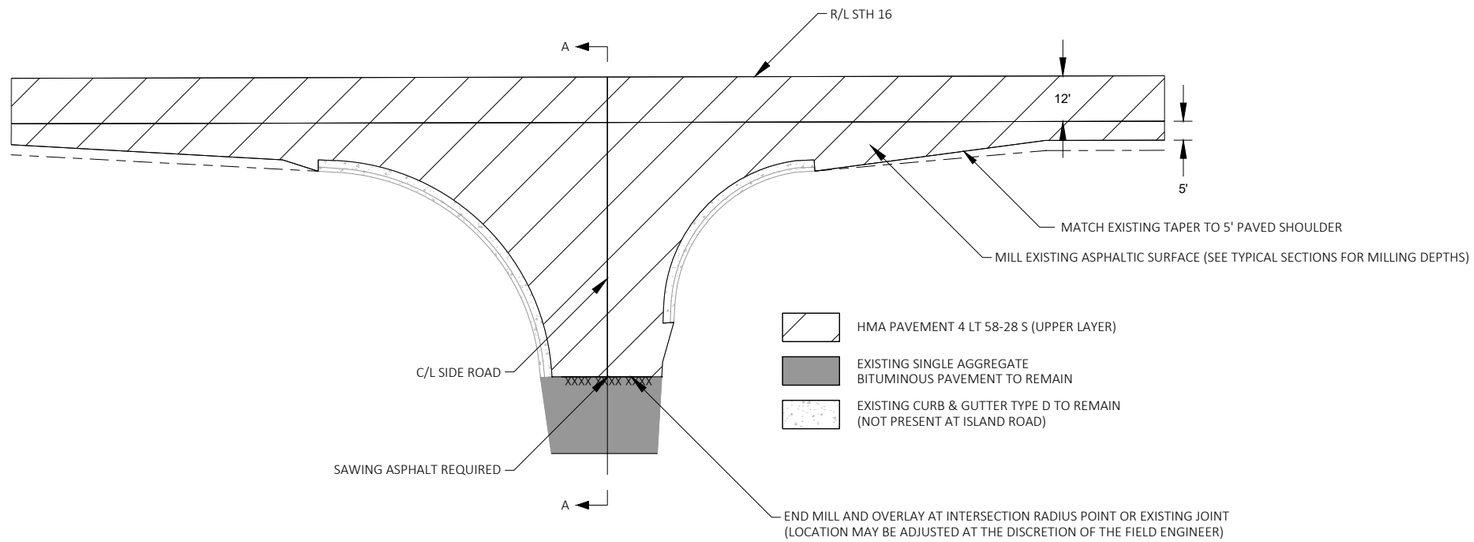

PLAN VIEW

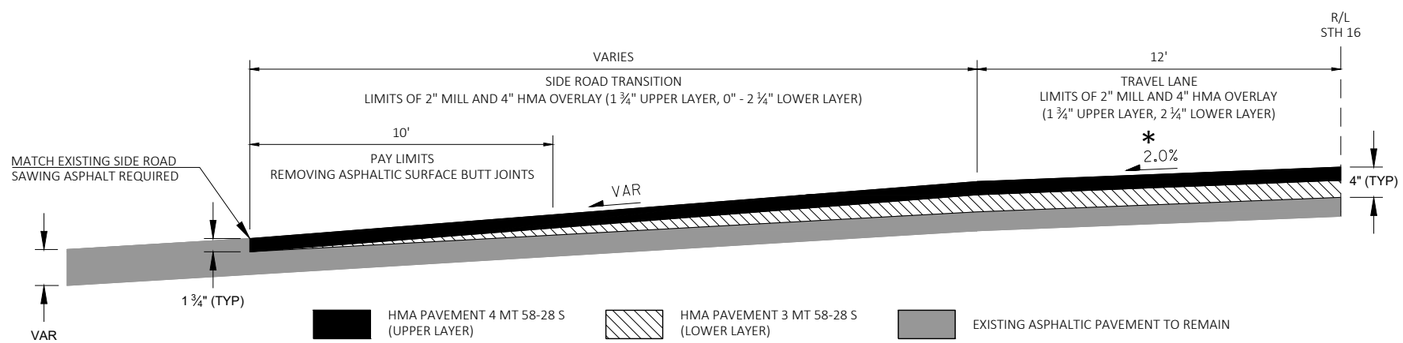

SECTION A-A

SIDE ROAD WITH CURB AND GUTTER TRANSITION DETAIL

*2.0% TYPICAL; MATCH EXISTING PAVEMENT CROSS SLOPE ALONG SUPERELEVATED CURVES

DUNNING ROAD (SOUTH)

COWGILL ROAD/RIO STREET

COLUMBIA COUNTY SOLID WASTE WASTE ENTRANCE (INCLUDES RIGHT TURN LANE)

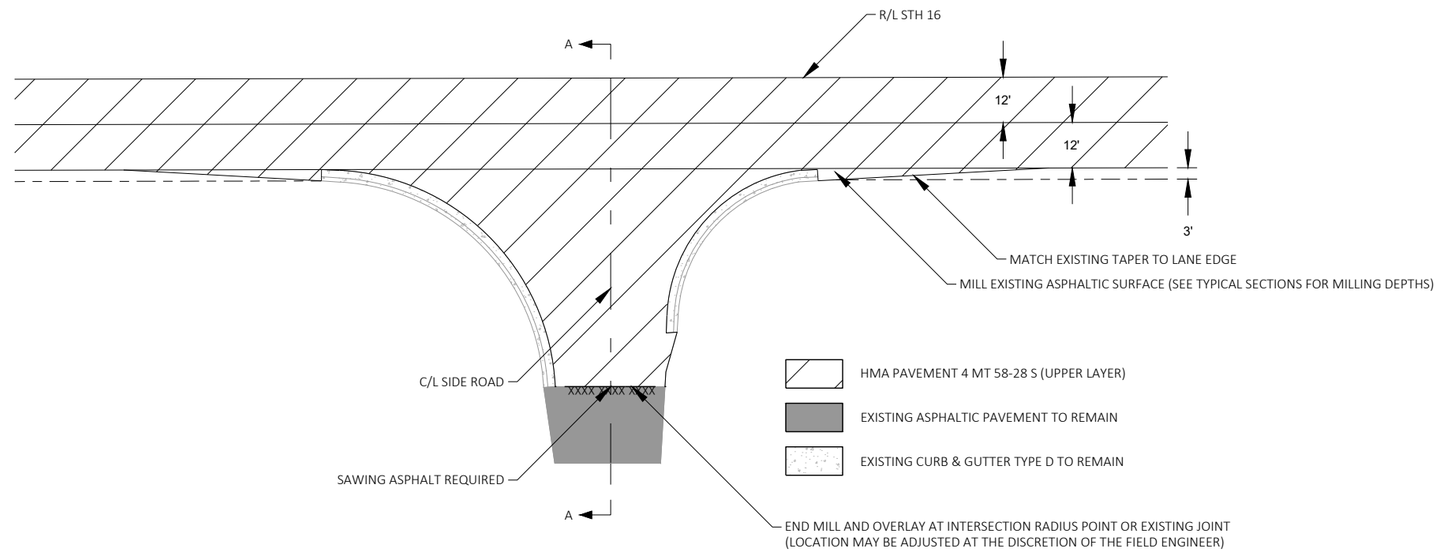

PLAN VIEW

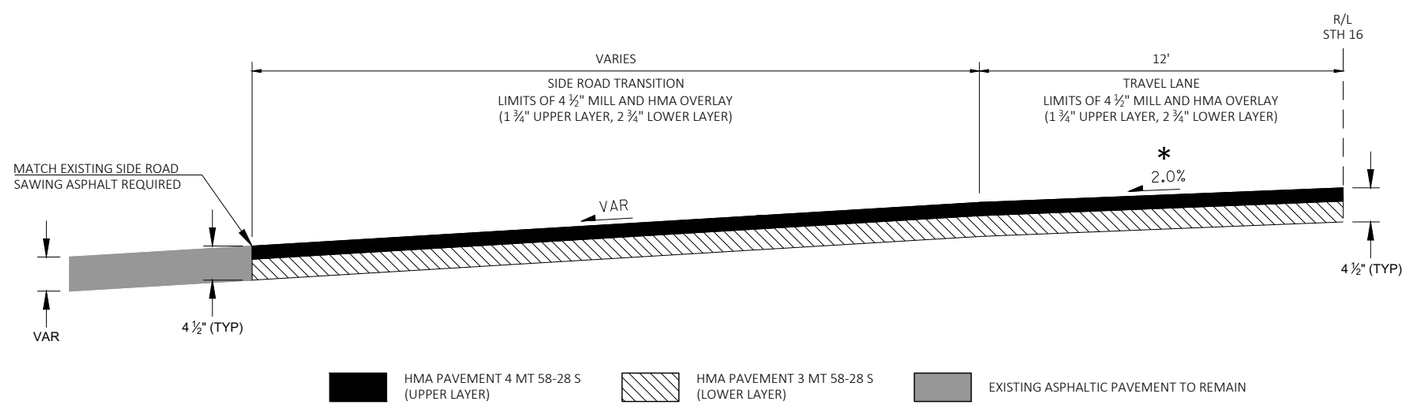

SECTION A-A

SIDE ROAD WITH CURB AND GUTTER TRANSITION DETAIL

*2.0% TYPICAL; MATCH EXISTING PAVEMENT CROSS SLOPE ALONG SUPERELEVATED CURVES

CTH B/C

PARIS STREET

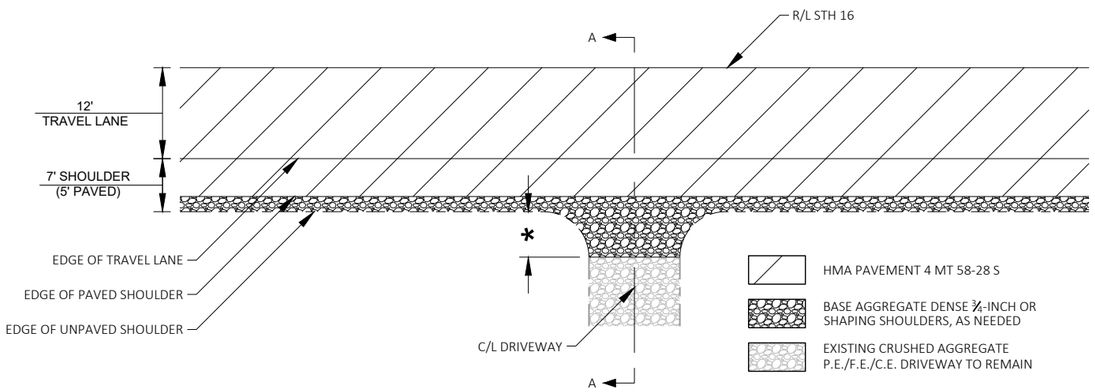

PLAN VIEW

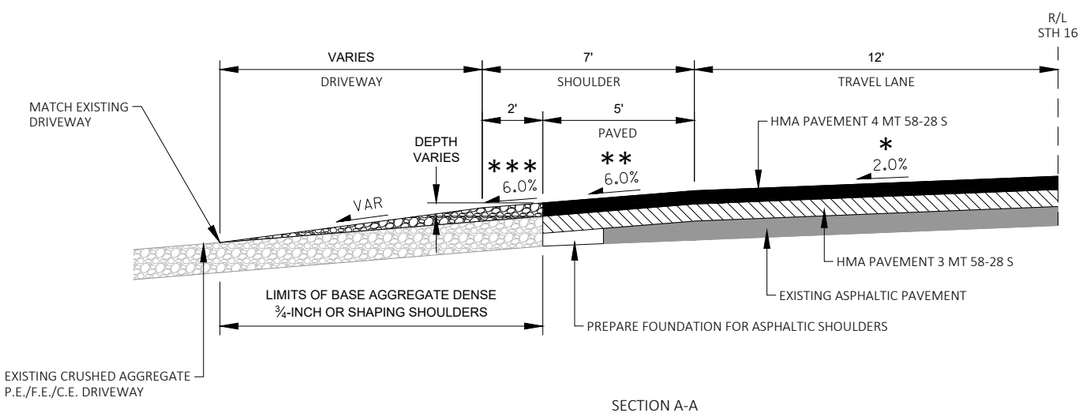

SECTION A-A

P.E./F.E./C.E. DRIVEWAY DETAIL - EXISTING CRUSHED AGGREGATE (STA 19+04.50 - STA 561+35)

*REPLACE TO THE DRIVEWAY RADIUS POINTS OR AS DIRECTED BY THE FIELD ENGINEER

**2.0% TYPICAL ON DRIVING LANE; 6.0% TYPICAL ON PAVED SHOULDER; MATCH EXISTING PAVEMENT CROSS SLOPE ALONG SUPERELEVATED CURVES

***6% TYPICAL; MATCH S.E. SLOPE AT LOW END OF S.E. CURVE; 8% MAX. ROLLOVER RATE AT HIGH END OF S.E. CURVE

2

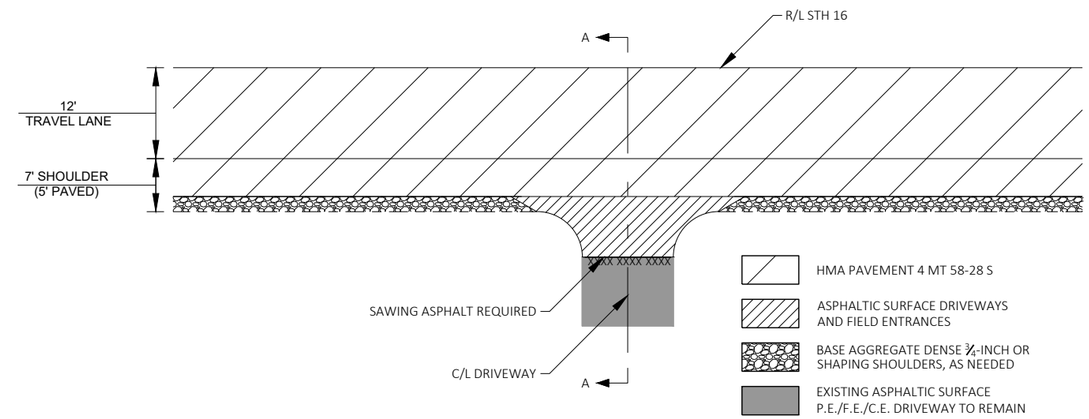

PLAN VIEW

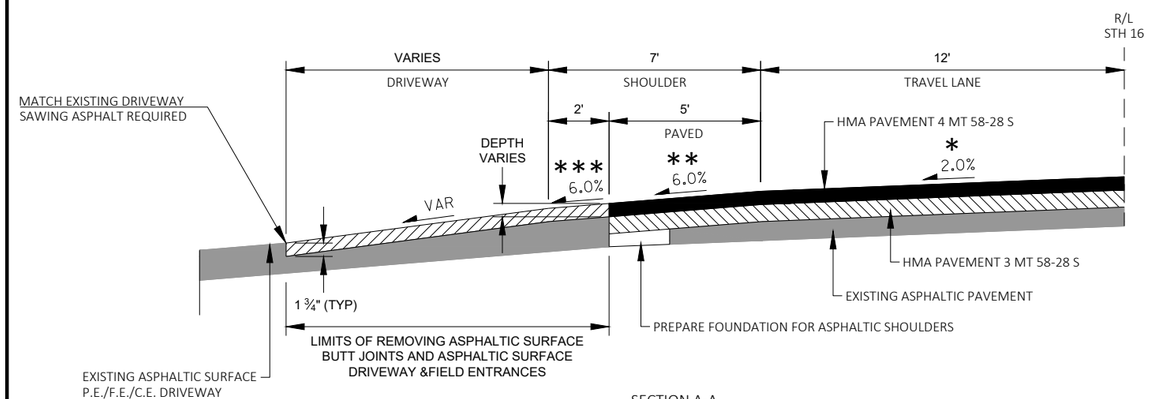

SECTION A-A

P.E./F.E./C.E. DRIVEWAY DETAIL - EXISTING ASPHALT (STA 19+04.50 - STA 561+35)

*REPLACE TO THE EXISTING PAVEMENT JOINT OR AS DIRECTED BY THE FIELD ENGINEER

**MATCH EXISTING PAVEMENT CROSS SLOPE

***6% TYPICAL; MATCH S.E. SLOPE AT LOW END OF S.E. CURVE; 8% MAX. ROLLOVER RATE AT HIGH END OF S.E. CURVE

2

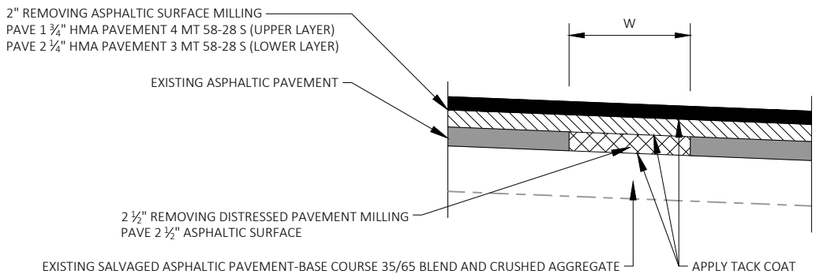

SECTION A-A

■ HMA PAVEMENT 4 MT 58-28 S (UPPER LAYER)

▨ HMA PAVEMENT 3 MT 58-28 S (LOWER LAYER)

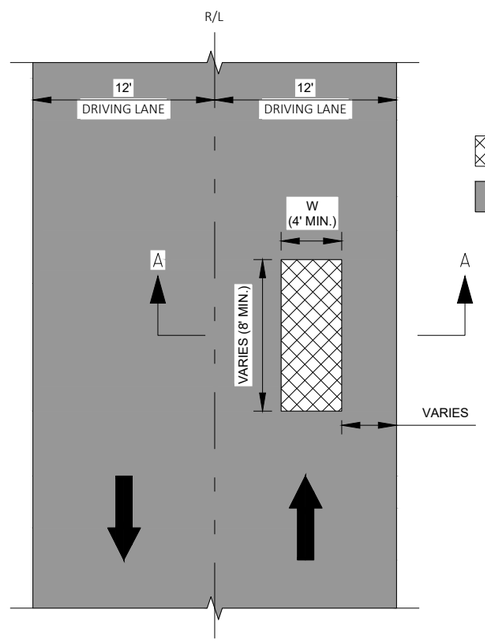

PLAN VIEW - MILLED SURFACE

▩ 2 ½" REMOVING DISTRESSED PAVEMENT MILLING
PAVE 2 ½" ASPHALTIC SURFACE

▒ EXISTING ASPHALTIC PAVEMENT TO REMAIN

REMOVING DISTRESSED PAVEMENT MILLING DETAIL

SEE TABLES (RIGHT) FOR APPROXIMATE LOCATIONS AND WIDTHS.
EXACT LOCATIONS AND WIDTHS TO BE DETERMINED BY THE FIELD ENGINEER.

STATION	TO	STATION	OFFSET	W (FT)
	-		LT	
	-		LT	
	-		LT	
	-		LT	
	-		LT	
	-		LT	
	-		LT	
	-		LT	
	-		LT	
	-		LT	
	-		LT	
	-		LT	
	-		LT	
	-		LT	
	-		LT	
	-		LT	
	-		LT	
	-		LT	
	-		LT	
	-		LT	
	-		LT	
	-		LT	
	-		LT	
	-		LT	
	-		LT	
	-		LT	
	-		LT	
	-		LT	
	-		LT	

STATION	TO	STATION	OFFSET	W (FT)
	-		RT	
	-		RT	
	-		RT	
	-		RT	
	-		RT	
	-		RT	
	-		RT	
	-		RT	
	-		RT	
	-		RT	
	-		RT	
	-		RT	
	-		RT	
	-		RT	
	-		RT	
	-		RT	
	-		RT	
	-		RT	
	-		RT	
	-		RT	
	-		RT	
	-		RT	
	-		RT	
	-		RT	
	-		RT	
	-		RT	
	-		RT	
	-		RT	
	-		RT	
	-		RT	
	-		RT	
	-		RT	
	-		RT	
	-		RT	
	-		RT	
	-		RT	
	-		RT	
	-		RT	
	-		RT	
	-		RT	
	-		RT	
	-		RT	
	-		RT	
	-		RT	
	-		RT	
	-		RT	

2

PROJECT NO: 1400-01-73	HWY: STH 16	COUNTY: COLUMBIA	CONSTRUCTION DETAILS - REMOVING DISTRESSED PAVEMENT MILLING DETAILS	SHEET	E

FILE NAME : N:\PDS\C3D\14000103\SHEETSPLAN\021002-CD.DWG
LAYOUT NAME - 07
PLOT DATE : 10/12/2020 2:46 PM
PLOT BY : RINZEL, JAMES M
PLOT NAME :
PLOT SCALE : 1 IN:10 FT
WISDOT/CADDS SHEET 42

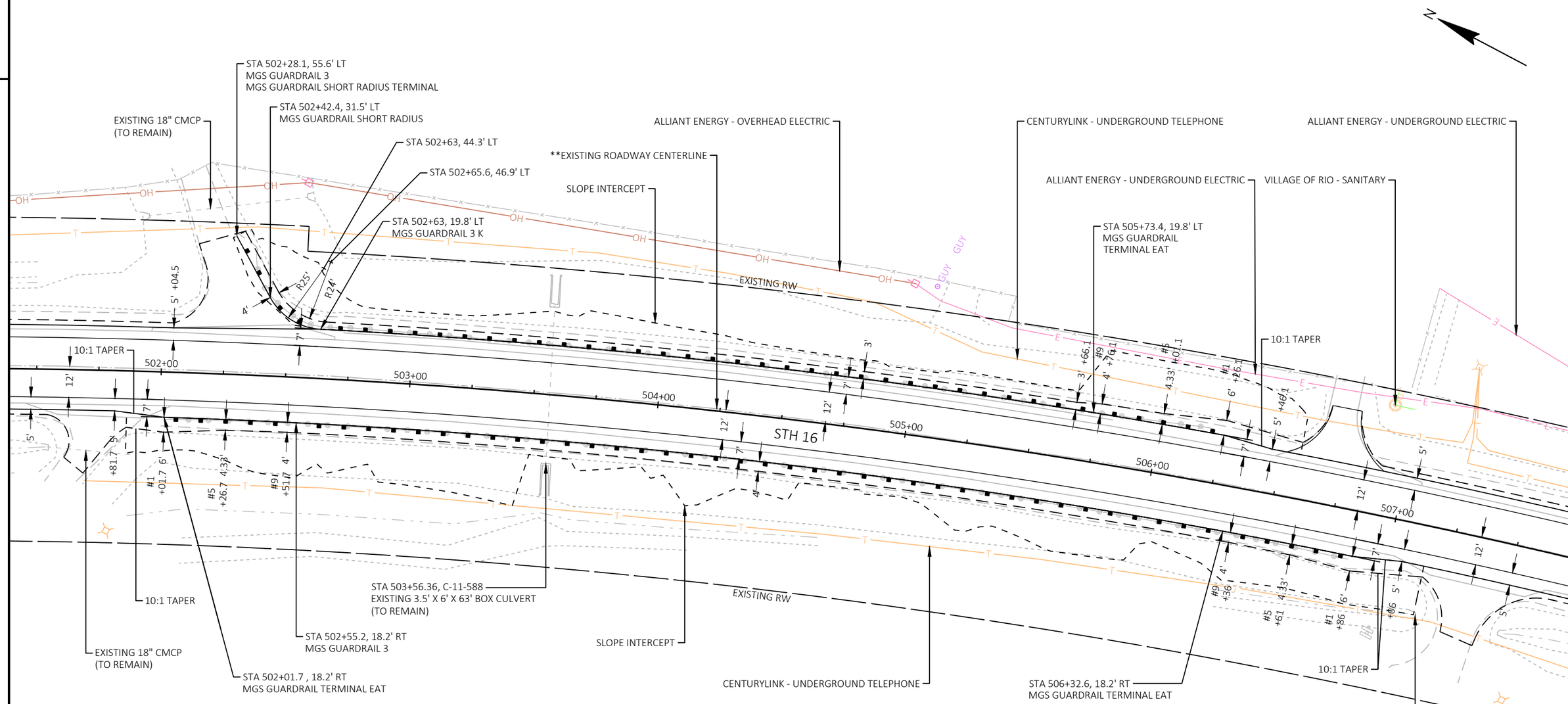

MGS GUARDRAIL LAYOUT DETAILS

TYPE	LOCATION	LOCATION
MGS GUARDRAIL TERMINAL EAT	STA 502+01.7, 18.2' RT	STA 502+55.2, 18.2' RT
MGS GUARDRAIL 3	STA 502+55.2, 18.2' RT	STA 506+32.6, 18.2' RT
MGS GUARDRAIL TERMINAL EAT	STA 506+32.6, 18.2' RT	STA 506+86, 18.2' RT
MGS GUARDRAIL 3	STA 502+28.1, 55.6' LT	STA 502+42.4, 31.5' LT
MGS GUARDRAIL SHORT RADIUS	STA 502+42.4, 31.5' LT	STA 502+63, 19.8' LT
MGS GUARDRAIL 3 K	STA 502+63, 19.8' LT	STA 505+73.4, 19.8' LT
MGS GUARDRAIL TERMINAL EAT	STA 505+73.4, 19.8' LT	STA 506+26.1, 19.8' LT

**NOTE: THE EXISTING ROADWAY CENTERLINE IS 0.7'-0.8' LEFT OF THE ROADWAY REFERENCE LINE WITHIN THE ROADWAY CURVE. SEE CROSS SECTIONS FOR MORE INFORMATION.

PROJECT NO: 1400-01-73	HWY: STH 16	COUNTY: COLUMBIA	CONSTRUCTION DETAILS - MGS GUARDRAIL DETAILS	SHEET	E

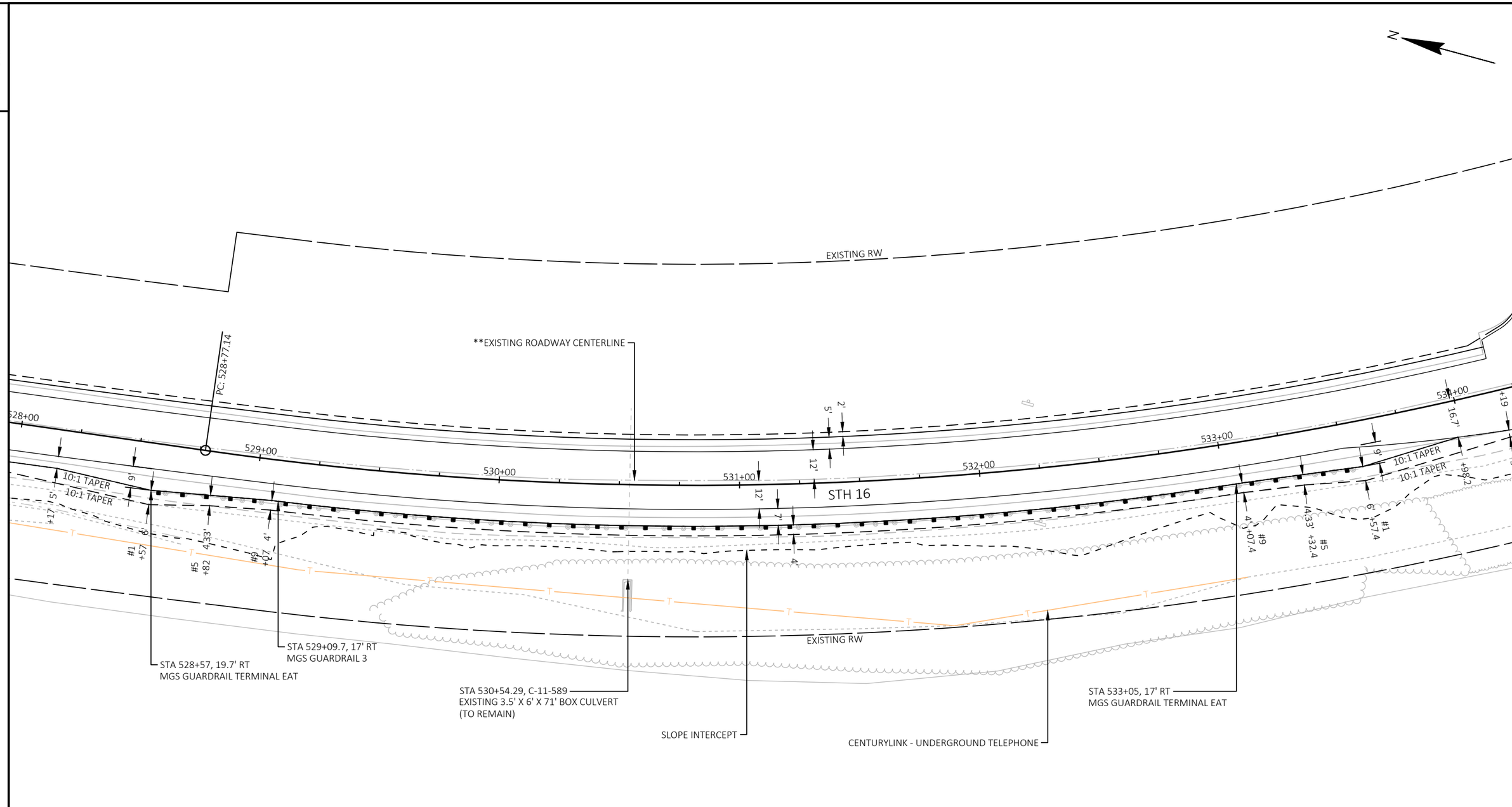

MGS GUARDRAIL LAYOUT DETAILS		
TYPE	LOCATION	LOCATION
MGS GUARDRAIL TERMINAL EAT	STA 528+57, 19.7' RT	STA 529+09.7, 17' RT
MGS GUARDRAIL 3	STA 529+09.7, 17' RT	STA 533+05, 17' RT
MGS GUARDRAIL TERMINAL EAT	STA 533+05, 17' RT	STA 533+57.4, 19' RT

**NOTE: THE EXISTING ROADWAY CENTERLINE IS 1.6'-2' LEFT OF THE ROADWAY REFERENCE LINE WITHIN THE ROADWAY CURVE. SEE CROSS SECTIONS FOR MORE INFORMATION.

PROJECT NO: 1400-01-73	HWY: STH 16	COUNTY: COLUMBIA	CONSTRUCTION DETAILS - MGS GUARDRAIL DETAILS	SHEET	E

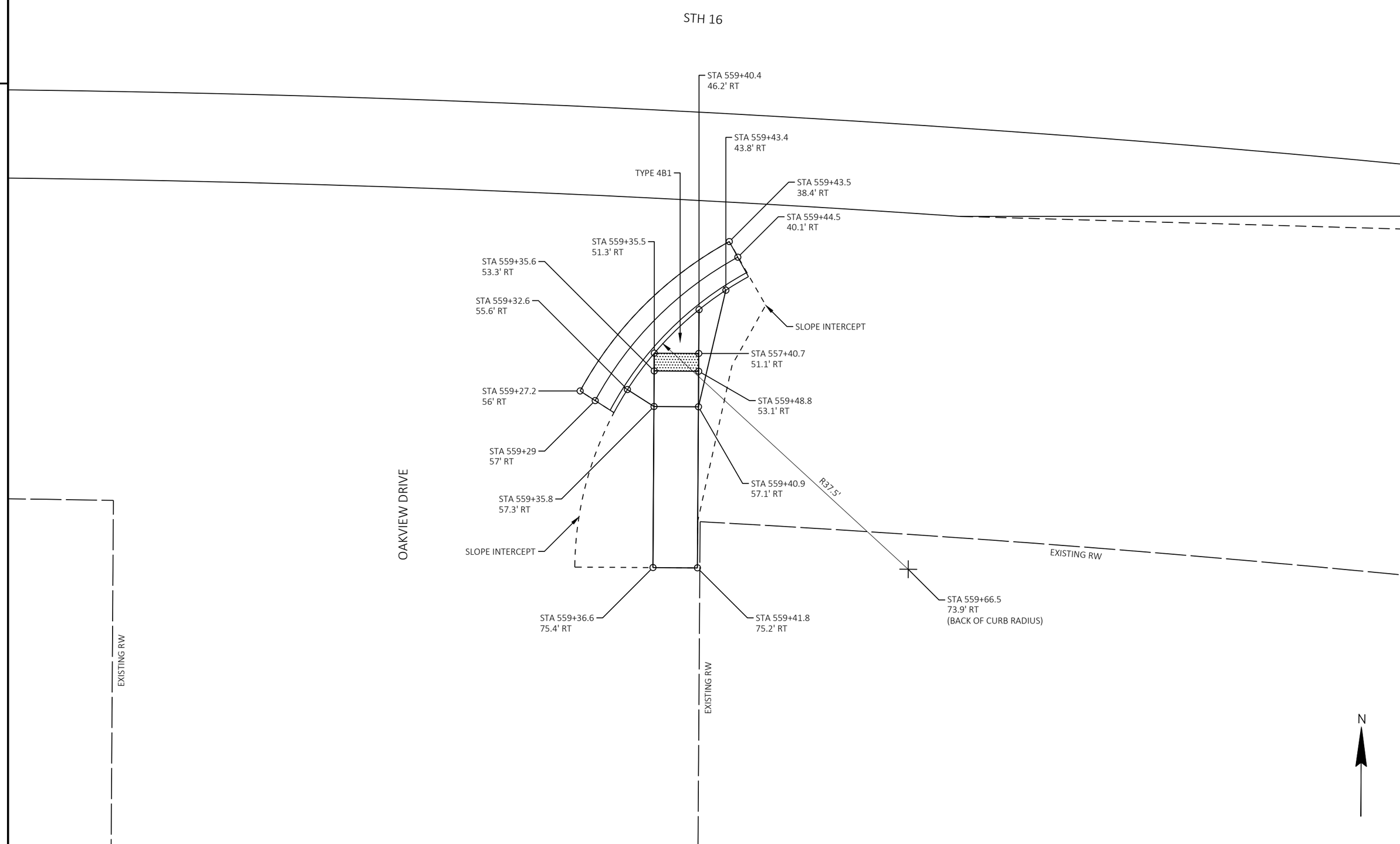

PROJECT NO: 1400-01-73	HWY: STH 16	COUNTY: COLUMBIA	CONSTRUCTION DETAILS - CURB RAMP DETAILS	SHEET	E

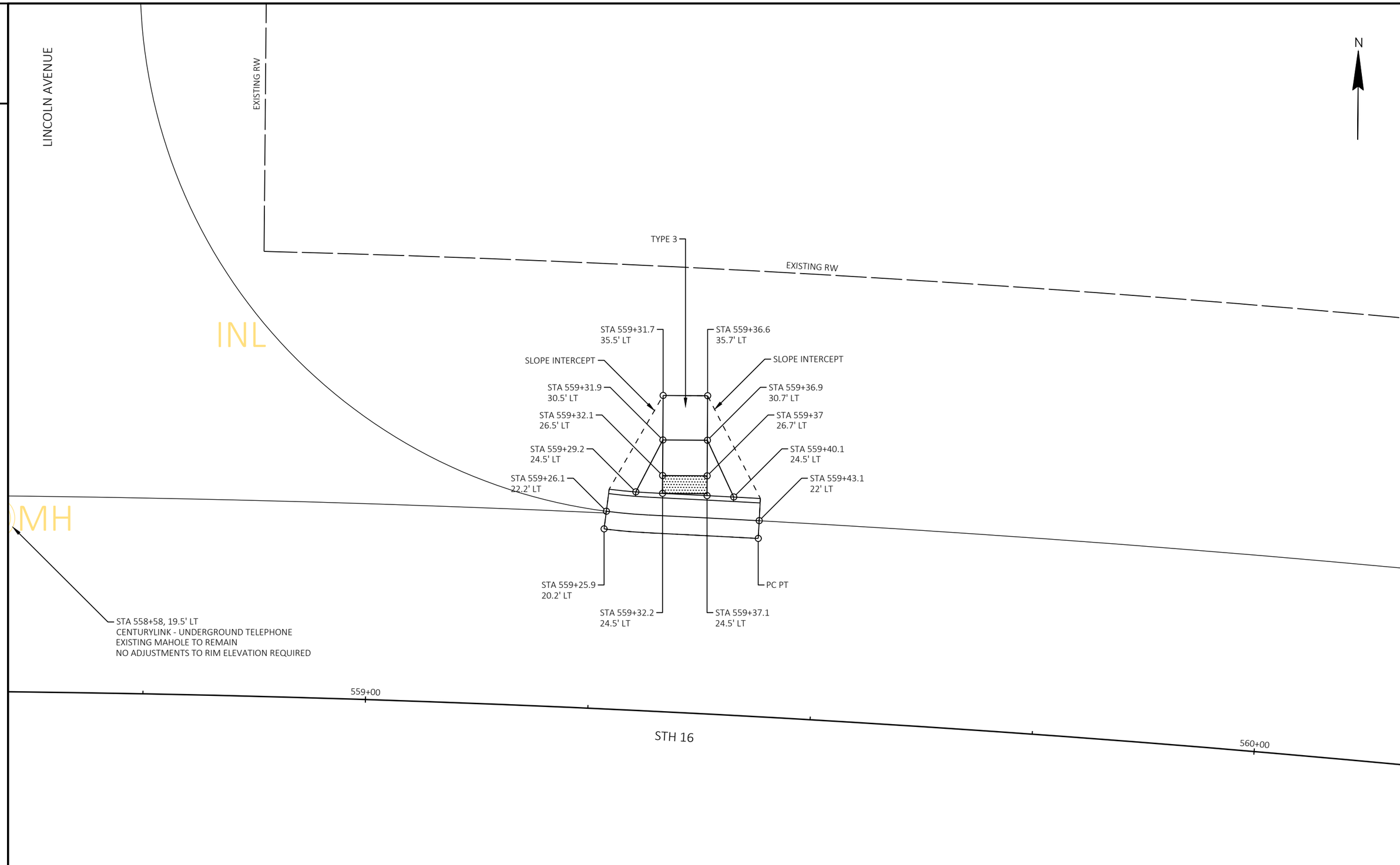

PROJECT NO: 1400-01-73	HWY: STH 16	COUNTY: COLUMBIA	CONSTRUCTION DETAILS - CURB RAMP DETAILS	SHEET	E

FILE NAME : N:\PDS\C3D\14000103\SHEETSPLAN\021004-CD.DWG
LAYOUT NAME - 02
PLOT DATE : 10/12/2020 2:52 PM
PLOT BY : RINZEL, JAMES M
PLOT NAME :
PLOT SCALE : 1 IN:10 FT
WISDOT/CADDS SHEET 42

2

BEGIN PROJECT
STA 19+04.50
SAWCUT REQUIRED

2

PROJECT NO: 1400-01-73	HWY: STH 16	COUNTY: COLUMBIA	PLAN	SHEET	E

2

2

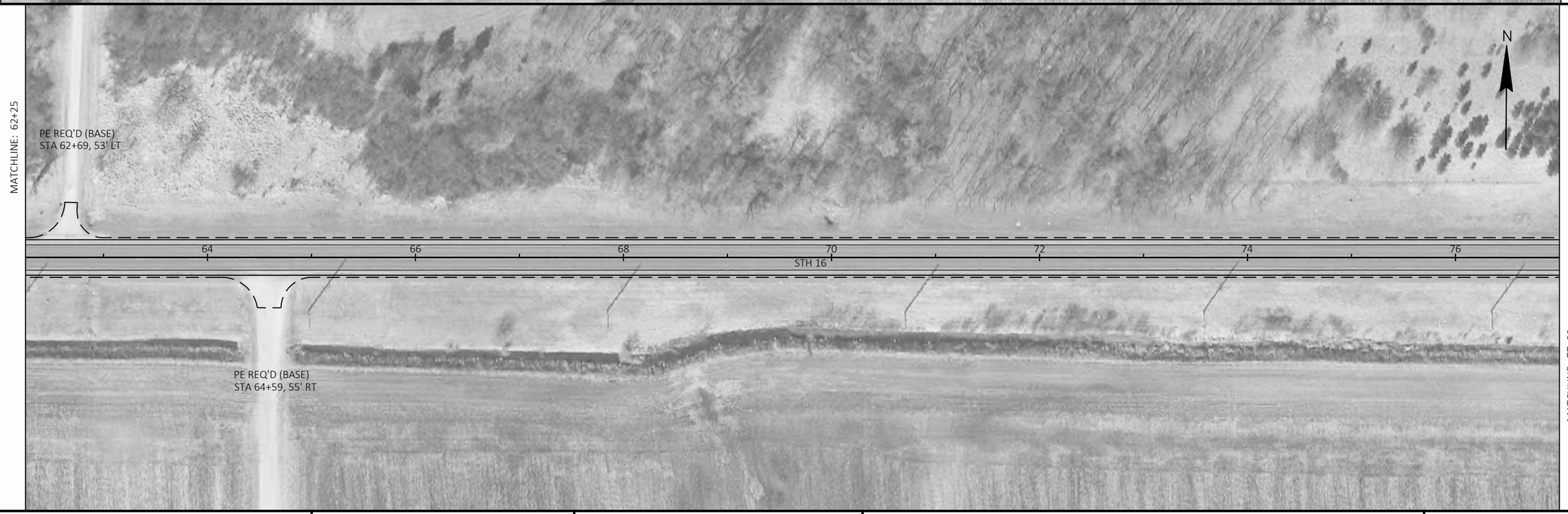

PROJECT NO: 1400-01-73	HWY: STH 16	COUNTY: COLUMBIA	PLAN	SHEET	E

FILE NAME : N:\PDS\C3D\14000103\SHEETSPLAN\021201-PN.DWG
LAYOUT NAME - 02
PLOT DATE : 10/12/2020 2:55 PM
PLOT BY : RINZEL, JAMES M
PLOT NAME :
PLOT SCALE : 1 IN:100 FT

WISDOT/CADDS SHEET 44

2

MATCHLINE: 77+00

MATCHLINE: 91+75

MATCHLINE: 91+75

MATCHLINE: 106+50

2

PROJECT NO: 1400-01-73	HWY: STH 16	COUNTY: COLUMBIA	PLAN	SHEET	E

FILE NAME : N:\PDS\C3D\14000103\SHEETSPLAN\021201-PN.DWG
LAYOUT NAME - 03

PLOT DATE : 10/12/2020 2:55 PM PLOT BY : RINZEL, JAMES M PLOT NAME : PLOT SCALE : 1 IN:100 FT

WISDOT/CADDS SHEET 44

2

2

PROJECT NO: 1400-01-73	HWY: STH 16	COUNTY: COLUMBIA	PLAN	SHEET	E

FILE NAME : N:\PDS\C3D\14000103\SHEETSPLAN\021201-PN.DWG
LAYOUT NAME - 04
PLOT DATE : 10/12/2020 2:55 PM
PLOT BY : RINZEL, JAMES M
PLOT NAME :
PLOT SCALE : 1 IN:100 FT
WISDOT/CADDS SHEET 44

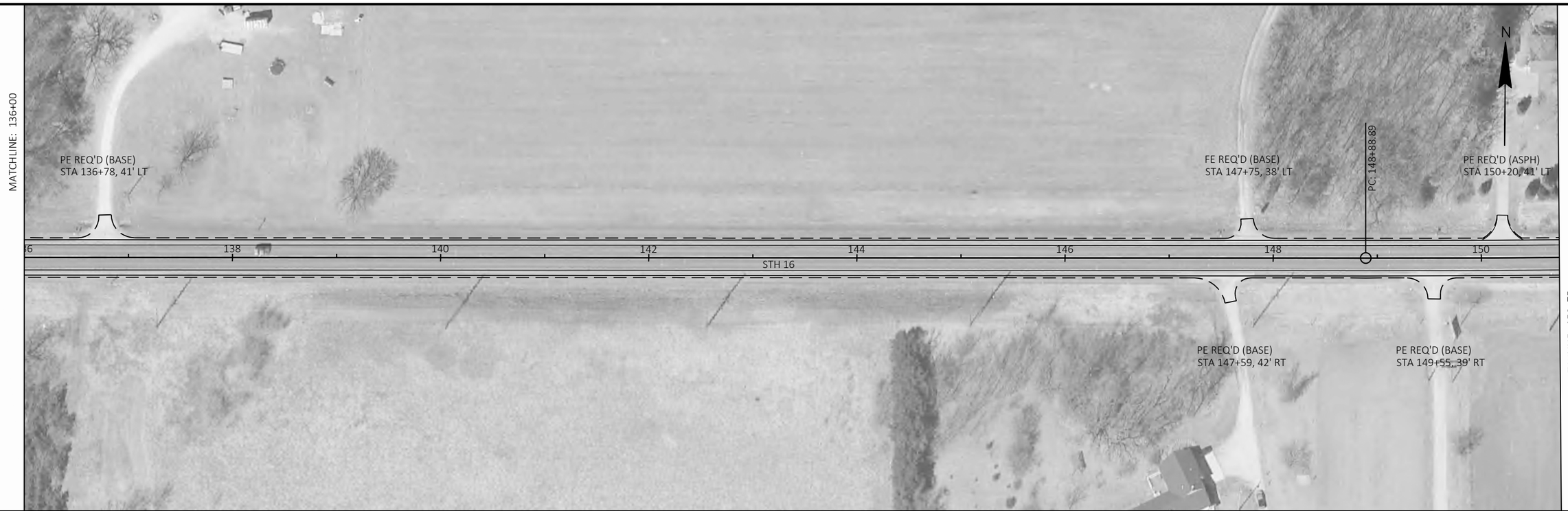

PROJECT NO: 1400-01-73	HWY: STH 16	COUNTY: COLUMBIA	PLAN	SHEET	E

2

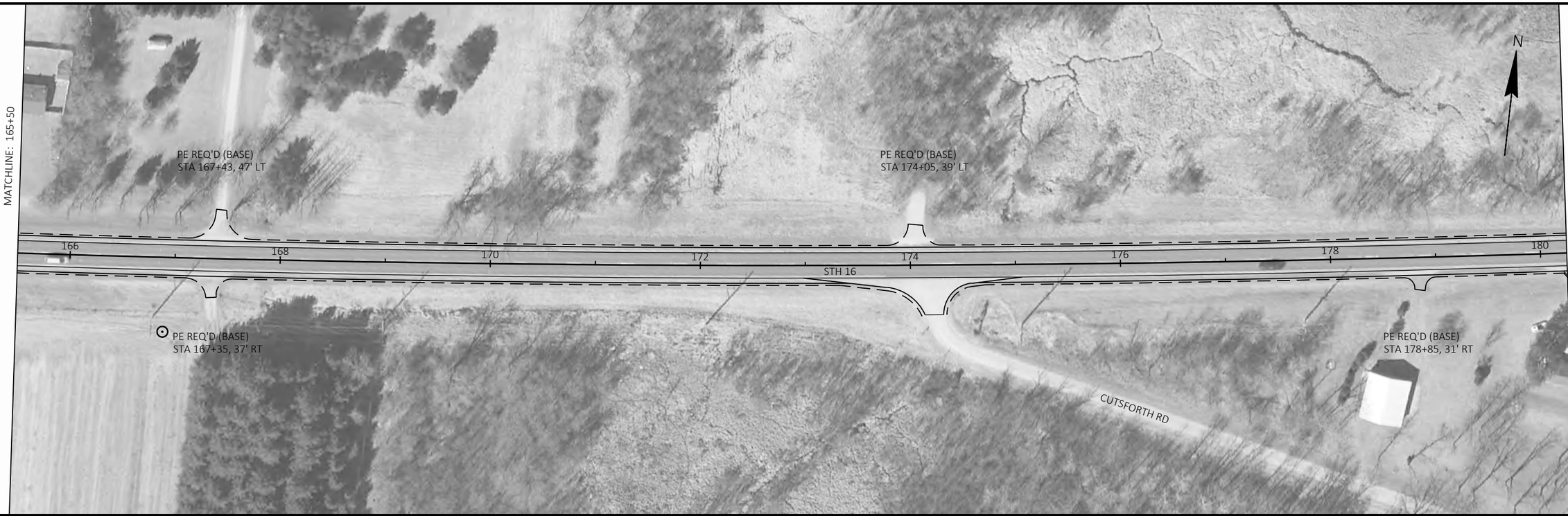

2

PROJECT NO: 1400-01-73	HWY: STH 16	COUNTY: COLUMBIA	PLAN	SHEET	E

FILE NAME : N:\PDS\C3D\14000103\SHEETSPLAN\021201-PN.DWG
LAYOUT NAME - 06
PLOT DATE : 10/12/2020 2:55 PM
PLOT BY : RINZEL, JAMES M
PLOT NAME :
PLOT SCALE : 1 IN:100 FT

WISDOT/CADDS SHEET 44

2

2

PROJECT NO: 1400-01-73	HWY: STH 16	COUNTY: COLUMBIA	PLAN	SHEET	E

FILE NAME : N:\PDS\C3D\14000103\SHEETSPLAN\021201-PN.DWG
LAYOUT NAME - 07
PLOT DATE : 10/12/2020 2:55 PM
PLOT BY : RINZEL, JAMES M
PLOT NAME :
PLOT SCALE : 1 IN:100 FT

WISDOT/CADDS SHEET 44

PROJECT NO: 1400-01-73	HWY: STH 16	COUNTY: COLUMBIA	PLAN	SHEET	E

FILE NAME : N:\PDS\C3D\14000103\SHEETSPLAN\021201-PN.DWG
LAYOUT NAME - 08
PLOT DATE : 10/12/2020 2:55 PM
PLOT BY : RINZEL, JAMES M
PLOT NAME :
PLOT SCALE : 1 IN:100 FT
WISDOT/CADDS SHEET 44

2

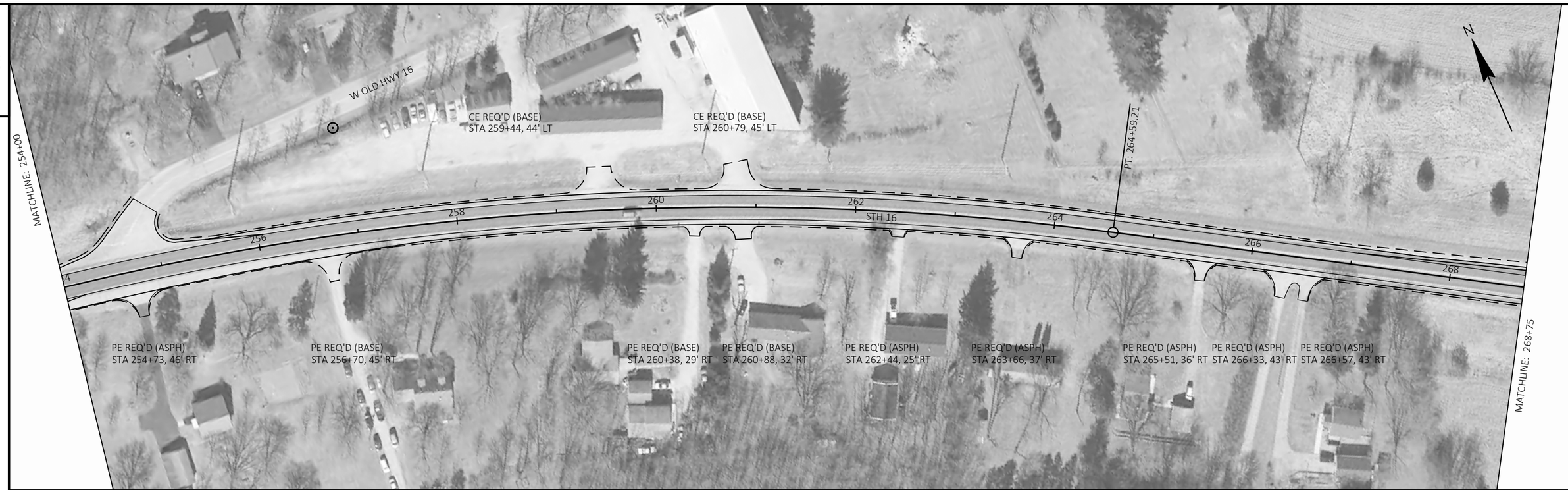

2

PROJECT NO: 1400-01-73	HWY: STH 16	COUNTY: COLUMBIA	PLAN	SHEET	E

FILE NAME : N:\PDS\C3D\14000103\SHEETSPLAN\021201-PN.DWG
LAYOUT NAME - 09
PLOT DATE : 10/12/2020 2:56 PM
PLOT BY : RINZEL, JAMES M
PLOT NAME :
PLOT SCALE : 1 IN:100 FT

2

MATCHLINE: 283+50

MATCHLINE: 298+25

MATCHLINE: 298+25

MATCHLINE: 313+00

2

PROJECT NO: 1400-01-73	HWY: STH 16	COUNTY: COLUMBIA	PLAN	SHEET	E

FILE NAME : N:\PDS\C3D\14000103\SHEETSPLAN\021201-PN.DWG
LAYOUT NAME - 10

PLOT DATE : 10/12/2020 2:56 PM PLOT BY : RINZEL, JAMES M PLOT NAME : PLOT SCALE : 1 IN:100 FT

WISDOT/CADDS SHEET 44

2

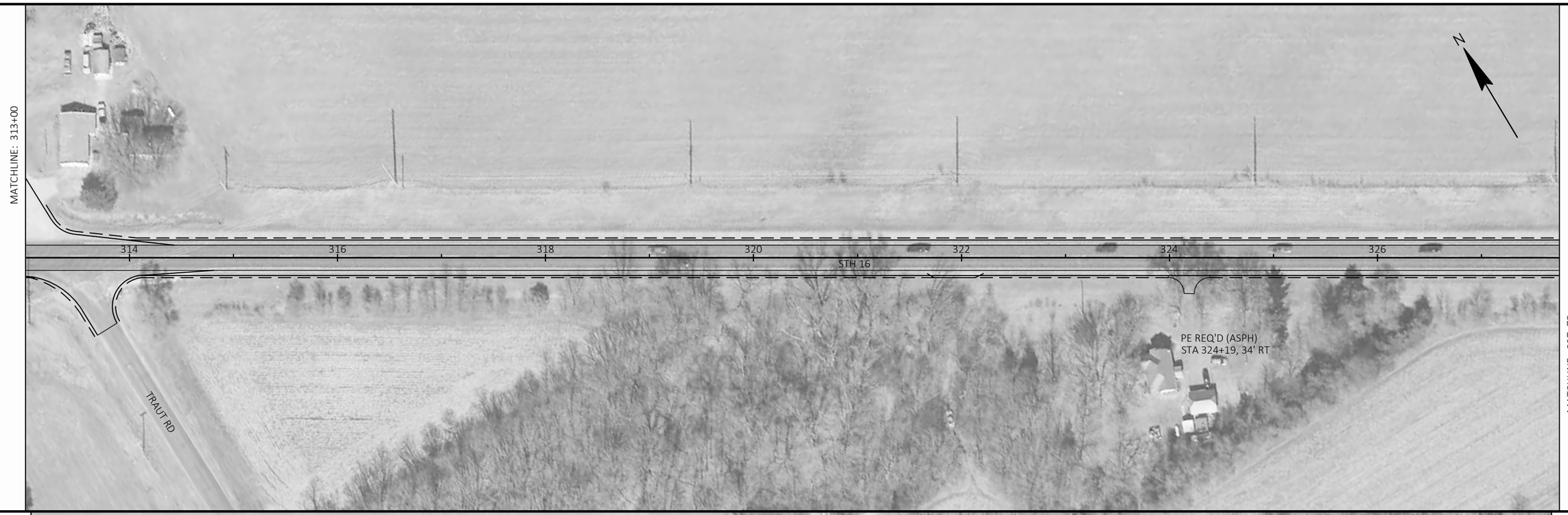

2

PROJECT NO: 1400-01-73	HWY: STH 16	COUNTY: COLUMBIA	PLAN	SHEET	E

FILE NAME : N:\PDS\C3D\14000103\SHEETSPLAN\021201-PN.DWG
LAYOUT NAME - 11
PLOT DATE : 10/12/2020 2:56 PM
PLOT BY : RINZEL, JAMES M
PLOT NAME :
PLOT SCALE : 1 IN:100 FT

WISDOT/CADDS SHEET 44

2

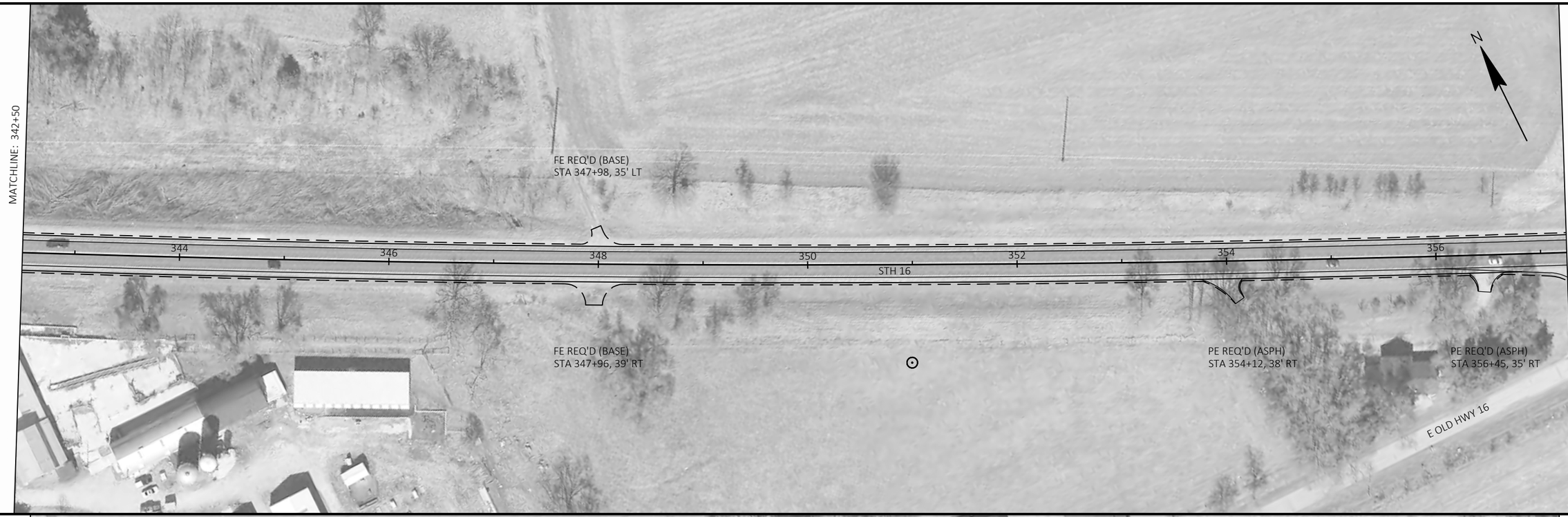

2

PROJECT NO: 1400-01-73	HWY: STH 16	COUNTY: COLUMBIA	PLAN	SHEET	E

FILE NAME : N:\PDS\C3D\14000103\SHEETSPLAN\021201-PN.DWG
LAYOUT NAME - 12
PLOT DATE : 10/12/2020 2:56 PM
PLOT BY : RINZEL, JAMES M
PLOT NAME :
PLOT SCALE : 1 IN:100 FT

WISDOT/CADDS SHEET 44

2

2

PROJECT NO: 1400-01-73	HWY: STH 16	COUNTY: COLUMBIA	PLAN	SHEET	E

2

MATCHLINE: 401+50

MATCHLINE: 416+25

MATCHLINE: 416+25

MATCHLINE: 431+00

2

PROJECT NO: 1400-01-73	HWY: STH 16	COUNTY: COLUMBIA	PLAN	SHEET	E

FILE NAME : N:\PDS\C3D\14000103\SHEETSPLAN\021201-PN.DWG
LAYOUT NAME - 14

PLOT DATE : 10/12/2020 2:56 PM PLOT BY : RINZEL, JAMES M PLOT NAME : PLOT SCALE : 1 IN:100 FT

WISDOT/CADDS SHEET 44

2

MATCHLINE: 431+00

MATCHLINE: 445+75

MATCHLINE: 445+75

MATCHLINE: 460+50

2

PROJECT NO: 1400-01-73	HWY: STH 16	COUNTY: COLUMBIA	PLAN	SHEET	E

FILE NAME : N:\PDS\C3D\14000103\SHEETSPLAN\021201-PN.DWG
LAYOUT NAME - 15

PLOT DATE : 10/12/2020 2:57 PM PLOT BY : RINZEL, JAMES M PLOT NAME : PLOT SCALE : 1 IN:100 FT

WISDOT/CADDS SHEET 44

2

MATCHLINE: 460+50

MATCHLINE: 475+25

MATCHLINE: 475+25

MATCHLINE: 490+00

2

PROJECT NO: 1400-01-73	HWY: STH 16	COUNTY: COLUMBIA	PLAN	SHEET	E

FILE NAME : N:\PDS\C3D\14000103\SHEETSPLAN\021201-PN.DWG
LAYOUT NAME - 16
PLOT DATE : 10/12/2020 2:57 PM
PLOT BY : RINZEL, JAMES M
PLOT NAME :
PLOT SCALE : 1 IN:100 FT

WISDOT/CADDS SHEET 44

2

PROJECT NO: 1400-01-73	HWY: STH 16	COUNTY: COLUMBIA	PLAN	SHEET	E

FILE NAME : N:\PDS\C3D\14000103\SHEETSPLAN\021201-PN.DWG
LAYOUT NAME - 17
PLOT DATE : 10/12/2020 2:57 PM
PLOT BY : RINZEL, JAMES M
PLOT NAME :
PLOT SCALE : 1 IN:100 FT

2

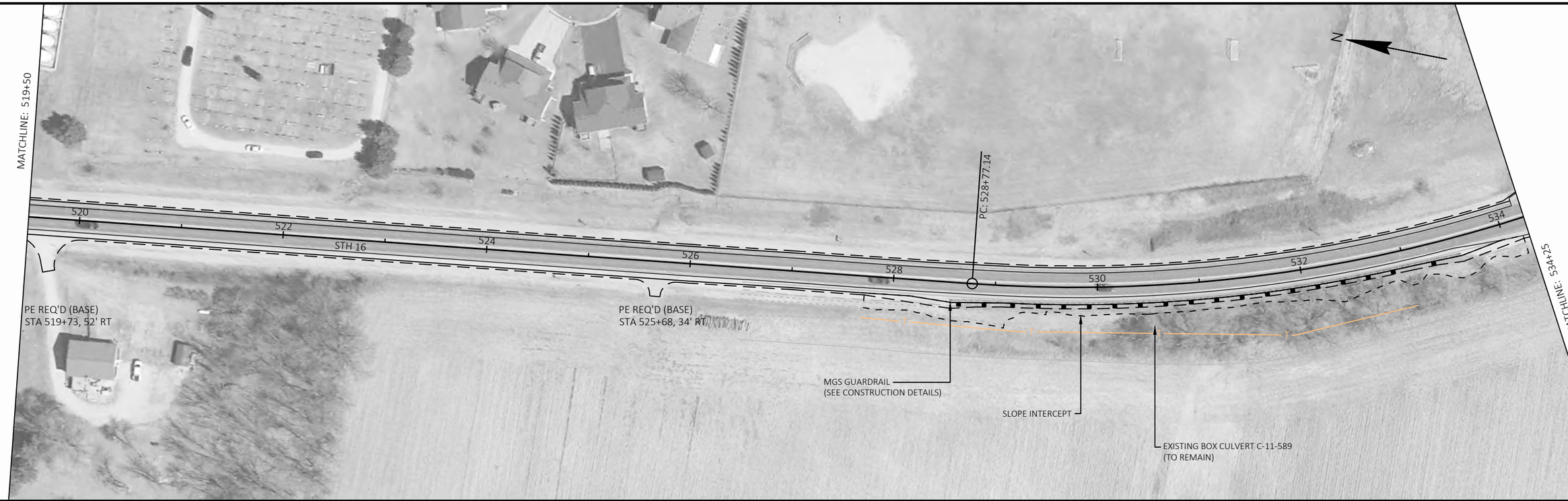

2

PROJECT NO: 1400-01-73	HWY: STH 16	COUNTY: COLUMBIA	PLAN	SHEET	E

FILE NAME : N:\PDS\C3D\14000103\SHEETSPLAN\021201-PN.DWG
LAYOUT NAME - 18
PLOT DATE : 10/12/2020 2:57 PM
PLOT BY : RINZEL, JAMES M
PLOT NAME :
PLOT SCALE : 1 IN:100 FT
WISDOT/CADDS SHEET 44

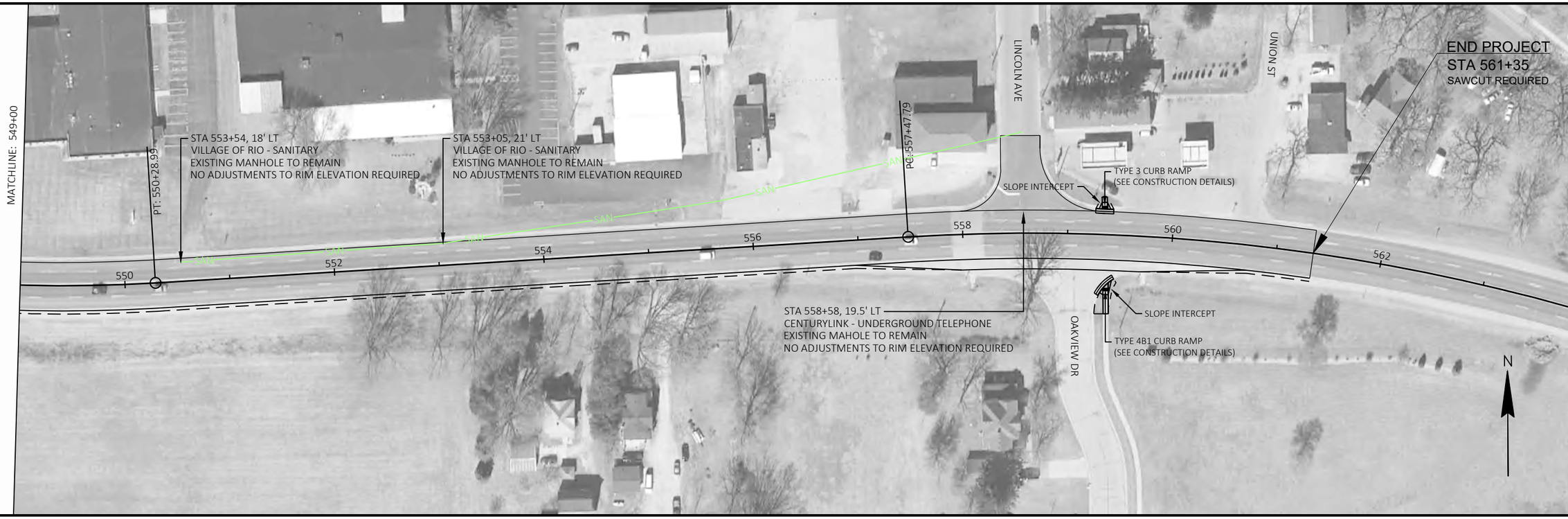
MATCHLINE: 549+00
PT: 550+28.99
STA 553+54, 18' LT
VILLAGE OF RIO - SANITARY
EXISTING MANHOLE TO REMAIN
NO ADJUSTMENTS TO RIM ELEVATION REQUIRED
STA 553+05, 21' LT
VILLAGE OF RIO - SANITARY
EXISTING MANHOLE TO REMAIN
NO ADJUSTMENTS TO RIM ELEVATION REQUIRED
PC: 557+47.79
LINCOLN AVE
UNION ST
END PROJECT
STA 561+35
SAWCUT REQUIRED
SLOPE INTERCEPT
TYPE 3 CURB RAMP
(SEE CONSTRUCTION DETAILS)
SAN
550
552
554
556
558
560
562
STA 558+58, 19.5' LT
CENTURYLINK - UNDERGROUND TELEPHONE
EXISTING MAHOLE TO REMAIN
NO ADJUSTMENTS TO RIM ELEVATION REQUIRED
OAKVIEW DR
SLOPE INTERCEPT
TYPE 4B1 CURB RAMP
(SEE CONSTRUCTION DETAILS)
N

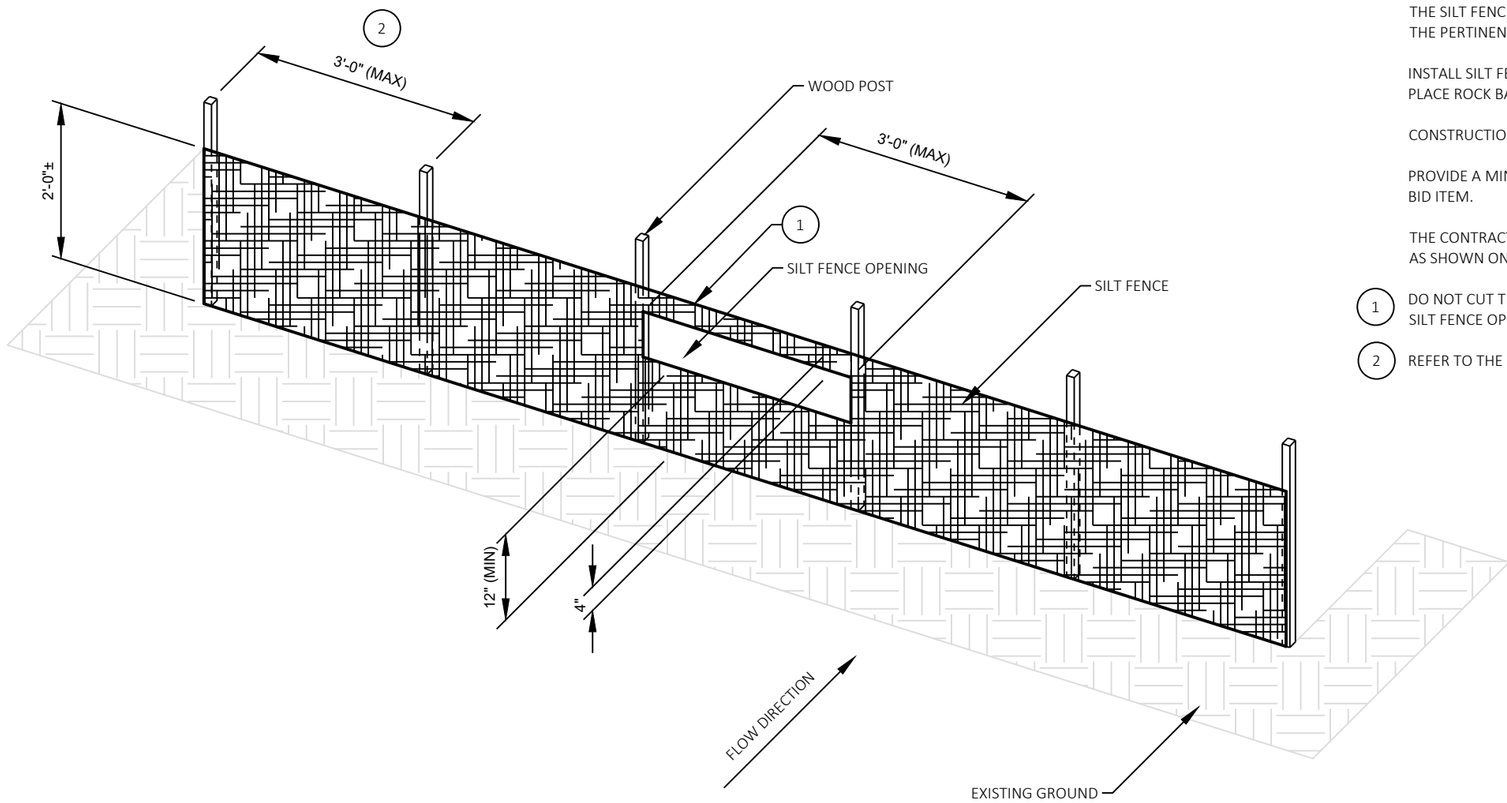

GENERAL NOTES

THE SILT FENCE RELIEF DETAIL IS A SUPPLEMENTAL DETAIL TO THE SILT FENCE STANDARD DETAILS AND SHALL CONFORM TO THE PERTINENT REQUIREMENTS OF THE STANDARD SPECIFICATIONS AND APPLICABLE SPECIAL PROVISIONS.

INSTALL SILT FENCE PRIOR TO CONSTRUCTING THE SILT FENCE OPENING. PRIOR TO CONSTRUCTING THE SILT FENCE OPENING, PLACE ROCK BAGS AT THE SILT FENCE OPENING AS SHOWN IN THIS DETAIL.

CONSTRUCTION OF THE SILT FENCE OPENING SHALL BE INCIDENTAL TO THE COST OF THE SILT FENCE BID ITEM.

PROVIDE A MINIMUM OF 22 ROCK BAGS MINIMUM PER 3 FOOT OPENING. ROCK BAGS SHALL BE PAID UNDER THE ROCK BAGS BID ITEM.

THE CONTRACTOR SHALL ADJUST THE SILT FENCE RELIEF OPENINGS WITHIN THE SILT FENCE AS NECESSARY TO PROVIDE RELIEF: AS SHOWN ON THE PLANS, TO FIT FIELD CONDITIONS AND AS DIRECTED BY THE FIELD ENGINEER.

1. DO NOT CUT THE SUPPORT CORD OR TENSION TAPE WHEN CONSTRUCTING THE SILT FENCE OPENING. KEEP THE TOP OF THE SILT FENCE OPENING 1"± BELOW THE 3" FOLD AT THE SUPPORT CORD OR TENSION TAPE.
2. REFER TO THE SILT FENCE STANDARD DETAILS FOR ALLOWABLE ADJUSTMENTS TO POST SPACING.

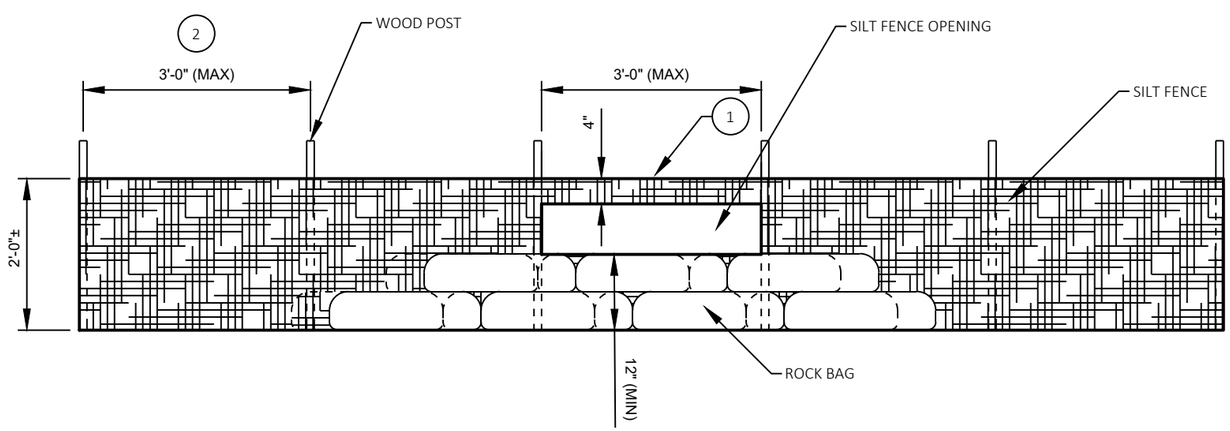

SECTION VIEW

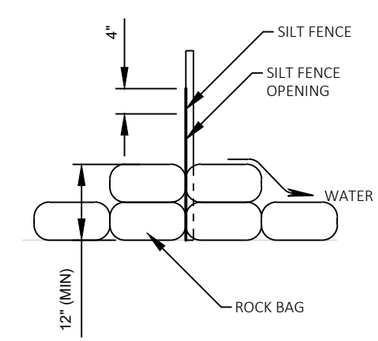

ROCK BAG DETAIL

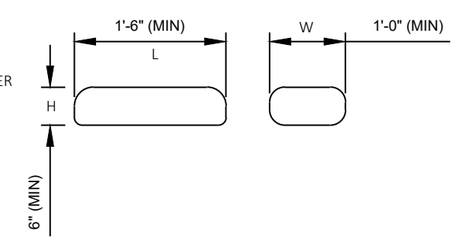

SILT FENCE RELIEF DETAIL

PROJECT NO: 1400-01-73	HWY: STH 16	COUNTY: COLUMBIA	EROSION CONTROL DETAILS	SHEET	E

2

EXISTING 18" CMCP
(TO REMAIN)

+56.4, 60.8' LT

+56.4, 50.8' LT

SLOPE INTERCEPT (TYP)

EXISTING ROADWAY CENTERLINE

ALLIANT ENERGY - OVERHEAD ELECTRIC

CENTURYLINK - UNDERGROUND TELEPHONE

ALLIANT ENERGY - UNDERGROUND ELECTRIC

ALLIANT ENERGY - UNDERGROUND ELECTRIC

VILLAGE OF RIO - SANITARY

EXISTING RW

502+00

503+00

504+00

505+00

STH 16

506+00

507+00

EXISTING RW

STA 503+56.36, C-11-588
EXISTING 3.5' X 6' X 63' BOX CULVERT
(TO REMAIN)

EXISTING 18" CMCP
(TO REMAIN)

CENTURYLINK - UNDERGROUND TELEPHONE

EXISTING 18" CMCP
(TO REMAIN)

LEGEND

SALVAGED TOPSOIL, SEEDING, FERTILIZER AND EROSION MAT CLASS I TYPE B

SILT FENCE

SILT FENCE WITH ROCK BAG RELIEF

TEMPORARY DITCH CHECK

SURFACE FLOW PATH DIRECTION

PROJECT NO: 1400-01-73	HWY: STH 16	COUNTY: COLUMBIA	EROSION CONTROL PLAN	SHEET	E

2

N

EXISTING RW

EXISTING ROADWAY CENTERLINE

STH 16

PC: 528+77.14

528+00

529+00

530+00

531+00

532+00

533+00

534+00

EXISTING RW

CENTURYLINK - UNDERGROUND TELEPHONE

STA 530+54.29, C-11-589
EXISTING 3.5' X 6' X 71' BOX CULVERT
(TO REMAIN)

SLOPE INTERCEPT

LEGEND

SALVAGED TOPSOIL, SEEDING, FERTILIZER AND EROSION MAT CLASS I TYPE B

SILT FENCE

SILT FENCE WITH ROCK BAG RELIEF

TEMPORARY DITCH CHECK

SURFACE FLOW PATH DIRECTION

2

PROJECT NO: 1400-01-73	HWY: STH 16	COUNTY: COLUMBIA	EROSION CONTROL PLAN	SHEET	E

2

VILLAGE OF RIO - SANITARY

EXISTING RW

STA 553+05, 21' LT
VILLAGE OF RIO - SANITARY
EXISTING MANHOLE TO REMAIN
NO ADJUSTMENTS TO RIM ELEVATION REQUIRED

SAN

+00 553+00 554+00 555+00 556+00 557+00 558+00

STH 16

PC: 557+47.79

EXISTING RW

VILLAGE OF RIO - SANITARY

STA 558+58, 19.5' LT
CENTURYLINK - UNDERGROUND TELEPHONE
EXISTING MAHOLE TO REMAIN
NO ADJUSTMENTS TO RIM ELEVATION REQUIRED

LINCOLN AVENUE

EXISTING RW

SLOPE INTERCEPT

N

+00 558+00 559+00 560+00

STH 16

PC: 557+47.79

OAKVIEW DRIVE

SLOPE INTERCEPT

EXISTING RW

N

LEGEND

INLET PROTECTION TYPE B

INLET PROTECTION TYPE C

SALVAGED TOPSOIL, SEEDING, FERTILIZER AND MULCH

PROJECT NO: 1400-01-73	HWY: STH 16	COUNTY: COLUMBIA	EROSION CONTROL PLAN	SHEET	E

FILE NAME : N:\PDS\C3D\14000103\SHEETSPLAN\022002-EC.DWG
LAYOUT NAME - 03

PLOT DATE : 10/12/2020 3:01 PM PLOT BY : RINZEL, JAMES M PLOT NAME : PLOT SCALE : 1 IN:40 FT

WISDOT/CADDS SHEET 42

2

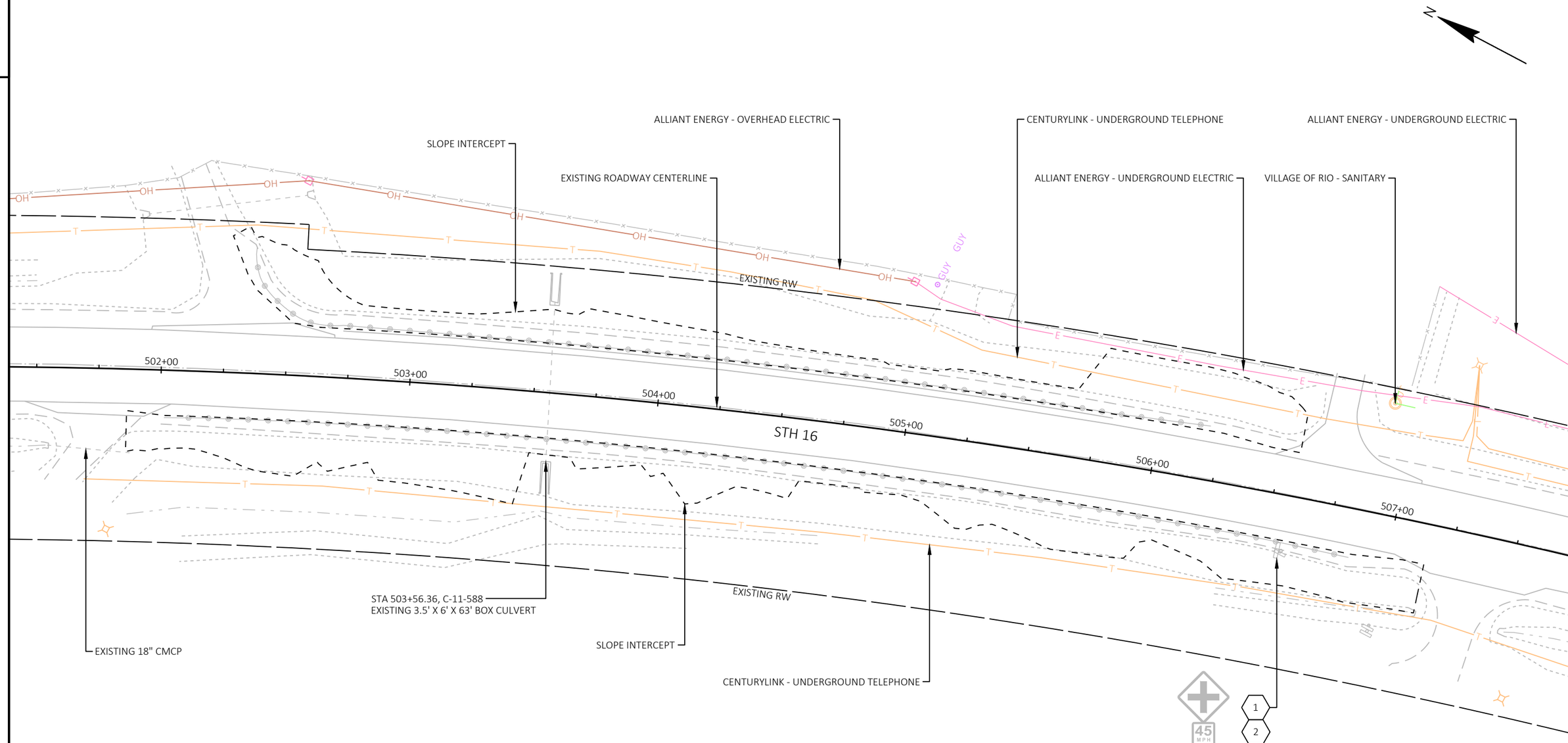

LEGEND

X — MOVING SIGNS TYPE II

NOTE: MOVING SIGNS TYPE II REQUIRE REMOVING SMALL SIGN SUPPORTS AND INSTALLING NEW POSTS WOOD 4X6-INCH X 16 UNLESS OTHERWISE NOTED. VERIFY THE LOCATION OF EXISTING SIGNS PRIOR TO CONSTRUCTION OPERATIONS. MOVE SIGN TO THE ORIGINAL LOCATION AFTER CONSTRUCTION OPERATIONS HAVE BEEN COMPLETED.

PROJECT NO: 1400-01-73	HWY: STH 16	COUNTY: COLUMBIA	MOVING SIGNS	SHEET	E

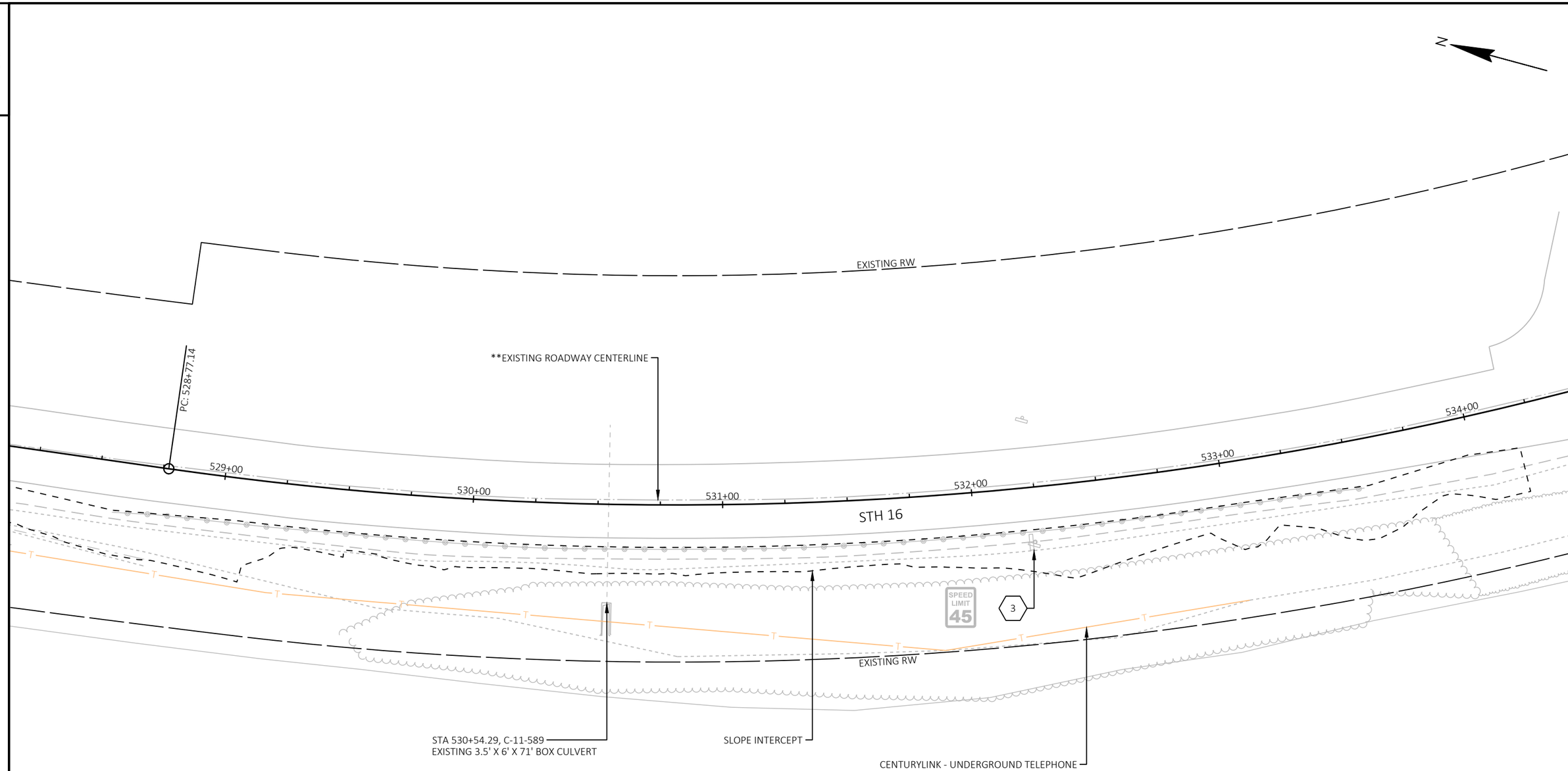

LEGEND

X — MOVING SIGNS TYPE II

NOTE: MOVING SIGNS TYPE II REQUIRE REMOVING SMALL SIGN SUPPORTS AND INSTALLING NEW POSTS WOOD 4X6-INCH X 16 UNLESS OTHERWISE NOTED. VERIFY THE LOCATION OF EXISTING SIGNS PRIOR TO CONSTRUCTION OPERATIONS. MOVE SIGN TO THE ORIGINAL LOCATION AFTER CONSTRUCTION OPERATIONS HAVE BEEN COMPLETED.

PROJECT NO: 1400-01-73	HWY: STH 16	COUNTY: COLUMBIA	MOVING SIGNS	SHEET	E

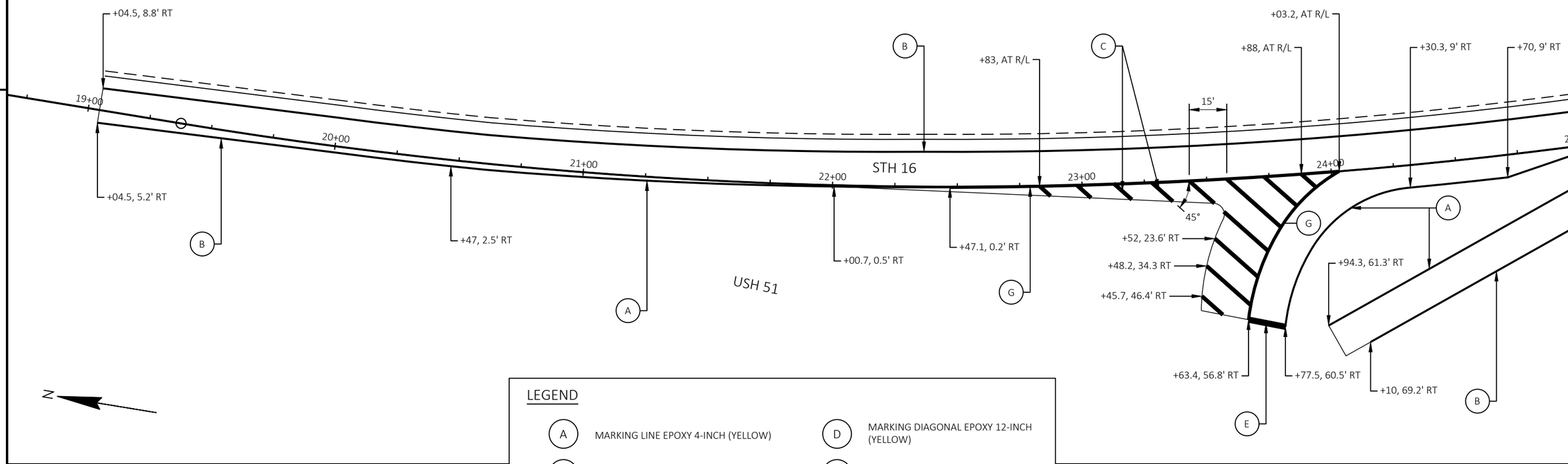

LEGEND

A	MARKING LINE EPOXY 4-INCH (YELLOW)	D	MARKING DIAGONAL EPOXY 12-INCH (YELLOW)
B	MARKING LINE GROOVED WET REF EPOXY 4-INCH (WHITE)	E	MARKING STOP LINE EPOXY 18-INCH
C	MARKING DIAGONAL EPOXY 12-INCH (WHITE)	F	MARKING LINE EPOXY 4-INCH (DOUBLE YELLOW)
G	MARKING LINE EPOXY 8-INCH (WHITE)		

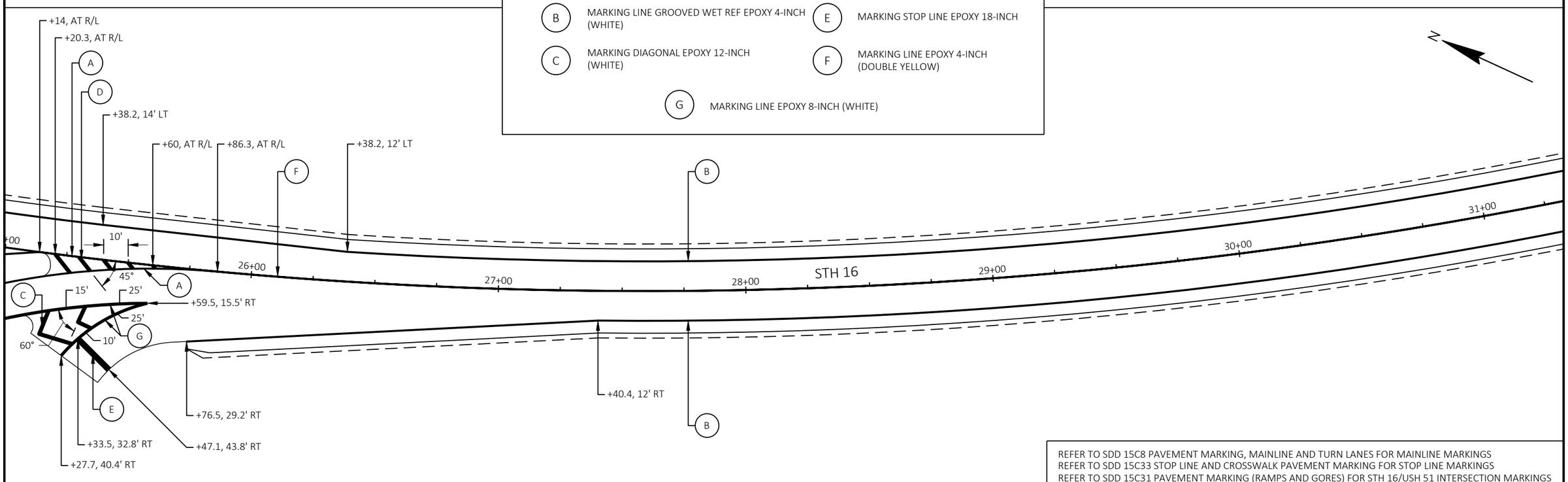

REFER TO SDD 15C8 PAVEMENT MARKING, MAINLINE AND TURN LANES FOR MAINLINE MARKINGS
REFER TO SDD 15C33 STOP LINE AND CROSSWALK PAVEMENT MARKING FOR STOP LINE MARKINGS
REFER TO SDD 15C31 PAVEMENT MARKING (RAMPS AND GORES) FOR STH 16/USH 51 INTERSECTION MARKINGS

PROJECT NO: 1400-01-73	HWY: STH 16	COUNTY: COLUMBIA	PAVEMENT MARKINGS	SHEET	E

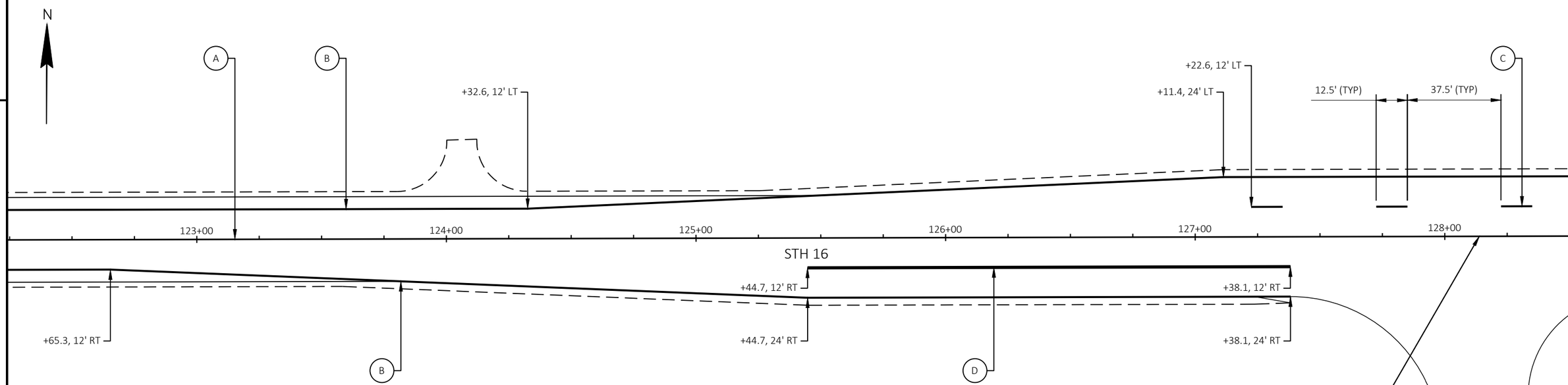

LEGEND

- (A) MARKING LINE EPOXY 4-INCH (YELLOW) (12.5' LINE, 37.5' SKIP)
- (B) MARKING LINE GROOVED WET REF EPOXY 4-INCH (WHITE)
- (C) MARKING LINE EPOXY 4-INCH (WHITE) (12.5' LINE, 37.5' SKIP)
- (D) MARKING LINE GROOVED WET REF EPOXY 8-INCH (WHITE)

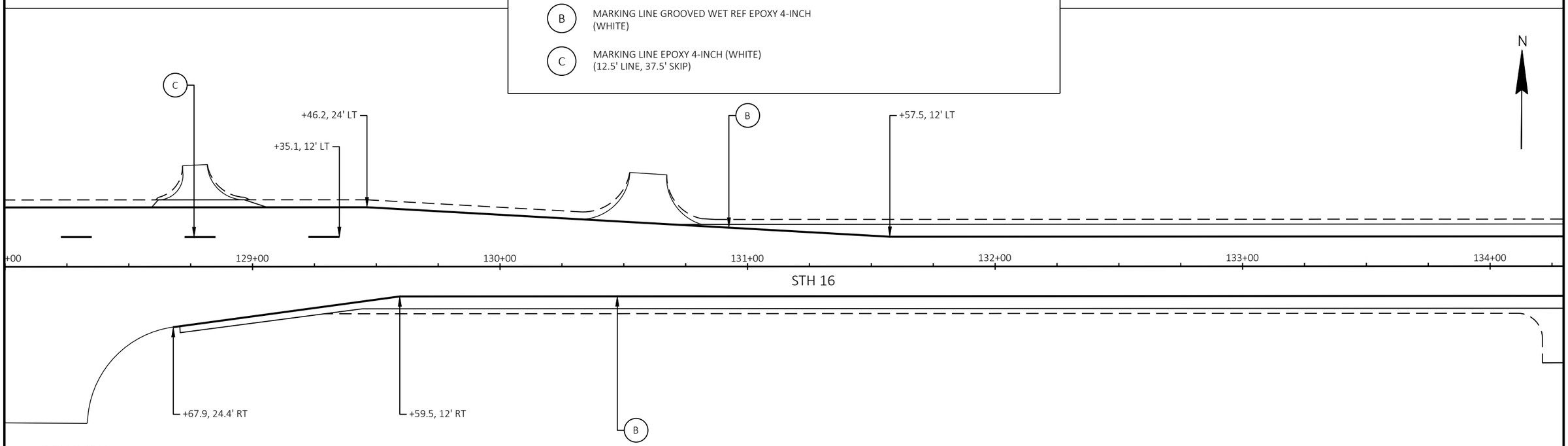

REFER TO SDD 15C8 PAVEMENT MARKING, MAINLINE AND TURN LANES FOR MAINLINE MARKINGS
REFER TO SDD 15C35 PAVEMENT MARKING FOR INTERSECTION MARKINGS

PROJECT NO: 1400-01-73	HWY: STH 16	COUNTY: COLUMBIA	PAVEMENT MARKINGS	SHEET	E

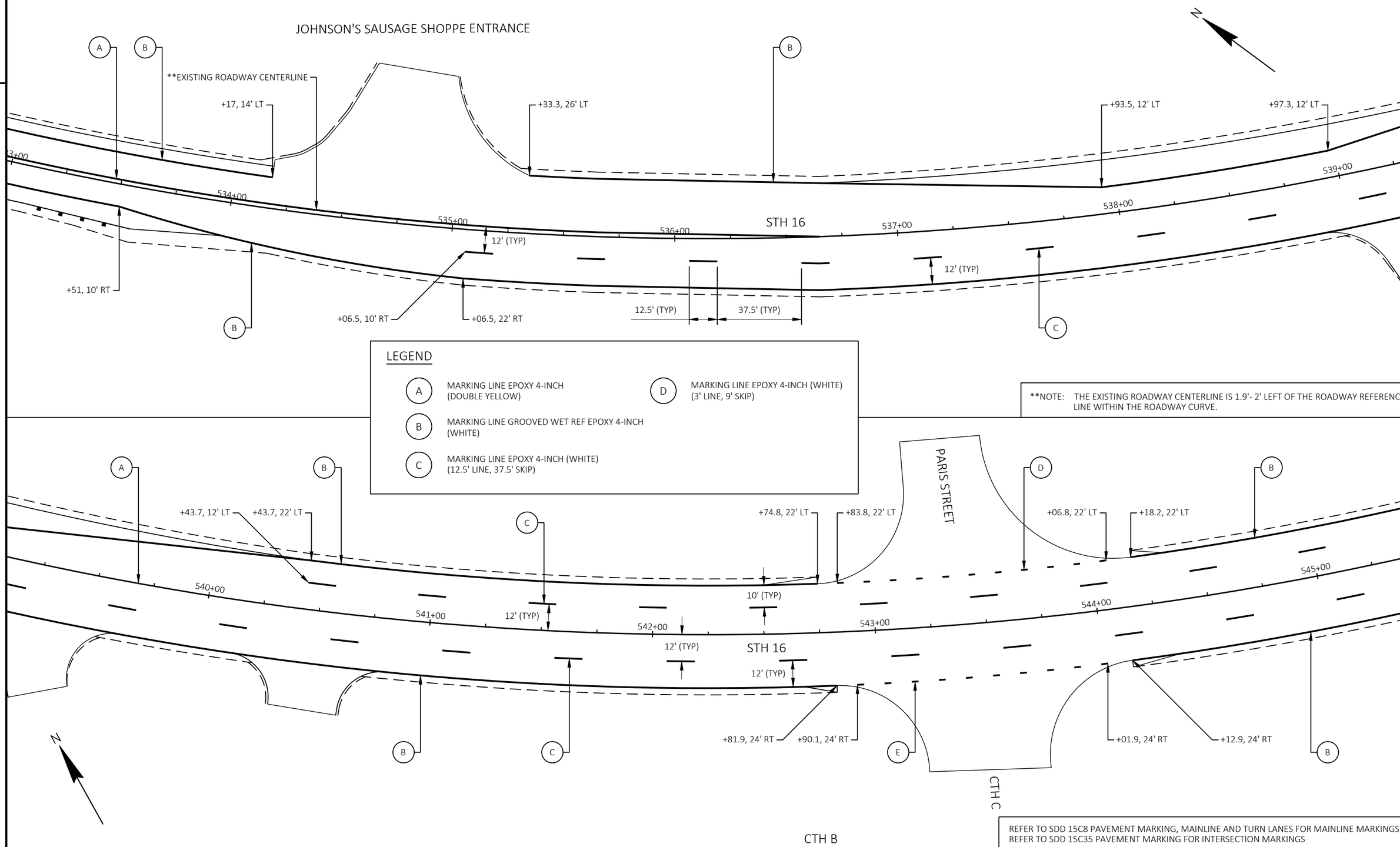

LEGEND

- (A) MARKING LINE EPOXY 4-INCH (DOUBLE YELLOW)
- (B) MARKING LINE GROOVED WET REF EPOXY 4-INCH (WHITE)
- (C) MARKING LINE EPOXY 4-INCH (WHITE) (12.5' LINE, 37.5' SKIP)
- (D) MARKING LINE EPOXY 4-INCH (WHITE) (3' LINE, 9' SKIP)

**NOTE: THE EXISTING ROADWAY CENTERLINE IS 1.9'- 2' LEFT OF THE ROADWAY REFERENCE LINE WITHIN THE ROADWAY CURVE.

REFER TO SDD 15C8 PAVEMENT MARKING, MAINLINE AND TURN LANES FOR MAINLINE MARKINGS
REFER TO SDD 15C35 PAVEMENT MARKING FOR INTERSECTION MARKINGS

PROJECT NO: 1400-01-73	HWY: STH 16	COUNTY: COLUMBIA	PAVEMENT MARKINGS	SHEET	E

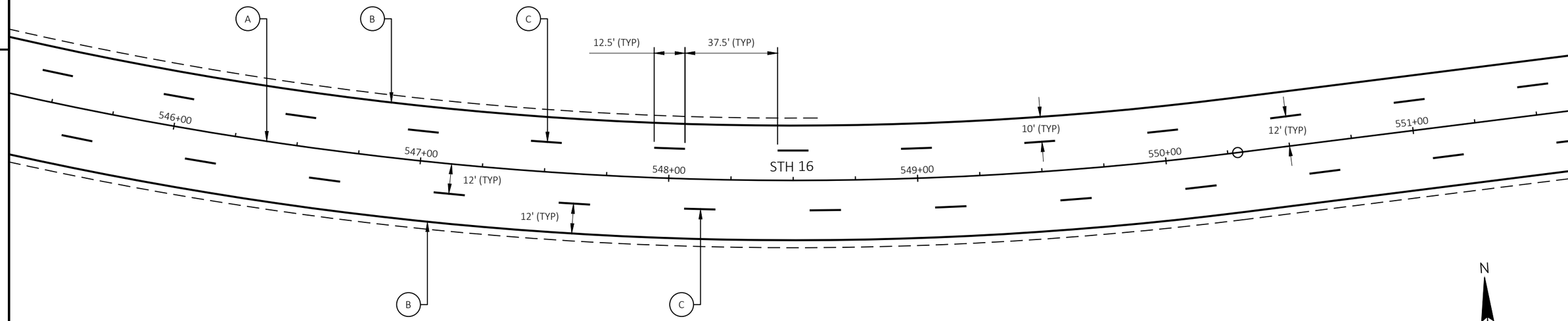

LEGEND

A	MARKING LINE EPOXY 4-INCH (DOUBLE YELLOW)
B	MARKING LINE GROOVED WET REF EPOXY 4-INCH (WHITE)
C	MARKING LINE EPOXY 4-INCH (WHITE) (12.5' LINE, 37.5' SKIP)

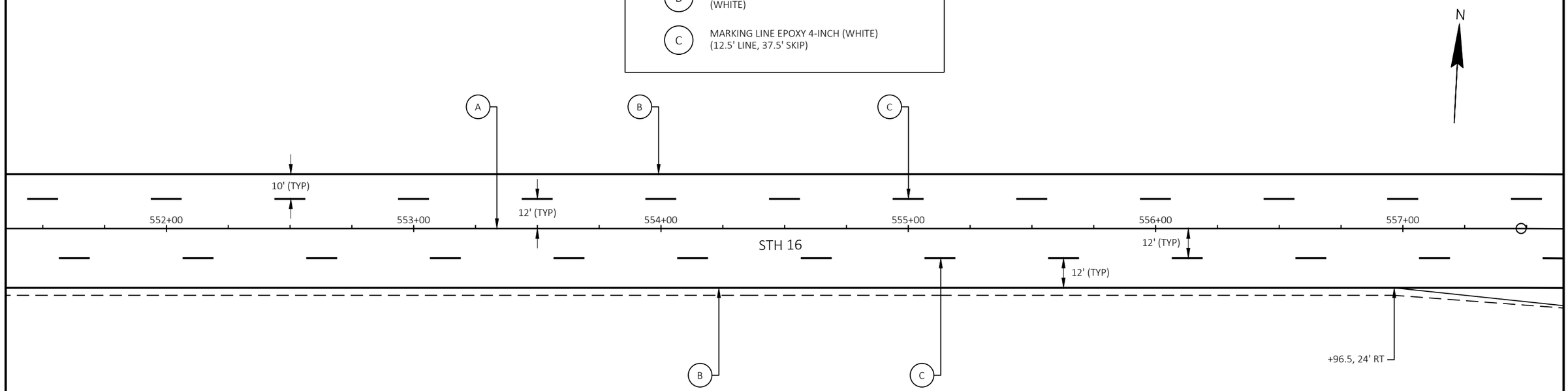

REFER TO SDD 15C8 PAVEMENT MARKING, MAINLINE AND TURN LANES FOR MAINLINE MARKINGS

PROJECT NO: 1400-01-73	HWY: STH 16	COUNTY: COLUMBIA	PAVEMENT MARKINGS	SHEET	E

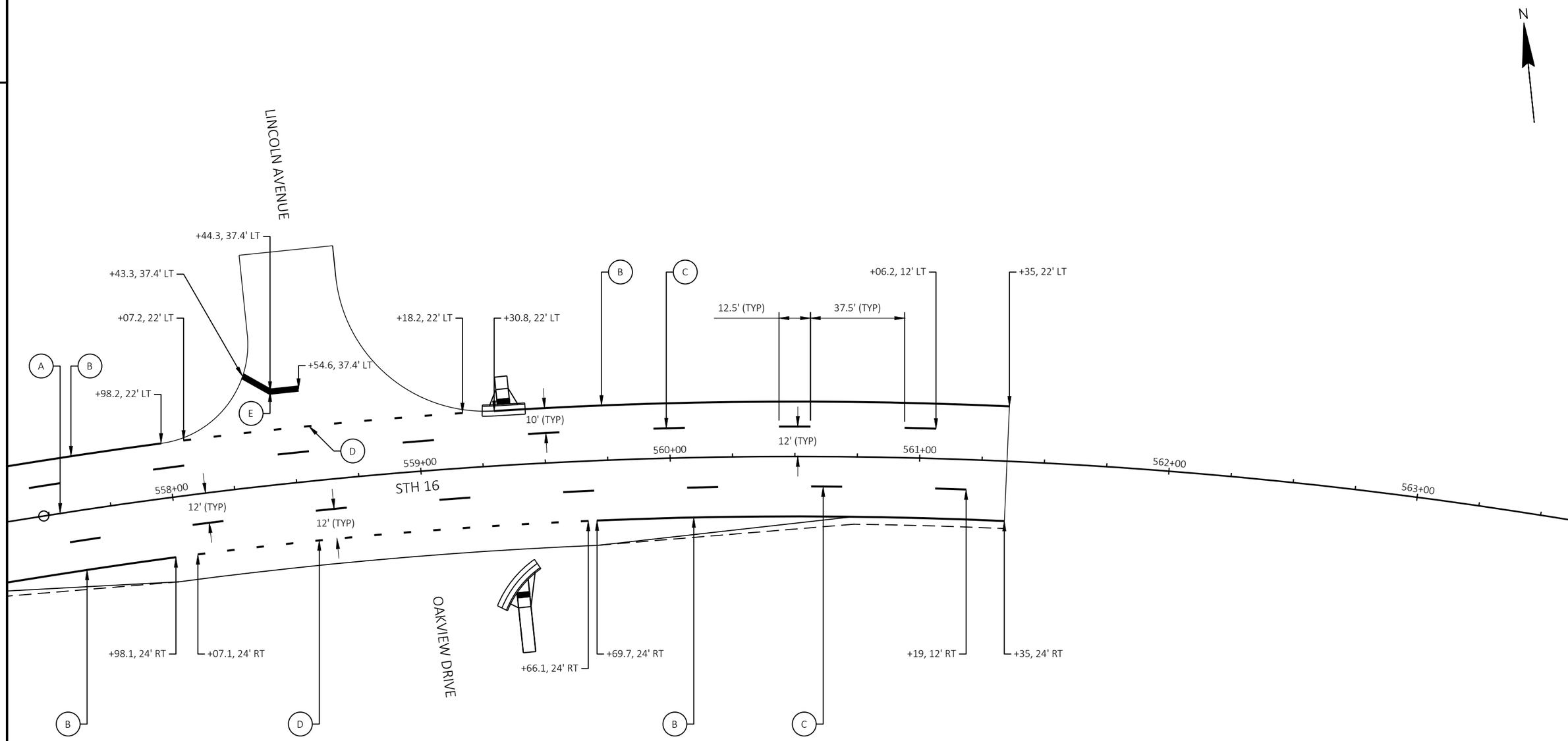

REFER TO SDD 15C8 PAVEMENT MARKING, MAINLINE AND TURN LANES FOR MAINLINE MARKINGS
REFER TO SDD 15C33 STOP LINE AND CROSSWALK PAVEMENT MARKING FOR STOP LINE MARKINGS
REFER TO SDD 15C35 PAVEMENT MARKING FOR INTERSECTION MARKINGS

LEGEND

- (A) MARKING LINE EPOXY 4-INCH (DOUBLE YELLOW)
- (B) MARKING LINE GROOVED WET REF EPOXY 4-INCH (WHITE)
- (C) MARKING LINE EPOXY 4-INCH (WHITE) (12.5' LINE, 37.5' SKIP)
- (D) MARKING LINE EPOXY 4-INCH (WHITE) (3' LINE, 9' SKIP)
- (E) MARKING STOP LINE EPOXY 18-INCH

PROJECT NO: 1400-01-73	HWY: STH 16	COUNTY: COLUMBIA	PAVEMENT MARKINGS	SHEET	E

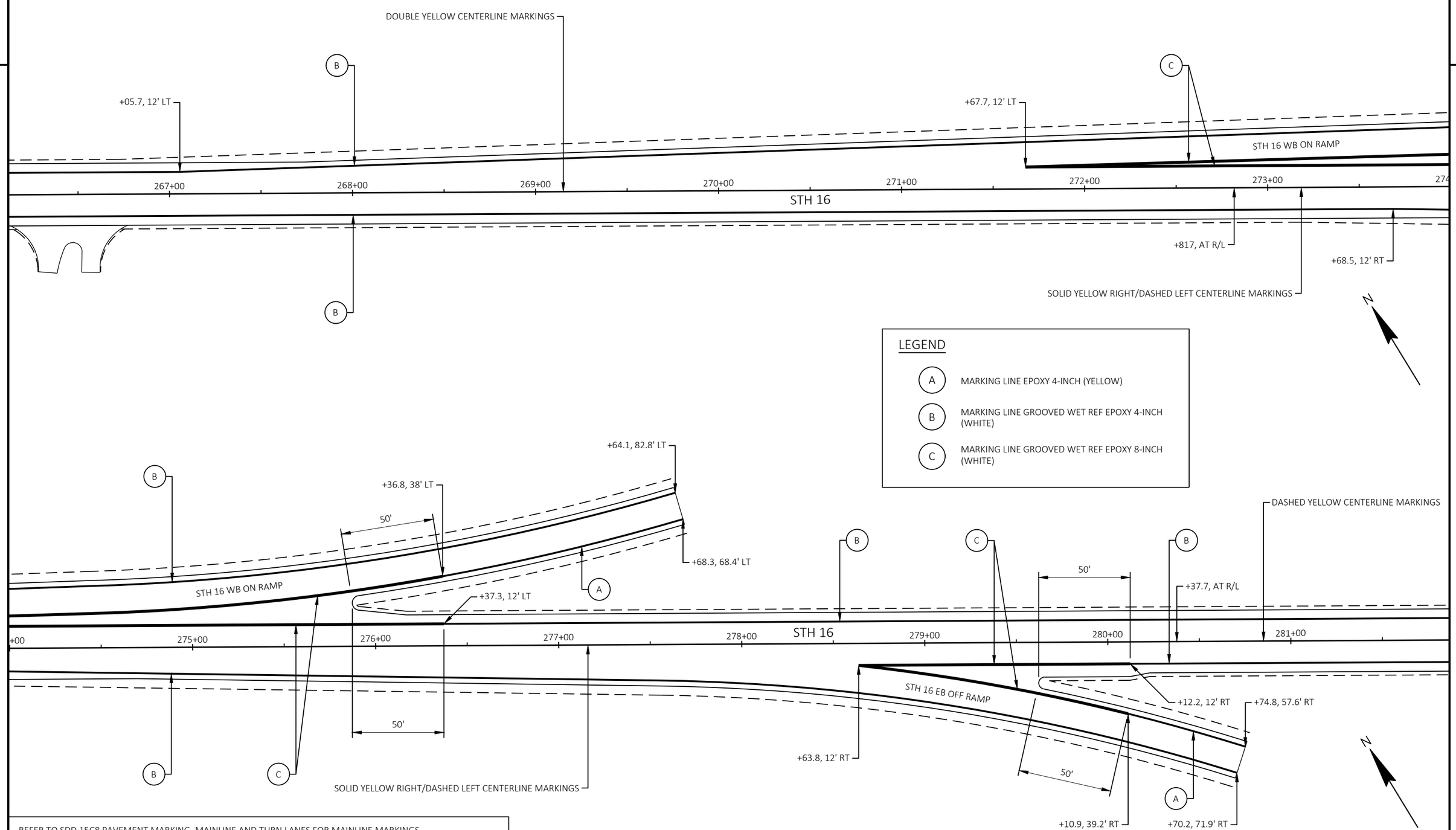

REFER TO SDD 15C8 PAVEMENT MARKING, MAINLINE AND TURN LANES FOR MAINLINE MARKINGS
REFER TO SDD 15C31 PAVEMENT MARKING (RAMPS AND GORES) FOR STH 16/STH 22 INTERCHANGE GORE MARKINGS

PROJECT NO: 1400-01-73	HWY: STH 16	COUNTY: COLUMBIA	PAVEMENT MARKINGS	SHEET	E

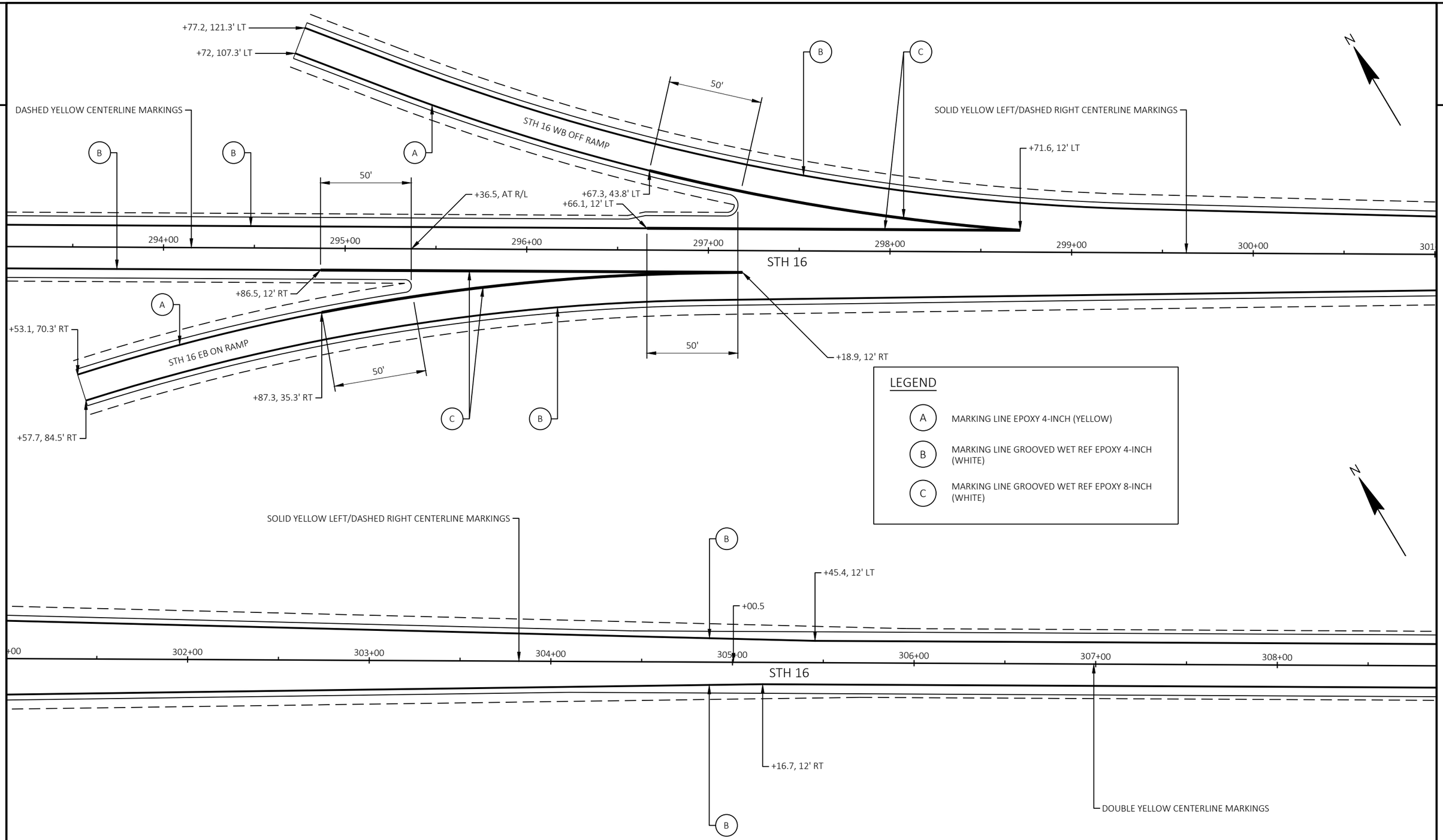

REFER TO SDD 15C8 PAVEMENT MARKING, MAINLINE AND TURN LANES FOR MAINLINE MARKINGS
REFER TO SDD 15C31 PAVEMENT MARKING (RAMPS AND GORES) FOR STH 16/STH 22 INTERCHANGE GORE MARKINGS

PROJECT NO: 1400-01-73	HWY: STH 16	COUNTY: COLUMBIA	PAVEMENT MARKINGS	SHEET	E

2

PROVIDE DRUMS WITH TYPE A WARNING LIGHTS DURING CONTRACTOR NON-WORKING HOURS FOR MGS GUARDRAIL WORK.
SEE SDD 15D28 TRAFFIC CONTROL, WORK ON SHOULDER OR PARKING LANE, UNDIVIDED ROADWAY
MGS GUARDRAIL WORK DURING WORKINGS HOURS SHALL BE DONE UNDER FLAGGING OPERATIONS
SEE SDD15C12 TRAFFIIC CONTROL FOR LANE CLOSURE WITH FLAGGING OPERATION

ALL SIGNS ARE 48" X 48" UNLESS OTHERWISE INDICATED.

LEGEND

WORKZONE — (SEE SDD 15C2 BARRICADES AND SIGNS FOR MAINLINE, DETOUR, ON RAMP, OFF RAMP CLOSURES AND ADVANCED WIDTH RESTRICTION) (SEE SDD 15C12 TRAFFIC CONTROL FOR LANE CLOSURE WITH FLAGGING OPERATION) (SEE SDD 15C19 MOVING PAVEMENT MARKING OPERATIONS)

(A) CENTER OF ROADWAY
MAINLINE ROADWAY UNDER CONSTRUCTION
500' MAX. OR AT LAST INTERSECTION WHICHEVER IS CLOSEST

ROAD WORK AHEAD W20-1A

SEE SDD15C04 TRAFFIC CONTROL, ADVANCE WARNING SIGNS 45 MPH OR GREATER
TWO WAY UNDIVIDED ROAD OPEN TO TRAFFIC

PROJECT NO: 1400-01-73	HWY: STH 16	COUNTY: COLUMBIA	TRAFFIC CONTROL	SHEET	E

FILE NAME : N:\PDS\C3D\14000103\SHEETSPLAN\025001-TC.DWG
LAYOUT NAME - 01
PLOT DATE : 10/12/2020 3:15 PM PLOT BY : RINZEL, JAMES M PLOT NAME : PLOT SCALE : 1 IN:1 MI

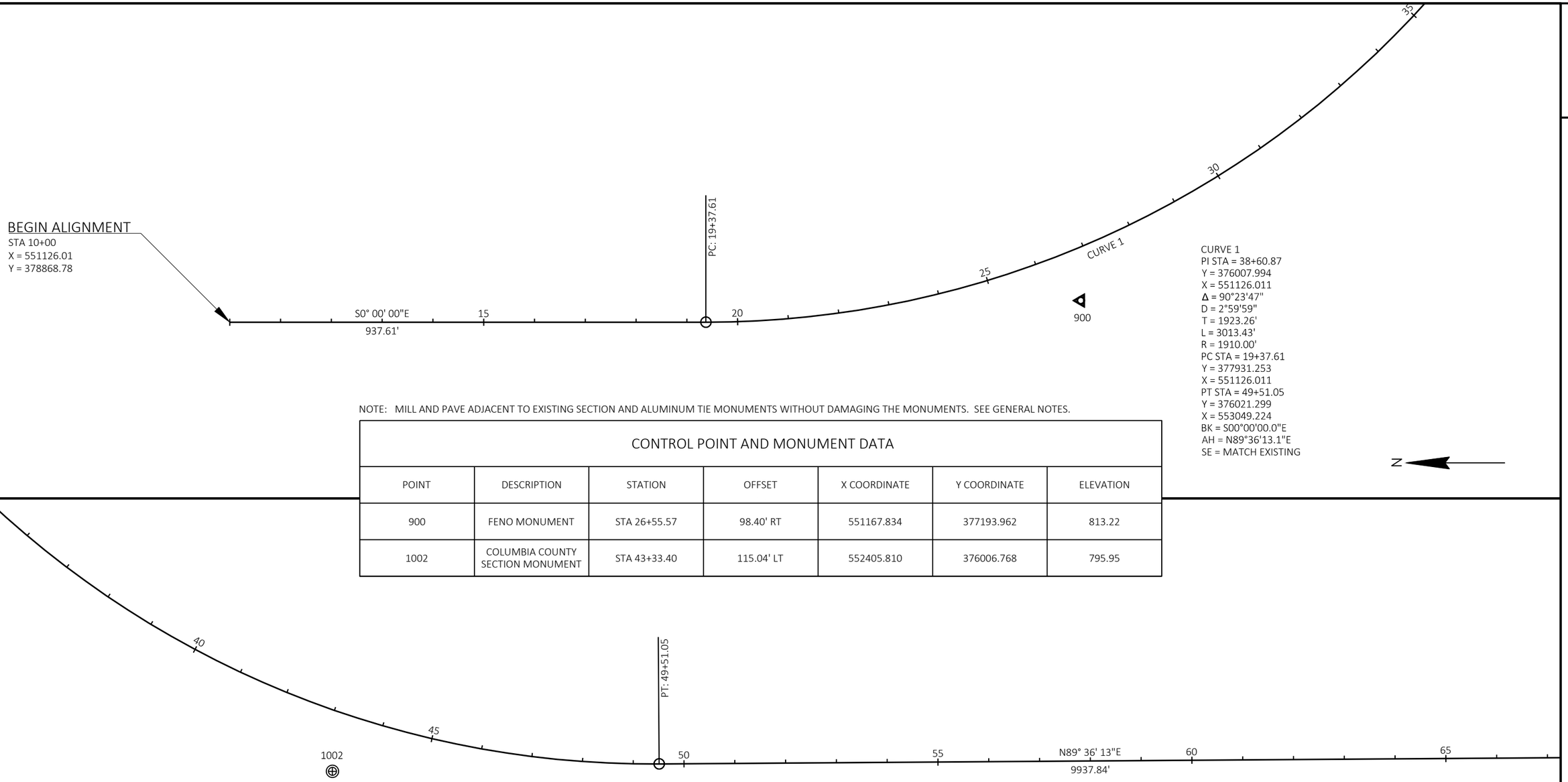

CURVE 1
PI STA = 38+60.87
Y = 376007.994
X = 551126.011
Δ = 90°23'47"
D = 2°59'59"
T = 1923.26'
L = 3013.43'
R = 1910.00'
PC STA = 19+37.61
Y = 377931.253
X = 551126.011
PT STA = 49+51.05
Y = 376021.299
X = 553049.224
BK = S00°00'00.0"E
AH = N89°36'13.1"E
SE = MATCH EXISTING

NOTE: MILL AND PAVE ADJACENT TO EXISTING SECTION AND ALUMINUM TIE MONUMENTS WITHOUT DAMAGING THE MONUMENTS. SEE GENERAL NOTES.

CONTROL POINT AND MONUMENT DATA

POINT	DESCRIPTION	STATION	OFFSET	X COORDINATE	Y COORDINATE	ELEVATION
900	FENO MONUMENT	STA 26+55.57	98.40' RT	551167.834	377193.962	813.22
1002	COLUMBIA COUNTY SECTION MONUMENT	STA 43+33.40	115.04' LT	552405.810	376006.768	795.95

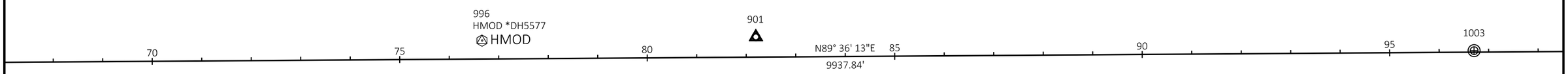

NOTE: DO NOT DISTURB DH5577 GPS AND KEEP CONSTRUCTION EQUIPMENT AT LEAST 10 FEET AWAY FROM DH5577 GPS. SEE GENERAL NOTES.
MILL AND PAVE ADJACENT TO EXISTING SECTION AND ALUMINUM TIE MONUMENTS WITHOUT DAMAGING THE MONUMENTS. SEE GENERAL NOTES.

CONTROL POINT AND MONUMENT DATA

POINT	DESCRIPTION	STATION	OFFSET	X COORDINATE	Y COORDINATE	ELEVATION
901	FENO MONUMENT	STA 82+18.98	41.44' LT	556316.790	376085.345	794.35
996	DH5577	STA 76+66.52	37.54' LT	555764.367	376077.624	795.47
1003	COLUMBIA COUNTY SECTION MONUMENT	STA 96+70.48	3.17' LT	557768.522	376057.116	796.17

NOTE: SECTION MONUMENT 1003 WILL BE DISTURBED DUE TO MILLING AND PAVING OPERATIONS. SEE SPECIAL PROVISIONS FOR BIDS ITEMS FOR RE-LOCATING AND RE-SETTING THE MONUMENT.

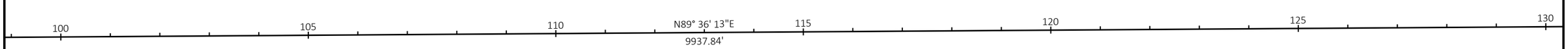

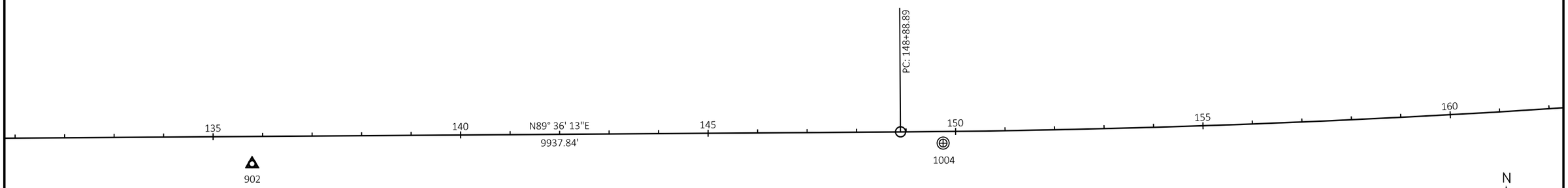

NOTE: MILL AND PAVE ADJACENT TO EXISTING SECTION AND ALUMINUM TIE MONUMENTS WITHOUT DAMAGING THE MONUMENTS. SEE GENERAL NOTES.

CONTROL POINT AND MONUMENT DATA

POINT	DESCRIPTION	STATION	OFFSET	X COORDINATE	Y COORDINATE	ELEVATION
902	FENO MONUMENT	STA 135+77.57	55.02' RT	561675.922	376025.959	817.17
1004	COLUMBIA COUNTY SECTION MONUMENT	STA 149+74.50	23.35' RT	563072.686	376067.447	819.33
903	FENO MONUMENT	STA 188+85.84	30.15' RT	566966.551	376432.062	794.33

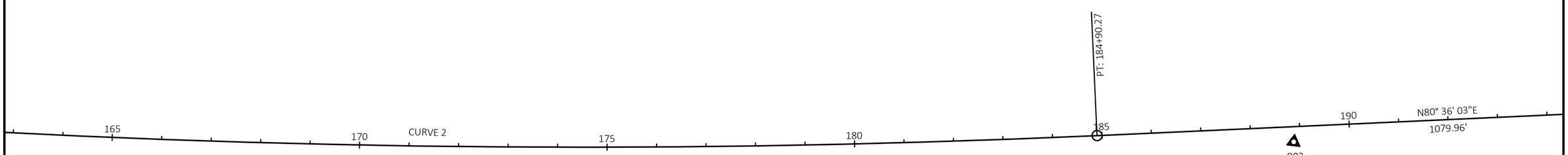

CURVE 2
PI STA = 166+93.29
Y = 376102.528
X = 564791.188
Δ = 9°00'10"
D = 0°15'00"
T = 1804.40'
L = 3601.38'
R = 22920.00'
PC STA = 148+88.89
Y = 376090.046
X = 562986.828
PT STA = 184+90.27
Y = 376397.207
X = 566571.366
BK = N89°36'13.1"E
AH = N80°36'03.1"E
SE = MATCH EXISTING

PROJECT NO: 1400-01-73	HWY: STH 16	COUNTY: COLUMBIA	ALIGNMENT DIAGRAM	SHEET	E

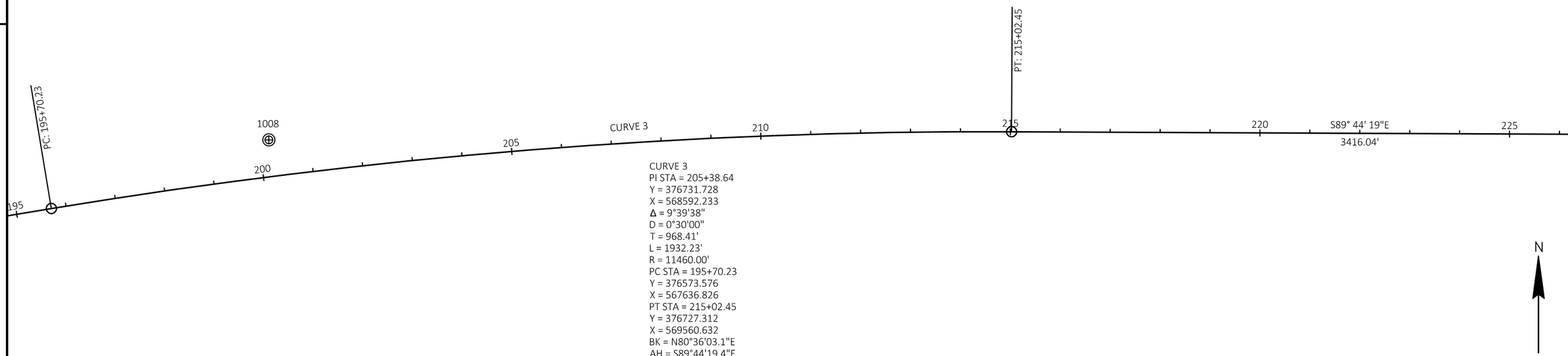

CURVE 3
PI STA = 205+38.64
Y = 376731.728
X = 568592.233
Δ = 9°39'38"
D = 0°30'00"
T = 968.41'
L = 1932.23'
R = 11460.00'
PC STA = 195+70.23
Y = 376573.576
X = 567636.826
PT STA = 215+02.45
Y = 376727.312
X = 569560.632
BK = N80°36'03.1"E
AH = S89°44'19.4"E
SE = MATCH EXISTING

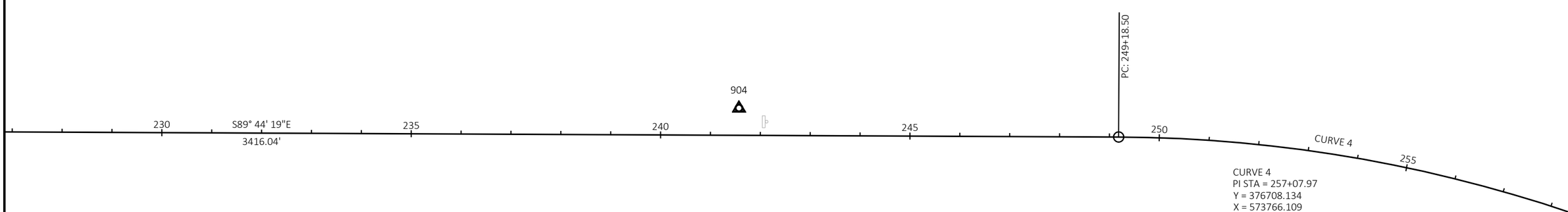

CURVE 4
PI STA = 257+07.97
Y = 376708.134
X = 573766.109
Δ = 30°48'43"
D = 1°59'59"
T = 789.48'
L = 1540.72'
R = 2865.00'
PC STA = 249+18.50
Y = 376711.734
X = 572976.640
PT STA = 264+59.21
Y = 376300.656
X = 574442.302
BK = S89°44'19.4"E
AH = S58°55'35.9"E
SE = MATCH EXISTING

NOTE: MILL AND PAVE ADJACENT TO EXISTING SECTION AND ALUMINUM TIE MONUMENTS WITHOUT DAMAGING THE MONUMENTS. SEE GENERAL NOTES.

CONTROL POINT AND MONUMENT DATA

POINT	DESCRIPTION	STATION	OFFSET	X COORDINATE	Y COORDINATE	ELEVATION
1008	COLUMBIA COUNTY SECTION MONUMENT	STA 200+19.64	73.36' LT	568072.393	376711.044	796.96
904	FENO MONUMENT	STA 241+56.13	54.65' LT	572214.527	376769.863	814.01

PROJECT NO: 1400-01-73	HWY: STH 16	COUNTY: COLUMBIA	ALIGNMENT DIAGRAM	SHEET	E

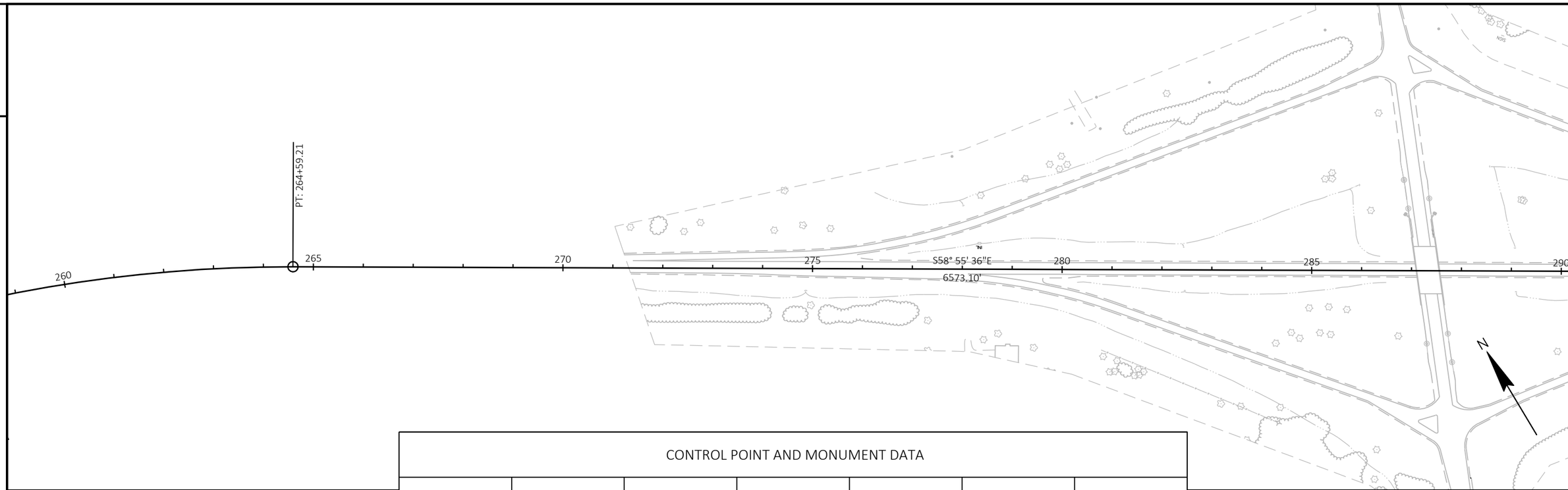

CONTROL POINT AND MONUMENT DATA

POINT	DESCRIPTION	STATION	OFFSET	X COORDINATE	Y COORDINATE	ELEVATION
905	FENO MONUMENT	STA 295+79.75	95.76' RT	577065.634	374608.020	850.57

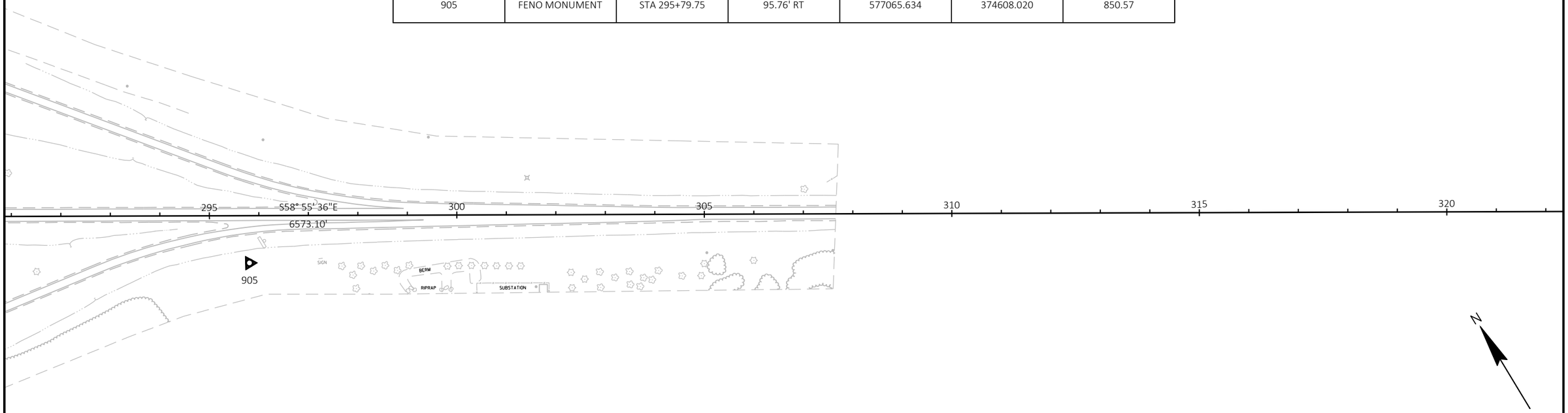

PROJECT NO: 1400-01-73	HWY: STH 16	COUNTY: COLUMBIA	ALIGNMENT DIAGRAM	SHEET	E

CURVE 5
PI STA = 351+04.96
Y = 371838.283
X = 581847.444
Δ = 10°20'04"
D = 0°15'00"
T = 2072.65'
L = 4134.05'
R = 22920.00'
PC STA = 330+32.31
Y = 372908.049
X = 580072.207
PT STA = 371+66.36
Y = 371104.335
X = 583785.790
BK = S58°55'35.9"E
AH = S69°15'39.6"E
SE = MATCH EXISTING

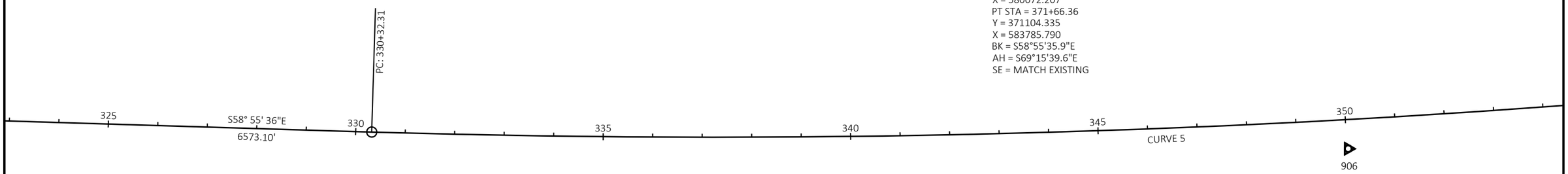

CONTROL POINT AND MONUMENT DATA

POINT	DESCRIPTION	STATION	OFFSET	X COORDINATE	Y COORDINATE	ELEVATION
906	FENO MONUMENT	STA 350+01.61	58.84' RT	581774.558	371912.476	956.23

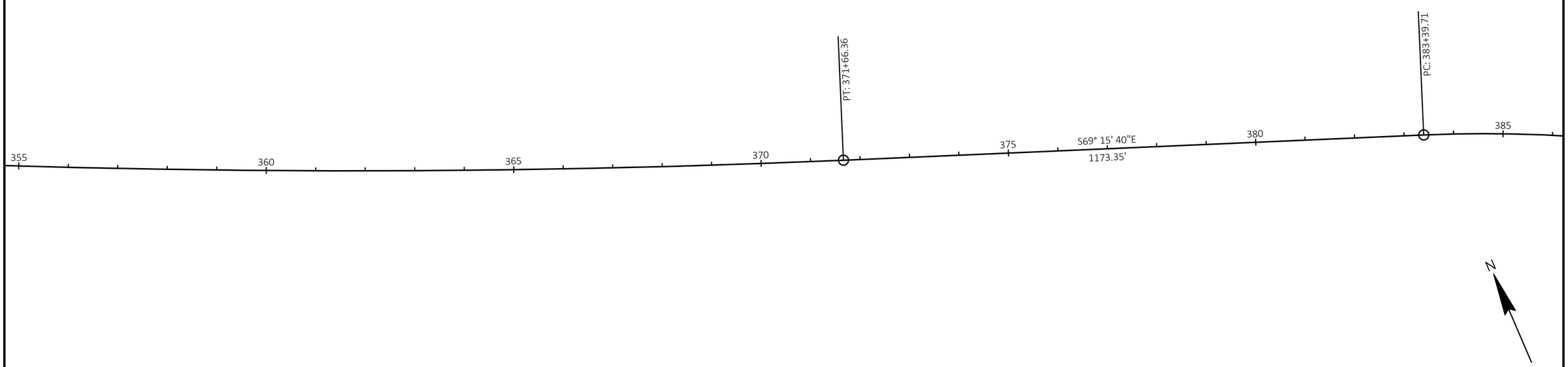

PROJECT NO: 1400-01-73	HWY: STH 16	COUNTY: COLUMBIA	ALIGNMENT DIAGRAM	SHEET	E

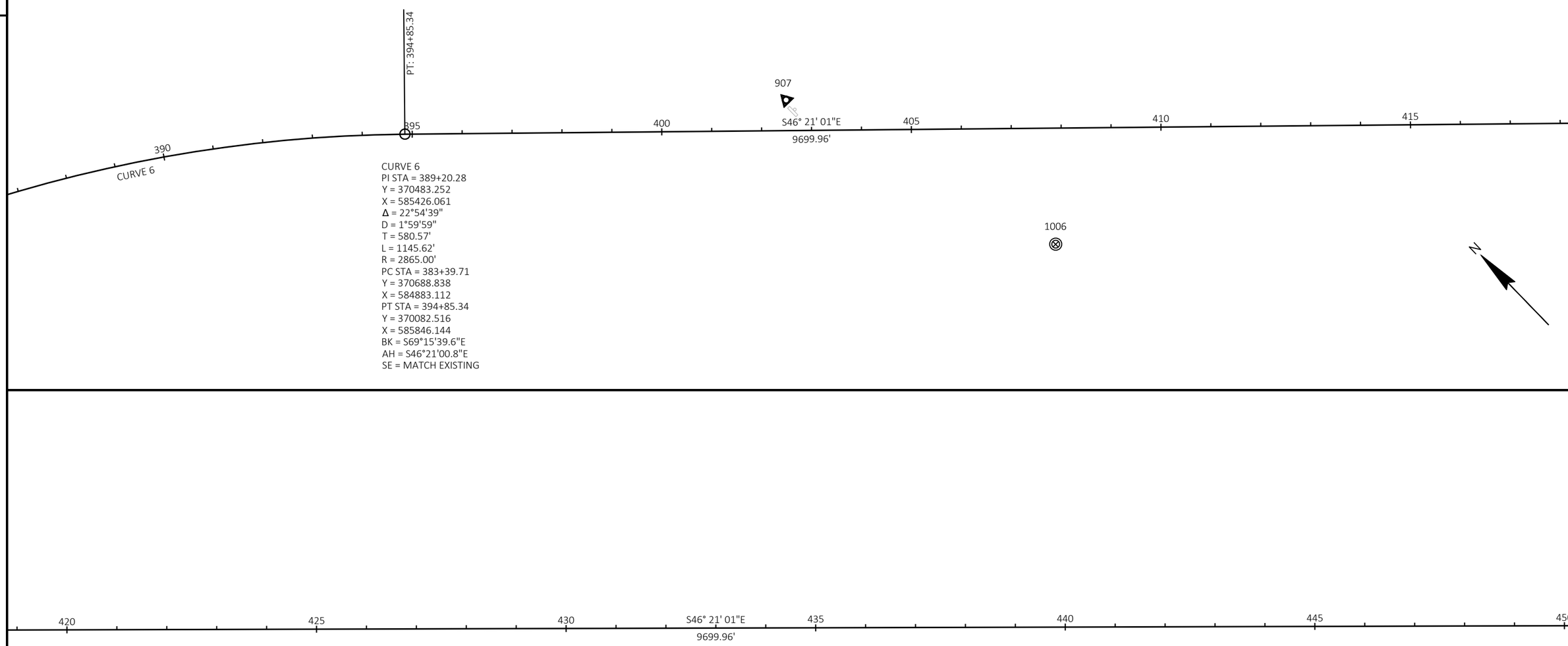

CURVE 6
PI STA = 389+20.28
Y = 370483.252
X = 585426.061
Δ = 22°54'39"
D = 1°59'59"
T = 580.57'
L = 1145.62'
R = 2865.00'
PC STA = 383+39.71
Y = 370688.838
X = 584883.112
PT STA = 394+85.34
Y = 370082.516
X = 585846.144
BK = S69°15'39.6"E
AH = S46°21'00.8"E
SE = MATCH EXISTING

NOTE: MILL AND PAVE ADJACENT TO EXISTING SECTION AND ALUMINUM TIE MONUMENTS WITHOUT DAMAGING THE MONUMENTS. SEE GENERAL NOTES.

CONTROL POINT AND MONUMENT DATA

POINT	DESCRIPTION	STATION	OFFSET	X COORDINATE	Y COORDINATE	ELEVATION
907	FENO MONUMENT	STA 402+48.79	60.94' LT	586440.624	369599.637	857.57
1006	COLUMBIA COUNTY SECTION MONUMENT	STA 407+86.94	232.47' RT	586627.487	369015.880	855.66
1000	COLUMBIA COUNTY SECTION MONUMENT	STA 445+37.87	244.69' RT	589333.127	366417.961	869.40

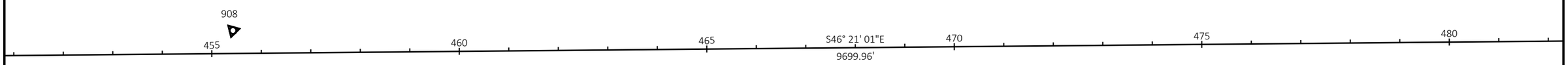

NOTE: MILL AND PAVE ADJACENT TO EXISTING SECTION AND ALUMINUM TIE MONUMENTS WITHOUT DAMAGING THE MONUMENTS. SEE GENERAL NOTES.

CONTROL POINT AND MONUMENT DATA

POINT	DESCRIPTION	STATION	OFFSET	X COORDINATE	Y COORDINATE	ELEVATION
908	FENO MONUMENT	STA 455+42.20	45.96' LT	590260.445	365935.030	869.13
1005	COLUMBIA COUNTY SECTION MONUMENT	STA 482+85.90	224.52' RT	592059.017	363845.484	917.13
909	FENO MONUMENT	STA 508+23.39	53.97' RT	593619.531	361974.648	909.75

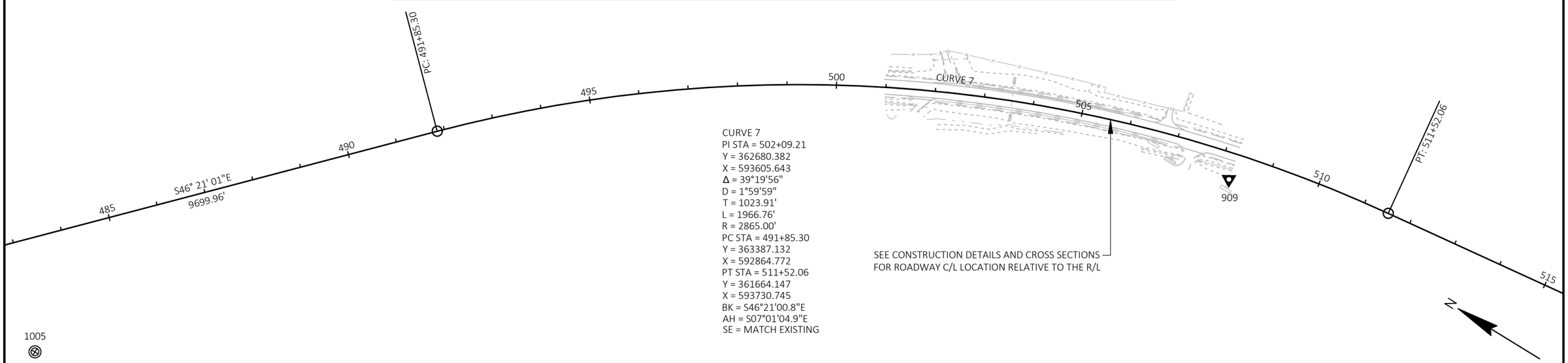

CURVE 7
PI STA = 502+09.21
Y = 362680.382
X = 593605.643
Δ = 39°19'56"
D = 1°59'59"
T = 1023.91'
L = 1966.76'
R = 2865.00'
PC STA = 491+85.30
Y = 363387.132
X = 592864.772
PT STA = 511+52.06
Y = 361664.147
X = 593730.745
BK = S46°21'00.8"E
AH = S07°01'04.9"E
SE = MATCH EXISTING

SEE CONSTRUCTION DETAILS AND CROSS SECTIONS FOR ROADWAY C/L LOCATION RELATIVE TO THE R/L

PROJECT NO: 1400-01-73	HWY: STH 16	COUNTY: COLUMBIA	ALIGNMENT DIAGRAM	SHEET	E

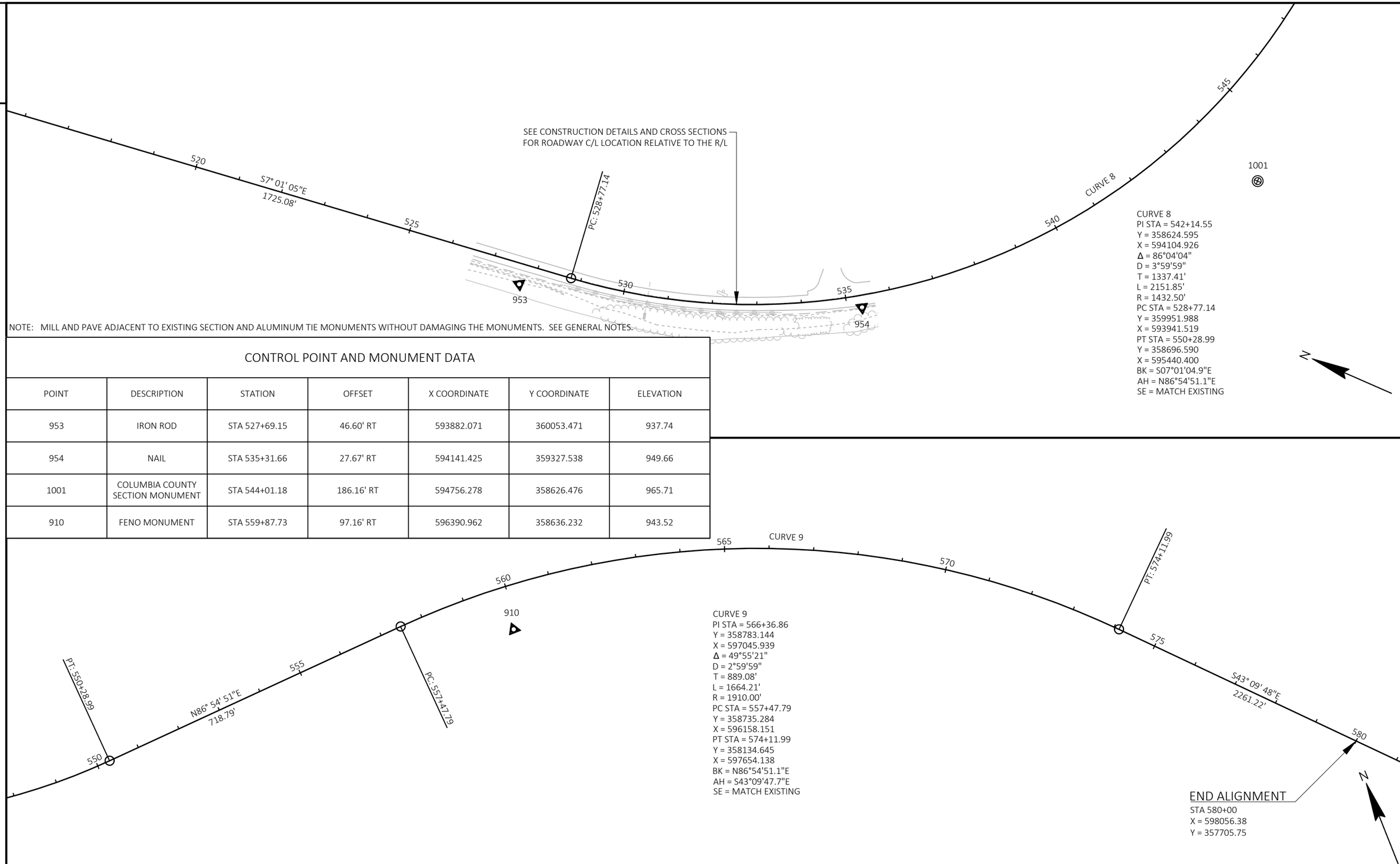

NOTE: MILL AND PAVE ADJACENT TO EXISTING SECTION AND ALUMINUM TIE MONUMENTS WITHOUT DAMAGING THE MONUMENTS. SEE GENERAL NOTES.

CONTROL POINT AND MONUMENT DATA

POINT	DESCRIPTION	STATION	OFFSET	X COORDINATE	Y COORDINATE	ELEVATION
953	IRON ROD	STA 527+69.15	46.60' RT	593882.071	360053.471	937.74
954	NAIL	STA 535+31.66	27.67' RT	594141.425	359327.538	949.66
1001	COLUMBIA COUNTY SECTION MONUMENT	STA 544+01.18	186.16' RT	594756.278	358626.476	965.71
910	FENO MONUMENT	STA 559+87.73	97.16' RT	596390.962	358636.232	943.52

PROJECT NO: 1400-01-73	HWY: STH 16	COUNTY: COLUMBIA	ALIGNMENT DIAGRAM	SHEET	E

SDD 14B42-a Midwest Guardrail System (MGS) Guardrail

1. WOOD OR STEEL POSTS (w6X9 OR w6X8.5) MAY BE USED. DO NOT INTERMIX WOOD AND STEEL POSTS. INSTALL STEEL POSTS WITH HOLES ON APPROACHING TRAFFIC SIDE.
2. USE WOOD OR APPROVED PLASTIC BLOCKOUTS. WOOD BLOCKOUTS MAY BE CONSTRUCTED OUT OF TWO OR MORE WOOD BLOCKOUTS. SEE ALTERNATE WOOD BLOCKOUT DETAIL. DIMENSIONS OF APPROVED PLASTIC BLOCKOUTS MAY VARY.
3. IF ROCK IS ENCOUNTERED DURING EXCAVATION, PROVIDE A HOLE 12 INCHES IN DIAMETER EXTENDING 20 INCHES DEEP INTO THE ROCK. PLACE APPROXIMATELY 2 1/2" INCHES OF GRANULAR MATERIAL IN THE BOTTOM OF THE HOLE. CUT THE POSTS THE TO LENGTH AMD INSTALL. BACKFILL WITH EXCAVATED MATERIAL AND COMPACT. BACKFILL IS TO BE FREE OF LARGE ROCKS.
4. WHEN THE DISTANCE FROM BACK OF POST TO SHOULDER HINGE POINT IS LESS THAN 2 FEET INSTALL LONGER POST AT HALF POST SPACING (K).
5. FOR NEW MGS INSTALLATION TOP OF W-BEAM RAIL TOLERANCE IS ±1". FOR EXISTING MGS INSTALLATION TOP OF W-BEAM IS BETWEEN 27 ¾" TO 32".
6. WHEN USING STEEL POST AND WOOD BLOCKOUTS INSTALL FOUR 16D GALVANIZED NAILS. INSTALL NAILS AT THE BACK CORNERS OF THE BLOCK AND BEND THE NAILS OVER THE FLANGE OF THE STEEL POST.
7. TOTAL POST LENGTH FOR TYPE K IS 7' - 0". TOTAL POST LENGTH FOR OTHER MGS TYPES IS 6' - 0".

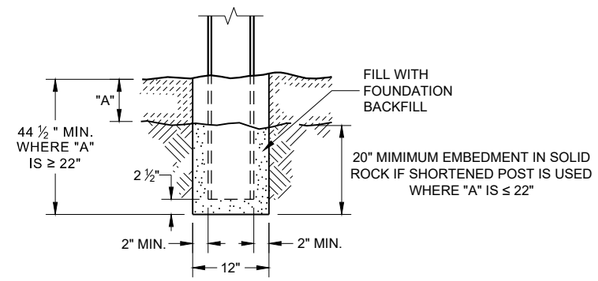

END VIEW
SETTING STEEL OR WOOD POST IN ROCK (3)

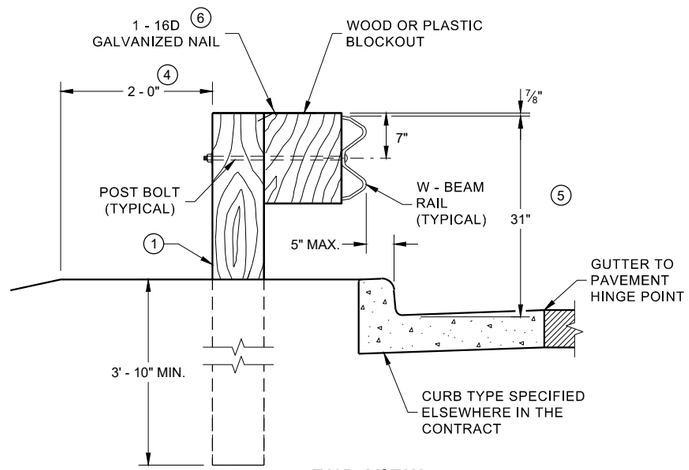

END VIEW
LOCATED ALONG A CURBED ROADWAY

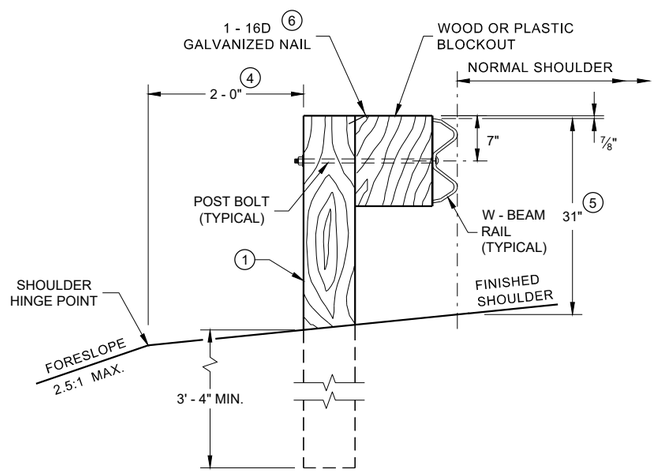

END VIEW
LOCATED ALONG A ROADWAY SHOULDER
STANDARD INSTALLATION

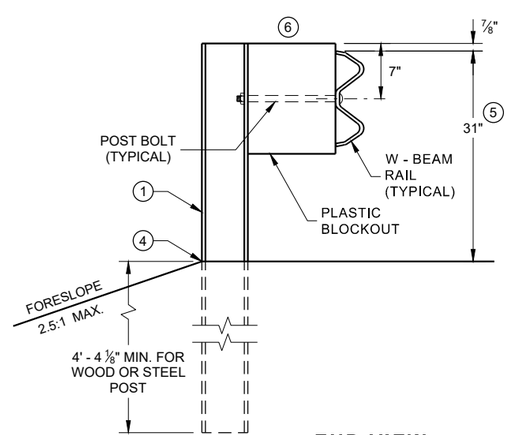

END VIEW
MGS LONGER POST AT HALFPOST
SPACING W BEAM (K)

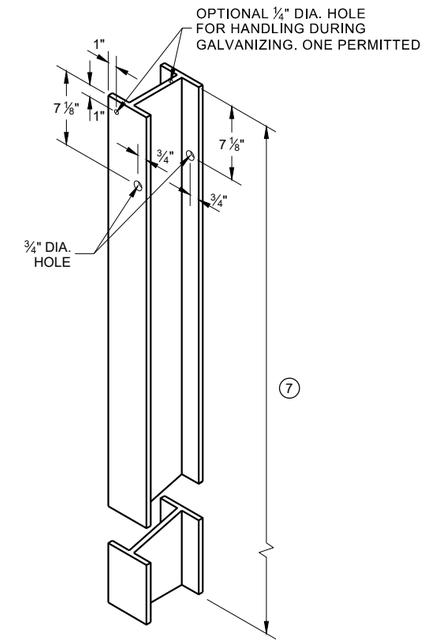

STEEL POST & HOLE
PUNCHING DETAIL
(W 6 X 9) (1)

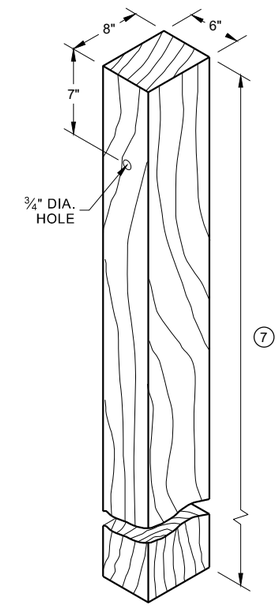

WOOD POST
(6" X 8") NOMINAL (1)

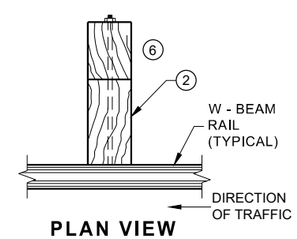

PLAN VIEW
WOOD POST,
BLOCKOUT & BEAM

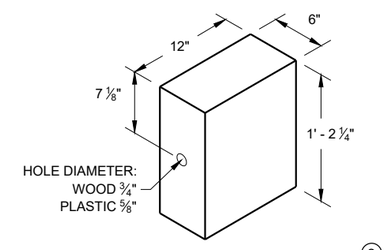

WOOD OR PLASTIC (2)
BLOCKOUT

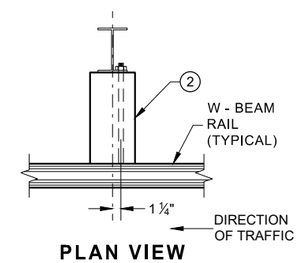

PLAN VIEW
STEEL POST,
PLASTIC BLOCKOUT & BEAM

MIDWEST GUARDRAIL SYSTEM (MGS) GUARDRAIL

STATE OF WISCONSIN
DEPARTMENT OF TRANSPORTATION

6
SDD 14B42 - 06a

SDD 14B42-b Midwest Guardrail System (MGS) Guardrail

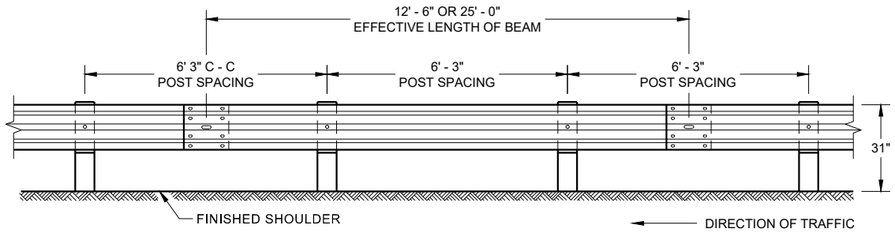

FRONT VIEW
POST SPACING STANDARD INSTALLATION

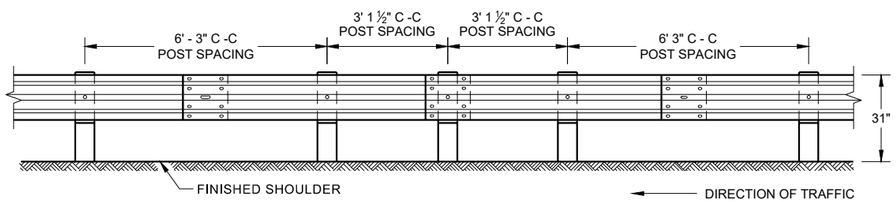

FRONT VIEW
HALF POST SPACING (HS) AND HALF POST SPACING WITH LONGER POSTS (K)

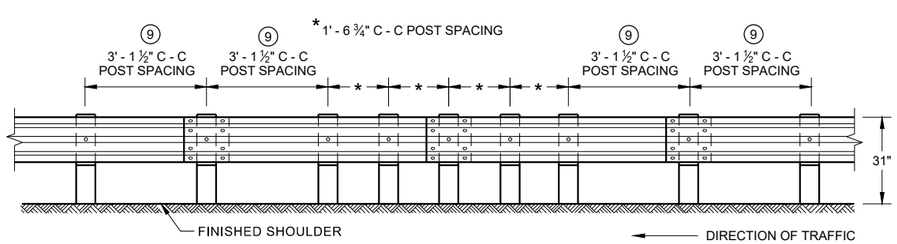

FRONT VIEW
QUARTER POST SPACING (QS)

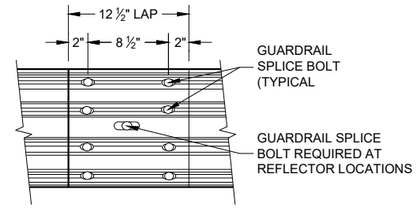

FRONT VIEW
MID-SPAN BEAM SPLICE

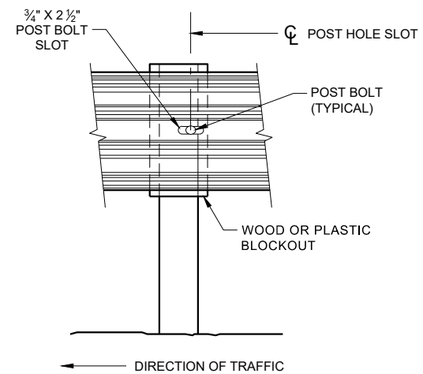

FRONT VIEW AT STEEL POST

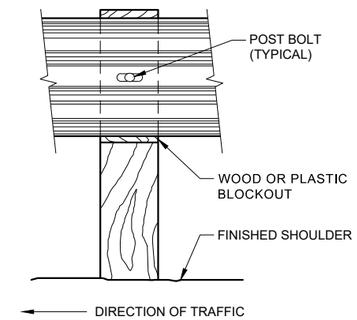

FRONT VIEW AT WOOD POST

GENERAL NOTES

8. DO NOT INSTALL REFLECTORS ON THE FIRST 50 FEET OF THE APPROACH END OF THE ENERGY ABSORBING TERMINAL.

9. 25 FEET OF HALF POST SPACING IS REQUIRED ON APPROACH AND DEPARTURE ENDS OF QUARTER POST SPACING.

POST BOLTS ARE A ⅝" DIAMETER ASTM A307 GUARDRAIL BOLT. A POST BOLT REQUIRES ⅝" DIAMETER A563A DOUBLE RECESSED (DR) HEAVY HEX NUT AND ⅝" DIAMETER F844 FLAT WASHER. POST BOLTS MAY BE LONGER IF MULTIPLE BLOCKOUTS ARE BEING USED.

GUARD RAIL SPLICE BOLTS ARE A ⅝" DIAMETER ASTM A307 GUARDRAIL HEAD BOLT. A GUARDRAIL SPLICE BOLT REQUIRES ⅝" DIAMETER A563A DOUBLE RECESSED (DR) HEAVY HEX NUT.

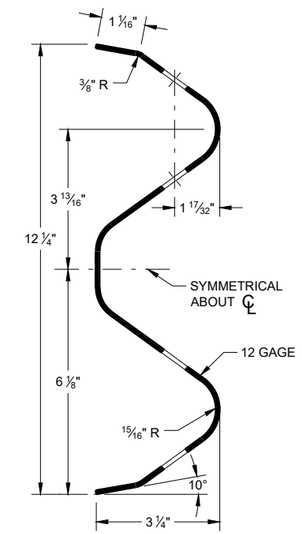

SECTION THRU W-BEAM RAIL

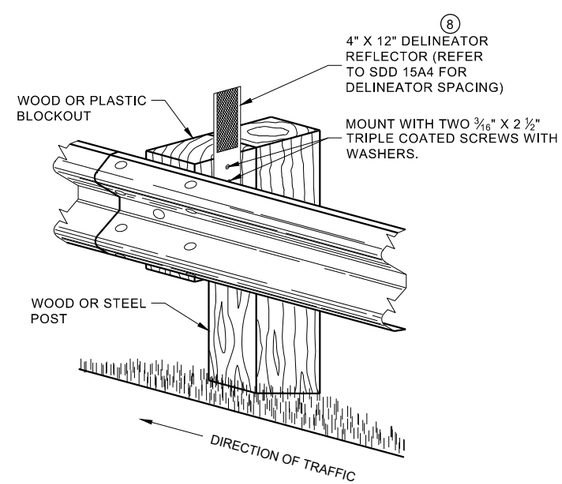

ONE SIDED REFLECTOR DETAIL AND TYPICAL INSTALLATION

MIDWEST GUARDRAIL SYSTEM (MGS) GUARDRAIL

STATE OF WISCONSIN
DEPARTMENT OF TRANSPORTATION

6

6

SDD 14B42 - 06b

SDD 14B42 - 06b

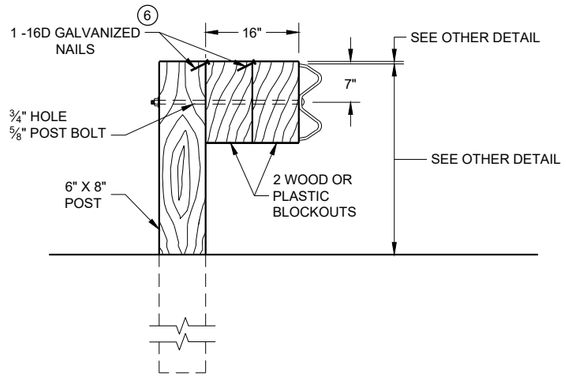

DETAIL FOR 16" BLOCKOUT DEPTH

IT IS ACCEPTABLE TO USE BLOCKOUTS UP TO 16" DEEP TO INCREASE THE POST OFFSET TO AVOID UNDERGROUND OBSTACLES. THERE IS NO LIMIT TO THE NUMBER OF POSTS THAT CAN HAVE ADDITIONAL BLOCKOUTS UP TO 16" DEEP.

NOTE:

1. ALL FILLETS SHALL HAVE A MINIMUM RADIUS OF 3/16".
2. IF THE BOLT EXTENDS MORE THAN ¼" FROM THE NUT THE BOLT SHOULD BE TRIMMED BACK.

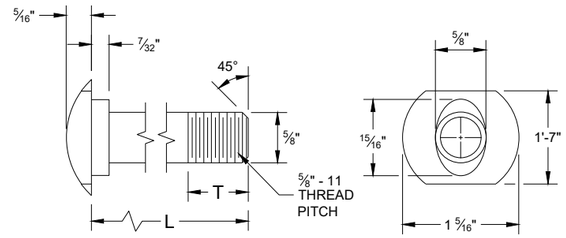

POST BOLT TABLE

L	T (MIN.)
1 ¼"	1 ⅛"
2"	1 ¾"
10"	4"
14"	4 1/16"
18"	4"
21"	4 1/16"
25"	4"

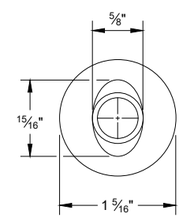

ALTERNATE BOLT HEAD

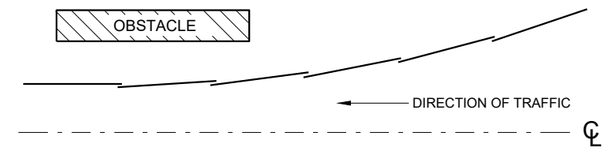

PLAN VIEW
BEAM LAPPING DETAIL

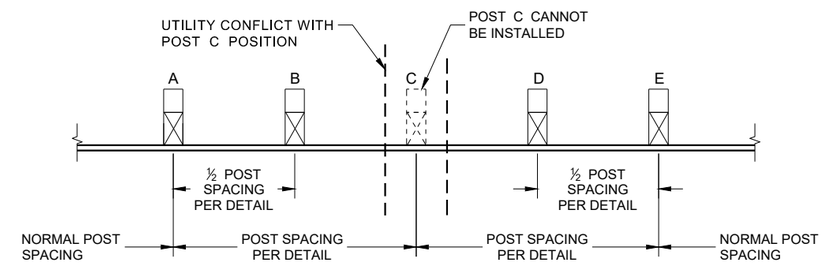

POST DRIVING FOR CONTINUOUS UNDERGROUND OBSTRUCTION

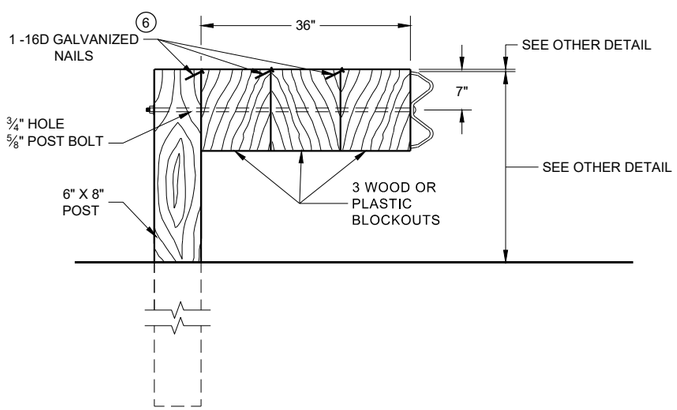

DETAIL FOR 36" BLOCKOUT DEPTH

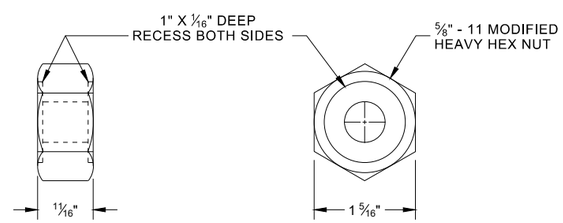

POST BOLT, SPLICE BOLT AND RECESS NUT

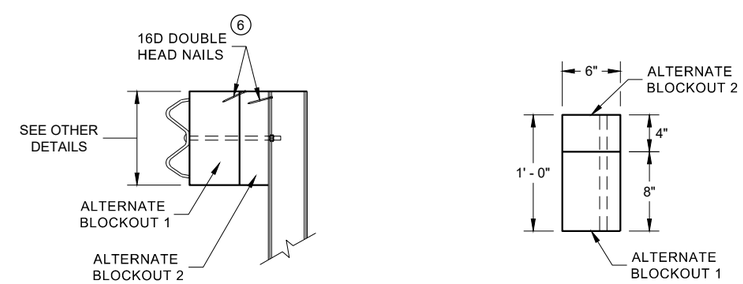

SIDE VIEW

PLAN VIEW

ALTERNATE WOOD BLOCKOUT DETAIL

NOTES: UNDER SPECIAL CIRCUMSTANCES, SUCH AS AVOIDING OBSTACLES THAT ARE NOT RELOCATED, IT IS ACCEPTABLE TO INSTALL ADDITIONAL BLOCKOUTS TO OBTAIN UP TO 36" DEPTH FOR ONE OR TWO POSTS IN A SECTION OF GUARDRAIL.

DO NOT USE 16" OR 36" BLOCKOUTS IF IT CAUSES THE POST TO BE DRIVEN BEYOND SHOULDER HINGE POINT OR CAUSES A FIXED OBJECT TO BE WITHIN THE DEFLECTION DISTANCE OF THE BARRIER.

(6) WHEN USING STEEL POST AD WOOD BLOCKOUTS, INSTALL FOUR 16D GALVANIZED NAILS. INSTALL NAILS AT THE BACK CORNERS OF THE BLOCK AND BEND THE NAILS OVER THE FLANGE OF THE STEEL POST.

MIDWEST GUARDRAIL SYSTEM (MGS) GUARDRAIL

STATE OF WISCONSIN
DEPARTMENT OF TRANSPORTATION

6
SDD 14B42 - 06c

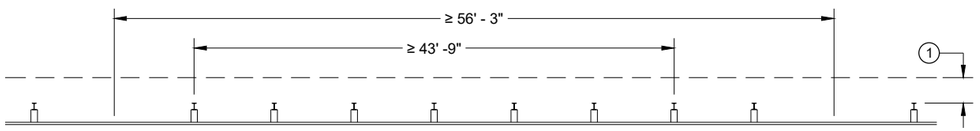

MISSING POST IN NORMAL BEAM GUARD RUN

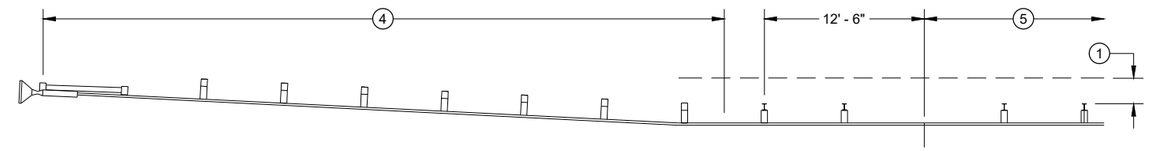

MISSING POST IN NORMAL BEAM GUARD RUN NEAR EAT

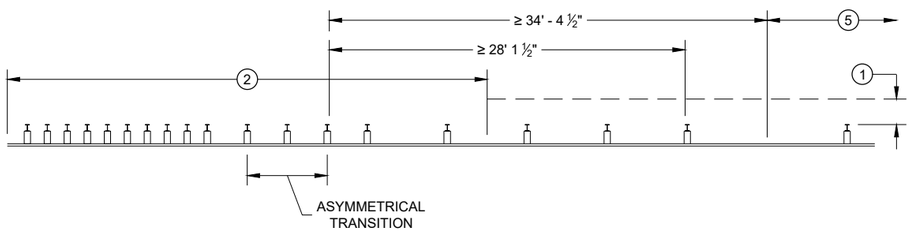

MISSING POST NEAR APPROACH THRIE BEAM TRANSITION

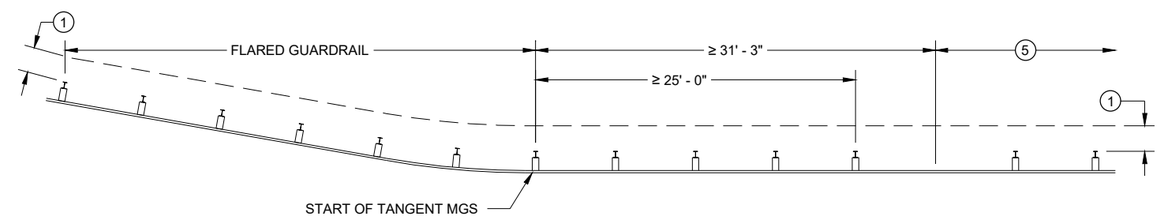

MISSING POST IN NORMAL BEAM GUARD RUN NEAR FLARED BEAM GUARD

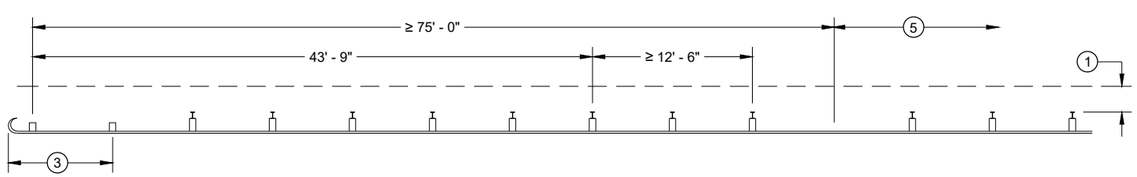

MISSING POST IN NORMAL BEAM GUARD RUN NEAR TYPE 2 TERMINAL

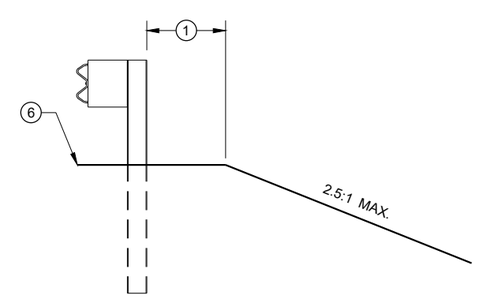

CROSS SECTION VIEW

1. MINIMUM OF 2 FEET OF GRADING BEHIND POST.
2. SEE SDD 14B45 FOR MORE DETAILS.
3. SEE SDD 14B47 FOR MORE DETAILS.
4. SEE SDD 14B44 FOR MORE DETAILS.
5. SEE MISSING POST IN NORMAL BEAM GUARD RUN FOR DISTANCE TO NEXT MISSING POST AND AREA FOR WELL DRAINED, COMPACTED SOILS.
6. SEE PLAN FOR SHOULDER DESIGN.

MIDWEST GUARDRAIL SYSTEM (MGS) GUARDRAIL

STATE OF WISCONSIN
DEPARTMENT OF TRANSPORTATION

APPROVED
7/2018 — DATE
/S/ Rodney Taylor — ROADWAY STANDARDS DEVELOPMENT UNIT SUPERVISOR
FHWA

6

SDD 14B42 - 06d

SDD 14B44-a Midwest Guardrail System (MGS) Energy Absorbing Terminal

GENERAL NOTES

(A) THE SLOPE IN THE AREA BOUNDED BY THE GRADELINE, THE HINGE POINT LINE (HPL) AND THE CLEAR ZONE LIMITS (CZL) SHALL BE 4:1 OR FLATTER.

(B) AFTER FINAL ASSEMBLY, RECHECK CABLE TO BE SURE IT IS TAUT AND HAS NOT RELAXED

(C) DIFFERENT MANUFACTURERS REQUIRE DIFFERENT PERFORATED W - BEAM RAIL END PANELS. SEE MANUFACTURER'S INFORMATION.

(D) ATTACH ALUMINUM SHEET TO E.A.T. HEAD USING 4 STAINLESS STEEL SELF - TAPPING SCREWS. ONE SCREW PER CORNER.

(E) HARDWARE MAY VARY BETWEEN MANUFACTURER. SEE MANUFACTURER'S DRAWING FOR INFORMATION.

(F) DIMENSIONS MAY VARY, MANUFACTURER'S INFORMATION.

SEE SDD 14B42 FOR MORE INFORMATION.

* DO NOT ATTACH BLOCKOUTS TO POST 1 AND 2.

DO NOT INSTALL REFLECTORS ON THE FIRST 50 FEET OF THE APPROACH END OF THE ENERGY ABSORBING TERMINAL.

SEE MANUFACTURER'S DRAWING FOR SPLICE LOCATION, HARDWARE DIMENSIONS AND INSTALLATION INSTRUCTIONS.

THE CENTER OF THE UPPER 3 ½" DIAMETER HOLE ON POST NUMBER 3 THROUGH POST 9 IS TO BE FLUSH WITH THE GROUND LINE UP TO A MAXIMUM OF 2" ABOVE GROUND LINE. WOOD BLOCKS ON POSTS NUMBERED 3 THROUGH 9 MAY BE ADJUSTED UP TO 3" ABOVE THE TOP OF POST.

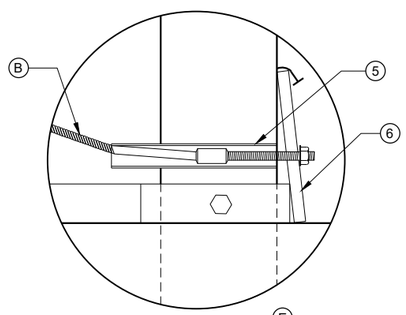

DETAIL "A" (E)

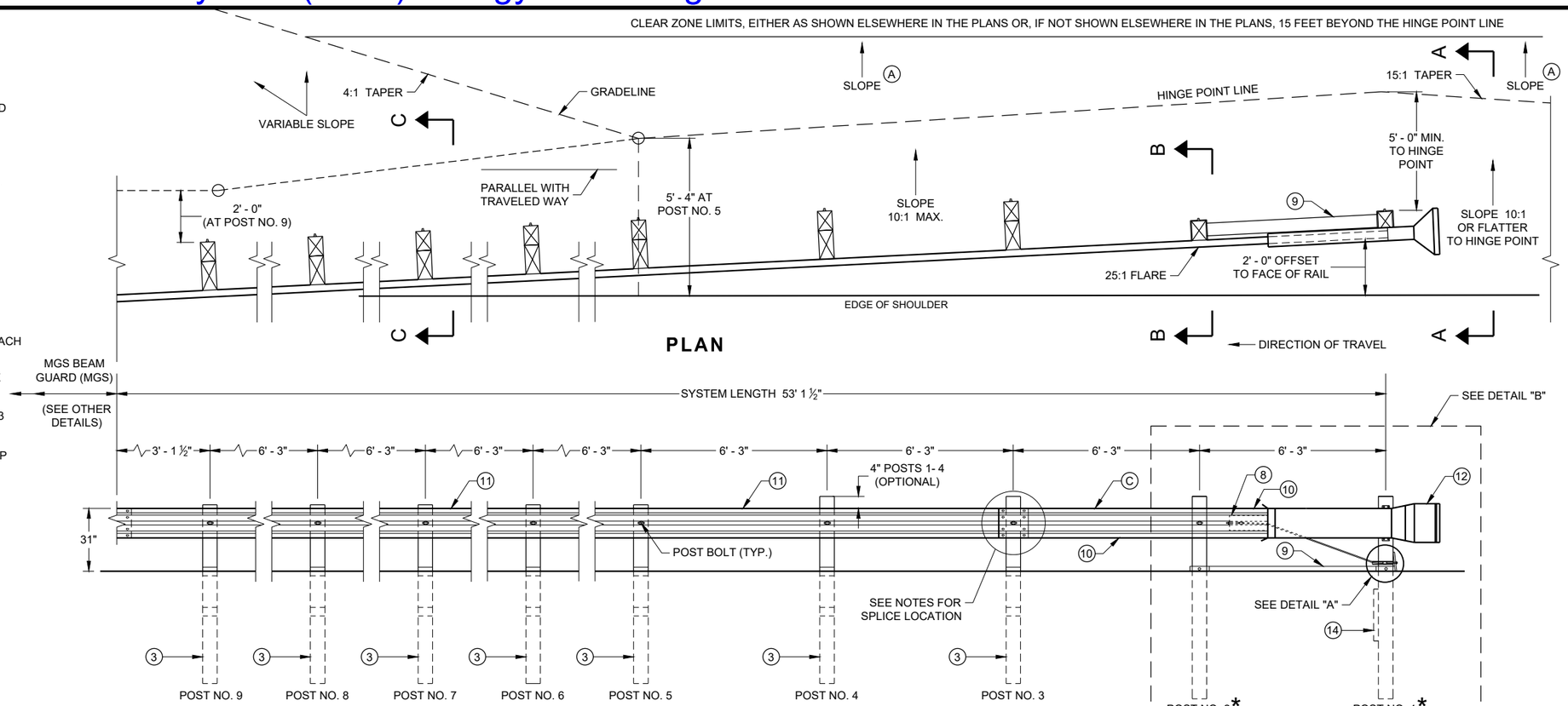

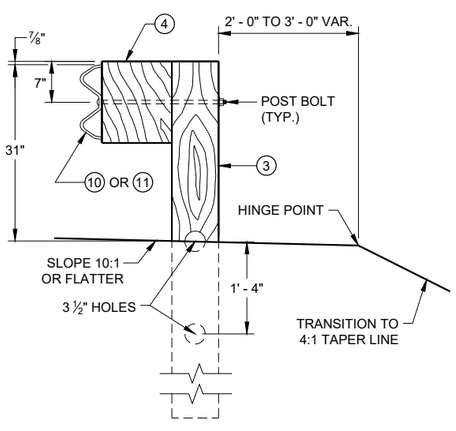

SECTION C - C
TYPICAL AT POST NOS. 3 - 9

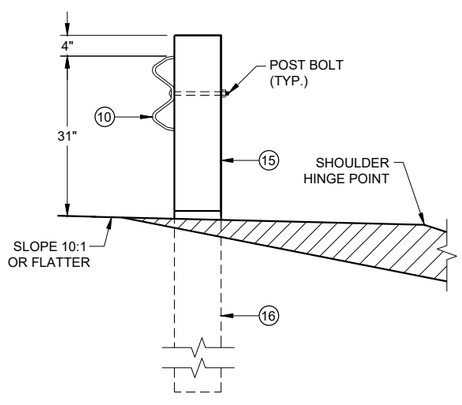

SECTION B - B
TYPICAL AT POST NO. 2*

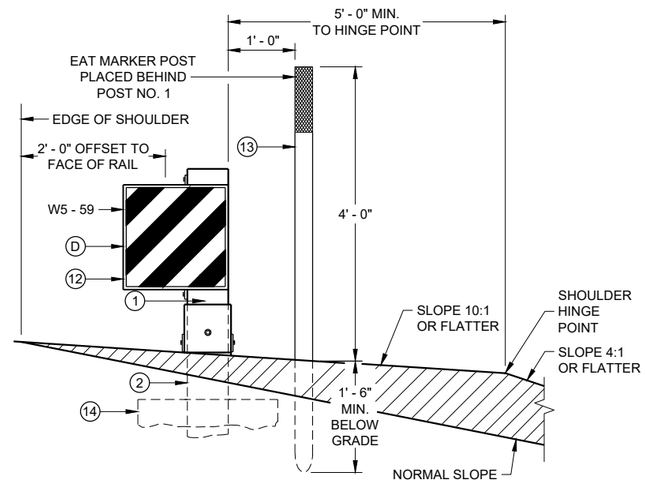

SECTION A - A
TYPICAL AT POST NO. 1*

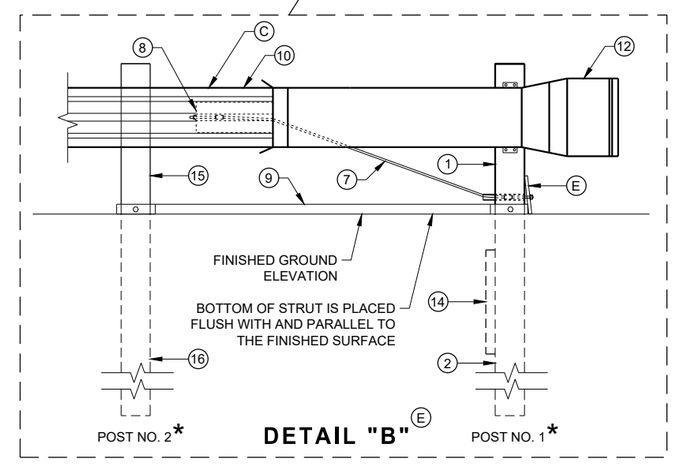

DETAIL "B" (E)

MIDWEST GUARDRAIL SYSTEM ENERGY ABSORBING TERMINAL (MGS)

STATE OF WISCONSIN
DEPARTMENT OF TRANSPORTATION

6

6

SDD 14B44 - 04a

SDD 14B44 - 04a

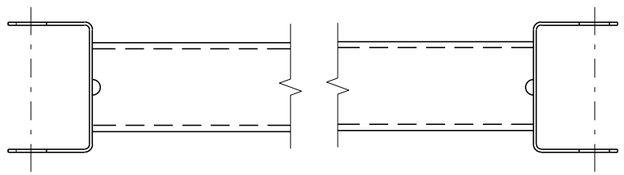

GENERIC GROUND STRUT (9)(E)

BILL OF MATERIALS

PART NO.	DESCRIPTION MATERIALS PROVIDED BY MGS EAT MANUFACTURER. SEE MANUGACTURER'S DETAILS FOR MORE INFORMATION.
1	UPPER POST NO. 1 6" X 6" TUBE
2	LOWER POST NO. 1
3	WOOD CRT
4	WOOD BLOCKOUT
5	PIPE SLEEVE
6	BEARING PLATE
7	BCT CABLE ASSEMBLY
8	ANCHOR CABLE BOX
9	GROUND STRUT
10	PERFORATED W-BEAM RAIL END PANEL, 12'-6" LONG.
11	STANDARD W-BEAM RAIL. MULTIPLE SECTIONS REQUIRED. SECTIONS VARY IN LENGTH.
12	IMPACT HEAD
13	EAT MARKER POST - YELLOW (SEE APPROVED PRODUCTS LIST)
14	SOIL PLATE
15	UPPER POST NO. 2
16	LOWER POST NO. 2

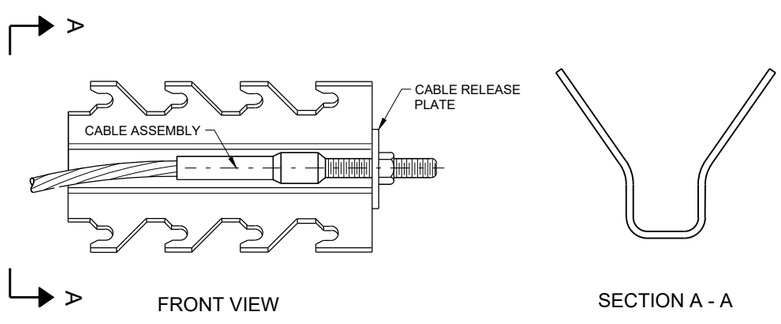

GENERIC ANCHOR CABLE BOX (9)(E)

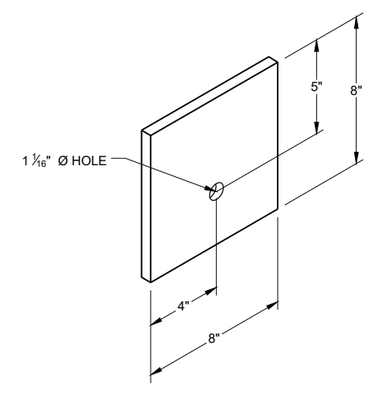

BEARING PLATE (6)(E)

MIDWEST GUARDRAIL SYSTEM ENERGY ABSORBING TERMINAL (MGS)

STATE OF WISCONSIN
DEPARTMENT OF TRANSPORTATION

6
SDD 14B44 - 04b

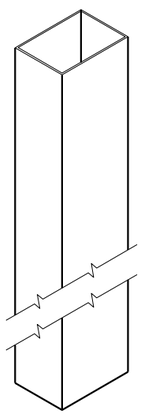

UPPER POST NO. 1 (1) (E)

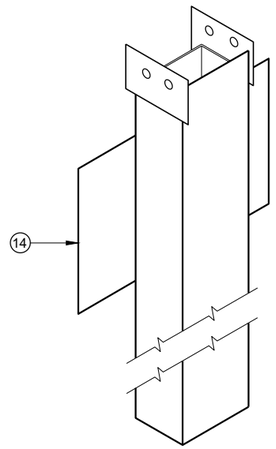

LOWER POST NO. 1 (2) (E)

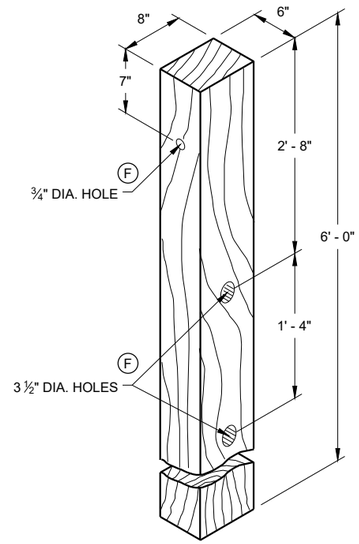

WOOD CRT POST (3) (E)
POSTS NUMBER 3-9

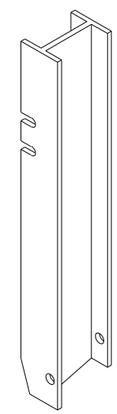

UPPER POST NO. 2 (15) (E)

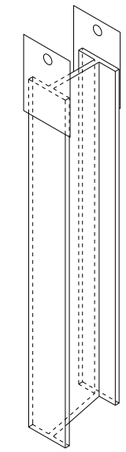

LOWER POST NO. 2 (16) (E)

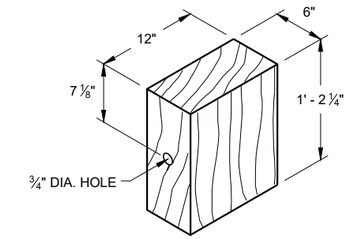

WOOD BLOCKOUT (4)
REQ'D. AT ALL POSTS EXCEPT POST NO'S 1 & 2

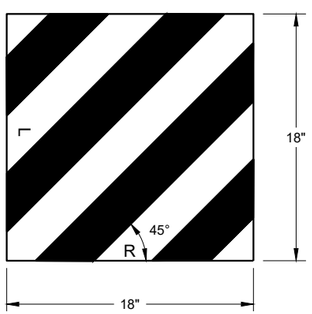

W5 - 59

REFLECTIVE SHEETING DETAIL (E)

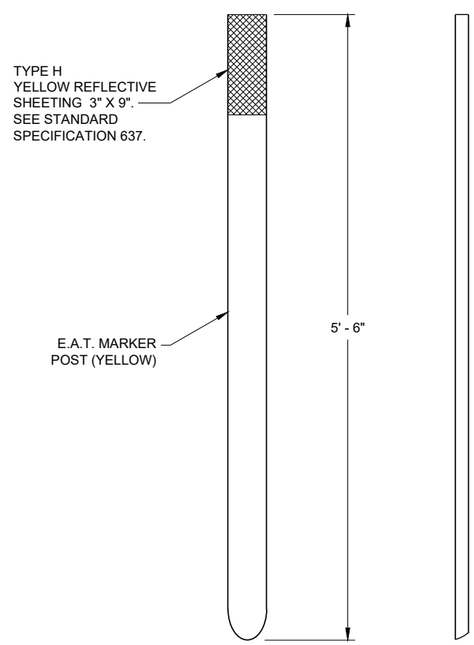

FRONT VIEW SIDE VIEW

E.A.T. MARKER POST (13)

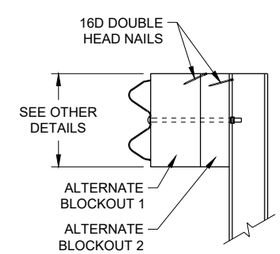

SIDE VIEW

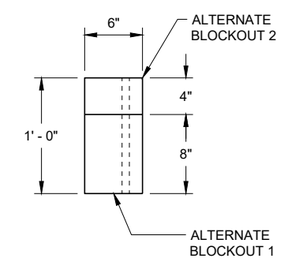

TOP VIEW

ALTERNATE WOOD
BLOCKOUT DETAIL

MIDWEST GUARDRAIL SYSTEM ENERGY ABSORBING TERMINAL (MGS)

STATE OF WISCONSIN
DEPARTMENT OF TRANSPORTATION

APPROVED
7/2018 — DATE
/S/ Rodney Taylor — ROADWAY STANDARDS DEVELOPMENT UNIT SUPERVISOR
FHWA

6
SDD 14B44 - 04c

SDD 14B53-a Short Radius Beam Guard and Terminal (MGS) - Layout

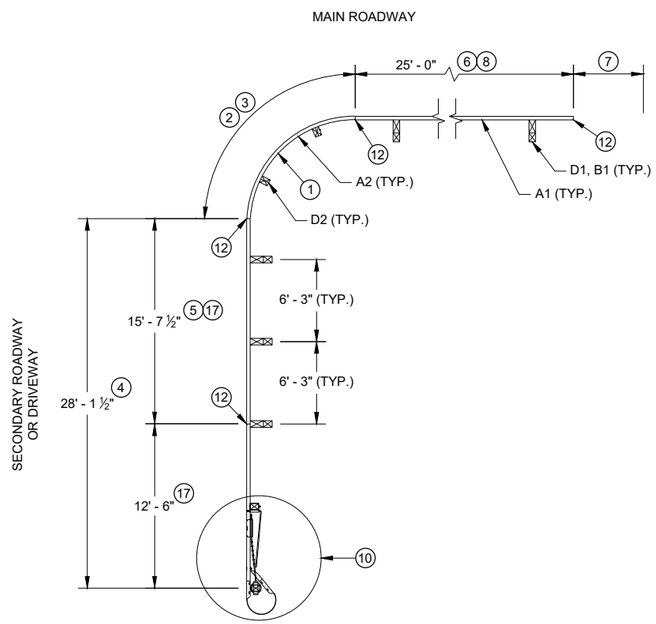

PLAN VIEW

SHORT RADIUS BEAM GUARD WITH SHORT RADIUS TERMINAL ON SECONDARY ROAD OR DRIVEWAY

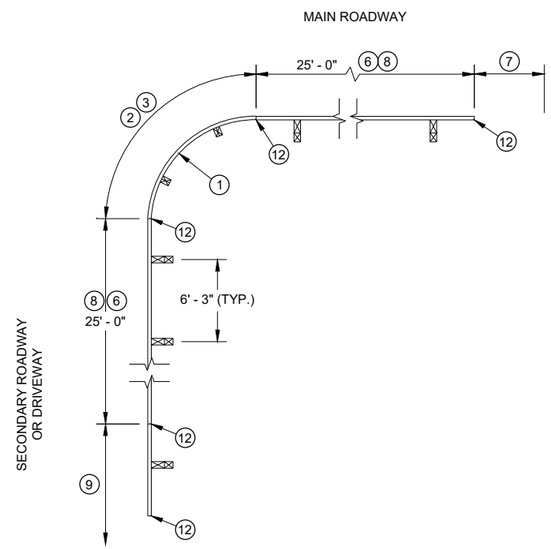

PLAN VIEW

SHORT RADIUS BEAM GUARD WITH EAT, ADDITIONAL BEAM GUARD OR TRANSITION TO RIGID BARRIER ON SECONDARY ROAD OR DRIVEWAY

TABLE FOR RADIUS OF 32' AND LESS

RADIUS (FT)	LENGTH (FT)	WIDTH (FT)
8	25	15
16	30	15
24	40	20
32	50	30

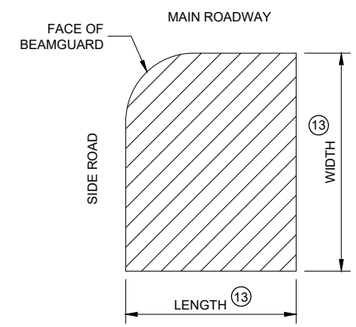

AREA FREE OF FIXED OBJECTS FOR RADIUS 32' AND LESS 16

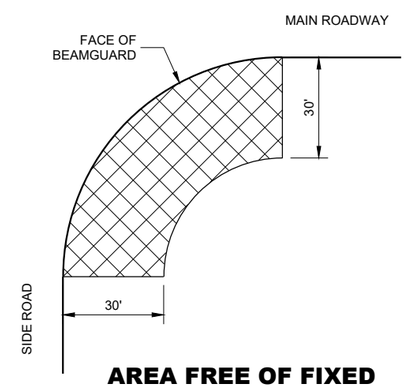

AREA FREE OF FIXED OBJECTS FOR RADIUS GREATER THAN 32'

GENERAL NOTES

SEE PLANS FOR OTHER BARRIER SYSTEM AND LOCATION SPECIFICS.

SEE SDD 14B42 FOR MORE INFORMATION ON BEAM GUARD INSTALLATION, PARTS, MATERIALS, AND INSTALLATION INFORMATION.

GALVANIZE PARTS AFTER FABRICATION.

WELDING TO FOLLOW CURRENT REQUIREMENTS OF THE AMERICAN WELDING SOCIETY STRUCTURAL WELDING CODE ANSI / AWS D1.1.

UNLESS NOTED OTHERWISE, ALL PLATES ARE FLAT AND FREE OF WARP.

UNLESS NOTED OTHERWISE, ALL EDGES ARE SMOOTH, STRAIGHT AND VERTICAL.

ALL CUTS AND HOLES, EXCEPT IN BEAM GUARD RAIL ARE TO BE MACHINED OR MACHINE FLAME CUT.

UNLESS NOTED OTHERWISE, CUT OR PROVIDE BOLTS THAT ARE ¼" TO ½" BEYOND THE NUT.

DRAWINGS ARE NOT TO SCALE.

1. RADIUS MEASURE FROM INSIDE OF RAIL. LENGTH OF BEAM GUARD SHORT RADIUS GUARD MEASURED ALONG TRAFFIC SIDE OF RAIL. RADIUS BETWEEN 8 FEET TO 150 FEET. SEE PLAN FOR REQUIRED RADIUS. BEAM GUARD RAIL IN RADIUS IS SHOP BENT. ODD RAIL LENGTH OR FIELD CUTS MAY BE REQUIRED.
2. CONTROLLED RELEASE TERMINAL (CRT) POSTS ARE USED IN THE RADIUS. CONTROLLED RELEASE TERMINAL (CRT) POSTS ARE SPACED 6' - 3". SEE PLAN FOR NUMBER OF CONTROLLED RELEASE (CRT) POSTS.
3. WITHIN RADIUS BEAM GUARD RAILS ARE NOT BOLTED TO POSTS. BEAM GUARD RAIL IS RESTED ON TOP OF LAG SCREW.
4. MINIMUM LENGTH OF BEAM GUARD ALONG SIDE ROAD OR DRIVEWAY TO INSTALL SHORT RADIUS TERMINAL. BEAM GUARD IS PAID WITH BEAM GUARD ITEM.
5. ODD LENGTH OF BEAM GUARD REQUIRED TO INSTALL SHORT RADIUS TERMINAL.
6. MINIMUM AMOUNT OF BEAM GUARD TO BE INSTALLED PRIOR TO TRANSITION TO RIGID BARRIER. ADDITIONAL BEAM GUARD, OR EAT. BEAM GUARD PAID FOR WITH BEAM GUARD ITEM. SEE PLANS FOR MORE DETAIL.
7. BEAM GUARD, EAT, OR TRANSITION TO RIGID BARRIER. SEE PLAN.
8. TOP OF BEAM GUARD BY THE RADIUS IS 27". HEIGHT OF BEAM GUARD IS 31" BY TRANSITION TO RIGID BARRIER, ADDITIONAL BEAM GUARD OR EAT.
9. ADDITIONAL BEAM GUARD, EAT OR TRANSITION TO RIGID BARRIER. BEAM GUARD SHOWN. SEE PLAN FOR DETAILS.
10. SHORT RADIUS TERMINAL (SEE OTHER DETAILS).
11. HEIGHT VARIES. SEE NOTE 8 AND 8.
12. BEAM GUARD RAIL SPLICE LOCATION. SPLICE LOCATION REQUIRES PART F1 AND F2. SEE SDD 14B42 FOR DETAILS.
13. SEE TABLE FOR VALUES.
14. MAXIMUM HEIGHT FOR CENTER OF HOLE IS ¾" ABOVE FINISHED GROUND ±1".
15. DRILL POST 15/64" DIA. PILOT HOLE. DO NOT HAMMER LAG SCREW INTO POST.
16. SMALL SIGNS ON BREAKAWAY HARDWARE ARE ACCEPTABLE.
17. TOP OF RAIL HEIGHT IS 27" WHEN USING A SHORT RADIUS TERMINAL (CRT).

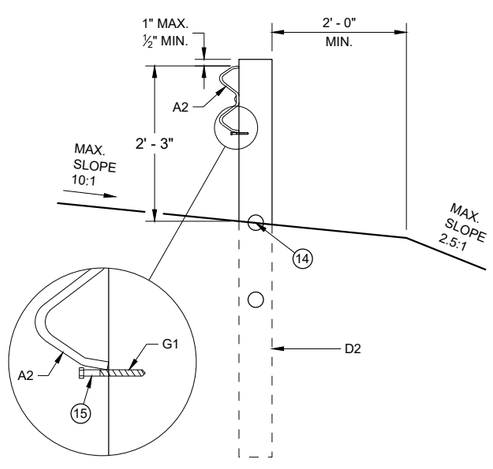

CONTROLLED RELEASE TERMINAL POST (CRT) IN RADIUS

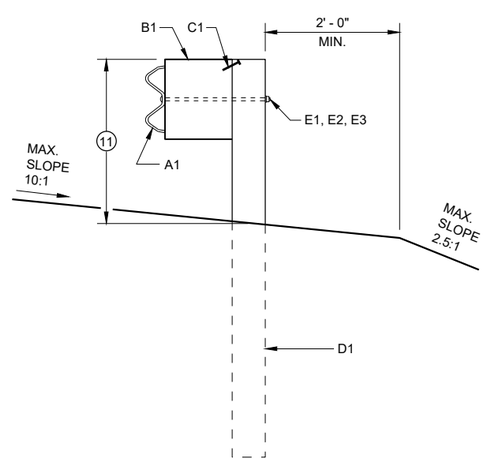

BEAM GUARD POSTS IN HEIGHT TRANSITION

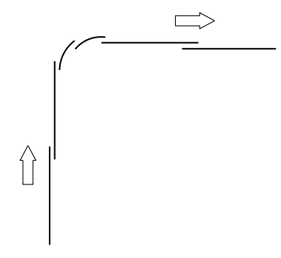

LAP SPLICE DETAIL

SHORT RADIUS BEAM GUARD (MGS) SHORT RADIUS TERMINAL (MGS)

STATE OF WISCONSIN
DEPARTMENT OF TRANSPORTATION

6

6

SDD 14B53 - 01a

SDD 14B53 - 01a

SDD 14B53-b Short Radius Beam Guard and Terminal (MGS) - Short Radius Terminal View, Detail A

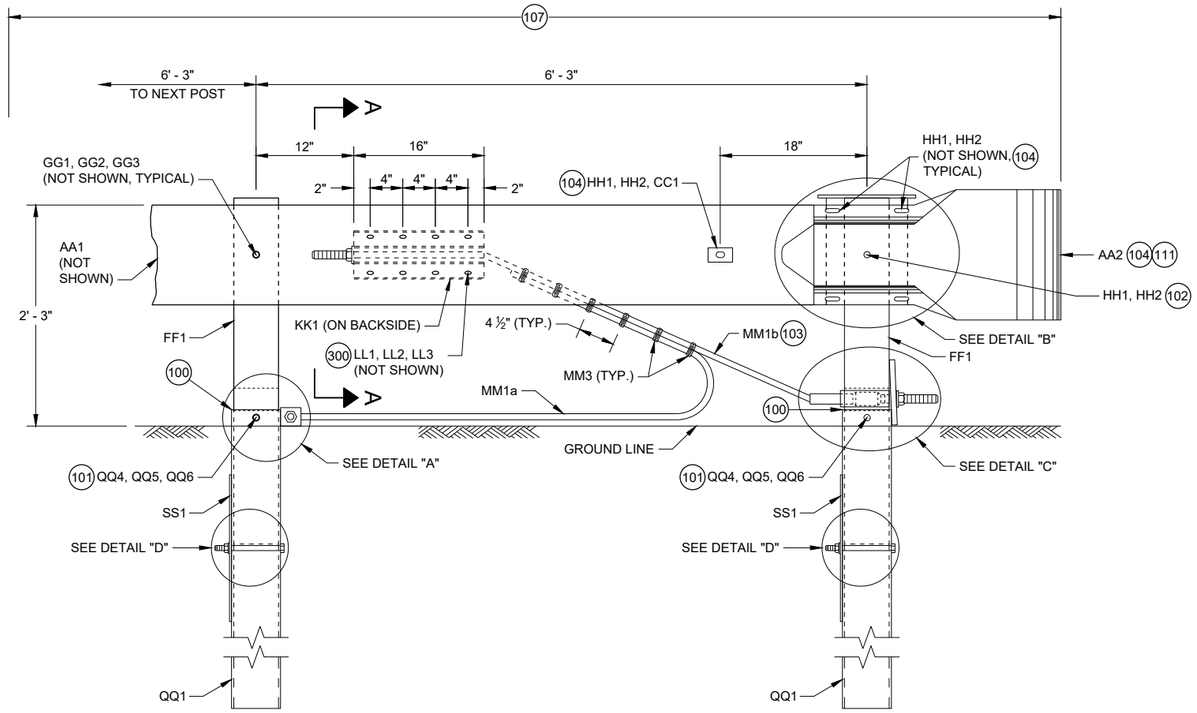

PROFILE VIEW

SHORT RADIUS TERMINAL

GENERAL NOTES

100 TOP OF FOUNDATION TUBE 2 INCHES MAXIMUM ABOVE FINISHED GROUND.

101 WASHERS REQUIRED BETWEEN BOLT HEAD AND FOUNDATION TUBE AND BETWEEN NUT AND FOUNDATION TUBE.

102 SPLICE BOLT AND NUT CONNECTS BEAM GUARD RAIL, W-BEAM SECTION BUFFER, AND STEEL PIPE ASSEMBLY. NO WASHER REQUIRED. SEE DETAIL "B".

103 CABLE IS TAUT.

104 ADJUST AA2 AND BB1 TO FIT.

105 BREAK POINT OF SHOULDER.

106 TACK WELD CABLE CONNECTOR TUBE PLATE TO CABLE CONNECTION TUBE. SEE DETAIL "A" PROFILE VIEW.

107 PAY LIMIT FOR BEAM GUARD.

108 SQUARE WASHER BETWEEN HEAD OF BOLT AND TRAFFIC FACE OF BEAM GUARD. ROUND WASHER REQUIRED BETWEEN NUT AND BB1.

109 CUT OR PROVIDE THREADED STUD THAT IS FLUSH WITH FACE OF BEAM GUARD RAIL KK1 (PLUS OR MINUS ½" TOLERANCE). DEBURR AFTER CUTTING.

110 SEE STEEL PIPE ASSEMBLY DETAILS.

111 ATTACH UU2 WITH UU3. SHOP APPLY UU1 TO UU2.

112 FOUR (4) HH1 AND HH2 REQUIRED TO ATTACH AA1 TO AA2.

113 FOUR (4) HH1 AND HH2 REQUIRED TO ATTACH AA2 TO BB1.

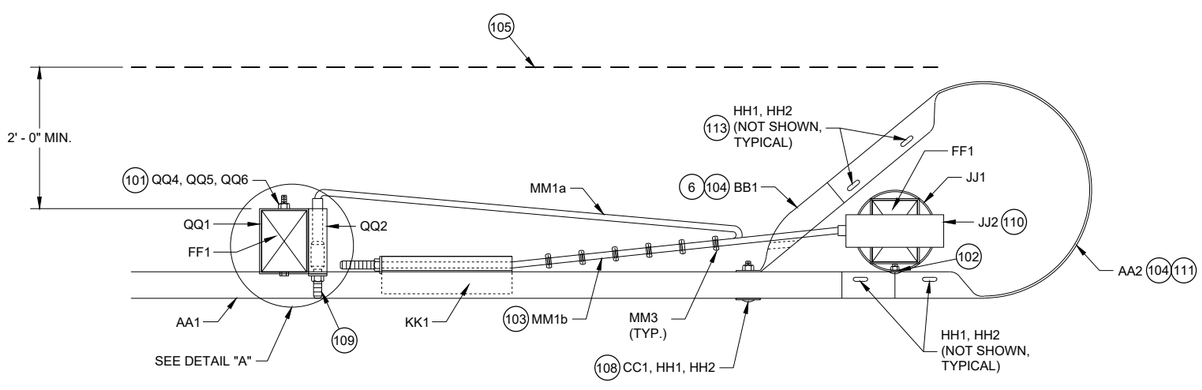

TOP VIEW

SHORT RADIUS TERMINAL

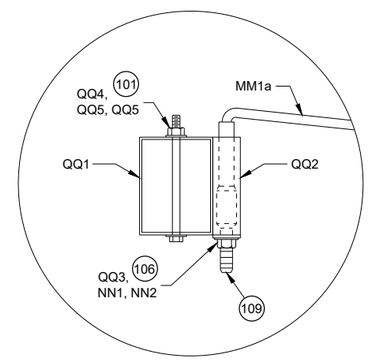

TOP VIEW

DETAIL "A"

(WOOD BREAKAWAY AND BEAM GUARD RAIL POSTS NOT SHOWN)

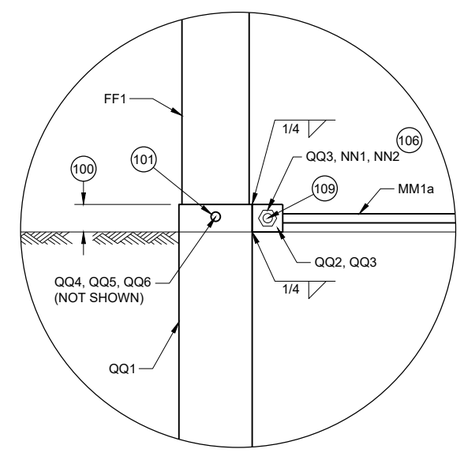

PROFILE VIEW

DETAIL "A"

6

6

SDD 14B53 - 01b

SDD 14B53 - 01b

SHORT RADIUS BEAM GUARD (MGS) SHORT RADIUS TERMINAL (MGS)

STATE OF WISCONSIN
DEPARTMENT OF TRANSPORTATION

GENERAL NOTES

200 TWO (2) NAILS SPACED 4 INCHES CENTER TO CENTER.

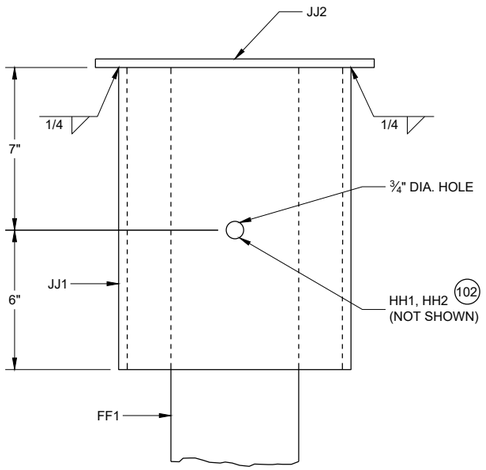

PROFILE VIEW

DETAIL "B"
STEEL PIPE ASSEMBLY
(BEAM GUARD AND W BEAM END SECTION NOT SHOWN)

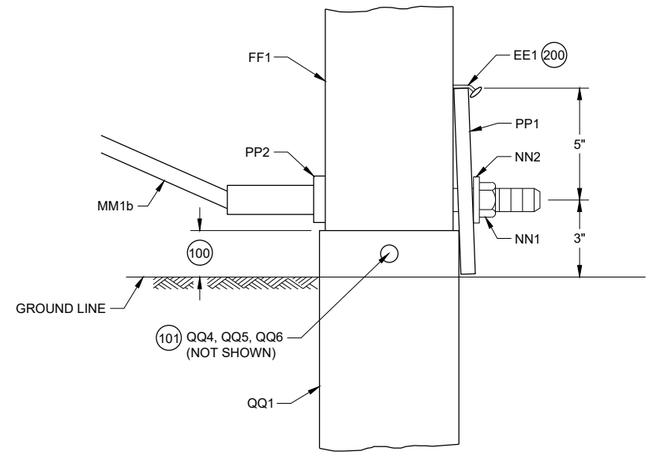

PROFILE VIEW

DETAIL "C"

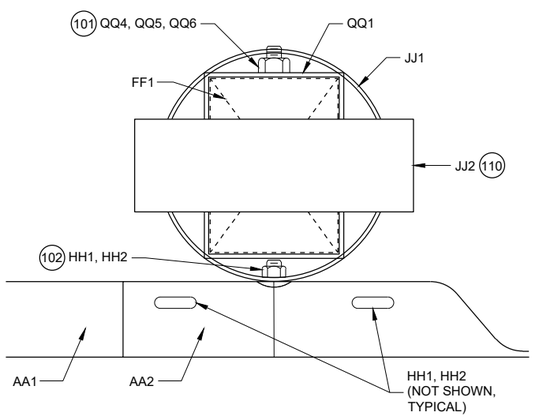

PLAN VIEW

DETAIL "B"
STEEL PIPE ASSEMBLY

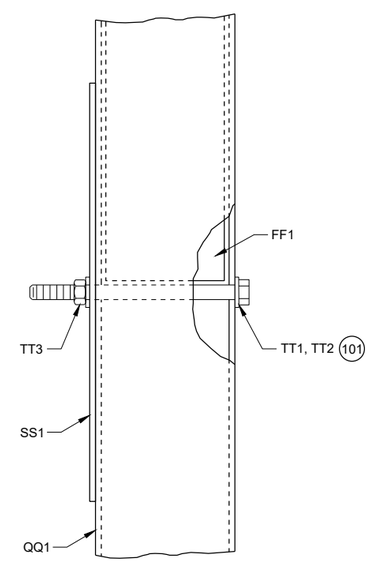

PROFILE VIEW

DETAIL "D"

SHORT RADIUS BEAM GUARD (MGS) SHORT RADIUS TERMINAL (MGS)

STATE OF WISCONSIN
DEPARTMENT OF TRANSPORTATION

6
SDD 14B53 - 01c

SDD 14B53-d Short Radius Beam Guard and Terminal (MGS) - Terminal Anchor Bracket and Bracket Bearing Details

GENERAL NOTES

300 WASHERS REQUIRED BETWEEN BOLT HEAD AND BEAM GUARD RAIL AND BETWEEN NUT AND ANCHOR BRACKET. EIGHT (8) LL1 AND LL3 REQUIRED. SIXTEEN (16) LL2 REQUIRED.

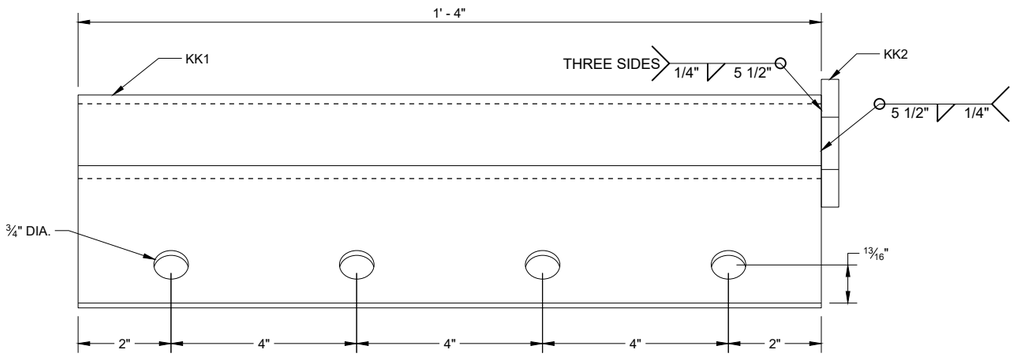

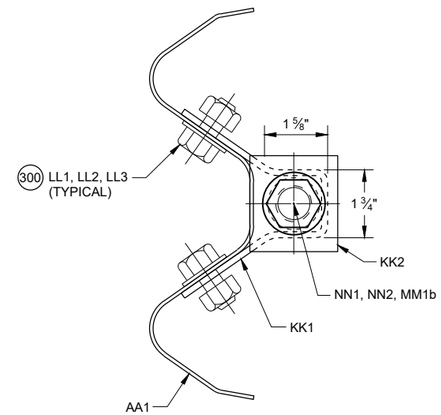

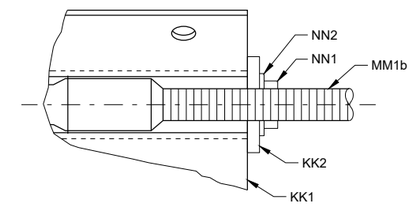

SECTION A - A

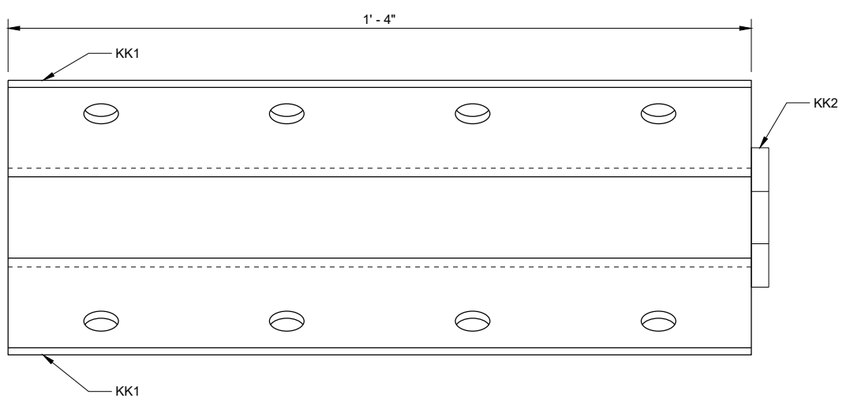

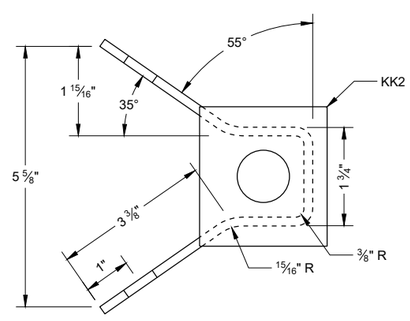

ANCHOR BRACKET (KK1, KK2)

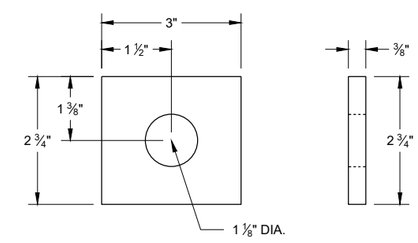

ANCHOR BRACKET BEARING PLATE (KK2)

6

6

SDD 14B53 - 01d

SDD 14B53 - 01d

SHORT RADIUS BEAM GUARD (MGS) SHORT RADIUS TERMINAL (MGS)

STATE OF WISCONSIN
DEPARTMENT OF TRANSPORTATION

GENERAL NOTES

400 CROSS SECTION OF PART IS TO FIT OVER AA1 .

401 CROSS SECTION OF PART IS TO FIT OVER OR UNDER AA1 .

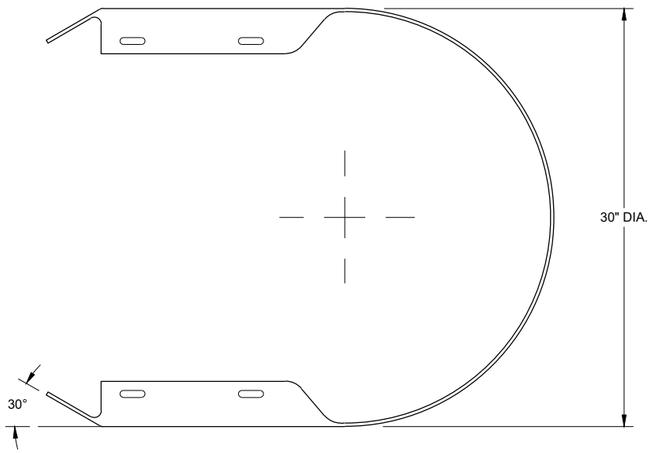

TOP VIEW

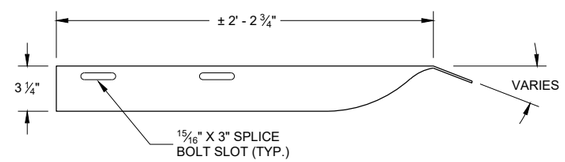

TOP VIEW

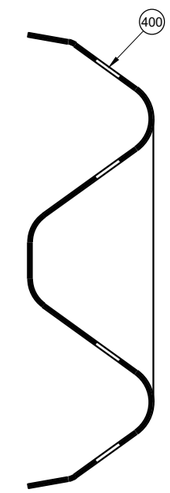

SECTION B -B

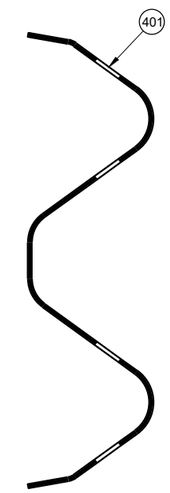

SECTION C -C

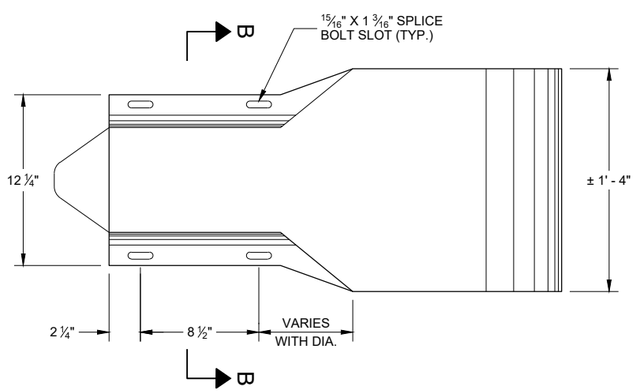

PROFILE VIEW

W BEAM
END SECTION BUFFER (AA2)

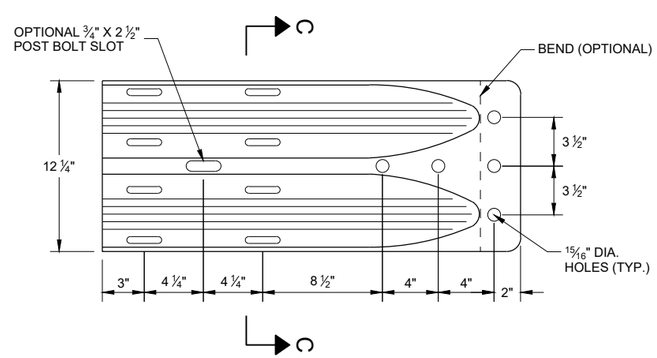

PROFILE VIEW

W BEAM
TERMINAL CONNECTOR (BB1)

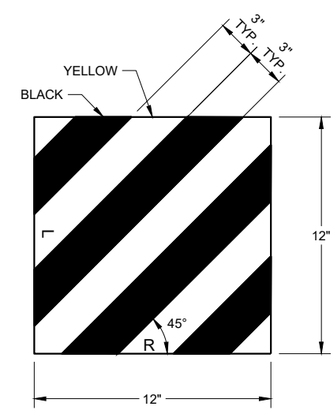

REFLECTIVE SHEETING (UU1, UU2)

SHORT RADIUS BEAM GUARD (MGS) SHORT RADIUS TERMINAL (MGS)

STATE OF WISCONSIN
DEPARTMENT OF TRANSPORTATION

6

6

SDD 14B53 - 01e

SDD 14B53 - 01e

SDD 14B53-f Short Radius Beam Guard and Terminal (MGS)-Cable Assembly,Terminal Post Details,Tube, Plate, Washer

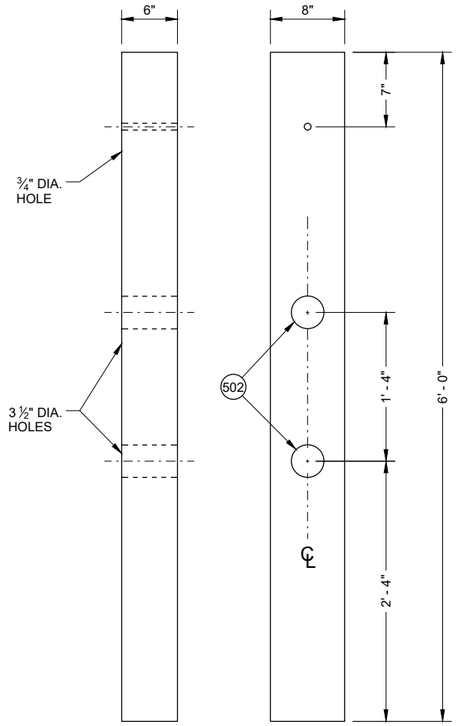

FRONT VIEW SIDE VIEW

CONTROLLED RELEASE POST (CRT) (DD2)

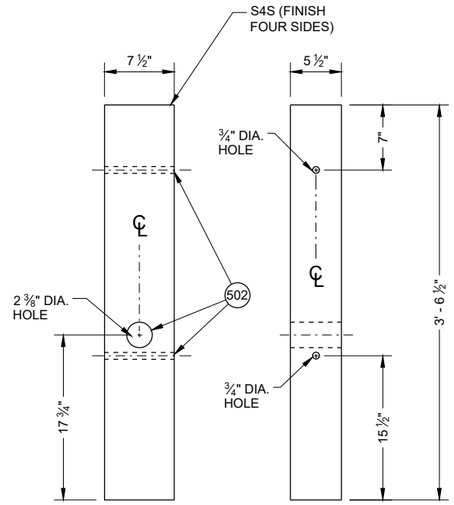

FRONT VIEW SIDE VIEW

WOOD BREAKAWAY POST (FF1)

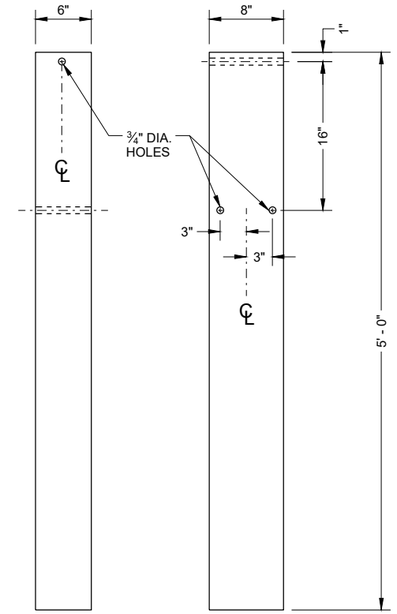

FRONT VIEW SIDE VIEW

FOUNDATION TUBE (QQ1) 500

GENERAL NOTES

500 SEE DETAIL "D" FOR LOCATION AND ATTACHMENT OF SS1.

501 FOR MM1a THREADED STUD ONLY REQUIRED ON ONE END. SWAGED FITTING REQUIRED.

502 LOCATE HOLES ON THE CENTERLINE OF THE SIDE OF THE POST.

503 MM1a MAY HAVE ONE THREADED STUD 4 INCHES LONG. SEE NOTE 109.

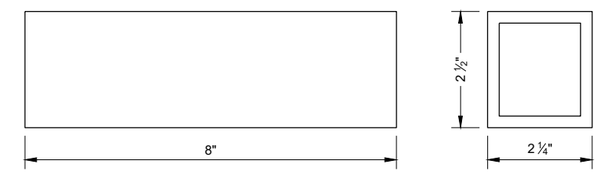

FOUNDATION TUBE - ANCHOR CABLE TUBE (QQ2)

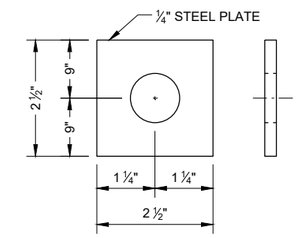

ANCHOR CABLE TUBE END PLATE (QQ3)

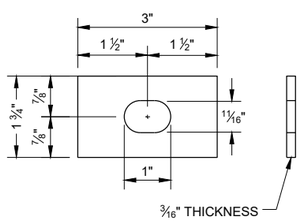

RECTANGULAR PLATE WASHER (CC1)

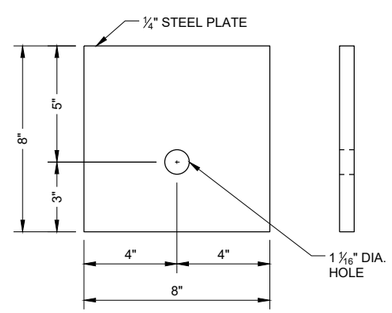

BEARING PLATE (PP1)

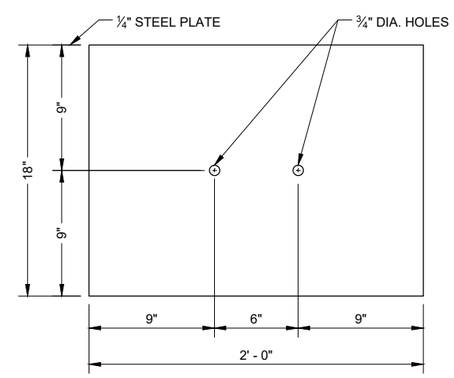

SOIL PLATE (SS1)

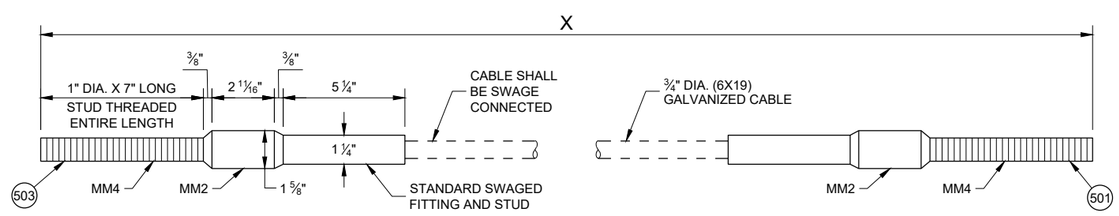

CABLE ASSEMBLY (MM1a, MM1b)

"X" LENGTH

MM1b	9' - 0"
MM1b	6' - 8"

SHORT RADIUS BEAM GUARD (MGS) SHORT RADIUS TERMINAL (MGS)

STATE OF WISCONSIN
DEPARTMENT OF TRANSPORTATION

6

6

SDD 14B53 - 01f

SDD 14B53 - 01f

SDD 14B53-g Short Radius Beam Guard and Terminal (MGS) - Part List

BILL OF MATERIALS - SHORT RADIUS BEAM GUARD (MGS)

PART	DESCRIPTION	MATERIALS SPECIFICATIONS	NOTES
A1	BEAM GUARD RAIL	AASHTO M180, CLASS A, TYPE 2	
		APPROVED PRODUCER	
A2	BEAM GUARD RAIL - SHOP BENT	INDICATE ON BACK OF RAIL THE RADIUS THAT RAIL WAS BENT TO. SHOP BEND RADIUS IS TO THE NEAREST FOOT. FOLLOW AASHTO M180 ON HOW TO MARK RADIUS INFORMATION.	
		AASHTO M180, CLASS A, TYPE 2	
		APPROVED PRODUCER	
B1	BLOCK - WOOD	WISDOT SPEC. 614	SEE SDD 14B42
C1	NAIL	ASTM A153 HOT DIP CLASS D	
		ASTM F1667 TYPE 1 STYLE 12 (16 DOUBLE HEAD)	
D1	POST-STRONG POST-WOOD	WISDOT SPEC. 614	SEE SDD 14B42
D2	POST-CRT-WOOD	WISDOT SPEC. 614	
E1	POST BOLT	ASTM A307 GRADE A OR SAE J429 GRADE 2	⅝" DIA. SEE SDD 14B42 FOR BOLT GEOMETRY
		AASHTO M180	
		GALV. HOT DIP TO AASHTO M232 CLASS C / ASTM A153 CLASS C / ASTM F2329 OR GALV. MECHANICALLY TO AASHTO M298 CLASS 50, TYPE 1 / ASTM B695 CLASS 50, TYPE 1	
		UNC	
E2	POST BOLT - WASHER	ASTM F436 TYPE 1 (HARDEN TYPICALLY USED WITH STEEL) OR ASTM F844 (UNHARDENED TYPICALLY WITH WOOD)	⅝" DIA.
		GALV. AASHTO M111 / ASTM A 123 OR GALV. HOT DIP. TO AASHTO M232 CLASS C / ASTM A153 CLASS C / ASTM F2329	
E3	POST BOLT - NUT	AASHTO M180 DOUBLE RECESSED HEAVY HEX HEAD	⅝" DIA. SEE SDD 14B42 FOR BOLT GEOMETRY
		GALV. HOT DIP TO AASHTO M232 CLASS C / ASTM A153 CLASS C / ASTM F2329 OR GALV. MECHANICALLY TO AASHTO M298 CLASS 50, TYPE 1 / ASTM B695 CLASS 50, TYPE 1	
		UNC	
		OVER TAPPED NUTS OVER-SIZE AS SPECIFIED IN AASHTO 291 / ASTM A 563	
		ASTM A563 GRADE A HEAVY HEX HEAD	
F1	SPLICE BOLT	GALV. HOT DIP TO AASHTO M232 CLASS C / ASTM A153 CLASS C / ASTM F2329 OR GALV. MECHANICALLY TO AASHTO M298 CLASS 50, TYPE 1 / ASTM B695 CLASS 50, TYPE 1	⅝" DIA. SEE SDD 14B42 FOR BOLT GEOMETRY
		ASTM A307 GRADE A OR SAE J429 GRADE 2	
		UNC	
		AASHTO M180	

PART	DESCRIPTION	MATERIALS SPECIFICATIONS	NOTES
F2	SPLICE BOLT - NUT	ASTM A563 GRADE A	⅝" DIA. SEE SDD 14B42 FOR BOLT GEOMETRY
		AASHTO M180 DOUBLE RECESSED HEAVY HEX HEAD	
		GALV. HOT DIP TO AASHTO M232 CLASS C/ASTM A153 CLASS C/ASTM F2329 OR GALV. MECHANICALLY TO AASHTO M298 CLASS 50, TYPE 1/ASTM B695 CLASS 50, TYPE 1	
		OVER TAPPED NUTS OVER-SIZE AS SPECIFIED IN AASHTO 291 / ASTM A 563	
		UNC	
G1	LAG SCREW	ASTM A308 GRADE A ASTM A153 CLASS D	½" DIA. 6" LONG
H1	DELINEATOR - BEAM GUARD		SEE SDD 14B42 FOR MORE INFORMATION
H2	DELINEATION - SHEETING	YELLOW OR WHITE	
		WISDOT SPEC 637 TYPE SH	
		APPROVED PRODUCT LIST	
J1	FOUNDATION BACKFILL	STANDARD SPEC. 614	
AA1	BEAM GUARD RAIL - PUNCHED	AASHTO M180, CLASS A, TYPE 2	
		APPROVED PRODUCER	
AA2	BEAM GUARD RAIL - END SECTION BUFFER	AASHTO M180, CLASS A, TYPE 2	
		APPROVED PRODUCER	
BB1	BEAM GUARD RAIL - TERMINAL CONNECTOR MODIFIED	AASHTO M180, CLASS A, TYPE 2	
		APPROVED PRODUCER	
CC1	SHORT RADIUS - SQUARE WASHER	AASHTO M180	
		GALV. AASHTO M111 / ASTM A123	
EE1	NAIL	ASTM A153 HOT DIP CLASS D	
		ASTM F1667 TYPE 1 STYLE 12 (16 DOUBLE HEADED)	
FF1	POST - BCT - WOOD	S4S FINISH ON 4 SIDES	
		WISDOT SPEC. 614	
GG1	POST BOLT	ASTM A307 GRADE A OR SAE J429 GRADE 2	⅜" DIA. SEE SDD 14B42 FOR BOLT GEOMETRY
		AASHTO M180	
		GALV. HOT DIP TO AASHTO M232 CLASS C/ASTM A153 CLASS C/ASTM F2329 OR GALV. MECHANICALLY TO AASHTO M298 CLASS 50, TYPE 1/ASTM B695 CLASS 50, TYPE 1	
		UNC	
GG2	POST BOLT - WASHER	ASTM F436 TYPE 1 (HARDEN TYPICALLY USED WITH STEEL) OR ASTM F844 (UNHARDENED TYPICALLY WITH WOOD)	⅜" DIA.
		GALV. AASHTO M111 / ASTM A 123 OR GALV. HOT DIP. TO AASHTO M232 CLASS C/ASTM A153 CLASS C / ASTM F2329	

SHORT RADIUS BEAM GUARD (MGS) SHORT RADIUS TERMINAL (MGS)

STATE OF WISCONSIN
DEPARTMENT OF TRANSPORTATION

6

SDD 14B53 - 01g

SDD 14B53-h Short Radius Beam Guard and Terminal (MGS) - Part List

BILL OF MATERIALS - SHORT RADIUS BEAM GUARD (MGS)

PART	DESCRIPTION	MATERIALS SPECIFICATIONS	NOTES
GG3	POST BOLT - NUT	ASTM A563 GRADE A	⅜" DIA. SEE 14B42 FOR GEOMETRY
		AASHTO M180 DOUBLE RECESSED HEAVY HEX HEAD	
		GALV. HOT DIP TO AASHTO M232 CLASS C / ASTM A153 CLASS C / ASTM F2329 OR GALV. MECHANICALLY TO AASHTO M298 CLASS 50, TYPE 1 / ASTM B695 CLASS 50, TYPE 1	
		UNC	
		OVER TAPPED NUTS OVER-SIZE AS SPECIFIED IN AASHTO 291 / ASTM A 563	
		ASTM A563 GRADE A HEAVY HEX HEAD	
HH1	SPLICE BOLT	GALV. HOT DIP TO AASHTO M232 CLASS C / ASTM A153 CLASS C / ASTM F2329 OR GALV. MECHANICALLY TO AASHTO M298 CLASS 50, TYPE 1 / ASTM B695 CLASS 50, TYPE 1	⅜" DIA. SEE SDD 14B42 FOR BOLT GEOMETRY
		ASTM A307 GRADE A OR SAE J429 GRADE 2	
		UNC	
		AASHTO M180 HEAD GEOMETRY	
HH2	SPLICE BOLT - NUT	ASTM A563 GRADE A	⅜" DIA. SEE SDD 14B42 FOR BOLT GEOMETRY
		AASHTO M180 DOUBLE RECESSED HEAVY HEX HEAD	
		GALV. HOT DIP TO AASHTO M232 CLASS C / ASTM A153 CLASS C / ASTM F2329 OR GALV. MECHANICALLY TO AASHTO M298 CLASS 50, TYPE 1 / ASTM B695 CLASS 50, TYPE 1	
		OVER TAPPED NUTS OVER-SIZE AS SPECIFIED IN AASHTO 291 / ASTM A 563	
		UNC	
JJ1	PIPE - STEEL	ASTM A53 GALVANIZED GRADE B SCHEDULE 40	10" O.D.
JJ2	TOP PLATE	ASTM A36 MIN. STRENGTH 36 KSI, OR ASTM A529 MAX. STRENGTH 50 KSI, OR ASTM A572 MAX STRENGTH 50 KSI OR ASTM A709 MAX STRENGTH 50 KSI OR ASTM A992 MAX STRENGTH 50 KSI	DIMENSIONS ⅜" X 4" X 1' - 0"
		GALV. AASHTO M111 / ASTM A123	
KK1	ANCHOR BRACKET	ASTM A36 MIN. STRENGTH 36 KSI, OR ASTM A529 MAX. STRENGTH 50 KSI, OR ASTM A572 MAX STRENGTH 50 KSI OR ASTM A709 MAX STRENGTH 50 KSI OR ASTM A992 MAX STRENGTH 50 KSI	
		GALV. AASHTO M111 / ASTM A123	
KK2	ANCHOR BRACKET - BEARING PLATE	ASTM A36 MIN. STRENGTH 36 KSI, OR ASTM A529 MAX. STRENGTH 50 KSI, OR ASTM A572 MAX STRENGTH 50 KSI OR ASTM A709 MAX STRENGTH 50 KSI OR ASTM A992 MAX STRENGTH 50 KSI	
		GALV. AASHTO M111 / ASTM A123	
LL1	ANCHOR BRACKET - BOLT	ASTM A307 GRADE B HEAVY HEX HEAD OR SAE J429 GRADE 2 HEAVY HEX HEAD	⅝" DIA.
		GALV. HOT DIP TO AASHTO M232 CLASS C / ASTM A153 CLASS C / ASTM F2329 OR GALV. MECHANICALLY TO AASHTO M298 CLASS 50, TYPE 1 / ASTM B695 CLASS 50, TYPE 1	
		UNC	

PART	DESCRIPTION	MATERIALS SPECIFICATIONS	NOTES
LL2	ANCHOR BRACKET - WASHER	ASTM F436 TYPE 1 (HARDEN WASHER ONLY)	⅝" DIA.
		GALV. AASHTO M111 / ASTM A123 OR GALV. HOT DIP TO AASHTO M232 CLASS C / ASTM A153 CLASS C / ASTM F2329	
LL3	ANCHOR BRACKET - NUT	ASTM A563 GRADE A	⅝" DIA.
		GALV. HOT DIP TO AASHTO M232 CLASS C / ASTM A153 CLASS C / ASTM F2329 OR GALV. MECHANICALLY TO AASHTO M298 CLASS 50, TYPE 1 / ASTM B695 CLASS 50, TYPE 1	
		OVER TAPPED NUTS OVER-SIZE AS SPECIFIED IN AASHTO 291 / ASTM A 563	
		UNC	
MM1a	ANCHOR CABLE	AASHTO M30 / ASTM A741 INDEPENDENT WIRE CORE (IWRC) OR WIRE STRAND CORE (WCS), IMPROVED PLOW STEEL (IPS), 6X19, TYPE II OR IIc CLASS C ZINC COATED	
MM1b	ANCHOR CABLE	AASHTO M30 / ASTM A741 INDEPENDENT WIRE CORE (IWRC) OR WIRE STRAND CORE (WCS), IMPROVED PLOW STEEL (IPS), 6X19, TYPE II OR IIc CLASS C ZINC COATED	
MM2	ANCHOR CABLE - SWAGE FITTING	ASTM A576 GRADE 1035	
		SWAGE FITTINGS ARE TO BE FACTORY SWEDGED. WITH A BREAKING STRENGTH 40,000 LBS.	
		GALV. AASHTO M111 / ASTM A123	
		ASME B30.26 FORGED, CAST, OR DIE STAMPED WITH THE FOLLOWING INTO CONNECTION: NAME OF MANUFACTURER OR TRADEMARK OF CONNECTION'S MANUFACTURER, SIZE OR RATED LOAD, GRADE.	
MM3	WIRE ROPE CABLE CLAMPS	FF-C-450D TYPE 1 CLASS 1	¾"
		ASTM A153 HOT DIP CLASS D	
MM4	ANCHOR CABLE - SWAGE FITTING - STUD	ASTM F3125 GRADE A325 TYPE 1 OR SAE GRADE 5 OR ASTM A449 TYPE 1 HEAVY HEX HEAD	
		GALV. HOT DIP TO AASHTO M232 CLASS C / ASTM A153 CLASS C / ASTM F2329 OR GALV. MECHANICALLY TO AASHTO M298 CLASS 50, TYPE 1 / ASTM B695 CLASS 50, TYPE 1	
		UNC	
NN1	ANCHOR CABLE - NUT	ASTM A563 GRADE A	1" DIA.
		AASHTO M180 DOUBLE RECESSED HEAVY HEX HEAD	
		GALV. HOT DIP TO AASHTO M232 CLASS C / ASTM A153 CLASS C / ASTM F2329 OR GALV. MECHANICALLY TO AASHTO M298 CLASS 50, TYPE 1 / ASTM B695 CLASS 50, TYPE 1	
		OVER TAPPED NUTS OVER-SIZE AS SPECIFIED IN AASHTO 291 / ASTM A 563	
		UNC	
NN2	ANCHOR CABLE - NUT - WASHER	ASTM F436 TYPE 1 (HARDEN WASHER ONLY)	1" DIA.
		GALV. AASHTO M111 / ASTM A123 OR GALV. HOT DIP TO AASHTO M232 CLASS C / ASTM A153 CLASS C / ASTM F2329	

SHORT RADIUS BEAM GUARD (MGS) SHORT RADIUS TERMINAL (MGS)

STATE OF WISCONSIN
DEPARTMENT OF TRANSPORTATION

BILL OF MATERIALS - SHORT RADIUS BEAM GUARD (MGS)

PART	DESCRIPTION	MATERIALS SPECIFICATIONS	NOTES
PP1	BEARING PLATE AT POST	ASTM A36 MIN. STRENGTH 36 KSI, OR ASTM A529 MAX. STRENGTH 50 KSI, OR ASTM A572 MAX STRENGTH 50 KSI OR ASTM A709 MAX STRENGTH 50 KSI OR ASTM A992 MAX STRENGTH 50 KSI	
		GALV. AASHTO M111 / ASTM A123	
PP2	PIPE - STEEL	ASTM A53 GALVANIZED GRADE B SCHEDULE 40	2" DIA. x 6" LONG
QQ1	FOUNDATION TUBE	ASTM A500 GRADE B	8" X 6" X 3/16"
		GALV. AASHTO M111 / ASTM A123	
QQ2	SHORT RADIUS - FOUNDATION TUBE - ANCHOR CABLE - TUBE	ASTM A500 GRADE B	DIMENSIONS 2 1/2" X 2 1/4" X 1/4" X 8"
		GALV. AASHTO M111 / ASTM A123	
QQ3	SHORT RADIUS - SOIL TUBE - ANCHOR CABLE - TUBE - END PLATE	ASTM A36 MIN. STRENGTH 36 KSI, OR ASTM A529 MAX. STRENGTH 50 KSI, OR ASTM A572 MAX STRENGTH 50 KSI OR ASTM A709 MAX STRENGTH 50 KSI OR ASTM A992 MAX STRENGTH 50 KSI	DIMENSIONS 2 1/2" X 2 1/2" X 1/4"
		GALV. AASHTO M111 / ASTM A123	
QQ4	GROUND STRUT AND YOKE - BOLT	GALV. HOT DIP TO AASHTO M232 CLASS C / ASTM A153 CLASS C / ASTM F2329 OR GALV. MECHANICALLY TO AASHTO M298 CLASS 50, TYPE 1 / ASTM B695 CLASS 50, TYPE 1	5/8 DIA.
		ASTM A307 GRADE B HEAVY HEX HEAD OR SAE J429 GRADE 2 HEAVY HEX HEAD	
		UNC	
QQ5	GROUND PLATE AND YOKE - WASHER	ASTM F436 TYPE 1 (HARDEN WASHER ONLY)	5/8 DIA.
		GALV. AASHTO M111 / ASTM A123 OR GALV. HOT DIP TO AASHTO M232 CLASS C / ASTM A153 CLASS C / ASTM F2329	
QQ6	GROUND STRUT AND YOKE - NUT	HEAVY HEX	5/8 DIA.
		UNC	
		ASTM A563 GRADE A	
		OVER TAPPED NUTS AS SPECIFIED IN AASHTO 291 / ASTM A 563	
		GALV. HOT DIP TO AASHTO M232 CLASS C / ASTM A153 CLASS C / ASTM F2329 OR GALV. MECHANICALLY TO AASHTO M298 CLASS 50, TYPE 1 / ASTM B695 CLASS 50, TYPE 1	

PART	DESCRIPTION	MATERIALS SPECIFICATIONS	NOTES
SS1	SOIL PLATE	ASTM A36 MIN. STRENGTH 36 KSI, OR ASTM A529 MAX. STRENGTH 50 KSI, OR ASTM A572 MAX STRENGTH 50 KSI OR ASTM A709 MAX STRENGTH 50 KSI OR ASTM A992 MAX STRENGTH 50 KSI	
		GALV. AASHTO M111 / A123	
TT1	SOIL PLATE - BOLT	ASTM A307 GRADE B HEAVY HEX HEAD OR SAE J429 GRADE 2 HEAVY HEX HEAD	5/8 DIA.
		GALV. HOT DIP TO AASHTO M232 CLASS C / ASTM A153 CLASS C / ASTM F2329 OR GALV. MECHANICALLY TO AASHTO M298 CLASS 50, TYPE 1 / ASTM B695 CLASS 50, TYPE 1	
		UNC	
TT2	SOIL PLATE - WASHER	ASTM F436 TYPE 1 (HARDEN WASHER ONLY)	5/8 DIA.
		GALV. AASHTO M111 / ASTM A123 OR GALV. HOT DIP TO AASHTO M232 CLASS C / ASTM A153 CLASS C / ASTM F2329	
TT3	SOIL PLATE - NUT	GALV. HOT DIP TO AASHTO M232 CLASS C / ASTM A153 CLASS C / ASTM F2329 OR GALV. MECHANICALLY TO AASHTO M298 CLASS 50, TYPE 1 / ASTM B695 CLASS 50, TYPE 1	5/8 DIA.
UU1	OBJECT MARKER - SHEETING	MUTCD / WISDOT OBJECT MARKER TYPE 3	PATTERN AND COLOR FOR SHEETING. SHEETING TYPE FOR MARKER.
		WISDOT SPEC 637 TYPE F	
		APPROVED PRODUCT LIST	
UU2	OBJECT MARKER - ALUMINUM PLATE	WISDOT SPEC 637 ALUMINUM PLATE	MATERIAL AND THICKNESS OF MATERIALS
UU3	OBJECT MARKER - SCREWS	STAINLESS SELF-TAPPING SCREWS	
VV1	FOUNDATION BACKFILL	WISDOT SPEC 614	

SHORT RADIUS BEAM GUARD (MGS) SHORT RADIUS TERMINAL (MGS)

STATE OF WISCONSIN
DEPARTMENT OF TRANSPORTATION

APPROVED
June 2017 — DATE
/S/ Rodney Taylor — ROADWAY STANDARDS DEVELOPMENT ENGINEER

FHWA

6

SDD 14B53 - 01i

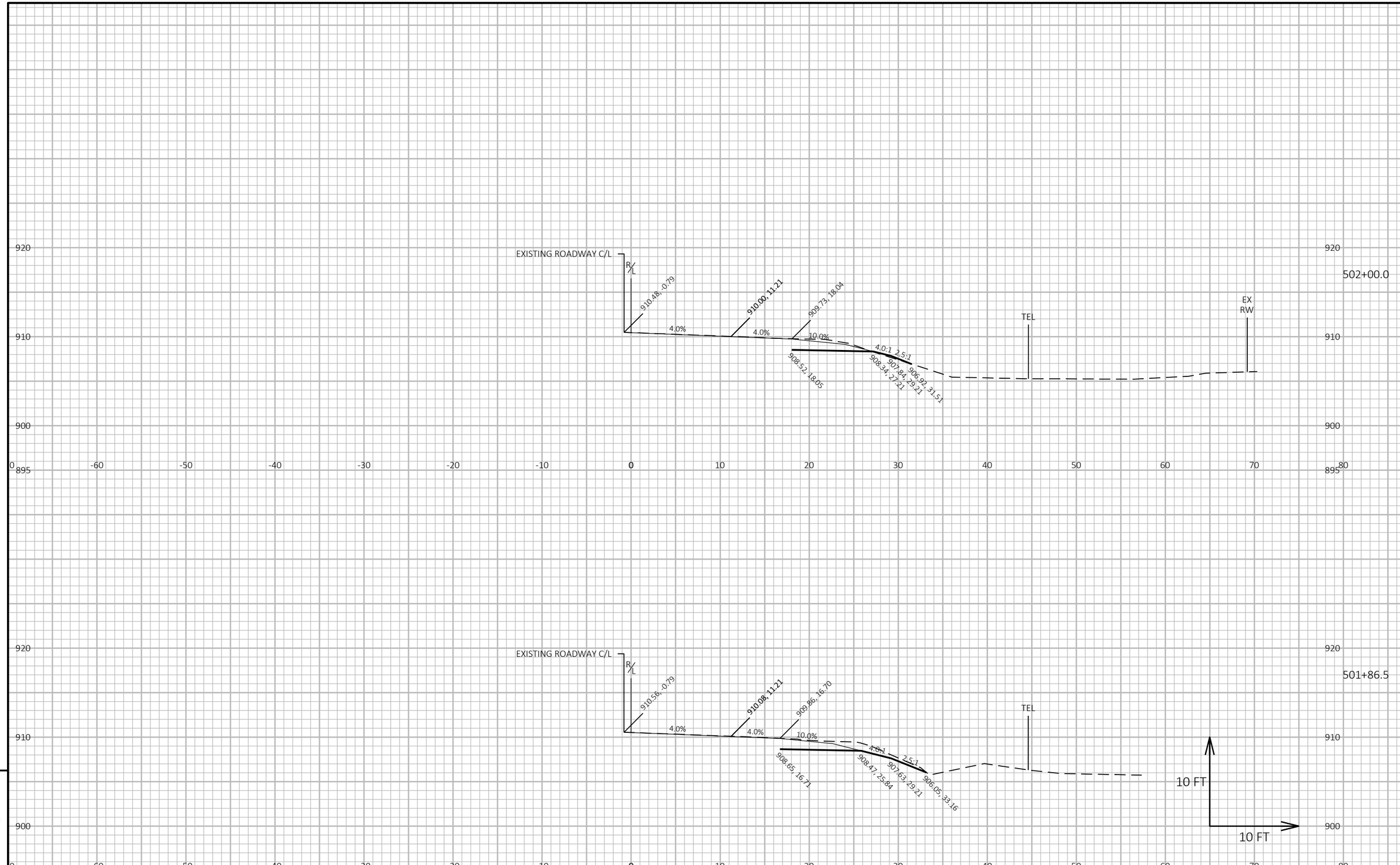

9

9

PROJECT NO: 1400-01-73	HWY: STH 16	COUNTY: COLUMBIA	CROSS SECTIONS: STH 16	SHEET	E

FILE NAME : N:\PDS\C3D\14000103\SHEETSPLAN\090101-XS.DWG
LAYOUT NAME - 01

PLOT DATE : 10/12/2020 3:18 PM

PLOT BY : RINZEL, JAMES M

PLOT NAME :

PLOT SCALE : 1 IN:10 FT HORZ. / 1 IN:10 FT VERT.

WISDOT/CADDS SHEET 49

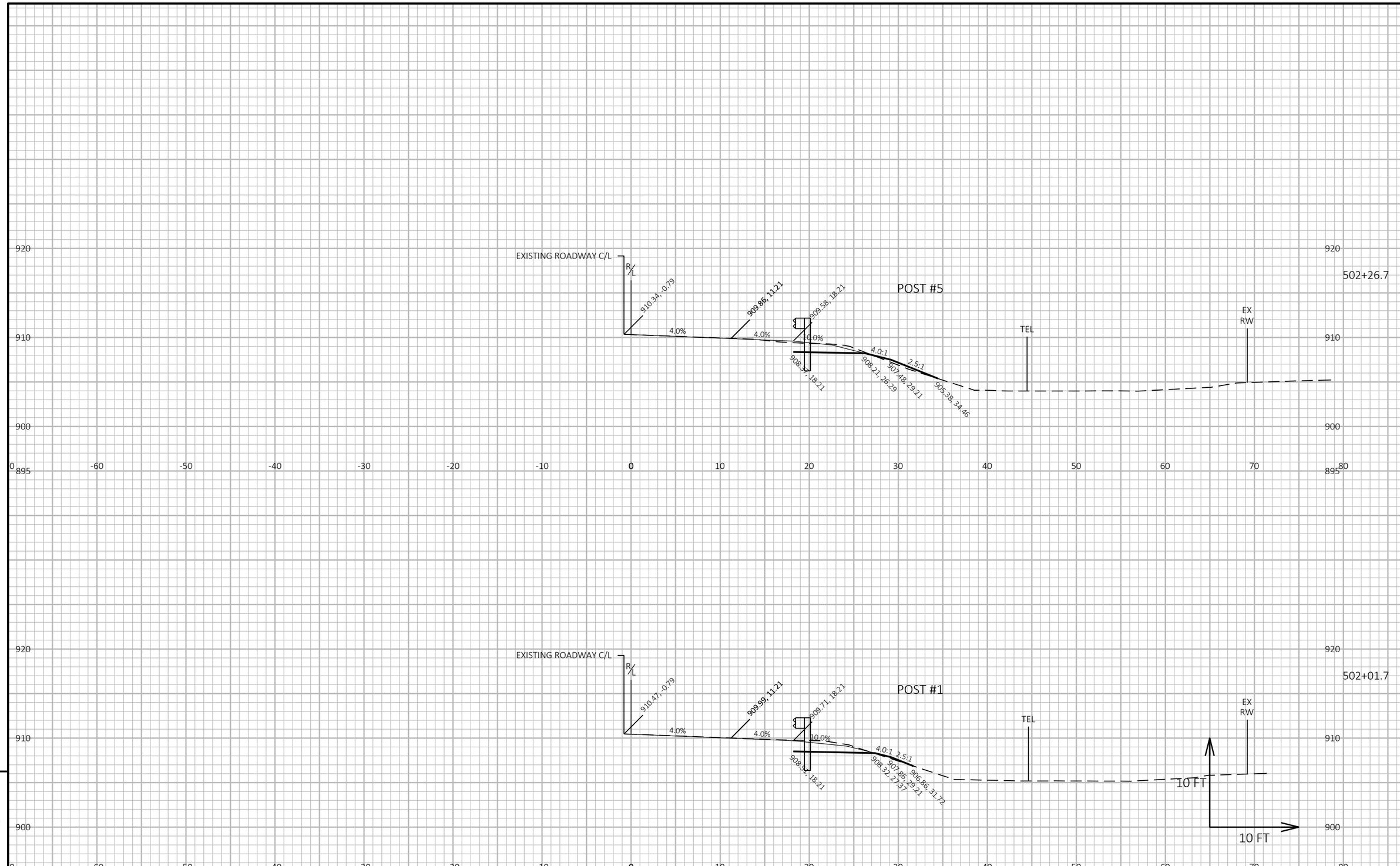

9

9

PROJECT NO: 1400-01-73	HWY: STH 16	COUNTY: COLUMBIA	CROSS SECTIONS: STH 16	SHEET	E

FILE NAME : N:\PDS\C3D\14000103\SHEETSPLAN\090101-XS.DWG
LAYOUT NAME - 02
PLOT DATE : 10/12/2020 3:18 PM
PLOT BY : RINZEL, JAMES M
PLOT NAME :
PLOT SCALE : 1 IN:10 FT HORZ. / 1 IN:10 FT VERT.

WISDOT/CADDS SHEET 49

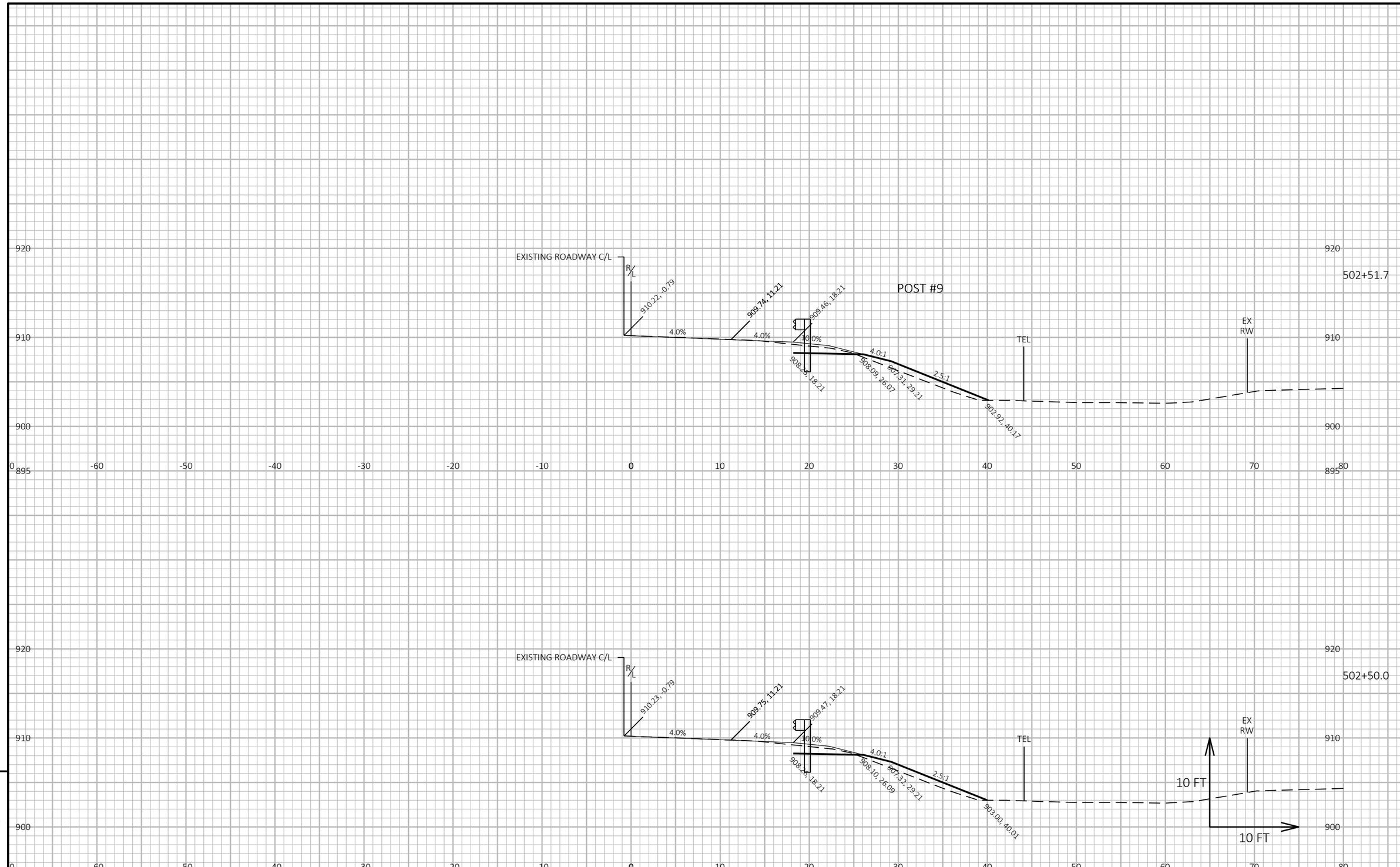

9

9

PROJECT NO: 1400-01-73	HWY: STH 16	COUNTY: COLUMBIA	CROSS SECTIONS: STH 16	SHEET	E

FILE NAME : N:\PDS\C3D\14000103\SHEETSPLAN\090101-XS.DWG
LAYOUT NAME - 03

PLOT DATE : 10/12/2020 3:18 PM

PLOT BY : RINZEL, JAMES M

PLOT NAME :

PLOT SCALE : 1 IN:10 FT HORZ. / 1 IN:10 FT VERT.

WISDOT/CADDS SHEET 49

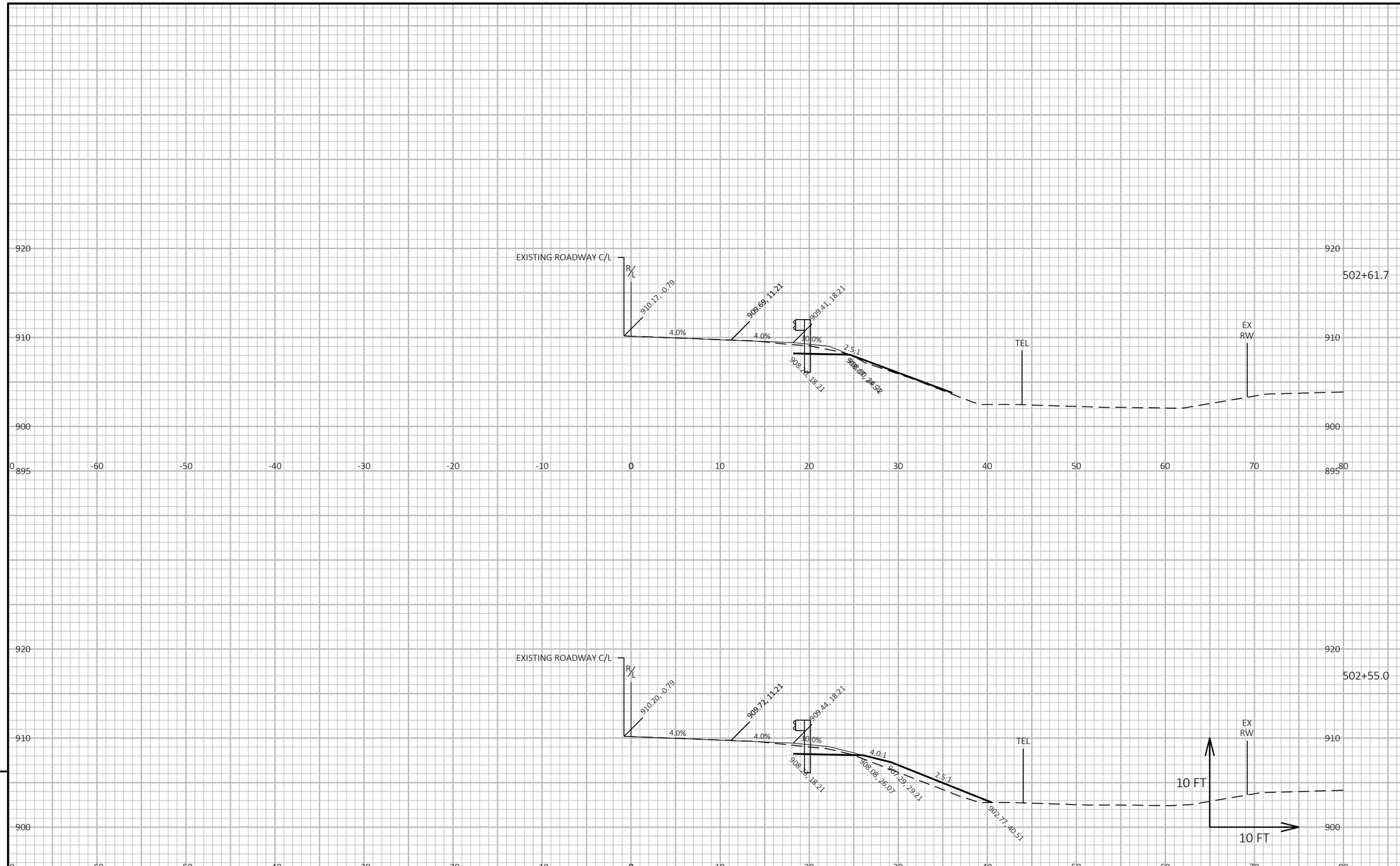

9

9

PROJECT NO: 1400-01-73	HWY: STH 16	COUNTY: COLUMBIA	CROSS SECTIONS: STH 16	SHEET	E

FILE NAME : N:\PDS\C3D\14000103\SHEETSPLAN\090101-XS.DWG
LAYOUT NAME - 04

PLOT DATE : 10/12/2020 3:18 PM

PLOT BY : RINZEL, JAMES M

PLOT NAME :

PLOT SCALE : 1 IN:10 FT HORZ. / 1 IN:10 FT VERT.

WISDOT/CADDS SHEET 49

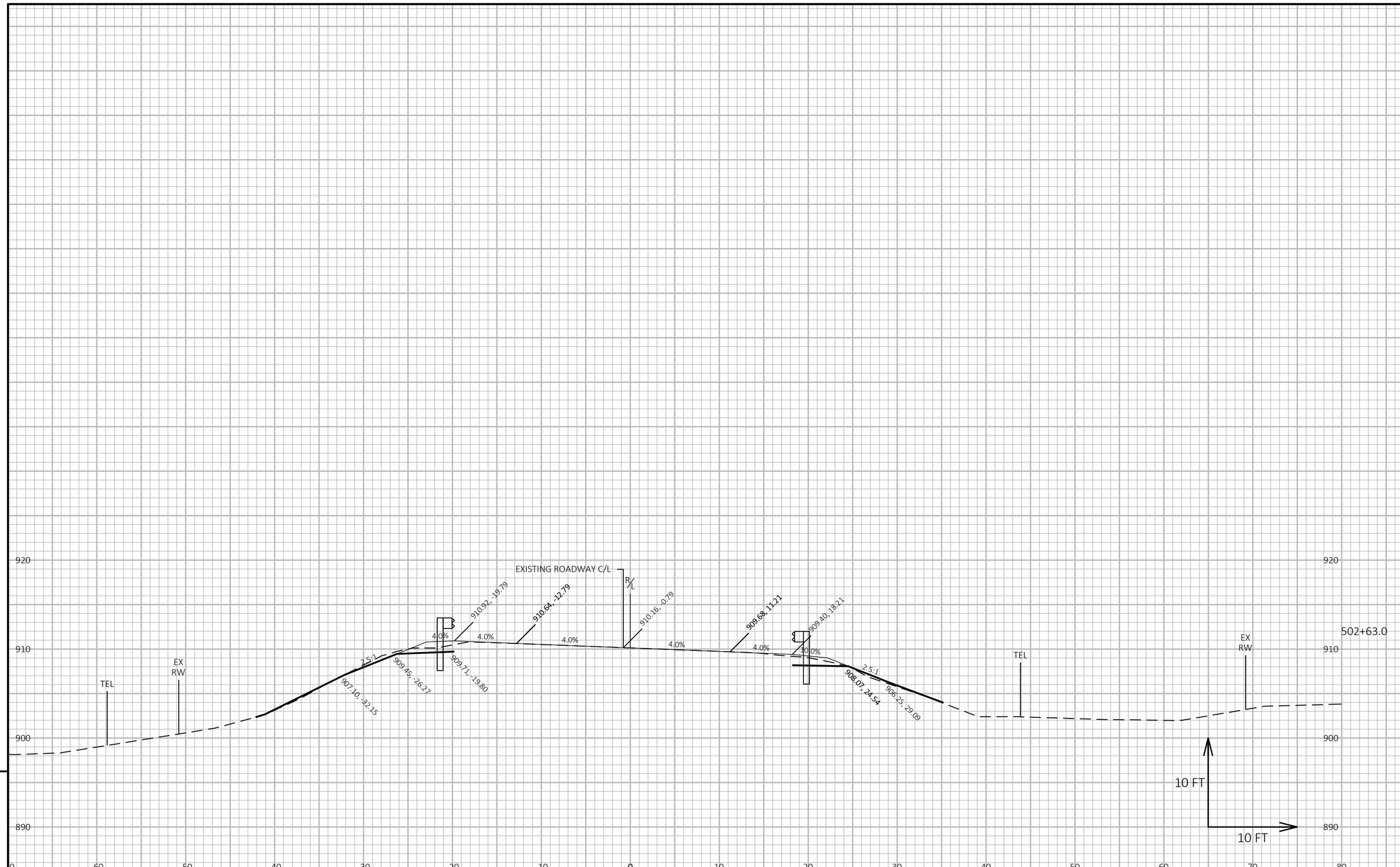

9

9

PROJECT NO: 1400-01-73	HWY: STH 16	COUNTY: COLUMBIA	CROSS SECTIONS: STH 16	SHEET	E

FILE NAME : N:\PDS\C3D\14000103\SHEETSPLAN\090101-XS.DWG
LAYOUT NAME - 05
PLOT DATE : 10/12/2020 3:18 PM
PLOT BY : RINZEL, JAMES M
PLOT NAME :
PLOT SCALE : 1 IN:10 FT HORZ. / 1 IN:10 FT VERT.

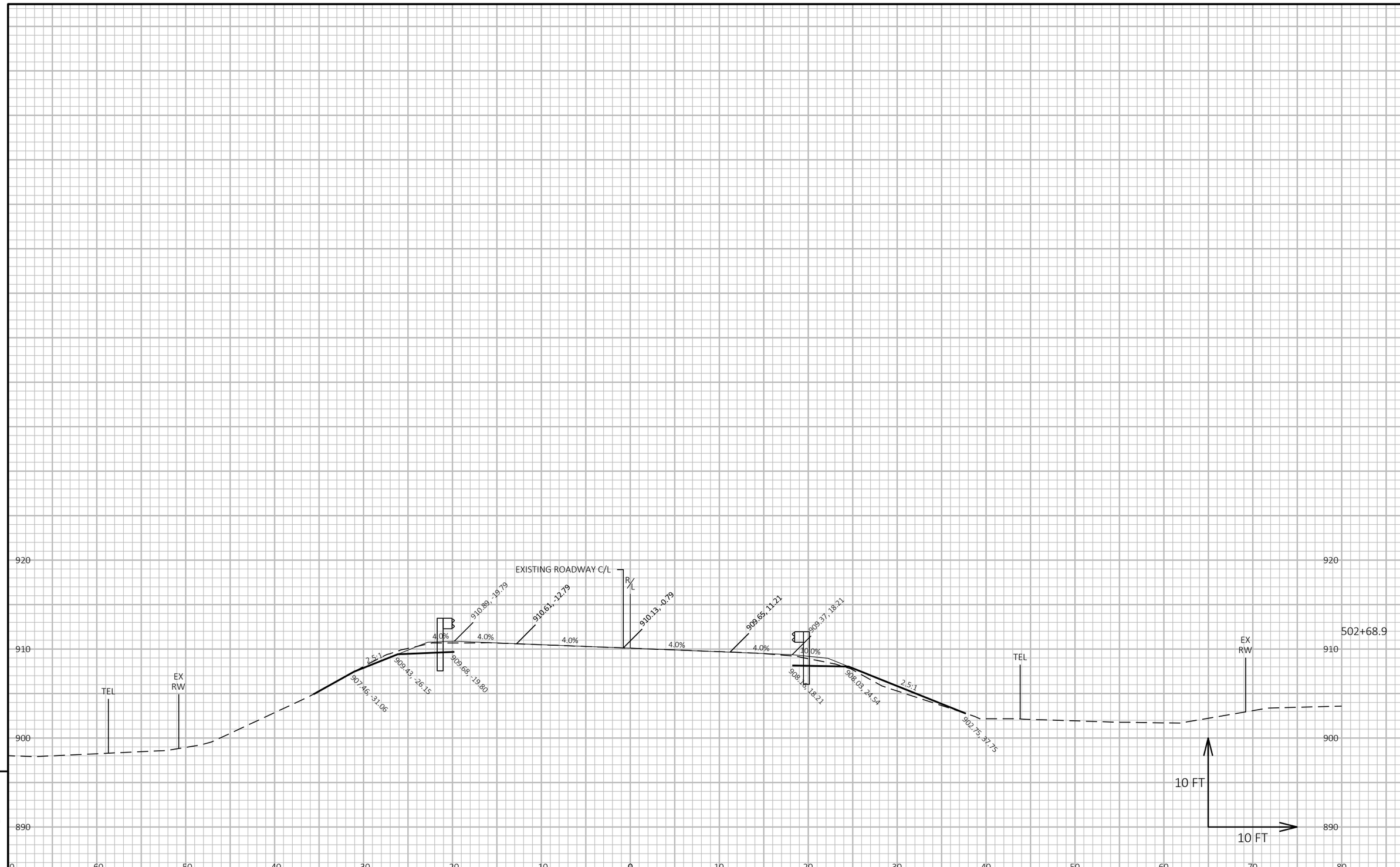

PROJECT NO: 1400-01-73	HWY: STH 16	COUNTY: COUNTY: COLUMBIA	CROSS SECTIONS: STH 16	SHEET	E

FILE NAME : N:\PDS\C3D\14000103\SHEETSPLAN\090101-XS.DWG
LAYOUT NAME - 06

PLOT DATE : 10/12/2020 3:18 PM

PLOT BY : RINZEL, JAMES M

PLOT NAME :

PLOT SCALE : 1 IN:10 FT HORZ. / 1 IN:10 FT VERT.

WISDOT/CADDS SHEET 49

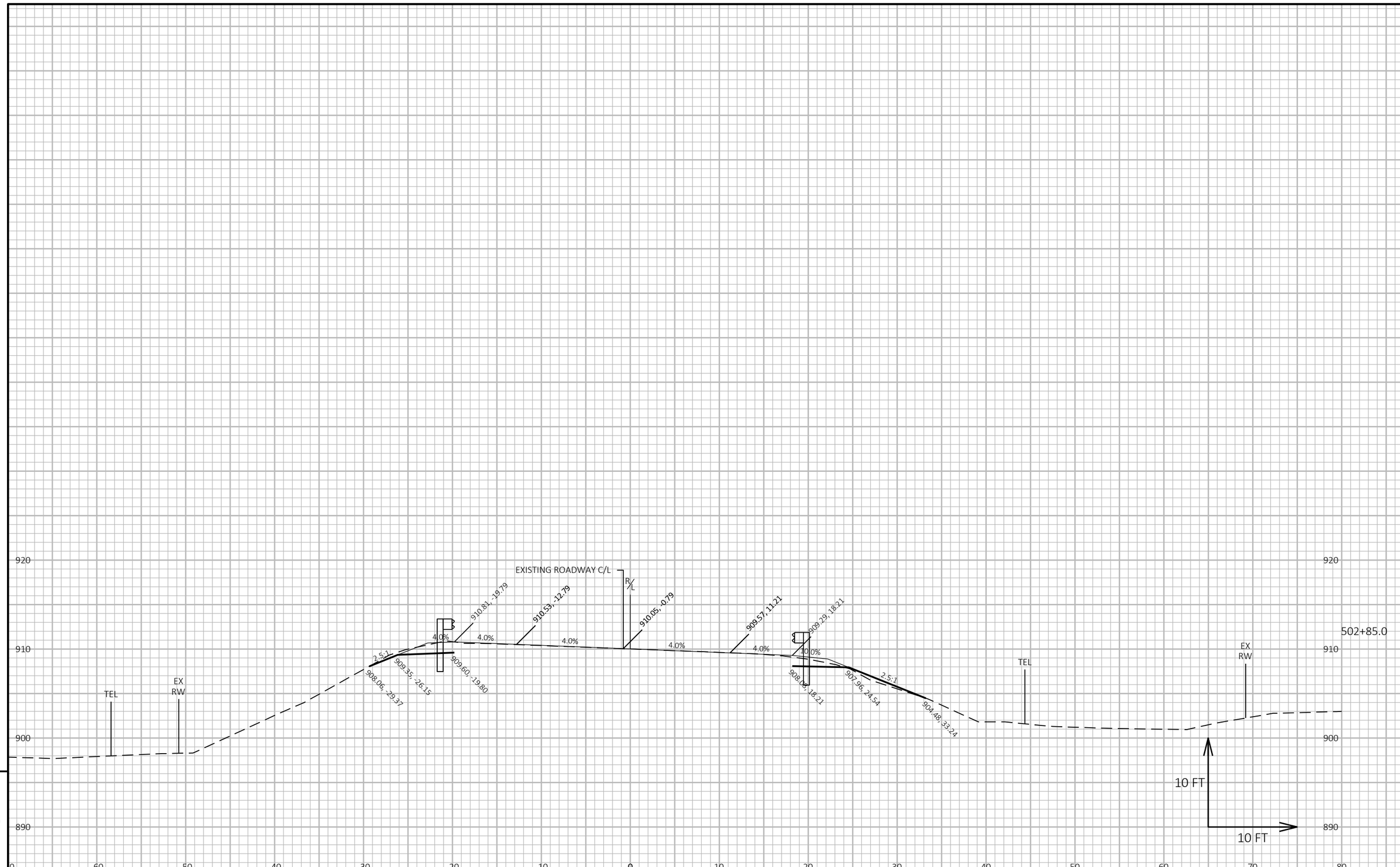

9

9

PROJECT NO: 1400-01-73	HWY: STH 16	COUNTY: COUNTY: COLUMBIA	CROSS SECTIONS: STH 16	SHEET	E

FILE NAME : N:\PDS\C3D\14000103\SHEETSPLAN\090101-XS.DWG
LAYOUT NAME - 07

PLOT DATE : 10/12/2020 3:18 PM

PLOT BY : RINZEL, JAMES M

PLOT NAME :

PLOT SCALE : 1 IN:10 FT HORZ. / 1 IN:10 FT VERT.

WISDOT/CADDS SHEET 49

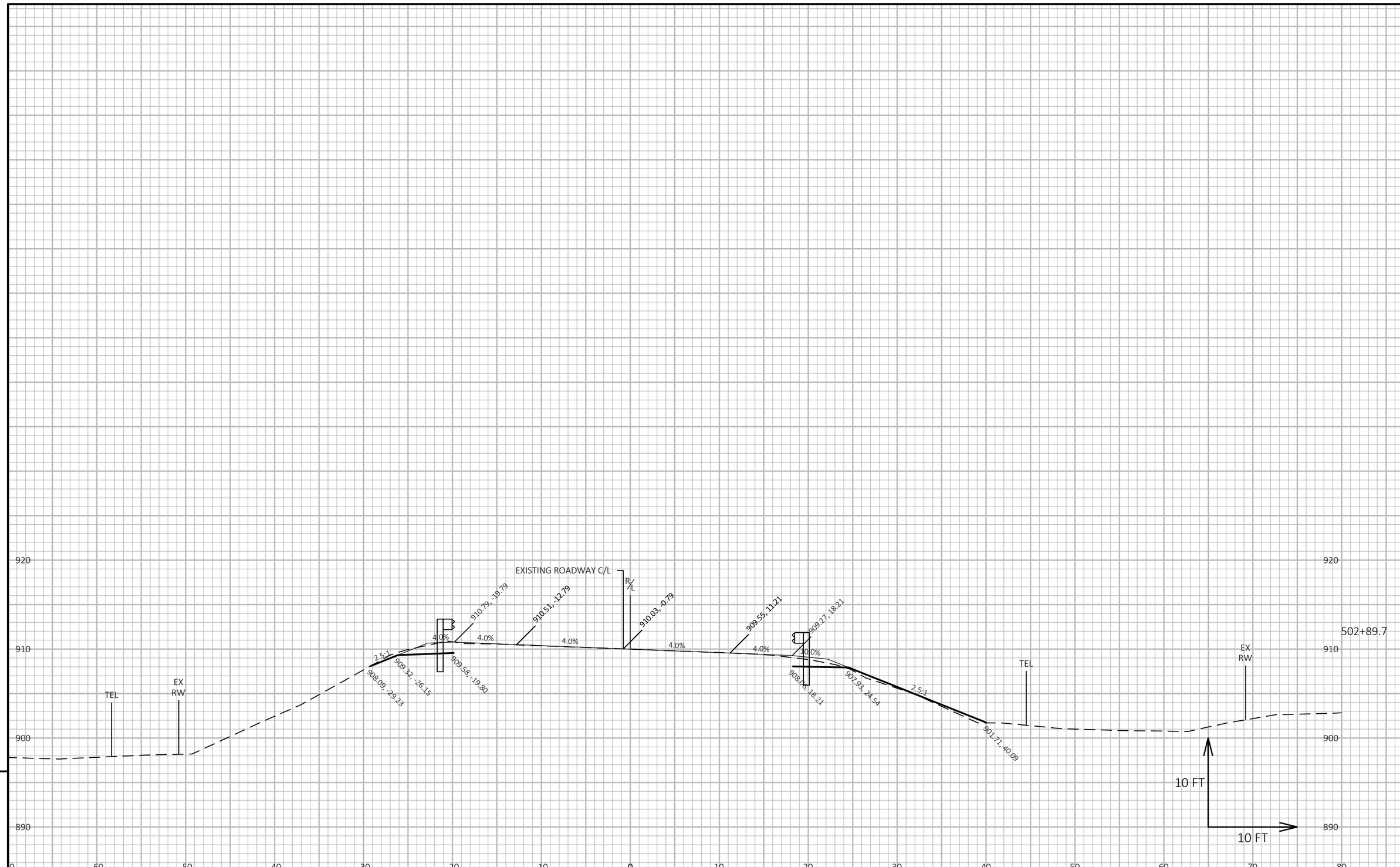

9

9

PROJECT NO: 1400-01-73	HWY: STH 16	COUNTY: COLUMBIA	CROSS SECTIONS: STH 16	SHEET	E

FILE NAME : N:\PDS\C3D\14000103\SHEETSPLAN\090101-XS.DWG
LAYOUT NAME - 08

PLOT DATE : 10/12/2020 3:18 PM

PLOT BY : RINZEL, JAMES M

PLOT NAME :

PLOT SCALE : 1 IN:10 FT HORZ. / 1 IN:10 FT VERT.

WISDOT/CADDS SHEET 49

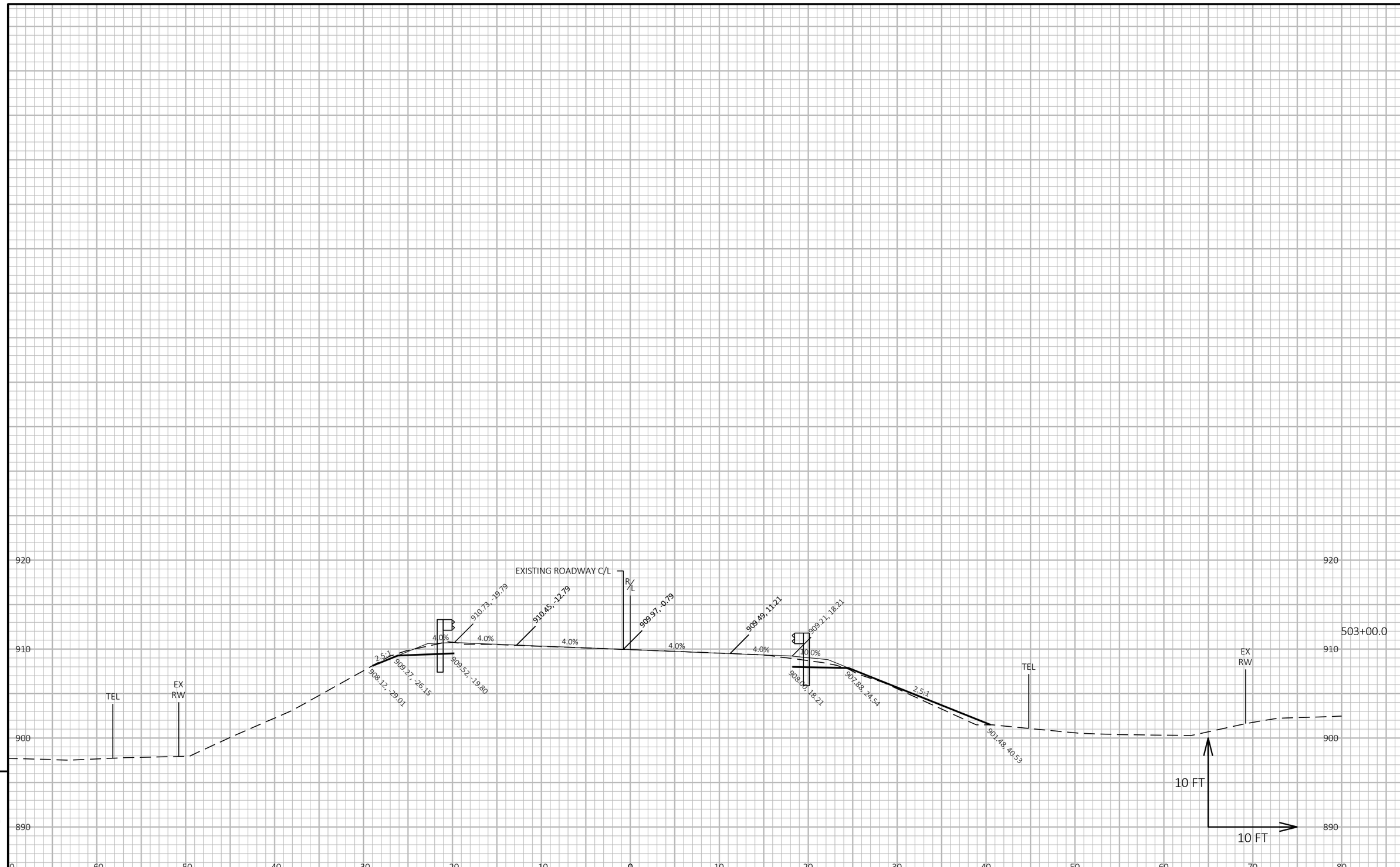

9

9

PROJECT NO: 1400-01-73	HWY: STH 16	COUNTY: COUNTY: COLUMBIA	CROSS SECTIONS: STH 16	SHEET	E

FILE NAME : N:\PDS\C3D\14000103\SHEETSPLAN\090101-XS.DWG
LAYOUT NAME - 09

PLOT DATE : 10/12/2020 3:18 PM

PLOT BY : RINZEL, JAMES M

PLOT NAME :

PLOT SCALE : 1 IN:10 FT HORZ. / 1 IN:10 FT VERT.

WISDOT/CADDS SHEET 49

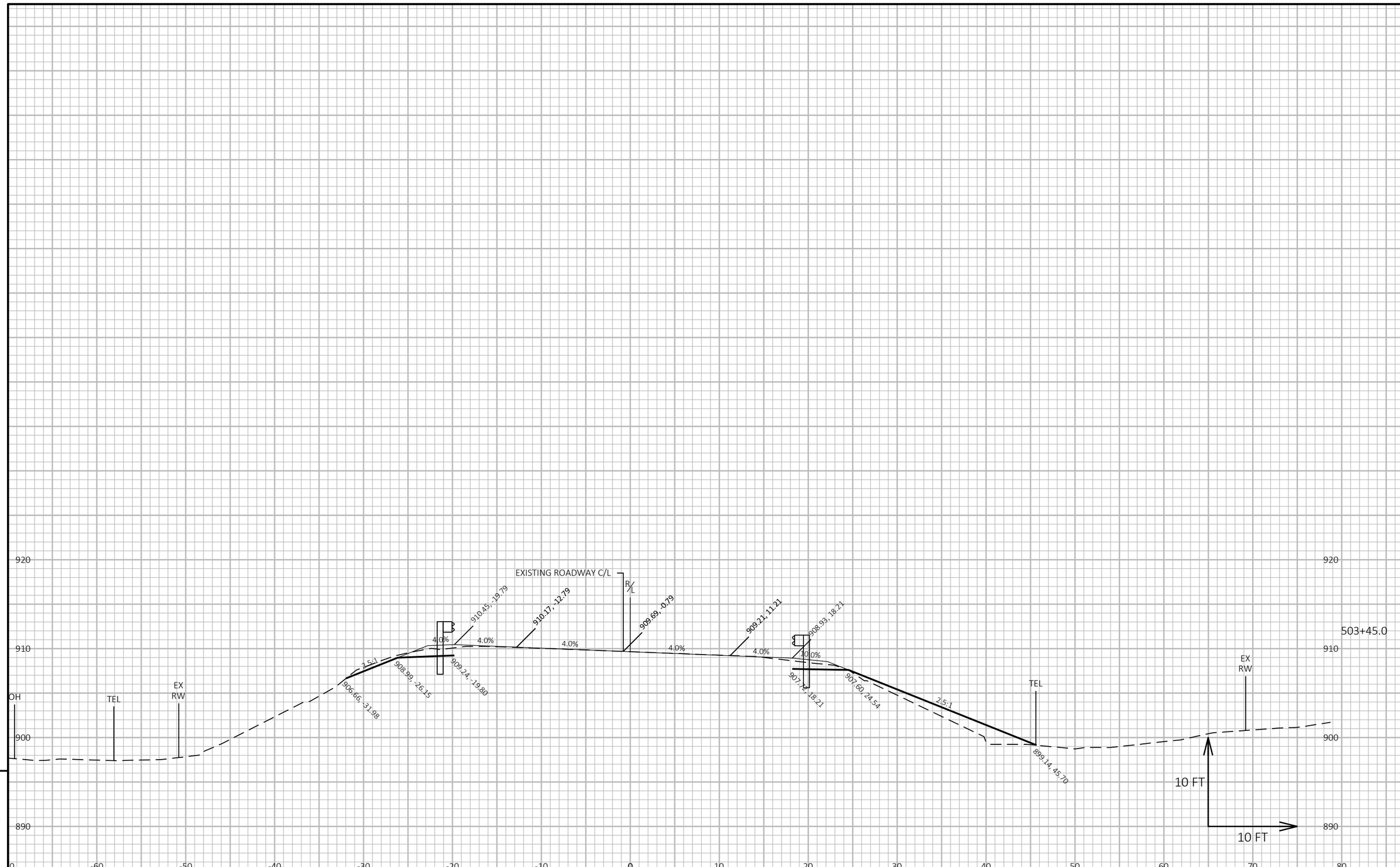

9

9

PROJECT NO: 1400-01-73	HWY: STH 16	COUNTY: COLUMBIA	CROSS SECTIONS: STH 16	SHEET	E

FILE NAME : N:\PDS\C3D\14000103\SHEETSPLAN\090101-XS.DWG
LAYOUT NAME - 10

PLOT DATE : 10/12/2020 3:18 PM

PLOT BY : RINZEL, JAMES M

PLOT NAME :

PLOT SCALE : 1 IN:10 FT HORZ. / 1 IN:10 FT VERT.

WISDOT/CADDS SHEET 49

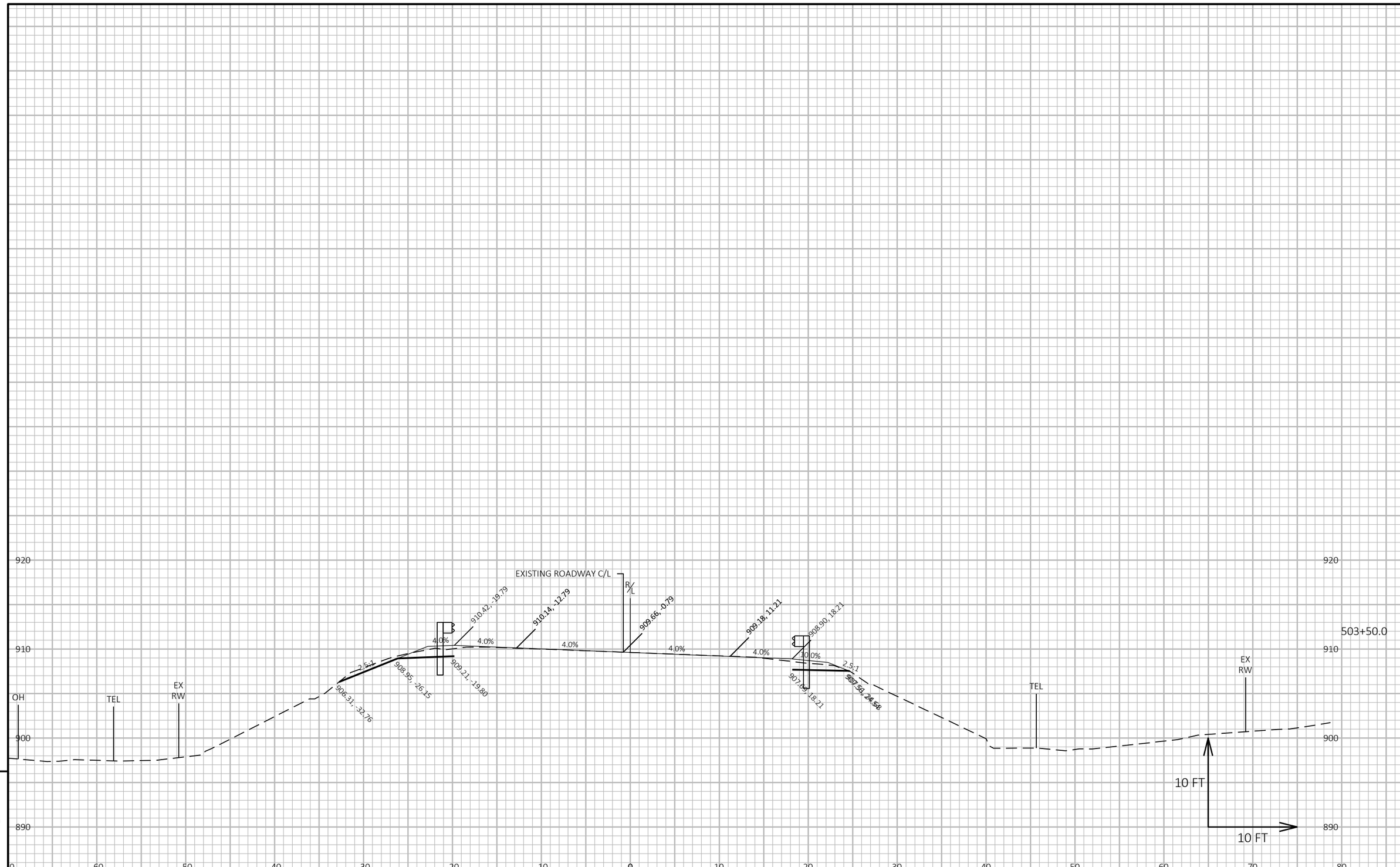

9

9

PROJECT NO: 1400-01-73	HWY: STH 16	COUNTY: COUNTY: COLUMBIA	CROSS SECTIONS: STH 16	SHEET	E

FILE NAME : N:\PDS\C3D\14000103\SHEETSPLAN\090101-XS.DWG
LAYOUT NAME - 11

PLOT DATE : 10/12/2020 3:18 PM

PLOT BY : RINZEL, JAMES M

PLOT NAME :

PLOT SCALE : 1 IN:10 FT HORZ. / 1 IN:10 FT VERT.

WISDOT/CADDS SHEET 49

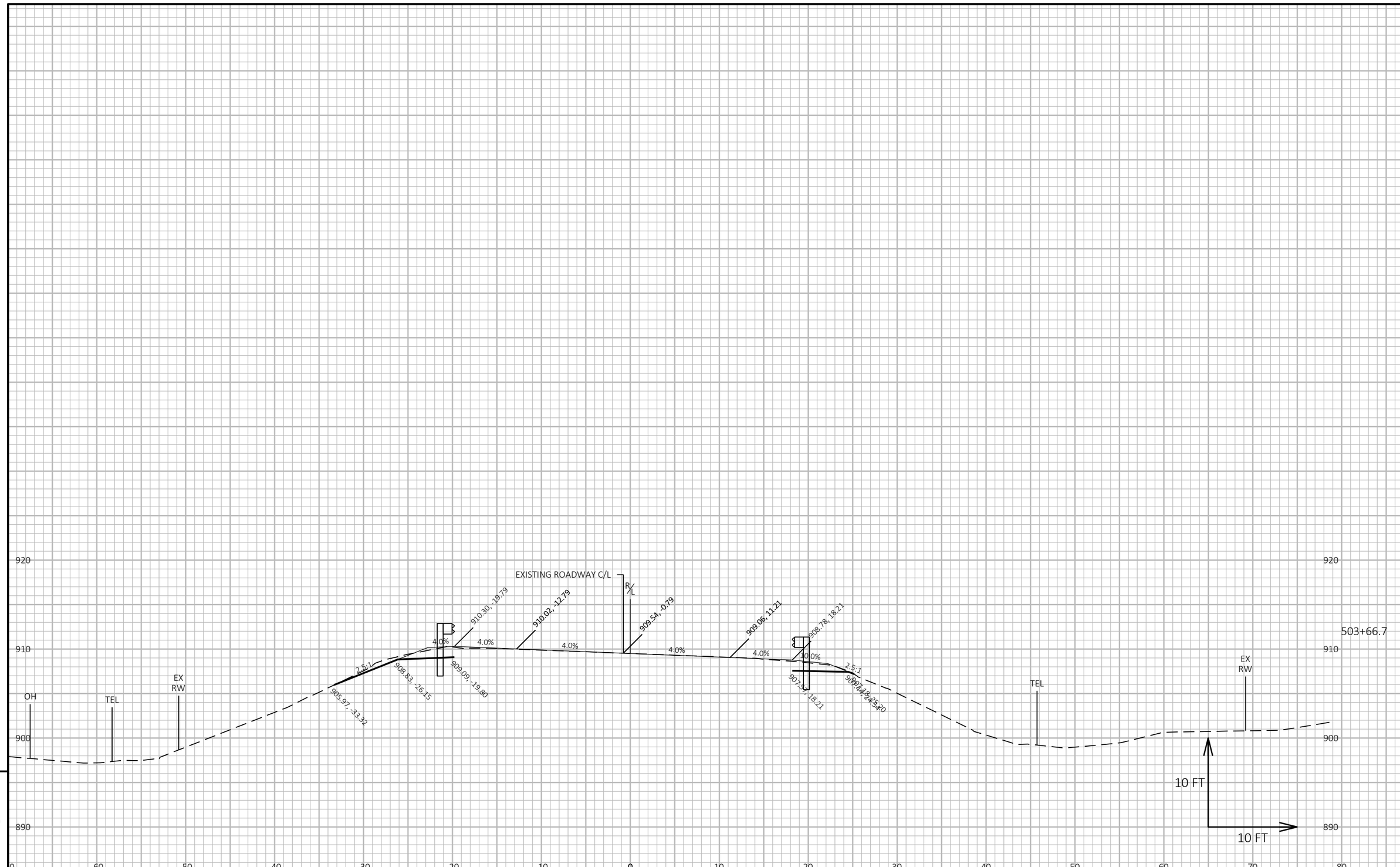

9

9

PROJECT NO: 1400-01-73	HWY: STH 16	COUNTY: COLUMBIA	CROSS SECTIONS: STH 16	SHEET	E

FILE NAME : N:\PDS\C3D\14000103\SHEETSPLAN\090101-XS.DWG
LAYOUT NAME - 12

PLOT DATE : 10/12/2020 3:18 PM

PLOT BY : RINZEL, JAMES M

PLOT NAME :

PLOT SCALE : 1 IN:10 FT HORZ. / 1 IN:10 FT VERT.

WISDOT/CADDS SHEET 49

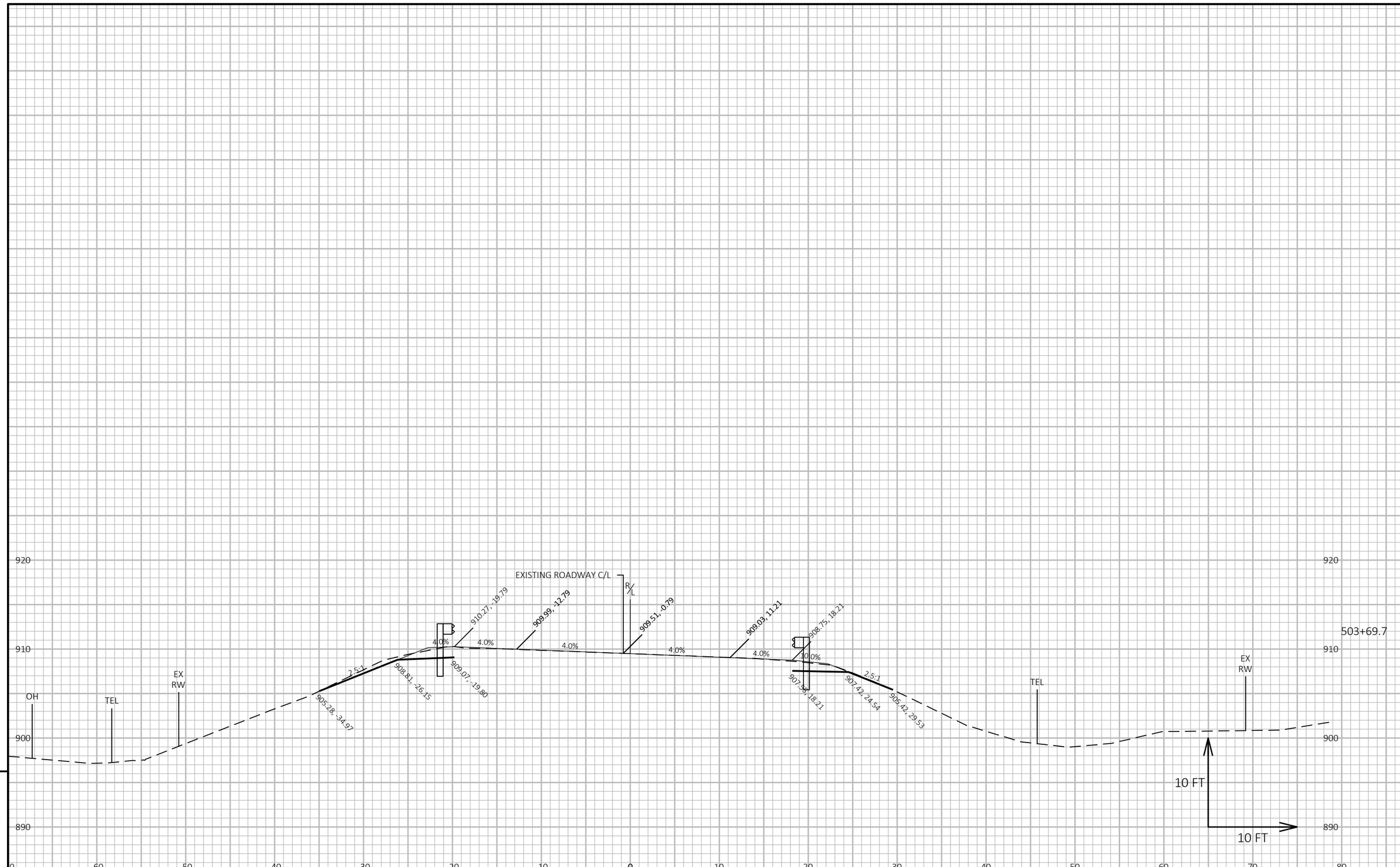

PROJECT NO: 1400-01-73	HWY: STH 16	COUNTY: COLUMBIA	CROSS SECTIONS: STH 16	SHEET	E

FILE NAME : N:\PDS\C3D\14000103\SHEETSPLAN\090101-XS.DWG
LAYOUT NAME - 13
PLOT DATE : 10/12/2020 3:19 PM
PLOT BY : RINZEL, JAMES M
PLOT NAME :
PLOT SCALE : 1 IN:10 FT HORZ. / 1 IN:10 FT VERT.

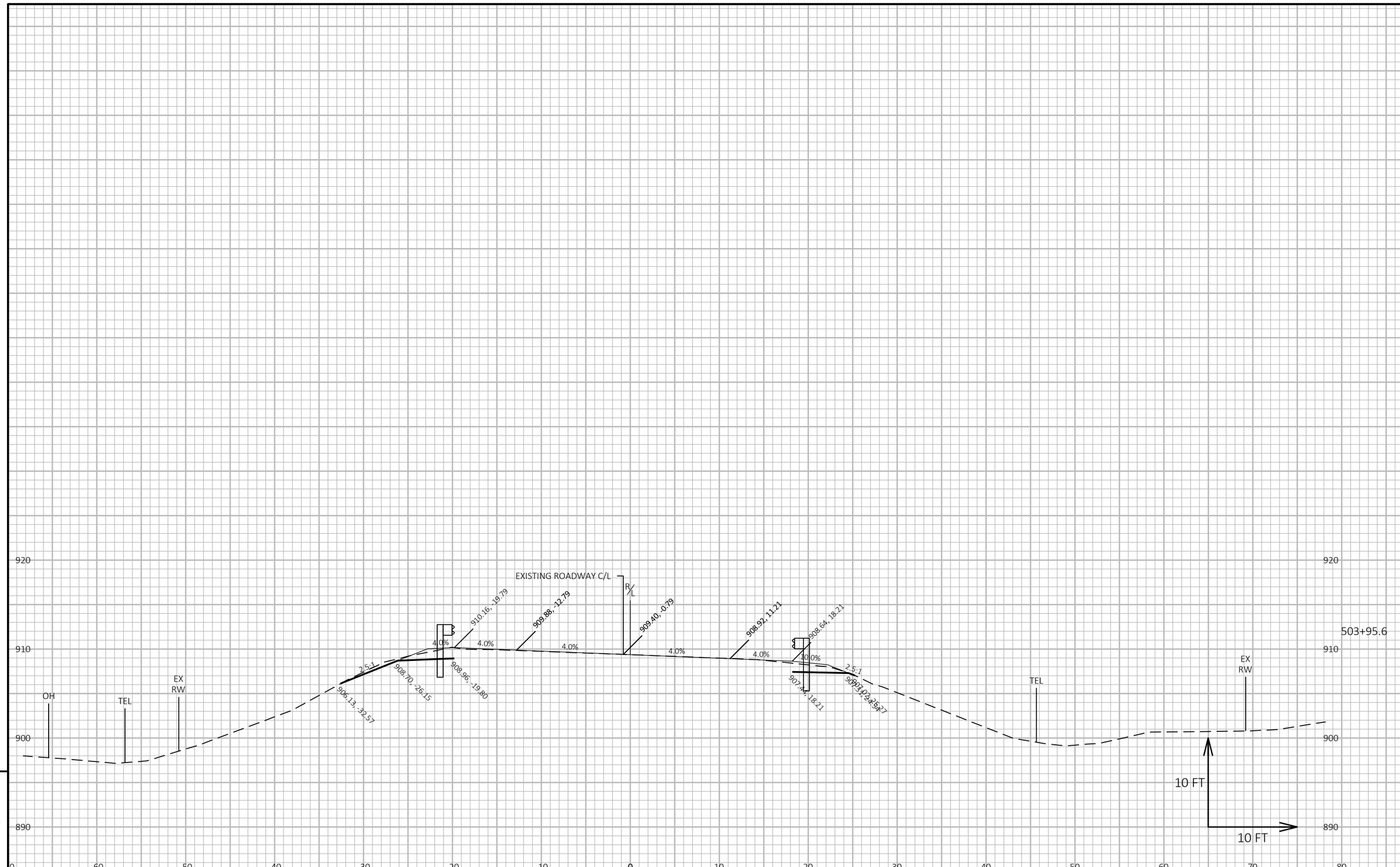

PROJECT NO: 1400-01-73	HWY: STH 16	COUNTY: COLUMBIA	CROSS SECTIONS: STH 16	SHEET	E

FILE NAME : N:\PDS\C3D\14000103\SHEETSPLAN\090101-XS.DWG
LAYOUT NAME - 14

PLOT DATE : 10/12/2020 3:19 PM

PLOT BY : RINZEL, JAMES M

PLOT NAME :

PLOT SCALE : 1 IN:10 FT HORZ. / 1 IN:10 FT VERT.

WISDOT/CADDS SHEET 49

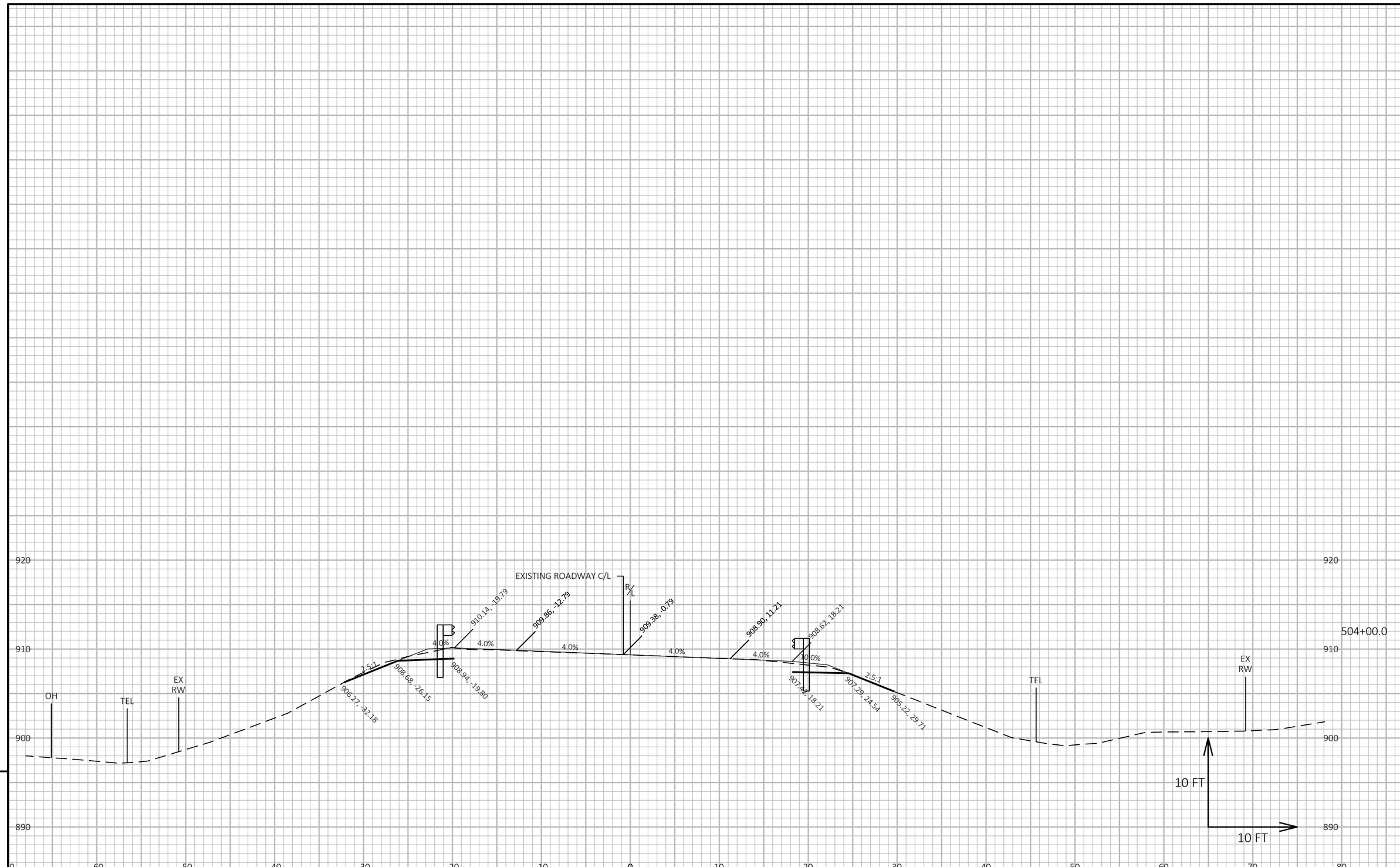

9

9

PROJECT NO: 1400-01-73	HWY: STH 16	COUNTY: COUNTY: COLUMBIA	CROSS SECTIONS: STH 16	SHEET	E

FILE NAME : N:\PDS\C3D\14000103\SHEETSPLAN\090101-XS.DWG
LAYOUT NAME - 15

PLOT DATE : 10/12/2020 3:19 PM

PLOT BY : RINZEL, JAMES M

PLOT NAME :

PLOT SCALE : 1 IN:10 FT HORZ. / 1 IN:10 FT VERT.

WISDOT/CADDS SHEET 49

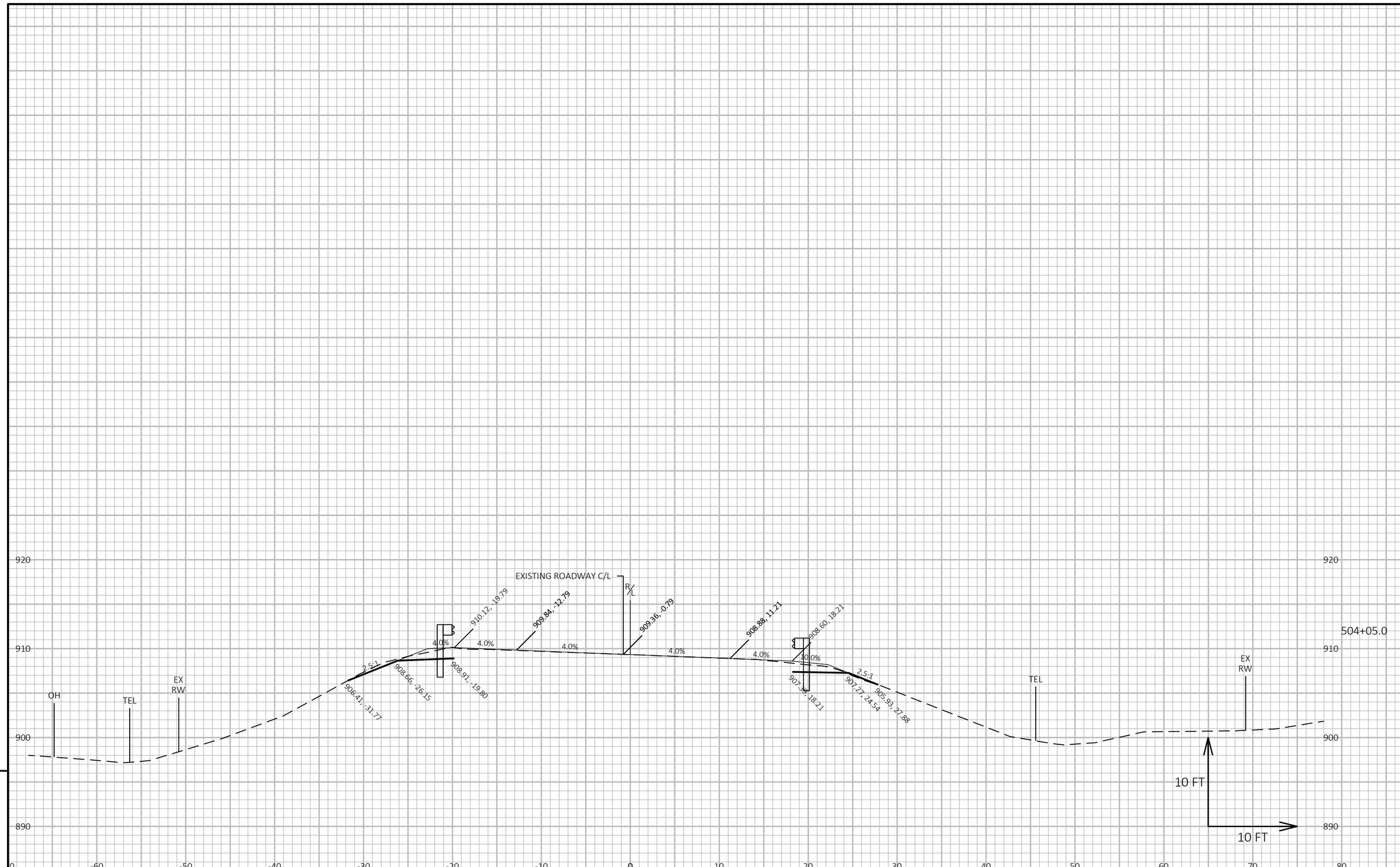

9

9

PROJECT NO: 1400-01-73	HWY: STH 16	COUNTY: COLUMBIA	CROSS SECTIONS: STH 16	SHEET	E

FILE NAME : N:\PDS\C3D\14000103\SHEETSPLAN\090101-XS.DWG
LAYOUT NAME - 16

PLOT DATE : 10/12/2020 3:19 PM

PLOT BY : RINZEL, JAMES M

PLOT NAME :

PLOT SCALE : 1 IN:10 FT HORZ. / 1 IN:10 FT VERT.

WISDOT/CADDS SHEET 49

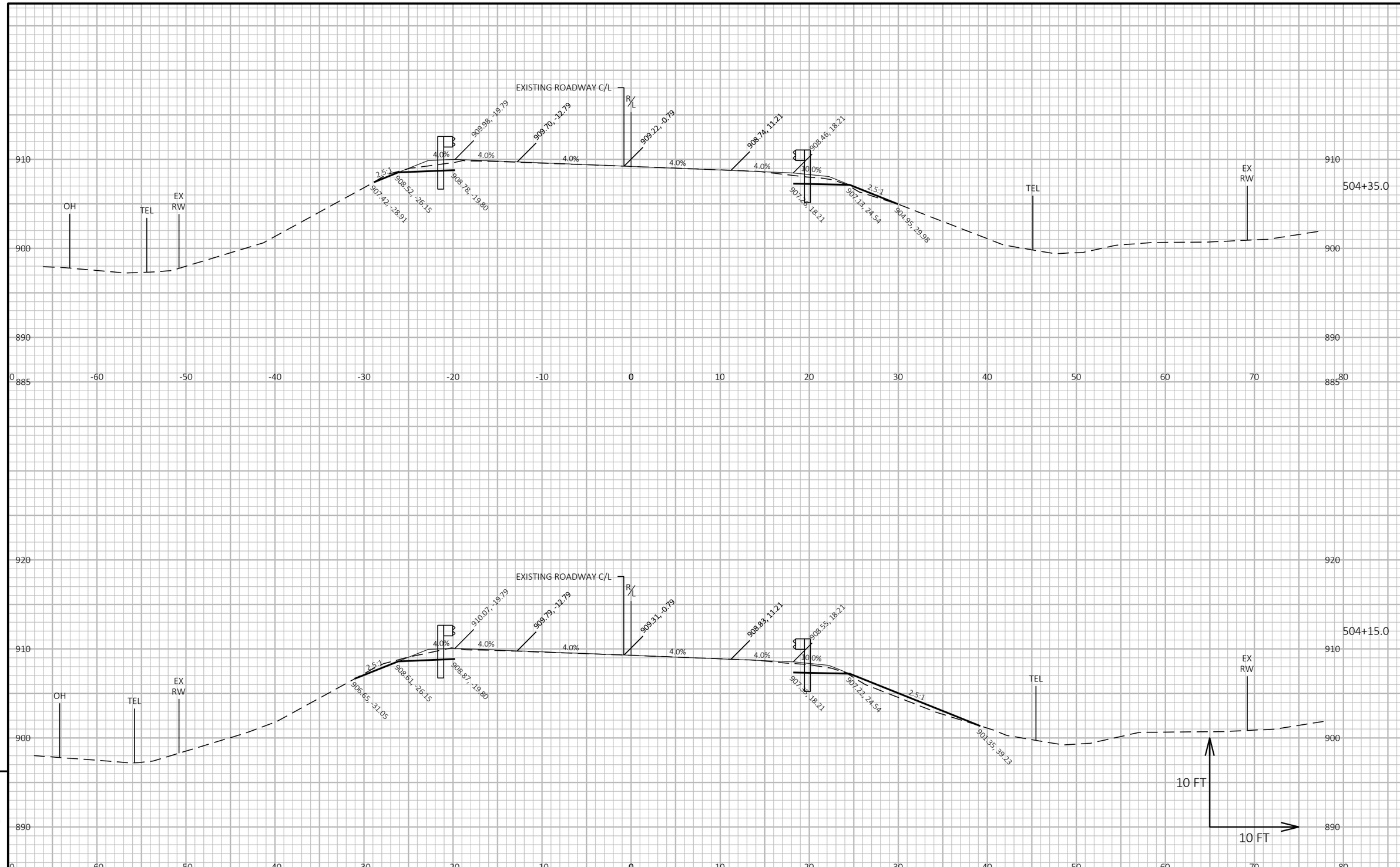

PROJECT NO: 1400-01-73	HWY: STH 16	COUNTY: COLUMBIA	CROSS SECTIONS: STH 16	SHEET	E

FILE NAME : N:\PDS\C3D\14000103\SHEETSPLAN\090101-XS.DWG
LAYOUT NAME - 17
PLOT DATE : 10/12/2020 3:19 PM
PLOT BY : RINZEL, JAMES M
PLOT NAME :
PLOT SCALE : 1 IN:10 FT HORZ. / 1 IN:10 FT VERT.
WISDOT/CADDS SHEET 49

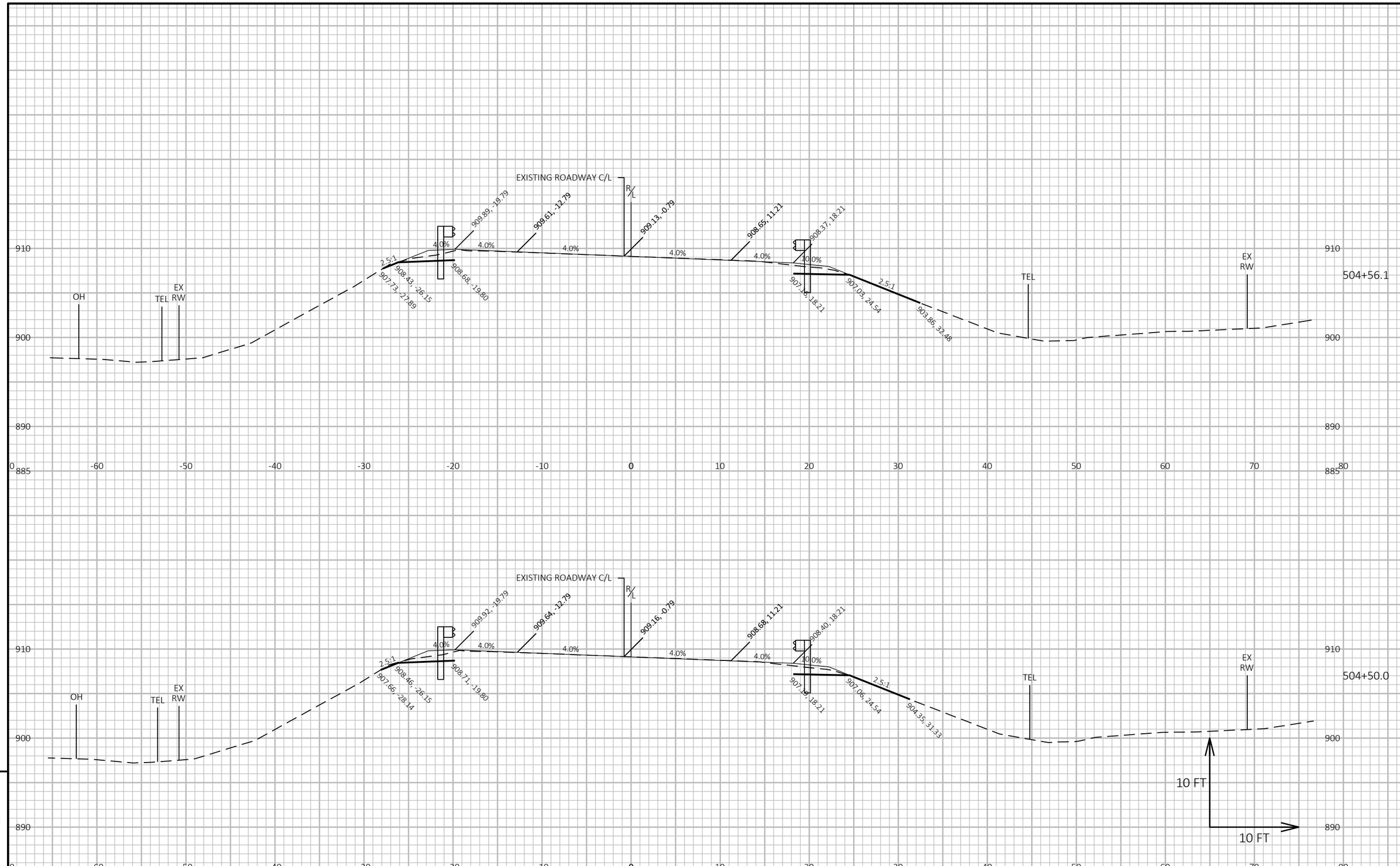

PROJECT NO: 1400-01-73	HWY: STH 16	COUNTY: COLUMBIA	CROSS SECTIONS: STH 16	SHEET	E

FILE NAME : N:\PDS\C3D\14000103\SHEETSPLAN\090101-XS.DWG
LAYOUT NAME - 18
PLOT DATE : 10/12/2020 3:19 PM
PLOT BY : RINZEL, JAMES M
PLOT NAME :
PLOT SCALE : 1 IN:10 FT HORZ. / 1 IN:10 FT VERT.

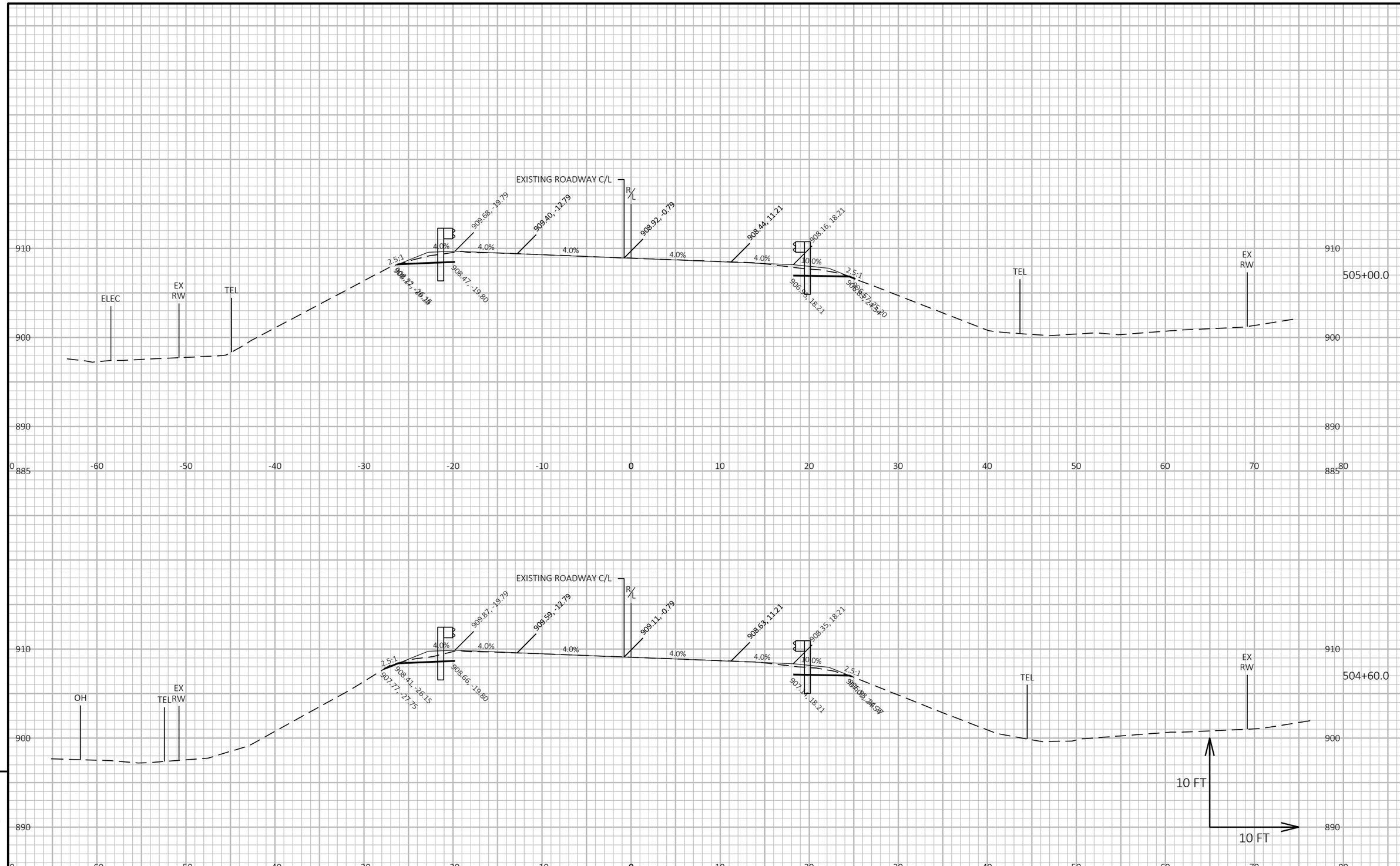

PROJECT NO: 1400-01-73	HWY: STH 16	COUNTY: COLUMBIA	CROSS SECTIONS: STH 16	SHEET	E

FILE NAME : N:\PDS\C3D\14000103\SHEETSPLAN\090101-XS.DWG
LAYOUT NAME - 19
PLOT DATE : 10/12/2020 3:19 PM
PLOT BY : RINZEL, JAMES M
PLOT NAME :
PLOT SCALE : 1 IN:10 FT HORZ. / 1 IN:10 FT VERT.

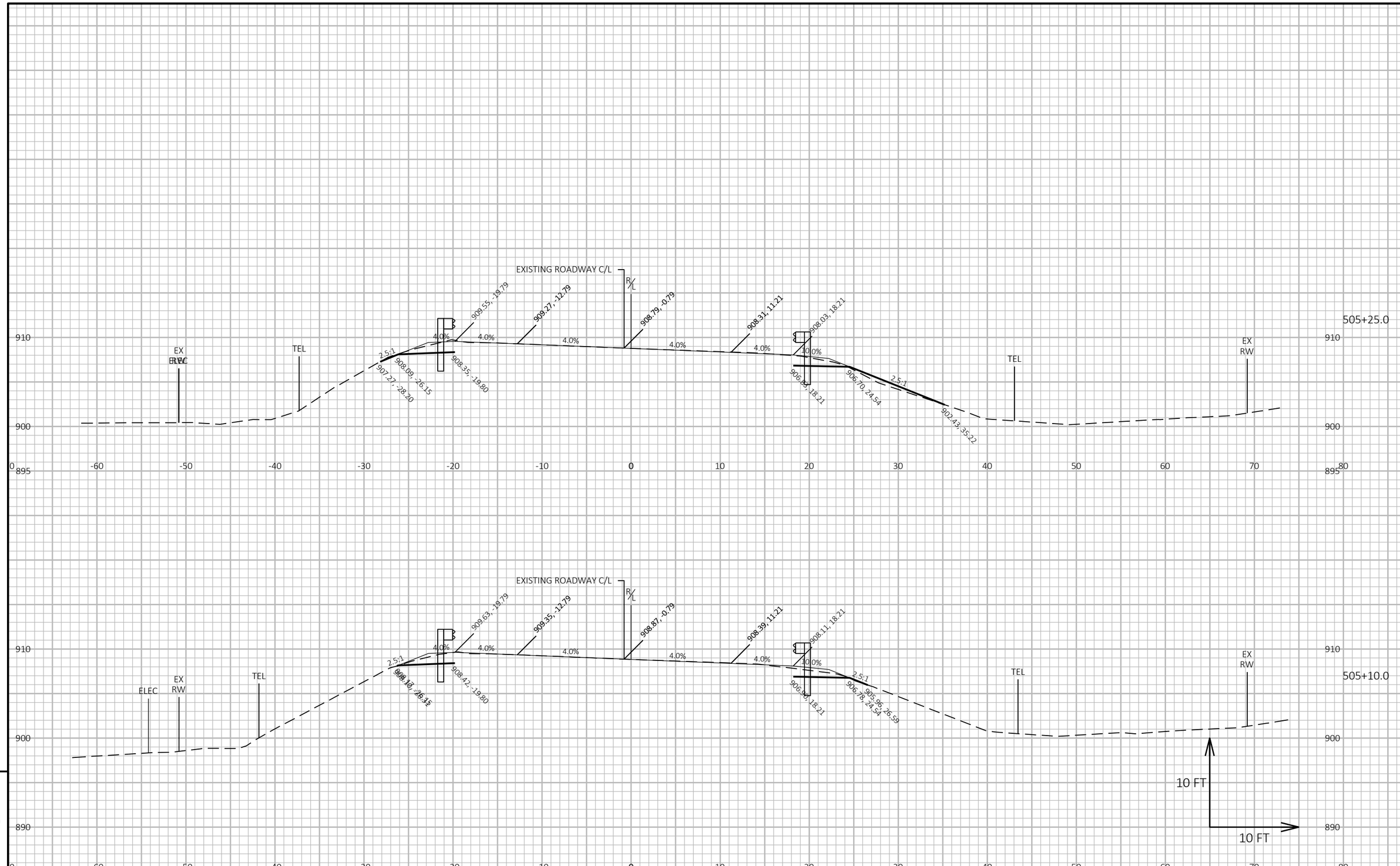

PROJECT NO: 1400-01-73	HWY: STH 16	COUNTY: COLUMBIA	CROSS SECTIONS: STH 16	SHEET	E

FILE NAME : N:\PDS\C3D\14000103\SHEETSPLAN\090101-XS.DWG
LAYOUT NAME - 20
PLOT DATE : 10/12/2020 3:19 PM
PLOT BY : RINZEL, JAMES M
PLOT NAME :
PLOT SCALE : 1 IN:10 FT HORZ. / 1 IN:10 FT VERT.
WISDOT/CADDS SHEET 49

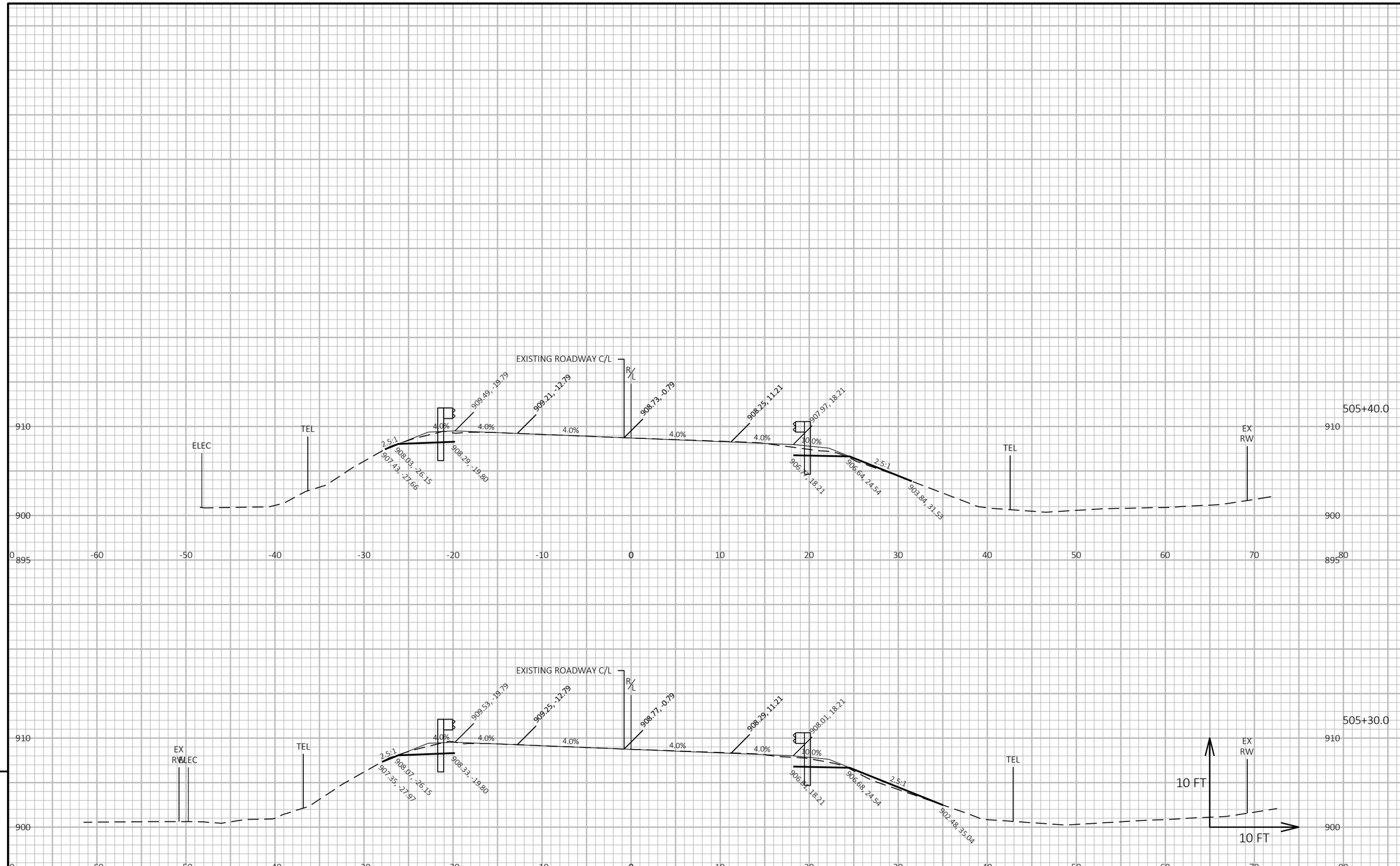

PROJECT NO: 1400-01-73	HWY: STH 16	COUNTY: COLUMBIA	CROSS SECTIONS: STH 16	SHEET	E

FILE NAME : N:\PDS\C3D\14000103\SHEETSPLAN\090101-XS.DWG
LAYOUT NAME - 21
PLOT DATE : 10/12/2020 3:19 PM
PLOT BY : RINZEL, JAMES M
PLOT NAME :
PLOT SCALE : 1 IN:10 FT HORZ. / 1 IN:10 FT VERT.

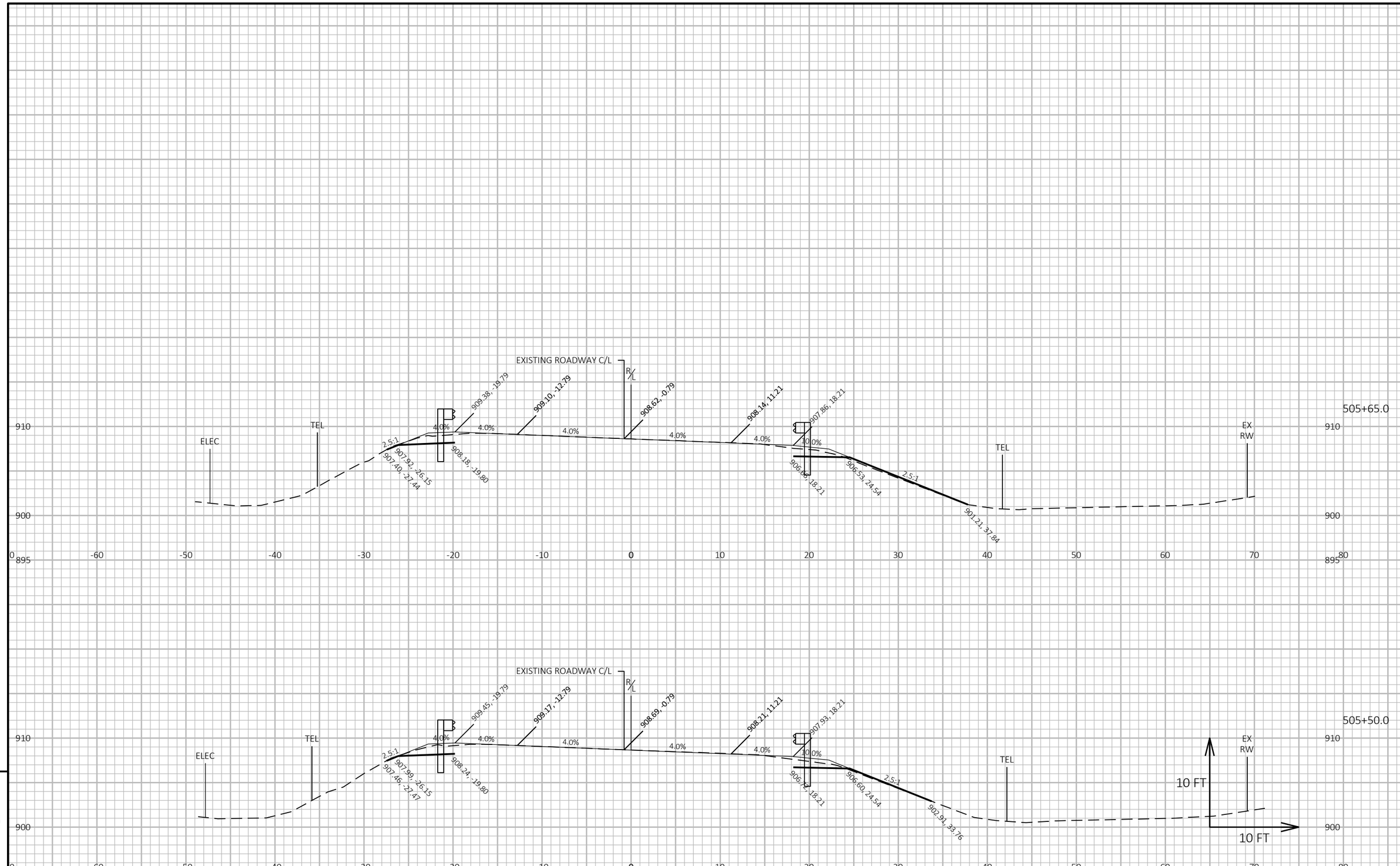

9

9

PROJECT NO: 1400-01-73	HWY: STH 16	COUNTY: COLUMBIA	CROSS SECTIONS: STH 16	SHEET	E

FILE NAME : N:\PDS\C3D\14000103\SHEETSPLAN\090101-XS.DWG
LAYOUT NAME - 22

PLOT DATE : 10/12/2020 3:19 PM PLOT BY : RINZEL, JAMES M PLOT NAME : **PLOT SCALE :** 1 IN:10 FT HORZ. / 1 IN:10 FT VERT.

WISDOT/CADDS SHEET 49

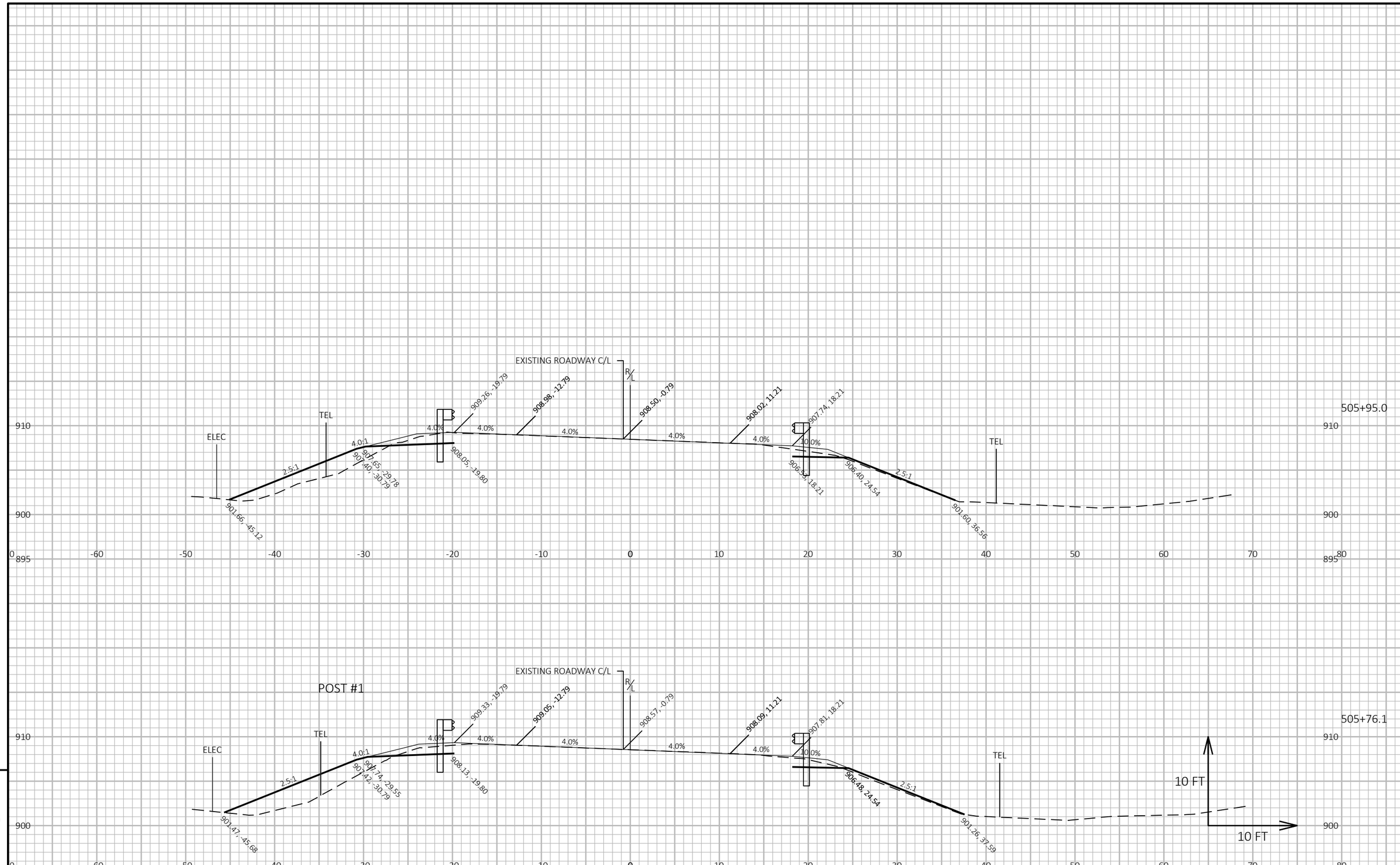

PROJECT NO: 1400-01-73	HWY: STH 16	COUNTY: COLUMBIA	CROSS SECTIONS: STH 16	SHEET	E

FILE NAME : N:\PDS\C3D\14000103\SHEETSPLAN\090101-XS.DWG
LAYOUT NAME - 23
PLOT DATE : 10/12/2020 3:19 PM
PLOT BY : RINZEL, JAMES M
PLOT NAME :
PLOT SCALE : 1 IN:10 FT HORZ. / 1 IN:10 FT VERT.
WISDOT/CADDS SHEET 49

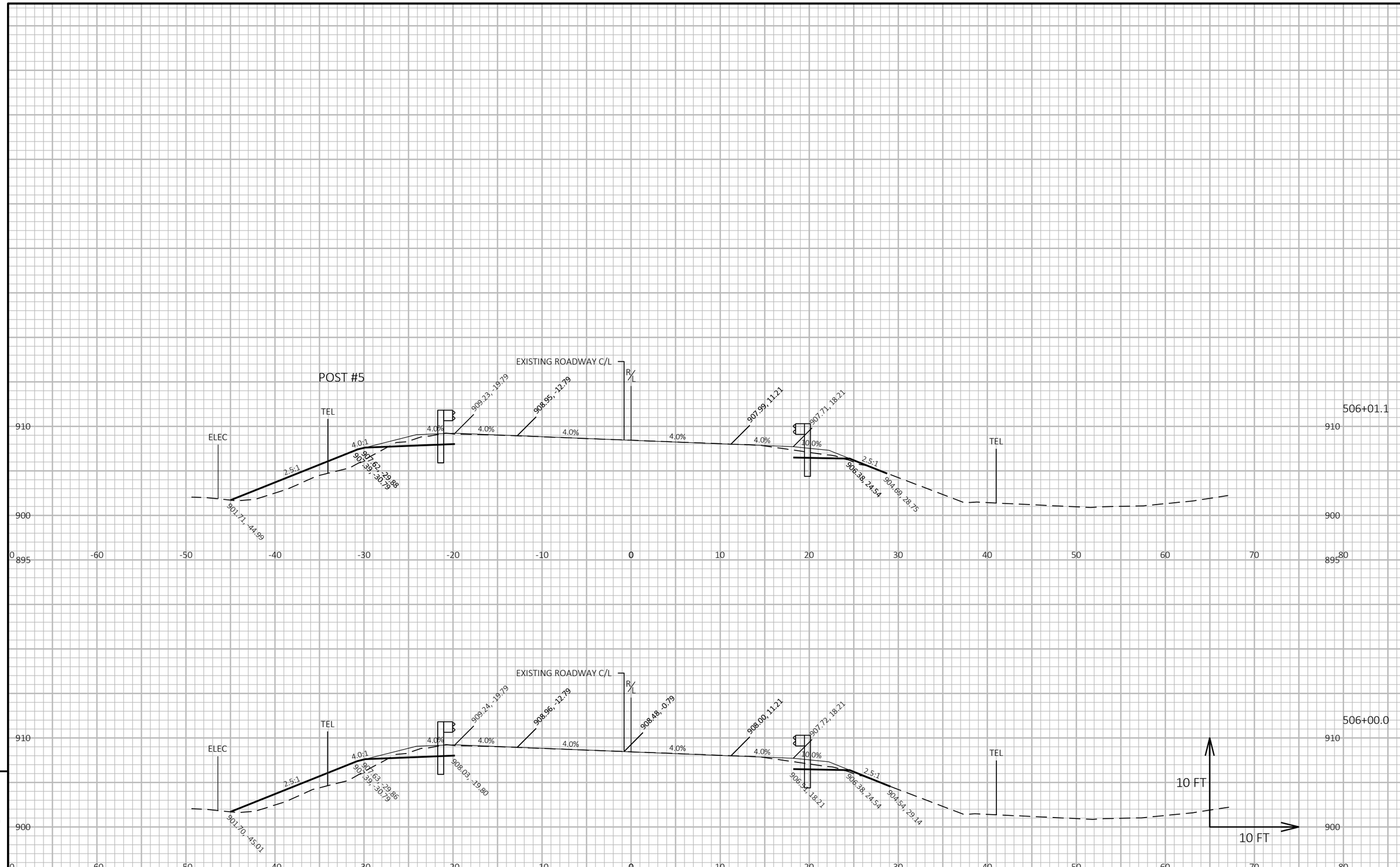

9

9

PROJECT NO: 1400-01-73	HWY: STH 16	COUNTY: COUNTY: COLUMBIA	CROSS SECTIONS: STH 16	SHEET	E

FILE NAME : N:\PDS\C3D\14000103\SHEETSPLAN\090101-XS.DWG
LAYOUT NAME - 24

PLOT DATE : 10/12/2020 3:19 PM PLOT BY : RINZEL, JAMES M PLOT NAME : **PLOT SCALE :** 1 IN:10 FT HORZ. / 1 IN:10 FT VERT.

WISDOT/CADDS SHEET 49

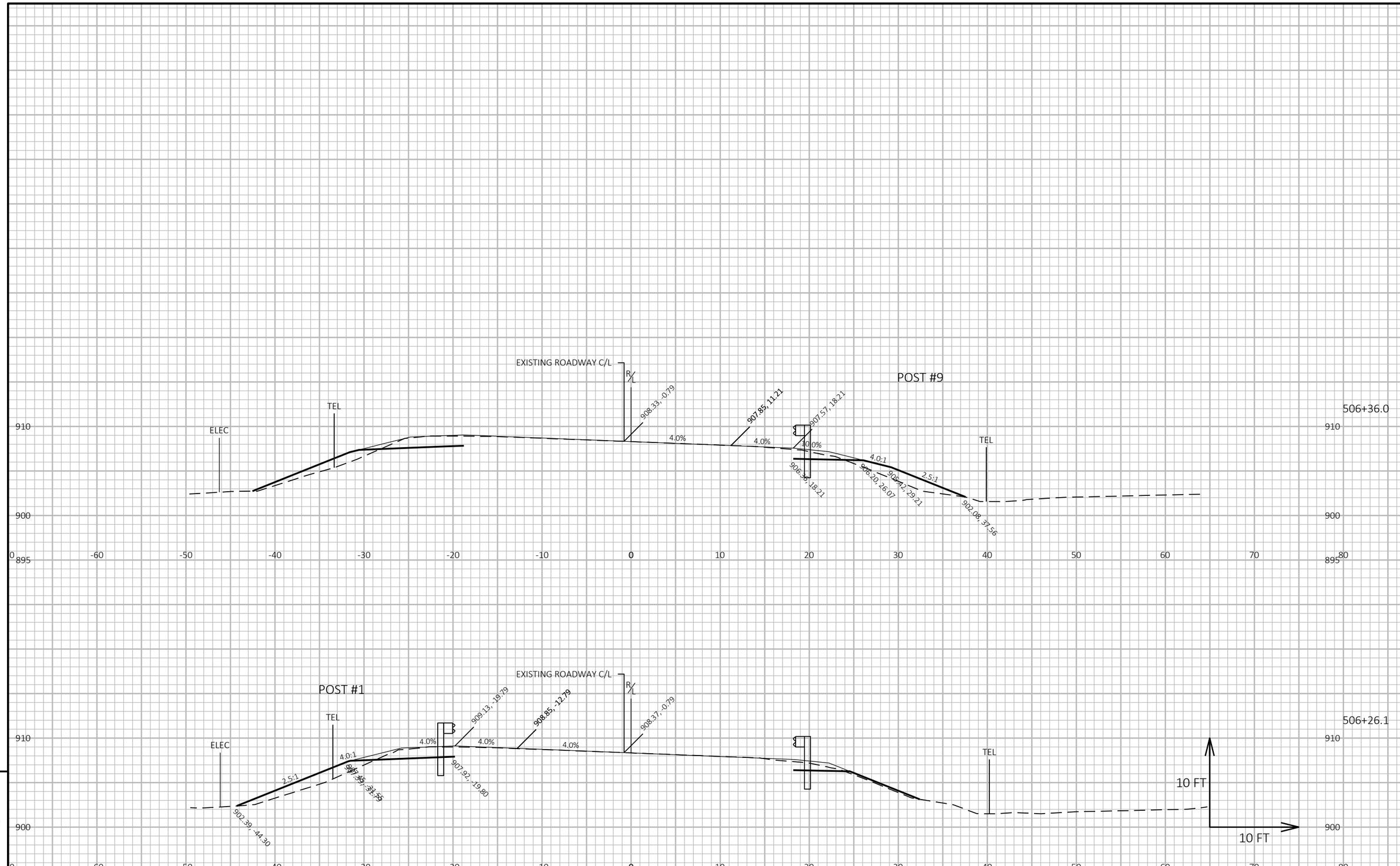

9

9

PROJECT NO: 1400-01-73	HWY: STH 16	COUNTY: COLUMBIA	CROSS SECTIONS: STH 16	SHEET	E

FILE NAME : N:\PDS\C3D\14000103\SHEETSPLAN\090101-XS.DWG
LAYOUT NAME - 25

PLOT DATE : 10/12/2020 3:19 PM

PLOT BY : RINZEL, JAMES M

PLOT NAME :

PLOT SCALE : 1 IN:10 FT HORZ. / 1 IN:10 FT VERT.

WISDOT/CADDS SHEET 49

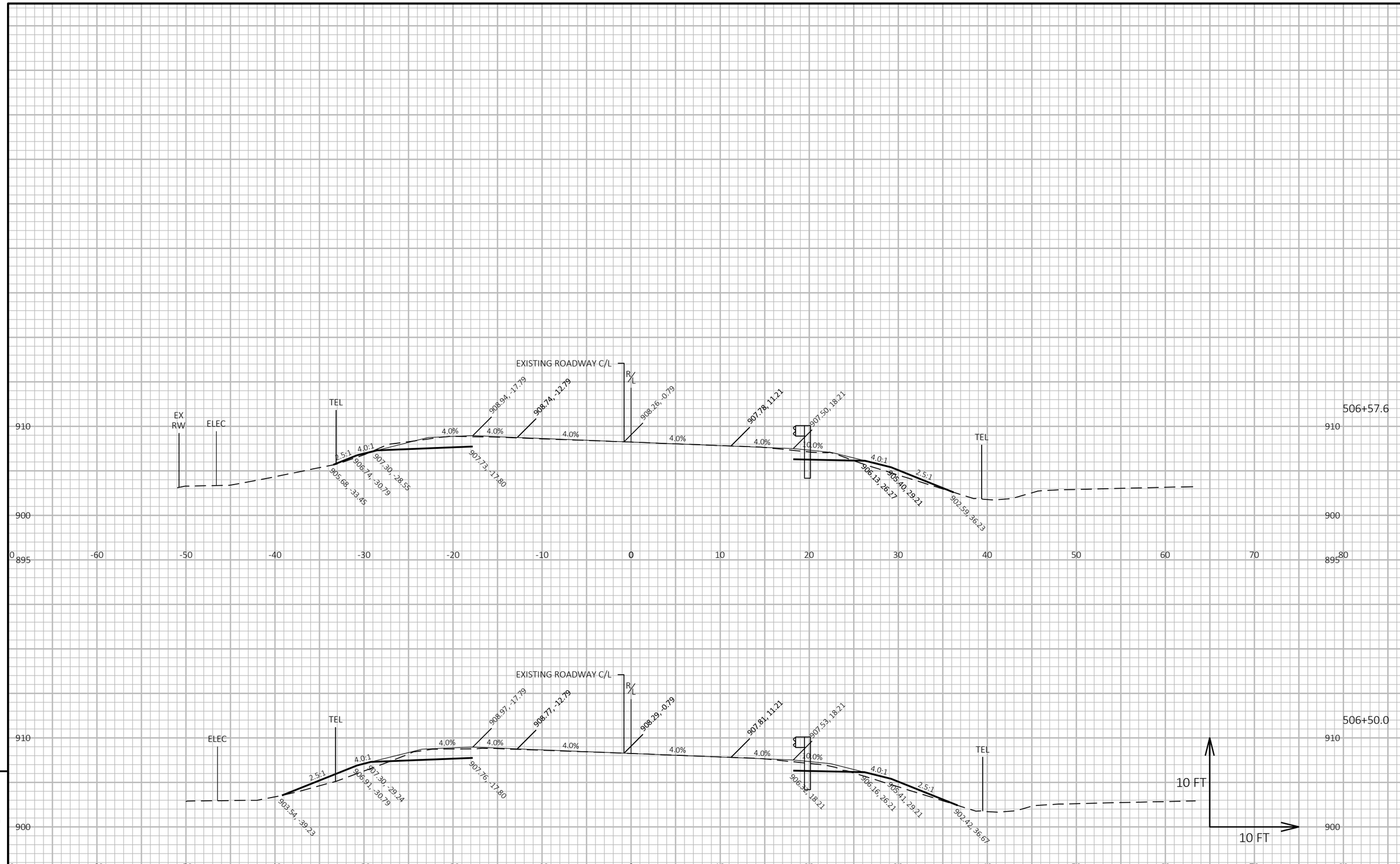

PROJECT NO: 1400-01-73	HWY: STH 16	COUNTY: COLUMBIA	CROSS SECTIONS: STH 16	SHEET	E

FILE NAME : N:\PDS\C3D\14000103\SHEETSPLAN\090101-XS.DWG
LAYOUT NAME - 26
PLOT DATE : 10/12/2020 3:19 PM
PLOT BY : RINZEL, JAMES M
PLOT NAME :
PLOT SCALE : 1 IN:10 FT HORZ. / 1 IN:10 FT VERT.

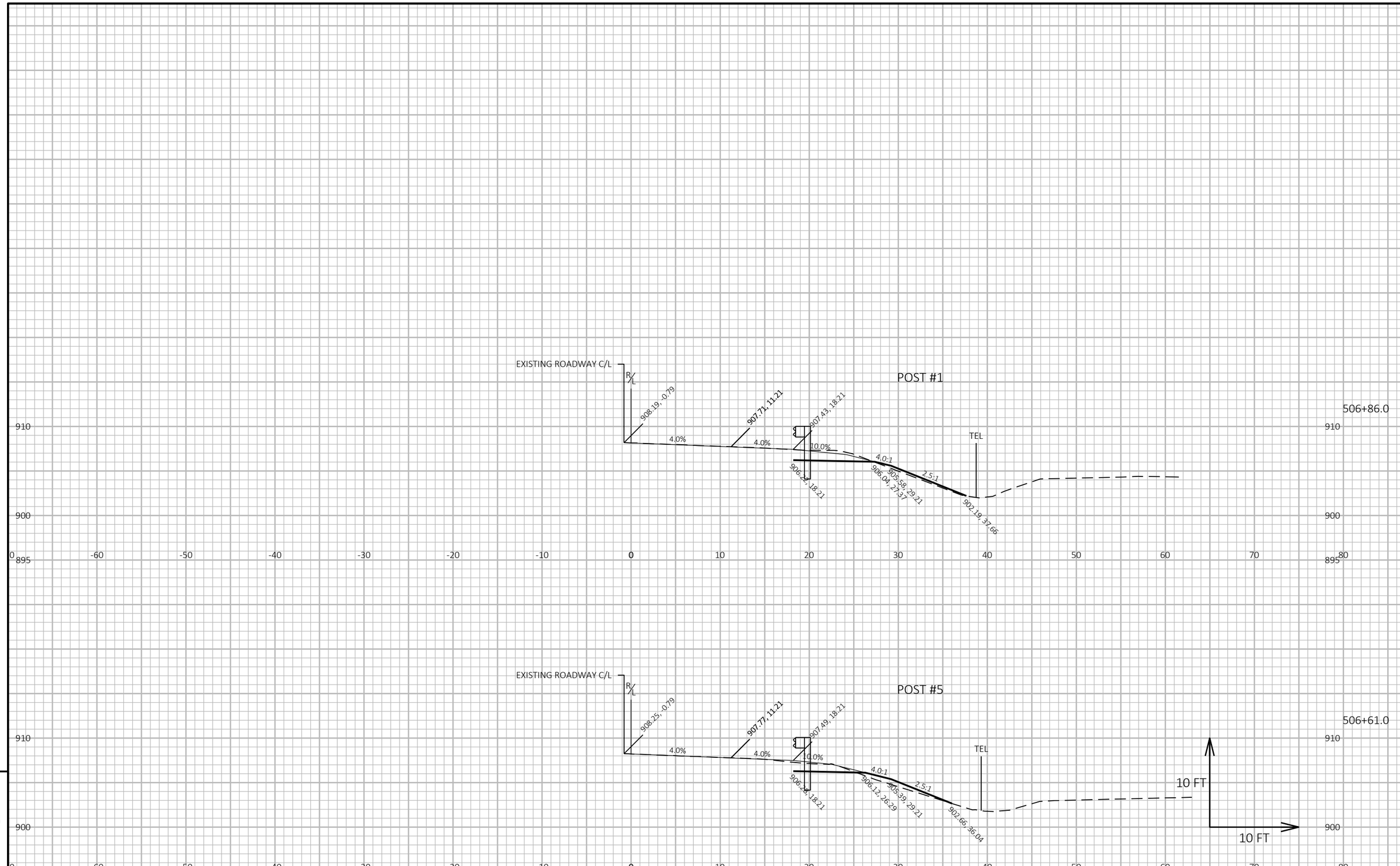

9

9

PROJECT NO: 1400-01-73	HWY: STH 16	COUNTY: COLUMBIA	CROSS SECTIONS: STH 16	SHEET	E

FILE NAME : N:\PDS\C3D\14000103\SHEETSPLAN\090101-XS.DWG
LAYOUT NAME - 27

PLOT DATE : 10/12/2020 3:19 PM PLOT BY : RINZEL, JAMES M PLOT NAME : **PLOT SCALE :** 1 IN:10 FT HORZ. / 1 IN:10 FT VERT.

WISDOT/CADDS SHEET 49

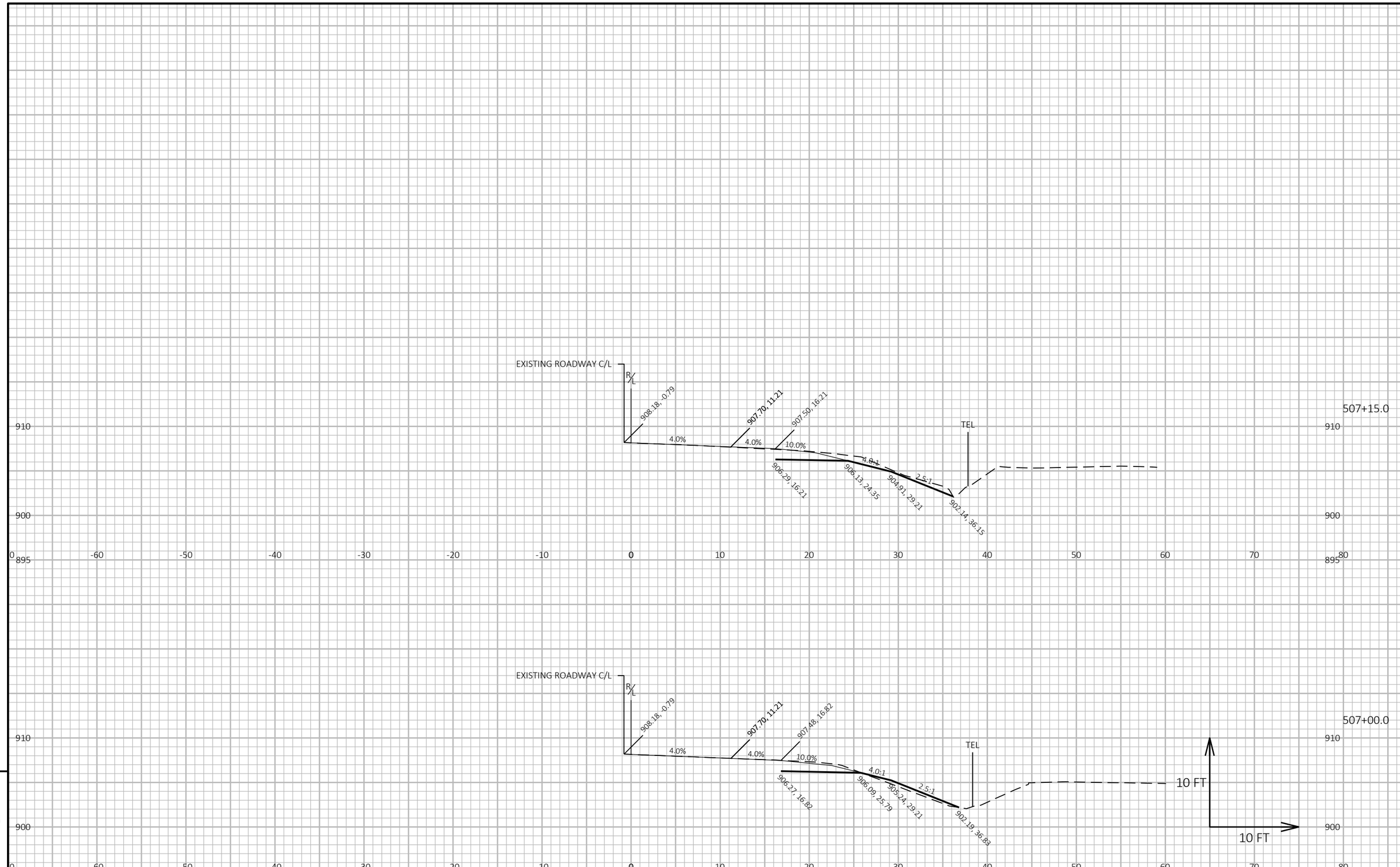

9

9

PROJECT NO: 1400-01-73	HWY: STH 16	COUNTY: COLUMBIA	CROSS SECTIONS: STH 16	SHEET	E

FILE NAME : N:\PDS\C3D\14000103\SHEETSPLAN\090101-XS.DWG
LAYOUT NAME - 28

PLOT DATE : 10/12/2020 3:19 PM PLOT BY : RINZEL, JAMES M PLOT NAME : **PLOT SCALE :** 1 IN:10 FT HORZ. / 1 IN:10 FT VERT.

WISDOT/CADDS SHEET 49

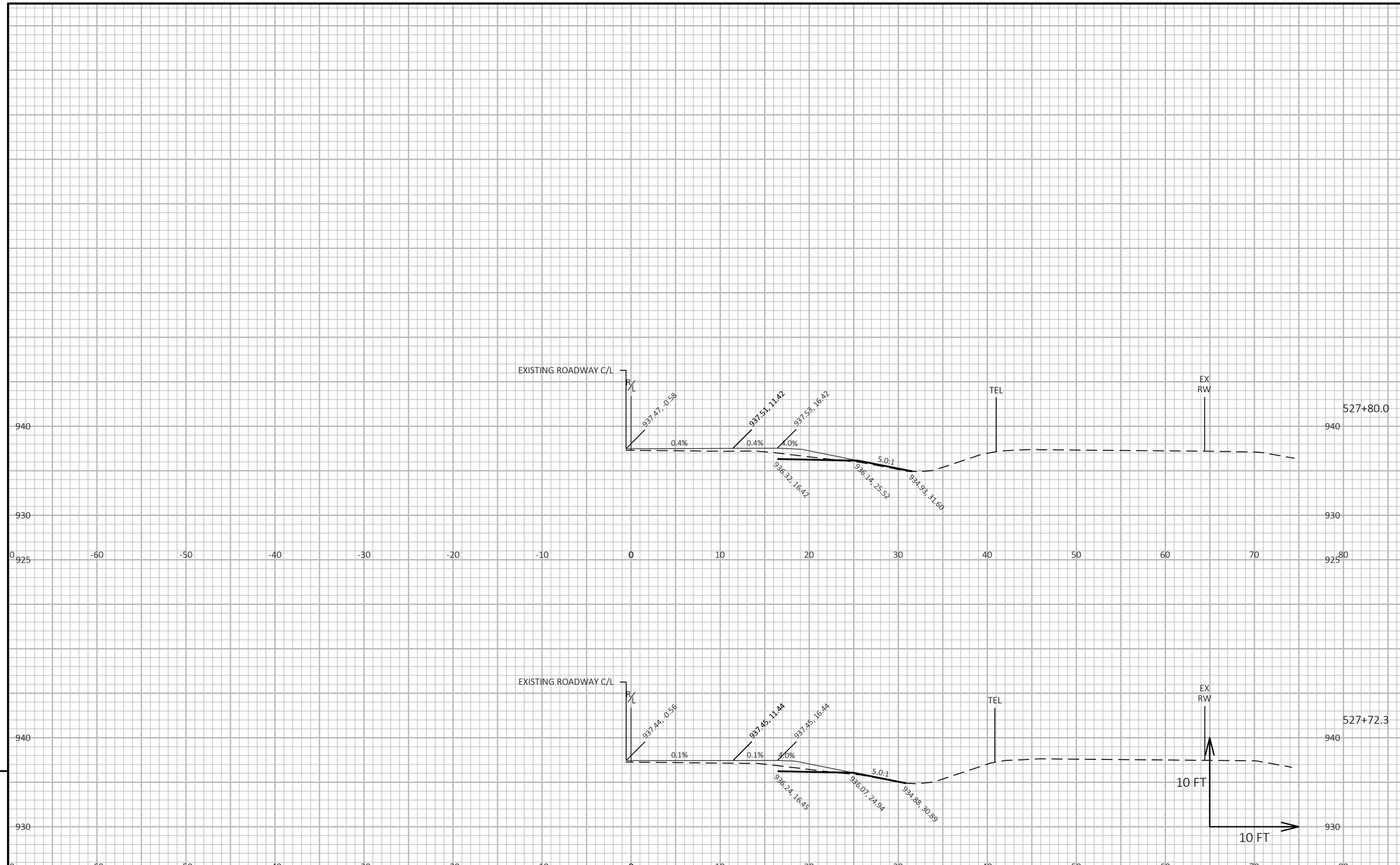

9

9

PROJECT NO: 1400-01-73	HWY: STH 16	COUNTY: COLUMBIA	CROSS SECTIONS: STH 16	SHEET	E

FILE NAME : N:\PDS\C3D\14000103\SHEETSPLAN\090101-XS.DWG
LAYOUT NAME - 29

PLOT DATE : 10/12/2020 3:19 PM PLOT BY : RINZEL, JAMES M PLOT NAME : **PLOT SCALE :** 1 IN:10 FT HORZ. / 1 IN:10 FT VERT.

WISDOT/CADDS SHEET 49

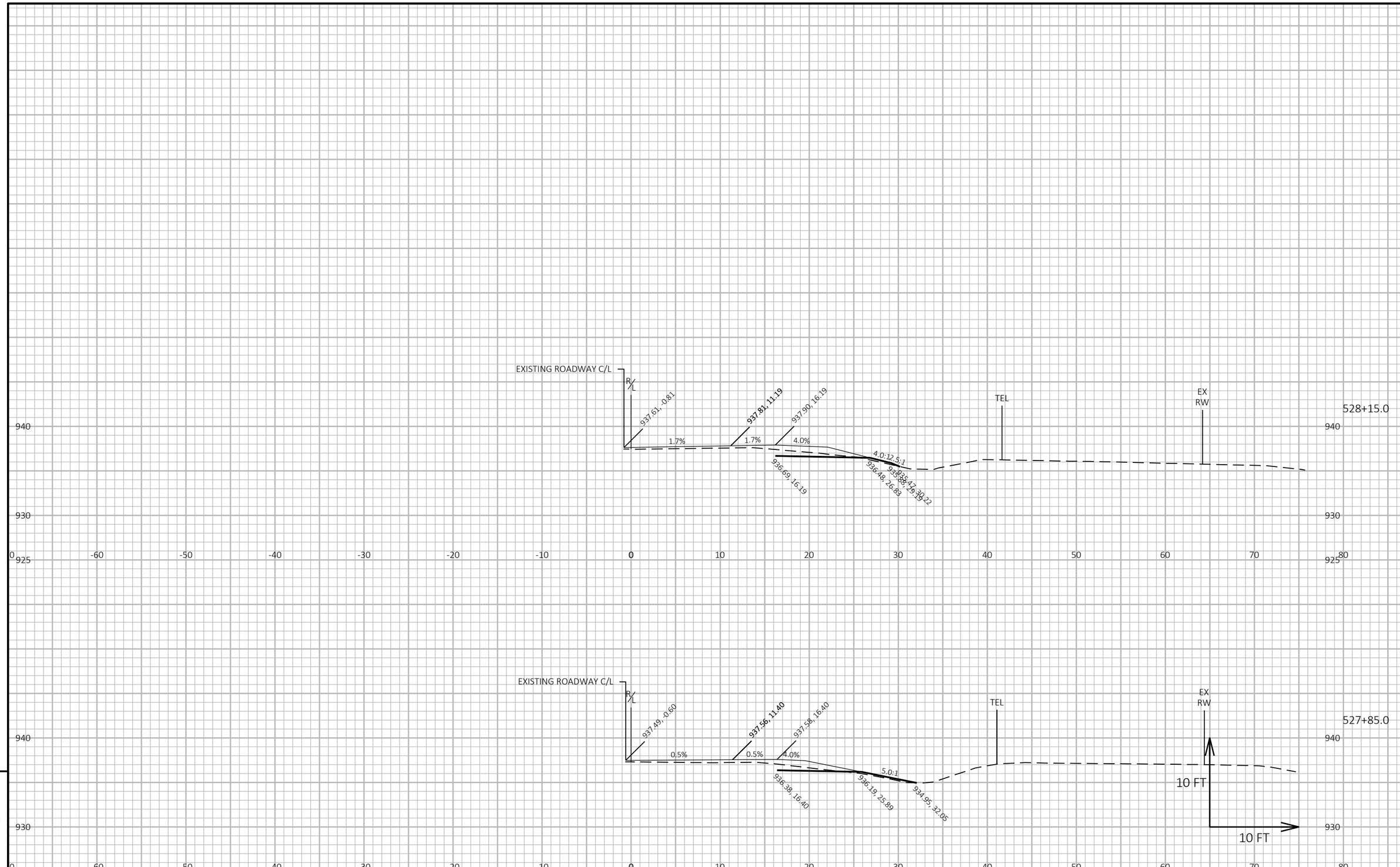

9

9

PROJECT NO: 1400-01-73	HWY: STH 16	COUNTY: COLUMBIA	CROSS SECTIONS: STH 16	SHEET	E

FILE NAME : N:\PDS\C3D\14000103\SHEETSPLAN\090101-XS.DWG
LAYOUT NAME - 30

PLOT DATE : 10/12/2020 3:19 PM

PLOT BY : RINZEL, JAMES M

PLOT NAME :

PLOT SCALE : 1 IN:10 FT HORZ. / 1 IN:10 FT VERT.

WISDOT/CADDS SHEET 49

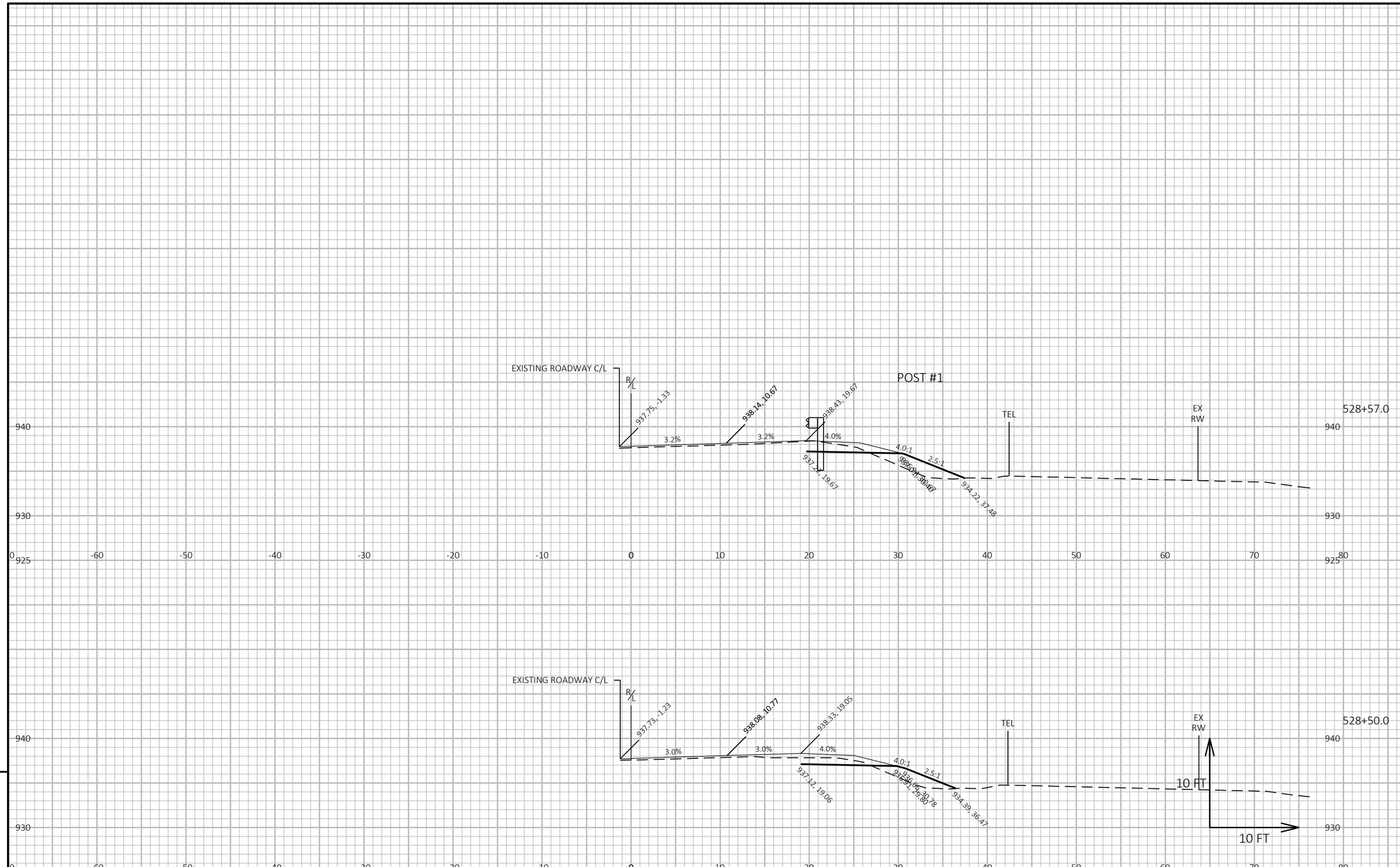

PROJECT NO: 1400-01-73	HWY: STH 16	COUNTY: COLUMBIA	CROSS SECTIONS: STH 16	SHEET	E

FILE NAME : N:\PDS\C3D\14000103\SHEETSPLAN\090101-XS.DWG
LAYOUT NAME - 31
PLOT DATE : 10/12/2020 3:19 PM
PLOT BY : RINZEL, JAMES M
PLOT NAME :
PLOT SCALE : 1 IN:10 FT HORZ. / 1 IN:10 FT VERT.

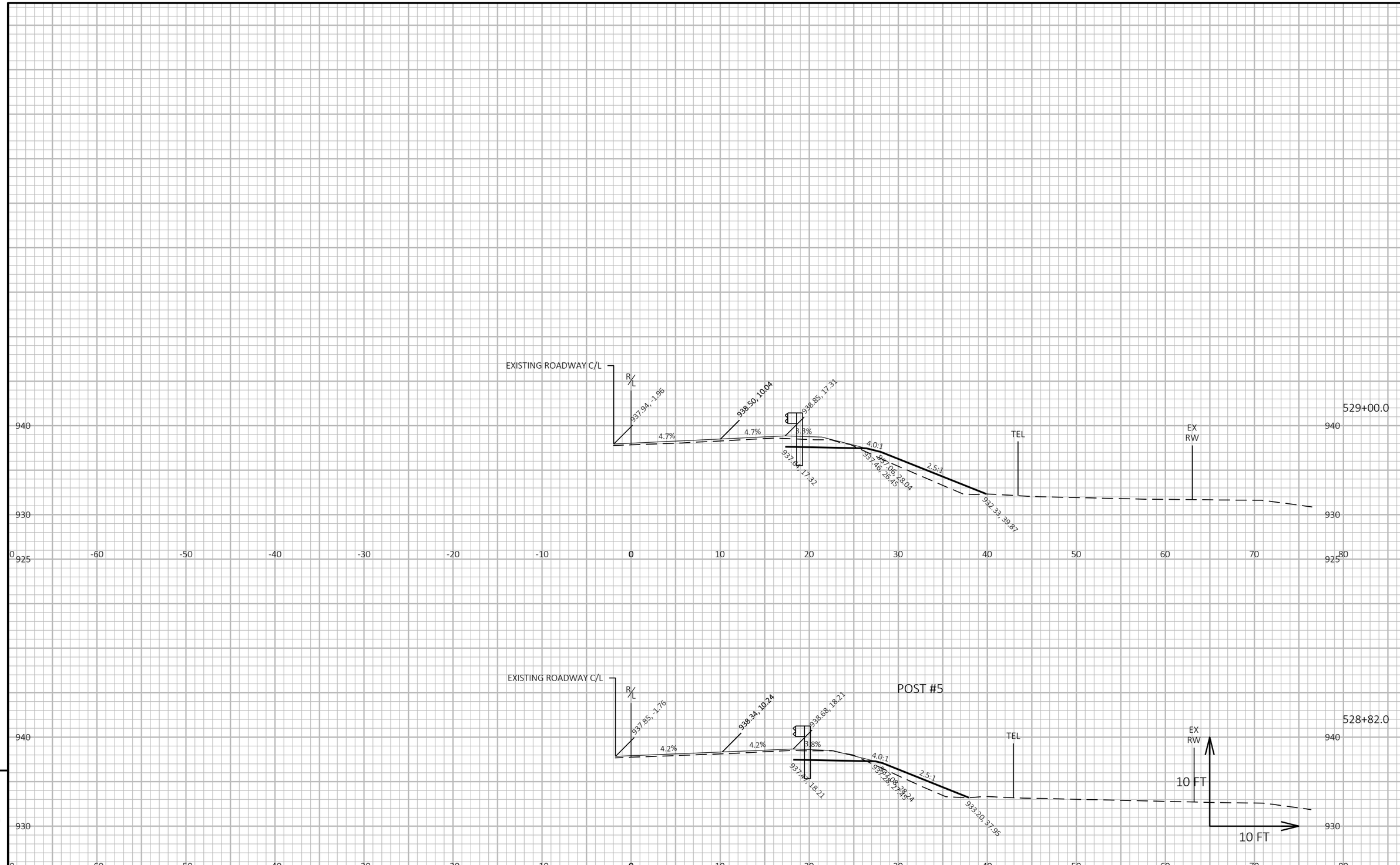

9

9

PROJECT NO: 1400-01-73	HWY: STH 16	COUNTY: COLUMBIA	CROSS SECTIONS: STH 16	SHEET	E

FILE NAME : N:\PDS\C3D\14000103\SHEETSPLAN\090101-XS.DWG
LAYOUT NAME - 32

PLOT DATE : 10/12/2020 3:19 PM PLOT BY : RINZEL, JAMES M PLOT NAME : **PLOT SCALE :** 1 IN:10 FT HORZ. / 1 IN:10 FT VERT.

WISDOT/CADDS SHEET 49

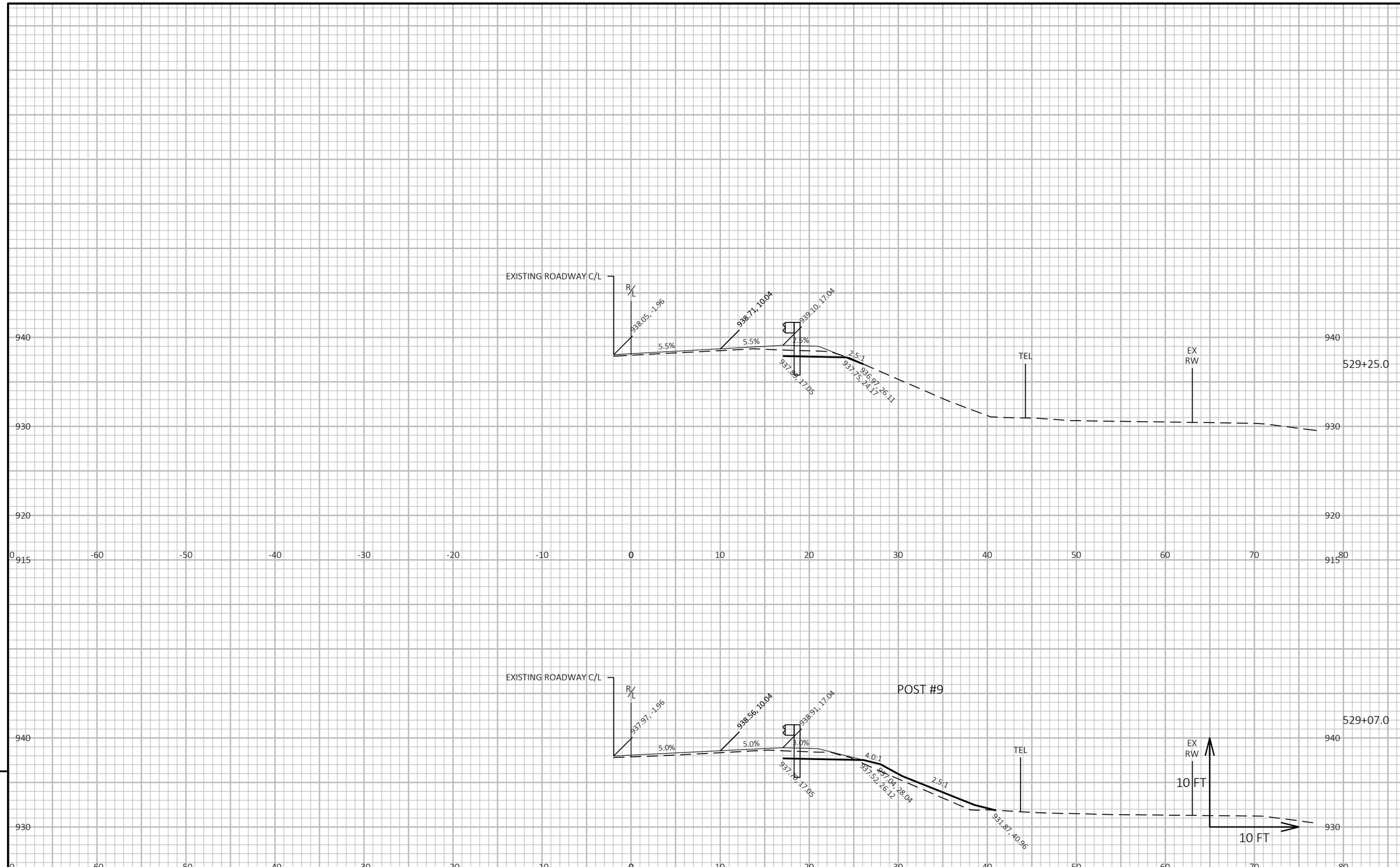

9

9

PROJECT NO: 1400-01-73	HWY: STH 16	COUNTY: COLUMBIA	CROSS SECTIONS: STH 16	SHEET	E

FILE NAME : N:\PDS\C3D\14000103\SHEETSPLAN\090101-XS.DWG
LAYOUT NAME - 33
PLOT DATE : 10/12/2020 3:19 PM
PLOT BY : RINZEL, JAMES M
PLOT NAME :
PLOT SCALE : 1 IN:10 FT HORZ. / 1 IN:10 FT VERT.
WISDOT/CADDS SHEET 49

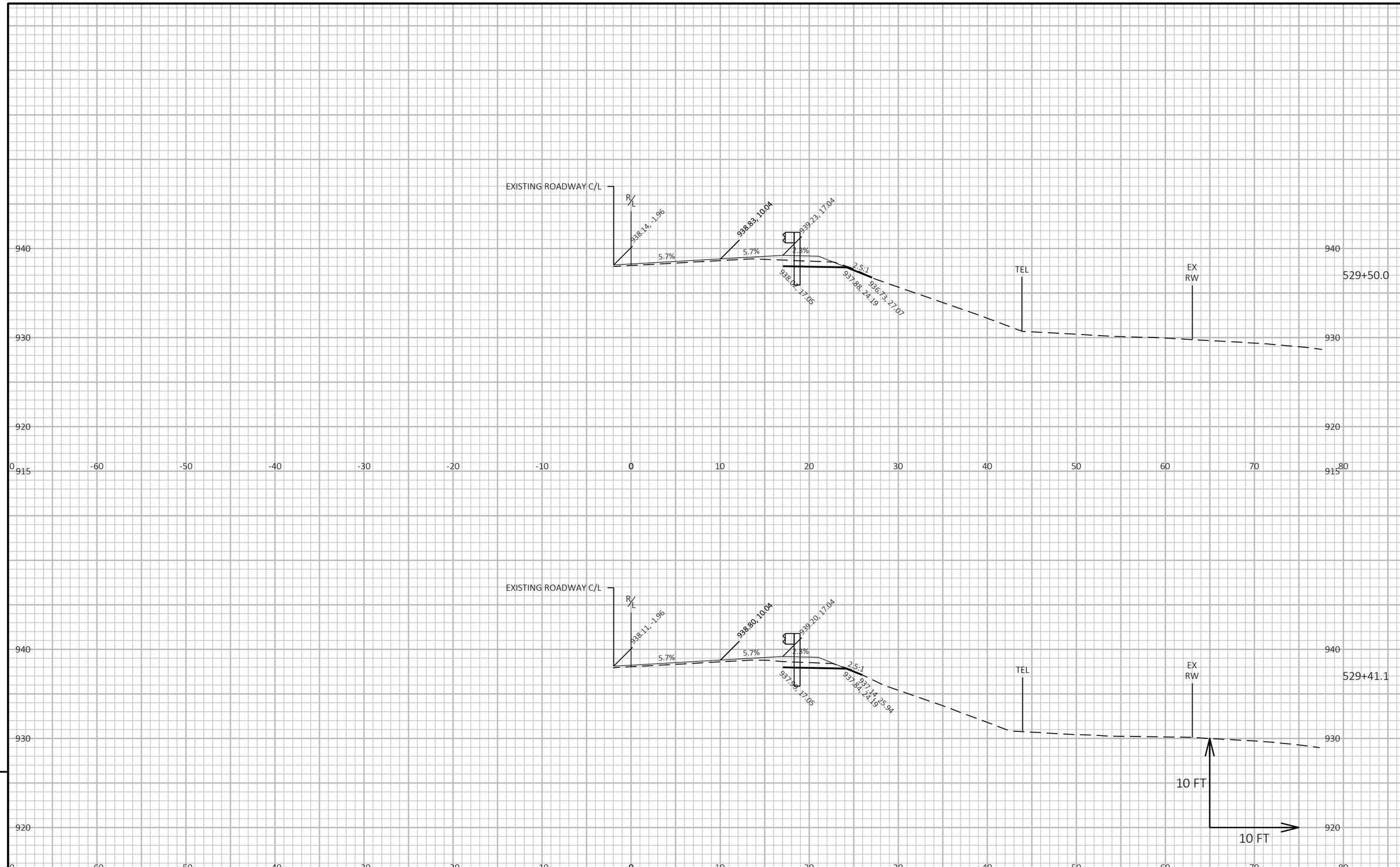

PROJECT NO: 1400-01-73	HWY: STH 16	COUNTY: COLUMBIA	CROSS SECTIONS: STH 16	SHEET	E

FILE NAME : N:\PDS\C3D\14000103\SHEETSPLAN\090101-XS.DWG
LAYOUT NAME - 34
PLOT DATE : 10/12/2020 3:19 PM
PLOT BY : RINZEL, JAMES M
PLOT NAME :
PLOT SCALE : 1 IN:10 FT HORZ. / 1 IN:10 FT VERT.
WISDOT/CADDS SHEET 49

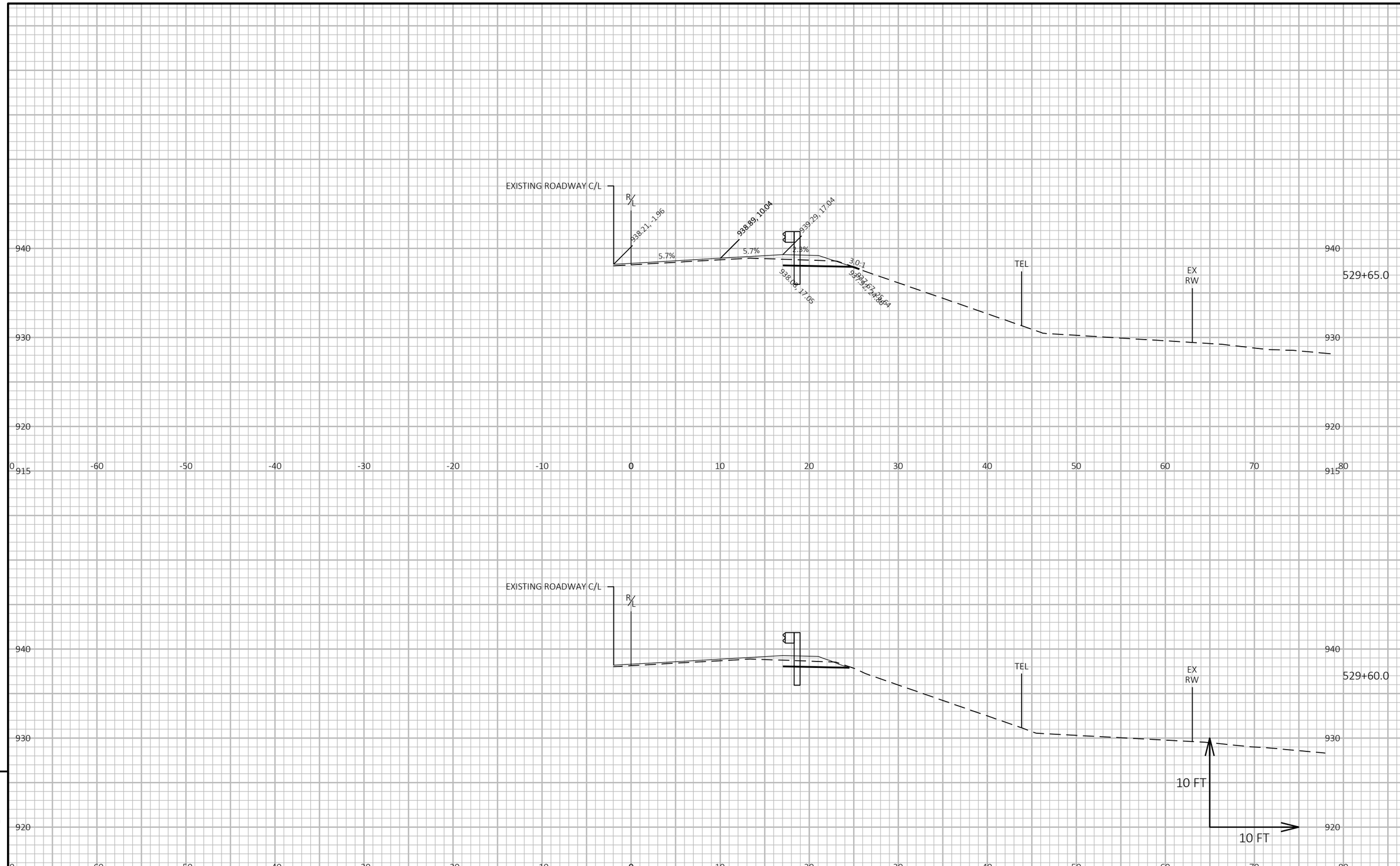

9

9

PROJECT NO: 1400-01-73	HWY: STH 16	COUNTY: COLUMBIA	CROSS SECTIONS: STH 16	SHEET	E

FILE NAME : N:\PDS\C3D\14000103\SHEETSPLAN\090101-XS.DWG
LAYOUT NAME - 35

PLOT DATE : 10/12/2020 3:19 PM

PLOT BY : RINZEL, JAMES M

PLOT NAME :

PLOT SCALE : 1 IN:10 FT HORZ. / 1 IN:10 FT VERT.

WISDOT/CADDS SHEET 49

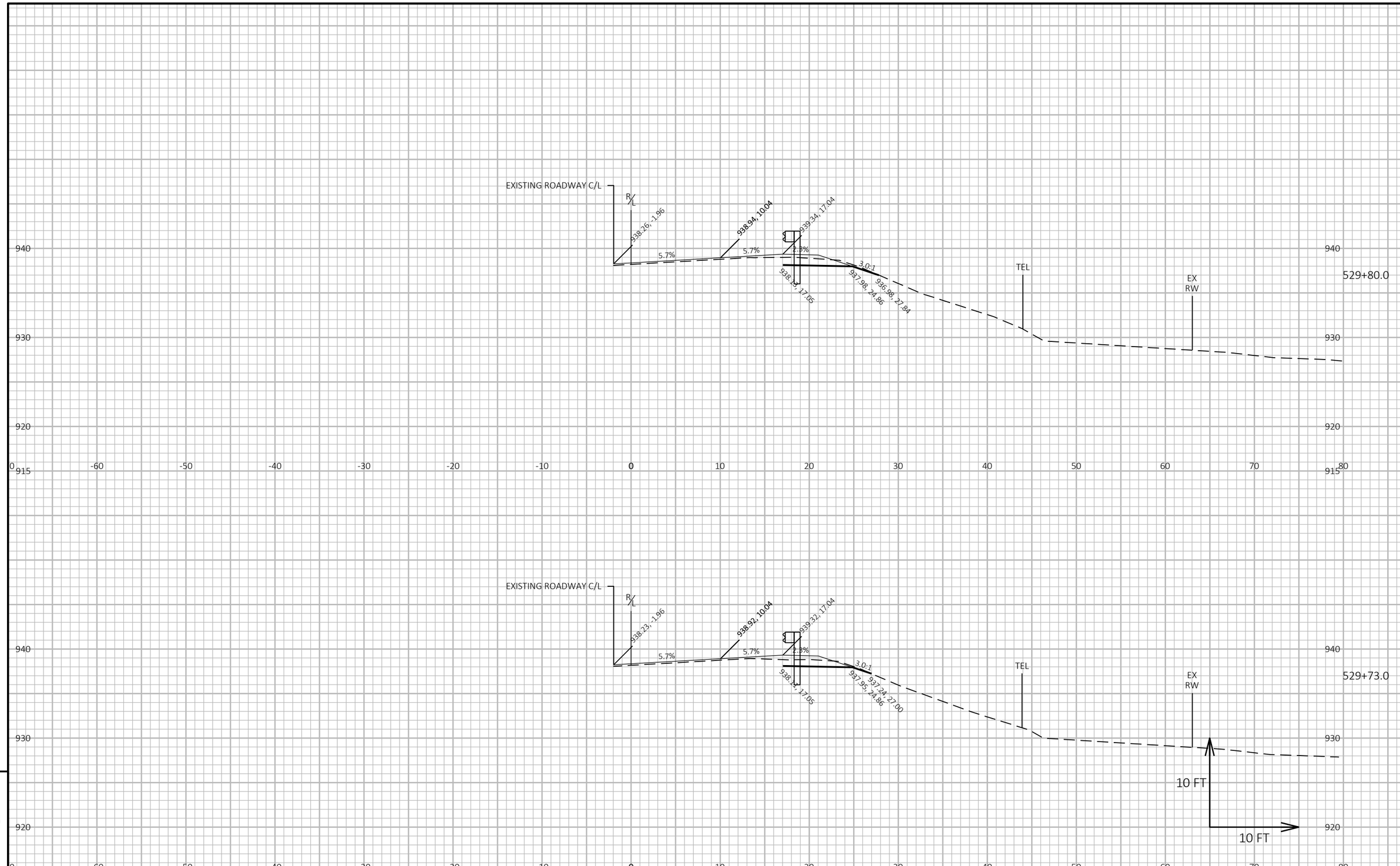

9

9

PROJECT NO: 1400-01-73	HWY: STH 16	COUNTY: COLUMBIA	CROSS SECTIONS: STH 16	SHEET	E

FILE NAME : N:\PDS\C3D\14000103\SHEETSPLAN\090101-XS.DWG
LAYOUT NAME - 36
PLOT DATE : 10/12/2020 3:19 PM
PLOT BY : RINZEL, JAMES M
PLOT NAME :
PLOT SCALE : 1 IN:10 FT HORZ. / 1 IN:10 FT VERT.
WISDOT/CADDS SHEET 49

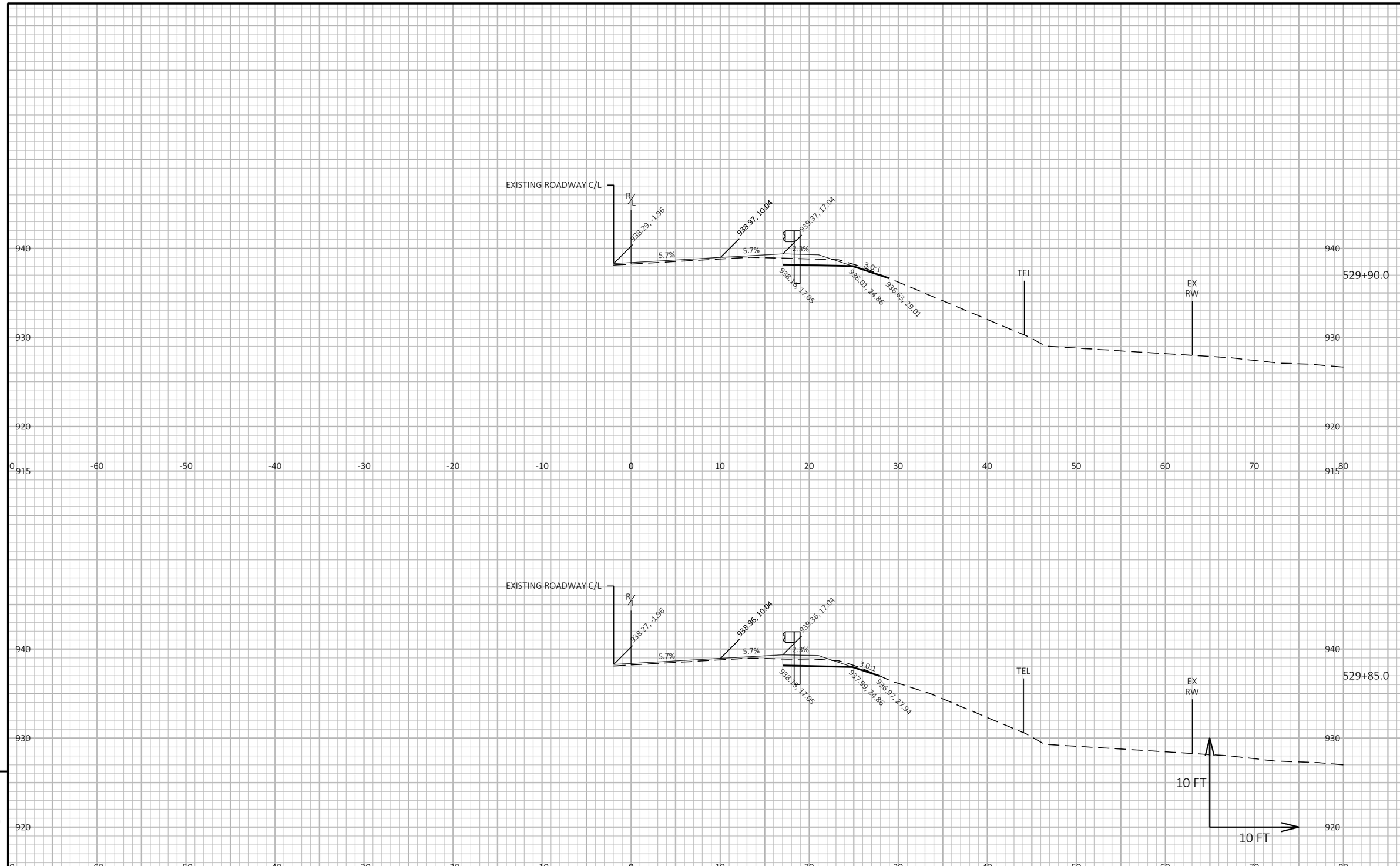

9

9

PROJECT NO: 1400-01-73	HWY: STH 16	COUNTY: COUNTY: COLUMBIA	CROSS SECTIONS: STH 16	SHEET	E

FILE NAME : N:\PDS\C3D\14000103\SHEETSPLAN\090101-XS.DWG
LAYOUT NAME - 37

PLOT DATE : 10/12/2020 3:19 PM

PLOT BY : RINZEL, JAMES M

PLOT NAME :

PLOT SCALE : 1 IN:10 FT HORZ. / 1 IN:10 FT VERT.

WISDOT/CADDS SHEET 49

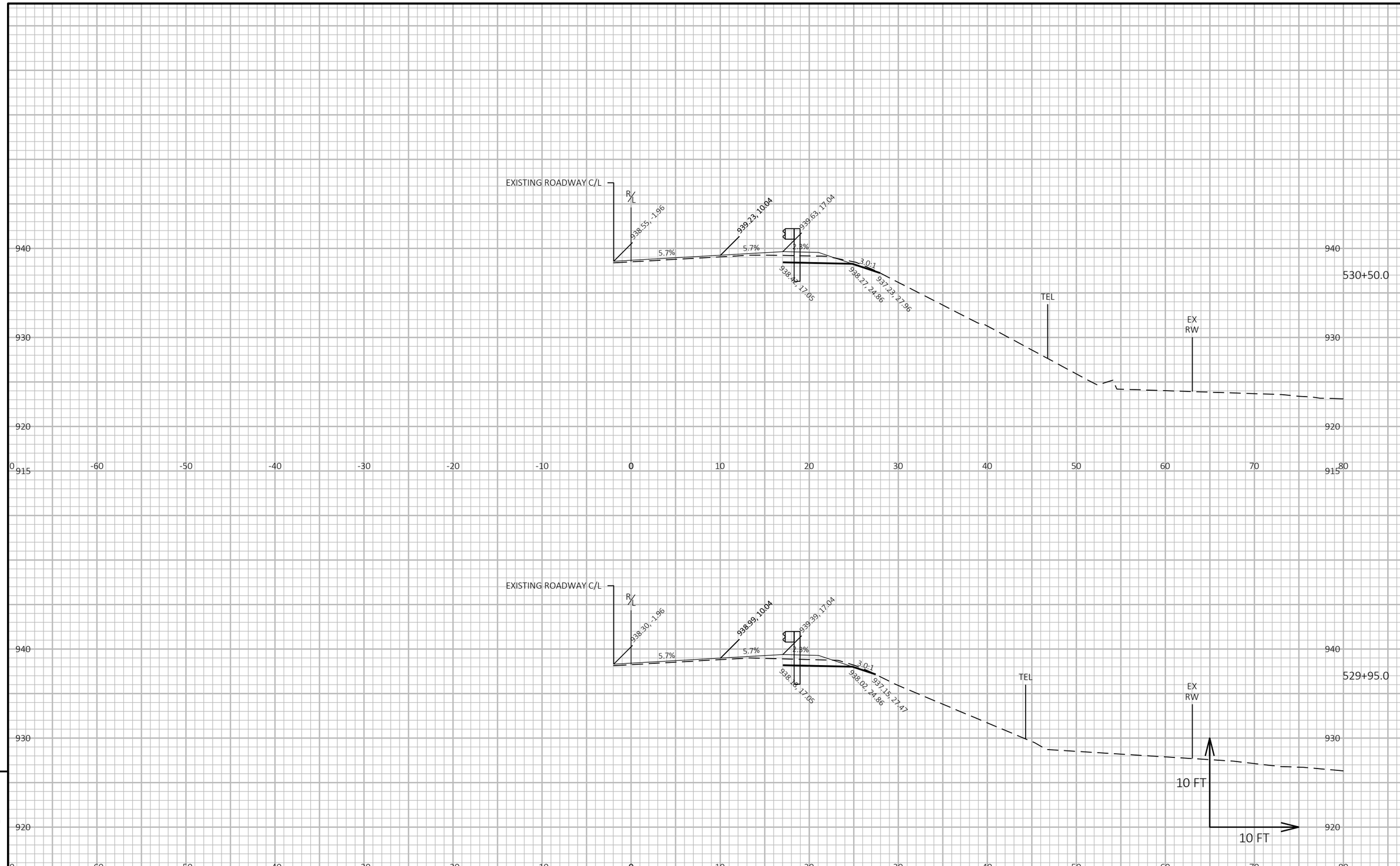

9

9

PROJECT NO: 1400-01-73	HWY: STH 16	COUNTY: COLUMBIA	CROSS SECTIONS: STH 16	SHEET	E

FILE NAME : N:\PDS\C3D\14000103\SHEETSPLAN\090101-XS.DWG
LAYOUT NAME - 38

PLOT DATE : 10/12/2020 3:20 PM

PLOT BY : RINZEL, JAMES M

PLOT NAME :

PLOT SCALE : 1 IN:10 FT HORZ. / 1 IN:10 FT VERT.

WISDOT/CADDS SHEET 49

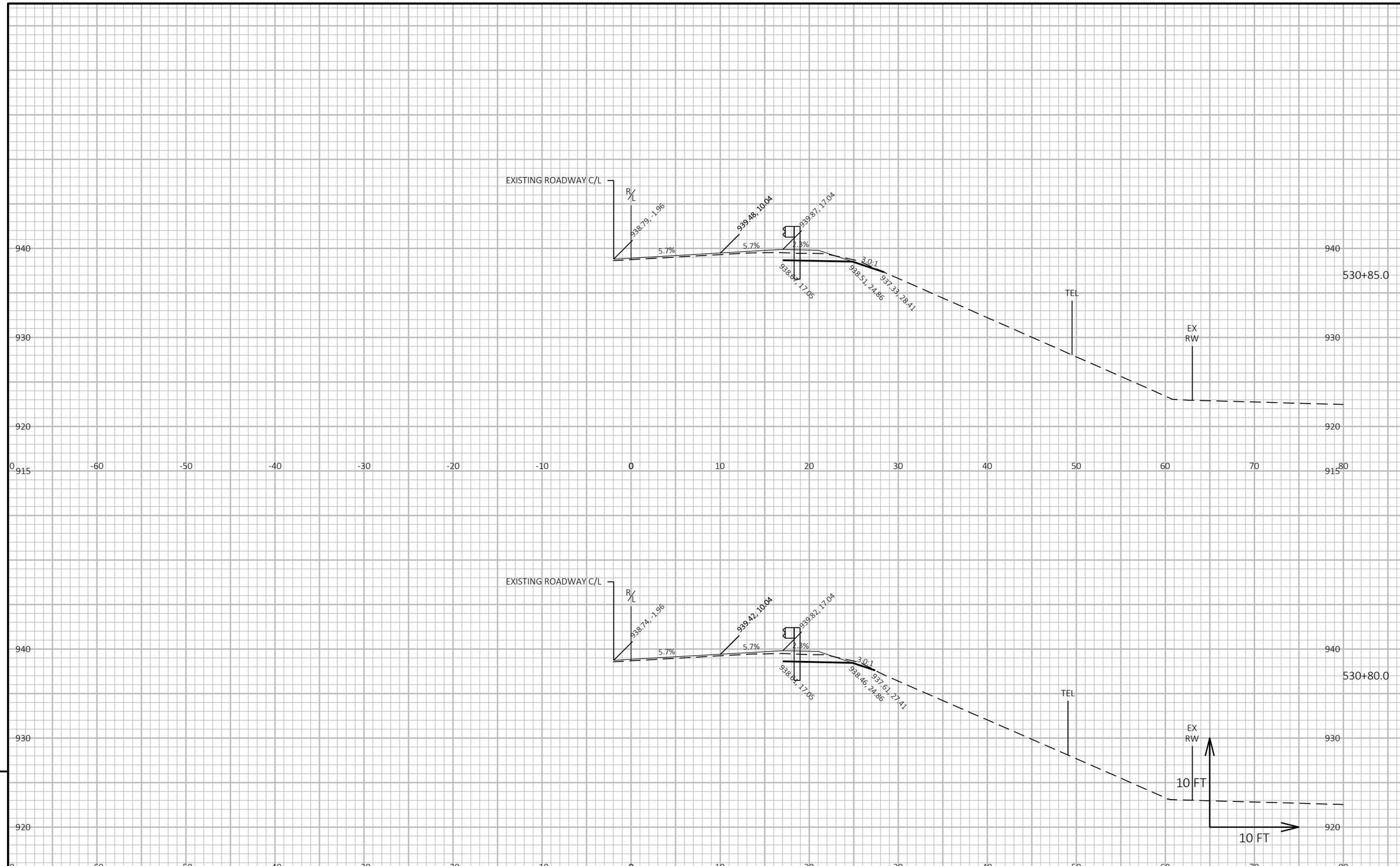

9

9

PROJECT NO: 1400-01-73	HWY: STH 16	COUNTY: COUNTY: COLUMBIA	CROSS SECTIONS: STH 16	SHEET	E

FILE NAME : N:\PDS\C3D\14000103\SHEETSPLAN\090101-XS.DWG
LAYOUT NAME - 39

PLOT DATE : 10/12/2020 3:20 PM

PLOT BY : RINZEL, JAMES M

PLOT NAME :

PLOT SCALE : 1 IN:10 FT HORZ. / 1 IN:10 FT VERT.

WISDOT/CADDS SHEET 49

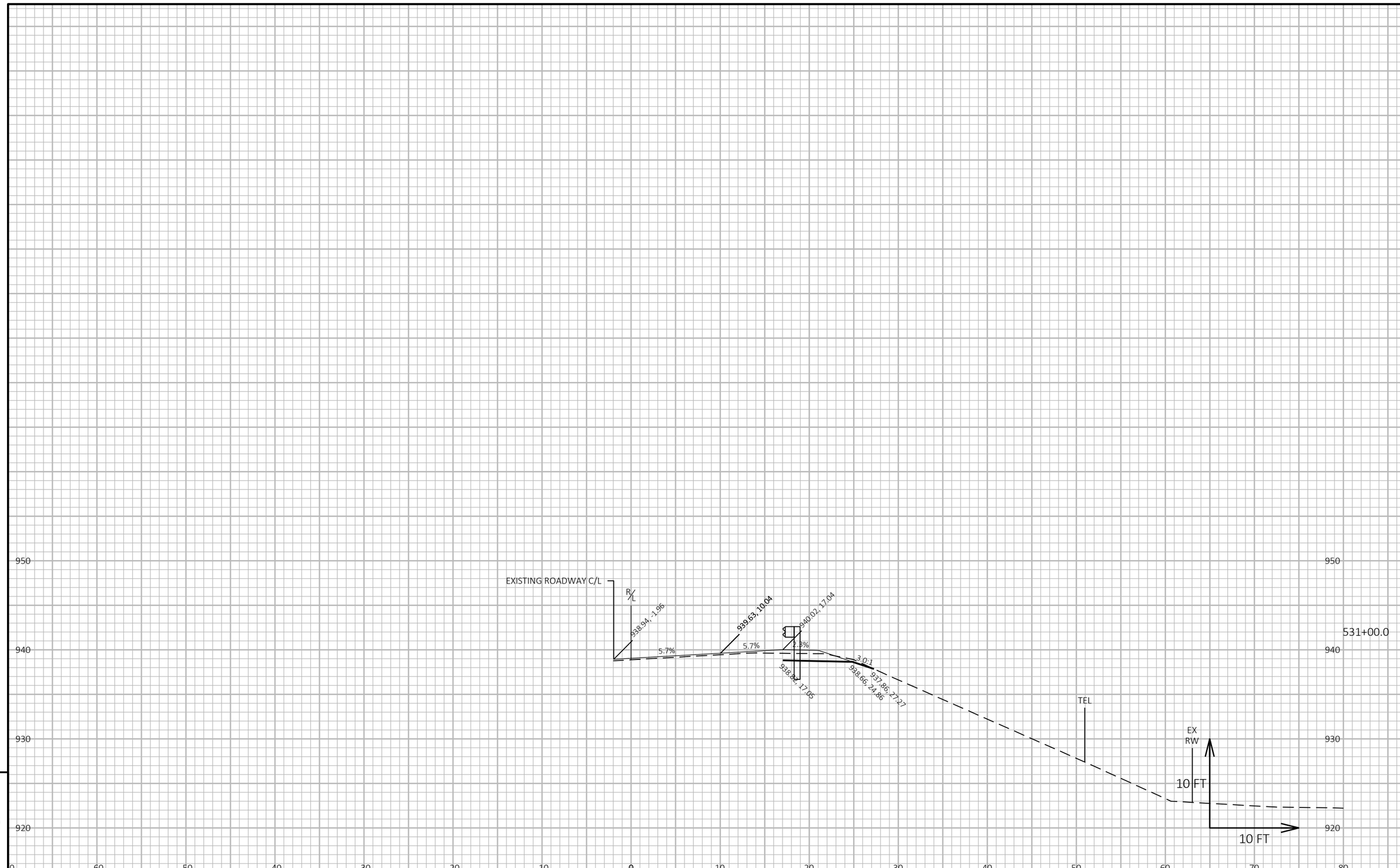

9

9

PROJECT NO: 1400-01-73	HWY: STH 16	COUNTY: COLUMBIA	CROSS SECTIONS: STH 16	SHEET	E

FILE NAME : N:\PDS\C3D\14000103\SHEETSPLAN\090101-XS.DWG
LAYOUT NAME - 40

PLOT DATE : 10/12/2020 3:20 PM

PLOT BY : RINZEL, JAMES M

PLOT NAME :

PLOT SCALE : 1 IN:10 FT HORZ. / 1 IN:10 FT VERT.

WISDOT/CADDS SHEET 49

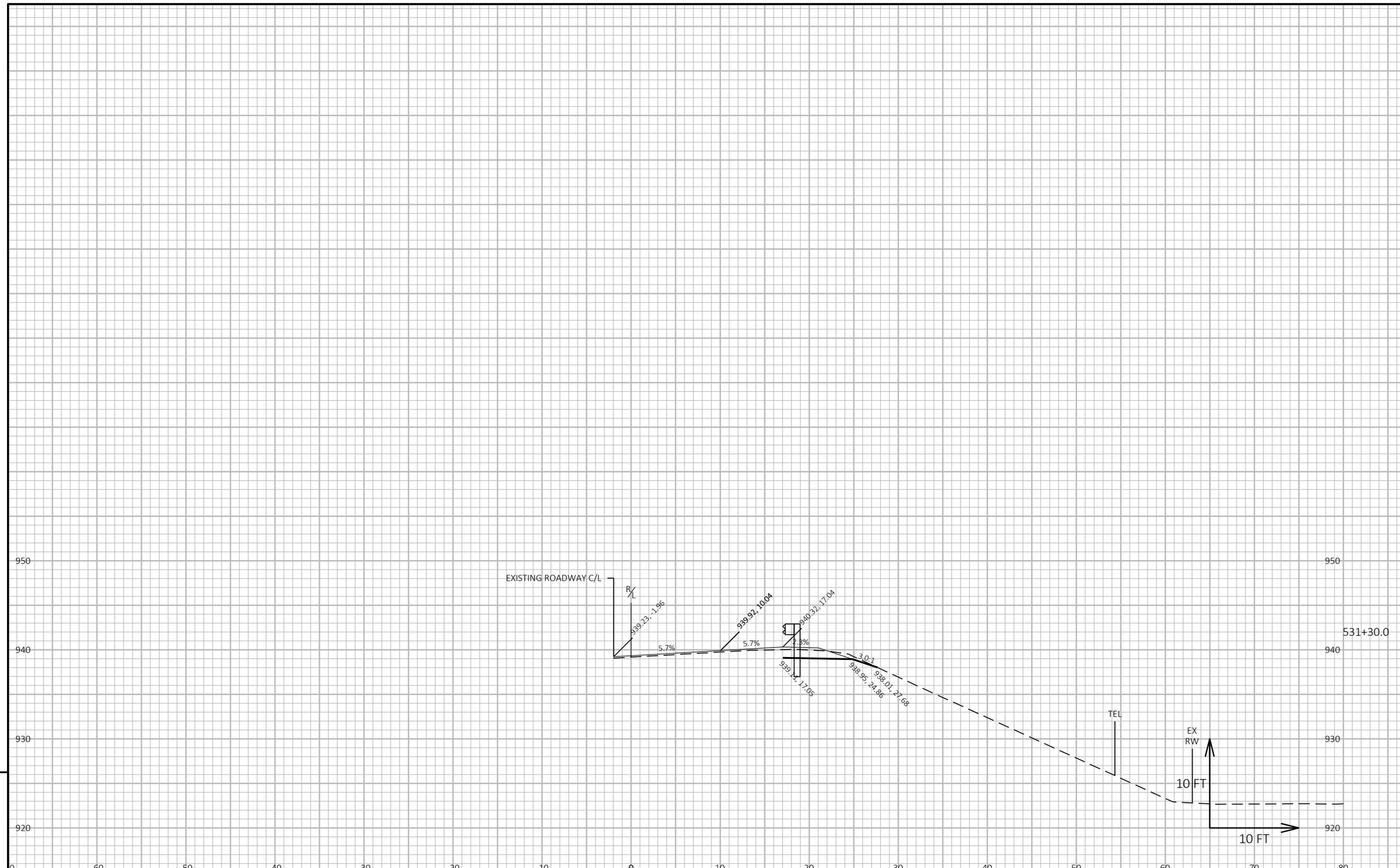

9

9

PROJECT NO: 1400-01-73	HWY: STH 16	COUNTY: COLUMBIA	CROSS SECTIONS: STH 16	SHEET	E

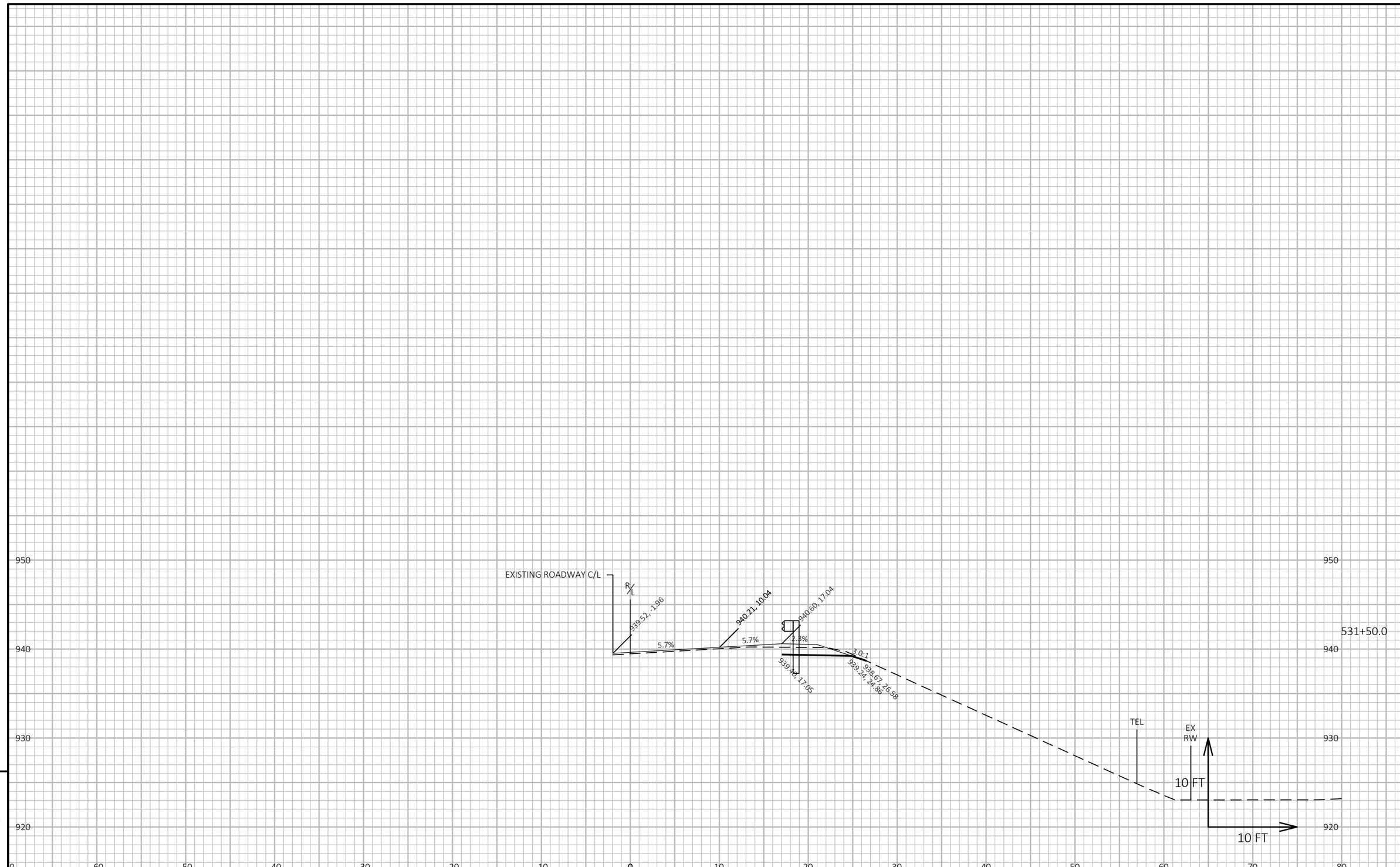

9

9

PROJECT NO: 1400-01-73	HWY: STH 16	COUNTY: COLUMBIA	CROSS SECTIONS: STH 16	SHEET	E

FILE NAME : N:\PDS\C3D\14000103\SHEETSPLAN\090101-XS.DWG
LAYOUT NAME - 42
PLOT DATE : 10/12/2020 3:20 PM
PLOT BY : RINZEL, JAMES M
PLOT NAME :
PLOT SCALE : 1 IN:10 FT HORZ. / 1 IN:10 FT VERT.
WISDOT/CADDS SHEET 49

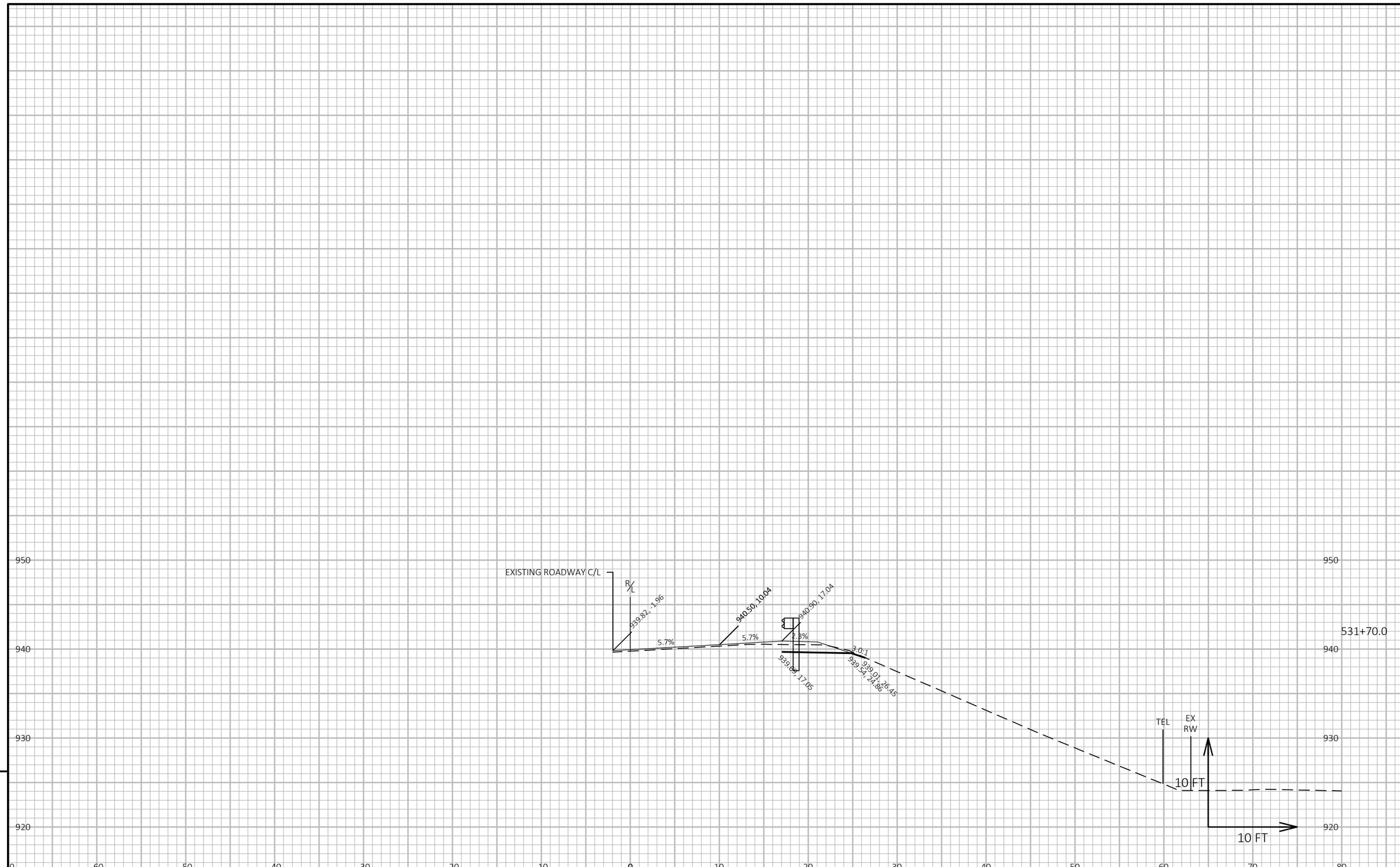

9

9

PROJECT NO: 1400-01-73	HWY: STH 16	COUNTY: COLUMBIA	CROSS SECTIONS: STH 16	SHEET	E

FILE NAME : N:\PDS\C3D\14000103\SHEETSPLAN\090101-XS.DWG
LAYOUT NAME - 43

PLOT DATE : 10/12/2020 3:20 PM

PLOT BY : RINZEL, JAMES M

PLOT NAME :

PLOT SCALE : 1 IN:10 FT HORZ. / 1 IN:10 FT VERT.

WISDOT/CADDS SHEET 49

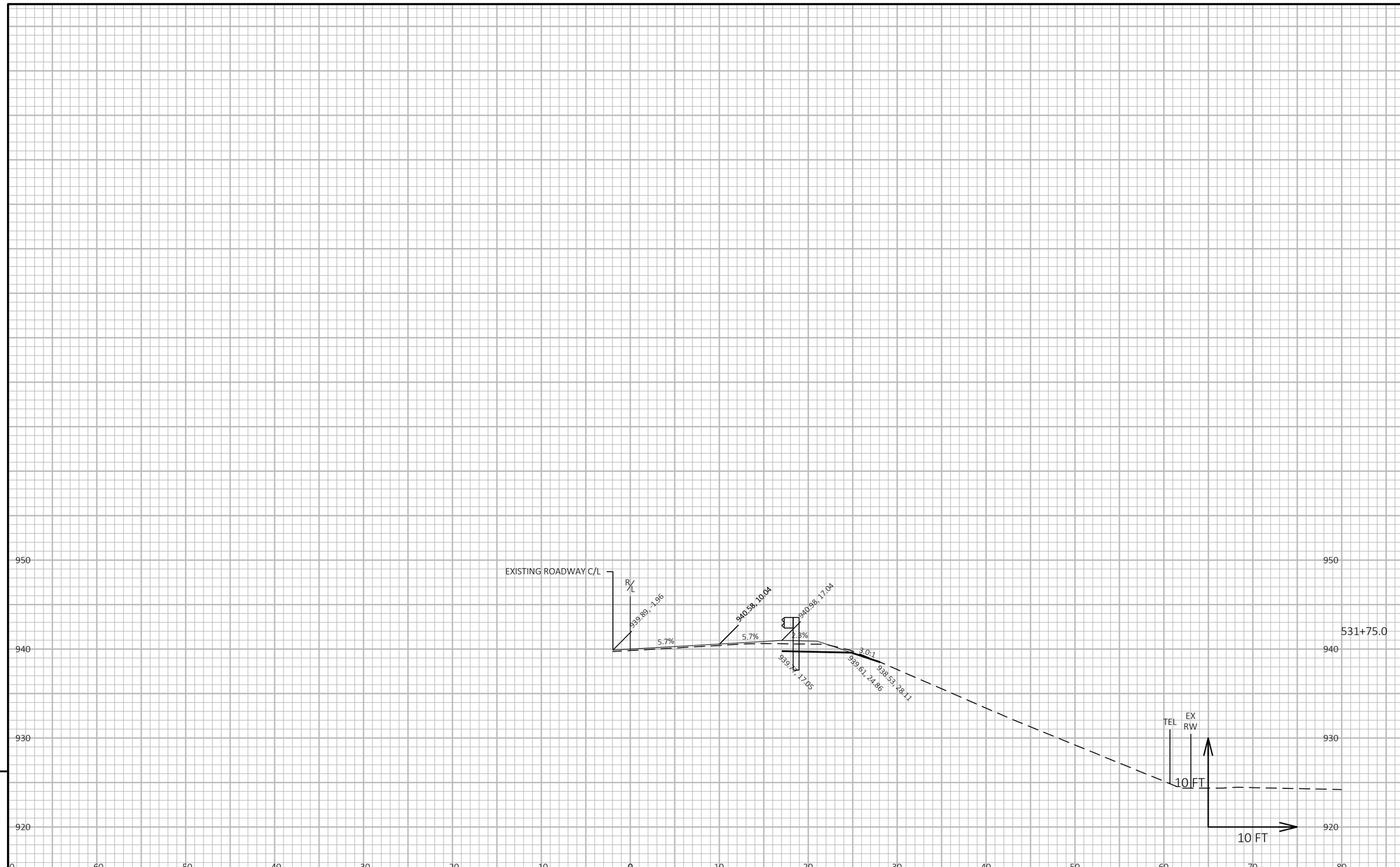

9

9

PROJECT NO: 1400-01-73	HWY: STH 16	COUNTY: COLUMBIA	CROSS SECTIONS: STH 16	SHEET	E

FILE NAME : N:\PDS\C3D\14000103\SHEETSPLAN\090101-XS.DWG
LAYOUT NAME - 44
PLOT DATE : 10/12/2020 3:20 PM
PLOT BY : RINZEL, JAMES M
PLOT NAME :
PLOT SCALE : 1 IN:10 FT HORZ. / 1 IN:10 FT VERT.
WISDOT/CADDS SHEET 49

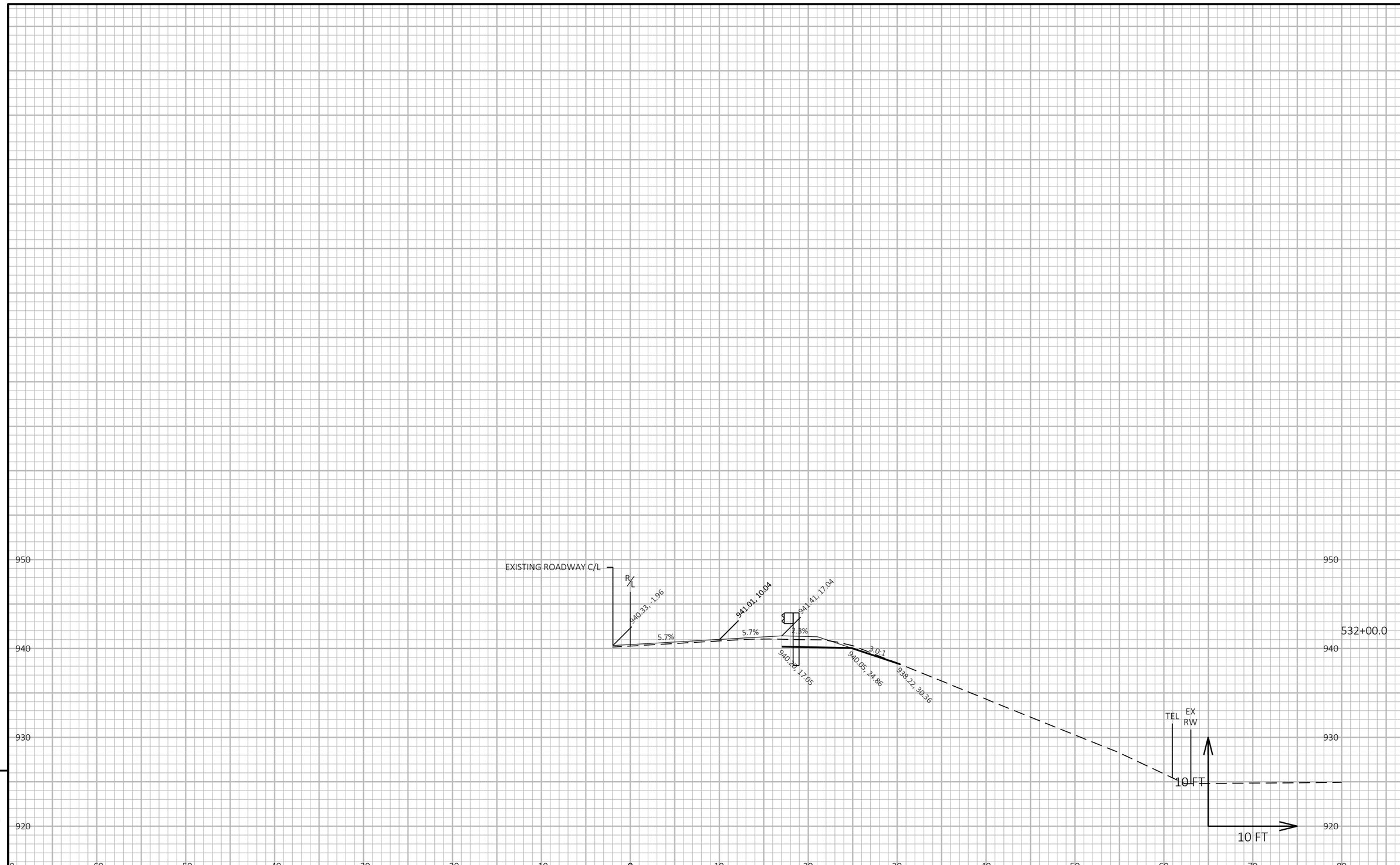

9

9

PROJECT NO: 1400-01-73	HWY: STH 16	COUNTY: COUNTY: COLUMBIA	CROSS SECTIONS: STH 16	SHEET	E

FILE NAME : N:\PDS\C3D\14000103\SHEETSPLAN\090101-XS.DWG
LAYOUT NAME - 45

PLOT DATE : 10/12/2020 3:20 PM

PLOT BY : RINZEL, JAMES M

PLOT NAME :

PLOT SCALE : 1 IN:10 FT HORZ. / 1 IN:10 FT VERT.

WISDOT/CADDS SHEET 49

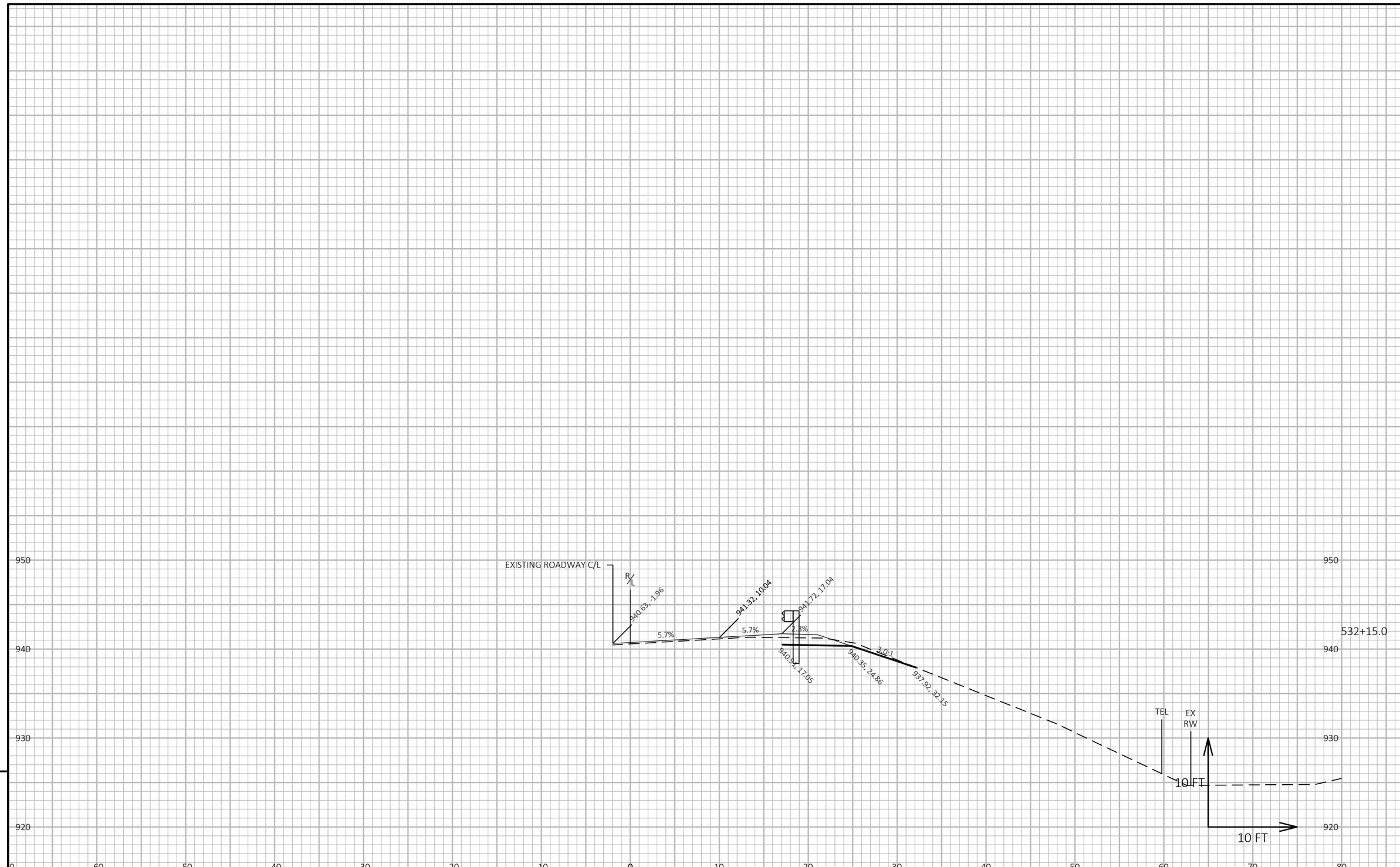

9

9

PROJECT NO: 1400-01-73	HWY: STH 16	COUNTY: COUNTY: COLUMBIA	CROSS SECTIONS: STH 16	SHEET	E

FILE NAME : N:\PDS\C3D\14000103\SHEETSPLAN\090101-XS.DWG
LAYOUT NAME - 46

PLOT DATE : 10/12/2020 3:20 PM

PLOT BY : RINZEL, JAMES M

PLOT NAME :

PLOT SCALE : 1 IN:10 FT HORZ. / 1 IN:10 FT VERT.

WISDOT/CADDS SHEET 49

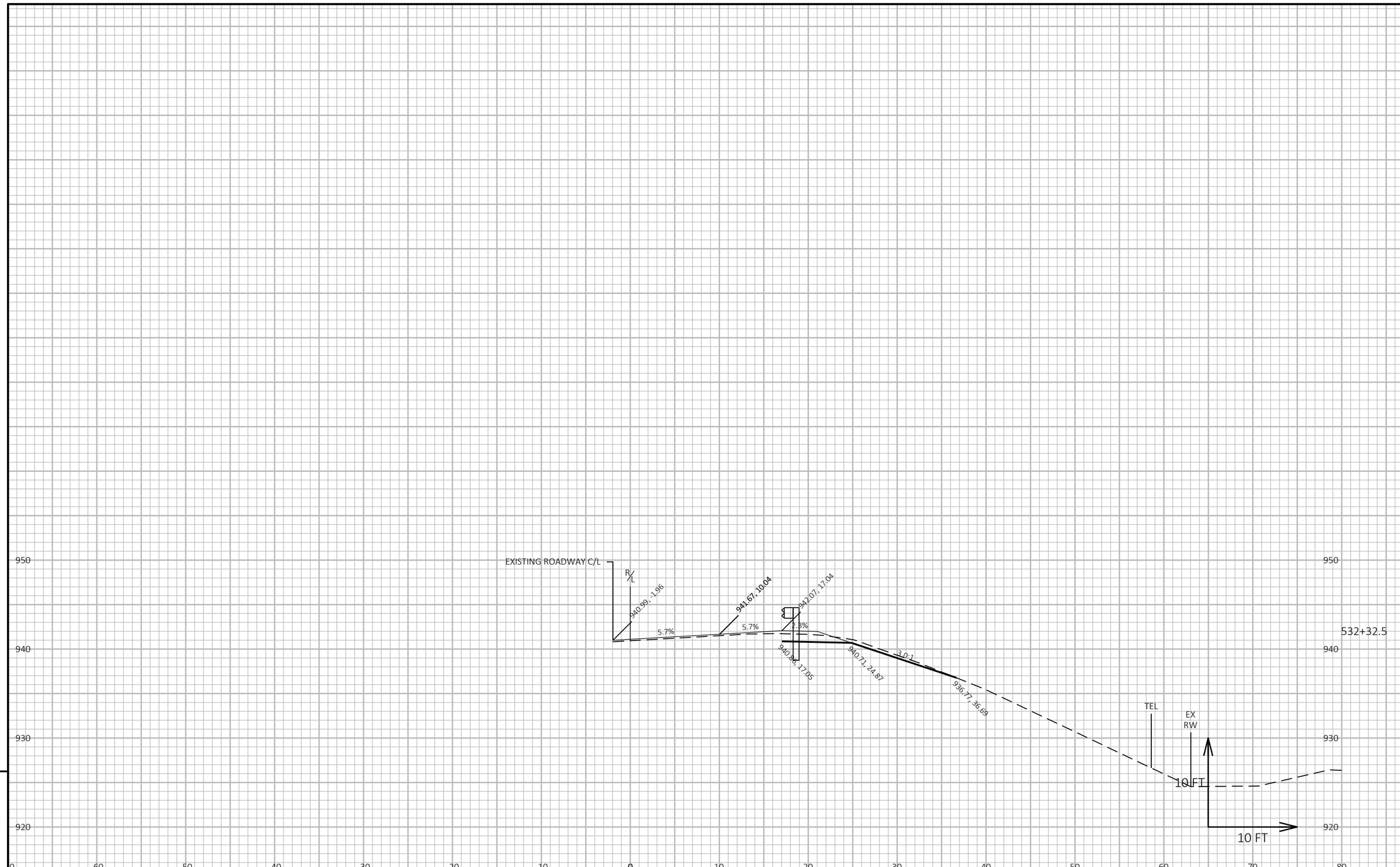

9

9

PROJECT NO: 1400-01-73	HWY: STH 16	COUNTY: COLUMBIA	CROSS SECTIONS: STH 16	SHEET	E

FILE NAME : N:\PDS\C3D\14000103\SHEETSPLAN\090101-XS.DWG
LAYOUT NAME - 47

PLOT DATE : 10/12/2020 3:20 PM

PLOT BY : RINZEL, JAMES M

PLOT NAME :

PLOT SCALE : 1 IN:10 FT HORZ. / 1 IN:10 FT VERT.

WISDOT/CADDS SHEET 49

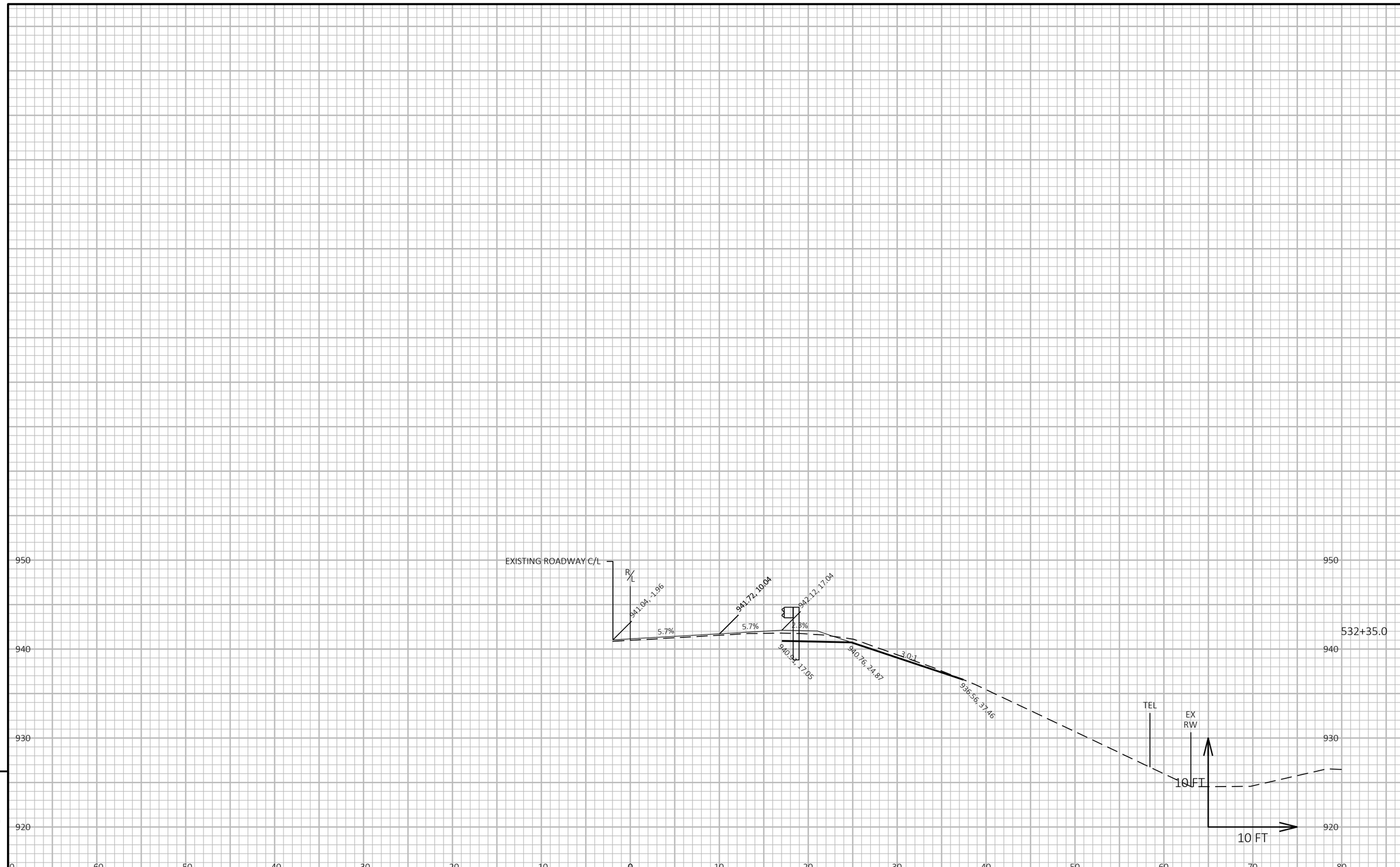

9

9

PROJECT NO: 1400-01-73	HWY: STH 16	COUNTY: COLUMBIA	CROSS SECTIONS: STH 16	SHEET	E

FILE NAME : N:\PDS\C3D\14000103\SHEETSPLAN\090101-XS.DWG
LAYOUT NAME - 48

PLOT DATE : 10/12/2020 3:20 PM

PLOT BY : RINZEL, JAMES M

PLOT NAME :

PLOT SCALE : 1 IN:10 FT HORZ. / 1 IN:10 FT VERT.

WISDOT/CADDS SHEET 49

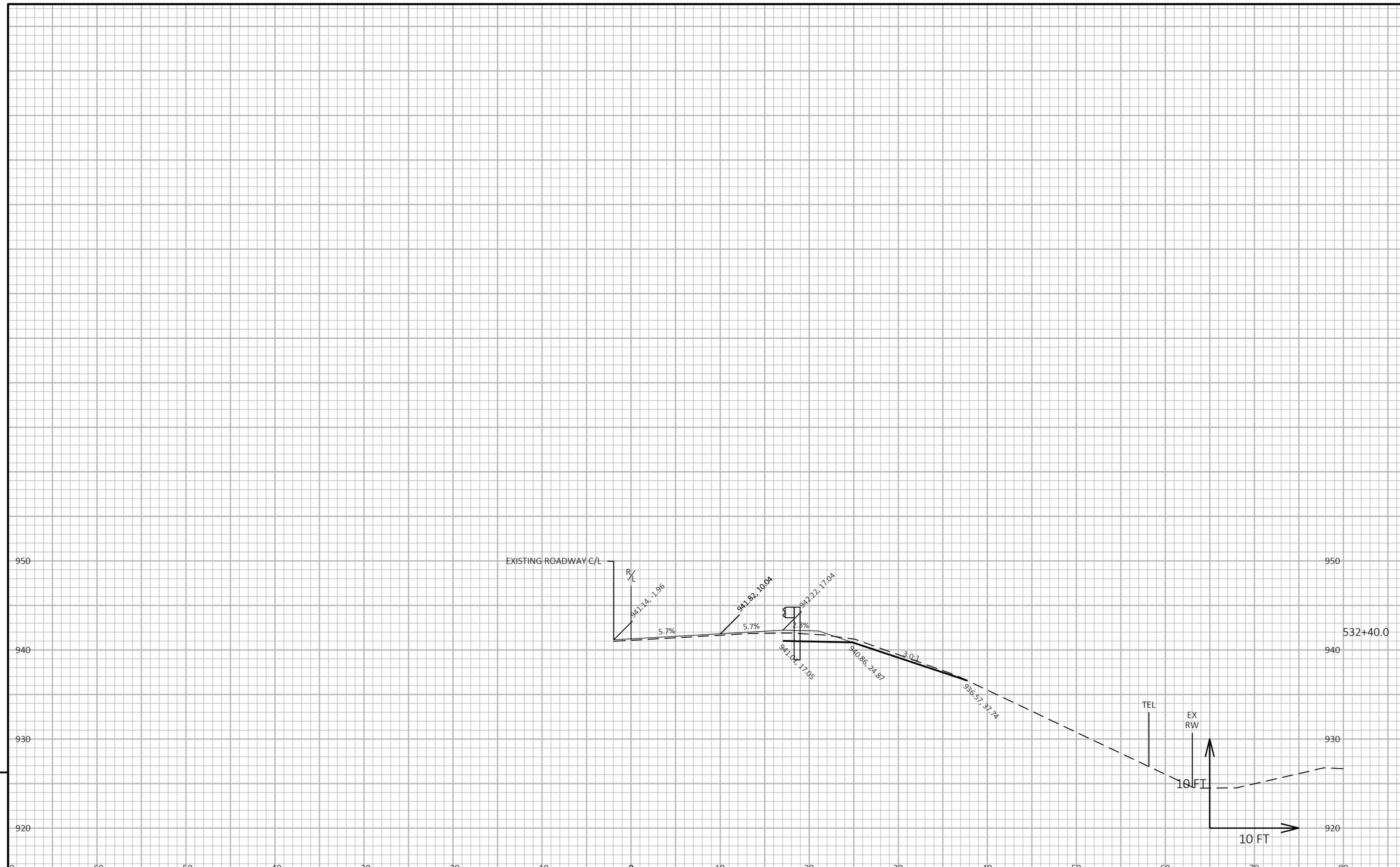

9

9

PROJECT NO: 1400-01-73	HWY: STH 16	COUNTY: COLUMBIA	CROSS SECTIONS: STH 16	SHEET	E

FILE NAME : N:\PDS\C3D\14000103\SHEETSPLAN\090101-XS.DWG
LAYOUT NAME - 49
PLOT DATE : 10/12/2020 3:20 PM
PLOT BY : RINZEL, JAMES M
PLOT NAME :
PLOT SCALE : 1 IN:10 FT HORZ. / 1 IN:10 FT VERT.
WISDOT/CADDS SHEET 49

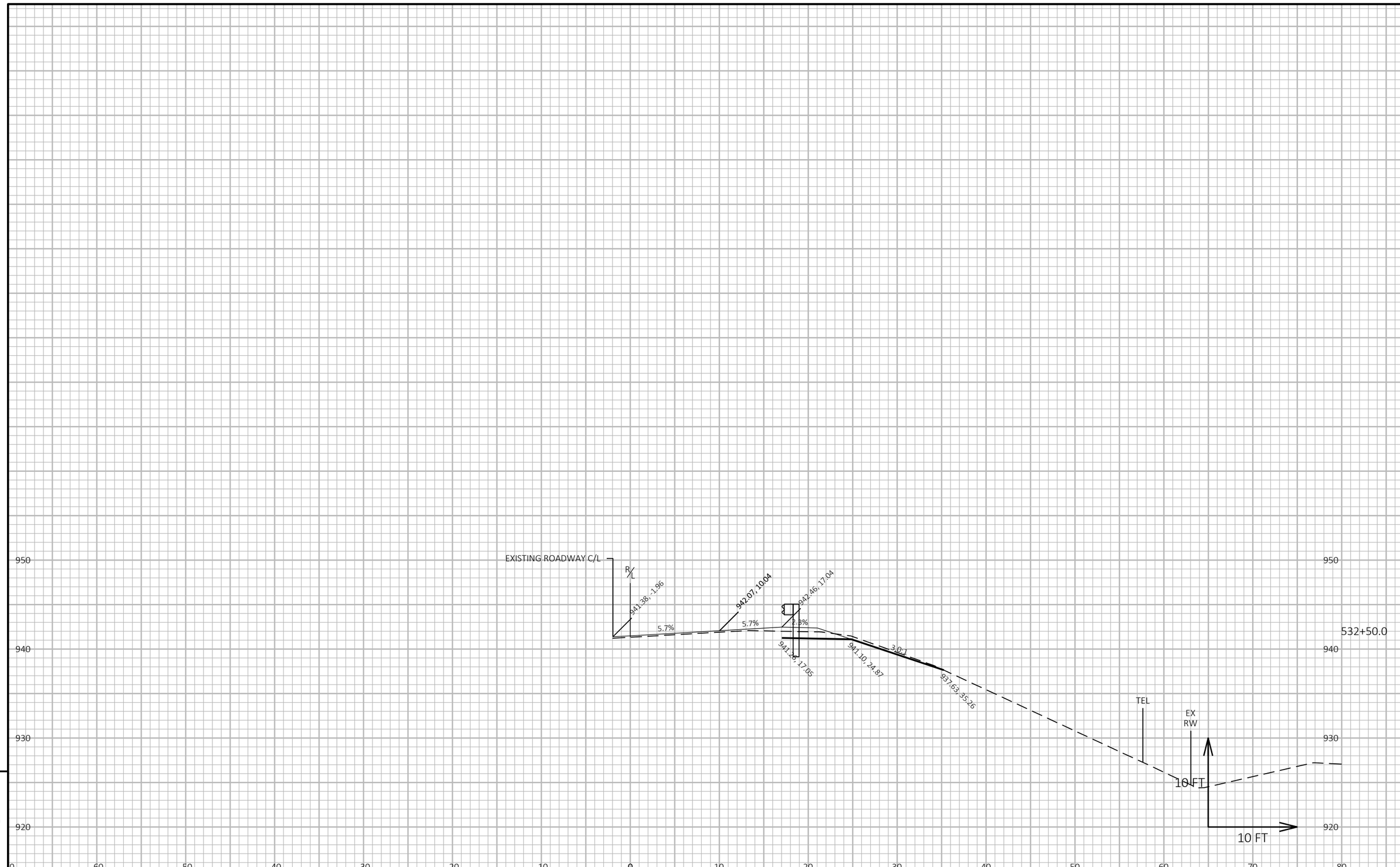

9

9

PROJECT NO: 1400-01-73	HWY: STH 16	COUNTY: COLUMBIA	CROSS SECTIONS: STH 16	SHEET	E

FILE NAME : N:\PDS\C3D\14000103\SHEETSPLAN\090101-XS.DWG
LAYOUT NAME - 50

PLOT DATE : 10/12/2020 3:20 PM

PLOT BY : RINZEL, JAMES M

PLOT NAME :

PLOT SCALE : 1 IN:10 FT HORZ. / 1 IN:10 FT VERT.

WISDOT/CADDS SHEET 49

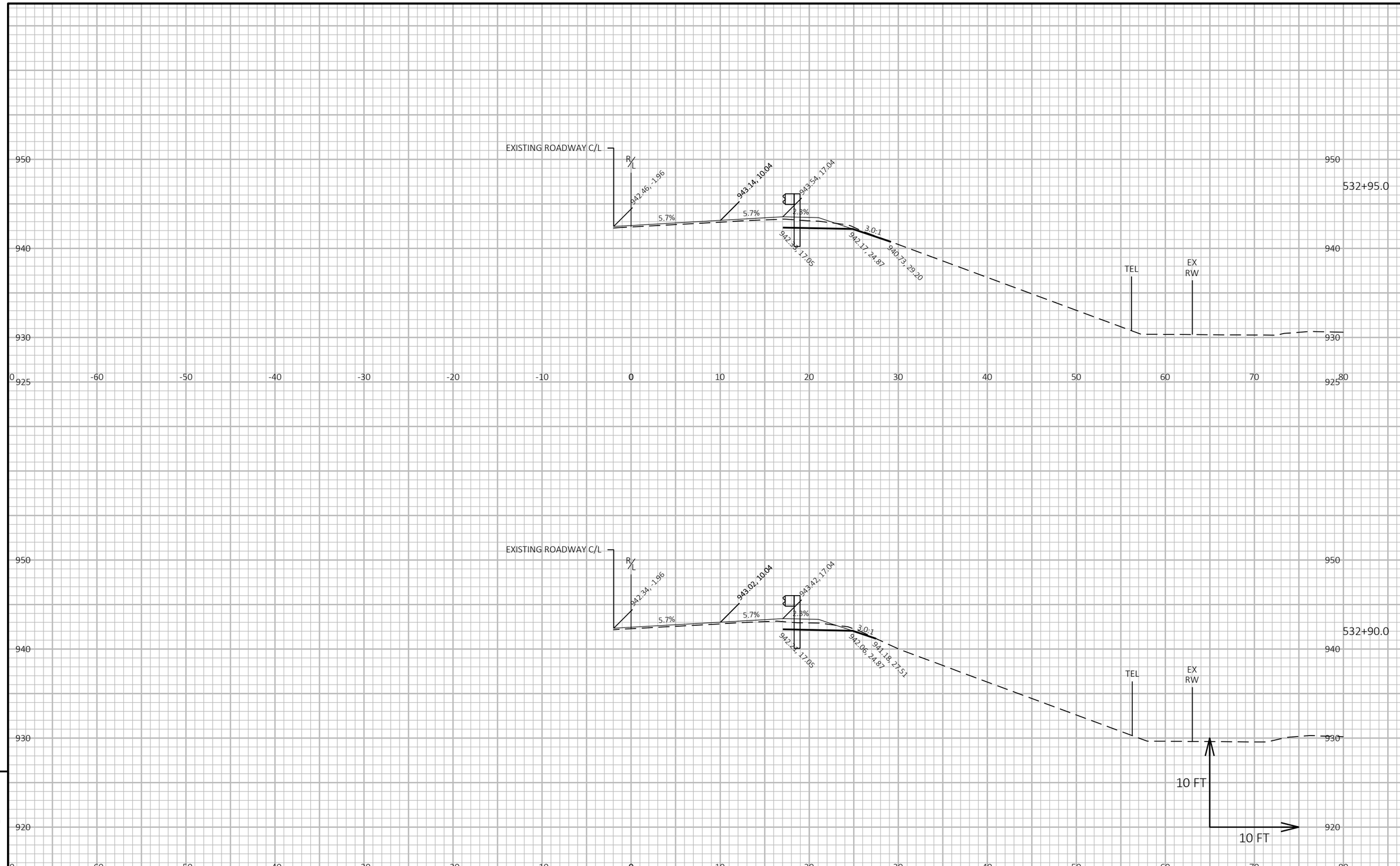

9

9

PROJECT NO: 1400-01-73	HWY: STH 16	COUNTY: COLUMBIA	CROSS SECTIONS: STH 16	SHEET	E

FILE NAME : N:\PDS\C3D\14000103\SHEETSPLAN\090101-XS.DWG
LAYOUT NAME - 51
PLOT DATE : 10/12/2020 3:20 PM
PLOT BY : RINZEL, JAMES M
PLOT NAME :
PLOT SCALE : 1 IN:10 FT HORZ. / 1 IN:10 FT VERT.
WISDOT/CADDS SHEET 49

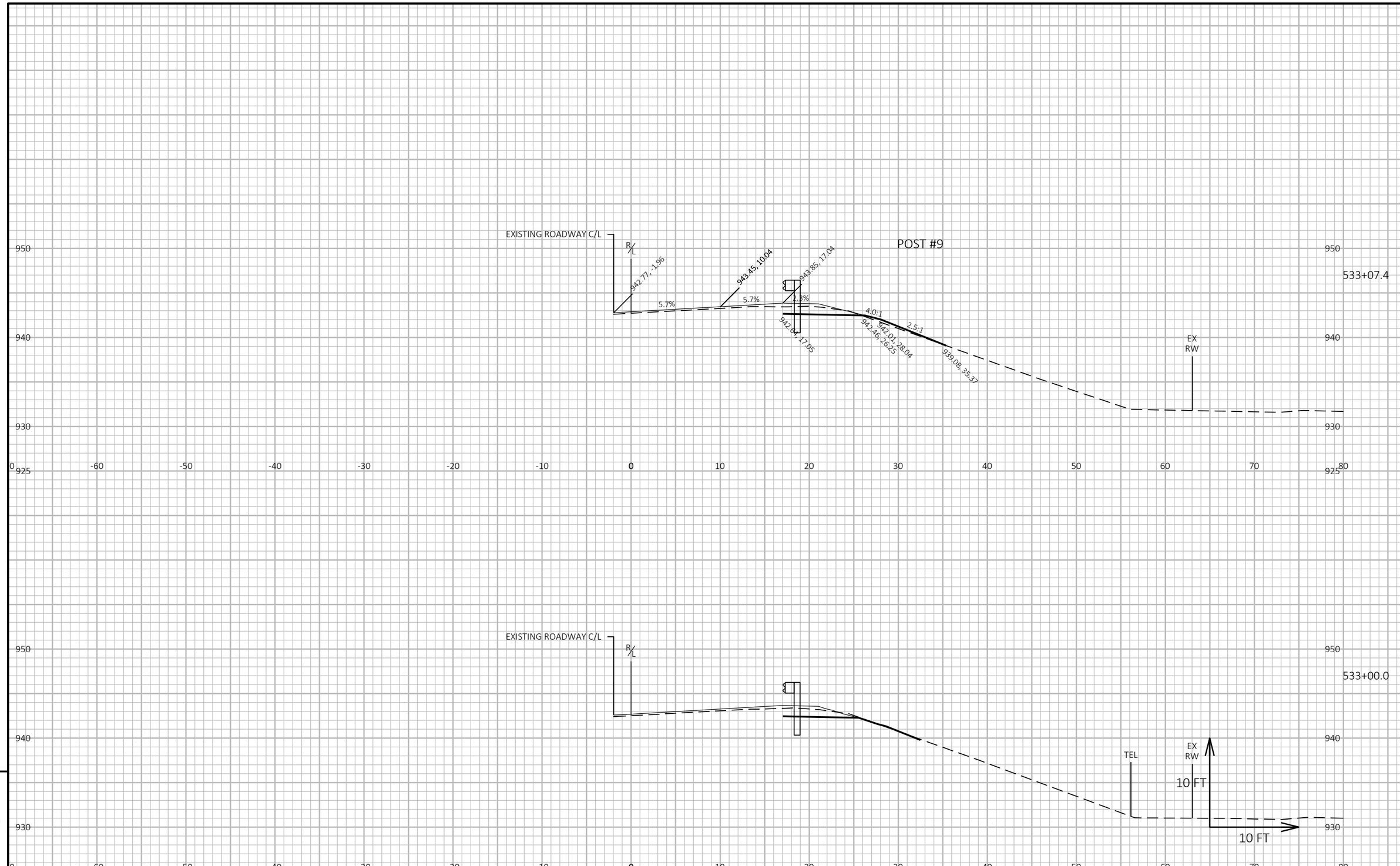

9

9

PROJECT NO: 1400-01-73	HWY: STH 16	COUNTY: COLUMBIA	CROSS SECTIONS: STH 16	SHEET	E

FILE NAME : N:\PDS\C3D\14000103\SHEETSPLAN\090101-XS.DWG
LAYOUT NAME - 52
PLOT DATE : 10/12/2020 3:20 PM
PLOT BY : RINZEL, JAMES M
PLOT NAME :
PLOT SCALE : 1 IN:10 FT HORZ. / 1 IN:10 FT VERT.
WISDOT/CADDS SHEET 49

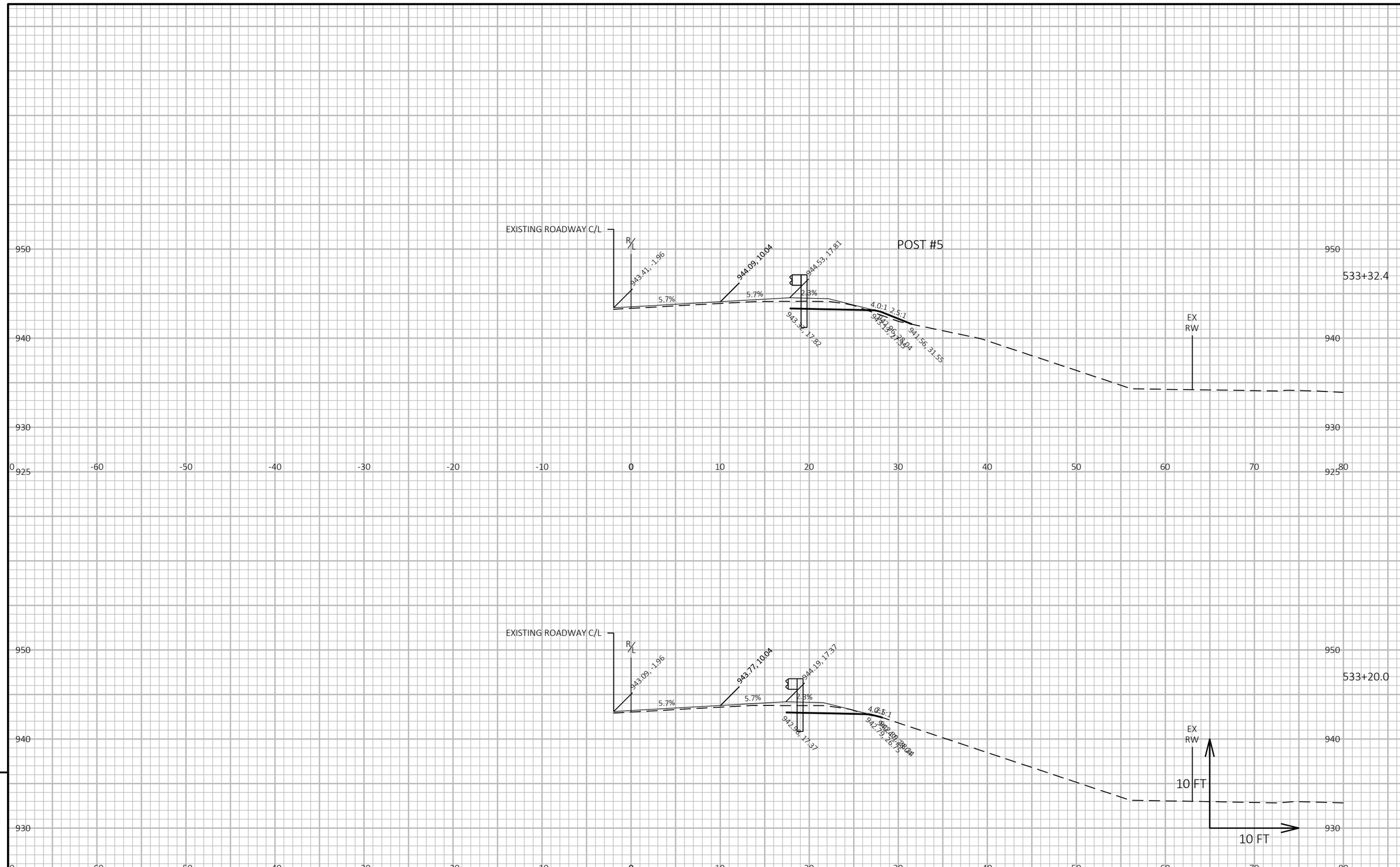

9

9

PROJECT NO: 1400-01-73	HWY: STH 16	COUNTY: COLUMBIA	CROSS SECTIONS: STH 16	SHEET	E

FILE NAME : N:\PDS\C3D\14000103\SHEETSPLAN\090101-XS.DWG
LAYOUT NAME - 53
PLOT DATE : 10/12/2020 3:20 PM
PLOT BY : RINZEL, JAMES M
PLOT NAME :
PLOT SCALE : 1 IN:10 FT HORZ. / 1 IN:10 FT VERT.
WISDOT/CADDS SHEET 49

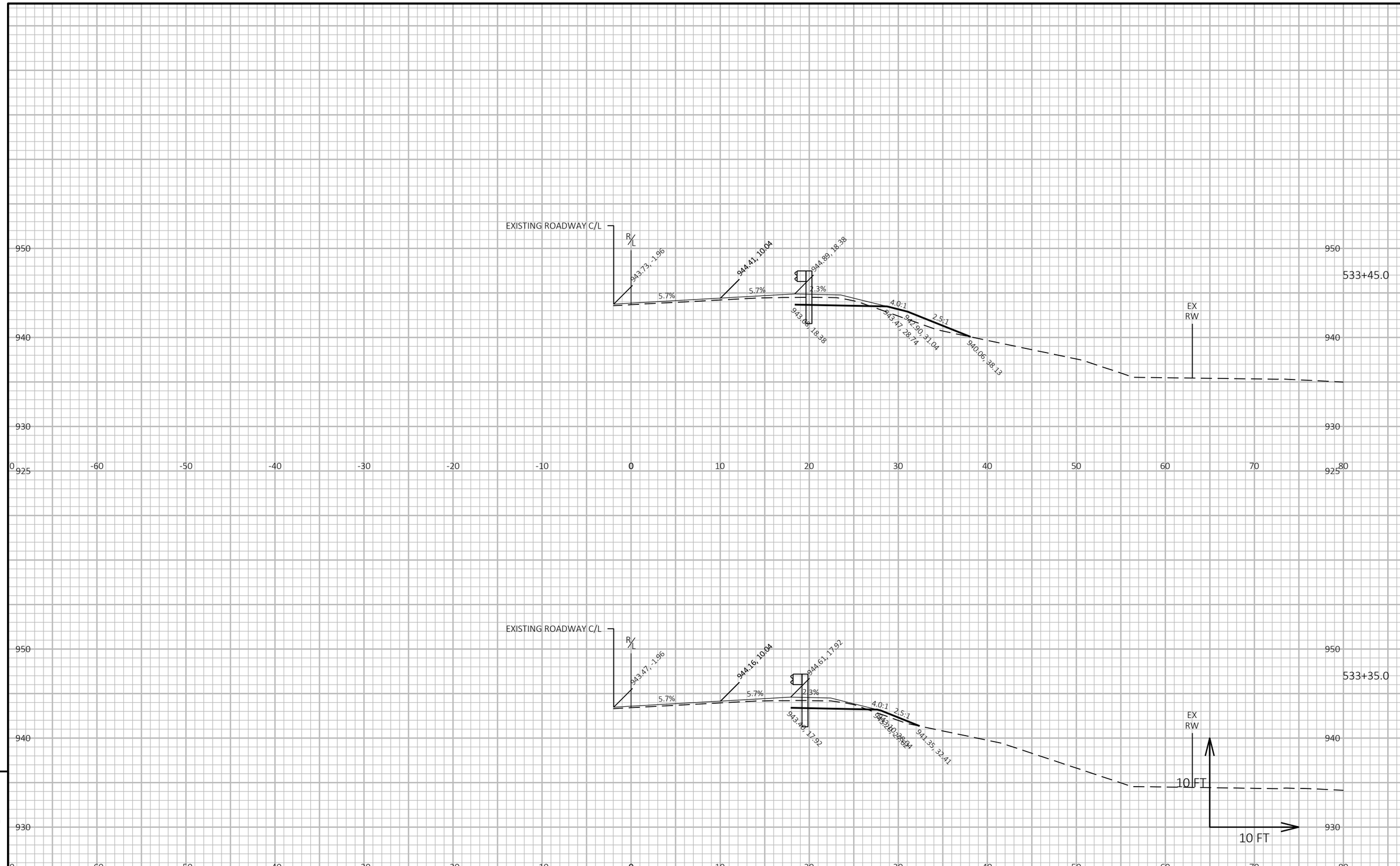

9

9

PROJECT NO: 1400-01-73	HWY: STH 16	COUNTY: COLUMBIA	CROSS SECTIONS: STH 16	SHEET	E

FILE NAME : N:\PDS\C3D\14000103\SHEETSPLAN\090101-XS.DWG
LAYOUT NAME - 54

PLOT DATE : 10/12/2020 3:20 PM

PLOT BY : RINZEL, JAMES M

PLOT NAME :

PLOT SCALE : 1 IN:10 FT HORZ. / 1 IN:10 FT VERT.

WISDOT/CADDS SHEET 49

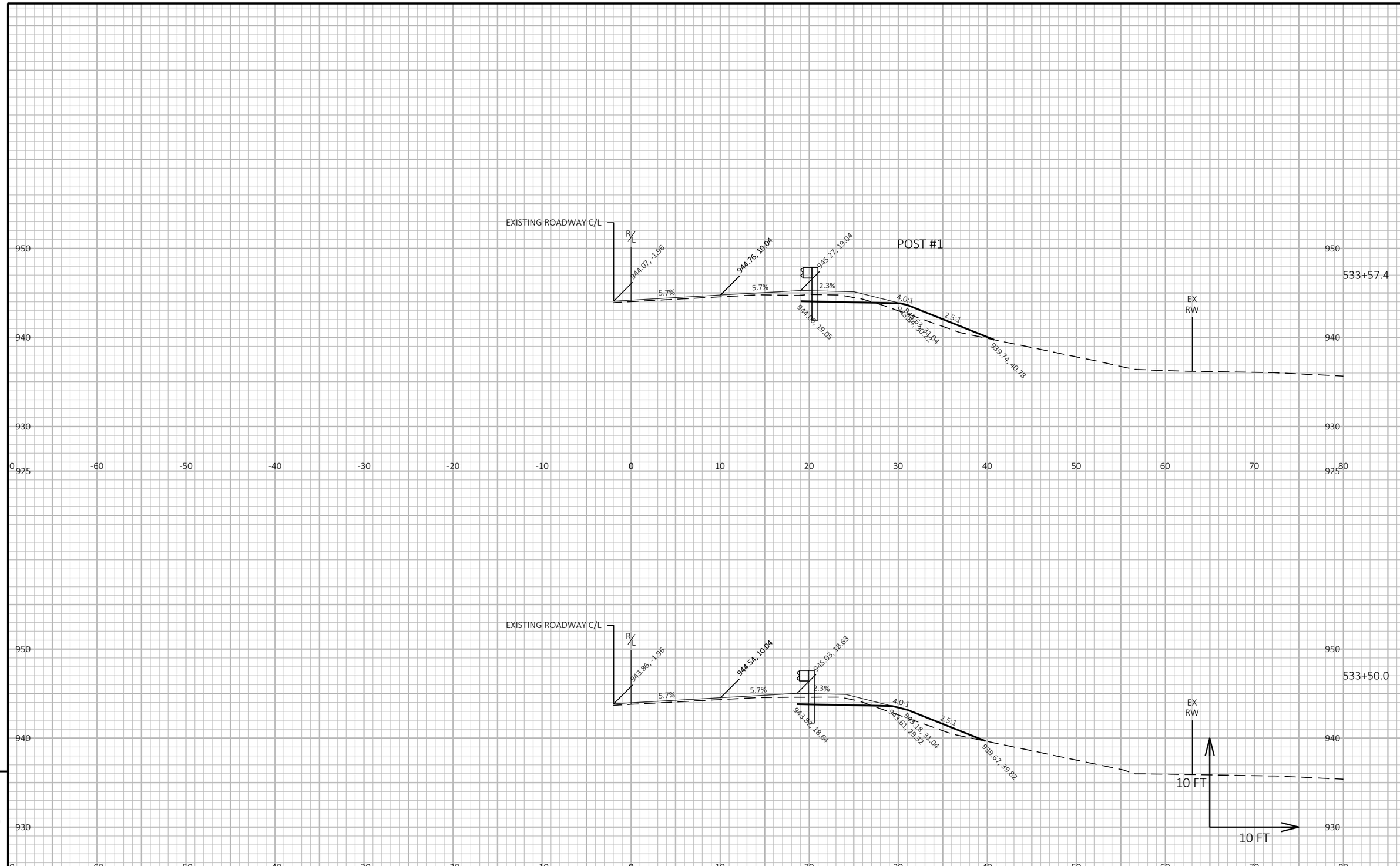

9

9

PROJECT NO: 1400-01-73	HWY: STH 16	COUNTY: COUNTY: COLUMBIA	CROSS SECTIONS: STH 16	SHEET	E

FILE NAME : N:\PDS\C3D\14000103\SHEETSPLAN\090101-XS.DWG
LAYOUT NAME - 55

PLOT DATE : 10/12/2020 3:20 PM

PLOT BY : RINZEL, JAMES M

PLOT NAME :

PLOT SCALE : 1 IN:10 FT HORZ. / 1 IN:10 FT VERT.

WISDOT/CADDS SHEET 49

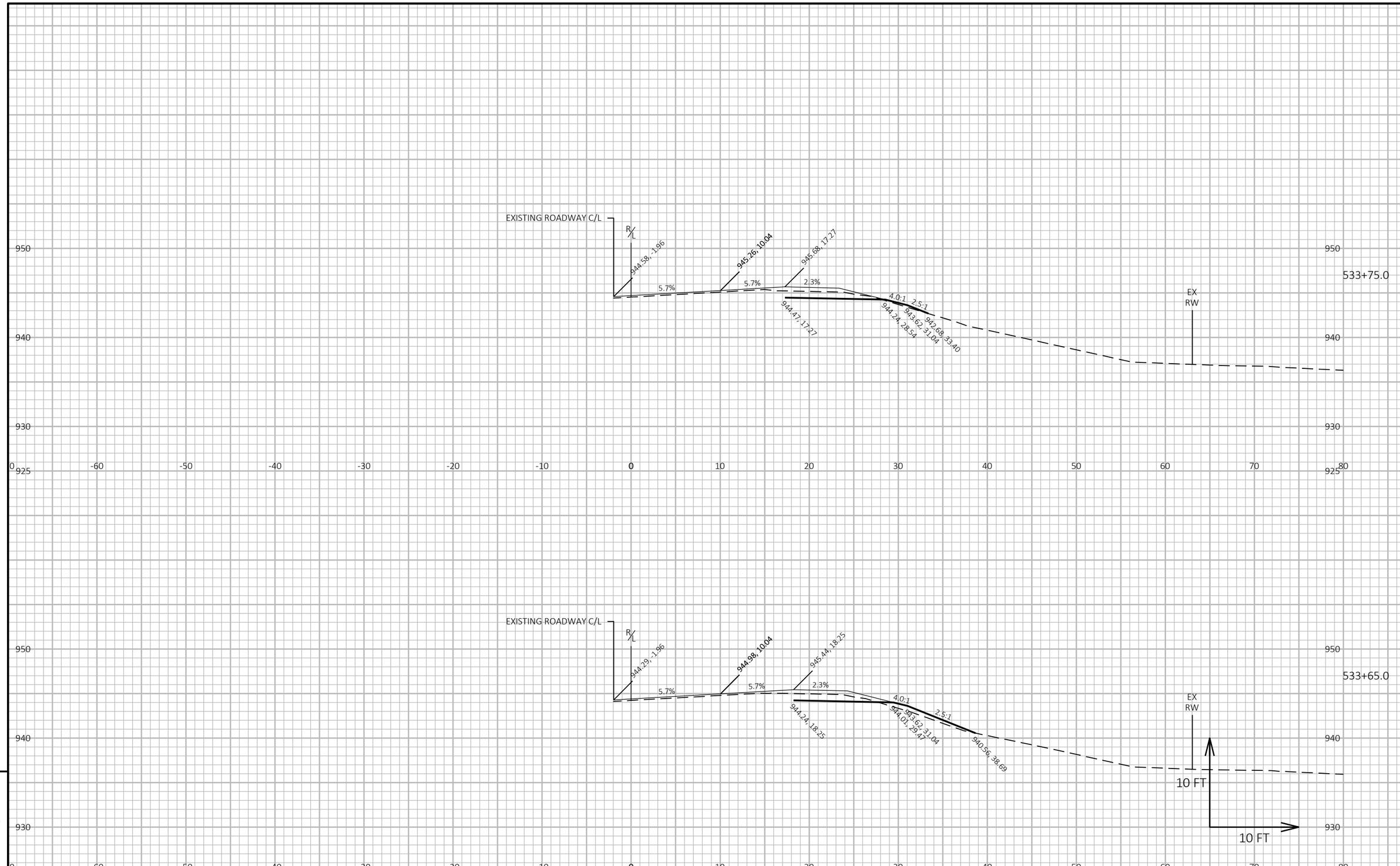

9

9

PROJECT NO: 1400-01-73	HWY: STH 16	COUNTY: COLUMBIA	CROSS SECTIONS: STH 16	SHEET	E

FILE NAME : N:\PDS\C3D\14000103\SHEETSPLAN\090101-XS.DWG
LAYOUT NAME - 56

PLOT DATE : 10/12/2020 3:20 PM

PLOT BY : RINZEL, JAMES M

PLOT NAME :

PLOT SCALE : 1 IN:10 FT HORZ. / 1 IN:10 FT VERT.

WISDOT/CADDS SHEET 49

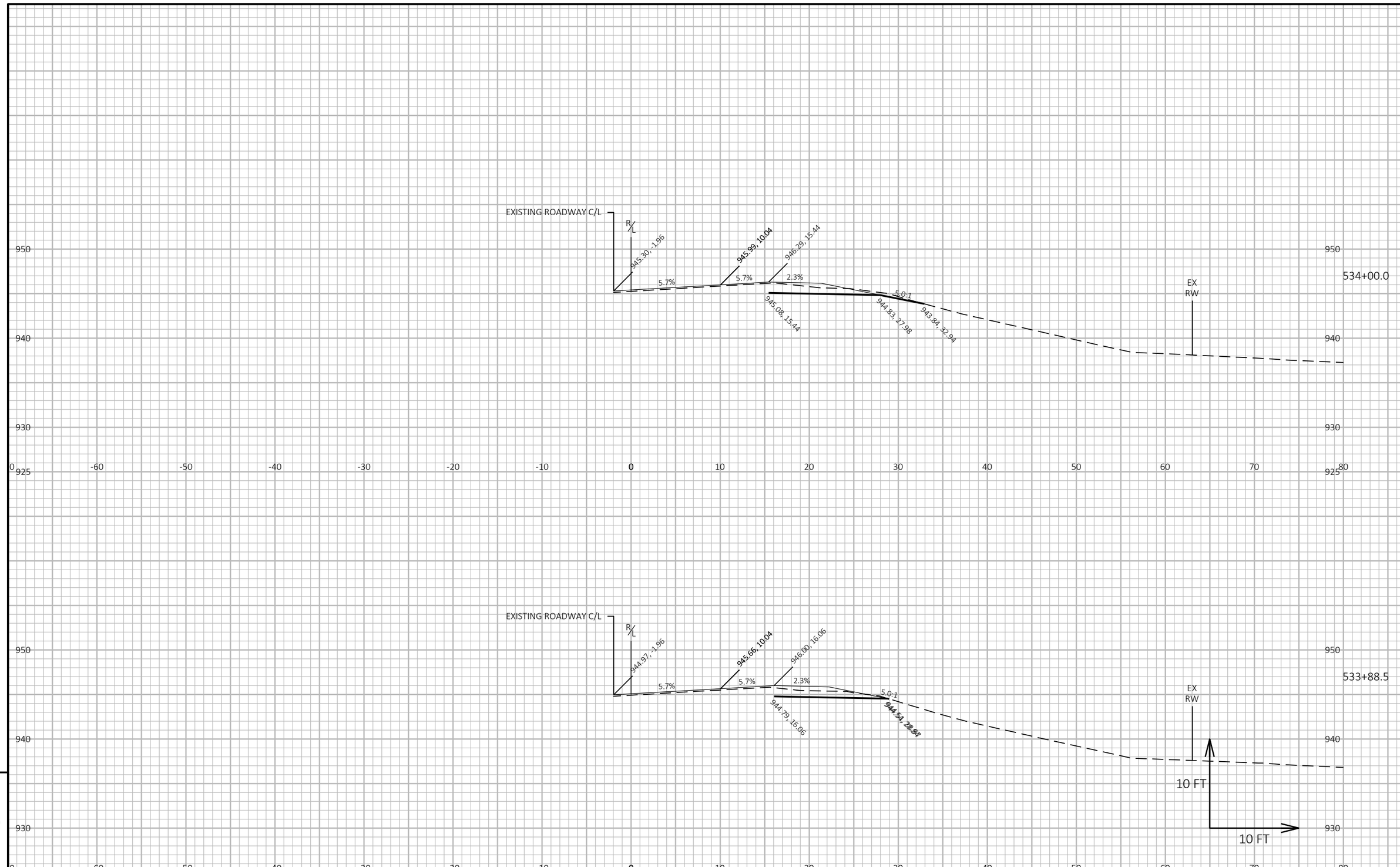

9

9

PROJECT NO: 1400-01-73	HWY: STH 16	COUNTY: COLUMBIA	CROSS SECTIONS: STH 16	SHEET	E

FILE NAME : N:\PDS\C3D\14000103\SHEETSPLAN\090101-XS.DWG
LAYOUT NAME - 57

PLOT DATE : 10/12/2020 3:20 PM

PLOT BY : RINZEL, JAMES M

PLOT NAME :

PLOT SCALE : 1 IN:10 FT HORZ. / 1 IN:10 FT VERT.

WISDOT/CADDS SHEET 49