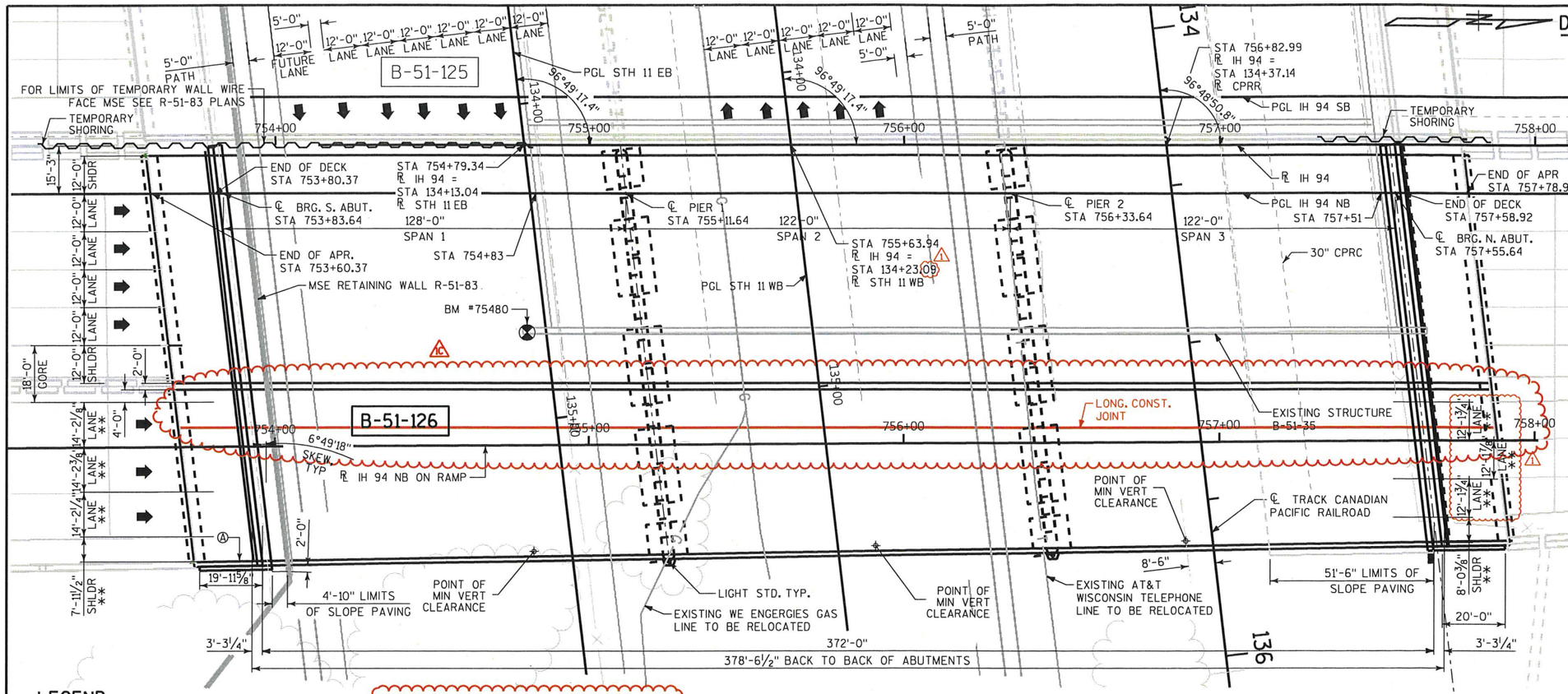

PLAN

(3 SPAN CONTINUOUS 54W" PRESTRESSED GIRDER)

LEGEND

Ⓐ NAME PLATE AND BENCH MARK CAP LOCATION

** MEASURED ALONG LINE NORMAL TO ℞ IH 94. LINE LOCATED AT INSTERSECTION OF CENTERLINE BEARING AND PGL IH 94

THE PE STAMP IN THIS PLAN SET COVERS ONLY THE MODIFICATIONS SHOWN CLOUDED IN RED AND SIGNIFIED BY △. WHICH MODIFY THE ORIGINAL BRIDGE PLANS TO UTILIZE A TRADITIONAL FULL-DEPTH, CAST IN PLACE CONCRETE DECK. THE DECK REINFORCEMENT IS DESIGNED PER THE CURRENT WISCONSIN DOT BRIDGE MANUAL.

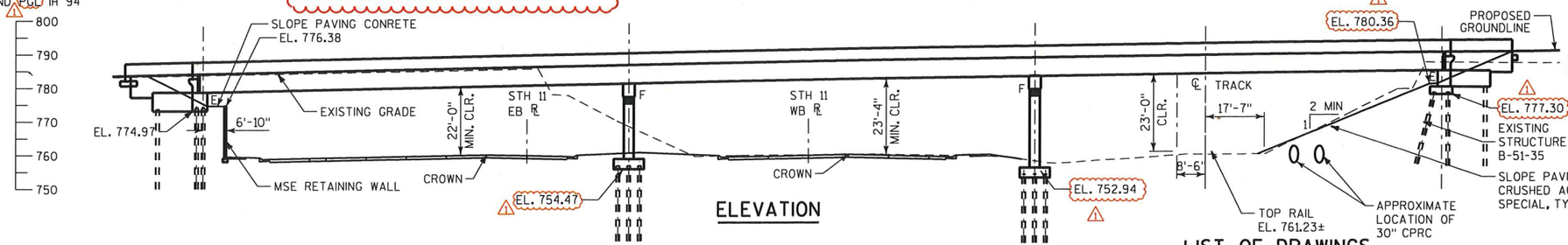

ELEVATION

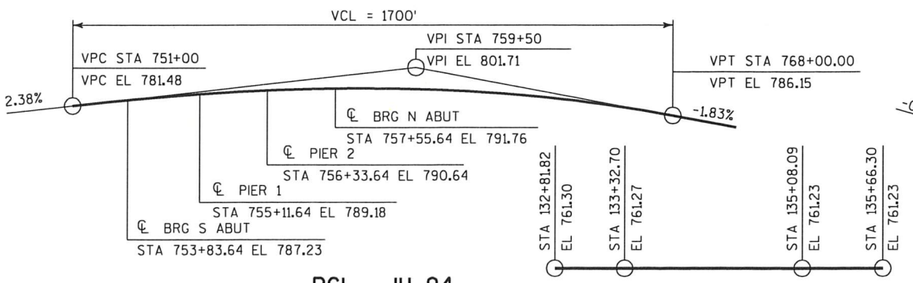

PGL - IH 94

PGL - CANADIAN PACIFIC RAILROAD

(BASED ON SURVEY)

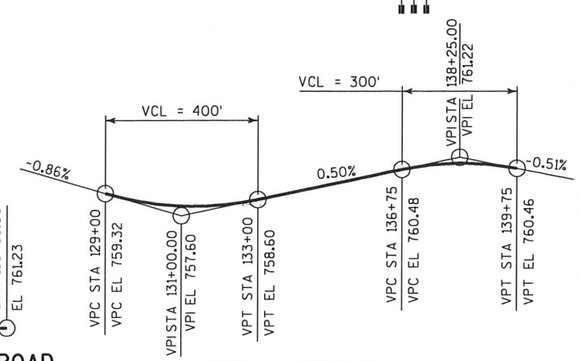

PGL - STH 11

DESIGN DATA

STATE PROJECT NUMBER **1030-24-72**

LIVE LOAD:

DESIGN RATING: HL-93
INVENTORY RATING: 1.38
OPERATING RATING: 1.79
WISCONSIN STANDARD PERMIT VEHICLE (WIS-SPV) = 250 KIPS

STRUCTURE IS DESIGNED FOR A FUTURE WEARING SURFACE OF 20 P.S.F.

SEE SHEET 3 FOR GENERAL NOTES & BENCHMARK INFORMATION

MATERIAL PROPERTIES:

CONCRETE MASONRY
SUPERSTRUCTURE (HPC) ..... f'c = 4,000 psi
ALL OTHER ..... f'c = 4,000 psi

BAR STEEL REINFORCEMENT,
HIGH STRENGTH, GRADE 60 .....fy = 60,000 psi
STAINLESS STEEL.....fy = 60,000 psi

54W-INCH PRESTRESSED GIRDERS,
CONCRETE MASONRY .....f'c = 8,500 psi
.....f'ci = 6,800 psi
0.6" DIA. PRESTRESSING STRANDS fu = 270,000 psi

FOUNDATION DATA

ABUTMENTS TO BE SUPPORTED ON 12¾X0.5-INCH CIP CONCRETE PILING DRIVEN TO A REQUIRED DRIVING RESISTANCE OF 210 TONS * PER PILE AS DETERMINED BY THE MODIFIED GATES DYNAMIC EQUATION. ESTIMATED PILE LENGTH IS 85 FEET AT SOUTH ABUTMENT AND 75 FEET AT PIERS 1 & 2 AND NORTH ABUTMENT.

DRIVE PILING TO PLAN LENGTH UNLESS THE REQUIRED BEARING IS OBTAINED AT A SHORTER LENGTH. IF THE REQUIRED BEARING IS NOT OBTAINED WHEN THE PILE IS DRIVEN TO PLAN LENGTH, THE ITEM "PILE REDRIVING" IS REQUIRED. NOTIFY THE STRUCTURES SECTION IF THE REQUIRED BEARING IS NOT OBTAINED AT PLAN LENGTH.

*THE FACTORED AXIAL RESISTANCE OF PILES IN COMPRESSION USED FOR DESIGN IS THE REQUIRED DRIVING RESISTANCE MULTIPLIED BY A RESISTANCE FACTOR OF 0.5 USING MODIFIED GATES TO DETERMINE DRIVEN PILE CAPACITY.

8/13/18

Plan Sheet Accepted By WISDOT BUREAU OF STRUCTURES

WISCONSIN DANIEL N. SYDOW E-38363 WI PROFESSIONAL ENGINEER

8/9/18

TRAFFIC DATA

I.H. 94

A.D.T. = 81,247 (2018)
A.D.T. = 105,378 (2038)
R.D.S. = 70 MPH

STH 11

A.D.T. = 19,450 (2020)
A.D.T. = 32,710 (2040)
R.D.S. = 45 MPH

LIST OF DRAWINGS

STRUCTURES DESIGN CONTACTS

BUREAU OF STRUCTURES:
WILLIAM DREHER (608) 266-8489
CONSULTANT:
MICHAEL RADTKE (414) 347-1607

NO.	DATE	REVISION	BY
△	8/09/18	REMOVE PRECAST DECK PANELS	AYRES
△	7/10/18	MISC REVISION	JRM

emcs inc
1300 W. Canal Street, Suite 200
Milwaukee, WI 53233
414.347.1607 Fax 414.347.1347

STATE OF WISCONSIN
DEPARTMENT OF TRANSPORTATION

ACCEPTED William C. Dreher 4/20/18
CHIEF STRUCTURES DESIGN ENGINEER DATE

STRUCTURE B-51-126

IH 94 NB AND RAMP OVER STH 11 AND CPRR

COUNTY	TOWN
RACINE	YORKVILLE

DESIGN SPEC. AASHTO LRFD BRIDGE DESIGN SPECIFICATIONS

DESIGNED BY	JRM	DESIGN CK'D.	AJC	DRAWN BY	JRM	PLANS CK'D.	AJC

GENERAL PLAN & ELEVATION

SHEET 1 OF 28

8

8

STATE PROJECT NUMBER
1030-24-72

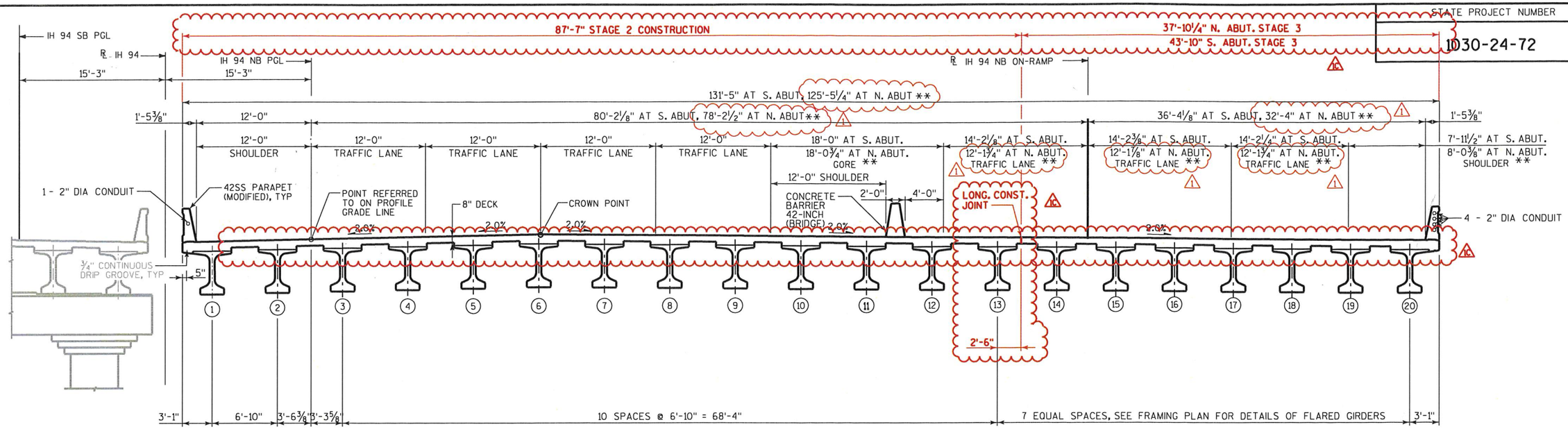

TYPICAL SECTION THRU IH 94 NB

54W" PRESTRESSED CONCRETE GIRDERS
(LOOKING NORTH)

NOTE: DIMENSIONS PERPENDICULAR TO ℄ IH94 UNLESS OTHERWISE NOTED.

** MEASURED ALONG LINE NORMAL TO ℄ IH 94. LINE LOCATED AT INSTERSECTION OF CENTERLINE BEARING OF ABUTMENT AND ℄ IH 94

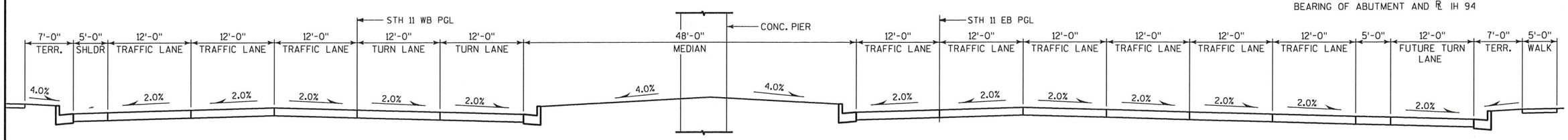

ULTIMATE TYPICAL FINISHED SECTION THRU STH 11

LOOKING EAST. DIMENSIONS PERPENDICULAR TO ℄ STH 11

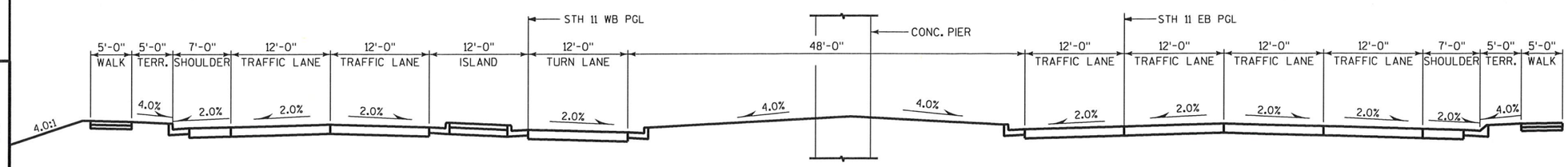

TYPICAL FINISHED SECTION THRU STH 11

LOOKING EAST. DIMENSIONS PERPENDICULAR TO STH 11

8

THE PE STAMP IN THIS PLAN SET COVERS ONLY THE MODIFICATIONS SHOWN CLOUDED IN RED AND SIGNIFIED BY 16, WHICH MODIFY THE ORIGINAL BRIDGE PLANS TO UTILIZE A TRADITIONAL FULL-DEPTH, CAST IN PLACE CONCRETE DECK. THE DECK REINFORCEMENT IS DESIGNED PER THE CURRENT WISCONSIN DOT BRIDGE MANUAL.

WISCONSIN DANIEL N. SYDOW E-38363 WI PROFESSIONAL ENGINEER
8/9/18

8/13/18
Plan Sheet Accepted By WISDOT BUREAU OF STRUCTURES

NO.	DATE	REVISION	BY
16	8/09/18	REMOVE PRECAST DECK PANELS	AYRES
1	7/6/2018	DIN 17 - DIMENSIONS	JRM

STATE OF WISCONSIN
DEPARTMENT OF TRANSPORTATION

STRUCTURE B-51-126

DRAWN BY JRM | PLANS CK'D. AJC

CROSS SECTION & TYPICAL SECTIONS

SHEET 2 OF 28

STATE PROJECT NUMBER
1030-24-72

TOTAL ESTIMATED QUANTITIES

BID ITEM NO.	BID ITEMS	UNIT	S. APPR.	S. ABUT.	PIER 1	PIER 2	N. ABUT.	N. APPR.	SUPER	TOTAL
203.0200.009	REMOVING OLD STRUCTURE STA 755+90	LS	-	-	-	-	-	-	-	1
203.0210.S.013	ABATEMENT OF AESBESTOS CONTAINING MATERIAL B-51-35	LS	-	-	-	-	-	-	-	1
206.1000.008	EXCAVATION FOR STRUCTURES BRIDGES B-51-126	LS	-	-	-	-	-	-	-	1
210.1500	BACKFILL STRUCTURE TYPE A	TON	-	-	-	-	850	-	-	850
305.0125	BASE AGGREGATE DENSE 1 1/4-INCH	CY	- 2	203	-	-	194	-	-	398 2
501.1000.S	ICE HOT WEATHER CONCRETING	LB	1,320	1,605	2,505	2,595	2,055	1,255	9,820	21,155
502.0100	CONCRETE MASONRY BRIDGES	CY	36	214	334	346	274	34	-	1,238
502.3100	EXPANSION DEVICE B-51-126	LS	-	-	-	-	-	-	-	1
502.3200	PROTECTIVE SURFACE TREATMENT	SY	272	-	-	-	-	286	5,400	5,958
502.3210	PIGMENTED SURFACE SEALER	SY	38	-	-	-	-	38	705	781
502.4206	ADHESIVE ANCHORS NO. 6 BAR	EACH	-	-	-	-	-	-	1,252	1,252
503.0155	PRESTRESSED GIRDER TYPE I 54W-INCH	LF	-	-	-	-	-	-	7,463	7,463
505.0400	BAR STEEL REINFORCEMENT HS STRUCTURES	LB	-	-	17,150	17,150	-	-	-	34,300 2
505.0600	BAR STEEL REINFORCEMENT HS COATED STRUCTURES	LB	27,320	16,780	47,960	47,960	18,160	26,380	321,540	506,100
505.0800.S	BAR STEEL REINFORCEMENT HS STAINLESS STRUCTURES	LB	2,270	-	-	-	-	2,150	-	4,420
506.2605	BEARING PADS ELASTOMERIC NON-LAMINATED	EACH	-	-	40	40	- 1	-	- 1	80
506.2610	BEARING PADS ELASTOMERIC LAMINATED	EACH	-	20	-	-	20	-	-	40
506.4000	STEEL DIAPHRAGMS B-51-126	EACH	-	-	-	-	- 2	-	114	114 2
511.1200	TEMPORARY SHORING B-51-126	SF	-	4,375	-	-	330	-	0	4,705
516.0500	RUBBERIZED MEMBRANE WATERPROOFING	SY	-	31	-	-	31	-	-	62
517.1010.S.412	CONCRETE STAINING B-51-126	SF	70	740	3,340	3,650	710	70	5,570	14,150
517.1050.S.002	ARCHITECTURAL SURFACE TREATMENT B-51-126	SF	-	16	-	-	16	-	-	32
550.0600	PILE REDRIVING	EACH	-	5	5 2	5	5 2	-	-	20 2
550.2128	PILING CIP CONCRETE 12 3/4 X 0.50-INCH	LF	-	3,910	7,800	7,800	3,900	-	-	23,410
604.0400	SLOPE PAVING CONCRETE	SY	-	74	-	-	-	-	-	74
612.0206	PIPE UNDERDRAIN UNPERFORATED 6-INCH	LF	-	-	-	-	30	-	-	30
612.0406	PIPE UNDERDRAIN WRAPPED 6-INCH	LF	-	-	-	-	155	-	-	155
645.0111	GEOTEXTILE TYPE DF SCHEDULE A	SY	-	-	-	-	130	-	-	130
652.0125	CONDUIT RIGID METALLIC 2-INCH	LF	-	-	-	-	-	-	40	40
652.0225	CONDUIT RIGID NONMETALLIC SCHEDULE 40 2-INCH	LF	-	-	-	-	-	-	2,075	2,075
653.0220	JUNCTION BOXES 18X6X6-INCH	EACH	-	-	-	-	-	-	5	5
653.0222	JUNCTION BOXES 18X12X6-INCH	EACH	1	-	-	-	-	1	3	5
657.6005	ANCHOR ASSEMBLIES LIGHT POLES ON STRUCTURES	EACH	- 2	-	-	-	-	2 -	2	2
SPV.0035.400	HPC MASONRY STRUCTURES	CY	140	-	-	-	-	133	1,309	1,582
10 SPV.0165.401	LONGITUDINAL GROOVING BRIDGE DECK	SF	2,570	-	-	-	-	2,442	47,030	52,042
~~SPV.0165.470~~	~~PARTIAL DEPTH PRECAST PRESTRESSED CONCRETE DECK PANEL B-51-126~~	~~SF~~	~~-~~	~~-~~	~~-~~	~~-~~	~~-~~	~~-~~	~~22,536~~	~~22,536~~
SPV.0180.400	SLOPE PAVING CRUSHED AGGREGATE SPECIAL	SY	-	-	-	-	836	-	-	836
	NON-BID ITEMS									
	FILLER	SIZE		-			-	-	-	1/2", 3/4", 1 1/2"
	GROUTED BAR COUPLERS									
	PRECAST PIER COLUMNS									
	PRECAST PIER CAPS									

			SUPER.	TOTAL
501.1000.S	ICE HOT WEATHER CONCRETING	LB	3,775	3,775
505.0600	BAR STEEL REINFORCEMENT HS COATED STRUCTURES	LB	83,070	83,070
SPV.0035.400	HPC MASONRY STRUCTURES	CY	503	503

REVISION QUANTITIES FOR INFORMATIONAL PURPOSES ONLY. 10

HPC MASONRY STRUCTURES QUANTITY INCLUDES CONCRETE REQUIRED TO REPLACE PARTIAL DEPTH PRECAST DECK PANELS AND GROUT AT GIRDER HAUNCHES.

8

THE PE STAMP IN THIS PLAN SET COVERS ONLY THE MODIFICATIONS SHOWN CLOUDED IN RED AND SIGNIFIED BY 10, WHICH MODIFY THE ORIGINAL BRIDGE PLANS TO UTILIZE A TRADITIONAL FULL-DEPTH, CAST IN PLACE CONCRETE DECK. THE DECK REINFORCEMENT IS DESIGNED PER THE CURRENT WISCONSIN DOT BRIDGE MANUAL. 10

BENCH MARKS

NO.	STATION	OFFSET	DESCRIPTION	ELEV.
75480	754+80.35	59.2' RT	CP BM DISK TOP PARAPET SE CORNER BRIDGE	788.05
75749	757+48.62	71.9' LT	CP BM DISK TOP PARAPET NW CORNER BRIDGE	789.58
304	757+05.62	375.6' RT	HMOD K3 RESET	759.62

GENERAL NOTES

DRAWINGS SHALL NOT BE SCALED.

BAR STEEL REINFORCEMENT SHALL BE EMBEDDED 2" CLEAR UNLESS OTHERWISE SHOWN OR NOTED.

ELASTOMERIC BEARING PADS NEED NOT BE INDIVIDUALLY MOLDED PROVIDED THE CUT EDGES ARE SMOOTH AND TRUE.

BEVEL EXPOSED EDGES OF CONCRETE ¾" UNLESS OTHERWISE NOTED.

JOINT FILLER SHALL CONFORM TO THE REQUIREMENTS OF AASHTO M153 TYPE 1, 2, OR 3, OR AASHTO M213.

ALL DIMENSIONS ARE IN FEET AND INCHES UNLESS OTHERWISE NOTED.

ALL STATIONS AND ELEVATIONS ARE IN FEET. ELEVATIONS ARE REFERENCED TO THE NAVD 88 (1991) DATUM.

ALL REINFORCING BARS ARE ENGLISH. THE FIRST DIGIT OF A THREE DIGIT BAR MARK OR THE FIRST TWO DIGITS OF A FOUR DIGIT BAR MARK SIGNIFY THE BAR SIZE.

THE EXISTING GROUNDLINE SHALL BE THE UPPER LIMITS OF "EXCAVATION FOR STRUCTURES BRIDGES B-51-126."

THE SLOPE OF THE FILL IN FRONT OF THE N. ABUTMENT SHALL BE COVERED WITH SLOPE PAVING CRUSHED AGGREGATE SPECIAL TO THE EXTENT SHOWN ON THE GENERAL PLAN & ELEVATION SHEET AND IN THE ABUTMENT DETAILS. THE SLOPE OF THE FILL BETWEEN THE SOUTH ABUTMENT AND MSE WALL SHALL BE CONCRETE SLOPE PAVING.

AT THE BACKFACE OF ABUTMENT ALL VOLUME WHICH CANNOT BE PLACED BEFORE ABUTMENT CONSTRUCTION AND IS NOT OCCUPIED BY THE NEW STRUCTURE SHALL BE BACKFILLED WITH STRUCTURE BACKFILL.

THE EXISTING BRIDGES B-51-35 AND B-51-34 ARE FIVE SPAN PRESTRESSED CONCRETE GIRDER BRIDGES WITH OVERALL WIDTH = 65'-5" AND OVERALL LENGTH = 266'-8". THE ENTIRE STRUCTURES SHALL BE REMOVED. EXISTING PILES SHALL REMAIN EXCEPT AS SHOWN ON THE ABUTMENT PLANS AND IN ACCORDANCE WITH THE STRUCTURE REMOVAL REQUIREMENTS. EXISTING SOILS SURROUNDING PILING MAY BE CONTAMINATED. SEE SPECIAL PROVISION "EXCAVATION, HAULING, AND DISPOSAL OF CREOSOTE CONTAMINATED SOIL". REMOVAL OF CONTAMINATED SOILS IS PAID FOR UNDER ROADWAY BID ITEMS. THE EXISTING BRIDGE ALSO CONTAINS ASBESTOS CONTAINING MATERIALS. SEE SPECIAL PROVISION "ABATEMENT OF ASBESTOS CONTAINING MATERIAL STRUCTURE B-51-35 AND B-51-34". REMOVAL OF ASBESTOS CONTAINING MATERIAL WILL BE PAID WITH BID ITEM "ABATEMENT OF AESBESTOS CONTAINNIG MATERIALS".

STAGE 1 CONSTRUCTION WILL CONSIST OF THE WORK PREPARATION CONTRACT AND WILL ONLY INCLUDE ROADWAY ITEMS. STAGE 2 CONSISTS OF REMOVAL OF B-51-35 AND THE STAGE 2 CONSTRUCTION AS DESCRIBED ON THE CONSTRUCTION STAGING SHEET, 3 LANES OF TRAFFIC IN EACH DIRECTION SHALL BE MAINTAINED ON THE EXISTING SB STRUCTURE. STAGE 3 WILL CONSIST OF FINISHING THE REMAINDER OF B-51-126 AND SHALL HAVE 3 LANES OF NB TRAFFIC ON THE NEW PORTION OF B-51-126. STAGE 4 SHALL CONSIST OF REMOVAL AND RECONSTRUCTION OF B-51-125, TRAFFIC WILL HAVE 3 LANES IN EACH DIRECTION ON B-51-126.

ELECTRICAL ITEMS ASSOCIATED WITH UNDERDECK LIGHTING ARE INCLUDED IN THE ROADWAY BID ITEMS IN THE CONTRACT PLANS & DOCUMENTS. CONDUIT AND JUNCTION BOXES IN THE PARAPETS FOR LIGHTING OF THE STRUCTURE AND FUTURE LIGHTING OF IH-94 ARE INCLUDED IN THE BRIDGE PLANS AND PAID FOR SEPARATELY.

SLIP FORMING OF '42SS PARAPET MODIFIED' AND CONCRETE BARRIER 42-INCH (BRIDGE) IS NOT PERMITTED.

GAP TEMPORARY SHORING TO AVOID EXISTING AND PROPOSED UTILITY LOCATIONS, CONTACT THE UTILITY COMPANY 7 DAYS IN ADVANCE TO COORDINATE LOCATIONS AND ANY EXCAVATION NEAR THEIR FACILITIES.

APPLY PROTECTIVE SURFACE TREATMENT TO TOP OF BRIDGE DECK, TOP OF APPROACH SLABS, TOP OF BACKWALL, AND TOP OF APPROACH SLAB NOTCH. APPLY PIGMENTED SURFACE SEALER TO TOP AND INSIDE FACES OF PARAPET INCLUDING PARAPET LOCATED ON STRUCTURAL APPROACH SLAB.

BID ITEM "HIGH PERFORMANCE CONCRETE (HPC) MASONRY STRUCTURES" SHALL BE UTILIZED IN THE DECK, PARAPETS, ABUTMENT & PIER DIAPHRAGMS, AND APPROACH SLABS. BID ITEM "CONCRETE MASONRY BRIDGES" SHALL BE UTILIZED FOR ALL OTHER CONCRETE ITEMS INCLUDING THE APPROACH SLAB FOOTINGS.

THE UTILITY INFORMATION SHOWN ON THESE DRAWINGS CONCERNING TYPE AND LOCATION OF UNDERGROUND UTILITIES IS NOT GUARANTEED TO BE ACCURATE OR ALL-INCLUSIVE. THE CONTRACTOR IS RESPONSIBLE FOR MAKING HIS OWN DETERMINATION AS TO TYPE AND LOCATION OF UNDERGROUND UTILITIES AS MAY BE NECESSARY TO AVOID DAMAGE. UTILITIES LABELED AS PROPOSED MAY BE INSTALLED BY OTHER PRIOR TO THIS CONTRACT.

8

WISCONSIN PROFESSIONAL ENGINEER DANIEL N. SYDOW E-38363 WI

8/13/18

8/9/18

Plan Sheet Accepted By WISDOT BUREAU OF STRUCTURES

NO.	DATE	REVISION	BY
10	8/09/18	REMOVE PRECAST DECK PANELS	AYRES
2	7/10/18	MISC REVISION	JRM
1	6/28/18	DIN 9 - ABUT. REBAR	JRM

STATE OF WISCONSIN
DEPARTMENT OF TRANSPORTATION

STRUCTURE B-51-126

DRAWN BY JRM | PLANS CK'D. AJC

QUANTITIES & GENERAL NOTES

SHEET 3 OF 28

STATE PROJECT NUMBER

1030-24-72

LEGEND

▲ 42SS PARAPET OPTIONAL FOR CONSTRUTION IN STAGE 2

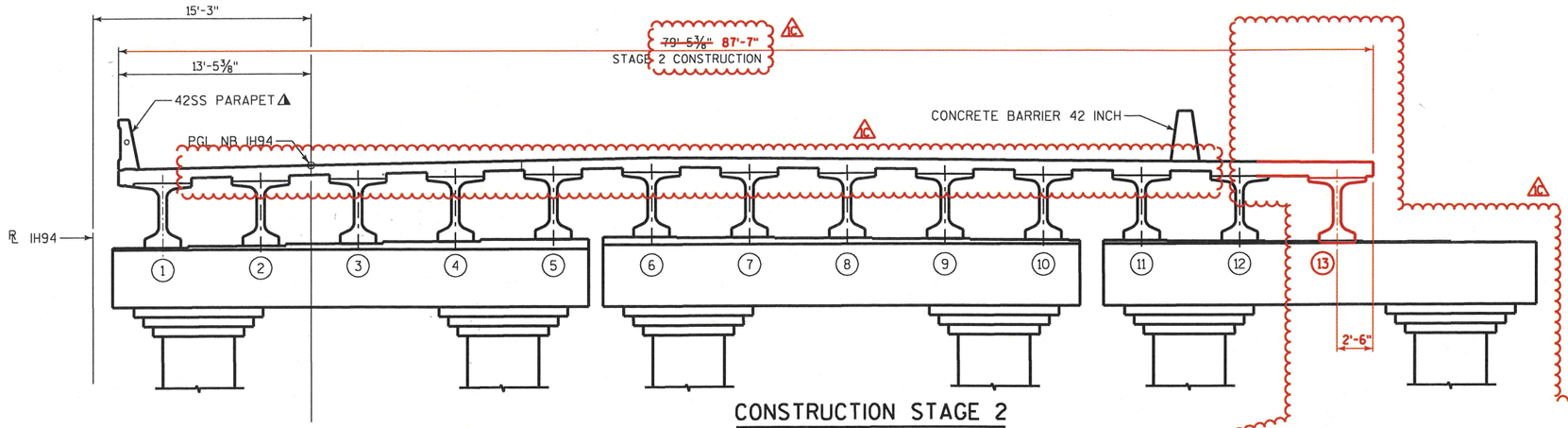

CONSTRUCTION STAGE 2

(ENTIRE EXISTING STRUCTURE B-51-35 TO BE REMOVED IN THIS STAGE)

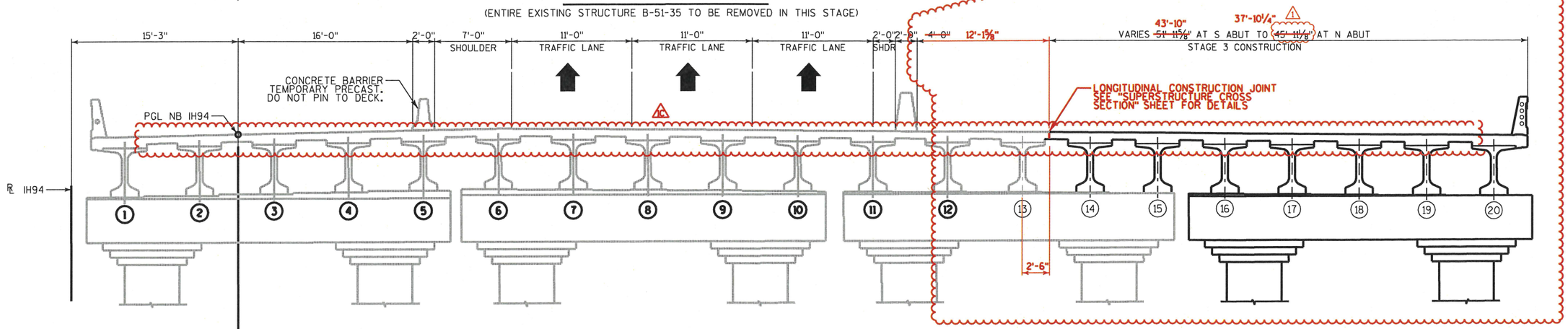

CONSTRUCTION STAGE 3

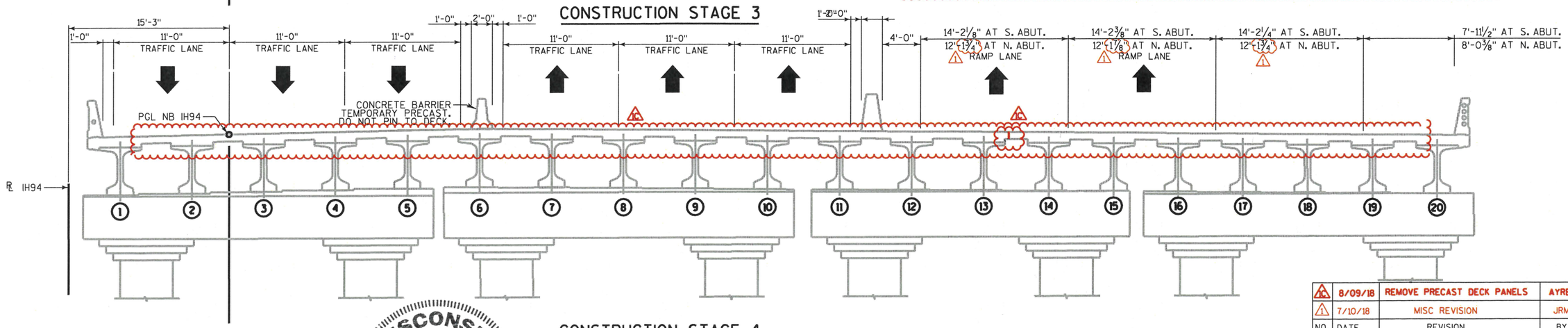

CONSTRUCTION STAGE 4

WISCONSIN PROFESSIONAL ENGINEER DANIEL N. SYDOW E-38363 WI

8/9/18

THE PE STAMP IN THIS PLAN SET COVERS ONLY THE MODIFICATIONS SHOWN CLOUDED IN RED AND SIGNIFIED BY ⚠, WHICH MODIFY THE ORIGINAL BRIDGE PLANS TO UTILIZE A TRADITIONAL FULL-DEPTH, CAST IN PLACE CONCRETE DECK. THE DECK REINFORCEMENT IS DESIGNED PER THE CURRENT WISCONSIN DOT BRIDGE MANUAL.

8/13/18

Plan Sheet Accepted By WISDOT BUREAU OF STRUCTURES

NO.	DATE	REVISION	BY
⚠	8/09/18	REMOVE PRECAST DECK PANELS	AYRES
⚠	7/10/18	MISC REVISION	JRM

STATE OF WISCONSIN
DEPARTMENT OF TRANSPORTATION

STRUCTURE B-51-126

DRAWN BY JRM | PLANS CK'D. AJC

CONSTRUCTION STAGING

SHEET 5 OF 28

8

8

GIRDER DATA																						
SPAN	GIRDER	GIRDER LENGTH "L"	DEAD LOAD DEFL. (IN)									CONC. STRGTH. f'c (psi)	"P" FIRST 1/3 OF GIRDER	"P" MID 1/3 OF GIRDER	"P" END 1/3 OF GIRDER	DIA. OF STRAND (IN.)	TOTAL NO. OF STRANDS	f'ci (psi)	DRAPED PATTERN (IN.)			
			1/10	2/10	3/10	4/10	5/10	6/10	7/10	8/10	9/10								"A"	"B" MIN.	"B" MAX"	"C"
1	1-13	128'-9.5"	0.7	1.4	2.0	2.3	2.4	2.3	2.0	1.4	0.7	8,500	7.50	7.50	7.50	0.6	42	6,800	49	16	19	5
1	14	128'-9"	0.7	1.3	1.8	2.1	2.2	2.1	1.8	1.3	0.7	8,500	7.50	7.50	7.50	0.6	42	6,800	49	16	19	5
1	15	128'- 8.5"	0.7	1.3	1.8	2.1	2.2	2.1	1.8	1.3	0.7	8,500	7.50	7.50	7.50	0.6	42	6,800	49	16	19	5
1	16, 17	128'-8"	0.7	1.3	1.8	2.1	2.2	2.1	1.8	1.3	0.7	8,500	7.50	7.50	7.50	0.6	42	6,800	49	16	19	5
1	18	128'-7.5"	0.7	1.3	1.8	2.1	2.2	2.1	1.8	1.3	0.7	8,500	7.50	7.50	7.50	0.6	42	6,800	49	16	19	5
1	19	128'-7"	0.7	1.3	1.8	2.1	2.2	2.1	1.8	1.3	0.7	8,500	7.50	7.50	7.50	0.6	42	6,800	49	16	19	5
1	20	128'-6.5"	0.7	1.3	1.8	2.1	2.2	2.1	1.8	1.3	0.7	8,500	7.50	7.50	7.50	0.6	42	6,800	49	16	19	5
2	1-13	121'-9"	0.6	1.1	1.6	1.8	1.9	1.8	1.6	1.1	0.6	8,500	7.50	7.50	7.50	0.6	40	6,800	49	16	19	5
2	14	121'-8.5"	0.5	1.0	1.4	1.6	1.7	1.6	1.4	1.0	0.5	8,500	7.50	7.50	7.50	0.6	40	6,800	49	16	19	5
2	15,16	121'-8"	0.5	1.0	1.4	1.6	1.7	1.6	1.4	1.0	0.5	8,500	7.50	7.50	7.50	0.6	40	6,800	49	16	19	5
2	17	121'-7.5"	0.5	1.0	1.4	1.6	1.7	1.6	1.4	1.0	0.5	8,500	7.50	7.50	7.50	0.6	40	6,800	49	16	19	5
2	18, 19	121'-7"	0.5	1.0	1.4	1.6	1.7	1.6	1.4	1.0	0.5	8,500	7.50	7.50	7.50	0.6	40	6,800	49	16	19	5
2	20	121'-6.5"	0.5	1.0	1.4	1.6	1.7	1.6	1.4	1.0	0.5	8,500	7.50	7.50	7.50	0.6	40	6,800	49	16	19	5
3	1-13	122'-9.5"	0.6	1.1	1.6	1.9	2.0	1.9	1.6	1.1	0.6	8,500	7.50	7.50	7.50	0.6	40	6,800	49	16	19	5
3	14	122'-9"	0.5	1.0	1.4	1.6	1.7	1.6	1.4	1.0	0.5	8,500	7.50	7.50	7.50	0.6	40	6,800	49	16	19	5
3	15,16	122'-8.5"	0.5	1.0	1.4	1.6	1.7	1.6	1.4	1.0	0.5	8,500	7.50	7.50	7.50	0.6	40	6,800	49	16	19	5
3	17	122'-8"	0.5	1.0	1.4	1.6	1.7	1.6	1.4	1.0	0.5	8,500	7.50	7.50	7.50	0.6	40	6,800	49	16	19	5
3	18	122'-7.5"	0.5	1.0	1.4	1.6	1.7	1.6	1.4	1.0	0.5	8,500	7.50	7.50	7.50	0.6	40	6,800	49	16	19	5
3	19, 20	122'-7"	0.5	1.0	1.4	1.7	1.8	1.7	1.4	1.1	0.6	8,500	7.50	7.50	7.50	0.6	40	6,800	49	16	19	5

DEAD LOAD DEFLECTIONS IN THE GIRDER TABLE ARE FOR THE FOLLOWING DEAD LOADS: DECK, PARAPET, PANELS, AND HAUNCH. 1c

DEAD LOAD DEFLECTION DUE TO PANELS AND HAUNCH (IN)	1/10	2/10	3/10	4/10	5/10	6/10	7/10	8/10	9/10
SPAN 1 GIR 1	0.2	0.4	0.6	0.7	0.7	0.7	0.6	0.4	0.2
SPAN 1 GIR 2-13	0.3	0.6	0.8	0.9	0.9	0.9	0.8	0.6	0.3
SPAN 1 GIR 20	0.2	0.4	0.5	0.6	0.7	0.6	0.5	0.4	0.2
SPAN 1 GIR 14-19	0.3	0.5	0.7	0.8	0.8	0.8	0.7	0.5	0.3
SPAN 2 GIR 1	0.2	0.4	0.6	0.7	0.7	0.7	0.6	0.4	0.2
SPAN 2 GIR 2-13	0.3	0.6	0.8	0.9	0.9	0.9	0.8	0.6	0.3
SPAN 2 GIR 20	0.2	0.4	0.5	0.6	0.6	0.6	0.5	0.4	0.2
SPAN 2 GIR 14-19	0.3	0.5	0.7	0.8	0.8	0.8	0.7	0.5	0.3
SPAN 3 GIR 1	0.2	0.4	0.6	0.7	0.7	0.7	0.6	0.4	0.2
SPAN 3 GIR 2-13	0.3	0.6	0.8	0.9	0.9	0.9	0.8	0.6	0.3
SPAN 3 GIR 20	0.2	0.4	0.5	0.6	0.6	0.6	0.5	0.4	0.2
SPAN 3 GIR 14-19	0.3	0.5	0.7	0.8	0.8	0.8	0.7	0.5	0.3

1c

STATE PROJECT NUMBER

1030-24-72

NOTES

TOP OF GIRDER TO BE ROUGH FLOATED AND BROOMED TRANSVERSELY, EXCEPT THE OUTSIDE 15" OF GIRDER, WHICH SHALL RECEIVE A SMOOTH FINISH. AN APPROVED CONCRETE SEALER SHALL BE APPLIED TO ALL SMOOTH SURFACES INCLUDING THE OUTSIDE 15" OF THE TOP FLANGE.

DO NOT APPLY CONCRETE SEALER OR EPOXY TO SURFACES RECEIVING APPLICATION OF CONCRETE STAINING.

THE GIRDERS SHALL BE PROVIDED WITH A SUITABLE LIFTING DEVICE FOR HANDLING AND ERECTING THE GIRDERS. SEE SECT. 503.3.3 OF STANDARD SPECIFICATIONS FOR GUIDANCE.

STRANDS SHALL BE FLUSH WITH END OF GIRDER. FOR GIRDER ENDS EMBEDDED COMPLETELY IN CONCRETE, END OF STRANDS SHALL BE COATED WITH NON-BITUMINOUS JOINT SEALER. FOR GIRDER ENDS THAT ARE FINALLY EXPOSED, COAT THE GIRDER ENDS, EXPOSED STRAND ENDS AND ALL NON-BONDING SURFACES WITHIN 2 FEET OF THE GIRDER ENDS WITH A NON-PIGMENTED EPOXY CONFORMING TO AASHTO M-235 TYPE III, GRADE 2, CLASS B OR C. THE EPOXY SHALL BE APPLIED AT LEAST 3 DAYS AFTER MOIST CURING HAS CEASED AND PRIOR TO THE APPLICATION OF THE SEALER.

ALL GIRDERS SHALL BE CAST FULL LENGTH AS SHOWN.

SPACING SHOWN FOR #4 STIRRUPS IS FOR GRADE 60 REINFORCEMENT.

AN ALTERNATE EQUIVALENT OF WELDED WIRE FABRIC (WWF) ASTM A1064 MAY BE SUBSTITUTED FOR THE STIRRUP REINFORCEMENT SHOWN, UPON APPROVAL OF THE STRUCTURES DEVELOPMENT SECTION.

PRESTRESSING STRANDS SHALL BE ( )-7 WIRE LOW-RELAXATION STRANDS WITH AN ULTIMATE STRENGTH OF 270,000 PSI.

FOR DIAPHRAGM INSERT & CONNECTION DETAILS SEE "STEEL DIAPHRAGM" SHEET.

*CLIP TOP FLANGE AT ABUTMENT LOCATIONS ONLY.

(A) DETAIL TYP. AT EACH END

(B) 6-#4 BARS, FULL LENGTH, MIN. LAP = 1'-11"

WISCONSIN DANIEL N. SYDOW E-38363 WI PROFESSIONAL ENGINEER

8/9/18

8/13/18

Plan Sheet Accepted By WISDOT BUREAU OF STRUCTURES

THE PE STAMP IN THIS PLAN SET COVERS ONLY THE MODIFICATIONS SHOWN CLOUDED IN RED AND SIGNIFIED BY 1c, WHICH MODIFY THE ORIGINAL BRIDGE PLANS TO UTILIZE A TRADITIONAL FULL-DEPTH, CAST IN PLACE CONCRETE DECK. THE DECK REINFORCEMENT IS DESIGNED PER THE CURRENT WISCONSIN DOT BRIDGE MANUAL.

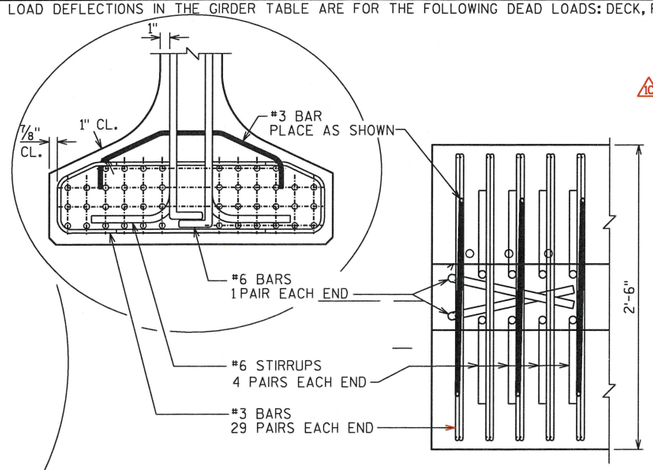

BOTTOM FLANGE

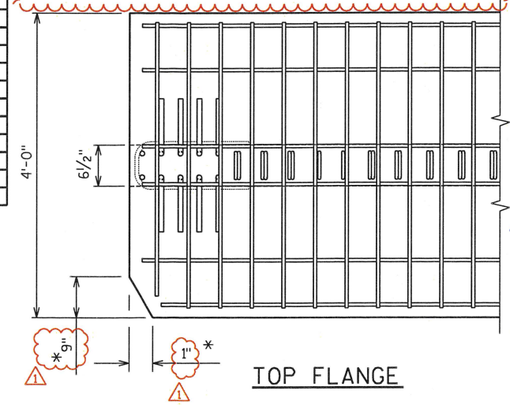

TOP FLANGE

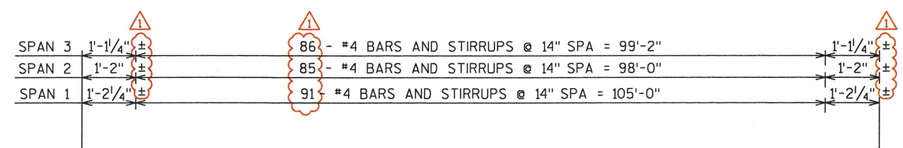

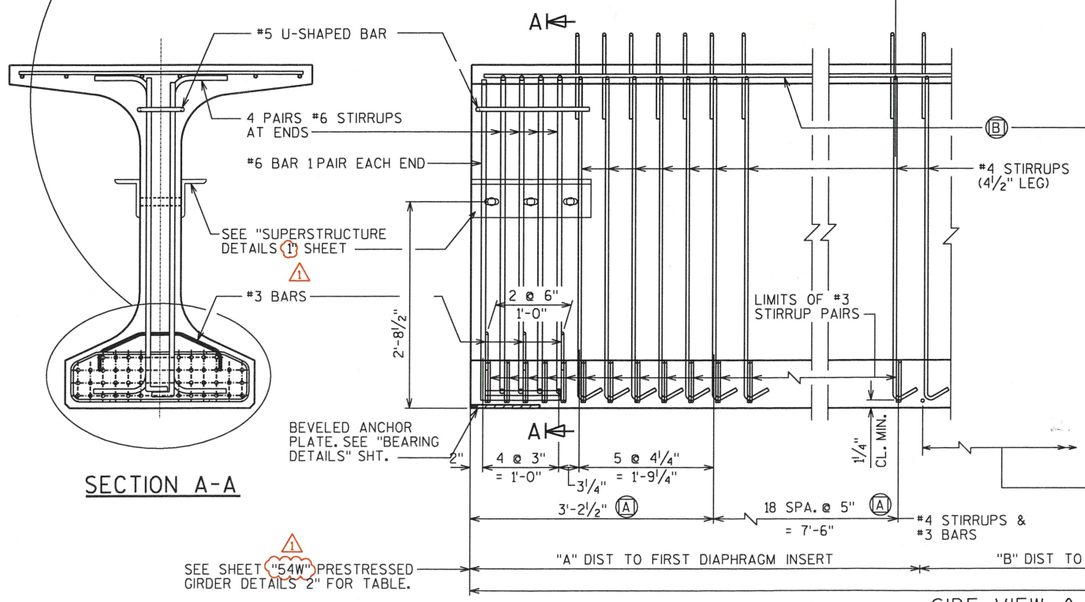

SECTION A-A

SIDE VIEW & TYP. SECTION IN SPAN

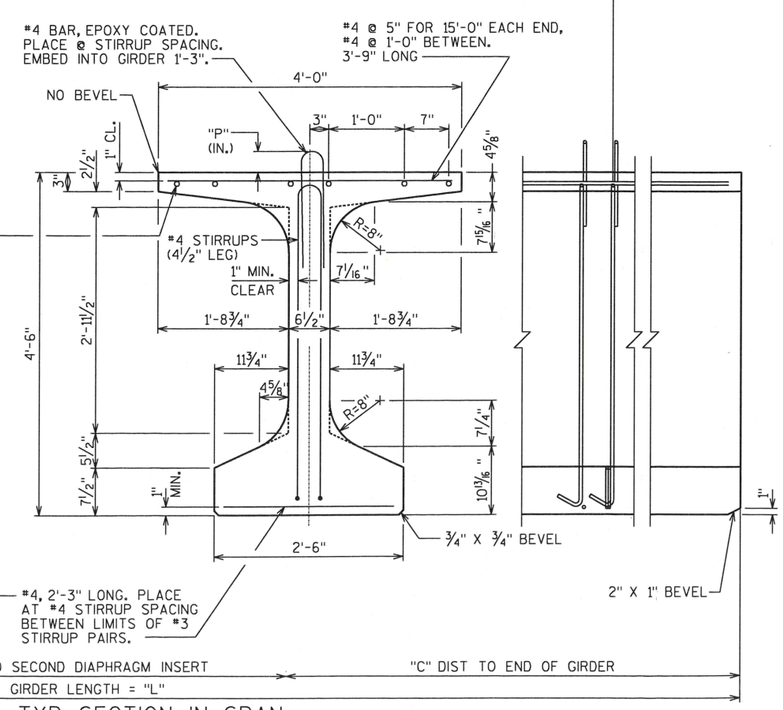

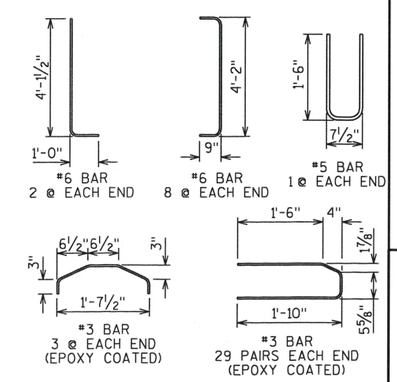

NO.	DATE	REVISION	BY
1c	8/09/18	REMOVE PRECAST DECK PANELS	AYRES
1	7/10/18	MISC REVISION	JRM

STATE OF WISCONSIN
DEPARTMENT OF TRANSPORTATION

STRUCTURE B-51-126

DRAWN BY JRM | PLANS CK'D. AJC

54W" PRESTRESSED GIRDER DETAILS 1

SHEET 14 OF 28

8

8

STATE PROJECT NUMBER

1030-24-72

DIAPHRAGM SPACING TABLE

	SPAN 1			SPAN 2			SPAN 2		
	A	B	C	A	B	C	A	B	C
GIRDER 1	50'-10 3/4"	42'-8"	35'-2 1/8"	47'-10 3/4"	40'-8"	33'-2 1/4"	47'-10 3/4"	40'-8"	34'-2 3/4"
GIRDER 2	50'-1 1/2"	42'-8"	36'-0"	47'-1"	40'-8"	34'-0"	47'-1"	40'-8"	35'-0 1/2"
GIRDER 3	49'-3 5/8"	42'-8"	36'-9 3/4"	46'-3"	40'-8"	34'-9 5/8"	46'-3 1/4"	40'-8"	35'-10 3/8"
GIRDER 4	48'-5 7/8"	42'-8"	37'-7 5/8"	45'-5 3/8"	40'-8"	35'-7 5/8"	45'-5 3/8"	40'-8"	36'-8 1/4"
GIRDER 5	47'-8"	42'-8"	38'-5 1/2"	44'-7 1/2"	40'-8"	36'-5 3/8"	44'-7 1/2"	40'-8"	37'-6"
GIRDER 6	46'-10 1/4"	42'-8"	39'-3 1/4"	43'-9 3/4"	40'-8"	37'-3 1/4"	43'-9 3/4"	40'-8"	38'-3 3/4"
GIRDER 7	46'-0 1/2"	42'-8"	40'-1"	42'-11 3/4"	40'-8"	38'-1"	42'-11 7/8"	40'-8"	39'-1 3/4"
GIRDER 8	45'-2 5/8" 1	42'-8"	40'-10 3/4"	42'-2 1/8"	40'-8"	38'-10 3/4"	42'-2 1/8"	40'-8"	39'-11 1/2"
GIRDER 9	44'-4 3/4"	42'-8"	41'-8 3/4"	41'-4 1/4"	40'-8"	39'-8 3/4"	41'-4 1/4"	40'-8"	40'-9 1/4"
GIRDER 10	43'-7"	42'-8"	42'-6 1/2"	40'-6 1/2"	40'-8"	40'-6 1/2"	40'-6 1/2"	40'-8"	41'-7"
GIRDER 11	42'-9 3/8"	42'-8"	43'-4 1/4"	39'-8 3/4"	40'-8"	41'-4 1/4"	39'-8 3/4"	40'-8"	42'-4 3/4"
GIRDER 12	41'-11 3/8"	42'-8"	44'-2 1/8"	38'-10 7/8"	40'-8"	42'-2 1/8"	38'-10 7/8"	40'-8"	43'-2 1/2"
GIRDER 13	41'-1 1/2"	42'-8"	45'-0"	38'-1 1/8"	40'-8"	43'-0"	38'-1"	40'-8"	44'-0 1/2"
GIRDER 14	40'-4 3/4"	42'-8"	45'-8 1/4"	37'-4 5/8"	40'-8"	43'-8"	37'-5"	40'-8"	44'-8"
GIRDER 15	39'-8" 1	42'-8"	46'-4 3/4"	36'-8 1/4"	40'-8"	44'-4"	36'-9"	40'-8"	45'-3 5/8"
GIRDER 16	38'-11"	42'-8"	47'-1 1/8"	36'-0"	40'-8"	45'-0"	36'-1"	40'-8"	45'-11 1/4"
GIRDER 17	38'-2 1/8"	42'-8"	47'-9 1/2"	35'-3 1/4"	40'-8"	45'-8"	35'-5"	40'-8"	46'-6 3/4"
GIRDER 18	37'-5 1/2"	42'-8"	48'-6"	34'-7"	40'-8"	46'-4"	34'-9"	40'-8"	47'-2 1/2"
GIRDER 19	36'-8 5/8"	42'-8"	49'-2 3/8"	33'-10 3/4"	40'-8"	47'-0"	34'-1 1/8"	40'-8"	47'-10"
GIRDER 20	35'-11 7/8"	42'-8"	49'-10 5/8"	33'-2 1/4"	40'-8"	47'-8"	33'-5 1/8"	40'-8"	48'-5 3/4"

1 1 1

1C THE PE STAMP IN THIS PLAN SET COVERS ONLY THE MODIFICATIONS SHOWN CLOUDED IN RED AND SIGNIFIED BY 1C, WHICH MODIFY THE ORIGINAL BRIDGE PLANS TO UTILIZE A TRADITIONAL FULL-DEPTH, CAST IN PLACE CONCRETE DECK. THE DECK REINFORCEMENT IS DESIGNED PER THE CURRENT WISCONSIN DOT BRIDGE MANUAL.

WISCONSIN PROFESSIONAL ENGINEER DANIEL N. SYDOW E-38363 WI

8/9/18

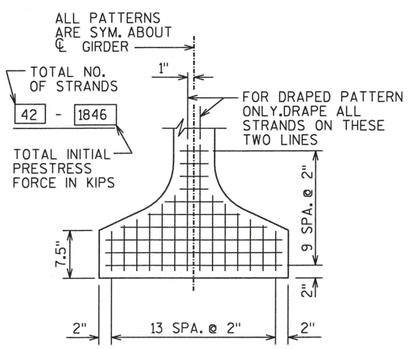

TYP. STRAND PATTERN

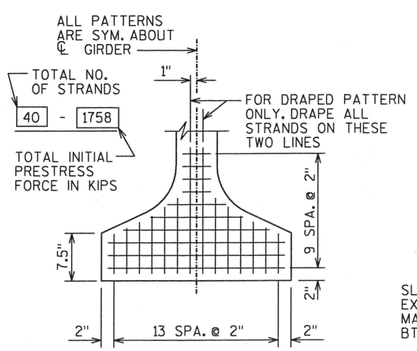

TYP. STRAND PATTERN

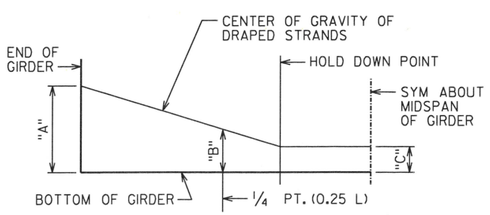

DRAPED STRAND PROFILE

*THE THEORETICAL INITIAL CAMBER VALUE AT THE TIME OF STRAND RELEASE AT MIDSPAN MULTIPLIED BY A FACTOR OF 1.4 TO ACCOUNT FOR CAMBER GROWTH FROM THE TIME OF STRAND RELEASE TO JOBSITE PLACEMENT.

SPAN	CAMBER (IN.) *
1	4.6
2	4.2
3	4.2

THESE VALUES ARE NOT TO BE USED IN DETERMINING 'T', USE ACTUAL GIRDER SHOTS.

THESE VALUES ARE FOR INFORMATIONAL PURPOSES ONLY.

1 * ASSUME 1'-0 3/4" WITH 3 3/4" HAUNCH AT ℄ BRG

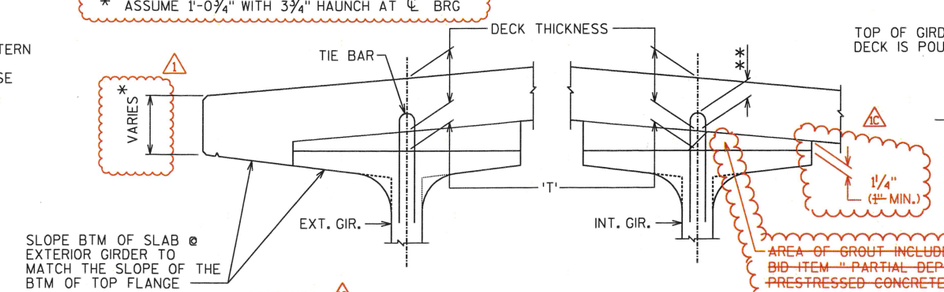

DECK HAUNCH DETAIL

1C 1 1/4" IF ~~1"~~ MINIMUM HAUNCH HEIGHT AT EDGE OF GIRDER CANNOT BE MAINTAINED, THE ~~GRADE~~ LINE MAY BE REVISED BY THE ENGINEER AT THE OPTION OF THE CONTRACTOR, THE PLAN DECK THICKNESS SHALL BE HELD. NOTIFY THE STRUCTURES SECTION IF THE GRADE LINE IS RAISED FROM THE PLAN PROFILE BY MORE THAN 1/2" OR,

** IF 3" MINIMUM DECK EMBEDMENT OF TIE BAR CANNOT BE OBTAINED.

TO DETERMINE 'T', ELEV. OF TOP OF GIR'S. AT ℄ OF SUBSTRUCTURE UNITS & AT 1/10 POINTS OF EACH SPAN SHALL BE TAKEN. THEN FOLLOW THIS PROCESS:

TOP OF DECK ELEV. AT FINAL GRADE
- TOP OF GIRDER ELEVATION
+ DEAD LOAD DEFLECTION
- DECK THICKNESS
= HAUNCH HEIGHT 'T'

1C NOTE: THE AVERAGE HAUNCH ('T') WAS CALCULATED AS 3 1/4" ~~3". GROUT IN HAUNCH AREAS INCLUDED IN THE BID ITEM "PARTIAL DEPTH PRECAST PRESTRESSED CONCRETE DECK PANEL B-51-126".~~

1C

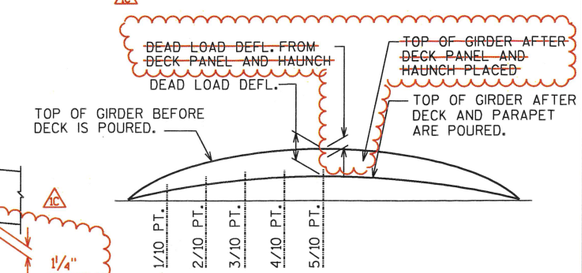

DEAD LOAD DEFLECTION DIAGRAM

8/13/18

Plan Sheet Accepted By WISDOT BUREAU OF STRUCTURES

NO.	DATE	REVISION	BY
1C	8/09/18	REMOVE PRECAST DECK PANELS	AYRES
1	7/6/18	DIN 17 - DIMENSIONS	JRM

STATE OF WISCONSIN
DEPARTMENT OF TRANSPORTATION

STRUCTURE B-51-126

DRAWN BY JRM | PLANS CK'D. AJC

54W" PRESTRESSED GIRDER DETAILS 2

SHEET 15 OF 28

8

8

STATE PROJECT NUMBER

1030-24-72

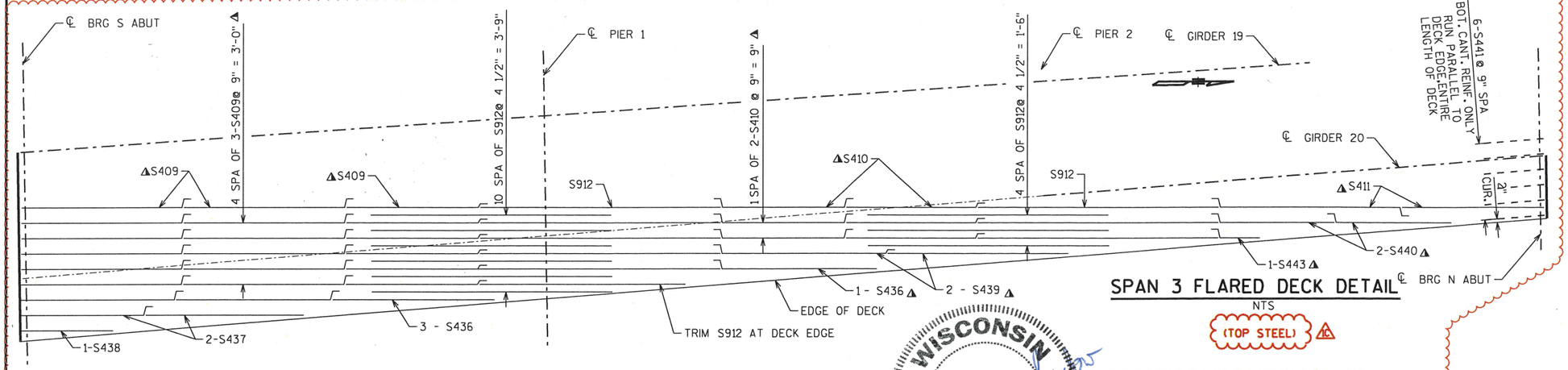

SPAN 3 FLARED DECK DETAIL

NTS

(TOP STEEL) 16

NOTES

ALL DIAPHRAGM MATERIAL NOT EMBEDDED IN THE CONCRETE GIRDER SHALL BE PAID FOR AT THE UNIT PRICE BID FOR "STEEL DIAPHRAGMS B-51-126", EACH.

EACH DIAPHRAGM BETWEEN GIRDERS SHALL CONSTITUTE ONE UNIT.

ALL DIAPHRAGM STRUCTURAL STEEL SHALL BE ASTM A709 GRADE 36.

ALL DIAPHRAGM MATERIAL INCLUDING BOLTS, NUTS, AND WASHERS SHALL GALVANIZED AFTER FABRICATION.

STEEL DIAPHRAGM TO CONCRETE WEB CONNECTION SHALL BE SNUG-TIGHT PLUS 1/4 TURN, UNLESS NOTED OTHERWISE. HIGH STRENGTH BOLTS FOR WEB CONNECTION SHALL MEET THE REQUIREMENTS FOR ASTM A325 OR ASTM A449.

SPAN 1 FLARED DECK DETAIL

NTS

(TOP STEEL) 16

SPAN 2 FLARED DECK DETAIL

NTS

(TOP STEEL) 16

WISCONSIN DANIEL N. SYDOW E-38363 WI PROFESSIONAL ENGINEER

8/9/18

THE PE STAMP IN THIS PLAN SET COVERS ONLY THE MODIFICATIONS SHOWN CLOUDED IN RED AND SIGNIFIED BY 16, WHICH MODIFY THE ORIGINAL BRIDGE PLANS TO UTILIZE A TRADITIONAL FULL-DEPTH, CAST IN PLACE CONCRETE DECK. THE DECK REINFORCEMENT IS DESIGNED PER THE CURRENT WISCONSIN DOT BRIDGE MANUAL. 18

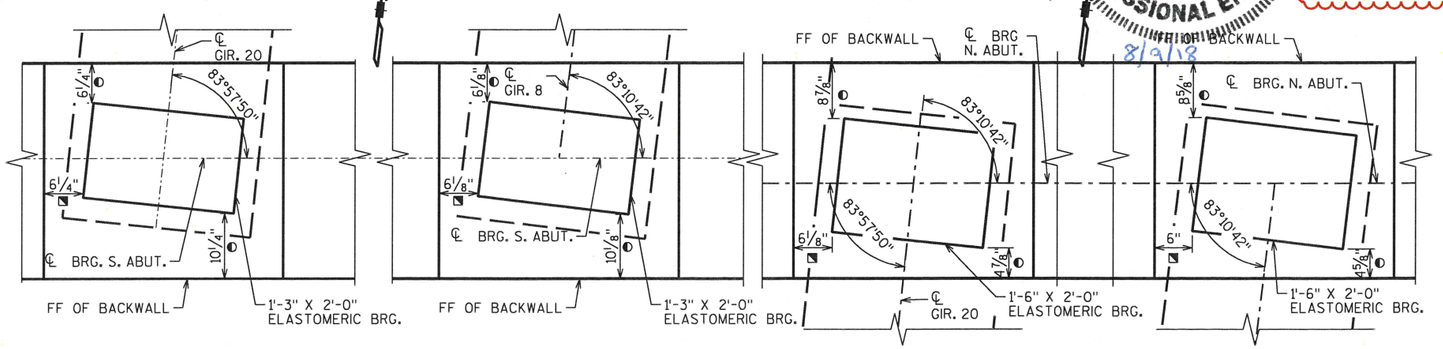

SOUTH ABUTMENT GIR. 14-20 BEARING DETAIL

(GIRDER 19 SHOWN, OTHER SIMILIAR)

SOUTH ABUTMENT GIR. 1-13 BEARING DETAIL

NORTH ABUTMENT GIR. 13-20 BEARING DETAIL

(GIRDER 19 SHOWN, OTHER SIMILIAR)

NORTH ABUTMENT GIR. 1-13 BEARING DETAIL

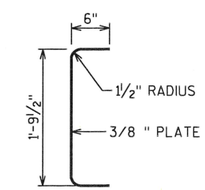

SECTION THRU ALTERNATE DIAPHRAGM

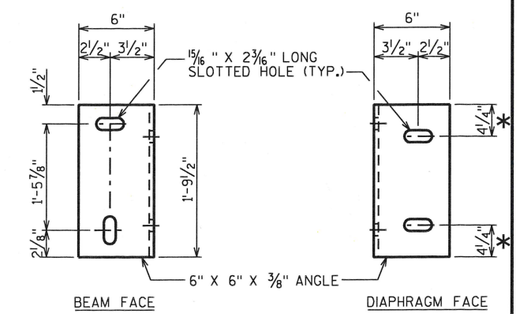

DIAPHRAGM SUPPORT

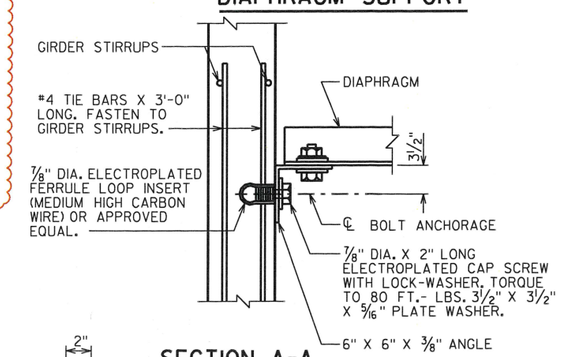

SECTION A-A

(FOR EXTERIOR ATTACHMENT)

BARS TO BE LAPPED TO S912 AT PIERS 1'-8" MIN LAP

DIMENSION PERPENDICULAR TO ℄ BRG.

DIMENSION ALONG ℄ BRG.

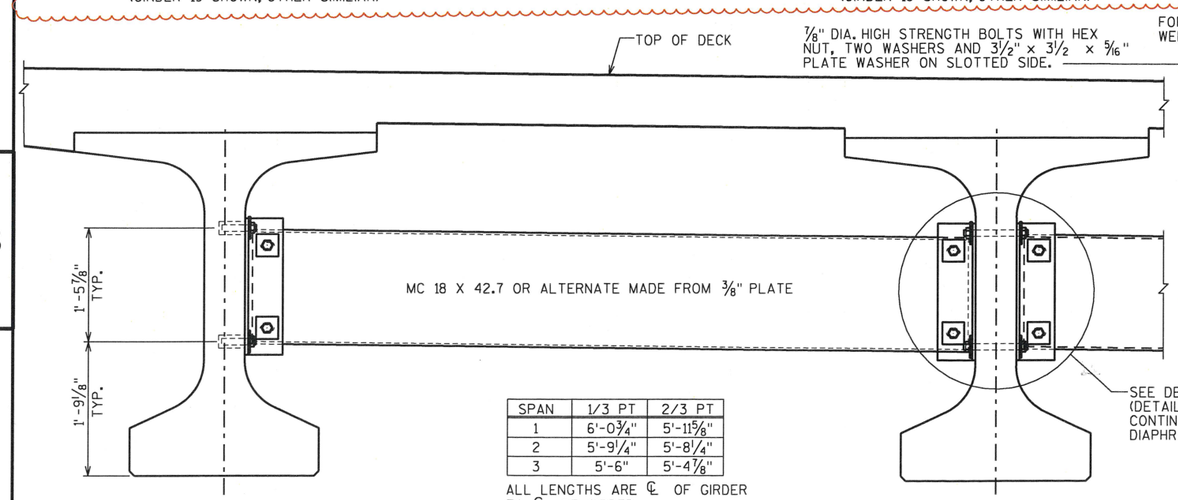

SPAN	1/3 PT	2/3 PT
1	6'-0 3/4"	5'-11 5/8"
2	5'-9 1/4"	5'-8 1/4"
3	5'-6"	5'-4 7/8"

ALL LENGTHS ARE ℄ OF GIRDER TO ℄ OF GIRDER.

FLARED GIRDER DIAPHRAGM LENGTHS

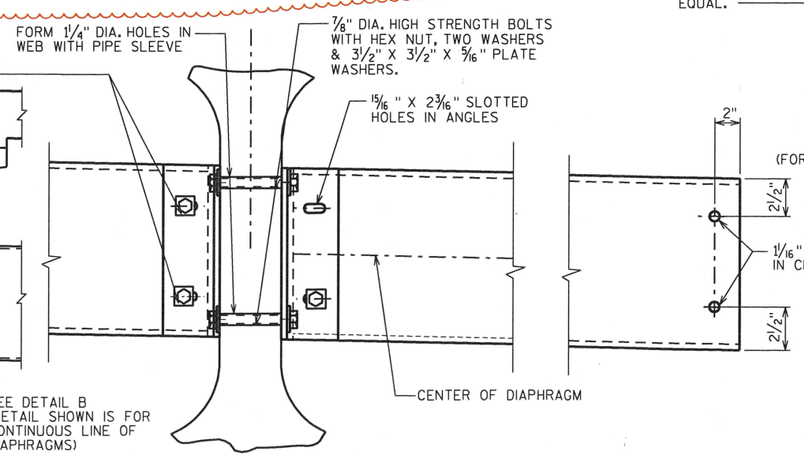

(FOR CONTINUOUS LINE OF DIAPHRAGMS)

DETAIL B

8/13/18

Plan Sheet Accepted By WISDOT BUREAU OF STRUCTURES

NO.	DATE	REVISION	BY
16	8/09/18	REMOVE PRECAST DECK PANELS	AYRES
1	7/10/18	MISC REVISION	JRM

STATE OF WISCONSIN
DEPARTMENT OF TRANSPORTATION

STRUCTURE B-51-126

DRAWN BY JRM | PLANS CK'D. AJC

STEEL DIAPHRAGM

SHEET 16 OF 28

8

8

STATE PROJECT NUMBER

1030-24-72

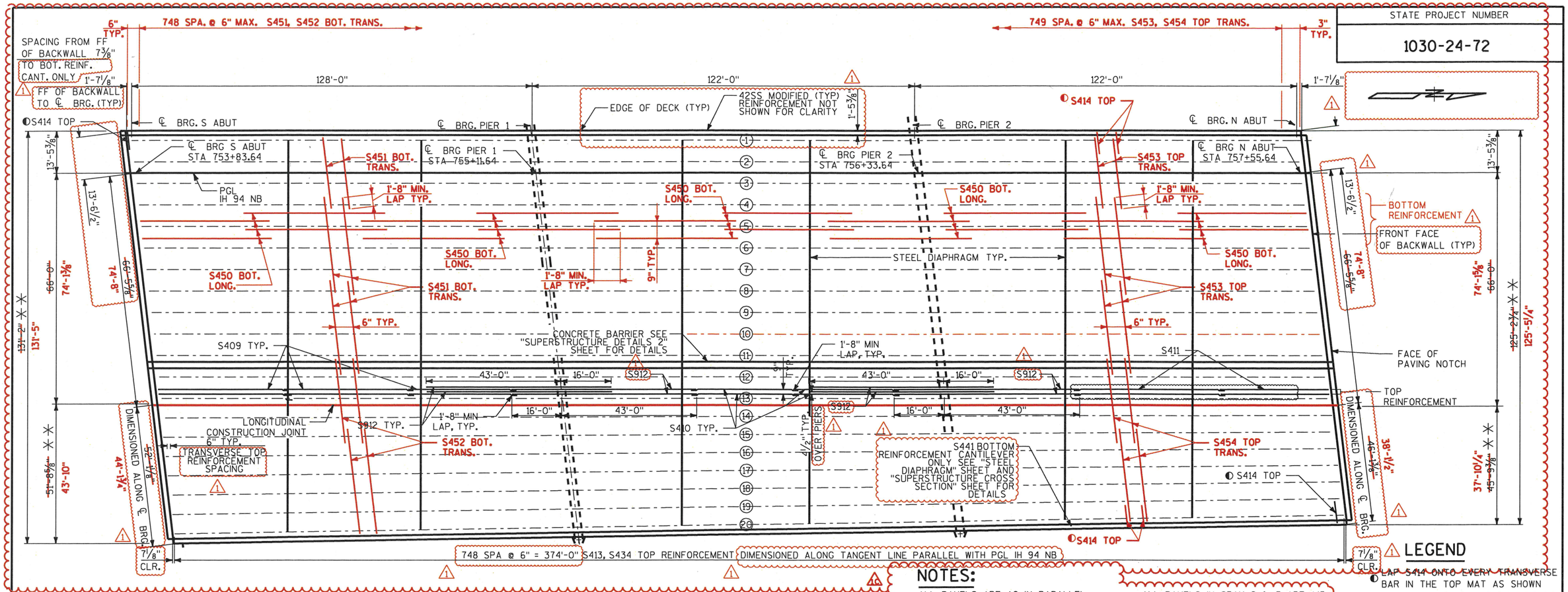

LEGEND

◐ LAP S414 ONTO EVERY TRANSVERSE BAR IN THE TOP MAT AS SHOWN

PLAN

SHOWING DECK REINF.

NOTES:

~~ALL PANELS ARE A2 IN PARALLEL GIRDER AREAS UNLESS NOTED OTHERWISE.~~ PARALLEL GIRDER AREAS ARE BETWEEN GIRDERS G1 & G13.

~~ALL PANELS IN SPAN 1 ARE A8 IN FLARED GIRDER AREAS UNLESS NOTED OTHERWISE.~~ FLARED GIRDER AREAS ARE BETWEEN G13 & G20.

~~ALL PANELS IN SPAN 2 & 3 ARE A15 IN FLARED GIRDER AREAS UNLESS NOTED OTHERWISE.~~ FLARED GIRDER AREAS ARE BETWEEN G13 & G20.

~~✳ DIMENSIONS TO PANEL EDGE VARIES BETWEEN GIRDERS G13 G20. DIMENSION GIVEN IS A MINIMUM. PANELS SHOULD EXTEND INTO PIER & ABUTMENT DIAPHRAGMS 1 1/2" MIN. "SEE SUPERSTRUCTURE DETAILS 1" FOR SECTION~~

✳✳ MEASURED PERPENDICULAR TO ℞ IH 94 TO EDGE OF DECK AT ℄ BRG.

WISCONSIN PROFESSIONAL ENGINEER DANIEL N. SYDOW E-38363 WI

8/10/18

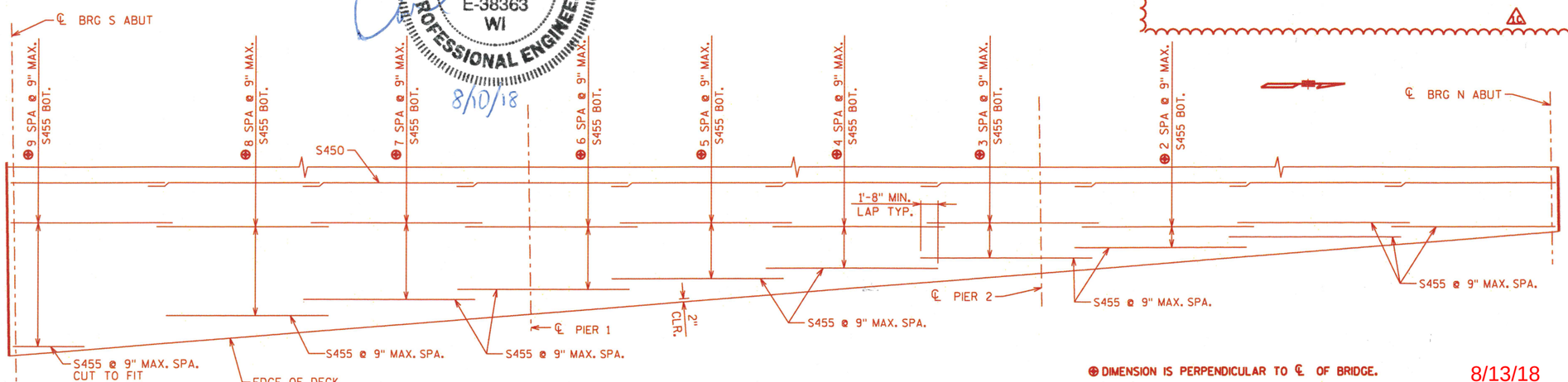

⊕ DIMENSION IS PERPENDICULAR TO ℄ OF BRIDGE.

8/13/18

SUPERSTRUCTURE FLARED DECK DETAIL

BOTTOM BAR STEEL

THE PE STAMP IN THIS PLAN SET COVERS ONLY THE MODIFICATIONS SHOWN CLOUDED IN RED AND SIGNIFIED BY 4, WHICH MODIFY THE ORIGINAL BRIDGE PLANS TO UTILIZE A TRADITIONAL FULL-DEPTH, CAST IN PLACE CONCRETE DECK. THE DECK REINFORCEMENT IS DESIGNED PER THE CURRENT WISCONSIN DOT BRIDGE MANUAL.

NO.	DATE	REVISION	BY
4	8/09/18	REMOVE PRECAST DECK PANELS	AYRES
1	7/10/18	MISC REVISION	JRM

STATE OF WISCONSIN
DEPARTMENT OF TRANSPORTATION

STRUCTURE B-51-126

DRAWN BY JRM | PLANS CK'D. AJC

SUPERSTRUCTURE

SHEET 18 OF 28

Plan Sheet Accepted By WISDOT BUREAU OF STRUCTURES

8 8

FILE NAME : $$....designfile....$$ PLOT DATE : $$...plottingdate...$$ PLOT BY : $$...plotuser...$$

STATE PROJECT NUMBER

1030-24-72

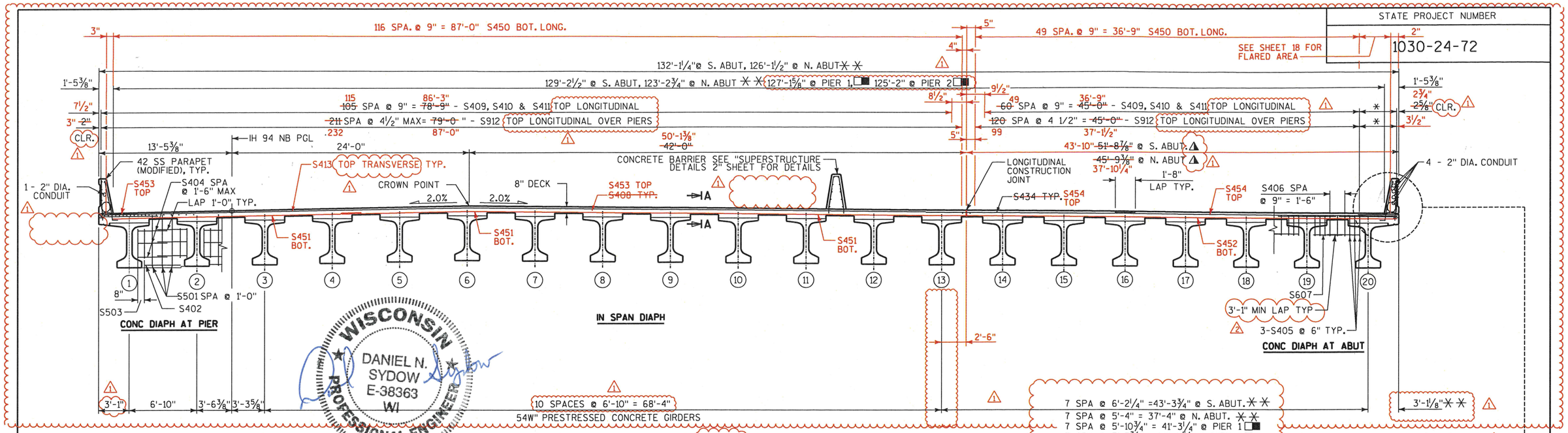

CROSS SECTION THRU DECK

(LOOKING NORTH)

WISCONSIN DANIEL N. SYDOW E-38363 WI PROFESSIONAL ENGINEER 8/9/18

TOP OF DECK ELEVATIONS

	℄ BRG S.ABUT	1/10	2/10	3/10	4/10	5/10	6/10	7/10	8/10	9/10	℄ PIER 1	1/10	2/10	3/10	4/10	5/10	6/10	7/10	8/10	9/10	℄ PIER 2	1/10	2/10	3/10	4/10	5/10	6/10	7/10	8/10	9/10	℄ BRG N.ABUT
LEOD	786.97	787.19	787.40	787.60	787.80	788.00	788.19	788.38	788.56	788.75	788.92	789.09	789.25	789.40	789.56	789.71	789.85	790.00	790.13	790.27	790.40	790.53	790.65	790.77	790.89	791.00	791.11	791.22	791.32	791.42	791.51
GIR 1	787.01	787.22	787.43	787.63	787.83	788.03	788.22	788.41	788.60	788.78	788.95	789.12	789.28	789.44	789.59	789.74	789.89	790.03	790.17	790.30	790.43	790.56	790.69	790.81	790.92	791.04	791.14	791.25	791.35	791.45	791.54
GIR 2	787.16	787.37	787.58	787.78	787.98	788.18	788.37	788.56	788.75	788.93	789.10	789.27	789.43	789.58	789.74	789.89	790.03	790.18	790.31	790.45	790.58	790.71	790.83	790.95	791.07	791.18	791.29	791.39	791.50	791.59	791.69
GIR 3	787.31	787.52	787.73	787.93	788.13	788.33	788.52	788.71	788.89	789.07	789.25	789.41	789.57	789.73	789.88	790.03	790.18	790.32	790.46	790.59	790.72	790.85	790.98	791.10	791.21	791.32	791.43	791.54	791.64	791.74	791.83
GIR 4	787.46	787.67	787.88	788.08	788.28	788.48	788.67	788.86	789.04	789.22	789.40	789.56	789.72	789.88	790.03	790.18	790.33	790.47	790.61	790.74	790.87	791.00	791.12	791.24	791.36	791.47	791.58	791.68	791.78	791.88	791.97
GIR 5	787.61	787.82	788.03	788.23	788.43	788.63	788.82	789.01	789.19	789.37	789.55	789.71	789.87	790.03	790.18	790.33	790.47	790.61	790.75	790.88	791.02	791.14	791.26	791.38	791.50	791.61	791.72	791.82	791.93	792.02	792.12
GIR 6	787.76	787.97	788.18	788.38	788.58	788.78	788.97	789.16	789.34	789.52	789.69	789.86	790.02	790.17	790.32	790.47	790.62	790.76	790.90	791.03	791.16	791.29	791.41	791.53	791.64	791.76	791.86	791.97	792.07	792.17	792.26
GIR 7	787.64	787.85	788.06	788.27	788.46	788.66	788.85	789.04	789.22	789.40	789.58	789.74	789.90	790.05	790.21	790.35	790.50	790.64	790.78	790.91	791.04	791.17	791.29	791.41	791.52	791.63	791.74	791.85	791.95	792.04	792.14
GIR 8	787.52	787.73	787.94	788.14	788.34	788.54	788.73	788.91	789.10	789.28	789.45	789.61	789.77	789.93	790.08	790.23	790.37	790.51	790.65	790.78	790.91	791.04	791.16	791.28	791.39	791.51	791.61	791.72	791.82	791.91	792.01
GIR 9	787.40	787.61	787.81	788.02	788.22	788.41	788.60	788.79	788.97	789.15	789.32	789.49	789.65	789.80	789.95	790.10	790.24	790.39	790.52	790.65	790.78	790.91	791.03	791.15	791.26	791.38	791.48	791.59	791.69	791.78	791.88
GIR 10	787.27	787.48	787.69	787.89	788.09	788.29	788.48	788.66	788.85	789.02	789.20	789.36	789.52	789.67	789.83	789.97	790.12	790.26	790.39	790.53	790.66	790.78	790.90	791.02	791.14	791.25	791.35	791.46	791.56	791.65	791.74
GIR 11	787.15	787.36	787.57	787.77	787.97	788.16	788.35	788.54	788.72	788.90	789.07	789.24	789.39	789.55	789.70	789.85	789.99	790.13	790.27	790.40	790.53	790.65	790.77	790.89	791.01	791.12	791.22	791.33	791.43	791.52	791.61
GIR 12	787.03	787.24	787.44	787.65	787.84	788.04	788.23	788.41	788.60	788.77	788.95	789.11	789.27	789.42	789.57	789.72	789.86	790.00	790.14	790.27	790.40	790.52	790.65	790.76	790.88	790.99	791.09	791.20	791.30	791.39	791.48
GIR 13	786.90	787.11	787.32	787.52	787.72	787.91	788.10	788.29	788.47	788.65	788.82	788.98	789.14	789.30	789.45	789.59	789.74	789.88	790.01	790.14	790.27	790.40	790.52	790.63	790.75	790.86	790.96	791.07	791.17	791.26	791.35
GIR 14	786.79	787.00	787.21	787.41	787.61	787.80	787.99	788.18	788.36	788.54	788.71	788.88	789.03	789.19	789.34	789.49	789.63	789.77	789.91	790.04	790.17	790.29	790.41	790.53	790.64	790.76	790.86	790.96	791.06	791.16	791.25
GIR 15	786.68	786.89	787.10	787.30	787.50	787.70	787.89	788.07	788.25	788.43	788.61	788.77	788.93	789.08	789.23	789.38	789.52	789.66	789.80	789.93	790.06	790.19	790.31	790.43	790.54	790.65	790.76	790.86	790.96	791.06	791.15
GIR 16	786.57	786.78	786.99	787.19	787.39	787.59	787.78	787.96	788.15	788.32	788.50	788.66	788.82	788.98	789.13	789.27	789.42	789.56	789.70	789.83	789.96	790.08	790.21	790.32	790.44	790.55	790.66	790.76	790.86	790.96	791.05
GIR 17	786.46	786.67	786.88	787.08	787.28	787.48	787.67	787.85	788.04	788.22	788.39	788.55	788.71	788.87	789.02	789.17	789.31	789.45	789.59	789.72	789.85	789.98	790.10	790.22	790.34	790.45	790.55	790.66	790.76	790.85	790.95
GIR 18	786.35	786.56	786.77	786.97	787.17	787.37	787.56	787.75	787.93	788.11	788.28	788.45	788.61	788.76	788.91	789.06	789.21	789.35	789.48	789.62	789.75	789.87	790.00	790.12	790.23	790.34	790.45	790.56	790.66	790.75	790.85
GIR 19	786.24	786.45	786.66	786.86	787.06	787.26	787.45	787.64	787.82	788.00	788.18	788.34	788.50	788.65	788.81	788.96	789.10	789.24	789.38	789.51	789.64	789.77	789.89	790.01	790.13	790.24	790.35	790.45	790.55	790.65	790.74
GIR 20	786.13	786.34	786.55	786.75	786.95	787.15	787.34	787.53	787.71	787.89	788.07	788.23	788.39	788.55	788.70	788.85	788.99	789.14	789.27	789.41	789.54	789.67	789.79	789.91	790.03	790.14	790.25	790.35	790.45	790.55	790.64
REOD	786.10	786.31	786.52	786.72	786.92	787.12	787.31	787.50	787.68	787.86	788.04	788.20	788.36	788.52	788.67	788.82	788.96	789.10	789.24	789.38	789.51	789.63	789.76	789.88	789.99	790.10	790.21	790.32	790.42	790.52	790.61

NOTE:

✳ SEE "STEEL DIAPHRAGM" SHEET FOR FLARED GIRDER BAR DETAILS.

DIMENSIONS PERPENDICULAR TO ℞ IH 94 UNLESS NOTED OTHERWISE.

✳✳ MEASURED ALONG ℄ BRG @ SUBSTRUCTURE UNIT

MEASURED ALONG ℄ PIER

MEASURED PERPENDICULAR FROM LONG. JT. TO EDGE OF DECK @ ℄ BRG

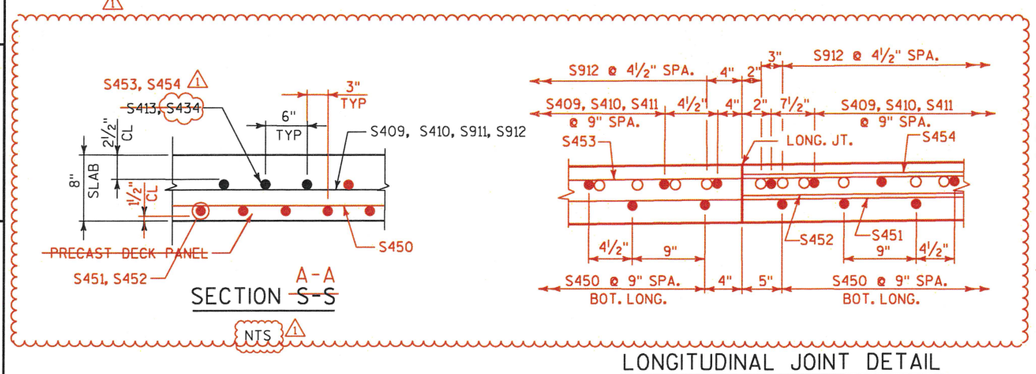

LONGITUDINAL JOINT DETAIL

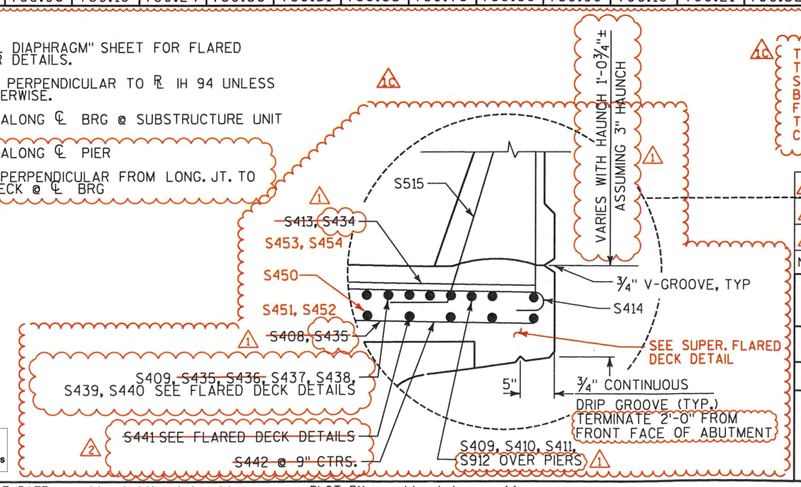

THE PE STAMP IN THIS PLAN SET COVERS ONLY THE MODIFICATIONS SHOWN CLOUDED IN RED AND SIGNIFIED BY 10, WHICH MODIFY THE ORIGINAL BRIDGE PLANS TO UTILIZE A TRADITIONAL FULL-DEPTH, CAST IN PLACE CONCRETE DECK. THE DECK REINFORCEMENT IS DESIGNED PER THE CURRENT WISCONSIN DOT BRIDGE MANUAL.

NO.	DATE	REVISION	BY
10	8/09/18	REMOVE PRECAST DECK PANELS	AYRES
2	7/10/18	MISC REVISION	JRM
1	7/6/18	DIN 17 - DIMENSIONS	JRM

STATE OF WISCONSIN
DEPARTMENT OF TRANSPORTATION

STRUCTURE B-51-126

DRAWN BY JRM | PLANS CK'D. AJC

SUPERSTRUCTURE CROSS SECTION

SHEET 19 OF 28

8/13/18

Plan Sheet Accepted By WISDOT BUREAU OF STRUCTURES

8

8

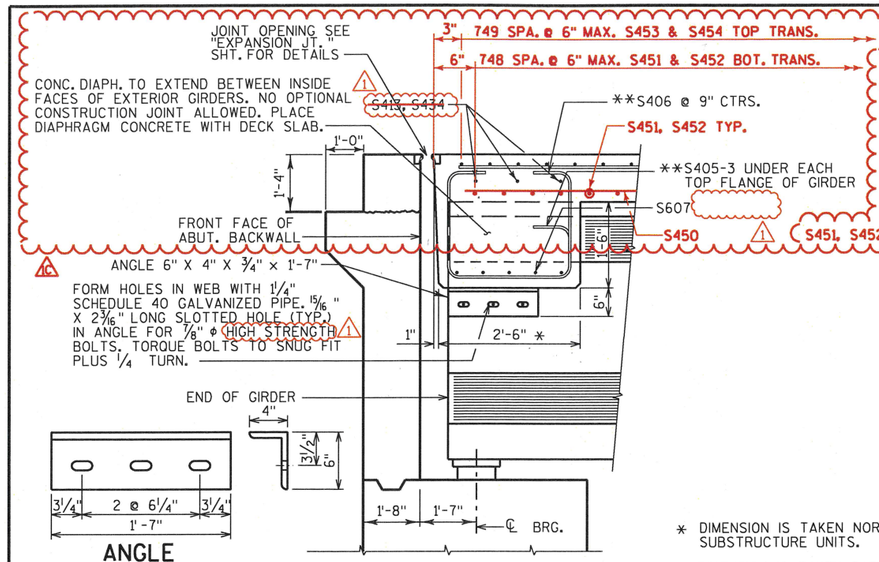

ANGLE

6" X 4" X 3/4" X 1'-7"
PROVIDE 3 1/2" x 3 1/2" x 5/16" PLATE WASHERS AT ALL LOCATIONS EXCEPT AT EXTERIOR FACES OF EXTERIOR GIRDERS WHERE 3 1/2" x 3 1/2" x 1/2" PLATE WASHERS SHALL BE PROVIDED.

PART LONGIT. SECTION

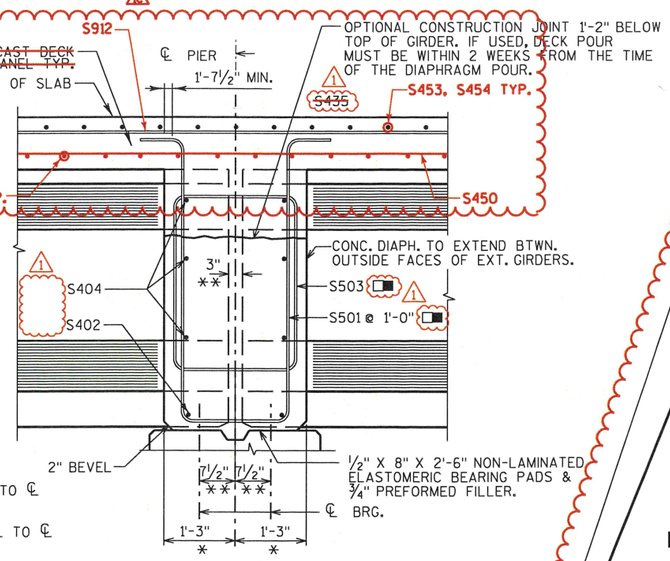

* DIMENSION IS TAKEN NORMAL TO ℄ SUBSTRUCTURE UNITS.

** DIMENSION IS TAKEN PARALLEL TO ℄ GIRDER.

BARS PLACED PARALLEL TO GIRDERS. SPACING PERPENDICULAR TO ℄ GIRDERS

AT PIER DIAPHRAGM

DESIGN DATA:

INITIAL PRESTRESSED FORCE/STRAND =13.17 KIPS

CONCRETE FOR DECK PANELS
f'c = 6,000 PSI
f'ci = 4,400 PSI

STATE PROJECT NUMBER
1030-24-72

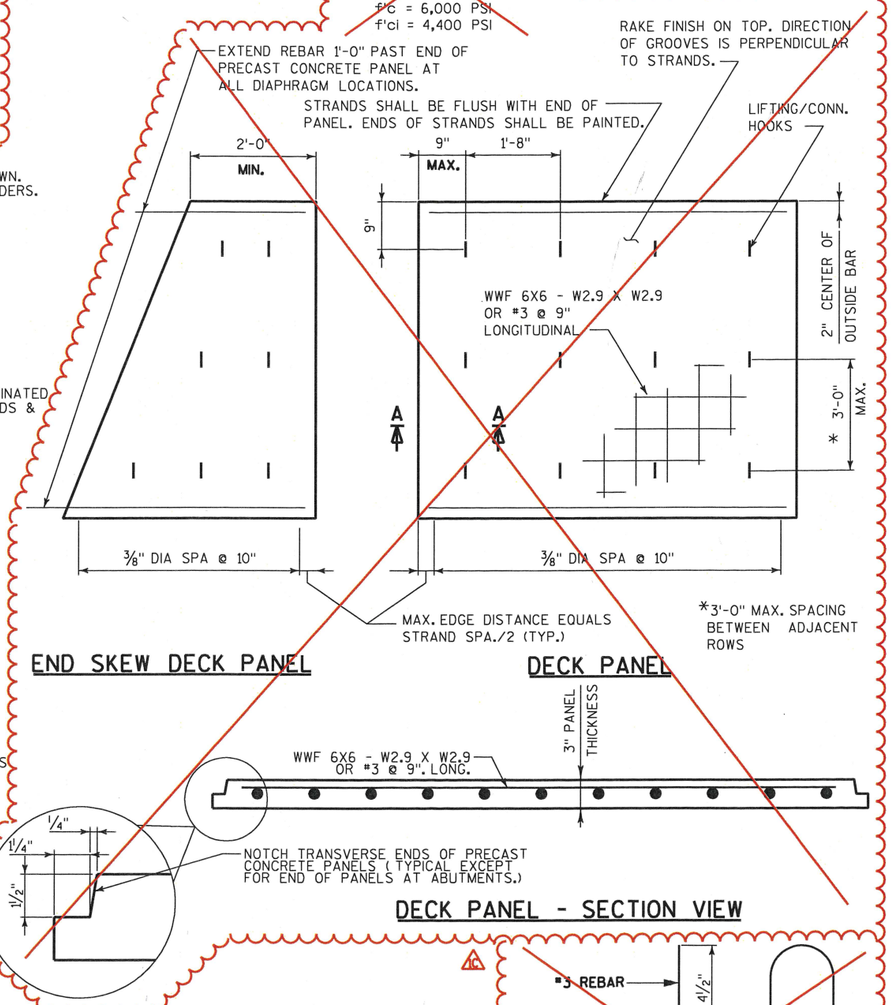

END SKEW DECK PANEL

DECK PANEL

DECK PANEL - SECTION VIEW

NOTES:

DIAPHRAGM SUPPORT ANGLES SHALL BE ASTM A709 GRADE 36.

ALL SUPPORT HARDWARE INCLUDING BOLTS, NUTS AND WASHERS SHALL BE GALVANIZED AFTER FABRICATION.

HIGH STRENGTH BOLTS FOR WEB CONNECTION SHALL MEET THE REQUIREMENTS FOR ASTM A325 OR ASTM A449.

THE PE STAMP IN THIS PLAN SET COVERS ONLY THE MODIFICATIONS SHOWN CLOUDED IN RED AND SIGNIFIED BY 1. WHICH MODIFY THE ORIGINAL BRIDGE PLANS TO UTILIZE A TRADITIONAL FULL-DEPTH, CAST IN PLACE CONCRETE DECK. THE DECK REINFORCEMENT IS DESIGNED PER THE CURRENT WISCONSIN DOT BRIDGE MANUAL.

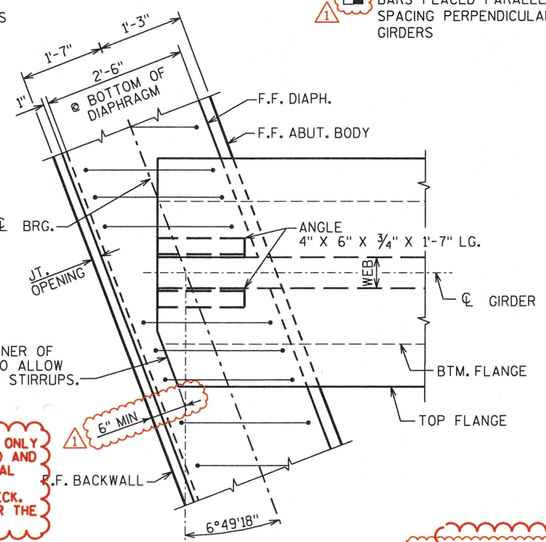

TOP VIEW OF DIAPHRAGM

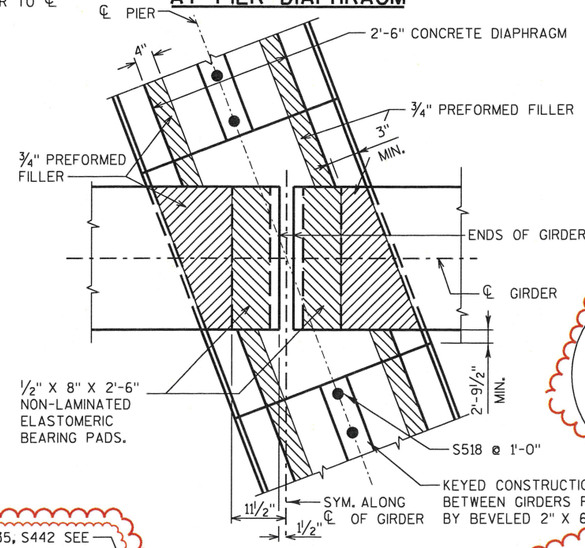

BEARING PAD DETAIL

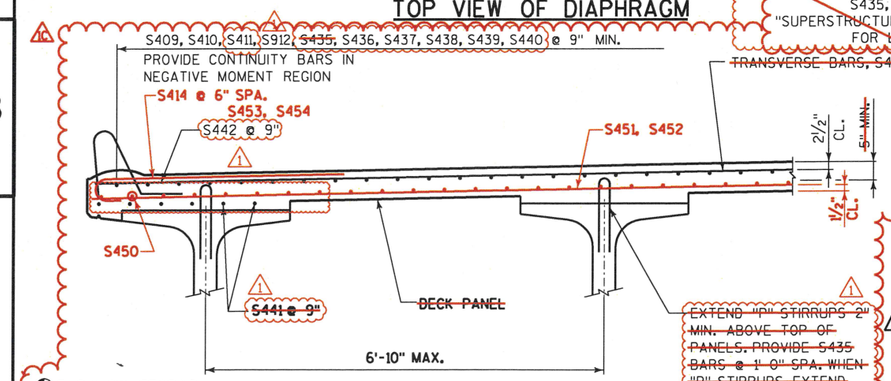

3'-0" MAX. SPACING BETWEEN ADJACENT ROWS

TRANSVERSE SECTION

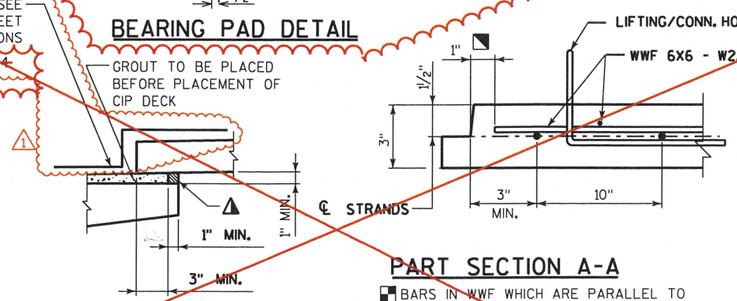

DETAIL A

PART SECTION A-A

BARS IN WWF WHICH ARE PARALLEL TO THE STRANDS MUST BE A MINIMUM OF 1" CLEAR FROM THE STRANDS.

LONG. REINFORCING AT PANELS ALONG SUBSTRUCTURES TO EXTEND 1'-0" BEYOND TRANSVERSE END OF PANELS INTO SUBSTRUCTURE DIAPHRAGM.

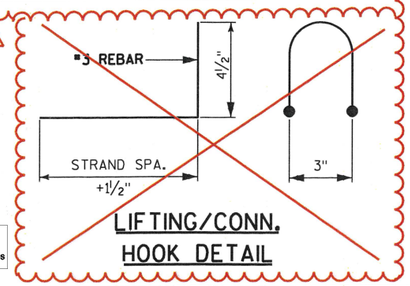

LIFTING/CONN. HOOK DETAIL

8/13/18

Plan Sheet Accepted by WISDOT BUREAU OF STRUCTURES

WISCONSIN DANIEL N. SYDOW E-38363 WI PROFESSIONAL ENGINEER

8/9/18

NO.	DATE	REVISION	BY
1	8/09/18	REMOVE PRECAST DECK PANELS	AYRES
1	7/10/18	MISC REVISION	JRM

STATE OF WISCONSIN
DEPARTMENT OF TRANSPORTATION

STRUCTURE B-51-126

DRAWN BY JRM | PLANS CK'D. AJC

SUPERSTRUCTURE DETAILS 1

SHEET 20 OF 28

8

8

STATE PROJECT NUMBER

1030-24-72

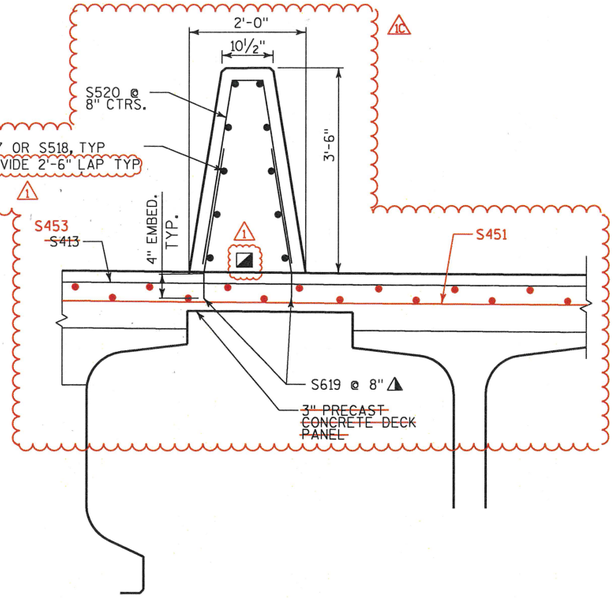

SECTION THRU BARRIER

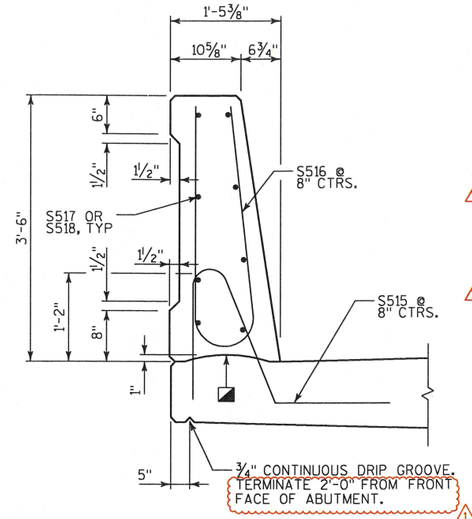

SECTION THRU PARAPET

BILL OF BARS

BAR	COAT	NO.	LENGTH	BENT	LOCATION
S501	X	152	12'-6"	X	PIER DIAPHRAGM VERT.
S402	X	76	3'-11"		PIER DIAPHRAGM HORIZ.
S503	X	152	10'-6"	X	PIER DIAPHRAGM STIRRUP
S404	X	356	3'-6"		PIER DIAPHRAGM HORIZ.
S405	X	228	5'-2"	X	ABUT. DIAPHRAGM STIRRUP.
S406	X	114	6'-6"	X	ABUT. DIAPHRAGM STIRRUP.
S407	X	380	4'-6"		ABUT. DIAPHRAGM HORIZ.
S408	X	5454	5'-10"		SLAB TRANS. BOT.
S409	X	519	39'-7"		SLAB LONG. SPAN 1 TOP
S410	X	340 342	34'-1"		SLAB LONG. SPAN 2. TOP
S411	X	336 334	42'-0"		SLAB LONG. SPAN 3 TOP
S912	X	682	59'-0"		SLAB LONG. NEG. MOM. AT PIER
S413	X	1510	43'-1"		SLAB TRANS. TOP
S414	X	1498	4'-6"	X	SLAB TRANS. TOP AT OVERHANGS
S515	X	1266	4'-5"	X	PARAPET VERT. DECK AND APPROACH
S516	X	1262	6'-8"	X	PARAPET VERT. DECK AND APPROACH
S517	X	208	49'-1"		HORIZ. MEDIAN BARRIER & PARAPET AT DECK
S518	X	52	21'-4"		HORIZ. MEDIAN BARRIER & PARAPET AT APPR
S619	X	1264	3'-6"	X	BARRIER DOWEL
S520	X	632	6'-10"	X	BARRIER VERT. DECK AND APPROACH
S421	X	76	6'-6"		EXPANSION JOINT LONG.
S522	X	120	7'-10"		BACK WALL HORIZ.
S523	X	24	7'-1"	X	LIGHT STD. - TRANS - DECK TOP
S524	X	8	7'-8"	X	LIGHT STD. - VERT - PARAPET
S525	X	8	7'-0"	X	LIGHT STD. - VERT - PARAPET
S626	X	18	10'-0"	X	LIGHT STD. - HORIZ - PARAPET
S527	X	24	6'-5"		LIGHT STD. - TRANS - DECK BOT
S528	X	4	4'-0"	X	LIGHT STD. - VERT - PARAPET
S529	X	4	3'-4"	X	LIGHT STD. - VERT - PARAPET
S434	X	749	44'-11"		SLAB TRANS. TOP
S435	X	1368	6'-4"	X	DECK BOT. HAT BARS
S436	X	4	40'-0"		SLAB LONG. AT OVERHANG
S437	X	2	35'-9"		SLAB LONG. AT OVERHANG
S438	X	1	22'-9"		SLAB LONG. AT OVERHANG
S439	X	1	44'-2"		SLAB LONG. AT OVERHANG
S440	X	2	30'-1"		SLAB LONG. AT OVERHANG
S441	X	126	43'-2"		SLAB LONG. BOT AT OVERHANG
S442	X	1008	6'-1"	X	DECK BOT. HAT BARS AT OVERHANG
S443	X	1	11'-8"		SLAB LONG. AT OVERHANG

BILL OF BARS

BAR	COAT	NO.	LENGTH	BENT	LOCATION
S450	X	1,670	39'-0"	-	SLAB LONG. BOT.
S451	X	2,247	31'-1"	-	SLAB TRANS. BOT. STAGE 2
S452	X	1,498	22'-9"	-	SLAB TRANS. BOT. STAGE 3
S453	X	2,250	31'-1"	-	SLAB TRANS. TOP STAGE 2
S454	X	1,500	22'-9"	-	SLAB TRANS. TOP STAGE 3
S455	X	55	39'-0"	-	SLAB LONG. BOT. FLARE

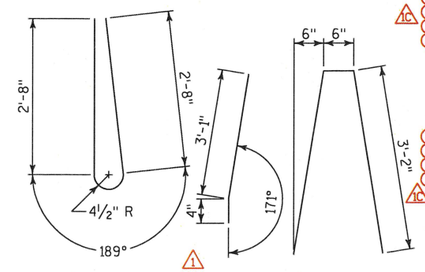

S516 S619 S520

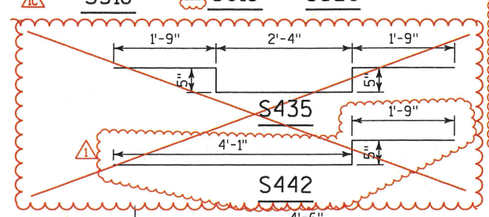

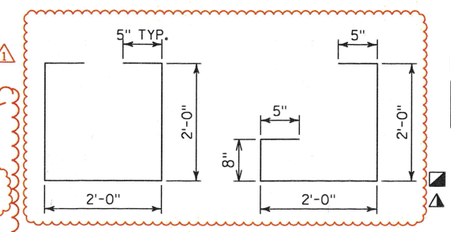

S406 S405

BAR SERIES TABLE

BAR MARK	NO. REQ'D	LENGTH
S434	1 SERIES OF 749	47'-10" TO 42'-0"

LEGEND

- CONST. JOINT - STRIKE OFF AS SHOWN
- ADHESIVE ANCHOR EMBED 4" INTO DECK

NOTES

ALL VERTICAL BAR STEEL REINFORCMENT IN CONCRETE DIAPHRAGMS SHALL BE PLACED PARALLEL TO THE GIRDERS.

DRILLING OR BUNRING THRU DECK REINFORCEMENT IS PROHIBITTED.

PARTIALLY DRILLED HOLES ABANDONED IN THE DECK SHALL BE FILLED WITH NON-SHRINK COMMERCIAL GROUT PER THE APPROVED PRODUCT LIST.

WISCONSIN DANIEL N. SYDOW E-38363 WI PROFESSIONAL ENGINEER

8/9/18

THE PE STAMP IN THIS PLAN SET COVERS ONLY THE MODIFICATIONS SHOWN CLOUDED IN RED AND SIGNIFIED BY 1C, WHICH MODIFY THE ORIGINAL BRIDGE PLANS TO UTILIZE A TRADITIONAL FULL-DEPTH, CAST IN PLACE CONCRETE DECK. THE DECK REINFORCEMENT IS DESIGNED PER THE CURRENT WISCONSIN DOT BRIDGE MANUAL.

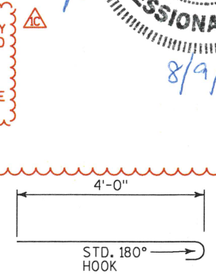

S414

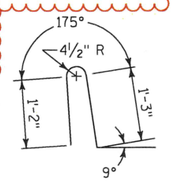

S515

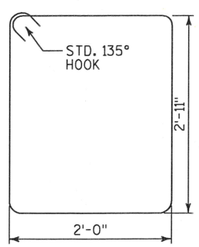

S503

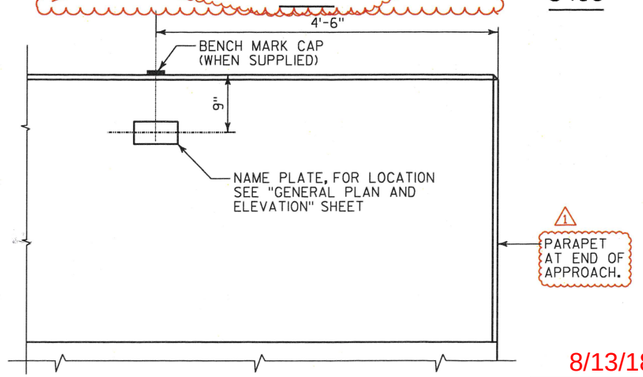

INSIDE ELEVATION

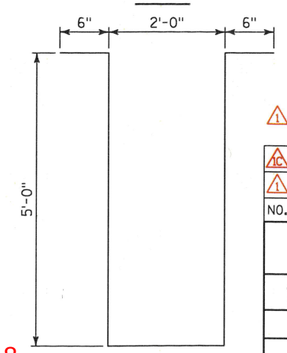

S501

8/13/18

Plan Sheet Accepted By WISDOT BUREAU OF STRUCTURES

NO.	DATE	REVISION	BY
1C	8/09/18	REMOVE PRECAST DECK PANELS	AYRES
1	7/10/18	MISC REVISION	JRM

STATE OF WISCONSIN
DEPARTMENT OF TRANSPORTATION

STRUCTURE B-51-126

DRAWN BY JRM | PLANS CK'D. AJC

SUPERSTRUCTURE DETAILS 2

SHEET 21 OF 28

8

8