STATE PROJECT NUMBER
1060-33-80

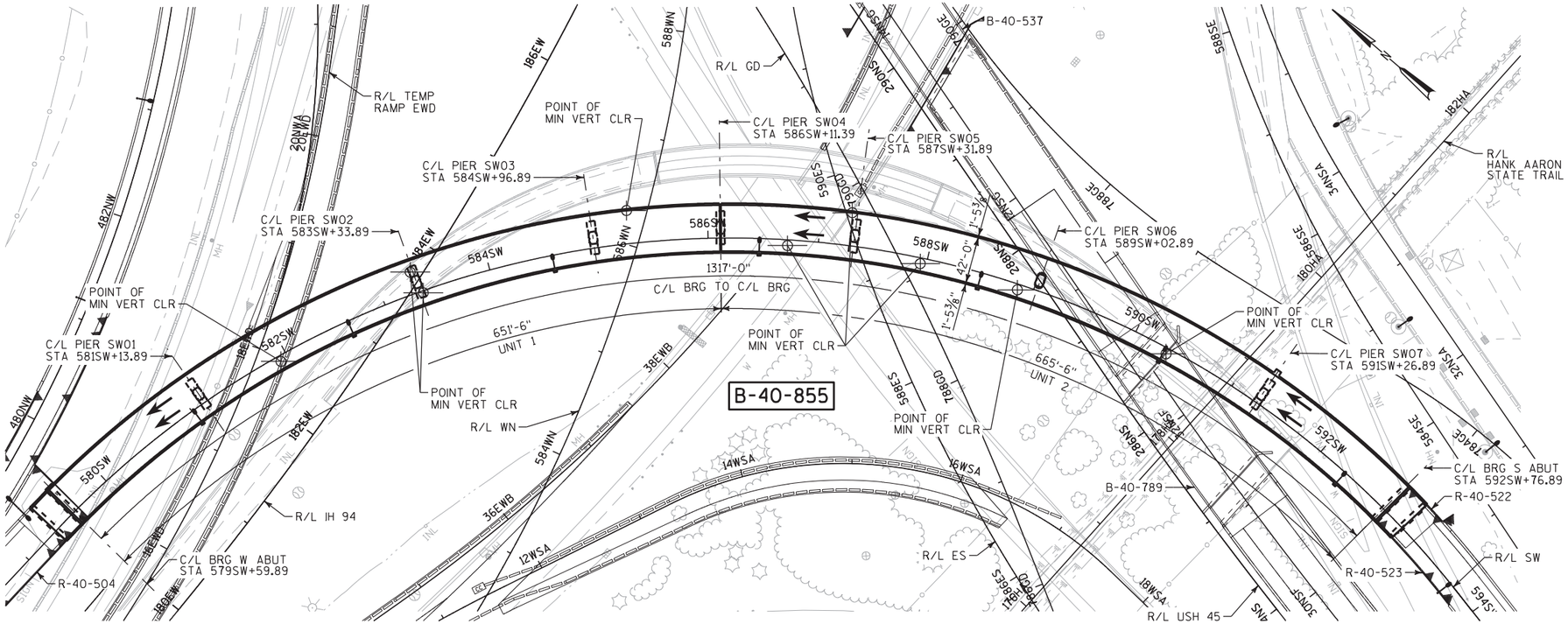

PLAN

8-SPAN CURVED STEEL TRAPEZOIDAL BOX GIRDER, 7 FOOT WEB DEPTH
ABUTMENTS AND PIERS ARE RADIAL TO R/L SW
DIMENSIONS SHOWN ARE ALONG R/L SW

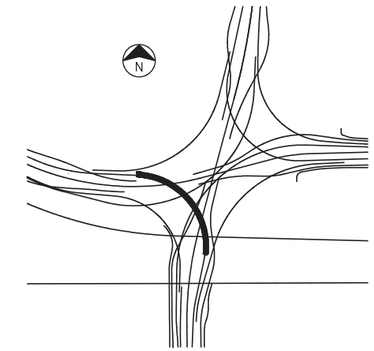

LOCATION MAP

LEGEND

- INDICATES LANE LOCATION AND DIRECTION OF TRAVEL
- ◪ = INTERIM CONDITION AT COMPLETION OF PROJECT ID 1060-33-80
- ◭ = ULTIMATE CONDITION AT COMPLETION OF FUTURE PROJECT ID 1060-33-81

WISCONSIN
W. RANDALL THOMAS
E-37361
MILWAUKEE, WI
PROFESSIONAL ENGINEER
06/12/2014

STRUCTURES DESIGN CONTACTS

BRIDGE OFFICE:
WILLIAM DREHER (608) 266-8489
CONSULTANT:
RANDY THOMAS (414) 847-0447

NO.	DATE	REVISION	BY

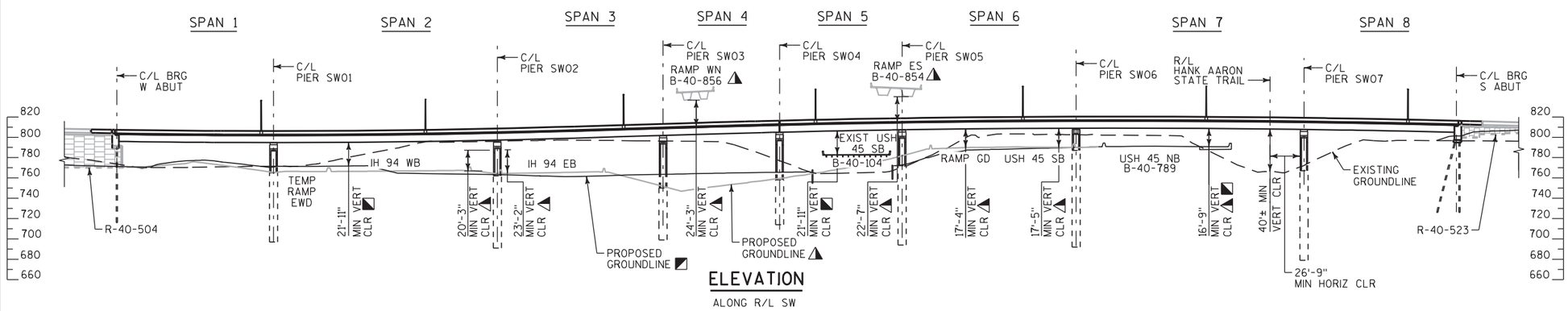

ELEVATION

ALONG R/L SW

FORWARD 45

STATE OF WISCONSIN
DEPARTMENT OF TRANSPORTATION

ACCEPTED William C. Dreher 6/12/14
CHIEF STRUCTURES DESIGN ENGINEER DATE

STRUCTURE B-40-855

ZOO INTERCHANGE RAMP SW

COUNTY	TOWN/CITY/VILLAGE
MILWAUKEE	MILWAUKEE

DESIGN SPEC.
AASHTO LRFD BRIDGE DESIGN SPECIFICATIONS

DESIGNED BY	DESIGN CK'D.	DRAWN BY	PLANS CK'D.
WRT	CNK	GLM	WRT

GENERAL PLAN & ELEVATION

SHEET 1 OF 96

8

8

STATE PROJECT NUMBER
1060-33-80

DRAWING LIST

MANDATORY

1. GENERAL PLAN & ELEVATION
2. DRAWING LIST
3. TYPICAL SECTION & DESIGN DATA
4. GENERAL NOTES
5. QUANTITIES
6. ROADWAY GEOMETRY (1 OF 2)
7. ROADWAY GEOMETRY (2 OF 2)
8. PLAN & ELEVATION SPANS 1 & 2
9. PLAN & ELEVATION SPANS 3 THRU 6
10. PLAN & ELEVATION SPANS 7 & 8
11. SUBSURFACE EXPLORATION SPANS 1 & 2
12. SUBSURFACE EXPLORATION SPANS 3 THRU 6
13. SUBSURFACE EXPLORATION SPANS 7 & 8
14. CONSTRUCTION STAGING NOTES (1 OF 2)
15. CONSTRUCTION STAGING NOTES (2 OF 2)
16. CONSTRUCTION STAGING (1 OF 5)
17. CONSTRUCTION STAGING (2 OF 5)
18. CONSTRUCTION STAGING (3 OF 5)
19. CONSTRUCTION STAGING (4 OF 5)
20. CONSTRUCTION STAGING (5 OF 5)
21. WEST ABUTMENT PLAN & ELEVATION
22. WEST ABUTMENT DETAILS (1 OF 2)
23. WEST ABUTMENT DETAILS (2 OF 2)
24. SOUTH ABUTMENT PLAN & ELEVATION
25. SOUTH ABUTMENT DETAILS (1 OF 2)
26. SOUTH ABUTMENT DETAILS (2 OF 2)
27. ABUTMENT PEDESTAL REINFORCEMENT
28. ABUTMENT REINFORCEMENT SCHEDULE
29. UNIT 1 BEARING LAYOUT
30. UNIT 2 BEARING LAYOUT
31. BEARING DETAILS
32. JACKING PROVISIONS
33. GIRDER SECTION
34. UNIT 1 FRAMING PLAN
35. UNIT 2 FRAMING PLAN
36. GIRDER PLAN AND ELEVATION: FIELD SECTIONS 1 & 2
37. GIRDER PLAN AND ELEVATION: FIELD SECTIONS 3 & 4
38. GIRDER PLAN AND ELEVATION: FIELD SECTIONS 5 & 6
39. GIRDER PLAN AND ELEVATION: FIELD SECTION 7
40. GIRDER PLAN AND ELEVATION: FIELD SECTIONS 8 & 9
41. GIRDER PLAN AND ELEVATION: FIELD SECTIONS 10 THRU 12
42. GIRDER PLAN AND ELEVATION: FIELD SECTIONS 13 & 14
43. GIRDER PLAN AND ELEVATION: FIELD SECTION 15
44. ACCESS HATCH DETAILS
45. ACCESS DOOR DETAILS
46. MISCELLANEOUS GIRDER DETAILS
47. K-FRAMES AND STRUTS
48. LATERAL BRACING DETAILS

MANDATORY CONT

49. FIELD SPLICE DETAILS
50. ABUTMENT DIAPHRAGM
51. TYPICAL PIER DIAPHRAGM
52. PIER END DIAPHRAGM
53. INTERMEDIATE DIAPHRAGM
54. DIAPHRAGM DETAILS (1 OF 2)
55. DIAPHRAGM DETAILS (2 OF 2)
56. PIER SW06 INTEGRAL CROSS HEAD
57. PIER SW06 INTEGRAL CROSS HEAD DETAILS
58. CAMBER DIAGRAM UNIT 1
59. CAMBER DIAGRAM UNIT 2
60. CAMBER AND DECK ELEVATIONS: FIELD SECTIONS 1 & 2
61. CAMBER AND DECK ELEVATIONS: FIELD SECTIONS 3 & 4
62. CAMBER AND DECK ELEVATIONS: FIELD SECTIONS 5 & 6
63. CAMBER AND DECK ELEVATIONS: FIELD SECTIONS 7 & 8
64. CAMBER AND DECK ELEVATIONS: FIELD SECTIONS 9 & 10
65. CAMBER AND DECK ELEVATIONS: FIELD SECTIONS 11 THRU 13
66. CAMBER AND DECK ELEVATIONS: FIELD SECTION 14 & 15
67. SUPERSTRUCTURE CROSS SECTION
68. DECK REINFORCEMENT (1 OF 3)
69. DECK REINFORCEMENT (2 OF 3)
70. DECK REINFORCEMENT (3 OF 3)
71. DECK DETAILS
72. DECK POURING SEQUENCE AND NOTES
73. DECK REINFORCEMENT SCHEDULE
74. EXPANSION JOINT LAYOUT - ABUTMENT
75. EXPANSION JOINT LAYOUT - PIER
76. EXPANSION JOINT SECTIONS
77. MODULAR EXPANSION JOINT COVER PLATES
78. MODULAR EXPANSION JOINT DETAILS
79. STRUCTURAL APPROACH SLAB
80. STRUCTURAL APPROACH SLAB DETAILS
81. APPROACH SLAB REINFORCEMENT SCHEDULE
82. PARAPET EMBEDDED WORK UNIT 1
83. PARAPET ELEVATIONS UNIT 1
84. PARAPET EMBEDDED WORK UNIT 2
85. PARAPET ELEVATIONS UNIT 2
86. PARAPET SECTIONS & DETAILS
87. LIGHT SUPPORT DETAILS (1 OF 2)
88. LIGHT SUPPORT DETAILS (2 OF 2)
89. SIGN BRIDGE BASE (1 OF 2)
90. SIGN BRIDGE BASE (2 OF 2)
91. PARAPET REINFORCEMENT SCHEDULE
92. FLOOR DRAIN PIPING (1 OF 2)
93. FLOOR DRAIN PIPING (2 OF 2)
94. FLOOR DRAIN SPECIAL
95. AESTHETIC DETAILS
96. SLOPE PAVING DETAILS

PIERS-OPTION A

A1. OPTION A - QUANTITIES
A2. OPTION A - FOUNDATION LAYOUT (1 OF 3)
A3. OPTION A - FOUNDATION LAYOUT (2 OF 3)
A4. OPTION A - FOUNDATION LAYOUT (3 OF 3)
A5. OPTION A - EXCAVATION PLAN (1 OF 4)
A6. OPTION A - EXCAVATION PLAN (2 OF 4)
A7. OPTION A - EXCAVATION PLAN (3 OF 4)
A8. OPTION A - EXCAVATION PLAN (4 OF 4)
A9. OPTION A - DRILLED SHAFT DETAILS (1 OF 2)
A10. OPTION A - DRILLED SHAFT DETAILS (2 OF 2)
A11. OPTION A - DRILLED SHAFT REINFORCEMENT SCHEDULE
A12. OPTION A - TYPICAL PIER LAYOUT
A13. OPTION A - TYPICAL PIER CAP REINFORCEMENT
A14. OPTION A - PIER SW01 DETAILS
A15. OPTION A - PIER SW02 DETAILS
A16. OPTION A - PIER SW03 DETAILS
A17. OPTION A - PIER SW04 DETAILS
A18. OPTION A - PIER SW05 DETAILS
A19. OPTION A - PIER SW07 DETAILS
A20. OPTION A - TYPICAL PEDESTAL REINFORCEMENT
A21. OPTION A - PIER SW06 LAYOUT
A22. OPTION A - PIER SW06 DETAILS
A23. OPTION A - PIER SW06 PEDESTAL REINFORCEMENT
A24. OPTION A - PIER REINFORCEMENT SCHEDULE (1 OF 2)
A25. OPTION A - PIER REINFORCEMENT SCHEDULE (2 OF 2)

PIERS-OPTION B

B1. OPTION B - QUANTITIES
B2. OPTION B - FOUNDATION LAYOUT (1 OF 3)
B3. OPTION B - FOUNDATION LAYOUT (2 OF 3)
B4. OPTION B - FOUNDATION LAYOUT (3 OF 3)
B5. OPTION B - EXCAVATION PLAN (1 OF 4)
B6. OPTION B - EXCAVATION PLAN (2 OF 4)
B7. OPTION B - EXCAVATION PLAN (3 OF 4)
B8. OPTION B - EXCAVATION PLAN (4 OF 4)
B9. OPTION B - DRILLED SHAFT DETAILS (1 OF 2)
B10. OPTION B - DRILLED SHAFT DETAILS (2 OF 2)
B11. OPTION B - DRILLED SHAFT REINFORCEMENT SCHEDULE
B12. OPTION B - TYPICAL PIER LAYOUT
B13. OPTION B - TYPICAL PIER CAP REINFORCEMENT
B14. OPTION B - PIER SW01 DETAILS
B15. OPTION B - PIER SW02 DETAILS
B16. OPTION B - PIER SW03 DETAILS
B17. OPTION B - PIER SW04 DETAILS
B18. OPTION B - PIER SW05 DETAILS
B19. OPTION B - PIER SW07 DETAILS
B20. OPTION B - TYPICAL PEDESTAL REINFORCEMENT
B21. OPTION B - PIER SW06 LAYOUT
B22. OPTION B - PIER SW06 DETAILS
B23. OPTION B - PIER SW06 FOOTING
B24. OPTION B - PIER SW06 PEDESTAL REINFORCEMENT
B25. OPTION B - PIER REINFORCEMENT SCHEDULE (1 OF 2)
B26. OPTION B - PIER REINFORCEMENT SCHEDULE (2 OF 2)

NOTES

THIS CONTRACT CONTAINS TWO OPTIONS FOR PIER CONSTRUCTION.
THE CONTRACTOR MUST BID EITHER OPTION A OR OPTION B.

PIERS - OPTION A
DRILLED SHAFT FOUNDATION AT ALL LOCATIONS
SHEETS A1 THRU A25

PIERS - OPTION B
DRIVEN PILE FOUNDATION AT PIER SW06
DRILLED SHAFT FOUNDATION AT ALL OTHER LOCATIONS
SHEETS B1 THRU B26

WISCONSIN
W. RANDALL THOMAS
E-37361
MILWAUKEE, WI
PROFESSIONAL ENGINEER
06/12/2014

NO.	DATE	REVISION	BY

STATE OF WISCONSIN
DEPARTMENT OF TRANSPORTATION

STRUCTURE B-40-855

DRAWN BY GLM | PLANS CK'D. WRT

DRAWING LIST

SHEET 2 OF 96

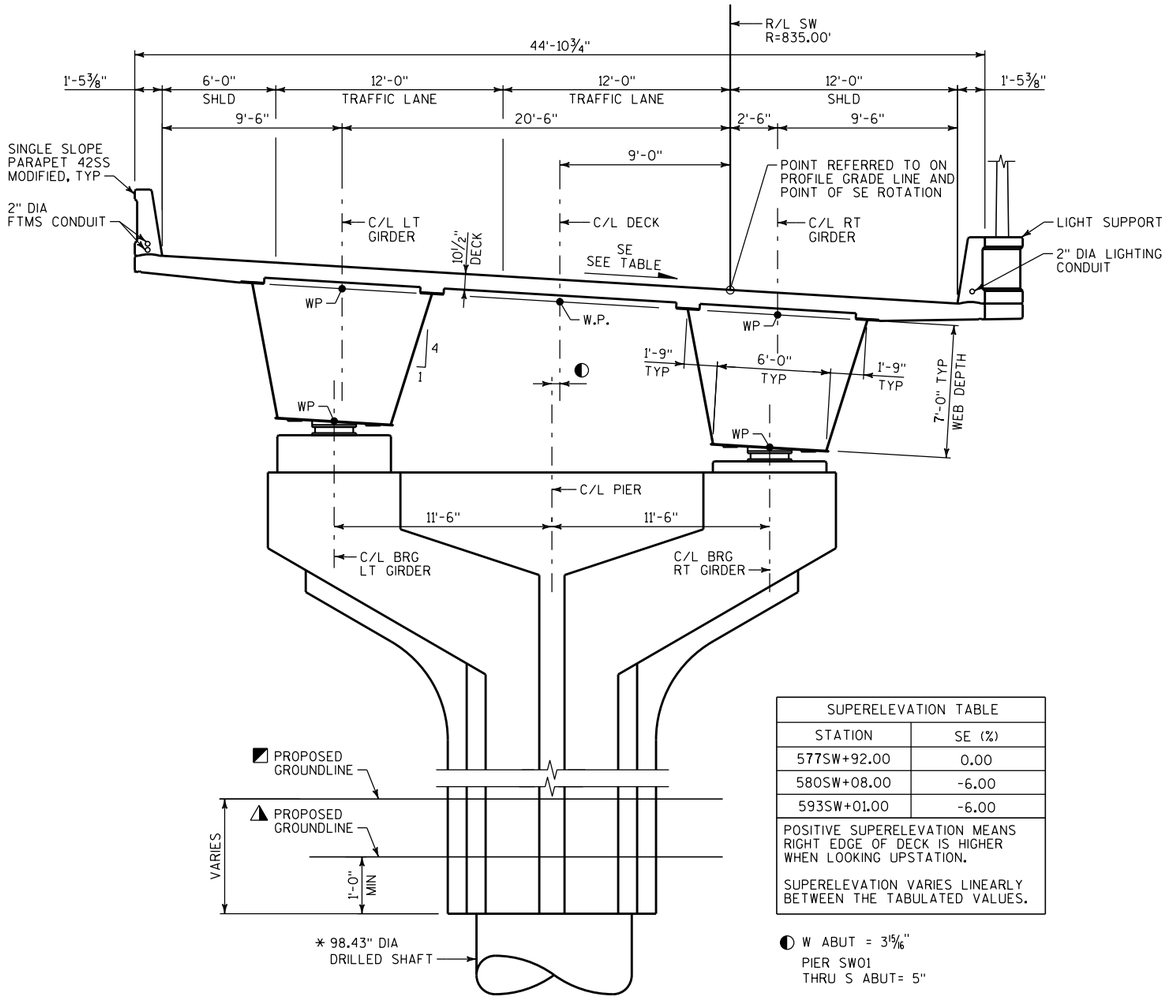

SUPERELEVATION TABLE	
STATION	SE (%)
577SW+92.00	0.00
580SW+08.00	-6.00
593SW+01.00	-6.00

POSITIVE SUPERELEVATION MEANS RIGHT EDGE OF DECK IS HIGHER WHEN LOOKING UPSTATION.

SUPERELEVATION VARIES LINEARLY BETWEEN THE TABULATED VALUES.

◐ W ABUT = 3 15/16"
PIER SW01
THRU S ABUT= 5"

TYPICAL SECTION THRU RAMP SW

LOOKING UPSTATION

* DRILLED SHAFT FOUNDATION SHOWN.
IF OPTION B IS BID, CONSTRUCT DRIVEN
PILE FOUNDATION AT PIER SW06.
SEE NOTES ON SHEET 2.

DESIGN DATA

LIVE LOAD

DESIGN LOADING: HL-93

CONTROLLING RATINGS FOR UNIT 1
INVENTORY RATING FACTOR: RF = 1.19
OPERATING RATING FACTOR: RF = 1.54
WISCONSIN STANDARD PERMIT VEHICLE (WIS-SPV): 250 KIPS

CONTROLLING RATINGS FOR UNIT 2
INVENTORY RATING FACTOR: RF = 1.24
OPERATING RATING FACTOR: RF = 1.61
WISCONSIN STANDARD PERMIT VEHICLE (WIS-SPV): 250 KIPS

STRUCTURE IS DESIGNED FOR A FUTURE WEARING SURFACE OF 20 POUNDS PER SQUARE FOOT.

ULTIMATE DESIGN STRESSES

CONCRETE MASONRY:
SUPERSTRUCTURE (HPC) _____ f'c = 4,000 PSI
SUBSTRUCTURE, PIERS _____ f'c = 5,000 PSI
SUBSTRUCTURE, ABUTMENTS _____ f'c = 4,000 PSI
DRILLED SHAFTS _____ f'c = 4,000 PSI
C.I.P. CONCRETE PILING _____ f'c = 3,500 PSI
BAR STEEL REINFORCEMENT _____ fy = 60,000 PSI
STRUCTURAL STEEL
ASTM A709 (AASHTO M270) GRADE HPS 70W _____ Fy = 70,000 PSI
ASTM A709 (AASHTO M270) GRADE HPS 50W _____ Fy = 50,000 PSI
ASTM A709 (AASHTO M270) GRADE 50 _____ Fy = 50,000 PSI

TRAFFIC DATA					
ROUTE	RAMP SW	IH 94 EB	IH 94 WB	USH 45 NB	USH 45 SB
A.A.D.T.	29,900	44,900	44,900	59,900	63,600
YEAR	2035	2035	2035	2035	2035
R.D.S. (MPH)	50	60	60	60	60

LEGEND

◪ = INTERIM CONDITION AT COMPLETION OF PROJECT ID 1060-33-80

◭ = ULTIMATE CONDITION AT COMPLETION OF FUTURE PROJECT ID 1060-33-81

8

8

NO.	DATE	REVISION	BY

STATE OF WISCONSIN
DEPARTMENT OF TRANSPORTATION

STRUCTURE B-40-855

DRAWN BY GLM | PLANS CK'D. WRT

TYPICAL SECTION & DESIGN DATA

SHEET 3 OF 96

STATE PROJECT NUMBER

1060-33-80

GENERAL

G.1. DRAWINGS SHALL NOT BE SCALED.

G.2. ALL DIMENSIONS ARE IN FEET AND INCHES UNLESS NOTED OTHERWISE.

G.3. COORDINATES ON THIS PLAN ARE REFERENCED TO THE WISCONSIN COUNTY COORDINATE SYSTEM (WCCS), MILWAUKEE COUNTY ZONE, NAD 83 (2007). ALL STATIONS AND ELEVATIONS ARE IN FEET. ELEVATIONS ARE REFERENCED TO THE NORTH AMERICAN VERTICAL DATUM NAVD 88 (2007).

G.4. GIRDERS AND OTHER ELEMENTS OF THE STRUCTURE ARE REFERRED TO AS 'LEFT' AND 'RIGHT'. THESE DIRECTIONS ARE WITH RESPECT TO THE REFERENCE LINE WHEN LOOKING UP STATION.

G.5. TRANSVERSE DIMENSIONS ARE RADIAL TO THE REFERENCE LINE UNLESS NOTED OTHERWISE.

G.6. THE UTILITY INFORMATION SHOWN ON THESE DRAWINGS CONCERNING TYPE AND LOCATION OF UNDERGROUND UTILITIES IS NOT GUARANTEED TO BE ACCURATE OR ALL-INCLUSIVE. THE CONTRACTOR IS RESPONSIBLE FOR MAKING THEIR OWN DETERMINATION AS TO TYPE AND LOCATION OF UNDERGROUND UTILITIES AS MAY BE NECESSARY TO AVOID DAMAGE. UTILITIES LABELED AS PROPOSED MAY BE INSTALLED BY OTHERS PRIOR TO THIS CONTRACT.

G.7. EXISTING BRIDGE B-40-755 IS A TWO SPAN CURVED STEEL PLATE GIRDER STRUCTURE. EXISTING BRIDGES B-40-98 & B-40-99 ARE THREE SPAN KINKED STEEL ROLLED BEAM STRUCTURES. ALL THREE BRIDGES WILL BE REMOVED IN THEIR ENTIRETY.

G.8. ABOVE GROUND PORTIONS OF EXISTING BRIDGE B-40-103 WERE REMOVED IN YEAR 2010. CONCRETE ABUTMENTS ON TIMBER PILES AND CONCRETE PIER FOOTINGS ON CIPC PILES REMAIN. REMOVE EAST ABUTMENT TO ELEVATION 784. REMOVE WEST ABUTMENT IN ITS ENTIRETY, INCLUDING PILES. REMOVAL OF PIERS IS NOT REQUIRED. PIER 1 IS CLASSIFIED AS A KNOWN OBSTRUCTION FOR CONSTRUCTION OF DRILLED SHAFT FOUNDATION, SEE SHEET A3 OR B3.

G.9. THE CONTRACTOR MUST COORDINATE THE REMOVAL OF EXISTING BRIDGES B-40-755, B-40-89, B-40-99 & B-40-103 AND THE CONSTRUCTION OF BRIDGE B-40-855, WITH PROPOSED WALLS R-40-504, R-40-522 & R-40-523, PROPOSED BRIDGE B-40-789, AND EXISTING BRIDGE B-40-104. SEE STRUCTURE PLANS.

G.10. STRUCTURE PLANS OF EXISTING STRUCTURES ARE AVAILABLE FOR REVIEW AT WISDOT SE REGION OFFICE, 141 NW BARSTOW STREET, WAUKESHA, WI, OR THROUGH THE WISDOT STRUCTURES WEBSITE.

G.11. SEE CONSTRUCTION STAGING SHEETS FOR INFORMATION ON ASSUMED DEMOLITION AND CONSTRUCTION SEQUENCES.

G.12. THIS CONTRACT CONTAINS TWO OPTIONS FOR PIER CONSTRUCTION. THE CONTRACTOR MUST BID EITHER OPTION A OR OPTION B. SEE NOTE ON SHEET 2.

EXCAVATION AND BACKFILL

EB.1. THE UPPER LIMITS OF "EXCAVATION FOR STRUCTURES, BRIDGES B-40-855" SHALL BE AS FOLLOWS:
SOUTH ABUTMENT: EXISTING GROUNDLINE
PIERS: AS DEFINED ON THE EXCAVATION PLAN SHEETS

EB.2. AT THE BACK FACE OF ABUTMENTS, ALL VOLUME WHICH CANNOT BE PLACED BEFORE ABUTMENT CONSTRUCTION AND IS NOT OCCUPIED BY THE NEW BRIDGE OR RETAINING WALL REINFORCED ZONE SHALL BE BACKFILLED WITH STRUCTURE BACKFILL.

DESIGN

D.1. DESIGN IS IN ACCORDANCE WITH AASHTO LRFD BRIDGE DESIGN SPECIFICATIONS 6TH EDITION, 2012, UNLESS NOTED OTHERWISE.

D.2. LOAD MODIFIERS (AASHTO LRFD 1.3)
DUCTILITY: 1.00
REDUNDANCY: 1.05 FOR STEEL BOX GIRDERS AND DIAPHRAGMS
1.00 ALL OTHER ELEMENTS
OPERATIONAL IMPORTANCE: 1.00

D.3. TEMPERATURE CHANGE USED FOR DETERMINING SUBSTRUCTURE FORCES = 90°F.

D.4. ABSOLUTE TEMPERATURE RANGE FOR DETERMINING BEARING AND EXPANSION JOINT MOVEMENTS = -30°F TO +120°F.

D.5. DESIGN ASSUMED 200 LB/FT ON EACH GIRDER FOR STAY-IN-PLACE METAL FORMS, INCLUDING CONCRETE WITHIN FORM FLUTES.

D.6. DESIGN ASSUMED 10 PSF FOR TEMPORARY FORMWORK IN ADDITION TO STAY-IN-PLACE FORMS.

D.7. LIVE LOAD DEFLECTION LIMIT = SPAN/800 (HL93)

D.8. LOAD RATINGS REPORTED ON SHEET 3 INCLUDE THE FOLLOWING SYSTEM FACTORS: 0.85 FOR FLEXURE, 1.00 FOR SHEAR

STRUCTURAL STEEL

SS.1. STEEL GRADE FOR WEBS AND FLANGES OF GIRDERS AND DIAPHRAGMS, INCLUDING SPLICE PLATES AND ALL PLATES WELDED TO GIRDER WEBS, SHALL BE ASTM A709 GRADE HPS 50W, UNLESS NOTED AS HPS 70W ON GIRDER SHEETS.

SS.2. STEEL GRADE FOR STIFFENERS, K-FRAMES, STRUTS, LATERAL BRACING AND JACKING PADS SHALL BE ASTM A709 GRADE 50.

SS.3. STEEL GRADE FOR MASONRY PLATES, SOLE PLATES, AND BEVELED TOP PLATES FOR THE BEARING ASSEMBLIES SHALL BE ASTM A709 GRADE 50W. FOR STEEL GRADE OF OTHER BEARING COMPONENTS, SEE SPECIAL PROVISIONS FOR BEARINGS.

SS.4. ALL STRUCTURAL STEEL PLATE FOR BOX GIRDER FLANGES AND WEBS IN TENSION ZONES AS SHOWN ON THE PLANS, ALL SPLICE PLATES IN TENSION ZONES, ALL WEB STIFFENERS, AND ALL INTERNAL AND EXTERNAL DIAPHRAGM PLATES SHALL BE CLASSIFIED AS FRACTURE CRITICAL MEMBERS (FCM). ALL WELDS FOR THESE ELEMENTS SHALL BE CONSIDERED FRACTURE CRITICAL WELDS.

SS.5. CHARPY V-NOTCH TOUGHNESS REQUIREMENTS FOR ALL STEEL SHALL CONFORM TO THE REQUIREMENTS FOR ZONE 2.

SS.6. FIELD WELDING ON HIGH PERFORMANCE STEEL (HPS) PLATES IN TENSION IS NOT PERMITTED, EXCEPT FOR FIELD WELDED SHEAR CONNECTORS. THE CONTRACTOR WILL NEED TO ESTABLISH A METHOD OF ATTACHING FORMS WITHOUT WELDING.

SS.7. ALL BOLTS SHALL BE ASTM A325-X TYPE 1. BOLTS SHALL BE 1" DIAMETER UNLESS NOTED OTHERWISE. ALL HOLES SHALL BE STANDARD DIAMETER - NO OVERSIZED HOLES. ALL CONNECTIONS SHALL BE FABRICATED AND ASSEMBLED AS SLIP-CRITICAL CONNECTIONS. DESIGN ASSUMED CLASS B FAYING SURFACE FOR SLIP RESISTANCE.

SS.8. PAINT ALL STRUCTURAL STEEL, INCLUDING SURFACES AND BRACING MEMBERS ON THE INSIDE OF THE BOX GIRDERS. FINISH COAT FOR EXTERIOR SURFACES SHALL HAVE A COLOR TO MATCH SHERWIN WILLIAMS COLOR "SW6523". FINISH COAT FOR INTERIOR SURFACES SHALL BE WHITE, FEDERAL COLOR #27925.

SS.9. CAMBER DIAGRAMS HAVE BEEN DEVELOPED ASSUMING A CONSTANT 4" HAUNCH HEIGHT, MEASURED FROM THE UNDERSIDE OF THE TOP FLANGE TO THE UNDERSIDE OF THE DECK (TOP OF STAY-IN-PLACE METAL FORMS). ANY ADDITIONAL QUANTITIES REQUIRED AS A RESULT OF VARIATION IN THE HAUNCH HEIGHT ARE ASSUMED TO BE INCIDENTAL TO OTHER PAY ITEMS AND WILL NOT BE PAID FOR SEPARATELY. THIS INCLUDES ADDITIONAL CONCRETE IN THE HAUNCH, ADDITIONAL OR MORE COMPLICATED FORM WORK, EXTRA SHEAR STUD LENGTH AND ANY REQUIRED REINFORCEMENT IN THE HAUNCH.

SS.10. TEMPORARY SUPPORTS AND FALSE WORK (INCLUDING OVERHANG BRACKETS) SHALL NOT BEAR ON GIRDER WEBS, EXCEPT WITHIN 8 INCHES OF THE BOTTOM FLANGE.

SS.11. ALL PLAN DIMENSIONS ARE BASED ON THE FINAL DEFLECTED SHAPE AT 60° F.

REINFORCING STEEL

RS.1. ALL REINFORCING BARS ARE ENGLISH DESIGNATION AND THE FIRST DIGIT OF A 3-DIGIT BAR MARK OR THE FIRST TWO DIGITS OF A 4-DIGIT BAR MARK SIGNIFY THE BAR SIZE.

RS.2. BAR STEEL REINFORCEMENT SHALL BE EMBEDDED 2" CLEAR UNLESS NOTED OTHERWISE.

RS.3. FOR BARS NOTED IN THE BILL OF BAR TABLES AS STAINLESS STEEL, PROVIDE STAINLESS STEEL REINFORCEMENT PER THE SPECIAL PROVISION "BAR STEEL REINFORCEMENT STAINLESS BRIDGES".

CONCRETE

C.1. THE HAUNCH CONCRETE QUANTITY IS BASED ON AN AVERAGE HAUNCH DEPTH OF 4" MEASURED FROM TOP OF WEB TO UNDERSIDE OF SLAB (EXCLUDING THE VOLUME TAKEN UP BY THE TOP FLANGE) WHICH IS THE MAXIMUM HAUNCH QUANTITY FOR WHICH THE CONTRACTOR WILL BE PAID.

C.2. THE PARAPET CONCRETE QUANTITY FOR PARAPET ON THE DECK, ABUTMENT BACKWALL, AND APPROACH SLAB SHALL BE PAID FOR UNDER BID ITEM "HPC MASONRY STRUCTURES".

C.3. THE CONCRETE QUANTITY FOR APPROACH SLAB FOOTING SHALL BE PAID FOR UNDER BID ITEM "CONCRETE MASONRY BRIDGES". THE REMAINING CONCRETE QUANTITY FOR APPROACH SLAB SHALL BE PAID FOR UNDER BID ITEM "HPC MASONRY STRUCTURES".

C.4. CONCRETE ABOVE THE ABUTMENT UPPER BACKWALL CONSTRUCTION JOINT SHALL BE PAID FOR UNDER BID ITEM "HPC MASONRY STRUCTURES". THE REMAINING CONCRETE QUANTITY FOR ABUTMENT SHALL BE PAID FOR UNDER BID ITEM "CONCRETE MASONRY BRIDGES".

C.5. THE CONCRETE QUANTITY FOR THE PIERS SHALL BE PAID FOR UNDER BID ITEM "CONCRETE MASONRY BRIDGES".

C.6. CHAMFER ALL EXPOSED OUTSIDE CORNERS ¾" UNLESS NOTED OTHERWISE.

FOUNDATION DATA

DRIVEN PILES:

FD.1. ABUTMENTS AND PIERS SHALL BE SUPPORTED ON 16" DIA CIP CONCRETE PILING DRIVEN TO FOLLOWING REQUIRED DRIVING RESISTANCE AS DETERMINED BY THE PDA/CAPWAP METHOD.

REQUIRED DRIVING RESISTANCE:
WEST ABUTMENT: 246 TONS
PIER SW06: 250 TONS (BID OPTION B ONLY)
SOUTH ABUTMENT: 193 TONS

FD.2. THE FACTORED AXIAL RESISTANCE OF PILES IN COMPRESSION USED FOR DESIGN IS THE REQUIRED DRIVING RESISTANCE MULTIPLIED BY A RESISTANCE FACTOR OF 0.65 USING THE PDA/CAPWAP METHOD TO DETERMINE DRIVEN PILE CAPACITY.

FD.3. ESTIMATED PILE LENGTHS:
WEST ABUTMENT: 75 FEET
PIER SW06: 70 FEET
SOUTH ABUTMENT: 70 FEET

FD.4. AT THE WEST ABUTMENT, IT IS ANTICIPATED THAT PILES WILL BE DRIVEN PRIOR TO CONSTRUCTION OF MSE WALL R-40-504. PILE DRIVING THROUGH MSE FILL WITHOUT SLEEVES IS PROHIBITED.

FD.5. PILE SPLICES SHALL BE MADE BY A CERTIFIED WELDER.

DRILLED SHAFTS:

FD.6. PIERS SHALL BE SUPPORTED ON BASE GROUTED DRILLED SHAFTS. SHAFT DIAMETERS, FACTORED AXIAL RESISTANCES, TOP OF SHAFT AND BOTTOM OF SHAFT ELEVATIONS, AND CORRESPONDING SHAFT LENGTHS FOR EACH DRILLED SHAFT ARE GIVEN IN THE TABLE BELOW.

FD.7. THE MINIMUM FACTORED AXIAL RESISTANCE OF DRILLED SHAFTS IN COMPRESSION USED FOR DESIGN IS THE REQUIRED AXIAL RESISTANCE MULTIPLIED BY A SHAFT RESISTANCE FACTOR OF 0.56. THE RESISTANCE FACTOR INCLUDES A 20% REDUCTION FOR NON-REDUNDANCY.

DRILLED SHAFT DATA

SHAFT LOCATION	SHAFT DIA (IN)	MINIMUM FACTORED AXIAL RESIST (KIP)	TOP OF SHAFT EL	BOTTOM OF SHAFT EL	SHAFT LENGTH (FT)
PIER SW01	98.43	5400	765.0	697.0	68.0
PIER SW02	98.43	5300	762.0	691.0	71.0
PIER SW03	98.43	4300	750.0	699.0	51.0
PIER SW04	98.43	3200	758.0	714.0	44.0
PIER SW05	98.43	4400	772.0	694.0	78.0
PIER SW06*	98.43	5200	787.0	692.0	95.0
PIER SW07	98.43	5500	767.0	679.0	88.0

* BID OPTION A ONLY

8

8

NO.	DATE	REVISION	BY

STATE OF WISCONSIN
DEPARTMENT OF TRANSPORTATION

STRUCTURE B-40-855

DRAWN BY GLM | PLANS CK'D. WRT

GENERAL NOTES

SHEET 4 OF 96

STATE PROJECT NUMBER
1060-33-80

ESTIMATED QUANTITIES - MANDATORY ITEMS

ITEM CATEGORY	ITEM NO.	BID ITEMS	UNIT	W APPR SLAB	WEST ABUTMENT	PIER SW01	PIER SW02	PIER SW03	PIER SW04	PIER SW05	PIER SW06	PIER SW07	SOUTH ABUTMENT	S APPR SLAB	SUPER UNIT 1	SUPER UNIT 2	TOTAL
2070	203.0200.0002	REMOVING OLD STRUCTURE STATION 586SW+76.79	LS	---	---	---	---	---	---	---	---	---	---	---	---	---	1*
2070	203.0200.0003	REMOVING OLD STRUCTURE STATION 590SW+89.63	LS	---	---	---	---	---	---	---	---	---	---	---	---	---	1*
2070	203.0200.0004	REMOVING OLD STRUCTURE STATION 591SW+15.01	LS	---	---	---	---	---	---	---	---	---	---	---	---	---	1*
2070	203.0200.0014	REMOVING OLD STRUCTURE STATION 587SW+01.22	LS	---	---	---	---	---	---	---	---	---	---	---	---	---	1*
2070	203.0210.S.0007	ABATEMENT OF ASBESTOS CONTAINING MATERIAL STRUCTURE B-40-98	LS	---	---	---	---	---	---	---	---	---	---	---	---	---	1
2070	203.0210.S.0008	ABATEMENT OF ASBESTOS CONTAINING MATERIAL STRUCTURE B-40-99	LS	---	---	---	---	---	---	---	---	---	---	---	---	---	1
2070	210.0100	BACKFILL STRUCTURE	CY	---	---	---	---	---	---	---	---	---	142	---	---	---	142
2070	305.0120	BASE AGGREGATE DENSE 1 1/4-INCH	TON	130	---	---	---	---	---	---	---	---	---	130	---	---	260
2070	502.0100	CONCRETE MASONRY BRIDGES	CY	11.3	102.4	---	---	---	---	---	---	---	128.0	10.3	---	---	252
2070	502.3200	PROTECTIVE SURFACE TREATMENT	SY	119	20	---	---	---	---	---	---	---	20	119	3,733	3,813	7,824
2070	505.0405	BAR STEEL REINFORCEMENT HS BRIDGES	LB	---	---	---	---	---	---	---	---	---	840	---	---	---	840
2070	505.0605	BAR STEEL REINFORCEMENT HS COATED BRIDGES	LB	840	6,760	---	---	---	---	---	---	---	6,180	760	---	---	14,540
2070	506.0605	STRUCTURAL STEEL HS	LB	---	---	---	---	---	---	---	---	---	---	---	1,459,100	1,534,200	2,993,300
2070	506.3015	WELDED STUD SHEAR CONNECTORS 7/8X6-INCH	EACH	---	---	---	---	---	---	---	---	---	---	---	9,623	9,532	19,155
2070	514.2608	DOWNSPOUT 8-INCH	LF	---	---	61	58	62	69	59	---	61	---	---	---	---	370
2070	516.0500	RUBBERIZED MEMBRANE WATERPROOFING	SY	---	8	---	---	---	---	---	---	---	8	---	---	---	16
2070	550.2168	PILING CIP CONCRETE 16 X 0.50-INCH	LF	---	825	---	---	---	---	---	---	---	1,050	---	---	---	1,875
2070	604.0400	SLOPE PAVING CONCRETE	SY	---	14	---	---	---	---	---	---	---	---	---	---	---	14
2070	606.0200	RIPRAP MEDIUM	CY	---	---	1	1	1	1	1	---	1	---	---	---	---	6
2070	612.0406	PIPE UNDERDRAIN WRAPPED 6-INCH	LF	---	---	---	---	---	---	---	---	---	45	---	---	---	45
2070	652.0125	CONDUIT RIGID METALLIC 2-INCH	LF	68	---	---	---	---	---	---	---	---	---	68	25	25	186
2070	652.0225	CONDUIT RIGID NONMETALLIC SCHEDULE 40 2-INCH	LF	---	---	---	---	---	---	---	---	---	---	---	2,000	2,050	4,050
2070	653.0220	JUNCTION BOXES 18x6x6-INCH	EACH	---	---	---	---	---	---	---	---	---	---	---	1	1	2
2070	653.0222	JUNCTION BOXES 18x12x6-INCH	EACH	---	---	---	---	---	---	---	---	---	---	---	5	6	11
2070	657.6005.S	ANCHOR ASSEMBLIES LIGHT POLES ON STRUCTURES	EACH	---	---	---	---	---	---	---	---	---	---	---	3	4	7
2070	SPV.0035.4000	HPC MASONRY STRUCTURES	CY	52	5	---	---	---	---	---	---	---	5	52	1,223	1,250	2,587
2070	SPV.0060.4100	ANCHOR ASSEMBLIES SIGN BRIDGE STRUCTURES	EACH	---	---	---	---	---	---	---	---	---	---	---	---	1	1
2070	SPV.0060.4110	PILE DYNAMIC ANALYZER (PDA) TESTING	EACH	---	2	---	---	---	---	---	---	---	2	---	---	---	4
2070	SPV.0060.4115	PILE DYNAMIC ANALYZER (PDA) RESTRIKES	EACH	---	2	---	---	---	---	---	---	---	2	---	---	---	4
2070	SPV.0060.4120	BEARINGS HIGH-LOAD MULTI-ROTATIONAL FIXED	EACH	---	---	---	2	---	---	---	2	---	---	---	---	---	4
2070	SPV.0060.4125	BEARINGS HIGH-LOAD MULTI-ROTATIONAL GUIDED	EACH	---	2	2	---	2	4	2	---	2	2	---	---	---	16
2070	SPV.0060.4130	FLOOR DRAIN SPECIAL	EACH	---	---	---	---	---	---	---	---	---	---	---	4	3	7
2070	SPV.0085.4300	BAR STEEL REINFORCEMENT HS STAINLESS BRIDGES	LB	7,140	1,600	---	---	---	---	---	---	---	1,590	7,220	316,330	340,780	674,660
2070	SPV.0105.4500	PAINTING POLYSILOXANE SYSTEM STRUCTURE B-40-855	LS	---	---	---	---	---	---	---	---	---	---	---	---	---	1
2070	SPV.0105.4555	EXPANSION DEVICE MODULAR LRFD B-40-855	LS	---	---	---	---	---	---	---	---	---	---	---	---	---	1
2070	SPV.0165.4700	LONGITUDINAL GROOVING BRIDGE DECK	SF	867	74	---	---	---	---	---	---	---	74	867	27,742	28,336	57,960
2070	SPV.0180.4800	SLOPE PAVING CRUSHED AGGREGATE SPECIAL	SY	---	---	---	---	---	---	---	---	---	98	---	---	---	98
		NON-BID ITEMS															
		BRIDGE SEAT PROTECTION	LS														1
		PREFORMED JOINT FILLER	SIZE														3/4",1 1/2",2"
		NAME PLATE	EACH														1
		SIZE 2 COARSE AGGREGATE	SY														---
		EXPANDED POLYSTYRENE	SIZE														1"

8

NOTES

THIS CONTRACT CONTAINS TWO OPTIONS FOR PIER CONSTRUCTION. THE CONTRACTOR MUST BID EITHER OPTION A OR OPTION B.

ITEMS ON THIS SHEET ARE MANDATORY AND ARE REQUIRED WITH PIER OPTION A AND PIER OPTION B. FOR ADDITIONAL ITEMS AND QUANTITIES, SEE SHEET A1 FOR OPTION A AND SHEET B1 FOR OPTION B.

* THE STATIONS GIVEN FOR REMOVING OLD STRUCTURES CORRESPOND TO THE FOLLOWING EXISTING STRUCTURE NUMBERS:
- STA 586SW+76.79: B-40-755
- STA 590SW+89.63: B-40-98
- STA 591SW+15.01: B-40-99
- STA 587SW+01.22: B-40-103

8

NO.	DATE	REVISION	BY

STATE OF WISCONSIN
DEPARTMENT OF TRANSPORTATION

STRUCTURE B-40-855

DRAWN BY GLM | PLANS CK'D. WRT

QUANTITIES

SHEET 5 OF 96

STATE PROJECT NUMBER
1060-33-80

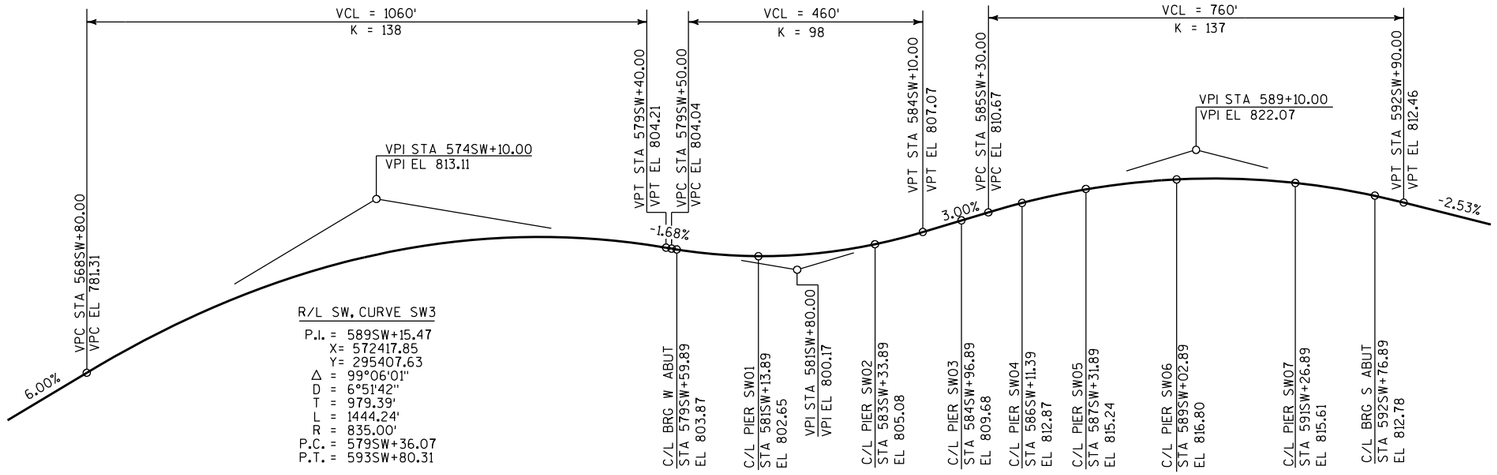

PROFILE GRADE LINE SW

RAMP SW

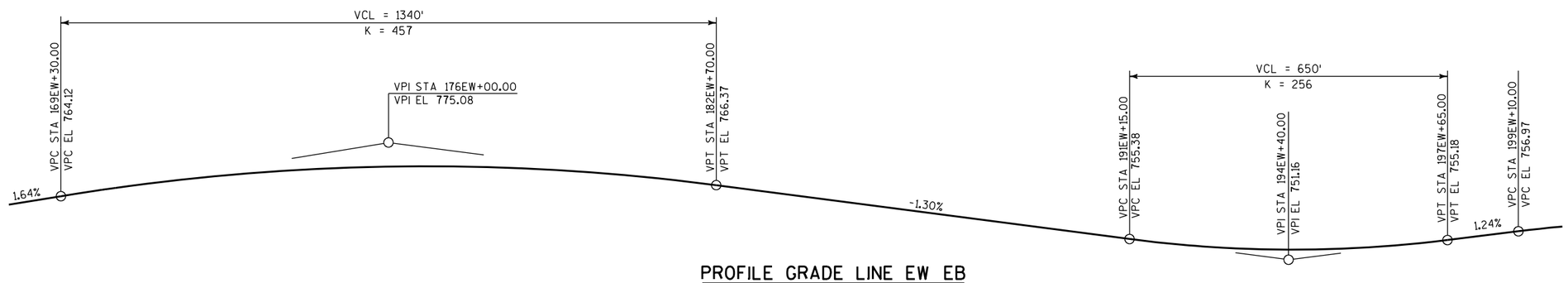

PROFILE GRADE LINE EW EB

IH 94 EB

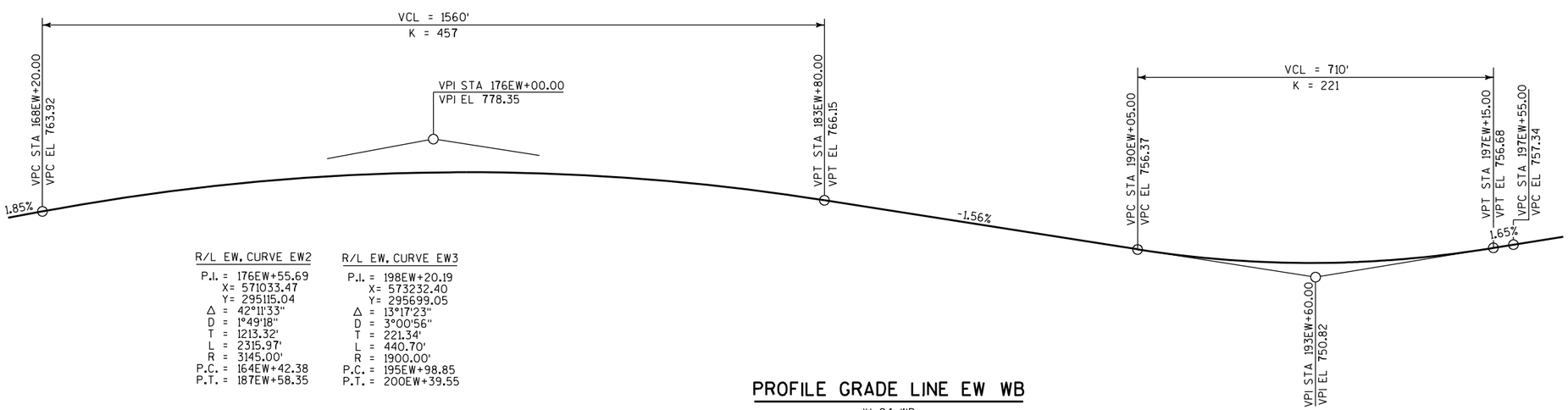

R/L EW, CURVE EW2

P.I. = 176EW+55.69
X= 571033.47
Y= 295115.04
Δ = 42°11'33"
D = 1°49'18"
T = 1213.32'
L = 2315.97'
R = 3145.00'
P.C. = 164EW+42.38
P.T. = 187EW+58.35

R/L EW, CURVE EW3

P.I. = 198EW+20.19
X= 573232.40
Y= 295699.05
Δ = 13°17'23"
D = 3°00'56"
T = 221.34'
L = 440.70'
R = 1900.00'
P.C. = 195EW+98.85
P.T. = 200EW+39.55

PROFILE GRADE LINE EW WB

IH 94 WB

8

8

NO.	DATE	REVISION	BY

STATE OF WISCONSIN
DEPARTMENT OF TRANSPORTATION

STRUCTURE B-40-855

DRAWN BY GLM | PLANS CK'D. WRT

ROADWAY GEOMETRY (1 OF 2)

SHEET 6 OF 96

STATE PROJECT NUMBER
1060-33-80

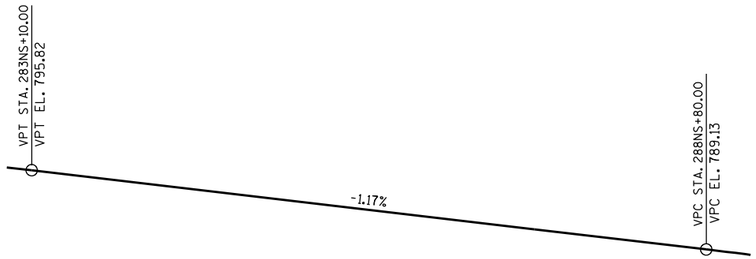

PROFILE GRADE LINE NS NB & PROFILE GRADE LINE NS SB

USH 45 NB & SB

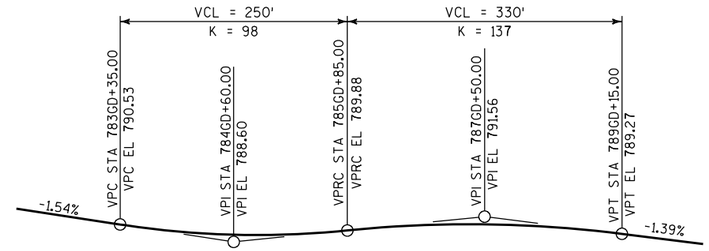

R/L GD, CURVE GD5

P.I. = 783GD+09.01
X= 571841.37
Y= 294479.81
Δ = 28°29'51"
D = 9°57'52"
T = 146.02'
L = 285.99'
R = 575.00'
P.C. = 781GD+62.99
P.T. = 784GD+48.99

R/L GD, CURVE GD6

P.I. = 789GD+70.98
X= 572156.84
Y= 295068.65
Δ = 13°05'48"
D = 2°01'54"
T = 323.71'
L = 644.59'
R = 2820.00'
P.C. = 786GD+47.28
P.T. = 792GD+91.87

PROFILE GRADE LINE GD

RAMP GD

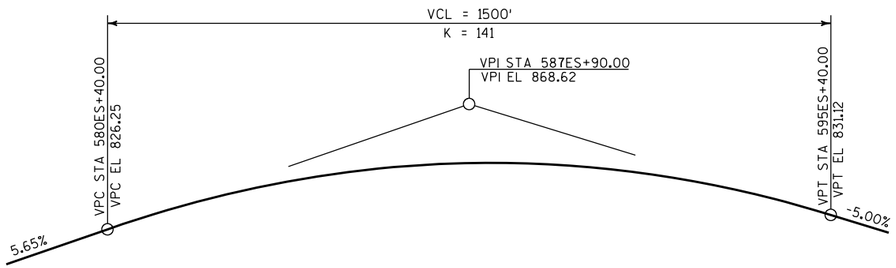

R/L ES, CURVE ES3

P.I. = 596ES+89.51
X= 571931.07
Y= 295860.01
Δ = 90°54'49"
D = 3°50'15"
T = 1517.00'
L = 2369.01'
R = 1493.00'
P.C. = 581ES+72.50
P.T. = 605ES+41.51

PROFILE GRADE LINE ES

RAMP ES

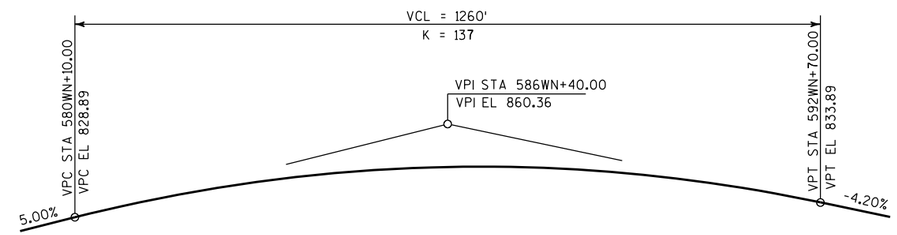

R/L WN, CURVE WN2

P.I. = 593WN+87.45
X= 572730.07
Y= 294711.15
Δ = 101° 45'17"
D = 4°03'59"
T = 1732.38'
L = 2502.32'
R = 1409.00'
P.C. = 576WN+55.07
P.T. = 601WN+57.39

PROFILE GRADE LINE WN

RAMP WN

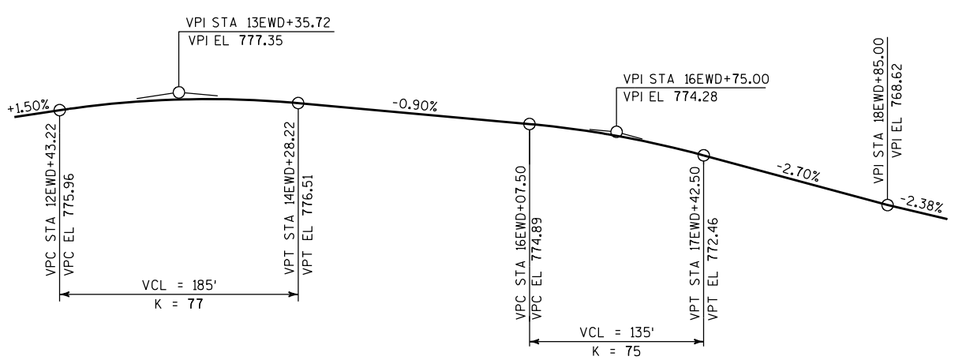

TEMP EWD, CURVE EWD1

P.I. = 15EWD+92.47
X= 571472.49
Y= 295249.40
Δ = 46°57'55"
D = 4°40'38"
T = 532.20'
L = 1004.13'
R = 1225.00'
P.C. = 10EWD+60.26
P.T. = 20EWD+64.39

PROFILE GRADE LINE EWD

TEMPORARY RAMP EWD

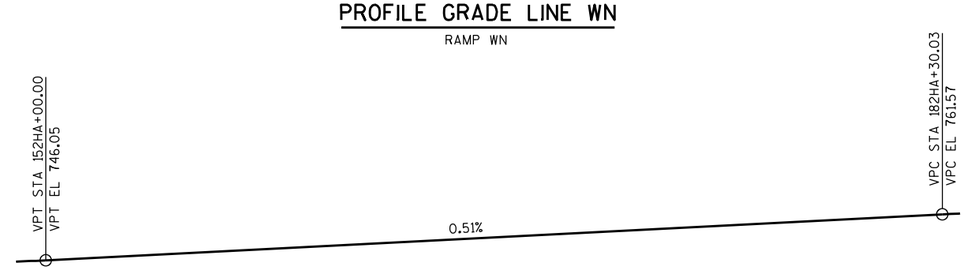

R/L HA, CURVE HA1

P.I. = 165HA+07.60
X= 570829.86
Y= 294768.68
Δ = 25°10'43"
D = 1°10'53"
T = 1083.15'
L = 2131.33'
R = 4850.00'
P.C. = 154HA+24.45
P.T. = 175HA+55.78

PROFILE GRADE LINE HA

HANK ARRON STATE TRAIL

8

8

NO.	DATE	REVISION	BY

STATE OF WISCONSIN
DEPARTMENT OF TRANSPORTATION

STRUCTURE B-40-855

DRAWN BY GLM | PLANS CK'D. WRT

ROADWAY GEOMETRY (2 OF 2)

SHEET 7 OF 96

STATE PROJECT NUMBER
1060-33-80

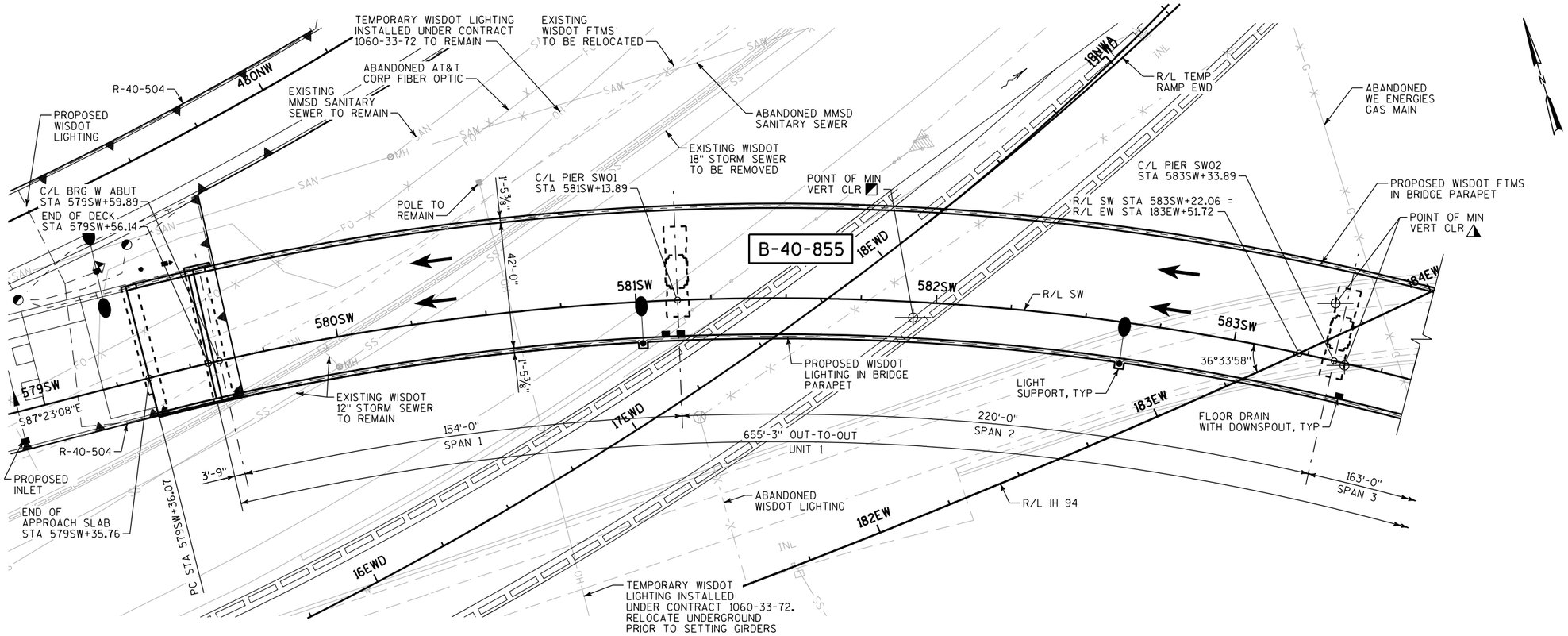

PLAN

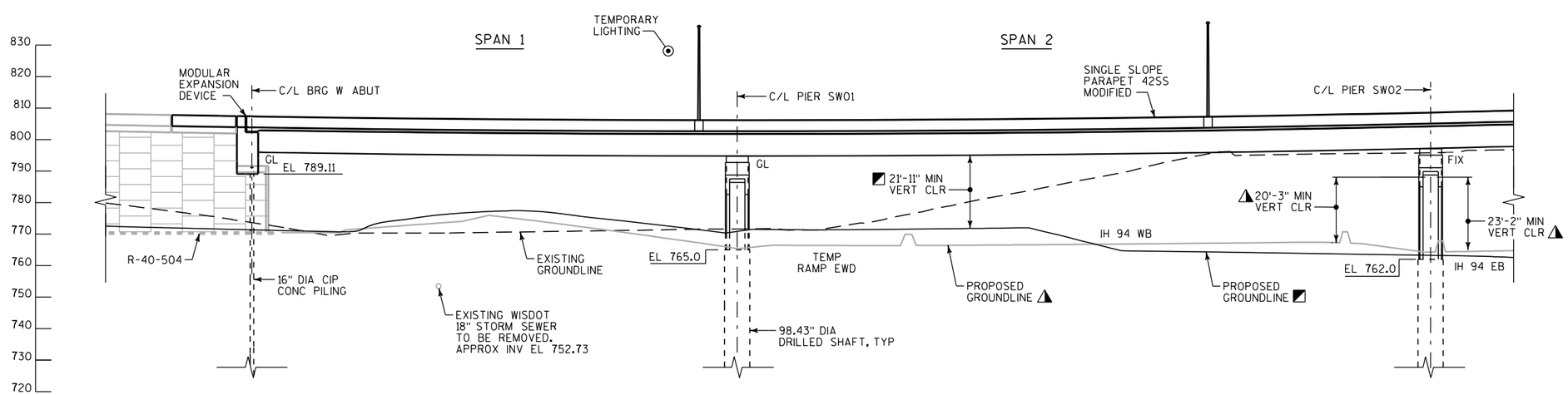

ELEVATION

ALONG R/L SW

LEGEND

- ← INDICATES LANE LOCATION AND DIRECTION OF TRAVEL
- FIX = FIXED BEARINGS
- GL = GUIDED BEARINGS
- ◩ = INTERIM CONDITION AT COMPLETION OF PROJECT ID 1060-33-80
- ◭ = ULTIMATE CONDITION AT COMPLETION OF FUTURE PROJECT ID 1060-33-81

NO.	DATE	REVISION	BY

STATE OF WISCONSIN
DEPARTMENT OF TRANSPORTATION

STRUCTURE B-40-855

DRAWN BY GLM | PLANS CK'D. WRT

PLAN & ELEVATION SPANS 1 & 2

SHEET 8 OF 96

8

8

STATE PROJECT NUMBER

1060-33-80

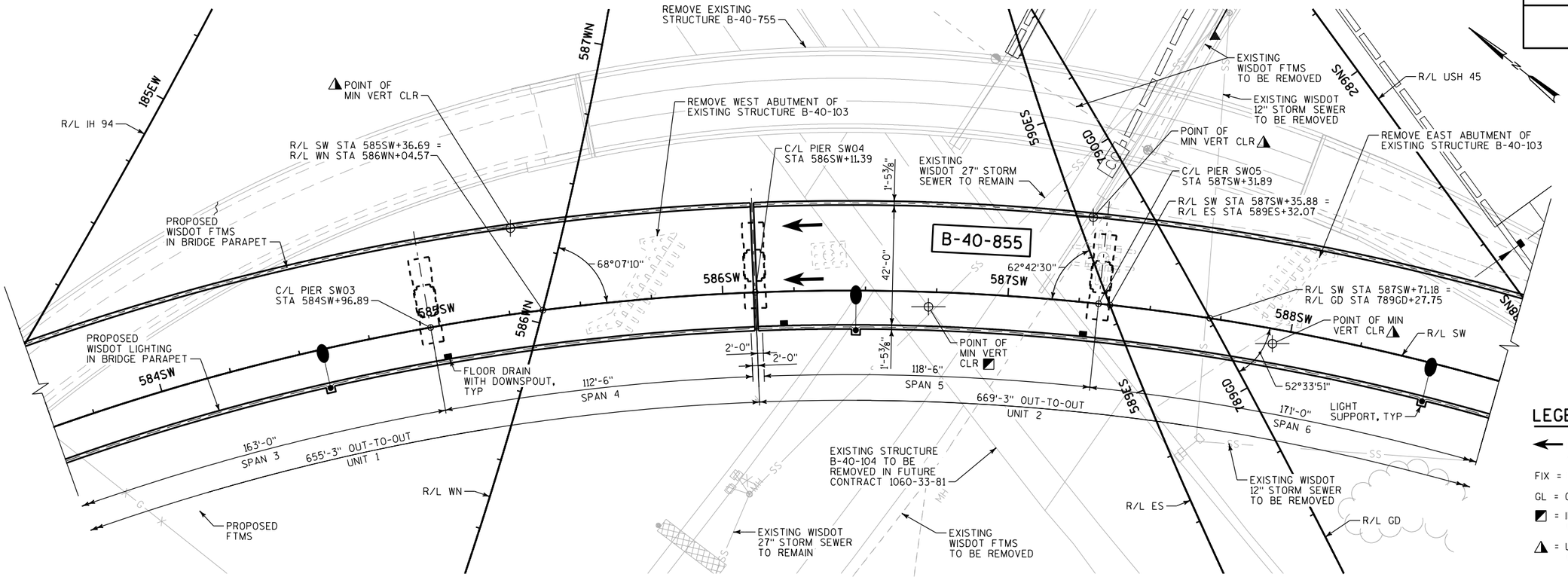

PLAN

LEGEND

- ← INDICATES LANE LOCATION AND DIRECTION OF TRAVEL
- FIX = FIXED BEARINGS
- GL = GUIDED BEARINGS
- ◪ = INTERIM CONDITION AT COMPLETION OF PROJECT ID 1060-33-80
- ◭ = ULTIMATE CONDITION AT COMPLETION OF FUTURE PROJECT ID 1060-33-81

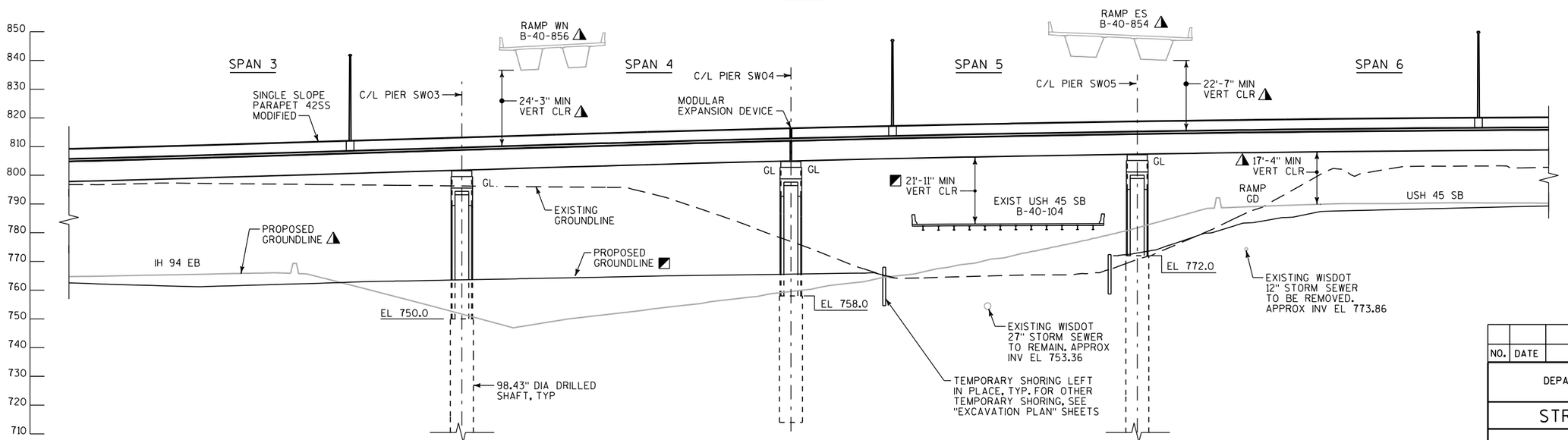

ELEVATION

ALONG R/L SW

NO.	DATE	REVISION	BY

STATE OF WISCONSIN
DEPARTMENT OF TRANSPORTATION

STRUCTURE B-40-855

DRAWN BY GLM | PLANS CK'D. WRT

PLAN & ELEVATION SPANS 3 THRU 6

SHEET 9 OF 96

8

8

STATE PROJECT NUMBER
1060-33-80

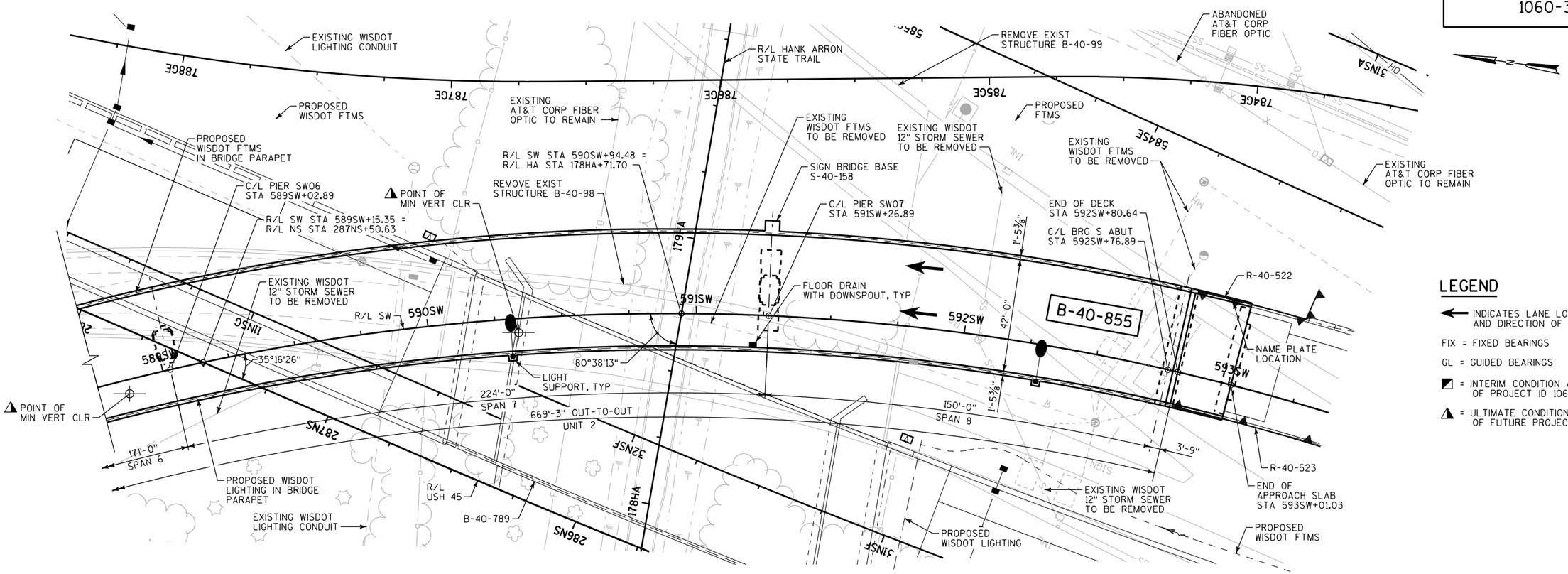

PLAN

LEGEND

- ← INDICATES LANE LOCATION AND DIRECTION OF TRAVEL
- FIX = FIXED BEARINGS
- GL = GUIDED BEARINGS
- ◩ = INTERIM CONDITION AT COMPLETION OF PROJECT ID 1060-33-80
- ◭ = ULTIMATE CONDITION AT COMPLETION OF FUTURE PROJECT ID 1060-33-81

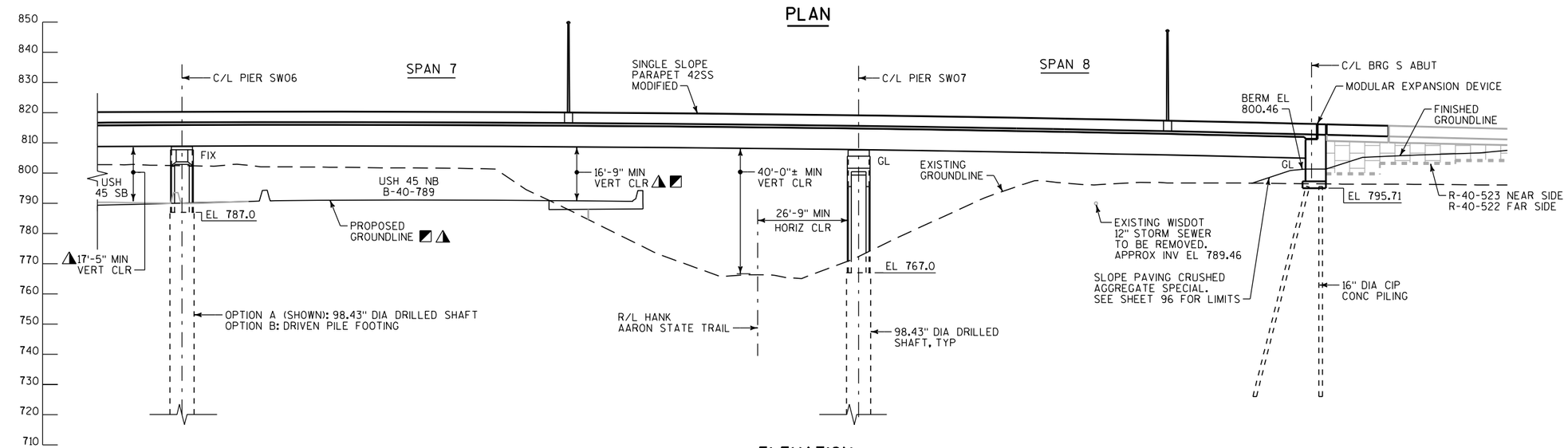

ELEVATION

ALONG R/L SW

8

8

NO.	DATE	REVISION	BY

STATE OF WISCONSIN
DEPARTMENT OF TRANSPORTATION

STRUCTURE B-40-855

DRAWN BY GLM | PLANS CK'D. WRT

PLAN & ELEVATION SPANS 7 & 8

SHEET 10 OF 96

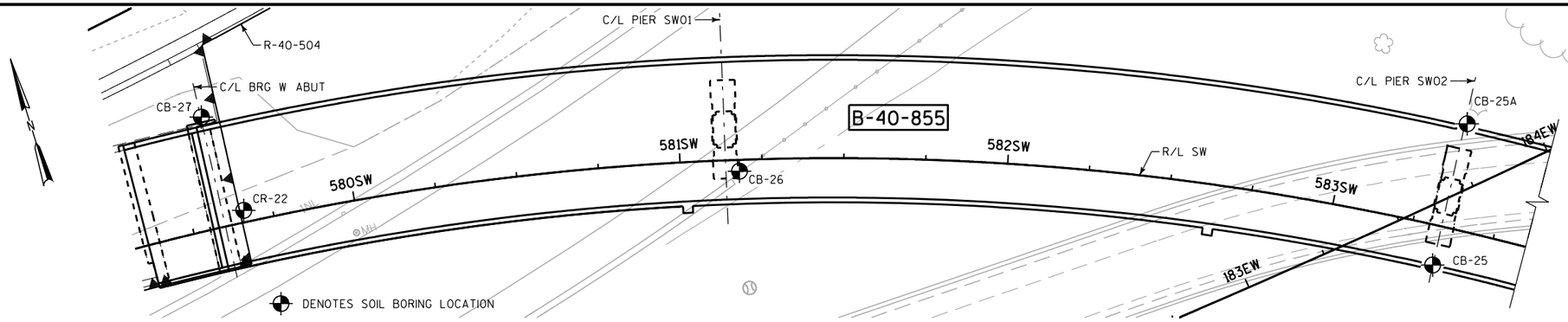

SOIL BORINGS COMPLETED BY:
GESTRA ENGINEERING, INC.

SOIL BORINGS TAKEN:
MAY 12, 2012 = BORING CR-22
APRIL 4, 2012 = BORING CB-25
JUNE 25, 2012 = BORING CB-26
APRIL 26, 2012 = BORING CB-27
JANUARY 26, 2013 = BORING CB-25A

NOTES

THE SUBSURFACE INFORMATION PRESENTED HEREIN IS AN ABBREVIATED VERSION OF THE INFORMATION PRESENTED IN THE GEOTECHNICAL ENGINEERING REPORT. REVIEW THE APPROPRIATE GEOTECHNICAL REPORT AND SOIL BORING LOGS FOR ADDITIONAL SUBSURFACE INFORMATION.

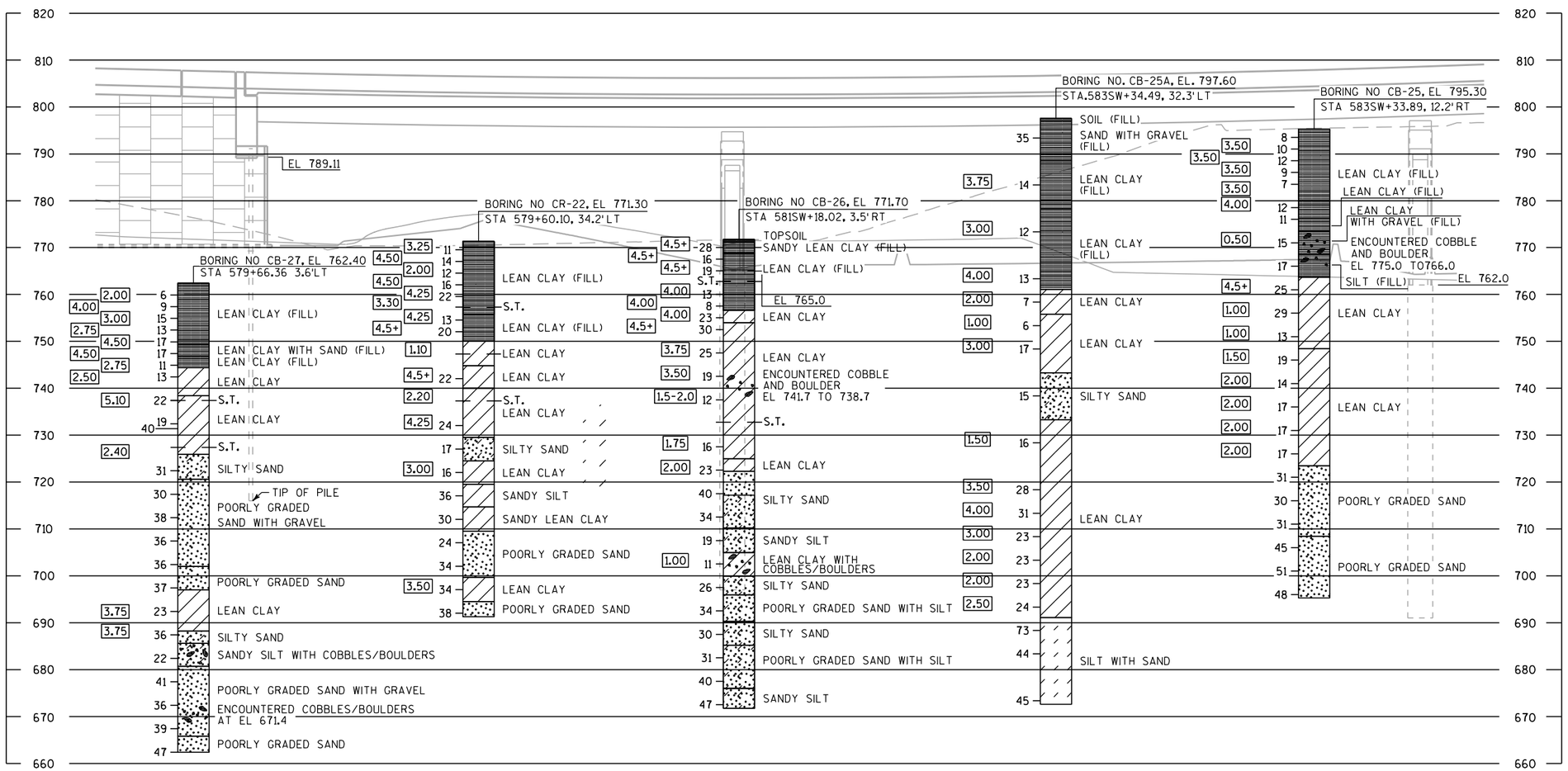

STATE PROJECT NUMBER

1060-33-80

ABBREVIATIONS

F — FINE M — MEDIUM C — COARSE
WS — WEATHERED SO — SOUND

MATERIAL SYMBOLS

TOPSOIL / FILL, SILT, SANDSTONE, SAND, PEAT, LIMESTONE, GRAVEL, CLAY, IGNEOUS ROCK

LEGEND OF PROBING

PROBING NO.
STA.
ELEVATION
7 AVERAGE BLOWS PER FOOT
REFUSAL 95/6

95/6=95 BLOWS FOR 6" PENETRATION
PROBING TAKEN WITH A 350# WT. FALLING 18" ON A 2" O.D. POINT.

LEGEND OF BORING

BORING NO.
ELEV. STA.
UNCONFINED STRENGTH (TSF) 7.7
BLOWS PER FT. USING 140# WT. FALLING 30"
WASH SAMPLE
SHELBY TUBE — S.T.
GROUND WATER ELEVATION
NO GROUND WATER OBSERVED ABOVE THIS ELEVATION
SANDY GRAVEL
BOULDERS OR COBBLES
SAND
SILTY CLAY
SO LIMESTONE

UNLESS OTHERWISE SPECIFIED, THE BLOWS PER FOOT AT THE LOCATIONS INDICATED ARE BASED ON DRIVING A 2" O.D. X 1.4" I.D. SPLIT SPOON SAMPLER WITH A 140# HAMMER HAVING A FREE FALL OF 30". THE BLOW COUNT IS TAKEN IN UNDISTURBED SOIL IMMEDIATELY BELOW A CASED OR OPEN HOLE ELIMINATING SIDE FRICTION ON THE DRIVE PIPE.

SUBSURFACE EXPLORATION FOR FOUNDATION DESIGN AND BIDDERS INFORMATION

TO OBTAIN RELATIVE DATA CONCERNING THE CHARACTER OF MATERIAL IN AND UPON WHICH THE FOUNDATION MIGHT BE BUILT, BORINGS AND/OR SOUNDINGS WERE MADE AT POINTS APPROXIMATELY AS INDICATED ON THIS DRAWING. THE DATA PRESENTED HEREIN REPRESENTS THE FINDINGS OF THE SUBSURFACE EXPLORATIONS MADE. HOWEVER, BECAUSE THE DEPTHS INVESTIGATED ARE LIMITED AND THE AREA OF THE BORINGS AND/OR SOUNDINGS IS VERY SMALL IN RELATION TO THE ENTIRE AREA, THE WISCONSIN DEPARTMENT OF TRANSPORTATION DOES NOT WARRANT CONDITIONS BELOW THE DEPTHS INVESTIGATED OR THAT THE CLASSIFICATION OF MATERIAL ENCOUNTERED IN THESE INVESTIGATIONS IS NECESSARILY TYPICAL OF THE ENTIRE SITE.

NO.	DATE	REVISION	BY

STATE OF WISCONSIN
DEPARTMENT OF TRANSPORTATION

STRUCTURE B-40-855

DRAWN BY GLM PLANS CK'D. WRT

SUBSURFACE EXPLORATION SPANS 1 & 2

SHEET 11 OF 96

8

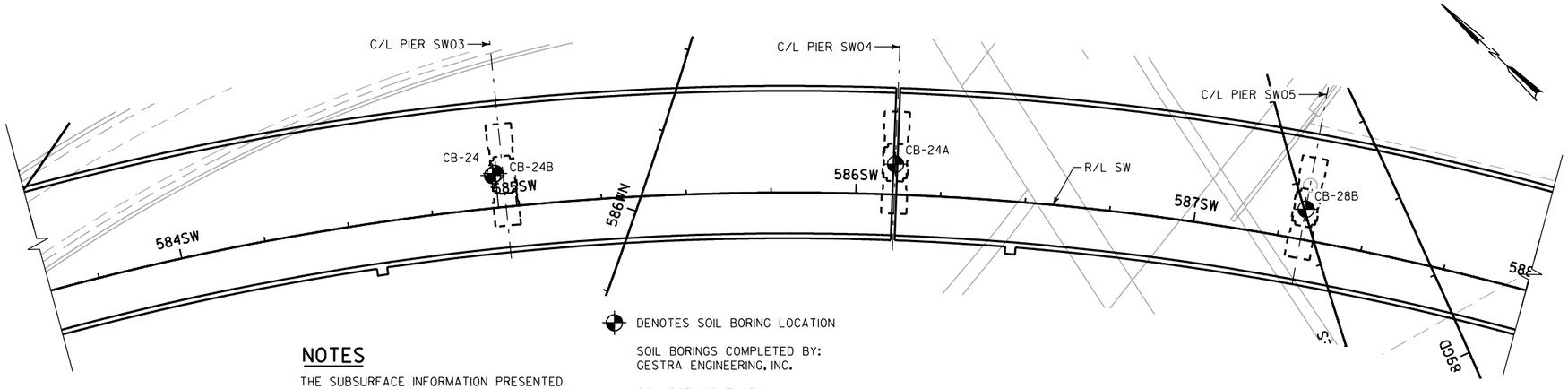

NOTES

THE SUBSURFACE INFORMATION PRESENTED HEREIN IS AN ABBREVIATED VERSION OF THE INFORMATION PRESENTED IN THE GEOTECHNICAL ENGINEERING REPORT. REVIEW THE APPROPRIATE GEOTECHNICAL REPORT AND SOIL BORING LOGS FOR ADDITIONAL SUBSURFACE INFORMATION.

SOIL BORINGS COMPLETED BY:
GESTRA ENGINEERING, INC.

SOIL BORINGS TAKEN:
APRIL 3, 2012 = BORING CB-24
JANUARY 15, 2013 = BORING CB-24A
JANUARY 16, 2013 = BORING CB-24B
FEBRUARY 4, 2013 = BORING CB-28B

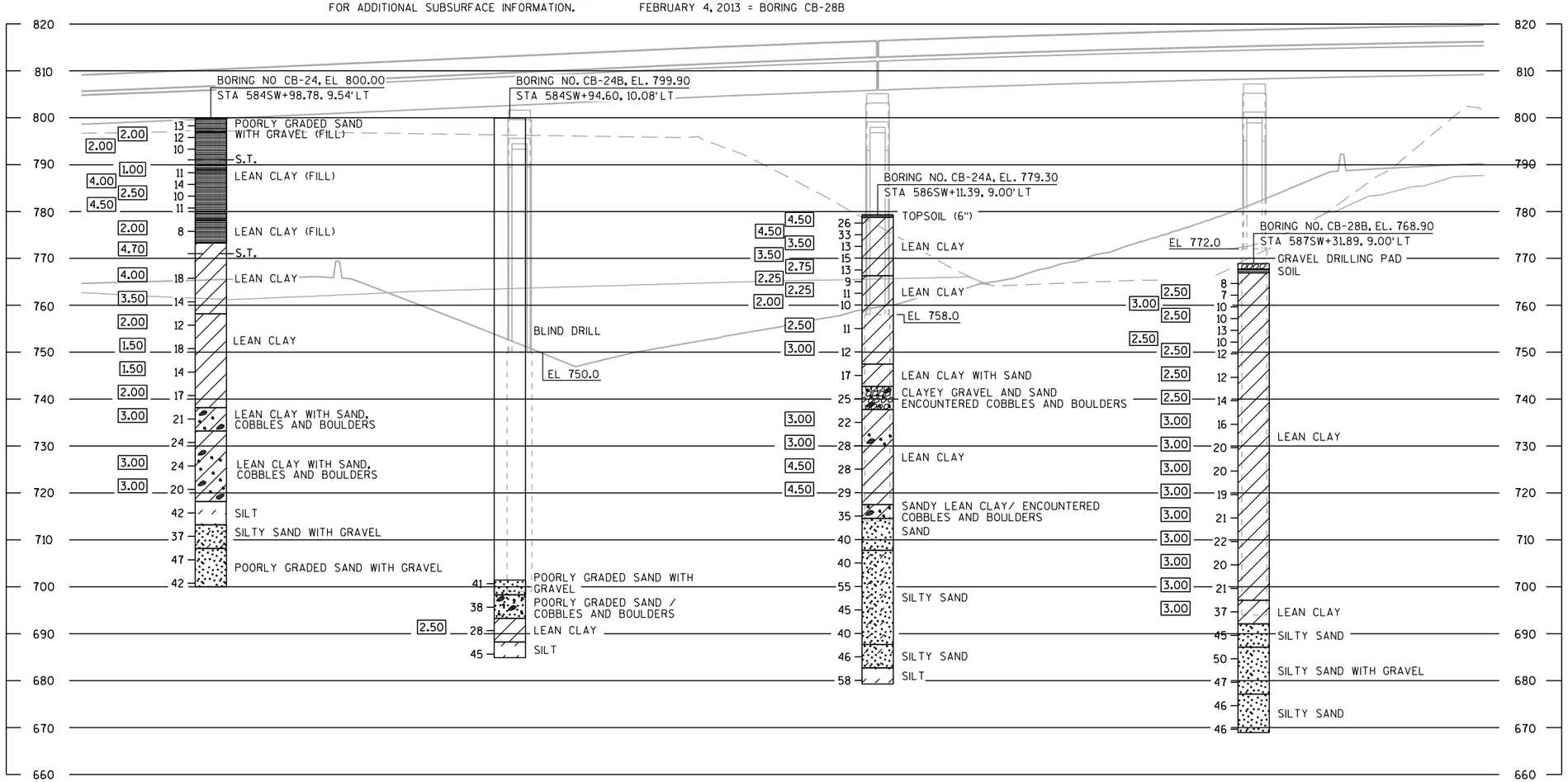

STATE PROJECT NUMBER

1060-33-80

ABBREVIATIONS

F — FINE M — MEDIUM C — COARSE
WS — WEATHERED SO — SOUND

MATERIAL SYMBOLS

TOPSOIL / FILL, SILT, SANDSTONE, SAND, PEAT, LIMESTONE, GRAVEL, CLAY, IGNEOUS ROCK

LEGEND OF PROBING

PROBING NO.
STA.
ELEVATION
7 AVERAGE BLOWS PER FOOT
REFUSAL 95/6

95/6=95 BLOWS FOR 6" PENETRATION
PROBING TAKEN WITH A 350# WT. FALLING 18" ON A 2" O.D. POINT.

LEGEND OF BORING

BORING NO.
ELEV. STA.
UNCONFINED STRENGTH (TSF) — 7.7
BLOWS PER FT. USING 140# WT. FALLING 30"
WASH SAMPLE
SHELBY TUBE — S.T.
GROUND WATER ELEVATION
NO GROUND WATER OBSERVED ABOVE THIS ELEVATION
SANDY GRAVEL
BOULDERS OR COBBLES
SAND
SILTY CLAY
SO LIMESTONE

UNLESS OTHERWISE SPECIFIED, THE BLOWS PER FOOT AT THE LOCATIONS INDICATED ARE BASED ON DRIVING A 2" O.D. X 1.4" I.D. SPLIT SPOON SAMPLER WITH A 140# HAMMER HAVING A FREE FALL OF 30". THE BLOW COUNT IS TAKEN IN UNDISTURBED SOIL IMMEDIATELY BELOW A CASED OR OPEN HOLE ELIMINATING SIDE FRICTION ON THE DRIVE PIPE.

SUBSURFACE EXPLORATION FOR FOUNDATION DESIGN AND BIDDERS INFORMATION

TO OBTAIN RELATIVE DATA CONCERNING THE CHARACTER OF MATERIAL IN AND UPON WHICH THE FOUNDATION MIGHT BE BUILT, BORINGS AND/OR SOUNDINGS WERE MADE AT POINTS APPROXIMATELY AS INDICATED ON THIS DRAWING. THE DATA PRESENTED HEREIN REPRESENTS THE FINDINGS OF THE SUBSURFACE EXPLORATIONS MADE. HOWEVER, BECAUSE THE DEPTHS INVESTIGATED ARE LIMITED AND THE AREA OF THE BORINGS AND/OR SOUNDINGS IS VERY SMALL IN RELATION TO THE ENTIRE AREA, THE WISCONSIN DEPARTMENT OF TRANSPORTATION DOES NOT WARRANT CONDITIONS BELOW THE DEPTHS INVESTIGATED OR THAT THE CLASSIFICATION OF MATERIAL ENCOUNTERED IN THESE INVESTIGATIONS IS NECESSARILY TYPICAL OF THE ENTIRE SITE.

NO.	DATE	REVISION	BY

STATE OF WISCONSIN
DEPARTMENT OF TRANSPORTATION

STRUCTURE B-40-855

DRAWN BY GLM PLANS CK'D. WRT

SUBSURFACE EXPLORATION SPANS 3 THRU 6

SHEET 12 OF 96

8

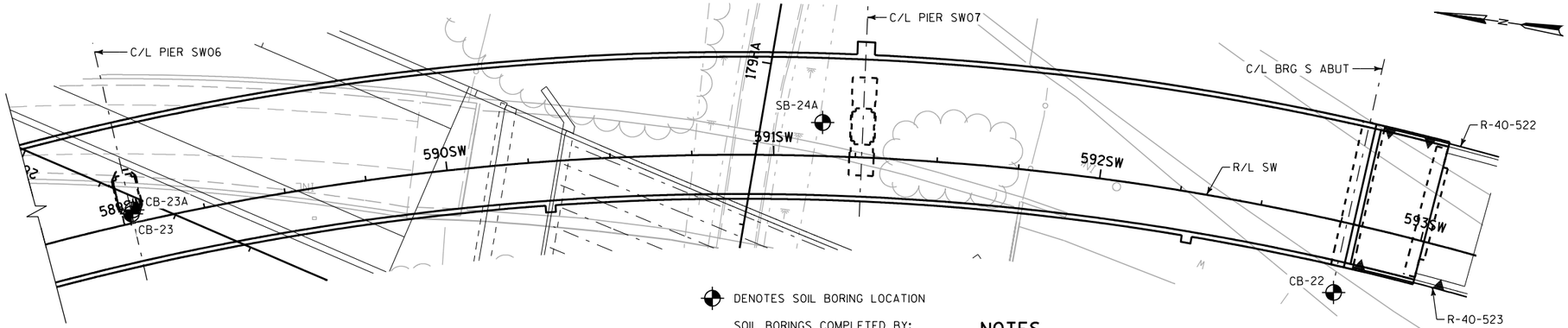

DENOTES SOIL BORING LOCATION

SOIL BORINGS COMPLETED BY:
GESTRA ENGINEERING, INC.

SOIL BORINGS TAKEN:
OCT 18, 2012 = BORING CB-22
MARCH 28, 2012 = BORING CB-23
JANUARY 30, 2013 = BORING CB-23A
JANUARY 19, 2013 = BORING SB-24A

NOTES

THE SUBSURFACE INFORMATION PRESENTED HEREIN IS AN ABBREVIATED VERSION OF THE INFORMATION PRESENTED IN THE GEOTECHNICAL ENGINEERING REPORT. REVIEW THE APPROPRIATE GEOTECHNICAL REPORT AND SOIL BORING LOGS FOR ADDITIONAL SUBSURFACE INFORMATION.

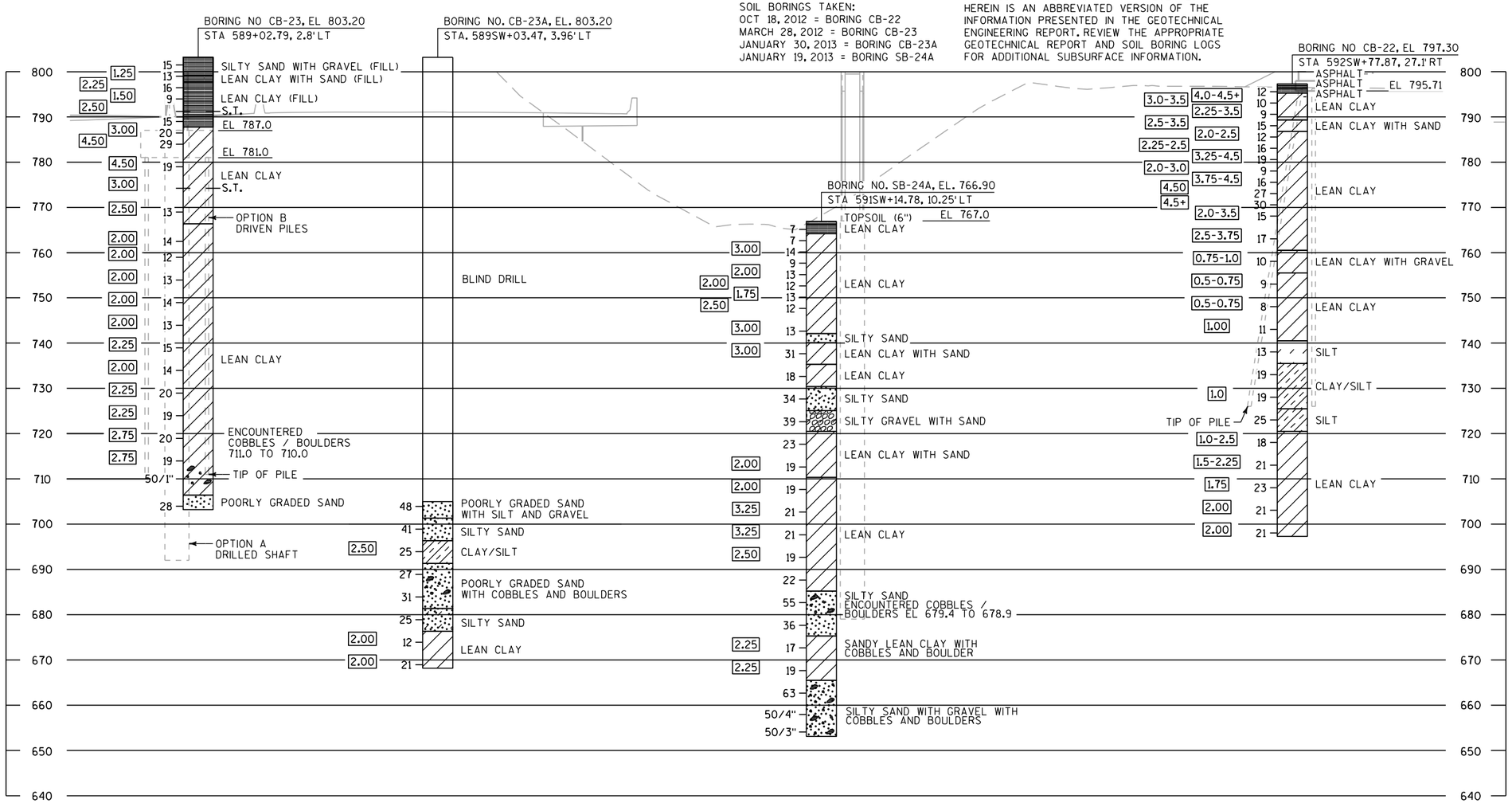

STATE PROJECT NUMBER

1060-33-80

ABBREVIATIONS

F — FINE M — MEDIUM C — COARSE
WS — WEATHERED SO — SOUND

MATERIAL SYMBOLS

TOPSOIL / FILL, SILT, SANDSTONE, SAND, PEAT, LIMESTONE, GRAVEL, CLAY, IGNEOUS ROCK

LEGEND OF PROBING

PROBING NO.
STA.
ELEVATION
7 AVERAGE BLOWS PER FOOT
REFUSAL 95/6

95/6=95 BLOWS FOR 6" PENETRATION
PROBING TAKEN WITH A 350# WT. FALLING 18" ON A 2" O.D. POINT.

LEGEND OF BORING

BORING NO.
ELEV.
STA.
UNCONFINED STRENGTH (TSF) — 7.7
BLOWS PER FT. USING 140# WT. FALLING 30"
WASH SAMPLE
SHELBY TUBE — S.T.
GROUND WATER ELEVATION
NO GROUND WATER OBSERVED ABOVE THIS ELEVATION
SANDY GRAVEL
BOULDERS OR COBBLES
SAND
SILTY CLAY
SO LIMESTONE

UNLESS OTHERWISE SPECIFIED, THE BLOWS PER FOOT AT THE LOCATIONS INDICATED ARE BASED ON DRIVING A 2" O.D. X 1.4" I.D. SPLIT SPOON SAMPLER WITH A 140# HAMMER HAVING A FREE FALL OF 30". THE BLOW COUNT IS TAKEN IN UNDISTURBED SOIL IMMEDIATELY BELOW A CASED OR OPEN HOLE ELIMINATING SIDE FRICTION ON THE DRIVE PIPE.

SUBSURFACE EXPLORATION FOR FOUNDATION DESIGN AND BIDDERS INFORMATION

TO OBTAIN RELATIVE DATA CONCERNING THE CHARACTER OF MATERIAL IN AND UPON WHICH THE FOUNDATION MIGHT BE BUILT, BORINGS AND/OR SOUNDINGS WERE MADE AT POINTS APPROXIMATELY AS INDICATED ON THIS DRAWING. THE DATA PRESENTED HEREIN REPRESENTS THE FINDINGS OF THE SUBSURFACE EXPLORATIONS MADE. HOWEVER, BECAUSE THE DEPTHS INVESTIGATED ARE LIMITED AND THE AREA OF THE BORINGS AND/OR SOUNDINGS IS VERY SMALL IN RELATION TO THE ENTIRE AREA, THE WISCONSIN DEPARTMENT OF TRANSPORTATION DOES NOT WARRANT CONDITIONS BELOW THE DEPTHS INVESTIGATED OR THAT THE CLASSIFICATION OF MATERIAL ENCOUNTERED IN THESE INVESTIGATIONS IS NECESSARILY TYPICAL OF THE ENTIRE SITE.

NO.	DATE	REVISION	BY

STATE OF WISCONSIN
DEPARTMENT OF TRANSPORTATION

STRUCTURE B-40-855

DRAWN BY GLM PLANS CK'D. WRT

SUBSURFACE EXPLORATION SPANS 7 & 8

SHEET 13 OF 96

8

CONSTRUCTION STAGING NOTES

N1. THE CONSTRUCTION STAGING NOTES OUTLINED BELOW APPLY TO ALL CONSTRUCTION STAGING SHEETS.

N2. THE ASSUMED CONSTRUCTION SEQUENCE DESCRIBED AND SHOWN IN THIS PLAN SET IS ONLY ONE POTENTIAL CONSTRUCTION SEQUENCE AND IS PRESENTED FOR INFORMATION ONLY. THE CONTRACTOR IS RESPONSIBLE FOR THE SEQUENCE OF CONSTRUCTION EVEN IF THE EXACT SEQUENCE IN THE PLANS IS FOLLOWED.

N3. DETERMINE THE CONSTRUCTION SEQUENCE BEST SUITED TO THE MEANS AND METHODS AVAILABLE AND SUBJECT TO THE RESTRICTIONS PRESENTED BY THE OVERALL PROJECT STAGING, SITE RESTRICTIONS AND OTHER LIMITATIONS.

N4. THE UTILITY INFORMATION SHOWN ON THESE DRAWINGS CONCERNING TYPE AND LOCATION OF UNDERGROUND UTILITIES IS NOT GUARANTEED TO BE ACCURATE OR ALL-INCLUSIVE. THE CONTRACTOR IS RESPONSIBLE FOR MAKING THEIR OWN DETERMINATION AS TO TYPE AND LOCATION OF UNDERGROUND UTILITIES AS MAY BE NECESSARY TO AVOID DAMAGE.

N5. UTILITY INFORMATION IS SHOWN MORE CLEARLY ELSEWHERE WITHIN THIS PLAN SET AND WITHIN THE COMPLETE CONTRACT DOCUMENT PACKAGE - ENSURE THAT ALL SOURCES OF UTILITY INFORMATION ARE PROPERLY CONSIDERED.

N6. THE CONSTRUCTION STAGING PLANS SHOW EXISTING AND PROPOSED STRUCTURES EXPECTED OR ASSUMED TO BE IN PLACE AS CONSTRUCTION PROCEEDS. THE STRUCTURES ACTUALLY IN PLACE MAY VARY FROM THOSE SHOWN DEPENDING ON THE OVERALL SCHEDULE SELECTED BY THE CONTRACTOR. THE CONSTRUCTION SEQUENCE SHOWN IN THIS PLAN SET INCLUDES ONLY MAJOR CONSTRUCTION TASKS AND IS NOT INTENDED TO BE ALL-INCLUSIVE.

N7. ACCESS TO THE CRANE LOCATIONS, ASSEMBLY AND STAGING AREAS SHOWN MAY REQUIRE CONSTRUCTION OF TEMPORARY DRIVING AND WORKING PLATFORMS NOT EXPLICITLY DESCRIBED IN THE CONSTRUCTION SEQUENCE.

N8. ENSURE THE STABILITY OF PARTIALLY ERECTED STEEL THROUGH THE USE OF TEMPORARY CROSS FRAMES, SUPPORTS, BRACES OR OTHER MEANS AND METHODS AS DEEMED NECESSARY. TEMPORARILY LOCK EXPANSION BEARINGS OR PROVIDE ALTERNATIVE MEANS OF RESTRAINT AS REQUIRED TO MAINTAIN STABILITY AT ALL TIMES.

N9. COMPUTE ALL LOADS ON TEMPORARY SHORING TOWERS AND DESIGN ACCORDINGLY. ENSURE THAT THE POTENTIAL FOR UPLIFT IS PROPERLY ASSESSED AND THAT SHORING TOWER DESIGN, FOUNDATION DESIGN AND STEEL CONNECTION DETAILS ACCOUNT FOR ANY EXPECTED UPLIFT FORCES.

N10. CRANE LOADS SPECIFIED IN THE TABLE ARE BASED ON THE NOMINAL FIELD SECTION WEIGHTS SHOWN PLUS A SMALL PERCENTAGE TO ALLOW FOR VARIABILITY IN THE LOAD DISTRIBUTION. THESE LOADS ARE APPROXIMATE AND ARE PROVIDED FOR INFORMATION ONLY. VERIFY ALL CRANE LOADS BASED ON APPROVED SHOP DRAWINGS AND THE FINAL SELECTED ERECTION SEQUENCE.

ASSUMED CONSTRUCTION SEQUENCE

REFER TO SHEET 16 FOR THE FOLLOWING STAGES:

1. BEGIN ROADWAY GRADING TO REMOVE THE EXISTING SW RAMP BERM PRIOR TO THE START OF BRIDGE CONSTRUCTION. REMOVE EXISTING STRUCTURES B-40-755, B-40-98 AND B-40-99 AND REMOVE THE REMAINING PORTION OF THE ABUTMENTS OF B-40-103. INSTALL TEMPORARY SHORING NEAR PIERS SW04, SW05 AND SW07. SEE ROADWAY GRADING SHEETS FOR GRADING LIMITS. SEE EXCAVATION PLAN SHEETS FOR DETAILS OF TEMPORARY SHORING AND LOCAL EXCAVATION AT EACH PIER.

ASSUMED CONSTRUCTION SEQUENCE, CONT.

2. BEGIN CONSTRUCTION OF DRILLED SHAFTS AT PIERS SW02, SW03, SW04, SW05, AND SW07. AT PIER SW06, BEGIN CONSTRUCTION OF DRILLED SHAFT (OPTION A) OR PILE FOUNDATION (OPTION B). PROPOSED DRILLING ELEVATION FOR ALL PIERS IS ASSUMED TO MATCH THE INTERIM GRADING INDICATED ON THE EXCAVATION PLAN SHEETS. WHERE DRILLING ELEVATION IS ABOVE TOP-OF-SHAFT ELEVATION, THE NEED FOR TEMPORARY HOLE BRACING IS ANTICIPATED PRIOR TO COLUMN CONSTRUCTION. TEMPORARY HOLE BRACING MAY CONSIST OF SLIP-IN CASING OR OTHER APPROVED METHOD.

3. BEGIN CONSTRUCTION OF SOUTH ABUTMENT. DRIVE PILE AND CONSTRUCT PILE CAP. COORDINATE WITH STRUCTURES R-40-523 AND R-40-522.

4. AFTER INSTALLATION OF THE DRILLED SHAFTS OR PILE FOUNDATION, BEGIN CONSTRUCTION OF THE HAMMERHEAD PIER COLUMN AND CAP AT PIERS SW02, SW03, SW04, SW05, SW06, AND SW07.

REFER TO SHEET 17 FOR THE FOLLOWING STAGES:

5. CONTINUE CONSTRUCTION OF PIERS SW02, SW03, SW04, SW05, SW06, AND SW07 AND CONTINUE CONSTRUCTION OF SOUTH ABUTMENT. UPON COMPLETION OF THE HAMMERHEAD PIER COLUMNS, BACKFILL THE EXCAVATION AS INDICATED ON THE EXCAVATION PLAN SHEETS. PROVIDE COLUMN PROTECTION WHERE INDICATED. REMOVE TEMPORARY SHORING AT PIER SW07.

6. BEGIN CONSTRUCTION OF DRILLED SHAFT AT PIER SW01. PROPOSED DRILLING ELEVATION SHALL CORRESPOND TO THE GRADING INDICATED ON THE EXCAVATION PLAN SHEETS.

7. BEGIN CONSTRUCTION OF WEST ABUTMENT. DRIVE PILE AND CONSTRUCT PILE CAP. COORDINATE WITH STRUCTURE R-40-504.

8. AFTER INSTALLATION OF THE DRILLED SHAFT AT PIER SW01, BEGIN CONSTRUCTION OF THE HAMMERHEAD PIER COLUMN AND CAP. UPON COMPLETION OF THE HAMMERHEAD PIER COLUMN, BACKFILL THE EXCAVATION AS INDICATED ON THE EXCAVATION PLAN SHEETS. PROVIDE COLUMN PROTECTION WHERE INDICATED.

REFER TO SHEET 18 FOR THE FOLLOWING STAGES:

9. TRANSPORT AND GROUND ASSEMBLE LEFT GIRDERS OF FIELD SECTIONS 6 AND 7 AND MAKE READY FOR ERECTION. INSTALL BOLTS AT FIELD SPLICE #6 AND INSTALL LATERAL BRACING MEMBER CROSSING THE SPLICE.

10. TRANSPORT AND GROUND ASSEMBLE RIGHT GIRDERS OF FIELD SECTIONS 6 AND 7 AND MAKE READY FOR ERECTION. INSTALL BOLTS AT FIELD SPLICE #6 AND INSTALL LATERAL BRACING MEMBER CROSSING THE SPLICE.

11. TRANSPORT AND GROUND ASSEMBLE LEFT GIRDERS OF FIELD SECTIONS 4 AND 5 AND MAKE READY FOR ERECTION. INSTALL BOLTS AT FIELD SPLICE #4 AND INSTALL LATERAL BRACING MEMBER CROSSING THE SPLICE.

12. TRANSPORT AND GROUND ASSEMBLE RIGHT GIRDERS OF FIELD SECTIONS 4 AND 5 AND MAKE READY FOR ERECTION. INSTALL BOLTS AT FIELD SPLICE #4 AND INSTALL LATERAL BRACING MEMBER CROSSING THE SPLICE.

13. TRANSPORT AND GROUND ASSEMBLE LEFT GIRDERS OF FIELD SECTIONS 2 AND 3 AND MAKE READY FOR ERECTION. INSTALL BOLTS AT FIELD SPLICE #2 AND INSTALL LATERAL BRACING MEMBER CROSSING THE SPLICE.

14. TRANSPORT AND GROUND ASSEMBLE RIGHT GIRDERS OF FIELD SECTIONS 2 AND 3 AND MAKE READY FOR ERECTION. INSTALL BOLTS AT FIELD SPLICE #2 AND INSTALL LATERAL BRACING MEMBER CROSSING THE SPLICE.

15. TRANSPORT LEFT GIRDER OF FIELD SECTION 1 AND MAKE READY FOR ERECTION.

16. TRANSPORT RIGHT GIRDER OF FIELD SECTION 1 AND MAKE READY FOR ERECTION.

17. INSTALL TEMPORARY SHORING TOWER T3 UNDER LEFT AND RIGHT GIRDERS. TWO SUPPORT TOWERS ARE SHOWN, BUT ONE COMBINED TOWER MAY BE PROVIDED.

ASSUMED CONSTRUCTION SEQUENCE, CONT.

18. INSTALL LEFT AND RIGHT SIDE BEARINGS AT PIER SW03 AND UNIT 1 SIDE AT PIER SW04.

19. USING TWO CRANES LOCATED AT POSITIONS L1 AND L2, ERECT THE ASSEMBLY FOR THE LEFT GIRDER OF FIELD SECTIONS 6 AND 7. TEMPORARILY BRACE GIRDER FOR STABILITY. ERECT THE ASSEMBLY FOR THE RIGHT GIRDER OF FIELD SECTIONS 6 AND 7. INSTALL DIAPHRAGMS FOR FIELD SECTIONS 6 AND 7.

20. INSTALL LEFT AND RIGHT SIDE BEARINGS AT PIER SW02.

21. USING TWO CRANES LOCATED AT POSITIONS L3 AND L4, ERECT THE ASSEMBLY FOR THE LEFT GIRDER OF FIELD SECTIONS 4 AND 5. INSTALL BOLTS IN LEFT GIRDER AT FIELD SPLICE #5. INSTALL LATERAL BRACING MEMBER CROSSING THE SPLICE. TEMPORARILY BRACE GIRDER FOR STABILITY. ERECT THE ASSEMBLY FOR THE RIGHT GIRDER OF FIELD SECTIONS 4 AND 5. INSTALL BOLTS IN RIGHT GIRDER AT FIELD SPLICE #5. INSTALL LATERAL BRACING MEMBER CROSSING THE SPLICE. INSTALL DIAPHRAGMS FOR FIELD SECTIONS 4 AND 5.

22. INSTALL TEMPORARY SHORING TOWER T2 UNDER LEFT AND RIGHT GIRDERS. TWO SUPPORT TOWERS ARE SHOWN, BUT ONE COMBINED TOWER MAY BE PROVIDED.

23. BEGIN DETOUR OF WB IH 94 TRAFFIC.

24. INSTALL LEFT AND RIGHT SIDE BEARINGS AT PIER SW01.

25. USING TWO CRANES LOCATED AT POSITIONS L5 AND L6, ERECT THE ASSEMBLY FOR THE LEFT GIRDER OF FIELD SECTIONS 2 AND 3. INSTALL BOLTS IN LEFT GIRDER AT FIELD SPLICE #3. INSTALL LATERAL BRACING MEMBER CROSSING THE SPLICE. TEMPORARILY BRACE GIRDER FOR STABILITY. ERECT THE ASSEMBLY FOR THE RIGHT GIRDER OF FIELD SECTIONS 2 AND 3. INSTALL BOLTS IN RIGHT GIRDER AT FIELD SPLICE #3. INSTALL LATERAL BRACING MEMBER CROSSING THE SPLICE. INSTALL DIAPHRAGMS FOR FIELD SECTIONS 2 AND 3.

26. REMOVE TEMPORARY SHORING TOWER T3.

27. INSTALL TEMPORARY SHORING TOWER T1 UNDER LEFT AND RIGHT GIRDERS. TWO SUPPORT TOWERS ARE SHOWN, BUT ONE COMBINED TOWER MAY BE PROVIDED.

28. INSTALL LEFT AND RIGHT SIDE BEARINGS AT WEST ABUTMENT.

29. USING TWO CRANES LOCATED AT POSITIONS L7 AND L8, ERECT THE ASSEMBLY FOR THE LEFT GIRDER OF FIELD SECTION 1. INSTALL BOLTS IN LEFT GIRDER AT FIELD SPLICE #1. INSTALL LATERAL BRACING MEMBER CROSSING THE SPLICE. TEMPORARILY BRACE GIRDER FOR STABILITY. ERECT THE ASSEMBLY FOR THE RIGHT GIRDER OF FIELD SECTION 1. INSTALL BOLTS IN RIGHT GIRDER AT FIELD SPLICE #1. INSTALL LATERAL BRACING MEMBER CROSSING THE SPLICE. INSTALL DIAPHRAGMS FOR FIELD SECTION 1.

30. REMOVE TEMPORARY SHORING TOWERS T1 & T2.

31. END DETOUR OF WB IH 94 TRAFFIC.

REFER TO SHEET 19 FOR THE FOLLOWING STAGES:

32. TRANSPORT LEFT GIRDER OF FIELD SECTION 15 AND MAKE READY FOR ERECTION.

33. TRANSPORT RIGHT GIRDER OF FIELD SECTION 15 AND MAKE READY FOR ERECTION.

34. TRANSPORT AND GROUND ASSEMBLE LEFT GIRDERS OF FIELD SECTIONS 13 AND 14 AND MAKE READY FOR ERECTION. INSTALL BOLTS AT FIELD SPLICE #12 AND INSTALL LATERAL BRACING MEMBER CROSSING THE SPLICE.

35. TRANSPORT AND GROUND ASSEMBLE RIGHT GIRDERS OF FIELD SECTIONS 13 AND 14 AND MAKE READY FOR ERECTION. INSTALL BOLTS AT FIELD SPLICE #12 AND INSTALL LATERAL BRACING MEMBER CROSSING THE SPLICE.

36. TRANSPORT LEFT GIRDER OF FIELD SECTION 12 AND MAKE READY FOR ERECTION.

37. TRANSPORT RIGHT GIRDER OF FIELD SECTION 12 AND MAKE READY FOR ERECTION.

8

8

NO.	DATE	REVISION	BY

STATE OF WISCONSIN
DEPARTMENT OF TRANSPORTATION

STRUCTURE B-40-855

DRAWN BY GLM | PLANS CK'D. WRT

CONSTRUCTION STAGING NOTES (1 OF 2)

SHEET 14 OF 96

STATE PROJECT NUMBER

1060-33-80

ASSUMED CONSTRUCTION SEQUENCE, CONT.

38. TRANSPORT FIELD SECTION 11 AND MAKE READY FOR ERECTION. TEMPORARY BRACING MAY BE REQUIRED TO TRANSPORT INTEGRAL CROSS HEAD TO SITE.

39. TRANSPORT LEFT GIRDER OF FIELD SECTION 10 AND MAKE READY FOR ERECTION.

40. TRANSPORT RIGHT GIRDER OF FIELD SECTION 10 AND MAKE READY FOR ERECTION.

41. INSTALL LEFT AND RIGHT SIDE BEARINGS AT SOUTH ABUTMENT.

42. INSTALL TEMPORARY SHORING TOWER T7 UNDER LEFT AND RIGHT GIRDERS. TWO SUPPORT TOWERS ARE SHOWN, BUT ONE COMBINED TOWER MAY BE PROVIDED.

43. USING TWO CRANES LOCATED AT POSITIONS L9 AND L10, ERECT THE ASSEMBLY FOR THE LEFT GIRDER OF FIELD SECTION 15. TEMPORARILY BRACE GIRDER FOR STABILITY. ERECT THE ASSEMBLY FOR THE RIGHT GIRDER OF FIELD SECTION 15. INSTALL DIAPHRAGMS FOR FIELD SECTION 15.

44. INSTALL TEMPORARY SHORING TOWER T6 UNDER LEFT AND RIGHT GIRDERS. TWO SUPPORT TOWERS ARE SHOWN, BUT ONE COMBINED TOWER MAY BE PROVIDED.

45. INSTALL LEFT AND RIGHT SIDE BEARINGS AT PIER SW07.

46. USING TWO CRANES LOCATED AT POSITIONS L11 AND L12, ERECT THE ASSEMBLY FOR THE LEFT GIRDER OF FIELD SECTIONS 13 AND 14. INSTALL BOLTS IN LEFT GIRDER AT FIELD SPLICE #13. INSTALL LATERAL BRACING MEMBER CROSSING THE SPLICE. TEMPORARILY BRACE GIRDER FOR STABILITY. ERECT THE ASSEMBLY FOR THE RIGHT GIRDER OF FIELD SECTIONS 13 AND 14. INSTALL BOLTS IN RIGHT GIRDER AT FIELD SPLICE #13. INSTALL LATERAL BRACING MEMBER CROSSING THE SPLICE. INSTALL DIAPHRAGMS FOR FIELD SECTIONS 13 AND 14.

47. INSTALL TEMPORARY SHORING TOWER T5 UNDER LEFT AND RIGHT GIRDERS OF THE INTEGRAL CROSS HEAD. FOUR SUPPORT TOWERS ARE SHOWN, BUT A SINGLE TOWER UNDER THE LEFT GIRDER AND A SINGLE TOWER UNDER THE RIGHT GIRDER MAY BE PROVIDED.

48. INSTALL LEFT AND RIGHT SIDE BEARINGS AT PIER SW06.

49. USING TWO CRANES LOCATED AT POSITIONS L13 AND L14, ERECT ASSEMBLY FOR FIELD SECTION 11 (INTEGRAL CROSS HEAD). TEMPORARY BRACING MAY BE REQUIRED TO MAINTAIN SHAPE AND PREVENT TWIST DURING ERECTION OF INTEGRAL CROSS HEAD.

50. USING TWO CRANES LOCATED AT POSITIONS L15 AND L16, ERECT THE ASSEMBLY FOR THE LEFT GIRDER OF FIELD SECTION 12. INSTALL BOLTS IN LEFT GIRDER AT FIELD SPLICE #10 AND #11. INSTALL LATERAL BRACING MEMBERS CROSSING THE SPLICES. ERECT THE ASSEMBLY FOR THE RIGHT GIRDER OF FIELD SECTION 12. INSTALL BOLTS IN RIGHT GIRDER AT FIELD SPLICE #10 AND #11. INSTALL LATERAL BRACING MEMBER CROSSING THE SPLICES.

51. REMOVE TEMPORARY SHORING TOWER T7.

52. INSTALL TEMPORARY SHORING TOWER T4 UNDER LEFT AND RIGHT GIRDERS. TWO SUPPORT TOWERS ARE SHOWN, BUT ONE COMBINED TOWER MAY BE PROVIDED.

53. USING TWO CRANES LOCATED AT POSITIONS L17 AND L18, ERECT THE ASSEMBLY FOR THE LEFT GIRDER OF FIELD SECTION 10. INSTALL BOLTS IN LEFT GIRDER AT FIELD SPLICE #9. INSTALL LATERAL BRACING MEMBERS CROSSING THE SPLICE. ERECT THE ASSEMBLY FOR THE RIGHT GIRDER OF FIELD SECTION 10. INSTALL BOLTS IN RIGHT GIRDER AT FIELD SPLICE #9. INSTALL LATERAL BRACING MEMBER CROSSING THE SPLICE. INSTALL DIAPHRAGMS FOR FIELD SECTION 10.

54. BEGIN DETOUR OF EB IH 94 AND SB USH 45 TRAFFIC.

55. INSTALL LEFT AND RIGHT SIDE BEARINGS AT PIER SW05.

56. TRANSPORT LEFT GIRDER OF FIELD SECTION 9 AND MAKE READY FOR ERECTION.

57. TRANSPORT RIGHT GIRDER OF FIELD SECTION 9 AND MAKE READY FOR ERECTION.

ASSUMED CONSTRUCTION SEQUENCE, CONT.

58. USING TWO CRANES LOCATED AT POSITIONS L19 AND L20, ERECT THE ASSEMBLY FOR THE LEFT GIRDER OF FIELD SECTION 9. INSTALL BOLTS IN LEFT GIRDER AT FIELD SPLICE #8. INSTALL LATERAL BRACING MEMBERS CROSSING THE SPLICE. ERECT THE ASSEMBLY FOR THE RIGHT GIRDER OF FIELD SECTION 9. INSTALL BOLTS IN RIGHT GIRDER AT FIELD SPLICE #8. INSTALL LATERAL BRACING MEMBER CROSSING THE SPLICE. INSTALL DIAPHRAGMS FOR FIELD SECTION 9.

59. REMOVE TEMPORARY SHORING TOWER T6.

60. INSTALL LEFT AND RIGHT SIDE BEARINGS FOR UNIT 2 SIDE AT PIER SW04.

61. TRANSPORT LEFT GIRDER OF FIELD SECTION 8 AND MAKE READY FOR ERECTION.

62. TRANSPORT RIGHT GIRDER OF FIELD SECTION 8 AND MAKE READY FOR ERECTION.

63. USING TWO CRANES LOCATED AT POSITIONS L21 AND L22, ERECT THE ASSEMBLY FOR THE LEFT GIRDER OF FIELD SECTION 8. INSTALL BOLTS IN LEFT GIRDER AT FIELD SPLICE #7. INSTALL LATERAL BRACING MEMBERS CROSSING THE SPLICE. ERECT THE ASSEMBLY FOR THE RIGHT GIRDER OF FIELD SECTION 8. INSTALL BOLTS IN RIGHT GIRDER AT FIELD SPLICE #7. INSTALL LATERAL BRACING MEMBER CROSSING THE SPLICE. INSTALL DIAPHRAGMS FOR FIELD SECTION 8.

64. REMOVE TEMPORARY SHORING TOWERS T4 & T5.

65. END DETOUR OF EB IH 94 AND SB USH 45 TRAFFIC.

66. REMOVE TEMPORARY SHORING NEAR PIER SW05.

REFER TO SHEET 20 FOR THE FOLLOWING STAGES:

67. POUR THE DECK SLAB IN EACH UNIT USING AN APPROVED POUR SEQUENCE, EXCLUDING THE BLOCKOUTS AT THE EXPANSION JOINTS.

68. POUR THE LEFT AND RIGHT PARAPETS OVER THE FULL LENGTH OF EACH UNIT, EXCLUDING ZONES ADJACENT TO THE EXPANSION JOINTS.

69. INSTALL THE EXPANSION JOINTS AND PLACE CONCRETE IN BLOCKOUTS.

70. CONSTRUCT APPROACH SLAB AT WEST AND SOUTH ABUTMENTS.

71. POUR THE PARAPETS IN ZONES ADJACENT TO THE EXPANSION JOINTS AND POUR PARAPETS ON APPROACH SLAB.

CRANE LOCATION AND LIFT SUMMARY

LOC'N ID	LIFT DESC'N	SEQ. NO.	WEIGHT (TONS)	RADIUS (FEET)	HEIGHT (FEET)
L1	FS#6L + FS#7L	19	45	40	50
L1	FS#6R + FS#7R	19	40	40	50
L2	FS#6L + FS#7L	19	45	40	50
L2	FS#6R + FS#7R	19	40	40	50
L3	FS#4L + FS#5L	21	50	40	40
L3	FS#4R + FS#5R	21	45	40	40
L4	FS#4L + FS#5L	21	50	40	40
L4	FS#4R + FS#5R	21	45	40	40
L5	FS#2L + FS#3L	25	65	55	40
L5	FS#2R + FS#3R	25	55	55	40
L6	FS#2L + FS#3L	25	65	55	30
L6	FS#2R + FS#3R	25	55	55	30
L7	FS#1L	29	30	50	30
L7	FS#1R	29	30	50	30
L8	FS#1L	29	30	55	30
L8	FS#1R	29	30	55	30
L9	FS#15L	43	30	75	25
L9	FS#15R	43	30	75	25
L10	FS#15L	43	30	75	25
L10	FS#15R	43	30	75	25
L11	FS#13L + FS#14L	46	65	80	30
L11	FS#13R + FS#14R	46	60	80	30
L12	FS#13L + FS#14L	46	65	60	30
L12	FS#13R + FS#14R	46	60	60	30
L13	FS#11	49	20	45	35
L14	FS#11	49	20	45	35
L15	FS#12L	50	15	70	35
L15	FS#12R	50	15	70	35
L16	FS#12L	50	15	70	35
L16	FS#12R	50	15	70	35
L17	FS#10L	53	35	45	35
L17	FS#10R	53	30	45	35
L18	FS#10L	53	35	45	30
L18	FS#10R	53	30	45	30
L19	FS#9L	58	25	50	30
L19	FS#9R	58	25	35	30
L20	FS#9L	58	25	90	50
L20	FS#9R	58	25	80	50
L21	FS#8L	63	25	70	50
L21	FS#8R	63	20	50	50
L22	FS#8L	63	25	70	50
L22	FS#8R	63	20	50	50

8

8

NO.	DATE	REVISION	BY

STATE OF WISCONSIN
DEPARTMENT OF TRANSPORTATION

STRUCTURE B-40-855

DRAWN BY GLM | PLANS CK'D. WRT

CONSTRUCTION STAGING NOTES (2 OF 2)

SHEET 15 OF 96

STATE PROJECT NUMBER

1060-33-80

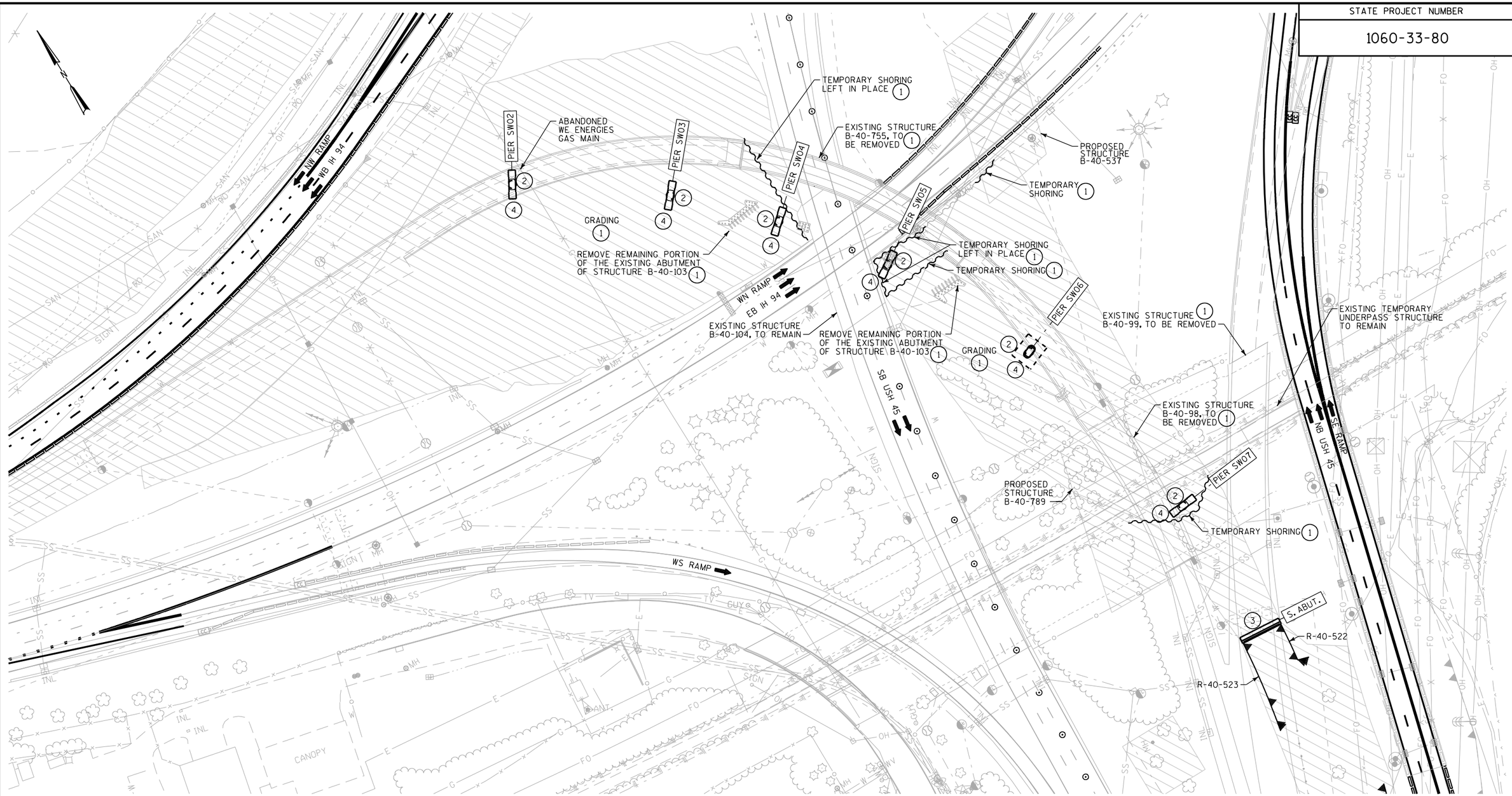

8

8

PLAN - UNIT 1 & UNIT 2

CONSTRUCTION STAGE 2A TRAFFIC SHOWN

LEGEND

(3) CONSTRUCTION SEQUENCE NUMBER

TEMPORARY SHORING, SEE EXCAVATION PLAN FOR DETAILS

PROPOSED GRADING, PAVEMENT OR STRUCTURE WORK IN CONSTRUCTION STAGE 2A, SEE ROADWAY PLANS

NOTES

SEE CONSTRUCTION STAGING NOTES SHEETS FOR GENERAL CONSTRUCTION STAGING NOTES.

NO.	DATE	REVISION	BY

STATE OF WISCONSIN
DEPARTMENT OF TRANSPORTATION

STRUCTURE B-40-855

DRAWN BY GLM | PLANS CK'D. WRT

CONSTRUCTION STAGING (1 OF 5)

SHEET 16 OF 96

STATE PROJECT NUMBER
1060-33-80

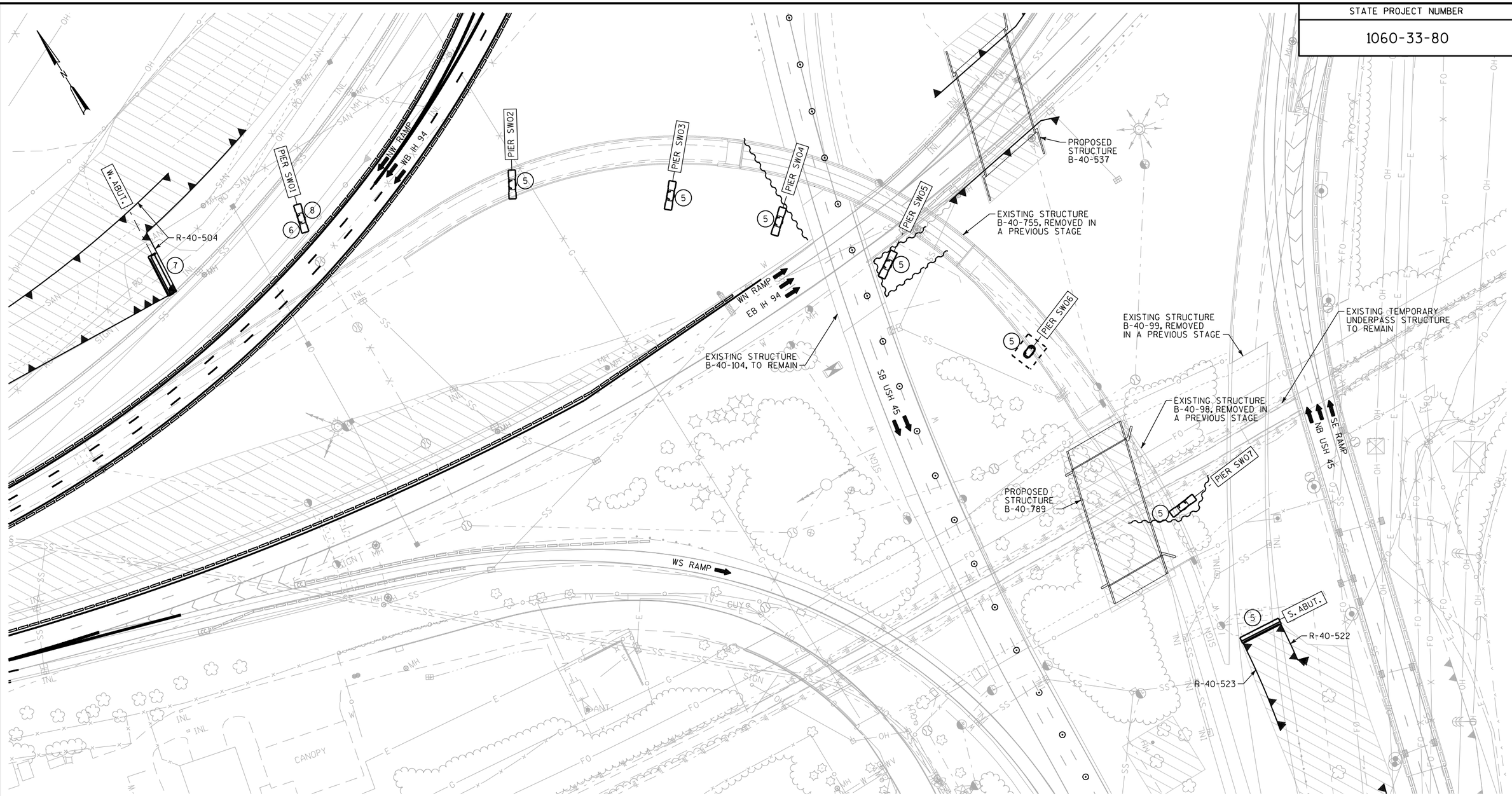

PLAN - UNIT 1 & UNIT 2

CONSTRUCTION STAGE 2B TRAFFIC SHOWN
CONSTRUCTION STAGE 2C & STAGE 3 TRAFFIC SIMILAR

LEGEND

(3) CONSTRUCTION SEQUENCE NUMBER

TEMPORARY SHORING, SEE EXCAVATION PLAN FOR DETAILS

PROPOSED GRADING, PAVEMENT OR STRUCTURE WORK IN CONSTRUCTION STAGE 2B. STAGE 2C & 3 SIMILAR, SEE ROADWAY PLANS

NOTES

SEE CONSTRUCTION STAGING NOTES SHEETS FOR GENERAL CONSTRUCTION STAGING NOTES.

NO.	DATE	REVISION	BY

STATE OF WISCONSIN
DEPARTMENT OF TRANSPORTATION

STRUCTURE B-40-855

DRAWN BY GLM | PLANS CK'D. WRT

CONSTRUCTION STAGING (2 OF 5)

SHEET 17 OF 96

STATE PROJECT NUMBER
1060-33-80

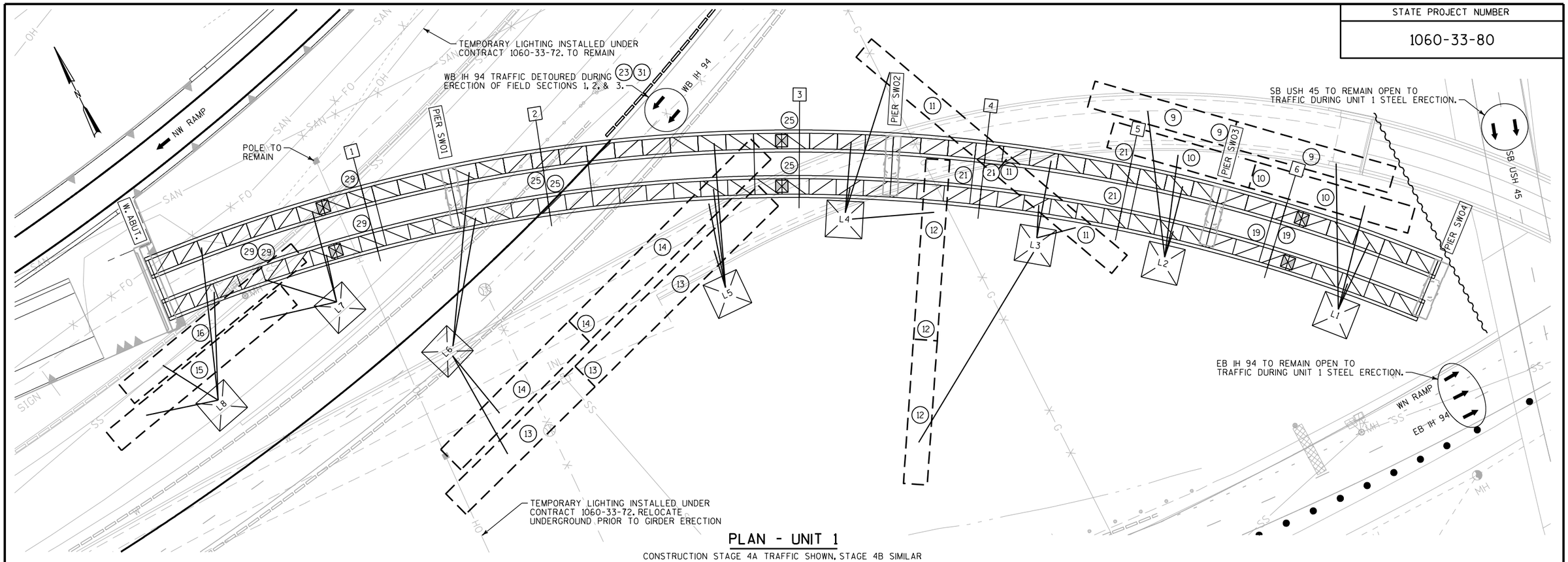

PLAN - UNIT 1

CONSTRUCTION STAGE 4A TRAFFIC SHOWN, STAGE 4B SIMILAR

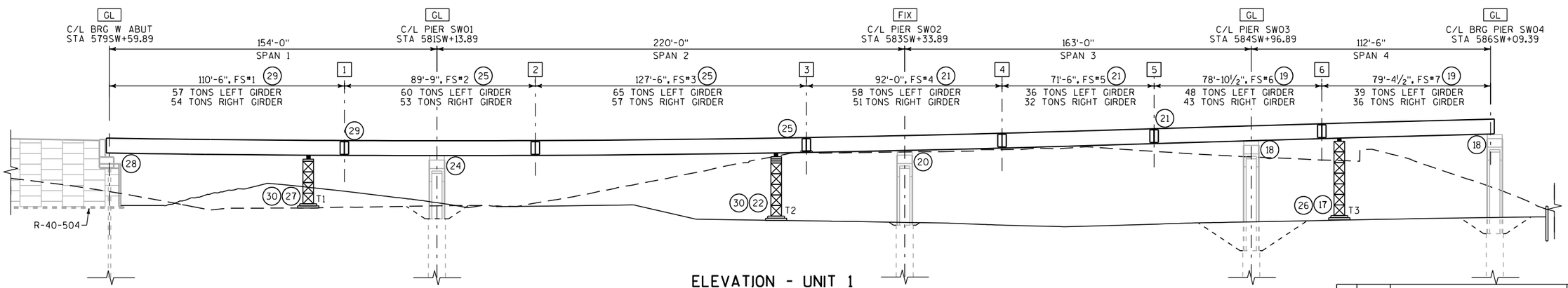

ELEVATION - UNIT 1

SPAN AND FIELD SECTION LENGTHS SHOWN ARE TAKEN ALONG THE REFERENCE LINE

LEGEND

- L1 — POTENTIAL CRANE LOCATION
- L1 — CRANE LOCATION IDENTIFIER
- POTENTIAL TEMPORARY SHORING TOWER
- T1 — SHORING TOWER IDENTIFIER
- 3 — CONSTRUCTION SEQUENCE NUMBER
- 1 — FIELD SPLICE NUMBER
- OUTLINE OF TRANSPORTED GIRDER

NOTES

SEE CONSTRUCTION STAGING NOTES SHEETS FOR GENERAL CONSTRUCTION STAGING NOTES.

FIELD SECTION WEIGHTS SHOWN ARE GIVEN FOR INFORMATION ONLY. VERIFY ALL STEEL WEIGHTS FROM APPROVED SHOP DRAWINGS. THE WEIGHT IS THE APPROXIMATE TOTAL WEIGHT FOR THE LEFT OR RIGHT GIRDER INCLUDING INTERNAL DIAPHRAGMS, STRUTS, K-FRAMES, AND BRACING. THE WEIGHT OF EXTERNAL DIAPHRAGMS IS NOT INCLUDED. VERIFY ALL STEEL WEIGHTS FROM APPROVED SHOP DRAWINGS ONLY.

NO.	DATE	REVISION	BY

STATE OF WISCONSIN
DEPARTMENT OF TRANSPORTATION

STRUCTURE B-40-855

DRAWN BY	GLM	PLANS CK'D.	WRT

CONSTRUCTION STAGING (3 OF 5)

SHEET 18 OF 96

STATE PROJECT NUMBER
1060-33-80

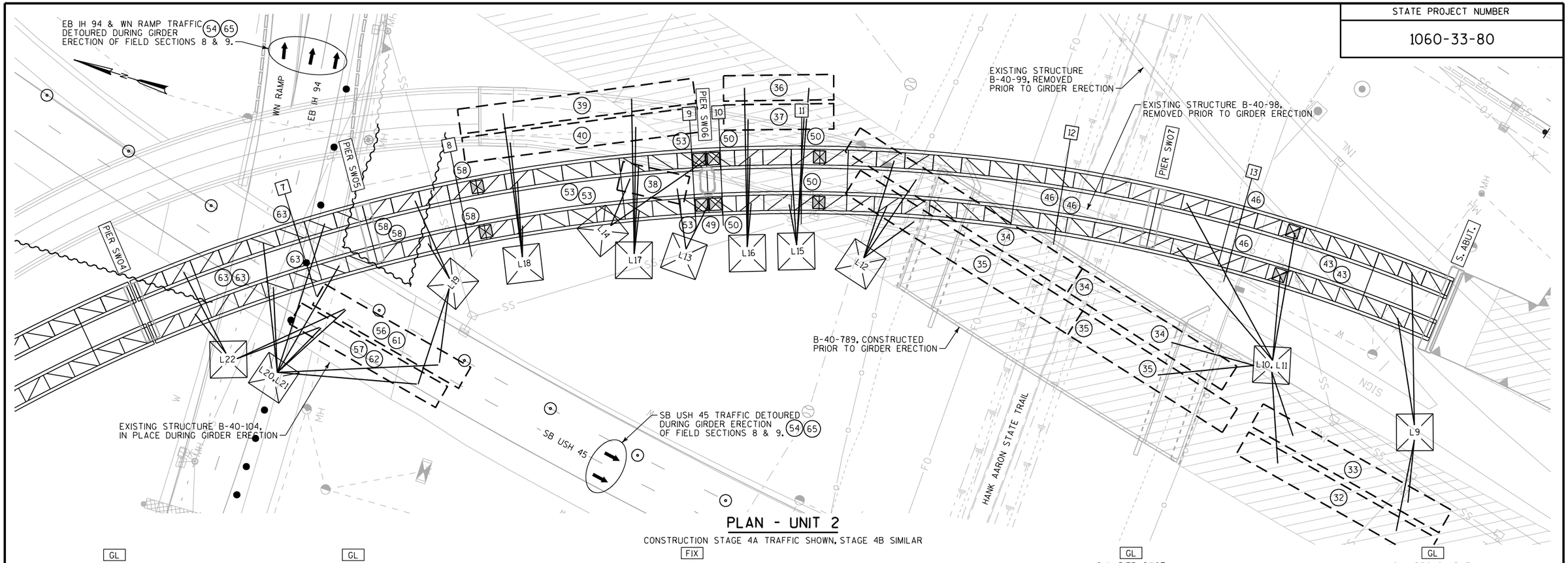

PLAN - UNIT 2

CONSTRUCTION STAGE 4A TRAFFIC SHOWN, STAGE 4B SIMILAR

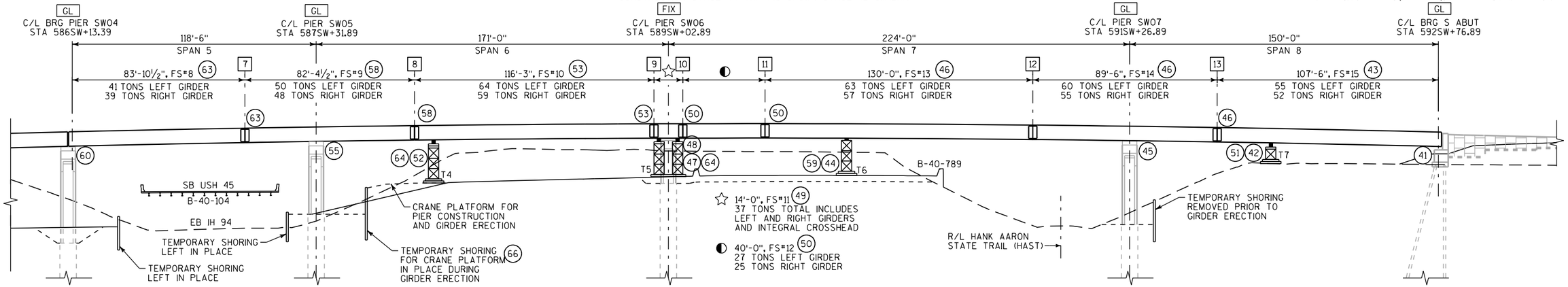

ELEVATION - UNIT 2

SPAN AND FIELD SECTION LENGTHS SHOWN ARE TAKEN ALONG THE REFERENCE LINE

LEGEND

- POTENTIAL CRANE LOCATION
- L1 — CRANE LOCATION IDENTIFIER
- POTENTIAL TEMPORARY SHORING TOWER
- T1 — SHORING TOWER IDENTIFIER
- 3 — CONSTRUCTION SEQUENCE NUMBER
- 1 — FIELD SPLICE NUMBER
- OUTLINE OF TRANSPORTED GIRDER
- PROPOSED GRADING, PAVEMENT OR STRUCTURE WORK IN CONSTRUCTION STAGE 4A OR 4B, SEE ROADWAY PLANS

NOTES

SEE CONSTRUCTION STAGING NOTES SHEETS FOR GENERAL CONSTRUCTION STAGING NOTES.

FIELD SECTION WEIGHTS SHOWN ARE GIVEN FOR INFORMATION ONLY. VERIFY ALL STEEL WEIGHTS FROM APPROVED SHOP DRAWINGS. THE WEIGHT IS THE APPROXIMATE TOTAL WEIGHT FOR THE LEFT OR RIGHT GIRDER INCLUDING INTERNAL DIAPHRAGMS, STRUTS, K-FRAMES, AND BRACING. THE WEIGHT OF EXTERNAL DIAPHRAGMS IS NOT INCLUDED. VERIFY ALL STEEL WEIGHTS FROM APPROVED SHOP DRAWINGS ONLY.

NO.	DATE	REVISION	BY

STATE OF WISCONSIN
DEPARTMENT OF TRANSPORTATION

STRUCTURE B-40-855

DRAWN BY GLM | PLANS CK'D. WRT

CONSTRUCTION STAGING (4 OF 5)

SHEET 19 OF 96

STATE PROJECT NUMBER
1060-33-80

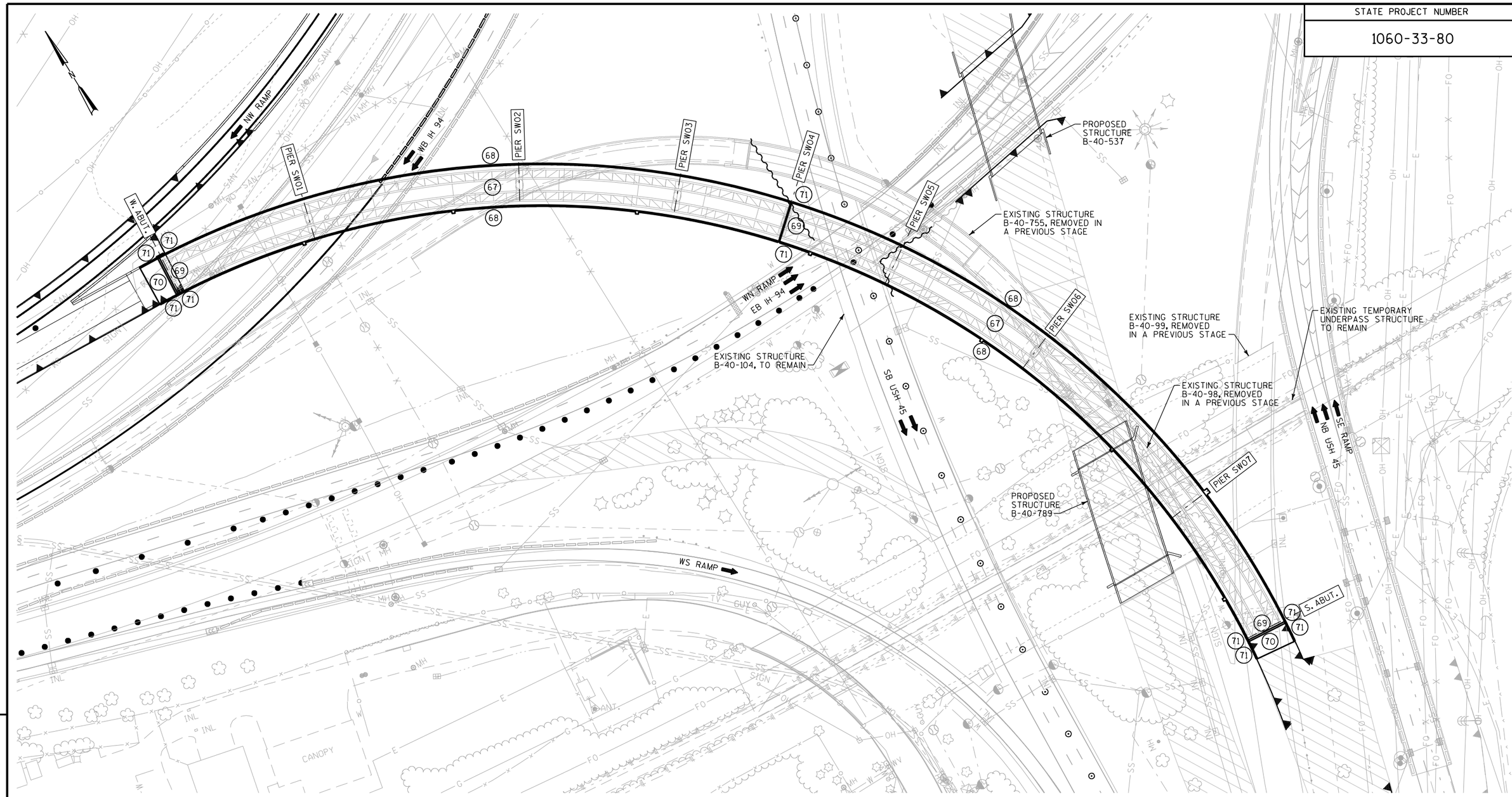

PLAN - UNIT 1 & UNIT 2

CONSTRUCTION STAGE 4A TRAFFIC SHOWN, STAGE 4B SIMILAR

LEGEND

- (3) CONSTRUCTION SEQUENCE NUMBER
- TEMPORARY SHORING, SEE EXCAVATION PLAN FOR DETAILS
- PROPOSED GRADING, PAVEMENT OR STRUCTURE WORK IN CONSTRUCTION STAGE 4A OR 4B, SEE ROADWAY PLANS

NOTES

SEE CONSTRUCTION STAGING NOTES SHEET FOR GENERAL CONSTRUCTION STAGING NOTES.

NO.	DATE	REVISION	BY

STATE OF WISCONSIN
DEPARTMENT OF TRANSPORTATION

STRUCTURE B-40-855

DRAWN BY GLM | PLANS CK'D. WRT

CONSTRUCTION STAGING (5 OF 5)

SHEET 20 OF 96

STATE PROJECT NUMBER
1060-33-80

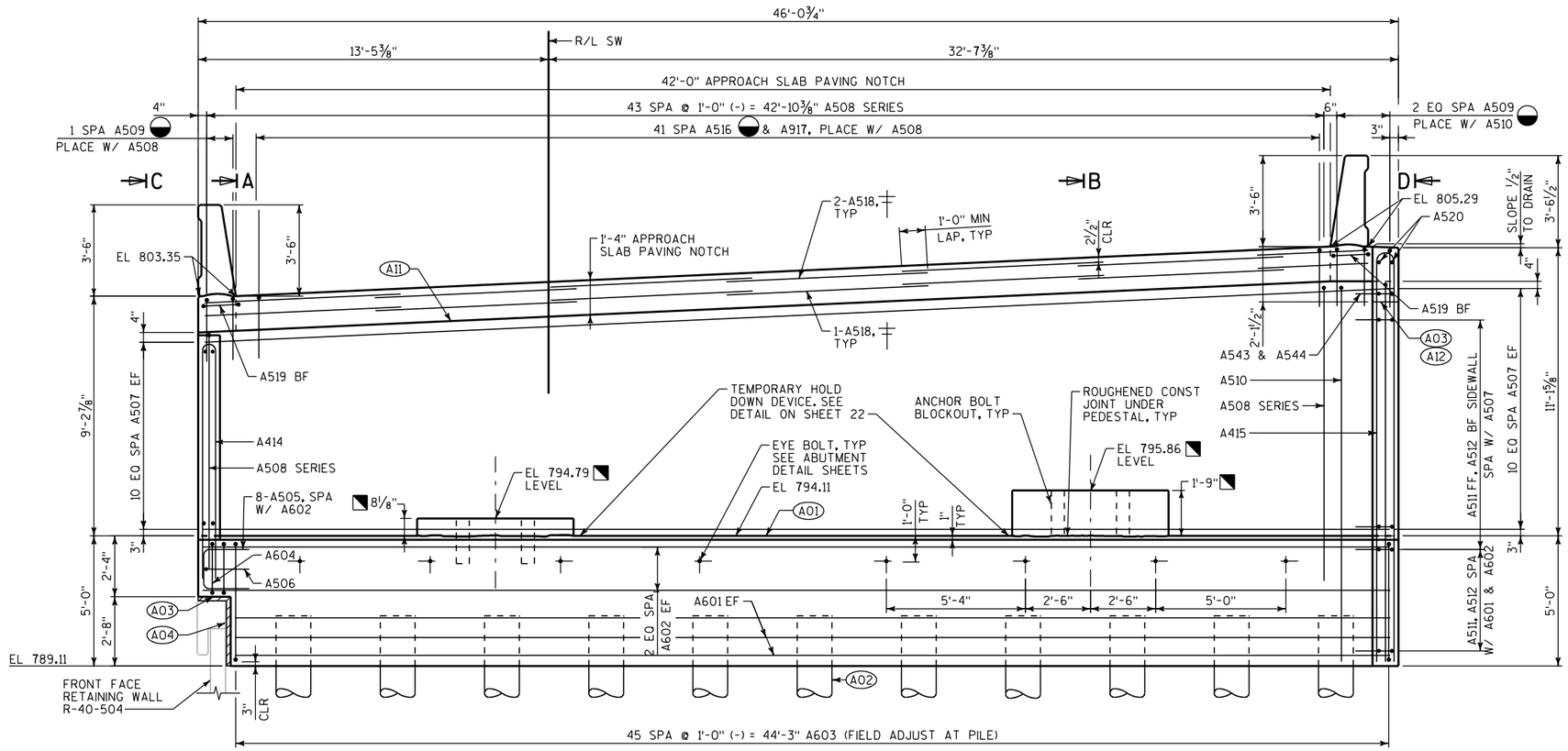

ELEVATION

LOOKING DOWN STATION
ALL DIMENSIONS AND ELEVATIONS ARE GIVEN ALONG FRONT FACE OF BACKWALL.

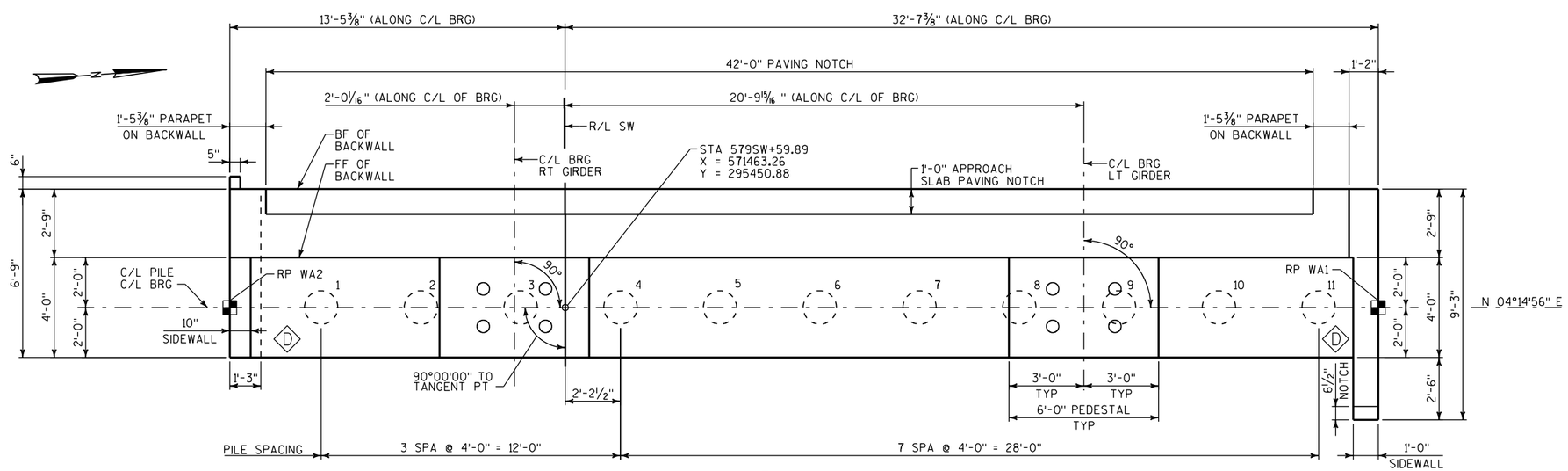

PLAN

LEGEND

- (A01) KEYED CONSTRUCTION JOINT FORMED BY A BEVELED 2"x6" KEYWAY AT BASE OF BACKWALL.
- (A02) ABUTMENT SUPPORTED ON 16" DIA CIP PILING WITH A REQUIRED DRIVING RESISTANCE OF 246 TONS PER PILE AS DETERMINED BY THE PDA/CAPWAP ACCEPTANCE METHOD.

  ESTIMATED PILE LENGTH = 75'.
- (A03) 2" PREFORMED JOINT FILLER ABOVE COPING WITH NON-BITUMINUS JOINT SEALER. COLOR TO MATCH CONCRETE STAIN.
- (A04) PREFORMED JOINT FILLER (1½"± BASED ON A 7½" MSE WALL PANEL THICKNESS) WITH NON-BITUMINUS JOINT SEALER PLACED BETWEEN COPING/PRECAST PANEL AND EDGE OF BEAM SEAT. COLOR TO MATCH CONCRETE STAIN.
- (A11) CONST JOINT - POUR CONCRETE ABOVE THIS JOINT AFTER SUPERSTRUCTURE IS IN PLACE. STRIKE OFF AND LEAVE ROUGH.
- (A12) OPTIONAL CONST JT ADJUST VERTICALLY AS NECESSARY TO FACILITATE DECK PLACEMENT. PLACE 18" RUBBERIZED MEMBRANE WATERPROOFING OVER JOINT.
- ELEVATIONS AND DIMENSIONS DEPEND ON THE ASSUMED BEARING DIMENSIONS SHOWN ON BEARING LAYOUT SHEET. ADJUST AS REQUIRED TO SUIT THE ACTUAL SELECTED BEARING DIMENSIONS. MINIMUM PEDESTAL HEIGHT = 6" MAXIMUM PEDESTAL HEIGHT INCREASE = 3".
- (D) DYNAMIC PILE LOAD TESTING.
- ANCHOR REBAR INTO PLACE W/ EPOXY RESIN AFTER MODULAR JOINT IS IN POSITION. FOLLOW STD SPEC FOR MASONRY ANCHOR TYPE S WITH A MIN. PULLOUT CAPACITY OF 20 KIPS AND EMBEDMENT OF 1'-0".
- REFERENCE POINT, SEE SHEET A2 OR B2.
- 8'-0" LONG BAR WITH 1'-0" MIN LAP, CUT IN FIELD TO CLEAR JOINT SUPPORT SYSTEM AS REQUIRED.

NOTES

FOR SECTIONS A-A & B-B, SEE WEST ABUTMENT DETAILS (1 OF 2).

FOR SECTIONS C-C & D-D, SEE WEST ABUTMENT DETAILS (2 OF 2).

FOR DETAILS OF BEARINGS, SEE BEARING LAYOUT AND BEARING DETAILS SHEETS.

FOR DETAILS OF PEDESTALS AND ANCHOR BOLT BLOCKOUTS, SEE ABUTMENT PEDESTAL REINFORCEMENT SHEET.

FOR DETAILS OF EXPANSION JT, SEE EXPANSION JOINT SHEETS.

FOR DETAILS OF PARAPET ON BACKWALL, SEE PARAPET SHEETS.

NO.	DATE	REVISION	BY

STATE OF WISCONSIN
DEPARTMENT OF TRANSPORTATION

STRUCTURE B-40-855

DRAWN BY PAK | PLANS CK'D. DGS

WEST ABUTMENT PLAN & ELEVATION

SHEET 21 OF 96

STATE PROJECT NUMBER
1060-33-80

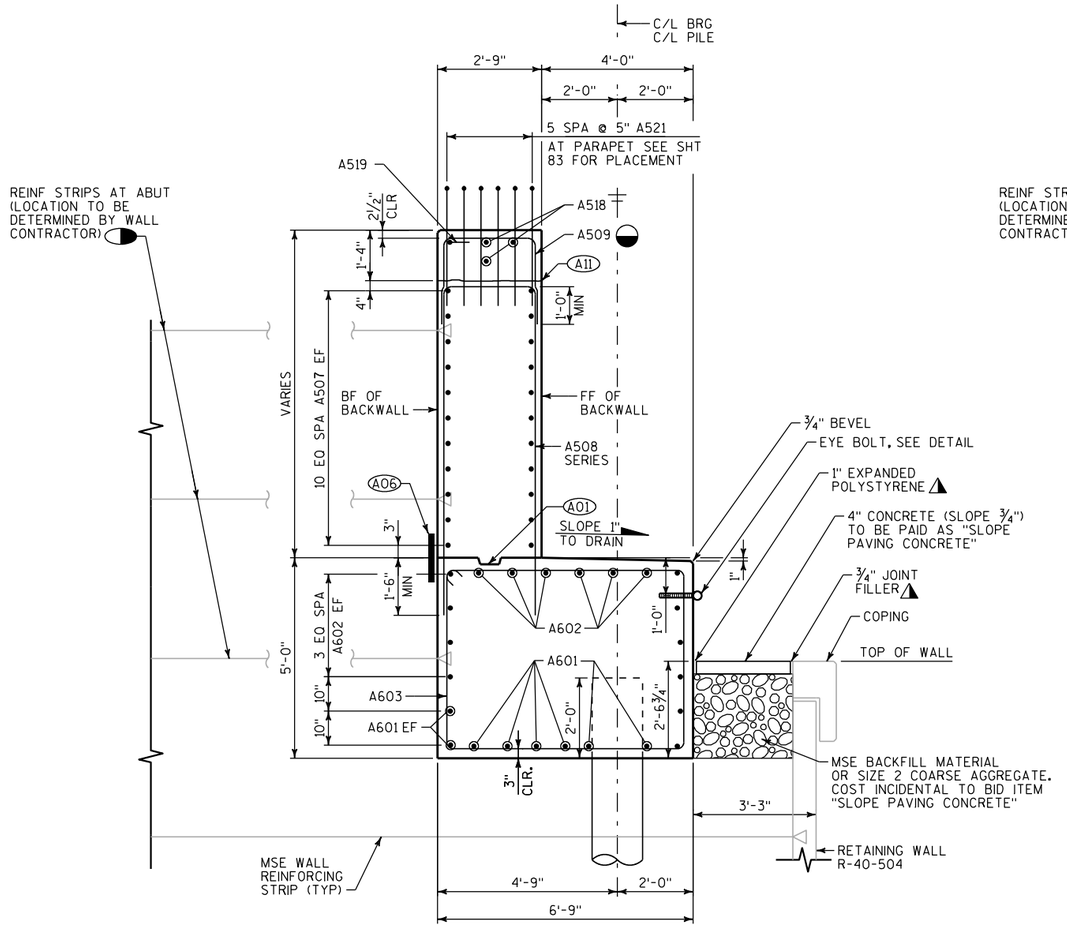

SECTION A-A

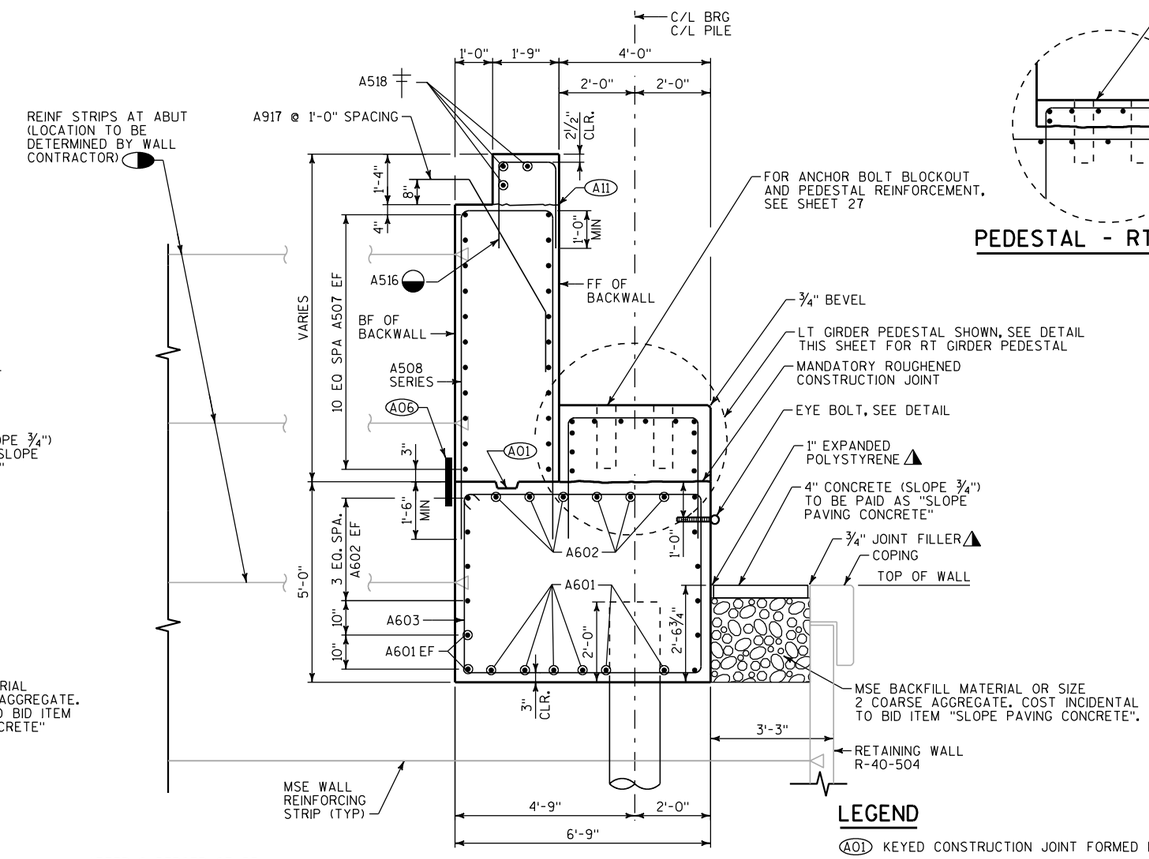

SECTION B-B

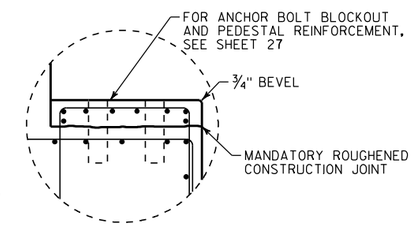

PEDESTAL - RT GIRDER

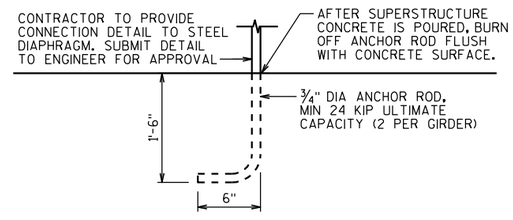

TEMPORARY HOLD DOWN DEVICE

LOCATE WITHIN 1'-6" OF GIRDER BOTTOM FLANGE. PAYMENT IS INCIDENTAL TO "CONCRETE MASONRY BRIDGES"

LEGEND

- (A01) KEYED CONSTRUCTION JOINT FORMED BY A BEVELED 2"X6"
- (A06) 18" RUBBERIZED MEMBRANE WATERPROOFING SEAL ALL HORIZONTAL AND VERTICAL JOINTS ON BACKFACE OF ABUTMENTS.
- (A11) CONST JOINT - POUR CONCRETE ABOVE THIS JOINT AFTER SUPERSTRUCTURE IS IN PLACE. STRIKE OFF AND LEAVE ROUGH.
- REINFORCING STRIPS SHALL BE DESIGNED TO RESIST AN UNFACTORED SUPERSTRUCTURE LATERAL LINE LOAD OF 2.4 K/LF OF ABUTMENT LENGTH. THE LINE LOAD IS A SUMMATION OF AASHTO LOADS BR, WS, WL, AND TU.
- SEAL ALL EXPOSED HORIZONTAL AND VERTICAL SURFACES OF FILLER AND EXPANDED POLYSTYRENE WITH NON-STAINING, GRAY NON-BITUMINOUS JOINT SEALER. (1" DEEP AND HOLD ⅛" BELOW SURFACE OF CONCRETE).
- ANCHOR REBAR INTO PLACE W/ EPOXY RESIN AFTER MODULAR JOINT IS IN POSITION. FOLLOW STD SPEC FOR MASONRY ANCHOR TYPE S WITH A MIN PULLOUT CAPACITY OF 20 KIPS AND EMBEDMENT OF 1'-0".
- 8'-0" LONG BAR WITH 1'-0" MIN LAP. CUT IN FIELD TO CLEAR JOINT SUPPORT SYSTEM AS REQUIRED.

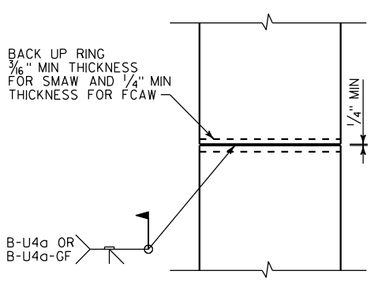

CIP PILE SPLICE DETAIL

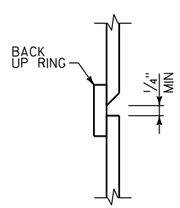

CIP PILE WELD DETAIL

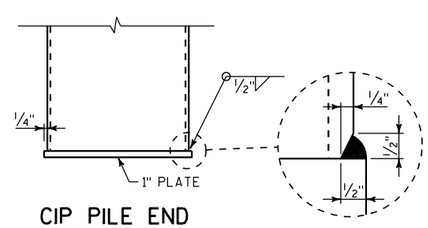

CIP PILE END PLATE DETAIL

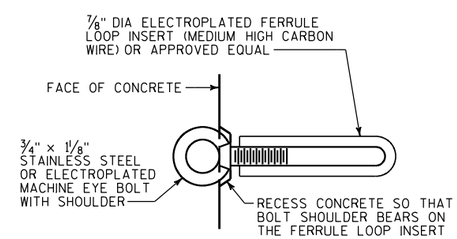

EYE BOLT DETAIL

EYE BOLTS AND FERRULE LOOP INSERTS ARE INCLUDED IN THE BID ITEM "CONCRETE MASONRY BRIDGES". MINIMUM STRENGTH OF EYE BOLT AND LOOP INSERT IS 3500 LB.

NO.	DATE	REVISION	BY

STATE OF WISCONSIN
DEPARTMENT OF TRANSPORTATION

STRUCTURE B-40-855

DRAWN BY PAK | PLANS CK'D. DGS

WEST ABUTMENT DETAILS (1 OF 2)

SHEET 22 OF 96

STATE PROJECT NUMBER
1060-33-80

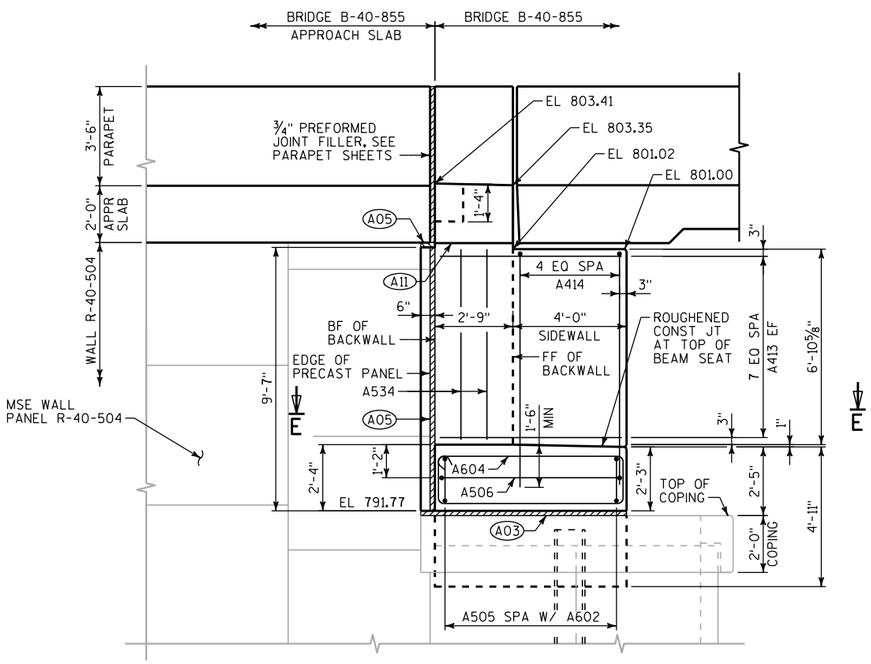

SECTION C-C

(LOOKING NORTH)

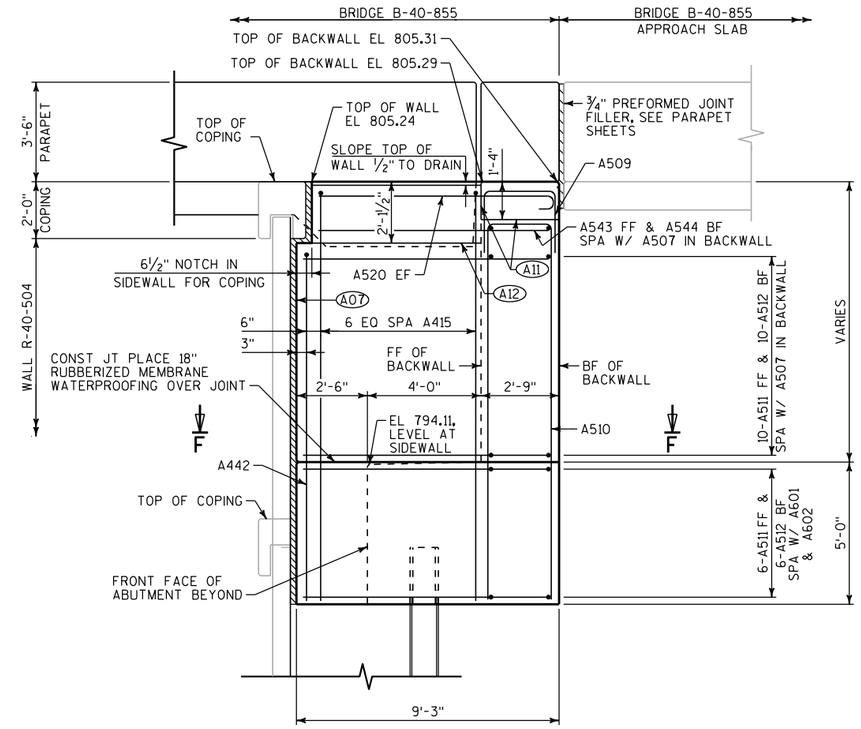

SECTION D-D

(LOOKING SOUTH)

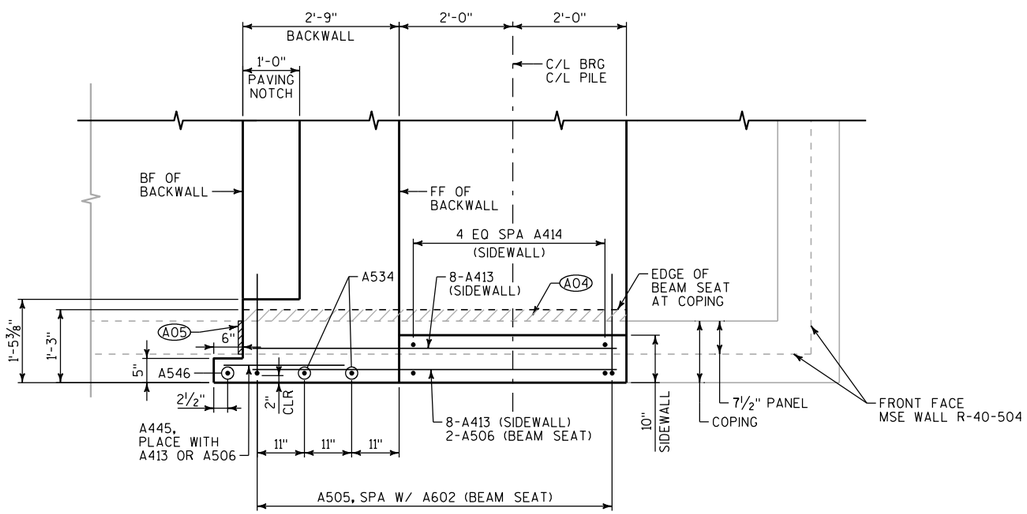

SECTION E-E

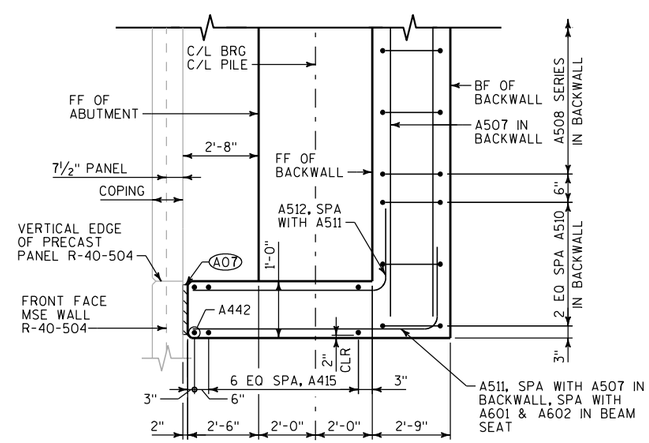

SECTION F-F

LEGEND

(A03) 2" PREFORMED JOINT FILLER ABOVE COPING WITH NON-BITUMINOUS JOINT SEALER. COLOR TO MATCH CONCRETE STAIN.

(A04) PREFORMED JOINT FILLER (1 1/2"± BASED ON A 7 1/2" MSE WALL PANEL THICKNESS) WITH NON-BITUMINOUS JOINT SEALER PLACED BETWEEN COPING/PRECAST PANEL AND EDGE OF BEAM SEAT. COLOR TO MATCH CONCRETE STAIN.

(A05) 3/4" PREFORMED JOINT FILLER WITH NON-BITUMINOUS JOINT SEALER BETWEEN BACKFACE OF BACK WALL AND WALL R-40-504. COLOR TO MATCH CONCRETE STAIN.

(A07) PREFORMED JOINT FILLER (1 1/2"± BASED ON A 7 1/2" MSE WALL PANEL THICKNESS) WITH NON-BITUMINOUS JOINT SEALER PLACED BETWEEN ABUTMENT SIDEWALL AND WALL R-40-504. COLOR TO MATCH CONCRETE STAIN.

(A11) CONST JOINT - POUR CONCRETE ABOVE THIS JOINT AFTER SUPERSTRUCTURE IS IN PLACE. STRIKE OFF AND LEAVE ROUGH.

(A12) OPTIONAL CONST JT ADJUST VERTICALLY AS NECESSARY TO FACILITATE DECK PLACEMENT. PLACE 18" RUBBERIZED MEMBRANE WATERPROOFING OVER JOINT.

NO.	DATE	REVISION	BY

STATE OF WISCONSIN
DEPARTMENT OF TRANSPORTATION

STRUCTURE B-40-855

DRAWN BY PAK | PLANS CK'D. DGS

WEST ABUTMENT DETAILS (2 OF 2)

SHEET 23 OF 96

STATE PROJECT NUMBER
1060-33-80

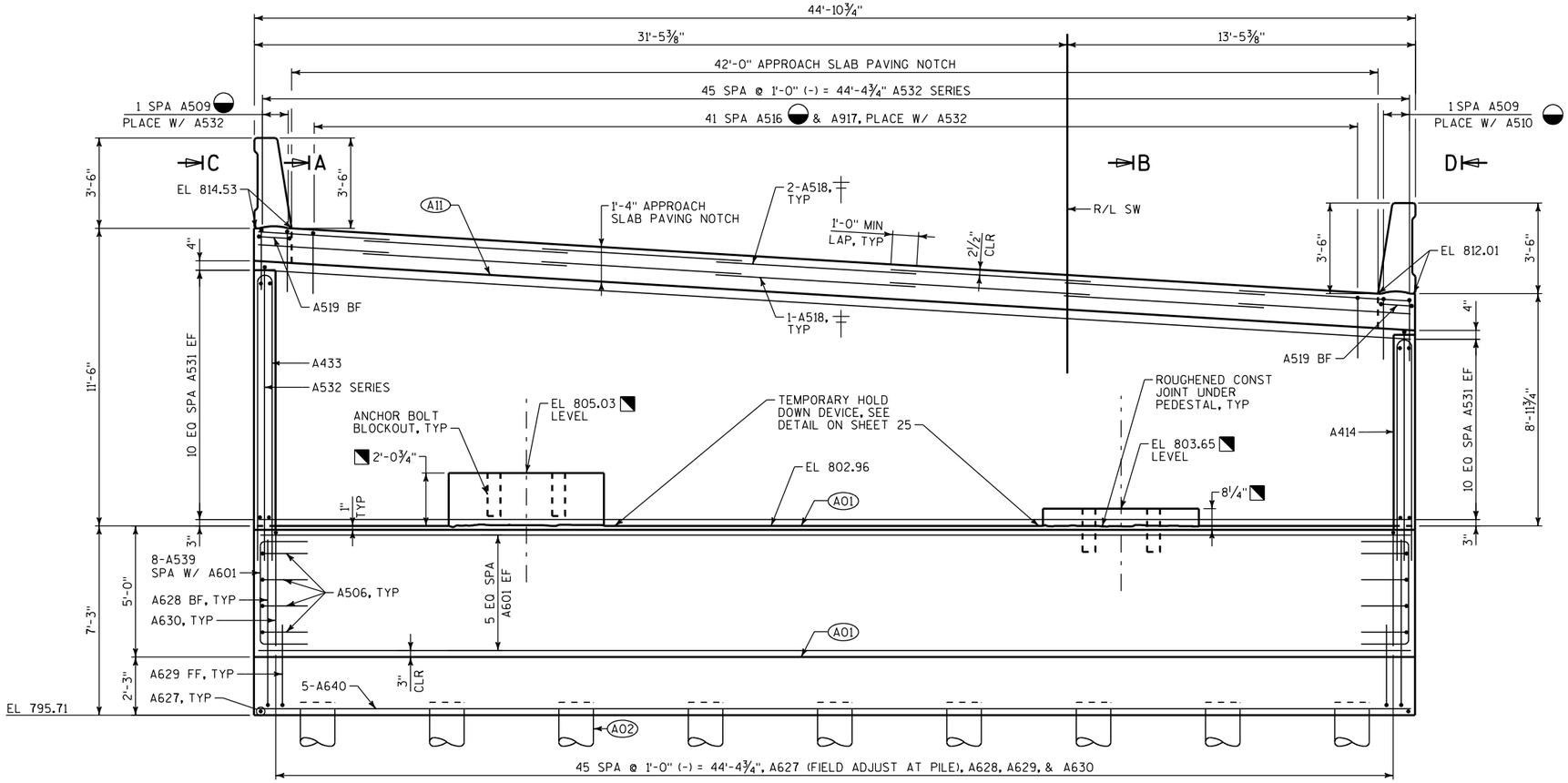

ELEVATION

LOOKING UPSTATION
ALL DIMENSIONS AND ELEVATIONS ARE GIVEN ALONG FRONT FACE OF BACKWALL

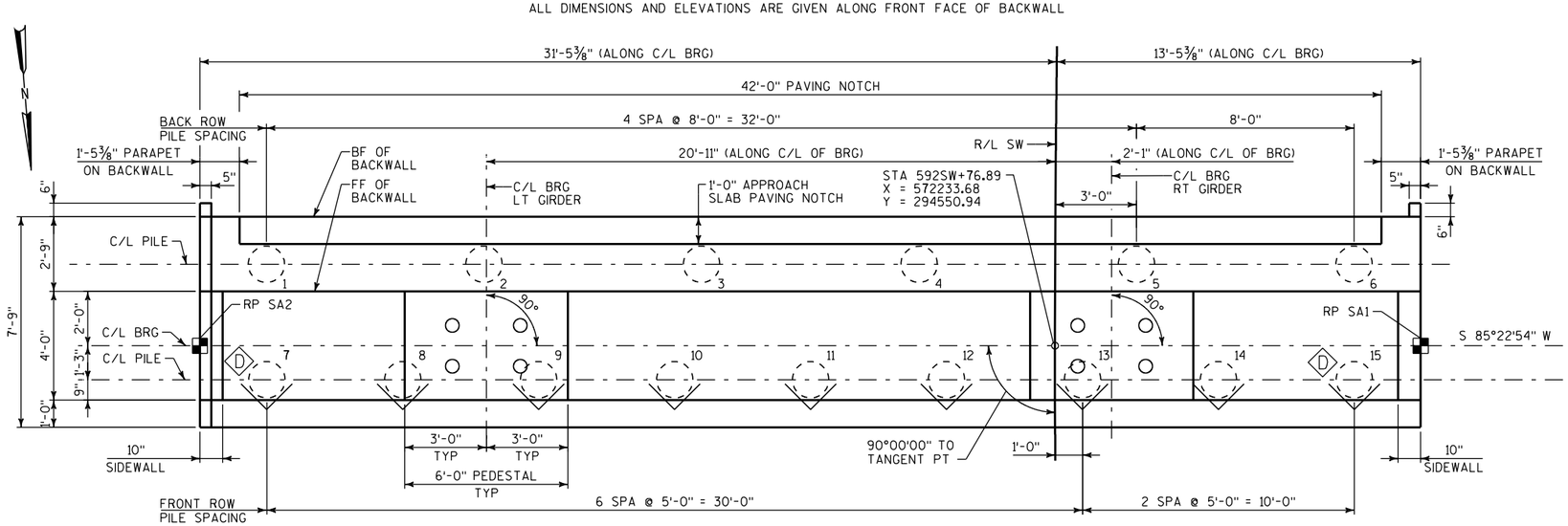

PLAN

LEGEND

- (A01) KEYED CONSTRUCTION JOINT FORMED BY A BEVELED 2"x6".
- (A02) ABUTMENT SUPPORTED ON 16" DIA CIP PILING WITH A REQUIRED DRIVING RESISTANCE OF 193 TONS PER PILE AS DETERMINED BY THE PDA/CAPWAP ACCEPTANCE METHOD. BATTER FRONT ROW 4:12.

  ESTIMATED PILE LENGTH = 70'.
- (A11) CONST JOINT - POUR CONCRETE ABOVE THIS JOINT AFTER SUPERSTRUCTURE IS IN PLACE. STRIKE OFF AND LEAVE ROUGH.
- ELEVATIONS AND DIMENSIONS DEPEND ON THE ASSUMED BEARING DIMENSIONS SHOWN ON BEARING LAYOUT SHEET. ADJUST AS REQUIRED TO SUIT THE ACTUAL SELECTED BEARING DIMENSIONS. MINIMUM PEDESTAL HEIGHT = 6" MAXIMUM PEDESTAL HEIGHT INCREASE = 3"
- (D) DYNAMIC PILE LOAD TESTING
- ANCHOR REBAR INTO PLACE W/ EPOXY RESIN AFTER MODULAR JOINT IS IN POSITION. FOLLOW STD SPEC FOR MASONRY ANCHOR TYPE S WITH A MIN PULLOUT CAPACITY OF 20 KIPS AND EMBEDMENT OF 1'-0".
- REFERENCE POINT, SEE SHEET A4 OR B4.
- 8'-0" LONG BAR WITH 1'-0" MIN LAP, CUT IN FIELD TO CLEAR JOINT SUPPORT SYSTEM AS REQUIRED.

NOTES

FOR SECTIONS A-A & B-B, SEE SOUTH ABUTMENT DETAILS (1 OF 2).

FOR SECTIONS C-C & D-D, SEE SOUTH ABUTMENT DETAILS (2 OF 2).

FOR DETAILS OF BEARINGS, SEE BEARING LAYOUT AND BEARING DETAILS SHEETS.

FOR DETAILS OF PEDESTALS AND ANCHOR BOLT BLOCKOUTS, SEE ABUTMENT PEDESTAL REINFORCEMENT SHEET.

FOR DETAILS OF EXPANSION JT, SEE EXPANSION JOINT SHEETS.

FOR DETAILS OF PARAPET ON BACKWALL, SEE PARAPET SHEETS.

NO.	DATE	REVISION	BY

STATE OF WISCONSIN
DEPARTMENT OF TRANSPORTATION

STRUCTURE B-40-855

DRAWN BY PAK | PLANS CK'D. DGS

SOUTH ABUTMENT PLAN & ELEVATION

SHEET 24 OF 96

STATE PROJECT NUMBER
1060-33-80

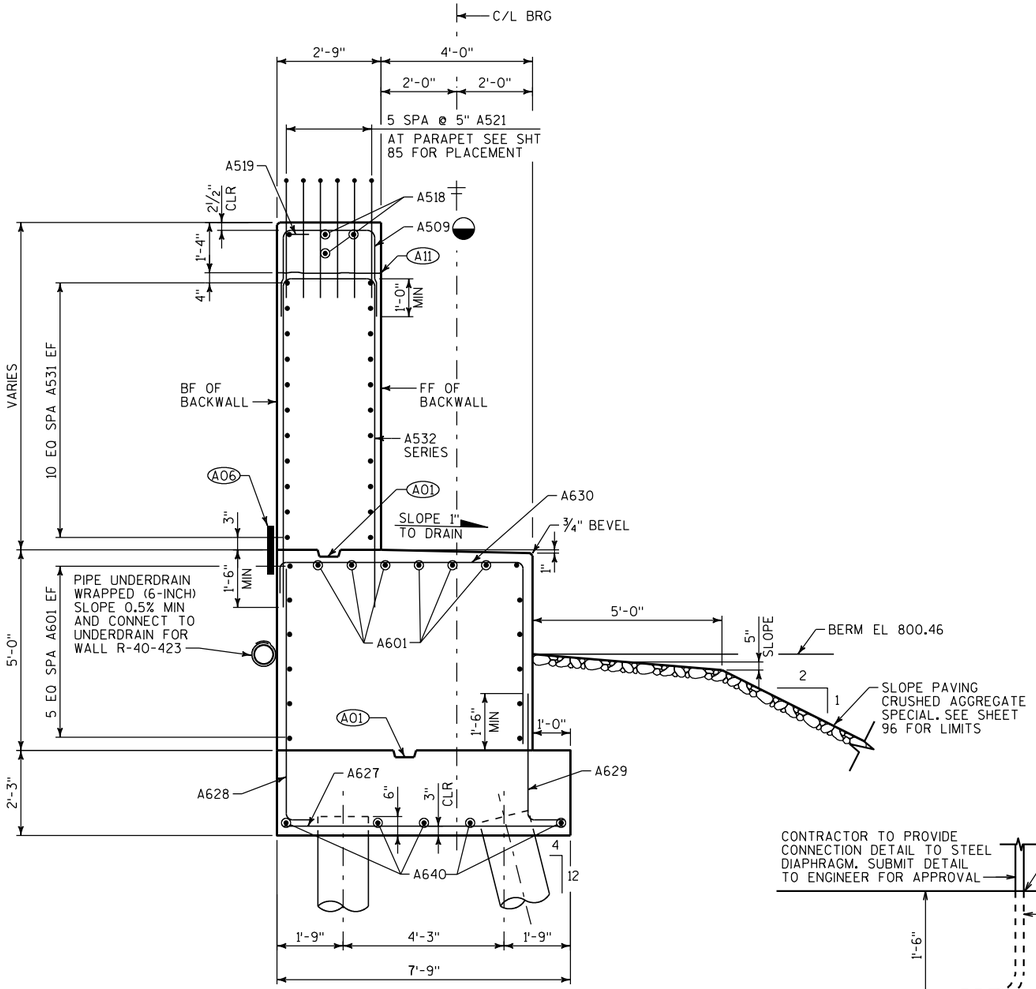

SECTION A-A

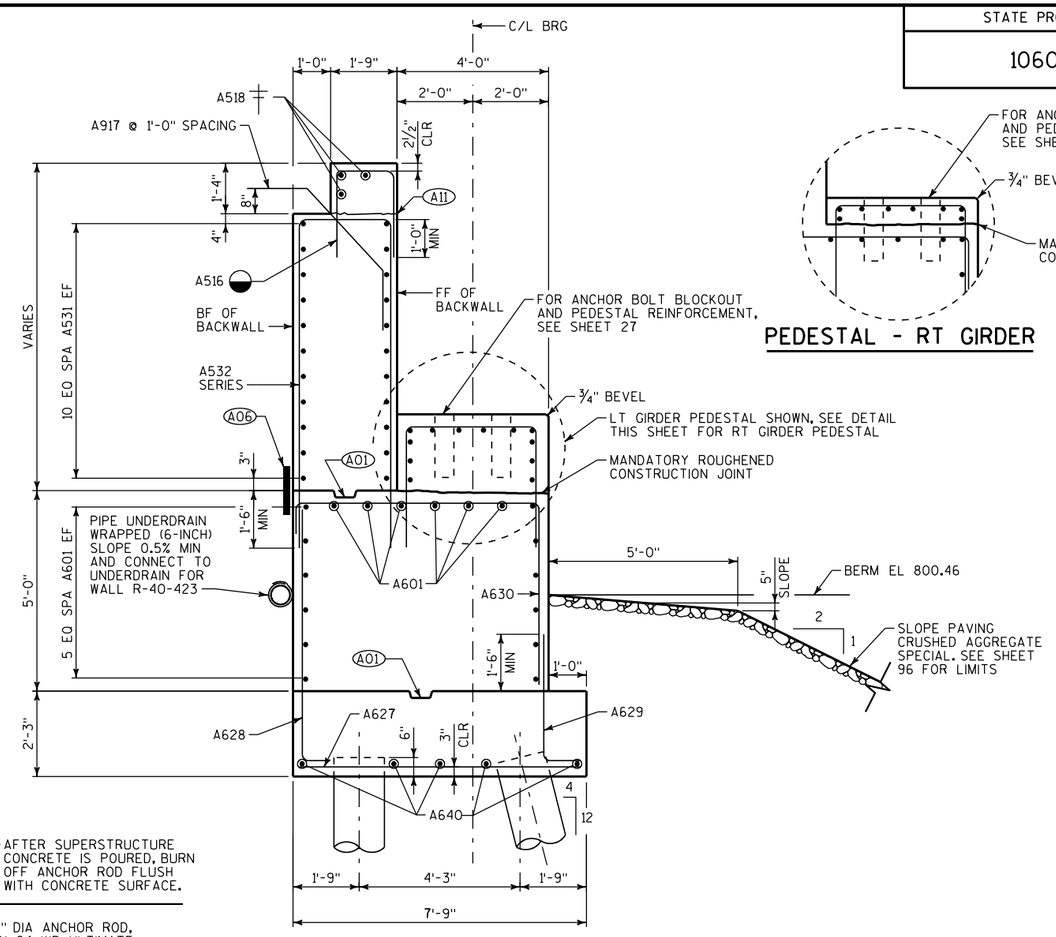

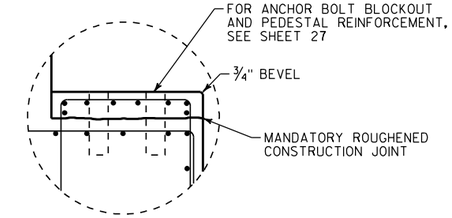

PEDESTAL - RT GIRDER

SECTION B-B

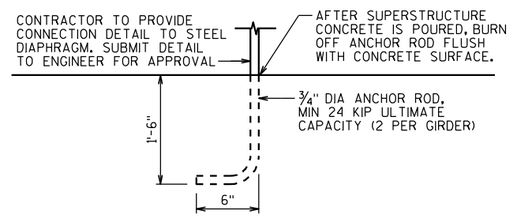

TEMPORARY HOLD DOWN DEVICE

LOCATE WITHIN 1'-6" OF GIRDER BOTTOM FLANGE.
PAYMENT IS INCIDENTAL TO "CONCRETE MASONRY BRIDGES"

LEGEND

- (A01) KEYED CONSTRUCTION JOINT FORMED BY A BEVELED 2"X6"
- (A06) 18" RUBBERIZED MEMBRANE WATERPROOFING SEAL ALL HORIZONTAL AND VERTICAL JOINTS ON BACKFACE OF ABUTMENTS.
- (A11) CONST JOINT - POUR CONCRETE ABOVE THIS JOINT AFTER SUPERSTRUCTURE IS IN PLACE. STRIKE OFF AND LEAVE ROUGH.
- ◒ ANCHOR REBAR INTO PLACE W/ EPOXY RESIN AFTER MODULAR JOINT IS IN POSITION. FOLLOW STD SPEC FOR MASONRY ANCHOR TYPE S WITH A MIN. PULLOUT CAPACITY OF 20 KIPS AND EMBEDMENT OF 1'-0".
- ┼ 8'-0" LONG BAR WITH 1'-0" MIN LAP. CUT IN FIELD TO CLEAR JOINT SUPPORT SYSTEM AS REQUIRED.

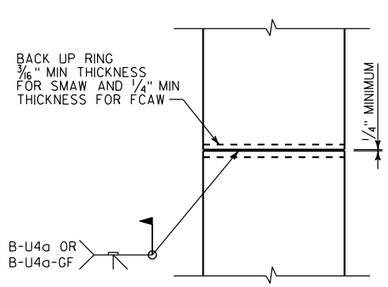

CIP PILE SPLICE DETAIL

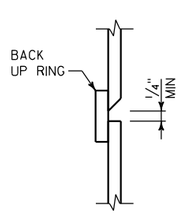

CIP PILE WELD DETAIL

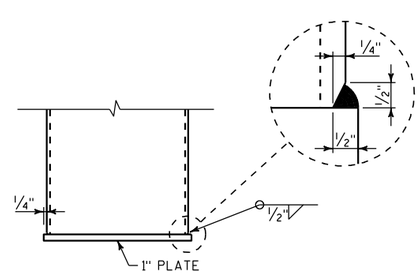

CIP PILE END PLATE DETAIL

NO.	DATE	REVISION	BY

STATE OF WISCONSIN
DEPARTMENT OF TRANSPORTATION

STRUCTURE B-40-855

DRAWN BY PAK | PLANS CK'D. DGS

SOUTH ABUTMENT DETAILS (1 OF 2)

SHEET 25 OF 96

STATE PROJECT NUMBER
1060-33-80

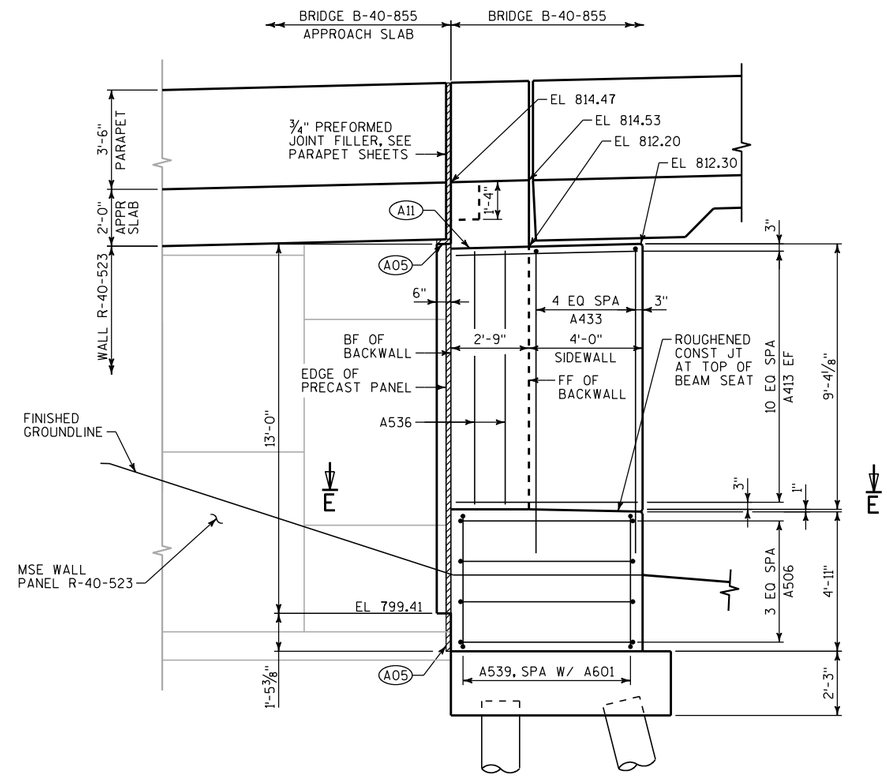

SECTION C-C

(LOOKING WEST)

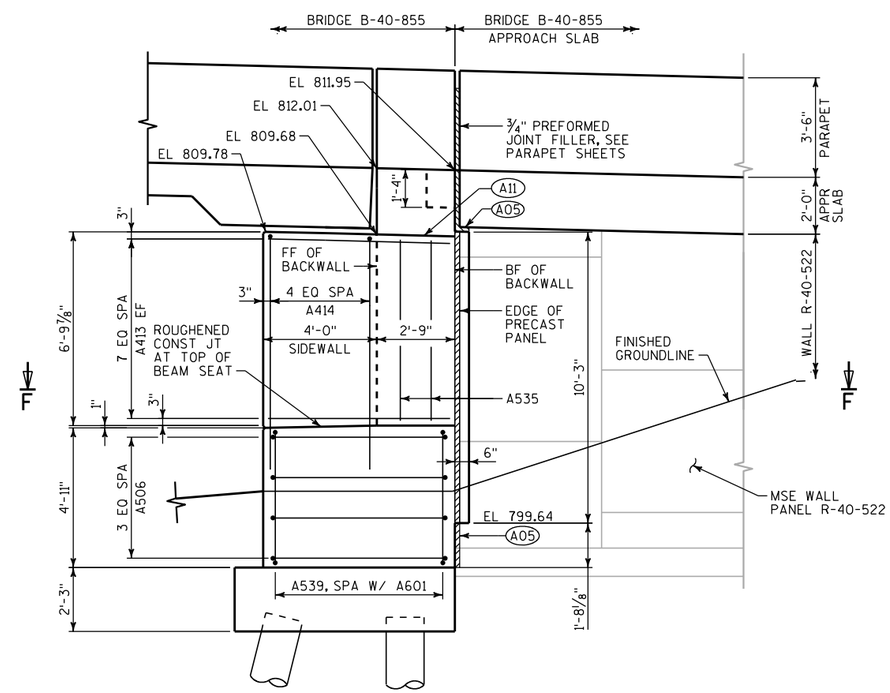

SECTION D-D

(LOOKING EAST)

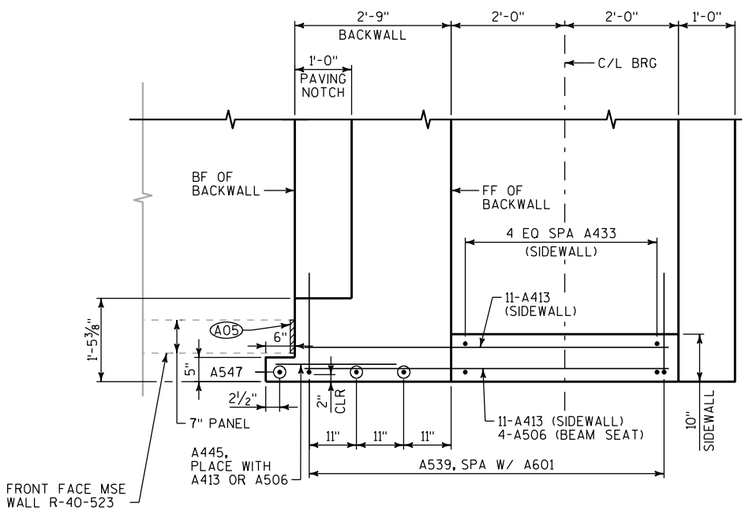

SECTION E-E

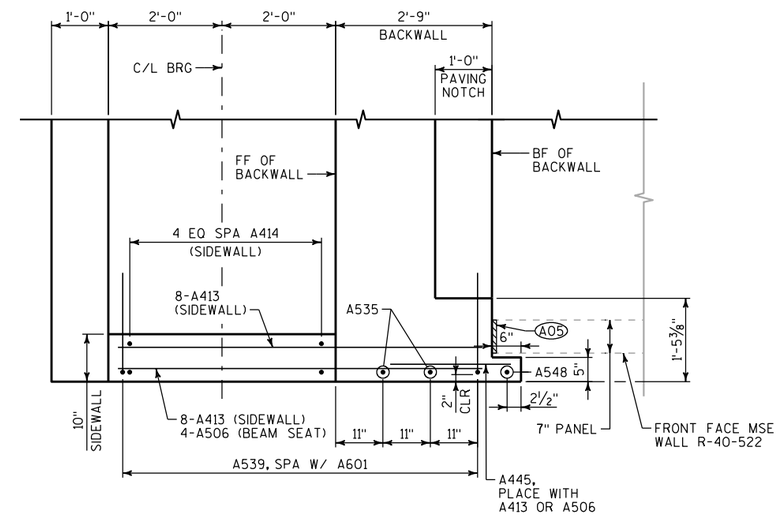

SECTION F-F

LEGEND

(A05) ¾" PREFORMED JOINT FILLER WITH NON-BITUMINOUS JOINT SEALER BETWEEN BACKFACE OF BACK WALL AND WALL R-40-523 AND R-40-522. COLOR TO MATCH CONCRETE STAIN.

(A11) CONST JOINT - POUR CONCRETE ABOVE THIS JOINT AFTER SUPERSTRUCTURE IS IN PLACE. STRIKE OFF AND LEAVE ROUGH.

NO.	DATE	REVISION	BY

STATE OF WISCONSIN
DEPARTMENT OF TRANSPORTATION

STRUCTURE B-40-855

DRAWN BY PAK | PLANS CK'D. DGS

SOUTH ABUTMENT DETAILS (2 OF 2)

SHEET 26 OF 96

8

8

STATE PROJECT NUMBER
1060-33-80

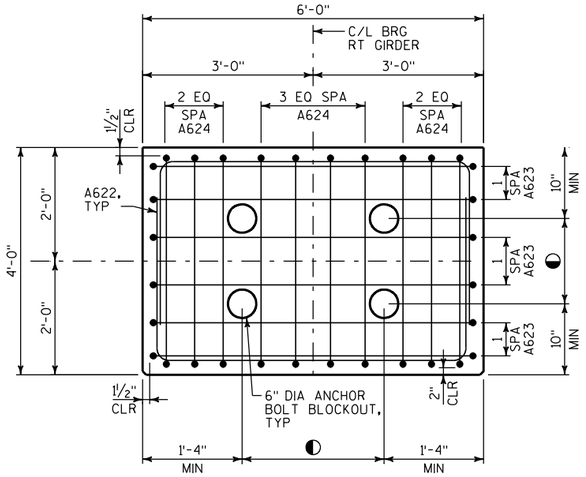

PEDESTAL PLAN - RIGHT GIRDER

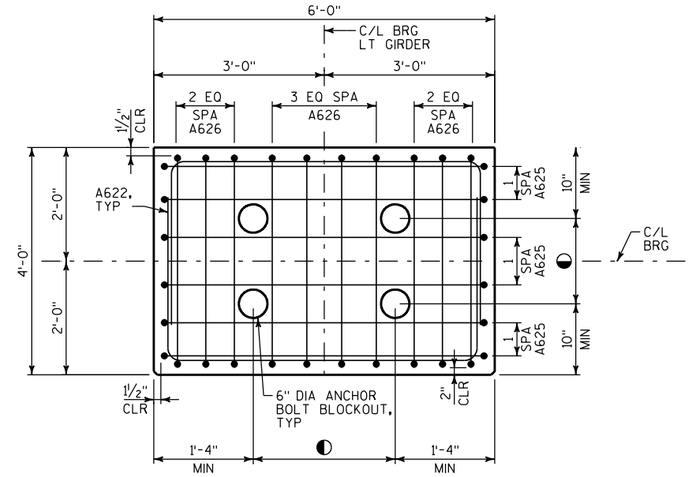

PEDESTAL PLAN - LEFT GIRDER

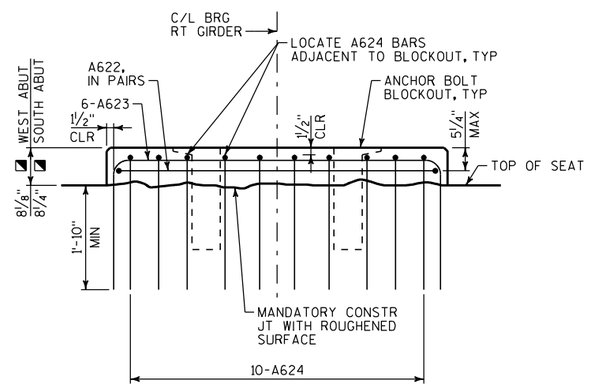

PEDESTAL ELEVATION - RIGHT GIRDER

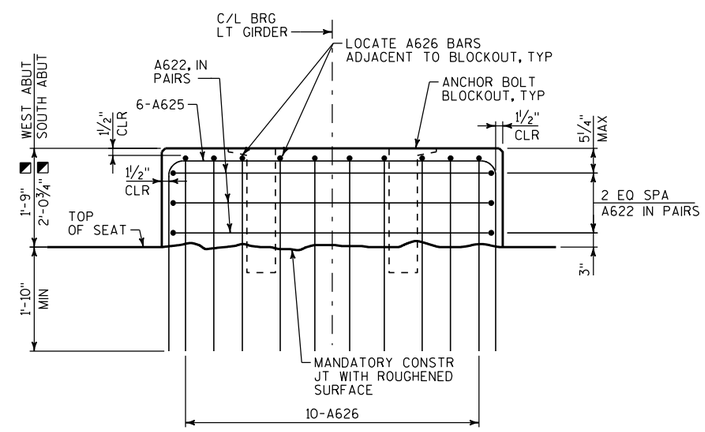

PEDESTAL ELEVATION - LEFT GIRDER

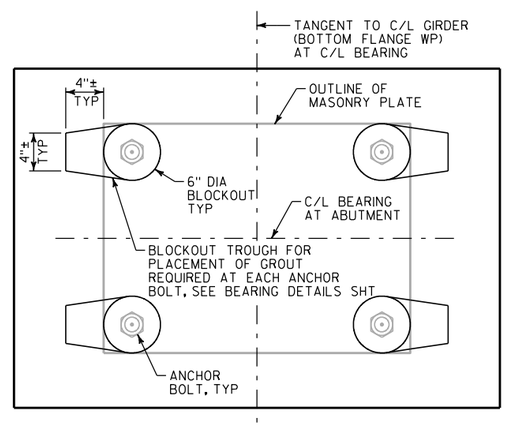

PEDESTAL PLAN - GROUT TROUGHS

SEE BEARING DETAILS SHEET

NOTES

FOR DETAILS OF ANCHOR BOLT BLOCKOUTS, SEE BEARING DETAILS SHEET.

FOR DETAILS OF BEARINGS, SEE BEARING LAYOUT SHEET AND BEARING DETAILS SHEET.

LEGEND

◥ ELEVATIONS AND DIMENSIONS DEPEND ON THE ASSUMED BEARING DIMENSIONS SHOWN ON BEARING LAYOUT SHEET. ADJUST AS REQUIRED TO SUIT THE ACTUAL FABRICATED BEARING DIMENSIONS.
MINIMUM PEDESTAL HEIGHT = 6".
MAXIMUM PEDESTAL HEIGHT INCREASE = 3"

◐ SEE BEARING LAYOUT SHEETS FOR ANCHOR BOLT BLOCKOUT LOCATION. VERIFY LOCATIONS WITH BEARING MANUFACTURER.

NO.	DATE	REVISION	BY

STATE OF WISCONSIN
DEPARTMENT OF TRANSPORTATION

STRUCTURE B-40-855

DRAWN BY PAK | PLANS CK'D. DGS

ABUTMENT PEDESTAL REINFORCEMENT

SHEET 27 OF 96

STATE PROJECT NUMBER

1060-33-80

BAR INFORMATION							BAR DIMENSIONS						LOCATION	BAR SERIES INFORMATION				
BAR MARK	MATL	NO. REQ'D	LENGTH	BENT	BAR SERIES	BEND TYPE	A	B	C	D	E	F		DIM	MIN	MAX	NO REQ'D	LENGTH
A601	E	28	44'-4"			1	44'-4"						BODY HORIZONTAL					
A602	E	14	45'-7"			1	45'-7"						BODY HORIZONTAL					
A603	E	46	22'-8"	X		3	4'-6"	6'-5"					BODY STIRRUP					
A604	E	2	17'-4"	X		3	1'-10"	6'-5"					BODY STIRRUP					
A505	E	8	4'-11"	X		4	1'-9"	1'-8"					BODY HORIZONTAL					
A506	E	9	9'-8"	X		4	1'-10"	6'-3"					BODY HORIZONTAL					
A507	E	22	45'-8"			1	45'-8"						BACKWALL HORIZONTAL					
A508	E	44	22'-9"	X	X	4	10'-3½"	2'-5"					BACKWALL VERTICAL	A	9'-4"	11'-3"	1 SERIES OF 44	20'-10" TO 24'-8"
A509	S	9	7'-2"	X		4	2'-6"	2'-5"					BACKWALL VERTICAL					
A510	E	3	31'-0"	X		4	14'-5"	2'-5"					BACKWALL VERTICAL					
A511	E	16	9'-6"	X		8	8'-9"	0'-10"					SIDEWALL HORIZONTAL					
A512	E	16	7'-3"	X		8	6'-6"	0'-10"					SIDEWALL HORIZONTAL					
A413	E	54	6'-5"			1	6'-5"						SIDEWALL HORIZONTAL					
A414	E	10	18'-6"	X		4	9'-1"	0'-6"					SIDEWALL VERTICAL					
A415	E	7	31'-10"	X		4	15'-8"	0'-8"					SIDEWALL VERTICAL					
A516	S	84	6'-0"	X		4	2'-6"	1'-3"					BACKWALL VERTICAL					
A917	S	84	7'-3"	X		17	1'-7"	4'-1"	1'-7"	150	60		BACKWALL APPROACH TIE					
A518	S	42	8'-0"			1	8'-0"						BACKWALL HORIZONTAL					
A519	S	4	2'-2"	X		4	0'-8"	1'-1"					BACKWALL HORIZONTAL					
A520	E	2	8'-10"	X		2	8'-3"						SIDEWALL HORIZTONAL					
A521	S	24	6'-10"	X		11	2'-10"	172	0'-4½"	0'-10"	2'-0"	188	PARAPET TIE					
A622	E	16	11'-1"	X		4	2'-11"	5'-7"					RIGHT & LEFT PEDESTAL					
A623	E	12	10'-1"	X		4	2'-4"	5'-9"					RIGHT PEDESTAL					
A624	E	20	8'-3"	X		4	2'-5"	3'-9"					RIGHT PEDESTAL					
A625	E	12	12'-11"	X		4	3'-9"	5'-9"					LEFT PEDESTAL					
A626	E	20	10'-11"	X		4	3'-9"	3'-9"					LEFT PEDESTAL					
A627	U	46	7'-4"			1	7'-4"						FOOTING HORIZONTAL					
A628	E	46	7'-6"	X		8	6'-8"	1'-0"					BODY VERTICAL					
A629	E	46	4'-4"	X		8	3'-6"	1'-0"					BODY VERTICAL					
A630	E	46	11'-9"	X		22	1'-0"	6'-5"	4'-8"				BODY VERTICAL					
A531	E	22	44'-5"			1	44'-5"						BACKWALL HORIZONTAL					
A532	E	46	22'-8"	X	X	4	10'-3"	2'-5"					BACKWALL VERTICAL	A	9'-0"	11'-6"	1 SERIES OF 46	20'-2" TO 25'-2"
A433	E	5	23'-4"	X		4	11'-6"	0'-6"					SIDEWALL VERTICAL					
A534	E	2	7'-6"			1	7'-6"						SIDEWALL VERTICAL					
A535	E	2	7'-3"			1	7'-3"						SIDEWALL VERTICAL					
A536	E	2	9'-10"			1	9'-10"						SIDEWALL VERTICAL					
A539	E	16	7'-9"	X		4	1'-9"	4'-6"					BODY HORIZONTAL					
A640	U	5	44'-6"			1	44'-6"						FOOTING HORIZONTAL					
A442	E	1	27'-6"	X		4	13'-6"	0'-8"					SIDEWALL VERTICAL					
A543	E	1	9'-0"	X		8	8'-3"	0'-10"					BODY HORIZONTAL					
A544	E	1	6'-9"	X		8	6'-0"	0'-10"					BODY HORIZONTAL					
A445	E	37	2'-5"			1	2'-5"						BACKWALL HORIZONTAL					
A546	E	1	8'-8"			1	8'-8"						BACKWALL VERTICAL					
A547	E	1	12'-8"			1	12'-8"						BACKWALL VERTICAL					
A548	E	1	9'-11"			1	9'-11"						BACKWALL VERTICAL					

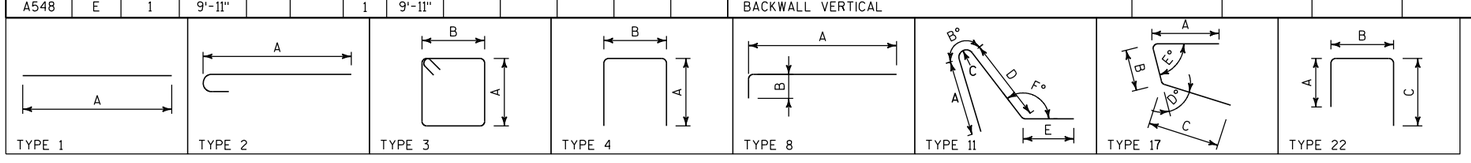

BAR MARK BREAKDOWN				
BAR MARK	WEST ABUTMENT	SOUTH ABUTMENT	TOTAL NO	WEIGHT
A601	10	18	28	1864
A602	14	0	14	959
A603	46	0	46	1566
A604	2	0	2	52
A505	8	0	8	41
A506	1	8	9	91
A507	22	0	22	1048
A508	44	0	44	1044
A509	5	4	9	67
A510	3	0	3	97
A511	16	0	16	159
A512	16	0	16	121
A413	16	38	54	231
A414	5	5	10	124
A415	7	0	7	149
A516	42	42	84	526
A917	42	42	84	2071
A518	21	21	42	350
A519	2	2	4	9
A520	2	0	2	18
A521	12	12	24	171
A622	8	8	16	266
A623	6	6	12	182
A624	10	10	20	248
A625	6	6	12	233
A626	10	10	20	328
A627	0	46	46	507
A628	0	46	46	518
A629	0	46	46	299
A630	0	46	46	812
A531	0	22	22	1019
A532	0	46	46	1088
A433	0	5	5	78
A534	2	0	2	16
A535	0	2	2	15
A536	0	2	2	21
A539	0	16	16	129
A640	0	5	5	334
A442	1	0	1	18
A543	1	0	1	9
A544	1	0	1	7
A445	10	27	37	60
A546	1	0	1	9
A547	0	1	1	13
A548	0	1	1	10
TOT WEIGHT	8364	8613		16977

NOTES

THE FIRST DIGIT OF A THREE-DIGIT BAR MARK OR THE FIRST TWO DIGITS OF A FOUR-DIGIT BAR MARK SIGNIFY THE BAR SIZE.

DIMENSIONS ARE TO OUTSIDE OF BARS, EXCEPT FOR RADIUS DIMENSIONS WHICH ARE TO INSIDE OF BENDS.

FOR A BAR SERIES, LENGTH SHOWN IN THE FOURTH COLUMN OF TABLE IS THE AVERAGE BAR LENGTH USED TO COMPUTE BAR WEIGHT.

BAR MATERIAL CODES USED IN SECOND COLUMN OF TABLE
U - STEEL, HIGH STRENGTH, UNCOATED.
E - STEEL, HIGH STRENGTH, EPOXY COATED.
S - STAINLESS STEEL.

NO.	DATE	REVISION	BY

STATE OF WISCONSIN
DEPARTMENT OF TRANSPORTATION

STRUCTURE B-40-855

DRAWN BY PAK PLANS CK'D. DGS

ABUTMENT REINFORCEMENT SCHEDULE

SHEET 28 OF 96

STATE PROJECT NUMBER
1060-33-80

BEARING LEGEND

HIGH LOAD MULTI-ROTATIONAL GUIDED (ARROWHEADS DENOTE MOVEMENT DIRECTIONS)

HIGH LOAD MULTI-ROTATIONAL FIXED

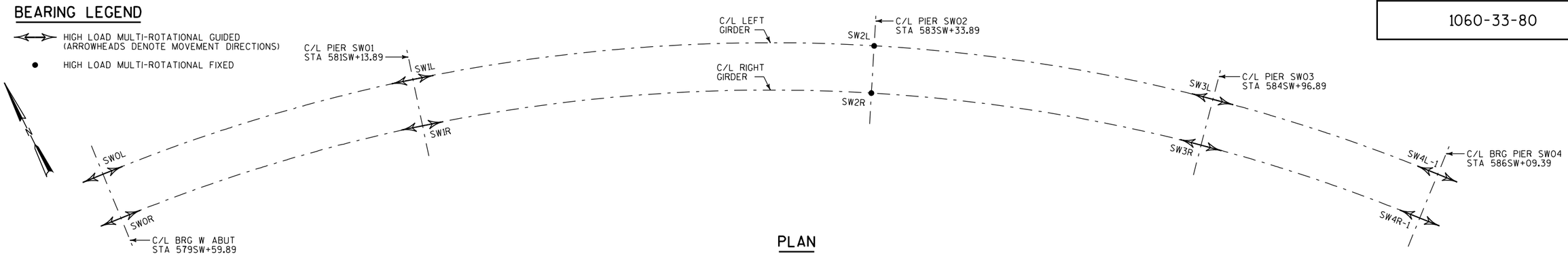

PLAN

BEARING MARK	BEARING TYPE	SKEW ANGLE 'SK'	BOT./ GIRDER EL. AT C/L	TOP OF PEDESTAL EL.	VERTICAL FORCES SERVICE PERMANENT (KIPS)	VERTICAL FORCES SERVICE TOTAL (KIPS)	VERTICAL FORCES STRENGTH TOTAL (KIPS)	TRANSVERSE FORCES SERVICE (KIPS)	TRANSVERSE FORCES STRENGTH (KIPS)	LONGITUDINAL FORCES SERVICE (KIPS)	LONGITUDINAL FORCES STRENGTH (KIPS)	MOVEMENT 90° (ONE WAY) TRANS (IN)	MOVEMENT 90° (ONE WAY) LONGIT (IN)	ROTATIONS STRENGTH RADIANS
SW0L	GUIDED	0°	796.58	795.86	280	530	790	20	30	40	40	---	3¼"	0.014
SW0R			795.50	794.79	290	560	830	20	30	40	40	---	3¼"	0.012
SW01L	GUIDED	0°	795.51	794.54	1190	1740	2480	60	110	140	140	---	2¼"	0.013
SW01R			794.15	793.18	1230	1780	2510	60	110	140	140	---	2¼"	0.010
SW02L	FIXED	N/A	797.94	796.98	1130	1690	2420	60	120	100	120	---	---	0.013
SW02R			796.58	795.63	1140	1690	2410	60	120	100	120	---	---	0.010
SW03L	GUIDED	0°	802.60	801.68	770	1240	1790	30	50	90	90	---	1¾"	0.004
SW03R			801.24	800.32	770	1230	1790	30	50	90	90	---	1¾"	0.003
SW04L-1	GUIDED	0°	805.80	805.08	220	450	670	20	30	30	30	---	2"	0.007
SW04R-1			804.43	803.72	250	480	720	20	30	30	30	---	2"	0.008

BEARING MARK	NOMINAL BEARING DIMENSIONS: BEVELED TOP PLATE THICKNESS LB (IN)	RB (IN)	LA (IN)	RA (IN)	CC (IN)	TOP PLATE & SOLE PLATE A (IN)	B (IN)	MASONRY PLATE C (IN)	D (IN)	E (IN)	BEARING ASSEMBLY H (IN)	TH (IN)	ANCHOR BOLTS
SW0L	2.873	1.474	2.399	1.000	1.937	30"	30"	36"	22"	1¼"	6⅝"	8 9/16"	4 - 1" DIA.
SW0R	2.873	1.474	2.399	1.000	1.937	30"	30"	36"	22"	1¼"	6⅝"	8 9/16"	4 - 1" DIA.
SW01L	3.525	1.005	3.520	1.000	2.262	42"	38"	48"	32"	1¼"	9⅜"	11⅝"	6 - 1½" DIA.
SW01R	3.525	1.005	3.520	1.000	2.262	42"	38"	48"	32"	1¼"	9⅜"	11⅝"	6 - 1½" DIA.
SW02L	3.280	1.000	3.992	1.712	2.496	38"	32"	44"	34"	1¼"	9"	11½"	6 - 1½" DIA.
SW02R	3.280	1.000	3.992	1.712	2.496	38"	32"	44"	34"	1¼"	9"	11½"	6 - 1½" DIA.
SW03L	3.280	1.000	4.240	1.960	2.620	38"	32"	44"	28"	1¼"	8⅜"	11"	4 - 1½" DIA.
SW03R	3.280	1.000	4.240	1.960	2.620	38"	32"	44"	28"	1¼"	8⅜"	11"	4 - 1½" DIA.
SW04L-1	2.800	1.000	3.430	1.630	2.215	30"	26"	36"	22"	1¼"	6⅜"	8 9/16"	4 - 1" DIA.
SW04R-1	2.800	1.000	3.430	1.630	2.215	30"	26"	36"	22"	1¼"	6⅜"	8 9/16"	4 - 1" DIA.

BEARING TEMPERATURE SETTING DATA

TEMP (°F)	WEST ABUT (IN)	SW01 (IN)	SW03 (IN)	SW04 (IN)
120°	-2.14	-1.49	1.20	1.31
110°	-1.78	-1.24	1.00	1.09
100°	-1.42	-0.99	0.80	0.87
90°	-1.07	-0.74	0.60	0.66
80°	-0.71	-0.50	0.40	0.44
70°	-0.36	-0.25	0.20	0.22
60°	0.00	0.00	0.00	0.00
50°	0.36	0.25	-0.20	-0.22
40°	0.71	0.50	-0.40	-0.44
30°	1.07	0.74	-0.60	-0.66
20°	1.42	0.99	-0.80	-0.87
10°	1.78	1.24	-1.00	-1.09
0°	2.14	1.49	-1.20	-1.31
-10°	2.49	1.74	-1.40	-1.53
-20°	2.85	1.98	-1.60	-1.75
-30°	3.20	2.23	-1.80	-1.97

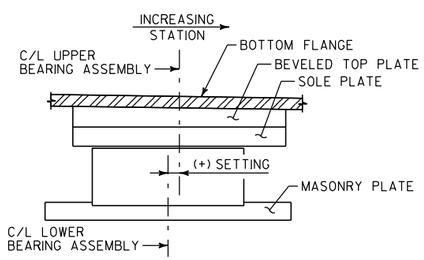

NOTE:
DATA IS PROVIDED FOR BEARING MANUFACTURER. FIELD SETTING SHALL BE BASED ON TABLE IN FINAL APPROVED SHOP DRAWINGS PER SPECIAL PROVISION FOR HLMR BEARINGS.

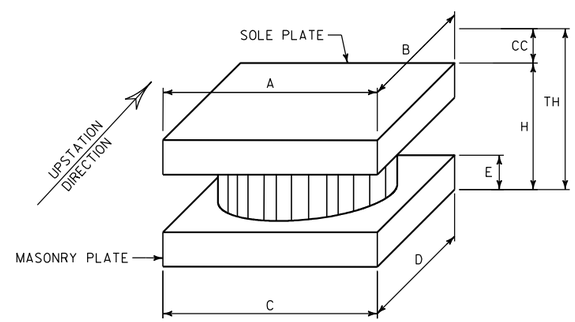

BEARING DIMENSION KEY

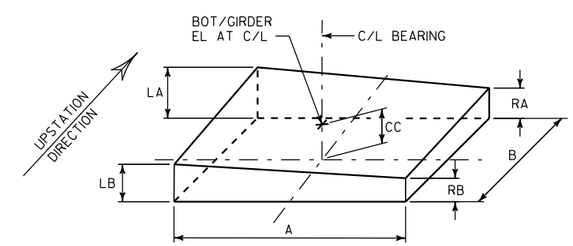

BEVELED TOP PLATE DIMENSION KEY

LB = LEFT BACK STATION
LA = LEFT AHEAD STATION
RB = RIGHT BACK STATION
RA = RIGHT AHEAD STATION

NOTES

1. FOR TYPICAL BEARING DETAILS, SEE BEARING DETAILS SHEET.
2. BEARING DIMENSIONS SHOWN ARE NOMINAL VALUES ONLY AND WILL VARY WITH THE SELECTED MANUFACTURER. MAKE ALL NECESSARY ADJUSTMENTS TO DIMENSIONS AND ELEVATIONS AS REQUIRED TO INCORPORATE THE SPECIFIC BEARINGS SELECTED.
3. FORCES SPECIFIED ARE MAXIMUM EFFECTS FOR LRFD LOAD COMBINATIONS, INCLUDING DYNAMIC LOAD ALLOWANCE.
4. HORIZONTAL FORCES SPECIFIED IN THE TABLE ARE THE EXPECTED APPLIED FORCES. DESIGN BEARINGS FOR THESE VALUES OR 15 PERCENT OF THE VERTICAL PERMANENT LOAD, WHICHEVER IS LARGER.
5. DESIGN BEARINGS FOR THE ROTATION VALUES SHOWN IN THE TABLE OR 0.02 RADIANS, WHICHEVER IS LARGER.

   ROTATION VALUES IN THE TABLE INCLUDE AN ALLOWANCE OF 0.005 RADIANS FOR UNCERTANTIES.

   FOR POT BEARINGS, INCREASE THE ROTATIONAL DEMAND BY AN ADDITIONAL 0.005 RADIANS TO ACCOUNT FOR CONSTRUCTION TOLERANCES.
6. FOR DEFINITION OF SKEW ANGLE 'SK', SEE "PLAN - MASONRY PLATE" ON THE BEARING DETAILS SHEET.

NO.	DATE	REVISION	BY

STATE OF WISCONSIN
DEPARTMENT OF TRANSPORTATION

STRUCTURE B-40-855

DRAWN BY GLM | PLANS CK'D. WRT

UNIT 1
BEARING
LAYOUT

SHEET 29 OF 96

8

8

STATE PROJECT NUMBER
1060-33-80

BEARING LEGEND

HIGH LOAD MULTI-ROTATIONAL GUIDED (ARROWHEADS DENOTE MOVEMENT DIRECTIONS)

HIGH LOAD MULTI-ROTATIONAL FIXED

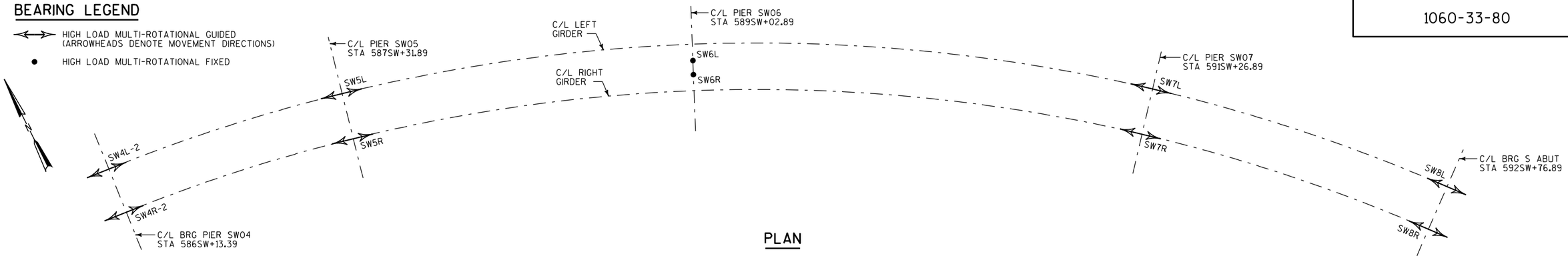

PLAN

BEARING MARK	BEARING TYPE	SKEW ANGLE 'SK'	BOT./ GIRDER EL. AT C/L	TOP OF PEDESTAL EL.	VERTICAL FORCES SERVICE PERMANENT (KIPS)	VERTICAL FORCES SERVICE TOTAL (KIPS)	VERTICAL FORCES STRENGTH TOTAL (KIPS)	TRANSVERSE FORCES SERVICE (KIPS)	TRANSVERSE FORCES STRENGTH (KIPS)	LONGITUDINAL FORCES SERVICE (KIPS)	LONGITUDINAL FORCES STRENGTH (KIPS)	MOVEMENT 90° (ONE WAY) TRANS (IN)	MOVEMENT 90° (ONE WAY) LONGIT (IN)	ROTATIONS STRENGTH RADIANS
SW04L-2	GUIDED	0°	805.89	805.18	230	460	700	20	30	30	30	---	2½"	0.006
SW04R-2			804.53	803.81	260	500	750	20	30	30	30	---	2½"	0.007
SW05L	GUIDED	0°	808.17	807.26	820	1300	1880	30	60	100	100	---	1½"	0.007
SW05R			806.79	805.88	820	1300	1880	30	60	100	100	---	1½"	0.006
SW06L	FIXED	N/A	809.24	808.25	1160	2030	3000	80	150	100	120	---	---	0.016
SW06R			808.82	807.83	1220	2080	3040	80	150	100	120	---	---	0.013
SW07L	GUIDED	0°	808.48	807.49	1200	1750	2480	40	80	140	140	---	1⅞"	0.012
SW07R			807.12	806.13	1220	1750	2480	40	80	140	140	---	1⅞"	0.014
SW08L	GUIDED	0°	805.77	805.03	270	500	740	20	40	40	40	---	3⅛"	0.013
SW08R			804.39	803.65	270	510	770	20	40	40	40	---	3⅛"	0.011

BEARING MARK	NOMINAL BEARING DIMENSIONS: BEVELED TOP PLATE THICKNESS LB (IN)	RB (IN)	LA (IN)	RA (IN)	CC (IN)	TOP PLATE & SOLE PLATE A (IN)	B (IN)	MASONRY PLATE C (IN)	D (IN)	E (IN)	BEARING ASSEMBLY H (IN)	TH (IN)	ANCHOR BOLTS
SW04L-2	2.800	1.000	3.422	1.622	2.211	30"	26"	36"	22"	1¼"	6⅜"	8 9/16"	4 - 1" DIA.
SW04R-2	2.800	1.000	3.422	1.622	2.211	30"	26"	36"	22"	1¼"	6⅜"	8 9/16"	4 - 1" DIA.
SW05L	3.400	1.000	3.921	1.521	2.460	40"	34"	46"	30"	1¼"	8½"	10 15/16"	4 - 1½" DIA.
SW05R	3.400	1.000	3.921	1.521	2.460	40"	34"	46"	30"	1¼"	8½"	10 15/16"	4 - 1½" DIA.
SW06L	3.160	1.000	3.280	1.120	2.140	36"	42"	38"	48"	1¼"	9¾"	11⅞"	6 - 1½" DIA.
SW06R	3.160	1.000	3.280	1.120	2.140	36"	42"	38"	48"	1¼"	9¾"	11⅞"	6 - 1½" DIA.
SW07L	4.030	1.510	3.520	1.000	2.515	42"	38"	48"	32"	1¼"	9⅜"	11⅞"	6 - 1½" DIA.
SW07R	4.030	1.510	3.520	1.000	2.515	42"	38"	48"	32"	1¼"	9⅜"	11⅞"	6 - 1½" DIA.
SW08L	3.530	1.730	2.800	1.000	2.265	30"	30"	36"	22"	1¼"	6⅝"	8⅞"	4 - 1" DIA.
SW08R	3.530	1.730	2.800	1.000	2.265	30"	30"	36"	22"	1¼"	6⅝"	8⅞"	4 - 1" DIA.

BEARING TEMPERATURE SETTING DATA

TEMP (°F)	SW04 (IN)	SW05 (IN)	SW07 (IN)	SOUTH ABUT (IN)
120°	-1.70	-1.04	1.27	2.08
110°	-1.42	-0.87	1.06	1.73
100°	-1.14	-0.69	0.85	1.39
90°	-0.85	-0.52	0.64	1.04
80°	-0.57	-0.35	0.42	0.69
70°	-0.28	-0.17	0.21	0.35
60°	0.00	0.00	0.00	0.00
50°	0.28	0.17	-0.21	-0.35
40°	0.57	0.35	-0.42	-0.69
30°	0.85	0.52	-0.64	-1.04
20°	1.14	0.69	-0.85	-1.39
10°	1.42	0.87	-1.06	-1.73
0°	1.70	1.04	-1.27	-2.08
-10°	1.99	1.21	-1.48	-2.43
-20°	2.27	1.39	-1.70	-2.77
-30°	2.56	1.56	-1.91	-3.12

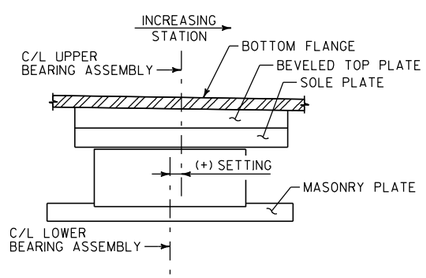

NOTE:
DATA IS PROVIDED FOR BEARING MANUFACTURER. FIELD SETTING SHALL BE BASED ON TABLE IN FINAL APPROVED SHOP DRAWINGS PER SPECIAL PROVISION FOR HLMR BEARINGS.

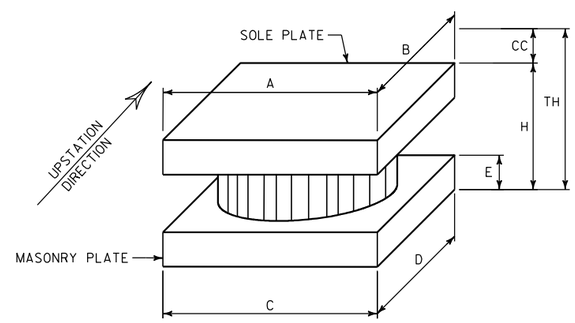

BEARING DIMENSION KEY

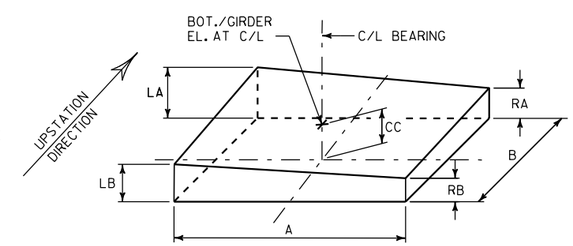

BEVELED TOP PLATE DIMENSION KEY

LB = LEFT BACK STATION
LA = LEFT AHEAD STATION
RB = RIGHT BACK STATION
RA = RIGHT AHEAD STATION

NOTES

1. FOR TYPICAL BEARING DETAILS, SEE BEARING DETAILS SHEET.
2. BEARING DIMENSIONS SHOWN ARE NOMINAL VALUES ONLY AND WILL VARY WITH THE SELECTED MANUFACTURER. MAKE ALL NECESSARY ADJUSTMENTS TO DIMENSIONS AND ELEVATIONS AS REQUIRED TO INCORPORATE THE SPECIFIC BEARINGS SELECTED.
3. FORCES SPECIFIED ARE MAXIMUM EFFECTS FOR LRFD LOAD COMBINATIONS, INCLUDING DYNAMIC LOAD ALLOWANCE.
4. HORIZONTAL FORCES SPECIFIED IN THE TABLE ARE THE EXPECTED APPLIED FORCES. DESIGN BEARINGS FOR THESE VALUES OR 15 PERCENT OF THE VERTICAL PERMANENT LOAD, WHICHEVER IS LARGER.
5. DESIGN BEARINGS FOR THE ROTATION VALUES SHOWN IN THE TABLE OR 0.02 RADIANS, WHICHEVER IS LARGER.

   ROTATION VALUES IN THE TABLE INCLUDE AN ALLOWANCE OF 0.005 RADIANS FOR UNCERTANTIES.

   FOR POT BEARINGS, INCREASE THE ROTATIONAL DEMAND BY AN ADDITIONAL 0.005 RADIANS TO ACCOUNT FOR CONSTRUCTION TOLERANCES.
6. FOR DEFINITION OF SKEW ANGLE 'SK', SEE "PLAN - MASONRY PLATE" ON THE BEARING DETAILS SHEET.

NO.	DATE	REVISION	BY

STATE OF WISCONSIN
DEPARTMENT OF TRANSPORTATION

STRUCTURE B-40-855

DRAWN BY GLM | PLANS CK'D. WRT

UNIT 2
BEARING
LAYOUT

SHEET 30 OF 96

8

STATE PROJECT NUMBER
1060-33-80

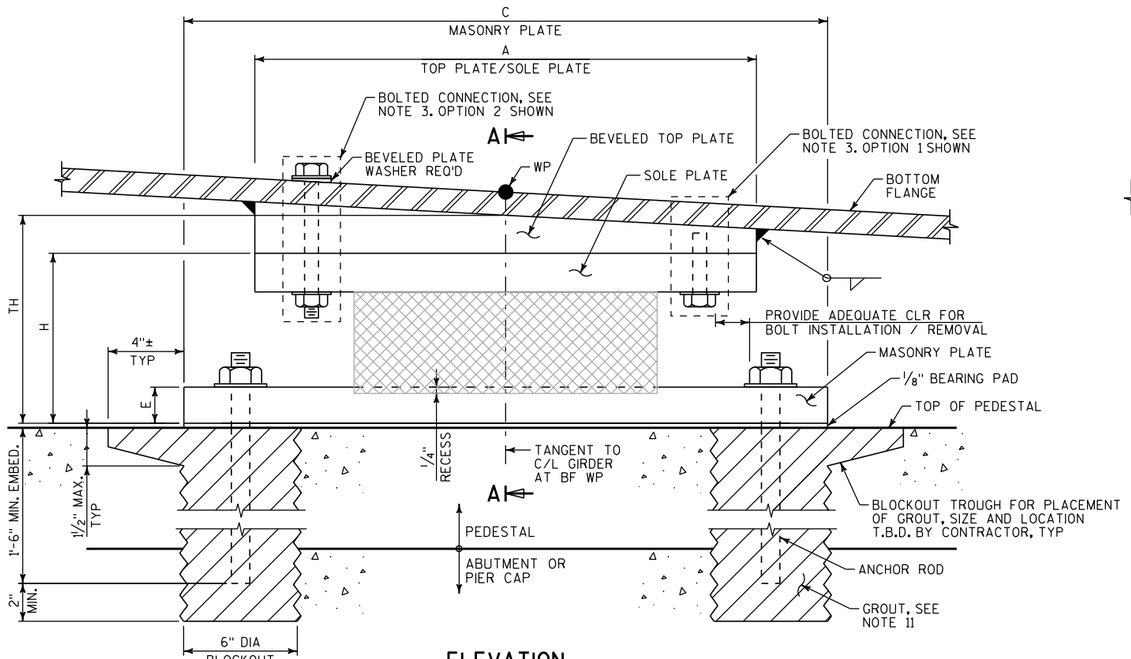

ELEVATION

(SHOWN LOOKING UPSTATION)

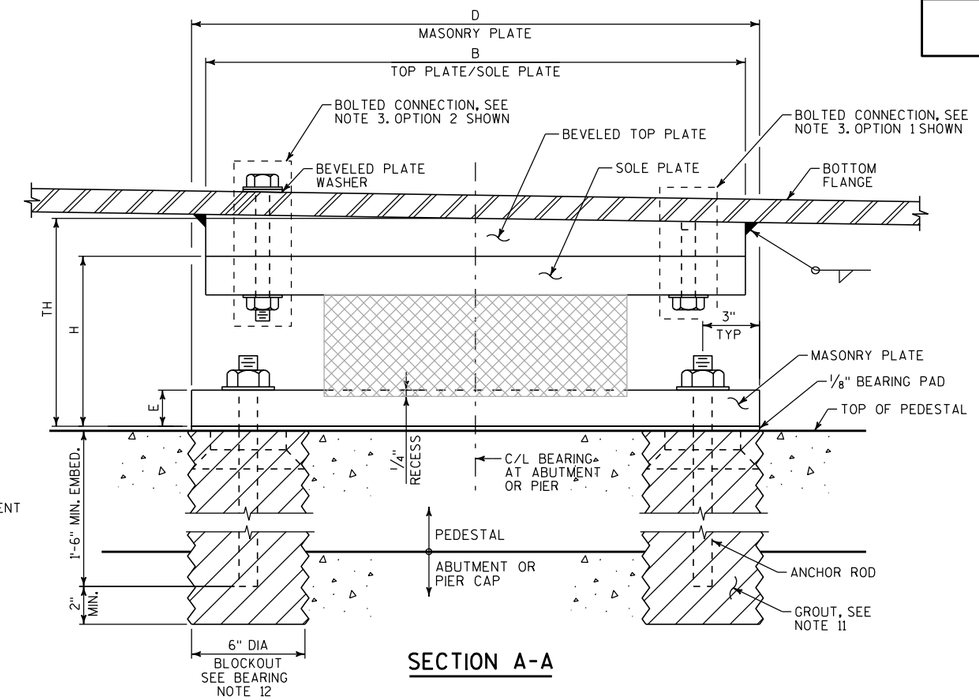

SECTION A-A

LEGEND

CROSSHATCHING INDICATES PART OF THE BEARING ASSEMBLY THAT IS TO BE SUPPLIED AND DESIGNED BY THE BEARING MANUFACTURER. THE MASONRY PLATE AND SOLE PLATE ARE TO BE PROVIDED BY THE BEARING MANUFACTURER AND SIZED ACCORDING TO BEARING NOTES 4 & 6. THE BEVELED TOP PLATE DIMENSIONS SHOULD BE COORDINATED BETWEEN THE STEEL FABRICATOR AND THE BEARING MANUFACTURER. THE BEVELED TOP PLATE IS INCLUDED IN THE QUANTITY FOR "STRUCTURAL STEEL HS".

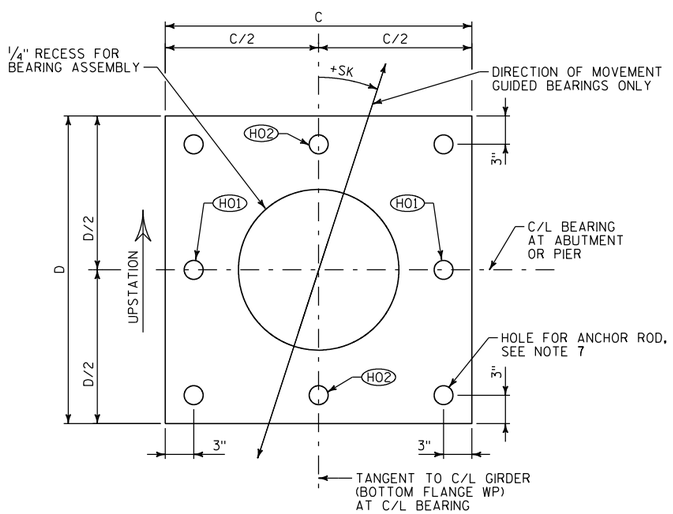

PLAN - MASONRY PLATE

A POSITIVE SKEW ANGLE (+SK) IS SHOWN ABOVE AND INDICATED BY A CLOCKWISE OR LEFT HAND FORWARD ROTATION

(HO1) HOLE REQ'D AT PIERS SW01, SW02 & SW07 ONLY

(HO2) HOLE REQ'D AT PIER SW06 ONLY

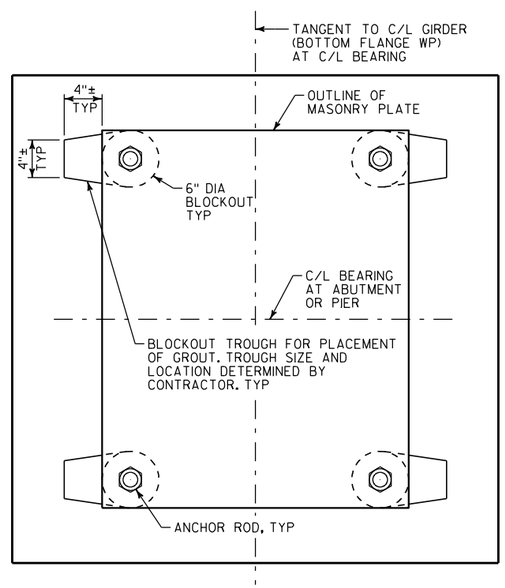

PLAN - TOP OF PEDESTAL

BEARING NOTES

1. SEE BEARING LAYOUT SHEETS FOR BEARING LAYOUT AND LOCATION SPECIFIC DIMENSIONS.
2. SEE JACKING PROVISIONS SHEET FOR LOCATION AND SIZE OF BEARING REPLACEMENT JACKING PADS ATTACHED TO BOTTOM OF GIRDER FLANGE.
3. DESIGN BOLTED CONNECTION BETWEEN SOLE PLATE AND BEVELED TOP PLATE FOR A MINIMUM OF 1.25 TIMES THE COMBINED SPECIFIED HORIZONTAL LOADS. ARRANGE CONNECTION TO ENSURE ALL BOLTS CAN BE REMOVED WITHOUT INTERFERENCE FROM ANCHOR RODS OR OTHER OBSTRUCTIONS AFTER BEARING IS INSTALLED.

   BOLTED CONNECTION OPTION 1: TAP HOLES COMPLETELY THROUGH TOP PLATE. ENGAGE BOLTS TO WITHIN 1/4" OF BOTTOM FLANGE.

   BOLTED CONNECTION OPTION 2: BOLT DOWNWARD THROUGH BOTTOM FLANGE, BEVELED TOP PLATE, & SOLE PLATE.
4. SOLE PLATE THICKNESS TO BE SELECTED BY THE BEARING MANUFACTURER. MINIMUM 1".
5. HOLES IN SOLE PLATE MAY BE SLOTTED OR OVERSIZED AS REQUIRED TO FACILITATE STEEL ERECTION. IF OVERSIZED OR SLOTTED HOLES ARE USED, THE CONNECTION SHALL BE DESIGNED AS SLIP-RESISTANT.
6. MASONRY PLATE THICKNESS TO BE CONFIRMED BY THE BEARING DESIGNER AND INCREASED IF REQUIRED. NO REDUCTION PERMITTED.
7. HOLES IN MASONRY PLATE SHALL BE A MAXIMUM OF 1/8" LARGER THAN THE SPECIFIED ANCHOR BOLT DIAMETER. SEE BEARING LAYOUT SHEETS FOR NUMBER AND SIZE OF ANCHOR RODS.

BEARING NOTES, CONTINUED

8. ANCHOR RODS SHALL BE IN ACCORDANCE WITH ASTM F1554 (GRADE 105) AND HOT-DIP GALVANIZED IN ACCORDANCE WITH AASHTO M232.
9. BEARINGS SHALL BE DESIGNED TO PERMIT REPLACEMENT BY JACKING THE BRIDGE A MAXIMUM OF 1/2".
10. PROVIDE A 1/8" THICK BEARING PAD THE SAME SIZE AS THE MASONRY PLATE. THE THICKNESS OF THE PAD IS NOT INCLUDED IN THE HEIGHT ("H" OR "TH") OF THE BEARING ASSEMBLY.
11. NON-SHRINK GROUT USED IN FILLING THE ANCHOR BOLT BLOCKOUTS SHALL BE PROVIDED AS STATED IN THE BEARING SPECIAL PROVISION. THE MINIMUM 28-DAY COMPRESSIVE STRENGTH SHALL BE 6.0 KSI. GROUTING MATERIALS AND INSTALLATION ARE CONSIDERED INCIDENTAL TO THE PAY ITEM FOR THE BEARING ASSEMBLY.
12. THE TYPE OF BLOCKOUT SHALL BE DETERMINED BY THE CONTRACTOR. TEMPORARY BLOCKOUTS OR BLOCKOUTS WITH STAY-IN-PLACE FORMS ARE ALLOWED. IF BLOCKOUTS CONSISTING OF STAY-IN-PLACE FORMS ARE USED, THE TOP OF THE FORM MUST BE AT OR BELOW THE TOP OF THE PEDESTAL CONCRETE. THE CONTRACTOR SHALL PREVENT WATER FROM FREEZING AND EXPANDING WITHIN THE BLOCKOUT.
13. THE BEARING ASSEMBLIES SHALL BE PAINTED OR ZINC METALIZED AS OUTLINED IN THE BEARING SPECIAL PROVISION. IF BEARING ASSEMBLIES ARE PAINTED, THE COLOR SHALL MATCH THE COLOR OF THE EXTERIOR OF THE BOX GIRDER.

8

8

NO.	DATE	REVISION	BY

STATE OF WISCONSIN
DEPARTMENT OF TRANSPORTATION

STRUCTURE B-40-855

DRAWN BY GLM | PLANS CK'D. WRT

BEARING DETAILS

SHEET 31 OF 96

STATE PROJECT NUMBER
1060-33-80

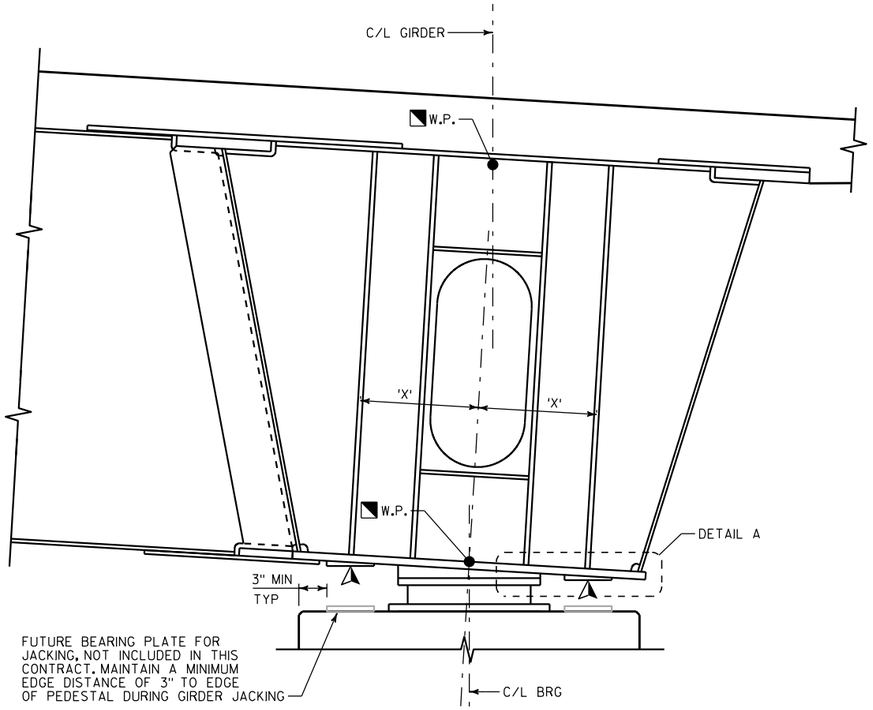

SECTION AT TYPICAL PIER

(PIER SW06 SIMILAR)

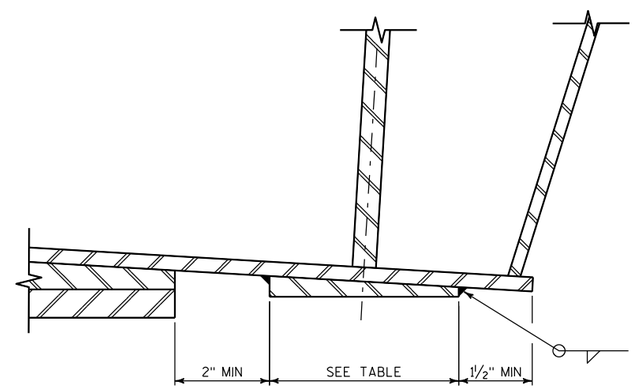

DETAIL A

LEGEND

SUGGESTED JACKING LOCATIONS FOR FUTURE BEARING REPLACEMENT

SEE GIRDER SECTION SHEET FOR DEFINITION OF WORKING POINTS

NOTES

1. THIS DRAWING SHOWS DETAILS AND LOCATION OF JACKING PADS AND ADDITIONAL WEB STIFFENERS REQUIRED FOR FUTURE BEARING REPLACEMENT.
2. JACKING PAD DIMENSIONS AND LOCATIONS ARE BASED ON THE MINIMUM CLEARANCES SHOWN AND THE NOMINAL BEARING DIMENSIONS GIVEN ON BEARING LAYOUT SHEET. MAKE ADJUSTMENTS AS REQUIRED TO ACCOMMODATE ACTUAL BEARINGS SUPPLIED.
3. JACKING PADS ARE PROVIDED TO GIVE A JACKING SURFACE THAT IS APPROXIMATELY LEVEL AND TO ENSURE THAT JACKING LOADS ARE APPLIED TO THE CORRECT LOCATION.

   TAKE MEASURES TO CORRECT FOR ANY UNINTENDED SLOPE AND TO ENSURE THAT JACKS ARE POSITIVELY HELD IN POSITION ON THE JACKING PADS.
4. ESTIMATED JACKING FORCE IS GIVEN AT EACH PAD AND IS BASED ON UNFACTORED DEAD LOAD REACTIONS ONLY - NO LIVE LOAD IS INCLUDED AND NO ADDITIONAL ALLOWANCES HAVE BEEN MADE. MULTIPLE JACKS ARE ANTICIPATED AT EACH PAD.

   THESE FORCES MUST BE INCREASED TO ALLOW FOR JACK FRICTION AND OTHER FACTORS. RECOMMENDED MINIMUM JACK CAPACITY IS 2 TIMES THE TABULATED VALUES.
5. FORCES AND RECOMMENDATIONS ARE PROVIDED FOR INFORMATION ONLY AND MUST BE VERIFIED BY THE ENGINEER RESPONSIBLE FOR JACKING OPERATIONS.
6. JACKING PROVISIONS HAVE BEEN DESIGNED ASSUMING THAT THE STRUCTURE IS CLOSED TO TRAFFIC AT ALL TIMES THAT THE STRUCTURE IS NOT RESTING ON THE PERMANENT BEARINGS.
7. CONTROL JACKS TO ENSURE THAT FORCES APPLIED TO ALL JACKING PADS AT A SINGLE BEARING LOCATION ARE APPROXIMATELY EQUAL.

   IF THIS REQUIREMENT IS NOT MET, A COMPLETE ANALYSIS OF THE ABUTMENT AND PIER DIAPHRAGM SYSTEM WILL BE REQUIRED IN ORDER TO ACCOUNT FOR THE REDISTRIBUTION OF FORCES WITHIN THE SYSTEM.

LOCATION	UNIT	NUMBER OF PADS PER GIRDER	JACKING PAD DIMENSIONS							OFFSET 'X' *	MIN. JACK FORCE (KIPS) **
			WIDTH (IN) *	LENGTH (IN) *	LB (IN)	RB (IN)	LA (IN)	RA (IN)	CC (IN)		
WEST ABUT	UNIT 1	2	8"	1'-6"	1.157	0.785	0.873	0.500	0.829	2'-1"	145
PIER SW01	UNIT 1	2	8"	2'-0"	0.983	0.503	0.980	0.500	0.742	2'-4"	615
PIER SW02	UNIT 1	2	8"	2'-0"	0.980	0.500	1.514	1.034	1.007	2'-4"	570
PIER SW03	UNIT 1	2	8"	2'-0"	0.980	0.500	1.700	1.220	1.100	2'-4"	385
PIER SW04	UNIT 1	2	8"	1'-6"	0.980	0.500	1.416	0.936	0.958	2'-1"	125
PIER SW04	UNIT 2	2	8"	1'-6"	0.980	0.500	1.411	0.931	0.955	2'-1"	130
PIER SW05	UNIT 2	2	8"	2'-0"	0.980	0.500	1.348	0.868	0.924	2'-4"	410
PIER SW06	UNIT 2	2	8"	2'-4"	0.980	0.500	1.060	0.580	0.780	2'-5"	610
PIER SW07	UNIT 2	2	8"	2'-0"	1.302	0.822	0.980	0.500	0.901	2'-4"	610
SOUTH ABUT	UNIT 2	2	8"	1'-6"	1.418	0.938	0.980	0.500	0.959	2'-1"	135

* SEE NOTE 2
** SEE NOTE 4. FORCE SHOWN IS PER PAD

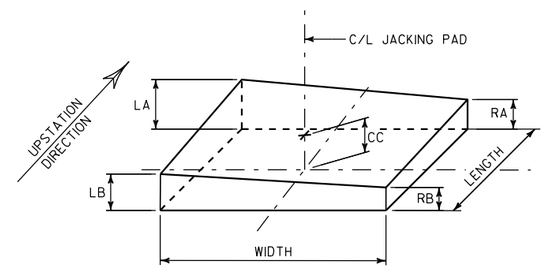

JACKING PAD DIMENSION KEY

LB = LEFT BACK STATION
LA = LEFT AHEAD STATION
RB = RIGHT BACK STATION
RA = RIGHT AHEAD STATION

NO.	DATE	REVISION	BY

STATE OF WISCONSIN
DEPARTMENT OF TRANSPORTATION

STRUCTURE B-40-855

DRAWN BY GLM | PLANS CK'D. WRT

JACKING PROVISIONS

SHEET 32 OF 96

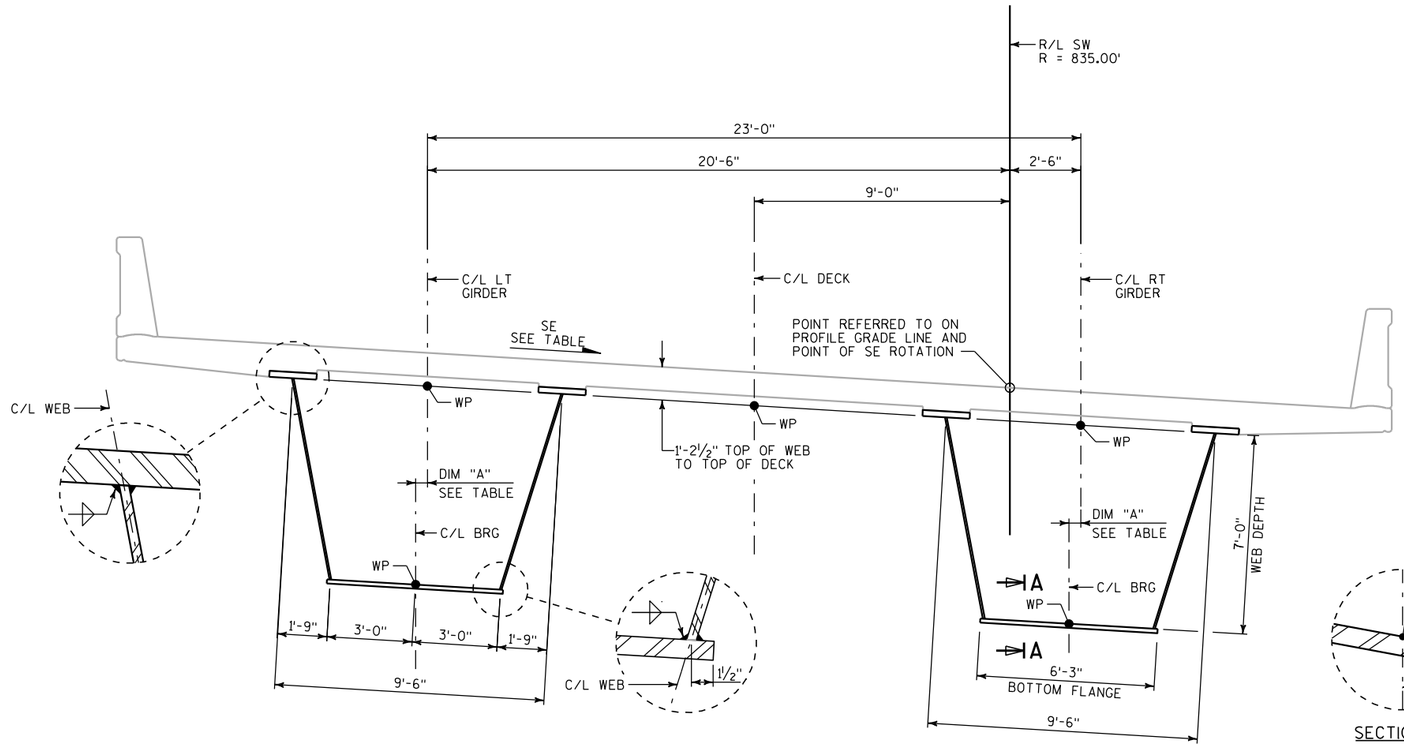

TYPICAL SECTION
LOOKING UPSTATION

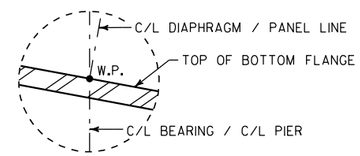

SECTION A-A

SUPERELEVATION TABLE		
STATION	SE (%)	DIM. "A"
577SW+92.00	0.00	-
579SW+59.89 C/L BRG W ABUT	-4.66	3 15/16"
580SW+08.00	-6.00	5"
581SW+13.89 C/L PIER SW01	-6.00	5"
583WH+33.89 C/L PIER SW02	-6.00	5"
584SW+96.89 C/L PIER SW03	-6.00	5"
586SW+11.39 C/L PIER SW04	-6.00	5"
587SW+31.89 C/L PIER SW05	-6.00	5"
589SW+02.89 C/L PIER SW06	-6.00	5"
591SW+26.89 C/L PIER SW07	-6.00	5"
592SW+76.89 C/L BRG S ABUT	-6.00	5"
593SW+01.00	-6.00	-

POSITIVE SUPERELEVATION MEANS RIGHT EDGE OF DECK IS HIGHER WHEN LOOKING UPSTATION.

SUPERELEVATION VARIES LINEARLY BETWEEN THE TABULATED VALUES.

NOTES

1. FOR ADDITIONAL STRUCTURAL STEEL NOTES, SEE GENERAL NOTES SHEET.
2. ENSURE THE STABILITY OF ALL COMPONENTS DURING FABRICATION, HANDLING, TRANSPORTATION AND ERECTION UNTIL THE STRUCTURAL STEEL IS IN FINAL POSITION WITH ALL PERMANENT BRACING, CONNECTIONS AND SUPPORTS IN PLACE AND THE CONCRETE IN THE DECK HAS REACHED THE SPECIFIED DESIGN STRENGTH.

   DESIGN AND USE TEMPORARY CROSS FRAMES, SUPPORTS, BRACES OR WHATEVER OTHER MEANS AND METHODS DEEMED NECESSARY.
3. CARRY OUT DESIGN CALCULATIONS AS REQUIRED TO VERIFY MATERIAL STRESSES AND SUPPORT FORCES (INCLUDING UPLIFT) DURING ALL STAGES OF ERECTION AS REQUIRED BY AASHTO LRFD SPECIFICATIONS.
4. MINIMUM FILLET WELD SIZE:

THICKNESS OF THICKER PART JOINED, "T"	MINIMUM FILLET WELD SIZE
T <= ½"	3/16"
½" < T <= ¾"	¼"
¾" < T <= 1½"	5/16"
T > 1½"	⅜"

MINIMUM WELD SIZES SHOWN IN TABLE ABOVE SHALL BE USED WHEN A SIZE IS NOT OTHERWISE SPECIFIED OR SHOWN.

WELD SIZE SHALL NOT EXCEED THE THICKNESS OF THE THINNER PART BEING JOINED.

FOR ALL WELDS 5/16" OR LARGER, THE MINIMUM PASS SIZE SHALL BE 5/16".

8

8

NO.	DATE	REVISION	BY

STATE OF WISCONSIN
DEPARTMENT OF TRANSPORTATION

STRUCTURE B-40-855

DRAWN BY GLM | PLANS CK'D. WRT

GIRDER SECTION

STATE PROJECT NUMBER

1060-33-80

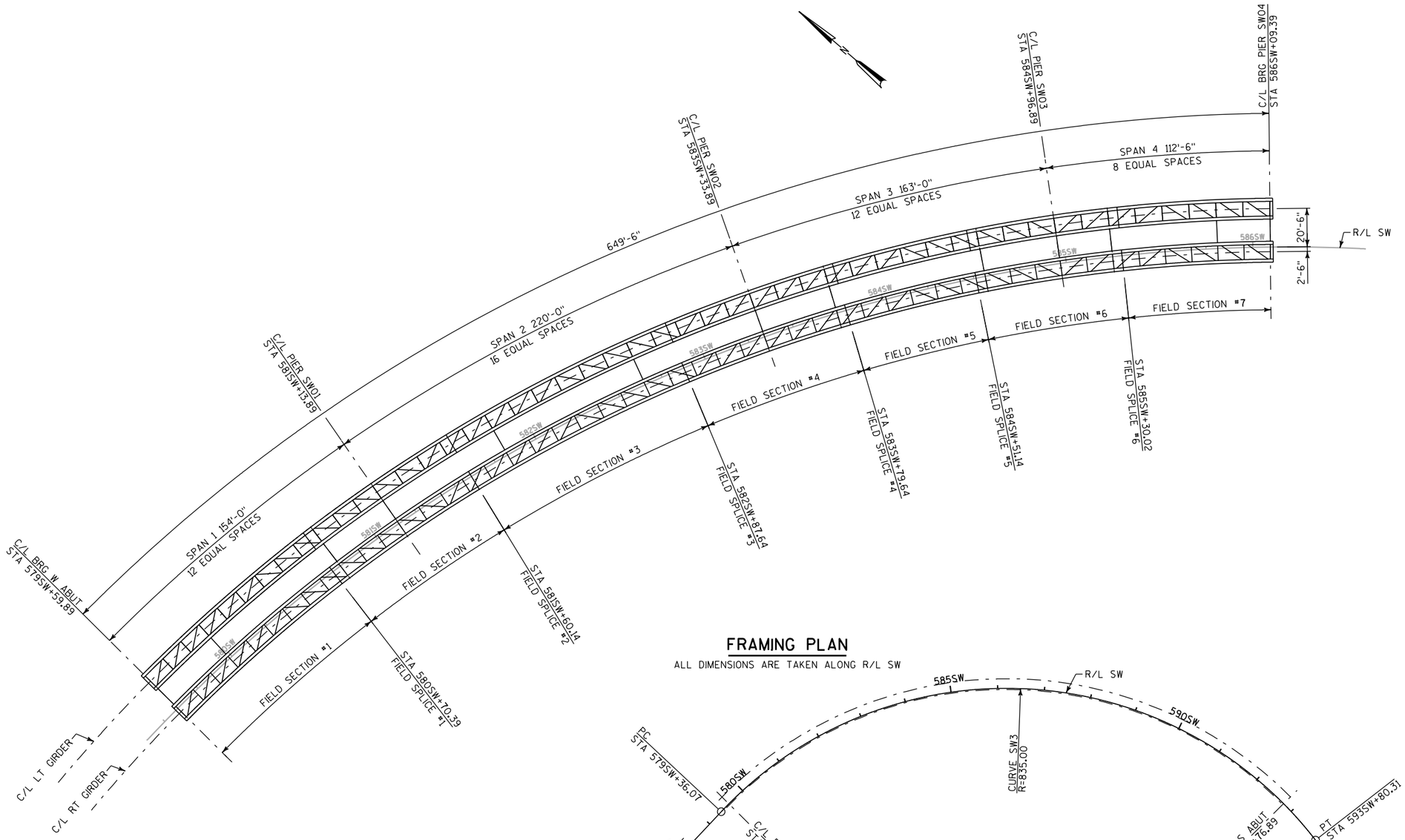

FRAMING PLAN

ALL DIMENSIONS ARE TAKEN ALONG R/L SW

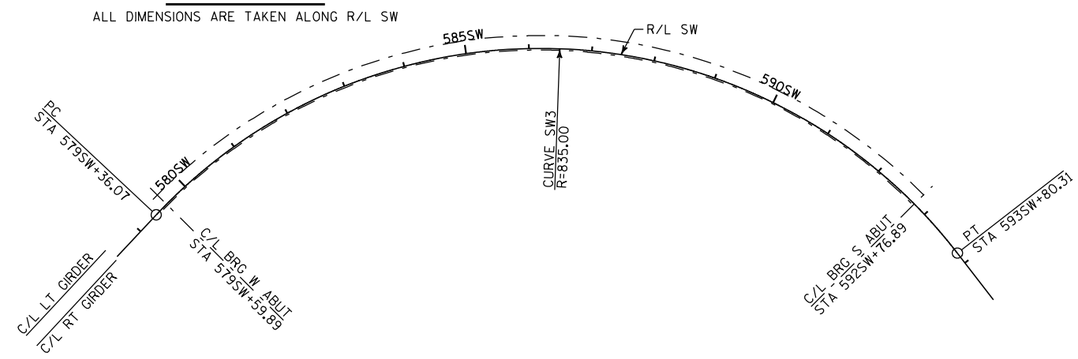

PLAN LAYOUT SKETCH

NOT TO SCALE

NO.	DATE	REVISION	BY

STATE OF WISCONSIN
DEPARTMENT OF TRANSPORTATION

STRUCTURE B-40-855

DRAWN BY GLM | PLANS CK'D. WRT

UNIT 1
FRAMING PLAN

SHEET 34 OF 96

8

8

STATE PROJECT NUMBER
1060-33-80

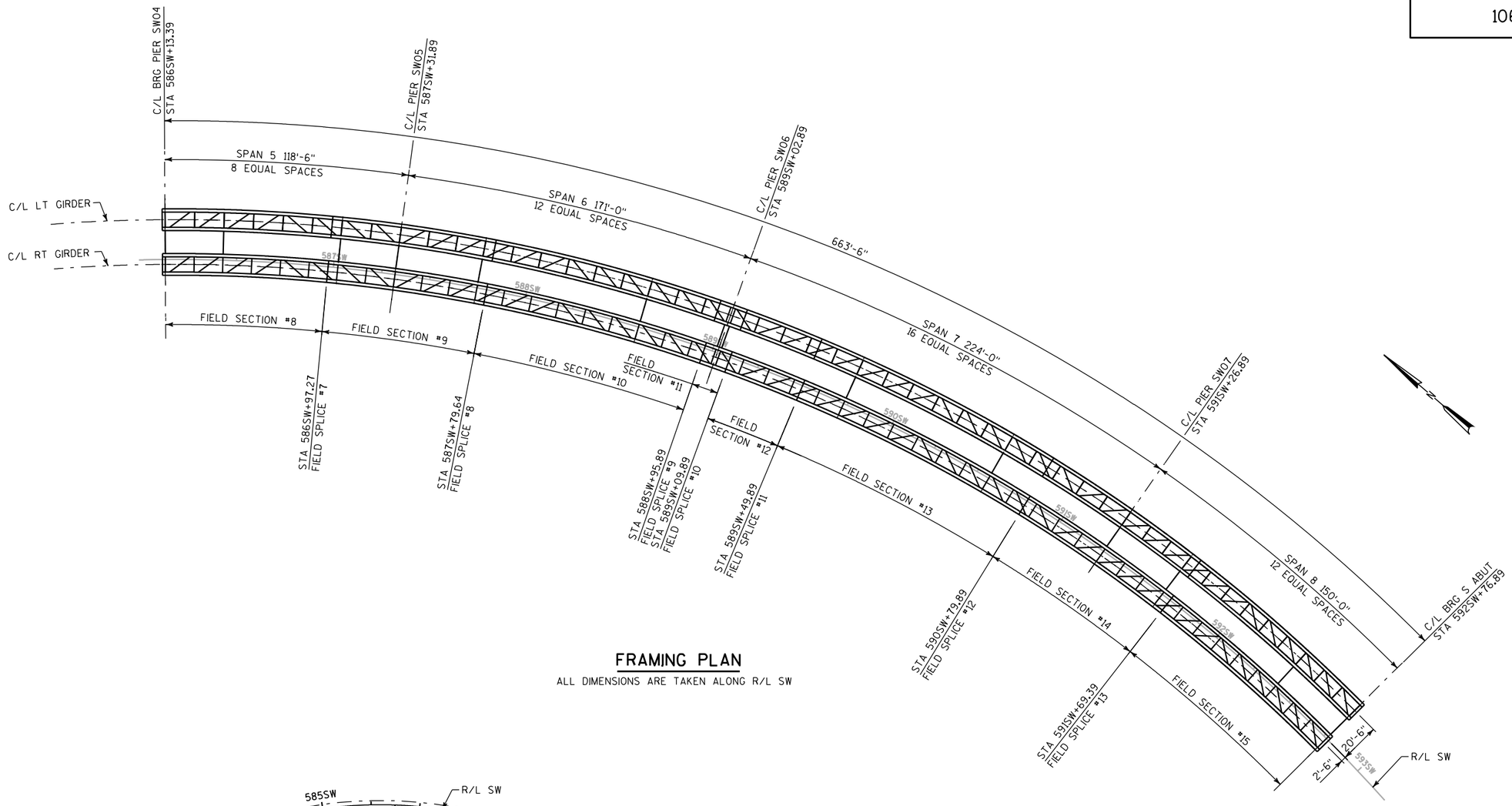

FRAMING PLAN

ALL DIMENSIONS ARE TAKEN ALONG R/L SW

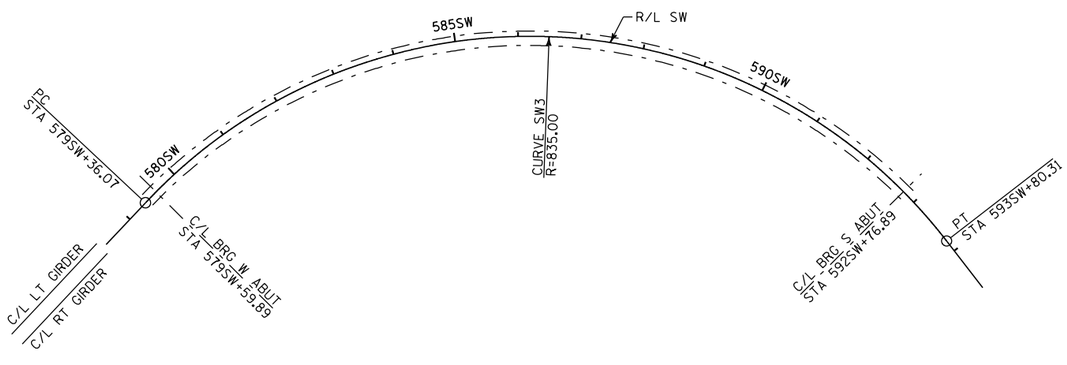

PLAN LAYOUT SKETCH

NOT TO SCALE

NO.	DATE	REVISION	BY

STATE OF WISCONSIN
DEPARTMENT OF TRANSPORTATION

STRUCTURE B-40-855

DRAWN BY	GLM	PLANS CK'D.	WRT

UNIT 2
FRAMING PLAN

SHEET 35 OF 96

8

8

STATE PROJECT NUMBER
1060-33-80

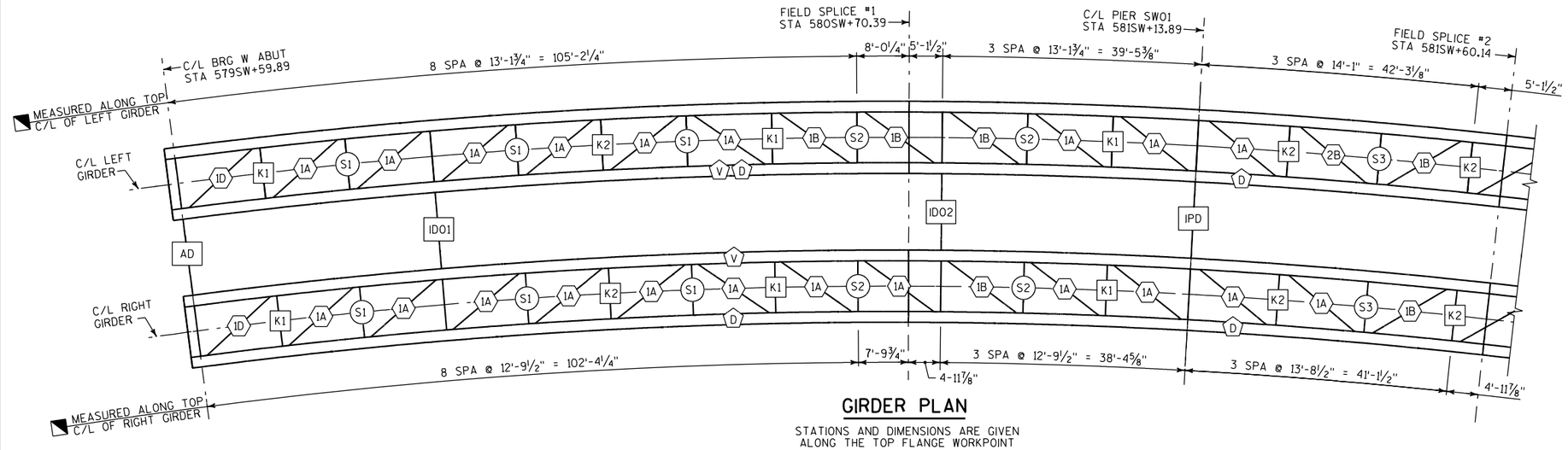

GIRDER PLAN

STATIONS AND DIMENSIONS ARE GIVEN ALONG THE TOP FLANGE WORKPOINT

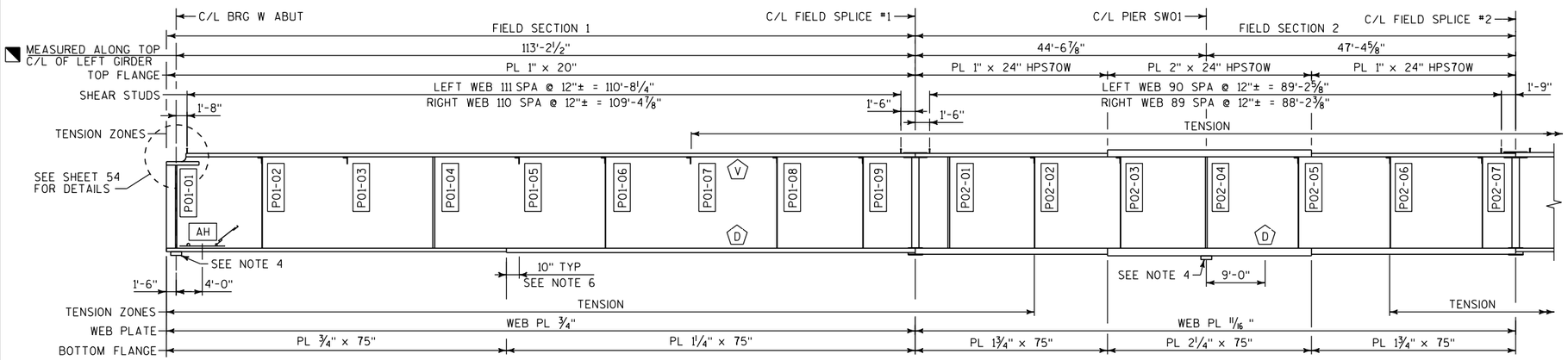

LEFT GIRDER INTERIOR ELEVATION

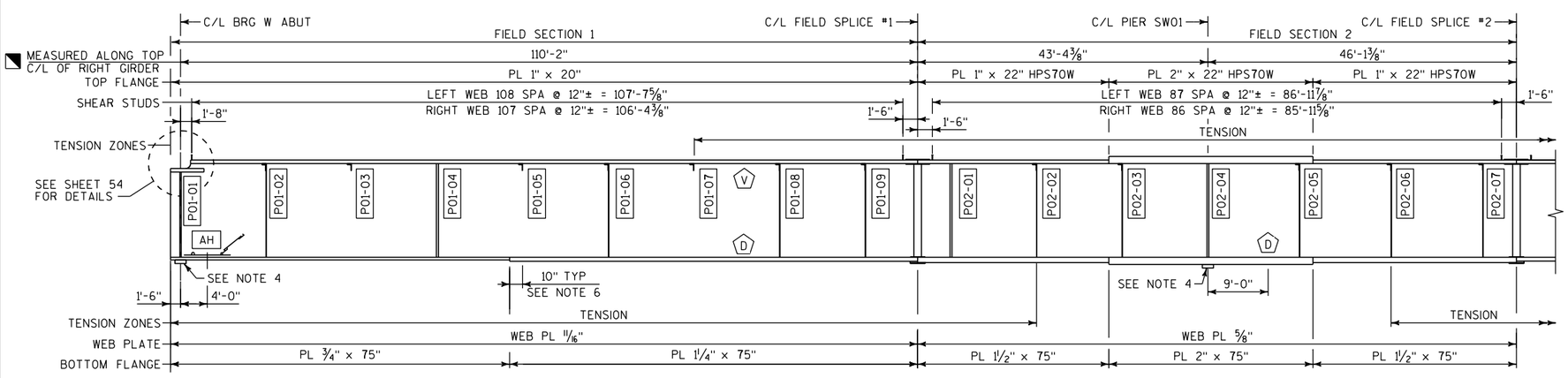

RIGHT GIRDER INTERIOR ELEVATION

LEGEND

K1	K-FRAME IDENTIFIER, SEE SHEET 47.
S1	TRANSVERSE STRUT IDENTIFIER, SEE SHEET 47.
AD	ABUTMENT DIAPHRAGM, SEE SHEETS 50, 54 & 55.
IPD	INTERIOR PIER DIAPHRAGM, SEE SHEETS 51, 54 & 55.
PED	PIER END DIAPHRAGM, SEE SHEETS 52, 54 & 55.
ICH	PIER SW06 INTEGRAL CROSS HEAD, SEE SHEETS 56 & 57.
IDXX	INTERMEDIATE DIAPHRAGM, SEE SHEETS 53, 54 & 55. "XX" INDICATES DIAPHRAGM NUMBER.
1A	LATERAL BRACING IDENTIFIER, SEE SHEET 48 FOR MEMBER SIZE AND CONNECTION DETAILS.
D	BOTTOM FLANGE DRAIN HOLE, SEE SHEET 46.
V	WEB PLATE VENT HOLE, SEE SHEET 46.
AH	BOTTOM FLANGE ACCESS HATCH, SEE SHEET 44.
AC	END DIAPHRAGM ACCESS DOOR, SEE SHEET 45.
PXX-XX	PANEL POINT IDENTIFIER. FIRST "XX" INDICATES FIELD SECTION. SECOND "XX" INDICATES PANEL SEQUENCE WITHIN THE FIELD SECTION.
◥	SEE GIRDER SECTION SHEET FOR LOCATION OF WORKING POINT.

NOTES

1. FOR SHOP SPLICE DETAILS AND SHEAR CONNECTOR DETAILS, SEE MISCELLANEOUS GIRDER DETAILS SHEET.
2. FOR CAMBER REQUIREMENTS, SEE CAMBER DIAGRAM SHEETS AND CAMBER AND DECK ELEVATIONS SHEETS.
3. 'TENSION' DENOTES ZONES OF TOP AND BOTTOM FLANGES ASSUMED TO CARRY TENSILE STRESS IN THE COMPLETED STRUCTURE. FIELD WELDING TO TENSION FLANGES AND WEB IS PROHIBITED, EXCEPT FOR SHEAR STUD CONNECTIONS TO THE TOP FLANGE.
4. BEVELED TOP PLATE, SEE BEARING SHEETS FOR DETAILS. THE DIMENSIONS OF THE BEVELED TOP PLATE SHALL BE COORDINATED WITH THE BEARING MANUFACTURER. PAYMENT FOR THE BEVELED TOP PLATE IS INCLUDED WITH THE BID ITEM "STRUCTURAL STEEL HS".
5. DIMENSIONS SHOWN IN GIRDER PLAN AND ELEVATION ARE HORIZONTAL DIMENSIONS.
6. LOCATE FLANGE SHOP SPLICE 10" FROM PANEL POINT, TYP. SEE DETAIL ON SHEET 46.

NO.	DATE	REVISION	BY

STATE OF WISCONSIN
DEPARTMENT OF TRANSPORTATION

STRUCTURE B-40-855

DRAWN BY GLM | PLANS CK'D. WRT

GIRDER PLAN AND ELEVATION: FIELD SECTIONS 1 & 2

SHEET 36 OF 96

8

8

STATE PROJECT NUMBER
1060-33-80

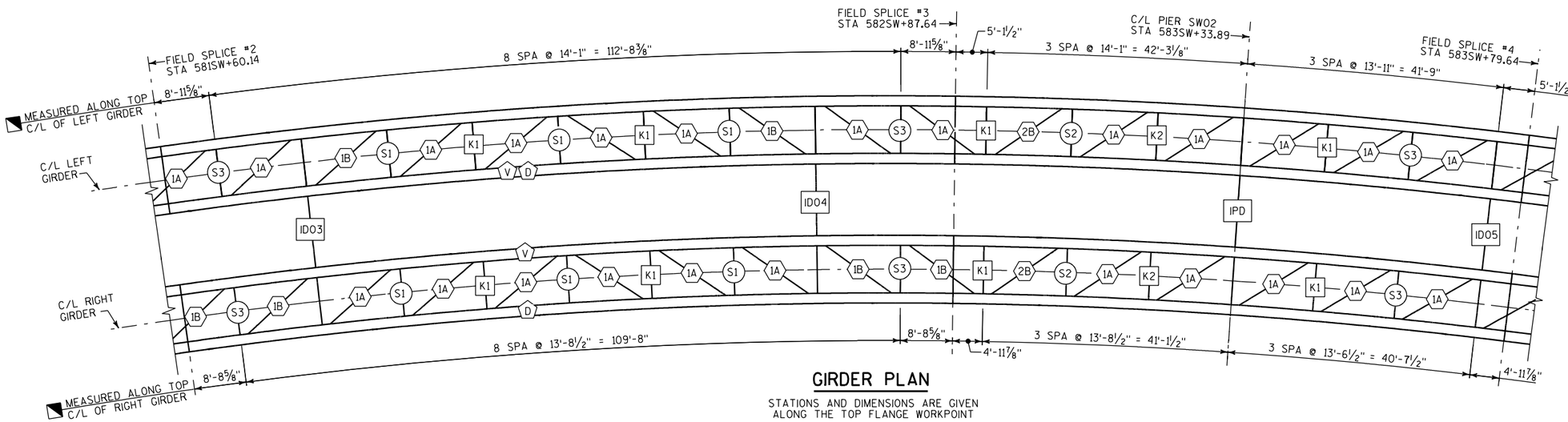

GIRDER PLAN

STATIONS AND DIMENSIONS ARE GIVEN ALONG THE TOP FLANGE WORKPOINT

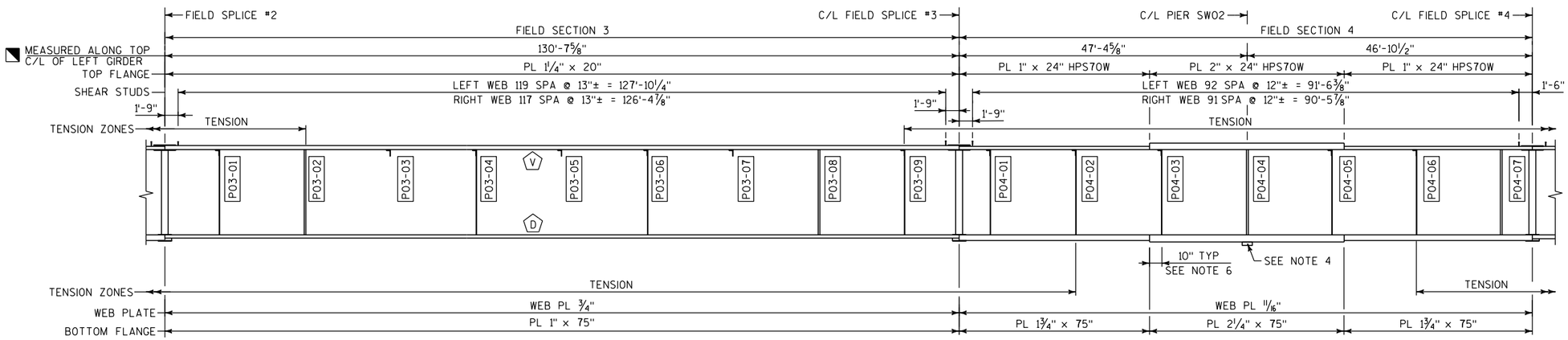

LEFT GIRDER INTERIOR ELEVATION

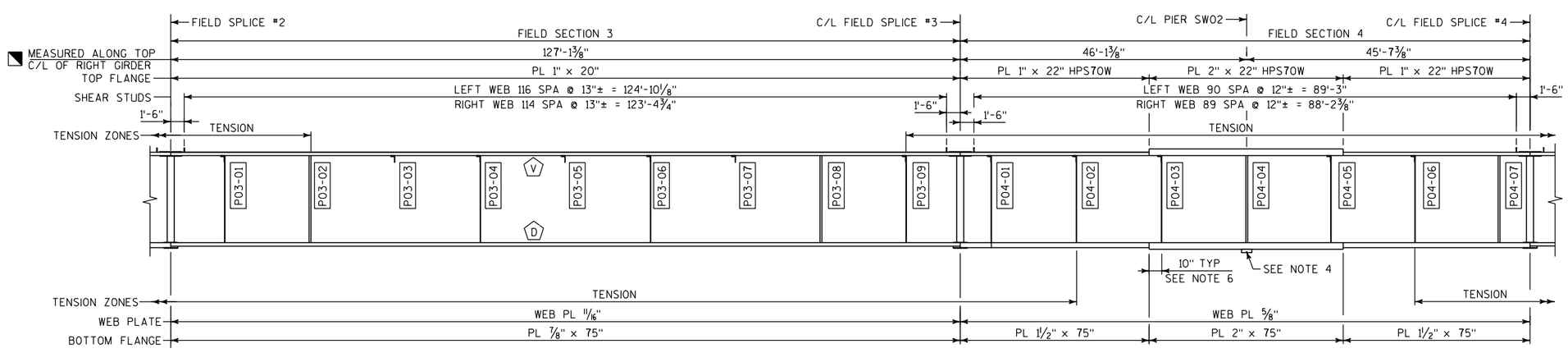

RIGHT GIRDER INTERIOR ELEVATION

LEGEND

K1	K-FRAME IDENTIFIER, SEE SHEET 47.
S1	TRANSVERSE STRUT IDENTIFIER, SEE SHEET 47.
AD	ABUTMENT DIAPHRAGM, SEE SHEETS 50, 54 & 55.
IPD	INTERIOR PIER DIAPHRAGM, SEE SHEETS 51, 54 & 55.
PED	PIER END DIAPHRAGM, SEE SHEETS 52, 54 & 55.
ICH	PIER SW06 INTEGRAL CROSS HEAD, SEE SHEETS 56 & 57.
IDXX	INTERMEDIATE DIAPHRAGM, SEE SHEETS 53, 54 & 55. "XX" INDICATES DIAPHRAGM NUMBER.
1A	LATERAL BRACING IDENTIFIER, SEE SHEET 48 FOR MEMBER SIZE AND CONNECTION DETAILS.
D	BOTTOM FLANGE DRAIN HOLE, SEE SHEET 46.
V	WEB PLATE VENT HOLE, SEE SHEET 46.
AH	BOTTOM FLANGE ACCESS HATCH, SEE SHEET 44.
AC	END DIAPHRAGM ACCESS DOOR, SEE SHEET 45.
PXX-XX	PANEL POINT IDENTIFIER. FIRST "XX" INDICATES FIELD SECTION. SECOND "XX" INDICATES PANEL SEQUENCE WITHIN THE FIELD SECTION.
◥	SEE GIRDER SECTION SHEET FOR LOCATION OF WORKING POINT.

NOTES

1. FOR SHOP SPLICE DETAILS AND SHEAR CONNECTOR DETAILS, SEE MISCELLANEOUS GIRDER DETAILS SHEET.
2. FOR CAMBER REQUIREMENTS, SEE CAMBER DIAGRAM SHEETS AND CAMBER AND DECK ELEVATIONS SHEETS.
3. 'TENSION' DENOTES ZONES OF TOP AND BOTTOM FLANGES ASSUMED TO CARRY TENSILE STRESS IN THE COMPLETED STRUCTURE. FIELD WELDING TO TENSION FLANGES AND WEB IS PROHIBITED, EXCEPT FOR SHEAR STUD CONNECTIONS TO THE TOP FLANGE.
4. BEVELED TOP PLATE, SEE BEARING SHEETS FOR DETAILS. THE DIMENSIONS OF THE BEVELED TOP PLATE SHALL BE COORDINATED WITH THE BEARING MANUFACTURER. PAYMENT FOR THE BEVELED TOP PLATE IS INCLUDED WITH THE BID ITEM "STRUCTURAL STEEL HS".
5. DIMENSIONS SHOWN IN GIRDER PLAN AND ELEVATION ARE HORIZONTAL DIMENSIONS.
6. LOCATE FLANGE SHOP SPLICE 10" FROM PANEL POINT, TYP. SEE DETAIL ON SHEET 46.

NO.	DATE	REVISION	BY

STATE OF WISCONSIN
DEPARTMENT OF TRANSPORTATION

STRUCTURE B-40-855

DRAWN BY GLM | PLANS CK'D. WRT

GIRDER PLAN AND ELEVATION: FIELD SECTIONS 3 & 4

SHEET 37 OF 96

8

STATE PROJECT NUMBER
1060-33-80

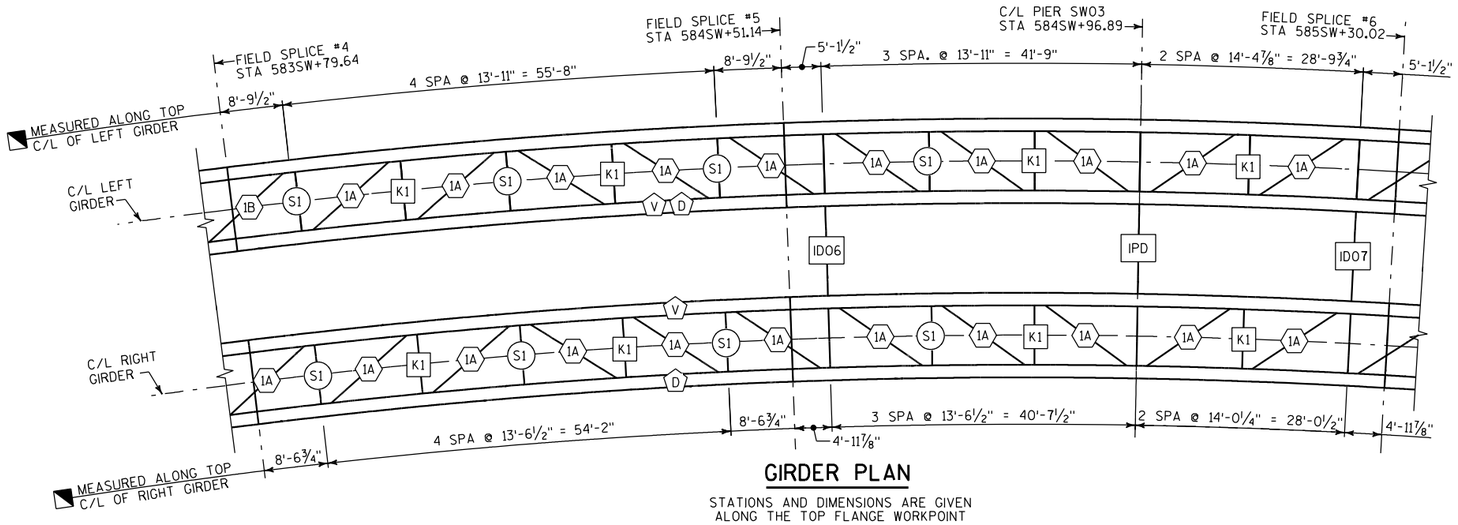

GIRDER PLAN

STATIONS AND DIMENSIONS ARE GIVEN ALONG THE TOP FLANGE WORKPOINT

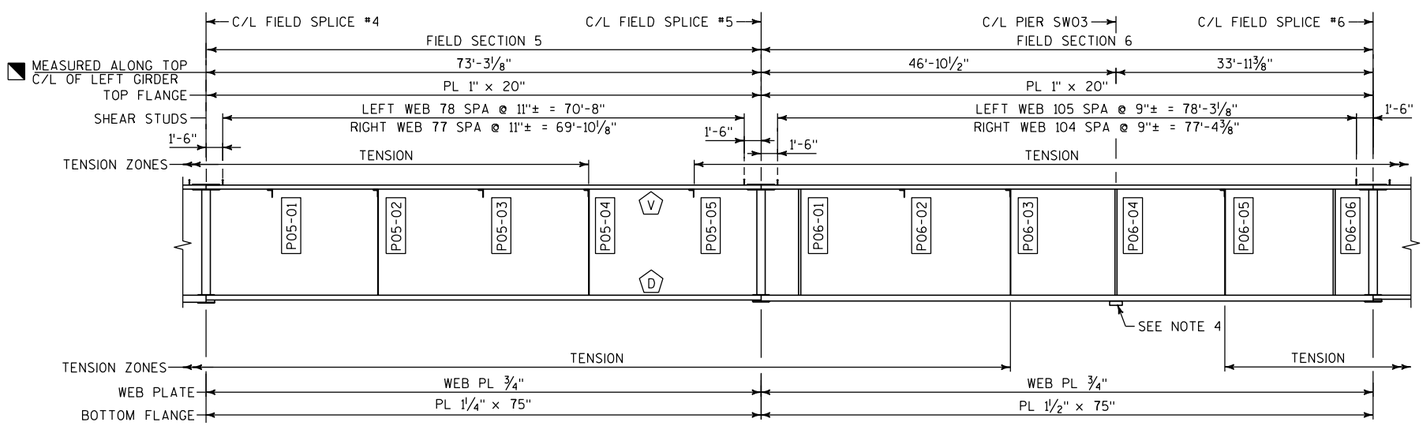

LEFT GIRDER INTERIOR ELEVATION

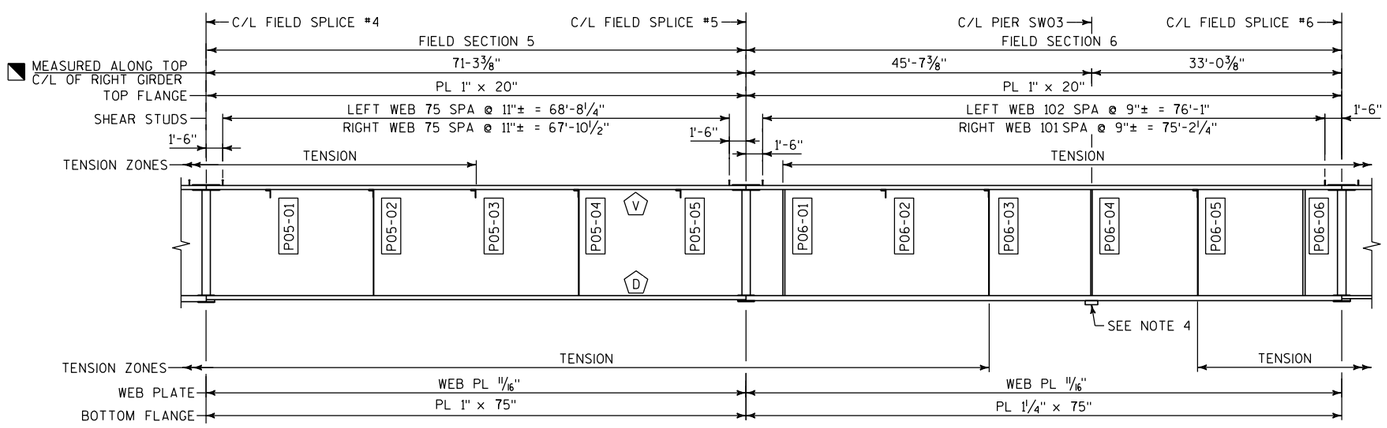

RIGHT GIRDER INTERIOR ELEVATION

LEGEND

K1	K-FRAME IDENTIFIER, SEE SHEET 47.
S1	TRANSVERSE STRUT IDENTIFIER, SEE SHEET 47.
AD	ABUTMENT DIAPHRAGM, SEE SHEETS 50, 54 & 55.
IPD	INTERIOR PIER DIAPHRAGM, SEE SHEETS 51, 54 & 55.
PED	PIER END DIAPHRAGM, SEE SHEETS 52, 54 & 55.
ICH	PIER SW06 INTEGRAL CROSS HEAD, SEE SHEETS 56 & 57.
IDXX	INTERMEDIATE DIAPHRAGM, SEE SHEETS 53, 54 & 55. "XX" INDICATES DIAPHRAGM NUMBER.
1A	LATERAL BRACING IDENTIFIER, SEE SHEET 48 FOR MEMBER SIZE AND CONNECTION DETAILS.
D	BOTTOM FLANGE DRAIN HOLE, SEE SHEET 46.
V	WEB PLATE VENT HOLE, SEE SHEET 46.
AH	BOTTOM FLANGE ACCESS HATCH, SEE SHEET 44.
AC	END DIAPHRAGM ACCESS DOOR, SEE SHEET 45.
PXX-XX	PANEL POINT IDENTIFIER. FIRST "XX" INDICATES FIELD SECTION. SECOND "XX" INDICATES PANEL SEQUENCE WITHIN THE FIELD SECTION.
◥	SEE GIRDER SECTION SHEET FOR LOCATION OF WORKING POINT.

NOTES

1. FOR SHOP SPLICE DETAILS AND SHEAR CONNECTOR DETAILS, SEE MISCELLANEOUS GIRDER DETAILS SHEET.
2. FOR CAMBER REQUIREMENTS, SEE CAMBER DIAGRAM SHEETS AND CAMBER AND DECK ELEVATIONS SHEETS.
3. 'TENSION' DENOTES ZONES OF TOP AND BOTTOM FLANGES ASSUMED TO CARRY TENSILE STRESS IN THE COMPLETED STRUCTURE. FIELD WELDING TO TENSION FLANGES AND WEB IS PROHIBITED, EXCEPT FOR SHEAR STUD CONNECTIONS TO THE TOP FLANGE.
4. BEVELED TOP PLATE, SEE BEARING SHEETS FOR DETAILS. THE DIMENSIONS OF THE BEVELED TOP PLATE SHALL BE COORDINATED WITH THE BEARING MANUFACTURER. PAYMENT FOR THE BEVELED TOP PLATE IS INCLUDED WITH THE BID ITEM "STRUCTURAL STEEL HS".
5. DIMENSIONS SHOWN IN GIRDER PLAN AND ELEVATION ARE HORIZONTAL DIMENSIONS.

NO.	DATE	REVISION	BY

STATE OF WISCONSIN
DEPARTMENT OF TRANSPORTATION

STRUCTURE B-40-855

DRAWN BY GLM | PLANS CK'D. WRT

GIRDER PLAN AND ELEVATION: FIELD SECTIONS 5 & 6

SHEET 38 OF 96

8

8

STATE PROJECT NUMBER
1060-33-80

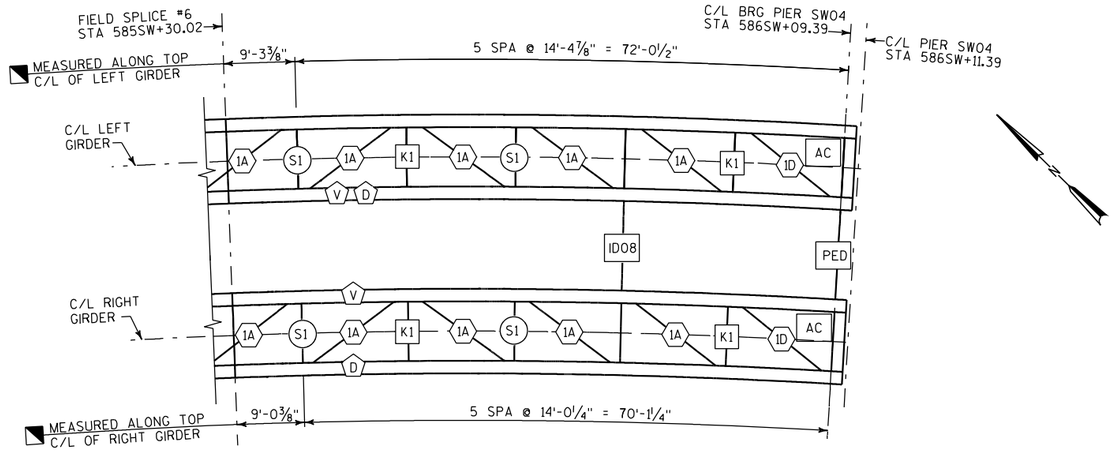

GIRDER PLAN

STATIONS AND DIMENSIONS ARE GIVEN
ALONG THE TOP FLANGE WORKPOINT

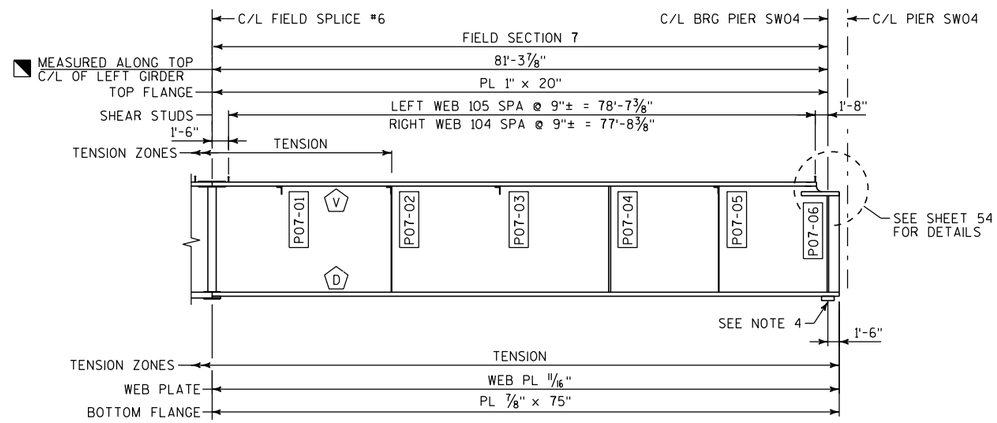

LEFT GIRDER INTERIOR ELEVATION

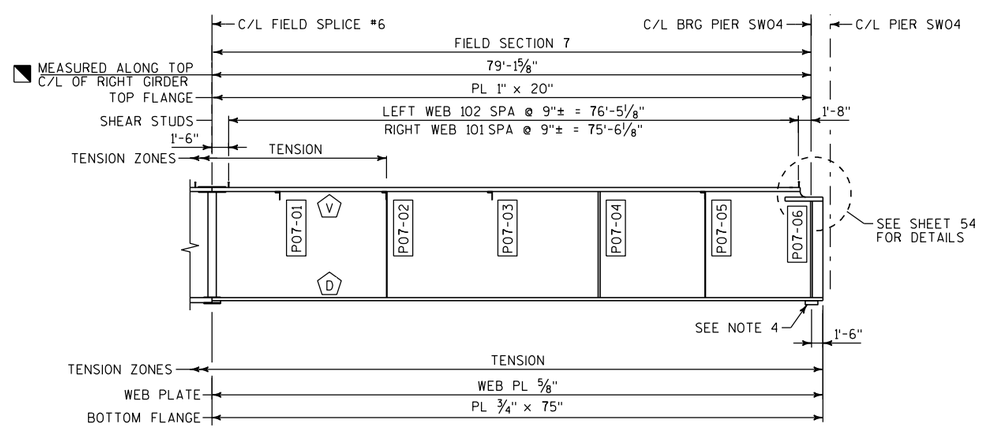

RIGHT GIRDER INTERIOR ELEVATION

LEGEND

K1	K-FRAME IDENTIFIER, SEE SHEET 47.
S1	TRANSVERSE STRUT IDENTIFIER, SEE SHEET 47.
AD	ABUTMENT DIAPHRAGM, SEE SHEETS 50, 54 & 55.
IPD	INTERIOR PIER DIAPHRAGM, SEE SHEETS 51, 54 & 55.
PED	PIER END DIAPHRAGM, SEE SHEETS 52, 54 & 55.
ICH	PIER SW06 INTEGRAL CROSS HEAD, SEE SHEETS 56 & 57.
IDXX	INTERMEDIATE DIAPHRAGM, SEE SHEETS 53, 54 & 55. "XX" INDICATES DIAPHRAGM NUMBER.
1A	LATERAL BRACING IDENTIFIER, SEE SHEET 48 FOR MEMBER SIZE AND CONNECTION DETAILS.
D	BOTTOM FLANGE DRAIN HOLE, SEE SHEET 46.
V	WEB PLATE VENT HOLE, SEE SHEET 46.
AH	BOTTOM FLANGE ACCESS HATCH, SEE SHEET 44.
AC	END DIAPHRAGM ACCESS DOOR, SEE SHEET 45.
PXX-XX	PANEL POINT IDENTIFIER. FIRST "XX" INDICATES FIELD SECTION. SECOND "XX" INDICATES PANEL SEQUENCE WITHIN THE FIELD SECTION.
◥	SEE GIRDER SECTION SHEET FOR LOCATION OF WORKING POINT.

NOTES

1. FOR SHOP SPLICE DETAILS AND SHEAR CONNECTOR DETAILS, SEE MISCELLANEOUS GIRDER DETAILS SHEET.
2. FOR CAMBER REQUIREMENTS, SEE CAMBER DIAGRAM SHEETS AND CAMBER AND DECK ELEVATIONS SHEETS.
3. 'TENSION' DENOTES ZONES OF TOP AND BOTTOM FLANGES ASSUMED TO CARRY TENSILE STRESS IN THE COMPLETED STRUCTURE. FIELD WELDING TO TENSION FLANGES AND WEB IS PROHIBITED, EXCEPT FOR SHEAR STUD CONNECTIONS TO THE TOP FLANGE.
4. BEVELED TOP PLATE, SEE BEARING SHEETS FOR DETAILS. THE DIMENSIONS OF THE BEVELED TOP PLATE SHALL BE COORDINATED WITH THE BEARING MANUFACTURER. PAYMENT FOR THE BEVELED TOP PLATE IS INCLUDED WITH THE BID ITEM "STRUCTURAL STEEL HS".
5. DIMENSIONS SHOWN IN GIRDER PLAN AND ELEVATION ARE HORIZONTAL DIMENSIONS.

NO.	DATE	REVISION	BY

STATE OF WISCONSIN
DEPARTMENT OF TRANSPORTATION

STRUCTURE B-40-855

DRAWN BY GLM | PLANS CK'D. WRT

GIRDER PLAN AND ELEVATION: FIELD SECTION 7

SHEET 39 OF 96

8

8

STATE PROJECT NUMBER
1060-33-80

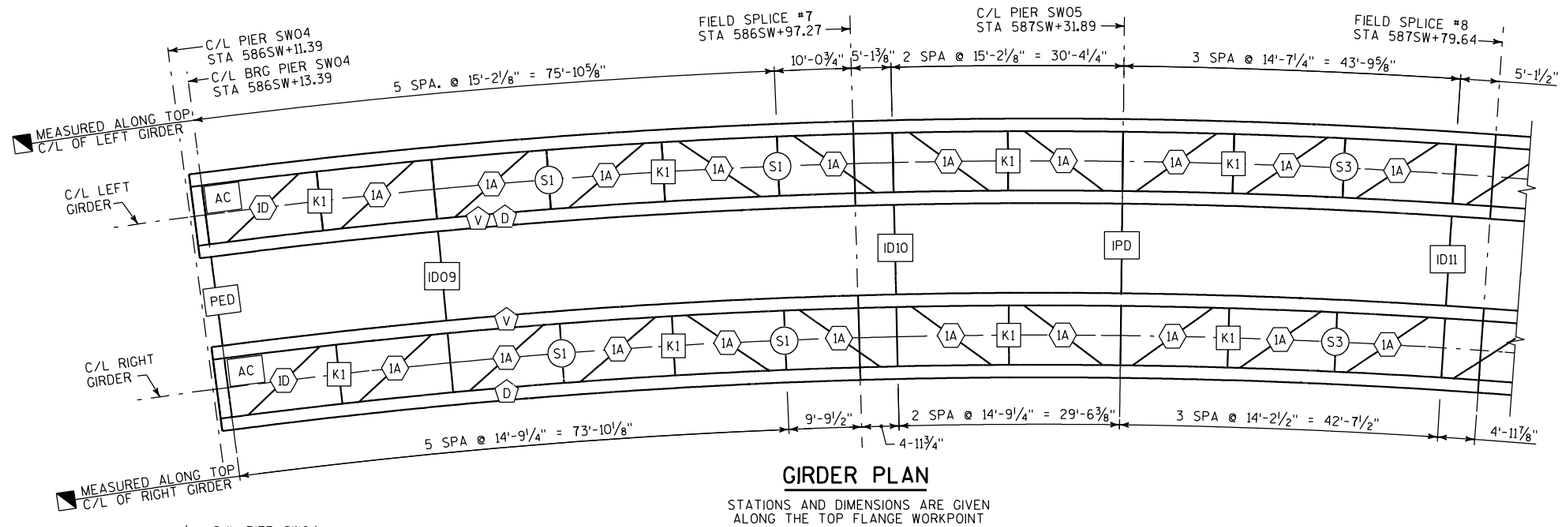

GIRDER PLAN

STATIONS AND DIMENSIONS ARE GIVEN ALONG THE TOP FLANGE WORKPOINT

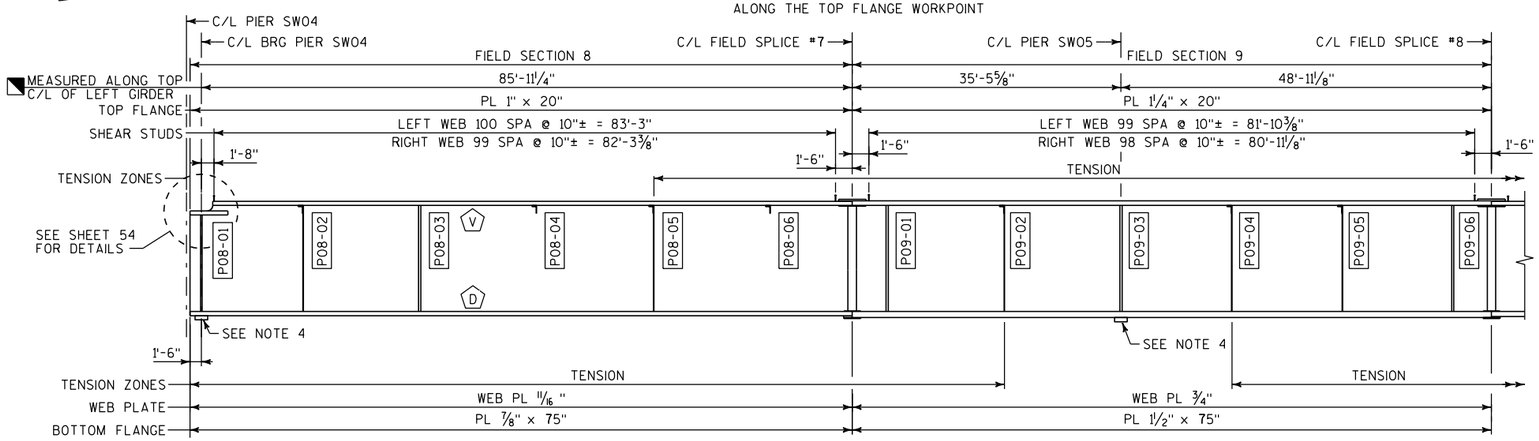

LEFT GIRDER INTERIOR ELEVATION

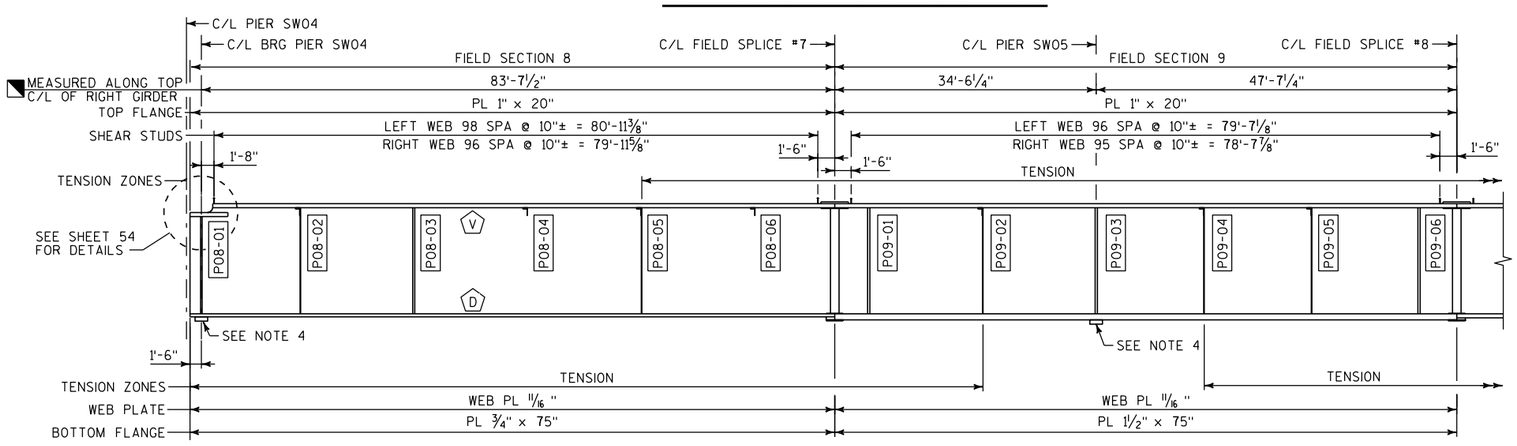

RIGHT GIRDER INTERIOR ELEVATION

LEGEND

K1	K-FRAME IDENTIFIER, SEE SHEET 47.
S1	TRANSVERSE STRUT IDENTIFIER, SEE SHEET 47.
AD	ABUTMENT DIAPHRAGM, SEE SHEETS 50, 54 & 55.
IPD	INTERIOR PIER DIAPHRAGM, SEE SHEETS 51, 54 & 55.
PED	PIER END DIAPHRAGM, SEE SHEETS 52, 54 & 55.
ICH	PIER SW06 INTEGRAL CROSS HEAD, SEE SHEETS 56 & 57.
IDXX	INTERMEDIATE DIAPHRAGM, SEE SHEETS 53, 54 & 55. "XX" INDICATES DIAPHRAGM NUMBER.
1A	LATERAL BRACING IDENTIFIER, SEE SHEET 48 FOR MEMBER SIZE AND CONNECTION DETAILS.
D	BOTTOM FLANGE DRAIN HOLE, SEE SHEET 46.
V	WEB PLATE VENT HOLE, SEE SHEET 46.
AH	BOTTOM FLANGE ACCESS HATCH, SEE SHEET 44.
AC	END DIAPHRAGM ACCESS DOOR, SEE SHEET 45.
PXX-XX	PANEL POINT IDENTIFIER. FIRST "XX" INDICATES FIELD SECTION. SECOND "XX" INDICATES PANEL SEQUENCE WITHIN THE FIELD SECTION.
◥	SEE GIRDER SECTION SHEET FOR LOCATION OF WORKING POINT.

NOTES

1. FOR SHOP SPLICE DETAILS AND SHEAR CONNECTOR DETAILS, SEE MISCELLANEOUS GIRDER DETAILS SHEET.
2. FOR CAMBER REQUIREMENTS, SEE CAMBER DIAGRAM SHEETS AND CAMBER AND DECK ELEVATIONS SHEETS.
3. 'TENSION' DENOTES ZONES OF TOP AND BOTTOM FLANGES ASSUMED TO CARRY TENSILE STRESS IN THE COMPLETED STRUCTURE. FIELD WELDING TO TENSION FLANGES AND WEB IS PROHIBITED, EXCEPT FOR SHEAR STUD CONNECTIONS TO THE TOP FLANGE.
4. BEVELED TOP PLATE, SEE BEARING SHEETS FOR DETAILS. THE DIMENSIONS OF THE BEVELED TOP PLATE SHALL BE COORDINATED WITH THE BEARING MANUFACTURER. PAYMENT FOR THE BEVELED TOP PLATE IS INCLUDED WITH THE BID ITEM "STRUCTURAL STEEL HS".
5. DIMENSIONS SHOWN IN GIRDER PLAN AND ELEVATION ARE HORIZONTAL DIMENSIONS.

NO.	DATE	REVISION	BY

STATE OF WISCONSIN
DEPARTMENT OF TRANSPORTATION

STRUCTURE B-40-855

DRAWN BY GLM | PLANS CK'D. WRT

GIRDER PLAN AND ELEVATION: FIELD SECTIONS 8 & 9

SHEET 40 OF 96

8

8

STATE PROJECT NUMBER
1060-33-80

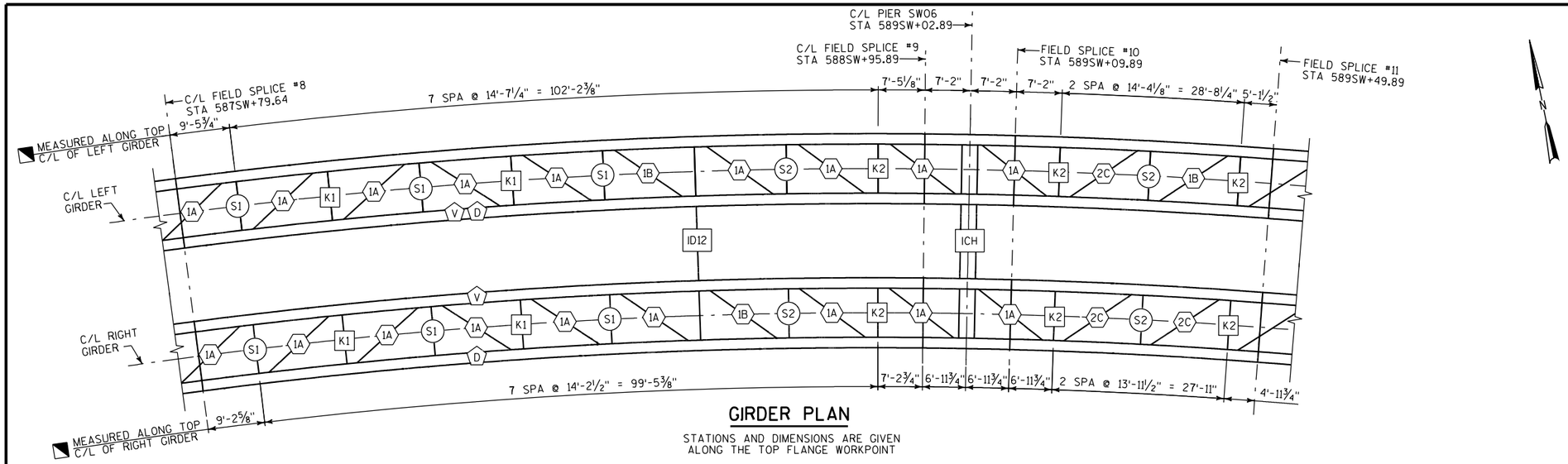

GIRDER PLAN

STATIONS AND DIMENSIONS ARE GIVEN ALONG THE TOP FLANGE WORKPOINT

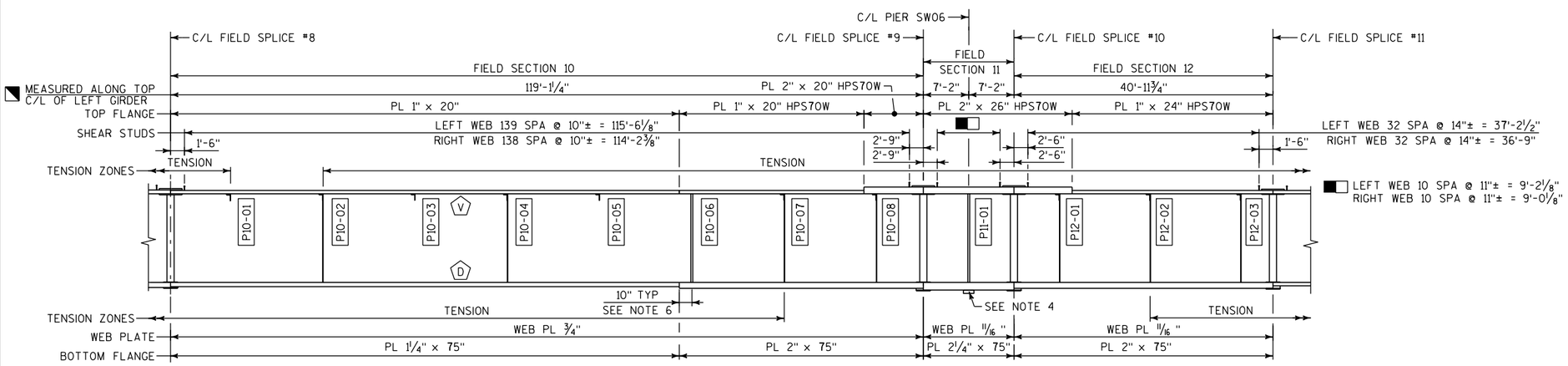

LEFT GIRDER INTERIOR ELEVATION

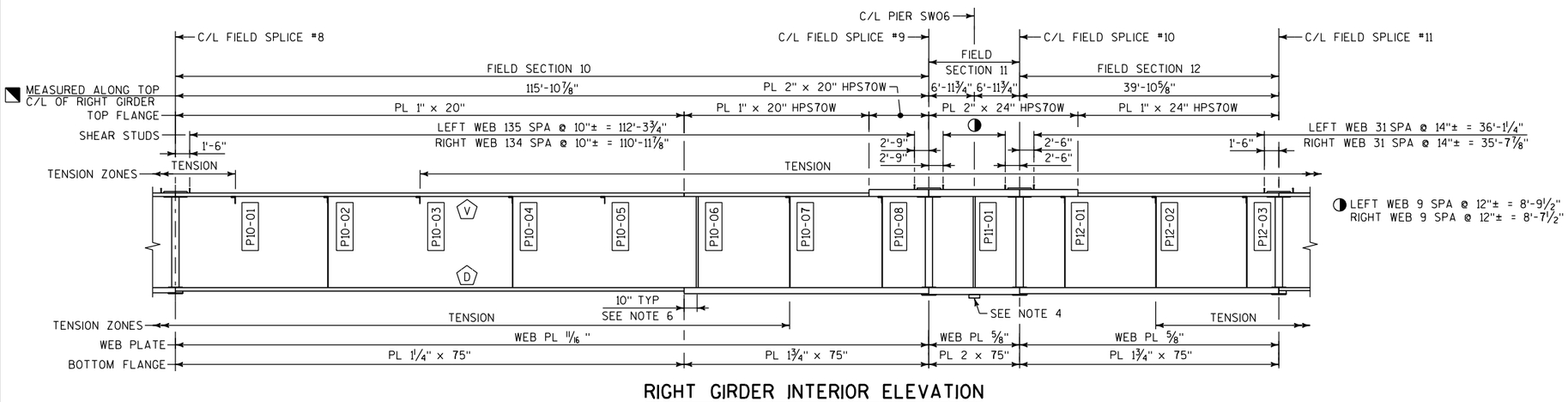

RIGHT GIRDER INTERIOR ELEVATION

LEGEND

K1	K-FRAME IDENTIFIER, SEE SHEET 47.
S1	TRANSVERSE STRUT IDENTIFIER, SEE SHEET 47.
AD	ABUTMENT DIAPHRAGM, SEE SHEETS 50, 54 & 55.
IPD	INTERIOR PIER DIAPHRAGM, SEE SHEETS 51, 54 & 55.
PED	PIER END DIAPHRAGM, SEE SHEETS 52, 54 & 55.
ICH	PIER SW06 INTEGRAL CROSS HEAD, SEE SHEETS 56 & 57.
IDXX	INTERMEDIATE DIAPHRAGM, SEE SHEETS 53, 54 & 55. "XX" INDICATES DIAPHRAGM NUMBER.
1A	LATERAL BRACING IDENTIFIER, SEE SHEET 48 FOR MEMBER SIZE AND CONNECTION DETAILS.
D	BOTTOM FLANGE DRAIN HOLE, SEE SHEET 46.
V	WEB PLATE VENT HOLE, SEE SHEET 46.
AH	BOTTOM FLANGE ACCESS HATCH, SEE SHEET 44.
AC	END DIAPHRAGM ACCESS DOOR, SEE SHEET 45.
PXX-XX	PANEL POINT IDENTIFIER. FIRST "XX" INDICATES FIELD SECTION. SECOND "XX" INDICATES PANEL SEQUENCE WITHIN THE FIELD SECTION.
◥	SEE GIRDER SECTION SHEET FOR LOCATION OF WORKING POINT.

NOTES

1. FOR SHOP SPLICE DETAILS AND SHEAR CONNECTOR DETAILS, SEE MISCELLANEOUS GIRDER DETAILS SHEET.
2. FOR CAMBER REQUIREMENTS, SEE CAMBER DIAGRAM SHEETS AND CAMBER AND DECK ELEVATIONS SHEETS.
3. 'TENSION' DENOTES ZONES OF TOP AND BOTTOM FLANGES ASSUMED TO CARRY TENSILE STRESS IN THE COMPLETED STRUCTURE. FIELD WELDING TO TENSION FLANGES AND WEB IS PROHIBITED, EXCEPT FOR SHEAR STUD CONNECTIONS TO THE TOP FLANGE.
4. BEVELED TOP PLATE, SEE BEARING SHEETS FOR DETAILS. THE DIMENSIONS OF THE BEVELED TOP PLATE SHALL BE COORDINATED WITH THE BEARING MANUFACTURER. PAYMENT FOR THE BEVELED TOP PLATE IS INCLUDED WITH THE BID ITEM "STRUCTURAL STEEL HS".
5. DIMENSIONS SHOWN IN GIRDER PLAN AND ELEVATION ARE HORIZONTAL DIMENSIONS.
6. LOCATE FLANGE SHOP SPLICE 10" FROM PANEL POINT, TYP. SEE DETAIL ON SHEET 46.

NO.	DATE	REVISION	BY

STATE OF WISCONSIN
DEPARTMENT OF TRANSPORTATION

STRUCTURE B-40-855

DRAWN BY	GLM	PLANS CK'D.	WRT

GIRDER PLAN AND ELEVATION: FIELD SECTIONS 10 THRU 12

SHEET 41 OF 96

8

FILE NAME : W:\Cadd\Final\10603380_Z1\Structs\B-40-855\cds\cds Mandatory\B855_080513_ss.dgn PLOT DATE : 02-MAY-2014 12:03 PLOT BY : MSCGLM PLOT NAME : B855_080513_ss PLOT SCALE : 20:1

STATE PROJECT NUMBER
1060-33-80

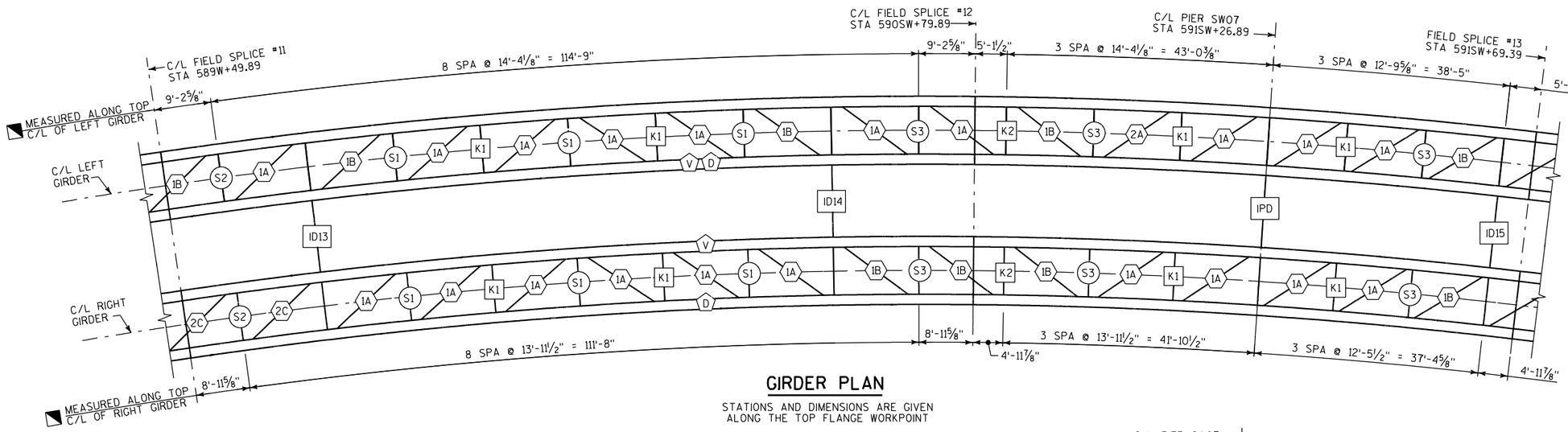

GIRDER PLAN

STATIONS AND DIMENSIONS ARE GIVEN ALONG THE TOP FLANGE WORKPOINT

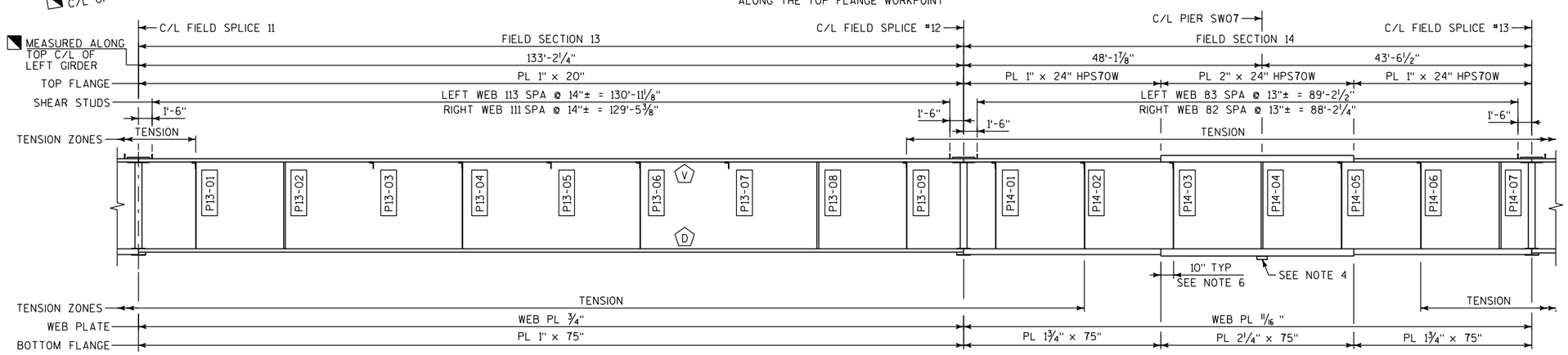

LEFT GIRDER INTERIOR ELEVATION

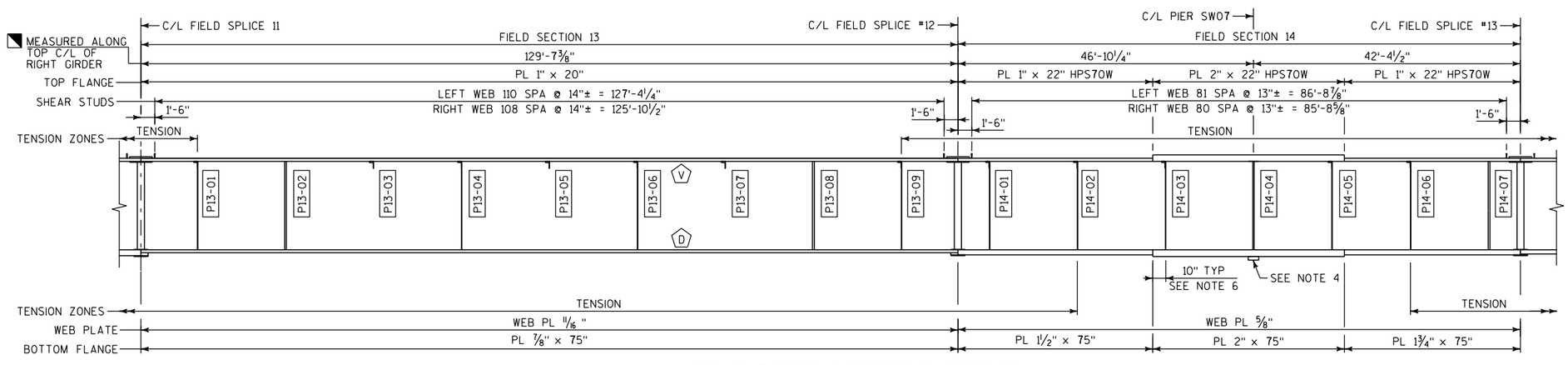

RIGHT GIRDER INTERIOR ELEVATION

LEGEND

K1	K-FRAME IDENTIFIER, SEE SHEET 47.
S1	TRANSVERSE STRUT IDENTIFIER, SEE SHEET 47.
AD	ABUTMENT DIAPHRAGM, SEE SHEETS 50, 54 & 55.
IPD	INTERIOR PIER DIAPHRAGM, SEE SHEETS 51, 54 & 55.
PED	PIER END DIAPHRAGM, SEE SHEETS 52, 54 & 55.
ICH	PIER SW06 INTEGRAL CROSS HEAD, SEE SHEETS 56 & 57.
IDXX	INTERMEDIATE DIAPHRAGM, SEE SHEETS 53, 54 & 55. "XX" INDICATES DIAPHRAGM NUMBER.
1A	LATERAL BRACING IDENTIFIER, SEE SHEET 48 FOR MEMBER SIZE AND CONNECTION DETAILS.
D	BOTTOM FLANGE DRAIN HOLE, SEE SHEET 46.
V	WEB PLATE VENT HOLE, SEE SHEET 46.
AH	BOTTOM FLANGE ACCESS HATCH, SEE SHEET 44.
AC	END DIAPHRAGM ACCESS DOOR, SEE SHEET 45.
PXX-XX	PANEL POINT IDENTIFIER. FIRST "XX" INDICATES FIELD SECTION. SECOND "XX" INDICATES PANEL SEQUENCE WITHIN THE FIELD SECTION.
◥	SEE GIRDER SECTION SHEET FOR LOCATION OF WORKING POINT.

NOTES

1. FOR SHOP SPLICE DETAILS AND SHEAR CONNECTOR DETAILS, SEE MISCELLANEOUS GIRDER DETAILS SHEET.
2. FOR CAMBER REQUIREMENTS, SEE CAMBER DIAGRAM SHEETS AND CAMBER AND DECK ELEVATIONS SHEETS.
3. 'TENSION' DENOTES ZONES OF TOP AND BOTTOM FLANGES ASSUMED TO CARRY TENSILE STRESS IN THE COMPLETED STRUCTURE. FIELD WELDING TO TENSION FLANGES AND WEB IS PROHIBITED, EXCEPT FOR SHEAR STUD CONNECTIONS TO THE TOP FLANGE.
4. BEVELED TOP PLATE, SEE BEARING SHEETS FOR DETAILS. THE DIMENSIONS OF THE BEVELED TOP PLATE SHALL BE COORDINATED WITH THE BEARING MANUFACTURER. PAYMENT FOR THE BEVELED TOP PLATE IS INCLUDED WITH THE BID ITEM "STRUCTURAL STEEL HS".
5. DIMENSIONS SHOWN IN GIRDER PLAN AND ELEVATION ARE HORIZONTAL DIMENSIONS.
6. LOCATE FLANGE SHOP SPLICE 10" FROM PANEL POINT, TYP. SEE DETAIL ON SHEET 46.

NO.	DATE	REVISION	BY

STATE OF WISCONSIN
DEPARTMENT OF TRANSPORTATION

STRUCTURE B-40-855

DRAWN BY	GLM	PLANS CK'D.	WRT

GIRDER PLAN AND ELEVATION: FIELD SECTIONS 13 & 14

SHEET 42 OF 96

8

8

STATE PROJECT NUMBER
1060-33-80

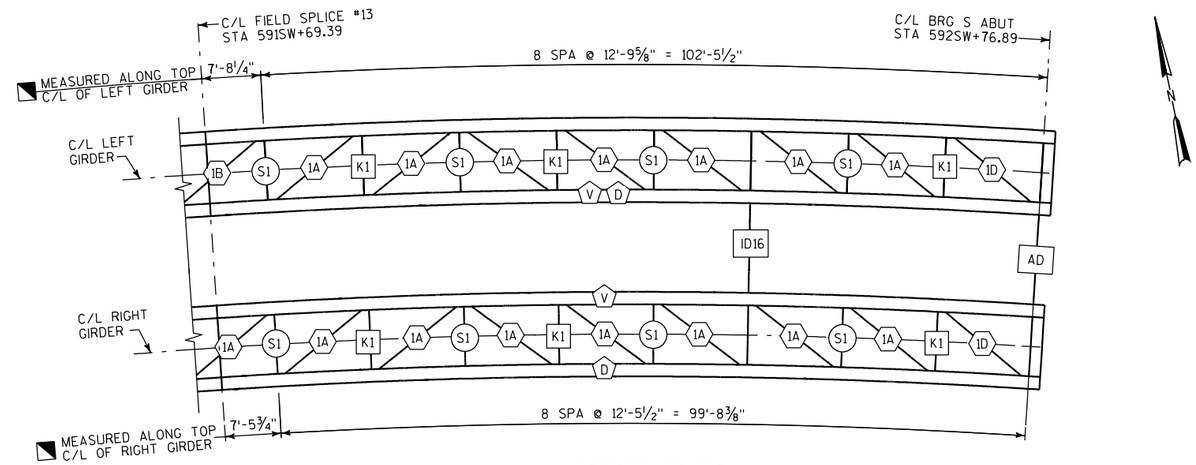

GIRDER PLAN

STATIONS AND DIMENSIONS ARE GIVEN ALONG THE TOP FLANGE WORKPOINT

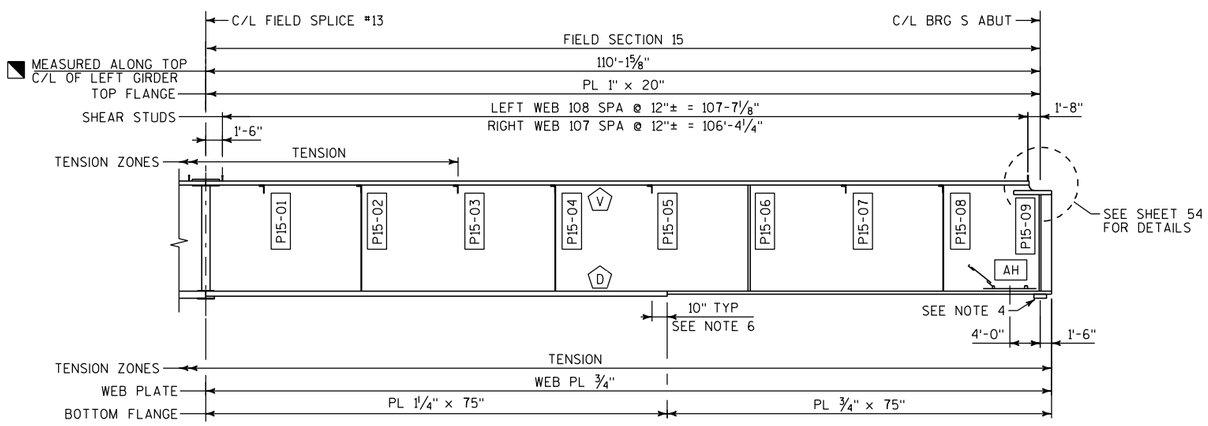

LEFT GIRDER INTERIOR ELEVATION

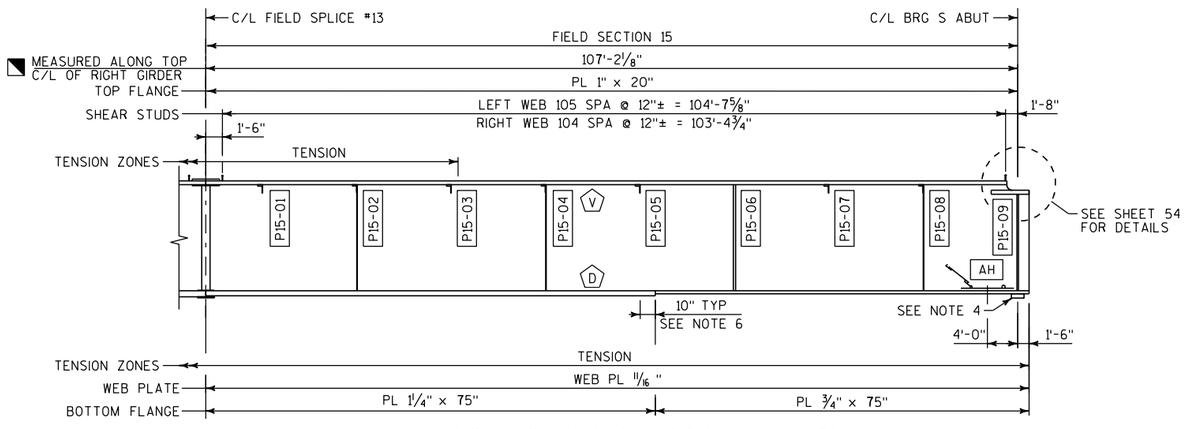

RIGHT GIRDER INTERIOR ELEVATION

LEGEND

K1	K-FRAME IDENTIFIER, SEE SHEET 47.
S1	TRANSVERSE STRUT IDENTIFIER, SEE SHEET 47.
AD	ABUTMENT DIAPHRAGM, SEE SHEETS 50, 54 & 55.
IPD	INTERIOR PIER DIAPHRAGM, SEE SHEETS 51, 54 & 55.
PED	PIER END DIAPHRAGM, SEE SHEETS 52, 54 & 55.
ICH	PIER SW06 INTEGRAL CROSS HEAD, SEE SHEETS 56 & 57.
IDXX	INTERMEDIATE DIAPHRAGM, SEE SHEETS 53, 54 & 55. "XX" INDICATES DIAPHRAGM NUMBER.
1A	LATERAL BRACING IDENTIFIER, SEE SHEET 48 FOR MEMBER SIZE AND CONNECTION DETAILS.
D	BOTTOM FLANGE DRAIN HOLE, SEE SHEET 46.
V	WEB PLATE VENT HOLE, SEE SHEET 46.
AH	BOTTOM FLANGE ACCESS HATCH, SEE SHEET 44.
AC	END DIAPHRAGM ACCESS DOOR, SEE SHEET 45.
PXX-XX	PANEL POINT IDENTIFIER. FIRST "XX" INDICATES FIELD SECTION. SECOND "XX" INDICATES PANEL SEQUENCE WITHIN THE FIELD SECTION.
◥	SEE GIRDER SECTION SHEET FOR LOCATION OF WORKING POINT.

NOTES

1. FOR SHOP SPLICE DETAILS AND SHEAR CONNECTOR DETAILS, SEE MISCELLANEOUS GIRDER DETAILS SHEET.
2. FOR CAMBER REQUIREMENTS, SEE CAMBER DIAGRAM SHEETS AND CAMBER AND DECK ELEVATIONS SHEETS.
3. 'TENSION' DENOTES ZONES OF TOP AND BOTTOM FLANGES ASSUMED TO CARRY TENSILE STRESS IN THE COMPLETED STRUCTURE. FIELD WELDING TO TENSION FLANGES AND WEB IS PROHIBITED, EXCEPT FOR SHEAR STUD CONNECTIONS TO THE TOP FLANGE.
4. BEVELED TOP PLATE, SEE BEARING SHEETS FOR DETAILS. THE DIMENSIONS OF THE BEVELED TOP PLATE SHALL BE COORDINATED WITH THE BEARING MANUFACTURER. PAYMENT FOR THE BEVELED TOP PLATE IS INCLUDED WITH THE BID ITEM "STRUCTURAL STEEL HS".
5. DIMENSIONS SHOWN IN GIRDER PLAN AND ELEVATION ARE HORIZONTAL DIMENSIONS.
6. LOCATE FLANGE SHOP SPLICE 10" FROM PANEL POINT, TYP. SEE DETAIL ON SHEET 46.

NO.	DATE	REVISION	BY

STATE OF WISCONSIN
DEPARTMENT OF TRANSPORTATION

STRUCTURE B-40-855

DRAWN BY GLM | PLANS CK'D. WRT

GIRDER PLAN AND ELEVATION: FIELD SECTION 15

SHEET 43 OF 96

8

STATE PROJECT NUMBER
1060-33-80

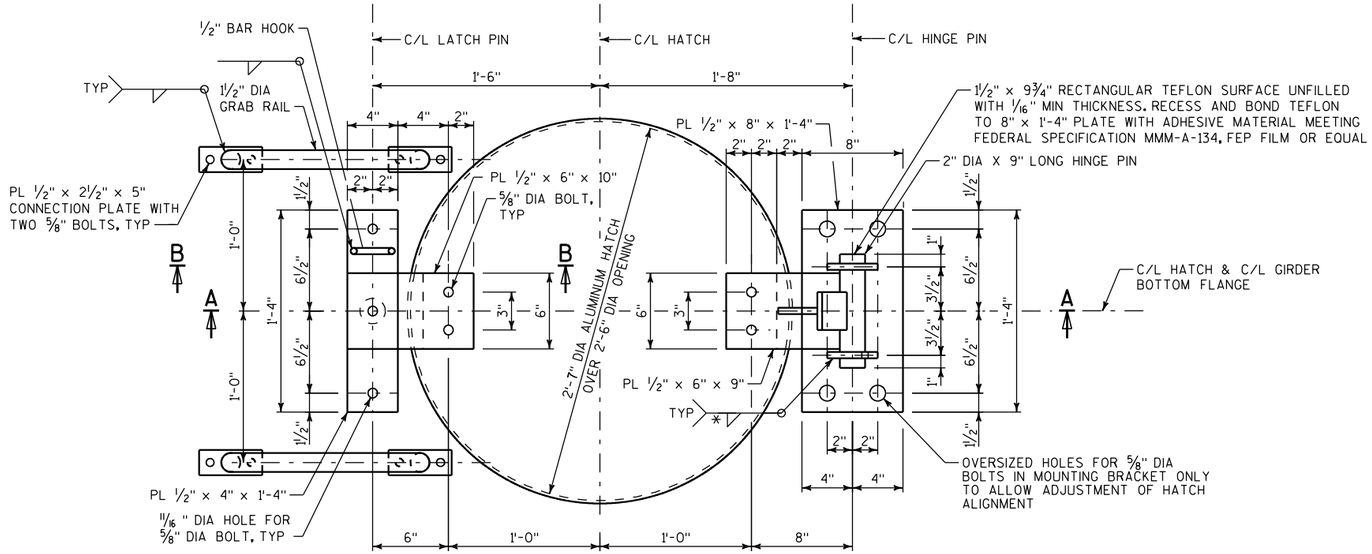

ACCESS HATCH PLAN

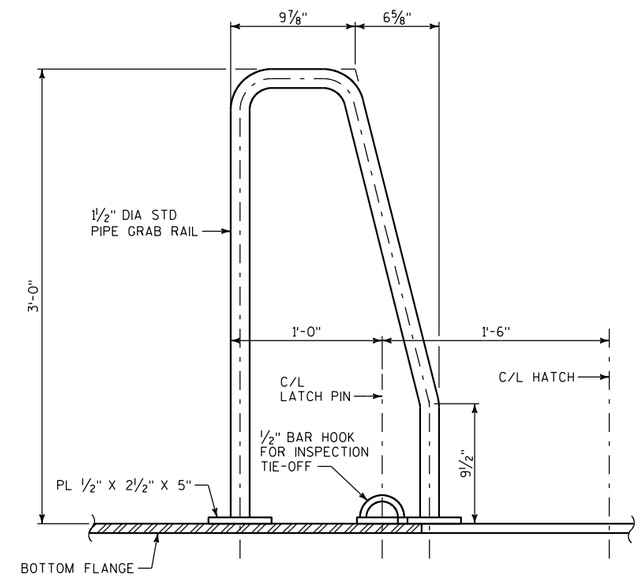

SECTION B-B

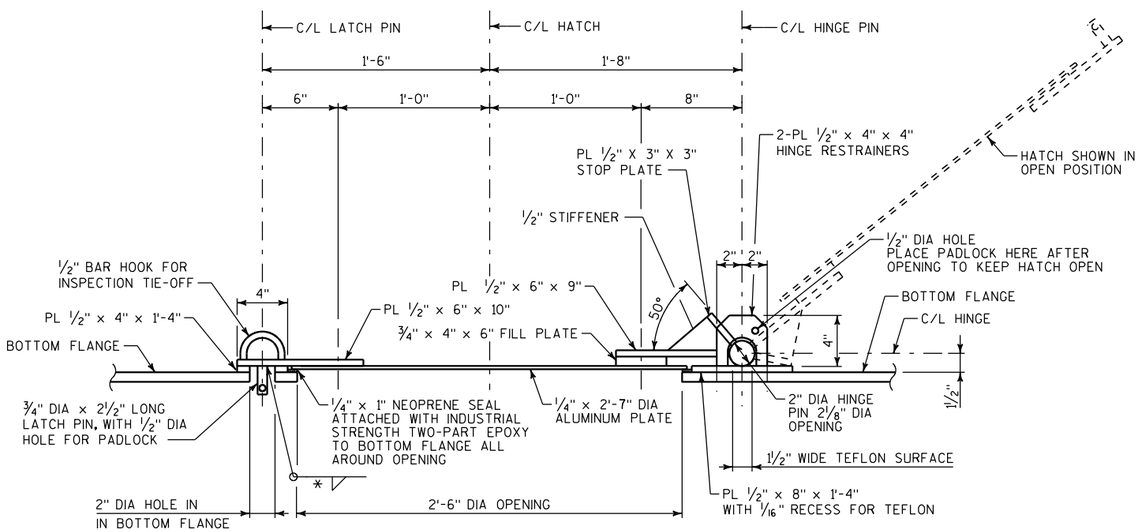

SECTION A-A

*SEE TABLE OF FILLET WELD SIZES ON GIRDER SECTION SHEET.

NOTES:

1. ALL BOLTS SHOWN ARE 5/8" DIAMETER ASTM A325 TYPE 1.
2. FOUR ACCESS HATCHES REQUIRED. SEE GIRDER PLAN AND ELEVATIONS SHEETS FOR HATCH LOCATIONS.
3. STEEL FOR HATCH IS ASTM A709 GRADE 50, EXCEPT THE HATCH PLATE SHALL BE MADE OF ALUMINUM PLATE CONFORMING TO ASTM B209, ALLOY 6061-T651 AND THE PIPE GRAB RAIL SHALL BE ASTM A53.
4. THE INTERIOR COMPONENTS OF THE HATCH INCLUDING THE PIPE GRAB RAIL SHALL BE PAINTED TO MATCH THE INTERIOR COLOR OF THE BOX GIRDER.
5. ALL EXTERIOR COMPONENTS OF THE HATCH AND THE ALUMINUM PLATE SHALL BE PAINTED TO MATCH THE EXTERIOR COLOR OF THE BOX GIRDER. THE CONTRACTOR SHALL FOLLOW THE COATING MANUFACTURER'S RECOMMENDATIONS FOR SURFACE PREPARATION AND PRIMING OF THE ALUMINUM PLATE.
6. ALL MATERIALS SHOWN ON THIS SHEET FOR THE ACCESS HATCH AND GRAB RAIL WILL BE PAID FOR AT THE UNIT BID FOR "STRUCTURAL STEEL HS".

NO.	DATE	REVISION	BY

STATE OF WISCONSIN
DEPARTMENT OF TRANSPORTATION

STRUCTURE B-40-855

DRAWN BY	GLM	PLANS CK'D.	WRT

ACCESS HATCH DETAILS

SHEET 44 OF 96

8

8

STATE PROJECT NUMBER

1060-33-80

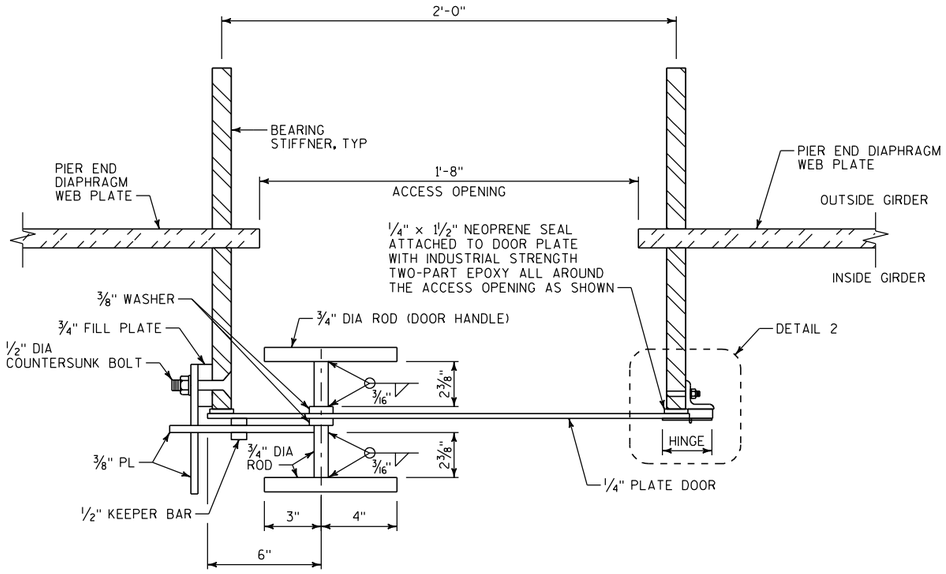

SECTION A-A

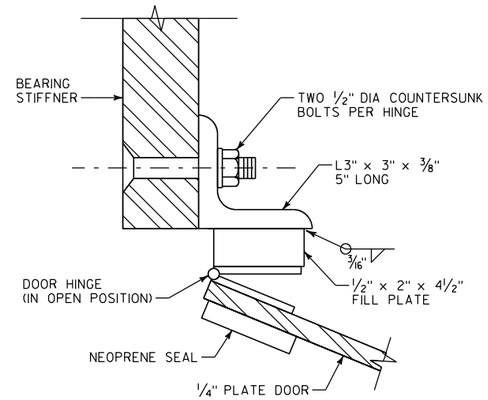

DETAIL 2

(WITH DOOR OPEN)

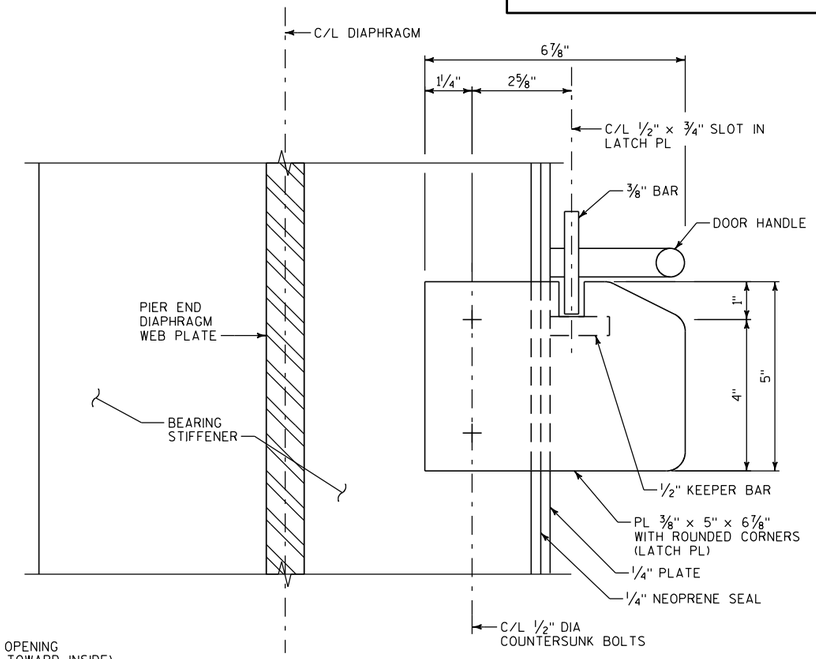

SECTION B-B

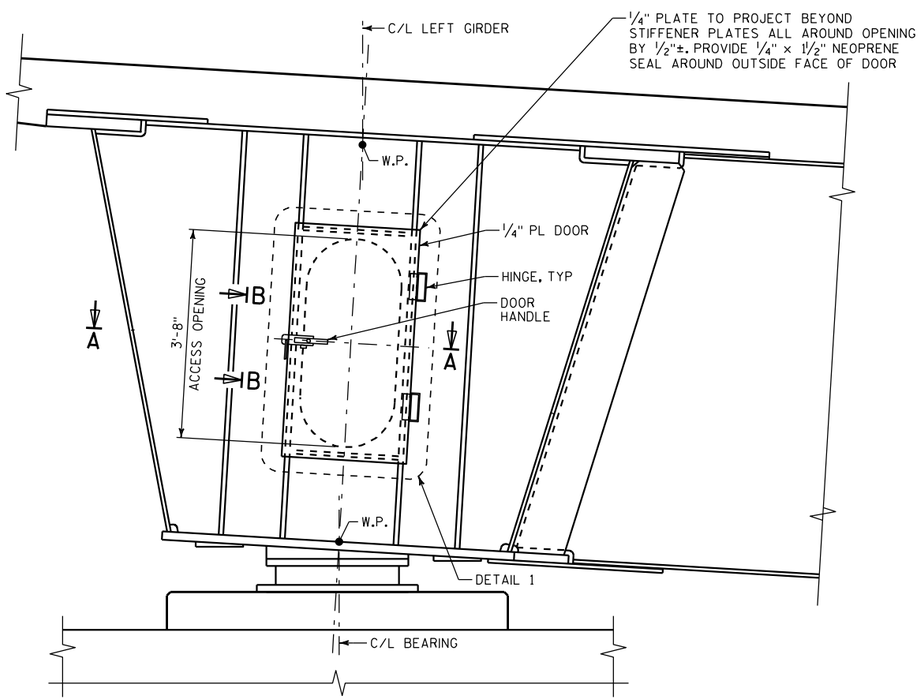

ELEVATION

LEFT GIRDER SHOWN, RIGHT GIRDER SIMILAR

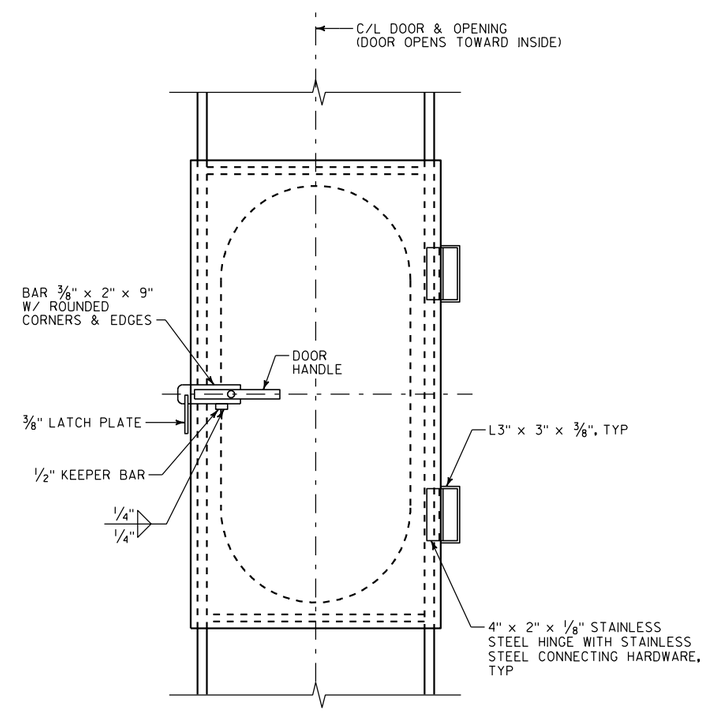

DETAIL 1

NO.	DATE	REVISION	BY

STATE OF WISCONSIN
DEPARTMENT OF TRANSPORTATION

STRUCTURE B-40-855

DRAWN BY GLM | PLANS CK'D. WRT

ACCESS DOOR DETAILS

SHEET 45 OF 96

8

8

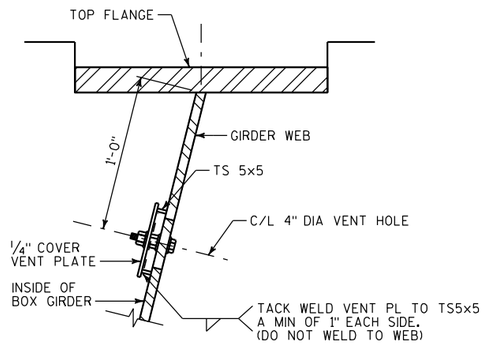

VENT HOLE LOCATION

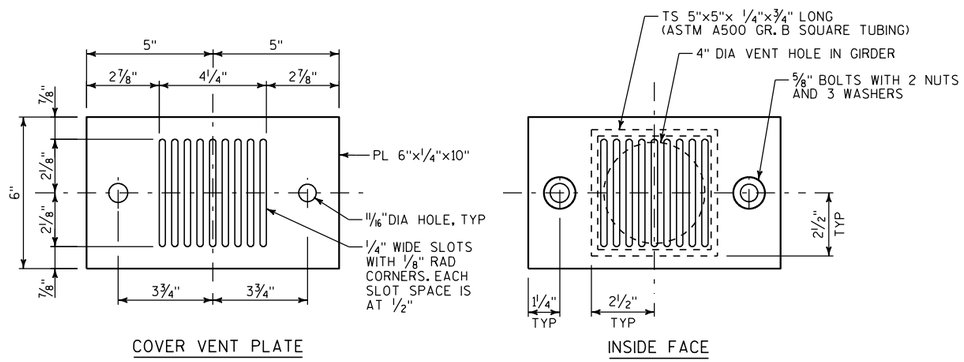

COVER VENT PLATE

INSIDE FACE

VENT HOLE COVER ASSEMBLY

NOT TO SCALE

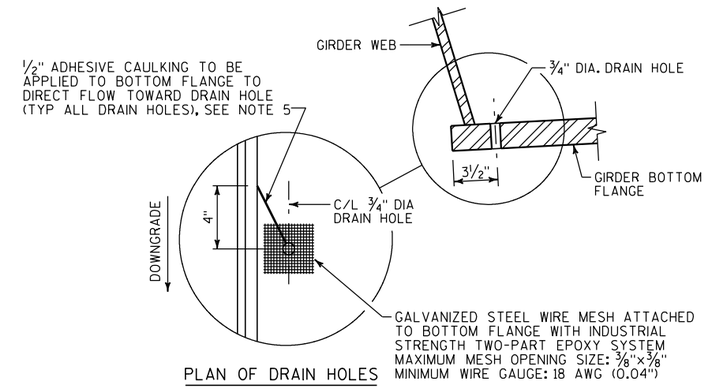

PLAN OF DRAIN HOLES

DRAIN HOLE DETAILS

NOT TO SCALE

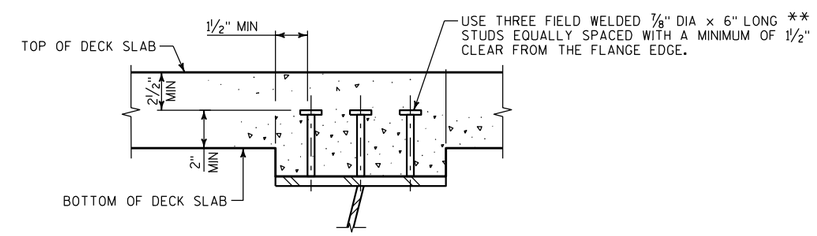

SHEAR CONNECTOR DETAIL

** USE DIFFERENT LENGTH STUDS IF 2 1/2" MIN. CLEARANCE OR 2" EXTENSION CRITERIA IS VIOLATED.

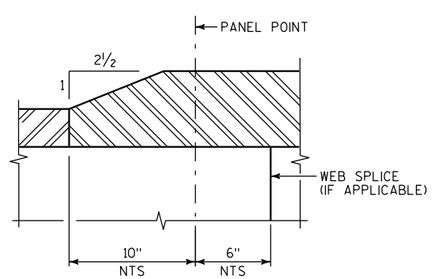

SHOP SPLICE DETAIL

NOTES

1. SEE GIRDER PLAN AND ELEVATION SHEETS FOR DRAIN AND VENT HOLE LOCATION.
2. LOCATE ALL VENT HOLES ON THE INTERIOR WEBS - I.E. THE RIGHT WEB OF THE LEFT GIRDER AND THE LEFT WEB OF THE RIGHT GIRDER.
3. VENT HOLE COVER ASSEMBLIES SHALL BE HOT-DIP GALVANIZED AFTER FABRICATION AND INSTALLED AFTER GIRDERS ARE PAINTED. PAYMENT FOR VENT HOLE COVER ASSEMBLIES IS INCLUDED WITH COST OF "STRUCTURAL STEEL HS".
4. LOCATE ALL DRAIN HOLES ON THE LOW SIDE OF THE GIRDER AS SHOWN.
5. COST OF ADHESIVE CAULKING AND WIRE MESH ATTACHMENT AT DRAIN HOLES IS INCLUDED IN THE COST OF "STRUCTURAL STEEL HS".

NO.	DATE	REVISION	BY

STATE OF WISCONSIN
DEPARTMENT OF TRANSPORTATION

STRUCTURE B-40-855

DRAWN BY GLM | PLANS CK'D. WRT

MISCELLANEOUS GIRDER DETAILS

SHEET 46 OF 96

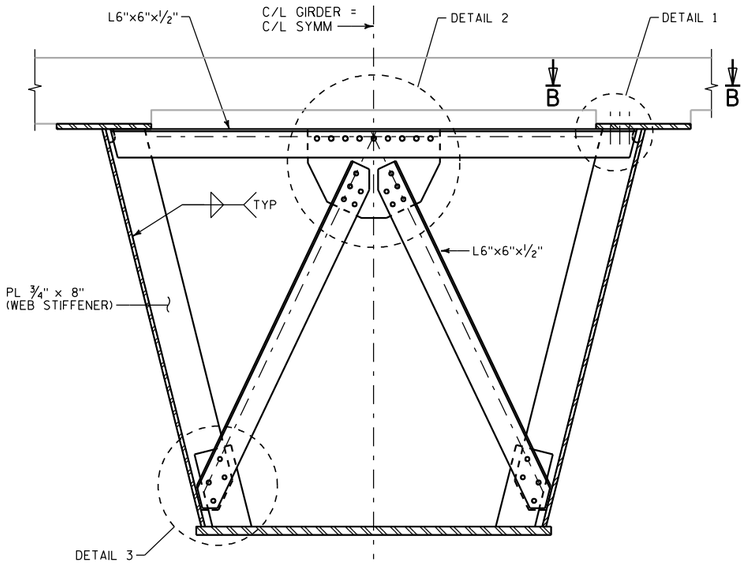

TYPICAL SECTION AT K-FRAME

FOR LOCATION OF K-FRAMES K1 AND K2
SEE GIRDER PLAN AND ELEVATION SHEETS

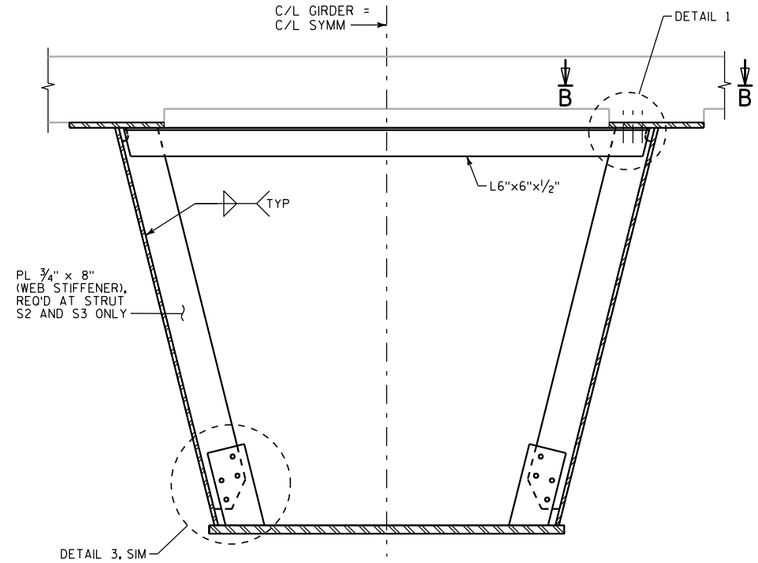

TYPICAL SECTION AT STRUT

FOR LOCATION OF STRUTS S1, S2, AND S3
SEE GIRDER PLAN AND ELEVATION SHEETS

KEY TO K-FRAME AND STRUT IDENTIFIERS		
ID	NO. OF BOLTS REQ'D AT DETAIL 1	WEB STIFFENERS REQUIRED
K1	3	YES
K2	6	YES
S1	3	NO
S2	6	YES
S3	3	YES

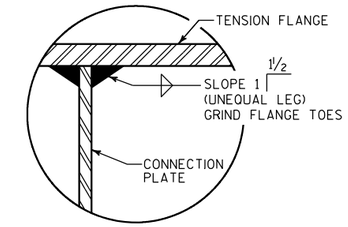

DETAIL 4

WEB STIFFENER DETAIL
AT TENSION FLANGE

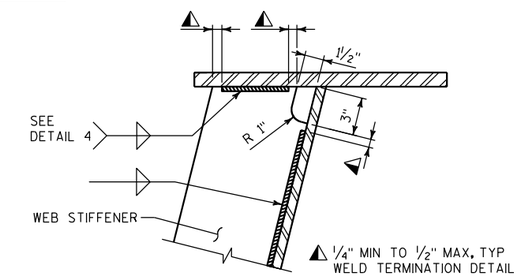

DETAIL 5

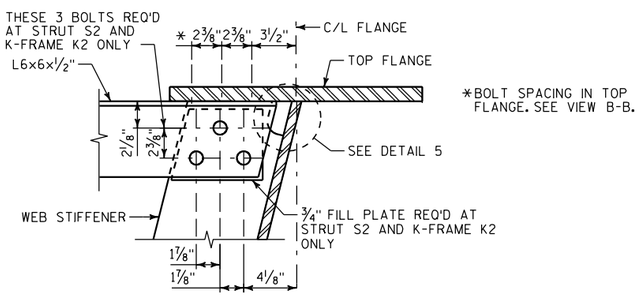

DETAIL 1

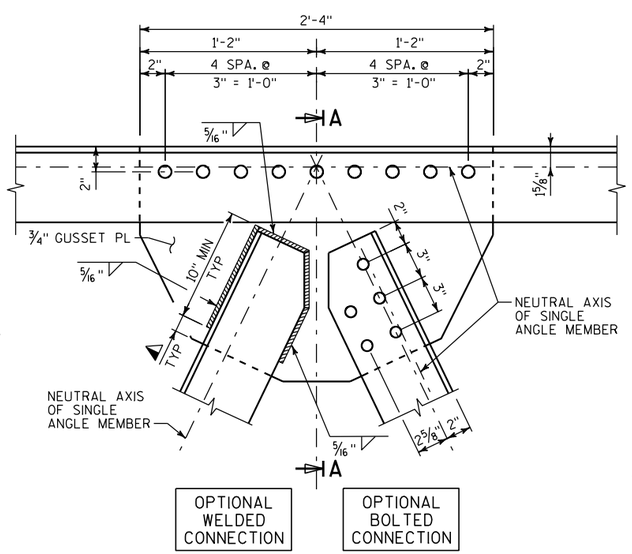

DETAIL 2

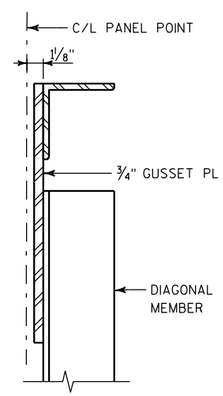

SECTION A-A

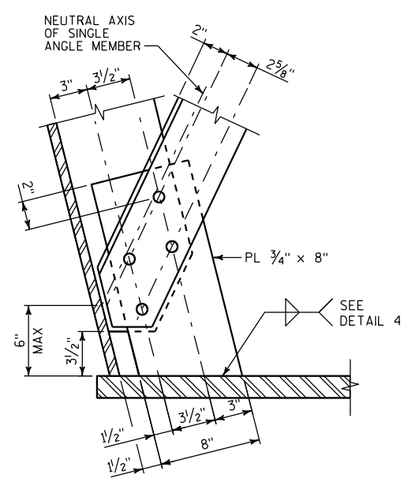

DETAIL 3

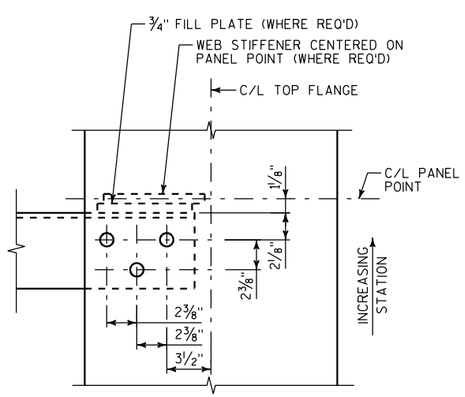

VIEW B-B

NOTES

1. ALL BOLTS IN K-FRAME OR STRUT CONNECTIONS ARE 7/8" DIAMETER ASTM A325 TYPE 1.
2. K-FRAMES AND STRUTS ARE ALIGNED NORMAL TO THE GIRDER BOTTOM FLANGE UNLESS NOTED OTHERWISE.
3. ALL DIAGONALS AT EACH SPECIFIC K-FRAME LOCATION SHALL USE THE SAME CONNECTION DETAIL, EITHER BOLTED OR WELDED.

NO.	DATE	REVISION	BY

STATE OF WISCONSIN
DEPARTMENT OF TRANSPORTATION

STRUCTURE B-40-855

DRAWN BY GLM | PLANS CK'D. WRT

K-FRAMES AND STRUTS

STATE PROJECT NUMBER
1060-33-80

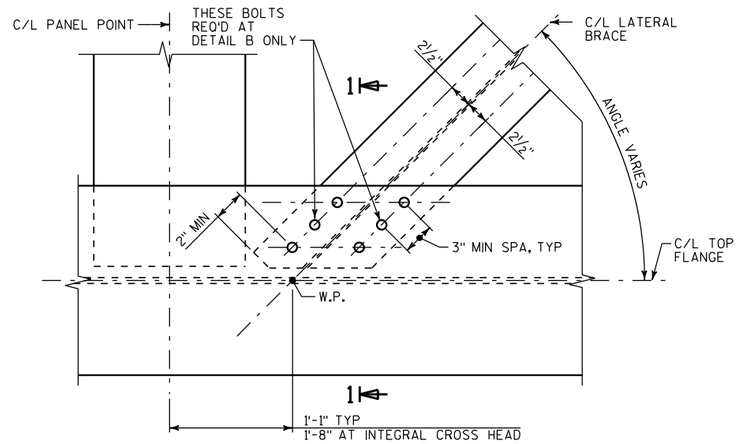

DETAIL A
4 BOLT CONNECTION

DETAIL B
6 BOLT CONNECTION

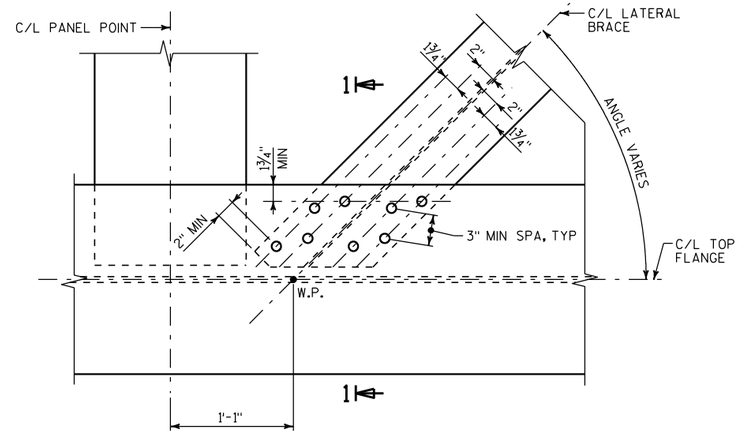

DETAIL C
8 BOLT CONNECTION

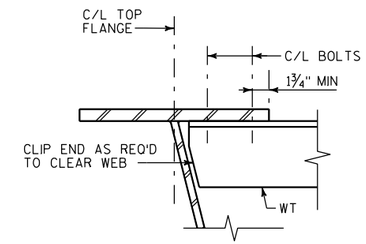

SECTION 1-1

SECTION MARKS

THE FIRST CHARACTER OF THE LATERAL BRACING INTENTIFIER SPECIFIES THE MEMBER SIZE AS FOLLOWS:

1 WT 7 × 30.5

2 WT 8 × 33.5

3 WT 8 × 38.5

THE SECOND CHARACTER OF THE LATERAL BRACING IDENTIFIER SPECIFIES THE END CONNECTION DETAIL AND RELATES DIRECTLY TO DETAILS A THRU D ON THIS SHEET.

NOTES:

1. ALL BOLTS CONNECTING LATERAL BRACING MEMBERS ARE 1" DIAMETER ASTM A325 TYPE 1.
2. ALL HOLES ARE STD. HOLES.
3. DETAILS ON THIS SHEET SHOW TYPICAL DIMENSIONS ONLY AND WILL HAVE TO BE MIRRORED OR REVERSED AS REQUIRED.
4. SEE GIRDER FRAMING PLANS FOR ORIENTATION OF EACH LATERAL BRACE.

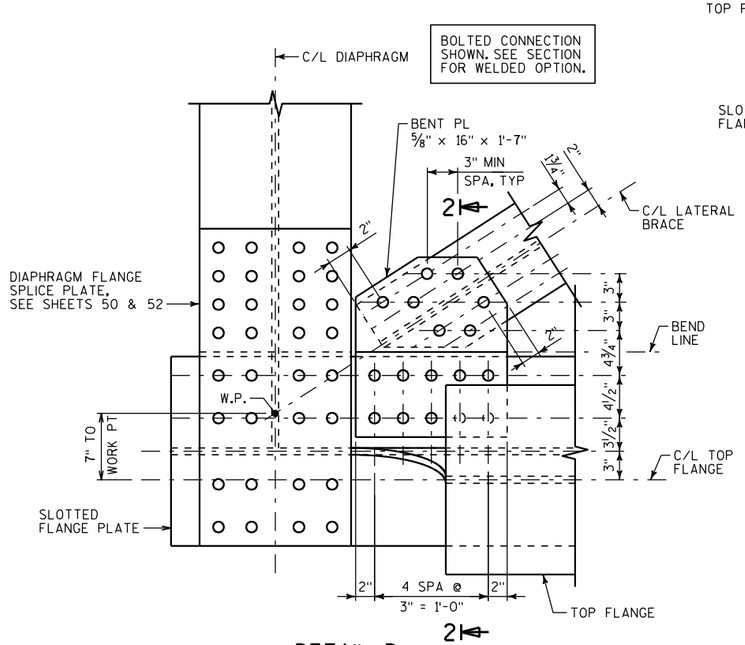

DETAIL D
AT ABUTMENT DIAPHRAGM OR PIER END DIAPHRAGM

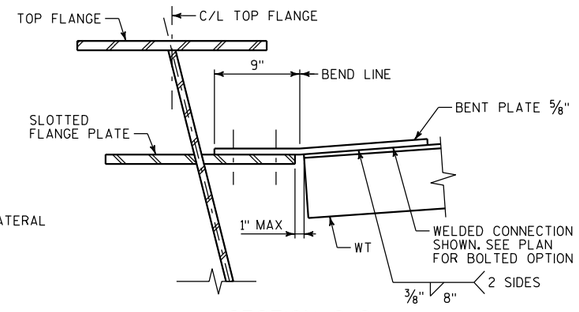

SECTION 2-2

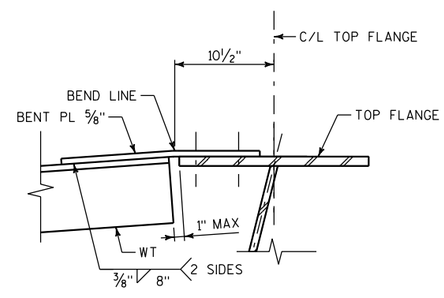

SECTION 3-3

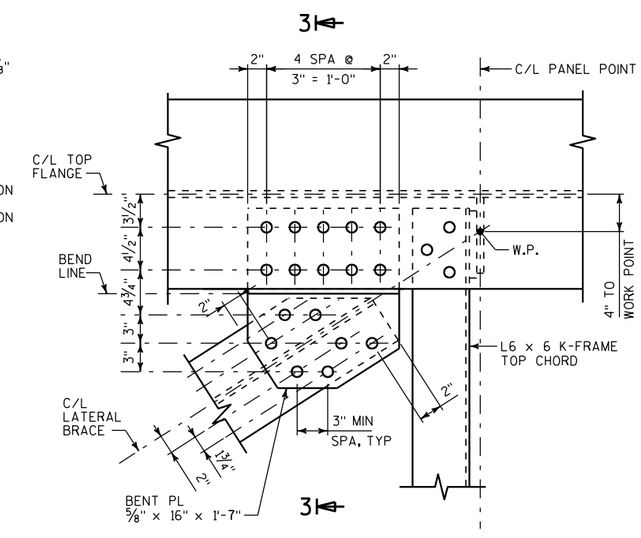

DETAIL D
AT FIRST K-FRAME

NO.	DATE	REVISION	BY

STATE OF WISCONSIN
DEPARTMENT OF TRANSPORTATION

STRUCTURE B-40-855

DRAWN BY GLM | PLANS CK'D. WRT

LATERAL BRACING DETAILS

SHEET 48 OF 96

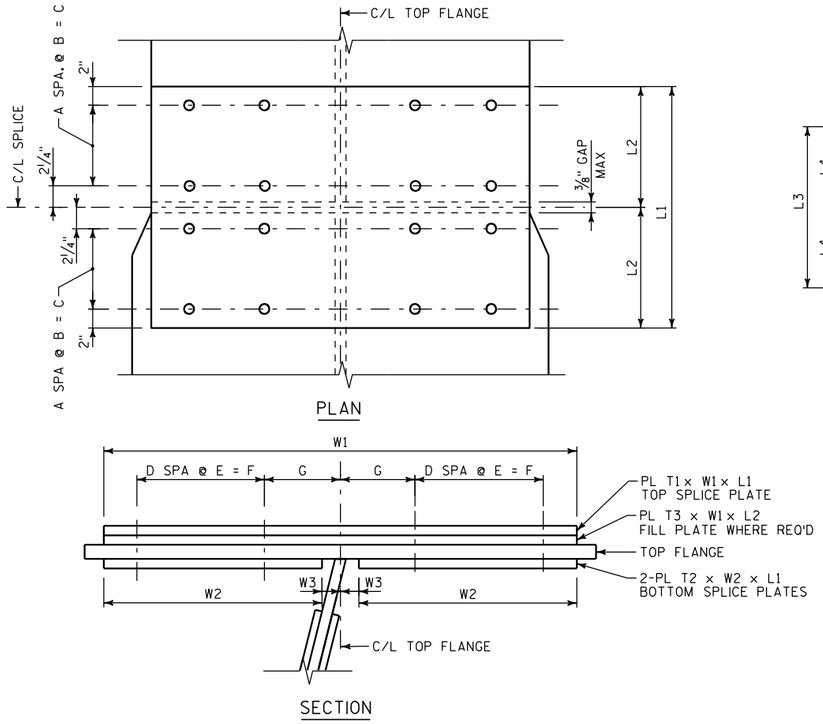

TOP FLANGE SPLICE

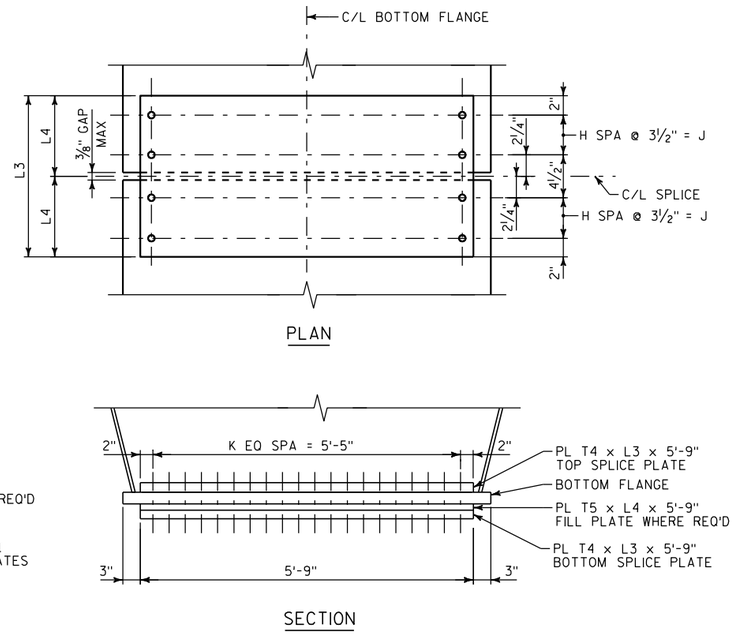

BOTTOM FLANGE SPLICE

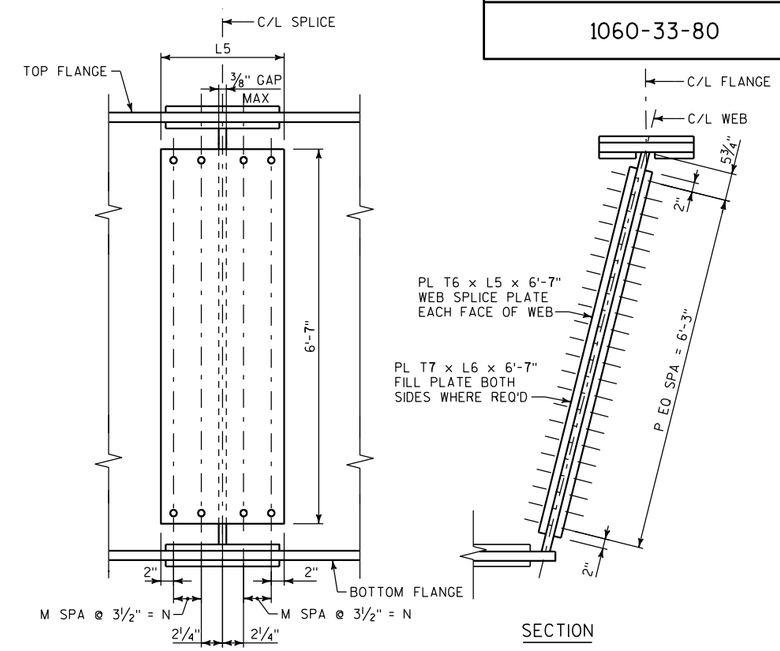

WEB SPLICE

FLANGE SPLICE TABLE

FIELD SPLICE NUMBER	GIRDER	TOP FLANGE SPLICE															BOTTOM FLANGE SPLICE							WEB SPLICE						
		T1	T2	T3	L1	L2	W1	W2	W3	A	B	C	D	E	F	G	T4	T5	L3	L4	H	J	K	T6	T7	L5	L6	M	N	P
1	LT	½"	½"	-	1'-10½"	11¼"	1'-8"	9"	1"	2	3½"	7"	1	4½"	4½"	3¼"	⅝"	½"	1'-10½"	11¼"	2	7"	21	½"	-	1'-10½"	11¼"	2	7"	16
	RT	½"	½"	-	1'-10½"	11¼"	1'-8"	9"	1"	2	3½"	7"	1	4½"	4½"	3¼"	⅝"	¼"	1'-10½"	11¼"	2	7"	21	½"	-	1'-10½"	11¼"	2	7"	16
2	LT	⅝"	⅝"	¼"	2'-5½"	1'-2¾"	1'-8"	9"	1"	3	3½"	10½"	1	4½"	4½"	3¼"	⅝"	¾"	1'-10½"	11¼"	2	7"	21	½"	-	1'-10½"	11¼"	2	7"	16
	RT	½"	½"	-	1'-10½"	11¼"	1'-8"	9"	1"	2	3½"	7"	1	4½"	4½"	3¼"	½"	⅝"	1'-10½"	11¼"	2	7"	21	½"	-	1'-10½"	11¼"	2	7"	16
3	LT	⅝"	⅝"	¼"	2'-5½"	1'-2¾"	1'-8"	9"	1"	3	3½"	10½"	1	4½"	4½"	3¼"	⅝"	¾"	1'-10½"	11¼"	2	7"	21	½"	-	1'-10½"	11¼"	2	7"	16
	RT	½"	½"	-	1'-10½"	11¼"	1'-8"	9"	1"	2	3½"	7"	1	4½"	4½"	3¼"	½"	⅝"	1'-10½"	11¼"	2	7"	21	½"	-	1'-10½"	11¼"	2	7"	16
4	LT	½"	½"	-	1'-10½"	11¼"	1'-8"	9"	1"	2	3½"	7"	1	4½"	4½"	3¼"	⅝"	½"	1'-10½"	11¼"	2	7"	21	½"	-	1'-10½"	11¼"	2	7"	16
	RT	½"	½"	-	1'-10½"	11¼"	1'-8"	9"	1"	2	3½"	7"	1	4½"	4½"	3¼"	½"	½"	1'-10½"	11¼"	2	7"	21	½"	-	1'-10½"	11¼"	2	7"	16
5	LT	½"	½"	-	1'-10½"	11¼"	1'-8"	9"	1"	2	3½"	7"	1	4½"	4½"	3¼"	⅝"	¼"	1'-10½"	11¼"	2	7"	21	½"	-	1'-10½"	11¼"	2	7"	16
	RT	½"	½"	-	1'-10½"	11¼"	1'-8"	9"	1"	2	3½"	7"	1	4½"	4½"	3¼"	½"	¼"	1'-10½"	11¼"	2	7"	21	½"	-	1'-10½"	11¼"	2	7"	16
6	LT	½"	½"	-	1'-10½"	11¼"	1'-8"	9"	1"	2	3½"	7"	1	4½"	4½"	3¼"	½"	⅝"	1'-10½"	11¼"	2	7"	21	½"	-	1'-10½"	11¼"	2	7"	16
	RT	½"	½"	-	1'-10½"	11¼"	1'-8"	9"	1"	2	3½"	7"	1	4½"	4½"	3¼"	½"	½"	1'-10½"	11¼"	2	7"	21	½"	-	1'-10½"	11¼"	2	7"	16
7	LT	⅝"	⅝"	¼"	2'-5½"	1'-2¾"	1'-8"	9"	1"	3	3½"	10½"	1	4½"	4½"	3¼"	⅝"	⅝"	1'-10½"	11¼"	2	7"	21	½"	-	1'-10½"	11¼"	2	7"	16
	RT	½"	½"	-	1'-10½"	11¼"	1'-8"	9"	1"	2	3½"	7"	1	4½"	4½"	3¼"	½"	¾"	1'-10½"	11¼"	2	7"	21	½"	-	1'-10½"	11¼"	2	7"	16
8	LT	⅝"	⅝"	¼"	2'-5½"	1'-2¾"	1'-8"	9"	1"	3	3½"	10½"	1	4½"	4½"	3¼"	⅝"	¼"	1'-10½"	11¼"	2	7"	21	½"	-	1'-10½"	11¼"	2	7"	16
	RT	½"	½"	-	1'-10½"	11¼"	1'-8"	9"	1"	2	3½"	7"	1	4½"	4½"	3¼"	⅝"	¼"	1'-10½"	11¼"	2	7"	21	½"	-	1'-10½"	11¼"	2	7"	16
9	LT	1¼"	1¼"	-	4'-9½"	2'-4¾"	1'-8"	9"	1"	7	3½"	2'-0½"	1	4½"	4½"	3¼"	1"	¼"	2'-5½"	1'-2¾"	3	10½"	21	⅝"	-	1'-10½"	11¼"	2	7"	18
	RT	1¼"	1¼"	-	4'-9½"	2'-4¾"	1'-8"	9"	1"	7	3½"	2'-0½"	1	4½"	4½"	3¼"	1"	¼"	2'-5½"	1'-2¾"	3	10½"	21	⅝"	-	1'-10½"	11¼"	2	7"	18
10	LT	1¼"	1⅜"	-	4'-2½"	2'-1¼"	2'-0"	11"	1"	6	3½"	1'-9"	2	3½"	7"	3¼"	1"	¼"	2'-5½"	1'-2¾"	3	10½"	21	½"	-	1'-10½"	11¼"	2	7"	18
	RT	1¼"	1⅜"	-	4'-2½"	2'-1¼"	2'-0"	11"	1"	6	3½"	1'-9"	2	3½"	7"	3¼"	1"	¼"	2'-5½"	1'-2¾"	3	10½"	21	½"	-	1'-10½"	11¼"	2	7"	18
11	LT	½"	½"	-	1'-10½"	11¼"	1'-8"	9"	1"	2	3½"	7"	1	4½"	4½"	3¼"	½"	1"	1'-10½"	11¼"	2	7"	21	½"	-	1'-10½"	11¼"	2	7"	16
	RT	½"	½"	-	1'-10½"	11¼"	1'-8"	9"	1"	2	3½"	7"	1	4½"	4½"	3¼"	½"	⅞"	1'-10½"	11¼"	2	7"	21	½"	-	1'-10½"	11¼"	2	7"	16
12	LT	½"	½"	-	1'-10½"	11¼"	1'-8"	9"	1"	2	3½"	7"	1	4½"	4½"	3¼"	½"	¾"	1'-10½"	11¼"	2	7"	21	½"	-	1'-10½"	11¼"	2	7"	16
	RT	½"	½"	-	1'-10½"	11¼"	1'-8"	9"	1"	2	3½"	7"	1	4½"	4½"	3¼"	½"	⅝"	1'-10½"	11¼"	2	7"	21	½"	-	1'-10½"	11¼"	2	7"	16
13	LT	⅝"	⅝"	-	2'-5½"	1'-2¾"	1'-8"	9"	1"	3	3½"	10½"	1	4½"	4½"	3¼"	⅝"	½"	1'-10½"	11¼"	2	7"	21	½"	-	1'-10½"	11¼"	2	7"	16
	RT	½"	½"	-	1'-10½"	11¼"	1'-8"	9"	1"	2	3½"	7"	1	4½"	4½"	3¼"	⅝"	½"	1'-10½"	11¼"	2	7"	21	½"	-	1'-10½"	11¼"	2	7"	16

FIELD SPLICE NOTES

1. ALL BOLTS SHOWN FOR FIELD SPLICES ARE 1" DIAMETER ASTM A325 TYPE 1.
2. ALL HOLES SHALL BE STANDARD DIAMETER - NO OVERSIZE HOLES.
3. ALL CONNECTIONS SHALL BE FABRICATED AND ASSEMBLED AS SLIP-CRITICAL CONNECTIONS.
4. ALL SPLICE PLATES SHALL BE GRADE HPS 50W.

NO.	DATE	REVISION	BY

STATE OF WISCONSIN
DEPARTMENT OF TRANSPORTATION

STRUCTURE B-40-855

DRAWN BY GLM | PLANS CK'D. WRT

FIELD SPLICE DETAILS

STATE PROJECT NUMBER
1060-33-80

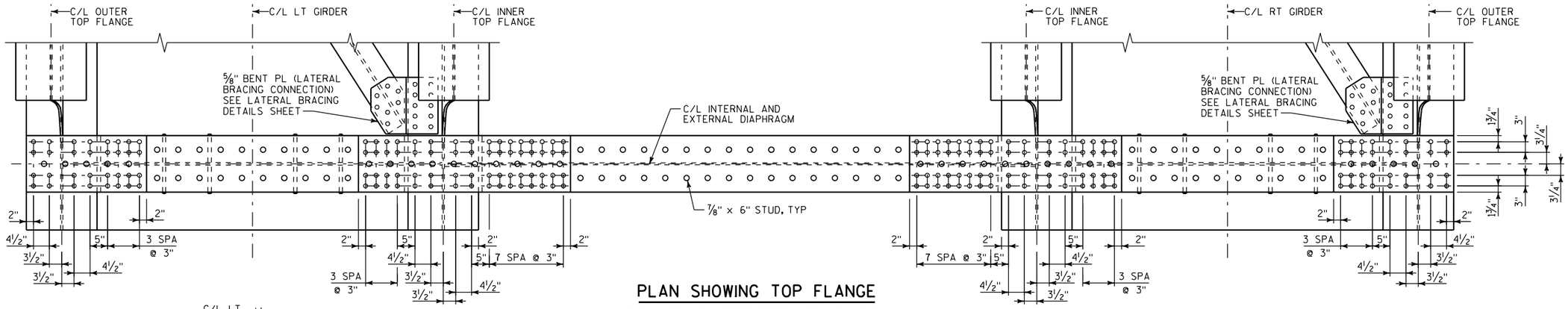

PLAN SHOWING TOP FLANGE

WEST ABUTMENT SHOWN, SOUTH ABUTMENT SIMILAR
VIEWED NORMAL TO DECK SURFACE

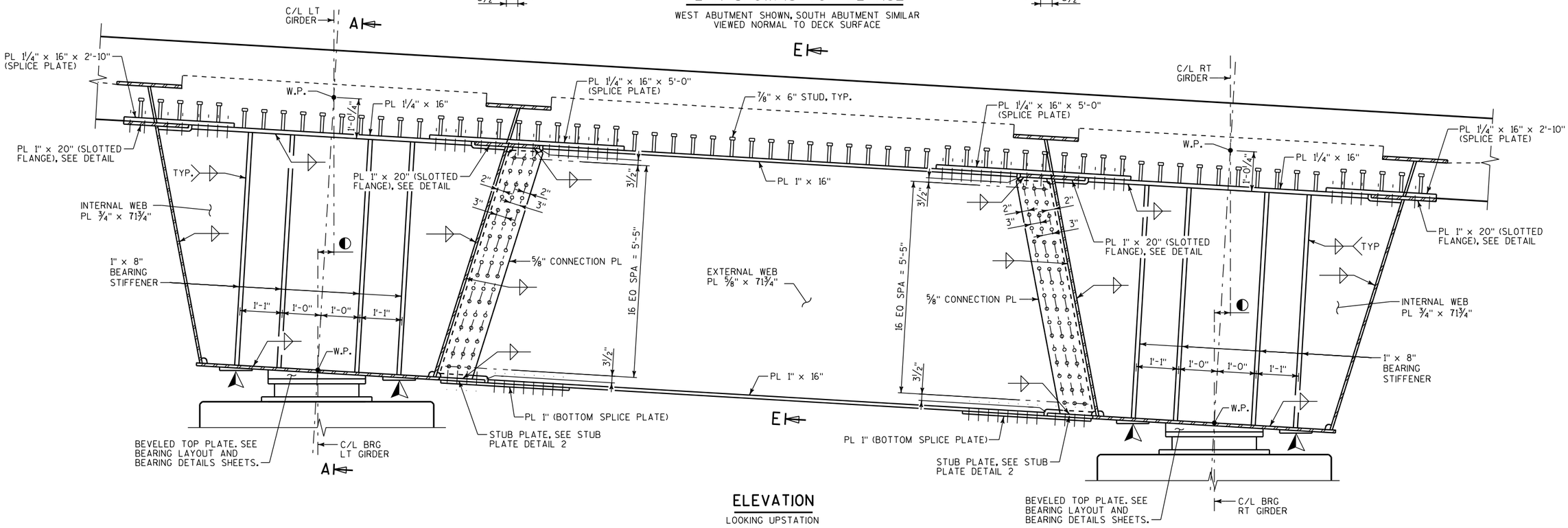

ELEVATION

LOOKING UPSTATION

NOTES

1. DIAPHRAGM WEB IS ALIGNED NORMAL TO TUB GIRDER BOTTOM FLANGE.
2. ALL BOLTS IN DIAPHRAGMS ARE 1" DIAMETER.
3. FOR DETAILS OF WELD TERMINATIONS AND STANDARD CLIPS, SEE DIAPHRAGM DETAILS (2 OF 2) SHEET.
4. SHEAR STUD CONNECTORS SHALL BE PROVIDED ON THE TOP FLANGE AND TOP FLANGE SPLICE PLATE AT ABOUT 6" CENTERS. PROVIDE TWO STUDS PER ROW ON THE TOP FLANGE AND ONE STUD PER ROW CENTERED ON THE TOP FLANGE SPLICE PLATES.
5. FOR SECTIONS, SEE SHEET 54.

LEGEND

SUGGESTED JACKING PAD AND STIFFENER LOCATION FOR FUTURE BEARING REPLACEMENT. SEE JACKING PROVISIONS SHEET FOR DETAILS.

3 15/16" W. ABUT
5" S. ABUT

NO.	DATE	REVISION	BY

STATE OF WISCONSIN
DEPARTMENT OF TRANSPORTATION

STRUCTURE B-40-855

DRAWN BY GLM | PLANS CK'D. WRT

ABUTMENT DIAPHRAGM

SHEET 50 OF 96

8

STATE PROJECT NUMBER
1060-33-80

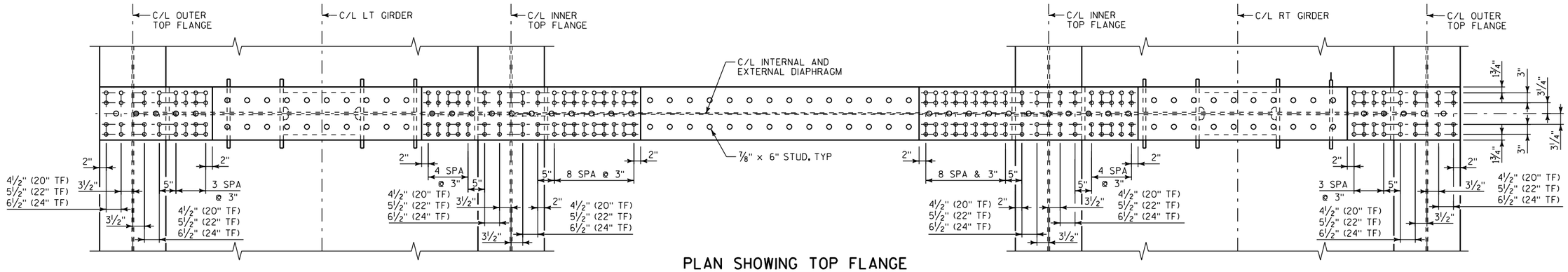

PLAN SHOWING TOP FLANGE

PIER 1 DIAPHRAGM SHOWN, OTHER DIAPHRAGMS SIMILAR
VIEWED NORMAL TO DECK SURFACE

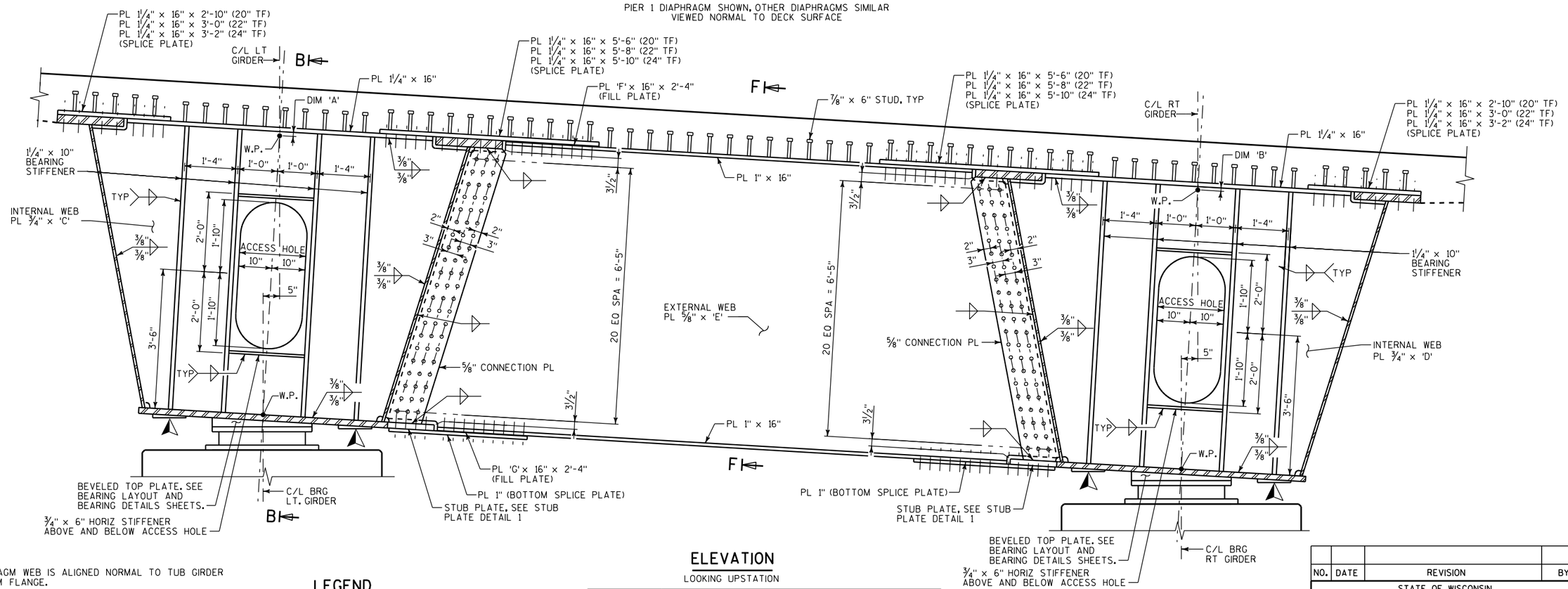

ELEVATION

LOOKING UPSTATION

DIAPHRAGM LOCATION	DIMENSIONS						
	'A'*	'B'*	'C'	'D'	'E'	'F'	'G'
PIER SW01	3/4"	3/4"	84 3/4"	84 3/4"	86"	0"	1/4"
PIER SW02	3/4"	3/4"	84 3/4"	84 3/4"	86"	0"	1/4"
PIER SW03	-1/4"	-1/4"	83 3/4"	83 3/4"	84 1/4"	0"	1/4"
PIER SW05	0"	-1/4"	84"	83 3/4"	84 1/2"	1/4"	0"
PIER SW07	3/4"	3/4"	84 3/4"	84 3/4"	86"	0"	1/4"

* A NEGATIVE DIMENSION IN DIMENSION 'A' OR 'B' REPRESENTS A DIMENSION TO THE TOP FLANGE WORKING POINT THAT FALLS WITHIN THE DIAPHRAGM TOP FLANGE.

NOTES

1. DIAPHRAGM WEB IS ALIGNED NORMAL TO TUB GIRDER BOTTOM FLANGE.
2. ALL BOLTS IN DIAPHRAGMS ARE 1" DIAMETER.
3. FOR DETAILS OF WELD TERMINATIONS AND STANDARD CLIPS, SEE DIAPHRAGM DETAILS (2 OF 2) SHEET.
4. SHEAR STUD CONNECTORS SHALL BE PROVIDED ON THE TOP FLANGE AND TOP FLANGE SPLICE PLATE AT ABOUT 6" CENTERS. PROVIDE TWO STUDS PER ROW ON THE TOP FLANGE AND ONE STUD PER ROW CENTERED ON THE TOP FLANGE SPLICE PLATES.
5. FOR SECTIONS SEE SHEET 54.

LEGEND

SUGGESTED JACKING PAD AND STIFFENER LOCATION FOR FUTURE BEARING REPLACEMENT. SEE JACKING PROVISIONS SHEET FOR DETAILS.

NO.	DATE	REVISION	BY

STATE OF WISCONSIN
DEPARTMENT OF TRANSPORTATION

STRUCTURE B-40-855

DRAWN BY GLM | PLANS CK'D. WRT

TYPICAL PIER DIAPHRAGM

SHEET 51 OF 96

8

FILE NAME : W:\Cadd\Final\10603380_Z1\Structs\B-40-855\cds\cds Mandatory\B855_080523_ss.dgn PLOT DATE : 02-MAY-2014 12:03 PLOT BY : MSCGLM PLOT NAME : B855_080523_ss PLOT SCALE : 2.666667:1

STATE PROJECT NUMBER
1060-33-80

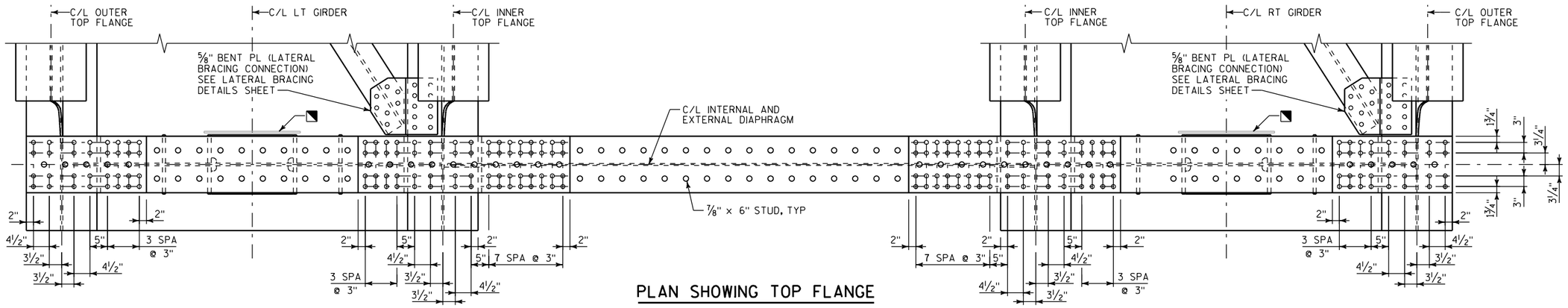

PLAN SHOWING TOP FLANGE

UNIT 2 DIAPHRAGM SHOWN, UNIT 1 DIAPHRAGM SIMILAR
VIEWED NORMAL TO DECK SURFACE

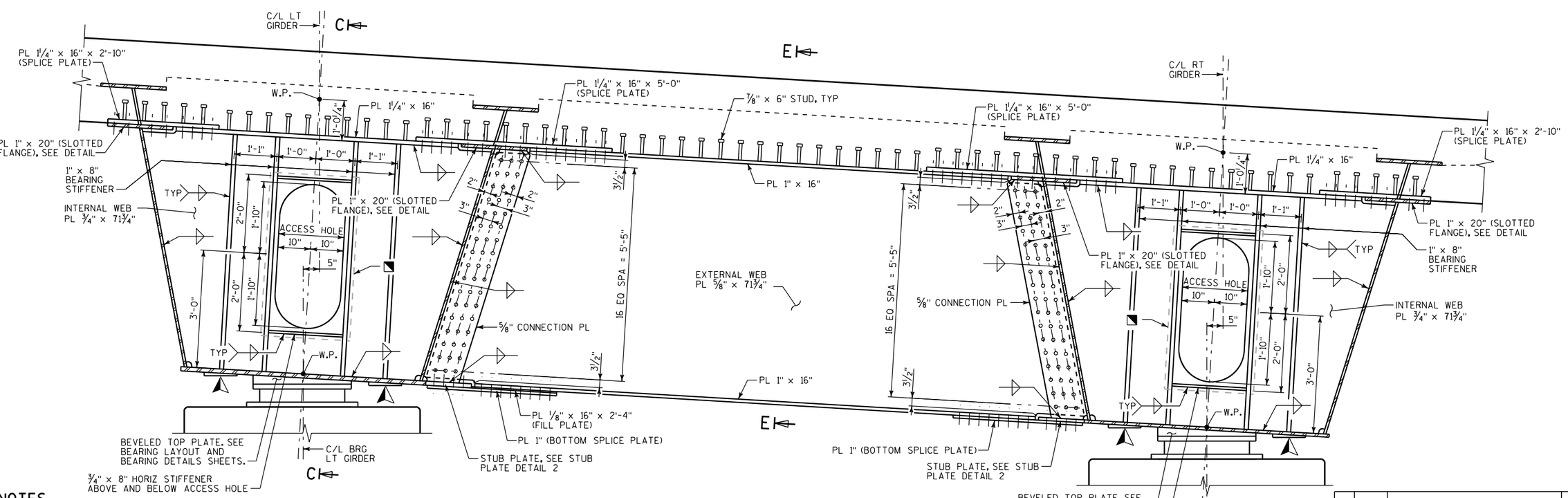

ELEVATION

LOOKING UPSTATION

NOTES

1. DIAPHRAGM WEB IS ALIGNED NORMAL TO TUB GIRDER BOTTOM FLANGE.
2. ALL BOLTS IN DIAPHRAGMS ARE 1" DIAMETER.
3. FOR DETAILS OF WELD TERMINATIONS AND STANDARD CLIPS, SEE DIAPHRAGM DETAILS (2 OF 2) SHEET.
4. SHEAR STUD CONNECTORS SHALL BE PROVIDED ON THE TOP FLANGE AND TOP FLANGE SPLICE PLATE AT ABOUT 6" CENTERS. PROVIDE TWO STUDS PER ROW ON THE TOP FLANGE AND ONE STUD PER ROW CENTERED ON THE TOP FLANGE SPLICE PLATES.
5. FOR SECTIONS, SEE SHEET 54.

LEGEND

SUGGESTED JACKING PAD AND STIFFENER LOCATION FOR FUTURE BEARING REPLACEMENT. SEE JACKING PROVISIONS SHEET FOR DETAILS.

OUTLINE OF ACCESS DOOR. SEE ACCESS DOOR DETAILS SHEET. PLACE ACCESS DOOR ON THE INTERIOR SIDE OF THE INTERNAL DIAPHRAGM.

NO.	DATE	REVISION	BY

STATE OF WISCONSIN
DEPARTMENT OF TRANSPORTATION

STRUCTURE B-40-855

DRAWN BY	GLM	PLANS CK'D.	WRT

PIER END DIAPHRAGM

SHEET 52 OF 96

STATE PROJECT NUMBER
1060-33-80

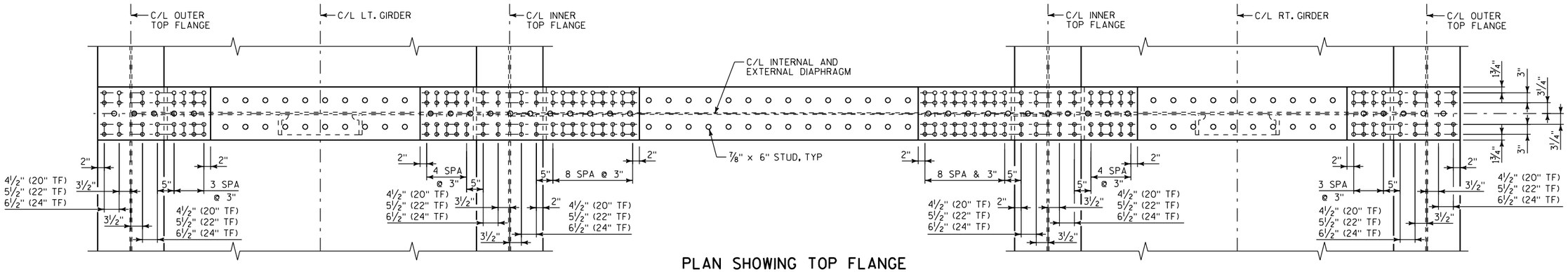

PLAN SHOWING TOP FLANGE

INTERMEDIATE DIAPHRAGM 02 SHOWN, OTHER DIAPHRAGMS SIMILAR
VIEWED NORMAL TO DECK SURFACE

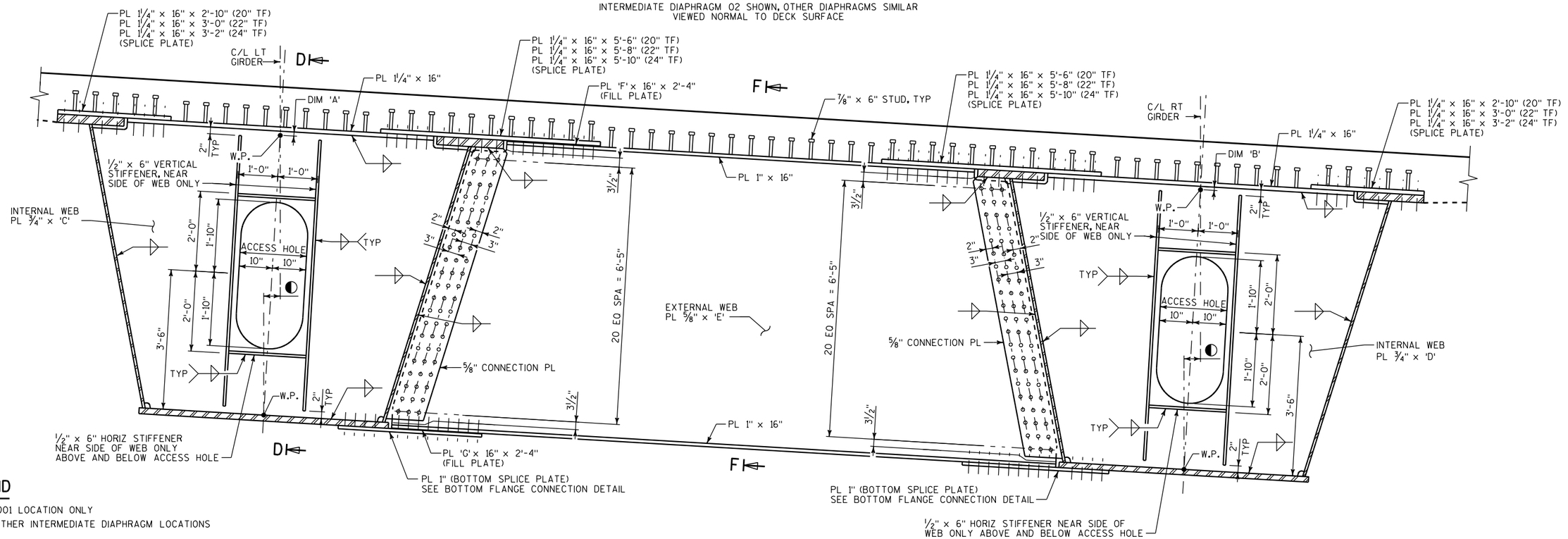

ELEVATION

LOOKING UPSTATION

LEGEND

◐ 4 13/16" ID01 LOCATION ONLY
5" OTHER INTERMEDIATE DIAPHRAGM LOCATIONS

NOTES

1. DIAPHRAGM WEB IS ALIGNED NORMAL TO TUB GIRDER BOTTOM FLANGE.
2. ALL BOLTS IN DIAPHRAGMS ARE 1" DIAMETER.
3. FOR DETAILS OF WELD TERMINATIONS AND STANDARD CLIPS, SEE DIAPHRAGM DETAILS (2 OF 2) SHEET.
4. SHEAR STUD CONNECTORS SHALL BE PROVIDED ON THE TOP FLANGE AND TOP FLANGE SPLICE PLATE AT ABOUT 6" CENTERS. PROVIDE TWO STUDS PER ROW ON THE TOP FLANGE AND ONE STUD PER ROW CENTERED ON THE TOP FLANGE SPLICE PLATES.
5. FOR SECTIONS, SEE SHEET 54.

DIAPHRAGM LOCATION	DIMENSIONS							DIAPHRAGM LOCATION	DIMENSIONS						
	'A'*	'B'*	'C'	'D'	'E'	'F'	'G'		'A'*	'B'*	'C'	'D'	'E'	'F'	'G'
ID01, ID16	-1/4"	-1/4"	83 3/4"	83 3/4"	83 3/4"	0"	0"	ID08, ID09	-1/4"	-1/4"	83 3/4"	83 3/4"	83 3/4"	0"	1/8"
ID02	-1/4"	-1/4"	83 3/4"	83 3/4"	84 1/2"	0"	1/4"	ID10, ID11	0"	-1/4"	84"	83 3/4"	84 1/2"	1/4"	0"
ID03, ID04	0"	-1/4"	84"	83 3/4"	83 7/8"	1/4"	1/8"	ID12	-1/4"	-1/4"	83 3/4"	83 3/4"	84 3/4"	0"	1/4"
ID05	-1/4"	-1/4"	83 3/4"	83 3/4"	84 1/2"	0"	1/4"	ID13, ID14	-1/4"	-1/4"	83 3/4"	83 3/4"	83 7/8"	0"	1/8"
ID06, ID07	-1/4"	-1/4"	83 3/4"	83 3/4"	84 1/4"	0"	1/4"	ID15	-1/4"	-1/4"	83 3/4"	83 3/4"	84 3/4"	0"	0"

* A NEGATIVE DIMENSION IN DIMENSION 'A' OR 'B' REPRESENTS A DIMENSION TO THE TOP FLANGE WORKING POINT THAT FALLS WITHIN THE DIAPHRAGM TOP FLANGE.

NO.	DATE	REVISION	BY

STATE OF WISCONSIN
DEPARTMENT OF TRANSPORTATION

STRUCTURE B-40-855

DRAWN BY GLM | PLANS CK'D. WRT

INTERMEDIATE DIAPHRAGM

SHEET 53 OF 96

STATE PROJECT NUMBER
1060-33-80

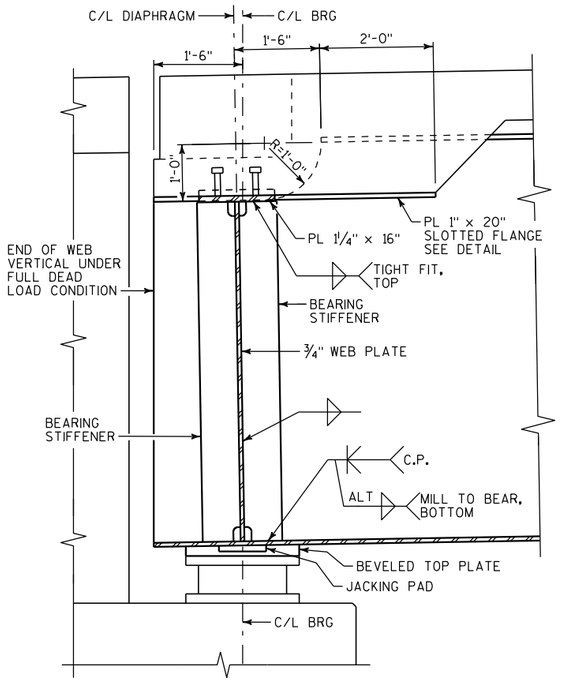

SECTION A-A

INTERNAL DIAPHRAGM AT ABUTMENT DIAPHRAGM

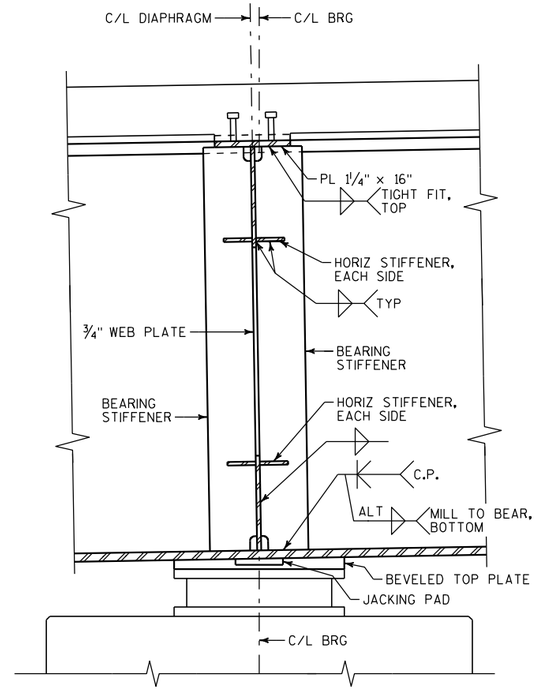

SECTION B-B

INTERNAL DIAPHRAGM AT TYPICAL PIER DIAPHRAGM

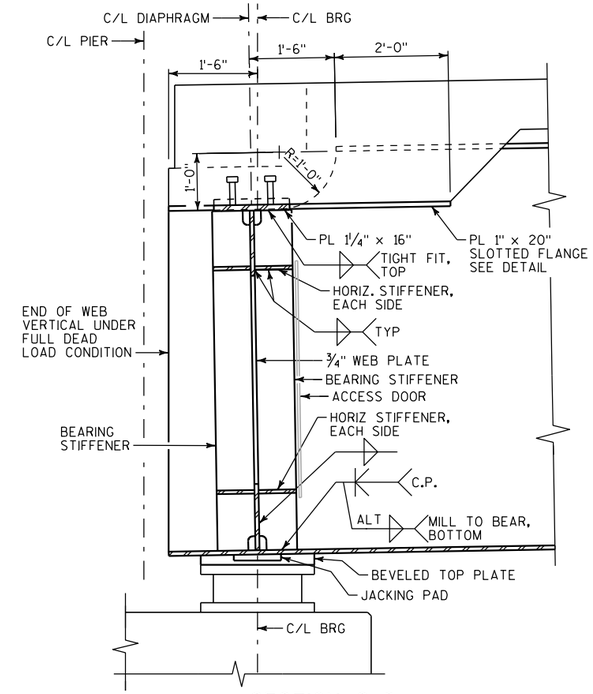

SECTION C-C

INTERNAL DIAPHRAGM AT PIER END DIAPHRAGM

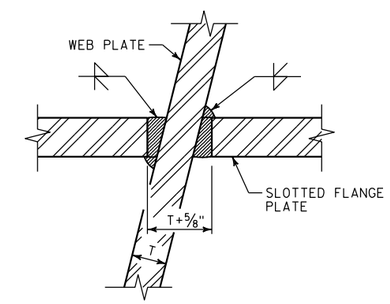

SLOTTED FLANGE DETAIL

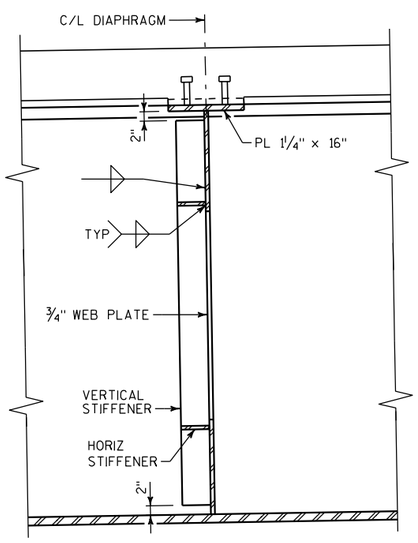

SECTION D-D

INTERNAL DIAPHRAGM AT INTERMEDIATE DIAPHRAGM

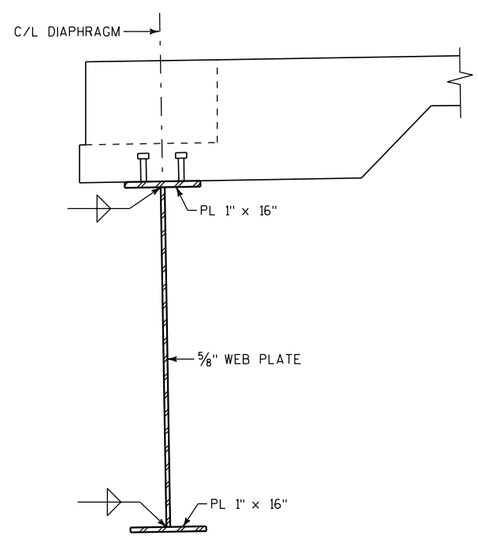

SECTION E-E

EXTERNAL DIAPHRAGM AT ABUTMENT DIAPHRAGM AND PIER END DIAPHRAGM

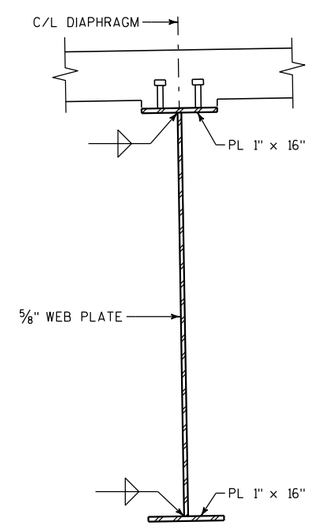

SECTION F-F

EXTERNAL DIAPHRAGM AT TYPICAL PIER DIAPHRAGM AND INTERMEDIATE DIAPHRAGM

NOTES

1. DIAPHRAGM WEB IS ALIGNED NORMAL TO TUB GIRDER BOTTOM FLANGE.
2. ALL BOLTS IN DIAPHRAGMS ARE 1" DIAMETER.
3. FOR DETAILS OF WELD TERMINATIONS AND STANDARD CLIPS, SEE DIAPHRAGM DETAILS (2 OF 2) SHEET.
4. LATERAL BRACING CONNECTIONS ARE NOT SHOWN FOR CLARITY. SEE LATERAL BRACING DETAILS SHEET.

NO.	DATE	REVISION	BY

STATE OF WISCONSIN
DEPARTMENT OF TRANSPORTATION

STRUCTURE B-40-855

DRAWN BY	GLM	PLANS CK'D.	WRT

DIAPHRAGM DETAILS (1 OF 2)

SHEET 54 OF 96

8

8

STATE PROJECT NUMBER
1060-33-80

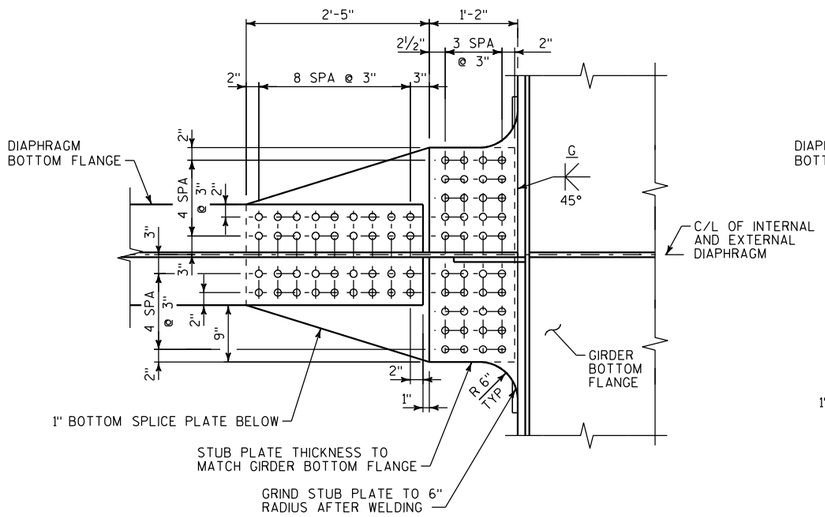

STUB PLATE DETAIL 1

TYPICAL PIER DIAPHRAGM

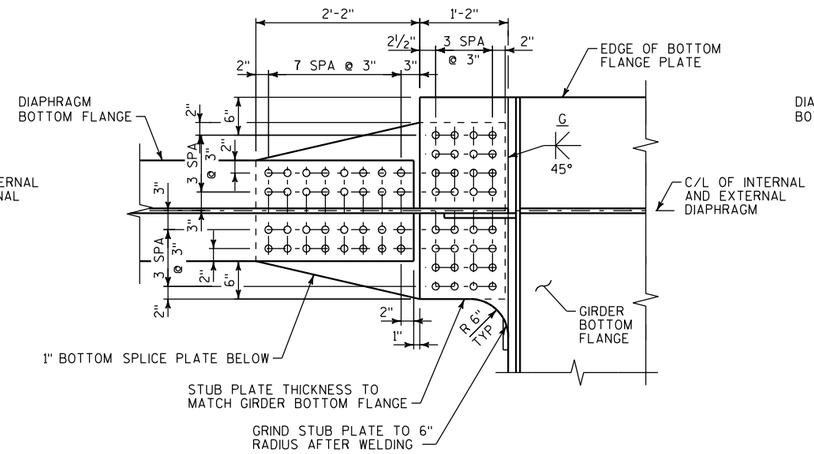

STUB PLATE DETAIL 2

ABUTMENT DIAPHRAGM AND PIER END DIAPHRAGM

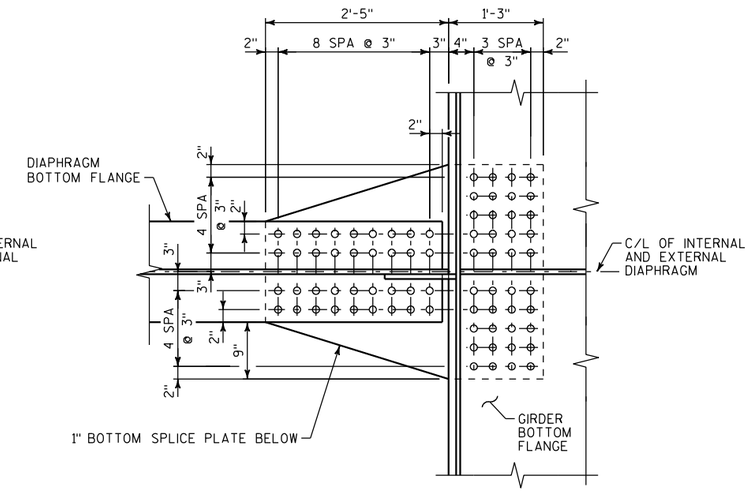

BOTTOM FLANGE CONNECTION DETAIL

INTERMEDIATE DIAPHRAGM ONLY

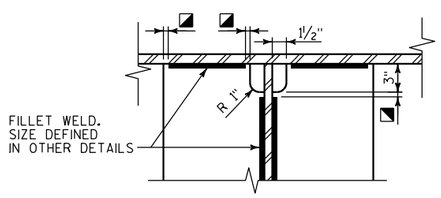

STANDARD CLIP & WELD TERMINATION DETAIL

◪ ¼" MIN TO ½" MAX, TYP

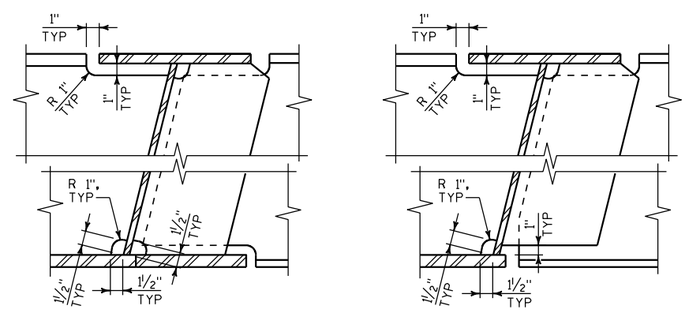

ABUTMENT & PIER DIAPHRAGMS

INTERMEDIATE DIAPHRAGM

DIAPHRAGM CLIP DETAIL

NOTES:

1. INTERNAL AND EXTERNAL DIAPHRAGMS ARE ALIGNED NORMAL TO THE GIRDER BOTTOM FLANGE.
2. ALL BOLTS IN DIAPHRAGMS ARE 1" DIAMETER.

NO.	DATE	REVISION	BY

STATE OF WISCONSIN
DEPARTMENT OF TRANSPORTATION

STRUCTURE B-40-855

DRAWN BY	GLM	PLANS CK'D.	WRT

DIAPHRAGM DETAILS (2 OF 2)

SHEET 55 OF 96

8

8

STATE PROJECT NUMBER
1060-33-80

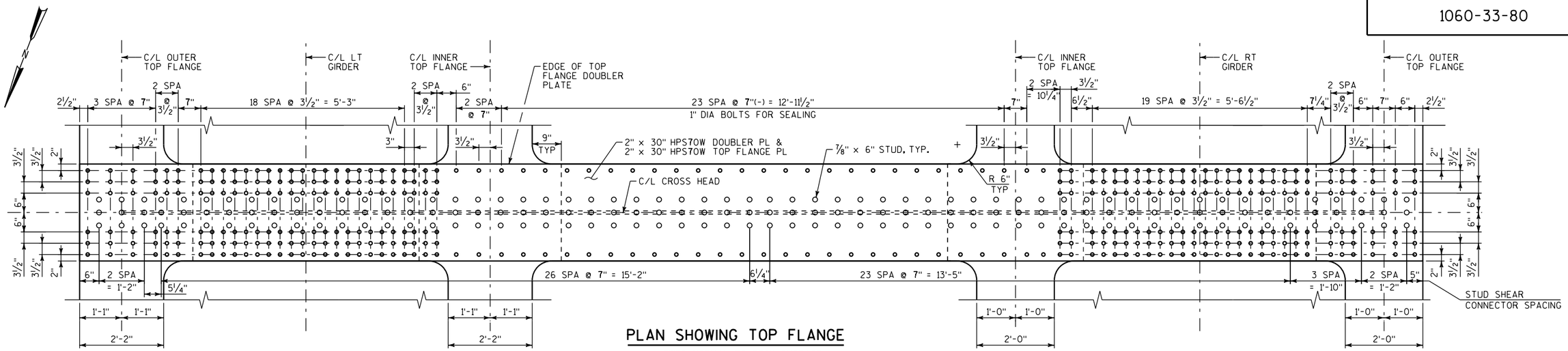

PLAN SHOWING TOP FLANGE

VIEWED NORMAL TO DECK SURFACE
LATERAL BRACING NOT SHOWN FOR CLARITY

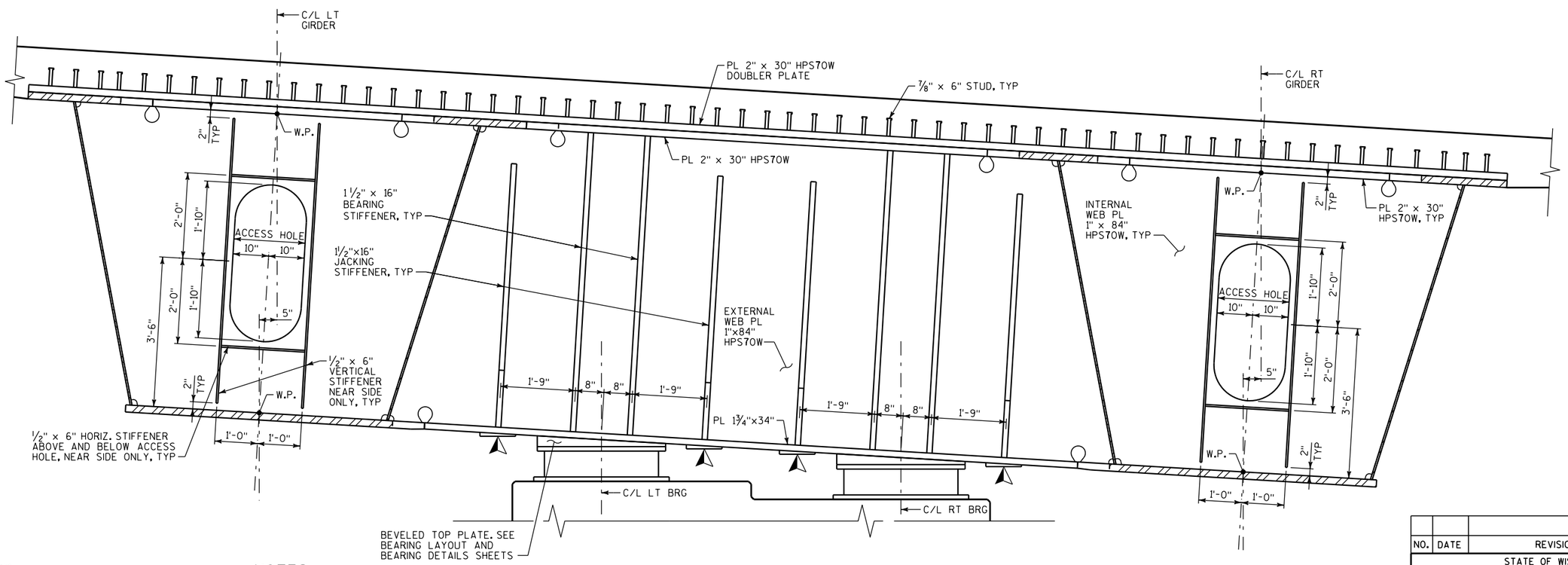

INTEGRAL CROSS HEAD ELEVATION

LOOKING UPSTATION

LEGEND

⚠ SUGGESTED JACKING PAD AND STIFFENER LOCATION FOR FUTURE BEARING REPLACEMENT. JACKING AT ACCESS HOLE STIFFENERS NOT ALLOWED. SEE JACKING PROVISIONS SHEET FOR DETAILS.

NOTES

1. CROSS HEAD WEB IS ALIGNED NORMAL TO TUB GIRDER BOTTOM FLANGE.
2. ALL BOLTS IN CROSS HEAD ARE 1" DIAMETER.

NO.	DATE	REVISION	BY

STATE OF WISCONSIN
DEPARTMENT OF TRANSPORTATION

STRUCTURE B-40-855

DRAWN BY CNK | PLANS CK'D. WRT

PIER SW06 INTEGRAL CROSS HEAD

SHEET 56 OF 96

8 8

STATE PROJECT NUMBER
1060-33-80

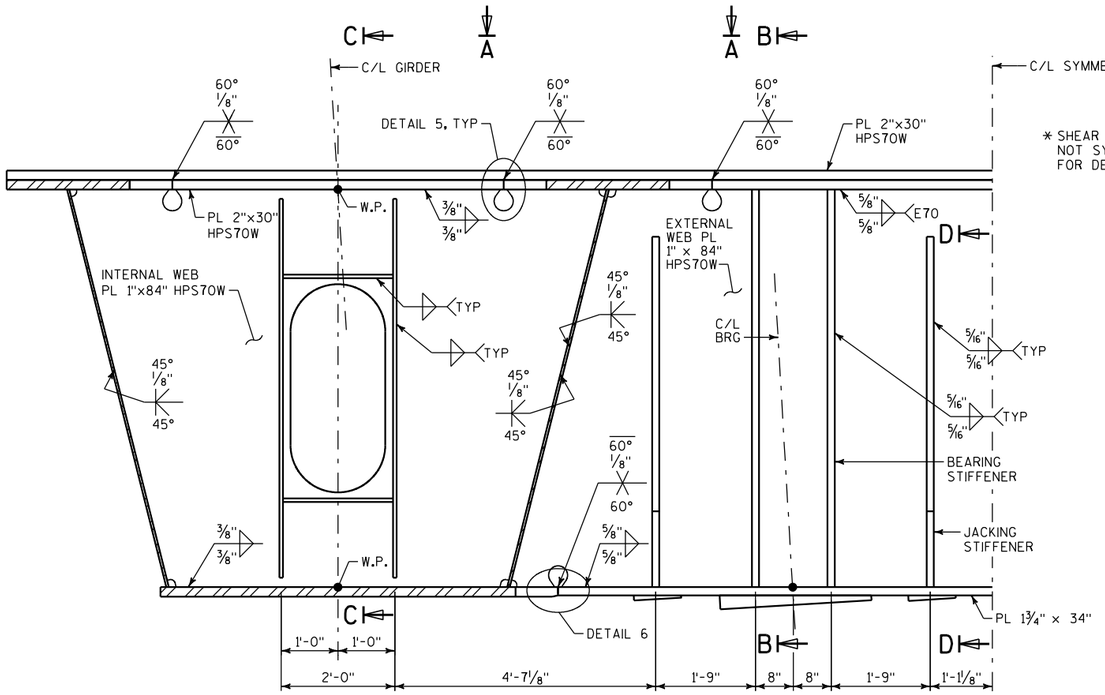

PARTIAL ELEVATION

SHOWING WELDS

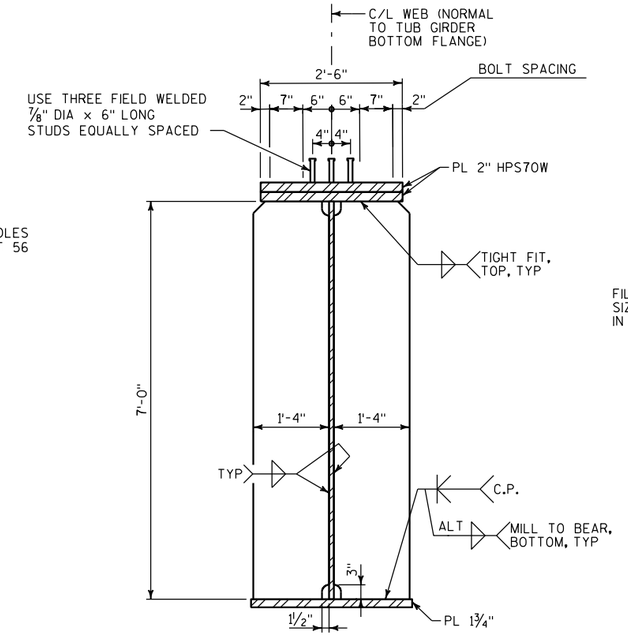

SECTION B-B

BEARING STIFFENERS

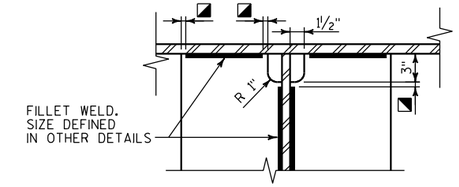

STANDARD CLIP & WELD TERMINATION DETAIL

◪ ¼" MIN TO ½" MAX, TYP

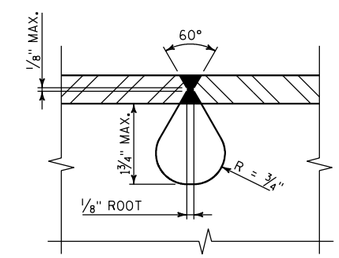

DETAIL 5

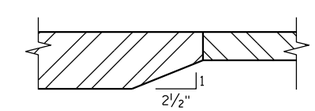

DETAIL 6

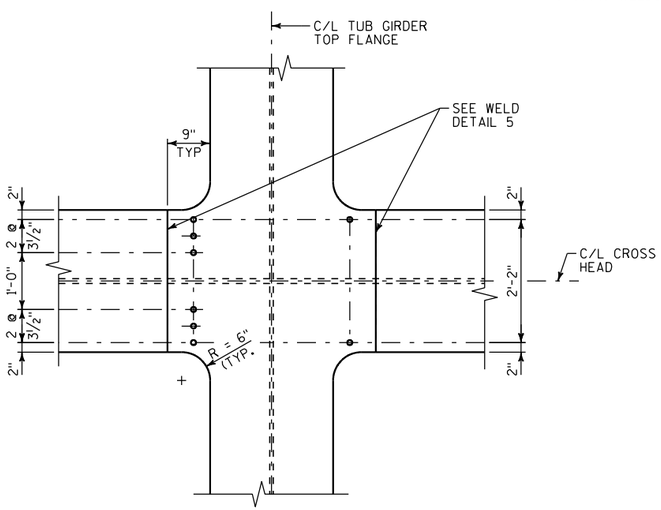

VIEW A-A

(DOUBLER PLATE NOT SHOWN FOR CLARITY)

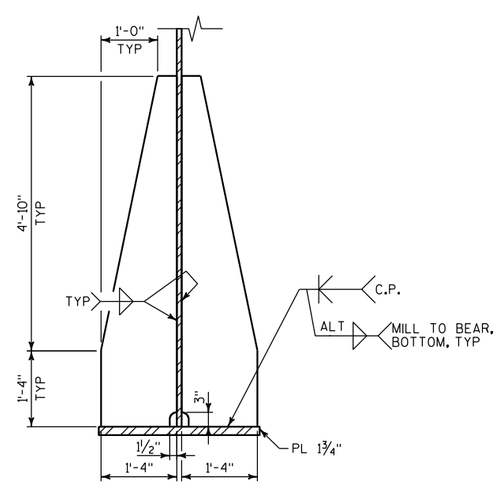

SECTION D-D

JACKING STIFFENERS

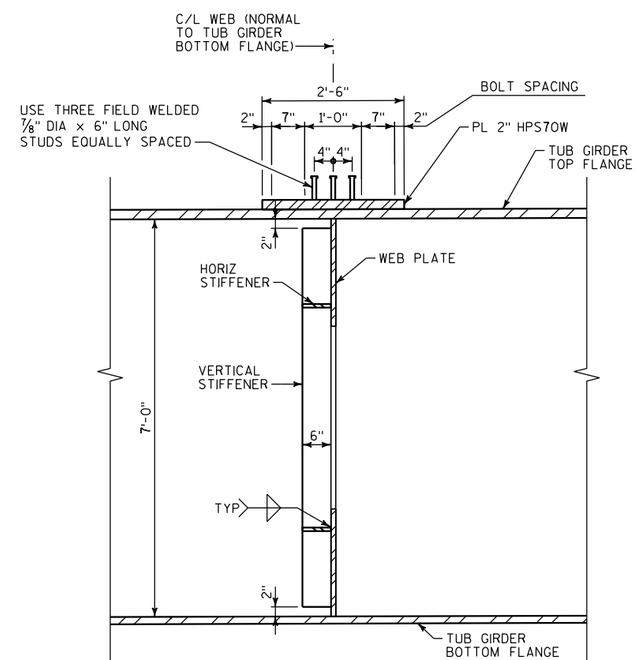

SECTION C-C

NO.	DATE	REVISION	BY

STATE OF WISCONSIN
DEPARTMENT OF TRANSPORTATION

STRUCTURE B-40-855

DRAWN BY CNK | PLANS CK'D. WRT

PIER SW06 INTEGRAL CROSS HEAD DETAILS

SHEET 57 OF 96

8

8

STATE PROJECT NUMBER
1060-33-80

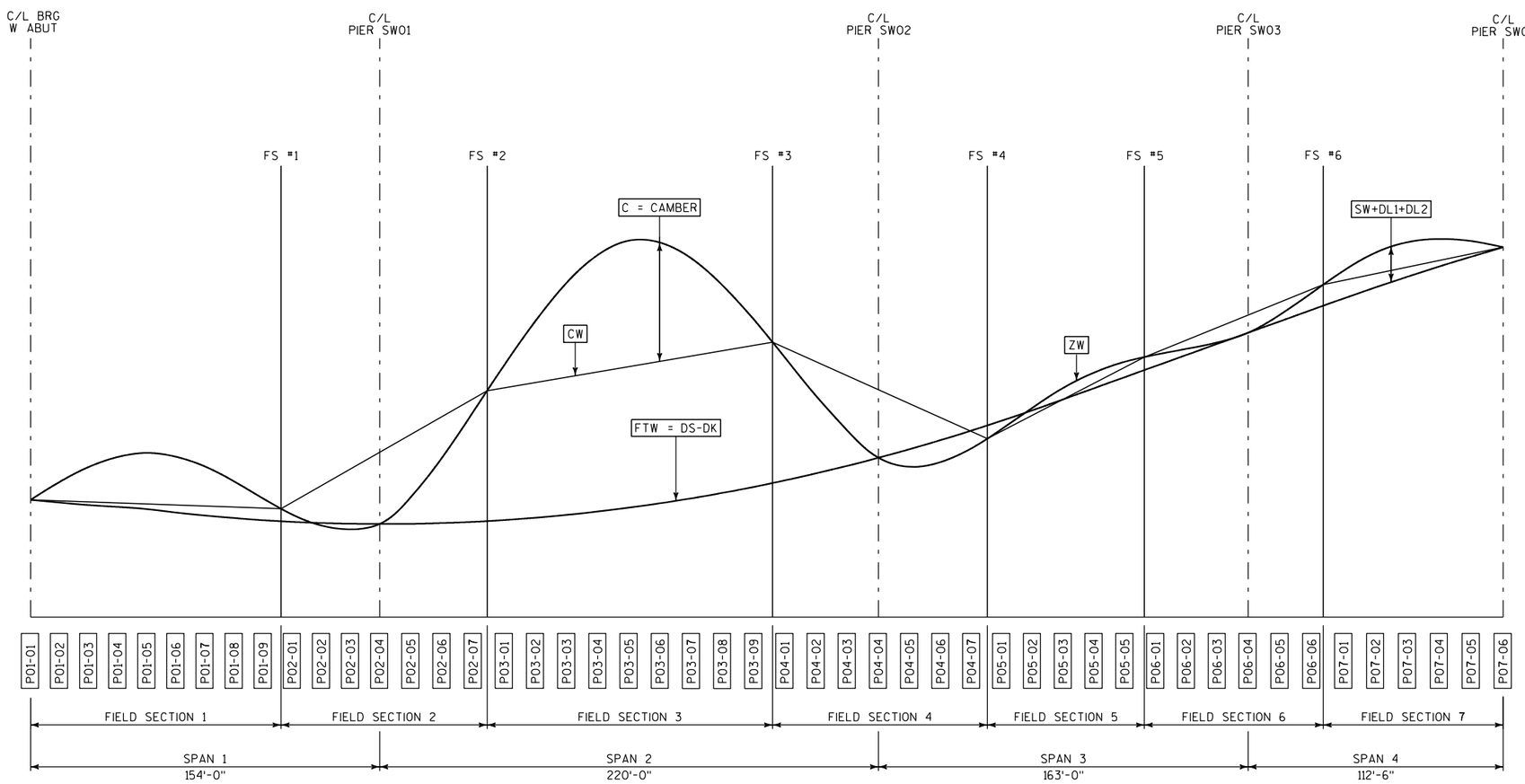

CAMBER DIAGRAM - UNIT 1

VERTICAL PROFILE AND DEFLECTIONS ARE EXAGGERATED TO DIFFERENT DEGREES. THE CAMBERS SHOWN ON THIS DIAGRAM ARE SCHEMATIC ONLY. DIMENSIONS SHOWN ARE ALONG R/L SW

LEGEND

P14-04 INTERMEDIATE ELEVATION POINT (PANEL POINT).

IN THIS EXAMPLE, '14' IS THE FIELD SECTION NUMBER AND '04' IS THE PANEL POINT WITHIN THIS FIELD SECTION.

NOTES

1. ALL TABULATED VALUES ARE IN DECIMALS OF A FOOT.
2. POSITIVE DEFLECTIONS ARE DOWNWARD.
3. POSITIVE CAMBER IS UPWARD RELATIVE TO A CHORD LINE JOINING THE FIELD SECTION ENDPOINTS.
4. CAMBER DIAGRAMS HAVE BEEN DEVELOPED ASSUMING THAT ALL SLAB WEIGHT, INCLUDING ALLOWANCE FOR PERMANENT STAY-IN-PLACE FORMS, IS APPLIED TO A NON-COMPOSITE STRUCTURE. VERIFY THE VALIDITY OF THIS ASSUMPTION BASED ON THE SELECTED POUR SEQUENCE. ADJUST CAMBER TABLES AS NECESSARY FOR ANY EXPECTED VARIATIONS EXCEEDING .04' (1/2").
5. CAMBER GIRDERS TO THE VALUES SHOWN, AFTER INCORPORATING ANY REQUIRED ADJUSTMENTS FOR THE SELECTED POUR SEQUENCE.
6. TOP OF ERECTED STEEL ELEVATIONS AT SUPPORTS AND FIELD SPLICES SHALL BE CHECKED AFTER ERECTION IS COMPLETE AND BEFORE BOLTED CONNECTIONS ARE FINALLY TORQUED.

   IF SURVEYED ELEVATIONS DIFFER FROM THOSE EXPECTED BY MORE THAN 0.02 FT (1/4") AT SUPPORTS OR 0.083 FT (1") AT FIELD SPLICES, CORRECTIVE MEASURES SHALL BE TAKEN BEFORE FURTHER CONSTRUCTION OPERATIONS MAY PROCEED.

TABULATED ELEVATIONS

FTW FINISHED ELEVATION AT TOP OF WEB.

DS FINISHED ELEVATION AT TOP OF DECK SLAB.

TES TOP OF ERECTED STEEL ELEVATION.

= ZW + PL - SW

ZW TOP OF WEB ELEVATION NEGLECTING ALL DEFLECTIONS.

= DS + SW + DL1 + DL2 - DK

CW ELEVATION OF CHORD LINES JOINING TOP OF WEB ELEVATION AT 'ZW' AT FIELD SPLICES AND END SUPPORTS.

BLK BLOCKING HEIGHT TO UNDEFLECTED SHAPE. BLOCKING HEIGHT IS MEASURED TO BOTTOM OF WEB AND DOES NOT TAKE INTO ACCOUNT BOTTOM FLANGE THICKNESS, SPLICE PLATES, ETC.

TABULATED DEFLECTIONS

SW SELF-WEIGHT OF STEEL GIRDERS, INCLUDING ALL DIAPHRAGMS, STIFFENERS AND BRACING.

DL1 CONCRETE DECK SLAB AND HAUNCHES APPLIED TO BARE STEEL SECTION INCLUDING PERMANENT STAY-IN-PLACE FORMS.

DL2 PARAPETS APPLIED TO COMPOSITE SECTION.

CALCULATED VALUES

PL = THICKNESS OF TOP FLANGE PLUS ANY FILLER AND SPLICE PLATES

DK = DECK ASSEMBLY THICKNESS FROM TOP OF WEB TO FINISHED GRADE

= 4" HAUNCH + 10 1/2" SLAB = 14 1/2" = 1.21 FT

C = CAMBER = ZW - CW

8

8

NO.	DATE	REVISION	BY

STATE OF WISCONSIN
DEPARTMENT OF TRANSPORTATION

STRUCTURE B-40-855

DRAWN BY GLM | PLANS CK'D. WRT

CAMBER DIAGRAM UNIT 1

SHEET 58 OF 96

STATE PROJECT NUMBER
1060-33-80

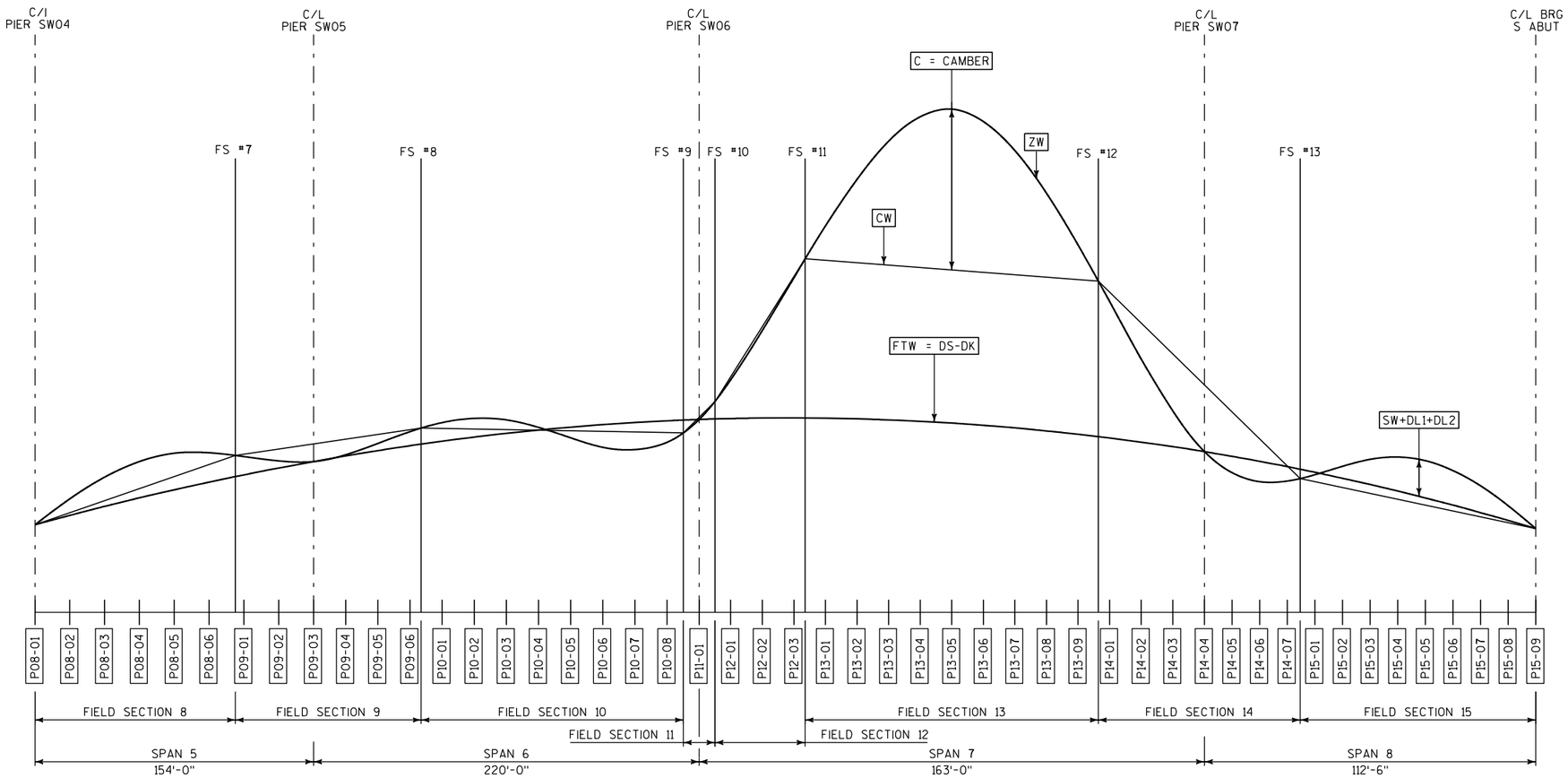

CAMBER DIAGRAM - UNIT 2

VERTICAL PROFILE AND DEFLECTIONS ARE EXAGGERATED TO DIFFERENT DEGREES. THE CAMBERS SHOWN ON THIS DIAGRAM ARE SCHEMATIC ONLY. DIMENSIONS SHOWN ARE ALONG R/L SW

LEGEND

P14-04 INTERMEDIATE ELEVATION POINT (PANEL POINT).

IN THIS EXAMPLE, '14' IS THE FIELD SECTION NUMBER AND '04' IS THE PANEL POINT WITHIN THIS FIELD SECTION.

NOTES

1. ALL TABULATED VALUES ARE IN DECIMALS OF A FOOT.
2. POSITIVE DEFLECTIONS ARE DOWNWARD.
3. POSITIVE CAMBER IS UPWARD RELATIVE TO A CHORD LINE JOINING THE FIELD SECTION ENDPOINTS.
4. CAMBER DIAGRAMS HAVE BEEN DEVELOPED ASSUMING THAT ALL SLAB WEIGHT, INCLUDING ALLOWANCE FOR PERMANENT STAY-IN-PLACE FORMS, IS APPLIED TO A NON-COMPOSITE STRUCTURE. VERIFY THE VALIDITY OF THIS ASSUMPTION BASED ON THE SELECTED POUR SEQUENCE. ADJUST CAMBER TABLES AS NECESSARY FOR ANY EXPECTED VARIATIONS EXCEEDING .04' (1/2").
5. CAMBER GIRDERS TO THE VALUES SHOWN, AFTER INCORPORATING ANY REQUIRED ADJUSTMENTS FOR THE SELECTED POUR SEQUENCE.
6. TOP OF ERECTED STEEL ELEVATIONS AT SUPPORTS AND FIELD SPLICES SHALL BE CHECKED AFTER ERECTION IS COMPLETE AND BEFORE BOLTED CONNECTIONS ARE FINALLY TORQUED.

   IF SURVEYED ELEVATIONS DIFFER FROM THOSE EXPECTED BY MORE THAN 0.02 FT (1/4") AT SUPPORTS OR 0.083 FT (1") AT FIELD SPLICES, CORRECTIVE MEASURES SHALL BE TAKEN BEFORE FURTHER CONSTRUCTION OPERATIONS MAY PROCEED.

TABULATED ELEVATIONS

FTW FINISHED ELEVATION AT TOP OF WEB.

DS FINISHED ELEVATION AT TOP OF DECK SLAB.

TES TOP OF ERECTED STEEL ELEVATION.

= ZW + PL - SW

ZW TOP OF WEB ELEVATION NEGLECTING ALL DEFLECTIONS.

= DS + SW + DL1 + DL2 - DK

CW ELEVATION OF CHORD LINES JOINING TOP OF WEB ELEVATION AT 'ZW' AT FIELD SPLICES AND END SUPPORTS.

BLK BLOCKING HEIGHT TO UNDEFLECTED SHAPE. BLOCKING HEIGHT IS MEASURED TO BOTTOM OF WEB AND DOES NOT TAKE INTO ACCOUNT BOTTOM FLANGE THICKNESS, SPLICE PLATES, ETC.

TABULATED DEFLECTIONS

SW SELF-WEIGHT OF STEEL GIRDERS, INCLUDING ALL DIAPHRAGMS, STIFFENERS AND BRACING.

DL1 CONCRETE DECK SLAB AND HAUNCHES APPLIED TO BARE STEEL SECTION INCLUDING PERMANENT STAY-IN-PLACE FORMS.

DL2 PARAPETS APPLIED TO COMPOSITE SECTION.

CALCULATED VALUES

PL = THICKNESS OF TOP FLANGE PLUS ANY FILLER AND SPLICE PLATES

DK = DECK ASSEMBLY THICKNESS FROM TOP OF WEB TO FINISHED GRADE

= 4" HAUNCH + 10 1/2" SLAB = 14 1/2" = 1.21 FT

C = CAMBER = ZW - CW

8

8

NO.	DATE	REVISION	BY

STATE OF WISCONSIN
DEPARTMENT OF TRANSPORTATION

STRUCTURE B-40-855

DRAWN BY GLM | PLANS CK'D. WRT

CAMBER DIAGRAM UNIT 2

SHEET 59 OF 96

FIELD SECTION #1

POS'N NO.	VALUE	PANEL POINT POSITION AND STATION									
		P01-01	P01-02	P01-03	P01-04	P01-05	P01-06	P01-07	P01-08	P01-09	FS #1
		579+59.89	579+72.72	579+85.56	579+98.39	580+11.22	580+24.06	580+36.89	580+49.72	580+62.56	580+70.39
FINISHED ELEVATION - TOP OF DECK											
1	DS	805.34	805.26	805.20	805.15	805.09	804.96	804.85	804.75	804.68	804.64
2		805.28	805.19	805.12	805.06	805.00	804.87	804.76	804.67	804.59	804.55
6		803.88	803.68	803.50	803.34	803.20	803.07	802.96	802.87	802.79	802.75
8		803.32	803.08	802.86	802.66	802.48	802.35	802.24	802.15	802.07	802.03
9		803.25	803.01	802.78	802.57	802.39	802.27	802.15	802.06	801.98	801.94
CAMBER DATA											
3	DS	805.05	804.95	804.86	804.79	804.71	804.59	804.48	804.38	804.31	804.27
	TES	803.93	803.87	803.83	803.78	803.72	803.59	803.46	803.33	803.22	803.20
LEFT	ZW	803.85	803.81	803.77	803.74	803.68	803.55	803.41	803.27	803.15	803.09
GIRDER	CW	803.85	803.76	803.67	803.58	803.49	803.41	803.32	803.23	803.14	803.09
	SW	0.00	0.02	0.03	0.04	0.04	0.04	0.04	0.03	0.01	0.01
LEFT	DL1	0.00	0.04	0.08	0.11	0.12	0.11	0.09	0.07	0.03	0.02
WEB	DL2	0.00	0.00	0.01	0.01	0.01	0.01	0.01	0.01	0.01	0.00
	C	0.00	0.05	0.10	0.16	0.19	0.14	0.09	0.05	0.01	0.00
4	DS	804.61	804.47	804.35	804.25	804.14	804.02	803.91	803.81	803.74	803.70
	TES	803.49	803.40	803.31	803.24	803.14	803.01	802.88	802.76	802.65	802.64
LEFT	ZW	803.40	803.33	803.26	803.19	803.10	802.96	802.83	802.70	802.58	802.52
GIRDER	CW	803.40	803.30	803.20	803.10	802.99	802.89	802.79	802.69	802.59	802.52
	SW	0.00	0.02	0.03	0.04	0.04	0.04	0.03	0.02	0.02	0.01
RIGHT	DL1	0.00	0.04	0.08	0.10	0.11	0.10	0.09	0.06	0.04	0.02
WEB	DL2	0.00	0.00	0.01	0.01	0.01	0.01	0.01	0.01	0.00	0.00
	C	0.00	0.03	0.06	0.09	0.10	0.07	0.04	0.01	0.00	0.00
5	DS	803.98	803.80	803.63	803.47	803.33	803.21	803.10	803.00	802.93	802.89
	TES	802.86	802.72	802.58	802.46	802.34	802.21	802.08	801.96	801.85	801.84
RIGHT	ZW	802.77	802.65	802.53	802.41	802.29	802.16	802.03	801.91	801.79	801.73
GIRDER	CW	802.77	802.65	802.53	802.41	802.29	802.17	802.05	801.92	801.80	801.73
	SW	0.00	0.01	0.03	0.03	0.04	0.04	0.04	0.03	0.02	0.01
LEFT	DL1	0.00	0.04	0.08	0.10	0.11	0.11	0.10	0.08	0.05	0.03
WEB	DL2	0.00	0.00	0.01	0.01	0.01	0.01	0.01	0.01	0.00	0.00
	C	0.00	-0.01	0.00	0.00	0.00	0.00	-0.01	-0.02	-0.01	0.00
7	DS	803.54	803.32	803.11	802.93	802.76	802.64	802.53	802.43	802.36	802.32
	TES	802.41	802.24	802.07	801.91	801.76	801.63	801.51	801.39	801.29	801.28
RIGHT	ZW	802.33	802.17	802.02	801.86	801.72	801.59	801.46	801.34	801.23	801.17
GIRDER	CW	802.33	802.20	802.06	801.92	801.79	801.65	801.52	801.38	801.25	801.17
	SW	0.00	0.01	0.03	0.03	0.04	0.04	0.03	0.03	0.02	0.02
RIGHT	DL1	0.00	0.04	0.08	0.10	0.11	0.11	0.10	0.08	0.05	0.04
WEB	DL2	0.00	0.00	0.01	0.01	0.01	0.01	0.01	0.01	0.01	0.00
	C	0.00	-0.03	-0.04	-0.06	-0.07	-0.07	-0.06	-0.05	-0.02	0.00
BLOCKING HEIGHTS											
10	BLK	1.13									0.36
11		0.85									0.00
12		1.42									0.36
13		1.14									0.00

FIELD SECTION #2

POS'N NO.	VALUE	PANEL POINT POSITION AND STATION								
		FS#1	P02-01	P02-02	P02-03	PIER	P02-05	P02-06	P02-07	FS #2
		580+70.39	580+75.39	580+88.22	581+01.06	581+13.89	581+27.64	581+41.39	581+55.14	581+60.14
FINISHED ELEVATION - TOP OF DECK										
1	DS	804.64	804.62	804.57	804.55	804.54	804.54	804.57	804.62	804.64
2		804.55	804.53	804.49	804.46	804.45	804.46	804.48	804.53	804.55
6		802.75	802.73	802.69	802.66	802.65	802.66	802.68	802.73	802.75
8		802.03	802.01	801.97	801.94	801.93	801.94	801.96	802.01	802.03
9		801.94	801.92	801.88	801.85	801.84	801.85	801.88	801.92	801.95
CAMBER DATA										
3	DS	804.27	804.25	804.20	804.17	804.16	804.17	804.20	804.25	804.27
	TES	803.20	803.12	803.06	803.11	803.12	803.20	803.23	803.38	803.53
LEFT	ZW	803.09	803.04	802.97	802.94	802.96	803.05	803.19	803.37	803.46
GIRDER	CW	803.09	803.11	803.16	803.22	803.27	803.33	803.38	803.44	803.46
	SW	0.01	0.00	0.00	-0.01	0.00	0.02	0.04	0.07	0.09
LEFT	DL1	0.02	0.00	-0.02	-0.02	0.00	0.06	0.14	0.24	0.29
WEB	DL2	0.00	0.00	0.00	0.00	0.00	0.01	0.01	0.02	0.03
	C	0.00	-0.07	-0.19	-0.28	-0.31	-0.28	-0.19	-0.07	0.00
4	DS	803.70	803.68	803.63	803.60	803.59	803.60	803.63	803.68	803.70
	TES	802.64	802.56	802.49	802.55	802.55	802.62	802.64	802.78	802.93
LEFT	ZW	802.52	802.48	802.41	802.37	802.39	802.46	802.59	802.77	802.86
GIRDER	CW	802.52	802.54	802.59	802.64	802.68	802.74	802.79	802.84	802.86
	SW	0.01	0.01	0.00	0.00	0.00	0.02	0.04	0.07	0.08
RIGHT	DL1	0.02	0.01	-0.01	-0.02	0.00	0.05	0.12	0.21	0.26
WEB	DL2	0.00	0.00	0.00	0.00	0.00	0.01	0.01	0.02	0.03
	C	0.00	-0.06	-0.18	-0.26	-0.30	-0.27	-0.19	-0.07	0.00
5	DS	802.89	802.87	802.82	802.79	802.78	802.79	802.82	802.87	802.89
	TES	801.84	801.76	801.69	801.74	801.74	801.80	801.82	801.95	802.05
RIGHT	ZW	801.73	801.69	801.61	801.57	801.58	801.65	801.77	801.92	802.00
GIRDER	CW	801.73	801.74	801.78	801.82	801.86	801.90	801.94	801.98	802.00
	SW	0.01	0.01	0.00	0.00	0.00	0.01	0.03	0.06	0.07
LEFT	DL1	0.03	0.02	0.00	-0.01	0.00	0.04	0.11	0.18	0.22
WEB	DL2	0.00	0.00	0.00	0.00	0.00	0.00	0.01	0.02	0.02
	C	0.00	-0.06	-0.17	-0.25	-0.28	-0.25	-0.18	-0.06	0.00
7	DS	802.32	802.30	802.25	802.22	802.21	802.22	802.25	802.30	802.32
	TES	801.28	801.20	801.13	801.18	801.17	801.22	801.23	801.36	801.46
RIGHT	ZW	801.17	801.13	801.05	801.01	801.01	801.07	801.18	801.32	801.40
GIRDER	CW	801.17	801.18	801.21	801.25	801.28	801.31	801.35	801.38	801.40
	SW	0.02	0.01	0.00	0.00	0.00	0.01	0.03	0.05	0.06
RIGHT	DL1	0.04	0.03	0.00	-0.01	0.00	0.04	0.09	0.16	0.20
WEB	DL2	0.00	0.00	0.00	0.00	0.00	0.01	0.01	0.02	0.02
	C	0.00	-0.05	-0.16	-0.24	-0.27	-0.25	-0.17	-0.06	0.00
BLOCKING HEIGHTS										
10	BLK	0.36								0.73
11		0.00								0.34
12		0.36								0.62
13		0.00								0.24

STATE PROJECT NUMBER

1060-33-80

LEGEND

P14-04 INTERMEDIATE ELEVATION POINT (PANEL POINT).

IN THIS EXAMPLE, '14' IS THE FIELD SECTION NUMBER AND '04' IS THE PANEL POINT WITHIN THIS FIELD SECTION.

NOTES

1. ALL TABULATED VALUES ARE IN DECIMALS OF A FOOT.
2. POSITIVE DEFLECTIONS ARE DOWNWARD.
3. POSITIVE CAMBER IS UPWARD RELATIVE TO A CHORD LINE JOINING THE FIELD SECTION ENDPOINTS.
4. CAMBER DIAGRAMS HAVE BEEN DEVELOPED ASSUMING THAT ALL SLAB WEIGHT, INCLUDING ALLOWANCE FOR PERMANENT STAY-IN-PLACE FORMS, IS APPLIED TO A NON-COMPOSITE STRUCTURE. VERIFY THE VALIDITY OF THIS ASSUMPTION BASED ON THE SELECTED POUR SEQUENCE. ADJUST CAMBER TABLES AS NECESSARY FOR ANY EXPECTED VARIATIONS EXCEEDING .04' (1/2").
5. CAMBER GIRDERS TO THE VALUES SHOWN, AFTER INCORPORATING ANY REQUIRED ADJUSTMENTS FOR THE SELECTED POUR SEQUENCE.
6. TOP OF ERECTED STEEL ELEVATIONS AT SUPPORTS AND FIELD SPLICES SHALL BE CHECKED AFTER ERECTION IS COMPLETE AND BEFORE BOLTED CONNECTIONS ARE FINALLY TORQUED.

   IF SURVEYED ELEVATIONS DIFFER FROM THOSE EXPECTED BY MORE THAN 0.02 FT (1/4") AT SUPPORTS OR 0.083 FT (1") AT FIELD SPLICES, CORRECTIVE MEASURES SHALL BE TAKEN BEFORE FURTHER CONSTRUCTION OPERATIONS MAY PROCEED.

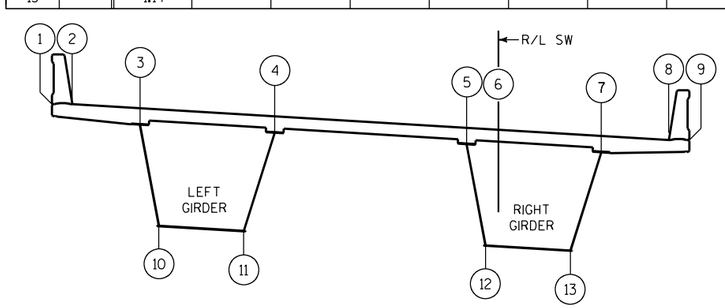

HORIZONTAL LOCATION KEY

LOOKING UPSTATION

TABULATED ELEVATIONS

FTW FINISHED ELEVATION AT TOP OF WEB.

DS FINISHED ELEVATION AT TOP OF DECK SLAB.

TES TOP OF ERECTED STEEL ELEVATION.

= ZW + PL - SW

ZW TOP OF WEB ELEVATION NEGLECTING ALL DEFLECTIONS.

= DS + SW + DL1 + DL2 - DK

CW ELEVATION OF CHORD LINES JOINING TOP OF WEB ELEVATION AT 'ZW' AT FIELD SPLICES AND END SUPPORTS.

BLK BLOCKING HEIGHT TO UNDEFLECTED SHAPE. BLOCKING HEIGHT IS MEASURED TO BOTTOM OF WEB AND DOES NOT TAKE INTO ACCOUNT BOTTOM FLANGE THICKNESS, SPLICE PLATES, ETC.

TABULATED DEFLECTIONS

SW SELF-WEIGHT OF STEEL GIRDERS, INCLUDING ALL DIAPHRAGMS, STIFFENERS AND BRACING.

DL1 CONCRETE DECK SLAB AND HAUNCHES APPLIED TO BARE STEEL SECTION INCLUDING PERMANENT STAY-IN-PLACE FORMS.

DL2 PARAPETS APPLIED TO COMPOSITE SECTION.

CALCULATED VALUES

PL = THICKNESS OF TOP FLANGE PLUS ANY FILLER AND SPLICE PLATES

DK = DECK ASSEMBLY THICKNESS FROM TOP OF WEB TO FINISHED GRADE

= 4" HAUNCH + 10 1/2" SLAB = 14 1/2" = 1.21 FT

C = CAMBER = ZW - CW

NO.	DATE	REVISION	BY

STATE OF WISCONSIN
DEPARTMENT OF TRANSPORTATION

STRUCTURE B-40-855

DRAWN BY GLM | PLANS CK'D. WRT

CAMBER AND DECK ELEVATIONS: FIELD SECTIONS 1 & 2

SHEET 60 OF 96

FIELD SECTION #3

POS'N NO.	VALUE	PANEL POINT POSITION AND STATION										
		FS #2	P03-01	P03-02	P03-03	P03-04	P03-05	P03-06	P03-07	P03-08	P03-09	FS #3
		581+60.14	581+68.89	581+82.64	581+96.39	582+10.14	582+23.89	582+37.64	582+51.39	582+65.14	582+78.89	582+87.64
FINISHED ELEVATION - TOP OF DECK												
1	DS	804.64	804.68	804.77	804.87	805.00	805.14	805.30	805.48	805.68	805.90	806.05
2		804.55	804.60	804.68	804.79	804.91	805.05	805.21	805.39	805.59	805.81	805.96
6		802.75	802.80	802.88	802.99	803.11	803.25	803.41	803.59	803.79	804.01	804.16
8		802.03	802.08	802.16	802.27	802.39	802.53	802.69	802.87	803.07	803.29	803.44
9		801.95	801.99	802.07	802.18	802.30	802.44	802.61	802.79	802.99	803.21	803.36
CAMBER DATA												
3	DS	804.27	804.31	804.40	804.50	804.62	804.77	804.93	805.11	805.31	805.53	805.68
	TES	803.53	803.57	803.76	803.94	804.12	804.29	804.43	804.56	804.69	804.81	804.96
LEFT	ZW	803.46	803.58	803.79	804.00	804.20	804.37	804.51	804.62	804.72	804.82	804.90
GIRDER	CW	803.46	803.56	803.72	803.87	804.03	804.18	804.34	804.49	804.65	804.80	804.90
	SW	0.09	0.11	0.14	0.16	0.18	0.18	0.18	0.16	0.14	0.11	0.10
LEFT	DL1	0.29	0.33	0.42	0.50	0.55	0.57	0.56	0.51	0.44	0.35	0.30
WEB	DL2	0.03	0.03	0.04	0.05	0.05	0.05	0.05	0.05	0.04	0.03	0.03
	C	0.00	0.01	0.07	0.13	0.17	0.19	0.17	0.13	0.08	0.02	0.00
4	DS	803.70	803.74	803.83	803.93	804.05	804.20	804.36	804.54	804.74	804.96	805.11
	TES	802.93	802.97	803.15	803.32	803.49	803.65	803.80	803.94	804.08	804.21	804.36
LEFT	ZW	802.86	802.97	803.17	803.36	803.54	803.70	803.85	803.98	804.10	804.20	804.29
GIRDER	CW	802.86	802.95	803.11	803.26	803.42	803.57	803.73	803.88	804.04	804.19	804.29
	SW	0.08	0.10	0.12	0.14	0.16	0.16	0.16	0.15	0.13	0.10	0.09
RIGHT	DL1	0.26	0.30	0.39	0.45	0.49	0.50	0.49	0.46	0.40	0.32	0.27
WEB	DL2	0.03	0.03	0.04	0.04	0.05	0.05	0.05	0.05	0.04	0.03	0.03
	C	0.00	0.01	0.06	0.10	0.12	0.13	0.13	0.10	0.06	0.01	0.00
5	DS	802.89	802.93	803.02	803.12	803.24	803.39	803.55	803.73	803.93	804.15	804.30
	TES	802.05	802.10	802.27	802.43	802.60	802.76	802.91	803.05	803.19	803.33	803.48
RIGHT	ZW	802.00	802.10	802.29	802.48	802.66	802.82	802.97	803.10	803.22	803.33	803.43
GIRDER	CW	802.00	802.10	802.25	802.41	802.56	802.71	802.87	803.02	803.18	803.33	803.43
	SW	0.07	0.08	0.11	0.13	0.14	0.14	0.14	0.13	0.11	0.09	0.08
LEFT	DL1	0.22	0.26	0.34	0.40	0.44	0.45	0.44	0.40	0.35	0.28	0.24
WEB	DL2	0.02	0.03	0.04	0.04	0.05	0.05	0.05	0.04	0.04	0.03	0.03
	C	0.00	0.00	0.04	0.07	0.10	0.11	0.10	0.08	0.04	0.00	0.00
7	DS	802.32	802.36	802.45	802.55	802.67	802.82	802.98	803.16	803.36	803.58	803.73
	TES	801.46	801.50	801.66	801.82	801.98	802.14	802.29	802.44	802.58	802.73	802.88
RIGHT	ZW	801.40	801.49	801.67	801.85	802.02	802.18	802.33	802.47	802.60	802.72	802.82
GIRDER	CW	801.40	801.50	801.65	801.80	801.96	802.11	802.26	802.42	802.57	802.72	802.82
	SW	0.06	0.07	0.09	0.11	0.12	0.12	0.12	0.11	0.10	0.08	0.07
RIGHT	DL1	0.20	0.24	0.30	0.35	0.39	0.40	0.39	0.36	0.31	0.25	0.21
WEB	DL2	0.02	0.03	0.04	0.04	0.05	0.05	0.05	0.04	0.04	0.03	0.03
	C	0.00	0.00	0.02	0.05	0.06	0.07	0.06	0.05	0.03	0.00	0.00
BLOCKING HEIGHTS												
10	BLK	0.73										2.16
11		0.34										1.78
12		0.62										2.05
13		0.24										1.67

FIELD SECTION #4

POS'N NO.	VALUE	PANEL POINT POSITION AND STATION								
		FS #3	P04-01	P04-02	P04-03	PIER	P04-05	P04-06	P04-07	FS #4
		582+87.64	582+92.64	583+06.39	583+20.14	583+33.89	583+47.47	583+61.06	583+74.64	583+79.64
FINISHED ELEVATION - TOP OF DECK										
1	DS	806.05	806.14	806.40	806.67	806.97	807.28	807.61	807.96	808.10
2		805.96	806.05	806.31	806.59	806.88	807.20	807.53	807.87	808.01
6		804.16	804.25	804.51	804.79	805.08	805.40	805.73	806.07	806.21
8		803.44	803.53	803.79	804.07	804.36	804.68	805.01	805.35	805.49
9		803.36	803.45	803.70	803.98	804.28	804.59	804.92	805.27	805.40
CAMBER DATA										
3	DS	805.68	805.77	806.02	806.30	806.60	806.91	807.24	807.59	807.72
	TES	804.96	804.92	805.07	805.33	805.56	805.83	806.07	806.43	806.61
LEFT	ZW	804.90	804.92	805.04	805.19	805.39	805.65	805.97	806.33	806.48
GIRDER	CW	804.90	804.99	805.22	805.46	805.69	805.93	806.16	806.39	806.48
	SW	0.10	0.08	0.05	0.02	0.00	-0.01	-0.01	-0.01	-0.01
LEFT	DL1	0.30	0.26	0.16	0.07	0.00	-0.03	-0.05	-0.04	-0.03
WEB	DL2	0.03	0.02	0.01	0.01	0.00	0.00	0.00	0.00	0.00
	C	0.00	-0.07	-0.18	-0.27	-0.30	-0.27	-0.19	-0.06	0.00
4	DS	805.11	805.20	805.45	805.73	806.03	806.34	806.67	807.02	807.15
	TES	804.36	804.32	804.48	804.75	804.99	805.27	805.51	805.87	806.05
LEFT	ZW	804.29	804.31	804.44	804.61	804.82	805.09	805.42	805.78	805.92
GIRDER	CW	804.29	804.38	804.62	804.87	805.11	805.35	805.59	805.84	805.92
	SW	0.09	0.07	0.04	0.02	0.00	-0.01	-0.01	-0.01	0.00
RIGHT	DL1	0.27	0.23	0.14	0.06	0.00	-0.03	-0.03	-0.03	-0.02
WEB	DL2	0.03	0.02	0.01	0.01	0.00	0.00	0.00	0.00	0.00
	C	0.00	-0.07	-0.18	-0.26	-0.29	-0.26	-0.18	-0.06	0.00
5	DS	804.30	804.39	804.64	804.92	805.22	805.53	805.86	806.21	806.34
	TES	803.48	803.48	803.65	803.94	804.18	804.47	804.71	805.08	805.26
RIGHT	ZW	803.43	803.46	803.61	803.79	804.01	804.29	804.62	804.99	805.14
GIRDER	CW	803.43	803.52	803.78	804.03	804.29	804.54	804.79	805.05	805.14
	SW	0.08	0.06	0.04	0.02	0.00	-0.01	-0.01	0.00	0.00
LEFT	DL1	0.24	0.20	0.12	0.05	0.00	-0.02	-0.02	-0.01	0.00
WEB	DL2	0.03	0.02	0.01	0.01	0.00	0.00	0.00	0.00	0.00
	C	0.00	-0.06	-0.17	-0.25	-0.28	-0.25	-0.17	-0.05	0.00
7	DS	803.73	803.82	804.07	804.35	804.65	804.96	805.29	805.64	805.77
	TES	802.88	802.89	803.07	803.36	803.61	803.90	804.15	804.52	804.70
RIGHT	ZW	802.82	802.86	803.02	803.21	803.44	803.73	804.07	804.44	804.58
GIRDER	CW	802.82	802.92	803.18	803.44	803.71	803.97	804.23	804.49	804.58
	SW	0.07	0.05	0.03	0.01	0.00	0.00	0.00	0.00	0.01
RIGHT	DL1	0.21	0.17	0.10	0.04	0.00	-0.01	-0.01	0.00	0.01
WEB	DL2	0.03	0.02	0.01	0.01	0.00	0.00	0.00	0.00	0.00
	C	0.00	-0.06	-0.17	-0.24	-0.27	-0.24	-0.16	-0.05	0.00
BLOCKING HEIGHTS										
10	BLK	2.16								3.75
11		1.78								3.40
12		2.05								3.77
13		1.67								3.42

STATE PROJECT NUMBER

1060-33-80

LEGEND

P14-04 INTERMEDIATE ELEVATION POINT (PANEL POINT).

IN THIS EXAMPLE, '14' IS THE FIELD SECTION NUMBER AND '04' IS THE PANEL POINT WITHIN THIS FIELD SECTION.

NOTES

1. ALL TABULATED VALUES ARE IN DECIMALS OF A FOOT.
2. POSITIVE DEFLECTIONS ARE DOWNWARD.
3. POSITIVE CAMBER IS UPWARD RELATIVE TO A CHORD LINE JOINING THE FIELD SECTION ENDPOINTS.
4. CAMBER DIAGRAMS HAVE BEEN DEVELOPED ASSUMING THAT ALL SLAB WEIGHT, INCLUDING ALLOWANCE FOR PERMANENT STAY-IN-PLACE FORMS, IS APPLIED TO A NON-COMPOSITE STRUCTURE. VERIFY THE VALIDITY OF THIS ASSUMPTION BASED ON THE SELECTED POUR SEQUENCE. ADJUST CAMBER TABLES AS NECESSARY FOR ANY EXPECTED VARIATIONS EXCEEDING .04' (1/2").
5. CAMBER GIRDERS TO THE VALUES SHOWN, AFTER INCORPORATING ANY REQUIRED ADJUSTMENTS FOR THE SELECTED POUR SEQUENCE.
6. TOP OF ERECTED STEEL ELEVATIONS AT SUPPORTS AND FIELD SPLICES SHALL BE CHECKED AFTER ERECTION IS COMPLETE AND BEFORE BOLTED CONNECTIONS ARE FINALLY TORQUED.

   IF SURVEYED ELEVATIONS DIFFER FROM THOSE EXPECTED BY MORE THAN 0.02 FT (1/4") AT SUPPORTS OR 0.083 FT (1") AT FIELD SPLICES, CORRECTIVE MEASURES SHALL BE TAKEN BEFORE FURTHER CONSTRUCTION OPERATIONS MAY PROCEED.

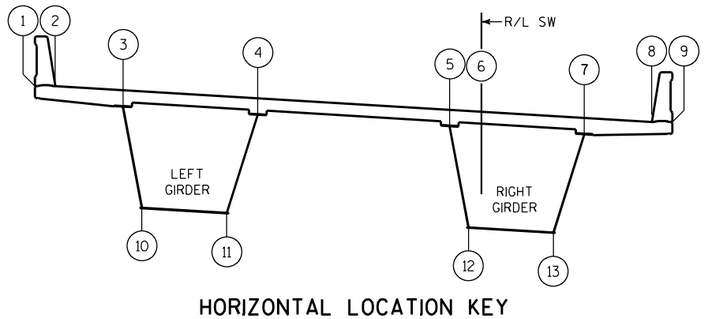

HORIZONTAL LOCATION KEY

LOOKING UPSTATION

TABULATED ELEVATIONS

FTW FINISHED ELEVATION AT TOP OF WEB.

DS FINISHED ELEVATION AT TOP OF DECK SLAB.

TES TOP OF ERECTED STEEL ELEVATION.

= ZW + PL - SW

ZW TOP OF WEB ELEVATION NEGLECTING ALL DEFLECTIONS.

= DS + SW + DL1 + DL2 - DK

CW ELEVATION OF CHORD LINES JOINING TOP OF WEB ELEVATION AT 'ZW' AT FIELD SPLICES AND END SUPPORTS.

BLK BLOCKING HEIGHT TO UNDEFLECTED SHAPE. BLOCKING HEIGHT IS MEASURED TO BOTTOM OF WEB AND DOES NOT TAKE INTO ACCOUNT BOTTOM FLANGE THICKNESS, SPLICE PLATES, ETC.

TABULATED DEFLECTIONS

SW SELF-WEIGHT OF STEEL GIRDERS, INCLUDING ALL DIAPHRAGMS, STIFFENERS AND BRACING.

DL1 CONCRETE DECK SLAB AND HAUNCHES APPLIED TO BARE STEEL SECTION INCLUDING PERMANENT STAY-IN-PLACE FORMS.

DL2 PARAPETS APPLIED TO COMPOSITE SECTION.

CALCULATED VALUES

PL = THICKNESS OF TOP FLANGE PLUS ANY FILLER AND SPLICE PLATES

DK = DECK ASSEMBLY THICKNESS FROM TOP OF WEB TO FINISHED GRADE

= 4" HAUNCH + 10 1/2" SLAB = 14 1/2" = 1.21 FT

C = CAMBER = ZW - CW

NO.	DATE	REVISION	BY

STATE OF WISCONSIN
DEPARTMENT OF TRANSPORTATION

STRUCTURE B-40-855

DRAWN BY GLM | PLANS CK'D. WRT

CAMBER AND DECK ELEVATIONS: FIELD SECTIONS 3 & 4

SHEET 61 OF 96

FIELD SECTION #5

POS'N NO.	VALUE	PANEL POINT POSITION AND STATION						
		FS #4	P05-01	P05-02	P05-03	P05-04	P05-05	FS #5
		583+79.64	583+88.22	584+01.81	584+15.39	584+28.97	584+42.56	584+51.14
FINISHED ELEVATION - TOP OF DECK								
1	DS	808.10	808.33	808.72	809.12	809.53	809.94	810.19
2		808.01	808.24	808.63	809.03	809.44	809.85	810.11
6		806.21	806.44	806.83	807.23	807.64	808.05	808.31
8		805.49	805.72	806.11	806.51	806.92	807.33	807.59
9		805.40	805.64	806.02	806.43	806.83	807.24	807.50
CAMBER DATA								
3	DS	807.72	807.96	808.34	808.75	809.16	809.56	809.82
	TES	806.61	806.82	807.23	807.65	808.07	808.47	808.77
LEFT	ZW	806.48	806.73	807.15	807.58	808.00	808.40	808.66
GIRDER	CW	806.48	806.74	807.15	807.57	807.98	808.39	808.66
	SW	-0.01	0.00	0.00	0.01	0.01	0.01	0.01
LEFT	DL1	-0.03	-0.02	0.00	0.02	0.03	0.03	0.03
WEB	DL2	0.00	0.00	0.00	0.01	0.01	0.01	0.00
	C	0.00	-0.01	-0.01	0.01	0.02	0.01	0.00
4	DS	807.15	807.39	807.77	808.18	808.59	808.99	809.25
	TES	806.05	806.25	806.66	807.08	807.50	807.91	808.20
LEFT	ZW	805.92	806.17	806.58	807.01	807.43	807.84	808.09
GIRDER	CW	805.92	806.18	806.60	807.01	807.42	807.83	808.09
	SW	0.00	0.00	0.01	0.01	0.01	0.01	0.01
RIGHT	DL1	-0.02	-0.01	0.01	0.02	0.03	0.03	0.03
WEB	DL2	0.00	0.00	0.00	0.00	0.00	0.00	0.00
	C	0.00	-0.01	-0.01	0.00	0.01	0.01	0.00
5	DS	806.34	806.58	806.96	807.37	807.78	808.18	808.44
	TES	805.26	805.47	805.87	806.29	806.71	807.11	807.40
RIGHT	ZW	805.14	805.39	805.80	806.23	806.64	807.04	807.29
GIRDER	CW	805.14	805.40	805.81	806.22	806.63	807.04	807.29
	SW	0.00	0.01	0.01	0.02	0.02	0.02	0.02
LEFT	DL1	0.00	0.01	0.03	0.05	0.05	0.05	0.04
WEB	DL2	0.00	0.00	0.00	0.00	0.00	0.00	0.00
	C	0.00	-0.01	0.00	0.01	0.02	0.01	0.00
7	DS	805.77	806.01	806.39	806.80	807.21	807.61	807.87
	TES	804.70	804.91	805.31	805.73	806.14	806.55	806.84
RIGHT	ZW	804.58	804.83	805.25	805.67	806.08	806.48	806.73
GIRDER	CW	804.58	804.84	805.25	805.66	806.07	806.47	806.73
	SW	0.01	0.01	0.01	0.02	0.02	0.02	0.02
RIGHT	DL1	0.01	0.02	0.04	0.05	0.06	0.05	0.05
WEB	DL2	0.00	0.00	0.00	0.01	0.01	0.01	0.00
	C	0.00	-0.01	0.00	0.01	0.02	0.01	0.00
BLOCKING HEIGHTS								
10	BLK	3.75						5.92
11		3.40						5.57
12		3.77						5.92
13		3.42						5.56

FIELD SECTION #6

POS'N NO.	VALUE	PANEL POINT POSITION AND STATION							
		FS #5	P06-01	P06-02	P06-03	PIER	P06-05	P06-06	FS #6
		584+51.14	584+56.14	584+69.72	584+83.31	584+96.89	585+10.95	585+25.02	585+30.02
FINISHED ELEVATION - TOP OF DECK									
1	DS	810.19	810.34	810.75	811.16	811.57	811.99	812.41	812.56
2		810.11	810.26	810.66	811.07	811.48	811.90	812.32	812.47
6		808.31	808.46	808.86	809.27	809.68	810.10	810.52	810.67
8		807.59	807.74	808.14	808.55	808.96	809.38	809.80	809.95
9		807.50	807.65	808.06	808.46	808.87	809.29	809.72	809.87
CAMBER DATA									
3	DS	809.82	809.97	810.38	810.79	811.19	811.62	812.04	812.19
	TES	808.77	808.87	809.27	809.66	810.07	810.51	810.96	811.16
LEFT	ZW	808.66	808.80	809.19	809.58	809.99	810.43	810.88	811.05
GIRDER	CW	808.66	808.81	809.22	809.63	810.05	810.47	810.90	811.05
	SW	0.01	0.01	0.01	0.00	0.00	0.00	0.01	0.01
LEFT	DL1	0.03	0.02	0.01	0.00	0.00	0.02	0.04	0.05
WEB	DL2	0.00	0.00	0.00	0.00	0.00	0.00	0.00	0.00
	C	0.00	-0.01	-0.03	-0.05	-0.06	-0.04	-0.02	0.00
4	DS	809.25	809.40	809.81	810.22	810.62	811.05	811.47	811.62
	TES	808.20	808.31	808.70	809.10	809.50	809.94	810.38	810.59
LEFT	ZW	808.09	808.24	808.63	809.02	809.42	809.86	810.31	810.47
GIRDER	CW	808.09	808.24	808.65	809.06	809.47	809.90	810.32	810.47
	SW	0.01	0.01	0.01	0.00	0.00	0.00	0.01	0.01
RIGHT	DL1	0.03	0.03	0.02	0.00	0.00	0.02	0.04	0.05
WEB	DL2	0.00	0.00	0.00	0.00	0.00	0.00	0.00	0.00
	C	0.00	-0.01	-0.03	-0.05	-0.06	-0.04	-0.01	0.00
5	DS	808.44	808.59	809.00	809.41	809.81	810.24	810.66	810.81
	TES	807.40	807.51	807.90	808.29	808.69	809.12	809.57	809.77
RIGHT	ZW	807.29	807.44	807.82	808.21	808.61	809.04	809.49	809.66
GIRDER	CW	807.29	807.44	807.85	808.26	808.67	809.09	809.51	809.66
	SW	0.02	0.01	0.01	0.00	0.00	0.00	0.01	0.01
LEFT	DL1	0.04	0.04	0.02	0.01	0.00	0.01	0.03	0.04
WEB	DL2	0.00	0.00	0.00	0.00	0.00	0.00	0.00	0.00
	C	0.00	-0.01	-0.03	-0.05	-0.06	-0.04	-0.01	0.00
7	DS	807.87	808.02	808.43	808.84	809.24	809.67	810.09	810.24
	TES	806.84	806.94	807.33	807.72	808.12	808.55	809.00	809.20
RIGHT	ZW	806.73	806.87	807.26	807.64	808.04	808.47	808.92	809.08
GIRDER	CW	806.73	806.88	807.29	807.69	808.10	808.51	808.93	809.08
	SW	0.02	0.01	0.01	0.00	0.00	0.00	0.01	0.01
RIGHT	DL1	0.05	0.04	0.03	0.01	0.00	0.01	0.03	0.04
WEB	DL2	0.00	0.00	0.00	0.00	0.00	0.00	0.00	0.00
	C	0.00	-0.01	-0.03	-0.05	-0.06	-0.04	-0.01	0.00
BLOCKING HEIGHTS									
10	BLK	5.92							8.32
11		5.57							7.95
12		5.92							8.28
13		5.56							7.92

STATE PROJECT NUMBER

1060-33-80

LEGEND

P14-04 INTERMEDIATE ELEVATION POINT (PANEL POINT).

IN THIS EXAMPLE, '14' IS THE FIELD SECTION NUMBER AND '04' IS THE PANEL POINT WITHIN THIS FIELD SECTION.

NOTES

1. ALL TABULATED VALUES ARE IN DECIMALS OF A FOOT.
2. POSITIVE DEFLECTIONS ARE DOWNWARD.
3. POSITIVE CAMBER IS UPWARD RELATIVE TO A CHORD LINE JOINING THE FIELD SECTION ENDPOINTS.
4. CAMBER DIAGRAMS HAVE BEEN DEVELOPED ASSUMING THAT ALL SLAB WEIGHT, INCLUDING ALLOWANCE FOR PERMANENT STAY-IN-PLACE FORMS, IS APPLIED TO A NON-COMPOSITE STRUCTURE. VERIFY THE VALIDITY OF THIS ASSUMPTION BASED ON THE SELECTED POUR SEQUENCE. ADJUST CAMBER TABLES AS NECESSARY FOR ANY EXPECTED VARIATIONS EXCEEDING .04' (1/2").
5. CAMBER GIRDERS TO THE VALUES SHOWN, AFTER INCORPORATING ANY REQUIRED ADJUSTMENTS FOR THE SELECTED POUR SEQUENCE.
6. TOP OF ERECTED STEEL ELEVATIONS AT SUPPORTS AND FIELD SPLICES SHALL BE CHECKED AFTER ERECTION IS COMPLETE AND BEFORE BOLTED CONNECTIONS ARE FINALLY TORQUED.

   IF SURVEYED ELEVATIONS DIFFER FROM THOSE EXPECTED BY MORE THAN 0.02 FT (1/4") AT SUPPORTS OR 0.083 FT (1") AT FIELD SPLICES, CORRECTIVE MEASURES SHALL BE TAKEN BEFORE FURTHER CONSTRUCTION OPERATIONS MAY PROCEED.

8

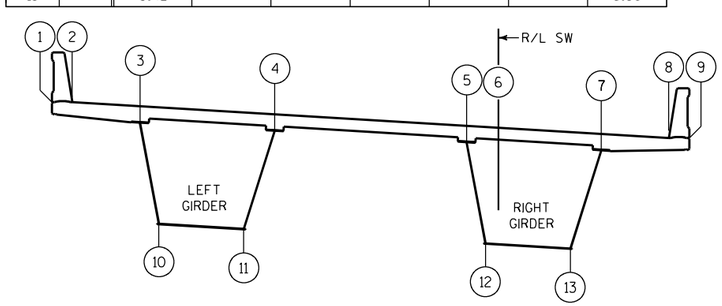

HORIZONTAL LOCATION KEY

LOOKING UPSTATION

TABULATED ELEVATIONS

FTW FINISHED ELEVATION AT TOP OF WEB.

DS FINISHED ELEVATION AT TOP OF DECK SLAB.

TES TOP OF ERECTED STEEL ELEVATION.

= ZW + PL - SW

ZW TOP OF WEB ELEVATION NEGLECTING ALL DEFLECTIONS.

= DS + SW + DL1 + DL2 - DK

CW ELEVATION OF CHORD LINES JOINING TOP OF WEB ELEVATION AT 'ZW' AT FIELD SPLICES AND END SUPPORTS.

BLK BLOCKING HEIGHT TO UNDEFLECTED SHAPE. BLOCKING HEIGHT IS MEASURED TO BOTTOM OF WEB AND DOES NOT TAKE INTO ACCOUNT BOTTOM FLANGE THICKNESS, SPLICE PLATES, ETC.

TABULATED DEFLECTIONS

SW SELF-WEIGHT OF STEEL GIRDERS, INCLUDING ALL DIAPHRAGMS, STIFFENERS AND BRACING.

DL1 CONCRETE DECK SLAB AND HAUNCHES APPLIED TO BARE STEEL SECTION INCLUDING PERMANENT STAY-IN-PLACE FORMS.

DL2 PARAPETS APPLIED TO COMPOSITE SECTION.

CALCULATED VALUES

PL = THICKNESS OF TOP FLANGE PLUS ANY FILLER AND SPLICE PLATES

DK = DECK ASSEMBLY THICKNESS FROM TOP OF WEB TO FINISHED GRADE

= 4" HAUNCH + 10 1/2" SLAB = 14 1/2" = 1.21 FT

C = CAMBER = ZW - CW

8

NO.	DATE	REVISION	BY

STATE OF WISCONSIN
DEPARTMENT OF TRANSPORTATION

STRUCTURE B-40-855

DRAWN BY GLM | PLANS CK'D. WRT

CAMBER AND DECK ELEVATIONS: FIELD SECTIONS 5 & 6

SHEET 62 OF 96

STATE PROJECT NUMBER
1060-33-80

FIELD SECTION #7

POS'N NO.	VALUE	PANEL POINT POSITION AND STATION						
		FS #6	P07-01	P07-02	P07-03	P07-04	P07-05	P07-06
		585+30.02	585+39.08	585+53.14	585+67.20	585+81.27	585+95.33	586+09.39
FINISHED ELEVATION - TOP OF DECK								
1	DS	812.56	812.83	813.23	813.62	814.00	814.36	814.71
2		812.47	812.74	813.15	813.54	813.91	814.28	814.62
6		810.67	810.94	811.35	811.74	812.11	812.48	812.82
8		809.95	810.22	810.63	811.02	811.39	811.76	812.10
9		809.87	810.13	810.54	810.93	811.31	811.67	812.02
CAMBER DATA								
3	DS	812.19	812.46	812.86	813.25	813.63	813.99	814.34
	TES	811.16	811.40	811.82	812.22	812.57	812.91	813.21
LEFT	ZW	811.05	811.34	811.76	812.15	812.51	812.83	813.13
GIRDER	CW	811.05	811.29	811.66	812.03	812.39	812.76	813.13
	SW	0.01	0.02	0.02	0.02	0.02	0.01	0.00
LEFT	DL1	0.05	0.06	0.08	0.08	0.06	0.04	0.00
WEB	DL2	0.00	0.01	0.01	0.01	0.01	0.00	0.00
	C	0.00	0.05	0.11	0.13	0.11	0.07	0.00
4	DS	811.62	811.89	812.29	812.68	813.06	813.42	813.77
	TES	810.59	810.82	811.24	811.64	812.00	812.33	812.64
LEFT	ZW	810.47	810.76	811.18	811.57	811.93	812.26	812.56
GIRDER	CW	810.47	810.71	811.08	811.45	811.82	812.19	812.56
	SW	0.01	0.02	0.02	0.02	0.02	0.01	0.00
RIGHT	DL1	0.05	0.06	0.07	0.07	0.06	0.03	0.00
WEB	DL2	0.00	0.01	0.01	0.01	0.01	0.00	0.00
	C	0.00	0.04	0.10	0.12	0.11	0.07	0.00
5	DS	810.81	811.08	811.48	811.87	812.25	812.61	812.96
	TES	809.77	810.01	810.43	810.82	811.18	811.52	811.83
RIGHT	ZW	809.66	809.94	810.36	810.76	811.12	811.44	811.75
GIRDER	CW	809.66	809.90	810.27	810.64	811.01	811.38	811.75
	SW	0.01	0.01	0.02	0.02	0.02	0.01	0.00
LEFT	DL1	0.04	0.05	0.07	0.07	0.05	0.03	0.00
WEB	DL2	0.00	0.00	0.01	0.01	0.01	0.00	0.00
	C	0.00	0.04	0.10	0.12	0.11	0.06	0.00
7	DS	810.24	810.51	810.91	811.30	811.68	812.04	812.39
	TES	809.20	809.43	809.85	810.24	810.61	810.95	811.26
RIGHT	ZW	809.08	809.36	809.78	810.18	810.54	810.87	811.18
GIRDER	CW	809.08	809.32	809.69	810.07	810.44	810.81	811.18
	SW	0.01	0.01	0.02	0.02	0.01	0.01	0.00
RIGHT	DL1	0.04	0.05	0.06	0.06	0.05	0.03	0.00
WEB	DL2	0.00	0.01	0.01	0.01	0.01	0.00	0.00
	C	0.00	0.04	0.09	0.11	0.10	0.06	0.00
BLOCKING HEIGHTS								
10	BLK	8.32						10.40
11		7.95						10.04
12		8.28						10.38
13		7.92						10.02

FIELD SECTION #8

POS'N NO.	VALUE	PANEL POINT POSITION AND STATION						
		P08-01	P08-02	P08-03	P08-04	P08-05	P08-06	FS# 7
		586+13.39	586+28.20	586+43.02	586+57.83	586+72.64	586+87.45	586+97.27
FINISHED ELEVATION - TOP OF DECK								
1	DS	814.81	815.15	815.48	815.80	816.10	816.38	816.56
2		814.72	815.07	815.40	815.71	816.01	816.29	816.47
6		812.92	813.27	813.60	813.91	814.21	814.49	814.67
8		812.20	812.55	812.88	813.19	813.49	813.77	813.95
9		812.11	812.46	812.79	813.11	813.40	813.69	813.87
CAMBER DATA								
3	DS	814.44	814.78	815.11	815.43	815.73	816.01	816.19
	TES	813.31	813.70	814.07	814.40	814.70	814.96	815.20
LEFT	ZW	813.23	813.63	814.01	814.35	814.64	814.90	815.06
GIRDER	CW	813.23	813.55	813.87	814.20	814.52	814.85	815.06
	SW	0.00	0.01	0.02	0.03	0.02	0.02	0.02
LEFT	DL1	0.00	0.04	0.07	0.09	0.09	0.07	0.06
WEB	DL2	0.00	0.00	0.01	0.01	0.01	0.01	0.01
	C	0.00	0.08	0.13	0.15	0.12	0.06	0.00
4	DS	813.87	814.21	814.54	814.86	815.16	815.44	815.62
	TES	812.74	813.13	813.49	813.82	814.12	814.39	814.62
LEFT	ZW	812.66	813.06	813.43	813.76	814.06	814.32	814.48
GIRDER	CW	812.66	812.98	813.30	813.62	813.95	814.27	814.48
	SW	0.00	0.01	0.02	0.02	0.02	0.02	0.01
RIGHT	DL1	0.00	0.04	0.07	0.08	0.08	0.07	0.05
WEB	DL2	0.00	0.00	0.01	0.01	0.01	0.01	0.00
	C	0.00	0.08	0.13	0.14	0.11	0.05	0.00
5	DS	813.06	813.40	813.73	814.05	814.35	814.63	814.81
	TES	811.93	812.32	812.68	813.01	813.31	813.57	813.78
RIGHT	ZW	811.85	812.24	812.61	812.94	813.24	813.50	813.67
GIRDER	CW	811.85	812.17	812.49	812.81	813.13	813.45	813.67
	SW	0.00	0.01	0.02	0.02	0.02	0.02	0.01
LEFT	DL1	0.00	0.03	0.06	0.08	0.08	0.06	0.05
WEB	DL2	0.00	0.00	0.01	0.01	0.01	0.01	0.00
	C	0.00	0.07	0.12	0.13	0.11	0.05	0.00
7	DS	812.49	812.83	813.16	813.48	813.78	814.06	814.24
	TES	811.36	811.74	812.10	812.43	812.73	813.00	813.20
RIGHT	ZW	811.28	811.67	812.03	812.37	812.66	812.93	813.09
GIRDER	CW	811.28	811.60	811.92	812.24	812.56	812.88	813.09
	SW	0.00	0.01	0.02	0.02	0.02	0.01	0.01
RIGHT	DL1	0.00	0.03	0.06	0.07	0.07	0.06	0.05
WEB	DL2	0.00	0.00	0.01	0.01	0.01	0.01	0.01
	C	0.00	0.07	0.12	0.13	0.10	0.05	0.00
BLOCKING HEIGHTS								
10	BLK	10.50						12.33
11		10.13						11.96
12		10.47						12.29
13		10.11						11.93

LEGEND

P14-04 INTERMEDIATE ELEVATION POINT (PANEL POINT).

IN THIS EXAMPLE, '14' IS THE FIELD SECTION NUMBER AND '04' IS THE PANEL POINT WITHIN THIS FIELD SECTION.

NOTES

1. ALL TABULATED VALUES ARE IN DECIMALS OF A FOOT.
2. POSITIVE DEFLECTIONS ARE DOWNWARD.
3. POSITIVE CAMBER IS UPWARD RELATIVE TO A CHORD LINE JOINING THE FIELD SECTION ENDPOINTS.
4. CAMBER DIAGRAMS HAVE BEEN DEVELOPED ASSUMING THAT ALL SLAB WEIGHT, INCLUDING ALLOWANCE FOR PERMANENT STAY-IN-PLACE FORMS, IS APPLIED TO A NON-COMPOSITE STRUCTURE. VERIFY THE VALIDITY OF THIS ASSUMPTION BASED ON THE SELECTED POUR SEQUENCE. ADJUST CAMBER TABLES AS NECESSARY FOR ANY EXPECTED VARIATIONS EXCEEDING .04' (1/2").
5. CAMBER GIRDERS TO THE VALUES SHOWN, AFTER INCORPORATING ANY REQUIRED ADJUSTMENTS FOR THE SELECTED POUR SEQUENCE.
6. TOP OF ERECTED STEEL ELEVATIONS AT SUPPORTS AND FIELD SPLICES SHALL BE CHECKED AFTER ERECTION IS COMPLETE AND BEFORE BOLTED CONNECTIONS ARE FINALLY TORQUED.

   IF SURVEYED ELEVATIONS DIFFER FROM THOSE EXPECTED BY MORE THAN 0.02 FT (1/4") AT SUPPORTS OR 0.083 FT (1") AT FIELD SPLICES, CORRECTIVE MEASURES SHALL BE TAKEN BEFORE FURTHER CONSTRUCTION OPERATIONS MAY PROCEED.

8

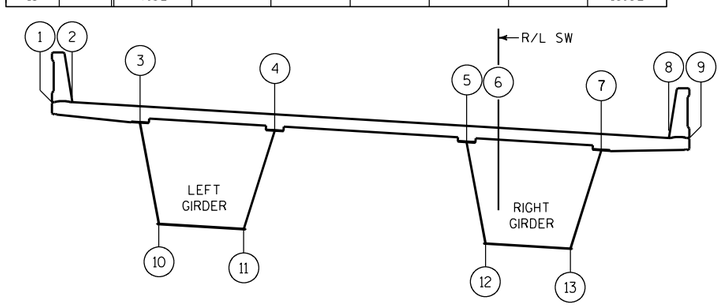

HORIZONTAL LOCATION KEY

LOOKING UPSTATION

TABULATED ELEVATIONS

FTW FINISHED ELEVATION AT TOP OF WEB.

DS FINISHED ELEVATION AT TOP OF DECK SLAB.

TES TOP OF ERECTED STEEL ELEVATION.

= ZW + PL - SW

ZW TOP OF WEB ELEVATION NEGLECTING ALL DEFLECTIONS.

= DS + SW + DL1 + DL2 - DK

CW ELEVATION OF CHORD LINES JOINING TOP OF WEB ELEVATION AT 'ZW' AT FIELD SPLICES AND END SUPPORTS.

BLK BLOCKING HEIGHT TO UNDEFLECTED SHAPE. BLOCKING HEIGHT IS MEASURED TO BOTTOM OF WEB AND DOES NOT TAKE INTO ACCOUNT BOTTOM FLANGE THICKNESS, SPLICE PLATES, ETC.

TABULATED DEFLECTIONS

SW SELF-WEIGHT OF STEEL GIRDERS, INCLUDING ALL DIAPHRAGMS, STIFFENERS AND BRACING.

DL1 CONCRETE DECK SLAB AND HAUNCHES APPLIED TO BARE STEEL SECTION INCLUDING PERMANENT STAY-IN-PLACE FORMS.

DL2 PARAPETS APPLIED TO COMPOSITE SECTION.

CALCULATED VALUES

PL = THICKNESS OF TOP FLANGE PLUS ANY FILLER AND SPLICE PLATES

DK = DECK ASSEMBLY THICKNESS FROM TOP OF WEB TO FINISHED GRADE

= 4" HAUNCH + 10 1/2" SLAB = 14 1/2" = 1.21 FT

C = CAMBER = ZW - CW

8

NO.	DATE	REVISION	BY

STATE OF WISCONSIN
DEPARTMENT OF TRANSPORTATION

STRUCTURE B-40-855

DRAWN BY GLM | PLANS CK'D. WRT

CAMBER AND DECK ELEVATIONS: FIELD SECTIONS 7 & 8

SHEET 63 OF 96

FIELD SECTION #9

POS'N NO.	VALUE	PANEL POINT POSITION AND STATION							
		FS #7	P09-01	P09-02	PIER	P09-04	P09-05	P09-06	FS #8
		586+97.27	587+02.27	587+17.08	587+31.89	587+46.14	587+60.39	587+74.64	587+79.64
FINISHED ELEVATION - TOP OF DECK									
1	DS	816.56	816.65	816.90	817.13	817.34	817.54	817.72	817.78
2		816.47	816.56	816.81	817.05	817.26	817.45	817.63	817.69
6		814.67	814.76	815.01	815.25	815.46	815.65	815.83	815.89
8		813.95	814.04	814.29	814.53	814.74	814.93	815.11	815.17
9		813.87	813.95	814.20	814.44	814.65	814.85	815.03	815.09
CAMBER DATA									
3	DS	816.19	816.28	816.53	816.76	816.97	817.17	817.35	817.41
	TES	815.20	815.22	815.44	815.66	815.87	816.08	816.28	816.40
LEFT	ZW	815.06	815.13	815.34	815.55	815.77	815.99	816.19	816.26
GIRDER	CW	815.06	815.13	815.35	815.56	815.77	815.98	816.19	816.26
	SW	0.02	0.01	0.00	0.00	0.00	0.01	0.02	0.02
LEFT	DL1	0.06	0.05	0.02	0.00	0.00	0.01	0.03	0.03
WEB	DL2	0.01	0.00	0.00	0.00	0.00	0.00	0.01	0.01
	C	0.00	0.00	-0.01	-0.01	0.00	0.01	0.00	0.00
4	DS	815.62	815.71	815.96	816.19	816.40	816.60	816.78	816.84
	TES	814.62	814.65	814.87	815.09	815.30	815.52	815.71	815.83
LEFT	ZW	814.48	814.55	814.77	814.98	815.20	815.42	815.63	815.69
GIRDER	CW	814.48	814.56	814.77	814.99	815.20	815.41	815.62	815.69
	SW	0.01	0.01	0.00	0.00	0.00	0.01	0.02	0.02
RIGHT	DL1	0.05	0.04	0.02	0.00	0.01	0.02	0.03	0.04
WEB	DL2	0.00	0.00	0.00	0.00	0.00	0.00	0.00	0.00
	C	0.00	0.00	0.00	-0.01	0.00	0.01	0.01	0.00
5	DS	814.81	814.90	815.15	815.38	815.59	815.79	815.97	816.03
	TES	813.78	813.81	814.04	814.26	814.47	814.69	814.89	815.00
RIGHT	ZW	813.67	813.74	813.96	814.17	814.39	814.62	814.83	814.90
GIRDER	CW	813.67	813.74	813.96	814.18	814.40	814.61	814.82	814.90
	SW	0.01	0.01	0.00	0.00	0.00	0.01	0.02	0.02
LEFT	DL1	0.05	0.04	0.01	0.00	0.01	0.02	0.04	0.05
WEB	DL2	0.00	0.00	0.00	0.00	0.00	0.00	0.00	0.00
	C	0.00	0.00	-0.01	-0.01	0.00	0.01	0.00	0.00
7	DS	814.24	814.33	814.58	814.81	815.02	815.22	815.40	815.46
	TES	813.20	813.24	813.47	813.69	813.91	814.12	814.32	814.43
RIGHT	ZW	813.09	813.16	813.39	813.60	813.83	814.05	814.26	814.33
GIRDER	CW	813.09	813.17	813.39	813.61	813.83	814.04	814.25	814.33
	SW	0.01	0.01	0.00	0.00	0.00	0.01	0.02	0.02
RIGHT	DL1	0.05	0.04	0.01	0.00	0.01	0.03	0.04	0.05
WEB	DL2	0.01	0.00	0.00	0.00	0.00	0.00	0.00	0.01
	C	0.00	0.00	0.00	-0.01	0.00	0.01	0.01	0.00
BLOCKING HEIGHTS									
10	BLK	12.33							13.53
11		11.96							13.17
12		12.29							13.52
13		11.93							13.16

FIELD SECTION #10

POS'N NO.	VALUE	PANEL POINT POSITION AND STATION									
		FS #8	P10-01	P10-02	P10-03	P10-04	P10-05	P10-06	P10-07	P10-08	FS #9
		587+79.64	587+88.89	588+03.14	588+17.39	588+31.64	588+45.89	588+60.14	588+74.39	588+88.64	588+95.89
FINISHED ELEVATION - TOP OF DECK											
1	DS	817.78	817.89	818.04	818.18	818.30	818.41	818.50	818.58	818.64	818.67
2		817.69	817.80	817.95	818.09	818.21	818.32	818.41	818.49	818.55	818.58
6		815.89	816.00	816.15	816.29	816.41	816.52	816.61	816.69	816.75	816.78
8		815.17	815.28	815.43	815.57	815.69	815.80	815.89	815.97	816.03	816.06
9		815.09	815.19	815.35	815.48	815.60	815.71	815.80	815.88	815.94	815.97
CAMBER DATA											
3	DS	817.41	817.52	817.67	817.80	817.93	818.03	818.13	818.20	818.27	818.29
	TES	816.40	816.44	816.59	816.72	816.82	816.90	816.97	817.04	817.20	817.35
LEFT	ZW	816.26	816.38	816.53	816.66	816.75	816.82	816.88	816.95	817.02	817.08
GIRDER	CW	816.26	816.32	816.42	816.53	816.63	816.73	816.83	816.93	817.03	817.08
	SW	0.02	0.02	0.02	0.02	0.02	0.01	0.00	-0.01	-0.01	0.00
LEFT	DL1	0.03	0.04	0.04	0.03	0.01	-0.01	-0.03	-0.04	-0.03	-0.01
WEB	DL2	0.01	0.01	0.01	0.01	0.01	0.00	0.00	0.00	0.00	0.00
	C	0.00	0.05	0.11	0.13	0.13	0.10	0.06	0.02	0.00	0.00
4	DS	816.84	816.95	817.10	817.23	817.36	817.46	817.56	817.63	817.70	817.72
	TES	815.83	815.87	816.02	816.14	816.25	816.34	816.41	816.47	816.62	816.77
LEFT	ZW	815.69	815.81	815.96	816.08	816.18	816.26	816.33	816.38	816.45	816.50
GIRDER	CW	815.69	815.76	815.86	815.95	816.05	816.15	816.25	816.35	816.45	816.50
	SW	0.02	0.02	0.02	0.02	0.02	0.01	0.00	-0.01	-0.01	0.00
RIGHT	DL1	0.04	0.04	0.04	0.03	0.02	0.00	-0.02	-0.03	-0.03	-0.01
WEB	DL2	0.00	0.01	0.01	0.01	0.00	0.00	0.00	0.00	0.00	0.00
	C	0.00	0.05	0.10	0.13	0.13	0.11	0.08	0.04	0.00	0.00
5	DS	816.03	816.14	816.29	816.42	816.55	816.65	816.75	816.82	816.89	816.91
	TES	815.00	815.07	815.23	815.36	815.46	815.55	815.62	815.67	815.82	815.96
RIGHT	ZW	814.90	815.01	815.17	815.30	815.40	815.48	815.54	815.59	815.65	815.69
GIRDER	CW	814.90	814.96	815.06	815.15	815.25	815.35	815.45	815.54	815.64	815.69
	SW	0.02	0.03	0.03	0.03	0.02	0.01	0.01	0.00	-0.01	0.00
LEFT	DL1	0.05	0.06	0.06	0.06	0.04	0.02	-0.01	-0.02	-0.02	-0.01
WEB	DL2	0.00	0.01	0.01	0.01	0.00	0.00	0.00	0.00	0.00	0.00
	C	0.00	0.05	0.12	0.15	0.15	0.13	0.09	0.05	0.01	0.00
7	DS	815.46	815.57	815.72	815.85	815.98	816.08	816.18	816.25	816.32	816.34
	TES	814.43	814.50	814.66	814.79	814.90	814.98	815.05	815.11	815.25	815.40
RIGHT	ZW	814.33	814.45	814.60	814.73	814.84	814.92	814.97	815.03	815.08	815.12
GIRDER	CW	814.33	814.39	814.49	814.59	814.68	814.78	814.88	814.98	815.07	815.12
	SW	0.02	0.03	0.03	0.03	0.02	0.01	0.01	0.00	0.00	0.00
RIGHT	DL1	0.05	0.06	0.06	0.06	0.04	0.02	0.00	-0.02	-0.02	-0.01
WEB	DL2	0.01	0.01	0.01	0.01	0.00	0.00	0.00	0.00	0.00	0.00
	C	0.00	0.05	0.11	0.15	0.15	0.13	0.10	0.05	0.01	0.00
BLOCKING HEIGHTS											
10	BLK	13.53									14.34
11		13.17									13.98
12		13.52									14.32
13		13.16									13.96

STATE PROJECT NUMBER

1060-33-80

LEGEND

P14-04 INTERMEDIATE ELEVATION POINT (PANEL POINT).

IN THIS EXAMPLE, '14' IS THE FIELD SECTION NUMBER AND '04' IS THE PANEL POINT WITHIN THIS FIELD SECTION.

NOTES

1. ALL TABULATED VALUES ARE IN DECIMALS OF A FOOT.
2. POSITIVE DEFLECTIONS ARE DOWNWARD.
3. POSITIVE CAMBER IS UPWARD RELATIVE TO A CHORD LINE JOINING THE FIELD SECTION ENDPOINTS.
4. CAMBER DIAGRAMS HAVE BEEN DEVELOPED ASSUMING THAT ALL SLAB WEIGHT, INCLUDING ALLOWANCE FOR PERMANENT STAY-IN-PLACE FORMS, IS APPLIED TO A NON-COMPOSITE STRUCTURE. VERIFY THE VALIDITY OF THIS ASSUMPTION BASED ON THE SELECTED POUR SEQUENCE. ADJUST CAMBER TABLES AS NECESSARY FOR ANY EXPECTED VARIATIONS EXCEEDING .04' (1/2").
5. CAMBER GIRDERS TO THE VALUES SHOWN, AFTER INCORPORATING ANY REQUIRED ADJUSTMENTS FOR THE SELECTED POUR SEQUENCE.
6. TOP OF ERECTED STEEL ELEVATIONS AT SUPPORTS AND FIELD SPLICES SHALL BE CHECKED AFTER ERECTION IS COMPLETE AND BEFORE BOLTED CONNECTIONS ARE FINALLY TORQUED.

   IF SURVEYED ELEVATIONS DIFFER FROM THOSE EXPECTED BY MORE THAN 0.02 FT (1/4") AT SUPPORTS OR 0.083 FT (1") AT FIELD SPLICES, CORRECTIVE MEASURES SHALL BE TAKEN BEFORE FURTHER CONSTRUCTION OPERATIONS MAY PROCEED.

8

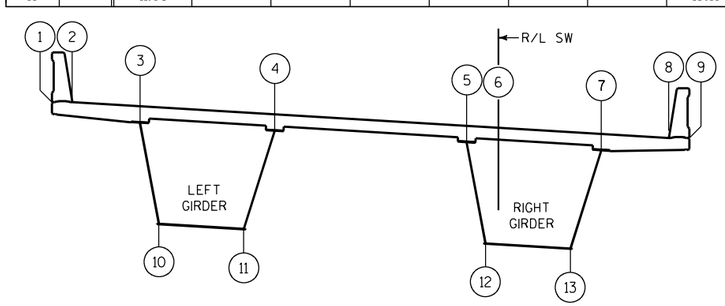

HORIZONTAL LOCATION KEY

LOOKING UPSTATION

TABULATED ELEVATIONS

FTW FINISHED ELEVATION AT TOP OF WEB.

DS FINISHED ELEVATION AT TOP OF DECK SLAB.

TES TOP OF ERECTED STEEL ELEVATION.

= ZW + PL - SW

ZW TOP OF WEB ELEVATION NEGLECTING ALL DEFLECTIONS.

= DS + SW + DL1 + DL2 - DK

CW ELEVATION OF CHORD LINES JOINING TOP OF WEB ELEVATION AT 'ZW' AT FIELD SPLICES AND END SUPPORTS.

BLK BLOCKING HEIGHT TO UNDEFLECTED SHAPE. BLOCKING HEIGHT IS MEASURED TO BOTTOM OF WEB AND DOES NOT TAKE INTO ACCOUNT BOTTOM FLANGE THICKNESS, SPLICE PLATES, ETC.

TABULATED DEFLECTIONS

SW SELF-WEIGHT OF STEEL GIRDERS, INCLUDING ALL DIAPHRAGMS, STIFFENERS AND BRACING.

DL1 CONCRETE DECK SLAB AND HAUNCHES APPLIED TO BARE STEEL SECTION INCLUDING PERMANENT STAY-IN-PLACE FORMS.

DL2 PARAPETS APPLIED TO COMPOSITE SECTION.

CALCULATED VALUES

PL = THICKNESS OF TOP FLANGE PLUS ANY FILLER AND SPLICE PLATES

DK = DECK ASSEMBLY THICKNESS FROM TOP OF WEB TO FINISHED GRADE

= 4" HAUNCH + 10 1/2" SLAB = 14 1/2" = 1.21 FT

C = CAMBER = ZW - CW

8

NO.	DATE	REVISION	BY

STATE OF WISCONSIN
DEPARTMENT OF TRANSPORTATION

STRUCTURE B-40-855

DRAWN BY GLM | PLANS CK'D. WRT

CAMBER AND DECK ELEVATIONS: FIELD SECTIONS 9 & 10

SHEET 64 OF 96

FIELD SECTION #11

POS'N NO.	VALUE	PANEL POINT POSITION AND STATION		
		FS #9	PIER	FS #10
		588+95.89	589+02.89	589+09.89
FINISHED ELEVATION - TOP OF DECK				
1	DS	818.67	818.69	818.71
2		818.58	818.60	818.62
6		816.78	816.80	816.82
8		816.06	816.08	816.10
9		815.97	815.99	816.01
CAMBER DATA				
3	DS	818.29	818.32	818.33
	TES	817.35	817.29	817.45
LEFT	ZW	817.08	817.12	817.19
GIRDER	CW	817.08	817.13	817.19
	SW	0.00	0.00	0.01
LEFT	DL1	-0.01	0.01	0.05
WEB	DL2	0.00	0.00	0.00
	C	0.00	-0.01	0.00
4	DS	817.72	817.75	817.76
	TES	816.77	816.70	816.86
LEFT	ZW	816.50	816.54	816.60
GIRDER	CW	816.50	816.55	816.60
	SW	0.00	0.00	0.01
RIGHT	DL1	-0.01	0.00	0.03
WEB	DL2	0.00	0.00	0.00
	C	0.00	-0.01	0.00
5	DS	816.91	816.94	816.95
	TES	815.96	815.89	816.05
RIGHT	ZW	815.69	815.73	815.78
GIRDER	CW	815.69	815.74	815.78
	SW	0.00	0.00	0.01
LEFT	DL1	-0.01	0.00	0.03
WEB	DL2	0.00	0.00	0.00
	C	0.00	-0.01	0.00
7	DS	816.34	816.37	816.38
	TES	815.40	815.32	815.47
RIGHT	ZW	815.12	815.16	815.21
GIRDER	CW	815.12	815.17	815.21
	SW	0.00	0.00	0.01
RIGHT	DL1	-0.01	0.00	0.02
WEB	DL2	0.00	0.00	0.00
	C	0.00	-0.01	0.00
BLOCKING HEIGHTS				
10	BLK	14.34		14.45
11		13.98		14.08
12		14.32		14.41
13		13.96		14.05

FIELD SECTION #12

POS'N NO.	VALUE	PANEL POINT POSITION AND STATION				
		FS #10	P12-01	P12-02	P12-03	FS #11
		589+09.89	589+16.89	589+30.89	589+44.89	589+49.89
FINISHED ELEVATION - TOP OF DECK						
1	DS	818.71	818.72	818.74	818.74	818.74
2		818.62	818.63	818.65	818.66	818.65
6		816.82	816.83	816.85	816.86	816.85
8		816.10	816.11	816.13	816.14	816.13
9		816.01	816.03	816.04	816.05	816.05
CAMBER DATA						
3	DS	818.33	818.35	818.37	818.37	818.37
	TES	817.45	817.39	817.43	817.54	817.64
LEFT	ZW	817.19	817.25	817.39	817.54	817.61
GIRDER	CW	817.19	817.26	817.41	817.56	817.61
	SW	0.01	0.03	0.05	0.08	0.10
LEFT	DL1	0.05	0.08	0.17	0.27	0.32
WEB	DL2	0.00	0.01	0.02	0.03	0.03
	C	0.00	-0.01	-0.02	-0.02	0.00
4	DS	817.76	817.78	817.80	817.80	817.80
	TES	816.86	816.81	816.84	816.95	817.04
LEFT	ZW	816.60	816.66	816.80	816.94	817.01
GIRDER	CW	816.60	816.67	816.81	816.96	817.01
	SW	0.01	0.02	0.05	0.08	0.09
RIGHT	DL1	0.03	0.06	0.15	0.25	0.30
WEB	DL2	0.00	0.01	0.01	0.02	0.03
	C	0.00	-0.01	-0.01	-0.02	0.00
5	DS	816.95	816.97	816.99	816.99	816.99
	TES	816.05	815.99	816.01	816.11	816.20
RIGHT	ZW	815.78	815.84	815.96	816.09	816.15
GIRDER	CW	815.78	815.85	815.98	816.10	816.15
	SW	0.01	0.02	0.04	0.06	0.08
LEFT	DL1	0.03	0.06	0.13	0.22	0.26
WEB	DL2	0.00	0.01	0.01	0.02	0.03
	C	0.00	-0.01	-0.01	-0.02	0.00
7	DS	816.38	816.40	816.42	816.42	816.42
	TES	815.47	815.41	815.43	815.52	815.61
RIGHT	ZW	815.21	815.26	815.38	815.50	815.55
GIRDER	CW	815.21	815.27	815.39	815.51	815.55
	SW	0.01	0.01	0.03	0.06	0.07
RIGHT	DL1	0.02	0.05	0.12	0.20	0.24
WEB	DL2	0.00	0.01	0.01	0.02	0.03
	C	0.00	-0.01	-0.01	-0.01	0.00
BLOCKING HEIGHTS						
10	BLK	14.45				14.87
11		14.08				14.49
12		14.41				14.77
13		14.05				14.39

FIELD SECTION #13

POS'N NO.	VALUE	PANEL POINT POSITION AND STATION										
		FS #11	P13-01	P13-02	P13-03	P13-04	P13-05	P13-06	P13-07	P13-08	P13-09	FS #12
		589+49.89	589+58.89	589+72.89	589+86.89	590+00.89	590+14.89	590+28.89	590+42.89	590+56.89	590+70.89	590+79.89
FINISHED ELEVATION - TOP OF DECK												
1	DS	818.74	818.73	818.71	818.67	818.62	818.55	818.47	818.38	818.27	818.14	818.05
2		818.65	818.65	818.62	818.58	818.53	818.46	818.38	818.29	818.18	818.05	817.97
6		816.85	816.85	816.82	816.78	816.73	816.66	816.58	816.49	816.38	816.25	816.17
8		816.13	816.13	816.10	816.06	816.01	815.94	815.86	815.77	815.66	815.53	815.45
9		816.05	816.04	816.02	815.98	815.92	815.86	815.78	815.68	815.57	815.45	815.36
CAMBER DATA												
3	DS	818.37	818.36	818.34	818.30	818.25	818.18	818.10	818.00	817.89	817.77	817.68
	TES	817.64	817.64	817.72	817.77	817.77	817.72	817.62	817.47	817.27	817.04	816.94
LEFT	ZW	817.61	817.67	817.78	817.85	817.87	817.83	817.72	817.55	817.33	817.07	816.91
GIRDER	CW	817.61	817.56	817.49	817.41	817.33	817.26	817.18	817.11	817.03	816.96	816.91
	SW	0.10	0.11	0.14	0.17	0.18	0.19	0.18	0.17	0.14	0.11	0.10
LEFT	DL1	0.32	0.37	0.46	0.54	0.59	0.61	0.59	0.54	0.46	0.36	0.31
WEB	DL2	0.03	0.04	0.04	0.05	0.06	0.06	0.06	0.05	0.04	0.03	0.03
	C	0.00	0.11	0.30	0.44	0.54	0.57	0.54	0.44	0.30	0.11	0.00
4	DS	817.80	817.79	817.77	817.73	817.68	817.61	817.53	817.43	817.32	817.20	817.11
	TES	817.04	817.05	817.12	817.15	817.14	817.08	816.99	816.85	816.66	816.44	816.34
LEFT	ZW	817.01	817.07	817.17	817.22	817.22	817.17	817.07	816.91	816.71	816.46	816.31
GIRDER	CW	817.01	816.96	816.88	816.81	816.73	816.66	816.58	816.51	816.43	816.35	816.31
	SW	0.09	0.11	0.13	0.15	0.16	0.17	0.16	0.15	0.13	0.10	0.09
RIGHT	DL1	0.30	0.34	0.43	0.49	0.53	0.54	0.53	0.49	0.42	0.34	0.29
WEB	DL2	0.03	0.03	0.04	0.05	0.05	0.05	0.05	0.05	0.04	0.03	0.03
	C	0.00	0.11	0.28	0.41	0.49	0.51	0.49	0.41	0.28	0.11	0.00
5	DS	816.99	816.98	816.96	816.92	816.87	816.80	816.72	816.62	816.51	816.39	816.30
	TES	816.20	816.19	816.26	816.29	816.29	816.24	816.14	815.99	815.81	815.59	815.50
RIGHT	ZW	816.15	816.20	816.30	816.35	816.35	816.31	816.20	816.04	815.84	815.60	815.45
GIRDER	CW	816.15	816.10	816.03	815.95	815.87	815.80	815.72	815.65	815.57	815.50	815.45
	SW	0.08	0.09	0.12	0.14	0.15	0.15	0.15	0.14	0.11	0.09	0.08
LEFT	DL1	0.26	0.31	0.39	0.45	0.50	0.51	0.49	0.45	0.38	0.30	0.25
WEB	DL2	0.03	0.03	0.04	0.05	0.05	0.05	0.05	0.05	0.04	0.03	0.03
	C	0.00	0.10	0.27	0.40	0.48	0.51	0.48	0.39	0.27	0.10	0.00
7	DS	816.42	816.41	816.39	816.35	816.30	816.23	816.15	816.05	815.94	815.82	815.73
	TES	815.61	815.60	815.66	815.68	815.66	815.61	815.51	815.38	815.20	815.00	814.91
RIGHT	ZW	815.55	815.60	815.68	815.72	815.71	815.66	815.56	815.41	815.22	814.99	814.85
GIRDER	CW	815.55	815.50	815.43	815.35	815.28	815.20	815.12	815.05	814.97	814.90	814.85
	SW	0.07	0.08	0.10	0.12	0.13	0.13	0.13	0.12	0.10	0.08	0.07
RIGHT	DL1	0.24	0.28	0.35	0.41	0.44	0.45	0.44	0.40	0.34	0.27	0.23
WEB	DL2	0.03	0.03	0.04	0.05	0.05	0.05	0.05	0.05	0.04	0.03	0.03
	C	0.00	0.10	0.25	0.37	0.44	0.46	0.44	0.36	0.25	0.10	0.00
BLOCKING HEIGHTS												
10	BLK	14.87										14.17
11		14.49										13.79
12		14.77										14.07
13		14.39										13.69

STATE PROJECT NUMBER

1060-33-80

LEGEND

P14-04 INTERMEDIATE ELEVATION POINT (PANEL POINT).

IN THIS EXAMPLE, '14' IS THE FIELD SECTION NUMBER AND '04' IS THE PANEL POINT WITHIN THIS FIELD SECTION.

NOTES

1. ALL TABULATED VALUES ARE IN DECIMALS OF A FOOT.
2. POSITIVE DEFLECTIONS ARE DOWNWARD.
3. POSITIVE CAMBER IS UPWARD RELATIVE TO A CHORD LINE JOINING THE FIELD SECTION ENDPOINTS.
4. CAMBER DIAGRAMS HAVE BEEN DEVELOPED ASSUMING THAT ALL SLAB WEIGHT, INCLUDING ALLOWANCE FOR PERMANENT STAY-IN-PLACE FORMS, IS APPLIED TO A NON-COMPOSITE STRUCTURE. VERIFY THE VALIDITY OF THIS ASSUMPTION BASED ON THE SELECTED POUR SEQUENCE. ADJUST CAMBER TABLES AS NECESSARY FOR ANY EXPECTED VARIATIONS EXCEEDING .04' (1/2").
5. CAMBER GIRDERS TO THE VALUES SHOWN, AFTER INCORPORATING ANY REQUIRED ADJUSTMENTS FOR THE SELECTED POUR SEQUENCE.
6. TOP OF ERECTED STEEL ELEVATIONS AT SUPPORTS AND FIELD SPLICES SHALL BE CHECKED AFTER ERECTION IS COMPLETE AND BEFORE BOLTED CONNECTIONS ARE FINALLY TORQUED.

   IF SURVEYED ELEVATIONS DIFFER FROM THOSE EXPECTED BY MORE THAN 0.02 FT (1/4") AT SUPPORTS OR 0.083 FT (1") AT FIELD SPLICES, CORRECTIVE MEASURES SHALL BE TAKEN BEFORE FURTHER CONSTRUCTION OPERATIONS MAY PROCEED.

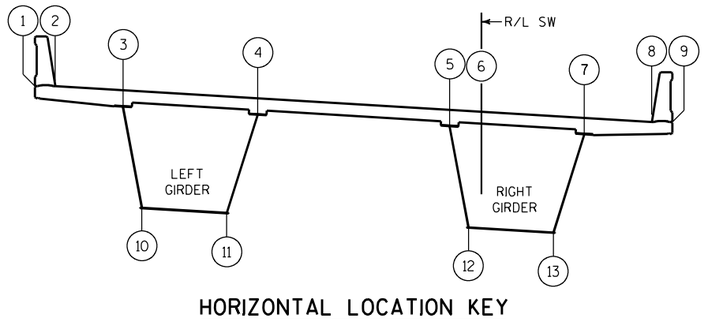

HORIZONTAL LOCATION KEY

LOOKING UPSTATION

TABULATED ELEVATIONS

FTW FINISHED ELEVATION AT TOP OF WEB.

DS FINISHED ELEVATION AT TOP OF DECK SLAB.

TES TOP OF ERECTED STEEL ELEVATION.

= ZW + PL - SW

ZW TOP OF WEB ELEVATION NEGLECTING ALL DEFLECTIONS.

= DS + SW + DL1 + DL2 - DK

CW ELEVATION OF CHORD LINES JOINING TOP OF WEB ELEVATION AT 'ZW' AT FIELD SPLICES AND END SUPPORTS.

BLK BLOCKING HEIGHT TO UNDEFLECTED SHAPE. BLOCKING HEIGHT IS MEASURED TO BOTTOM OF WEB AND DOES NOT TAKE INTO ACCOUNT BOTTOM FLANGE THICKNESS, SPLICE PLATES, ETC.

TABULATED DEFLECTIONS

SW SELF-WEIGHT OF STEEL GIRDERS, INCLUDING ALL DIAPHRAGMS, STIFFENERS AND BRACING.

DL1 CONCRETE DECK SLAB AND HAUNCHES APPLIED TO BARE STEEL SECTION INCLUDING PERMANENT STAY-IN-PLACE FORMS.

DL2 PARAPETS APPLIED TO COMPOSITE SECTION.

CALCULATED VALUES

PL = THICKNESS OF TOP FLANGE PLUS ANY FILLER AND SPLICE PLATES

DK = DECK ASSEMBLY THICKNESS FROM TOP OF WEB TO FINISHED GRADE

= 4" HAUNCH + 10 1/2" SLAB = 14 1/2" = 1.21 FT

C = CAMBER = ZW - CW

NO.	DATE	REVISION	BY

STATE OF WISCONSIN
DEPARTMENT OF TRANSPORTATION

STRUCTURE B-40-855

DRAWN BY GLM | PLANS CK'D. WRT

CAMBER AND DECK ELEVATIONS: FIELD SECTIONS 11 THRU 13

SHEET 65 OF 96

FIELD SECTION #14

POS'N NO.	VALUE	PANEL POINT POSITION AND STATION								
		FS #12	P14-01	P14-02	P14-03	PIER	P14-05	P14-06	P14-07	FS #13
		590+79.89	590+84.89	590+98.89	591+12.89	591+26.89	591+39.39	591+51.89	591+64.39	591+69.39
FINISHED ELEVATION - TOP OF DECK										
1	DS	818.05	818.00	817.85	817.68	817.50	817.33	817.15	816.95	816.87
2		817.97	817.92	817.76	817.60	817.42	817.24	817.06	816.86	816.78
6		816.17	816.12	815.96	815.80	815.62	815.44	815.26	815.06	814.98
8		815.45	815.40	815.24	815.08	814.90	814.72	814.54	814.34	814.26
9		815.36	815.31	815.16	814.99	814.81	814.64	814.45	814.26	814.17
CAMBER DATA										
3	DS	817.68	817.63	817.48	817.31	817.13	816.96	816.77	816.58	816.50
	TES	816.94	816.79	816.53	816.34	816.09	815.89	815.61	815.43	815.41
LEFT	ZW	816.91	816.79	816.49	816.20	815.92	815.71	815.52	815.34	815.28
GIRDER	CW	816.91	816.82	816.56	816.31	816.05	815.83	815.60	815.37	815.28
	SW	0.10	0.08	0.05	0.02	0.00	-0.01	-0.01	0.00	0.00
LEFT	DL1	0.31	0.26	0.16	0.07	0.00	-0.03	-0.03	-0.02	-0.01
WEB	DL2	0.03	0.02	0.02	0.01	0.00	0.00	0.00	0.00	0.00
	C	0.00	-0.03	-0.07	-0.11	-0.13	-0.11	-0.08	-0.03	0.00
4	DS	817.11	817.06	816.91	816.74	816.56	816.39	816.20	816.01	815.93
	TES	816.34	816.20	815.94	815.76	815.52	815.32	815.05	814.87	814.85
LEFT	ZW	816.31	816.18	815.89	815.61	815.35	815.15	814.96	814.79	814.72
GIRDER	CW	816.31	816.22	815.97	815.72	815.47	815.25	815.03	814.81	814.72
	SW	0.09	0.07	0.04	0.02	0.00	-0.01	0.00	0.00	0.00
RIGHT	DL1	0.29	0.24	0.14	0.06	0.00	-0.02	-0.03	-0.01	0.00
WEB	DL2	0.03	0.02	0.01	0.01	0.00	0.00	0.00	0.00	0.00
	C	0.00	-0.03	-0.07	-0.11	-0.12	-0.10	-0.07	-0.02	0.00
5	DS	816.30	816.25	816.10	815.93	815.75	815.58	815.39	815.20	815.12
	TES	815.50	815.36	815.11	814.95	814.71	814.52	814.25	814.07	814.04
RIGHT	ZW	815.45	815.34	815.07	814.80	814.54	814.35	814.17	813.99	813.93
GIRDER	CW	815.45	815.37	815.13	814.89	814.65	814.44	814.23	814.01	813.93
	SW	0.08	0.06	0.04	0.02	0.00	0.00	0.00	0.00	0.01
LEFT	DL1	0.25	0.21	0.12	0.05	0.00	-0.02	-0.02	0.00	0.01
WEB	DL2	0.03	0.02	0.01	0.01	0.00	0.00	0.00	0.00	0.00
	C	0.00	-0.03	-0.06	-0.09	-0.11	-0.09	-0.06	-0.02	0.00
7	DS	815.73	815.68	815.53	815.36	815.18	815.01	814.82	814.63	814.55
	TES	814.91	814.77	814.53	814.37	814.14	813.95	813.69	813.51	813.48
RIGHT	ZW	814.85	814.74	814.48	814.22	813.97	813.78	813.61	813.43	813.37
GIRDER	CW	814.85	814.77	814.54	814.30	814.07	813.87	813.66	813.45	813.37
	SW	0.07	0.06	0.03	0.01	0.00	0.00	0.00	0.01	0.01
RIGHT	DL1	0.23	0.19	0.11	0.04	0.00	-0.01	-0.01	0.01	0.02
WEB	DL2	0.03	0.02	0.01	0.01	0.00	0.00	0.00	0.00	0.00
	C	0.00	-0.03	-0.06	-0.09	-0.10	-0.08	-0.05	-0.02	0.00
BLOCKING HEIGHTS										
10	BLK	14.17								12.55
11		13.79								12.20
12		14.07								12.56
13		13.69								12.20

FIELD SECTION #15

POS'N NO.	VALUE	PANEL POINT POSITION AND STATION									
		FS #13	P15-01	P15-02	P15-03	P15-04	P15-05	P15-06	P15-07	P15-08	P15-09
		591+69.39	591+76.89	591+89.39	592+01.89	592+14.39	592+26.89	592+39.39	592+51.89	592+64.39	592+76.89
FINISHED ELEVATION - TOP OF DECK											
1	DS	816.87	816.74	816.52	816.29	816.05	815.80	815.53	815.26	814.97	814.67
2		816.78	816.65	816.44	816.20	815.96	815.71	815.45	815.17	814.88	814.58
6		814.98	814.85	814.64	814.40	814.16	813.91	813.65	813.37	813.08	812.78
8		814.26	814.13	813.92	813.68	813.44	813.19	812.93	812.65	812.36	812.06
9		814.17	814.05	813.83	813.60	813.36	813.10	812.84	812.56	812.28	811.98
CAMBER DATA											
3	DS	816.50	816.37	816.15	815.92	815.68	815.42	815.16	814.88	814.60	814.30
	TES	815.41	815.25	815.06	814.86	814.64	814.39	814.12	813.83	813.51	813.17
LEFT	ZW	815.28	815.17	814.99	814.80	814.58	814.34	814.07	813.77	813.44	813.09
GIRDER	CW	815.28	815.13	814.87	814.62	814.36	814.11	813.85	813.60	813.34	813.09
	SW	0.00	0.01	0.02	0.02	0.03	0.03	0.03	0.02	0.01	0.00
LEFT	DL1	-0.01	0.00	0.03	0.06	0.07	0.08	0.08	0.06	0.03	0.00
WEB	DL2	0.00	0.00	0.01	0.01	0.01	0.01	0.01	0.01	0.00	0.00
	C	0.00	0.04	0.12	0.18	0.22	0.23	0.21	0.17	0.09	0.00
4	DS	815.93	815.80	815.58	815.35	815.11	814.85	814.59	814.31	814.03	813.73
	TES	814.85	814.68	814.49	814.28	814.06	813.82	813.55	813.26	812.94	812.60
LEFT	ZW	814.72	814.61	814.43	814.23	814.01	813.77	813.50	813.20	812.87	812.52
GIRDER	CW	814.72	814.57	814.31	814.06	813.80	813.54	813.29	813.03	812.78	812.52
	SW	0.00	0.01	0.02	0.02	0.03	0.03	0.03	0.02	0.01	0.00
RIGHT	DL1	0.00	0.01	0.03	0.05	0.07	0.08	0.08	0.06	0.03	0.00
WEB	DL2	0.00	0.00	0.00	0.01	0.01	0.01	0.01	0.01	0.00	0.00
	C	0.00	0.04	0.11	0.17	0.21	0.22	0.21	0.16	0.09	0.00
5	DS	815.12	814.99	814.77	814.54	814.30	814.04	813.78	813.50	813.22	812.92
	TES	814.04	813.89	813.70	813.49	813.26	813.01	812.74	812.44	812.13	811.79
RIGHT	ZW	813.93	813.82	813.64	813.44	813.21	812.96	812.69	812.38	812.06	811.71
GIRDER	CW	813.93	813.77	813.52	813.26	813.00	812.74	812.48	812.23	811.97	811.71
	SW	0.01	0.01	0.02	0.03	0.03	0.03	0.03	0.02	0.01	0.00
LEFT	DL1	0.01	0.02	0.05	0.07	0.08	0.09	0.08	0.06	0.03	0.00
WEB	DL2	0.00	0.00	0.00	0.01	0.01	0.01	0.01	0.01	0.00	0.00
	C	0.00	0.05	0.12	0.18	0.21	0.22	0.20	0.16	0.09	0.00
7	DS	814.55	814.42	814.20	813.97	813.73	813.47	813.21	812.93	812.65	812.35
	TES	813.48	813.33	813.13	812.92	812.69	812.44	812.17	811.88	811.56	811.22
RIGHT	ZW	813.37	813.26	813.07	812.87	812.64	812.39	812.12	811.81	811.49	811.14
GIRDER	CW	813.37	813.21	812.95	812.70	812.44	812.18	811.92	811.66	811.40	811.14
	SW	0.01	0.01	0.02	0.03	0.03	0.03	0.03	0.02	0.01	0.00
RIGHT	DL1	0.02	0.03	0.05	0.07	0.08	0.09	0.08	0.06	0.03	0.00
WEB	DL2	0.00	0.00	0.01	0.01	0.01	0.01	0.01	0.01	0.00	0.00
	C	0.00	0.05	0.12	0.17	0.21	0.22	0.20	0.16	0.09	0.00
BLOCKING HEIGHTS											
10	BLK	12.55									10.36
11		12.20									10.00
12		12.56									10.34
13		12.20									9.98

STATE PROJECT NUMBER

1060-33-80

LEGEND

P14-04 INTERMEDIATE ELEVATION POINT (PANEL POINT).

IN THIS EXAMPLE, '14' IS THE FIELD SECTION NUMBER AND '04' IS THE PANEL POINT WITHIN THIS FIELD SECTION.

NOTES

1. ALL TABULATED VALUES ARE IN DECIMALS OF A FOOT.
2. POSITIVE DEFLECTIONS ARE DOWNWARD.
3. POSITIVE CAMBER IS UPWARD RELATIVE TO A CHORD LINE JOINING THE FIELD SECTION ENDPOINTS.
4. CAMBER DIAGRAMS HAVE BEEN DEVELOPED ASSUMING THAT ALL SLAB WEIGHT, INCLUDING ALLOWANCE FOR PERMANENT STAY-IN-PLACE FORMS, IS APPLIED TO A NON-COMPOSITE STRUCTURE. VERIFY THE VALIDITY OF THIS ASSUMPTION BASED ON THE SELECTED POUR SEQUENCE. ADJUST CAMBER TABLES AS NECESSARY FOR ANY EXPECTED VARIATIONS EXCEEDING .04' (1/2").
5. CAMBER GIRDERS TO THE VALUES SHOWN, AFTER INCORPORATING ANY REQUIRED ADJUSTMENTS FOR THE SELECTED POUR SEQUENCE.
6. TOP OF ERECTED STEEL ELEVATIONS AT SUPPORTS AND FIELD SPLICES SHALL BE CHECKED AFTER ERECTION IS COMPLETE AND BEFORE BOLTED CONNECTIONS ARE FINALLY TORQUED.

   IF SURVEYED ELEVATIONS DIFFER FROM THOSE EXPECTED BY MORE THAN 0.02 FT (1/4") AT SUPPORTS OR 0.083 FT (1") AT FIELD SPLICES, CORRECTIVE MEASURES SHALL BE TAKEN BEFORE FURTHER CONSTRUCTION OPERATIONS MAY PROCEED.

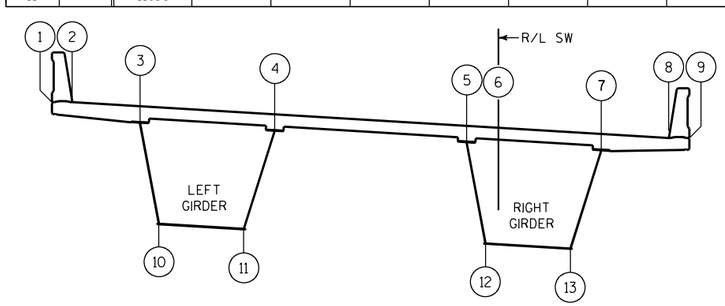

HORIZONTAL LOCATION KEY

LOOKING UPSTATION

TABULATED ELEVATIONS

FTW FINISHED ELEVATION AT TOP OF WEB.

DS FINISHED ELEVATION AT TOP OF DECK SLAB.

TES TOP OF ERECTED STEEL ELEVATION.

= ZW + PL - SW

ZW TOP OF WEB ELEVATION NEGLECTING ALL DEFLECTIONS.

= DS + SW + DL1 + DL2 - DK

CW ELEVATION OF CHORD LINES JOINING TOP OF WEB ELEVATION AT 'ZW' AT FIELD SPLICES AND END SUPPORTS.

BLK BLOCKING HEIGHT TO UNDEFLECTED SHAPE. BLOCKING HEIGHT IS MEASURED TO BOTTOM OF WEB AND DOES NOT TAKE INTO ACCOUNT BOTTOM FLANGE THICKNESS, SPLICE PLATES, ETC.

TABULATED DEFLECTIONS

SW SELF-WEIGHT OF STEEL GIRDERS, INCLUDING ALL DIAPHRAGMS, STIFFENERS AND BRACING.

DL1 CONCRETE DECK SLAB AND HAUNCHES APPLIED TO BARE STEEL SECTION INCLUDING PERMANENT STAY-IN-PLACE FORMS.

DL2 PARAPETS APPLIED TO COMPOSITE SECTION.

CALCULATED VALUES

PL = THICKNESS OF TOP FLANGE PLUS ANY FILLER AND SPLICE PLATES

DK = DECK ASSEMBLY THICKNESS FROM TOP OF WEB TO FINISHED GRADE

= 4" HAUNCH + 10 1/2" SLAB = 14 1/2" = 1.21 FT

C = CAMBER = ZW - CW

NO.	DATE	REVISION	BY

STATE OF WISCONSIN
DEPARTMENT OF TRANSPORTATION

STRUCTURE B-40-855

DRAWN BY GLM | PLANS CK'D. WRT

CAMBER AND DECK ELEVATIONS: FIELD SECTIONS 14 & 15

SHEET 66 OF 96

STATE PROJECT NUMBER
1060-33-80

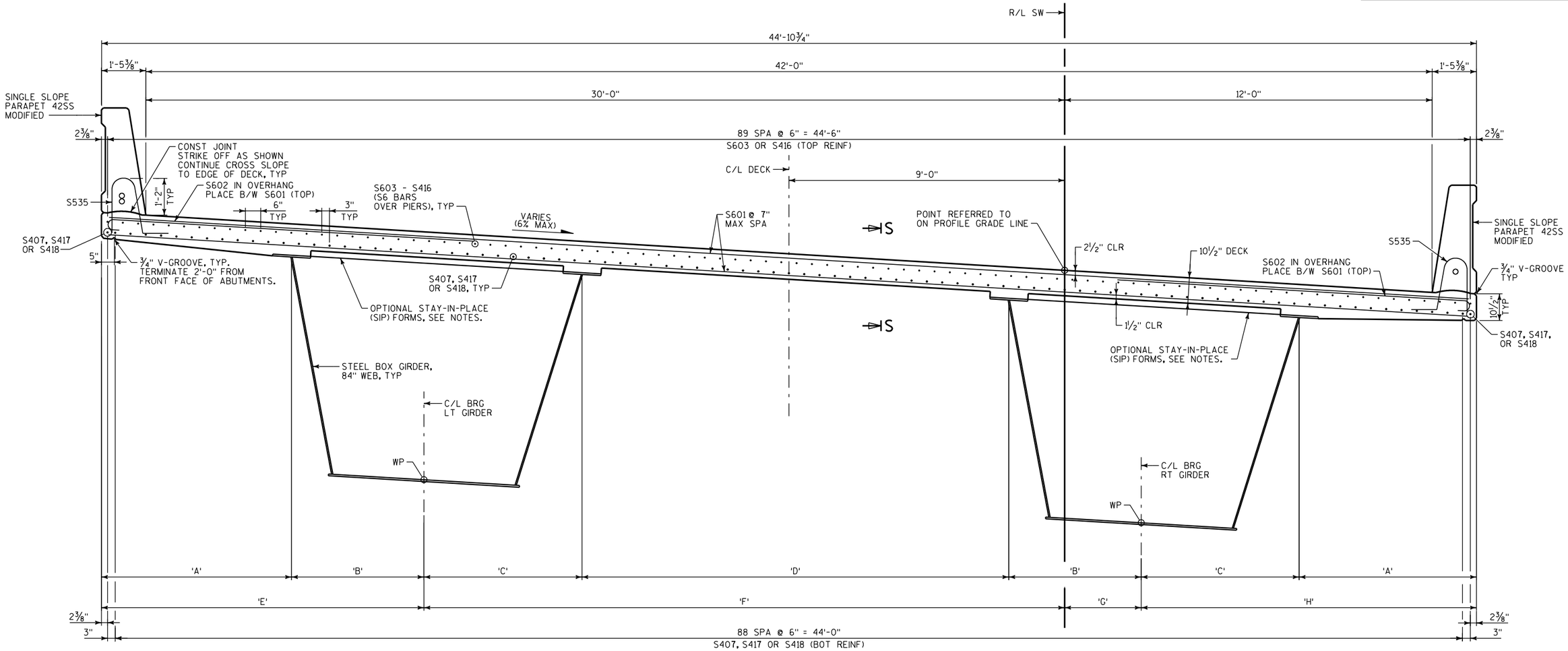

CROSS SECTION THRU SUPERSTRUCTURE

(LOOKING UPSTATION - DIMENSIONS ARE NORMAL TO R/L SW)

NOTES

1. STAY-IN-PLACE METAL FORMS WILL ONLY BE PERMITTED INSIDE THE BOX GIRDERS. THE OVERHANGS AND THE ZONE BETWEEN THE GIRDERS SHALL USE CONVENTIONAL TEMPORARY FORMS.

   THE USE OF STAY-IN-PLACE METAL FORMS IS OPTIONAL, CONVENTIONAL FORMWORK MAY BE USED INSIDE THE BOXES BUT MUST BE COMPLETELY REMOVED.

   DESIGN CONNECTION BETWEEN STAY-IN-PLACE METAL FORMS AND GIRDER FLANGES TO PROVIDE ADJUSTMENT OF VERTICAL POSITION BASED ON THE ACTUAL HAUNCH HEIGHT REQUIRED.

   TOP OF STAY-IN-PLACE METAL FORMS SHALL BE ALIGNED WITH THE UNDERSIDE OF THE DECK SLAB.

   COST OF PERMANENT STAY-IN-PLACE METAL FORMS IS INCIDENTAL TO THE PAY ITEM "HPC MASONRY STRUCTURES". THE SUPERSTRUCTURE CONCRETE QUANTITY DOES NOT INCLUDE THE CONCRETE WITHIN THE STAY-IN-PLACE METAL FORM FLUTES. SUCH CONCRETE IS CONSIDERED INCIDENTAL AND WILL NOT BE PAID FOR SEPARATELY.

2. TO AVOID OVERSTRESSING THE EXTERIOR GIRDER WEBS DURING DECK PLACEMENT, DECK OVERHANG FORMWORK BRACKETS MUST CONTACT THE GIRDER WEB WITHIN 8" OF THE TOP OF THE BOTTOM FLANGE.

TABLE OF DIMENSIONS

STATION	DIM 'A'	DIM 'B'	DIM 'C'	DIM 'D'	DIM 'E'	DIM 'F'	DIM 'G'	DIM 'H'
579SW+59.89	6'-2 7/16"	4'-5"	5'-0 7/8"	13'-6 1/8"	10'-7 7/16"	20'-9 15/16"	2'-2 1/16"	11'-3 5/16"
580SW+08.00 TO 592SW+76.89	6'-2½"	4'-3⅞"	5'-1 15/16"	13'-6 3/16"	10'-6⅜"	20'-11"	2'-1"	11'-4⅜"

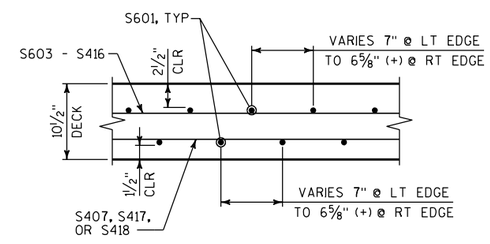

SECTION S-S

NO.	DATE	REVISION	BY

STATE OF WISCONSIN
DEPARTMENT OF TRANSPORTATION

STRUCTURE B-40-855

DRAWN BY GLM | PLANS CK'D. WRT

SUPERSTRUCTURE CROSS SECTION

SHEET 67 OF 96

STATE PROJECT NUMBER
1060-33-80

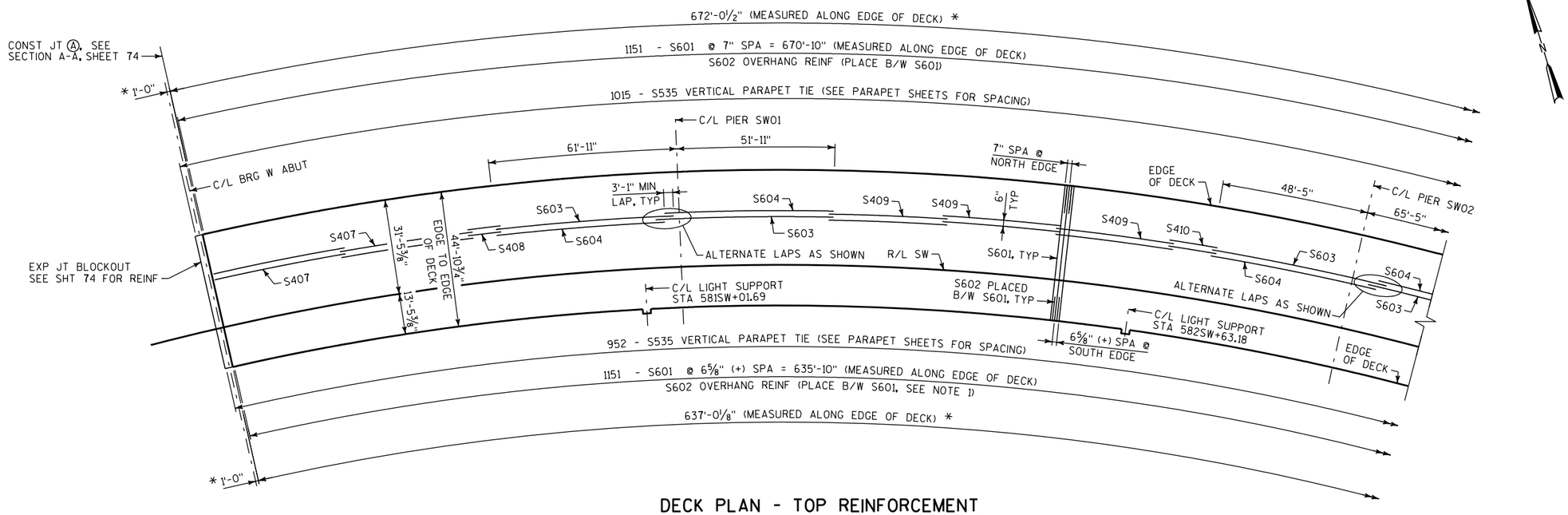

DECK PLAN - TOP REINFORCEMENT

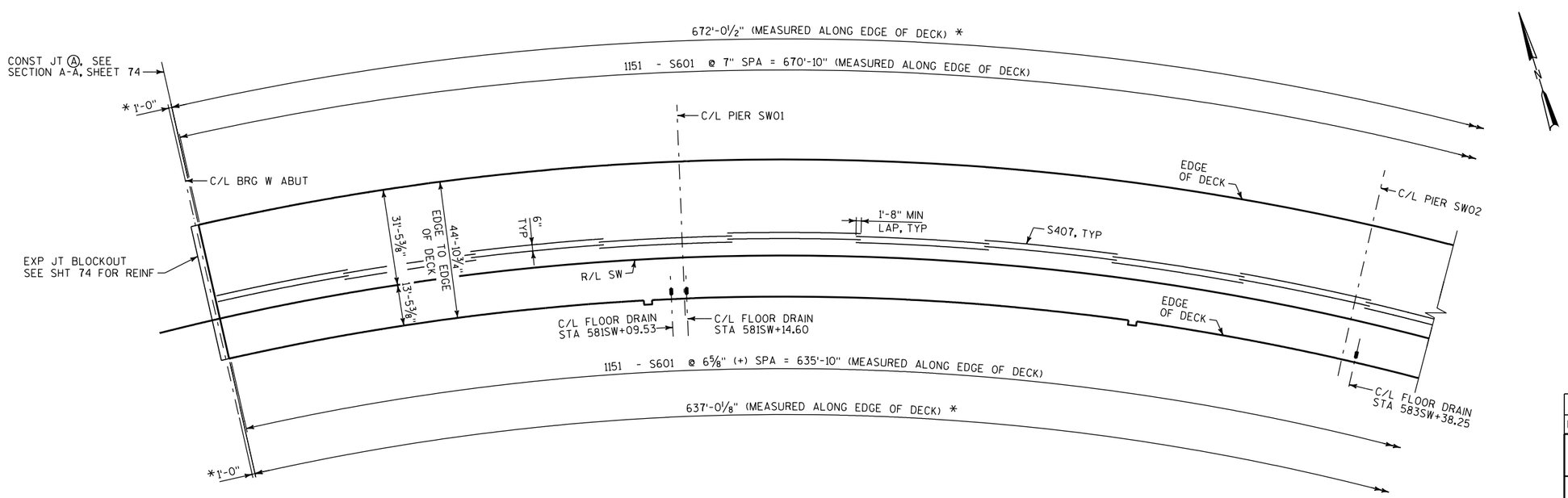

DECK PLAN - BOTTOM REINFORCEMENT

LEGEND

* MEASURED AT 60 DEG F

NOTES

1. AT EACH LIGHT SUPPORT, 6-S602 BARS ARE NOT REQUIRED. THE S602 BARS ARE REPLACED BY THE R610 BARS AS INDICATED ON LIGHT SUPPORT DETAIL SHEETS. R513 SHALL BE PLACED IN LIEU OF S535.

NO.	DATE	REVISION	BY

STATE OF WISCONSIN
DEPARTMENT OF TRANSPORTATION

STRUCTURE B-40-855

DRAWN BY	GLM	PLANS CK'D.	WRT

DECK REINFORCEMENT (1 OF 3)

SHEET 68 OF 96

8

8

STATE PROJECT NUMBER
1060-33-80

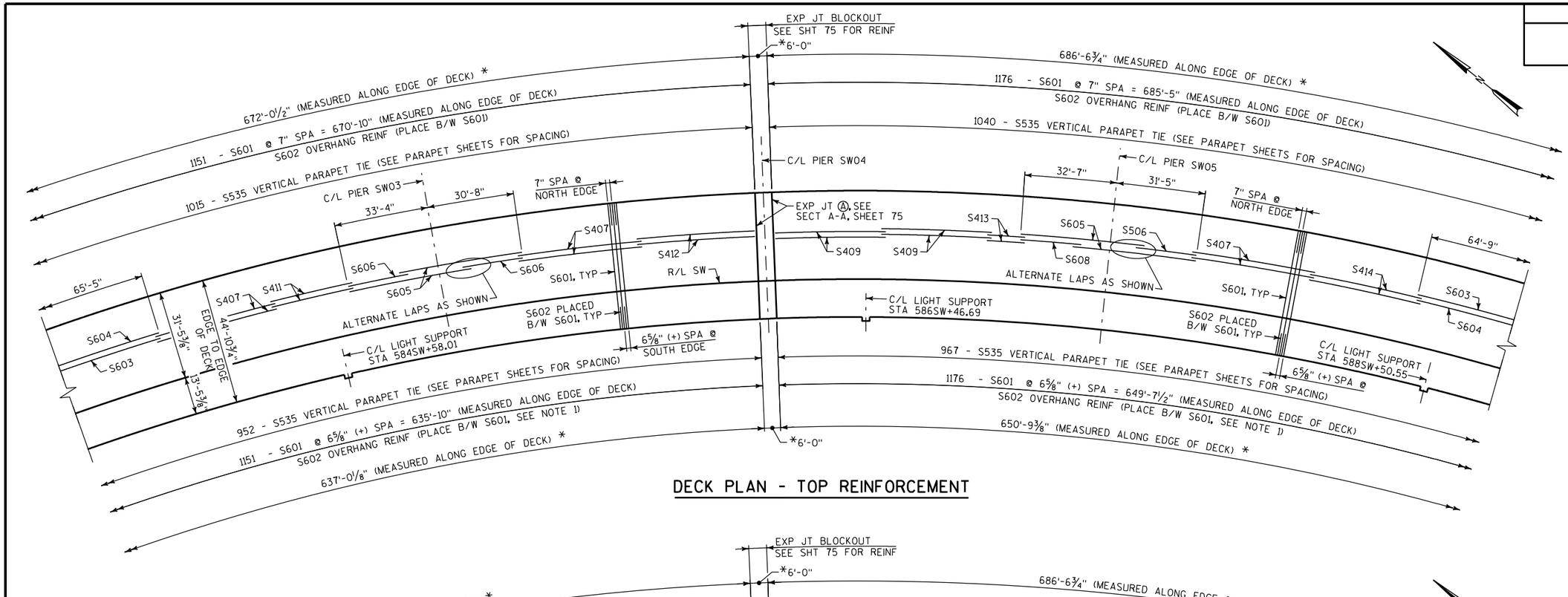

DECK PLAN - TOP REINFORCEMENT

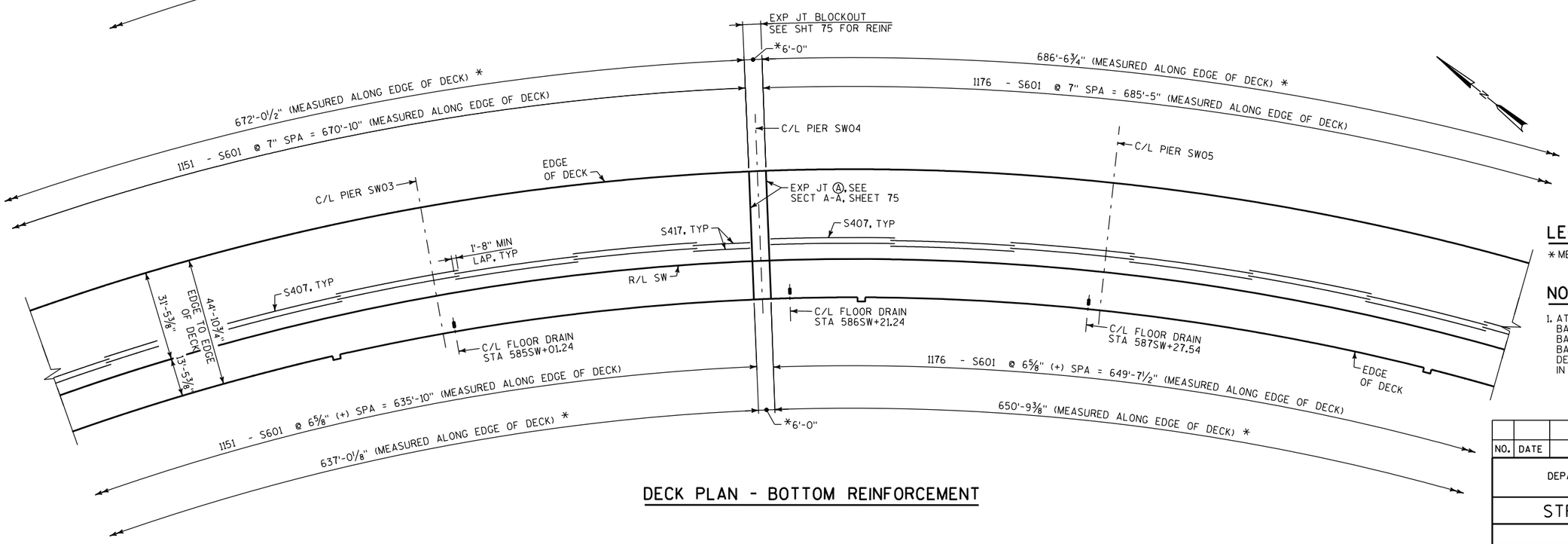

DECK PLAN - BOTTOM REINFORCEMENT

LEGEND

* MEASURED AT 60 DEG F

NOTES

1. AT EACH LIGHT SUPPORT, 6-S602 BARS ARE NOT REQUIRED. THE S602 BARS ARE REPLACED BY THE R610 BARS AS INDICATED ON LIGHT SUPPORT DETAIL SHEETS. R513 SHALL BE PLACED IN LIEU OF S535.

NO.	DATE	REVISION	BY

STATE OF WISCONSIN
DEPARTMENT OF TRANSPORTATION

STRUCTURE B-40-855

DRAWN BY GLM | PLANS CK'D. WRT

DECK REINFORCEMENT (2 OF 3)

SHEET 69 OF 96

8

8

STATE PROJECT NUMBER
1060-33-80

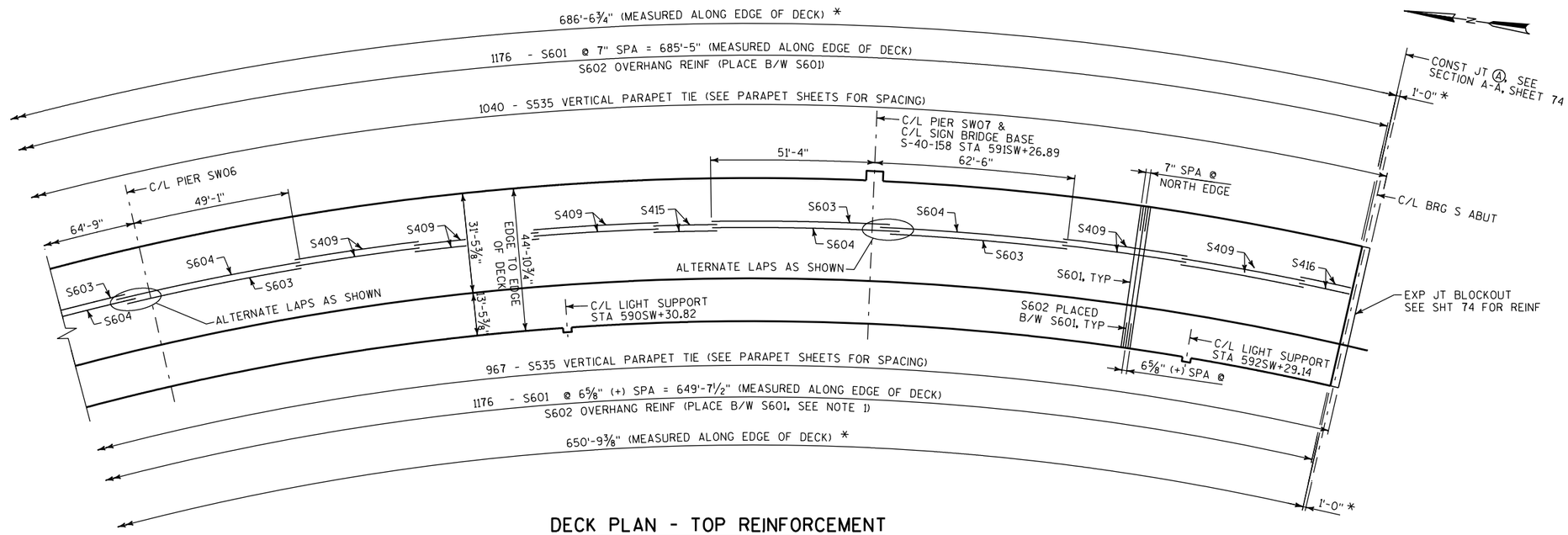

DECK PLAN - TOP REINFORCEMENT

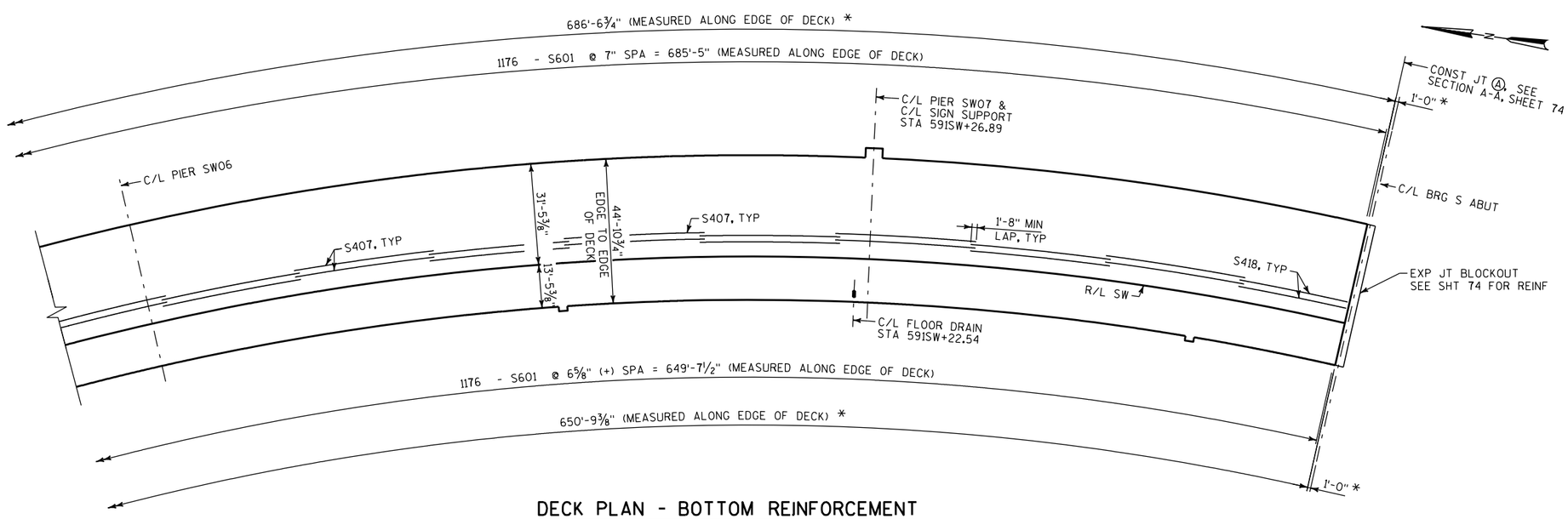

DECK PLAN - BOTTOM REINFORCEMENT

LEGEND

* MEASURED AT 60 DEG F

NOTES

1. AT EACH LIGHT SUPPORT, 6-S602 BARS ARE NOT REQUIRED. THE S602 BARS ARE REPLACED BY THE R610 BARS AS INDICATED ON LIGHT SUPPORT DETAIL SHEETS. R513 SHALL BE PLACED IN LIEU OF S535.

NO.	DATE	REVISION	BY

STATE OF WISCONSIN
DEPARTMENT OF TRANSPORTATION

STRUCTURE B-40-855

DRAWN BY GLM | PLANS CK'D. WRT

DECK REINFORCEMENT (3 OF 3)

SHEET 70 OF 96

8

8

STATE PROJECT NUMBER
1060-33-80

LEGEND

◐ SET TOP OF FLOOR DRAIN ½" BELOW TOP OF DECK

◭ HAND-FINISH SLAB WITHIN THE SLOPED AREA.

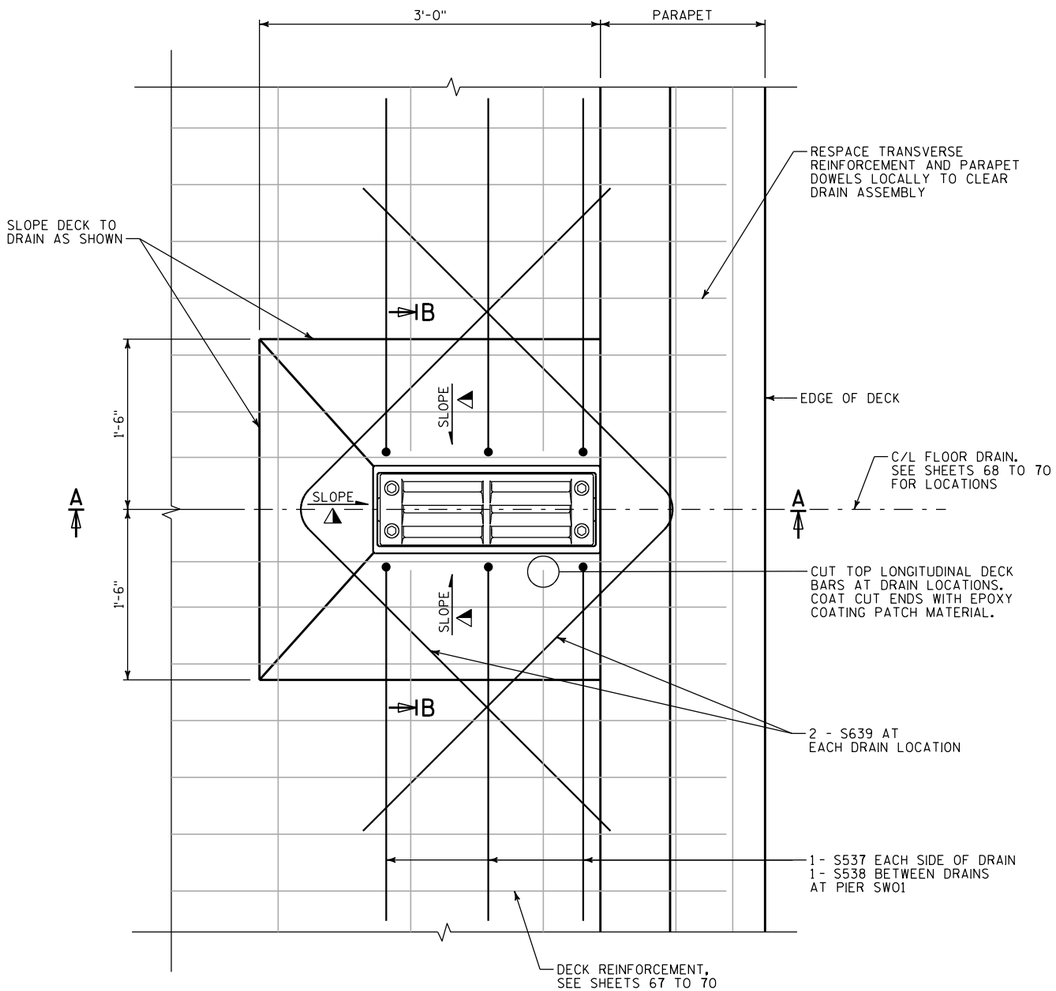

PART PLAN AT FLOOR DRAIN

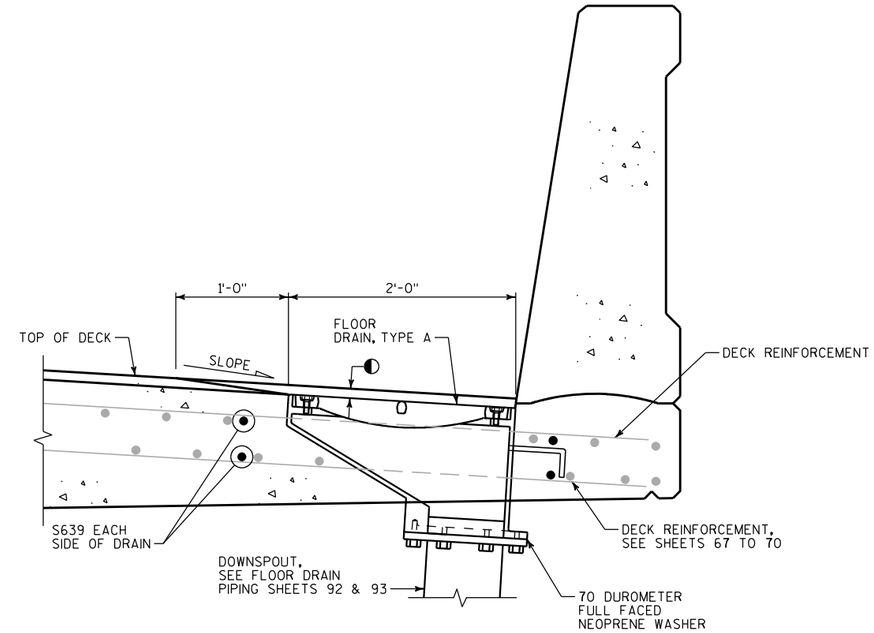

SECTION A-A

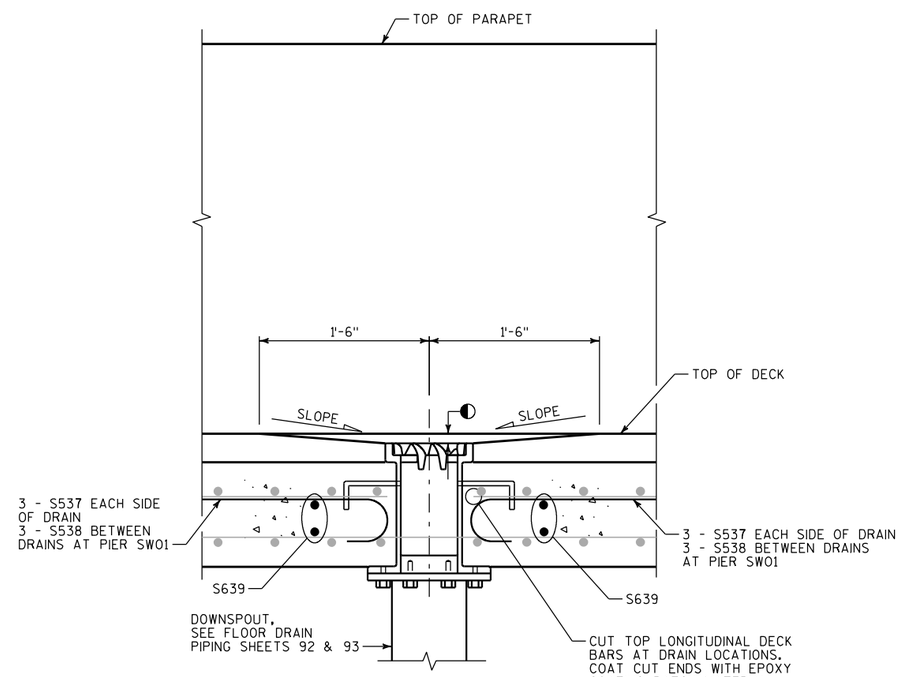

SECTION B-B

NO.	DATE	REVISION	BY

STATE OF WISCONSIN
DEPARTMENT OF TRANSPORTATION

STRUCTURE B-40-855

DRAWN BY GLM | PLANS CK'D. WRT

DECK DETAILS

SHEET 71 OF 96

8

8

STATE PROJECT NUMBER
1060-33-80

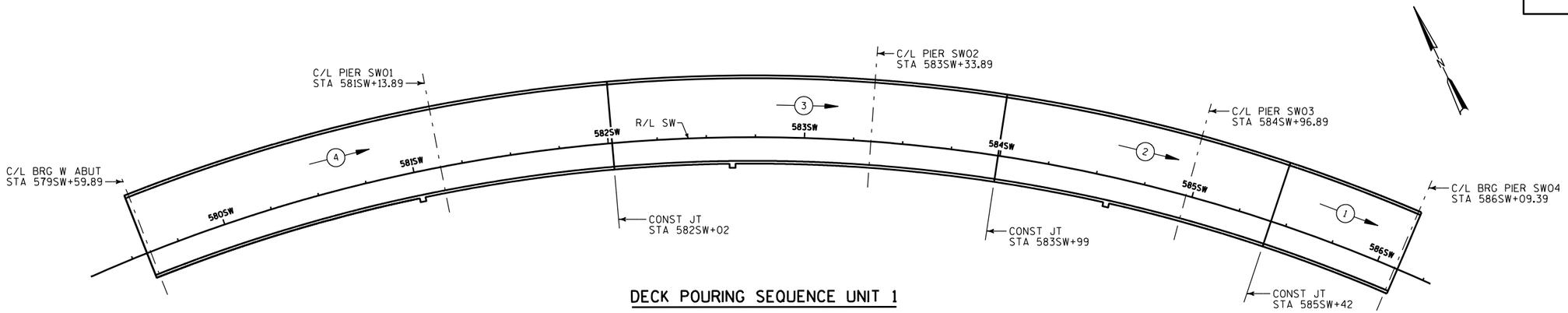

DECK POURING SEQUENCE UNIT 1

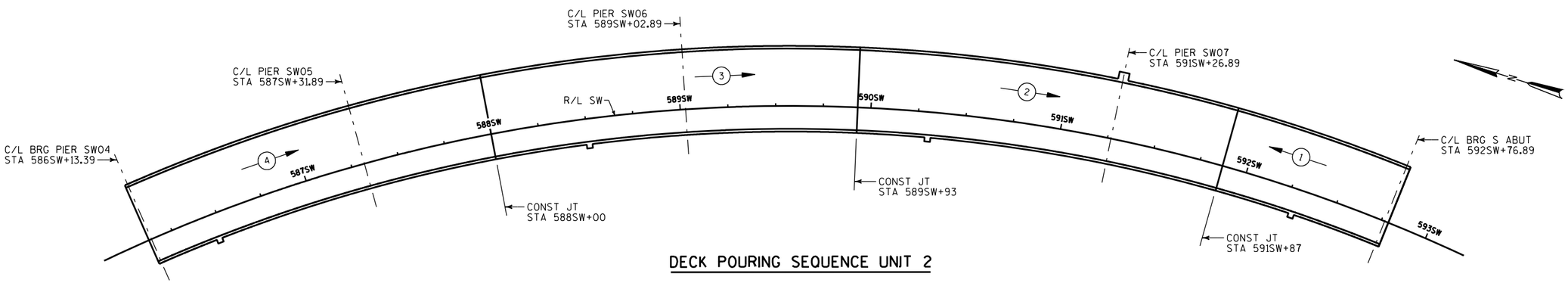

DECK POURING SEQUENCE UNIT 2

(1) → INDICATES POUR NUMBER AND DIRECTION OF POUR

DECK POURING SEQUENCE NOTES

THE RATE OF PLACING CONCRETE SHALL EQUAL OR EXCEED ½ SPAN LENGTH PER HOUR BUT NEED NOT EXCEED 100 CU. YDS. PER HOUR.

THE CONTRACTOR MAY SUBMIT AN ALTERNATE POURING SEQUENCE SUBJECT TO THE APPROVAL OF THE ENGINEER.

THE CONTRACTOR IS RESPONSIBLE FOR SCHEDULING AND COORDINATING DECK POURS TO BEST SUIT THE MEANS AND METHODS AVAILABLE TO HIM.

CONTRACTOR MAY PLACE THE DECK CONTINUOUSLY FROM EITHER END OF THE STRUCTURE PROVIDED THAT ALL OTHER REQUIREMENTS ARE MET. IF MORE THAN ONE POUR IS REQUIRED, BULKHEAD LOCATIONS MUST BE APPROVED BY THE ENGINEER.

CONTROL POUR SEQUENCE AND PLACEMENT RATE TO ENSURE THAT BEFORE THE CONCRETE IN ANY PIER AREA REACHES THE INITIAL SET CONDITION, THE CONCRETE IN BOTH ADJACENT 'SPAN' AREAS IS ALREADY IN PLACE.

DEPOSIT FRESH CONCRETE FIRST IN THE AREA BETWEEN THE GIRDERS FOLLOWED BY THE OVERHANG AREA TO INSIDE OF THE CURVE AND THEN BY THE OVERHANG AREA TO THE OUTSIDE OF THE CURVE.

CONTROL THE PLACEMENT TO ENSURE THAT THE FURTHEST PROGRESS OF FRESH CONCRETE VARIES BY NO MORE THAN 10 FEET ACROSS THE WIDTH OF THE DECK.

FOLLOW PROCEDURES OUTLINED IN THE STANDARD SPECIFICATIONS.

SOME POUR SEQUENCES COULD TEND TO CAUSE UPLIFT AT ENDS OF UNITS. THEREFORE, TEMPORARY HOLD DOWN DEVICES ARE REQUIRED AT ALL ABUTMENT DIAPHRAGMS AND AT ALL PIER END DIAPHRAGMS.

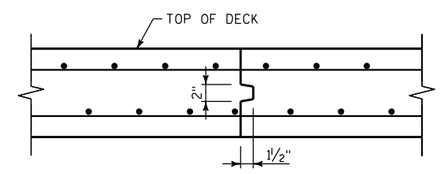

TRANSVERSE CONSTRUCTION JOINT DETAIL

NO.	DATE	REVISION	BY

STATE OF WISCONSIN
DEPARTMENT OF TRANSPORTATION

STRUCTURE B-40-855

DRAWN BY	GLM	PLANS CK'D.	WRT

DECK POURING SEQUENCE AND NOTES

SHEET 72 OF 96

8

8

STATE PROJECT NUMBER
1060-33-80

BAR INFORMATION							BAR DIMENSIONS						LOCATION	BAR SERIES INFORMATION				
BAR MARK	MATL	NO. REQ'D	LENGTH	BENT	BAR SERIES	BEND TYPE	A	B	C	D	E	F		DIM	MIN	MAX	NO REQ'D	LENGTH
S601	S	4434	44'-7"			1	44'-7"						DECK TRANSVERSE					
S602	S	2215	12'-7"	X		2	11'-11"						DECK TRANSVERSE AT OVERHANG					
S603	S	360	60'-0"			1	60'-0"						DECK LONG. TOP OVER PIER					
S604	S	360	56'-11"			1	56'-11"						DECK LONG. TOP OVER PIER					
S605	S	180	45'-0"			1	45'-0"						DECK LONG. TOP OVER PIER					
S606	S	180	22'-1"			1	22'-1"						DECK LONG. TOP OVER PIER					
S407	S	3180	45'-0"			1	45'-0"						DECK LONG. TOP & BOT.					
S408	S	90	11'-6"			1	11'-6"						DECK LONG. TOP SPAN 1					
S409	S	900	40'-0"			1	40'-0"						DECK LONG. TOP					
S410	S	90	16'-6"			1	16'-6"						DECK LONG. TOP SPAN 2					
S411	S	90	30'-6"			1	30'-6"						DECK LONG. TOP SPAN 3					
S412	S	90	43'-0"			1	43'-0"						DECK LONG. TOP SPAN 4					
S413	S	90	14'-0"			1	14'-0"						DECK LONG. TOP SPAN 5					
S414	S	90	41'-6"			1	41'-6"						DECK LONG. TOP SPAN 6					
S415	S	90	20'-6"			1	20'-6"						DECK LONG. TOP SPAN 7					
S416	S	90	16'-8"			1	16'-8"						DECK LONG. TOP SPAN 8					
S417	S	91	21'-6"			1	21'-6"						DECK LONG. BOT. SPAN 4					
S418	S	91	36'-6"			1	36'-6"						DECK LONG. BOT. SPAN 8					
S519	S	20	7'-6"	X	X	3	1'-1½"	2'-4"					EXPANSION JOINT STIRRUPS	A	6"	1'-9"	4 SERIES OF 5	6'-3" TO 8'-9"
S520	S	312	8'-9"	X		3	1'-9"	2'-4"					EXPANSION JOINT STIRRUPS					
S421	S	72	4'-10"	X		9	2'-5"	2'-5"	32				EXPANSION JOINT BOT. OF SLAB TRANSVERSE					
S622	S	28	44'-7"			1	44'-7"						EXPANSION JOINT TOP OF SLAB TRANSVERSE					
S623	S	56	8'-8"			1	8'-8"						EXPANSION JOINT BOT. OF SLAB TRANSVERSE					
S424	S	320	1'-11"			1	1'-11"						EXPANSION JOINT BLOCKOUT BOT.					
S425	S	640	2'-3"	X		22	0'-4½"	0'-8½"	1'-4"				EXPANSION JOINT BLOCKOUT BOT.					
S426	S	32	39'-8"			1	39'-8"						EXPANSION JOINT BOT. OF SLAB TRANSVERSE					
S527	S	320	8'-2"	X		4	4'-0"	0'-5"					EXPANSION JOINT BOT. OF SLAB LONG.					
S528	S	320	2'-8"	X		4	0'-6"	1'-11"					EXPANSION JOINT BLOCKOUT TOP					
S529	S	312	5'-5"	X		29	1'-9"	1'-11"	45	1'-9"			EXPANSION JOINT SLAB THICKNESS TRANSITION					
S530	S	32	4'-8"	X	X	29	1'-9"	1'-2"	45	1'-9"			EXPANSION JOINT SLAB THICKNESS TRANSITION	B	5½"	1'-10½"	8 SERIES OF 4	3'-10" TO 5'-3"
S431	S	8	44'-7"			1	44'-7"						EXPANSION JOINT BLOCKOUT TOP					
S632	S	56	4'-0"			1	4'-0"						EXPANSION JOINT BOT. OF SLAB TRANSVERSE					
S633	S	14	13'-3"			1	13'-3"						EXPANSION JOINT BOT. OF SLAB TRANSVERSE					
S534	S	312	5'-3"	X		8	4'-6"	0'-10"					EXPANSION JOINT BLOCKOUT TOP					
S535	S	4118	4'-9"	X		11	1'-4"	172	0'-4½"	1'-5"	0'-10"	98	PARAPET TIE					
S636	S	10	6'-0"			1	6'-0"						EXPANSION JOINT BOT. OF SLAB TRANSVERSE					
S537	S	36	4'-7"	X		2	4'-0"						FLOOR DRAIN					
S538	S	3	4'-11"	X		12	3'-9"	0'-2"	0'-2½"				FLOOR DRAIN					
S639	S	28	7'-10"	X		8	4'-0"	4'-0"					FLOOR DRAIN					

BAR MARK BREAKDOWN				
BAR MARK	UNIT 1	UNIT 2	TOTAL NO	WEIGHT
S601	2084	2350	4434	296919
S602	1041	1174	2215	41864
S603	180	180	360	32443
S604	180	180	360	30776
S605	90	90	180	12166
S606	90	90	180	5970
S407	1725	1455	3180	95591
S408	90	0	90	691
S409	270	630	900	24048
S410	90	0	90	992
S411	90	0	90	1834
S412	90	0	90	2585
S413	0	90	90	842
S414	0	90	90	2495
S415	0	90	90	1232
S416	0	90	90	1002
S417	91	0	91	1307
S418	0	91	91	2219
S519	10	10	20	156
S520	156	156	312	2847
S421	36	36	72	232
S622	14	14	28	1875
S623	28	28	56	729
S424	160	160	320	410
S425	320	320	640	962
S426	16	16	32	848
S527	160	160	320	2726
S528	160	160	320	890
S529	156	156	312	1763
S530	16	16	32	156
S431	4	4	8	238
S632	28	28	56	336
S633	7	7	14	279
S534	156	156	312	1708
S535	2039	2079	4118	20402
S636	5	5	10	90
S537	18	18	36	172
S538	3	0	3	15
S639	16	12	28	329
TOT WEIGHT	284898	307243		592141

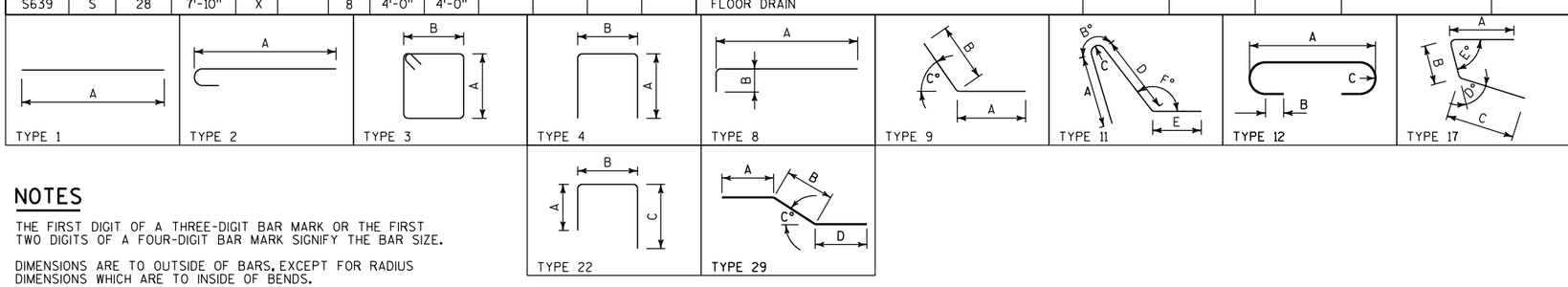

NOTES

THE FIRST DIGIT OF A THREE-DIGIT BAR MARK OR THE FIRST TWO DIGITS OF A FOUR-DIGIT BAR MARK SIGNIFY THE BAR SIZE.

DIMENSIONS ARE TO OUTSIDE OF BARS, EXCEPT FOR RADIUS DIMENSIONS WHICH ARE TO INSIDE OF BENDS.

FOR A BAR SERIES, LENGTH SHOWN IN THE FOURTH COLUMN OF TABLE IS THE AVERAGE BAR LENGTH USED TO COMPUTE BAR WEIGHT.

BAR MATERIAL CODES USED IN SECOND COLUMN OF TABLE
U - STEEL, HIGH STRENGTH, UNCOATED.
E - STEEL, HIGH STRENGTH, EPOXY COATED.
S - STAINLESS STEEL.

NO.	DATE	REVISION	BY

STATE OF WISCONSIN
DEPARTMENT OF TRANSPORTATION

STRUCTURE B-40-855

DRAWN BY GLM | PLANS CK'D. WRT

DECK REINFORCEMENT SCHEDULE

SHEET 73 OF 96

STATE PROJECT NUMBER
1060-33-80

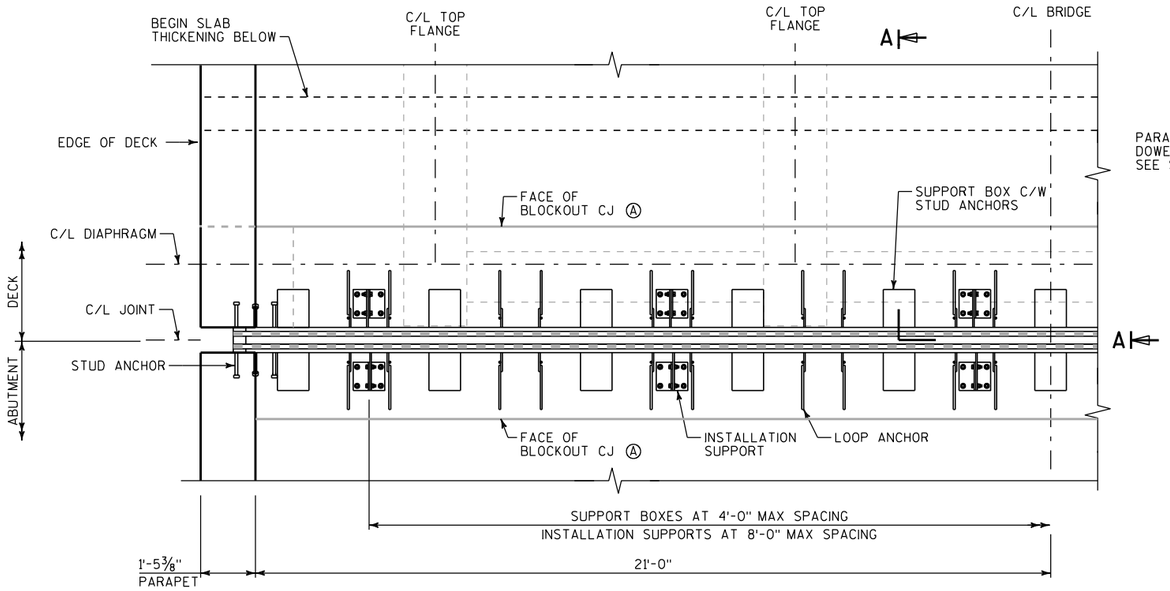

PLAN - JOINT AT ABUTMENT

JOINT SYMMETRICAL ABOUT C/L

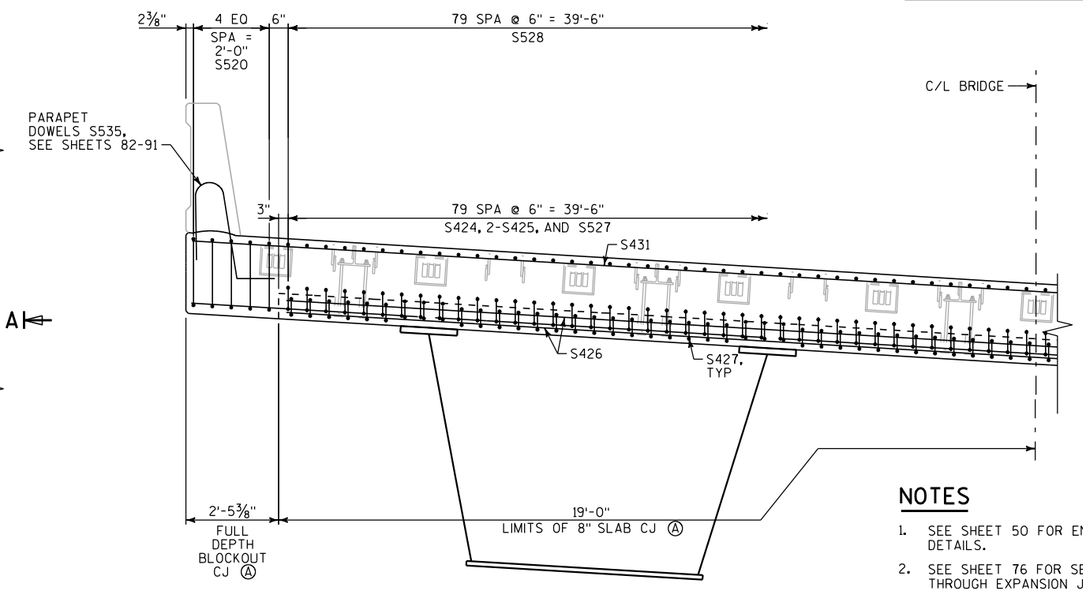

SECTION B-B

DECK REINFORCEMENT NOT SHOWN FOR CLARITY

NOTES

1. SEE SHEET 50 FOR END DIAPHRAGM DETAILS.
2. SEE SHEET 76 FOR SECTIONS THROUGH EXPANSION JOINT REGIONS.
3. SEE SHEET 78 FOR DETAILS OF THE MODULAR EXPANSION DEVICES INCLUDING REQUIRED MOVEMENT CAPACITY, NUMBER OF SEALS, ANCHORAGES AND TEMPORARY SUPPORTS.
4. SEE SHEET 77 FOR DETAILS OF THE PARAPET COVER PLATES.

   COVER PLATES ARE REQUIRED AT ALL PARAPETS BUT FOR CLARITY ARE NOT SHOWN ON THIS DRAWING.
5. SUPPORT BOX SIZE AS SHOWN IS APPROXIMATE ONLY AND IS BASED ON A 2-CELL EXPANSION DEVICE. DIMENSIONS WILL VARY FOR DIFFERENT JOINT SIZES AND MANUFACTURERS.
6. EXPANSION DEVICE DETAILS SHOWN ON THIS DRAWING (INCLUDING SIZE AND SPACING OF SUPPORT BOXES, LOOP ANCHORS AND INSTALLATION SUPPORTS) ARE PICTORIAL ONLY.
7. ALL CONSTRUCTION SHALL BE CARRIED OUT USING THE APPROVED EXPANSION JOINT SHOP DRAWINGS ONLY.

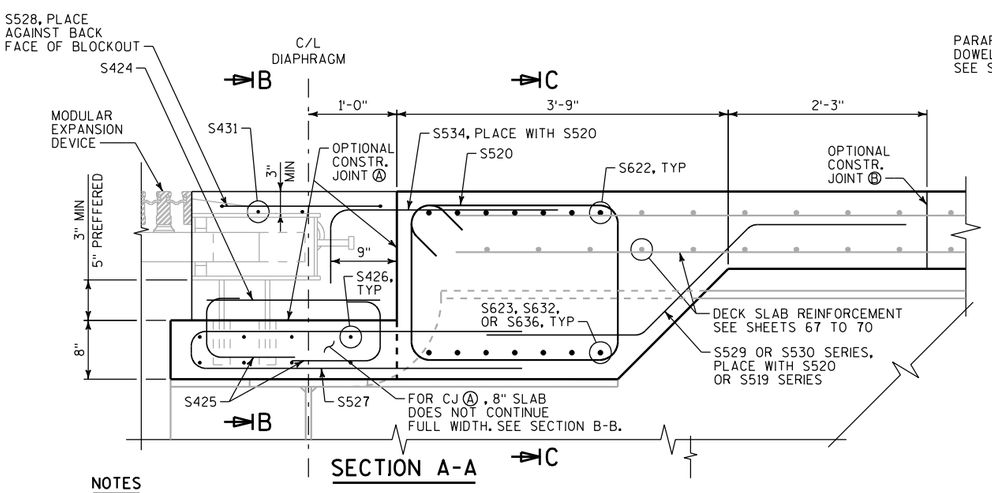

SECTION A-A

NOTES

1. THE MODULAR EXPANSION DEVICE SHALL NOT BE POSITIONED IN ITS FINAL LOCATION UNTIL AFTER THE ADJACENT SPANS OF THE DECK HAVE BEEN POURED.
2. THE CONTRACTOR MAY INSTALL EITHER CONSTRUCTION JOINT Ⓐ OR CONSTRUCTION JOINT Ⓑ TO FACILITATE THE POSITIONING AND INSTALLATION OF THE MODULAR EXPANSION DEVICE.
3. IF CONSTRUCTION JOINT Ⓑ IS CHOSEN, THE CONTRACTOR SHALL BE RESPONSIBLE FOR THE FABRICATION AND INSTALLATION OF A SUITABLE SUPPORT SYSTEM FOR THE MODULAR EXPANSION DEVICE THAT PROPERLY LOCATES AND SECURES THE DEVICE IN POSITION, AND PROVIDES SUPPORT POINTS IN ACCORDANCE WITH THE SPECIFICATIONS. PAYMENT FOR ANY SUPPORT SYSTEM SHALL BE INCIDENTAL TO THE BID ITEM "EXPANSION DEVICE MODULAR LRFD B-40-855".

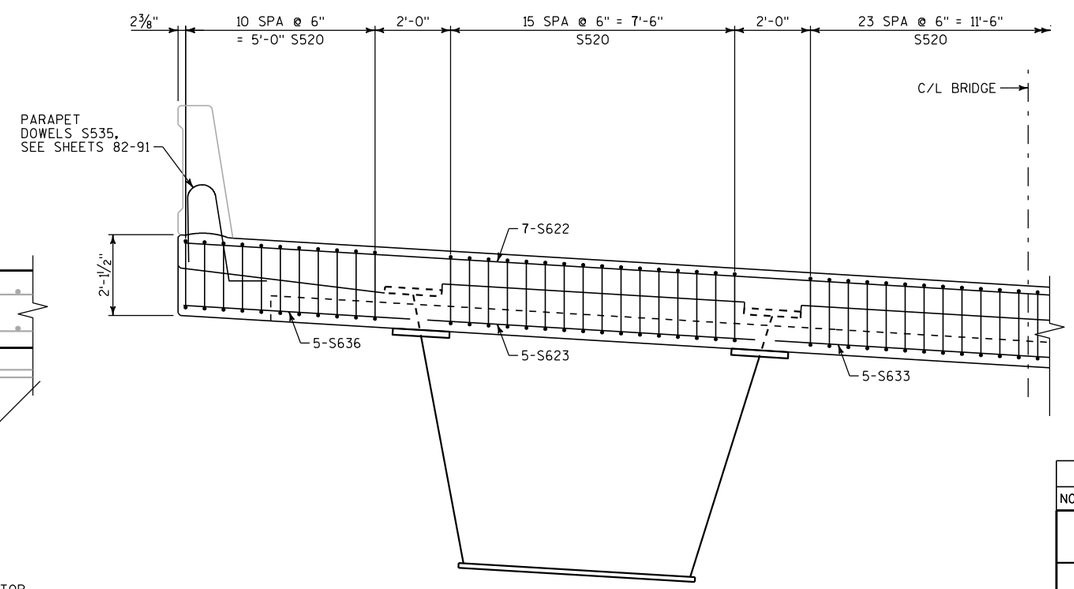

SECTION C-C

DECK REINFORCEMENT NOT SHOWN FOR CLARITY

NO.	DATE	REVISION	BY

STATE OF WISCONSIN
DEPARTMENT OF TRANSPORTATION

STRUCTURE B-40-855

DRAWN BY GLM | PLANS CK'D. WRT

EXPANSION JOINT LAYOUT - ABUTMENT

SHEET 74 OF 96

8

8

STATE PROJECT NUMBER
1060-33-80

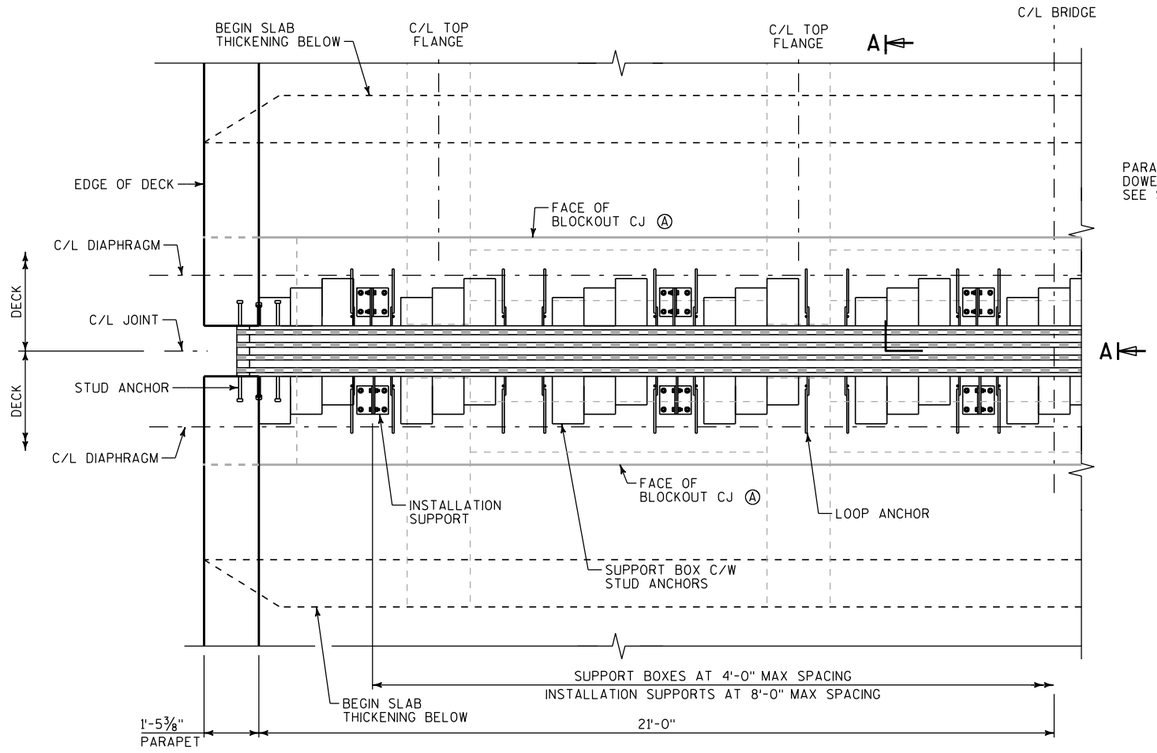

PLAN - JOINT AT PIER

JOINT SYMMETRICAL ABOUT C/L

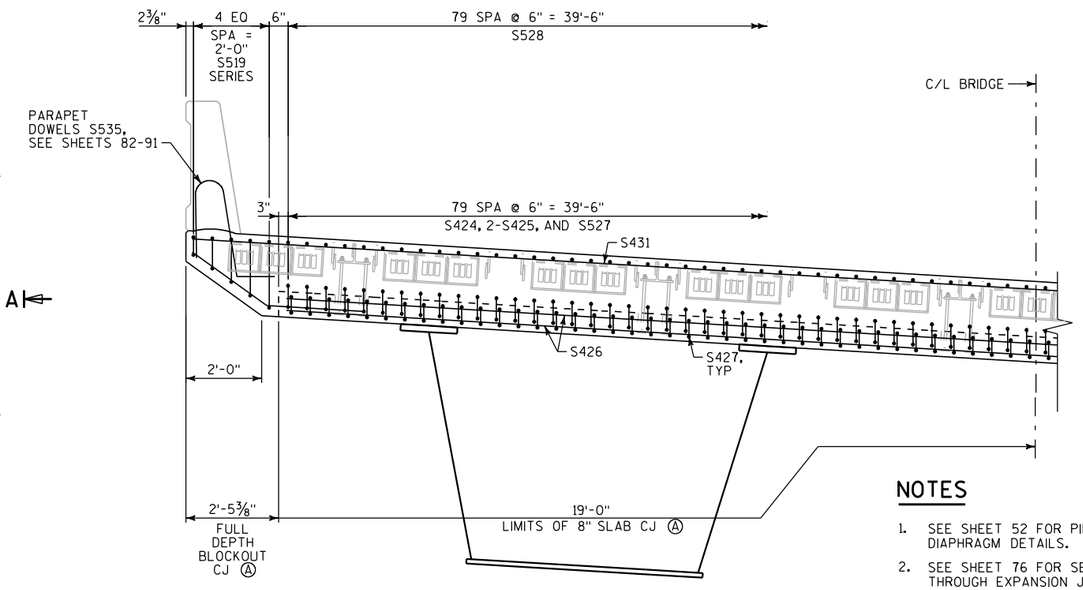

SECTION B-B

DECK REINFORCEMENT NOT SHOWN FOR CLARITY

NOTES

1. SEE SHEET 52 FOR PIER SW04 DIAPHRAGM DETAILS.
2. SEE SHEET 76 FOR SECTIONS THROUGH EXPANSION JOINT REGIONS.
3. SEE SHEET 78 FOR DETAILS OF THE MODULAR EXPANSION DEVICES INCLUDING REQUIRED MOVEMENT CAPACITY, NUMBER OF SEALS, ANCHORAGES AND TEMPORARY SUPPORTS.
4. SEE SHEET 77 FOR DETAILS OF THE PARAPET COVER PLATES.

   COVER PLATES ARE REQUIRED AT ALL PARAPETS BUT FOR CLARITY ARE NOT SHOWN ON THIS DRAWING.
5. SUPPORT BOX SIZE AS SHOWN IS APPROXIMATE ONLY AND IS BASED ON A 4-CELL EXPANSION DEVICE. DIMENSIONS WILL VARY FOR DIFFERENT JOINT SIZES AND MANUFACTURERS.
6. EXPANSION DEVICE DETAILS SHOWN ON THIS DRAWING (INCLUDING SIZE AND SPACING OF SUPPORT BOXES, LOOP ANCHORS AND INSTALLATION SUPPORTS) ARE PICTORIAL ONLY.
7. ALL CONSTRUCTION SHALL BE CARRIED OUT USING THE APPROVED EXPANSION JOINT SHOP DRAWINGS ONLY.

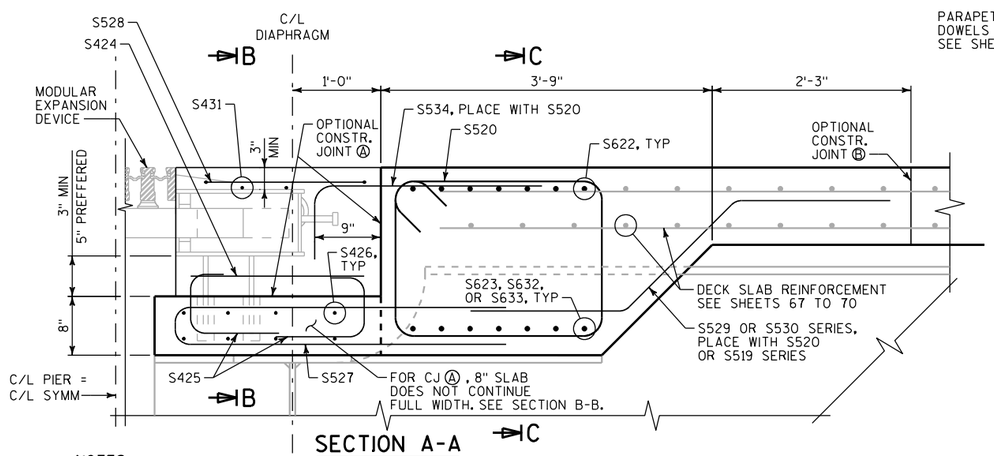

SECTION A-A

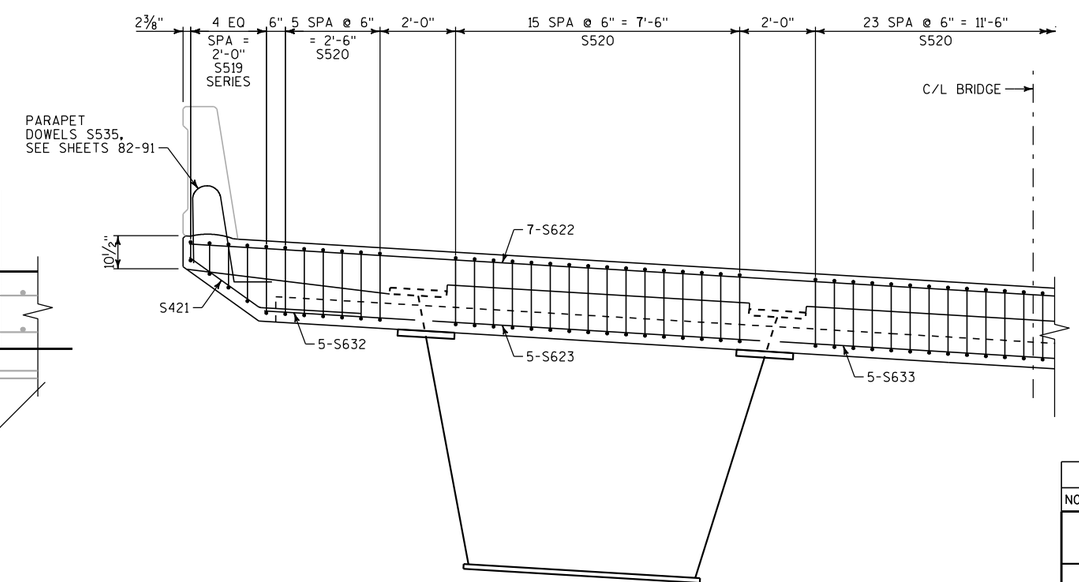

SECTION C-C

DECK REINFORCEMENT NOT SHOWN FOR CLARITY

NOTES

1. THE MODULAR EXPANSION DEVICE SHALL NOT BE POSITIONED IN ITS FINAL LOCATION UNTIL AFTER THE ADJACENT SPANS OF THE DECK HAVE BEEN POURED.
2. THE CONTRACTOR MAY INSTALL EITHER CONSTRUCTION JOINT Ⓐ OR CONSTRUCTION JOINT Ⓑ TO FACILITATE THE POSITIONING AND INSTALLATION OF THE MODULAR EXPANSION DEVICE.
3. IF CONSTRUCTION JOINT Ⓑ IS CHOSEN, THE CONTRACTOR SHALL BE RESPONSIBLE FOR THE FABRICATION AND INSTALLATION OF A SUITABLE SUPPORT SYSTEM FOR THE MODULAR EXPANSION DEVICE THAT PROPERLY LOCATES AND SECURES THE DEVICE IN POSITION, AND PROVIDES SUPPORT POINTS IN ACCORDANCE WITH THE SPECIFICATIONS. PAYMENT FOR ANY SUPPORT SYSTEM SHALL BE INCIDENTAL TO THE BID ITEM "EXPANSION DEVICE MODULAR LRFD B-40-855".

NO.	DATE	REVISION	BY

STATE OF WISCONSIN
DEPARTMENT OF TRANSPORTATION

STRUCTURE B-40-855

DRAWN BY GLM | PLANS CK'D. WRT

EXPANSION JOINT LAYOUT - PIER

SHEET 75 OF 96

8

8

STATE PROJECT NUMBER

1060-33-80

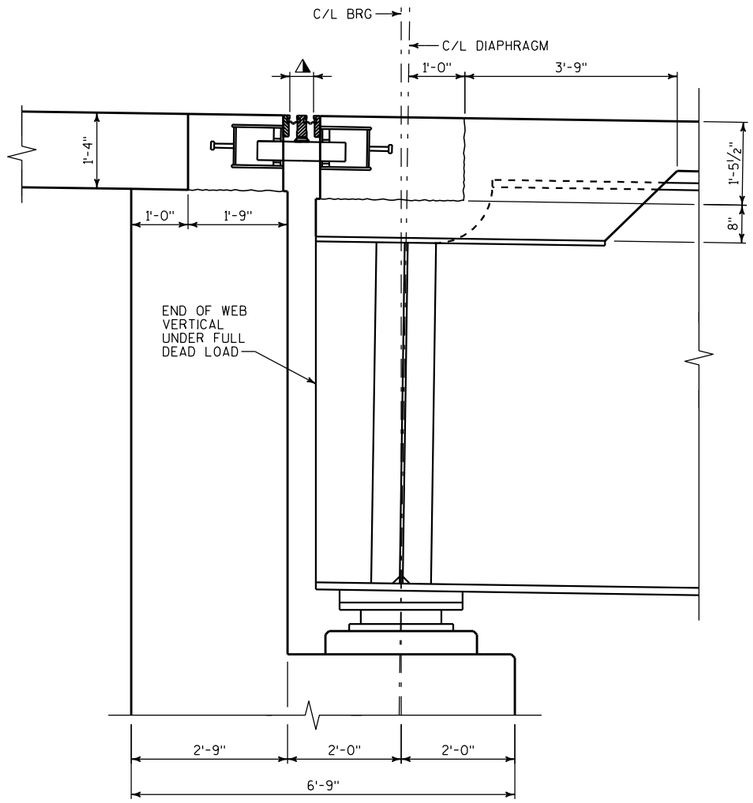

SECTION AT W ABUT

◭ SEE TEMPERATURE SETTING TABLE

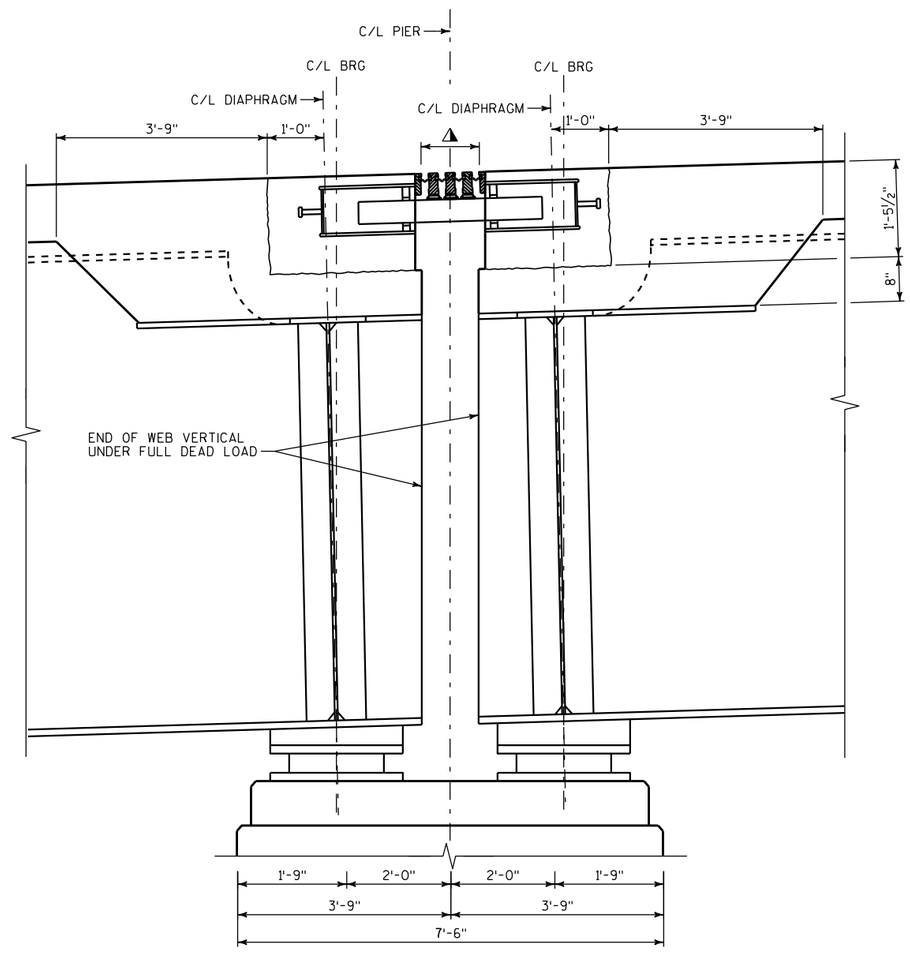

SECTION AT PIER SW04

◭ SEE TEMPERATURE SETTING TABLE

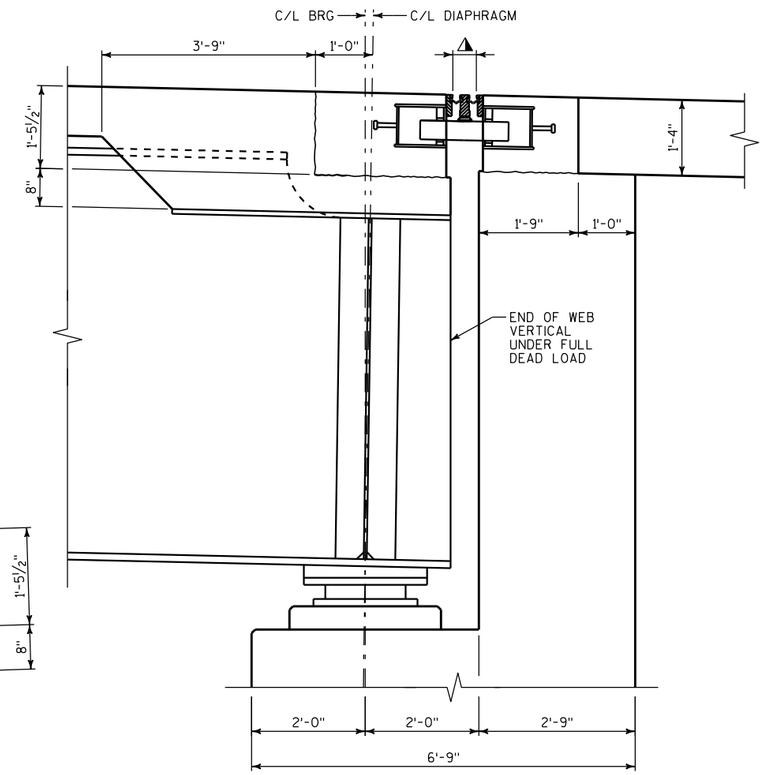

SECTION AT S ABUT

◭ SEE TEMPERATURE SETTING TABLE

TEMPERATURE SETTING TABLE

PREPARE AND SUBMIT A TABLE FOR SETTING EACH JOINT OPENING BASED ON THE FOLLOWING CRITERIA:

1. JOINT OPENING SHALL BE AT THE MEDIAN VALUE FOR A TEMPERATURE OF 45°F.
2. ESTIMATED MOVEMENT PER 10°F CHANGE IN TEMPERATURE AS FOLLOWS:

W ABUT	=	3/8"
PIER SW04	=	5/8"
S ABUT	=	3/8"

3. THESE VALUES RELATE TO THE NET OPENING OF THE JOINT AND INCLUDE CONTRIBUTIONS FROM BOTH SIDES.
4. INCLUDE VALUES IN THE TABLE FOR AMBIENT TEMPERATURES FROM -5°F TO 95°F.

8

8

NO.	DATE	REVISION	BY

STATE OF WISCONSIN
DEPARTMENT OF TRANSPORTATION

STRUCTURE B-40-855

DRAWN BY GLM | PLANS CK'D. WRT

EXPANSION JOINT SECTIONS

SHEET 76 OF 96

STATE PROJECT NUMBER
1060-33-80

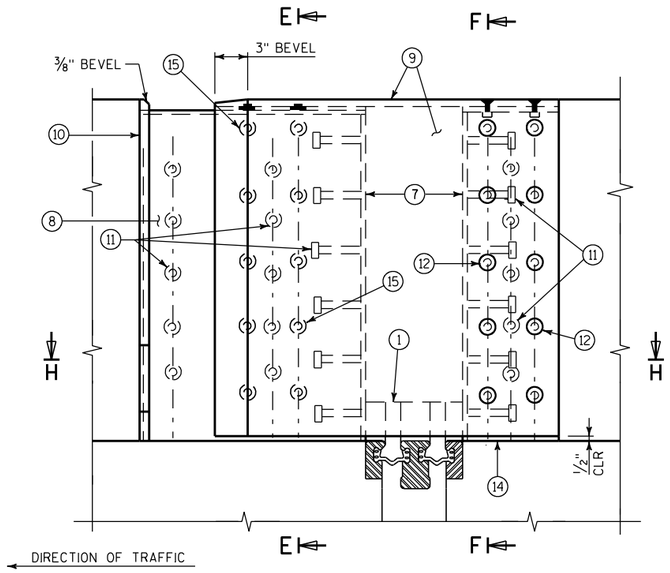

ELEVATION OF SINGLE SLOPE PARAPET

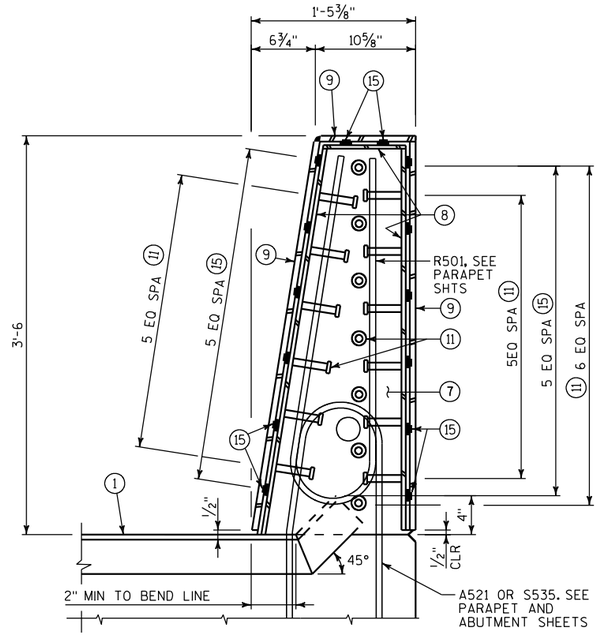

SECTION E-E

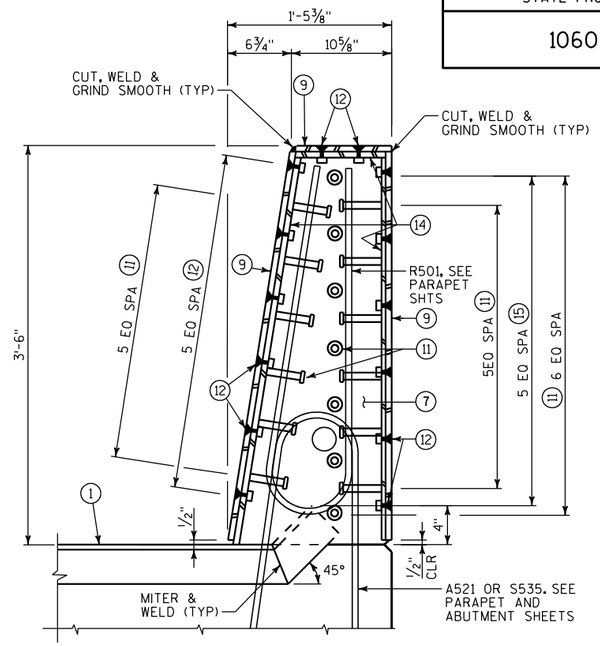

SECTION F-F

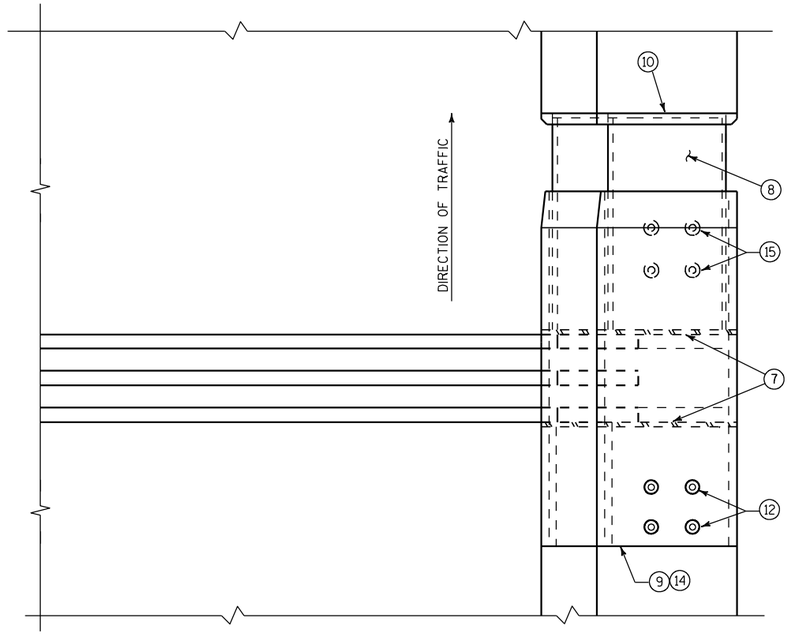

PLAN OF SINGLE SLOPE PARAPET

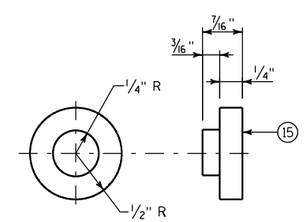

ADIPRENE BUTTON DETAIL

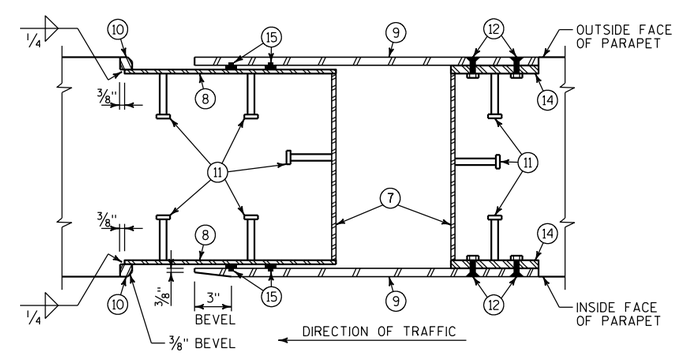

SECTION H-H

NO.	DATE	REVISION	BY

STATE OF WISCONSIN
DEPARTMENT OF TRANSPORTATION

STRUCTURE B-40-855

DRAWN BY GLM | PLANS CK'D. WRT

MODULAR EXPANSION JOINT COVER PLATES

SHEET 77 OF 96

STATE PROJECT NUMBER
1060-33-80

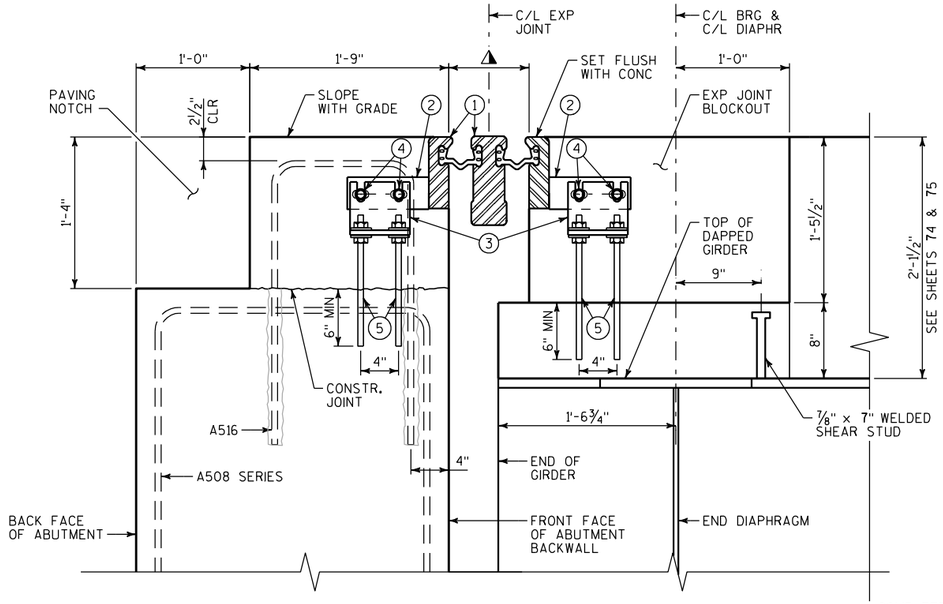

SECTION THRU JOINT @ ABUTMENT

NORMAL TO C/L SUBSTRUCTURE

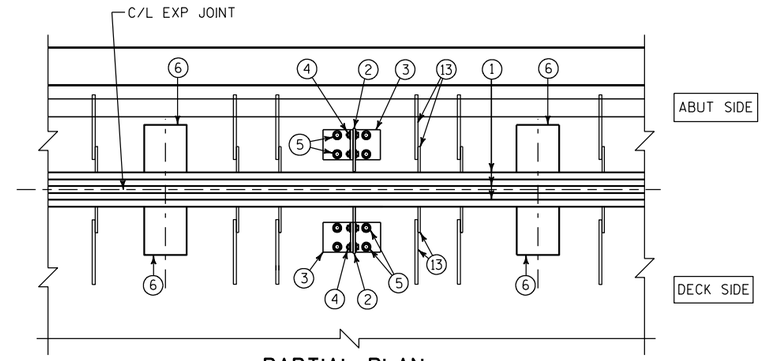

PARTIAL PLAN

NOTE:
MODULAR EXPANSION DEVICE DESIGN AND DETAILS ARE SPECIFIC TO THE MANUFACTURER SELECTED FROM THOSE LISTED IN THE SPECIAL PROVISIONS. FABRICATION DRAWING IS SUBJECT TO THE APPROVAL OF THE BUREAU OF STRUCTURES.

SUPPORT BOXES ARE SHOWN FOR GENERAL INFORMATION AND LOCATION MAY VARY ACCORDING TO FABRICATOR DESIGN. SPACE SUPPORT BOXES NOT TO EXCEED MAXIMUM SPACING PER SPECIAL PROVISIONS.

LEGEND

1. MODULAR EXPANSION JOINT DEVICE.
2. ½" PLATE, 8'-0" SPA MAX. PROVIDE 2 - 1" X 2" MIN. SLOTTED HOLES PLACED HORIZONTALLY FOR NO. 4.
3. WT 6 X 29 (OR EQUIVALENT BUILT UP T-SECTION). SPA AT 8'-0" MAX. PROVIDE 2 - 1" X 3" MIN. SLOTTED HOLES PLACED VERTICALLY IN WEB OF WT FOR BOLTS NO. 4.
4. ¾" Φ HIGH STRENGTH BOLTS WITH NUTS & WASHERS. (A325 GALV.)
5. ¾" Φ THREADED ROD WITH 2 NUTS & WASHERS. GROUT THREADED ROD INTO FIELD DRILLED HOLES. (GALV.)
6. SUPPORT BOX ASSEMBLY FOR SUPPORT BAR (SPA. PER MANUFACTURER). FABRICATE BOX FROM ½" PLATES.
7. ⅜" BULKHEAD PLATE. WELD TO NO. 1, NO. 8 AND NO. 14. WHEN CONDUIT IS PRESENT IN PARAPET, ACCOMMODATE FOR BY PROVIDING OPENING IN NO. 7.
8. INSIDE PLATE. FABRICATE FROM ⅜" PLATE.
9. OUTSIDE PLATE. FABRICATE FROM ⅝" PLATE.
10. ⅞" SQUARE BAR. WELD TO NO. 8 AS SHOWN.
11. ¾" Φ X 4" LONG STUDS. WELD TO NO. 8 , NO. 7 & NO. 14 AS SHOWN.
12. ¾" Φ X 2" STAINLESS STEEL FLAT CTSK. SLOTTED HEAD CAP SCREWS WITH ANTI-SEIZE LUBRICANT. RECESS 1/16" BELOW PLATE SURFACE.
13. ½" PLATE WITH ⅝" Φ LOOP ANCHOR FABRICATED AS SHOWN. SPACED AT MANUFACTURER'S SPEC.
14. INSIDE PLATE. FABRICATE FROM ⅝" PLATE.
15. ADIPRENE BUTTON. SEE DETAIL. SET IN OUTSIDE PLATE.

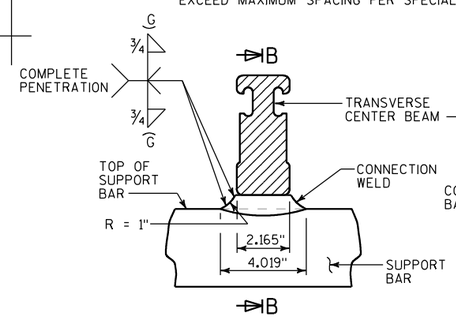

MODULAR EXPANSION JOINT CONNECTION DETAIL AND WELD SPECIFICATION

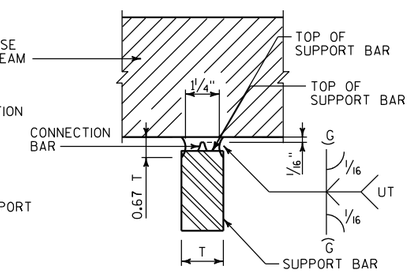

SECTION B-B

* POUR CONC. ABOVE THIS JOINT AFTER SUPERSTRUCTURE CONC. IS IN PLACE. STRIKE OFF & LEAVE ROUGH.

▲ MANUFACTURER'S RECOMMENDED JOINT OPENING BASED ON THE TEMPERATURE ON THE DAY OF PLACEMENT PER TEMPERATURE TABLE. THE MODULAR EXPANSION DEVICE SHALL HAVE THE NUMBER OF CELLS AS INDICATED BELOW:

WEST ABUTMENT	2 CELLS
PIER SW06	4 CELLS
SOUTH ABUTMENT	2 CELLS

◑ DIMENSION IS PARALLEL TO ℄ GIRDER.

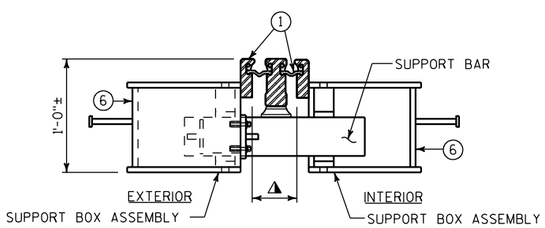

JOINT DETAIL

AT SUPPORT BAR & SUPPORT BOX ASSEMBLY

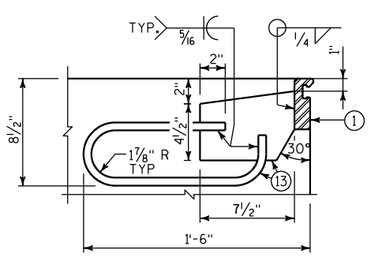

ANCHORAGE DETAIL

PLACE ADJACENT TO SUPPORT BOXES IN PAVING BLOCK @ ABUT. & IN DECK @ CONC. DIAPH.

GENERAL NOTES

ONE FIELD SPLICE PERMITTED IN STEEL EXTRUSIONS. DETAILS SHALL BE SUBMITTED FOR APPROVAL. NO SPLICING PERMITTED IN NEOPRENE GLAND.

AFTER FABRICATION, BUT BEFORE SHIPMENT, STRAIGHTEN STEEL EXTRUSIONS SUCH THAT THEY SHALL BE FREE FROM WARP, TWIST & SWEEP.

NO EXPANSION JOINT PROTRUSIONS PERMITTED ABOVE ROADWAY SURFACE OR ON PARAPET ROADWAY FACE.

THE EXPANSION JOINT SEALS SHALL BE PLACED, BONDED & SEALED AS RECOMMENDED BY THE MANUFACTURER. FORM WORK SHALL BE PLACED BETWEEN THE SUPPORT BOXES TO PREVENT CONCRETE INTRUSION INTO THE SUPPORT BOX. A TECHNICAL REPRESENTATIVE OF THE MANUFACTURER SHALL BE PRESENT DURING INSTALLATION. PRIOR TO SETTING THE JOINT ASSEMBLY INTO POSITION, THE PROJECT ENGINEER SHALL DETERMINE THE PROPER JOINT OPENING.

EXPANSION JOINT EXTRUSIONS SHALL BE FABRICATED TO CONFORM TO ROADWAY CROWN & GRADE. FABRICATOR SHALL PROVIDE MEANS OF KEEPING GALVANIZED EXTRUSIONS CLEAN & SMOOTH DURING SHIPMENT AND PRIOR TO APPLYING LUBRICANT ADHESIVE FOR NEOPRENE GLAND INSTALLATION.

SANDBLAST BARS, PLATES, WT-SECTION, ANCHORAGE LOOP, & EXTRUSIONS AFTER FABRICATION IN ACCORDANCE WITH SSPC SP. #6 "COMMERICAL BLAST CLEANING". AFTER BLAST CLEANING, THIS ASSEMBLY SHALL BE HOT DIPPED GALVANIZED.

COST OF FURNISHING & PLACING OF THE EXPANSION JOINTS COMPLETE WITH PARAPET PLATES SHALL BE PAID FOR UNDER THE PRICE BID FOR "EXPANSION DEVICE MODULAR B-40-855".

BAR STEEL REINF. IN DECK AND CONC. DIAPHRAGM SHALL BE RESPACED AS NECESSARY TO ALLOW PLACEMENT OF JOINT ASSEMBLY.

NO.	DATE	REVISION	BY

STATE OF WISCONSIN
DEPARTMENT OF TRANSPORTATION

STRUCTURE B-40-855

DRAWN BY GLM | PLANS CK'D. WRT

MODULAR EXPANSION JOINT DETAILS

STATE PROJECT NUMBER
1060-33-80

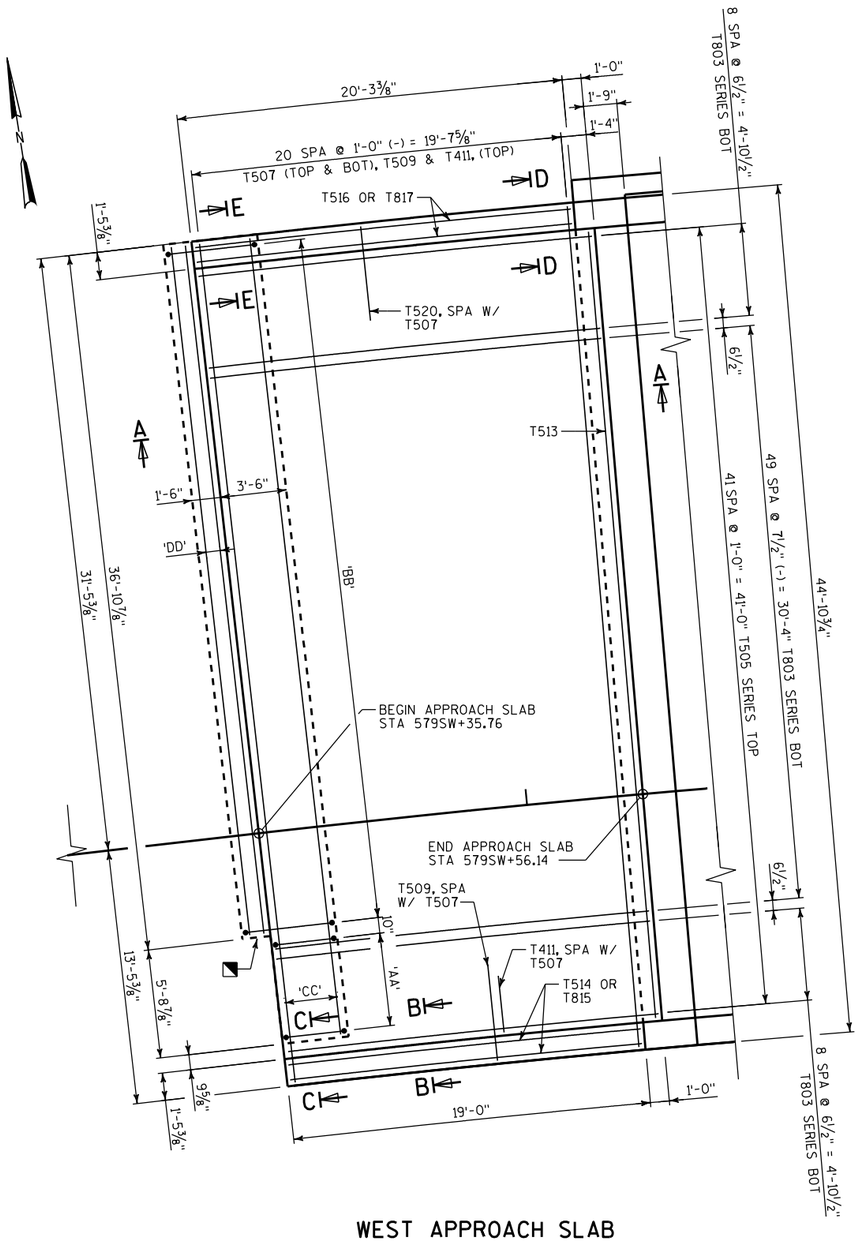

WEST APPROACH SLAB

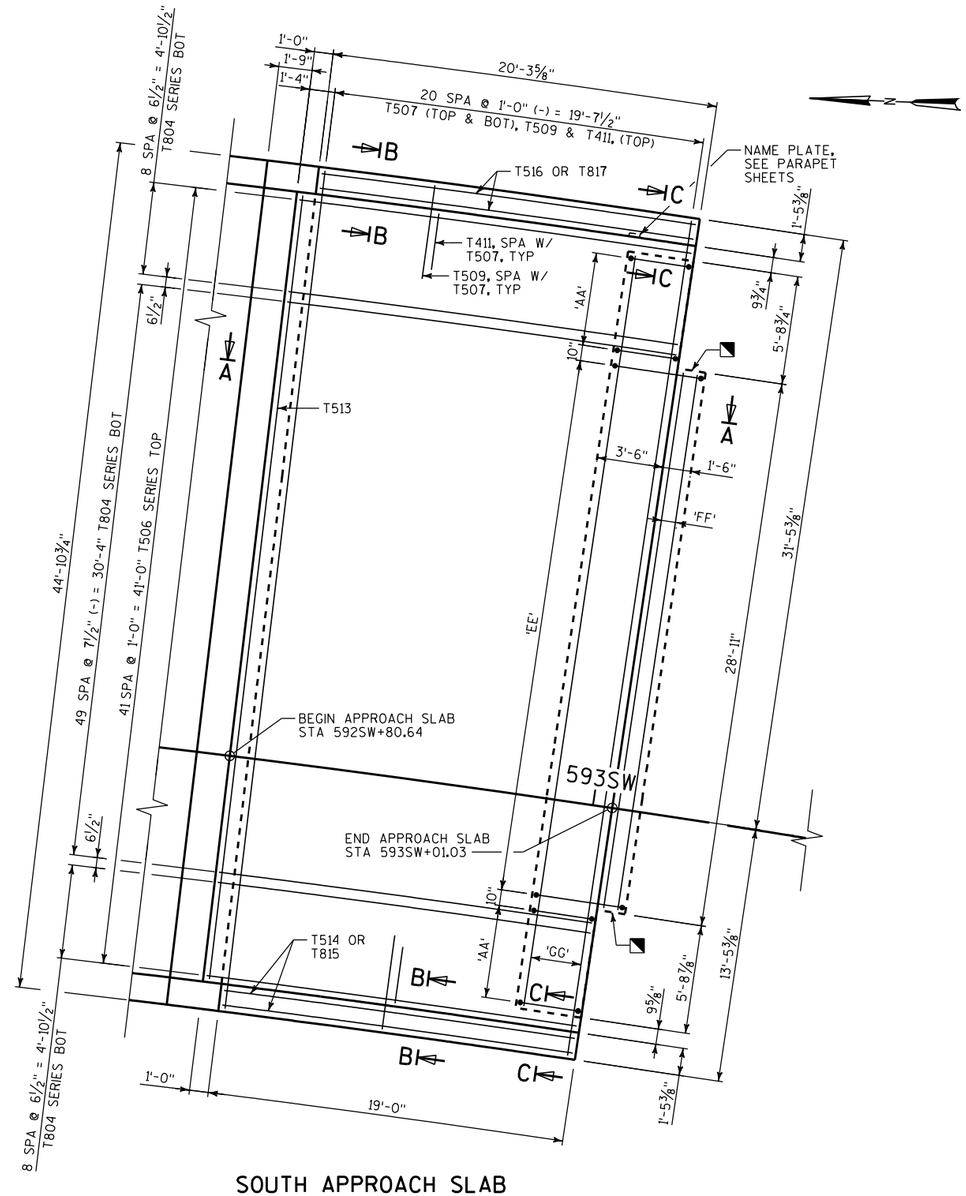

SOUTH APPROACH SLAB

TABLE OF ELEVATIONS

FEATURE	STA. 579SW+35.76	579SW+56.14	592SW+80.64	593SW+01.03
LT. EDGE OF SLAB	805.53	805.37	814.58	814.06
TOE OF 42SS BARRIER	805.47	805.30	814.49	813.98
R/L SW	804.28	803.93	812.69	812.18
TOE OF 42SS BARRIER	803.80	803.39	811.97	811.46
RT. EDGE OF SLAB	803.74	803.32	811.88	811.37

LEGEND

◥ PROVIDE ½" PREFORMED JOINT FILLER BETWEEN EDGE OF APPROACH SLAB FOOTING AND RETAINING WALL MOMENT SLAB.

NOTES

FOR SECTIONS A-A, B-B, C-C, D-D, & E-E, SEE STRUCTURAL APPROACH SLAB DETAILS.

'AA' = 6 SPA @ 10"(-) = 4'-11", T502
'BB' = 40 SPA. @ 11"(-) = 36'-3", T501
'CC' = 3 SPA. @ 1'-0" = 3'-0", T510
'DD' = 1 SPA. @ 9", T508
'EE' = 31 SPA @ 11"(-) = 28'-3", T501
'FF' = 1 SPA. @ 9", T518
'GG' = 3 SPA. @ 1'-0" = 3'-0", T519

NO.	DATE	REVISION	BY

STATE OF WISCONSIN
DEPARTMENT OF TRANSPORTATION

STRUCTURE B-40-855

DRAWN BY GLM | PLANS CK'D. WRT

STRUCTURAL APPROACH SLAB

SHEET 79 OF 96

STATE PROJECT NUMBER
1060-33-80

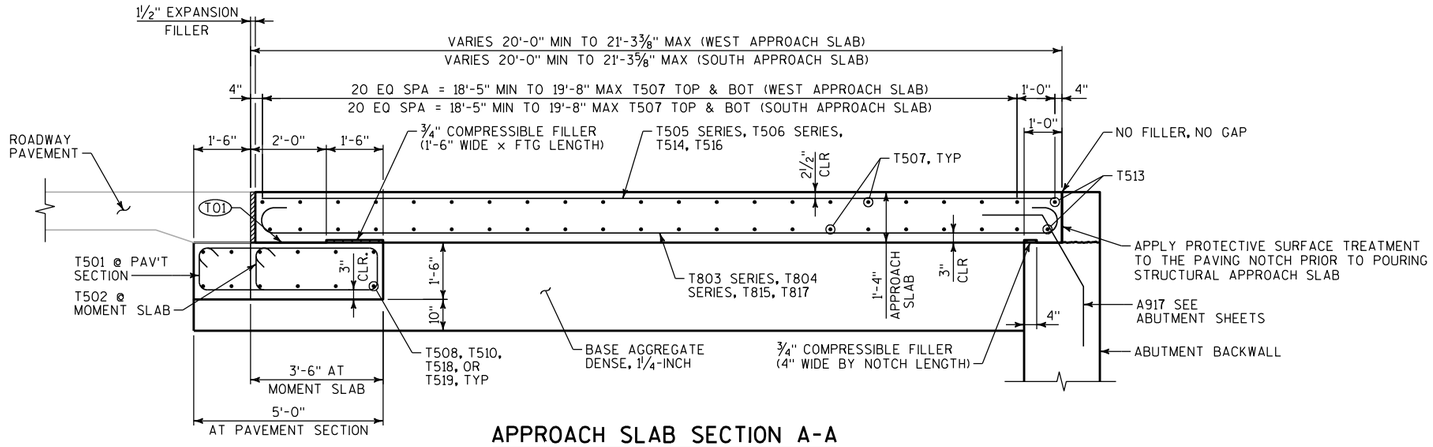

APPROACH SLAB SECTION A-A

(WEST APPROACH SHOWN, SOUTH APPROACH SIMILAR BUT OPPOSITE)

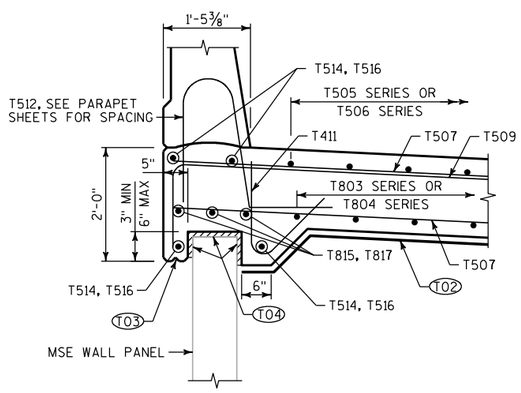

SECTION B-B

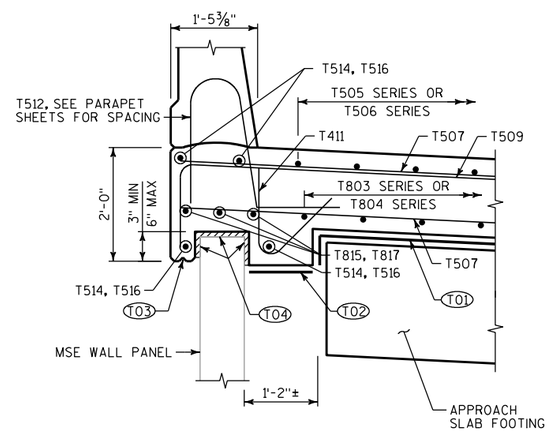

SECTION C-C

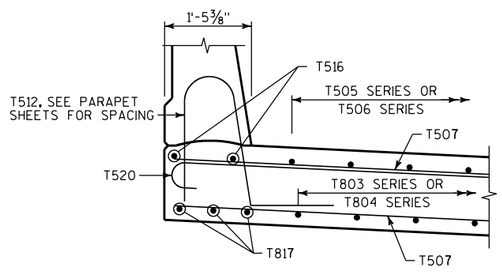

SECTION D-D

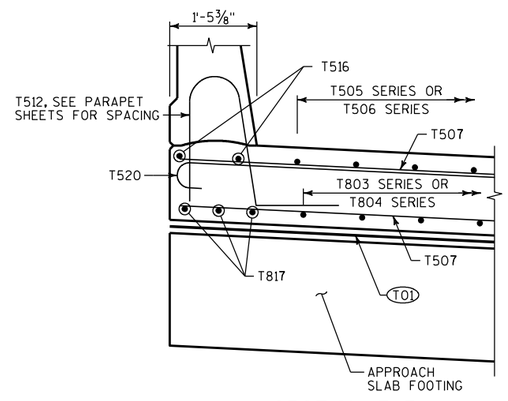

SECTION E-E

LEGEND

(T01) STEEL TROWEL TOP SURFACE OF FOOTING AND PLACE MULTIPLE LAYERS (0.03" MIN. TOTAL THK.) OF POLYETHYLENE SHEETS OVER THE ENTIRE TOP OF FOOTING.

(T02) PLACE MULTIPLE LAYERS (0.03" MIN. TOTAL THK.) OF POLYETHYLENE SHEETS OVER THE ENTIRE TOP OF SUBGRADE. POLYETHYLENE SHEETS SHALL BE CONSIDERED INCIDENTAL TO "CONCRETE MASONRY BRIDGES".

(T03) ¾" CONT. DRIP GROOVE. TERMINATE 2'-0" FROM ABUTMENT BACKWALL.

(T04) 1" EXPANDED POLYSTYRENE

APPROACH SLAB NOTES

THE DECK SHALL HAVE A TINE FINISH AS DEFINED IN THE STANDARD SPECIFICATIONS.

SEE PARAPET SHEETS FOR PARAPET REINFORCING TIE PLACEMENT REQUIRED IN APPROACH SLABS.

IN ADDITION TO THE AREAS OUTLINED IN THE STANDARD SPECIFICATIONS, APPLY PROTECTIVE SURFACE TREATMENT TO THE TOP OF APPROACH SLAB SURFACE, TOPS OF PARAPETS, INSIDE FACES OF PARAPETS, AND AREAS SHOWN IN THE APPROACH SLAB SECTION.

NO.	DATE	REVISION	BY

STATE OF WISCONSIN
DEPARTMENT OF TRANSPORTATION

STRUCTURE B-40-855

DRAWN BY GLM | PLANS CK'D. WRT

STRUCTURAL APPROACH SLAB DETAILS

SHEET 80 OF 96

8

STATE PROJECT NUMBER
1060-33-80

BAR INFORMATION							BAR DIMENSIONS						LOCATION	BAR SERIES INFORMATION				
BAR MARK	MATL	NO. REQ'D	LENGTH	BENT	BAR SERIES	BEND TYPE	A	B	C	D	E	F		DIM	MIN	MAX	NO REQ'D	LENGTH
T501	E	73	12'-1"	X		3	1'-1"	4'-8"					FTG TIE AT PAV'T SECTION					
T502	E	21	9'-1"	X		3	1'-1"	3'-2"					FTG TIE AT MOMENT SLAB					
T803	S	68	22'-2"	X	X	12	20'-4"	0'-4"	0'-3"				LONG BOT W APPR. SLAB	A	19'-8"	20'-11"	1 SERIES OF 68	21'-6" TO 22'-9"
T804	S	68	22'-2"	X	X	12	20'-4"	0'-4"	0'-3"				LONG BOT S APPR. SLAB	A	19'-8"	20'-11"	1 SERIES OF 68	21'-6" TO 22'-9"
T505	S	42	20'-4"		X	1	20'-4"						LONG TOP W APPR. SLAB	A	19'-8"	20'-11"	1 SERIES OF 42	19'-8" TO 20'-11"
T506	S	42	20'-4"		X	1	20'-4"						LONG TOP S APPR. SLAB	A	19'-8"	20'-11"	1 SERIES OF 42	19'-8" TO 20'-11"
T507	S	42	44'-6"			1	44'-6"						TRANSVERSE, TOP & BOT					
T508	E	2	36'-6"			1	36'-6"						FTG TRANS AT PAV'T SECTION					
T509	S	63	6'-3"	X		8	5'-0"	1'-4"					TRANS TOP EDGES AT MSE WALL					
T510	E	4	42'-3"			1	42'-3"						FTG TRANS AT MOMENT SLAB					
T411	S	63	4'-10"	X		10	1'-3"	135	0'-3"				TRANS AT BF MSE WALL					
T512	S	116	5'-7"	X		11	1'-8"	172	0'-4½"	1'-9"	1'-0"	99	PARAPET TIE					
T513	S	4	41'-8"			1	41'-8"						TRANSVERSE TOP & BOT AT ABUT					
T514	S	8	18'-8"			1	18'-8"						LONG TOP AT PARAPET					
T815	S	6	20'-6"	X		12	18'-8"	0'-4"	0'-3"				LONG BOT AT PARAPET					
T516	S	8	19'-11"			1	19'-11"						LONG TOP AT PARAPET					
T817	S	6	21'-9"	X		12	19'-11"	0'-4"	0'-3"				LONG BOT AT PARAPET					
T518	E	2	28'-7"			1	28'-7"						FTG TRANS AT PAV'T SECTION					
T519	E	4	40'-0"			1	40'-0"						FTG TRANS AT MOMENT SLAB					
T520	S	21	5'-7"	X		2	5'-0"						TRANS TOP EDGES					

BAR MARK BREAKDOWN				
BAR MARK	WEST APPROACH SLAB	SOUTH APPROACH SLAB	TOTAL NO	WEIGHT
T501	41	32	73	920
T502	7	14	21	199
T803	68	0	68	4025
T804	0	68	68	4025
T505	42	0	42	891
T506	0	42	42	891
T507	21	21	42	1949
T508	2	0	2	76
T509	21	42	63	411
T510	4	0	4	176
T411	21	42	63	203
T512	58	58	116	676
T513	2	2	4	174
T514	4	4	8	156
T815	3	3	6	328
T516	4	4	8	166
T817	3	3	6	348
T518	0	2	2	60
T519	0	4	4	167
T520	21	0	21	122
TOT WEIGHT	7976	7986		15962

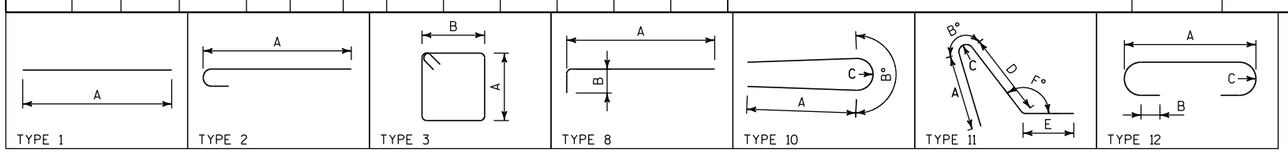

NOTES

THE FIRST DIGIT OF A THREE-DIGIT BAR MARK OR THE FIRST TWO DIGITS OF A FOUR-DIGIT BAR MARK SIGNIFY THE BAR SIZE.

DIMENSIONS ARE TO OUTSIDE OF BARS, EXCEPT FOR RADIUS DIMENSIONS WHICH ARE TO INSIDE OF BENDS.

FOR A BAR SERIES, LENGTH SHOWN IN THE FOURTH COLUMN OF TABLE IS THE AVERAGE BAR LENGTH USED TO COMPUTE BAR WEIGHT.

BAR MATERIAL CODES USED IN SECOND COLUMN OF TABLE
- U - STEEL, HIGH STRENGTH, UNCOATED.
- E - STEEL, HIGH STRENGTH, EPOXY COATED.
- S - STAINLESS STEEL.

8

8

NO.	DATE	REVISION	BY

STATE OF WISCONSIN
DEPARTMENT OF TRANSPORTATION

STRUCTURE B-40-855

DRAWN BY GLM | PLANS CK'D. WRT

APPROACH SLAB REINFORCEMENT SCHEDULE

SHEET 81 OF 96

STATE PROJECT NUMBER
1060-33-80

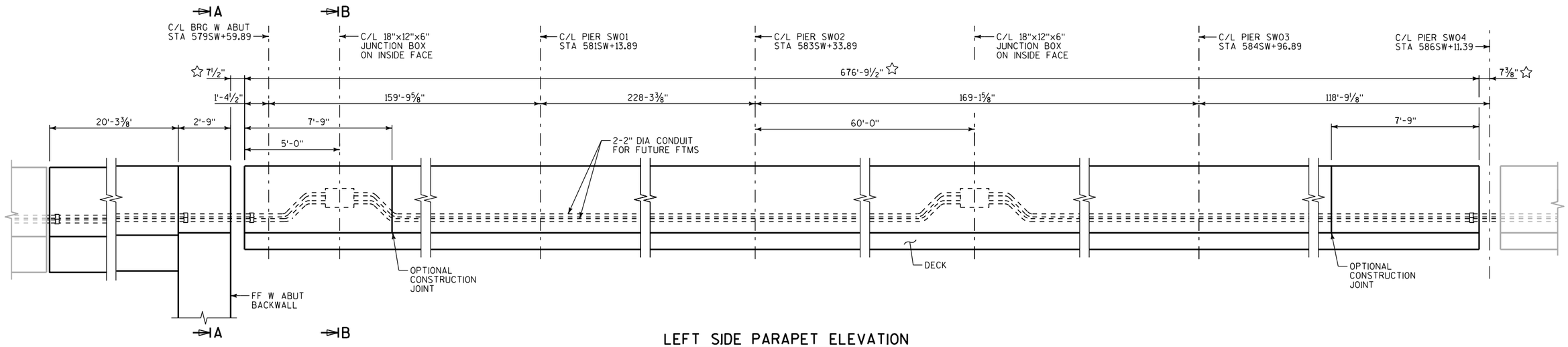

LEFT SIDE PARAPET ELEVATION

DIMENSIONS MEASURED ALONG
EDGE OF DECK / EXTERIOR FACE OF PARAPET
(LOOKING AT INTERIOR FACE)

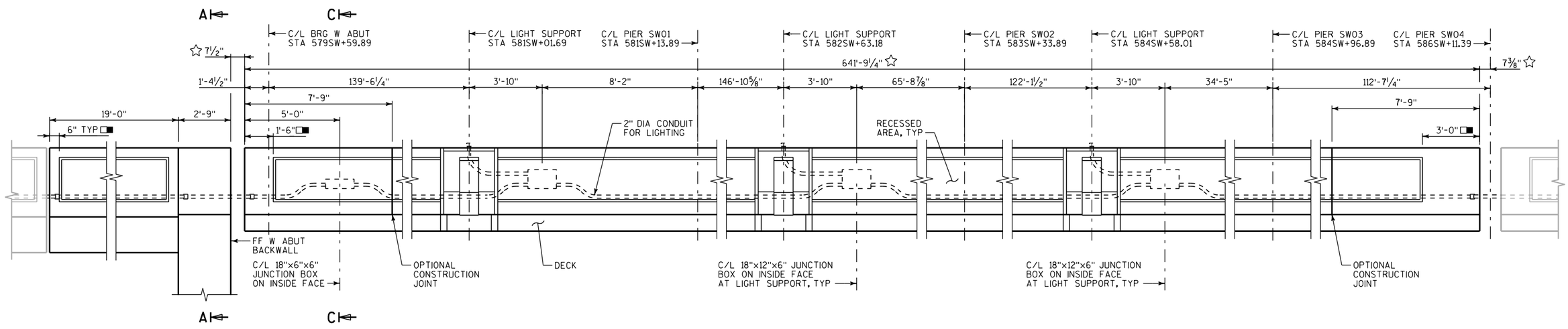

RIGHT SIDE PARAPET ELEVATION

DIMENSIONS MEASURED ALONG
EDGE OF DECK / EXTERIOR FACE OF PARAPET
(LOOKING AT EXTERIOR FACE))

8

8

LEGEND

☆ PARAPET DIMENSIONS SHOWN ARE BASED ON A 7½" CONCRETE OPENING (5" JOINT OPENING) AT THE ABUTMENT AND AN 1'-2¾" OPENING (1'-0¼" JOINT OPENING) AT PIER SW04 AS SHOWN ON SHEET 76.

□■ DIMENSIONS RELATING TO THE AESTHETIC RELIEF ARE SIMILAR FOR THE LEFT SIDE AS FOR THE RIGHT SIDE SHOWN.

NOTES

FOR SECTION A-A, B-B & C-C SEE PARAPET SECTIONS & DETAILS SHEET

NO.	DATE	REVISION	BY

STATE OF WISCONSIN
DEPARTMENT OF TRANSPORTATION

STRUCTURE B-40-855

DRAWN BY	GLM	PLANS CK'D.	WRT

PARAPET
EMBEDED WORK
UNIT 1

SHEET 82 OF 96

STATE PROJECT NUMBER
1060-33-80

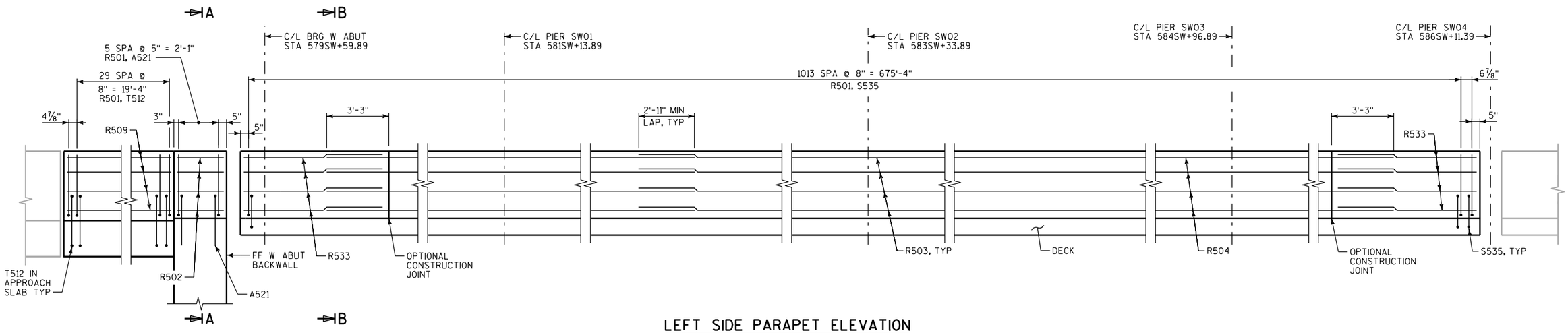

LEFT SIDE PARAPET ELEVATION

DIMENSIONS MEASURED ALONG
EDGE OF DECK / EXTERIOR FACE OF PARAPET
(LOOKING AT INTERIOR FACE)

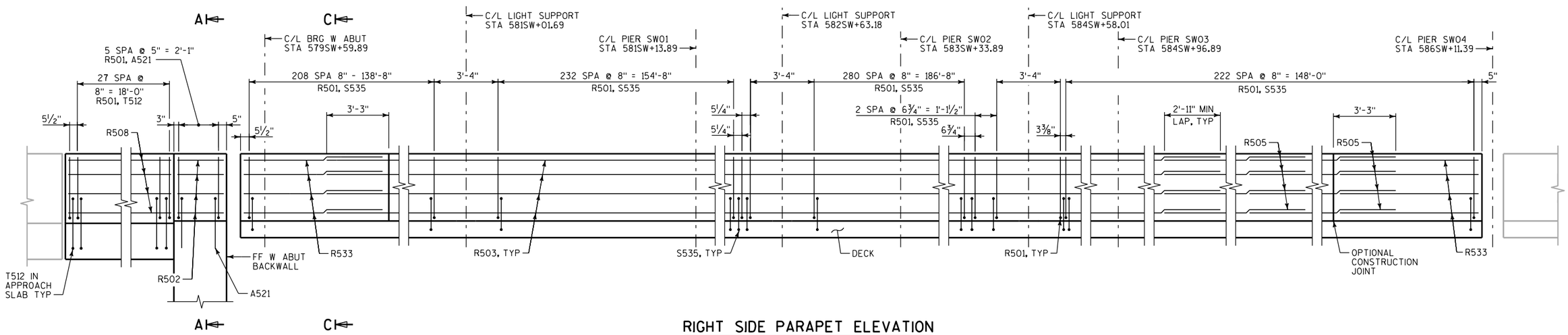

RIGHT SIDE PARAPET ELEVATION

DIMENSIONS MEASURED ALONG
EDGE OF DECK / EXTERIOR FACE OF PARAPET
(LOOKING AT EXTERIOR FACE))

NOTES

FOR SECTION A-A, SEE PARAPET SECTIONS & DETAILS SHEET

NO.	DATE	REVISION	BY

STATE OF WISCONSIN
DEPARTMENT OF TRANSPORTATION

STRUCTURE B-40-855

DRAWN BY	GLM	PLANS CK'D.	WRT

PARAPET ELEVATIONS UNIT 1

SHEET 83 OF 96

8

8

FILE NAME : W:\Cadd\Final\10603380_Z1\Structs\B-40-855\cds\cds Mandatory\B855_080556_rp.dgn PLOT DATE : 02-MAY-2014 12:04 PLOT BY : MSCGLM PLOT NAME : B855_080556_rp PLOT SCALE : 5.333333:1

STATE PROJECT NUMBER
1060-33-80

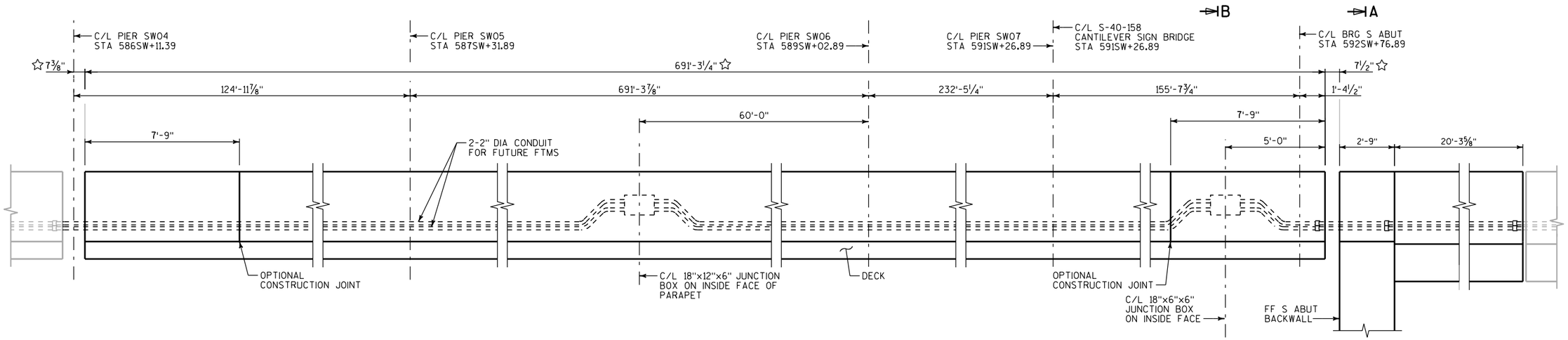

LEFT SIDE PARAPET ELEVATION

DIMENSIONS MEASURED ALONG
EDGE OF DECK / EXTERIOR FACE OF PARAPET
(LOOKING AT INTERIOR FACE)

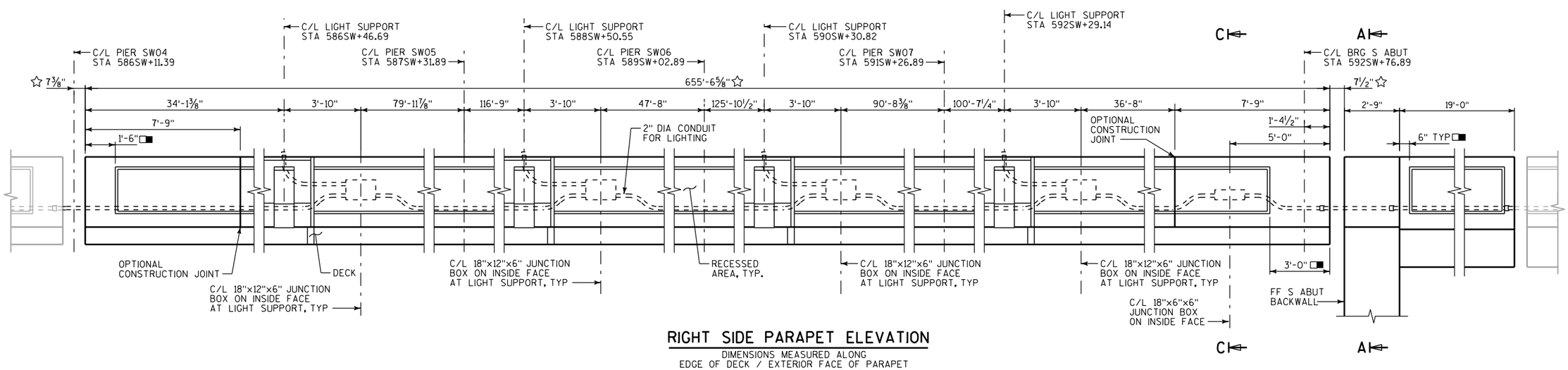

RIGHT SIDE PARAPET ELEVATION

DIMENSIONS MEASURED ALONG
EDGE OF DECK / EXTERIOR FACE OF PARAPET
(LOOKING AT EXTERIOR FACE)

8

8

LEGEND

☆ PARAPET DIMENSIONS SHOWN ARE BASED ON A 7 1/2" CONCRETE OPENING (5" JOINT OPENING) AT THE ABUTMENT AND AN 1'-2 3/4" OPENING (1'-0 1/4" JOINT OPENING) AT PIER SW04 AS SHOWN ON SHEET 76.

■ DIMENSIONS RELATING TO THE AESTHETIC RELIEF ARE SIMILAR FOR THE LEFT SIDE AS FOR THE RIGHT SIDE SHOWN.

NOTES

FOR SECTIONS A-A, B-B & C-C SEE PARAPET SECTIONS & DETAILS SHEET

NO.	DATE	REVISION	BY

STATE OF WISCONSIN
DEPARTMENT OF TRANSPORTATION

STRUCTURE B-40-855

DRAWN BY	GLM	PLANS CK'D.	WRT

PARAPET
EMBEDDED WORK
UNIT 2

SHEET 84 OF 96

STATE PROJECT NUMBER
1060-33-80

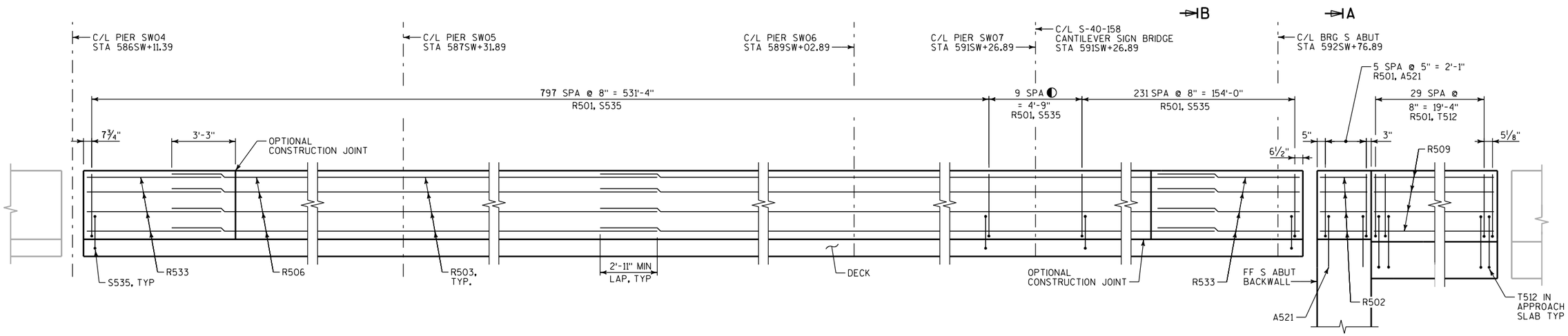

LEFT SIDE PARAPET ELEVATION

DIMENSIONS MEASURED ALONG
EDGE OF DECK / EXTERIOR FACE OF PARAPET
(LOOKING AT INTERIOR FACE)

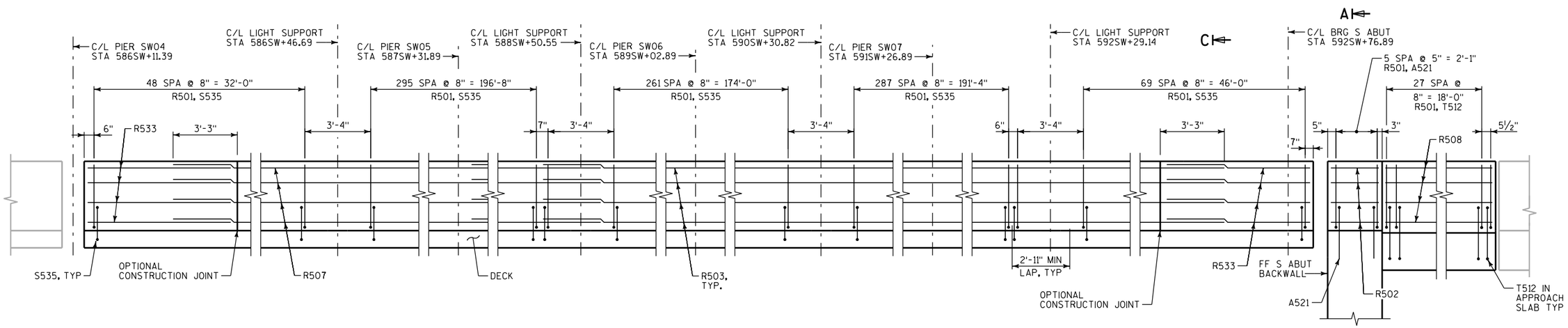

RIGHT SIDE PARAPET ELEVATION

DIMENSIONS MEASURED ALONG
EDGE OF DECK / EXTERIOR FACE OF PARAPET
(LOOKING AT EXTERIOR FACE)

8

8

LEGEND

◐ REFER TO SIGN BRIDGE BASE SHEETS FOR REINFORCEMENT SPACING

NOTES

FOR SECTIONS A-A & B-B, SEE PARAPET SECTIONS & DETAILS SHEET

NO.	DATE	REVISION	BY

STATE OF WISCONSIN
DEPARTMENT OF TRANSPORTATION

STRUCTURE B-40-855

DRAWN BY GLM | PLANS CK'D. WRT

PARAPET ELEVATIONS UNIT 2

SHEET 85 OF 96

STATE PROJECT NUMBER
1060-33-80

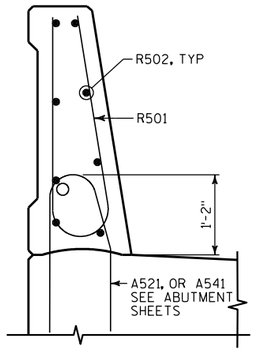

SECTION A

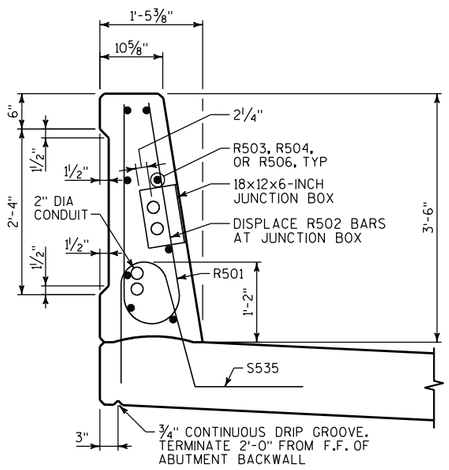

SECTION B

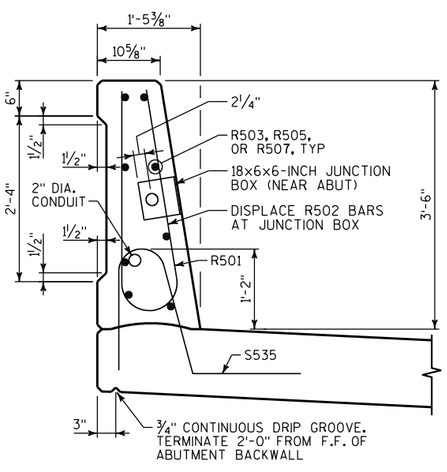

SECTION C

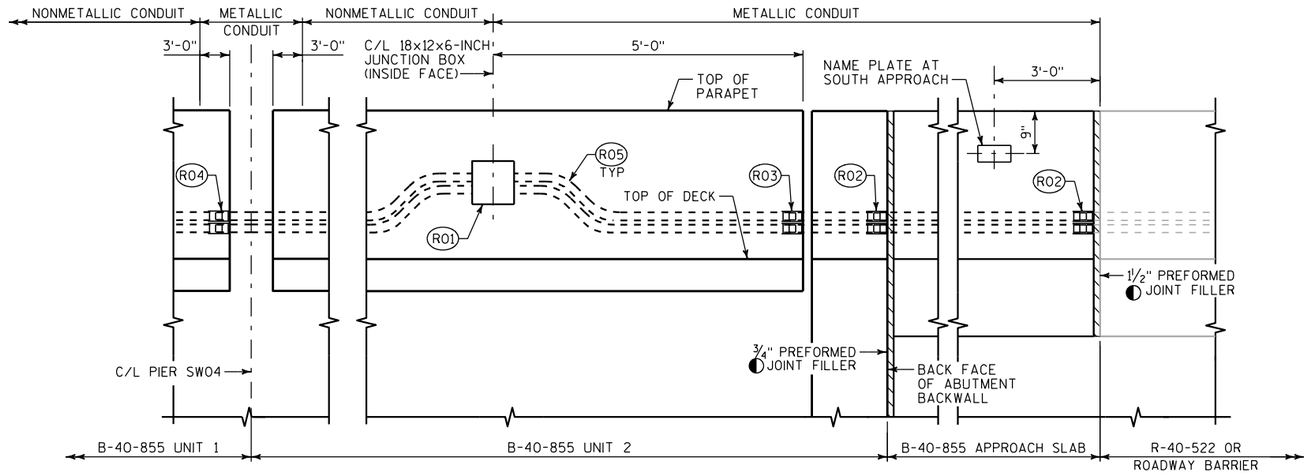

LEFT SIDE PARAPET INTERIOR ELEVATION AT ABUTMENT SHOWING CONDUITS

SOUTH ABUTMENT SHOWN, WEST ABUTMENT SIMILAR

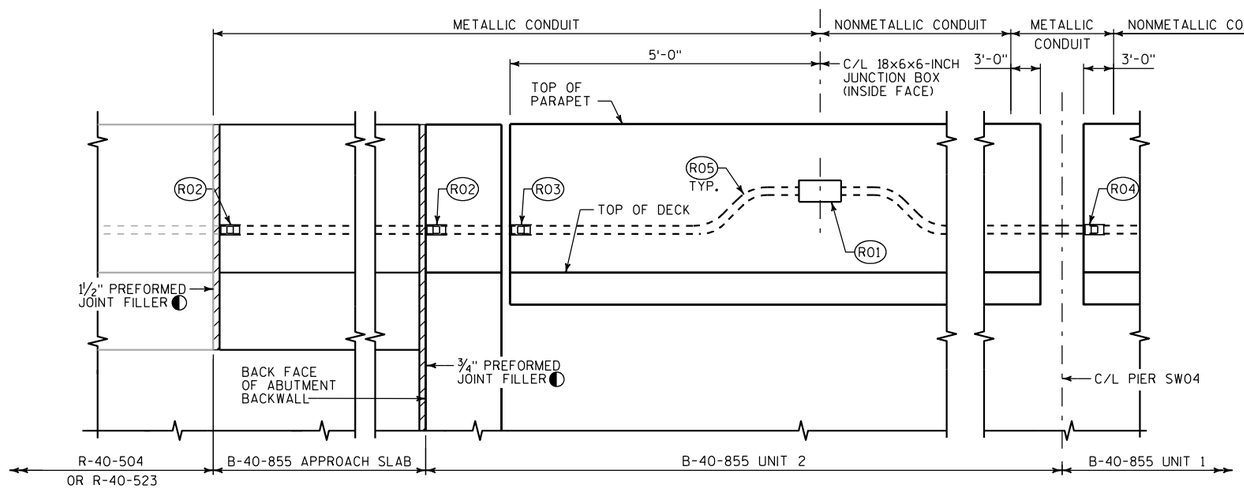

RIGHT SIDE PARAPET INTERIOR ELEVATION AT ABUTMENT SHOWING CONDUITS

SOUTH ABUTMENT SHOWN, WEST ABUTMENT SIMILAR

POSITION MOVABLE END OF CONDUIT INSIDE EXPANSION FITTING, SUCH THAT IT WILL HAVE THE SAME ALLOWANCE FOR MOVEMENT (EXPANSION/CONTRACTION) AS THE EXPANSION DEVICE SET IN PLACE IN THE DECK BELOW IT. TAKE CARE TO INSTALL EXPANSION FITTING AND CONDUIT EXACTLY PARALLEL TO BRIDGE MOVEMENT.

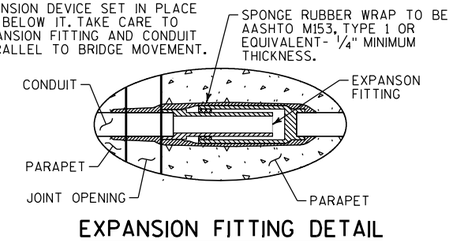

EXPANSION FITTING DETAIL

LEGEND

- (R01) CUT OUT ± 1" OF GASKET AT BOTTOM OF JUNCTION BOX COVER TO ALLOW FOR DRAINAGE
- (R02) EXPANSION FITTING WITH 4" TOTAL CONDUIT MOVEMENT, O-Z/GEDNEY TYPE AX-200 OR EQUIVALENT SUBJECT TO DEPARTMENT APPROVAL
- (R03) EXPANSION FITTING WITH 8" TOTAL CONDUIT MOVEMENT, O-Z/GEDNEY TYPE AX-8-200 OR EQUIVALENT SUBJECT TO DEPARTMENT APPROVAL
- (R04) EXPANSION FITTING WITH 10" TOTAL CONDUIT MOVEMENT, O-Z/GEDNEY TYPE EX-200 WITH PBS-200-12S OR EQUIVALENT SUBJECT TO DEPARTMENT APPROVAL
- (R05) 45° BEND IN CONDUIT. USE MINIMUM BENDING RADIUS PER WISCONSIN ELECTRIC CODE.
- ◐ PREFORMED JOINT FILLER WITH NON-BITUMINOUS JOINT SEALER. COLOR TO MATCH CONCRETE STAIN.

NOTES

EXPANSION FITTINGS, SPONGE RUBBER WRAP, ANGLES, AND ADAPTER FITTINGS TO BE INCIDENTAL TO "CONDUIT RIGID METALLIC 2-INCH".

WHEN CONNECTING NONMETALLIC CONDUIT TO METALLIC CONDUIT, USE ADAPTER FITTINGS LISTED BY UL OR NRTL FOR ELECTRICAL USE.

FOR APPROVED MANUFACTURERS OF JUNCTION BOXES, SEE APPROVED MATERIAL LIST.

8

8

NO.	DATE	REVISION	BY

STATE OF WISCONSIN
DEPARTMENT OF TRANSPORTATION

STRUCTURE B-40-855

DRAWN BY	GLM	PLANS CK'D.	WRT

PARAPET SECTIONS & DETAILS

SHEET 86 OF 96

STATE PROJECT NUMBER
1060-33-80

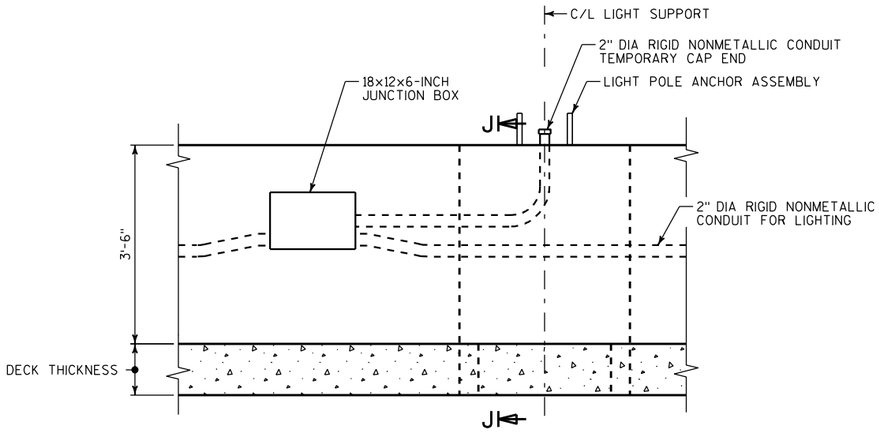

INTERIOR ELEVATION

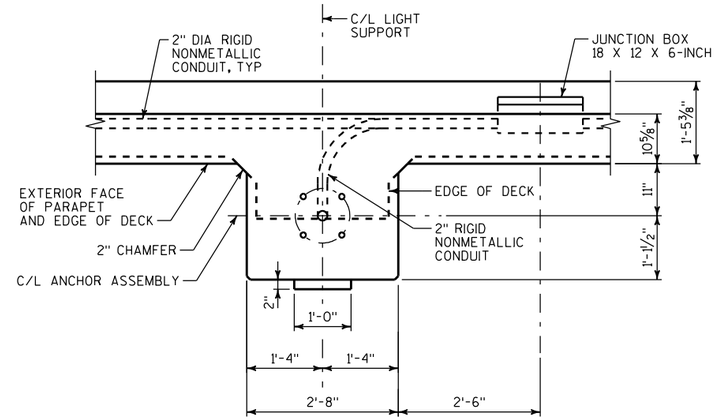

PLAN

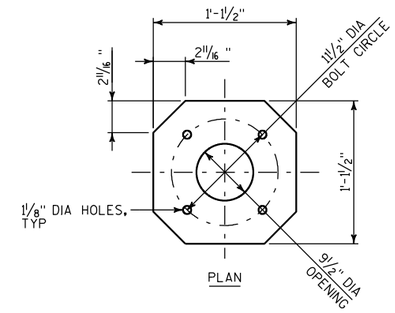

PLAN

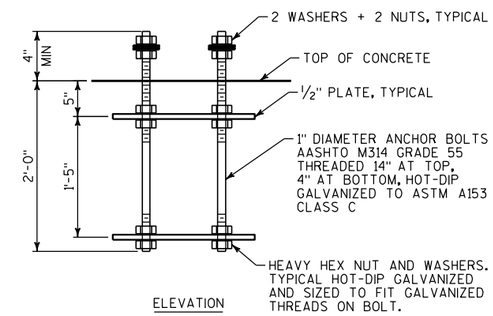

ELEVATION

ANCHOR ASSEMBLY
LIGHT POLE ON STRUCTURES

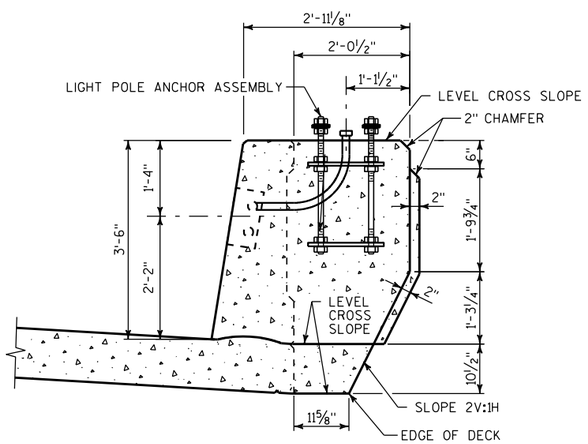

SECTION J-J

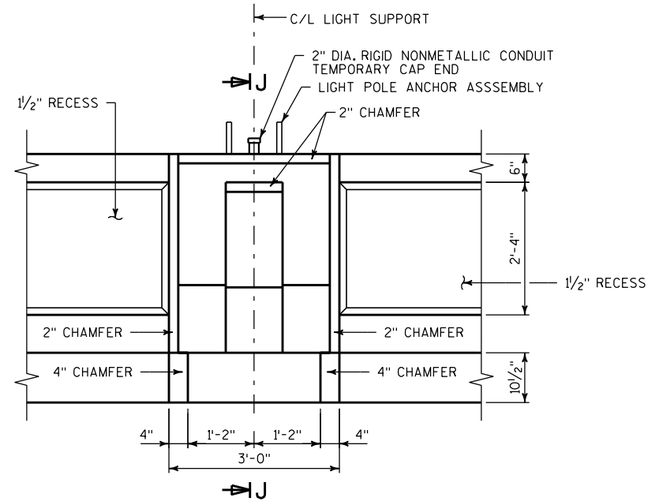

EXTERIOR ELEVATION

8

8

NO.	DATE	REVISION	BY

STATE OF WISCONSIN
DEPARTMENT OF TRANSPORTATION

STRUCTURE B-40-855

DRAWN BY GLM | PLANS CK'D. WRT

LIGHT SUPPORT DETAILS (1 OF 2)

SHEET 87 OF 96

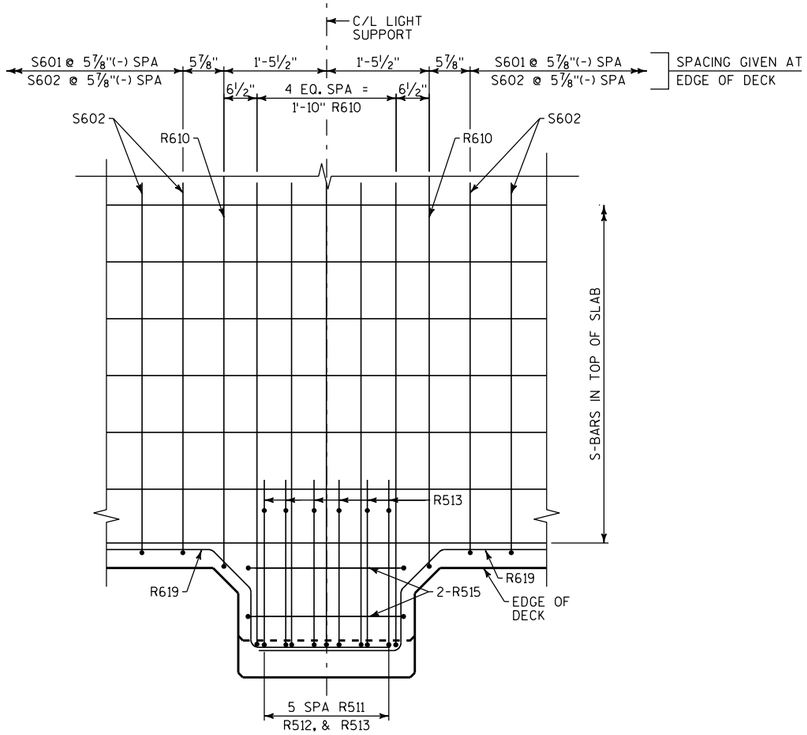

PLAN SHOWING REINFORCEMENT IN DECK

(S535 NOT SHOWN FOR CLARITY)

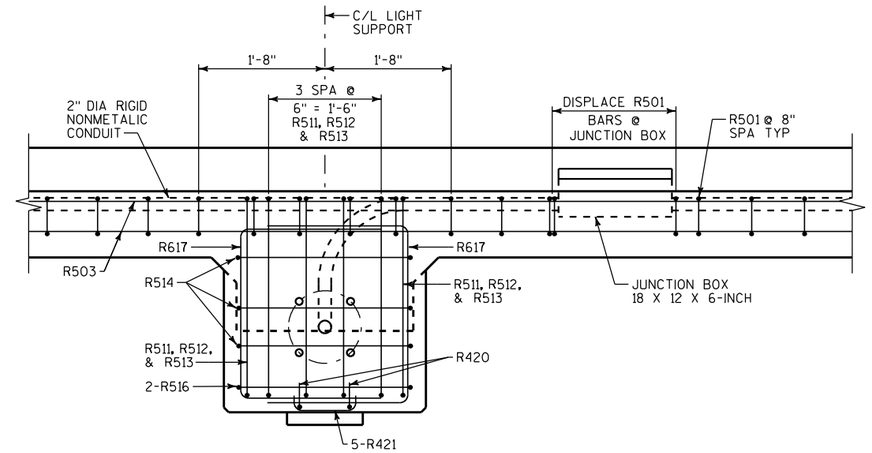

PLAN SHOWING REINFORCEMENT

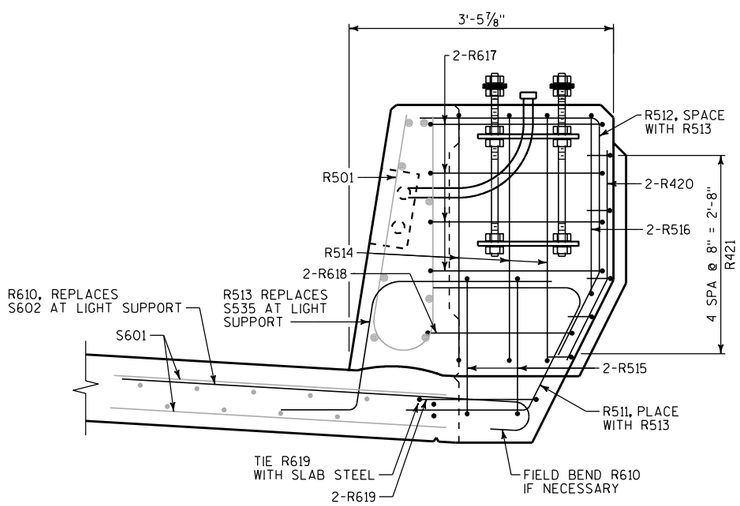

SIDE VIEW SHOWING REINFORCEMENT

CROSS SECTION AT LIGHT SUPPORT

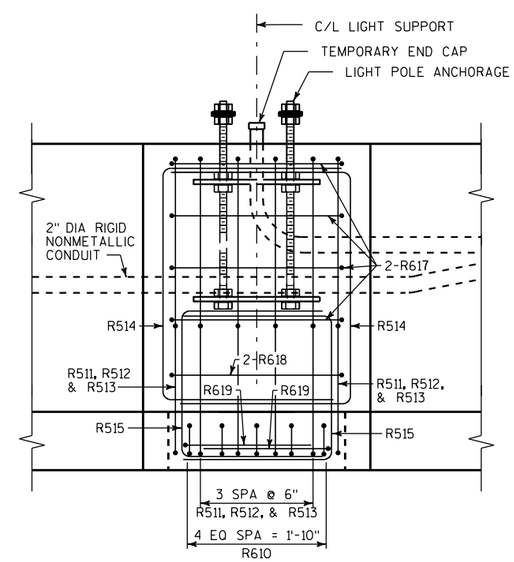

INTERIOR ELEVATION SHOWING REINFORCEMENT

NO.	DATE	REVISION	BY

STATE OF WISCONSIN
DEPARTMENT OF TRANSPORTATION

STRUCTURE B-40-855

DRAWN BY GLM | PLANS CK'D. WRT

LIGHT SUPPORT DETAILS (2 OF 2)

SHEET 88 OF 96

8

8

STATE PROJECT NUMBER
1060-33-80

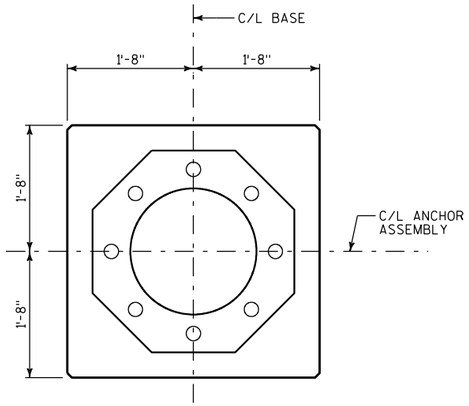

PEDESTAL PLAN

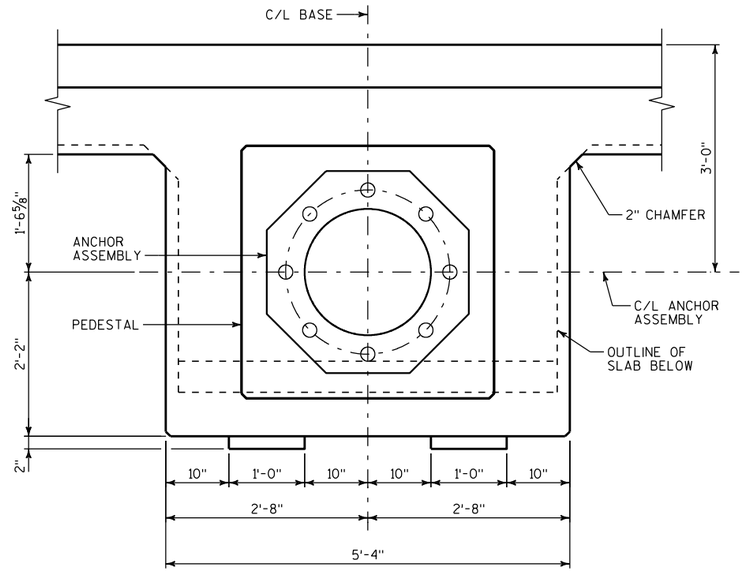

PLAN

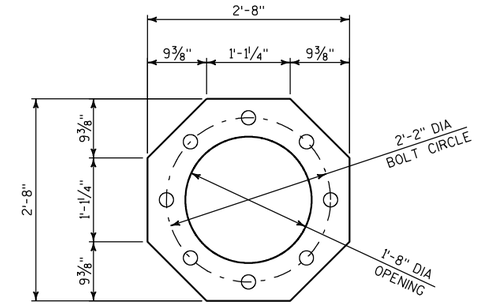

PLAN

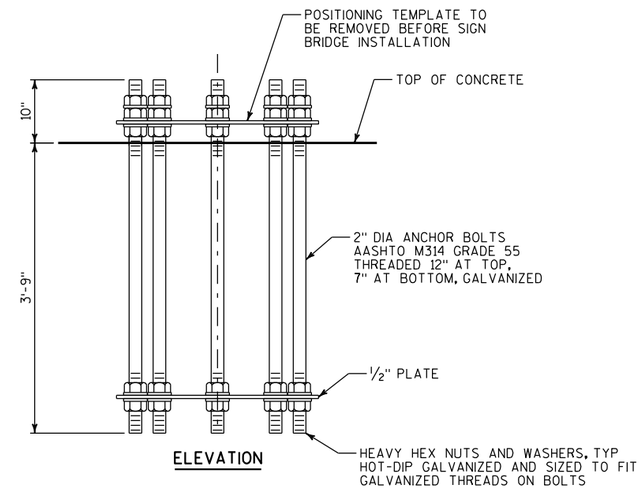

ELEVATION

ANCHOR ASSEMBLY
SIGN BRIDGE STRUCTURES

NOTE:
AN ALTERNATIVE ANCHOR ASSEMBLY MAY BE SUBMITTED FOR REVIEW AND POSSIBLE ACCEPTANCE BY THE ENGINEER. UPON ACCEPTANCE, THE SIGN BRIDGE FABRICATION DRAWINGS MUST MATCH THE EXACT SIZE, NUMBER, AND ORIENTATION OF THE ALTERNATIVE ANCHORAGE ASSEMBLY.

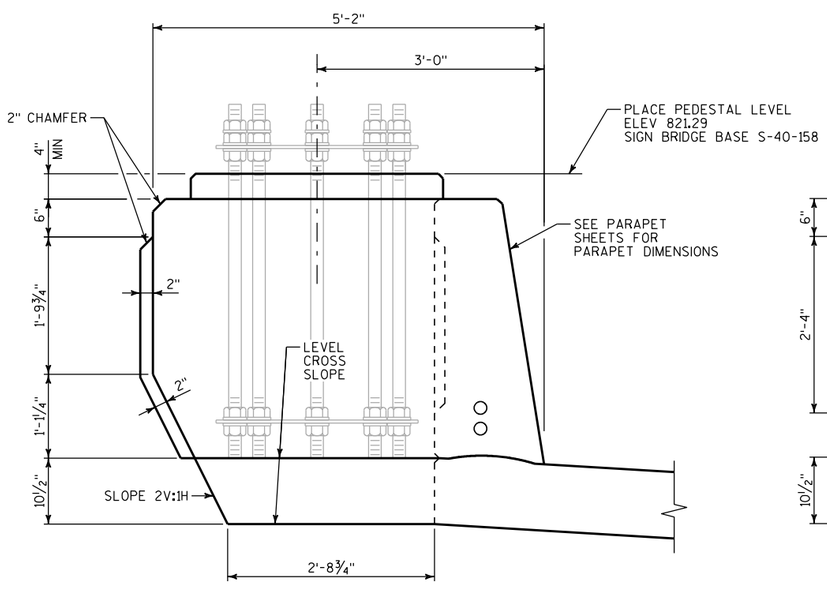

SIDE VIEW

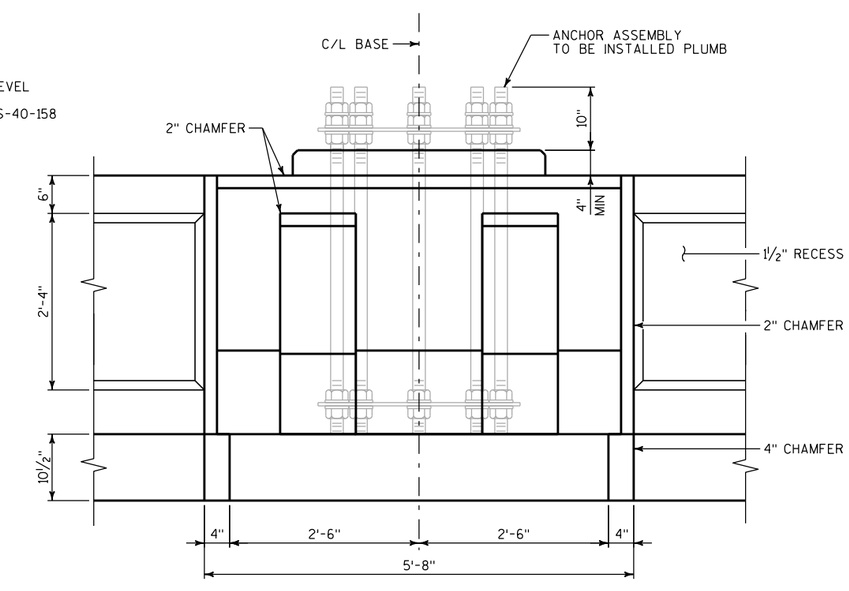

EXTERIOR ELEVATION

NO.	DATE	REVISION	BY

STATE OF WISCONSIN
DEPARTMENT OF TRANSPORTATION

STRUCTURE B-40-855

DRAWN BY TGL | PLANS CK'D. WRT

SIGN BRIDGE BASE (1 OF 2)

SHEET 89 OF 96

8

8

STATE PROJECT NUMBER
1060-33-80

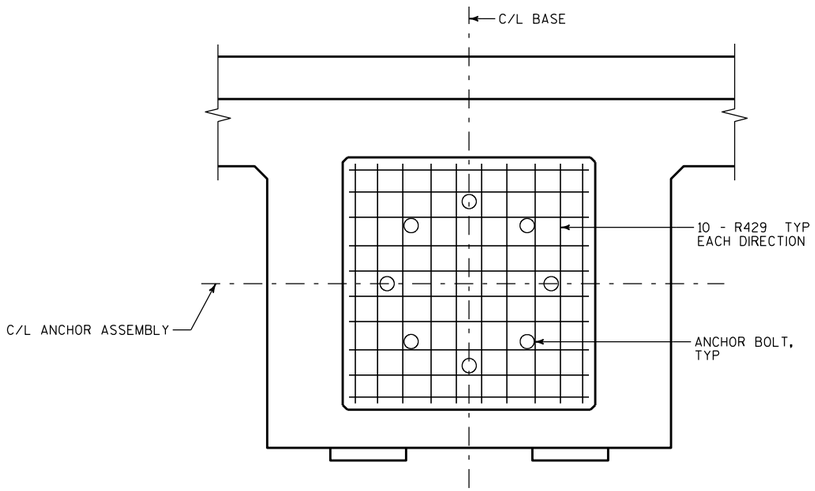

PEDESTAL PLAN SHOWING REINFORCEMENT

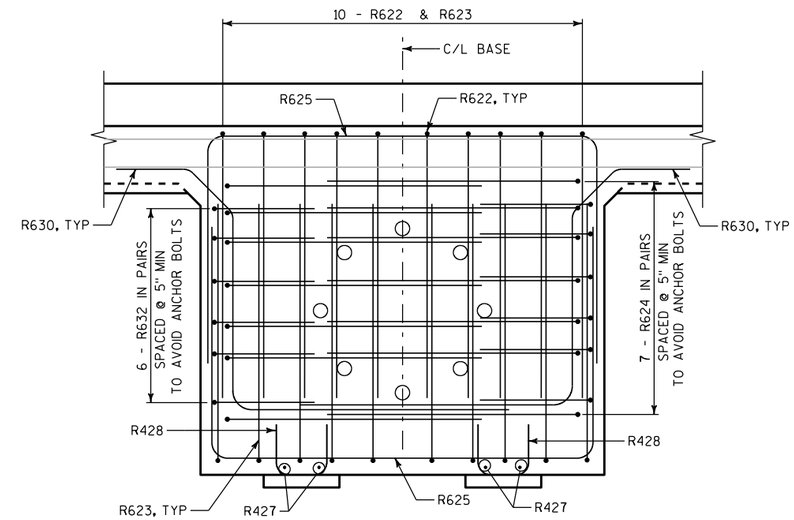

PLAN SHOWING REINFORCEMENT

PEDESTAL REINFORCEMENT NOT SHOWN - SEE PEDESTAL PLAN

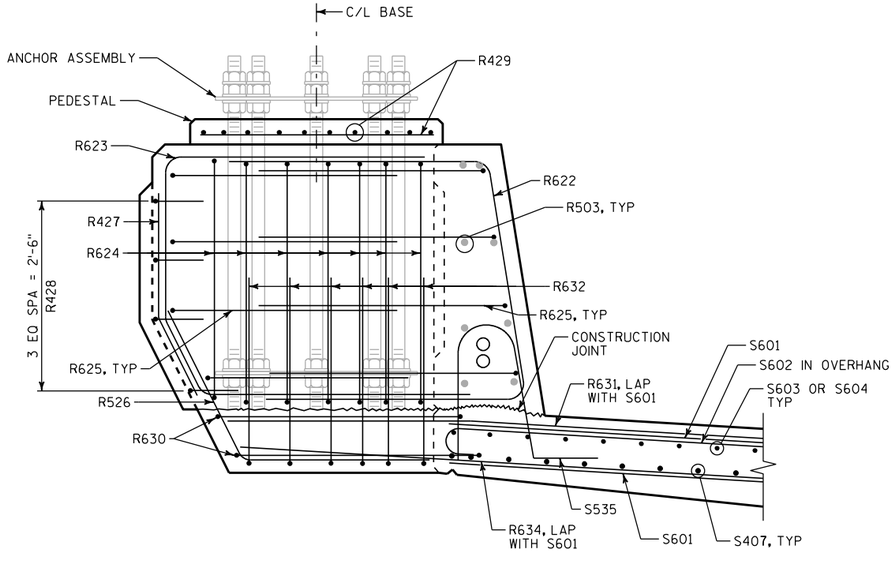

SIDE VIEW SHOWING REINFORCEMENT

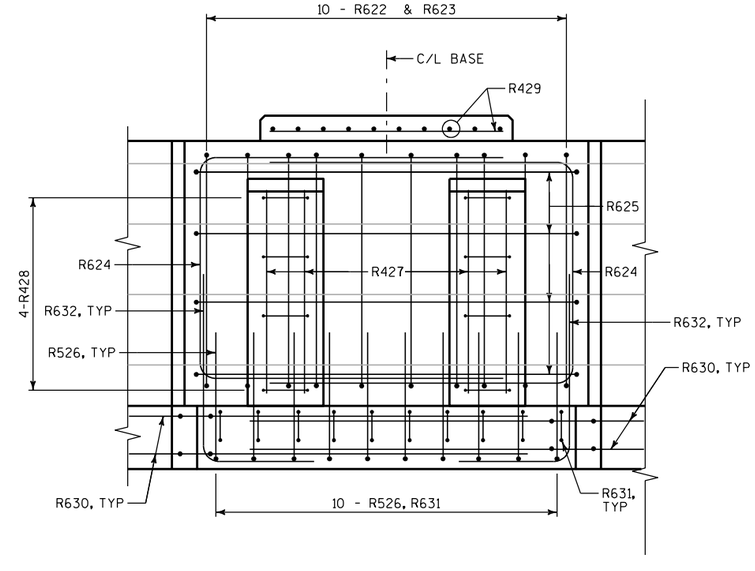

EXTERIOR ELEVATION SHOWING REINFORCEMENT

NO.	DATE	REVISION	BY

STATE OF WISCONSIN
DEPARTMENT OF TRANSPORTATION

STRUCTURE B-40-855

DRAWN BY TGL | PLANS CK'D. WRT

SIGN BRIDGE
BASE
(2 OF 2)

SHEET 90 OF 96

8

8

STATE PROJECT NUMBER
1060-33-80

BAR INFORMATION							BAR DIMENSIONS						LOCATION	BAR SERIES INFORMATION				
BAR MARK	MATL	NO. REQ'D	LENGTH	BENT	BAR SERIES	BEND TYPE	A	B	C	D	E	F		DIM	MIN	MAX	NO REQ'D	LENGTH
R501	S	4118	8'-8"	X		10	2'-8"	189	0'-4½"				PARAPET - 42SS VERTICAL					
R502	S	32	2'-5"			1	2'-5"						PARAPET - BACKWALL HORIZONTAL					
R503	S	344	60'-0"			1	60'-0"						PARAPET - HORIZONTAL					
R504	S	8	39'-10"			1	39'-10"						PARAPET - HORIZONTAL (END UNIT 1 LT)					
R505	S	16	32'-6"			1	32'-6"						PARAPET - HORIZONTAL (END UNIT 1 RT)					
R506	S	8	54'-5"			1	54'-5"						PARAPET - HORIZONTAL (END UNIT 2 LT)					
R507	S	8	18'-8"			1	18'-8"						PARAPET - HORIZONTAL (END UNIT 2 RT)					
R508	S	16	18'-6"			1	18'-6"						PARAPET - APPROACH SLAB RT					
R509	S	16	19'-9"			1	19'-9"						PARAPET - APPROACH SLAB LT					
R610	S	35	12'-4"	X		2	11'-8"						LIGHT BLISTER - DECK OVERHANG					
R511	S	49	5'-3"	X		17	2'-0"	2'-0"	1'-6"	67	67		LIGHT BLISTER - VERTICAL (OUTSIDE)					
R512	S	42	5'-2"	X		17	2'-4"	2'-0"	1'-1"	90	27		LIGHT BLISTER - VERTICAL (OUTSIDE WITH SLAB)					
R513	S	42	4'-11"	X		11	2'-0"	81	0'-4½"	1'-5"	1'-0"	99	LIGHT BLISTER - VERTICAL (WITH SLAB)					
R514	S	42	7'-5"	X		4	2'-3"	3'-2"					LIGHT BLISTER - VERTICAL (BODY)					
R515	S	28	5'-8"	X		4	2'-0"	1'-11"					LIGHT BLISTER - VERTICAL (LOWER BODY)					
R516	S	14	6'-6"	X		4	2'-3"	2'-3"					LIGHT BLISTER - VERTICAL (OUTSIDE)					
R617	S	56	6'-5"	X		4	2'-3"	2'-3"					LIGHT BLISTER - HORIZONTAL (TOP)					
R618	S	14	6'-1"	X		4	2'-3"	1'-11"					LIGHT BLISTER - HORIZONTAL (BODY)					
R619	S	14	4'-9"	X		20	1'-9"	0'-10"	0'-10"	1'-8"	135	270	LIGHT BLISTER - HORIZONTAL (BOTTOM)					
R420	S	14	3'-5"	X		9	1'-8"	1'-9"	19				LIGHT BLISTER - OUTSIDE FACE					
R421	S	35	1'-1"	X		4	0'-4"	0'-7"					LIGHT BLISTER - OUTSIDE FACE					
R622	S	10	10'-1"	X		17	3'-8"	3'-1"	3'-8"	99	99		SIGN BASE SUPPORT - TIE					
R623	S	10	10'-2"	X		41	3'-8"	2'-1"	1'-1"	3'-8"	153	117	SIGN BASE SUPPORT - TIE					
R624	S	14	10'-7"	X		4	4'-0"	2'-11"					SIGN BASE SUPPORT - VERTICAL TIE					
R625	S	8	12'-0"	X		4	3'-8"	5'-0"					SIGN BASE SUPPORT - HORIZONTAL TIE					
R526	S	10	4'-7"	X		9	2'-5"	2'-2"	116				SIGN BASE SUPPORT - VERTICAL TIE					
R427	S	4	2'-10"	X		9	1'-8"	1'-2"	27				SIGN BASE SUPPORT - VERTICAL					
R428	S	8	1'-10"	X		4	0'-8"	0'-8"					SIGN BASE SUPPORT - HORIZONTAL					
R429	S	20	3'-0"			1	3'-0"						SIGN BASE SUPPORT - PEDESTAL					
R630	S	4	8'-10"	X		20	1'-10"	0'-10"	2'-8"	3'-10"	135	270	SIGN BASE SUPPORT - DECK					
R631	S	10	7'-6"	X		9	3'-0"	4'-6"	4				SIGN BASE SUPPORT - TRANSVERSE DECK					
R632	S	12	3'-11"	X		9	2'-5"	1'-6"	90				SIGN BASE SUPPORT - TIE					
R533	S	16	7'-7"			1	7'-7"						PARAPET - HORIZONTAL AT CONST. JOINT					
R634	S	10	7'-0"			1	7'-0"						SIGN BASE SUPPORT - TRANSVERSE DECK					

BAR MARK BREAKDOWN				
BAR MARK	UNIT 1	UNIT 2	TOTAL NO	WEIGHT
R501	2039	2079	4118	37224
R502	16	16	32	81
R503	168	176	344	21528
R504	8	0	8	332
R505	16	0	16	542
R506	0	8	8	454
R507	0	8	8	156
R508	8	8	16	309
R509	8	8	16	330
R610	15	20	35	648
R511	21	28	49	268
R512	18	24	42	226
R513	18	24	42	215
R514	18	24	42	325
R515	12	16	28	165
R516	6	8	14	95
R617	24	32	56	540
R618	6	8	14	128
R619	6	8	14	100
R420	6	8	14	32
R421	15	20	35	25
R622	0	10	10	151
R623	0	10	10	153
R624	0	14	14	223
R625	0	8	8	144
R526	0	10	10	48
R427	0	4	4	8
R428	0	8	8	10
R429	0	20	20	40
R630	0	4	4	53
R631	0	10	10	113
R632	0	12	12	71
R533	8	8	16	127
R634	0	10	10	105
TOT WEIGHT	31429	33539	5087	64968

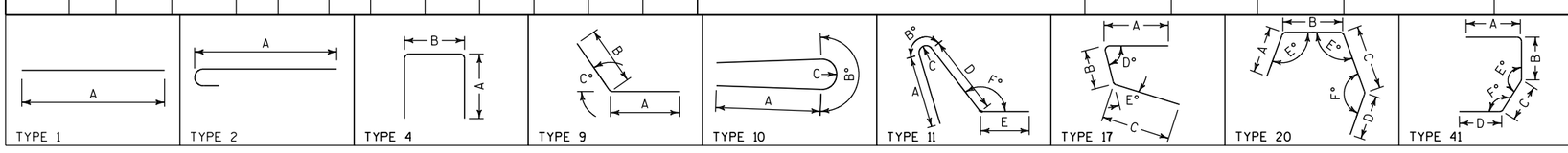

NOTES

THE FIRST DIGIT OF A THREE-DIGIT BAR MARK OR THE FIRST TWO DIGITS OF A FOUR-DIGIT BAR MARK SIGNIFY THE BAR SIZE.

DIMENSIONS ARE TO OUTSIDE OF BARS, EXCEPT FOR RADIUS DIMENSIONS WHICH ARE TO INSIDE OF BENDS.

FOR A BAR SERIES, LENGTH SHOWN IN THE FOURTH COLUMN OF TABLE IS THE AVERAGE BAR LENGTH USED TO COMPUTE BAR WEIGHT.

BAR MATERIAL CODES USED IN SECOND COLUMN OF TABLE
- U - STEEL, HIGH STRENGTH, UNCOATED.
- E - STEEL, HIGH STRENGTH, EPOXY COATED.
- S - STAINLESS STEEL.

NO.	DATE	REVISION	BY

STATE OF WISCONSIN
DEPARTMENT OF TRANSPORTATION

STRUCTURE B-40-855

DRAWN BY GLM | PLANS CK'D. WRT

PARAPET REINFORCEMENT SCHEDULE

STATE PROJECT NUMBER
1060-33-80

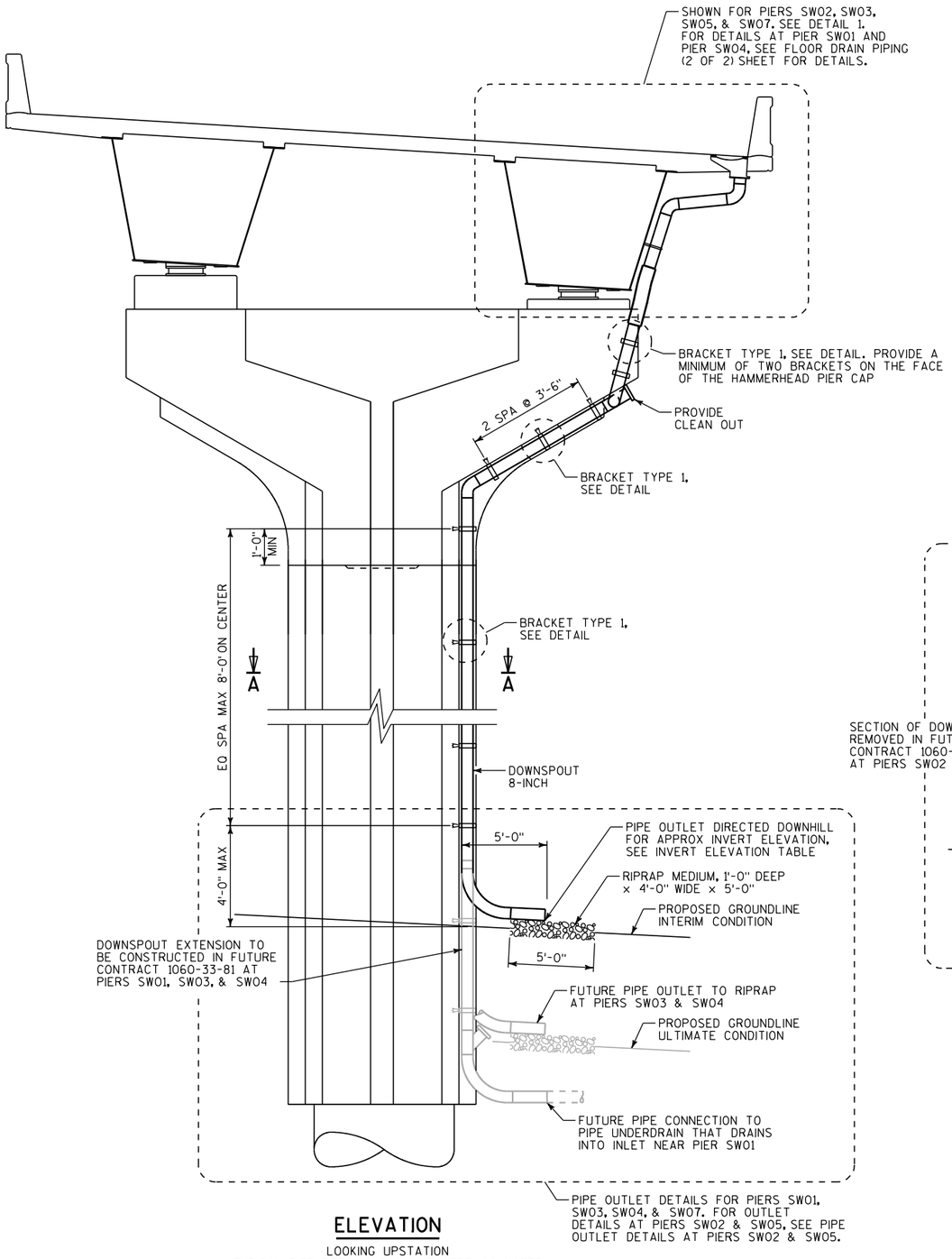

ELEVATION

LOOKING UPSTATION
TYPICAL PIER DETAILS SHOWN EXCEPT AS NOTED

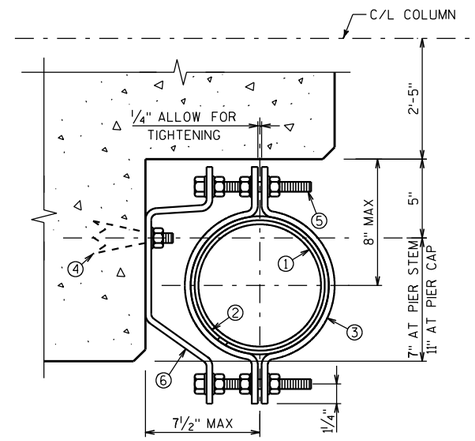

BRACKET TYPE 1

LEGEND

1. 8" DIA DOWNSPOUT
2. 6" LONG SPLIT RTRP STRIP, BOND TO #1, PLACE AT ALL BRACKET LOCATIONS
3. 2 1/2" X 3/8" BAR
4. 5/8" DIA TYPE S ANCHOR WITH 1 NUT & 1 WASHER LOCATED TO AVOID CONFLICT WITH REINFORCEMENT IN PIER
5. 5/8" DIA HEADED BOLT WITH 3 NUTS & 4 WASHERS
6. 2 1/2" X 3/8" BAR WITH 11/16" X 1 3/16" HORIZ SLOTTED HOLE AT MASONRY ANCHOR

NOTES

FOR FLOOR DRAIN LOCATIONS, SEE DECK REINFORCEMENT SHEETS.

INSTALL PIPING AT THE STEEPEST GRADE POSSIBLE, MINIMUM 2 PERCENT.

ALL FITTINGS, ELBOWS, CLEANOUTS, MASONRY ANCHORS, BOLTS, AND OTHER HARDWARE REQUIRED FOR MOUNTING THE DOWNSPOUT SHALL BE INCLUDED IN PAYMENT FOR "DOWNSPOUT 8-INCH".

ALL DOWNSPOUT PIPE SHALL BE COLOR MATCHED TO THE OBJECT IT IS ATTACHED TO. FOR SECTIONS ATTACHED TO STEEL TUB GIRDER USE SHERWIN WILLIAMS COLOR SW6523. FOR SECTIONS ATTACHED TO CONCRETE PIER COLUMN USE FEDERAL COLOR 33564.

ALL FASTERNERS, INCLUDING BOLTS, NUTS, WASHERS, AND MASONRY ANCHORS, SHALL BE STAINLESS STEEL MEETING THE MATERIAL REQUIREMENTS IN THE STANDARD SPECIFICATIONS. BARS SHALL BE STAINLESS STEEL MEETING ASTM A276, TYPE 304.

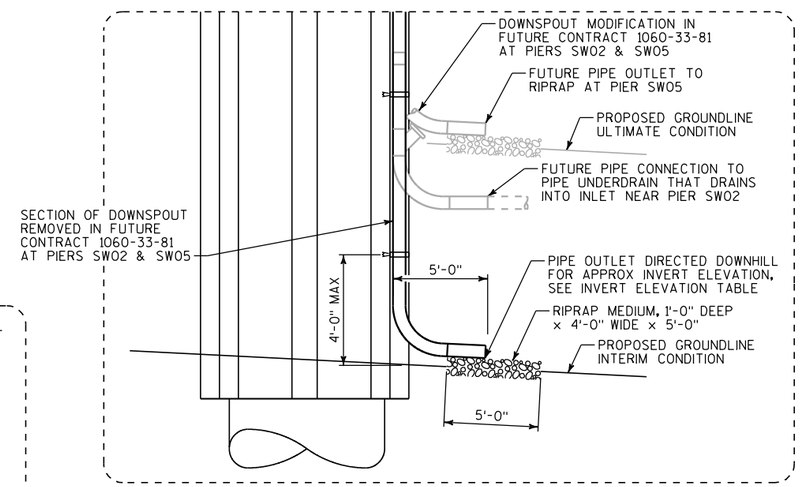

PIPE OUTLET DETAILS AT PIERS SW02 & SW05

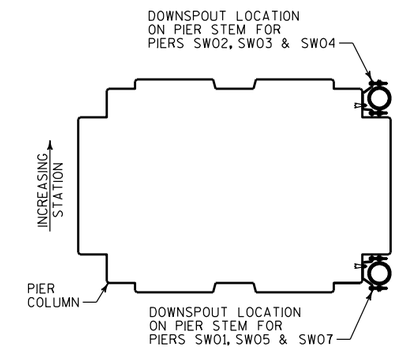

SECTION A-A

INVERT ELEVATION TABLE	
LOCATION	INVERT ELEV
PIER SW01	771.50
PIER SW02	763.50
PIER SW03	764.00
PIER SW04	766.00
PIER SW05	772.50
PIER SW07	770.50

NO.	DATE	REVISION	BY

STATE OF WISCONSIN
DEPARTMENT OF TRANSPORTATION

STRUCTURE B-40-855

DRAWN BY GLM | PLANS CK'D. WRT

FLOOR DRAIN PIPING (1 OF 2)

SHEET 92 OF 96

8

8

STATE PROJECT NUMBER
1060-33-80

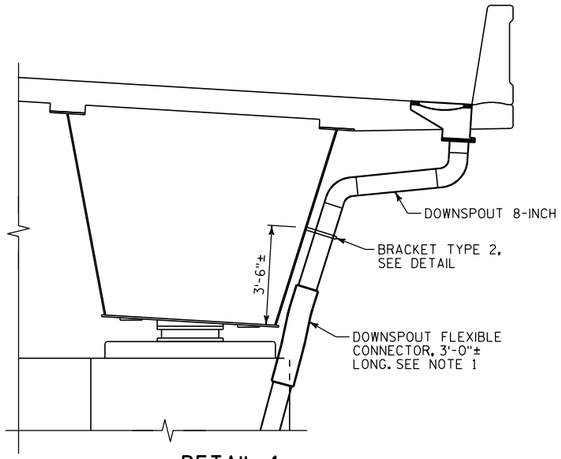

DETAIL 1

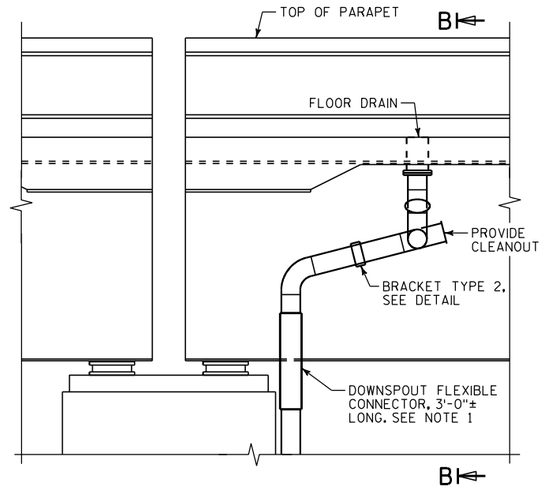

PARTIAL ELEVATION - PIER SW04

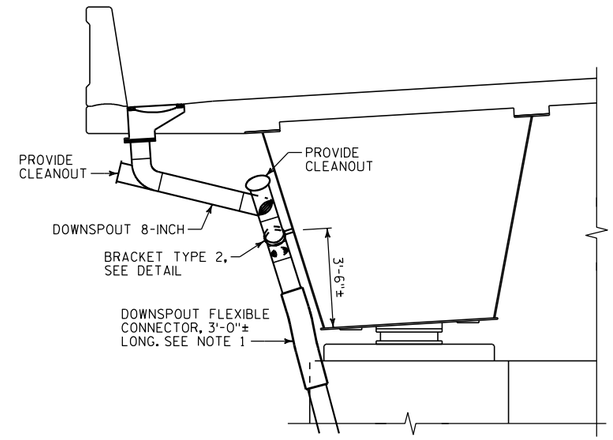

SECTION B-B

NOTES

1. PROVIDE FLEXIBLE CONNECTOR THAT IS CAPABLE OF HANDLING THE MOVEMENT GIVEN ON THE BEARING LAYOUT SHEETS. THE MOVEMENT RANGE SHALL PROVIDE FOR TWO WAY MOVEMENT.

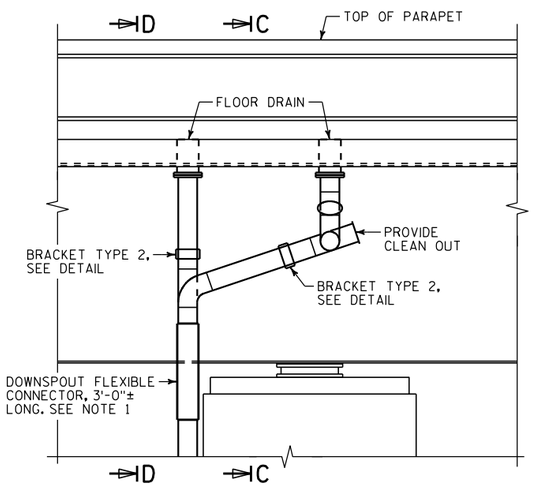

PARTIAL ELEVATION - PIER SW01

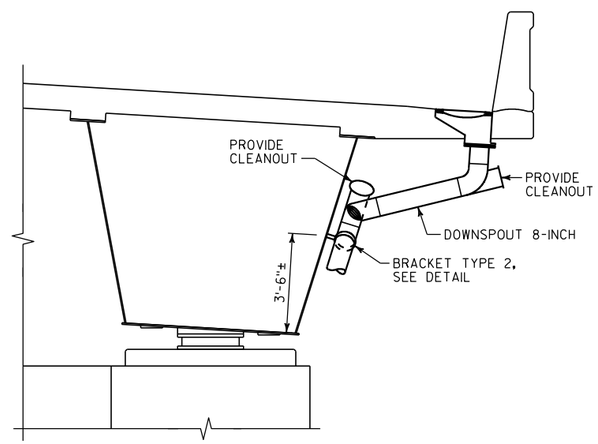

SECTION C-C

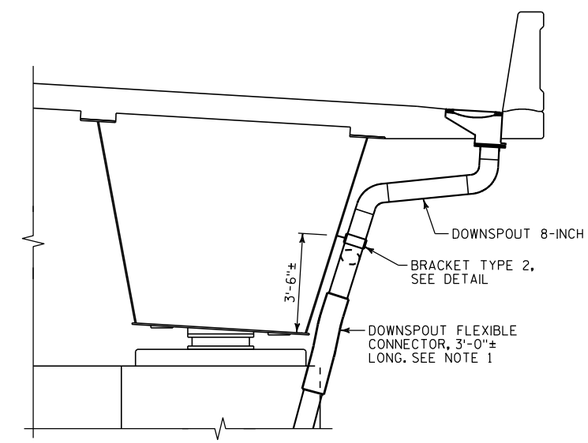

SECTION D-D

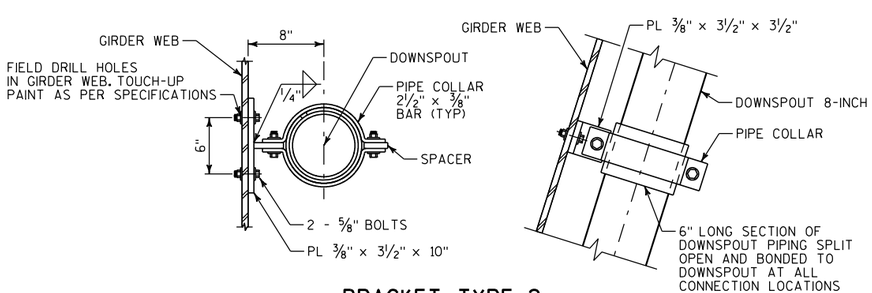

BRACKET TYPE 2

8

8

NO.	DATE	REVISION	BY

STATE OF WISCONSIN
DEPARTMENT OF TRANSPORTATION

STRUCTURE B-40-855

DRAWN BY GLM | PLANS CK'D. WRT

FLOOR DRAIN PIPING (2 OF 2)

SHEET 93 OF 96

STATE PROJECT NUMBER
1060-33-80

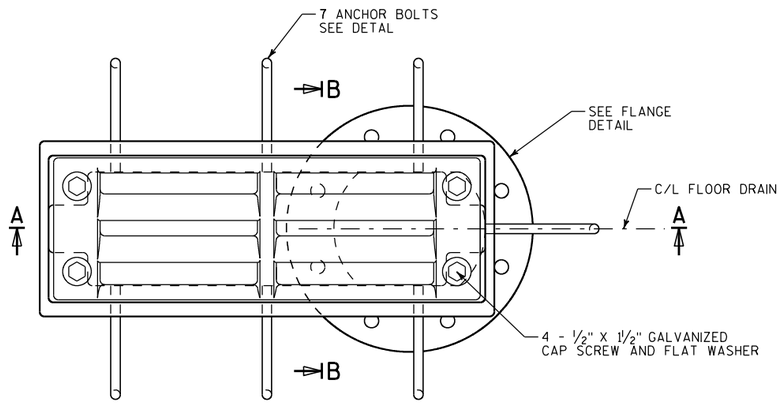

PLAN

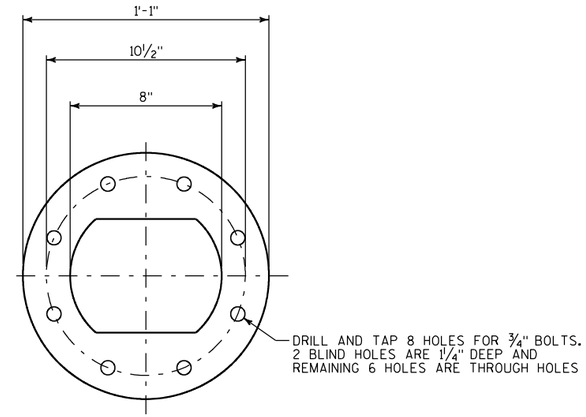

PLAN - FLANGE

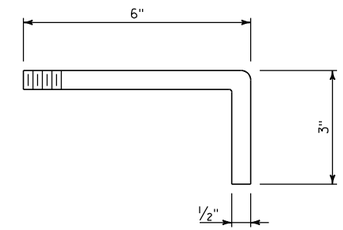

ANCHOR BOLT DETAIL

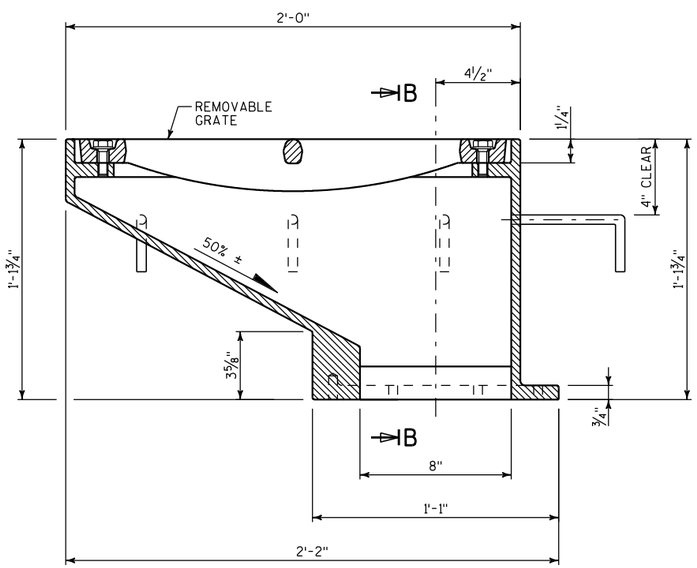

SECTION A-A

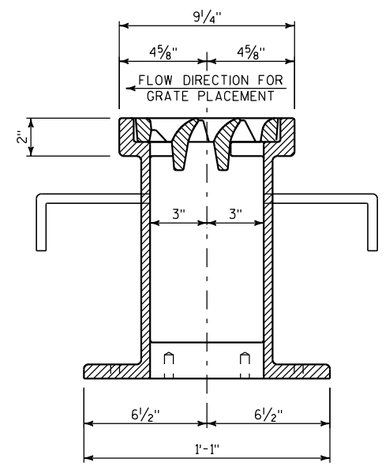

SECTION B-B

NOTES

1. THE DRAIN CASTING SHOWN IS BASED ON PART NUMBER R-3921-V1 FROM THE NEENAH FOUNDRY COMPANY WITH MODIFICATIONS AS REQUIRED TO PERMIT AN 8" DOWNSPOUT TO BE USED.

2. A FABRICATED DRAIN ASSEMBLY MAY BE SUBSTITUTED IF THE HYDRAULIC PROPERTIES OF THE SPECIFIED CASTING CAN BE MAINTAINED. IF THE GEOMETRY OF THE PLACEMENT IS ACCEPTABLE AND IF APPROVED BY THE ENGINEER. FABRICATED DRAINS SHALL BE HOT-DIP GALVANIZED AFTER FABRICATION IN ACCORDANCE WITH ASTM A153.

NO.	DATE	REVISION	BY

STATE OF WISCONSIN
DEPARTMENT OF TRANSPORTATION

STRUCTURE B-40-855

DRAWN BY GLM | PLANS CK'D. WRT

FLOOR DRAIN SPECIAL

SHEET 94 OF 96

STATE PROJECT NUMBER
1060-33-80

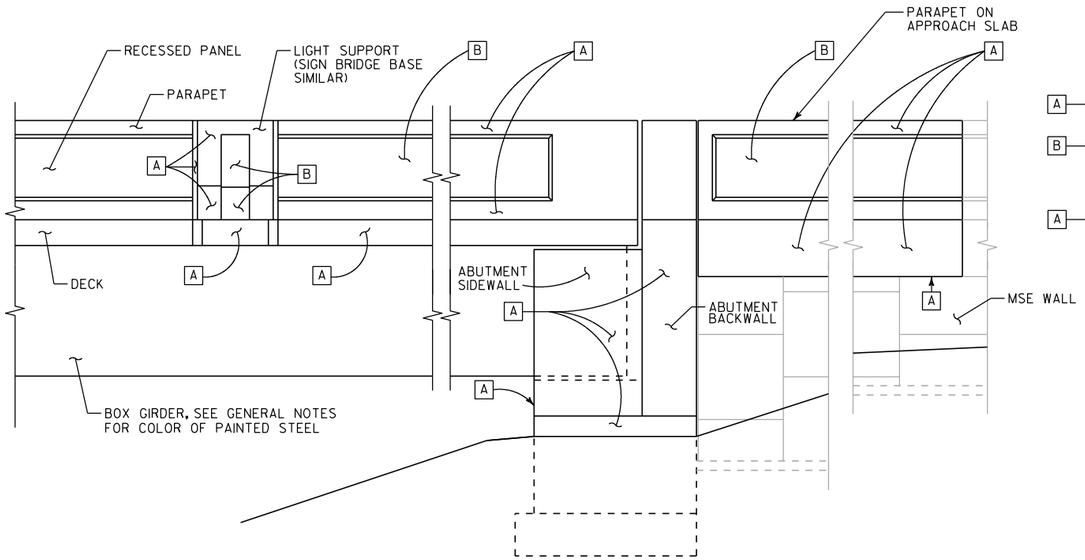

OUTSIDE ELEVATION OF RIGHT PARAPET

(LEFT PARAPET SIMILAR)

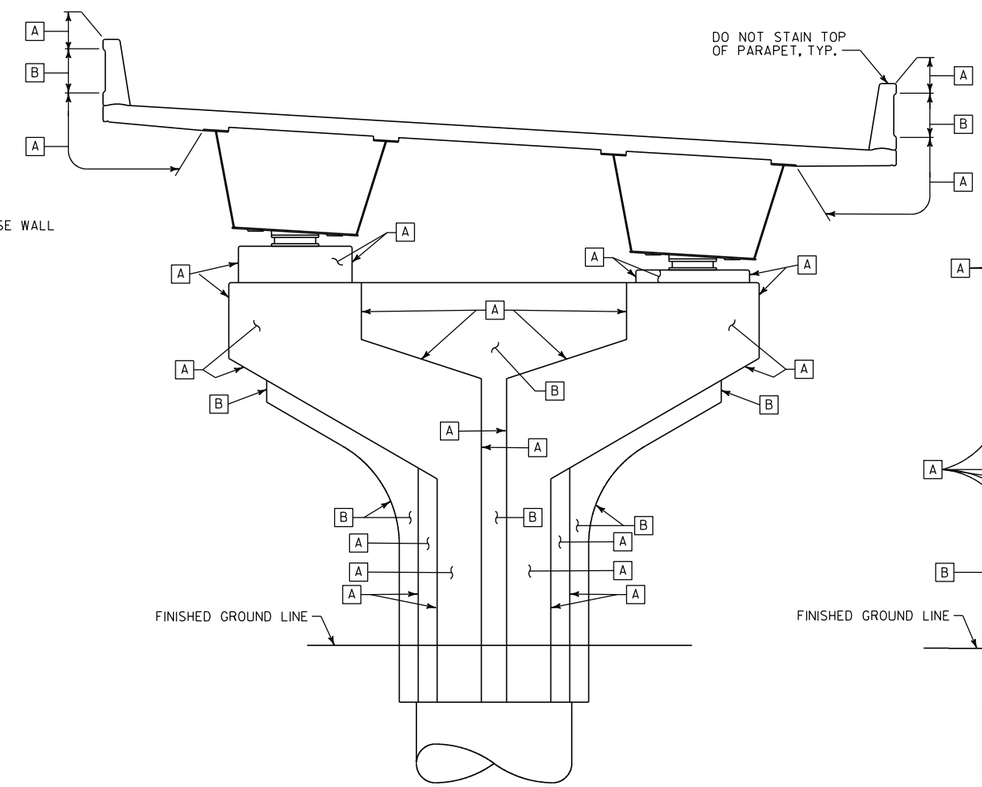

ELEVATION OF PIER

(LOOKING UP STATION)

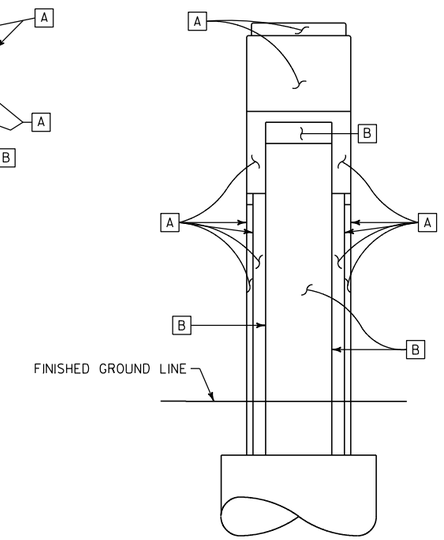

END VIEW OF PIER

CONCRETE STAINING SCHEDULE

MARK	COLOR	LOCATION	NOTES
A	BASE COLOR	PARAPETS	EXTERIOR FACE, EXCEPT AS NOTED FOR ACCENT COLORS.
		DECK	FASCIA AND EXPOSED UNDERSIDE TO EXTERIOR GIRDER FLANGE.
		APPROACH SLAB	FASCIA AND UNDERSIDE OF COPING
		ABUTMENT	FRONT FACE OF BEAM SEAT FROM TOP OF ABUTMENT TO TOP OF CONCRETE SLOPE PAVING, EXTERIOR EXPOSED FACE OF ABUTMENT BEAM SEAT, EXTERIOR EXPOSED FACE OF BACKWALL, FRONT FACE AND EXTERIOR EXPOSED FACE OF SIDEWALL, AND EACH SIDE OF GIRDER PEDESTAL.
		PIER	SIDES OF GIRDER PEDESTALS, SIDES AND BOTTOM OF CAP BEAM AND STEM TO 1 FOOT BELOW FINISHED GROUND LINE, EXCEPT AS NOTED FOR ACCENT COLORS.
B	ACCENT COLOR #1	PARAPETS	RECESSED PANELS ON EXTERIOR FACE.
		PIERS	RECESS AREAS AND REVEALS ON PIERS.

THE FINAL COLOR OF THE CONCRTE FOLLOWING APPLICATION OF THE STAIN SYSTEM SHALL MATCH THE COLORS LISTED BELOW:
BASE COLOR: FEDERAL COLOR - 33564
ACCENT COLOR #1: FEDERAL COLOR - 33448

CONCRETE STAINING DETAILS SHOWN ON THIS SHEET ARE FOR INFORMATION ONLY. CONCRETE STAINING IS NOT INCLUDED IN THIS CONTRACT. CONCRETE STAINING WILL BE PERFORMED BY OTHERS UNDER FUTURE PROJECT I.D. 1060-33-81.

NO.	DATE	REVISION	BY

STATE OF WISCONSIN
DEPARTMENT OF TRANSPORTATION

STRUCTURE B-40-855

DRAWN BY GLM | PLANS CK'D. WRT

AESTHETIC DETAILS

SHEET 95 OF 96

8

STATE PROJECT NUMBER
1060-33-80

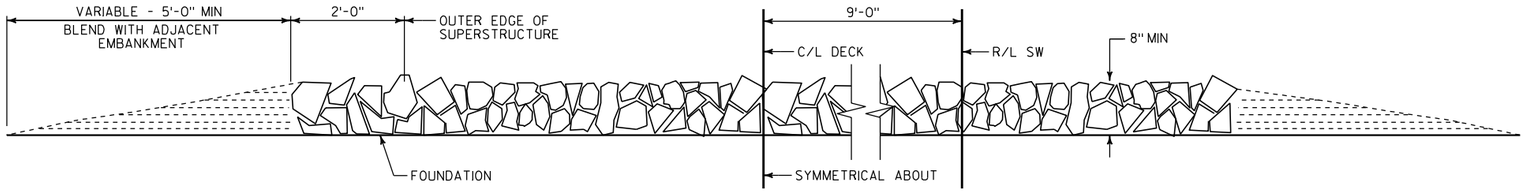

SECTION A-A

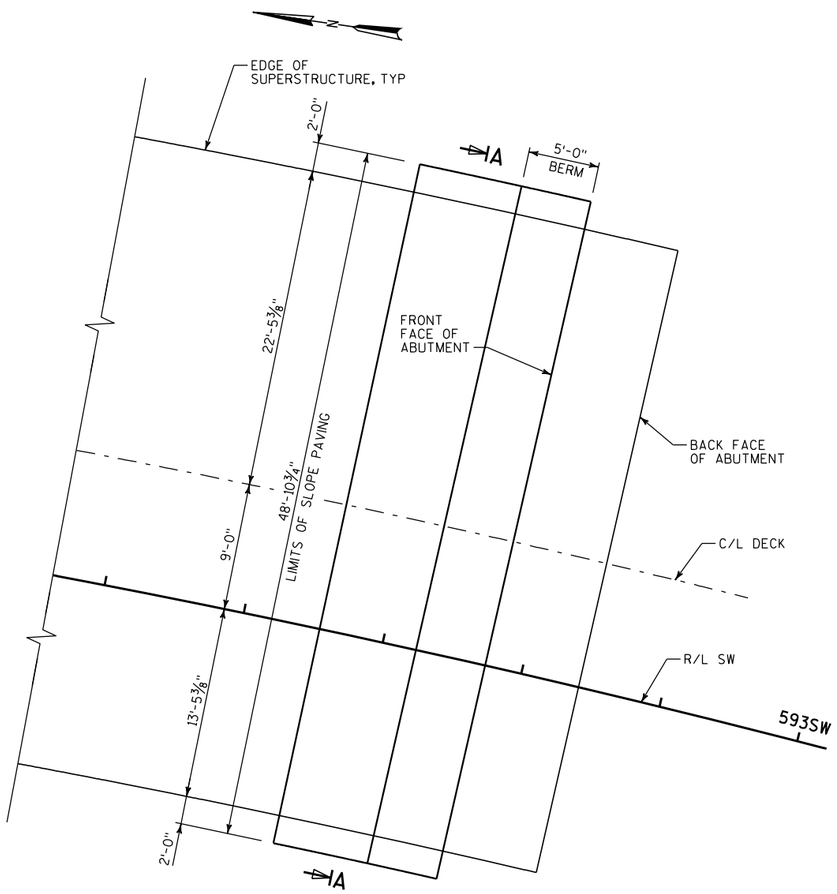

PLAN

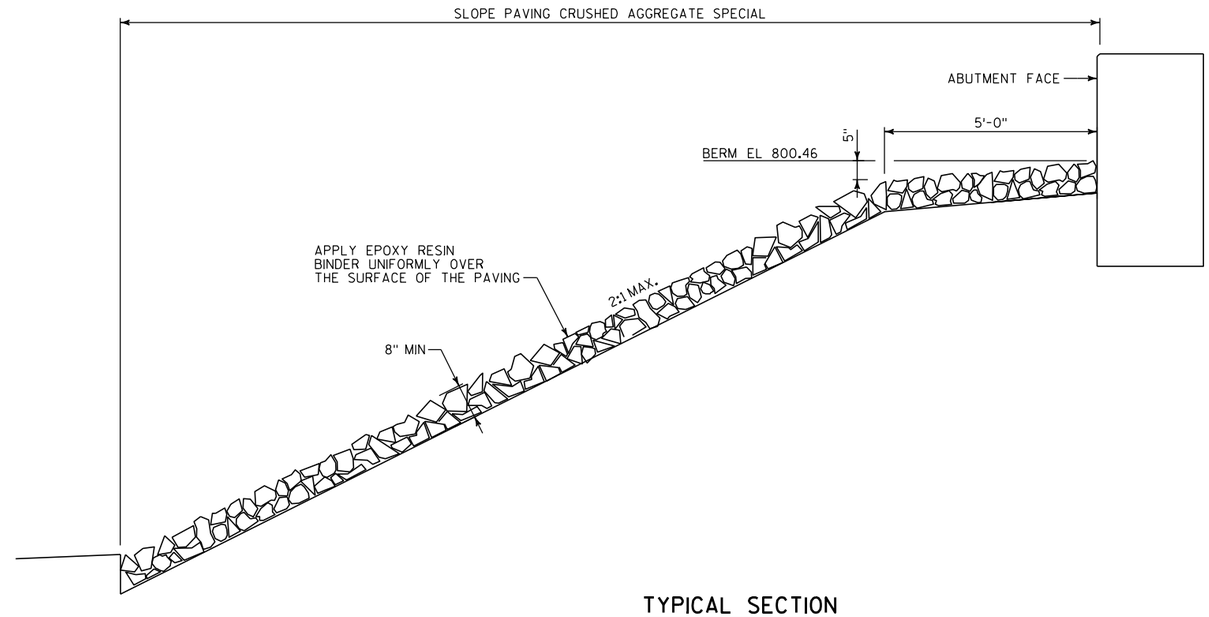

TYPICAL SECTION

8

8

NO.	DATE	REVISION	BY

STATE OF WISCONSIN
DEPARTMENT OF TRANSPORTATION

STRUCTURE B-40-855

DRAWN BY GLM | PLANS CK'D. WRT

SLOPE PAVING DETAILS

SHEET 96 OF 96

STATE PROJECT NUMBER

1060-33-80

ESTIMATED QUANTITIES - PIER OPTION A

ITEM CATEGORY	ITEM NO.	BID ITEMS	UNIT	PIER SW01	PIER SW02	PIER SW03	PIER SW04	PIER SW05	PIER SW06	PIER SW07	TOTAL
2071	206.1000.0008	EXCAVATION FOR STRUCTURES BRIDGES B-40-855	LS	---	---	---	---	---	---	---	1
2071	209.0100	BACKFILL GRANULAR	CY	13	---	18	9	---	---	---	40
2071	502.0100	CONCRETE MASONRY BRIDGES	CY	119.9	135.0	181.3	168.4	135.6	60.6	150.2	951
2071	505.0405	BAR STEEL REINFORCEMENT HS BRIDGES	LB	29,100	31,900	24,310	19,150	31,980	39,910	37,940	214,290
2071	505.0605	BAR STEEL REINFORCEMENT HS COATED BRIDGES	LB	25,840	28,590	37,220	34,970	28,790	13,480	31,480	200,370
2071	511.1200.0001	TEMPORARY SHORING B-40-855	SF	---	---	---	---	905	---	765	1,670
2071	511.2200.0001	TEMPORARY SHORING LEFT IN PLACE B-40-855	SF	---	---	---	625	670	---	---	1,295
2071	SPV.0060.4160	DRILLED FOUNDATION SHAFT BASE GROUTING	EACH	1	1	1	1	1	1	1	7
2071	SPV.0060.4171	THERMAL INTEGRITY PROFILER (TIP) TESTING DRILLED FOUNDATION SHAFT 98.43-INCH	EACH	1	1	1	1	1	1	1	7
2071	SPV.0075.4200	OBSTRUCTIONS DRILLED FOUNDATION SHAFT	HRS	4	4	4	4	4	4	4	28
2071	SPV.0090.4460	DRILLED FOUNDATION SHAFT 98.43-INCH	LF	68	71	51	44	78	95	88	495
2071	SPV.0105.4510	TRIAL DRILLED FOUNDATION SHAFT 98.43-INCH	LS	---	---	---	---	---	---	---	1

NOTES

THIS CONTRACT CONTAINS TWO OPTIONS FOR PIER CONSTRUCTION.
THE CONTRACTOR MUST BID EITHER OPTION A OR OPTION B.

ITEMS ON THIS SHEET ARE FOR PIER OPTION A ONLY. FOR ADDITIONAL ITEMS AND QUANTITIES, SEE SHEET 5.

8

8

NO.	DATE	REVISION	BY

STATE OF WISCONSIN
DEPARTMENT OF TRANSPORTATION

STRUCTURE B-40-855

DRAWN BY GLM | PLANS CK'D. WRT

OPTION A QUANTITIES

SHEET A1 OF A25

STATE PROJECT NUMBER
1060-33-80

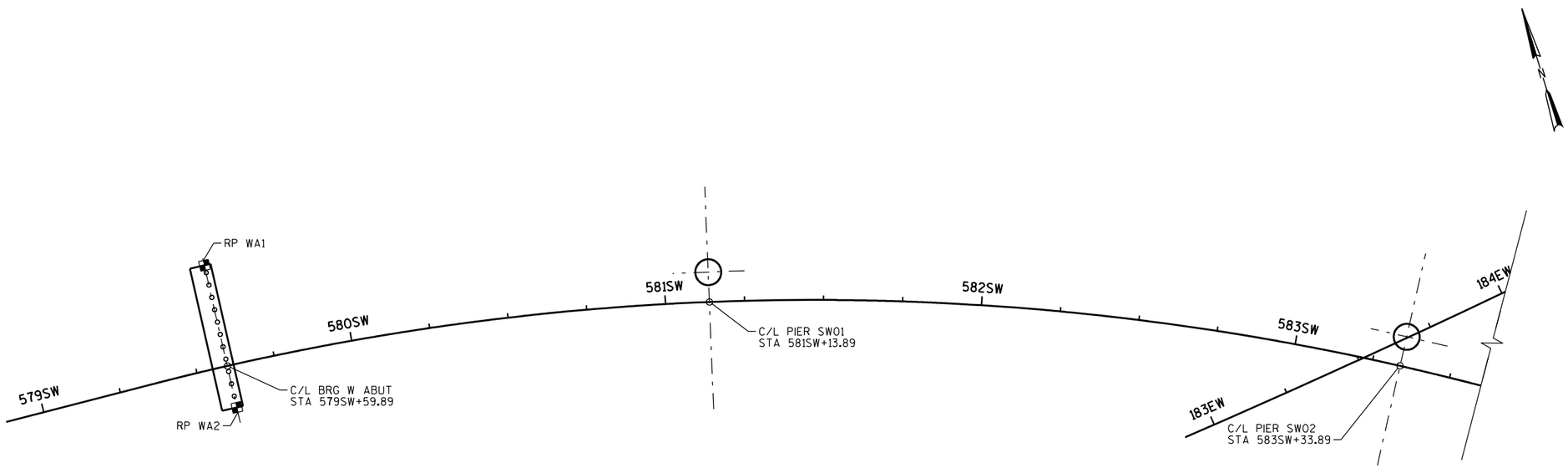

WEST ABUT
11 CIPC PILES, 16" DIA
RP WA1
STA 579SW+59.89, 32.60' LT
X=571465.67, Y=295483.39
RP WA2
STA 579SW+59.89, 13.46' RT
X=571462.26, Y=295437.46
BOTTOM OF FOOTING EL 789.11
ESTIMATED PILE LENGTH 75 FT

PIER SW01
DRILLED SHAFT, 98.43" DIA
CENTER POINT:
STA 581SW+13.89, 9.42' LT
X=571617.32, Y=295434.51
TOP OF SHAFT EL 765.00
BOTTOM OF SHAFT EL 697.00

PIER SW02
DRILLED SHAFT, 98.43" DIA
CENTER POINT:
STA 583SW+33.89, 9.42' LT
X=571822.47, Y=295350.11
TOP OF SHAFT EL 762.00
BOTTOM OF SHAFT EL 691.00

8

8

NO.	DATE	REVISION	BY

STATE OF WISCONSIN
DEPARTMENT OF TRANSPORTATION

STRUCTURE B-40-855

DRAWN BY GLM | PLANS CK'D. WRT

OPTION A
FOUNDATION
LAYOUT (1 OF 3)

SHEET A2 OF A25

STATE PROJECT NUMBER
1060-33-80

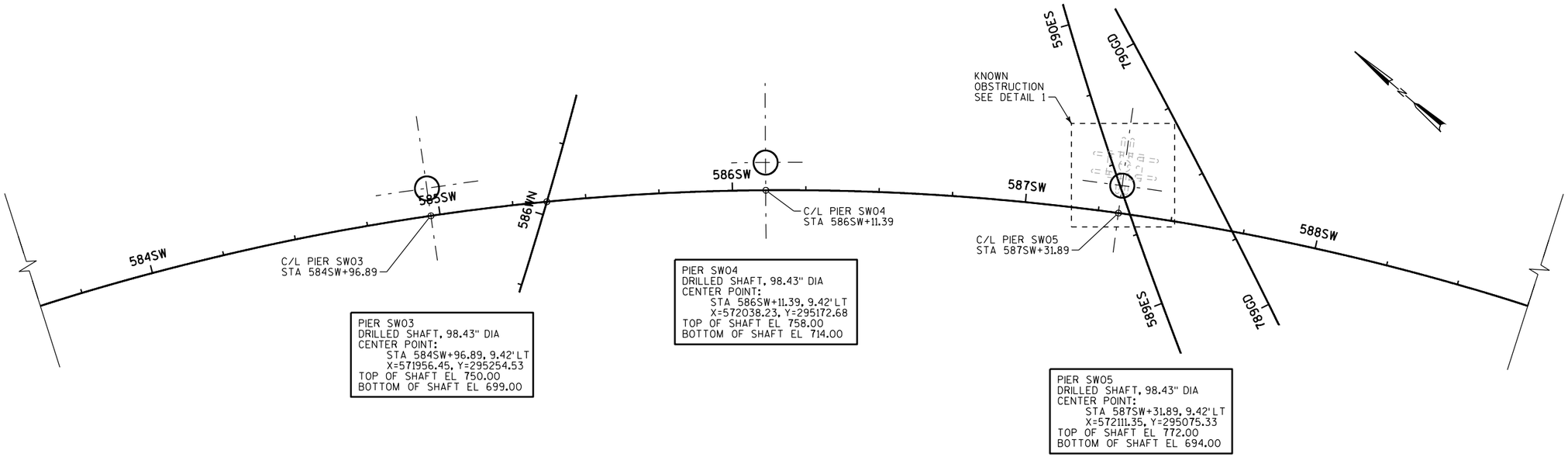

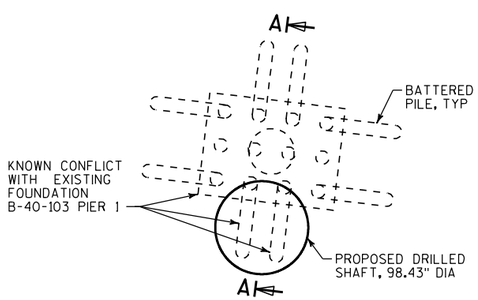

DETAIL 1

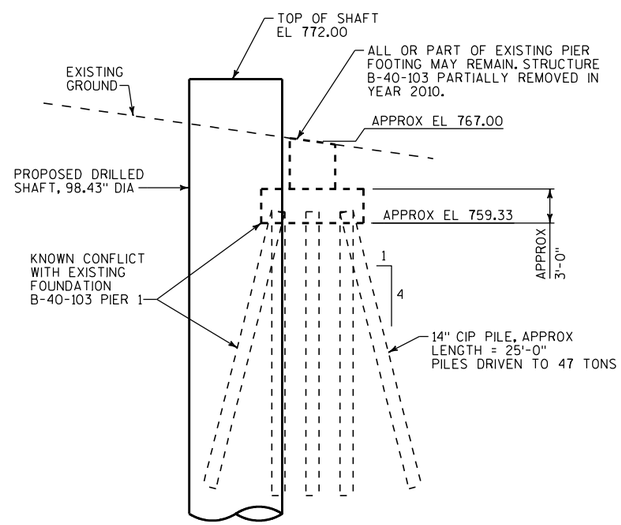

SECTION A-A

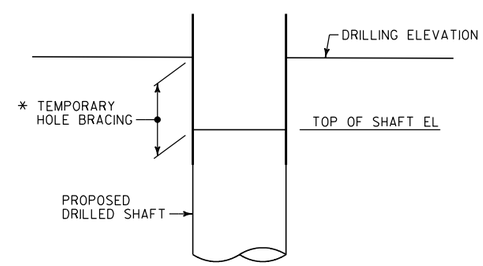

TEMPORARY HOLE BRACING

AT PIERS SW03 & SW04

* TEMPORARY HOLE BRACING MAY CONSIST OF SLIP-IN CASING OR OTHER APPROVED METHOD. COST OF TEMPORARY HOLE BRACING SHALL BE INCLUDED WITH COST OF "EXCAVATION FOR STRUCTURES BRIDGES B-40-855".

NO.	DATE	REVISION	BY

STATE OF WISCONSIN
DEPARTMENT OF TRANSPORTATION

STRUCTURE B-40-855

DRAWN BY GLM | PLANS CK'D. WRT

OPTION A
FOUNDATION
LAYOUT (2 OF 3)

SHEET A3 OF A25

STATE PROJECT NUMBER
1060-33-80

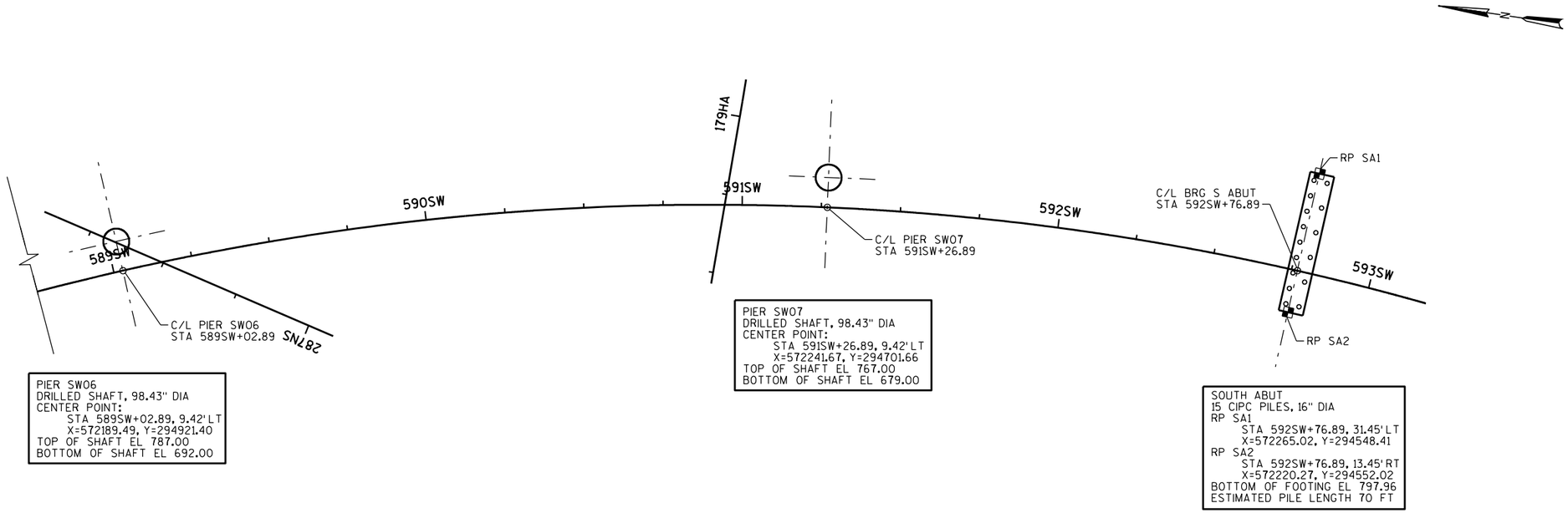

PIER SW06
DRILLED SHAFT, 98.43" DIA
CENTER POINT:
STA 589SW+02.89, 9.42' LT
X=572189.49, Y=294921.40
TOP OF SHAFT EL 787.00
BOTTOM OF SHAFT EL 692.00

PIER SW07
DRILLED SHAFT, 98.43" DIA
CENTER POINT:
STA 591SW+26.89, 9.42' LT
X=572241.67, Y=294701.66
TOP OF SHAFT EL 767.00
BOTTOM OF SHAFT EL 679.00

SOUTH ABUT
15 CIPC PILES, 16" DIA
RP SA1
STA 592SW+76.89, 31.45' LT
X=572265.02, Y=294548.41
RP SA2
STA 592SW+76.89, 13.45' RT
X=572220.27, Y=294552.02
BOTTOM OF FOOTING EL 797.96
ESTIMATED PILE LENGTH 70 FT

8

NO.	DATE	REVISION	BY

STATE OF WISCONSIN
DEPARTMENT OF TRANSPORTATION

STRUCTURE B-40-855

DRAWN BY GLM | PLANS CK'D. WRT

OPTION A
FOUNDATION
LAYOUT (3 OF 3)

SHEET A4 OF A25

STATE PROJECT NUMBER
1060-33-80

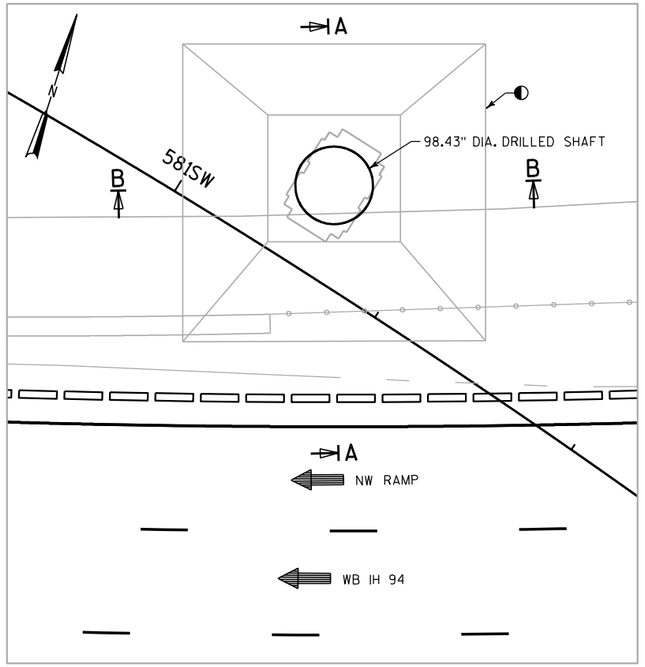

EXCAVATION PLAN - PIER SW01

STA 581SW+13.89

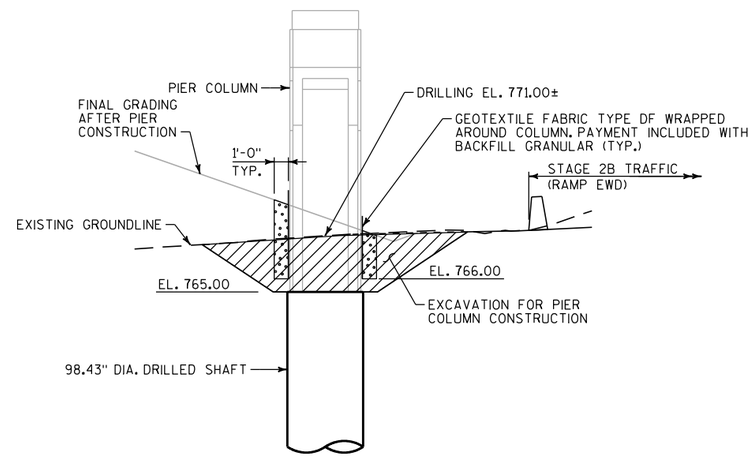

SECTION A-A

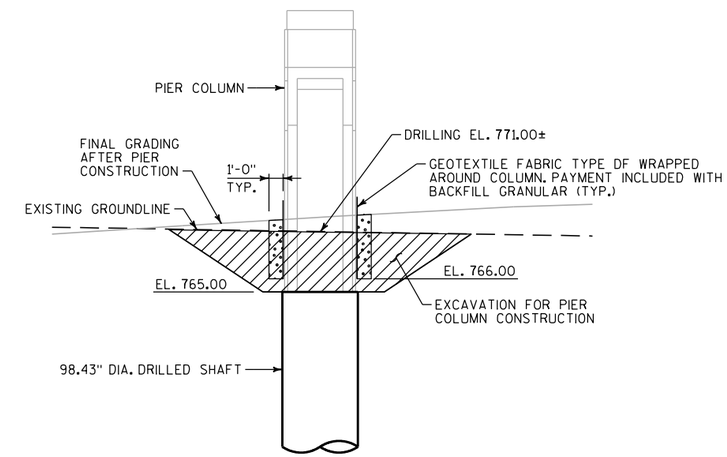

SECTION B-B

LEGEND

- EXCAVATION FOR STRUCTURES
- BACKFILL GRANULAR
- 1'-0" SAND BACKFILL AROUND COLUMN. PAYMENT INCLUDED WITH BACKFILL GRANULAR.
- APPROXIMATE EXCAVATION LIMITS. LIMITS WILL VARY BASED ON THE WORKING AREA REQUIRED AND THE MAXIMUM EXCAVATION SLOPE THAT CAN BE SAFELY MAINTAINED. EXCAVATION ON THESE SHEETS IS INCLUDED "EXCAVATION FOR STRUCTURES BRIDGES B-40-855".
- APPROXIMATE EXPOSED TEMPORARY SHORING HEIGHTS. HEIGHTS ARE SHOWN FOR INFORMATION ONLY.

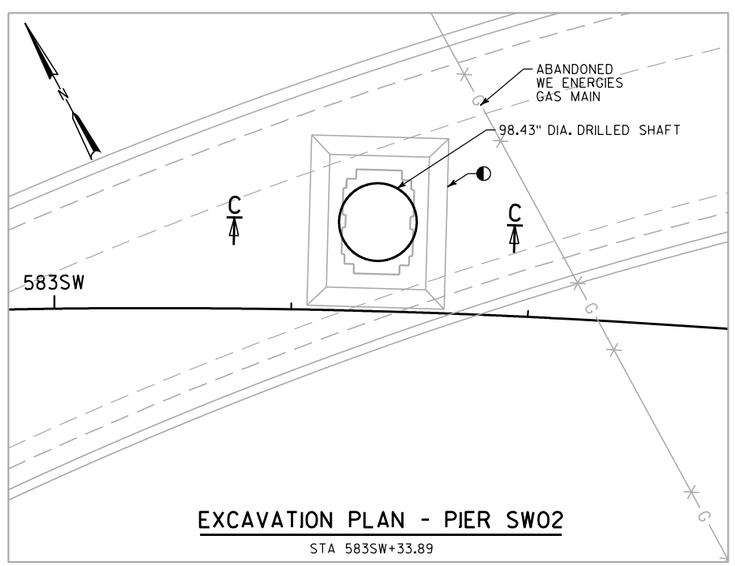

EXCAVATION PLAN - PIER SW02

STA 583SW+33.89

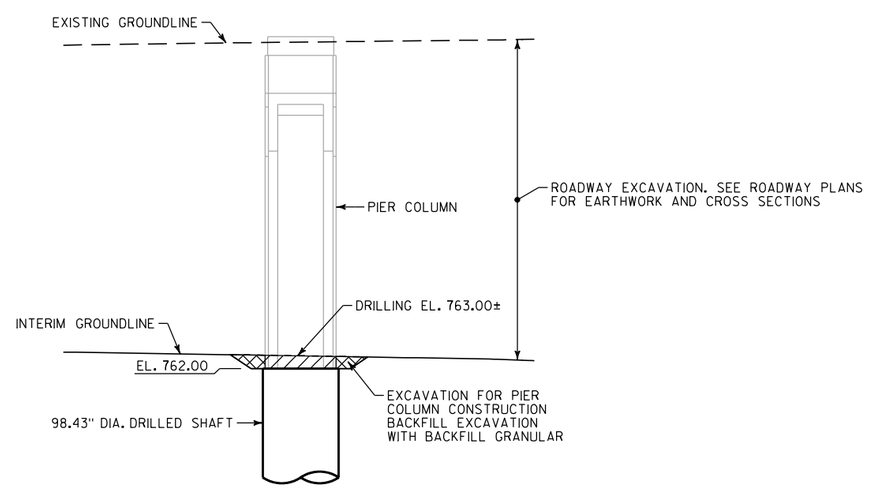

SECTION C-C

NOTES

THIS DRAWING IS INTENDED TO PROVIDE A REFERENCE FOR ASSUMED EXCAVATION LIMITS AND TEMPORARY SHORING REQUIREMENTS. THIS DRAWING IS NOT ALL-INCLUSIVE.

NO.	DATE	REVISION	BY

STATE OF WISCONSIN
DEPARTMENT OF TRANSPORTATION

STRUCTURE B-40-855

DRAWN BY BKS | PLANS CK'D. WRT

OPTION A
EXCAVATION PLAN
(1 OF 4)

SHEET A5 OF A25

8

8

STATE PROJECT NUMBER
1060-33-80

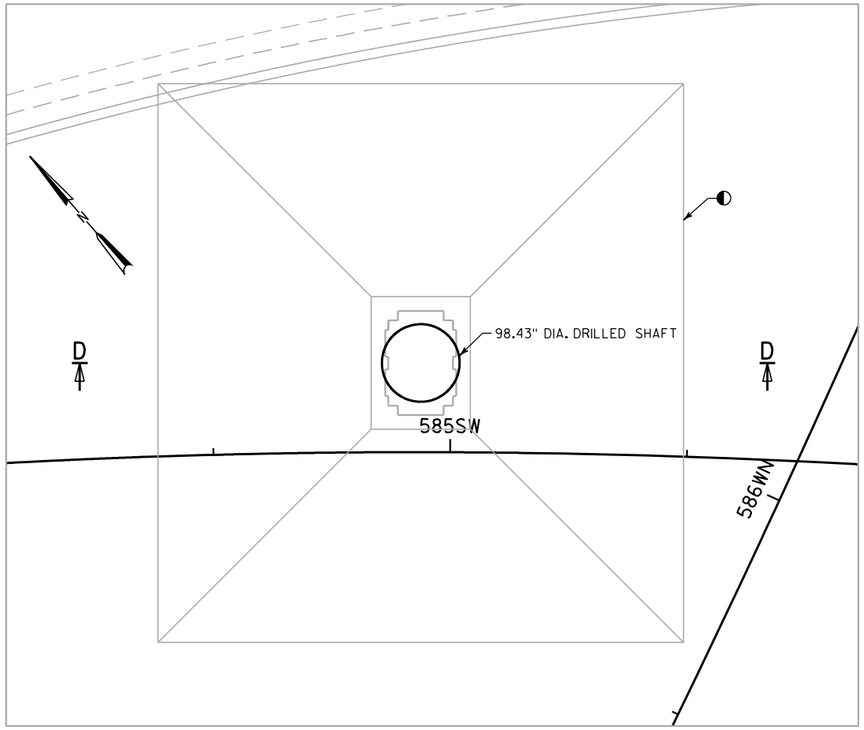

EXCAVATION PLAN - PIER SW03

STA 584SW+96.89

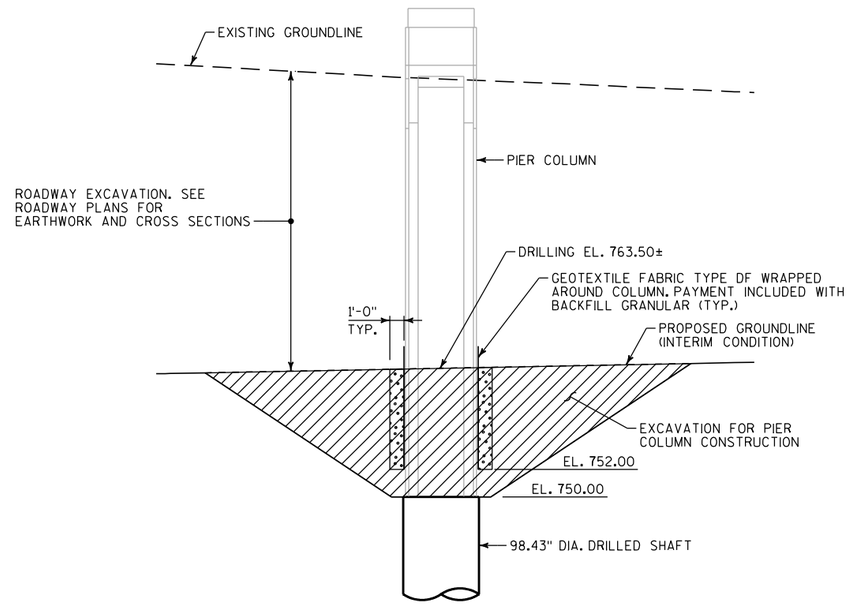

SECTION D-D

LEGEND

- EXCAVATION FOR STRUCTURES
- BACKFILL GRANULAR
- 1'-0" SAND BACKFILL AROUND COLUMN. PAYMENT INCLUDED WITH BACKFILL GRANULAR.
- APPROXIMATE EXCAVATION LIMITS. LIMITS WILL VARY BASED ON THE WORKING AREA REQUIRED AND THE MAXIMUM EXCAVATION SLOPE THAT CAN BE SAFELY MAINTAINED. EXCAVATION ON THESE SHEETS IS INCLUDED "EXCAVATION FOR STRUCTURES BRIDGES B-40-855".
- APPROXIMATE EXPOSED TEMPORARY SHORING HEIGHTS. HEIGHTS ARE SHOWN FOR INFORMATION ONLY.

NOTES

THIS DRAWING IS INTENDED TO PROVIDE A REFERENCE FOR ASSUMED EXCAVATION LIMITS AND TEMPORARY SHORING REQUIREMENTS. THIS DRAWING IS NOT ALL-INCLUSIVE.

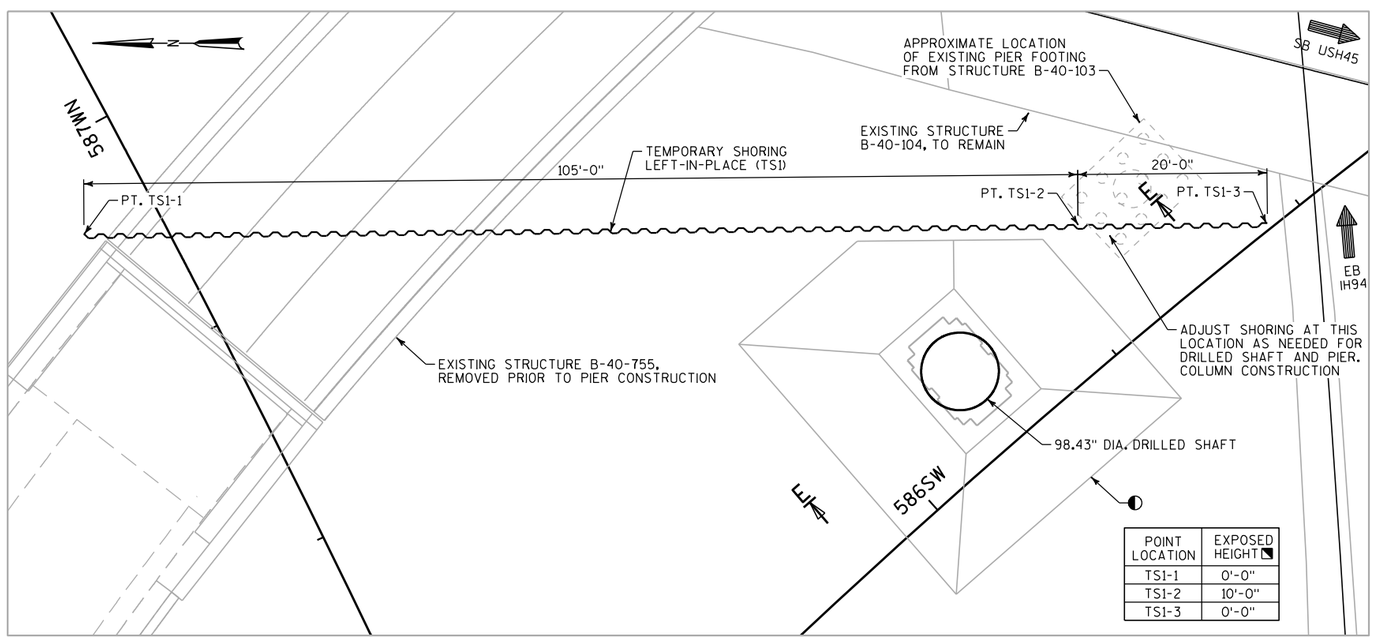

POINT LOCATION	EXPOSED HEIGHT
TS1-1	0'-0"
TS1-2	10'-0"
TS1-3	0'-0"

EXCAVATION PLAN - PIER SW04

STA 586SW+11.39

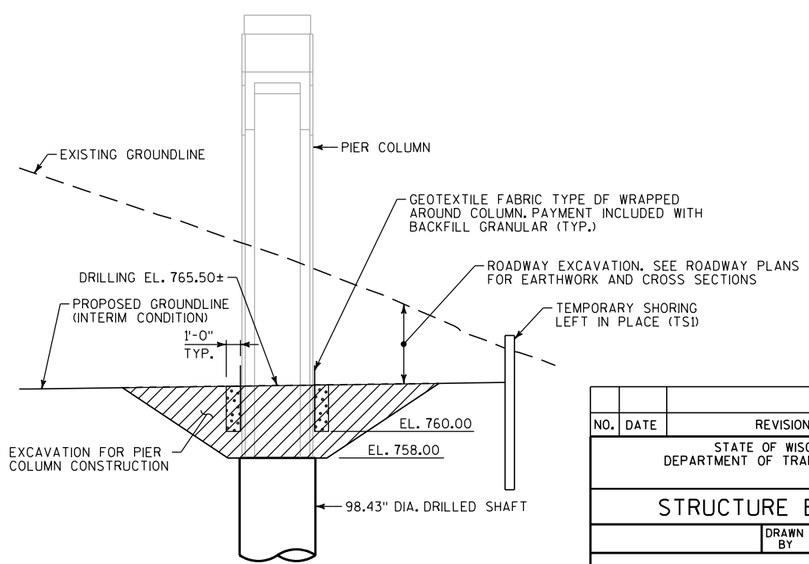

SECTION E-E

NO.	DATE	REVISION	BY

STATE OF WISCONSIN
DEPARTMENT OF TRANSPORTATION

STRUCTURE B-40-855

DRAWN BY BKS | PLANS CK'D. WRT

OPTION A
EXCAVATION PLAN
(2 OF 4)

SHEET A6 OF A25

8

8

STATE PROJECT NUMBER

1060-33-80

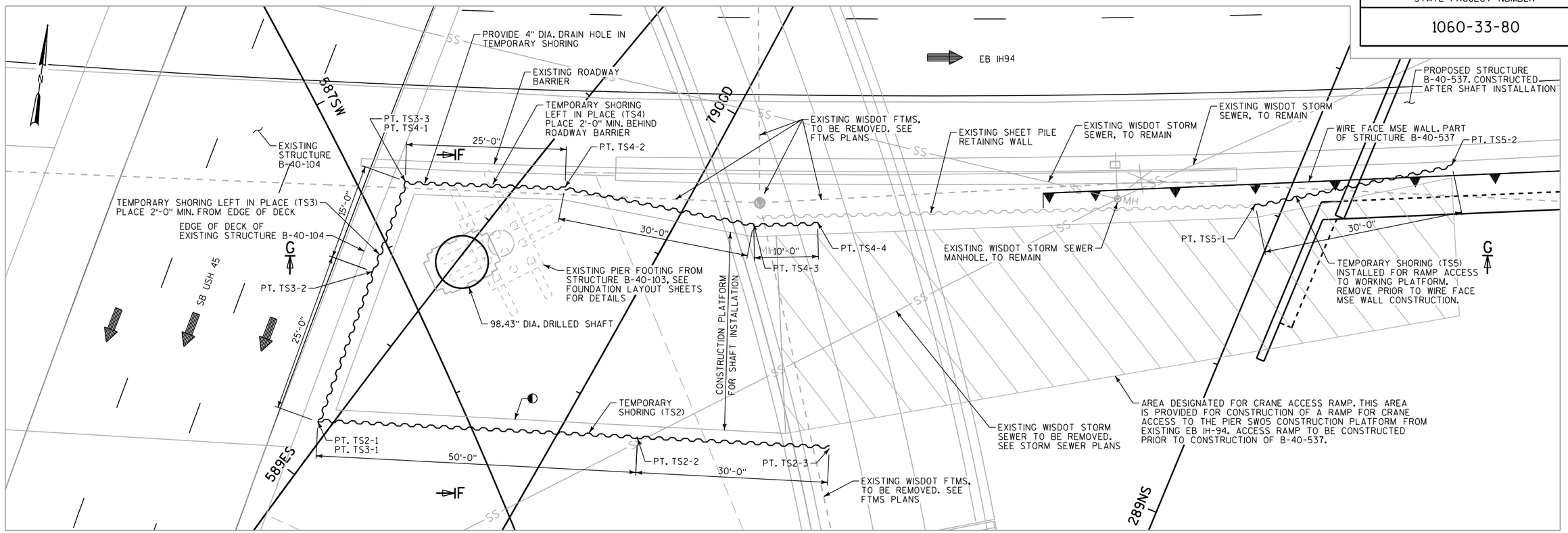

EXCAVATION PLAN - PIER SW05

STA 587SW+31.89

POINT LOCATION	EXPOSED HEIGHT
TS2-1	13'-0"
TS2-2	13'-0"
TS2-3	0'-0"
TS3-1	13'-0"
TS3-2	0'-0"
TS3-3	7'-0"
TS4-1	7'-0"
TS4-2	7'-0"
TS4-3	7'-0"
TS4-4	7'-0"
TS5-1	4'-0"
TS5-2	0'-0"

LEGEND

- EXCAVATION FOR STRUCTURES
- BACKFILL GRANULAR
- COMPACTED FILL MATERIAL. PAYMENT INCLUDED WITH EXCAVATION FOR STRUCTURES.
- 1'-0" SAND BACKFILL AROUND COLUMN. PAYMENT INCLUDED WITH BACKFILL GRANULAR.
- APPROXIMATE EXCAVATION LIMITS. LIMITS WILL VARY BASED ON THE WORKING AREA REQUIRED AND THE MAXIMUM EXCAVATION SLOPE THAT CAN BE SAFELY MAINTAINED. EXCAVATION ON THESE SHEETS IS INCLUDED "EXCAVATION FOR STRUCTURES BRIDGES B-40-855".
- APPROXIMATE EXPOSED TEMPORARY SHORING HEIGHTS. HEIGHTS ARE SHOWN FOR INFORMATION ONLY.

NOTES

THIS DRAWING IS INTENDED TO PROVIDE A REFERENCE FOR ASSUMED EXCAVATION LIMITS AND TEMPORARY SHORING REQUIREMENTS. THIS DRAWING IS NOT ALL-INCLUSIVE.

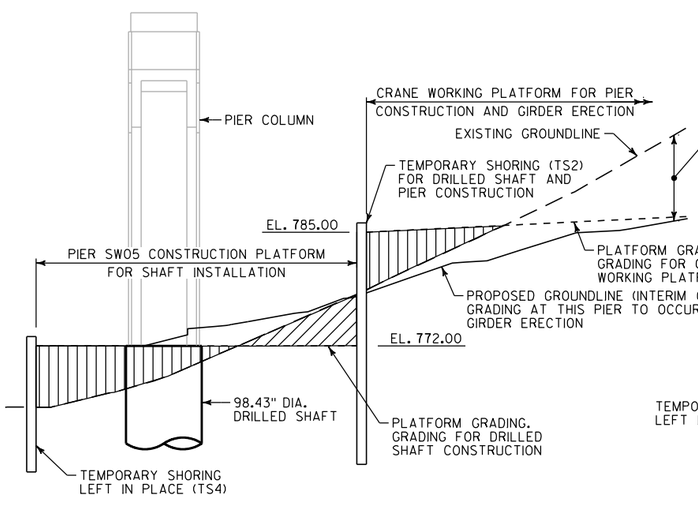

SECTION F-F

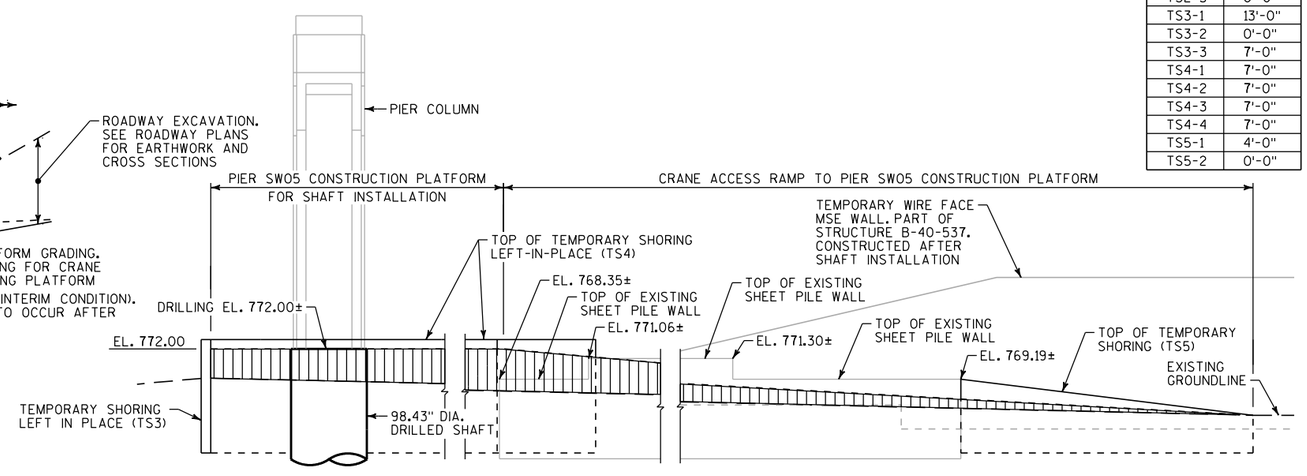

SECTION G-G

NO.	DATE	REVISION	BY

STATE OF WISCONSIN
DEPARTMENT OF TRANSPORTATION

STRUCTURE B-40-855

DRAWN BY BKS | PLANS CK'D. WRT

OPTION A
EXCAVATION PLAN
(3 OF 4)

SHEET A7 OF A25

8

8

STATE PROJECT NUMBER
1060-33-80

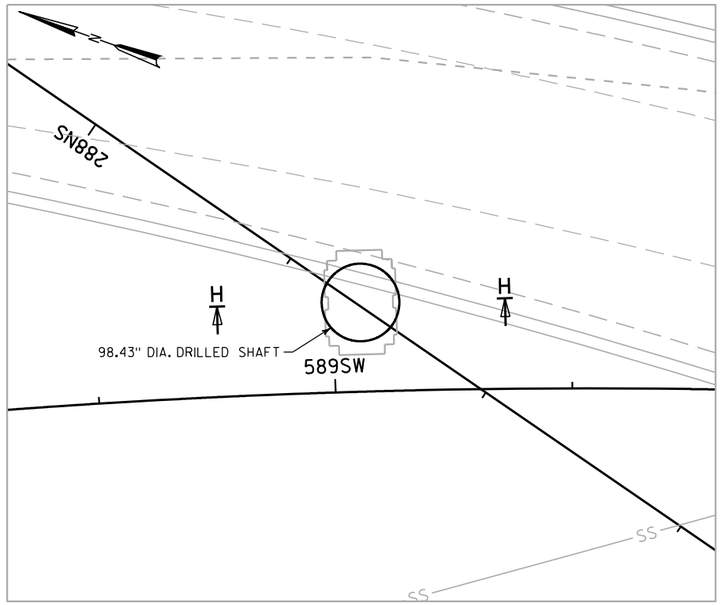

EXCAVATION PLAN - PIER SW06

STA 589SW+02.89

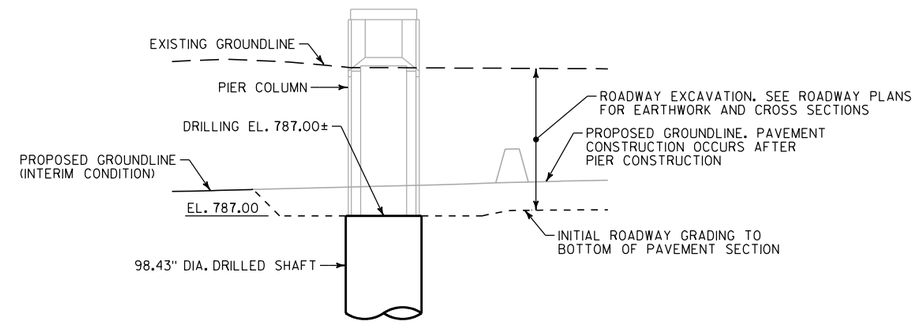

SECTION H-H

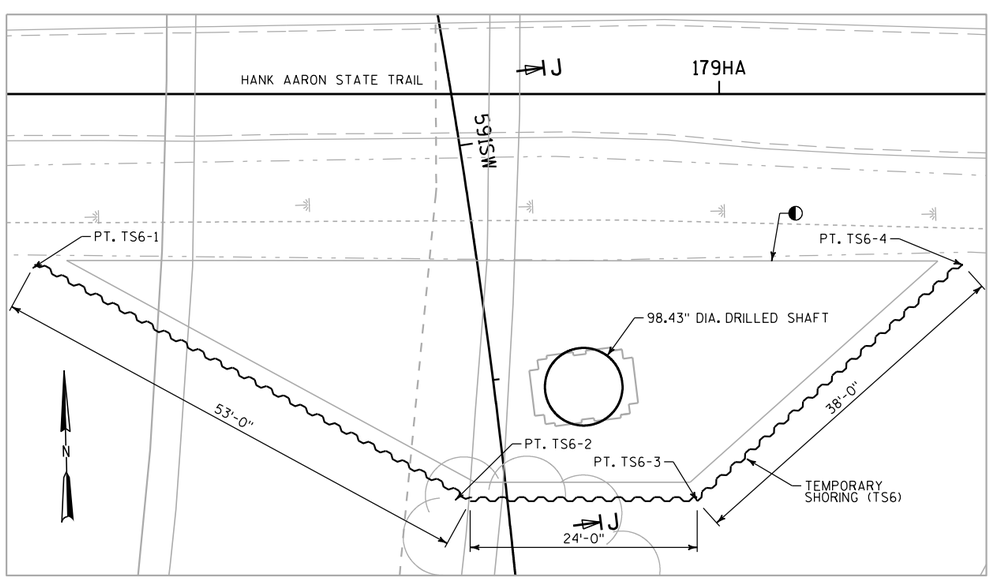

POINT LOCATION	EXPOSED HEIGHT
TS6-1	0'-0"
TS6-2	11'-0"
TS6-3	11'-0"
TS6-4	0'-0"

EXCAVATION PLAN - PIER SW07

STA 591SW+26.89

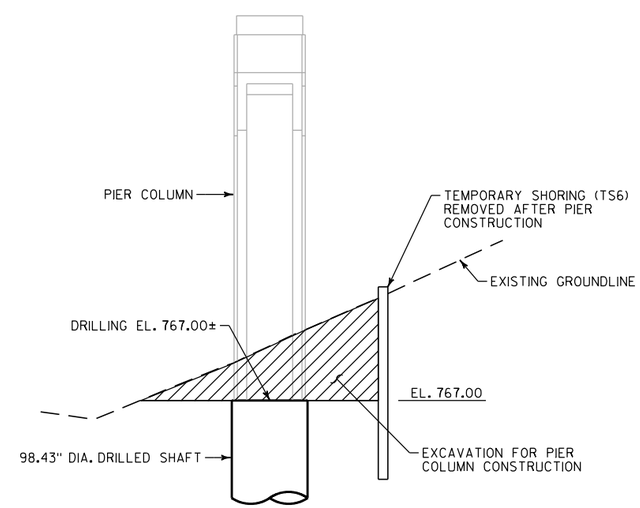

SECTION J-J

LEGEND

- EXCAVATION FOR STRUCTURES
- BACKFILL GRANULAR
- 1'-0" SAND BACKFILL AROUND COLUMN. PAYMENT INCLUDED WITH BACKFILL GRANULAR.
- APPROXIMATE EXCAVATION LIMITS. LIMITS WILL VARY BASED ON THE WORKING AREA REQUIRED AND THE MAXIMUM EXCAVATION SLOPE THAT CAN BE SAFELY MAINTAINED. EXCAVATION ON THESE SHEETS IS INCLUDED "EXCAVATION FOR STRUCTURES BRIDGES B-40-855".
- APPROXIMATE EXPOSED TEMPORARY SHORING HEIGHTS. HEIGHTS ARE SHOWN FOR INFORMATION ONLY.

NOTES

THIS DRAWING IS INTENDED TO PROVIDE A REFERENCE FOR ASSUMED EXCAVATION LIMITS AND TEMPORARY SHORING REQUIREMENTS. THIS DRAWING IS NOT ALL-INCLUSIVE.

8

NO.	DATE	REVISION	BY

STATE OF WISCONSIN
DEPARTMENT OF TRANSPORTATION

STRUCTURE B-40-855

DRAWN BY BKS | PLANS CK'D. WRT

OPTION A
EXCAVATION PLAN
(4 OF 4)

SHEET A8 OF A25

STATE PROJECT NUMBER
1060-33-80

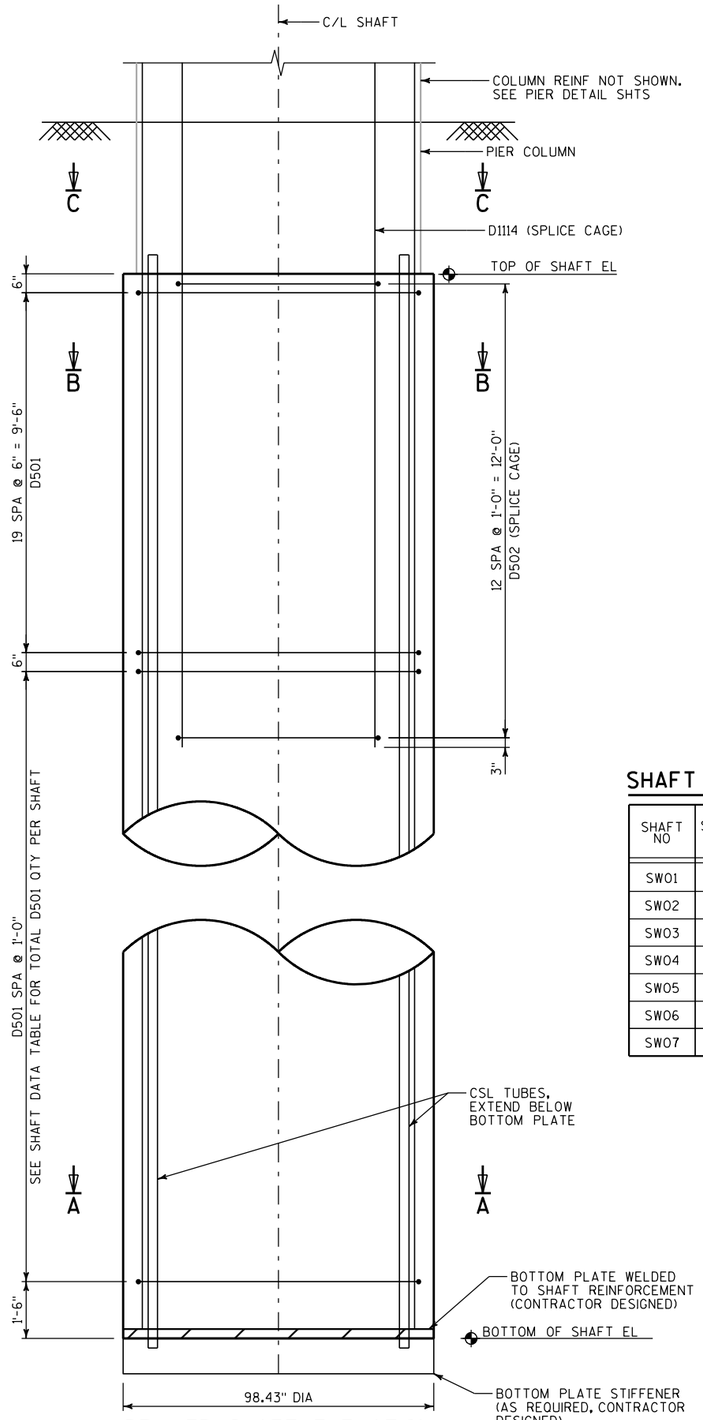

DRILLED SHAFT ELEVATION

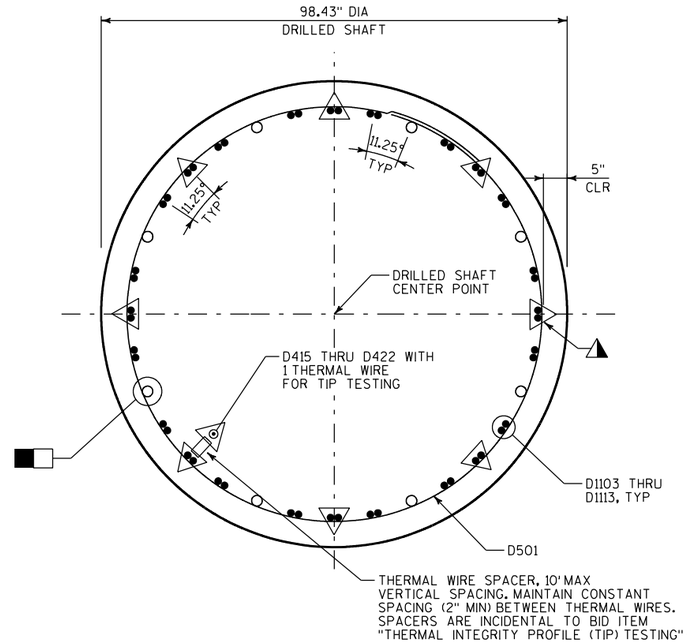

SECTION A-A

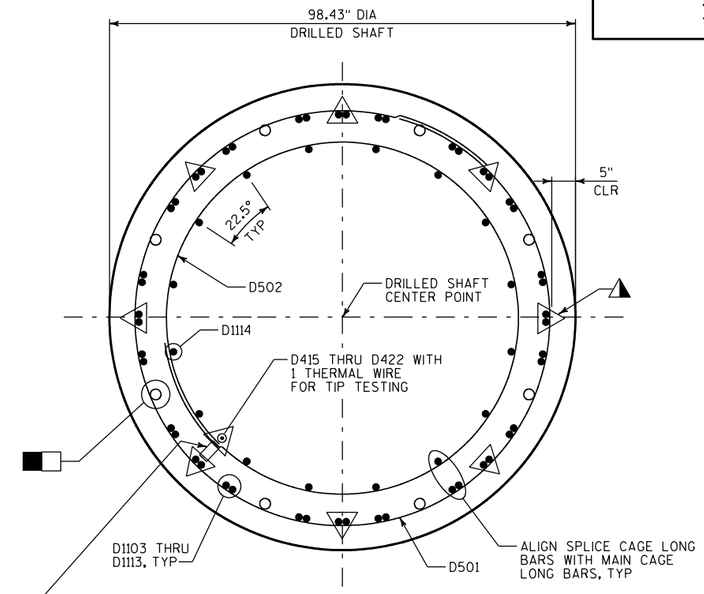

SECTION B-B

SHAFT DATA

SHAFT NO	SHAFT C/L "X"	SHAFT C/L "Y"	ASSUMED DRILLING EL	TOP OF SHAFT EL	BOTTOM OF SHAFT EL	SHAFT LENGTH (FT)	SHAFT VOLUME (CY)	TIE NO. REQ'D (EACH)	INSTRUMENTATION	MAXIMUM BASE GROUTING PRESSURE (PSI)
SW01	571617.32	295434.51	771.00	765.00	697.00	68.00	133.10	77	CSL TUBES/TIP TESTING	425
SW02	571822.47	295350.12	763.00	762.00	691.00	71.00	139.00	80	CSL TUBES/TIP TESTING	300
SW03	571956.45	295254.53	763.50	750.00	699.00	51.00	99.80	60	CSL TUBES/TIP TESTING	325
SW04	572038.23	295172.68	765.50	758.00	714.00	44.00	86.10	53	CSL TUBES/TIP TESTING	225
SW05	572111.35	295075.33	772.00	772.00	694.00	78.00	152.70	87	CSL TUBES/TIP TESTING	400
SW06	572189.49	294921.40	787.00	787.00	692.00	95.00	185.90	104	CSL TUBES/TIP TESTING	500
SW07	572241.67	294701.66	767.00	767.00	679.00	88.00	172.20	97	CSL TUBES/TIP TESTING	500

LEGEND

8 - 2" DIA CSL TUBES FULL LENGTH OF SHAFT TIED TO INSIDE AND SPACED AROUND THE PERIMETER OF REINFORCEMENT AS SHOWN. AFTER TESTING, USE CSL TUBES TO BASE-GROUT THE PIER DRILLED SHAFTS.

9 - THERMAL WIRES FOR TIP TESTING. DISTRIBUTE 8 THERMAL WIRES EVENLY AROUND THE PERIMETER OF REINFORCMENT TIED TO VERTICAL BARS.

NOTE

FOR SECTION C-C, SEE SHT A10.

NO.	DATE	REVISION	BY

STATE OF WISCONSIN
DEPARTMENT OF TRANSPORTATION

STRUCTURE B-40-855

DRAWN BY PAK | PLANS CK'D. WRT

OPTION A
DRILLED SHAFT
DETAILS (1 OF 2)

SHEET A9 OF A25

STATE PROJECT NUMBER
1060-33-80

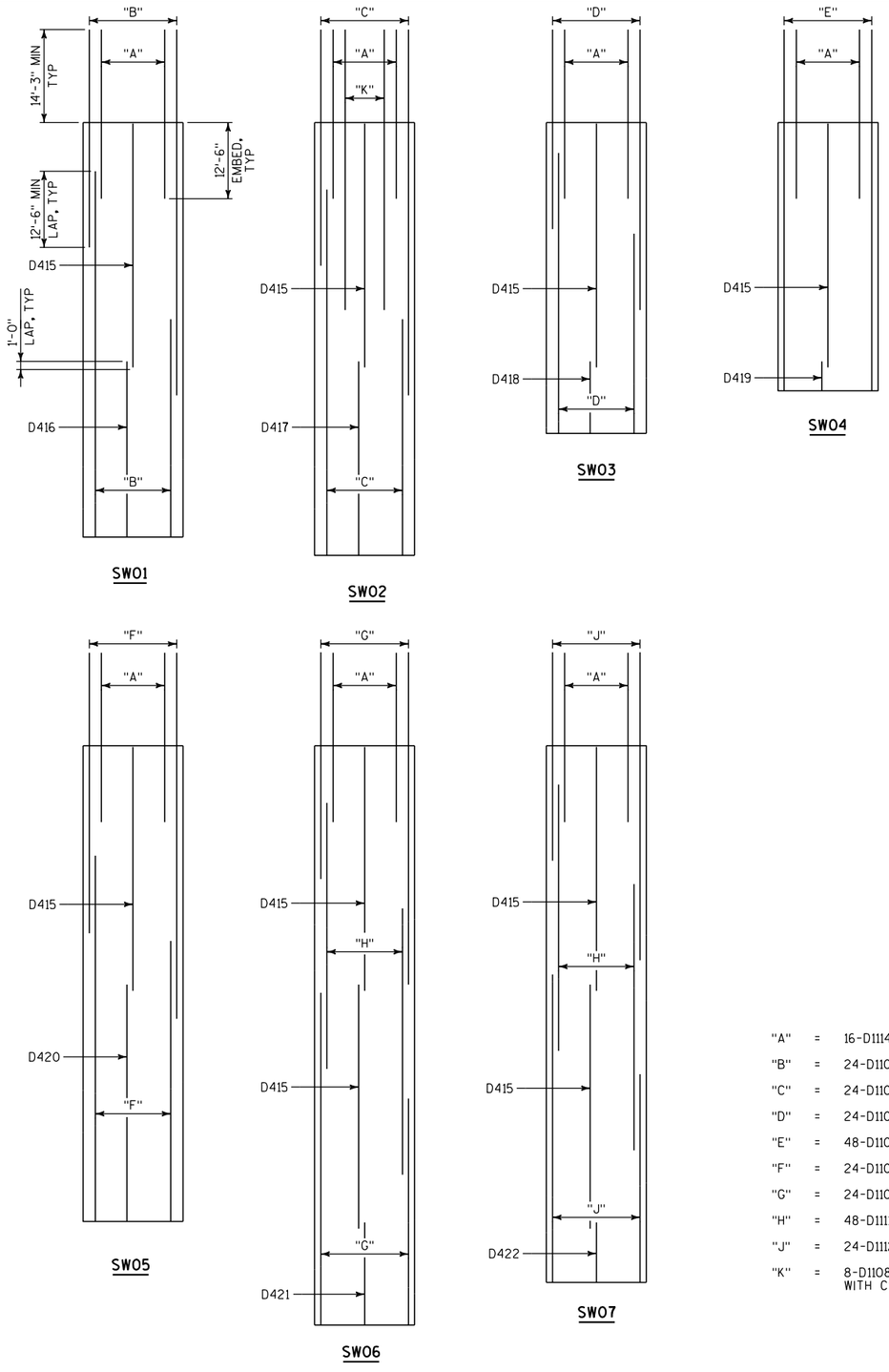

"A" = 16-D1114 BARS
"B" = 24-D1103 & 24-D1104 BARS
"C" = 24-D1103 & 24-D1105 BARS
"D" = 24-D1106 & 24-D1108 BARS
"E" = 48-D1107 BARS
"F" = 24-D1103 & 24-D1108 BARS
"G" = 24-D1109 & 24-D1110 BARS
"H" = 48-D1111 BARS
"J" = 24-D1112 & 24-D1113 BARS
"K" = 8-D1108 BARS. TIE BAR WITH CSL TUBES.

DRILLED SHAFT MAIN REINFORCEMENT SCHEMATIC

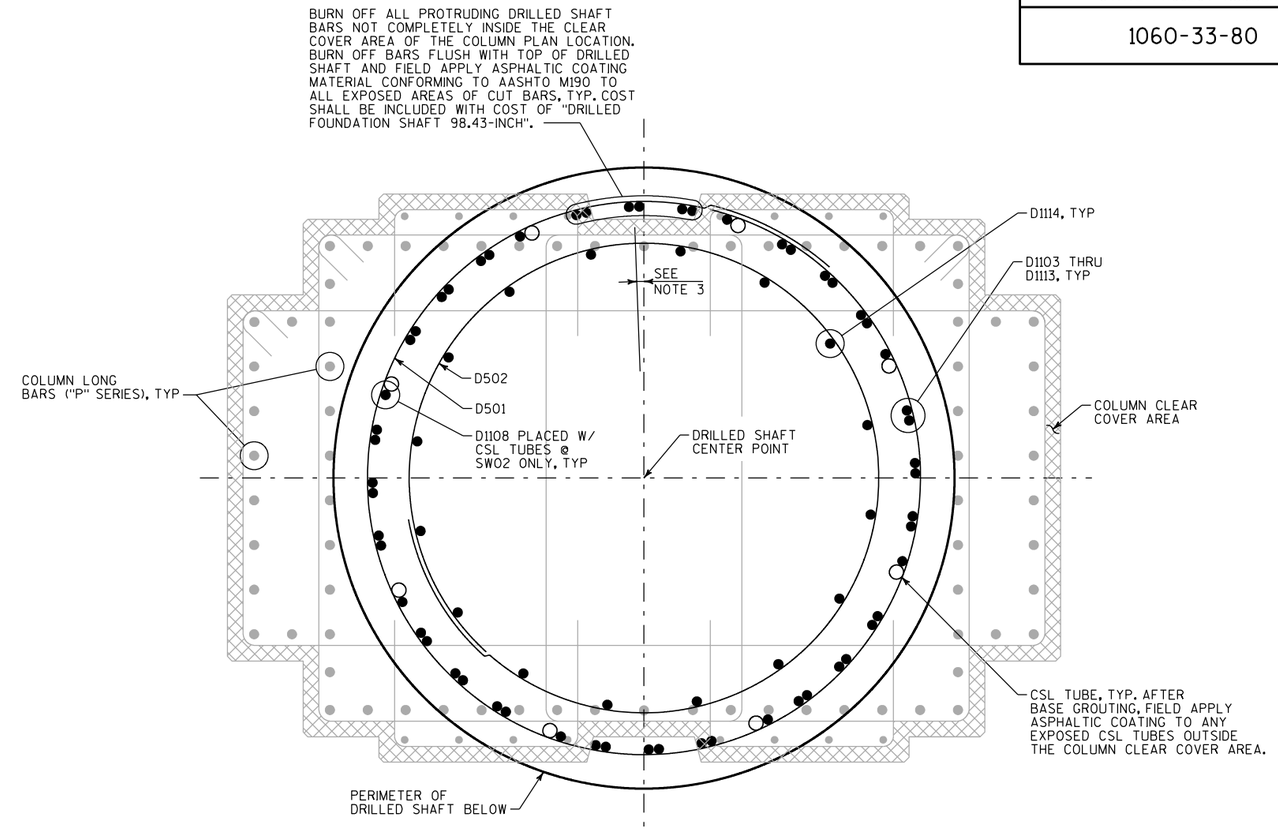

SECTION C-C
DRILLED SHAFT CONNECTION DETAIL

NOTES:

1. STAGGER LAPS AS SHOWN SO AS TO LAP NO MORE THAN HALF OF THE BARS PER SECTION.
2. WELDMENT OF BOTTOM PLATE AND REINFORCING BAR CAGE NOT SHOWN FOR CLARITY. SEE SHEET A9.
3. ORIENTATION OF DRILLED SHAFT CAGE IS ARBITRARY FOR DESIGN PURPOSES. CONTRACTOR MAY INSTALL CAGE ASSEMBLY IN ANY DESIRED ORIENTATION.
4. DRILLED SHAFT CONNECTION HAS BEEN DESIGNED TO ACCOMMODATE DRILLED SHAFT CAGE PLACED UP TO 4" OUT OF POSITION HORIZONTALLY IN ANY DIRECTION. IF THE AS-BUILT CONDITION EXCEEDS THIS TOLERANCE, ALERT THE DESIGN ENGINEER.

8

NO.	DATE	REVISION	BY

STATE OF WISCONSIN
DEPARTMENT OF TRANSPORTATION

STRUCTURE B-40-855

DRAWN BY PAK | PLANS CK'D. WRT

OPTION A
DRILLED SHAFT
DETAILS (2 OF 2)

SHEET A10 OF A25

STATE PROJECT NUMBER

1060-33-80

BAR INFORMATION							BAR DIMENSIONS						LOCATION	BAR SERIES INFORMATION				
BAR MARK	MATL	NO. REQ'D	LENGTH	BENT	BAR SERIES	BEND TYPE	A	B	C	D	E	F		DIM	MIN	MAX	NO REQ'D	LENGTH
D501	U	558	24'-9"	X		23	7'-5"	1'-5"					SHAFT TIE BAR					
D502	U	91	21'-1"	X		23	6'-3"	1'-5"					SPLICE CAGE TIE BAR					
D1103	U	144	60'-0"			1	60'-0"						LONGITUDINAL BAR					
D1104	U	48	35'-9"			1	35'-9"						LONGITUDINAL BAR SW01					
D1105	U	48	38'-9"			1	38'-9"						LONGITUDINAL BAR SW02					
D1106	U	48	32'-9"			1	32'-9"						LONGITUDINAL BAR SW03					
D1107	U	48	59'-3"			1	59'-3"						LONGITUDINAL BAR SW04					
D1108	U	104	46'-0"			1	46'-0"						LONGITUDINAL BAR SW02/SW03/SW05					
D1109	U	48	54'-6"			1	54'-6"						LONGITUDINAL BAR SW06					
D1110	U	48	37'-2"			1	37'-2"						LONGITUDINAL BAR SW06					
D1111	U	96	43'-8"			1	43'-8"						LONGITUDINAL BAR SW06/SW07					
D1112	U	48	50'-6"			1	50'-6"						LONGITUDINAL BAR SW07					
D1113	U	48	34'-2"			1	34'-2"						LONGITUDINAL BAR SW07					
D1114	U	112	27'-9"			1	27'-9"						SPLICE CAGE LONGITUDINAL BAR					
D415	U	9	40'-0"			1	40'-0"						LONGITUDINAL THERMAL BAR					
D416	U	1	29'-0"			1	29'-0"						LONGITUDINAL THERMAL BAR SW01					
D417	U	1	32'-0"			1	32'-0"						LONGITUDINAL THERMAL BAR SW02					
D418	U	1	12'-0"			1	12'-0"						LONGITUDINAL THERMAL BAR SW03					
D419	U	1	5'-0"			1	5'-0"						LONGITUDINAL THERMAL BAR SW04					
D420	U	1	39'-0"			1	39'-0"						LONGITUDINAL THERMAL BAR SW05					
D421	U	1	17'-0"			1	17'-0"						LONGITUDINAL THERMAL BAR SW06					
D422	U	1	10'-0"			1	10'-0"						LONGITUDINAL THERMAL BAR SW07					

BAR MARK BREAKDOWN

BAR MARK	PIER SW01	PIER SW02	PIER SW03	PIER SW04	PIER SW05	PIER SW06	PIER SW07	TOTAL NO	WEIGHT
D501	77	80	60	53	87	104	97	558	14404
D502	13	13	13	13	13	13	13	91	2001
D1103	48	48	0	0	48	0	0	144	45904
D1104	48	0	0	0	0	0	0	48	9117
D1105	0	48	0	0	0	0	0	48	9882
D1106	0	0	48	0	0	0	0	48	8352
D1107	0	0	0	48	0	0	0	48	15110
D1108	0	8	48	0	48	0	0	104	25417
D1109	0	0	0	0	0	48	0	48	13899
D1110	0	0	0	0	0	48	0	48	9478
D1111	0	0	0	0	0	48	48	96	22272
D1112	0	0	0	0	0	0	48	48	12879
D1113	0	0	0	0	0	0	48	48	8713
D1114	16	16	16	16	16	16	16	112	16513
D415	1	1	1	1	1	2	2	9	240
D416	1	0	0	0	0	0	0	1	19
D417	0	1	0	0	0	0	0	1	21
D418	0	0	1	0	0	0	0	1	8
D419	0	0	0	1	0	0	0	1	3
D420	0	0	0	0	1	0	0	1	26
D421	0	0	0	0	0	1	0	1	11
D422	0	0	0	0	0	0	1	1	7
TOT WEIGHT	29097	31897	24312	19153	31976	39908	37937		214279

NOTES

THE FIRST DIGIT OF A THREE-DIGIT BAR MARK OR THE FIRST TWO DIGITS OF A FOUR-DIGIT BAR MARK SIGNIFY THE BAR SIZE.

DIMENSIONS ARE TO OUTSIDE OF BARS, EXCEPT FOR RADIUS DIMENSIONS WHICH ARE TO INSIDE OF BENDS.

FOR A BAR SERIES, LENGTH SHOWN IN THE FOURTH COLUMN OF TABLE IS THE AVERAGE BAR LENGTH USED TO COMPUTE BAR WEIGHT.

BAR MATERIAL CODES USED IN SECOND COLUMN OF TABLE
- U - STEEL, HIGH STRENGTH, UNCOATED.
- E - STEEL, HIGH STRENGTH, EPOXY COATED.
- S - STAINLESS STEEL.

NO.	DATE	REVISION	BY

STATE OF WISCONSIN
DEPARTMENT OF TRANSPORTATION

STRUCTURE B-40-855

DRAWN BY PAK | PLANS CK'D. WRT

OPTION A
DRILLED SHAFT
REINFORCEMENT
SCHEDULE

SHEET A11 OF A25

STATE PROJECT NUMBER
1060-33-80

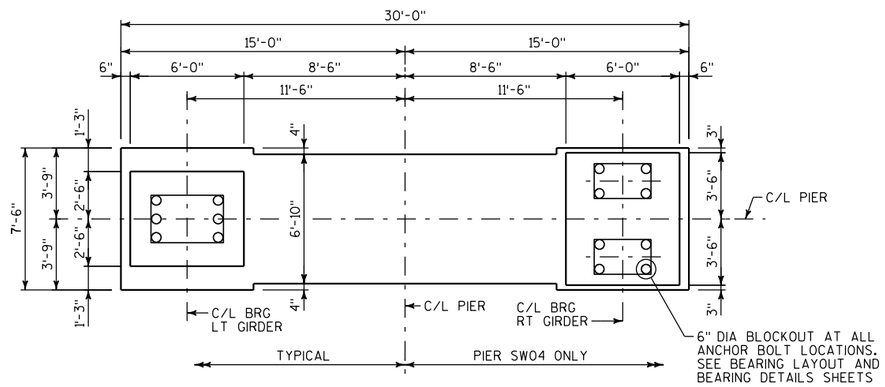

PLAN

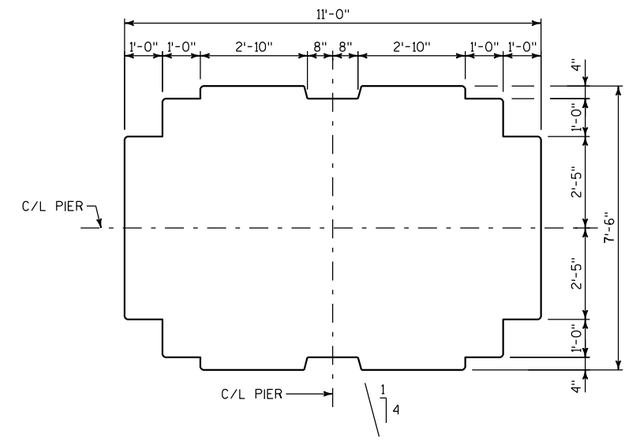

SECTION A-A

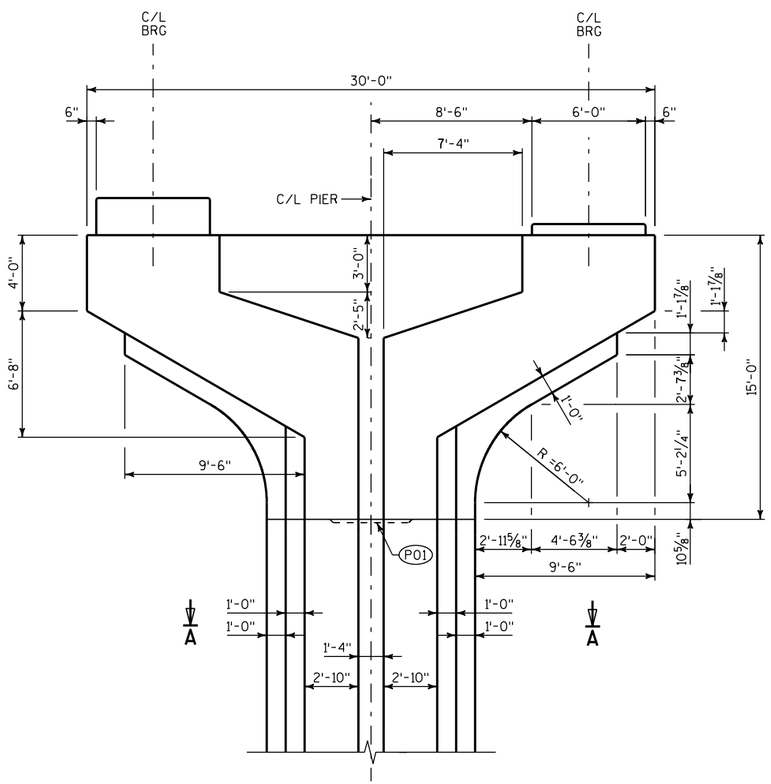

FRONT ELEVATION

(LOOKING UPSTATION)

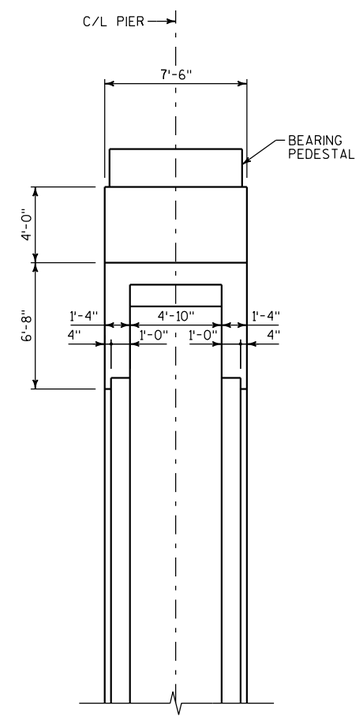

SIDE ELEVATION

LEGEND

(P01) KEYED CONSTRUCTION JOINT FORMED BY SURFACED BEVELED 4"x1'-4"x6'-0".

NO.	DATE	REVISION	BY

STATE OF WISCONSIN
DEPARTMENT OF TRANSPORTATION

STRUCTURE B-40-855

DRAWN BY GLM | PLANS CK'D. WRT

OPTION A
TYPICAL PIER
LAYOUT

SHEET A12 OF A25

8

8

STATE PROJECT NUMBER
1060-33-80

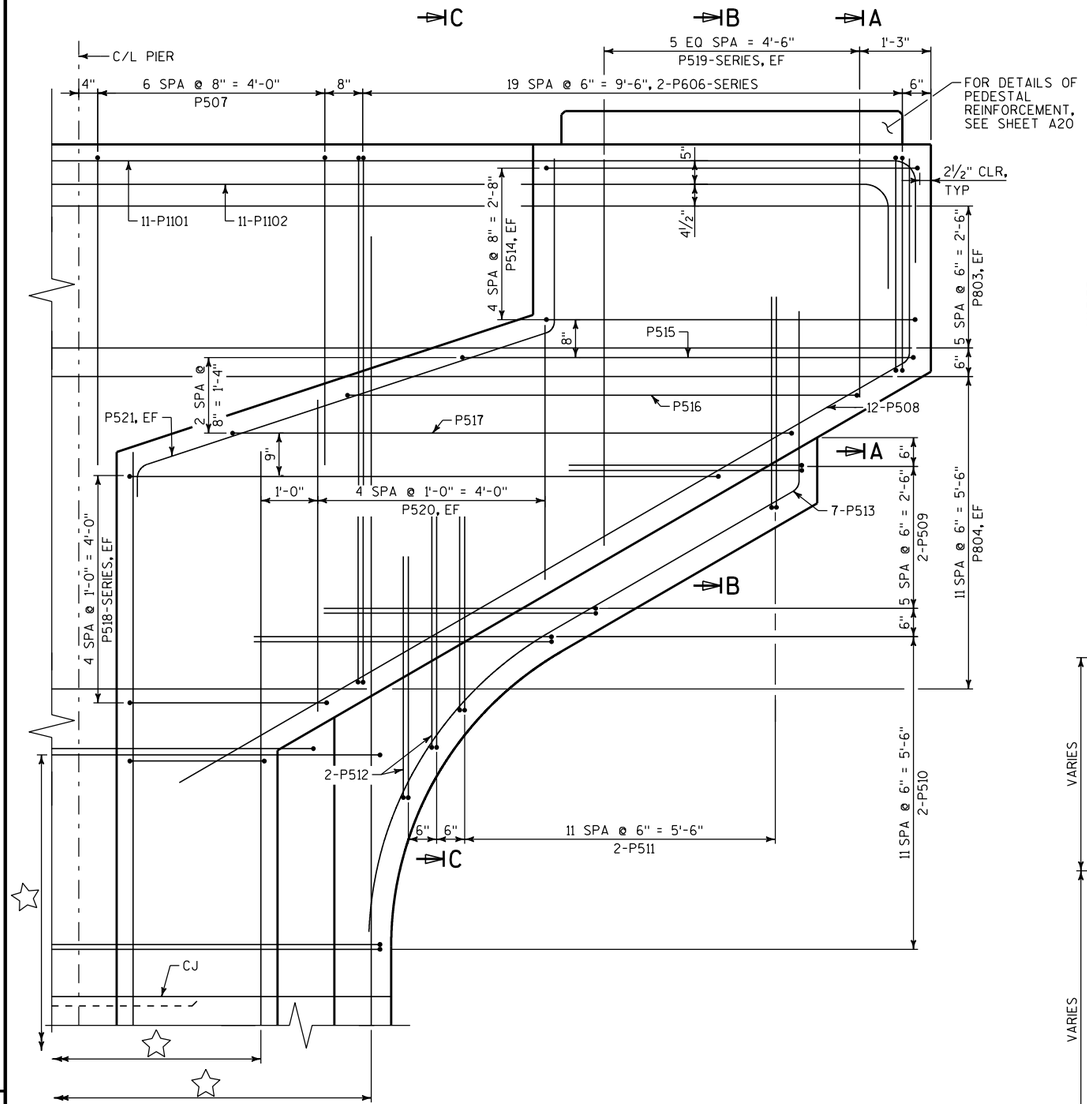

PARTIAL ELEVATION

(REINFORCEMENT IS SYMMETRICAL ABOUT C/L PIER)

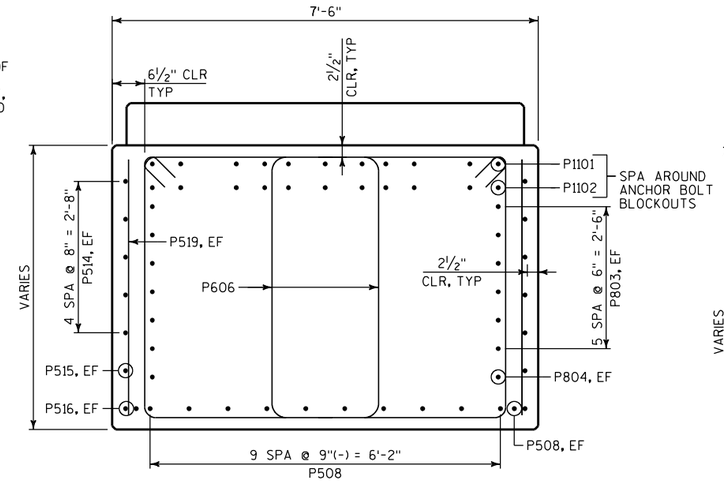

SECTION A-A

(PEDESTAL REINFORCEMENT NOT SHOWN FOR CLARITY)

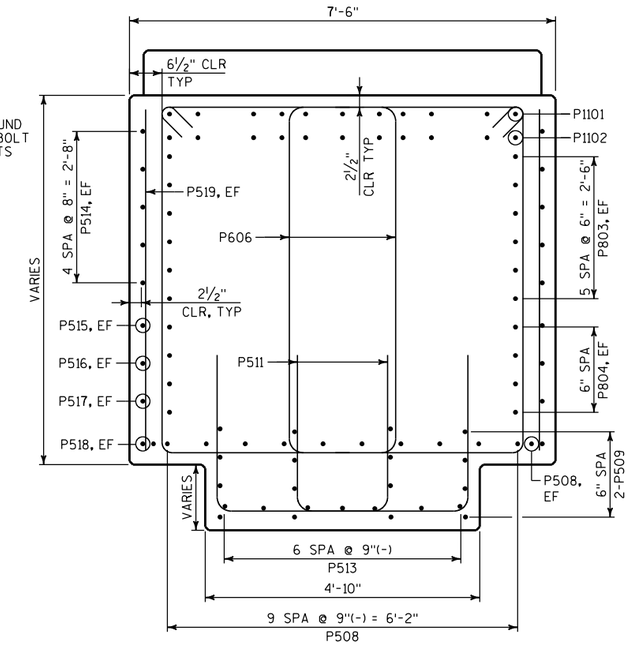

SECTION B-B

(PEDESTAL REINFORCEMENT NOT SHOWN FOR CLARITY)

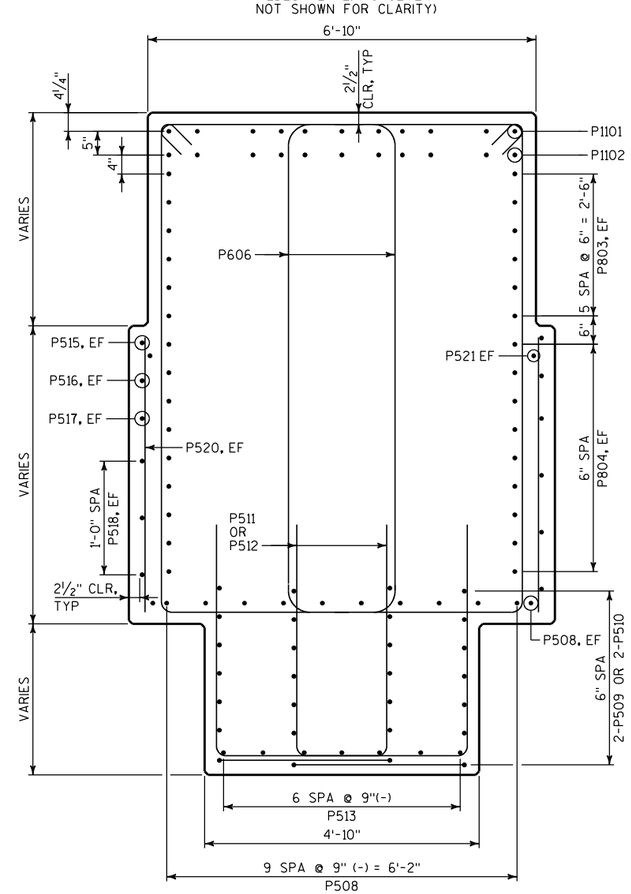

SECTION C-C

LEGEND

☆ COLUMN REINFORCEMENT VARIES BY PIER. SEE PIER DETAIL SHEETS.

NO.	DATE	REVISION	BY

STATE OF WISCONSIN
DEPARTMENT OF TRANSPORTATION

STRUCTURE B-40-855

DRAWN BY ASW | PLANS CK'D. WRT

OPTION A
TYPICAL PIER
CAP REINFORCEMENT

SHEET A13 OF A25

8

8

STATE PROJECT NUMBER
1060-33-80

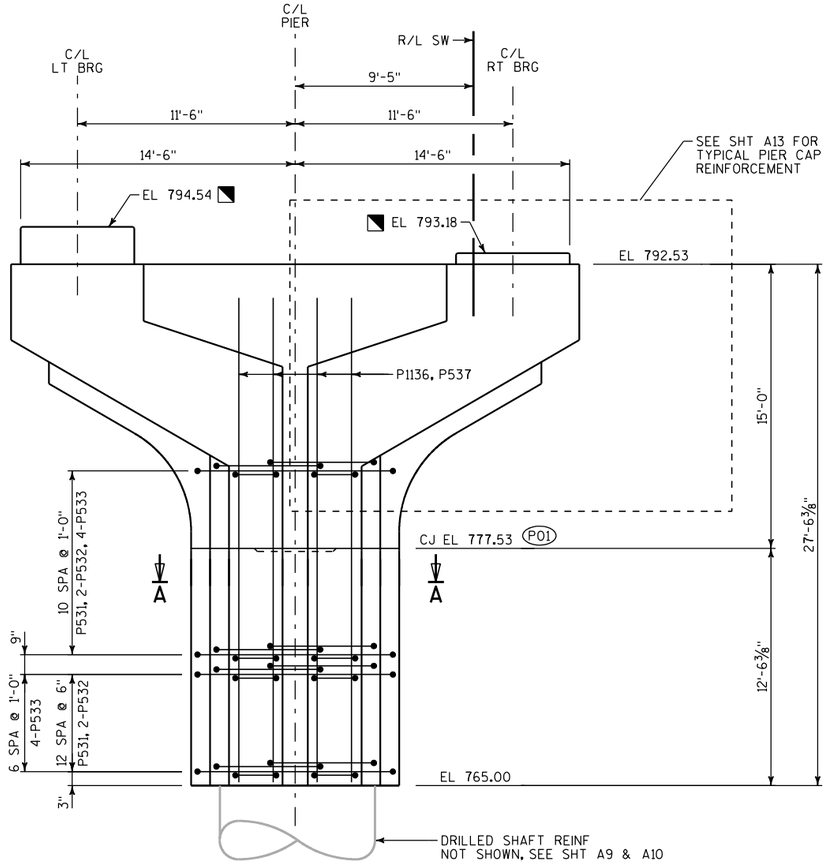

ELEVATION

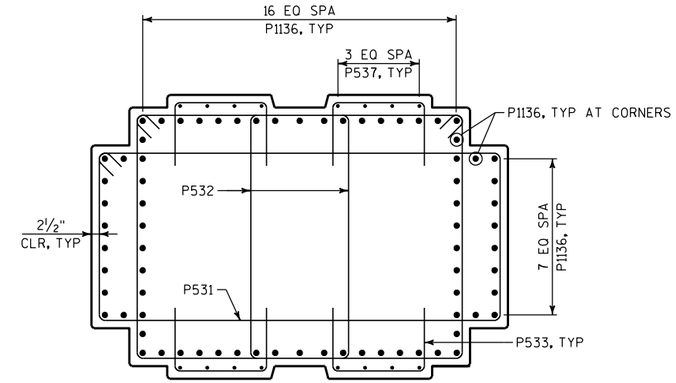

SECTION A-A

LEGEND

◥ ELEVATIONS AND DIMENSIONS DEPEND ON THE ASSUMED BEARING DIMENSIONS SHOWN ON BEARING LAYOUT SHEET. ADJUST AS REQUIRED TO SUIT THE ACTUAL SELECTED BEARING DIMENSIONS.
MINIMUM PEDESTAL HEIGHT = 6".
MAXIMUM PEDESTAL HEIGHT INCREASE = 3"

(P01) KEYED CONSTRUCTION JOINT FORMED BY SURFACED BEVELED 4"x1'-4"x6'-0".

8

8

NO.	DATE	REVISION	BY

STATE OF WISCONSIN
DEPARTMENT OF TRANSPORTATION

STRUCTURE B-40-855

DRAWN BY GLM | PLANS CK'D. WRT

OPTION A
PIER SW01
DETAILS

SHEET A14 OF A25

STATE PROJECT NUMBER
1060-33-80

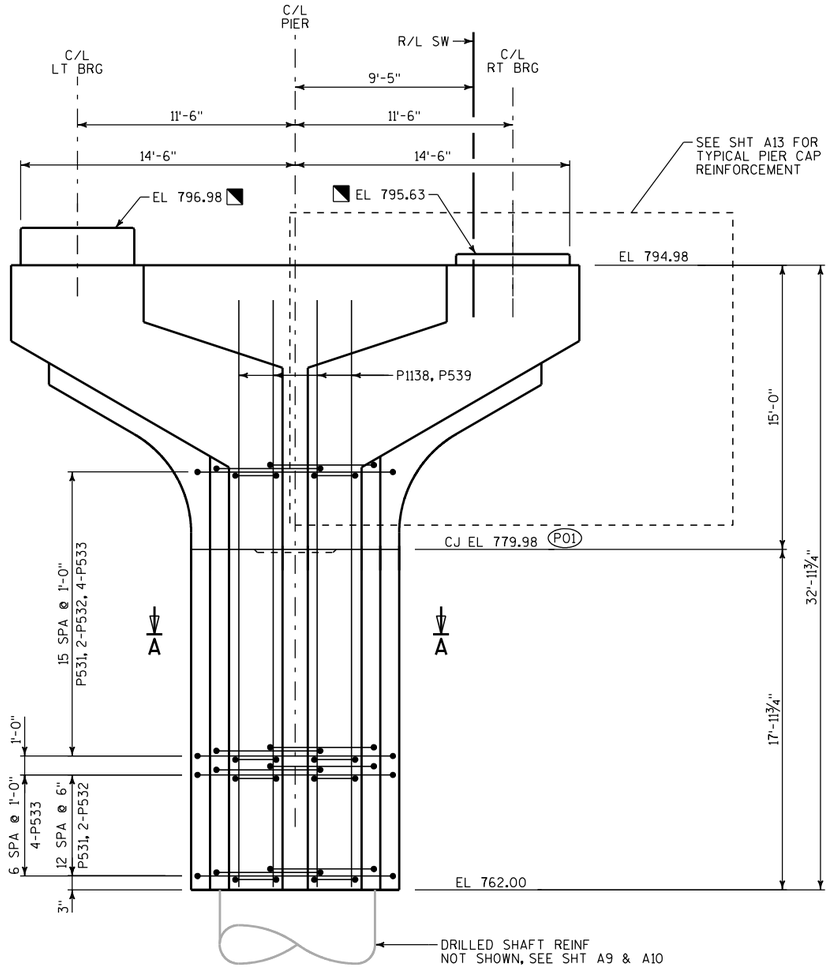

ELEVATION

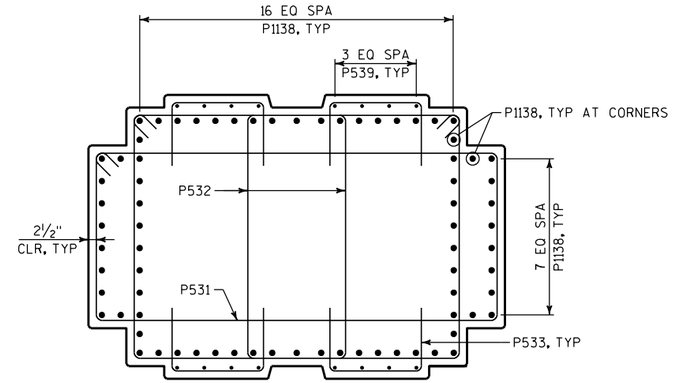

SECTION A-A

LEGEND

◥ ELEVATIONS AND DIMENSIONS DEPEND ON THE ASSUMED BEARING DIMENSIONS SHOWN ON BEARING LAYOUT SHEET. ADJUST AS REQUIRED TO SUIT THE ACTUAL SELECTED BEARING DIMENSIONS.
MINIMUM PEDESTAL HEIGHT = 6".
MAXIMUM PEDESTAL HEIGHT INCREASE = 3"

(P01) KEYED CONSTRUCTION JOINT FORMED BY SURFACED BEVELED 4"x1'-4"x6'-0".

8

8

NO.	DATE	REVISION	BY

STATE OF WISCONSIN
DEPARTMENT OF TRANSPORTATION

STRUCTURE B-40-855

DRAWN BY GLM | PLANS CK'D. WRT

OPTION A
PIER SW02
DETAILS

SHEET A15 OF A25

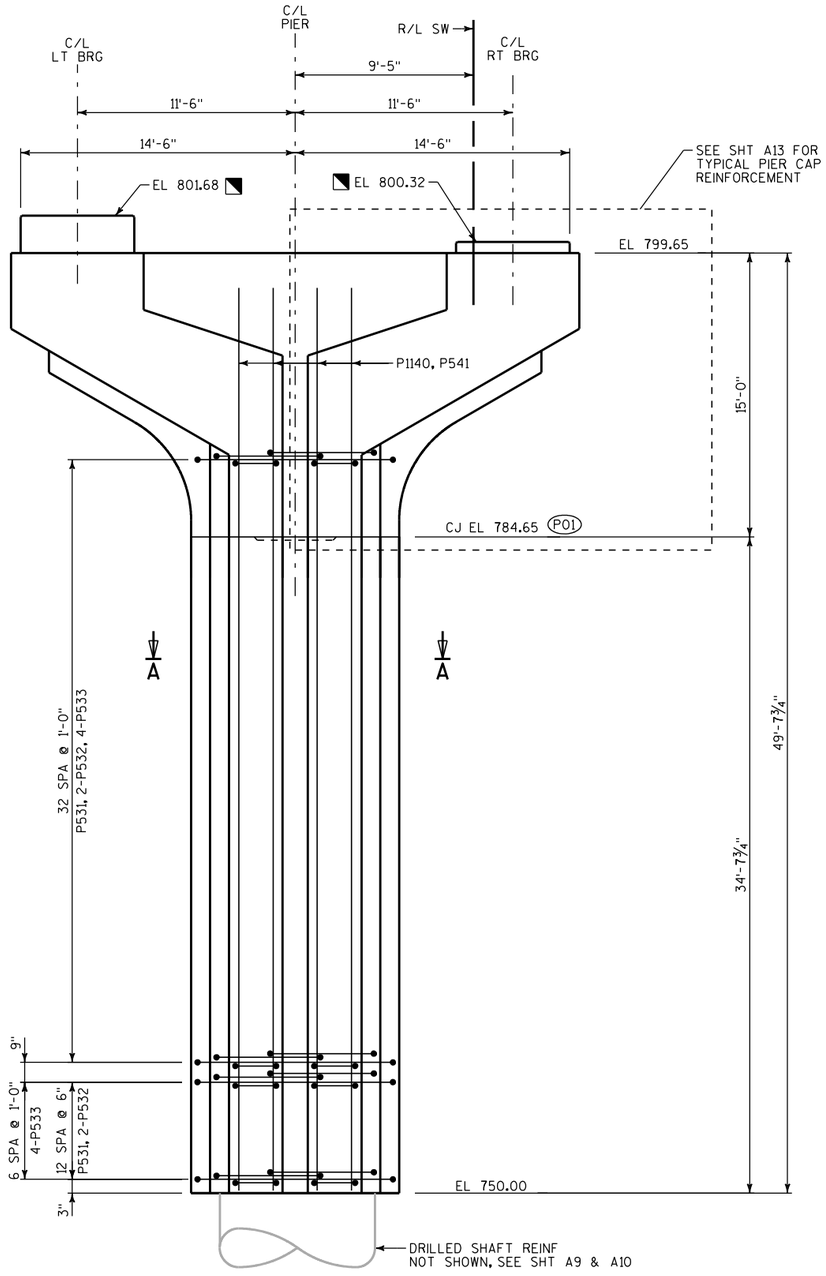

ELEVATION

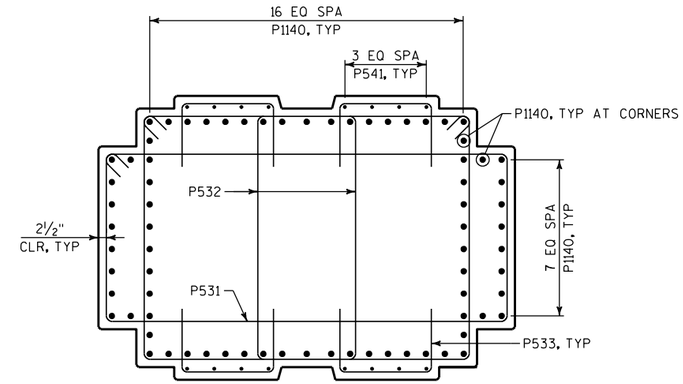

SECTION A-A

LEGEND

◥ ELEVATIONS AND DIMENSIONS DEPEND ON THE ASSUMED BEARING DIMENSIONS SHOWN ON BEARING LAYOUT SHEET. ADJUST AS REQUIRED TO SUIT THE ACTUAL SELECTED BEARING DIMENSIONS.
MINIMUM PEDESTAL HEIGHT = 6".
MAXIMUM PEDESTAL HEIGHT INCREASE = 3"

P01 KEYED CONSTRUCTION JOINT FORMED BY SURFACED BEVELED 4"x1'-4"x6'-0".

NO.	DATE	REVISION	BY

STATE OF WISCONSIN
DEPARTMENT OF TRANSPORTATION

STRUCTURE B-40-855

DRAWN BY GLM | PLANS CK'D. WRT

OPTION A
PIER SW03
DETAILS

SHEET A16 OF A25

STATE PROJECT NUMBER
1060-33-80

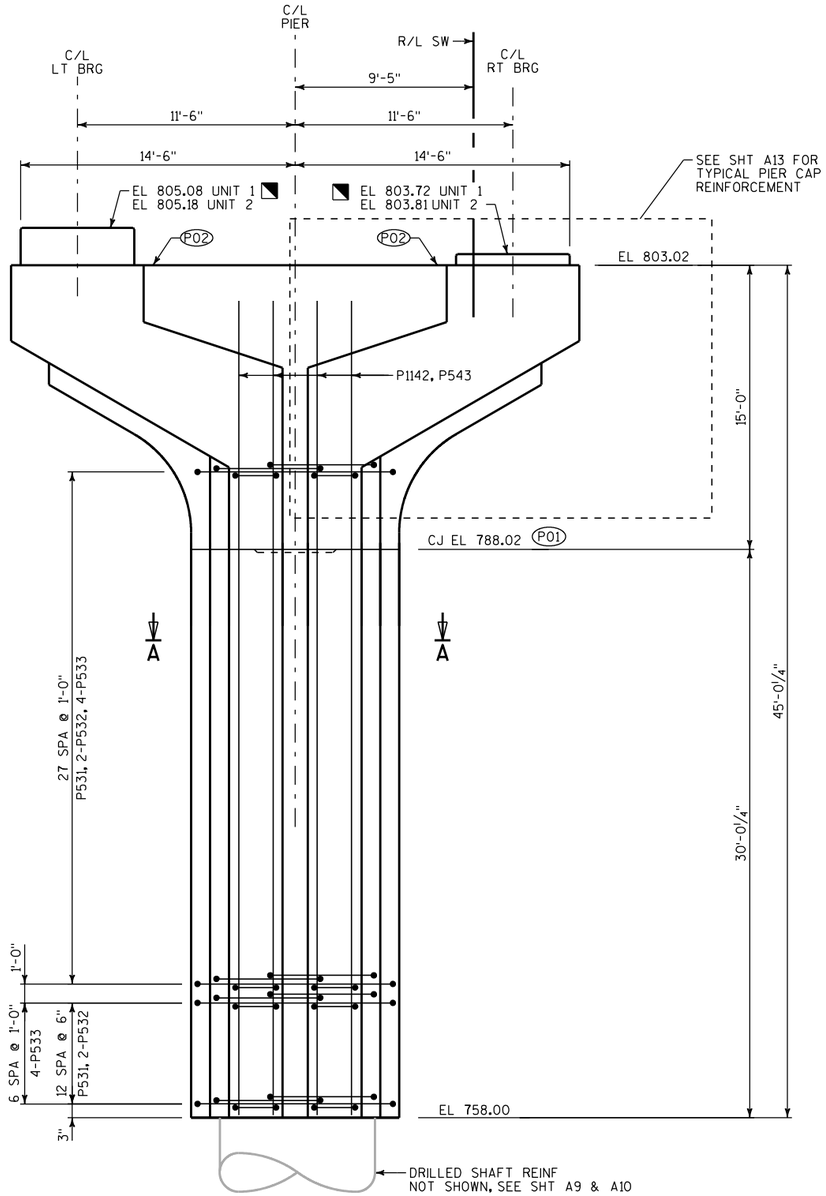

ELEVATION

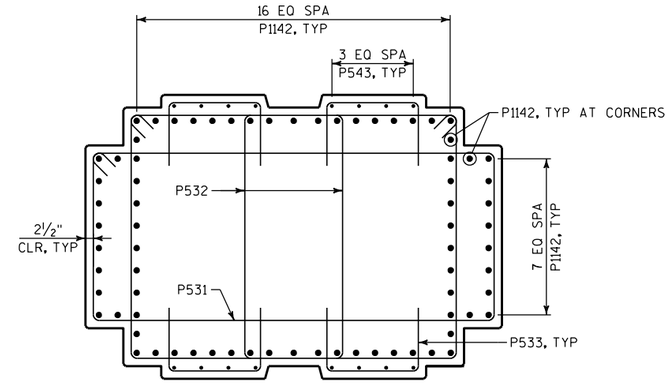

SECTION A-A

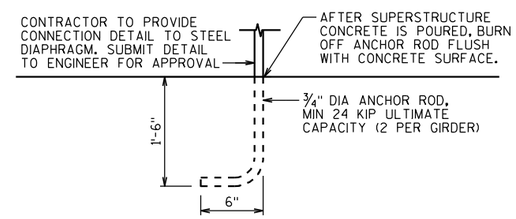

TEMPORARY HOLD DOWN DEVICE

LOCATE WITHIN 1'-6" OF GIRDER BOTTOM FLANGE.
PAYMENT IS INCIDENTAL TO "CONCRETE MASONRY BRIDGES"

LEGEND

◥ ELEVATIONS AND DIMENSIONS DEPEND ON THE ASSUMED BEARING DIMENSIONS SHOWN ON BEARING LAYOUT SHEET. ADJUST AS REQUIRED TO SUIT THE ACTUAL SELECTED BEARING DIMENSIONS.
MINIMUM PEDESTAL HEIGHT = 6".
MAXIMUM PEDESTAL HEIGHT INCREASE = 3"

P01 KEYED CONSTRUCTION JOINT FORMED BY SURFACED BEVELED 4"x1'-4"x6'-0".

P02 TEMPORARY HOLD DOWN DEVICE, SEE DETAIL.

8

8

NO.	DATE	REVISION	BY

STATE OF WISCONSIN
DEPARTMENT OF TRANSPORTATION

STRUCTURE B-40-855

DRAWN BY GLM | PLANS CK'D. WRT

OPTION A
PIER SW04
DETAILS

SHEET A17 OF A25

STATE PROJECT NUMBER
1060-33-80

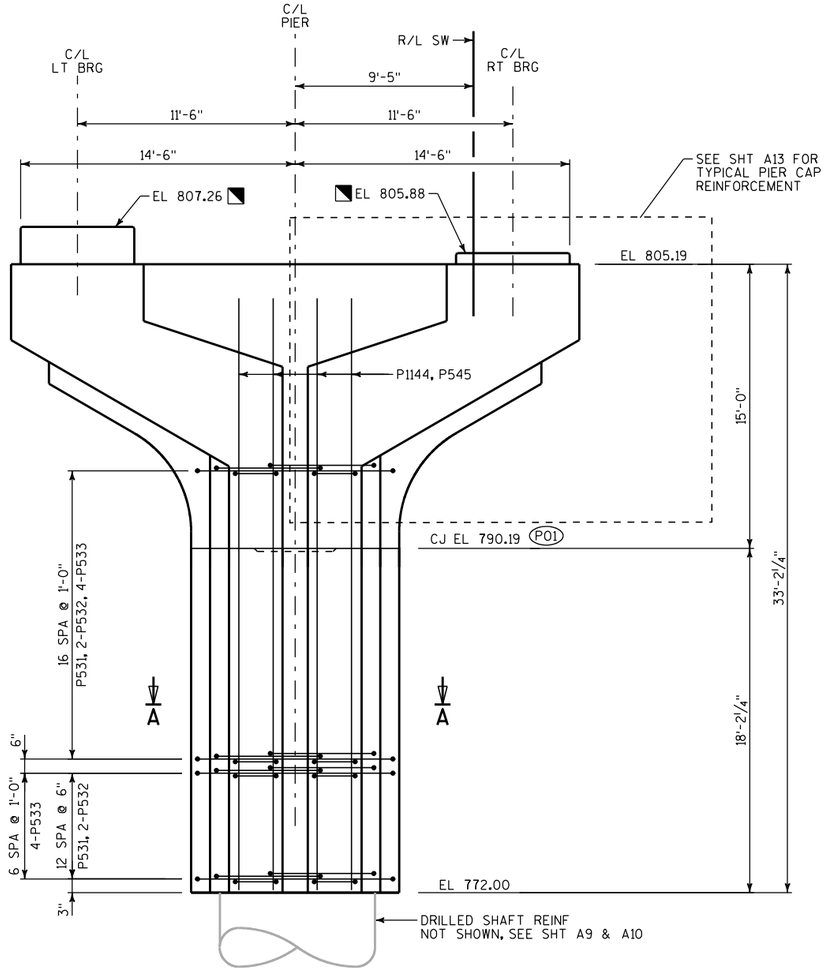

ELEVATION

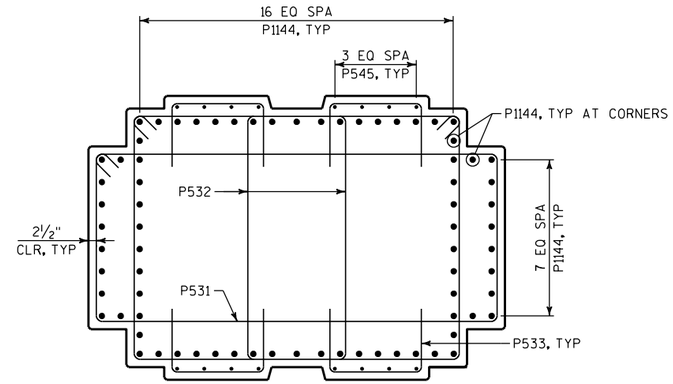

SECTION A-A

LEGEND

◥ ELEVATIONS AND DIMENSIONS DEPEND ON THE ASSUMED BEARING DIMENSIONS SHOWN ON BEARING LAYOUT SHEET. ADJUST AS REQUIRED TO SUIT THE ACTUAL SELECTED BEARING DIMENSIONS.
MINIMUM PEDESTAL HEIGHT = 6".
MAXIMUM PEDESTAL HEIGHT INCREASE = 3"

(P01) KEYED CONSTRUCTION JOINT FORMED BY SURFACED BEVELED 4"x1'-4"x6'-0".

8

NO.	DATE	REVISION	BY

STATE OF WISCONSIN
DEPARTMENT OF TRANSPORTATION

STRUCTURE B-40-855

DRAWN BY GLM | PLANS CK'D. WRT

OPTION A
PIER SW05
DETAILS

SHEET A18 OF A25

STATE PROJECT NUMBER
1060-33-80

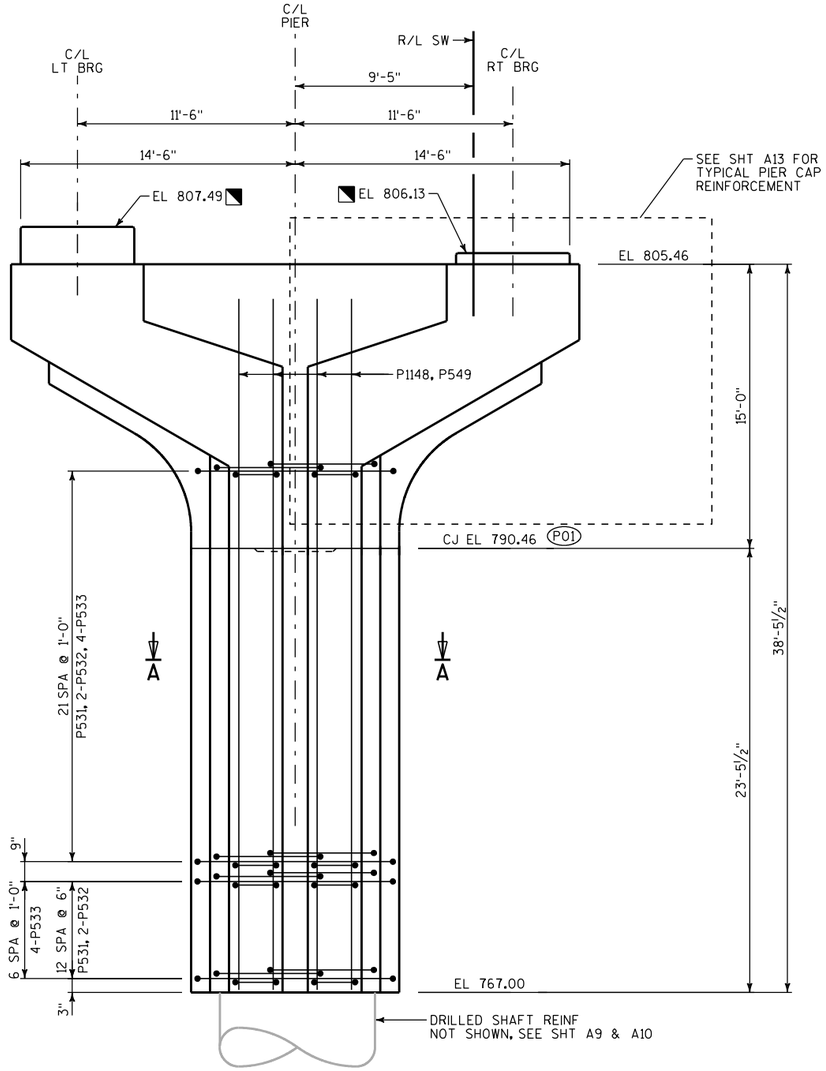

ELEVATION

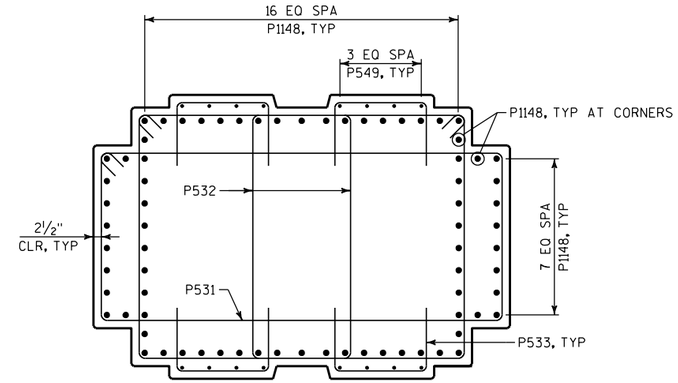

SECTION A-A

LEGEND

◥ ELEVATIONS AND DIMENSIONS DEPEND ON THE ASSUMED BEARING DIMENSIONS SHOWN ON BEARING LAYOUT SHEET. ADJUST AS REQUIRED TO SUIT THE ACTUAL SELECTED BEARING DIMENSIONS.
MINIMUM PEDESTAL HEIGHT = 6".
MAXIMUM PEDESTAL HEIGHT INCREASE = 3"

P01 KEYED CONSTRUCTION JOINT FORMED BY SURFACED BEVELED 4"x1'-4"x6'-0".

8

8

NO.	DATE	REVISION	BY

STATE OF WISCONSIN
DEPARTMENT OF TRANSPORTATION

STRUCTURE B-40-855

DRAWN BY GLM | PLANS CK'D. WRT

OPTION A
PIER SW07
DETAILS

SHEET A19 OF A25

STATE PROJECT NUMBER
1060-33-80

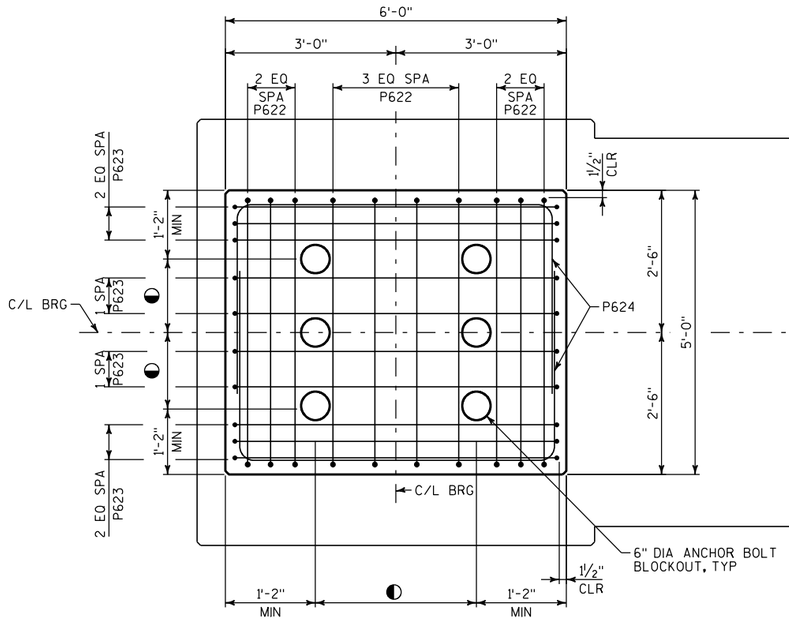

PEDESTAL PLAN
(TYPICAL PIER)

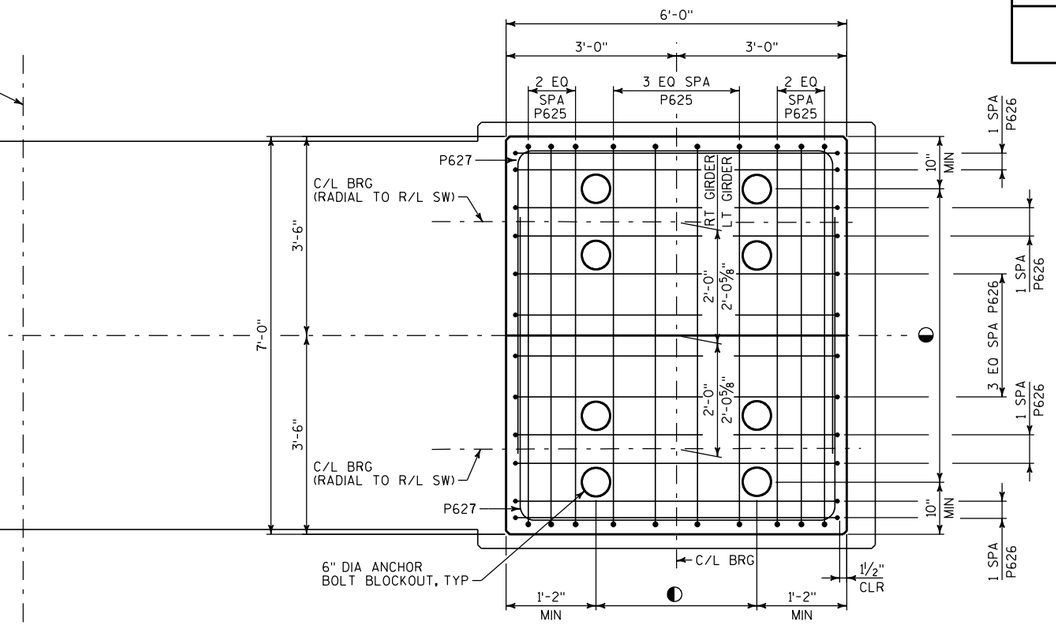

PEDESTAL PLAN
(PIER SW04 ONLY)

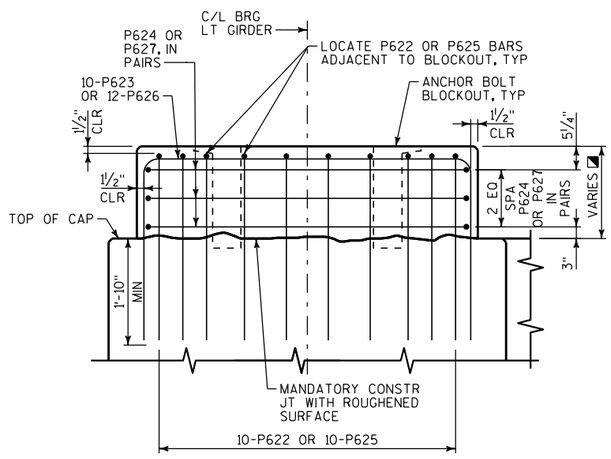

PEDESTAL ELEVATION - LEFT GIRDER

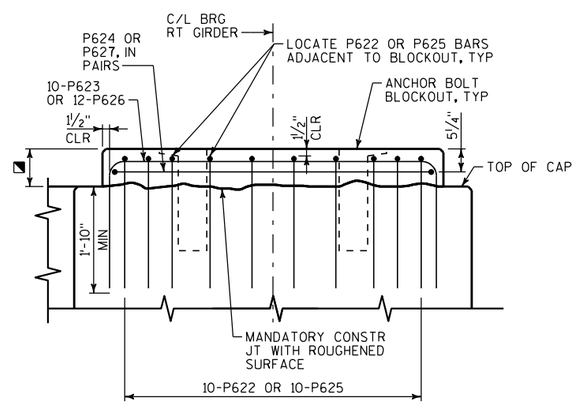

PEDESTAL ELEVATION - RIGHT GIRDER

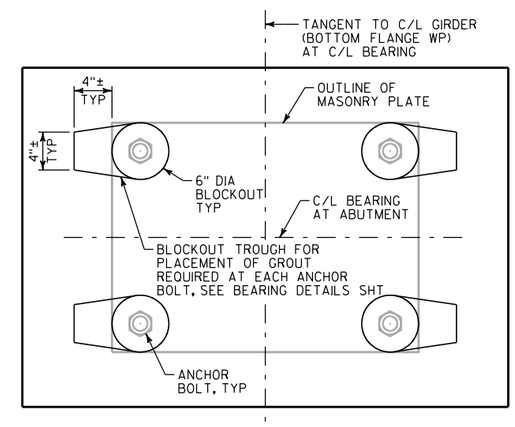

PEDESTAL PLAN - GROUT TROUGHS
SEE BEARING DETAILS SHEET

NOTES

FOR DETAILS OF ANCHOR BOLT BLOCKOUTS, SEE BEARING DETAILS SHEET.

FOR DETAILS OF BEARINGS, SEE BEARING LAYOUT SHEETS AND BEARING DETAILS SHEET.

LEGEND

◥ DIMENSIONS DEPEND ON THE ASSUMED BEARING DIMENSIONS SHOWN ON BEARING LAYOUT SHEET. ADJUST AS REQUIRED TO SUIT THE ACTUAL SELECTED BEARING DIMENSIONS.
MINIMUM PEDESTAL HEIGHT = 6".
MAXIMUM PEDESTAL HEIGHT INCREASE = 3"

◐ SEE BEARING LAYOUT SHEETS FOR ANCHOR BOLT BLOCKOUT LOCATION. VERIFY LOCATIONS WITH BEARING MANUFACTURER.

NO.	DATE	REVISION	BY

STATE OF WISCONSIN
DEPARTMENT OF TRANSPORTATION

STRUCTURE B-40-855

DRAWN BY GLM | PLANS CK'D. WRT

OPTION A
TYPICAL PEDESTAL REINFORCEMENT

SHEET A20 OF A25

8

8

STATE PROJECT NUMBER
1060-33-80

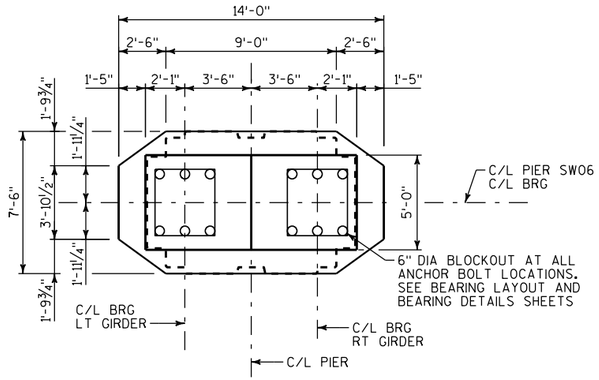

PLAN

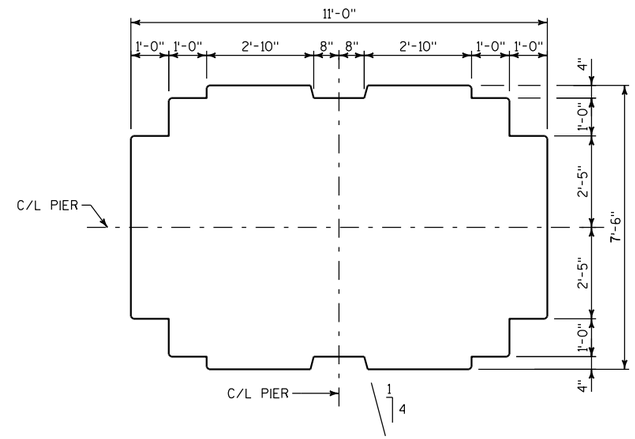

SECTION A-A

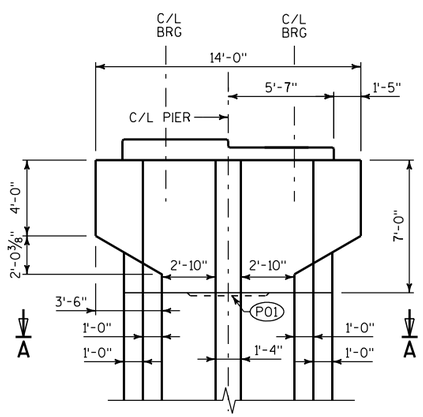

FRONT ELEVATION

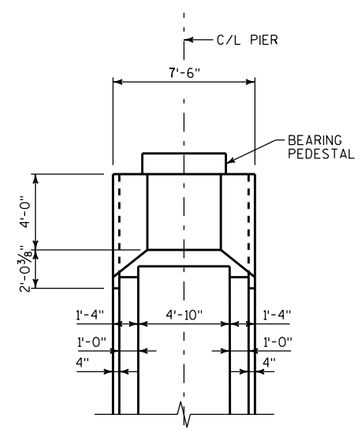

SIDE ELEVATION

LEGEND

(P01) KEYED CONSTRUCTION JOINT FORMED BY SURFACED BEVELED 4"x1'-4"x6'-0".

NO.	DATE	REVISION	BY

STATE OF WISCONSIN
DEPARTMENT OF TRANSPORTATION

STRUCTURE B-40-855

DRAWN BY PAK | PLANS CK'D. WRT

OPTION A
PIER SW06
LAYOUT

SHEET A21 OF A25

8

8

STATE PROJECT NUMBER
1060-33-80

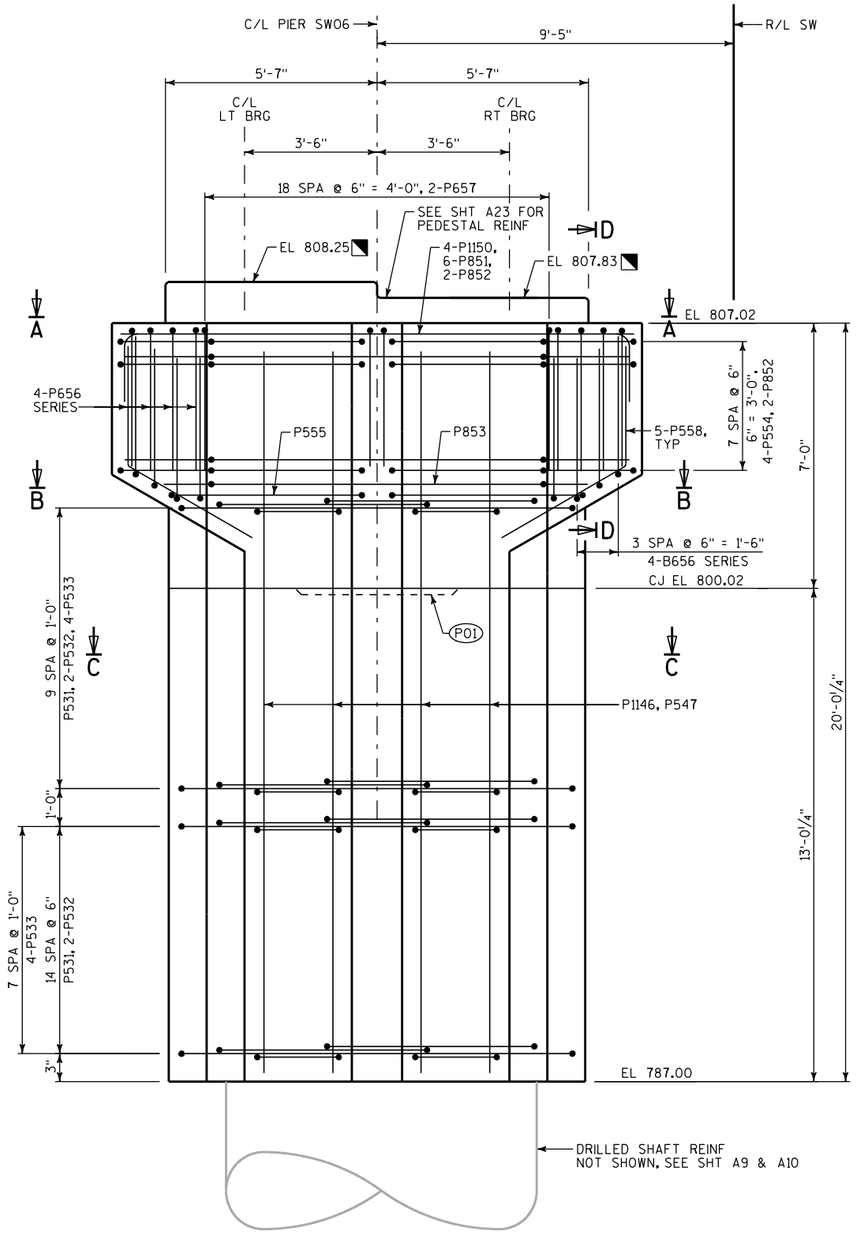

ELEVATION

(REINFORCEMENT IS SYMMETRICAL ABOUT C/L OF PIER)

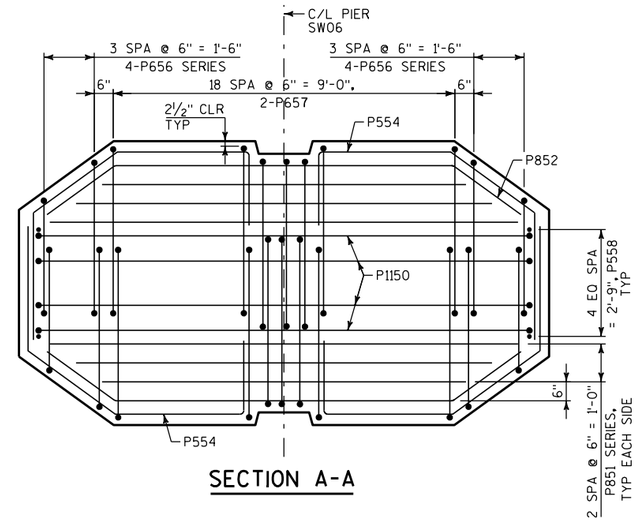

SECTION A-A

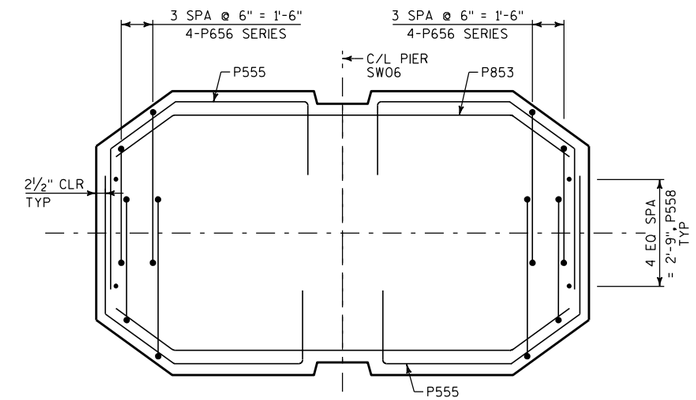

SECTION B-B

COLUMN REINFORCEMENT NOT SHOWN FOR CLARITY

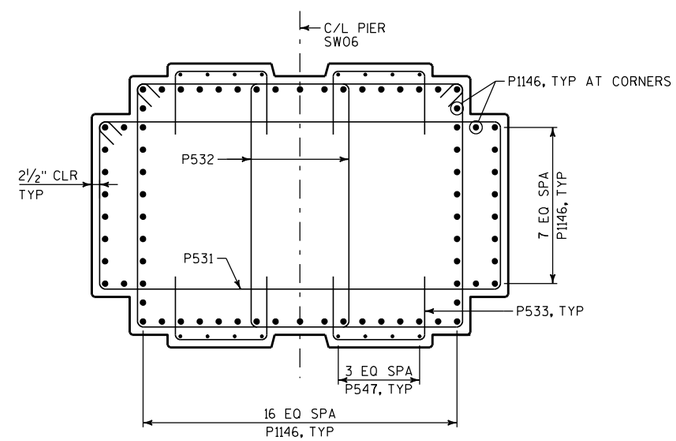

SECTION C-C

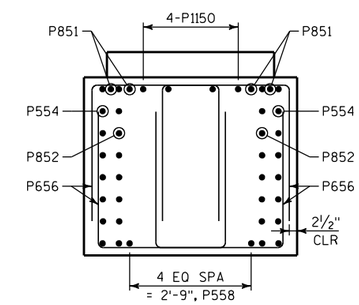

SECTION D-D

FOR PEDESTAL REINFORCEMENT SEE SHT A23

LEGEND

◥ ELEVATIONS AND DIMENSIONS DEPEND ON THE ASSUMED BEARING DIMENSIONS SHOWN ON BEARING LAYOUT SHEET. ADJUST AS REQUIRED TO SUIT THE ACTUAL SELECTED BEARING DIMENSIONS.
MINIMUM PEDESTAL HEIGHT = 6".
MAXIMUM PEDESTAL HEIGHT INCREASE = 3"

(P01) KEYED CONSTRUCTION JOINT FORMED BY SURFACED BEVELED 4"x1'-4"x6'-0".

8

8

NO.	DATE	REVISION	BY

STATE OF WISCONSIN
DEPARTMENT OF TRANSPORTATION

STRUCTURE B-40-855

DRAWN BY GLM | PLANS CK'D. WRT

OPTION A
PIER SW06
DETAILS

SHEET A22 OF A25

STATE PROJECT NUMBER
1060-33-80

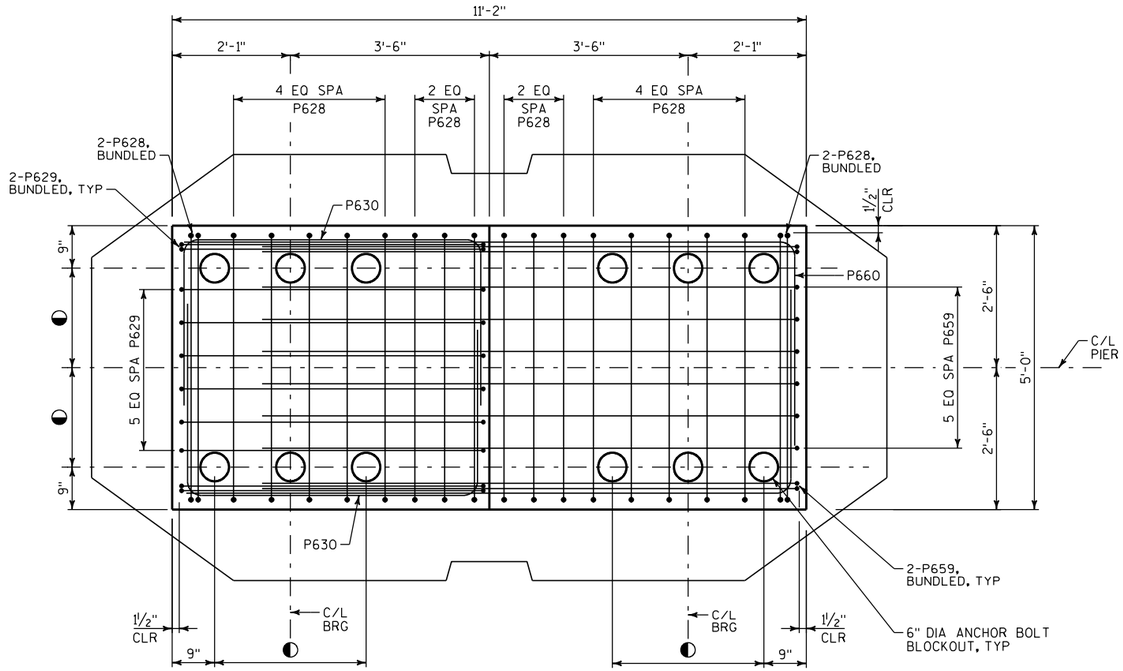

PEDESTAL PLAN

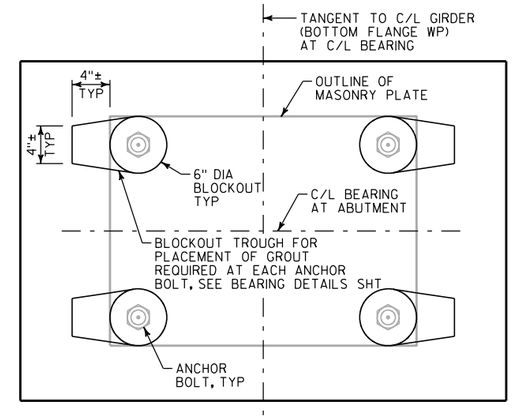

PEDESTAL PLAN - GROUT TROUGHS

SEE BEARING DETAILS SHEET

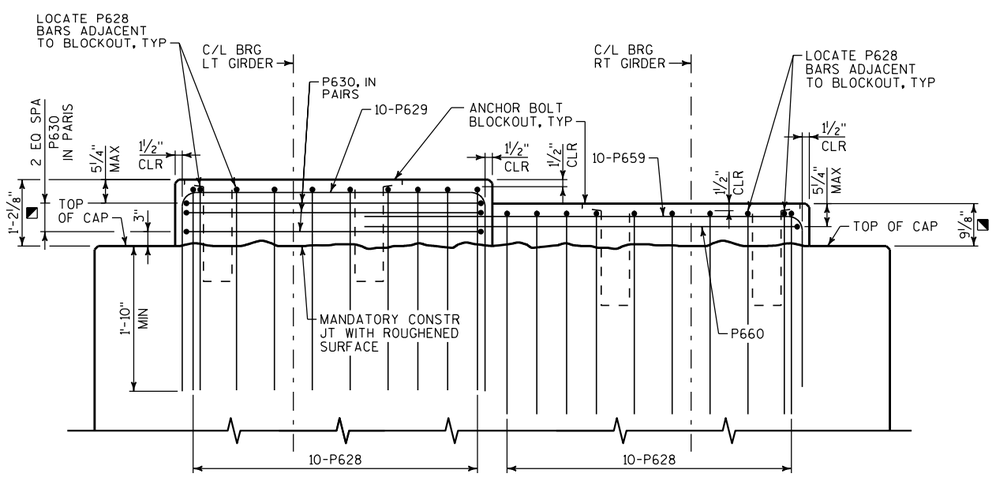

PEDESTAL ELEVATION

NOTES

FOR DETAILS OF ANCHOR BOLT BLOCKOUTS, SEE BEARING DETAILS SHEET.

FOR DETAILS OF BEARINGS, SEE BEARING LAYOUT SHEETS AND BEARING DETAILS SHEET.

LEGEND

◪ ELEVATIONS AND DIMENSIONS DEPEND ON THE ASSUMED BEARING DIMENSIONS SHOWN ON BEARING LAYOUT SHEET. ADJUST AS REQUIRED TO SUIT THE ACTUAL SELECTED BEARING DIMENSIONS.
MINIMUM PEDESTAL HEIGHT = 6".
MAXIMUM PEDESTAL HEIGHT INCREASE = 3"

◐ SEE BEARING LAYOUT SHEET FOR ANCHOR BOLT BLOCKOUT LOCATION. VERIFY LOCATIONS WITH BEARING MANUFACTURER.

NO.	DATE	REVISION	BY

STATE OF WISCONSIN
DEPARTMENT OF TRANSPORTATION

STRUCTURE B-40-855

DRAWN BY GLM | PLANS CK'D. WRT

OPTION A
PIER SW06 PEDESTAL REINFORCEMENT

SHEET A23 OF A25

8

8

STATE PROJECT NUMBER

1060-33-80

BAR INFORMATION							BAR DIMENSIONS						LOCATION	BAR SERIES INFORMATION				
BAR MARK	MATL	NO. REQ'D	LENGTH	BENT	BAR SERIES	BEND TYPE	A	B	C	D	E	F		DIM	MIN	MAX	NO REQ'D	LENGTH
P1101	E	66	32'-8"	X		4	2'-0"	29'-4"					TOP TIE BAR					
P1102	E	66	31'-10"	X		4	2'-0"	28'-6"					BOTTOM TIE BAR					
P803	E	72	29'-4"			1	29'-4"						SKIN STEEL - TOP OF CAP					
P804	E	144	19'-5"		X	1	19'-5"						SKIN STEEL - MIDDLE OF CAP (SERIES)	A	10'-0"	28'-10"	12 SERIES OF 12	10'-0" TO 28'-10"
P606	E	480	21'-11"	X	X	3	4'-2"	6'-4½"					STIRRUPS - TOP EDGES OF CAP (SERIES)	A	3'-7"	9'-2"	24 SERIES OF 20	16'-4" TO 27'-6"
P507	E	84	17'-11"	X		4	6'-4"	5'-6"					TIE - TOP CENTER OF CAP					
P508	E	144	18'-9"	X		9	3'-6"	15'-3"	60				OUTSIDE FACE OF PIER CAP - TOP					
P509	E	144	11'-3"	X		4	4'-3"	3'-0"					HORIZONTAL TIE - BOTTOM OF CAP (TOP SEC)					
P510	E	288	13'-3"	X		4	5'-3"	3'-0"					HORIZONTAL TIE - BOTTOM OF CAP (BOT SEC)					
P511	E	288	10'-3"	X		4	3'-9"	3'-0"					VERTICAL TIE - BOTTOM OF CAP (TOP SEC)					
P512	E	48	11'-3"	X		4	4'-3"	3'-0"					VERTICAL TIE - BOTTOM OF CAP (BOT SEC)					
P513	E	84	14'-5"	X		40	3'-0"	5'-0"	6'-5"	60	6'-5"		OUTSIDE FACE OF PIER CAP - BOT					
P514	E	120	16'-5"	X		4	5'-1"	6'-6"					TIE - ARCHITECTURAL REVEAL - HORIZ - TOP					
P515	E	24	18'-1"	X		4	5'-1"	8'-2"					TIE - ARCHITECTURAL REVEAL - HORIZ - MID					
P516	E	24	18'-10"	X		4	5'-1"	8'-11"					TIE - ARCHITECTURAL REVEAL - HORIZ - MID					
P517	E	24	19'-9"	X		4	5'-1"	9'-10"					TIE - ARCHITECTURAL REVEAL - HORIZ - MID					
P518	E	120	11'-4"	X	X	4	2'-4"	6'-10½"					TIE - ARCHITECTURAL REVEAL - HORIZ - BOT (SERIES)	B	3'-5"	10'-4"	24 SERIES OF 5	7'-10" TO 14'-9"
P519	E	144	5'-0"		X	1	5'-0"						ARCHITECTURAL REVEAL - VERT - TOP (SERIES)	A	4'-2"	6'-9"	24 SERIES OF 6	4'-2" TO 6'-9"
P520	E	120	4'-11"		X	1	4'-11"						ARCHITECTURAL REVEAL - VERT - MID (SERIES)	A	4'-5"	5'-5"	24 SERIES OF 5	4'-5" TO 5'-5"
P521	E	24	11'-6"	X		15	7'-9"	3'-0"	72				ARCHITECTURAL REVEAL - VERT - INSIDE FACE					
P622	E	100	10'-11"	X		4	3'-3"	4'-9"					PEDESTAL REINFORCEMENT - TYP - TOP FACE					
P623	E	100	11'-9"	X		4	3'-2"	5'-9"					PEDESTAL REINFORCEMENT - TYP - TOP FACE					
P624	E	40	12'-5"	X		4	3'-7"	5'-7"					PEDESTAL REINFORCEMENT - TYP - SIDE					
P625	E	20	12'-11"	X		4	3'-3"	6'-9"					PEDESTAL REINFORCEMENT - SW04 - TOP FACE					
P626	E	24	11'-9"	X		4	3'-2"	5'-9"					PEDESTAL REINFORCEMENT - SW04 - TOP FACE					
P627	E	8	14'-5"	X		4	4'-7"	5'-7"					PEDESTAL REINFORCEMENT - SW04 - SIDE					
P628	E	20	11'-7"	X		4	3'-7"	4'-9"					PEDESTAL REINFORCEMENT - SW06 - TOP FACE					
P629	E	10	12'-0"	X		4	3'-6"	5'-4"					PEDESTAL REINFORCEMENT - SW06 - TOP FACE					
P630	E	6	11'-10"	X		4	3'-6"	5'-2"					PEDESTAL REINFORCEMENT - SW06 - SIDE					
P531	E	230	30'-7"	X		3	10'-7"	4'-5"					COLUMN TRANSVERSE (MAIN)					
P532	E	460	24'-7"	X		3	6'-5"	5'-7"					COLUMN TRANSVERSE (MAIN)					
P533	E	748	5'-6"	X		4	1'-8"	2'-5"					COLUMN TRANSVERSE (SECONDARY)					
P1136	E	74	25'-7"			1	25'-7"						SW01 VERTICAL BAR (MAIN)					
P537	E	16	21'-11"			1	21'-11"						SW01 VERTICAL BAR (SECONDARY)					
P1138	E	74	31'-0"			1	31'-0"						SW02 VERTICAL BAR (MAIN)					
P539	E	16	27'-5"			1	27'-5"						SW02 VERTICAL BAR (SECONDARY)					

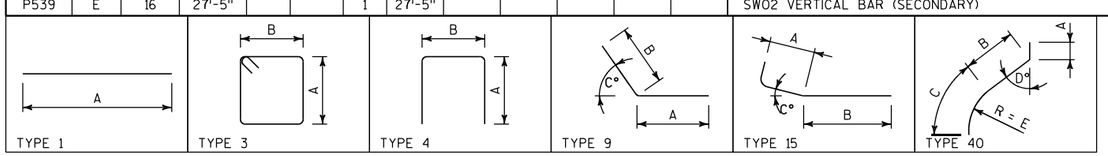

NOTES

THE FIRST DIGIT OF A THREE-DIGIT BAR MARK OR THE FIRST TWO DIGITS OF A FOUR-DIGIT BAR MARK SIGNIFY THE BAR SIZE.

DIMENSIONS ARE TO OUTSIDE OF BARS, EXCEPT FOR RADIUS DIMENSIONS WHICH ARE TO INSIDE OF BENDS.

FOR A BAR SERIES, LENGTH SHOWN IN THE FOURTH COLUMN OF TABLE IS THE AVERAGE BAR LENGTH USED TO COMPUTE BAR WEIGHT.

BAR MATERIAL CODES USED IN SECOND COLUMN OF TABLE
- U - STEEL, HIGH STRENGTH, UNCOATED.
- E - STEEL, HIGH STRENGTH, EPOXY COATED.
- S - STAINLESS STEEL.

NO.	DATE	REVISION	BY

STATE OF WISCONSIN
DEPARTMENT OF TRANSPORTATION

STRUCTURE B-40-855

DRAWN BY PAK | PLANS CK'D. WRT

OPTION A
PIER REINFORCEMENT
SCHEDULE (1 OF 2)

SHEET A24 OF A25

BAR INFORMATION							BAR DIMENSIONS						LOCATION	BAR SERIES INFORMATION				
BAR MARK	MATL	NO. REQ'D	LENGTH	BENT	BAR SERIES	BEND TYPE	A	B	C	D	E	F		DIM	MIN	MAX	NO REQ'D	LENGTH
P1140	E	74	47'-8"			1	47'-8"						SW03 VERTICAL BAR (MAIN)					
P541	E	16	44'-1"			1	44'-1"						SW03 VERTICAL BAR (SECONDARY)					
P1142	E	74	43'-1"			1	43'-1"						SW04 VERTICAL BAR (MAIN)					
P543	E	16	39'-5"			1	39'-5"						SW04 VERTICAL BAR (SECONDARY)					
P1144	E	74	31'-3"			1	31'-3"						SW05 VERTICAL BAR (MAIN)					
P545	E	16	27'-7"			1	27'-7"						SW05 VERTICAL BAR (SECONDARY)					
P1146	E	74	17'-10"			1	17'-10"						SW06 VERTICAL BAR (MAIN)					
P547	E	16	14'-5"			1	14'-5"						SW06 VERTICAL BAR (SECONDARY)					
P1148	E	74	36'-6"			1	36'-6"						SW07 VERTICAL BAR (MAIN)					
P549	E	16	32'-11"			1	32'-11"						SW07 VERTICAL BAR (SECONDARY)					
P1150	E	4	16'-8"	X		4	2'-0"	13'-4"					SW06 PIER CAP - TOP TIE BAR					
P851	E	6	12'-3"		X	1	12'-3"						SW06 PIER CAP - TOP FACE BAR (SERIES)	A	11'-4"	13'-2"	2 SERIES OF 3	11'-4" TO 13'-2"
P852	E	18	14'-3"	X		24	2'-3"	9'-9"	36				SW06 PIER CAP - HORIZ SKIN STEEL					
P853	E	2	13'-1"	X		24	1'-8"	9'-9"	36				SW06 PIER CAP - HORIZ SKIN STEEL - BOT					
P554	E	32	10'-6"	X		41	3'-3"	2'-10"	3'-5"	1'-3"	126	144	SW06 PIER CAP - FACE SKIN STEEL					
P555	E	4	10'-3"	X		41	3'-7"	2'-3"	3'-5"	1'-3"	126	144	SW06 PIER CAP - FACE SKIN STEEL - BOT					
P656	E	32	10'-4"	X	X	4	3'-7"	3'-6"					SW06 PIER CAP - SHEAR STEEL - EDGE (SERIES)	B	3'-0"	4'-0"	4 SERIES OF 4	9'-10" TO 10'-10"
P657	E	38	11'-2"	X		4	3'-7"	4'-4"					SW06 PIER CAP - SHEAR STEEL - CENTER					
P558	E	10	7'-0"	X		9	3'-2"	3'-10"	70				SW06 PIER CAP - OUTSIDE FACE					
P659	E	10	10'-7"	X		8	7'-9"	3'-0"					PEDESTAL REINFORCEMENT - SW06 - TOP FACE - RIGHT SIDE					
P660	E	2	11'-1"	X		8	7'-9"	3'-6"					PEDESTAL REINFORCEMENT - SW06 - SIDE - RIGHT SIDE					

BAR MARK BREAKDOWN

MARK	PIER SW01	PIER SW02	PIER SW03	PIER SW04	PIER SW05	PIER SW06	PIER SW07	TOTAL NO	WEIGHT
P1101	11	11	11	11	11	0	11	66	11455
P1102	11	11	11	11	11	0	11	66	11163
P803	12	12	12	12	12	0	12	72	5639
P804	24	24	24	24	24	0	24	144	7465
P606	80	80	80	80	80	0	80	480	15801
P507	14	14	14	14	14	0	14	84	1570
P508	24	24	24	24	24	0	24	144	2816
P509	24	24	24	24	24	0	24	144	1690
P510	48	48	48	48	48	0	48	288	3980
P511	48	48	48	48	48	0	48	288	3079
P512	8	8	8	8	8	0	8	48	563
P513	14	14	14	14	14	0	14	84	1263
P514	20	20	20	20	20	0	20	120	2055
P515	4	4	4	4	4	0	4	24	453
P516	4	4	4	4	4	0	4	24	471
P517	4	4	4	4	4	0	4	24	494
P518	20	20	20	20	20	0	20	120	1418
P519	24	24	24	24	24	0	24	144	751
P520	20	20	20	20	20	0	20	120	615
P521	4	4	4	4	4	0	4	24	288
P622	20	20	20	0	20	0	20	100	1640
P623	20	20	20	0	20	0	20	100	1765
P624	8	8	8	0	8	0	8	40	746
P625	0	0	0	20	0	0	0	20	388
P626	0	0	0	24	0	0	0	24	424
P627	0	0	0	8	0	0	0	8	173
P628	0	0	0	0	0	20	0	20	348
P629	0	0	0	0	0	10	0	10	180
P630	0	0	0	0	0	6	0	6	107
P531	24	29	46	41	30	25	35	230	7337

BAR MARK BREAKDOWN

MARK	PIER SW01	PIER SW02	PIER SW03	PIER SW04	PIER SW05	PIER SW06	PIER SW07	TOTAL NO	WEIGHT
P532	48	58	92	82	60	50	70	460	11795
P533	72	92	160	140	96	72	116	748	4291
P1136	74	0	0	0	0	0	0	74	10058
P537	16	0	0	0	0	0	0	16	366
P1138	0	74	0	0	0	0	0	74	12188
P539	0	16	0	0	0	0	0	16	458
P1140	0	0	74	0	0	0	0	74	18741
P541	0	0	16	0	0	0	0	16	736
P1142	0	0	0	74	0	0	0	74	16939
P543	0	0	0	16	0	0	0	16	658
P1144	0	0	0	0	74	0	0	74	12286
P545	0	0	0	0	16	0	0	16	460
P1146	0	0	0	0	0	74	0	74	7011
P547	0	0	0	0	0	16	0	16	241
P1148	0	0	0	0	0	0	74	74	14350
P549	0	0	0	0	0	0	16	16	549
P1150	0	0	0	0	0	4	0	4	354
P851	0	0	0	0	0	6	0	6	196
P852	0	0	0	0	0	18	0	18	685
P853	0	0	0	0	0	2	0	2	70
P554	0	0	0	0	0	32	0	32	350
P555	0	0	0	0	0	4	0	4	43
P656	0	0	0	0	0	32	0	32	497
P657	0	0	0	0	0	38	0	38	637
P558	0	0	0	0	0	10	0	10	73
P659	0	0	0	0	0	10	0	10	159
P660	0	0	0	0	0	2	0	2	33
TOT WEIGHT	25835	28587	37222	34966	28794	13477	31478		200360

STATE PROJECT NUMBER

1060-33-80

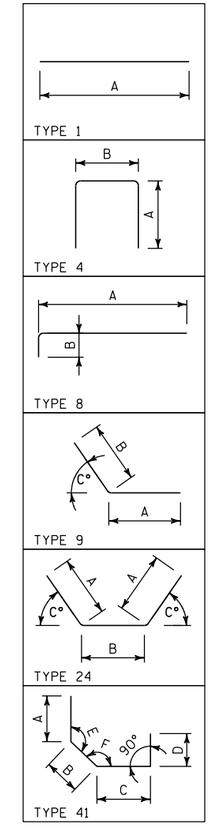

NOTES

THE FIRST DIGIT OF A THREE-DIGIT BAR MARK OR THE FIRST TWO DIGITS OF A FOUR-DIGIT BAR MARK SIGNIFY THE BAR SIZE.

DIMENSIONS ARE TO OUTSIDE OF BARS, EXCEPT FOR RADIUS DIMENSIONS WHICH ARE TO INSIDE OF BENDS.

FOR A BAR SERIES, LENGTH SHOWN IN THE FOURTH COLUMN OF TABLE IS THE AVERAGE BAR LENGTH USED TO COMPUTE BAR WEIGHT.

BAR MATERIAL CODES USED IN SECOND COLUMN OF TABLE
U - STEEL, HIGH STRENGTH, UNCOATED.
E - STEEL, HIGH STRENGTH, EPOXY COATED.
S - STAINLESS STEEL.

NO.	DATE	REVISION	BY

STATE OF WISCONSIN
DEPARTMENT OF TRANSPORTATION

STRUCTURE B-40-855

DRAWN BY PAK | PLANS CK'D. WRT

OPTION A
PIER REINFORCEMENT
SCHEDULE (2 OF 2)

SHEET A25 OF A25

8

8

STATE PROJECT NUMBER

1060-33-80

ESTIMATED QUANTITIES - PIER OPTION B

ITEM CATEGORY	ITEM NO.	BID ITEMS	UNIT	PIER SW01	PIER SW02	PIER SW03	PIER SW04	PIER SW05	PIER SW06	PIER SW07	TOTAL
2072	206.1000.0008	EXCAVATION FOR STRUCTURES BRIDGES B-40-855	LS	---	---	---	---	---	---	---	1
2072	209.0100	BACKFILL GRANULAR	CY	13	---	18	9	---	301	---	341
2072	502.0100	CONCRETE MASONRY BRIDGES	CY	119.9	135.0	181.3	168.4	135.6	209.6	150.2	1,100
2072	505.0405	BAR STEEL REINFORCEMENT HS BRIDGES	LB	29,100	31,900	24,310	19,150	31,980	14,590	37,940	188,970
2072	505.0605	BAR STEEL REINFORCEMENT HS COATED BRIDGES	LB	25,840	28,590	37,220	34,970	28,790	16,200	31,480	203,090
2072	511.1200.0001	TEMPORARY SHORING B-40-855	SF	---	---	---	---	905	---	765	1,670
2072	511.2200.0001	TEMPORARY SHORING LEFT IN PLACE B-40-855	SF	---	---	---	625	670	---	---	1,295
2072	550.2168	PILING CIP CONCRETE 16 X 0.50-INCH	LF	---	---	---	---	---	2,100	---	2,100
2072	SPV.0060.4110	PILE DYNAMIC ANALYZER (PDA) TESTING	EACH	---	---	---	---	---	2	---	2
2072	SPV.0060.4115	PILE DYNAMIC ANALYZER (PDA) RESTRIKES	EACH	---	---	---	---	---	2	---	2
2072	SPV.0060.4160	DRILLED FOUNDATION SHAFT BASE GROUTING	EACH	1	1	1	1	1	---	1	6
2072	SPV.0060.4171	THERMAL INTEGRITY PROFILER (TIP) TESTING DRILLED FOUNDATION SHAFT 98.43-INCH	EACH	1	1	1	1	1	---	1	6
2072	SPV.0075.4200	OBSTRUCTIONS DRILLED FOUNDATION SHAFT	HRS	4	4	4	4	4	---	4	24
2072	SPV.0090.4460	DRILLED FOUNDATION SHAFT 98.43-INCH	LF	68	71	51	44	78	---	88	400
2071	SPV.0105.4510	TRIAL DRILLED FOUNDATION SHAFT 98.43-INCH	LS	---	---	---	---	---	---	---	1

NOTES

THIS CONTRACT CONTAINS TWO OPTIONS FOR PIER CONSTRUCTION.
THE CONTRACTOR MUST BID EITHER OPTION A OR OPTION B.

ITEMS ON THIS SHEET ARE FOR PIER OPTION B ONLY. FOR ADDITIONAL ITEMS AND QUANTITIES, SEE SHEET 5.

8

8

NO.	DATE	REVISION	BY

STATE OF WISCONSIN
DEPARTMENT OF TRANSPORTATION

STRUCTURE B-40-855

DRAWN BY GLM PLANS CK'D. WRT

OPTION B QUANTITIES

SHEET B1 OF B26

STATE PROJECT NUMBER
1060-33-80

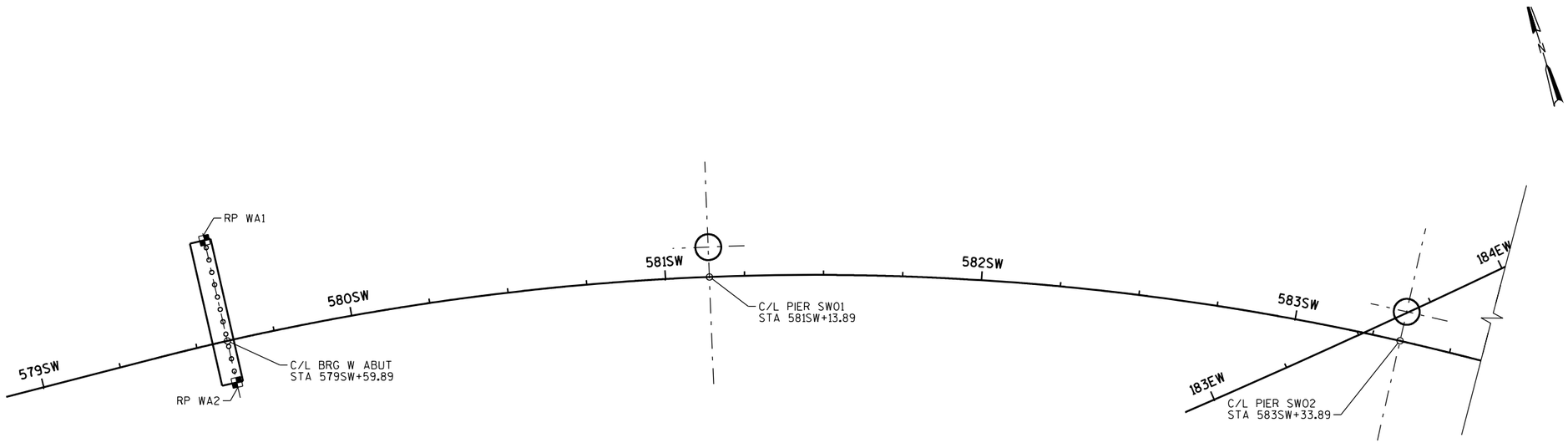

WEST ABUT
11 CIPC PILES, 16" DIA
RP WA1
STA 579SW+59.89, 32.60' LT
X=571465.67, Y=295483.39
RP WA2
STA 579SW+59.89, 13.46' RT
X=571462.26, Y=295437.46
BOTTOM OF FOOTING EL 789.11
ESTIMATED PILE LENGTH 75 FT

PIER SW01
DRILLED SHAFT, 98.43" DIA
CENTER POINT:
STA 581SW+13.89, 9.42' LT
X=571617.32, Y=295434.51
TOP OF SHAFT EL 765.00
BOTTOM OF SHAFT EL 697.00

PIER SW02
DRILLED SHAFT, 98.43" DIA
CENTER POINT:
STA 583SW+33.89, 9.42' LT
X=571822.47, Y=295350.11
TOP OF SHAFT EL 762.00
BOTTOM OF SHAFT EL 691.00

8

8

NO.	DATE	REVISION	BY

STATE OF WISCONSIN
DEPARTMENT OF TRANSPORTATION

STRUCTURE B-40-855

DRAWN BY GLM | PLANS CK'D. WRT

OPTION B
FOUNDATION
LAYOUT (1 OF 3)

SHEET B2 OF B26

STATE PROJECT NUMBER
1060-33-80

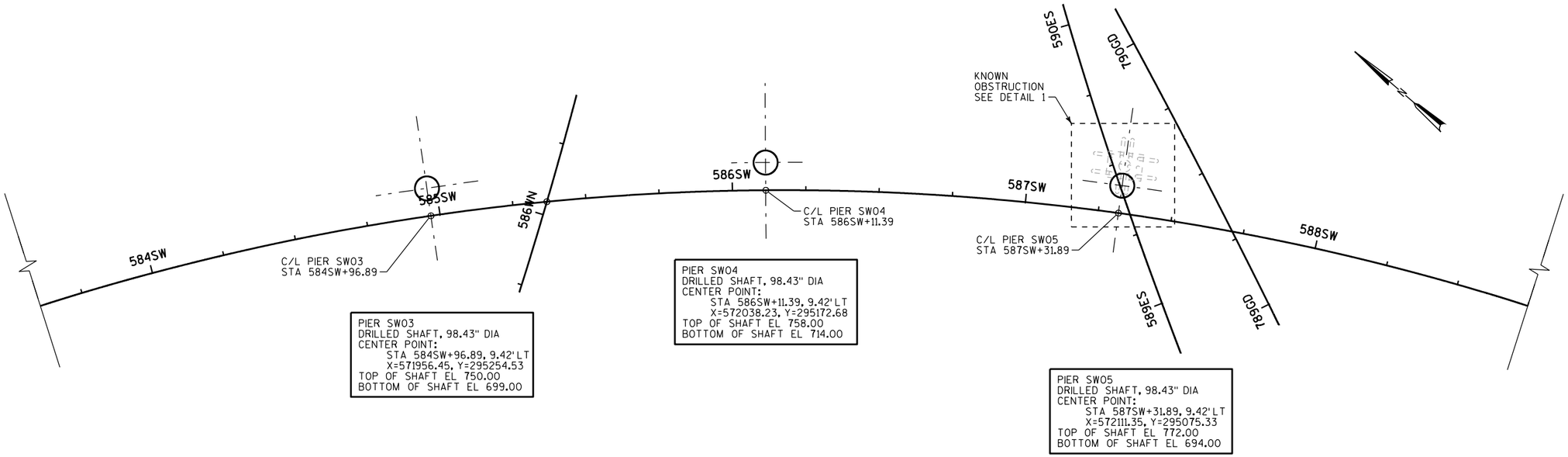

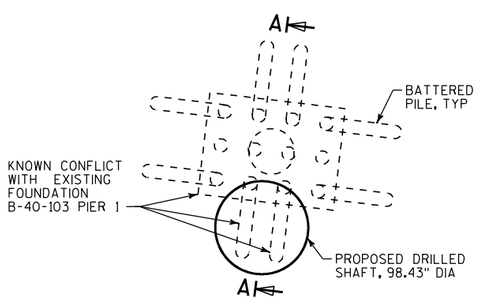

DETAIL 1

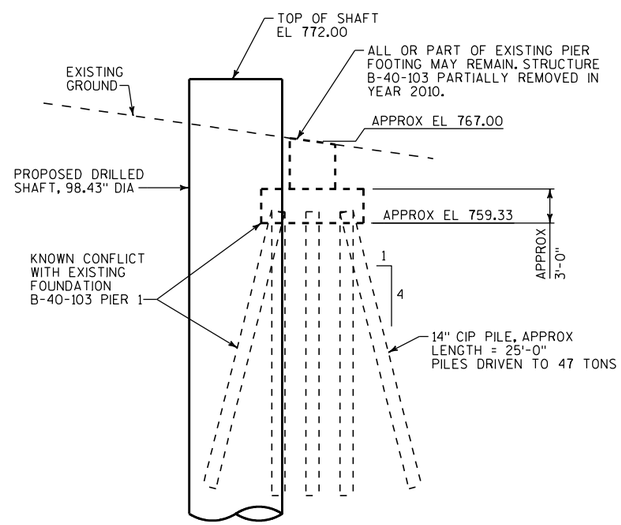

SECTION A-A

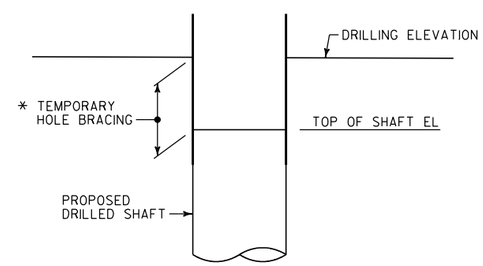

TEMPORARY HOLE BRACING

AT PIERS SW03 & SW04

* TEMPORARY HOLE BRACING MAY CONSIST OF SLIP-IN CASING OR OTHER APPROVED METHOD. COST OF TEMPORARY HOLE BRACING SHALL BE INCLUDED WITH COST OF "EXCAVATION FOR STRUCTURES BRIDGES B-40-855".

8

8

NO.	DATE	REVISION	BY

STATE OF WISCONSIN
DEPARTMENT OF TRANSPORTATION

STRUCTURE B-40-855

DRAWN BY	GLM	PLANS CK'D.	WRT

OPTION B
FOUNDATION
LAYOUT (2 OF 3)

SHEET B3 OF B26

STATE PROJECT NUMBER
1060-33-80

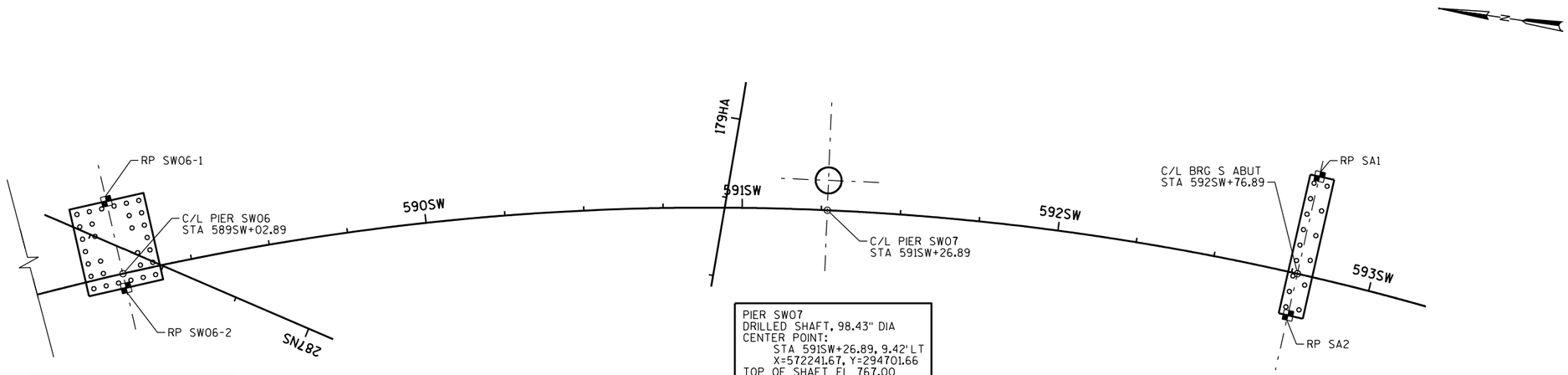

PIER SW06
30 CIPC PILES, 16" DIA
RP SW06-1
STA 589SW+02.89, 23.42' LT
X=572202.55, Y=294926.43
RP SW06-2
STA 589SW+02.89, 4.58' RT
X=572176.42, Y=294916.37
BOTTOM OF FOOTING 781.00
ESTIMATED PILE LENGTH 70 FT

PIER SW07
DRILLED SHAFT, 98.43" DIA
CENTER POINT:
STA 591SW+26.89, 9.42' LT
X=572241.67, Y=294701.66
TOP OF SHAFT EL 767.00
BOTTOM OF SHAFT EL 679.00

SOUTH ABUT
15 CIPC PILES, 16" DIA
RP SA1
STA 592SW+76.89, 31.45' LT
X=572265.02, Y=294548.41
RP SA2
STA 592SW+76.89, 13.45' RT
X=572220.27, Y=294552.02
BOTTOM OF FOOTING EL 797.96
ESTIMATED PILE LENGTH 70 FT

8

NO.	DATE	REVISION	BY

STATE OF WISCONSIN
DEPARTMENT OF TRANSPORTATION

STRUCTURE B-40-855

DRAWN BY GLM | PLANS CK'D. WRT

OPTION B
FOUNDATION
LAYOUT (3 OF 3)

SHEET B4 OF B26

STATE PROJECT NUMBER
1060-33-80

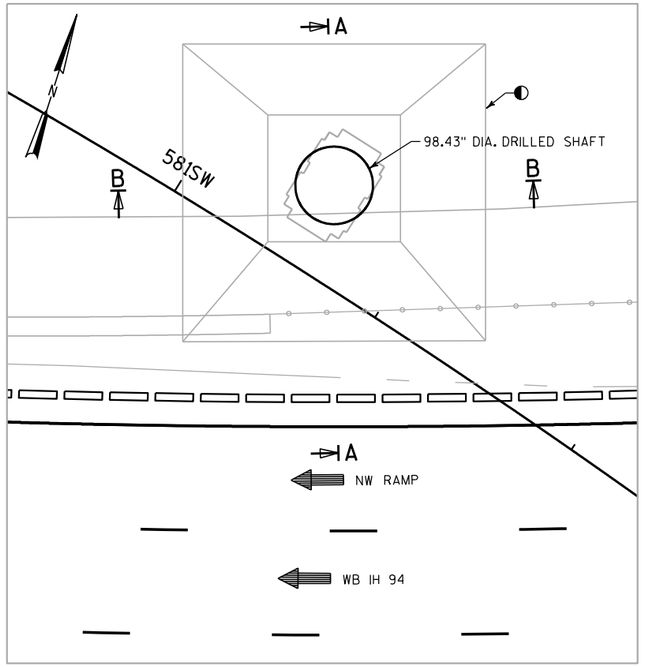

EXCAVATION PLAN - PIER SW01

STA 581SW+13.89

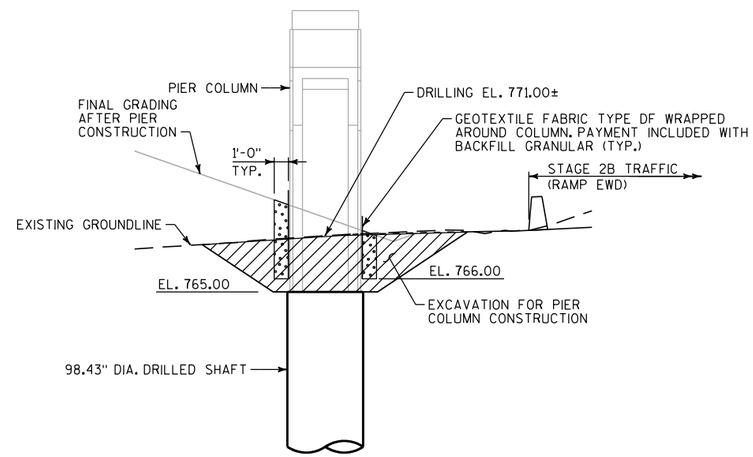

SECTION A-A

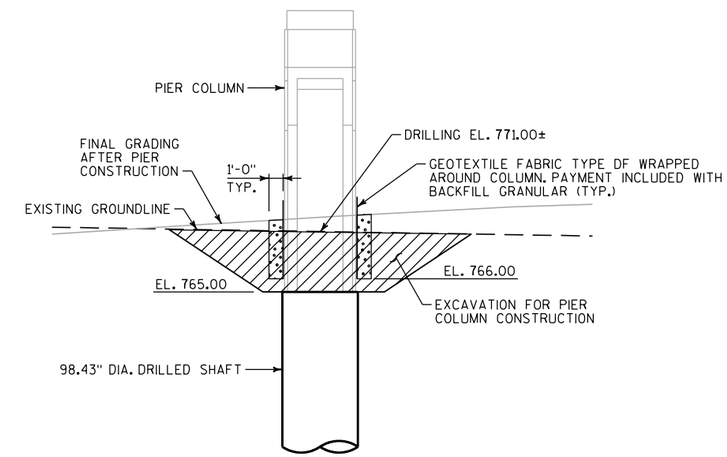

SECTION B-B

LEGEND

- EXCAVATION FOR STRUCTURES
- BACKFILL GRANULAR
- 1'-0" SAND BACKFILL AROUND COLUMN. PAYMENT INCLUDED WITH BACKFILL GRANULAR.
- APPROXIMATE EXCAVATION LIMITS. LIMITS WILL VARY BASED ON THE WORKING AREA REQUIRED AND THE MAXIMUM EXCAVATION SLOPE THAT CAN BE SAFELY MAINTAINED. EXCAVATION ON THESE SHEETS IS INCLUDED "EXCAVATION FOR STRUCTURES BRIDGES B-40-855".
- APPROXIMATE EXPOSED TEMPORARY SHORING HEIGHTS. HEIGHTS ARE SHOWN FOR INFORMATION ONLY.

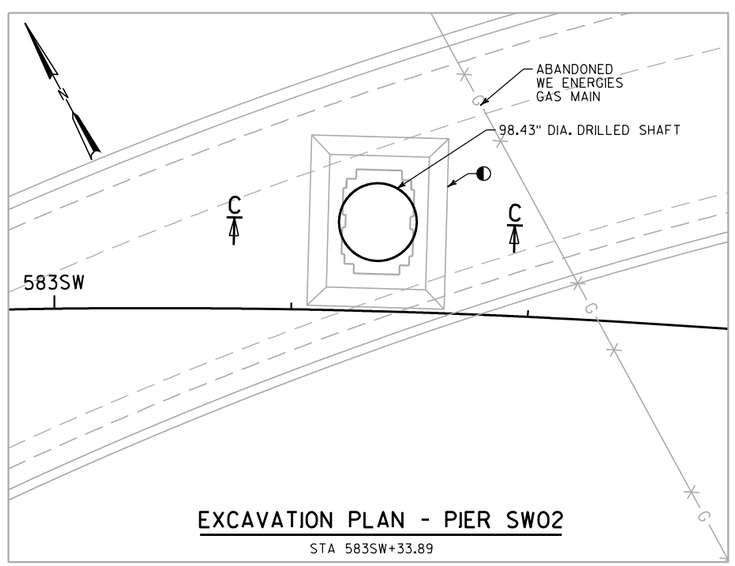

EXCAVATION PLAN - PIER SW02

STA 583SW+33.89

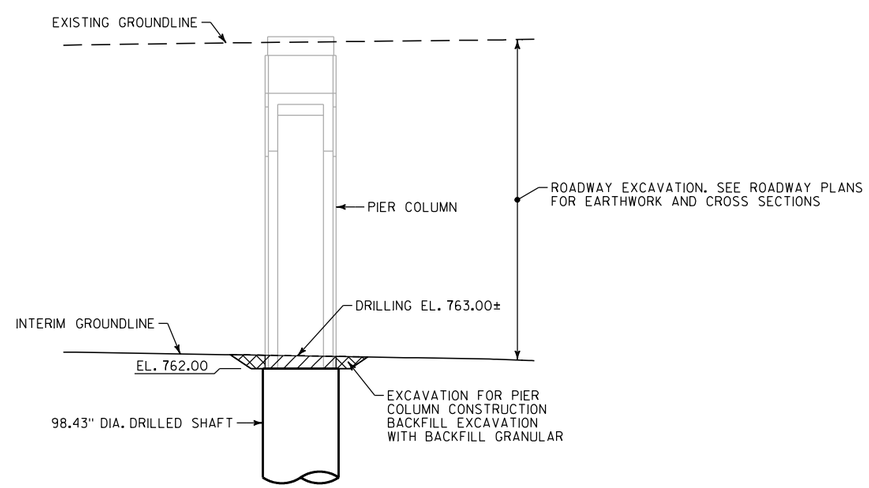

SECTION C-C

NOTES

THIS DRAWING IS INTENDED TO PROVIDE A REFERENCE FOR ASSUMED EXCAVATION LIMITS AND TEMPORARY SHORING REQUIREMENTS. THIS DRAWING IS NOT ALL-INCLUSIVE.

NO.	DATE	REVISION	BY

STATE OF WISCONSIN
DEPARTMENT OF TRANSPORTATION

STRUCTURE B-40-855

DRAWN BY BKS | PLANS CK'D. WRT

OPTION B
EXCAVATION PLAN
(1 OF 4)

SHEET B5 OF B26

8

8

STATE PROJECT NUMBER
1060-33-80

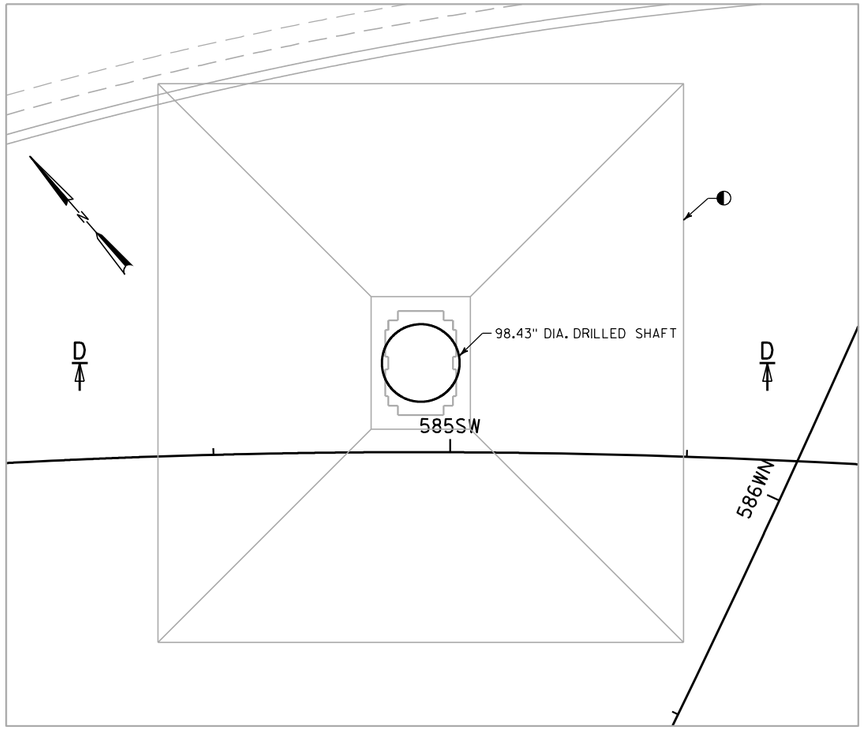

EXCAVATION PLAN - PIER SW03

STA 584SW+96.89

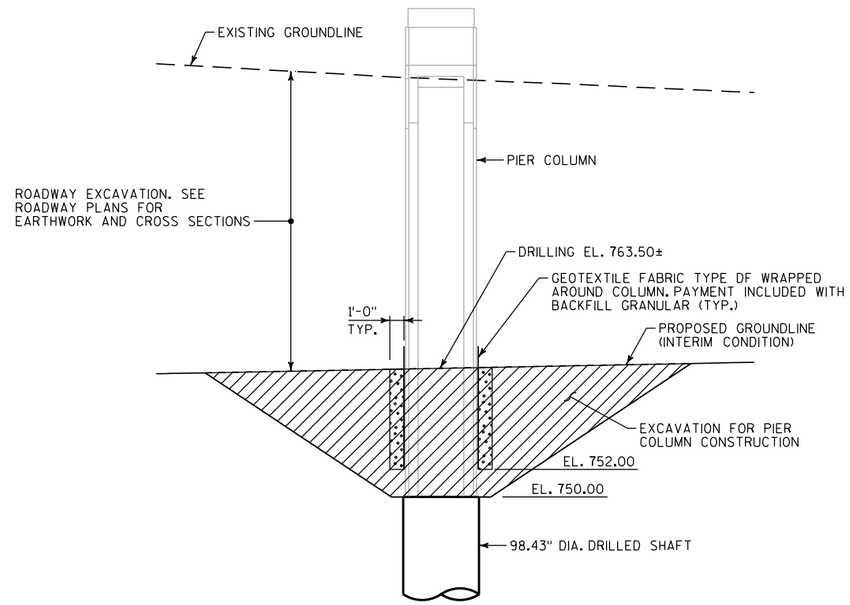

SECTION D-D

LEGEND

- EXCAVATION FOR STRUCTURES
- BACKFILL GRANULAR
- 1'-0" SAND BACKFILL AROUND COLUMN. PAYMENT INCLUDED WITH BACKFILL GRANULAR.
- APPROXIMATE EXCAVATION LIMITS. LIMITS WILL VARY BASED ON THE WORKING AREA REQUIRED AND THE MAXIMUM EXCAVATION SLOPE THAT CAN BE SAFELY MAINTAINED. EXCAVATION ON THESE SHEETS IS INCLUDED "EXCAVATION FOR STRUCTURES BRIDGES B-40-855".
- APPROXIMATE EXPOSED TEMPORARY SHORING HEIGHTS. HEIGHTS ARE SHOWN FOR INFORMATION ONLY.

NOTES

THIS DRAWING IS INTENDED TO PROVIDE A REFERENCE FOR ASSUMED EXCAVATION LIMITS AND TEMPORARY SHORING REQUIREMENTS. THIS DRAWING IS NOT ALL-INCLUSIVE.

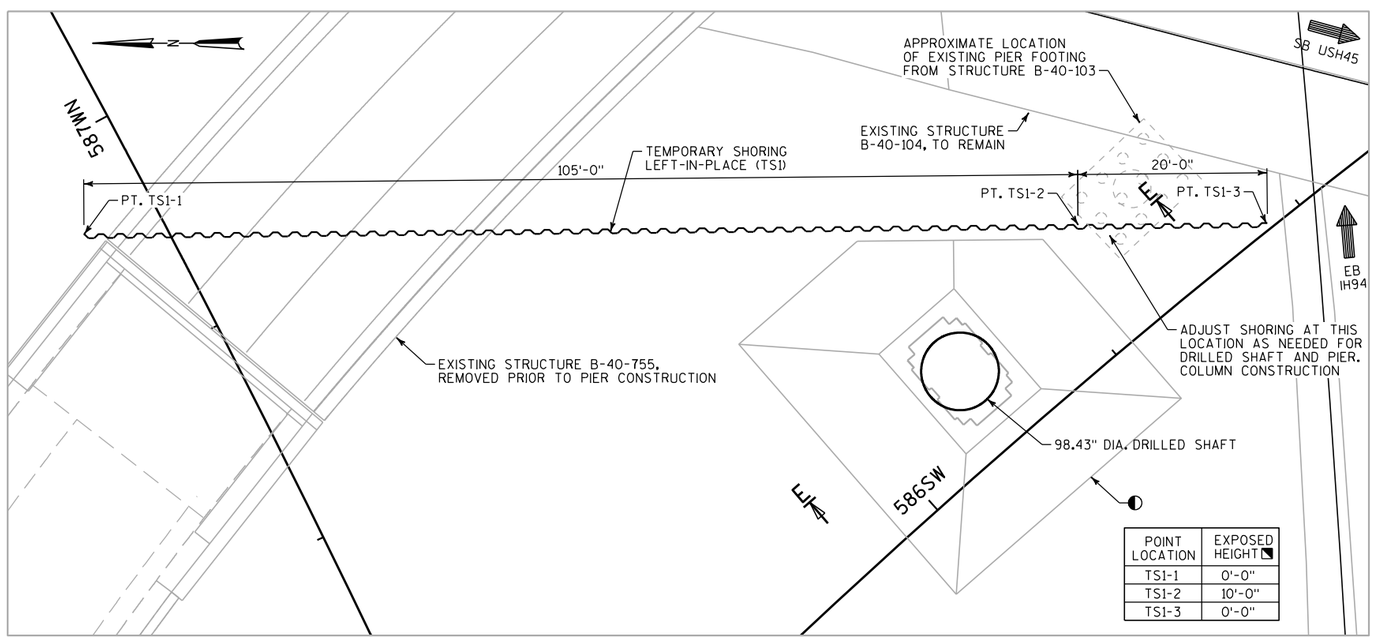

POINT LOCATION	EXPOSED HEIGHT
TS1-1	0'-0"
TS1-2	10'-0"
TS1-3	0'-0"

EXCAVATION PLAN - PIER SW04

STA 586SW+11.39

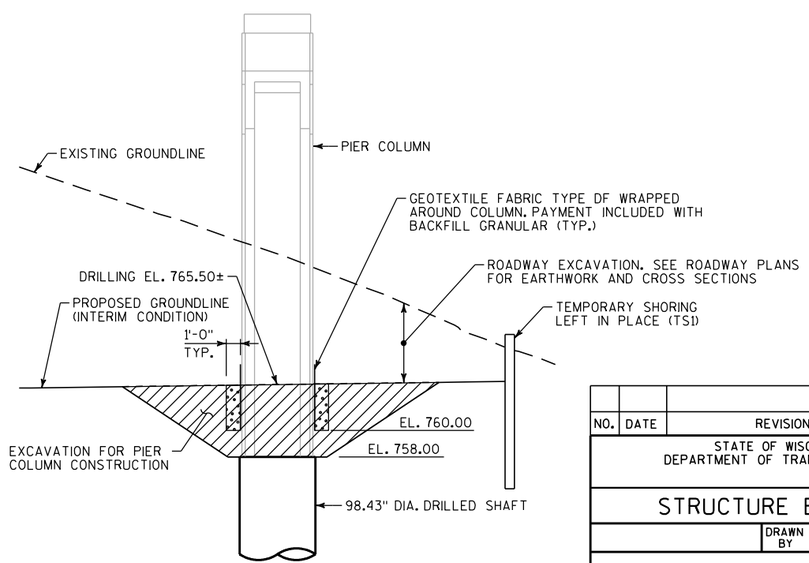

SECTION E-E

NO.	DATE	REVISION	BY

STATE OF WISCONSIN
DEPARTMENT OF TRANSPORTATION

STRUCTURE B-40-855

DRAWN BY BKS | PLANS CK'D. WRT

OPTION B
EXCAVATION PLAN
(2 OF 4)

SHEET B6 OF B26

8

8

STATE PROJECT NUMBER
1060-33-80

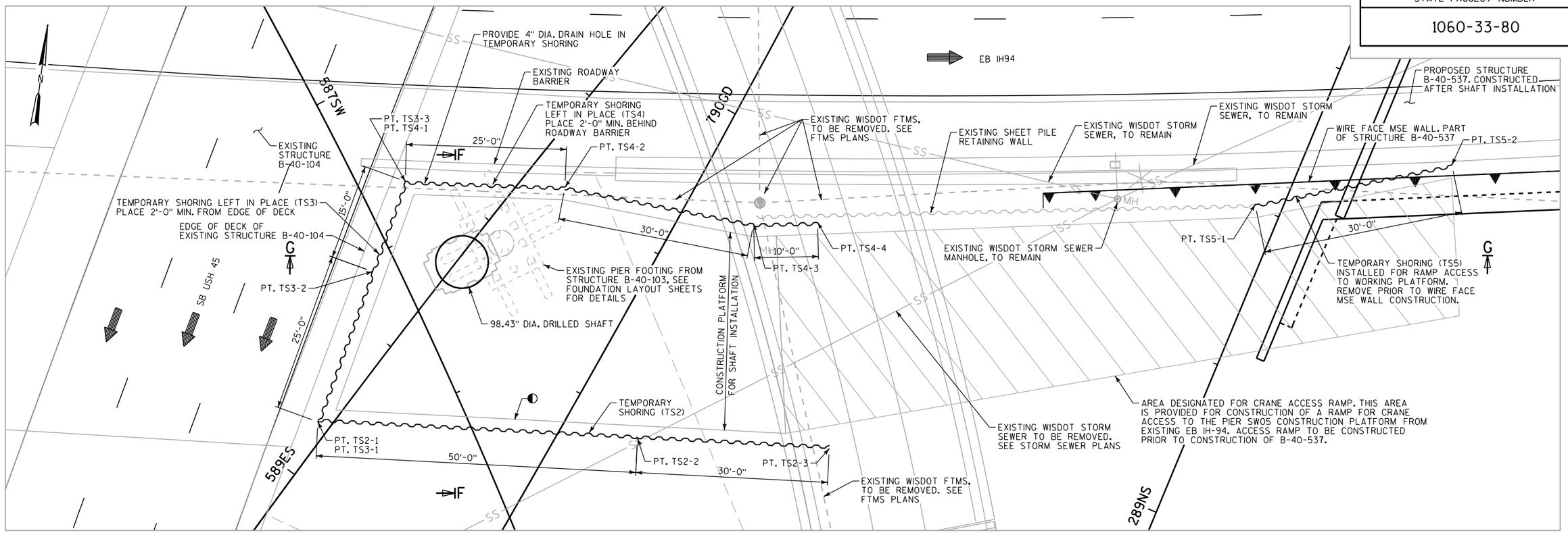

EXCAVATION PLAN - PIER SW05

STA 587SW+31.89

POINT LOCATION	EXPOSED HEIGHT
TS2-1	13'-0"
TS2-2	13'-0"
TS2-3	0'-0"
TS3-1	13'-0"
TS3-2	0'-0"
TS3-3	7'-0"
TS4-1	7'-0"
TS4-2	7'-0"
TS4-3	7'-0"
TS4-4	7'-0"
TS5-1	4'-0"
TS5-2	0'-0"

LEGEND

- EXCAVATION FOR STRUCTURES
- BACKFILL GRANULAR
- COMPACTED FILL MATERIAL. PAYMENT INCLUDED WITH EXCAVATION FOR STRUCTURES.
- 1'-0" SAND BACKFILL AROUND COLUMN. PAYMENT INCLUDED WITH BACKFILL GRANULAR.
- APPROXIMATE EXCAVATION LIMITS. LIMITS WILL VARY BASED ON THE WORKING AREA REQUIRED AND THE MAXIMUM EXCAVATION SLOPE THAT CAN BE SAFELY MAINTAINED. EXCAVATION ON THESE SHEETS IS INCLUDED "EXCAVATION FOR STRUCTURES BRIDGES B-40-855".
- APPROXIMATE EXPOSED TEMPORARY SHORING HEIGHTS. HEIGHTS ARE SHOWN FOR INFORMATION ONLY.

NOTES

THIS DRAWING IS INTENDED TO PROVIDE A REFERENCE FOR ASSUMED EXCAVATION LIMITS AND TEMPORARY SHORING REQUIREMENTS. THIS DRAWING IS NOT ALL-INCLUSIVE.

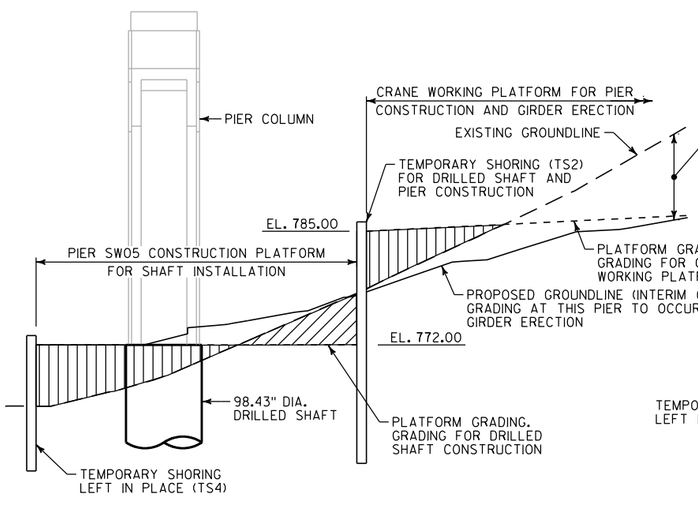

SECTION F-F

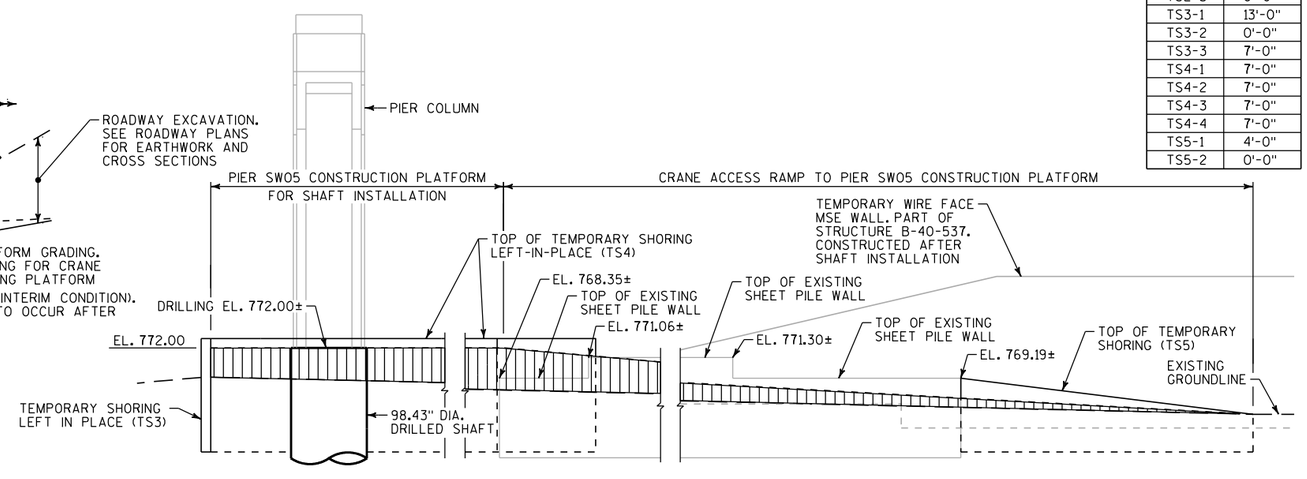

SECTION G-G

NO.	DATE	REVISION	BY

STATE OF WISCONSIN
DEPARTMENT OF TRANSPORTATION

STRUCTURE B-40-855

DRAWN BY BKS | PLANS CK'D. WRT

OPTION B
EXCAVATION PLAN
(3 OF 4)

SHEET B7 OF B26

STATE PROJECT NUMBER
1060-33-80

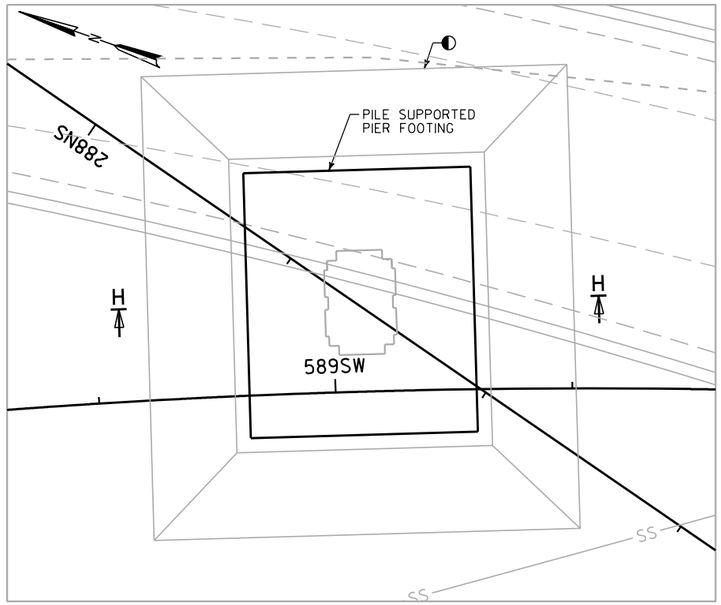

EXCAVATION PLAN - PIER SW06

STA 589SW+02.89

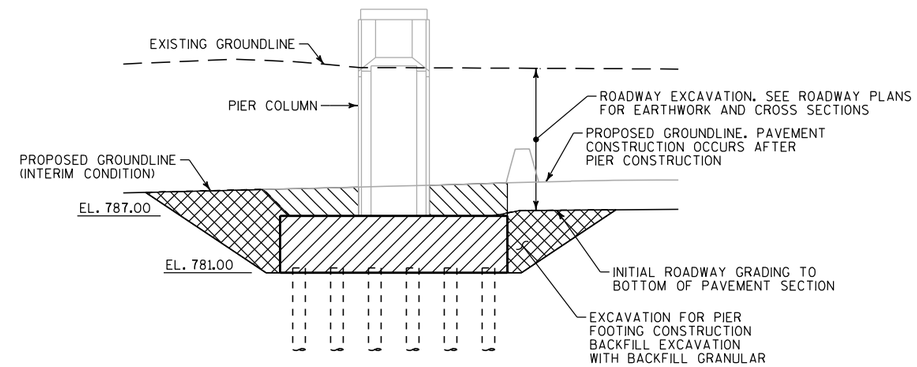

SECTION H-H

LEGEND

- EXCAVATION FOR STRUCTURES
- BACKFILL GRANULAR
- 1'-0" SAND BACKFILL AROUND COLUMN. PAYMENT INCLUDED WITH BACKFILL GRANULAR.
- APPROXIMATE EXCAVATION LIMITS. LIMITS WILL VARY BASED ON THE WORKING AREA REQUIRED AND THE MAXIMUM EXCAVATION SLOPE THAT CAN BE SAFELY MAINTAINED. EXCAVATION ON THESE SHEETS IS INCLUDED "EXCAVATION FOR STRUCTURES BRIDGES B-40-855".
- APPROXIMATE EXPOSED TEMPORARY SHORING HEIGHTS. HEIGHTS ARE SHOWN FOR INFORMATION ONLY.

NOTES

THIS DRAWING IS INTENDED TO PROVIDE A REFERENCE FOR ASSUMED EXCAVATION LIMITS AND TEMPORARY SHORING REQUIREMENTS. THIS DRAWING IS NOT ALL-INCLUSIVE.

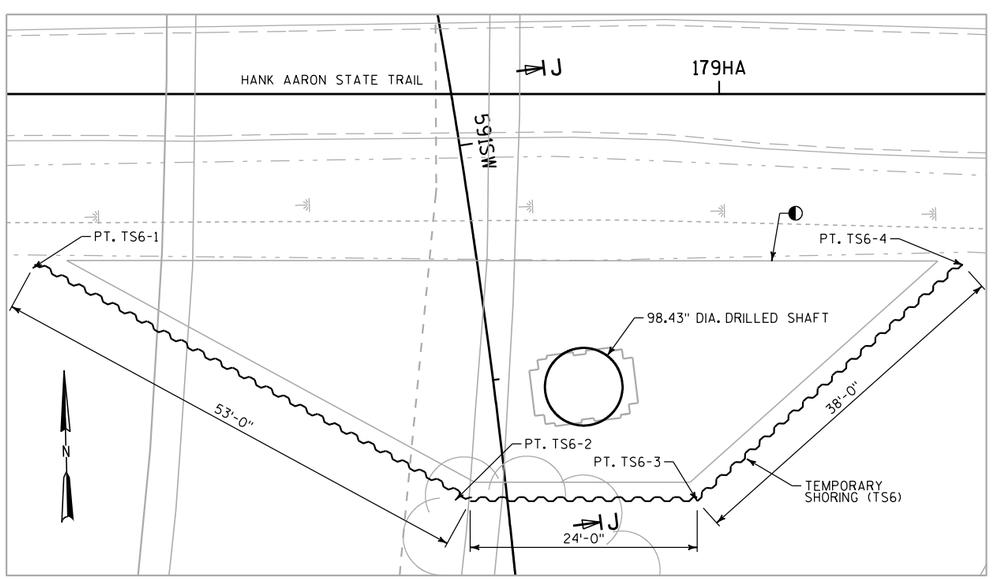

POINT LOCATION	EXPOSED HEIGHT
TS6-1	0'-0"
TS6-2	11'-0"
TS6-3	11'-0"
TS6-4	0'-0"

EXCAVATION PLAN - PIER SW07

STA 591SW+26.89

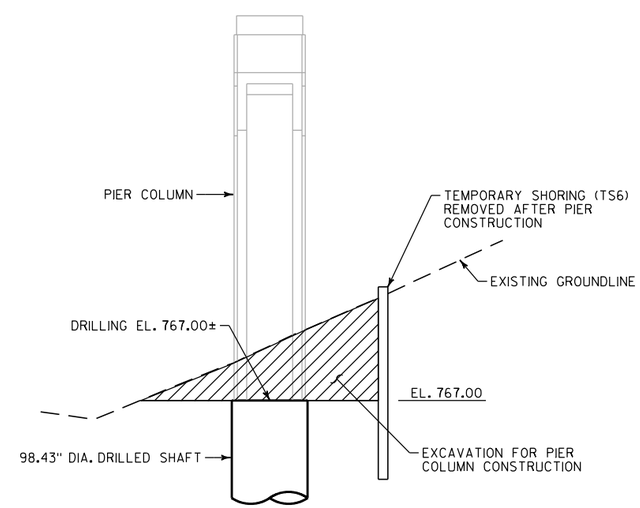

SECTION J-J

NO.	DATE	REVISION	BY

STATE OF WISCONSIN
DEPARTMENT OF TRANSPORTATION

STRUCTURE B-40-855

DRAWN BY BKS | PLANS CK'D. WRT

OPTION B
EXCAVATION PLAN
(4 OF 4)

SHEET B8 OF B26

8

8

STATE PROJECT NUMBER
1060-33-80

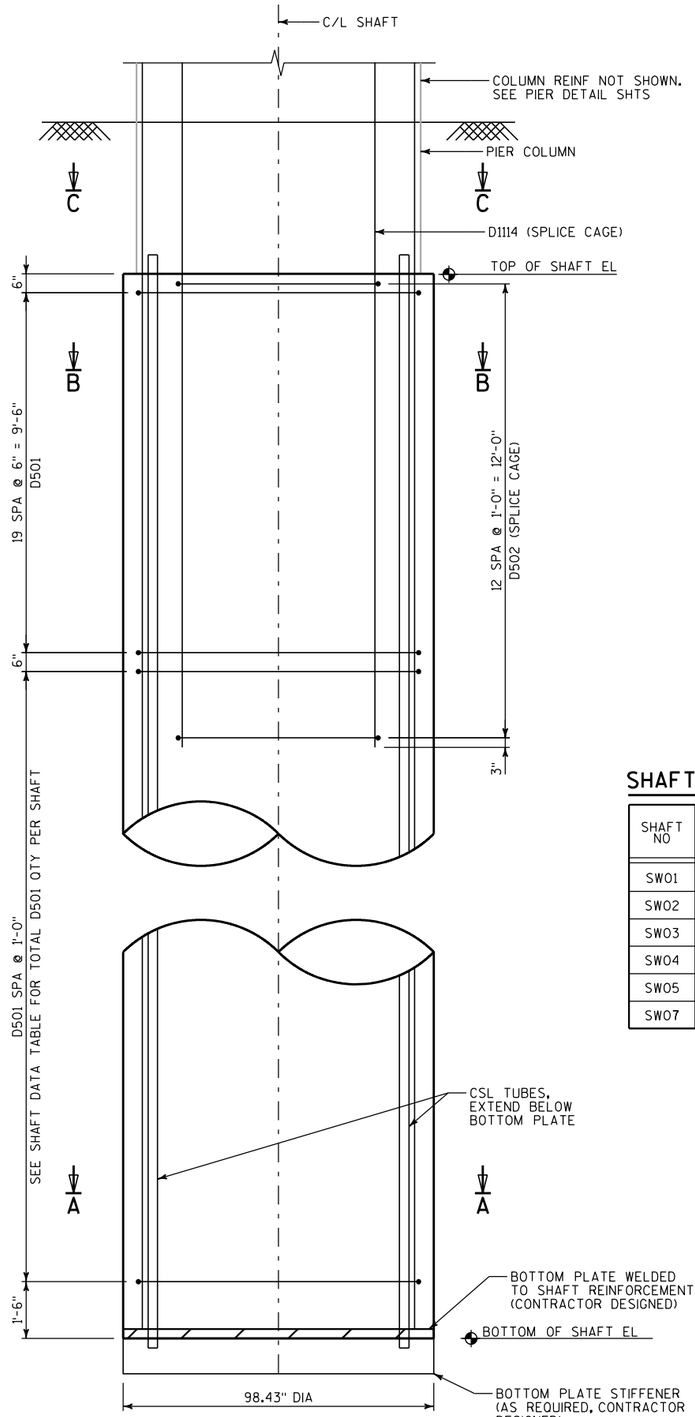

DRILLED SHAFT ELEVATION

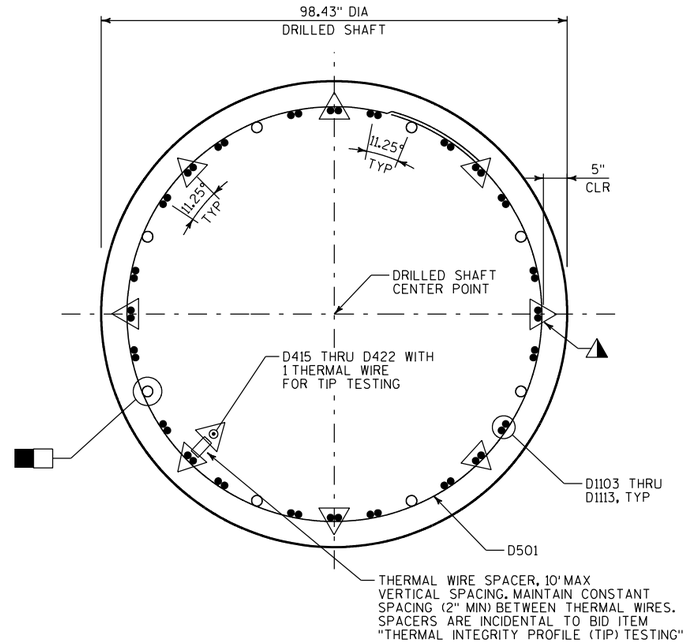

SECTION A-A

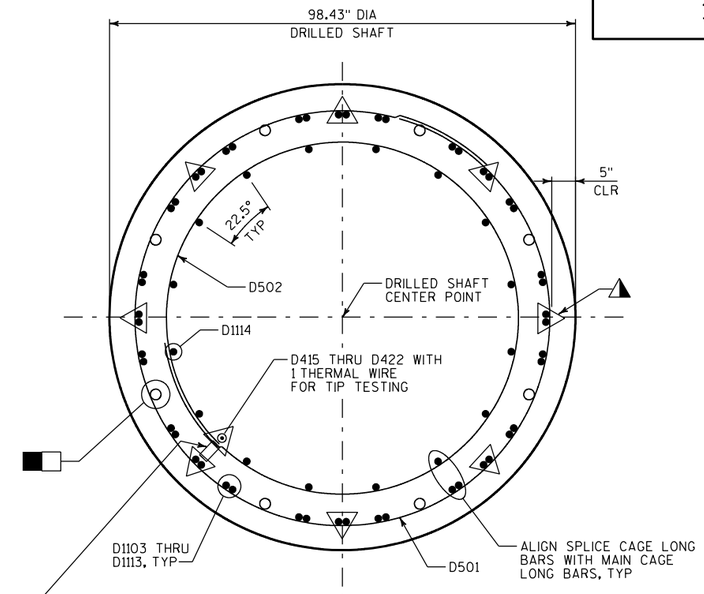

SECTION B-B

SHAFT DATA

SHAFT NO	SHAFT C/L "X"	SHAFT C/L "Y"	ASSUMED DRILLING EL	TOP OF SHAFT EL	BOTTOM OF SHAFT EL	SHAFT LENGTH (FT)	SHAFT VOLUME (CY)	TIE NO. REQ'D (EACH)	INSTRUMENTATION	MAXIMUM BASE GROUTING PRESSURE (PSI)
SW01	571617.32	295434.51	771.00	765.00	697.00	68.00	133.10	77	CSL TUBES/TIP TESTING	425
SW02	571822.47	295350.12	763.00	762.00	691.00	71.00	139.00	80	CSL TUBES/TIP TESTING	300
SW03	571956.45	295254.53	763.50	750.00	699.00	51.00	99.80	60	CSL TUBES/TIP TESTING	325
SW04	572038.23	295172.68	765.50	758.00	714.00	44.00	86.10	53	CSL TUBES/TIP TESTING	225
SW05	572111.35	295075.33	772.00	772.00	694.00	78.00	152.70	87	CSL TUBES/TIP TESTING	400
SW07	572241.67	294701.66	767.00	767.00	679.00	88.00	172.20	97	CSL TUBES/TIP TESTING	500

LEGEND

8 - 2" DIA CSL TUBES FULL LENGTH OF SHAFT TIED TO INSIDE AND SPACED AROUND THE PERIMETER OF REINFORCEMENT AS SHOWN. AFTER TESTING, USE CSL TUBES TO BASE-GROUT THE PIER DRILLED SHAFTS.

9 - THERMAL WIRES FOR TIP TESTING. DISTRIBUTE 8 THERMAL WIRES EVENLY AROUND THE PERIMETER OF REINFORCMENT TIED TO VERTICAL BARS.

NOTE

FOR SECTION C-C, SEE SHT B10.

8

8

NO.	DATE	REVISION	BY

STATE OF WISCONSIN
DEPARTMENT OF TRANSPORTATION

STRUCTURE B-40-855

DRAWN BY PAK | PLANS CK'D. WRT

OPTION B
DRILLED SHAFT
DETAILS (1 OF 2)

SHEET B9 OF B26

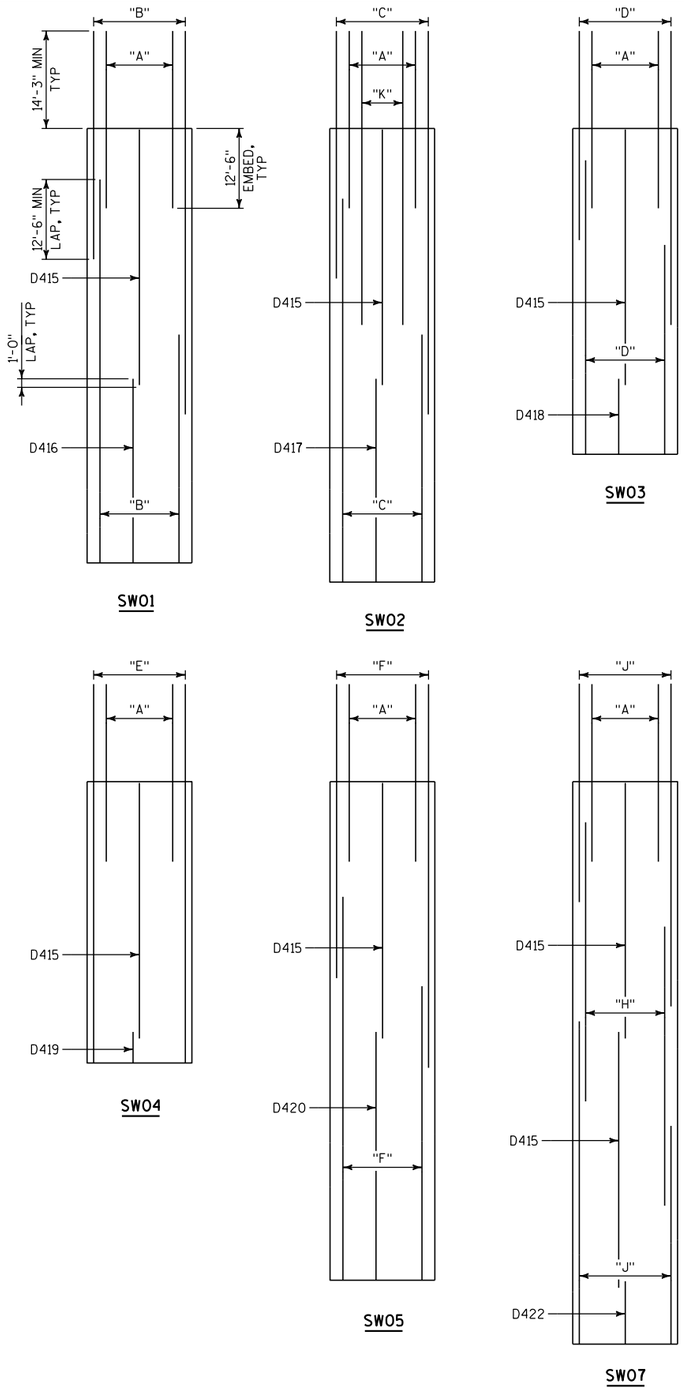

"A" = 16-D1114 BARS
"B" = 24-D1103 & 24-D1104 BARS
"C" = 24-D1103 & 24-D1105 BARS
"D" = 24-D1106 & 24-D1108 BARS
"E" = 48-D1107 BARS
"F" = 24-D1103 & 24-D1108 BARS
"H" = 48-D1111 BARS
"J" = 24-D1112 & 24-D1113 BARS
"K" = 8-D1108 BARS. TIE BAR WITH CSL TUBES.

DRILLED SHAFT MAIN REINFORCEMENT SCHEMATIC

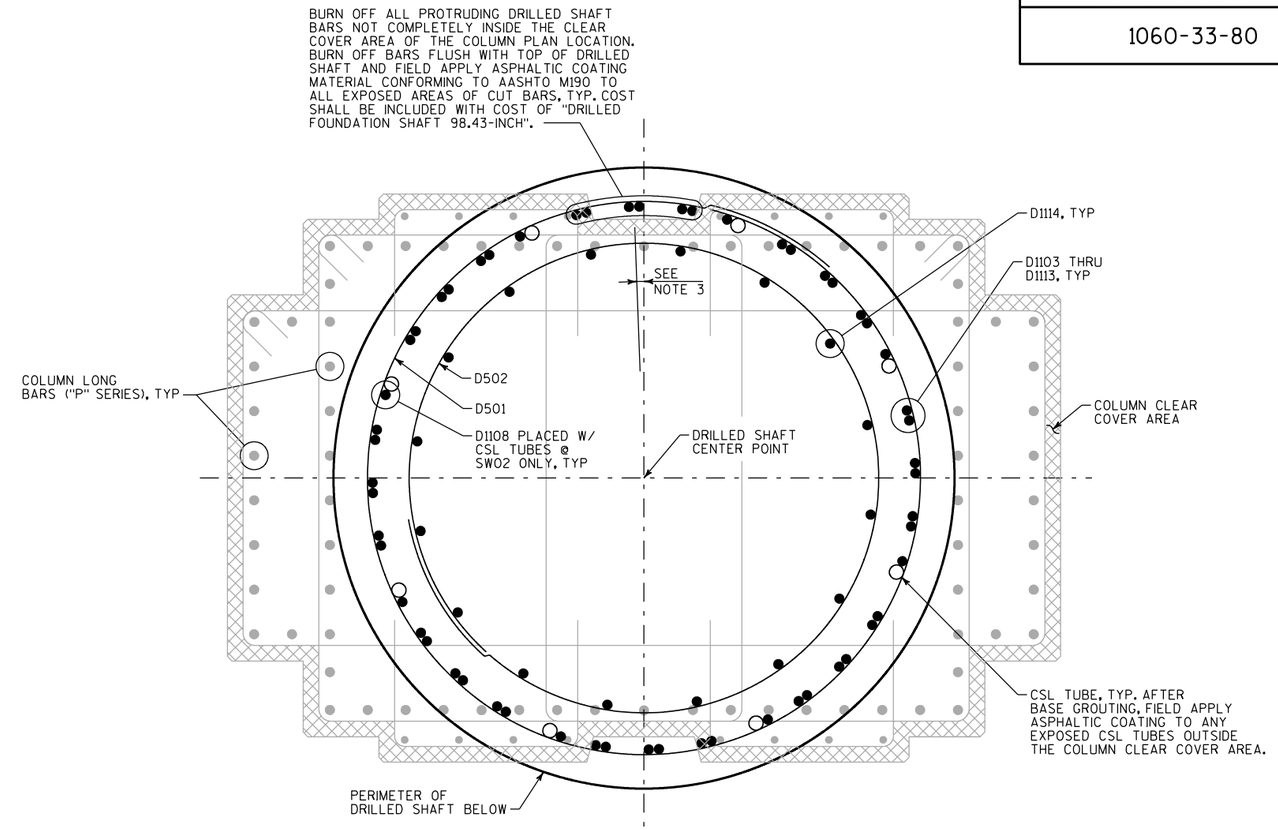

SECTION C-C
DRILLED SHAFT CONNECTION DETAIL

NOTES:

1. STAGGER LAPS AS SHOWN SO AS TO LAP NO MORE THAN HALF OF THE BARS PER SECTION.
2. WELDMENT OF BOTTOM PLATE AND REINFORCING BAR CAGE NOT SHOWN FOR CLARITY. SEE SHEET B9.
3. ORIENTATION OF DRILLED SHAFT CAGE IS ARBITRARY FOR DESIGN PURPOSES. CONTRACTOR MAY INSTALL CAGE ASSEMBLY IN ANY DESIRED ORIENTATION.
4. DRILLED SHAFT CONNECTION HAS BEEN DESIGNED TO ACCOMMODATE DRILLED SHAFT CAGE PLACED UP TO 4" OUT OF POSITION HORIZONTALLY IN ANY DIRECTION. IF THE AS-BUILT CONDITION EXCEEDS THIS TOLERANCE, ALERT THE DESIGN ENGINEER.

NO.	DATE	REVISION	BY

STATE OF WISCONSIN
DEPARTMENT OF TRANSPORTATION

STRUCTURE B-40-855

DRAWN BY PAK | PLANS CK'D. WRT

OPTION B
DRILLED SHAFT
DETAILS (2 OF 2)

SHEET B10 OF B26

STATE PROJECT NUMBER
1060-33-80

BAR INFORMATION							BAR DIMENSIONS						LOCATION	BAR SERIES INFORMATION				
BAR MARK	MATL	NO. REQ'D	LENGTH	BENT	BAR SERIES	BEND TYPE	A	B	C	D	E	F		DIM 1	MIN	MAX	NO REQ'D	LENGTH
D501	U	454	24'-9"	X		23	7'-5"	1'-5"					SHAFT TIE BAR					
D502	U	78	21'-1"	X		23	6'-3"	1'-5"					SPLICE CAGE TIE BAR					
D1103	U	144	60'-0"			1	60'-0"						LONGITUDINAL BAR					
D1104	U	48	35'-9"			1	35'-9"						LONGITUDINAL BAR SW01					
D1105	U	48	38'-9"			1	38'-9"						LONGITUDINAL BAR SW02					
D1106	U	48	32'-9"			1	32'-9"						LONGITUDINAL BAR SW03					
D1107	U	48	59'-3"			1	59'-3"						LONGITUDINAL BAR SW04					
D1108	U	104	46'-0"			1	46'-0"						LONGITUDINAL BAR SW02/SW03/SW05					
D1111	U	48	43'-8"			1	43'-8"						LONGITUDINAL BAR SW07					
D1112	U	48	50'-6"			1	50'-6"						LONGITUDINAL BAR SW07					
D1113	U	48	34'-2"			1	34'-2"						LONGITUDINAL BAR SW07					
D1114	U	96	27'-9"			1	27'-9"						SPLICE CAGE LONGITUDINAL BAR					
D415	U	7	40'-0"			1	40'-0"						LONGITUDINAL THERMAL BAR					
D416	U	1	29'-0"			1	29'-0"						LONGITUDINAL THERMAL BAR SW01					
D417	U	1	32'-0"			1	32'-0"						LONGITUDINAL THERMAL BAR SW02					
D418	U	1	12'-0"			1	12'-0"						LONGITUDINAL THERMAL BAR SW03					
D419	U	1	5'-0"			1	5'-0"						LONGITUDINAL THERMAL BAR SW04					
D420	U	1	39'-0"			1	39'-0"						LONGITUDINAL THERMAL BAR SW05					
D422	U	1	10'-0"			1	10'-0"						LONGITUDINAL THERMAL BAR SW07					

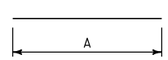

TYPE 1

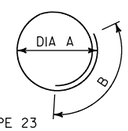

TYPE 23

BAR MARK BREAKDOWN								
BAR MARK	PIER SW01	PIER SW02	PIER SW03	PIER SW04	PIER SW05	PIER SW07	TOTAL NO	WEIGHT
D501	77	80	60	53	87	97	454	11720
D502	13	13	13	13	13	13	78	1715
D1103	48	48	0	0	48	0	144	45904
D1104	48	0	0	0	0	0	48	9117
D1105	0	48	0	0	0	0	48	9882
D1106	0	0	48	0	0	0	48	8352
D1107	0	0	0	48	0	0	48	15110
D1108	0	8	48	0	48	0	104	25417
D1111	0	0	0	0	0	48	48	11136
D1112	0	0	0	0	0	48	48	12879
D1113	0	0	0	0	0	48	48	8713
D1114	16	16	16	16	16	16	96	14154
D415	1	1	1	1	1	2	7	187
D416	1	0	0	0	0	0	1	19
D417	0	1	0	0	0	0	1	21
D418	0	0	1	0	0	0	1	8
D419	0	0	0	1	0	0	1	3
D420	0	0	0	0	1	0	1	26
D422	0	0	0	0	0	1	1	7
TOT WEIGHT	29097	31897	24312	19153	31976	37937		174372

NOTES

THE FIRST DIGIT OF A THREE-DIGIT BAR MARK OR THE FIRST TWO DIGITS OF A FOUR-DIGIT BAR MARK SIGNIFY THE BAR SIZE.

DIMENSIONS ARE TO OUTSIDE OF BARS, EXCEPT FOR RADIUS DIMENSIONS WHICH ARE TO INSIDE OF BENDS.

FOR A BAR SERIES, LENGTH SHOWN IN THE FOURTH COLUMN OF TABLE IS THE AVERAGE BAR LENGTH USED TO COMPUTE BAR WEIGHT.

BAR MATERIAL CODES USED IN SECOND COLUMN OF TABLE
- U - STEEL, HIGH STRENGTH, UNCOATED.
- E - STEEL, HIGH STRENGTH, EPOXY COATED.
- S - STAINLESS STEEL.

NO.	DATE	REVISION	BY

STATE OF WISCONSIN
DEPARTMENT OF TRANSPORTATION

STRUCTURE B-40-855

DRAWN BY PAK | PLANS CK'D. WRT

OPTION B
DRILLED SHAFT
REINFORCEMENT
SCHEDULE

SHEET B11 OF B26

STATE PROJECT NUMBER
1060-33-80

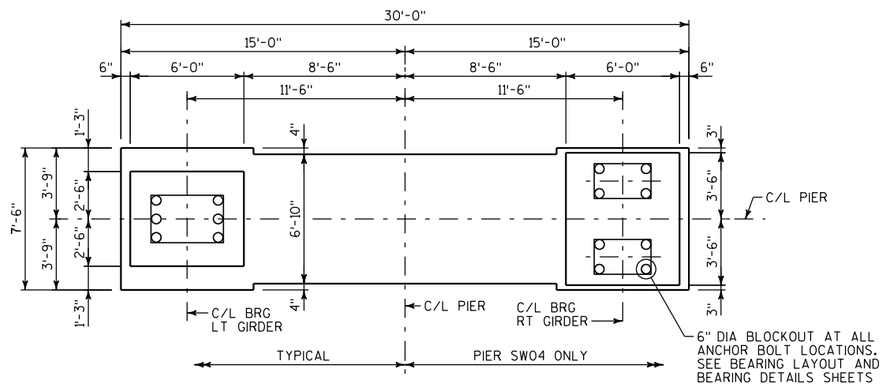

PLAN

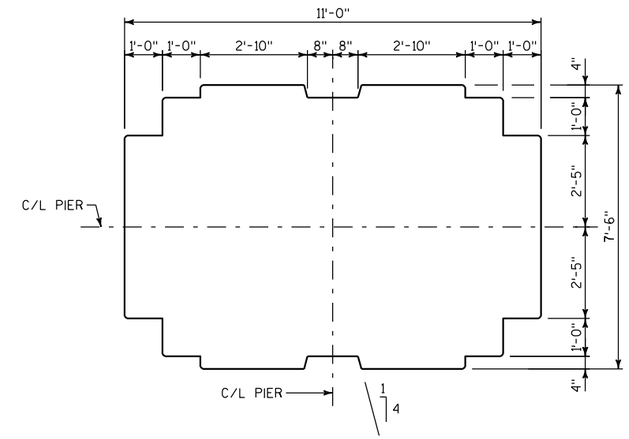

SECTION A-A

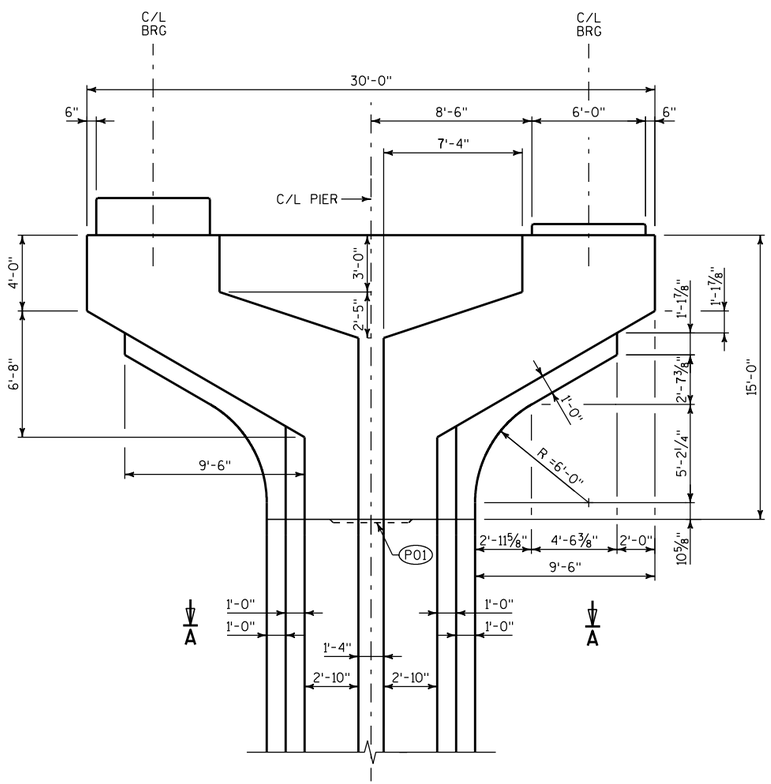

FRONT ELEVATION

(LOOKING UPSTATION)

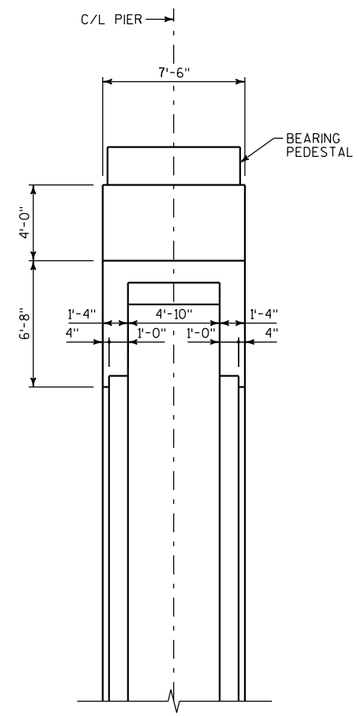

SIDE ELEVATION

LEGEND

(P01) KEYED CONSTRUCTION JOINT FORMED BY SURFACED BEVELED 4"x1'-4"x6'-0".

NO.	DATE	REVISION	BY

STATE OF WISCONSIN
DEPARTMENT OF TRANSPORTATION

STRUCTURE B-40-855

DRAWN BY GLM | PLANS CK'D. WRT

OPTION B
TYPICAL PIER
LAYOUT

SHEET B12 OF B26

8

8

STATE PROJECT NUMBER
1060-33-80

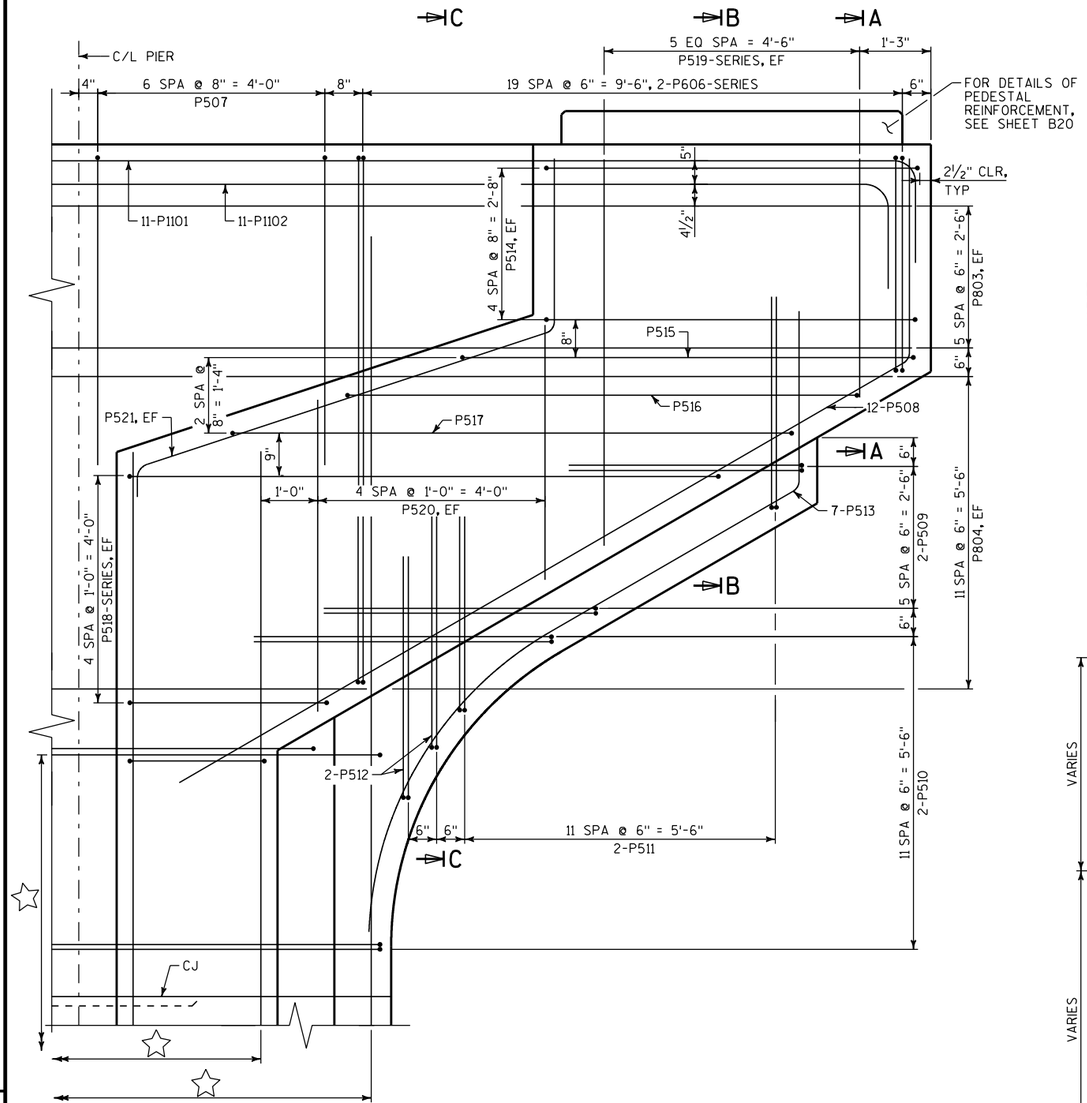

PARTIAL ELEVATION

(REINFORCEMENT IS SYMMETRICAL ABOUT C/L PIER)

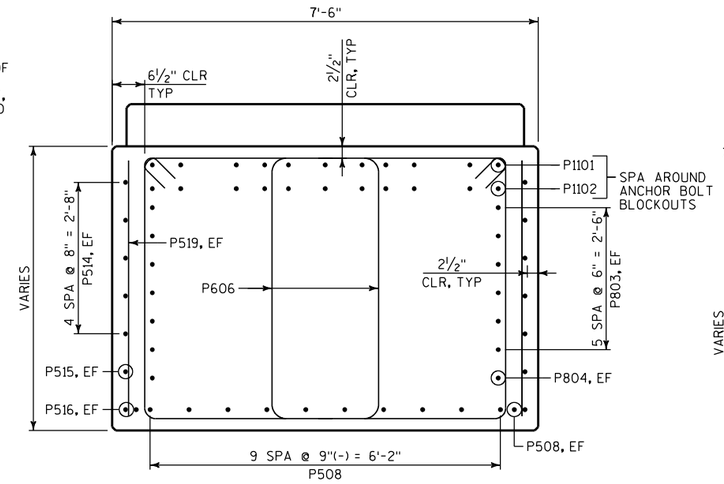

SECTION A-A

(PEDESTAL REINFORCEMENT NOT SHOWN FOR CLARITY)

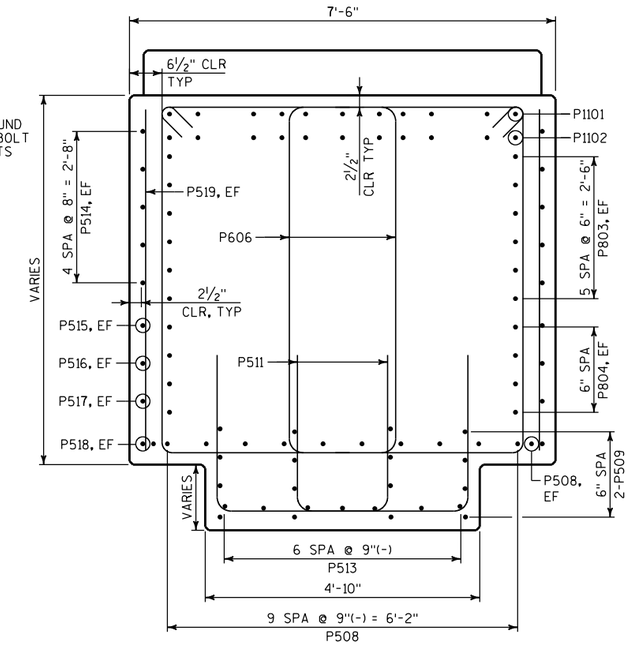

SECTION B-B

(PEDESTAL REINFORCEMENT NOT SHOWN FOR CLARITY)

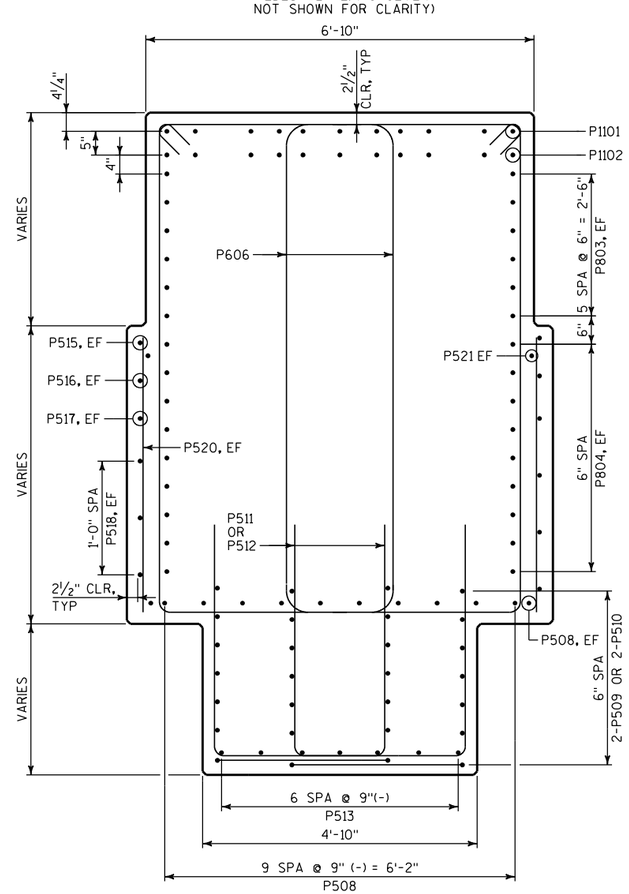

SECTION C-C

LEGEND

☆ COLUMN REINFORCEMENT VARIES BY PIER. SEE PIER DETAIL SHEETS.

NO.	DATE	REVISION	BY

STATE OF WISCONSIN
DEPARTMENT OF TRANSPORTATION

STRUCTURE B-40-855

DRAWN BY ASW | PLANS CK'D. WRT

OPTION B
TYPICAL PIER
CAP REINFORCEMENT

SHEET B13 OF B26

8

8

STATE PROJECT NUMBER
1060-33-80

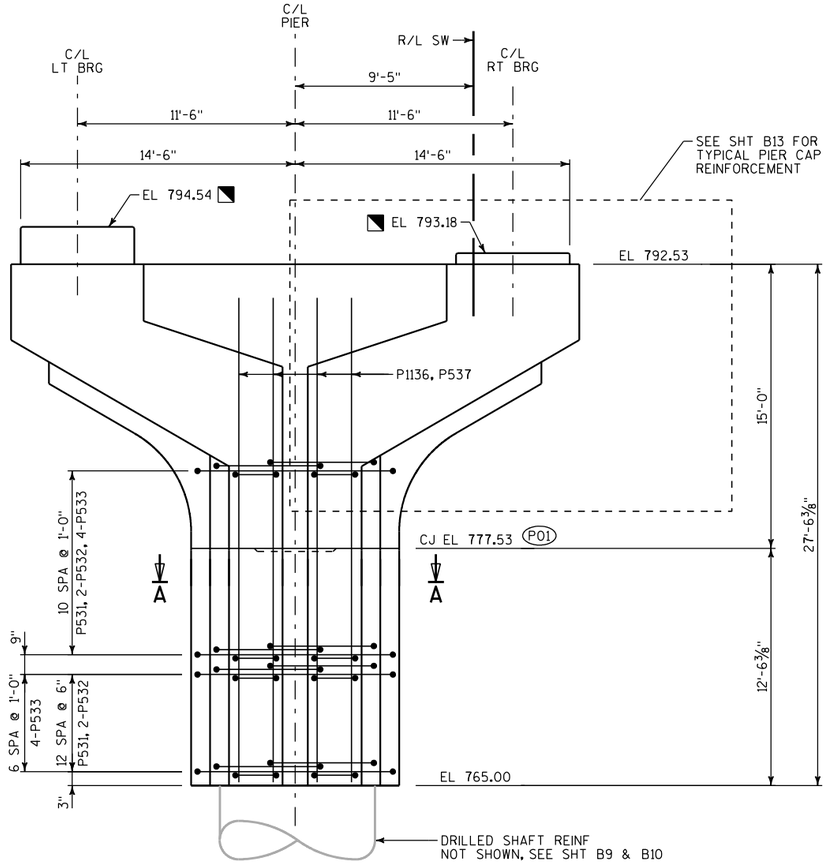

ELEVATION

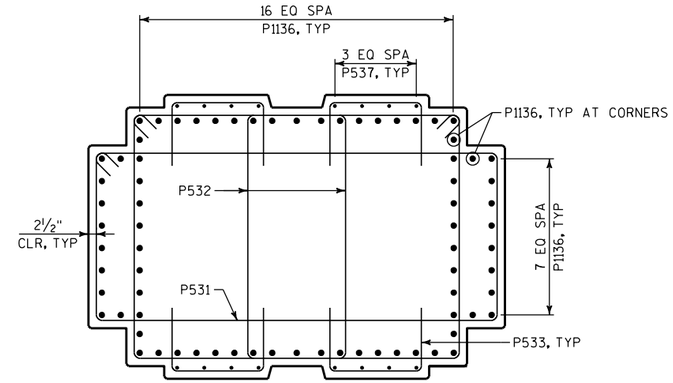

SECTION A-A

LEGEND

◥ ELEVATIONS AND DIMENSIONS DEPEND ON THE ASSUMED BEARING DIMENSIONS SHOWN ON BEARING LAYOUT SHEET. ADJUST AS REQUIRED TO SUIT THE ACTUAL SELECTED BEARING DIMENSIONS.
MINIMUM PEDESTAL HEIGHT = 6".
MAXIMUM PEDESTAL HEIGHT INCREASE = 3"

(P01) KEYED CONSTRUCTION JOINT FORMED BY SURFACED BEVELED 4"x1'-4"x6'-0".

8

8

NO.	DATE	REVISION	BY

STATE OF WISCONSIN
DEPARTMENT OF TRANSPORTATION

STRUCTURE B-40-855

DRAWN BY GLM | PLANS CK'D. WRT

OPTION B
PIER SW01
DETAILS

SHEET B14 OF B26

STATE PROJECT NUMBER
1060-33-80

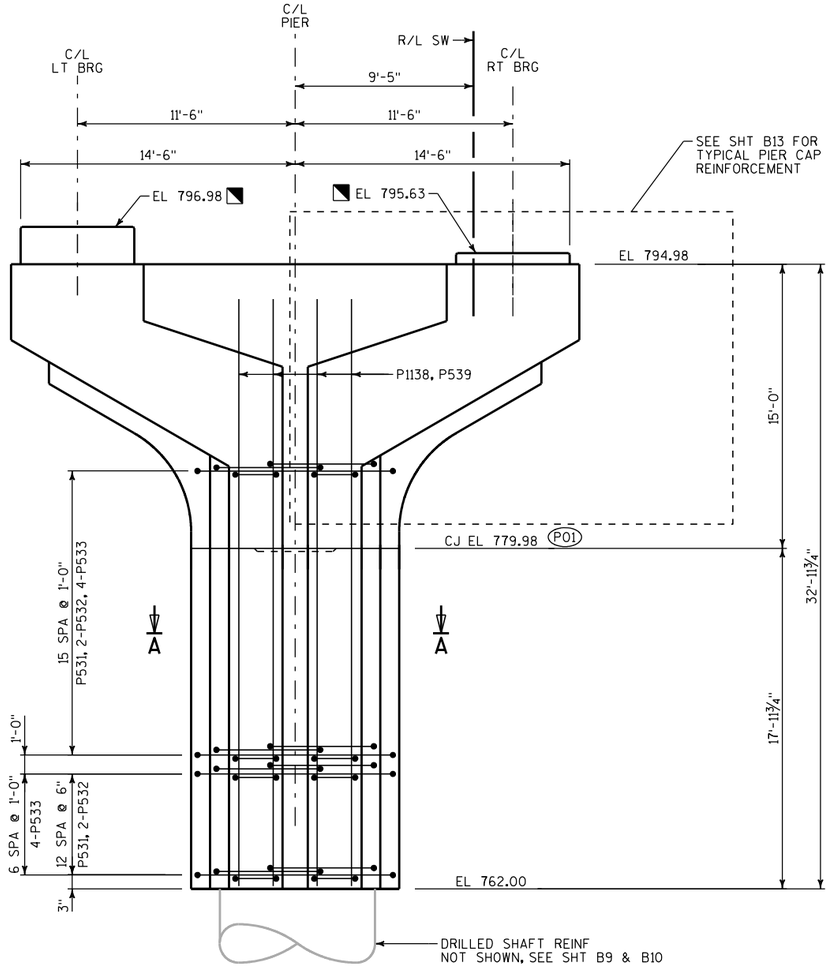

ELEVATION

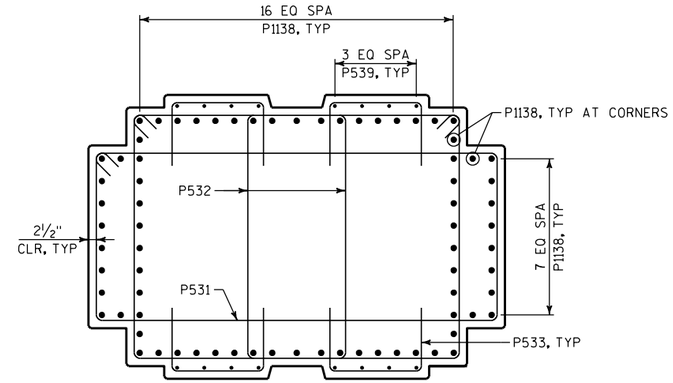

SECTION A-A

LEGEND

◥ ELEVATIONS AND DIMENSIONS DEPEND ON THE ASSUMED BEARING DIMENSIONS SHOWN ON BEARING LAYOUT SHEET. ADJUST AS REQUIRED TO SUIT THE ACTUAL SELECTED BEARING DIMENSIONS.
MINIMUM PEDESTAL HEIGHT = 6".
MAXIMUM PEDESTAL HEIGHT INCREASE = 3"

P01 KEYED CONSTRUCTION JOINT FORMED BY SURFACED BEVELED 4"x1'-4"x6'-0".

8

NO.	DATE	REVISION	BY

STATE OF WISCONSIN
DEPARTMENT OF TRANSPORTATION

STRUCTURE B-40-855

DRAWN BY GLM | PLANS CK'D. WRT

OPTION B
PIER SW02
DETAILS

SHEET B15 OF B26

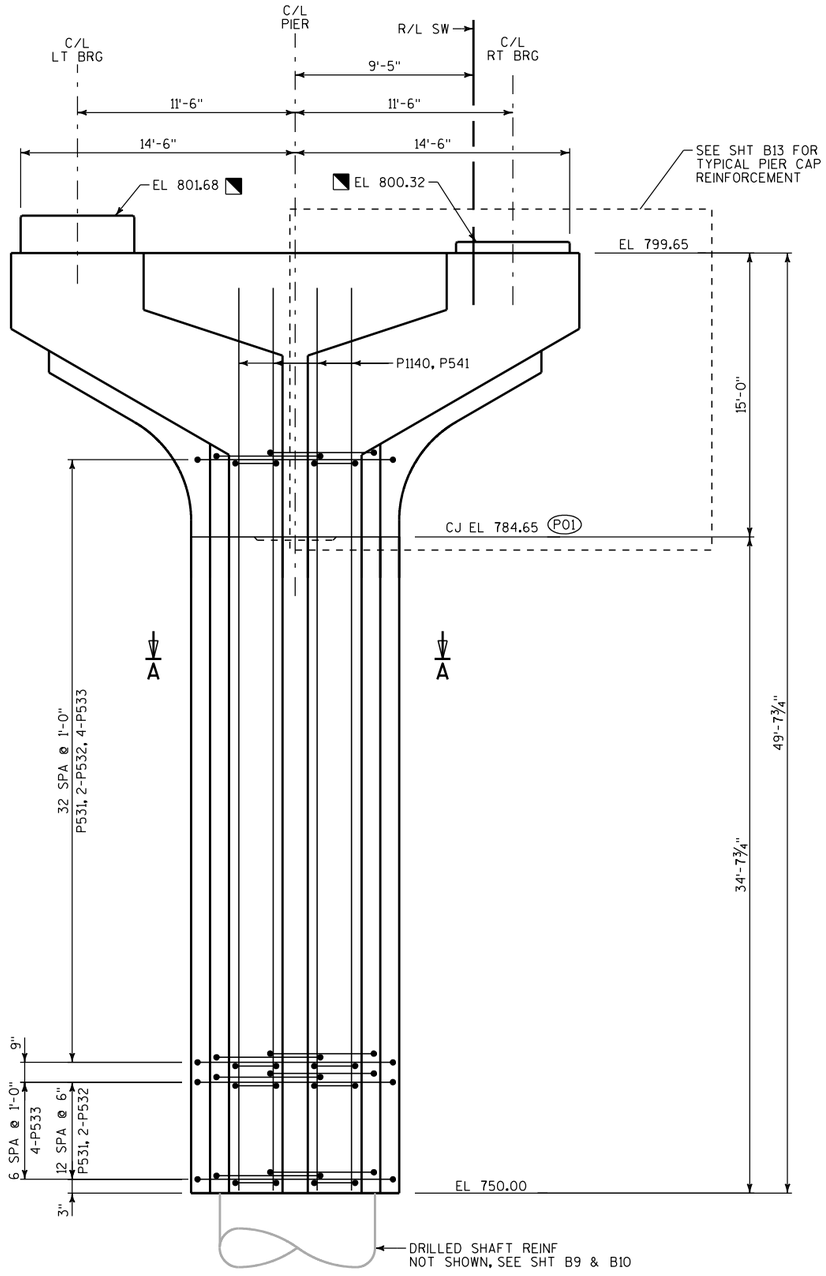

ELEVATION

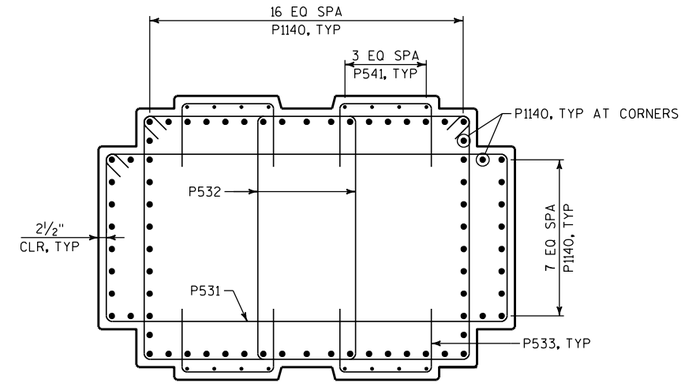

SECTION A-A

LEGEND

◥ ELEVATIONS AND DIMENSIONS DEPEND ON THE ASSUMED BEARING DIMENSIONS SHOWN ON BEARING LAYOUT SHEET. ADJUST AS REQUIRED TO SUIT THE ACTUAL SELECTED BEARING DIMENSIONS.
MINIMUM PEDESTAL HEIGHT = 6".
MAXIMUM PEDESTAL HEIGHT INCREASE = 3"

P01 KEYED CONSTRUCTION JOINT FORMED BY SURFACED BEVELED 4"x1'-4"x6'-0".

NO.	DATE	REVISION	BY

STATE OF WISCONSIN
DEPARTMENT OF TRANSPORTATION

STRUCTURE B-40-855

DRAWN BY GLM | PLANS CK'D. WRT

OPTION B
PIER SW03
DETAILS

SHEET B16 OF B26

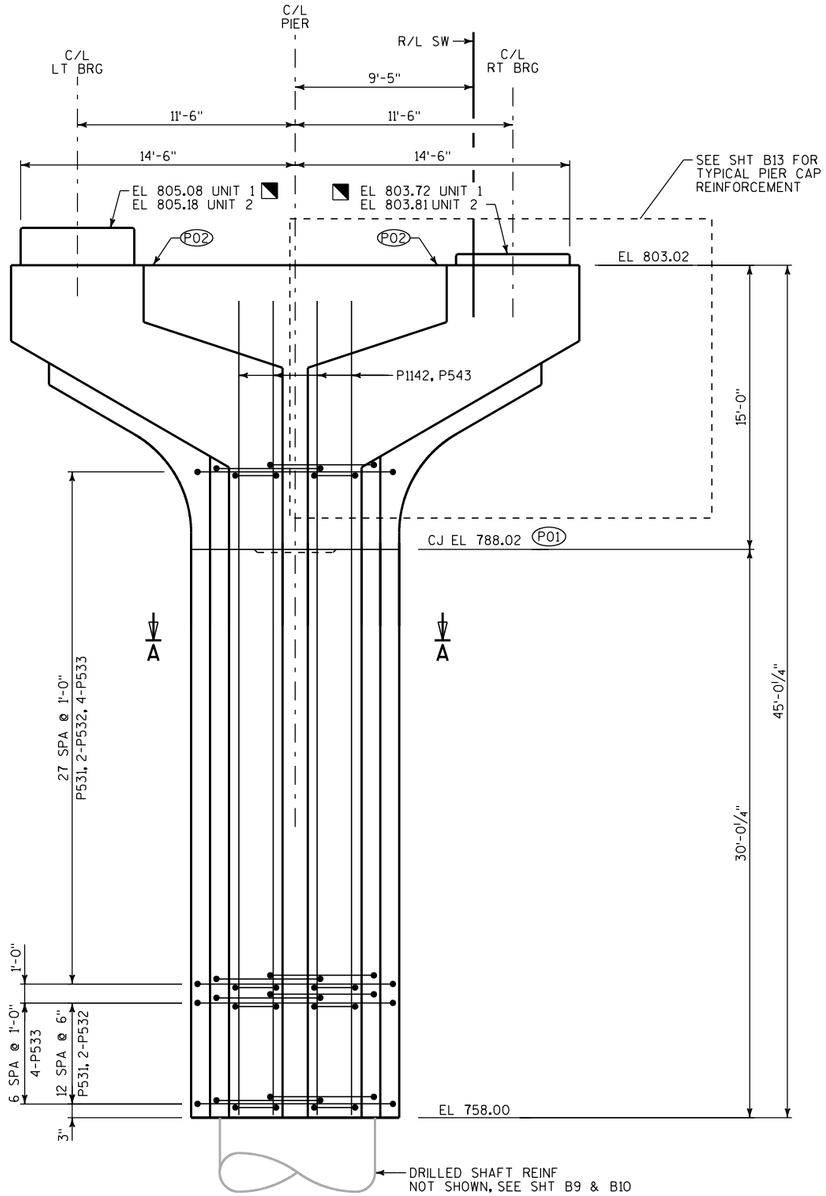

ELEVATION

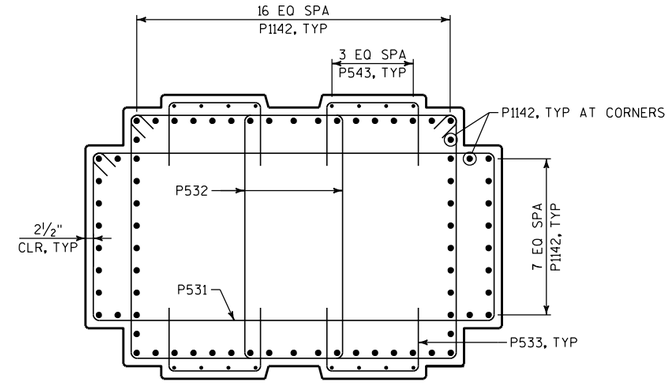

SECTION A-A

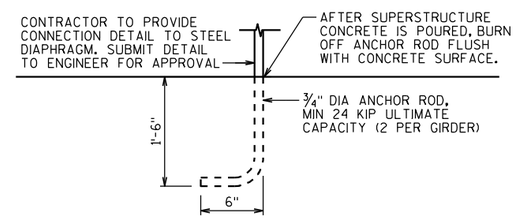

TEMPORARY HOLD DOWN DEVICE

LOCATE WITHIN 1'-6" OF GIRDER BOTTOM FLANGE.
PAYMENT IS INCIDENTAL TO "CONCRETE MASONRY BRIDGES"

LEGEND

◥ ELEVATIONS AND DIMENSIONS DEPEND ON THE ASSUMED BEARING DIMENSIONS SHOWN ON BEARING LAYOUT SHEET. ADJUST AS REQUIRED TO SUIT THE ACTUAL SELECTED BEARING DIMENSIONS.
MINIMUM PEDESTAL HEIGHT = 6".
MAXIMUM PEDESTAL HEIGHT INCREASE = 3"

P01 KEYED CONSTRUCTION JOINT FORMED BY SURFACED BEVELED 4"x1'-4"x6'-0".

P02 TEMPORARY HOLD DOWN DEVICE, SEE DETAIL.

8

8

NO.	DATE	REVISION	BY

STATE OF WISCONSIN
DEPARTMENT OF TRANSPORTATION

STRUCTURE B-40-855

DRAWN BY GLM | PLANS CK'D. WRT

OPTION B
PIER SW04
DETAILS

SHEET B17 OF B26

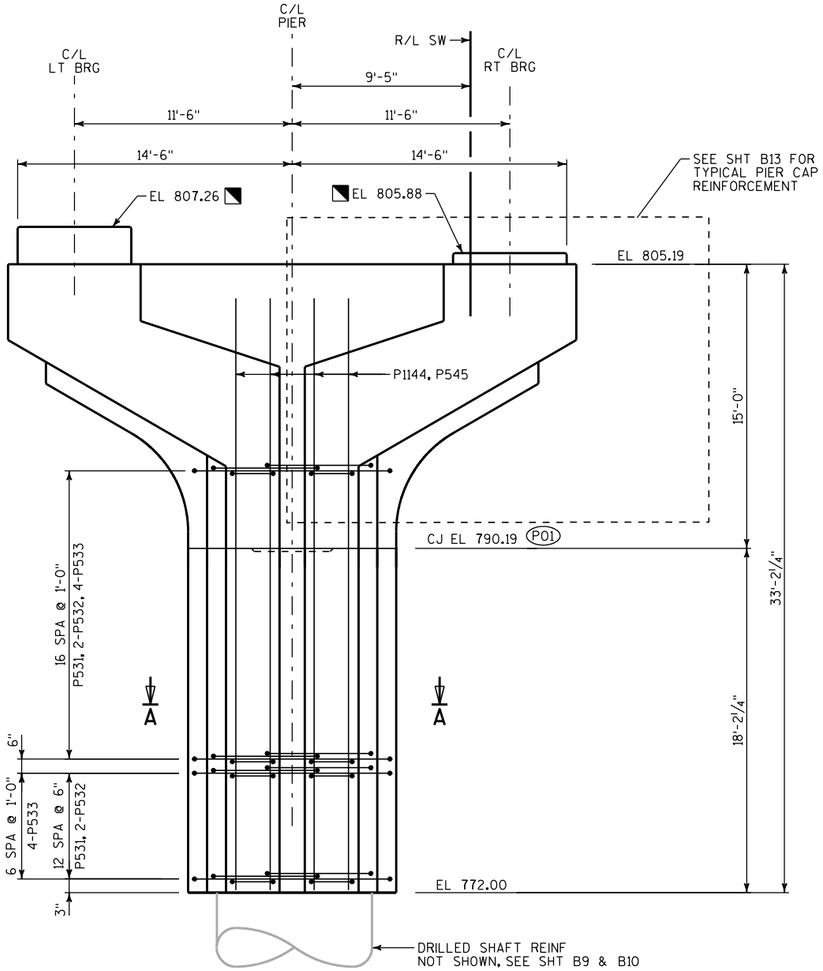

ELEVATION

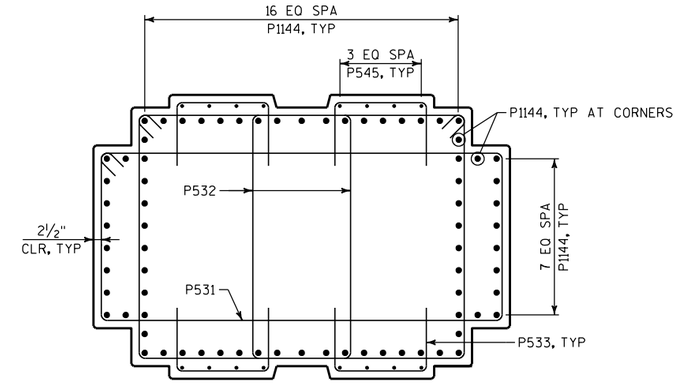

SECTION A-A

LEGEND

◥ ELEVATIONS AND DIMENSIONS DEPEND ON THE ASSUMED BEARING DIMENSIONS SHOWN ON BEARING LAYOUT SHEET. ADJUST AS REQUIRED TO SUIT THE ACTUAL SELECTED BEARING DIMENSIONS.
MINIMUM PEDESTAL HEIGHT = 6".
MAXIMUM PEDESTAL HEIGHT INCREASE = 3"

(P01) KEYED CONSTRUCTION JOINT FORMED BY SURFACED BEVELED 4"x1'-4"x6'-0".

8

NO.	DATE	REVISION	BY

STATE OF WISCONSIN
DEPARTMENT OF TRANSPORTATION

STRUCTURE B-40-855

DRAWN BY GLM | PLANS CK'D. WRT

OPTION B
PIER SW05
DETAILS

SHEET B18 OF B26

STATE PROJECT NUMBER
1060-33-80

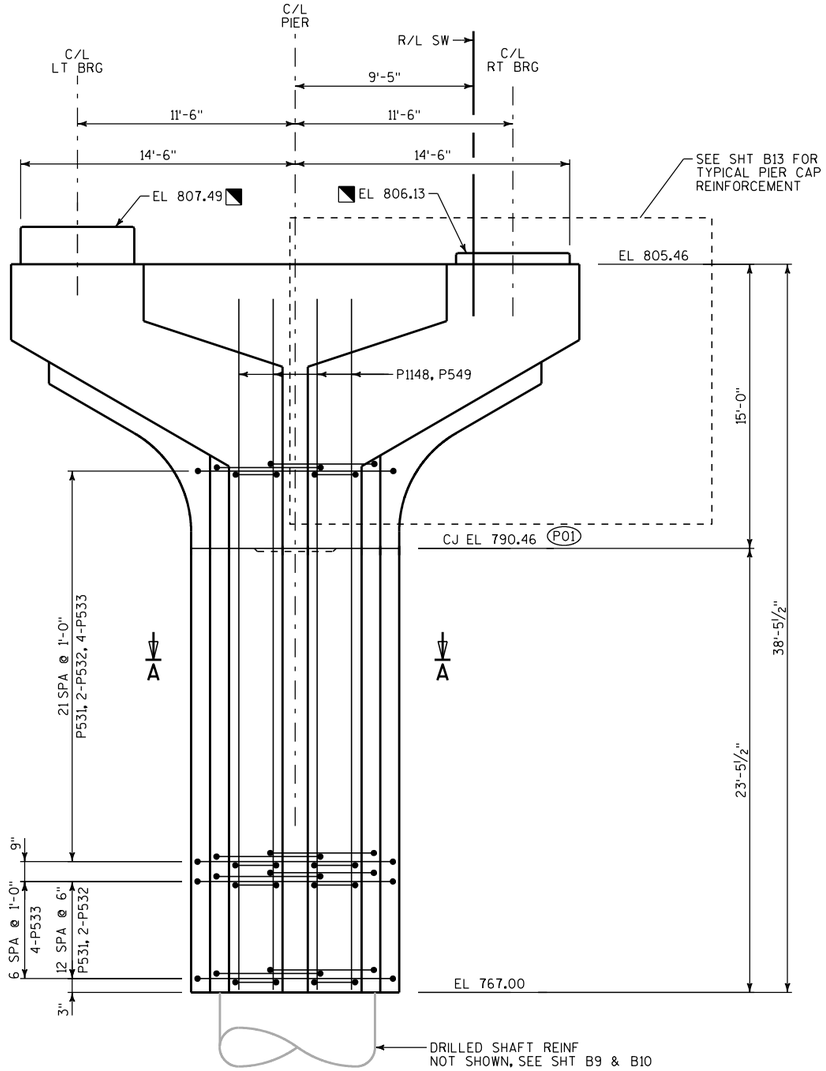

ELEVATION

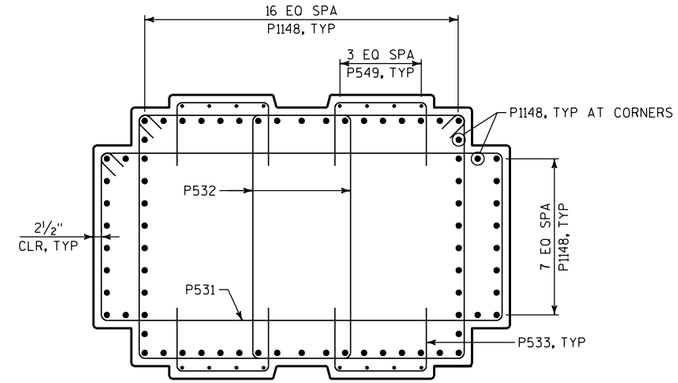

SECTION A-A

LEGEND

◥ ELEVATIONS AND DIMENSIONS DEPEND ON THE ASSUMED BEARING DIMENSIONS SHOWN ON BEARING LAYOUT SHEET. ADJUST AS REQUIRED TO SUIT THE ACTUAL SELECTED BEARING DIMENSIONS.
MINIMUM PEDESTAL HEIGHT = 6".
MAXIMUM PEDESTAL HEIGHT INCREASE = 3"

(P01) KEYED CONSTRUCTION JOINT FORMED BY SURFACED BEVELED 4"x1'-4"x6'-0".

8

8

NO.	DATE	REVISION	BY

STATE OF WISCONSIN
DEPARTMENT OF TRANSPORTATION

STRUCTURE B-40-855

DRAWN BY GLM | PLANS CK'D. WRT

OPTION B
PIER SW07
DETAILS

SHEET B19 OF B26

STATE PROJECT NUMBER
1060-33-80

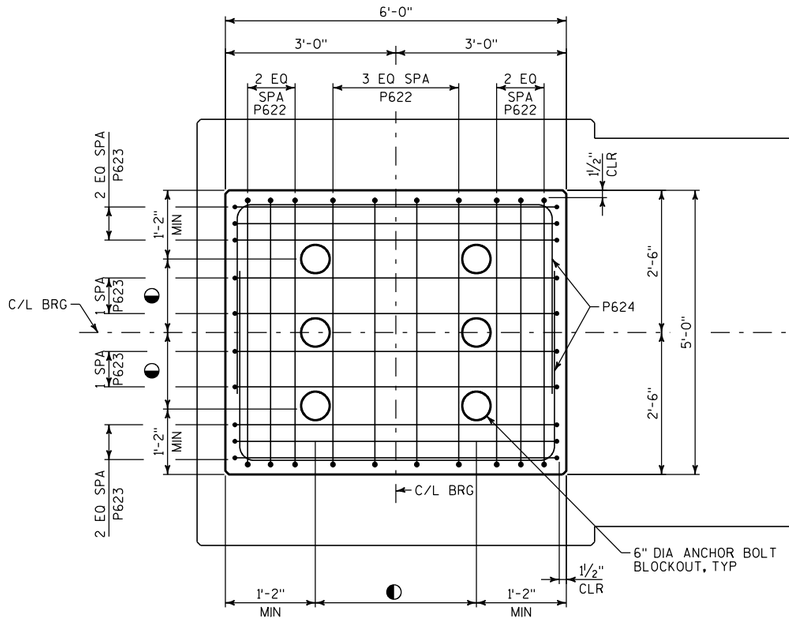

PEDESTAL PLAN
(TYPICAL PIER)

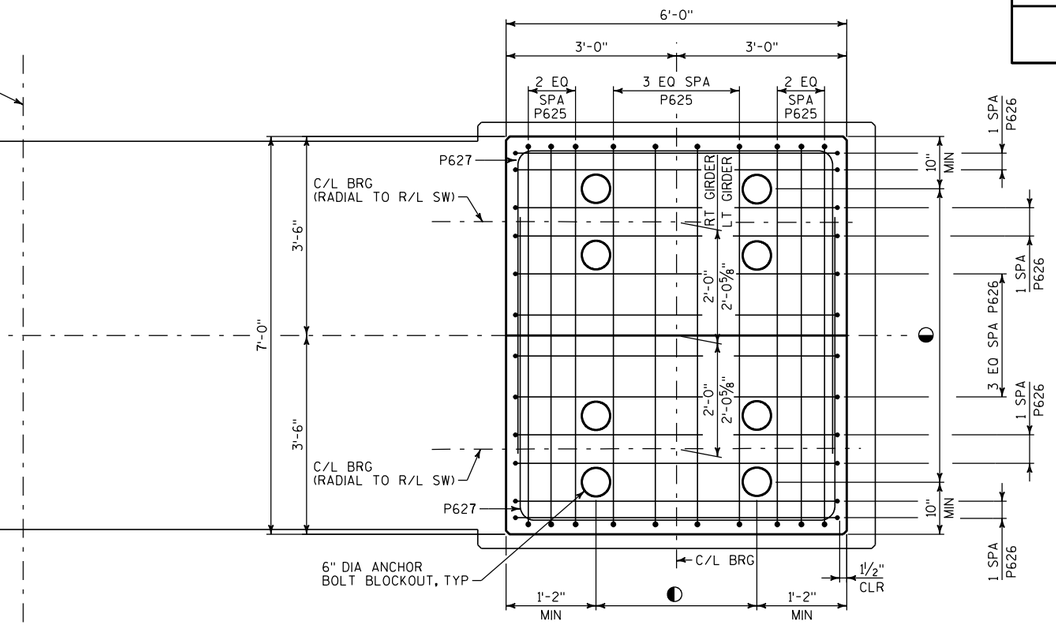

PEDESTAL PLAN
(PIER SW04 ONLY)

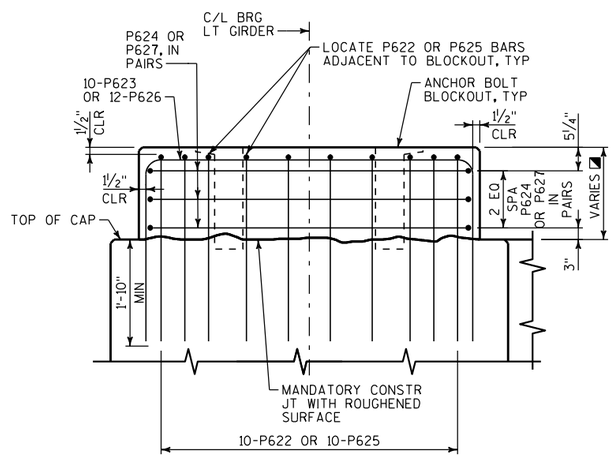

PEDESTAL ELEVATION - LEFT GIRDER

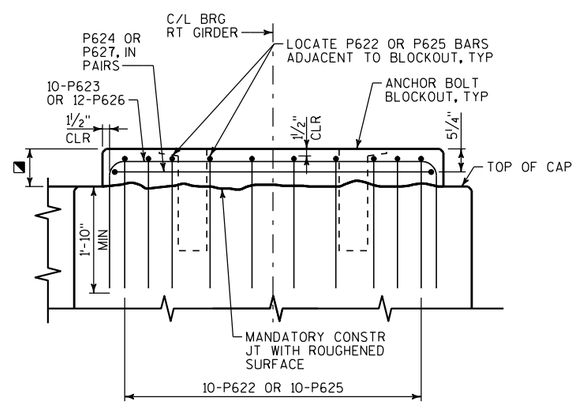

PEDESTAL ELEVATION - RIGHT GIRDER

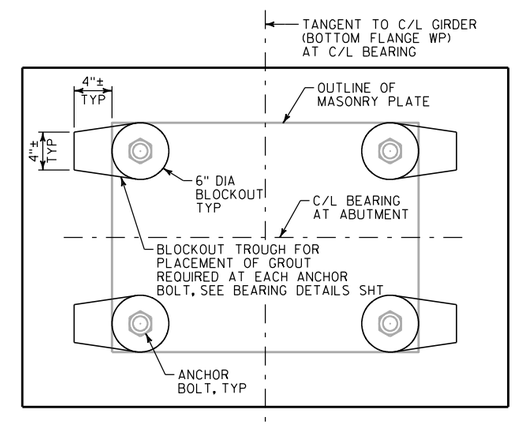

PEDESTAL PLAN - GROUT TROUGHS
SEE BEARING DETAILS SHEET

NOTES

FOR DETAILS OF ANCHOR BOLT BLOCKOUTS, SEE BEARING DETAILS SHEET.

FOR DETAILS OF BEARINGS, SEE BEARING LAYOUT SHEETS AND BEARING DETAILS SHEET.

LEGEND

◥ DIMENSIONS DEPEND ON THE ASSUMED BEARING DIMENSIONS SHOWN ON BEARING LAYOUT SHEET. ADJUST AS REQUIRED TO SUIT THE ACTUAL SELECTED BEARING DIMENSIONS.
MINIMUM PEDESTAL HEIGHT = 6".
MAXIMUM PEDESTAL HEIGHT INCREASE = 3"

◐ SEE BEARING LAYOUT SHEETS FOR ANCHOR BOLT BLOCKOUT LOCATION. VERIFY LOCATIONS WITH BEARING MANUFACTURER.

NO.	DATE	REVISION	BY

STATE OF WISCONSIN
DEPARTMENT OF TRANSPORTATION

STRUCTURE B-40-855

DRAWN BY GLM | PLANS CK'D. WRT

OPTION B
TYPICAL PEDESTAL REINFORCEMENT

SHEET B20 OF B26

STATE PROJECT NUMBER
1060-33-80

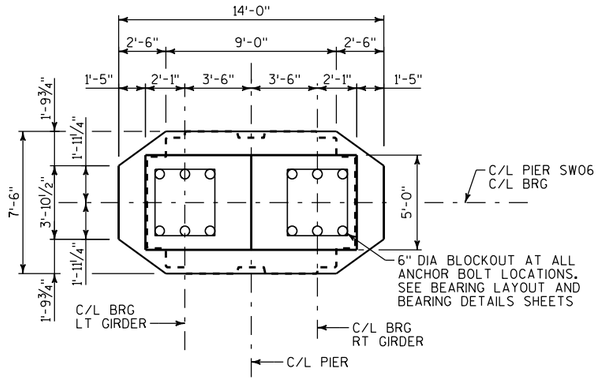

PLAN

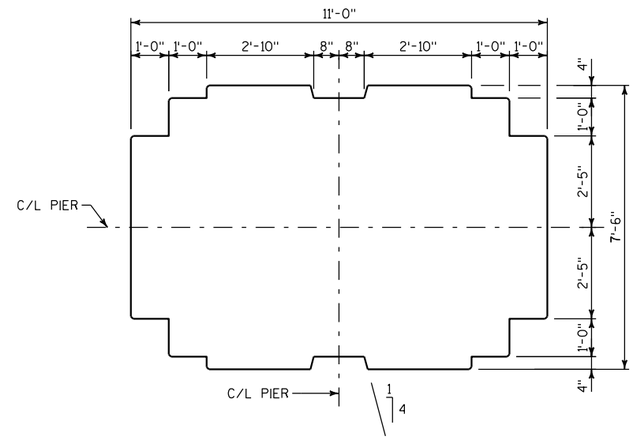

SECTION A-A

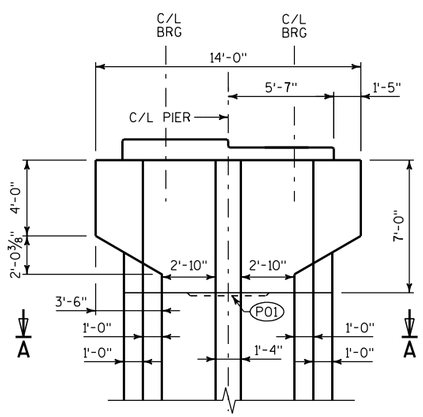

FRONT ELEVATION

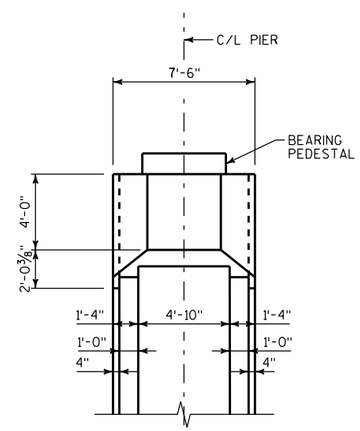

SIDE ELEVATION

LEGEND

(P01) KEYED CONSTRUCTION JOINT FORMED BY SURFACED BEVELED 4"x1'-4"x6'-0".

8

8

NO.	DATE	REVISION	BY

STATE OF WISCONSIN
DEPARTMENT OF TRANSPORTATION

STRUCTURE B-40-855

DRAWN BY PAK | PLANS CK'D. WRT

OPTION B
PIER SW06
LAYOUT

SHEET B21 OF B26

STATE PROJECT NUMBER

1060-33-80

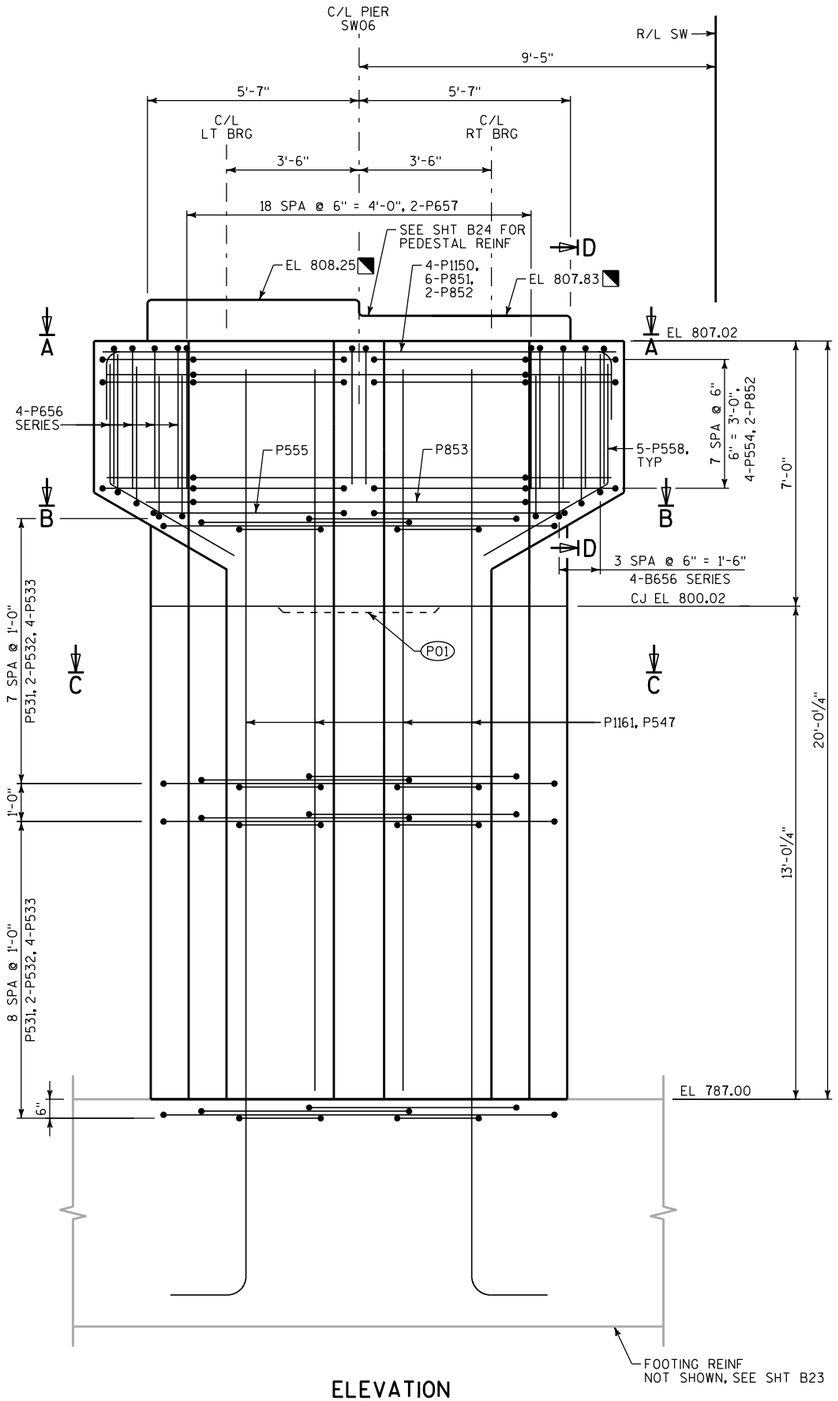

ELEVATION

(REINFORCEMENT IS SYMMETRICAL ABOUT C/L OF PIER)

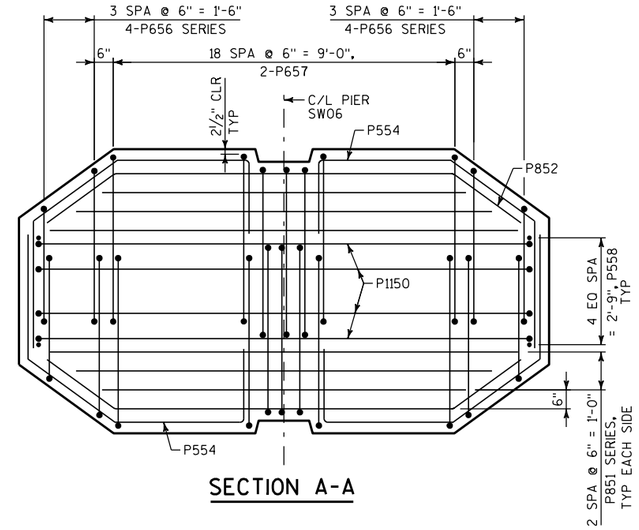

SECTION A-A

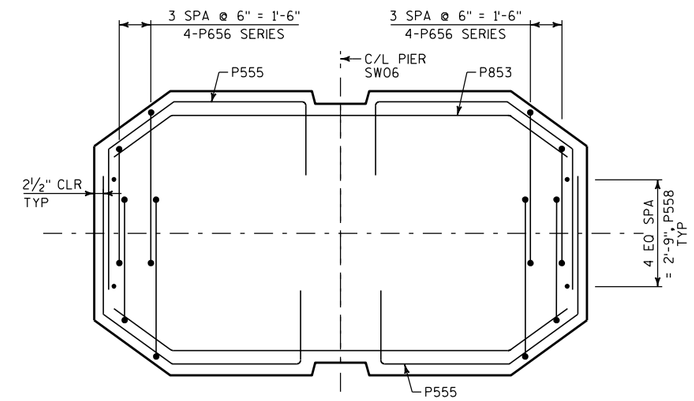

SECTION B-B

COLUMN REINFORCEMENT NOT SHOWN FOR CLARITY

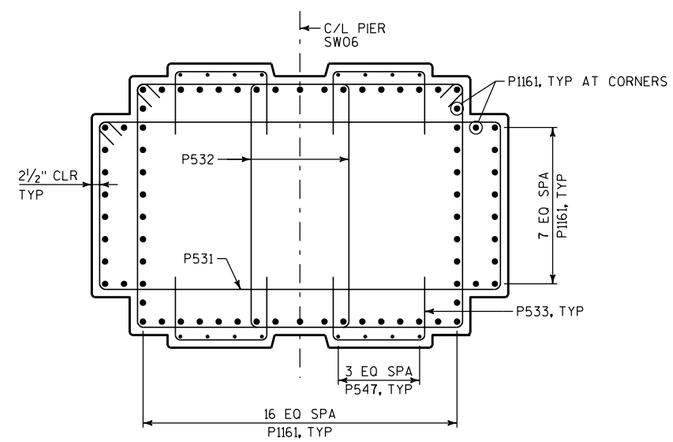

SECTION C-C

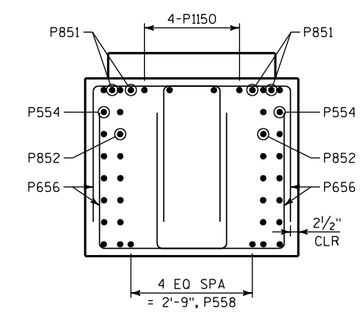

SECTION D-D

FOR PEDESTAL REINFORCEMENT SEE SHT B24

LEGEND

◥ ELEVATIONS AND DIMENSIONS DEPEND ON THE ASSUMED BEARING DIMENSIONS SHOWN ON BEARING LAYOUT SHEET. ADJUST AS REQUIRED TO SUIT THE ACTUAL SELECTED BEARING DIMENSIONS.
MINIMUM PEDESTAL HEIGHT = 6".
MAXIMUM PEDESTAL HEIGHT INCREASE = 3"

(P01) KEYED CONSTRUCTION JOINT FORMED BY SURFACED BEVELED 4"x1'-4"x6'-0".

NO.	DATE	REVISION	BY

STATE OF WISCONSIN
DEPARTMENT OF TRANSPORTATION

STRUCTURE B-40-855

DRAWN BY GLM | PLANS CK'D. WRT

OPTION B
PIER SW06
DETAILS

SHEET B22 OF B26

8

8

STATE PROJECT NUMBER
1060-33-80

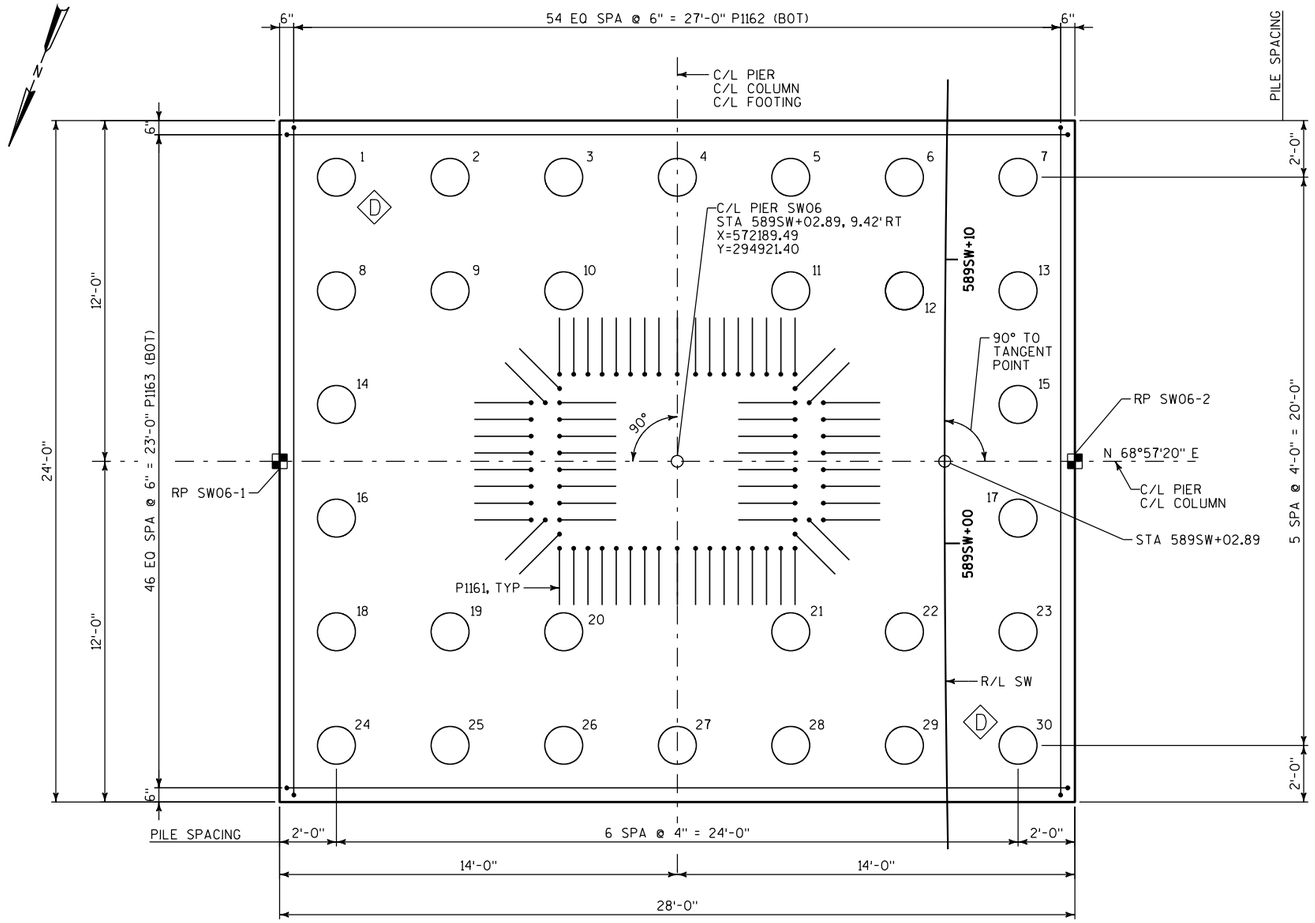

PLAN

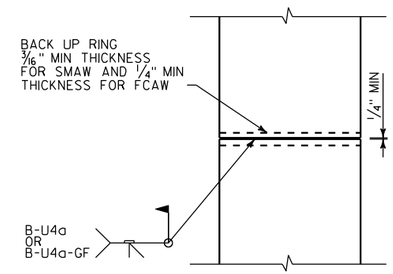

CIP PILE SPLICE DETAIL

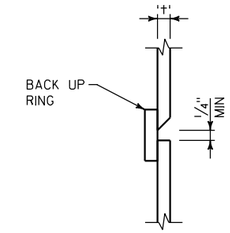

CIP PILE WELD DETAIL

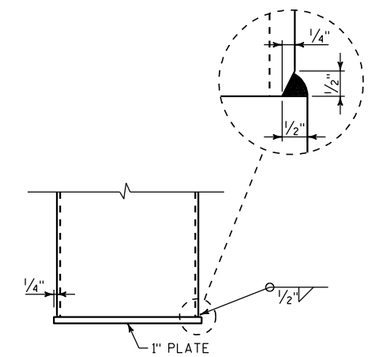

CIP PILE END
PLATE DETAIL

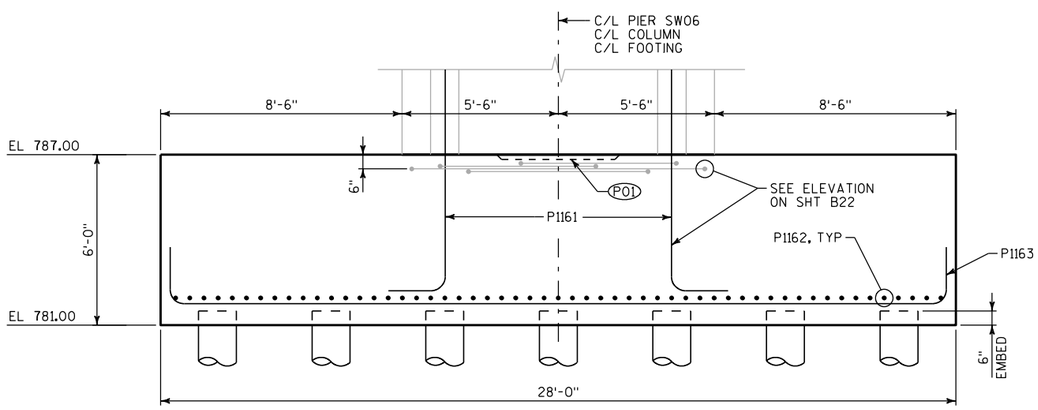

ELEVATION

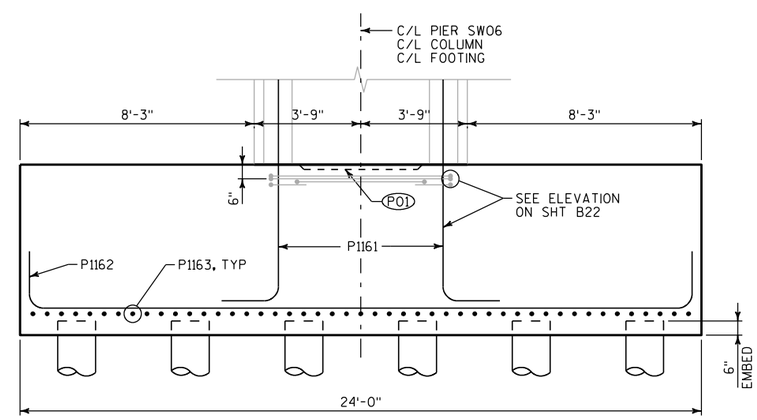

END VIEW

LEGEND

- (P01) KEYED CONSTRUCTION JOINT FORMED BY SURFACED BEVELED 4"x1'-4"x6'-0".
- (D) DYNAMIC PILE LOAD TESTING.
- ○ PIER SUPPORTED ON 16" DIA CIP CONCRETE PILING WITH A REQUIRED DRIVING RESISTANCE OF 250 TONS PER PILE AS DETERMINED BYT THE PDA/ CAPWAP ACCEPTANCE METHOD.

  ESTIMATED PILE LENGTH = 70 FT.
- ■ REFERENCE POINT, SEE SHEET B4.

NO.	DATE	REVISION	BY

STATE OF WISCONSIN
DEPARTMENT OF TRANSPORTATION

STRUCTURE B-40-855

DRAWN BY PAK | PLANS CK'D. WRT

OPTION B
PIER SW06
FOOTING

SHEET B23 OF B26

8

8

STATE PROJECT NUMBER
1060-33-80

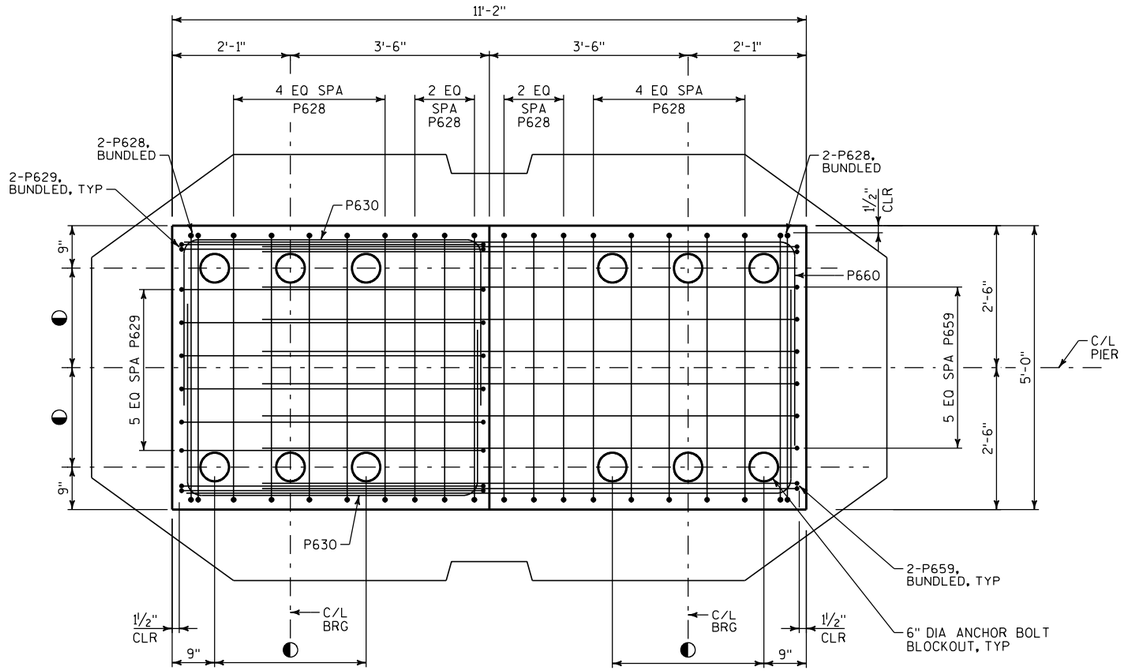

PEDESTAL PLAN

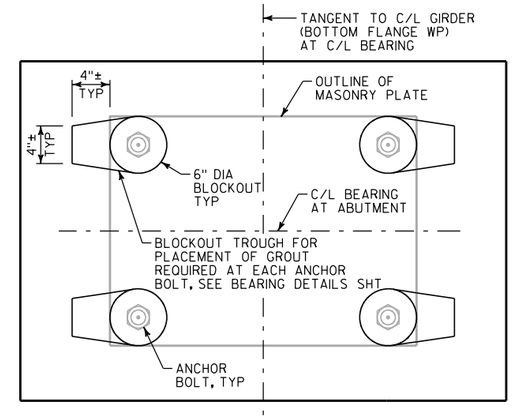

PEDESTAL PLAN - GROUT TROUGHS

SEE BEARING DETAILS SHEET

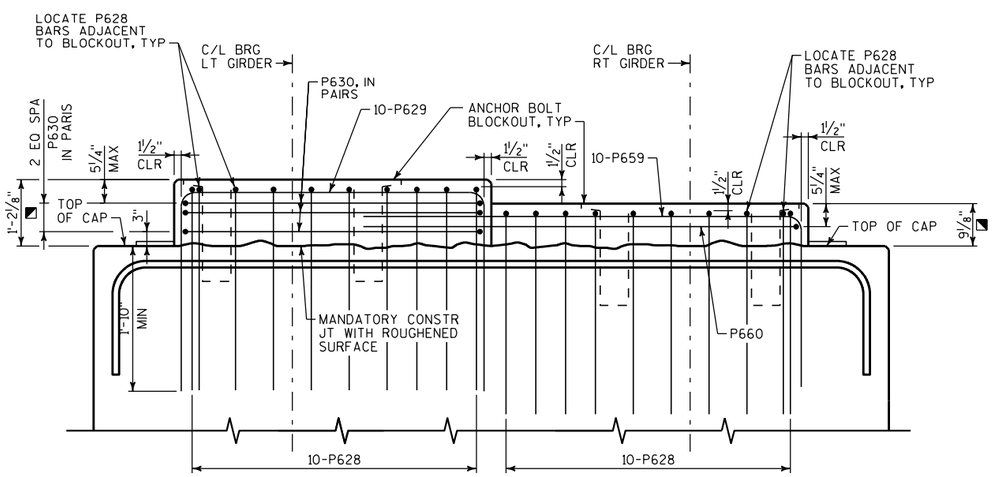

PEDESTAL ELEVATION

NOTES

FOR DETAILS OF ANCHOR BOLT BLOCKOUTS, SEE BEARING DETAILS SHEET.

FOR DETAILS OF BEARINGS, SEE BEARING LAYOUT SHEETS AND BEARING DETAILS SHEET.

LEGEND

◥ ELEVATIONS AND DIMENSIONS DEPEND ON THE ASSUMED BEARING DIMENSIONS SHOWN ON BEARING LAYOUT SHEET. ADJUST AS REQUIRED TO SUIT THE ACTUAL SELECTED BEARING DIMENSIONS.
MINIMUM PEDESTAL HEIGHT = 6".
MAXIMUM PEDESTAL HEIGHT INCREASE = 3"

◐ SEE BEARING LAYOUT SHEET FOR ANCHOR BOLT BLOCKOUT LOCATION. VERIFY LOCATIONS WITH BEARING MANUFACTURER.

NO.	DATE	REVISION	BY

STATE OF WISCONSIN
DEPARTMENT OF TRANSPORTATION

STRUCTURE B-40-855

DRAWN BY GLM | PLANS CK'D. WRT

OPTION B
PIER SW06
PEDESTAL
REINFORCEMENT

SHEET B24 OF B26

8

8

STATE PROJECT NUMBER

1060-33-80

BAR INFORMATION							BAR DIMENSIONS						LOCATION	BAR SERIES INFORMATION				
BAR MARK	MATL	NO. REQ'D	LENGTH	BENT	BAR SERIES	BEND TYPE	A	B	C	D	E	F		DIM	MIN	MAX	NO REQ'D	LENGTH
P1101	E	66	32'-8"	X		4	2'-0"	29'-4"					TOP TIE BAR					
P1102	E	66	31'-10"	X		4	2'-0"	28'-6"					BOTTOM TIE BAR					
P803	E	72	29'-4"			1	29'-4"						SKIN STEEL - TOP OF CAP					
P804	E	144	19'-5"		X	1	19'-5"						SKIN STEEL - MIDDLE OF CAP (SERIES)	A	10'-0"	28'-10"	12 SERIES OF 12	10'-0" TO 28'-10"
P606	E	480	21'-11"	X	X	3	4'-2"	6'-4½"					STIRRUPS - TOP EDGES OF CAP (SERIES)	A	3'-7"	9'-2"	24 SERIES OF 20	16'-4" TO 27'-6"
P507	E	84	17'-11"	X		4	6'-4"	5'-6"					TIE - TOP CENTER OF CAP					
P508	E	144	18'-9"	X		9	3'-6"	15'-3"	60				OUTSIDE FACE OF PIER CAP - TOP					
P509	E	144	11'-3"	X		4	4'-3"	3'-0"					HORIZONTAL TIE - BOTTOM OF CAP (TOP SEC)					
P510	E	288	13'-3"	X		4	5'-3"	3'-0"					HORIZONTAL TIE - BOTTOM OF CAP (BOT SEC)					
P511	E	288	10'-3"	X		4	3'-9"	3'-0"					VERTICAL TIE - BOTTOM OF CAP (TOP SEC)					
P512	E	48	11'-3"	X		4	4'-3"	3'-0"					VERTICAL TIE - BOTTOM OF CAP (BOT SEC)					
P513	E	84	14'-5"	X		40	3'-0"	5'-0"	6'-5"	60	6'-5"		OUTSIDE FACE OF PIER CAP - BOT					
P514	E	120	16'-5"	X		4	5'-1"	6'-6"					TIE - ARCHITECTURAL REVEAL - HORIZ - TOP					
P515	E	24	18'-1"	X		4	5'-1"	8'-2"					TIE - ARCHITECTURAL REVEAL - HORIZ - MID					
P516	E	24	18'-10"	X		4	5'-1"	8'-11"					TIE - ARCHITECTURAL REVEAL - HORIZ - MID					
P517	E	24	19'-9"	X		4	5'-1"	9'-10"					TIE - ARCHITECTURAL REVEAL - HORIZ - MID					
P518	E	120	11'-4"	X	X	4	2'-4"	6'-10½"					TIE - ARCHITECTURAL REVEAL - HORIZ - BOT (SERIES)	B	3'-5"	10'-4"	24 SERIES OF 5	7'-10" TO 14'-9"
P519	E	144	5'-0"		X	1	5'-0"						ARCHITECTURAL REVEAL - VERT - TOP (SERIES)	A	4'-2"	6'-9"	24 SERIES OF 6	4'-2" TO 6'-9"
P520	E	120	4'-11"		X	1	4'-11"						ARCHITECTURAL REVEAL - VERT - MID (SERIES)	A	4'-5"	5'-5"	24 SERIES OF 5	4'-5" TO 5'-5"
P521	E	24	11'-6"	X		15	7'-9"	3'-0"	72				ARCHITECTURAL REVEAL - VERT - INSIDE FACE					
P622	E	100	10'-11"	X		4	3'-3"	4'-9"					PEDESTAL REINFORCEMENT - TYP - TOP FACE					
P623	E	100	11'-9"	X		4	3'-2"	5'-9"					PEDESTAL REINFORCEMENT - TYP - TOP FACE					
P624	E	40	12'-5"	X		4	3'-7"	5'-7"					PEDESTAL REINFORCEMENT - TYP - SIDE					
P625	E	20	12'-11"	X		4	3'-3"	6'-9"					PEDESTAL REINFORCEMENT - SW04 - TOP FACE					
P626	E	24	11'-9"	X		4	3'-2"	5'-9"					PEDESTAL REINFORCEMENT - SW04 - TOP FACE					
P627	E	8	14'-5"	X		4	4'-7"	5'-7"					PEDESTAL REINFORCEMENT - SW04 - SIDE					
P628	E	20	11'-7"	X		4	3'-7"	4'-9"					PEDESTAL REINFORCEMENT - SW06 - TOP FACE					
P629	E	10	12'-0"	X		4	3'-6"	5'-4"					PEDESTAL REINFORCEMENT - SW06 - TOP FACE					
P630	E	6	11'-10"	X		4	3'-6"	5'-2"					PEDESTAL REINFORCEMENT - SW06 - SIDE					
P531	E	230	30'-7"	X		3	10'-7"	4'-5"					COLUMN TRANSVERSE (MAIN)					
P532	E	460	24'-7"	X		3	6'-5"	5'-7"					COLUMN TRANSVERSE (MAIN)					
P533	E	748	5'-6"	X		4	1'-8"	2'-5"					COLUMN TRANSVERSE (SECONDARY)					
P1136	E	74	25'-7"			1	25'-7"						SW01 VERTICAL BAR (MAIN)					
P537	E	16	21'-11"			1	21'-11"						SW01 VERTICAL BAR (SECONDARY)					
P1138	E	74	31'-0"			1	31'-0"						SW02 VERTICAL BAR (MAIN)					
P539	E	16	27'-5"			1	27'-5"						SW02 VERTICAL BAR (SECONDARY)					
P1140	E	74	47'-8"			1	47'-8"						SW03 VERTICAL BAR (MAIN)					
P541	E	16	44'-1"			1	44'-1"						SW03 VERTICAL BAR (SECONDARY)					
P1142	E	74	43'-1"			1	43'-1"						SW04 VERTICAL BAR (MAIN)					
P543	E	16	39'-5"			1	39'-5"						SW04 VERTICAL BAR (SECONDARY)					
P1144	E	74	31'-3"			1	31'-3"						SW05 VERTICAL BAR (MAIN)					
P545	E	16	27'-7"			1	27'-7"						SW05 VERTICAL BAR (SECONDARY)					
P547	E	16	14'-5"			1	14'-5"						SW06 VERTICAL BAR (SECONDARY)					

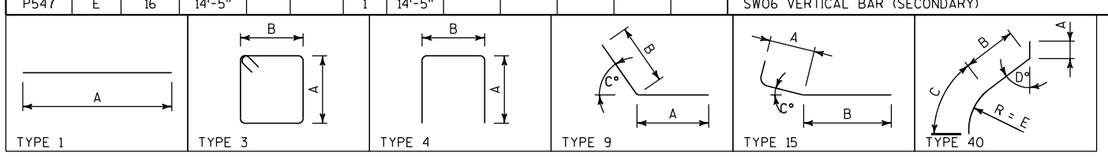

NOTES

THE FIRST DIGIT OF A THREE-DIGIT BAR MARK OR THE FIRST TWO DIGITS OF A FOUR-DIGIT BAR MARK SIGNIFY THE BAR SIZE.

DIMENSIONS ARE TO OUTSIDE OF BARS, EXCEPT FOR RADIUS DIMENSIONS WHICH ARE TO INSIDE OF BENDS.

FOR A BAR SERIES, LENGTH SHOWN IN THE FOURTH COLUMN OF TABLE IS THE AVERAGE BAR LENGTH USED TO COMPUTE BAR WEIGHT.

BAR MATERIAL CODES USED IN SECOND COLUMN OF TABLE
- U - STEEL, HIGH STRENGTH, UNCOATED.
- E - STEEL, HIGH STRENGTH, EPOXY COATED.
- S - STAINLESS STEEL.

NO.	DATE	REVISION	BY

STATE OF WISCONSIN
DEPARTMENT OF TRANSPORTATION

STRUCTURE B-40-855

DRAWN BY PAK | PLANS CK'D. WRT

OPTION B
PIER REINFORCEMENT
SCHEDULE (1 OF 2)

SHEET B25 OF B26

BAR INFORMATION							BAR DIMENSIONS						LOCATION	BAR SERIES INFORMATION				
BAR MARK	MATL	NO. REQ'D	LENGTH	BENT	BAR SERIES	BEND TYPE	A	B	C	D	E	F		DIM	MIN	MAX	NO REQ'D	LENGTH
P1148	E	74	36'-6"			1	36'-6"						SW07 VERTICAL BAR (MAIN)					
P549	E	16	32'-11"			1	32'-11"						SW07 VERTICAL BAR (SECONDARY)					
P1150	E	4	16'-8"	X		4	2'-0"	13'-4"					SW06 PIER CAP - TOP TIE BAR					
P851	E	6	12'-3"		X	1	12'-3"						SW06 PIER CAP - TOP FACE BAR (SERIES)	A	11'-4"	13'-2"	2 SERIES OF 3	11'-4" TO 13'-2"
P852	E	18	14'-3"	X		24	2'-3"	9'-9"	36				SW06 PIER CAP - HORIZ SKIN STEEL					
P853	E	2	13'-1"	X		24	1'-8"	9'-9"	36				SW06 PIER CAP - HORIZ SKIN STEEL - BOT					
P554	E	32	10'-6"	X		41	3'-3"	2'-10"	3'-5"	1'-3"	126	144	SW06 PIER CAP - FACE SKIN STEEL					
P555	E	4	10'-3"	X		41	3'-7"	2'-3"	3'-5"	1'-3"	126	144	SW06 PIER CAP - FACE SKIN STEEL - BOT					
P656	E	32	10'-4"	X	X	4	3'-7"	3'-6"					SW06 PIER CAP - SHEAR STEEL - EDGE (SERIES)	B	3'-0"	4'-0"	4 SERIES OF 4	9'-10" TO 10'-10"
P657	E	38	11'-2"	X		4	3'-7"	4'-4"					SW06 PIER CAP - SHEAR STEEL - CENTER					
P558	E	10	7'-0"	X		9	3'-2"	3'-10"	70				SW06 PIER CAP - OUTSIDE FACE					
P659	E	10	10'-7"	X		8	7'-9"	3'-0"					PEDESTAL REINFORCEMENT - SW06 - TOP FACE - RIGHT SIDE					
P660	E	2	11'-1"	X		8	7'-9"	3'-6"					PEDESTAL REINFORCEMENT - SW06 - SIDE - RIGHT SIDE					
P1161	E	74	24'-9"	X		8	23'-1"	2'-0"					SW06 VERTICAL BAR (MAIN)					
P1162	U	55	25'-0"	X		8	23'-4"	2'-0"					FOOTING BOTTOM - HORIZ					
P1163	U	47	29'-2"	X		8	27'-6"	2'-0"					FOOTING BOTTOM - HORIZ					

BAR MARK BREAKDOWN

MARK	PIER SW01	PIER SW02	PIER SW03	PIER SW04	PIER SW05	PIER SW06	PIER SW07	TOTAL NO	WEIGHT
P1101	11	11	11	11	11	0	11	66	11455
P1102	11	11	11	11	11	0	11	66	11163
P803	12	12	12	12	12	0	12	72	5639
P804	24	24	24	24	24	0	24	144	7465
P606	80	80	80	80	80	0	80	480	15801
P507	14	14	14	14	14	0	14	84	1570
P508	24	24	24	24	24	0	24	144	2816
P509	24	24	24	24	24	0	24	144	1690
P510	48	48	48	48	48	0	48	288	3980
P511	48	48	48	48	48	0	48	288	3079
P512	8	8	8	8	8	0	8	48	563
P513	14	14	14	14	14	0	14	84	1263
P514	20	20	20	20	20	0	20	120	2055
P515	4	4	4	4	4	0	4	24	453
P516	4	4	4	4	4	0	4	24	471
P517	4	4	4	4	4	0	4	24	494
P518	20	20	20	20	20	0	20	120	1418
P519	24	24	24	24	24	0	24	144	751
P520	20	20	20	20	20	0	20	120	615
P521	4	4	4	4	4	0	4	24	288
P622	20	20	20	0	20	0	20	100	1640
P623	20	20	20	0	20	0	20	100	1765
P624	8	8	8	0	8	0	8	40	746
P625	0	0	0	20	0	0	0	20	388
P626	0	0	0	24	0	0	0	24	424
P627	0	0	0	8	0	0	0	8	173
P628	0	0	0	0	0	20	0	20	348
P629	0	0	0	0	0	10	0	10	180
P630	0	0	0	0	0	6	0	6	107
P531	24	29	46	41	30	25	35	230	7337
P532	48	58	92	82	60	50	70	460	11795
P533	72	92	160	140	96	72	116	748	4291
P1136	74	0	0	0	0	0	0	74	10058

BAR MARK BREAKDOWN

MARK	PIER SW01	PIER SW02	PIER SW03	PIER SW04	PIER SW05	PIER SW06	PIER SW07	TOTAL NO	WEIGHT
P537	16	0	0	0	0	0	0	16	366
P1138	0	74	0	0	0	0	0	74	12188
P539	0	16	0	0	0	0	0	16	458
P1140	0	0	74	0	0	0	0	74	18741
P541	0	0	16	0	0	0	0	16	736
P1142	0	0	0	74	0	0	0	74	16939
P543	0	0	0	16	0	0	0	16	658
P1144	0	0	0	0	74	0	0	74	12286
P545	0	0	0	0	16	0	0	16	460
P547	0	0	0	0	0	16	0	16	241
P1148	0	0	0	0	0	0	74	74	14350
P549	0	0	0	0	0	0	16	16	549
P1150	0	0	0	0	0	4	0	4	354
P851	0	0	0	0	0	6	0	6	196
P852	0	0	0	0	0	18	0	18	685
P853	0	0	0	0	0	2	0	2	70
P554	0	0	0	0	0	32	0	32	350
P555	0	0	0	0	0	4	0	4	43
P656	0	0	0	0	0	32	0	32	497
P657	0	0	0	0	0	38	0	38	637
P558	0	0	0	0	0	10	0	10	73
P659	0	0	0	0	0	10	0	10	159
P660	0	0	0	0	0	2	0	2	33
P1161	0	0	0	0	0	74	0	74	9731
P1162	0	0	0	0	0	55	0	55	7305
P1163	0	0	0	0	0	47	0	47	7283
TOT WEIGHT	25835	28587	37222	34966	28794	30785	31478		217668

STATE PROJECT NUMBER

1060-33-80

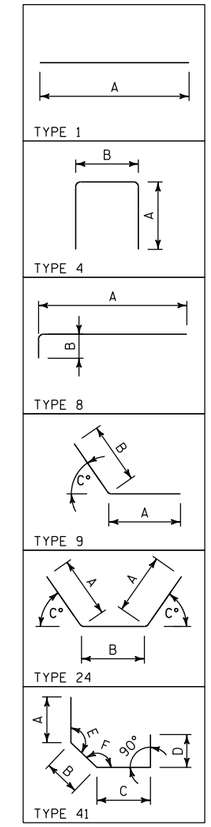

NOTES

THE FIRST DIGIT OF A THREE-DIGIT BAR MARK OR THE FIRST TWO DIGITS OF A FOUR-DIGIT BAR MARK SIGNIFY THE BAR SIZE.

DIMENSIONS ARE TO OUTSIDE OF BARS, EXCEPT FOR RADIUS DIMENSIONS WHICH ARE TO INSIDE OF BENDS.

FOR A BAR SERIES, LENGTH SHOWN IN THE FOURTH COLUMN OF TABLE IS THE AVERAGE BAR LENGTH USED TO COMPUTE BAR WEIGHT.

BAR MATERIAL CODES USED IN SECOND COLUMN OF TABLE
U - STEEL, HIGH STRENGTH, UNCOATED.
E - STEEL, HIGH STRENGTH, EPOXY COATED.
S - STAINLESS STEEL.

NO.	DATE	REVISION	BY

STATE OF WISCONSIN
DEPARTMENT OF TRANSPORTATION

STRUCTURE B-40-855

DRAWN BY PAK | PLANS CK'D. WRT

OPTION B
PIER REINFORCEMENT
SCHEDULE (2 OF 2)

SHEET B26 OF B26

8

8