STATE PROJECT NUMBER

1133-11-76

LIST OF DRAWINGS

1. SITE PLAN B-5-678 UNITS 1-2 & DRAWING LIST
2. SITE PLAN B-5-678 UNITS 3-5
3. GENERAL NOTES, & QUANTITIES
4. GENERAL PLAN AND ELEVATION - SPANS 1-6
5. GENERAL PLAN AND ELEVATION - SPANS 7-11
6. GENERAL PLAN AND ELEVATION - SPANS 12-15
7. GENERAL PLAN AND ELEVATION - SPANS 16-18
8. GENERAL PLAN AND ELEVATION - SPANS 19-21
9. GENERAL PLAN AND ELEVATION - SPANS 22-23
10. CROSS SECTION AT PIER
11. TYPICAL BOX GIRDER CROSS SECTION
12. ALIGNMENT AND SUPERELEVATION
13. BEARING LAYOUT UNIT 3
14. BEARING LAYOUT UNIT 4
15. BEARING LAYOUT UNIT 5
16. BEARING DETAILS
17. JACKING PROVISIONS
18. FRAMING PLAN UNIT 3 SPANS 11 TO 14
19. FRAMING PLAN UNIT 4 SPANS 15 TO 18
20. FRAMING PLAN UNIT 5 SPANS 19 TO 23
21. GIRDER PLAN AND ELEVATION UNIT 3 SPAN 11
22. GIRDER PLAN AND ELEVATION UNIT 3 SPAN 12
23. GIRDER PLAN AND ELEVATION UNIT 3 SPAN 13
24. GIRDER PLAN AND ELEVATION UNIT 3 SPAN 14
25. GIRDER PLAN AND ELEVATION UNIT 4 SPAN 15
26. GIRDER PLAN AND ELEVATION UNIT 4 SPAN 16
27. GIRDER PLAN AND ELEVATION UNIT 4 SPAN 17
28. GIRDER PLAN AND ELEVATION UNIT 4 SPAN 18
29. GIRDER PLAN AND ELEVATION UNIT 5 SPAN 19
30. GIRDER PLAN AND ELEVATION UNIT 5 SPAN 20
31. GIRDER PLAN AND ELEVATION UNIT 5 SPAN 21
32. GIRDER PLAN AND ELEVATION UNIT 5 SPAN 22
33. GIRDER PLAN AND ELEVATION UNIT 5 SPAN 23
34. INTERMEDIATE PIER DIAPHRAGMS XD1 AND D1
35. UNIT END DIAPHRAGMS XD2, XD3, D2, AND D3
36. INTERMEDIATE DIAPHRAGMS XD4 AND D4
37. MISCELLANEOUS DIAPHRAGM DETAILS
38. EXTERIOR CROSS FRAME DETAILS
39. INTERIOR CROSS FRAME K1 DETAILS
40. FIELD SPLICE DETAILS
41. BRACING CONNECTION DETAILS SHEET 1
42. BRACING CONNECTION DETAILS SHEET 2
43. MISCELLANEOUS GIRDER DETAILS SHEET 1
44. MISCELLANEOUS GIRDER DETAILS SHEET 2
45. MISCELLANEOUS GIRDER DETAILS SHEET 3
46. ACCESS HATCH DETAILS
47. ACCESS DOOR DETAILS
48. SUPERSTRUCTURE DETAILS
49. CAMBER DIAGRAM UNIT 3
50. CAMBER DIAGRAM UNIT 4
51. CAMBER DIAGRAM UNIT 5
52. CAMBER DATA FIELD SECTION 1 AND 2
53. CAMBER DATA FIELD SECTION 3 AND 4
54. CAMBER DATA FIELD SECTION 5 AND 6
55. CAMBER DATA FIELD SECTION 7 AND 8
56. CAMBER DATA FIELD SECTION 9 AND 10
57. CAMBER DATA FIELD SECTION 11 AND 12
58. CAMBER DATA FIELD SECTION 13 AND 14
59. CAMBER DATA FIELD SECTION 15 AND 16
60. CAMBER DATA FIELD SECTION 17 AND 18
61. CAMBER DATA FIELD SECTION 19 AND 20
62. CAMBER DATA FIELD SECTION 21 AND 22
63. CAMBER DATA FIELD SECTION 23

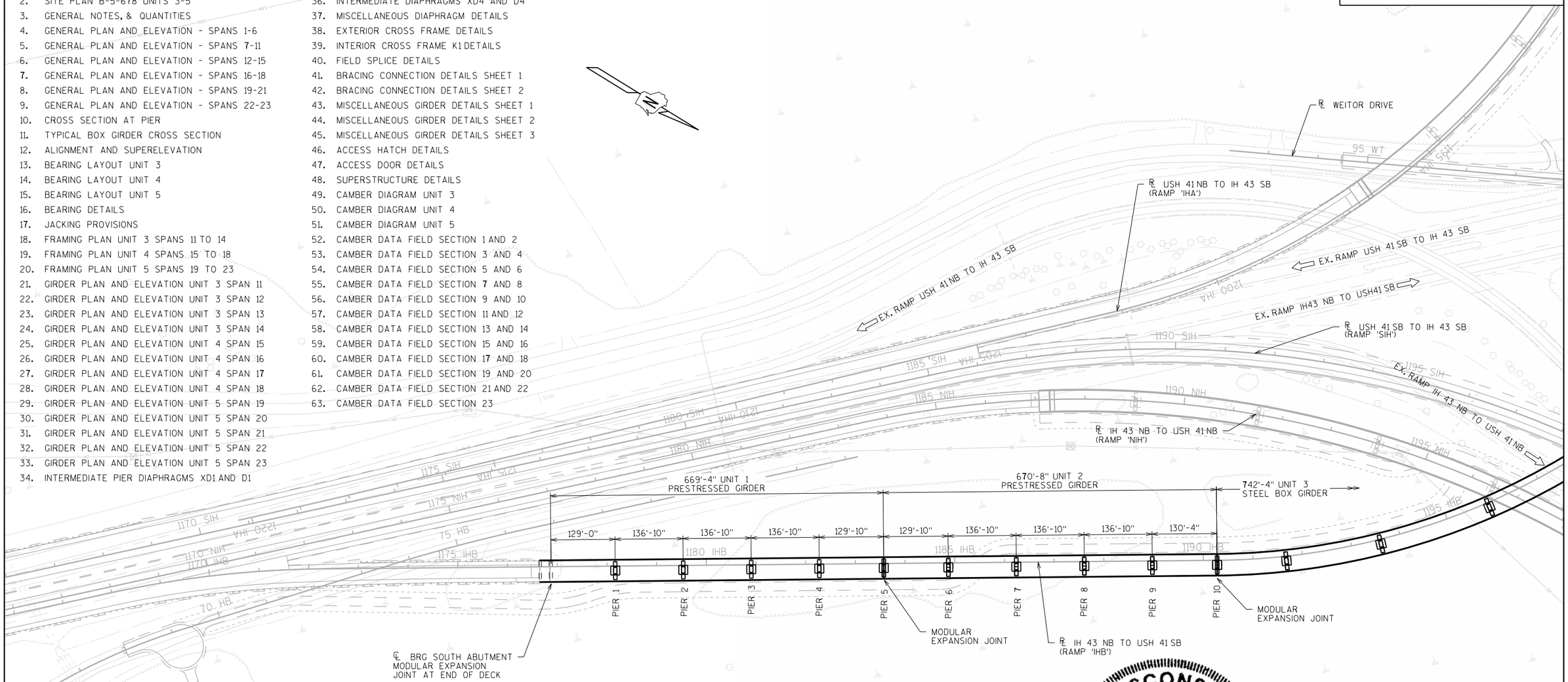

WISCONSIN
NARENDRA P. PATEL
38246-006
CHICAGO, IL
PROFESSIONAL ENGINEER

Narendra P. Patel
7-24-2012

NE REGION CONTACT - DANIELLE BLOCK (920) 492-2212
BUREAU OF STRUCTURES CONTACT - WILLIAM DREHER (608) 266-8489
CONSULTANT CONTACT - ROBERT FIELDBINDER (414) 831-4129

STEEL FABRICATION CONTRACT ONLY

NO.	DATE	REVISION	BY

URS
6737 West Washington Street
Suite 2265
Milwaukee, WI 53214
(414) 831-4100

STATE OF WISCONSIN
DEPARTMENT OF TRANSPORTATION

ACCEPTED William C. Dreher KAR 07/20/12
CHIEF STRUCTURES DESIGN ENGINEER DATE

STRUCTURE B-5-678

IH 43 NB TO USH 41 SB (RAMP IHB)

COUNTY BROWN ~~TOWN/CITY~~/VILLAGE HOWARD

DESIGN SPEC. AASHTO LRFD DESIGN SPEC. 5th EDITION

DESIGNED BY	JRS	DESIGN CK'D.	NPP	DRAWN BY	ZMG	PLANS CK'D.	NPP

SITE PLAN B-5-678 UNITS 1-2 & DRAWING LIST

SHEET 1 OF 63

5

8

8

FILE= Q:\WisDot_12345678_US41Bridges_Plans\B-05-678E001 - B-5-678E - Site Plan Unit 1-2 & Drawing List.dgn

DATE: 7/19/2012
I.D.

STATE PROJECT NUMBER

1133-11-76

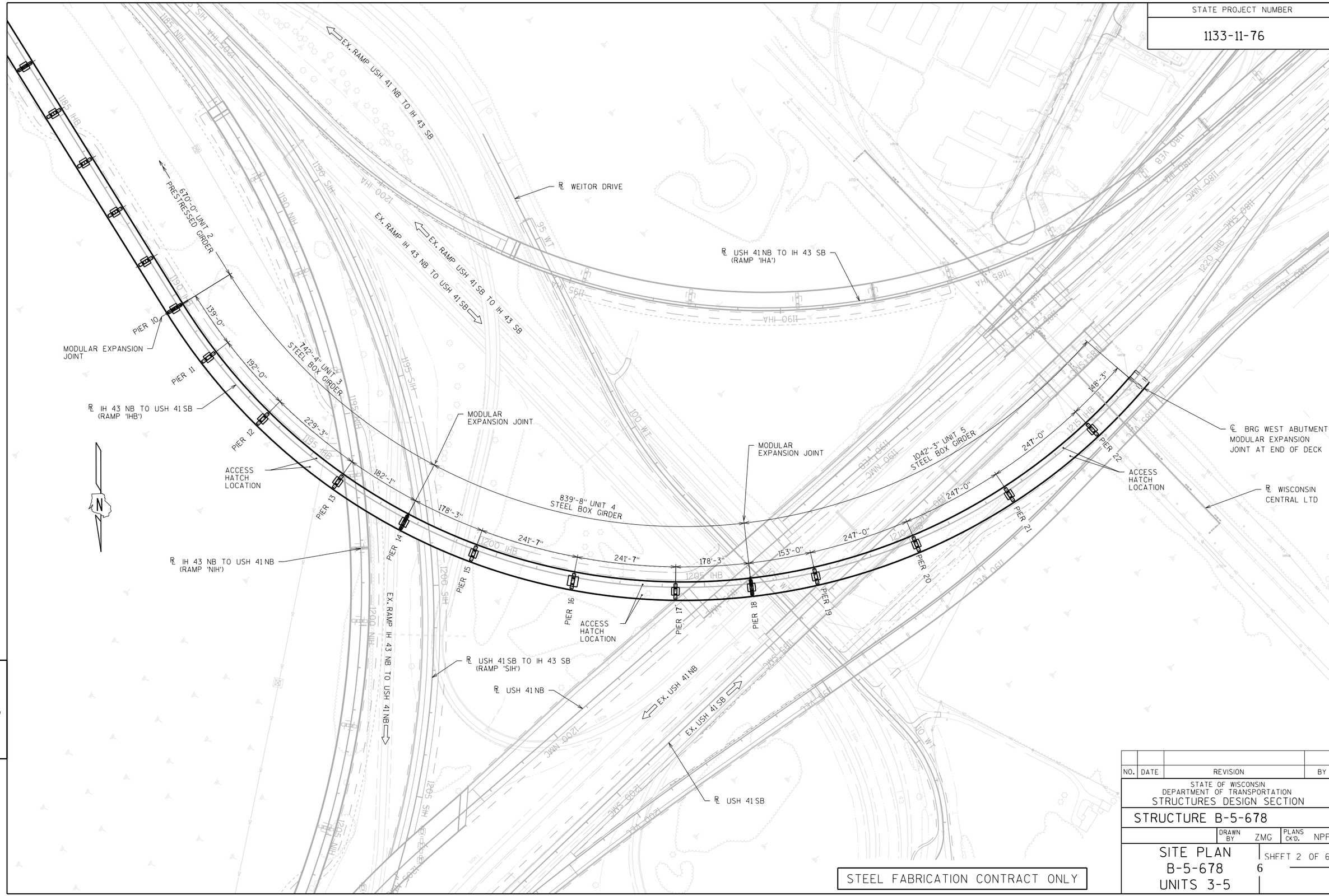

STEEL FABRICATION CONTRACT ONLY

NO.	DATE	REVISION	BY

STATE OF WISCONSIN
DEPARTMENT OF TRANSPORTATION
STRUCTURES DESIGN SECTION

STRUCTURE B-5-678

DRAWN BY ZMG | PLANS CK'D. NPP

SITE PLAN
B-5-678
UNITS 3-5

SHEET 2 OF 63

6

8

8

FILE= O:\WisDot_12345678_US41Bridges_Plans\B-05-678E002 - B-5-678E - Site Plan Unit 3-5.dgn

DATE: 7/19/2012
I.D.

GENERAL NOTES

DO NOT SCALE THE DRAWINGS.

ALL DIMENSIONS ARE IN FEET AND INCHES. ALL STATIONS AND ELEVATIONS ARE IN FEET.

ELEVATIONS ARE REFERENCED TO THE NATIONAL GEODETIC VERTICAL DATUM OF 1988 (1991).

GIRDERS AND OTHER ELEMENTS OF THE STRUCTURE ARE REFERRED TO AS 'LEFT' AND 'RIGHT'. THESE ORIENTATIONS ARE WITH RESPECT TO THE REFERENCE LINE WHEN LOOKING IN THE DIRECTION OF INCREASING STATION.

TRANSVERSE DIMENSIONS ARE RADIAL TO THE REFERENCE LINE UNLESS NOTED OTHERWISE.

THIS CONTRACT INCLUDES FABRICATING, FURNISHING, STORING AND DELIVERING STRUCTURAL STEEL AND BEARINGS AS SHOWN IN THESE PLANS AND DESCRIBED IN THE SPECIAL PROVISIONS.

STRUCTURAL STEEL

ALL STRUCTURAL STEEL PLATE FOR BOX GIRDER FLANGES AND WEBS, BOX GIRDER FLANGE AND WEB SPLICE PLATES, EXTERNAL AND INTERNAL DIAPHRAGMS FOR BOX GIRDERS, AND ALL OTHER STEEL PLATE COMPONENTS WELDED TO ANY OF THESE ELEMENTS SHALL BE HIGH STRENGTH ASTM A709 (AASHTO M270) GRADE HPS 50W (FY=50 KSI). 2-WAY BEVELED JACKING PADS SHALL BE A709-50W (FCM). ALL OTHER STEEL SHALL BE IN ACCORDANCE WITH ASTM A709 GRADE 50 (FY=50 KSI).

ALL STRUCTURAL STEEL PLATE FOR BOX GIRDER FLANGES AND WEBS IN TENSION ZONES AS SHOWN ON THE PLANS AND ALL ASSOCIATED SPLICE PLATES, ALL TRANSVERSE WEB STIFFENERS AND CONNECTION PLATES, AND ALL STEEL PLATE ELEMENTS OF EXTERNAL AND INTERNAL DIAPHRAGMS FOR BOX GIRDERS SHALL MEET THE FRACTURE CRITICAL TENSION COMPONENT IMPACT TEST REQUIREMENTS FOR HPS 50WF/HPS 345WF OF TABLE 10 OF ASTM A709/A709M-05 FOR ZONE 2.

ALL WELDING PERFORMED IN TENSION ZONES SHOWN ON THE PLANS FOR BOX GIRDER WEB AND FLANGE ELEMENTS, INCLUDING ATTACHING TRANSVERSE WEB STIFFENER AND CONNECTION PLATES, AND ALL WELDING PERFORMED FOR ALL ELEMENTS OF EXTERNAL AND INTERNAL STEEL PLATE DIAPHRAGMS FOR BOX GIRDERS SHALL BE PERFORMED, TESTED, AND INSPECTED IN ACCORDANCE WITH REQUIREMENTS FOR FABRICATION OF FRACTURE CRITICAL MEMBERS.

CHARPY V-NOTCH TOUGHNESS REQUIREMENTS FOR ALL STEEL SHALL CONFORM TO THE REQUIREMENTS FOR ZONE 2.

ALL WELDING SHALL BE IN ACCORDANCE WITH THE CURRENT AASHTO/AWS D1.5 BRIDGE WELDING CODE.

USE WELD MATERIAL WITH A TENSILE STRENGTH AT LEAST 20 KSI GREATER THAN THE YIELD STRENGTH OF THE STEEL BEING WELDED. NON-WEATHERING CONSUMABLES MAY BE USED FOR SINGLE-PASS FILLET WELDS.

FABRICATE BEARING ASSEMBLIES FROM ASTM A709 GRADE 50W MATERIAL (FY=50 KSI).

PROVIDE ANCHOR RODS, NUTS AND WASHERS CONFORMING TO ASTM F1554 (GRADE 105) AND HOT-DIP GALVANIZE IN ACCORDANCE WITH AASHTO M232.

ALL BOLTS SHALL BE ASTM A325 TYPE 1, BOLTS SHALL BE 7/8" DIAMETER UNLESS NOTED OTHERWISE. ALL HOLES SHALL BE STANDARD DIAMETER. NO OVERSIZE HOLES WILL BE PERMITTED WITHOUT PRIOR APPROVAL. ALL CONNECTIONS SHALL BE FABRICATED AND ASSEMBLED AS SLIP-CRITICAL CONNECTIONS. DESIGN ASSUMED SURFACE CLASS A.

PAINT ALL STRUCTURAL STEEL, INCLUDING SURFACES AND BRACING MEMBERS ON THE INSIDE OF THE BOX GIRDERS, IN ACCORDANCE WITH THE SPECIAL PROVISIONS.

THE COMPRESSIVE STRENGTH OF THE BEARING PEDESTAL AND PIER CONCRETE IS 4,000 PSI.

DESIGN CRITERIA

DESIGN IS IN ACCORDANCE WITH AMERICAN ASSOCIATION OF STATE HIGHWAY AND TRANSPORTATION OFFICIALS (AASHTO) LRFD BRIDGE DESIGN SPECIFICATIONS, 5TH EDITION WITH 2010 INTERIM REVISIONS, AND THE WISDOT BRIDGE MANUAL.

ALL DETAILS, MATERIALS, AND FABRICATION SHALL CONFORM TO THE THE STATE OF WISCONSIN STANDARD SPECIFICATIONS FOR HIGHWAY AND STRUCTURE CONSTRUCTION. USE THE CURRENT EDITION OF THE STANDARD SPECIFICATIONS AT THE TIME OF CONSTRUCTION.

LIVE LOAD PLUS DYNAMIC LOAD DEFLECTION LIMIT = SPAN / 800 (HL93).

DESIGN LIVE LOAD

DESIGN LOADING: HL-93

INVENTORY RATING FACTOR: RF = 1.28

OPERATING RATING FACTOR: RF = 1.66

WISCONSIN STANDARD PERMIT VEHICLE (WIS-SPV): 250 KIPS

OTHER DESIGN LOADS

PROFILE GRADE LINE AND TOP OF DECK ELEVATIONS ARE TO THE TOP OF THE 10" DECK THICKNESS. THE 10" DECK THICKNESS INCLUDES A 1/2" INTEGRAL WEARING SURFACE, BUT DOES NOT INCLUDE AN ADDITIONAL EPOXY OVERLAY THAT WILL BE PROVIDED AFTER POURING OF THE DECK.
THE STRUCTURE IS DESIGNED FOR THE WEIGHT OF THE 10" THICKNESS OF CONCRETE PLUS 3/8" THICKNESS OF EPOXY OVERLAY.
UNIT WEIGHTS ASSUMED FOR DESIGN WERE 150 PCF FOR CONCRETE AND 3 PSF FOR 3/8" EPOXY OVERLAY.

TEMPERATURE CHANGE FOR DETERMINING THERMAL FORCES ON SUBSTRUCTURES = 90°F.

BEARING MOVEMENT RANGE IS BASED ON BEARING CENTERED AT 60°F AND ACCOMMODATING 90°F OF MOVEMENT IN EITHER DIRECTION.

DESIGN ASSUMED A WEIGHT PER GIRDER OF 10 PSF FOR STAY-IN-PLACE METAL FORMS INSIDE EACH GIRDER ONLY AND 13.5 PSF FOR CONCRETE WITHIN THE RIBS OF THESE FORMS.

DESIGN ASSUMED 7.5 PSF FOR TEMPORARY FORMWORK IN ADDITION TO STAY-IN-PLACE FORMS.

PARAPETS WERE ASSUMED TO WEIGH 563 PLF AND 464 PLF FOR "42SS" AND "32SS" SECTIONS RESPECTIVELY.

ALL OTHER LOADS IN ACCORDANCE WITH AASHTO.

MINIMUM FILLET WELD SIZE:

THICKNESS OF THICKER PART JOINED	MINIMUM WELD SIZE
T <= 1/2"	3/16"
1/2" < T <= 3/4"	1/4"
3/4" < T <= 1 1/2"	5/16"
1 1/2" < T <= 2 1/4"	3/8"
T > 2 1/4"	1/2"

MINIMUM WELD SIZES SHOWN SHALL BE USED WHEN A SIZE IS NOT OTHERWISE SPECIFIED OR SHOWN.

WELD SIZE SHALL NOT EXCEED THE THICKNESS OF THE THINNER PART BEING JOINED.

FOR ALL WELDS 5/16" OR LARGER THE MINIMUM PASS SIZE SHALL BE 5/16".

TOTAL ESTIMATED QUANTITIES

BID ITEM #	BID ITEM	UNIT	UNIT 3 QUANTITY	UNIT 4 QUANTITY	UNIT 5 QUANTITY	TOTAL
SPV.0060.01	BEARING HIGH-LOAD MULTI-ROTATIONAL FIXED B-5-678	EACH	4	4	2	10
SPV.0060.02	BEARING HIGH-LOAD MULTI-ROTATIONAL UNI-DIRECTIONAL B-5-678	EACH	6	6	10	22
SPV.0085.01	FABRICATED STRUCTURAL STEEL HPS 50W B-5-678	LB	1,821,910	2,144,700	2,708,300	6,674,910
SPV.0085.02	FABRICATED STRUCTURAL STEEL HS B-5-678	LB	145,600	162,600	211,100	519,300
SPV.0105.01	PAINTING POLYSILOXANE SYSTEM B-5-678	LS	-	-	-	1

STEEL FABRICATION CONTRACT ONLY

NO.	DATE	REVISION	BY

STATE OF WISCONSIN
DEPARTMENT OF TRANSPORTATION
STRUCTURES DESIGN SECTION

STRUCTURE B-5-678

DRAWN BY KJZ PLANS CK'D. NPP

GENERAL NOTES, & QUANTITIES

STATE PROJECT NUMBER
1133-11-76

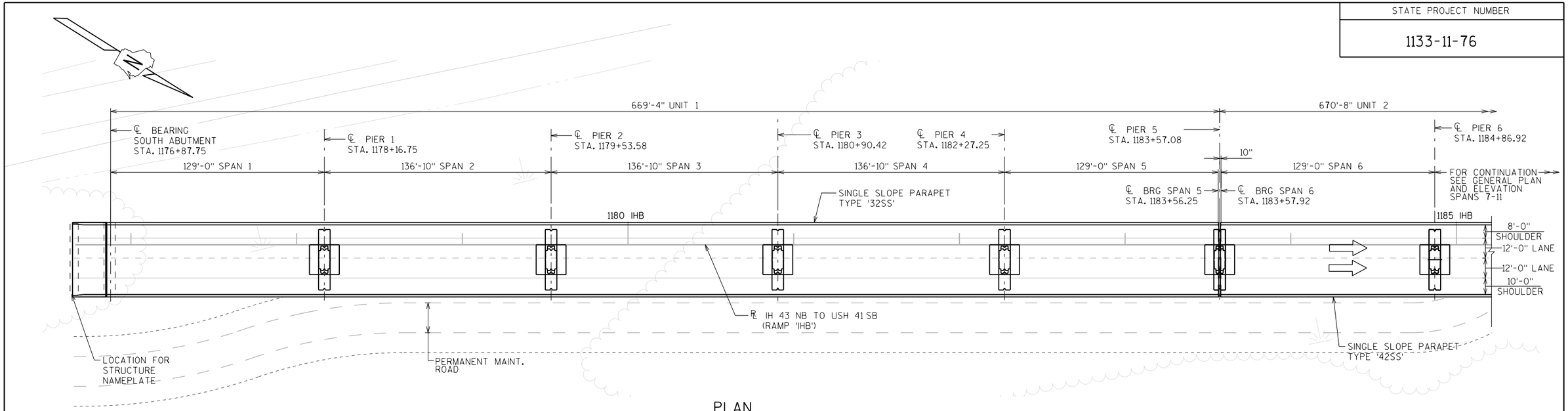

PLAN

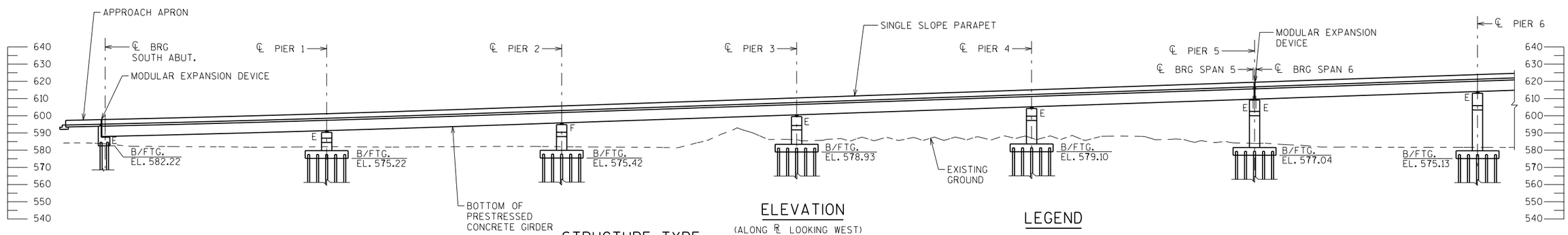

ELEVATION

(ALONG ℄ LOOKING WEST)

STRUCTURE TYPE

5-SPAN CONTINUOUS PRESTRESSED CONCRETE GIRDER BRIDGE UNIT 1
5-SPAN CONTINUOUS PRESTRESSED CONCRETE GIRDER BRIDGE UNIT 2
4-SPAN CONTINUOUS STEEL BOX GIRDER BRIDGE UNIT 3
4-SPAN CONTINUOUS STEEL BOX GIRDER BRIDGE UNIT 4
5-SPAN CONTINUOUS STEEL BOX GIRDER BRIDGE UNIT 5

LEGEND

F - FIXED BEARING
GL - GUIDED LONGITUDINAL UNIDIRECTIONAL BEARING
E - ELASTOMERIC EXPANSION BEARING

BENCH MARK

NO.	DESCRIPTION	ELEVATION
BM 1301	DISK ON PARAPET WALL	612.17

FOUNDATION DATA

SOUTH AND WEST ABUTMENTS TO BE SUPPORTED ON HP14X73 STEEL PILING DRIVEN TO A REQUIRED DRIVING RESISTANCE OF 250 TONS PER PILE AS DETERMINED BY THE PDA/CAPWAP METHODS. ESTIMATED XX FEET LONG.

PIERS 1 THROUGH PIER 22 TO BE SUPPORTED ON HP14X73 STEEL PILING DRIVEN TO A REQUIRED DRIVING RESISTANCE OF 250 TONS PER PILE AS DETERMINED BY THE PDA/CAPWAP METHODS. ESTIMATED XX FEET LONG.

THE FACTORED AXIAL RESISTANCE OF PILES IN COMPRESSION USED FOR DESIGN IS THE REQUIRED DRIVING RESISTANCE MULTIPLIED BY A RESISTANCE FACTOR OF 0.8 USING THE PDA/CAPWAP METHODS AND THE PREVIOUSLY COMPLETED STATIC LOAD TEST TO DETERMINE THE REQUIRED DRIVING RESISTANCE.

NOTES:

ALL SUBSTRUCTURE UNITS ARE NORMAL TO ℄.

DIMENSIONS SHOWN ARE ALONG ℄.

SPAN LENGTHS SHOWN ARE MEASURED ALONG ℄.

FOR CURVE DATA SEE ALIGNMENT LAYOUT AND SUPERELEVATION SHEET.

△ VERTICAL CLEARANCE ESTIMATED BASED ON PRELIMINARY ROADWAY GEOMETRY.

FLOOR DRAIN AND LIGHT POLE LOCATIONS ARE NOT YET DETERMINED.

GUIDED LONGITUDINAL BEARINGS ARE ORIENTED PARALLEL TO ℄.

EXISTING AND FUTURE UTILITIES ARE SHOWN FOR INFORMATION ONLY. THE CONTRACTOR IS RESPONSIBLE FOR IDENTIFYING ALL UTILITIES PRIOR TO EXCAVATION OR PILE DRIVING.

DESIGN DATA

ULTIMATE DESIGN STRESSES:

CONCRETE MASONRY, HIGH PERFORMANCE CONCRETE
SLAB----------f'c = 4,000 P.S.I.
ALL OTHER----------f'c = 4,000 P.S.I.
BAR STEEL REINFORCEMENT, GRADE 60----------fy = 60,000 P.S.I.
HIGH STRENGTH STRUCTURAL STEEL,----------fy = 50,000 P.S.I.
(ASTM A709, GRADE 50 AND HPS50W)
PRESTRESSED GIRDER, CONCRETE MASONRY----------f'c = 8,000 P.S.I.
STRANDS - 0.6"Φ WITH ULTIMATE TENSILE STRENGTH OF 270,000 P.S.I.

TRAFFIC VOLUME:

RAMP 'NIH'
ADT (2015) = 8,600
ADT (2035) = 10,200
R.D.S. = 70 M.P.H.

RAMP 'IHB'
ADT (2015) = 13,500
ADT (2035) = 14,000
R.D.S. = 60-70 M.P.H.

RAMP 'SIH'
ADT (2015) = 9,000
ADT (2035) = 10,700
R.D.S. = 70 M.P.H.

USH 41 NB
ADT (2015) = 15,800
ADT (2035) = 31,500
R.D.S. = 70 M.P.H.

USH 41 SB
ADT (2015) = 15,500
ADT (2035) = 26,400
R.D.S. = 70 M.P.H.

STEEL FABRICATION CONTRACT ONLY

NO.	DATE	REVISION	BY

STATE OF WISCONSIN
DEPARTMENT OF TRANSPORTATION
STRUCTURES DESIGN SECTION

STRUCTURE B-5-678

DRAWN BY ZMG | PLANS CK'D. NPP

GENERAL PLAN AND ELEVATION SPANS 1-6

SHEET 4 OF 63

8

8

FILE= O:\WisDot_12345678_US41Bridges_Plans\B-05-678EX004 - B-5-678E - Plan and Elevation - Spans 1-6.dgn

DATE: 7/19/2012
I.D.

STATE PROJECT NUMBER

1133-11-76

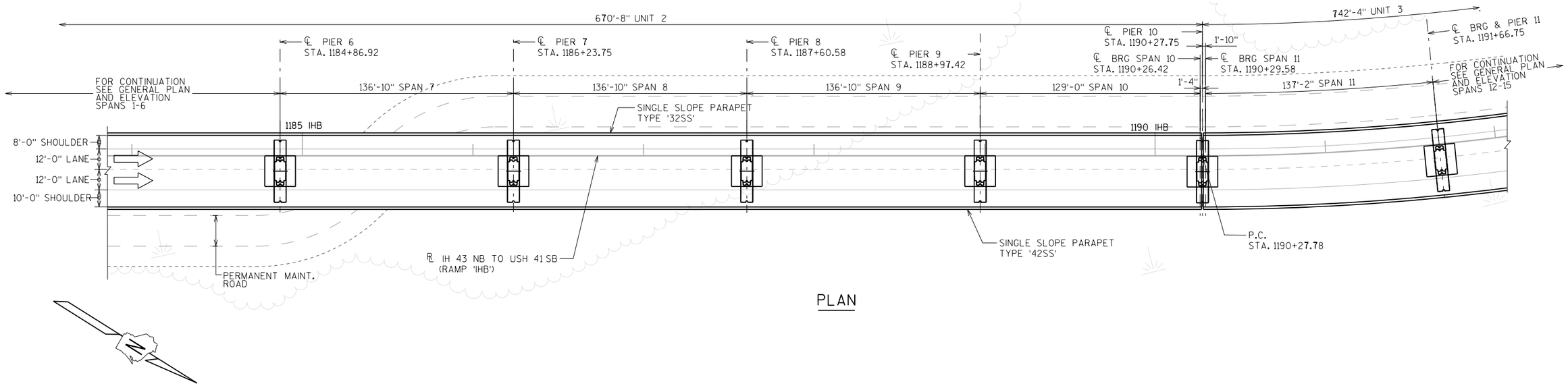

PLAN

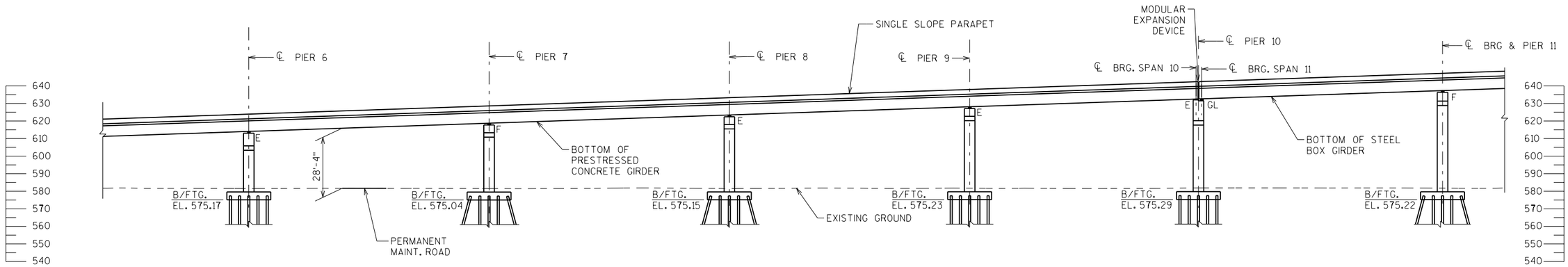

ELEVATION

(ALONG ℞ LOOKING WEST)

LEGEND

F - FIXED BEARING
GL - GUIDED LONGITUDINAL UNIDIRECTIONAL BEARING
E - ELASTOMERIC EXPANSION BEARING

NOTES:

FOR NOTES, SEE SHEET TITLED
"GENERAL PLAN & ELEVATION SPANS 1-6"

STEEL FABRICATION CONTRACT ONLY

NO.	DATE	REVISION	BY

STATE OF WISCONSIN
DEPARTMENT OF TRANSPORTATION
STRUCTURES DESIGN SECTION

STRUCTURE B-5-678

DRAWN BY ZMG | PLANS CK'D. NPP

GENERAL PLAN AND ELEVATION SPANS 7-11

SHEET 5 OF 63

9

8

8

FILE= O:\WisDot_12345678_US41Bridges_Plans\B-05-678E\005 - B-5-678E - Plan and Elevation - Spans 7-11.dgn

DATE: 7/19/2012
I.D.

STATE PROJECT NUMBER

1133-11-76

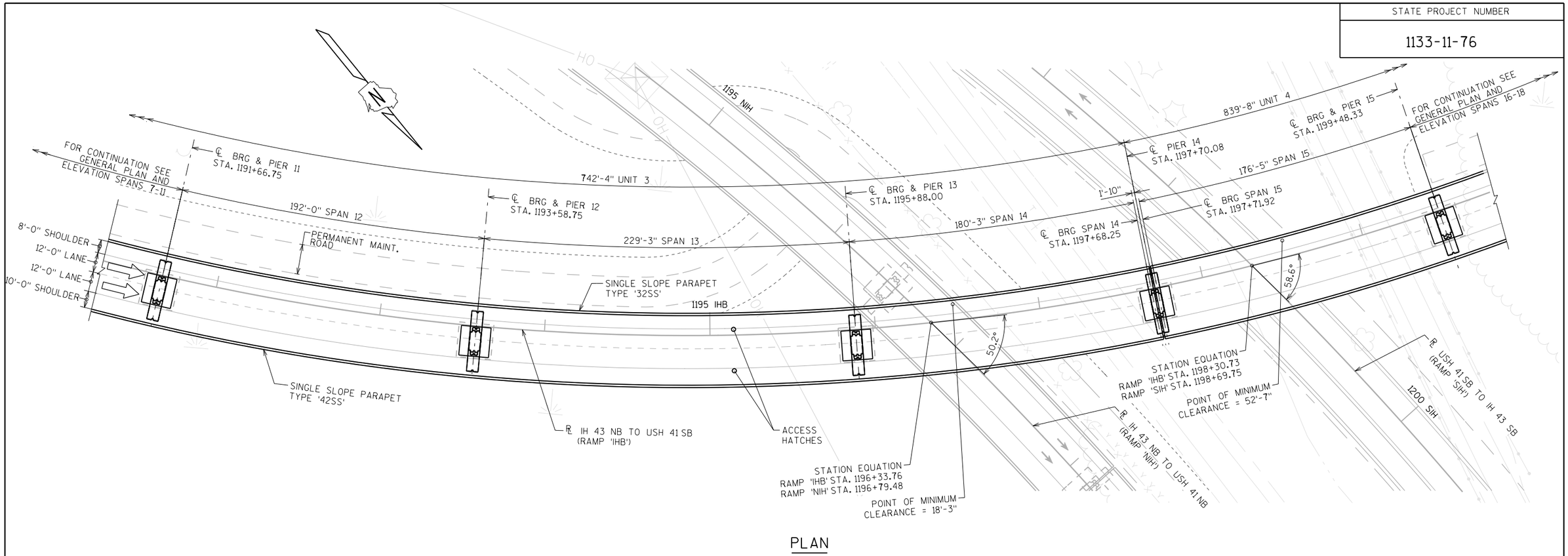

PLAN

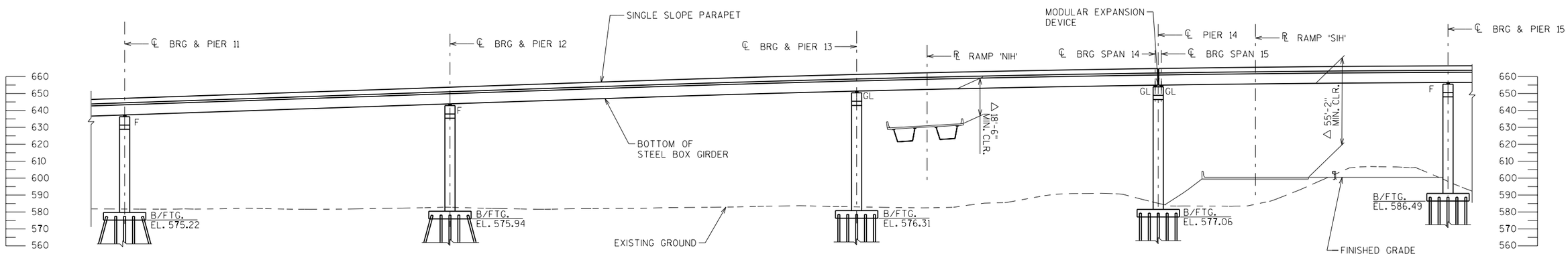

ELEVATION

(ALONG ℞ LOOKING SOUTHWEST)

LEGEND

F - FIXED BEARING
GL - GUIDED LONGITUDINAL UNIDIRECTIONAL BEARING
E - ELASTOMERIC EXPANSION BEARING

NOTES:

FOR NOTES, SEE SHEET TITLED "GENERAL PLAN & ELEVATION SPANS 1-6"

STEEL FABRICATION CONTRACT ONLY

NO.	DATE	REVISION	BY

STATE OF WISCONSIN
DEPARTMENT OF TRANSPORTATION
STRUCTURES DESIGN SECTION

STRUCTURE B-5-678

DRAWN BY ZMG | PLANS CK'D. NPP

GENERAL PLAN AND ELEVATION SPANS 12-15

SHEET 6 OF 63

10

8

8

FILE= O:\WisDot_12345678_US41Bridges_Plans\B-05-678E\006 - B-5-678E - Plan and Elevation - Spans 12-15.dgn

DATE: 7/19/2012
I.D.

STATE PROJECT NUMBER
1133-11-76

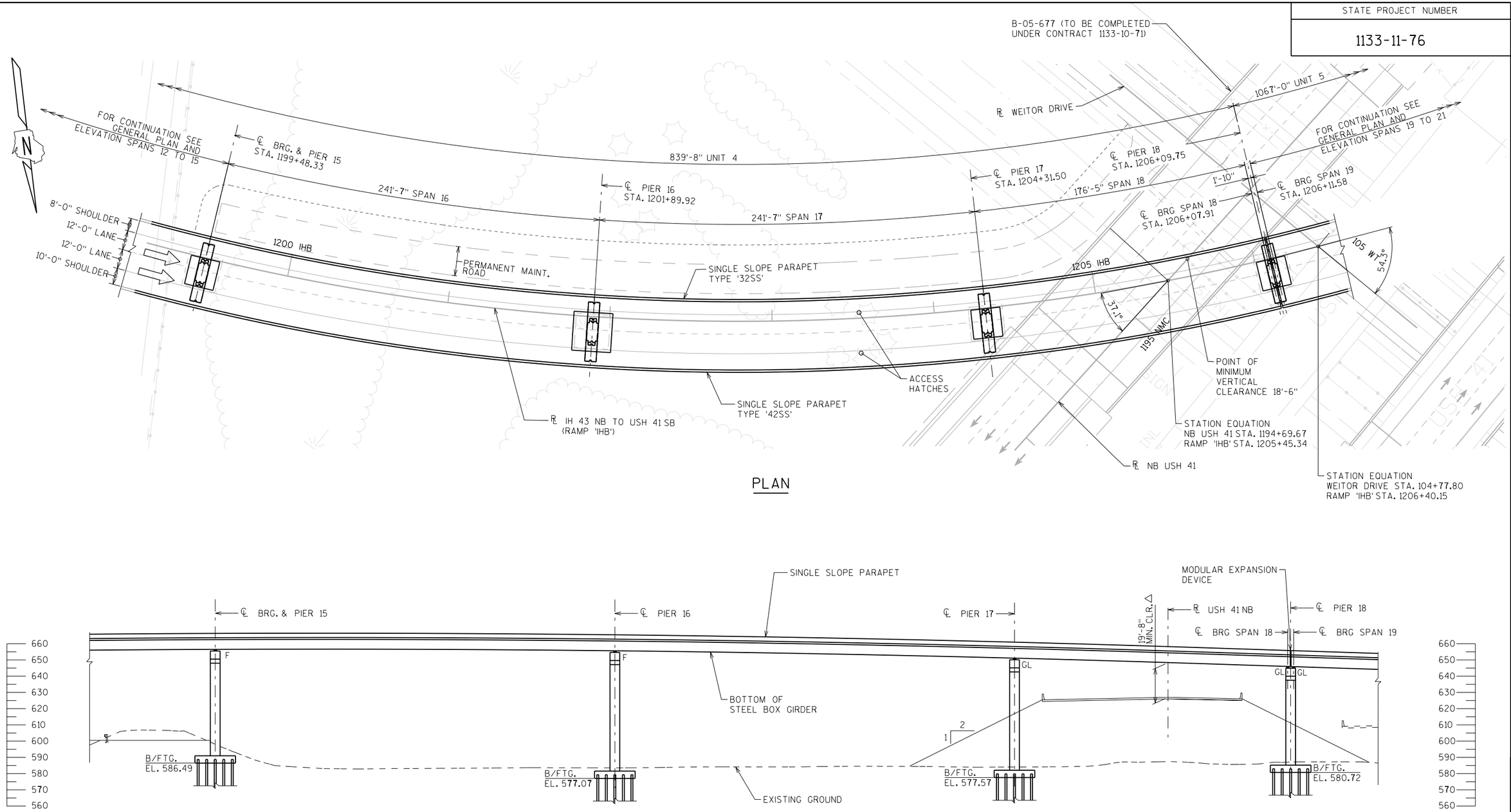

PLAN

ELEVATION

(ALONG ℄ LOOKING SOUTH)

LEGEND

F - FIXED BEARING
GL - GUIDED LONGITUDINAL UNIDIRECTIONAL BEARING
E - ELASTOMERIC EXPANSION BEARING

NOTES:

FOR NOTES, SEE SHEET TITLED "GENERAL PLAN & ELEVATION SPANS 1-6"

STEEL FABRICATION CONTRACT ONLY

NO.	DATE	REVISION	BY

STATE OF WISCONSIN
DEPARTMENT OF TRANSPORTATION
STRUCTURES DESIGN SECTION

STRUCTURE B-5-678

DRAWN BY ZMG | PLANS CK'D. NPP

GENERAL PLAN AND ELEVATION SPANS 16-18

SHEET 7 OF 63

11

8

8

FILE= O:\WisDot_12345678_US41Bridges_Plans\B-05-678E\007 - B-5-678E - Plan and Elevation - Spans 16-18.dgn

DATE: 7/19/2012
I.D.

STATE PROJECT NUMBER

1133-11-76

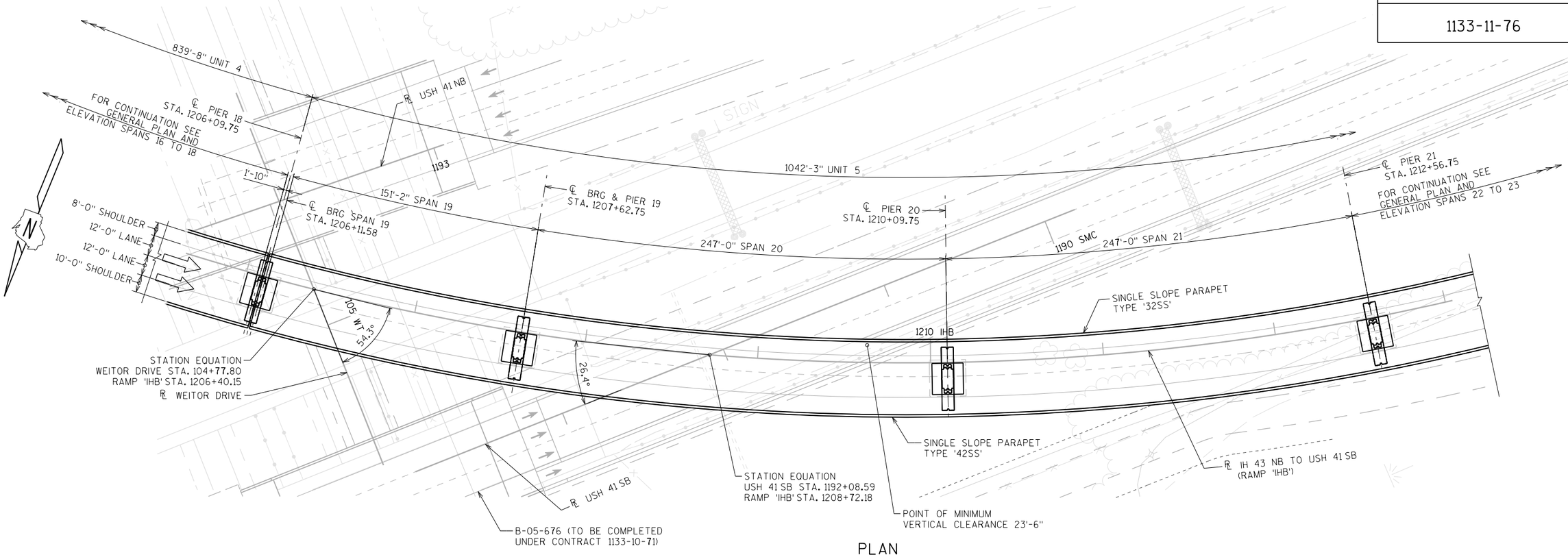

PLAN

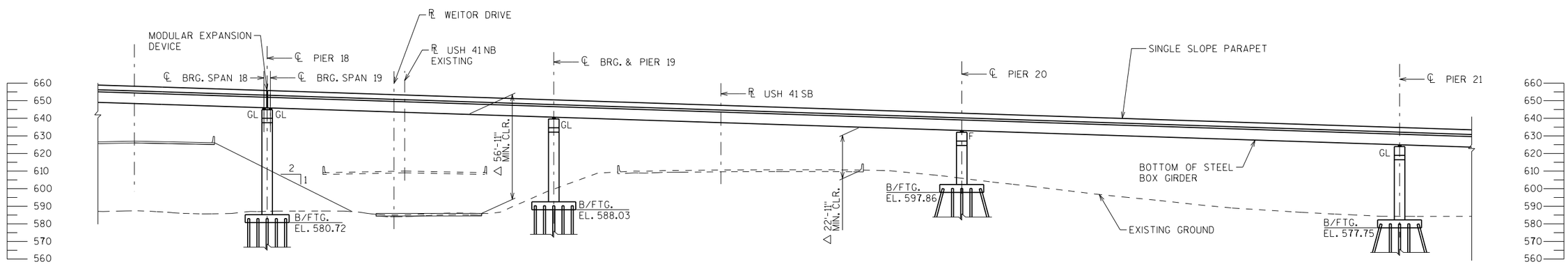

ELEVATION

(ALONG ℞ LOOKING SOUTH)

LEGEND

F - FIXED BEARING
GL - GUIDED LONGITUDINAL UNIDIRECTIONAL BEARING
E - ELASTOMERIC EXPANSION BEARING

NOTES:

FOR NOTES, SEE SHEET TITLED
"GENERAL PLAN & ELEVATION SPANS 1-6"

STEEL FABRICATION CONTRACT ONLY

NO.	DATE	REVISION	BY

STATE OF WISCONSIN
DEPARTMENT OF TRANSPORTATION
STRUCTURES DESIGN SECTION

STRUCTURE B-5-678

DRAWN BY ZMG | PLANS CK'D. NPP

GENERAL PLAN AND ELEVATION SPANS 19-21

SHEET 8 OF 63

12

8

8

FILE= O:\WisDot_12345678_US41Bridges_Plans\B-05-678E\008 - B-5-678E - Plan and Elevation - Spans 19-21.dgn

DATE: 7/19/2012
I.D.

STATE PROJECT NUMBER
1133-11-76

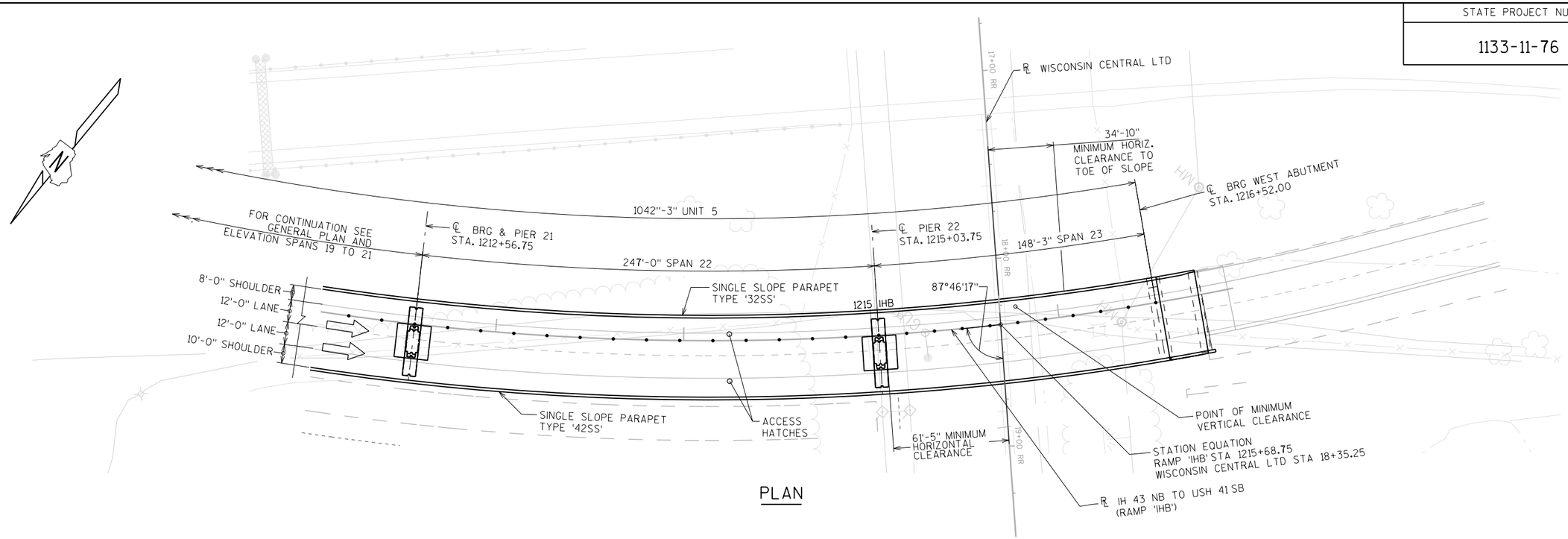

PLAN

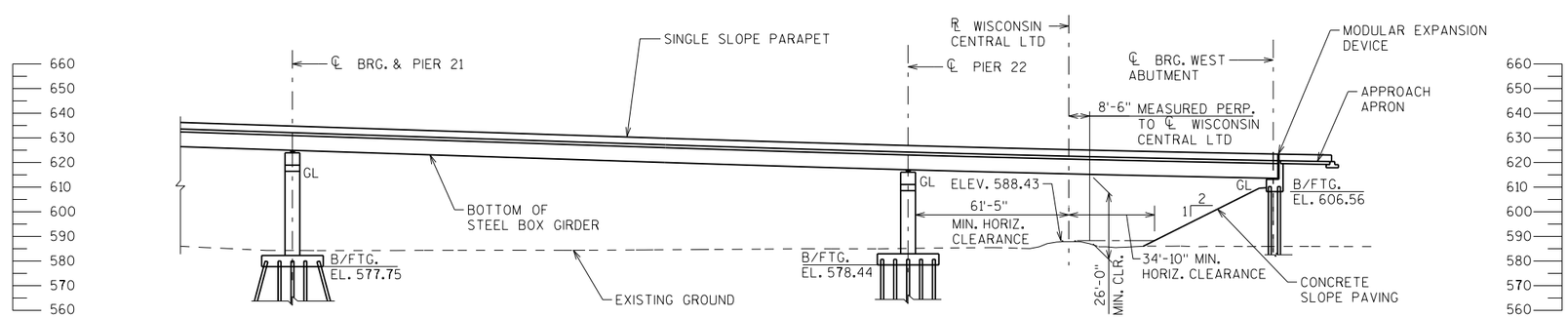

ELEVATION

(ALONG ℄ LOOKING SOUTH)

LEGEND

F - FIXED BEARING
GL - GUIDED LONGITUDINAL UNIDIRECTIONAL BEARING
E - ELASTOMERIC EXPANSION BEARING

NOTES:

FOR NOTES, SEE SHEET TITLED "GENERAL PLAN & ELEVATION SPANS 1-6"

STEEL FABRICATION CONTRACT ONLY

NO.	DATE	REVISION	BY

STATE OF WISCONSIN
DEPARTMENT OF TRANSPORTATION
STRUCTURES DESIGN SECTION

STRUCTURE B-5-678

DRAWN BY	ZMG	PLANS CK'D.	NPP

GENERAL PLAN AND ELEVATION SPANS 22-23

SHEET 9 OF 63

13

8

8

FILE= O:\WisDot_12345678_US41Bridges_Plans\B-05-678E\009 - B-5-678E - Plan and Elevation - Spans 22-23.dgn

DATE: 7/19/2012
I.D.

STATE PROJECT NUMBER

1133-11-76

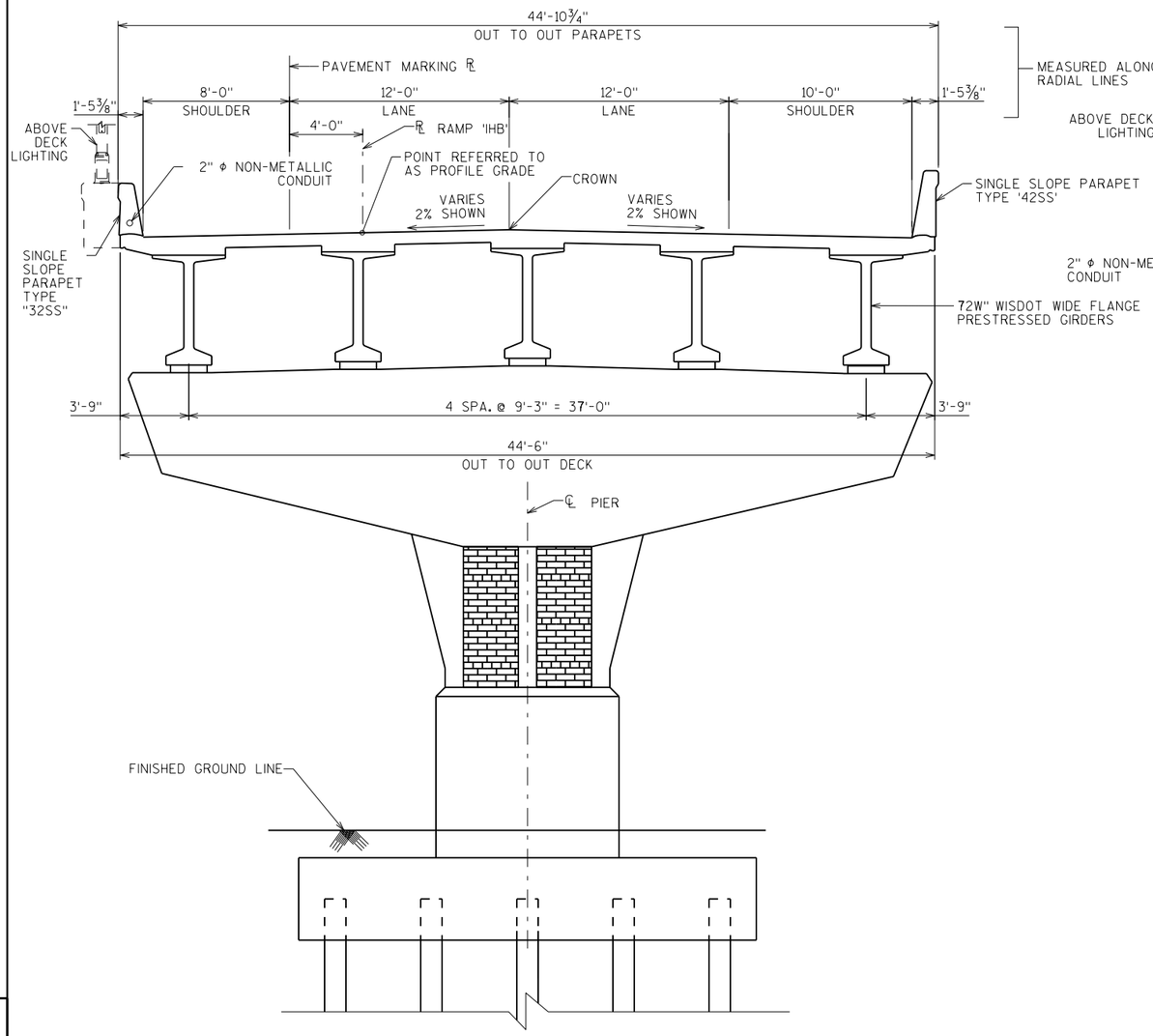

TYPICAL SECTION - UNITS 1-2

(LOOKING UPSTATION)

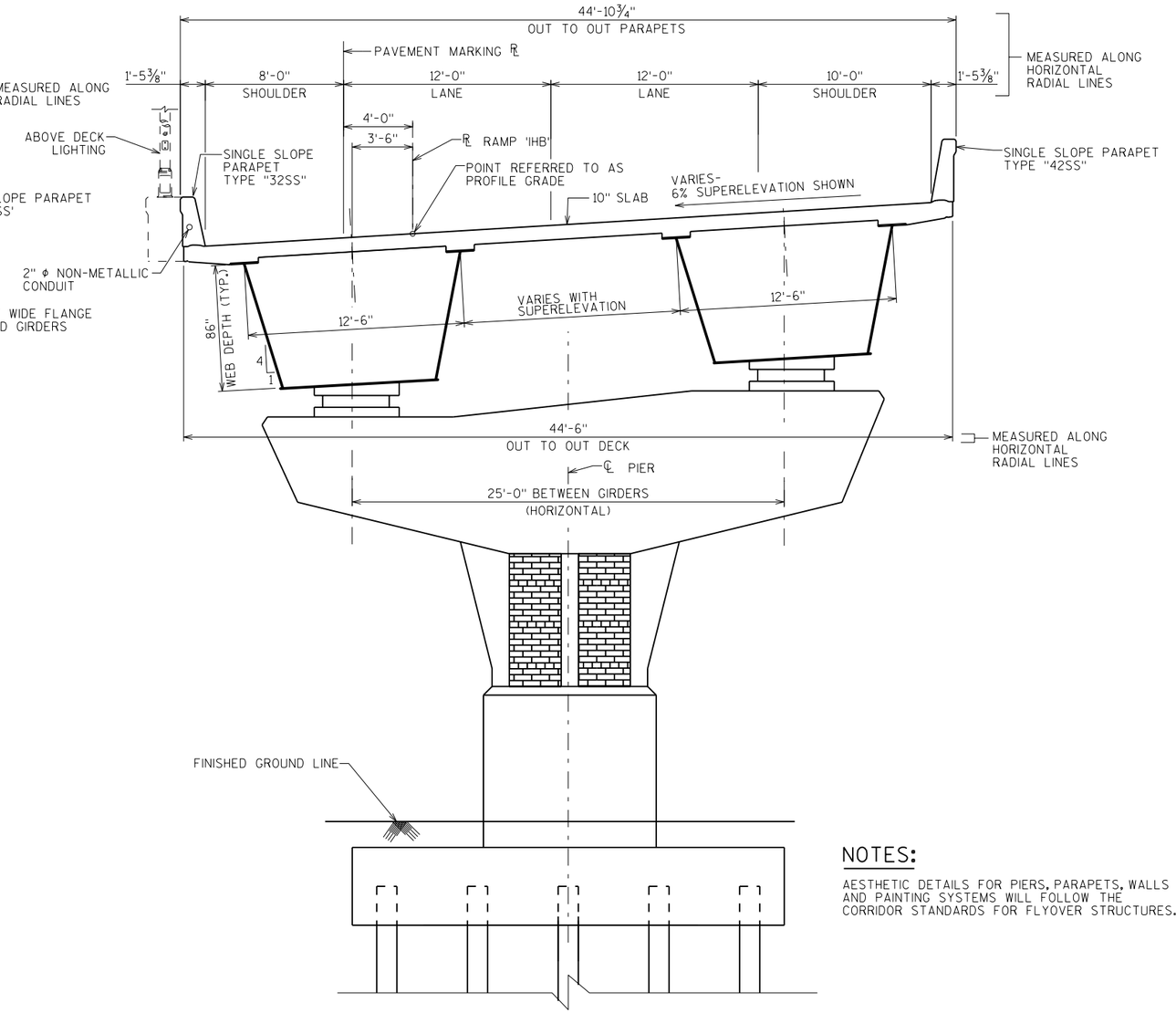

TYPICAL SECTION - UNITS 3-5

(LOOKING UPSTATION)

NOTES:

AESTHETIC DETAILS FOR PIERS, PARAPETS, WALLS AND PAINTING SYSTEMS WILL FOLLOW THE CORRIDOR STANDARDS FOR FLYOVER STRUCTURES.

STEEL FABRICATION CONTRACT ONLY

NO.	DATE	REVISION	BY

STATE OF WISCONSIN
DEPARTMENT OF TRANSPORTATION
STRUCTURES DESIGN SECTION

STRUCTURE B-5-678

DRAWN BY ZMG | PLANS CK'D. NPP

CROSS SECTION AT PIER

SHEET 10 OF 63

8

8

FILE= Q:\WisDot_12345678_US41Bridges_Plans\B-05-678E\010 - B-5-678E - Cross Section at Pier.dgn

DATE: 7/19/2012

I.D.

STATE PROJECT NUMBER

1133-11-76

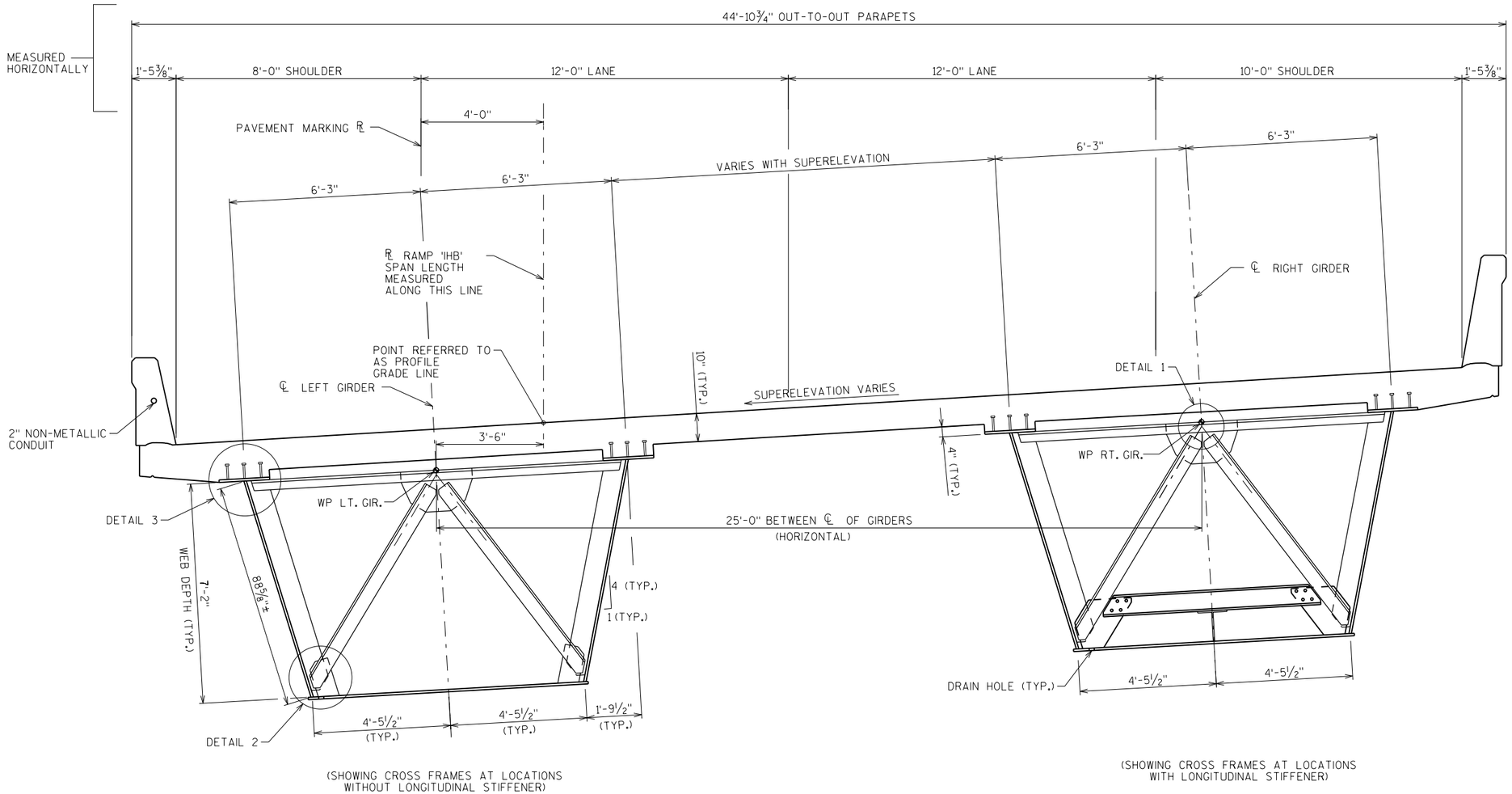

(SHOWING CROSS FRAMES AT LOCATIONS WITHOUT LONGITUDINAL STIFFENER)

(SHOWING CROSS FRAMES AT LOCATIONS WITH LONGITUDINAL STIFFENER)

TYPICAL BOX GIRDER CROSS SECTION (UNITS 3-5)

(LOOKING UPSTATION)

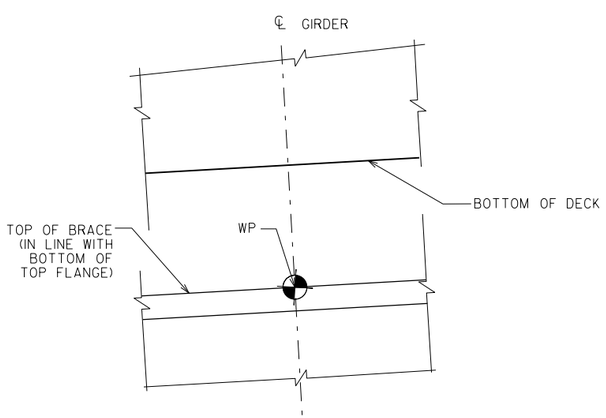

DETAIL 1

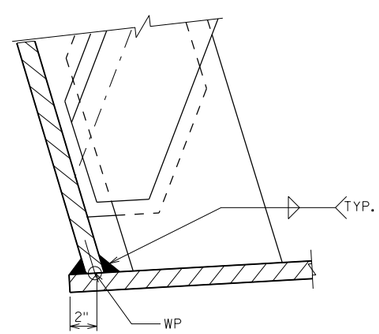

DETAIL 2

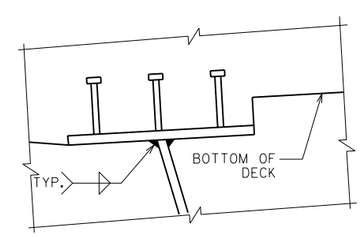

DETAIL 3

(LATERAL BRACING NOT SHOWN FOR CLARITY)

NOTES:

WP = WORK POINT TO WHICH DIMENSIONS ARE MEASURED.

STAY-IN-PLACE METAL FORMS PERMITTED INSIDE BOX GIRDERS ONLY.

STEEL FABRICATION CONTRACT ONLY

NO.	DATE	REVISION	BY

STATE OF WISCONSIN
DEPARTMENT OF TRANSPORTATION
STRUCTURES DESIGN SECTION

STRUCTURE B-5-678

DRAWN BY ZMG | PLANS CK'D. NPP

TYPICAL BOX GIRDER CROSS SECTION

SHEET 11 OF 63

15

8

8

FILE= O:\WisDot_12345678_US41Bridges_Plans\B-05-678E\011 - B-5-678E - Typical Cross Section.dgn

DATE: 7/19/2012
I.D.

STATE PROJECT NUMBER
1133-11-76

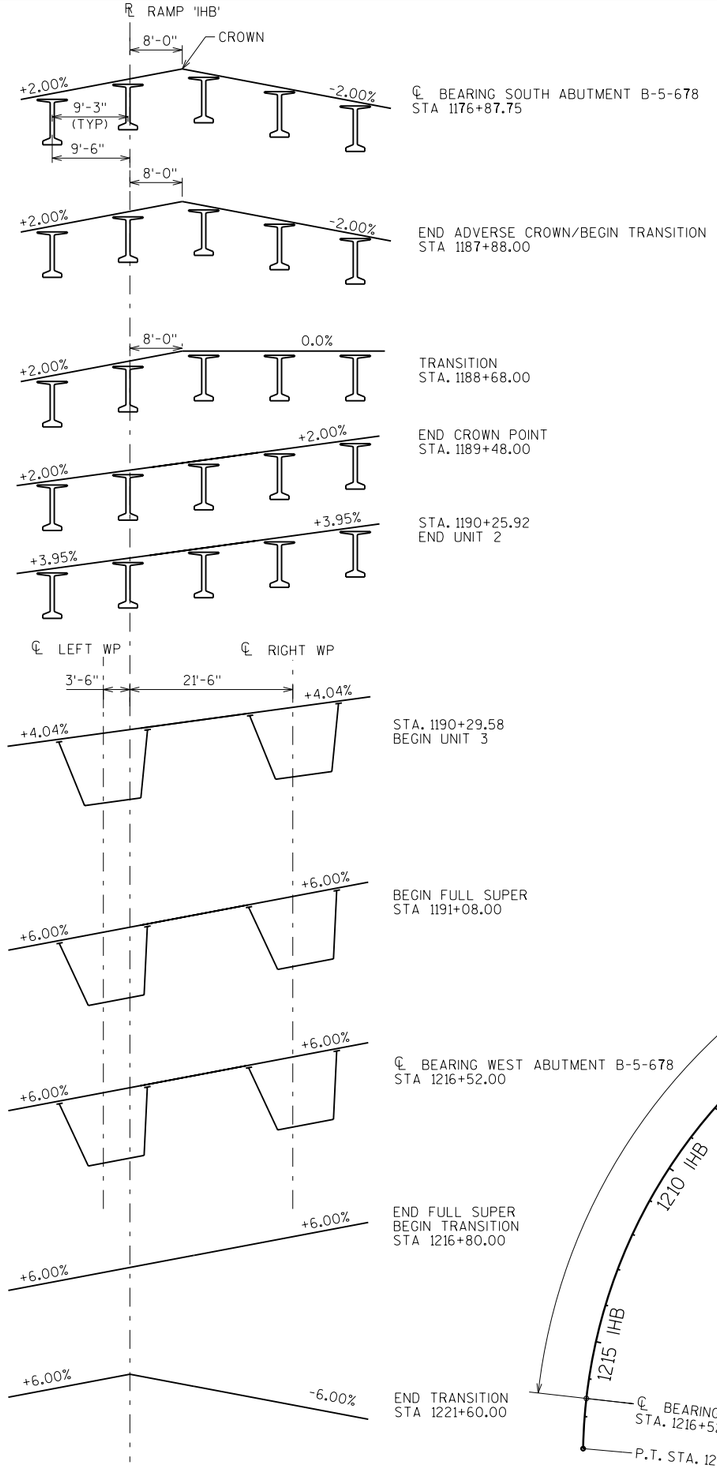

DECK SLOPE TRANSITION

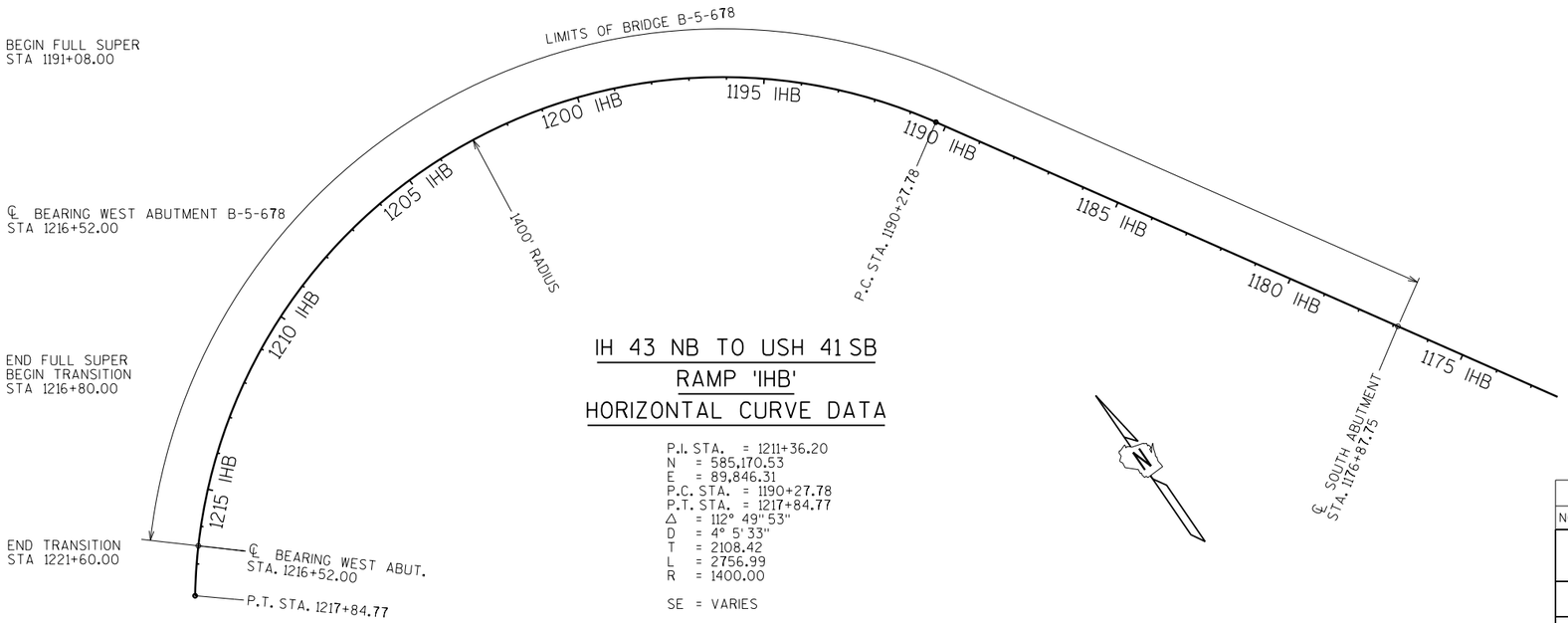

IH 43 NB TO USH 41 SB
RAMP 'IHB'
HORIZONTAL CURVE DATA

P.I. STA. = 1211+36.20
N = 585,170.53
E = 89,846.31
P.C. STA. = 1190+27.78
P.T. STA. = 1217+84.77
Δ = 112° 49' 53"
D = 4° 5' 33"
T = 2108.42
L = 2756.99
R = 1400.00

SE = VARIES

HORIZONTAL ALIGNMENT IH 43 NB TO USH 41 SB (RAMP 'IHB')

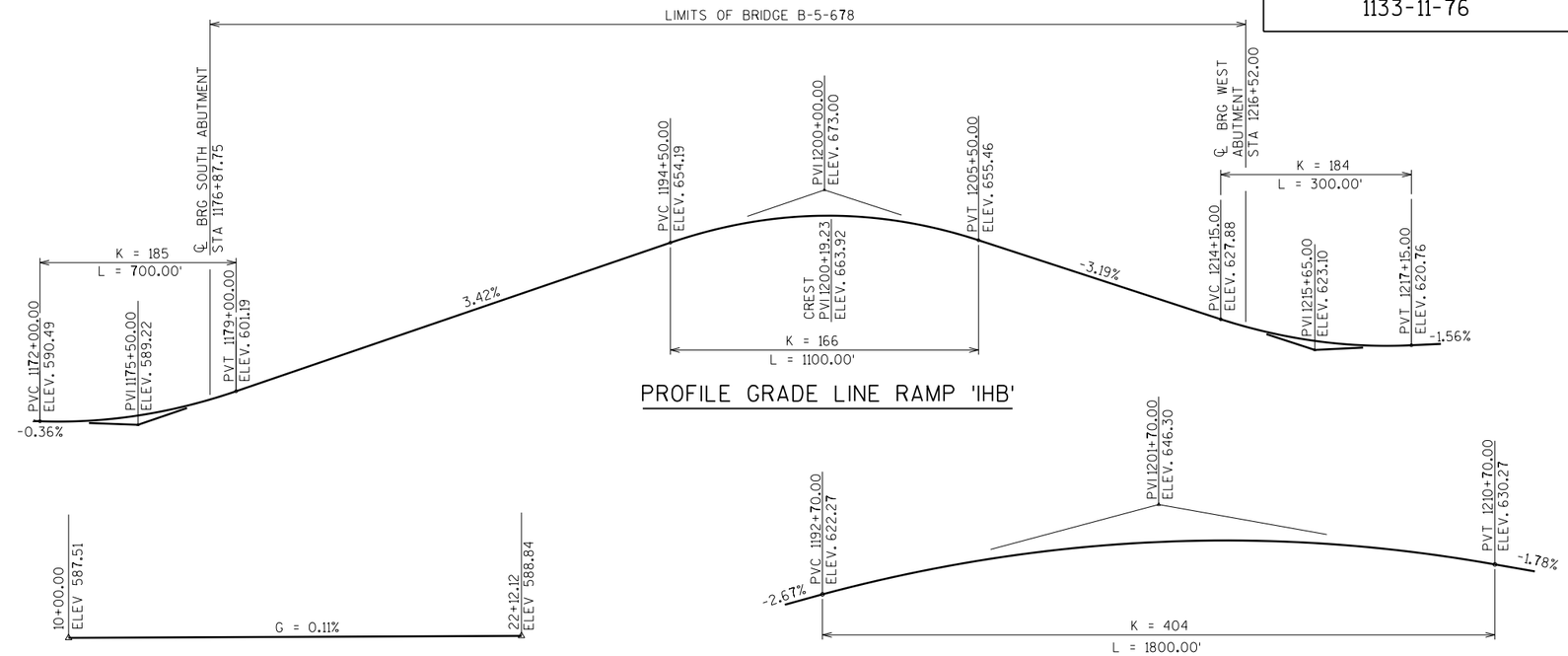

PROFILE GRADE LINE RAMP 'IHB'

PROFILE GRADE LINE RR3

WISCONSIN CENTRAL LTD

PROFILE GRADE LINE RAMP 'NIH'

NOTES:

STEEL GIRDER FLANGES ALWAYS PARALLEL TO DECK ABOVE.

THEORETICAL HAUNCH HEIGHT FOR STEEL TUB GIRDERS IS CONSTANT AT 4"

+ SLOPE - SLOPE

STEEL FABRICATION CONTRACT ONLY

NO.	DATE	REVISION	BY

STATE OF WISCONSIN
DEPARTMENT OF TRANSPORTATION
STRUCTURES DESIGN SECTION

STRUCTURE B-5-678

DRAWN BY ZMG | PLANS CK'D. NPP

ALIGNMENT AND SUPERELEVATION

SHEET 16 OF 63

8

8

FILE= Q:\WisDot_12345678_US41Bridges_Plans\B-05-678E012 - B-5-678E - Alignment & Superelevation.dgn

DATE: 7/19/2012
I.D.

STATE PROJECT NUMBER
1133-11-76

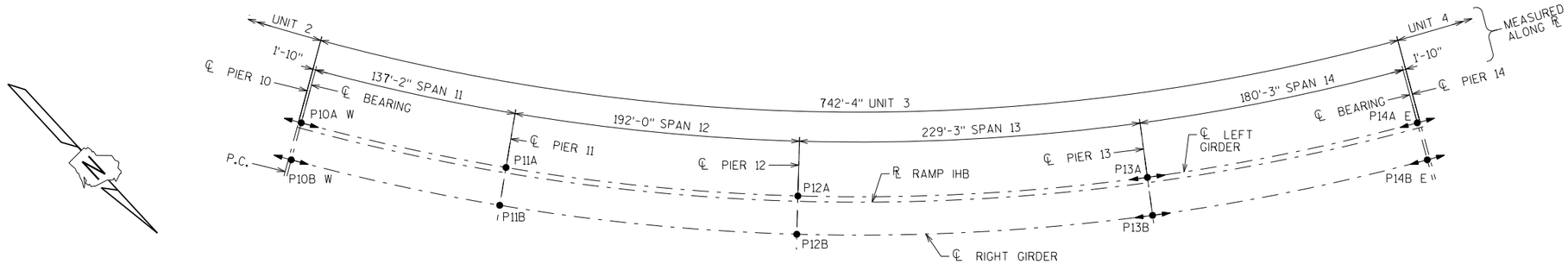

BEARING LEGEND

- ● MULTIROTATIONAL FIXED
- ◄●► MULTIROTATIONAL UNI-DIRECTIONAL (GUIDED) ARROWHEADS DENOTE MOVEMENT DIRECTIONS.
- DC DEAD LOAD OF STRUCTURAL COMPONENTS AND NONSTRUCTURAL ATTACHMENTS
- LL+I VEHICULAR LIVE LOAD AND IMPACT
- WS WIND ON STRUCTURE
- WL WIND ON LIVE LOAD
- TU FORCE EFFECT DUE TO UNIFORM TEMPERATURE
- CE VEHICULAR CENTRIFUGAL FORCE
- BR VEHICULAR BRAKING FORCE

BEARING LAYOUT

LENGTH NOT TO SCALE

BEARING MARK	TYPE	VERTICAL		TRANSVERSE				LONGITUDINAL				ROTATIONS		MOVEMENT RANGE (FOR 180 DEG.)	TAPERED SOLE PLATE THICKNESS					NOMINAL BEARING DIMENSIONS						MIN. ANCHOR BOLTS	MIN. TOP BOLTS
		DC (KIPS)	LL+I (KIPS)	WS (KIPS)	WL (KIPS)	TU (KIPS)	CE (KIPS)	WS (KIPS)	WL (KIPS)	TU (KIPS)	BR (KIPS)	X-AXIS TORSION (RAD)	Y-AXIS FLEXURE (RAD)	LONGIT. (IN)	LL (IN)	RL (IN)	LH (IN)	RH (IN)	CC (IN)	A (IN)	B (IN)	C (IN)	D (IN)	E (IN)	H (IN)		
P10A W	GUIDED	275	234	22	4	4	36	6	2	28	29	0.0019	0.0030	3.30	1.00	2.32	1.73	3.05	2.02	33	21.25	28.25	20.25	1.75	8.375	4-1" DIA.	4-1" DIA.
P10B W	GUIDED	275	234	22	4	4	36	6	2	28	29	0.0019	0.0030	3.30	1.00	2.32	1.73	3.05	2.02	33	21.25	28.25	20.25	1.75	8.375	4-1" DIA.	4-1" DIA.
P11A	FIXED	911	478	51	9	0	40	13	4	90	33	0.0002	0.0009	N/A	1.00	3.24	2.00	4.24	2.62	37.25	29.25	41.25	33.25	1.75	11.5	6-1 1/4" DIA.	8-1" DIA.
P11B	FIXED	911	478	51	9	0	40	13	4	90	33	0.0002	0.0009	N/A	1.00	3.24	2.00	4.24	2.62	37.25	29.25	41.25	33.25	1.75	11.5	6-1 1/4" DIA.	8-1" DIA.
P12A	FIXED	1132	525	64	11	0	40	16	5	90	33	0.0002	0.0021	N/A	1.00	3.40	2.09	4.49	2.75	40	32	44	36	1.75	12.375	6-1 1/2" DIA.	10-1" DIA.
P12B	FIXED	1132	525	64	11	0	40	16	5	90	33	0.0002	0.0021	N/A	1.00	3.40	2.09	4.49	2.75	40	32	44	36	1.75	12.375	6-1 1/2" DIA.	10-1" DIA.
P13A	GUIDED	1229	533	63	11	9	40	0	5	36	33	0.0002	0.0014	4.57	1.00	4.00	1.91	4.91	2.95	50	35	40.875	32.875	1.75	13.25	6-1 1/2" DIA.	10-1" DIA.
P13B	GUIDED	1229	533	63	11	9	40	0	5	36	33	0.0002	0.0014	4.57	1.00	4.00	1.91	4.91	2.95	50	35	40.875	32.875	1.75	13.25	6-1 1/2" DIA.	10-1" DIA.
P14A E	GUIDED	359	266	28	5	6	38	0	2	36	31	0.0037	0.0063	7.10	1.00	3.09	1.34	3.42	2.21	34.75	22.5	29.5	21.5	1.75	9.125	4-1" DIA.	4-1" DIA.
P14B E	GUIDED	359	266	28	5	6	38	0	2	36	31	0.0037	0.0063	7.10	1.00	3.09	1.34	3.42	2.21	34.75	22.5	29.5	21.5	1.75	9.125	4-1" DIA.	4-1" DIA.

BEARING FORCES SHOWN ARE UNFACTORED.

NOTES:

SEE BEARING DETAILS SHEET FOR TYPICAL BEARING DETAILS

BEARING DIMENSIONS SHOWN ARE NOMINAL VALUES ONLY AND MAY VARY WITH THE SELECTED MANUFACTURER. IF BEARING DIMENSIONS VARY FROM THOSE SHOWN HERE, THE BEARING MANUFACTURER SHALL COORDINATE WITH THE STEEL GIRDER FABRICATOR TO ASSURE THERE ARE NO CONFLICTS WITH JACKING PADS OR ANY OTHER STEEL ELEMENTS. THE STEEL GIRDER FABRICATOR IS RESPONSIBLE TO DETERMINE WHAT ELEMENTS REQUIRE RE-DESIGN AND TO RE-DESIGN THEM, SUBJECT TO APPROVAL BY THE ENGINEER.

HORIZONTAL FORCES SPECIFIED IN THE TABLE ARE THE EXPECTED APPLIED FORCES. DESIGN BEARINGS AND CONNECTIONS FOR THESE VALUES OR 15 PERCENT OF THE VERTICAL DEAD LOAD, WHICHEVER IS LARGER.

ROTATIONS SPECIFIED IN THE TABLE ARE THE EXPECTED APPLIED ROTATIONS FROM APPLICABLE STRENGTH LOAD COMBINATIONS.
DESIGN BEARINGS FOR AN ADDITIONAL 0.005 RADIANS FOR FABRICATION AND INSTALLATION TOLERANCES, AND 0.005 RADIANS FOR UNCERTAINTIES.
DESIGN ALL BEARINGS FOR A MINIMUM 0.020 RADIANS OF TOTAL ROTATION.

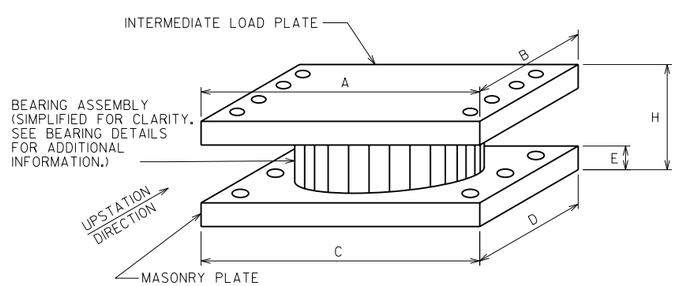

BEARING DIMENSION KEY

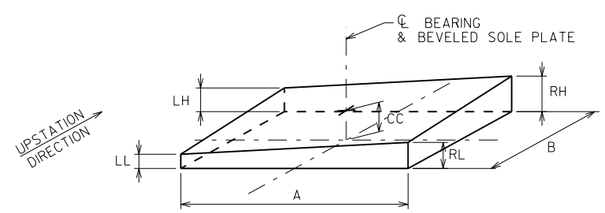

BEVELED SOLE PLATE DIMENSION KEY

(HOLES MATCHING INTERMEDIATE LOAD PLATE NOT SHOWN FOR CLARITY)

STEEL FABRICATION CONTRACT ONLY

NO.	DATE	REVISION	BY

STATE OF WISCONSIN
DEPARTMENT OF TRANSPORTATION
STRUCTURES DESIGN SECTION

STRUCTURE B-5-678

DRAWN BY ZMG | PLANS CK'D. NPP

BEARING LAYOUT UNIT 3

SHEET 13 OF 63

FILE= O:\WisDot_12345678_US41Bridges_Plans\B-05-678E\013 - B-5-678E - BEARING LAYOUT UNIT 3.dgn

DATE: 7/19/2012
I.D.

8

8

STATE PROJECT NUMBER
1133-11-76

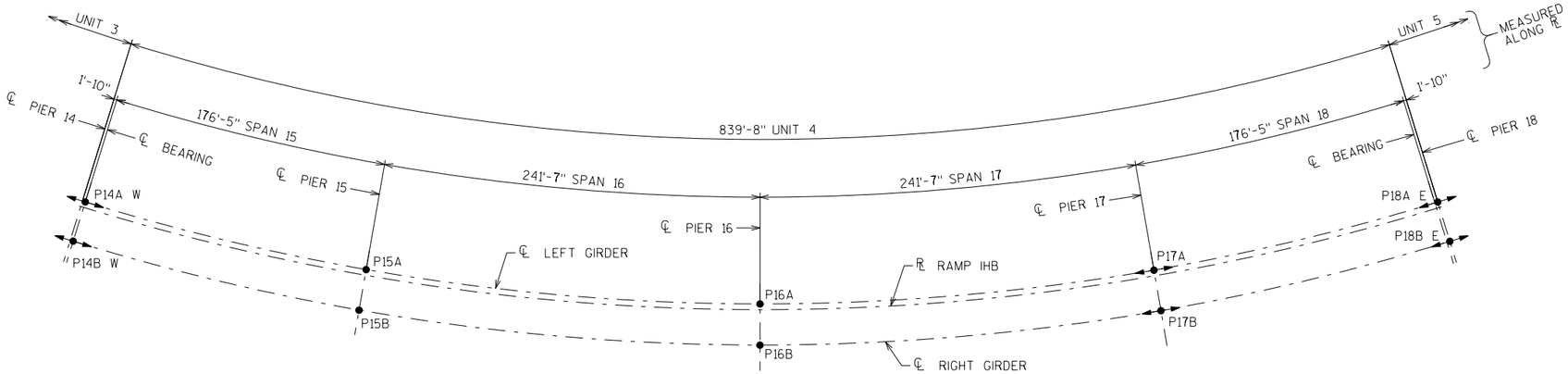

BEARING LAYOUT

LENGTH NOT TO SCALE

BEARING LEGEND

●	MULTIROTATIONAL FIXED
◄●►	MULTIROTATIONAL UNI-DIRECTIONAL (GUIDED) ARROWHEADS DENOTE MOVEMENT DIRECTIONS.
DC	DEAD LOAD OF STRUCTURAL COMPONENTS AND NONSTRUCTURAL ATTACHMENTS
LL+I	VEHICULAR LIVE LOAD AND IMPACT
WS	WIND ON STRUCTURE
WL	WIND ON LIVE LOAD
TU	FORCE EFFECT DUE TO UNIFORM TEMPERATURE
CE	VEHICULAR CENTRIFUGAL FORCE
BR	VEHICULAR BRAKING FORCE

BEARING MARK	TYPE	VERTICAL		TRANSVERSE				LONGITUDINAL				ROTATIONS		MOVEMENT RANGE (FOR 180 DEG.)	TAPERED SOLE PLATE THICKNESS					NOMINAL BEARING DIMENSIONS						MIN. ANCHOR BOLTS	MIN. TOP BOLTS
		DC (KIPS)	LL+I (KIPS)	WS (KIPS)	WL (KIPS)	TU (KIPS)	CE (KIPS)	WS (KIPS)	WL (KIPS)	TU (KIPS)	BR (KIPS)	X-AXIS TORSION (RAD)	Y-AXIS FLEXURE (RAD)	LONGIT. (IN)	LL (IN)	RL (IN)	LH (IN)	RH (IN)	CC (IN)	A (IN)	B (IN)	C (IN)	D (IN)	E (IN)	H (IN)		
P14A W	GUIDED	344	265	27	5	4	38	7	5	35	31	0.0037	0.0054	4.17	1.00	3.09	1.33	3.42	2.21	34.75	22.5	29.5	21.5	1.75	9.125	4-1" DIA.	4-1" DIA.
P14B W	GUIDED	344	265	27	5	4	38	7	5	35	31	0.0037	0.0054	4.17	1.00	3.09	1.33	3.42	2.21	34.75	22.5	29.5	21.5	1.75	9.125	4-1" DIA.	4-1" DIA.
P15A	FIXED	1238	541	64	11	0	40	16	11	73	33	0.0003	0.0017	N/A	1.00	3.46	1.14	3.60	2.30	41	33	45	37	1.75	12.75	6-1 1/2" DIA.	10-1" DIA.
P15B	FIXED	1238	541	64	11	0	40	16	11	73	33	0.0003	0.0017	N/A	1.00	3.46	1.14	3.60	2.30	41	33	45	37	1.75	12.75	6-1 1/2" DIA.	10-1" DIA.
P16A	FIXED	1340	563	74	13	0	40	18	13	73	33	0.0002	0.0021	N/A	1.36	3.92	1.00	3.57	2.46	42.75	34.75	46.75	38.75	1.75	13	6-1 1/2" DIA.	12-1" DIA.
P16B	FIXED	1340	563	74	13	0	40	18	13	73	33	0.0002	0.0021	N/A	1.36	3.92	1.00	3.57	2.46	42.75	34.75	46.75	38.75	1.75	13	6-1 1/2" DIA.	12-1" DIA.
P17A	GUIDED	1235	541	64	11	8	40	16	11	35	33	0.0005	0.0019	5.09	1.87	4.87	1.00	4.00	2.93	50	35	40.875	32.875	1.75	13.25	6-1 1/2" DIA.	10-1" DIA.
P17B	GUIDED	1235	541	64	11	8	40	16	11	35	33	0.0005	0.0019	5.09	1.87	4.87	1.00	4.00	2.93	50	35	40.875	32.875	1.75	13.25	6-1 1/2" DIA.	10-1" DIA.
P18A E	GUIDED	342	264	27	5	5	38	7	5	35	31	0.0037	0.0054	7.56	1.72	3.80	1.00	3.09	2.40	34.75	22.5	29.5	21.5	1.75	9.125	4-1" DIA.	4-1" DIA.
P18B E	GUIDED	342	264	27	5	5	38	7	5	35	31	0.0037	0.0054	7.56	1.72	3.80	1.00	3.09	2.40	34.75	22.5	29.5	21.5	1.75	9.125	4-1" DIA.	4-1" DIA.

BEARING FORCES SHOWN ARE UNFACTORED.

NOTES:

SEE BEARING DETAILS SHEET FOR TYPICAL BEARING DETAILS

BEARING DIMENSIONS SHOWN ARE NOMINAL VALUES ONLY AND MAY VARY WITH THE SELECTED MANUFACTURER. IF BEARING DIMENSIONS VARY FROM THOSE SHOWN HERE, THE BEARING MANUFACTURER SHALL COORDINATE WITH THE STEEL GIRDER FABRICATOR TO ASSURE THERE ARE NO CONFLICTS WITH JACKING PADS OR ANY OTHER STEEL ELEMENTS. THE STEEL GIRDER FABRICATOR IS RESPONSIBLE TO DETERMINE WHAT ELEMENTS REQUIRE RE-DESIGN AND TO RE-DESIGN THEM, SUBJECT TO APPROVAL BY THE ENGINEER.

HORIZONTAL FORCES SPECIFIED IN THE TABLE ARE THE EXPECTED APPLIED FORCES. DESIGN BEARINGS AND CONNECTIONS FOR THESE VALUES OR 15 PERCENT OF THE VERTICAL DEAD LOAD, WHICHEVER IS LARGER.

ROTATIONS SPECIFIED IN THE TABLE ARE THE EXPECTED APPLIED ROTATIONS FROM APPLICABLE STRENGTH LOAD COMBINATIONS. DESIGN BEARINGS FOR AN ADDITIONAL 0.005 RADIANS FOR FABRICATION AND INSTALLATION TOLERANCES, AND 0.005 RADIANS FOR UNCERTAINTIES. DESIGN ALL BEARINGS FOR A MINIMUM 0.020 RADIANS OF TOTAL ROTATION.

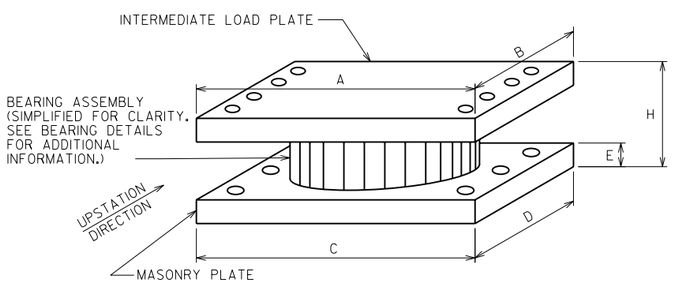

BEARING DIMENSION KEY

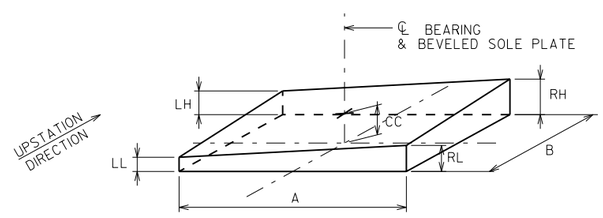

BEVELED SOLE PLATE DIMENSION KEY

(HOLES MATCHING INTERMEDIATE LOAD PLATE NOT SHOWN FOR CLARITY)

STEEL FABRICATION CONTRACT ONLY

NO.	DATE	REVISION	BY

STATE OF WISCONSIN
DEPARTMENT OF TRANSPORTATION
STRUCTURES DESIGN SECTION

STRUCTURE B-5-678

DRAWN BY ZMG | PLANS CK'D. NPP

BEARING LAYOUT UNIT 4

SHEET 14 OF 63

8

8

FILE= O:\WisDot_12345678_US41Bridges_Plans\B-05-678E\014 - B-5-678E - BEARING LAYOUT UNIT 4.dgn

DATE: 7/19/2012
I.D.

STATE PROJECT NUMBER
1133-11-76

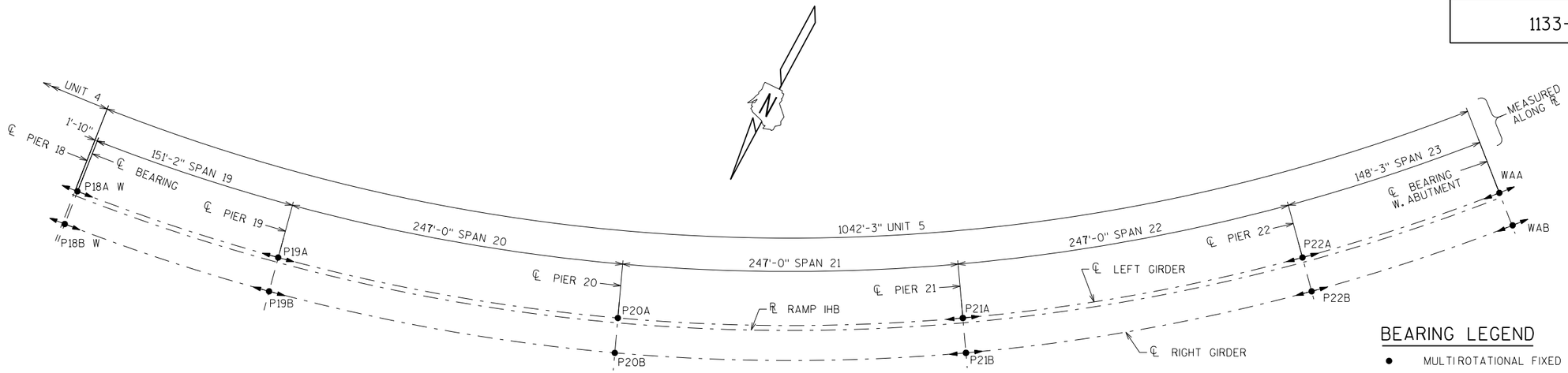

BEARING LAYOUT

LENGTH NOT TO SCALE

BEARING MARK	TYPE	VERTICAL		TRANSVERSE				LONGITUDINAL				ROTATIONS		MOVEMENT RANGE (FOR 180 DEG.)	TAPERED SOLE PLATE THICKNESS					NOMINAL BEARING DIMENSIONS						MIN. ANCHOR BOLTS	MIN. TOP BOLTS
		DC (KIPS)	LL+I (KIPS)	WS (KIPS)	WL (KIPS)	TU (KIPS)	CE (KIPS)	WS (KIPS)	WL (KIPS)	TU (KIPS)	BR (KIPS)	X-AXIS TORSION (RAD)	Y-AXIS FLEXURE (RAD)	LONGIT. (IN)	LL (IN)	RL (IN)	LH (IN)	RH (IN)	CC (IN)	A (IN)	B (IN)	C (IN)	D (IN)	E (IN)	H (IN)		
P18A W	GUIDED	251	250	23	4	4	38	6	2	26	31	0.0016	0.0017	5.59	1.68	3.66	1.00	2.98	2.33	33	21.25	28.25	20.25	1.75	8.375	4-1" DIA.	4-1" DIA.
P18B W	GUIDED	251	250	23	4	4	38	6	2	26	31	0.0016	0.0017	5.59	1.68	3.66	1.00	2.98	2.33	33	21.25	28.25	20.25	1.75	8.375	4-1" DIA.	4-1" DIA.
P19A	GUIDED	1183	534	61	10	8	41	15	4	119	33	0.0019	0.0033	3.47	2.12	5.12	1.00	4.00	3.06	50	35	40.875	32.875	1.75	13.25	6-1 1/2" DIA.	10-1" DIA.
P19B	GUIDED	1183	534	61	10	8	41	15	4	119	33	0.0019	0.0033	3.47	2.12	5.12	1.00	4.00	3.06	50	35	40.875	32.875	1.75	13.25	6-1 1/2" DIA.	10-1" DIA.
P20A	FIXED	1357	571	75	13	0	40	19	5	236	33	0.0003	0.0038	N/A	2.11	4.67	1.00	3.57	2.84	42.75	34.75	46.75	38.75	1.75	13	6-1 1/2" DIA.	10-1 1/8" DIA.
P20B	FIXED	1357	571	75	13	0	40	19	5	236	33	0.0003	0.0038	N/A	2.11	4.67	1.00	3.57	2.84	42.75	34.75	46.75	38.75	1.75	13	6-1 1/2" DIA.	10-1 1/8" DIA.
P21A	GUIDED	1366	571	75	13	8	40	19	5	137	33	0.0005	0.0038	3.47	2.16	5.30	1.00	4.14	3.15	52.25	36.5	42.5	34.5	1.75	13.75	6-1 1/2" DIA.	12-1" DIA.
P21B	GUIDED	1366	571	75	13	8	40	19	5	137	33	0.0005	0.0038	3.47	2.16	5.30	1.00	4.14	3.15	52.25	36.5	42.5	34.5	1.75	13.75	6-1 1/2" DIA.	12-1" DIA.
P22A	GUIDED	1186	534	60	10	8	41	15	4	119	33	0.0017	0.0030	6.94	1.95	4.95	1.00	4.00	2.97	50	35	40.875	32.875	1.75	13.25	6-1 1/2" DIA.	10-1" DIA.
P22B	GUIDED	1186	534	60	10	8	41	15	4	119	33	0.0017	0.0030	6.94	1.95	4.95	1.00	4.00	2.97	50	35	40.875	32.875	1.75	13.25	6-1 1/2" DIA.	10-1" DIA.
WA A	GUIDED	238	248	23	4	4	38	6	2	24	31	0.0014	0.0014	9.02	1.39	3.37	1.00	2.98	2.18	33	20.5	27.5	19.5	1.75	8	4-1" DIA.	4-1" DIA.
WA B	GUIDED	238	248	23	4	4	38	6	2	24	31	0.0014	0.0014	9.02	1.39	3.37	1.00	2.98	2.18	33	20.5	27.5	19.5	1.75	8	4-1" DIA.	4-1" DIA.

BEARING FORCES SHOWN ARE UNFACTORED.

BEARING LEGEND

- ● MULTIROTATIONAL FIXED
- ◄●► MULTIROTATIONAL UNI-DIRECTIONAL (GUIDED) ARROWHEADS DENOTE MOVEMENT DIRECTIONS.
- DC DEAD LOAD OF STRUCTURAL COMPONENTS AND NONSTRUCTURAL ATTACHMENTS
- LL+I VEHICULAR LIVE LOAD AND IMPACT
- WS WIND ON STRUCTURE
- WL WIND ON LIVE LOAD
- TU FORCE EFFECT DUE TO UNIFORM TEMPERATURE
- CE VEHICULAR CENTRIFUGAL FORCE
- BR VEHICULAR BRAKING FORCE

NOTES:

SEE BEARING DETAILS SHEET FOR TYPICAL BEARING DETAILS

BEARING DIMENSIONS SHOWN ARE NOMINAL VALUES ONLY AND MAY VARY WITH THE SELECTED MANUFACTURER. IF BEARING DIMENSIONS VARY FROM THOSE SHOWN HERE, THE BEARING MANUFACTURER SHALL COORDINATE WITH THE STEEL GIRDER FABRICATOR TO ASSURE THERE ARE NO CONFLICTS WITH JACKING PADS OR ANY OTHER STEEL ELEMENTS. THE STEEL GIRDER FABRICATOR IS RESPONSIBLE TO DETERMINE WHAT ELEMENTS REQUIRE RE-DESIGN AND TO RE-DESIGN THEM, SUBJECT TO APPROVAL BY THE ENGINEER.

HORIZONTAL FORCES SPECIFIED IN THE TABLE ARE THE EXPECTED APPLIED FORCES. DESIGN BEARINGS AND CONNECTIONS FOR THESE VALUES OR 15 PERCENT OF THE VERTICAL DEAD LOAD, WHICHEVER IS LARGER.

ROTATIONS SPECIFIED IN THE TABLE ARE THE EXPECTED APPLIED ROTATIONS FROM APPLICABLE STRENGTH LOAD COMBINATIONS.
DESIGN BEARINGS FOR AN ADDITIONAL 0.005 RADIANS FOR FABRICATION AND INSTALLATION TOLERANCES, AND 0.005 RADIANS FOR UNCERTAINTIES.
DESIGN ALL BEARINGS FOR A MINIMUM 0.020 RADIANS OF TOTAL ROTATION.

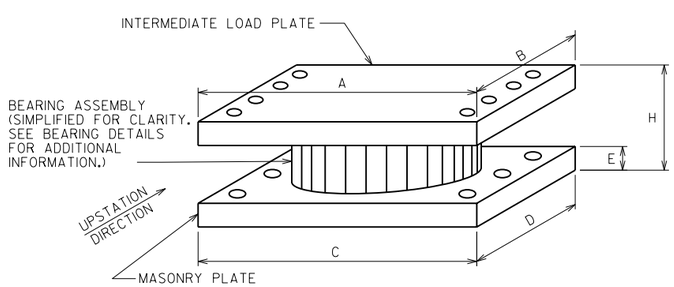

BEARING DIMENSION KEY

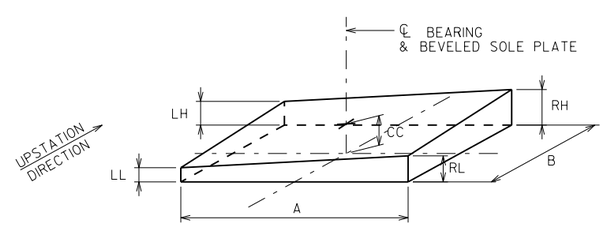

BEVELED SOLE PLATE DIMENSION KEY

(HOLES MATCHING INTERMEDIATE LOAD PLATE NOT SHOWN FOR CLARITY)

STEEL FABRICATION CONTRACT ONLY

NO.	DATE	REVISION	BY

STATE OF WISCONSIN
DEPARTMENT OF TRANSPORTATION
STRUCTURES DESIGN SECTION

STRUCTURE B-5-678

DRAWN BY ZMG | PLANS CK'D. NPP

BEARING LAYOUT UNIT 5

SHEET 15 OF 63

8

8

FILE= Q:\WisDot_12345678_US41Bridges_Plans\B-05-678E\015 - B-5-678E - BEARING LAYOUT UNIT 5.dgn

DATE: 7/19/2012
I.D.

STATE PROJECT NUMBER

1133-11-76

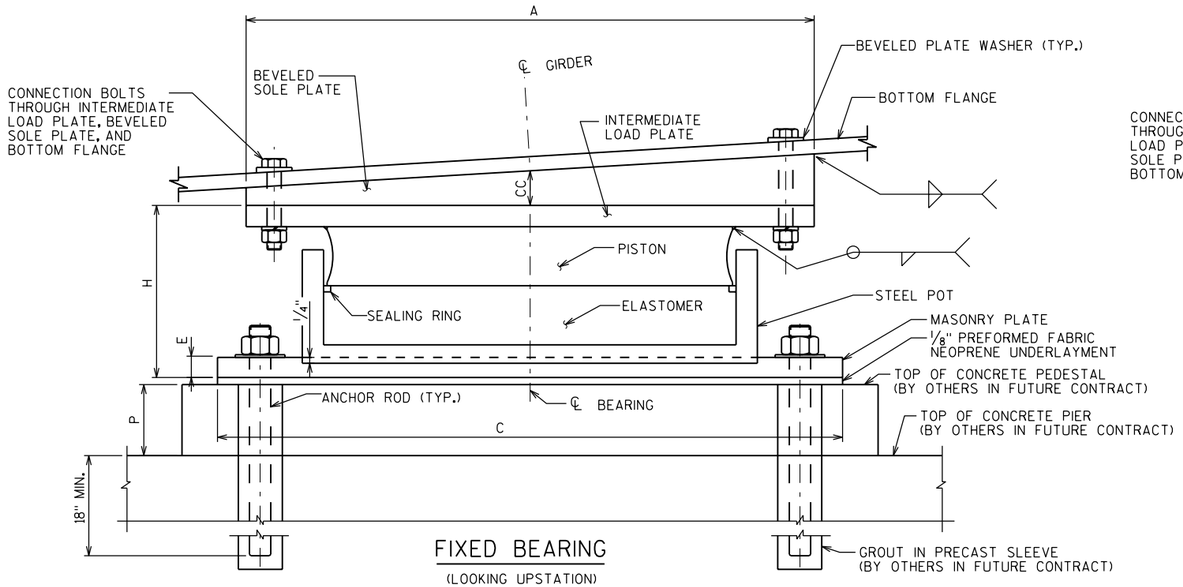

FIXED BEARING

(LOOKING UPSTATION)

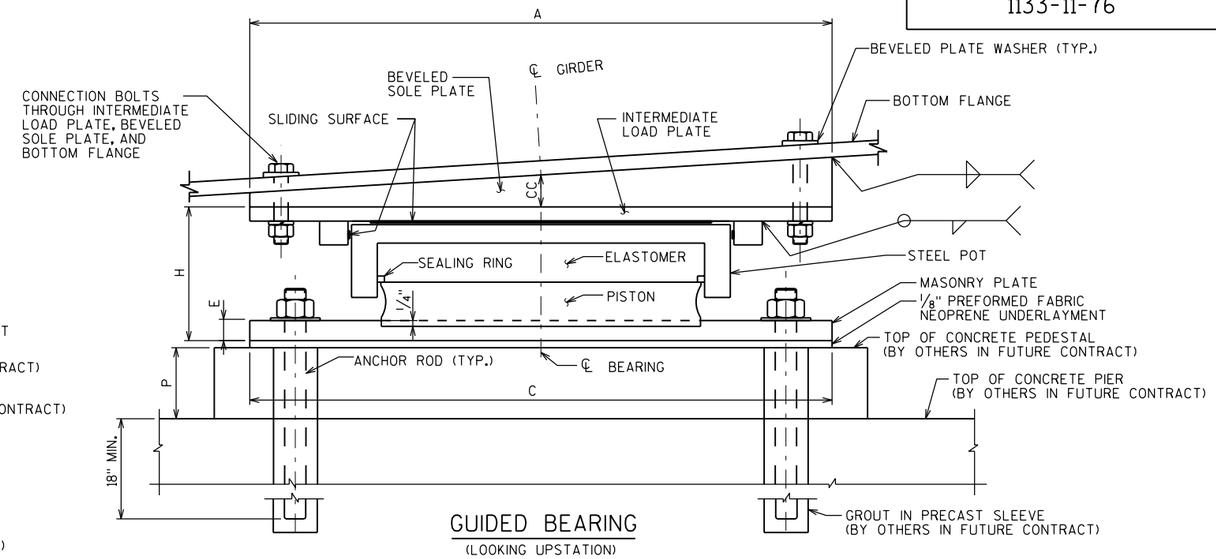

GUIDED BEARING

(LOOKING UPSTATION)

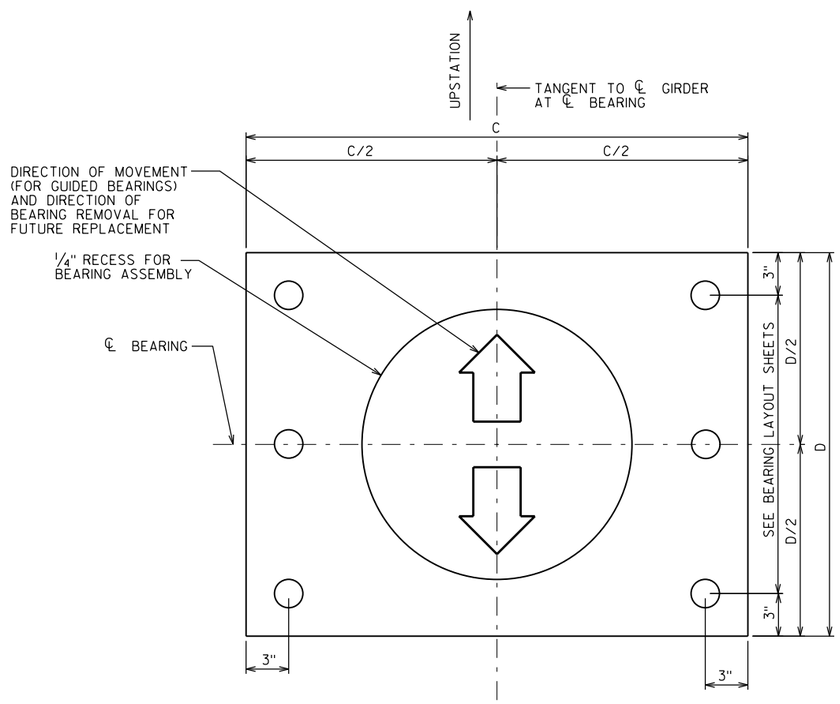

PLAN - MASONRY PLATE

SEE BEARING LAYOUT SHEETS FOR REQUIRED NUMBER OF ANCHOR RODS PER RESPECTIVE BEARING

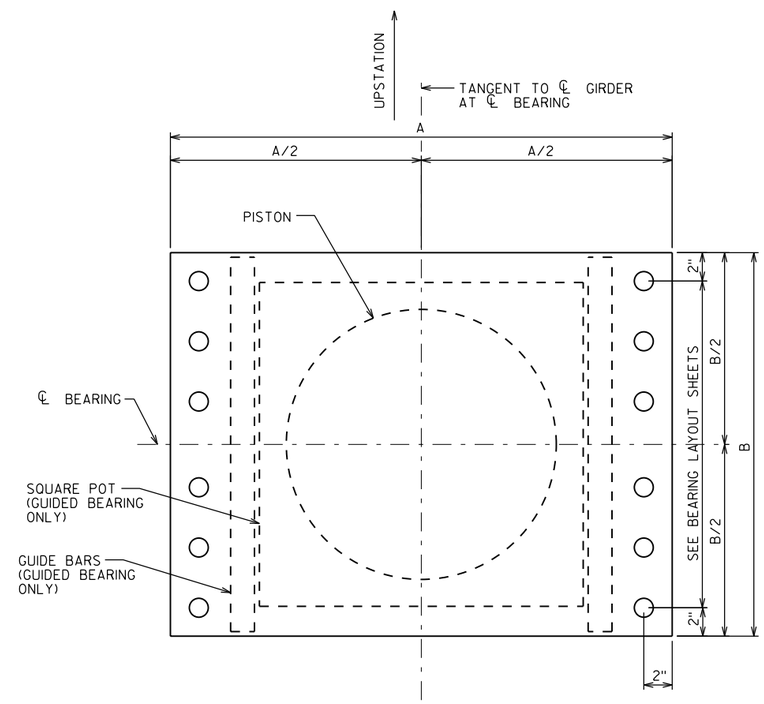

PLAN - INTERMEDIATE LOAD PLATE

(BEVELED SOLE PLATE SIMILAR)

NOTES:

SEE BEARING LAYOUT SHEETS FOR LOCATION-SPECIFIC DIMENSIONS.

SEE JACKING PROVISIONS SHEET FOR LOCATION AND SIZE OF BEARING REPLACEMENT JACKING PADS ATTACHED TO BOTTOM OF GIRDER FLANGE.

DESIGN BOLTED CONNECTION BETWEEN BEVELED SOLE PLATE AND INTERMEDIATE LOAD PLATE FOR THE COMBINED SPECIFIED HORIZONTAL LOADS SHOWN ON THE BEARING LAYOUT SHEETS PER AASHTO LRFD AND THE WISDOT BRIDGE MANUAL. FOR FUTURE BEARING REPLACEMENT, ARRANGE THE CONNECTION TO ENSURE ALL BOLTS CAN BE REMOVED WITHOUT INTERFERENCE FROM ANCHOR BOLTS OR OTHER OBSTRUCTIONS AFTER BEARING IS INSTALLED.

HOLES IN TOP PLATE MAY BE SLOTTED OR OVERSIZED AS REQUIRED TO FACILITATE STEEL ERECTION. IF OVERSIZED OR SLOTTED HOLES ARE USED, DESIGN CONNECTION AS SLIP-RESISTANT PER AASHTO LRFD BRIDGE DESIGN SPECIFICATIONS.

HOLES IN MASONRY PLATE SHALL BE A MAXIMUM OF 1/8" LARGER THAN THE SPECIFIED ANCHOR BOLT DIAMETER.

BEVELED SOLE PLATE, INTERMEDIATE LOAD PLATE AND MASONRY PLATES ARE ALIGNED WITH THE GIRDER AND THE SUBSTRUCTURE BELOW.

BEVELED SOLE PLATE AND INTERMEDIATE LOAD PLATE THICKNESSES TO BE SELECTED BY THE BEARING DESIGNER. MINIMUM 1".

MASONRY PLATE THICKNESS TO BE CONFIRMED BY THE BEARING DESIGNER AND INCREASED IF REQUIRED, BUT NOT DECREASED FROM 1.75".

PROVIDE ANCHOR BOLTS IN ACCORDANCE WITH ASTM F1554 (GRADE 105) AND HOT-DIP GALVANIZED IN ACCORDANCE WITH AASHTO M232.

DESIGN BEARINGS TO PERMIT REPLACEMENT BY JACKING THE BRIDGE A MAXIMUM OF 1/2".

FINAL DISTANCE BETWEEN BOTTOM OF STEEL GIRDER AND TOP OF PIER IS THE SUMMATION OF "CC", THE ACTUAL "H" OF THE BEARING, 1/8" UNDERLAYMENT AND THE ACTUAL PEDESTAL HEIGHT "P". HEIGHT "P" IS ASSUMED TO BE 10" FOR ALL LOCATIONS.

ALL ELEMENTS SHOWN ARE PROVIDED BY THE BEARING MANUFACTURER (UNLESS OTHERWISE NOTED) AND COORDINATED WITH THE STEEL FABRICATOR.

THE CONTRACTOR IS RESPONSIBLE DURING STORAGE AND FUTURE ERECTION OF THE BEARING TO PREVENT OVER-ROTATION OR SLIDING OF THE BEARING. CONSTRUCTION ROTATIONS MUST NOT EXCEED THE ALLOWABLE ROTATIONS SHOWN.

DO NOT DISASSEMBLE ANY BEARING WITHOUT THE PRESENCE OF THE TECHNICAL REPRESENTATIVE OF THE BEARING MANUFACTURER.

INSTALL BEARINGS IN STRICT ACCORDANCE WITH THE MANUFACTURER'S INSTRUCTIONS, AS APPROVED BY THE ENGINEER. THE MANUFACTURER SHALL HAVE ITS TECHNICAL REPRESENTATIVE PRESENT FOR THE PLACEMENT OF THE FIRST BEARING. AT THE OPTION OF THE ENGINEER, CONTRACTOR OR MANUFACTURER, THE TECHNICAL REPRESENTATIVE MAY BE REQUIRED TO BE PRESENT FOR THE PLACEMENT OF ANY NUMBER OF ADDITIONAL BEARINGS.

STEEL FABRICATION CONTRACT ONLY

NO.	DATE	REVISION	BY

STATE OF WISCONSIN
DEPARTMENT OF TRANSPORTATION
STRUCTURES DESIGN SECTION

STRUCTURE B-5-678

DRAWN BY ZMG | PLANS CK'D. NPP

BEARING DETAILS 20

SHEET 16 OF 63

8

8

FILE= Q:\WisDot_12345678_US41Bridges_Plans\B-05-678E\016 - B-5-678E - BEARING DETAILS.dgn

DATE: 7/19/2012
I.D.

STATE PROJECT NUMBER

1133-11-76

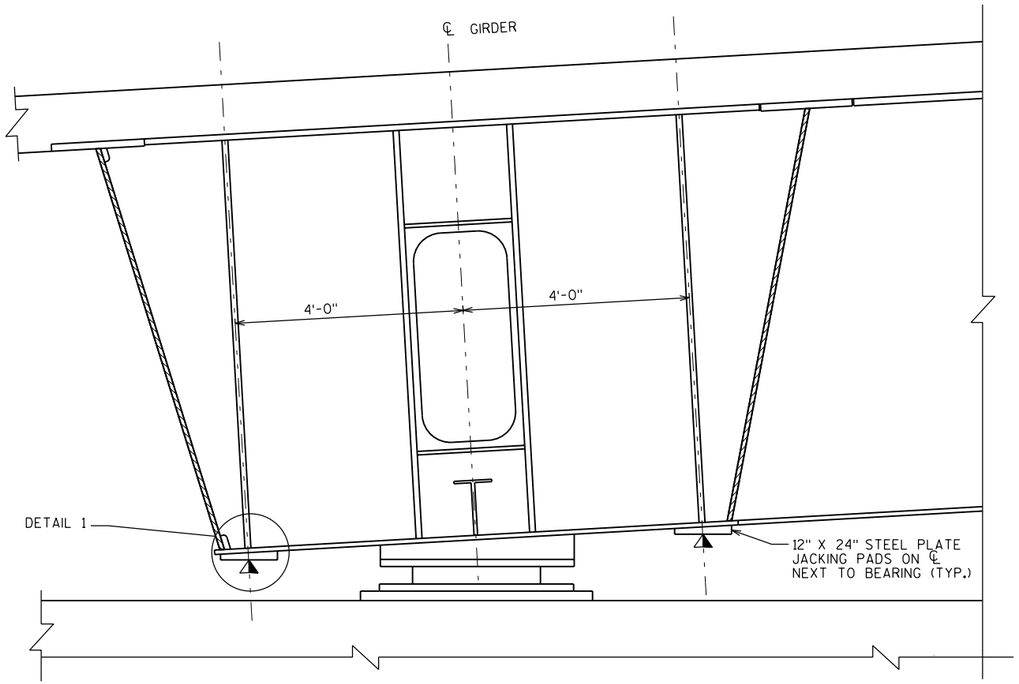

TYPICAL ELEVATION

(LOOKING UPSTATION)

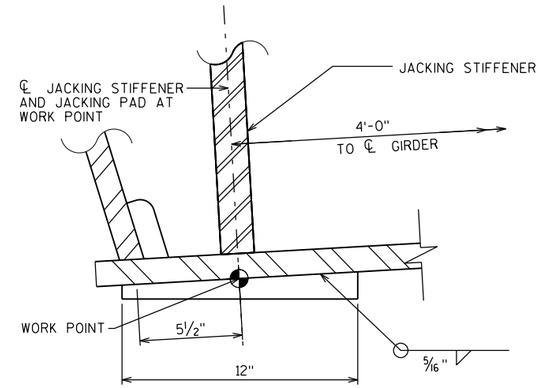

DETAIL 1

NOT TO SCALE

LEGEND:

◭ SUGGESTED JACKING LOCATIONS FOR FUTURE BEARING REPLACEMENT.

NOTES:

THIS DRAWING SHOWS DETAILS AND LOCATION OF JACKING PADS AND ADDITIONAL JACKING STIFFENERS REQUIRED FOR FUTURE BEARING REPLACEMENT.

JACKING PAD DIMENSIONS AND LOCATIONS ARE BASED ON THE MINIMUM CLEARANCES SHOWN AND THE NOMINAL BEARING DIMENSIONS GIVEN ON BEARING LAYOUT SHEETS. MAKE ADJUSTMENTS AS REQUIRED TO ACCOMMODATE ACTUAL BEARINGS SUPPLIED.

JACKING PADS ARE PROVIDED TO GIVE A JACKING SURFACE THAT IS APPROXIMATELY LEVEL AND TO ENSURE THAT JACKING LOADS ARE APPLIED TO THE CORRECT LOCATION.

ADDITIONAL MEASURES SHALL BE TAKEN TO CORRECT FOR ANY UNINTENDED SLOPE AND TO ENSURE THAT JACKS ARE POSITIVELY HELD IN POSITION ON THE JACKING PADS.

ESTIMATED JACKING FORCES ARE GIVEN AT EACH PAD AND ARE BASED ON DEAD LOAD AND LIVE LOAD REACTIONS ONLY AND NO ADDITIONAL ALLOWANCES HAVE BEEN MADE. THESE FORCES MUST BE INCREASED TO ALLOW FOR JACK FRICTION AND OTHER FACTORS. RECOMMENDED MINIMUM JACK CAPACITY IS 2 TIMES THE TABULATED JACK FORCE.

FORCES AND RECOMMENDATIONS ARE PROVIDED FOR INFORMATION ONLY AND MUST BE VERIFIED BY THE ENGINEER RESPONSIBLE FOR JACKING OPERATIONS.

CONTROL JACKS TO ENSURE THAT FORCES APPLIED TO ALL JACKING PADS AT A SINGLE BEARING LOCATION ARE APPROXIMATELY EQUAL. IF THIS REQUIREMENT IS NOT MET, A COMPLETE ANALYSIS OF THE PIER DIAPHRAGM SYSTEM WILL BE REQUIRED IN ORDER TO ACCOUNT FOR THE REDISTRIBUTION OF FORCES WITHIN THE SYSTEM.

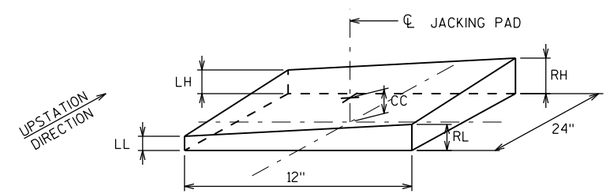

JACKING PAD DIMENSION KEY

LOCATION	NUMBER OF PADS PER BOX	LEFT BOX JACKING PAD DIMENSIONS					RIGHT BOX JACKING PAD DIMENSIONS					MIN. JACK FORCE (KIP)
		LL (IN)	RL (IN)	LH (IN)	RH (IN)	CC (IN)	LL (IN)	RL (IN)	LH (IN)	RH (IN)	CC (IN)	
PIER 10W	2	1.00	1.48	1.82	2.30	1.65	1.00	1.48	1.82	2.30	1.65	260
PIER 11	2	1.00	1.72	1.82	2.54	1.77	1.00	1.72	1.82	2.54	1.77	700
PIER 12	2	1.00	1.72	1.82	2.54	1.77	1.00	1.72	1.82	2.54	1.77	830
PIER 13	2	1.00	1.72	1.62	2.34	1.67	1.00	1.72	1.62	2.34	1.67	890
PIER 14E	2	1.00	1.72	1.36	2.08	1.54	1.00	1.72	1.36	2.08	1.54	320
PIER 14W	2	1.00	1.72	1.36	2.08	1.54	1.00	1.72	1.36	2.08	1.54	310
PIER 15	2	1.00	1.72	1.10	1.82	1.41	1.00	1.72	1.10	1.82	1.41	890
PIER 16	2	1.25	1.97	1.00	1.72	1.48	1.25	1.97	1.00	1.72	1.48	960
PIER 17	2	1.59	2.31	1.00	1.72	1.66	1.59	2.31	1.00	1.72	1.66	890
PIER 18E	2	1.77	2.49	1.00	1.72	1.74	1.77	2.49	1.00	1.72	1.74	310
PIER 18W	2	1.77	2.49	1.00	1.72	1.74	1.77	2.49	1.00	1.72	1.74	260
PIER 19	2	1.77	2.49	1.00	1.72	1.74	1.77	2.49	1.00	1.72	1.74	860
PIER 20	2	1.77	2.49	1.00	1.72	1.74	1.77	2.49	1.00	1.72	1.74	970
PIER 21	2	1.77	2.49	1.00	1.72	1.74	1.77	2.49	1.00	1.72	1.74	970
PIER 22	2	1.65	2.37	1.00	1.72	1.68	1.65	2.37	1.00	1.72	1.68	860
W. ABUT.	2	1.46	2.18	1.00	1.72	1.59	1.46	2.18	1.00	1.72	1.59	250

STEEL FABRICATION CONTRACT ONLY

NO.	DATE	REVISION	BY

STATE OF WISCONSIN
DEPARTMENT OF TRANSPORTATION
STRUCTURES DESIGN SECTION

STRUCTURE B-5-678

DRAWN BY ZMG | PLANS CK'D. NPP

JACKING PROVISIONS

SHEET 17 OF 63

8

8

FILE= Q:\WisDot_12345678_US41Bridges_Plans\B-05-678E\017 - B-5-678E - JACKING PROVISIONS.dgn

DATE: 7/19/2012
I.D.

STATE PROJECT NUMBER

1133-11-76

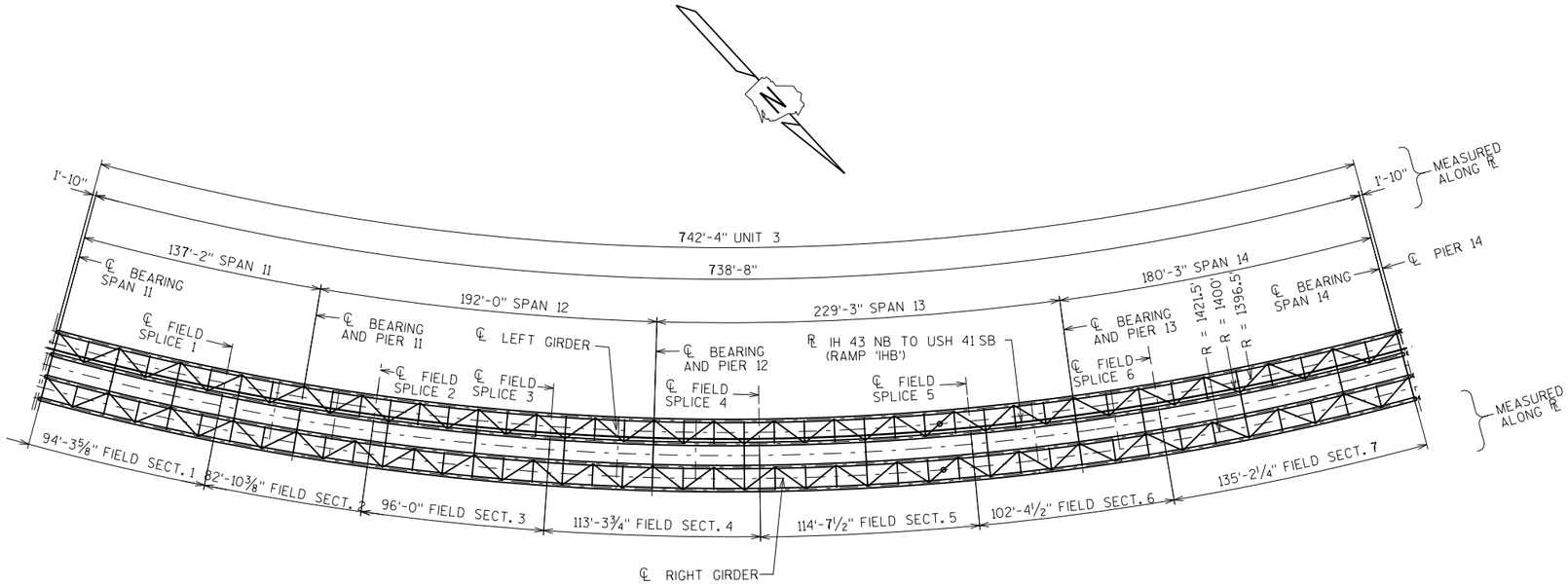

FRAMING PLAN - UNIT 3

8

STEEL FABRICATION CONTRACT ONLY

NO.	DATE	REVISION	BY

STATE OF WISCONSIN
DEPARTMENT OF TRANSPORTATION
STRUCTURES DESIGN SECTION

STRUCTURE B-5-678

DRAWN BY ZMG | PLANS CK'D. NPP

FRAMING PLAN
UNIT 3
SPANS 11 TO 14

SHEET 18 OF 63

22

FILE= O:\WisDot_12345678_US41Bridges_Plans\B-05-678E\018 - B-5-678E - FRAMING PLAN UNIT 3.dgn

DATE: 7/19/2012

I.D.

8

STATE PROJECT NUMBER

1133-11-76

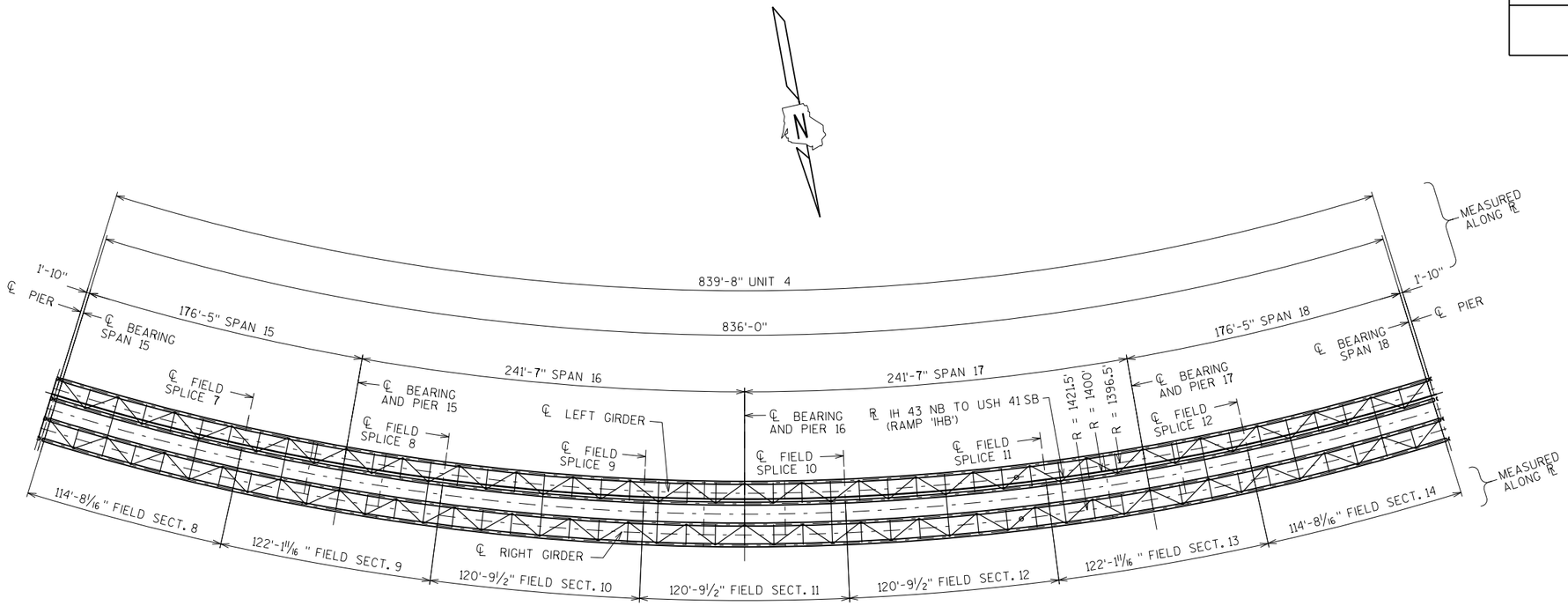

FRAMING PLAN - UNIT 4

STEEL FABRICATION CONTRACT ONLY

NO.	DATE	REVISION	BY

STATE OF WISCONSIN
DEPARTMENT OF TRANSPORTATION
STRUCTURES DESIGN SECTION

STRUCTURE B-5-678

DRAWN BY ZMG | PLANS CK'D. NPP

FRAMING PLAN
UNIT 4
SPANS 15 TO 18

SHEET 19 OF 63

8

8

FILE= O:\WisDot_12345678_US41Bridges_Plans\B-05-678E\019 - B-5-678E - FRAMING PLAN UNIT 4.dgn

DATE: 7/19/2012
I.D.

STATE PROJECT NUMBER

1133-11-76

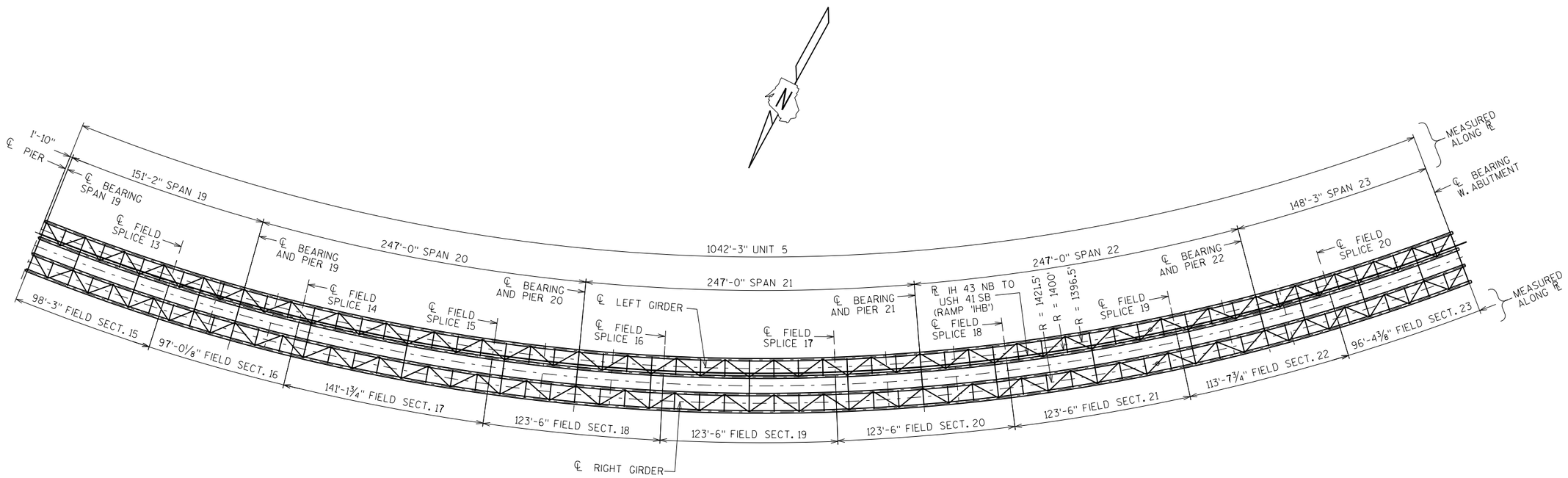

FRAMING PLAN - UNIT 5

8

STEEL FABRICATION CONTRACT ONLY

NO.	DATE	REVISION	BY

STATE OF WISCONSIN
DEPARTMENT OF TRANSPORTATION
STRUCTURES DESIGN SECTION

STRUCTURE B-5-678

DRAWN BY ZMG | PLANS CK'D. NPP

FRAMING PLAN
UNIT 5
SPANS 19 TO 23

SHEET 20 OF 63

24

FILE= O:\WisDot_12345678_US41Bridges_Plans\B-05-678E\020 - B-5-678E - FRAMING PLAN UNIT 5.dgn

DATE: 7/19/2012

I.D.

8

STATE PROJECT NUMBER

1133-11-76

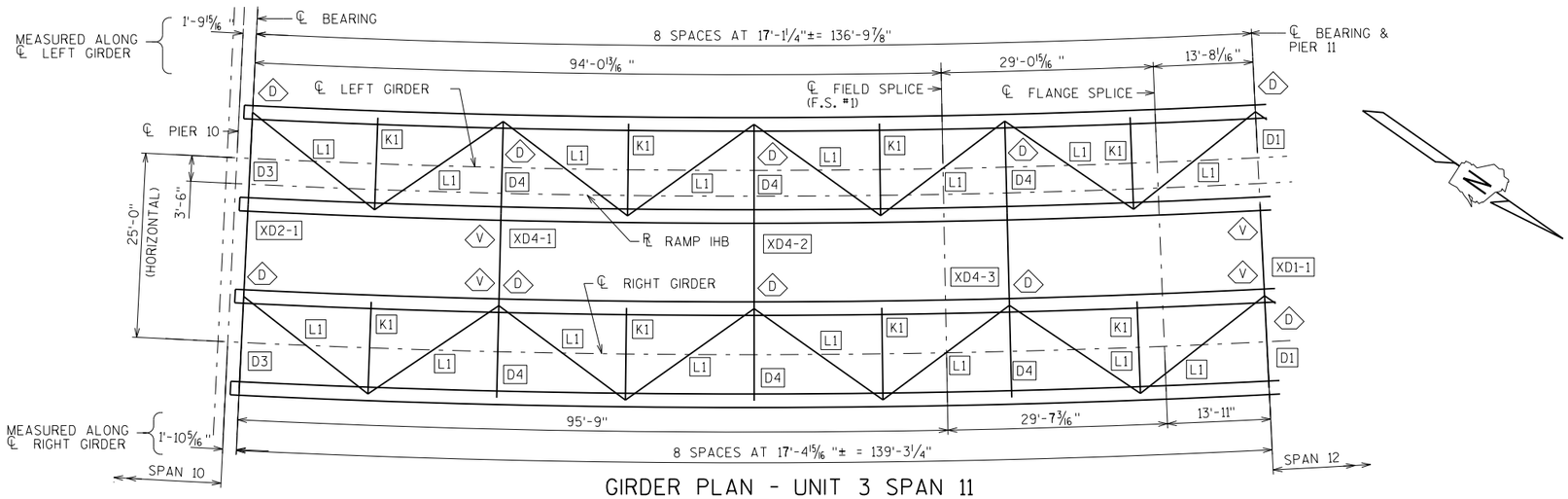

GIRDER PLAN - UNIT 3 SPAN 11

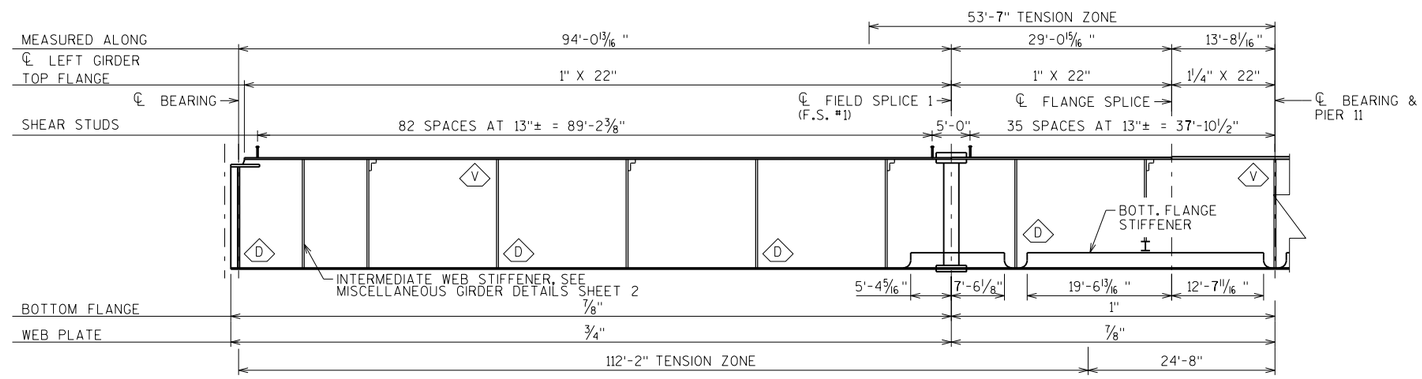

LEFT GIRDER ELEVATION - UNIT 3 SPAN 11

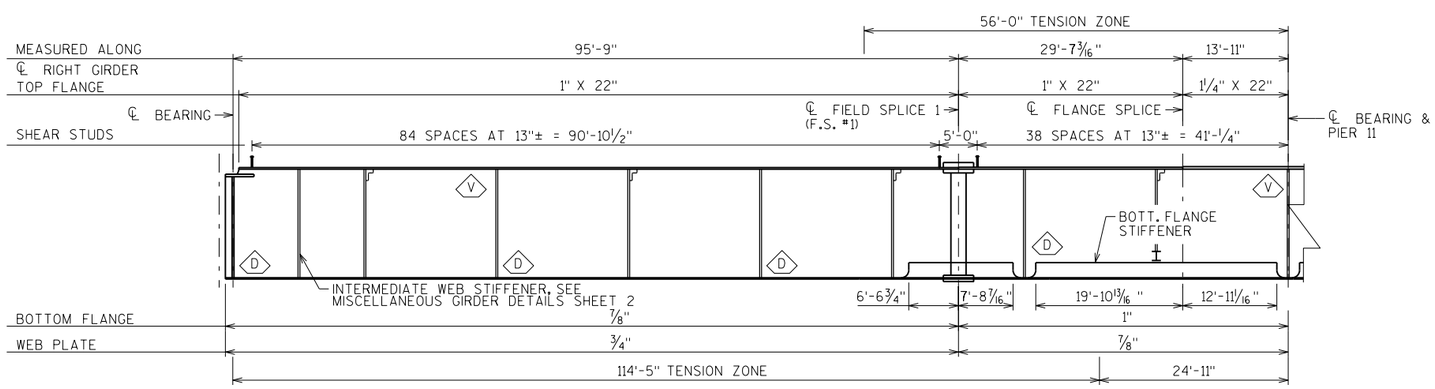

RIGHT GIRDER ELEVATION - UNIT 3 SPAN 11

STEEL FABRICATION CONTRACT ONLY

LEGEND

D1	INTERIOR DIAPHRAGM OVER PIER FOR CONTINUOUS SPAN
D2	INTERIOR DIAPHRAGM OVER PIER AT UNIT BREAK
D3	INTERIOR DIAPHRAGM AT ABUTMENT
D4	INTERIOR INTERMEDIATE DIAPHRAGM
XDA-B	EXTERIOR DIAPHRAGM (WHERE 'A' INDICATES CORRESPONDING INTERIOR DIAPHRAGM NUMBER AND 'B' INDICATES SEQUENTIAL NUMBER WHICH VARIES DUE TO CHANGE IN CROSS SLOPE)
K1	INTERIOR K FRAME
XF	EXTERIOR INTERMEDIATE CROSS FRAME
L1	TOP FLANGE LATERAL BRACING MARK NUMBER
V	VENT HOLE LOCATION
D	DRAIN HOLE LOCATION

NOTES:

SHEAR STUDS FURNISHED AND INSTALLED BY OTHERS DURING FUTURE ERECTION CONTRACT.

ALL LONGITUDINAL DIMENSIONS SHOWN ARE MEASURED HORIZONTALLY ALONG CENTERLINE OF EACH GIRDER. CONTRACTOR SHALL MAKE ADJUSTMENTS FOR CAMBER AND GRADE.

FOR SHOP WELDED BUTT SPLICES OF FLANGES, FABRICATOR MAY CHOOSE TO ELIMINATE SPLICE AND CONTINUE THICKER PLATE TO END OF SECTION AT FIELD SPLICE AT NO ADDITIONAL COST TO THE OWNER. ADJUST CAMBER IF PLATE SIZES ARE CHANGED.

TENSION ZONES SHOWN ABOVE THE GIRDER ELEVATION INDICATE TENSION ZONES FOR TOP FLANGE AND UPPER PORTION OF WEB.

TENSION ZONES SHOWN BELOW THE GIRDER ELEVATION INDICATE TENSION ZONES FOR BOTTOM FLANGE AND LOWER PORTION OF WEB.

FOR OPTIONAL SHOP SPLICE DETAIL AS REQUIRED DUE TO MAXIMUM PLATE LENGTHS AVAILABLE FROM MILL, SEE MISCELLANEOUS GIRDER DETAILS SHEET.

FOR LONGITUDINAL STIFFENER TERMINATION DETAILS SEE SHEETS MISCELLANEOUS GIRDER DETAILS 1 AND MISCELLANEOUS GIRDER DETAILS 2.

NO.	DATE	REVISION	BY

STATE OF WISCONSIN
DEPARTMENT OF TRANSPORTATION
STRUCTURES DESIGN SECTION

STRUCTURE B-5-678

DRAWN BY ZMC | PLANS CK'D. NPP

GIRDER PLAN AND ELEVATION UNIT 3 SPAN 11

SHEET 21 OF 63

25

8

FILE= O:\WisDot_12345678_US41Bridges_Plans\B-05-678E021 - B-5-678E - GIRDER PLAN AND ELEV UNIT 3 SPAN 11.dgn

DATE: 7/19/2012
I.D.

STATE PROJECT NUMBER

1133-11-76

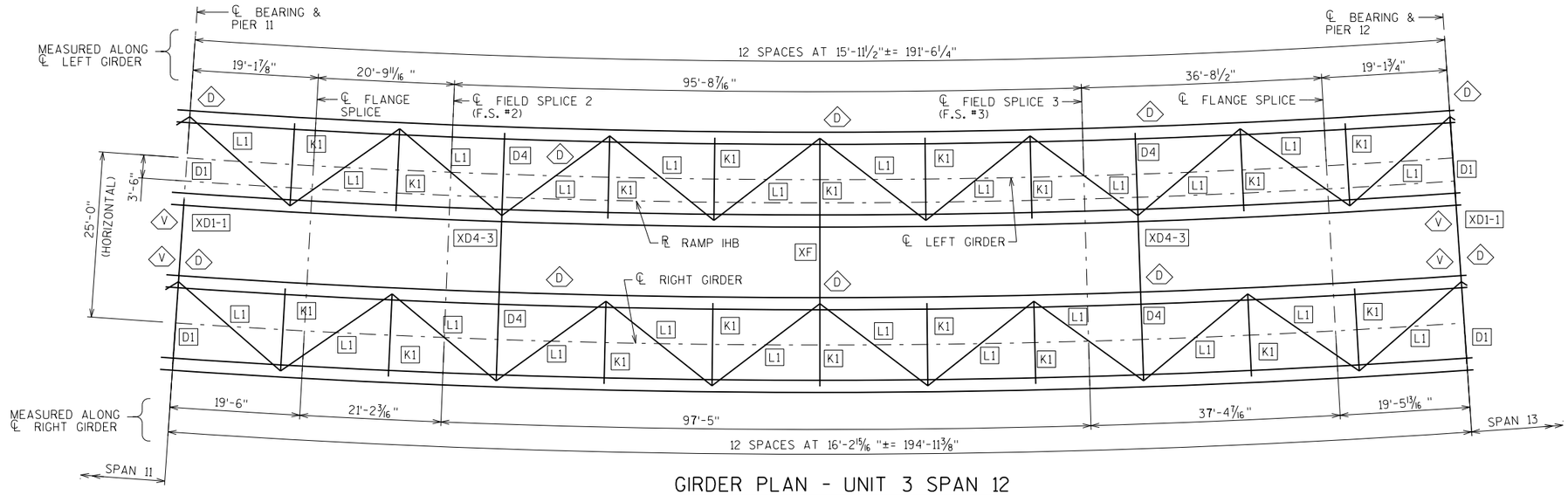

GIRDER PLAN - UNIT 3 SPAN 12

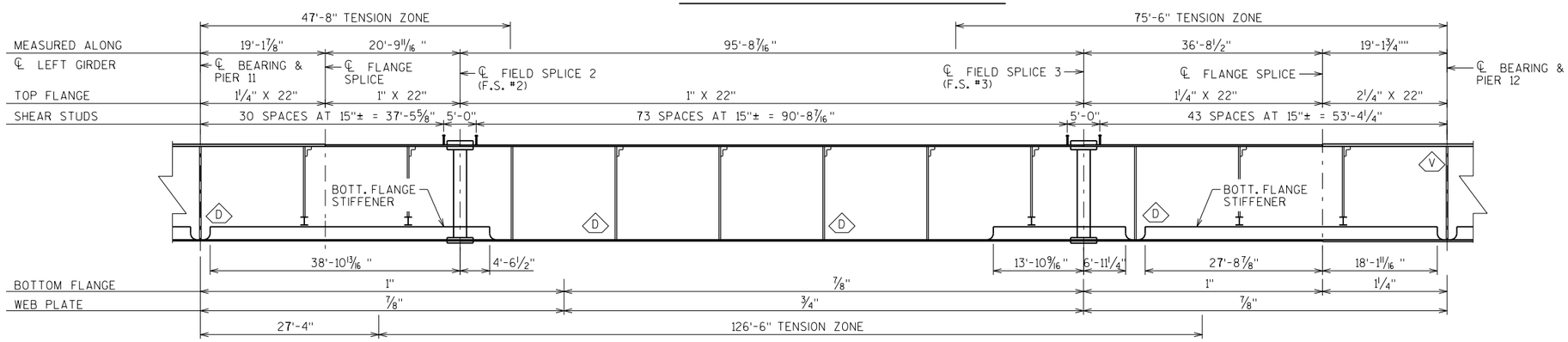

LEFT GIRDER ELEVATION - UNIT 3 SPAN 12

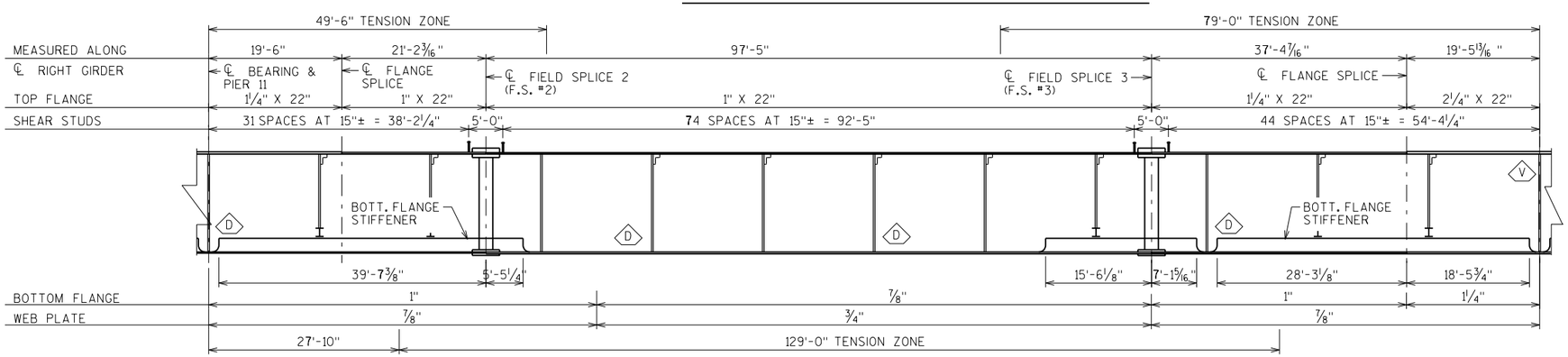

RIGHT GIRDER ELEVATION - UNIT 3 SPAN 12

STEEL FABRICATION CONTRACT ONLY

NO.	DATE	REVISION	BY

STATE OF WISCONSIN
DEPARTMENT OF TRANSPORTATION
STRUCTURES DESIGN SECTION

STRUCTURE B-5-678

DRAWN BY ZMG | PLANS CK'D. NPP

GIRDER PLAN AND ELEVATION UNIT 3 SPAN 12

SHEET 22 OF 63

8

8

FILE= Q:\WisDot_12345678_US41Bridges_Plans\B-05-678E022 - B-5-678E - GIRDER PLAN AND ELEV UNIT 3 SPAN 12.dgn

DATE: 7/19/2012
I.D.

STATE PROJECT NUMBER

1133-11-76

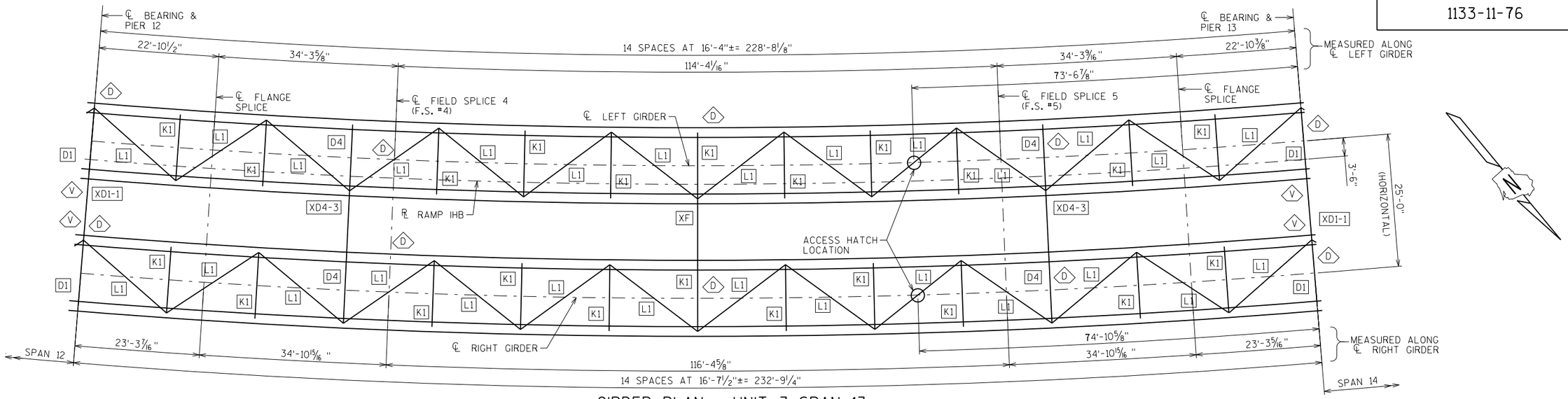

GIRDER PLAN - UNIT 3 SPAN 13

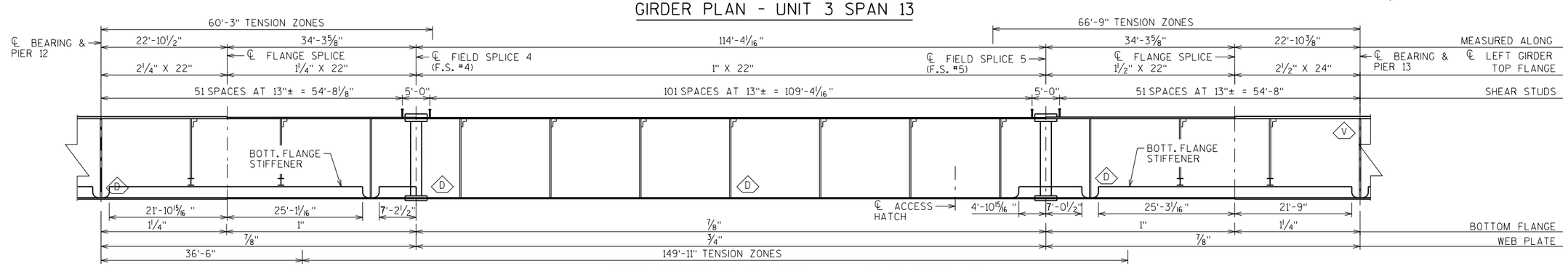

LEFT GIRDER ELEVATION - UNIT 3 SPAN 13

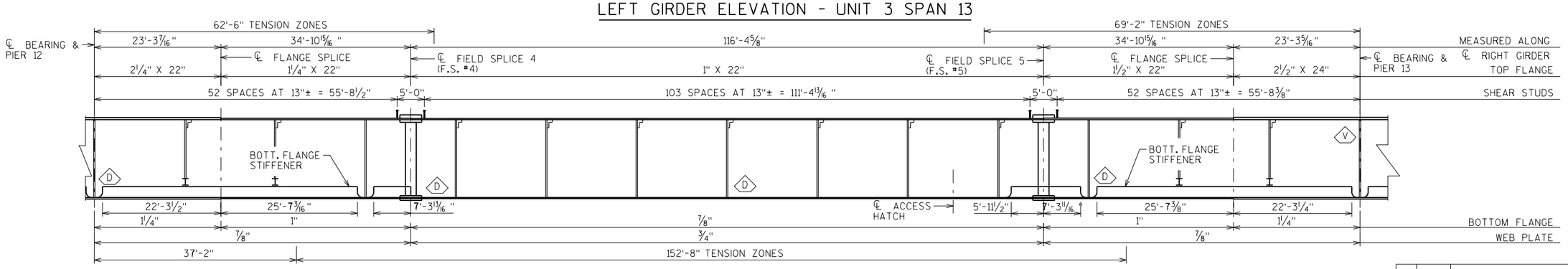

RIGHT GIRDER ELEVATION - UNIT 3 SPAN 13

8

NO.	DATE	REVISION	BY

STATE OF WISCONSIN
DEPARTMENT OF TRANSPORTATION
STRUCTURES DESIGN SECTION

STRUCTURE B-5-678

DRAWN BY ZMG | PLANS CK'D. NPP

GIRDER PLAN AND ELEVATION UNIT 3 SPAN 13

SHEET 23 OF 63

27

STEEL FABRICATION CONTRACT ONLY

FILE= O:\WisDot_12345678_US41Bridges_Plans\B-05-678E\023 - B-5-678E - GIRDER PLAN AND ELEV UNIT 3 SPAN 13.dgn

DATE: 7/19/2012
I.D.

8

STATE PROJECT NUMBER

1133-11-76

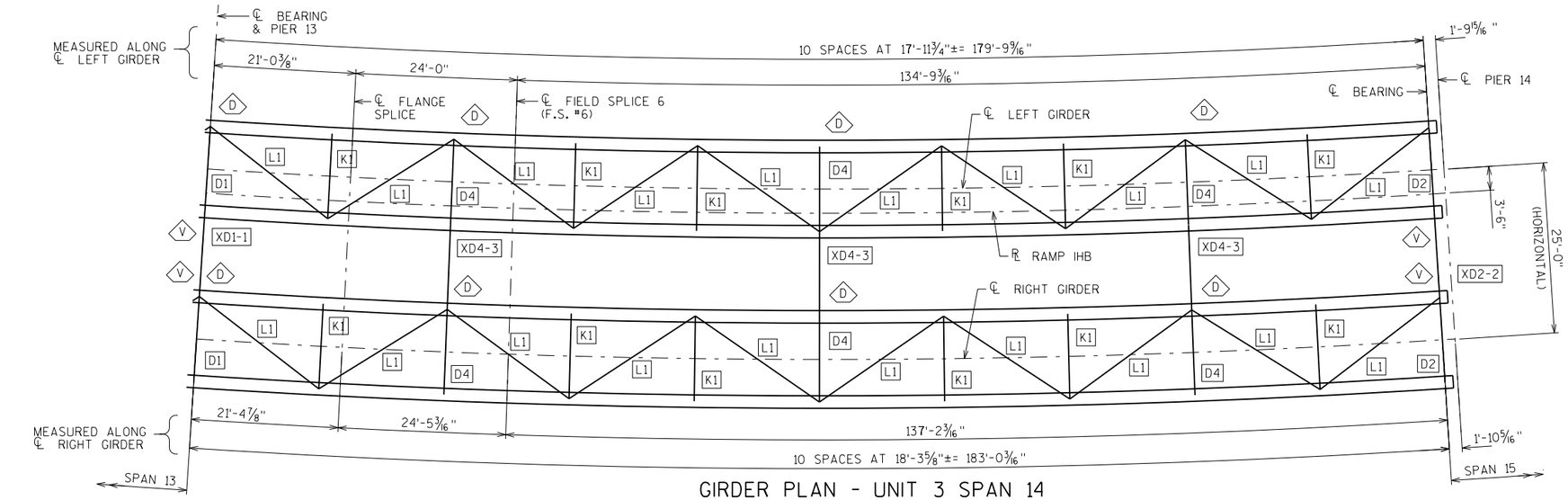

GIRDER PLAN - UNIT 3 SPAN 14

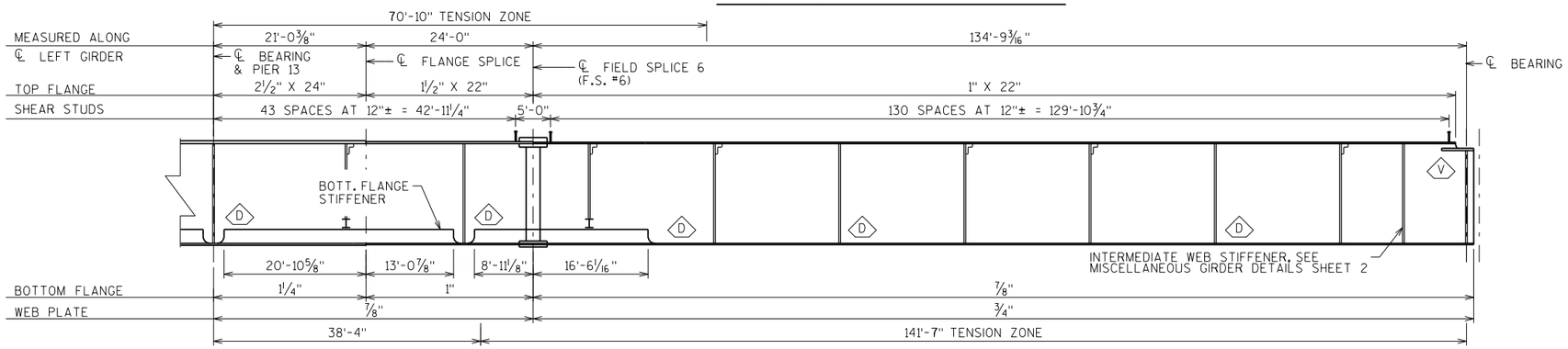

LEFT GIRDER ELEVATION - UNIT 3 SPAN 14

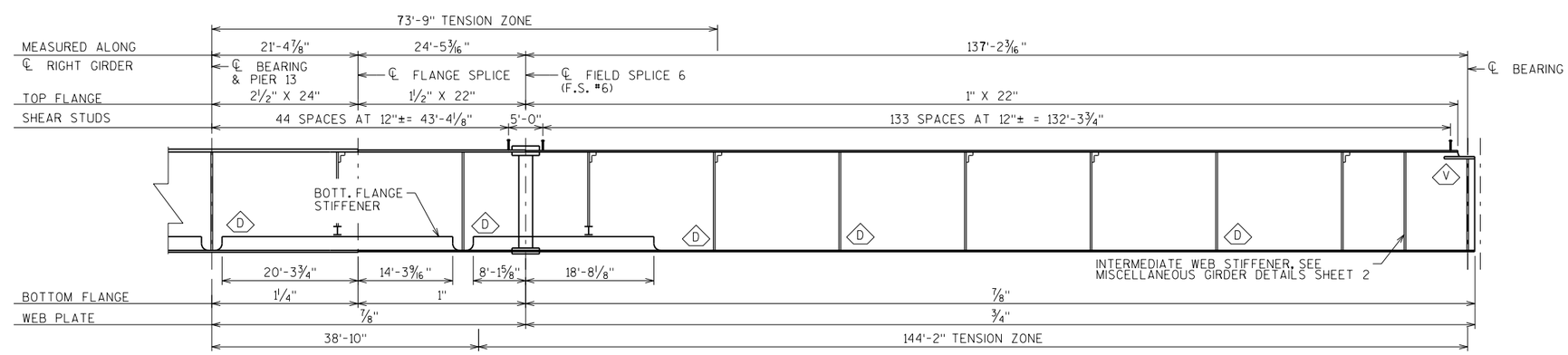

RIGHT GIRDER ELEVATION - UNIT 3 SPAN 14

STEEL FABRICATION CONTRACT ONLY

NO.	DATE	REVISION	BY

STATE OF WISCONSIN
DEPARTMENT OF TRANSPORTATION
STRUCTURES DESIGN SECTION

STRUCTURE B-5-678

DRAWN BY ZMG | PLANS CK'D. NPP

GIRDER PLAN AND ELEVATION UNIT 3 SPAN 14

SHEET 24 OF 63

8

FILE= O:\WisDot_12345678_US41Bridges_Plans\B-05-678EX024 - B-5-678E - GIRDER PLAN AND ELEV UNIT 3 SPAN 14.dgn

DATE: 7/19/2012
I.D.

STATE PROJECT NUMBER

1133-11-76

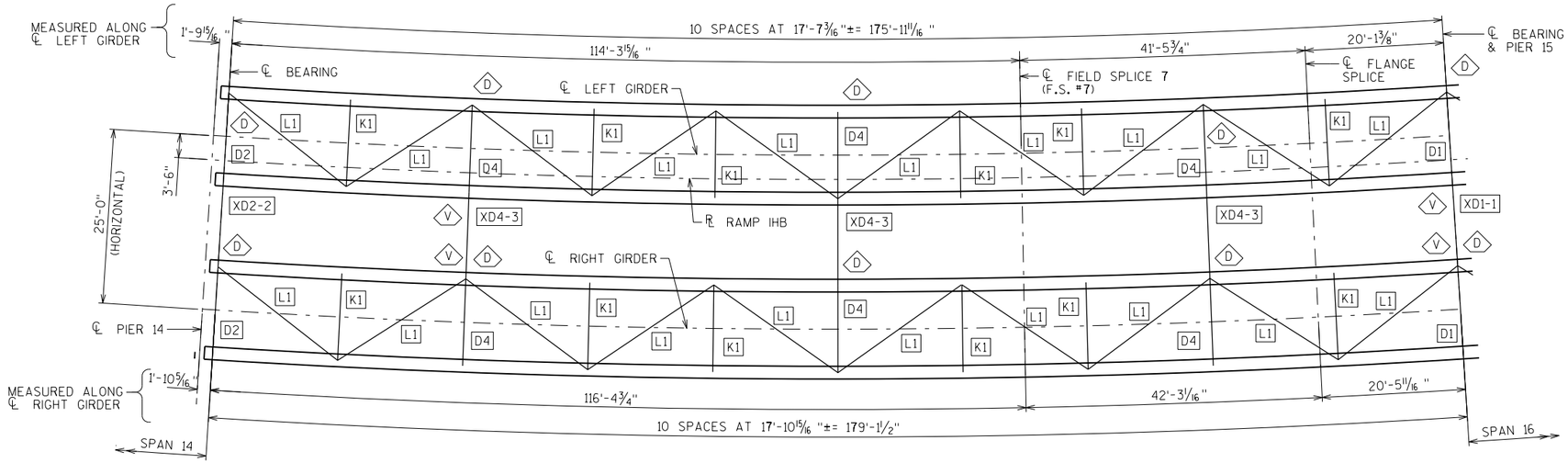

GIRDER PLAN - UNIT 4 SPAN 15

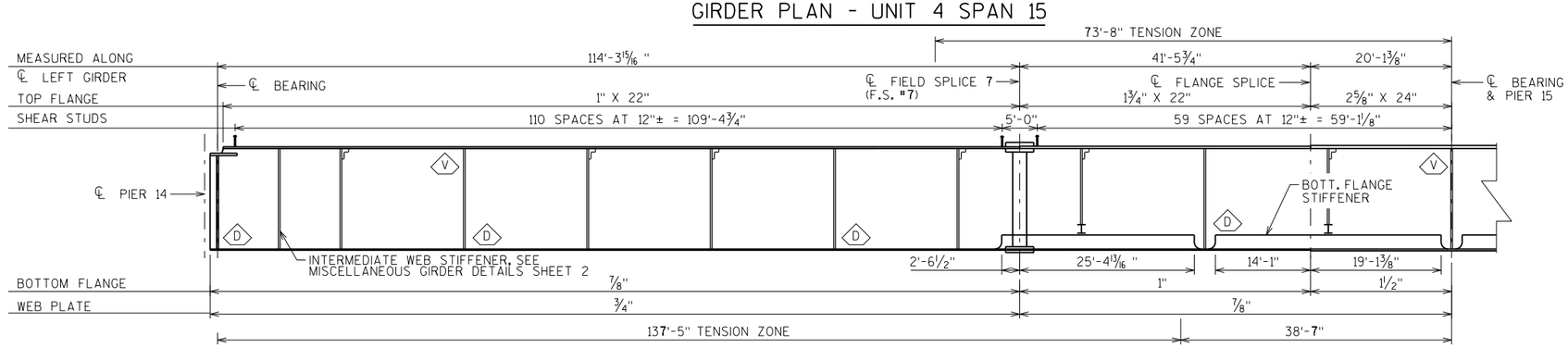

LEFT GIRDER ELEVATION - UNIT 4 SPAN 15

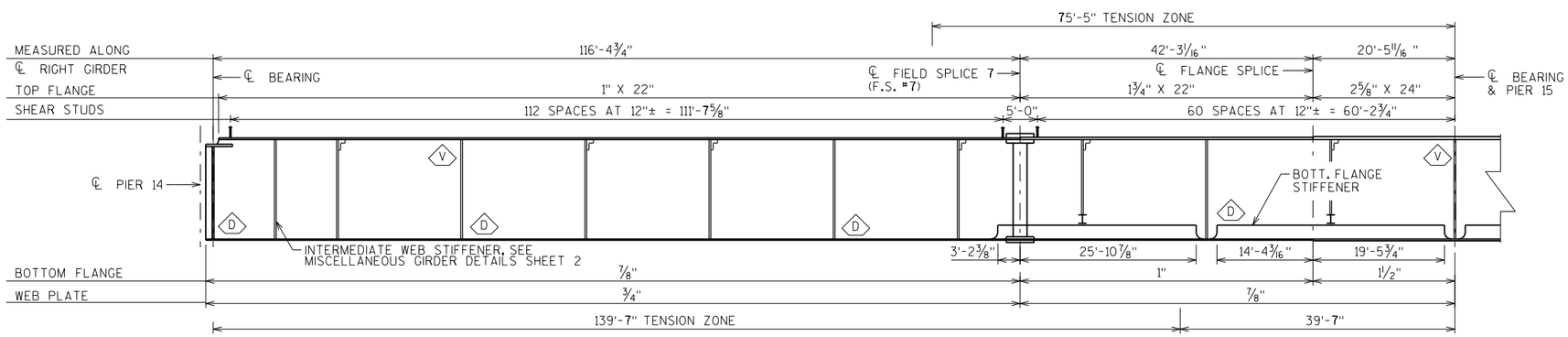

RIGHT GIRDER ELEVATION - UNIT 4 SPAN 15

STEEL FABRICATION CONTRACT ONLY

NO.	DATE	REVISION	BY

STATE OF WISCONSIN
DEPARTMENT OF TRANSPORTATION
STRUCTURES DESIGN SECTION

STRUCTURE B-5-678

DRAWN BY ZMG | PLANS CK'D. NPP

GIRDER PLAN AND ELEVATION UNIT 4 SPAN 15

SHEET 25 OF 63

29

8

8

FILE= Q:\WisDot_12345678_US41Bridges_Plans\B-05-678EX025 - B-5-678E - GIRDER PLAN AND ELEV UNIT 4 SPAN 15.dgn

DATE: 7/19/2012
I.D.

STATE PROJECT NUMBER

1133-11-76

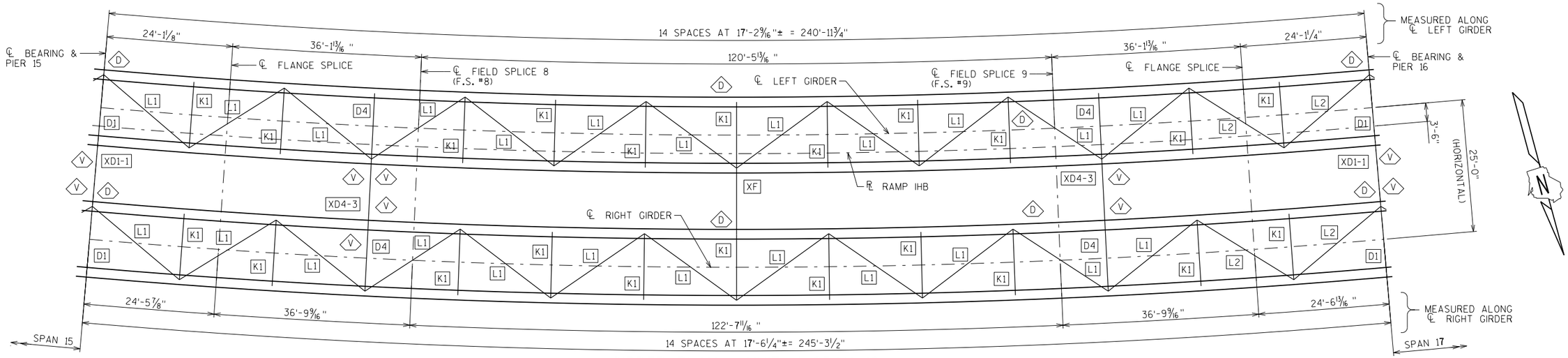

GIRDER PLAN - UNIT 4 SPAN 16

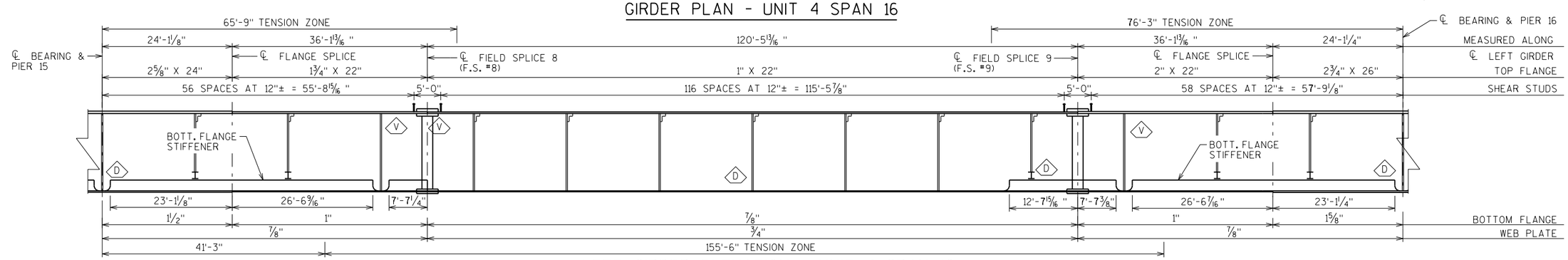

LEFT GIRDER ELEVATION - UNIT 4 SPAN 16

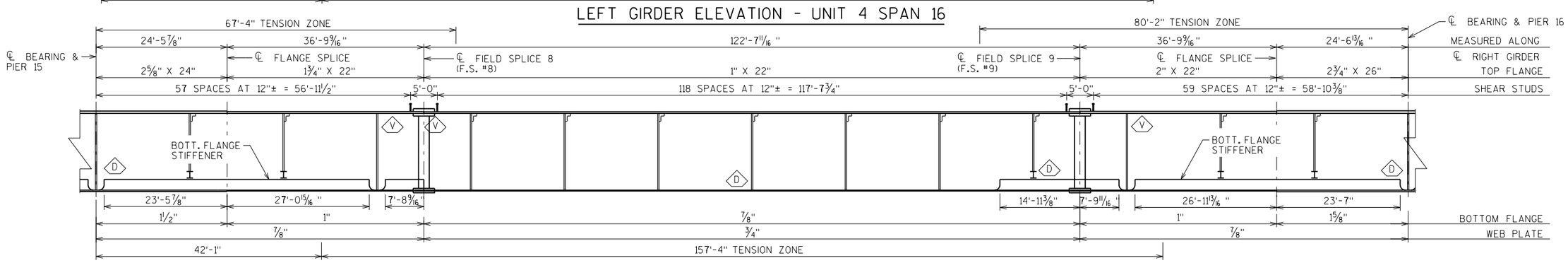

RIGHT GIRDER ELEVATION - UNIT 4 SPAN 16

STEEL FABRICATION CONTRACT ONLY

NO.	DATE	REVISION	BY

STATE OF WISCONSIN
DEPARTMENT OF TRANSPORTATION
STRUCTURES DESIGN SECTION

STRUCTURE B-5-678

DRAWN BY ZMG | PLANS CK'D. NPP

GIRDER PLAN AND ELEVATION UNIT 4 SPAN 16

SHEET 26 OF 63

30

8

8

FILE= Q:\WisDot_12345678_US41Bridges_Plans\B-05-678E\026 - B-5-678E - GIRDER PLAN AND ELEV UNIT 4 SPAN 16.dgn

DATE: 7/19/2012
I.D.

STATE PROJECT NUMBER

1133-11-76

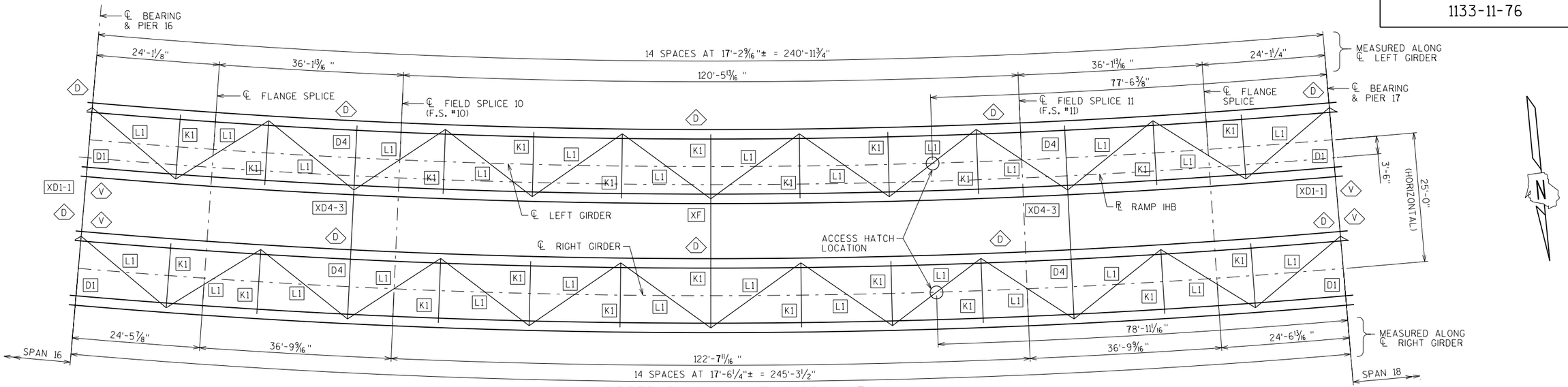

GIRDER PLAN - UNIT 4 SPAN 17

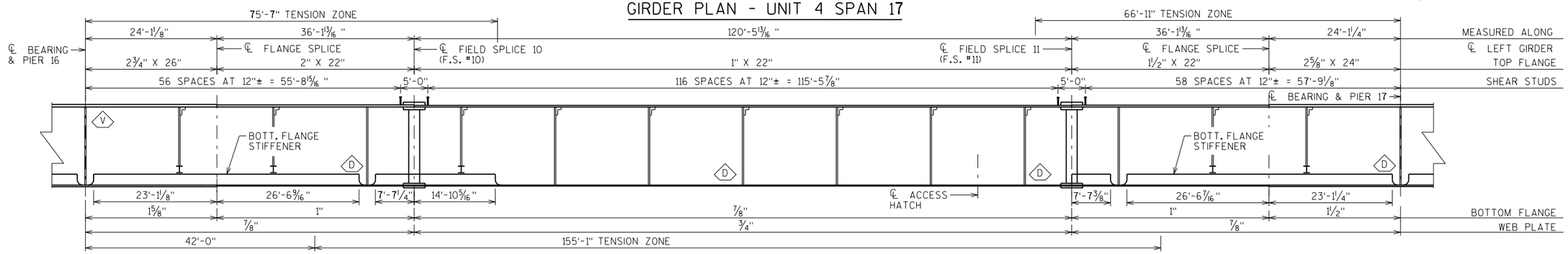

LEFT GIRDER ELEVATION - UNIT 4 SPAN 17

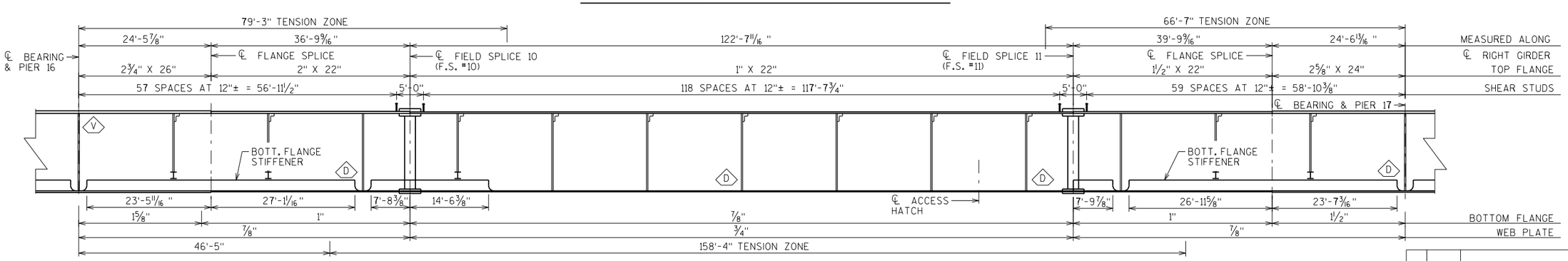

RIGHT GIRDER ELEVATION - UNIT 4 SPAN 17

STEEL FABRICATION CONTRACT ONLY

NO.	DATE	REVISION	BY

STATE OF WISCONSIN
DEPARTMENT OF TRANSPORTATION
STRUCTURES DESIGN SECTION

STRUCTURE B-5-678

DRAWN BY ZMG | PLANS CK'D. NPP

GIRDER PLAN AND ELEVATION UNIT 4 SPAN 17

SHEET 27 OF 63

8

8

FILE= Q:\WisDot_12345678_US41Bridges_Plans\B-05-678E\027 - B-5-678E - GIRDER PLAN AND ELEV UNIT 4 SPAN 17.dgn

DATE: 7/19/2012
I.D.

STATE PROJECT NUMBER

1133-11-76

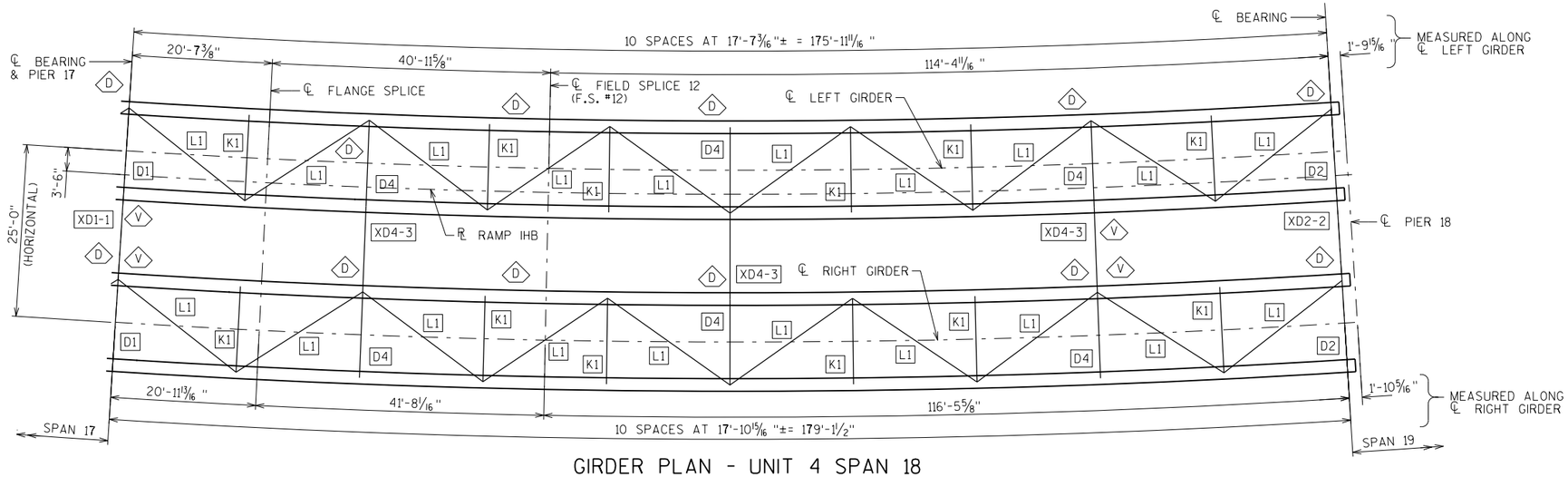

GIRDER PLAN - UNIT 4 SPAN 18

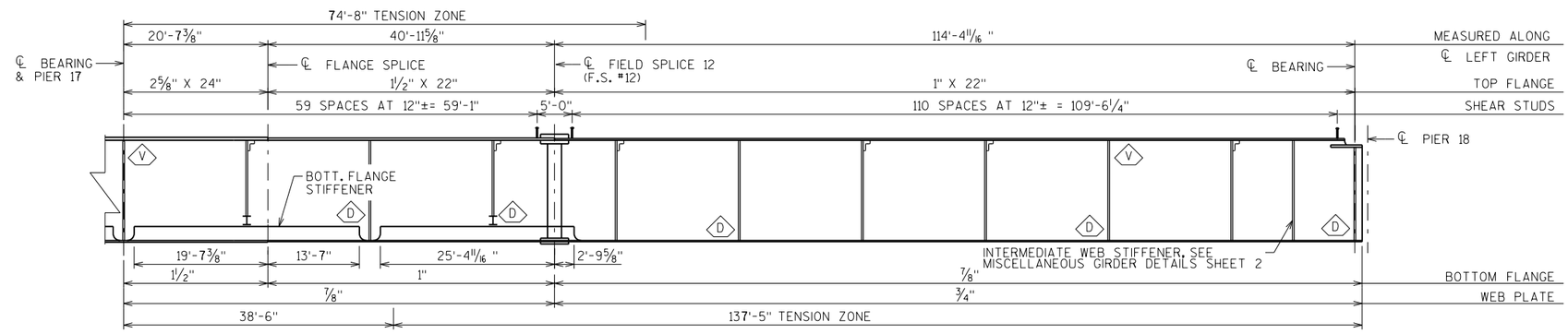

LEFT GIRDER ELEVATION - UNIT 4 SPAN 18

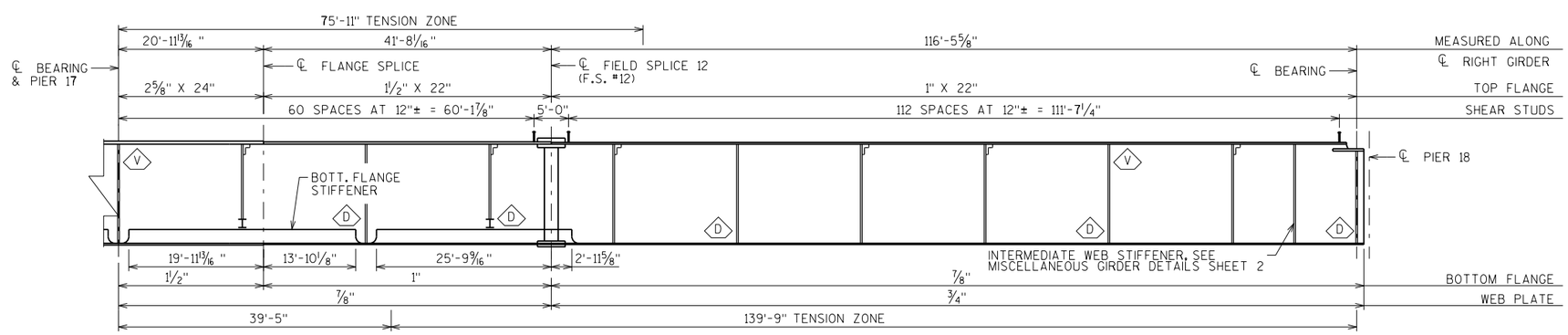

RIGHT GIRDER ELEVATION - UNIT 4 SPAN 18

STEEL FABRICATION CONTRACT ONLY

NO.	DATE	REVISION	BY

STATE OF WISCONSIN
DEPARTMENT OF TRANSPORTATION
STRUCTURES DESIGN SECTION

STRUCTURE B-5-678

DRAWN BY ZMG | PLANS CK'D. NPP

GIRDER PLAN AND ELEVATION UNIT 4 SPAN 18

SHEET 28 OF 63

8

FILE= O:\WisDot_12345678_US41Bridges_Plans\B-05-678E028 - B-5-678E - GIRDER PLAN AND ELEV UNIT 4 SPAN 18.dgn

DATE: 7/19/2012
I.D.

STATE PROJECT NUMBER

1133-11-76

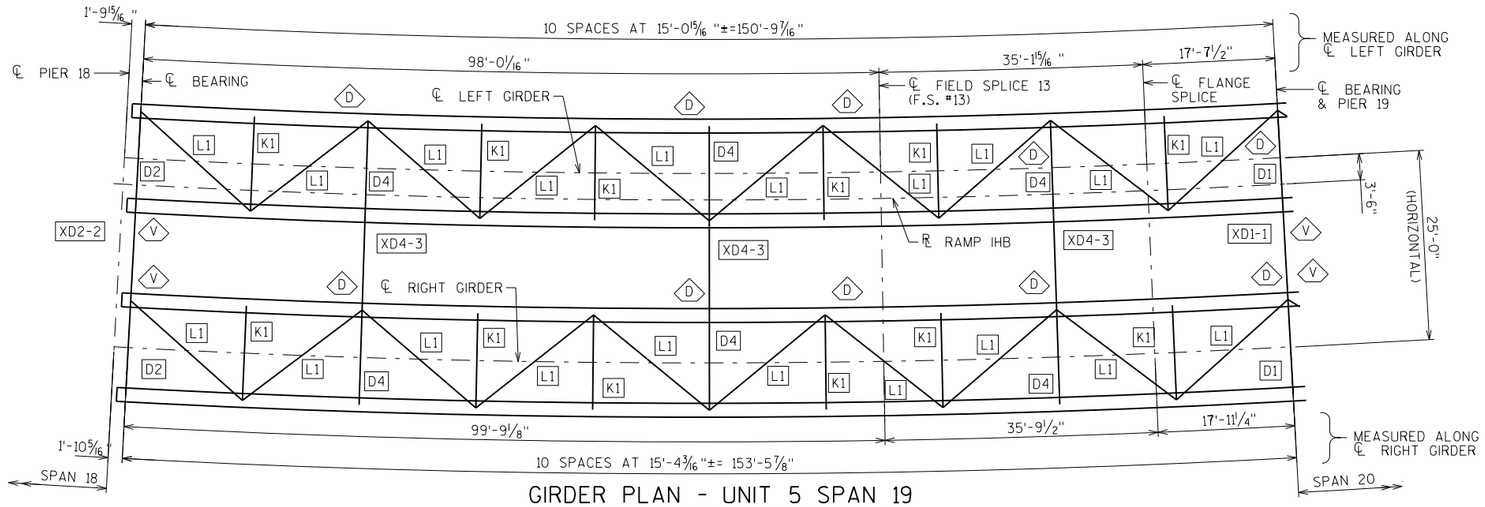

GIRDER PLAN - UNIT 5 SPAN 19

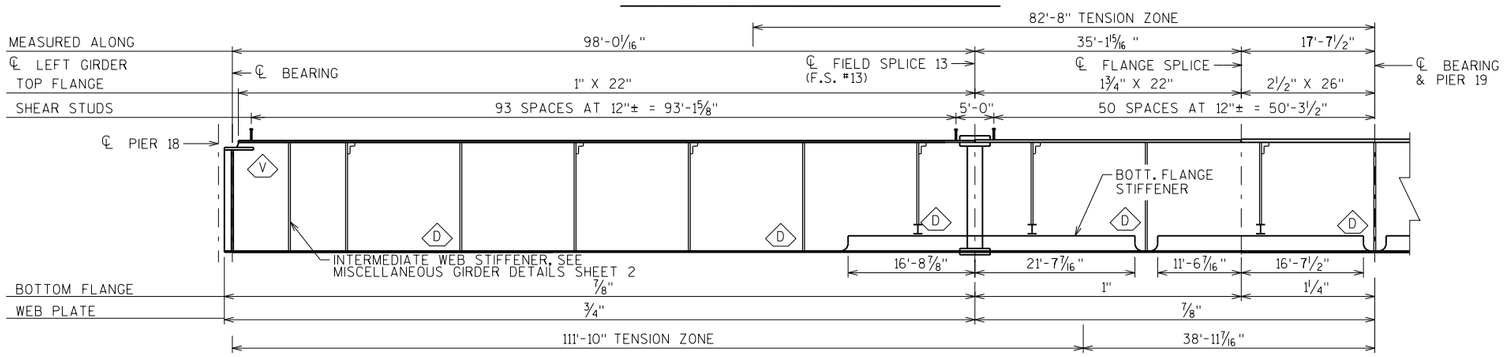

LEFT GIRDER ELEVATION - UNIT 5 SPAN 19

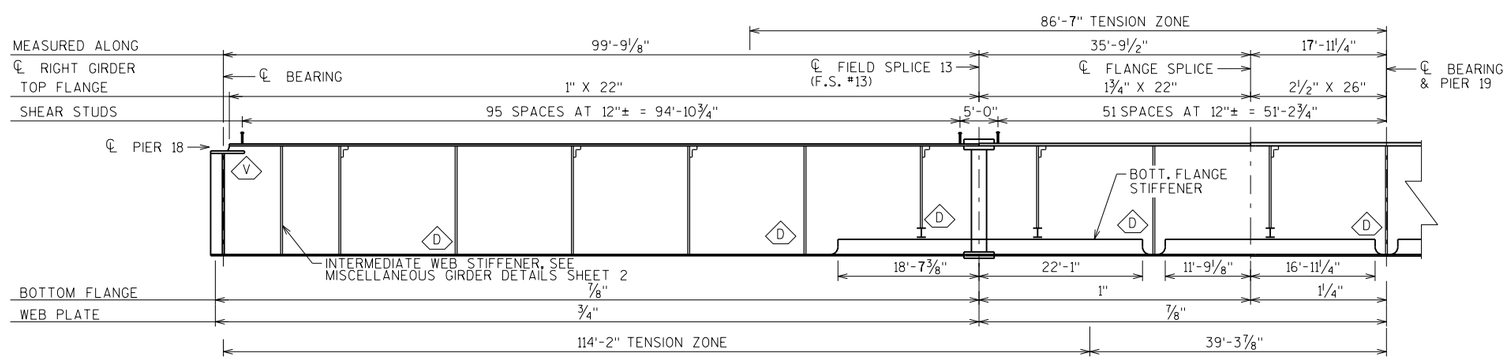

RIGHT GIRDER ELEVATION - UNIT 5 SPAN 19

STEEL FABRICATION CONTRACT ONLY

NO.	DATE	REVISION	BY

STATE OF WISCONSIN
DEPARTMENT OF TRANSPORTATION
STRUCTURES DESIGN SECTION

STRUCTURE B-5-678

DRAWN BY ZMG | PLANS CK'D. NPP

GIRDER PLAN AND ELEVATION UNIT 5 SPAN 19

SHEET 29 OF 63

33

FILE= Q:\WisDot_12345678_US41Bridges_Plans\B-05-678E\029 - B-5-678E - GIRDER PLAN AND ELEV UNIT 5 SPAN 19.dgn

DATE: 7/19/2012
I.D.

8

8

STATE PROJECT NUMBER

1133-11-76

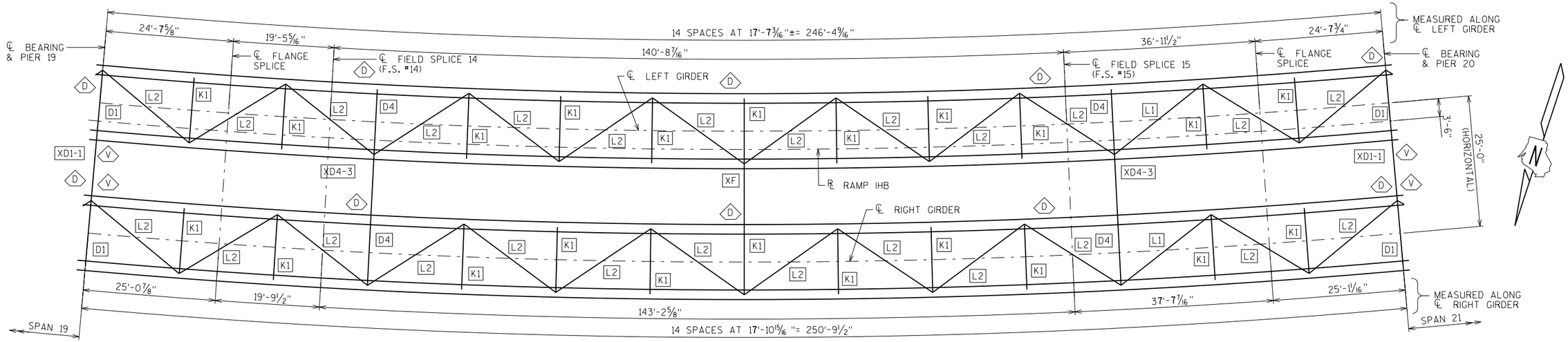

GIRDER PLAN - UNIT 5 SPAN 20

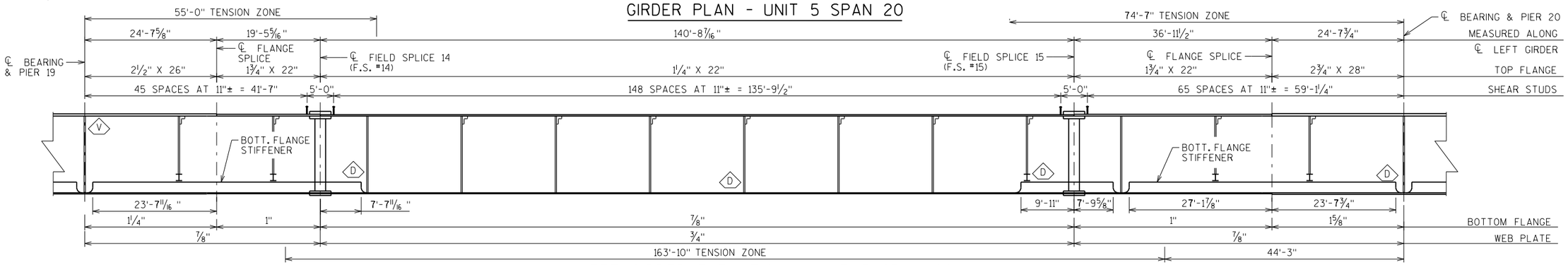

LEFT GIRDER ELEVATION - UNIT 5 SPAN 20

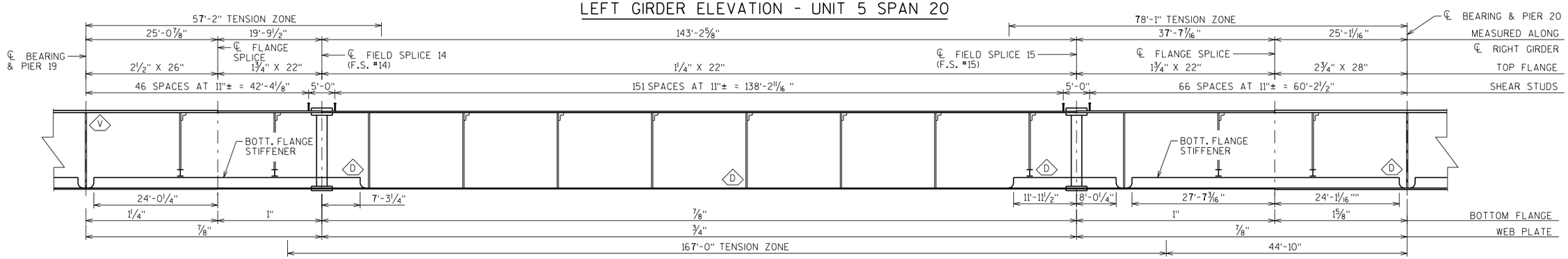

RIGHT GIRDER ELEVATION - UNIT 5 SPAN 20

NO.	DATE	REVISION	BY

STATE OF WISCONSIN
DEPARTMENT OF TRANSPORTATION
STRUCTURES DESIGN SECTION

STRUCTURE B-5-678

DRAWN BY ZMG | PLANS CK'D. NPP

GIRDER PLAN AND ELEVATION UNIT 5 SPAN 20

SHEET 30 OF 63

34

STEEL FABRICATION CONTRACT ONLY

8

8

FILE= Q:\WisDot_12345678_US41Bridges_Plans\B-05-678E\030 - B-5-678E - GIRDER PLAN AND ELEV UNIT 5 SPAN 20.dgn

DATE: 7/19/2012
I.D.

STATE PROJECT NUMBER

1133-11-76

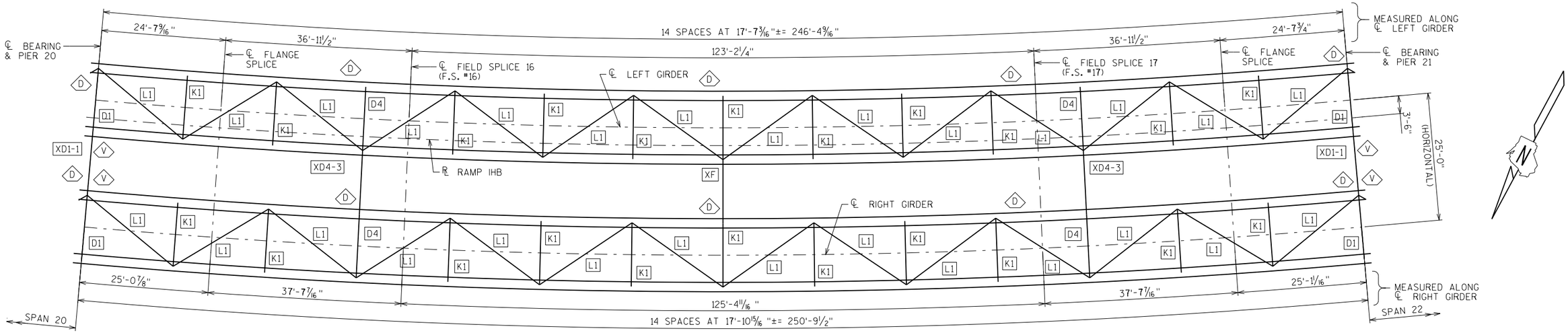

GIRDER PLAN - UNIT 5 SPAN 21

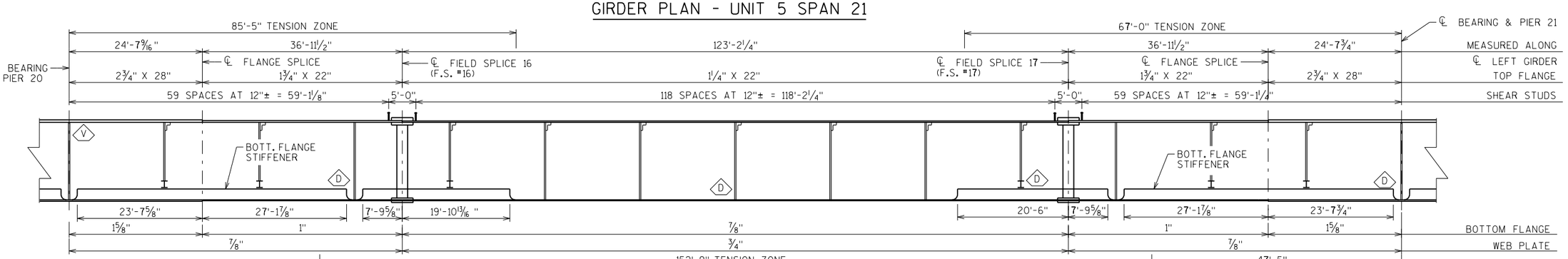

LEFT GIRDER ELEVATION - UNIT 5 SPAN 21

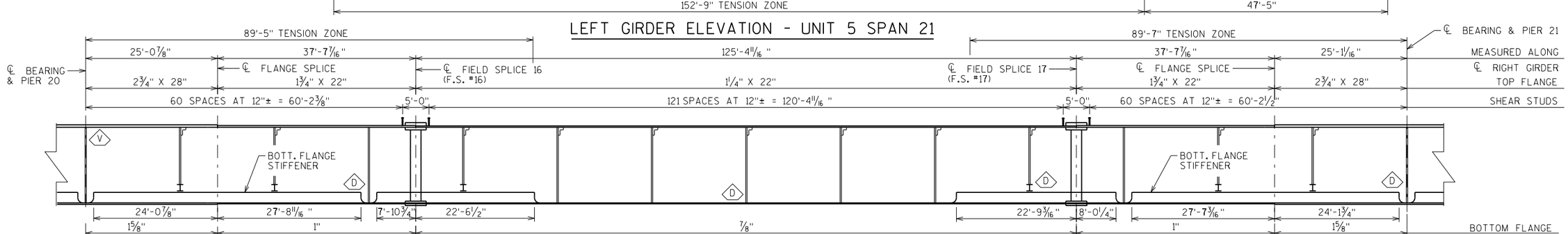

RIGHT GIRDER ELEVATION - UNIT 5 SPAN 21

NO.	DATE	REVISION	BY

STATE OF WISCONSIN
DEPARTMENT OF TRANSPORTATION
STRUCTURES DESIGN SECTION

STRUCTURE B-5-678

DRAWN BY ZMG | PLANS CK'D. NPP

GIRDER PLAN AND ELEVATION UNIT 5 SPAN 21

SHEET 31 OF 63

35

STEEL FABRICATION CONTRACT ONLY

8

8

FILE= Q:\WisDot_12345678_US41Bridges_Plans\B-05-678E\031 - B-5-678E - GIRDER PLAN AND ELEV UNIT 5 SPAN 21.dgn

DATE: 7/19/2012

I.D.

STATE PROJECT NUMBER

1133-11-76

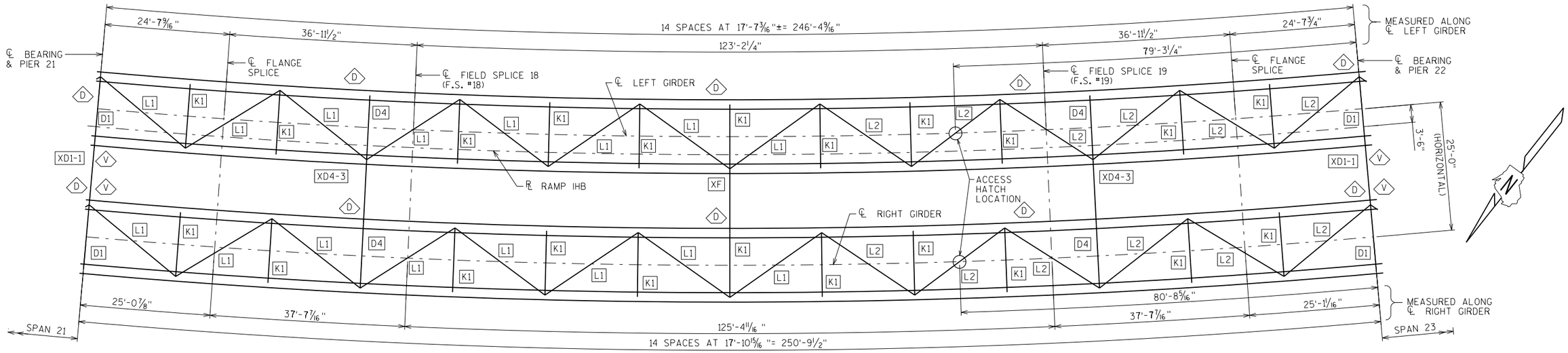

GIRDER PLAN - UNIT 5 SPAN 22

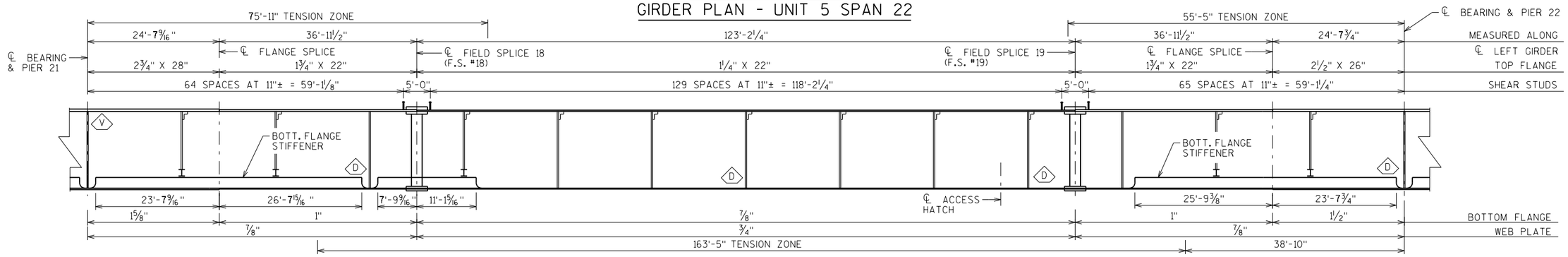

LEFT GIRDER ELEVATION - UNIT 5 SPAN 22

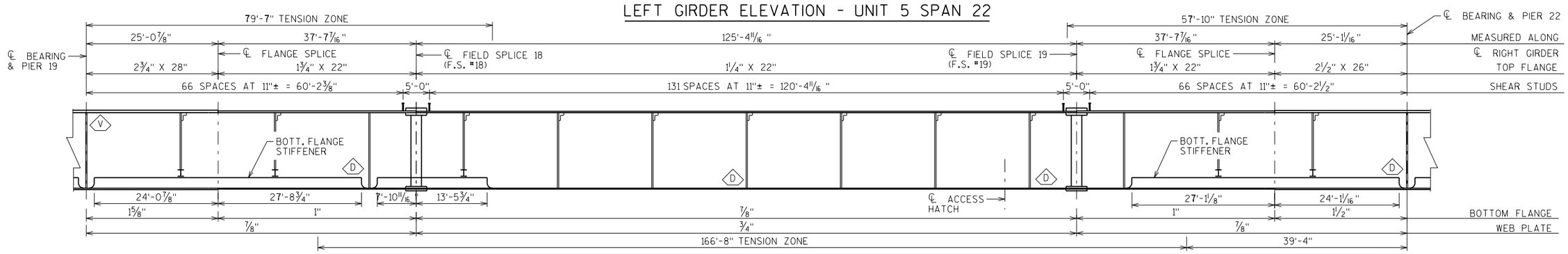

RIGHT GIRDER ELEVATION - UNIT 5 SPAN 22

8

8

NO.	DATE	REVISION	BY

STATE OF WISCONSIN
DEPARTMENT OF TRANSPORTATION
STRUCTURES DESIGN SECTION

STRUCTURE B-5-678

DRAWN BY ZMG | PLANS CK'D. NPP

GIRDER PLAN AND ELEVATION UNIT 5 SPAN 22

SHEET 32 OF 63

36

STEEL FABRICATION CONTRACT ONLY

FILE= O:\WisDot_12345678_US41Bridges_Plans\B-05-678E\032 - B-5-678E - GIRDER PLAN AND ELEV UNIT 5 SPAN 22.dgn

DATE: 7/19/2012
I.D.

STATE PROJECT NUMBER

1133-11-76

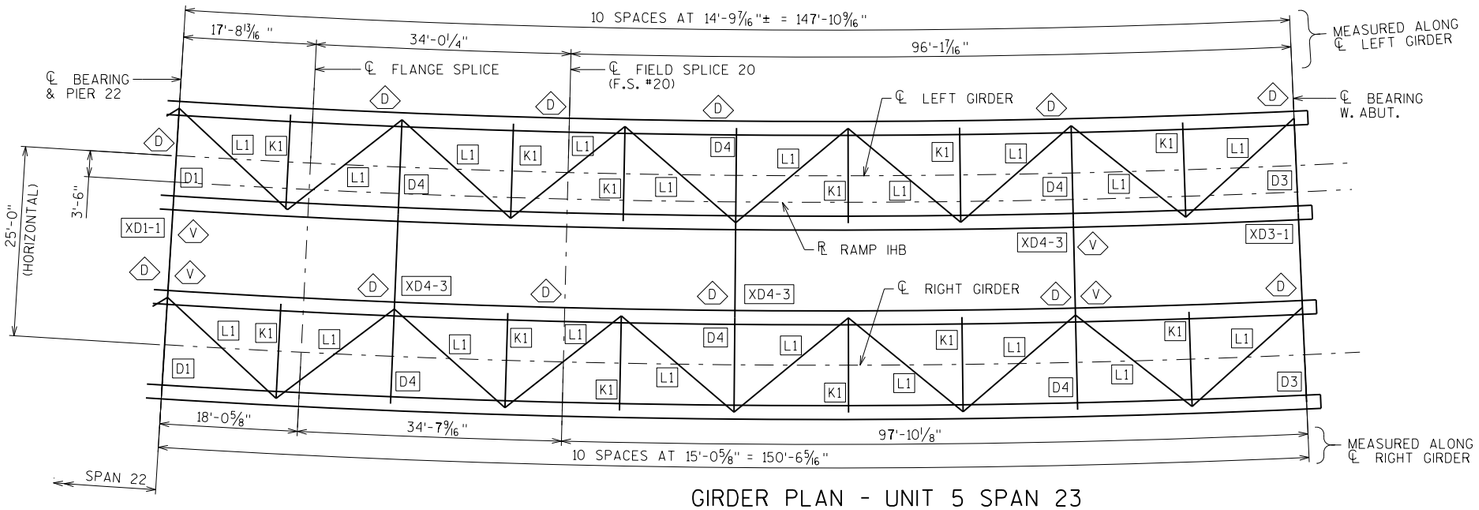

GIRDER PLAN - UNIT 5 SPAN 23

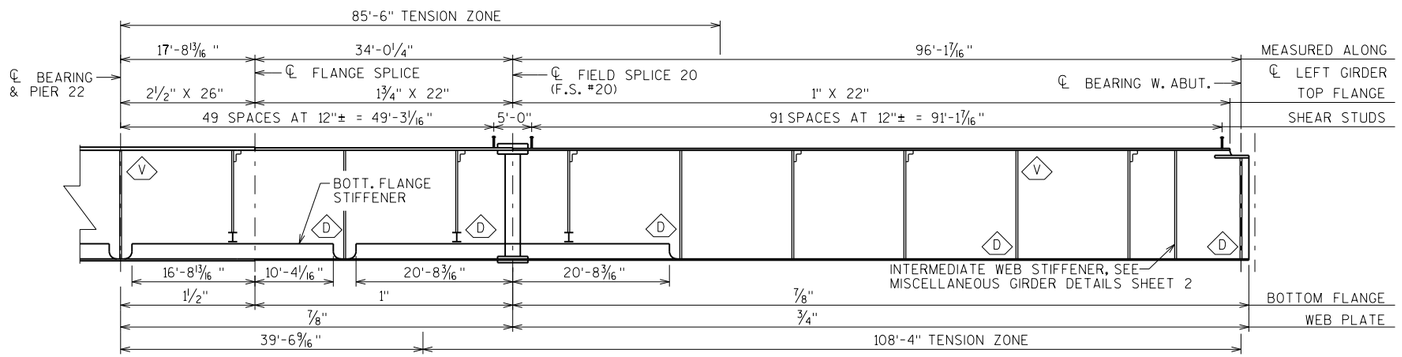

LEFT GIRDER ELEVATION - UNIT 5 SPAN 23

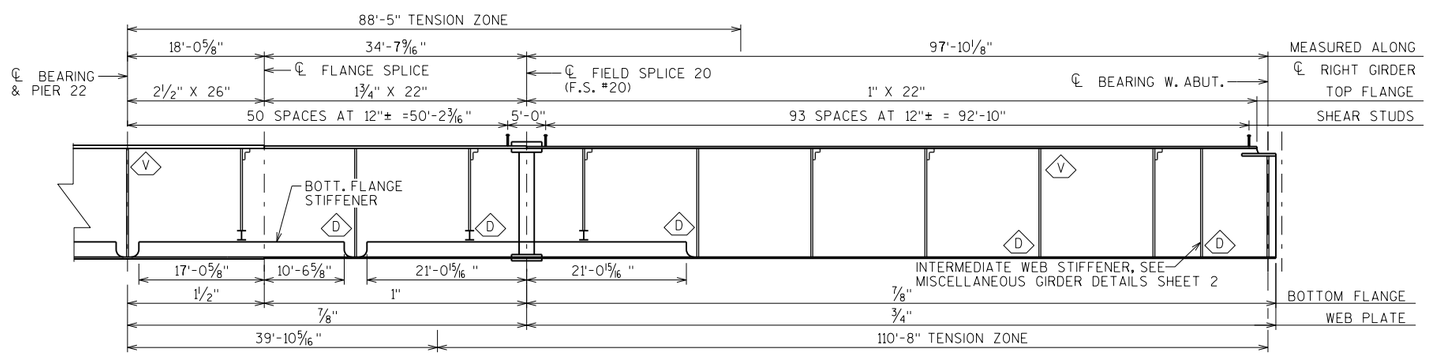

RIGHT GIRDER ELEVATION - UNIT 5 SPAN 23

STEEL FABRICATION CONTRACT ONLY

NO.	DATE	REVISION	BY

STATE OF WISCONSIN
DEPARTMENT OF TRANSPORTATION
STRUCTURES DESIGN SECTION

STRUCTURE B-5-678

DRAWN BY ZMG | PLANS CK'D. NPP

GIRDER PLAN AND ELEVATION UNIT 5 SPAN 23

SHEET 33 OF 63

37

FILE= O:\WisDot_12345678_US41Bridges_Plans\B-05-678EV033 - B-5-678E - GIRDER PLAN AND ELEV UNIT 5 SPAN 23.dgn

DATE: 7/19/2012
I.D.

8

8

STATE PROJECT NUMBER

1133-11-76

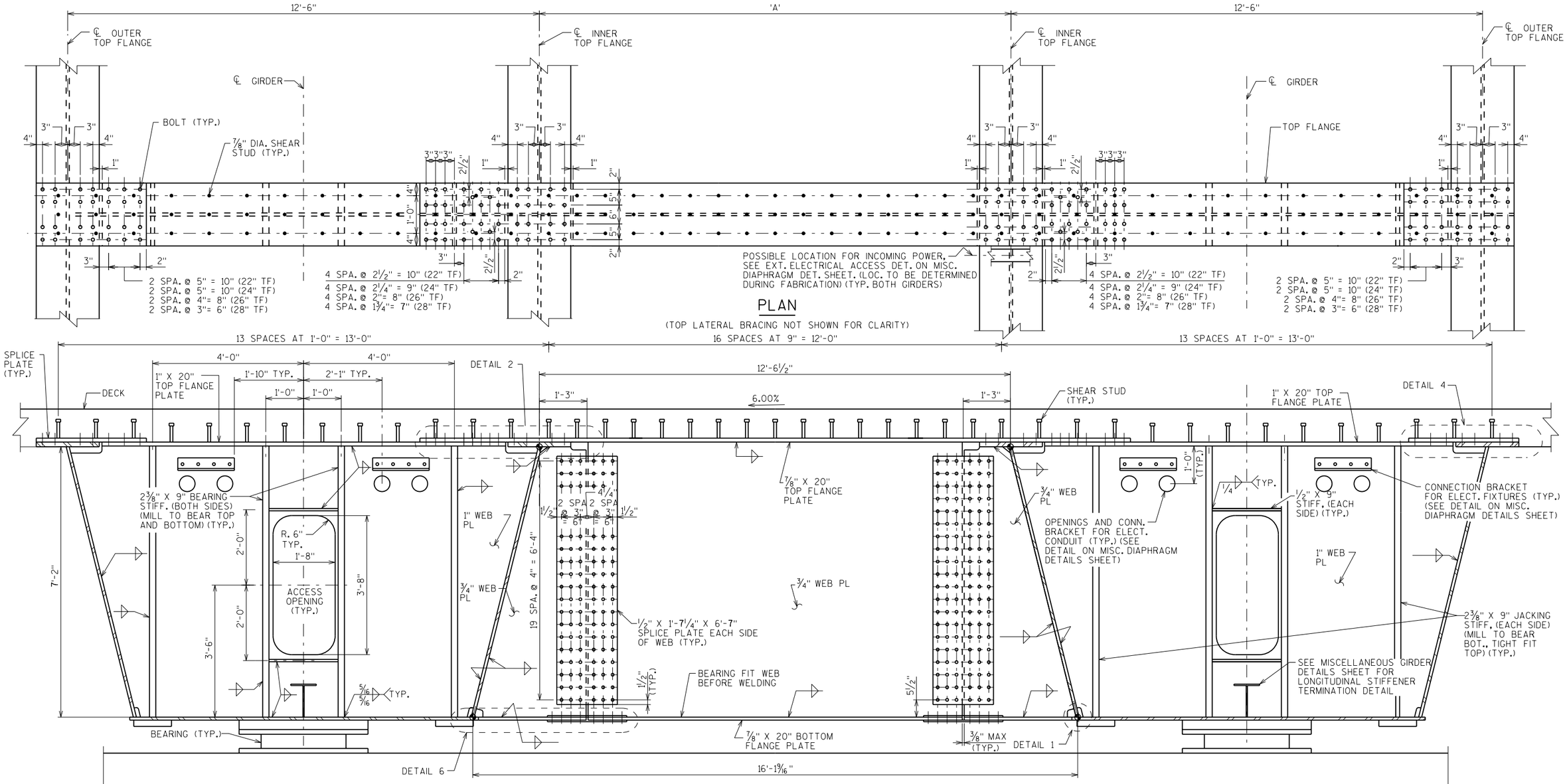

INTERNAL DIAPHRAGM D1

EXTERNAL DIAPHRAGM 'XD1'

INTERNAL DIAPHRAGM D1

ELEVATION

(SUPERELEVATION NOT SHOWN)

+ SLOPE

DIMENSIONS ARE MEASURED ALONG SUPERELEVATION.

NOTES:

SHEAR STUDS FURNISHED AND INSTALLED BY OTHERS DURING ERECTION.

ALL BOLTS SHOWN SHALL BE 7/8" DIAMETER.

TOP OF DIAPHRAGM TOP FLANGE PLATE TO BE PROVIDED WITH 3 MIL OF ORGANIC ZINC RICH PRIMER.

SEE MISCELLANEOUS DIAPHRAGM DETAILS SHEET FOR DETAILS 1, 2, 4 AND 6 AND SECTIONS.

UNLESS OTHERWISE NOTED, ALL DIMENSIONS GIVEN ARE PARALLEL OR PERPENDICULAR TO SUPERELEVATION.

STEEL FABRICATION CONTRACT ONLY

NO.	DATE	REVISION	BY

STATE OF WISCONSIN
DEPARTMENT OF TRANSPORTATION
STRUCTURES DESIGN SECTION

STRUCTURE B-5-678

DRAWN BY JRS | PLANS CK'D. NPP

INTERMEDIATE PIER DIAPHRAGMS XD1 AND D1

SHEET 34 OF 63

38

8

8

FILE= O:\WisDot_12345678_US41Bridges_Plans\B-05-678E\034-B-05-678E_INTERMEDIATE PIER DIAPHRAGMS XD1 D1.dgn

DATE: 7/19/2012
I.D.

STATE PROJECT NUMBER

1133-11-76

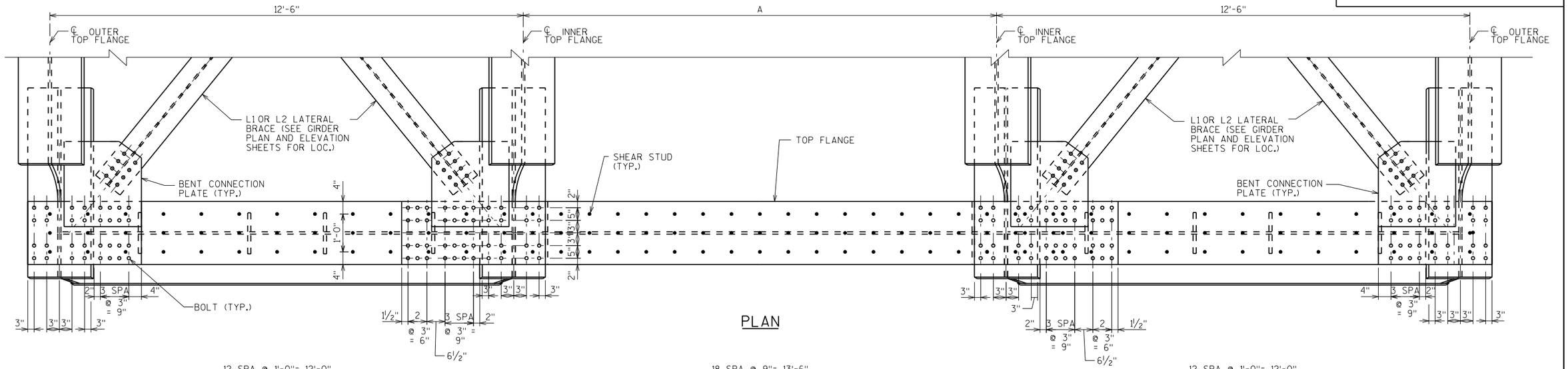

PLAN

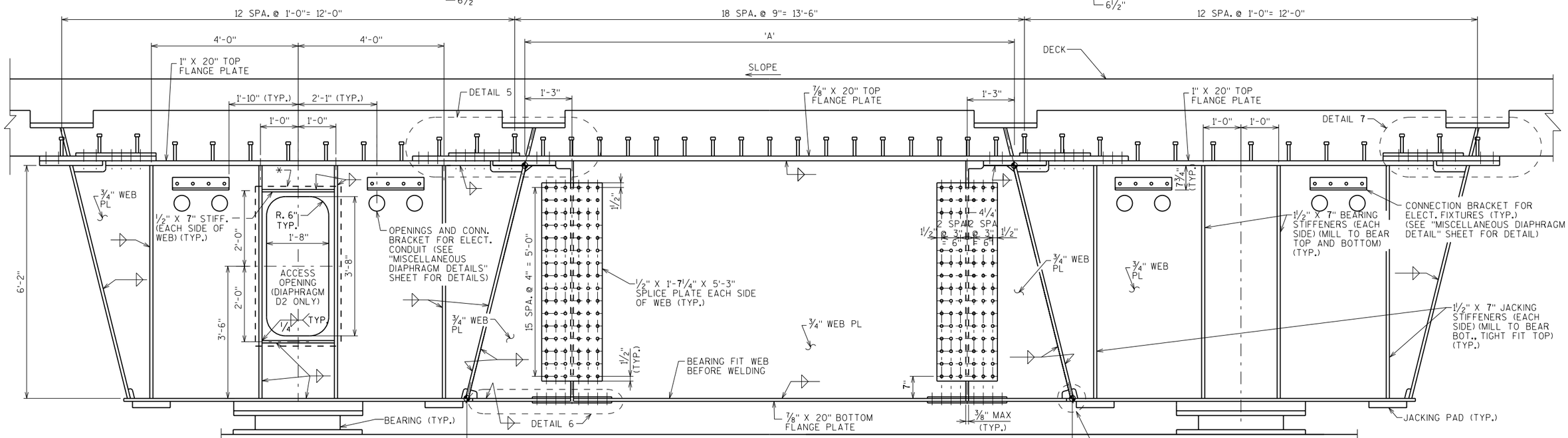

ELEVATION

(SUPERELEVATION NOT SHOWN)

NOTES:

SHEAR STUDS FURNISHED AND INSTALLED BY OTHERS DURING ERECTION.

ALL BOLTS SHOWN SHALL BE ⅞" DIAMETER.

TOP OF DIAPHRAGM TOP FLANGE PLATE TO BE PROVIDED WITH 3 MIL OF AN ORGANIC ZINC RICH PRIMER.

SEE MISCELLANEOUS DIAPHRAGM DETAILS SHEET FOR DETAILS 1, 5, 6 AND 7 AND SECTIONS.

UNLESS OTHERWISE NOTED, ALL DIMENSIONS GIVEN ARE PARALLEL OR PERPENDICULAR TO SUPERELEVATION.

* ACCESS DOOR REQUIRED AT INTERNAL DIAPHRAGM D2, SEE ACCESS DOOR DETAILS SHEET.

TABLE OF VARIABLES

	A	B	SLOPE
XD2-1	13'-0¼"	16'-1¼"	+4.04%
XD2-2	13'-0 9/16"	16'-1 9/16"	+6.00%
XD3-1	13'-0 9/16"	16'-1 9/16"	+6.00%

DIMENSIONS ARE MEASURED ALONG SUPERELEVATION.

+ SLOPE

STEEL FABRICATION CONTRACT ONLY

NO.	DATE	REVISION	BY

STATE OF WISCONSIN
DEPARTMENT OF TRANSPORTATION
STRUCTURES DESIGN SECTION

STRUCTURE B-5-678

DRAWN BY JRS | PLANS CK'D. NPP

UNIT END DIAPHRAGMS XD2, XD3, D2, AND D3

SHEET 35 OF 63

FILE= Q:\WisDot_12345678_US41Bridges_Plans\B-05-678E\035-B-05-678E_UNIT END DIAPHRAGMS XD2 XD3 D2 D3.dgn

DATE: 7/19/2012
I.D.

8

8

STATE PROJECT NUMBER

1133-11-76

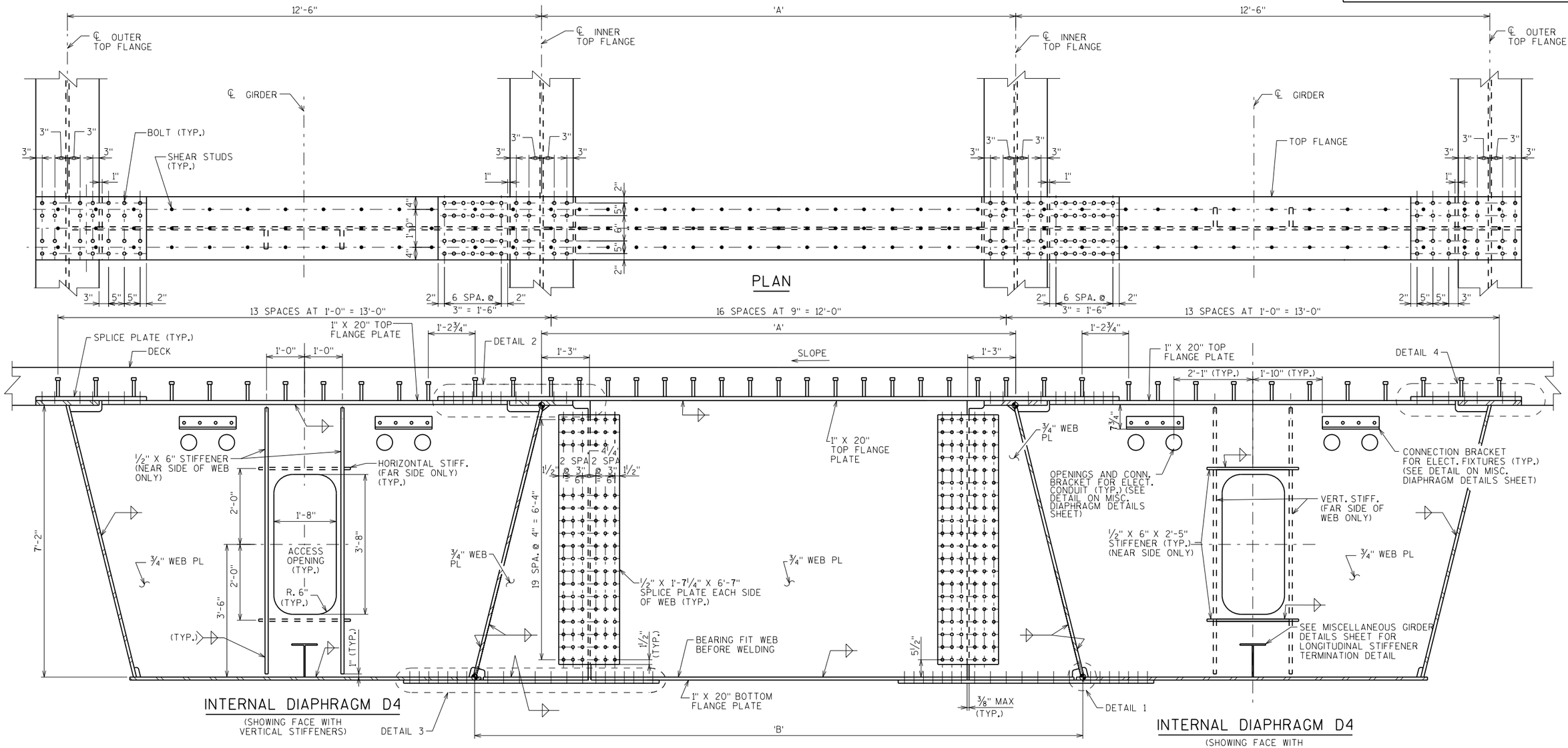

TABLE OF VARIABLES

	A	B	SLOPE
XD4-1	12'-6 3/8"	16'-1 3/8"	+4.90%
XD4-2	12'-6 7/16"	16'-1 7/16"	+5.50%
XD4-3	12'-6 1/2"	16'-1 9/16"	+6.00%

DIMENSIONS ARE MEASURED ALONG SUPERELEVATION.

+ SLOPE

NOTES:

SHEAR STUDS FURNISHED AND INSTALLED BY OTHERS DURING ERECTION.

ALL BOLTS SHOWN SHALL BE 7/8" DIAMETER.

TOP OF DIAPHRAGM TOP FLANGE PLATE TO BE PROVIDED WITH 3 MIL OF ORGANIC ZINC RICH PRIMER.

SEE MISCELLANEOUS DIAPHRAGM DETAILS SHEET FOR DETAILS 1, 2, 3 AND 4 AND SECTIONS.

UNLESS OTHERWISE NOTED, ALL DIMENSIONS GIVEN ARE PARALLEL OR PERPENDICULAR TO SUPERELEVATION.

STEEL FABRICATION CONTRACT ONLY

NO.	DATE	REVISION	BY

STATE OF WISCONSIN
DEPARTMENT OF TRANSPORTATION
STRUCTURES DESIGN SECTION

STRUCTURE B-5-678

DRAWN BY JRS | PLANS CK'D. NPP

INTERMEDIATE DIAPHRAGMS XD4 AND D4

SHEET 36 OF 63

40

8

8

FILE= O:\WisDot_12345678_US41Bridges_Plans\B-05-678E\036-B-05-678E_INTERMEDIATE DIAPHRAGMS XD4 D4.dgn

DATE: 7/19/2012
I.D.

STATE PROJECT NUMBER

1133-11-76

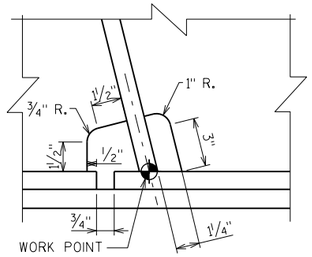

DETAIL 1

DIAPHRAGM XD4/D4

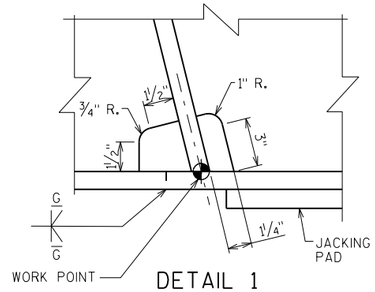

DETAIL 1

DIAPHRAGMS XD1/D1 AND XD2/D2/XD3/D3

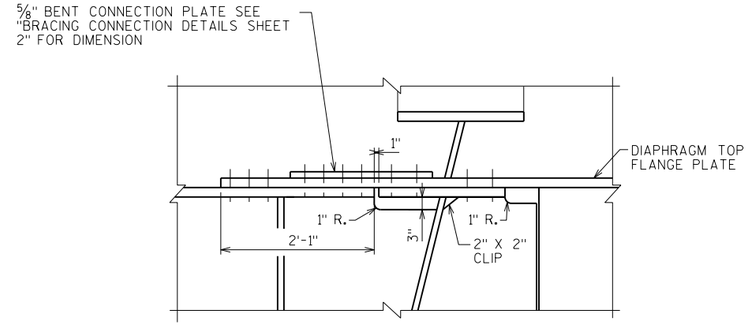

DETAIL 5

DIAPHRAGMS XD2/D2/XD3/D3

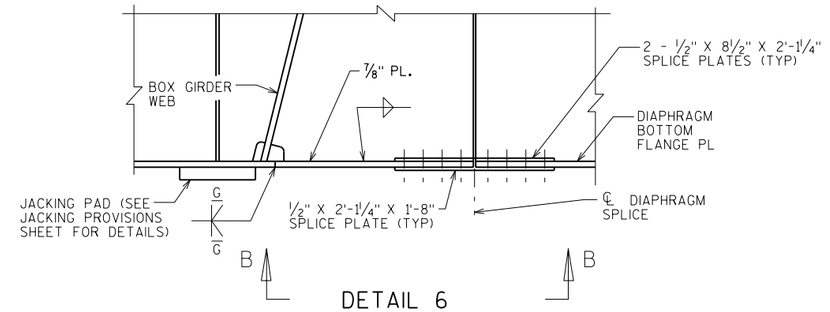

DETAIL 6

DIAPHRAGMS XD1/D1, XD2/D2 AND XD3/D3

* SEE MISC. GIRDER DETAILS SHEET 3

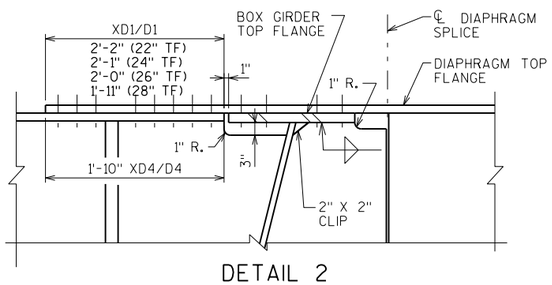

DETAIL 2

SHEET XD1/D1 AND XD4/D4

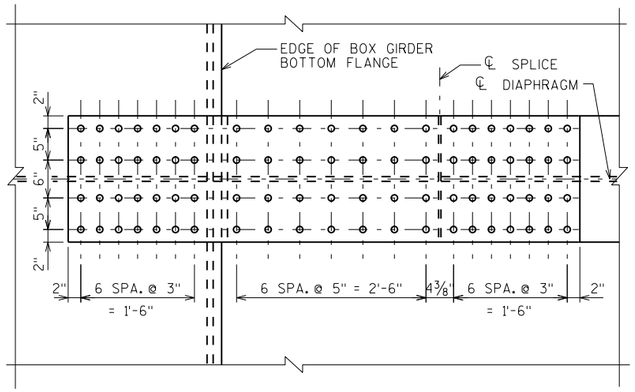

SECTION A-A

THIS SHEET

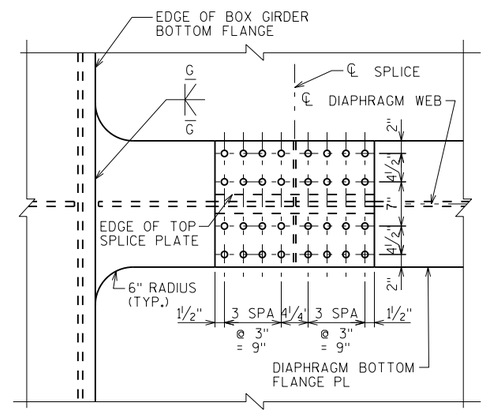

SECTION B-B

THIS SHEET
(DIAPHRAGM XD1/D1)

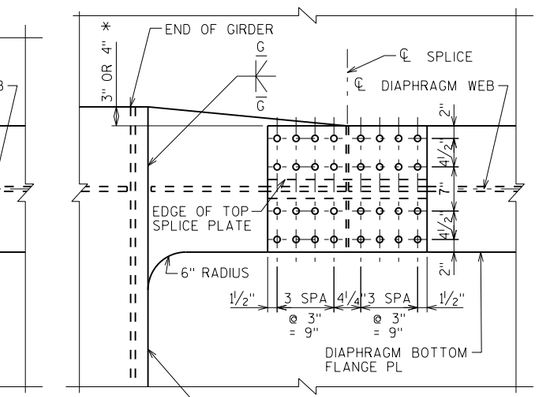

SECTION B-B

THIS SHEET
(DIAPHRAGM XD2/D2 AND XD3/D3)

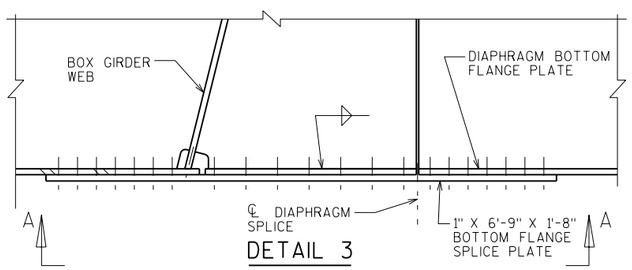

DETAIL 3

DIAPHRAGM XD4/D4

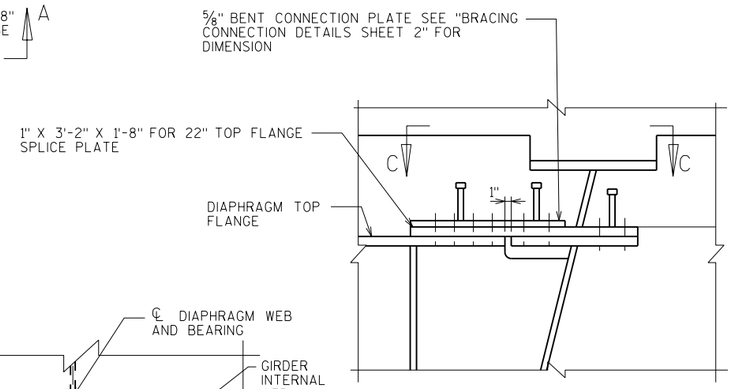

DETAIL 7

DIAPHRAGMS XD2/D2/XD3/D3

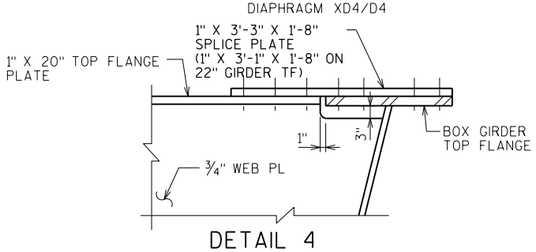

DETAIL 4

DIAPHRAGMS XD1/D1 AND XD4/D4

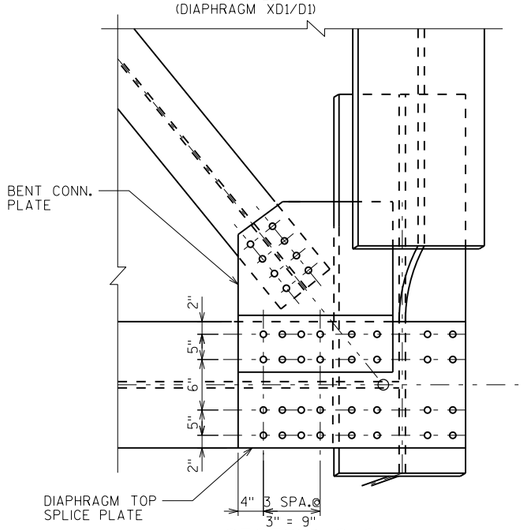

SECTION C-C

THIS SHEET
(SHEAR STUDS NOT SHOWN FOR CLARITY)

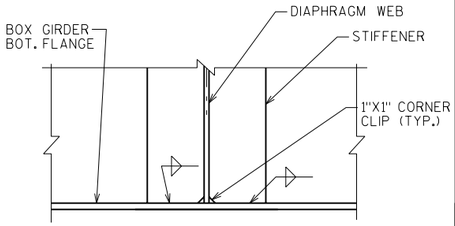

STIFFENER TO FLANGE DETAIL

ALL DIAPHRAGMS AND ALL STIFFENERS
NO WELD AT TOP OF STIFFENERS

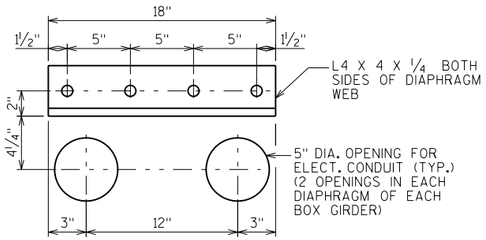

OPENINGS AND CONNECTION BRACKET DETAILS FOR ELECTRICAL

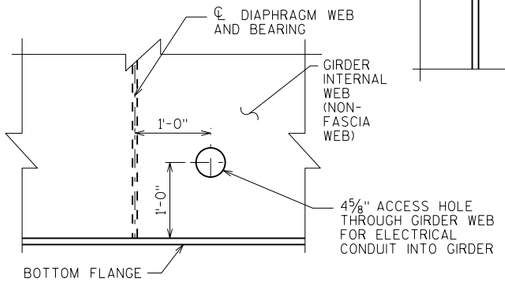

EXTERNAL ELECTRICAL ACCESS DETAIL

TWO ACCESS LOCATIONS FOR INCOMING POWER TO INTERIOR OF GIRDER (LOC. TO BE DETERMINED DURING FABRICATION) (TYP. BOTH GIRDERS)

STEEL FABRICATION CONTRACT ONLY

NO.	DATE	REVISION	BY

STATE OF WISCONSIN
DEPARTMENT OF TRANSPORTATION
STRUCTURES DESIGN SECTION

STRUCTURE B-5-678

DRAWN BY JRS | PLANS CK'D. NPP

MISCELLANEOUS DIAPHRAGM DETAILS

SHEET 37 OF 63

41

8

8

FILE= Q:\WisDot_12345678_US41Bridges_Plans\B-05-678E\037-B-05-678E_DIAPHRAGM MISC DETAILS.dgn

DATE: 7/19/2012
I.D.

STATE PROJECT NUMBER

1133-11-76

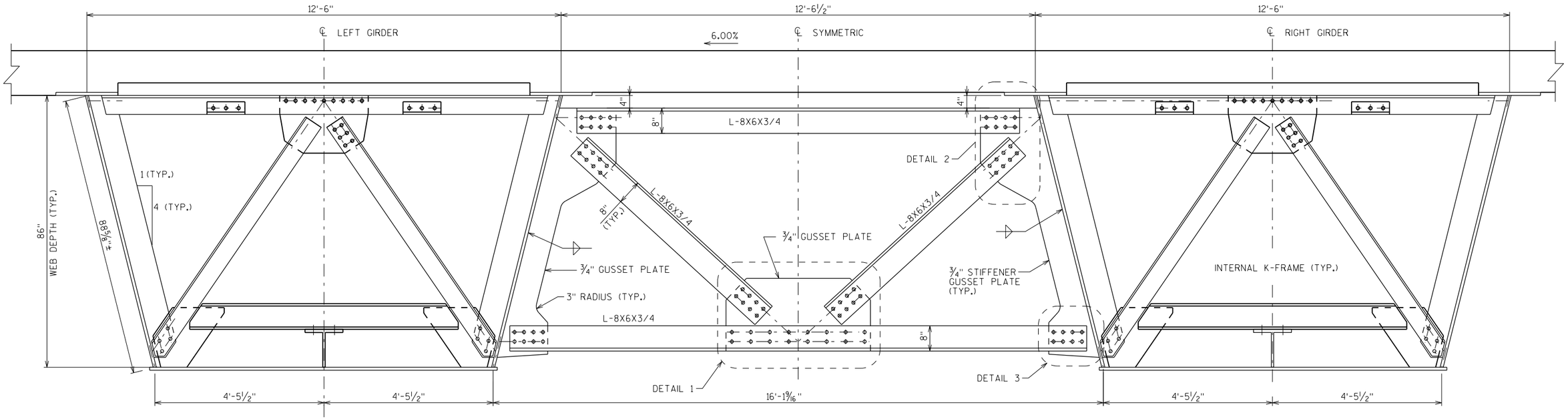

ELEVATION EXTERIOR CROSS FRAME XF

(SUPERELEVATION NOT SHOWN)
(LOOKING UPSTATION)

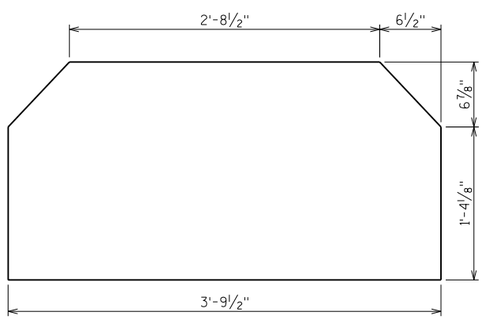

GUSSET PLATE DETAILS

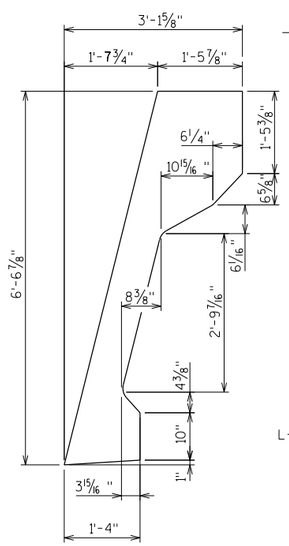

STIFFENER GUSSET PLATE DETAILS

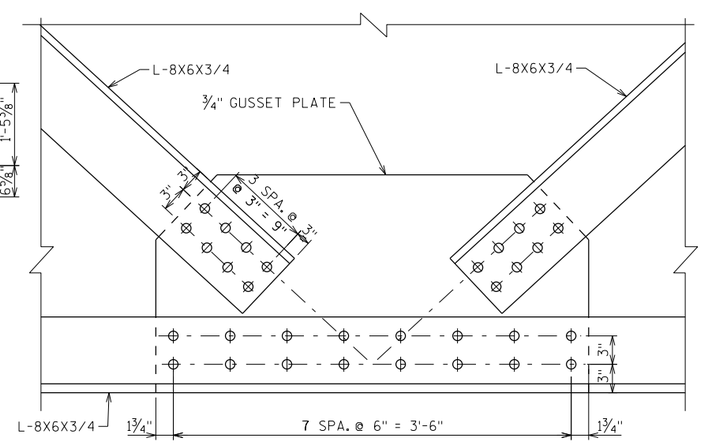

DETAIL 1

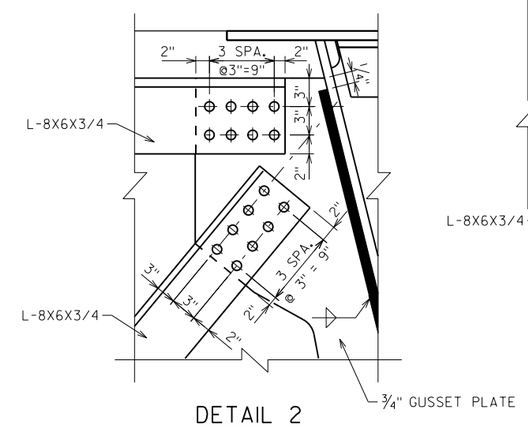

DETAIL 2

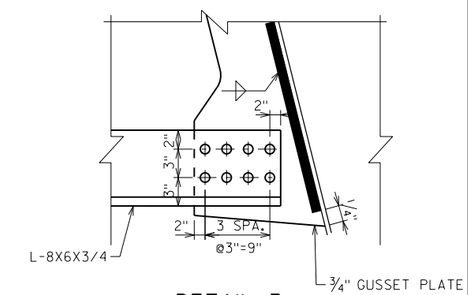

DETAIL 3

NOTES:

1. ALL HOLES SHALL BE STANDARD DIAMETER - NO OVERSIZE HOLES.
2. ALL CONNECTIONS SHALL BE FABRICATED AND ASSEMBLED AS SLIP-CRITICAL CONNECTIONS
3. CROSS FRAMES ARE ALIGNED NORMAL TO THE GIRDERS.
4. EXTERIOR CONNECTION PLATES SHALL BE LOCATED DIRECTLY IN LINE WITH THE CORRESPONDING WEB STIFFENER LOCATED INSIDE THE BOX.
5. FOR SUPERELEVATED ROAD SECTION, THE EXTERIOR FRAMES VARY IN LENGTH

TABLE OF VARIABLES

	A	B	C
XF	12'-6½"	16'-1⁹⁄₁₆"	+6.00%

+SLOPE 'C'

STEEL FABRICATION CONTRACT ONLY

NO.	DATE	REVISION	BY

STATE OF WISCONSIN
DEPARTMENT OF TRANSPORTATION
STRUCTURES DESIGN SECTION

STRUCTURE B-5-678

DRAWN BY SOI | PLANS CK'D. NPP

EXTERIOR CROSS FRAME DETAILS

SHEET 38 OF 63

42

8

8

FILE= O:\WisDot_12345678_US41Bridges_Plans\B-05-678E\038-B-05-678E_CROSS FRAM EXT.dgn

DATE: 7/19/2012
I.D.

STATE PROJECT NUMBER

1133-11-76

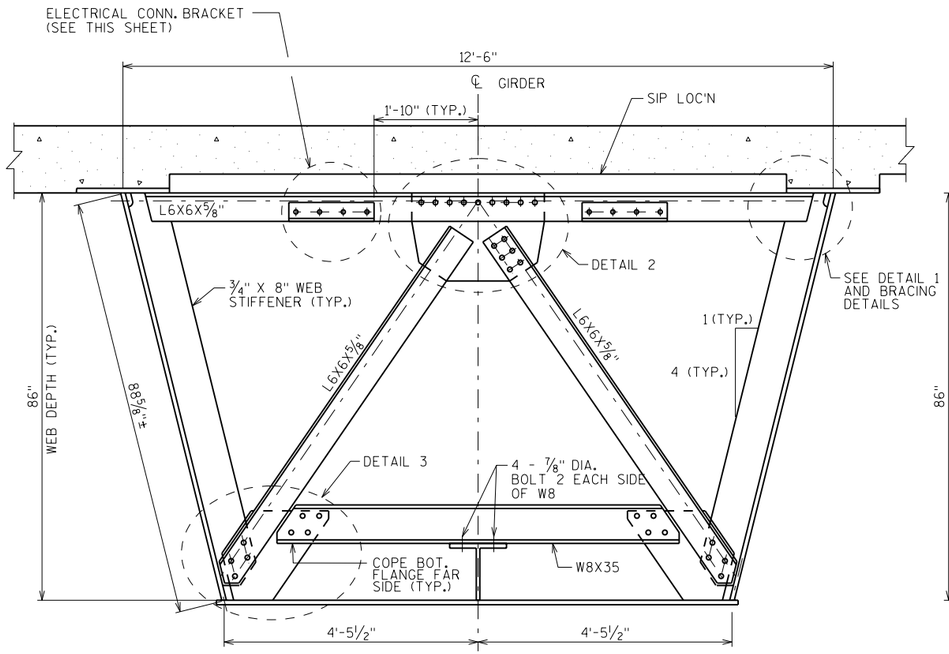

TYPICAL SECTION AT K-FRAME K1

(DETAIL WITH LONGITUDINAL STIFFENER)

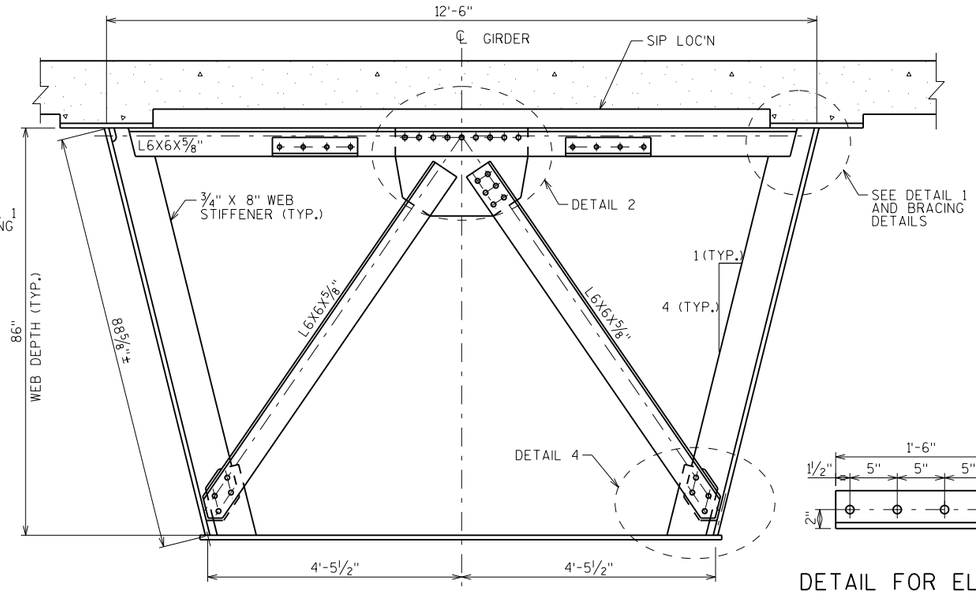

TYPICAL SECTION AT K-FRAME K1

(DETAIL WITHOUT LONGITUDINAL STIFFENER)

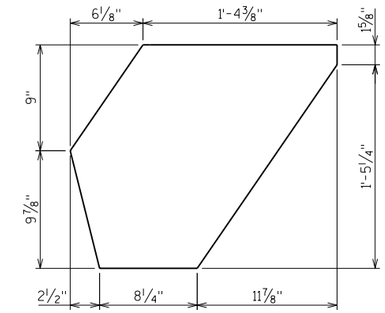

PL 3/4" DETAIL

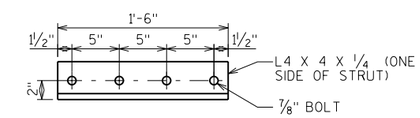

DETAIL FOR ELECTRICAL CONNECTION BRACKET

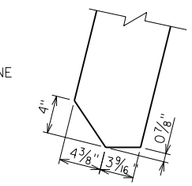

WEB STIFFENER DETAIL

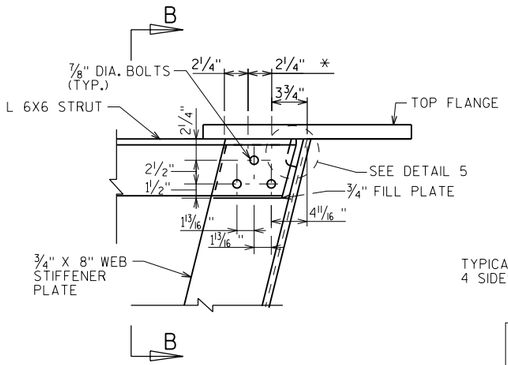

DETAIL 1

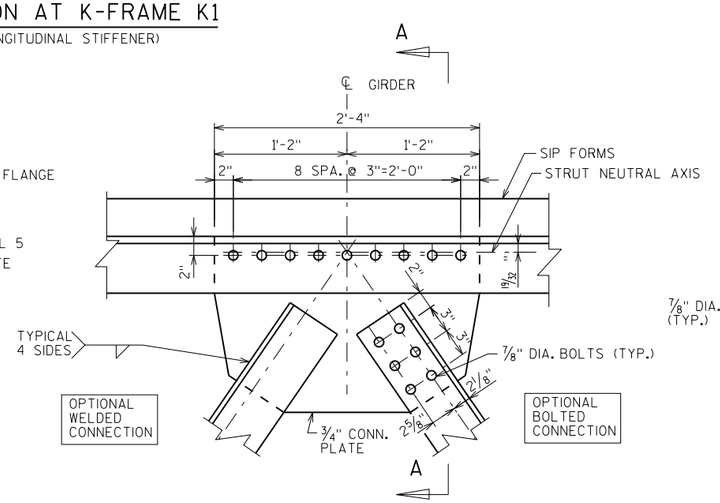

DETAIL 2

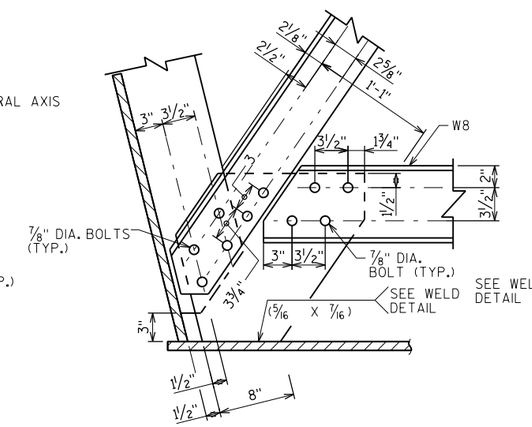

DETAIL 3

(DETAIL FOR CROSS FRAMES WITH BOTTOM CHORD)

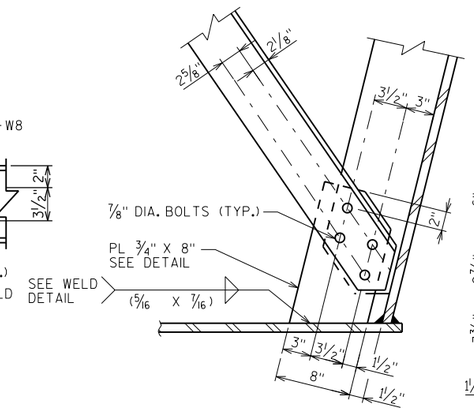

DETAIL 4

(DETAIL FOR CROSS FRAMES WITHOUT BOTTOM CHORD)

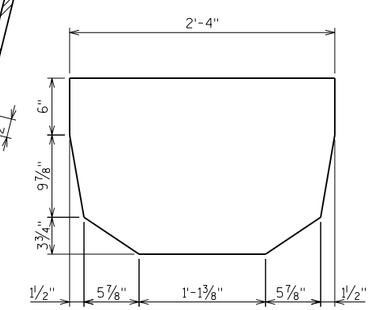

3/4" CONN. PLATE DETAIL

* BOLT SPACING FOR STRUT TO TOP FLANGE CONNECTION. SEE BRACING DETAILS SHEET FOR PLAN VIEW.

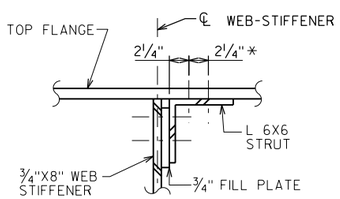

SECTION B-B

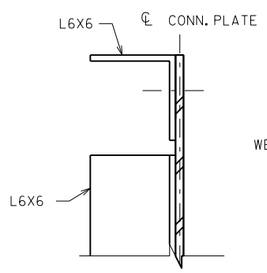

SECTION A-A

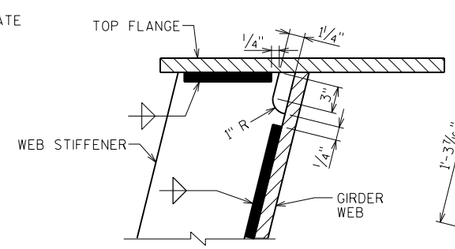

DETAIL 5

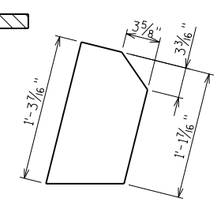

PL 3/4"X8" DETAIL

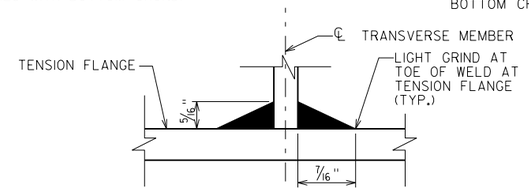

TRANSVERSE WELD TO TENSION FLANGE DETAIL

TYP. FOR ANY TENSION FLANGE (BOTTOM FLANGE SHOWN)

STEEL FABRICATION CONTRACT ONLY

NO.	DATE	REVISION	BY

STATE OF WISCONSIN
DEPARTMENT OF TRANSPORTATION
STRUCTURES DESIGN SECTION

STRUCTURE B-5-678

DRAWN BY JRS | PLANS CK'D. NPP

INTERIOR CROSS FRAME K1 DETAILS

SHEET 39 OF 63

43

8

8

FILE= Q:\WisDot_12345678_US41Bridges_Plans\B-05-678E_CROSS FRAM INT K1.dgn

DATE: 7/19/2012

I.D.

STATE PROJECT NUMBER

1133-11-76

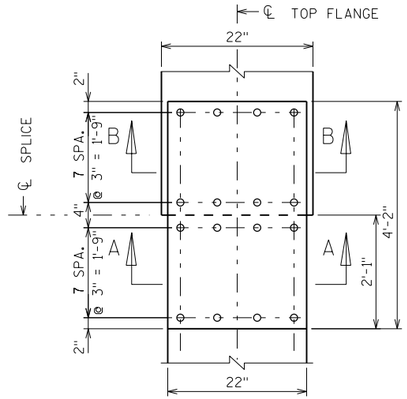

PLAN

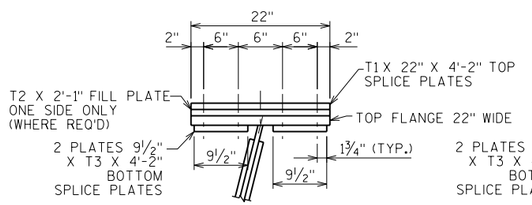

SECTION A-A

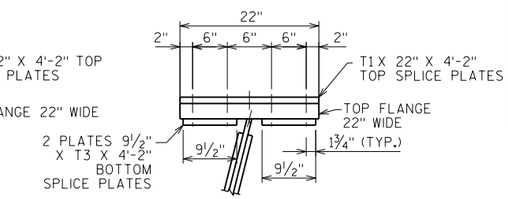

SECTION B-B

TYPICAL TOP FLANGE CONNECTION

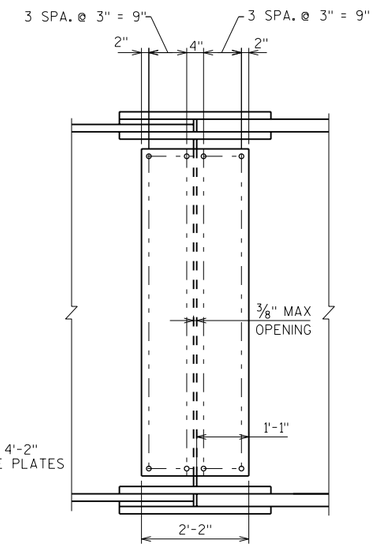

ELEVATION

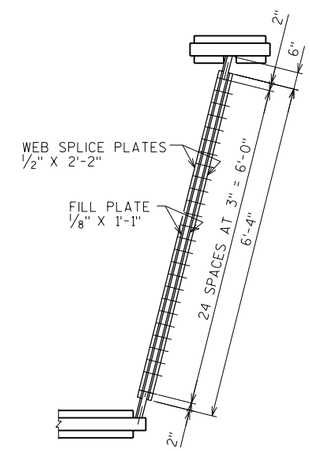

SECTION

TYPICAL WEB CONNECTION

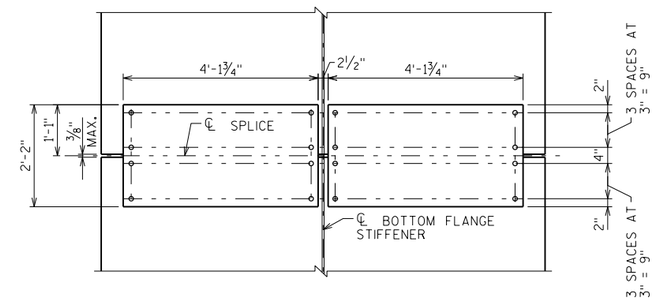

PLAN

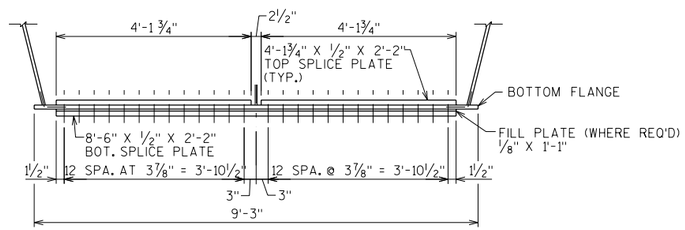

SECTION

TYPICAL BOTTOM FLANGE CONNECTION

FIELD SPLICE NO.	VARIABLE DIMENSIONS		
	T1 (IN)	T2 (IN)	T3 (IN)
1	0.5	0	0.625
2	0.5	0	0.625
3	0.5	0.25	0.625
4	0.5	0.25	0.625
5	0.5	0.5	0.625
6	0.5	0.5	0.625
7	0.5	0.75	0.625
8	0.5	0.75	0.625
9	0.5	1	0.625
10	0.5	1	0.625
11	0.5	0.5	0.625
12	0.5	0.5	0.625
13	0.5	0.75	0.625
14	0.625	0.5	0.75
15	0.625	0.5	0.75
16	0.625	0.5	0.75
17	0.625	0.5	0.75
18	0.625	0.5	0.75
19	0.625	0.5	0.75
20	0.5	0.75	0.625

NOTES:

ALL BOLTS SHOWN ARE ⅞" DIAMETER ASTM A325 TYPE 1.

ALL HOLES SHALL BE STANDARD DIAMETER NO OVERSIZE HOLES.

ALL CONNECTIONS SHALL BE FABRICATED AND ASSEMBLED AS SLIP-CRITICAL CLASS A CONNECTIONS

ALL SPLICE PLATES SHALL BE ASTM A709 GRADE HPS 50W.

STEEL FABRICATION CONTRACT ONLY

NO.	DATE	REVISION	BY

STATE OF WISCONSIN
DEPARTMENT OF TRANSPORTATION
STRUCTURES DESIGN SECTION

STRUCTURE B-5-678

DRAWN BY JRS | PLANS CK'D. NPP

FIELD SPLICE DETAILS

SHEET 40 OF 63

8

8

FILE= O:\WisDot_12345678_US41Bridges_Plans\B-05-678E\040-B-05-678E_FIELD SPLICE.dgn

DATE: 7/19/2012
I.D.

STATE PROJECT NUMBER

1133-11-76

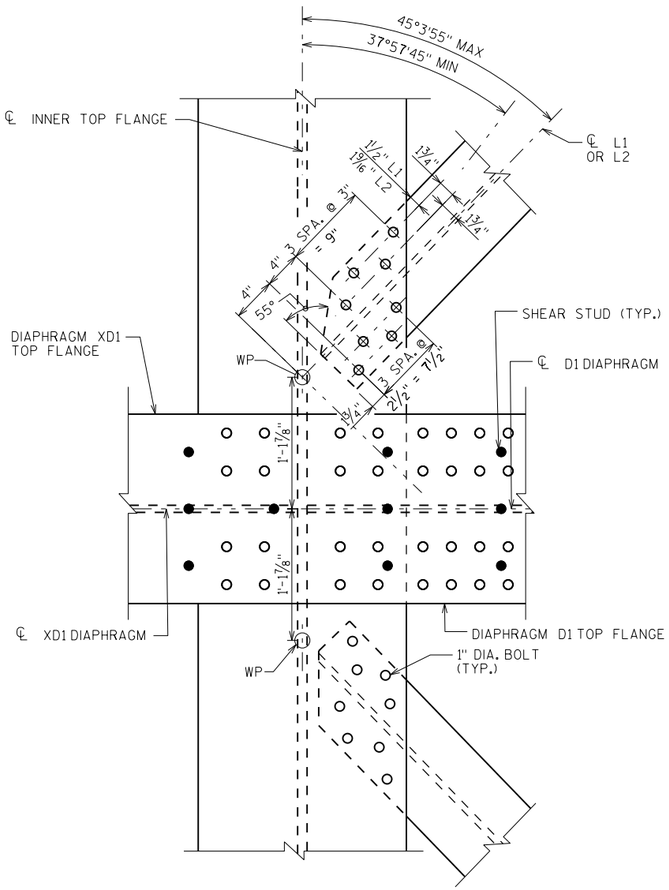

PLAN VIEW AT DIAPHRAGM XD1/D1

(SHOWING INNER TOP FLANGE)
(XD4/D4 SIMILAR)

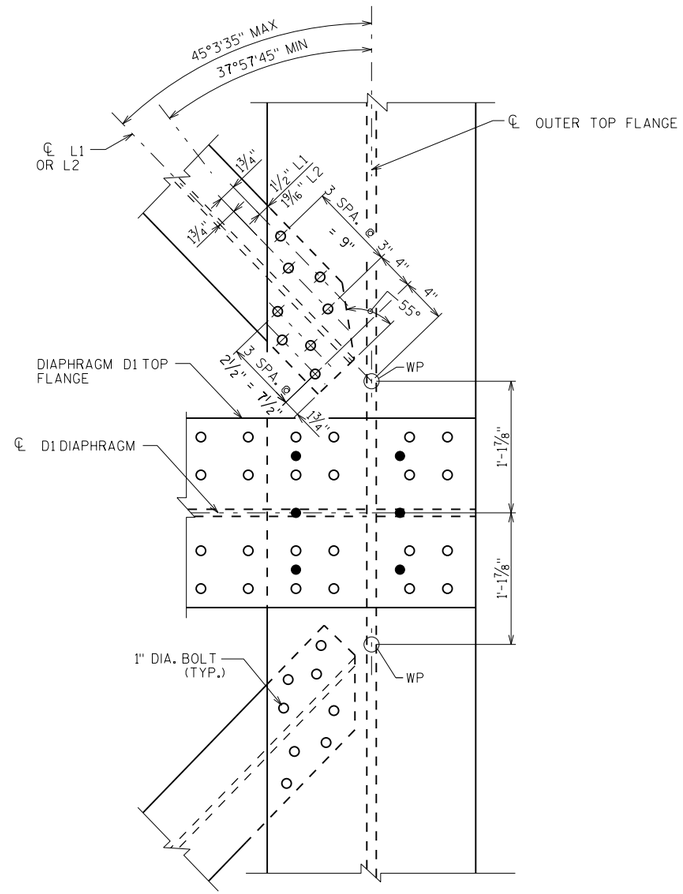

PLAN VIEW AT DIAPHRAGM XD1/D1

(SHOWING OUTER TOP FLANGE)
(XD4/D4 SIMILAR)

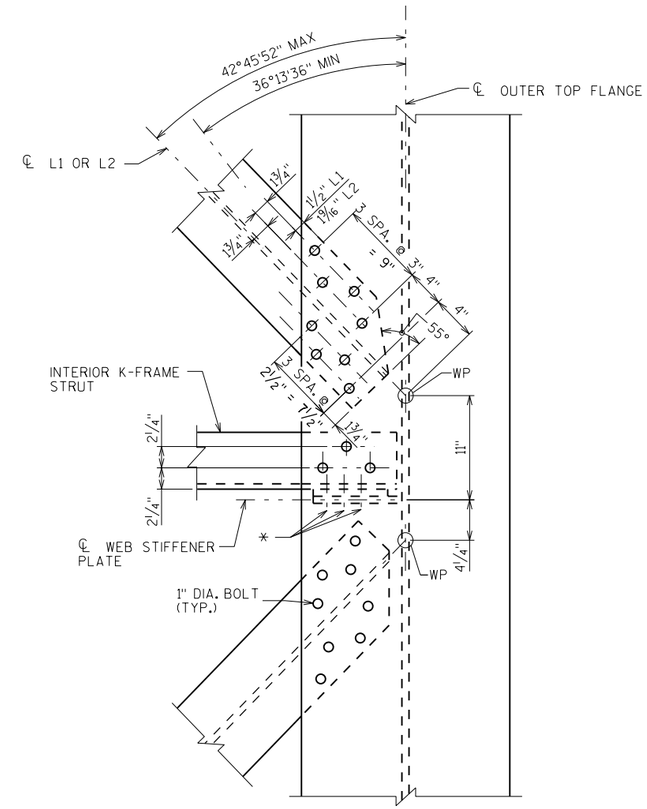

PLAN VIEW AT K-FRAME

(SHOWING OUTER TOP FLANGE)
(INNER TOP FLANGE SIMILAR)

8

NOTES:

SEE GIRDER PLAN AND ELEVATION SHEETS FOR LOCATIONS OF DETAILS.

LATERAL BRACE MEMBERS:

L1: WT7X34
L2: WT7X41

* SEE INTERIOR CROSS FRAME K-1 DETAILS SHEET FOR ADDITIONAL DETAILS FOR BOLTED CONNECTION THROUGH STRUT ANGLE LEG TO WEB STIFFENER.

NOTES:

LATERAL BRACE L1 SHALL BE CONNECTED TO THE DIAPHRAGM TOP FLANGE AND GIRDER TOP FLANGE WITH 8-1" DIAMETER BOLTS. LATERAL BRACES L2 SHALL BE CONNECTED WITH 10-1" DIAMETER BOLTS.

8

STEEL FABRICATION CONTRACT ONLY

NO.	DATE	REVISION	BY

STATE OF WISCONSIN
DEPARTMENT OF TRANSPORTATION
STRUCTURES DESIGN SECTION

STRUCTURE B-5-678

DRAWN BY KJZ | PLANS CK'D. NPP

BRACING CONNECTION DETAILS SHEET 1

SHEET 41 OF 63

45

FILE= O:\WisDot_12345678_US41Bridges_Plans\B-05-678E_BRACING DETAILS.dgn

DATE: 7/19/2012

I.D.

STATE PROJECT NUMBER

1133-11-76

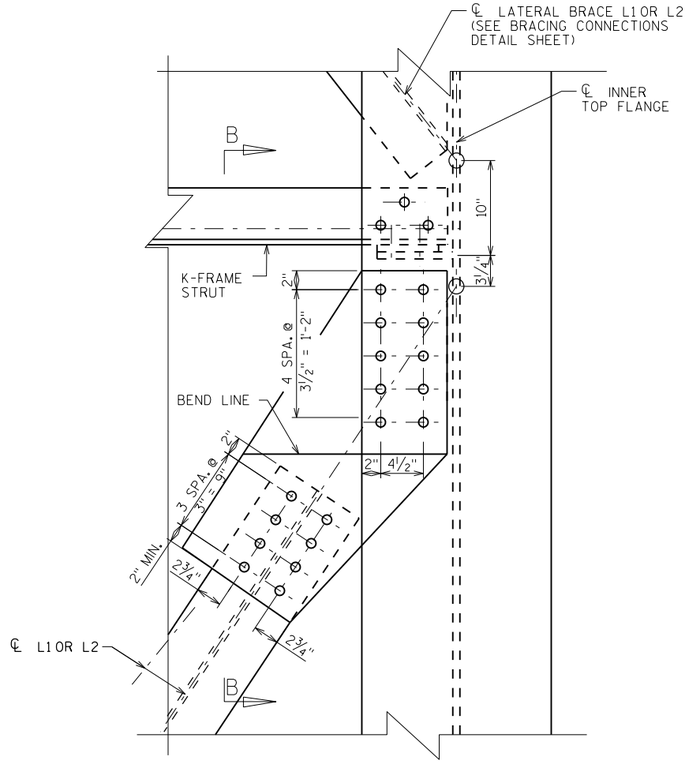

PLAN VIEW AT K-FRAME ADJACENT TO UNIT END

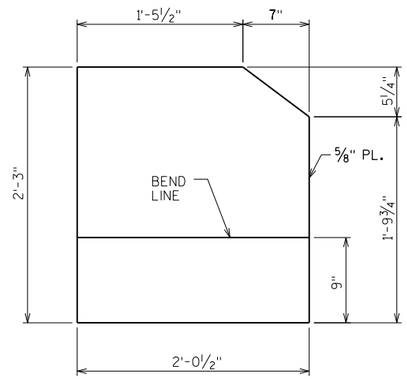

BENT CONNECTION PLATE DETAIL

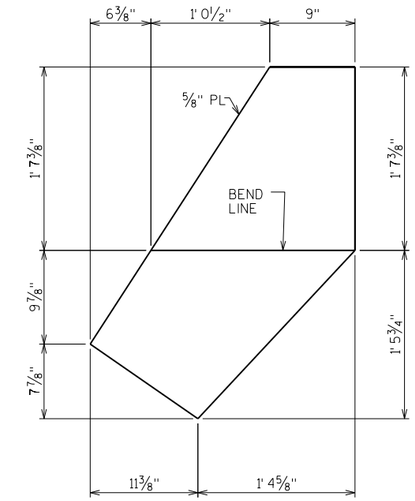

BENT CONNECTION PLATE DETAIL

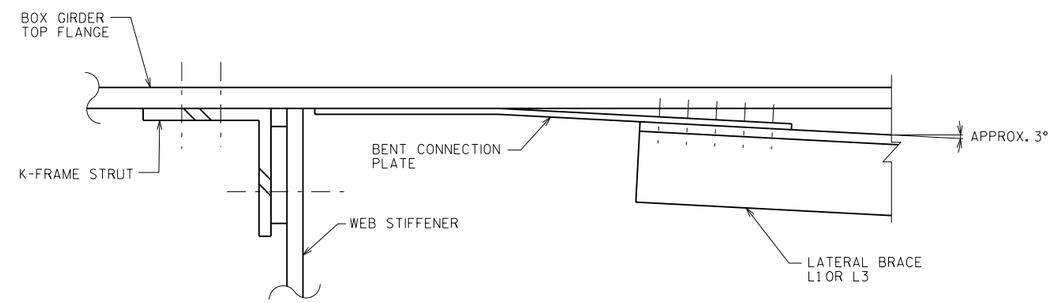

SECTION B-B

THIS SHEET

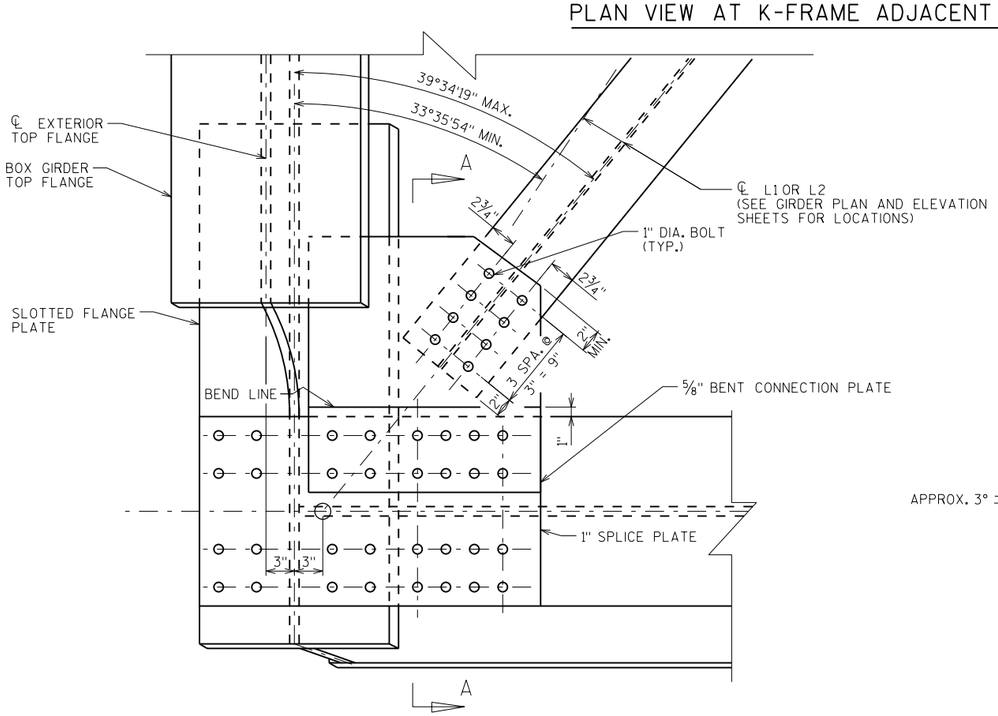

PLAN VIEW AT UNIT END DIAPHRAGM

(EXTERIOR GIRDER SHOWN, INTERIOR GIRDER SIMILAR)

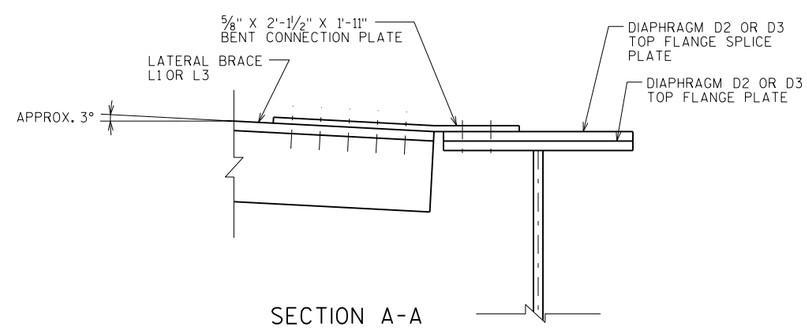

SECTION A-A

THIS SHEET

NOTES:

SEE GIRDER PLAN AND ELEVATION SHEETS FOR LOCATIONS OF DETAILS

STEEL FABRICATION CONTRACT ONLY

NO.	DATE	REVISION	BY

STATE OF WISCONSIN
DEPARTMENT OF TRANSPORTATION
STRUCTURES DESIGN SECTION

STRUCTURE B-5-678

DRAWN BY JRS | PLANS CK'D. NPP

BRACING CONNECTION DETAILS SHEET 2

SHEET 42 OF 63

8

8

FILE= O:\WisDot_12345678_US41Bridges_Plans\B-05-678E\042-B-05-678E_BRACING DETAILS 2.dgn

DATE: 7/19/2012

I.D.

STATE PROJECT NUMBER
1133-11-76

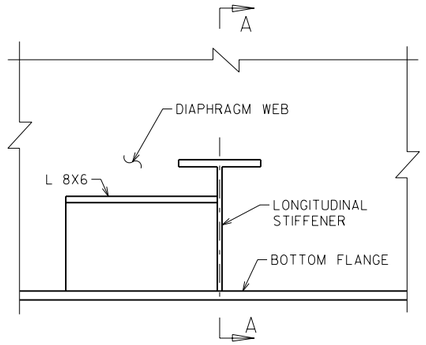

STIFFENER TERMINATION AT INTERIOR DIAPHRAGM

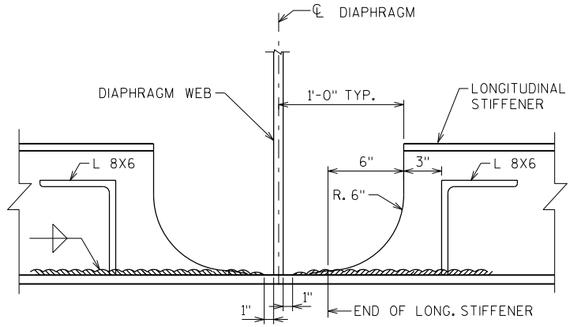

SECTION A-A

FOR MORE INFORMATION AND DETAILS SEE MISCELLANEOUS GIRDER DETAILS SHEET 2

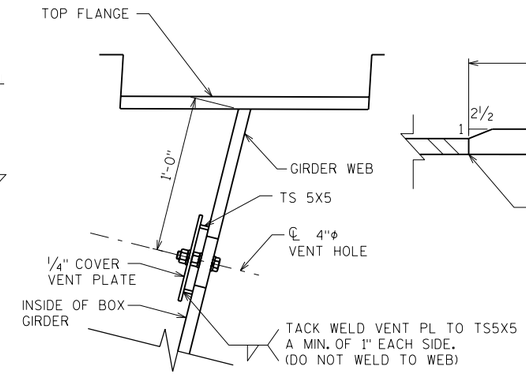

VENT HOLE LOCATION

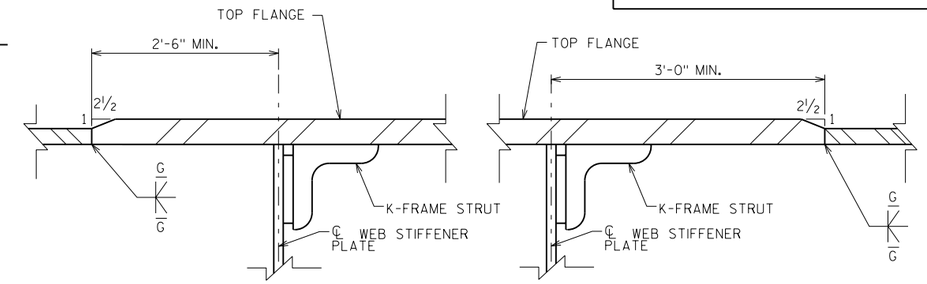

FLANGE THICKNESS TRANSITION DETAIL

NOT TO SCALE

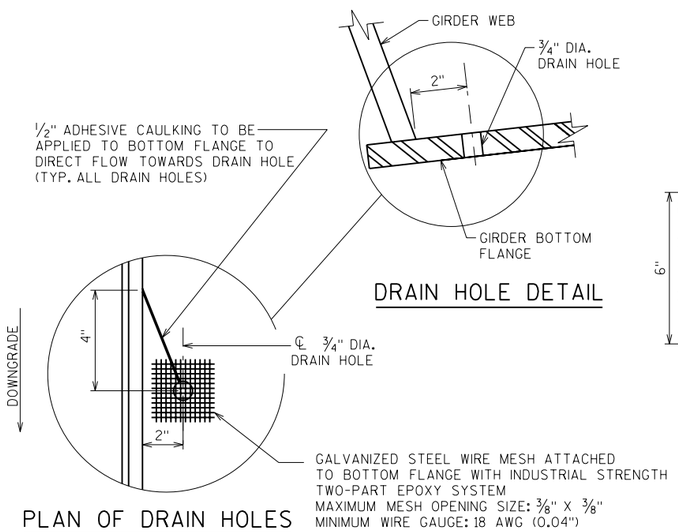

DRAIN HOLE DETAIL

PLAN OF DRAIN HOLES

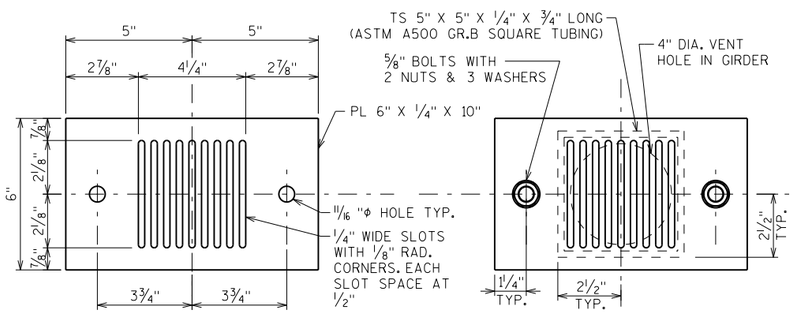

COVER VENT PLATE

INSIDE FACE

VENT HOLE COVER ASSEMBLY

NOT TO SCALE

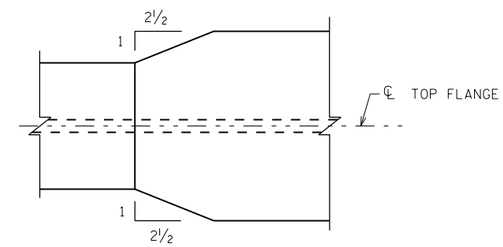

TOP FLANGE WIDTH TRANSITION DETAIL

NOT TO SCALE

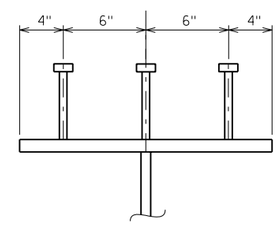

SHEAR STUD DETAIL AT DIAPHRAGM

NOTES:

SEE GIRDER PLAN AND ELEVATION SHEETS FOR DRAIN AND VENT HOLE LOCATIONS.

LOCATE ALL VENT HOLES ON THE INTERIOR WEBS - I.E. THE RIGHT WEB OF THE LEFT GIRDER AND THE LEFT WEB OF THE RIGHT GIRDER.

VENT HOLE COVER ASSEMBLIES SHALL BE HOT- DIP GALVANIZED AFTER FABRICATION AND INSTALLED AFTER GIRDERS ARE PAINTED.

LOCATE ALL DRAIN HOLES ON THE LOW SIDE OF THE GIRDER AS SHOWN.

COST OF ADHESIVE CAULKING, WIRE MESH AND ATTACHMENT IS INCLUDED IN THE COST OF "FABRICATED STRUCTURAL STEEL HPS 50W B-5-678".

SHEAR STUD CONNECTORS ARE SHOWN FOR REFERENCE ONLY AND ARE NOT FURNISHED OR INSTALLED AS PART OF THIS CONTRACT.

SHEAR CONNECTORS PROVIDED IN FUTURE CONTRACT WILL PENETRATE INTO DECK 2" ABOVE BOTTOM MAT OF REINFORCING STEEL.

FOR WEB PLATES WITH LENGTHS MORE THAN 90'-0", ONE OPTIONAL WELDED SHOP SPLICE IS ALLOWED PER FIELD SECTION. FOR ALL FLANGE PLATES, A MAXIMUM OF TWO OPTIONAL WELDED SHOP SPLICES IS ALLOWED PER FIELD SECTION. NO ADDITIONAL PAYMENT WILL BE MADE FOR OPTIONAL WELDED SHOP SPLICES OR FOR SHOP SPLICES AS REQUIRED DUE TO MAXIMUM PLATE LENGTH AVAILABILITY FROM THE MILL.

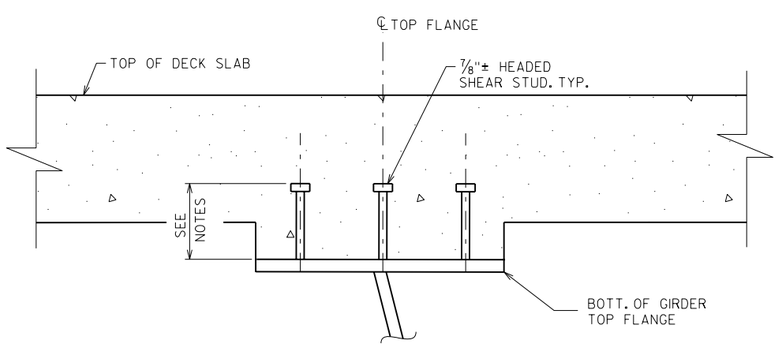

SHEAR STUD DETAIL

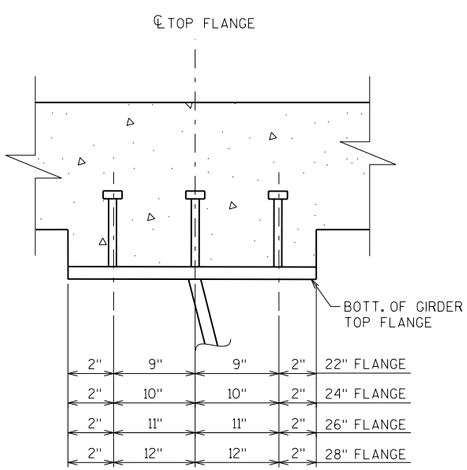

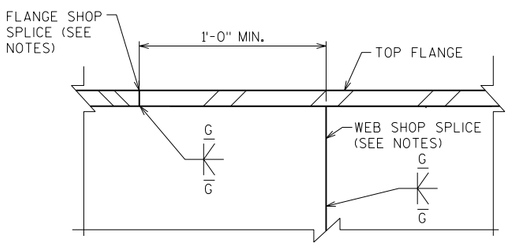

OPTIONAL SHOP SPLICE DETAIL

NOT TO SCALE
(SEE FLANGE THICKNESS TRANSITION DETAIL FOR MINIMUM SPACING OF SHOP SPLICES TO STIFFENERS AND K-FRAMES)

STEEL FABRICATION CONTRACT ONLY

NO.	DATE	REVISION	BY

STATE OF WISCONSIN
DEPARTMENT OF TRANSPORTATION
STRUCTURES DESIGN SECTION

STRUCTURE B-5-678

DRAWN BY ZMG | PLANS CK'D. NPP

MISCELLANEOUS GIRDER DETAILS SHEET 1

SHEET 43 OF 63

47

8

8

FILE= O:\WisDot_12345678_US41Bridges_Plans\B-05-678E\043-B-05-678E_MISC DETAILS.dgn

DATE: 7/19/2012
I.D.

STATE PROJECT NUMBER

1133-11-76

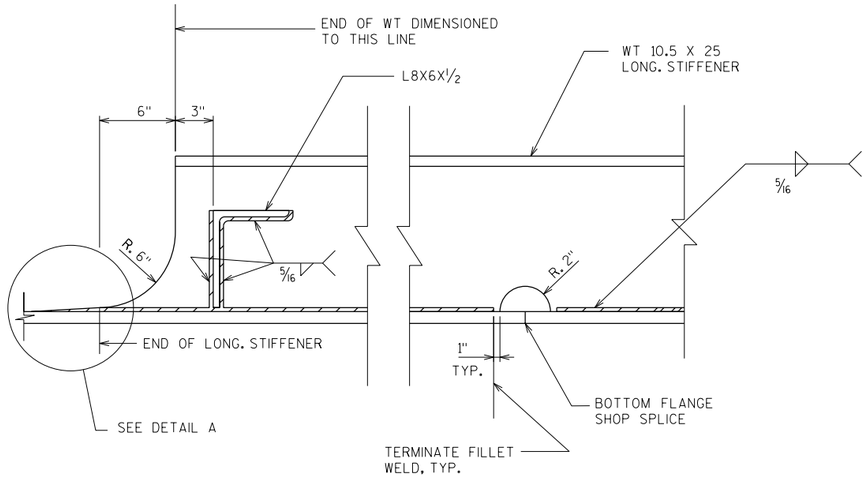

BOTTOM FLANGE LONGITUDINAL STIFFENER
TYPICAL TERMINATION DETAIL

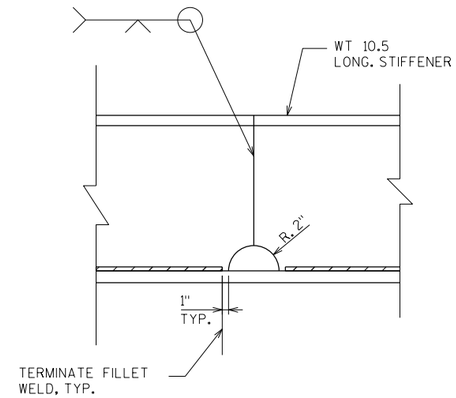

BOTTOM FLANGE
LONGITUDINAL STIFFENER SPLICE

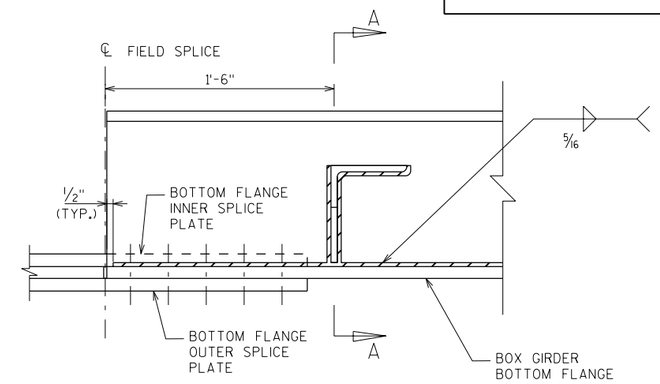

BOTTOM FLANGE LONGITUDINAL STIFFENER
TERMINATION DETAIL AT GIRDER FIELD SPLICE

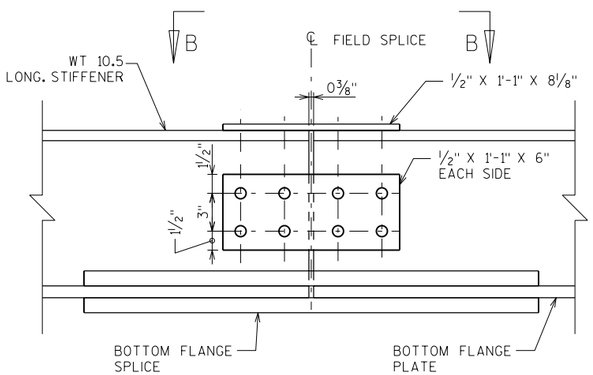

BOTTOM FLANGE LONGITUDINAL
STIFFENER FIELD SPLICE DETAIL

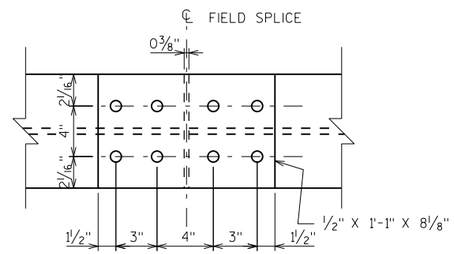

SECTION B-B

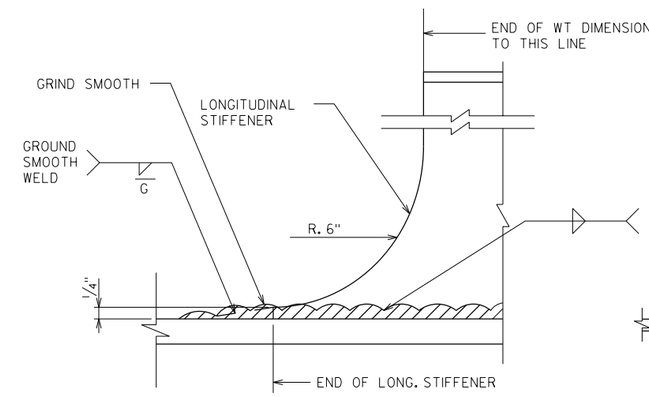

DETAIL A

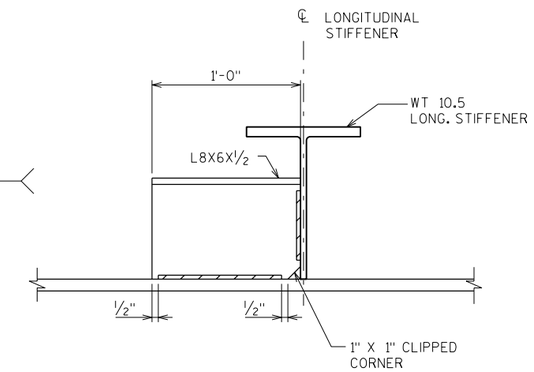

SECTION A-A

BOTTOM FLANGE LONGITUDINAL
STIFFENER TERMINATION DETAIL

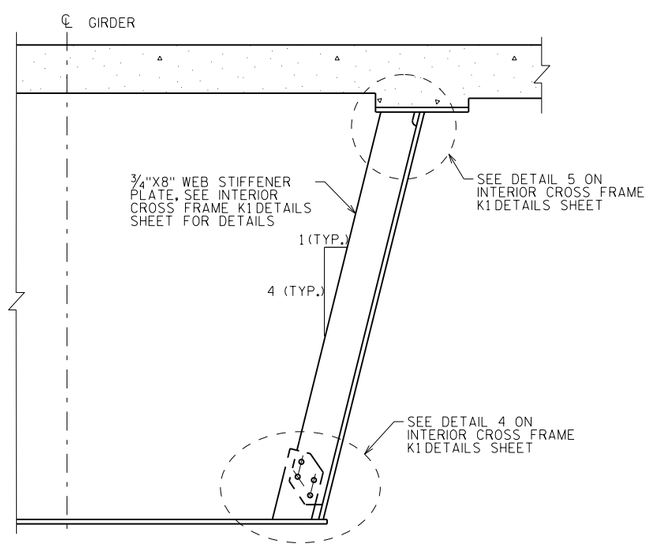

TYPICAL SECTION AT INTERMEDIATE WEB STIFFENER
(HALF-SECTION SHOWN)

NOTES:

FOR NOTES SEE MISCELLANEOUS GIRDER DETAILS SHEET.

STEEL FABRICATION CONTRACT ONLY

NO.	DATE	REVISION	BY

STATE OF WISCONSIN
DEPARTMENT OF TRANSPORTATION
STRUCTURES DESIGN SECTION

STRUCTURE B-5-678

DRAWN BY ZMG | PLANS CK'D. NPP

MISCELLANEOUS GIRDER DETAILS SHEET 2

SHEET 44 OF 63
48

FILE= O:\WisDot_12345678_US41Bridges_Plans\B-05-678E\044-B-05-678E_MISC DETAILS 2.dgn

DATE: 7/19/2012
I.D.

8

8

STATE PROJECT NUMBER

1133-11-76

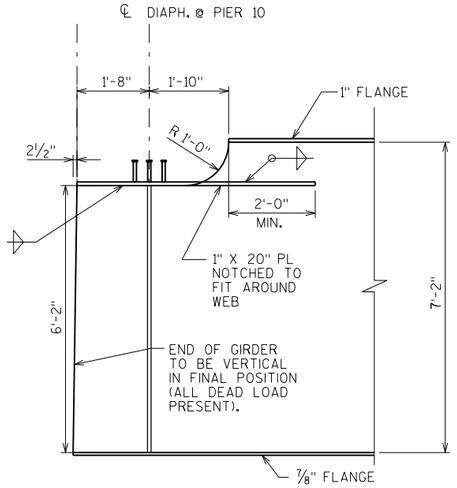

UNIT 3 SPAN 11

(GIRDER IS PARALLEL TO VERTICAL CURVE)

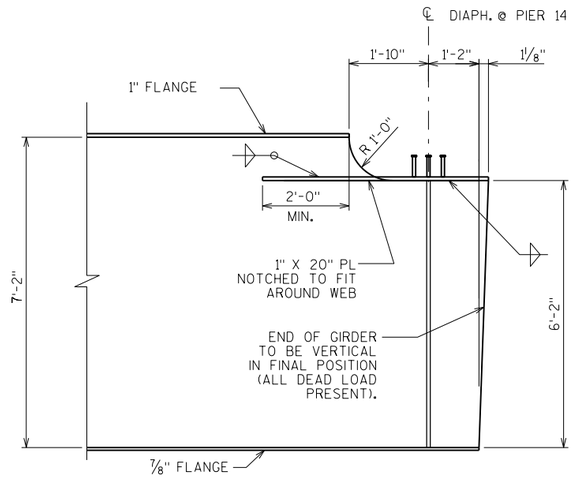

UNIT 3 SPAN 14

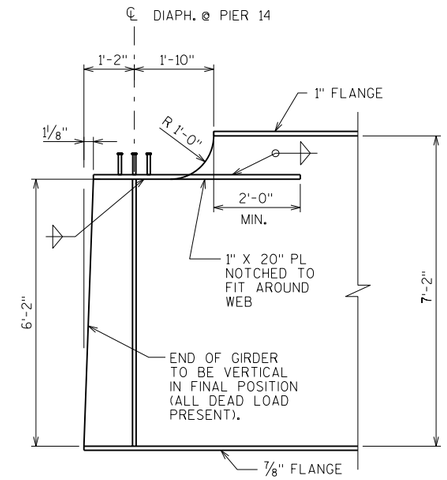

UNIT 4 SPAN 15

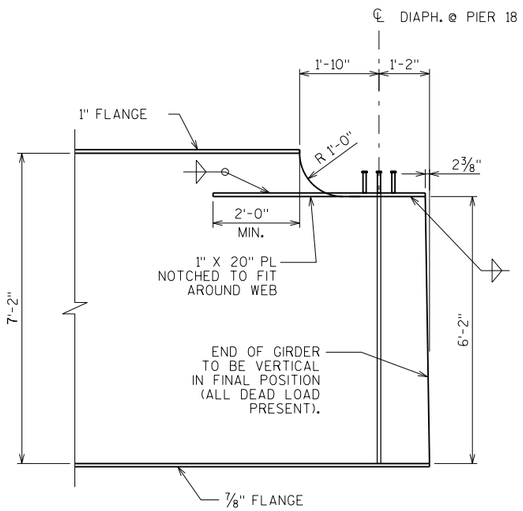

UNIT 4 SPAN 18

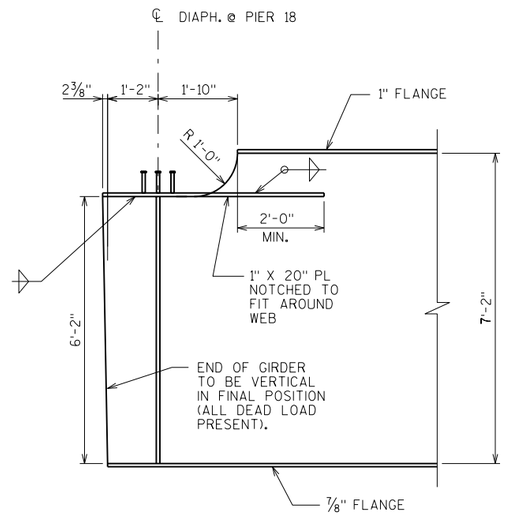

UNIT 5 SPAN 19

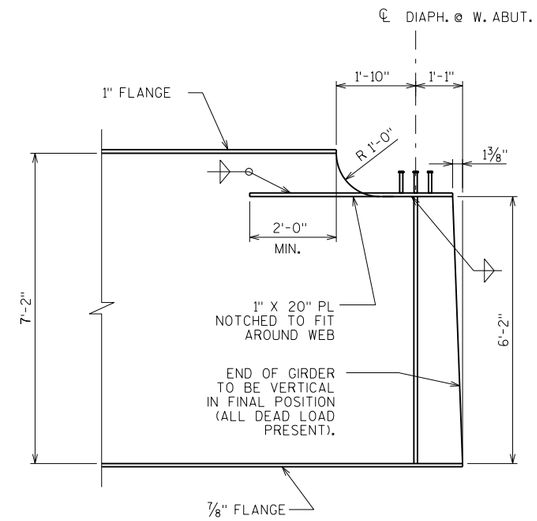

UNIT 5 SPAN 23

NOTE:

GIRDER FLANGES ARE NOT HORIZONTAL, BUT PARALLEL TO VERTICAL CURVE. DIAPHRAGMS ARE PERPENDICULAR TO GIRDERS FLANGES. ONLY ENDS OF GIRDER WEBS ARE VERTICAL.

STEEL FABRICATION CONTRACT ONLY

NO.	DATE	REVISION	BY

STATE OF WISCONSIN
DEPARTMENT OF TRANSPORTATION
STRUCTURES DESIGN SECTION

STRUCTURE B-5-678

DRAWN BY KJZ | PLANS CK'D. NPP

MISCELLANEOUS GIRDER DETAILS SHEET 3

SHEET 45 OF 63

49

8

FILE= O:\WisDot_12345678_US41Bridges_Plans\B-05-678E\045-B-05-678E_MISC DETAILS 3.dgn

DATE: 7/19/2012
I.D.

STATE PROJECT NUMBER

1133-11-76

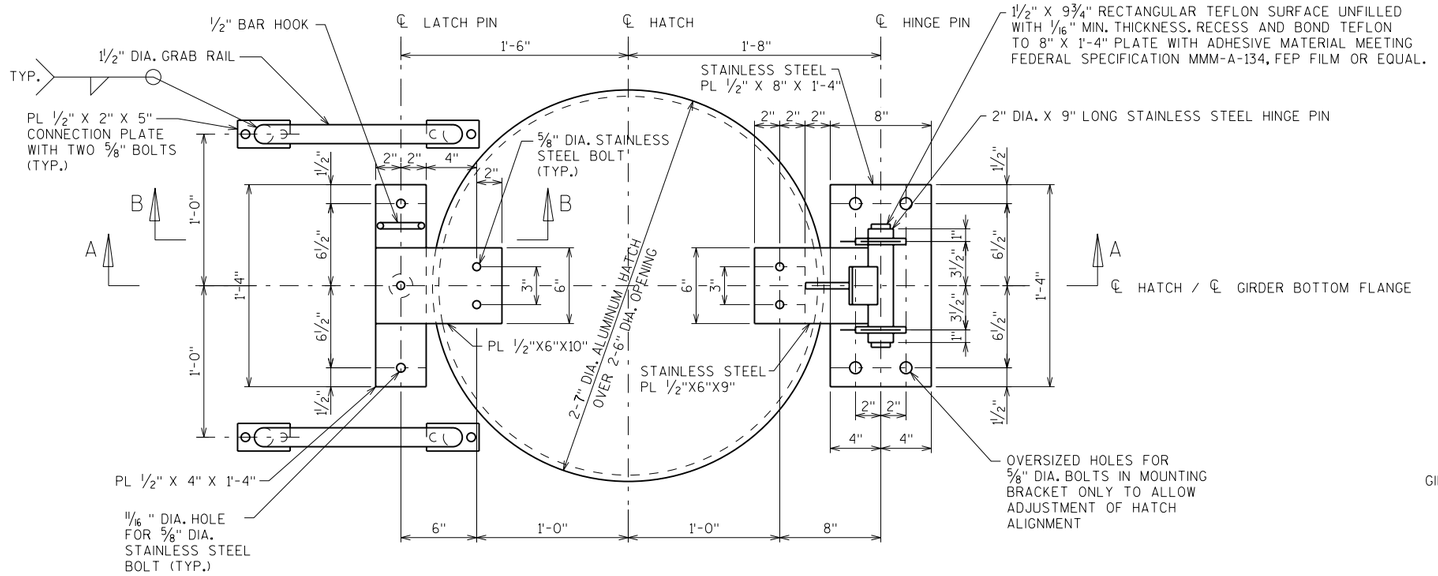

PLAN

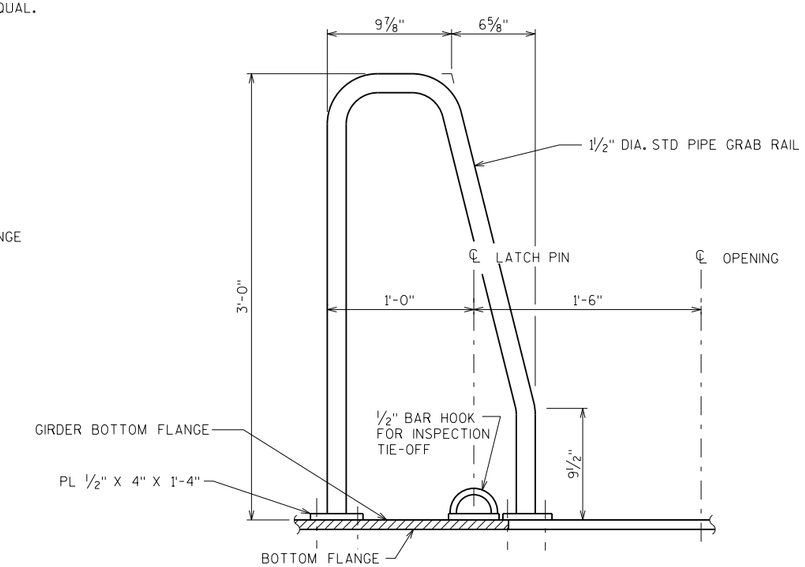

SECTION B-B

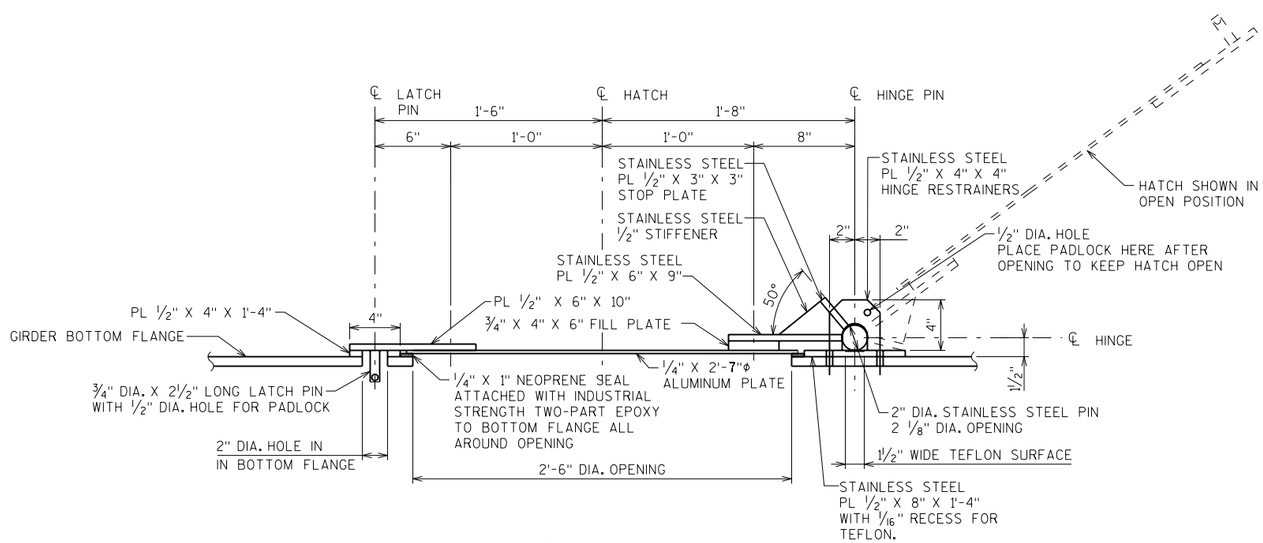

SECTION A-A

NOTES:

ALL BOLTS SHOWN ARE 5/8" DIAMETER STAINLESS STEEL.

FOUR ACCESS HATCHES REQUIRED. SEE GIRDER PLAN AND ELEVATION SHEETS FOR HATCH LOCATIONS IN SPANS 5 AND 10.

STEEL FOR HATCH IS A709 GRADE 50 UNLESS OTHERWISE NOTED.

ALL MATERIALS SHOWN WILL BE PAID FOR AT THE UNIT PRICE BID FOR "FABRICATED STRUCTURAL STEEL HS B-5-678".

STEEL FABRICATION CONTRACT ONLY

NO.	DATE	REVISION	BY

STATE OF WISCONSIN
DEPARTMENT OF TRANSPORTATION
STRUCTURES DESIGN SECTION

STRUCTURE B-5-678

DRAWN BY ZMG | PLANS CK'D. NPP

ACCESS HATCH DETAILS

SHEET 46 OF 63

50

FILE= O:\WisDot_12345678_US41Bridges_Plans\B-05-678E\046-B-05-678E_Access Hatch Details.dgn

DATE: 7/19/2012
I.D.

8

8

STATE PROJECT NUMBER

1133-11-76

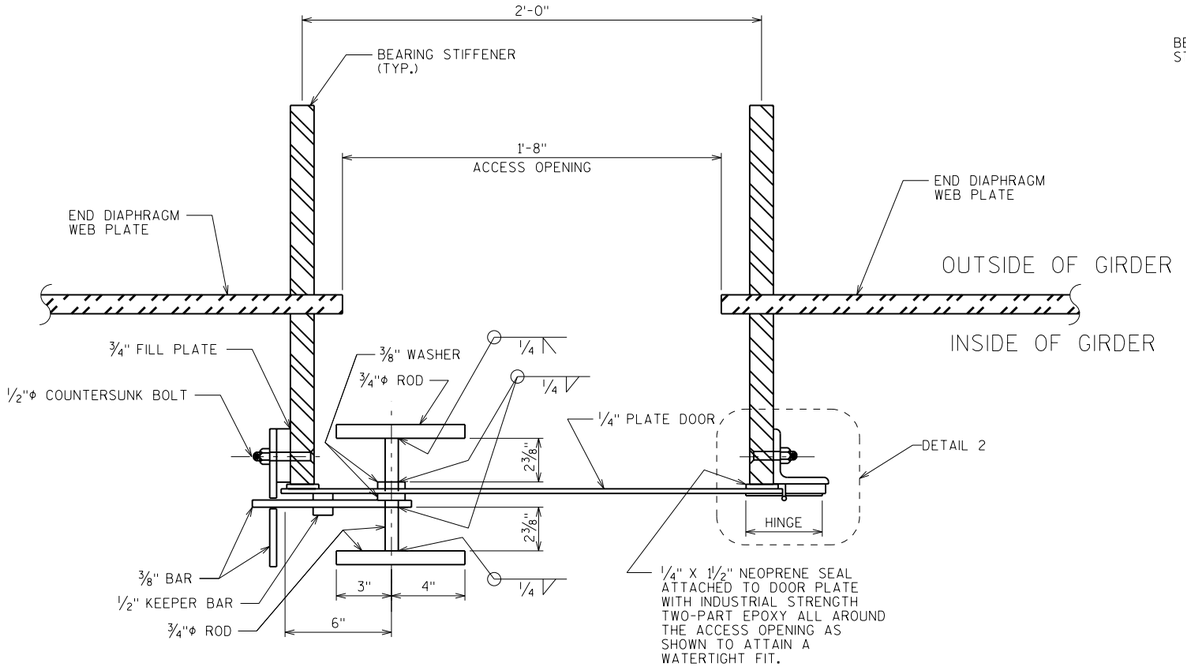

SECTION A-A

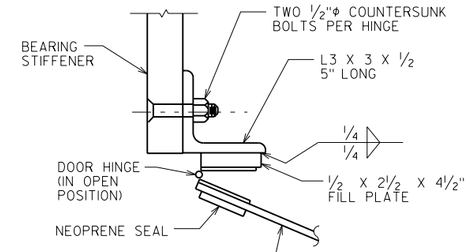

DETAIL 2

(WITH DOOR OPEN)

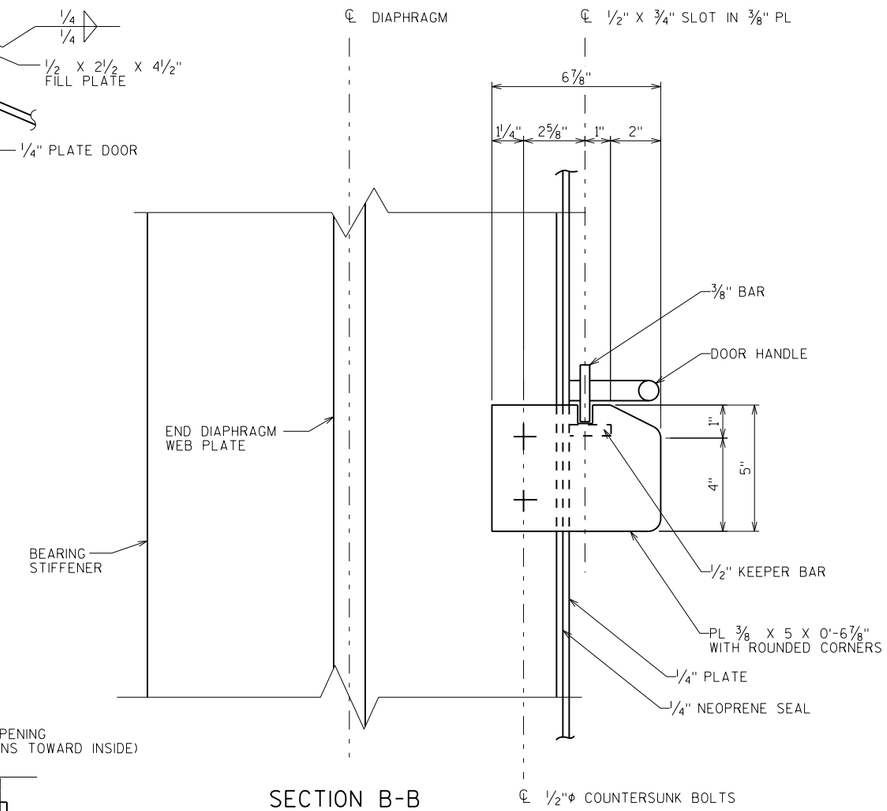

SECTION B-B

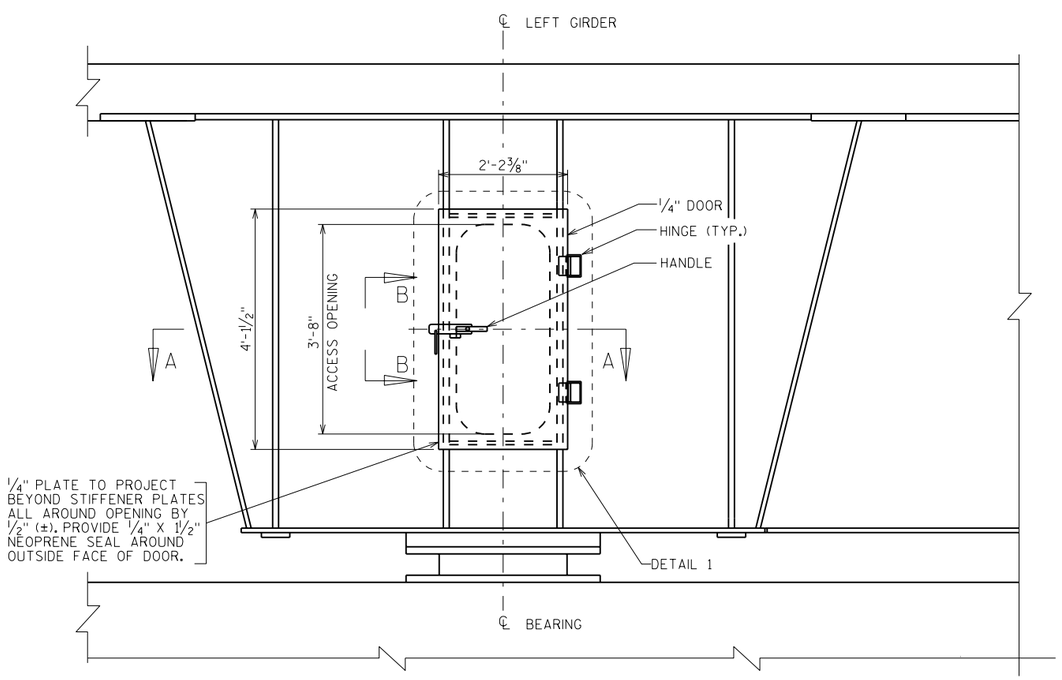

ELEVATION

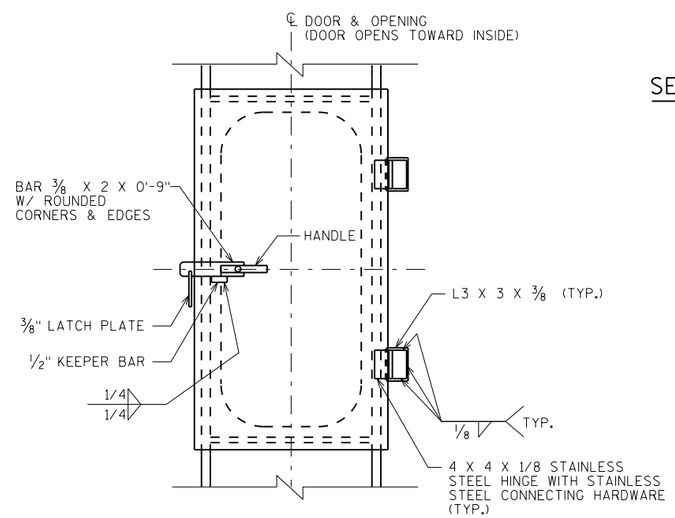

DETAIL 1

NOTES:

8 DOORS TOTAL REQUIRED:
4 AT PIER 14
4 AT PIER 18

DOORS OPEN TOWARDS THE INSIDE OF THE BOX GIRDERS.

THE COST OF ACCESS DOOR AND ITS ATTACHMENT IS INCLUDED IN THE COST OF "FABRICATED STRUCTURAL STEEL HS B-5-678".

STEEL FABRICATION CONTRACT ONLY

NO.	DATE	REVISION	BY

STATE OF WISCONSIN
DEPARTMENT OF TRANSPORTATION
STRUCTURES DESIGN SECTION

STRUCTURE B-5-678

DRAWN BY ZMG | PLANS CK'D. NPP

ACCESS DOOR DETAILS

SHEET 47 OF 63

8

8

FILE= O:\WisDot_12345678_US41Bridges_Plans\B-05-678E\047-B-05-678E_Access Door Details.dgn

DATE: 7/19/2012

I.D.

STATE PROJECT NUMBER

1133-11-76

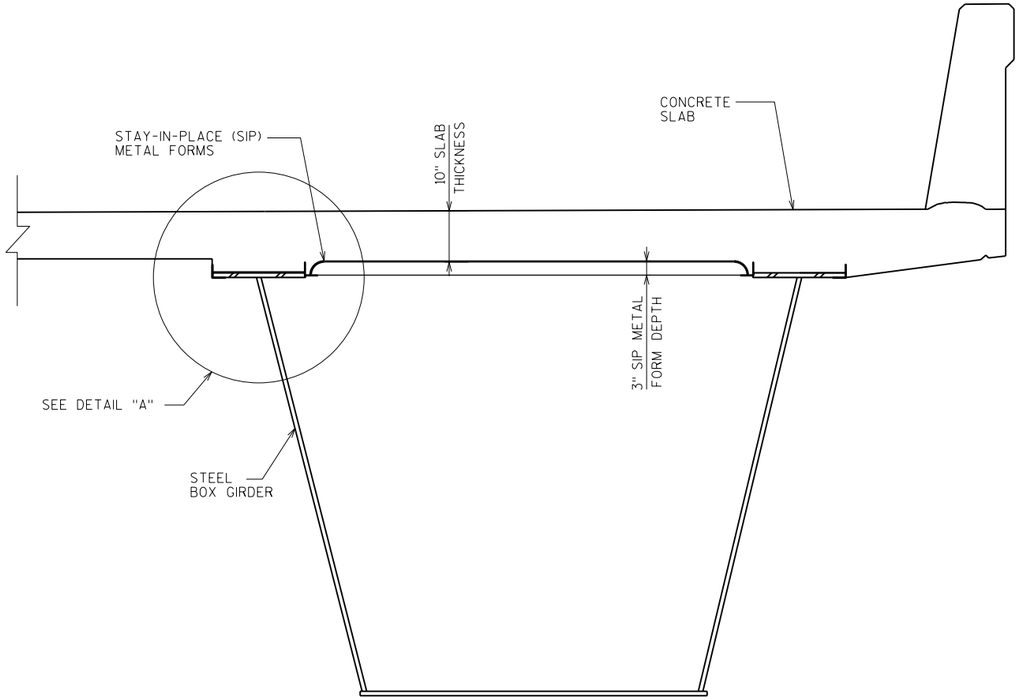

PARTIAL SECTION THROUGH SUPERSTRUCTURE

(SHOWING TYPICAL DETAILS AND NOTES FOR SIP METAL FORMS)

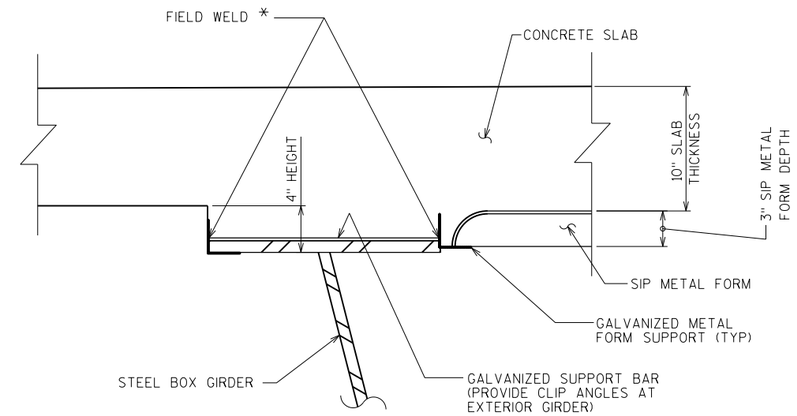

DETAIL "A"

* DO NOT WELD TO NOR PERMIT WELD SPATTER ON SUPPORTING STEEL GIRDER, DIAPHRAGMS, BRACING ETC. ELECTRICAL GROUNDING TO STRUCTURAL STEEL IS PROHIBITED. SEE SPECIFICATIONS FOR FIELD WELDING OF SIP FORMS IN PLACE AND PAINTING OF THE TOP FLANGE.

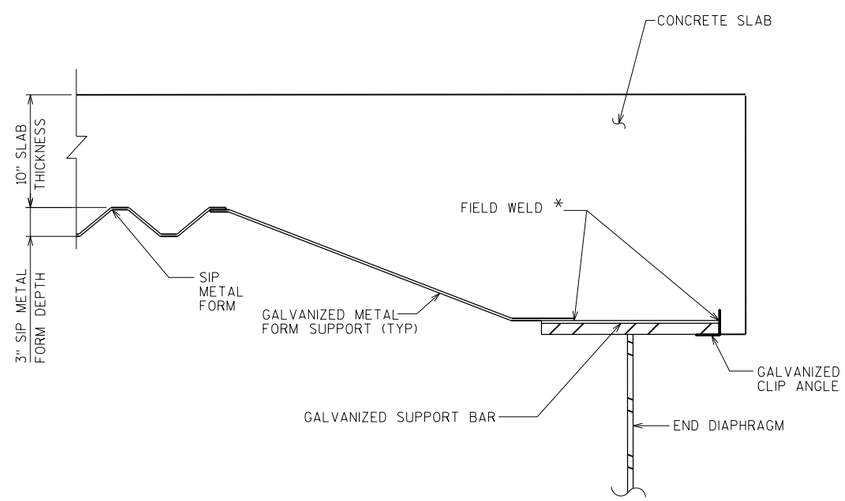

PARTIAL SECTION THROUGH END OF SPAN

(INTERIOR OF BOXES ONLY)

NOTES:

STAY-IN-PLACE (SIP) FORM DETAILS ARE SHOWN FOR REFERENCE ONLY. SIP FORMS, GALVANIZED SUPPORT BARS, FORM SUPPORTS, AND CLIP ANGLES ARE NOT FURNISHED AS PART OF THIS CONTRACT.

STEEL FABRICATION CONTRACT ONLY

NO.	DATE	REVISION	BY

STATE OF WISCONSIN
DEPARTMENT OF TRANSPORTATION
STRUCTURES DESIGN SECTION

STRUCTURE B-5-678

DRAWN BY ZMG | PLANS CK'D. NPP

SUPERSTRUCTURE DETAILS

SHEET 48 OF 63

8

8

FILE= O:\WisDot_12345678_US41Bridges_Plans\B-05-678E\048-B-05-678E_SUPERSTRUCTURE DETAILS.dgn

DATE: 7/19/2012
I.D.

STATE PROJECT NUMBER
1133-11-76

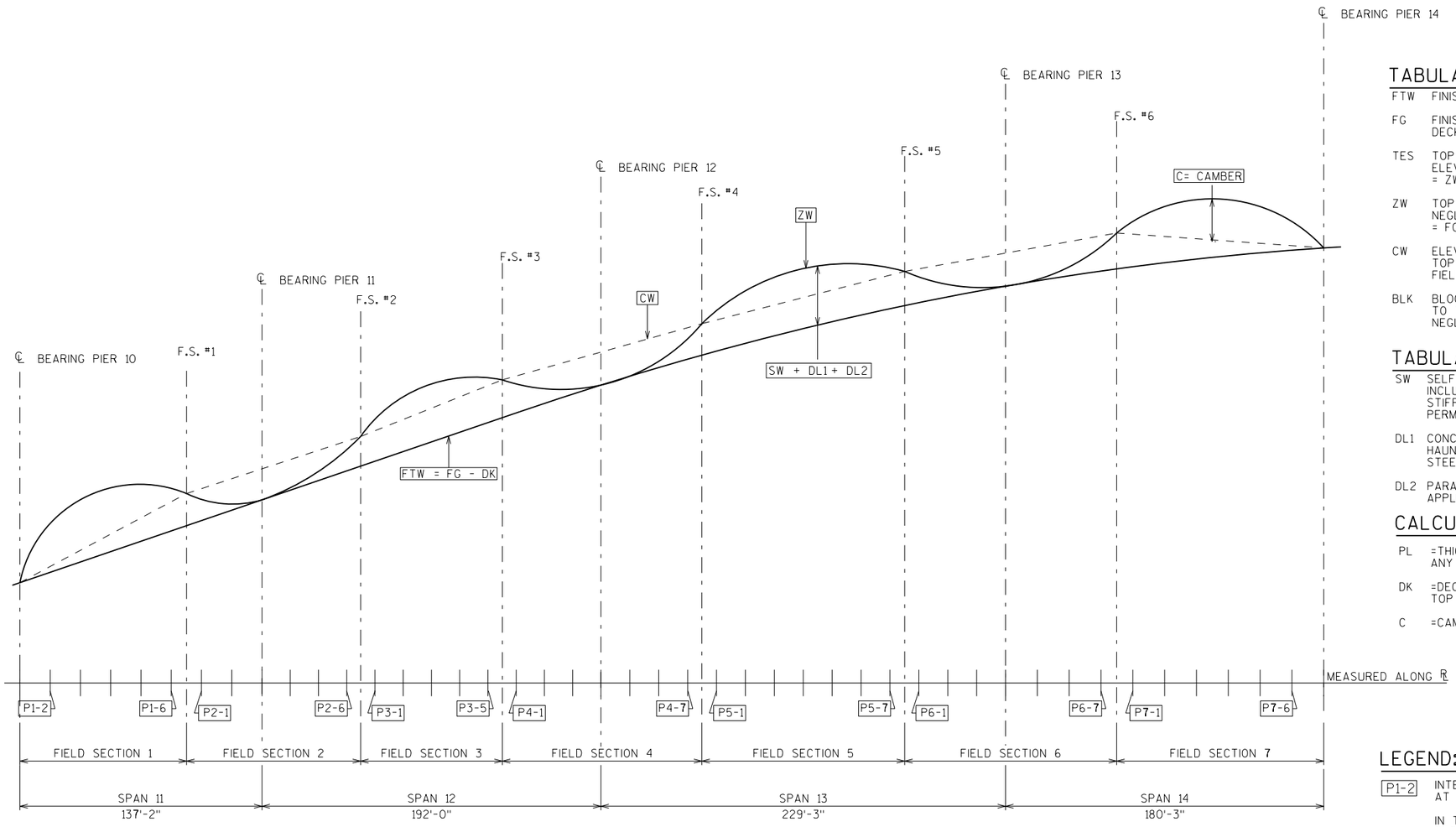

CAMBER & BLOCKING DIAGRAM

TABULATED ELEVATIONS

FTW FINISHED ELEVATION AT TOP OF WEB.

FG FINISHED ELEVATION AT TOP OF DECK SLAB.

TES TOP OF ERECTED STEEL ELEVATION. = ZW + PL - SW

ZW TOP OF ERECTED WEB ELEVATION NEGLECTING ALL DEFLECTIONS = FG + SW + DL1 + DL2 - DK

CW ELEVATION OF CHORD LINES JOINING TOP OF WEB ELEVATION 'ZW' AT FIELD SPLICES AND END SUPPORTS.

BLK BLOCKING HEIGHT CORRESPONDING TO THE ERECTED STEEL CONDITION NEGLECTING ALL DEFLECTIONS.

TABULATED DEFLECTIONS

SW SELF -WEIGHT OF STEEL GIRDERS, INCLUDING ALL DIAPHRAGMS, STIFFENERS, BRACING, AND PERMANENT METAL FORMS.

DL1 CONCRETE DECK SLAB AND HAUNCHES APPLIED TO BARE STEEL SECTION.

DL2 PARAPETS AND WEARING SURFACE APPLIED TO COMPOSITE SECTION.

CALCULATED VALUES

PL =THICKNESS OF TOP FLANGE PLUS ANY FILLER AND SPLICE PLATES

DK =DECK ASSEMBLY THICKNESS FROM TOP OF WEB TO FINISHED GRADE

C =CAMBER= ZW - CW

NOTES:

POSITIVE DEFLECTIONS ARE DOWNWARD.

POSITIVE CAMBER IS UPWARD RELATIVE TO A CHORD LINE JOINING THE FIELD SECTION ENDPOINTS.

TES ELEVATIONS ARE TO TOP OF STEEL (SPLICE AND COVER PLATE THICKNESS, IF APPLICABLE, ARE ACCOUNTED FOR) AND THEY ARE FOR THE MATERIAL AS ERECTED. THE ELEVATION OF THE TOP STEEL AT THE FIELD SPLICE POINTS SHALL BE CHECKED, AND CORRECTED, IF POSSIBLE, AFTER ERECTION AND BEFORE PERMANENTLY BOLTING THE DIAPHRAGMS IN PLACE.

BECAUSE VERTICAL PROFILE AND DEFLECTIONS ARE EXAGGERATED TO DIFFERENT DEGREES, THE CAMBERS SHOWN ON THIS DIAGRAM ARE SCHEMATIC ONLY.

SPECIFICALLY COMPARING RELATIVE CAMBER MAGNITUDES BETWEEN FIELD SECTIONS MAY BE MISLEADING.

CAMBERS ACCOUNT FOR PERMANENT FORMWORK WEIGHT OF 10.0 PSF INSIDE EACH GIRDER PLUS 13.5 PSF FOR ADDITIONAL CONCRETE IN RIBS OF PERMANENT FORMWORK. THE CONTRACTOR MAY NEED TO REVISE THE CAMBERS IF THE PERMANENT FORMWORK IS USED DIFFERS FROM THAT SHOWN ON THE PLANS.

ALL TABULATED VALUES ARE IN DECIMALS OF A FOOT.

TOP OF ERECTED STEEL ELEVATIONS AT SUPPORTS AND FIELD SPLICES SHALL BE AFTER ERECTION IS COMPLETE AND BEFORE BOLTED CONNECTIONS ARE FINALLY TORQUED.

IF SURVEYED ELEVATIONS DIFFER FROM THOSE EXPECTED BY MORE THAN 0.02 FT (1/4") AT SUPPORTS OR 0.083 FT (1") AT FIELD SPLICES, CORRECTIVE MEASURES SHALL BE TAKEN BEFORE FURTHER CONSTRUCTION OPERATIONS MAY PROCEED.

CAMBER DIAGRAMS HAVE BEEN DEVELOPED ASSUMING A CONSTANT 4" DIMENSION, MEASURED FROM THE UNDERSIDE OF THE TOP FLANGE (TOP OF WEB) TO THE UNDERSIDE OF THE DECK (TOP OF STAY-IN-PLACE METAL FORMS).

LEGEND:

P1-2 INTERMEDIATE ELEVATION POINT AT PANEL POINTS.

IN THIS EXAMPLE, '1' IS THE FIELD SECTION NUMBER AND '2' IS THE PANEL NUMBER WITHIN THIS FIELD SECTION.

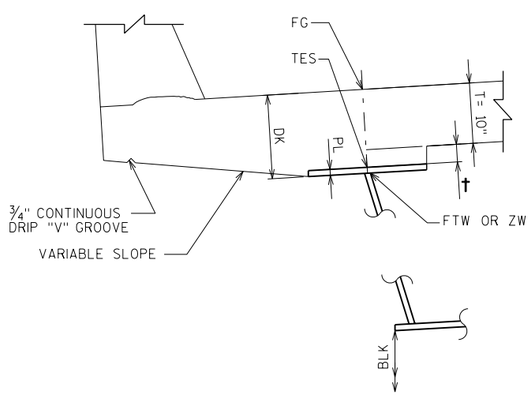

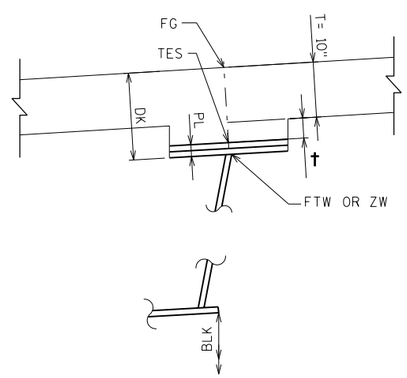

HAUNCH NOTE:

† = HAUNCH HEIGHT AT CENTERLINE OF WEB.

TO DETERMINE "†" AFTER ALL STRUCTURAL STEEL HAS BEEN ERECTED, ELEVATIONS OF THE TOP FLANGES, TOP OF SPLICE PLATES, OR TOP OF COVER PLATES, WHICHEVER APPLIES, SHALL BE TAKEN.

TOP OF DECK ELEV. AT FINAL GRADE

\- TOP OF STEEL ELEV. AFTER PLACEMENT

\+ CONC. ONLY DEFLECTIONS (DOWNWARD DEFLECTION IS POSITIVE, UPWARD DEFLECTION IS NEGATIVE.)

\- SLAB THICKNESS (10")

= "†" VALUE FOR SETTING HAUNCH

STEEL FABRICATION CONTRACT ONLY

NO.	DATE	REVISION	BY

STATE OF WISCONSIN
DEPARTMENT OF TRANSPORTATION
STRUCTURES DESIGN SECTION

STRUCTURE B-5-678

DRAWN BY SOI | PLANS CK'D. NPP

CAMBER DIAGRAM UNIT 3

SHEET 49 OF 63

FILE= Q:\WisDot_12345678_US41Bridges_Plans\B-05-678E\049-B-05-678E_CAMBER DIAGRAM UNIT 3.dgn

DATE: 7/19/2012
I.D.

8

8

STATE PROJECT NUMBER

1133-11-76

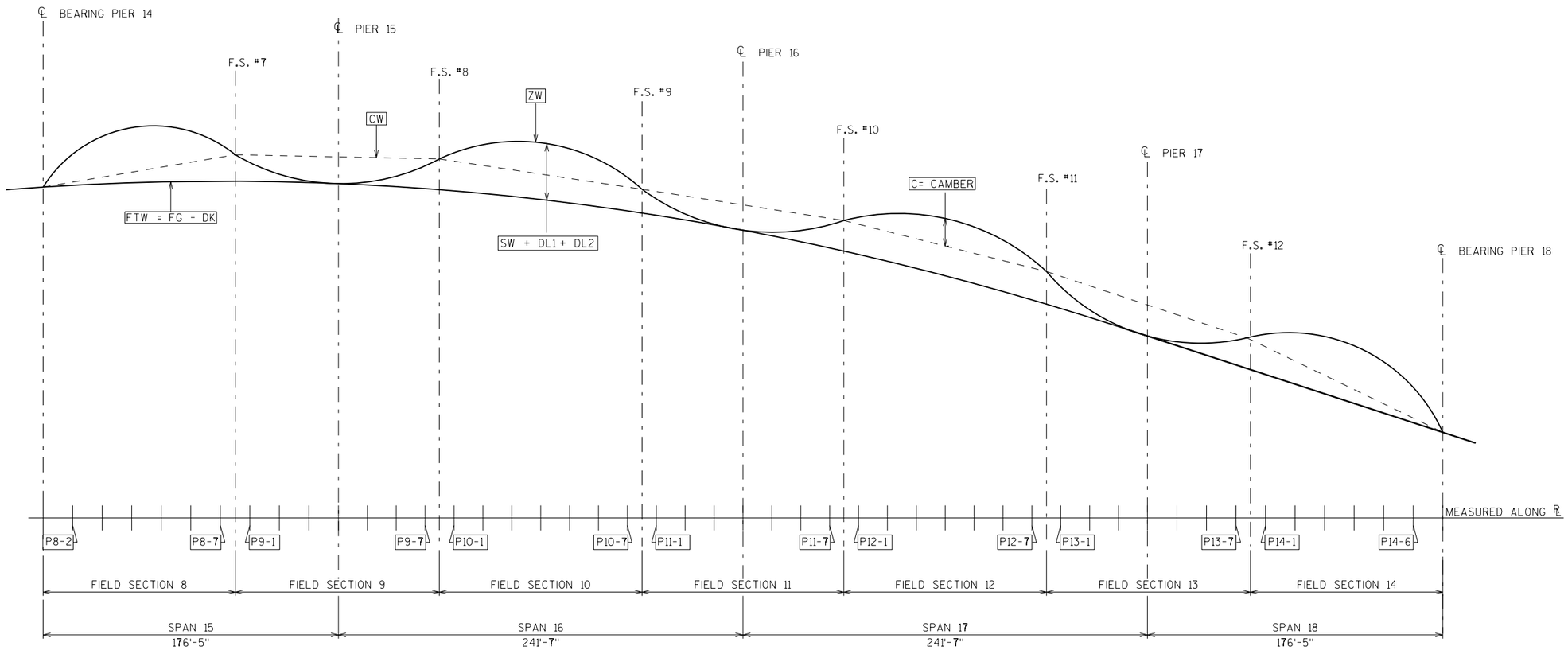

CAMBER & BLOCKING DIAGRAM

8

LEGEND:

FOR LEGEND SEE CAMBER DIAGRAM UNIT 3 SHEET.

NOTES:

FOR NOTES SEE CAMBER DIAGRAM UNIT 3 SHEET

HAUNCH NOTES:

FOR HAUNCH NOTES SEE CAMBER DIAGRAM UNIT 3 SHEET.

STEEL FABRICATION CONTRACT ONLY

NO.	DATE	REVISION	BY

STATE OF WISCONSIN
DEPARTMENT OF TRANSPORTATION
STRUCTURES DESIGN SECTION

STRUCTURE B-5-678

DRAWN BY SOI | PLANS CK'D. NPP

CAMBER DIAGRAM UNIT 4

SHEET 50 OF 63

FILE= O:\WisDot_12345678_US41Bridges_Plans\B-05-678E\050-B-05-678E_CAMBER DIAGRAM UNIT 4.dgn

DATE: 7/19/2012

I.D.

8

STATE PROJECT NUMBER

1133-11-76

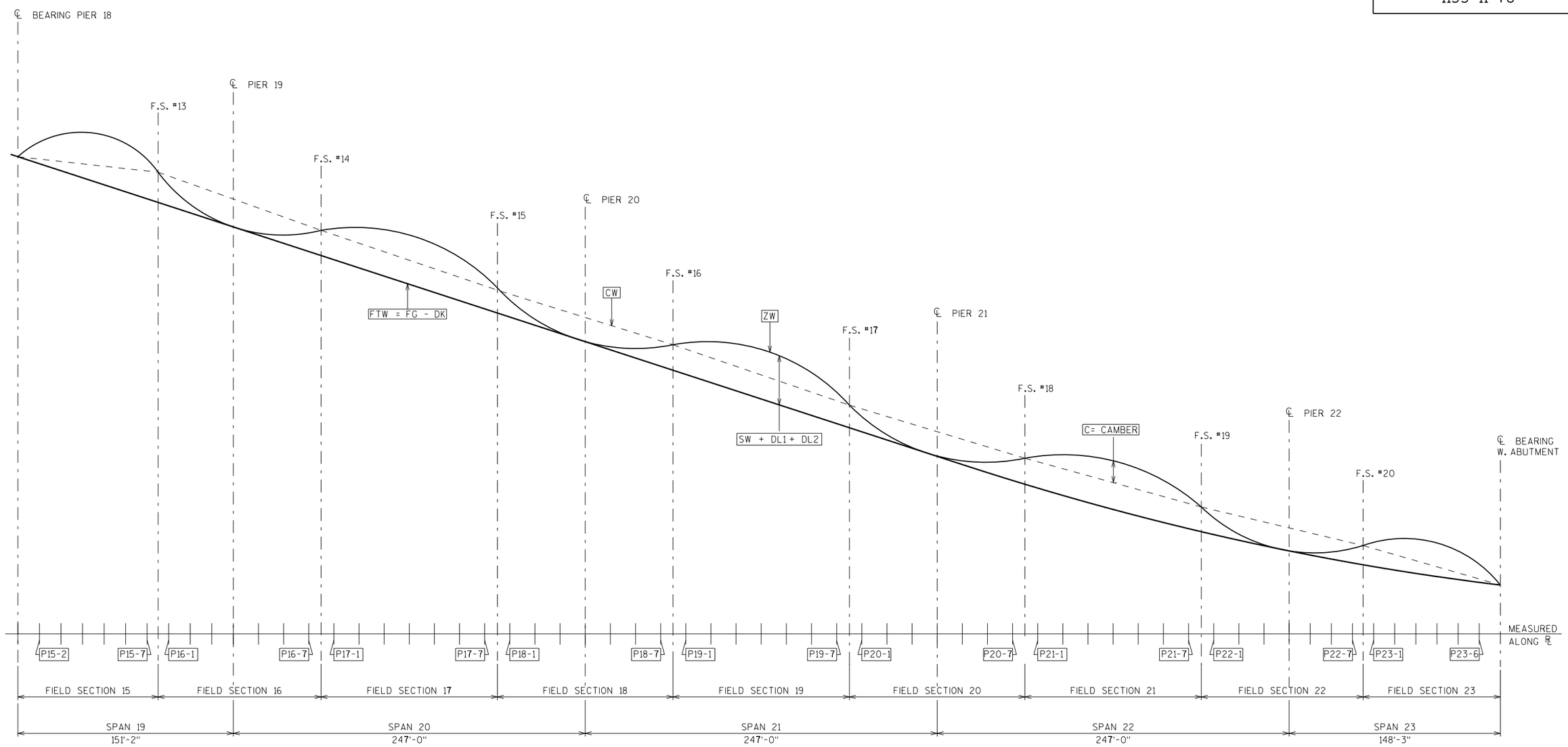

CAMBER & BLOCKING DIAGRAM

8

LEGEND:

FOR LEGEND SEE CAMBER DIAGRAM UNIT 3 SHEET.

NOTES:

FOR NOTES SEE CAMBER DIAGRAM UNIT 3 SHEET

HAUNCH NOTES:

FOR HAUNCH NOTES SEE CAMBER DIAGRAM UNIT 3 SHEET.

STEEL FABRICATION CONTRACT ONLY

NO.	DATE	REVISION	BY

STATE OF WISCONSIN
DEPARTMENT OF TRANSPORTATION
STRUCTURES DESIGN SECTION

STRUCTURE B-5-678

DRAWN BY SOI | PLANS CK'D. NPP

CAMBER DIAGRAM
UNIT 5

SHEET 51 OF 63

FILE= Q:\WisDot_12345678_US41Bridges_Plans\B-05-678E\051-B-05-678E_CAMBER DIAGRAM UNIT 5.dgn

DATE: 7/19/2012
I.D.

8

STATE PROJECT NUMBER

1133-11-76

FIELD SECTION 1

HORIZ. LOC.	VALUE	POSITION AND STATION						
		PIER 10 1190+29.58	P1-2 1190+46.73	P1-3 1190+63.87	P1-4 1190+81.02	P1-5 1190+98.16	P1-6 1191+15.31	FS #1 1191+23.88
CAMBER DATA								
1	FG	639.42	639.96	640.51	641.05	641.60	642.16	642.45
	TES	638.33	638.92	639.49	640.05	640.59	641.14	641.46
LEFT GIRDER	ZW	638.25	638.85	639.43	640.00	640.54	641.07	641.35
	CW	638.25	638.81	639.38	639.94	640.50	641.07	641.35
	SW	0.00	0.01	0.02	0.03	0.03	0.02	0.02
LEFT WEB	DL1	0.00	0.04	0.07	0.08	0.07	0.06	0.04
	DL2	0.00	0.00	0.01	0.01	0.01	0.00	0.00
	C	0.00	0.03	0.06	0.06	0.03	0.01	0.00
2	FG	639.92	640.52	641.12	641.72	642.32	642.91	643.20
	TES	638.84	639.48	640.11	640.72	641.31	641.89	642.21
LEFT GIRDER	ZW	638.76	639.41	640.05	640.67	641.26	641.83	642.10
	CW	638.76	639.36	639.97	640.58	641.19	641.80	642.10
	SW	0.00	0.01	0.03	0.03	0.03	0.02	0.02
RIGHT WEB	DL1	0.00	0.04	0.07	0.08	0.08	0.06	0.05
	DL2	0.00	0.00	0.01	0.01	0.01	0.00	0.00
	C	0.00	0.04	0.08	0.09	0.07	0.03	0.00
3	FG	640.43	641.08	641.73	642.38	643.03	643.66	643.95
	TES	639.34	640.04	640.72	641.39	642.04	642.64	642.96
RIGHT GIRDER	ZW	639.26	639.97	640.67	641.34	641.98	642.58	642.85
	CW	639.26	639.91	640.57	641.22	641.87	642.53	642.85
	SW	0.00	0.01	0.03	0.03	0.03	0.02	0.02
LEFT WEB	DL1	0.00	0.04	0.07	0.08	0.08	0.06	0.05
	DL2	0.00	0.00	0.01	0.01	0.01	0.00	0.00
	C	0.00	0.05	0.10	0.12	0.11	0.05	0.00
4	FG	640.93	641.64	642.34	643.05	643.75	644.41	644.70
	TES	639.85	640.60	641.34	642.06	642.76	643.39	643.71
RIGHT GIRDER	ZW	639.77	640.53	641.28	642.01	642.71	643.33	643.61
	CW	639.77	640.46	641.16	641.86	642.56	643.26	643.61
	SW	0.00	0.01	0.03	0.03	0.03	0.02	0.02
RIGHT WEB	DL1	0.00	0.04	0.07	0.08	0.08	0.06	0.05
	DL2	0.00	0.00	0.01	0.01	0.01	0.00	0.00
	C	0.00	0.07	0.12	0.14	0.15	0.08	0.00
BLOCKING HEIGHTS								
5	BLK	0.00						3.10
6		0.36						3.71
7		1.01						4.60
8		1.37						5.21

FIELD SECTION 2

HORIZ. LOC.	VALUE	POSITION AND STATION						
		FS #1 1191+23.88	P2-1 1191+32.46	P2-2 1191+49.60	PIER 11 1191+66.75	P2-4 1191+82.75	P2-5 1191+98.75	FS #2 1192+06.75
CAMBER DATA								
1	FG	642.45	642.74	643.33	643.92	644.46	645.01	645.29
	TES	641.46	641.69	642.26	642.86	643.42	643.98	644.31
LEFT GIRDER	ZW	641.35	641.62	642.18	642.75	643.32	643.91	644.20
	CW	641.35	641.64	642.24	642.83	643.38	643.93	644.20
	SW	0.02	0.01	0.00	0.00	0.01	0.01	0.02
LEFT WEB	DL1	0.04	0.03	0.01	0.00	0.02	0.04	0.06
	DL2	0.00	0.00	0.00	0.00	0.00	0.01	0.01
	C	0.00	-0.02	-0.06	-0.07	-0.06	-0.02	0.00
2	FG	643.20	643.49	644.08	644.67	645.21	645.76	646.04
	TES	642.21	642.45	643.01	643.61	644.17	644.73	645.06
LEFT GIRDER	ZW	642.10	642.38	642.93	643.50	644.07	644.66	644.96
	CW	642.10	642.40	642.99	643.58	644.13	644.68	644.96
	SW	0.02	0.01	0.00	0.00	0.01	0.01	0.02
RIGHT WEB	DL1	0.05	0.03	0.01	0.00	0.02	0.04	0.06
	DL2	0.00	0.00	0.00	0.00	0.00	0.01	0.01
	C	0.00	-0.02	-0.06	-0.08	-0.06	-0.02	0.00
3	FG	643.95	644.24	644.83	645.42	645.96	646.51	646.79
	TES	642.96	643.20	643.76	644.36	644.92	645.48	645.81
RIGHT GIRDER	ZW	642.85	643.13	643.68	644.25	644.82	645.41	645.71
	CW	642.85	643.15	643.74	644.33	644.88	645.43	645.71
	SW	0.02	0.01	0.00	0.00	0.01	0.01	0.02
LEFT WEB	DL1	0.05	0.03	0.01	0.00	0.02	0.05	0.06
	DL2	0.00	0.00	0.00	0.00	0.00	0.01	0.01
	C	0.00	-0.02	-0.06	-0.08	-0.06	-0.02	0.00
4	FG	644.70	644.99	645.58	646.17	646.71	647.26	647.54
	TES	643.71	643.95	644.51	645.11	645.67	646.23	646.57
RIGHT GIRDER	ZW	643.61	643.88	644.43	645.00	645.57	646.16	646.46
	CW	643.61	643.90	644.49	645.08	645.63	646.19	646.46
	SW	0.02	0.01	0.00	0.00	0.01	0.02	0.02
RIGHT WEB	DL1	0.05	0.03	0.01	0.00	0.02	0.05	0.06
	DL2	0.00	0.00	0.00	0.00	0.00	0.01	0.01
	C	0.00	-0.02	-0.06	-0.08	-0.06	-0.02	0.00
BLOCKING HEIGHTS								
5	BLK	3.10			4.50			5.95
6		3.71			5.11			6.56
7		4.60			6.00			7.46
8		5.21			6.61			8.07

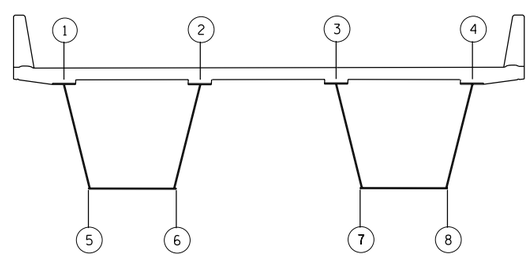

HORIZONTAL LOCATION KEY

LOOKING UPSTATION

STEEL FABRICATION CONTRACT ONLY

LEGEND:

FOR LEGEND SEE CAMBER DIAGRAM UNIT 1

NOTES:

FOR NOTES SEE CAMBER DIAGRAM UNIT 1

NO.	DATE	REVISION	BY

STATE OF WISCONSIN
DEPARTMENT OF TRANSPORTATION
STRUCTURES DESIGN SECTION

STRUCTURE B-5-678

DRAWN BY STB | PLANS CK'D. NPP

CAMBER DATA: FIELD SECTIONS 1 AND 2

SHEET 52 OF 63

56

FILE= O:\WisDot_12345678_US41Bridges_Plans\B-05-678E\052 B-05-678E-CAMBER DATA FS 1 AND 2.dgn

DATE: 7/19/2012

I.D.

8

8

STATE PROJECT NUMBER

1133-11-76

FIELD SECTION 3

HORIZ. LOC.	VALUE	POSITION AND STATION							
		FS #2	P3-1	P3-2	P3-3	P3-4	P3-5	P3-6	FS #3
		1192+06.75	1192+14.75	1192+30.75	1192+46.75	1192+62.75	1192+78.75	1192+94.75	1193+02.75
CAMBER DATA									
1	FG	645.29	645.56	646.11	646.65	647.20	647.75	648.30	648.57
	TES	644.31	644.56	645.13	645.70	646.24	646.77	647.29	647.61
LEFT GIRDER	ZW	644.20	644.50	645.08	645.65	646.20	646.72	647.23	647.48
	CW	644.20	644.48	645.02	645.57	646.12	646.66	647.21	647.48
	SW	0.02	0.02	0.03	0.04	0.04	0.03	0.02	0.02
LEFT WEB	DL1	0.06	0.07	0.10	0.11	0.11	0.10	0.07	0.05
	DL2	0.01	0.01	0.01	0.01	0.01	0.01	0.01	0.01
	C	0.00	0.02	0.06	0.08	0.08	0.06	0.02	0.00
2	FG	646.04	646.31	646.86	647.40	647.95	648.50	649.05	649.32
	TES	645.06	645.31	645.89	646.45	647.00	647.53	648.04	648.36
LEFT GIRDER	ZW	644.96	645.25	645.84	646.40	646.95	647.47	647.98	648.23
	CW	644.96	645.23	645.78	646.32	646.87	647.41	647.96	648.23
	SW	0.02	0.03	0.03	0.04	0.04	0.03	0.02	0.02
RIGHT WEB	DL1	0.06	0.08	0.10	0.12	0.12	0.10	0.07	0.06
	DL2	0.01	0.01	0.01	0.01	0.01	0.01	0.01	0.01
	C	0.00	0.02	0.06	0.08	0.08	0.06	0.02	0.00
3	FG	646.79	647.06	647.61	648.15	648.70	649.25	649.80	650.07
	TES	645.81	646.06	646.64	647.20	647.75	648.28	648.80	649.11
RIGHT GIRDER	ZW	645.71	646.01	646.59	647.16	647.71	648.23	648.74	648.99
	CW	645.71	645.98	646.53	647.07	647.62	648.17	648.71	648.99
	SW	0.02	0.03	0.03	0.04	0.04	0.03	0.02	0.02
LEFT WEB	DL1	0.06	0.08	0.11	0.12	0.12	0.10	0.07	0.06
	DL2	0.01	0.01	0.01	0.01	0.01	0.01	0.01	0.01
	C	0.00	0.02	0.06	0.08	0.09	0.06	0.02	0.00
4	FG	647.54	647.81	648.36	648.90	649.45	650.00	650.55	650.82
	TES	646.57	646.82	647.39	647.96	648.51	649.03	649.55	649.87
RIGHT GIRDER	ZW	646.46	646.76	647.35	647.91	648.46	648.98	649.49	649.74
	CW	646.46	646.74	647.28	647.83	648.37	648.92	649.46	649.74
	SW	0.02	0.03	0.04	0.04	0.04	0.03	0.02	0.02
RIGHT WEB	DL1	0.06	0.08	0.11	0.12	0.12	0.11	0.08	0.06
	DL2	0.01	0.01	0.01	0.01	0.01	0.01	0.01	0.01
	C	0.00	0.03	0.07	0.09	0.09	0.06	0.02	0.00
BLOCKING HEIGHTS									
5	BLK	5.95							9.23
6		6.56							9.84
7		7.46							10.73
8		8.07							11.34

FIELD SECTION 4

HORIZ. LOC.	VALUE	POSITION AND STATION								
		FS #3	P4-1	P4-2	P4-3	PIER 12	P4-5	P4-6	P4-7	FS #4
		1193+02.75	1193+10.75	1193+26.75	1193+42.75	1193+58.75	1193+75.12	1193+91.50	1194+07.87	1194+16.06
CAMBER DATA										
1	FG	648.57	648.84	649.39	649.94	650.48	651.04	651.60	652.16	652.44
	TES	647.61	647.82	648.34	648.95	649.51	650.11	650.64	651.27	651.63
LEFT GIRDER	ZW	647.48	647.73	648.24	648.76	649.32	649.93	650.57	651.22	651.55
	CW	647.48	647.77	648.34	648.92	649.49	650.08	650.67	651.25	651.55
	SW	0.02	0.01	0.00	0.00	0.00	0.01	0.03	0.06	0.07
LEFT WEB	DL1	0.05	0.04	0.01	-0.01	0.00	0.04	0.09	0.15	0.18
	DL2	0.01	0.01	0.00	0.00	0.00	0.00	0.01	0.02	0.02
	C	0.00	-0.04	-0.11	-0.16	-0.17	-0.15	-0.10	-0.03	0.00
2	FG	649.32	649.59	650.14	650.69	651.23	651.79	652.35	652.91	653.19
	TES	648.36	648.57	649.09	649.70	650.25	650.86	651.39	652.03	652.38
LEFT GIRDER	ZW	648.23	648.48	648.99	649.51	650.07	650.68	651.32	651.98	652.31
	CW	648.23	648.52	649.10	649.67	650.25	650.83	651.42	652.01	652.31
	SW	0.02	0.01	0.00	0.00	0.00	0.01	0.03	0.06	0.07
RIGHT WEB	DL1	0.06	0.04	0.01	-0.01	0.00	0.04	0.09	0.16	0.19
	DL2	0.01	0.01	0.00	0.00	0.00	0.00	0.01	0.02	0.02
	C	0.00	-0.04	-0.11	-0.16	-0.18	-0.15	-0.10	-0.03	0.00
3	FG	650.07	650.34	650.89	651.44	651.98	652.54	653.10	653.66	653.94
	TES	649.11	649.33	649.84	650.45	651.01	651.61	652.15	652.78	653.14
RIGHT GIRDER	ZW	648.99	649.23	649.74	650.26	650.82	651.43	652.08	652.74	653.07
	CW	648.99	649.27	649.85	650.43	651.00	651.59	652.18	652.77	653.07
	SW	0.02	0.01	0.00	0.00	0.00	0.01	0.04	0.06	0.07
LEFT WEB	DL1	0.06	0.04	0.01	-0.01	0.00	0.04	0.10	0.16	0.19
	DL2	0.01	0.01	0.00	0.00	0.00	0.00	0.01	0.02	0.02
	C	0.00	-0.04	-0.11	-0.16	-0.18	-0.16	-0.10	-0.03	0.00
4	FG	650.82	651.09	651.64	652.19	652.73	653.29	653.85	654.41	654.69
	TES	649.87	650.08	650.59	651.20	651.75	652.36	652.90	653.54	653.90
RIGHT GIRDER	ZW	649.74	649.99	650.49	651.01	651.57	652.19	652.83	653.49	653.82
	CW	649.74	650.03	650.60	651.18	651.76	652.35	652.94	653.53	653.82
	SW	0.02	0.01	0.00	0.00	0.00	0.02	0.04	0.06	0.07
RIGHT WEB	DL1	0.06	0.04	0.01	-0.01	0.00	0.04	0.10	0.17	0.20
	DL2	0.01	0.01	0.00	0.00	0.00	0.00	0.01	0.02	0.02
	C	0.00	-0.04	-0.12	-0.17	-0.19	-0.16	-0.11	-0.03	0.00
BLOCKING HEIGHTS										
5	BLK	9.23				11.07				13.30
6		9.84				11.67				13.91
7		10.73				12.57				14.81
8		11.34				13.17				15.43

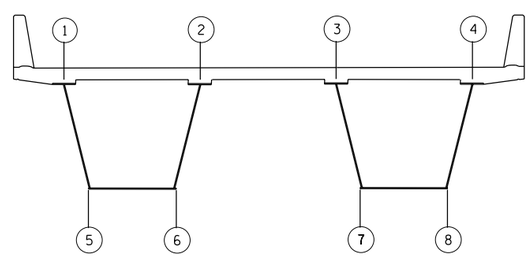

HORIZONTAL LOCATION KEY

LOOKING UPSTATION

LEGEND:

FOR LEGEND SEE CAMBER DIAGRAM UNIT 1

NOTES:

FOR NOTES SEE CAMBER DIAGRAM UNIT 1

STEEL FABRICATION CONTRACT ONLY

NO.	DATE	REVISION	BY

STATE OF WISCONSIN
DEPARTMENT OF TRANSPORTATION
STRUCTURES DESIGN SECTION

STRUCTURE B-5-678

DRAWN BY STB | PLANS CK'D. NPP

CAMBER DATA: FIELD SECTIONS 3 AND 4

SHEET 53 OF 63

57

FILE= O:\WisDot_12345678_US41Bridges_Plans\B-05-678E\053 B-05-678E-CAMBER DATA FS 3 AND 4.dgn

DATE: 7/19/2012
I.D.

8

8

STATE PROJECT NUMBER

1133-11-76

FIELD SECTION 5

HORIZ. LOC.	VALUE	POSITION AND STATION								
		FS #4	P5-1	P5-2	P5-3	P5-4	P5-5	P5-6	P5-7	FS #5
		1194+16.06	1194+24.25	1194+40.62	1194+57.00	1194+73.37	1194+89.75	1195+06.12	1195+22.50	1195+30.68
CAMBER DATA										
1	FG	652.44	652.72	653.28	653.84	654.39	654.92	655.43	655.93	656.17
	TES	651.63	651.88	652.50	653.09	653.64	654.15	654.62	655.05	655.35
LEFT GIRDER	ZW	651.55	651.87	652.51	653.11	653.67	654.17	654.62	655.04	655.24
	CW	651.55	651.81	652.34	652.87	653.39	653.92	654.45	654.97	655.24
	SW	0.07	0.08	0.10	0.11	0.11	0.10	0.09	0.07	0.06
LEFT WEB	DL1	0.18	0.21	0.27	0.30	0.30	0.28	0.25	0.19	0.16
	DL2	0.02	0.02	0.03	0.03	0.03	0.03	0.03	0.02	0.02
	C	0.00	0.06	0.17	0.25	0.28	0.25	0.18	0.07	0.00
2	FG	653.19	653.47	654.03	654.59	655.14	655.67	656.18	656.68	656.92
	TES	652.38	652.64	653.26	653.85	654.40	654.91	655.38	655.81	656.10
LEFT GIRDER	ZW	652.31	652.63	653.27	653.88	654.43	654.93	655.39	655.80	655.99
	CW	652.31	652.57	653.10	653.62	654.15	654.68	655.20	655.73	655.99
	SW	0.07	0.08	0.10	0.11	0.11	0.11	0.09	0.07	0.06
RIGHT WEB	DL1	0.19	0.22	0.27	0.31	0.31	0.29	0.25	0.19	0.16
	DL2	0.02	0.02	0.03	0.03	0.04	0.03	0.03	0.02	0.02
	C	0.00	0.06	0.18	0.25	0.28	0.26	0.18	0.07	0.00
3	FG	653.94	654.22	654.78	655.34	655.89	656.42	656.93	657.43	657.67
	TES	653.14	653.39	654.01	654.61	655.16	655.67	656.14	656.57	656.86
RIGHT GIRDER	ZW	653.07	653.39	654.03	654.64	655.20	655.70	656.15	656.56	656.75
	CW	653.07	653.33	653.85	654.38	654.91	655.43	655.96	656.49	656.75
	SW	0.07	0.08	0.10	0.11	0.12	0.11	0.09	0.07	0.06
LEFT WEB	DL1	0.19	0.23	0.28	0.31	0.32	0.30	0.26	0.20	0.17
	DL2	0.02	0.03	0.03	0.04	0.04	0.03	0.03	0.02	0.02
	C	0.00	0.07	0.18	0.26	0.29	0.26	0.19	0.07	0.00
4	FG	654.69	654.97	655.53	656.09	656.64	657.17	657.68	658.18	658.42
	TES	653.90	654.15	654.77	655.37	655.93	656.43	656.90	657.32	657.61
RIGHT GIRDER	ZW	653.82	654.15	654.80	655.40	655.96	656.46	656.91	657.32	657.51
	CW	653.82	654.09	654.61	655.14	655.67	656.19	656.72	657.24	657.51
	SW	0.07	0.09	0.11	0.12	0.12	0.11	0.10	0.07	0.06
RIGHT WEB	DL1	0.20	0.23	0.29	0.32	0.33	0.31	0.27	0.21	0.17
	DL2	0.02	0.03	0.03	0.04	0.04	0.04	0.03	0.03	0.02
	C	0.00	0.07	0.18	0.26	0.30	0.27	0.19	0.07	0.00
BLOCKING HEIGHTS										
5	BLK	13.30								16.98
6		13.91								17.60
7		14.81								18.50
8		15.43								19.11

FIELD SECTION 6

HORIZ. LOC.	VALUE	POSITION AND STATION							
		FS #5	P6-1	P6-2	P6-3	PIER 13	P6-5	P6-6	FS #6
		1195+30.68	1195+38.87	1195+55.25	1195+71.62	1195+88.00	1196+06.02	1196+24.05	1196+33.06
CAMBER DATA									
1	FG	656.17	656.41	656.87	657.32	657.75	658.21	658.65	658.86
	TES	655.35	655.51	655.90	656.39	656.79	657.27	657.66	657.95
LEFT GIRDER	ZW	655.24	655.43	655.80	656.19	656.59	657.06	657.56	657.81
	CW	655.24	655.44	655.85	656.26	656.68	657.13	657.58	657.81
	SW	0.06	0.05	0.02	0.01	0.00	0.01	0.02	0.03
LEFT WEB	DL1	0.16	0.13	0.06	0.02	0.00	0.02	0.05	0.08
	DL2	0.02	0.02	0.01	0.00	0.00	0.00	0.00	0.01
	C	0.00	-0.01	-0.05	-0.08	-0.09	-0.06	-0.02	0.00
2	FG	656.92	657.16	657.62	658.07	658.50	658.96	659.40	659.61
	TES	656.10	656.26	656.65	657.14	657.54	658.02	658.42	658.70
LEFT GIRDER	ZW	655.99	656.18	656.55	656.94	657.34	657.81	658.31	658.56
	CW	655.99	656.20	656.61	657.02	657.43	657.88	658.34	658.56
	SW	0.06	0.05	0.02	0.01	0.00	0.01	0.02	0.03
RIGHT WEB	DL1	0.16	0.13	0.07	0.02	0.00	0.02	0.06	0.08
	DL2	0.02	0.02	0.01	0.00	0.00	0.00	0.00	0.01
	C	0.00	-0.02	-0.06	-0.08	-0.09	-0.07	-0.03	0.00
3	FG	657.67	657.91	658.37	658.82	659.25	659.71	660.15	660.36
	TES	656.86	657.02	657.41	657.89	658.29	658.77	659.17	659.45
RIGHT GIRDER	ZW	656.75	656.94	657.31	657.69	658.09	658.57	659.06	659.32
	CW	656.75	656.96	657.37	657.78	658.19	658.64	659.09	659.32
	SW	0.06	0.05	0.02	0.01	0.00	0.01	0.02	0.03
LEFT WEB	DL1	0.17	0.13	0.07	0.02	0.00	0.02	0.06	0.09
	DL2	0.02	0.02	0.01	0.00	0.00	0.00	0.00	0.01
	C	0.00	-0.02	-0.06	-0.09	-0.10	-0.07	-0.03	0.00
4	FG	658.42	658.66	659.12	659.57	660.00	660.46	660.90	661.11
	TES	657.61	657.77	658.16	658.64	659.04	659.52	659.92	660.20
RIGHT GIRDER	ZW	657.51	657.69	658.06	658.44	658.84	659.32	659.81	660.07
	CW	657.51	657.71	658.12	658.53	658.94	659.39	659.84	660.07
	SW	0.06	0.05	0.03	0.01	0.00	0.01	0.02	0.03
RIGHT WEB	DL1	0.17	0.14	0.07	0.02	0.00	0.02	0.06	0.09
	DL2	0.02	0.02	0.01	0.00	0.00	0.00	0.01	0.01
	C	0.00	-0.02	-0.06	-0.09	-0.11	-0.08	-0.03	0.00
BLOCKING HEIGHTS									
5	BLK	16.98				18.34			19.56
6		17.60				18.94			20.17
7		18.50				19.84			21.06
8		19.11				20.44			21.67

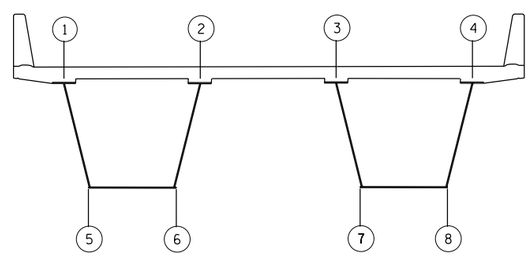

HORIZONTAL LOCATION KEY

LOOKING UPSTATION

LEGEND:

FOR LEGEND SEE CAMBER DIAGRAM UNIT 1

NOTES:

FOR NOTES SEE CAMBER DIAGRAM UNIT 1

STEEL FABRICATION CONTRACT ONLY

NO.	DATE	REVISION	BY

STATE OF WISCONSIN
DEPARTMENT OF TRANSPORTATION
STRUCTURES DESIGN SECTION

STRUCTURE B-5-678

DRAWN BY STB | PLANS CK'D. NPP

CAMBER DATA: FIELD SECTIONS 5 AND 6

SHEET 54 OF 63

58

8

8

FILE= O:\WisDot_12345678_US41Bridges_Plans\B-05-678E\054 B-05-678E-CAMBER DATA FS 5 AND 6.dgn

DATE: 7/19/2012
I.D.

STATE PROJECT NUMBER

1133-11-76

FIELD SECTION 7

HORIZ. LOC.	VALUE	POSITION AND STATION								
		FS #6	P7-1	P7-2	P7-3	P7-4	P7-5	P7-6	P7-7	PIER 14
		1196+33.06	1196+42.07	1196+60.10	1196+78.12	1196+96.15	1197+14.17	1197+32.20	1197+50.22	1197+68.25
CAMBER DATA										
1	FG	658.86	659.07	659.46	659.84	660.20	660.54	660.86	661.16	661.45
	TES	657.95	658.10	658.55	658.97	659.35	659.67	659.94	660.17	660.36
LEFT GIRDER	ZW	657.81	658.05	658.53	658.96	659.34	659.65	659.91	660.11	660.28
	CW	657.81	657.97	658.30	658.63	658.96	659.29	659.62	659.95	660.28
	SW	0.03	0.04	0.06	0.07	0.07	0.07	0.05	0.03	0.00
LEFT WEB	DL1	0.08	0.11	0.16	0.20	0.21	0.19	0.15	0.08	0.00
	DL2	0.01	0.01	0.01	0.02	0.02	0.02	0.01	0.01	0.00
	C	0.00	0.08	0.22	0.33	0.38	0.36	0.29	0.16	0.00
2	FG	659.61	659.82	660.21	660.59	660.95	661.29	661.61	661.91	662.20
	TES	658.70	658.85	659.31	659.73	660.11	660.42	660.70	660.92	661.11
LEFT GIRDER	ZW	658.56	658.81	659.28	659.72	660.10	660.41	660.67	660.86	661.03
	CW	658.56	658.73	659.06	659.38	659.71	660.04	660.37	660.70	661.03
	SW	0.03	0.04	0.06	0.07	0.08	0.07	0.05	0.03	0.00
RIGHT WEB	DL1	0.08	0.11	0.16	0.20	0.22	0.20	0.15	0.08	0.00
	DL2	0.01	0.01	0.01	0.02	0.02	0.02	0.01	0.01	0.00
	C	0.00	0.08	0.23	0.34	0.39	0.37	0.29	0.16	0.00
3	FG	660.36	660.57	660.96	661.34	661.70	662.04	662.36	662.66	662.95
	TES	659.45	659.61	660.07	660.49	660.86	661.18	661.45	661.67	661.86
RIGHT GIRDER	ZW	659.32	659.56	660.04	660.48	660.86	661.17	661.42	661.62	661.78
	CW	659.32	659.48	659.81	660.14	660.46	660.79	661.12	661.45	661.78
	SW	0.03	0.04	0.06	0.07	0.08	0.07	0.06	0.03	0.00
LEFT WEB	DL1	0.09	0.11	0.17	0.21	0.22	0.20	0.16	0.08	0.00
	DL2	0.01	0.01	0.02	0.02	0.02	0.02	0.01	0.01	0.00
	C	0.00	0.08	0.23	0.34	0.40	0.38	0.30	0.17	0.00
4	FG	661.11	661.32	661.71	662.09	662.45	662.79	663.11	663.41	663.70
	TES	660.20	660.36	660.82	661.25	661.62	661.94	662.21	662.42	662.61
RIGHT GIRDER	ZW	660.07	660.32	660.80	661.24	661.62	661.93	662.18	662.37	662.53
	CW	660.07	660.23	660.56	660.89	661.22	661.55	661.87	662.20	662.53
	SW	0.03	0.04	0.06	0.08	0.08	0.07	0.06	0.03	0.00
RIGHT WEB	DL1	0.09	0.12	0.17	0.22	0.23	0.21	0.16	0.09	0.00
	DL2	0.01	0.01	0.02	0.02	0.02	0.02	0.01	0.01	0.00
	C	0.00	0.09	0.24	0.35	0.40	0.38	0.31	0.17	0.00
BLOCKING HEIGHTS										
5	BLK	19.56								22.03
6		20.17								22.63
7		21.06								23.53
8		21.67								24.13

FIELD SECTION 8

HORIZ. LOC.	VALUE	POSITION AND STATION							
		PIER 14	P8-2	P8-3	P8-4	P8-5	P8-6	P8-7	FS #7
		1197+71.92	1197+89.56	1198+07.20	1198+24.85	1198+42.49	1198+60.13	1198+77.77	1198+86.59
CAMBER DATA									
1	FG	661.50	661.75	661.99	662.20	662.40	662.58	662.74	662.81
	TES	660.42	660.75	661.05	661.30	661.51	661.67	661.79	661.94
LEFT GIRDER	ZW	660.33	660.69	661.01	661.28	661.49	661.65	661.76	661.80
	CW	660.33	660.56	660.78	661.01	661.24	661.46	661.69	661.80
	SW	0.00	0.03	0.05	0.06	0.07	0.06	0.05	0.04
LEFT WEB	DL1	0.00	0.07	0.13	0.17	0.18	0.16	0.13	0.11
	DL2	0.00	0.01	0.01	0.01	0.02	0.01	0.01	0.01
	C	0.00	0.13	0.23	0.27	0.26	0.19	0.07	0.00
2	FG	662.25	662.50	662.74	662.95	663.15	663.33	663.49	663.56
	TES	661.17	661.50	661.80	662.06	662.27	662.43	662.55	662.70
LEFT GIRDER	ZW	661.08	661.44	661.77	662.04	662.25	662.41	662.51	662.55
	CW	661.08	661.31	661.54	661.76	661.99	662.21	662.44	662.55
	SW	0.00	0.03	0.05	0.06	0.07	0.06	0.05	0.04
RIGHT WEB	DL1	0.00	0.07	0.13	0.17	0.18	0.17	0.13	0.11
	DL2	0.00	0.01	0.01	0.02	0.02	0.02	0.01	0.01
	C	0.00	0.13	0.23	0.27	0.26	0.19	0.07	0.00
3	FG	663.00	663.25	663.49	663.70	663.90	664.08	664.24	664.31
	TES	661.92	662.25	662.56	662.81	663.02	663.18	663.30	663.45
RIGHT GIRDER	ZW	661.83	662.20	662.52	662.79	663.01	663.17	663.27	663.31
	CW	661.83	662.06	662.29	662.51	662.74	662.97	663.20	663.31
	SW	0.00	0.03	0.05	0.07	0.07	0.07	0.05	0.04
LEFT WEB	DL1	0.00	0.07	0.14	0.18	0.19	0.17	0.14	0.11
	DL2	0.00	0.01	0.01	0.02	0.02	0.02	0.01	0.01
	C	0.00	0.13	0.24	0.28	0.27	0.20	0.07	0.00
4	FG	663.75	664.00	664.24	664.45	664.65	664.83	664.99	665.06
	TES	662.67	663.00	663.31	663.57	663.78	663.94	664.06	664.21
RIGHT GIRDER	ZW	662.58	662.95	663.28	663.55	663.77	663.93	664.03	664.06
	CW	662.58	662.81	663.04	663.27	663.49	663.72	663.95	664.06
	SW	0.00	0.03	0.05	0.07	0.07	0.07	0.05	0.05
RIGHT WEB	DL1	0.00	0.08	0.14	0.18	0.20	0.18	0.14	0.12
	DL2	0.00	0.01	0.01	0.02	0.02	0.02	0.01	0.01
	C	0.00	0.14	0.24	0.29	0.28	0.20	0.08	0.00
BLOCKING HEIGHTS									
5	BLK	8.48							9.94
6		9.02							10.48
7		9.98							11.45
8		10.52							11.99

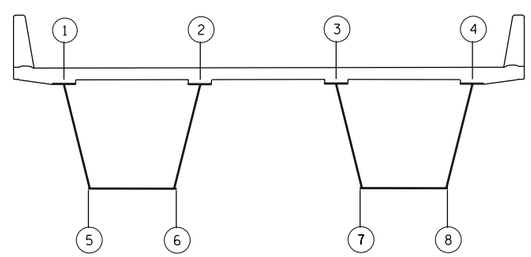

HORIZONTAL LOCATION KEY

LOOKING UPSTATION

LEGEND:

FOR LEGEND SEE CAMBER DIAGRAM UNIT 1

NOTES:

FOR NOTES SEE CAMBER DIAGRAM UNIT 1

STEEL FABRICATION CONTRACT ONLY

NO.	DATE	REVISION	BY

STATE OF WISCONSIN
DEPARTMENT OF TRANSPORTATION
STRUCTURES DESIGN SECTION

STRUCTURE B-5-678

DRAWN BY STB | PLANS CK'D. NPP

CAMBER DATA: FIELD SECTIONS 7 AND 8

SHEET 55 OF 63

8

FILE= O:\WisDot_12345678_US41Bridges_Plans\B-05-678E\055 B-05-678E-CAMBER DATA FS 7 AND 8.dgn

DATE: 7/19/2012
I.D.

STATE PROJECT NUMBER

1133-11-76

FIELD SECTION 9

HORIZ. LOC.	VALUE	POSITION AND STATION								
		FS #7	P9-1	P9-2	P9-3	PIER 15	P9-5	P9-6	P9-7	FS #8
		1198+86.59	1198+95.41	1199+13.05	1199+30.70	1199+48.34	1199+65.59	1199+82.85	1200+00.10	1200+08.73
CAMBER DATA										
1	FG	662.81	662.88	663.00	663.10	663.19	663.25	663.30	663.33	663.33
LEFT GIRDER	TES	661.94	661.94	662.02	662.16	662.24	662.34	662.37	662.47	662.56
	ZW	661.80	661.83	661.89	661.95	662.02	662.13	662.25	662.38	662.43
	CW	661.80	661.84	661.94	662.03	662.12	662.21	662.30	662.39	662.43
LEFT WEB	SW	0.04	0.03	0.02	0.00	0.00	0.01	0.03	0.05	0.06
	DL1	0.11	0.08	0.04	0.01	0.00	0.03	0.08	0.15	0.18
	DL2	0.01	0.01	0.00	0.00	0.00	0.00	0.01	0.02	0.02
	C	0.00	-0.01	-0.05	-0.08	-0.10	-0.08	-0.05	-0.01	0.00
2	FG	663.56	663.63	663.75	663.85	663.94	664.00	664.05	664.08	664.08
LEFT GIRDER	TES	662.70	662.70	662.77	662.91	662.99	663.09	663.12	663.23	663.31
	ZW	662.55	662.58	662.64	662.70	662.77	662.88	663.00	663.13	663.19
	CW	662.55	662.60	662.69	662.78	662.88	662.97	663.06	663.15	663.19
RIGHT WEB	SW	0.04	0.03	0.02	0.00	0.00	0.01	0.03	0.05	0.06
	DL1	0.11	0.08	0.04	0.01	0.00	0.03	0.08	0.15	0.19
	DL2	0.01	0.01	0.00	0.00	0.00	0.00	0.01	0.02	0.02
	C	0.00	-0.01	-0.05	-0.09	-0.11	-0.09	-0.05	-0.01	0.00
3	FG	664.31	664.38	664.50	664.60	664.69	664.75	664.80	664.83	664.83
RIGHT GIRDER	TES	663.45	663.45	663.52	663.66	663.74	663.84	663.87	663.98	664.07
	ZW	663.31	663.34	663.39	663.45	663.52	663.63	663.76	663.89	663.95
	CW	663.31	663.35	663.45	663.54	663.63	663.72	663.81	663.90	663.95
LEFT WEB	SW	0.04	0.03	0.02	0.00	0.00	0.01	0.03	0.05	0.07
	DL1	0.11	0.09	0.04	0.01	0.00	0.03	0.08	0.15	0.19
	DL2	0.01	0.01	0.00	0.00	0.00	0.00	0.01	0.02	0.02
	C	0.00	-0.02	-0.06	-0.09	-0.11	-0.09	-0.06	-0.02	0.00
4	FG	665.06	665.13	665.25	665.35	665.44	665.50	665.55	665.58	665.58
RIGHT GIRDER	TES	664.21	664.20	664.27	664.41	664.49	664.59	664.62	664.73	664.83
	ZW	664.06	664.09	664.14	664.20	664.27	664.38	664.51	664.64	664.71
	CW	664.06	664.11	664.20	664.30	664.39	664.48	664.57	664.66	664.71
RIGHT WEB	SW	0.05	0.04	0.02	0.00	0.00	0.01	0.03	0.05	0.07
	DL1	0.12	0.09	0.04	0.01	0.00	0.03	0.09	0.16	0.20
	DL2	0.01	0.01	0.00	0.00	0.00	0.00	0.01	0.02	0.03
	C	0.00	-0.02	-0.06	-0.10	-0.12	-0.10	-0.06	-0.02	0.00
BLOCKING HEIGHTS										
5	BLK	9.94				10.17				10.58
6		10.48				10.70				11.12
7		11.45				11.67				12.09
8		11.99				12.20				12.64

FIELD SECTION 10

HORIZ. LOC.	VALUE	POSITION AND STATION								
		FS #8	P10-1	P10-2	P10-3	P10-4	P10-5	P10-6	P10-7	FS #9
		1200+08.73	1200+17.36	1200+34.62	1200+51.87	1200+69.13	1200+86.38	1201+03.64	1201+20.90	1201+29.52
CAMBER DATA										
1	FG	663.33	663.34	663.33	663.31	663.26	663.20	663.12	663.03	662.97
LEFT GIRDER	TES	662.56	662.49	662.55	662.56	662.53	662.45	662.32	662.16	662.19
	ZW	662.43	662.48	662.56	662.59	662.56	662.47	662.32	662.14	662.03
	CW	662.43	662.40	662.35	662.29	662.23	662.18	662.12	662.06	662.03
LEFT WEB	SW	0.06	0.07	0.09	0.11	0.11	0.10	0.09	0.07	0.05
	DL1	0.18	0.21	0.27	0.31	0.32	0.30	0.25	0.19	0.16
	DL2	0.02	0.03	0.03	0.04	0.04	0.04	0.03	0.02	0.02
	C	0.00	0.08	0.21	0.29	0.32	0.29	0.21	0.08	0.00
2	FG	664.08	664.09	664.08	664.06	664.01	663.95	663.87	663.78	663.72
LEFT GIRDER	TES	663.31	663.25	663.31	663.32	663.29	663.21	663.08	662.91	662.94
	ZW	663.19	663.24	663.32	663.35	663.32	663.23	663.09	662.90	662.79
	CW	663.19	663.16	663.10	663.05	662.99	662.93	662.88	662.82	662.79
RIGHT WEB	SW	0.06	0.08	0.10	0.11	0.11	0.11	0.09	0.07	0.06
	DL1	0.19	0.22	0.28	0.31	0.32	0.30	0.26	0.20	0.16
	DL2	0.02	0.03	0.03	0.04	0.04	0.04	0.03	0.02	0.02
	C	0.00	0.08	0.22	0.30	0.33	0.30	0.21	0.08	0.00
3	FG	664.83	664.84	664.83	664.81	664.76	664.70	664.62	664.53	664.47
RIGHT GIRDER	TES	664.07	664.01	664.07	664.08	664.05	663.97	663.83	663.67	663.70
	ZW	663.95	664.00	664.08	664.11	664.08	663.99	663.84	663.65	663.55
	CW	663.95	663.92	663.86	663.80	663.75	663.69	663.63	663.58	663.55
LEFT WEB	SW	0.07	0.08	0.10	0.11	0.12	0.11	0.09	0.07	0.06
	DL1	0.19	0.23	0.28	0.32	0.33	0.31	0.26	0.20	0.16
	DL2	0.02	0.03	0.04	0.04	0.04	0.04	0.03	0.02	0.02
	C	0.00	0.08	0.22	0.31	0.34	0.30	0.21	0.08	0.00
4	FG	665.58	665.59	665.58	665.56	665.51	665.45	665.37	665.28	665.22
RIGHT GIRDER	TES	664.83	664.76	664.82	664.84	664.81	664.72	664.59	664.42	664.45
	ZW	664.71	664.76	664.84	664.87	664.85	664.75	664.60	664.41	664.30
	CW	664.71	664.68	664.62	664.56	664.50	664.45	664.39	664.33	664.30
RIGHT WEB	SW	0.07	0.08	0.10	0.11	0.12	0.11	0.10	0.07	0.06
	DL1	0.20	0.23	0.29	0.33	0.34	0.32	0.27	0.20	0.17
	DL2	0.03	0.03	0.04	0.04	0.04	0.04	0.03	0.03	0.02
	C	0.00	0.08	0.22	0.31	0.34	0.31	0.21	0.08	0.00
BLOCKING HEIGHTS										
5	BLK	10.58								10.18
6		11.12								10.72
7		12.09								11.69
8		12.64								12.23

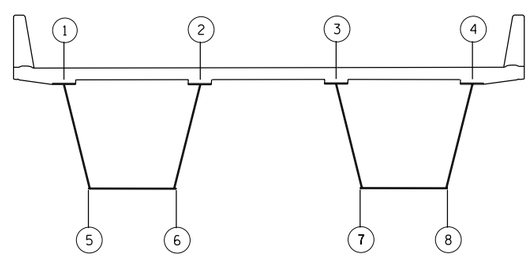

HORIZONTAL LOCATION KEY

LOOKING UPSTATION

STEEL FABRICATION CONTRACT ONLY

LEGEND:

FOR LEGEND SEE CAMBER DIAGRAM UNIT 1

NOTES:

FOR NOTES SEE CAMBER DIAGRAM UNIT 1

NO.	DATE	REVISION	BY

STATE OF WISCONSIN
DEPARTMENT OF TRANSPORTATION
STRUCTURES DESIGN SECTION

STRUCTURE B-5-678

DRAWN BY STB | PLANS CK'D. NPP

CAMBER DATA: FIELD SECTIONS 9 AND 10

SHEET 56 OF 63

60

FILE= O:\WisDot_12345678_US41Bridges_Plans\B-05-678E\056 B-05-678E-CAMBER DATA FS 9 AND 10.dgn

DATE: 7/19/2012
I.D.

8

8

STATE PROJECT NUMBER

1133-11-76

FIELD SECTION 11

HORIZ. LOC.	VALUE	POSITION AND STATION								
		FS #9	P11-1	P11-2	P11-3	PIER 16	P11-5	P11-6	P11-7	FS #10
		1201+29.52	1201+38.15	1201+55.41	1201+72.66	1201+89.92	1202+07.18	1202+24.43	1202+41.69	1202+50.32
CAMBER DATA										
1	FG	662.97	662.91	662.78	662.63	662.46	662.27	662.07	661.85	661.73
	TES	662.19	662.05	661.85	661.71	661.52	661.36	661.15	660.99	660.95
LEFT GIRDER	ZW	662.03	661.92	661.70	661.49	661.29	661.15	661.00	660.87	660.81
	CW	662.03	661.95	661.77	661.60	661.42	661.24	661.07	660.89	660.81
	SW	0.05	0.04	0.02	0.01	0.00	0.01	0.03	0.05	0.06
LEFT WEB	DL1	0.16	0.12	0.06	0.02	0.00	0.02	0.07	0.13	0.16
	DL2	0.02	0.02	0.01	0.00	0.00	0.00	0.01	0.02	0.02
	C	0.00	-0.02	-0.07	-0.11	-0.13	-0.10	-0.06	-0.02	0.00
2	FG	663.72	663.66	663.53	663.38	663.21	663.02	662.82	662.60	662.48
	TES	662.94	662.80	662.60	662.46	662.27	662.11	661.90	661.74	661.71
LEFT GIRDER	ZW	662.79	662.68	662.45	662.24	662.04	661.89	661.75	661.63	661.56
	CW	662.79	662.70	662.53	662.35	662.18	662.00	661.82	661.65	661.56
	SW	0.06	0.04	0.02	0.01	0.00	0.01	0.03	0.05	0.06
RIGHT WEB	DL1	0.16	0.12	0.06	0.02	0.00	0.02	0.07	0.13	0.16
	DL2	0.02	0.02	0.01	0.00	0.00	0.00	0.01	0.02	0.02
	C	0.00	-0.02	-0.08	-0.12	-0.13	-0.11	-0.07	-0.02	0.00
3	FG	664.47	664.41	664.28	664.13	663.96	663.77	663.57	663.35	663.23
	TES	663.70	663.56	663.35	663.22	663.02	662.86	662.64	662.50	662.46
RIGHT GIRDER	ZW	663.55	663.44	663.21	662.99	662.79	662.64	662.50	662.38	662.31
	CW	663.55	663.46	663.28	663.11	662.93	662.75	662.58	662.40	662.31
	SW	0.06	0.05	0.02	0.01	0.00	0.01	0.02	0.05	0.06
LEFT WEB	DL1	0.16	0.13	0.07	0.02	0.00	0.02	0.06	0.13	0.17
	DL2	0.02	0.02	0.01	0.00	0.00	0.00	0.01	0.02	0.02
	C	0.00	-0.02	-0.07	-0.11	-0.14	-0.11	-0.08	-0.03	0.00
4	FG	665.22	665.16	665.03	664.88	664.71	664.52	664.32	664.10	663.98
	TES	664.45	664.31	664.10	663.97	663.77	663.61	663.39	663.25	663.21
RIGHT GIRDER	ZW	664.30	664.19	663.96	663.74	663.54	663.39	663.25	663.13	663.07
	CW	664.30	664.22	664.04	663.86	663.69	663.51	663.33	663.16	663.07
	SW	0.06	0.05	0.02	0.01	0.00	0.01	0.02	0.05	0.06
RIGHT WEB	DL1	0.17	0.13	0.07	0.02	0.00	0.02	0.06	0.13	0.17
	DL2	0.02	0.02	0.01	0.00	0.00	0.00	0.01	0.02	0.02
	C	0.00	-0.02	-0.08	-0.12	-0.14	-0.12	-0.08	-0.03	0.00
BLOCKING HEIGHTS										
5	BLK	10.18				9.44				8.95
6		10.72				9.97				9.49
7		11.69				10.94				10.46
8		12.23				11.47				11.00

FIELD SECTION 12

HORIZ. LOC.	VALUE	POSITION AND STATION								
		FS #10	P12-1	P12-2	P12-3	P12-4	P12-5	P12-6	P12-7	FS #11
		1202+50.32	1202+58.94	1202+76.20	1202+93.46	1203+10.71	1203+27.97	1203+45.22	1203+62.48	1203+71.11
CAMBER DATA										
1	FG	661.73	661.61	661.35	661.08	660.78	660.47	660.14	659.80	659.62
	TES	660.95	660.74	660.55	660.33	660.06	659.73	659.37	658.96	658.82
LEFT GIRDER	ZW	660.81	660.73	660.56	660.35	660.09	659.76	659.38	658.95	658.72
	CW	660.81	660.66	660.36	660.06	659.76	659.47	659.17	658.87	658.72
	SW	0.06	0.07	0.09	0.11	0.12	0.11	0.10	0.08	0.07
LEFT WEB	DL1	0.16	0.19	0.26	0.30	0.32	0.31	0.27	0.22	0.19
	DL2	0.02	0.02	0.03	0.03	0.04	0.04	0.03	0.03	0.02
	C	0.00	0.08	0.20	0.29	0.33	0.30	0.21	0.08	0.00
2	FG	662.48	662.36	662.10	661.83	661.53	661.22	660.89	660.55	660.37
	TES	661.71	661.50	661.31	661.09	660.82	660.49	660.13	659.71	659.58
LEFT GIRDER	ZW	661.56	661.49	661.32	661.11	660.85	660.53	660.14	659.71	659.48
	CW	661.56	661.41	661.11	660.82	660.52	660.22	659.93	659.63	659.48
	SW	0.06	0.07	0.10	0.11	0.12	0.12	0.10	0.08	0.07
RIGHT WEB	DL1	0.16	0.20	0.26	0.31	0.33	0.32	0.28	0.22	0.19
	DL2	0.02	0.02	0.03	0.04	0.04	0.04	0.03	0.03	0.02
	C	0.00	0.08	0.21	0.30	0.33	0.30	0.22	0.08	0.00
3	FG	663.23	663.11	662.85	662.58	662.28	661.97	661.64	661.30	661.12
	TES	662.46	662.25	662.07	661.85	661.58	661.25	660.88	660.47	660.34
RIGHT GIRDER	ZW	662.31	662.24	662.08	661.88	661.62	661.29	660.90	660.47	660.24
	CW	662.31	662.17	661.87	661.57	661.28	660.98	660.68	660.39	660.24
	SW	0.06	0.07	0.10	0.11	0.12	0.12	0.10	0.08	0.07
LEFT WEB	DL1	0.17	0.20	0.27	0.32	0.34	0.33	0.29	0.23	0.20
	DL2	0.02	0.02	0.03	0.04	0.04	0.04	0.03	0.03	0.02
	C	0.00	0.08	0.21	0.30	0.34	0.31	0.22	0.08	0.00
4	FG	663.98	663.86	663.60	663.33	663.03	662.72	662.39	662.05	661.87
	TES	663.21	663.01	662.83	662.61	662.34	662.01	661.64	661.23	661.09
RIGHT GIRDER	ZW	663.07	663.00	662.84	662.64	662.38	662.05	661.67	661.23	661.00
	CW	663.07	662.92	662.62	662.33	662.03	661.74	661.44	661.15	661.00
	SW	0.06	0.08	0.10	0.12	0.13	0.12	0.11	0.09	0.07
RIGHT WEB	DL1	0.17	0.21	0.27	0.32	0.35	0.34	0.30	0.24	0.20
	DL2	0.02	0.03	0.03	0.04	0.04	0.04	0.04	0.03	0.03
	C	0.00	0.08	0.22	0.31	0.35	0.31	0.22	0.08	0.00
BLOCKING HEIGHTS										
5	BLK	8.95								6.87
6		9.49								7.41
7		10.46								8.39
8		11.00								8.93

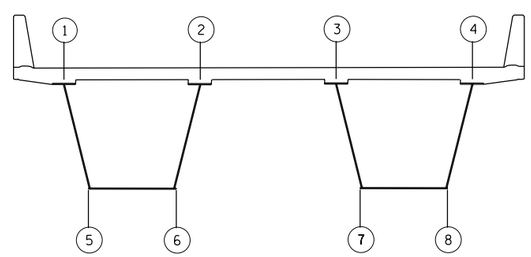

HORIZONTAL LOCATION KEY

LOOKING UPSTATION

LEGEND:

FOR LEGEND SEE CAMBER DIAGRAM UNIT 1

NOTES:

FOR NOTES SEE CAMBER DIAGRAM UNIT 1

STEEL FABRICATION CONTRACT ONLY

NO.	DATE	REVISION	BY

STATE OF WISCONSIN
DEPARTMENT OF TRANSPORTATION
STRUCTURES DESIGN SECTION

STRUCTURE B-5-678

DRAWN BY STB | PLANS CK'D. NPP

CAMBER DATA: FIELD SECTIONS 11 AND 12

SHEET 57 OF 63

8

FILE= O:\WisDot_12345678_US41Bridges_Plans\B-05-678E\057 B-05-678E-CAMBER DATA FS 11 AND 12.dgn

DATE: 7/19/2012
I.D.

STATE PROJECT NUMBER

1133-11-76

FIELD SECTION 13

HORIZ. LOC.	VALUE	POSITION AND STATION								
		FS #11 1203+71.11	P13-1 1203+79.74	P13-2 1203+96.99	P13-3 1204+14.25	PIER 17 1204+31.50	P13-5 1204+49.15	P13-6 1204+66.79	P13-7 1204+84.43	FS #12 1204+93.25
CAMBER DATA										
1 LEFT GIRDER	FG	659.62	659.43	659.05	658.65	658.23	657.78	657.32	656.83	656.58
	TES	658.82	658.56	658.10	657.73	657.28	656.84	656.31	655.88	655.70
	ZW	658.72	658.49	658.00	657.52	657.06	656.62	656.20	655.78	655.57
	CW	658.72	658.50	658.05	657.61	657.16	656.71	656.25	655.80	655.57
LEFT WEB	SW	0.07	0.05	0.03	0.01	0.00	0.00	0.01	0.03	0.04
	DL1	0.19	0.15	0.08	0.03	0.00	0.01	0.03	0.08	0.10
	DL2	0.02	0.02	0.01	0.00	0.00	0.00	0.00	0.01	0.01
	C	0.00	-0.01	-0.05	-0.08	-0.10	-0.08	-0.05	-0.01	0.00
2 LEFT GIRDER	FG	660.37	660.18	659.80	659.40	658.98	658.53	658.07	657.58	657.33
	TES	659.58	659.31	658.85	658.48	658.03	657.59	657.06	656.63	656.45
	ZW	659.48	659.24	658.76	658.28	657.81	657.37	656.95	656.53	656.32
	CW	659.48	659.26	658.81	658.37	657.92	657.46	657.01	656.55	656.32
RIGHT WEB	SW	0.07	0.06	0.03	0.01	0.00	0.00	0.01	0.03	0.04
	DL1	0.19	0.15	0.08	0.03	0.00	0.01	0.03	0.08	0.11
	DL2	0.02	0.02	0.01	0.00	0.00	0.00	0.00	0.01	0.01
	C	0.00	-0.01	-0.06	-0.09	-0.11	-0.09	-0.06	-0.02	0.00
3 RIGHT GIRDER	FG	661.12	660.93	660.55	660.15	659.73	659.28	658.82	658.33	658.08
	TES	660.34	660.07	659.61	659.24	658.78	658.34	657.81	657.38	657.20
	ZW	660.24	660.00	659.52	659.03	658.56	658.12	657.70	657.29	657.08
	CW	660.24	660.02	659.57	659.12	658.68	658.22	657.76	657.31	657.08
LEFT WEB	SW	0.07	0.06	0.03	0.01	0.00	0.00	0.01	0.03	0.04
	DL1	0.20	0.16	0.09	0.04	0.00	0.01	0.04	0.08	0.11
	DL2	0.02	0.02	0.01	0.00	0.00	0.00	0.00	0.01	0.01
	C	0.00	-0.01	-0.05	-0.09	-0.11	-0.10	-0.06	-0.02	0.00
4 RIGHT GIRDER	FG	661.87	661.68	661.30	660.90	660.48	660.03	659.57	659.08	658.83
	TES	661.09	660.82	660.36	659.99	659.53	659.09	658.56	658.14	657.96
	ZW	661.00	660.76	660.27	659.79	659.31	658.87	658.45	658.04	657.83
	CW	661.00	660.78	660.33	659.88	659.43	658.98	658.52	658.06	657.83
RIGHT WEB	SW	0.07	0.06	0.03	0.01	0.00	0.00	0.01	0.03	0.04
	DL1	0.20	0.16	0.09	0.04	0.00	0.00	0.04	0.09	0.11
	DL2	0.03	0.02	0.01	0.01	0.00	0.00	0.00	0.01	0.01
	C	0.00	-0.02	-0.06	-0.10	-0.12	-0.10	-0.07	-0.02	0.00
BLOCKING HEIGHTS										
5	BLK	6.87				5.21				3.71
6		7.41				5.74				4.25
7		8.39				6.71				5.22
8		8.93				7.24				5.76

FIELD SECTION 14

HORIZ. LOC.	VALUE	POSITION AND STATION							
		FS #12 1204+93.25	P14-1 1205+02.07	P14-2 1205+19.71	P14-3 1205+37.35	P14-4 1205+55.00	P14-5 1205+72.64	P14-6 1205+90.28	PIER 18 1206+07.92
CAMBER DATA									
1 LEFT GIRDER	FG	656.58	656.33	655.81	655.27	654.71	654.15	653.59	653.02
	TES	655.70	655.38	654.90	654.38	653.81	653.21	652.58	651.94
	ZW	655.57	655.35	654.88	654.36	653.78	653.17	652.52	651.85
	CW	655.57	655.28	654.71	654.14	653.57	653.00	652.43	651.85
LEFT WEB	SW	0.04	0.05	0.06	0.06	0.06	0.05	0.02	0.00
	DL1	0.10	0.13	0.16	0.18	0.17	0.13	0.07	0.00
	DL2	0.01	0.01	0.01	0.02	0.01	0.01	0.01	0.00
	C	0.00	0.06	0.17	0.22	0.21	0.17	0.09	0.00
2 LEFT GIRDER	FG	657.33	657.08	656.56	656.02	655.46	654.90	654.34	653.77
	TES	656.45	656.14	655.66	655.14	654.56	653.96	653.33	652.69
	ZW	656.32	656.10	655.64	655.12	654.54	653.93	653.27	652.61
	CW	656.32	656.04	655.46	654.89	654.32	653.75	653.18	652.61
RIGHT WEB	SW	0.04	0.05	0.06	0.07	0.06	0.05	0.03	0.00
	DL1	0.11	0.13	0.17	0.18	0.17	0.13	0.07	0.00
	DL2	0.01	0.01	0.02	0.02	0.02	0.01	0.01	0.00
	C	0.00	0.07	0.17	0.22	0.22	0.18	0.09	0.00
3 RIGHT GIRDER	FG	658.08	657.83	657.31	656.77	656.21	655.65	655.09	654.52
	TES	657.20	656.89	656.42	655.89	655.32	654.72	654.08	653.44
	ZW	657.08	656.86	656.39	655.88	655.30	654.68	654.03	653.35
	CW	657.08	656.79	656.22	655.65	655.07	654.50	653.93	653.35
LEFT WEB	SW	0.04	0.05	0.06	0.07	0.06	0.05	0.03	0.00
	DL1	0.11	0.13	0.17	0.19	0.18	0.14	0.07	0.00
	DL2	0.01	0.01	0.02	0.02	0.02	0.01	0.01	0.00
	C	0.00	0.07	0.18	0.23	0.23	0.18	0.10	0.00
4 RIGHT GIRDER	FG	658.83	658.58	658.06	657.52	656.96	656.40	655.84	655.27
	TES	657.96	657.65	657.17	656.65	656.08	655.47	654.84	654.19
	ZW	657.83	657.61	657.15	656.63	656.06	655.44	654.78	654.11
	CW	657.83	657.54	656.97	656.40	655.83	655.25	654.68	654.11
RIGHT WEB	SW	0.04	0.05	0.06	0.07	0.06	0.05	0.03	0.00
	DL1	0.11	0.14	0.18	0.20	0.18	0.14	0.08	0.00
	DL2	0.01	0.01	0.02	0.02	0.02	0.01	0.01	0.00
	C	0.00	0.07	0.18	0.24	0.23	0.19	0.10	0.00
BLOCKING HEIGHTS									
5	BLK	3.71							0.00
6		4.25							0.54
7		5.22							1.50
8		5.76							2.04

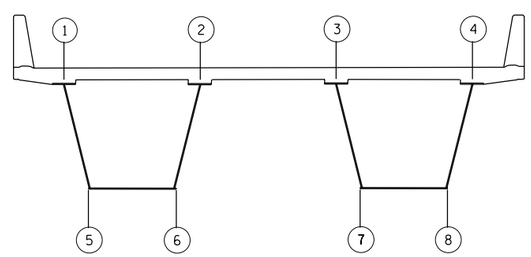

HORIZONTAL LOCATION KEY

LOOKING UPSTATION

STEEL FABRICATION CONTRACT ONLY

LEGEND:

FOR LEGEND SEE CAMBER DIAGRAM UNIT 1

NOTES:

FOR NOTES SEE CAMBER DIAGRAM UNIT 1

NO.	DATE	REVISION	BY

STATE OF WISCONSIN
DEPARTMENT OF TRANSPORTATION
STRUCTURES DESIGN SECTION

STRUCTURE B-5-678

DRAWN BY STB | PLANS CK'D. NPP

CAMBER DATA: FIELD SECTIONS 13 AND 14

SHEET 58 OF 63

FILE= Q:\WisDot_12345678_US41Bridges_Plans\B-05-678E\058 B-05-678E-CAMBER DATA FS 13 AND 14.dgn

DATE: 7/19/2012
I.D.

8

8

STATE PROJECT NUMBER

1133-11-76

FIELD SECTION 15

HORIZ. LOC.	VALUE	POSITION AND STATION							
		PIER 18	P15-2	P15-3	P15-4	P15-5	P15-6	P15-7	FS #13
		1206+11.58	1206+26.70	1206+41.82	1206+56.93	1206+72.05	1206+87.17	1207+02.28	1207+09.83
CAMBER DATA									
1	FG	652.91	652.42	651.94	651.46	650.98	650.49	650.01	649.77
	TES	651.82	651.36	650.90	650.42	649.94	649.44	648.94	648.79
LEFT GIRDER	ZW	651.74	651.29	650.83	650.35	649.87	649.37	648.86	648.60
	CW	651.74	651.26	650.77	650.29	649.81	649.33	648.84	648.60
	SW	0.00	0.01	0.01	0.02	0.02	0.01	0.00	0.00
LEFT WEB	DL1	0.00	0.02	0.04	0.04	0.04	0.02	0.01	0.00
	DL2	0.00	0.00	0.00	0.01	0.01	0.00	0.00	0.00
	C	0.00	0.03	0.05	0.06	0.06	0.04	0.01	0.00
2	FG	653.66	653.17	652.69	652.21	651.73	651.24	650.76	650.52
	TES	652.57	652.11	651.65	651.17	650.69	650.19	649.69	649.54
LEFT GIRDER	ZW	652.49	652.04	651.58	651.11	650.62	650.12	649.61	649.35
	CW	652.49	652.01	651.52	651.04	650.56	650.08	649.59	649.35
	SW	0.00	0.01	0.01	0.02	0.02	0.01	0.00	0.00
RIGHT WEB	DL1	0.00	0.02	0.04	0.04	0.04	0.02	0.01	0.00
	DL2	0.00	0.00	0.01	0.01	0.01	0.00	0.00	0.00
	C	0.00	0.03	0.06	0.07	0.06	0.04	0.01	0.00
3	FG	654.41	653.92	653.44	652.96	652.48	651.99	651.51	651.27
	TES	653.32	652.86	652.40	651.93	651.44	650.94	650.44	650.29
RIGHT GIRDER	ZW	653.24	652.79	652.33	651.86	651.37	650.87	650.36	650.10
	CW	653.24	652.76	652.27	651.79	651.31	650.83	650.34	650.10
	SW	0.00	0.01	0.02	0.02	0.02	0.01	0.00	0.00
LEFT WEB	DL1	0.00	0.02	0.04	0.04	0.04	0.03	0.01	0.00
	DL2	0.00	0.00	0.01	0.01	0.01	0.00	0.00	0.00
	C	0.00	0.03	0.06	0.07	0.06	0.04	0.02	0.00
4	FG	655.16	654.67	654.19	653.71	653.23	652.74	652.26	652.02
	TES	654.07	653.62	653.15	652.68	652.19	651.69	651.19	651.04
RIGHT GIRDER	ZW	653.99	653.54	653.08	652.61	652.12	651.62	651.11	650.85
	CW	653.99	653.51	653.02	652.54	652.06	651.58	651.09	650.85
	SW	0.00	0.01	0.02	0.02	0.02	0.01	0.00	0.00
RIGHT WEB	DL1	0.00	0.02	0.04	0.04	0.04	0.03	0.01	0.00
	DL2	0.00	0.00	0.01	0.01	0.01	0.00	0.00	0.00
	C	0.00	0.03	0.06	0.07	0.06	0.05	0.02	0.00
BLOCKING HEIGHTS									
5	BLK	31.64							28.50
6		32.18							29.04
7		33.14							30.00
8		33.68							30.54

FIELD SECTION 16

HORIZ. LOC.	VALUE	POSITION AND STATION							
		FS #13	P16-1	P16-2	P16-3	PIER 19	P16-5	P16-6	FS #14
		1207+09.83	1207+17.40	1207+32.52	1207+47.63	1207+62.75	1207+80.39	1207+98.04	1208+06.84
CAMBER DATA									
1	FG	649.77	649.53	649.05	648.57	648.08	647.52	646.96	646.68
	TES	648.79	648.50	648.00	647.58	647.12	646.63	646.09	645.91
LEFT GIRDER	ZW	648.60	648.35	647.84	647.37	646.92	646.44	645.99	645.78
	CW	648.60	648.38	647.94	647.50	647.06	646.55	646.04	645.78
	SW	0.00	0.00	-0.01	-0.01	0.00	0.02	0.05	0.07
LEFT WEB	DL1	0.00	-0.01	-0.03	-0.02	0.00	0.06	0.14	0.18
	DL2	0.00	0.00	0.00	0.00	0.00	0.01	0.01	0.02
	C	0.00	-0.03	-0.10	-0.13	-0.15	-0.11	-0.04	0.00
2	FG	650.52	650.28	649.80	649.32	648.83	648.27	647.71	647.43
	TES	649.54	649.25	648.75	648.33	647.87	647.38	646.85	646.67
LEFT GIRDER	ZW	649.35	649.10	648.59	648.12	647.67	647.19	646.75	646.54
	CW	649.35	649.13	648.69	648.26	647.82	647.30	646.79	646.54
	SW	0.00	0.00	-0.01	-0.01	0.00	0.02	0.05	0.07
RIGHT WEB	DL1	0.00	-0.01	-0.03	-0.02	0.00	0.06	0.14	0.19
	DL2	0.00	0.00	0.00	0.00	0.00	0.01	0.02	0.02
	C	0.00	-0.03	-0.10	-0.14	-0.15	-0.11	-0.04	0.00
3	FG	651.27	651.03	650.55	650.07	649.58	649.02	648.46	648.18
	TES	650.29	650.00	649.50	649.08	648.62	648.13	647.60	647.42
RIGHT GIRDER	ZW	650.10	649.85	649.34	648.87	648.42	647.95	647.51	647.30
	CW	650.10	649.88	649.45	649.01	648.57	648.06	647.55	647.30
	SW	0.00	0.00	-0.01	-0.01	0.00	0.02	0.05	0.07
LEFT WEB	DL1	0.00	-0.01	-0.03	-0.02	0.00	0.06	0.15	0.20
	DL2	0.00	0.00	0.00	0.00	0.00	0.01	0.02	0.02
	C	0.00	-0.03	-0.10	-0.14	-0.15	-0.11	-0.04	0.00
4	FG	652.02	651.78	651.30	650.82	650.33	649.77	649.21	648.93
	TES	651.04	650.75	650.25	649.83	649.37	648.89	648.36	648.18
RIGHT GIRDER	ZW	650.85	650.60	650.09	649.61	649.17	648.70	648.26	648.05
	CW	650.85	650.63	650.20	649.76	649.33	648.82	648.31	648.05
	SW	0.00	0.00	-0.01	-0.01	0.00	0.02	0.05	0.07
RIGHT WEB	DL1	0.00	-0.01	-0.03	-0.02	0.00	0.07	0.15	0.20
	DL2	0.00	0.00	0.00	0.00	0.00	0.01	0.02	0.02
	C	0.00	-0.04	-0.11	-0.15	-0.16	-0.12	-0.04	0.00
BLOCKING HEIGHTS									
5	BLK	28.50				26.82			25.68
6		29.04				27.35			26.22
7		30.00				28.32			27.20
8		30.54				28.85			27.74

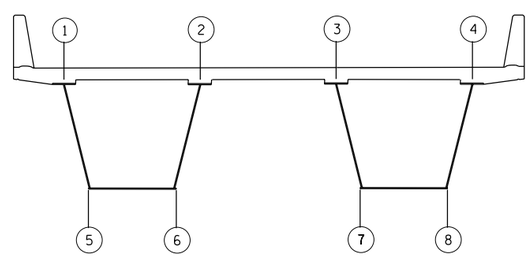

HORIZONTAL LOCATION KEY

LOOKING UPSTATION

LEGEND:

FOR LEGEND SEE CAMBER DIAGRAM UNIT 1

NOTES:

FOR NOTES SEE CAMBER DIAGRAM UNIT 1

STEEL FABRICATION CONTRACT ONLY

NO.	DATE	REVISION	BY

STATE OF WISCONSIN
DEPARTMENT OF TRANSPORTATION
STRUCTURES DESIGN SECTION

STRUCTURE B-5-678

DRAWN BY STB | PLANS CK'D. NPP

CAMBER DATA: FIELD SECTIONS 15 AND 16

SHEET 59 OF 63

8

FILE= O:\WisDot_12345678_US41Bridges_Plans\B-05-678E\059 B-05-678E-CAMBER DATA FS 15 AND 16.dgn

DATE: 7/19/2012
I.D.

STATE PROJECT NUMBER

1133-11-76

FIELD SECTION 17

HORIZ. LOC.	VALUE	POSITION AND STATION									
		FS #14	P17-1	P17-2	P17-3	P17-4	P17-5	P17-6	P17-7	P17-8	FS #15
		1208+06.84	1208+15.68	1208+33.32	1208+50.96	1208+68.61	1208+86.25	1209+03.89	1209+21.54	1209+39.18	1209+47.99
CAMBER DATA											
1	FG	646.68	646.39	645.83	645.27	644.71	644.14	643.58	643.02	642.46	642.17
	TES	645.91	645.59	645.11	644.63	644.11	643.55	642.96	642.34	641.69	641.45
LEFT GIRDER	ZW	645.78	645.56	645.12	644.66	644.15	643.60	643.00	642.35	641.68	641.33
	CW	645.78	645.50	644.94	644.39	643.83	643.28	642.72	642.17	641.61	641.33
	SW	0.07	0.08	0.11	0.13	0.15	0.15	0.14	0.12	0.09	0.08
LEFT WEB	DL1	0.18	0.23	0.31	0.38	0.42	0.43	0.40	0.34	0.27	0.22
	DL2	0.02	0.02	0.03	0.04	0.04	0.04	0.04	0.04	0.03	0.02
	C	0.00	0.06	0.18	0.27	0.32	0.32	0.27	0.19	0.07	0.00
2	FG	647.43	647.14	646.58	646.02	645.46	644.89	644.33	643.77	643.21	642.92
	TES	646.67	646.34	645.88	645.39	644.87	644.32	643.72	643.10	642.45	642.21
LEFT GIRDER	ZW	646.54	646.32	645.89	645.42	644.92	644.37	643.77	643.12	642.44	642.09
	CW	646.54	646.26	645.70	645.15	644.59	644.04	643.48	642.93	642.37	642.09
	SW	0.07	0.08	0.11	0.14	0.15	0.16	0.15	0.13	0.10	0.08
RIGHT WEB	DL1	0.19	0.24	0.32	0.39	0.43	0.44	0.41	0.36	0.28	0.23
	DL2	0.02	0.03	0.03	0.04	0.05	0.05	0.04	0.04	0.03	0.02
	C	0.00	0.06	0.18	0.28	0.33	0.33	0.28	0.19	0.07	0.00
3	FG	648.18	647.89	647.33	646.77	646.21	645.64	645.08	644.52	643.96	643.67
	TES	647.42	647.10	646.64	646.15	645.64	645.08	644.49	643.86	643.21	642.97
RIGHT GIRDER	ZW	647.30	647.08	646.65	646.19	645.69	645.14	644.53	643.89	643.20	642.85
	CW	647.30	647.02	646.46	645.91	645.35	644.80	644.24	643.69	643.13	642.85
	SW	0.07	0.09	0.12	0.14	0.16	0.16	0.15	0.13	0.10	0.08
LEFT WEB	DL1	0.20	0.24	0.33	0.40	0.45	0.46	0.42	0.37	0.28	0.24
	DL2	0.02	0.03	0.04	0.04	0.05	0.05	0.05	0.04	0.03	0.02
	C	0.00	0.07	0.19	0.29	0.34	0.34	0.29	0.20	0.07	0.00
4	FG	648.93	648.64	648.08	647.52	646.96	646.39	645.83	645.27	644.71	644.42
	TES	648.18	647.86	647.40	646.92	646.40	645.85	645.25	644.62	643.97	643.73
RIGHT GIRDER	ZW	648.05	647.84	647.42	646.96	646.46	645.91	645.30	644.65	643.97	643.61
	CW	648.05	647.78	647.22	646.67	646.11	645.56	645.00	644.45	643.89	643.61
	SW	0.07	0.09	0.12	0.15	0.16	0.17	0.15	0.13	0.10	0.09
RIGHT WEB	DL1	0.20	0.25	0.34	0.42	0.46	0.47	0.44	0.38	0.29	0.24
	DL2	0.02	0.03	0.04	0.05	0.05	0.05	0.05	0.04	0.03	0.03
	C	0.00	0.07	0.19	0.29	0.35	0.36	0.30	0.21	0.08	0.00
BLOCKING HEIGHTS											
5	BLK	25.68									21.23
6		26.22									21.78
7		27.20									22.75
8		27.74									23.30

FIELD SECTION 18

HORIZ. LOC.	VALUE	POSITION AND STATION								
		FS #15	P18-1	P18-2	P18-3	PIER 20	P18-5	P18-6	P18-7	FS #16
		1209+47.99	1209+56.82	1209+74.46	1209+92.11	1210+09.75	1210+27.39	1210+45.04	1210+62.68	1210+71.49
CAMBER DATA										
1	FG	642.17	641.89	641.33	640.77	640.20	639.64	639.08	638.52	638.23
	TES	641.45	641.07	640.41	639.86	639.27	638.71	638.10	637.59	637.39
LEFT GIRDER	ZW	641.33	640.99	640.30	639.65	639.04	638.49	637.97	637.48	637.24
	CW	641.33	641.04	640.45	639.87	639.28	638.70	638.11	637.53	637.24
	SW	0.08	0.06	0.03	0.01	0.00	0.00	0.02	0.03	0.04
LEFT WEB	DL1	0.22	0.18	0.10	0.03	0.00	0.01	0.04	0.08	0.11
	DL2	0.02	0.02	0.01	0.00	0.00	0.00	0.01	0.01	0.02
	C	0.00	-0.05	-0.15	-0.22	-0.25	-0.21	-0.14	-0.05	0.00
2	FG	642.92	642.64	642.08	641.52	640.95	640.39	639.83	639.27	638.98
	TES	642.21	641.82	641.17	640.62	640.02	639.46	638.85	638.34	638.14
LEFT GIRDER	ZW	642.09	641.74	641.06	640.40	639.79	639.24	638.72	638.23	637.99
	CW	642.09	641.80	641.21	640.63	640.04	639.46	638.87	638.28	637.99
	SW	0.08	0.06	0.03	0.01	0.00	0.00	0.02	0.03	0.04
RIGHT WEB	DL1	0.23	0.18	0.10	0.03	0.00	0.01	0.04	0.08	0.11
	DL2	0.02	0.02	0.01	0.00	0.00	0.00	0.01	0.01	0.02
	C	0.00	-0.06	-0.16	-0.23	-0.25	-0.22	-0.15	-0.05	0.00
3	FG	643.67	643.39	642.83	642.27	641.70	641.14	640.58	640.02	639.73
	TES	642.97	642.58	641.92	641.37	640.77	640.21	639.60	639.09	638.90
RIGHT GIRDER	ZW	642.85	642.50	641.81	641.15	640.54	639.99	639.47	638.98	638.75
	CW	642.85	642.56	641.97	641.39	640.80	640.21	639.63	639.04	638.75
	SW	0.08	0.07	0.04	0.01	0.00	0.00	0.02	0.04	0.05
LEFT WEB	DL1	0.24	0.19	0.10	0.03	0.00	0.01	0.04	0.09	0.11
	DL2	0.02	0.02	0.01	0.00	0.00	0.00	0.01	0.01	0.02
	C	0.00	-0.06	-0.16	-0.24	-0.26	-0.23	-0.15	-0.05	0.00
4	FG	644.42	644.14	643.58	643.02	642.45	641.89	641.33	640.77	640.48
	TES	643.73	643.34	642.67	642.12	641.52	640.96	640.35	639.85	639.65
RIGHT GIRDER	ZW	643.61	643.26	642.56	641.90	641.29	640.74	640.22	639.74	639.50
	CW	643.61	643.32	642.73	642.14	641.56	640.97	640.38	639.79	639.50
	SW	0.09	0.07	0.04	0.01	0.00	0.00	0.02	0.04	0.05
RIGHT WEB	DL1	0.24	0.20	0.10	0.04	0.00	0.01	0.04	0.09	0.12
	DL2	0.03	0.02	0.01	0.00	0.00	0.00	0.01	0.01	0.02
	C	0.00	-0.06	-0.17	-0.24	-0.27	-0.23	-0.16	-0.06	0.00
BLOCKING HEIGHTS										
5	BLK	21.23				18.94				17.14
6		21.78				19.47				17.68
7		22.75				20.44				18.65
8		23.30				20.97				19.19

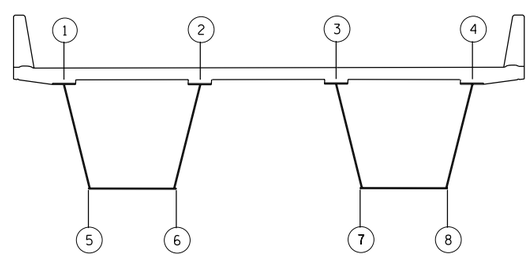

HORIZONTAL LOCATION KEY

LOOKING UPSTATION

LEGEND:

FOR LEGEND SEE CAMBER DIAGRAM UNIT 1

NOTES:

FOR NOTES SEE CAMBER DIAGRAM UNIT 1

STEEL FABRICATION CONTRACT ONLY

NO.	DATE	REVISION	BY

STATE OF WISCONSIN
DEPARTMENT OF TRANSPORTATION
STRUCTURES DESIGN SECTION

STRUCTURE B-5-678

DRAWN BY STB | PLANS CK'D. NPP

CAMBER DATA: FIELD SECTIONS 17 AND 18

SHEET 60 OF 63

64

8

8

FILE= O:\WisDot_12345678_US41Bridges_Plans\B-05-678E\060 B-05-678E-CAMBER DATA FS 17 AND18.dgn

DATE: 7/19/2012

I.D.

STATE PROJECT NUMBER

1133-11-76

FIELD SECTION 19

HORIZ. LOC.	VALUE	POSITION AND STATION								
		FS #16	P19-1	P19-2	P19-3	P19-4	P19-5	P19-6	P19-7	FS #17
		1210+71.49	1210+80.32	1210+97.96	1211+15.61	1211+33.25	1211+50.89	1211+68.54	1211+86.18	1211+94.99
CAMBER DATA										
1	FG	638.23	637.95	637.39	636.83	636.26	635.70	635.14	634.58	634.29
	TES	637.39	637.05	636.54	636.01	635.46	634.88	634.28	633.66	633.44
LEFT GIRDER	ZW	637.24	637.00	636.50	635.99	635.44	634.86	634.24	633.60	633.28
	CW	637.24	636.95	636.39	635.82	635.26	634.69	634.13	633.56	633.28
	SW	0.04	0.05	0.07	0.08	0.09	0.08	0.07	0.05	0.04
LEFT WEB	DL1	0.11	0.14	0.18	0.22	0.23	0.21	0.18	0.13	0.10
	DL2	0.02	0.02	0.03	0.03	0.03	0.03	0.03	0.02	0.02
	C	0.00	0.04	0.12	0.17	0.19	0.16	0.12	0.04	0.00
2	FG	638.98	638.70	638.14	637.58	637.01	636.45	635.89	635.33	635.04
	TES	638.14	637.80	637.29	636.77	636.22	635.64	635.03	634.41	634.19
LEFT GIRDER	ZW	637.99	637.75	637.26	636.75	636.20	635.62	635.00	634.36	634.03
	CW	637.99	637.71	637.14	636.58	636.01	635.45	634.88	634.31	634.03
	SW	0.04	0.06	0.07	0.08	0.09	0.08	0.07	0.05	0.04
RIGHT WEB	DL1	0.11	0.14	0.19	0.22	0.23	0.22	0.18	0.13	0.10
	DL2	0.02	0.02	0.03	0.03	0.03	0.03	0.03	0.02	0.02
	C	0.00	0.04	0.12	0.17	0.19	0.17	0.12	0.04	0.00
3	FG	639.73	639.45	638.89	638.33	637.76	637.20	636.64	636.08	635.79
	TES	638.90	638.56	638.05	637.52	636.98	636.39	635.79	635.17	634.95
RIGHT GIRDER	ZW	638.75	638.51	638.02	637.51	636.96	636.37	635.76	635.11	634.79
	CW	638.75	638.46	637.90	637.33	636.77	636.20	635.63	635.07	634.79
	SW	0.05	0.06	0.07	0.09	0.09	0.08	0.07	0.05	0.04
LEFT WEB	DL1	0.11	0.14	0.19	0.23	0.24	0.22	0.19	0.13	0.10
	DL2	0.02	0.02	0.03	0.03	0.03	0.03	0.03	0.02	0.02
	C	0.00	0.04	0.12	0.18	0.20	0.17	0.12	0.04	0.00
4	FG	640.48	640.20	639.64	639.08	638.51	637.95	637.39	636.83	636.54
	TES	639.65	639.31	638.81	638.28	637.73	637.15	636.55	635.92	635.70
RIGHT GIRDER	ZW	639.50	639.26	638.78	638.27	637.72	637.13	636.51	635.87	635.54
	CW	639.50	639.22	638.65	638.09	637.52	636.95	636.39	635.82	635.54
	SW	0.05	0.06	0.08	0.09	0.09	0.09	0.07	0.05	0.04
RIGHT WEB	DL1	0.12	0.15	0.20	0.23	0.25	0.23	0.19	0.14	0.11
	DL2	0.02	0.02	0.03	0.03	0.03	0.03	0.03	0.02	0.02
	C	0.00	0.05	0.13	0.18	0.20	0.18	0.13	0.04	0.00
BLOCKING HEIGHTS										
5	BLK	17.14								13.18
6		17.68								13.72
7		18.65								14.69
8		19.19								15.23

FIELD SECTION 20

HORIZ. LOC.	VALUE	POSITION AND STATION								
		FS #17	P20-1	P20-2	P20-3	PIER 21	P20-5	P20-6	P20-7	FS #18
		1211+94.99	1212+03.82	1212+21.46	1212+39.11	1212+56.75	1212+74.39	1212+92.04	1213+09.68	1213+18.49
CAMBER DATA										
1	FG	634.29	634.01	633.45	632.89	632.32	631.76	631.20	630.64	630.36
	TES	633.44	633.07	632.46	631.95	631.39	630.87	630.30	629.82	629.64
LEFT GIRDER	ZW	633.28	632.95	632.32	631.71	631.16	630.66	630.19	629.75	629.53
	CW	633.28	633.01	632.47	631.94	631.40	630.87	630.33	629.80	629.53
	SW	0.04	0.03	0.01	0.00	0.00	0.02	0.04	0.07	0.09
LEFT WEB	DL1	0.10	0.07	0.02	-0.01	0.00	0.04	0.11	0.19	0.23
	DL2	0.02	0.01	0.01	0.00	0.00	0.00	0.01	0.02	0.02
	C	0.00	-0.06	-0.16	-0.22	-0.24	-0.21	-0.14	-0.05	0.00
2	FG	635.04	634.76	634.20	633.64	633.07	632.51	631.95	631.39	631.11
	TES	634.19	633.83	633.21	632.69	632.14	631.62	631.05	630.58	630.40
LEFT GIRDER	ZW	634.03	633.71	633.07	632.46	631.91	631.41	630.95	630.50	630.29
	CW	634.03	633.76	633.23	632.69	632.16	631.62	631.09	630.56	630.29
	SW	0.04	0.03	0.01	0.00	0.00	0.02	0.04	0.07	0.09
RIGHT WEB	DL1	0.10	0.07	0.02	-0.01	0.00	0.04	0.11	0.19	0.24
	DL2	0.02	0.01	0.01	0.00	0.00	0.00	0.01	0.02	0.02
	C	0.00	-0.06	-0.16	-0.23	-0.25	-0.22	-0.14	-0.05	0.00
3	FG	635.79	635.51	634.95	634.39	633.82	633.26	632.70	632.14	631.86
	TES	634.95	634.58	633.96	633.45	632.89	632.37	631.80	631.33	631.16
RIGHT GIRDER	ZW	634.79	634.46	633.82	633.21	632.66	632.16	631.70	631.26	631.05
	CW	634.79	634.52	633.98	633.45	632.92	632.38	631.85	631.32	631.05
	SW	0.04	0.03	0.01	0.00	0.00	0.02	0.04	0.08	0.09
LEFT WEB	DL1	0.10	0.07	0.02	-0.01	0.00	0.05	0.11	0.20	0.24
	DL2	0.02	0.01	0.01	0.00	0.00	0.00	0.01	0.02	0.03
	C	0.00	-0.06	-0.16	-0.24	-0.26	-0.22	-0.15	-0.05	0.00
4	FG	636.54	636.26	635.70	635.14	634.57	634.01	633.45	632.89	632.61
	TES	635.70	635.33	634.71	634.19	633.64	633.12	632.56	632.09	631.91
RIGHT GIRDER	ZW	635.54	635.21	634.57	633.96	633.41	632.91	632.46	632.02	631.81
	CW	635.54	635.27	634.74	634.21	633.67	633.14	632.61	632.08	631.81
	SW	0.04	0.03	0.01	0.00	0.00	0.02	0.04	0.08	0.09
RIGHT WEB	DL1	0.11	0.07	0.02	-0.01	0.00	0.05	0.12	0.20	0.25
	DL2	0.02	0.01	0.01	0.00	0.00	0.00	0.01	0.02	0.03
	C	0.00	-0.06	-0.17	-0.24	-0.27	-0.23	-0.15	-0.05	0.00
BLOCKING HEIGHTS										
5	BLK	13.18				11.06				9.43
6		13.72				11.59				9.97
7		14.69				12.56				10.95
8		15.23				13.09				11.50

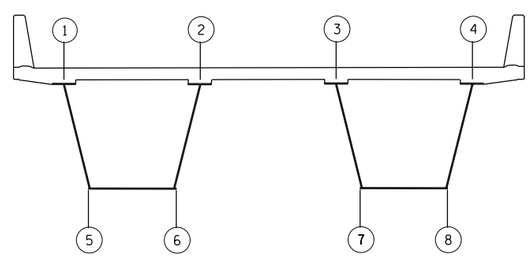

HORIZONTAL LOCATION KEY

LOOKING UPSTATION

STEEL FABRICATION CONTRACT ONLY

LEGEND:

FOR LEGEND SEE CAMBER DIAGRAM UNIT 1

NOTES:

FOR NOTES SEE CAMBER DIAGRAM UNIT 1

NO.	DATE	REVISION	BY

STATE OF WISCONSIN
DEPARTMENT OF TRANSPORTATION
STRUCTURES DESIGN SECTION

STRUCTURE B-5-678

DRAWN BY STB | PLANS CK'D. NPP

CAMBER DATA: FIELD SECTIONS 19 AND 20

SHEET 61 OF 63

FILE= Q:\WisDot_12345678_US41Bridges_Plans\B-05-678E\061 B-05-678E-CAMBER DATA FS 19 AND 20.dgn

DATE: 7/19/2012
I.D.

8

8

STATE PROJECT NUMBER

1133-11-76

FIELD SECTION 21

HORIZ. LOC.	VALUE	POSITION AND STATION								
		FS #18	P21-1	P21-2	P21-3	P21-4	P21-5	P21-6	P21-7	FS #19
		1213+18.49	1213+27.32	1213+44.96	1213+62.61	1213+80.25	1213+97.89	1214+15.54	1214+33.18	1214+41.99
CAMBER DATA										
1	FG	630.36	630.07	629.51	628.95	628.39	627.82	627.28	626.73	626.46
	TES	629.64	629.31	628.83	628.32	627.79	627.22	626.63	626.00	625.78
LEFT GIRDER	ZW	629.53	629.31	628.85	628.37	627.84	627.26	626.66	626.01	625.68
	CW	629.53	629.25	628.70	628.15	627.61	627.06	626.51	625.96	625.68
	SW	0.09	0.10	0.13	0.15	0.16	0.15	0.14	0.11	0.10
LEFT WEB	DL1	0.23	0.27	0.35	0.40	0.42	0.41	0.37	0.30	0.26
	DL2	0.02	0.03	0.04	0.04	0.04	0.04	0.04	0.03	0.03
	C	0.00	0.05	0.15	0.21	0.24	0.21	0.16	0.05	0.00
2	FG	631.11	630.82	630.26	629.70	629.14	628.57	628.03	627.48	627.21
	TES	630.40	630.07	629.59	629.09	628.56	627.98	627.39	626.76	626.54
LEFT GIRDER	ZW	630.29	630.07	629.62	629.14	628.61	628.03	627.43	626.78	626.44
	CW	630.29	630.01	629.46	628.92	628.37	627.82	627.27	626.72	626.44
	SW	0.09	0.11	0.13	0.15	0.16	0.16	0.14	0.12	0.10
RIGHT WEB	DL1	0.24	0.28	0.36	0.41	0.44	0.43	0.38	0.31	0.27
	DL2	0.02	0.03	0.04	0.04	0.05	0.04	0.04	0.03	0.03
	C	0.00	0.06	0.15	0.22	0.25	0.22	0.16	0.06	0.00
3	FG	631.86	631.57	631.01	630.45	629.89	629.32	628.78	628.23	627.96
	TES	631.16	630.83	630.35	629.85	629.32	628.75	628.16	627.53	627.30
RIGHT GIRDER	ZW	631.05	630.83	630.39	629.91	629.38	628.80	628.20	627.54	627.21
	CW	631.05	630.77	630.23	629.68	629.13	628.58	628.03	627.48	627.21
	SW	0.09	0.11	0.14	0.16	0.17	0.16	0.15	0.12	0.10
LEFT WEB	DL1	0.24	0.29	0.37	0.42	0.45	0.44	0.40	0.32	0.28
	DL2	0.03	0.03	0.04	0.04	0.05	0.05	0.04	0.03	0.03
	C	0.00	0.06	0.16	0.23	0.25	0.22	0.17	0.06	0.00
4	FG	632.61	632.32	631.76	631.20	630.64	630.07	629.53	628.98	628.71
	TES	631.91	631.59	631.12	630.62	630.09	629.51	628.92	628.29	628.06
RIGHT GIRDER	ZW	631.81	631.59	631.15	630.67	630.15	629.57	628.97	628.31	627.97
	CW	631.81	631.53	630.99	630.44	629.89	629.34	628.79	628.24	627.97
	SW	0.09	0.11	0.14	0.16	0.17	0.17	0.15	0.12	0.11
RIGHT WEB	DL1	0.25	0.30	0.38	0.43	0.46	0.45	0.41	0.33	0.29
	DL2	0.03	0.03	0.04	0.05	0.05	0.05	0.04	0.04	0.03
	C	0.00	0.06	0.17	0.24	0.26	0.23	0.17	0.06	0.00
BLOCKING HEIGHTS										
5	BLK	9.43								5.58
6		9.97								6.13
7		10.95								7.11
8		11.50								7.66

FIELD SECTION 22

HORIZ. LOC.	VALUE	POSITION AND STATION								
		FS #19	P22-1	P22-2	P22-3	PIER 22	P22-5	P22-6	P22-7	FS #20
		1214+41.99	1214+50.82	1214+68.46	1214+86.11	1215+03.75	1215+18.58	1215+33.40	1215+48.23	1215+55.63
CAMBER DATA										
1	FG	626.46	626.19	625.67	625.17	624.68	624.29	623.90	623.53	623.35
	TES	625.78	625.42	624.80	624.27	623.72	623.31	622.85	622.49	622.36
LEFT GIRDER	ZW	625.68	625.35	624.70	624.09	623.52	623.09	622.70	622.34	622.17
	CW	625.68	625.41	624.86	624.32	623.77	623.32	622.86	622.40	622.17
	SW	0.10	0.08	0.05	0.02	0.00	-0.01	-0.01	-0.01	0.00
LEFT WEB	DL1	0.26	0.22	0.13	0.06	0.00	-0.02	-0.03	-0.02	-0.01
	DL2	0.03	0.02	0.01	0.01	0.00	0.00	0.00	0.00	0.00
	C	0.00	-0.06	-0.16	-0.23	-0.26	-0.22	-0.16	-0.06	0.00
2	FG	627.21	626.94	626.42	625.92	625.43	625.04	624.65	624.28	624.10
	TES	626.54	626.17	625.55	625.02	624.47	624.06	623.60	623.24	623.11
LEFT GIRDER	ZW	626.44	626.11	625.46	624.84	624.27	623.84	623.45	623.09	622.92
	CW	626.44	626.17	625.62	625.08	624.53	624.07	623.61	623.15	622.92
	SW	0.10	0.08	0.05	0.02	0.00	-0.01	-0.01	-0.01	0.00
RIGHT WEB	DL1	0.27	0.23	0.14	0.06	0.00	-0.02	-0.03	-0.02	-0.01
	DL2	0.03	0.02	0.01	0.01	0.00	0.00	0.00	0.00	0.00
	C	0.00	-0.06	-0.17	-0.24	-0.26	-0.23	-0.16	-0.06	0.00
3	FG	627.96	627.69	627.17	626.67	626.18	625.79	625.40	625.03	624.85
	TES	627.30	626.93	626.31	625.78	625.22	624.81	624.35	623.99	623.86
RIGHT GIRDER	ZW	627.21	626.87	626.21	625.59	625.02	624.59	624.20	623.84	623.67
	CW	627.21	626.93	626.38	625.83	625.29	624.82	624.36	623.90	623.67
	SW	0.10	0.09	0.05	0.02	0.00	-0.01	-0.01	-0.01	0.00
LEFT WEB	DL1	0.28	0.24	0.14	0.06	0.00	-0.02	-0.03	-0.02	-0.01
	DL2	0.03	0.03	0.02	0.01	0.00	0.00	0.00	0.00	0.00
	C	0.00	-0.06	-0.17	-0.24	-0.27	-0.23	-0.17	-0.06	0.00
4	FG	628.71	628.44	627.92	627.42	626.93	626.54	626.15	625.78	625.60
	TES	628.06	627.69	627.06	626.53	625.97	625.56	625.10	624.74	624.61
RIGHT GIRDER	ZW	627.97	627.63	626.97	626.34	625.77	625.34	624.94	624.59	624.42
	CW	627.97	627.69	627.14	626.59	626.04	625.58	625.11	624.65	624.42
	SW	0.11	0.09	0.05	0.02	0.00	-0.01	-0.01	-0.01	0.00
RIGHT WEB	DL1	0.29	0.24	0.15	0.06	0.00	-0.02	-0.03	-0.02	-0.01
	DL2	0.03	0.03	0.02	0.01	0.00	0.00	0.00	0.00	0.00
	C	0.00	-0.06	-0.17	-0.25	-0.27	-0.24	-0.17	-0.06	0.00
BLOCKING HEIGHTS										
5	BLK	5.58				3.42				2.07
6		6.13				3.95				2.61
7		7.11				4.92				3.57
8		7.66				5.45				4.11

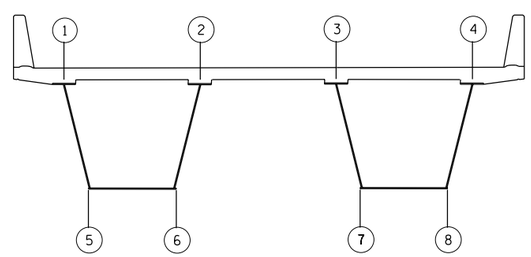

HORIZONTAL LOCATION KEY

LOOKING UPSTATION

LEGEND:

FOR LEGEND SEE CAMBER DIAGRAM UNIT 1

NOTES:

FOR NOTES SEE CAMBER DIAGRAM UNIT 1

STEEL FABRICATION CONTRACT ONLY

NO.	DATE	REVISION	BY

STATE OF WISCONSIN
DEPARTMENT OF TRANSPORTATION
STRUCTURES DESIGN SECTION

STRUCTURE B-5-678

DRAWN BY STB | PLANS CK'D. NPP

CAMBER DATA: FIELD SECTIONS 21 AND 22

SHEET 62 OF 63

66

FILE= O:\WisDot_12345678_US41Bridges_Plans\B-05-678E\062 B-05-678E-CAMBER DATA FS 21 AND 22.dgn

DATE: 7/19/2012

I.D.

8

8

STATE PROJECT NUMBER

1133-11-76

FIELD SECTION 23

HORIZ. LOC.	VALUE	POSITION AND STATION							
		FS #20 1215+55.63	P23-1 1215+63.05	P23-2 1215+77.88	P23-3 1215+92.70	P23-4 1216+07.53	P23-5 1216+22.35	P23-6 1216+37.18	W. ABUT. 1216+52.00
CAMBER DATA									
1	FG	623.35	623.17	622.82	622.49	622.17	621.85	621.55	621.27
	TES	622.36	622.09	621.76	621.44	621.12	620.80	620.49	620.18
LEFT GIRDER	ZW	622.17	622.01	621.68	621.36	621.05	620.73	620.41	620.10
	CW	622.17	622.01	621.69	621.37	621.06	620.74	620.42	620.10
	SW	0.00	0.00	0.01	0.01	0.01	0.01	0.01	0.00
LEFT WEB	DL1	-0.01	0.00	0.01	0.03	0.03	0.03	0.02	0.00
	DL2	0.00	0.00	0.00	0.00	0.01	0.00	0.00	0.00
	C	0.00	-0.01	-0.01	-0.01	-0.01	-0.01	-0.01	0.00
2	FG	624.10	623.92	623.57	623.24	622.92	622.60	622.30	622.02
	TES	623.11	622.84	622.51	622.19	621.87	621.55	621.24	620.93
LEFT GIRDER	ZW	622.92	622.76	622.43	622.12	621.80	621.48	621.16	620.85
	CW	622.92	622.76	622.44	622.12	621.81	621.49	621.17	620.85
	SW	0.00	0.00	0.01	0.01	0.01	0.01	0.01	0.00
RIGHT WEB	DL1	-0.01	0.00	0.02	0.03	0.03	0.03	0.02	0.00
	DL2	0.00	0.00	0.00	0.01	0.01	0.00	0.00	0.00
	C	0.00	-0.01	-0.01	-0.01	-0.01	0.00	0.00	0.00
3	FG	624.85	624.67	624.32	623.99	623.67	623.35	623.05	622.77
	TES	623.86	623.59	623.26	622.94	622.62	622.31	621.99	621.68
RIGHT GIRDER	ZW	623.67	623.51	623.18	622.87	622.55	622.23	621.91	621.60
	CW	623.67	623.51	623.19	622.87	622.55	622.24	621.92	621.60
	SW	0.00	0.00	0.01	0.01	0.01	0.01	0.01	0.00
LEFT WEB	DL1	-0.01	0.00	0.02	0.03	0.03	0.03	0.02	0.00
	DL2	0.00	0.00	0.00	0.01	0.01	0.00	0.00	0.00
	C	0.00	-0.01	-0.01	-0.01	0.00	0.00	0.00	0.00
4	FG	625.60	625.42	625.07	624.74	624.42	624.10	623.80	623.52
	TES	624.61	624.34	624.01	623.69	623.37	623.06	622.74	622.43
RIGHT GIRDER	ZW	624.42	624.26	623.94	623.62	623.30	622.99	622.67	622.35
	CW	624.42	624.26	623.94	623.62	623.30	622.99	622.67	622.35
	SW	0.00	0.00	0.01	0.01	0.01	0.01	0.01	0.00
RIGHT WEB	DL1	-0.01	0.00	0.02	0.03	0.04	0.03	0.02	0.00
	DL2	0.00	0.00	0.00	0.01	0.01	0.00	0.00	0.00
	C	0.00	-0.01	-0.01	0.00	0.00	0.00	0.00	0.00
BLOCKING HEIGHTS									
5	BLK	2.07							0.00
6		2.61							0.54
7		3.57							1.50
8		4.11							2.04

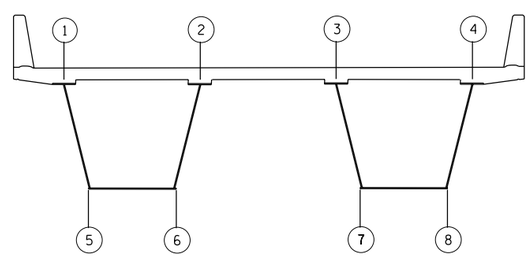

HORIZONTAL LOCATION KEY

LOOKING UPSTATION

LEGEND:

FOR LEGEND SEE CAMBER DIAGRAM UNIT 1

NOTE:

FOR NOTES SEE CAMBER DIAGRAM UNIT 1

STEEL FABRICATION CONTRACT ONLY

NO.	DATE	REVISION	BY

STATE OF WISCONSIN
DEPARTMENT OF TRANSPORTATION
STRUCTURES DESIGN SECTION

STRUCTURE B-5-678

DRAWN BY STB | PLANS CK'D. NPP

CAMBER DATA: FIELD SECTION 23

SHEET 63 OF 63

8

8

FILE= O:\WisDot_12345678_US41Bridges_Plans\B-05-678E\063 B-05-678E-CAMBER DATA FS 23.dgn

DATE: 7/19/2012
I.D.