AS BUILT PLAN

WKE

MAR 11

PROJECT ID: 1033-02-70
WITH:

COUNTY: RACINE

ORDER OF SHEETS

Section No.	1	Title
Section No.	2	Typical Sections and Details
Section No.	3	Estimate of Quantities
Section No.	3	Miscellaneous Quantities
Section No.	4	Right of Way Plat
Section No.	5	Plan and Profile
Section No.	6	Standard Detail Drawings
Section No.	7	Sign Plates
~~Section No.~~	~~8~~	~~Structure Plans~~
Section No.	9	Computer Earthwork Data
Section No.	9	Cross Sections

TOTAL SHEETS = 242

STATE OF WISCONSIN
DEPARTMENT OF TRANSPORTATION

PLAN OF PROPOSED IMPROVEMENT

STATE PROJECT	FEDERAL PROJECT	
	PROJECT	CONTRACT
1033-02-70	WISC 2011091	1

N-S FREEWAY - STH 20 INTERCHANGE

EAST FRONTAGE ROAD

IH 94

RACINE COUNTY

STATE PROJECT NUMBER
1033-02-70

Project Manager: Mark Klipstein (WisDOT)
Project Leader:
Jeff Reedy (Bloom Companies, LLC)
Project Personnel:
Greg Howell (Bloom Companies, LLC)
Nick Manning (Bloom Companies, LLC)
Mehran Sanati (Bloom Companies, LLC)
Badi Alsalami (Bloom Companies, LLC)
John Pawlak (Bloom Companies, LLC)
.
Date Work Started: 05/23/2011
Date Work Completed: 10/12/2012
.
Awarded Contract Amount: $4,479,033.42
Current Contract Amount: $4,742,511.78

Contractor: Mann Brothers, Inc. (Grading, Shouldering, Concrete Curb & Gutter, Concrete Pavement, Fencing, Restoration)
Sub-Contractors: Bradford Contractors, LLC (Storm Sewer, Culverts, Water and Sanitary)
Andrew Services Corp (Guardrail Removal, Erosion Control, Restoration)
Payne and Dolan (Milling, Asphalt Pavement, Asphalt Flumes and Asphalt Curb)
Q3 Contracting, Inc (Traffic Control)
Nielson Madsen & Barber, S.C. (Surveying)
Century Fence (Pavement Marking)
Interstate Tree (Clearing & Grubbing)

N

DESIGN DESIGNATION

	CTH C	SE FRONTAGE ROAD	NE FRONTAGE ROAD
A.A.D.T. 2010 =	7,130	2010 = 9,110	2010 = 4,770
A.A.D.T. 2030 =	9,300	2030 = 12,270	2030 = 6,040
D.H.V. =	410	= 840	= 450
D.D. =	58/42	= 65/35	= 51/49
T. =	2%	= 18%	= 12%
DESIGN SPEED =	55 MPH	= 40 MPH	= 40 MPH
ESALS =	817,600	= 1,138,800	= 1,138,800

CONVENTIONAL SYMBOLS

PLAN
- CORPORATE LIMITS
- PROPERTY LINE
- LOT LINE
- LIMITED HIGHWAY EASEMENT
- EXISTING RIGHT OF WAY
- PROPOSED OR NEW R/W LINE
- SLOPE INTERCEPT
- REFERENCE LINE
- EXISTING CULVERT
- PROPOSED CULVERT (Box or Pipe)
- COMBUSTIBLE FLUIDS — CAUTION
- MARSH AREA
- WOODED OR SHRUB AREA

PROFILE
- GRADE LINE
- ORIGINAL GROUND
- MARSH OR ROCK PROFILE (To be noted as such) — ROCK
- SPECIAL DITCH — LABEL
- GRADE ELEVATION — 915.36
- CULVERT (Profile View)

UTILITIES
- ELECTRIC — E
- FIBER OPTIC — FO
- GAS — G
- SANITARY SEWER — SAN
- STORM SEWER — SS
- TELEPHONE — T
- WATER — W
- UTILITY PEDESTAL
- POWER POLE
- TELEPHONE POLE

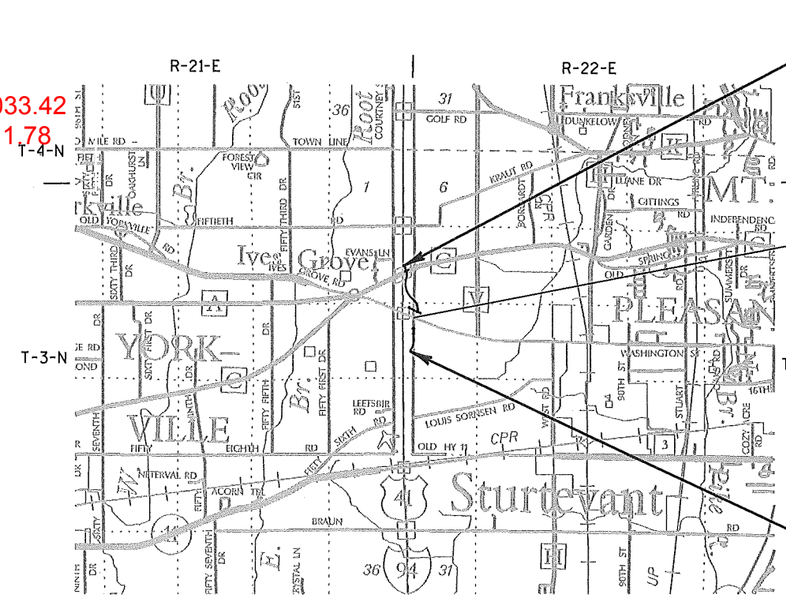

LAYOUT
SCALE 0 1.0 MI.

TOTAL NET LENGTH OF CENTERLINE = 1.257 MI.

COORDINATES ON THIS PLAN ARE REFERENCED TO THE WISCONSIN COUNTY COORDINATE SYSTEM (WCCS), RACINE COUNTY, NAD 1983(97)

ELEVATIONS SHOWN ON THIS PLAN ARE REFERENCED TO THE NORTH AMERICAN VERTICAL DATUM OF 1988 (91) (NAVD 88(91)).

Milwaukee Transportation Partners LLC
ORIGINAL PLANS PREPARED BY
MILWAUKEE, WISCONSIN

WISCONSIN
ANDREA M. MASTERS
38385
RACINE, WI
PROFESSIONAL ENGINEER

8/2/2010 (Date) Andrea M. Masters (Signature)

STATE OF WISCONSIN
DEPARTMENT OF TRANSPORTATION

PREPARED BY

Surveyor	WISDOT
Designer	MTP
Project Manager	JOSHUA LEVEQUE
District Examiner	
District Supervisor	WAFA ELOAO
C.O. Examiner	Carl W Bugajewski

APPROVED FOR DISTRICT OFFICE
DATE: 8/2/10 (Signature)

E

UTILITY CONTACTS

TO OBTAIN LOCATION OF PARTICIPANTS' UNDERGROUND FACILITIES BEFORE YOU DIG IN WISCONSIN

WIS. STATUTE 182.0175 (1974) REQUIRES MIN. OF 3 WORK DAYS NOTICE BEFORE YOU EXCAVATE.

DIGGERS HOTLINE

Toll Free (800) 242-8511
Milwaukee Area 811
Hearing Impaired TDD (800) 542-2289
www.DiggersHotline.com

AT&T WISCONSIN
TODD BARTELS – AREA MANAGER
AT&T WISCONSIN
7721 W. FOND DU LAC AVE
PHONE: (414) 536-2971
tb1368@att.com

TDS METROCOM
MR.MICHAEL JOHHNSON
TDS METROCOM
20875 CROSSROADS CIRCLE, SUITE 800
WAUKESHA, WI 53186
PHONE: (262) 754-3052
CELL: (262) 939-6355
michael.johnson@tdstelecom.com

VILLAGE OF MOUNT PLEASANT SANITARY
MR. ROBERT PUCELY
SEWER UTILITY
6126 DURAND AVE
RACINE, WI 53406
PHONE: (262) 554-8750 EXT.213
FAX: (262) 554-6785
rpucely@mtpleasantwi.gov

TIME WARNER CABLE
MR. ROBERT DETERT
TIME WARNER CABLE
1320 N. MARTIN LUTHER KING JR. DRIVE
MILWAUKEE, WI 53212
PHONE: (414) 277-4280
CELL: (414) 688 0348
FAX: (414) 277-0638
robert.detert@twcable.com

WE ENERGIES (ELECTRIC)
SEND ALL CORRESPONDENCE TO:
MR. DAN SANDE
333 W. EVERETT STREET - A299
MILWAUKEE, WI 53203
PHONE: (414) 221-4578
FAX: (414) 221-2336
dan.sande@we-energies.com

CONSTRUCTION FIELD CONTACT:
MR. LEO SCHUELLER
500 S. 116TH STREET
WEST ALLIS, WI 53214
PHONE: (414) 944-5511
CELL: (414) 588-5878
leo.schueller@we-energies.com

WE ENERGIES (GAS)
SEND ALL CORRESPONDENCE TO:
MR. DAN SANDE
333 W. EVERETT STREET - A299
MILWAUKEE, WI 53203
PHONE: (414) 221-4578
FAX: (414) 221-2336
dan.sande@we-energies.com

CONSTRUCTION FIELD CONTACT:
MR. LEO SCHUELLER
500 S. 116TH STREET
WEST ALLIS, WI 53214
PHONE: (414) 944-5511
CELL: (414) 588-5878
leo.schueller@we-energies.com

WISDOT STORM SEWER
MR. DAVE ZEMAN
WISDOT STORM SEWER
10190 W WATERTOWN RD
WAUWATOSA, WI 53226
PHONE: (414) 257-6567
dave.zeman@dot.wi.gov

OTHER AGENCIES

WISCONSIN DEPARTMENT OF NATURAL RESOURCES
SHELLEY WARWICK, WATER RESOURCES MANAGEMENT SPECIALIST
141 NW BARSTOW ST. ROOM 180
WAUKESHA, WI 53188
PHONE: (414) 550-4274
shelley.warwick@wisconsin.gov

WisDOT UTILITY COORDINATOR
RABI BISTA
WisDOT SE FREEWAYS UTILITY COORDINATOR
141 NW BARSTOW ST.
WAUKESHA, WI 53187-0798
PHONE: (414) 750-7224
Rabi.bista@dot.wi.gov

RACINE COUNTY DPW
MR. JEFFREY KATZ, COUNTY ENGINEER
RACINE COUNTY DPW
14200 WASHINGTON AVENUE
STURTEVANT, WI 53177
PHONE: (262) 886-8440
FAX: (262) 886-8480
jeff.katz@goracine.org

ORDER OF SECTION 2 DETAIL SHEETS

GENERAL NOTES
PROJECT OVERVIEW
TYPICAL SECTIONS
CONSTRUCTION DETAILS
PLAN DETAILS
EROSION CONTROL
EXISTING SIGNING
PERMANENT SIGNING
PAVEMENT MARKING
TRAFFIC CONTROL
STAGE CONSTRUCTION
DETOURS
FENCING PLAN
ALIGNMENT LAYOUT

2

GENERAL NOTES

NO TREES OR SHRUBS SHALL BE REMOVED WITHOUT APPROVAL OF THE ENGINEER.

THE LOCATIONS OF EXISTING AND PROPOSED UTILITY INSTALLATION AS SHOWN ON THE PLANS ARE APPROXIMATE. THERE MAY BE OTHER UTILITY INSTALLATIONS WITHIN THE PROJECT AREA THAT ARE NOT SHOWN.

THE CONTRACTOR SHALL NOTIFY DIGGERS HOTLINE AND AFFECTED UTILITIES PRIOR TO THE START OF WORK. ANY LOCAL MUNICIPAL UTILITY WHICH IS NOT A MEMBER OF THE DIGGERS HOTLINE MUST BE CONTACTED SEPARATELY.

ALL HOLES OR OPENINGS BELOW SUBGRADE RESULTING FROM ABANDONMENT OR REMOVAL OF EXISTING STRUCTURES SHALL BE FILLED WITH GRANULAR BACKFILL AND PAID FOR AS INCIDENTAL TO THE ABANDON OR REMOVAL ITEM .

WHEN THE QUANTITY OF ASPHALTIC CONCRETE PAVEMENT OR BASE COURSE IS MEASURED FOR PAYMENT BY THE TON, THE DEPTH OR THICKNESS OF THE COURSE SHOWN ON THE PLAN IS APPROXIMATE AND THE ACTUAL THICKNESS WILL DEPEND ON THE DISTRIBUTION OF THE MATERIAL AS DIRECTED BY THE ENGINEER.

TACK COAT HAS BEEN ESTIMATED AT AN APPLICATION RATE OF 0.025 GALLON PER SQUARE YARD AND SHALL BE APPLIED BETWEEN ALL LAYERS OF ASPHALTIC PAVEMENT.

PRIOR TO ORDERING DRAINAGE PIPES AND STRUCTURES, THE CONTRACTOR SHALL VERIFY RELATED DRAINAGE INFORMATION IN THE PLANS AND PROVIDE DOCUMENTATION TO ENGINEER IN ACCORDANCE WITH SPECIFICATIONS.

INLET AND DISCHARGE ELEVATIONS FOR DRAINAGE STRUCTURES SHOWN ON THE PLAN MAY BE ADJUSTED BY THE ENGINEER TO FIT FIELD CONDITIONS.

THE QUANTITY OF SALVAGED TOPSOIL IS COMPUTED FROM MEASUREMENTS BETWEEN THE SUBGRADE SHOULDER POINTS AND THE SLOPE INTERCEPTS AS SHOWN ON THE CROSS SECTIONS PLUS 5 FEET FOR ROUNDING.

CURB HEIGHTS AT THE END OF CURB AND GUTTER SHALL BE TAPERED FROM 0 TO 4 INCHES OR 0 TO 6 INCHES IN 6 FEET.

CURB AND GUTTER GRADES ARE GIVEN TO THE FLANGE. CURB AND GUTTER RADII ARE MEASURED TO THE FLANGE.

EXISTING DRIVEWAYS AND FIELD ENTRANCES SHALL BE RESTORED IN KIND AS DIRECTED BY THE ENGINEER IN THE FIELD AND AT THE LOCATION DETERMINED BY THE ENGINEER.

TEMPORARY STORAGE OF ANY EXCAVATED MATERIAL WILL NOT BE PERMITTED IN WETLANDS.

BROKEN CONCRETE CONTAINING RE-BAR SHALL NOT BE USED AS RIPRAP OR HEAVY RIPRAP.

CROSS SECTIONS SHOWN INCLUDE THE THICKNESS OF TOPSOIL WHERE REQUIRED. TOPSOIL SHALL BE REPLACED WITH 4-INCH TYPICAL DEPTH.

A SAWED JOINT IS REQUIRED WHERE NEW ASPHALTIC CONCRETE SURFACE MEETS EXISTING ASPHALTIC CONCRETE SURFACE.

TRAFFIC CONTROL DEVICES SHALL BE ADJUSTED TO FIT FIELD CONDITIONS AS DIRECTED BY THE ENGINEER.

REMOVAL OF EROSION CONTROL DEVICES IS INCLUDED IN THE COST OF THEIR RESPECTIVE BID ITEMS.

THE EROSION CONTROL FEATURES AS SHOWN IN THE PLANS ARE AT SUGGESTED LOCATIONS. EXACT LOCATIONS WILL BE DETERMINED BY THE ENGINEER IN THE FIELD.

DISTURBED AREAS WITHIN THE RIGHT OF WAY, EXCEPT THE AREAS WITHIN THE FINISHED SHOULDER POINTS, SHALL BE TOPSOILED, FERTILIZED, MULCHED AND SEEDED AS DIRECTED BY THE ENGINEER.

INLET PROTECTION IS REQUIRED AT ALL INLETS AS PER DETAIL OR AS DIRECTED BY THE ENGINEER.

CONCRETE MEDIAN SLOPED NOSE SHALL BE CONSTRUCTED FOR ALL MEDIAN OPENINGS AT INTERSECTIONS WITH CURB & GUTTER.

HMA PAVEMENT AND CONCRETE DRIVEWAYS AND/OR PARKING LOTS SHALL BE SAWCUT AT THE MATCHLINE AS SHOWN ON THE PAVING DETAILS OR AS DIRECTED BY THE ENGINEER.

-A CONVERSION FACTOR OF 1.8 TONS/CY IS USED TO ESTIMATE QUANTITIES FOR SELECT
CRUSHED MATERIAL.

-A CONVERSION FACTOR OF 2.10 TONS/CY IS USED TO ESTIMATE QUANTITIES FOR BASE AGGREGATE DENSE.

-A CONVERSION FACTOR OF 115 LB/SY/IN IS USED TO ESTIMATE QUANTITIES FOR HMA PAVEMENT.

EXISTING PIPE CULVERT SIZES AND CONCRETE BOX CULVERT SIZES SHOWN ARE APPROXIMATE AND CONTRACTOR WILL BASE BID ON THE ACTUAL FIELD CONDITIONS.

ALL TYPES OF HMA PAVEMENT SHALL BE CONSTRUCTED WITH THE FOLLOWING LAYERS AND GRADATIONS:

TOTAL LAYER PAVEMENT THICKNESS	LAYERS	NOMINAL MAXIMUM SIZE GRADATION	ASPHALTIC MATERIAL
7"	2" UPPER LAYER	12.5 MM	PG64-28
	2 1/2" UPPER-LOWER LAYER	19.0 MM	PG64-22
	2 1/2" LOWER-LOWER LAYER	19.0 MM	PG64-22

ALL EXISTING STREET NAME SIGNS WILL BE REMOVED AND REPLACED BY THE VILLAGE OF MOUNT PLEASANT.

STANDARD ABBREVIATIONS

AEW	APRON END WALL
AGG	AGGREGATE
BAD	BASE AGGREGATE DENSE
BM	BENCH MARK
C&G	CURB AND GUTTER
C/L OR ℄	CENTER OR CONSTUCTION LINE
CONC	CONCRETE
CP	CULVERT PIPE
CPCM	CULVERT PIPE CORRUGATED METAL
CPCS	CULVERT PIPE CORRUGATED STEEL
CPRC	CULVERT PIPE REINFORCED CONCRETE
CPRCHE	CULVERT PIPE REINFORCED CONCRETE HORIZONTAL ELLIPTICAL
CSD	CONCRETE SURFACE DRAIN
CY	CUBIC-YARD
D	DEGREE OF CURVE
Δ	DELTA
DISCH	DISCHARGE
FE	FIELD ENTRANCE
HMA	HOT MIX ASPHALT
INV	INVERT
L	LENGTH OF CURVE
LHF	LEFT HAND FORWARD
LT	LEFT
MIN	MINIMUM
M/L	MATCHLINE
NB	NORTHBOUND
NC	NORMAL CROWN
PAVT	PAVEMENT
PC	POINT OF CURVE
PCC	POINT OF COMPOUND CURVE
PE	PRIVATE ENTRANCE
PI	POINT OF INTERSECTION
PLE	PERMANENT LIMITED EASMENT
PT	POINT OF TANGENT
R	RADIUS OF CURVE
R/L	REFERENCE LINE
R/W	RIGHT OF WAY
RC	REVERSE CROWN
RCAEW	APRON ENDWALL FOR CULVERT PIPE REINFORCE CONCRETE
REQD	REQUIRED
RHF	RIGHT HAND FORWARD
RO	RUN OFF LENGTH
RRSP	RAILROAD SPIKE
RT	RIGHT
SALV	SALVAGED
SB	SOUTHBOUND
SDD	STANDARD DETAIL DRAWING
SE	SUPER ELEVATION
SF	SQUARE FOOT
STA	STATION
SY	SQUARE YARD
T	TANGENT LENGTH
TLE	TEMPORARY LIMITED EASEMENT
VCL	VERTICAL CURVE LENGTH
VPC	POINT OF VERTICAL CURVE
VPI	POINT OF VERTICAL INTERSECTION
VPT	POINT OF VERTICAL TANGENT

2

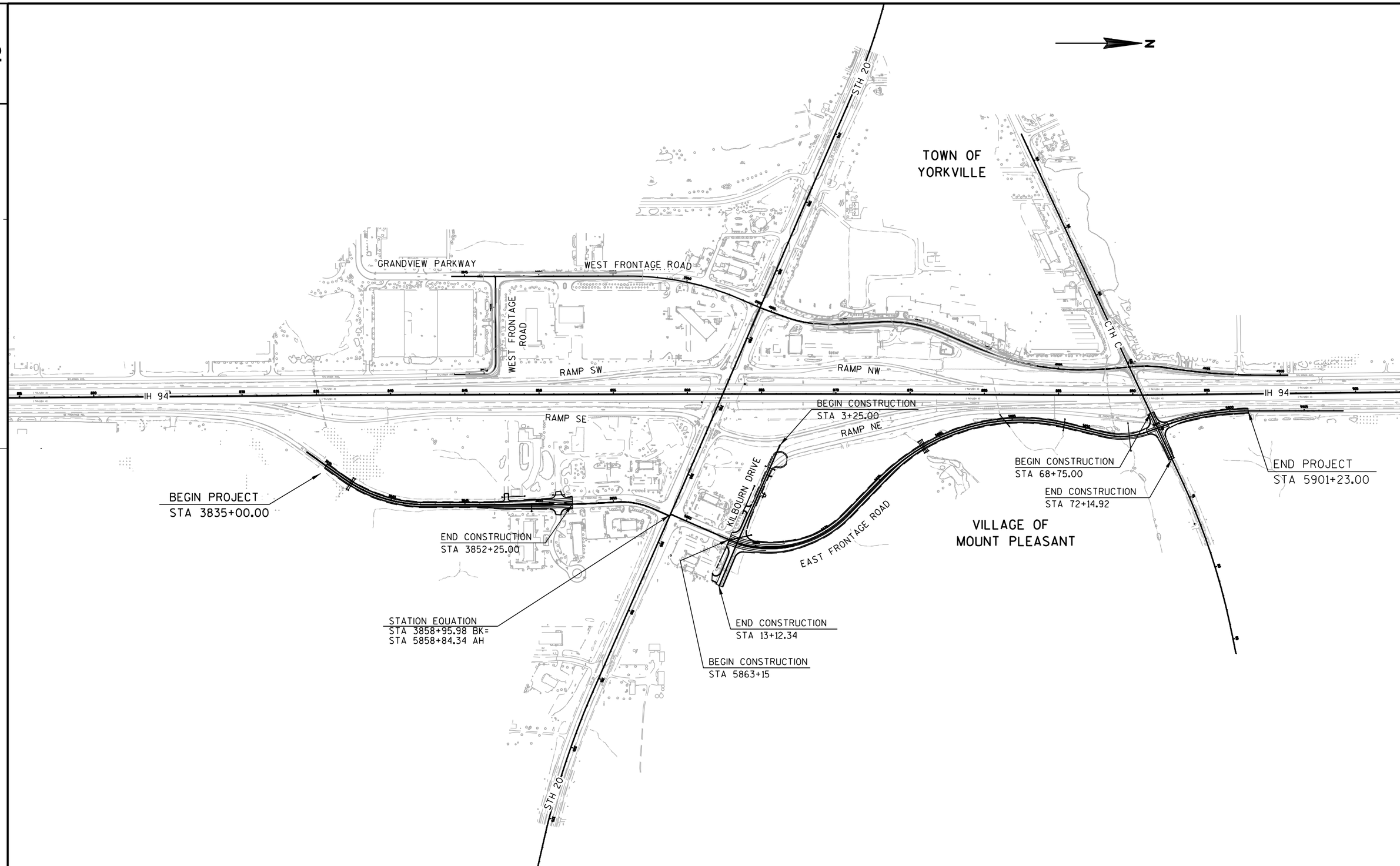

PROJECT NO:1033-02-70	HWY:IH 94/STH 20	COUNTY:RACINE	PROJECT OVERVIEW	SHEET 4	E

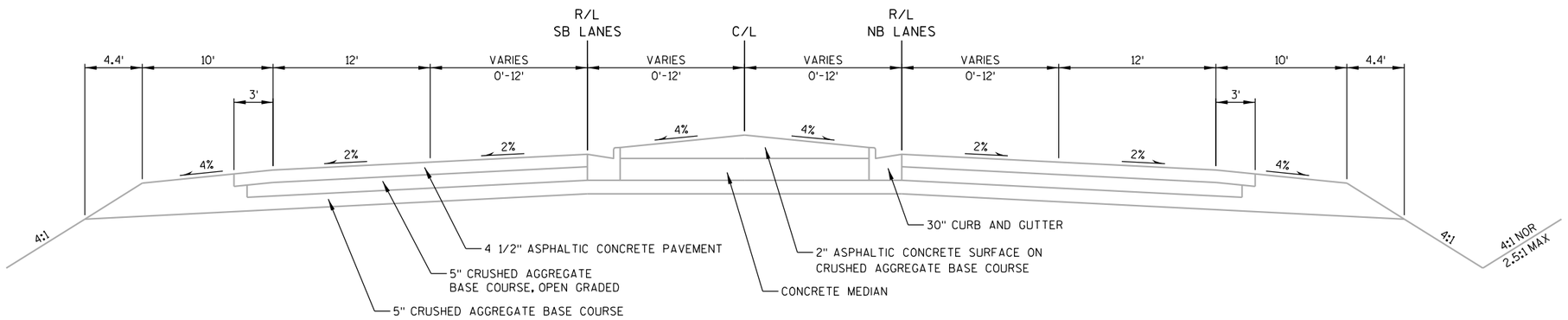

TYPICAL EXISTING SECTION

EAST FRONTAGE ROAD

SOUTH OF STH 20

STA 3849+75 TO STA 3852+25

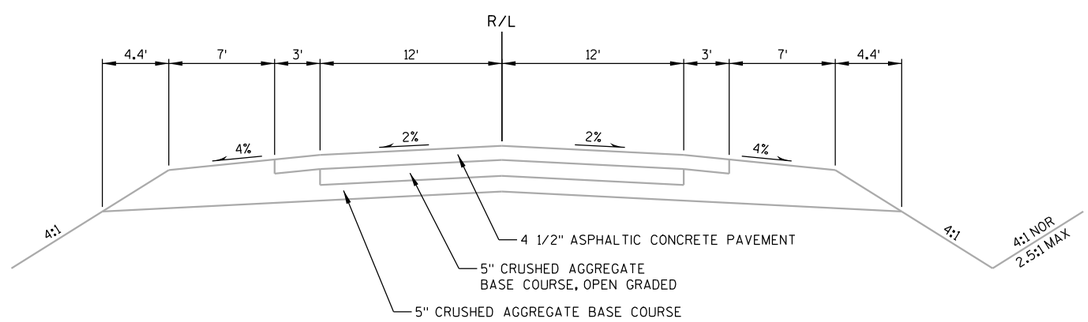

TYPICAL EXISTING SECTION

EAST FRONTAGE ROAD

NORTH OF STH 20

STA 3835+00 TO STA 3849+75
STA 5863+15 TO STA 5888+00

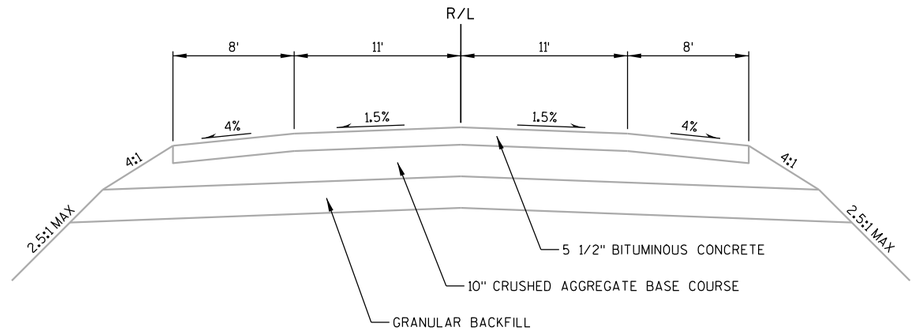

TYPICAL EXISTING SECTION

EAST FRONTAGE ROAD

AT CTH C

STA 5888+00 TO STA 5901+23

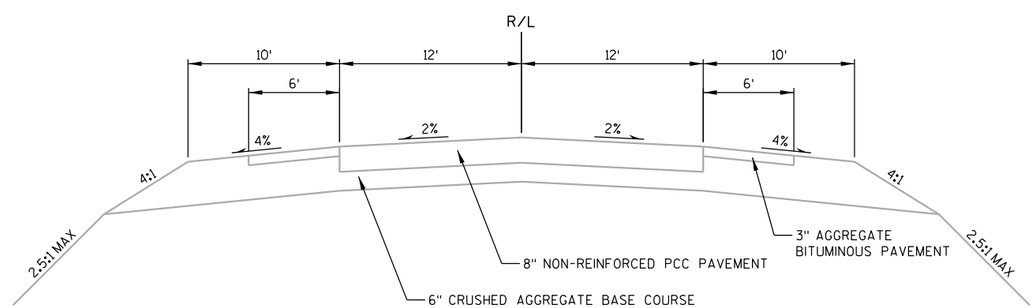

TYPICAL EXISTING SECTION

CTH C

STA 68+75 TO STA 72+15

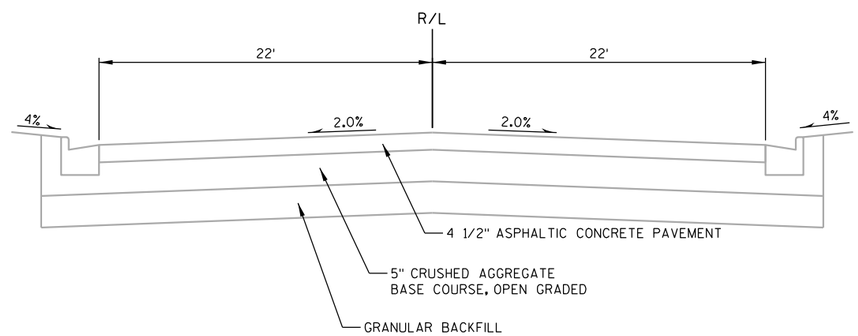

TYPICAL EXISTING SECTION

KILBOURN DRIVE

STA 10+39 TO STA 13+12

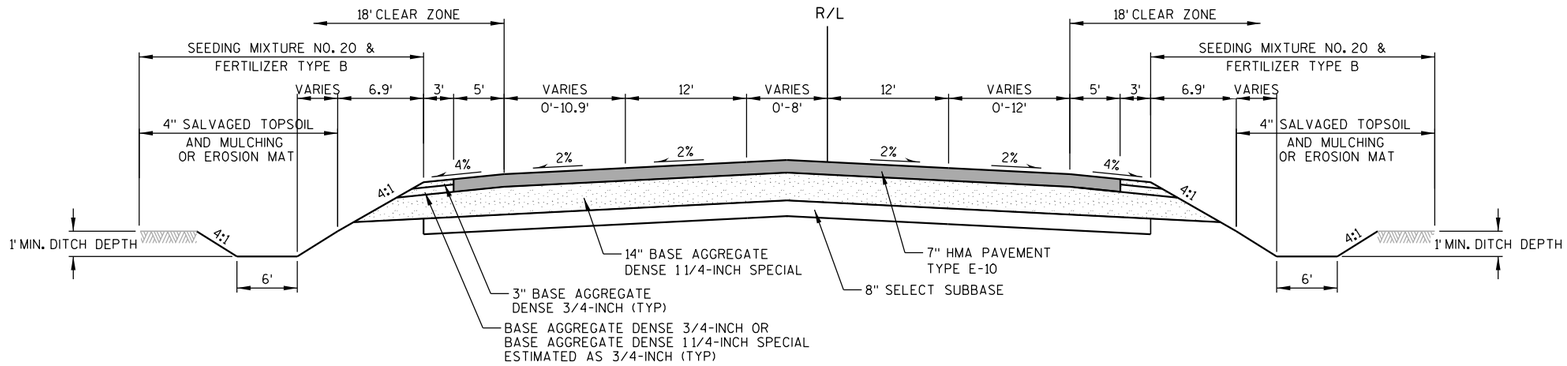

TYPICAL FINISHED SECTION

EAST FRONTAGE ROAD

STA 3845+62 TO STA 3849+46

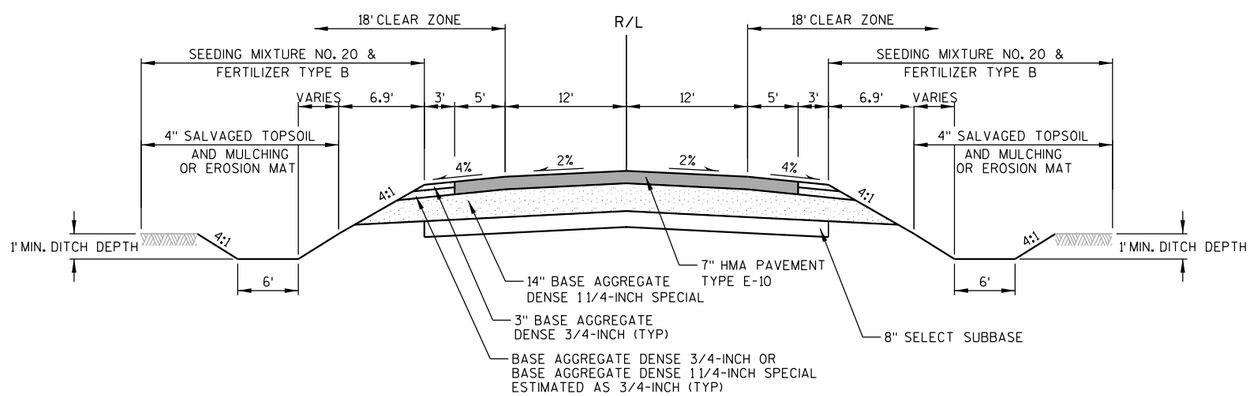

TYPICAL FINISHED SECTION

EAST FRONTAGE ROAD

STA 3835+00 TO STA 3845+62

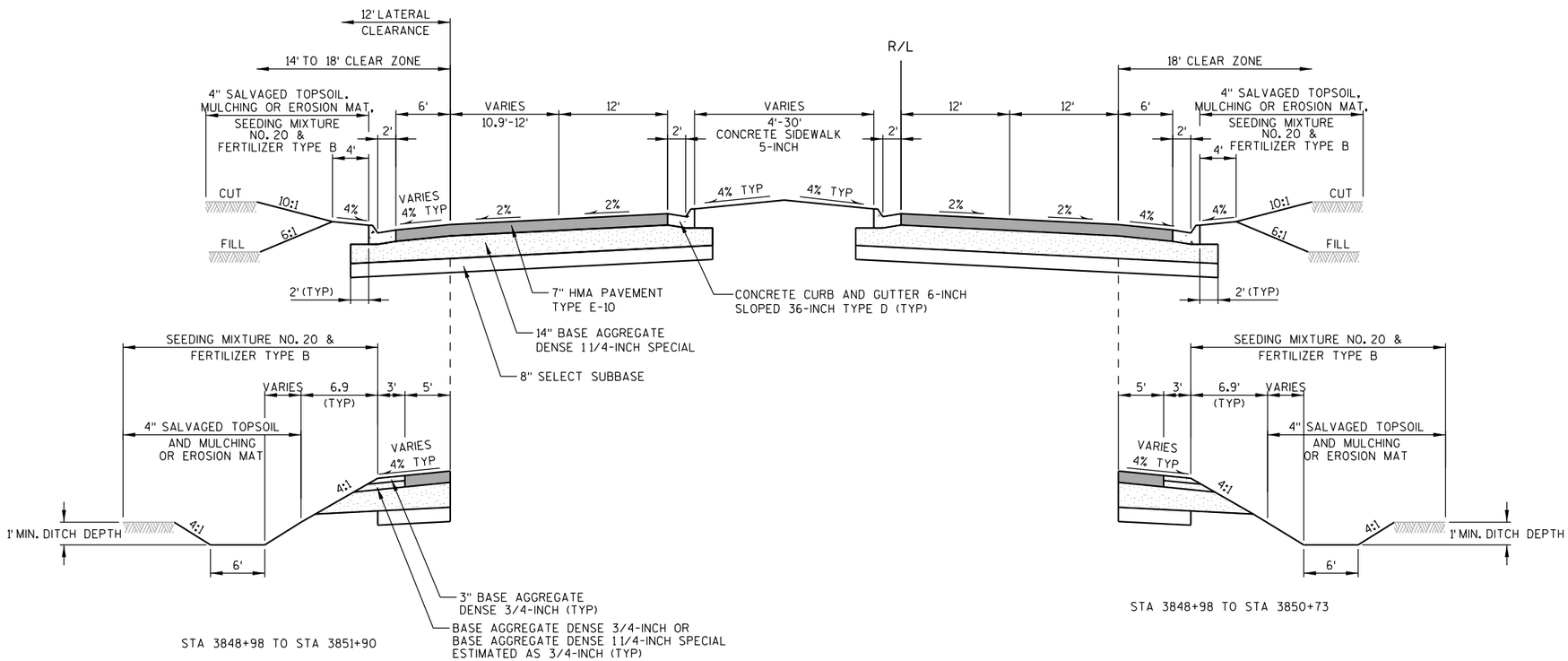

TYPICAL FINISHED SECTION
EAST FRONTAGE ROAD

STA 3849+46 TO STA 3852+25

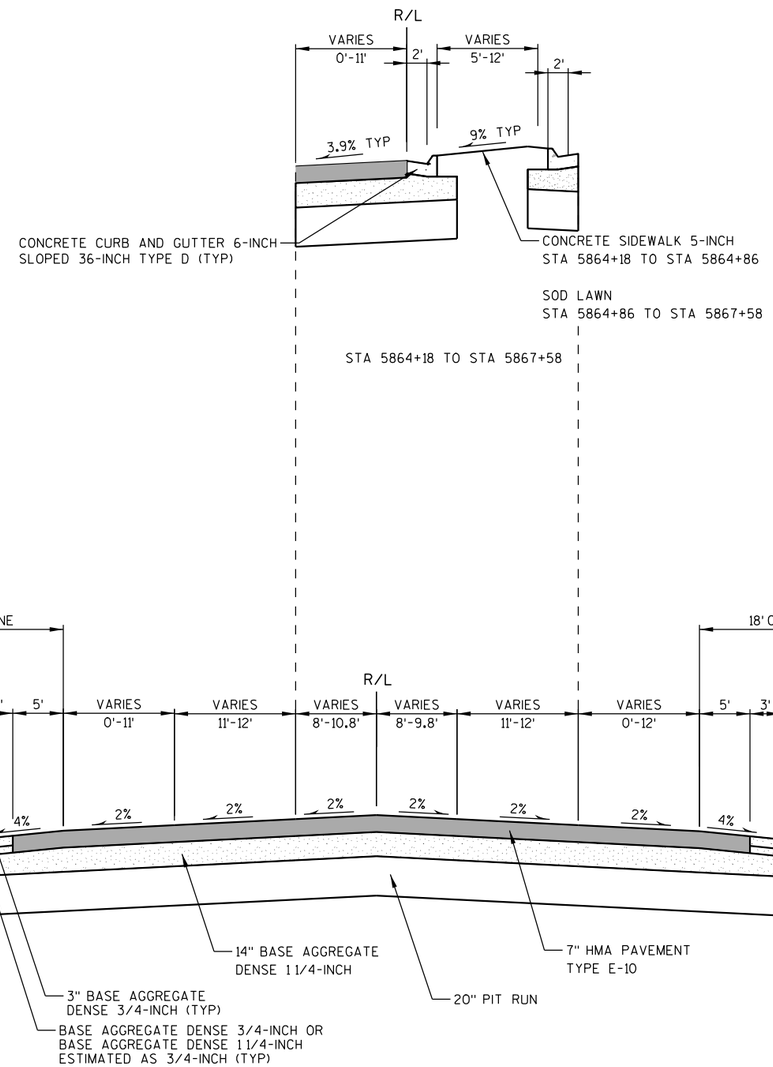

TYPICAL FINISHED SECTION

EAST FRONTAGE ROAD

STA 5863+15 TO STA 5874+59

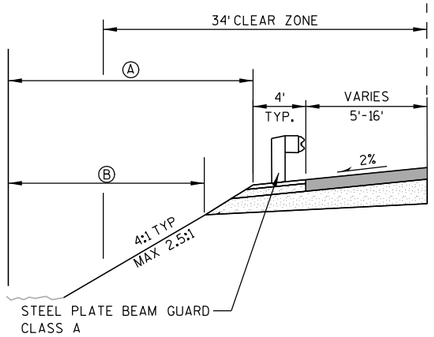

STA 5895+73 TO STA 5898+04

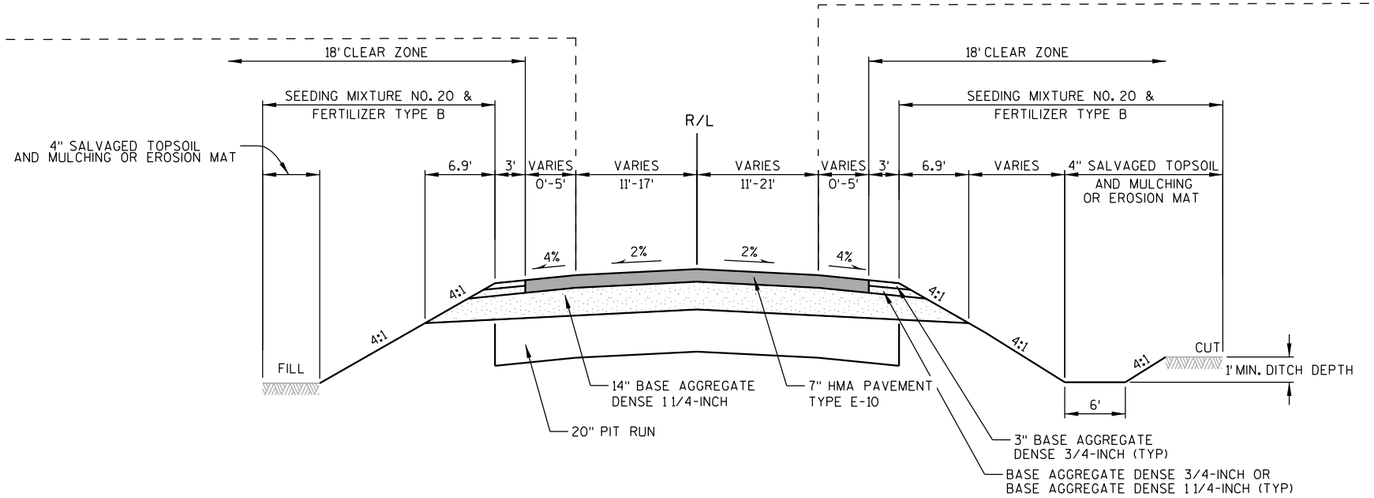

TYPICAL FINISHED SECTION
EAST FRONTAGE ROAD

STA 5895+73 TO STA 5901+23

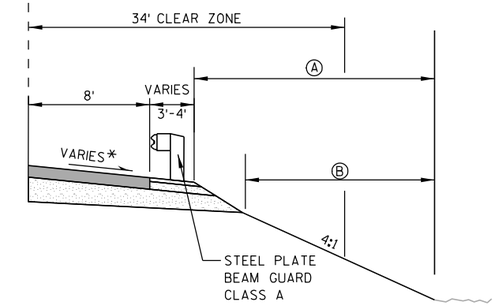

STA 5895+73 TO STA 5895+84

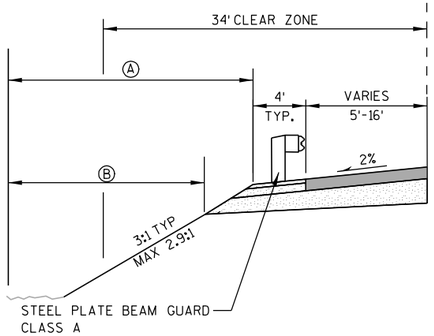

STA 5892+51 TO STA 5894+23

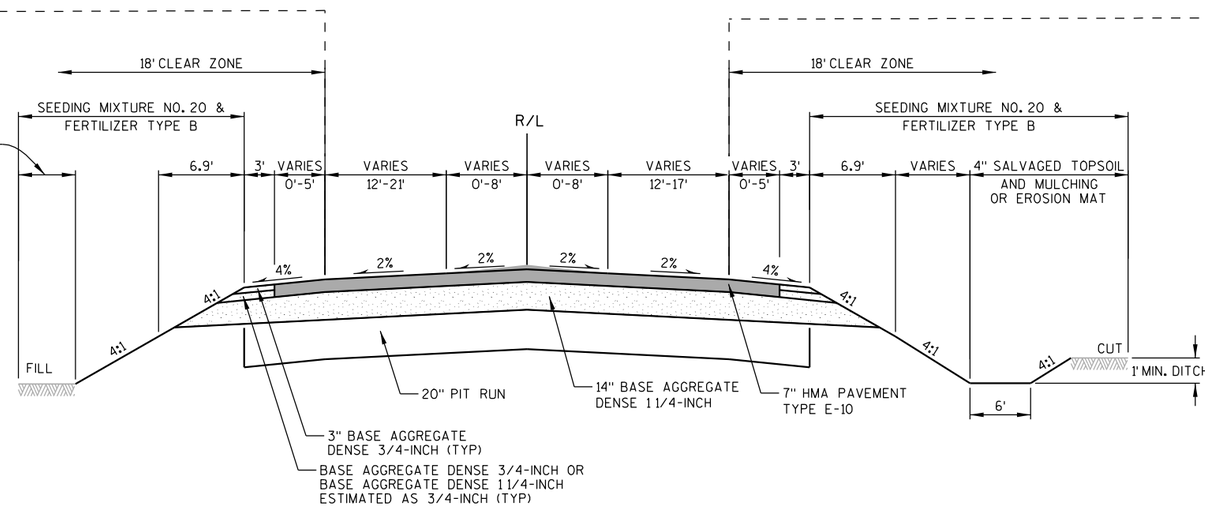

TYPICAL FINISHED SECTION
EAST FRONTAGE ROAD

STA 5874+59 TO STA 5894+23

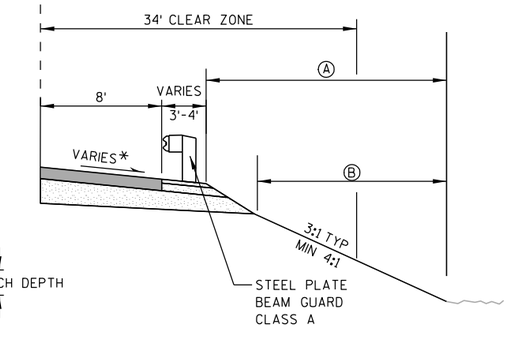

STA 5891+98 TO STA 5894+23

LEGEND:

(A) SEEDING MIXTURE NO. 20 AND FERTILIZER TYPE B

(B) 4" SALVAGED TOPSOIL AND MULCHING OR EROSION MAT

PROJECT NO: 1033-02-70	HWY: IH 94/STH 20	COUNTY: RACINE	TYPICAL SECTIONS	SHEET 11	E

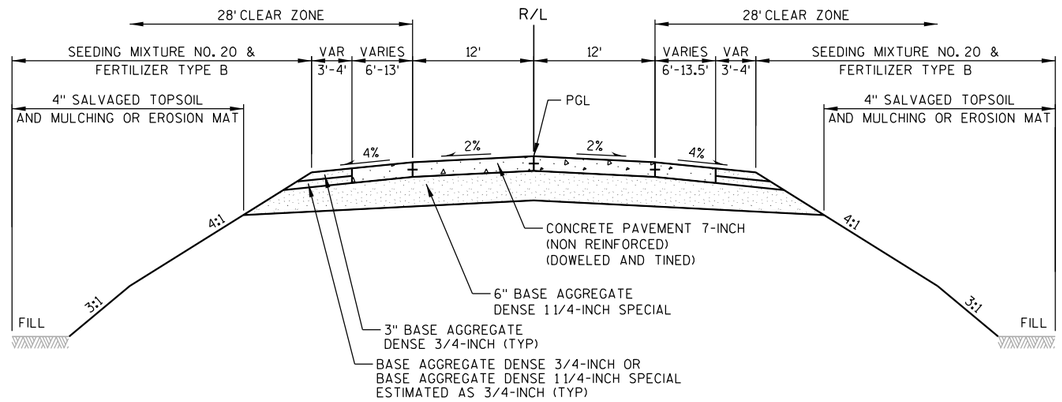

TYPICAL FINISHED SECTION

CTH C

STA 70+65 TO STA 72+15

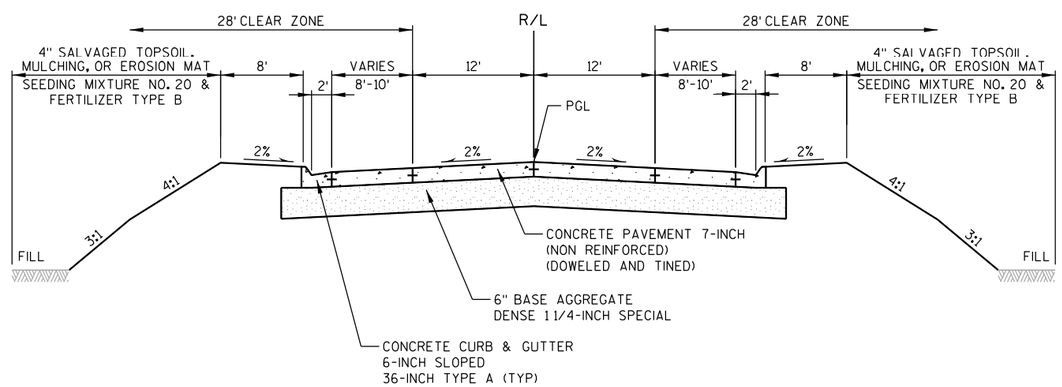

TYPICAL FINISHED SECTION

CTH C

STA 68+75 TO STA 70+65

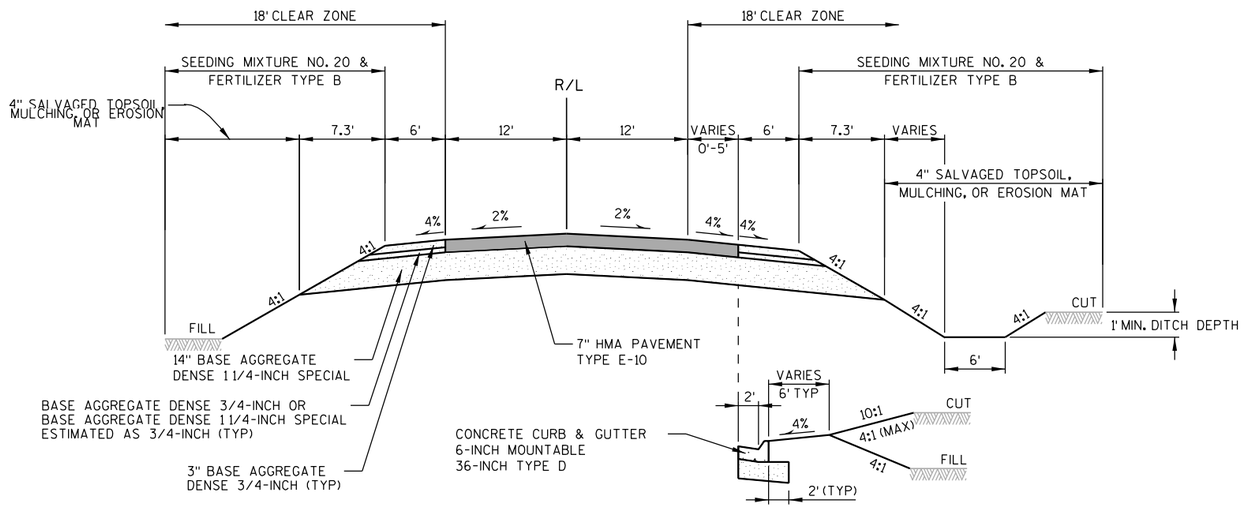

STA 7+24 TO STA 9+63

TYPICAL FINISHED SECTION
KILBOURN DRIVE

STA 4+62 TO STA 9+63

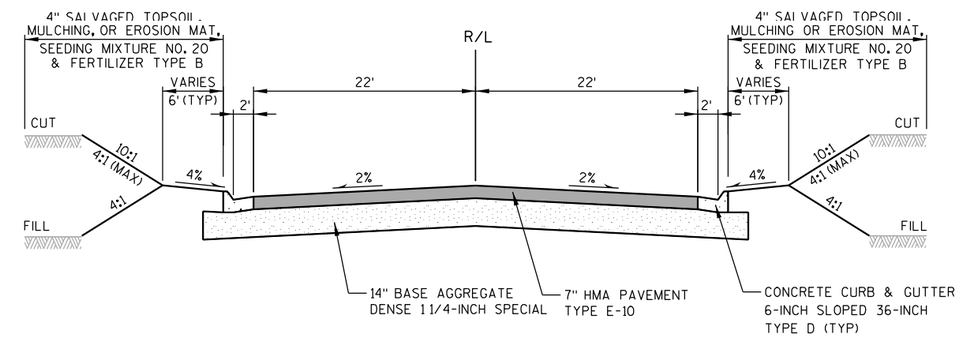

TYPICAL FINISHED SECTION
KILBOURN DRIVE

STA 10+39 TO STA 13+12

(SEE PAVING DETAILS FOR PARKING LOT DETAILS)

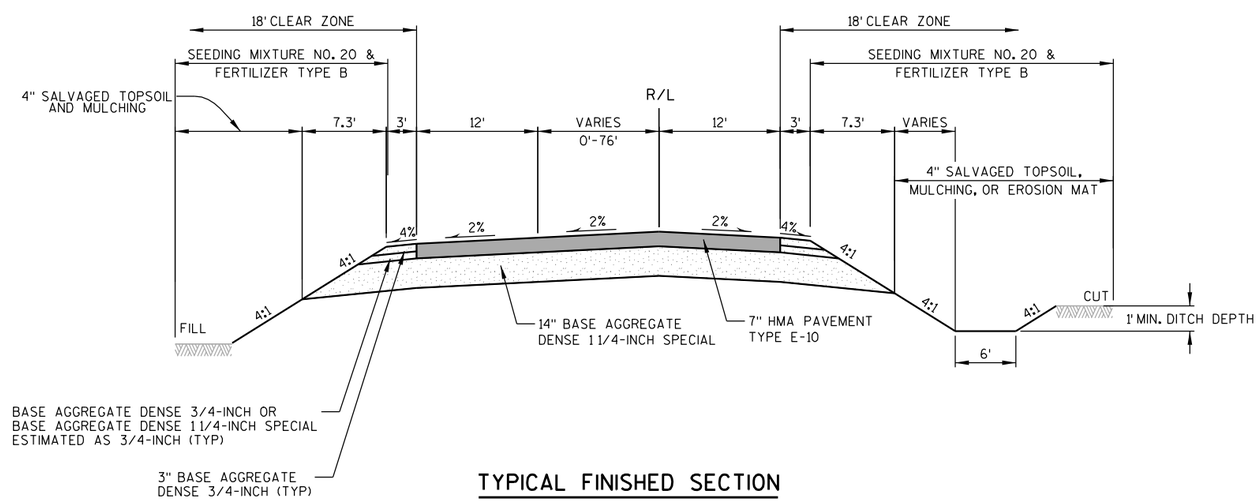

NOTE

CROWN CUL-DE-SAC AROUND THE CENTER OF CIRCLE

TYPICAL FINISHED SECTION
KILBOURN DRIVE

STA 3+25 TO STA 4+62 (CUL-DE-SAC)

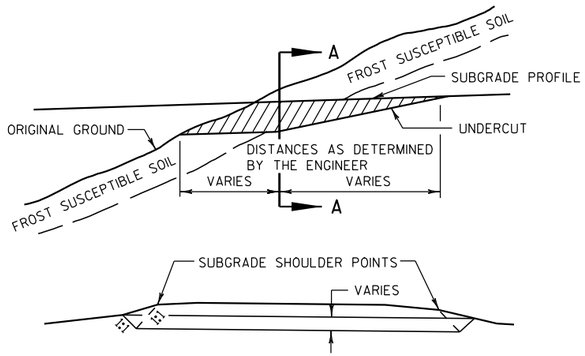

SECTION A-A
CROSS SECTION SHOWING UNDERCUT

NOTES

1. EXACT LOCATIONS AND EXTENT OF EBS SECTIONS SHALL BE DETERMINED BY THE ENGINEER IN THE FIELD.
2. EBS AREA TO BE BACKFILLED WITH MATERIAL ACCEPTABLE TO THE ENGINEER.
3. BACKFILL MUST BE HOMOGENEOUS WITH ADJOINING FILL MATERIAL.
4. THE FILL SECTION WITHIN 100' OF THE MOUTH OF THE CUT MUST BE KEPT 2' BELOW SUBGRADE UNTIL EBS IS COMPLETED.

EXCAVATION BELOW SUBGRADE AT CUTS

100813

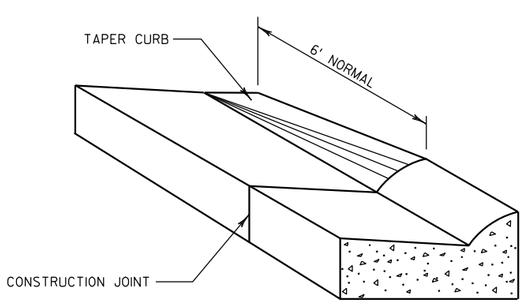

CURB & GUTTER TERMINI DETAIL

NOTE: USE 6 FT TRANSITION FOR CONCRETE AND ASPHALTIC CURB

100813

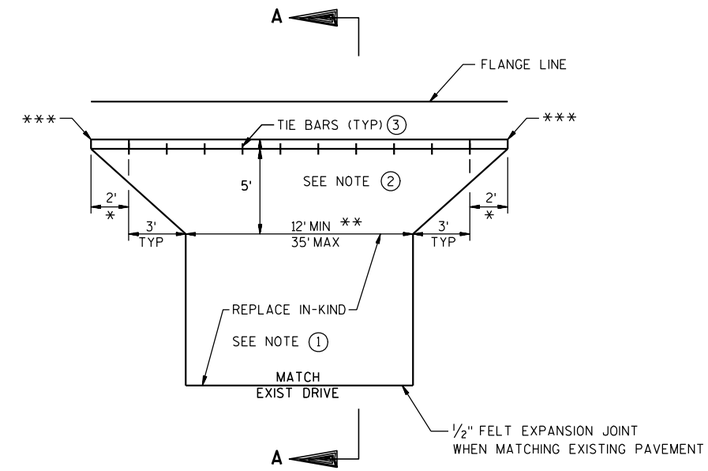

PLAN VIEW

NOTES:

1. DRIVEWAY SURFACE BEYOND APRON TO BE REPLACED IN-KIND WITH MINIMUM SECTION OF:

   ASPHALTIC SURFACE (3-INCH) DRIVEWAYS AND FIELD ENTRANCES
   OVER BASE AGGREGATE DENSE 3/4-INCH (4-INCH)
   OR
   CONCRETE DRIVEWAY 6-INCH OVER
   BASE AGGREGATE DENSE 3/4-INCH (4-INCH)
   OR
   BASE AGGREGATE DENSE 3/4-INCH (6-INCH)

2. ALL URBAN DRIVEWAYS TO BACK OF APRON TO BE PAID FOR AS CONCRETE DRIVEWAY 6-INCH
3. TIE BARS ARE INCIDENTAL TO THE BID ITEM "CONCRETE DRIVEWAY 6-INCH"

* TAPER CURB HEAD
** SEE PAVING DETAILS FOR WIDTH REQD
*** STATION SHOWN ON PAVING DETAILS

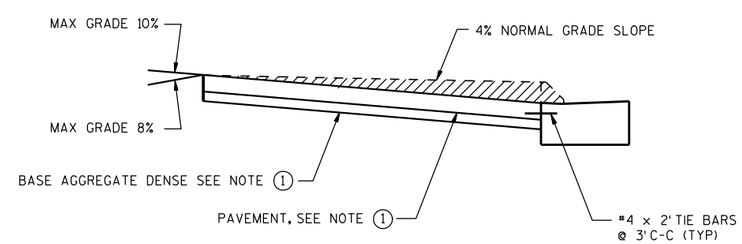

SECTION A-A

URBAN DRIVEWAY

081230

2

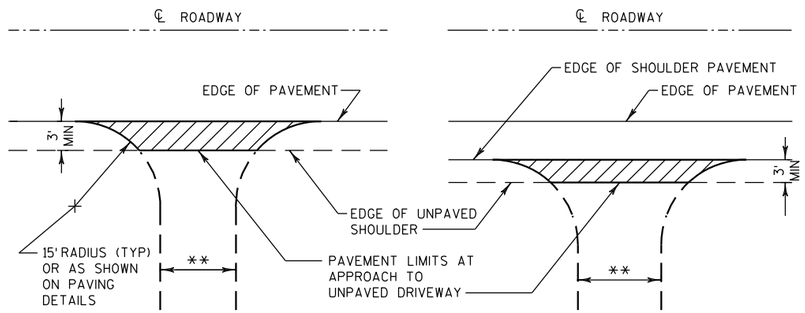

** SEE PAVING DETAILS FOR WIDTH REQUIRED.

PLAN VIEW

PLAN VIEW
(PAVED SHOULDER ON HIGHWAY)

RURAL DRIVEWAY INTERSECTION

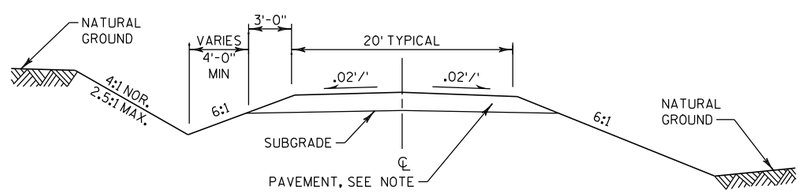

IN CUT

IN FILL

TYPICAL CROSS SECTION FOR PRIVATE DRIVE OR FIELD ENTRANCE

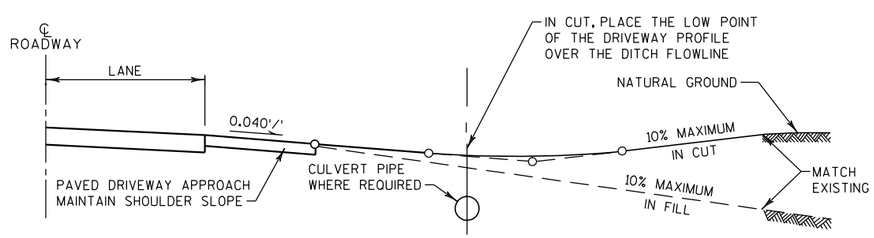

TYPICAL DRIVEWAY PROFILES

NOTES

1. WHERE DRIVEWAY IS PAVED, APPROACH PAVEMENT SHOULD BE EXTENDED TO MATCH DRIVEWAY PAVEMENT. SAWCUT IS REQUIRED.

2. DRIVEWAY SURFACE TO BE SAME AS EXISTING WITH MINIMUM SECTION OF:

   ASPHALTIC SURFACE (3 OR 4-INCH) DRIVEWAYS AND FIELD ENTRANCES OVER BASE AGGREGATE DENSE 3/4 -INCH (4-INCH)

   OR

   CONCRETE DRIVEWAY 6-INCH OVER BASE AGGREGATE DENSE 3/4 -INCH (4-INCH)

   OR

   BASE AGGREGATE DENSE 3/4 -INCH (6-INCH)

100902

RURAL DRIVEWAY

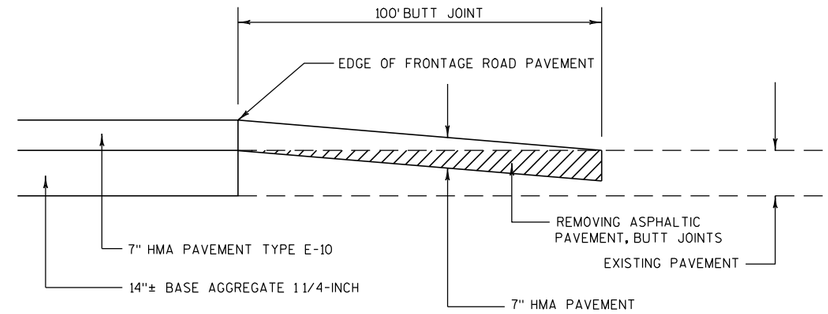

BUTT JOINT DETAIL

AT BEGIN CONSTRUCTION & END CONSTRUCTION

EAST FRONTAGE ROAD

STA 3835+00
STA 3852+25
STA 5863+15
STA 5901+23

100813

2

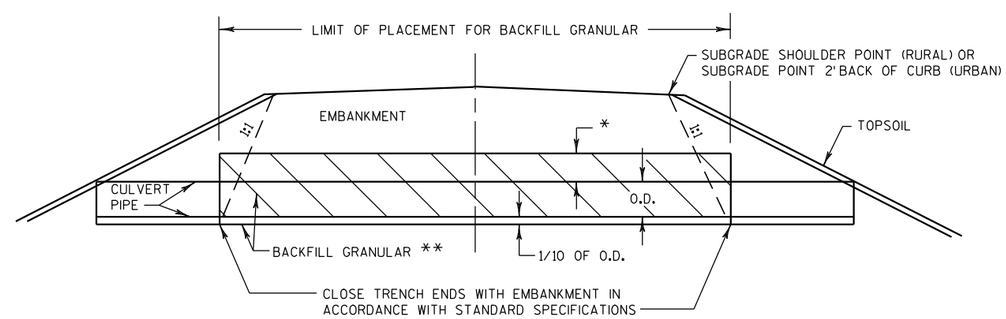

O.D. = OUTSIDE DIAMETER

* CULVERT PIPE IN NEW EMBANKMENT = 1' MIN
* CULVERT PIPE IN EXISTING EMBANKMENT = TO EXISTING GROUND ELEVATION

** INCIDENTAL TO CULVERT PIPE

CULVERT BACKFILL DETAIL

100813

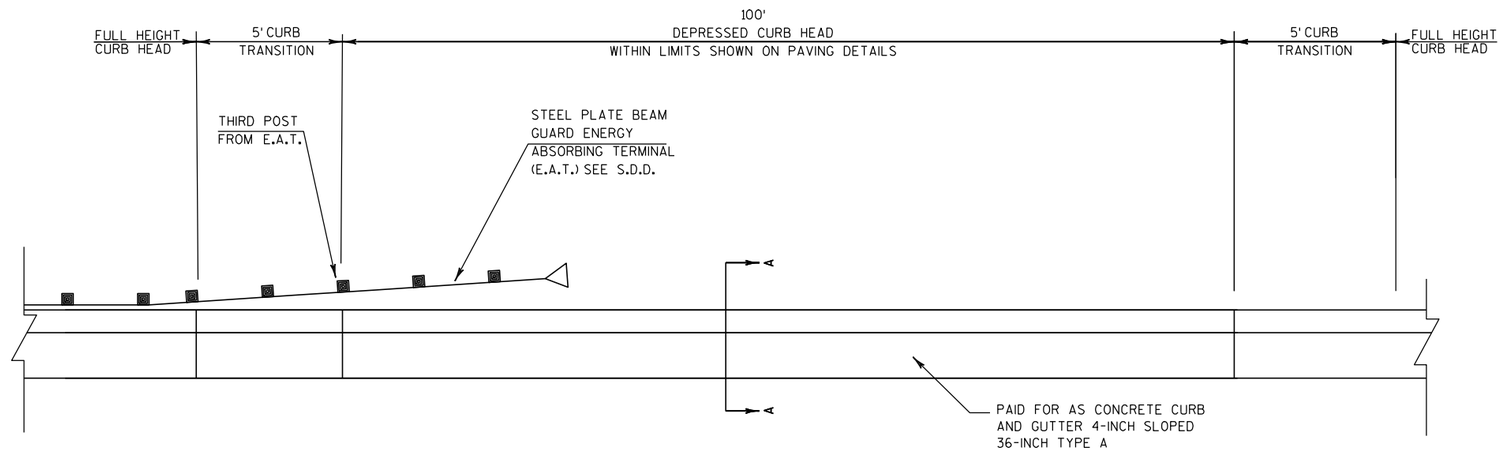

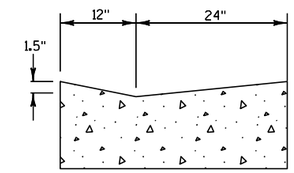

SECTION A-A

DEPRESSED CURB

DEPRESSED CURB HEAD AT BEAM GUARD TERMINAL

081230

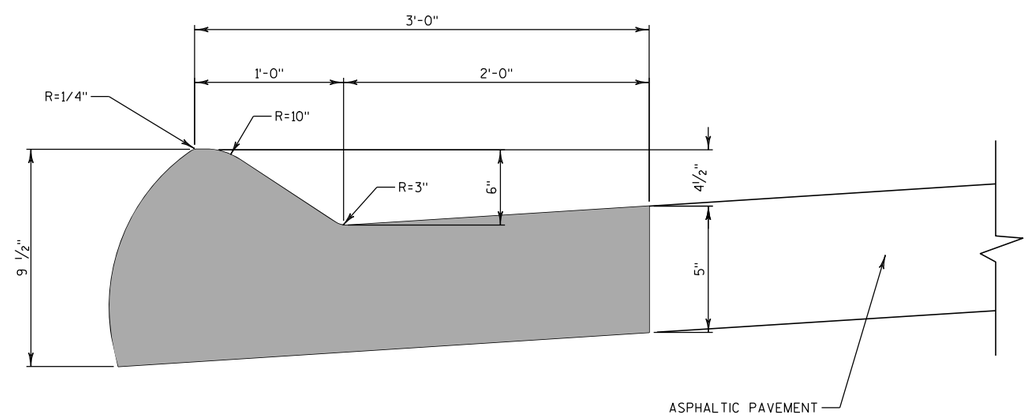

ASPHALTIC CURB

090401

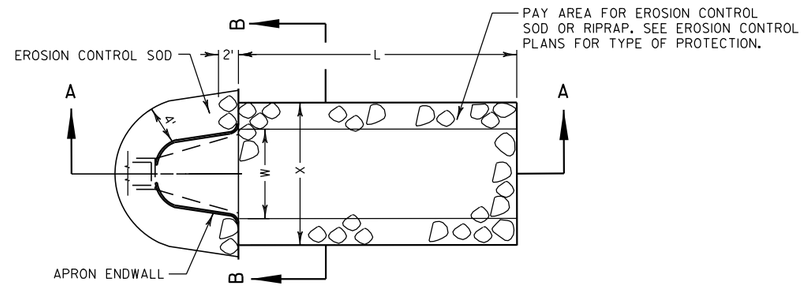

PLAN VIEW

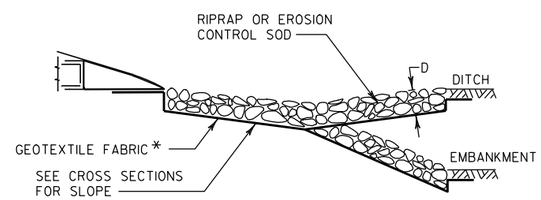

SECTION A-A

L = 3 x W (NOR) OR 10' MIN
OR AS INDICATED IN THE PLANS
OR AS DIRECTED BY THE ENGINEER

D = 12" FOR RIPRAP LIGHT
18" FOR RIPRAP MEDIUM
24" FOR RIPRAP HEAVY

X = W+2' FOR TYPICAL CULVERT
DISCHARGE INTO DITCH
W+5' FOR CULVERT DISCHARGE
DOWN EMBANKMENT SLOPE

Y = 0' FOR TYPICAL CULVERT
DISCHARGE INTO DITCH
12" FOR CULVERT DISCHARGE
DOWN EMBANKMENT SLOPE

* TYPE R (FOR RIPRAP LIGHT ONLY)
TYPE HR (FOR RIPRAP HEAVY AND MEDIUM ONLY)

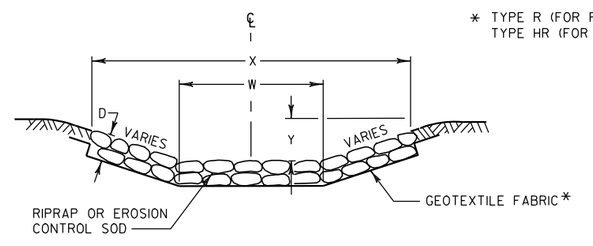

SECTION B-B

SOD, RIPRAP AND GEOTEXTILE FABRIC DETAIL AT APRON ENDWALLS

SEE EROSION CONTROL PLAN FOR LOCATIONS

100914

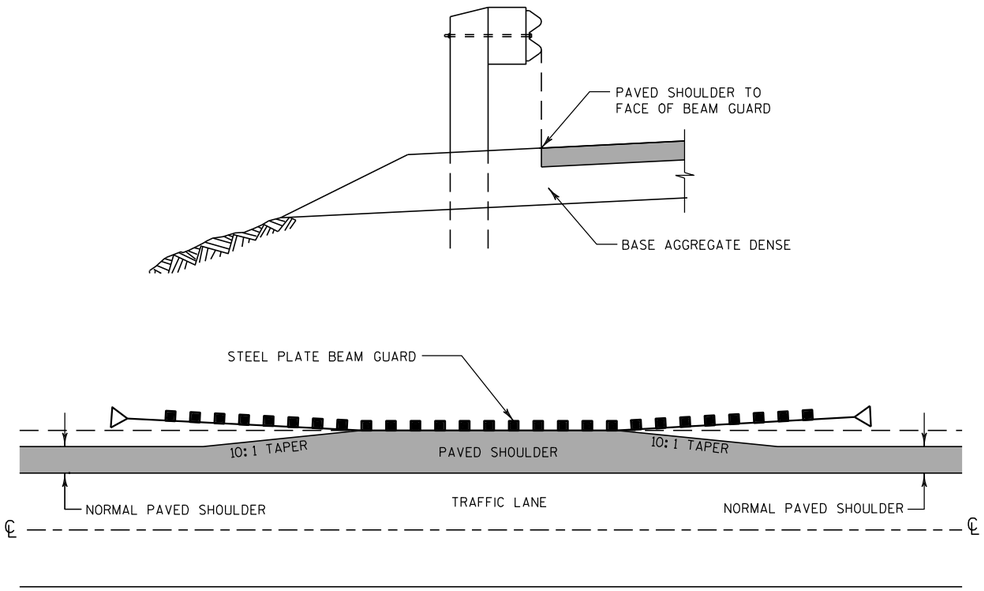

PAVED SHOULDER AT BEAM GUARD

100818

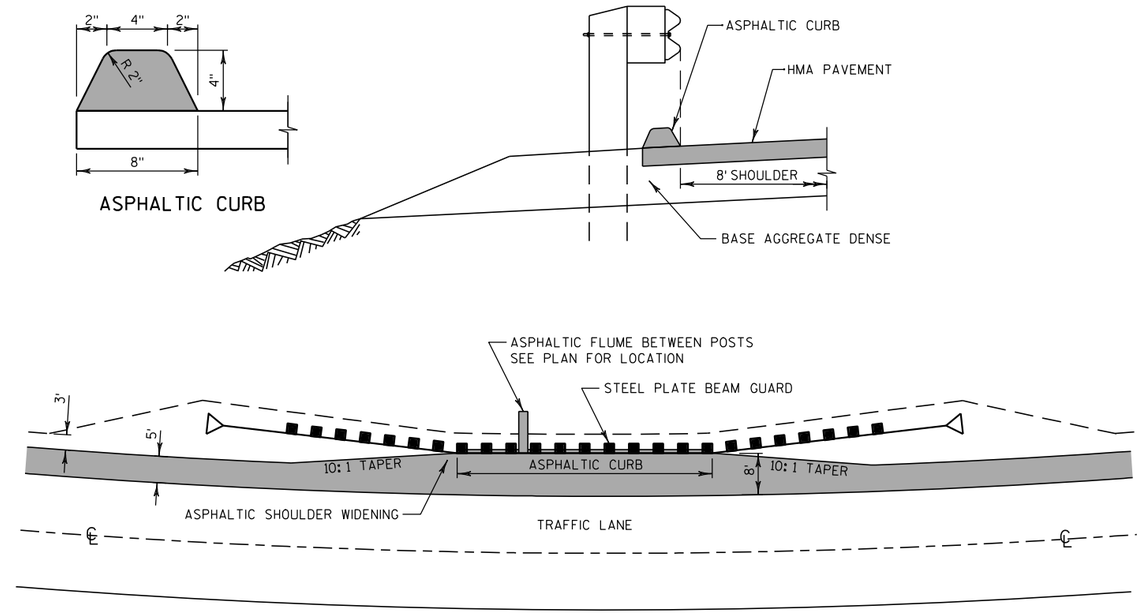

PAVED SHOULDER WIDENING AT BEAM GUARD

FOR LOW SIDE SHOULDER IN SUPERELEVATION SECTIONS

100818

2

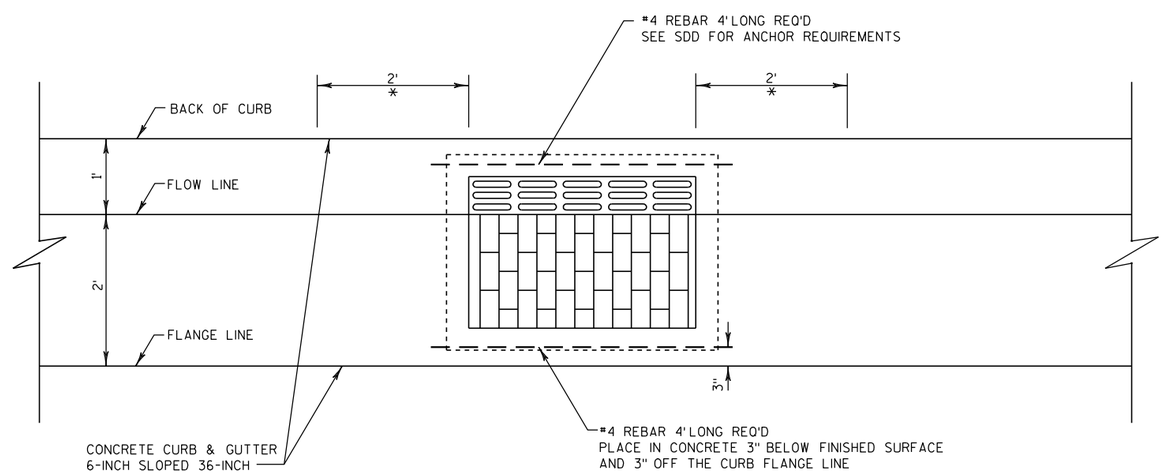

PLAN VIEW

* TRANSITION STANDARD CURB HEAD TO MATCH THE TYPE HM INLET COVER.

NOTES

1. SEE SDD "INLET COVERS TYPE F, HM, HM-S, S, V, HM-GJ, & HM-GJ-S" FOR ADDITIONAL INFORMATION.
2. THE TWO 2-FOOT LONG CURB TRANSITION SEGMENTS ARE PAID AS CONCRETE CURB & GUTTER 6-INCH SLOPED 36-INCH.
3. THE TWO 4-FOOT LENGTHS OF #4 REBAR ARE INCIDENTAL TO THE BID ITEM "INLET COVERS TYPE HM".

INLET COVERS, TYPE HM

100813

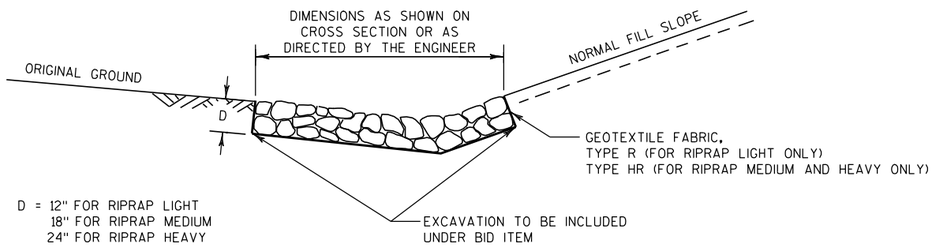

RIPRAP IN DITCHES

100901

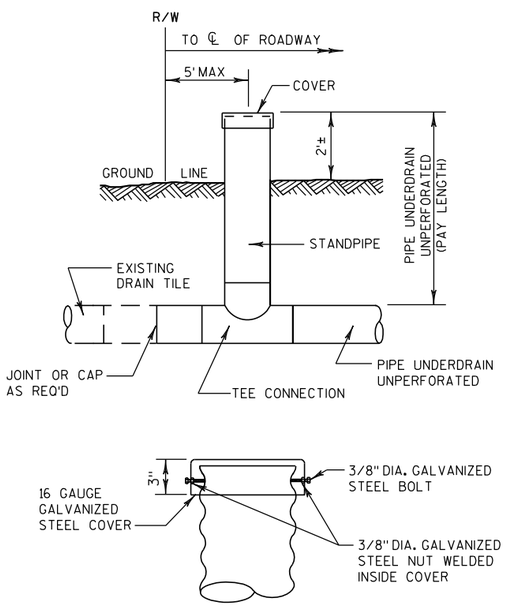

NOTE

THE COST OF FURNISHING AND INSTALLING THE CONNECTION TO THE UNDERDRAIN AND THE COVER SHALL BE CONSIDERED INCIDENTAL TO THE ITEM PIPE UNDERDRAIN, UNPERFORATED.

INSPECTION STANDPIPE AIR VENT

FOR DRAIN TILE

100813

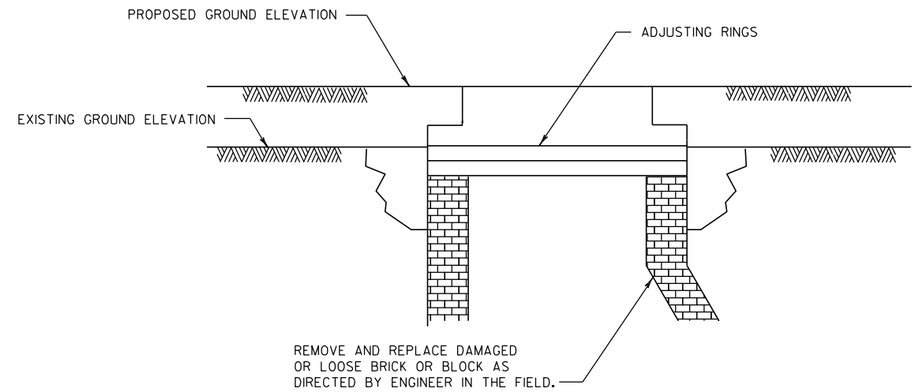

NON-PAVED AREA

NOTE

ADJUST CHIMNEY WITH PROPER SIZE CONCRETE ADJUSTING RINGS (SIZE OF OPENING OF CONCRETE ADJUSTING RING TO BE DETERMINED BY SIZE OF OPENING IN FRAME) AND REINSTALL EXISTING FRAME AND LID TO FINISHED GRADE.
(BACKFILL AND OTHER WORK TO BE DONE IN ACCORDANCE WITH ITEM ADJUSTING INLET COVER.)

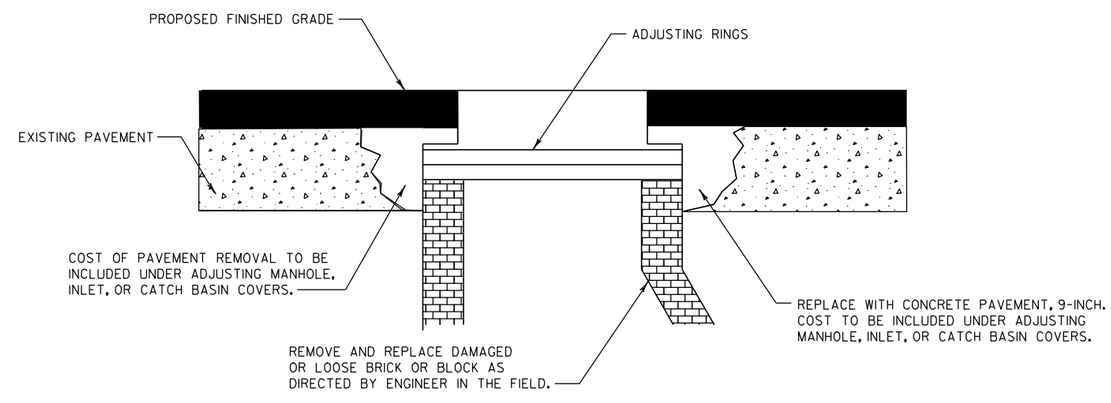

PAVED AREA

ADJUSTING MANHOLE OR INLET COVERS

100813

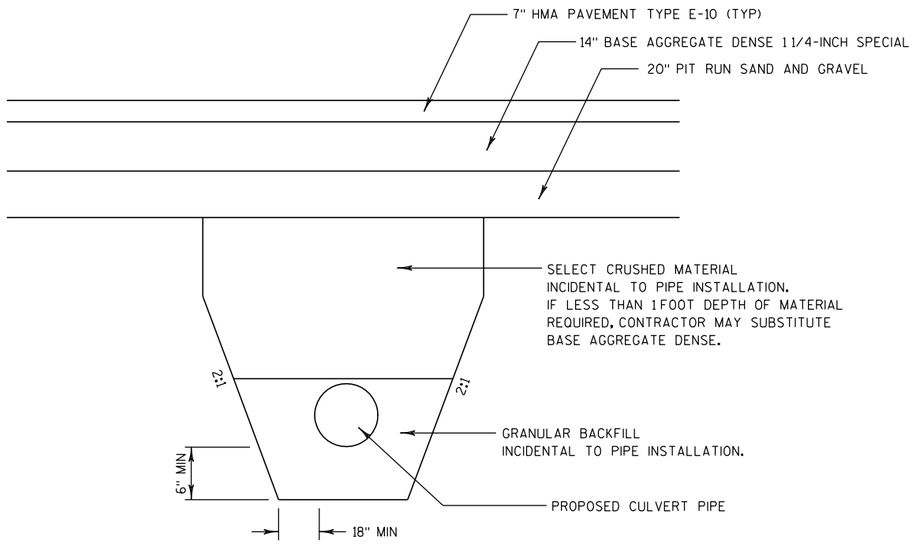

INSTALLATION OF PIPES

081231

RUNOFF COEFFICIENT TABLE

	HYDROLOGIC SOIL GROUP											
	A			B			C			D		
	SLOPE RANGE (PERCENT)			SLOPE RANGE (PERCENT)			SLOPE RANGE (PERCENT)			SLOPE RANGE (PERCENT)		
LAND USE:	0-2	2-6	6 & OVER	0-2	2-6	6 & OVER	0-2	2-6	6 & OVER	0-2	2-6	6 & OVER
ROW CROPS	.08 .22	.16 .30	.22 .38	.12 .26	.20 .34	.27 .44	.15 .30	.24 .37	.33 .50	.19 .34	.28 .41	.38 .56
MEDIAN STRIP-TURF	.19 .24	.20 .26	.24 .30	.19 .25	.22 .28	.26 .33	.20 .26	.23 .30	.30 .37	.20 .27	.25 .32	.30 .40
SIDE SLOPE-TURF			.25 .32			.27 .34			.28 .36			.30 .38
PAVEMENT:												
ASPHALT	.70 - .95											
CONCRETE	.80 - .95											
BRICK	.70 - .80											
DRIVES, WALKS	.75 - .85											
ROOFS	.75 - .95											
GRAVEL ROADS, SHOULDERS	.40 - .60											

TOTAL PROJECT AREA = 148.8 ACRES (STH 20 TO CTH K R/W AREA)
TOTAL AREA EXPECTED TO BE DISTURBED BY CONSTRUCTION ACTIVITIES = 20.2 ACRES (I.D. 1033-02-70 DISTURBED AREA)

090805

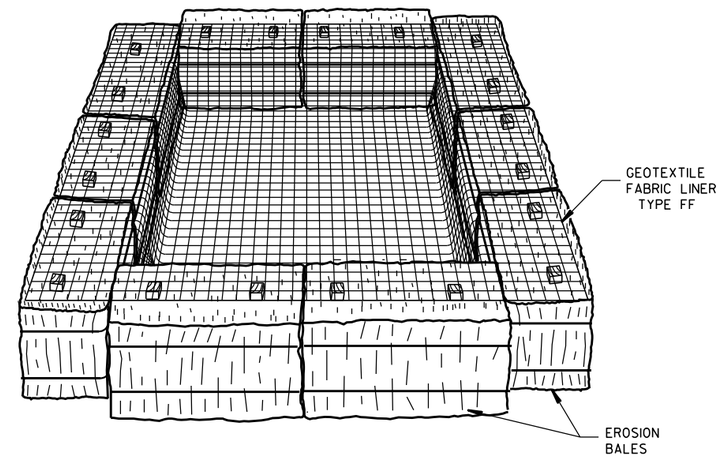

TEMPORARY SETTLING BASIN

(SIZE TO BE DETERMINED IN FIELD AS INDICATED BELOW:)

STORAGE VOLUME (C.F.) = 16 X GPM (PUMP RATE)

EXAMPLE:
CONTRACTOR INDICATES PUMP CAPABLE OF 50 GPM
HEIGHT OF BALES = 1.5 FT.

SOLUTION:
SV (C.F.) = 16 X 50
SV = 800 C.F.

$\frac{800 \text{ C.F.}}{1.5 \text{ FT.}}$ = 533 S.F.

USE A 20 FT. X 27 FT. BASIN

NOTES:

1. CONTRACTOR TO PUMP WATER FROM EXCAVATION TO BASIN PRIOR TO DISCHARGING TO THE WATERWAY.
2. BASIN TO BE KEPT LESS THAN 10% FULL OF SEDIMENT. GEOTEXTILE FABRIC AND SEDIMENTS TO BE DISPOSED BY THE CONTRACTOR OFF OF THE PROJECT SITE.
3. TEMPORARY SETTLING BASIN TO BE PAID FOR AS EROSION BALES AND GEOTEXTILE FABRIC TYPE FF.

081230

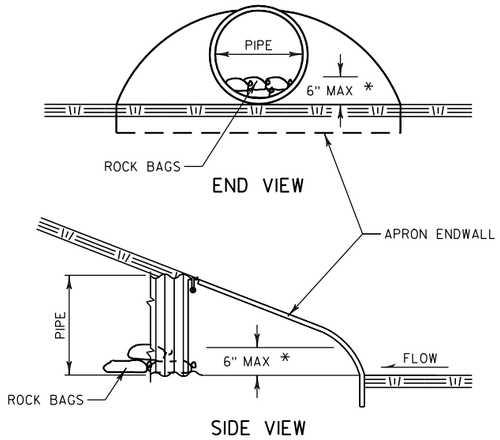

* OR AS DIRECTED BY THE ENGINEER

CULVERT PIPE CHECK

100813

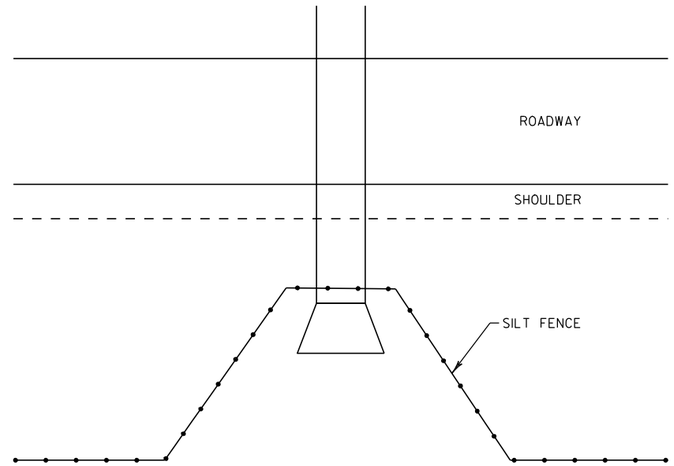

NOTE
SEE SILT FENCE SDD FOR ADDITIONAL INFORMATION.

TYPICAL SILT FENCE DETAIL AT PIPE INLET

100902

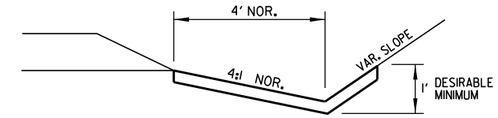

SOD OR EROSION MAT DETAIL FOR DITCHES

081231

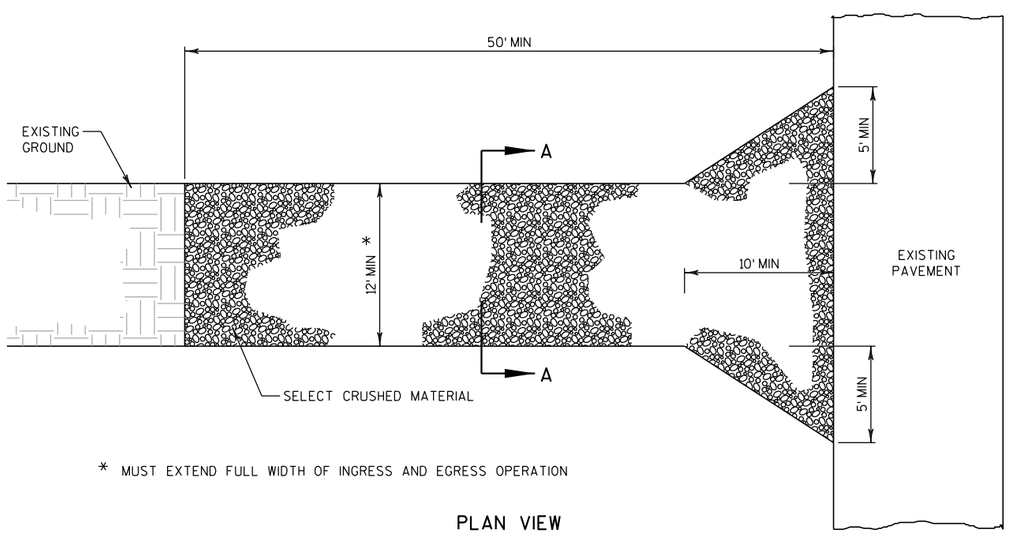

* MUST EXTEND FULL WIDTH OF INGRESS AND EGRESS OPERATION

PLAN VIEW

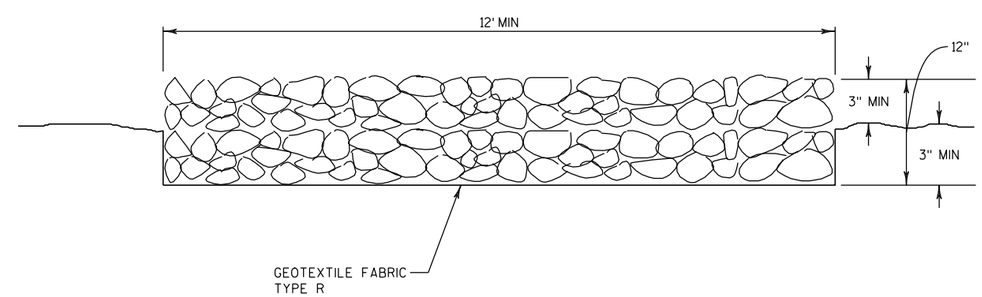

SECTION A-A

TRACKING PADS

FOR CONSTRUCTION EGRESS POINTS

NOTE
TRACKING PADS TO BE INSPECTED DAILY. DEFICIENT AREAS TO BE REPAIRED OR REPLACED IMMEDIATELY.

100813

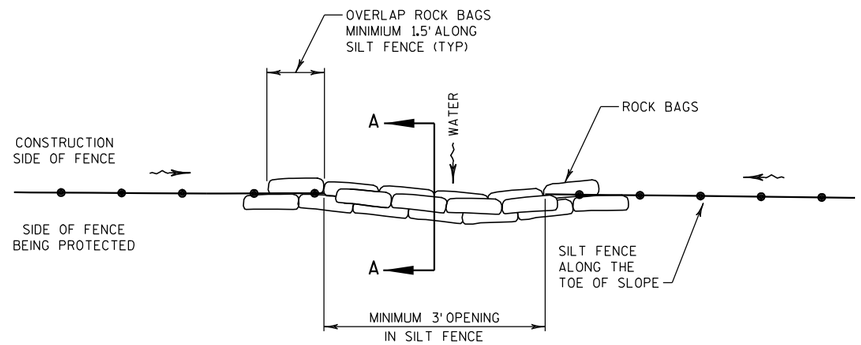

PLAN VIEW

SECTION A-A

SILT FENCE DRAINAGE OUTLET, ROCK BAGS

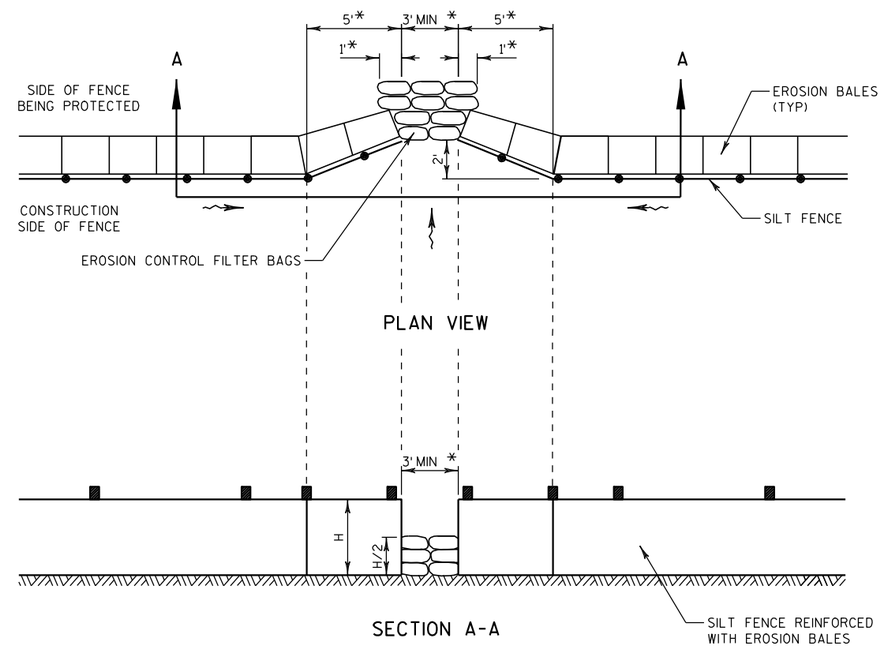

PLAN VIEW

SECTION A-A

* DIMENSIONS MAY BE ADJUSTED TO FIT FIELD CONDITIONS
AS DIRECTED BY THE ENGINEER.

SILT FENCE DRAINAGE OUTLET, EROSION CONTROL FILTER BAGS

(FOR USE IN ENVIRONMENTALLY SENSITIVE AREAS)

NOTE TO DESIGNER: When using these detail drawings,
include the corresonding corridor specifications

100903

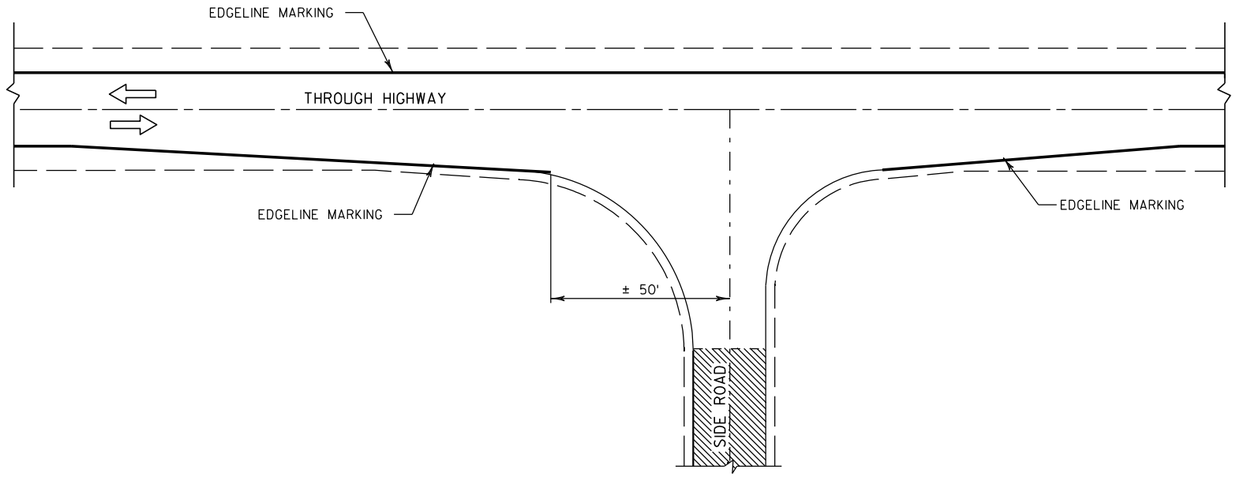

MINOR INTERSECTION WITHOUT CURBS
TYPICAL MARKING

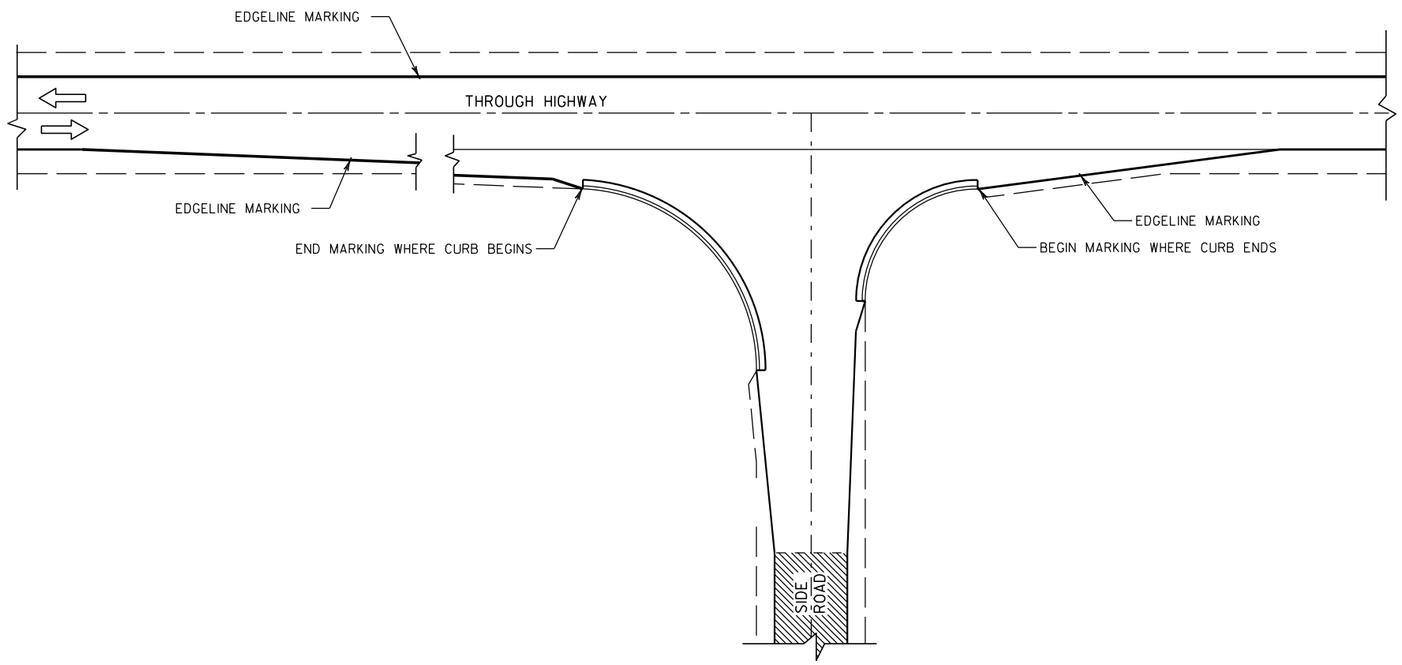

MINOR INTERSECTION WITH CURBS
TYPICAL MARKING

100803

MINOR INTERSECTION EDGELINE MARKING

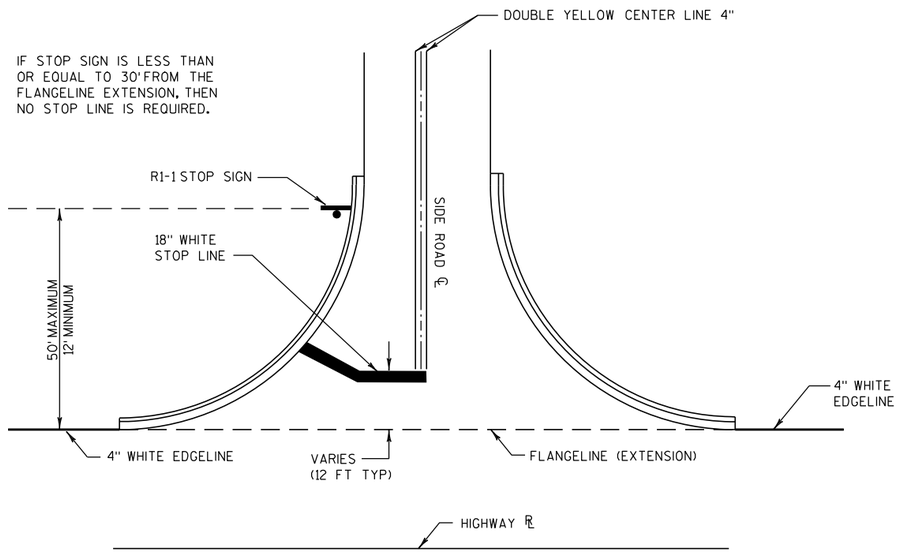

TYPICAL PAVEMENT MARKING FOR SIDEROADS

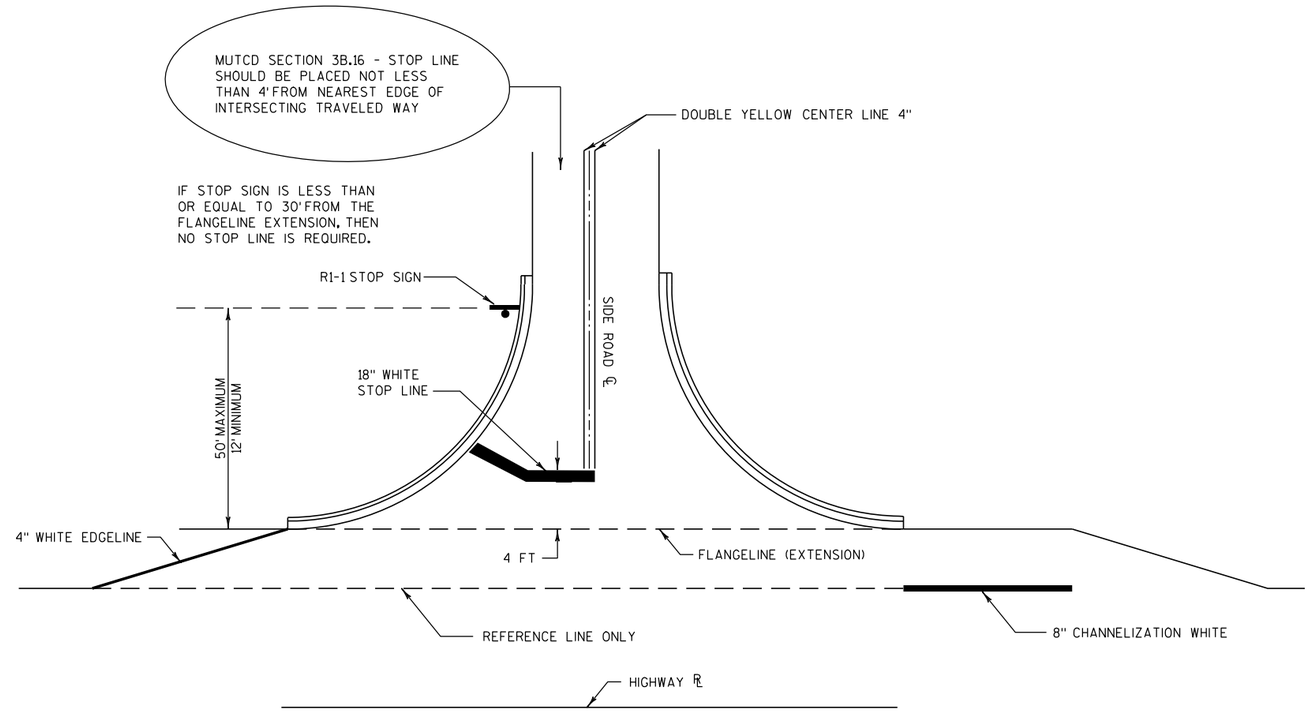

TYPICAL PAVEMENT MARKING FOR SIDEROADS WITH RIGHT TURN LANE

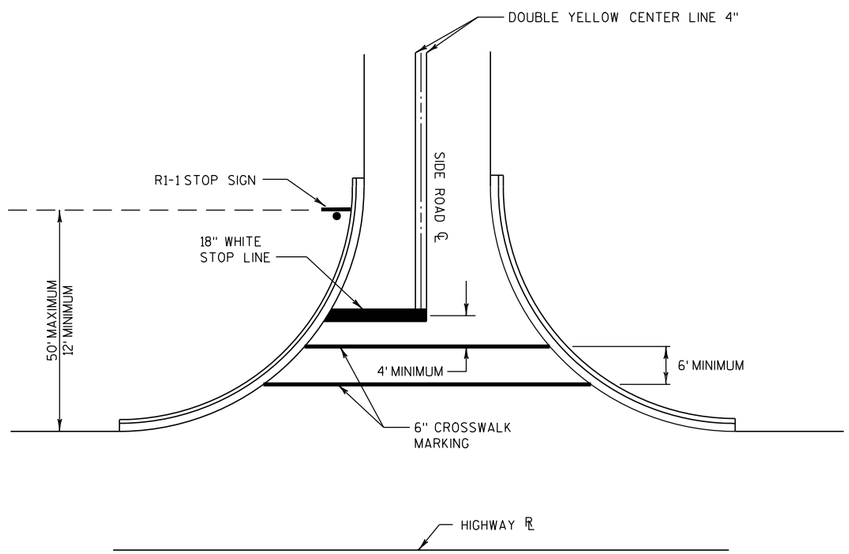

TYPICAL PAVEMENT MARKING FOR SIDEROADS WITH CROSSWALK MARKING

NOTES

1. 18-INCH STOP LINES MAY BE DELETED OR ADDED BY THE PROJECT ENGINEER BASED ON VISIBILITY AND SIGHT LINES.
2. STOP LINES REQUIRED WHERE:
   A. CROSSWALK MARKINGS EXIST OR ARE BEING PROVIDED
   B. LARGE RADII
   C. OFFSET LEFT TURNS WHERE STOP BAR FOR LEFT TURN IS SET BACK FROM THRU MOVEMENT

100818

PAVEMENT MARKING AT SIDEROADS

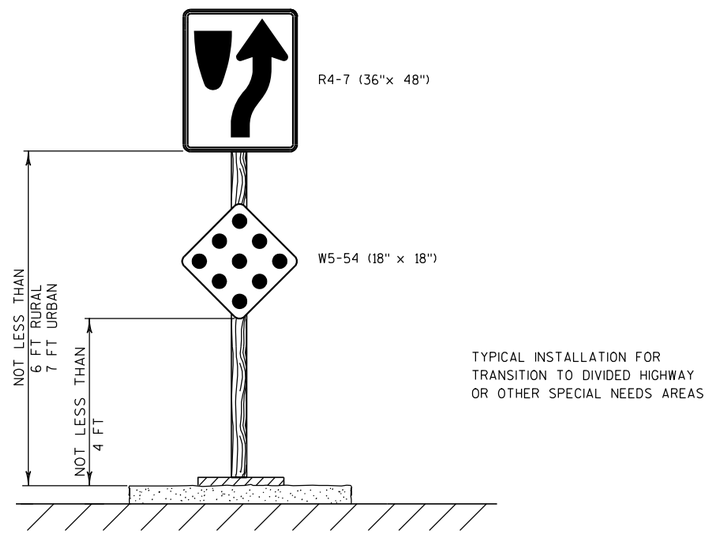

SIGNING DETAIL

SEE PERMANENT SIGNING PLANS FOR LOCATIONS

090610

SHALLOW CUT/FILL

** STA

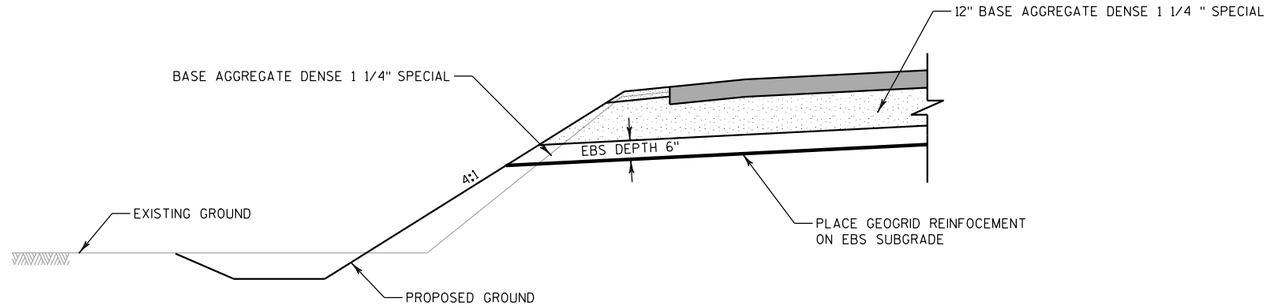

EXISTING DITCHES

** STA

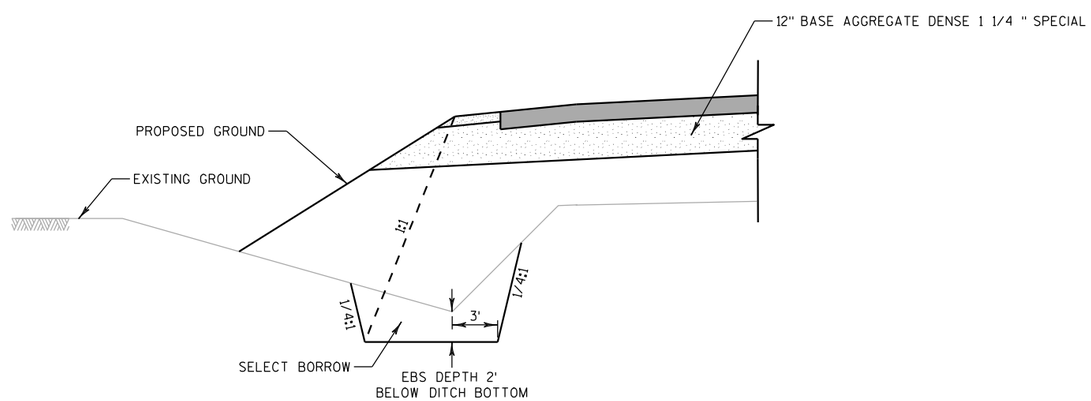

PAVEMENT SUBGRADE IMPROVEMENT DETAILS FOR FRONTAGE ROADS AND CROSSROADS

** ACTUAL LOCATION DEPENDENT ON FIELD CONDITIONS DURING GRADING OPERATIONS. GEOGRID REINFORCEMENT AND FILL MATERIAL SHALL NOT BE PLACED UNTIL AUTHORIZED BY THE ENGINEER OR SOILS ENGINEER.

100813

MINOR FILL EMBANKMENTS
** STA

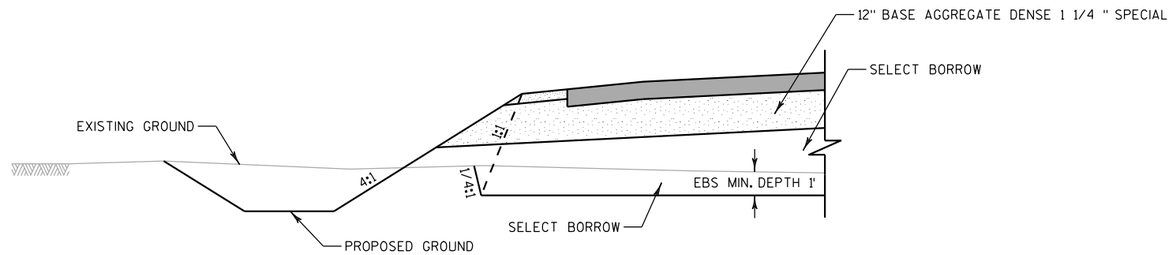

FILL EMBANKMENTS (RURAL)
** STA

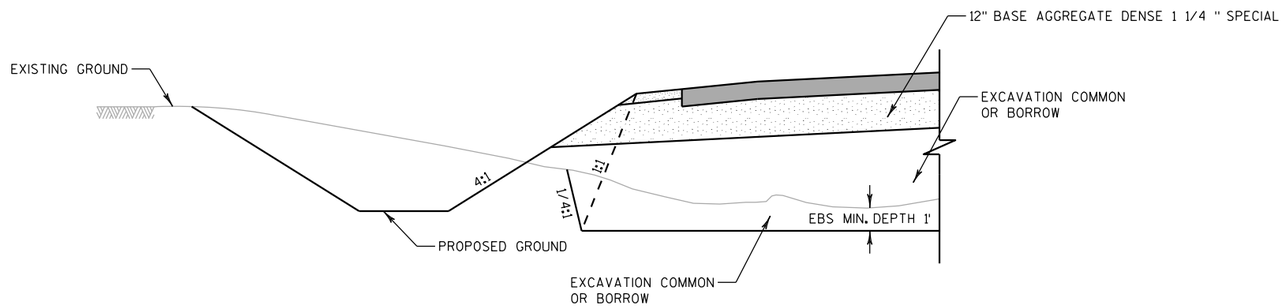

FILL EMBANKMENTS (URBAN)
** STA

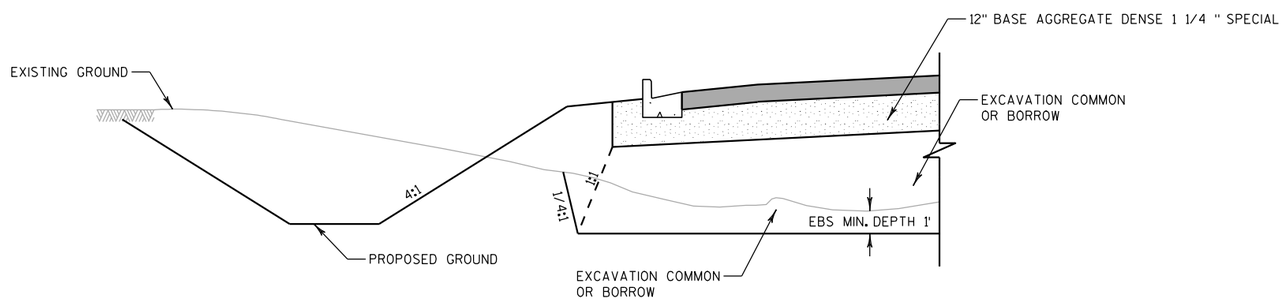

PAVEMENT SUBGRADE IMPROVEMENT DETAILS FOR FRONTAGE ROADS AND CROSSROADS

** ACTUAL LOCATION DEPENDENT ON FIELD CONDITIONS DURING GRADING OPERATIONS. GEOGRID REINFORCEMENT AND FILL MATERIAL SHALL NOT BE PLACED UNTIL AUTHORIZED BY THE ENGINEER OR SOILS ENGINEER.

100813

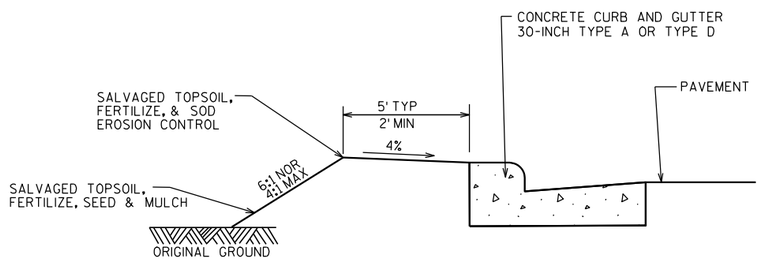

TYPICAL PARTIAL SECTION
AT INTERSECTION RADII

081230

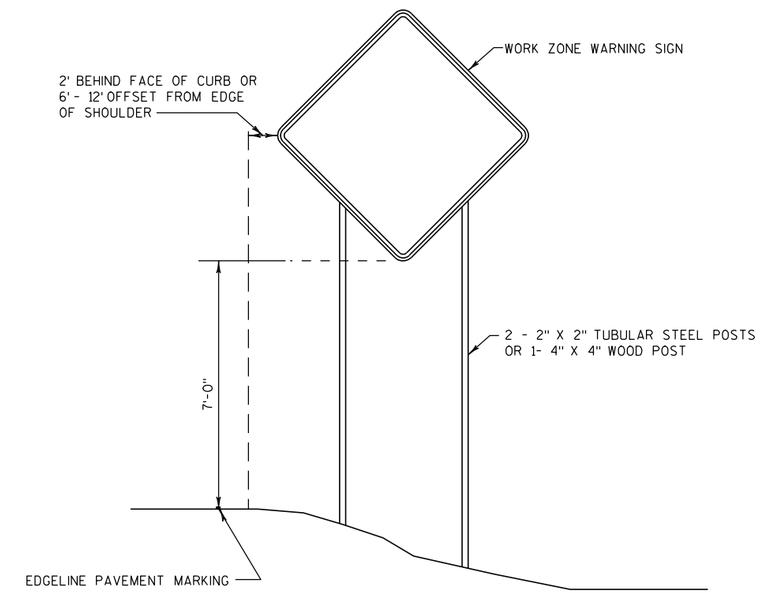

TYPICAL TEMPORARY TRAFFIC CONTROL SIGN
MOUNTING ON FIXED SUPPORT

LONG TERM
7 DAYS OR MORE

101105

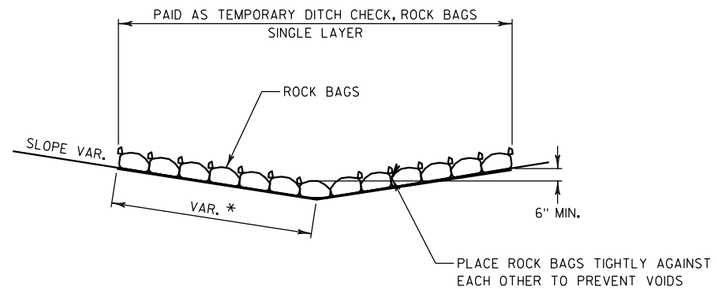

SIDE VIEW (SINGLE LAYER)

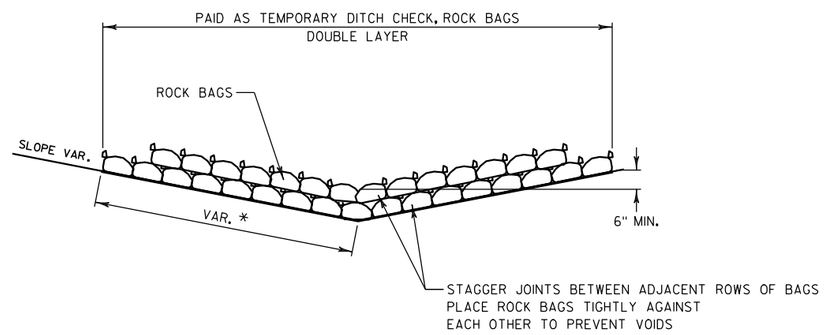

* LENGTH AND NUMBER OF BAGS MAY VARY
DEPENDING ON DESIRED DEPTH OF WATER POOL.

SIDE VIEW (DOUBLE LAYER)

TEMPORARY DITCH CHECK, ROCK BAGS,
SINGLE LAYER AND DOUBLE LAYER

TEMPORARY DITCH CHECKS

091218

2

BEGIN PROJECT
I.D. 1033-02-70
STA. 3835+00.00
= MATCH EXISTING

SW01

3835
767.61
767.46
AP06
767.31
767.17
3836
767.05
766.93
766.84
766.75
3837
766.68
766.63
766.59
766.56
3838
766.54
766.54
766.56
766.59
3839
766.63
766.68
766.75
766.84
3840
766.93
767.05
767.17
767.31
3841
767.46
767.62
767.78

5'
3'
12'
12'
5'
3'

EAST FRONTAGE ROAD

WETLAND BOUNDARY (TYP.)

AG01
AP06
AP06
AG01
AP06

MATCHLINE 3841+50

N

2

LEGEND

- AP06 HMA PAVEMENT TYPE E-3, 7-INCH
- AG01 BASE AGGREGATE DENSE 3/4-INCH
- PV01 CONCRETE PAVEMENT APPROACH SLAB
- PV02 SLOPE PAVING CONCRETE
- PV05 ASPHALTIC FLUME
- CG04 CONCRETE CURB AND GUTTER 6-INCH SLOPED 36-INCH TYPE D
- CM01 CONCRETE MEDIAN SLOPED NOSE TYPE 1
- CM05 CONCRETE SIDEWALK, 5-INCH
- DR02 CONCRETE DRIVEWAY 9-INCH
- DR03 ASPHALTIC SURFACE DRIVEWAYS AND FIELD ENTRANCES, 3-INCH
- DR04 AGGREGATE DRIVEWAY, BASE AGGREGATE DENSE 3/4-INCH, 6-INCH
- BG01 STEEL THRIE BEAM STRUCTURE APPROACH
- BG02 STEEL PLATE BEAM GUARD CLASS A
- BG04 STEEL PLATE BEAM GUARD ENERGY ABSORBING TERMINAL
- LS01 SOD LAWN
- SW01 SAWING EXISTING PAVEMENT
- SW02 SAWING CONCRETE PAVEMENT FULL DEPTH

See new sheet #30

PROJECT NO:1033-02-70	HWY:IH 94/STH 20	COUNTY:RACINE	PLAN DETAILS	SHEET	E

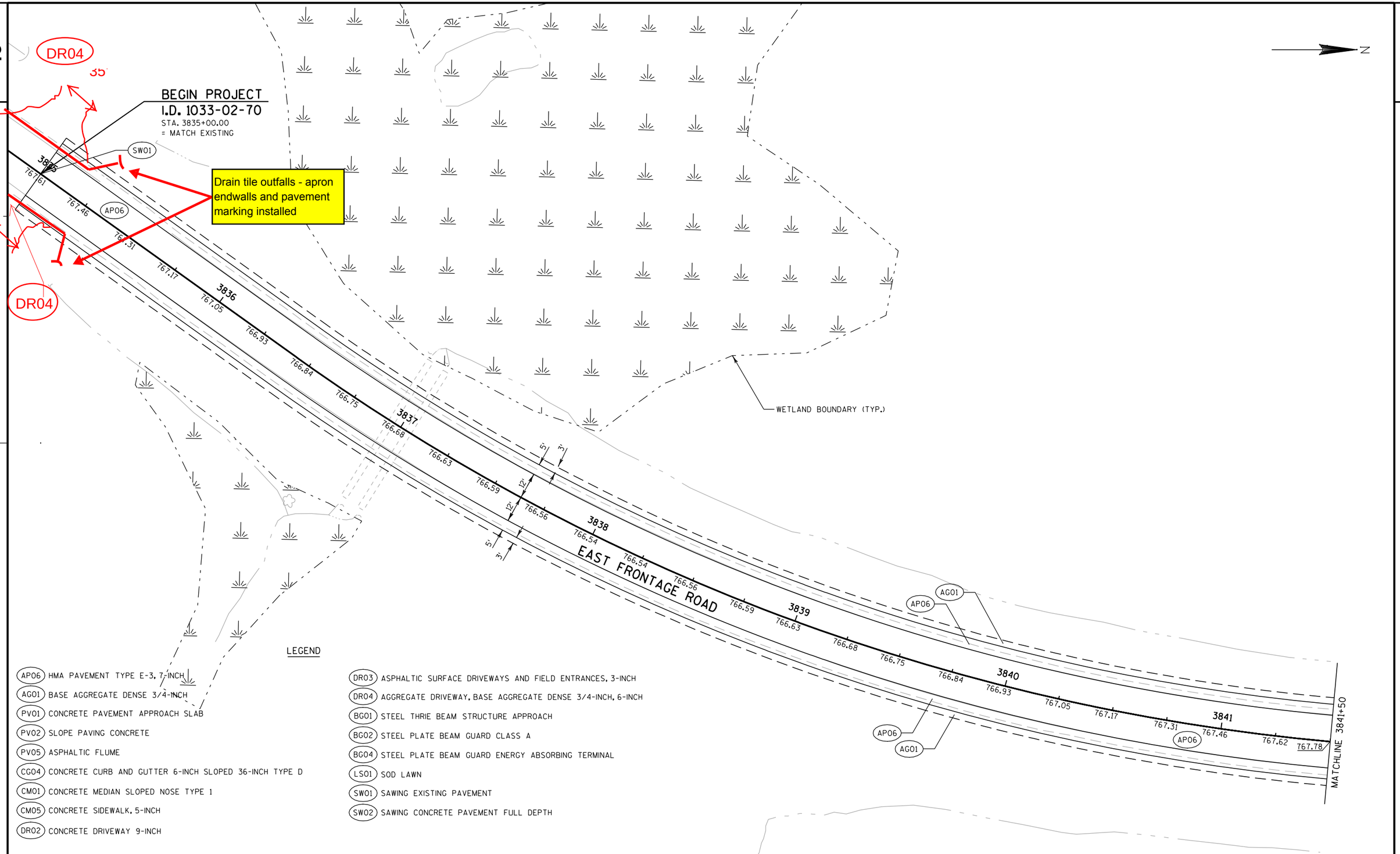

LEGEND

- AP06 HMA PAVEMENT TYPE E-3, 7-INCH
- AG01 BASE AGGREGATE DENSE 3/4-INCH
- PV01 CONCRETE PAVEMENT APPROACH SLAB
- PV02 SLOPE PAVING CONCRETE
- PV05 ASPHALTIC FLUME
- CG04 CONCRETE CURB AND GUTTER 6-INCH SLOPED 36-INCH TYPE D
- CM01 CONCRETE MEDIAN SLOPED NOSE TYPE 1
- CM05 CONCRETE SIDEWALK, 5-INCH
- DR02 CONCRETE DRIVEWAY 9-INCH
- DR03 ASPHALTIC SURFACE DRIVEWAYS AND FIELD ENTRANCES, 3-INCH
- DR04 AGGREGATE DRIVEWAY, BASE AGGREGATE DENSE 3/4-INCH, 6-INCH
- BG01 STEEL THRIE BEAM STRUCTURE APPROACH
- BG02 STEEL PLATE BEAM GUARD CLASS A
- BG04 STEEL PLATE BEAM GUARD ENERGY ABSORBING TERMINAL
- LS01 SOD LAWN
- SW01 SAWING EXISTING PAVEMENT
- SW02 SAWING CONCRETE PAVEMENT FULL DEPTH

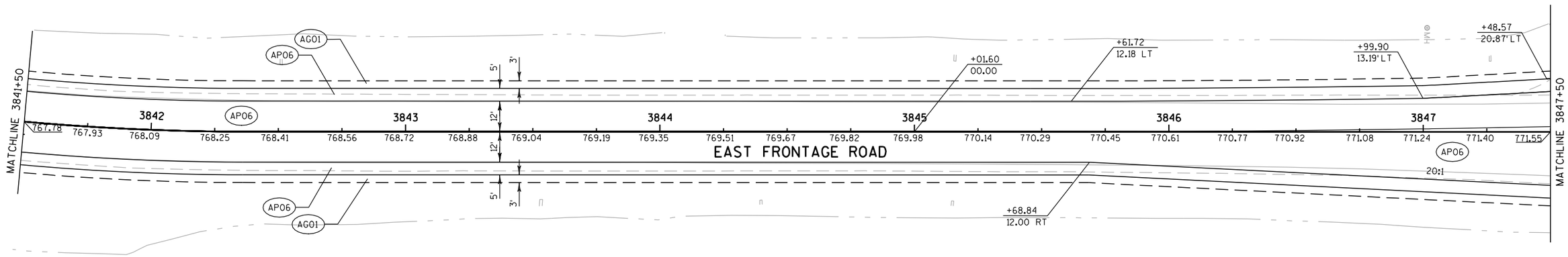

NOTE: SEE "ALIGNMENT PLAN-TRANSITIONAL CURVES" FOR LANE LAYOUT

SIGN

LEGEND

- (AP06) HMA PAVEMENT TYPE E-3, 7-INCH
- (AG01) BASE AGGREGATE DENSE 3/4-INCH
- (PV01) CONCRETE PAVEMENT APPROACH SLAB
- (PV02) SLOPE PAVING CONCRETE
- (PV05) ASPHALTIC FLUME
- (CG04) CONCRETE CURB AND GUTTER 6-INCH SLOPED 36-INCH TYPE D
- (CM01) CONCRETE MEDIAN SLOPED NOSE TYPE 1
- (CM05) CONCRETE SIDEWALK, 5-INCH
- (DR02) CONCRETE DRIVEWAY 9-INCH
- (DR03) ASPHALTIC SURFACE DRIVEWAYS AND FIELD ENTRANCES, 3-INCH
- (DR04) AGGREGATE DRIVEWAY, BASE AGGREGATE DENSE 3/4-INCH, 6-INCH
- (BG01) STEEL THRIE BEAM STRUCTURE APPROACH
- (BG02) STEEL PLATE BEAM GUARD CLASS A
- (BG04) STEEL PLATE BEAM GUARD ENERGY ABSORBING TERMINAL
- (LS01) SOD LAWN
- (SW01) SAWING EXISTING PAVEMENT
- (SW02) SAWING CONCRETE PAVEMENT FULL DEPTH

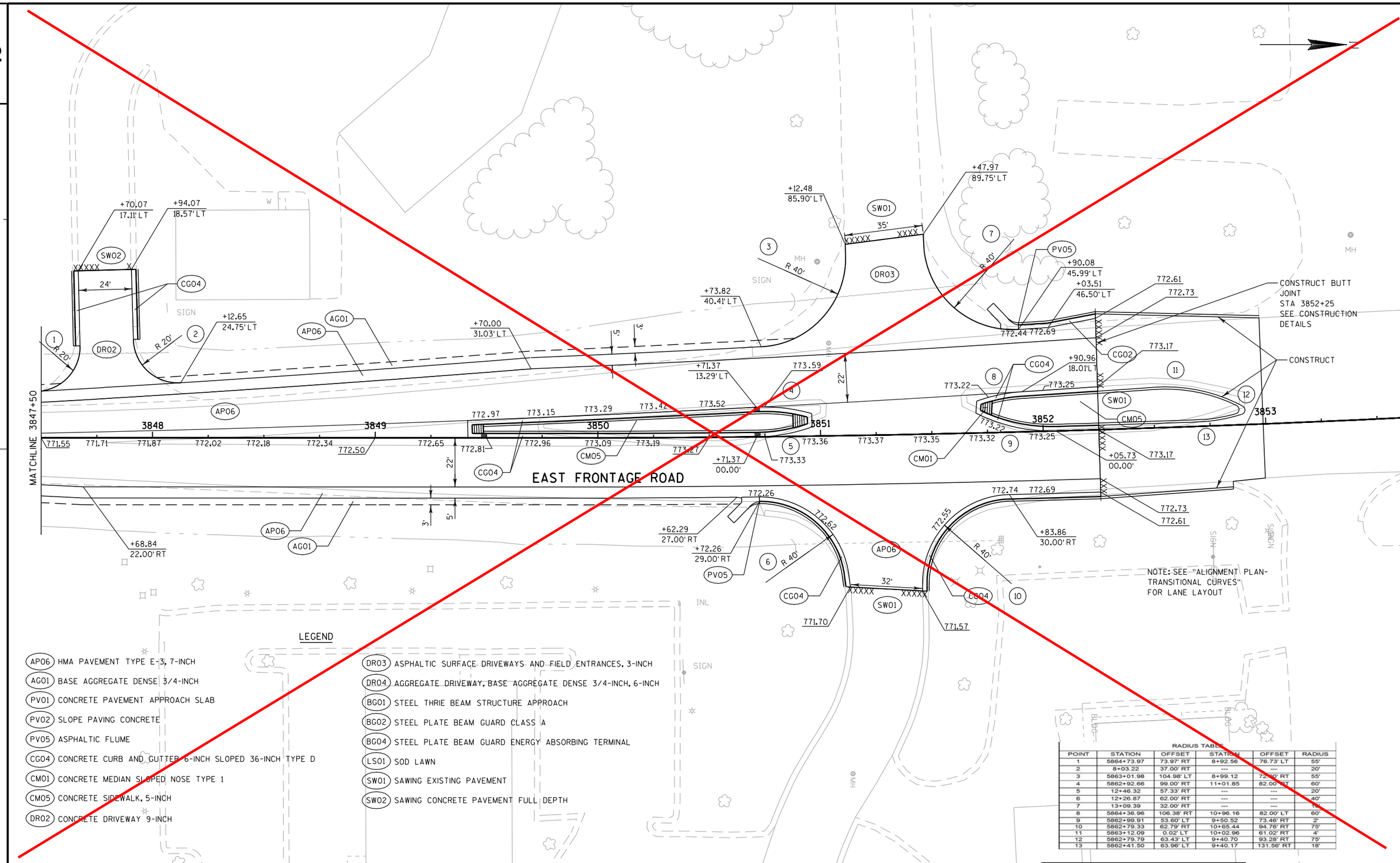

LEGEND

- APO6 HMA PAVEMENT TYPE E-3, 7-INCH
- AGO1 BASE AGGREGATE DENSE 3/4-INCH
- PVO1 CONCRETE PAVEMENT APPROACH SLAB
- PVO2 SLOPE PAVING CONCRETE
- PVO5 ASPHALTIC FLUME
- CGO4 CONCRETE CURB AND GUTTER 6-INCH SLOPED 36-INCH TYPE D
- CMO1 CONCRETE MEDIAN SLOPED NOSE TYPE 1
- CMO5 CONCRETE SIDEWALK, 5-INCH
- DRO2 CONCRETE DRIVEWAY 9-INCH
- DRO3 ASPHALTIC SURFACE DRIVEWAYS AND FIELD ENTRANCES, 3-INCH
- DRO4 AGGREGATE DRIVEWAY, BASE AGGREGATE DENSE 3/4-INCH, 6-INCH
- BGO1 STEEL THRIE BEAM STRUCTURE APPROACH
- BGO2 STEEL PLATE BEAM GUARD CLASS A
- BGO4 STEEL PLATE BEAM GUARD ENERGY ABSORBING TERMINAL
- LSO1 SOD LAWN
- SWO1 SAWING EXISTING PAVEMENT
- SWO2 SAWING CONCRETE PAVEMENT FULL DEPTH

RADIUS TABLE

POINT	STATION	OFFSET	STATION	OFFSET	RADIUS
1	5864+73.97	73.97' RT	8+92.56	76.73' LT	55'
2	8+03.22	37.00' RT	---	---	20'
3	5863+01.98	104.98' LT	8+99.12	72.00' RT	55'
4	5862+92.66	99.00' RT	11+01.85	82.00' RT	60'
5	12+46.32	57.33' RT	---	---	20'
6	12+26.87	62.00' RT	---	---	40'
7	13+09.39	32.00' RT	---	---	40'
8	5864+36.96	106.38' RT	10+96.16	82.00' LT	60'
9	5862+99.91	53.60' LT	9+50.52	73.46' RT	2'
10	5862+79.33	62.79' RT	10+65.44	94.76' RT	75'
11	5863+12.09	0.02' LT	10+02.96	61.02' RT	4'
12	5862+79.79	63.43' LT	9+40.70	93.28' RT	75'
13	5862+41.50	63.96' LT	9+40.17	131.56' RT	18'

See new sheet #32

PROJECT NO:1033-02-70	HWY:IH 94/STH 20	COUNTY:RACINE	PLAN DETAILS	SHEET	E

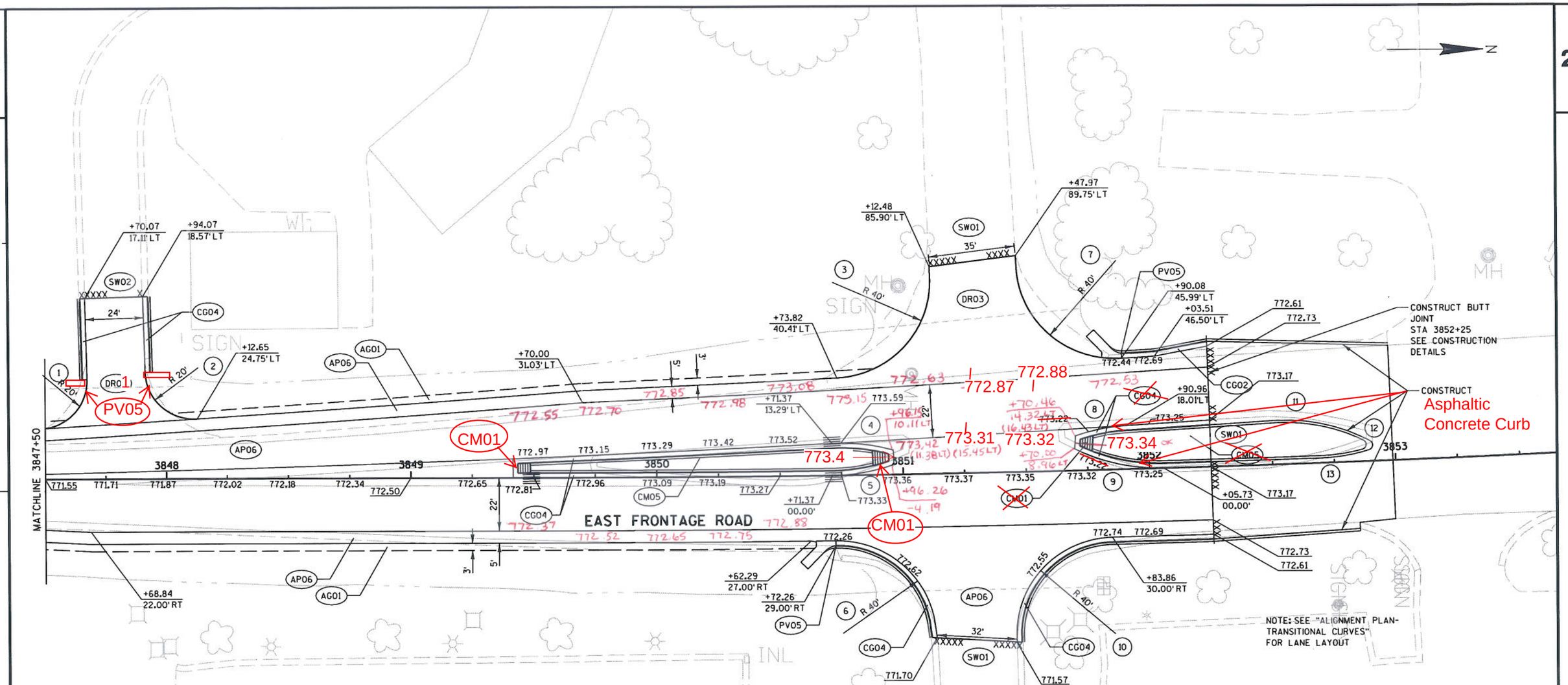

LEGEND

- APO6 HMA PAVEMENT TYPE E-3, 7-INCH
- AGO1 BASE AGGREGATE DENSE 3/4-INCH
- PVO1 CONCRETE PAVEMENT APPROACH SLAB
- PVO2 SLOPE PAVING CONCRETE
- PVO5 ASPHALTIC FLUME
- CGO4 CONCRETE CURB AND GUTTER 6-INCH SLOPED 36-INCH TYPE D
- CMO1 CONCRETE MEDIAN SLOPED NOSE TYPE 1
- CMO5 CONCRETE SIDEWALK, 5-INCH
- DRO2 CONCRETE DRIVEWAY 9-INCH
- DRO3 ASPHALTIC SURFACE DRIVEWAYS AND FIELD ENTRANCES, 3-INCH
- DRO4 AGGREGATE DRIVEWAY, BASE AGGREGATE DENSE 3/4-INCH, 6-INCH
- BGO1 STEEL THRIE BEAM STRUCTURE APPROACH
- BGO2 STEEL PLATE BEAM GUARD CLASS A
- BGO4 STEEL PLATE BEAM GUARD ENERGY ABSORBING TERMINAL
- LSO1 SOD LAWN
- SWO1 SAWING EXISTING PAVEMENT
- SWO2 SAWING CONCRETE PAVEMENT FULL DEPTH

DR01 Concrete Driveway 6-Inch

RADIUS TABLE

POINT	STATION	OFFSET	STATION	OFFSET	RADIUS
1	3847+48.86	15.87' LT	—	—	20'
2	3848+12.97	19.76' LT	—	—	20'
3	3850+74.03	35.42' LT			40'
4	3850+74.42	61.65' RT	—	—	75'
5	3850+71.43	75.00' LT	—	—	75'
6	3850+72.26	22.00' RT	—	—	40'
7	3851+90.31	40.00' LT			40'
8	3851+93.79	56.94' RT	—	—	75'
9	3852+05.73	75.00' LT	—	—	75'
10	3851+84.09	68.00' RT	—	—	40'
11	3852+53.31	28.00' RT	—	—	72'
12	3852+86.26	6.80' LT	—	—	2'
13	3852+69.65	75.00' LT	—	—	72'

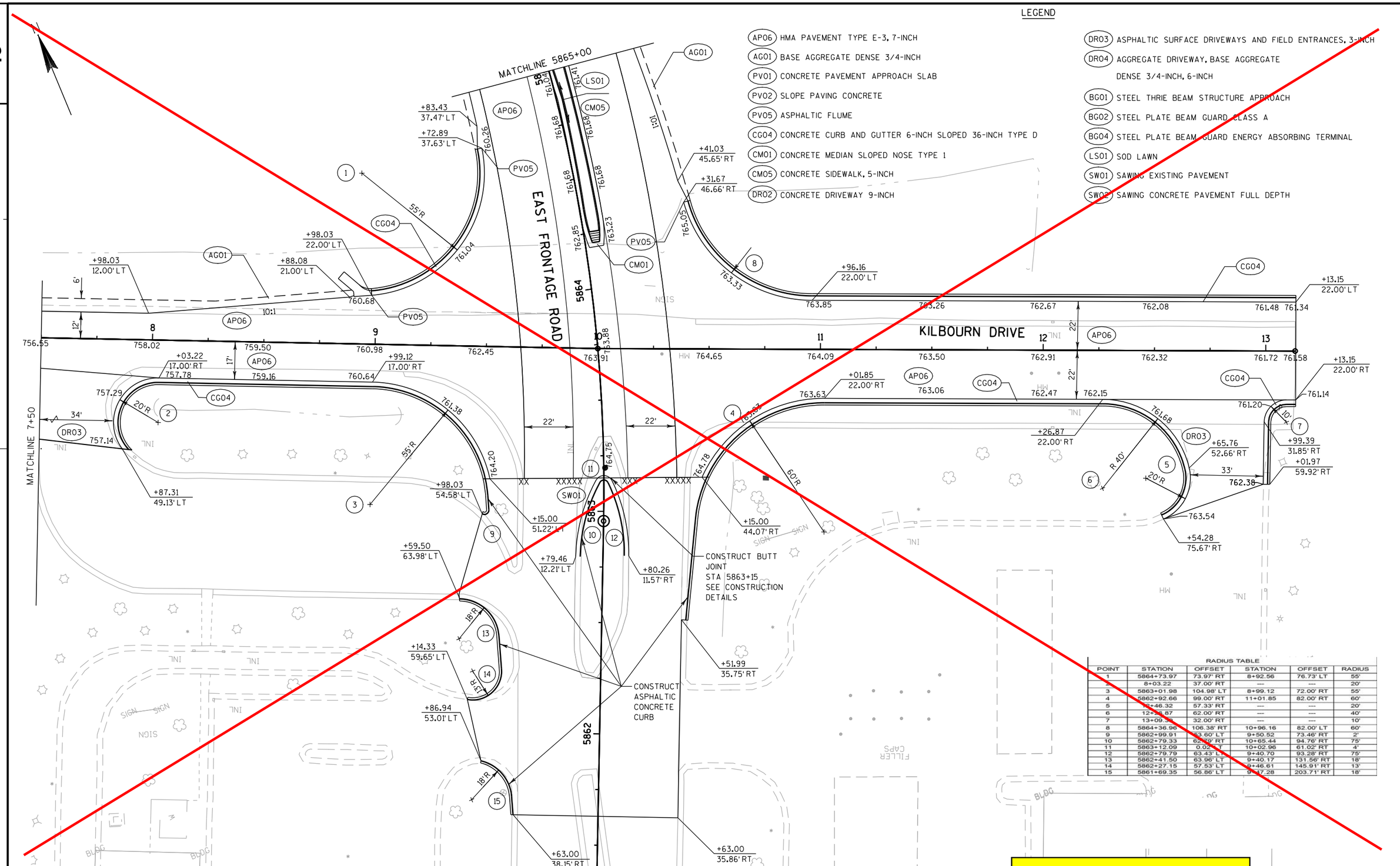

LEGEND

- AP06 HMA PAVEMENT TYPE E-3, 7-INCH
- AG01 BASE AGGREGATE DENSE 3/4-INCH
- PV01 CONCRETE PAVEMENT APPROACH SLAB
- PV02 SLOPE PAVING CONCRETE
- PV05 ASPHALTIC FLUME
- CG04 CONCRETE CURB AND GUTTER 6-INCH SLOPED 36-INCH TYPE D
- CM01 CONCRETE MEDIAN SLOPED NOSE TYPE 1
- CM05 CONCRETE SIDEWALK, 5-INCH
- DR02 CONCRETE DRIVEWAY 9-INCH
- DR03 ASPHALTIC SURFACE DRIVEWAYS AND FIELD ENTRANCES, 3-INCH
- DR04 AGGREGATE DRIVEWAY, BASE AGGREGATE DENSE 3/4-INCH, 6-INCH
- BG01 STEEL THRIE BEAM STRUCTURE APPROACH
- BG02 STEEL PLATE BEAM GUARD CLASS A
- BG04 STEEL PLATE BEAM GUARD ENERGY ABSORBING TERMINAL
- LS01 SOD LAWN
- SW01 SAWING EXISTING PAVEMENT
- SW02 SAWING CONCRETE PAVEMENT FULL DEPTH

RADIUS TABLE

POINT	STATION	OFFSET	STATION	OFFSET	RADIUS
1	5864+73.97	73.97' RT	8+92.56	76.73' LT	55'
2	8+03.22	37.00' RT	---	---	20'
3	5863+01.98	104.98' LT	8+99.12	72.00' RT	55'
4	5862+92.66	99.00' RT	11+01.85	82.00' RT	60'
5	12+46.32	57.33' RT	---	---	20'
6	12+26.87	62.00' RT	---	---	40'
7	13+09.[illegible]	32.00' RT	---	---	10'
8	5864+36.96	106.38' RT	10+96.16	82.00' LT	60'
9	5862+99.91	53.60' LT	9+50.52	73.46' RT	2'
10	5862+79.33	62.79' RT	10+65.44	94.76' RT	75'
11	5863+12.09	0.02' LT	10+02.96	61.02' RT	4'
12	5862+79.79	63.43' LT	9+40.70	93.28' RT	75'
13	5862+41.50	63.96' LT	9+40.17	131.56' RT	18'
14	5862+27.15	57.53' LT	9+46.61	145.91' RT	13'
15	5861+69.35	56.86' LT	9+[illegible]7.28	203.71' RT	18'

See new sheet #33 and #33A

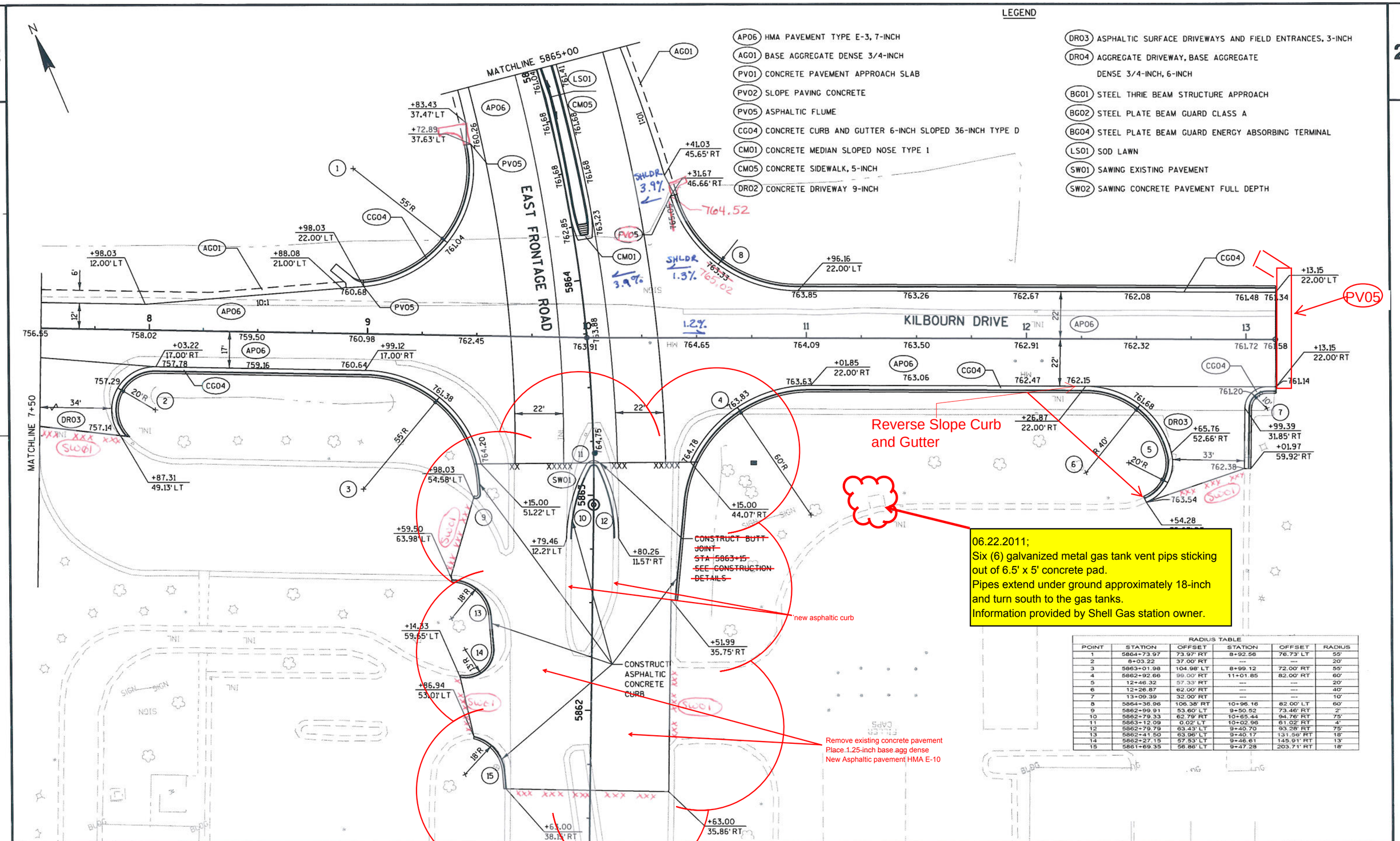

RADIUS TABLE

POINT	STATION	OFFSET	STATION	OFFSET	RADIUS
1	5864+73.97	73.97' RT	8+92.56	76.73' LT	55'
2	8+03.22	37.00' RT	---	---	20'
3	5863+01.98	104.98' LT	8+99.12	72.00' RT	55'
4	5862+92.66	99.00' RT	11+01.85	82.00' RT	60'
5	12+46.32	57.33' RT	---	---	20'
6	12+26.87	62.00' RT	---	---	40'
7	13+09.39	32.00' RT	---	---	10'
8	5864+36.96	106.38' RT	10+96.16	82.00' LT	60'
9	5862+99.91	53.60' LT	9+50.52	73.46' RT	2'
10	5862+79.33	62.79' RT	10+65.44	94.76' RT	75'
11	5863+12.09	0.02' LT	10+02.96	61.02' RT	4'
12	5862+79.79	63.43' LT	9+40.70	93.28' RT	75'
13	5862+41.50	63.96' LT	9+40.17	131.56' RT	18'
14	5862+27.15	57.53' LT	9+46.61	145.91' RT	13'
15	5861+69.35	56.86' LT	9+47.28	203.71' RT	18'

PROJECT NO: 1033-02-70	HWY: IH 94/STH 20	COUNTY: RACINE	PLAN DETAILS	SHEET 33	E

FILE NAME : S:\FinalDesign\20\10330270_E\Roads\cds\021204_pd.dgn PLOT DATE : 07-DEC-2010 16:58 PLOT BY : MSCD1S PLOT NAME : 021204_pd PLOT SCALE : 40:1

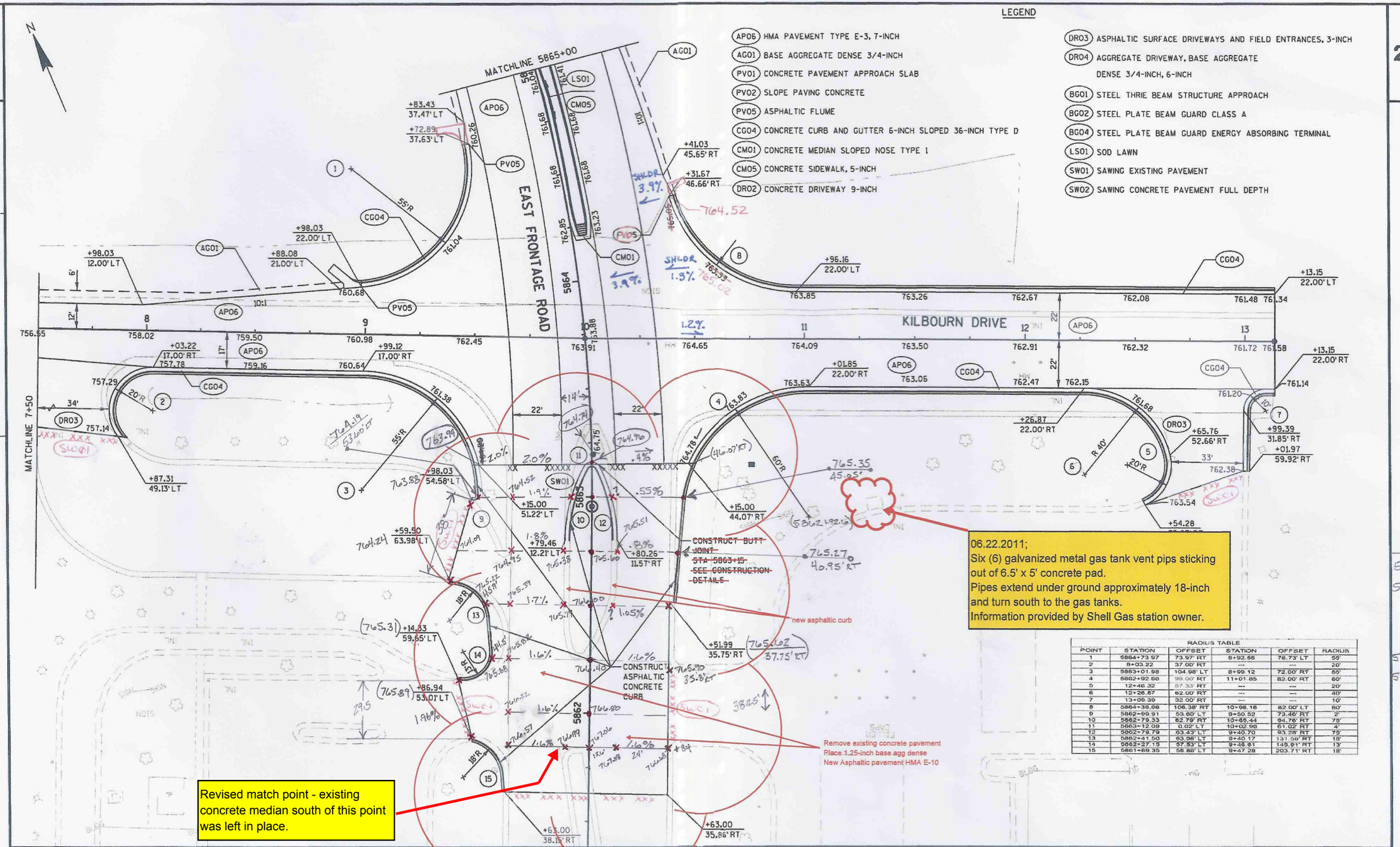

R/L GRADES
5861+84 = 767.0
5862+00 = 766.
+25 = 766.
+50 = 766.0
+75 = 765.
5863+00 = 765.
5863+25 = Median
(764.7

1.6% x 36' = .58

PROJECT NO: 1033-02-70	HWY: IH 94/STH 20	COUNTY: RACINE	PLAN DETAILS	SHEET 33A	E

FILE NAME : S:\FinalDesign\20\10330270_E\Roads\cds\021204_pd.dgn PLOT DATE : 07-DEC-2010 16:58 PLOT BY : MSCD1S PLOT NAME : 021204_pd PLOT SCALE : 40:1 WISDOT/CADDS SHEET 42

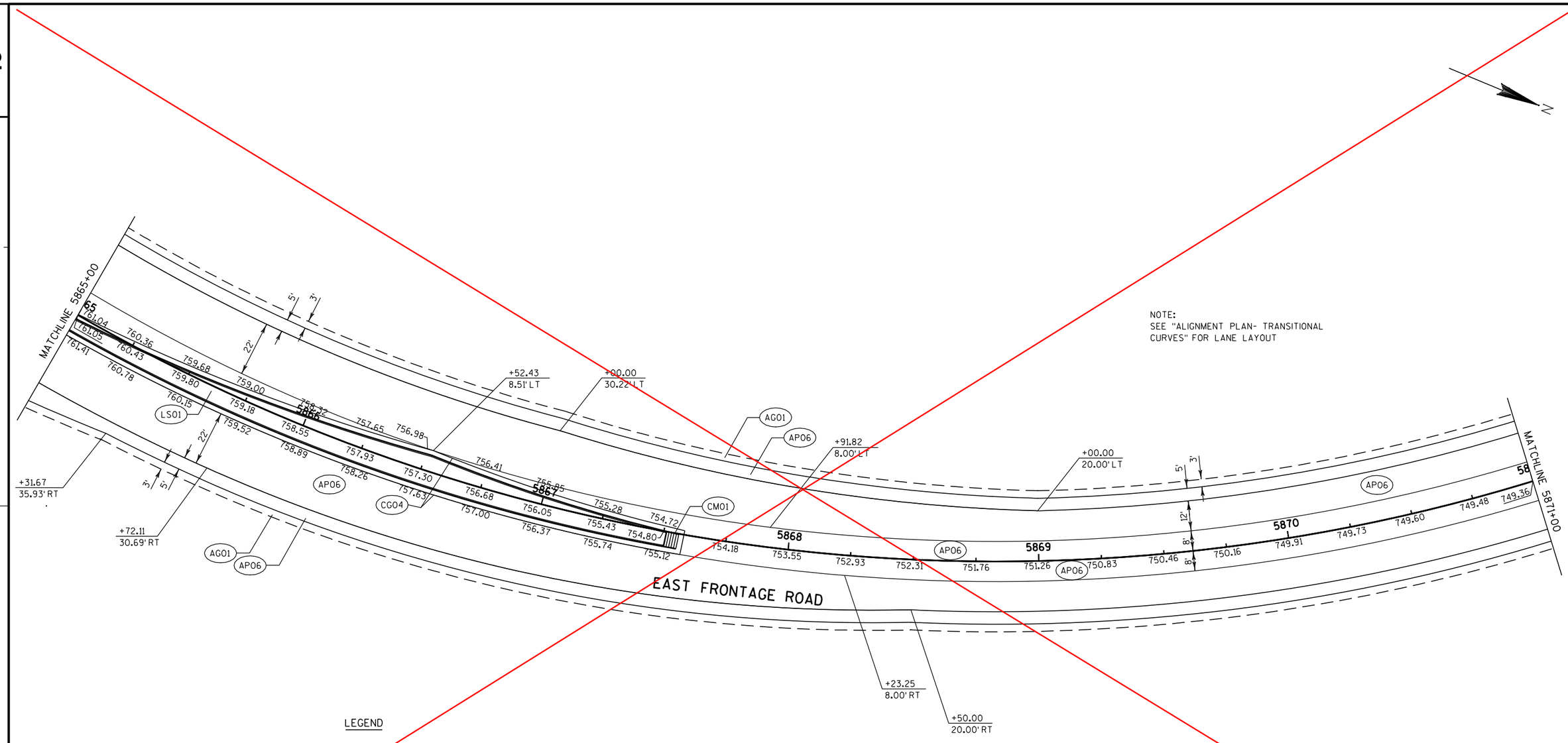

LEGEND

- AP06 HMA PAVEMENT TYPE E-3, 7-INCH
- AG01 BASE AGGREGATE DENSE 3/4-INCH
- PV01 CONCRETE PAVEMENT APPROACH SLAB
- PV02 SLOPE PAVING CONCRETE
- PV05 ASPHALTIC FLUME
- CG04 CONCRETE CURB AND GUTTER 6-INCH SLOPED 36-INCH TYPE D
- CM01 CONCRETE MEDIAN SLOPED NOSE TYPE 1
- CM05 CONCRETE SIDEWALK, 5-INCH
- DR02 CONCRETE DRIVEWAY 9-INCH
- DR03 ASPHALTIC SURFACE DRIVEWAYS AND FIELD ENTRANCES, 3-INCH
- DR04 AGGREGATE DRIVEWAY, BASE AGGREGATE DENSE 3/4-INCH, 6-INCH
- BG01 STEEL THRIE BEAM STRUCTURE APPROACH
- BG02 STEEL PLATE BEAM GUARD CLASS A
- BG04 STEEL PLATE BEAM GUARD ENERGY ABSORBING TERMINAL
- LS01 SOD LAWN
- SW01 SAWING EXISTING PAVEMENT
- SW02 SAWING CONCRETE PAVEMENT FULL DEPTH

2

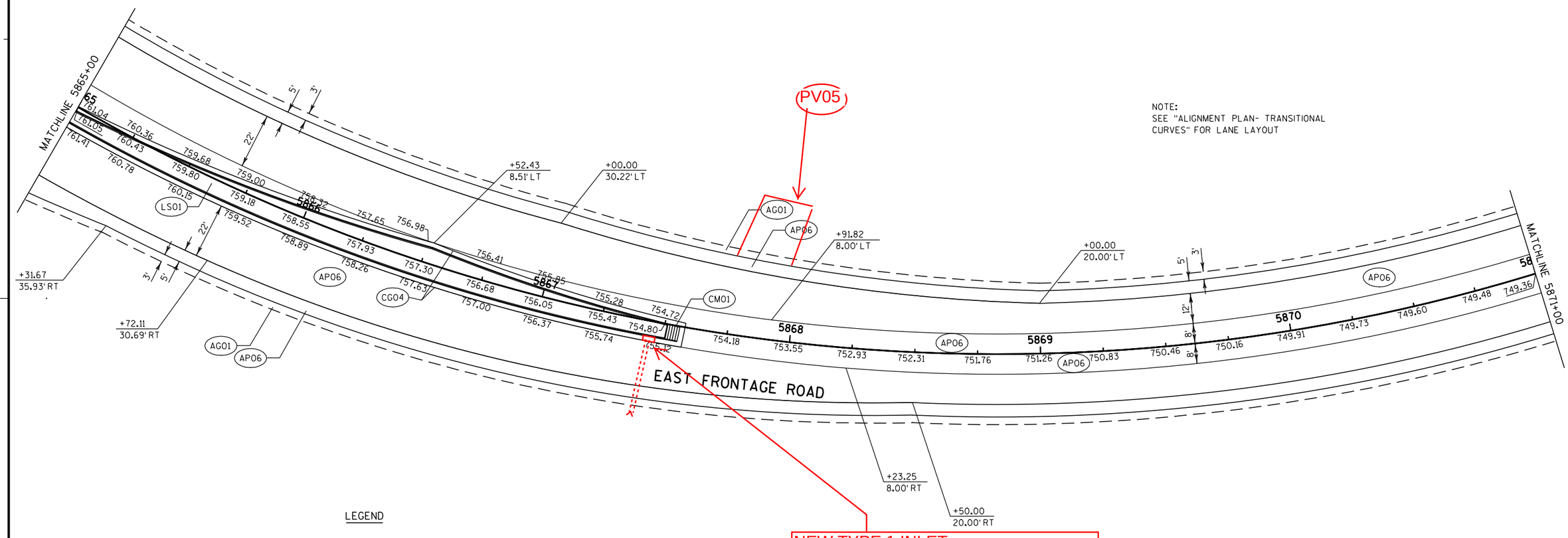

NOTE:
SEE "ALIGNMENT PLAN- TRANSITIONAL CURVES" FOR LANE LAYOUT

LEGEND

- (AP06) HMA PAVEMENT TYPE E-3, 7-INCH
- (AG01) BASE AGGREGATE DENSE 3/4-INCH
- (PV01) CONCRETE PAVEMENT APPROACH SLAB
- (PV02) SLOPE PAVING CONCRETE
- (PV05) ASPHALTIC FLUME
- (CG04) CONCRETE CURB AND GUTTER 6-INCH SLOPED 36-INCH TYPE D
- (CM01) CONCRETE MEDIAN SLOPED NOSE TYPE 1
- (CM05) CONCRETE SIDEWALK, 5-INCH
- (DR02) CONCRETE DRIVEWAY 9-INCH
- (DR03) ASPHALTIC SURFACE DRIVEWAYS AND FIELD ENTRANCES, 3-INCH
- (DR04) AGGREGATE DRIVEWAY, BASE AGGREGATE DENSE 3/4-INCH, 6-INCH
- (BG01) STEEL THRIE BEAM STRUCTURE APPROACH
- (BG02) STEEL PLATE BEAM GUARD CLASS A
- (BG04) STEEL PLATE BEAM GUARD ENERGY ABSORBING TERMINAL
- (LS01) SOD LAWN
- (SW01) SAWING EXISTING PAVEMENT
- (SW02) SAWING CONCRETE PAVEMENT FULL DEPTH

NOTE:
SEE "ALIGNMENT PLAN- TRANSITIONAL CURVES" FOR LANE LAYOUT

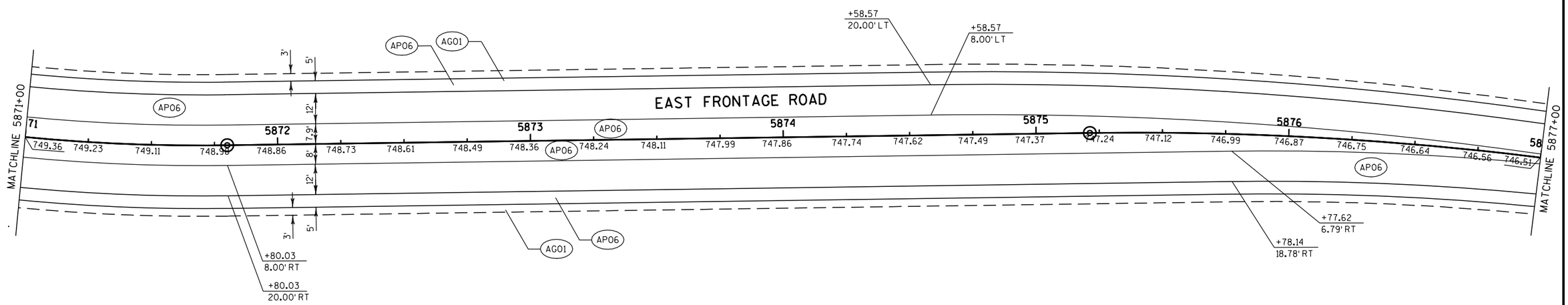

LEGEND

- AP06 HMA PAVEMENT TYPE E-3, 7-INCH
- AG01 BASE AGGREGATE DENSE 3/4-INCH
- PV01 CONCRETE PAVEMENT APPROACH SLAB
- PV02 SLOPE PAVING CONCRETE
- PV05 ASPHALTIC FLUME
- CG04 CONCRETE CURB AND GUTTER 6-INCH SLOPED 36-INCH TYPE D
- CM01 CONCRETE MEDIAN SLOPED NOSE TYPE 1
- CM05 CONCRETE SIDEWALK, 5-INCH
- DR02 CONCRETE DRIVEWAY 9-INCH
- DR03 ASPHALTIC SURFACE DRIVEWAYS AND FIELD ENTRANCES, 3-INCH
- DR04 AGGREGATE DRIVEWAY, BASE AGGREGATE DENSE 3/4-INCH, 6-INCH
- BG01 STEEL THRIE BEAM STRUCTURE APPROACH
- BG02 STEEL PLATE BEAM GUARD CLASS A
- BG04 STEEL PLATE BEAM GUARD ENERGY ABSORBING TERMINAL
- LS01 SOD LAWN
- SW01 SAWING EXISTING PAVEMENT
- SW02 SAWING CONCRETE PAVEMENT FULL DEPTH

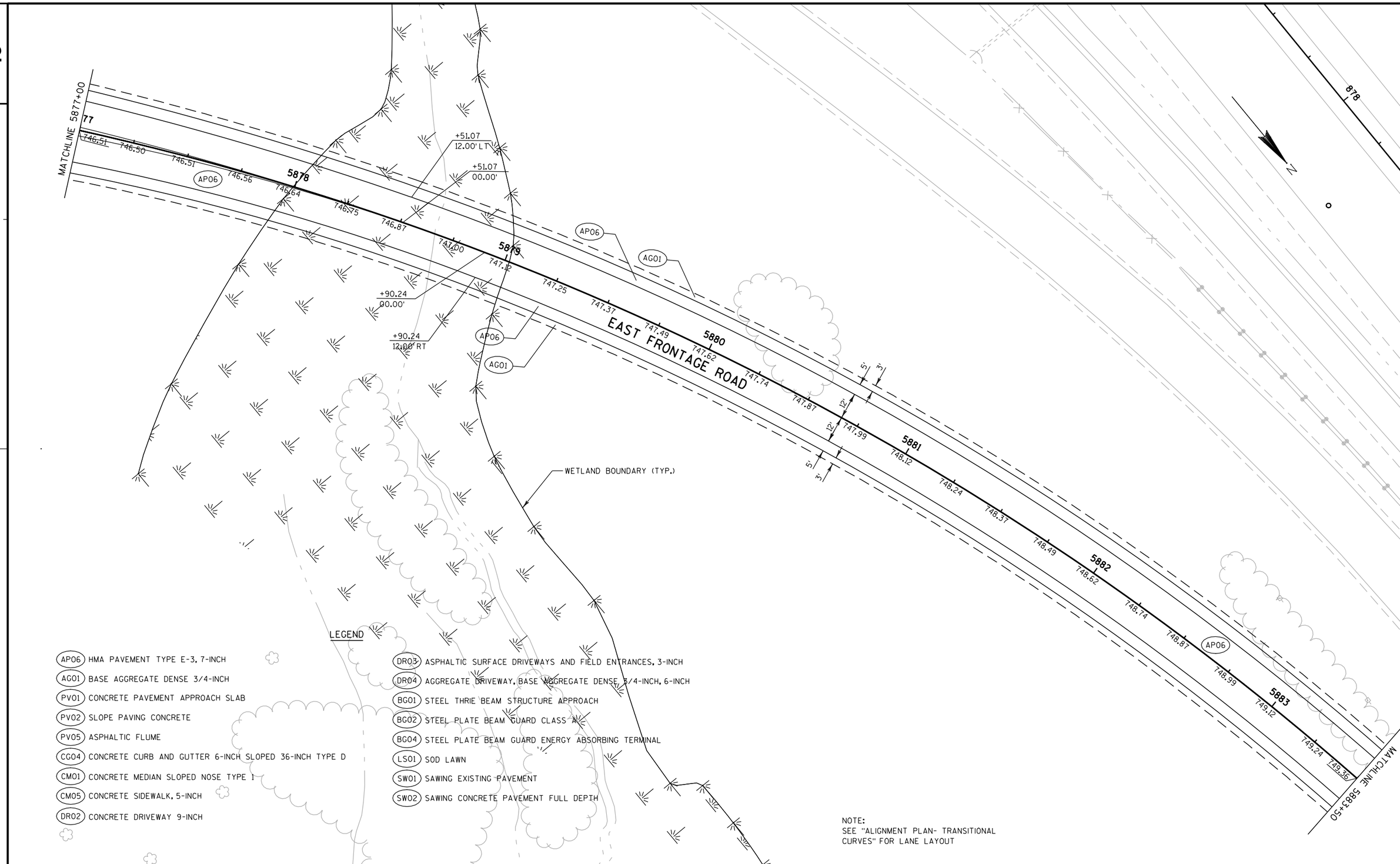

LEGEND

- AP06 HMA PAVEMENT TYPE E-3, 7-INCH
- AG01 BASE AGGREGATE DENSE 3/4-INCH
- PV01 CONCRETE PAVEMENT APPROACH SLAB
- PV02 SLOPE PAVING CONCRETE
- PV05 ASPHALTIC FLUME
- CG04 CONCRETE CURB AND GUTTER 6-INCH SLOPED 36-INCH TYPE D
- CM01 CONCRETE MEDIAN SLOPED NOSE TYPE 1
- CM05 CONCRETE SIDEWALK, 5-INCH
- DR02 CONCRETE DRIVEWAY 9-INCH
- DR03 ASPHALTIC SURFACE DRIVEWAYS AND FIELD ENTRANCES, 3-INCH
- DR04 AGGREGATE DRIVEWAY, BASE AGGREGATE DENSE 3/4-INCH, 6-INCH
- BG01 STEEL THRIE BEAM STRUCTURE APPROACH
- BG02 STEEL PLATE BEAM GUARD CLASS A
- BG04 STEEL PLATE BEAM GUARD ENERGY ABSORBING TERMINAL
- LS01 SOD LAWN
- SW01 SAWING EXISTING PAVEMENT
- SW02 SAWING CONCRETE PAVEMENT FULL DEPTH

NOTE:
SEE "ALIGNMENT PLAN- TRANSITIONAL CURVES" FOR LANE LAYOUT

PROJECT NO:1033-02-70	HWY:IH 94/STH 20	COUNTY:RACINE	PLAN DETAILS	SHEET	E

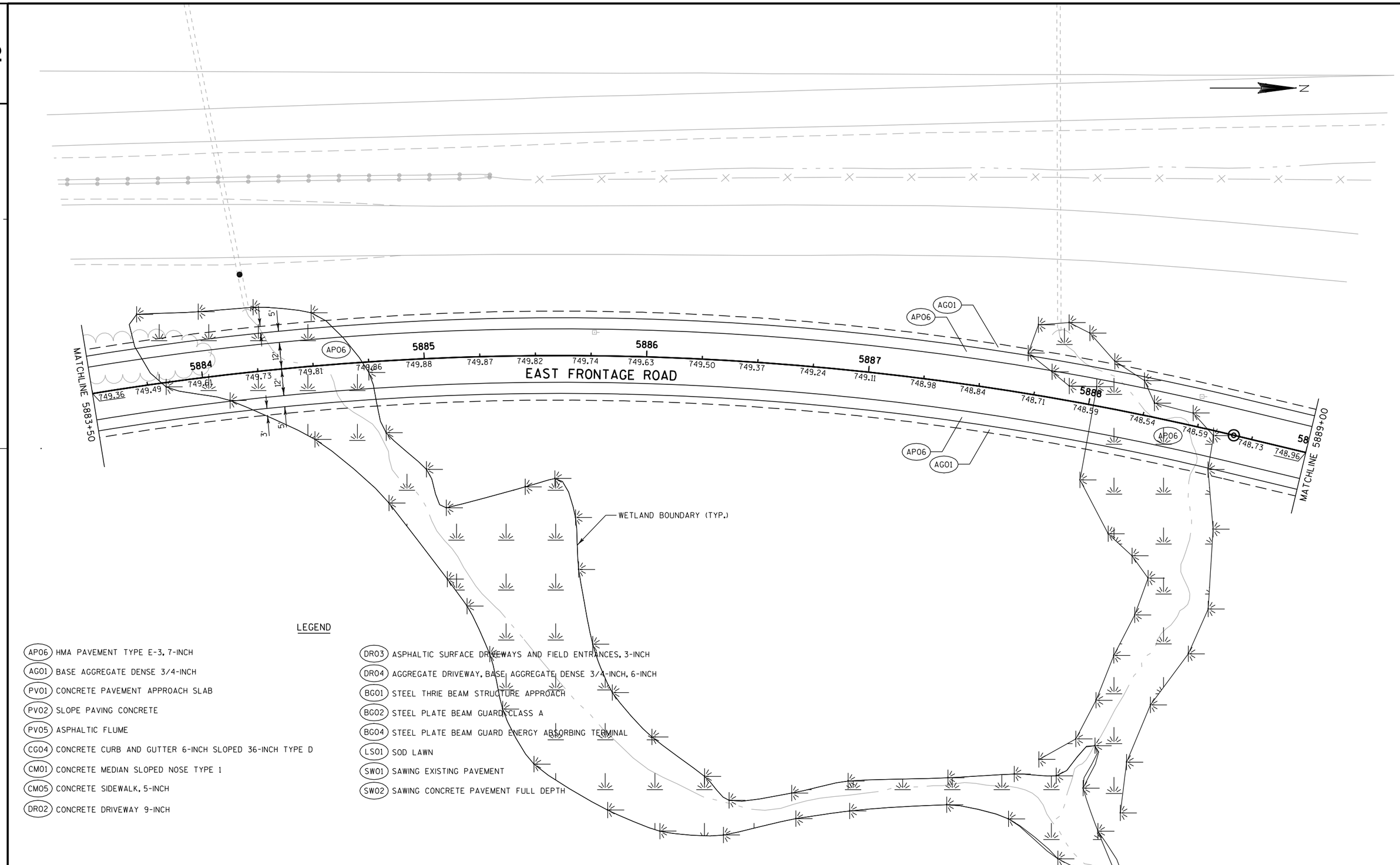

LEGEND

- AP06 HMA PAVEMENT TYPE E-3, 7-INCH
- AG01 BASE AGGREGATE DENSE 3/4-INCH
- PV01 CONCRETE PAVEMENT APPROACH SLAB
- PV02 SLOPE PAVING CONCRETE
- PV05 ASPHALTIC FLUME
- CG04 CONCRETE CURB AND GUTTER 6-INCH SLOPED 36-INCH TYPE D
- CM01 CONCRETE MEDIAN SLOPED NOSE TYPE 1
- CM05 CONCRETE SIDEWALK, 5-INCH
- DR02 CONCRETE DRIVEWAY 9-INCH
- DR03 ASPHALTIC SURFACE DRIVEWAYS AND FIELD ENTRANCES, 3-INCH
- DR04 AGGREGATE DRIVEWAY, BASE, AGGREGATE DENSE 3/4-INCH, 6-INCH
- BG01 STEEL THRIE BEAM STRUCTURE APPROACH
- BG02 STEEL PLATE BEAM GUARD CLASS A
- BG04 STEEL PLATE BEAM GUARD ENERGY ABSORBING TERMINAL
- LS01 SOD LAWN
- SW01 SAWING EXISTING PAVEMENT
- SW02 SAWING CONCRETE PAVEMENT FULL DEPTH

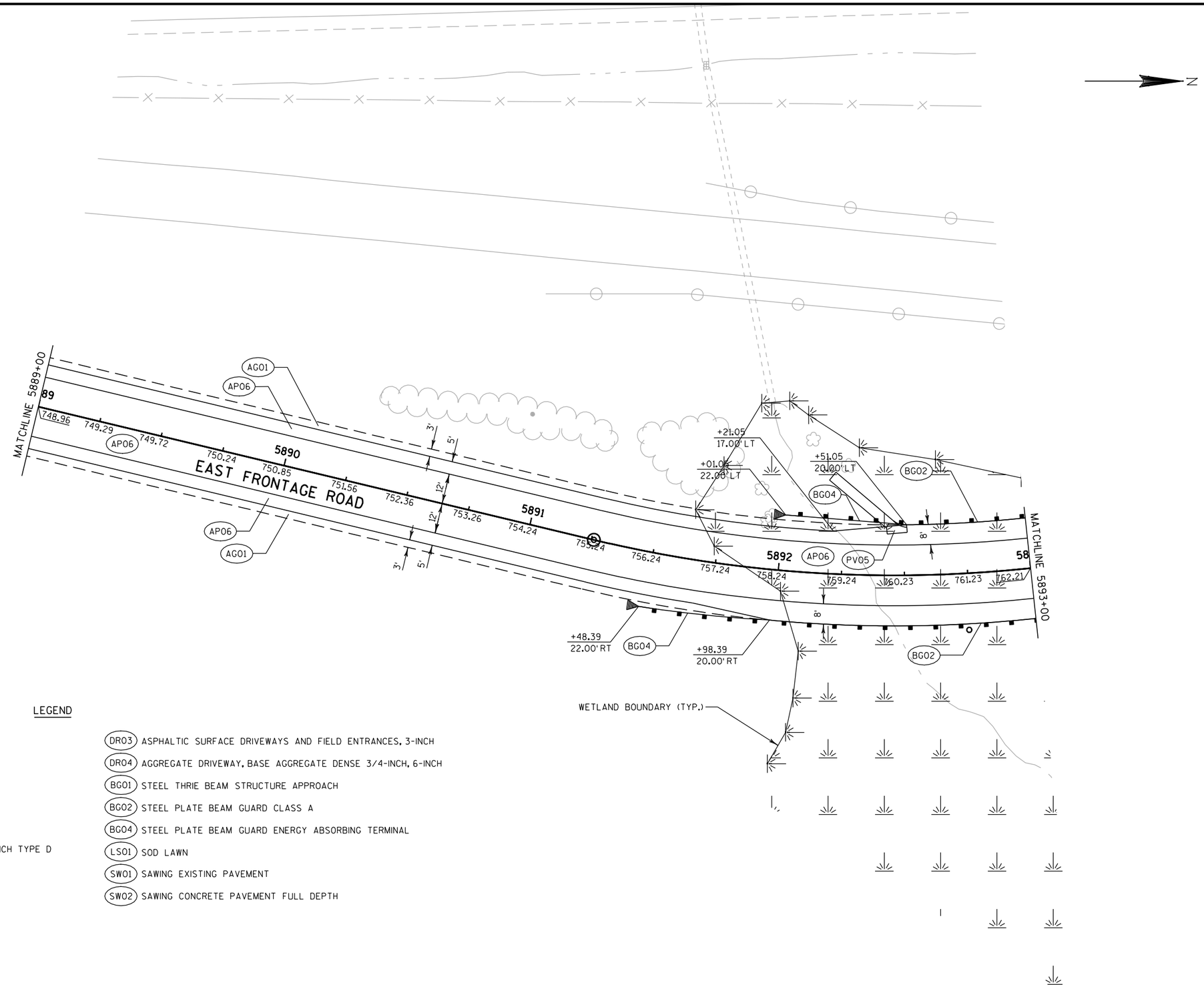

LEGEND

- (AP06) HMA PAVEMENT TYPE E-3, 7-INCH
- (AG01) BASE AGGREGATE DENSE 3/4-INCH
- (PV01) CONCRETE PAVEMENT APPROACH SLAB
- (PV02) SLOPE PAVING CONCRETE
- (PV05) ASPHALTIC FLUME
- (CG04) CONCRETE CURB AND GUTTER 6-INCH SLOPED 36-INCH TYPE D
- (CM01) CONCRETE MEDIAN SLOPED NOSE TYPE 1
- (CM05) CONCRETE SIDEWALK, 5-INCH
- (DR02) CONCRETE DRIVEWAY 9-INCH
- (DR03) ASPHALTIC SURFACE DRIVEWAYS AND FIELD ENTRANCES, 3-INCH
- (DR04) AGGREGATE DRIVEWAY, BASE AGGREGATE DENSE 3/4-INCH, 6-INCH
- (BG01) STEEL THRIE BEAM STRUCTURE APPROACH
- (BG02) STEEL PLATE BEAM GUARD CLASS A
- (BG04) STEEL PLATE BEAM GUARD ENERGY ABSORBING TERMINAL
- (LS01) SOD LAWN
- (SW01) SAWING EXISTING PAVEMENT
- (SW02) SAWING CONCRETE PAVEMENT FULL DEPTH

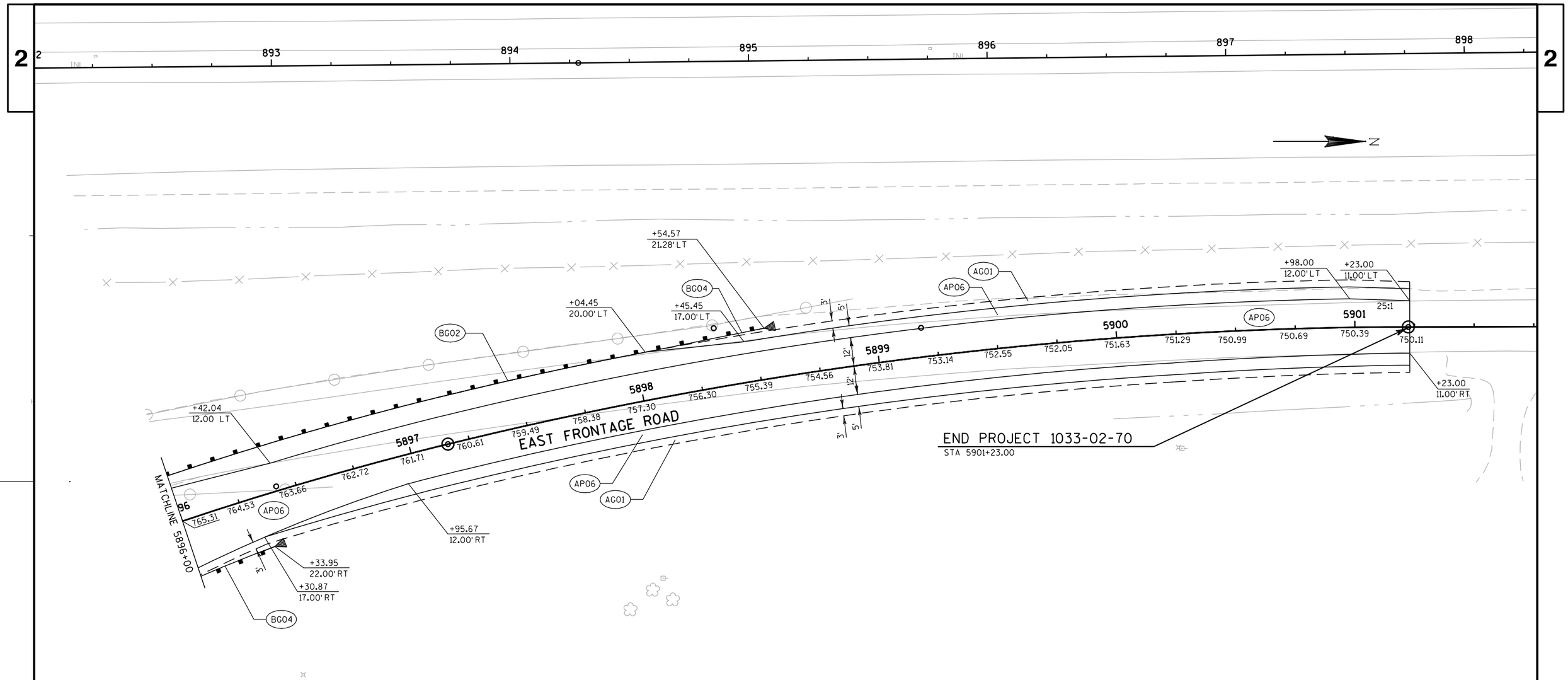

LEGEND

- (AP06) HMA PAVEMENT TYPE E-3, 7-INCH
- (AG01) BASE AGGREGATE DENSE 3/4-INCH
- (PV01) CONCRETE PAVEMENT APPROACH SLAB
- (PV02) SLOPE PAVING CONCRETE
- (PV05) ASPHALTIC FLUME
- (CG04) CONCRETE CURB AND GUTTER 6-INCH SLOPED 36-INCH TYPE D
- (CM01) CONCRETE MEDIAN SLOPED NOSE TYPE 1
- (CM05) CONCRETE SIDEWALK, 5-INCH
- (DR02) CONCRETE DRIVEWAY 9-INCH
- (DR03) ASPHALTIC SURFACE DRIVEWAYS AND FIELD ENTRANCES, 3-INCH
- (DR04) AGGREGATE DRIVEWAY, BASE AGGREGATE DENSE 3/4-INCH, 6-INCH
- (BG01) STEEL THRIE BEAM STRUCTURE APPROACH
- (BG02) STEEL PLATE BEAM GUARD CLASS A
- (BG04) STEEL PLATE BEAM GUARD ENERGY ABSORBING TERMINAL
- (LS01) SOD LAWN
- (SW01) SAWING EXISTING PAVEMENT
- (SW02) SAWING CONCRETE PAVEMENT FULL DEPTH

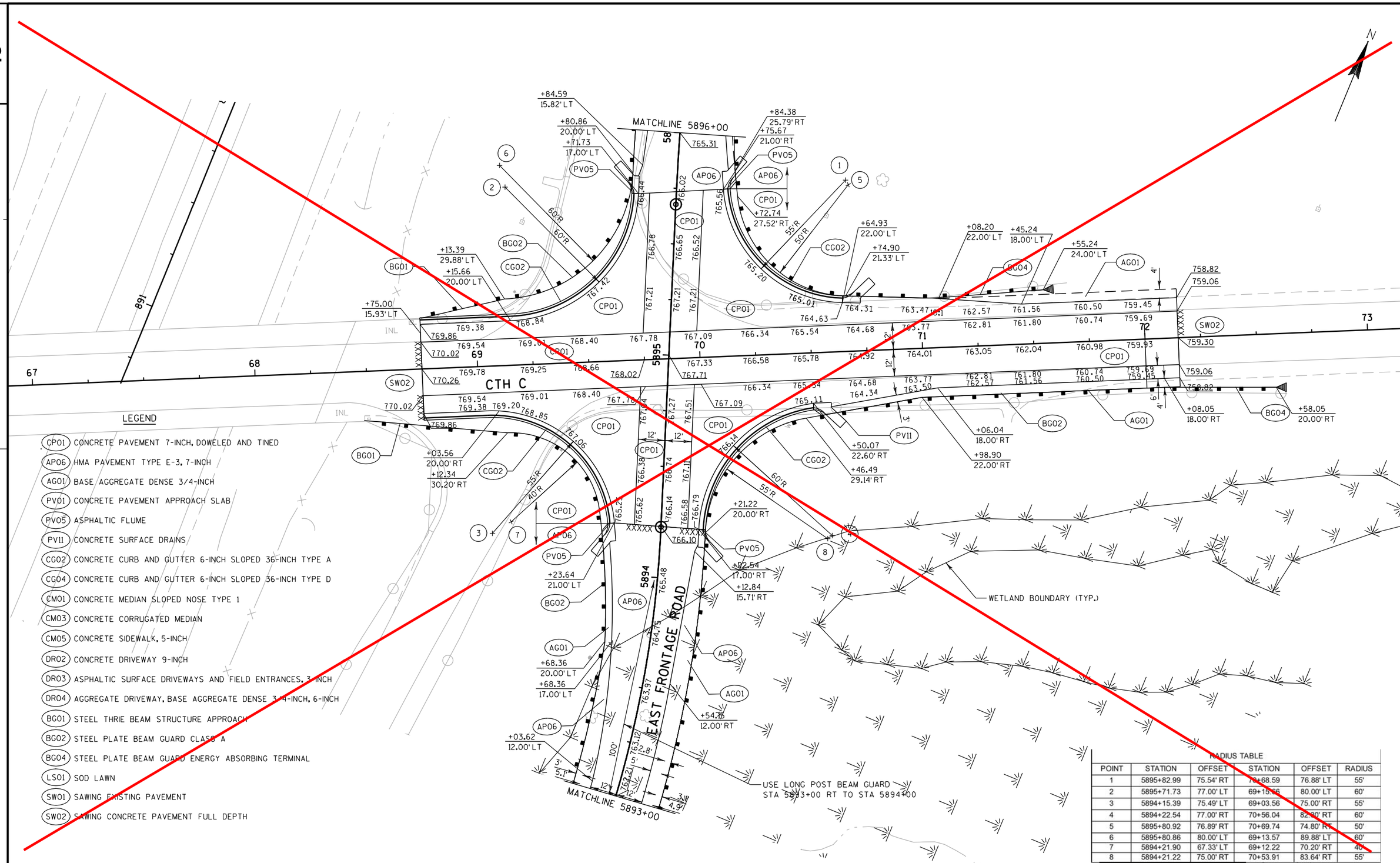

RADIUS TABLE

POINT	STATION	OFFSET	STATION	OFFSET	RADIUS
1	5895+82.99	75.54' RT	70+68.59	76.88' LT	55'
2	5895+71.73	77.00' LT	69+15.66	80.00' LT	60'
3	5894+15.39	75.49' LT	69+03.56	75.00' RT	55'
4	5894+22.54	77.00' RT	70+56.04	82.00' RT	60'
5	5895+80.92	76.89' RT	70+69.74	74.80' RT	50'
6	5895+80.86	80.00' LT	69+13.57	89.88' LT	60'
7	5894+21.90	67.33' LT	69+12.22	70.20' RT	40'
8	5894+21.22	75.00' RT	70+53.91	83.64' RT	55'

See new sheet #40

PROJECT NO:1033-02-70	HWY:IH 94/STH 20	COUNTY:RACINE	PLAN DETAILS	SHEET	E

NOTE: HIGHLIGHTED AREA TO BE ADDED TO 1033-02-72 (MAINLINE)

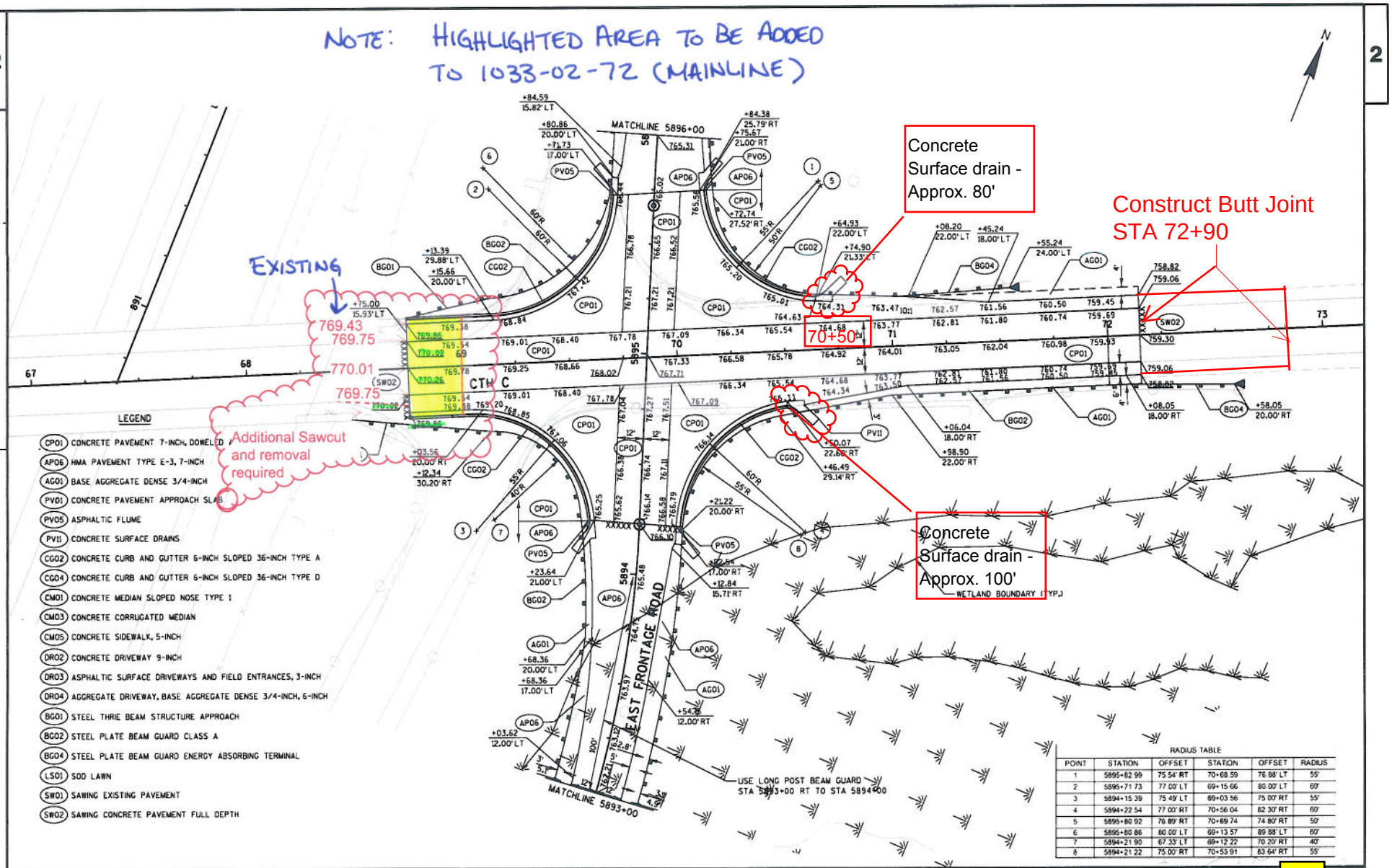

RADIUS TABLE

POINT	STATION	OFFSET	STATION	OFFSET	RADIUS
1	5895+82.99	75.54' RT	70+68.59	76.88' LT	55'
2	5895+71.73	77.00' LT	69+15.66	80.00' LT	60'
3	5894+15.39	75.49' LT	69+03.56	75.00' RT	55'
4	5894+22.54	77.00' RT	70+56.04	82.30' RT	60'
5	5895+80.92	76.89' RT	70+69.74	74.80' RT	50'
6	5895+80.86	80.00' LT	69+13.57	89.88' LT	60'
7	5894+21.90	67.33' LT	69+12.22	70.20' RT	40'
8	5894+21.22	75.00' RT	70+53.91	83.64' RT	55'

PROJECT NO:1033-02-70	HWY: IH 94/STH 20	COUNTY: RACINE	PLAN DETAILS	SHEET 40	E

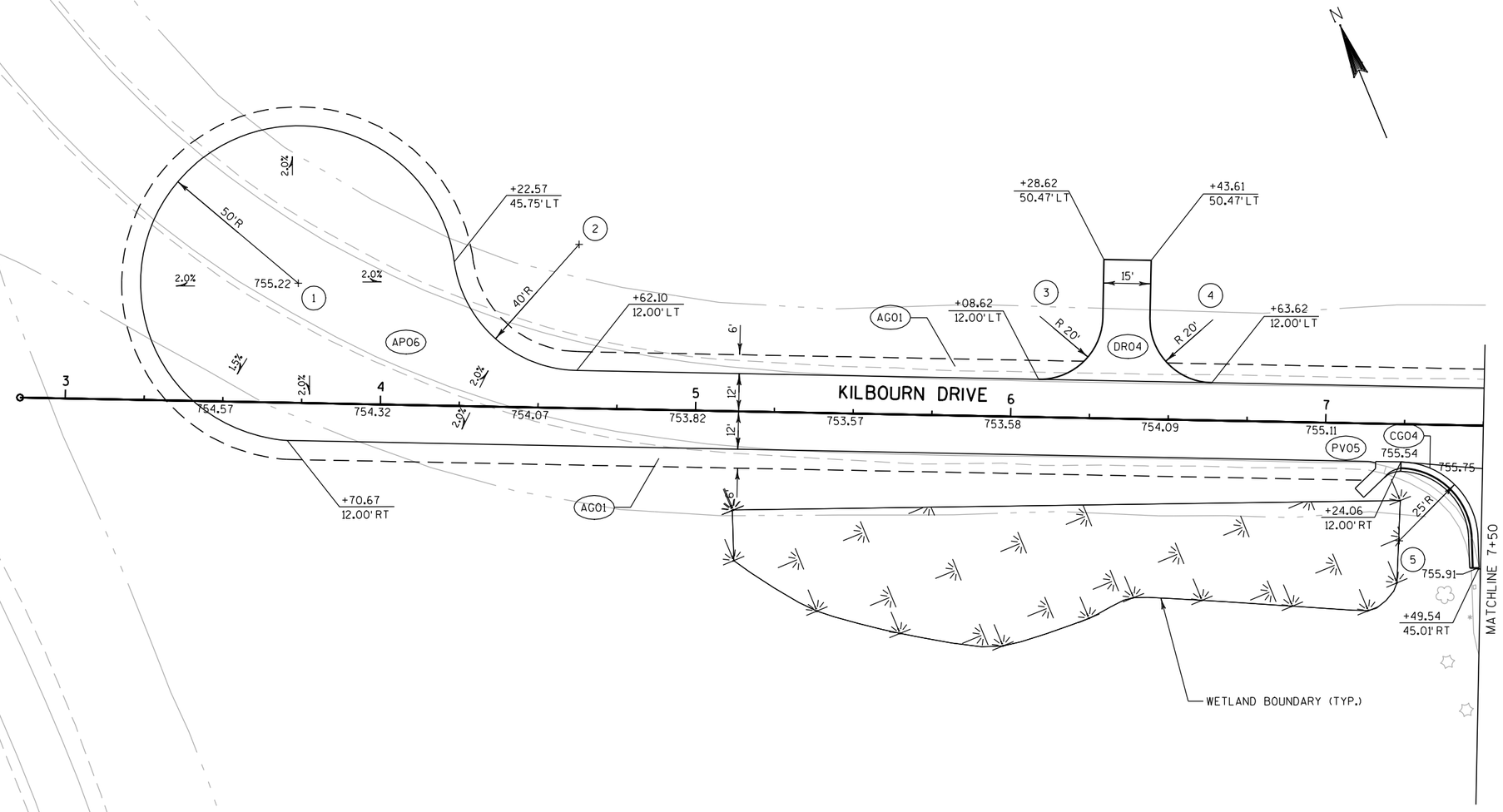

LEGEND

- AP06 HMA PAVEMENT TYPE E-3, 7-INCH
- AG01 BASE AGGREGATE DENSE 3/4-INCH
- PV01 CONCRETE PAVEMENT APPROACH SLAB
- PV02 SLOPE PAVING CONCRETE
- PV05 ASPHALTIC FLUME
- CG04 CONCRETE CURB AND GUTTER 6-INCH SLOPED 36-INCH TYPE D
- CM01 CONCRETE MEDIAN SLOPED NOSE TYPE 1
- CM05 CONCRETE SIDEWALK, 5-INCH
- DR02 CONCRETE DRIVEWAY 9-INCH
- DR03 ASPHALTIC SURFACE DRIVEWAYS AND FIELD ENTRANCES, 3-INCH
- DR04 AGGREGATE DRIVEWAY, BASE AGGREGATE DENSE 3/4-INCH, 6-INCH
- BG01 STEEL THRIE BEAM STRUCTURE APPROACH
- BG02 STEEL PLATE BEAM GUARD CLASS A
- BG04 STEEL PLATE BEAM GUARD ENERGY ABSORBING TERMINAL
- LS01 SOD LAWN
- SW01 SAWING EXISTING PAVEMENT
- SW02 SAWING CONCRETE PAVEMENT FULL DEPTH

RADIUS TABLE

POINT	STATION	OFFSET	STATION	OFFSET	RADIUS
1	5895+82.99	75.54' RT	70+68.59	76.88' LT	55'
2	5895+71.73	77.00' LT	69+15.66	80.00' LT	60'
3	5894+15.39	75.49' LT	69+03.56	75.00' RT	55'
4	5894+22.54	77.00' RT	70+56.04	82.30' RT	60'
5	5895+80.92	76.89' RT	70+69.74	74.80' RT	50'

2

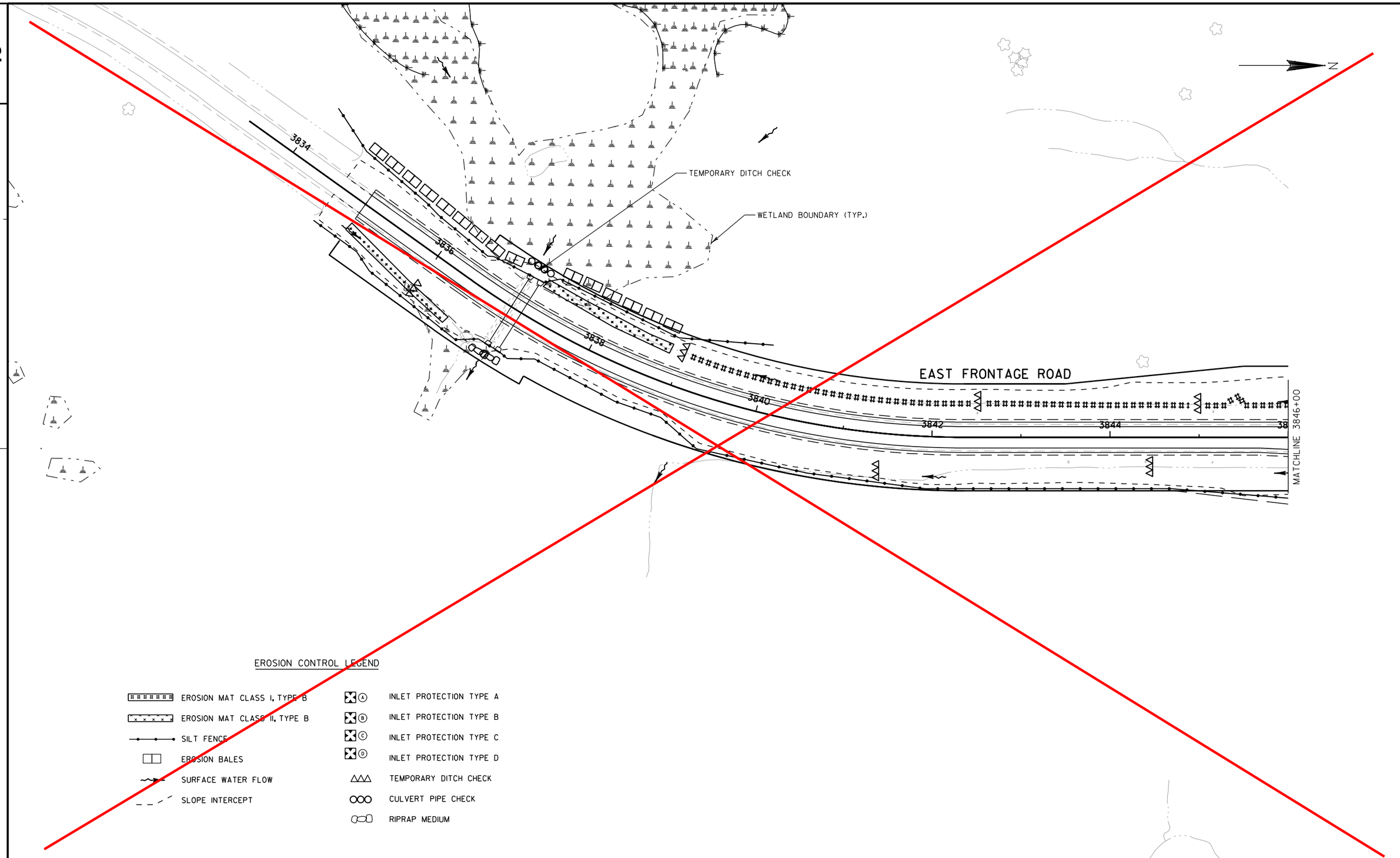

2

See new sheet #42

PROJECT NO:1033-02-70	HWY:IH 94/STH 20	COUNTY:RACINE	EROSION CONTROL	SHEET	E

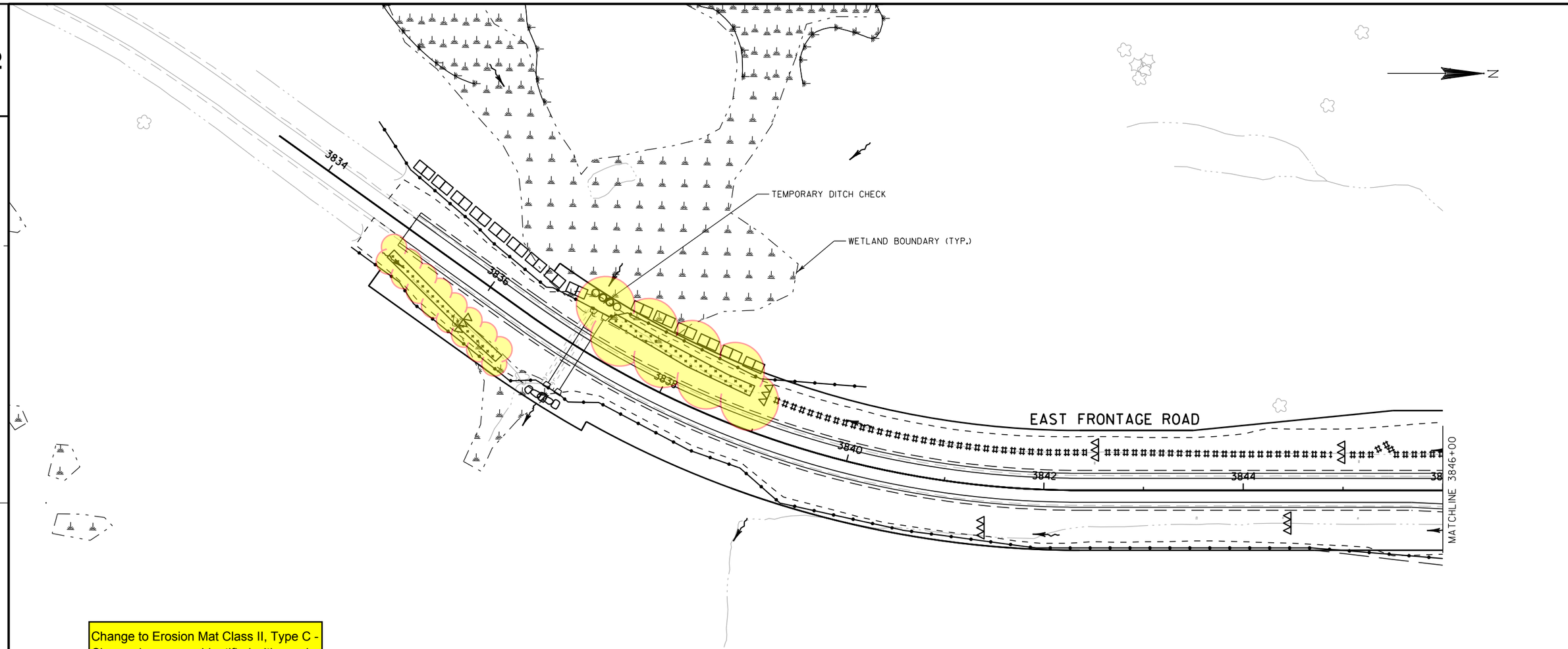

Change to Erosion Mat Class II, Type C - Changed areas are identified with a red cloud.

EROSION CONTROL LEGEND

- EROSION MAT CLASS I, TYPE B
- EROSION MAT CLASS II, TYPE B
- SILT FENCE
- EROSION BALES
- SURFACE WATER FLOW
- SLOPE INTERCEPT
- INLET PROTECTION TYPE A
- INLET PROTECTION TYPE B
- INLET PROTECTION TYPE C
- INLET PROTECTION TYPE D
- TEMPORARY DITCH CHECK
- CULVERT PIPE CHECK
- RIPRAP MEDIUM

2

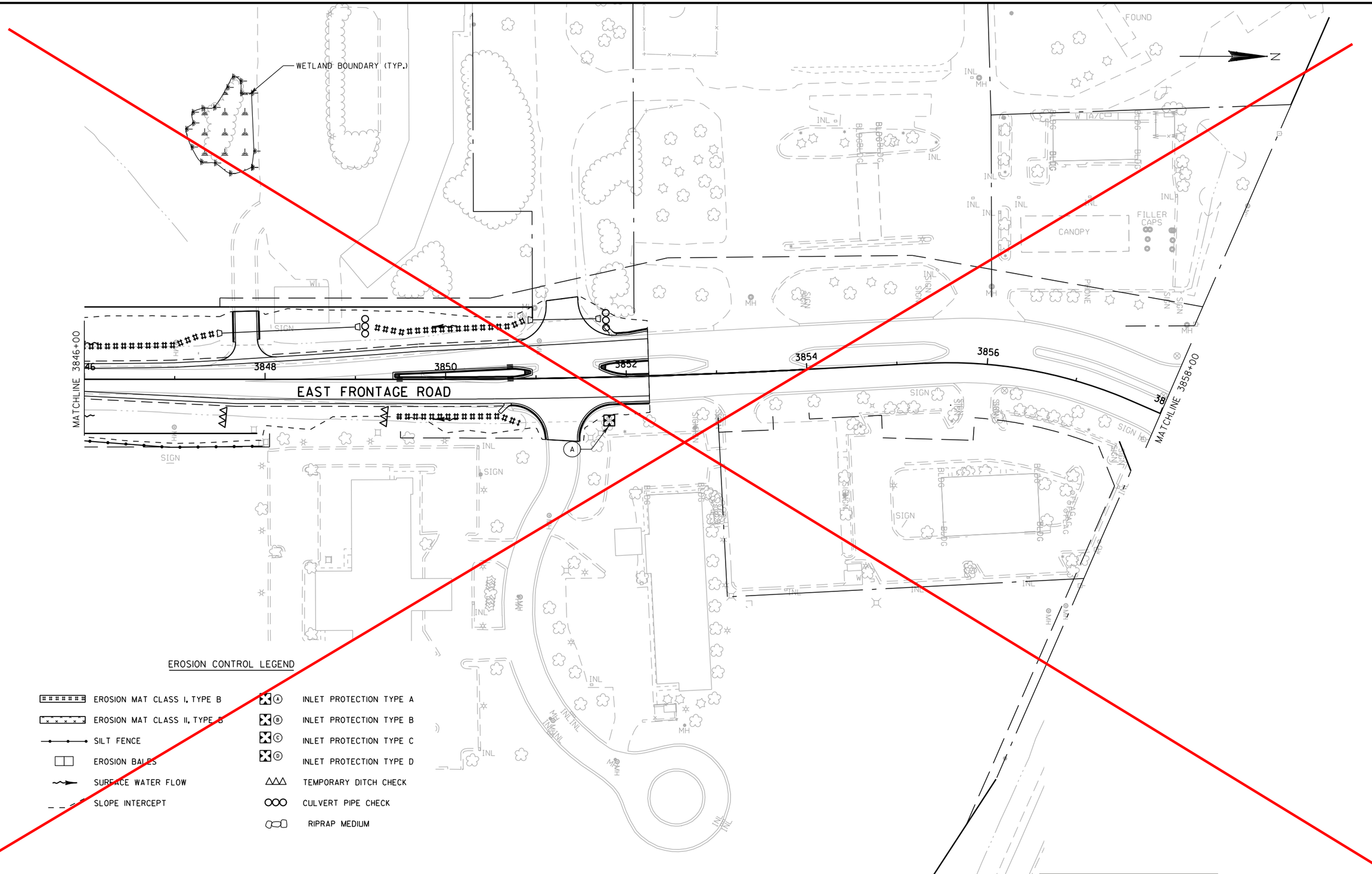

2

PROJECT NO:1033-02-70	HWY:IH 94/STH 20	COUNTY:RACINE	EROSION CONTROL	See new sheet #43	SHEET	E

FILE NAME : S:\FinalDesign\20\10330270_E\Roads\cds\022002_ec.dgn PLOT DATE : 07-DEC-2010 16:37 PLOT BY : MSCKXK PLOT NAME : 022002_ec PLOT SCALE : 100:1

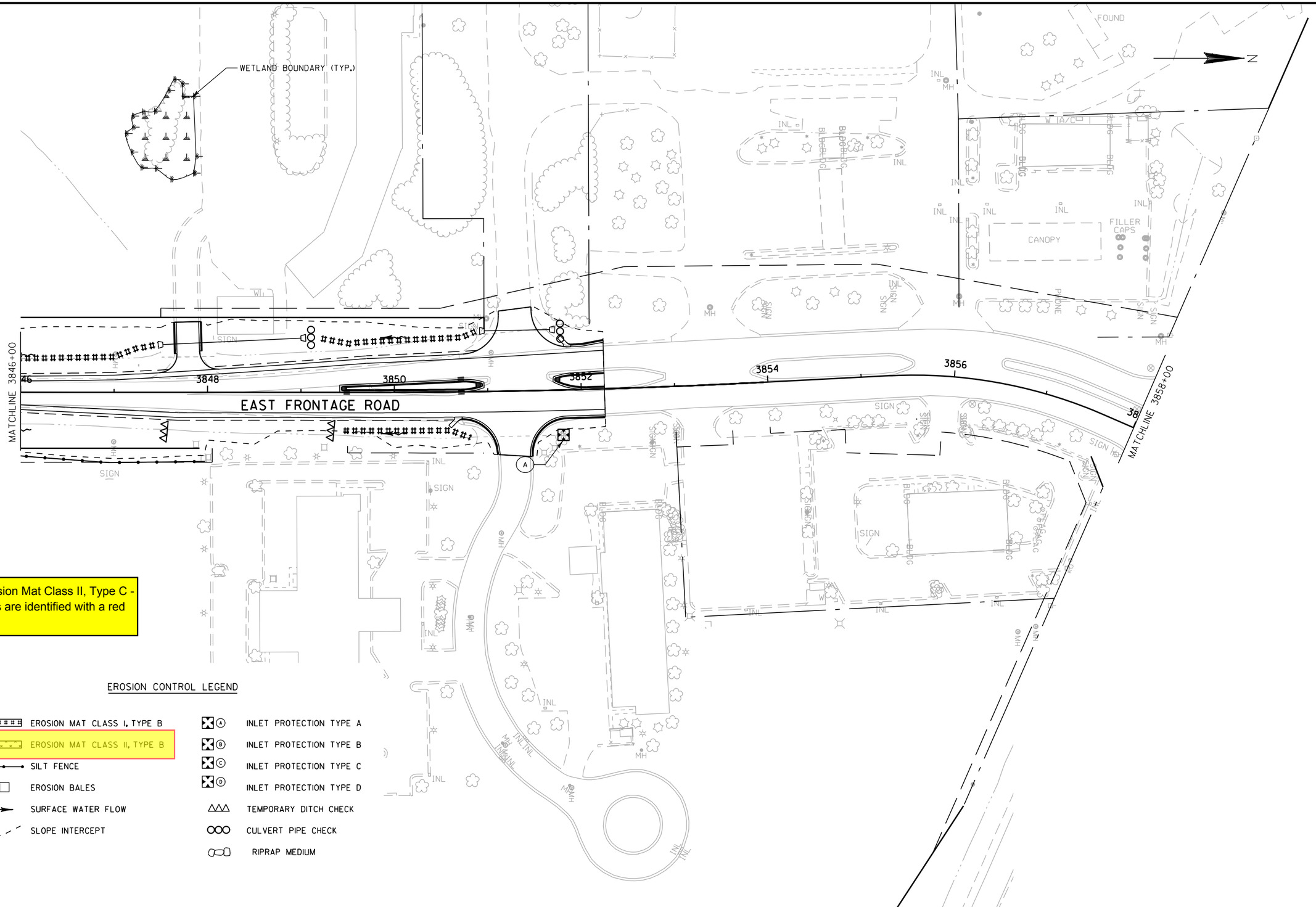

Change to Erosion Mat Class II, Type C - Changed areas are identified with a red cloud.

EROSION CONTROL LEGEND

- EROSION MAT CLASS I, TYPE B
- EROSION MAT CLASS II, TYPE B
- SILT FENCE
- EROSION BALES
- SURFACE WATER FLOW
- SLOPE INTERCEPT
- INLET PROTECTION TYPE A
- INLET PROTECTION TYPE B
- INLET PROTECTION TYPE C
- INLET PROTECTION TYPE D
- TEMPORARY DITCH CHECK
- CULVERT PIPE CHECK
- RIPRAP MEDIUM

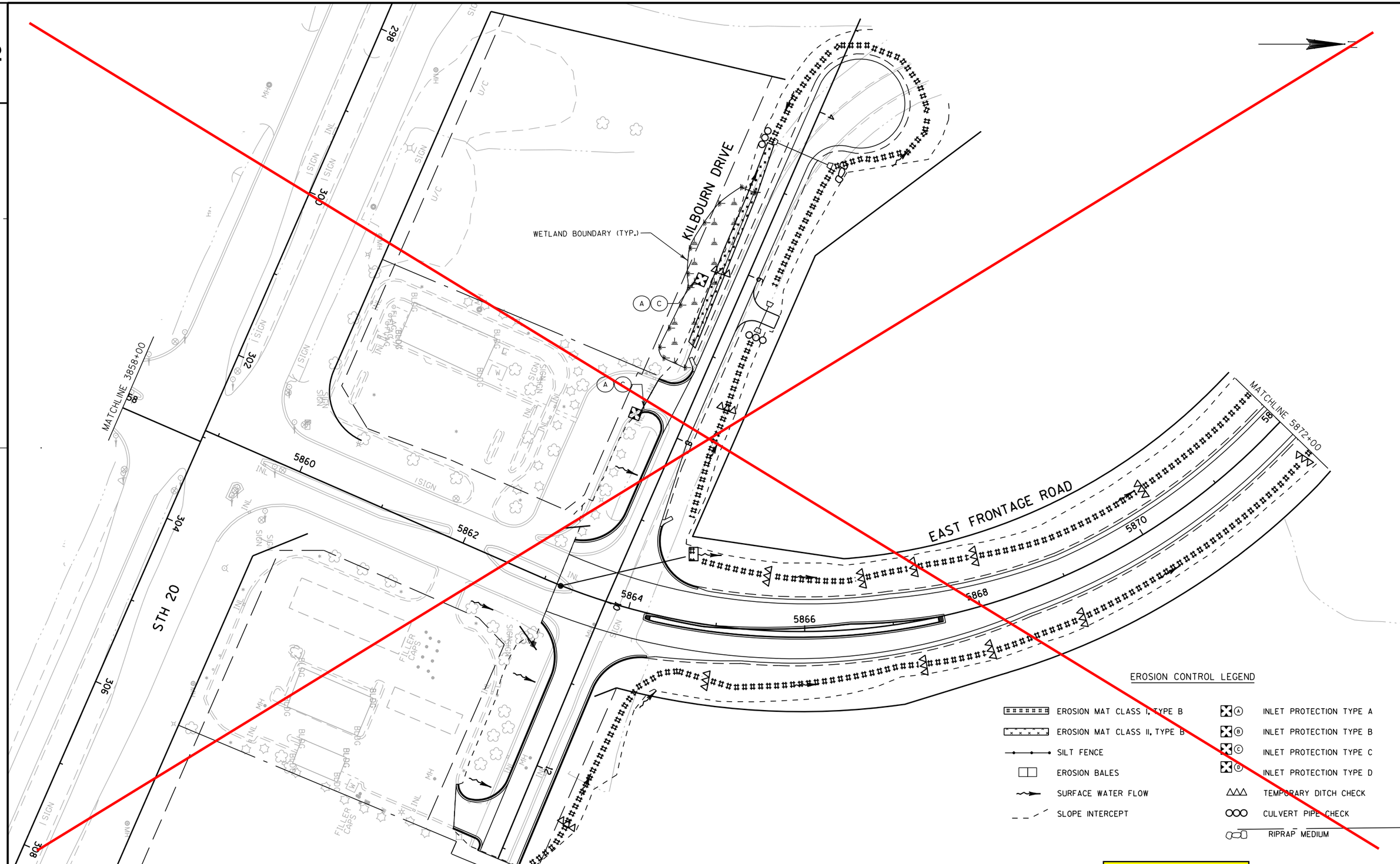

2

PROJECT NO:1033-02-70	HWY:IH 94/STH 20	COUNTY:RACINE	EROSION CONTROL	See new sheet #44	SHEET	E

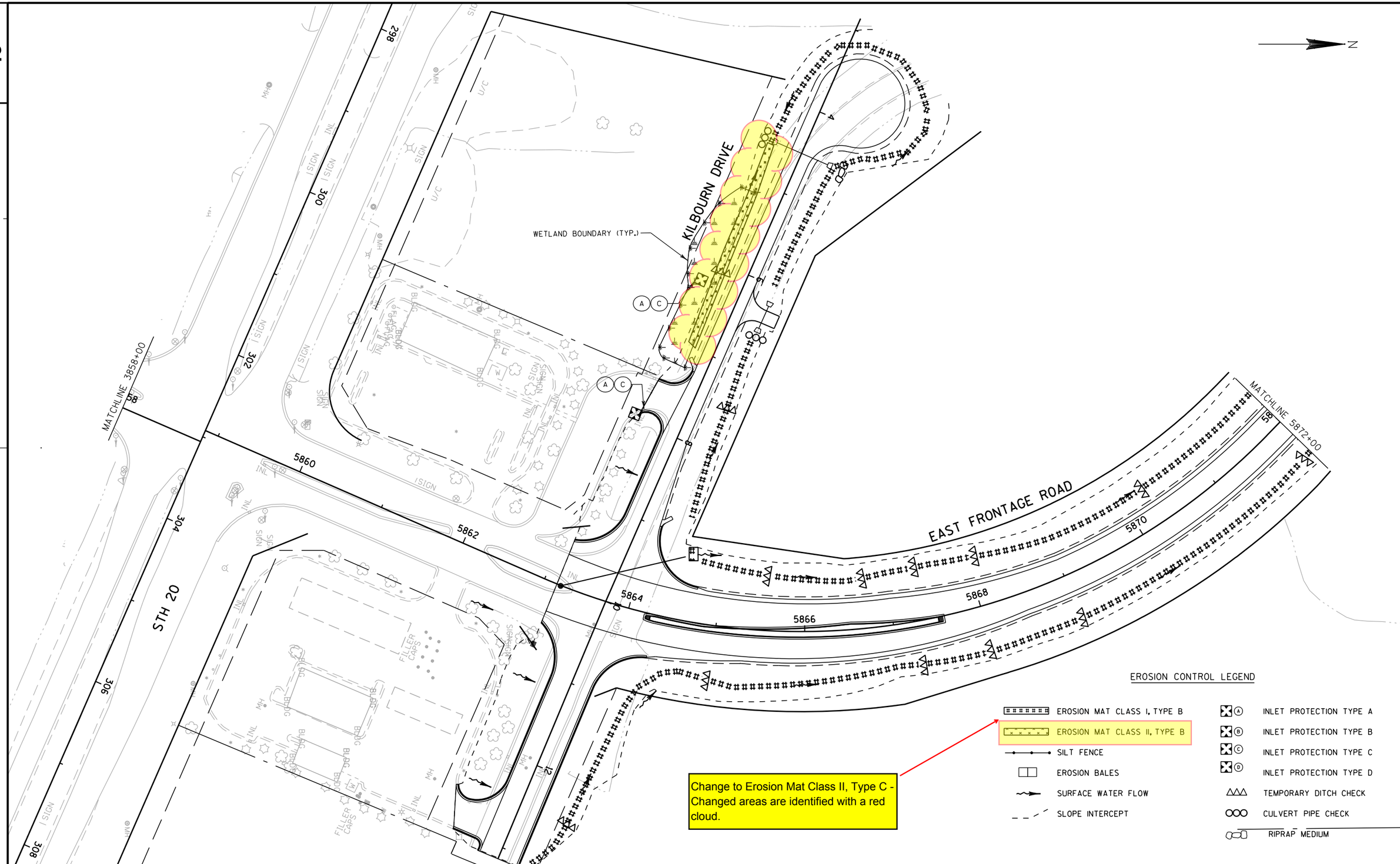

PROJECT NO:1033-02-70	HWY:IH 94/STH 20	COUNTY:RACINE	EROSION CONTROL	SHEET 44	E

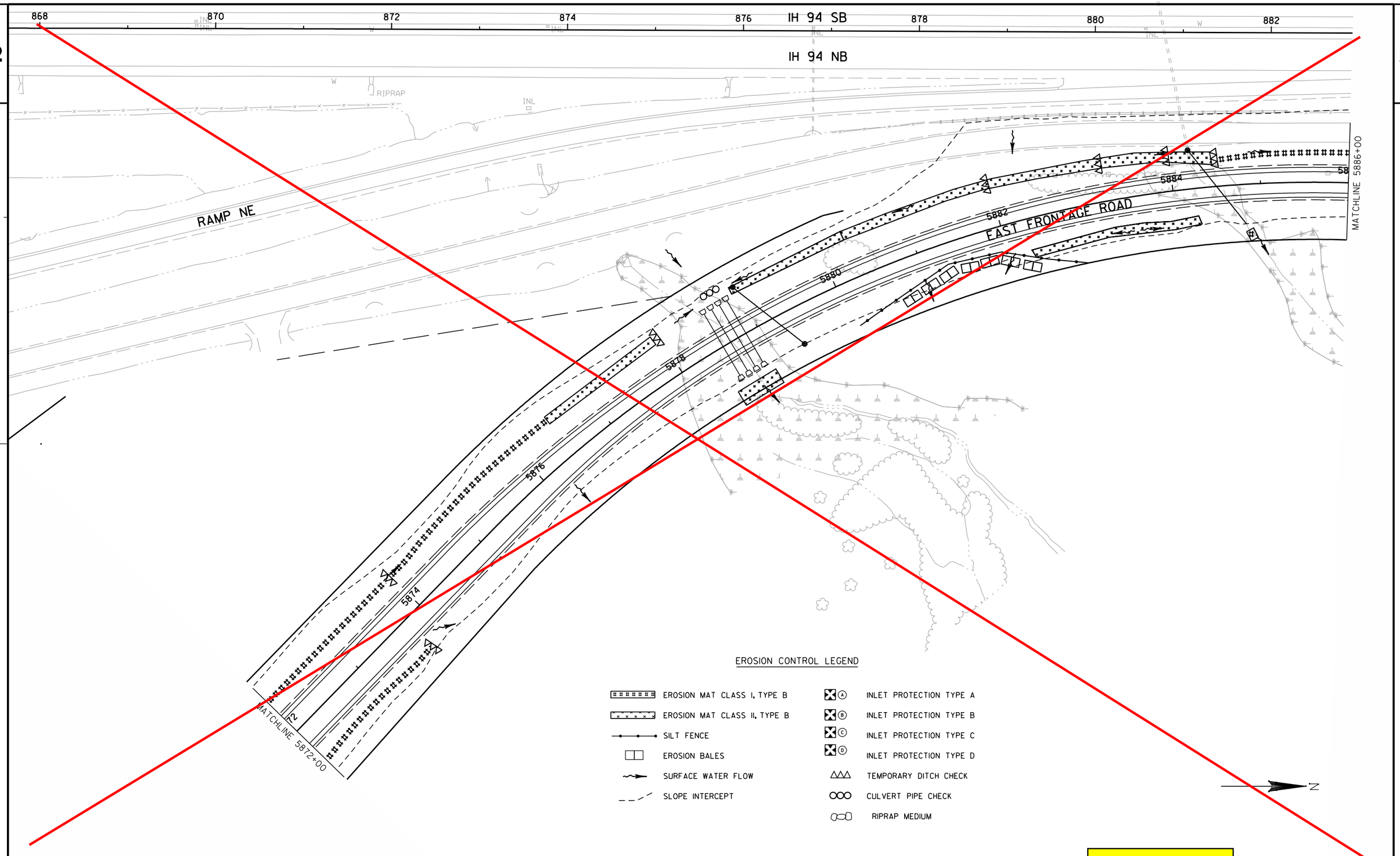

See new sheet #45

PROJECT NO:1033-02-70	HWY:IH 94/STH 20	COUNTY:RACINE	EROSION CONTROL	SHEET 45	E

FILE NAME : C:\w3mtp\FinalDesign\20\10330270_E\Roads\cds\022004_ec.dgn PLOT DATE : 1/18/2011 PLOT BY : mtp94nscREMOTE PLOT NAME : $FILE$ PLOT SCALE : 1:100

WISDOT/CADDS SHEET 42

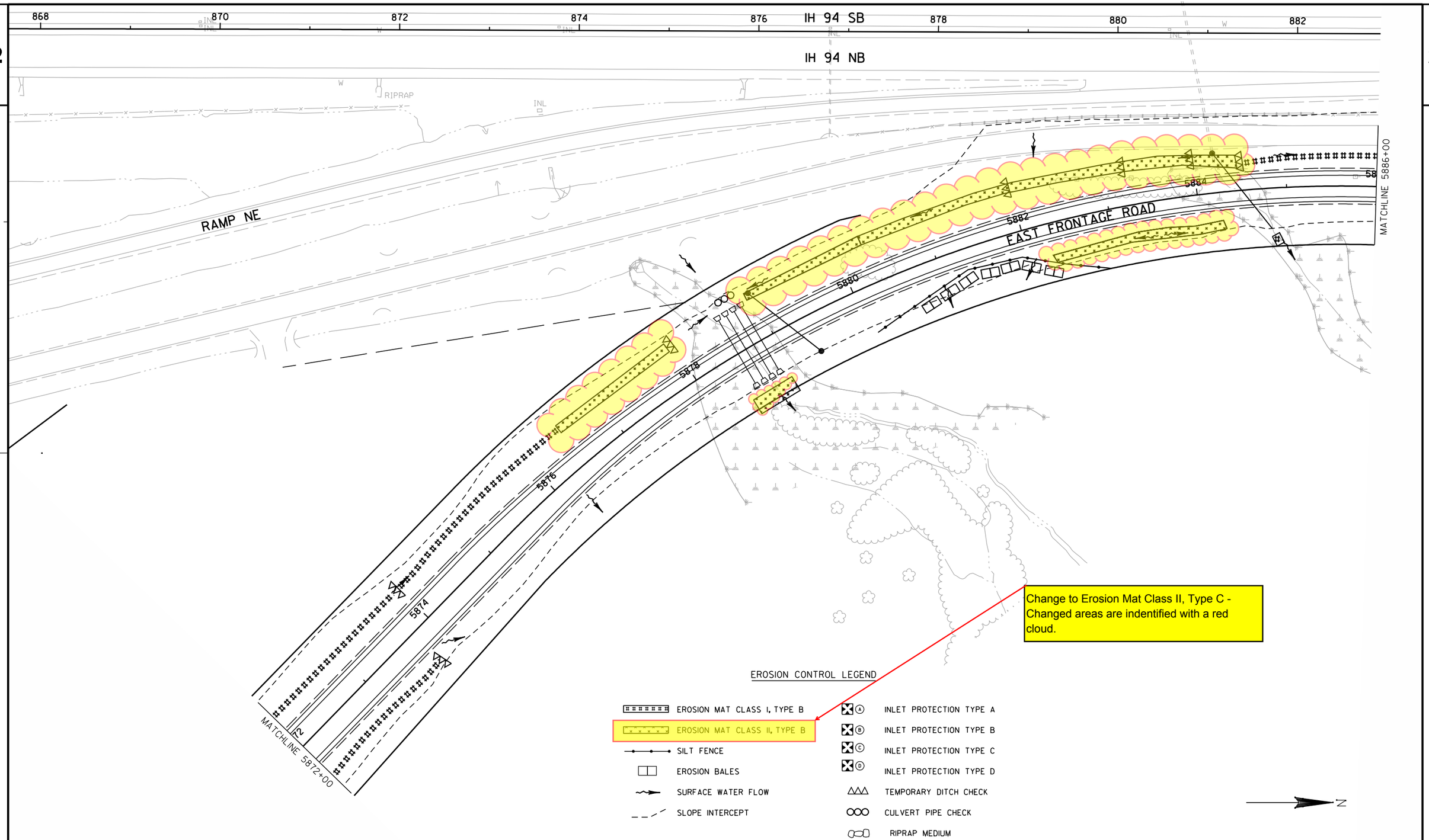

Change to Erosion Mat Class II, Type C - Changed areas are indentified with a red cloud.

PROJECT NO:1033-02-70	HWY:IH 94/STH 20	COUNTY:RACINE	EROSION CONTROL	SHEET 45	E

FILE NAME : C:\w3mtp\FinalDesign\20\10330270_E\Roads\cds\022004_ec.dgn PLOT DATE : 1/18/2011 PLOT BY : mtp94nscREMOTE PLOT NAME : $FILE$ PLOT SCALE : 1:100

2

WEST FRONTAGE ROAD

IH 94 SB

IH 94 NB

884 886 888 890 892 894 896 898

66 68 70 72 74

MATCHLINE 5886+00

5886 5888 5890 5892 5894 5896 5898 5900

EAST FRONTAGE ROAD

WETLAND BOUNDARY (TYP.)

WETLAND BOUNDARY (TYP.)

CTH C

N

EROSION CONTROL LEGEND

EROSION MAT CLASS I, TYPE B	INLET PROTECTION TYPE A
EROSION MAT CLASS II, TYPE B	INLET PROTECTION TYPE B
SILT FENCE	INLET PROTECTION TYPE C
EROSION BALES	INLET PROTECTION TYPE D
SURFACE WATER FLOW	TEMPORARY DITCH CHECK
SLOPE INTERCEPT	CULVERT PIPE CHECK
	RIPRAP MEDIUM

2

PROJECT NO:1033-02-70	HWY:IH 94/STH 20	COUNTY:RACINE	EROSION CONTROL	See new sheet #46	SHEET 46	E

FILE NAME : S:\FinalDesign\20\10330270_E\Roads\cds\022005_ec.dgn PLOT DATE : 07-DEC-2010 16:38 PLOT BY : MSCKXK PLOT NAME : 022005_ec PLOT SCALE : 100:1

WISDOT/CADDS SHEET 42

2

WEST FRONTAGE ROAD

IH 94 SB

IH 94 NB

884 886 888 890 892 894 896 898

66 68 70 72 74

MATCHLINE 5886+00

EAST FRONTAGE ROAD

5886 5888 5890 5892 5894 5896 5898 5900

WETLAND BOUNDARY (TYP.)

WETLAND BOUNDARY (TYP.)

CTH C

N

EROSION CONTROL LEGEND

- EROSION MAT CLASS I, TYPE B
- EROSION MAT CLASS II, TYPE B
- SILT FENCE
- EROSION BALES
- SURFACE WATER FLOW
- SLOPE INTERCEPT
- INLET PROTECTION TYPE A
- INLET PROTECTION TYPE B
- INLET PROTECTION TYPE C
- INLET PROTECTION TYPE D
- TEMPORARY DITCH CHECK
- CULVERT PIPE CHECK
- RIPRAP MEDIUM

Change to Erosion Mat Class II, Type C - Changed areas are identified by a red cloud

2

PROJECT NO:1033-02-70	HWY:IH 94/STH 20	COUNTY:RACINE	EROSION CONTROL	SHEET 46	E

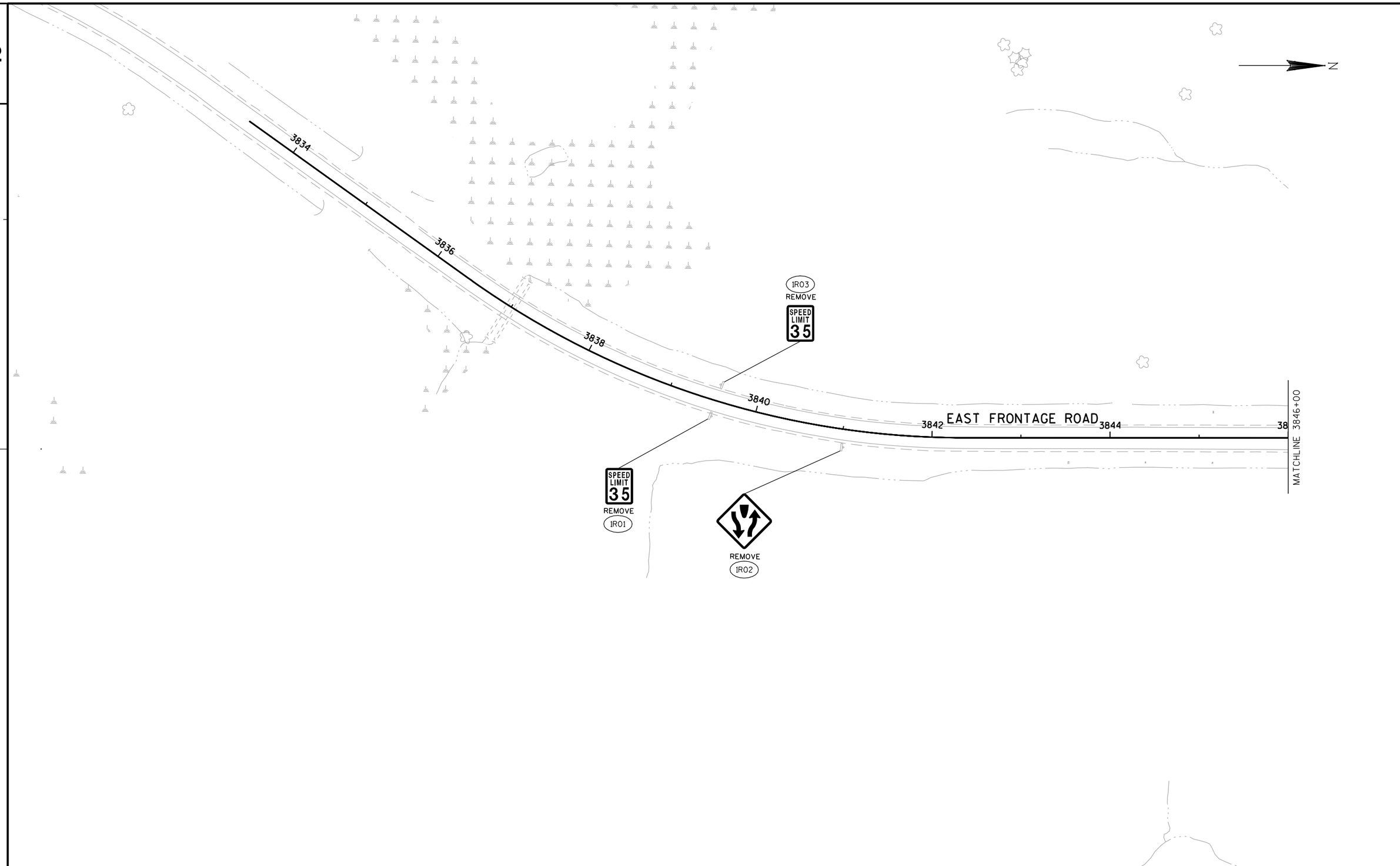

2

PROJECT NO:1033-02-70	HWY:IH 94/STH 20	COUNTY:RACINE	EXISTING SIGNING	SHEET 47	E

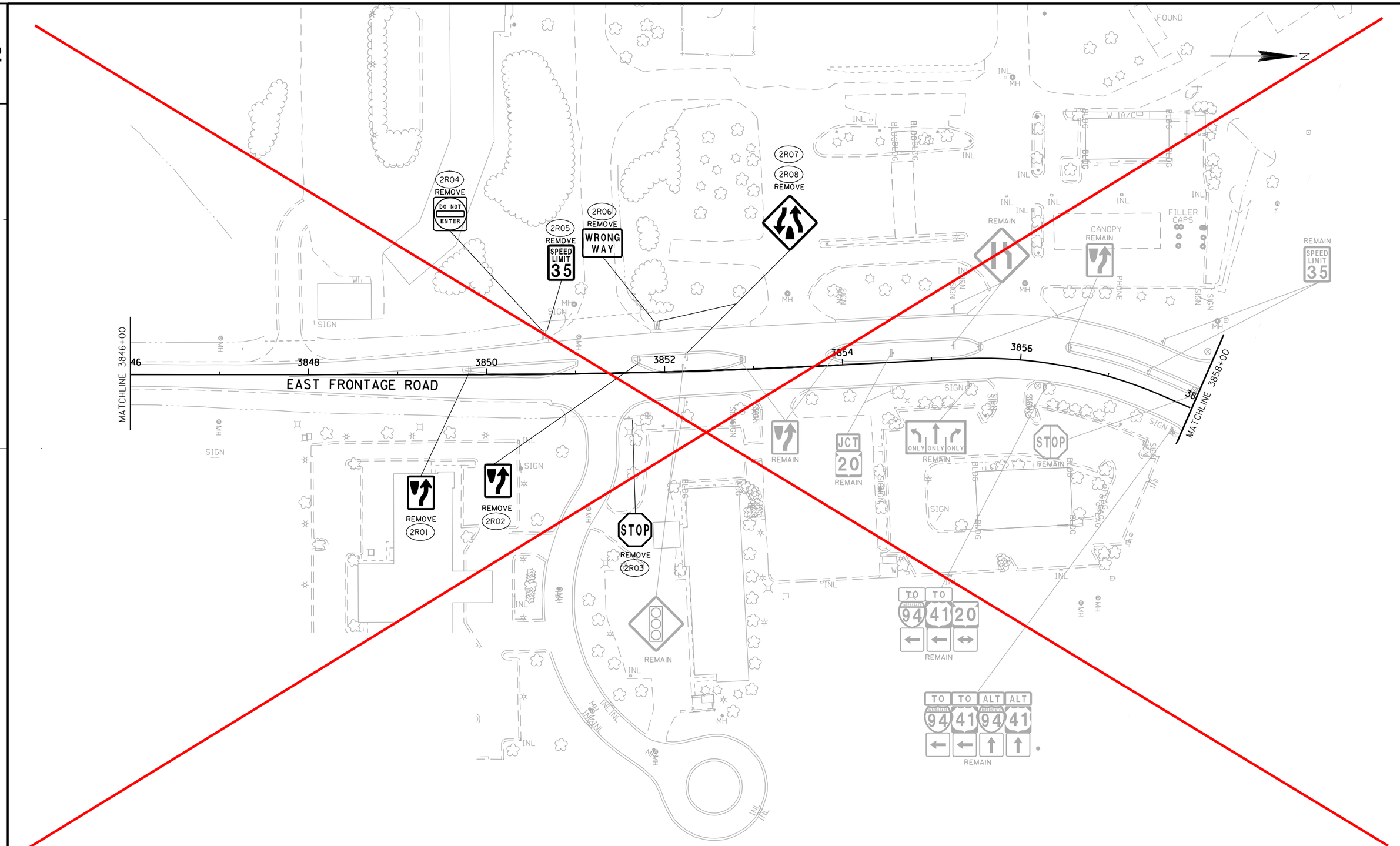

PROJECT NO:1033-02-70	HWY:IH 94/STH 20	COUNTY:RACINE	EXISTING SIGNING	See new sheet #48	SHEET 48	E

FILE NAME : s:\FinalDesign\20\10330270_E\Roads\cds\023202_es.dgn PLOT DATE : 06-DEC-2010 20:22 PLOT BY : MSCD1S PLOT NAME : 023202_es PLOT SCALE : 100:1

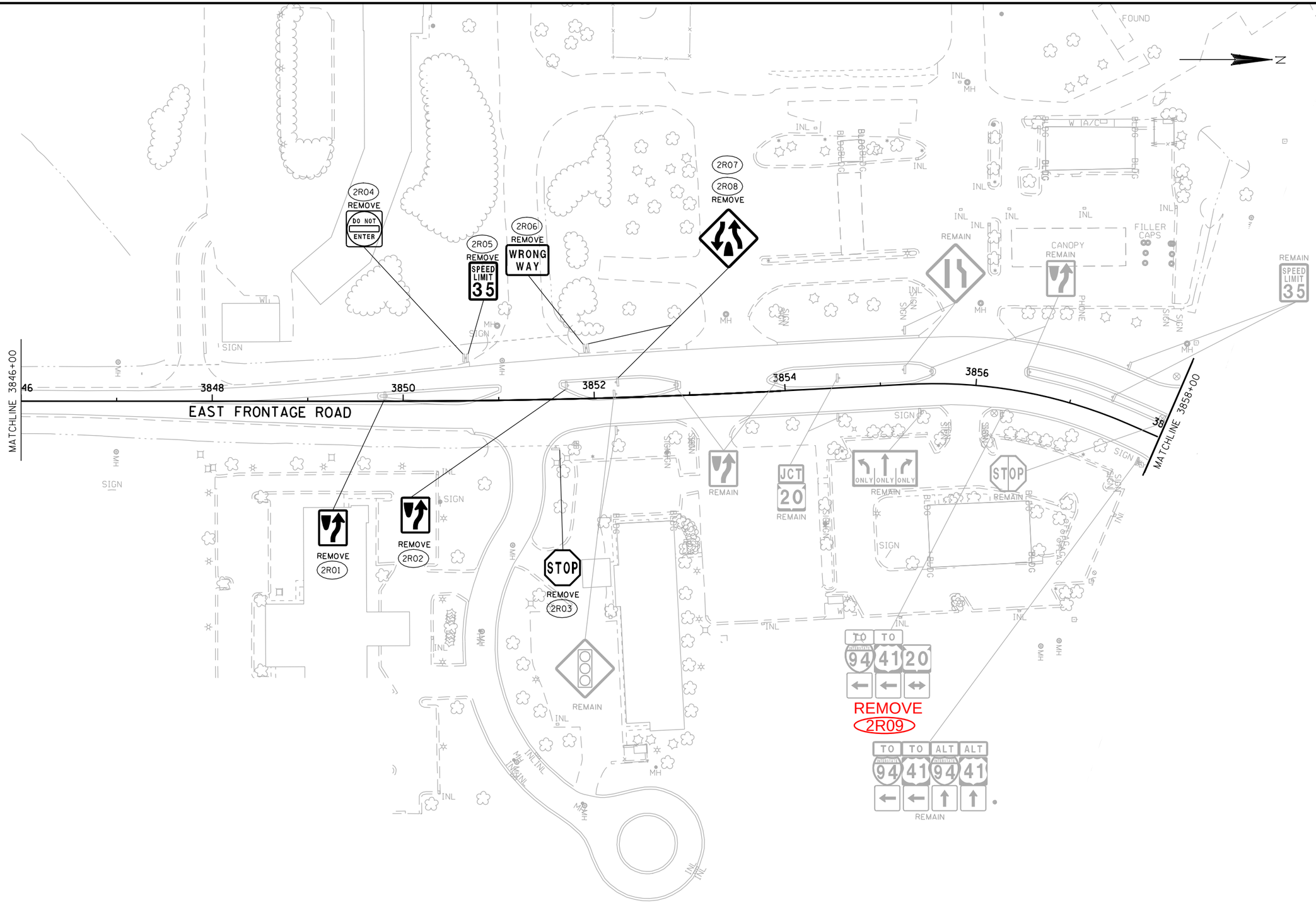

PROJECT NO:1033-02-70	HWY:IH 94/STH 20	COUNTY:RACINE	EXISTING SIGNING	SHEET 48	E

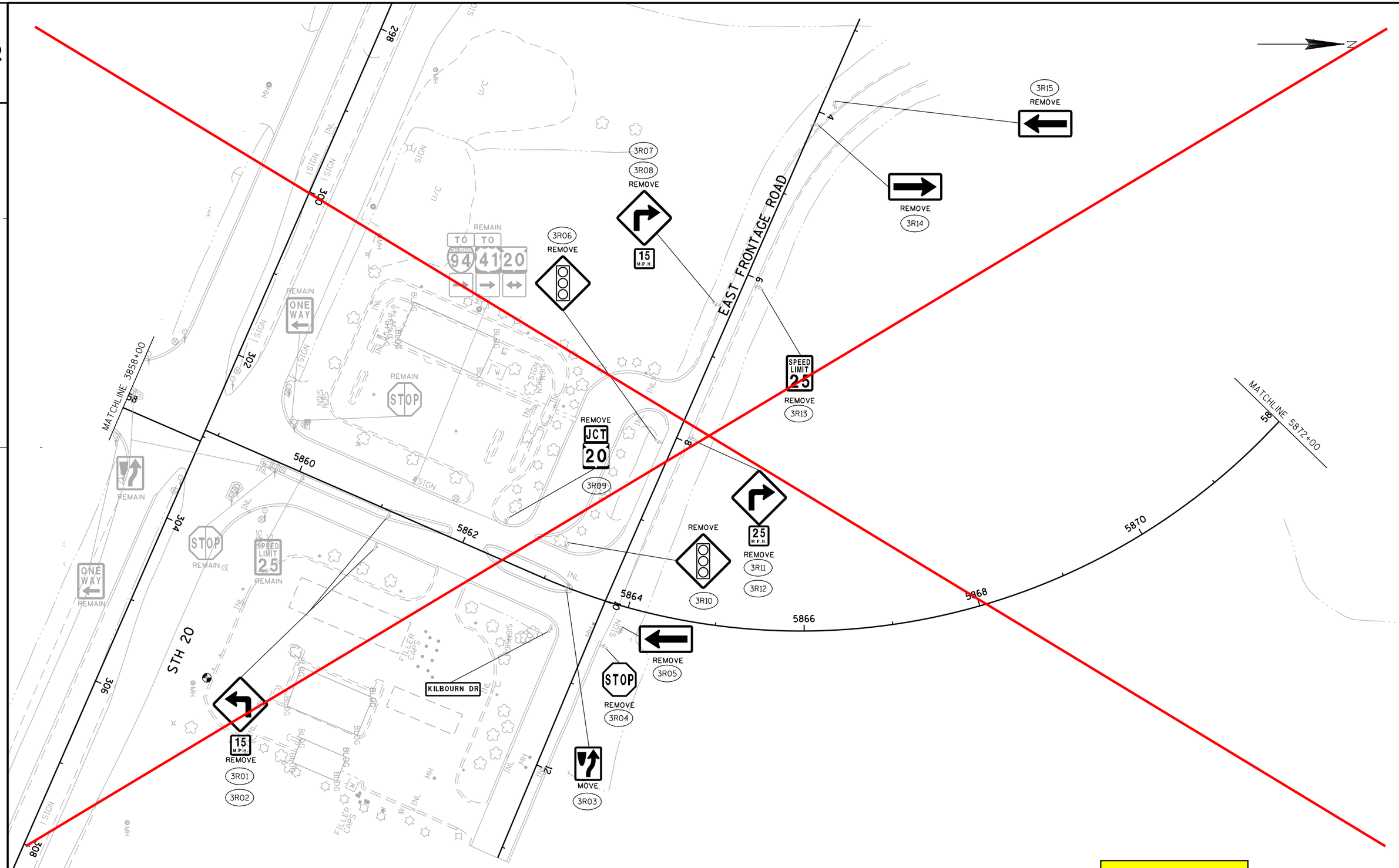
N
3R15
REMOVE
REMOVE
3R14
3R07
3R08
REMOVE
15
M.P.H.
3R06
REMOVE
REMAIN
TO
TO
94
41
20
EAST FRONTAGE ROAD
SPEED
LIMIT
25
REMOVE
3R13
REMAIN
ONE
WAY
REMAIN
STOP
REMOVE
JCT
20
3R09
MATCHLINE 3858+00
MATCHLINE 5872+00
298
300
302
304
306
308
5860
5862
5864
5866
5868
5870
REMOVE
25
M.P.H.
REMOVE
3R11
3R12
REMOVE
3R10
REMAIN
STOP
REMAIN
SPEED
LIMIT
25
REMAIN
REMAIN
ONE
WAY
REMAIN
STH 20
KILBOURN DR
REMOVE
3R05
STOP
REMOVE
3R04
15
M.P.H.
REMOVE
3R01
3R02
MOVE
3R03

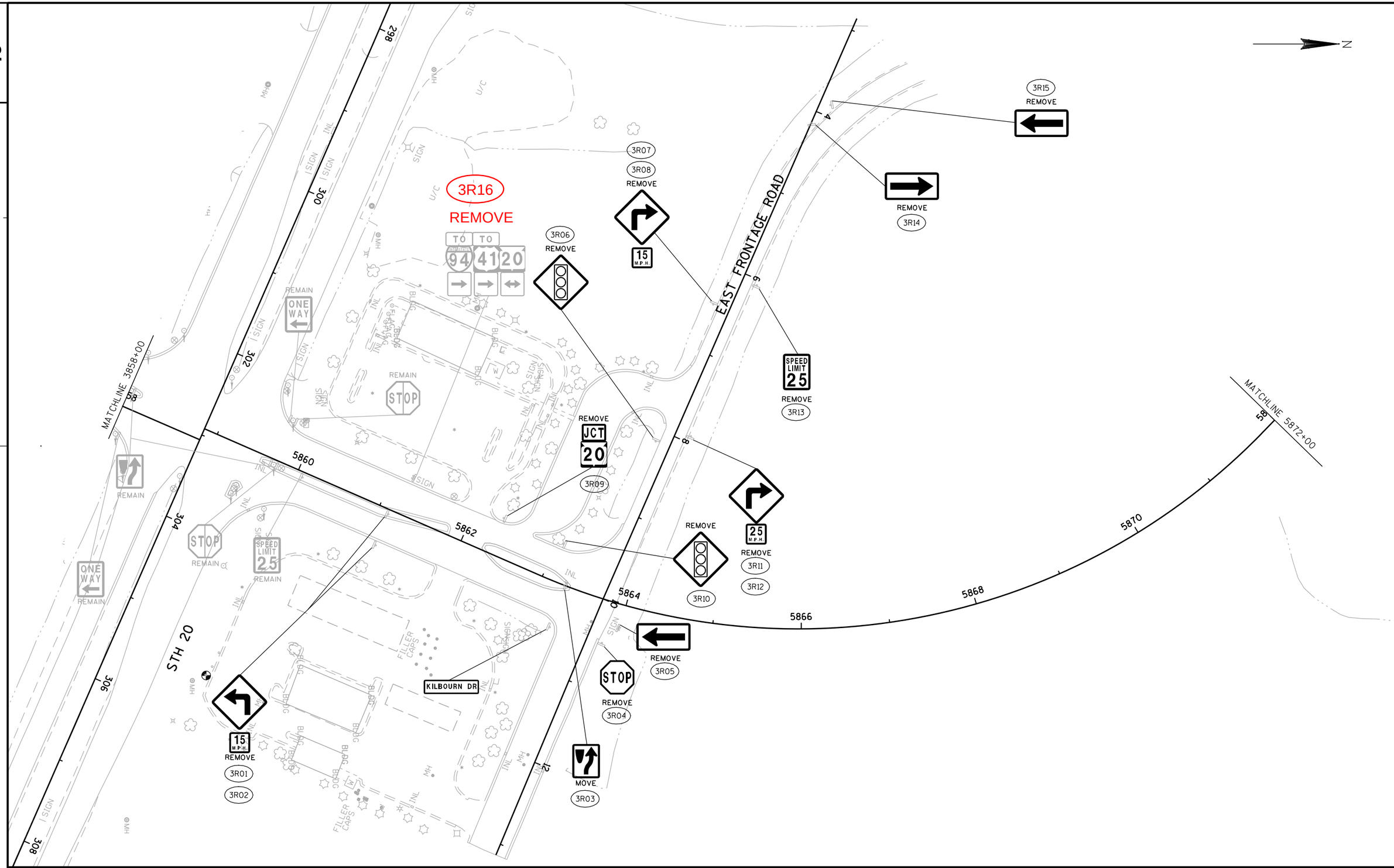

PROJECT NO:1033-02-70	HWY:IH 94/STH 20	COUNTY:RACINE	EXISTING SIGNING	SHEET 49	E

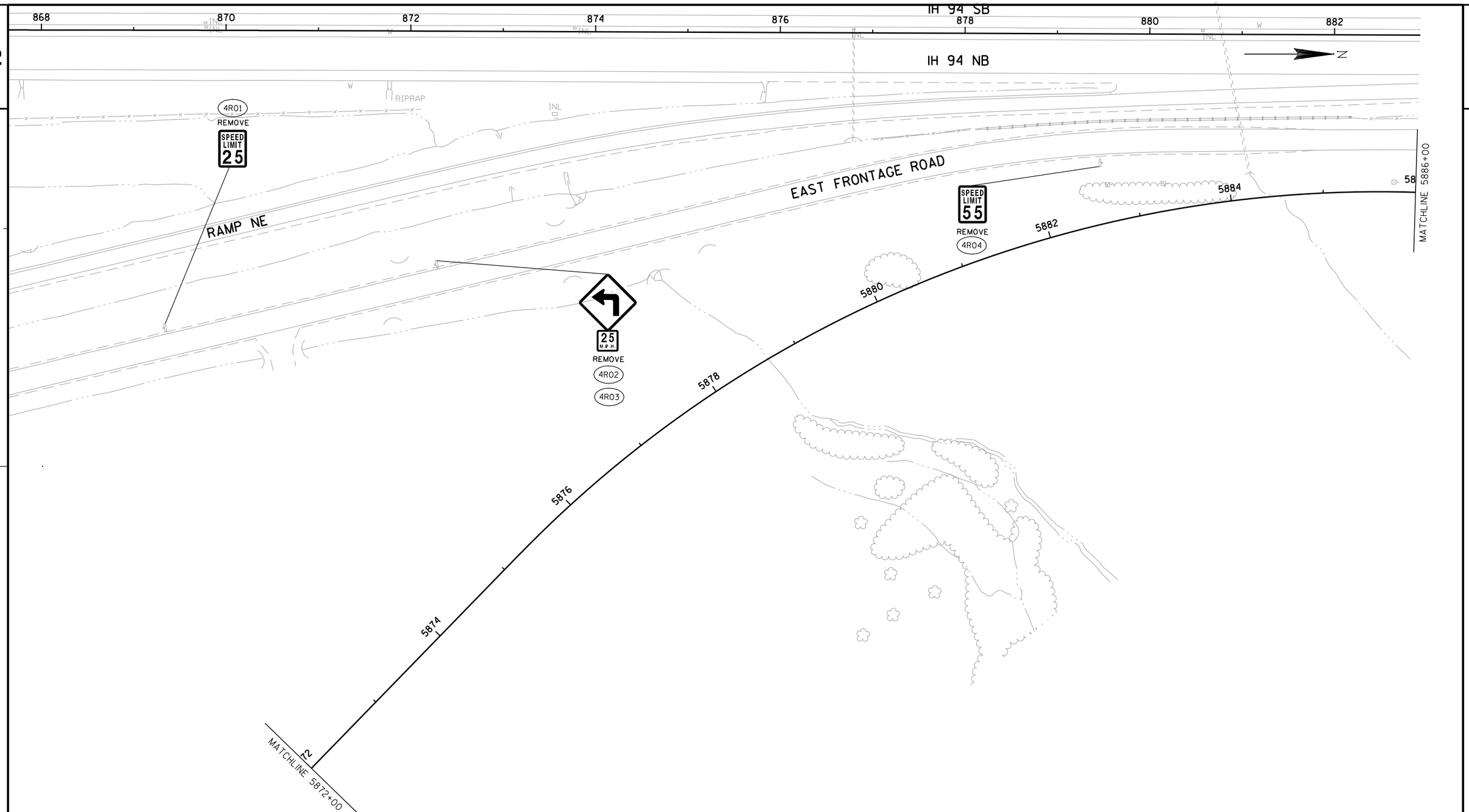

PROJECT NO:1033-02-70	HWY:IH 94/STH 20	COUNTY:RACINE	EXISTING SIGNING	SHEET 50	E

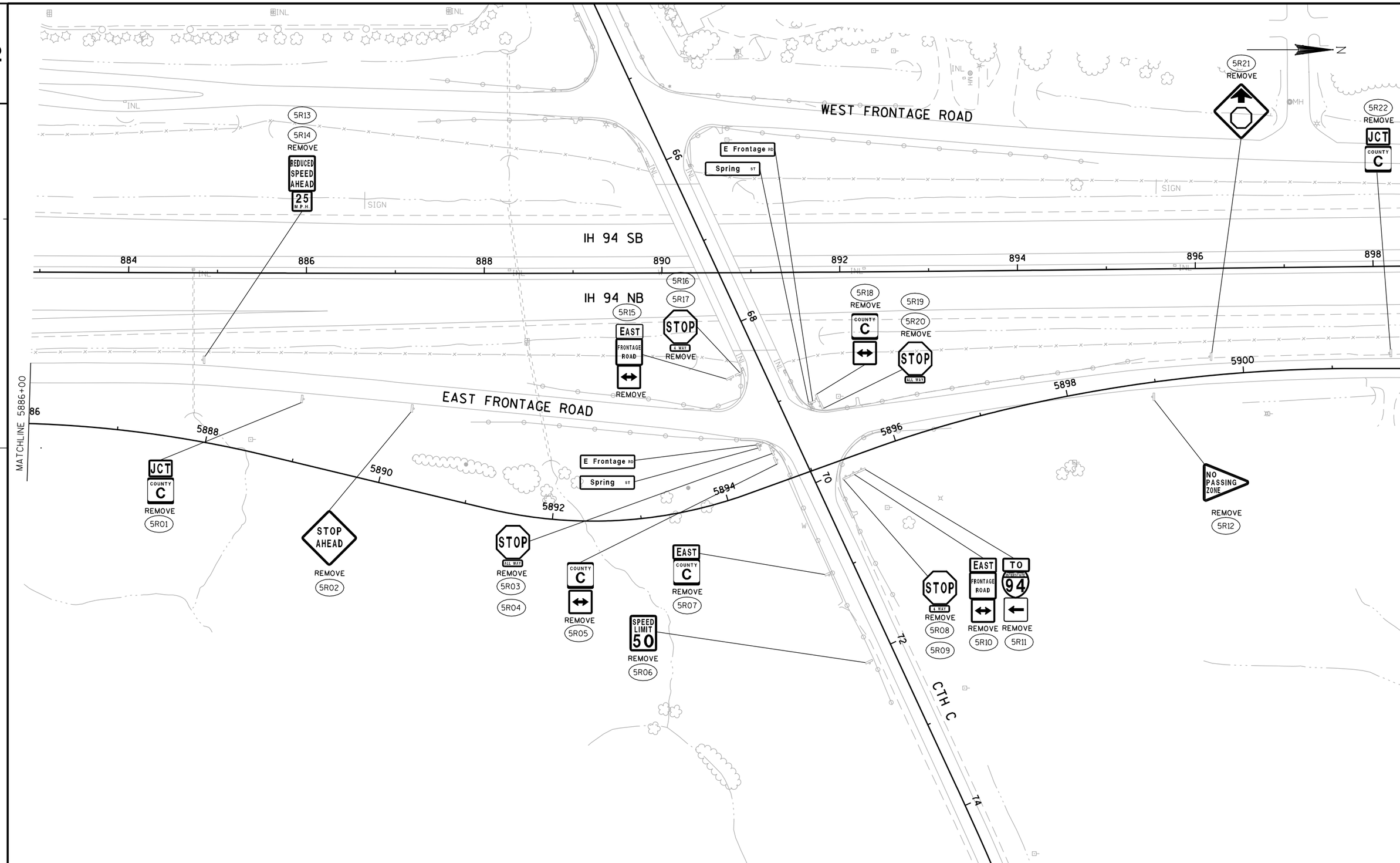
WEST FRONTAGE ROAD
EAST FRONTAGE ROAD
IH 94 SB
IH 94 NB
CTH C
MATCHLINE 5886+00
884
886
888
890
892
894
896
898
5886
5888
5890
5892
5894
5896
5898
5900
66
68
70
72
74
5R01
JCT
COUNTY C
REMOVE
5R02
STOP AHEAD
REMOVE
5R03
5R04
STOP
ALL WAY
REMOVE
5R05
COUNTY C
REMOVE
5R06
SPEED LIMIT 50
REMOVE
5R07
EAST
COUNTY C
REMOVE
5R08
5R09
STOP
4 WAY
REMOVE
5R10
EAST
FRONTAGE ROAD
REMOVE
5R11
TO
INTERSTATE
94
REMOVE
5R12
NO PASSING ZONE
REMOVE
5R13
5R14
REMOVE
REDUCED SPEED AHEAD
25 M.P.H.
5R15
EAST
FRONTAGE ROAD
REMOVE
5R16
5R17
STOP
4 WAY
REMOVE
5R18
REMOVE
COUNTY C
5R19
5R20
REMOVE
STOP
ALL WAY
5R21
REMOVE
5R22
REMOVE
JCT
COUNTY C
E Frontage RD
Spring ST
E Frontage RD
Spring ST
SIGN
SIGN
INL
MH
N

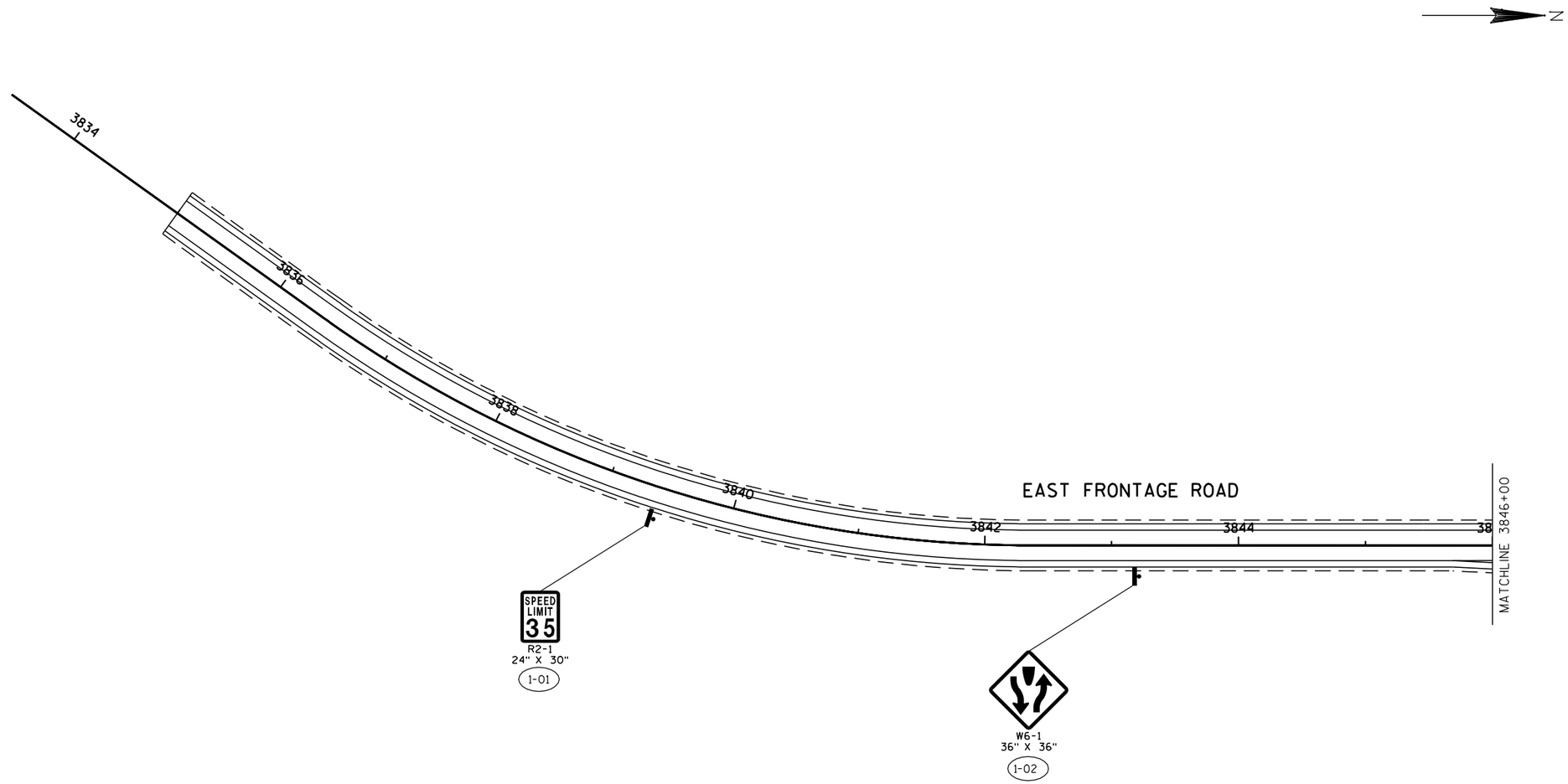

LEGEND

- EXISTING SIGN MOUNTED ON POST(S)
- EXISTING SIGN MOUNTED ON BRIDGE OR SIGN BRIDGE
- PROPOSED SIGN MOUNTED ON POST(S)
- PROPOSED SIGN MOUNTED ON BRIDGE OR SIGN BRIDGE
- (XXXX) DENOTES SIGN NUMBER

PROJECT NO:1033-02-70	HWY:IH 94/STH 20	COUNTY:RACINE	PERMANENT SIGNING	SHEET 52	E

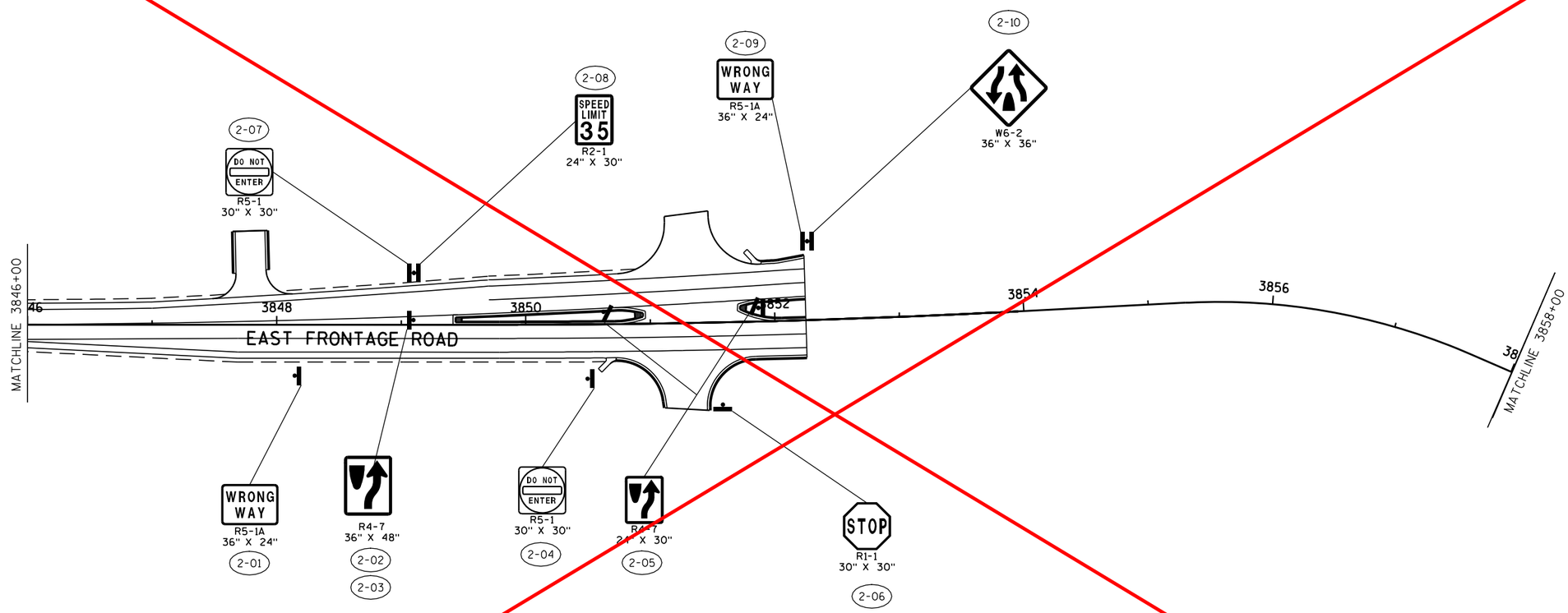

LEGEND

- EXISTING SIGN MOUNTED ON POST(S)
- EXISTING SIGN MOUNTED ON BRIDGE OR SIGN BRIDGE
- PROPOSED SIGN MOUNTED ON POST(S)
- PROPOSED SIGN MOUNTED ON BRIDGE OR SIGN BRIDGE
- (XXXX) DENOTES SIGN NUMBER

See new sheet #53

PROJECT NO:1033-02-70	HWY:IH 94/STH 20	COUNTY:RACIONE	PERMANENT SIGNING	SHEET 53	E

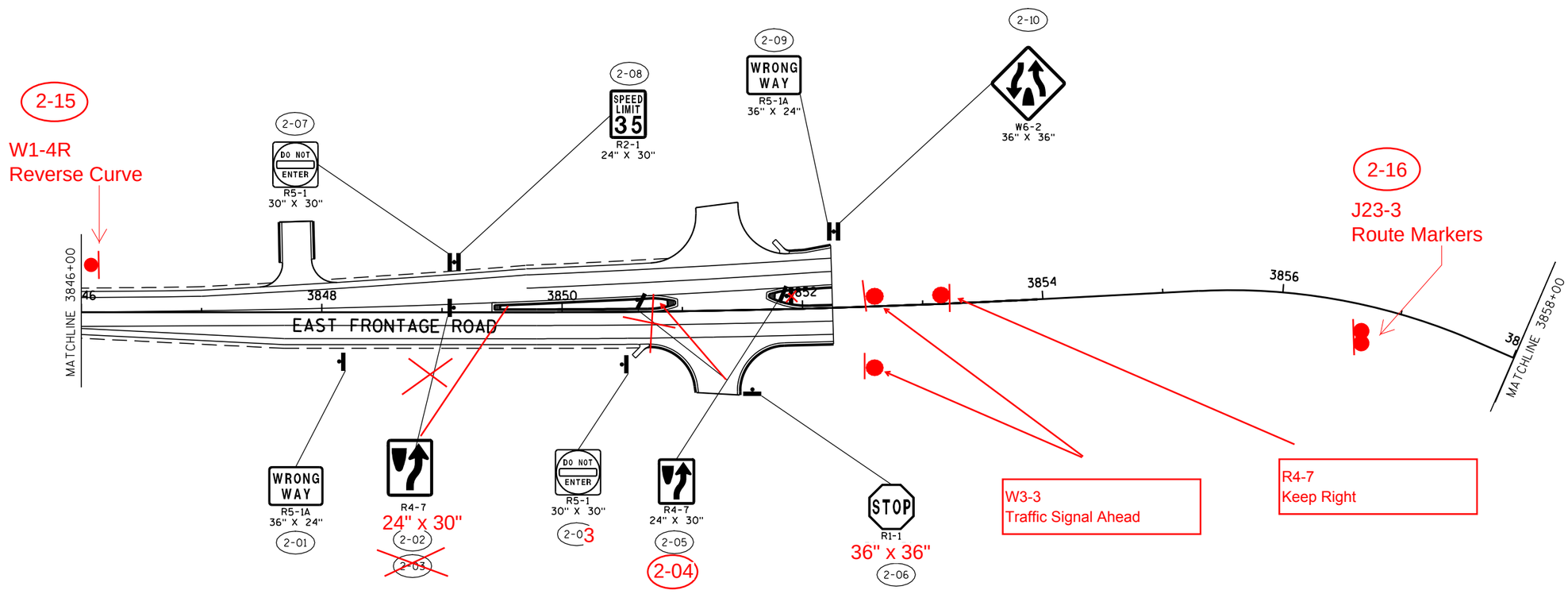

LEGEND

- EXISTING SIGN MOUNTED ON POST(S)
- EXISTING SIGN MOUNTED ON BRIDGE OR SIGN BRIDGE
- PROPOSED SIGN MOUNTED ON POST(S)
- PROPOSED SIGN MOUNTED ON BRIDGE OR SIGN BRIDGE
- (XXXX) DENOTES SIGN NUMBER

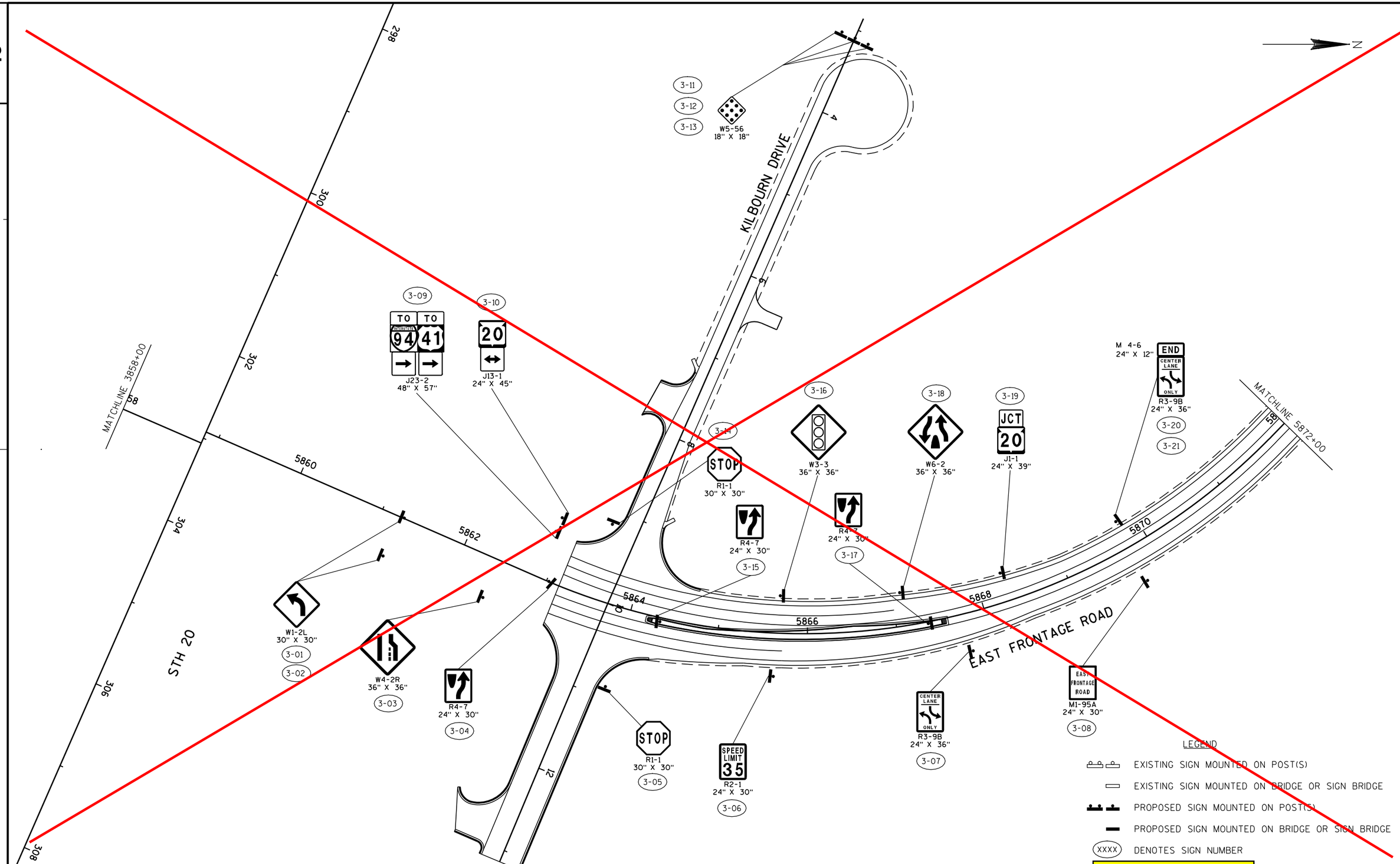

See new sheet #54

PROJECT NO:1033-02-70	HWY:IH 94/STH 20	COUNTY:RACINE	PERMANENT SIGNING	SHEET 54	E

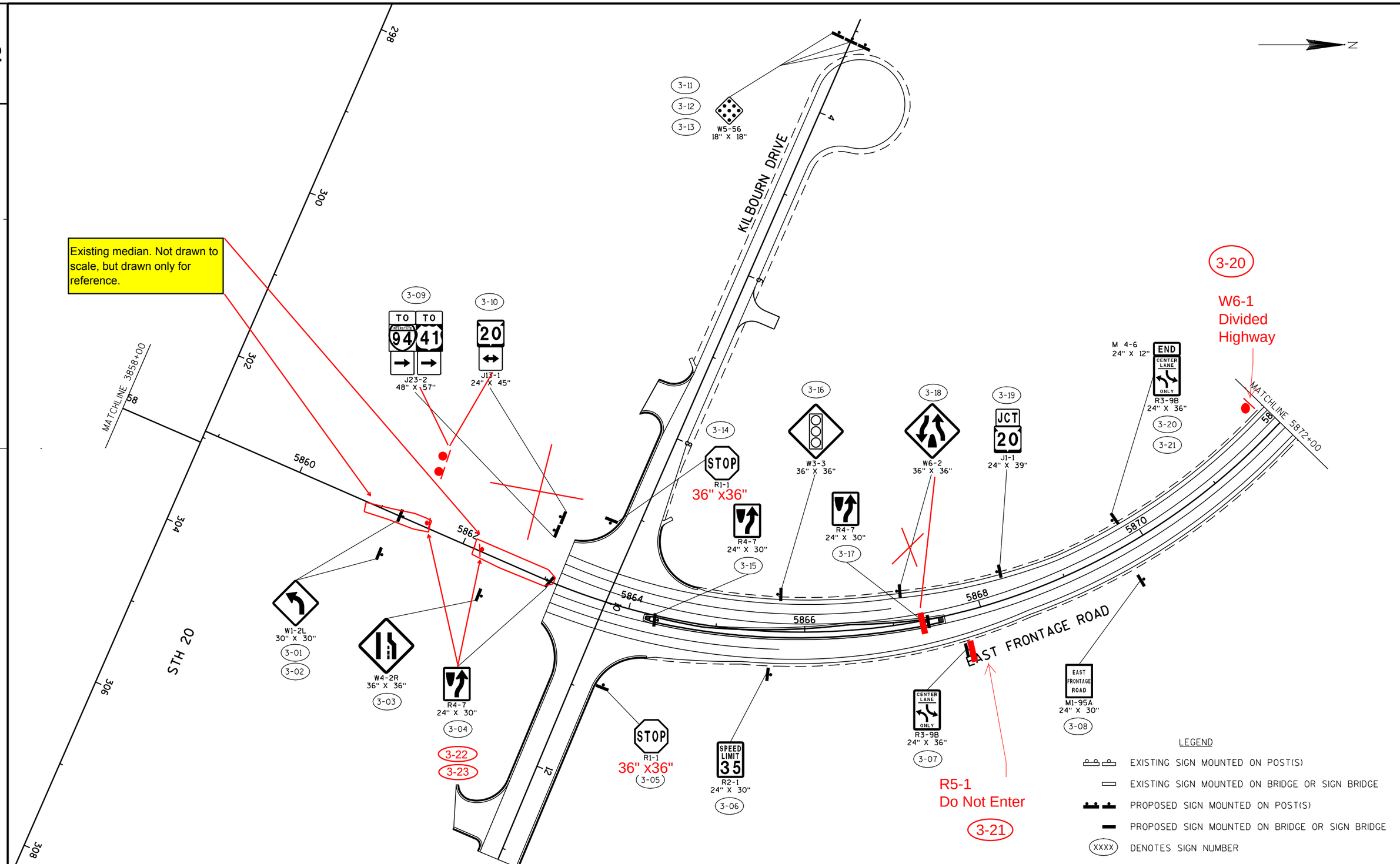

PROJECT NO:1033-02-70	HWY:IH 94/STH 20	COUNTY:RACINE	PERMANENT SIGNING	SHEET 54	E

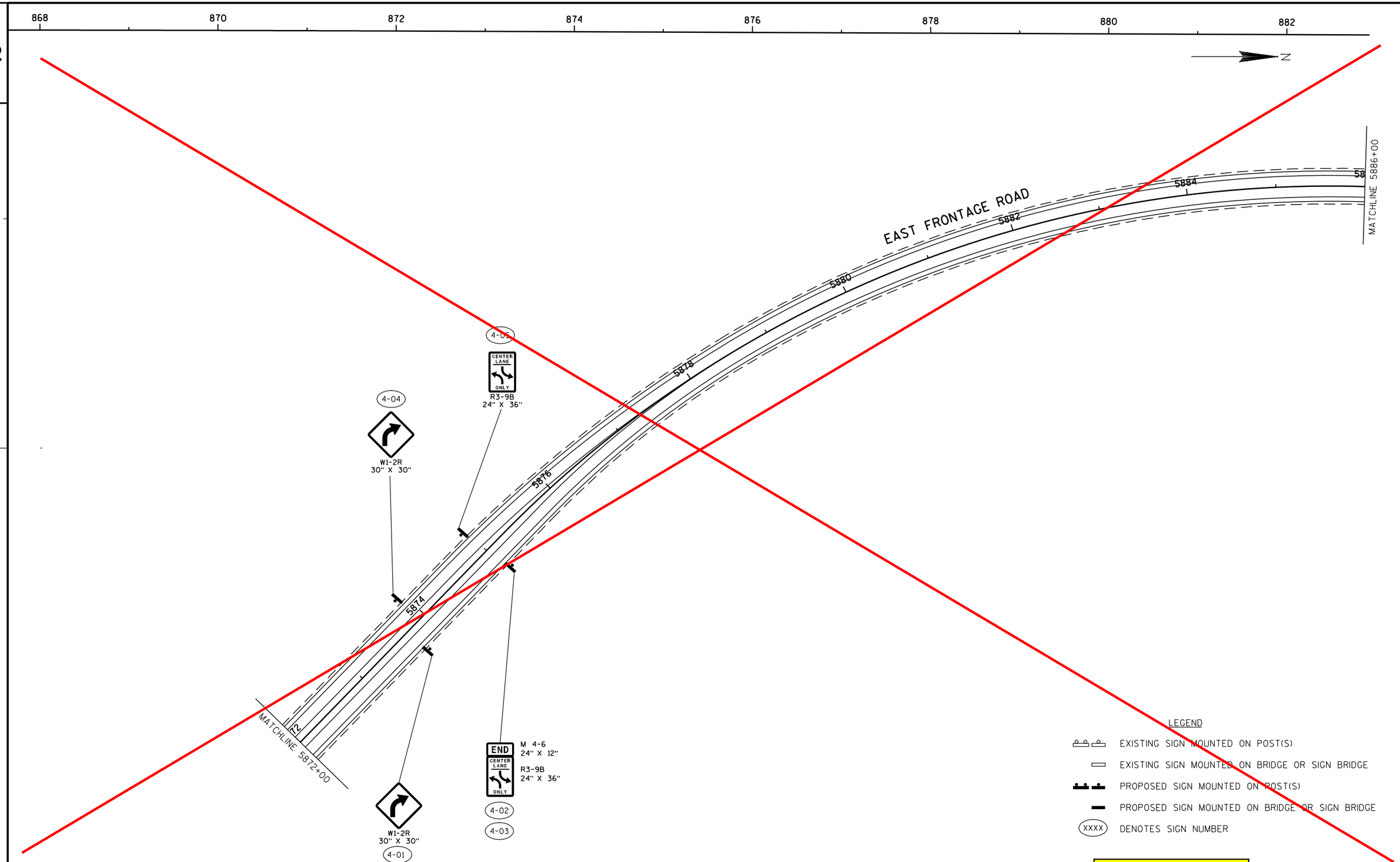

See new sheet #55

PROJECT NO:1033-02-70	HWY:IH 94/STH 20	COUNTY:RACINE	PERMANENT SIGNING	SHEET 55	E

FILE NAME : s:\FinalDesign\20\10330270_E\Roads\cds\023209_ps.dgn PLOT DATE : 06-DEC-2010 20:24 PLOT BY : MSCD1S PLOT NAME : 023209_ps PLOT SCALE : 100:1

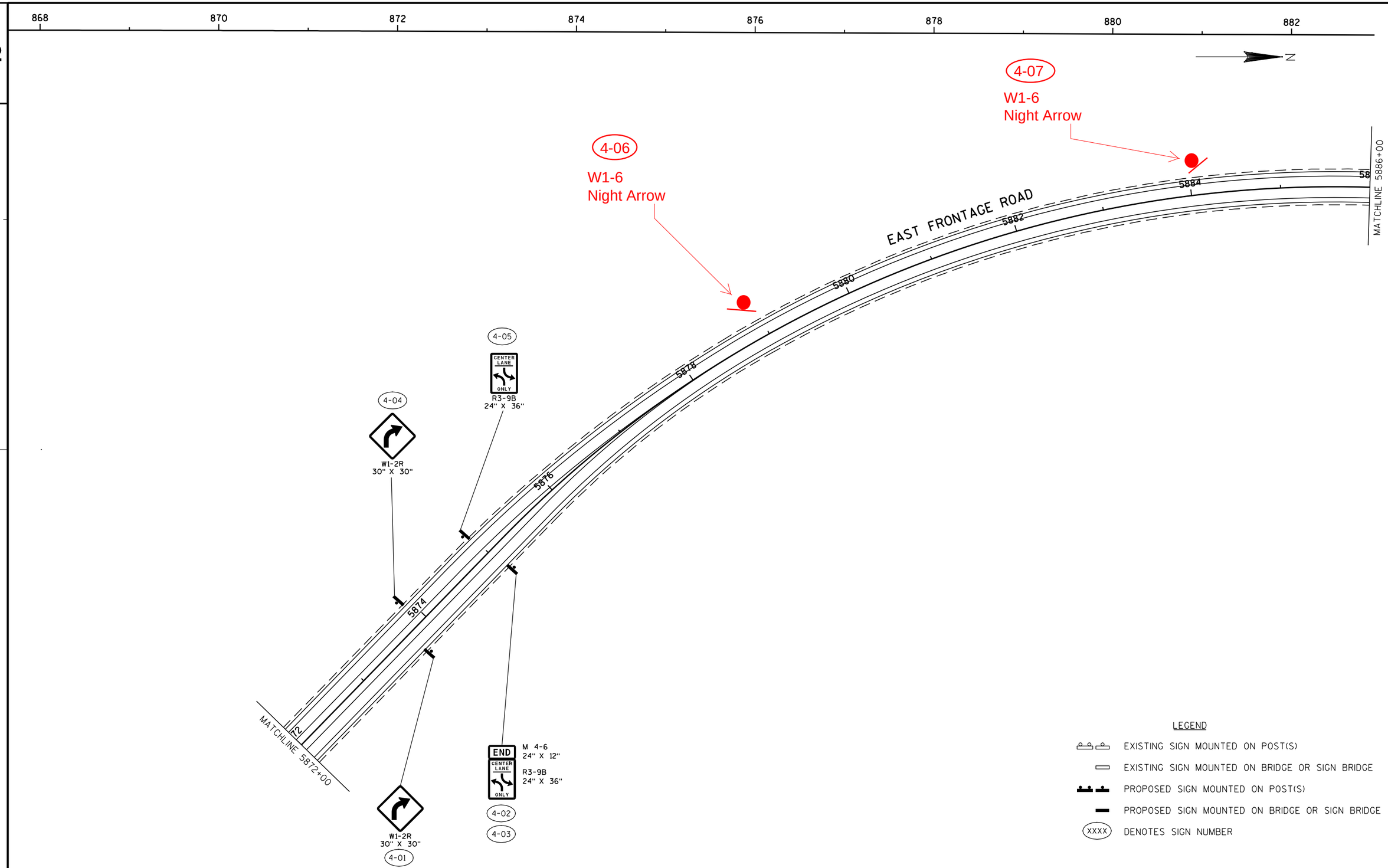

PROJECT NO:1033-02-70	HWY:IH 94/STH 20	COUNTY:RACINE	PERMANENT SIGNING	SHEET 55	E

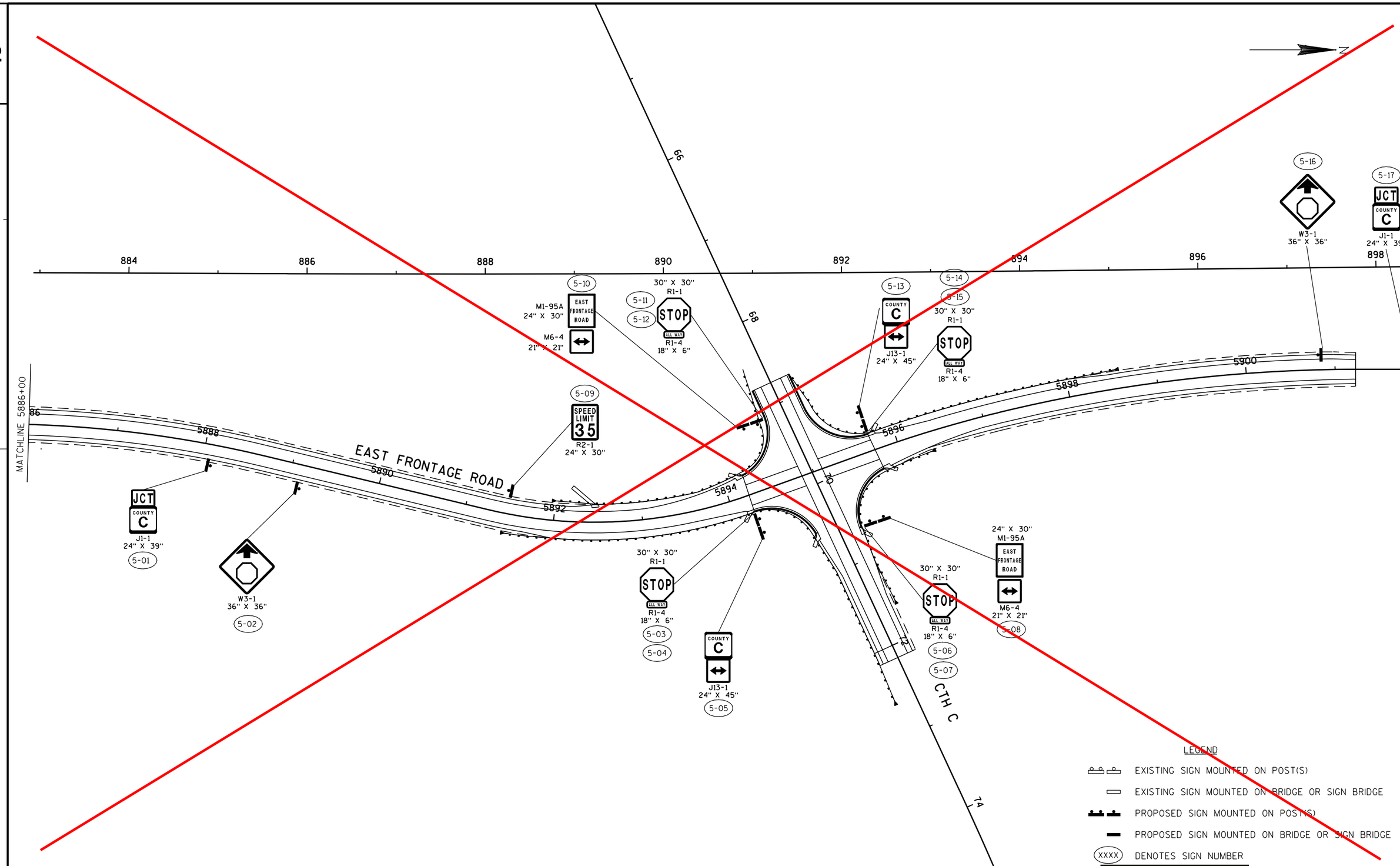

PROJECT NO:1033-02-70	HWY:IH 94/STH 20	COUNTY:RACINE	PERMANENT SIGNING	See new sheet #56	SHEET 56	E

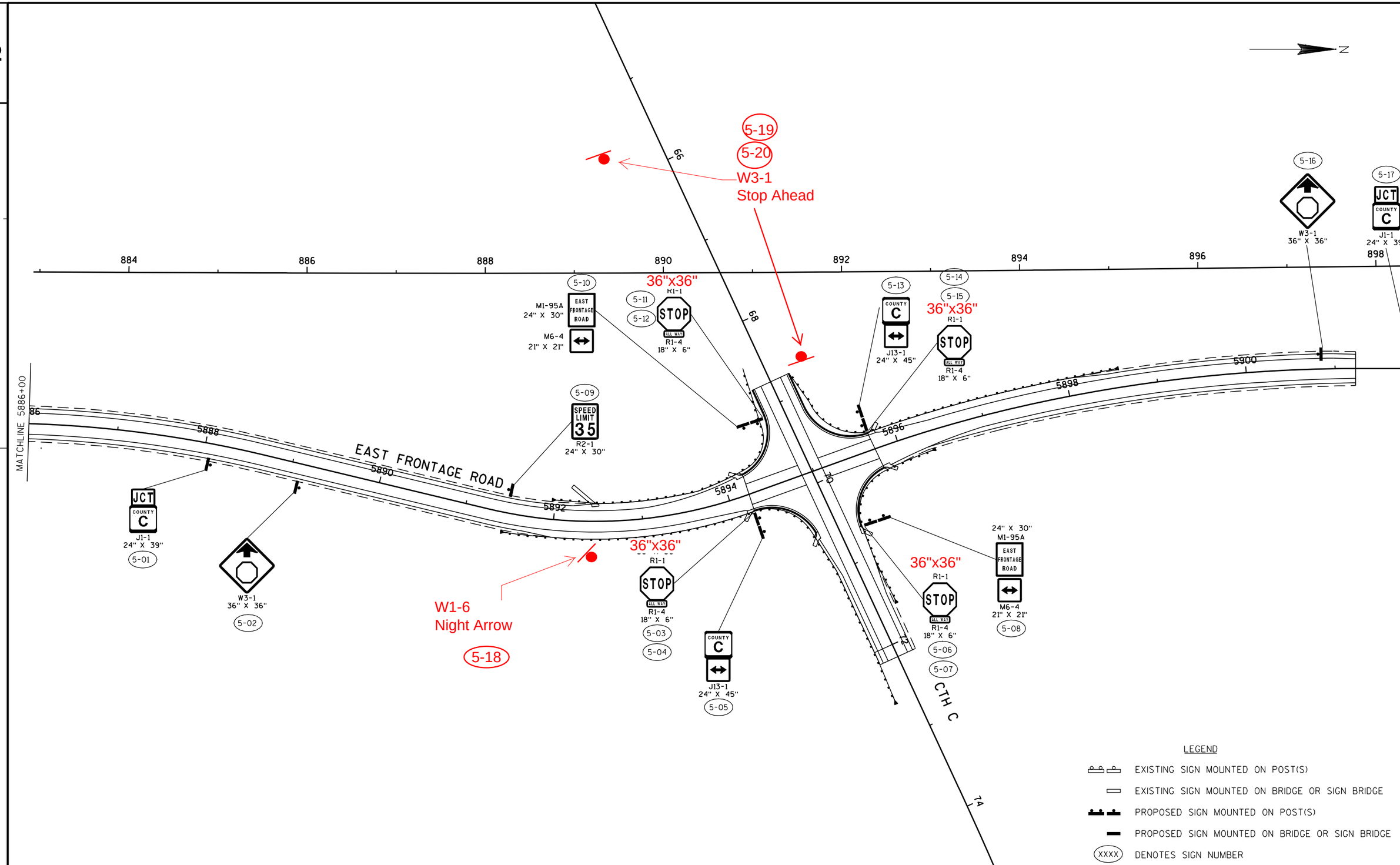

PROJECT NO:1033-02-70	HWY:IH 94/STH 20	COUNTY:RACINE	PERMANENT SIGNING	SHEET 56	E

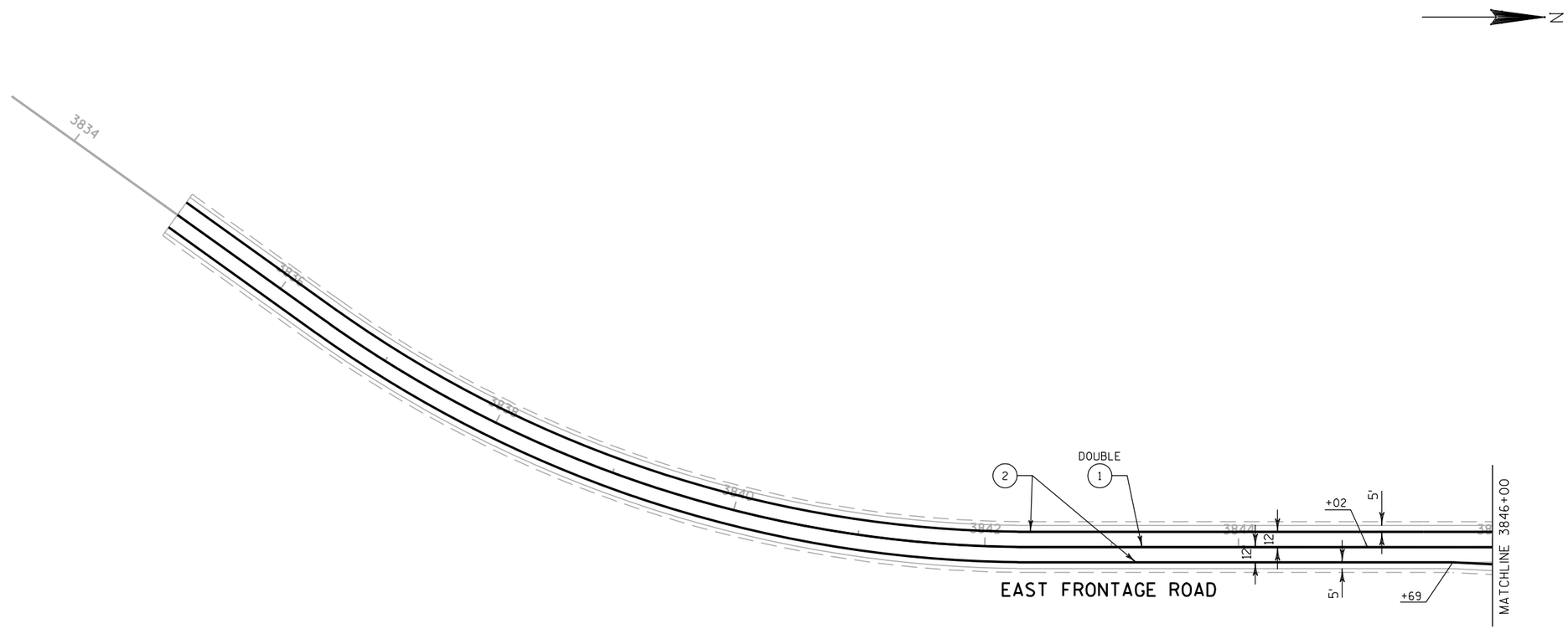

PAVEMENT MARKING LEGEND

1. PAVEMENT MARKING EPOXY 4-INCH (YELLOW)
2. PAVEMENT MARKING EPOXY 4-INCH (WHITE)
3. PAVEMENT MARKING EPOXY 4-INCH (DASHED WHITE) (12.5 FT LINE, 37.5 FT SKIP)
7. PAVEMENT MARKING STOPLINE EPOXY 18-INCH (WHITE)
10. PAVEMENT MARKING DIAGONAL EPOXY 12-INCH (YELLOW)
16. PAVEMENT MARKING ARROWS EPOXY TYPE 2
20. PAVEMENT MARKING CURB EPOXY (YELLOW)
21. PAVEMENT MARKING ISLAND NOSE EPOXY
36. PAVEMENT MARKING EPOXY 4-INCH (DASHED YELLOW) (12.5 FT LINE, 37.5 FT SKIP)

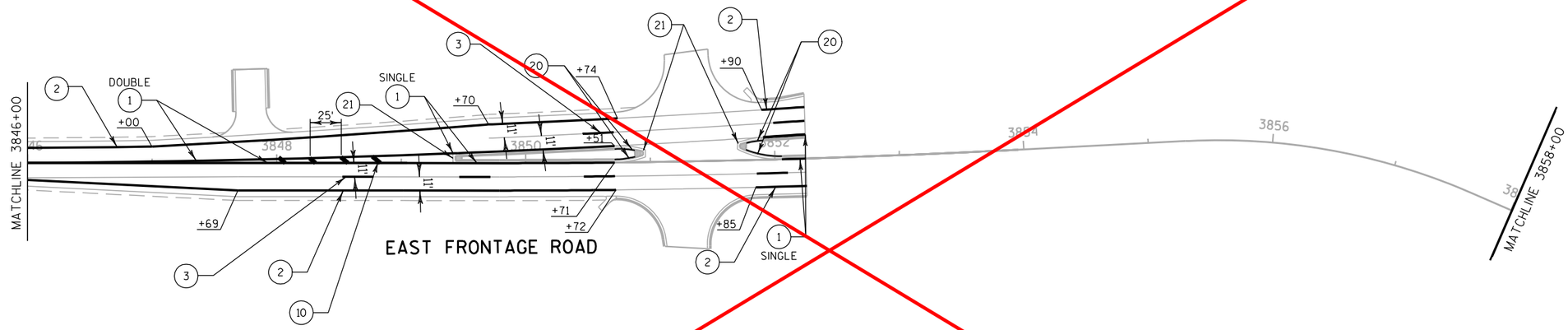

PAVEMENT MARKING LEGEND

1. PAVEMENT MARKING EPOXY 4-INCH (YELLOW)
2. PAVEMENT MARKING EPOXY 4-INCH (WHITE)
3. PAVEMENT MARKING EPOXY 4-INCH (DASHED WHITE) (12.5 FT LINE, 37.5 FT SKIP)
7. PAVEMENT MARKING STOPLINE EPOXY 18-INCH (WHITE)
10. PAVEMENT MARKING DIAGONAL EPOXY 12-INCH (YELLOW)
16. PAVEMENT MARKING ARROWS EPOXY TYPE 2
20. PAVEMENT MARKING CURB EPOXY (YELLOW)
21. PAVEMENT MARKING ISLAND NOSE EPOXY
36. PAVEMENT MARKING EPOXY 4-INCH (DASHED YELLOW) (12.5 FT LINE, 37.5 FT SKIP)

See new sheet #58

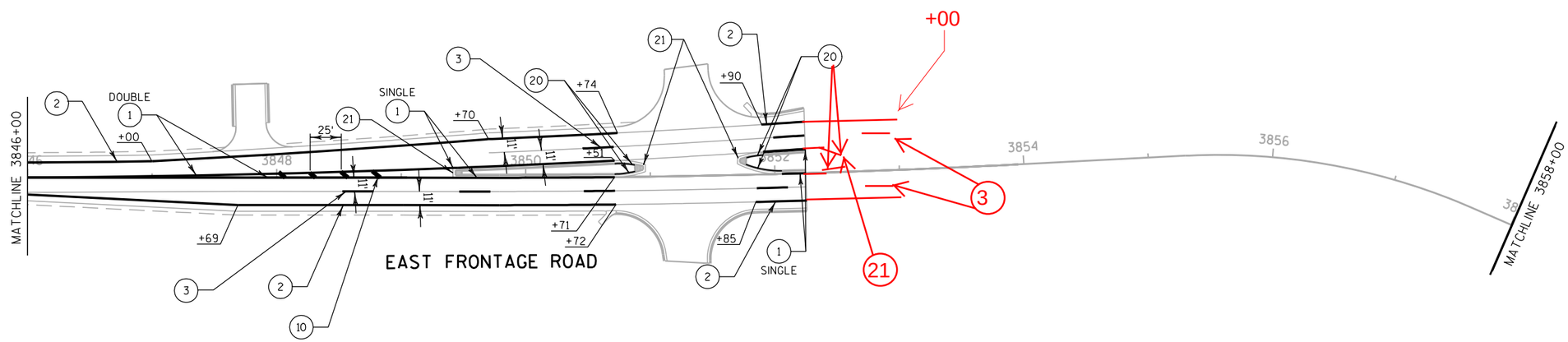

PAVEMENT MARKING LEGEND

1	PAVEMENT MARKING EPOXY 4-INCH (YELLOW)
2	PAVEMENT MARKING EPOXY 4-INCH (WHITE)
3	PAVEMENT MARKING EPOXY 4-INCH (DASHED WHITE) (12.5 FT LINE, 37.5 FT SKIP)
7	PAVEMENT MARKING STOPLINE EPOXY 18-INCH (WHITE)
10	PAVEMENT MARKING DIAGONAL EPOXY 12-INCH (YELLOW)
16	PAVEMENT MARKING ARROWS EPOXY TYPE 2
20	PAVEMENT MARKING CURB EPOXY (YELLOW)
21	PAVEMENT MARKING ISLAND NOSE EPOXY
36	PAVEMENT MARKING EPOXY 4-INCH (DASHED YELLOW) (12.5 FT LINE, 37.5 FT SKIP)

PAVEMENT MARKING LEGEND

1. PAVEMENT MARKING EPOXY 4-INCH (YELLOW)
2. PAVEMENT MARKING EPOXY 4-INCH (WHITE)
3. PAVEMENT MARKING EPOXY 4-INCH (DASHED WHITE) (12.5 FT LINE, 37.5 FT SKIP)
7. PAVEMENT MARKING STOPLINE EPOXY 18-INCH (WHITE)
10. PAVEMENT MARKING DIAGONAL EPOXY 12-INCH (YELLOW)
16. PAVEMENT MARKING ARROWS EPOXY TYPE 2
20. PAVEMENT MARKING CURB EPOXY (YELLOW)
21. PAVEMENT MARKING ISLAND NOSE EPOXY
36. PAVEMENT MARKING EPOXY 4-INCH (DASHED YELLOW) (12.5 FT LINE, 37.5 FT SKIP)

See new sheet #59

PROJECT NO:1033-02-70	HWY:IH 94/STH 20	COUNTY:RACINE	PAVEMENT MARKING	SHEET 59	E

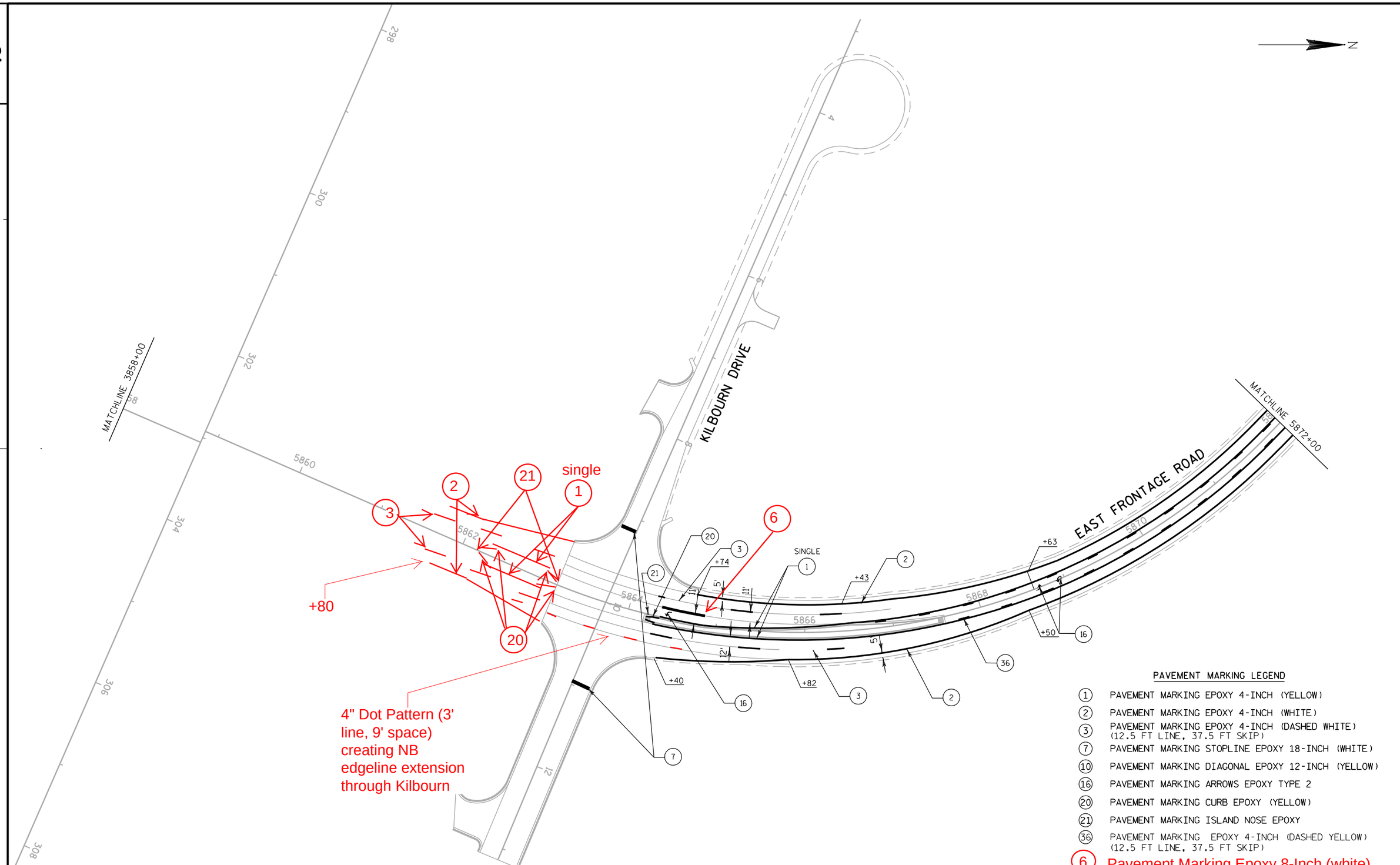

PAVEMENT MARKING LEGEND

1. PAVEMENT MARKING EPOXY 4-INCH (YELLOW)
2. PAVEMENT MARKING EPOXY 4-INCH (WHITE)
3. PAVEMENT MARKING EPOXY 4-INCH (DASHED WHITE) (12.5 FT LINE, 37.5 FT SKIP)
7. PAVEMENT MARKING STOPLINE EPOXY 18-INCH (WHITE)
10. PAVEMENT MARKING DIAGONAL EPOXY 12-INCH (YELLOW)
16. PAVEMENT MARKING ARROWS EPOXY TYPE 2
20. PAVEMENT MARKING CURB EPOXY (YELLOW)
21. PAVEMENT MARKING ISLAND NOSE EPOXY
36. PAVEMENT MARKING EPOXY 4-INCH (DASHED YELLOW) (12.5 FT LINE, 37.5 FT SKIP)
6. Pavement Marking Epoxy 8-Inch (white)

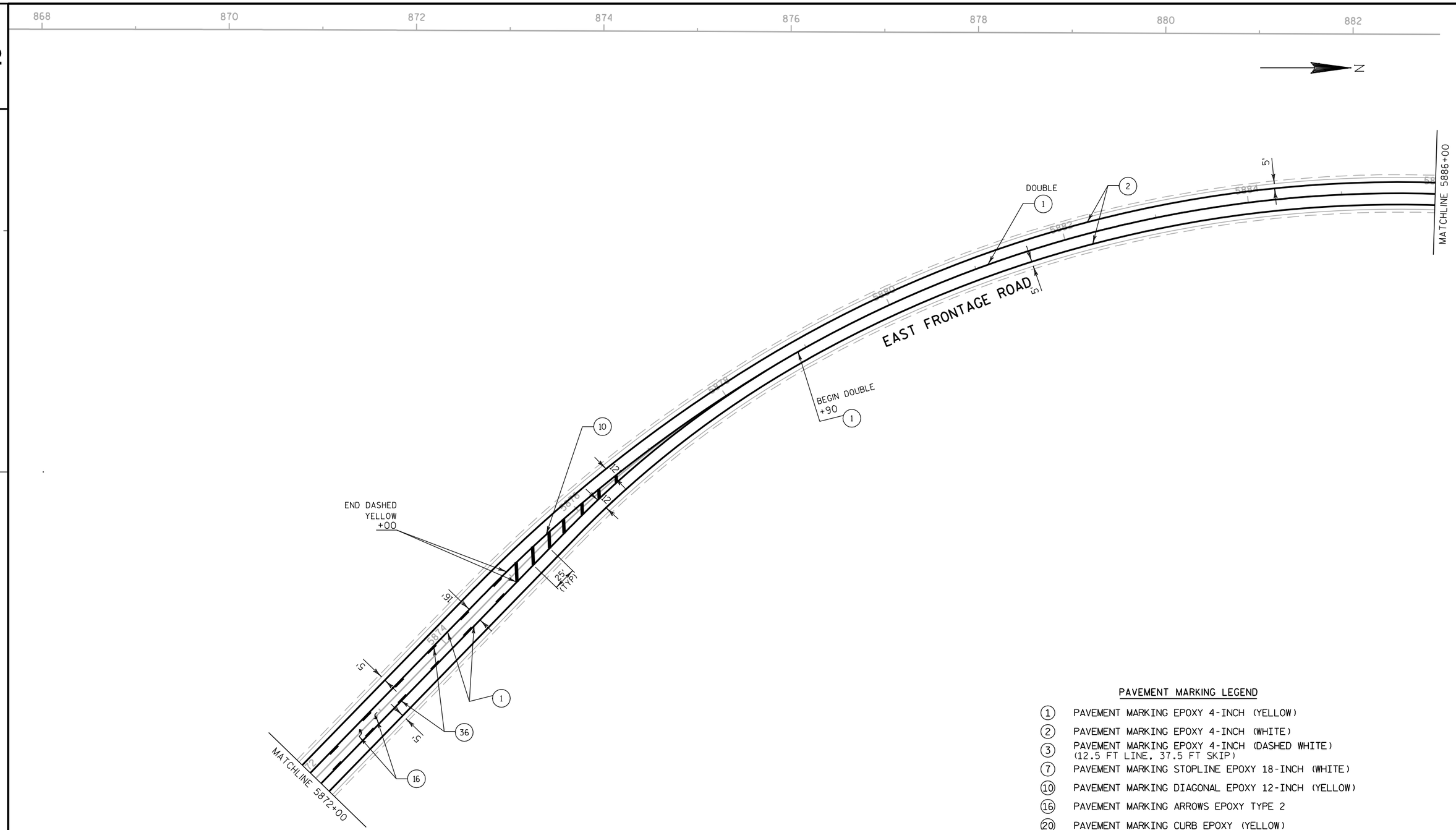

PAVEMENT MARKING LEGEND

1	PAVEMENT MARKING EPOXY 4-INCH (YELLOW)
2	PAVEMENT MARKING EPOXY 4-INCH (WHITE)
3	PAVEMENT MARKING EPOXY 4-INCH (DASHED WHITE) (12.5 FT LINE, 37.5 FT SKIP)
7	PAVEMENT MARKING STOPLINE EPOXY 18-INCH (WHITE)
10	PAVEMENT MARKING DIAGONAL EPOXY 12-INCH (YELLOW)
16	PAVEMENT MARKING ARROWS EPOXY TYPE 2
20	PAVEMENT MARKING CURB EPOXY (YELLOW)
21	PAVEMENT MARKING ISLAND NOSE EPOXY
36	PAVEMENT MARKING EPOXY 4-INCH (DASHED YELLOW) (12.5 FT LINE, 37.5 FT SKIP)

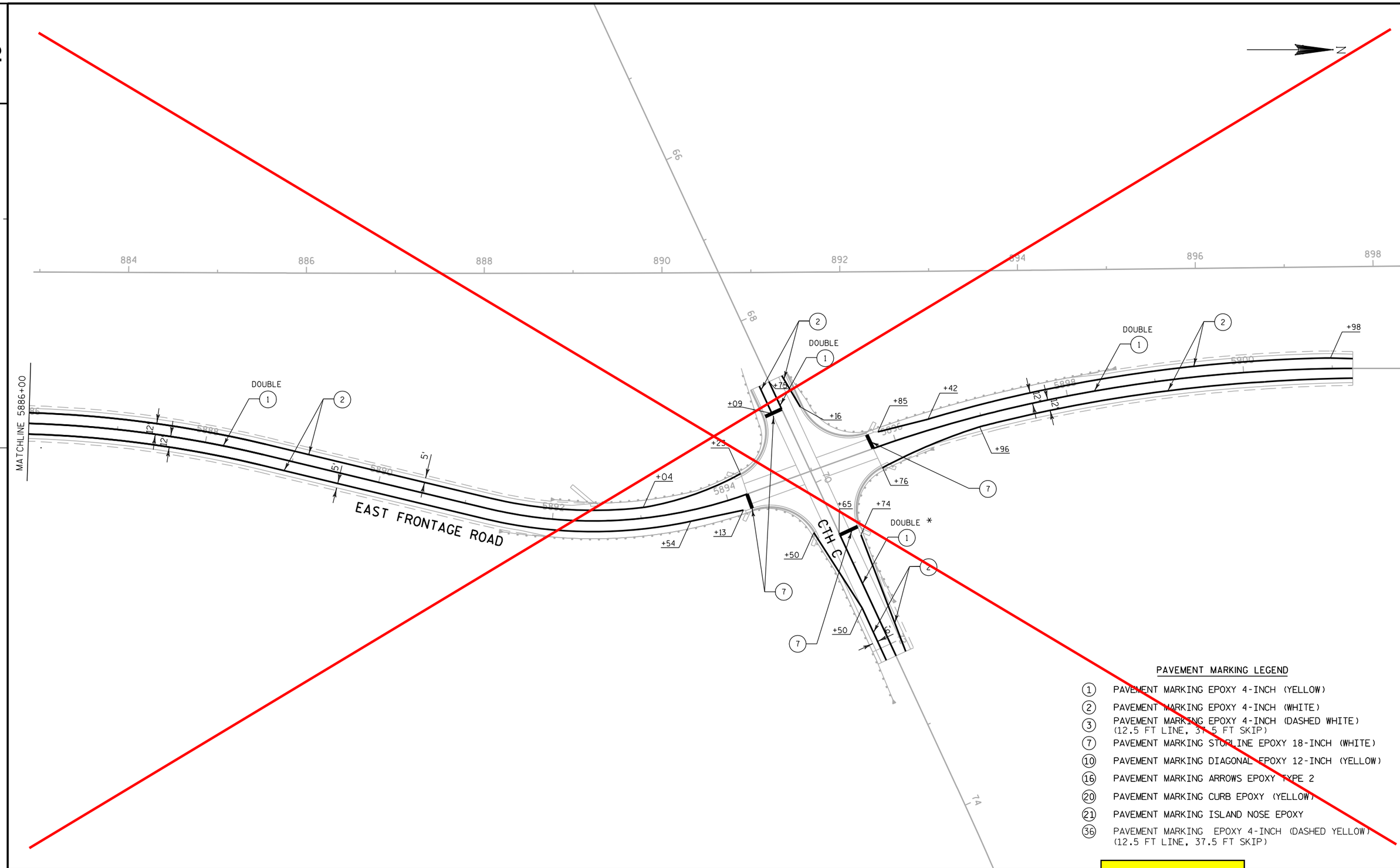

PAVEMENT MARKING LEGEND

1. PAVEMENT MARKING EPOXY 4-INCH (YELLOW)
2. PAVEMENT MARKING EPOXY 4-INCH (WHITE)
3. PAVEMENT MARKING EPOXY 4-INCH (DASHED WHITE) (12.5 FT LINE, 37.5 FT SKIP)
7. PAVEMENT MARKING STOPLINE EPOXY 18-INCH (WHITE)
10. PAVEMENT MARKING DIAGONAL EPOXY 12-INCH (YELLOW)
16. PAVEMENT MARKING ARROWS EPOXY TYPE 2
20. PAVEMENT MARKING CURB EPOXY (YELLOW)
21. PAVEMENT MARKING ISLAND NOSE EPOXY
36. PAVEMENT MARKING EPOXY 4-INCH (DASHED YELLOW) (12.5 FT LINE, 37.5 FT SKIP)

See new sheet #61

PROJECT NO:1033-02-70	HWY:IH 94/STH 20	COUNTY:RACINE	PAVEMENT MARKING	SHEET 61	E

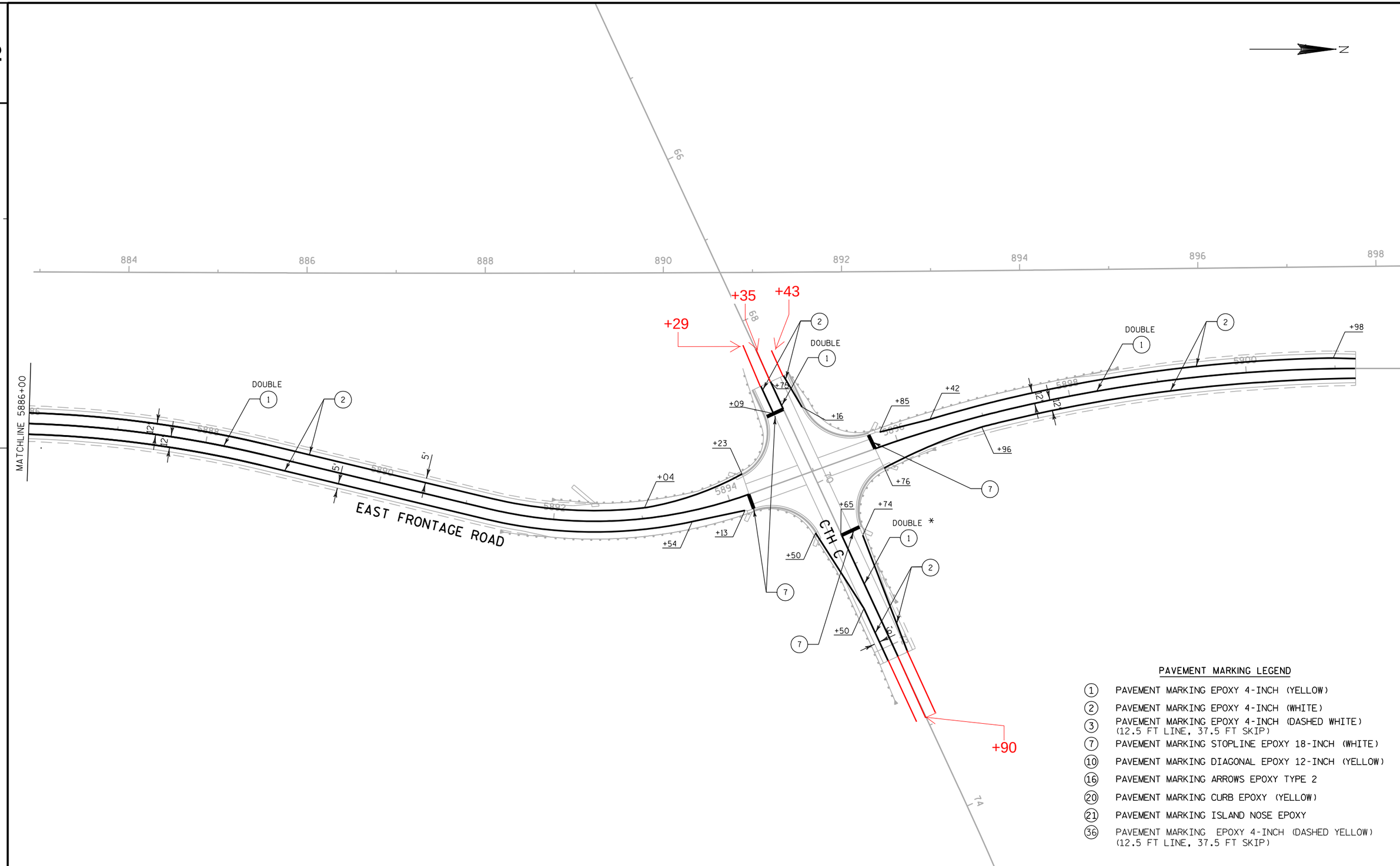

PAVEMENT MARKING LEGEND

1. PAVEMENT MARKING EPOXY 4-INCH (YELLOW)
2. PAVEMENT MARKING EPOXY 4-INCH (WHITE)
3. PAVEMENT MARKING EPOXY 4-INCH (DASHED WHITE) (12.5 FT LINE, 37.5 FT SKIP)
7. PAVEMENT MARKING STOPLINE EPOXY 18-INCH (WHITE)
10. PAVEMENT MARKING DIAGONAL EPOXY 12-INCH (YELLOW)
16. PAVEMENT MARKING ARROWS EPOXY TYPE 2
20. PAVEMENT MARKING CURB EPOXY (YELLOW)
21. PAVEMENT MARKING ISLAND NOSE EPOXY
36. PAVEMENT MARKING EPOXY 4-INCH (DASHED YELLOW) (12.5 FT LINE, 37.5 FT SKIP)

PROJECT NO:1033-02-70	HWY:IH 94/STH 20	COUNTY:RACINE	PAVEMENT MARKING	SHEET 61	E

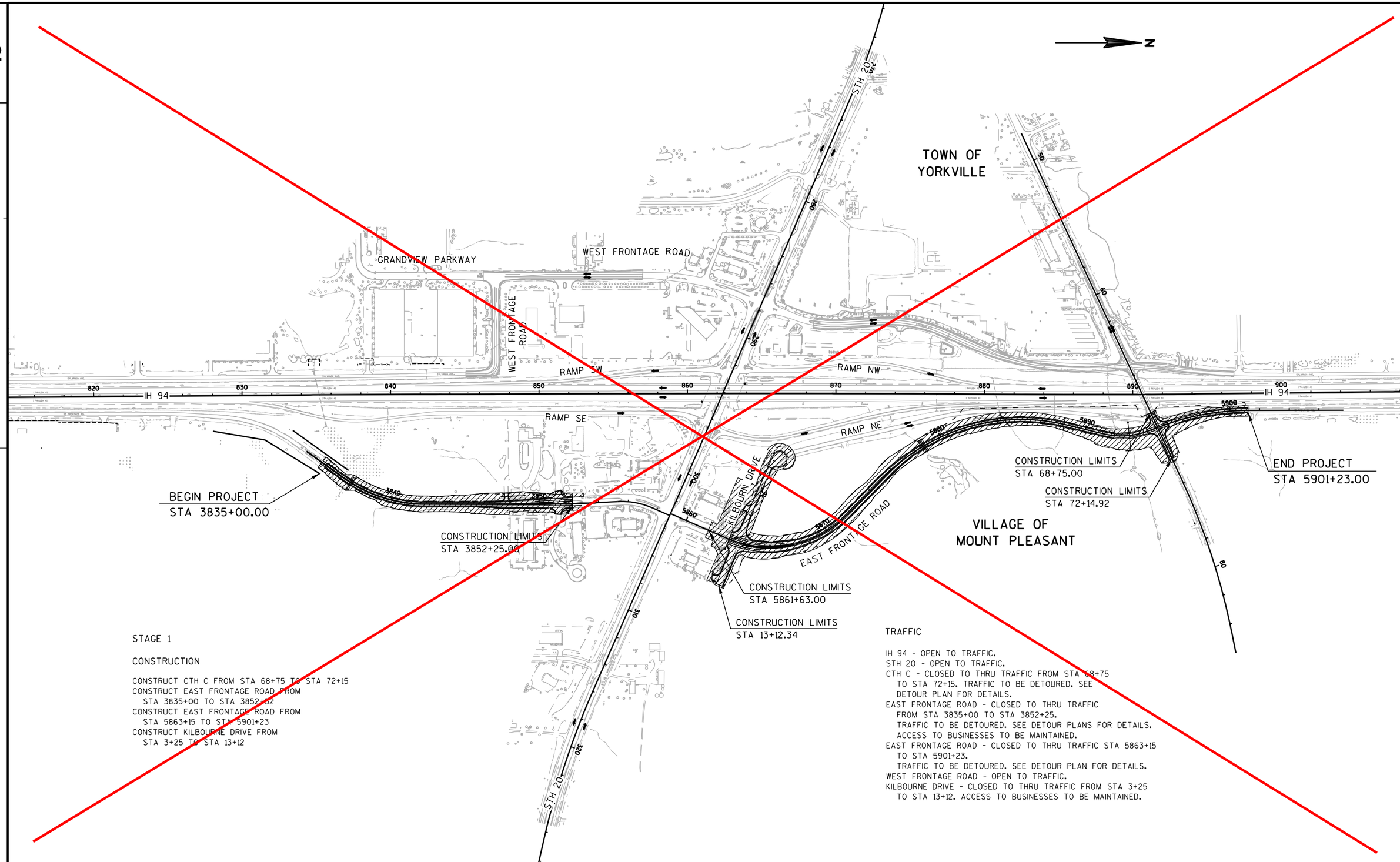

STAGE 1

CONSTRUCTION

CONSTRUCT CTH C FROM STA 68+75 TO STA 72+15
CONSTRUCT EAST FRONTAGE ROAD FROM
STA 3835+00 TO STA 3852+32
CONSTRUCT EAST FRONTAGE ROAD FROM
STA 5863+15 TO STA 5901+23
CONSTRUCT KILBOURNE DRIVE FROM
STA 3+25 TO STA 13+12

TRAFFIC

IH 94 - OPEN TO TRAFFIC.
STH 20 - OPEN TO TRAFFIC.
CTH C - CLOSED TO THRU TRAFFIC FROM STA 68+75
TO STA 72+15. TRAFFIC TO BE DETOURED. SEE
DETOUR PLAN FOR DETAILS.
EAST FRONTAGE ROAD - CLOSED TO THRU TRAFFIC
FROM STA 3835+00 TO STA 3852+25.
TRAFFIC TO BE DETOURED. SEE DETOUR PLANS FOR DETAILS.
ACCESS TO BUSINESSES TO BE MAINTAINED.
EAST FRONTAGE ROAD - CLOSED TO THRU TRAFFIC STA 5863+15
TO STA 5901+23.
TRAFFIC TO BE DETOURED. SEE DETOUR PLAN FOR DETAILS.
WEST FRONTAGE ROAD - OPEN TO TRAFFIC.
KILBOURNE DRIVE - CLOSED TO THRU TRAFFIC FROM STA 3+25
TO STA 13+12. ACCESS TO BUSINESSES TO BE MAINTAINED.

PROJECT NO:1033-02-70	HWY:IH 94/STH 20	COUNTY:RACINE	CONSTRUCTION STAGING OVERVIEW: STAGE 1	See new sheet #62	SHEET 62	E

FMS Fixed Message Sign - Place FMS at locations noted 14 days in advance of closing roadway.

PCMS Portable Changeable Message Sign - Place PCMS at locations noted 14 days in advance of closing roadway.

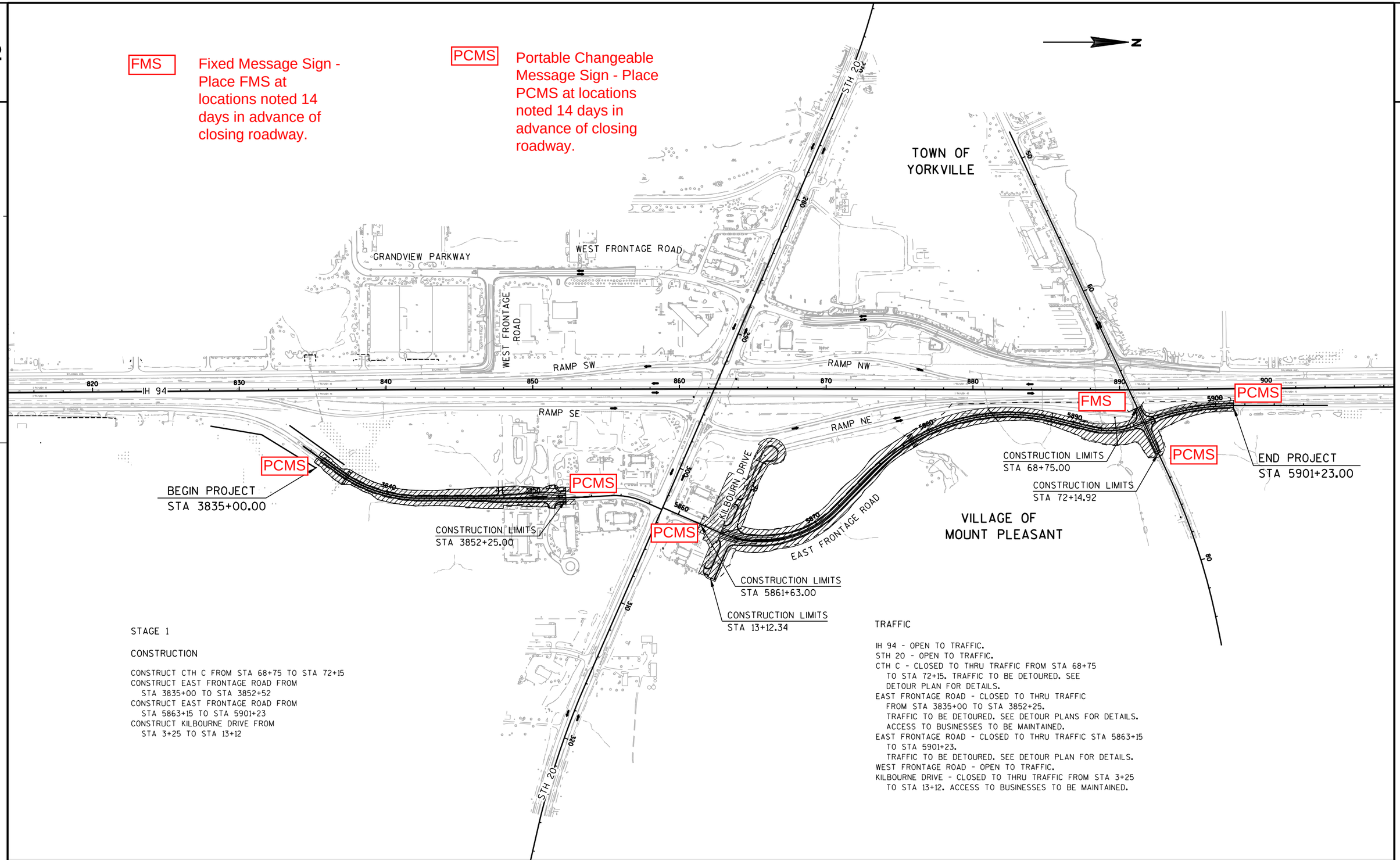

STAGE 1

CONSTRUCTION

CONSTRUCT CTH C FROM STA 68+75 TO STA 72+15
CONSTRUCT EAST FRONTAGE ROAD FROM
STA 3835+00 TO STA 3852+52
CONSTRUCT EAST FRONTAGE ROAD FROM
STA 5863+15 TO STA 5901+23
CONSTRUCT KILBOURNE DRIVE FROM
STA 3+25 TO STA 13+12

TRAFFIC

IH 94 - OPEN TO TRAFFIC.
STH 20 - OPEN TO TRAFFIC.
CTH C - CLOSED TO THRU TRAFFIC FROM STA 68+75
TO STA 72+15. TRAFFIC TO BE DETOURED. SEE
DETOUR PLAN FOR DETAILS.
EAST FRONTAGE ROAD - CLOSED TO THRU TRAFFIC
FROM STA 3835+00 TO STA 3852+25.
TRAFFIC TO BE DETOURED. SEE DETOUR PLANS FOR DETAILS.
ACCESS TO BUSINESSES TO BE MAINTAINED.
EAST FRONTAGE ROAD - CLOSED TO THRU TRAFFIC STA 5863+15
TO STA 5901+23.
TRAFFIC TO BE DETOURED. SEE DETOUR PLAN FOR DETAILS.
WEST FRONTAGE ROAD - OPEN TO TRAFFIC.
KILBOURNE DRIVE - CLOSED TO THRU TRAFFIC FROM STA 3+25
TO STA 13+12. ACCESS TO BUSINESSES TO BE MAINTAINED.

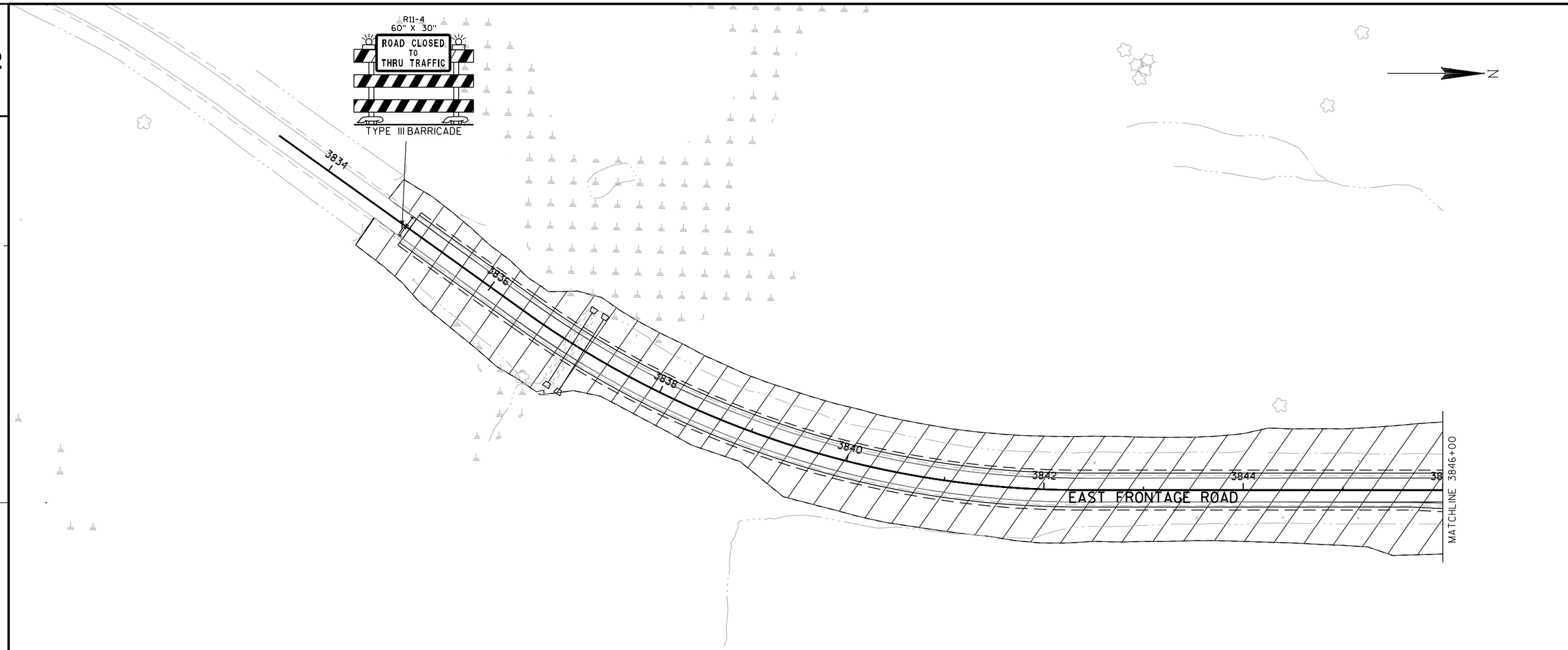

LEGEND

- CONSTRUCTION THIS STAGE
- CONSTRUCTION BY OTHERS
- TRAFFIC FLOW
- TWO 18" SQUARE ORANGE FLAGS
- TRAFFIC CONTROL DRUM WITH/WITHOUT TRAFFIC CONTROL WARNING LIGHT TYPE C
- POST MOUNTED TRAFFIC CONTROL SIGN
- TRAFFIC CONTROL BARRICADE TYPE III WITH TWO TRAFFIC CONTROL WARNING LIGHTS TYPE A WITH/WITHOUT SIGN

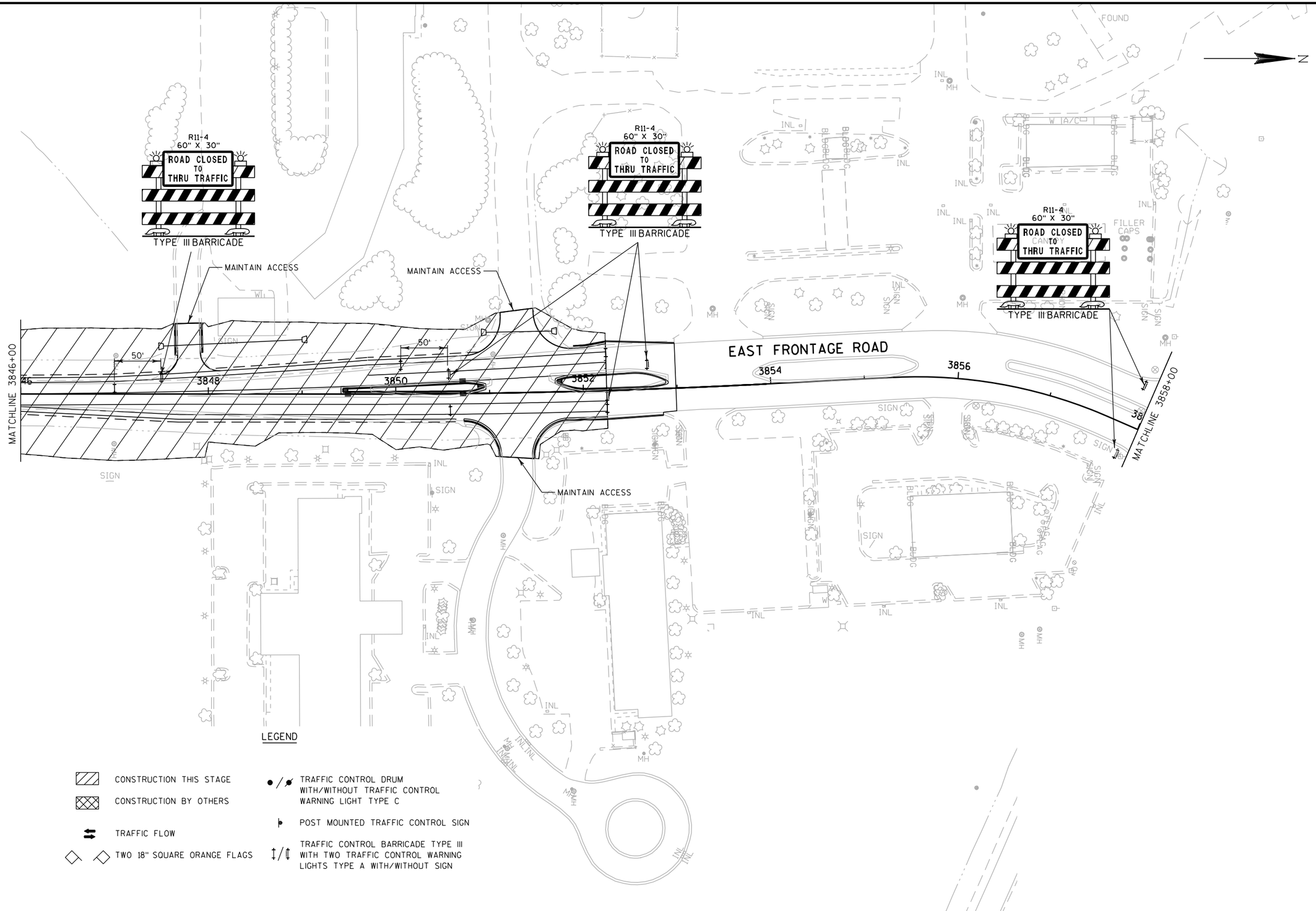

LEGEND

- CONSTRUCTION THIS STAGE
- CONSTRUCTION BY OTHERS
- TRAFFIC FLOW
- TWO 18" SQUARE ORANGE FLAGS
- TRAFFIC CONTROL DRUM WITH/WITHOUT TRAFFIC CONTROL WARNING LIGHT TYPE C
- POST MOUNTED TRAFFIC CONTROL SIGN
- TRAFFIC CONTROL BARRICADE TYPE III WITH TWO TRAFFIC CONTROL WARNING LIGHTS TYPE A WITH/WITHOUT SIGN

PROJECT NO:1033-02-70	HWY:IH 94/STH 20	COUNTY:RACINE	STAGE 1 CONSTRUCTION	SHEET 64	E

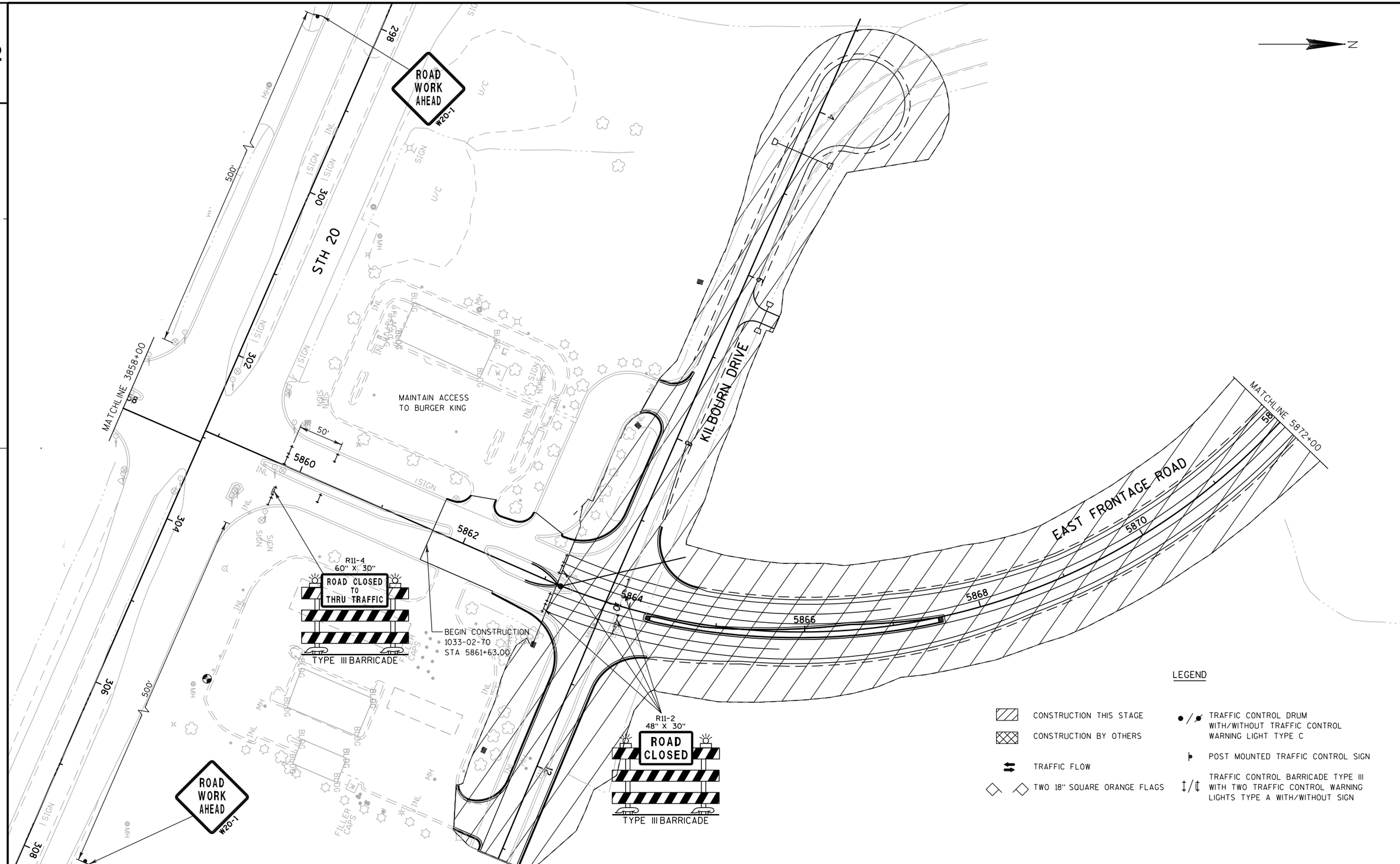

PROJECT NO:1033-02-70	HWY:IH 94/STH 20	COUNTY:RACINE	STAGE 1 CONSTRUCTION	SHEET 65	E

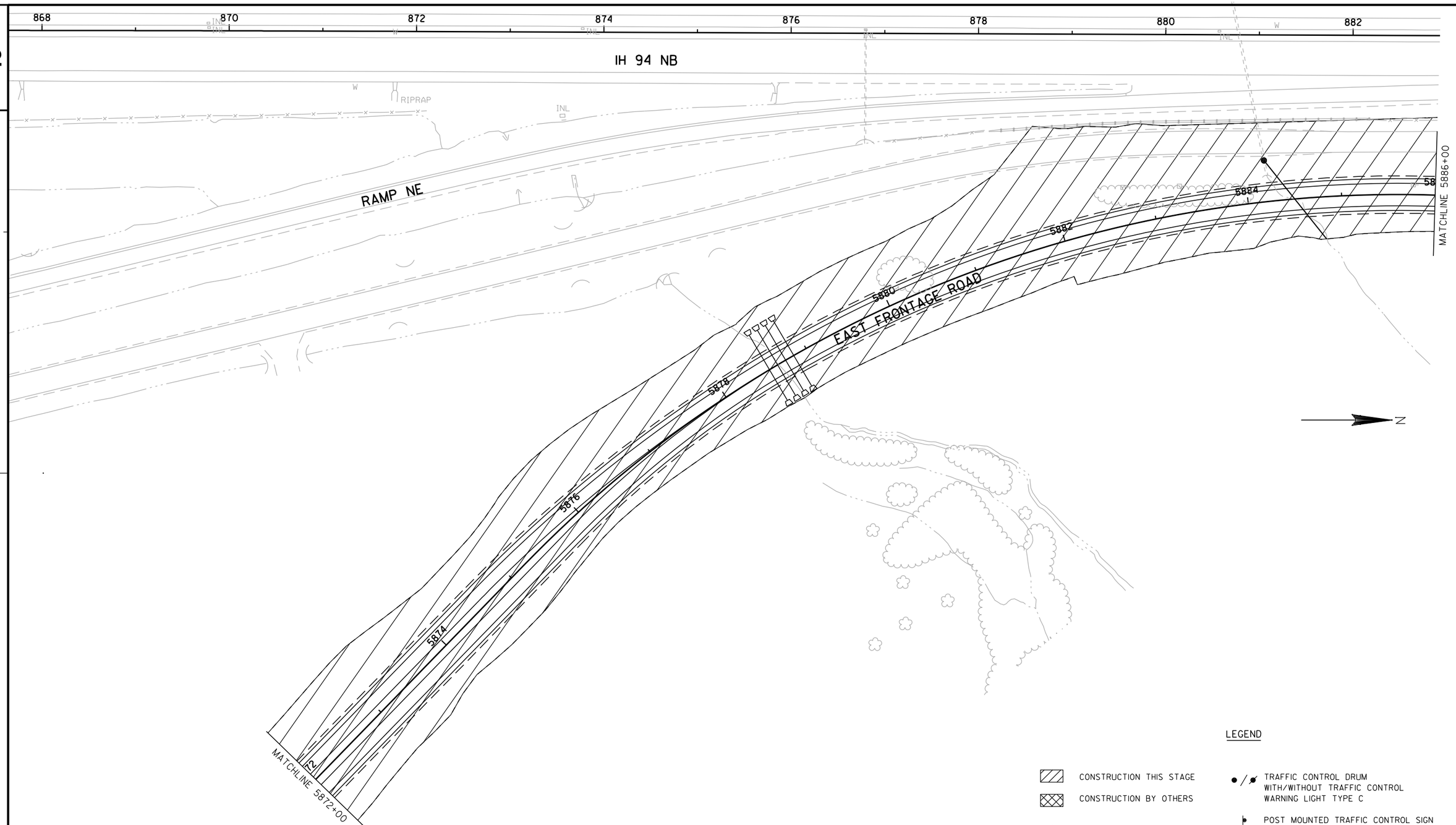

LEGEND

- CONSTRUCTION THIS STAGE
- CONSTRUCTION BY OTHERS
- TRAFFIC FLOW
- TWO 18" SQUARE ORANGE FLAGS
- TRAFFIC CONTROL DRUM WITH/WITHOUT TRAFFIC CONTROL WARNING LIGHT TYPE C
- POST MOUNTED TRAFFIC CONTROL SIGN
- TRAFFIC CONTROL BARRICADE TYPE III WITH TWO TRAFFIC CONTROL WARNING LIGHTS TYPE A WITH/WITHOUT SIGN

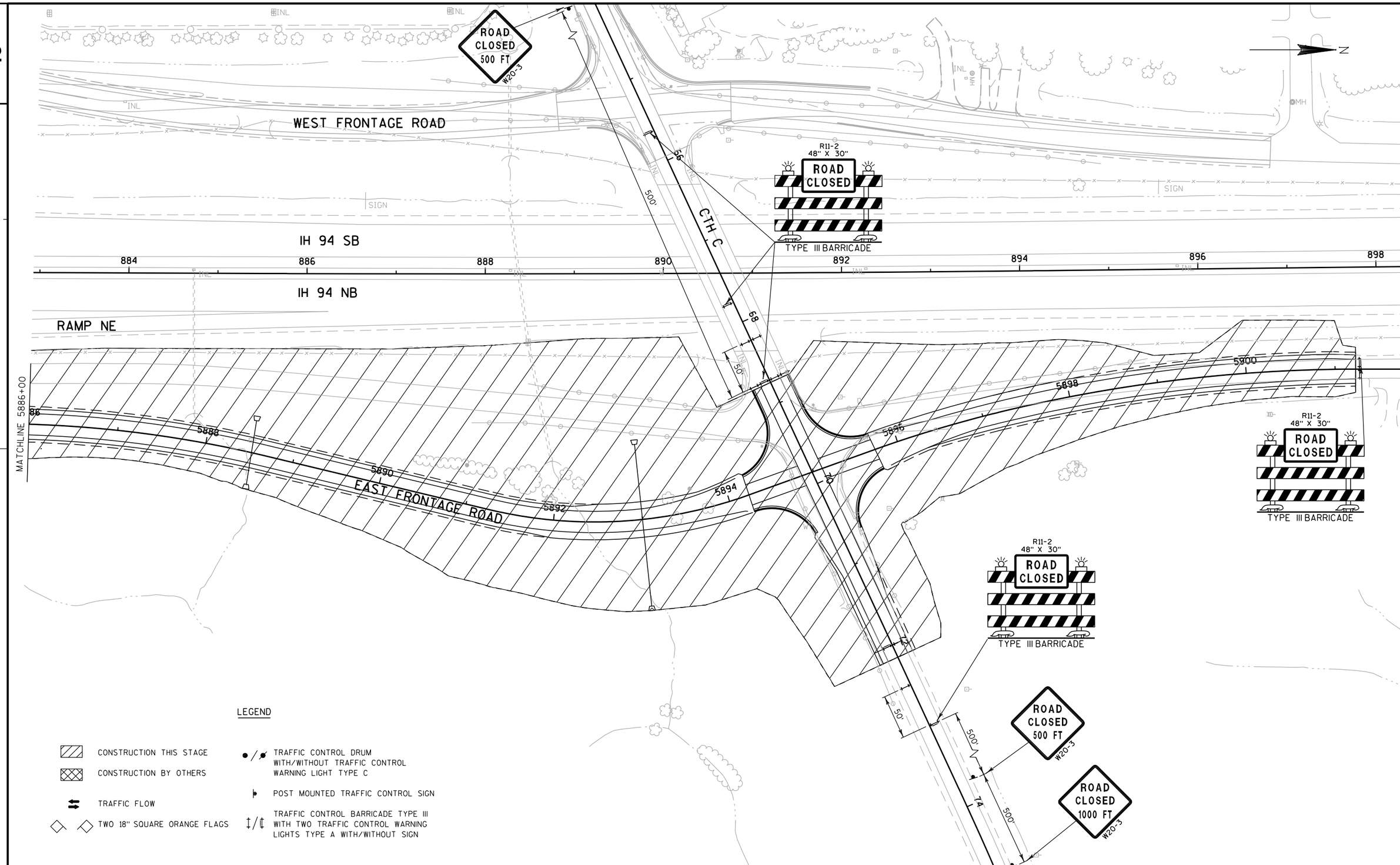

PROJECT NO:1033-02-70	HWY:IH 94/STH 20	COUNTY:RACINE	STAGE 1 CONSTRUCTION	SHEET 67	E

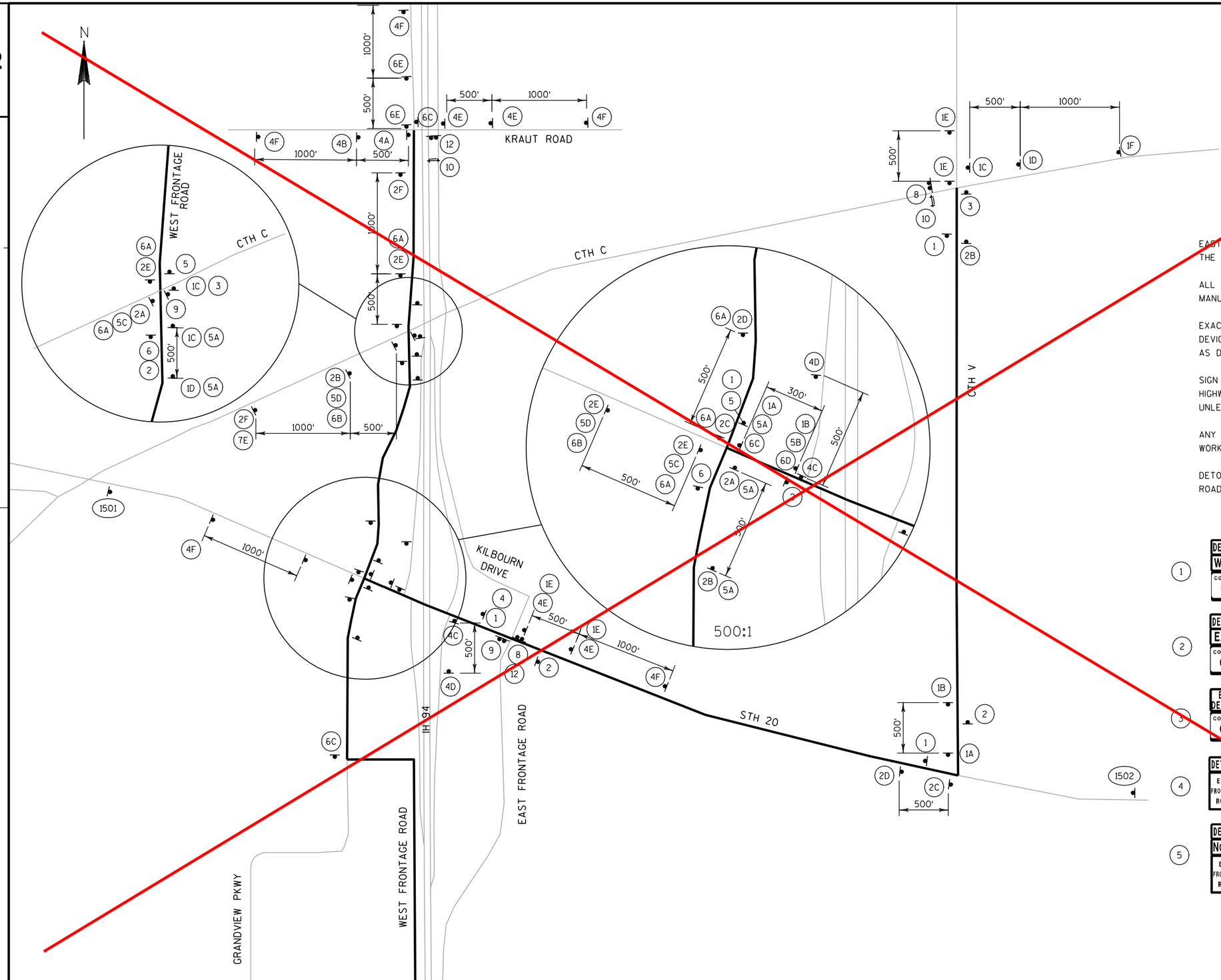

LEGEND

- PROPOSED SIGN MOUNTED ON POST(S)
- SIGN NUMBER
- DETOUR ROUTE
- TRAFFIC CONTROL BARRICADE TYPE III WITH ATTACHED SIGN
- XXX — FIXED MESSAGE SIGN NUMBER (SEE TRAFFIC CONTROL DETAIL: FIXED MESSAGE SIGN)

NOTES

EAST FRONTAGE ROAD AND CTH C ARE CLOSED FOR THE DURATION OF DETOUR

ALL SIGNS SHALL BE PLACED IN ACCORDANCE WITH THE MANUAL ON UNIFORM TRAFFIC CONTROL DEVICES.

EXACT NUMBER, LOCATION AND SPACING OF SIGNS AND DEVICES MAY BE ADJUSTED TO FIT FIELD CONDITIONS AS DIRECTED BY THE ENGINEER.

SIGN LAYOUTS SHALL BE IN ACCORDANCE WITH THE FEDERAL HIGHWAY ADMINISTRATION MANUAL OF STANDARD HIGHWAY SIGNS. UNLESS OTHERWISE PROVIDED IN THE PLAN.

ANY EXISTING TRAFFIC SIGNS THAT CONFLICT WITH THIS WORK SHALL BE COVERED AS DIRECTED BY THE ENGINEER.

DETOUR SIGNS SHALL BE COVERED OR REMOVED WHEN EAST FRONTAGE ROAD AND CTH C IS OPEN TO TRAFFIC AND SIGN DETOUR IS NOT IN USE.

1	DETOUR WEST COUNTY C — M4-8 24" X 12", M3-4 24" X 12", M1-5A 24" X 24"	6	DETOUR SOUTH EAST FRONTAGE ROAD — M4-8 24" X 12", M3-3 24" X 12", M1-95A 24" X 30"
2	DETOUR EAST COUNTY C — M4-8 24" X 12", M3-2 24" X 12", M1-5A 24" X 24"	7	TO DETOUR EAST FRONTAGE ROAD — M04-5 24" X 12", M4-8 24" X 12", M1-95A 24" X 30"
3	END DETOUR COUNTY C — M4-8A 24" X 18", M1-5A 24" X 24"	8	DETOUR ← M4-9L 30" X 24"
4	DETOUR EAST FRONTAGE ROAD — M4-8 24" X 12", M1-95A 24" X 30"	9	DETOUR → M4-9R 30" X 24"
5	DETOUR NORTH EAST FRONTAGE ROAD — M4-8 24" X 12", M3-1 24" X 12", M1-95A 24" X 30"	10	ROAD CLOSED XX MILES AHEAD LOCAL TRAFFIC ONLY — R11-3 60" X 30"
12	ACCESS TO LOCAL BUSINESSES — R10-71 66" X 36"		

A	M06-1 21" X 21"
B	M05-1R 21" X 21"
C	M06-1 21" X 21"
D	M05-1L 21" X 21"
E	M06-1 21" X 21"
F	DETOUR AHEAD W20-2

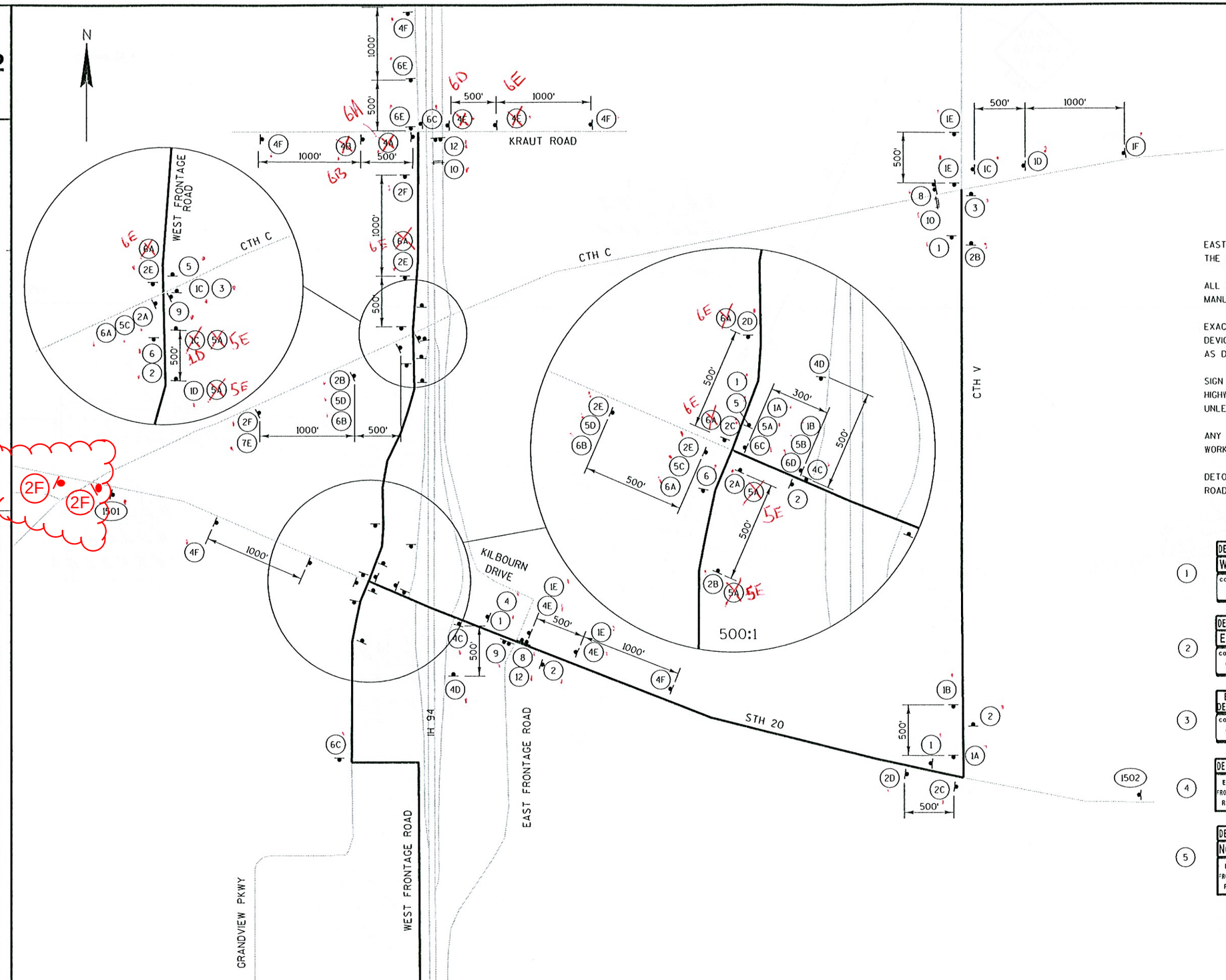

LEGEND

- PROPOSED SIGN MOUNTED ON POST(S)
- SIGN NUMBER
- DETOUR ROUTE
- TRAFFIC CONTROL BARRICADE TYPE III WITH ATTACHED SIGN
- XXX — FIXED MESSAGE SIGN NUMBER (SEE TRAFFIC CONTROL DETAIL: FIXED MESSAGE SIGN)

NOTES

EAST FRONTAGE ROAD AND CTH C ARE CLOSED FOR THE DURATION OF DETOUR

ALL SIGNS SHALL BE PLACED IN ACCORDANCE WITH THE MANUAL ON UNIFORM TRAFFIC CONTROL DEVICES.

EXACT NUMBER, LOCATION AND SPACING OF SIGNS AND DEVICES MAY BE ADJUSTED TO FIT FIELD CONDITIONS AS DIRECTED BY THE ENGINEER.

SIGN LAYOUTS SHALL BE IN ACCORDANCE WITH THE FEDERAL HIGHWAY ADMINISTRATION MANUAL OF STANDARD HIGHWAY SIGNS. UNLESS OTHERWISE PROVIDED IN THE PLAN.

ANY EXISTING TRAFFIC SIGNS THAT CONFLICT WITH THIS WORK SHALL BE COVERED AS DIRECTED BY THE ENGINEER.

DETOUR SIGNS SHALL BE COVERED OR REMOVED WHEN EAST FRONTAGE ROAD AND CTH C IS OPEN TO TRAFFIC AND SIGN DETOUR IS NOT IN USE.

1	DETOUR WEST COUNTY C — M4-8 24" X 12", M3-4 24" X 12", M1-5A 24" X 24"	6	DETOUR SOUTH EAST FRONTAGE ROAD — M4-8 24" X 12", M3-3 24" X 12", M1-95A 24" X 30"	A	M06-1 21" X 21"
2	DETOUR EAST COUNTY C — M4-8 24" X 12", M3-2 24" X 12", M1-5A 24" X 24"	7	TO DETOUR EAST FRONTAGE ROAD — M04-5 24" X 12", M4-8 24" X 12", M1-95A 24" X 30"	B	M05-1R 21" X 21"
3	END DETOUR COUNTY C — M4-8A 24" X 18", M1-5A 24" X 24"	8	DETOUR — M4-9L 30" X 24"	C	M06-1 21" X 21"
4	DETOUR EAST FRONTAGE ROAD — M4-8 24" X 12", M1-95A 24" X 30"	9	DETOUR — M4-9R 30" X 24"	D	M05-1L 21" X 21"
5	DETOUR NORTH EAST FRONTAGE ROAD — M4-8 24" X 12", M3-1 24" X 12", M1-95A 24" X 30"	10	ROAD CLOSED XX MILES AHEAD LOCAL TRAFFIC ONLY — R11-3 60" X 30"	E	M06-1 21" X 21"
12	ACCESS TO LOCAL BUSINESSES — R10-71 66" X 36"	F	DETOUR AHEAD — W20-2		

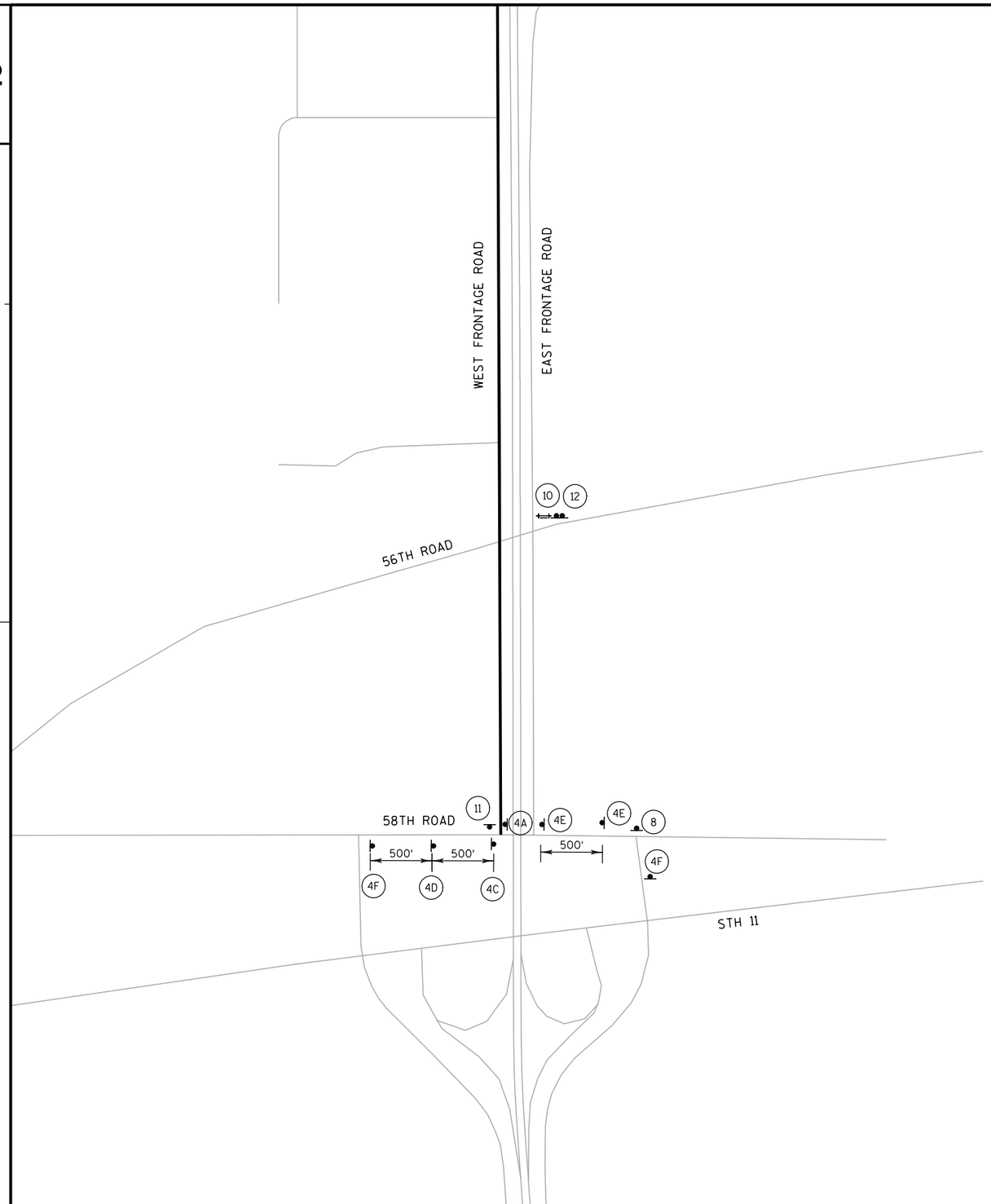

LEGEND

- PROPOSED SIGN MOUNTED ON POST(S)
- SIGN NUMBER
- DETOUR ROUTE
- TRAFFIC CONTROL BARRICADE TYPE III WITH ATTACHED SIGN

NOTES

EAST FRONTAGE ROAD AND CTH C ARE CLOSED FOR THE DURATION OF DETOUR

ALL SIGNS SHALL BE PLACED IN ACCORDANCE WITH THE MANUAL ON UNIFORM TRAFFIC CONTROL DEVICES.

EXACT NUMBER, LOCATION AND SPACING OF SIGNS AND DEVICES MAY BE ADJUSTED TO FIT FIELD CONDITIONS AS DIRECTED BY THE ENGINEER.

SIGN LAYOUTS SHALL BE IN ACCORDANCE WITH THE FEDERAL HIGHWAY ADMINISTRATION MANUAL OF STANDARD HIGHWAY SIGNS. UNLESS OTHERWISE PROVIDED IN THE PLAN.

ANY EXISTING TRAFFIC SIGNS THAT CONFLICT WITH THIS WORK SHALL BE COVERED AS DIRECTED BY THE ENGINEER.

DETOUR SIGNS SHALL BE COVERED OR REMOVED WHEN EAST FRONTAGE ROAD AND CTH C IS OPEN TO TRAFFIC AND SIGN DETOUR IS NOT IN USE.

1 — DETOUR / WEST / COUNTY C — M4-8 24" X 12", M3-4 24" X 12", M1-5A 24" X 24"

2 — DETOUR / EAST / COUNTY C — M4-8 24" X 12", M3-2 24" X 12", M1-5A 24" X 24"

3 — END DETOUR / COUNTY C — M4-8A 24" X 18", M1-5A 24" X 24"

4 — DETOUR / EAST FRONTAGE ROAD — M4-8 24" X 12", M1-95A 24" X 30"

5 — DETOUR / NORTH / EAST FRONTAGE ROAD — M4-8 24" X 12", M3-1 24" X 12", M1-95A 24" X 30"

6 — DETOUR / SOUTH / EAST FRONTAGE ROAD — M4-8 24" X 12", M3-3 24" X 12", M1-95A 24" X 30"

7 — TO / DETOUR / EAST FRONTAGE ROAD — M04-5 24" X 12", M4-8 24" X 12", M1-95A 24" X 30"

8 — DETOUR — M4-9L 30" X 24"

9 — DETOUR — M4-9R 30" X 24"

10 — ROAD CLOSED / XX MILES AHEAD / LOCAL TRAFFIC ONLY — R11-3 60" X 30"

11 — END DETOUR / EAST FRONTAGE ROAD — M4-8A 24" X 18", M1-95A 24" X 30"

12 — ACCESS TO LOCAL BUSINESSES — R10-71 66" X 36"

A — M06-1 21" X 21"

B — M05-1R 21" X 21"

C — M06-1 21" X 21"

D — M05-1L 21" X 21"

E — M06-1 21" X 21"

F — DETOUR AHEAD — W20-2

GENERAL NOTES

ALL SIGNS TO HAVE STANDARD REFLECTIVE SHEETING-REFERENCE: "WISDOT STANDARD SPECIFICATIONS FOR ROAD AND BRIDGE CONSTRUCTION"

ENGINEER WILL FIELD VERIFY THE LOCATION OF SIGNS AFTER INITIAL LAYOUT

SIGNS ON THIS SHEET TO BE PAID FOR AS "FIXED MESSAGE SIGNS"

SIGNS SHALL BE BLACK NON-REFLECTIVE MESSAGE ON ORANGE REFLECTIVE BACKGROUND

ALL SIGNS SHALL HAVE CAPITAL LETTERS: 6" CAPS SHALL BE SERIES "C"

(XXX) SIGN NUMBER NOTED ON TRAFFIC CONTROL PLAN

** CONTRACTOR TO VERIFY DIMENSIONS PRIOR TO FABRICATION

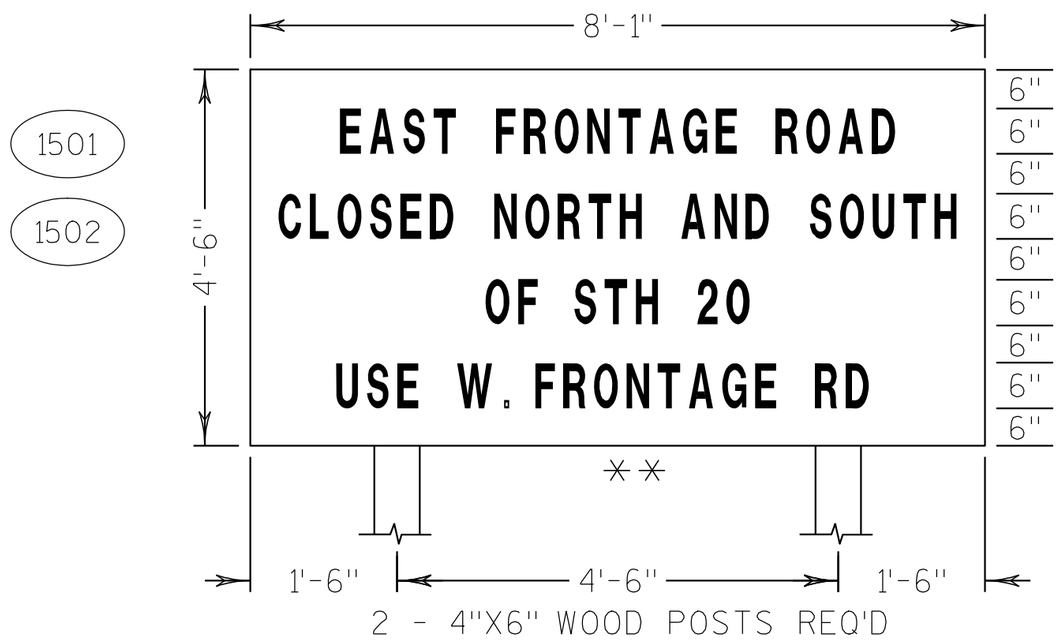

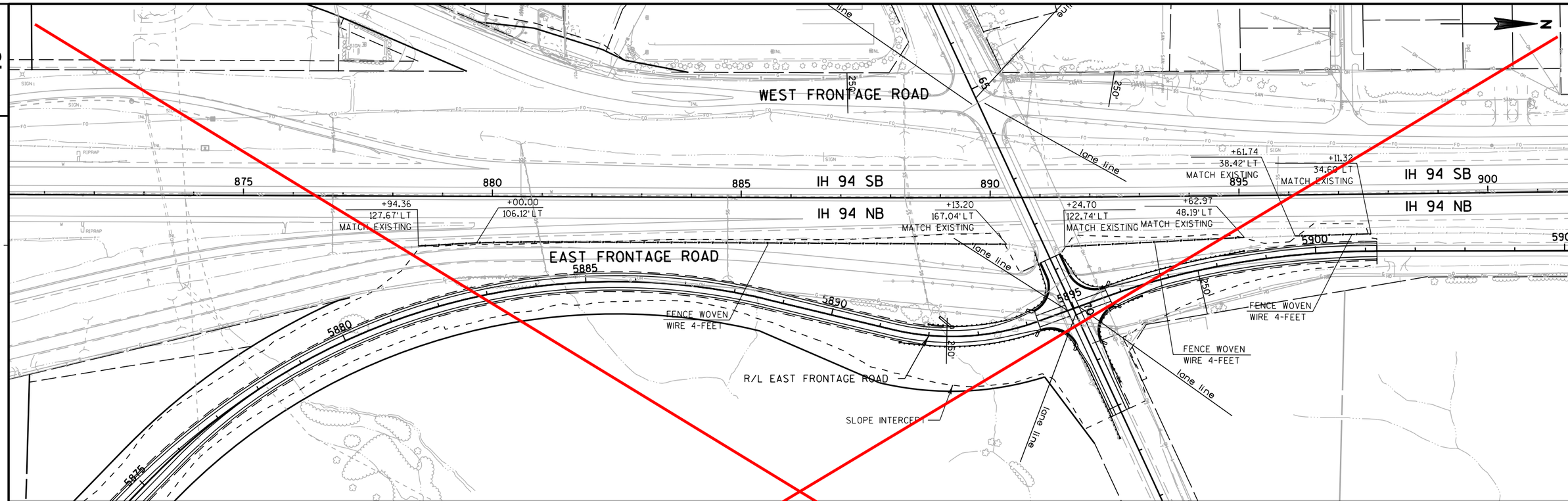

PROJECT NO:1033-02-70	HWY:IH 94	COUNTY:RACINE	FENCING PLAN- EAST FRONTAGE ROAD	See new sheet #71	SHEET 71	E

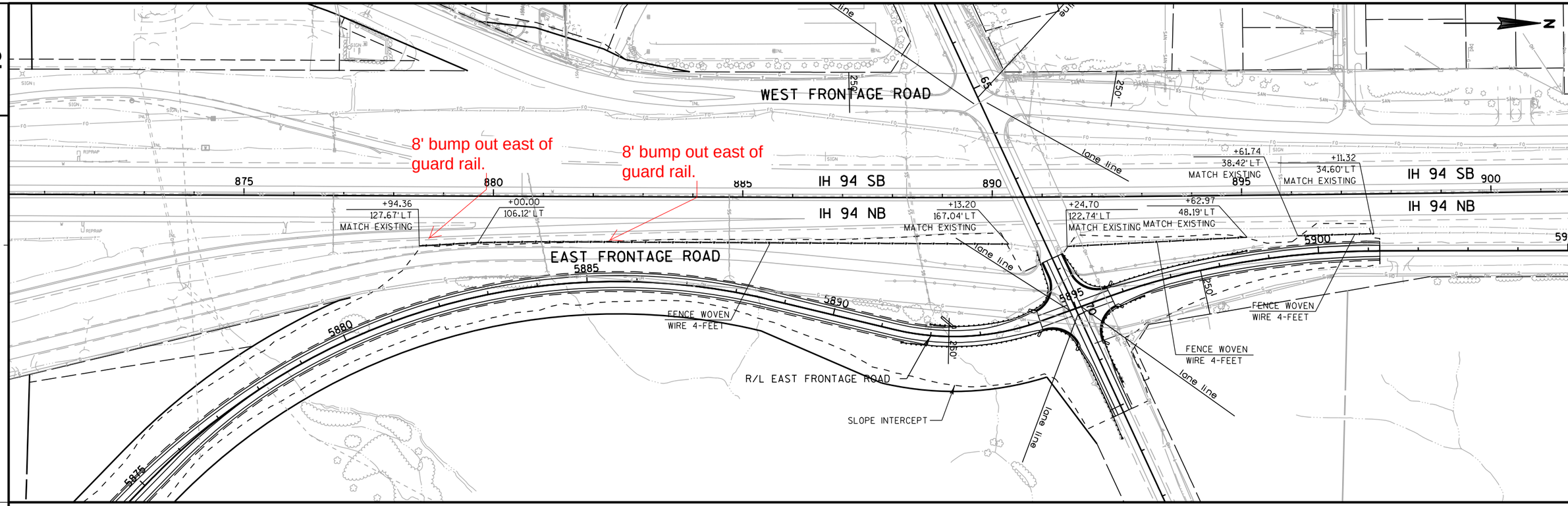

PROJECT NO:1033-02-70	HWY:IH 94	COUNTY:RACINE	FENCING PLAN- EAST FRONTAGE ROAD	SHEET 71	E

CURVE DATA											
CURVE NO.	PI	PI COORDINATES X	PI COORDINATES Y	Δ	D	T	L	E	R	PC	PT
1	839+47.69	594019.87	183216.67	0°19'28"	0°02'00"	486.49	972.97	0.69	171881.34	834+61.20	844+34.17
ES1	3839+49.28	594759.75	183199.84	35°36'31"	6°00'00"	306.67	593.47	48.04	954.93	3836+42.61	3842+36.09
ES2	3851+87.15	594760.09	184457.58	2°59'07"	0°42'58"	208.45	416.81	2.72	8000.00	3849+78.70	3853+95.51
ES3	3856+49.68	594736.12	184919.59	26°28'10"	11°14'04"	119.95	235.61	13.91	510.00	3855+29.74	3857+65.35

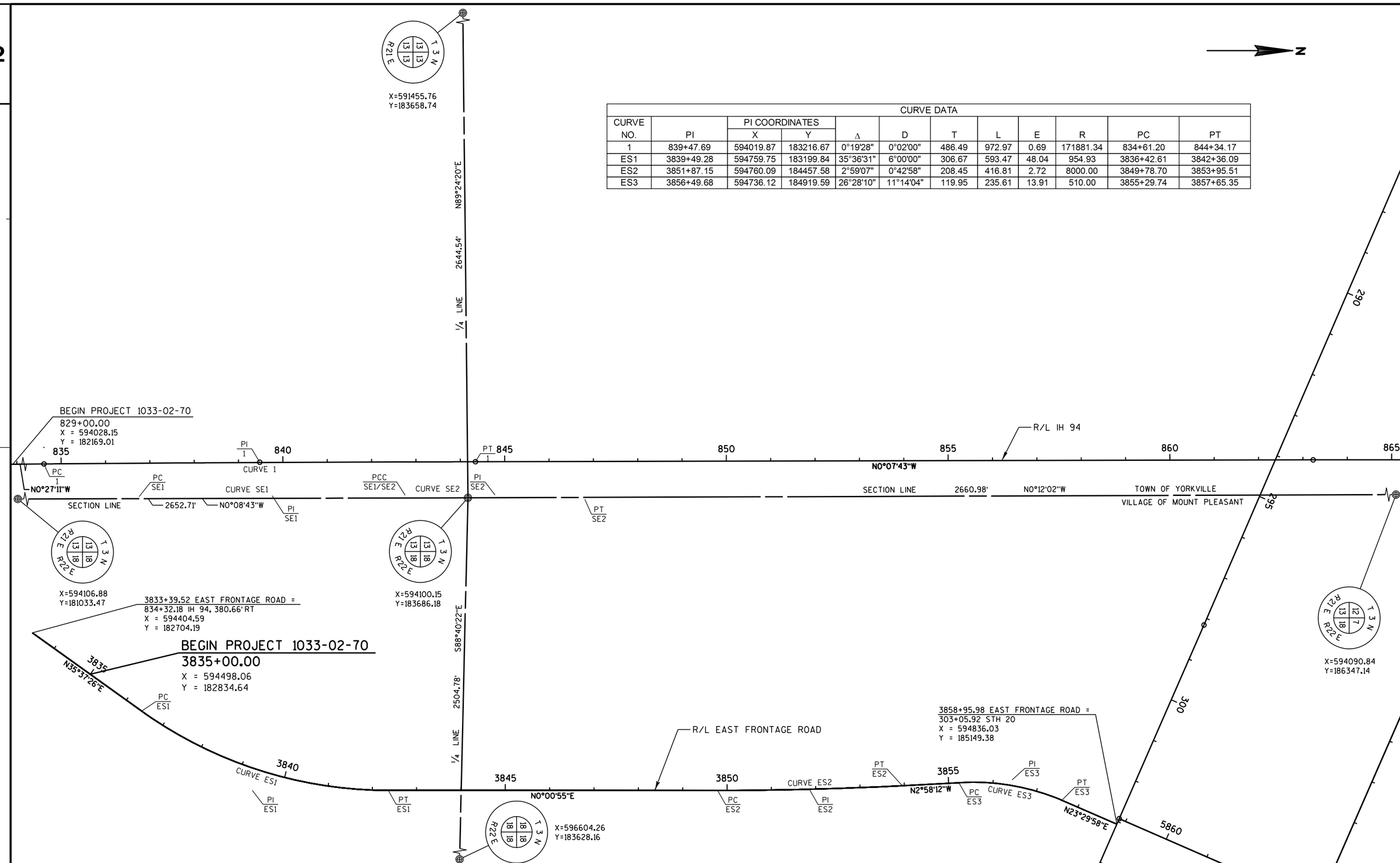

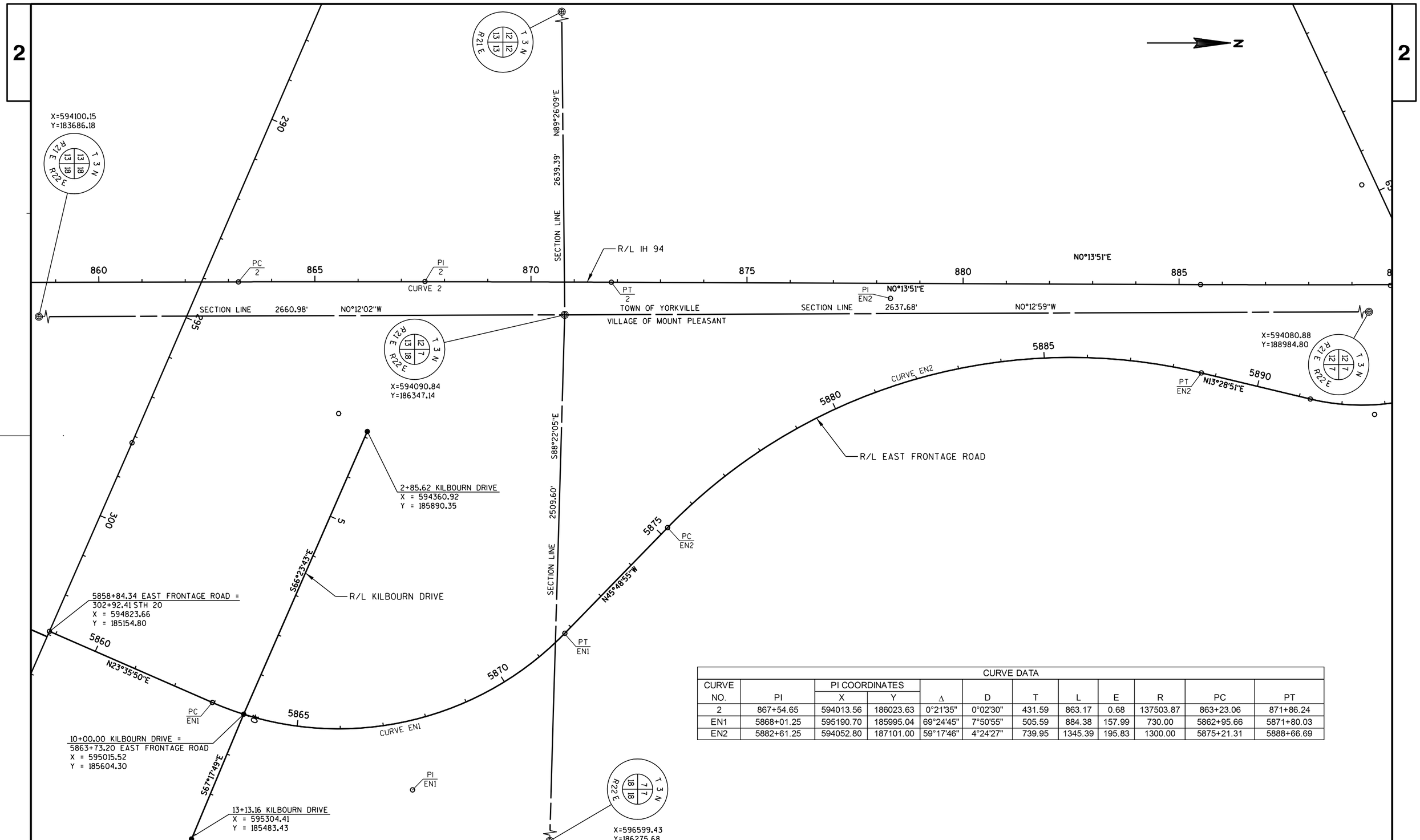

CURVE DATA											
CURVE NO.	PI	PI COORDINATES X	PI COORDINATES Y	Δ	D	T	L	E	R	PC	PT
2	867+54.65	594013.56	186023.63	0°21'35"	0°02'30"	431.59	863.17	0.68	137503.87	863+23.06	871+86.24
EN1	5868+01.25	595190.70	185995.04	69°24'45"	7°50'55"	505.59	884.38	157.99	730.00	5862+95.66	5871+80.03
EN2	5882+61.25	594052.80	187101.00	59°17'46"	4°24'27"	739.95	1345.39	195.83	1300.00	5875+21.31	5888+66.69

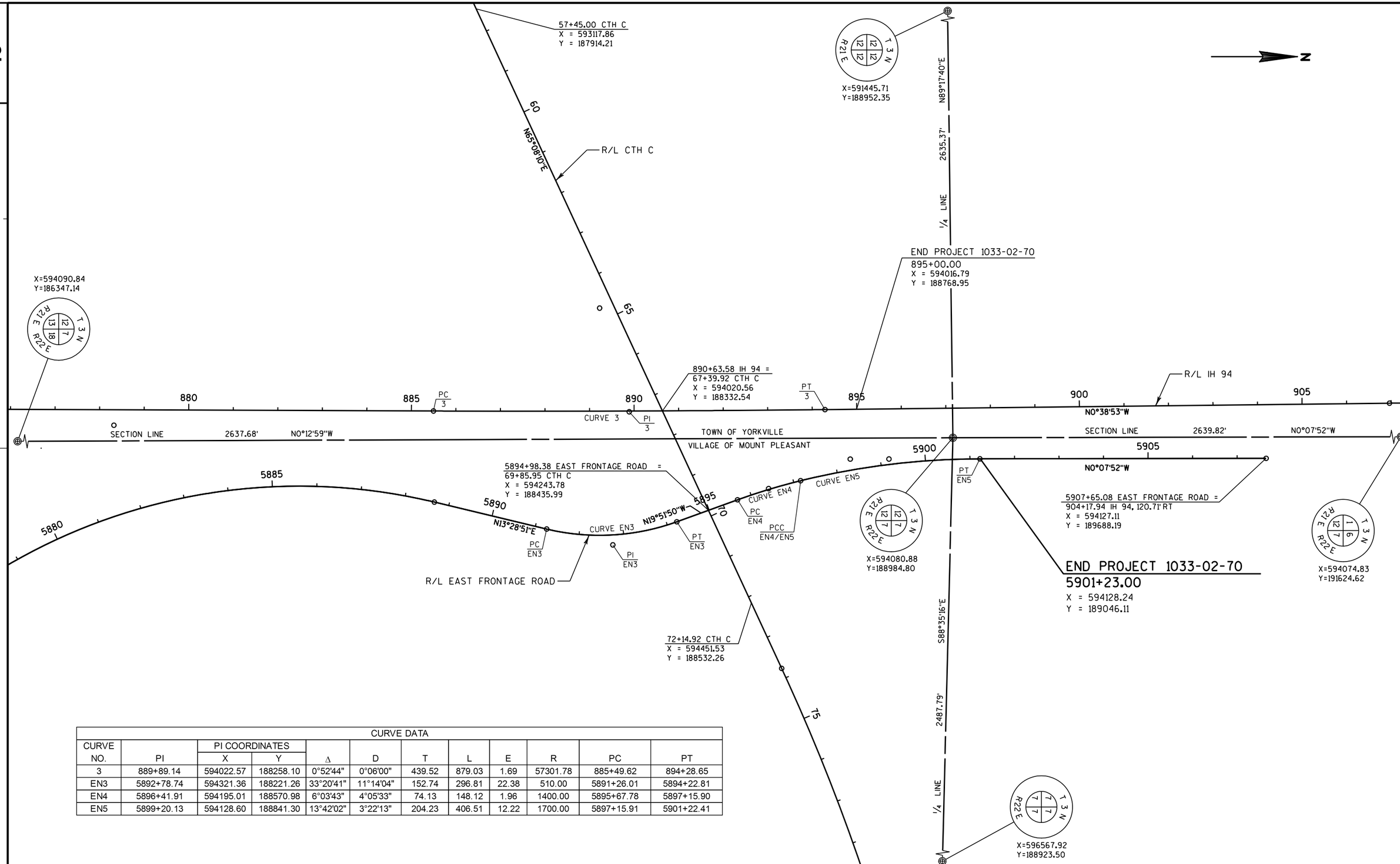

CURVE DATA

CURVE NO.	PI	PI COORDINATES X	PI COORDINATES Y	Δ	D	T	L	E	R	PC	PT
3	889+89.14	594022.57	188258.10	0°52'44"	0°06'00"	439.52	879.03	1.69	57301.78	885+49.62	894+28.65
EN3	5892+78.74	594321.36	188221.26	33°20'41"	11°14'04"	152.74	296.81	22.38	510.00	5891+26.01	5894+22.81
EN4	5896+41.91	594195.01	188570.98	6°03'43"	4°05'33"	74.13	148.12	1.96	1400.00	5895+67.78	5897+15.90
EN5	5899+20.13	594128.60	188841.30	13°42'02"	3°22'13"	204.23	406.51	12.22	1700.00	5897+15.91	5901+22.41

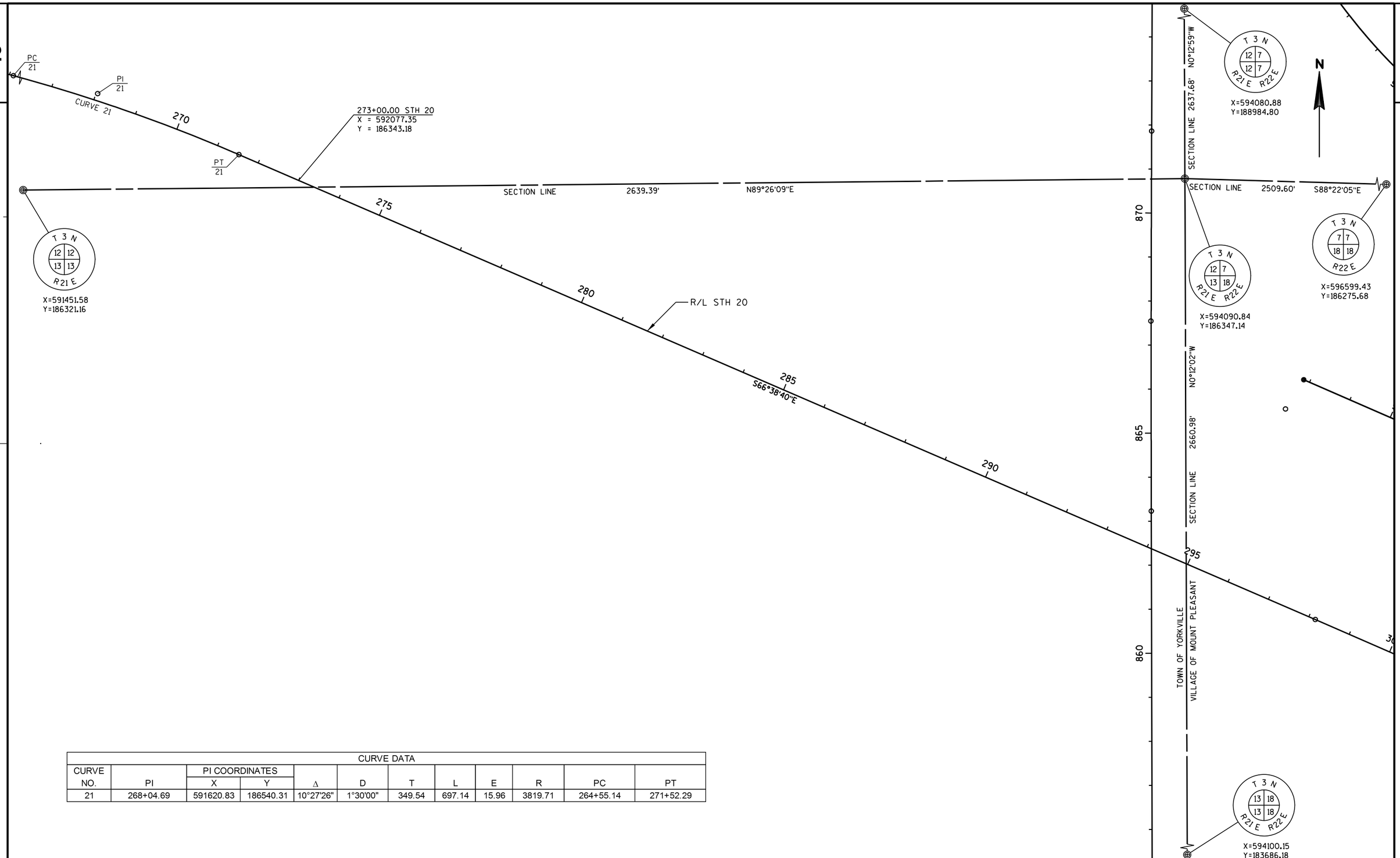

CURVE DATA											
CURVE NO.	PI	PI COORDINATES X	PI COORDINATES Y	Δ	D	T	L	E	R	PC	PT
21	268+04.69	591620.83	186540.31	10°27'26"	1°30'00"	349.54	697.14	15.96	3819.71	264+55.14	271+52.29

PROJECT NO: 1033-02-70	HWY: IH-94/STH 20	COUNTY: RACINE	ALIGNMENT LAYOUT	SHEET 75	E

CURVE DATA											
CURVE NO.	PI	PI COORDINATES X	PI COORDINATES Y	Δ	D	T	L	E	R	PC	PT
22	321+32.17	596509.19	184417.44	10°50'59"	1°00'00"	544.11	1084.97	25.78	5729.62	315+88.05	326+73.03

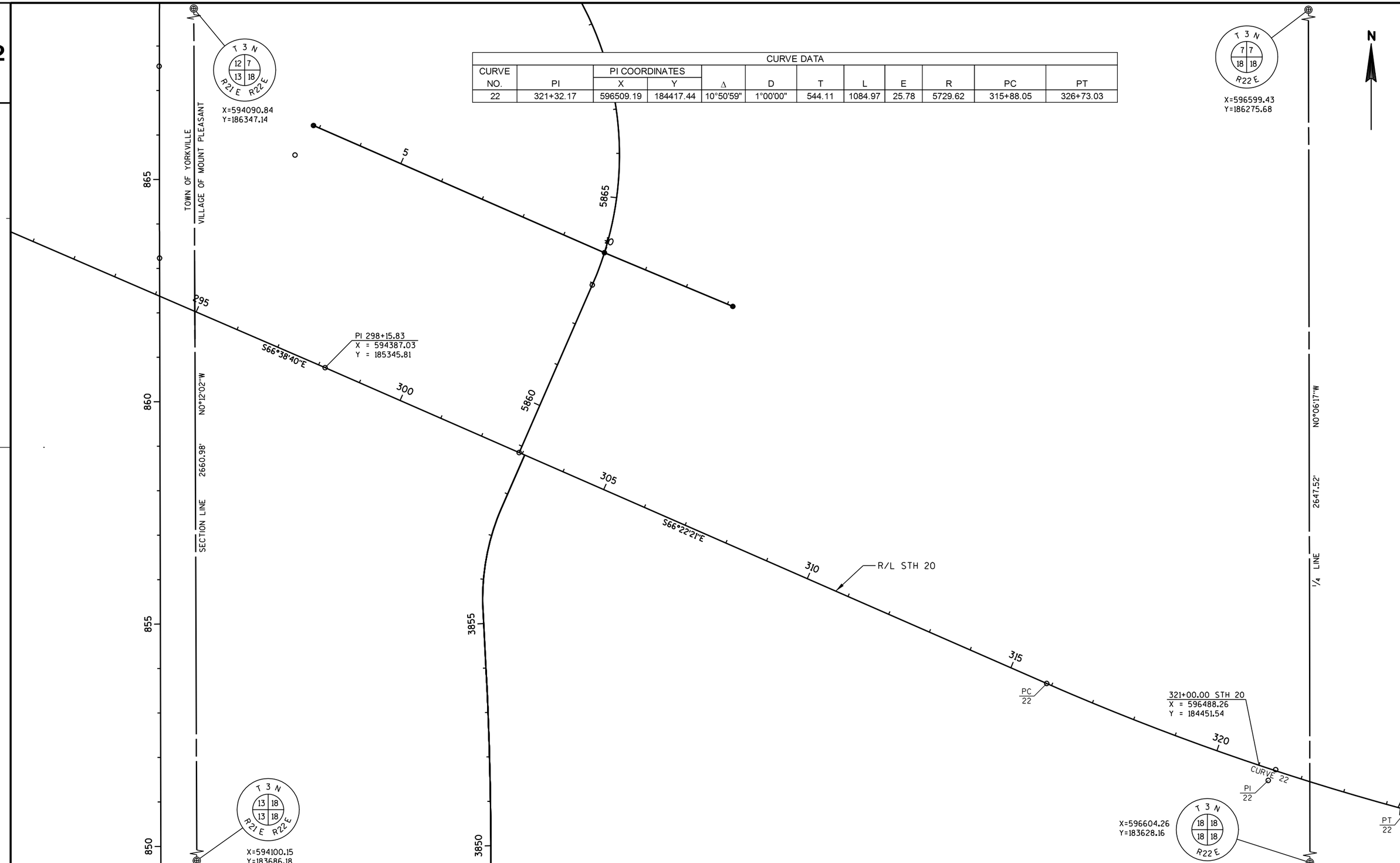

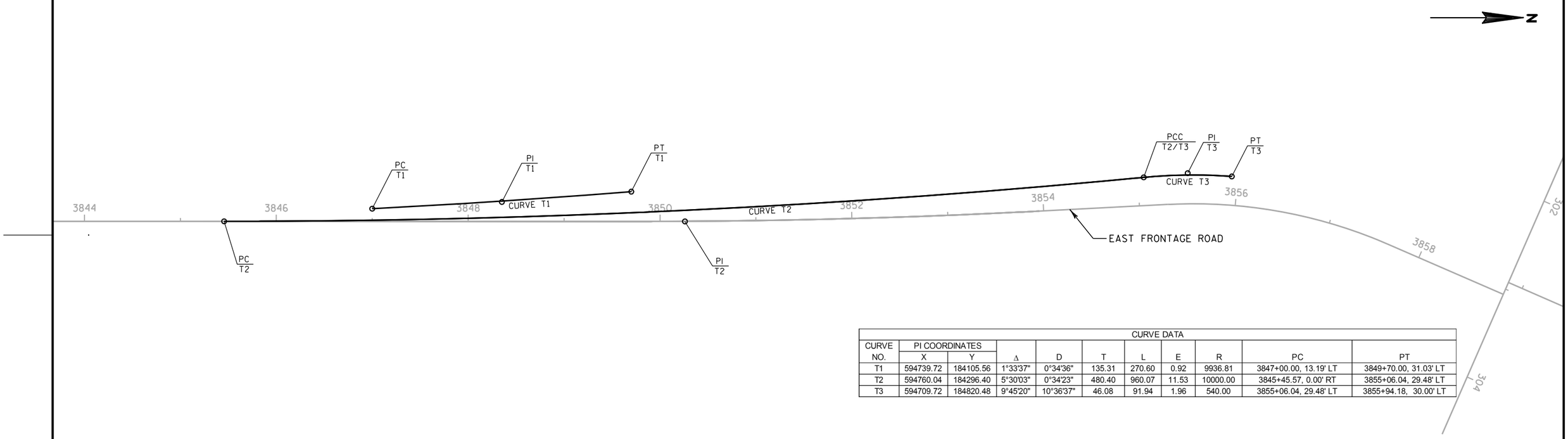

CURVE DATA										
CURVE NO.	PI COORDINATES X	PI COORDINATES Y	Δ	D	T	L	E	R	PC	PT
T1	594739.72	184105.56	1°33'37"	0°34'36"	135.31	270.60	0.92	9936.81	3847+00.00, 13.19' LT	3849+70.00, 31.03' LT
T2	594760.04	184296.40	5°30'03"	0°34'23"	480.40	960.07	11.53	10000.00	3845+45.57, 0.00' RT	3855+06.04, 29.48' LT
T3	594709.72	184820.48	9°45'20"	10°36'37"	46.08	91.94	1.96	540.00	3855+06.04, 29.48' LT	3855+94.18, 30.00' LT

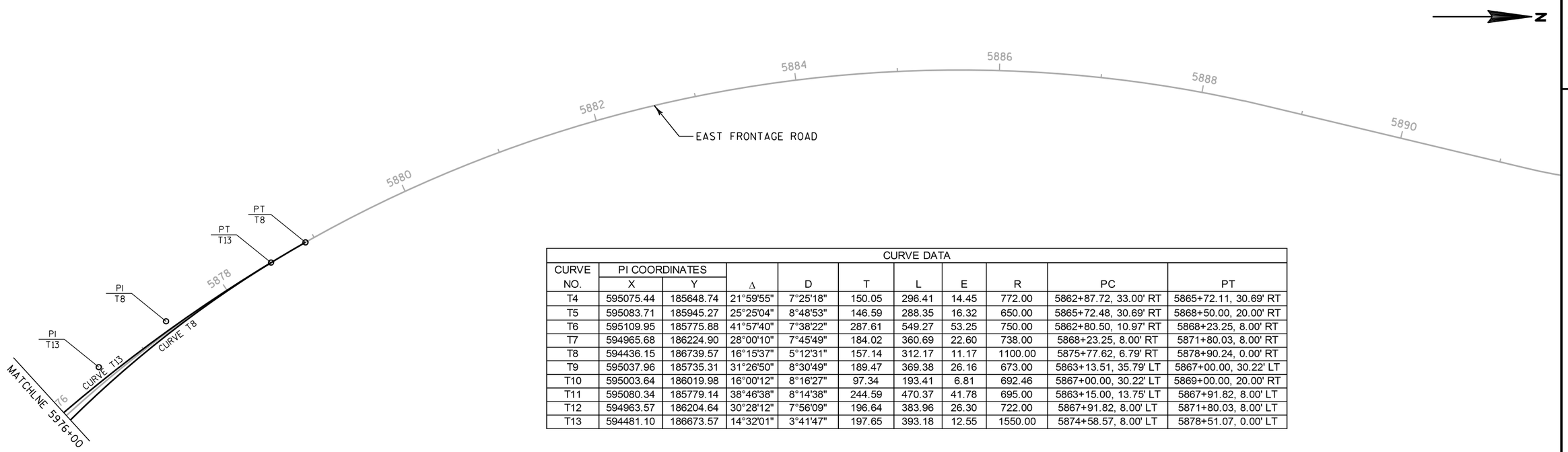

CURVE DATA										
CURVE NO.	PI COORDINATES X	PI COORDINATES Y	Δ	D	T	L	E	R	PC	PT
T4	595075.44	185648.74	21°59'55"	7°25'18"	150.05	296.41	14.45	772.00	5862+87.72, 33.00' RT	5865+72.11, 30.69' RT
T5	595083.71	185945.27	25°25'04"	8°48'53"	146.59	288.35	16.32	650.00	5865+72.48, 30.69' RT	5868+50.00, 20.00' RT
T6	595109.95	185775.88	41°57'40"	7°38'22"	287.61	549.27	53.25	750.00	5862+80.50, 10.97' RT	5868+23.25, 8.00' RT
T7	594965.68	186224.90	28°00'10"	7°45'49"	184.02	360.69	22.60	738.00	5868+23.25, 8.00' RT	5871+80.03, 8.00' RT
T8	594436.15	186739.57	16°15'37"	5°12'31"	157.14	312.17	11.17	1100.00	5875+77.62, 6.79' RT	5878+90.24, 0.00' RT
T9	595037.96	185735.31	31°26'50"	8°30'49"	189.47	369.38	26.16	673.00	5863+13.51, 35.79' LT	5867+00.00, 30.22' LT
T10	595003.64	186019.98	16°00'12"	8°16'27"	97.34	193.41	6.81	692.46	5867+00.00, 30.22' LT	5869+00.00, 20.00' RT
T11	595080.34	185779.14	38°46'38"	8°14'38"	244.59	470.37	41.78	695.00	5863+15.00, 13.75' LT	5867+91.82, 8.00' LT
T12	594963.57	186204.64	30°28'12"	7°56'09"	196.64	383.96	26.30	722.00	5867+91.82, 8.00' LT	5871+80.03, 8.00' LT
T13	594481.10	186673.57	14°32'01"	3°41'47"	197.65	393.18	12.55	1550.00	5874+58.57, 8.00' LT	5878+51.07, 0.00' LT

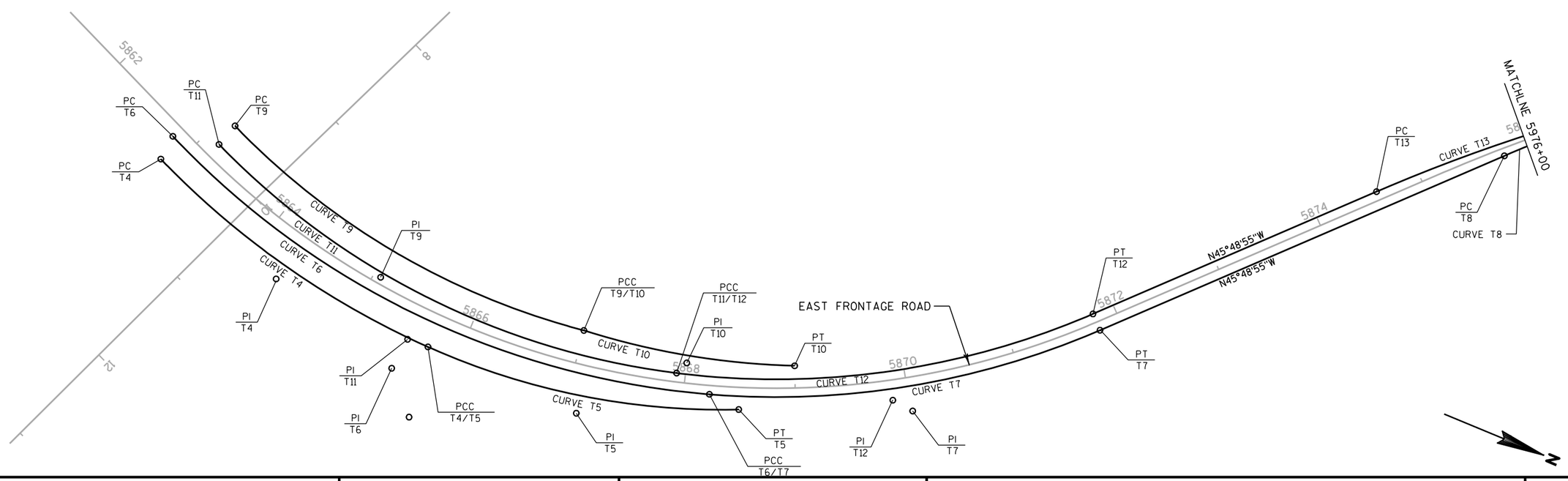

PROJECT NO:1033-02-70	HWY:IH 94/STH 20	COUNTY:RACINE	ALIGNMENT LAYOUT - TRANSITIONAL CURVES	SHEET 78	E

EAST FRONTAGE ROAD

SUPERELEVATION DATA	STATION	RATE	
		LEFT	RIGHT
END NORMAL CROWN	3834+25	2.0%	-2.0%
REMOVE CROWN	3835+00	FLAT	FLAT
SUPER EQUALS NORMAL CROWN	3835+75	-2.0%	2.0%
BEGIN FULL SUPER	3836+75	-5.0%	5.0%
END FULL SUPER	3842+00	-5.0%	5.0%
SUPER EQUALS NORMAL CROWN	3842+75	-2.0%	2.0%
REMOVE CROWN	3843+00	-2.0%	FLAT
BEGIN NORMAL CROWN	3843+50	-2.0%	-2.0%
END NORMAL CROWN	3854+25	-2.0%	-2.0%
REMOVE CROWN	3854+88	FLAT	-2.0%
SUPER EQUALS NORMAL CROWN	3855+00	2.0%	-2.0%
SUPER EQUALS NORMAL CROWN	3857+75	2.0%	-2.0%
REMOVE CROWN	3858+00	FLAT	-2.0%
WARP TO INTERSECTION	3858+50	-2.0%	-2.0%
END NORMAL CROWN	5862+75	-2.0%	-2.0%
REMOVE CROWN	5863+25	-2.0%	FLAT
SUPER EQUALS NORMAL CROWN	5863+50	-2.0%	2.0%
BEGIN FULL SUPER	5864+00	-3.9%	3.9%
END FULL SUPER	5871+50	-3.9%	3.9%
SUPER EQUALS NORMAL CROWN	5872+00	-2.0%	2.0%
REMOVE CROWN	5872+25	-2.0%	FLAT
BEGIN NORMAL CROWN	5872+75	-2.0%	-2.0%
END NORMAL CROWN	5874+25	-2.0%	-2.0%
REMOVE CROWN	5874+50	FLAT	-2.0%
SUPER EQUALS NORMAL CROWN	5875+00	2.0%	-2.0%
BEGIN FULL SUPER	5875+50	4.3%	-4.3%
END FULL SUPER	5888+25	4.3%	-4.3%
SUPER EQUALS NORMAL CROWN	5888+75	2.0%	-2.0%
REMOVE CROWN	5889+25	FLAT	-2.0%
BEGIN NORMAL CROWN	5889+75	-2.0%	-2.0%
END NORMAL CROWN	5890+00	-2.0%	-2.0%
REMOVE CROWN	5890+50	-2.0%	FLAT
SUPER EQUALS NORMAL CROWN	5890+75	-2.0%	2.0%
BEGIN FULL SUPER	5891+75	-6.0%	6.0%
END FULL SUPER	5893+75	-6.0%	6.0%
BEGIN REVERSE FULL SUPER	5896+25	4.1%	-4.1%
END REVERSE FULL SUPER	5897+16	4.1%	-4.1%
SUPER TRANSITION	5897+25	3.7%	-3.7%
SUPER TRANSITION	5900+50	3.7%	-3.7%
SUPER EQUALS NORMAL CROWN	5901+00	2.0%	-2.0%
REMOVE CROWN	5901+25	FLAT	-2.0%
BEGIN NORMAL CROWN	5901+75	-2.0%	-2.0%

The most current Right of Way information should be viewed in DTD View using the Real Estate Project ID. The Plat information contained in this AsBuilt Plan may not be the final records.

STATE OF WISCONSIN
DEPARTMENT OF TRANSPORTATION

TRANSPORTATION PROJECT PLAT TITLE SHEET

PROJECT NO. 1033-02-20
INTERSTATE 94
STH 20 INTERCHANGE
RACINE COUNTY

CONVENTIONAL ABBREVIATIONS

ACCESS POINT	AP	RELEASE OF RIGHTS	ROR
ACCESS RIGHTS	AR	REMAINING	REM.
ACRES	AC.	RIGHT-OF-WAY	R/W
AND OTHERS	ET.AL.	SECTION	SEC.
CENTERLINE	C/L	STATION	STA.
CERTIFIED SURVEY MAP	CSM	TEMPORARY LIMITED EASEMENT	TLE
CORNER	COR.	VOLUME	V.
CONVEYANCE OF RIGHTS	CR		
DOCUMENT	DOC.		
EASEMENT	EASE.		
LAND CONTRACT	LC		
MONUMENT	MON.		
PAGE	P.		
PERMANENT LIMITED EASEMENT	PLE		
PROPERTY LINE	PL		
RECORDED AS	(100')		
REFERENCE LINE	R/L		

CURVE DATA

LONG CHORD	LCH
LONG CHORD BEARING	LCB
RADIUS	R
DEGREE OF CURVE	D
CENTRAL ANGLE OR DELTA	DELTA
LENGTH OF CURVE	L
TANGENT	TAN

CONVENTIONAL SYMBOLS

FOUND IRON PIPE/PIN	LP (1" UNLESS NOTED)
R/W MONUMENT	(SET)
R/W STANDARD	(SET)
SIGN	SIGN
SECTION CORNER MONUMENT	
SECTION CORNER SYMBOL	
FEE (HATCH VARIES)	
TEMPORARY LIMITED EASEMENT	
PERMANENT LIMITED EASEMENT	
R/W BOUNDARY POINT	RWB20
PARCEL NUMBER	02
SIGN NUMBER (OFF PREMISE)	1
BUILDING	
PROPOSED R/W LINE	
EXISTING H.E. LINE	
PROPERTY LINE	
LOT & TIE LINES	
SLOPE INTERCEPTS	
CORPORATE LIMITS	
NO ACCESS (BY PREVIOUS ACQUISITION/CONTROL)	
NO ACCESS (BY ACQUISTION)	
NO ACCESS (BY STATUTORY AUTHORITY)	
SECTION LINE	
QUARTER LINE	
SIXTEENTH LINE	
EXISTING CENTERLINE	
PROPOSED REFERENCE LINE	
PARALLEL OFFSET	

CONVENTIONAL UTILITY SYMBOLS

WATER	W
GAS	G
TELEPHONE	T
OVERHEAD TRANSMISSION LINES	OH
ELECTRIC	E
CABLE TELEVISION	TV
FIBER OPTIC	FO
SANITARY SEWER	SAN
STORM SEWER	SS

	NON COMPENSABLE	COMPENSABLE
POWER POLE		
TELEPHONE POLE		
TELEPHONE PEDESTAL		
ELECTRIC TOWER		

END PROJECT 1033-02-20

T-4-N T-4-N

R-21-E R-22-E

T-3-N T-3-N

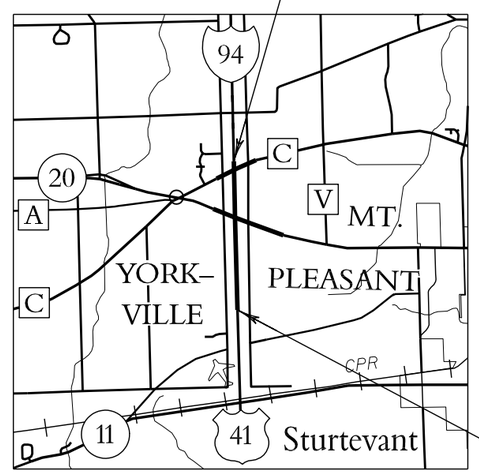

BEGIN PROJECT 1033-02-20

N

YORKVILLE MT. PLEASANT
R-21-E R-22-E

RACINE COUNTY

LAYOUT
SCALE 0 1 MILE

THE NOTES, CONVENTIONAL SYMBOLS, AND VARIOUS ABBREVIATIONS ARE ASSOCIATED WITH EACH TRANSPORTATION PROJECT PLAT OF PROJECT 1033-02-20.

NOTES:

COORDINATES AND BEARINGS SHOWN ON THIS PLAT ARE REFERENCED TO THE WISCONSIN COUNTY COORDINATE SYSTEM, RACINE COUNTY ZONE, NAD83 (97) ADJUSTMENT AND ARE REFERENCED TO GPS HARN POINTS YORKVILLE EAST, RAYMOND SOUTH, AND PARIS EAST. THE COORDINATES SHOWN ARE GRID COORDINATES AND ARE TO BE USED AS GRID OR GROUND VALUES ON THIS PLAT. RIGHT-OF-WAY MONUMENTS ARE TYPE 2 AND WILL BE PLACED PRIOR TO THE COMPLETION OF THE PROJECT, BY SE REGION DOT SURVEY.

RIGHT-OF-WAY BOUNDARIES ARE DEFINED WITH COURSES OF THE PERIMETER OF THE HIGHWAY LANDS REFERENCED TO THE U.S. PUBLIC LAND SURVEY SYSTEM OR OTHER "SURVEYS OF PUBLIC RECORD".

PROPERTY LINES SHOWN ON THIS PLAT ARE DRAWN FROM DATA DERIVED FROM MAPS AND DOCUMENTS OF PUBLIC RECORD AND/OR EXISTING OCCUPATIONAL LINES. THIS PLAT MAY NOT BE A TRUE REPRESENTATION OF EXISTING PROPERTY LINES, EXCLUDING RIGHT-OF-WAY LINES, AND SHOULD NOT BE USED AS A SUBSTITUTE FOR AN ACCURATE FIELD SURVEY.

A **TEMPORARY LIMITED EASEMENT** (TLE) IS A RIGHT FOR CONSTRUCTION PURPOSES, AS DEFINED HEREIN, INCLUDING THE RIGHT TO OPERATE NECESSARY EQUIPMENT THEREON AND THE RIGHT OF INGRESS AND EGRESS, AS LONG AS REQUIRED FOR SUCH PUBLIC PURPOSE, INCLUDING THE RIGHT TO PRESERVE, PROTECT, REMOVE, OR PLANT THEREON ANY VEGETATION THAT THE HIGHWAY AUTHORITIES MAY DEEM NECESSARY OR DESIRABLE. ALL TLE EASEMENTS ARE TO TERMINATE UPON THE COMPLETION OF THIS PROJECT OR ON THE DAY THE HIGHWAY IS OPEN TO THE TRAVELING PUBLIC, WHICHEVER IS LATER.

A **PERMANENT LIMITED EASEMENT** (PLE) IS A RIGHT FOR CONSTRUCTION AND MAINTENANCE PURPOSES, AS DEFINED HEREIN, INCLUDING THE RIGHT TO OPERATE NECESSARY EQUIPMENT THEREON AND THE RIGHT OF INGRESS AND EGRESS, AS LONG AS REQUIRED FOR SUCH PUBLIC PURPOSE, INCLUDING THE RIGHT TO PRESERVE, PROTECT, REMOVE, OR PLANT THEREON ANY VEGETATION THAT THE HIGHWAY AUTHORITIES MAY DEEM NECESSARY OR DESIRABLE. BUT WITHOUT PREJUDICE TO THE OWNER'S RIGHT TO MAKE OR CONSTRUCT IMPROVEMENT ON SAID LANDS OR TO FLATTEN THE SLOPES, PROVIDING SAID ACTIVITIES WILL NOT IMPAIR OR OTHERWISE ADVERSELY AFFECT THE HIGHWAY FACILITIES.

TPP NUMBER 1033-02-20-4.01
SHEET 2 OF 2

DOC # 2202146
Recorded
Feb. 18, 2009 AT 01:23PM
VOL. 1 P. 73

James A. Ladwig

JAMES A LADWIG
RACINE COUNTY
REGISTER OF DEEDS
Fee Receipt: $25.00

THIS IS A COPY, THE ORIGINAL DOCUMENT IS AT THE RACINE COUNTY REGISTER OF DEEDS

TRANSPORTATION PROJECT PLAT NO: 1033-02-20 - 4.01

THAT PART OF THE NW1/4 OF THE SW1/4, SECTION 18, TOWN 3 NORTH, RANGE 22 EAST, VILLAGE OF MT. PLEASANT, RACINE COUNTY, WISCONSIN.

RELOCATION ORDER IH-94/STH 20 RACINE COUNTY

TO PROPERLY ESTABLISH, LAY OUT, WIDEN, ENLARGE, EXTEND, CONSTRUCT, RECONSTRUCT, IMPROVE, OR MAINTAIN A PORTION OF THE HIGHWAY DESIGNATED ABOVE, THE STATE OF WISCONSIN DEPARTMENT OF TRANSPORTATION DEEMS IT NECESSARY TO RELOCATE OR CHANGE SAID HIGHWAY AND ACQUIRE CERTAIN LANDS AND INTERESTS OR RIGHTS IN LANDS FOR THE ABOVE PROJECT.

TO EFFECT THIS CHANGE, PURSUANT TO AUTHORITY GRANTED UNDER SECTION 84.02 (3) AND 84.09, WISCONSIN STATUTES, THE DEPARTMENT OF TRANSPORTATION HEREBY ORDERS THAT:
1. THAT PORTION OF SAID HIGHWAY AS SHOWN ON THIS PLAT IS LAID OUT AND ESTABLISHED TO THE LINES AND WIDTHS AS SO SHOWN FOR THE ABOVE PROJECT.
2. THE LANDS OR INTERESTS OR RIGHTS IN LANDS AS SHOWN ON THIS PLAT ARE REQUIRED BY THE DEPARTMENT FOR THE ABOVE PROJECT AND SHALL BE ACQUIRED IN THE NAME OF THE STATE OF WISCONSIN, PURSUANT TO THE PROVISIONS OF SECTION 84.09 (1) OR (2), WISCONSIN STATUTES.

SCHEDULE OF LANDS & INTERESTS REQUIRED		OWNERS NAMES ARE SHOWN FOR REFERENCE PURPOSES ONLY AND ARE SUBJECT TO CHANGE PRIOR TO THE TRANSFER OF LAND INTEREST TO THE DEPARTMENT.				
PARCEL NUMBER	OWNER	INTEREST REQUIRED	R/W REQUIRED ACRES			T.L.E. TEMP. ACRES
			NEW	EXISTING	TOTAL	
1	MLG/HWY 20	Fee AR	0.320	0.000	0.320	0.000
2	WOODSTOCK GROUP	Fee AR	0.122	0.000	0.122	0.000
100	WE-ENERGIES ELECTRIC	ROR	- -	- -	- -	- -
101	WE-ENERGIES GAS	ROR	- -	- -	- -	- -
103	AT&T WISCONSIN	ROR	- -	- -	- -	- -
108	TOWN OF YORKVILLE	ROR	- -	- -	- -	- -

HIGHWAY	BASIS OF EXISTING RIGHT-OF-WAY	WIDTH	YEAR
I-94	I 101-1(3)	VARIES	1956
EAST FRONTAGE ROAD	1032-06-29	VARIES	1989

I-94
PI STA 839+47.69
Y 183216.67
X 594019.87
PC STA 834+61.20
PT STA 844+34.17
DELTA 0°19'28"
D 0°02'00"
L 972.97
R 171881.34
LCH 972.97
LCB N 00°17'27" W

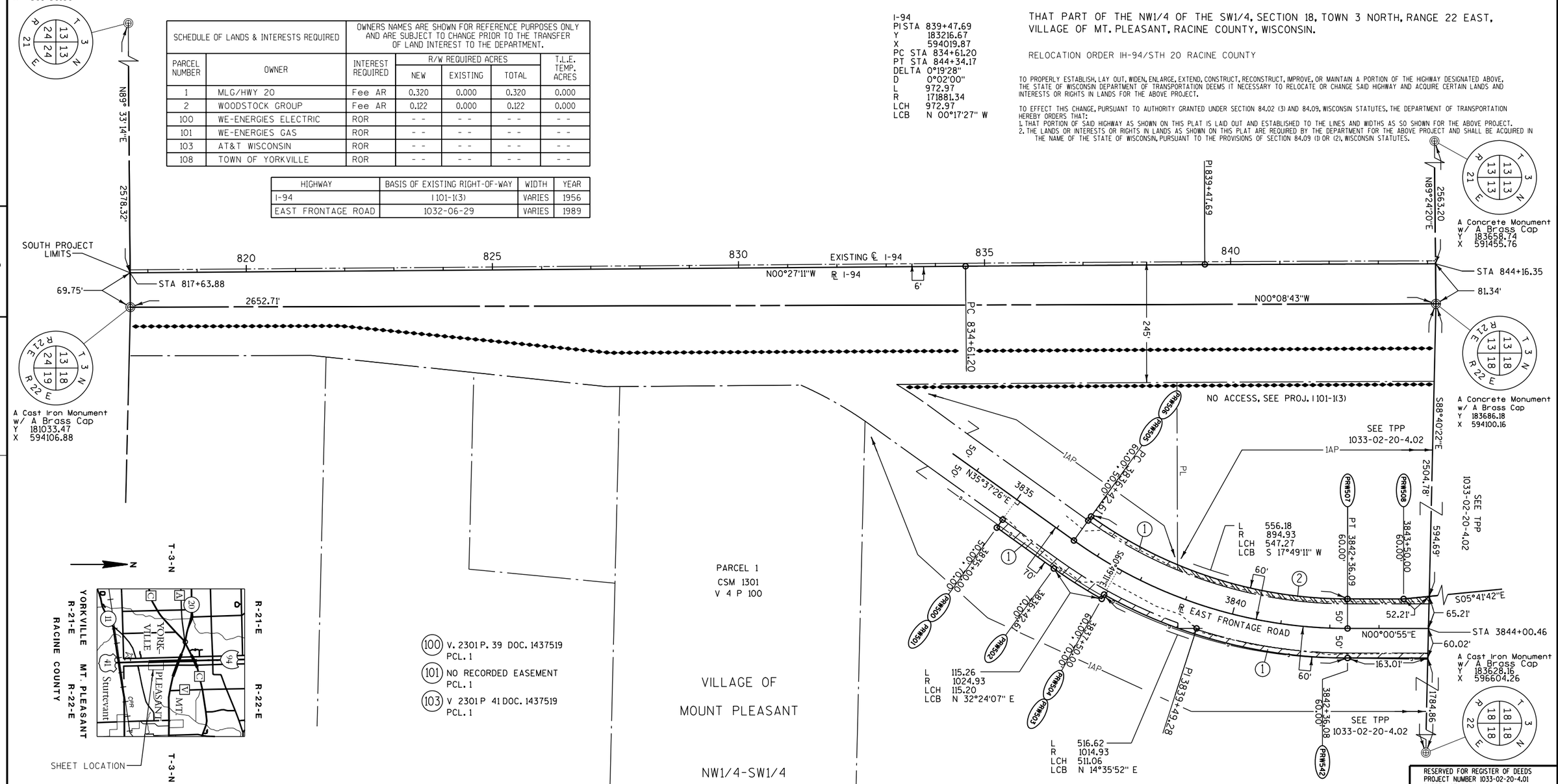

(100) V. 2301 P. 39 DOC. 1437519 PCL. 1

(101) NO RECORDED EASEMENT PCL. 1

(103) V 2301 P 41 DOC. 1437519 PCL. 1

EAST FRONTAGE ROAD
PI STA 3839+49.28
Y 183199.84
X 594759.75
PC STA 3836+42.61
PT STA 3842+36.09
DELTA -35°36'31"
D 06°00'00"
L 593.47
R 954.93
LCH 583.97
LCB N 17°49'10" E

I HEREBY CERTIFY THAT THIS PLAT MEETS ALL REQUIREMENTS OF SECTION 84.095, WISCONSIN STATUTES. THIS PLAT IS APPROVED FOR THE WISCONSIN DEPARTMENT OF TRANSPORTATION.

DATE: 2/10/09 Robert D. Duffek
Name
Title

THIS PLAT WAS PREPARED BY OR UNDER THE DIRECTION OF:

DATE: 2/10/09 Paul Krause
Name

RESERVED FOR REGISTER OF DEEDS
PROJECT NUMBER 1033-02-20-4.01
SHEET 1 OF 2
AMENDMENT NO:

DOC # 2202146
Recorded
Feb. 16, 2009 AT 01:23PM
VOL. 1 P. 72
James A. Ladwig
JAMES A LADWIG
RACINE COUNTY
REGISTER OF DEEDS
Fee Amount: 125.00

NOTES:

COORDINATES AND BEARINGS SHOWN ON THIS PLAT ARE REFERENCED TO THE WISCONSIN COUNTY COORDINATE SYSTEM, RACINE COUNTY ZONE, NAD83 (97) ADJUSTMENT AND ARE REFERENCED TO GPS HARN POINTS YORKVILLE EAST, RAYMOND SOUTH, AND PARIS EAST. THE COORDINATES SHOWN ARE GRID COORDINATES AND ARE TO BE USED AS GRID OR GROUND VALUES ON THIS PLAT.

RIGHT-OF-WAY MONUMENTS ARE TYPE 2 (TYPICAL ¾" REBAR) AND WILL BE PLACED PRIOR TO THE COMPLETION OF THE PROJECT, BY SE REGION DOT SURVEY.

TRANSPORTATION PROJECT PLAT NO: 1033-02-20 - 4.02

THAT PART OF LOT 1 OF CSM 1983, LOT 1 OF CSM 1378, LOTS 1 AND 2 OF CSM 1627, PARCELS 1 AND 2 OF CSM 1818, AND THAT PART OF THE NW1/4 OF THE NW1/4 AND THE SW1/4 OF THE NW1/4, SECTION 18, TOWN 3 NORTH, RANGE 22 EAST, VILLAGE OF MT. PLEASANT, RACINE COUNTY, WISCONSIN

RELOCATION ORDER IH-94/STH 20 RACINE COUNTY

TO PROPERLY ESTABLISH, LAY OUT, WIDEN, ENLARGE, EXTEND, CONSTRUCT, RECONSTRUCT, IMPROVE, OR MAINTAIN A PORTION OF THE HIGHWAY DESIGNATED ABOVE, THE STATE OF WISCONSIN DEPARTMENT OF TRANSPORTATION DEEMS IT NECESSARY TO RELOCATE OR CHANGE SAID HIGHWAY AND ACQUIRE CERTAIN LANDS AND INTERESTS OR RIGHTS IN LANDS FOR THE ABOVE PROJECT.

TO EFFECT THIS CHANGE, PURSUANT TO AUTHORITY GRANTED UNDER SECTION 84.02 (3) AND 84.09, WISCONSIN STATUTES, THE DEPARTMENT OF TRANSPORTATION HEREBY ORDERS THAT:
1. THAT PORTION OF SAID HIGHWAY AS SHOWN ON THIS PLAT IS LAID OUT AND ESTABLISHED TO THE LINES AND WIDTHS AS SO SHOWN FOR THE ABOVE PROJECT.
2. THE LANDS OR INTERESTS OR RIGHTS IN LANDS AS SHOWN ON THIS PLAT ARE REQUIRED BY THE DEPARTMENT FOR THE ABOVE PROJECT AND SHALL BE ACQUIRED IN THE NAME OF THE STATE OF WISCONSIN, PURSUANT TO THE PROVISIONS OF SECTION 84.09 (1) OR (2), WISCONSIN STATUTES.

FOR ADDITIONAL INFORMATION REFER TO THE TITLE SHEET, RECORDED AS SHEET 2 OF 2 OF DOCUMENT #2202146, OF TRANSPORTATION PROJECT PLATS IN THE RACINE COUNTY REGISTER OF DEEDS.

HIGHWAY	BASIS OF EXISTING RIGHT-OF-WAY	WIDTH	YEAR
I-94	I 101-1(3)	VARIES	1956
I-94	DJ 2483	VARIES	1923
STH 20	F065-1(6)	VARIES	1963
EAST FRONTAGE ROAD	1032-06-29	VARIES	1989
EAST FRONTAGE ROAD	CSM 1378	60'	1988
HOSPITALITY COURT	CSM 1983	66'	1997
HOSPITALITY COURT	CSM 1783	66'	1995

I-94
PI STA 839+47.69
Y 183216.67
X 594019.87
PC STA 834+61.20
PT STA 844+34.17
DELTA 0°19'28"
D 0°02'00"
L 972.97
R 171881.34
LCH 972.97
LCB N 00°17'27" W

EAST FRONTAGE ROAD
PI STA 3851+87.15
Y 184457.58
X 594760.09
PC STA 3849+78.70
PT STA 3853+95.51
DELTA 2°59'07"
D 00°42'58"
L 416.81
R 8000.00
LCH 416.76
LCB N 01°28'38" W

EAST FRONTAGE ROAD
PI STA 3856+49.68
Y 184919.59
X 594736.12
PC STA 3855+29.74
PT STA 3857+65.35
DELTA 26°28'10"
D 11°14'04"
L 235.61
R 510.00
LCH 233.52
LCB N 10°15'53" E

CURVE 1
L 204.11
R 483.07
LCH 202.59
LCB N 09°08'04" E

CURVE 2
L 56.47
R 7579.44
LCH 56.47
LCB S 02°45'23" E

CURVE 3
L 367.35
R 7699.44
LCH 367.32
LCB N 01°36'53" W

CURVE 4
L 168.32
R 366.07
LCH 166.85
LCB N 10°18'49" E

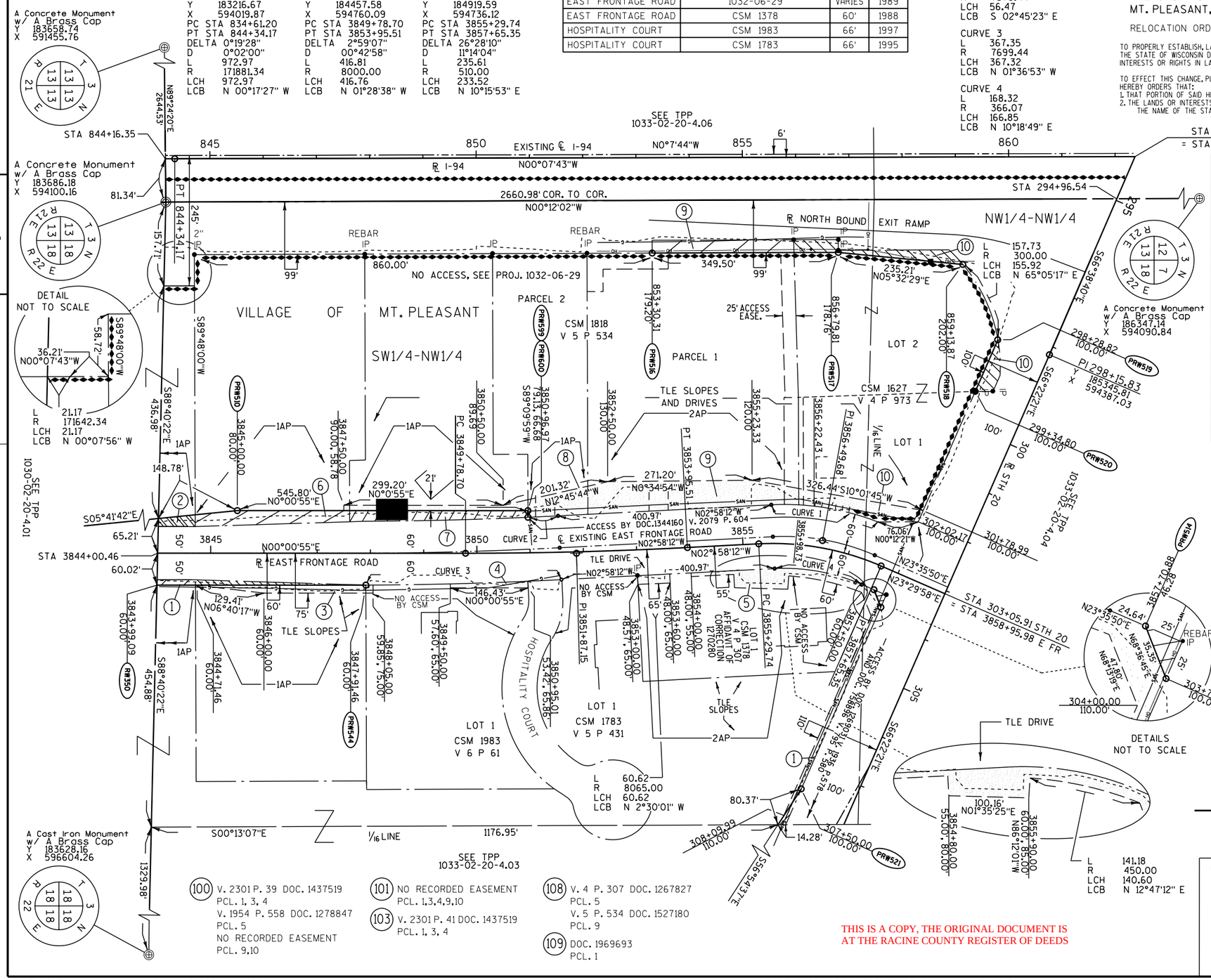

SCHEDULE OF LANDS & INTERESTS REQUIRED		OWNERS NAMES ARE SHOWN FOR REFERENCE PURPOSES ONLY AND ARE SUBJECT TO CHANGE PRIOR TO THE TRANSFER OF LAND INTEREST TO THE DEPARTMENT.				
PARCEL NUMBER	OWNER	INTEREST REQUIRED	R/W REQUIRED ACRES			T.L.E. TEMP. ACRES
			NEW	EXISTING	TOTAL	
1	MLG/HWY 20	Fee AR TLE	0.028	0.000	0.028	0.062
2	WOODSTOCK GROUP	Fee AR	0.030	0.000	0.030	0.000
3	HILIFE PROPERTIES	Fee AR TLE	0.037	0.000	0.037	0.088
4	RACINE HOTEL LLC	TLE	0.000	0.000	0.000	0.037
5	MC DONALDS	Fee AR TLE	0.007	0.000	0.007	0.223
6	CHARNICK LLC	Fee AR TLE	0.162	0.000	0.162	0.003
7	SHAH	Fee AR TLE	0.135	0.000	0.135	0.083
8	B&G REALTY	AR TLE	0.000	0.000	0.000	0.111
9	KWIK TRIP INC.	Fee AR TLE	0.147	0.000	0.147	0.460
10	CONVENIENCE STORE INV.	Fee TLE	0.174	0.000	0.174	0.155
100	WE-ENERGIES ELECTRIC	ROR	- -	- -	- -	- -
101	WE-ENERGIES GAS	ROR	- -	- -	- -	- -
103	AT&T WISCONSIN	ROR	- -	- -	- -	- -
108	TOWN OF YORKVILLE	ROR	- -	- -	- -	- -
109	VILLAGE OF MT. PLEASANT	ROR	- -	- -	- -	- -

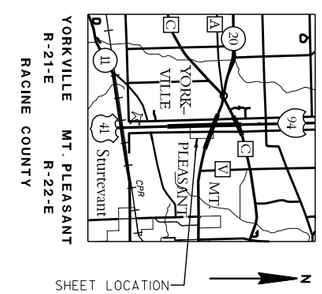

NOTES:

COORDINATES AND BEARINGS SHOWN ON THIS PLAT ARE REFERENCED TO THE WISCONSIN COUNTY COORDINATE SYSTEM, RACINE COUNTY ZONE, NAD83 (97) ADJUSTMENT AND ARE REFERENCED TO GPS HARN POINTS YORKVILLE EAST, RAYMOND SOUTH, AND PARIS EAST. THE COORDINATES SHOWN ARE GRID COORDINATES AND ARE TO BE USED AS GRID OR GROUND VALUES ON THIS PLAT.

RIGHT-OF-WAY MONUMENTS ARE TYPE 2 (TYPICAL ¾" REBAR) AND WILL BE PLACED PRIOR TO THE COMPLETION OF THE PROJECT, BY SE REGION DOT SURVEY.

(100) V. 2301 P. 39 DOC. 1437519
PCL. 1, 3, 4
V. 1954 P. 558 DOC. 1278847
PCL. 5
NO RECORDED EASEMENT
PCL. 9,10

(101) NO RECORDED EASEMENT
PCL. 1,3,4,9,10

(103) V. 2301 P. 41 DOC. 1437519
PCL. 1, 3, 4

(108) V. 4 P. 307 DOC. 1267827
PCL. 5
V. 5 P. 534 DOC. 1527180
PCL. 9

(109) DOC. 1969693
PCL. 1

THIS IS A COPY, THE ORIGINAL DOCUMENT IS AT THE RACINE COUNTY REGISTER OF DEEDS

I HEREBY CERTIFY THAT THIS PLAT MEETS ALL REQUIREMENTS OF SECTION 84.095, WISCONSIN STATUTES. THIS PLAT IS APPROVED FOR THE WISCONSIN DEPARTMENT OF TRANSPORTATION.

DATE: 3-18-09 Robert A. Duffield
Name
Title

THIS PLAT WAS PREPARED BY OR UNDER THE DIRECTION OF:

DATE: 3-18-09 Paul Krause
Name Paul Krause

RESERVED FOR REGISTER OF DEEDS
PROJECT NUMBER 1033-02-20-4.02
AMENDMENT NO:

DOC # 2207205
Recorded
Mar. 27, 2009 AT 03:33PM
VOL. 1 P. 74
James A. Ladwig
JAMES A LADWIG
RACINE COUNTY
REGISTER OF DEEDS
Fee Amount: $25.00

FILE NAME : J:\projects\d2_r_10330294\040402_rp.dgn
APPRAISAL PLAT DATE : 02-19-09
PLOT DATE : 24-MAR-2009 08:01 PLOT BY : dotphk PLOT NAME : PLOT SCALE : 100.000000:1.000000
CONST. 1033-02-70 STH 20 R/W 1033-02-20 4.02

FOR ADDITIONAL INFORMATION REFER TO THE TITLE SHEET, RECORDED AS SHEET 2 OF 2 OF DOCUMENT #2202146, OF TRANSPORTATION PROJECT PLATS IN THE RACINE COUNTY REGISTER OF DEEDS.

TRANSPORTATION PROJECT PLAT NO: 1033-02-20 - 4.03

THAT PART OF THE SE1/4 OF THE SE1/4 AND THE NE1/4 OF THE SE1/4, SECTION 18, TOWN 3 NORTH, RANGE 22 EAST, VILLAGE OF MT. PLEASANT, RACINE COUNTY, WISCONSIN.

RELOCATION ORDER IH-94/STH 20 RACINE COUNTY

TO PROPERLY ESTABLISH, LAY OUT, WIDEN, ENLARGE, EXTEND, CONSTRUCT, RECONSTRUCT, IMPROVE, OR MAINTAIN A PORTION OF THE HIGHWAY DESIGNATED ABOVE, THE STATE OF WISCONSIN DEPARTMENT OF TRANSPORTATION DEEMS IT NECESSARY TO RELOCATE OR CHANGE SAID HIGHWAY AND ACQUIRE CERTAIN LANDS AND INTERESTS OR RIGHTS IN LANDS FOR THE ABOVE PROJECT.

TO EFFECT THIS CHANGE, PURSUANT TO AUTHORITY GRANTED UNDER SECTION 84.02 (3) AND 84.09, WISCONSIN STATUTES, THE DEPARTMENT OF TRANSPORTATION HEREBY ORDERS THAT:
1. THAT PORTION OF SAID HIGHWAY AS SHOWN ON THIS PLAT IS LAID OUT AND ESTABLISHED TO THE LINES AND WIDTHS AS SO SHOWN FOR THE ABOVE PROJECT.
2. THE LANDS OR INTERESTS OR RIGHTS IN LANDS AS SHOWN ON THIS PLAT ARE REQUIRED BY THE DEPARTMENT FOR THE ABOVE PROJECT AND SHALL BE ACQUIRED IN THE NAME OF THE STATE OF WISCONSIN, PURSUANT TO THE PROVISIONS OF SECTION 84.09 (1) OR (2), WISCONSIN STATUTES.

SCHEDULE OF LANDS & INTERESTS REQUIRED		OWNERS NAMES ARE SHOWN FOR REFERENCE PURPOSES ONLY AND ARE SUBJECT TO CHANGE PRIOR TO THE TRANSFER OF LAND INTEREST TO THE DEPARTMENT.				
PARCEL NUMBER	OWNER	INTEREST REQUIRED	R/W REQUIRED ACRES			T.L.E. TEMP. ACRES
			NEW	EXISTING	TOTAL	
1	MLG/HWY 20	Fee	0.078	0.000	0.078	0.000
11	MT. PLEASANT GROUP LLC	Fee	0.105	0.000	0.105	0.000
12	HENRY J. KUIPER	Fee TLE	0.459	0.000	0.459	0.157
39	MT. PLEASANT GROUP LLC	Fee	0.111	0.000	0.111	0.000
100	WE-ENERGIES ELECTRIC	ROR	- -	- -	- -	- -
101	WE-ENERGIES GAS	ROR	- -	- -	- -	- -
103	AT&T WISCONSIN	ROR	- -	- -	- -	- -
109	VILLAGE OF MT. PLEASANT	ROR	- -	- -	- -	- -

HIGHWAY	BASIS OF EXISTING RIGHT-OF-WAY	WIDTH	YEAR
STH 20	F065-1(6)	VARIES	1963
TOWN ROAD	CSM 1171	66'	1986

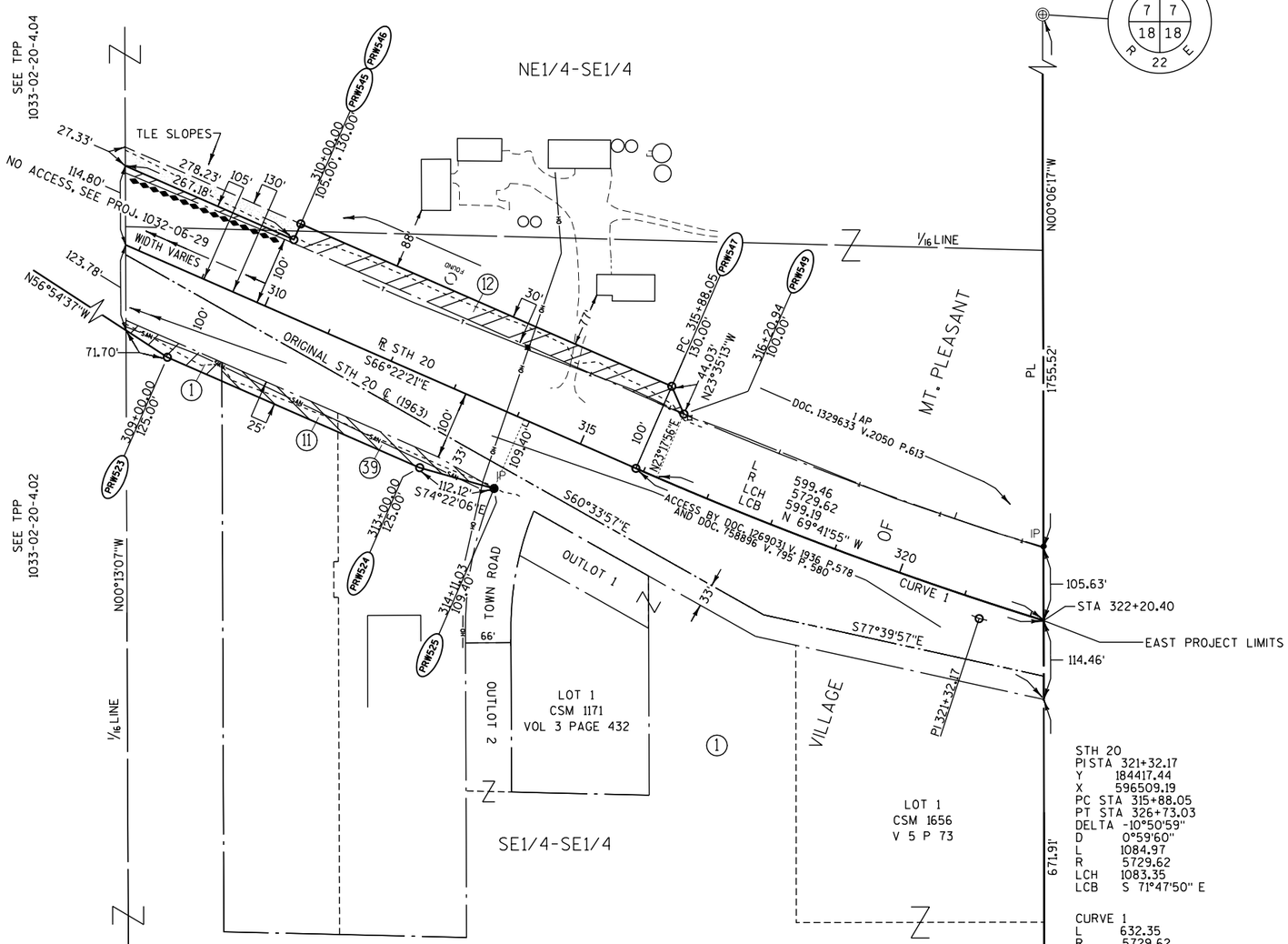

STH 20
PI STA 321+32.17
Y 184417.44
X 596509.19
PC STA 315+88.05
PT STA 326+73.03
DELTA -10°50'59"
D 0°59'60"
L 1084.97
R 5729.62
LCH 1083.35
LCB S 71°47'50" E

CURVE 1
L 632.35
R 5729.62
LCH 632.03
LCB S 69°32'03" E

(100) V. 1578 P. 413 DOC. 1079202 PCL. 11
(101) V. 1579 P. 121 DOC. 1079400 PCL. 11
(103) V. 2312 P. 135 DOC. 1441715 PCL. 12
(109) DOC. 1969693 PCL. 1 DOC. 1969690 PCL. 11

A Cast Iron Monument w/ A Brass Cap Y 186275.68 X 596599.43

A Concrete Monument w/ A Brass Cap Y 183686.18 X 594100.16

A Cast Iron Monument w/ A Brass Cap Y 183628.16 X 596604.26

SCALE, FEET 0 100 200

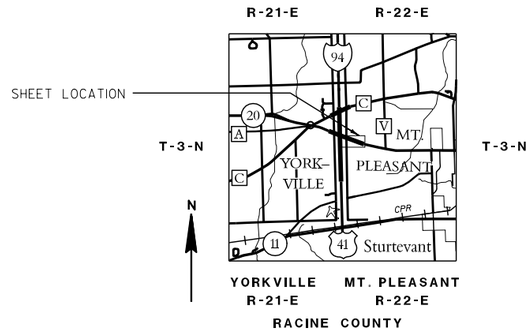

NOTES:
COORDINATES AND BEARINGS SHOWN ON THIS PLAT ARE REFERENCED TO THE WISCONSIN COUNTY COORDINATE SYSTEM, RACINE COUNTY ZONE, NAD83 (97) ADJUSTMENT AND ARE REFERENCED TO GPS HARN POINTS YORKVILLE EAST, RAYMOND SOUTH, AND PARIS EAST. THE COORDINATES SHOWN ARE GRID COORDINATES AND ARE TO BE USED AS GRID OR GROUND VALUES ON THIS PLAT.

RIGHT-OF-WAY MONUMENTS ARE TYPE 2 (TYPICAL ¾" REBAR) AND WILL BE PLACED PRIOR TO THE COMPLETION OF THE PROJECT, BY SE REGION DOT SURVEY.

THIS IS A COPY, THE ORIGINAL DOCUMENT IS AT THE RACINE COUNTY REGISTER OF DEEDS

I HEREBY CERTIFY THAT THIS PLAT MEETS ALL REQUIREMENTS OF SECTION 84.095, WISCONSIN STATUTES. THIS PLAT IS APPROVED FOR THE WISCONSIN DEPARTMENT OF TRANSPORTATION.

DATE: 3-18-09 Robert L. Dufflock
Name
Title

THIS PLAT WAS PREPARED BY OR UNDER THE DIRECTION OF:

DATE: 3-18-09 Paul Krause
Name Paul Krause

RESERVED FOR REGISTER OF DEEDS
PROJECT NUMBER 1033-02-20-4.03
AMENDMENT NO:

DOC # 2207206
Recorded
Mar. 27, 2009 AT 03:37PM
VOL. 1 P. 75
James A. Lewis
JAMES A LEWIS
RACINE COUNTY
REGISTER OF DEEDS
Fee Amount: 125.00

FILE NAME : J:\projects\d2_r_10330294\040403_rp.dgn PLOT DATE : 17-MAR-2009 13:07 PLOT BY : dotphk PLOT NAME : PLOT SCALE : 100.000000:1.000000
APPRAISAL PLAT DATE :
CONST. 1033-02-70 STH 20 R/W 1033-02-20 4.03

FOR ADDITIONAL INFORMATION REFER TO THE TITLE SHEET, RECORDED AS SHEET 2 OF 2 OF DOCUMENT #2202146, OF TRANSPORTATION PROJECT PLATS IN THE RACINE COUNTY REGISTER OF DEEDS.

TRANSPORTATION PROJECT PLAT NO: 1033-02-20 - 4.04
AMENDMENT NO: 1

AMENDS PARCELS 13, 14, 100, 101 & ADDS PARCEL 112 OF TPP 1033-02-20-4.04, RECORDED AS DOCUMENT 2207207.

THAT PART OF LOT 1 OF CSM 1993, LOT 1 OF CSM 1536 AND THAT PART OF THE NE1/4 OF THE NW1/4 AND THE NW1/4 OF THE NW1/4, SECTION 18, TOWN 3 NORTH, RANGE 22 EAST, VILLAGE OF MT. PLEASANT, RACINE COUNTY, WISCONSIN.

RELOCATION ORDER IH-94/STH 20 RACINE COUNTY

TO PROPERLY ESTABLISH, LAY OUT, WIDEN, ENLARGE, EXTEND, CONSTRUCT, RECONSTRUCT, IMPROVE, OR MAINTAIN A PORTION OF THE HIGHWAY DESIGNATED ABOVE, THE STATE OF WISCONSIN DEPARTMENT OF TRANSPORTATION DEEMS IT NECESSARY TO RELOCATE OR CHANGE SAID HIGHWAY AND ACQUIRE CERTAIN LANDS AND INTERESTS OR RIGHTS IN LANDS FOR THE ABOVE PROJECT.

TO EFFECT THIS CHANGE, PURSUANT TO AUTHORITY GRANTED UNDER SECTION 84.02 (3) AND 84.09, WISCONSIN STATUTES, THE DEPARTMENT OF TRANSPORTATION HEREBY ORDERS THAT:
1. THAT PORTION OF SAID HIGHWAY AS SHOWN ON THIS PLAT IS LAID OUT AND ESTABLISHED TO THE LINES AND WIDTHS AS SO SHOWN FOR THE ABOVE PROJECT.
2. THE LANDS OR INTERESTS OR RIGHTS IN LANDS AS SHOWN ON THIS PLAT ARE REQUIRED BY THE DEPARTMENT FOR THE ABOVE PROJECT AND SHALL BE ACQUIRED IN THE NAME OF THE STATE OF WISCONSIN, PURSUANT TO THE PROVISIONS OF SECTION 84.09 (1) OR (2), WISCONSIN STATUTES.

NOTES:

COORDINATES AND BEARINGS SHOWN ON THIS PLAT ARE REFERENCED TO THE WISCONSIN COUNTY COORDINATE SYSTEM, RACINE COUNTY ZONE, NAD83 (97) ADJUSTMENT AND ARE REFERENCED TO GPS HARN POINTS YORKVILLE EAST, RAYMOND SOUTH, AND PARIS EAST. THE COORDINATES SHOWN ARE GRID COORDINATES AND ARE TO BE USED AS GRID OR GROUND VALUES ON THIS PLAT.

RIGHT-OF-WAY MONUMENTS ARE TYPE 2 (TYPICAL ¾" REBAR) AND WILL BE PLACED PRIOR TO THE COMPLETION OF THE PROJECT, BY SE REGION DOT SURVEY.

I-94
PI STA 867+54.65
Y 186023.63
X 594013.56
PC STA 863+23.06
PT STA 871+86.23
DELTA 00°21'35"
D 00°02'30"
L 863.17
R 137503.87
LCH 863.17
LCB N 00°03'04" E

RELOCATED EAST FRONTAGE ROAD
PI STA 5868+01.25
Y 185995.04
X 595190.70
PC STA 5862+95.66
PT STA 5871+80.03
DELTA 69°24'45"
D 7°50'55"
L 884.38
R 730.00
LCH 831.28
LCB N 11°06'33" W

A Concrete Monument w/ A Brass Cap
Y 183686.18
X 594100.16

A Concrete Monument w/ A Brass Cap
Y 186347.14
X 594090.84

A Cast Iron Monument w/ A Brass Cap
Y 186275.68
X 596599.43

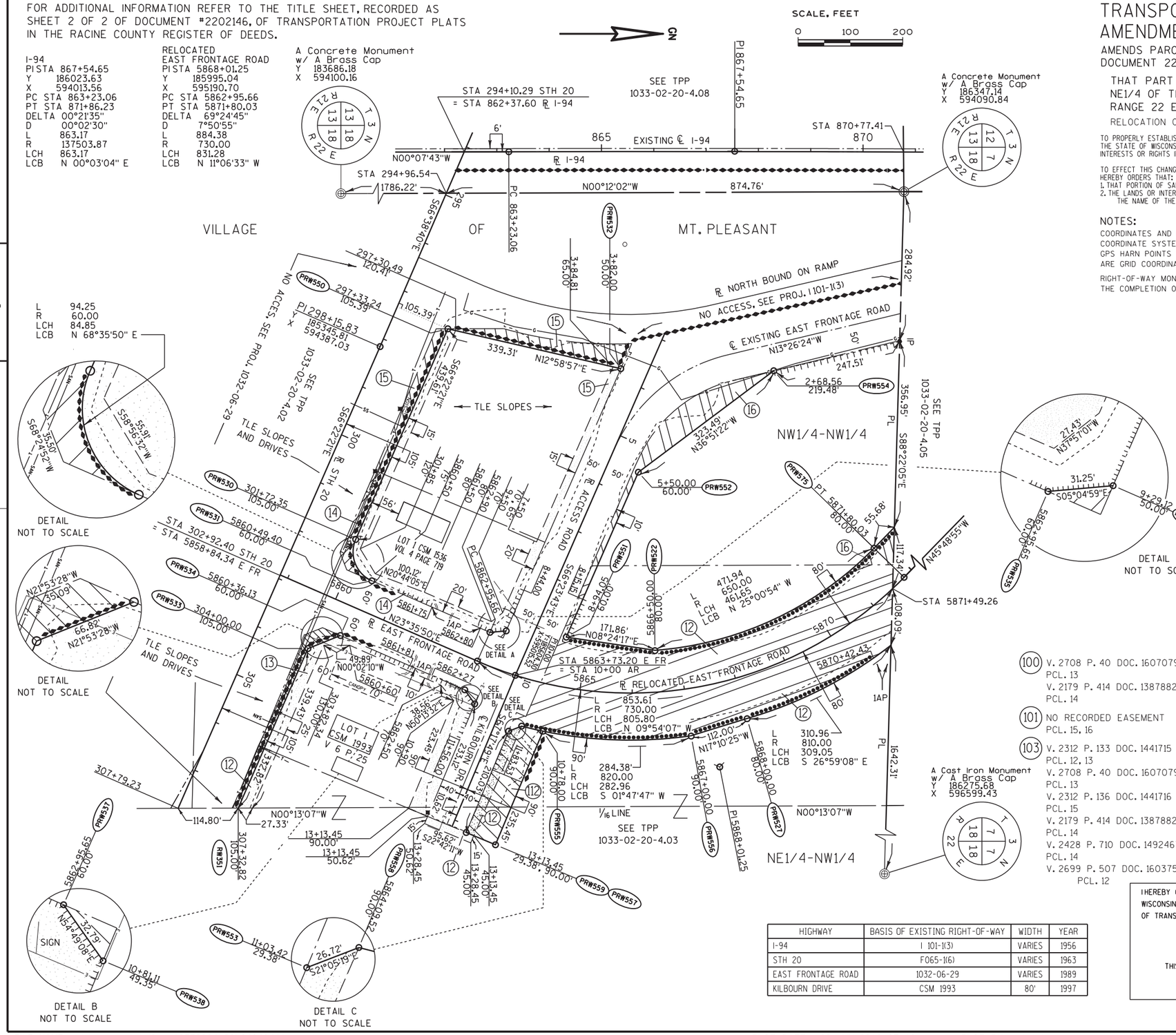

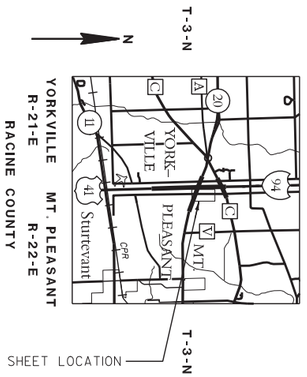

(108) V. 2090 P. 303 DOC. 1349538
PCL. 14, 15

(109) DOC. 1969715
PCL. 13
DOC. 1969714
PCL. 14
DOC. 1969713
PCL. 15

(100) V. 2708 P. 40 DOC. 1607079
PCL. 13
V. 2179 P. 414 DOC. 1387882
PCL. 14

(101) NO RECORDED EASEMENT
PCL. 15, 16

(103) V. 2312 P. 133 DOC. 1441715
PCL. 12, 13
V. 2708 P. 40 DOC. 1607079
PCL. 13
V. 2312 P. 136 DOC. 1441716
PCL. 15
V. 2179 P. 414 DOC. 1387882
PCL. 14
V. 2428 P. 710 DOC. 1492467
PCL. 14
V. 2699 P. 507 DOC. 1603756
PCL. 12

SCHEDULE OF LANDS & INTERESTS REQUIRED			OWNERS NAMES ARE SHOWN FOR REFERENCE PURPOSES ONLY AND ARE SUBJECT TO CHANGE PRIOR TO THE TRANSFER OF LAND INTEREST TO THE DEPARTMENT.			
PARCEL NUMBER	OWNER	INTEREST REQUIRED	R/W REQUIRED ACRES			T.L.E. TEMP. ACRES
			NEW	EXISTING	TOTAL	
12	KUIPER, HENRY J	Fee AR TLE	2.823	0.000	2.823	0.191
13	HWY 20 LLC	Fee AR TLE	0.102	0.000	0.102	0.421
14	SPIRIT MASTER FUNDING II LLC	Fee AR TLE	0.097	0.000	0.097	0.238
15	MEURER TRUST	Fee TLE	0.333	0.000	0.333	0.250
16	LV 20 LLC	Fee AR	0.373	0.000	0.373	0.000
112	KUIPER, HENRY J	Fee	0.317	0.000	0.317	0.000
100	WE-ENERGIES ELECTRIC	ROR	- -	- -	- -	- -
101	WE-ENERGIES GAS	ROR	- -	- -	- -	- -
103	AT&T WISCONSIN	ROR	- -	- -	- -	- -
108	TOWN OF YORKVILLE	ROR	- -	- -	- -	- -
109	VILLAGE OF MT. PLEASANT	ROR	- -	- -	- -	- -

HIGHWAY	BASIS OF EXISTING RIGHT-OF-WAY	WIDTH	YEAR
I-94	I 101-1(3)	VARIES	1956
STH 20	F065-1(6)	VARIES	1963
EAST FRONTAGE ROAD	1032-06-29	VARIES	1989
KILBOURN DRIVE	CSM 1993	80'	1997

I HEREBY CERTIFY THAT THIS PLAT MEETS ALL REQUIREMENTS OF SECTION 84.095, WISCONSIN STATUTES. THIS PLAT IS APPROVED FOR THE WISCONSIN DEPARTMENT OF TRANSPORTATION.

DATE: 6-29-2010 — Name / Title

THIS PLAT WAS PREPARED BY OR UNDER THE DIRECTION OF:

DATE: 6-29-2010 — Name PAUL KRAUSE

RESERVED FOR REGISTER OF DEEDS
PROJECT NUMBER 1033-02-20-4.04
AMENDMENT NO: 1

FILE NAME : J:\projects\d2_r_10330294\20\040404A1_rp.dgn
APPRAISAL PLAT DATE :
PLOT DATE : 29-JUN-2010 07:10 PLOT BY : dotphk PLOT NAME : PLOT SCALE : 100.000000:1.000000
CONST. 1033-02-70 STH 20 R/W 1033-02-20 4.04

TRANSPORTATION PROJECT PLAT NO: 1033-02-20 - 4.05

THAT PART OF THE NW1/4 OF THE SW1/4 AND THE SW1/4 OF THE SW1/4 OF SECTION 7, TOWN 3 NORTH, RANGE 22 EAST, VILLAGE OF MT. PLEASANT, RACINE COUNTY, WISCONSIN.

RELOCATION ORDER IH-94/STH 20 RACINE COUNTY

FOR ADDITIONAL INFORMATION REFER TO THE TITLE SHEET, RECORDED AS SHEET 2 OF 2 OF DOCUMENT #2202146, OF TRANSPORTATION PROJECT PLATS IN THE RACINE COUNTY REGISTER OF DEEDS.

NOTES:

COORDINATES AND BEARINGS SHOWN ON THIS PLAT ARE REFERENCED TO THE WISCONSIN COUNTY COORDINATE SYSTEM, RACINE COUNTY ZONE, NAD83 (97) ADJUSTMENT AND ARE REFERENCED TO GPS HARN POINTS YORKVILLE EAST, RAYMOND SOUTH, AND PARIS EAST. THE COORDINATES SHOWN ARE GRID COORDINATES AND ARE TO BE USED AS GRID OR GROUND VALUES ON THIS PLAT.

RIGHT-OF-WAY MONUMENTS ARE TYPE 2 (TYPICAL ¾" REBAR) AND WILL BE PLACED PRIOR TO THE COMPLETION OF THE PROJECT, BY SE REGION DOT SURVEY.

SCHEDULE OF LANDS & INTERESTS REQUIRED		OWNERS NAMES ARE SHOWN FOR REFERENCE PURPOSES ONLY AND ARE SUBJECT TO CHANGE PRIOR TO THE TRANSFER OF LAND INTEREST TO THE DEPARTMENT.				
PARCEL NUMBER	OWNER	INTEREST REQUIRED	R/W REQUIRED ACRES			T.L.E. TEMP. ACRES
			NEW	EXISTING	TOTAL	
17	I-94 ASSOCIATES	Fee, AR, TLE	6.348	0.000	6.348	0.445

HIGHWAY	BASIS OF EXISTING RIGHT-OF-WAY	WIDTH	YEAR
I-94	I 101-1(3)	VARIES	1956
STH 20	1032-06-29	VARIES	1989
CTH C	I 101-1(3)	140'	1956

THAT PROPERLY ESTABLISH, LAY OUT, WIDEN, ENLARGE, EXTEND, CONSTRUCT, RECONSTRUCT, IMPROVE, OR MAINTAIN A PORTION OF THE HIGHWAY DESIGNATED ABOVE, THE STATE OF WISCONSIN DEPARTMENT OF TRANSPORTATION DEEMS IT NECESSARY TO RELOCATE OR CHANGE SAID HIGHWAY AND ACQUIRE CERTAIN LANDS AND INTERESTS OR RIGHTS IN LANDS FOR THE ABOVE PROJECT.

TO EFFECT THIS CHANGE, PURSUANT TO AUTHORITY GRANTED UNDER SECTION 84.02 (3) AND 84.09, WISCONSIN STATUTES, THE DEPARTMENT OF TRANSPORTATION HEREBY ORDERS THAT:
1. THAT PORTION OF SAID HIGHWAY AS SHOWN ON THIS PLAT IS LAID OUT AND ESTABLISHED TO THE LINES AND WIDTHS AS SO SHOWN FOR THE ABOVE PROJECT.
2. THE LANDS OR INTERESTS OR RIGHTS IN LANDS AS SHOWN ON THIS PLAT ARE REQUIRED BY THE DEPARTMENT FOR THE ABOVE PROJECT AND SHALL BE ACQUIRED IN THE NAME OF THE STATE OF WISCONSIN, PURSUANT TO THE PROVISIONS OF SECTION 84.09 (1) OR (2), WISCONSIN STATUTES.

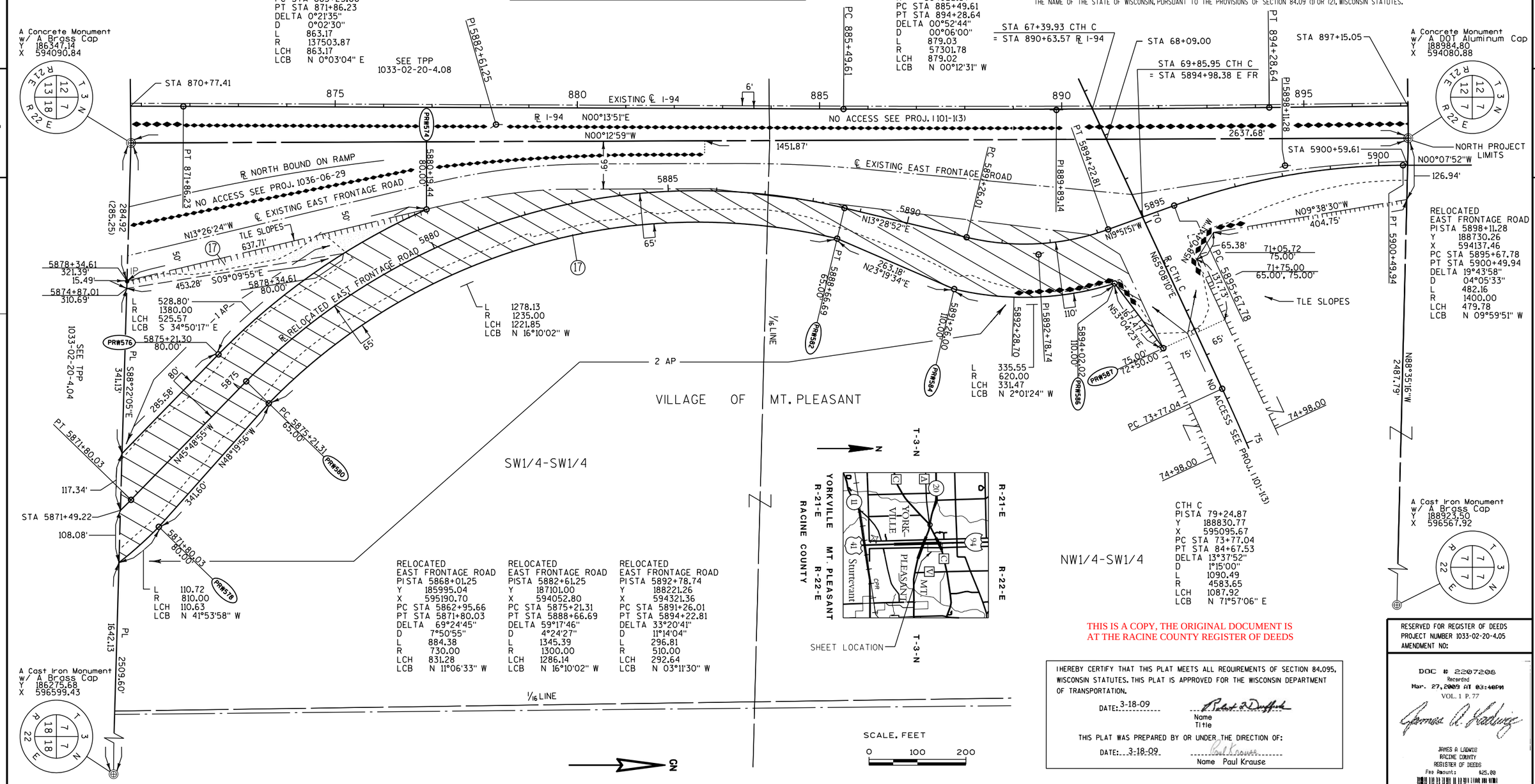

THIS IS A COPY, THE ORIGINAL DOCUMENT IS AT THE RACINE COUNTY REGISTER OF DEEDS

I HEREBY CERTIFY THAT THIS PLAT MEETS ALL REQUIREMENTS OF SECTION 84.095, WISCONSIN STATUTES. THIS PLAT IS APPROVED FOR THE WISCONSIN DEPARTMENT OF TRANSPORTATION.

DATE: 3-18-09 Name / Title

THIS PLAT WAS PREPARED BY OR UNDER THE DIRECTION OF:

DATE: 3-18-09 Name Paul Krause

RESERVED FOR REGISTER OF DEEDS
PROJECT NUMBER 1033-02-20-4.05
AMENDMENT NO:

DOC # 2207208
Recorded
Mar. 27, 2009 AT 03:40PM
VOL. 1 P. 77
JAMES A. LUDWIG
RACINE COUNTY
REGISTER OF DEEDS
Fee Amount: $25.00

FILE NAME : J:\projects\d2_r_10330294\040405_rp.dgn PLOT DATE : 17-MAR-2009 13:27 PLOT BY : dotphk PLOT NAME : PLOT SCALE : 100.000000:1.000000
APPRAISAL PLAT DATE : CONST. 1033-02-70 STH 20 R/W 1033-02-20 4.05

TRANSPORTATION PROJECT PLAT NO: 1033-02-20 - 4.06

THAT PART OF PARCEL 4 OF CSM 2008, PARCELS 1 AND 2 OF CSM 1950, PARCELS 1 AND 2 OF CSM 2154, PARCELS 1 AND 2 OF CSM 2604, PARCELS 1 AND 2 OF CSM2150, PARCELS 1 AND 2 OF CSM 2044, AND THAT PART OF THE NE1/4 OF THE NE1/4 AND THE SE1/4 OF THE NE1/4 OF SECTION 13, TOWN 3 NORTH, RANGE 21 EAST, TOWN OF YORKVILLE, RACINE COUNTY, WISCONSIN

RELOCATION ORDER IH-94/STH 20 RACINE COUNTY

TO PROPERLY ESTABLISH, LAY OUT, WIDEN, ENLARGE, EXTEND, CONSTRUCT, RECONSTRUCT, IMPROVE, OR MAINTAIN A PORTION OF THE HIGHWAY DESIGNATED ABOVE, THE STATE OF WISCONSIN DEPARTMENT OF TRANSPORTATION DEEMS IT NECESSARY TO RELOCATE OR CHANGE SAID HIGHWAY AND ACQUIRE CERTAIN LANDS AND INTERESTS OR RIGHTS IN LANDS FOR THE ABOVE PROJECT.

TO EFFECT THIS CHANGE, PURSUANT TO AUTHORITY GRANTED UNDER SECTION 84.02 (3) AND 84.09, WISCONSIN STATUTES, THE DEPARTMENT OF TRANSPORTATION HEREBY ORDERS THAT:
1. THAT PORTION OF SAID HIGHWAY AS SHOWN ON THIS PLAT IS LAID OUT AND ESTABLISHED TO THE LINES AND WIDTHS AS SO SHOWN FOR THE ABOVE PROJECT.
2. THE LANDS OR INTERESTS OR RIGHTS IN LANDS AS SHOWN ON THIS PLAT ARE REQUIRED BY THE DEPARTMENT FOR THE ABOVE PROJECT AND SHALL BE ACQUIRED IN THE NAME OF THE STATE OF WISCONSIN, PURSUANT TO THE PROVISIONS OF SECTION 84.09 (1) OR (2), WISCONSIN STATUTES.

SCHEDULE OF LANDS & INTERESTS REQUIRED		OWNERS NAMES ARE SHOWN FOR REFERENCE PURPOSES ONLY AND ARE SUBJECT TO CHANGE PRIOR TO THE TRANSFER OF LAND INTEREST TO THE DEPARTMENT.				
PARCEL NUMBER	OWNER	INTEREST REQUIRED	R/W REQUIRED ACRES NEW	EXISTING	TOTAL	T.L.E. TEMP. ACRES
18	SIERRA PROPERTIES LLC	Fee AR	0.328	0.000	0.328	0.000
19	REICO INVESTMENTS INC.	Fee AR TLE	0.286	0.000	0.286	.0310
20	WILLKOMM DEVELOPMENT LLP	Fee AR TLE	0.252	0.000	0.252	0.768
21	SNIKNEJ CO.	Fee AR	0.564	0.000	0.564	0.000
22	MOSHI HOTELS	Fee AR	0.026	0.000	0.026	0.005
23	MASKAL LLC	Fee AR	0.023	0.000	0.023	0.008
24	XYLON OF WISCONSIN INC.	AR TLE	0.000	0.000	0.000	0.083
25	TRIPLE H	AR TLE	0.000	0.000	0.000	0.106
26	SPOKES LLC	TLE	0.000	0.000	0.000	0.015
27	RACINE COUNTY CONVENTION CENTER	TLE	0.000	0.000	0.000	0.036
36	SNIKNEJ CO.	Fee AR	0.522	0.000	0.522	0.000
37	SNIKNEJ CO.	TLE	0.000	0.000	0.000	0.060
100	WE-ENERGIES ELECTRIC	ROR	- -	- -	- -	- -
101	WE-ENERGIES GAS	ROR	- -	- -	- -	- -
103	AT&T WISCONSIN	ROR	- -	- -	- -	- -
107	TIME WARNER CABLE	ROR	- -	- -	- -	- -
108	TOWN OF YORKVILLE	ROR	- -	- -	- -	- -

(100) V. 2683 P. 372 DOC. 1597577 PCL. 20
V. 2251 P. 323 DOC. 1417354 PCL. 20
V. 2670 P. 833 DOC. 1592809 PCL. 20
V. 2435 P. 793 DOC. 1495719 PCL. 22, 23
V. 2674 P. 417 DOC. 1594130 PCL. 24, 36
DOC. 1923809 PCL. 24
V. 2422 P. 248 DOC. 1489365 PCL. 21
NO RECORDED EASEMENT 18, 19, 20, 25

(101) NO RECORDED EASEMENT PCL. 18

(107) NO RECORDED EASEMENT PCL. 19,20,22,23,24,25,36

(103) V. 3010 P. 829 DOC. 1720105 PCL. 20
V. 2435 P. 793 DOC. 1495719 PCL. 22, 23
V. 2312 P. 152 DOC. 1442099 PCL. 25, 26, 27, 37
V. 2674 P. 417 DOC. 1594130 PCL. 24, 36
V. 2422 P. 248 DOC. 1489365 PCL. 21
V. 2362 P. 959 DOC. 1462193 PCL. 25
V. 2998 P. 592 DOC. 1715613 PCL. 25
V. 2998 P. 595 DOC. 1715614 PCL. 27
V. 2428 P. 702 DOC. 1492463 PCL. 27
V. 2251 P. 323 DOC. 1417354 PCL. 20

(108) V. 2474 P. 431 DOC. 1512697 PCL. 19, 20
V. 2051 P. 183 DOC. 1329937 PCL. 20
V. 2474 P. 428 DOC. 1512696 PCL. 22, 23
V. 3033 P. 412 DOC. 1728759 PCL. 24
V. 2474 P. 428 DOC. 1512698 PCL. 21, 24, 25, 36
DOC. 2069463 PCL. 21
V. 3014 P. 681 DOC. 1721604 PCL. 36
V. 3018 P. 001 DOC. 1722912 PCL. 27
V. 3014 P. 681 DOC. 1721605 PCL. 26, 37

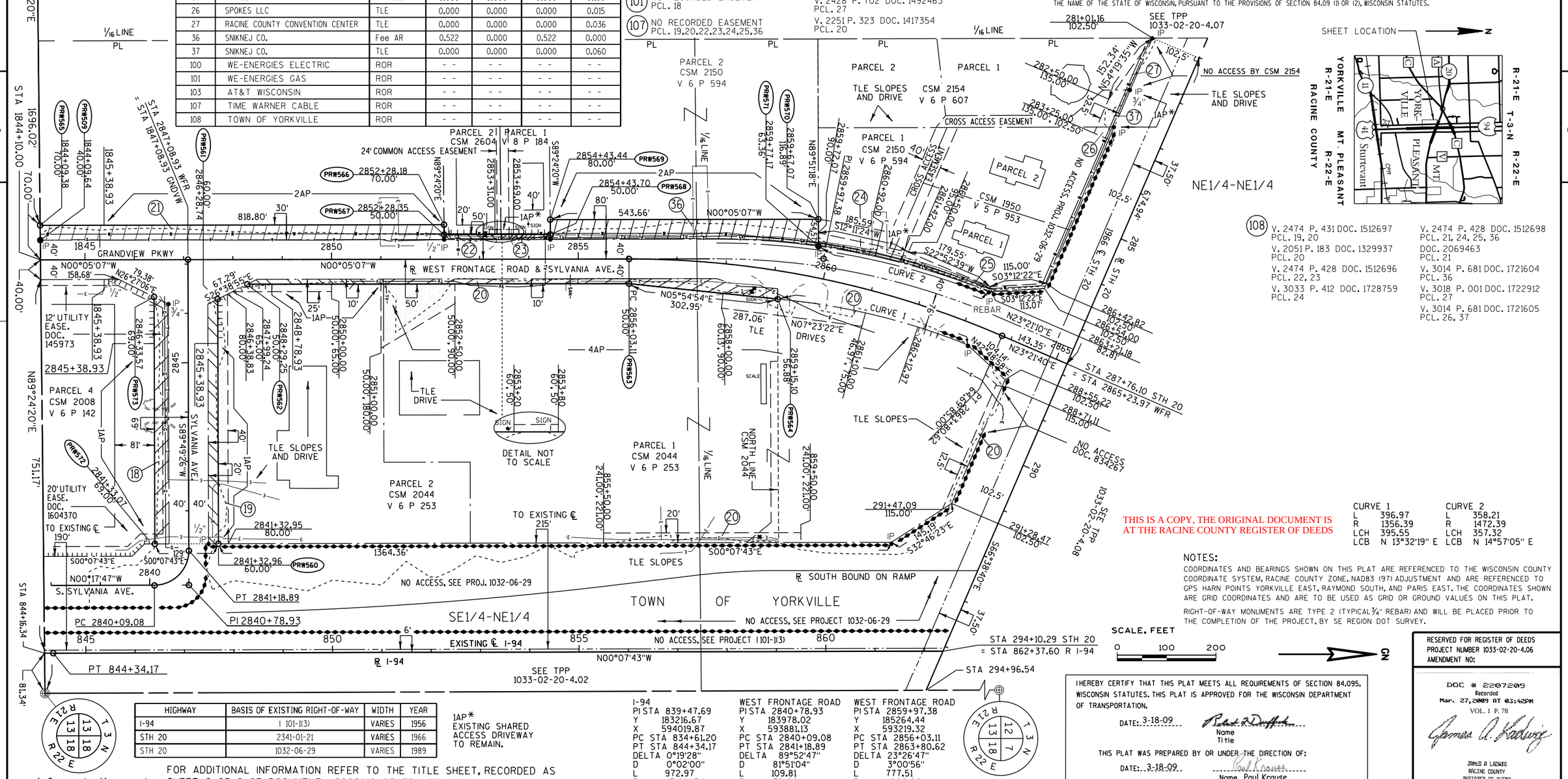

THIS IS A COPY, THE ORIGINAL DOCUMENT IS AT THE RACINE COUNTY REGISTER OF DEEDS

CURVE 1		CURVE 2	
L	396.97	L	358.21
R	1356.39	R	1472.39
LCH	395.55	LCH	357.32
LCB	N 13°32'19" E	LCB	N 14°57'05" E

NOTES:

COORDINATES AND BEARINGS SHOWN ON THIS PLAT ARE REFERENCED TO THE WISCONSIN COUNTY COORDINATE SYSTEM, RACINE COUNTY ZONE, NAD83 (97) ADJUSTMENT AND ARE REFERENCED TO GPS HARN POINTS YORKVILLE EAST, RAYMOND SOUTH, AND PARIS EAST. THE COORDINATES SHOWN ARE GRID COORDINATES AND ARE TO BE USED AS GRID OR GROUND VALUES ON THIS PLAT.

RIGHT-OF-WAY MONUMENTS ARE TYPE 2 (TYPICAL ¾" REBAR) AND WILL BE PLACED PRIOR TO THE COMPLETION OF THE PROJECT, BY SE REGION DOT SURVEY.

HIGHWAY	BASIS OF EXISTING RIGHT-OF-WAY	WIDTH	YEAR
I-94	I 101-1(3)	VARIES	1956
STH 20	2341-01-21	VARIES	1966
STH 20	1032-06-29	VARIES	1989

1AP* EXISTING SHARED ACCESS DRIVEWAY TO REMAIN.

FOR ADDITIONAL INFORMATION REFER TO THE TITLE SHEET, RECORDED AS SHEET 2 OF 2 OF DOCUMENT #2202146, OF TRANSPORTATION PROJECT PLATS IN THE RACINE COUNTY REGISTER OF DEEDS.

A Concrete Monument w/ A Brass Cap Y 183686.18 X 594100.16

I-94
PI STA 839+47.69
Y 183216.67
X 594019.87
PC STA 834+61.20
PT STA 844+34.17
DELTA 0°19'28"
D 0°02'00"
L 972.97
R 171881.34
LCH 972.97
LCB N 00°17'27" W

WEST FRONTAGE ROAD
PI STA 2840+78.93
Y 183978.02
X 593881.13
PC STA 2840+09.08
PT STA 2841+18.89
DELTA 89°52'47"
D 81°51'04"
L 109.81
R 70.00
LCH 98.89
LCB N 45°14'10" W

WEST FRONTAGE ROAD
PI STA 2859+97.38
Y 185264.44
X 593219.32
PC STA 2856+03.11
PT STA 2863+80.62
DELTA 23°26'47"
D 3°00'56"
L 777.51
R 1900.00
LCH 772.10
LCB N 11°38'17" E

A Concrete Monument w/ A Brass Cap Y 186347.14 X 594090.84

I HEREBY CERTIFY THAT THIS PLAT MEETS ALL REQUIREMENTS OF SECTION 84.095, WISCONSIN STATUTES. THIS PLAT IS APPROVED FOR THE WISCONSIN DEPARTMENT OF TRANSPORTATION.

DATE: 3-18-09 Robert L. Duffield
Name
Title

THIS PLAT WAS PREPARED BY OR UNDER THE DIRECTION OF:

DATE: 3-18-09 Paul Krause
Name Paul Krause

RESERVED FOR REGISTER OF DEEDS
PROJECT NUMBER 1033-02-20-4.06
AMENDMENT NO:

DOC # 2207209
Recorded
Mar. 27, 2009 AT 03:42PM
VOL. 1 P. 78
James A. Ladwig
JAMES A LADWIG
RACINE COUNTY
REGISTER OF DEEDS
Fee Amount: $25.00

FILE NAME : J:\projects\d2_r_10330294\040406_rp.dgn
APPRAISAL PLAT DATE : 02-19-09
PLOT DATE : 24-MAR-2009 08:03 PLOT BY : dotphk PLOT NAME : PLOT SCALE : 100.000000:1.000000
CONST. 1033-02-70 STH 20 R/W 1033-02-20 4.06

FOR ADDITIONAL INFORMATION REFER TO THE TITLE SHEET, RECORDED AS SHEET 2 OF 2 OF DOCUMENT #2202146, OF TRANSPORTATION PROJECT PLATS IN THE RACINE COUNTY REGISTER OF DEEDS.

TRANSPORTATION PROJECT PLAT NO: 1033-02-20 - 4.07

THAT PART OF THE NW1/4 OF THE NE1/4 OF SECTION 13, AND THAT PART OF THE SW1/4 OF THE SE1/4 OF SECTION 12, TOWN 3 NORTH, RANGE 21 EAST, TOWN OF YORKVILLE, RACINE COUNTY, WISCONSIN.

RELOCATION ORDER IH-94/STH 20 RACINE COUNTY

TO PROPERLY ESTABLISH, LAY OUT, WIDEN, ENLARGE, EXTEND, CONSTRUCT, RECONSTRUCT, IMPROVE, OR MAINTAIN A PORTION OF THE HIGHWAY DESIGNATED ABOVE, THE STATE OF WISCONSIN DEPARTMENT OF TRANSPORTATION DEEMS IT NECESSARY TO RELOCATE OR CHANGE SAID HIGHWAY AND ACQUIRE CERTAIN LANDS AND INTERESTS OR RIGHTS IN LANDS FOR THE ABOVE PROJECT.

TO EFFECT THIS CHANGE, PURSUANT TO AUTHORITY GRANTED UNDER SECTION 84.02 (3) AND 84.09, WISCONSIN STATUTES, THE DEPARTMENT OF TRANSPORTATION HEREBY ORDERS THAT:
1. THAT PORTION OF SAID HIGHWAY AS SHOWN ON THIS PLAT IS LAID OUT AND ESTABLISHED TO THE LINES AND WIDTHS AS SO SHOWN FOR THE ABOVE PROJECT.
2. THE LANDS OR INTERESTS OR RIGHTS IN LANDS AS SHOWN ON THIS PLAT ARE REQUIRED BY THE DEPARTMENT FOR THE ABOVE PROJECT AND SHALL BE ACQUIRED IN THE NAME OF THE STATE OF WISCONSIN, PURSUANT TO THE PROVISIONS OF SECTION 84.09 (1) OR (2), WISCONSIN STATUTES.

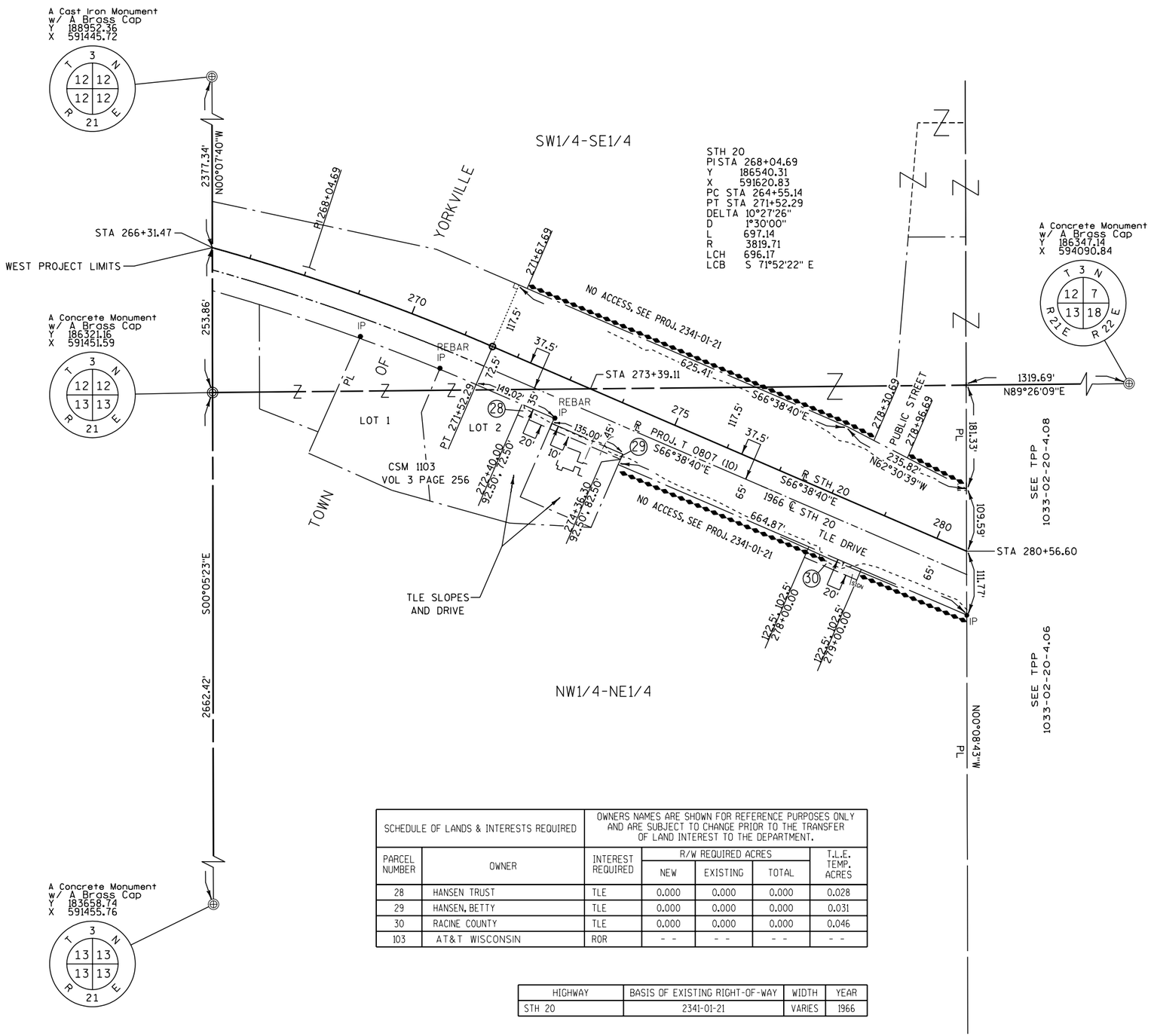

(103) V. 2392 P. 056 DOC. 1475579 PCL. 30

SHEET LOCATION

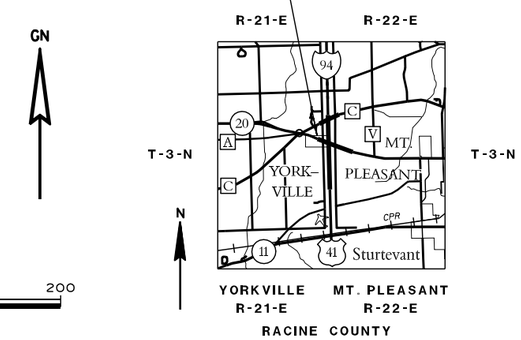

SCHEDULE OF LANDS & INTERESTS REQUIRED		OWNERS NAMES ARE SHOWN FOR REFERENCE PURPOSES ONLY AND ARE SUBJECT TO CHANGE PRIOR TO THE TRANSFER OF LAND INTEREST TO THE DEPARTMENT.				
PARCEL NUMBER	OWNER	INTEREST REQUIRED	R/W REQUIRED ACRES			T.L.E. TEMP. ACRES
			NEW	EXISTING	TOTAL	
28	HANSEN TRUST	TLE	0.000	0.000	0.000	0.028
29	HANSEN, BETTY	TLE	0.000	0.000	0.000	0.031
30	RACINE COUNTY	TLE	0.000	0.000	0.000	0.046
103	AT&T WISCONSIN	ROR	- -	- -	- -	- -

HIGHWAY	BASIS OF EXISTING RIGHT-OF-WAY	WIDTH	YEAR
STH 20	2341-01-21	VARIES	1966

NOTES:

COORDINATES AND BEARINGS SHOWN ON THIS PLAT ARE REFERENCED TO THE WISCONSIN COUNTY COORDINATE SYSTEM, RACINE COUNTY ZONE, NAD83 (97) ADJUSTMENT AND ARE REFERENCED TO GPS HARN POINTS YORKVILLE EAST, RAYMOND SOUTH, AND PARIS EAST. THE COORDINATES SHOWN ARE GRID COORDINATES AND ARE TO BE USED AS GRID OR GROUND VALUES ON THIS PLAT.

RIGHT-OF-WAY MONUMENTS ARE TYPE 2 (TYPICAL ¾" REBAR) AND WILL BE PLACED PRIOR TO THE COMPLETION OF THE PROJECT, BY SE REGION DOT SURVEY.

THIS IS A COPY, THE ORIGINAL DOCUMENT IS AT THE RACINE COUNTY REGISTER OF DEEDS

I HEREBY CERTIFY THAT THIS PLAT MEETS ALL REQUIREMENTS OF SECTION 84.095, WISCONSIN STATUTES. THIS PLAT IS APPROVED FOR THE WISCONSIN DEPARTMENT OF TRANSPORTATION.

DATE: 3-18-09 Robert L. Duffield
Name
Title

THIS PLAT WAS PREPARED BY OR UNDER THE DIRECTION OF:

DATE: 3-18-09 Paul Krause
Name Paul Krause

RESERVED FOR REGISTER OF DEEDS
PROJECT NUMBER 1033-02-20-4.07
AMENDMENT NO:

DOC # 2207210
Recorded
Mar. 27, 2009 AT 03:43PM
James A. Ladwig
VOL. 1 P. 79
JAMES A LADWIG
RACINE COUNTY
REGISTER OF DEEDS
Fee Amount: 125.00

FILE NAME : J:\projects\d2_r_10330294\040407_rp.dgn PLOT DATE : 17-MAR-2009 13:58 PLOT BY : dotphk PLOT NAME : PLOT SCALE : 100.000000:1.000000
APPRAISAL PLAT DATE : CONST. 1033-02-70 STH 20 R/W 1033-02-20 4.07

FOR ADDITIONAL INFORMATION REFER TO THE TITLE SHEET, RECORDED AS SHEET 2 OF 2 OF DOCUMENT #2202146, OF TRANSPORTATION PROJECT PLATS IN THE RACINE COUNTY REGISTER OF DEEDS.

TRANSPORTATION PROJECT PLAT NO: 1033-02-20 - 4.08
AMENDMENT NO: 1

AMENDS PARCELS 31, 100, & 103 OF TPP 1033-02-20-4.08, RECORDED AS DOCUMENT 2207211.

THAT PART OF THE SE1/4 OF THE SE1/4 OF SECTION 12, AND THAT PART OF THE NE1/4 OF THE NE1/4 OF SECTION 13, TOWN 3 NORTH, RANGE 21 EAST, TOWN OF YORKVILLE, RACINE COUNTY, WISCONSIN.

RELOCATION ORDER IH-94/STH 20 RACINE COUNTY

TO PROPERLY ESTABLISH, LAY OUT, WIDEN, ENLARGE, EXTEND, CONSTRUCT, RECONSTRUCT, IMPROVE, OR MAINTAIN A PORTION OF THE HIGHWAY DESIGNATED ABOVE, THE STATE OF WISCONSIN DEPARTMENT OF TRANSPORTATION DEEMS IT NECESSARY TO RELOCATE OR CHANGE SAID HIGHWAY AND ACQUIRE CERTAIN LANDS AND INTERESTS OR RIGHTS IN LANDS FOR THE ABOVE PROJECT.

TO EFFECT THIS CHANGE, PURSUANT TO AUTHORITY GRANTED UNDER SECTION 84.02 (3) AND 84.09, WISCONSIN STATUTES, THE DEPARTMENT OF TRANSPORTATION HEREBY ORDERS THAT:
1. THAT PORTION OF SAID HIGHWAY AS SHOWN ON THIS PLAT IS LAID OUT AND ESTABLISHED TO THE LINES AND WIDTHS AS SO SHOWN FOR THE ABOVE PROJECT.
2. THE LANDS OR INTERESTS OR RIGHTS IN LANDS AS SHOWN ON THIS PLAT ARE REQUIRED BY THE DEPARTMENT FOR THE ABOVE PROJECT AND SHALL BE ACQUIRED IN THE NAME OF THE STATE OF WISCONSIN, PURSUANT TO THE PROVISIONS OF SECTION 84.09 (1) OR (2), WISCONSIN STATUTES.

SCHEDULE OF LANDS & INTERESTS REQUIRED		OWNERS NAMES ARE SHOWN FOR REFERENCE PURPOSES ONLY AND ARE SUBJECT TO CHANGE PRIOR TO THE TRANSFER OF LAND INTEREST TO THE DEPARTMENT.				
PARCEL NUMBER	OWNER	INTEREST REQUIRED	R/W REQUIRED ACRES			T.L.E. TEMP. ACRES
			NEW	EXISTING	TOTAL	
31	RALPH O. & MARY JANE TURNOCK	Fee AR TLE	0.200	0.000	0.200	1.213
32	RV CAPITOL	Fee AR TLE	0.099	0.000	0.099	0.897
33	YORKVILLE - IVES GROVE	AR TLE	0.000	0.000	0.000	0.121
34	POMP TIRE	Fee TLE	0.063	0.000	0.063	0.019
35	BRUCE HELLER	Fee TLE	0.067	0.000	0.067	0.005
38	SBA STRUCTURES INC.	Fee AR TLE	0.144	0.000	0.144	0.200
100	WE-ENERGIES ELECTRIC	ROR	- -	- -	- -	- -
101	WE-ENERGIES GAS	ROR	- -	- -	- -	- -
103	AT&T WISCONSIN	ROR	- -	- -	- -	- -
108	TOWN OF YORKVILLE	ROR	- -	- -	- -	- -

WEST FRONTAGE ROAD
PI STA 4883+89.59
Y 187639.40
X 593884.10
PC STA 4879+37.26
PT STA 4888+23.56
DELTA 28°12'42"
D 03°10'59"
L 886.30
R 1800.00
LCH 877.37
LCB N 09°14'25" E

CURVE 1
L 302.24
R 676.20
LCH 299.73
LCB N 10°36'17" E

CURVE 2
L 461.09
R 994.93
LCH 456.97
LCB N 10°04'13" E

CURVE 3
L 149.46
R 914.93
LCH 149.27
LCB S 01°28'22" W

CURVE 4
L 732.26
R 137754.87
LCH 732.26
LCB N 00°04'43" E

WEST FRONTAGE ROAD
PI STA 4874+69.33
Y 186787.06
X 593516.20
PC STA 4872+44.01
PT STA 4876+86.55
DELTA 26°33'09"
D 06°00'00"
L 442.54
R 954.93
LCH 438.59
LCB N 10°04'12" E

WEST FRONTAGE ROAD
PI STA 4867+75.39
Y 186088.90
X 593555.31
PC STA 4865+87.63
PT STA 4869+57.83
DELTA 23°34'02"
D 06°21'58"
L 370.19
R 900.00
LCH 367.59
LCB N 08°34'39" E

I-94
PI STA 867+54.65
Y 186023.63
X 594013.56
PC STA 863+23.06
PT STA 871+86.23
DELTA 00°21'35"
D 00°02'30"
L 863.17
R 137503.87
LCH 863.17
LCB N 00°03'04" E

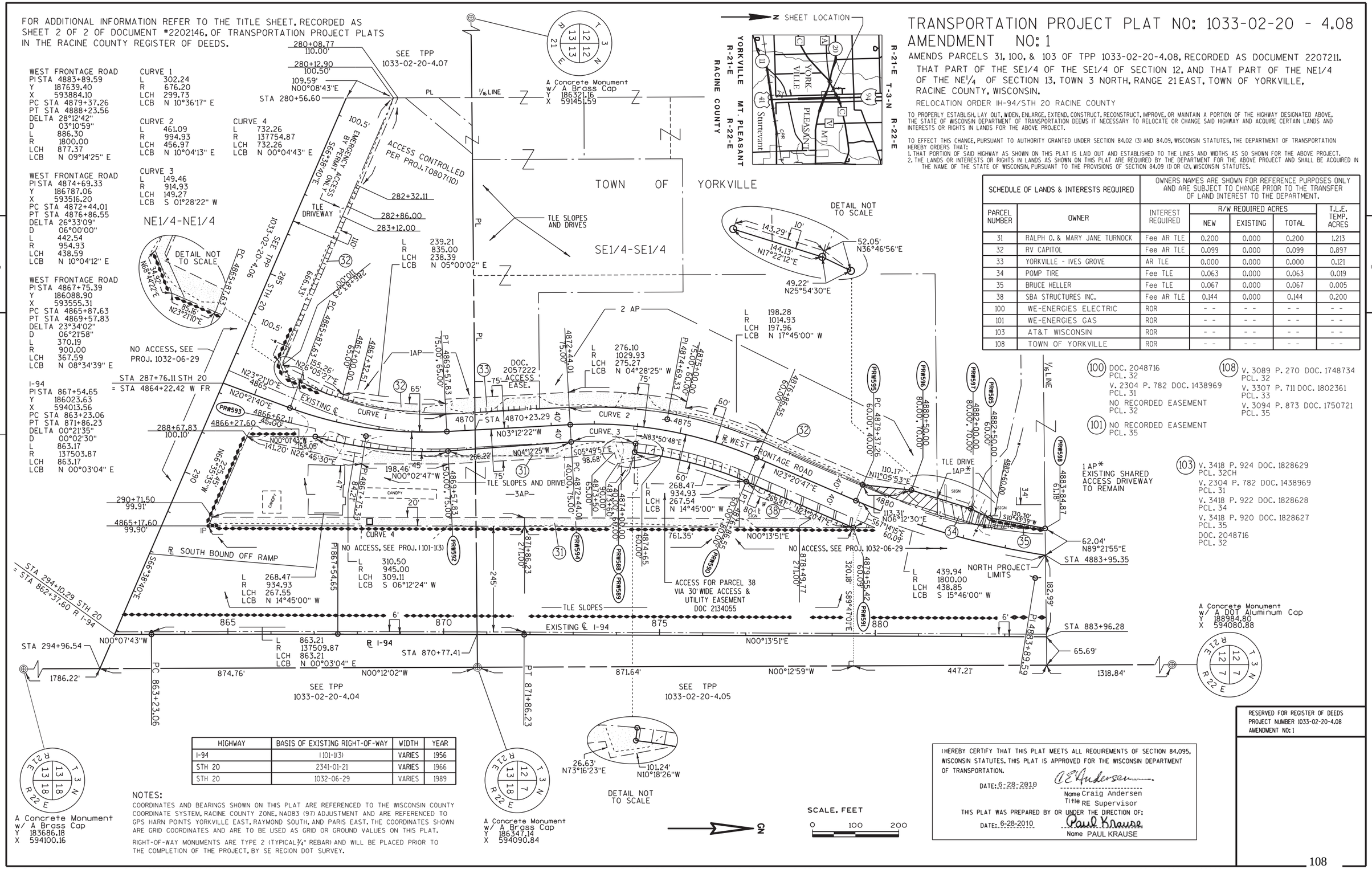

100 DOC. 2048716 PCL. 32
V. 2304 P. 782 DOC. 1438969 PCL. 31
NO RECORDED EASEMENT PCL. 32

101 NO RECORDED EASEMENT PCL. 35

108 V. 3089 P. 270 DOC. 1748734 PCL. 32
V. 3307 P. 711 DOC. 1802361 PCL. 33
V. 3094 P. 873 DOC. 1750721 PCL. 35

103 V. 3418 P. 924 DOC. 1828629 PCL. 32CH
V. 2304 P. 782 DOC. 1438969 PCL. 31
V. 3418 P. 922 DOC. 1828628 PCL. 34
V. 3418 P. 920 DOC. 1828627 PCL. 35
DOC. 2048716 PCL. 32

HIGHWAY	BASIS OF EXISTING RIGHT-OF-WAY	WIDTH	YEAR
I-94	1101-1(3)	VARIES	1956
STH 20	2341-01-21	VARIES	1966
STH 20	1032-06-29	VARIES	1989

NOTES:

COORDINATES AND BEARINGS SHOWN ON THIS PLAT ARE REFERENCED TO THE WISCONSIN COUNTY COORDINATE SYSTEM, RACINE COUNTY ZONE, NAD83 (97) ADJUSTMENT AND ARE REFERENCED TO GPS HARN POINTS YORKVILLE EAST, RAYMOND SOUTH, AND PARIS EAST. THE COORDINATES SHOWN ARE GRID COORDINATES AND ARE TO BE USED AS GRID OR GROUND VALUES ON THIS PLAT.

RIGHT-OF-WAY MONUMENTS ARE TYPE 2 (TYPICAL 3/4" REBAR) AND WILL BE PLACED PRIOR TO THE COMPLETION OF THE PROJECT, BY SE REGION DOT SURVEY.

I HEREBY CERTIFY THAT THIS PLAT MEETS ALL REQUIREMENTS OF SECTION 84.095, WISCONSIN STATUTES. THIS PLAT IS APPROVED FOR THE WISCONSIN DEPARTMENT OF TRANSPORTATION.

DATE: 6-28-2010 — Name Craig Andersen, Title RE Supervisor

THIS PLAT WAS PREPARED BY OR UNDER THE DIRECTION OF:

DATE: 6-28-2010 — Name PAUL KRAUSE

RESERVED FOR REGISTER OF DEEDS
PROJECT NUMBER 1033-02-20-4.08
AMENDMENT NO: 1

FILE NAME : J:\projects\d2_r_10330294\20\040408A1_rp.dgn
APPRAISAL PLAT DATE :
PLOT DATE : 28-JUN-2010 15:43 PLOT BY : dotphk PLOT NAME : PLOT SCALE : 100.000000:1.000000
CONST. 1033-20-70 STH 20 R/W 1033-02-20 4.08

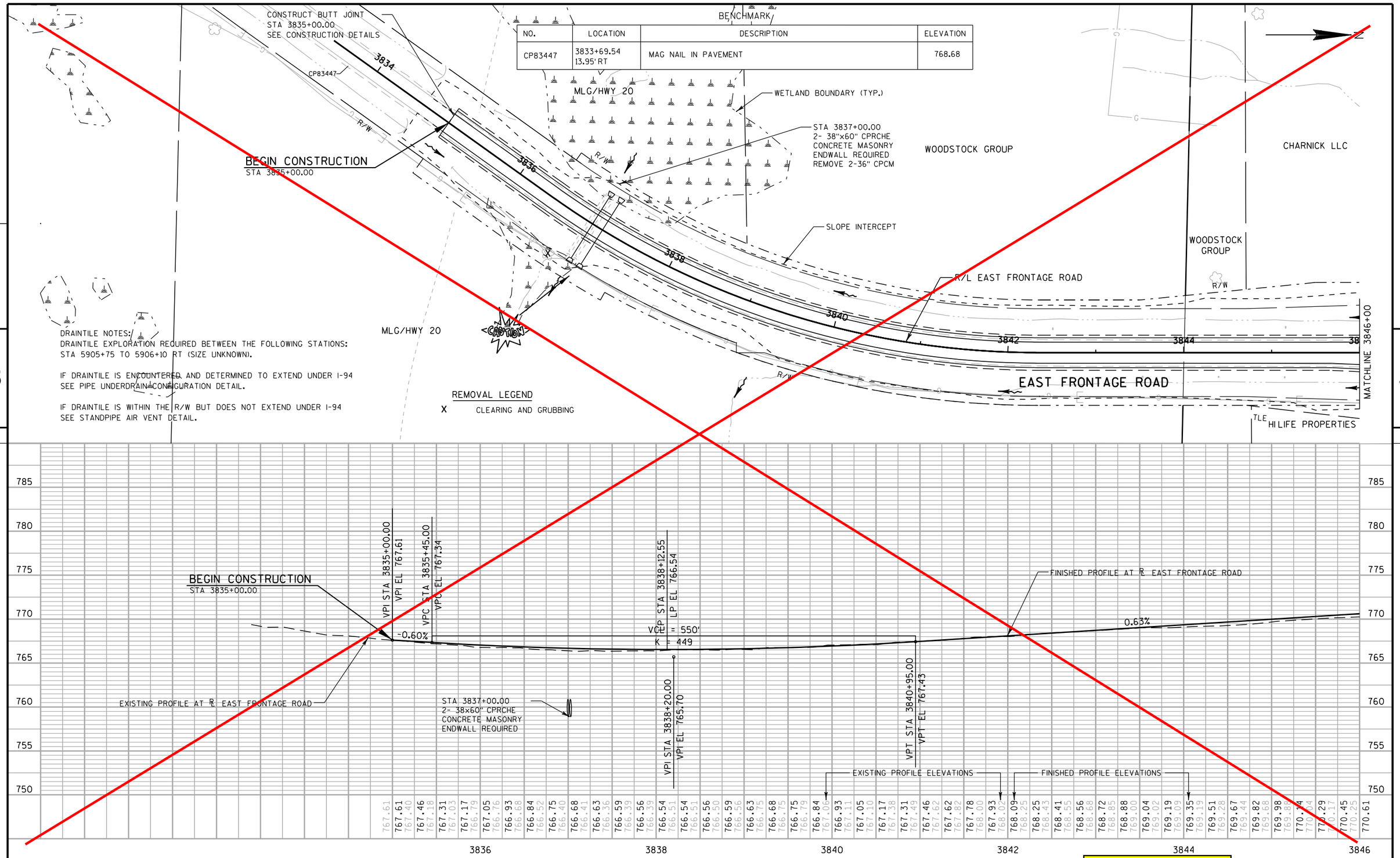

PROJECT NO:1033-02-70	HWY:IH 94/STH 20	COUNTY:RACINE	PLAN & PROFILE:EAST FRONTAGE ROAD	See new sheet #109	SHEET 109	E

FILE NAME : S:\FinalDesign\20\10330270_E\Roads\cds\050101_pp.dgn PLOT DATE : 07-DEC-2010 16:23 PLOT BY : MSCD1S PLOT NAME : 050101_pp PLOT SCALE : 100.0002:1

WISDOT/CADDS SHEET 40

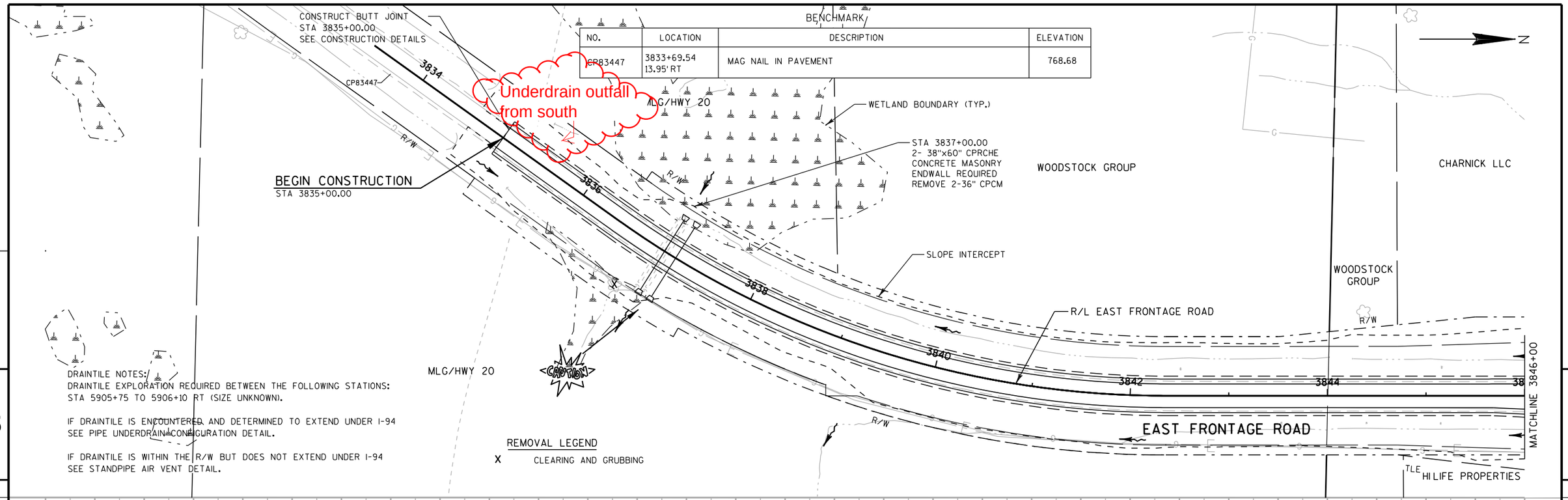

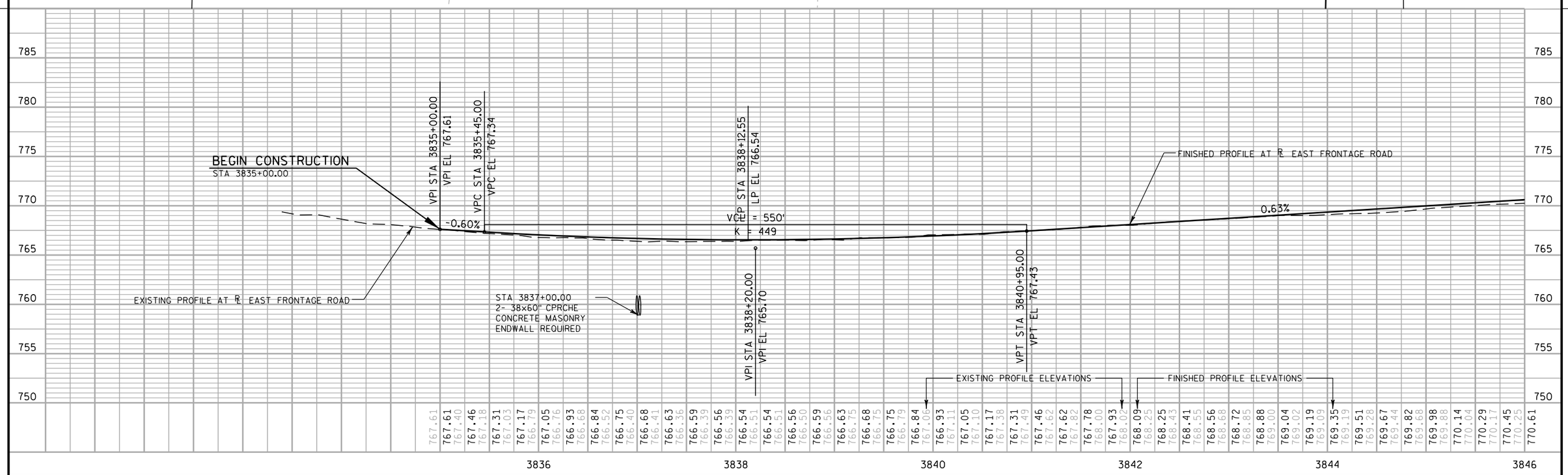

PROJECT NO:1033-02-70	HWY:IH 94/STH 20	COUNTY:RACINE	PLAN & PROFILE:EAST FRONTAGE ROAD	SHEET 109	E

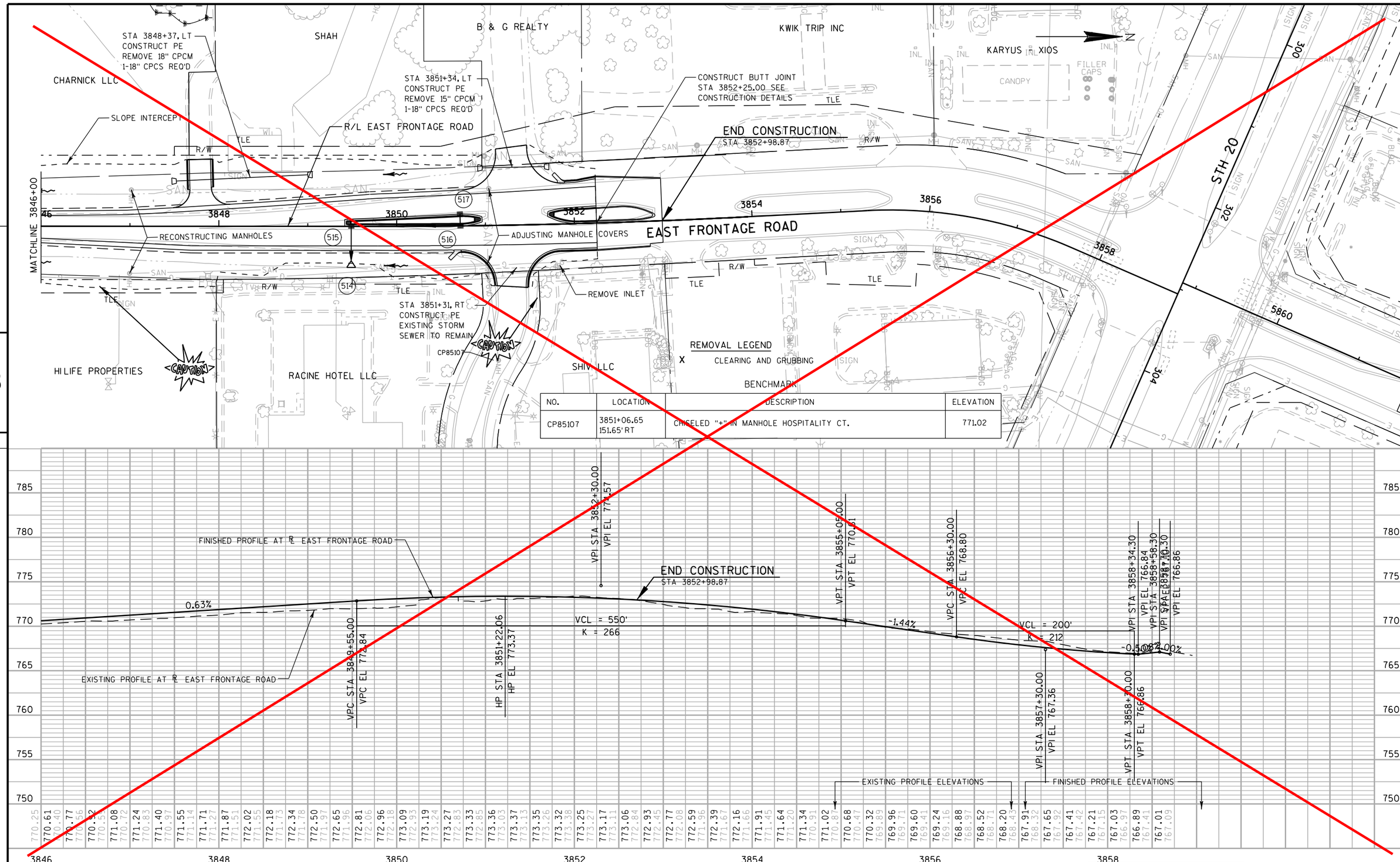

PROJECT NO:1033-02-70	HWY:IH 94/STH 20	COUNTY:RACINE	PLAN & PROFILE:EAST FRONTAGE ROAD	See new sheet #110	SHEET 110	E

FILE NAME : S:\FinalDesign\20\10330270_E\Roads\cds\050102_pp.dgn PLOT DATE : 07-DEC-2010 16:23 PLOT BY : MSCD1S PLOT NAME : 050102_pp PLOT SCALE : 100.0002:1

WISDOT/CADDS SHEET 40

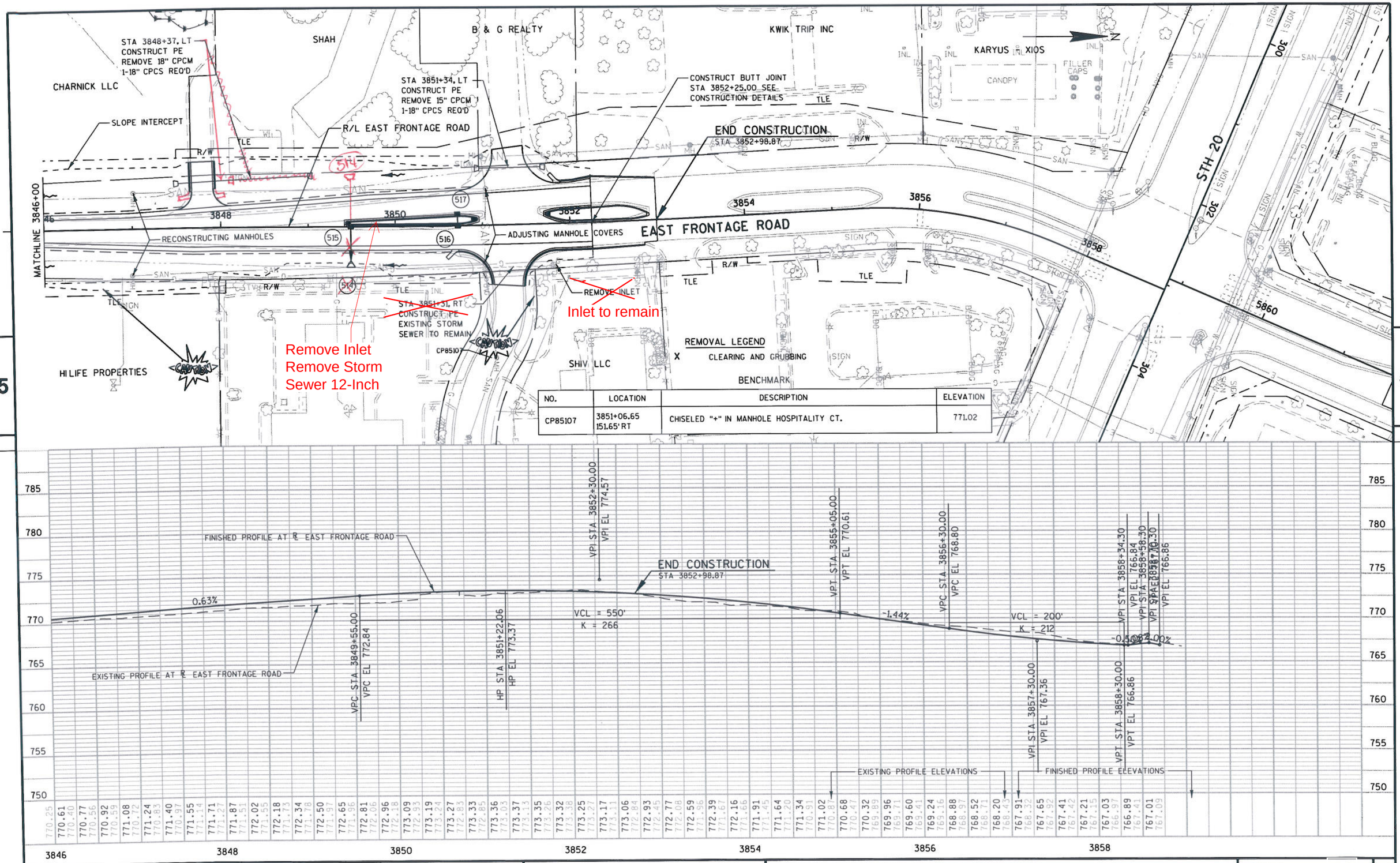

PROJECT NO:1033-02-70	HWY:IH 94/STH 20	COUNTY:RACINE	PLAN & PROFILE:EAST FRONTAGE ROAD	SHEET 110	E

FILE NAME : S:\FinalDesign\20\10330270_E\Roads\cds\050102_pp.dgn PLOT DATE : 07-DEC-2010 16:23 PLOT BY : MSCD1S PLOT NAME : 050102_pp PLOT SCALE : 100.0002:1 WISDOT/CADDS SHEET 40

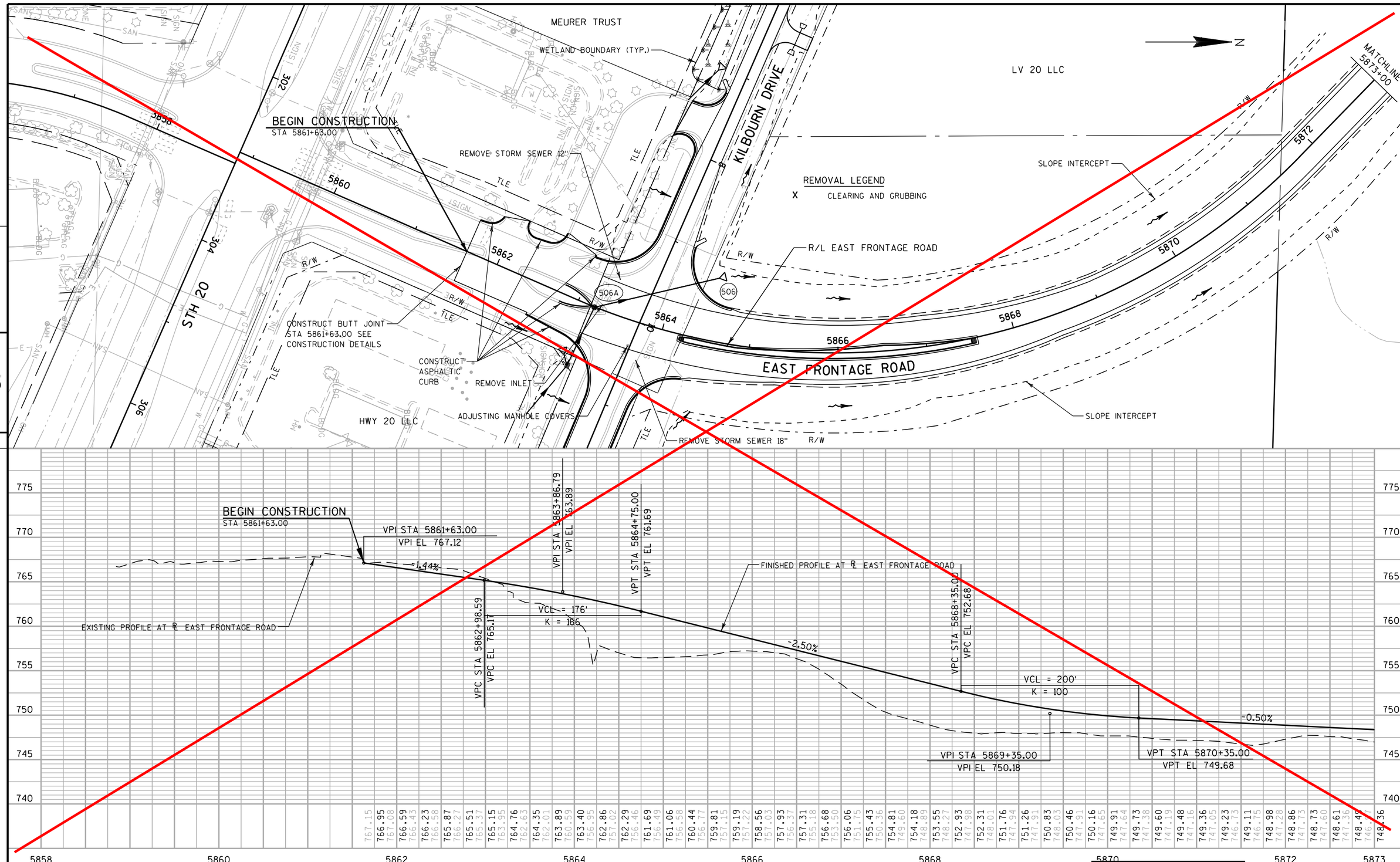

PROJECT NO:1033-02-70	HWY:IH 94/STH 20	COUNTY:RACINE	PLAN & PROFILE: EAST FRONTAGE ROAD	See new sheet #111	SHEET 111	E

FILE NAME : S:\FinalDesign\20\10330270_E\Roads\cds\050103_pp.dgn PLOT DATE : 07-DEC-2010 16:24 PLOT BY : MSCD1S PLOT NAME : 050103_pp PLOT SCALE : 100.0002:1

WISDOT/CADDS SHEET 40

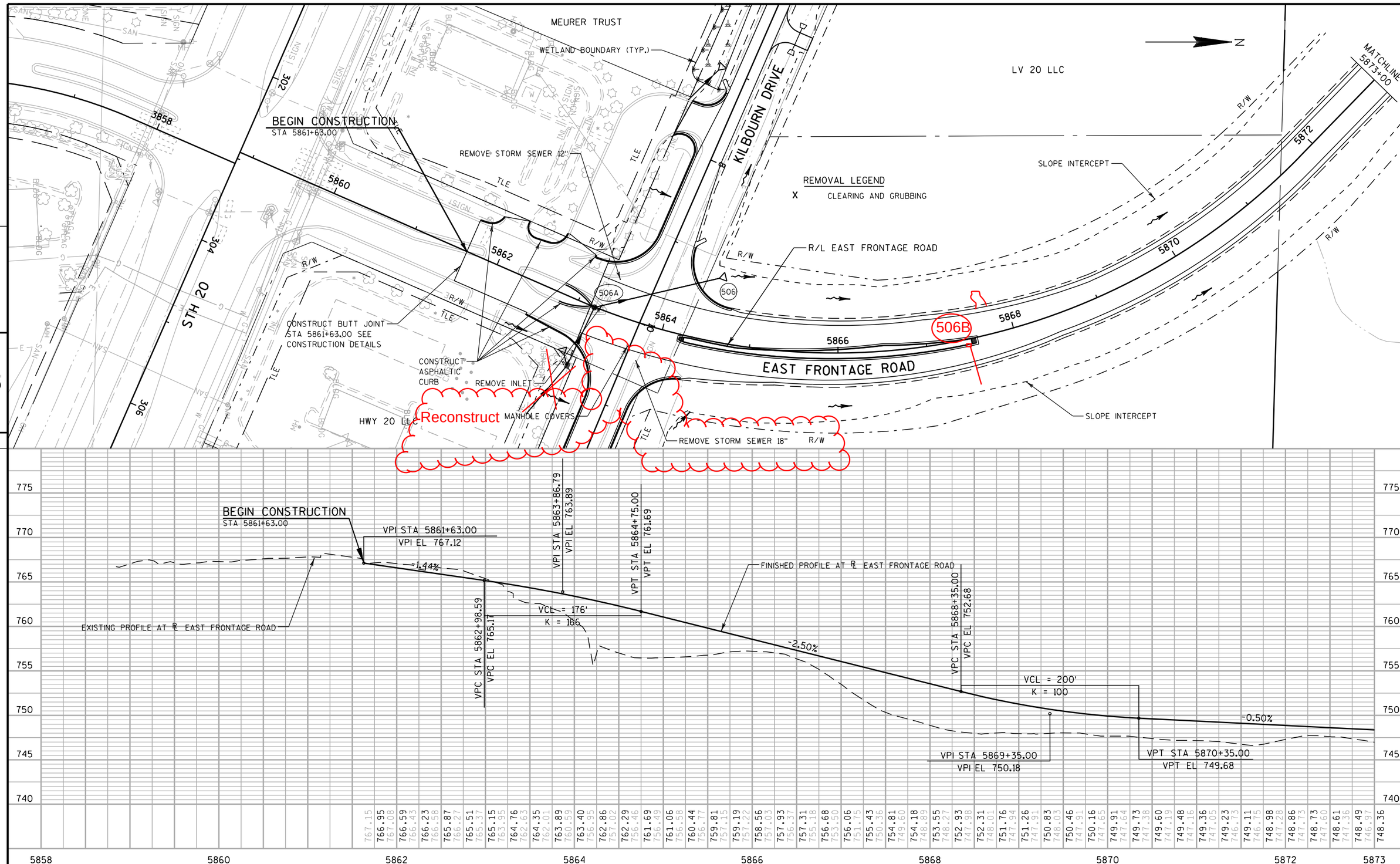

PROJECT NO:1033-02-70	HWY:IH 94/STH 20	COUNTY:RACINE	PLAN & PROFILE:EAST FRONTAGE ROAD	SHEET 111	E

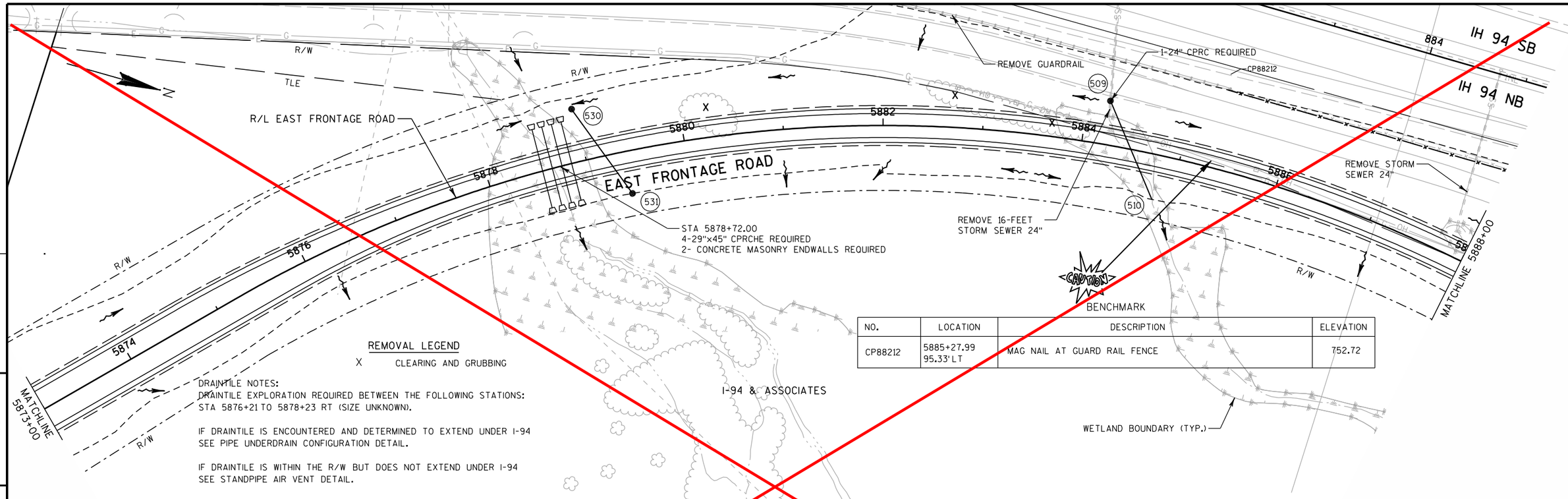

NO.	LOCATION	DESCRIPTION	ELEVATION
CP88212	5885+27.99 95.33' LT	MAG NAIL AT GUARD RAIL FENCE	752.72

REMOVAL LEGEND

X CLEARING AND GRUBBING

DRAINTILE NOTES:
DRAINTILE EXPLORATION REQUIRED BETWEEN THE FOLLOWING STATIONS:
STA 5876+21 TO 5878+23 RT (SIZE UNKNOWN).

IF DRAINTILE IS ENCOUNTERED AND DETERMINED TO EXTEND UNDER I-94
SEE PIPE UNDERDRAIN CONFIGURATION DETAIL.

IF DRAINTILE IS WITHIN THE R/W BUT DOES NOT EXTEND UNDER I-94
SEE STANDPIPE AIR VENT DETAIL.

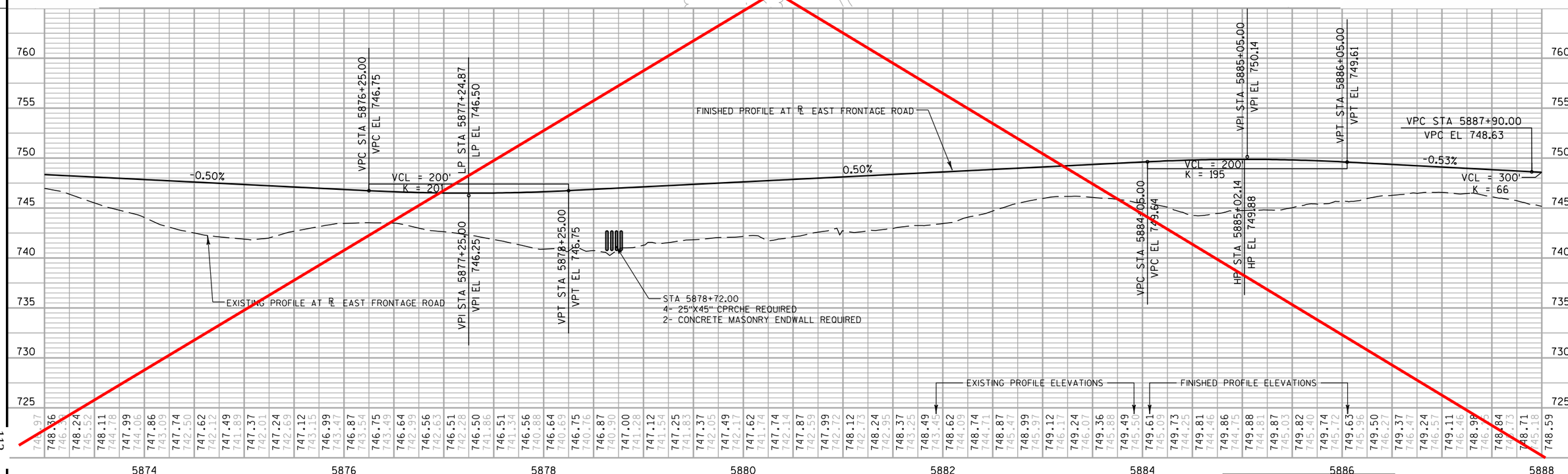

PROJECT NO: 1033-02-70	HWY: IH 94/STH 20	COUNTY: RACINE	PLAN & PROFILE: EAST FRONTAGE ROAD	See new sheet #112	SHEET	E

FILE NAME : C:\w3mtp\FinalDesign\20\10330270_E\Roads\cds\050104_pp.dgn PLOT DATE : 1/18/2011 PLOT BY : mtp94nscREMOTE PLOT NAME : $FILE$ PLOT SCALE : 1:100

WISDOT/CADDS SHEET 40

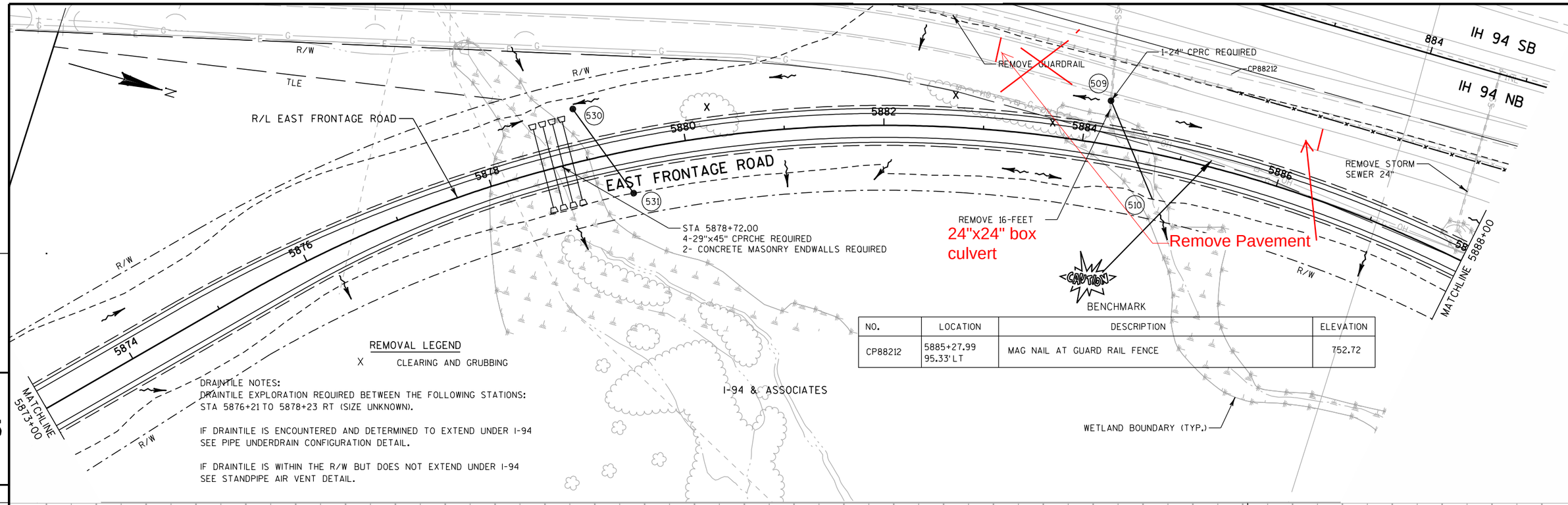

NO.	LOCATION	DESCRIPTION	ELEVATION
CP88212	5885+27.99 95.33' LT	MAG NAIL AT GUARD RAIL FENCE	752.72

REMOVAL LEGEND

X CLEARING AND GRUBBING

DRAINTILE NOTES:
DRAINTILE EXPLORATION REQUIRED BETWEEN THE FOLLOWING STATIONS:
STA 5876+21 TO 5878+23 RT (SIZE UNKNOWN).

IF DRAINTILE IS ENCOUNTERED AND DETERMINED TO EXTEND UNDER I-94
SEE PIPE UNDERDRAIN CONFIGURATION DETAIL.

IF DRAINTILE IS WITHIN THE R/W BUT DOES NOT EXTEND UNDER I-94
SEE STANDPIPE AIR VENT DETAIL.

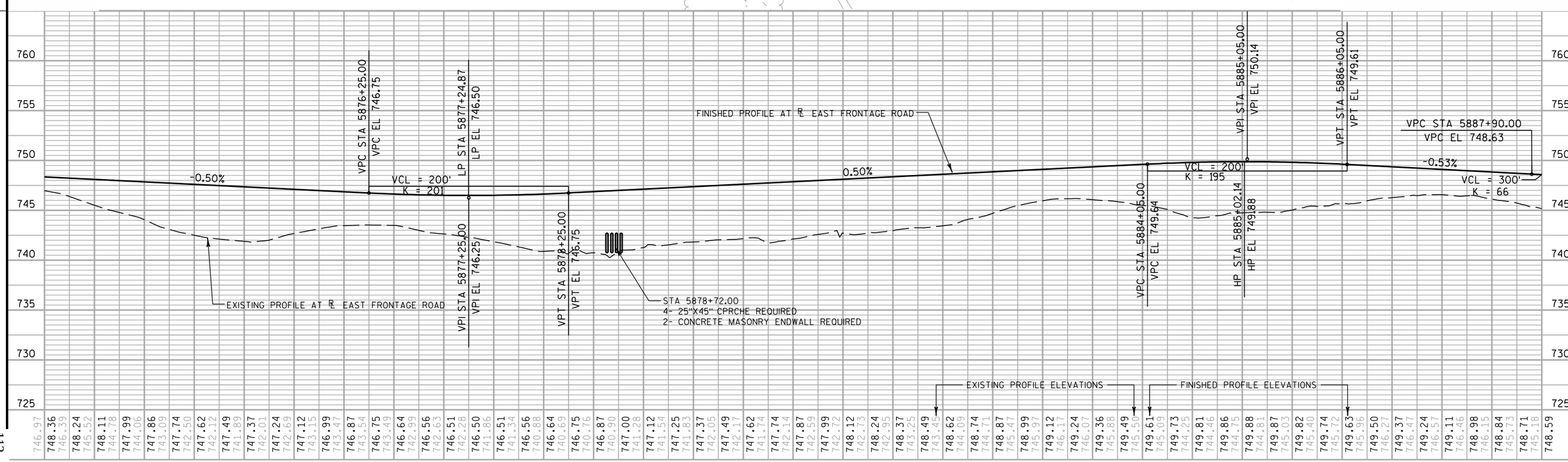

PROJECT NO:1033-02-70	HWY:IH 94/STH 20	COUNTY:RACINE	PLAN & PROFILE:EAST FRONTAGE ROAD	SHEET 112	E

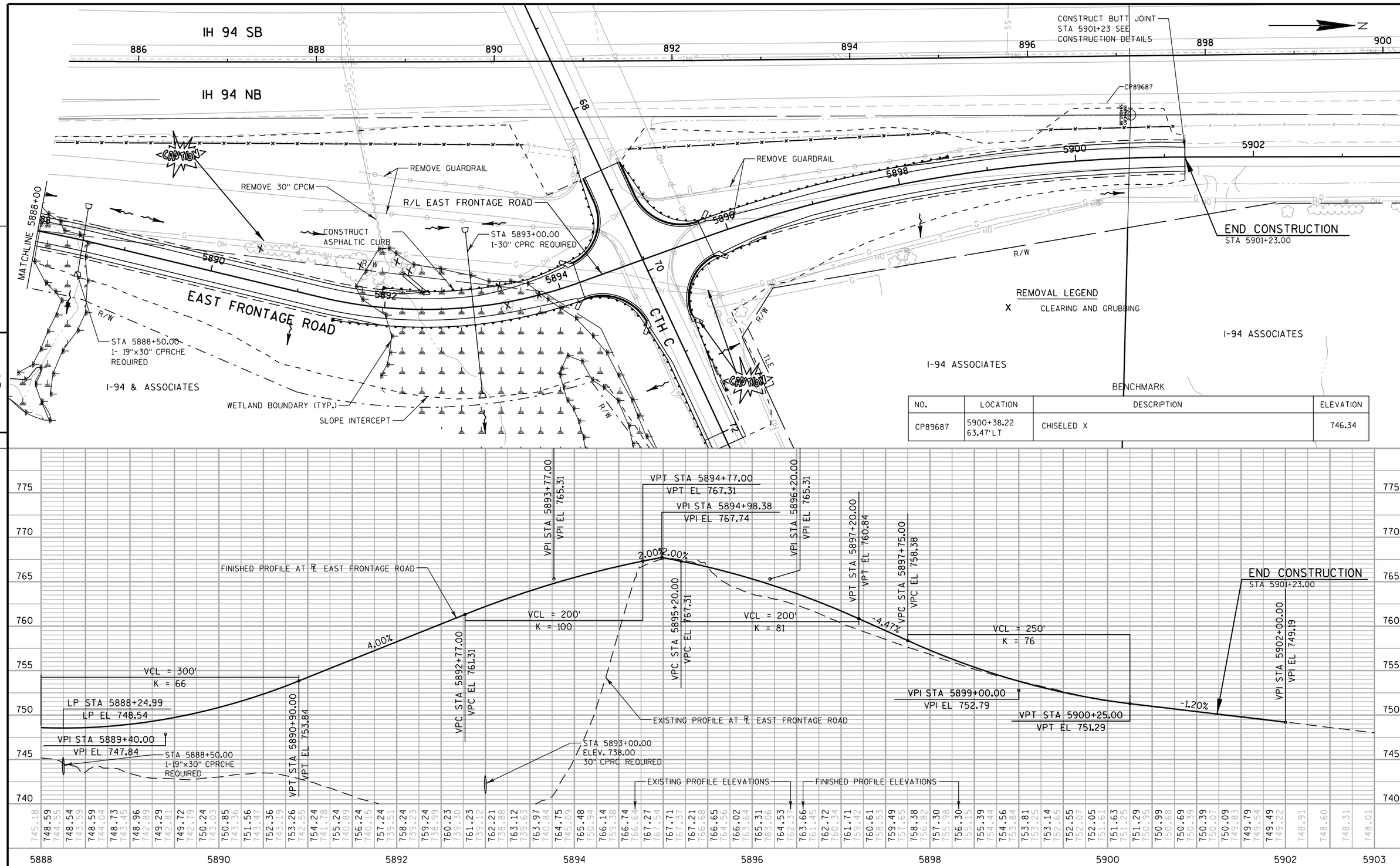

NO.	LOCATION	DESCRIPTION	ELEVATION
CP89687	5900+38.22 63.47' LT	CHISELED X	746.34

PROJECT NO:1033-02-70	HWY:IH 94/STH 20	COUNTY:RACINE	PLAN & PROFILE:EAST FRONTAGE ROAD	SHEET 113	E

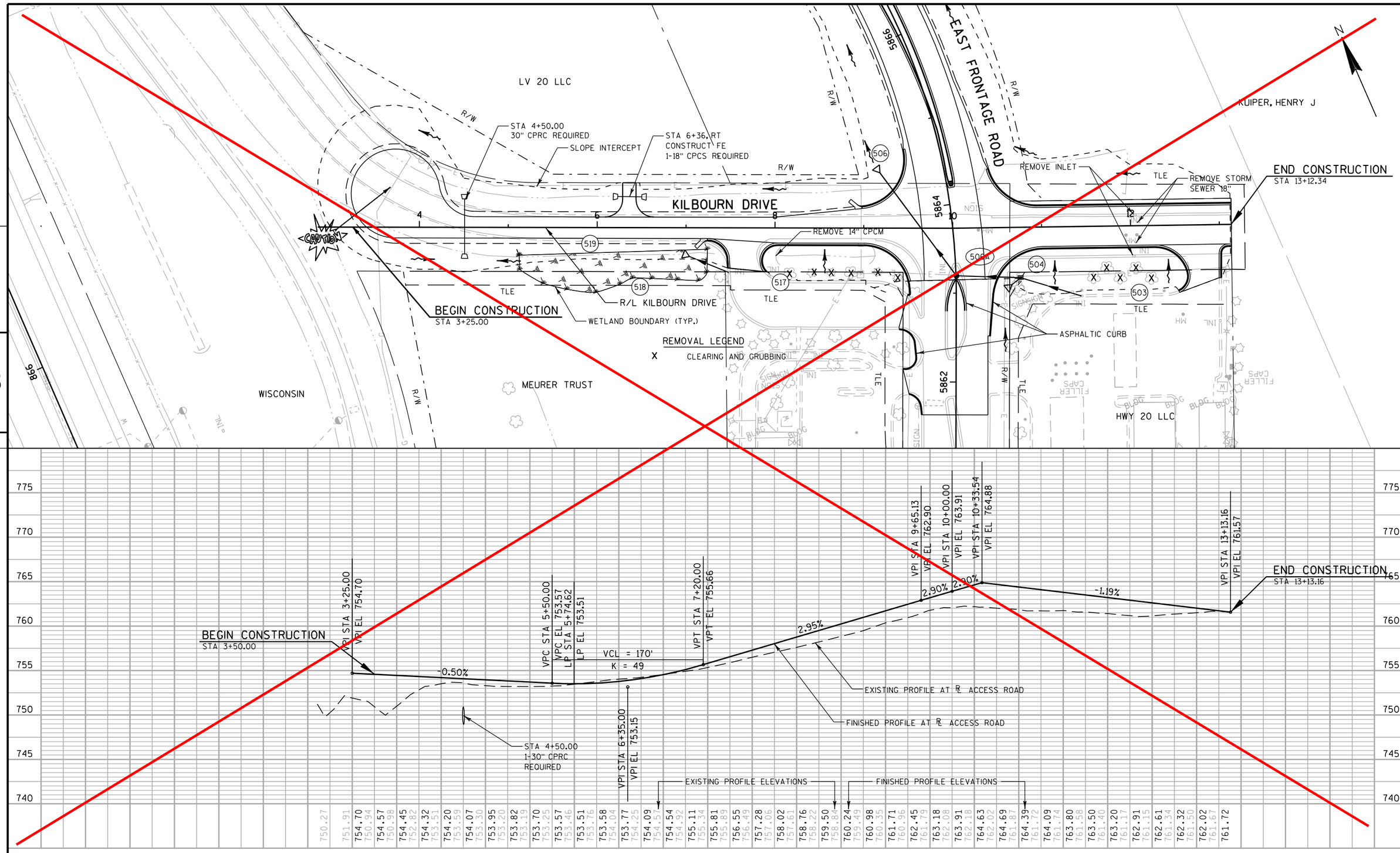

PROJECT NO:1033-02-70	HWY:IH 94/STH 20	COUNTY:RACINE	PLAN & PROFILE:KILBOURN DRIVE	See new sheet #114	SHEET 114	E

FILE NAME : S:\FinalDesign\20\10330270_E\Roads\cds\050106_pp.dgn PLOT DATE : 07-DEC-2010 16:25 PLOT BY : MSCD1S PLOT NAME : 050106_pp PLOT SCALE : 100.0002:1

WISDOT/CADDS SHEET 40

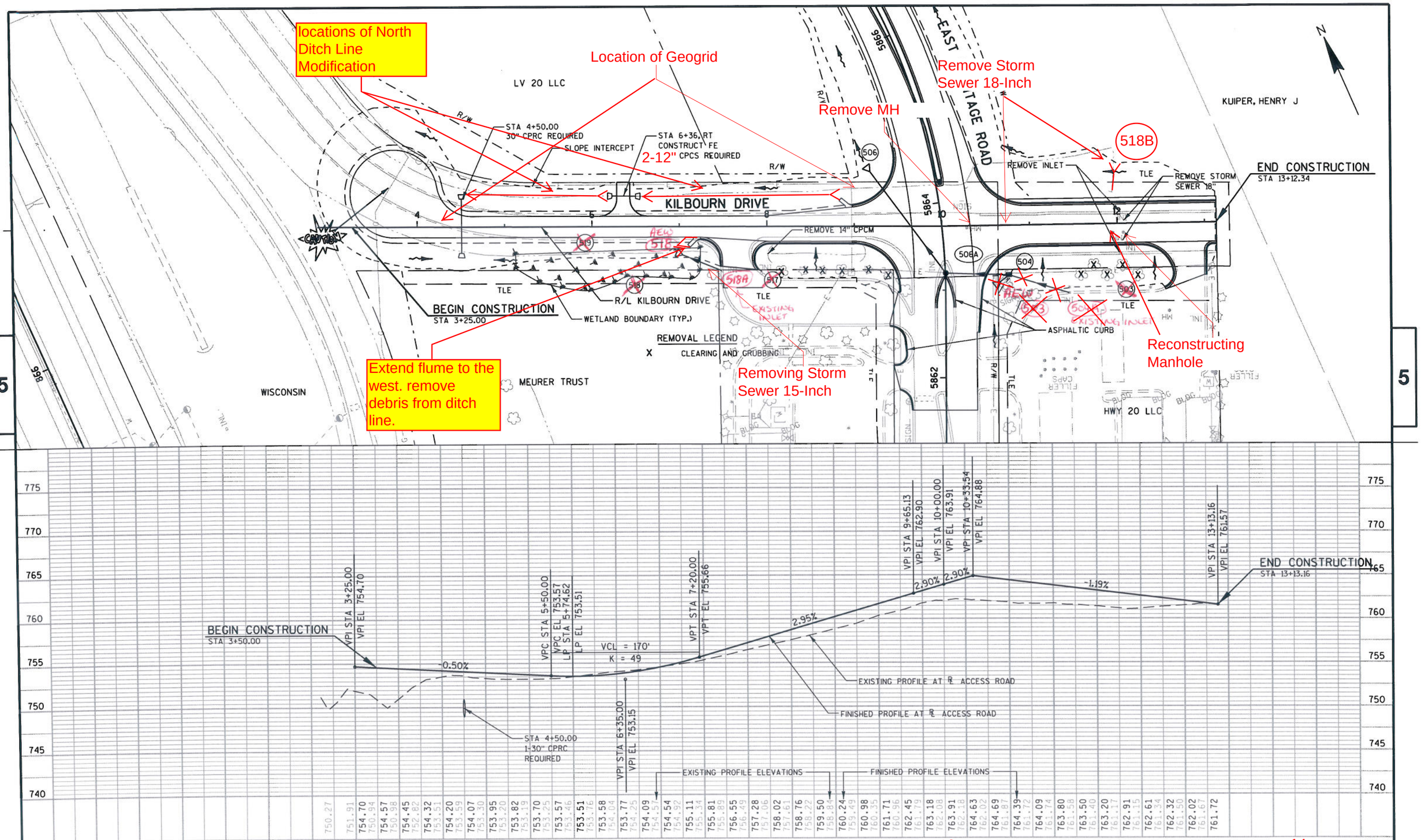
locations of North Ditch Line Modification
Location of Geogrid
Remove Storm Sewer 18-Inch
Remove MH
518B
LV 20 LLC
KUIPER, HENRY J
STA 4+50.00
30" CPRC REQUIRED
SLOPE INTERCEPT
STA 6+36, RT
CONSTRUCT FE
2-12" CPCS REQUIRED
KILBOURN DRIVE
EAST VINTAGE ROAD
REMOVE INLET
REMOVE STORM SEWER 18"
END CONSTRUCTION
STA 13+12.34
REMOVE 14" CPCM
BEGIN CONSTRUCTION
STA 3+25.00
R/L KILBOURN DRIVE
WETLAND BOUNDARY (TYP.)
REMOVAL LEGEND
X CLEARING AND GRUBBING
ASPHALTIC CURB
Reconstructing Manhole
Removing Storm Sewer 15-Inch
Extend flume to the west. remove debris from ditch line.
WISCONSIN
MEURER TRUST
HWY 20 LLC
BEGIN CONSTRUCTION
STA 3+50.00
VPI STA 3+25.00
VPI EL 754.70
0.50%
VPC STA 5+50.00
VPC EL 753.57
LP STA 5+74.62
LP EL 753.51
VCL = 170'
K = 49
VPT STA 7+20.00
VPT EL 755.66
VPI STA 6+35.00
VPI EL 753.15
2.95%
VPI STA 9+65.13
VPI EL 762.90
VPI STA 10+00.00
VPI EL 763.91
VPI STA 10+33.54
VPI EL 764.88
2.90%
2.90%
-1.19%
VPI STA 13+13.16
VPI EL 761.57
END CONSTRUCTION
STA 13+13.16
STA 4+50.00
1-30" CPRC
REQUIRED
EXISTING PROFILE AT ℞ ACCESS ROAD
FINISHED PROFILE AT ℞ ACCESS ROAD
EXISTING PROFILE ELEVATIONS
FINISHED PROFILE ELEVATIONS
PROJECT NO:1033-02-70
HWY:IH 94/STH 20
COUNTY:RACINE
PLAN & PROFILE:KILBOURN DRIVE
SHEET 114
E
FILE NAME : S:\FinalDesign\20\10330270_E\Roads\cds\050106_pp.dgn
PLOT DATE : 07-DEC-2010 16:25
PLOT BY : MSCD1S
PLOT NAME : 050106_pp
PLOT SCALE : 100.0002:1
WISDOT/CADDS SHEET 40

REMOVAL LEGEND

X CLEARING AND GRUBBING

TUBMAN

TUBMAN

GUTMAN

R/W

WALLS

R/L CTH C

CTH C

CONSTRUCT BUTT JOINT STA 68+75.00 SEE CONSTRUCTION DETAILS

BEGIN CONSTRUCTION

STA 68+75.00

892

890

888

5896

5894

CAUTION

CAUTION

SLOPE INTERCEPT

I-94 ASSOCIATES

TLE

REMOVE GUARDRAIL

REMOVE GUARDRAIL

WETLAND BOUNDARY (TYP.)

END CONSTRUCTION

STA 72+14.92

I-94 ASSOCIATES

FOOTBRIDGE

PACKEE

A/C

WEST FRONTAGE ROAD

IH 94 SB

IH 94 NB

EAST FRONTAGE ROAD

N

5

5

58 60 62 64 66 68 70 72

VPI STA 67+75.00

VPI EL 777.85

FINISHED PROFILE AT ℄ CTH C

BEGIN CONSTRUCTION

STA 68+75.00

EXISTING PROFILE AT ℄ CTH C

END CONSTRUCTION

STA 72+14.92

VPI STA 57+45.00

VPI EL 764.36

VPC STA 57+70.00

VPC EL 764.00

1.45%

VCL = 500'

K = 133

59+62.82

762.60

VPI STA 60+20.00

VPI EL 760.36

VPT STA 62+70.00

VPT EL 766.15

2.32%

VPC STA 63+95.00

VPC EL 769.05

66+64.52

772.17

VCL = 760'

K = 116

VPT STA 71+55.00

VPT EL 761.83

-4.22%

VPI STA 72+14.92

VPI EL 759.30

780 775 770 765 760 755 750 745

EXISTING PROFILE ELEVATIONS

764.66 764.28 764.29 763.89 763.92 763.42 763.59 763.14 763.31 762.95 763.08 762.80 762.89 762.72 762.74 762.65 762.65 762.63 762.60 762.59 762.60 762.69 762.65 762.79 762.74 762.88 762.88 763.07 763.07 763.38 763.30 763.71 763.59 764.00 763.92 764.14 764.29 764.56 764.72 765.11 765.19 765.74 765.70 766.32 766.27 766.89 766.85 767.31 767.43 767.88 768.00 768.44 768.58 768.95 769.16 769.59 769.70 770.07 770.19 770.57 770.62 770.95 771.00 771.24 771.33 771.49 771.60 771.62 771.82 771.74 771.99 771.91 772.10 754.37 772.16 749.57 772.16 749.91 772.11 749.24 772.01 749.34 771.85 749.86 771.64 748.87 771.38 756.06

FINISHED PROFILE ELEVATIONS

771.06 770.72 770.69 770.32 770.26 769.80 769.78 769.22 769.25 768.60 768.66 767.86 768.02 767.09 767.33 766.41 766.58 765.75 765.78 765.03 764.92 764.12 764.01 763.09 763.05 762.06 762.04 761.00 760.98 759.93 759.93 758.84

58 60 62 64 66 68 70 72

PROJECT NO:1033-02-70	HWY:IH 94/STH 20	COUNTY:RACINE	PLAN & PROFILE: CTH C	SHEET 115	E

Standard Detail Drawing List

08A5-16B	INLET COVERS TYPE B, B-A, C, MS, MS-A, & WM
08A5-17C	INLET COVERS TYPE F, HM, HM-S, S, T, V, HM-GJ, & HM-GJ-S
08A5-17D	INLET COVER, TYPE Z MANHOLE COVERS, TYPE K, J, J-S, J-H, J-H-S, L & M
08B6-4	MANHOLES TYPE 1
08C1-5	INLETS TYPE 1, 2, 3 & 4
08C5-2	INLETS TYPE 8, 9, 10, AND 11
08D1-17	CONCRETE CURB, CONCRETE CURB AND GUTTER AND TIES
08D4-5	CONCRETE SURFACE DRAINS & ASPHALTIC FLUMES
08E8-3	TYPICAL INSTALLATIONS OF EROSION BALES / TEMPORARY DITCH CHECKS
08E9-6	SILT FENCE
08E10-2	INLET PROTECTION TYPE A, B, C AND D
08F1-11	APRON ENDWALLS FOR CULVERT PIPE
08F2-1	APRON ENDWALLS FOR PIPE ARCH AND ELLIPTICAL PIPE
08F4-6	JOINT TIES FOR CONCRETE PIPE
08F8-1	SLOPED STEEL ENDWALLS FOR CULVERT PIPE AND PIPE ARCH CROSS DRAINS
09A1-12A	AT-GRADE SIDE ROAD INTERSECTION, TYPES "B1", "B2", "C" AND D AND TEE INTERSECTION BYPASS LANE
09A1-12B	AT-GRADE SIDE ROAD INTERSECTION, TYPE "A1" & "A2"
11B2-2	CONCRETE MEDIAN NOSE
13C1-14	CONCRETE PAVEMENT LONGITUDINAL JOINTS AND TIES
13C11-10A	RURAL DOWELED CONCRETE PAVEMENT
13C11-10B	RURAL DOWELED CONCRETE PAVEMENT
13C13-7	URBAN DOWELED CONCRETE PAVEMENT
14B15-6A	STEEL PLATE BEAM GUARD, CLASS "A" INSTALLATION & ELEMENTS
14B15-6B	STEEL PLATE BEAM GUARD, CLASS "A" INSTALLATION & ELEMENTS
14B18-6A	STEEL PLATE BEAM GUARD, CLASS "A" (AT BRIDGES, OBSTACLES AND SIDEROADS/DRIVEWAYS)
14B20-9A	STEEL THRIE BEAM STRUCTURE APPROACH
14B24-7A	STEEL PLATE BEAM GUARD ENERGY ABSORBING TERMINAL
14B24-7B	STEEL PLATE BEAM GUARD ENERGY ABSORBING TERMINAL
14B24-7C	STEEL PLATE BEAM GUARD ENERGY ABSORBING TERMINAL
15A3-1	MARKER POSTS, FLEXIBLE, FOR CULVERT END
15B1-8A	FENCE WOVEN WIRE
15B1-8B	FENCE WOVEN WIRE
15C3-1	BARRICADES AND SIGNS FOR SIDEROAD CLOSURES
15C7-11D	PAVEMENT MARKING ARROWS
15C8-13A	PAVEMENT MARKING (MAINLINE)
15C8-13F	PAVEMENT MARKING (ISLANDS, STOP LINE & CROSS WALK)
15C18-3	MEDIAN ISLAND MARKING
15C21-3	SIGNING AND MARKING FOR TWO LANE TO FOUR LANE DIVIDED TRANSITIONS
15D11-3	TRAFFIC CONTROL, SINGLE LANE CROSSOVER
15D20-1	TRAFFIC CONTROL, SINGLE LANE CLOSURE, NON-FREEWAY/EXPRESSWAY
15D21-1	TRAFFIC CONTROL, INTERSECTION WITHIN SINGLE LANE CLOSURE
16A1-6	LANDMARK REFERENCE MONUMENTS AND COVERS

6

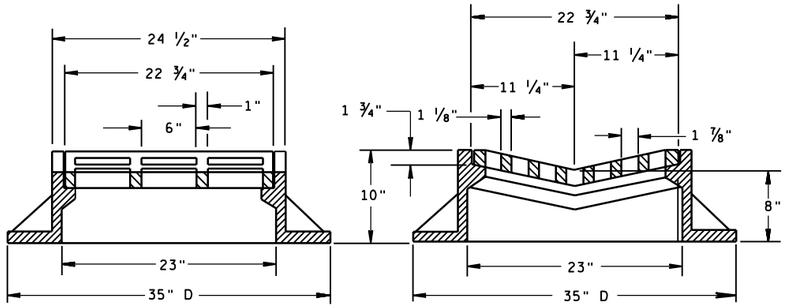

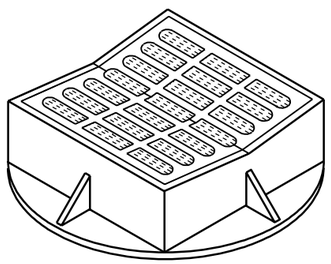

TYPE "B"

(APPROXIMATE WEIGHT 395 LBS.)

FRAME..... 285 LBS.
GRATE..... 110 LBS.

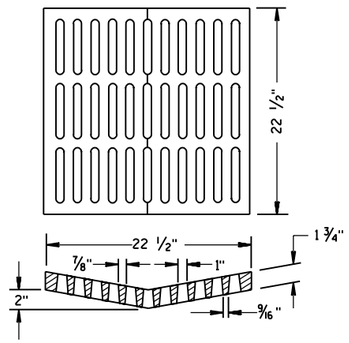

ALTERNATIVE GRATE FOR TYPE "B" COVER

(APPROXIMATE GRATE WEIGHT 125 LBS.)
GRATE.....125 LBS.

USE WHERE PEDESTRIAN OR BICYCLE TRAFFIC IS POSSIBLE.

NOTED AS TYPE B-A ON THE DRAINAGE TABLE

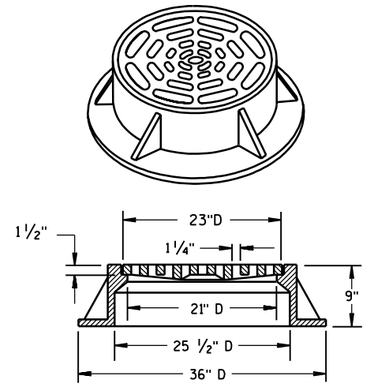

TYPE "C"

(APPROXIMATE WEIGHT 340 LBS.)

FRAME..... 235 LBS.
GRATE..... 105 LBS.

GENERAL NOTES

DETAILS OF CONSTRUCTION, MATERIALS AND WORKMANSHIP NOT SHOWN ON THIS DRAWING SHALL CONFORM TO THE PERTINENT REQUIREMENTS OF THE STANDARD SPECIFICATIONS AND THE APPLICABLE SPECIAL PROVISIONS.

DETAIL DRAWINGS FOR PROPOSED ALTERNATE DESIGNS FOR CATCH BASIN, MANHOLE AND INLET COVERS SHALL BE SUBMITTED TO THE ENGINEER FOR APPROVAL PROVIDING THAT SUCH ALTERNATE DESIGNS MAKE PROVISION FOR EQUIVALENT CAPACITY AND STRENGTH.

ROUND FRAMES AND COVERS SHALL HAVE CONTINUOUSLY MACHINED BEARING SURFACES TO PREVENT ROCKING AND RATTLING.

THE ACTUAL WEIGHT OF COVERS MAY VARY WITHIN 5 PERCENT, PLUS OR MINUS, OF THE APPROXIMATE WEIGHT.

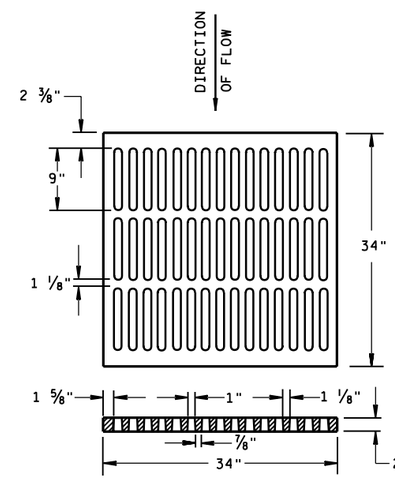

ALTERNATIVE TYPE "MS"

(APPROXIMATE GRATE WEIGHT 365 LBS.)
GRATE.....365 LBS.

USE WHERE PEDESTRIAN OR BICYCLE TRAFFIC IS PERMITTED

NOTED AS TYPE MS-A ON THE DRAINAGE TABLE

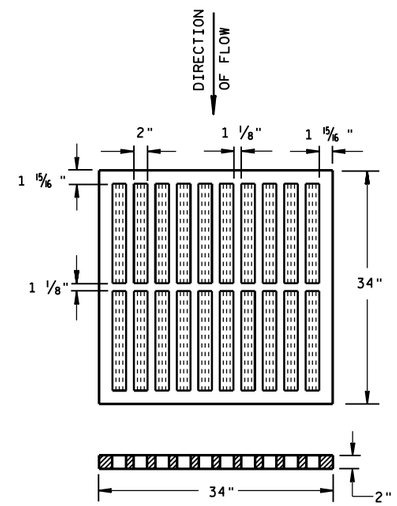

TYPE "MS"

(APPROXIMATE GRATE WEIGHT 270 LBS.)
GRATE.....270 LBS.

USE ON FREEWAYS AND EXPRESSWAYS

NOTED AS TYPE MS ON DRAINAGE TABLE

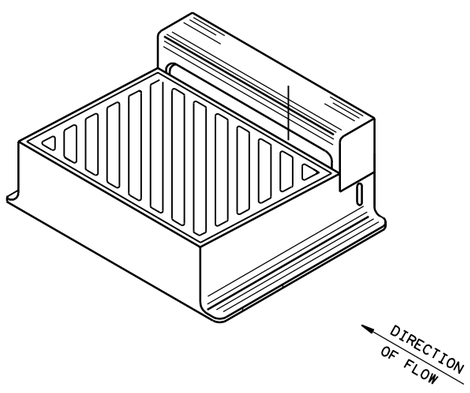

DIAGONAL SLOTS, SHALL BE ORIENTED TO THE DIRECTION OF FLOW AS ILLUSTRATED. GRATES ARE MANUFACTURED TO BE REVERSIBLE.

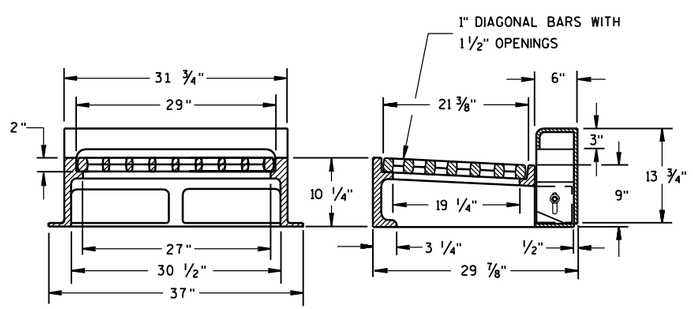

NOTE: CURB BOX HEIGHT ADJUSTABLE 6" TO 9"

TYPE "WM"

(APPROXIMATE WEIGHT 670 LBS.)

FRAME..... 360 LBS.
GRATE..... 160 LBS.
CURB BOX..... 150 LBS.

INLET COVERS
TYPE B, B-A, C, MS, MS-A, & WM

STATE OF WISCONSIN
DEPARTMENT OF TRANSPORTATION

APPROVED
10/4/99
DATE
FHWA

CHIEF ROADWAY DEVELOPMENT ENGINEER

6

S.D.D. 8 A 5-16b

6

S.D.D. 8 A 5-16b

GENERAL NOTES

DETAILS OF CONSTRUCTION, MATERIALS AND WORKMANSHIP NOT SHOWN ON THIS DRAWING SHALL CONFORM TO THE PERTINENT REQUIREMENTS OF THE STANDARD SPECIFICATIONS AND THE APPLICABLE SPECIAL PROVISIONS.

DETAIL DRAWINGS FOR PROPOSED ALTERNATE DESIGNS FOR INLET COVERS SHALL BE SUBMITTED TO THE ENGINEER FOR APPROVAL PROVIDING THAT SUCH ALTERNATE DESIGNS MAKE PROVISION FOR EQUIVALENT CAPACITY AND STRENGTH.

THE ACTUAL WEIGHT OF COVERS MAY VARY WITHIN 5 PERCENT, PLUS OR MINUS, OF THE APPROXIMATE WEIGHT.

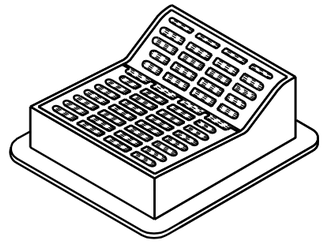

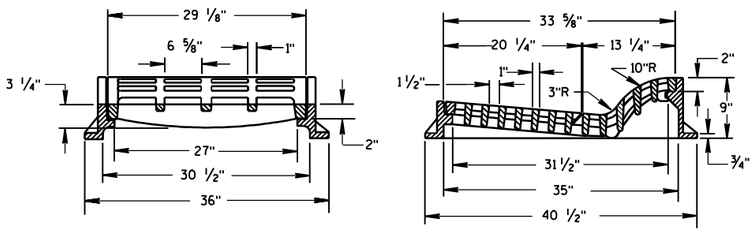

TYPE "F"

(APPROXIMATE WEIGHT 645 LBS.)

FRAME.....300 LBS.
GRATE..... 165 LBS.
GRATE..... 180 LBS.

USE WITH TYPES A & D CONCRETE CURB & GUTTER, 36 INCH.

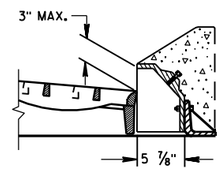

ALTERNATIVE CURB BOX FOR TYPE "HM" COVER

(APPROXIMATE WEIGHT 79 LBS.)
CURB BOX.....79 LBS.

USE WITH TYPES G & J CONCRETE CURB & GUTTER, 30 INCH
NOTED AS TYPE HM-GJ ON DRAINAGE TABLE

NOTE:
SPECIAL GRATE FOR THE TYPE "H" COVER MAY ALSO BE USED FOR THE TYPE "HM-GJ" COVER
NOTED AS TYPE HM-GJ-S ON DRAINAGE TABLE

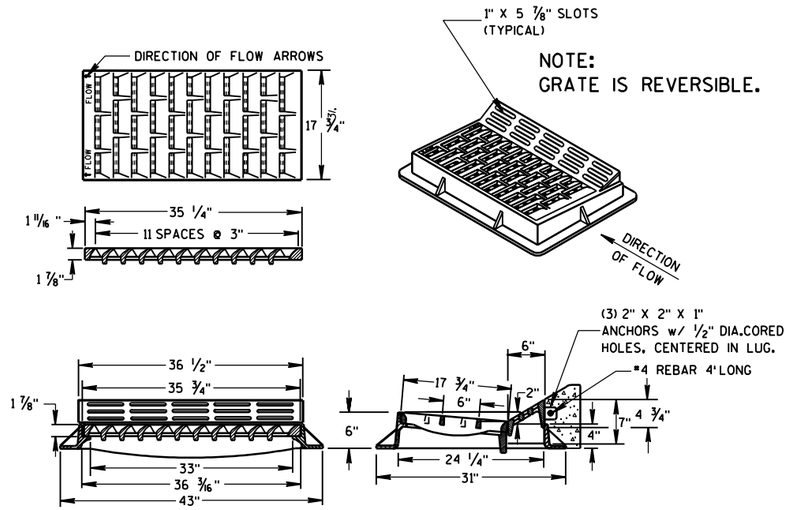

NOTE:
GRATE IS REVERSIBLE.

TYPE "HM"

(APPROXIMATE WEIGHT 375 LBS.)

FRAME.....175 LBS.
GRATE..... 138 LBS.
CURB BOX..... 62 LBS.

USE WITH TYPES A & D CONCRETE CURB & GUTTER, 36 INCH.

NOTE:
SPECIAL GRATE FOR THE TYPE "H" COVER MAY ALSO BE USED FOR THE TYPE "HM" COVER
NOTED AS TYPE HM-S ON DRAINAGE TABLE

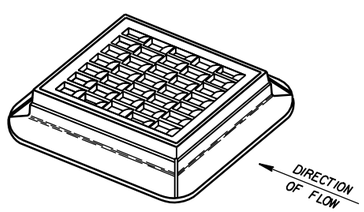

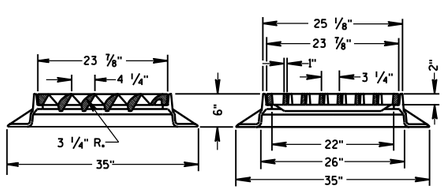

TYPE "S"

(APPROXIMATE WEIGHT 334 LBS.)

FRAME.....165 LBS.
GRATE..... 169 LBS.

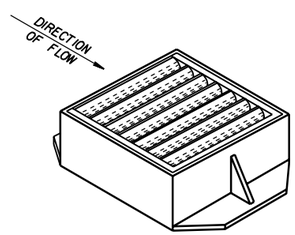

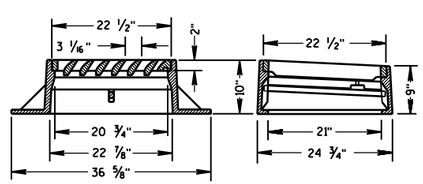

TYPE "V"

(APPROXIMATE WEIGHT 405 LBS.)

FRAME..... 270 LBS.
GRATE..... 130 LBS.
SAFETY BAR..... 5 LBS.

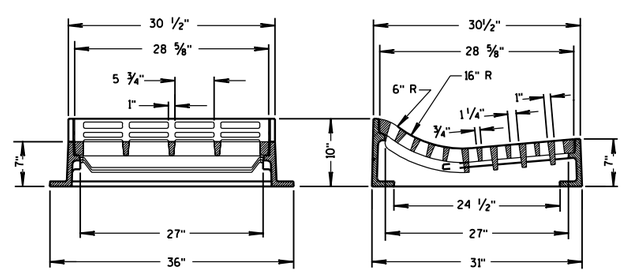

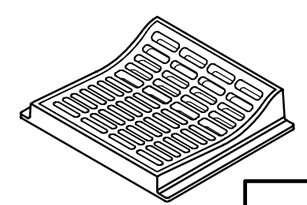

TYPE "T"

(APPROXIMATE WEIGHT 530 LBS.)

FRAME.....270 LBS.
GRATE.....260 LBS.

USE WITH TYPES R & T CONCRETE CURB & GUTTER, 30 INCH.

INLET COVERS
TYPE F, HM, HM-S, S, T, V, HM-GJ, & HM-GJ-S

STATE OF WISCONSIN
DEPARTMENT OF TRANSPORTATION

APPROVED
12/17/07 — DATE
/S/ Jerry H. Zogg — ROADWAY STANDARDS DEVELOPMENT ENGINEER
FHWA

6

S.D.D. 8 A 5-17c

6

S.D.D. 8 A 5-17c

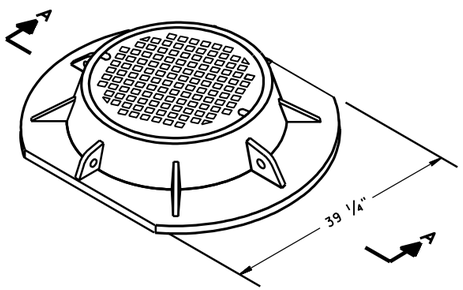

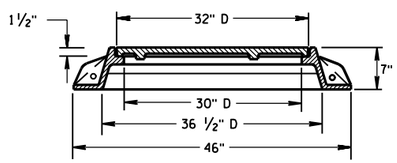

SECTION A-A

TYPE "K"

(APPROXIMATE WEIGHT 415 LBS.)

FRAME.....210 LBS.
LID.....205 LBS.

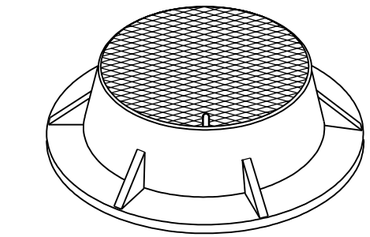

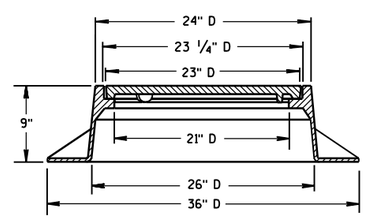

TYPE "J"

(APPROXIMATE WEIGHT 250 LBS.)

FRAME.....135 LBS.
LID.....115 LBS.

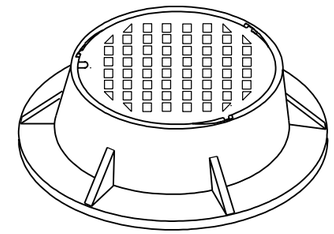

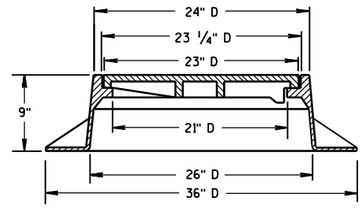

TYPE "J" SPECIAL

TYPE "B" NON-ROCKING SELF-SEAL LID

(APPROXIMATE WEIGHT 245 LBS.)

FRAME.....145 LBS.
LID.....100 LBS.

(NOTED AS TYPE J-S ON THE DRAINAGE TABLE)

GENERAL NOTES

DETAILS OF CONSTRUCTION, MATERIALS AND WORKMANSHIP NOT SHOWN ON THIS DRAWING SHALL CONFORM TO THE PERTINENT REQUIREMENTS OF THE STANDARD SPECIFICATIONS AND THE APPLICABLE SPECIAL PROVISIONS.

DETAIL DRAWINGS FOR PROPOSED ALTERNATE DESIGNS FOR MANHOLE COVERS SHALL BE SUBMITTED TO THE ENGINEER FOR APPROVAL PROVIDING THAT SUCH ALTERNATE DESIGNS MAKE PROVISION FOR EQUIVALENT CAPACITY AND STRENGTH.

ROUND FRAMES AND COVERS SHALL HAVE CONTINUOUSLY MACHINED BEARING SURFACES TO PREVENT ROCKING AND RATTLING.

THE ACTUAL WEIGHT OF COVERS MAY VARY WITHIN 5 PERCENT, PLUS OR MINUS, OF THE APPROXIMATE WEIGHT.

(1) MANUFACTURER MAY PROVIDE ADDITIONAL SEALS OR GASKETS.

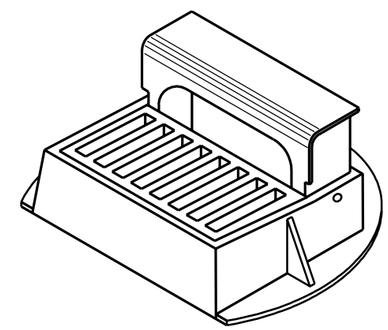

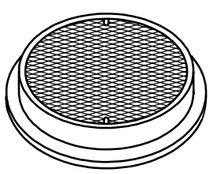

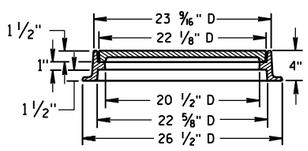

TYPE "L"

(APPROXIMATE WEIGHT 145 LBS.)

FRAME.....75#
LID.....70#

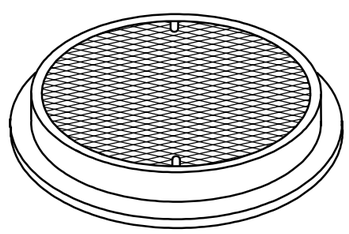

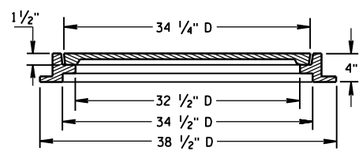

TYPE "M"

(APPROXIMATE WEIGHT 385 LBS.)

FRAME.....125#
LID.....260#

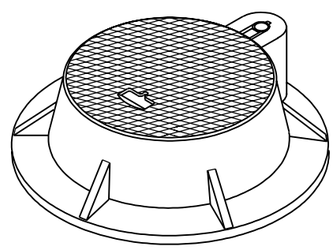

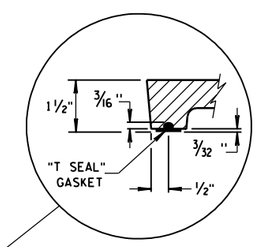

"T SEAL" GASKET DETAIL

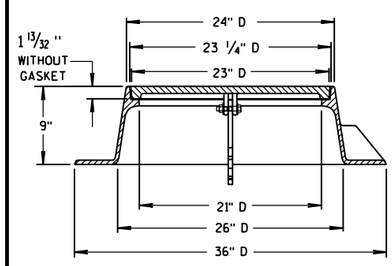

TYPE "J" HINGED

LID WITHOUT "T SEAL" GASKET

(APPROXIMATE WEIGHT 310 LBS.)

FRAME.....190 LBS.
LID.....120 LBS.

(NOTED AS TYPE J-H ON THE DRAINAGE TABLE)

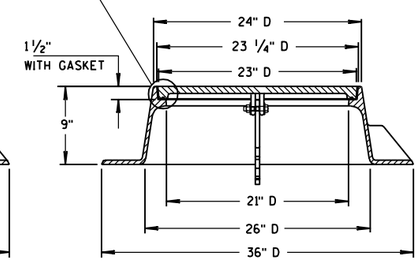

TYPE "J" HINGED-SPECIAL (1)

LID WITH "T SEAL" GASKET

(APPROXIMATE WEIGHT 310 LBS.)

FRAME.....190 LBS.
LID.....120 LBS.

(NOTED AS TYPE J-S-H ON THE DRAINAGE TABLE)

CURB BOX ADJUSTABLE 4" TO 10"

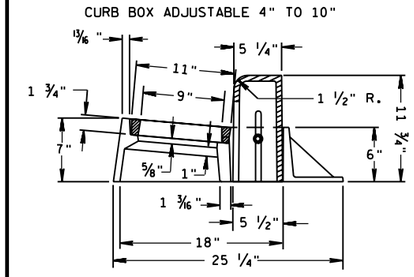

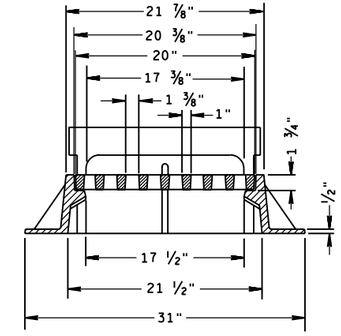

INLET COVER TYPE "Z"

(APPROXIMATE WEIGHT 340 LBS.)

FRAME.....198 LBS.
GRATE..... 50 LBS.
CURB BOX..... 92 LBS.

INLET COVER, TYPE Z
MANHOLE COVERS, TYPE
K, J, J-S, J-H, J-H-S, L & M

STATE OF WISCONSIN
DEPARTMENT OF TRANSPORTATION

APPROVED
4-29-05
DATE
FHWA

CHIEF ROADWAY DEVELOPMENT ENGINEER

6

6

S.D.D. 8 A 5-17d

S.D.D. 8 A 5-17d

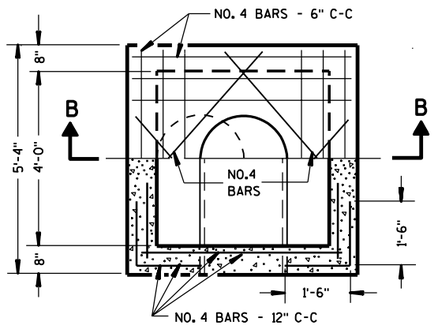

HALF SECTION A-A

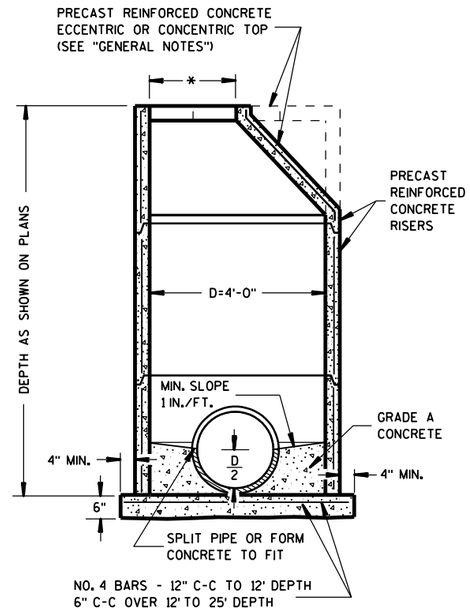

PRECAST REINFORCED CONCRETE

GENERAL NOTES

DETAILS OF CONSTRUCTION, MATERIALS AND WORKMANSHIP NOT SHOWN ON THIS DRAWING SHALL CONFORM TO THE PERTINENT REQUIREMENTS OF THE STANDARD SPECIFICATIONS AND THE APPLICABLE SPECIAL PROVISIONS.

DETAILED DRAWINGS FOR PROPOSED ALTERNATE DESIGNS FOR UNDERGROUND DRAINAGE STRUCTURES SHALL BE SUBMITTED TO THE ENGINEER FOR APPROVAL PROVIDING THAT SUCH ALTERNATE DESIGNS MAKE PROVISION FOR EQUIVALENT CAPACITY AND STRENGTH.

ALL DRAINAGE STRUCTURES ARE DESIGNATED ON THE PLANS AS "MANHOLES 1-C", "CATCH BASINS 1-B", "INLETS 3-H", ETC. THE FIRST DIGIT DESIGNATES THE MASONRY PORTION OF THE STRUCTURE, AND THE FOLLOWING LETTER DESIGNATES THE TYPE OF COVER TO BE USED TO COMPRISE THE COMPLETE UNIT.

PRECAST REINFORCED BASES SHALL BE PLACED ON A BED OF MATERIAL AT LEAST 6 INCHES IN DEPTH, WHICH MEETS THE REQUIREMENTS OF GRANULAR BACKFILL. THIS BEDDING SHALL BE COMPACTED AND PROVIDE UNIFORM SUPPORT FOR THE ENTIRE AREA OF THE BASE.

PRECAST REINFORCED CONE TOPS (ECCENTRIC OR CONCENTRIC) MAY BE USED ON CONCRETE BLOCK STRUCTURES. THE CONE TOPS SHALL BE INSTALLED ON A BED OF MORTAR.

ECCENTRIC CONE TOPS MAY BE USED ON ALL STRUCTURES, AND CONCENTRIC CONE TOPS SHALL BE USED ONLY ON STRUCTURES 5 FEET OR LESS IN DEPTH, UNLESS OTHERWISE DIRECTED BY THE ENGINEER.

STEPS CONFORMING TO AASHTO M 199 SHALL BE INSTALLED IN ALL STRUCTURES OVER 5 FEET IN DEPTH.

SOLID ALUMINUM STEPS SHALL HAVE A MINIMUM CROSS SECTIONAL DIMENSION OF 0.75 INCH. ALUMINUM SURFACES TO BE EMBEDDED IN CONCRETE SHALL BE GIVEN ONE COAT OF SUITABLE QUALITY PAINT, SUCH AS ZINC CHROMATE PRIMER CONFORMING TO FEDERAL SPECIFICATION TT-P-645 OR EQUIVALENT.

ALL BAR STEEL REINFORCEMENT SHALL BE EMBEDDED 2 INCHES CLEAR UNLESS OTHERWISE SHOWN OR NOTED.

PRECAST REINFORCED CONCRETE RISERS MAY BE PLACED WITH TONGUE UP OR DOWN.

ALL PRECAST INLET UNITS AND MANHOLES SHALL CONFORM TO THE PERTINENT REQUIREMENTS OF AASHTO DESIGNATION M 199.

* USE 2'-0" DIAMETER OPENING WITH TYPE "C", "L" AND "J" COVERS, OR 3'-0" DIAMETER WITH TYPE "K" AND "M" COVERS.

① 2 COURSES 6" BLOCK.

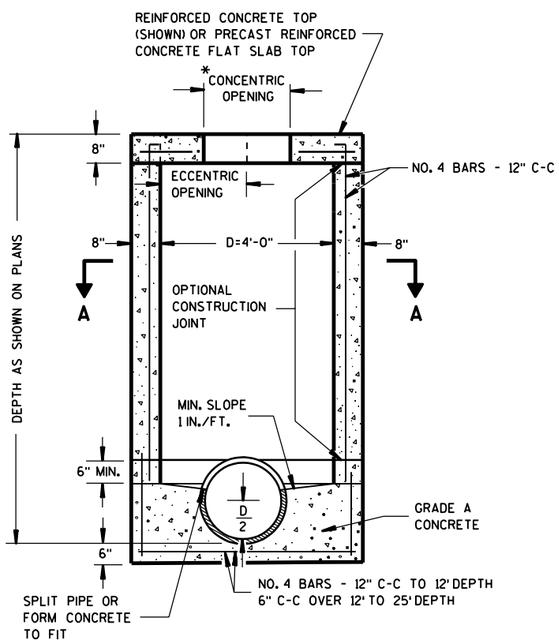

SECTION B-B
REINFORCED CONCRETE

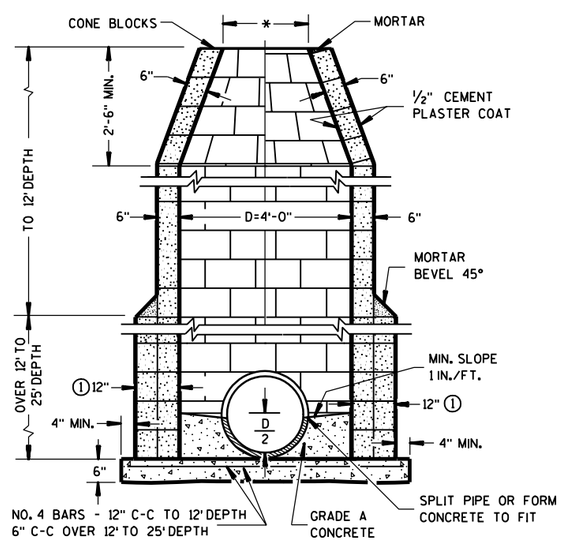

CONCRETE BLOCK

MANHOLES TYPE 1

MANHOLES TYPE I	
STATE OF WISCONSIN DEPARTMENT OF TRANSPORTATION	
APPROVED 9/9/05 DATE FHWA	/S/ Jerry H. Zogg ROADWAY STANDARDS DEVELOPMENT ENGINEER

6

6

S.D.D. 8 B 6-4

S.D.D. 8 B 6-4

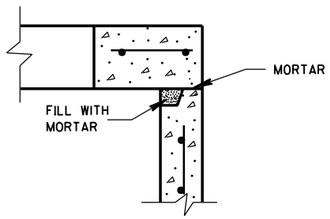

DETAIL "A"

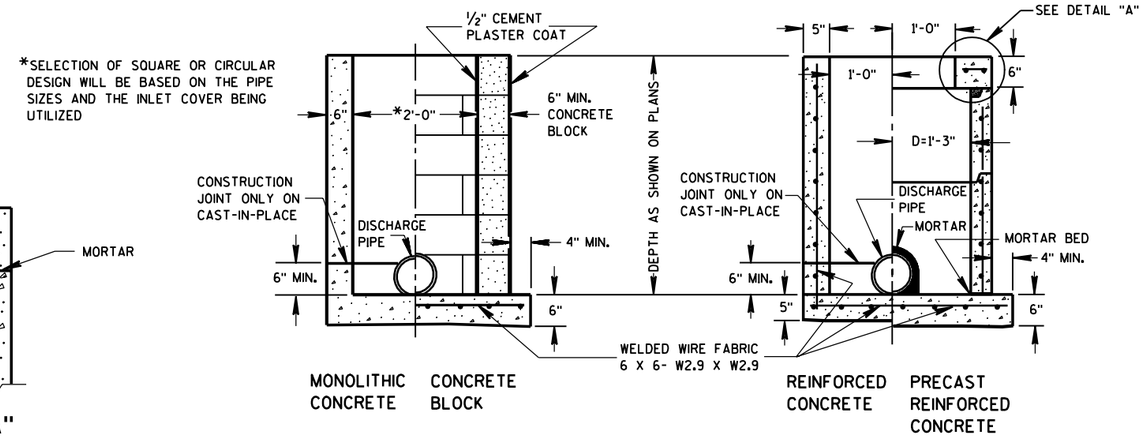

INLETS TYPE 1

GENERAL NOTES

DETAILS OF CONSTRUCTION, MATERIALS AND WORKMANSHIP NOT SHOWN ON THIS DRAWING SHALL CONFORM TO THE PERTINENT REQUIREMENTS OF THE STANDARD SPECIFICATIONS AND THE APPLICABLE SPECIAL PROVISIONS.

DETAILED DRAWINGS FOR PROPOSED ALTERNATE DESIGNS FOR UNDERGROUND DRAINAGE STRUCTURES SHALL BE SUBMITTED TO THE ENGINEER FOR APPROVAL PROVIDING THAT SUCH ALTERNATE DESIGNS MAKE PROVISION FOR EQUIVALENT CAPACITY AND STRENGTH.

ALL PRECAST INLET UNITS SHALL CONFORM TO THE PERTINENT REQUIREMENTS OF AASHTO DESIGNATION M 199.

ALL DRAINAGE STRUCTURES ARE DESIGNATED ON THE PLANS AS "MANHOLES 1-C", "CATCH BASINS 1-B", "INLETS 3-H", ETC. THE FIRST DIGIT DESIGNATES THE MASONRY PORTION OF THE STRUCTURE, AND THE FOLLOWING LETTER DESIGNATES THE TYPE OF COVER TO BE USED TO COMPRISE THE COMPLETE UNIT.

PRECAST REINFORCED BASES SHALL BE PLACED ON A BED OF MATERIAL AT LEAST 6 INCHES IN DEPTH, WHICH MEETS THE REQUIREMENTS OF GRANULAR BACKFILL. THIS BEDDING SHALL BE COMPACTED AND PROVIDE UNIFORM SUPPORT FOR THE ENTIRE AREA OF THE BASE.

PRECAST REINFORCED CONCRETE FLAT SLAB TOPS MAY BE USED ON THE STRUCTURES. THE TOPS SHALL BE INSTALLED ON A BED OF MORTAR.

ALL BAR STEEL REINFORCEMENT SHALL BE EMBEDDED 2 INCHES CLEAR UNLESS OTHERWISE SHOWN OR NOTED.

PRECAST REINFORCED CONCRETE RISERS SHALL BE PLACED WITH TONGUE DOWN.

(1) USE 2'-6" OPENING FOR TYPE 2 INLETS, 3'-0" OPENING FOR TYPE 3 INLETS, AND 2'-11" FOR TYPE 4 INLETS.

(2) USE 2'-0" OPENING FOR TYPE 1, 2 & 3 INLETS, 2'-6½" OPENING FOR TYPE 4 INLETS.

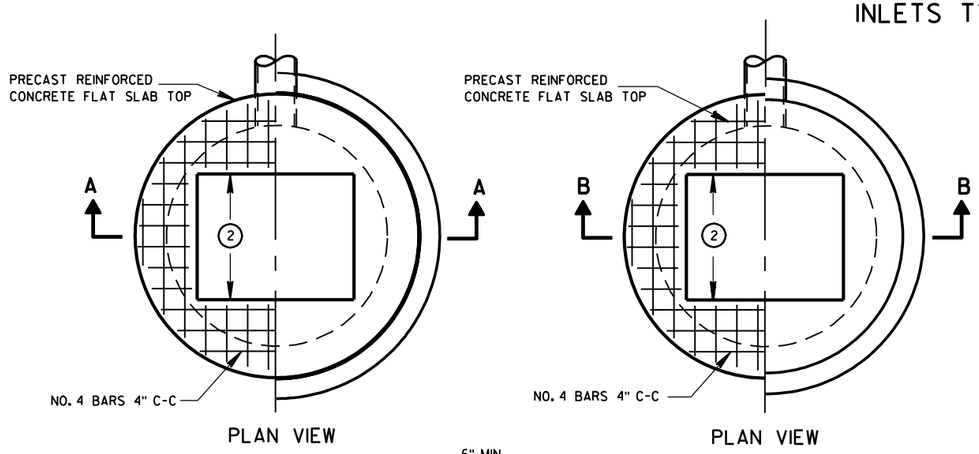

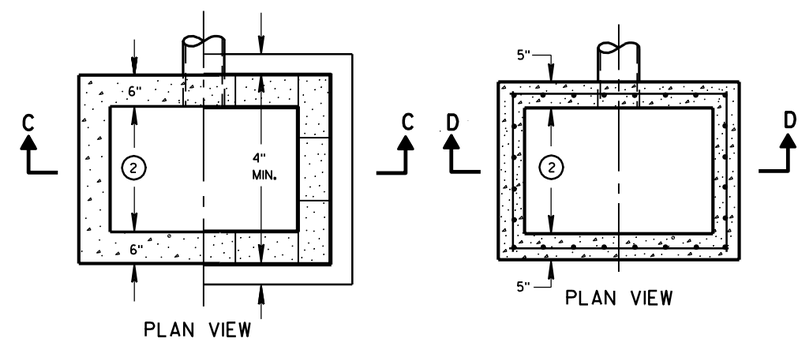

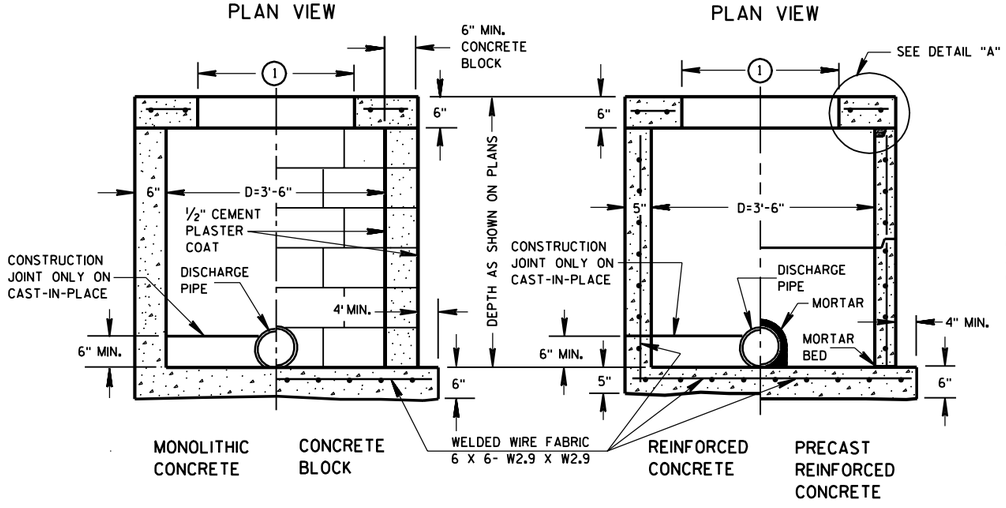

INLETS TYPE 2, 3 & 4

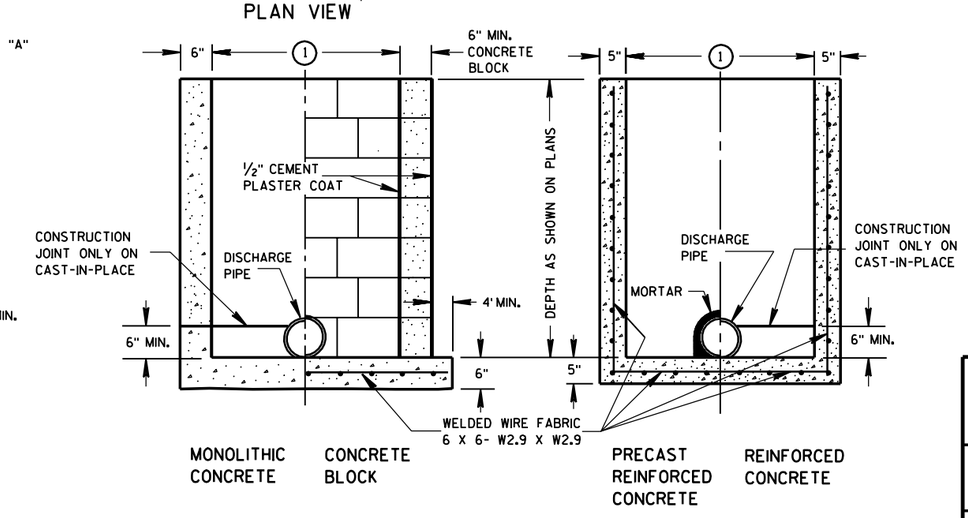

INLETS TYPE 1, 2, 3 & 4

STATE OF WISCONSIN
DEPARTMENT OF TRANSPORTATION

APPROVED 8/26/94 DATE
FHWA

CHIEF ROADWAY DEVELOPMENT ENGINEER

6

S.D.D. 8 C 1-5

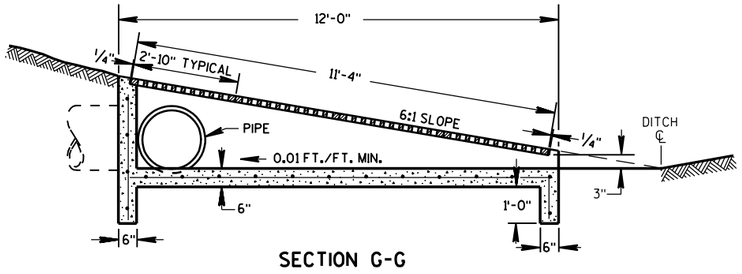

SECTION G-G

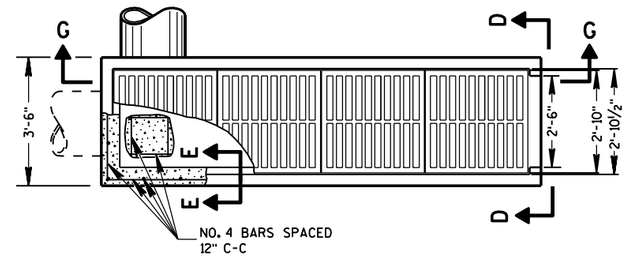

PLAN VIEW

REINFORCED CONCRETE INLET TYPE 11

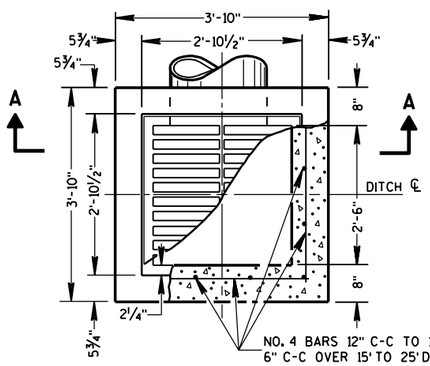

PLAN VIEW

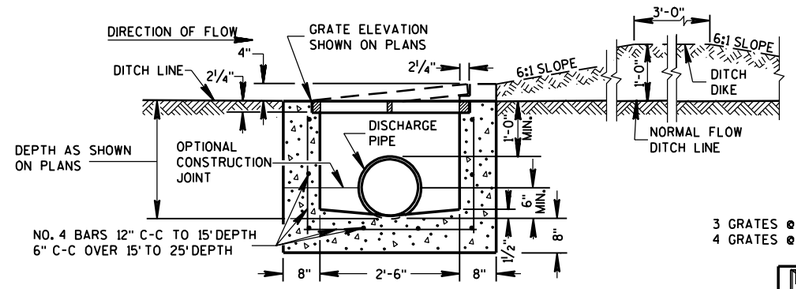

SECTION A-A

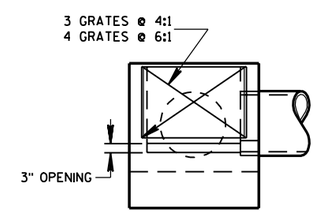

SECTION D-D

REINFORCED CONCRETE INLET TYPE 8

GENERAL NOTES

DETAILS OF CONSTRUCTION, MATERIALS AND WORKMANSHIP NOT SHOWN ON THIS DRAWING SHALL CONFORM TO THE PERTINENT REQUIREMENTS OF THE STANDARD SPECIFICATIONS AND THE APPLICABLE SPECIAL PROVISIONS.

DETAILED DRAWINGS FOR PROPOSED ALTERNATE DESIGNS FOR INLETS WHICH MAY INCLUDE PRECAST REINFORCED CONCRETE INLETS, SHALL BE SUBMITTED TO THE ENGINEER FOR APPROVAL PROVIDING THAT SUCH ALTERNATE DESIGNS MAKE PROVISION FOR EQUIVALENT CAPACITY AND STRENGTH.

PRECAST REINFORCED CONCRETE INLET UNITS, IF USED, SHALL CONFORM TO THE REQUIREMENTS OF THE CATCH BASINS, MANHOLES AND INLETS SECTION OF THE STANDARD SPECIFICATIONS. UNLESS OTHERWISE AUTHORIZED IN WRITING BY THE ENGINEER, THE CONTRACTOR SHALL NOT ORDER AND DELIVER PRECAST INLET UNITS REQUIRED FOR THE PROJECT UNTIL A CORRECTED LIST OF SIZES IS FURNISHED BY THE ENGINEER.

ALL INLETS ARE DESIGNATED ON THE PLANS AS "INLETS, 8-MS", ETC. THIS DESIGNATION IS INTERPRETED TO MEAN THAT THE NUMBER, OR FIRST DIGIT DESIGNATES THE MASONRY PORTION OF THE STRUCTURE AND THE FOLLOWING LETTER DESIGNATES THE TYPE OF COVER OR IRON CASTING TO BE USED THEREWITH TO COMPRISE THE COMPLETE UNIT.

ALL BAR STEEL REINFORCEMENT SHALL BE EMBEDDED 2 INCHES CLEAR UNLESS OTHERWISE SHOWN OR NOTED.

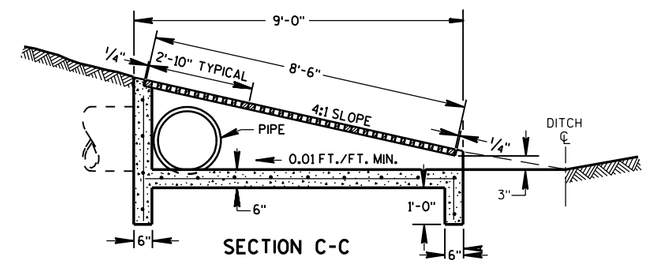

SECTION C-C

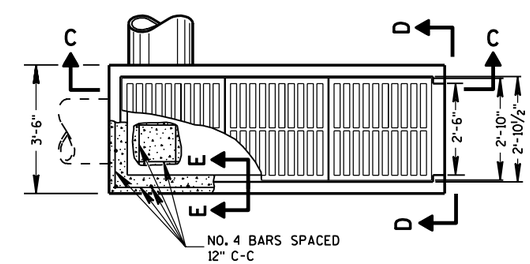

PLAN VIEW

REINFORCED CONCRETE INLET TYPE 10

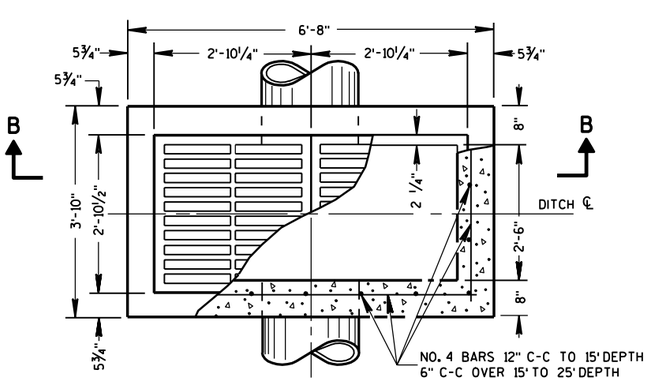

PLAN VIEW

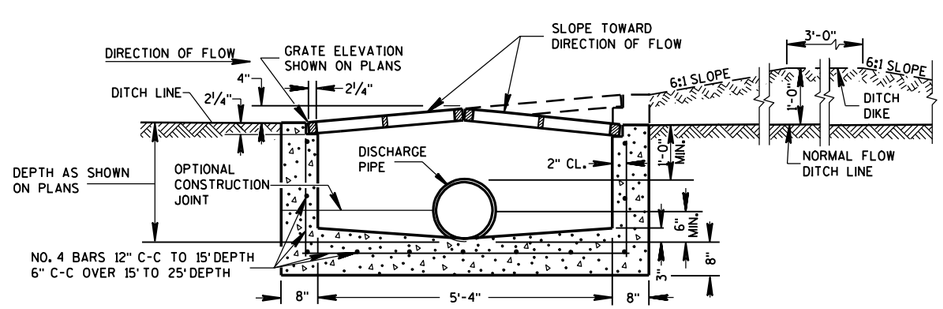

SECTION B-B

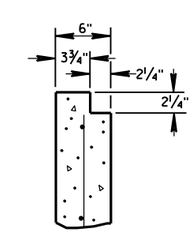

SECTION E-E

REINFORCED CONCRETE INLET TYPE 9

INLETS TYPE 8, 9, 10 AND 11

STATE OF WISCONSIN
DEPARTMENT OF TRANSPORTATION

APPROVED
8/10/94
DATE

CHIEF ROADWAY DEVELOPMENT ENGINEER

FHWA

6

S.D.D. 8 C 5-2

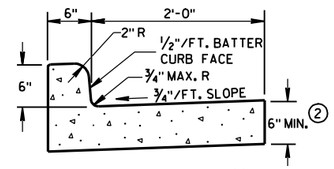

TYPES A & D ①

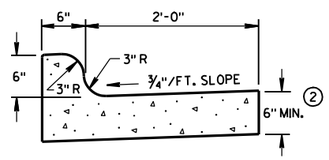

TYPES K & L ①

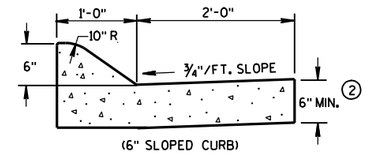

(6" SLOPED CURB)

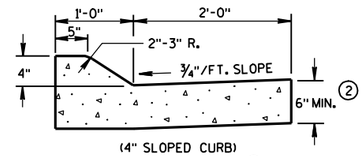

(4" SLOPED CURB)

TYPES A & D ①

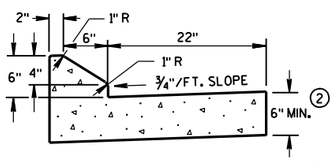

6" SLOPED CURB TYPES G & J ①

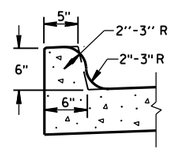

OPTIONAL CURB SHAPE FOR TYPES K & L ①

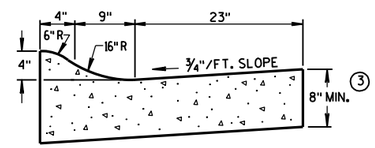

4" SLOPED CURB TYPES R & T ① ④

CONCRETE CURB & GUTTER 36"

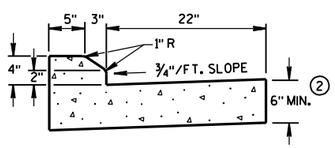

4" SLOPED CURB TYPES G & J ①

CONCRETE CURB & GUTTER 30"

GENERAL NOTES

DETAILS OF CONSTRUCTION, MATERIALS AND WORKMANSHIP NOT SHOWN ON THIS DRAWING SHALL CONFORM TO THE PERTINENT REQUIREMENTS OF THE CONTRACT.

PAVEMENT TIES AND TIE BARS SHALL BE EPOXY COATED IN CONFORMANCE WITH SUBSECTION 505.2.6.2 OF THE STANDARD SPECIFICATIONS.

INTEGRAL CURB & GUTTER SHALL CONFORM TO THE DETAILS SHOWN FOR CONCRETE CURB & GUTTER INCLUDING THE TRANSVERSE GUTTER SLOPE. A LONGITUDINAL CONSTRUCTION JOINT IS NOT REQUIRED WITH INTEGRAL CURB AND GUTTER.

WHERE THE TRANSVERSE JOINTS IN THE PAVEMENT ARE REQUIRED TO BE SEALED, THE JOINTS IN THE INTEGRAL CURB AND GUTTER SHALL BE SEALED TO THE FACE OF CURB WITH THE SAME TYPE OF SEALANT. THE COST OF FURNISHING AND INSTALLING THIS SEALANT SHALL BE INCIDENTAL TO THE ITEM CONCRETE CURB AND GUTTER.

UNLESS OTHERWISE SHOWN ON THE TYPICAL CROSS SECTIONS, THE BASE AGGREGATE AND COMMON EXCAVATION LIMITS ARE 2'-0" BEHIND THE BACK OF CURBS.

① TIE BARS ARE REQUIRED FOR CURB AND GUTTER TYPES A, G, K AND R.

② THE BOTTOM OF CURB AND GUTTER MAY BE CONSTRUCTED EITHER LEVEL OR PARALLEL TO THE SLOPE OF THE SUBGRADE OR BASE AGGREGATE PROVIDED A 6" MINIMUM GUTTER THICKNESS IS MAINTAINED.

③ THE BOTTOM OF CURB AND GUTTER MAY BE CONSTRUCTED EITHER LEVEL OR PARALLEL TO THE SLOPE OF THE SUBGRADE OR BASE AGGREGATE PROVIDED A 8" MINIMUM GUTTER THICKNESS IS MAINTAINED.

④ THE FACE OF CURB IS 6" FROM THE BACK OF CURB.

⑤ WHEN REVERSE SLOPE GUTTER IS REQUIRED, THE LOCATION(S) WILL BE SHOWN ELSEWHERE IN THE PLAN.

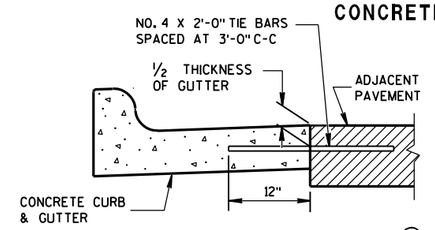

TYPICAL TIE BAR LOCATION ①

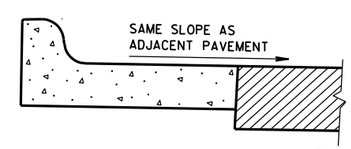

REVERSE SLOPE GUTTER ⑤
(TYPICAL FOR ALL CURB & GUTTER TYPES)

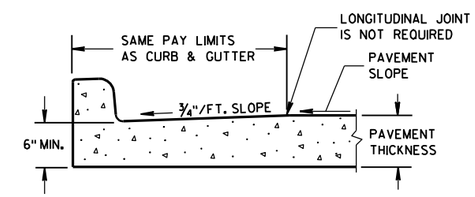

PARTIAL SECTION OF PAVEMENT WITH INTEGRAL CURB & GUTTER

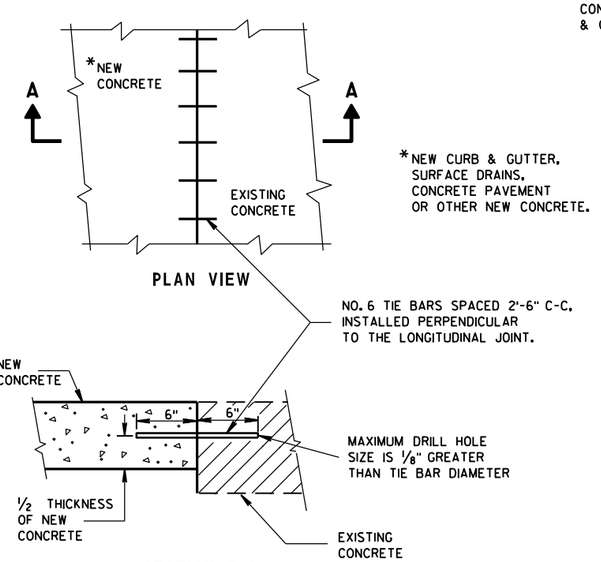

PLAN VIEW

SECTION A-A

TIE BARS DRILLED INTO EXISTING PAVEMENT

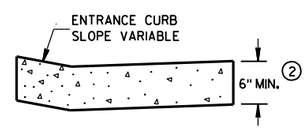

DRIVEWAY ENTRANCE CURB
(WHEN DIRECTED BY THE ENGINEER)

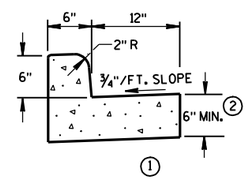

① TYPES A & D

CONCRETE CURB & GUTTER 18"

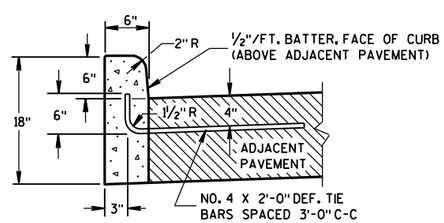

① TYPES A & D

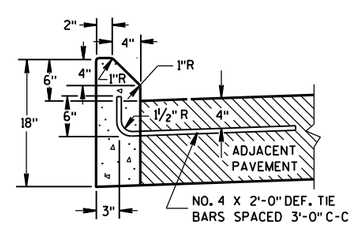

① TYPES G & J

CONCRETE CURB

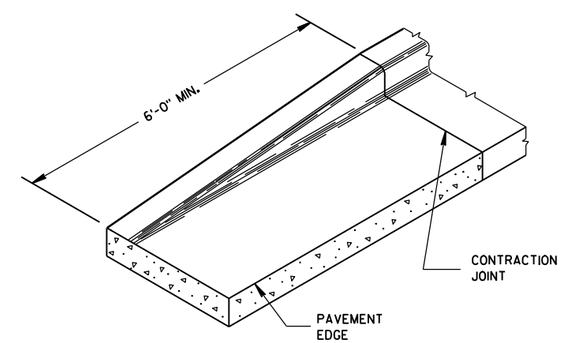

END SECTION CURB & GUTTER

CONCRETE CURB, CONCRETE CURB & GUTTER AND TIES

STATE OF WISCONSIN
DEPARTMENT OF TRANSPORTATION

APPROVED
9/4/08 — DATE
/S/ Jerry H. Zogg — ROADWAY STANDARDS DEVELOPMENT ENGINEER
FHWA

6

S.D.D. 8 D 1-17

GENERAL NOTES

DETAILS OF CONSTRUCTION, MATERIALS AND WORKMANSHIP NOT SHOWN ON THIS DRAWING SHALL CONFORM TO PERTINENT REQUIREMENTS OF THE STANDARD SPECIFICATIONS AND APPLICABLE SPECIAL PROVISIONS.

WELDED STEEL WIRE FABRIC SHALL BE IN ACCORDANCE WITH AASHTO SPECIFICATION M55.

① JOINTS SHALL BE 1/8 TO 1/4 INCH WIDE BY 1 1/2 INCHES DEEP AND SPACED AT UNIFORM INTERVALS OF APPROXIMATELY 4 FEET.

② GEOTEXTILE FABRIC TYPE "R" SHALL UNDERLAY THE FULL LENGTH AND WIDTH OF THE CONCRETE SURFACE DRAIN AND RIPRAP.

③ CONCRETE SURFACE DRAIN WITHOUT CURB AND GUTTER MAY BE USED ON BACKSLOPES WHEN SPECIFIED

ASPHALTIC FLUME

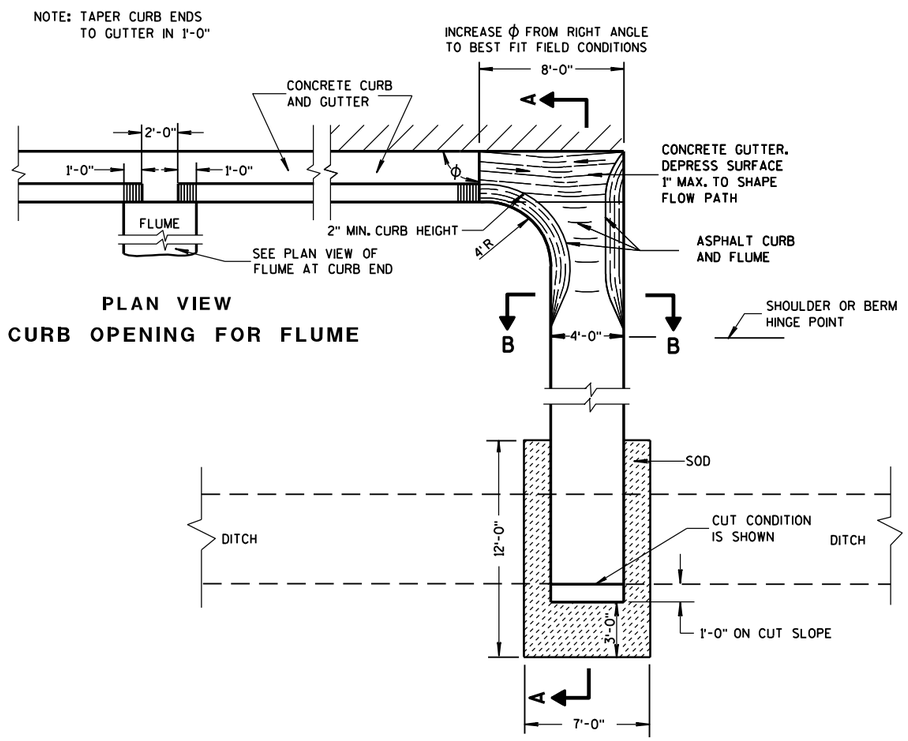

PLAN VIEW
CURB OPENING FOR FLUME

PLAN VIEW
FLUME AT CURB END

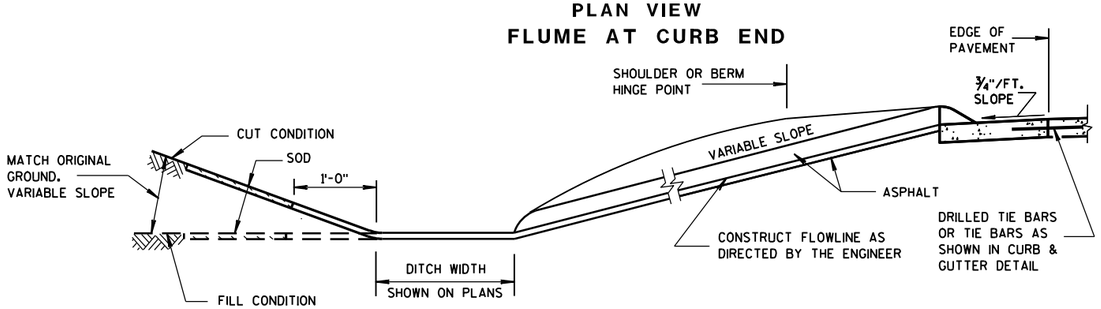

SECTION A-A

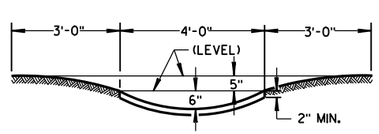

SECTION B-B

③ CONCRETE SURFACE DRAIN

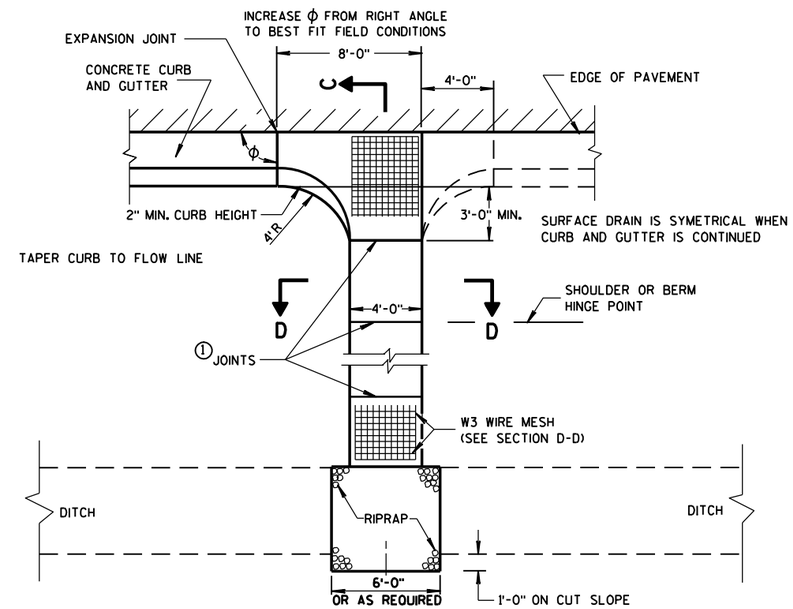

PLAN VIEW

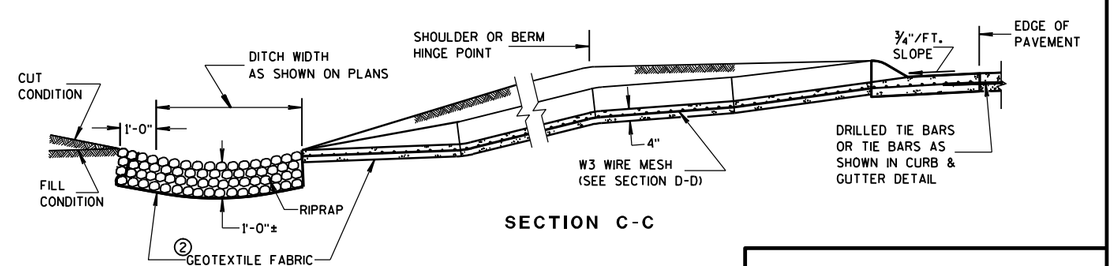

SECTION C-C

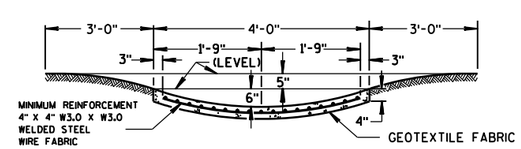

SECTION D-D

CONCRETE SURFACE DRAINS & ASPHALTIC FLUMES

STATE OF WISCONSIN
DEPARTMENT OF TRANSPORTATION

APPROVED
9-4-08 /S/ Jerry H. Zogg
DATE ROADWAY STANDARDS DEVELOPMENT ENGINEER
FHWA

6

S.D.D. 8 D 4-5

6

S.D.D. 8 D 4-5

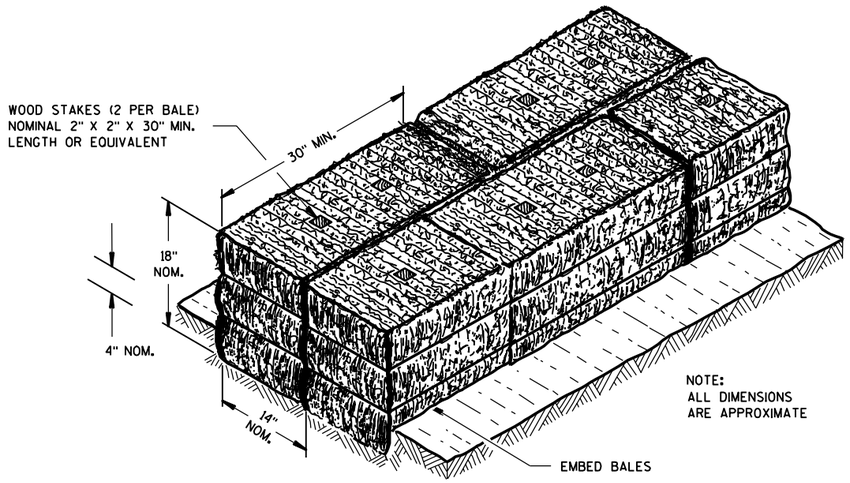

SECTION A-A

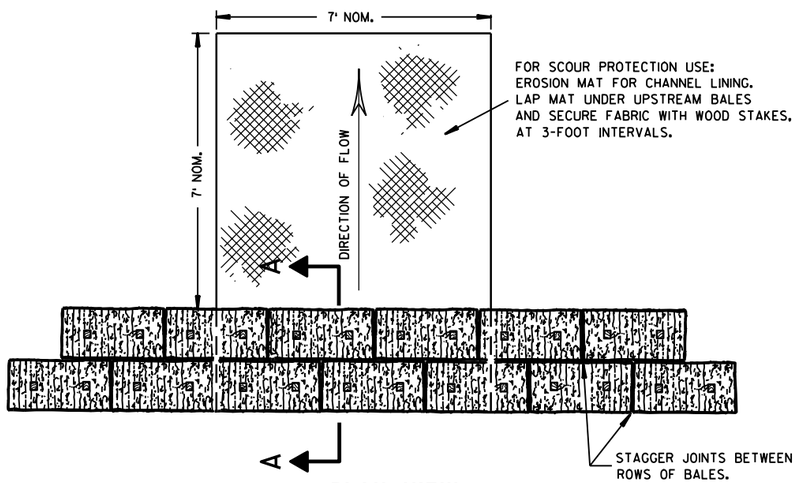

PLAN VIEW

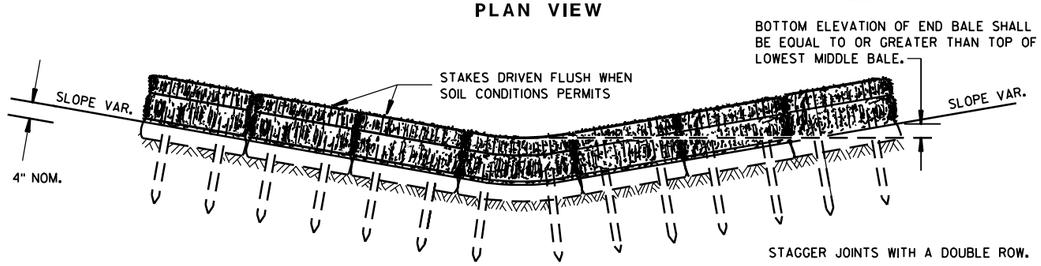

FRONT ELEVATION

TEMPORARY DITCH CHECK USING EROSION BALES ①

GENERAL NOTES

DETAILS OF CONSTRUCTION, MATERIALS AND WORKMANSHIP NOT SHOWN ON THIS DRAWING SHALL CONFORM TO THE PERTINENT REQUIREMENTS OF THE STANDARD SPECIFICATIONS AND THE APPLICABLE SPECIAL PROVISIONS.

① TEMPORARY DITCH CHECKS EITHER EROSION BALES OR MANUFACTURED SHALL BE PAID FOR UNDER THE BID ITEM OF TEMPORARY DITCH CHECK. THE DEPARTMENT WILL NOT PAY FOR TEMPORARY DITCH CHECKS CONSTRUCTED OF A SINGLE ROW OF EROSION BALES.

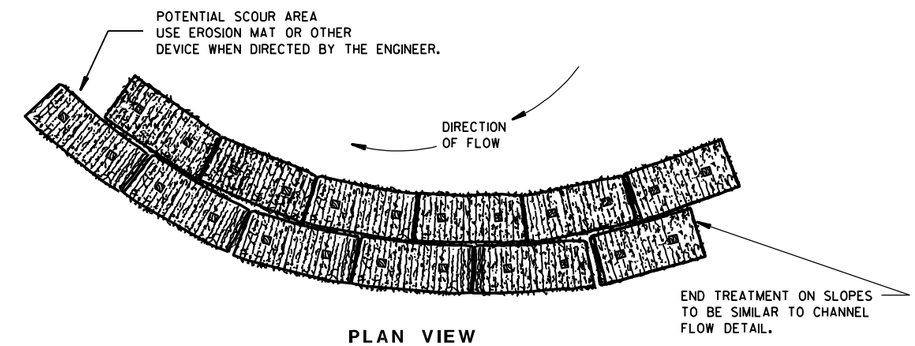

PLAN VIEW

WHEN ALTERING THE DIRECTION OF FLOW

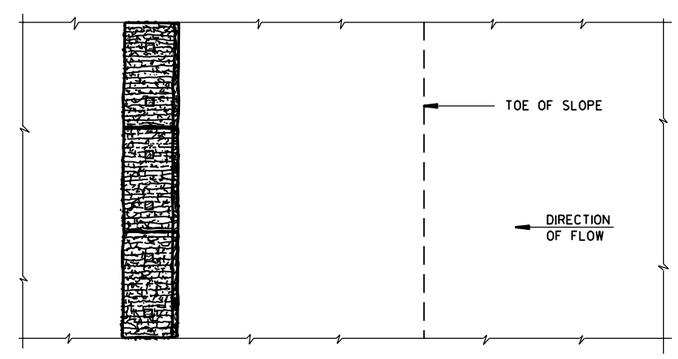

PLAN VIEW

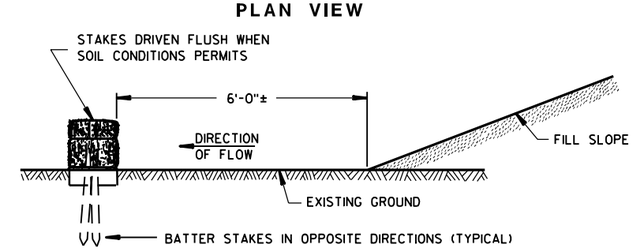

FRONT ELEVATION

WHEN EXISTING GROUND SLOPES AWAY FROM FILL SLOPE

EROSION BALES FOR SHEET FLOW

TYPICAL INSTALLATIONS OF
EROSION BALES / TEMPORARY
DITCH CHECKS

STATE OF WISCONSIN
DEPARTMENT OF TRANSPORTATION

APPROVED
6/04/02
DATE
CHIEF ROADWAY DEVELOPMENT ENGINEER
FHWA

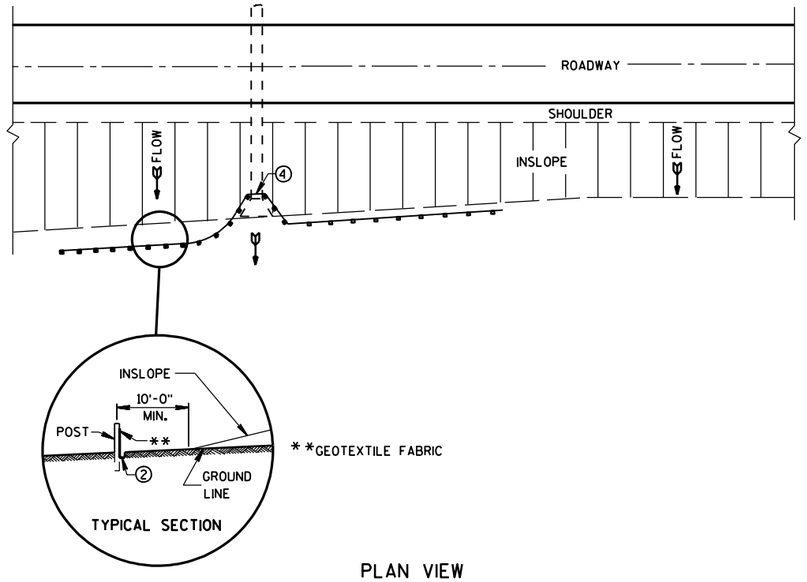

PLAN VIEW

TYPICAL APPLICATION OF SILT FENCE

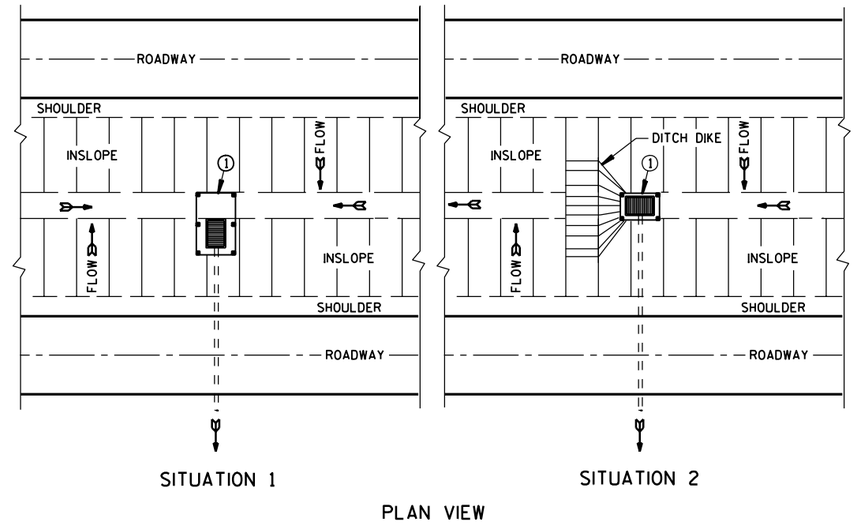

PLAN VIEW

SILT FENCE AT MEDIAN SURFACE DRAINS

GENERAL NOTES

DETAILS OF CONSTRUCTION NOT SHOWN ON THIS DRAWING SHALL CONFORM TO THE PERTINENT REQUIREMENTS OF THE STANDARD SPECIFICATIONS AND APPLICABLE SPECIAL PROVISIONS.

① HORIZONTAL BRACE REQUIRED WITH 2" X 4" WOODEN FRAME OR EQUIVALENT AT TOP OF POSTS.

② FOR MANUAL INSTALLATIONS THE TRENCH SHALL BE A MINIMUM OF 4" WIDE & 6" DEEP TO BURY AND ANCHOR THE GEOTEXTILE FABRIC. FOLD MATERIAL TO FIT TRENCH AND BACKFILL & COMPACT TRENCH WITH EXCAVATED SOIL.

③ WOOD POSTS SHALL BE A MINIMUM SIZE OF 1 1/8" X 1 1/8" OF OAK OR HICKORY.

④ SILT FENCE TO EXTEND ACROSS THE TOP OF THE PIPE.

⑤ CONSTRUCT SILT FENCE FROM A CONTINUOUS ROLL IF POSSIBLE BY CUTTING LENGTHS TO AVOID JOINTS. IF A JOINT IS NECESSARY USE ONE OF THE FOLLOWING TWO METHODS; A) OVERLAP THE END POSTS AND TWIST, OR ROTATE, AT LEAST 180 DEGREES, B) HOOK THE END OF EACH SILT FENCE LENGTH.

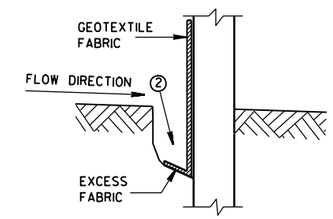

TRENCH DETAIL

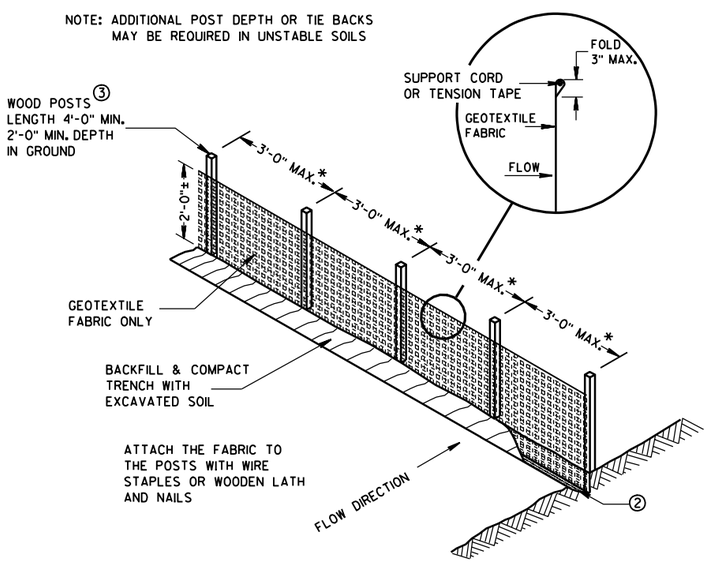

SILT FENCE

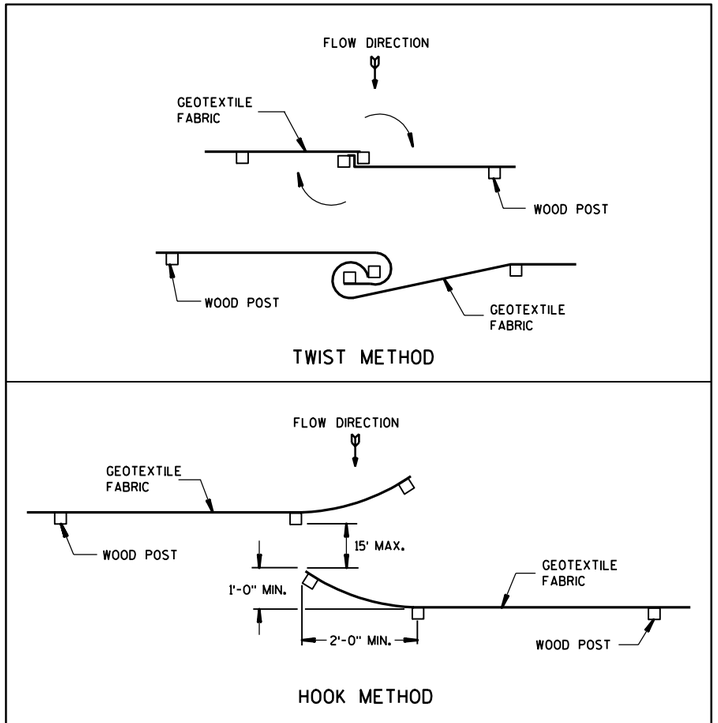

JOINING TWO LENGTHS OF SILT FENCE ⑤

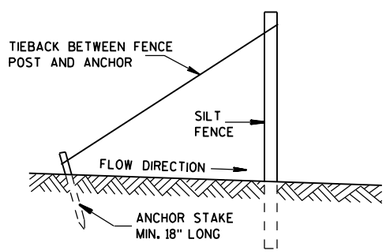

SILT FENCE TIE BACK

(WHEN REQUIRED BY THE ENGINEER)

6

SILT FENCE

STATE OF WISCONSIN
DEPARTMENT OF TRANSPORTATION

APPROVED
4-29-05
DATE
FHWA

CHIEF ROADWAY DEVELOPMENT ENGINEER

S.D.D. 8 E 9-6

S.D.D. 8 E 9-6

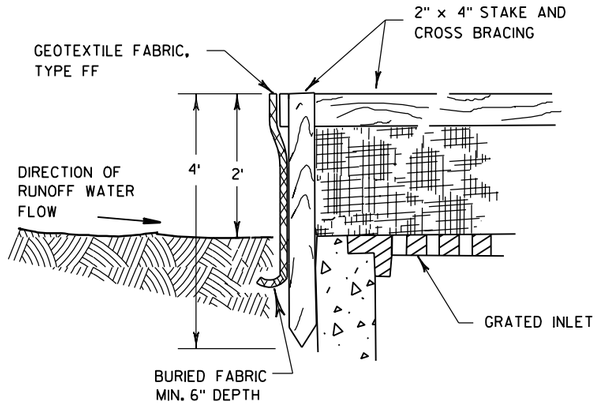

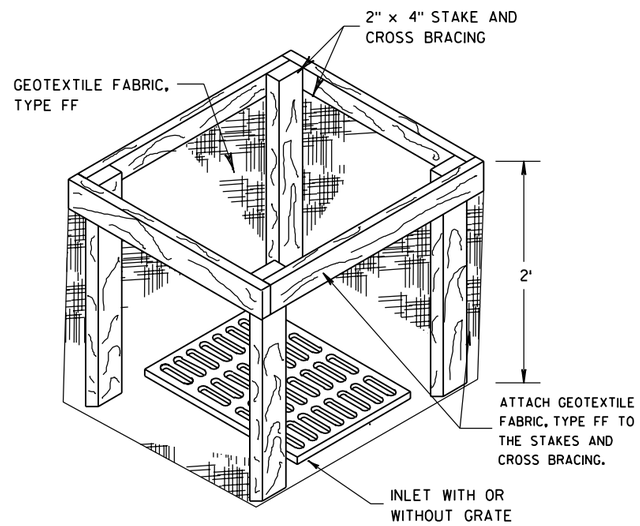

INLET PROTECTION, TYPE A

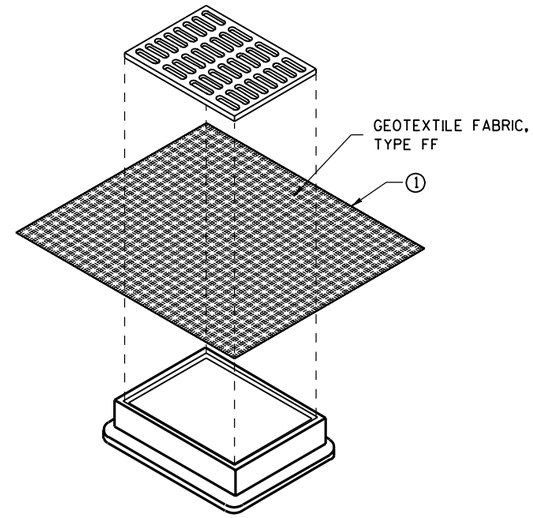

INLET PROTECTION, TYPE B (WITHOUT CURB BOX)

(CAN BE INSTALLED IN ANY INLET WITHOUT A CURB BOX)

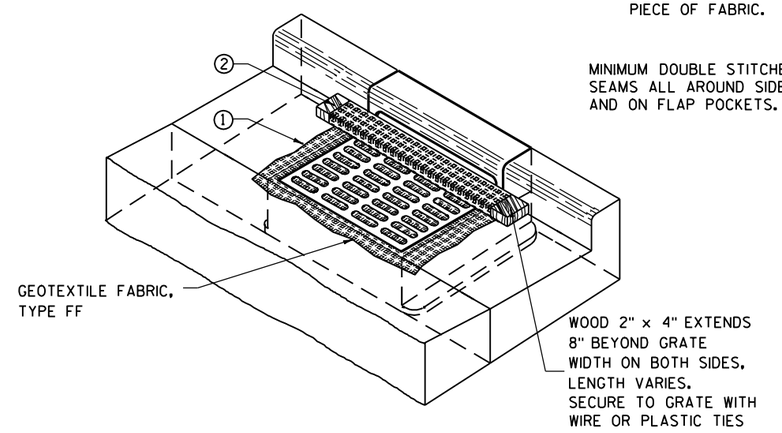

INLET PROTECTION, TYPE C (WITH CURB BOX)

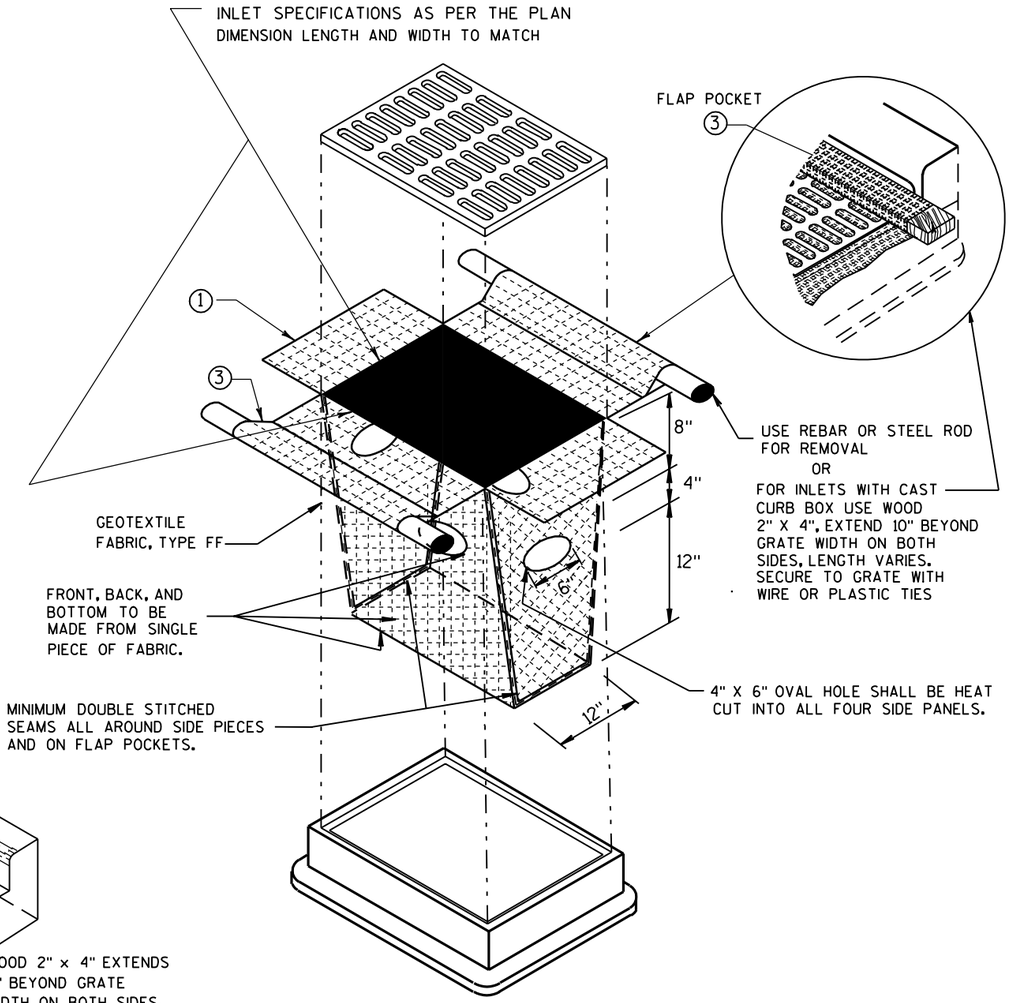

INLET PROTECTION, TYPE D

(CAN BE INSTALLED IN ANY INLET TYPE WITH OR WITHOUT A CURB BOX AS PER NOTE ②)

GENERAL NOTES

INLET PROTECTION DEVICES SHALL BE MAINTAINED OR REPLACED AT THE DIRECTION OF THE ENGINEER.

MANUFACTURED ALTERNATIVES APPROVED AND LISTED ON THE DEPARTMENT'S EROSION CONTROL PRODUCT ACCEPTABILITY LIST MAY BE SUBSTITUTED.

WHEN REMOVING OR MAINTAINING INLET PROTECTION, CARE SHALL BE TAKEN SO THAT THE SEDIMENT TRAPPED ON THE GEOTEXTILE FABRIC DOES NOT FALL INTO THE INLET. ANY MATERIAL FALLING INTO THE INLET SHALL BE REMOVED IMMEDIATELY.

① FINISHED SIZE, INCLUDING FLAP POCKETS WHERE REQUIRED, SHALL EXTEND A MINIMUM OF 10" AROUND THE PERIMETER TO FACILITATE MAINTENANCE OR REMOVAL.

② FOR INLET PROTECTION, TYPE C (WITH CURB BOX), AN ADDITIONAL 18" OF FABRIC IS WRAPPED AROUND THE WOOD AND SECURED WITH STAPLES. THE WOOD SHALL NOT BLOCK THE ENTIRE HEIGHT OF THE CURB BOX OPENING.

③ FLAP POCKETS SHALL BE LARGE ENOUGH TO ACCEPT WOOD 2X4.

INSTALLATION NOTES

TYPE B & C

TRIM EXCESS FABRIC IN THE FLOW LINE TO WITHIN 3" OF THE GRATE.

THE CONTRACTOR SHALL DEMONSTRATE A METHOD OF MAINTENANCE, USING A SEWN FLAP, HAND HOLDS OR OTHER METHOD TO PREVENT ACCUMULATED SEDIMENT FROM ENTERING THE INLET.

TYPE D

DO NOT INSTALL INLET PROTECTION TYPE D IN INLETS SHALLOWER THAN 30", MEASURED FROM THE BOTTOM OF THE INLET TO THE TOP OF THE GRATE.

TRIM EXCESS FABRIC IN THE FLOW LINE TO WITHIN 3" OF THE GRATE.

THE INSTALLED BAG SHALL HAVE A MINIMUM SIDE CLEARANCE, BETWEEN THE INLET WALLS AND THE BAG, MEASURED AT THE BOTTOM OF THE OVERFLOW HOLES, OF 3". WHERE NECESSARY THE CONTRACTOR SHALL CINCH THE BAG, USING PLASTIC ZIP TIES, TO ACHIEVE THE 3" CLEARANCE. THE TIES SHALL BE PLACED AT A MAXIMUM OF 4" FROM THE BOTTOM OF THE BAG.

INLET PROTECTION TYPE A, B, C, AND D

STATE OF WISCONSIN
DEPARTMENT OF TRANSPORTATION

APPROVED
10/16/02
DATE
FHWA

CHIEF ROADWAY DEVELOPMENT ENGINEER

6

S.D.D. 8 E 10-2

METAL APRON ENDWALLS

PIPE DIA. (IN.)	MIN. THICK. (inches) STEEL	MIN. THICK. (inches) ALUM.	DIMENSIONS (inches) A (±1")	B (MAX.)	H (±1")	L (±1 1/2")	L1 ①	L2 ①	W (±2")	APPROX. SLOPE	BODY
12	.064	.060	6	6	6	21	12	17 1/2	24	2 1/2 to 1	1 Pc.
15	.064	.060	7	8	6	26	14	21 3/4	30	2 1/2 to 1	1 Pc.
18	.064	.060	8	10	6	31	15	28 1/4	36	2 1/2 to 1	1 Pc.
21	.064	.060	9	12	6	36	18	29 5/8	42	2 1/2 to 1	1 Pc.
24	.064	.075	10	13	6	41	18	37 1/4	48	2 1/2 to 1	1 Pc.
30	.079	.075	12	16	8	51	18	52 1/4	60	2 1/2 to 1	1 Pc.
36	.079	.105	14	19	9	60	24	59 3/4	72	2 1/2 to 1	2 Pc.
42	.109	.105	16	22	11	69	24	75 5/8	84	2 1/2 to 1	2 Pc.
48	.109	.105	18	27	12	78	24	81	90	2 1/4 to 1	3 Pc.
54	.109	.105	18	30	12	84	30	85 1/2	102	2 1/4 to 1	3 Pc.
60	.109×	.105×	18	33	12	87	—	—	114	2 to 1	3 Pc.
66	.109×	.105×	18	36	12	87	—	—	120	2 to 1	3 Pc.
72	.109×	.105×	18	39	12	87	—	—	126	2 to 1	3 Pc.
78	.109×	.105×	18	42	12	87	—	—	132	1 1/2 to 1	3 Pc.
84	.109×	.105×	18	45	12	87	—	—	138	1 1/2 to 1	3 Pc.
90	.109×	.105×	18	37	12	87	—	—	144	1 1/2 to 1	3 Pc.
96	.109×	.105×	18	35	12	87	—	—	150	1 1/2 to 1	3 Pc.

× EXCEPT CENTER PANEL
SEE GENERAL NOTES

REINFORCED CONCRETE APRON ENDWALLS

PIPE DIA. (IN.)	DIMENSIONS (inches) T	A	B	C	D	E	G	APPROX. SLOPE
12	2	4	24	48 7/8	72 7/8	24	2	3 to 1
15	2 1/4	6	27	46	73	30	2 1/4	3 to 1
18	2 1/2	9	27	46	73	36	2 1/2	3 to 1
21	2 3/4	9	36	37 1/2	73 1/2	42	2 3/4	3 to 1
24	3	9 1/2	43 1/2	30	73 1/2	48	3	3 to 1
27	3 1/4	10 1/2	49 1/2	24	73 1/2	54	3 1/4	3 to 1
30	3 1/2	12	54	19 3/4	73 1/2	60	3 1/2	3 to 1
36	4	15	63	34 3/4	97 3/4	72	4	3 to 1
42	4 1/2	21	63	35	98	78	4 1/2	3 to 1
48	5	24	72	26	98	84	5	3 to 1
54	5 1/2	27	65	* 33 1/4-35	* 98 1/4- ** 100	90	5 1/2	2 2/5 to 1
60	6	* 30-35 **	60	39	99	96	5	2 to 1
66	6 1/2	* 24-30 **	* 72-78 **	* 21-27 **	99	102	5 1/2	2 to 1
72	7	* 24-36 **	78	21	99	108	6	2 to 1
78	7 1/2	* 24-36 **	78	21	99	114	6 1/2	2 to 1
84	8	36	90 1/2	21	111 1/2	120	6 1/2	1 1/2 to 1
90	8 1/2	41	87 1/2	24	111 1/2	132	6 1/2	1 1/2 to 1

*MINIMUM
**MAXIMUM

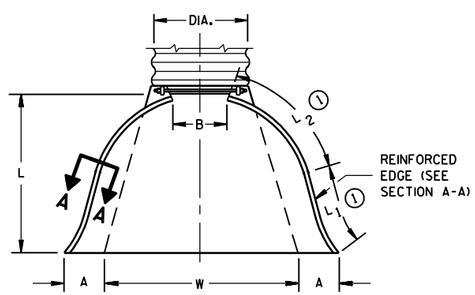

PLAN VIEW

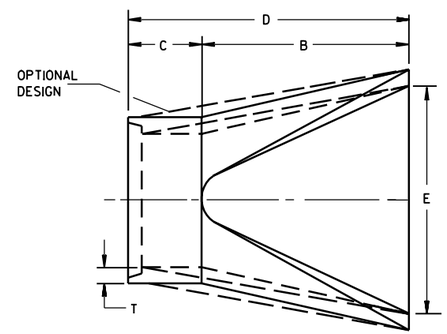

PLAN

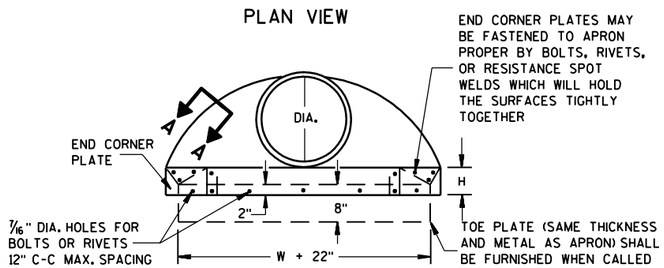

END VIEW

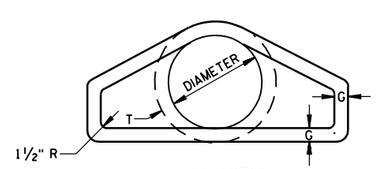

END VIEW

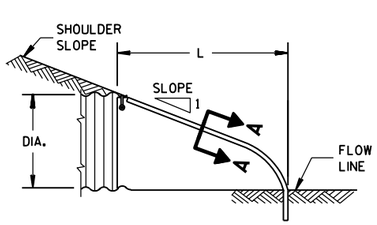

SIDE ELEVATION

METAL ENDWALLS

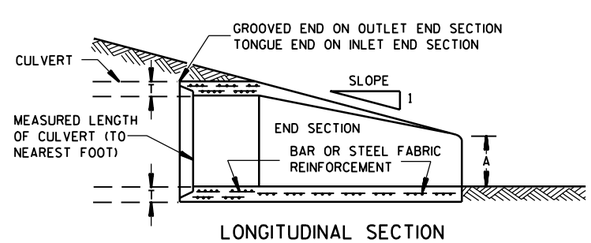

LONGITUDINAL SECTION

CONCRETE ENDWALLS

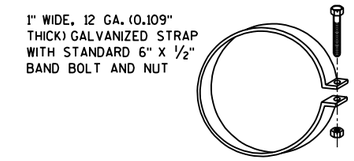

ALTERNATE FOR TYPE 1 CONNECTION

END SECTION CONNECTOR STRAP

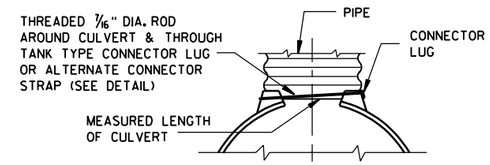

TYPE 1
FOR 12" THRU 24" CORR. PIPE

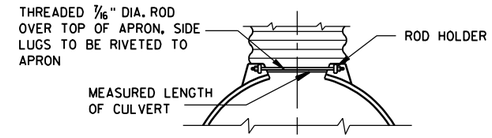

TYPE 2
FOR 30" THRU 96" CORR. PIPE

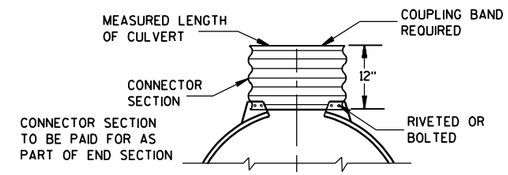

TYPE 3
FOR 42" THRU 96" CORR. PIPE

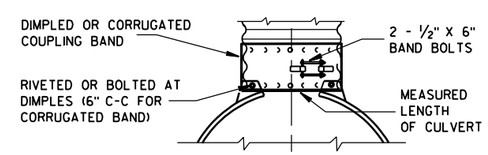

TYPE 5
ALTERNATE FOR:
ALL SIZES CORRUGATED CIRCULAR PIPE

NOTE: DIMPLED BAND FITS OVER OUTSIDE OF ENDWALL. AND CORRUGATED BAND FITS INSIDE ENDWALL. DIMPLED BAND MAY BE USED WITH HELICALLY CORRUGATED PIPE.

FOR CIRCUMFERENTIALLY CORRUGATED PIPE USE ENDWALL CONNECTION DETAILS 1, 2, 3 OR 5 AS APPLICABLE.

FOR HELICALLY CORRUGATED PIPE USE ENDWALL CONNECTION DETAILS 1, 2 OR 5.

FOR HELICALLY CORRUGATED PIPES WITH TWO CIRCUMFERENTIAL CORRUGATIONS AT EACH END USE ENDWALL CONNECTION DETAILS 1, 2 OR 3.

CONNECTION DETAILS

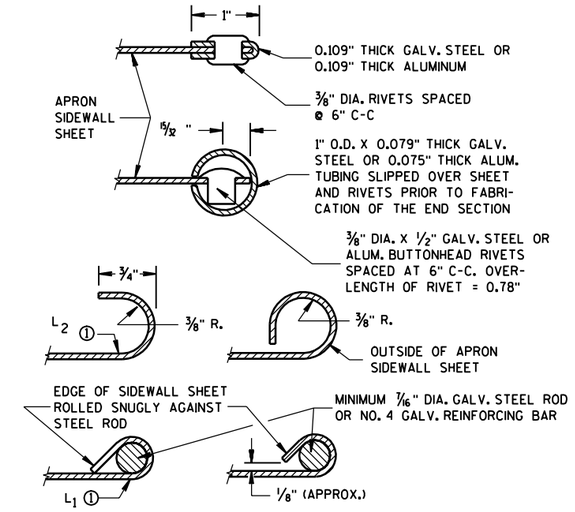

SECTION A-A

GENERAL NOTES

DETAILS OF CONSTRUCTION, MATERIALS AND WORKMANSHIP NOT SHOWN ON THIS DRAWING SHALL CONFORM TO THE PERTINENT REQUIREMENTS OF THE STANDARD SPECIFICATIONS AND THE APPLICABLE SPECIAL PROVISIONS.

CONCRETE CULVERT ENDWALLS MAY NOT BE USED WITH GALVANIZED STEEL OR ALUMINUM CULVERT PIPE OR VISE VERSA. GALVANIZED STEEL OR ALUMINUM ENDWALLS SHALL NORMALLY BE INSTALLED ON CULVERT PIPE OF THE SAME METAL.

ALL THREE PIECE STEEL APRON ENDWALLS FOR 60" DIAMETER PIPE AND LARGER SHALL HAVE 0.109" SIDES AND 0.138" CENTER PANELS. ALL THREE PIECE ALUMINUM APRON ENDWALLS FOR 60" DIAMETER PIPE AND LARGER SHALL HAVE 0.105" SIDES AND 0.134" CENTER PANELS. THE WIDTH OF CENTER PANELS SHALL BE GREATER THAN 20 PERCENT OF THE PIPE PERIMETER.

LAP SEAMS SHALL BE TIGHTLY JOINED BY GALVANIZED RIVETS OR BOLTS FOR STEEL UNITS AND ALUMINUM RIVETS AND BOLTS FOR ALUMINUM UNITS. FOR THE 60" THROUGH 96" DIAMETER APRON ENDWALL SIZES, THE REINFORCED EDGES AND CENTER PANEL SEAMS SHALL BE FURTHER REINFORCED WITH GALVANIZED STEEL OR ALUMINUM STIFFENER ANGLES. THE ANGLES SHALL BE ATTACHED BY GALVANIZED NUTS AND BOLTS FOR STEEL UNITS AND ALUMINUM NUTS AND BOLTS FOR ALUMINUM UNITS.

WHERE TWO OR MORE PIPES WITH APRON ENDWALLS ARE LAID ADJACENT TO EACH OTHER, THEY SHALL BE SEPARATED BY A DISTANCE SUFFICIENT TO PROVIDE A MINIMUM CLEARANCE OF 6 INCHES BETWEEN APRON ENDWALLS.

① FOR PIPE SIZES UP TO 60" DIAMETER, A 180° ROLLED EDGE MAY BE USED INSTEAD OF STEEL ROD REINFORCEMENT. SEE SECTION A-A.

APRON ENDWALLS FOR CULVERT PIPE

STATE OF WISCONSIN
DEPARTMENT OF TRANSPORTATION

APPROVED
11/30/94
DATE
FHWA

CHIEF ROADWAY DEVELOPMENT ENGINEER

6

S.D.D. 8 F 1-11

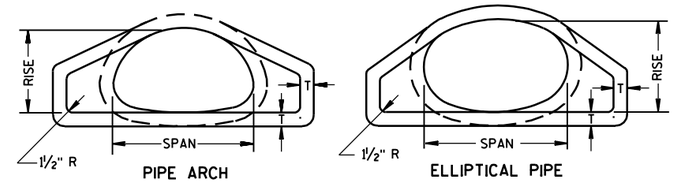

END VIEW

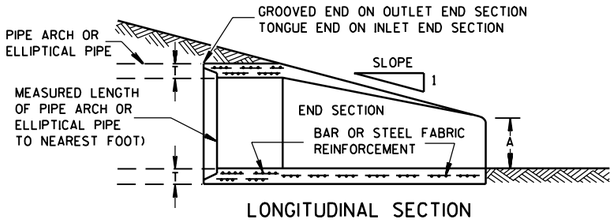

LONGITUDINAL SECTION

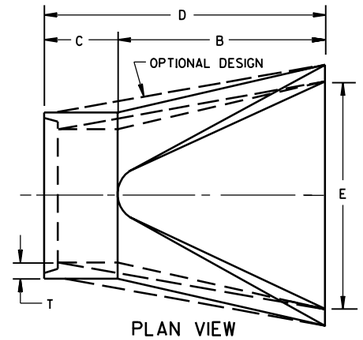

PLAN VIEW

CONCRETE ENDWALLS

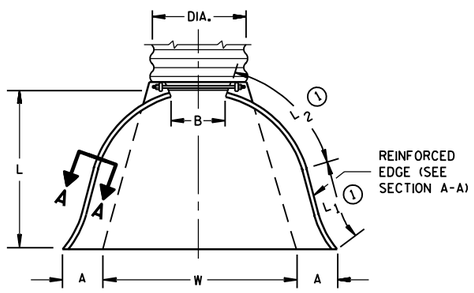

PLAN VIEW

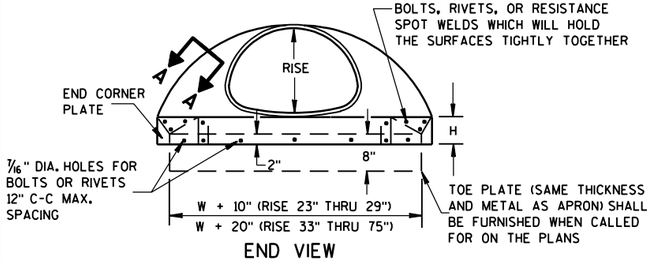

END VIEW

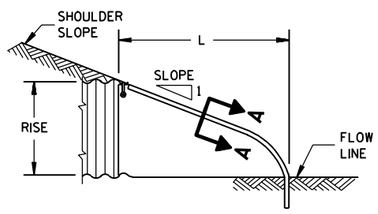

SIDE ELEVATION

METAL ENDWALLS

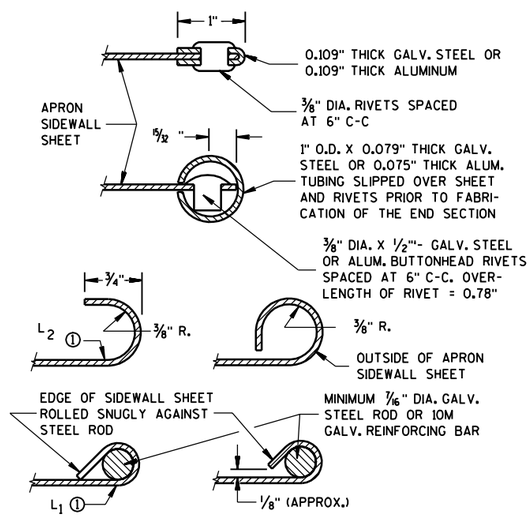

SECTION A-A

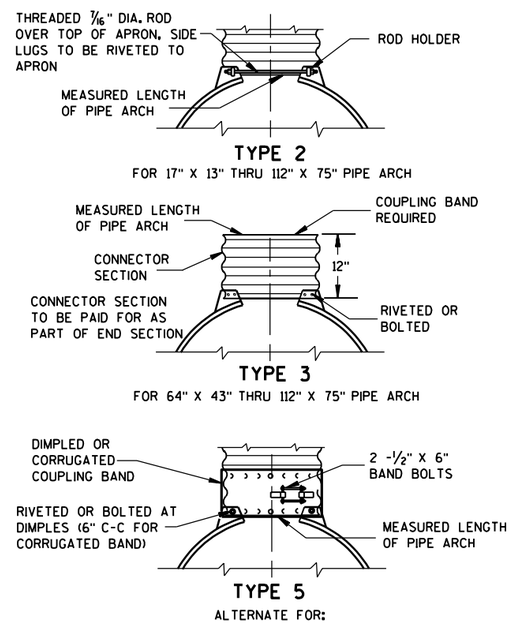

NOTE: DIMPLED BAND FITS OVER OUTSIDE OF ENDWALL, AND CORRUGATED BAND FITS INSIDE ENDWALL.

CONNECTION DETAILS

2- 2/3" X 1/2" CORRUGATIONS

EQUIV. DIA. (Inches)	(Inches) SPAN	(Inches) RISE	MIN. THICK. (Inches) STEEL	MIN. THICK. (Inches) ALUM.	DIMENSIONS (Inches) A (±1")	B (MAX.)	H (±1")	L (±1 1/2")	L1 ①	L2 ①	W (±2")	APPROX. SLOPE	BODY
15	17	13	.064	.060	7	9	6	19	14	16	30	2½ to 1	1 Pc.
18	21	15	.064	.060	7	10	6	23	14	19⅜	36	2½ to 1	1 Pc.
21	24	18	.064	.060	8	12	6	28	18	21¾	42	2½ to 1	1 Pc.
24	28	20	.064	.060	9	14	6	32	18	27½	48	2½ to 1	1 Pc.
30	35	24	.079	.075	10	16	6	39	18	37⅝	60	2½ to 1	1 Pc.
36	42	29	.079	.075	12	18	8	46	24	45⅜	75	2½ to 1	1 Pc.
42	49	33	.109	.105	13	21	9	53	24	54¾	85	2½ to 1	2 Pc.
48	57	38	.109	.105	18	26	12	63	24	68	90	2½ to 1	3 Pc.
54	64	43	.109	.105	18	30	12	70	24	72¾	102	2¼ to 1	3 Pc.
60	71	47	.109*	.105*	18	33	12	77	30	82¼	114	2¼ to 1	3 Pc.
66	77	52	.109*	.105*	18	36	12	77	—	—	126	2 to 1	3 Pc.
72	83	57	.109*	.105*	18	39	12	77	—	—	138	2 to 1	3 Pc.

3" X 1" CORRUGATIONS

EQUIV. DIA. (Inches)	(Inches) SPAN	(Inches) RISE	MIN. THICK. (Inches) STEEL	MIN. THICK. (Inches) ALUM.	DIMENSIONS (Inches) A (±1")	B (MAX.)	H (±1")	L (±1 1/2")	L1 ①	L2 ①	W (±2")	APPROX. SLOPE	BODY
48	53	41	.109	.105	18	26	12	63	24	72¾	90	2½ to 1	2 Pc.
54	60	46	.109	.105	18	30	12	70	30	82¼	102	2 to 1	2 Pc.
60	66	51	.109*	.105*	18	33	12	77	—	—	114	1½ to 1	3 Pc.
66	73	55	.109*	.105*	18	36	12	77	—	—	126	1½ to 1	3 Pc.
72	81	59	.109*	.105*	18	39	12	77	—	—	138	2 to 1	3 Pc.
78	87	63	.109*	.105*	22	38	12	77	—	—	148	1½ to 1	3 Pc.
84	95	67	.109*	.105*	22	34	12	77	—	—	162	1½ to 1	3 Pc.
90	103	71	.109*	.105*	22	38	12	77	—	—	174	1½ to 1	3 Pc.
96	112	75	.109*	.105*	24	40	12	77	—	—	174	1½ to 1	3 Pc.

NOTE: ALL SPLICES TO BE LAP RIVETED OR BOLTED.

* EXCEPT CENTER PANEL SEE GENERAL NOTES

REINFORCED CONCRETE PIPE ARCH

EQUIV. DIA. (Inches)	DIMENSIONS (Inches) ** SPAN	** RISE	T	A	B	C	D	E	APPROX. SLOPE
24	29	18	3	8½	39	33	72	48	3 to 1
30	36	22	3½	9½	50	46	96	60	3 to 1
36	44	27	4	11⅛	60	36	96	72	3 to 1
42	51	31	4½	15 13/16	60	36	96	78	3 to 1
48	58	36	5	21	60	36	96	84	3 to 1
54	65	40	5½	25½	60	36	96	90	3 to 1
60	73	45	6	31	60	36	96	96	3 to 1
72	88	54	7	31	60	39	99	120	2 to 1
84	102	62	8	28½	83	19	102	144	2 to 1

REINFORCED CONCRETE ELLIPTICAL PIPE

EQUIV. DIA. (Inches)	DIMENSIONS (Inches) ** SPAN	** RISE	T	A	B	C	D	E	APPROX. SLOPE
24	30	19	3¼	8½	39	33	72	48	3 to 1
30	38	24	3¾	9½	54	18	72	60	3 to 1
36	45	29	4½	11⅛	60	24	84	72	2½ to 1
42	53	34	5	15¾	60	36	96	78	2½ to 1
48	60	38	5½	21	60	36	96	84	2½ to 1
54	68	43	6	25½	60	36	96	90	2½ to 1
60	76	48	6½	30	60	36	96	96	2½ to 1

** NOMINAL SIZE

GENERAL NOTES

DETAILS OF CONSTRUCTION, MATERIALS AND WORKMANSHIP NOT SHOWN ON THIS DRAWING SHALL CONFORM TO THE PERTINENT REQUIREMENTS OF THE STANDARD SPECIFICATIONS AND THE APPLICABLE SPECIAL PROVISIONS.

CONCRETE APRON ENDWALLS MAY NOT BE USED WITH GALVANIZED STEEL OR ALUMINUM CULVERT PIPE OR VISE VERSA. GALVANIZED STEEL OR ALUMINUM APRON ENDWALLS SHALL NORMALLY BE INSTALLED ON CULVERT PIPE OF THE SAME METAL.

ALL THREE PIECE STEEL APRON ENDWALLS FOR 66" X 51" PIPE ARCH AND LARGER SHALL HAVE 0.109" SIDES AND 0.138" CENTER PANELS. ALL THREE PIECE ALUMINUM APRON ENDWALLS FOR 66" X 51" PIPE ARCH AND LARGER SHALL HAVE 0.105" SIDES AND 0.134" CENTER PANELS. THE WIDTH OF CENTER PANELS SHALL BE GREATER THAN 20 PERCENT OF THE PIPE ARCH PERIMETER.

LAP SEAMS SHALL BE TIGHTLY JOINED BY GALVANIZED RIVETS OR BOLTS FOR STEEL UNITS AND ALUMINUM RIVETS AND BOLTS FOR ALUMINUM UNITS. FOR THE 77" X 52" THROUGH 112" X 75" APRON ENDWALL SIZES, THE REINFORCED EDGES AND CENTER PANEL SEAMS SHALL BE FURTHER REINFORCED WITH GALVANIZED STEEL OR ALUMINUM STIFFENER ANGLES. THE ANGLES SHALL BE ATTACHED BY GALVANIZED NUTS AND BOLTS FOR STEEL UNITS AND ALUMINUM NUTS AND BOLTS FOR ALUMINUM UNITS.

WHERE TWO OR MORE PIPES WITH APRON ENDWALLS ARE LAID ADJACENT TO EACH OTHER, THEY SHALL BE SEPARATED BY A DISTANCE SUFFICIENT TO PROVIDE A MINIMUM CLEARANCE OF 6 INCHES BETWEEN APRON ENDWALLS.

① FOR PIPE ARCH SIZES UP TO 73" X 55" A 180° ROLLED EDGE MAY BE USED INSTEAD OF STEEL ROD REINFORCEMENT. SEE SECTION A-A.

APRON ENDWALLS FOR PIPE ARCH AND ELLIPTICAL PIPE

STATE OF WISCONSIN
DEPARTMENT OF TRANSPORTATION

APPROVED
11/30/94
DATE
FHWA
CHIEF ROADWAY DEVELOPMENT ENGINEER

6

S.D.D. 8 F 2-1

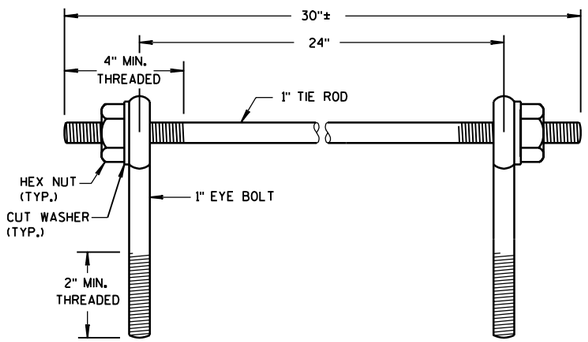

EYE BOLTS AND TIE ROD

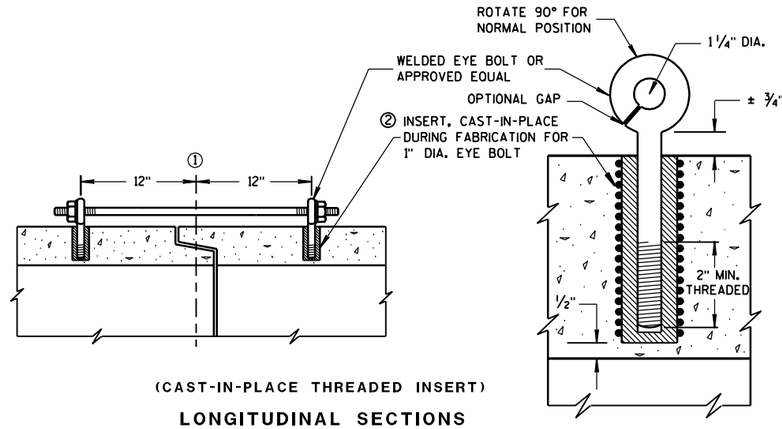

(CAST-IN-PLACE THREADED INSERT)

LONGITUDINAL SECTIONS

GENERAL NOTES

DETAILS OF CONSTRUCTION, MATERIALS, AND WORKMANSHIP NOT SHOWN ON THIS DRAWING SHALL CONFORM TO THE PERTINENT REQUIREMENTS OF THE STANDARD SPECIFICATIONS AND APPLICABLE SPECIAL PROVISIONS.

CONCRETE CULVERT PIPE SHALL BE TIED TOGETHER IN THE MANNER ILLUSTRATED BY THIS DETAIL AT LOCATIONS DESIGNATED ON THE PLAN. THE CONTRACTOR MAY USE EITHER ALTERNATE 1, 2 OR 3 FOR DRAINAGE STRUCTURES. ONLY ALTERNATE 1 AND 3 MAY BE USED FOR CATTLE PASSES. UNLESS OTHERWISE STATED IN THE CONTRACT THE MATERIALS, FABRICATION AND WORK NECESSARY TO TIE CULVERT PIPE AS INDICTED ON THE PLANS AND BY THIS DETAIL WILL BE CONSIDERED INCIDENTAL TO CILVERT PIPE, REINFORCED CONCRETE CULVERT PIPE, OR REINFORCED CONCRETE PIPE CATTLE PASS.

DETAILED DRAWINGS FOR PROPOSED ALTERNATE DESIGNS FOR JOINT TIES SHALL BE SUBMITTED TO THE ENGINEER FOR APPROVAL.

① ℄ OF TONGUE AND GROOVE OR BELL AND SPIGOT JOINTS.

② THE INSIDE OF THE THREADED INSERTS SHALL BE CLEAN TO ALLOW THE INSERTION OF THREADED EYE BOLTS.

③ HOLES SHALL BE CAST-IN-PLACE OR DRILLED 12 INCHES FROM ℄ OF TONGUE AND GROOVE.

④ BOLT PROJECTION INSIDE OF PIPE SHALL NOT EXCEED 2 INCHES.

⑤ OPENING TO BE ROD DIAMETER PLUS 1 INCH.

⑥ LENGTH ADEQUATE TO EXTEND TO WITHIN 1/2 INCH OF THE INNER SURFACE OF THE PIPE.

EYE BOLT AND TIE ROD ASSEMBLY (ALTERNATE NO. 1)

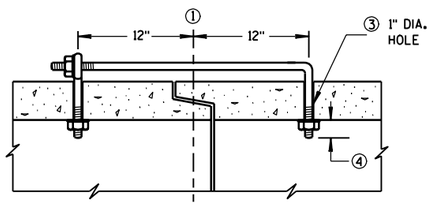

(TONGUE & GROOVE PIPE)

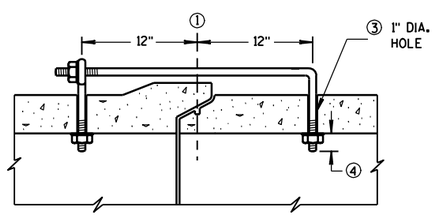

(MODIFIED BELL PIPE)

LONGITUDINAL SECTION

EYE BOLT DIMENSION TABLE

PIPE SIZE	L = LENGTH	
	TONGUE & GROOVE PIPE	MODIFIED BELL PIPE
18" TO 24"	4 1/2"	6 1/4"
30"	5"	7"
36"	5 1/2"	7"
42"	6"	
48"	6 1/2"	
60"	7 1/2"	
66"	8"	

ADJUSTABLE TIE ROD TABLE

PIPE DIAMETER	TIE ROD DIAMETER	D	L_1	N
12-60	5/8	5/8	5	1/2
66-84	3/4	3/4	5	1/2
90-108	1	1	7	1 7/16

DIMENSIONS SHOWN ARE IN INCHES

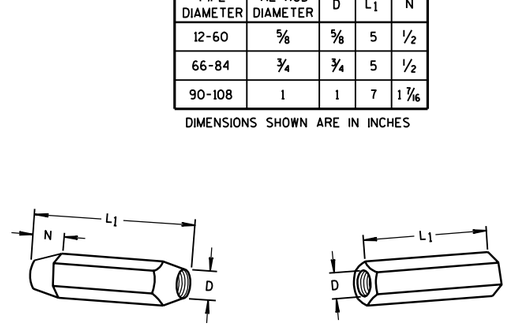

TAPERED PLAIN

RIGHT AND LEFT THREADS

SLEEVE NUTS

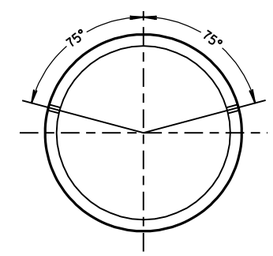

PLACEMENT OF (2) CAST-IN-PLACE INSERTS OR HOLES DURING FABRICATION FOR PIPE SECTIONS REQUIRING TIE RODS

TRANSVERSE SECTION

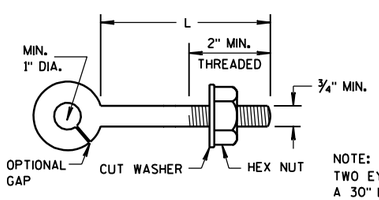

EYE BOLT

NOTE:
TWO EYE BOLTS MAY BE USED WITH A 30" LONG THREADED ROD IN LIEU OF THE 90° BENT TIE ROD.

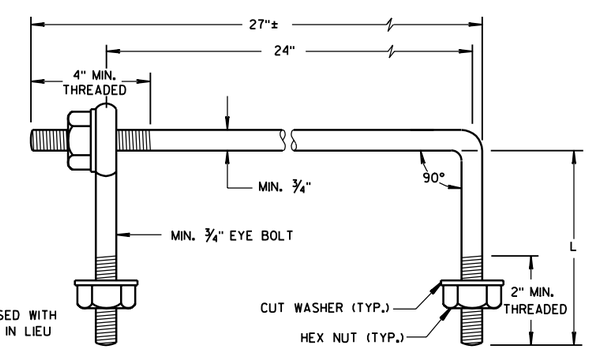

EYE BOLT AND TIE ROD

(JOINT TIES FOR 18" TO 66" DIA. CONCRETE PIPE)

EYE BOLT AND TIE ROD ASSEMBLY (ALTERNATE NO. 2)

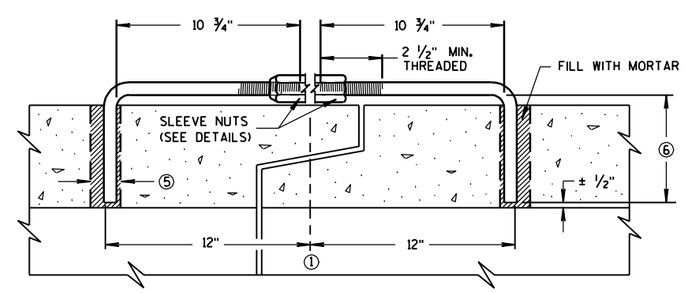

LONGITUDINAL SECTION

(JOINT TIES FOR 12" TO 108" DIA. CONCRETE PIPE)

ADJUSTABLE TIE ROD (ALTERNATE NO. 3)

JOINT TIES FOR CONCRETE PIPE

STATE OF WISCONSIN
DEPARTMENT OF TRANSPORTATION

APPROVED
12/17/07 — DATE
/S/ Jerry H. Zogg — ROADWAY STANDARDS DEVELOPMENT ENGINEER
FHWA

6

S.D.D. 8 F 4-6

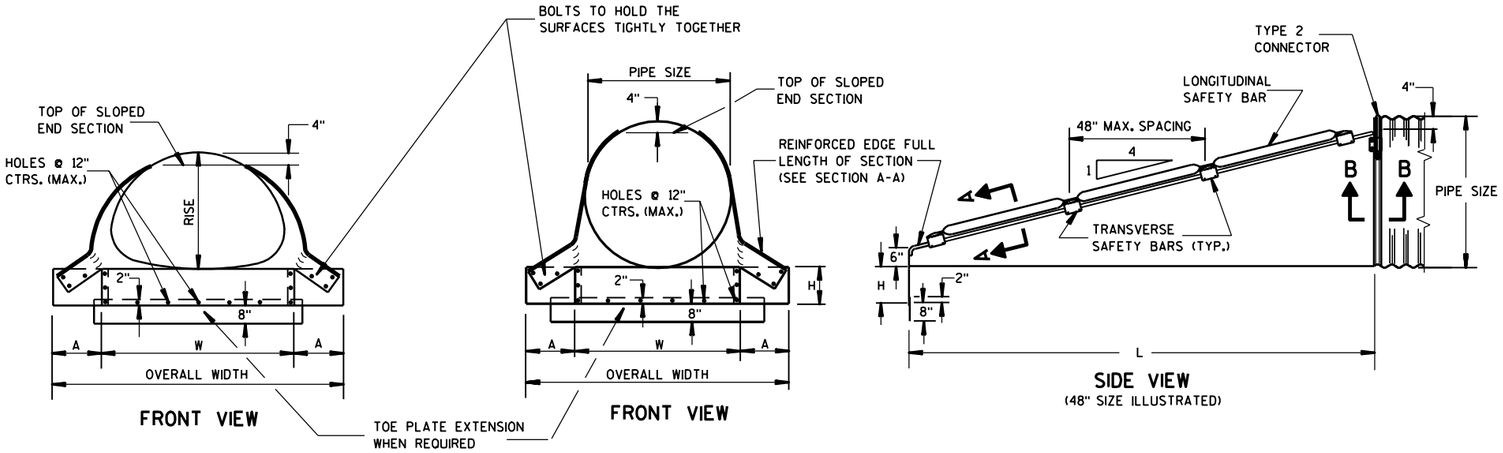

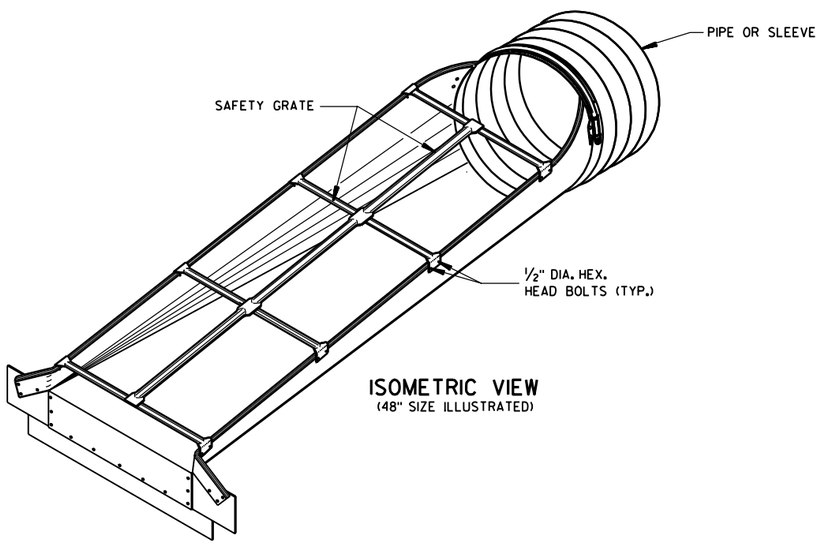

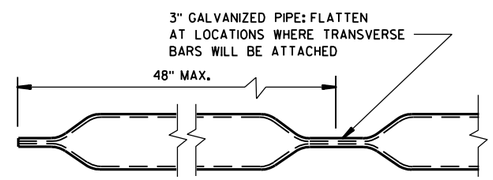

LONGITUDINAL SAFETY BAR

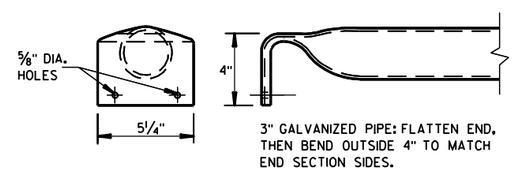

TRANSVERSE SAFETY BAR

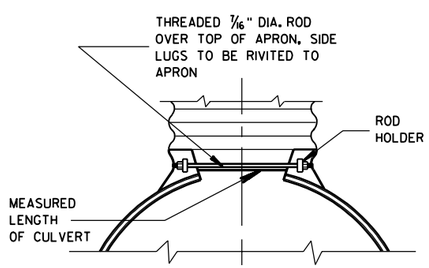

TYPE 2 CONNECTOR DETAIL

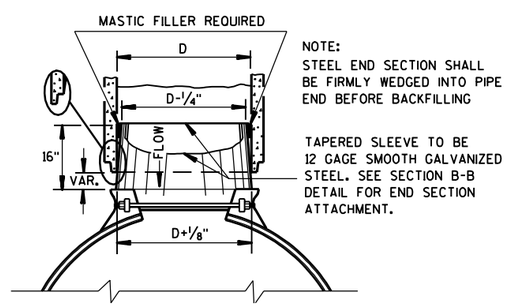

STEEL ADAPTER SLEEVE FOR CONCRETE PIPE

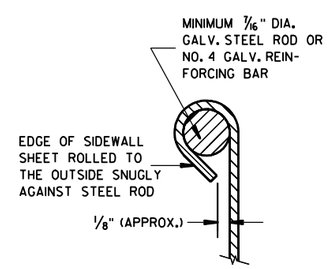

SECTION A-A

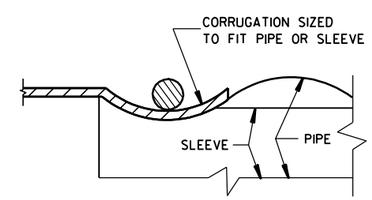

SECTION B-B

GENERAL NOTES

DETAILS OF CONSTRUCTION, MATERIALS AND WORKMANSHIP NOT SHOWN ON THIS DRAWING SHALL CONFORM TO THE PERTINENT REQUIREMENTS OF THE STANDARD SPECIFICATIONS AND APPLICABLE SPECIAL PROVISIONS.

SAFETY GRATES SHALL BE FABRICATED FROM 3-INCH DIAMETER GALVANIZED PIPE MEETING THE REQUIREMENTS OF ASTM A-53, GRADE B, SCHEDULE 40 OR APPROVED EQUAL. THE LONGITUDINAL BAR SHALL BE WELDED TO THE TRANSVERSE BARS WHERE THE BARS CROSS. THE NUMBER OF TRANSVERSE BARS REQUIRED WILL VARY DEPENDING ON THE LENGTH OF THE END SECTION.

SLOPED STEEL ENDWALLS LOCATED AT THE ENDS OF CONCRETE CULVERT PIPE SHALL BE FURNISHED WITH STEEL ADAPTER SLEEVES.

SLOPED STEEL ENDWALLS FOR CULVERT PIPE CROSS DRAINS

PIPE DIA. (IN.)	MIN. THICK.		DIMENSIONS (Inches)				L DIMENSIONS	
	IN.	GAGE	A	H	W	OVERALL WIDTH	SLOPE	LENGTH INCHES
36	.109	12	12	9	42	66	4:1	104
42	.109	12	16	12	48	80	4:1	128
48	.109	12	16	12	54	86	4:1	152
54	.109	12	16	12	60	92	4:1	176
60	.109	12	16	12	66	98	4:1	200

SLOPED STEEL ENDWALLS FOR PIPE ARCH CROSS DRAINS

EQUIV. DIA. (IN.)	INCHES		MIN. THICK.		DIMENSIONS (Inches)				L DIMENSIONS	
	SPAN	RISE	IN.	GAGE	A	H	W	OVERALL WIDTH	SLOPE	LENGTH INCHES
36	42	29	.079	12	12	9	48	72	4:1	76
42	49	33	.109	12	16	12	55	87	4:1	92
48	57	38	.109	12	16	12	63	95	4:1	112
54	64	43	.109	12	16	12	70	102	4:1	132
60	71	47	.109	12	16	12	77	109	4:1	148

DESIGN NOTE: (WILL NOT APPEAR ON CONTRACT PLANS)

THE INTENDED APPLICATION OF SLOPED STEEL ENDWALLS IS A SAFETY TREATMENT FOR CROSS DRAIN CULVERT PIPES/ARCHES LOCATED WITHIN THE CLEAR ZONE AND RECOVERY AREA OF RURAL HIGHWAYS. THIS SAFETY TREATMENT MAY BE A COST-EFFECTIVE ALTERNATIVE TO EXTENDING CULVERT PIPE OR SHIELDING THE CULVERT ENDS WITH TRAFFIC BARRIER. SLOPED STEEL ENDWALLS SHOULD NOT BE USED IF SIGNIFICANT HYDRAULIC CAPACITY OR CLOGGING PROBLEMS COULD RESULT.

USE 90.XXX BID ITEMS: SLOPED STEEL ENDWALL FOR CULVERT PIPE, CROSS DRAIN, (SIZE); OR SLOPED STEEL ENDWALL FOR PIPE ARCH, CROSS DRAIN, (SIZE).

SLOPED STEEL ENDWALLS FOR CULVERT PIPE AND PIPE ARCH CROSS DRAINS

STATE OF WISCONSIN
DEPARTMENT OF TRANSPORTATION

APPROVED
7/6/90
DATE
FHWA

STATE DESIGN ENGINEER FOR HWYS.

6

S.D.D. 8 F 8-1

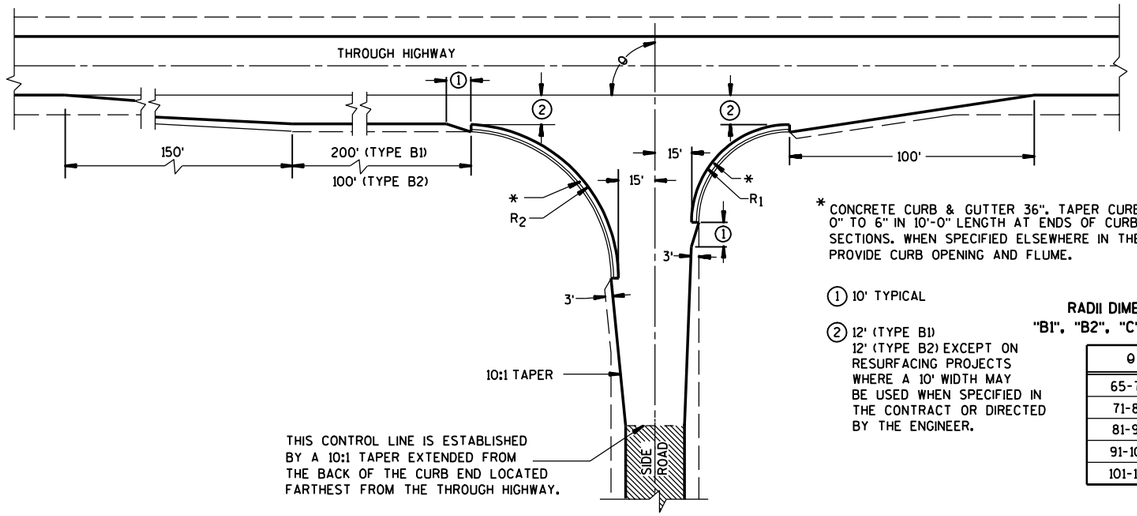

TYPE "B1" AND "B2"

* CONCRETE CURB & GUTTER 36". TAPER CURB HEIGHT 0" TO 6" IN 10'-0" LENGTH AT ENDS OF CURB & GUTTER SECTIONS. WHEN SPECIFIED ELSEWHERE IN THE CONTRACT, PROVIDE CURB OPENING AND FLUME.

(1) 10' TYPICAL

(2) 12' (TYPE B1)
12' (TYPE B2) EXCEPT ON RESURFACING PROJECTS WHERE A 10' WIDTH MAY BE USED WHEN SPECIFIED IN THE CONTRACT OR DIRECTED BY THE ENGINEER.

RADII DIMENSIONS FOR TYPES "B1", "B2", "C" AND "D" INTERSECTIONS

θ	R_1	R_2
65-70	35	70
71-80	40	70
81-90	40	60
91-100	50	55
101-110	60	45

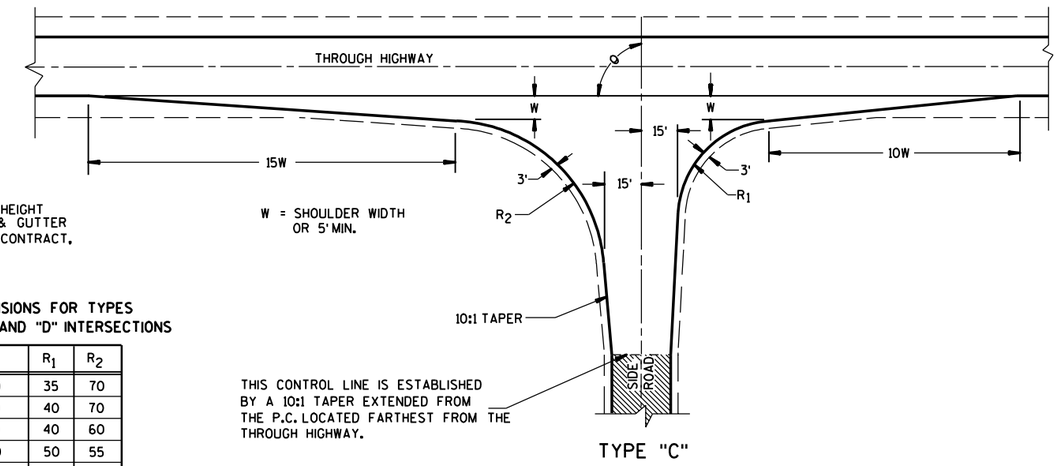

TYPE "C"

GENERAL NOTES

DESIGNS MAY BE USED INTERCHANGEABLY IN COMBINATION OR SEPARATELY FOR ANY ONE COMPLETE INTERSECTION DEPENDING UPON INTERSECTION ANGLE AND SURFACING OF EACH APPROACH ROADWAY.

SIDE ROAD SURFACING NOTE

WHEN THE SIDE ROAD IS NOT PRESENTLY PAVED, PAVEMENT SHALL BE PLACED TO THE LIMITS SHOWN UNLESS OTHERWISE PROVIDED IN THE CONTRACT. WHERE THE CONSTRUCTION LIMITS ARE BEYOND THE PAVING LIMITS, CRUSHED AGGREGATE SURFACING SHALL BE PLACED BETWEEN THE PAVING LIMITS AND CONSTRUCTION LIMITS.

WHEN THE SIDE ROAD IS PRESENTLY PAVED, NEW PAVEMENT SHALL BE PLACED TO THE LIMITS OF DESIGN AS SHOWN AND BEYOND, IF NECESSARY, TO MEET EXISTING PAVEMENT.

WHEN THE SIDE ROAD IS THE CONSTRUCTION PROJECT, THE INTERSECTION SURFACING SHALL BE THE SAME AS FOR THE PROJECT.

EXISTING SURFACE

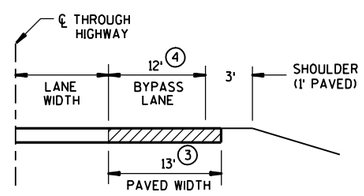

SECTION A-A
(SHOWING BYPASS LANE AND SHOULDER)

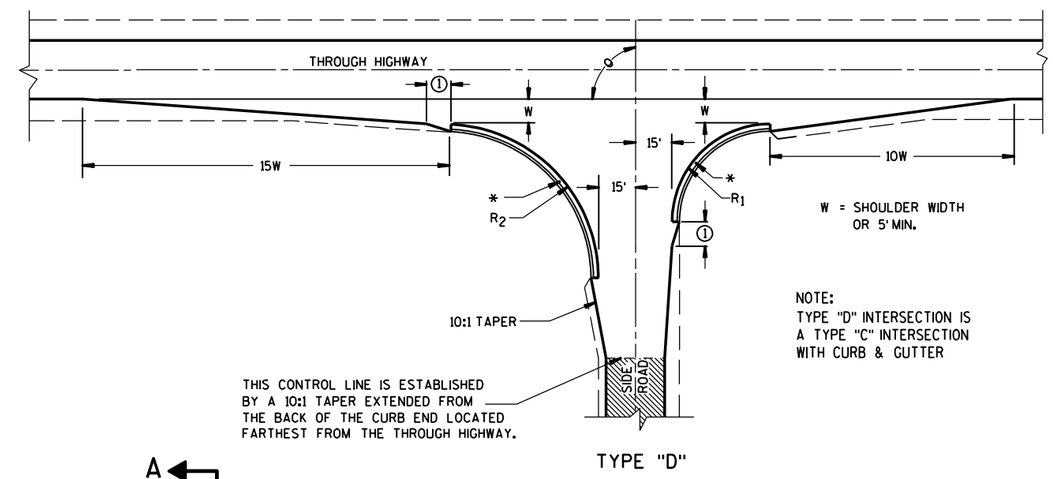

NOTE:
TYPE "D" INTERSECTION IS A TYPE "C" INTERSECTION WITH CURB & GUTTER

TYPE "D"

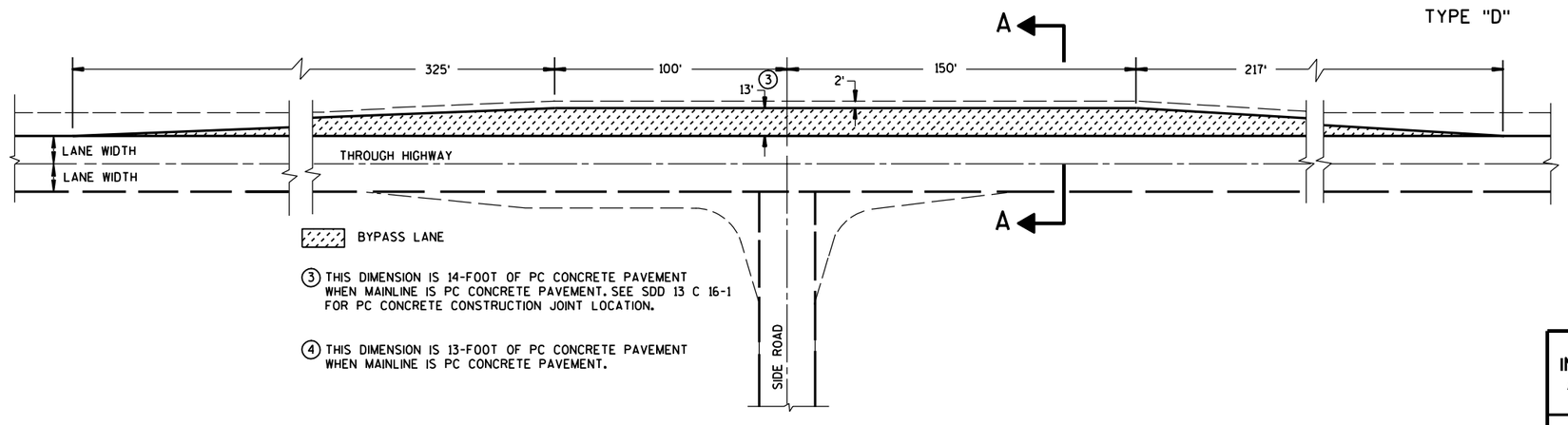

BYPASS LANE

(3) THIS DIMENSION IS 14-FOOT OF PC CONCRETE PAVEMENT WHEN MAINLINE IS PC CONCRETE PAVEMENT. SEE SDD 13 C 16-1 FOR PC CONCRETE CONSTRUCTION JOINT LOCATION.

(4) THIS DIMENSION IS 13-FOOT OF PC CONCRETE PAVEMENT WHEN MAINLINE IS PC CONCRETE PAVEMENT.

TEE INTERSECTION BYPASS LANE DETAIL

AT-GRADE SIDE ROAD INTERSECTION, TYPES "B1", "B2", "C" AND "D" AND TEE INTERSECTION BYPASS LANE

STATE OF WISCONSIN
DEPARTMENT OF TRANSPORTATION

6

S.D.D. 9 A 1-12a

6

S.D.D. 9 A 1-12a

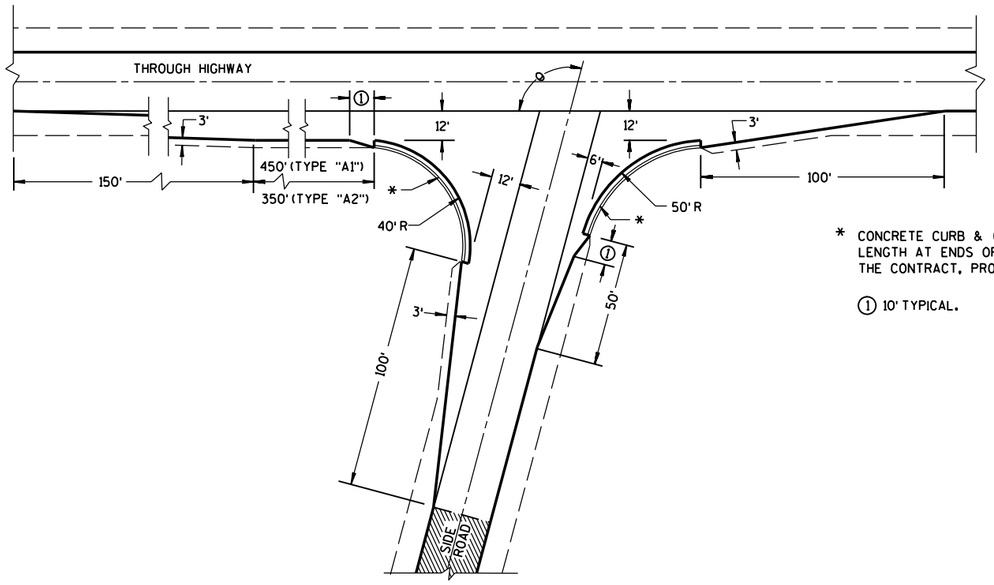

θ = MORE THAN 80°

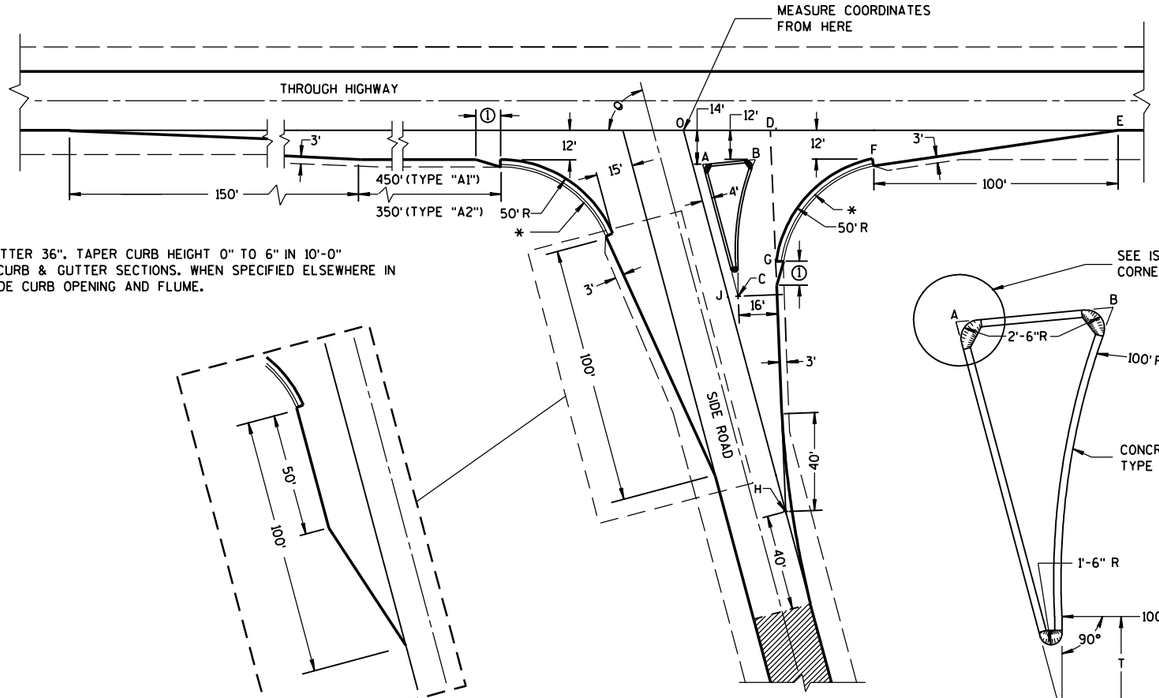

θ = ACUTE ANGLES 80° OR LESS

SIDE ROAD WIDENING AND TAPER REQUIRED WHERE THE THROUGH HIGHWAY CARRIES TWO-WAY TRAFFIC
θ = ACUTE ANGLES 70° OR LESS

* CONCRETE CURB & GUTTER 36". TAPER CURB HEIGHT 0" TO 6" IN 10'-0" LENGTH AT ENDS OF CURB & GUTTER SECTIONS. WHEN SPECIFIED ELSEWHERE IN THE CONTRACT, PROVIDE CURB OPENING AND FLUME.

① 10' TYPICAL.

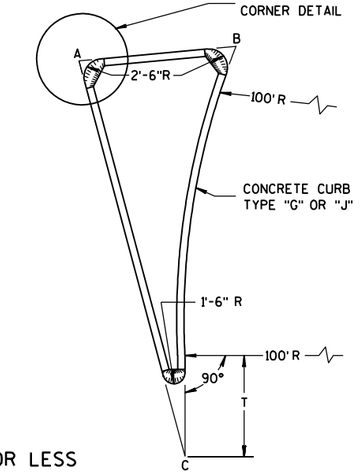

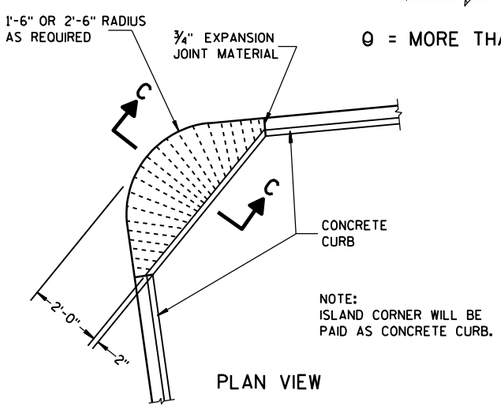

PLAN VIEW

EXISTING SURFACE

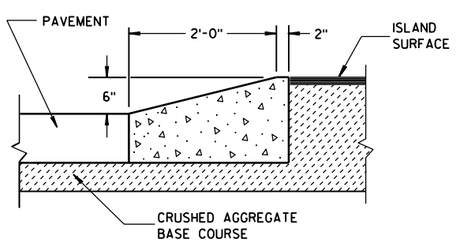

SECTION C-C

ISLAND CORNER DETAIL

(TO BE CONSTRUCTED AT ALL ISLAND CORNERS)

TABLE OF DIMENSIONS FOR VARIABLE SIDE ROAD INTERSECTION ANGLES

(INTERPOLATE VALUES FOR ANGLES NOT SHOWN)

ANGLE θ DEGREES	COORDINATES IN FEET (MEASURED FROM POINT "O") X/Y								LENGTH IN FEET				
	A	B	C	D	E	F	G	H	AB	AC	T	OJ	OH
60	12.7 / -14.0	44.9 / -12.0	46.4 / -72.4	41.9 / 0.0	205.0 / 0.0	104.6 / -12.0	64.0 / -75.5	85.0 / -147.1	32.3	67.4	4.9	85.9	169.9
65	10.9 / -14.0	39.0 / -12.0	37.8 / -71.6	39.4 / 0.0	196.1 / 0.0	95.7 / -12.0	54.1 / -71.5	70.5 / -151.3	28.2	63.6	8.5	80.9	166.9
70	9.4 / -14.0	33.9 / -12.0	29.8 / -70.1	37.4 / 0.0	188.3 / 0.0	87.8 / -12.0	45.6 / -67.5	56.1 / -154.2	24.6	59.7	11.5	76.1	164.1
75	7.9 / -14.0	29.3 / -12.0	22.3 / -67.9	35.7 / 0.0	181.2 / 0.0	80.7 / -12.0	38.2 / -63.4	41.8 / -155.9	21.5	55.8	13.8	71.4	161.4
80	6.5 / -14.0	25.4 / -12.0	15.6 / -65.2	34.4 / 0.0	174.8 / 0.0	74.4 / -12.0	31.8 / -59.3	27.6 / -156.5	18.9	52.0	15.6	66.9	158.9

TYPE "A1" & "A2" SIDE ROAD INTERSECTION DETAILS

AT-GRADE SIDE ROAD INTERSECTION, TYPE "A1" & "A2"

STATE OF WISCONSIN
DEPARTMENT OF TRANSPORTATION

APPROVED
12/17/02
DATE
FHWA

CHIEF ROADWAY DEVELOPMENT ENGINEER

6

S.D.D. 9 A 1-12b

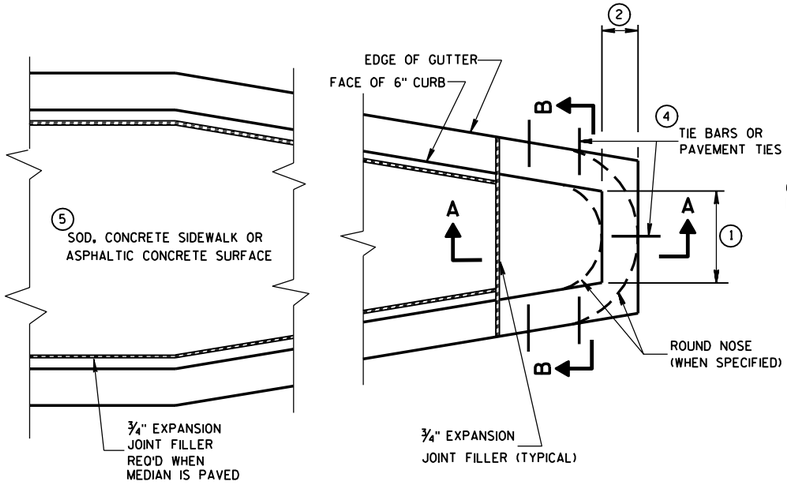

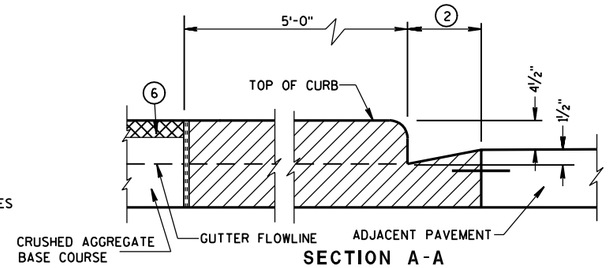

SECTION A-A

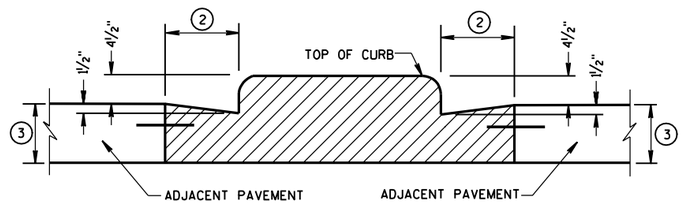

SECTION B-B

CONCRETE MEDIAN BLUNT NOSE DETAIL

GENERAL NOTES

DETAILS OF CONSTRUCTION, MATERIALS AND WORKMANSHIP NOT SHOWN ON THIS DRAWING SHALL CONFORM TO THE PERTINENT REQUIREMENTS OF THE STANDARD SPECIFICATIONS AND THE APPLICABLE SPECIAL PROVISIONS.

1. SEE PLAN FOR MEDIAN NOSE WIDTH AND RADIUS (FOR ROUND NOSE ALTERNATE).
2. WIDTH OF GUTTER TO MATCH EXISTING ADJACENT GUTTER OR AS SPECIFIED ELSEWHERE IN THE PLAN.
3. DEPTH EQUAL TO ADJACENT PAVEMENT. ADJACENT PAVEMENT STRUCTURE DETAILS ARE SHOWN ON THE PLAN. TYPICAL OPTIONS ARE:
   (1) NEW OR EXISTING CONCRETE PAVEMENT.
   (2) ASPHALTIC CONCRETE PAVEMENT OVER NEW OR EXISTING CONCRETE BASE COURSE.
   (3) ASPHALTIC CONCRETE PAVEMENT OVER CRUSHED AGGREGATE BASE COURSE.
4. TIE BARS OR PAVEMENT TIES REQUIRED IN NEW CONCRETE PAVEMENT OR CONCRETE BASE COURSE. TIE BARS SHALL BE NO. 4 X 2'-0" SPACED AT 2'-0" C-C.

   PAVEMENT TIES REQUIRED IN EXISTING CONCRETE BASE COURSE. PAVEMENT TIES SHALL BE NO. 6 X 1'-0" SPACED AT 3'-0" C-C INSTALLED ON A HORIZONTAL SKEW OF 6:1. THE DIRECTION OF SKEW SHALL ALTERNATE AFTER EVERY ONE OR TWO BARS.
5. SURFACE TYPE AND DETAILS ARE SHOWN ELSEWHERE IN THE PLAN.

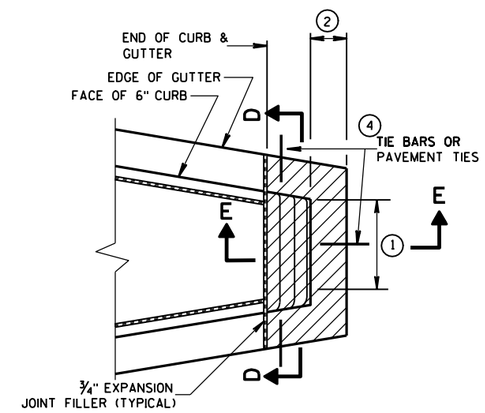

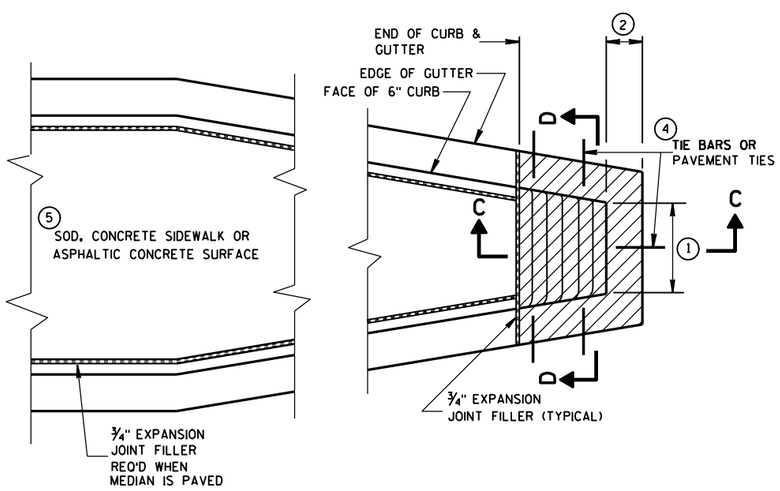

CONCRETE MEDIAN SLOPED NOSE TYPE 1

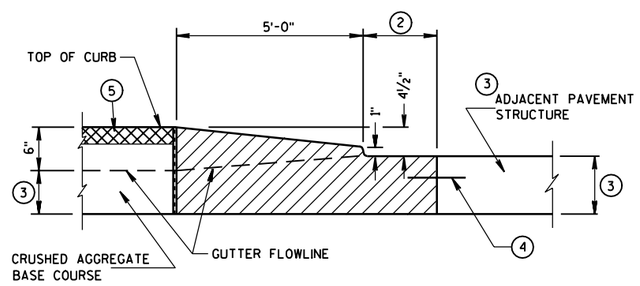

SECTION C-C

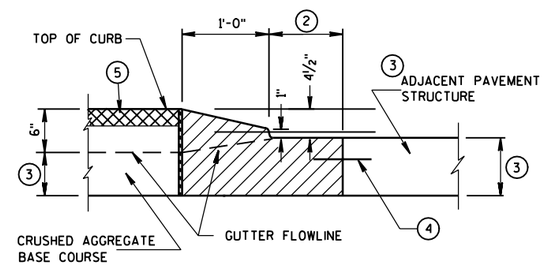

SECTION E-E

CONCRETE MEDIAN SLOPED NOSE TYPE 2

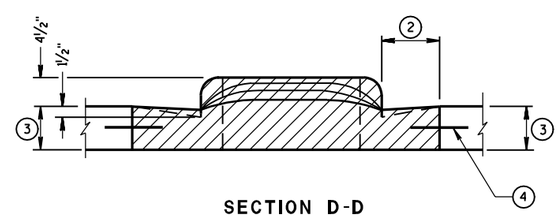

SECTION D-D

CONCRETE MEDIAN NOSE

STATE OF WISCONSIN
DEPARTMENT OF TRANSPORTATION

APPROVED
6/8/06 — DATE
/S/ Jerry H. Zogg — ROADWAY STANDARDS DEVELOPMENT ENGINEER
FHWA

6

S.D.D. 11B 2-2

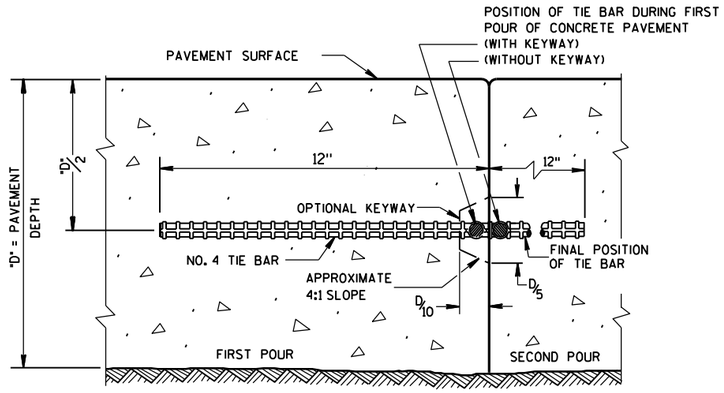

CONSTRUCTION JOINT

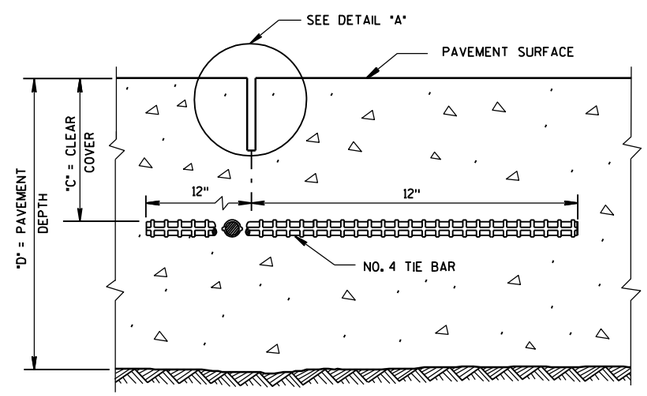

SAWED JOINT

GENERAL NOTES

DO NOT SEAL OR FILL LONGITUDINAL JOINTS.

(1) ANCHOR TIE BARS INTO DRILLED HOLES WITH AN EPOXY.

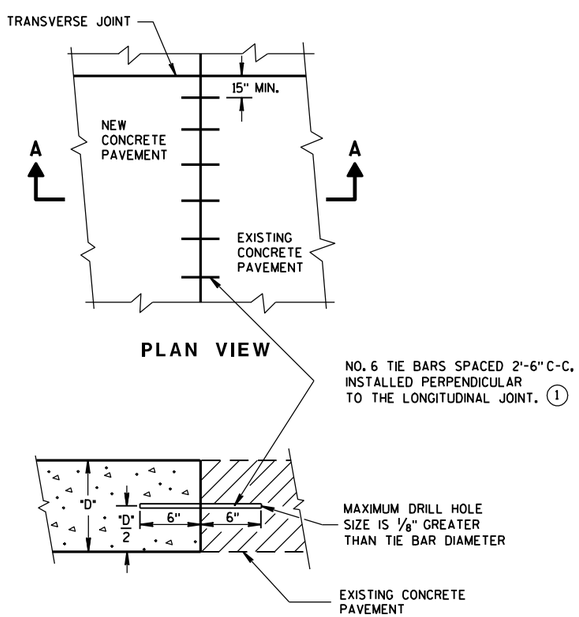

PLAN VIEW

SECTION A-A

LONGITUDINAL CONSTRUCTION JOINT
TIE BARS ANCHORED
INTO EXISTING PAVEMENT

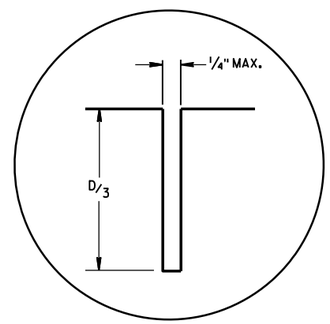

DETAIL "A"

PAVEMENT DEPTH "D"	CLEAR COVER "C"	MAXIMUM TIE BAR SPACING "S"	
		PAVEMENT WIDTH	
		24' OR 26'	≥30'
6, 6 1/2"	3"±1/2"	48"	42"
7, 7 1/2"	3 1/4"±1"	45"	36"
8, 8 1/2"	3 3/4"±1"	39"	30"
9, 9 1/2"	4 1/4"±1"	33"	27"
10, 10 1/2"	4 3/4"±1"	30"	24"
11, 11 1/2"	5 1/4"±1"	27"	21"
12"	5 3/4"±1"	24"	21"

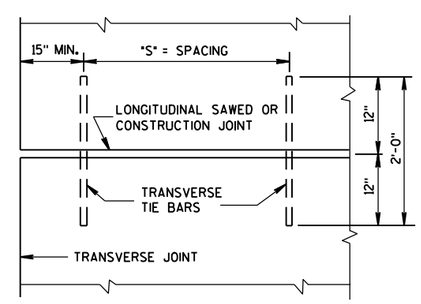

PLAN VIEW
SHOWING LOCATION OF TIE BARS

CONCRETE PAVEMENT
LONGITUDINAL JOINTS AND TIES

STATE OF WISCONSIN
DEPARTMENT OF TRANSPORTATION

APPROVED
12/11/2009 — DATE
/S/ Deb Bischoff — PAVEMENT POLICY & DESIGN ENGINEER
FHWA

6

S.D.D. 13 C 1-14

6

S.D.D. 13 C 1-14

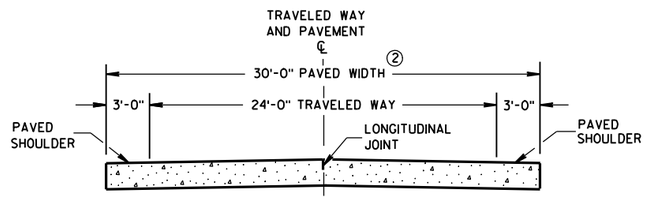

SECTION A-A ①
TWO-LANE TWO-WAY HIGHWAY

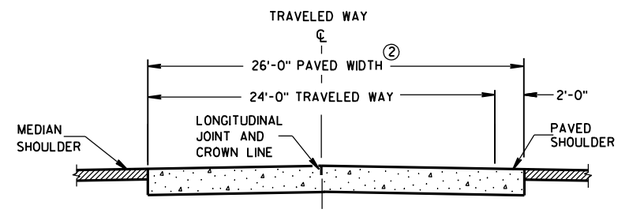

SECTION B-B

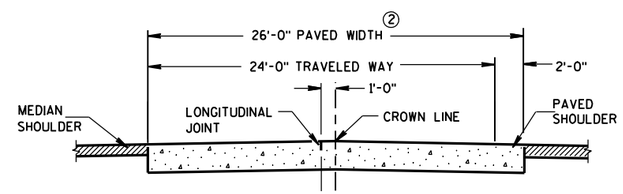

ALTERNATIVE SECTION B-B
①
DIVIDED HIGHWAY

GENERAL NOTES

CONTRACTION JOINTS

CONSTRUCT CONTRACTION JOINTS NORMAL TO THE CENTERLINE. SHOW THE LOCATION OF CONTRACTION JOINTS THROUGH INTERSECTIONS ON THE PLANS OR AS DIRECTED BY THE ENGINEER.

DO NOT SEAL OR FILL CONTRACTION JOINTS.

INSTALL DOWEL BARS PARALLEL TO THE PAVEMENT CENTERLINE AND PAVEMENT SURFACE.

FOR PAVEMENT SLABS OF VARYING WIDTHS, CENTER THE DOWEL ASSEMBLY ACROSS THE LANES. LOCATE THE INNER AND OUTER MOST DOWEL BARS SO THAT THE CENTER OF THE BARS ARE A MINIMUM OF 6 INCHES AND A MAXIMUM OF 12 INCHES FROM THE LONGITUDINAL JOINT AND THE EDGE OF PAVEMENT.

CONSTRUCTION JOINTS

LOCATE CONSTRUCTION JOINTS A MINIMUM OF 4 FEET FROM THE NEAREST CONTRACTION JOINT AND ALIGN PARALLEL TO CONTRACTION JOINTS.

THE CONTRACTOR MAY INSERT TIE BARS THROUGH THE HEADER BOARD AFTER THE CONCRETE HAS BEEN PLACED.

① REFER TO TYPICAL CROSS SECTIONS FOR ADDITIONAL DETAILS.

② MEASURE THE ENTIRE PAVED WIDTH INCLUDING THE PORTION(S) LABELED PAVED SHOULDER AS CONCRETE PAVEMENT.

PAVEMENT DEPTH, DOWEL BAR SIZE AND JOINT SPACING TABLE

PAVEMENT DEPTH (D)	DOWEL BAR DIAMETER	CONTRACTION JOINT SPACING
5 ½", 6", 6 ½"	NONE	12'
7", 7 ½"	1"	14'
8", 8 ½"	1 ¼"	15'
9", 9 ½"	1 ¼"	15'
10" & ABOVE	1 ½"	15'

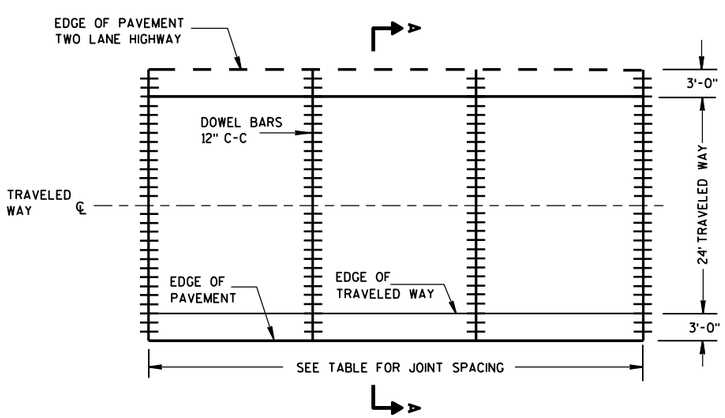

CONTRACTION JOINT LAYOUT
FOR TWO-LANE TWO-WAY HIGHWAY

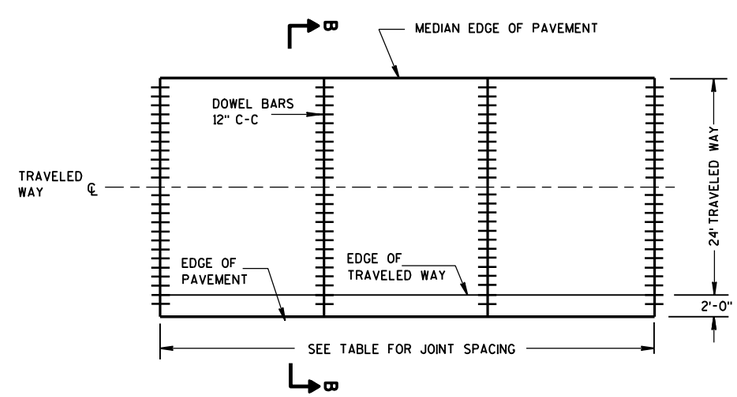

CONTRACTION JOINT LAYOUT
FOR DIVIDED HIGHWAY

RURAL DOWELED
CONCRETE PAVEMENT

STATE OF WISCONSIN
DEPARTMENT OF TRANSPORTATION

6

S.D.D. 13 C 11-10a

6

S.D.D. 13 C 11-10a

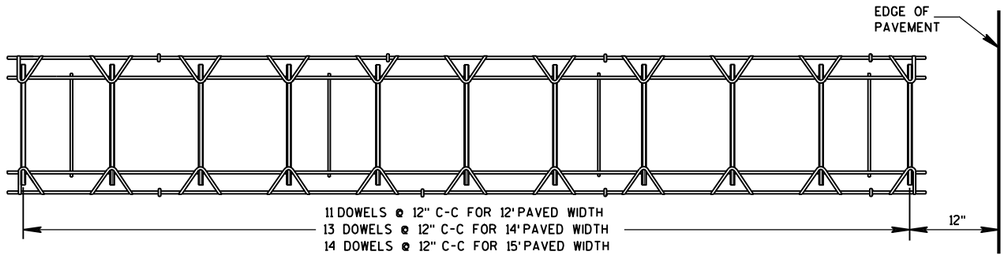

PLAN VIEW

SIDE VIEW

(NORMAL TO CENTERLINE)

CONTRACTION JOINT DOWEL ASSEMBLY ①

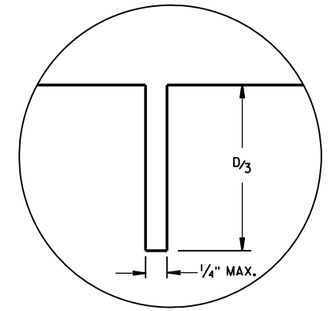

JOINT DETAIL

GENERAL NOTES

① THE ENGINEER MAY APPROVE THE USE OF ALTERNATIVE DESIGNS OF THE DOWEL ASSEMBLY. THE CONTRACTOR MAY USE MECHANICAL DOWEL BAR INSERTERS INSTEAD OF DOWEL ASSEMBLIES.

② ANCHOR DOWEL BARS INTO DRILLED HOLES WITH AN EPOXY.

③ APPLY A THIN UNIFORM COATING OF SURFACE TREATMENT TO THE FREE END OF DOWEL BARS TO PREVENT BONDING.

④ SPACE DOWEL BARS INSTALLED BY DRILLING 1'-3" ON CENTER. CENTER THE GROUPING OF DOWEL BARS INSIDE THE SLAB BASED ON ALL THE FOLLOWING SITUATIONS:

BETWEEN THE EDGES OF PAVEMENTS WITHOUT LONGITUDINAL JOINTS OR BETWEEN THE EDGE OF PAVEMENT AND NEAREST LONGITUDINAL JOINT OR BETWEEN TWO ADJACENT LONGITUDINAL JOINTS.

⑤ SECURE BASKETS WITH ANCHORS TO HOLD DOWEL BARS IN THE CORRECT POSITION AND ALIGNMENT. TYPE, LOCATION, NUMBER AND LENGTH OF ANCHORS ARE DEPENDENT UPON FIELD CONDITIONS.

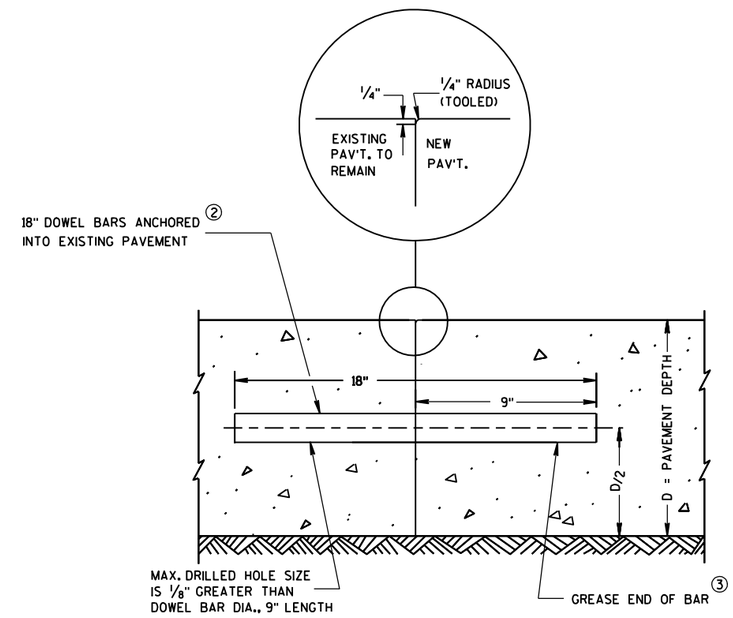

TRANSVERSE CONTRACTION JOINTS ABUTTING EXISTING PAVEMENT

④ DOWEL BAR DETAIL

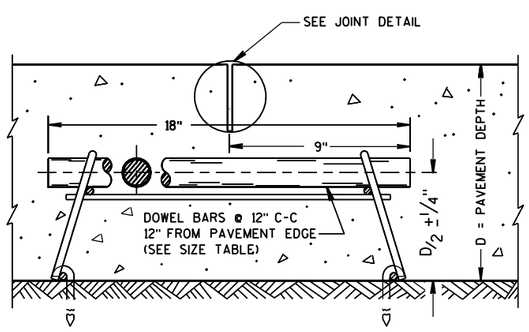

DOWELED CONTRACTION JOINT

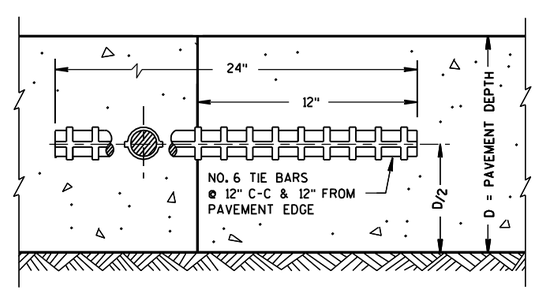

CONSTRUCTION JOINT

RURAL DOWELED CONCRETE PAVEMENT

STATE OF WISCONSIN
DEPARTMENT OF TRANSPORTATION

APPROVED
12/11/09 — DATE
/S/ Deb Bischoff — PAVEMENT POLICY & DESIGN ENGINEER
FHWA

6

S.D.D. 13 C 11-10b

6

S.D.D. 13 C 11-10b

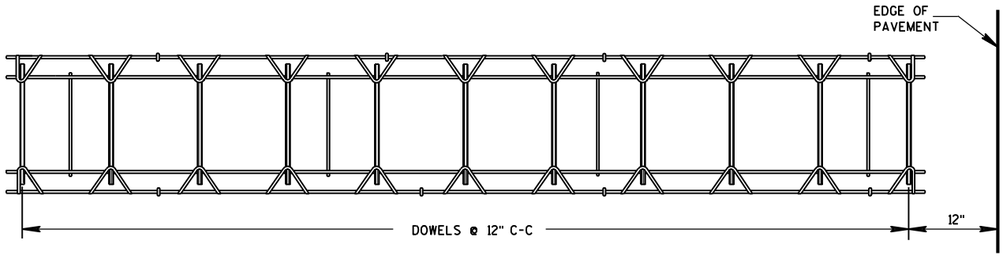

PLAN VIEW

SIDE VIEW

CONTRACTION JOINT DOWEL ASSEMBLY ①

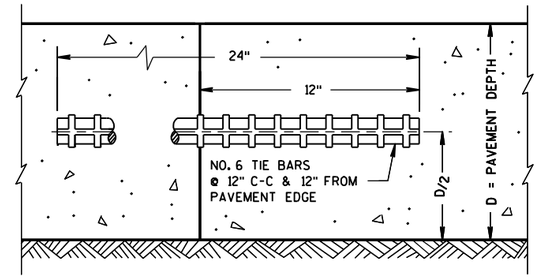

TRANSVERSE CONSTRUCTION JOINT

GENERAL NOTES

CONTRACTION JOINTS

CONSTRUCT CONTRACTION JOINTS NORMAL TO THE CENTERLINE. SHOW THE LOCATION OF CONTRACTION JOINTS THROUGH INTERSECTIONS ON THE PLANS OR AS DIRECTED BY THE ENGINEER.

DO NOT SEAL OR FILL CONTRACTION JOINTS.

INSTALL DOWEL BARS PARALLEL TO THE PAVEMENT CENTERLINE AND PAVEMENT SURFACE.

FOR PAVEMENT SLABS OF VARYING WIDTHS, CENTER THE DOWEL ASSEMBLY ACROSS THE LANES. LOCATE THE INNER AND OUTER MOST DOWEL BARS SO THAT THE CENTER OF THE BARS ARE A MINIMUM OF 6 INCHES AND A MAXIMUM OF 12 INCHES FROM THE LONGITUDINAL JOINT AND THE EDGE OF PAVEMENT.

CONSTRUCTION JOINTS

LOCATE CONSTRUCTION JOINTS A MINIMUM OF 4 FEET FROM THE NEAREST CONTRACTION JOINT AND ALIGN PARALLEL TO CONTRACTION JOINTS.

THE CONTRACTOR MAY INSERT TIE BARS THROUGH THE HEADER BOARD AFTER THE CONCRETE HAS BEEN PLACED.

① THE ENGINEER MAY APPROVE THE USE OF ALTERNATIVE DESIGNS OF THE DOWEL ASSEMBLY. THE CONTRACTOR MAY USE MECHANICAL DOWEL BAR INSERTERS INSTEAD OF DOWEL ASSEMBLIES.

② ANCHOR DOWEL BARS INTO DRILLED HOLES WITH AN EPOXY.

③ APPLY A THIN UNIFORM COATING OF SURFACE TREATMENT TO THE FREE END OF DOWEL BARS TO PREVENT BONDING.

④ SPACE DOWEL BARS INSTALLED BY DRILLING 1'-3" ON CENTER. CENTER THE GROUPING OF DOWEL BARS INSIDE THE SLAB BASED ON ALL THE FOLLOWING SITUATIONS:

BETWEEN THE EDGES OF PAVEMENTS WITHOUT LONGITUDINAL JOINTS OR BETWEEN THE EDGE OF PAVEMENT AND NEAREST LONGITUDINAL JOINT OR BETWEEN TWO ADJACENT LONGITUDINAL JOINTS.

⑤ SECURE BASKETS WITH ANCHORS TO HOLD DOWEL BARS IN THE CORRECT POSITION AND ALIGNMENT. TYPE, LOCATION, NUMBER AND LENGTH OF ANCHORS ARE DEPENDENT UPON FIELD CONDITIONS.

PAVEMENT DEPTH, DOWEL BAR SIZE AND JOINT SPACING TABLE

PAVEMENT DEPTH (D)	DOWEL BAR DIAMETER	CONTRACTION JOINT SPACING
5 1/2", 6", 6 1/2"	NONE	12'
7", 7 1/2"	1"	14'
8", 8 1/2"	1 1/4"	15'
9", 9 1/2"	1 1/4"	15'
10" & ABOVE	1 1/2"	15'

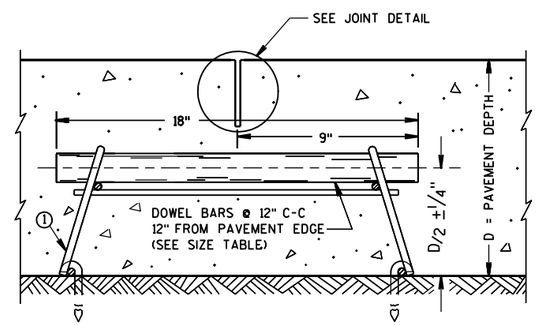

DOWELED CONTRACTION JOINT

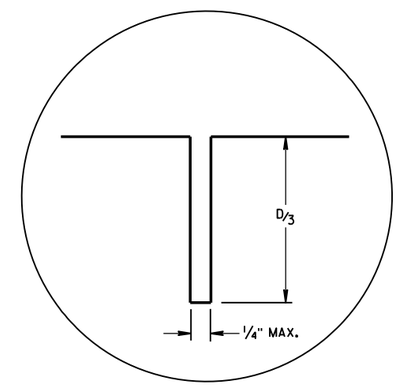

JOINT DETAIL

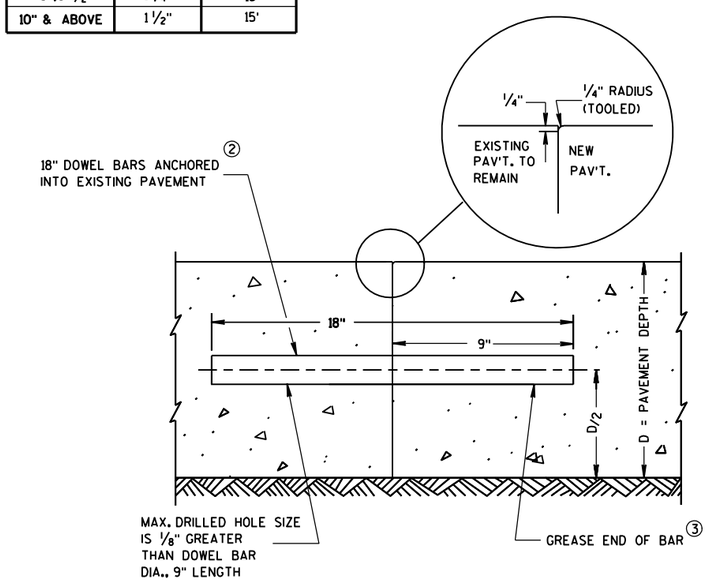

TRANSVERSE CONTRACTION JOINTS ABUTTING EXISTING PAVEMENT

④ DOWEL BAR DETAIL

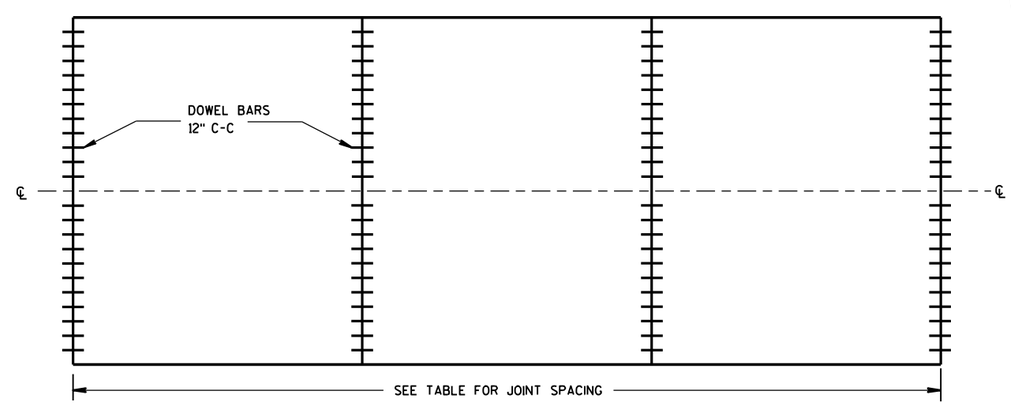

CONTRACTION JOINT LOCATIONS

URBAN DOWELED CONCRETE PAVEMENT

STATE OF WISCONSIN
DEPARTMENT OF TRANSPORTATION

APPROVED
12/11/2009 — DATE
/S/ Deb Bischoff — PAVEMENT POLICY & DESIGN ENGINEER
FHWA

6

S.D.D. 13 C 13-7

6

S.D.D. 13 C 13-7

GENERAL NOTES

DETAILS OF CONSTRUCTION, MATERIALS AND WORKMANSHIP NOT SHOWN ON THIS DRAWING SHALL CONFORM TO THE PERTINENT REQUIREMENTS OF THE STANDARD SPECIFICATIONS, AND THE APPLICABLE SPECIAL PROVISIONS.

1. W6 X 9 OR W6 X 8.5 STEEL POSTS AND NOTCHED PLASTIC BLOCKOUTS ARE ACCEPTABLE ALTERNATIVES FOR 6" X 8" WOOD POSTS WITH WOOD OR PLASTIC BLOCKOUTS. USE APPROVED NOTCHED PLASTIC BLOCKOUTS WITH STEEL POSTS. APPROVED PLASTIC BLOCKOUT DESIGNS MAY VARY FROM THIS TYPICAL DETAIL WHEN USED IN CONJUNCTION WITH STEEL POSTS.

   DO NOT MIX STEEL POSTS AND WOOD POSTS IN A SINGLE INSTALLATION.
2. USE STRUCTURAL STEEL POSTS CONFORMING TO ASTM A 36. GALVANIZED POSTS ACCORDING TO AASHTO M 111. EITHER SET THE POSTS IN DRILLED HOLES OR DRIVE TO GRADE. REMOVE MUSHROOMING CAUSED BY DRIVING AND REPAIR DAMAGED SPELTER COATING ON GALVANIZED POSTS.
3. INSTALL STEEL POSTS WITH HOLES ON APPROACHING TRAFFIC SIDE.
4. USE EITHER WOOD OR APPROVED PLASTIC BLOCKOUTS ON WOOD POSTS.
5. IF THE DISTANCE FROM BACK OF POST TO SHOULDER HINGE POINT IS LESS THAN 2 FEET INSTALL LONGER POST AT HALF POST SPACING, W BEAM (LHW).
6. IF ROCK IS ENCOUNTERED DURING EXCAVATION, THE ENGINEER MAY APPROVE USING A 12 INCH DIAMETER POST HOLE EXTENDING 20 INCHES DEEP INTO THE ROCK. PLACE GRANULAR MATERIAL IN THE BOTTOM OF THE HOLE APPROXIMATELY 2½ INCHES DEEP. CUT THE POSTS TO LENGTH AND PLACE IN YHE HOLE. BACKFILL WITH MATERIAL EXCAVATED FROM THE HOLE AND COMPACT ADEQUATEY.

   INSTALL BEAM GUARD SECTIONS AND ALL NECESSARY HARDWARE ACCORDING TO THE APPLICABLE PLAN AND CURRENT STANDARD AND SUPPLEMENTAL SPECIFICATIONS.

   ALL DIMENSIONS ARE SUBJECT TO MANUFACTURER'S TOLERANCES EXCEPT WHERE ALLOWABLE TOLERANCES ARE SHOWN.

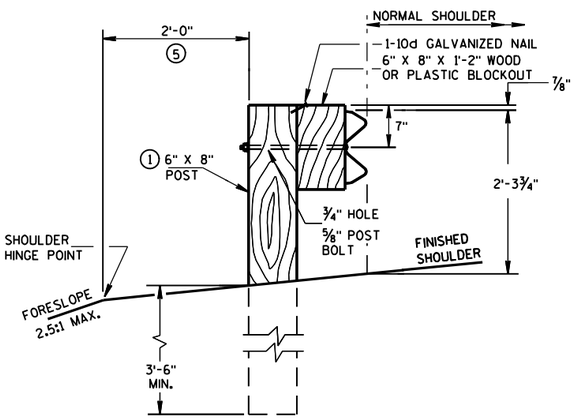

END VIEW
LOCATED ALONG A ROADWAY SHOULDER
STANDARD INSTALLATION

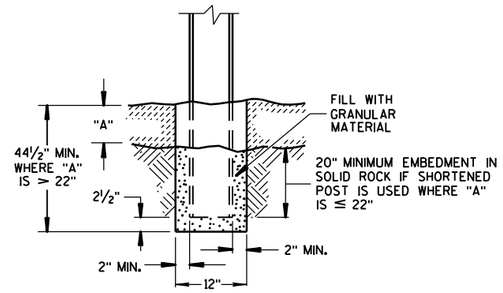

END VIEW
SETTING STEEL OR WOOD POST IN ROCK 6

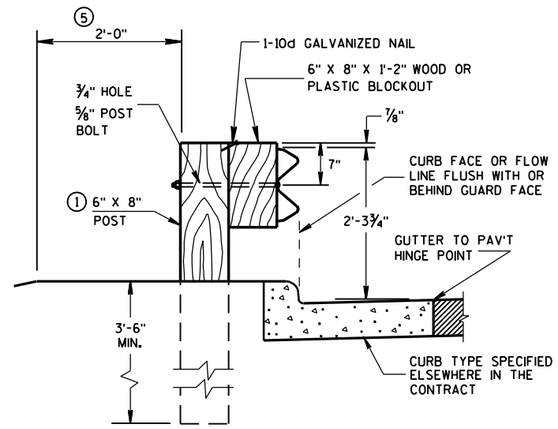

END VIEW
LOCATED ALONG A CURBED ROADWAY

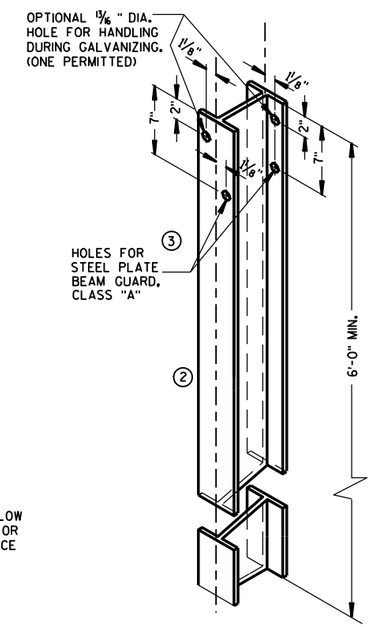

STEEL POST &
HOLE PUNCHING DETAIL
(W6 X 9) 1

ALL HOLES 13/16" DIAMETER EXCEPT AS NOTED

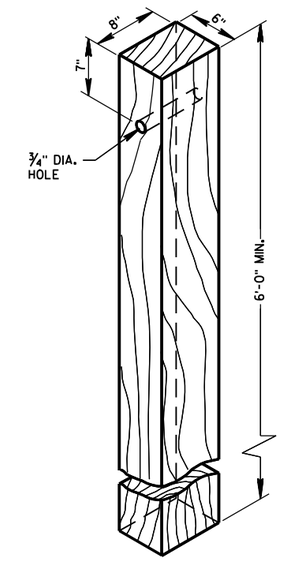

WOOD POST
(6"X8") NOMINAL

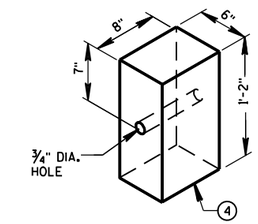

WOOD OR PLASTIC
BLOCKOUT FOR
WOOD POSTS

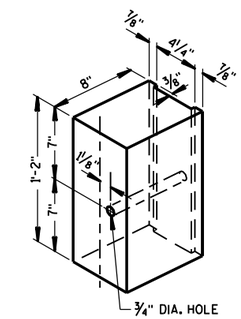

TYPICAL NOTCHED 1
PLASTIC BLOCKOUT
FOR STEEL POSTS

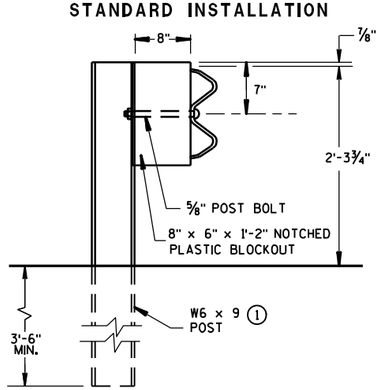

END VIEW
STEEL POST & NOTCHED
PLASTIC BLOCKOUT ALTERNATIVE
STANDARD INSTALLATION

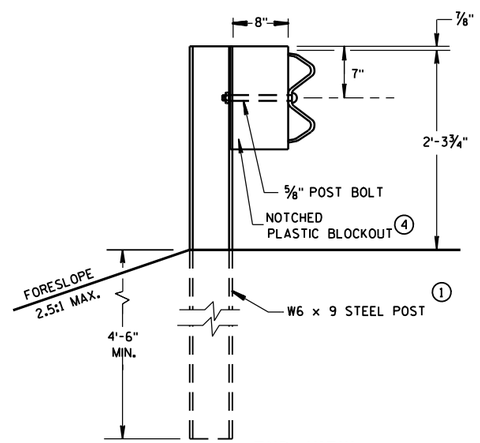

END VIEW
LONGER POST AT HALF
POST SPACING W BEAM
(LHW)

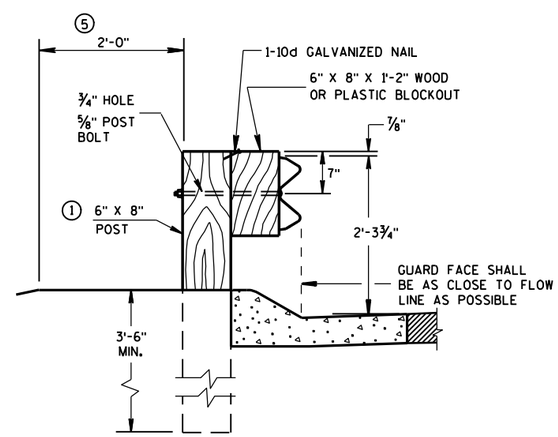

END VIEW
LOCATED ALONG A
MOUNTABLE CURBED ROADWAY

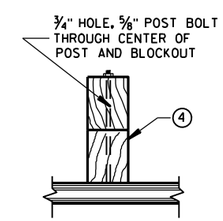

PLAN VIEW
WOOD POST,
BLOCKOUT & BEAM

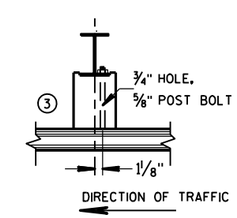

PLAN VIEW
STEEL POST, NOTCHED
PLASTIC BLOCKOUT & BEAM

TYPICAL INSTALLATION OF STEEL PLATE BEAM GUARD

STEEL PLATE BEAM GUARD,
CLASS "A"
INSTALLATION & ELEMENTS

STATE OF WISCONSIN
DEPARTMENT OF TRANSPORTATION

6

S.D.D. 14 B 15-6a

6

S.D.D. 14 B 15-6a

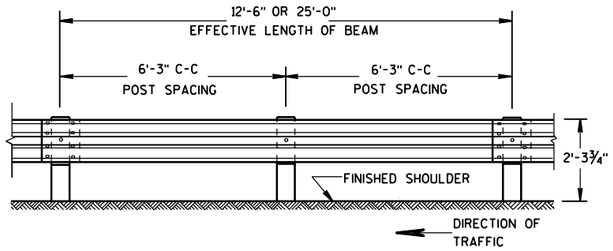

FRONT VIEW

POST SPACING STANDARD INSTALLATION

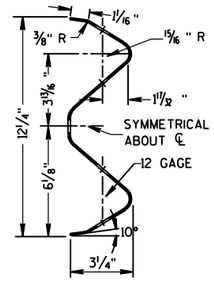

SECTION THRU W BEAM

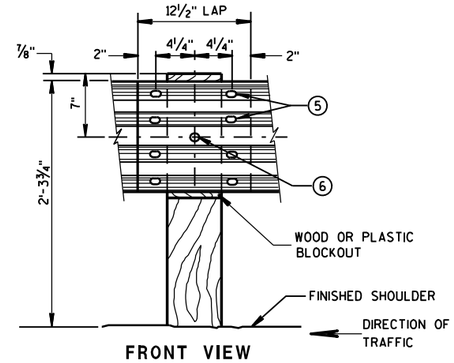

FRONT VIEW
BEAM SPLICE AT WOOD POST
AND POST MOUNTING DETAIL

GENERAL NOTES

1. PROVIDE TYPE "H" SILVER REFLECTIVE SHEETING ON ALL REFLECTORS EXCEPT THOSE LOCATED ALONG THE LEFT EDGE OF ONE-WAY ROADWAYS, WHICH SHALL BE PROVIDED WITH TYPE "H" YELLOW REFLECTIVE SHEETING.
2. DO NOT INSTALL REFLECTORS ON THE FIRST 50 FEET OF THE APPROACH END OF THE ENERGY ABSORBING TERMINAL.
3. REVERSE EVERY OTHER REFLECTOR FOR 2-WAY VISIBILITY. THE CONTRACTOR MAY FURNISH TWO-SIDED REFLECTORS IN LIEU OF ONE-SIDED REFLECTORS.
4. PROVIDE AN ANGLE OF BEND OF 90° ± 1° FOR TWO-SIDED REFLECTORS.
5. 8 -⅝" Φ X 2 " BUTTON HEAD BOLTS WITH OVAL SHOULDERS & RECESS NUTS.
6. ⅝" Φ X 1'-6" BUTTON HEAD BOLT AND AND RECESS NUT WITH ROUND WASHER UNDER NUT.

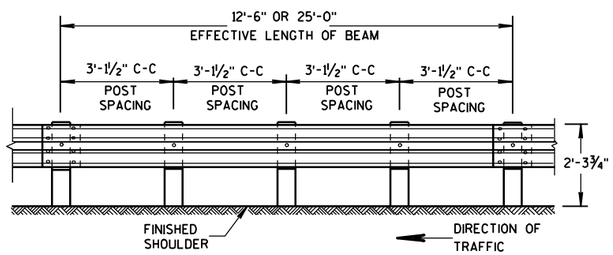

FRONT VIEW

POST SPACING FOR LONGER POST AT HALF POST SPACING W BEAM (LHW)

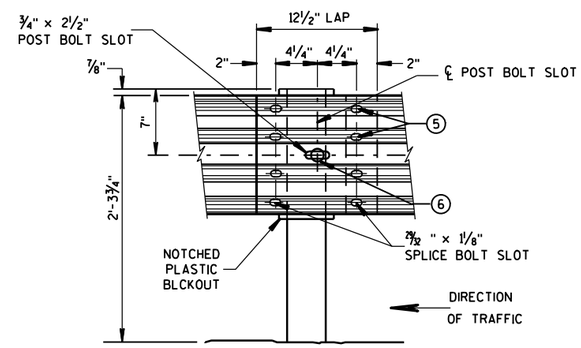

FRONT VIEW
BEAM SPLICE AT STEEL POST

TYPICAL SPLICING DETAILS OF STEEL PLATE BEAM GUARD

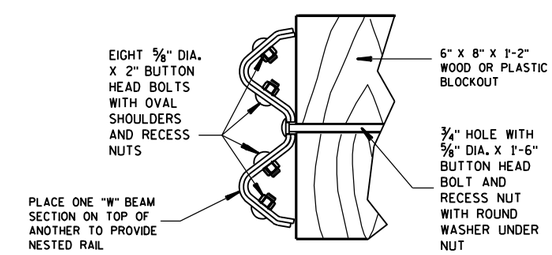

NESTED W BEAM (NW)

USE ALL OTHER STANDARD BEAM GUARD DETAILS FOR CONSTRUCTING NESTED W BEAM (NW)

REFLECTOR SPACING ②

	BEAM GUARD LENGTH	REFLECTOR SPACING	NO. SURFACES REFLECTORIZED	MIN. NO. REFLECTORS
ONE WAY TRAFFIC	< 200' > 200'	50' C-C 100' C-C	1 1	3
TWO WAY TRAFFIC	< 200' > 200'	25' C-C 50' C-C	1 ③ 1	6
TWO WAY TRAFFIC	< 200' > 200'	50' C-C 100' C-C	2 ④ 2	3

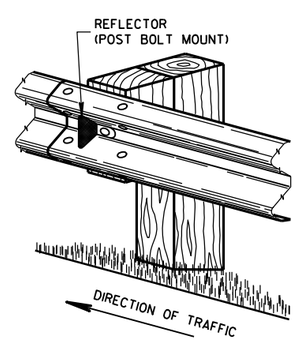

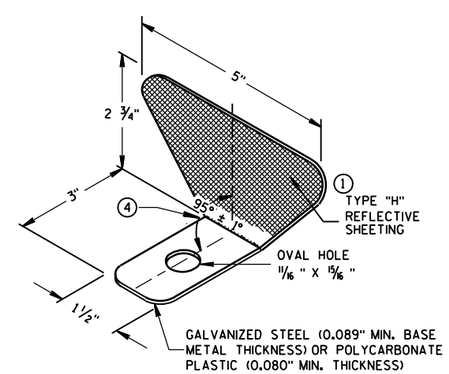

ONE SIDED REFLECTOR DETAIL AND TYPICAL INSTALLATION ①

STEEL PLATE BEAM GUARD,
CLASS "A",
INSTALLATION & ELEMENTS

STATE OF WISCONSIN
DEPARTMENT OF TRANSPORTATION

6

S.D.D. 14 B 15-6b

6

S.D.D. 14 B 15-6b

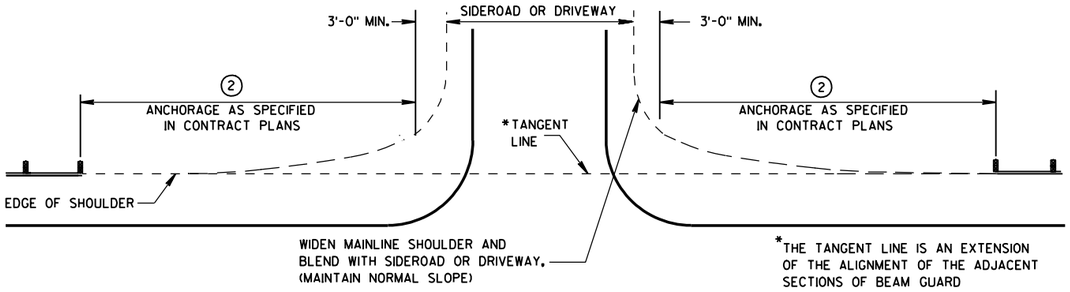

BEAM GUARD AT SIDEROADS OR DRIVEWAYS

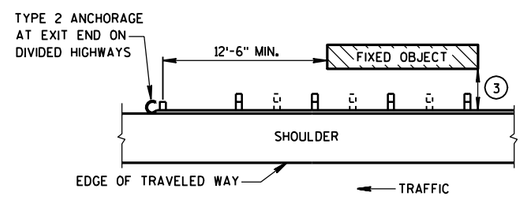

BEAM GUARD AT OBSTACLES EXIT END - ONE WAY TRAFFIC

GENERAL NOTES

DETAILS OF CONSTRUCTION, MATERIALS AND WORKMANSHIP SHALL CONFORM TO THE PERTINENT STANDARD SPECIFICATIONS AND THE APPLICABLE SPECIAL PROVISIONS.

W6 X 9 OR W6 X 8.5 STEEL POSTS WITH NOTCHED PLASTIC BLOCKOUTS ARE ACCEPTABLE ALTERNATIVES FOR 6" X 8" WOOD POSTS WITH WOOD OR PLASTIC BLOCKOUTS. USE APPROVED NOTCHED PLASTIC BLOCKOUTS WITH STEEL POSTS.

THE LOCATIONS AND LENGTHS OF BEAM GUARD ARE SHOWN ELSEWHERE IN THE PLAN.

1 STEEL THRIE BEAM STRUCTURAL APPROACH (STBSA) - SEE CURRENT SDD 14B20.

2 USE AN APPROVED END TREATMENT FOR THE TRAFFIC APPROACH SIDE OF BRIDGE/OBSTACLES. USE TYPE 2 ANCHORAGE ONLY AT THE DOWNSTREAM ENDS OF BEAM GUARD LOCATED ALONG ROADWAYS WITH ONE WAY TRAFFIC.

3

MINIMUM LATERAL DISTANCE FROM FACE OF BEAM GUARD TO FIXED OBJECT	POST SPACING
3'-6"	3' - 1½"
4'-6"	6' - 3"

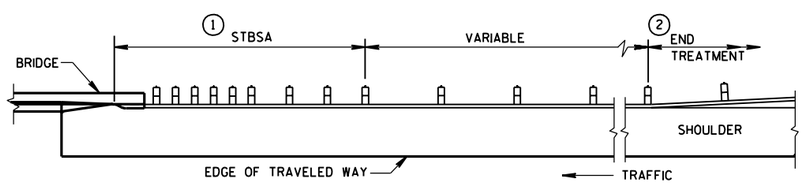

BEAM GUARD AT FULL WIDTH BRIDGES

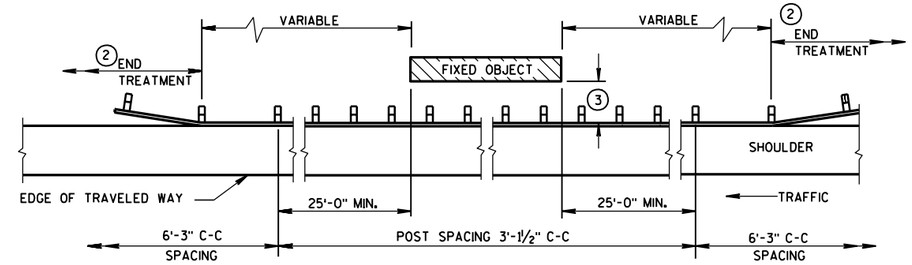

BEAM GUARD AT OBSTACLES - TWO WAY TRAFFIC

(RAIL TO OBSTACLE CLEARANCE 3'-6" TO 4'-6")

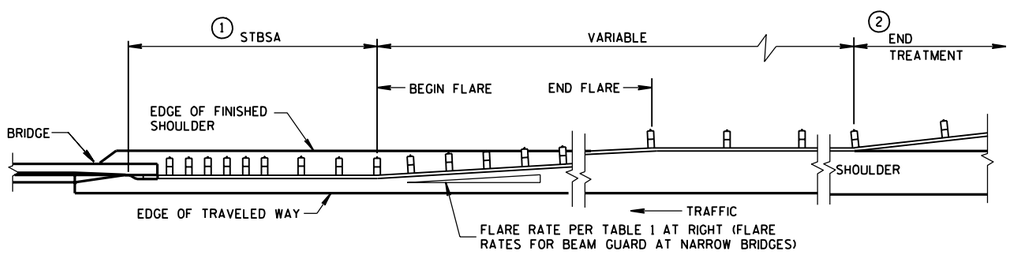

BEAM GUARD AT NARROW BRIDGES

(FLARED TO SHOULDER EDGE, THEN PARALLEL TO ROADWAY)

TABLE 1
FLARE RATES FOR BEAM GUARD AT NARROW BRIDGES

POSTED SPEED (MPH)	FLARE RATE
25	13:1
30	15:1
35	16:1
40	18:1
45	21:1
50	24:1
55	26:1
65	30:1

STEEL PLATE BEAM GUARD, CLASS "A" (AT BRIDGES, OBSTACLES AND SIDEROADS/DRIVEWAYS)

STATE OF WISCONSIN
DEPARTMENT OF TRANSPORTATION

APPROVED
8-21-07 — DATE
/S/ Jerry H. Zogg — ROADWAY STANDARDS DEVELOPMENT ENGINEER
FHWA

6

S.D.D. 14 B 18-6a

6

S.D.D. 14 B 18-6a

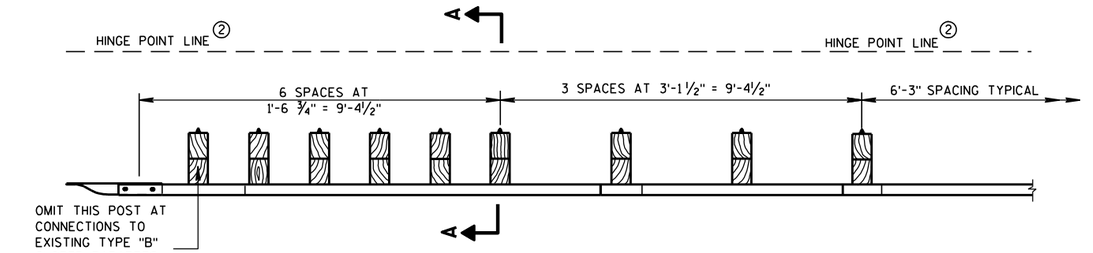

PLAN VIEW

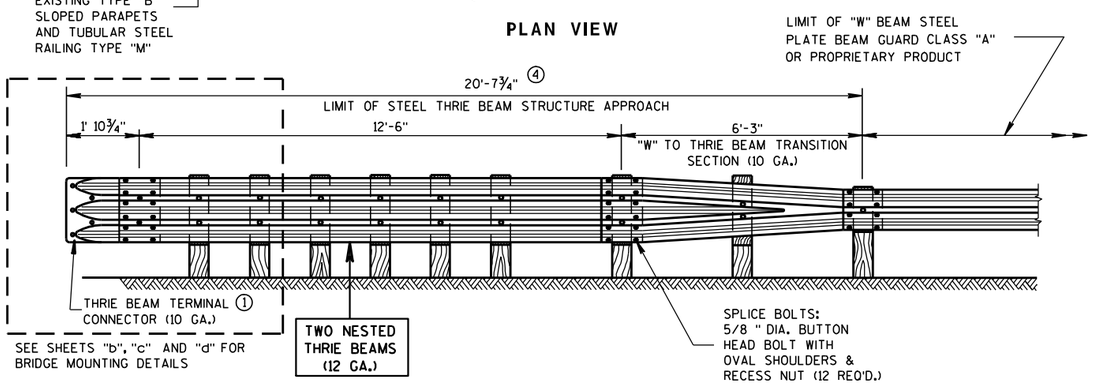

FRONT VIEW

GENERAL NOTES

DETAILS OF CONSTRUCTION, MATERIALS AND WORKMANSHIP NOT SHOWN ON THIS DRAWING SHALL CONFORM TO THE PERTINENT REQUIREMENTS OF THE STANDARD SPECIFICATIONS AND THE APPLICABLE SPECIAL PROVISIONS.

FURNISH AND CONSTRUCT THRIE BEAM STRUCTURAL APPROACH ACCORDING TO THE REQUIREMENTS OF SECTION 614 OF THE STANDARD SPECIFICATIONS. THRIE BEAM SECTIONS SHALL CONFORM TO THE REQUIREMENTS OF AASHTO DESIGNATION M180, CLASS "A", TYPE 2.

BOLT THE THRIE BEAM TO ALL POSTS AND BLOCKOUTS. DRILL OR PUNCH BOLT HOLES IN THE BEAM IF THE POST SPACING IS LESS THAN 6'-3.

DO NOT USE STEEL POSTS AND NOTCHED PLASTIC BLOCKOUTS IN THE STEEL THRIE BEAM STRUCTURAL APPROACH AND THE TRANSITION SECTION OF STEEL PLATE BEAM GUARD, CLASS "A" INSTALLATIONS.

IF ROCK IS ENCOUNTERED DURING EXCAVATION, THE ENGINEER MAY APPROVE USING A 12 INCH DIAMETER POST HOLE EXTENDING 20 INCHES DEEP INTO THE ROCK. PLACE GRANULAR MATERIAL IN THE BOTTOM OF THE HOLE APPROXIMATELY 2 1/2 INCHES DEEP. CUT THE POSTS TO LENGTH AND PLACE IN THE HOLE. BACKFILL WITH MATERIAL EXCAVATED FROM THE HOLE AND COMPACT ADEQUATELY. (SEE SDD 14 B 15-4a).

① BRIDGE RAILING TYPE "W" DOES NOT REQUIRE A TERMINAL CONNECTOR.

② MINIMUM EMBEDMENT SHALL BE 4'-0". WHERE EXISTING CONDITIONS DO NOT PERMIT THE APPROPRIATE EARTHWORK SHOWN ON THE PLAN TYPICAL SECTIONS OR DETAILS, THE ENGINEER MAY ALLOW THE REDUCTION OR ELIMINATION OF THE 2 FOOT DISTANCE TO THE HINGE POINT. OTHERWISE BUILD AS THE PLAN SHOWS OR AS THE ENGINEER DIRECTS. IF THE 2 FOOT DISTANCE TO THE HINGE POINT IS REDUCED OR ELIMINATED, INCREASE THE POST EMBEDMENT DEPTH TO 4'-6" OR MORE.

③ BOLTS SHALL CONFORM TO THE REQUIREMENTS OF ASTM F-1554, GRADE 55. NUTS SHALL CONFORM TO THE REQUIREMENTS OF ASTM A-563 DH.

④ ALL WOOD POSTS MUST BE 6" X 8" AND AT LEAST 7'-0" LONG.

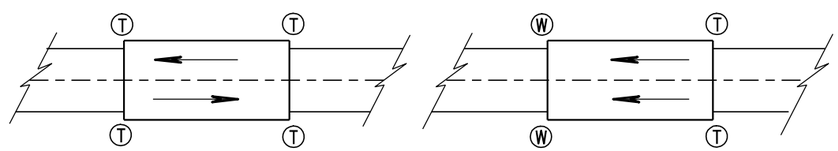

TWO WAY TRAFFIC

ONE WAY TRAFFIC

Ⓣ THRIE BEAM CONNECTION

Ⓦ W-BEAM CONNECTION WHEN REQUIRED

TYPICAL LOCATIONS OF THRIE BEAM AND W-BEAM CONNECTIONS TO BRIDGE

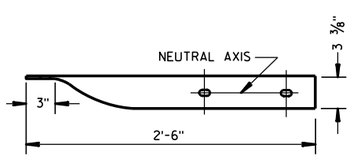

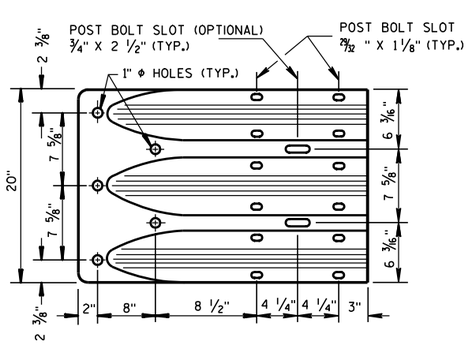

THRIE BEAM TERMINAL CONNECTOR

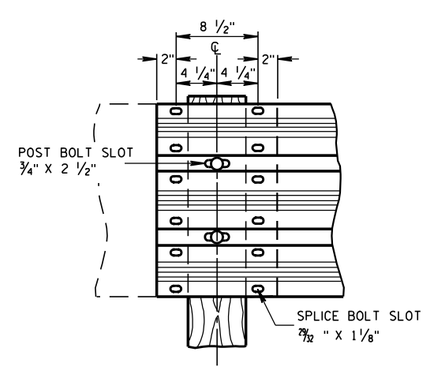

THRIE BEAM SPLICE

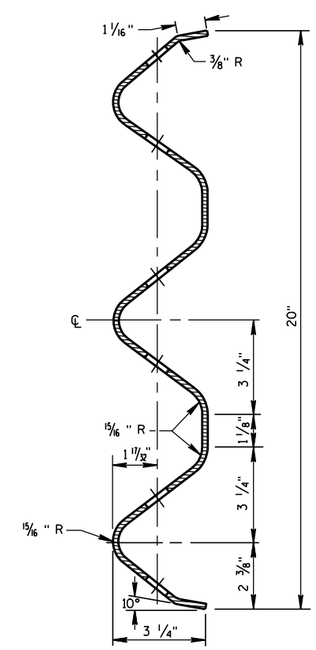

SECTION THRU THRIE BEAM RAIL ELEMENT

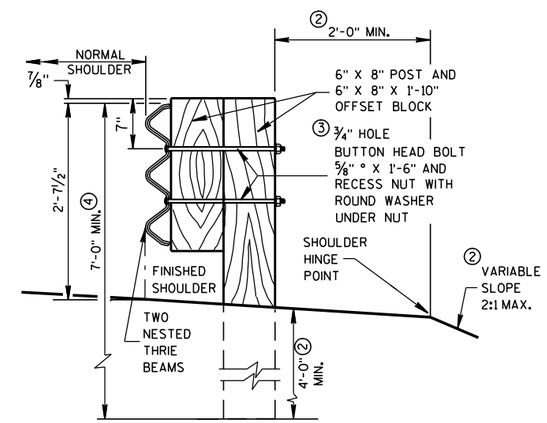

SECTION A-A

STEEL THRIE BEAM STRUCTURE APPROACH

STATE OF WISCONSIN
DEPARTMENT OF TRANSPORTATION

APPROVED
6-3-2010 — DATE
/S/ Jerry H. Zogg — ROADWAY STANDARDS DEVELOPMENT ENGINEER
FHWA

6

S.D.D. 14 B 20-9a

6

S.D.D. 14 B 20-9a

BILL OF MATERIALS

NOTE NO.	QTY.	DESCRIPTION
1	4	WOOD BREAKAWAY TERMINAL POST: 5½" X 7½" X 3'-9"
2	**	STEEL TUBE: OPTION 1 - QUANITY OF 4 TS 8" X 6" X 0.188", 4'-6" LONG OR OPTION 2 - QUANITY OF 2 TS 8" X 6" X 0.188", 6'-0" AND 2 TS 8" X 6" X 0.188", 4'-6" LONG
3	2	SOIL PLATE: 2'-0" X 1'-6" X ¼" **
4	4	WOOD BREAKAWAY CRT POST: 6" X 8" X 6'-0"
5	6	WOOD OFFSET BLOCKS: 6" X 8" X 1'-2"
6	1	PIPE SLEEVE: 2" X 5 ½" STANDARD PIPE
7	1	BEARING PLATE
8	1	BCT CABLE ASSEMBLY
9	1	CABLE ANCHOR BOX
10	1	STRUT & YOKE
11	1	STEEL PLATE BEAM, END PANEL 12 GA. 13'-6½" LONG FOR SKT-350, ET-2000 AND ET-2000 PLUS
12	3	STEEL PLATE BEAM: 12 GA. 13'-6½"
13	1	ET-2000/ET-2000 PLUS GUARDRAIL EXTRUDER OR SKT-350 IMPACT HEAD: AS FURNISHED BY MANUFACTURER
14	1	REFLECTIVE SHEETING TYPE H: 18" X 18"
15	1	E.A.T. MARKER POST

GENERAL NOTES

FOLLOW MANUFACTURE'S BOLTING RECOMMENDATIONS. IF NONE ARE AVAILABLE, INSTALL ⅝" ø X 1'-6" BUTTON HEAD BOLTS AT ALL POSTS EXCEPT FOR POST 1.

(A) THE SLOPE IN THE AREA BOUNDED BY THE EXTENDED VEHICLE RUNOUT PATH (EVRP), THE HINGE POINT LINE (HPL), AND THE CLEAR ZONE LIMITS (CZL) SHALL BE 4:1 OR FLATTER.

(B) AFTER FINAL ASSEMBLY, RECHECK CABLE TO BE SURE IT IS TAUT AND HAS NOT RELAXED.

(C) THE 13 SLOT FIRST RAIL PANEL MAY BE USED IN LIEU OF THE 3 SLOT RAIL PANEL ON SKT-350 ONLY.

(D) THE TOP OF THE STEEL TUBE ON POSTS 1 THROUGH 4 SHALL NOT BE MORE THAN 3" ABOVE THE FINISH GROUND ELEVATION.

(E) THE CENTER OF THE UPPER 3½" DIAMETER HOLE ON POST 5 THROUGH 8 SHALL BE ¾" ABOVE THE FINISHED GROUND LINE.

(F) SHEETING IS ATTACHED TO 0.040 ALUMINUM SHEET AND ATTACHED TO E.A.T. HEAD USING 4 STAINLESS STEEL SELF-TAPPING SCREWS. ONE SCREW PER CORNER OF E.A.T.

STEEL POSTS SHALL NOT BE ALLOWED FOR USE WITH ENERGY ABSORBING TERMINALS.

DO NOT INSTALL REFLECTORS ON THE FIRST 50 FEET OF THE APPROACH END OF THE ENERGY ABSORBING TERMINAL.

* DO NOT ATTACH BLOCKOUTS TO POSTS 1 AND 2.

** SDD SHOWS 4 - 54 INCH STEEL TUBES WITH SOIL PLATES INSTALLED ON POST 1 AND POST 2. POST 3 AND 4 DO NOT NEED SOIL PLATES. AN ALTERNATIVE INSTALLATION WOULD CONSIST OF 2 - 72 INCH STEEL TUBES ON POST 1 AND POST 2 AND 54 INCH SOIL TUBES ON POSTS 3 AND 4. THE ALTERNATIVE INSTALLATION DOES NOT REQUIRE SOIL PLATES.

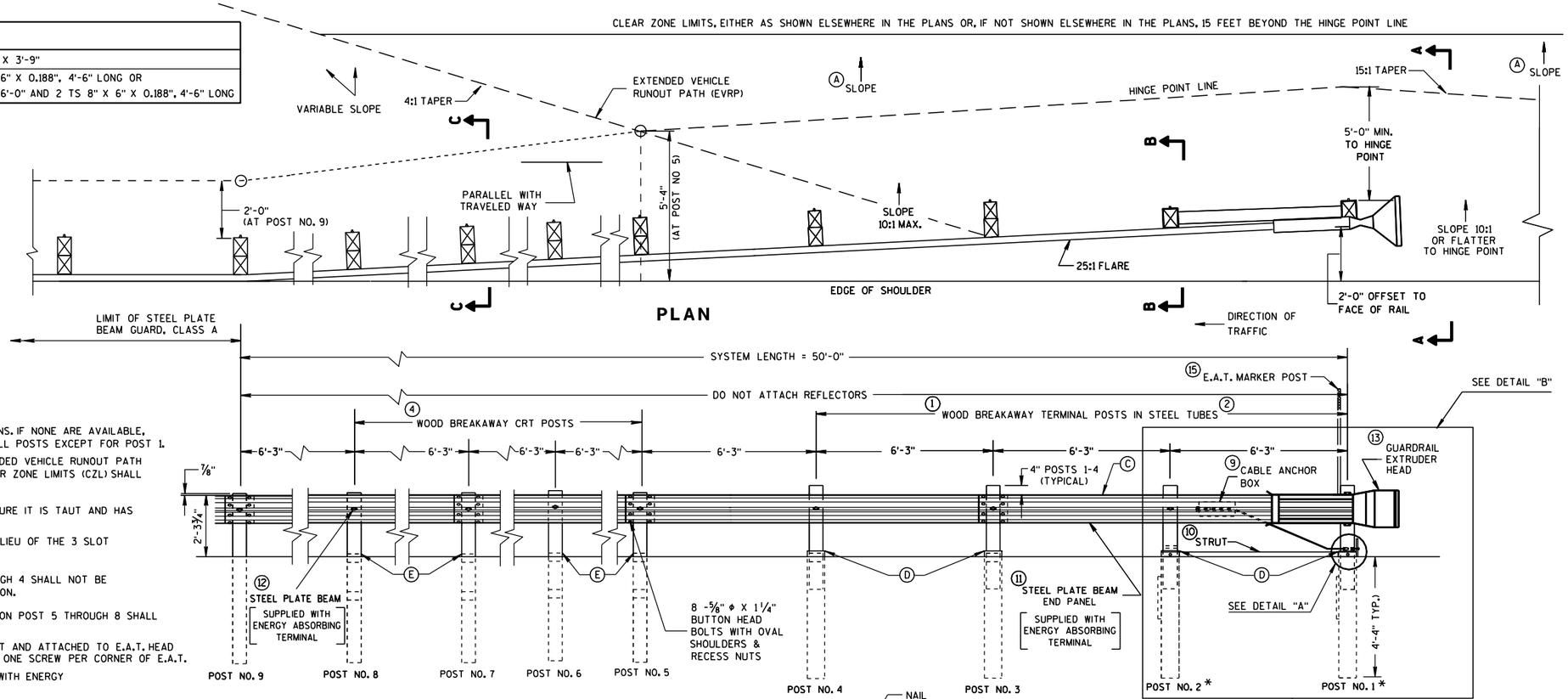

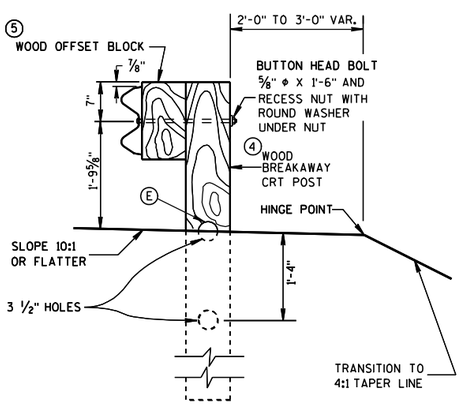

SECTION C-C

TYPICAL AT POST NOS. 6, 8

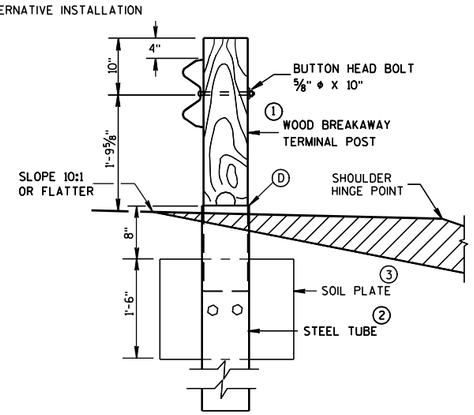

SECTION B-B

TYPICAL AT POST NO. 2*

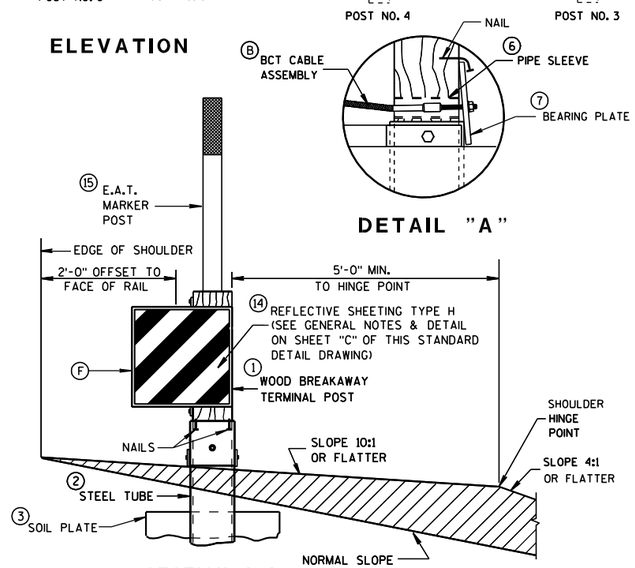

DETAIL "A"

SECTION A-A

TYPICAL AT POST NO. 1*

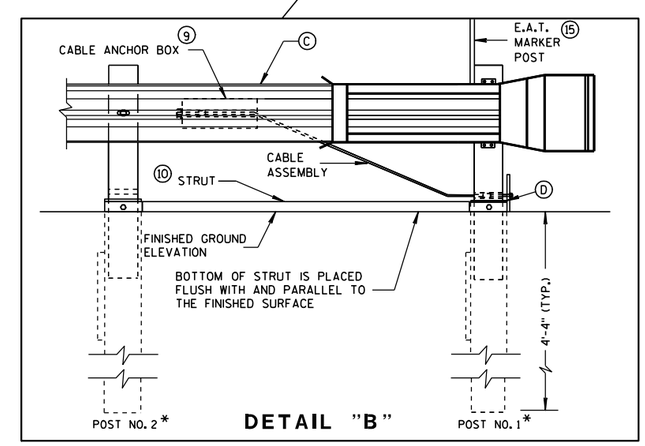

DETAIL "B"

STEEL PLATE BEAM GUARD
ENERGY ABSORBING TERMINAL

STATE OF WISCONSIN
DEPARTMENT OF TRANSPORTATION

6

S.D.D. 14 B 24-7a

6

S.D.D. 14 B 24-7a

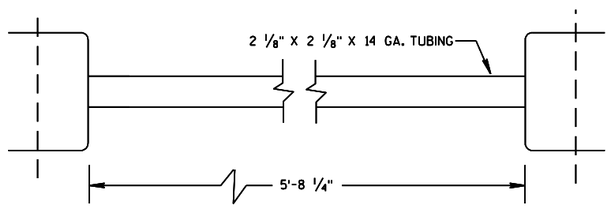

⑩ STRUT DETAIL (SKT-350)

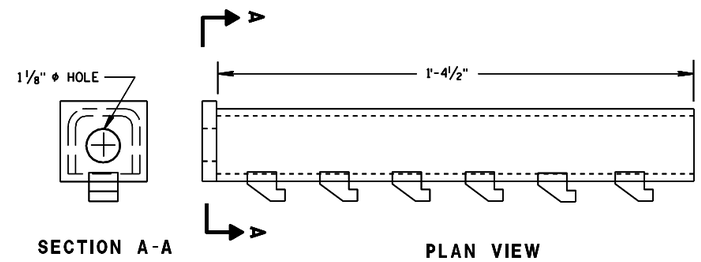

⑨ CABLE ANCHOR BOX (ET-2000/ET-2000 PLUS)

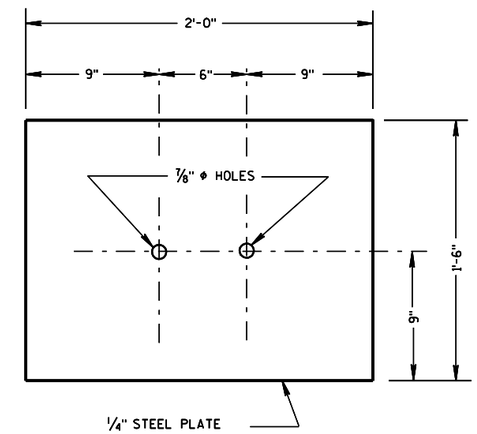

③ SOIL PLATE

(SKT-350, ET-2000/ET-2000 PLUS)

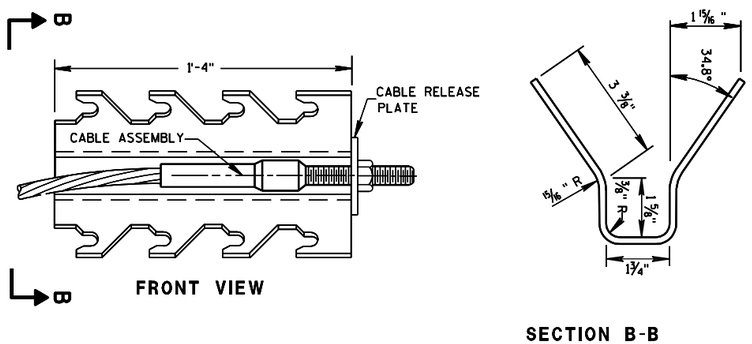

⑨ CABLE ANCHOR BOX (SKT-350)

(SKT-350)

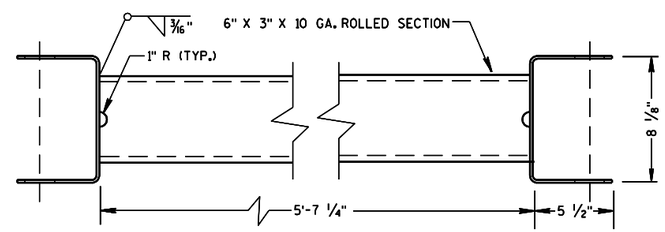

⑩ STRUT DETAIL (ET-2000/ET-2000 PLUS)

(ET-2000/ET-2000 PLUS)

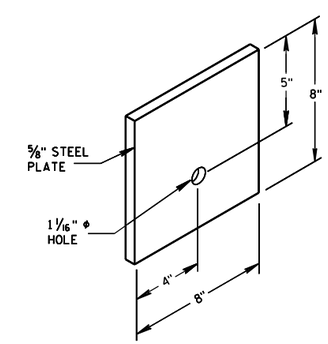

⑦ STEEL BEARING PLATE

(SKT-350, ET-2000/ET-2000 PLUS)

6

6

S.D.D. 14 B 24-7b

S.D.D. 14 B 24-7b

STEEL PLATE BEAM GUARD
ENERGY ABSORBING TERMINAL

STATE OF WISCONSIN
DEPARTMENT OF TRANSPORTATION

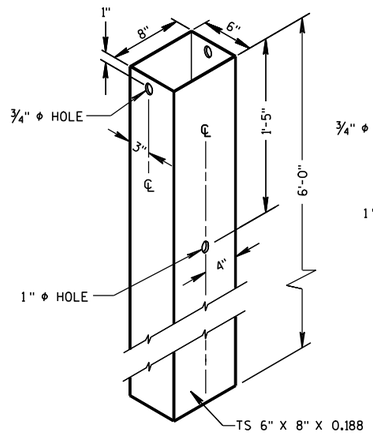

② 72" STEEL TUBE
(POSTS NO. 1-4

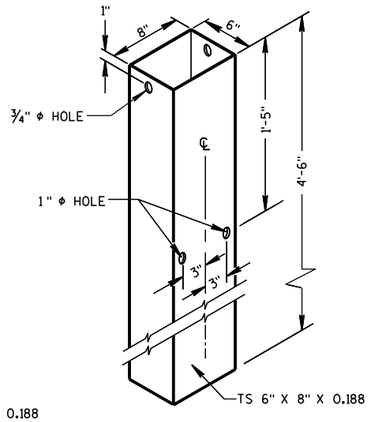

② 54" STEEL TUBE
(POSTS NO. 1-4

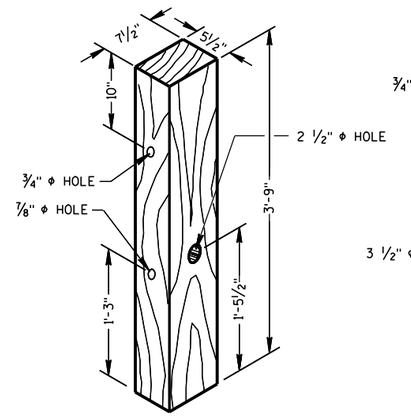

① TERMINAL POST
(POSTS NO. 1-4

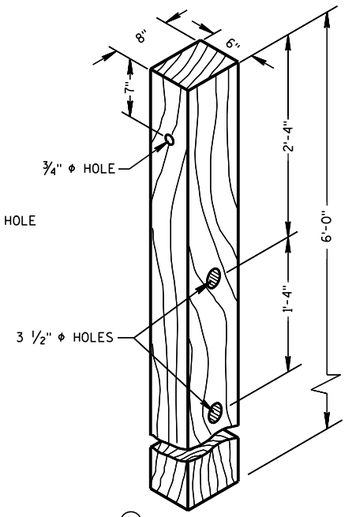

④ CRT POST
(POSTS NO'S 5-8

WOOD BREAKAWAY POSTS

GENERAL NOTES

STEEL PLATE BEAM GUARD, ENERGY ABSORBING TERMINAL SHALL BE PAID FOR AT THE CONTRACT UNIT PRICE EACH, WHICH SHALL INCLUDE HARDWARE, STEEL PLATE BEAM GUARD, POSTS, REFLECTIVE SHEETING AND INSTALLATION AS SHOWN.

WHEN ROCK IS ENCOUNTERED DURING EXCAVATION, A 12 INCH DIA. POST HOLE EXTENDING 20 INCHES DEEP INTO THE ROCK MAY BE USED IF APPROVED BY THE ENGINEER. GRANULAR MATERIAL SHALL BE PLACED IN THE BOTTOM OF THE HOLE APPROXIMATELY 2 1/2" INCHES DEEP TO PROVIDE DRAINAGE. THE SOIL TUBES SHALL BE FIELD CUT TO LENGTH, PLACED IN THE HOLE AND BACKFILLED WITH ADEQUATELY COMPACTED MATERIAL EXCAVATED FROM THE HOLE.

SEE APPROVED PRODUCTS LIST FOR ACCEPTABLE E. A. T. MARKER POST.

(G) 1/2" DIA. X 3" LAG BOLT WITH WASHER.

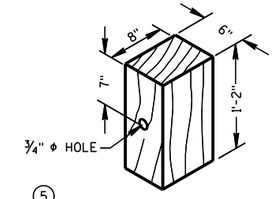

⑤ WOOD OFFSET BLOCK
REQ'D. AT ALL POSTS EXCEPT POST NO'S 1 & 2

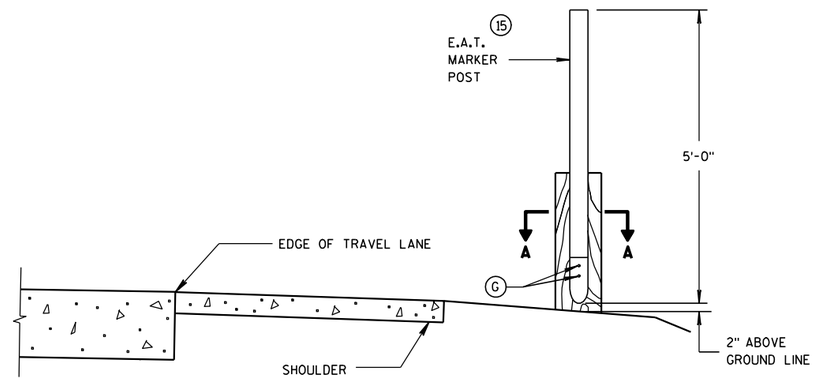

TYPICAL INSTALLATION OF E.A.T.
MARKER POST BACKSIDE OF POST NO. 1
(E.A.T. AND RAIL REMOVED FOR CLARITY)

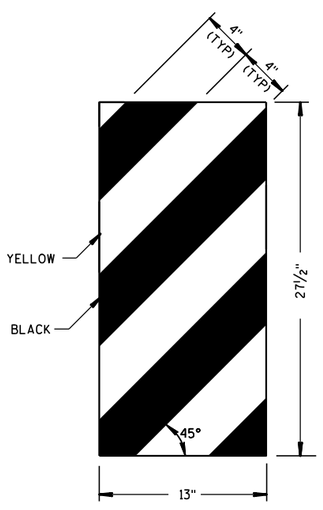

ET-2000 PLUS ONLY

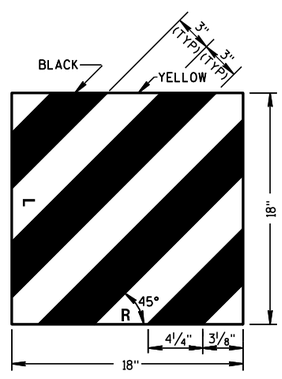

ET-2000 AND SKT-350

⑭ REFLECTIVE SHEETING DETAILS

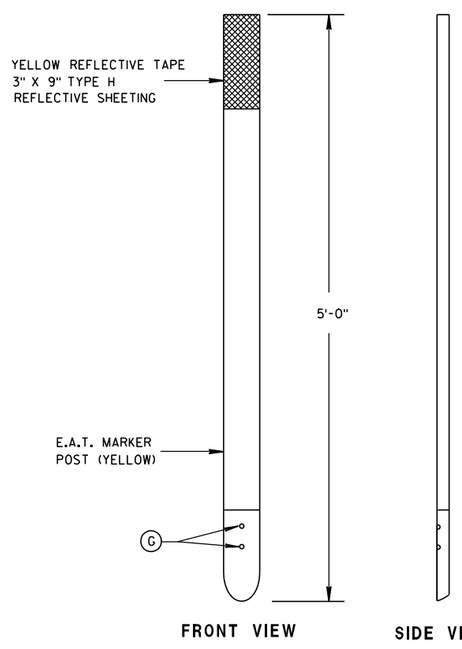

⑮ E.A.T. MARKER POST

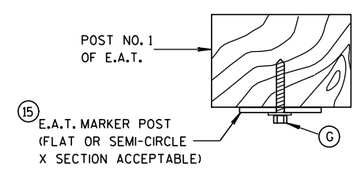

SECTION A-A

STEEL PLATE BEAM GUARD
ENERGY ABSORBING TERMINAL

STATE OF WISCONSIN
DEPARTMENT OF TRANSPORTATION

APPROVED

4-12-10
DATE

/S/ Jerry H. Zogg
ROADWAY STANDARDS DEVELOPMENT ENGINEER

FHWA

6

6

S.D.D. 14 B 24-7c

S.D.D. 14 B 24-7c

GENERAL NOTES

DETAILS OF CONSTRUCTION, MATERIALS AND WORKMANSHIP NOT SHOWN ON THIS DRAWING SHALL CONFORM TO THE PERTINENT REQUIREMENTS OF THE STANDARD SPECIFICATIONS AND THE APPLICABLE SPECIAL PROVISIONS.

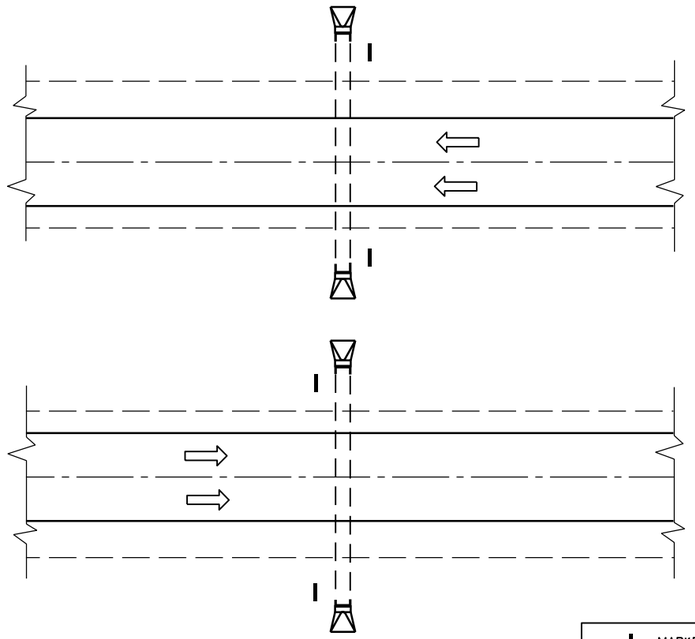

PLAN VIEW

DIVIDED HIGHWAY

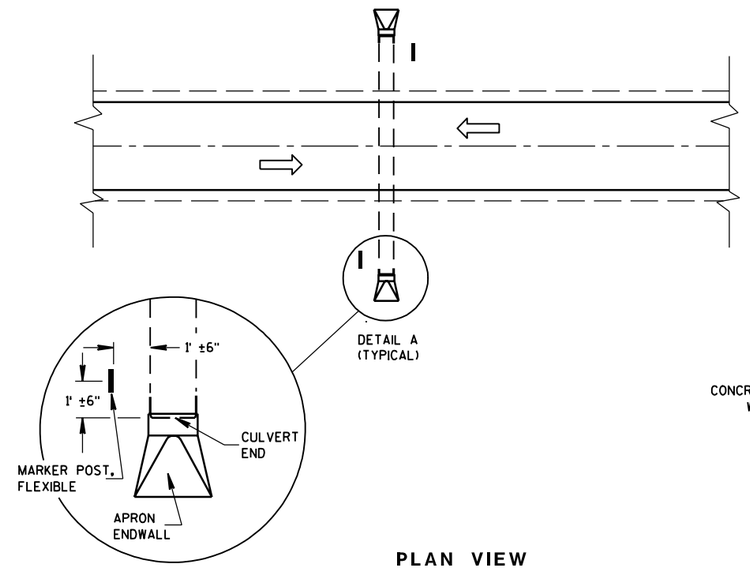

DETAIL A
(TYPICAL)

PLAN VIEW

UNDIVIDED HIGHWAY

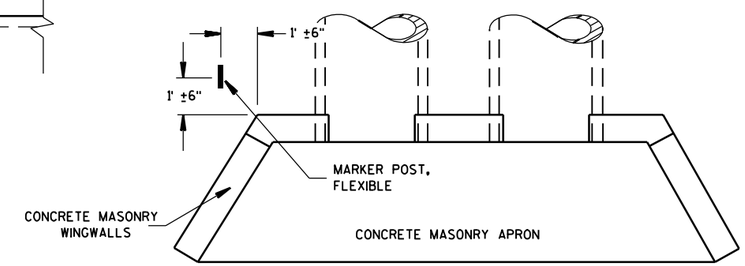

PLAN VIEW

CONCRETE MASONRY ENDWALLS FOR CULVERT PIPE AND PIPE ARCH

MARKER POST, FLEXIBLE

DIRECTION OF TRAFFIC FLOW

FLEXIBLE MARKER POST LOCATION

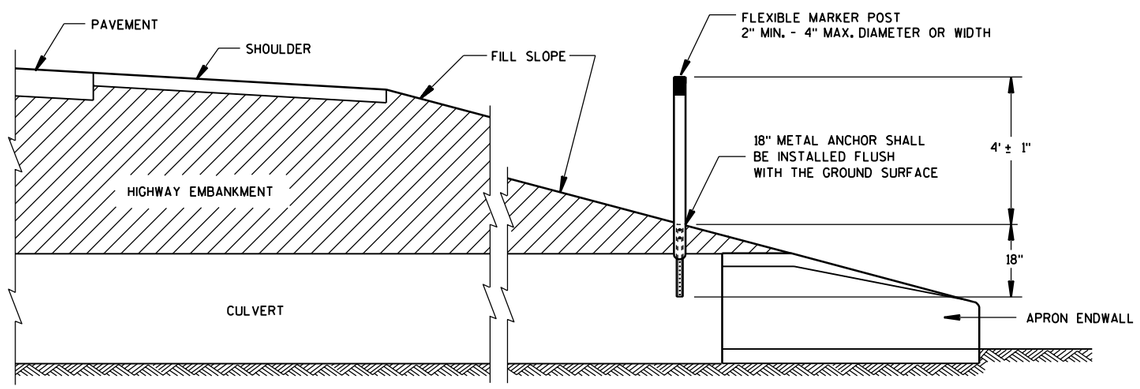

CROSS SECTION

FLEXIBLE MARKER POST

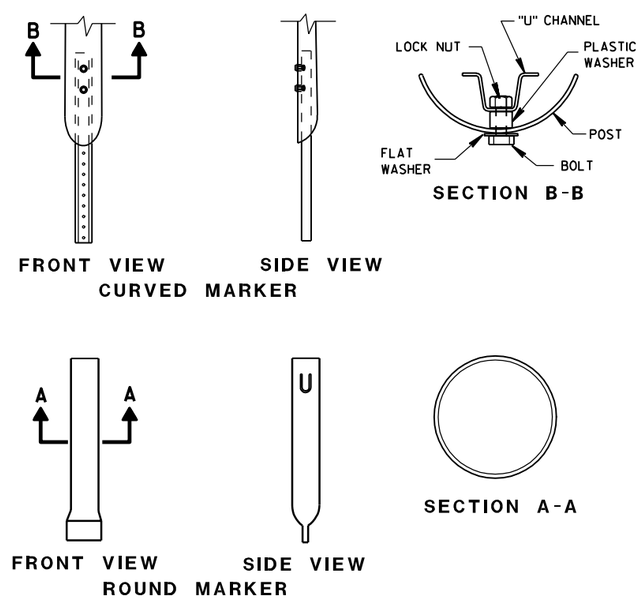

FRONT VIEW SIDE VIEW

CURVED MARKER

SECTION B-B

FRONT VIEW SIDE VIEW

ROUND MARKER

SECTION A-A

FLEXIBLE MARKER POST ANCHORS

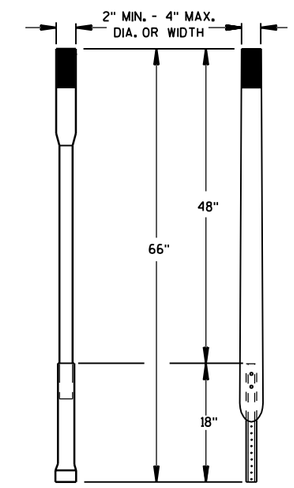

ALTERNATE 1 ALTERNATE 2

FLEXIBLE MARKER POST

MARKER POST, FLEXIBLE,
FOR CULVERT END

STATE OF WISCONSIN
DEPARTMENT OF TRANSPORTATION

APPROVED
10/1/98
DATE
FHWA

CHIEF ROADWAY DEVELOPMENT ENGINEER

6

S.D.D. 15 A 3-1

6

S.D.D. 15 A 3-1

NOTE: PULL OR STRETCHER POST ASSEMBLIES SHALL BE PLACED MIDWAY BETWEEN END POSTS AND CORNER POSTS WHERE A RUN OF FENCE EXCEEDS 660' BUT IS LESS THAN 1,320'. FOR RUNS OF FENCE IN EXCESS OF 1,320' MAXIMUM SPACING OF PULL OR STRETCHER POST ASSEMBLIES SHALL BE 660'± C-C.

ILLUSTRATION SHOWS POSITION OF STANDARD STEEL BRACE, DOUBLE STRAND GALVANIZED WIRE, AND THE POST TO BE EMBEDDED IN CONCRETE WHEN WIRE FENCE IS INSTALLED FROM LEFT TO RIGHT. THE BRACES SHALL BE POSITIONED ON THE OPPOSITE DIAGONALS AND THE OPPOSITE POST SHALL BE EMBEDDED IN CONCRETE WHEN WIRE FENCE IS INSTALLED FROM RIGHT TO LEFT.

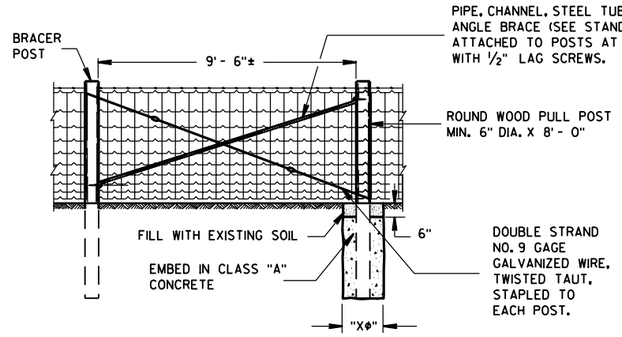

PULL OR STRETCHER POSTS ASSEMBLY

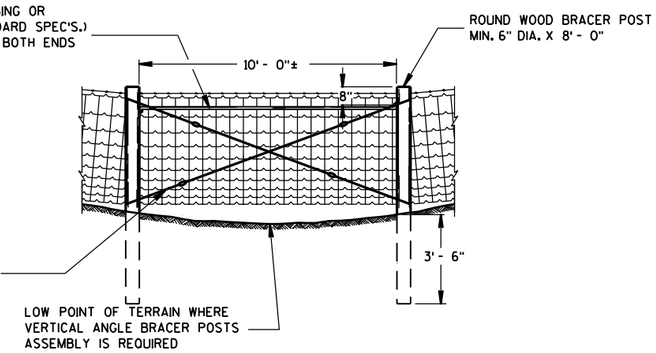

VERTICAL ANGLE BRACER POSTS ASSEMBLY

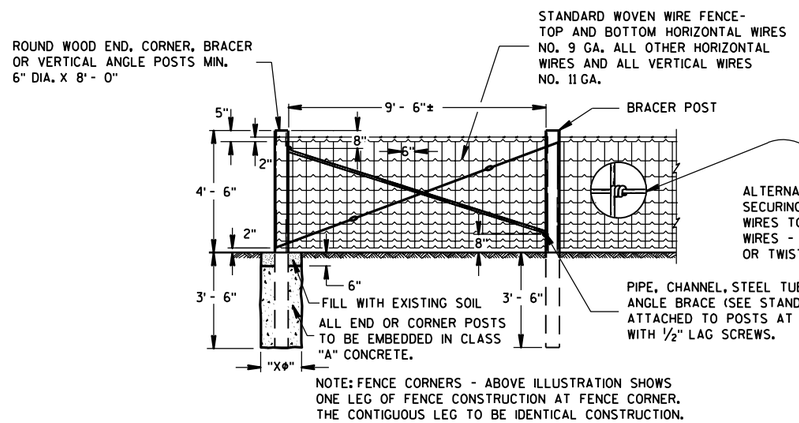

END OR CORNER POSTS ASSEMBLY

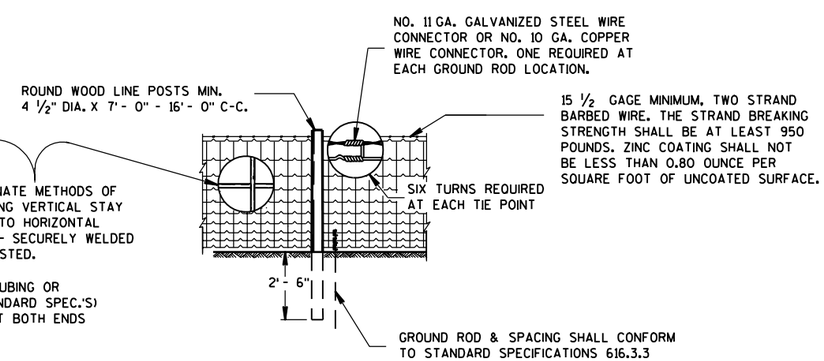

LINE FENCE CONSTRUCTION

GENERAL NOTES

"XΦ" = DIAMETER OF THE POST PLUS 12".

FENCE STAPLES SHOULD NEVER BE DRIVEN VERTICALLY INTO WOOD POSTS (WITH BOTH LEGS PARALLEL WITH THE WOOD GRAIN). DOING SO CAN SEPARATE THE GRAIN AND SIGNIFICANTLY REDUCE THE HOLDING POWER. ROTATING THE STAPLES SLIGHTLY OFF VERTICAL STRADDLES THE GRAIN AND PROVIDES MORE RESISTANCE TO PULL-OUT.

DO NOT STAPLE WIRE TIGHT TO THE LINE POSTS. ALLOW MOVEMENT OF WIRE FOR EXPANSION AND CONTRACTION. STAPLE ARRANGEMENT SHALL BE THE SAME FOR ALL OTHER POSTS EXCEPT THAT THEY SHALL BE DRIVEN TIGHT TO POSTS. ALL STAPLES SHALL BE 2" X 9 GAGE AND SHALL BE MANUFACTURED FROM GALVANIZED WIRE OR HOT DIP GALVANIZED AFTER FORMING. STAPLES SHALL HAVE SLASH-CUT POINTS.

FENCE SHALL BE LOCATED 3'-0" INSIDE THE RIGHT OF WAY LINE UNLESS OTHERWISE INDICATED ON THE PLANS.

GENERAL ROADSIDE VIEW OF WOVEN WIRE FENCE

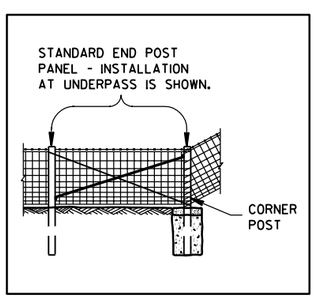

ALTERNATE FENCE DESIGN AT STRUCTURE

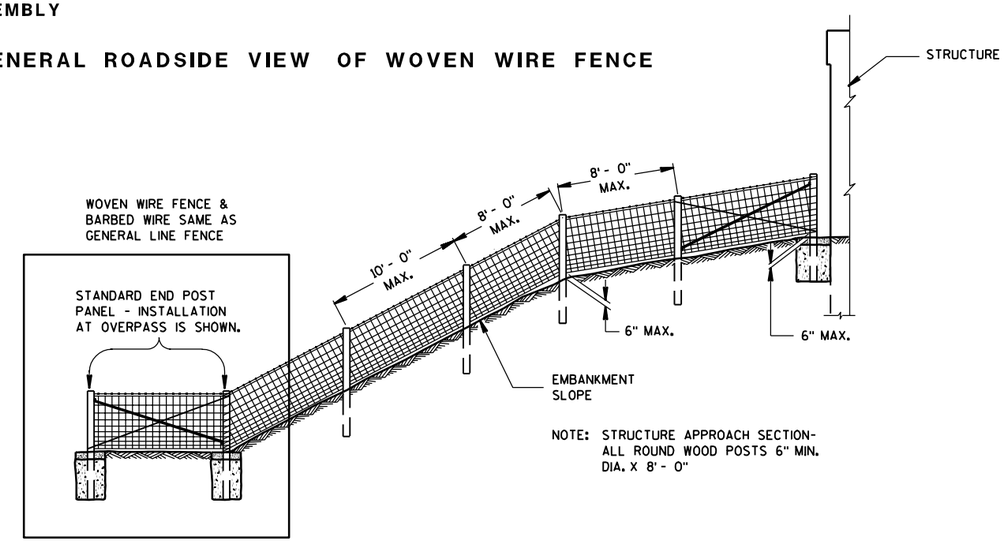

FENCE DESIGN AT STRUCTURE APPROACH

FENCE WOVEN WIRE

STATE OF WISCONSIN
DEPARTMENT OF TRANSPORTATION

6

S.D.D. 15 B 1-8a

6

S.D.D. 15 B 1-8a

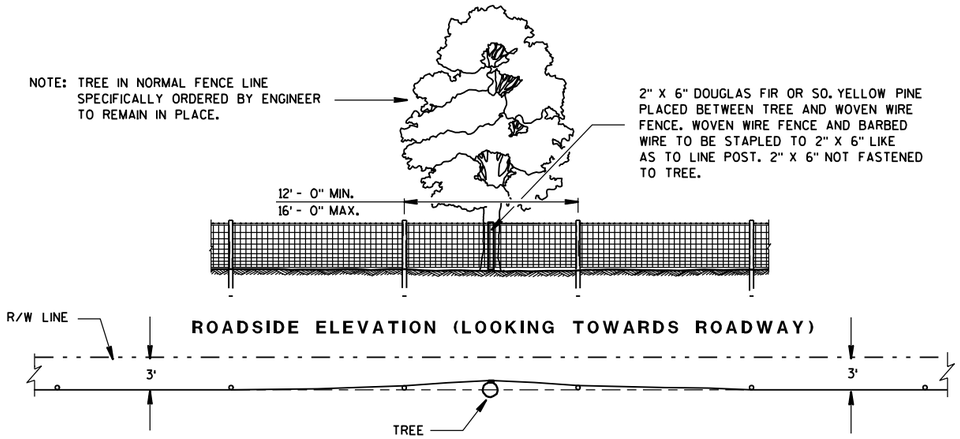

PLAN VIEW

FENCE DESIGN AT TREES REMAINING IN NORMAL FENCE LINE

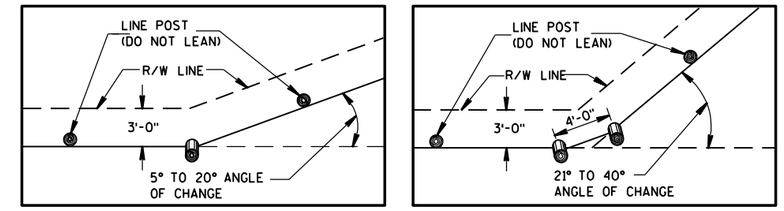

PLAN VIEW
SINGLE POST CORNER

PLAN VIEW
DOUBLE POST CORNER

RIGHT OF WAY LINE CHANGE 40° AND LESS

NOTE: SINGLE AND DOUBLE POSTS SHALL BE A MIN. 6" DIA. X 8'-0" WITH A LEAN OF 4" TOWARD THE OUTSIDE OF THE CURVE.

WHEN THE RIGHT OF WAY LINE CHANGE IS MORE THAN 40° USE THE CORNER OR STRETCHER POSTS ASSEMBLY.

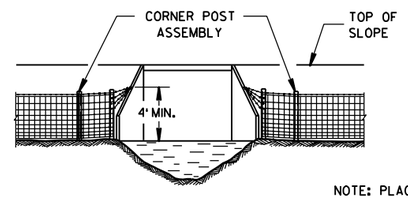

NOTE: PLACE A MINIMUM OF 4 STRANDS OF BARBED WIRE. 6" MAXIMUM CENTERS IN FAN SHAPE CONNECTED TO AN EYE BOLT ON WINGWALL OR SET A LONE POST WHEN NECESSARY TO CONNECT BARBED WIRE.

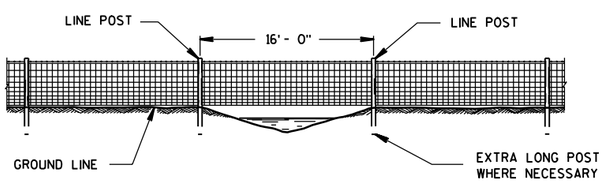

FENCE CONSTRUCTION OVER STREAM COURSES OF 15 FT. OR LESS IN WIDTH

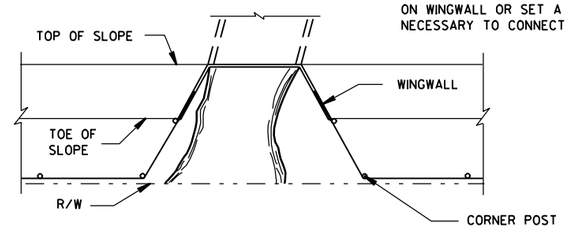

FENCE INSTALLATION TO WINGWALLS

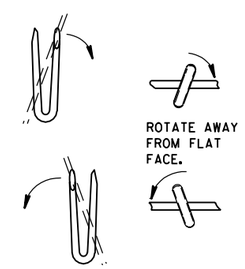

LINE POST

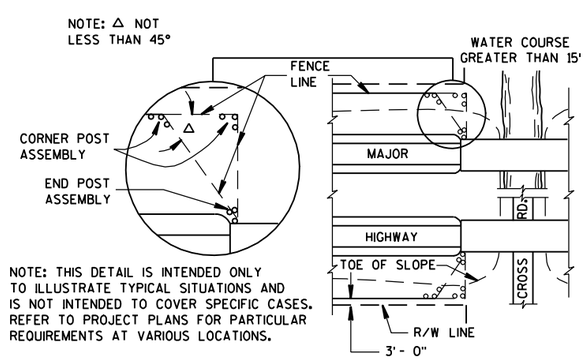

PLAN VIEW

MAJOR HIGHWAY OVERPASS OR STREAM COURSE CROSSING OF GREATER THAN 15 FT. IN WIDTH

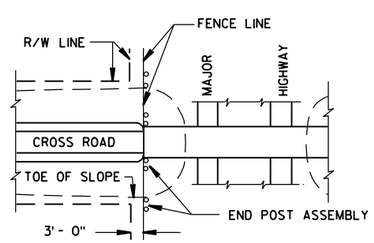

PLAN VIEW

MAJOR HIGHWAY UNDERPASS

FENCE LOCATION AT STRUCTURES

NOTE: WHEN POSTS ARE DRIVEN THE SMALL END SHALL BE DOWN.

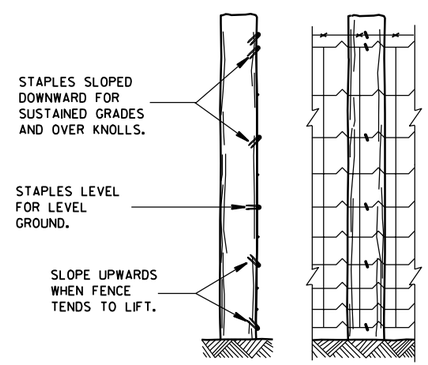

END ELEVATION

FARM SIDE ELEVATION

FENCE MOUNTING DETAIL

FENCE WOVEN WIRE

STATE OF WISCONSIN
DEPARTMENT OF TRANSPORTATION

APPROVED

4/4/08
DATE

/S/ Jerry H. Zogg
ROADWAY STANDARDS DEVELOPMENT ENGINEER

FHWA

6

S.D.D. 15 B 1-8b

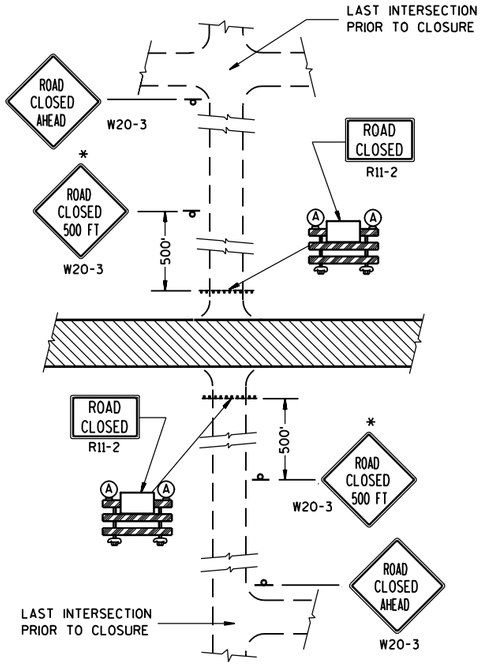

DETAIL 1

(NO ACCESS TO PROJECT)

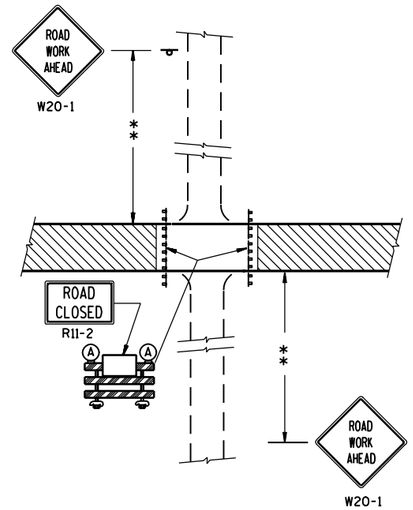

DETAIL 2

(PUBLIC CROSS-TRAFFIC MAINTAINED.
NO ACCESS TO PROJECT).

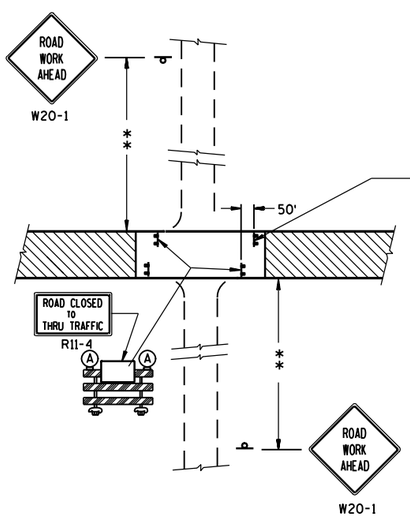

DETAIL 3

(PUBLIC CROSS-TRAFFIC MAINTAINED. CONTRACTOR,
LOCAL BUSINESS AND RESIDENT ACCESS).

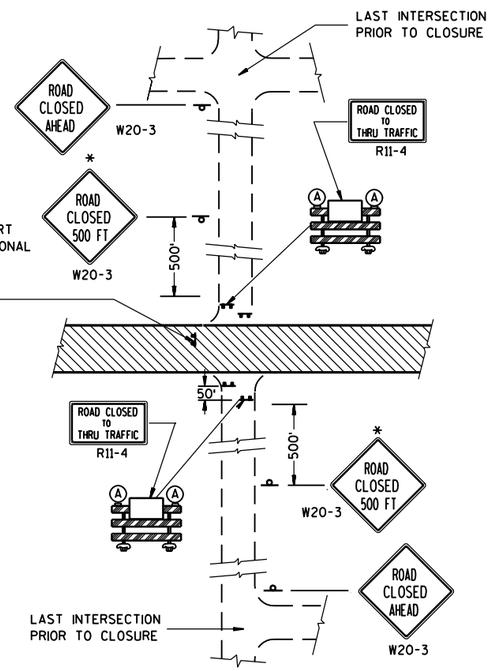

DETAIL 4

(CONTRACTOR, LOCAL BUSINESS AND
RESIDENT ACCESS TO PROJECT)

GENERAL NOTES

THE EXACT NUMBER, LOCATION, AND SPACING OF ALL SIGNS AND BARRICADES SHALL BE ADJUSTED TO FIT FIELD CONDITIONS AS APPROVED BY THE ENGINEER.

ANY SIGNS TEMPORARY OR EXISTING, WHICH CONFLICT WITH TRAFFIC CONTROL "IN USE" SHALL BE REMOVED OR COVERED AS NEEDED AND AS APPROVED BY THE ENGINEER.

THE SPACING BETWEEN TRAFFIC CONTROL SIGNS SHOULD BE ADJUSTED TO NOT CONFLICT WITH AND SHOULD PROVIDE A DESIRABLE MINIMUM OF 200 FEET CLEARANCE TO EXISTING SIGNS THAT WILL REMAIN IN PLACE.

IF A "STOP" SIGN MUST BE REMOVED FOR A WORK OPERATION, A TEMPORARY "STOP" SIGN SHALL BE PLACED PRIOR TO THE SIGN REMOVAL, OR A FLAGGER SHALL BE PROVIDED UNTIL THE SIGN IS RE-ESTABLISHED.

BARRICADES THAT MUST BE MOVED FOR A WORK OPERATION SHALL BE IMMEDIATELY RE-ESTABLISHED UPON COMPLETION OF THE OPERATION OR, FOR CONTINUING OPERATIONS, AT THE END OF EACH WORKING DAY.

SIGNS THAT WILL BE IN PLACE LESS THAN 7 CONTINUOUS DAYS AND NIGHTS MAY BE MOUNTED ON PORTABLE SUPPORTS.

ALL TYPE III BARRICADES SHALL HAVE RAILS REFLECTORIZED ON BOTH FACES. STRIPES SHALL BE PROPERLY SLOPED DOWN TOWARD THE TRAFFIC SIDE OR AS SHOWN IN THE ROAD CLOSURE BARRICADE DETAIL D FOR FULL ROAD CLOSURES.

TYPE "A" LOW-INTENSITY FLASHING WARNING LIGHTS SHALL BE VISIBLE ON BOTH SIDES OF THE BARRICADE.

THE R11-2, R11-3 AND R11-4 SIGNS PLACED ON BARRICADES SHALL COVER NO MORE THAN THE TOP RAIL. THE SIGNS SHALL NOT COVER ANY PORTION OF THE MIDDLE OR BOTTOM RAILS.

THE REFLECTIVE SHEETING USED ON R11-2, R11-3 AND R11-4 SIGNS SHALL COMPLY WITH SUBSECTION 637.2.2.2 OF THE STANDARD SPECIFICATIONS.

ALL SIGNS SHALL BE 48" X 48" UNLESS OTHERWISE NOTED BELOW:
R11-2 SHALL BE 48" X 30".
R11-4 AND R11-3 SHALL BE 60" X 30".

*OMIT THE "ROAD CLOSED 500 FT." SIGN IF THE LAST INTERSECTION IS 500 FT. OR LESS FROM THE WORK ZONE.

**500' MAX. OR AT LAST INTERSECTION WHICHEVER IS CLOSER.

LEGEND

- POST MOUNTED WARNING SIGN
- TYPE III BARRICADES
- (A) TYPE "A" LOW INTENSITY FLASHING WARNING LIGHT (FOR NIGHT USE)
- WORK AREA

BARRICADES AND SIGNS FOR SIDEROAD CLOSURES

STATE OF WISCONSIN
DEPARTMENT OF TRANSPORTATION

APPROVED
9-16-03
DATE
FHWA

Thomas N. Notthom for
CHIEF SIGNS AND MARKING ENGINEER

6

S.D.D. 15 C 3-1

GENERAL NOTES

DETAILS OF INSTALLATION, MATERIALS AND WORKMANSHIP NOT SHOWN ON THIS DRAWING SHALL CONFORM TO THE PERTINENT REQUIREMENTS OF THE STANDARD SPECIFICATIONS AND APPLICABLE SPECIAL PROVISIONS.

ALL LETTERS, ARROWS AND SYMBOLS SHALL BE IN CONFORMANCE WITH REQUIREMENTS INCLUDED IN "STANDARD ALPHABETS FOR HIGHWAY SIGNS AND PAVEMENT MARKING" BOOK BY THE FEDERAL HIGHWAY ADMINISTRATION. ALL LETTERS, ARROWS AND SYMBOLS SHALL BE WHITE AND REFLECTORIZED. SMALL DIFFERENCES IN DIMENSIONS WITHIN THE TOLERANCES OF THAT BOOK ARE ACCEPTABLE.

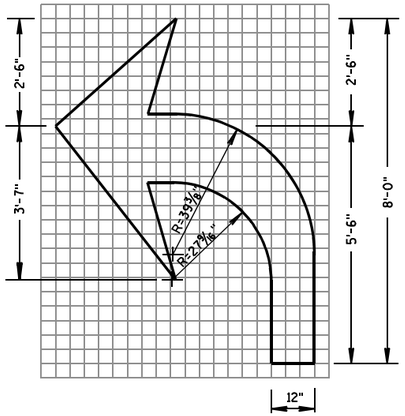

TYPE 2

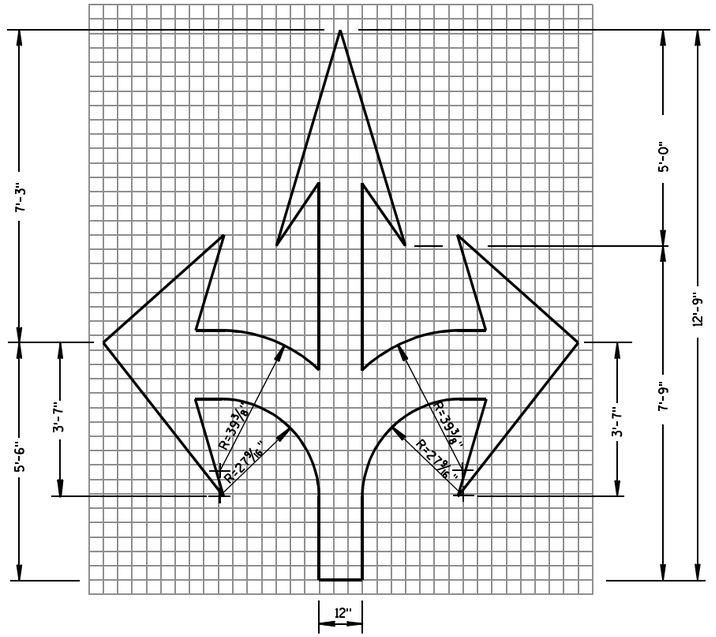

TYPE 6

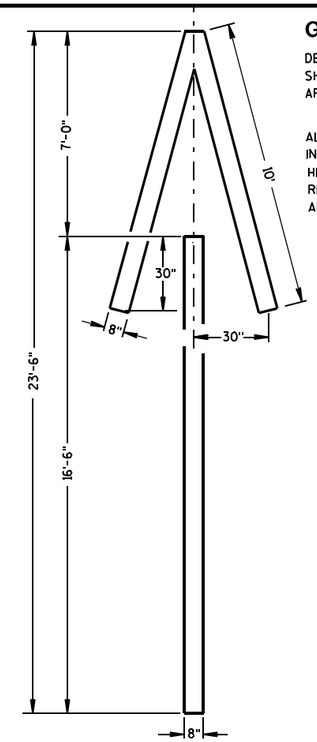

TYPE 4

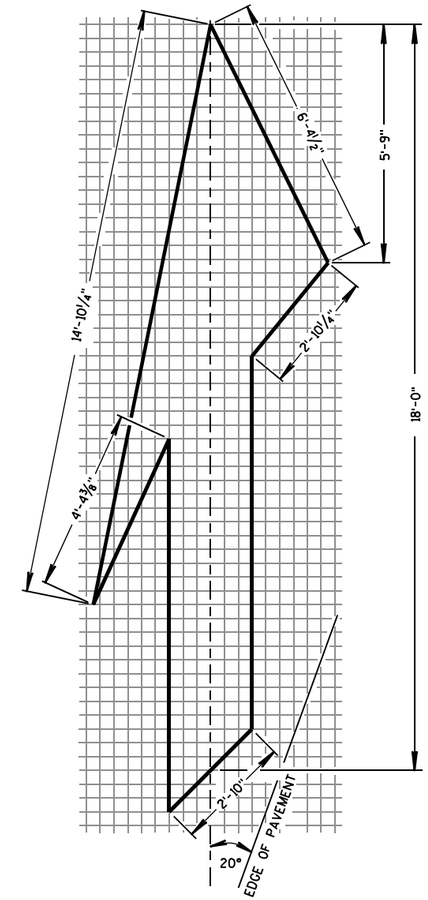

TYPE 5 LANE DROP ARROW

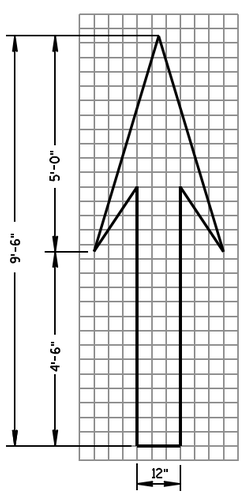

TYPE 1

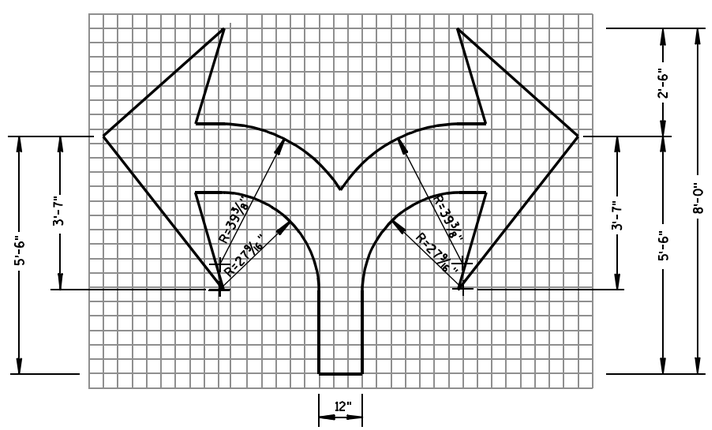

TYPE 7

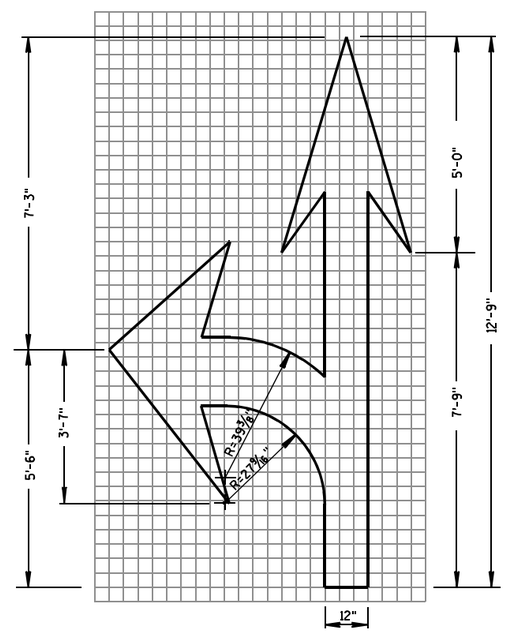

TYPE 3

PAVEMENT MARKING ARROWS

STATE OF WISCONSIN
DEPARTMENT OF TRANSPORTATION

APPROVED
5/13/10 — DATE
/S/ Thomas N. Notbohm — STATE TRAFFIC ENGINEER OF DESIGN
FHWA

6

S.D.D. 15 C 7-11d

6

S.D.D. 15 C 7-11d

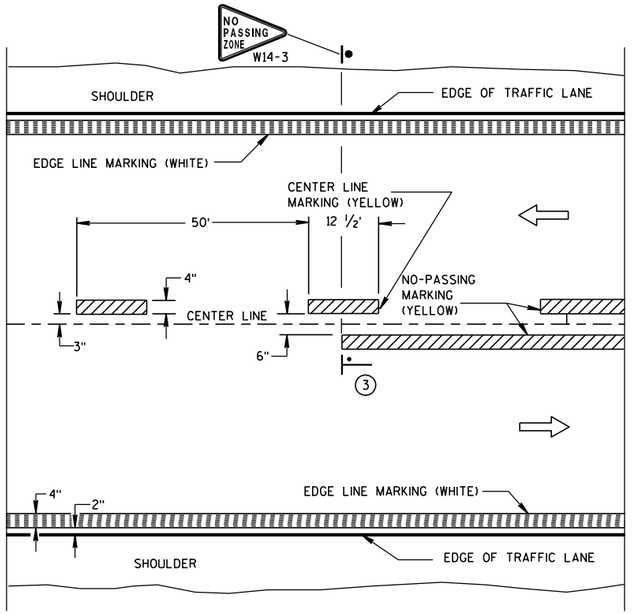

TWO WAY TRAFFIC

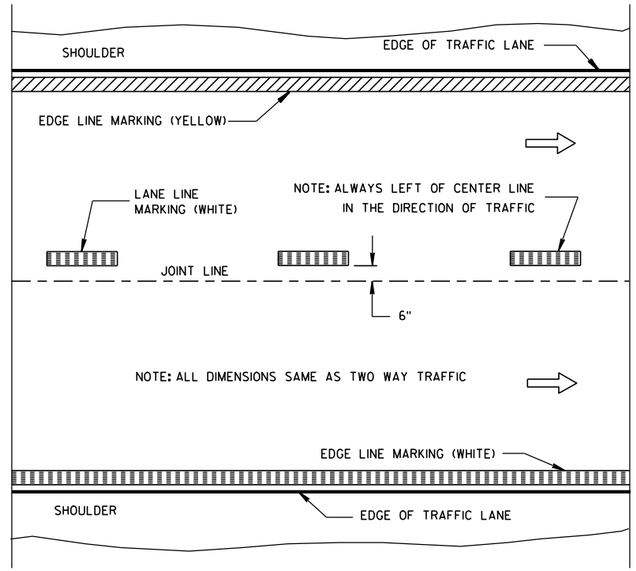

ONE WAY TRAFFIC

PERMANENT PAVEMENT MARKING

GENERAL NOTES

DETAILS OF CONSTRUCTION NOT SHOWN ON THIS DRAWING SHALL CONFORM TO STANDARD SPECIFICATIONS AND SPECIAL PROVISIONS.

1. HALF CYCLE LENGTHS (25'±) WITH 2' MINIMUM STRIPE LENGTHS SHALL BE PROVIDED ON ROADWAYS (INCLUDING TEMPORARY TRAVELED WAYS) WITH REVERSE CURVATURE, CURVATURE OF OVER 5 DEGREES OR WHEN DIRECTED BY THE ENGINEER TO MARK UNUSUAL ALIGNMENT OF THE TRAVELED WAY.

2. NO PASSING ZONE TEMPORARY PAVEMENT MARKING IS REQUIRED TO BE PLACED, WHERE APPROPRIATE, ALONG WITH CENTERLINE TEMPORARY PAVEMENT MARKING WHEN A SAME DAY PERMANENT PAVEMENT MARKING ITEM IS INCLUDED IN THE CONTRACT.

3. NO PASSING ZONE MARKINGS ARE PLACED ACCORDING TO "T" MARKINGS. IF EXISTING NO PASSING ZONE W14-3 SIGNS ARE BEYOND 50 FEET IN EITHER DIRECTION, THE SIGNS SHALL BE MOVED TO THE "T" MARKINGS.

NOTE

ARROW SYMBOL (⇨) SHOWS DIRECTION OF TRAVEL

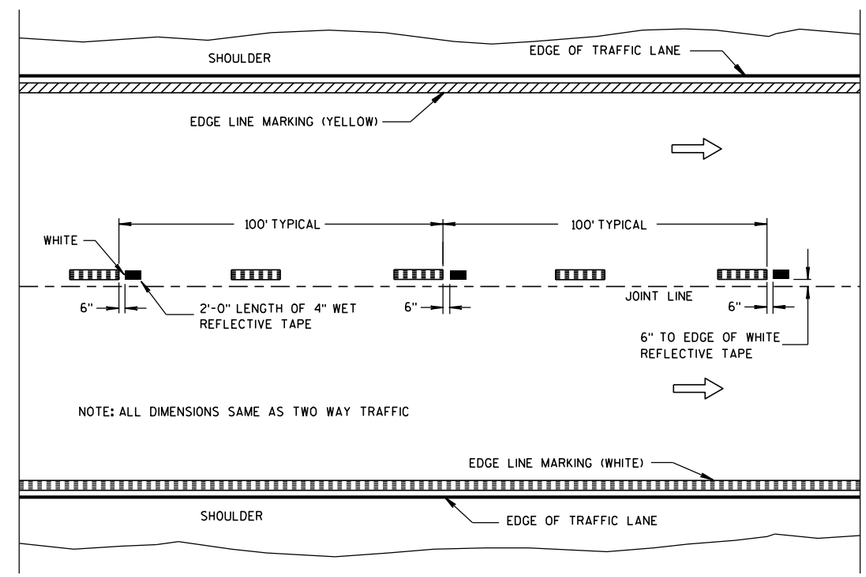

WET REFLECTIVE TAPE SUPPLEMENT TO SPRAYED OR NON WET REFLECTIVE TAPE LANE LINE

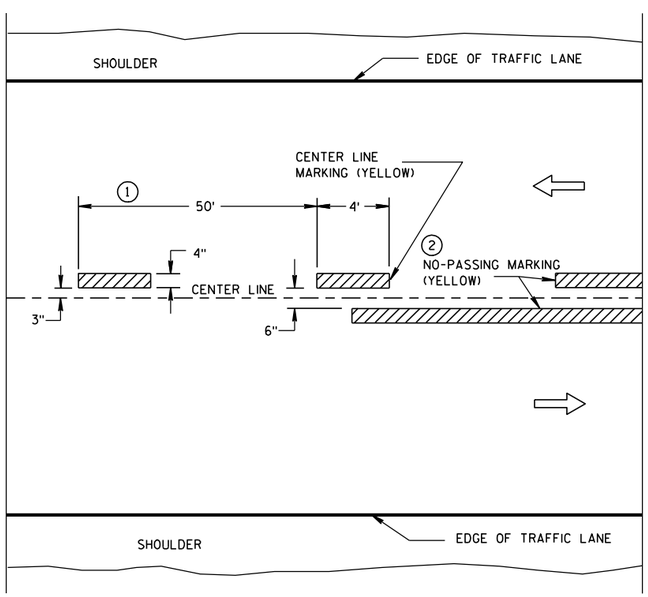

TWO WAY TRAFFIC

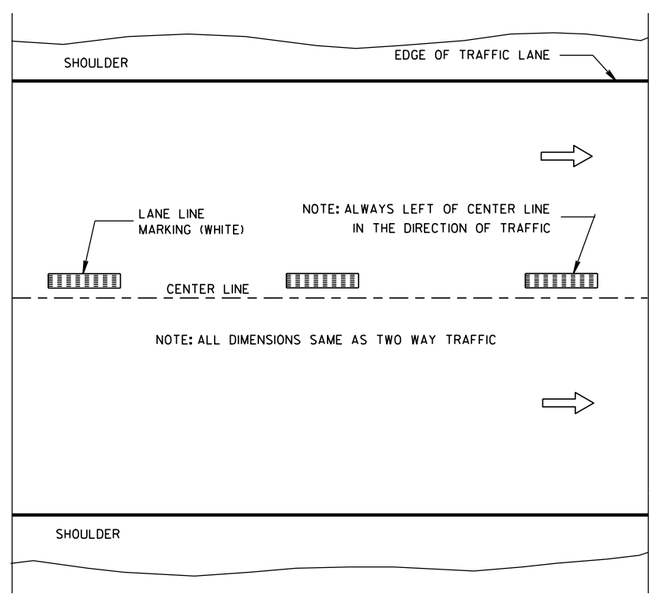

ONE WAY TRAFFIC

TEMPORARY (INTERMEDIATE) PAVEMENT MARKING

(SHOWS CYCLE FOR TEMPORARY CENTER LINE OR TEMPORARY LANE LINE MARKING)

LEGEND

"T" MARKING

POST MOUNTED SIGN

PAVEMENT MARKING (MAINLINE)

STATE OF WISCONSIN
DEPARTMENT OF TRANSPORTATION

APPROVED
5-13-10 — DATE
/S/ Thomas N. Notbohm — STATE TRAFFIC ENGINEER OF DESIGN
FHWA

6

S.D.D. 15 C 8-13a

6

S.D.D. 15 C 8-13a

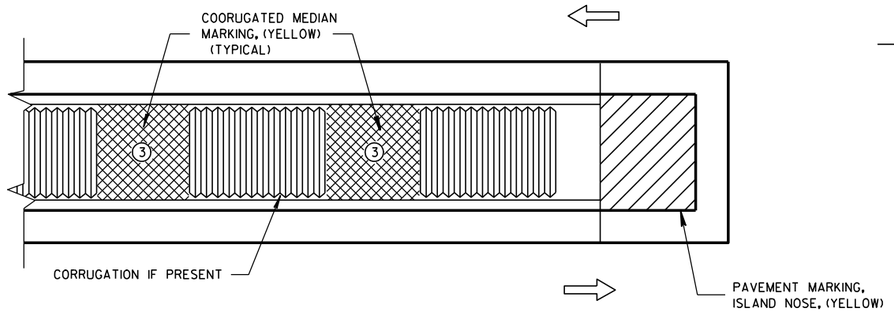

MEDIAN ISLAND WITH SQUARE BLUNT NOSE

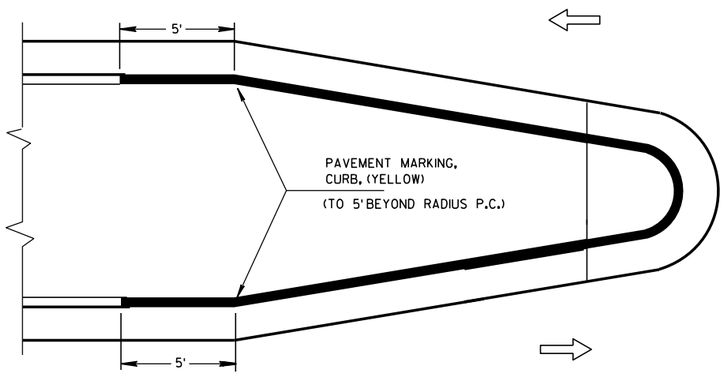

MEDIAN ISLAND WITH ROUND BLUNT NOSE

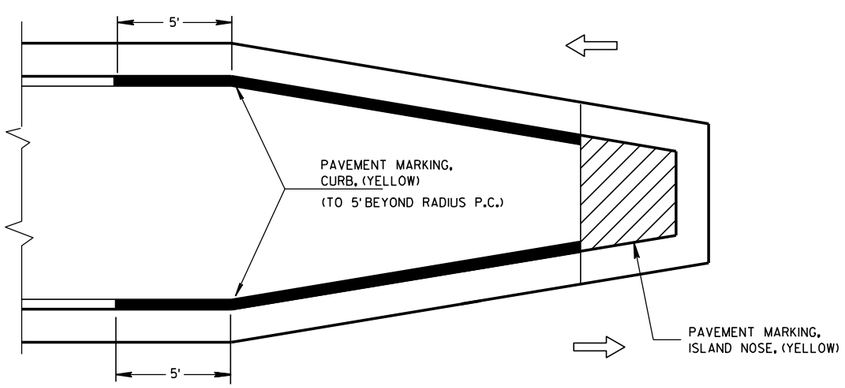

MEDIAN ISLAND WITH SLOPED NOSE

TYPICAL PLACEMENT OF PAVEMENT MARKING ON MEDIAN ISLANDS

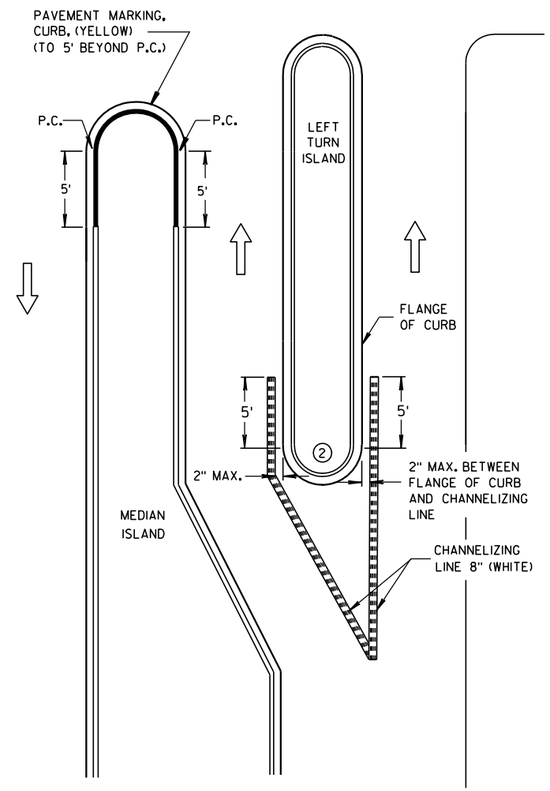

LEFT TURN & MEDIAN ISLAND

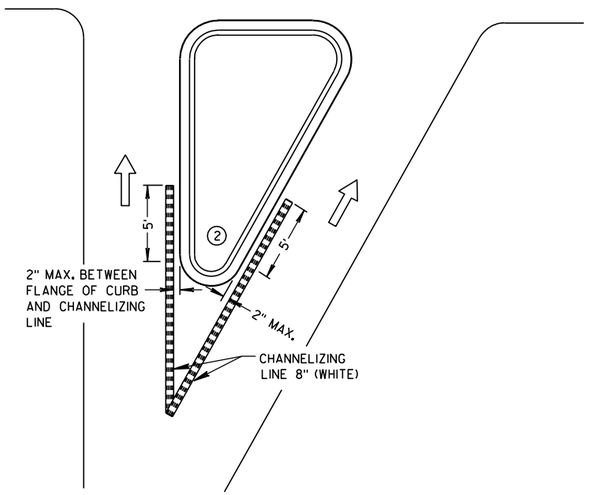

RIGHT TURN ISLAND

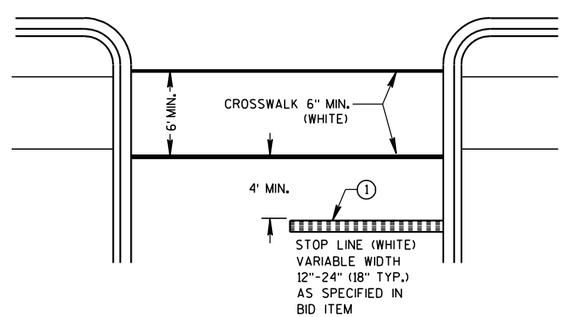

STOP LINE AND CROSSWALK

GENERAL NOTES

1. STOP LINE IS REQUIRED ONLY WHEN SPECIFIED IN THE CONTRACT.
2. DO NOT MARK CURB NOSES THAT SEPARATE LANES OF TRAFFIC TRAVELING IN THE SAME DIRECTION.
3. WHEN CONCRETE CORRUGATED MEDIAN IS CONSTRUCTED TO SEPARATE TRAFFIC OPERATING IN THE OPPOSING DIRECTION YELLOW PAVEMENT MARKING SHALL BE APPLIED TO THE FLAT PORTION OF THE CONCRETE CORRUGATED MEDIAN. THE ITEM OF PAVEMENT MARKING, CONCRETE CORRUGATED MEDIAN, WILL BE MEASURED IN PLACE AND AND ACCEPTED IN ACCORDANCE WITH THE CONTRACT AND PAID FOR AT THE CONTRACT UNIT PRICE PER SQUARE FOOT.

LEGEND

- ISLAND NOSE MARKING
- CURB MAKING
- CORRUGATED MEDIAN MARKING
- DIRECTION OF TRAVEL

PAVEMENT MARKING (ISLANDS, STOP LINE & CROSS WALK)

STATE OF WISCONSIN
DEPARTMENT OF TRANSPORTATION

6

S.D.D. 15 C 8-13f

6

S.D.D. 15 C 8-13f

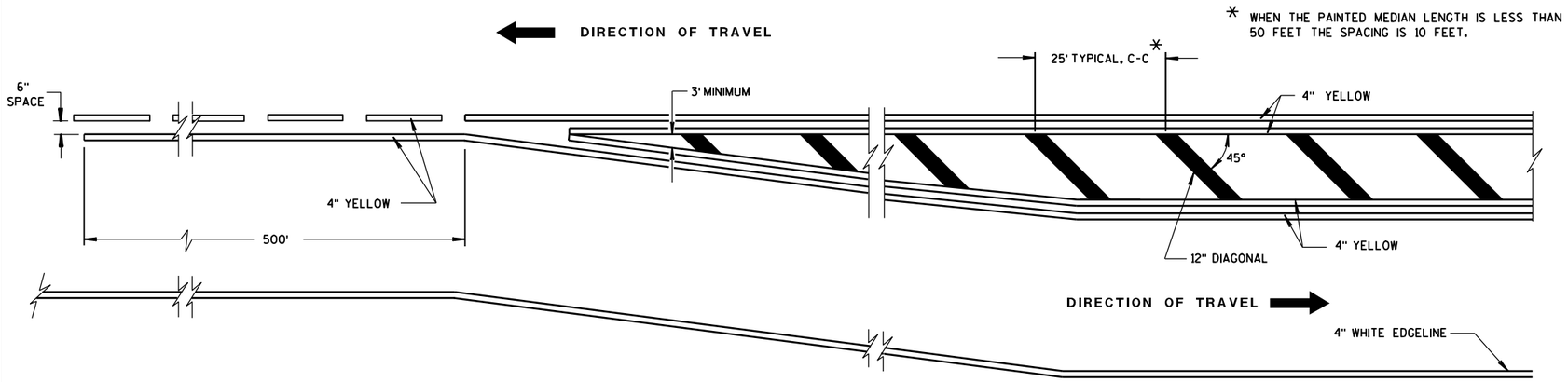

MEDIAN ISLAND DETAIL

GENERAL NOTE

DIAGONALS ARE OPTIONAL WHEN PAINTED ISLAND IS LESS THAN 6 FEET AT WIDEST POINT.

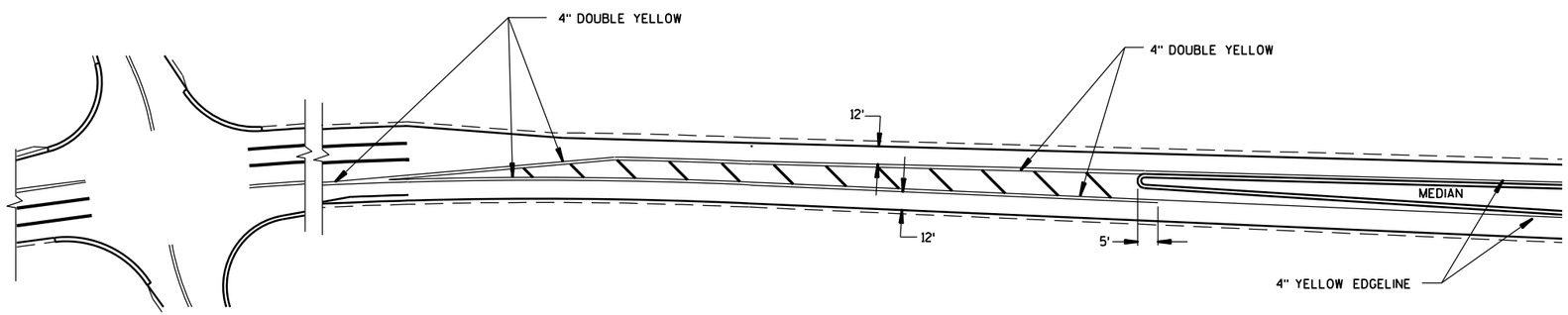

APPROACH MARKINGS FOR OTHER MEDIAN TYPES

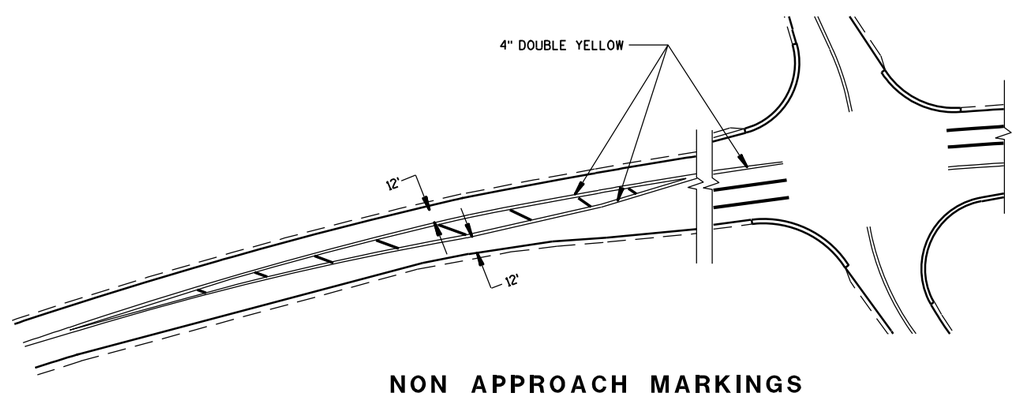

NON APPROACH MARKINGS

MEDIAN ISLAND MARKING	
STATE OF WISCONSIN DEPARTMENT OF TRANSPORTATION	
APPROVED 2-5-09 DATE FHWA	/S/ Thomas N. Notbohm STATE TRAFFIC ENGINEER OF DESIGN

6

S.D.D. 15 C 18-3

6

S.D.D. 15 C 18-3

GENERAL NOTES

SIGNING AND MARKING IS SHOWN AS TYPICAL PLACEMENT. FIELD CONDITIONS MAY DICTATE CHANGES IN SIGNING AND MARKING PLACEMENT.

A DISTANCE DEPENDENT ON SPEED (SEE TABLE)

(1) WRONG WAY PREVENTION SIGNS ARE DISCUSSED IN T G M 2-15-12

SYMBOLS

* OPTIONAL SIGNS

** SIGNS MAY BE OMITTED IF SPACE DOES NOT PERMIT

POST MOUNTED SIGN

DIRECTION OF TRAFFIC FLOW

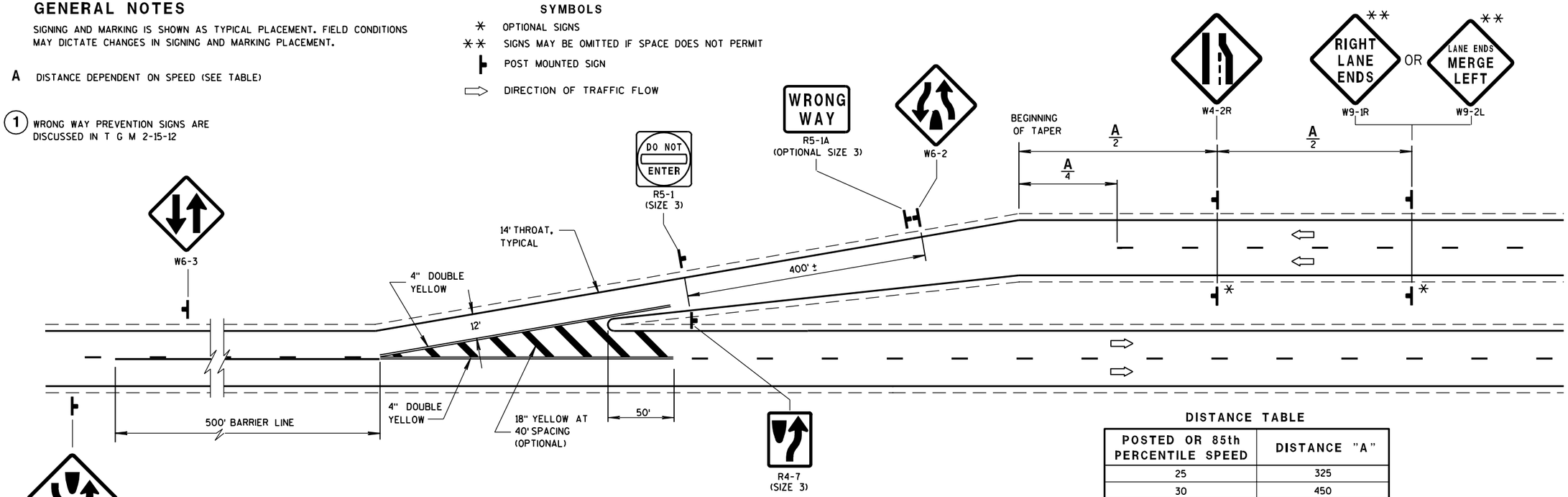

DISTANCE TABLE

POSTED OR 85th PERCENTILE SPEED	DISTANCE "A"
25	325
30	450
35	550
40	650
45	750
50	850
55	950

(1) THE LEFT LANE IS PUSHED TO THE RIGHT:

USE W4-2L IF :

OR

(2) THERE IS A VERY PROMINENT CONSTRUCTION JOINT ENDING THE LEFT LANE.

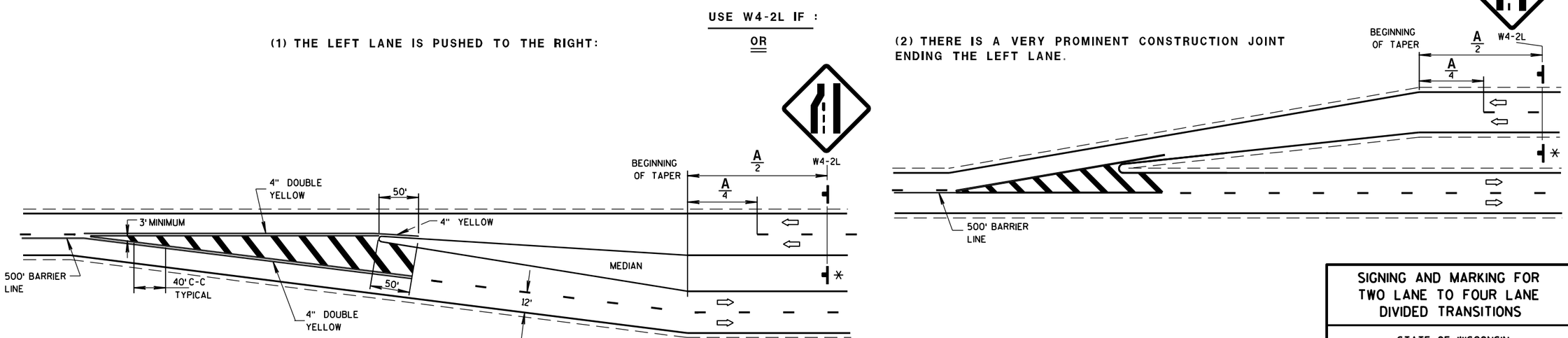

SIGNING AND MARKING FOR TWO LANE TO FOUR LANE DIVIDED TRANSITIONS

STATE OF WISCONSIN
DEPARTMENT OF TRANSPORTATION

APPROVED

4/7/08 — DATE

/S/ Thomas N. Notbohm — STATE TRAFFIC ENGINEER OF DESIGN

FHWA

6

S.D.D. 15 C 21-3

6

S.D.D. 15 C 21-3

SEE S.D.D. 15 D 10, "TRAFFIC CONTROL, SINGLE LANE CROSSOVER EXIT WITH BARRIER" OR "TRAFFIC CONTROL, SINGLE LANE CROSSOVER EXIT" DETAIL FOR ADDITIONAL TRAFFIC CONTROL ITEMS AND LAYOUT DIMENSIONS.

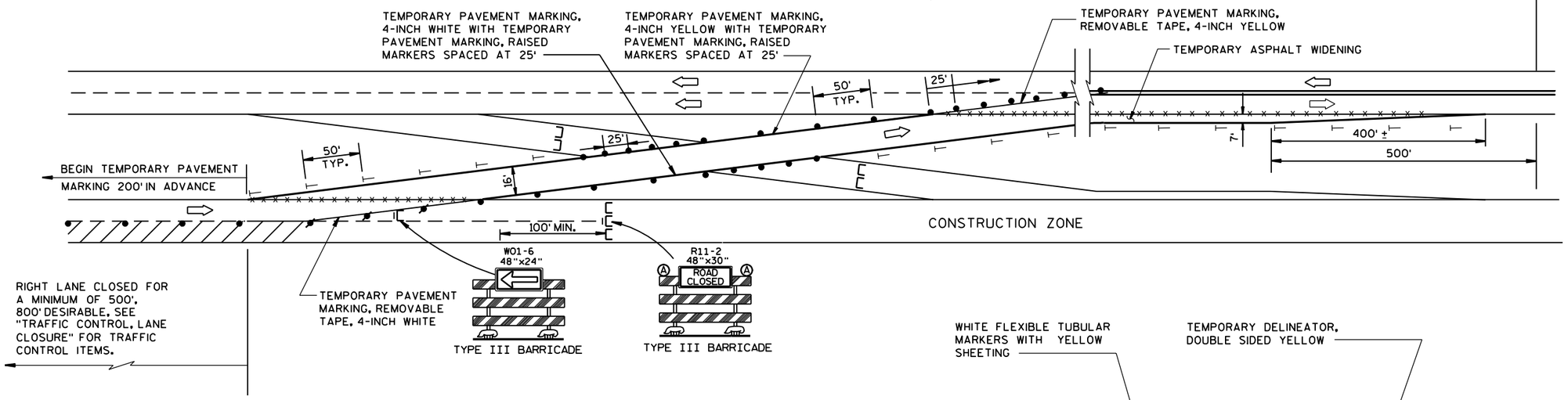

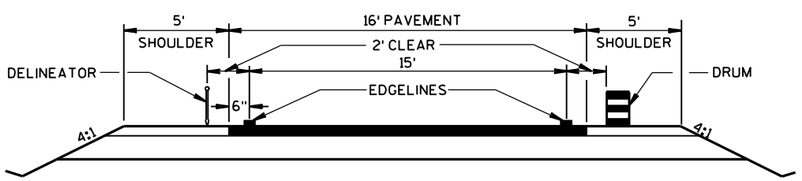

TYPICAL CROSSOVER ROADWAY DIMENSIONS

LEGEND

- 8' TYPE III BARRICADE WITHOUT/WITH ATTACHED SIGN
- DRUM WITH WARNING LIGHTS, TYPE C
- DRUM
- TEMPORARY DELINEATOR (STEEL POST W/SINGLE DELINEATOR) COLOR OF DELINEATOR SHALL MATCH THE COLOR OF THE RESPECTIVE EDGELINE PAINT
- WARNING LIGHT, TYPE A
- REMOVING PAVEMENT MARKINGS
- TEMPORARY DELINEATOR (DOUBLE SIDED)
- FLEXIBLE TUBULAR MARKER AND BASE
- DIRECTION OF TRAFFIC

GENERAL NOTES :

THE EXACT NUMBER, LOCATION, AND SPACING OF ALL SIGNS AND DEVICES SHALL BE ADJUSTED TO FIT FIELD CONDITIONS AS APPROVED BY THE ENGINEER.

THE SPACING BETWEEN PROPOSED SIGNS SHOULD BE ADJUSTED TO NOT CONFLICT WITH AND TO PROVIDE A MINIMUM OF 200 FEET (500 FEET DESIRABLE) DISTANCE TO EXISTING SIGNS.

TEMPORARY PAVEMENT MARKING REMOVABLE TAPE SHALL BE USED WHEN CROSSING PERMANENT ROADWAY SURFACES THAT WILL REMAIN AFTER USE OF CROSSOVER AND TEMPORARY PAVEMENT MARKING WHERE USED.

ALL SIGNS ARE 48"x48" UNLESS OTHERWISE NOTED.

"WO" IS THE SAME AS "W" EXCEPT THE BACKGROUND IS ORANGE.

ANY SIGNS TEMPORARY OR EXISTING, WHICH CONFLICT WITH THE TRAFFIC CONTROL "IN USE" SHALL BE REMOVED OR COVERED AS NEEDED AND AS APPROVED BY THE ENGINEER. NO WARNING LIGHTS SHALL BE WORKING ON "COVERED" OR "DOWNED" SIGNS.

REVERSE DEVICES WHEN OTHER LEG OF CROSSOVER IS IN USE.

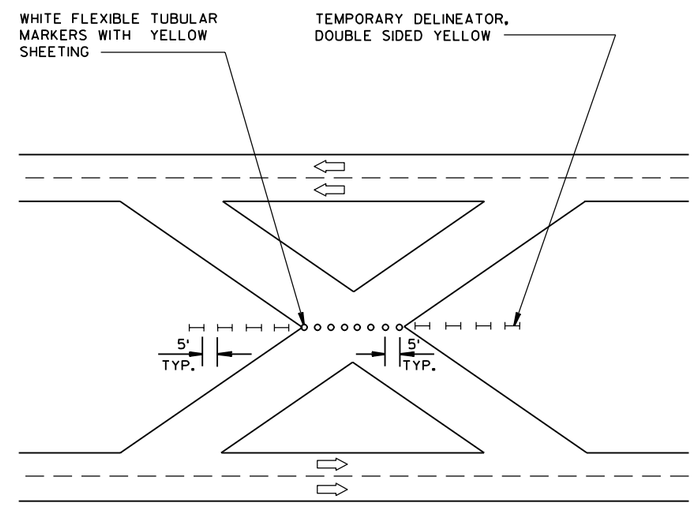

PROTECTION OF CROSSOVER NOT IN USE WHEN CONSTRUCTION IS NOT TAKING PLACE

TRAFFIC CONTROL, SINGLE LANE CROSSOVER

STATE OF WISCONSIN
DEPARTMENT OF TRANSPORTATION

APPROVED 10-22-96 DATE

Charles J. Spang for DIRECTOR, OFFICE OF TRAFFIC

FHWA

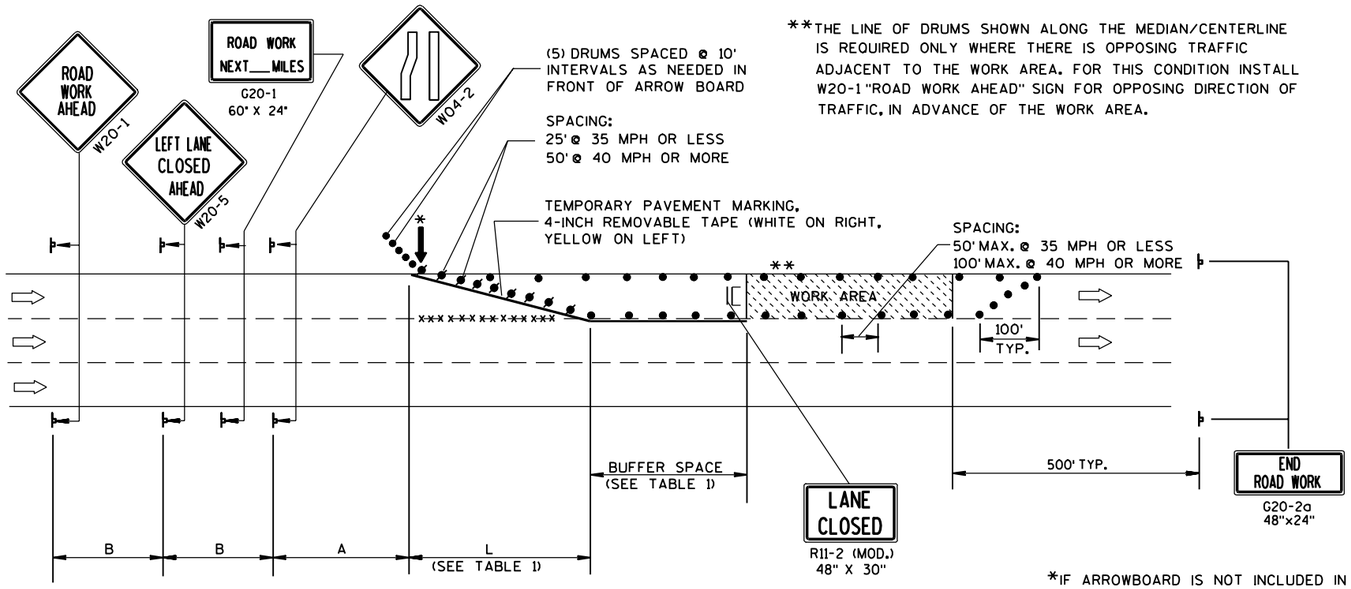

**THE LINE OF DRUMS SHOWN ALONG THE MEDIAN/CENTERLINE IS REQUIRED ONLY WHERE THERE IS OPPOSING TRAFFIC ADJACENT TO THE WORK AREA. FOR THIS CONDITION INSTALL W20-1 "ROAD WORK AHEAD" SIGN FOR OPPOSING DIRECTION OF TRAFFIC, IN ADVANCE OF THE WORK AREA.

B=400' AT 25-30 MPH
700' AT 35-40 MPH
1000' AT 45-55 MPH

A=200' AT 25-30 MPH
350' AT 35-40 MPH
500' AT 45-55 MPH

(PLACE BARRICADE AND SIGN APPROX. EVERY 1000' ACROSS THE CLOSED LANE)

*IF ARROWBOARD IS NOT INCLUDED IN MISCELLANEOUS QUANTITIES, SUBSTITUTE A TYPE III BARRICADE WITH W01-6 SIGN IN THE LANE CLOSURE TAPER.

W01-6
48"x24"

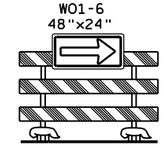

TABLE 1
TAPER AND BUFFER SPACE
FOR 12' LANE WIDTH

S	L	BUFFER SPACE
25	125'	55'
30	180'	85'
35	245'	120'
40	320'	170'
45	540'	220'
50	600'	280'
55	660'	335'

FOR LANE WIDTH OTHER THAN 12':

L = WS AT 45 MPH OR GREATER

$L = \frac{WS^2}{60}$ AT 40 MPH OR LESS

L = TAPER LENGTH IN FEET

S = NON-CONSTRUCTION SPEED LIMIT (MPH)

W = WIDTH OF LANE CLOSURE

LEGEND

- DRUM WITH/WITHOUT WARNING LIGHT, TYPE C (STEADY-BURN)
- POST MOUNTED SIGN
- ARROW BOARD
- TYPE III BARRICADE (8' EQUIVALENT) AND WARNING LIGHTS, TYPE A (FLASHING) WITH/WITHOUT SIGN
- DIRECTION OF TRAFFIC FLOW
- xxxx REMOVING PAVEMENT MARKING (SEE GENERAL NOTES)

GENERAL NOTES

THIS LANE CLOSURE DETAIL IS TYPICAL FOR CLOSING THE LEFT LANE. FOR A RIGHT LANE CLOSURE, REVERSE THE TRAFFIC CONTROL.

THIS DETAIL MAY BE USED FOR ROADWAYS WITH EITHER TWO OR THREE LANES IN EACH DIRECTION.

THE EXACT NUMBER, LOCATION, AND SPACING OF ALL SIGNS AND DEVICES SHALL BE ADJUSTED TO FIT FIELD CONDITIONS AS APPROVED BY THE ENGINEER.

THE SPACING BETWEEN TRAFFIC CONTROL SIGNS SHOULD BE ADJUSTED TO NOT CONFLICT WITH AND SHOULD PROVIDE A DESIRABLE MINIMUM OF 200 FEET CLEARANCE TO EXISTING SIGNS THAT WILL REMAIN IN PLACE.

ALL SIGNS ARE 48"x48" UNLESS OTHERWISE NOTED. IF NECESSARY DUE TO SPACE CONSTRAINTS IN URBAN AREAS, 36" X 36" SIGNS MAY BE USED IF APPROVED BY DISTRICT TRAFFIC UNIT.

"WO" SIGNS ARE THE SAME AS "W" SIGNS EXCEPT THE BACKGROUND IS ORANGE.

SIGNS THAT WILL BE IN PLACE LESS THAN 7 CONTINUOUS DAYS AND NIGHTS, OR THAT WILL BE PLACED IN A CLOSED LANE, MAY BE MOUNTED ON PORTABLE SUPPORTS.

ANY SIGNS TEMPORARY OR EXISTING, WHICH CONFLICT WITH TRAFFIC CONTROL "IN USE" SHALL BE REMOVED OR COVERED AS NEEDED AND AS APPROVED BY THE ENGINEER.

REMOVE PAVEMENT MARKINGS AND PLACE TEMPORARY PAVEMENT MARKING, REMOVABLE TAPE IF LANE CLOSURE IS TO BE IN PLACE FOR 7 OR MORE CONTINUOUS DAYS AND NIGHTS.

ON UNDIVIDED ROADWAYS, OMIT THE SIGNS SHOWN ON LEFT SIDE OF ROAD.

W20-1, G20-1 AND G20-2A SIGNS ARE NOT REQUIRED IF THE LANE CLOSURE IS WITHIN A LARGER WORK ZONE WHERE THESE SIGNS ARE ALREADY PRESENT.

OMIT G20-1 SIGNS IF LENGTH OF WORK AREA IS 2 MILES OR LESS.

CONSIDER GEOMETRICS WHEN LOCATING SIGNS AND ARROWBOARDS SO THE APPROACHING DRIVER HAS A CLEAR VIEW OF THE ARROWBOARDS AND LANE CLOSURE DRUMS.

PLACE THE ARROWBOARD AS CLOSE AS POSSIBLE TO THE BEGINNING OF THE LANE CLOSURE TAPER, PREFERABLY ON THE SHOULDER OR TERRACE.

CHANNELIZING DEVICES PLACED ADJACENT TO WORK AREA SHALL BE PULLED BACK FROM THE TRAVEL LANE WHEN WORK IS NOT IN PROGRESS.

BARRICADES IN A CLOSED LANE THAT MUST BE MOVED FOR A WORK OPERATION SHALL BE IMMEDIATELY RE-ESTABLISHED UPON COMPLETION OF THE OPERATION OR, FOR CONTINUING OPERATIONS, AT THE END OF EACH WORKING DAY.

WARNING LIGHTS ARE NOT REQUIRED IF THE LANE CLOSURE IS A DAYTIME ONLY OPERATION.

TRAFFIC CONTROL, SINGLE LANE CLOSURE, NON-FREEWAY/EXPRESSWAY

STATE OF WISCONSIN
DEPARTMENT OF TRANSPORTATION

APPROVED
5/23/00
DATE

Clinton J. Sparks
CHIEF SIGNS AND MARKING ENGINEER

FHWA

6

S.D.D. 15 D 20-1

6

S.D.D. 15 D 20-1

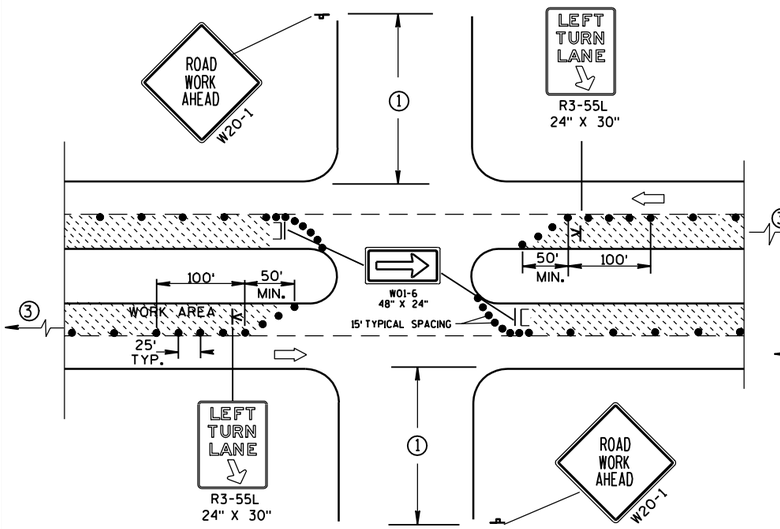

DETAIL A

FOR LEFT LANE CLOSURE AT INTERSECTION OR MEDIAN OPENING

PROVIDE TURN LANES AT INTERSECTIONS WHENEVER STAGING OF WORK ALLOWS. TAPER AND TURN LANE LENGTHS BASED ON FIELD CONDITIONS AS APPROVED BY THE ENGINEER.

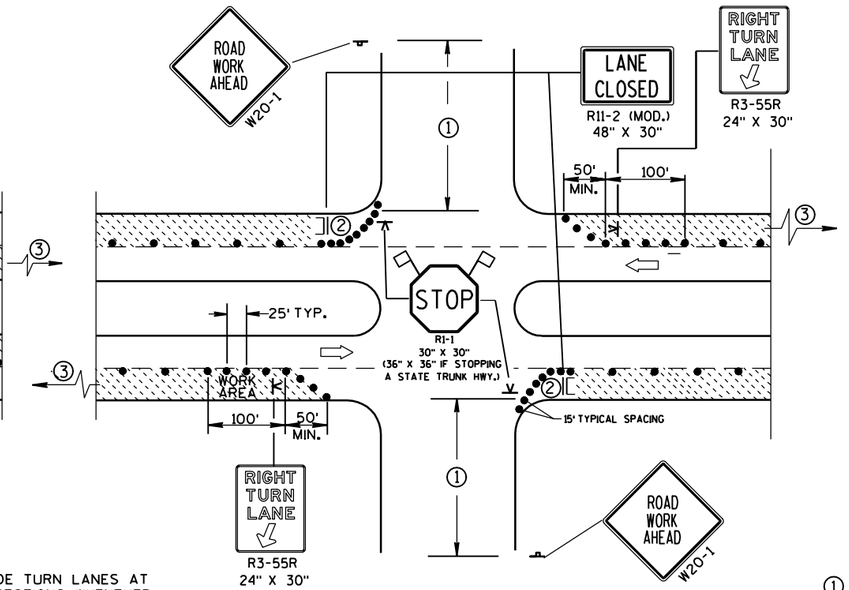

DETAIL B

FOR RIGHT LANE CLOSURE AT INTERSECTION

GENERAL NOTES

THE EXACT NUMBER, LOCATION, AND SPACING OF ALL SIGNS AND DEVICES SHALL BE ADJUSTED TO FIT FIELD CONDITIONS AS APPROVED BY THE ENGINEER.

THE SPACING BETWEEN SIGNS SHOULD BE ADJUSTED TO NOT CONFLICT WITH AND SHOULD PROVIDE A DESIRABLE MINIMUM OF 200 FEET CLEARANCE TO EXISTING SIGNS THAT WILL REMAIN IN PLACE.

ALL SIGNS ARE 48"x48" UNLESS OTHERWISE NOTED. IF NECESSARY DUE TO SPACE CONSTRAINTS IN URBAN AREAS, 36" X 36" SIGNS MAY BE USED IF APPROVED BY DISTRICT TRAFFIC UNIT.

"WO" SIGNS ARE THE SAME AS "W" SIGNS EXCEPT THE BACKGROUND IS ORANGE.

SIGN LAYOUTS SHALL BE IN ACCORDANCE WITH THE FHWA'S MANUAL OF STANDARD HIGHWAY SIGNS OR THE WISCONSIN STANDARD SIGN PLATES.

SIGNS THAT WILL BE IN PLACE LESS THAN 7 CONTINUOUS DAYS AND NIGHTS, OR THAT WILL BE PLACED IN A CLOSED LANE, MAY BE MOUNTED ON PORTABLE SUPPORTS.

ANY SIGNS TEMPORARY OR EXISTING, WHICH CONFLICT WITH TRAFFIC CONTROL "IN USE" SHALL BE REMOVED OR COVERED AS NEEDED AND AS APPROVED BY THE ENGINEER.

CHANNELIZING DEVICES PLACED ADJACENT TO WORK AREA SHALL BE PULLED BACK FROM THE TRAVEL LANE WHEN WORK IS NOT IN PROGRESS.

BARRICADES IN A CLOSED LANE THAT MUST BE MOVED FOR A WORK OPERATION SHALL BE IMMEDIATELY RE-ESTABLISHED UPON COMPLETION OF THE OPERATION OR, FOR CONTINUING OPERATIONS, AT THE END OF EACH WORKING DAY.

① 500' TYPICAL OR AT LAST INTERSECTION, WHICHEVER IS CLOSER.
350' IF 35-40 MPH.
200' IF 25-30 MPH.

② ALSO USE BARRICADE AND 15' TYPICAL DRUM SPACING AT COMMERCIAL DRIVEWAYS.

③ SEE SEPARATE LANE CLOSURE DETAIL FOR ADDITIONAL TRAFFIC CONTROL.

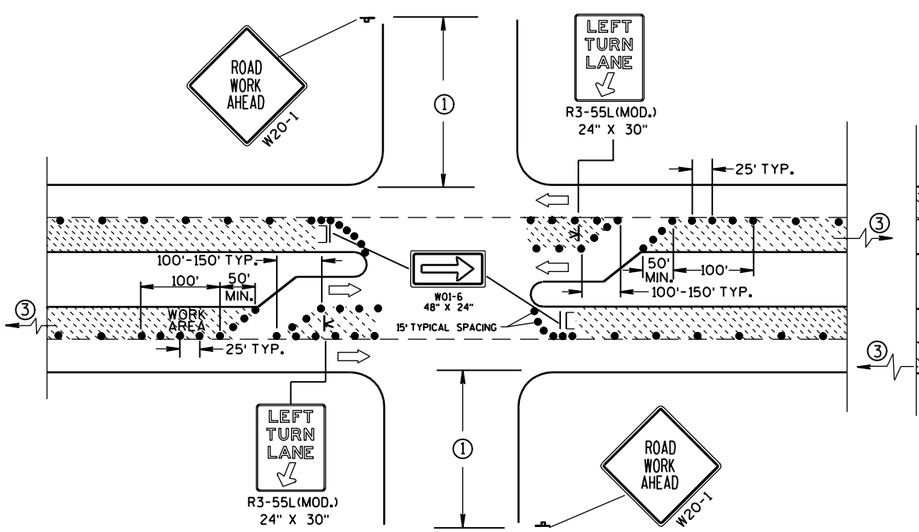

DETAIL C

FOR LEFT LANE CLOSURE AT INTERSECTION OR MEDIAN OPENING (WITH LEFT TURN BAY OPEN)

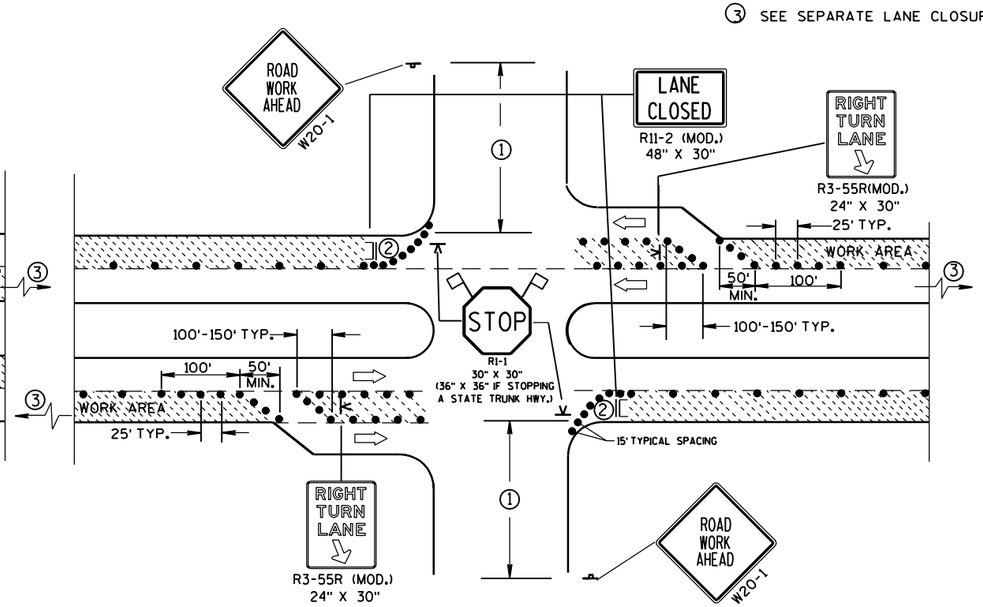

DETAIL D

FOR RIGHT LANE CLOSURE AT INTERSECTION (WITH RIGHT TURN BAY OPEN)

LEGEND

- DRUM
- POST MOUNTED SIGN
- SIGN ON PORTABLE SUPPORT (5' MIN. MOUNTING HEIGHT)
- TYPE III BARRICADE (8' EQUIVALENT) AND WARNING LIGHT, TYPE A (FLASHING) WITH SIGN
- DIRECTION OF TRAFFIC FLOW
- FLAGS, 16" X 16" MIN., ORANGE

TRAFFIC CONTROL, INTERSECTION WITHIN SINGLE LANE CLOSURE

STATE OF WISCONSIN
DEPARTMENT OF TRANSPORTATION

APPROVED
5/23/00 — DATE
/S/ Chester J. Spang — CHIEF SIGNS AND MARKING ENGINEER
FHWA

6

S.D.D. 15 D 21-1

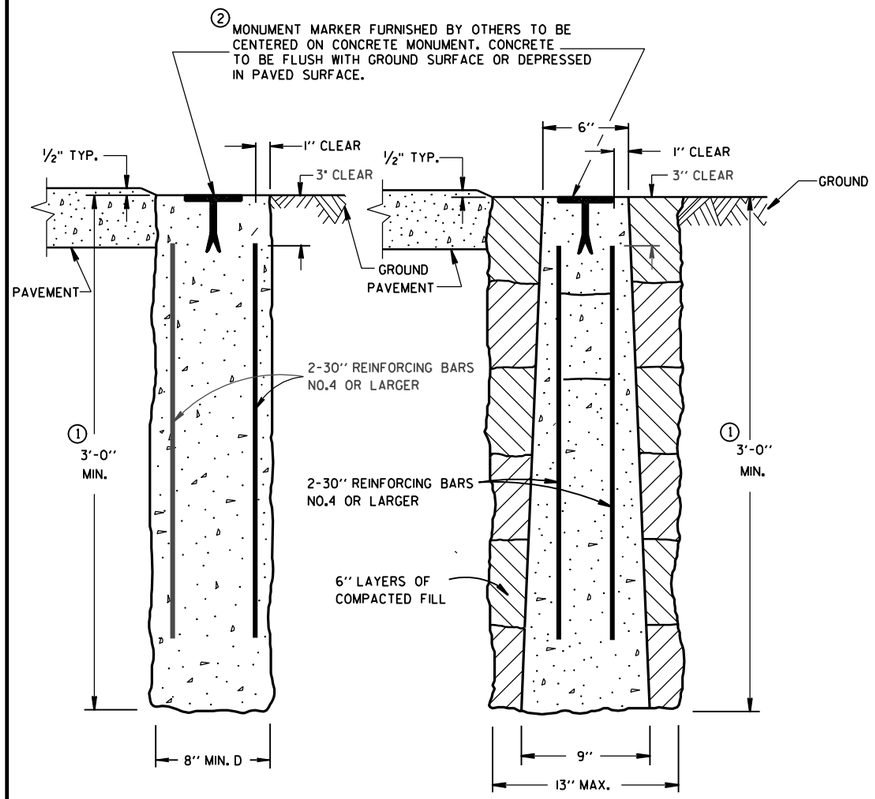

CAST-IN-PLACE PRECAST

CONCRETE MONUMENTS

TYPE A

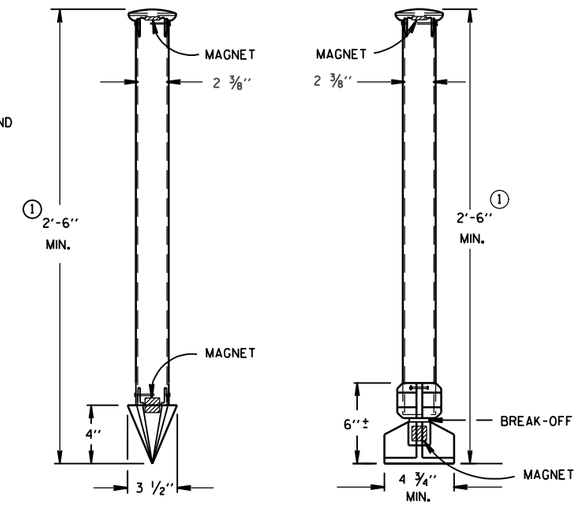

TYPE C

DRIVE-IN MONUMENT

TYPE D

BREAK-OFF MONUMENT

ALUMINUM MONUMENTS

(INCLUDES MARKER)

GENERAL NOTES

DETAILS OF CONSTRUCTION, MATERIALS AND WORKMANSHIP NOT SHOWN ON THIS DRAWING SHALL CONFORM TO THE PERTINENT REQUIREMENTS OF THE STANDARD SPECIFICATIONS AND THE APPLICABLE SPECIAL PROVISIONS.

DETAILED DRAWINGS OF PROPOSED ALTERNATE DESIGNS FOR METAL MONUMENTS OR MONUMENT COVERS SHALL BE SUBMITTED TO THE ENGINEER FOR APPROVAL.

INSTALLED METAL MONUMENTS MUST BE EASILY DETECTED WITH A DIP NEEDLE. INSERT PERMANENT MAGNETS SHALL BE ATTACHED NEAR THE TOP AND BOTTOM OF THOSE MONUMENTS CONSTRUCTED OF A METAL ALLOY WHICH IS NOT ATTRACTIVE TO A DIP NEEDLE.

THE CAST IRON MONUMENT COVER SHALL BE A "NON-ROCKING" TYPE. ADJUSTMENT OF THE COVER TO GRADE MAY BE ACCOMPLISHED BY THE USE OF MORTAR AND BRICK, OR BY EITHER PRECAST OR CAST-IN-PLACE REINFORCED CONCRETE GRADE RINGS.

MONUMENTS SHALL BE LOCATED AND PLACED AT THE DIRECTION OF THE ENGINEER.

ALUMINUM MONUMENTS AND MONUMENT COVERS SHALL BE MADE FROM AN ALUMINUM AND MAGNESIUM ALLOY AS DETERMINED BY THE MANUFACTURER.

THE MONUMENT COVERS DETAILED ON THIS DRAWING ARE NOT EQUAL ALTERNATES. MONUMENT COVERS SHALL BE CAST IRON UNLESS ALUMINUM IS SPECIFIED ELSEWHERE IN THE CONTRACT.

MONUMENT SHALL BE CAST-IN-PLACE CONCRETE UNLESS PRECAST CONCRETE OR ALUMINUM MONUMENTS ARE SPECIFIED IN THE CONTRACT OR PERMITTED BY THE ENGINEER.

① MINIMUM LENGTH SHALL BE 4'-0" FOR MONUMENTS INSTALLED IN PAVED AREAS.

② AN OFFICIAL COUNTY MONUMENT MARKER SUPPLIED BY A COUNTY MAY BE REQUIRED FOR SOME SECTION CORNERS AND WITNESS MONUMENTS INSTEAD OF THIS WIS DOT MARKER.

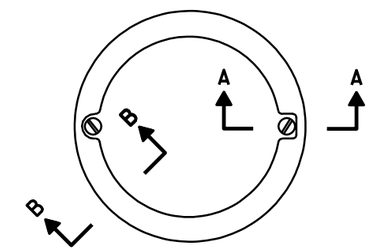

TOP VIEW

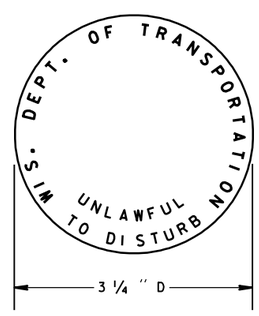

② WIS DOT MONUMENT MARKER LOGO

FOR TYPES "A", "C" & "D"

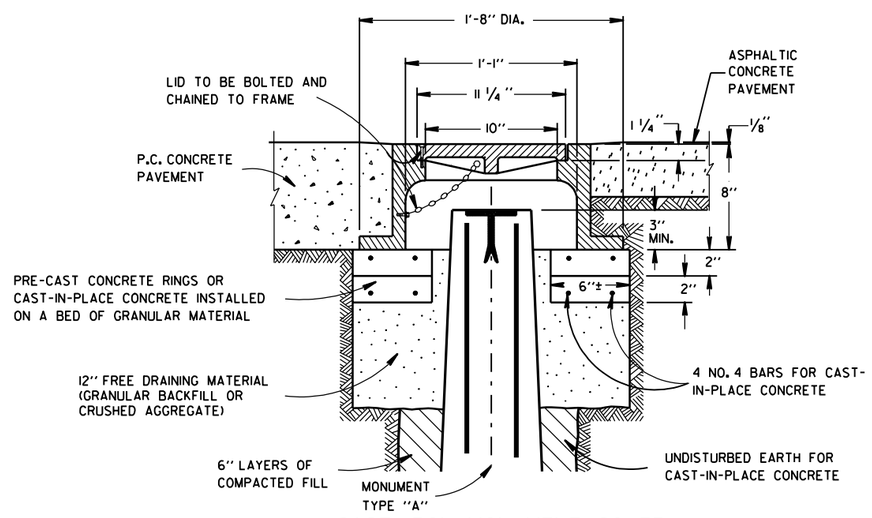

CAST IRON MONUMENT COVER

(APPROXIMATE WEIGHT - 95 LBS.)

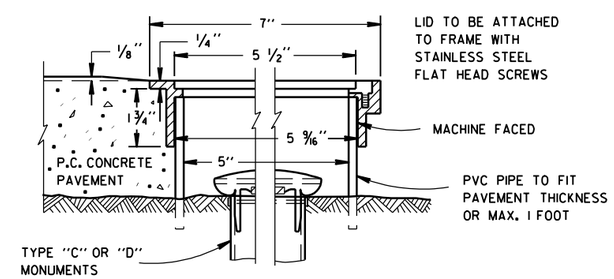

SECTION B-B SECTION A-A

ALUMINUM MONUMENT COVER

(APPROXIMATE WEIGHT 2 LBS)

(FOR CONCRETE PAVEMENT ONLY)

LANDMARK REFERENCE MONUMENTS AND COVERS

STATE OF WISCONSIN
DEPARTMENT OF TRANSPORTATION

APPROVED 9/22/99 DATE — CHIEF ROADWAY DEVELOPMENT ENGINEER

FHWA

6

S.D.D. 16 A 1-6

TYPICAL ASSEMBLIES

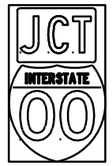

J1-1

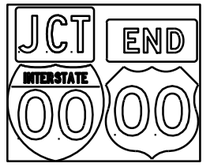

J1-2

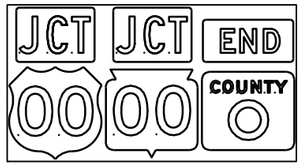

J1-3

JV

J2-1

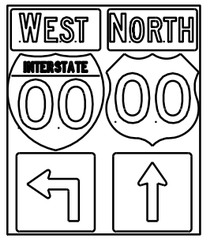

J2-2

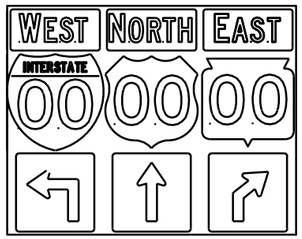

J2-3

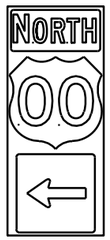

J3-1

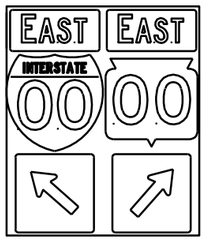

J3-2

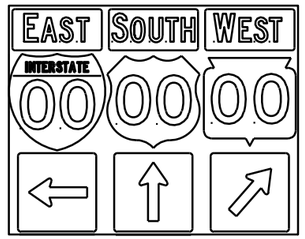

J3-3

J4-1

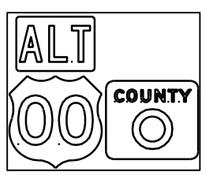

J4-2

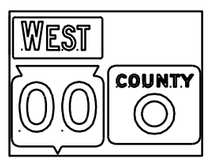

J4-2

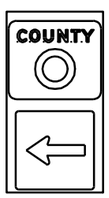

J13-1

J12-1

J32-1

J33-1

J23-1

J22-1

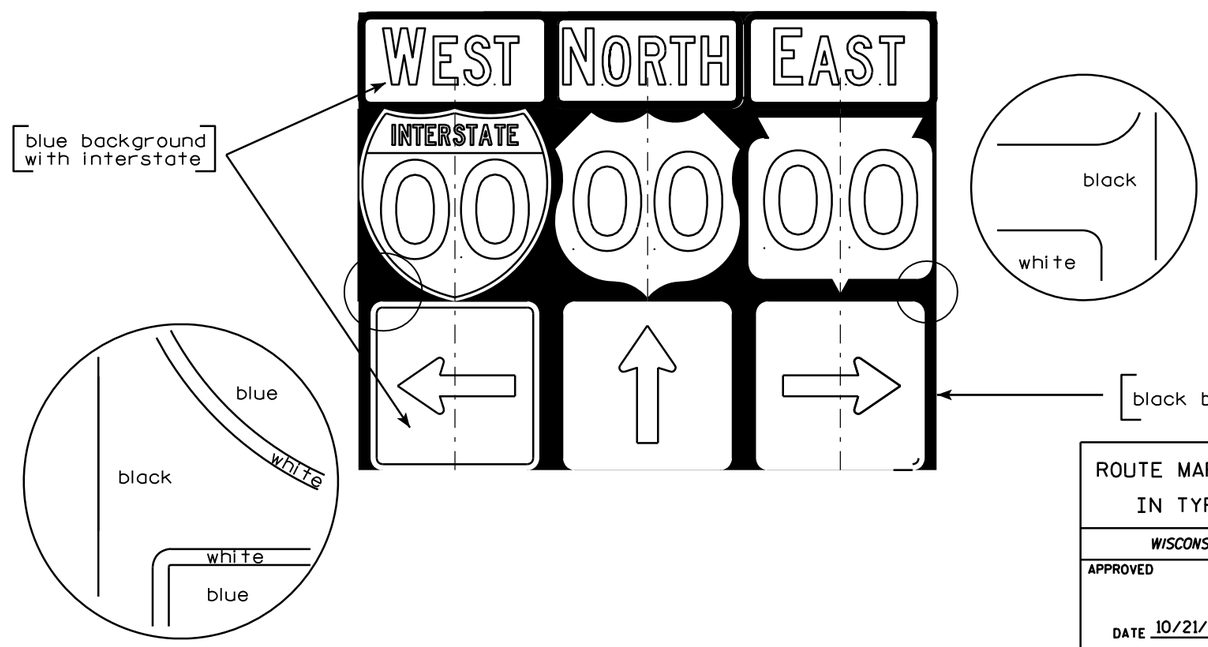

NOTES

1. Signs are Type II - Type H Reflective - reference WIS DOT Standard Specification for HIGHWAY and STRUCTURE CONSTRUCTION latest edition.
2. Color:
   Background - Black Non-reflective
   Message - see Note 5
3. Message Series - See Note 5
4. Corners shall be square since base material is plywood.
5. The colors and message spacing on each marker shall be according to the applicable route marker panel specifications.
6. Certain marker heads require the component pieces to be the same color. As an example, all the components used with an M1-1 Interstate marker shall be blue.
7. Single panel j-assemblies shall only be used with route marker shields that are same size. If the route marker shields are different size use multiple piece component.
8. Route assemblies that have 24 inch route shields and have dimensions greater than 48 inches (both vertical and horizontal) shall have one horizontal splice between the arrows and route shields. Vertical splices shall not be used on route assemblies with a horizontal dimension of 144 inches or less. The contractor shall not use more than one vertical joint per sign and the joint shall be between route shields.
9. Route assemblies that have 36 inch shields and have dimensions greater than 48 inchs (both vertical and horizontal) shall have two horizontal splices. One horizontal splice shall be between the cardinal direction and route shields and the other horizontal splice shall be between the arrows and route shields. Vertical splices shall not be used on route assemblies with a horizontal dimension of 144 or less. The contractor shall not use more than one vertical joint per sign and the joint shall be between route shields.

ROUTE MARKERS & COMPONENTS
IN TYPICAL ASSEMBLIES

WISCONSIN DEPT OF TRANSPORTATION

APPROVED Matthew R Rauch
for State Traffic Engineer

DATE 10/21/09 PLATE NO. A2-1S.6

7

7

PROJECT NO:

SHEET NO: 159 E

URBAN AREA

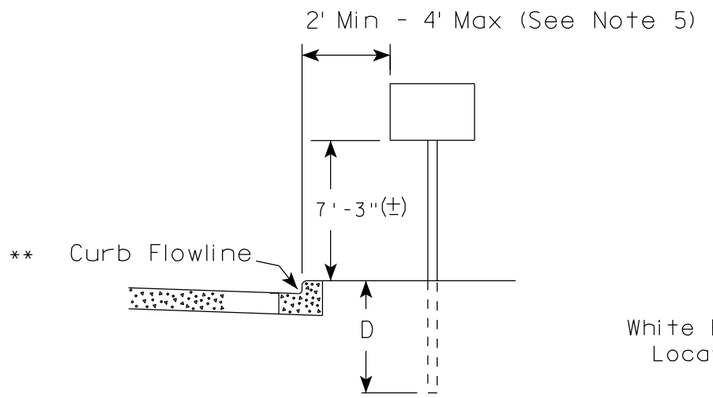

RURAL AREA (See Note 2)

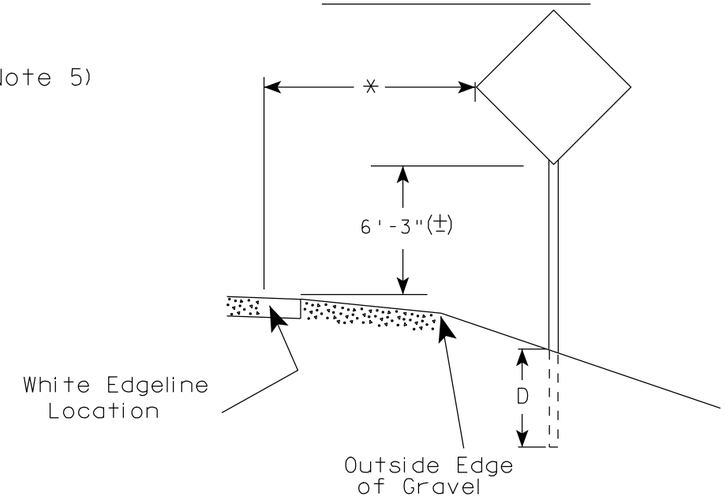

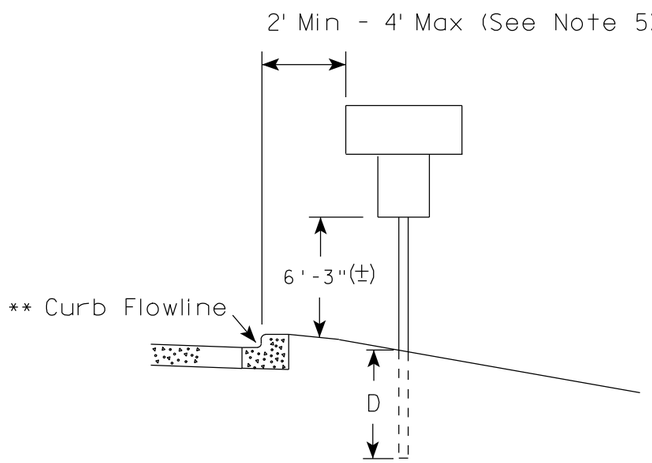

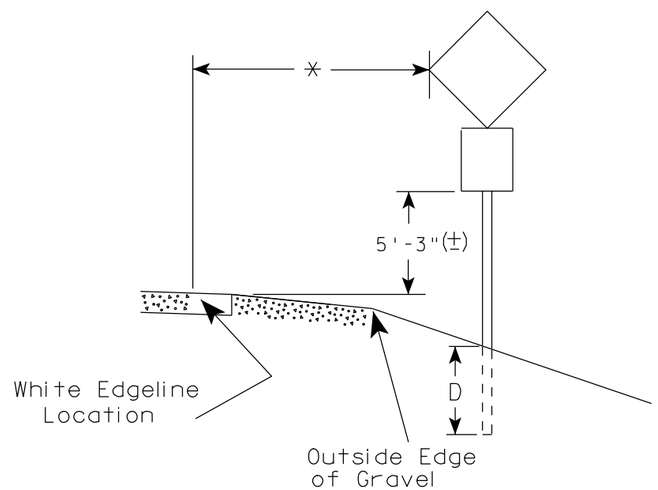

** The existence of curb and gutter does not in itself mandate the vertical clearance illustrated. That height is typically measured where there is sidewalk adjacent to the roadway or parking is permitted. In the absence of sidewalk vertical clearance is measured from the top of the curb. Offset of signs is measured from the flow line.

* 6 feet from edge of a paved shoulder or 12 feet from the edge of pavement (edge line location) or 2 feet from outside edge of gravel, whichever is greater unless directed by project engineer.

GENERAL NOTES

1. Signs wider than 4 feet or larger than 20 sq. ft. shall be mounted on multiple posts. Refer to plate A4-4.
2. If signs are mounted on barrier wall, see A4-10 sign plate.
3. For expressways and freeways, mounting height is 7'- 3" (±) or 6'-3" (±) depending upon existence of a sub-sign.
4. Minimum mounting height for J assemblies (A4-5) is 7'-3" (±) or 6'-3" (±) per urban or rural detail respectively.
5. Minimum mounting height for signs mounted on traffic signal poles is 5'- 3" (±).
6. Offset distance shall be consistent with existing signs or consistent throughout length of project.
7. The (±) tolerance for mounting height is 3 inches.
8. Folding stop signs (R1-1F) shall be mounted at a height of 5'-3" (±) or as directed by the Engineer.
9. The Double Arrow sign (W12-1) shall be mounted at a height of 2'-3" (±). The Chevron sign (W1-8), Roundabout Chevron panel (W1-8A), Clearance Markers (W5-52), Mile Markers (D10 series) & End of Road Markers (W5-56 & W5-56A) shall be mounted at a height of 4'-3" (±).

POST EMBEDMENT DEPTH

Area of Sign Installation (Sq. Ft.)	D (Min)
20 or Less	4'
Greater than 20	5'

TYPICAL INSTALLATION OF PERMANENT TYPE II SIGNS ON SINGLE POSTS

WISCONSIN DEPT OF TRANSPORTATION

APPROVED Matthew R Rauch for State Traffic Engineer

DATE 9/30/09 PLATE NO. A4-3.15

7

7

PROJECT NO:	HWY:	COUNTY:		SHEET NO: 160	E

URBAN AREA

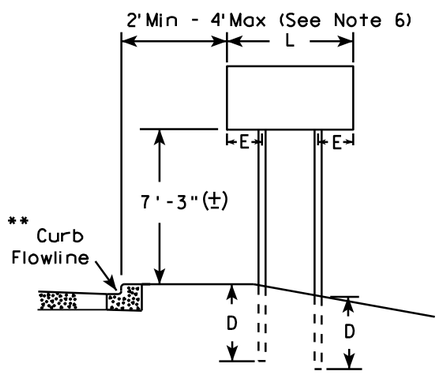

RURAL AREA (See Note 3)

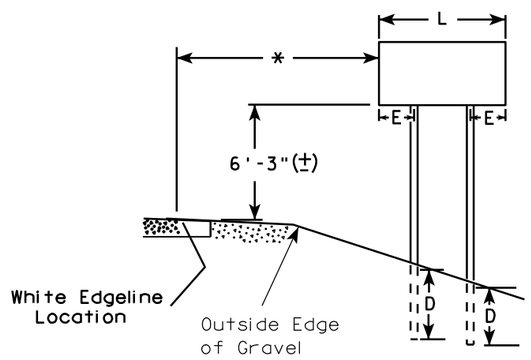

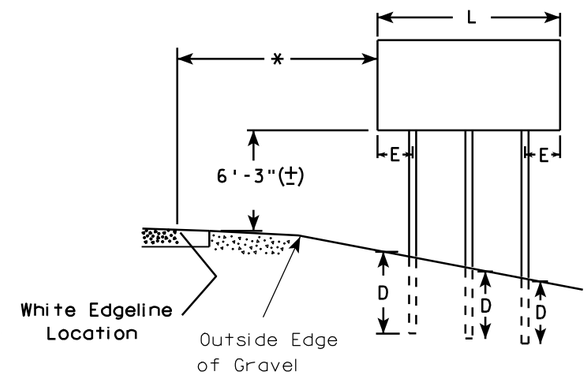

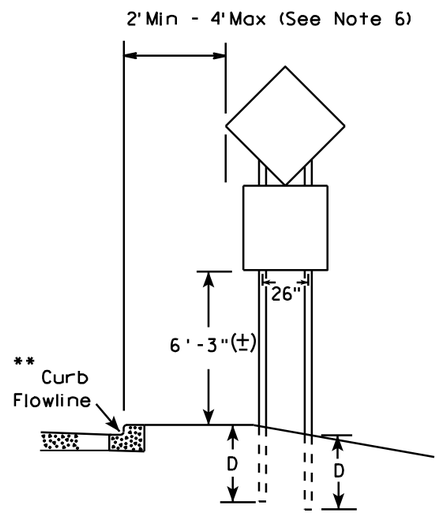

48" DIAMOND WARNING SIGN

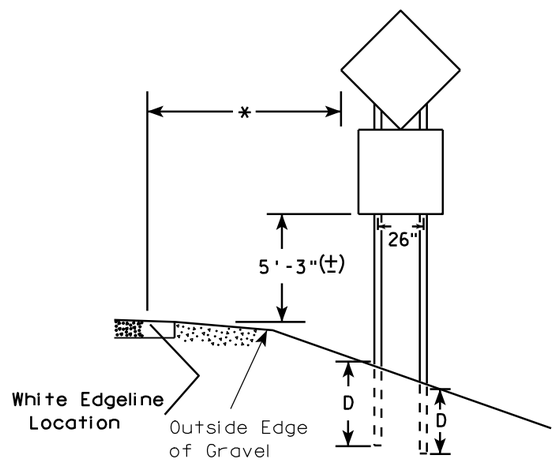

48" DIAMOND WARNING SIGN

GENERAL NOTES

1. For multiple post installations, individual post spacing shall be greater than 3'-6".
2. See tables below for required number of posts.
3. For expressways and freeways, mounting height is 7'-3" (±) or 6'-3" (±) depending upon existence of sub-sign.
4. The (±) tolerance for mounting height is 3 inches.
5. Minimum mounting height for J assemblies (A4-5) is 7'-3" (±) or 6'-3" (±) per urban or rural detail respectively.
6. Offset distance shall be consistent with existing signs or consistent throughout length of project.
7. Folding stop signs (R1-1F) shall be mounted at a height of 5'-3" (±) or as directed by the engineer.
8. The Double Arrow sign (W12-1) shall be mounted at a height of 2'-3" (±). The Chevron sign (W1-8), Roundabout Chevron panel (W1-8A), Clearance Markers (W5-52), Mile Markers (D10 series) & End of Road Markers (W5-56 & W5-56A) shall be mounted at a height of 4"-3" (±).

* 6 feet from edge of a paved shoulder or 12 feet from the edge of pavement (edge line location) or 2 feet from outside edge of gravel, whichever is greater unless directed by project engineer.

** The existence of curb and gutter does not in itself mandate the vertical clearance illustrated. That height is typically measured where there is sidewalk adjacent to the roadway or parking is permitted. In the absence of sidewalk vertical clearance is measured from the top of the curb. Offset of signs is measured from the flow line.

*** See A4-3 sign plate for signs 4' or less in width or 20 S.F. or less in area.

SIGN SHAPE OTHER THAN DIAMOND (TWO POSTS REQUIRED)	
L	E
*** Greater than 48" Less than 60"	12"
60" to 120"	L/5

SIGN SHAPE OTHER THAN DIAMOND (THREE POSTS REQUIRED)	
L	E
Greater than 120" less than 168"	12"

SIGN SHAPE OTHER THAN DIAMOND (FOUR POSTS REQUIRED)	
L	E
168" and greater	12"

POST EMBEDMENT DEPTH

Area of Sign Installation (Sq. Ft.)	D (Min)
20 or Less	4'
Greater than 20	5'

TYPICAL INSTALLATION OF TYPE II SIGNS ON MULTIPLE POSTS

WISCONSIN DEPT OF TRANSPORTATION

APPROVED Matthew R Rauch
for State Traffic Engineer

DATE 9/30/09 PLATE NO. A4-4.10

PROJECT NO:	HWY:	COUNTY:		SHEET NO: 161	E

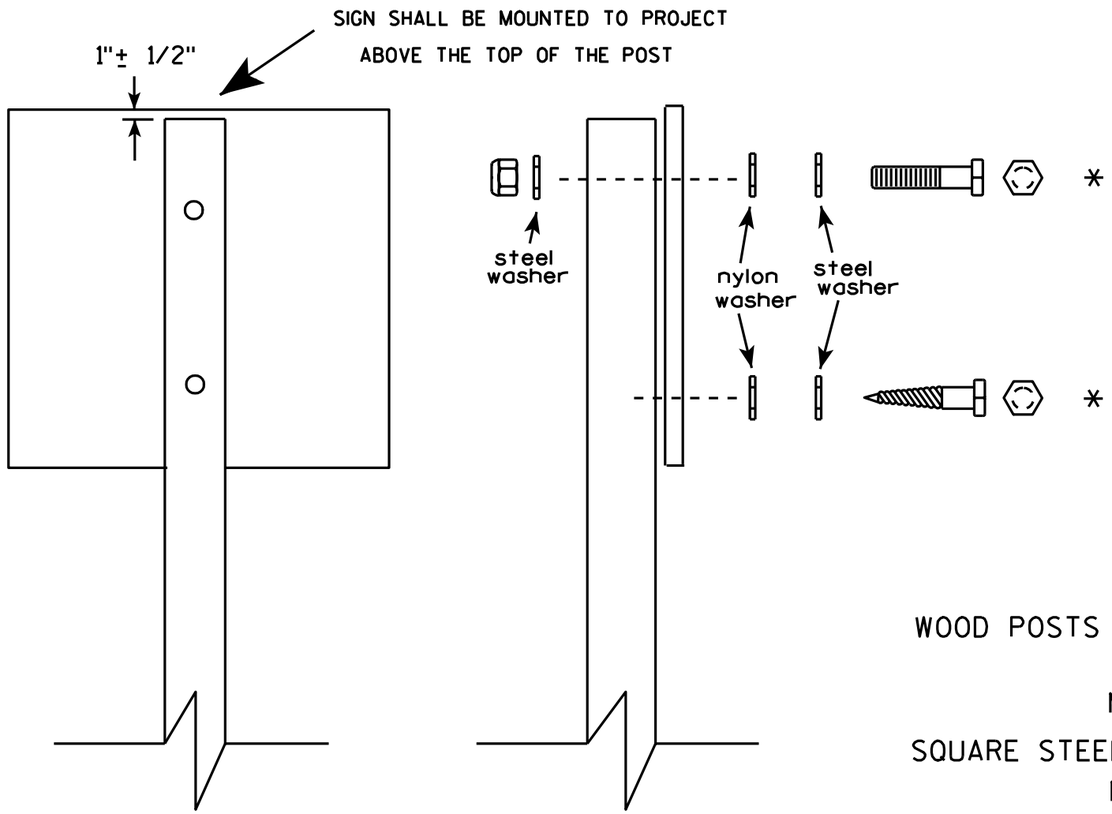

Nuts, bolts and lags used for mounting signs shall have hexagonal heads and shall be either :

a. Hot dip galvanized in accordance with ASTM Designation: A 153, Class D, or SC 3

b. Electro-galvanized in accordance with ASTM Designation : B 633, TYPE III, SC 3.

Threads on bolts and nuts shall be manufactured with sufficient allowance for the cadmium plate or galvanized coating to permit the nuts to run freely on the bolts.

WOOD POSTS (4" x 4" or 4" x 6")

LAG SCREWS - 3/8" X 3"

MACHINE BOLTS - 5/16" X 6-1/2" or 7" Length w/ nuts

SQUARE STEEL POSTS (2" x 2")

MACHINE BOLTS - 3/8" X 3-1/4" Length w/ nuts

RIVETS - 9/32 " (6605-9-6) BULB-TITE, TRI-FOLD, ALUMINUM BODY/MANDREL O.D. FLANGE .720-.765 INCH, GRIP RANGE .042-.375 INCH

WASHERS (ALL POSTS) -

1-1/4" O.D. X 3/8" I.D. X 1/16" STEEL

1-1/4" O.D. X 3/8" I.D. X .080 NYLON for all Type H signs.

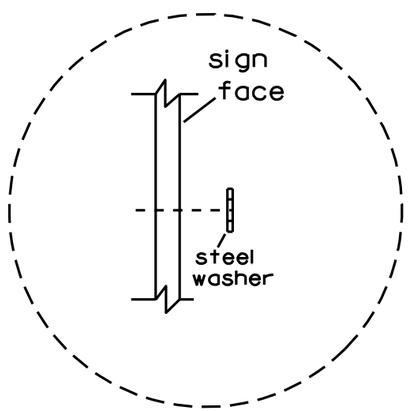

Washer Placement when Sign Has Other Than Type H or Type F Face

* Two different fastening systems are shown for illustration purposes. On any individual sign, either one or the other system shall be used. Actual number of fasteners per sign varies with the sign area, but normally there are two. For a single post installation, all signs greater than 9 sq. ft. require the use of 3 fasteners.

ATTACHMENT OF SIGNS TO POSTS

WISCONSIN DEPT OF TRANSPORTATION

APPROVED Matthew R Rauch
for State Traffic Engineer

DATE 3/23/10 PLATE NO. A4-8.7

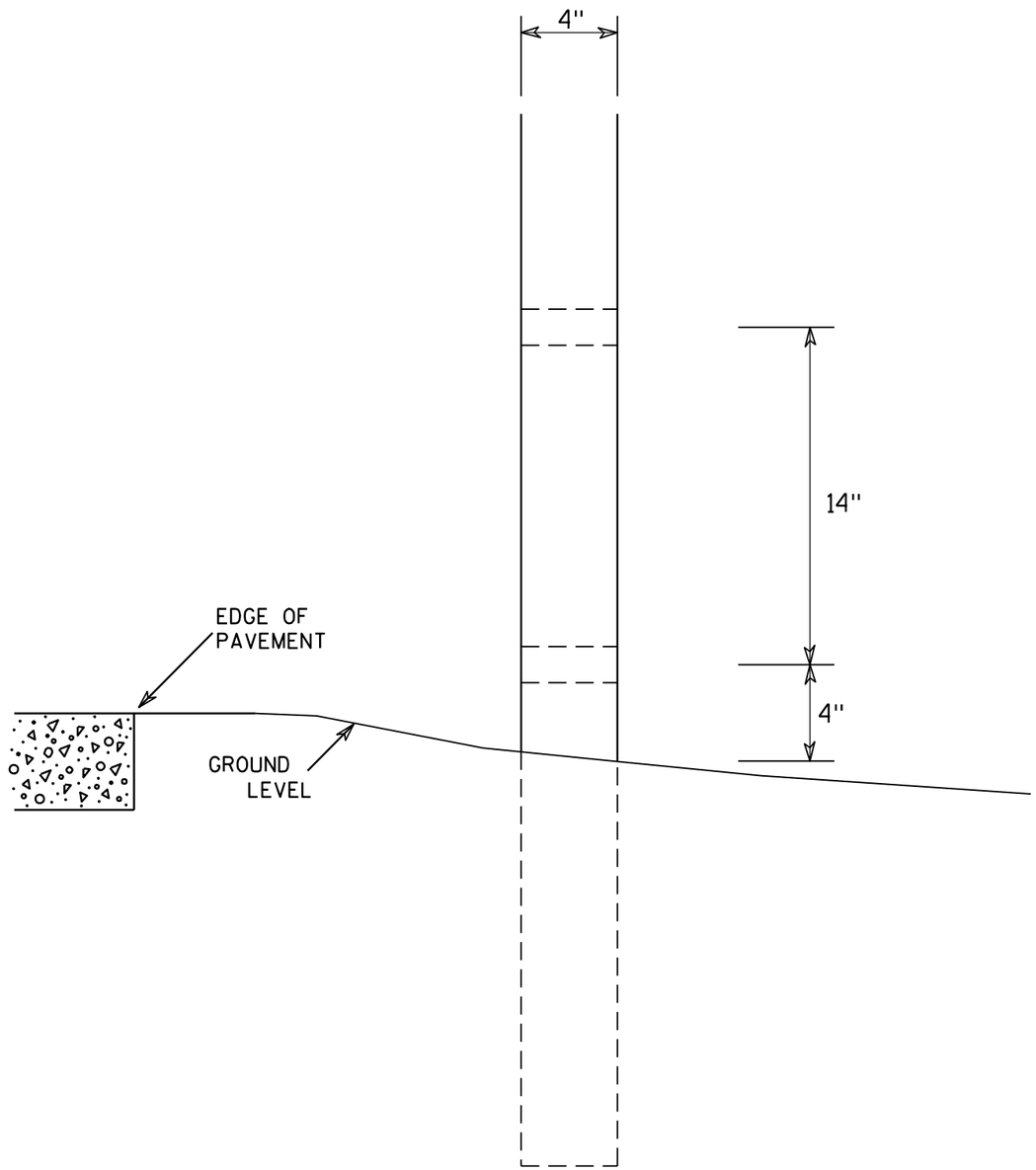

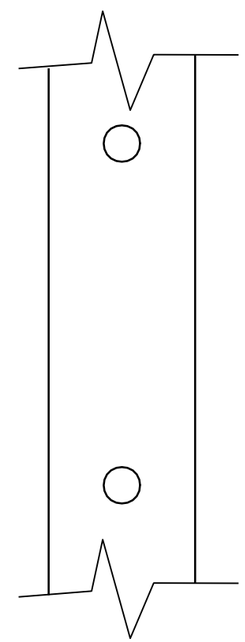

SIDE VIEW

GENERAL NOTES

1. All 4 x 6 Wood Posts shall be modified by having two 1½" diameter holes drilled perpendicular to the roadway centerline.

4 X 6 WOOD POST MODIFICATIONS

WISCONSIN DEPT OF TRANSPORTATION

APPROVED Chester J Spang for State Traffic Engineer

DATE 3/27/97 PLATE NO. A4-11.2

PROJECT NO:	HWY:	COUNTY:		SHEET NO: 163	E

BRACE BANDING

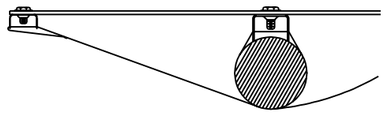

DETAIL C
CADMIUM PLATED STEEL BOLT
THROUGH BLACK BORDER

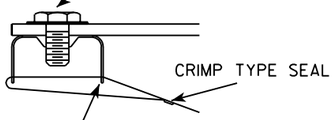

DETAIL C

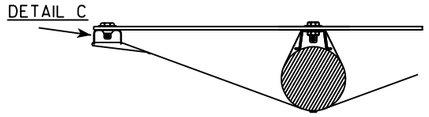

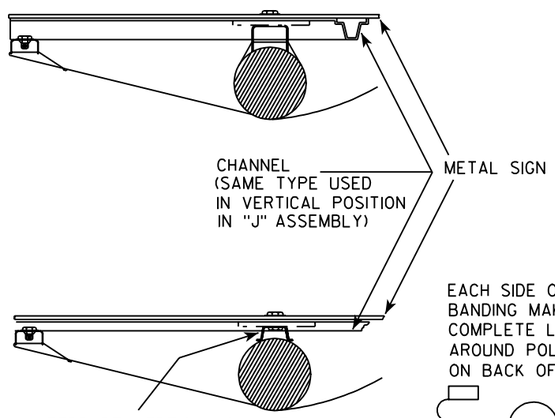

EACH SIDE OF BRACE
BANDING MAKES ONE
COMPLETE LOOP
AROUND POLE-SEAL
ON BACK OF POLE

BRACKET BANDING

SINGLE SIGN

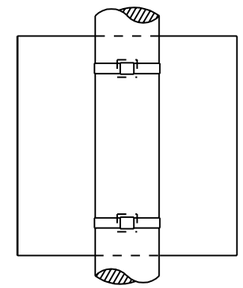

SEE DETAIL A

"J" ASSEMBLY

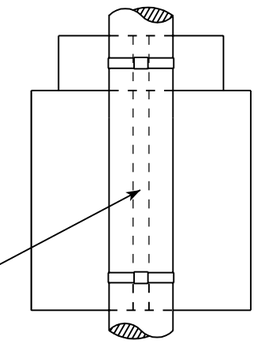

CHANNEL
SEE TYPICAL PANEL
INSTALLATION SHEET

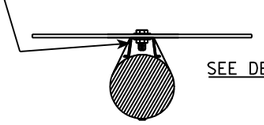

SEE DETAIL B

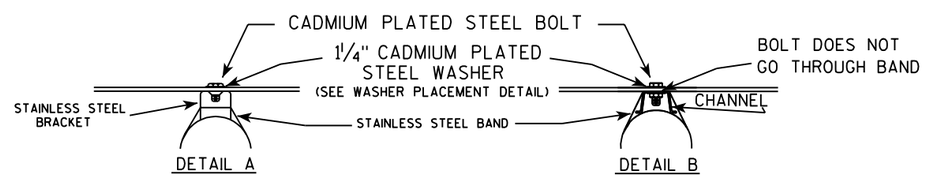

GENERAL NOTES

1. Signs 4' or greater in width shall have one brace band installed at the center of the sign.
2. Signs 3' or greater in height shall have three bracket bands installed. Signs less than 3' in height shall have two bracket bands installed.
3. Banding and assembly bracket shall be stainless steel. All bands shall be ¾" in width and 0.025" thickness.

WASHER PLACEMENT

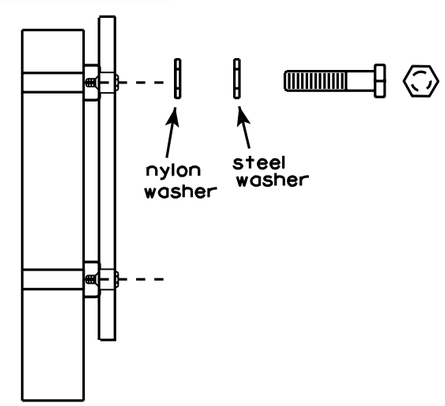

WASHERS (ALL POSTS) -
1-1/4" O.D. X 3/8" I.D. X 1/16" STEEL
1-1/4" O.D. X 3/8" I.D. X .080 NYLON
FOR ALL TYPE H SIGNS

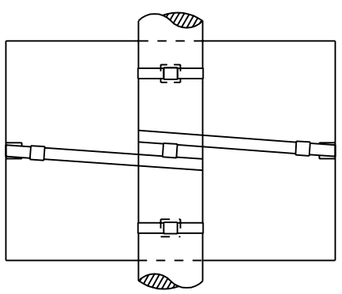

BRACE BANDING

BRACE BANDING SHALL BE TIGHTENED FIRMLY BUT NOT SO TIGHT AS TO APPRECIABLY CURVE FACE OF SIGN.

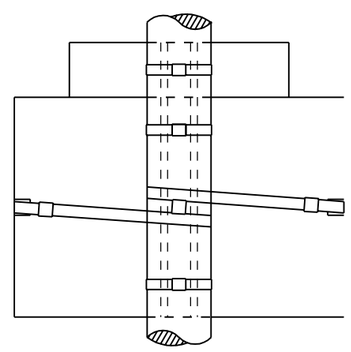

STANDARD SIGN
SIGN BANDING DETAILS

WISCONSIN DEPT OF TRANSPORTATION

APPROVED Matthew R Rauch
for State Traffic Engineer

DATE 11/08/05 PLATE NO. A5-9.2

PROJECT NO:	HWY:	COUNTY:		SHEET NO: 164	E

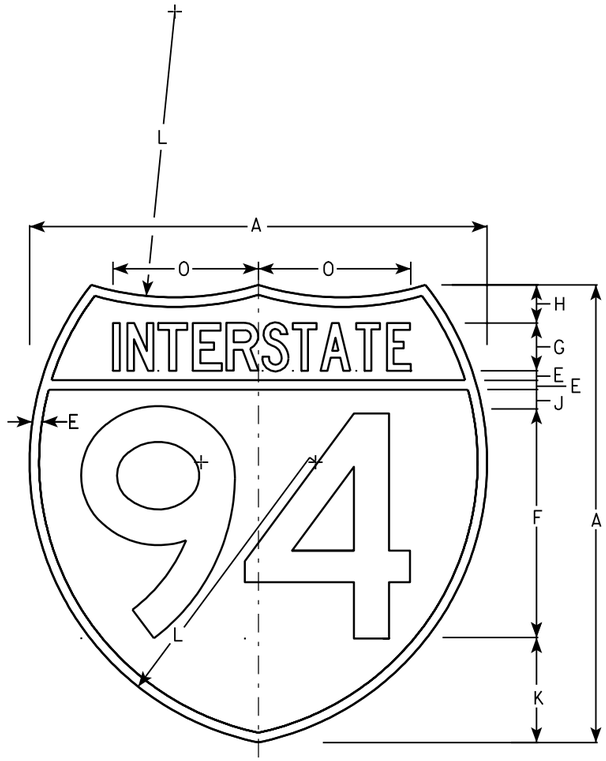

M1-1

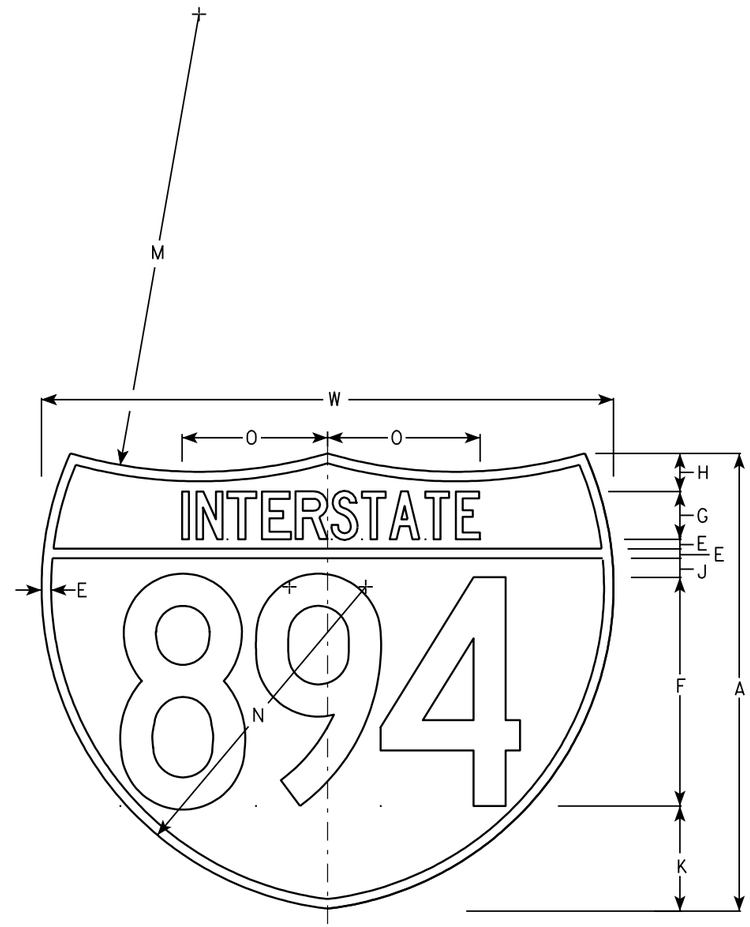

M1-1A

NOTES

1. Sign is Type II - See Note 6 - reference WIS DOT Standard Specification for HIGHWAY and STRUCTURE CONSTRUCTION latest edition.
2. Color:
   Background - Top Red - Bottom Blue (See Note 6)
   Message - White - See Note 6
3. Message Series - See note 5
4. Substitute appropriate numerals & ajust spacing as per plate A10-1.
5. M1-1 - Numerals - D
   Interstate - C
   M1-1A - All copy - C
6. Permanent Signs
   Message - Type H Reflective
   Detour or other temporary signs
   Background - Reflective
   Message - Reflective

7

Metric equivalent for these signs are:

SIZE	M1-1	SIZE	M1-1A
1			
2	600 mm X 600 mm	2	600 mm X 750 mm
3	900 mm X 900 mm	3	900 mm X 1125 mm
4	900 mm X 900 mm	4	900 mm X 1125 mm
5	900 mm X 900 mm	5	900 mm X 1125 mm

SIZE	A	B	C	D	E	F	G	H	I	J	K	L	M	N	O	P	Q	R	S	T	U	V	W	X	Y	M1-1 Area sq. ft.	M1-1A Area sq. ft.	M1-1 Area m2	M1-1A Area m2
1																													
2	24				1/2	12	2 1/2	2		1	5 1/2	15	24	17	7 7/8								30			3.13	3.91	.36	.46
3	36				3/4	18	3 3/4	3		1 1/2	8 1/4	22 1/2	36	25 1/2	11 3/4								45			7.03	8.79	.81	1.05
4	36				3/4	18	3 3/4	3		1 1/2	8 1/4	22 1/2	36	25 1/2	11 3/4								45			7.03	8.79	.81	1.05
5	36				3/4	18	3 3/4	3		1 1/2	8 1/4	22 1/2	36	25 1/2	11 3/4								45			7.03	8.79	.81	1.05

INTERSTATE ROUTE MARKER
M1-1 FOR ASSEMBLIES

WISCONSIN DEPT OF TRANSPORTATION

APPROVED Matthew R Rauch
for State Traffic Engineer

DATE 08/23/05 PLATE NO. M1-1.8

PROJECT NO:	HWY:	COUNTY:		SHEET NO: 165	E

NOTES

1. Sign is Type II - See Note 6 - reference WIS DOT Standard Specification for HIGHWAY and STRUCTURE CONSTRUCTION latest edition.
2. Color:
   Background - White & Black - See Note 6
   Message - Black
3. Message Series - See note 5
4. Corners may be square or rounded when base material is plywood but borders shall be rounded as shown. When base material is metal, the corners and borders shall be rounded.
5. Substitute appropriate numerals and adjust spacing as per Plate A10-1.
6. Permanent Signs
   Background - Type H Reflective
   Detour or other temporary signs
   Background - Reflective

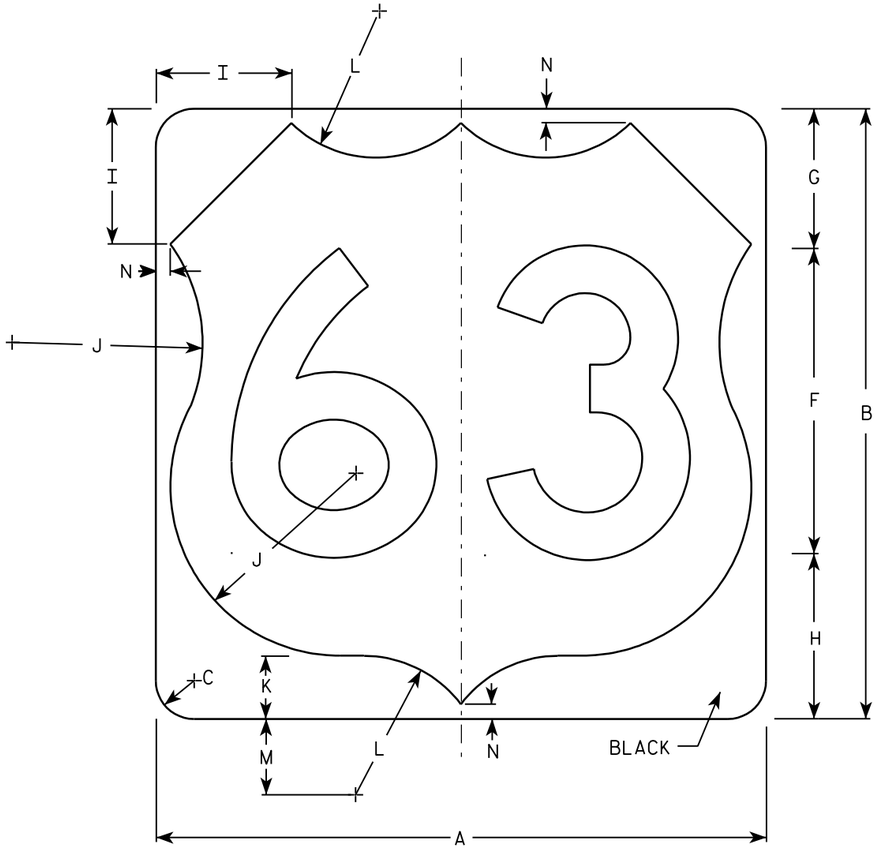

M1-4

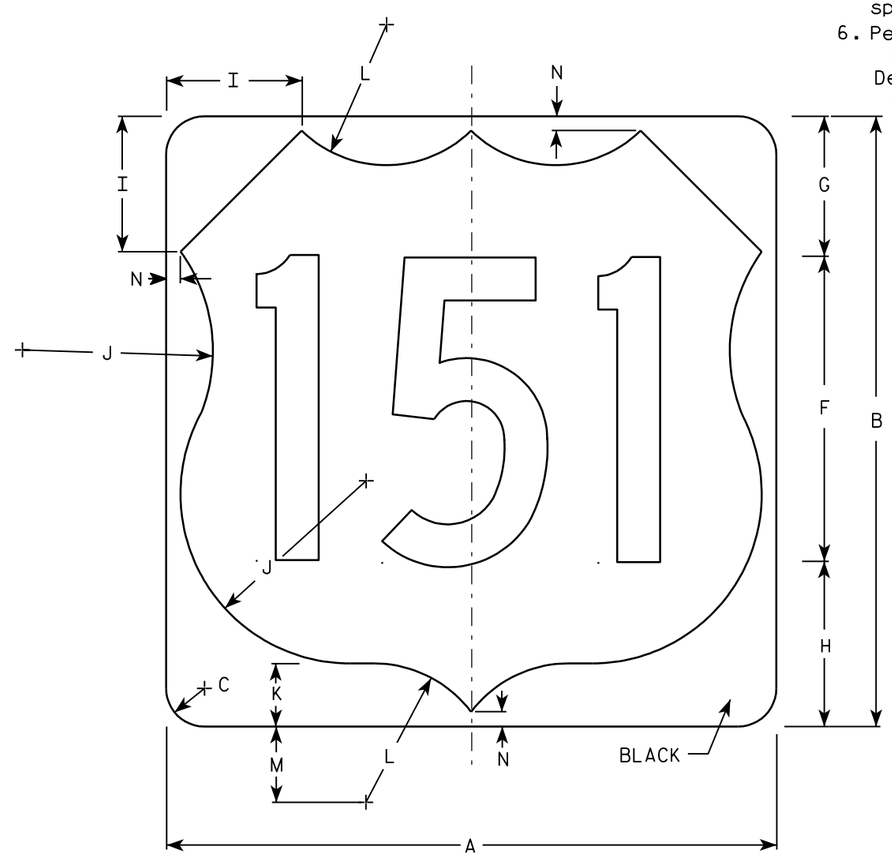

M1-4

Metric equivalent for this sign is:

SIZE	
1	
2	600 mm X 600 mm
3	900 mm X 900 mm
4	900 mm X 900 mm
5	900 mm X 900 mm

SIZE	A	B	C	D	E	F	G	H	I	J	K	L	M	N	O	P	Q	R	S	T	U	V	W	X	Y	Z	Area sq. ft.	Area m2
1																												
2	24	24	1 1/2			12	5 1/2	6 1/2	5	7 1/2	2 1/2	5 1/2	3	1/2													4.0	.36
3	36	36	2 1/4			18	8 1/4	9 1/4	7 1/4	11 1/4	3 3/4	8 1/4	4 1/2	3/4													9.0	.81
4	36	36	2 1/4			18	8 1/4	9 1/4	7 1/4	11 1/4	3 3/4	8 1/4	4 1/2	3/4													9.0	.81
5	36	36	2 1/4			18	8 1/4	9 1/4	7 1/4	11 1/4	3 3/4	8 1/4	4 1/2	3/4													9.0	.81

USH MARKER
M1-4 FOR ASSEMBLIES

WISCONSIN DEPT OF TRANSPORTATION

APPROVED Matthew R Rauch
for State Traffic Engineer

DATE 08/25/05 PLATE NO. M1-4.9

PROJECT NO: | HWY: | COUNTY: | SHEET NO: 166 | E

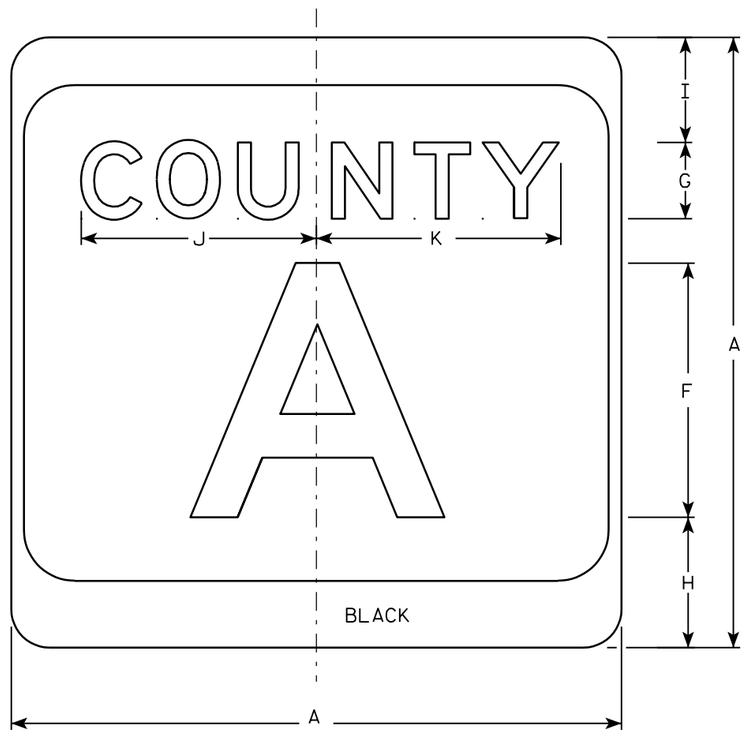

M1-5A

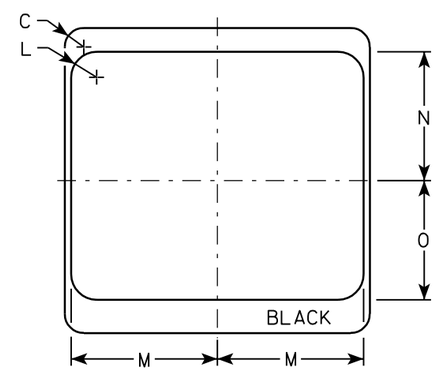

NOTES

1. Sign is Type II - see Note 7 - reference WIS DOT Standard Specification for HIGHWAY and STRUCTURE CONSTRUCTION latest edition.
2. Color:
   Background - White & Black - See Note 7
   Message - Black
3. Message Series - see Note 5
4. Corners may be square or rounded when base material is plywood but borders shall be rounded as shown. When base material is metal, the corners and borders shall be rounded.
5. Message Series E for 1 letter.
   Message Series D for 2 letters unless message is too big then Series C.
   Message Series C for 3 letters unless message is too big then Series B.
6. Substitute appropirate letters & optically adjust spacing to achieve proper balance.
7. Permanent Signs
   Background - Type H Reflective
   Detour or temporary Signs
   Background - Reflective

7

Metric equivalent for this sign is:

SIZE	
1	
2	600 mm X 600 mm
3	900 mm X 900 mm
4	900 mm X 900 mm
5	900 mm X 900 mm

SIZE	A	B	C	D	E	F	G	H	I	J	K	L	M	N	O	P	Q	R	S	T	U	V	W	X	Y	Z	Area sq. ft.	Area m2
1																												
2	24		1 1/2			10	3	5 1/8	4 1/8	9 1/4	9 5/8	2	11 1/2	10 1/8	9 3/8												4.0	.36
3	36		2 1/4			16	4	7 5/8	5 5/8	12 1/4	12 7/8	3	17 1/8	15 1/4	14												9.0	.81
4	36		2 1/4			16	4	7 5/8	5 5/8	12 1/4	12 7/8	3	17 1/8	15 1/4	14												9.0	.81
5	36		2 1/4			16	4	7 5/8	5 5/8	12 1/4	12 7/8	3	17 1/8	15 1/4	14												9.0	.81

CTH MARKER
M1-5A FOR ASSEMBLIES

WISCONSIN DEPT OF TRANSPORTATION

APPROVED Chester J Spagg for State Traffic Engineer

DATE 3/20/02 PLATE NO. M1-5A.7

PROJECT NO:	HWY:	COUNTY:		SHEET NO: 167	E

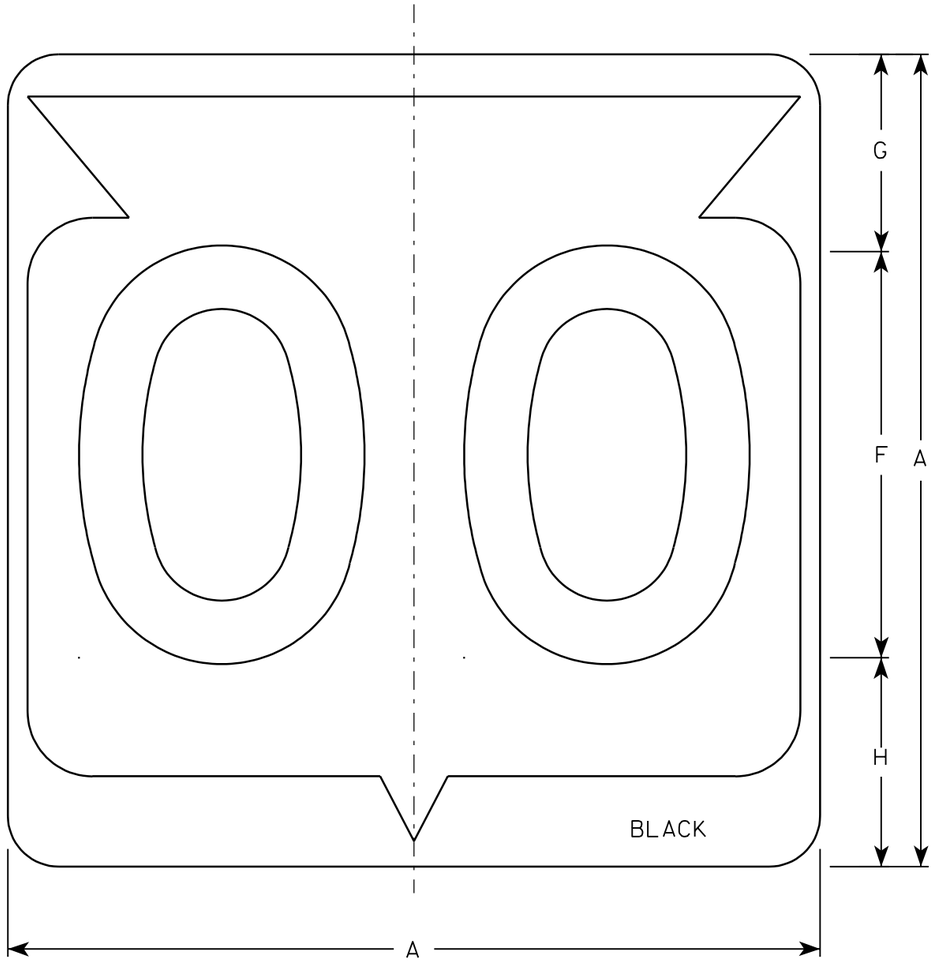

M1-6

NOTES

1. Sign is Type II - See Note 6 - reference WIS DOT Standard Specification for HIGHWAY and STRUCTURE CONSTRUCTION latest edition.
2. Color:
   Background - White & Black - See Note 6
   Message - Black
3. Message Series - See note 5
4. Corners may be square or rounded when base material is plywood but borders shall be rounded as shown. When base material is metal, the corners and borders shall be rounded.
5. Substitute appropriate Series numerals and adjust spacing as per plate A10-1.
6. Permanent Signs
   Background - Type H Reflective
   Detour or temporary Signs
   Background - Reflective

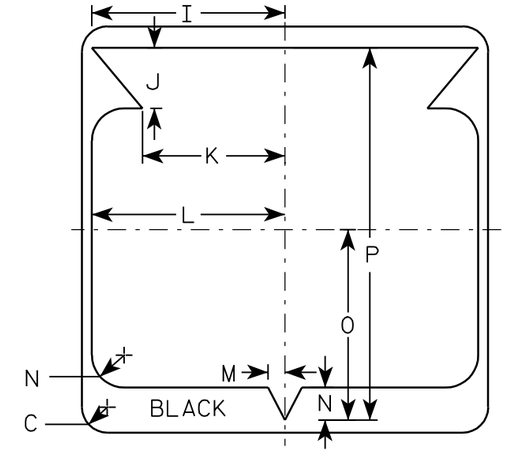

Metric equivalent for this sign is:

SIZE	
1	
2	600 mm X 600 mm
3	900 mm X 900 mm
4	900 mm X 900 mm
5	900 mm X 900 mm

SIZE	A	B	C	D	E	F	G	H	I	J	K	L	M	N	O	P	Q	R	S	T	U	V	W	X	Y	Z	Area sq. ft.	Area m2
1																												
2	24		1 1/2			12	5 1/2	6 1/2	10 1/4	2 1/2	8 7/8	11 1/2	1	1 7/8	11 1/4	21 7/8											4.0	.36
3	36		2 1/4			18	8 3/4	9 1/4	15 3/8	5 3/8	12 5/8	17 1/8	1 1/2	2 7/8	16 7/8	33											9.0	.81
4	36		2 1/4			18	8 3/4	9 1/4	15 3/8	5 3/8	12 5/8	17 1/8	1 1/2	2 7/8	16 7/8	33											9.0	.81
5	36		2 1/4			18	8 3/4	9 1/4	15 3/8	5 3/8	12 5/8	17 1/8	1 1/2	2 7/8	16 7/8	33											9.0	.81

STATE ROUTE MARKER
M1-6 FOR ASSEMBLIES

WISCONSIN DEPT OF TRANSPORTATION

APPROVED Chester J Spang
for State Traffic Engineer

DATE 3/20/02 PLATE NO. M1-6.9

PROJECT NO: | HWY: | COUNTY: | SHEET NO: 168 | E

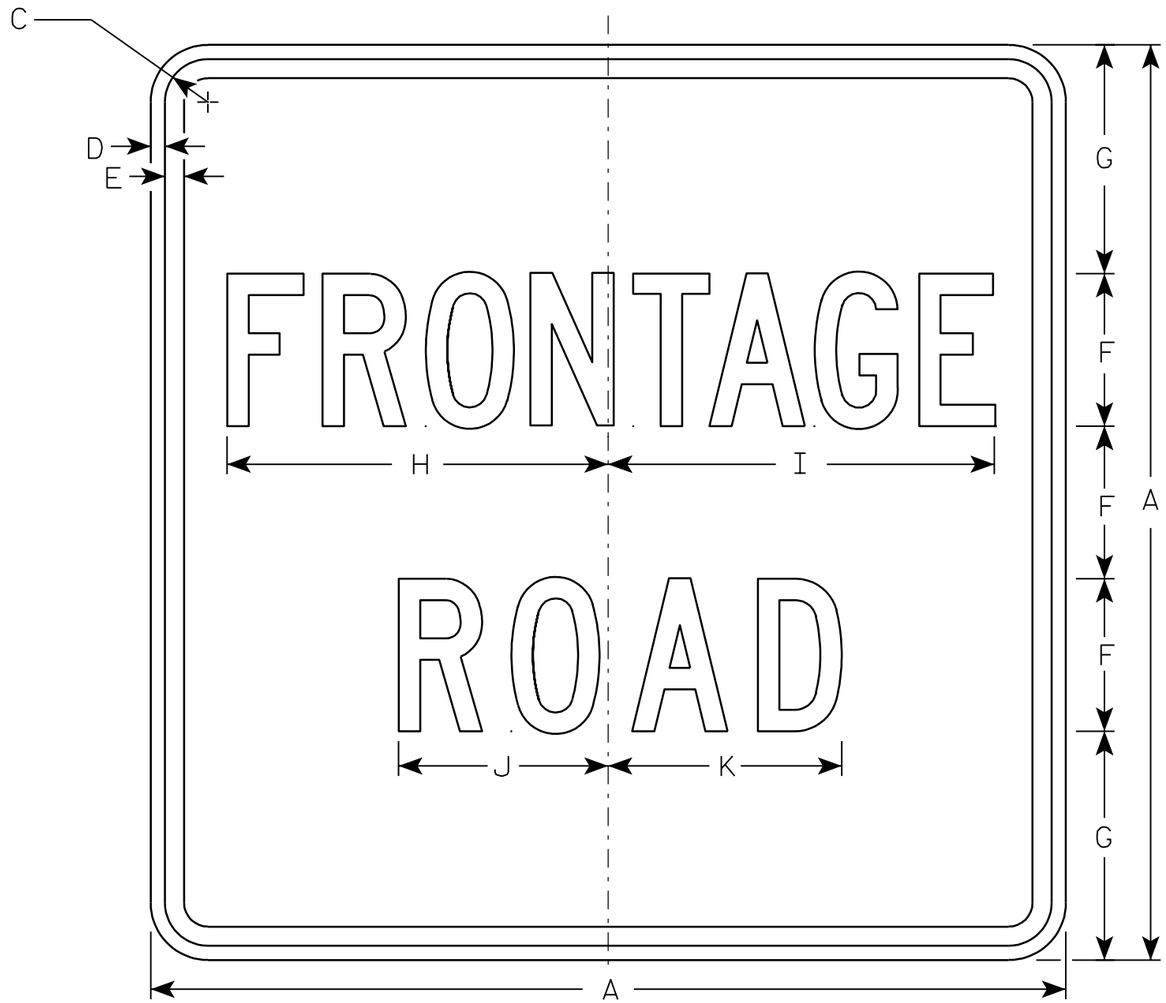

M1-95

NOTES

1. Sign is Type II - Type H Reflective - reference WIS DOT Standard Specification for HIGHWAY and STRUCTURE CONSTRUCTION latest edition.
2. Color:
   Background - White
   Message - Black
3. Message Series - C
4. Corners may be square or rounded when base material is plywood but borders shall be rounded as shown. When base material is metal, the corners and borders shall be rounded.

7

Metric equivalent for this sign is:

SIZE	
1	600 mm X 600 mm
2	600 mm X 600 mm
3	
4	900 mm X 900 mm
5	

SIZE	A	B	C	D	E	F	G	H	I	J	K	L	M	N	O	P	Q	R	S	T	U	V	W	X	Y	Z	Area sq. ft.	Area m2
1	24		1 1/8	3/8	1/2	4	6	10	10 1/8	5 1/2	6 1/8																4.0	0.36
2	24		1 1/8	3/8	1/2	4	6	10	10 1/8	5 1/2	6 1/8																4.0	0.36
3																												
4	36		1 3/8	1/2	5/8	6	9	15	15 1/4	8 1/4	9 1/8																9.0	0.81
5																												

STANDARD SIGN
M1-95

WISCONSIN DEPT OF TRANSPORTATION

APPROVED Chester J Spange for State Traffic Engineer

DATE 1/30/02 PLATE NO. M1-95.6

PROJECT NO:	HWY:	COUNTY:		SHEET NO: 169	E

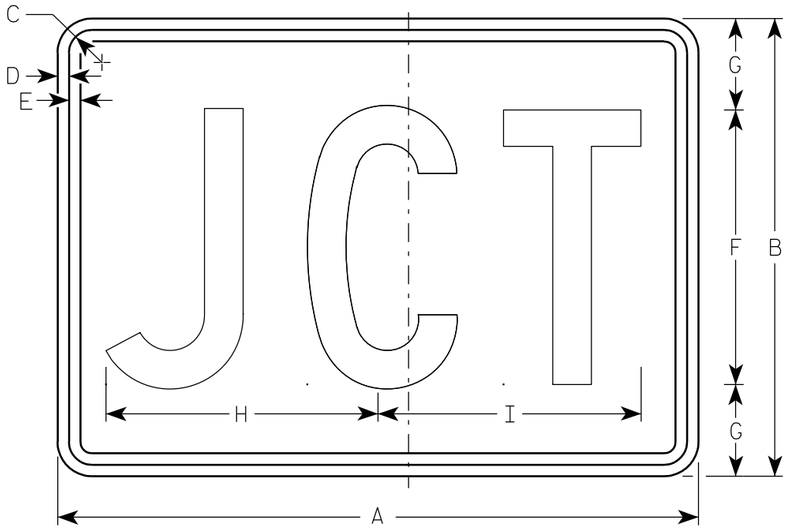

M2-1
MK2-1
MM2-1
MR2-1

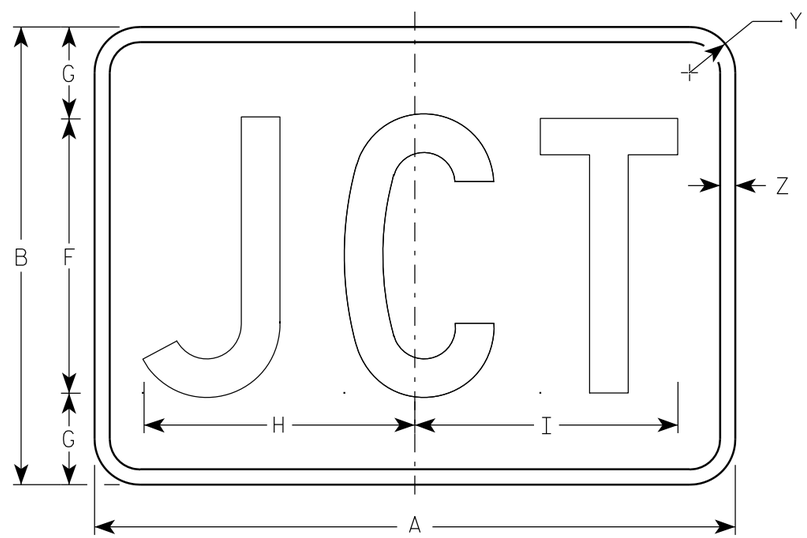

MB2-1
MG2-1
MN2-1

NOTES

1. Sign is Type II - See Note 5 - reference WIS DOT Standard Specification for HIGHWAY and STRUCTURE CONSTRUCTION latest edition.
2. Color:
   Background - See note 5
   Message - See note 5
3. Message Series - C
4. Corners may be square or rounded when base material is plywood but borders shall be rounded as shown. When base material is metal, the corners and borders shall be rounded.
5. M2-1 Background - White - Type H Reflective
   (Detour or temporary Signs - Reflective)
   Message - Black
   MB2-1 Background - Blue
   Message - White - Type H Reflective
   (Detour or temporary Signs - Reflective)
   MG2-1 Background - Green
   Message - White - Type H Reflective
   MK2-1 Background - Green
   Message - White - Type H Reflective
   MM2-1 Background - White - Type H Reflective
   Message - Green
   MN2-1 Background - Brown
   Message - White - Type H Reflective
   MR2-1 Background - Brown
   Message - Yellow - Type H Reflective

7

7

Metric equivalent for this sign is:

SIZE	
1	
2	525 mm X 375 mm
3	750 mm X 525 mm
4	750 mm X 525 mm
5	750 mm X 525 mm

SIZE	A	B	C	D	E	F	G	H	I	J	K	L	M	N	O	P	Q	R	S	T	U	V	W	X	Y	Z	Area sq. ft.	Area m2
1																												
2	21	15	1 1/8	3/8	3/8	9	3	8 7/8	8 5/8																1 1/2	1/2	2.20	0.20
3	30	21	1 1/8	3/8	3/8	13	4	12 7/8	12 3/8																1 1/2	1/2	4.40	0.20
4	30	21	1 1/8	3/8	3/8	13	4	12 7/8	12 3/8																1 1/2	1/2	4.40	0.20
5	30	21	1 1/8	3/8	3/8	13	4	12 7/8	12 3/8																1 1/2	1/2	4.40	0.20

STANDARD SIGN
M2-1

WISCONSIN DEPT OF TRANSPORTATION

APPROVED Matthew R Rauch
for State Traffic Engineer

DATE 3/16/10 PLATE NO. M2-1.10

PROJECT NO: | HWY: | COUNTY: | SHEET NO: 170 | E

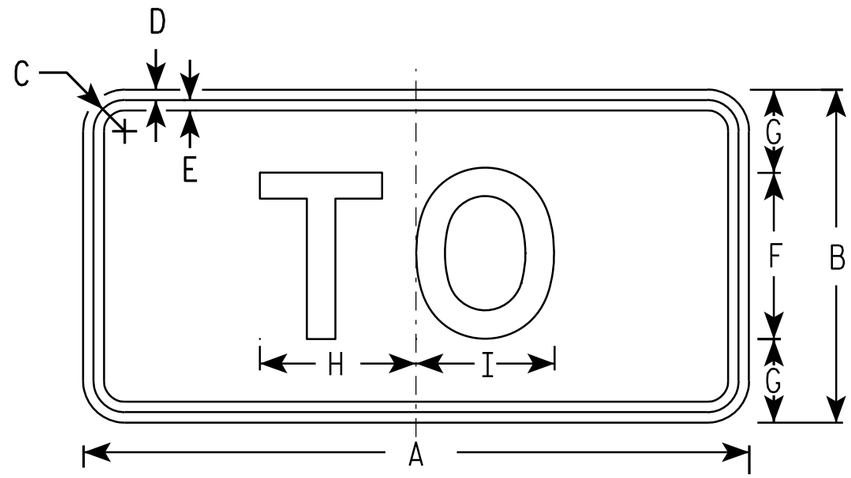

M4-5
MK4-5
MM4-5

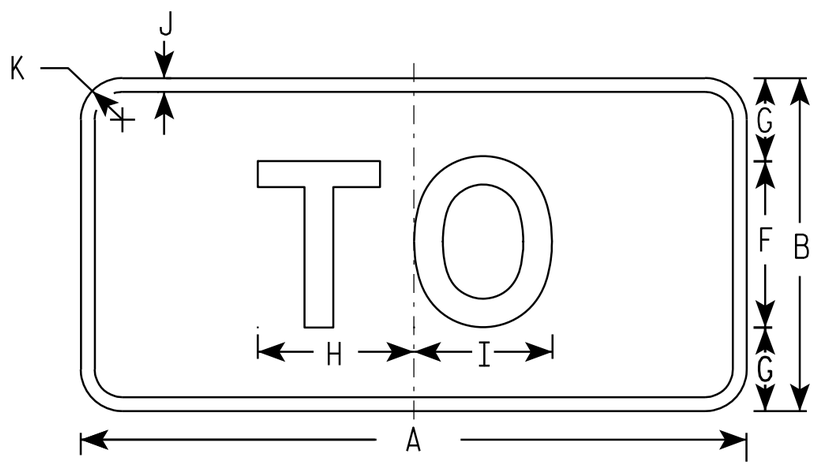

MB4-5
MG4-5
MN4-5

NOTES

1. Sign is Type II - See Note 5 - reference WIS DOT Standard Specification for HIGHWAY and STRUCTURE CONSTRUCTION latest edition.
2. Color:
   Background - See note 5
   Message - See note 5
3. Message Series - D
4. Corners may be square or rounded when base material is plywood but borders shall be rounded as shown. When base material is metal, the corners and borders shall be rounded.
5. M4-5 Background - White - Type H Reflective (Detour or temporary Signs - Reflective)
   Message - Black
   MB4-5 Background - Blue
   Message - White - Type H Reflective (Detour or temporary Signs - Reflective)
   MG4-5 Background - Green
   Message - White - Type H Reflective
   MK4-5 Background - Green
   Message - White - Type H Reflective
   MM4-5 Background - White - Type H Reflective
   Message - Green
   MN4-5 Background - Brown
   Message - White - Type H Reflective

7

7

Metric equivalent for this sign is:

SIZE	
1	
2	600 mm X 300 mm
3	750 mm X 375 mm
4	750 mm X 375 mm
5	750 mm X 375 mm

SIZE	A	B	C	D	E	F	G	H	I	J	K	L	M	N	O	P	Q	R	S	T	U	V	W	X	Y	Z	Area sq. ft.	Area m2
1																												
2	24	12	1 1/8	3/8	3/8	6	3	5 5/8	5	1/2	1 1/2																2.00	0.18
3	30	15	1 3/8	3/8	1/2	8	3 1/2	7 1/2	6 5/8	1/2	1 1/2																3.13	0.28
4	30	15	1 3/8	3/8	1/2	8	3 1/2	7 1/2	6 5/8	1/2	1 1/2																3.13	0.28
5	30	15	1 3/8	3/8	1/2	8	3 1/2	7 1/2	6 5/8	1/2	1 1/2																3.13	0.28

STANDARD SIGN
M4-5

WISCONSIN DEPT OF TRANSPORTATION

APPROVED Matthew R Rauch
for State Traffic Engineer

DATE 3/16/10 PLATE NO. M4-5.5

PROJECT NO: | HWY: | COUNTY: | SHEET NO: 171 | E

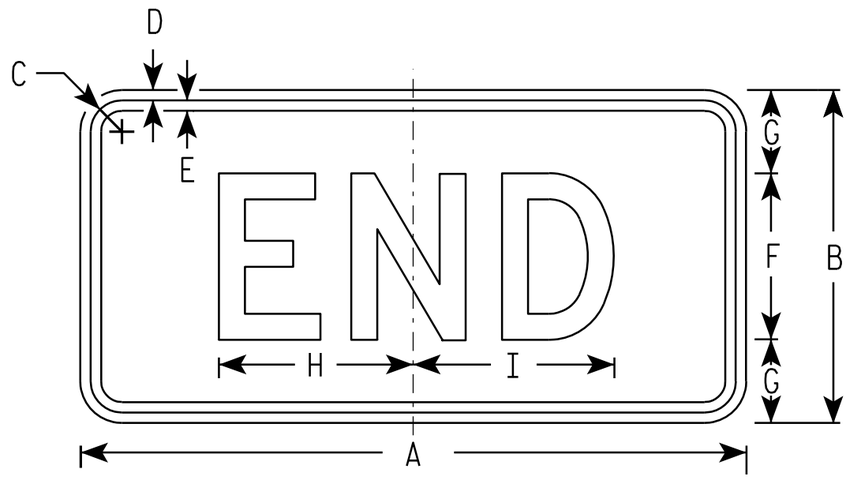

M4-6
MK4-6
MM4-6
MR4-6

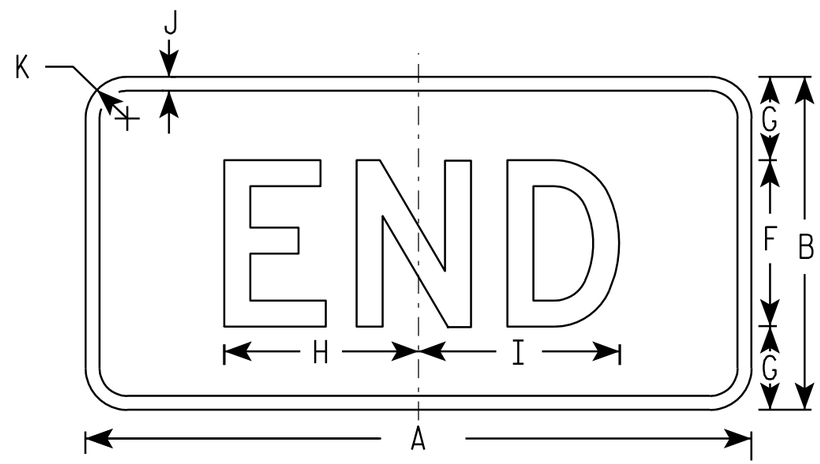

MB4-6
MG4-6
MN4-6

NOTES

1. Sign is Type II - See Note 5 - reference WIS DOT Standard Specification for HIGHWAY and STRUCTURE CONSTRUCTION latest edition.
2. Color:
   Background - See note 5
   Message - See note 5
3. Message Series - D
4. Corners may be square or rounded when base material is plywood but borders shall be rounded as shown. When base material is metal, the corners and borders shall be rounded.
5. M4-6 Background - White - Type H Reflective
   (Detour or temporary Signs - Reflective)
   Message - Black

   MB4-6 Background - Blue
   Message - White - Type H Reflective
   (Detour or temporary Signs - Reflective)

   MG4-6 Background - Green
   Message - White - Type H Reflective

   MK4-6 Background - Green
   Message - White - Type H Reflective

   MM4-6 Background - White - Type H Reflective
   Message - Green

   MN4-6 Background - Brown
   Message - White - Type H Reflective

   MR4-6 Background - Brown
   Message - Yellow - Type H Reflective

7

Metric equivalent for this sign is:

SIZE	
1	
2	600 mm X 300 mm
3	750 mm X 375 mm
4	750 mm X 375 mm
5	750 mm X 375 mm

SIZE	A	B	C	D	E	F	G	H	I	J	K	L	M	N	O	P	Q	R	S	T	U	V	W	X	Y	Z	Area sq. ft.	Area m2
1																												
2	24	12	1 1/8	3/8	3/8	6	3	7	7 1/4	1/2	1 1/2																2.00	0.18
3	30	15	1 1/8	3/8	1/2	8	3 1/2	9 1/4	9 3/4	1/2	1 1/2																3.13	0.28
4	30	15	1 1/8	3/8	1/2	8	3 1/2	9 1/4	9 3/4	1/2	1 1/2																3.13	0.28
5	30	15	1 1/8	3/8	1/2	8	3 1/2	9 1/4	9 3/4	1/2	1 1/2																3.13	0.28

STANDARD SIGN
M4-6

WISCONSIN DEPT OF TRANSPORTATION

APPROVED Matthew R Rauch
for State Traffic Engineer

DATE 3/16/10 PLATE NO. M4-6.6

PROJECT NO:	HWY:	COUNTY:		SHEET NO: 172	E

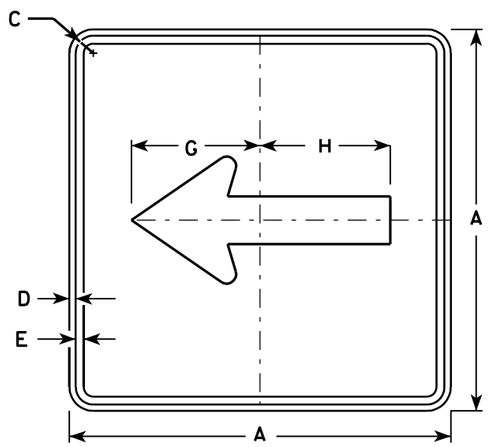

M6-1
MK6-1
MM6-1
MO6-1
MR6-1

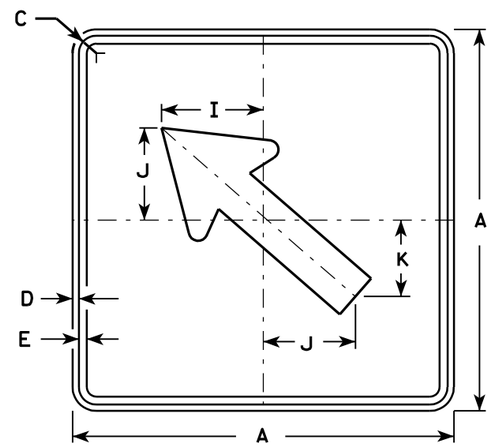

M6-2
MK6-2
MM6-2
MO6-2
MR6-2

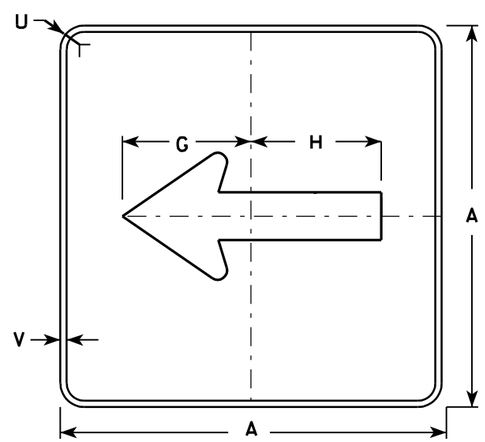

MB6-1
MG6-1
MN6-1

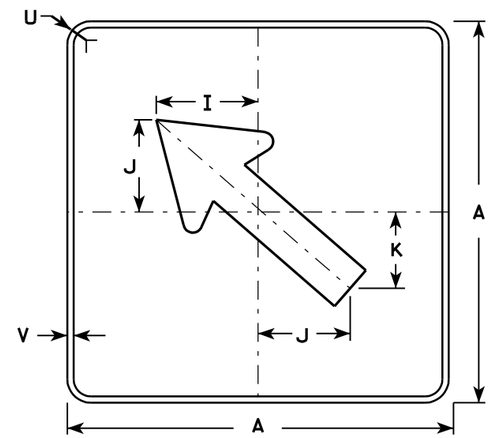

MB6-2
MG6-2
MN6-2

NOTES

1. Signs are Type II - See Note 4 - reference WIS DOT Standard Specification for HIGHWAY and STRUCTURE CONSTRUCTION latest edition.
2. Color:
   Background - See note 4
   Message - See note 4
3. Corners may be square or rounded when base material is plywood but borders shall be rounded as shown. When base material is metal, the corners and borders shall be rounded.
4. M6-1 and M6-2 Background - White - Type H Reflective
   (Detour or temporary Signs - Reflective)
   Message - Black
   MB6-1 and MB6-2 Background - Blue
   Message - White - Type H Reflective
   (Detour or temporary Signs - Reflective)
   MG6-1 and MG6-2 Background - Green
   Message - White - Type H Reflective
   MK6-1 and MK6-2 Background - Green
   Message - White - Type H Reflective
   MM6-1 and MM6-2 Background - White - Type H Reflective
   Message - Green
   MN6-1 and MN6-2 Background - Brown
   Message - White - Type H Reflective
   MO6-1 and MO6-2 Background - Orange - Reflective
   Message - Black
   MR6-1 and MR6-2 Background - Brown
   Message - Yellow - Type H Reflective

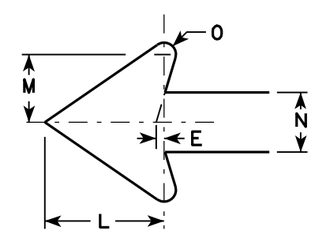

Metric equivalent for this sign is:

SIZE	
1	
2	525 mm X 525 mm
3	750 mm X 750 mm
4	750 mm X 750 mm
5	750 mm X 750 mm

SIZE	A	B	C	D	E	F	G	H	I	J	K	L	M	N	O	P	Q	R	S	T	U	V	W	X	Y	Z	Area sq. ft.	Area m2
1																												
2	21		1 1/8	3/8	3/8		7 1/2	7 1/8	5 5/8	5	4 1/4	5 1/4	3	2 5/8	1/2						1 1/2	1/2					3.06	0.28
3	30		1 3/8	1/2	5/8		10 3/4	10 1/4	8	7 1/4	6	7 1/2	4 1/4	3 3/4	3/4						1 7/8	1/2					6.25	0.56
4	30		1 3/8	1/2	5/8		10 3/4	10 1/4	8	7 1/4	6	7 1/2	4 1/4	3 3/4	3/4						1 7/8	1/2					6.25	0.56
5	30		1 3/8	1/2	5/8		10 3/4	10 1/4	8	7 1/4	6	7 1/2	4 1/4	3 3/4	3/4						1 7/8	1/2					6.25	0.56

STANDARD SIGN
M6-1 & M6-2
SERIES

WISCONSIN DEPT OF TRANSPORTATION

APPROVED Matthew R Rauch
for State Traffic Engineer

DATE 3/16/10 PLATE NO. M6-1.12

PROJECT NO:	HWY:	COUNTY:		SHEET NO: 173	E

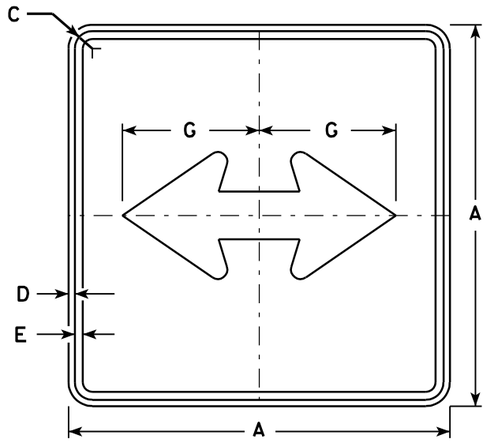

M6-4
MK6-4
MM6-4
MO6-4
MR6-4

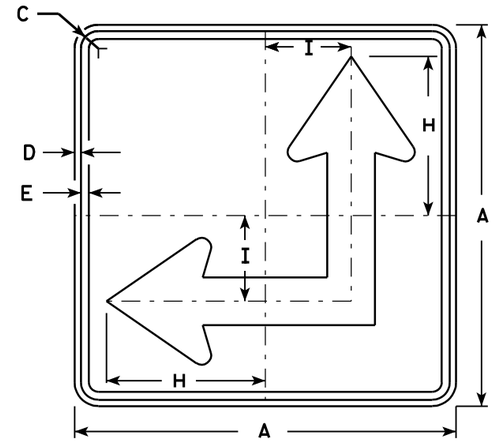

M6-6
MK6-6
MM6-6
MO6-6
MR6-6

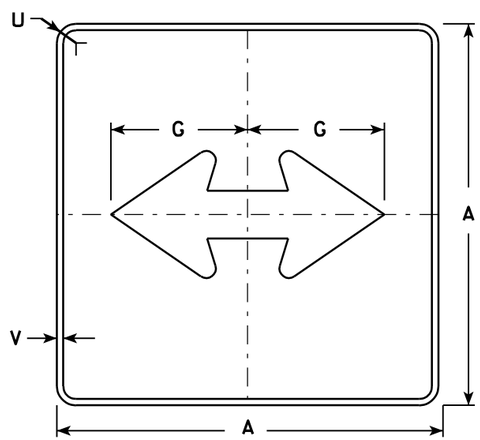

MB6-4
MG6-4
MN6-4

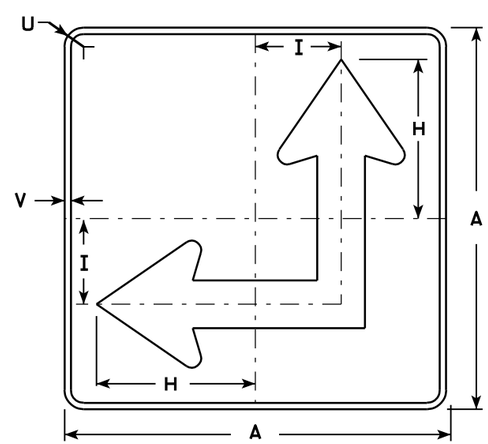

MB6-6
MG6-6
MN6-6

NOTES

1. Signs are Type II - See Note 4 - reference WIS DOT Standard Specification for HIGHWAY and STRUCTURE CONSTRUCTION latest edition.
2. Color:
   Background - See Note 4
   Message - See Note 4
3. Corners may be square or rounded when base material is plywood but borders shall be rounded as shown. When base material is metal, the corners and borders shall be rounded.
4. M6-4 and M6-6 Background - White - Type H Reflective (Detour or temporary Signs - Reflective)
   Message - Black
   MB6-4 and MB6-6 Background - Blue
   Message - White - Type H Reflective (Detour or temporary Signs - Reflective)
   MG6-4 and MG6-6 Background - Green
   Message - White - Type H Reflective
   MK6-4 and MK6-6 Background - Green
   Message - White - Type H Reflective
   MM6-4 and MM6-6 Background - White - Type H Reflective
   Message - Green
   MN6-4 and MN6-6 Background - Brown
   Message - White - Type H Reflective
   MO6-4 and MO6-6 Background - Orange - Reflective
   Message - Black
   MR6-4 and MR6-6 Background - Brown
   Message - Yellow - Type H Reflective
5. M6-6R same as M6-6L except arrow points ahead and right.

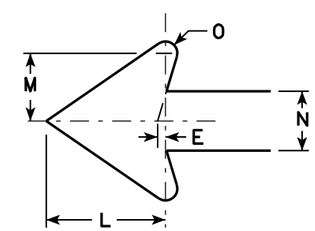

Metric equivalent for this sign is:

SIZE	
1	
2	525 mm X 525 mm
3	750 mm X 750 mm
4	750 mm X 750 mm
5	750 mm X 750 mm

SIZE	A	B	C	D	E	F	G	H	I	J	K	L	M	N	O	P	Q	R	S	T	U	V	W	X	Y	Z	Area sq. ft.	Area m2
1																												
2	21		1 1/8	3/8	3/8		7 1/2	8 3/4	4 1/4			5 1/4	3	2 5/8	1/2						1 1/2	1/2					3.06	0.28
3	30		1 3/8	1/2	5/8		10 3/4	12 1/2	6 3/4			7 1/2	4 1/4	3 3/4	3/4						1 7/8	1/2					6.25	0.56
4	30		1 3/8	1/2	5/8		10 3/4	12 1/2	6 3/4			7 1/2	4 1/4	3 3/4	3/4						1 7/8	1/2					6.25	0.56
5	30		1 3/8	1/2	5/8		10 3/4	12 1/2	6 3/4			7 1/2	4 1/4	3 3/4	3/4						1 7/8	1/2					6.25	0.56

STANDARD SIGN
M6-4 & M6-6
SERIES

WISCONSIN DEPT OF TRANSPORTATION

APPROVED Matthew R Rauch for State Traffic Engineer

DATE 3/16/10 PLATE NO. M6-4.7

PROJECT NO:	HWY:	COUNTY:		SHEET NO: 174	E

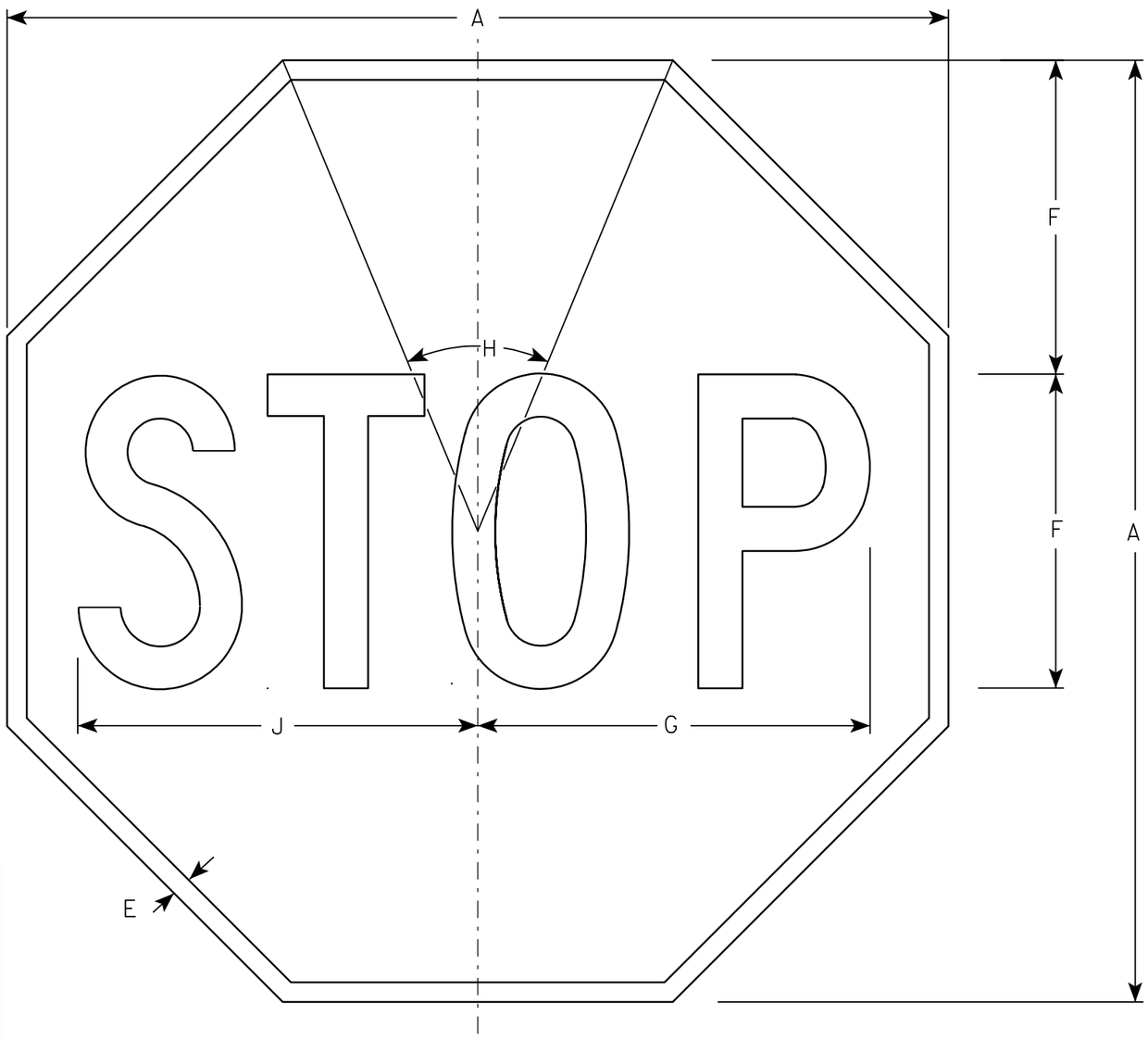

R1-1

NOTES

1. Sign is Type II - Type H Reflective - reference WIS DOT Standard Specification for HIGHWAY and STRUCTURE CONSTRUCTION latest edition.
2. Color:
   Background - Red
   Message - White
3. Message Series - C

Metric equivalent for this sign is:

SIZE	
1	600 mm X 600 mm
2	750 mm X 750 mm
3	900 mm X 900 mm
4	1200 mm X 1200 mm
5	1200 mm X 1200 mm
6	450 mm X 450 mm
7	300 mm X 300 mm

SIZE	A	B	C	D	E	F	G	H	I	J	K	L	M	N	O	P	Q	R	S	T	U	V	W	X	Y	Z	Area sq. ft.	Area m2
1	24				3/8	8	10	45°		10 1/4																	3.31	0.31
2	30				5/8	10	12 1/2	45°		12 3/4																	5.18	0.48
3	36				3/4	12	15	45°		15 3/8																	7.46	0.69
4	48				1	16	20	45°		20 1/2																	13.25	1.23
5	48				1	16	20	45°		20 1/2																	13.25	1.23
6	18				3/8	6	7 3/4	45°		7 3/4																	1.86	0.17
7	12				1/4	4	5	45°		5 1/8																	0.78	0.07

STANDARD SIGN

R1-1

WISCONSIN DEPT OF TRANSPORTATION

APPROVED Chester J Spay
for State Traffic Engineer

DATE 10/15/98 PLATE NO. R1-1.11

PROJECT NO:	HWY:	COUNTY:		SHEET NO: 175	E

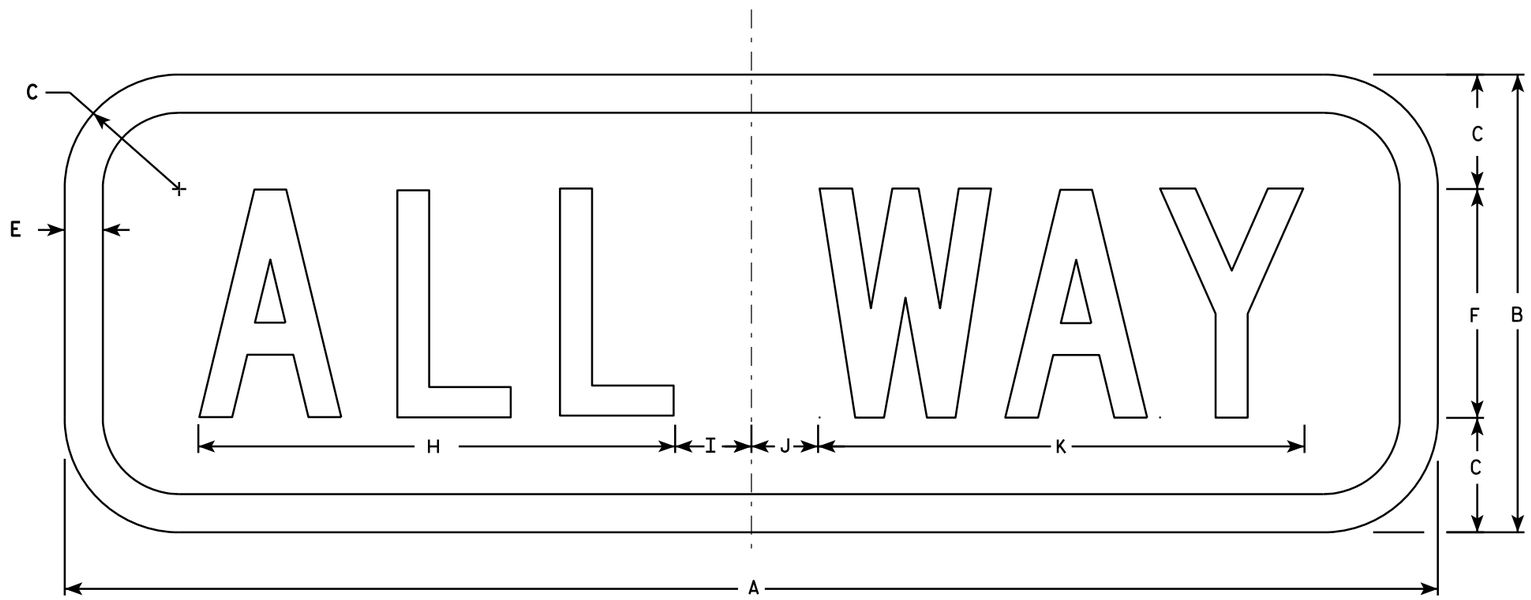

R1-4

NOTES

1. Sign is Type II - Type H Reflective - reference WIS DOT Standard Specification for HIGHWAY and STRUCTURE CONSTRUCTION latest edition.
2. Color:
   Background - Red
   Message - White
3. Message Series - C
4. Corners may be square or rounded when base material is plywood but borders shall be rounded as shown. When base material is metal, the corners and borders shall be rounded.

SIZE	A	B	C	D	E	F	G	H	I	J	K	L	M	N	O	P	Q	R	S	T	U	V	W	X	Y	Z	Area sq. ft.
1	18	6	1 1/2		1/2	3		6 1/4	1 1/4	7/8	6 3/8																0.75
2S	24	9	1 1/2		1/2	5		9 1/4	1 1/4	3/4	9 3/4																1.5
2M	24	9	1 1/2		1/2	5		9 1/4	1 1/4	3/4	9 3/4																1.5
3	24	9	1 1/2		1/2	5		9 1/4	1 1/4	3/4	9 3/4																1.5
4																											
5																											

STANDARD SIGN
R1-4

WISCONSIN DEPT OF TRANSPORTATION

APPROVED Matthew R Rauch
for State Traffic Engineer

DATE 8/3/10 PLATE NO. R1-4.5

PROJECT NO:	HWY:	COUNTY:		SHEET NO: 176	E

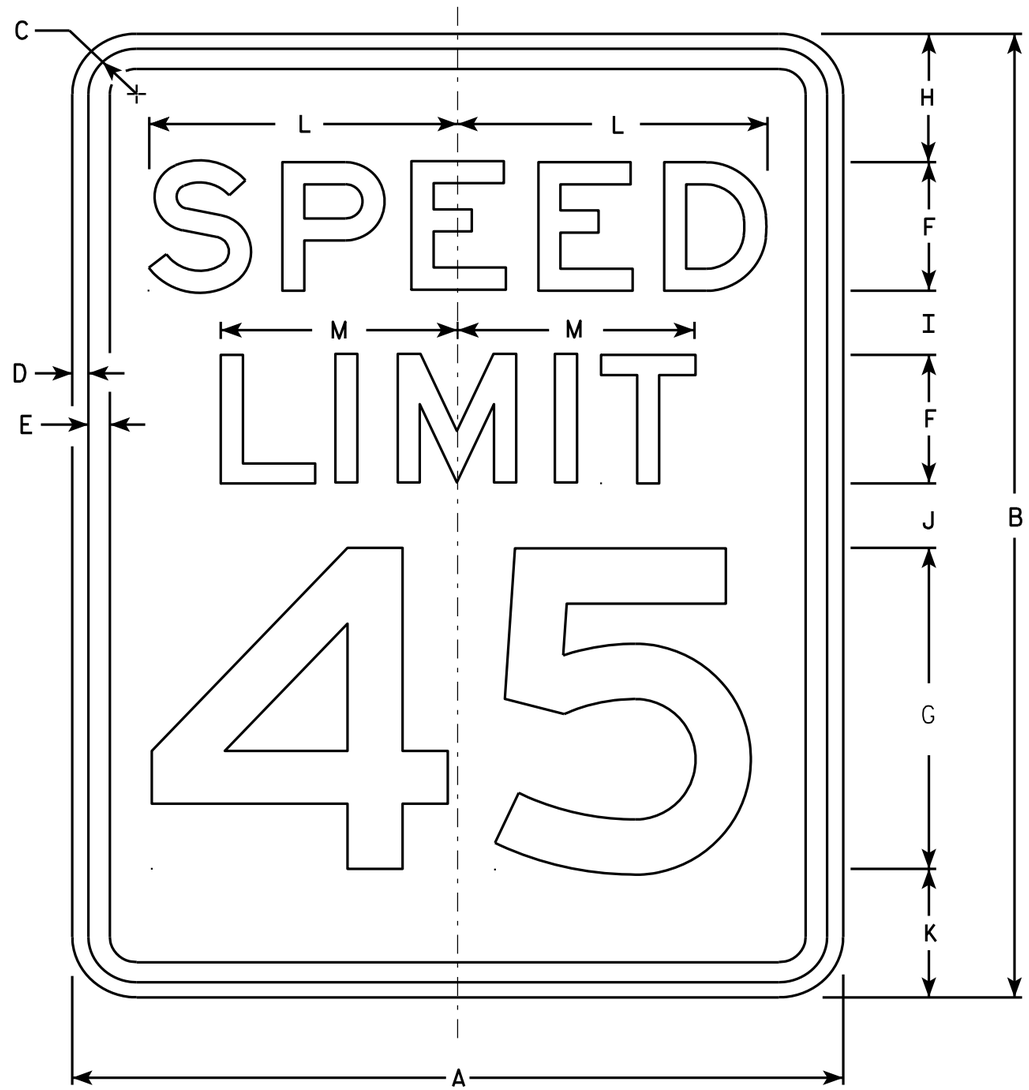

R2-1

NOTES

1. Sign is Type II - Type H Reflective - reference WIS DOT Standard Specification for HIGHWAY and STRUCTURE CONSTRUCTION latest edition.
2. Color:
   Background - White
   Message - Black
3. Message Series - E
4. Corners may be square or rounded when base material is plywood but borders shall be rounded as shown. When base material is metal, the corners and borders shall be rounded.
5. Substitute appropriate numerals and optically adjust spacing to achieve proper balance.

SIZE	A	B	C	D	E	F	G	H	I	J	K	L	M	N	O	P	Q	R	S	T	U	V	W	X	Y	Z	Area sq. ft.
1	18	24	1 1/8	3/8	1/2	3	8	3	2	2	3	7 1/4	5 1/2														3.0
2S	24	30	1 1/8	3/8	1/2	4	10	3	2 1/4	3 3/8	3 3/8	9 5/8	7 3/8														5.0
2M	30	36	1 3/8	1/2	5/8	5	12	5	2 1/2	2 1/2	4	12	9 1/4														7.5
3	36	48	1 3/8	1/2	5/8	6	14	6	5	5	6	14 3/8	11														12.0
4	36	48	1 3/8	1/2	5/8	6	14	6	5	5	6	14 3/8	11														12.0
5	48	60	2 1/4	3/4	1	8	20	6	4 1/2	6 3/4	6 3/4	19 1/4	14 5/8														20.0

STANDARD SIGN
R2-1

WISCONSIN DEPT OF TRANSPORTATION

APPROVED Matthew R Rauch
for State Traffic Engineer

DATE 5/26/10 PLATE NO. R2-1.13

PROJECT NO: | HWY: | COUNTY: | SHEET NO: 177 | E

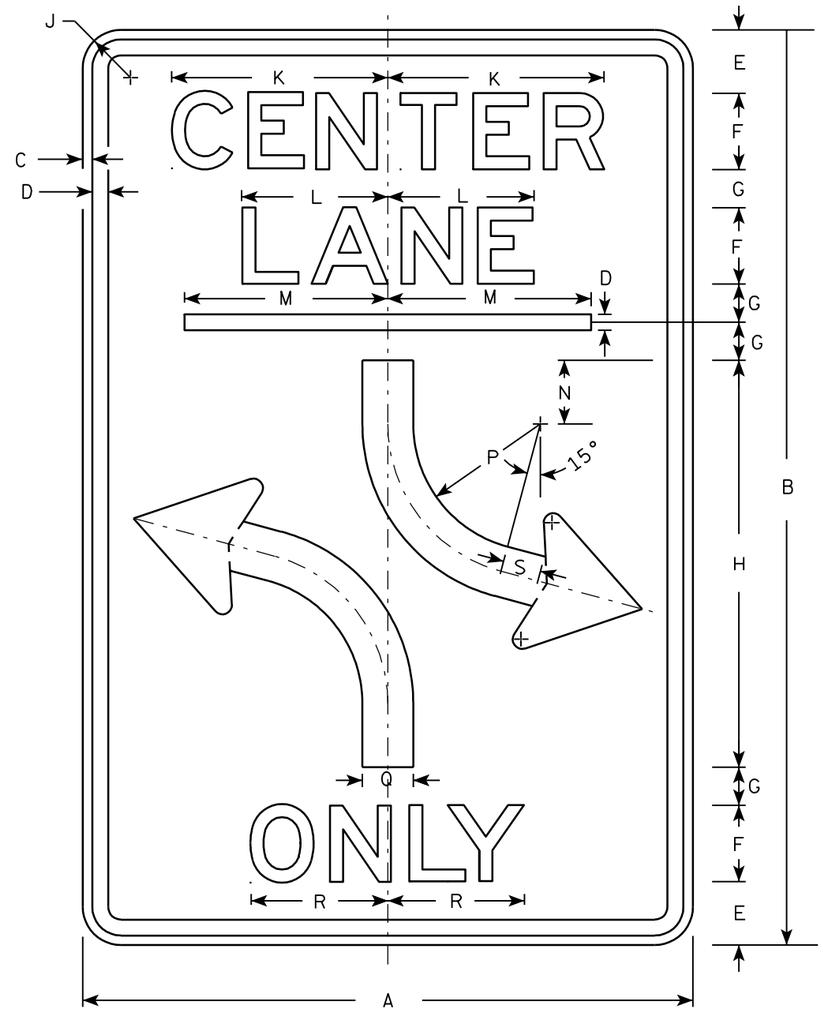

R3-9B

NOTES

1. Sign is Type II - Type H Reflective - reference WIS DOT Standard Specification for HIGHWAY and STRUCTURE CONSTRUCTION latest edition.
2. Color:
   Background - White
   Message - Black
3. Message Series - E
4. Corners may be square or rounded when base material is plywood but borders shall be rounded as shown. When base material is metal, the corners and borders shall be rounded.

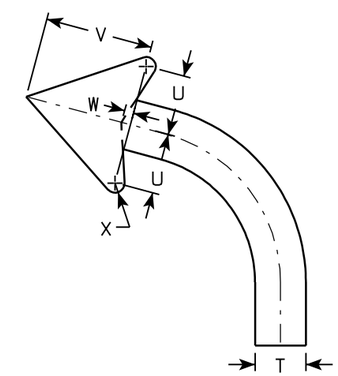

ARROW DETAIL

Metric equivalent for this sign is:

SIZE	
1	
2	600 mm X 900 mm
3	900 mm X 1200 mm
4	
5	

SIZE	A	B	C	D	E	F	G	H	I	J	K	L	M	N	O	P	Q	R	S	T	U	V	W	X	Y	Z	Area sq. ft.	Area m2
1																												
2	24	36	3/8	1/2	2 1/2	3	1 1/2	16		1 1/2	8 1/2	5 3/4	8	2 1/2		6	2	5 1/8	1 1/2		2 3/8	4 3/8	3/8				6.0	0.54
3	36	48	5/8	7/8	3 1/2	5	1 1/2	20		2 1/4	14 1/8	9 1/2	12	3		4	3	9 7/8	2		3 1/2	6 1/8	1/2				12.0	1.08
4																												
5																												

STANDARD SIGN
R3-9B

WISCONSIN DEPT OF TRANSPORTATION

APPROVED Chester J Spay for State Traffic Engineer

DATE 2/05/02 PLATE NO. R3-9B.4

PROJECT NO:	HWY:	COUNTY:		SHEET NO: 178	E

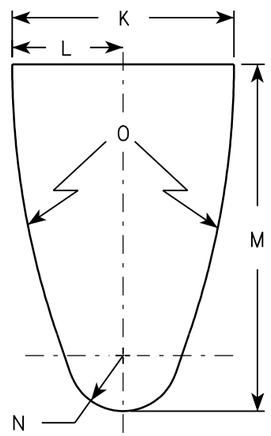

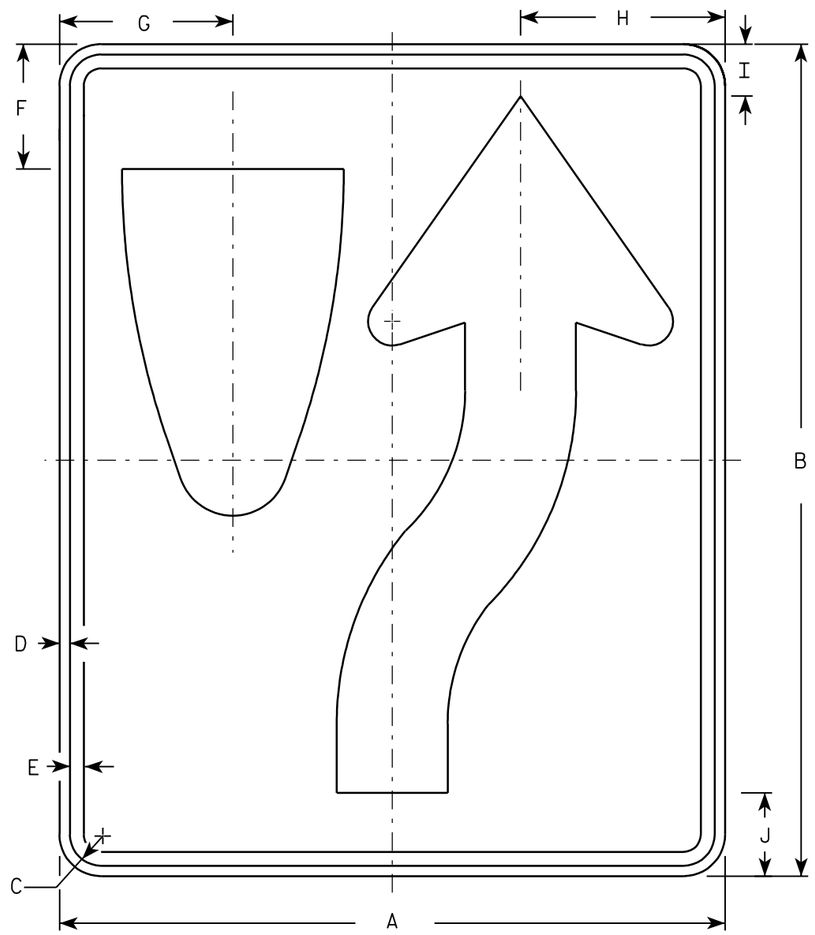

R4-7

NOTES

1. Sign is Type II - Type H Reflective - reference WIS DOT Standard Specification for HIGHWAY and STRUCTURE CONSTRUCTION latest edition. material is plywood but borders shall be rounded
2. Color:
   Background - White
   Message - Black
3. Corners may be square or rounded when base as shown. When base material is metal, the corners and borders shall be rounded.
4. R4-8 is the same as R4-7 except Legend is reversed.

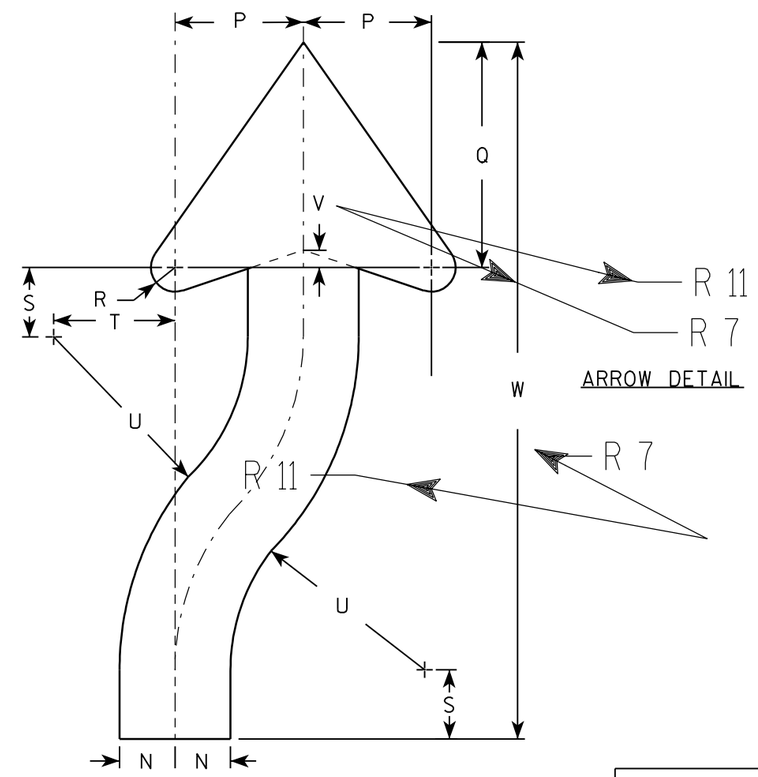

ARROW DETAIL

7

7

Metric equivalent for this sign is:

SIZE	
1	450 mm X 600 mm
2	600 mm X 750 mm
3	900 mm X 1200 mm
4	900 mm X 1200 mm
5	900 mm X 1200 mm

SIZE	A	B	C	D	E	F	G	H	I	J	K	L	M	N	O	P	Q	R	S	T	U	V	W	X	Y	Z	Area sq. ft.	Area m2
1	18	24	1 1/8	3/8	1/2	3 3/8	4 3/4	5 1/2	1 3/8	2 1/4	6	3	9 3/8	1 1/2	22 1/2	3 1/2	6 1/8	5/8	1 7/8	3 1/4	6 3/4	1/2	20 3/8				3.0	.27
2	24	30	1 1/8	3/8	1/2	4 1/2	6 1/4	7 3/8	1 7/8	3	8	4	12 1/2	2	30	4 5/8	8 1/8	7/8	2 1/2	4 3/8	9	5/8	25 1/8				5.0	.45
3	36	48	1 3/4	1/2	5/8	6 3/4	9 3/8	11 1/8	2 7/8	4 1/2	12	6	18 3/4	3	45	6 7/8	12 1/4	1 1/4	3 3/4	6 5/8	13 1/2	1	40 3/4				12.0	1.08
4	36	48	1 3/4	1/2	5/8	6 3/4	9 3/8	11 1/8	2 7/8	4 1/2	12	6	18 3/4	3	45	6 7/8	12 1/4	1 1/4	3 3/4	6 5/8	13 1/2	1	40 3/4				12.0	1.08
5	48	60	2 1/4	3/4	1	9	12 1/2	14 3/4	3 3/4	6	16	8	25	4	60	9 1/4	16 1/4	1 5/8	5	8 3/4	18	1 1/4	50 1/4				20.0	1.08

STANDARD SIGN
R4-7 & R4-8

WISCONSIN DEPT OF TRANSPORTATION

APPROVED Chester J Spang for State Traffic Engineer

DATE 2/6/02 PLATE NO. R4-7.7

PROJECT NO:	HWY:	COUNTY:		SHEET NO: 179	E

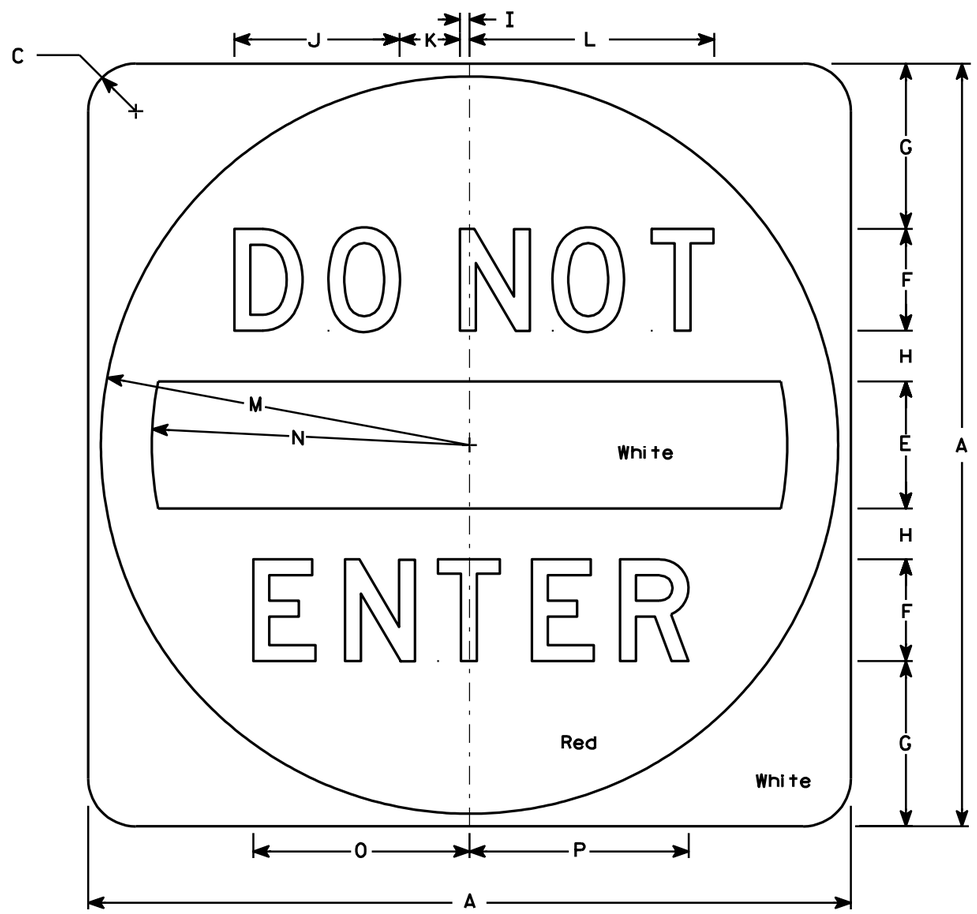

R5-1

NOTES

1. Sign is Type II - Type H Reflective - reference WIS DOT Standard Specification for HIGHWAY and STRUCTURE CONSTRUCTION latest edition.
2. Color:
   Background - See detail
   Message - White - Type H Reflective
3. Message Series - D
4. Corners may be square or rounded when base material is plywood but when base material is metal, the cornors shall be rounded.

Metric equivalent for this sign is:

SIZE	
1	
2	750 mm X 750 mm
3	900 mm X 900 mm
4	900 mm X 900 mm
5	1200 mm X 1200 mm

SIZE	A	B	C	D	E	F	G	H	I	J	K	L	M	N	O	P	Q	R	S	T	U	V	W	X	Y	Z	Area sq. ft.	Area m2
1																												
2	30		1 7/8		5	4	6 1/2	2	3/8	6 1/2	2 3/8	9 5/8	14 1/2	12 1/2	8 1/2	8 5/8											6.26	0.56
3	36		2 1/4		6	5	7 1/2	2 1/2	1/2	8 1/8	3	12 1/8	17 1/2	15	10 5/8	10 3/4											9.0	0.81
4	36		2 1/4		6	5	7 1/2	2 1/2	1/2	8 1/8	3	12 1/8	17 1/2	15	10 5/8	10 3/4											9.0	0.81
5	48		3		8	6	11	3	5/8	9 3/4	3 5/8	14 1/2	23 1/2	20	12 3/4	12 7/8											16.0	1.44

STANDARD SIGN
R5-1

WISCONSIN DEPT OF TRANSPORTATION

APPROVED Matthew R Rauch
for State Traffic Engineer

DATE 7/05/05 PLATE NO. R5-1.14

PROJECT NO: | HWY: | COUNTY: | SHEET NO: 180 | E

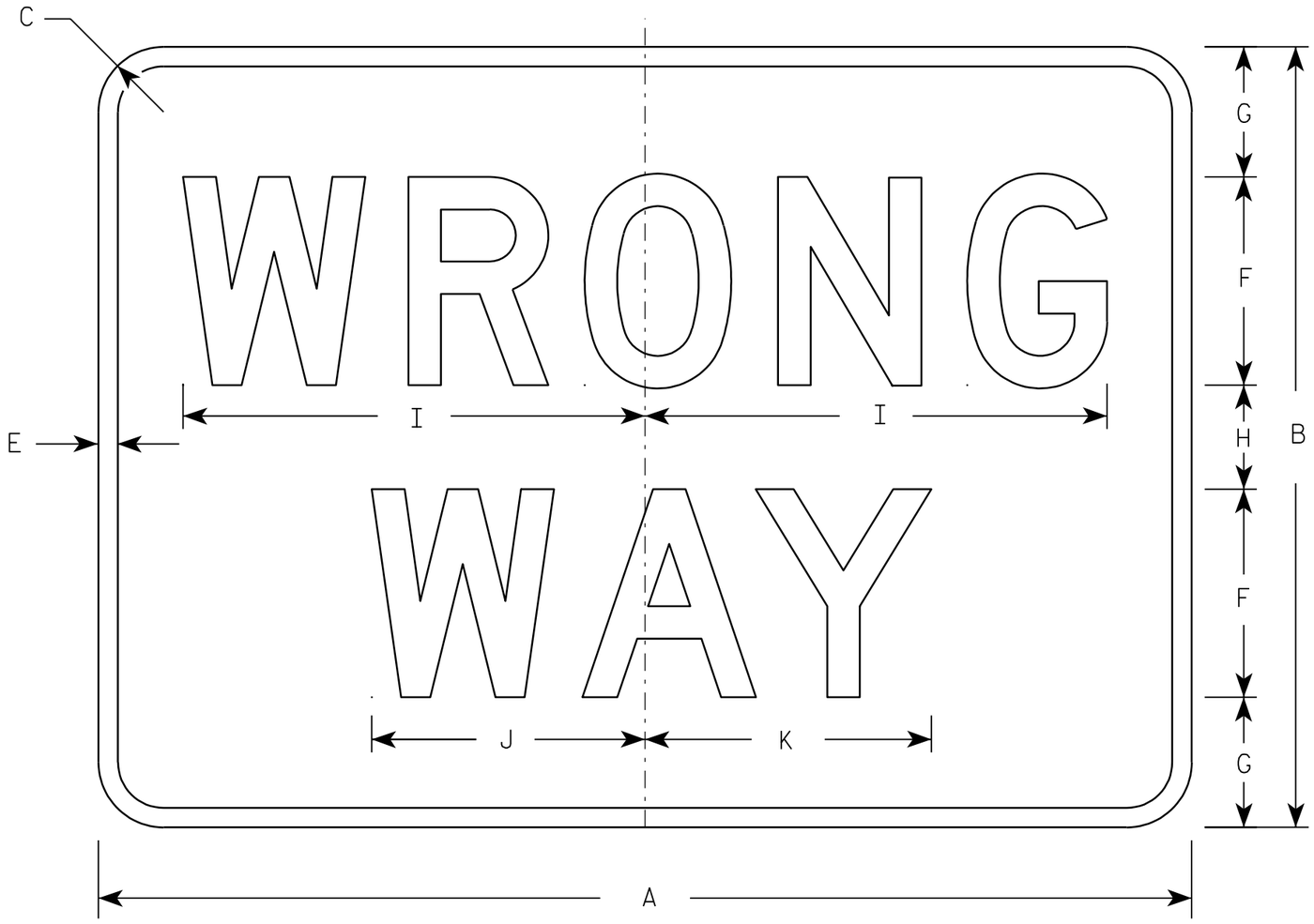

R5-1A

NOTES

1. Sign is Type II - Type H Reflective - reference WIS DOT Standard Specification for HIGHWAY and STRUCTURE CONSTRUCTION latest edition.
2. Color:
   Background - Red
   Message - White
3. Message Series - D
4. Corners may be square or rounded when base material is plywood but borders shall be rounded as shown. When base material is metal, the corners and borders shall be rounded.

Metric equivalent for this sign is:

SIZE	
1	750 mm X 450 mm
2	900 mm X 600 mm
3	1050 mm X 750 mm
4	1050 mm X 750 mm
5	1050 mm X 750 mm

SIZE	A	B	C	D	E	F	G	H	I	J	K	L	M	N	O	P	Q	R	S	T	U	V	W	X	Y	Z	Area sq. ft.	Area m2
1	30	18	1 1/2		1/2	5	3	2	11	6 1/2	6 7/8																3.75	0.34
2	36	24	2		5/8	6	4 1/2	3	13 1/4	7 7/8	8 1/4																6.00	0.54
3	42	30	2 1/2		3/4	8	5	4	17 3/4	10 1/2	11																8.75	0.79
4	42	30	2 1/2		3/4	8	5	4	17 3/4	10 1/2	11																8.75	0.79
5	42	30	2 1/2		3/4	8	5	4	17 3/4	10 1/2	11																8.75	0.79

STANDARD SIGN
R5-1A

WISCONSIN DEPT OF TRANSPORTATION

APPROVED Matthew R Rauch
for State Traffic Engineer

DATE 10/24/02 PLATE NO. R5-1A.1

PROJECT NO: | HWY: | COUNTY: | SHEET NO: 181 | E

NOTES

1. Sign is Type II - Type H Reflective - reference WIS DOT Standard Specification for HIGHWAY and STRUCTURE CONSTRUCTION latest edition.
2. Color:
   Background - Yellow
   Message - Black
3. Corners may be square or rounded when base material is plywood but borders shall be rounded as shown. When base material is metal, the corners and borders shall be rounded.
4. W1-2L is the same as W1-2R except the arrow is reversed along the vertical centerline.

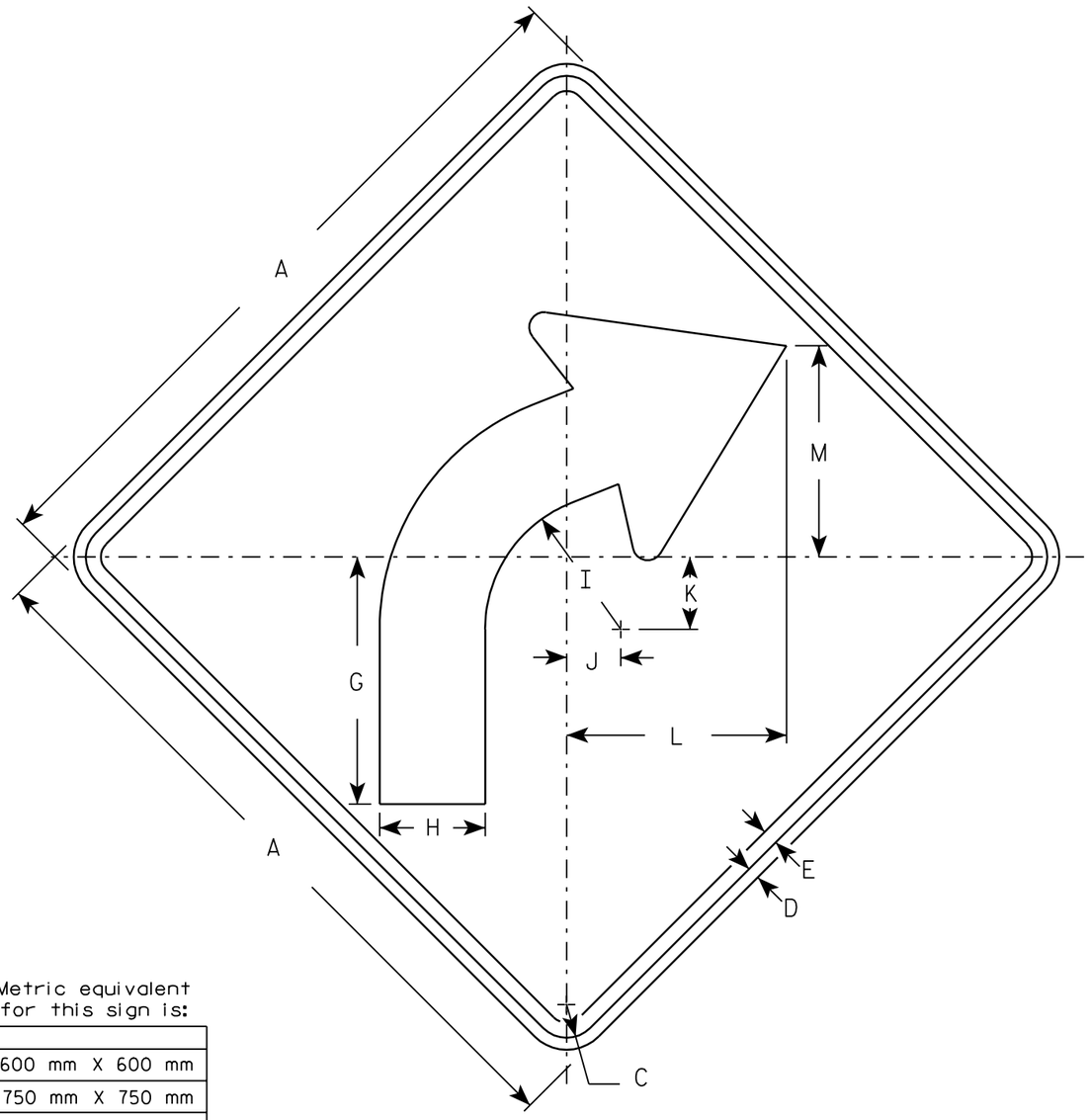

W1-2R

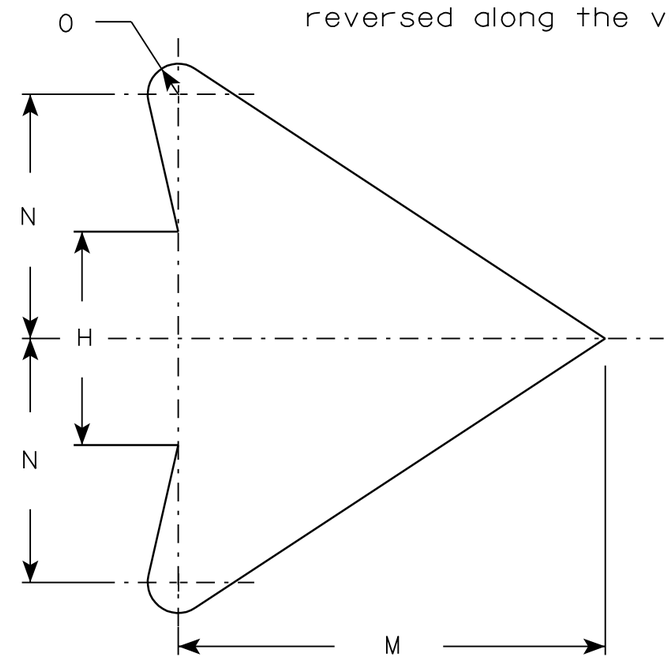

ARROW DETAIL

Metric equivalent for this sign is:

SIZE	
1	600 mm X 600 mm
2	750 mm X 750 mm
3	900 mm X 900 mm
4	900 mm X 900 mm
5	1200 mm X 1200 mm

SIZE	A	B	C	D	E	F	G	H	I	J	K	L	M	N	O	P	Q	R	S	T	U	V	W	X	Y	Z	Area sq. ft.	Area m2
1	24		1 1/8	3/8	1/2		8 1/4	3 1/2	4 1/2	1 3/4	2 3/8	7 1/4	7	4	1/2												4.0	0.36
2	30		1 3/8	1/2	5/8		10 1/4	4 3/8	5 5/8	2 1/4	3	9 1/8	8 3/4	5	5/8												6.25	0.56
3	36		1 5/8	5/8	3/4		12 3/8	5 1/4	6 3/4	2 5/8	3 1/2	10 7/8	10 1/2	6	3/4												9.0	0.81
4	36		1 5/8	5/8	3/4		12 3/8	5 1/4	6 3/4	2 5/8	3 1/2	10 7/8	10 1/2	6	3/4												9.0	0.81
5	48		2 1/4	3/4	1		16 1/2	7	9	3 1/2	4 5/8	14 1/2	14	8	1												16.0	1.44

STANDARD SIGN
W1-2

WISCONSIN DEPT OF TRANSPORTATION

APPROVED Chester J Sprang for State Traffic Engineer

DATE 01/14/02 PLATE NO. W1-2.8

PROJECT NO:	HWY:	COUNTY:		SHEET NO: 182	E

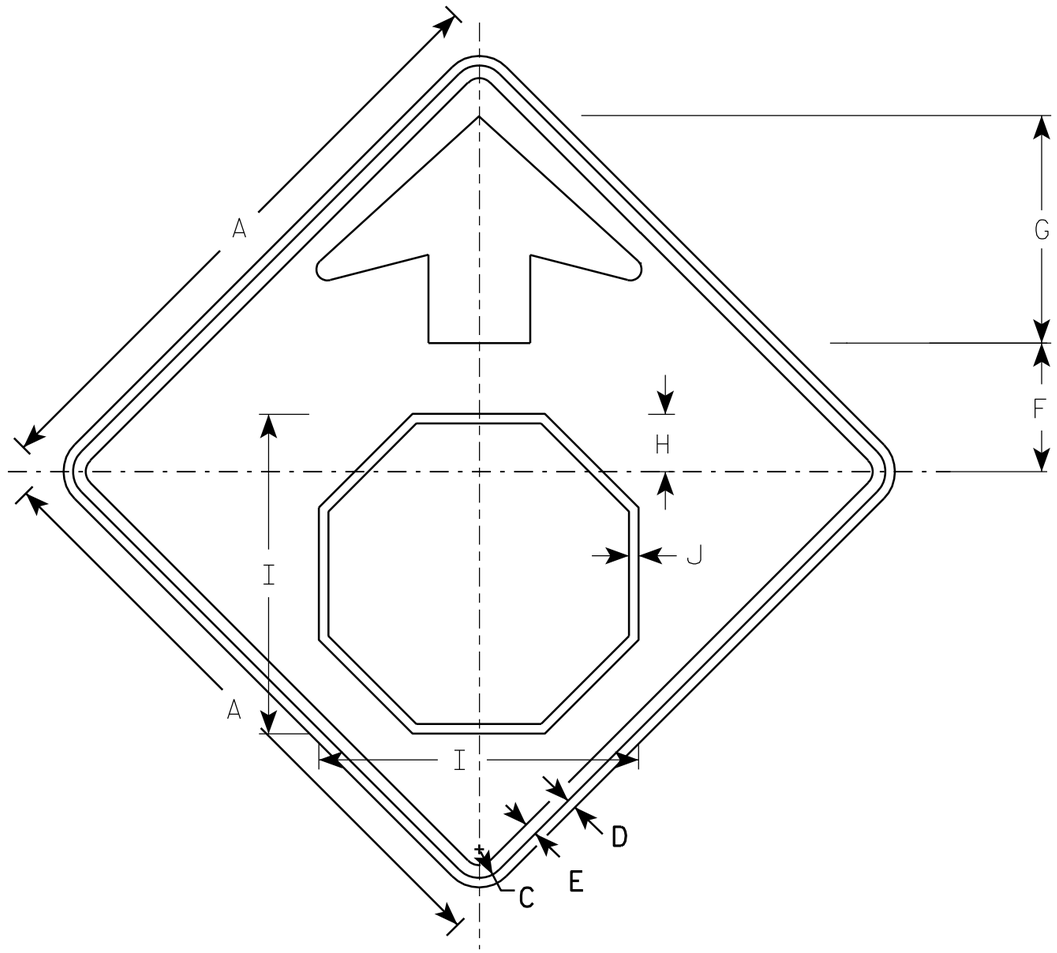

W3-1

NOTES

1. All Signs Type II - Type F Reflective - reference WIS DOT Standard Specification for HIGHWAY and STRUCTURE CONSTRUCTION latest edition.
2. Color:
   - Background - YELLOW
   - Arrow & Border - BLACK
   - Stop Symbol - WHITE BORDER ON RED BACKGROUND

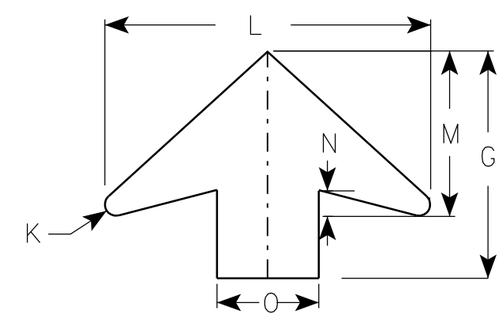

ARROW DETAIL

SIZE	A	B	C	D	E	F	G	H	I	J	K	L	M	N	O	P	Q	R	S	T	U	V	W	X	Y	Z	Area sq. ft.
1	30		1 3/8	1/2	5/8	6 1/4	11 1/4	2 7/8	15 3/4	1/2	1/2	16	8	1 1/4	5												6.25
2S	36		1 5/8	5/8	3/4	7 1/2	13 1/2	3 1/2	19	5/8	5/8	19 1/4	9 3/4	1 5/8	6												9.0
2M	36		1 5/8	5/8	3/4	7 1/2	13 1/2	3 1/2	19	5/8	5/8	19 1/4	9 3/4	1 5/8	6												9.0
3	36		1 5/8	5/8	3/4	7 1/2	13 1/2	3 1/2	19	5/8	5/8	19 1/4	9 3/4	1 5/8	6												9.0
4	48		2 1/4	3/4	1	10	17 7/8	4 1/2	25 1/8	3/4	7/8	25 5/8	13	2	8												16.0
5	48		2 1/4	3/4	1	10	17 7/8	4 1/2	25 1/8	3/4	7/8	25 5/8	13	2	8												16.0

STANDARD SIGN
W3-1

WISCONSIN DEPT OF TRANSPORTATION

APPROVED Matthew R Rauch
for State Traffic Engineer

DATE 6/7/10 PLATE NO. W3-1.12

PROJECT NO:

SHEET NO: 183 E

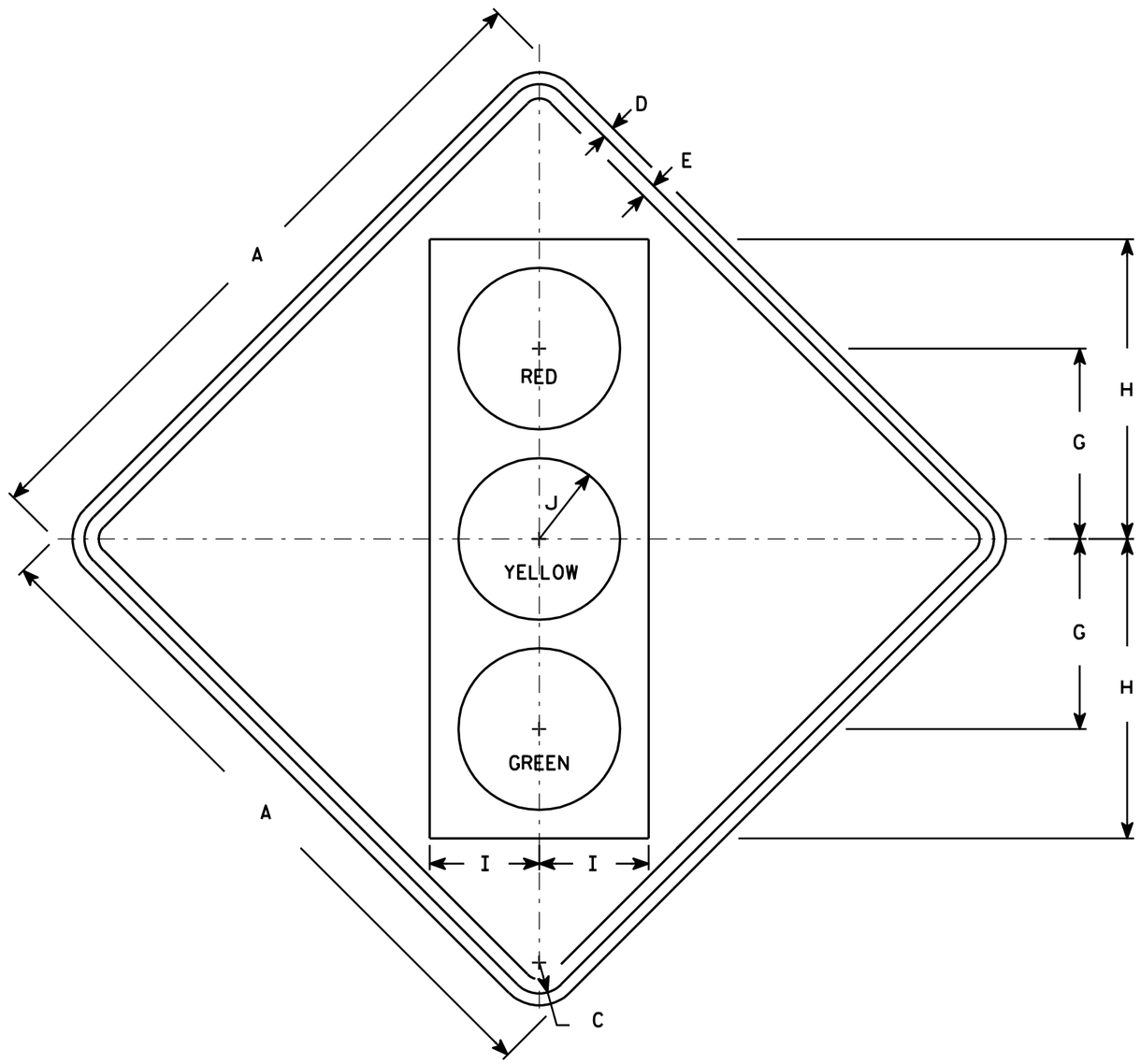

W3-3

NOTES

1. Sign is Type II - Type F Reflective - reference WIS DOT Standard Specification for HIGHWAY and STRUCTURE CONSTRUCTION latest edition.
2. Color:
   Background - Yellow
   Message - See Note 4
3. Corners may be square or rounded when base material is plywood but borders shall be rounded as shown. When base material is metal, the corners and borders shall be rounded.
4. Symbol and border are non-reflective black.
   Top circle - Type H Reflectorized Red
   Center circle - Same as background
   Bottom circle - Type H Reflectorized Green

SIZE	A	B	C	D	E	F	G	H	I	J	K	L	M	N	O	P	Q	R	S	T	U	V	W	X	Y	Z	Area sq. ft.
1	30		1 3/8	1/2	5/8		8 3/4	13 3/4	5	3 3/4																	6.25
2S	36		1 5/8	5/8	3/4		10	15 3/4	5 3/4	4 1/4																	9.0
2M	36		1 5/8	5/8	3/4		10	15 3/4	5 3/4	4 1/4																	9.0
3	36		1 5/8	5/8	3/4		10	15 3/4	5 3/4	4 1/4																	9.0
4	48		2 1/4	3/4	1		12 1/2	20	7 1/2	5																	16.0
5	48		2 1/4	3/4	1		12 1/2	20	7 1/2	5																	16.0

STANDARD SIGN
W3-3

WISCONSIN DEPT OF TRANSPORTATION

APPROVED Matthew R Rauch
for State Traffic Engineer

DATE 6/7/10 PLATE NO. W3-3.11

PROJECT NO: | HWY: | COUNTY: | SHEET NO: 184 | E

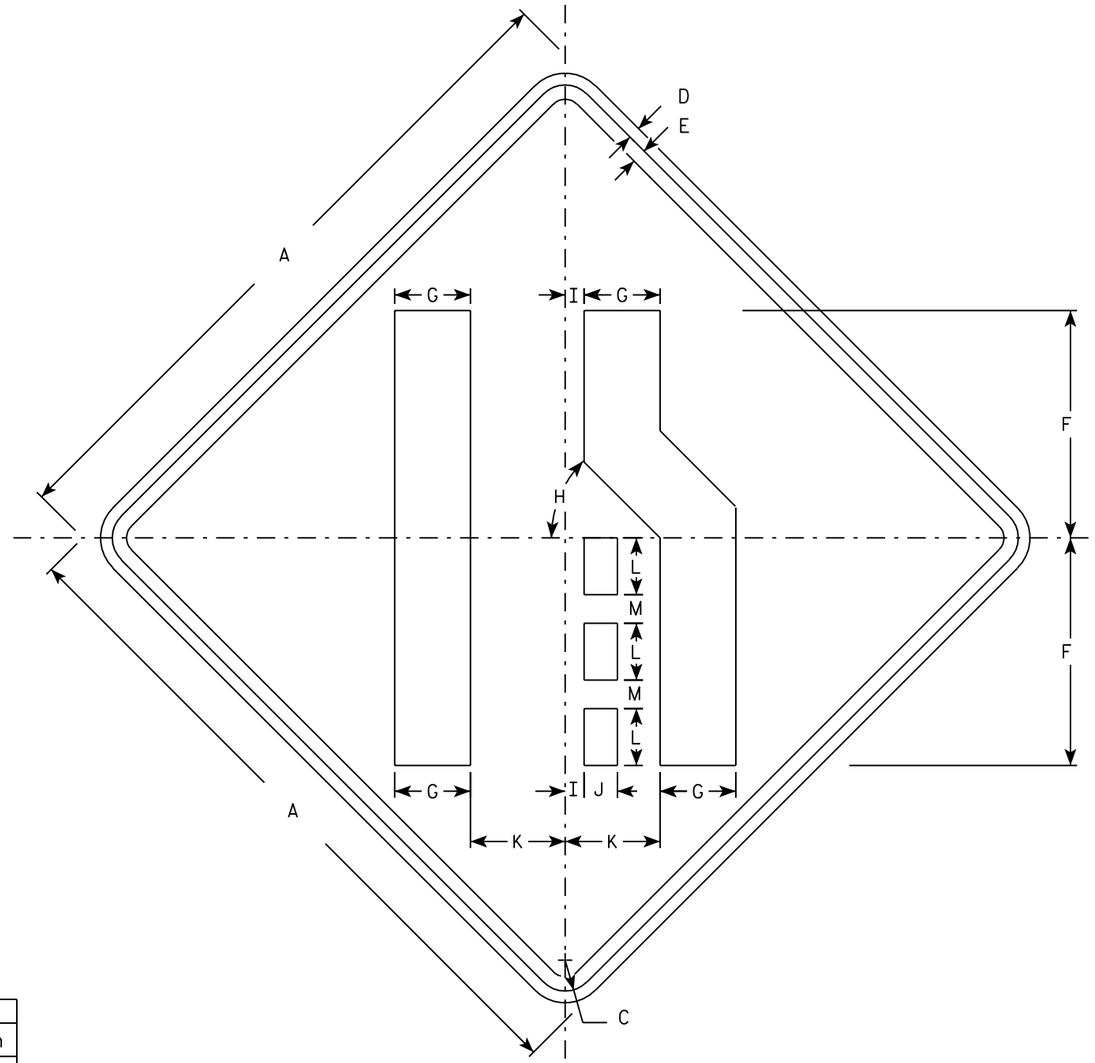

W4-2R

NOTES

1. Sign is Type II - Type H Reflective - reference WIS DOT Standard Specification for HIGHWAY and STRUCTURE CONSTRUCTION latest edition.
2. Color:
   Background - Yellow
   Message - Black
3. Corners may be square or rounded when base material is plywood but borders shall be rounded as shown. When base material is metal, the corners and borders shall be rounded.
4. W4-2L is the same as W4-2R except the message is reversed along the vertical centerline.

7

7

Metric equivalent for this sign is:

SIZE	
1	750 mm X 750 mm
2	900 mm X 900 mm
3	1200 mm X 1200 mm
4	1200 mm X 1200 mm
5	1200 mm X 1200 mm

SIZE	A	B	C	D	E	F	G	H	I	J	K	L	M	N	O	P	Q	R	S	T	U	V	W	X	Y	Z	Area sq. ft.	Area m2
1	30		1 3/8	1/2	5/8	10	3 3/8	45°	7/8	1 1/2	4 1/4	2 1/2	1 1/4														6.25	0.56
2	36		1 5/8	5/8	3/4	12	4	45°	1	1 3/4	5	3	1 1/2														9.0	0.81
3	48		2 1/4	3/4	1	16	5 3/8	45°	1 1/4	2 3/8	6 3/4	4	2														16.0	1.44
4	48		2 1/4	3/4	1	16	5 3/8	45°	1 1/4	2 3/8	6 3/4	4	2														16.0	1.44
5	48		2 1/4	3/4	1	16	5 3/8	45°	1 1/4	2 3/8	6 3/4	4	2														16.0	1.44

STANDARD SIGN
W4-2

WISCONSIN DEPT OF TRANSPORTATION

APPROVED Matthew R Rauch
for State Traffic Engineer

DATE 2/08/05 PLATE NO. W4-2.11

PROJECT NO:

SHEET NO: 185 E

NOTES

1. Sign is Type II - See Note 5 - reference WIS DOT Standard Specification for HIGHWAY and STRUCTURE CONSTRUCTION latest edition.
2. Color:
   Background - Red (See Note 5)
   Message - See Note 3
3. W5-56 Message Units are 3" center mount Red delineators as per 633.2.3.
4. Base material for W5-56 shall be metal and corners shall be rounded. Base material for W5-56A may be plywood or metal and corners may be square or rounded when material is plywood but rounded when metal.
5. W5-56 Background is Reflective
   W5-56A Background is Type H Reflective

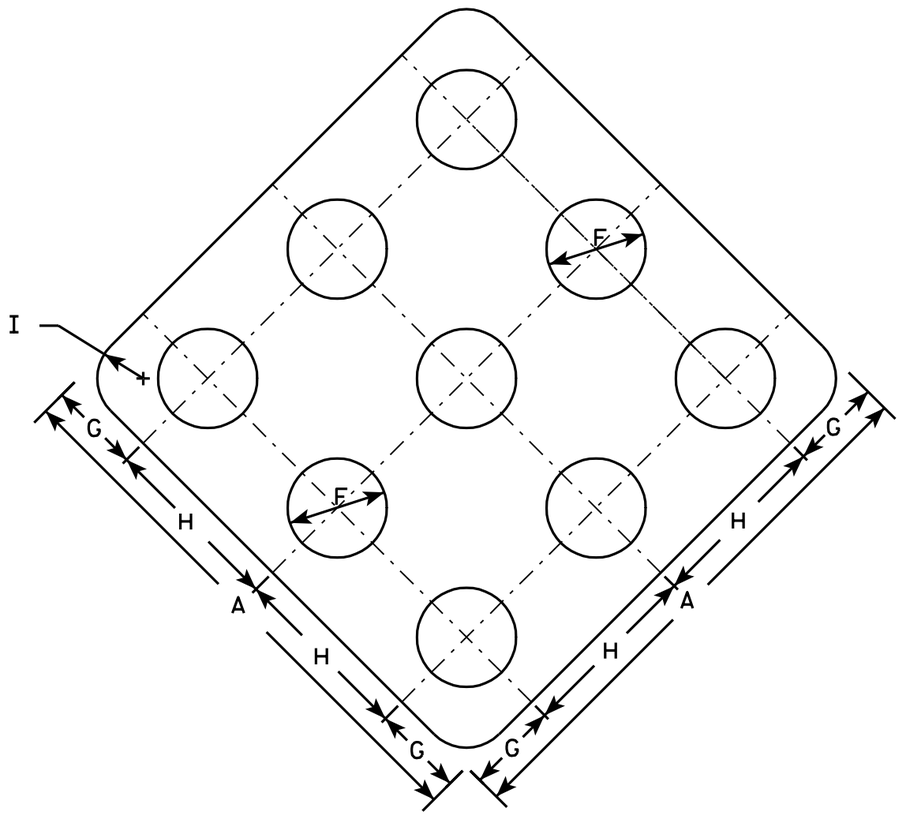

W5-56

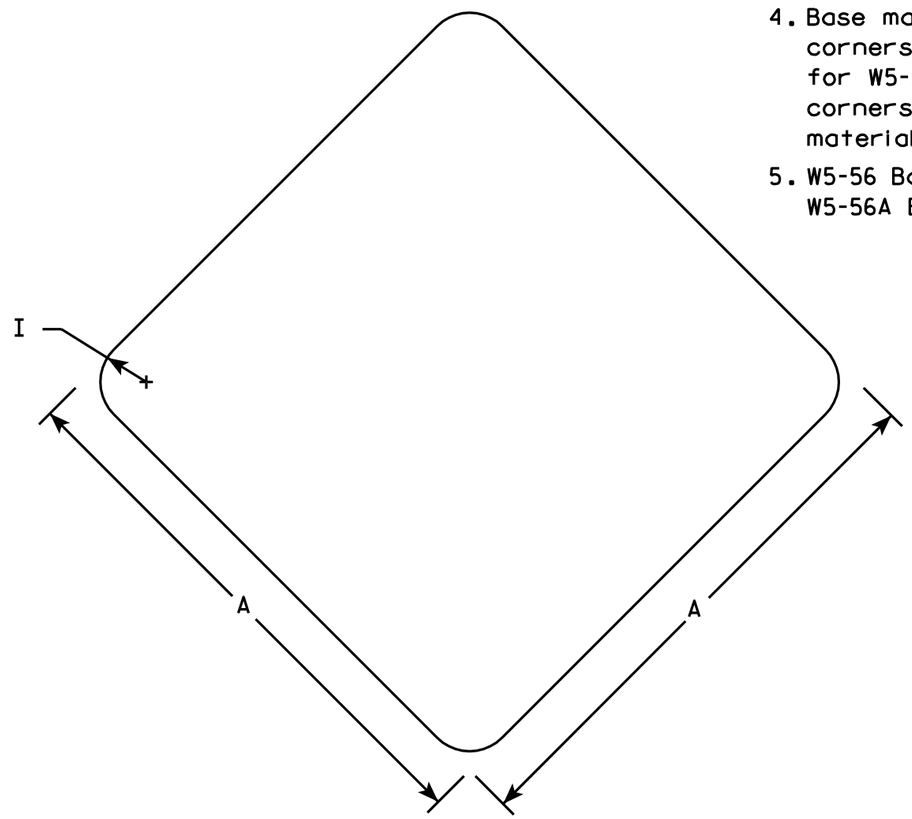

W5-56A

7

Metric equivalent for this sign is:

SIZE	
1	300 mm X 300 mm
2	450 mm X 450 mm
3	
4	
5	

SIZE	A	B	C	D	E	F	G	H	I	J	K	L	M	N	O	P	Q	R	S	T	U	V	W	X	Y	Z	Area sq. ft.	Area m2
1	12					3 1/4	2	4	1																		1.0	0.09
2	18					3 1/4	3	6	1 1/2																		2.25	0.20
3																												
4																												
5																												

STANDARD SIGN
W5-56 & W5-56A

WISCONSIN DEPT OF TRANSPORTATION

APPROVED Matthew R Rauch
for State Traffic Engineer

DATE 7/05/05 PLATE NO. W5-56.5

PROJECT NO: | HWY: | COUNTY: | SHEET NO: 186 | E

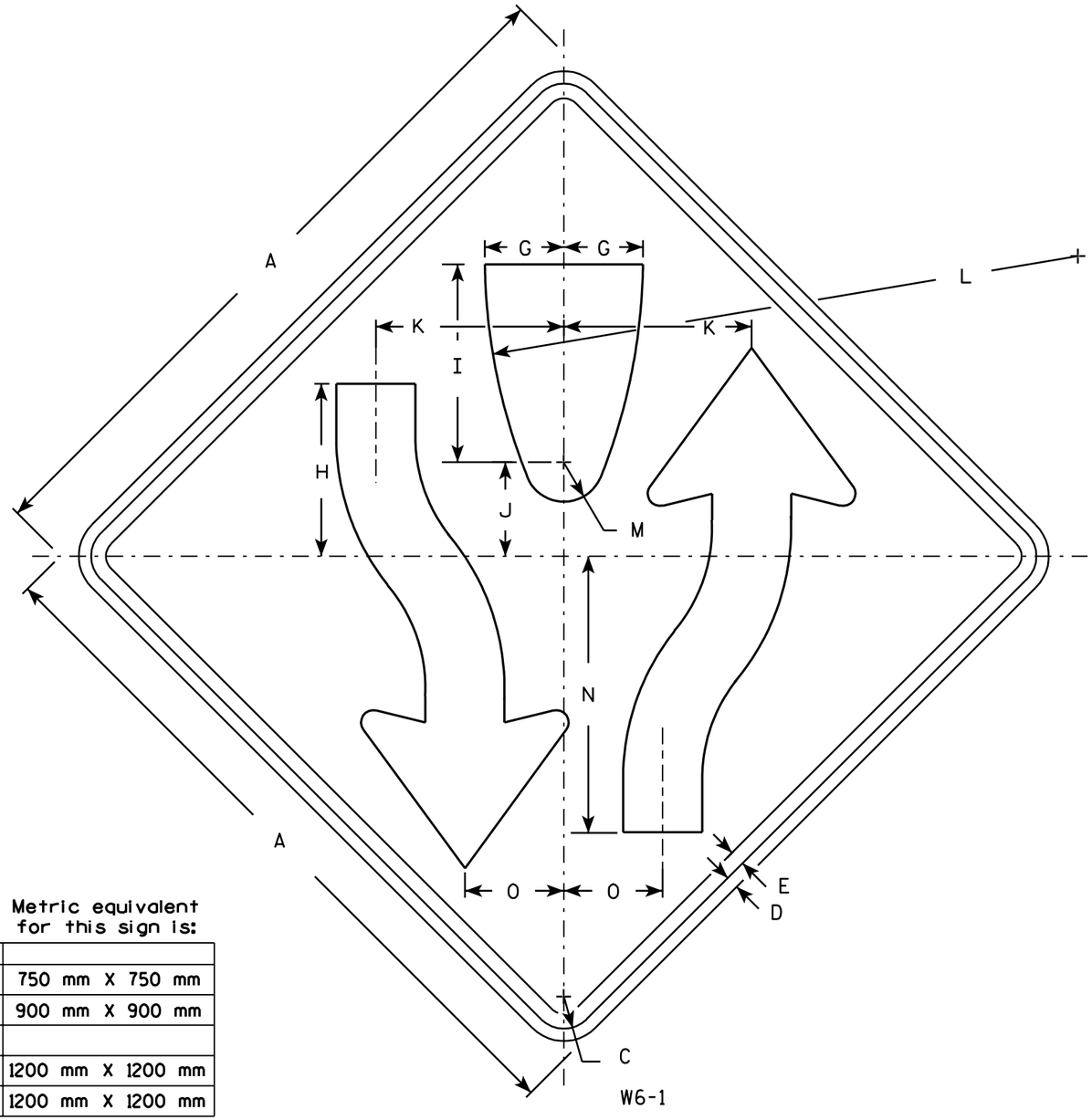

W6-1

NOTES

1. Sign is Type II - Type H Reflective - reference WIS DOT Standard Specification for HIGHWAY and STRUCTURE CONSTRUCTION latest edition.
2. Color:
   Background - Yellow
   Message - Black
3. Corners may be square or rounded when base material is plywood but borders shall be rounded as shown. When base material is metal, the corners and borders shall be rounded.
4. W6-2 same as W6-1 but is rotated 180° when mounted.

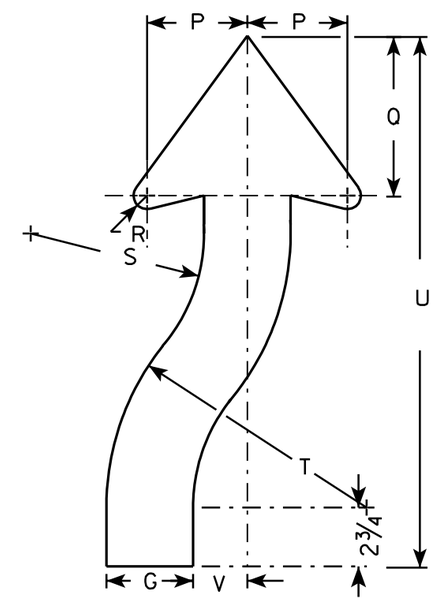

ARROW DETAIL

Metric equivalent for this sign is:

SIZE	
1	750 mm X 750 mm
2	900 mm X 900 mm
3	
4	1200 mm X 1200 mm
5	1200 mm X 1200 mm

SIZE	A	B	C	D	E	F	G	H	I	J	K	L	M	N	O	P	Q	R	S	T	U	V	W	X	Y	Z	Area sq. ft.	Area m2
1	30		1 3/8	1/2	5/8		3 1/4	8	8 1/4	4 1/8	7 7/8	25	1 3/4	11 5/8	4 1/8	3 7/8	6 3/4	5/8	6 5/8	9 7/8	21 5/8	2					6.25	0.56
2	36		1 5/8	5/8	3/4		4	8 3/4	10	4 3/4	9 1/2	30	2	14	5	4 5/8	7 3/8	7/8	8	12	24 1/2	2 1/2					9.0	0.81
3																												
4	48		2 1/4	3/4	1		5 3/8	11 5/8	13 3/8	6 3/8	12 5/8	40	2 5/8	18 5/8	6 5/8	6 1/4	9 7/8	1 1/4	10 5/8	16	32 5/8	3 3/8					16.0	1.44
5	48		2 1/4	3/4	1		5 3/8	11 5/8	13 3/8	6 3/8	12 5/8	40	2 5/8	18 5/8	6 5/8	6 1/4	9 7/8	1 1/4	10 5/8	16	32 5/8	3 3/8					16.0	1.44

STANDARD SIGN
W6-1 & W6-2

WISCONSIN DEPT OF TRANSPORTATION

APPROVED Matthew R Rauch
for State Traffic Engineer

DATE 3/01/05 PLATE NO. W6-1.12

PROJECT NO:	HWY:	COUNTY:		SHEET NO: 187	E

EAST FRONTAGE ROAD SOUTH

STATION	Distance	AREA (SF) Cut	AREA (SF) Salvaged/Unusable Pavement Material	AREA (SF) Fill	AREA (SF) EBS	Incremental Vol (CY) (Unadjusted) Cut	Incremental Vol (CY) (Unadjusted) Salvaged/Unusable Pavement Material	Incremental Vol (CY) (Unadjusted) Fill	Incremental Vol (CY) (Unadjusted) EBS	Cumulative Vol (CY) Cut 1.00	Cumulative Vol (CY) Expanded Fill 1.20	Cumulative Vol (CY) Expanded EBS Backfill 1.30	Cumulative Vol (CY) Reduced EBS In Fill 0.80	Mass Ordinate
3835+00 AH		163.21	0.00	0	0.00	0	0.00	0	0.00	0.00	0.00	0.00	0.00	0.00
3835+50	50.00	103.79	11.25	0	0.00	247.22	10.42	0.00	0.00	247.22	0.00	0.00	0.00	236.81
3836+00	50.00	82.97	11.25	1.07	0.00	172.93	20.83	0.99	0.00	420.15	1.19	0.00	0.00	387.71
3836+50	50.00	70.13	11.25	17.05	0.00	141.76	20.83	16.78	0.00	561.91	21.32	0.00	0.00	488.50
3837+00	50.00	72.48	11.25	35.95	0.00	132.05	20.83	49.07	0.00	693.95	80.21	0.00	0.00	540.83
3837+50	50.00	77.55	11.25	0	0.00	138.92	20.83	33.29	0.00	832.87	120.16	0.00	0.00	618.96
3838+00	50.00	89.12	11.25	0	0.00	154.32	20.83	0.00	0.00	987.19	120.16	0.00	0.00	752.46
3838+50	50.00	100.54	11.25	0	0.00	175.61	20.83	0.00	0.00	1162.81	120.16	0.00	0.00	907.23
3839+00	50.00	112.65	11.25	0	0.00	197.40	20.83	0.00	0.00	1360.20	120.16	0.00	0.00	1083.80
3839+50	50.00	116.73	11.25	11.24	0.00	212.39	20.83	10.41	0.00	1572.59	132.64	0.00	0.00	1262.86
3840+00	50.00	114.86	11.25	9.64	0.00	214.44	20.83	19.33	0.00	1787.03	155.84	0.00	0.00	1433.27
3840+50	50.00	126.42	11.25	0	0.00	223.41	20.83	8.93	0.00	2010.44	166.56	0.00	0.00	1625.13
3841+00	50.00	135.26	11.25	0	0.00	242.30	20.83	0.00	0.00	2252.73	166.56	0.00	0.00	1846.59
3841+50	50.00	145.71	11.25	0	0.00	260.16	20.83	0.00	0.00	2512.89	166.56	0.00	0.00	2085.92
3842+00	50.00	152.76	11.25	0	0.00	276.36	20.83	0.00	0.00	2789.25	166.56	0.00	0.00	2341.44
3842+50	50.00	154.78	11.25	0	0.00	284.76	20.83	0.00	0.00	3074.01	166.56	0.00	0.00	2605.37
3843+00	50.00	161.96	11.25	0	0.00	293.28	20.83	0.00	0.00	3367.29	166.56	0.00	0.00	2877.81
3843+50	50.00	164.86	11.25	0	0.00	302.61	20.83	0.00	0.00	3669.90	166.56	0.00	0.00	3159.59
3844+00	50.00	159.04	11.25	0	0.00	299.91	20.83	0.00	0.00	3969.81	166.56	0.00	0.00	3438.67
3844+50	50.00	169.32	11.25	0	0.00	304.04	20.83	0.00	0.00	4273.84	166.56	0.00	0.00	3721.87
3845+00	50.00	177.68	11.25	0	0.00	321.30	20.83	0.00	0.00	4595.14	166.56	0.00	0.00	4022.33
3845+50	50.00	272.01	11.81	1.22	0.00	416.38	21.35	1.13	0.00	5011.52	167.91	0.00	0.00	4416.00
3846+00	50.00	249.27	12.38	0	0.00	482.67	22.40	1.13	0.00	5494.19	169.27	0.00	0.00	4874.92
3846+50	50.00	264.17	12.38	0.07	0.00	475.41	22.92	0.06	0.00	5969.59	169.34	0.00	0.00	5327.33
3847+00	50.00	231.18	12.38	0.23	0.00	458.66	22.92	0.28	0.00	6428.25	169.68	0.00	0.00	5762.74
3847+50	50.00	215.63	13.31	1.65	0.00	413.71	23.78	1.74	0.00	6841.96	171.77	0.00	0.00	6150.58
3848+00	50.00	170.16	14.25	6.08	0.00	357.21	25.52	7.16	0.00	7199.18	180.36	0.00	0.00	6473.68
3848+50	50.00	178.31	16.31	11.5	0.00	322.66	28.30	16.28	0.00	7521.83	199.89	0.00	0.00	6748.51
3849+00	50.00	167.69	18.38	4.48	0.00	320.37	32.12	14.80	0.00	7842.20	217.64	0.00	0.00	7019.00
3849+50	50.00	81.08	20.63	32.76	0.00	230.34	36.11	34.48	0.00	8072.55	259.02	0.00	0.00	7171.86
3850+00	50.00	52.28	22.88	26.68	0.00	123.48	40.28	55.04	0.00	8196.03	325.07	0.00	0.00	7189.02
3850+50	50.00	42.19	25.50	19.26	0.00	87.47	44.79	42.54	0.00	8283.50	376.11	0.00	0.00	7180.65
3851+00	50.00	146.81	28.13	9.16	0.00	175.00	49.65	26.31	0.00	8458.50	407.69	0.00	0.00	7274.42
3851+50	50.00	292.11	24.19	0	0.00	406.41	48.44	8.48	0.00	8864.91	417.87	0.00	0.00	7622.21
3852+00	50.00	167.04	20.25	12.74	0.00	425.14	41.15	11.80	0.00	9290.05	432.02	0.00	0.00	7992.05
3852+25 BK	25.00	167.3	21.75	7.76	0.00	154.79	19.44	9.49	0.00	9444.83	443.41	0.00	0.00	8116.01
					Column totals	9444.83	885.42	369.51	0.00					

9

9

EAST FRONTAGE ROAD NORTH

STATION		Distance	AREA (SF) Cut	AREA (SF) Salvaged/Unusable Pavement Material	AREA (SF) Fill	AREA (SF) EBS	Incremental Vol (CY) (Unadjusted) Cut	Incremental Vol (CY) (Unadjusted) Salvaged/Unusable Pavement Material	Incremental Vol (CY) (Unadjusted) Fill	Incremental Vol (CY) (Unadjusted) EBS	Cumulative Vol (CY) Cut 1.00	Cumulative Vol (CY) Expanded Fill 1.20	Cumulative Vol (CY) Expanded EBS Backfill 1.30	Cumulative Vol (CY) Reduced EBS In Fill 0.80	Mass Ordinate
5863+15	AH		295.49	0.00	62.02	0.00	0	0.00	0	0.00	0.00	0.00	0.00	0.00	0.00
5863+50		35.00	267.41	0.00	96.61	0.00	364.84	0.00	102.82	0.00	364.84	123.38	0.00	0.00	241.46
5864+00		50.00	182.00	27.00	106.12	0.00	416.12	25.00	187.71	0.00	780.96	348.63	0.00	0.00	407.33
5864+50		50.00	36.30	0.00	368.19	0.00	202.13	25.00	439.18	0.00	983.09	875.65	0.00	0.00	57.45
5865+00		50.00	60.40	0.00	165.28	0.00	89.54	0.00	493.95	0.00	1072.63	1468.39	0.00	0.00	-445.76
5865+50		50.00	121.64	0.00	23.17	0.00	168.56	0.00	174.49	0.00	1241.19	1677.78	0.00	0.00	-486.59
5866+00		50.00	285.78	0.00	0	0.00	377.24	0.00	21.45	0.00	1618.43	1703.52	0.00	0.00	-135.10
5866+50		50.00	306.40	0.00	0	0.00	548.31	0.00	0.00	0.00	2166.74	1703.52	0.00	0.00	413.22
5867+00		50.00	110.91	0.00	10.59	0.00	386.40	0.00	9.81	0.00	2553.14	1715.29	0.00	0.00	787.85
5867+50		50.00	35.18	0.00	111.18	0.00	135.27	0.00	112.75	0.00	2688.41	1850.59	0.00	0.00	787.82
5868+00		50.00	37.92	0.00	144.32	0.00	67.69	0.00	236.57	0.00	2756.09	2134.48	0.00	0.00	571.61
5868+50		50.00	42.77	0.00	105.15	0.00	74.71	0.00	230.99	0.00	2830.81	2411.67	0.00	0.00	369.14
5869+00		50.00	81.56	0.00	58.54	0.00	115.12	0.00	151.56	0.00	2945.93	2593.55	0.00	0.00	302.38
5869+50		50.00	148.29	0.00	35.86	0.00	212.82	0.00	87.41	0.00	3158.75	2698.43	0.00	0.00	410.32
5870+00		50.00	164.33	0.00	26.9	0.00	289.46	0.00	58.11	0.00	3448.21	2768.17	0.00	0.00	630.05
5870+50		50.00	164.35	0.00	24.9	0.00	304.33	0.00	47.96	0.00	3752.55	2825.72	0.00	0.00	876.82
5871+00		50.00	158.35	0.00	27.94	0.00	298.80	0.00	48.93	0.00	4051.34	2884.43	0.00	0.00	1116.91
5871+50		50.00	163.46	0.00	32.58	0.00	297.97	0.00	56.04	0.00	4349.31	2951.68	0.00	0.00	1347.64
5872+00		50.00	247.53	0.00	4.76	0.00	380.55	0.00	34.57	0.00	4729.86	2993.17	0.00	0.00	1686.69
5872+50		50.00	326.31	0.00	0	0.00	531.33	0.00	4.41	0.00	5261.19	2998.46	0.00	0.00	2212.74
5873+00		50.00	306.99	0.00	0	0.00	586.39	0.00	0.00	0.00	5847.58	2998.46	0.00	0.00	2799.13
5873+50		50.00	182.02	0.00	8.33	0.00	452.79	0.00	7.71	0.00	6300.37	3007.71	0.00	0.00	3242.66
5874+00		50.00	48.63	0.00	50.81	0.00	213.56	0.00	54.76	0.00	6513.94	3073.42	0.00	0.00	3390.51
5874+50		50.00	15.32	0.00	169.16	0.00	59.21	0.00	203.68	0.00	6573.15	3317.83	0.00	0.00	3205.31
5875+00		50.00	9.27	0.00	221.32	0.00	22.77	0.00	361.56	0.00	6595.92	3751.70	0.00	0.00	2794.22
5875+50		50.00	31.26	0.00	125.81	0.00	37.53	0.00	321.42	0.00	6633.44	4137.40	0.00	0.00	2446.04
5876+00		50.00	84.77	0.00	39.42	0.00	107.44	0.00	152.99	0.00	6740.88	4320.99	0.00	0.00	2369.89
5876+50		50.00	90.22	0.00	34.34	0.00	162.03	0.00	68.30	0.00	6902.91	4402.95	0.00	0.00	2449.96
5877+00		50.00	50.73	0.00	66.36	0.00	130.51	0.00	93.24	0.00	7033.42	4514.83	0.00	0.00	2468.58
5877+50		50.00	24.28	0.00	130.5	0.00	69.45	0.00	182.28	0.00	7102.87	4733.57	0.00	0.00	2319.30
5878+00		50.00	13.42	0.00	213.79	0.00	34.91	0.00	318.79	0.00	7137.78	5116.11	0.00	0.00	1971.67
5878+50		50.00	4.78	0.00	261.58	0.00	16.85	0.00	440.16	0.00	7154.63	5644.30	0.00	0.00	1460.33
5878+72		22.00	20.28	0.00	269.25	0.00	10.21	0.00	216.26	0.00	7164.84	5903.82	0.00	0.00	1211.02
5879+00		28.00	23.11	0.00	227.76	0.00	22.50	0.00	257.71	0.00	7187.34	6213.07	0.00	0.00	924.27
5879+50		50.00	31.58	0.00	196.57	0.00	50.64	0.00	392.90	0.00	7237.98	6684.55	0.00	0.00	503.43
5880+00		50.00	33.13	0.00	203.54	0.00	59.92	0.00	370.47	0.00	7297.89	7129.11	0.00	0.00	118.78
5880+50		50.00	34.98	0.00	209.21	0.00	63.06	0.00	382.18	0.00	7360.96	7587.72	0.00	0.00	-276.77
5881+00		50.00	342.39	0.00	200.31	0.00	349.42	0.00	379.19	0.00	7710.37	8042.75	0.00	0.00	-382.37
5881+50		50.00	317.18	0.00	183.5	0.00	610.71	0.00	355.38	0.00	8321.09	8469.20	0.00	0.00	-198.11
5882+00		50.00	294.90	11.25	268.75	0.00	566.74	10.42	418.75	0.00	8887.83	8971.70	0.00	0.00	-144.29
5882+50		50.00	199.11	11.25	222.27	0.00	457.42	20.83	454.65	0.00	9345.25	9517.28	0.00	0.00	-253.28
5883+00		50.00	186.55	11.25	154.94	0.00	357.09	20.83	349.27	0.00	9702.34	9936.40	0.00	0.00	-336.15
5883+50		50.00	183.16	11.25	42.19	0.00	342.32	20.83	182.53	0.00	10044.66	10155.44	0.00	0.00	-233.69
5884+00		50.00	167.96	11.25	294.5	0.00	325.11	20.83	311.75	0.00	10369.77	10529.54	0.00	0.00	-303.51
5884+50		50.00	115.97	11.25	255.84	0.00	262.90	20.83	509.57	0.00	10632.67	11141.02	0.00	0.00	-672.94
5885+00		50.00	110.97	11.25	126.59	0.00	210.13	20.83	354.10	0.00	10842.80	11565.95	0.00	0.00	-908.56
5885+50		50.00	126.02	11.25	111.6	0.00	219.44	20.83	220.55	0.00	11062.24	11830.60	0.00	0.00	-974.62
5886+00		50.00	142.86	11.25	70.93	0.00	248.96	20.83	169.01	0.00	11311.20	12033.41	0.00	0.00	-949.30
5886+50		50.00	167.75	11.25	25.53	0.00	287.60	20.83	89.31	0.00	11598.80	12140.59	0.00	0.00	-789.71
5887+00		50.00	201.09	11.25	20.8	0.00	341.52	20.83	42.90	0.00	11940.32	12192.07	0.00	0.00	-520.50
5887+50		50.00	220.35	11.25	23.07	0.00	390.22	20.83	40.62	0.00	12330.54	12240.81	0.00	0.00	-199.85
5888+00		50.00	272.44	11.25	38.3	0.00	456.29	20.83	56.82	0.00	12786.83	12309.00	0.00	0.00	167.41
5888+50		50.00	342.52	14.25	115.4	0.00	569.41	23.61	142.31	0.00	13356.24	12479.78	0.00	0.00	542.43
5889+00		50.00	358.54	14.25	171.12	0.00	649.13	26.39	265.30	0.00	14005.37	12798.14	0.00	0.00	846.81
5889+50		50.00	444.91	14.25	283.17	0.00	743.94	26.39	420.64	0.00	14749.30	13302.90	0.00	0.00	1059.59
5890+00		50.00	589.08	14.25	379.39	0.00	957.40	26.39	613.48	0.00	15706.70	14039.08	0.00	0.00	1254.42
5890+50		50.00	761.65	14.25	517.47	0.00	1250.68	26.39	830.43	0.00	16957.37	15035.59	0.00	0.00	1482.20
5891+00		50.00	963.42	14.25	877.02	0.00	1597.29	26.39	1291.19	0.00	18554.66	16585.02	0.00	0.00	1503.67
5891+50		50.00	1162.77	14.25	1415.3	0.00	1968.69	26.39	2122.52	0.00	20523.36	19132.05	0.00	0.00	898.95
5892+00		50.00	1327.89	14.25	1843.7	0.00	2306.17	26.39	3017.56	0.00	22829.52	22753.11	0.00	0.00	-442.34
5892+50		50.00	1618.72	14.25	2193.2	0.00	2728.34	26.39	3737.86	0.00	25557.87	27238.55	0.00	0.00	-2225.82
5893+00		50.00	1877.37	14.25	2392.1	0.00	3237.12	26.39	4245.70	0.00	28794.99	32333.39	0.00	0.00	-4109.93
5893+50		50.00	1941.23	14.25	2392.8	0.00	3535.74	26.39	4430.46	0.00	32330.73	37649.95	0.00	0.00	-5917.14
5894+00		50.00	1464.79	14.25	2037	0.00	3153.72	26.39	4101.64	0.00	35484.45	42571.91	0.00	0.00	-7711.77
5894+50		50.00	68.32	14.25	517.47	0.00	1419.55	26.39	2365.25	0.00	36904.00	45410.21	0.00	0.00	-9156.91
5894+78	BK	28.00	68.32	14.25	517.47	0.00	70.85	14.78	536.64	0.00	36974.85	46054.18	0.00	0.00	-9744.80
						Column totals	36974.85	665.47	38378.48	0.00					

EAST FRONTAGE ROAD NORTH

STATION		Real Station	Distance	AREA (SF) Cut	AREA (SF) Salvaged/Unusable Pavement Material	AREA (SF) Fill	AREA (SF) EBS	Incremental Vol (CY) (Unadjusted) Cut	Incremental Vol (CY) (Unadjusted) Salvaged/Unusable Pavement Material	Incremental Vol (CY) (Unadjusted) Fill	Incremental Vol (CY) (Unadjusted) EBS	Cumulative Vol (CY) Cut 1.00	Cumulative Vol (CY) Expanded Fill 1.20	Cumulative Vol (CY) Expanded EBS Backfill 1.30	Cumulative Vol (CY) Reduced EBS In Fill 0.80	Mass Ordinate
5895+18	AH	589518.00		275.35	14.25	0	0.00	0	0.00	0	0.00	0.00	0.00	0.00	0.00	0.00
5895+50		589550.00	32.00	112.24	14.25	205.5	0.00	229.68	16.89	121.78	0.00	229.68	146.13	0.00	0.00	66.66
5896+00		589600.00	50.00	349.04	14.25	384.04	0.00	427.11	26.39	545.87	0.00	656.79	801.18	0.00	0.00	-187.66
5896+50		589650.00	50.00	244.7	14.25	268.9	0.00	549.76	26.39	604.57	0.00	1206.55	1526.67	0.00	0.00	-389.78
5897+00		589700.00	50.00	186.14	14.25	176.24	0.00	398.93	26.39	412.17	0.00	1605.48	2021.27	0.00	0.00	-511.84
5897+50		589750.00	50.00	191.01	14.25	104.85	0.00	349.21	26.39	260.27	0.00	1954.69	2333.59	0.00	0.00	-501.34
5898+00		589800.00	50.00	216.88	14.25	54.41	0.00	377.68	26.39	147.46	0.00	2332.37	2510.54	0.00	0.00	-327.01
5898+50		589850.00	50.00	162.34	14.25	31.21	0.00	351.13	26.39	79.28	0.00	2683.50	2605.68	0.00	0.00	-97.40
5899+00		589900.00	50.00	140.22	14.25	14.02	0.00	280.15	26.39	41.88	0.00	2963.65	2655.93	0.00	0.00	106.10
5899+50		589950.00	50.00	134.76	14.25	8.55	0.00	254.61	26.39	20.90	0.00	3218.26	2681.01	0.00	0.00	309.25
5900+00		590000.00	50.00	126.99	14.25	5.12	0.00	242.36	26.39	12.66	0.00	3460.62	2696.20	0.00	0.00	510.03
5900+50		590050.00	50.00	122.62	14.25	5.09	0.00	231.12	26.39	9.45	0.00	3691.74	2707.54	0.00	0.00	703.42
5901+00		590100.00	50.00	124.53	14.25	5.84	0.00	228.84	26.39	10.12	0.00	3920.58	2719.69	0.00	0.00	893.73
5901+23	BK	590123.00	23.00	127.96	14.25	6.65	0.00	107.54	12.14	5.32	0.00	4028.12	2726.07	0.00	0.00	982.74
							Column totals	4028.12	319.31	2271.73	0.00					

CTH C

STATION	Real Station	Distance	AREA (SF) Cut	AREA (SF) Salvaged/Unusable Pavement Material	AREA (SF) Fill	AREA (SF) EBS	Incremental Vol (CY) (Unadjusted) Cut	Incremental Vol (CY) (Unadjusted) Salvaged/Unusable Pavement Material	Incremental Vol (CY) (Unadjusted) Fill	Incremental Vol (CY) (Unadjusted) EBS	Cumulative Vol (CY) Cut 1.00	Cumulative Vol (CY) Expanded Fill 1.20	Cumulative Vol (CY) Expanded EBS Backfill 1.30	Cumulative Vol (CY) Reduced EBS In Fill 0.80	Mass Ordinate
68+75 AH	6875.00		996.69	0.00	13.41	0.00	0	0.00	0.00	0.00	0.00	0.00	0.00	0.00	0.00
69+00	6900.00	25.00	573.31	19.00	71.42	0.00	726.85	8.80	39.27	0.00	726.85	47.13	0.00	0.00	670.93
69+50	6950.00	50.00	50.04	19.00	0	0.00	577.18	35.19	66.13	0.00	1304.03	126.48	0.00	0.00	1133.56
70+00	7000.00	50.00	39.42	19.00	0	0.00	82.83	35.19	0.00	0.00	1386.86	126.48	0.00	0.00	1181.21
70+50	7050.00	50.00	48.83	19.00	34.54	0.00	81.71	35.19	31.98	0.00	1468.57	164.86	0.00	0.00	1189.36
71+00	7100.00	50.00	56.06	19.00	288.72	0.00	97.12	35.19	299.31	0.00	1565.69	524.04	0.00	0.00	892.12
71+50	7150.00	50.00	58.79	19.00	188.23	0.00	106.34	35.19	441.62	0.00	1672.04	1053.98	0.00	0.00	433.33
72+00	7200.00	50.00	57.47	19.00	101.79	0.00	107.65	35.19	268.54	0.00	1779.69	1376.23	0.00	0.00	183.55
72+15 BK	7214.92	14.92	59.06	19.00	102.52	0.00	32.20	10.50	56.45	0.00	1811.88	1443.97	0.00	0.00	137.51
						Column totals	1811.88	230.41	1203.31	0.00					

KILBOURN AVENUE																
			AREA (SF)				Incremental Vol (CY) (Unadjusted)				Cumulative Vol (CY)				
STATION	Real Station	Distance	Cut	Salvaged/Unusable Pavement Material	Fill	EBS	Cut	Salvaged/Unusable Pavement Material	Fill	EBS	Cut 1.00	Expanded Fill 1.20	Expanded EBS Backfill 1.30	Reduced EBS In Fill 0.80	Mass Ordinate
3+50.01 AH	325.00		133.53	0.00	109.69	0.00	0.00	0.00	0.00	0.00	0.00	0.00	0.00	0.00	0.00
4+00.00	350.00	25.00	159.99	11.25	105.73	0.00	135.89	5.21	99.73	0.00	135.89	119.68	0.00	0.00	11.00
4+50.00	375.00	25.00	91.1	11.25	2.14	0.00	116.25	10.42	49.94	0.00	252.13	179.61	0.00	0.00	56.90
5+00.00	400.00	25.00	88.98	11.25	1.76	0.00	83.37	10.42	1.81	0.00	335.50	181.77	0.00	0.00	127.69
5+50.00	425.00	25.00	96.99	11.25	1.76	0.00	86.10	10.42	1.63	0.00	421.60	183.73	0.00	0.00	201.42
6+00.00	450.00	25.00	117.52	11.25	0	0.00	99.31	10.42	0.81	0.00	520.91	184.71	0.00	0.00	289.33
6+50.00	475.00	25.00	114.82	11.25	0	0.00	107.56	10.42	0.00	0.00	628.48	184.71	0.00	0.00	386.48
7+00.00	500.00	25.00	87.88	11.25	0	0.00	93.84	10.42	0.00	0.00	722.32	184.71	0.00	0.00	469.91
7+50.00	525.00	25.00	52.24	11.25	4.18	0.00	64.87	10.42	1.94	0.00	787.19	187.03	0.00	0.00	522.04
8+00.00	550.00	25.00	16.98	11.25	100.85	0.00	32.05	10.42	48.63	0.00	819.24	245.38	0.00	0.00	485.32
8+50.00	575.00	25.00	13.1	11.25	149.15	0.00	13.93	10.42	115.74	0.00	833.16	384.27	0.00	0.00	349.94
9+00.00 BK	600.00	25.00	4.56	11.25	237.46	0.00	8.18	10.42	178.99	0.00	841.34	599.05	0.00	0.00	132.91
						Column totals	841.34	109.38	499.21	0.00					

KILBOURN AVENUE																
			AREA (SF)				Incremental Vol (CY) (Unadjusted)				Cumulative Vol (CY)				
STATION	Real Station	Distance	Cut	Salvaged/Unusable Pavement Material	Fill	EBS	Cut	Salvaged/Unusable Pavement Material	Fill	EBS	Cut 1.00	Expanded Fill 1.20	Expanded EBS Backfill 1.30	Reduced EBS In Fill 0.80	Mass Ordinate
11+00.00 AH	1100.00		37.11	16.50	214.23	0.00	0.00	0.00	0.00	0.00	0.00	0.00	0.00	0.00	0.00
11+50.00	1125.00	25.00	68.47	16.50	142.3	0.00	48.88	15.28	165.06	0.00	48.88	198.07	0.00	0.00	-164.47
12+00.00	1150.00	25.00	27.54	16.50	158.48	0.00	44.45	15.28	139.25	0.00	93.33	365.17	0.00	0.00	-302.40
12+50.00	1175.00	25.00	95.48	16.50	51.29	0.00	56.95	15.28	97.12	0.00	150.28	481.71	0.00	0.00	-377.26
13+00.00	1200.00	25.00	112.39	16.50	11.9	0.00	96.24	15.28	29.25	0.00	246.52	516.82	0.00	0.00	-331.41
13+12.34 BK	1225.00	25.00	102.14	16.50	9.41	0.00	99.32	15.28	9.87	0.00	345.84	528.66	0.00	0.00	-259.21
						Column totals	345.84	76.39	440.55	0.00					

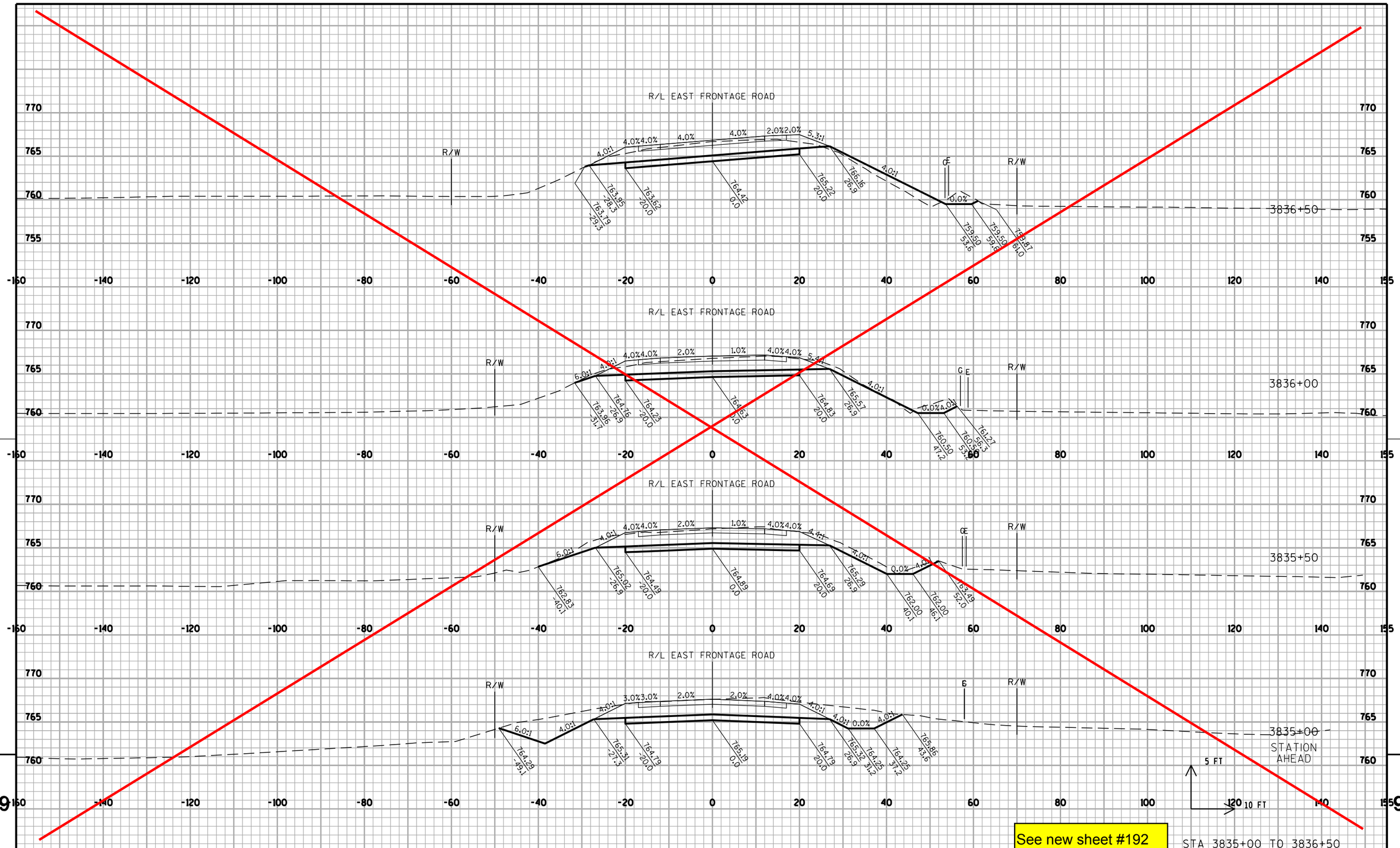

PROJECT NO: 1033-02-70	HWY: IH 94/STH 20	COUNTY: RACINE	CROSS SECTIONS: EAST FRONTAGE ROAD - SOUTH	SHEET 192	E

FILE NAME : S:\FinalDesign\20\10330270_E\Roads\cds\090201_xs_frse.dgn PLOT DATE : 07-DEC-2010 10:25 PLOT BY : MSCD1S PLOT NAME : 090201_xs_frse PLOT SCALE : 20:1

WISDOT/CADDS SHEET 21

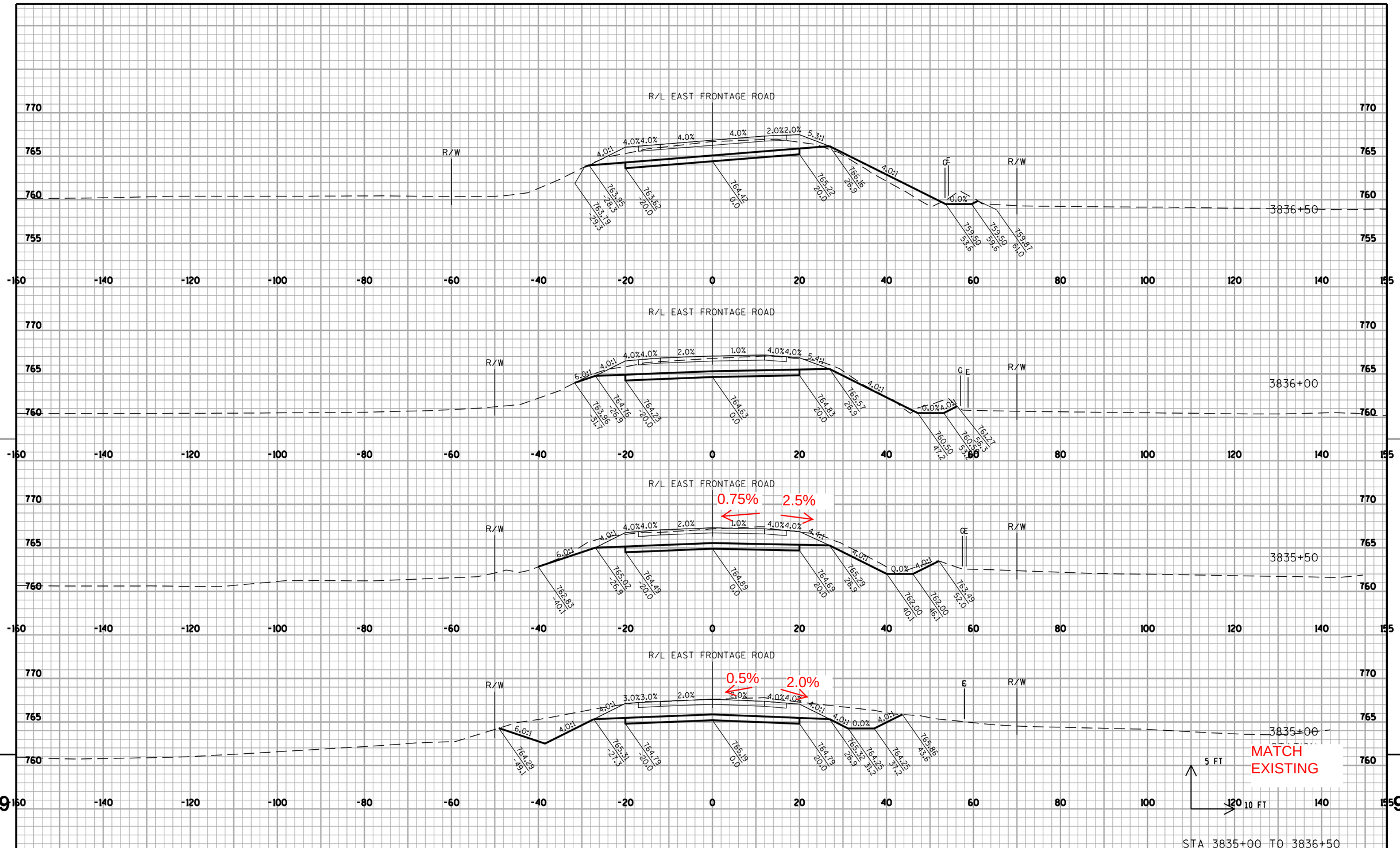

PROJECT NO: 1033-02-70	HWY: IH 94/STH 20	COUNTY: RACINE	CROSS SECTIONS: EAST FRONTAGE ROAD - SOUTH	SHEET 192	E

FILE NAME : S:\FinalDesign\20\10330270_E\Roads\cds\090201_xs_frse.dgn PLOT DATE : 07-DEC-2010 10:25 PLOT BY : MSCD1S PLOT NAME : 090201_xs_frse PLOT SCALE : 20:1

WISDOT/CADDS SHEET 21

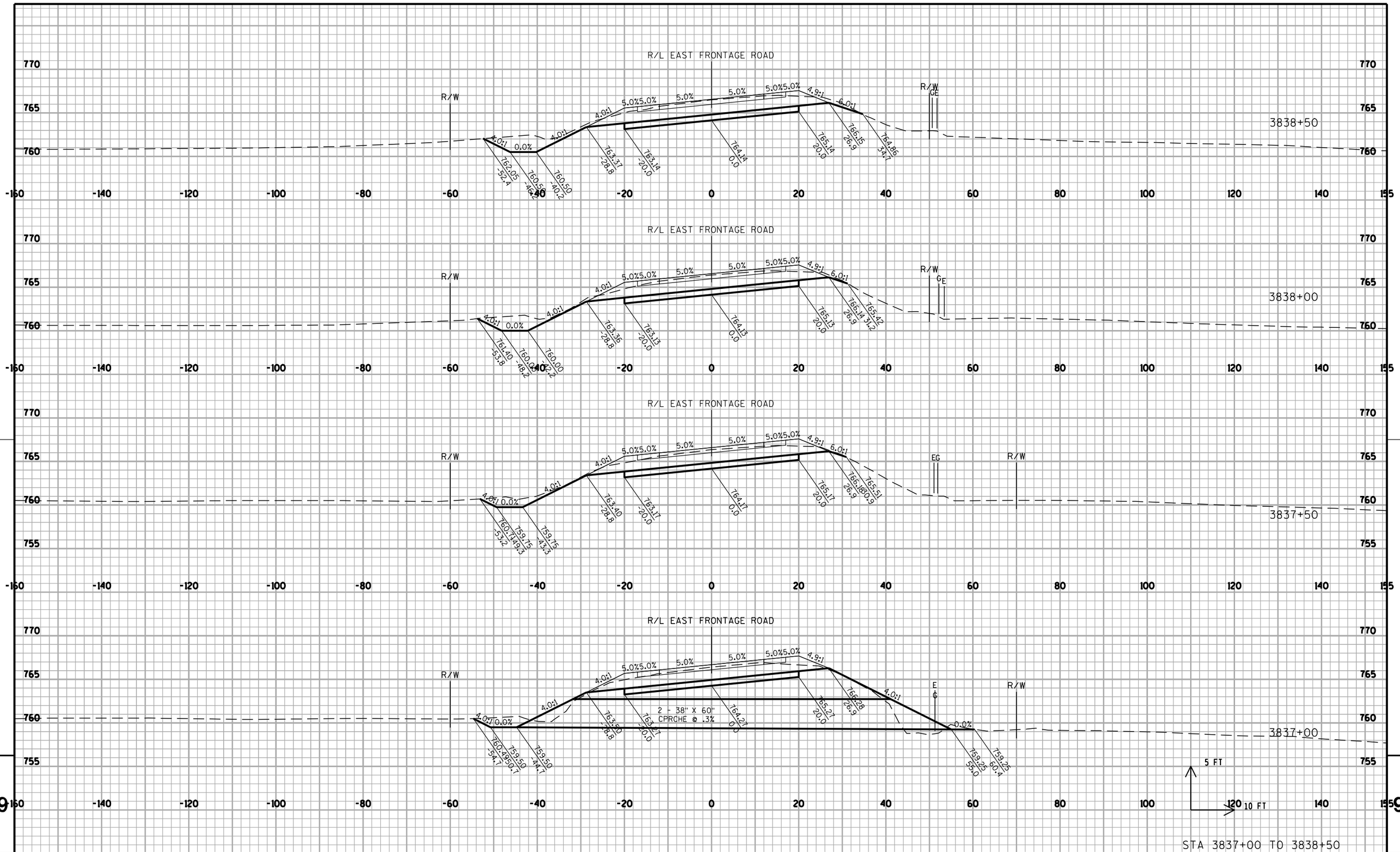

PROJECT NO: 1033-02-70	HWY: IH 94/STH 20	COUNTY: RACINE	CROSS SECTIONS: EAST FRONTAGE ROAD - SOUTH	SHEET 193	E

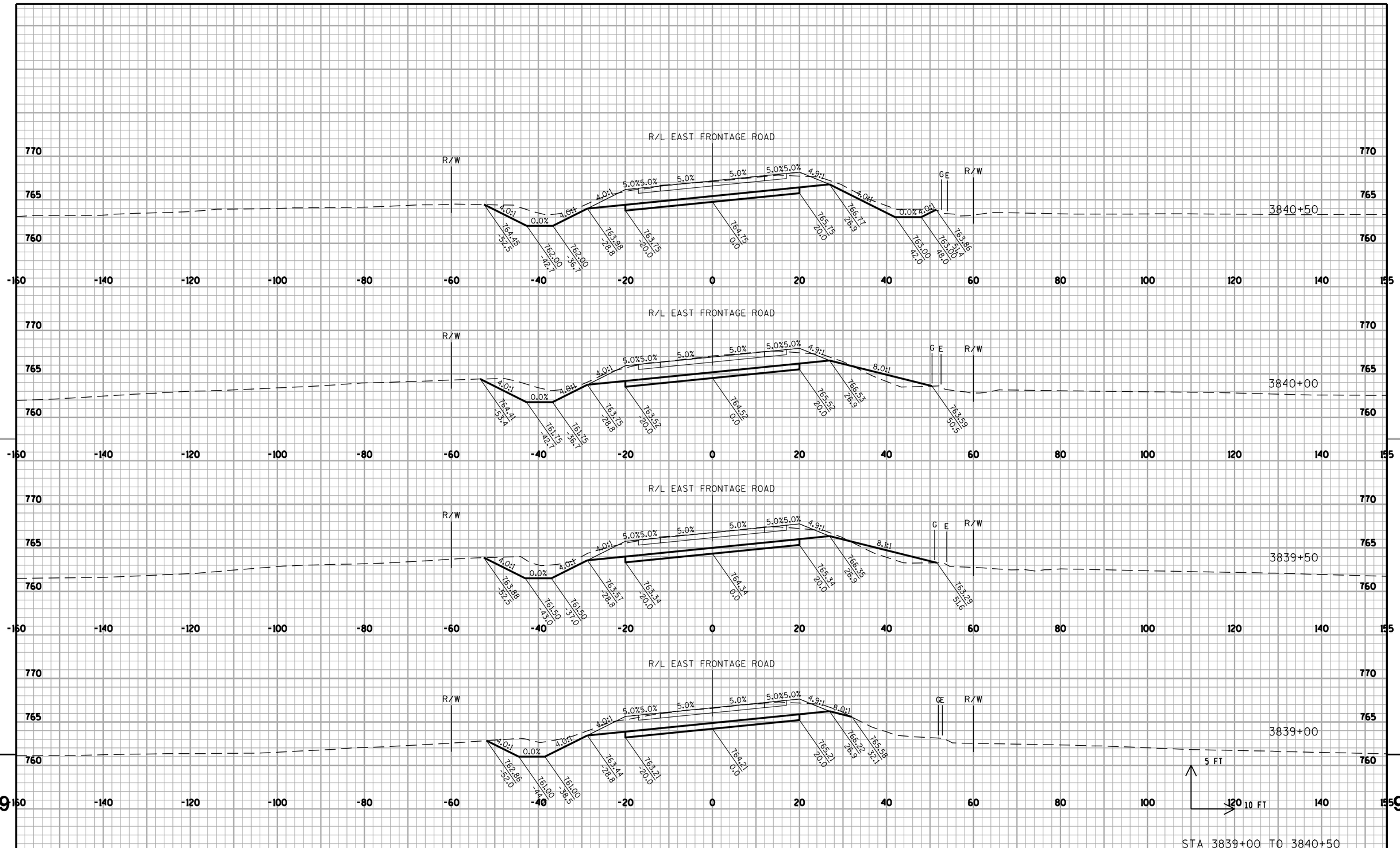

PROJECT NO: 1033-02-70	HWY: IH 94/STH 20	COUNTY: RACINE	CROSS SECTIONS: EAST FRONTAGE ROAD - SOUTH	SHEET 194	E

FILE NAME : S:\FinalDesign\20\10330270_E\Roads\cds\090201_xs_frse.dgn PLOT DATE : 07-DEC-2010 10:26 PLOT BY : MSCD1S PLOT NAME : 090201_xs_frse2 PLOT SCALE : 20:1

WISDOT/CADDS SHEET 21

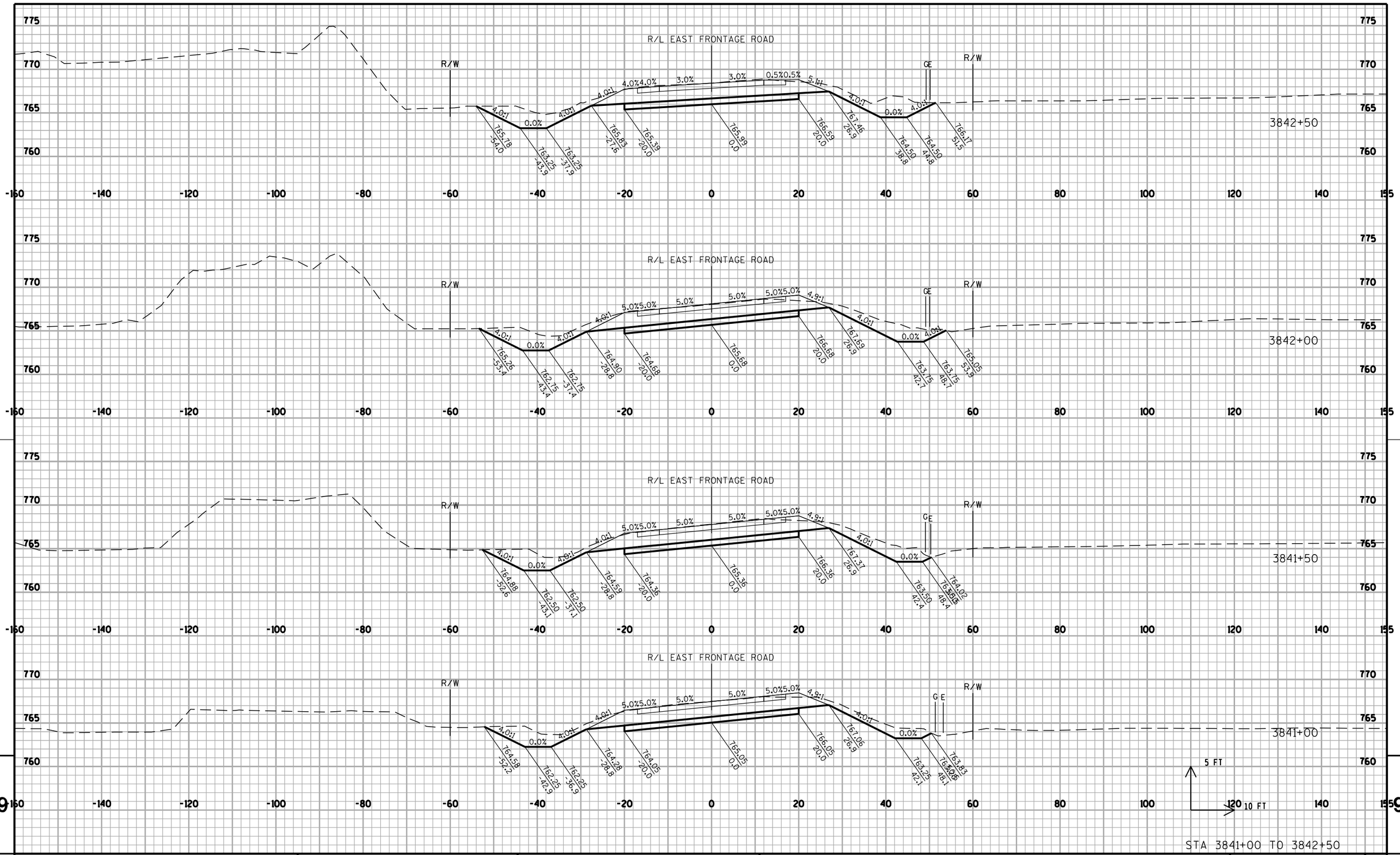

PROJECT NO: 1033-02-70	HWY: IH 94/STH 20	COUNTY: RACINE	CROSS SECTIONS: EAST FRONTAGE ROAD - SOUTH	SHEET 195	E

FILE NAME : S:\FinalDesign\20\10330270_E\Roads\cds\090201_xs_frse.dgn PLOT DATE : 07-DEC-2010 10:26 PLOT BY : MSCD1S PLOT NAME : 090201_xs_frse3 PLOT SCALE : 20:1

WISDOT/CADDS SHEET 21

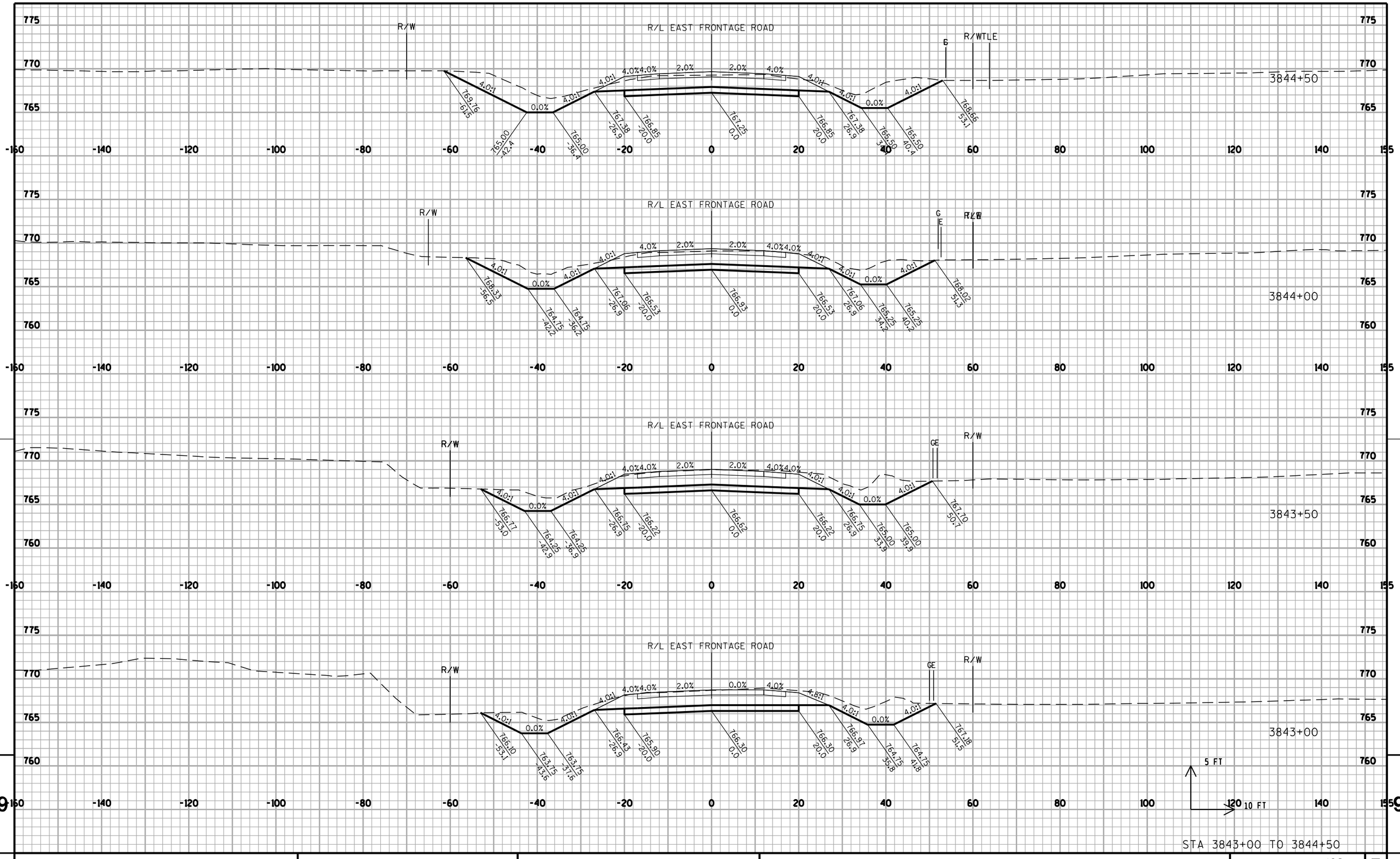

PROJECT NO: 1033-02-70	HWY: IH 94/STH 20	COUNTY: RACINE	CROSS SECTIONS: EAST FRONTAGE ROAD - SOUTH	SHEET 196	E

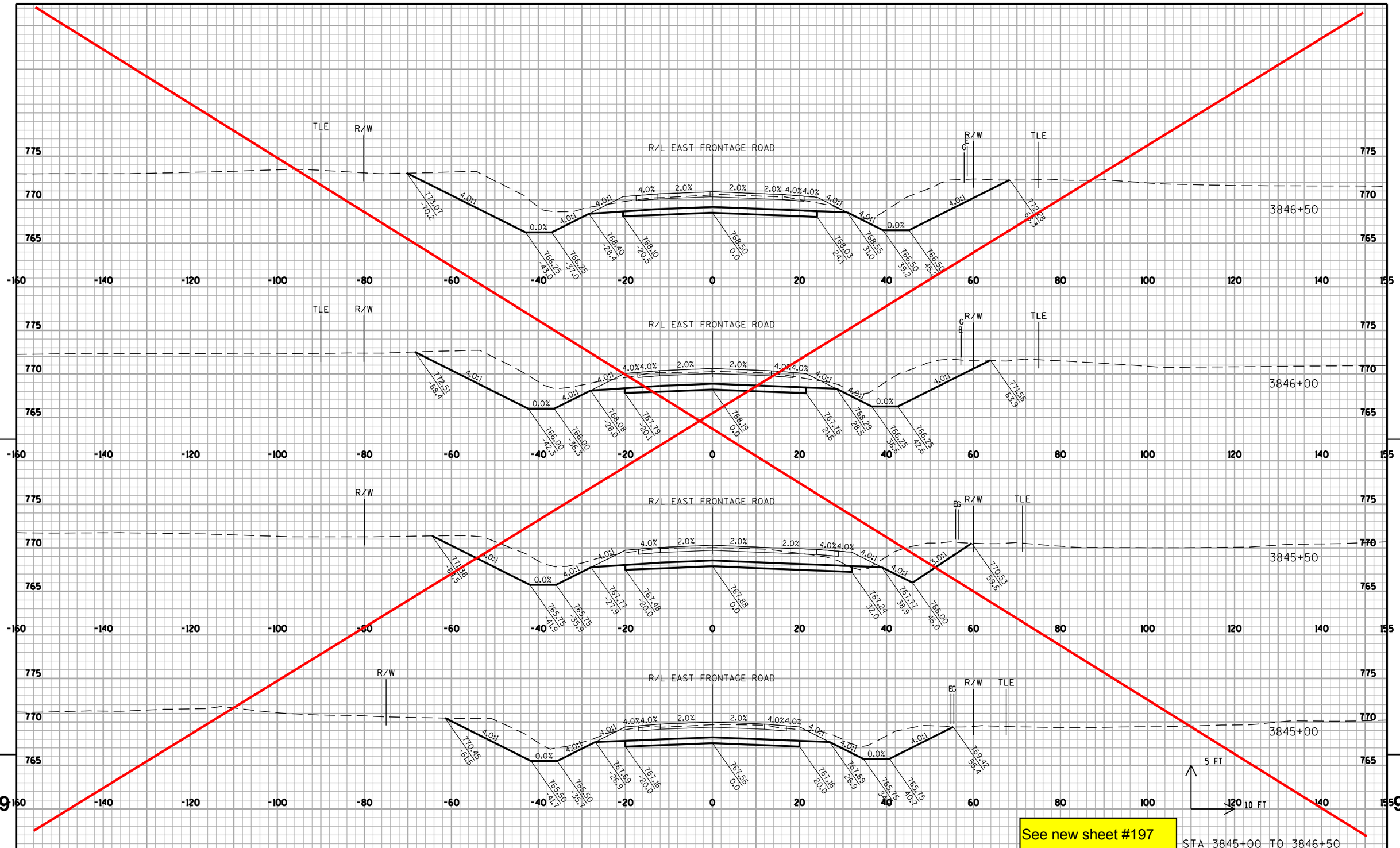

STA 3845+00 TO 3846+50

PROJECT NO:1033-02-70	HWY:IH 94/STH 20	COUNTY: RACINE	CROSS SECTIONS: EAST FRONTAGE ROAD - SOUTH	SHEET 197	E

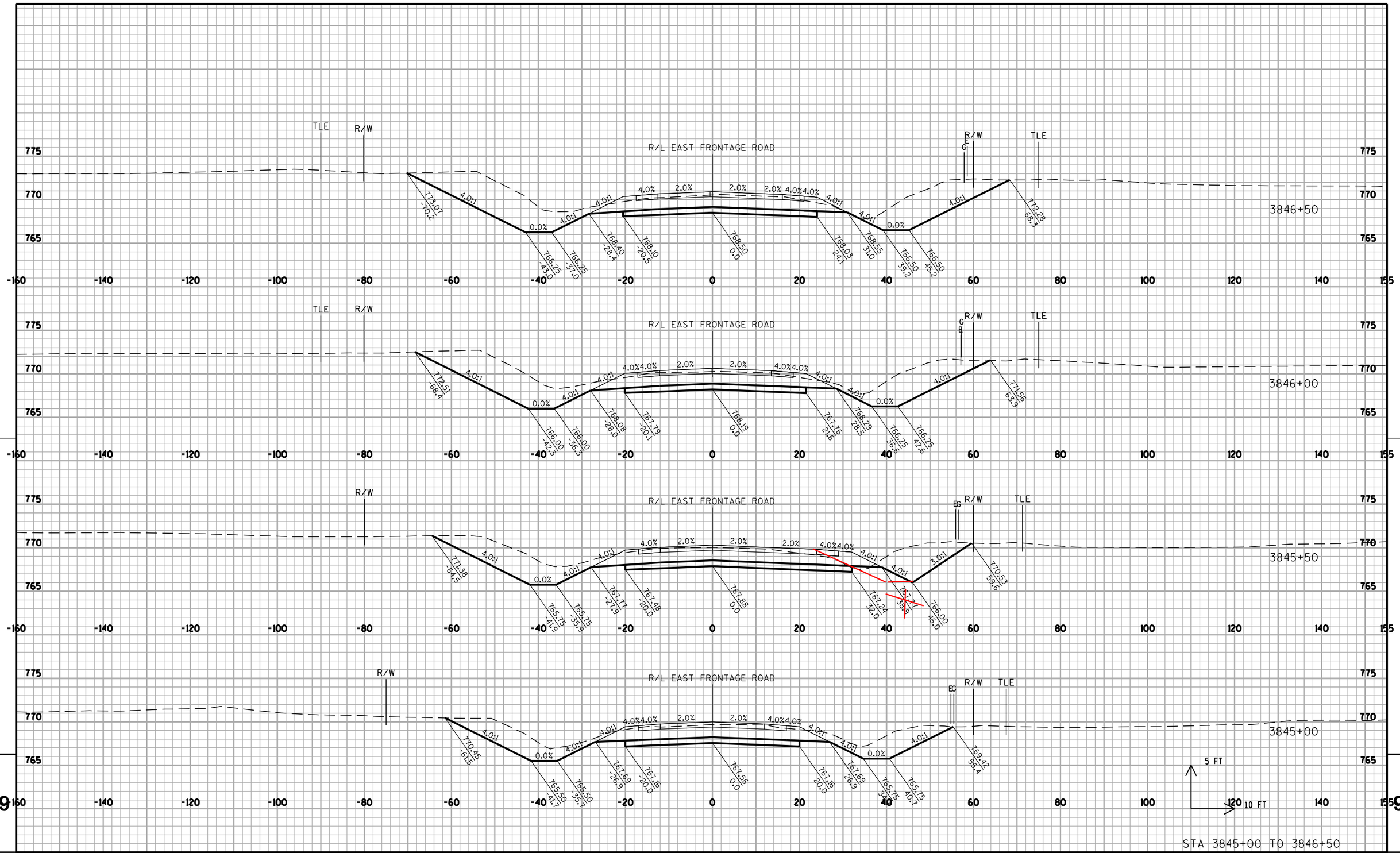

PROJECT NO: 1033-02-70	HWY: IH 94/STH 20	COUNTY: RACINE	CROSS SECTIONS: EAST FRONTAGE ROAD - SOUTH	SHEET 197	E

FILE NAME : S:\FinalDesign\20\10330270_E\Roads\cds\090201_xs_frse.dgn PLOT DATE : 07-DEC-2010 10:26 PLOT BY : MSCD1S PLOT NAME : 090201_xs_frse5 PLOT SCALE : 20:1

WISDOT/CADDS SHEET 21

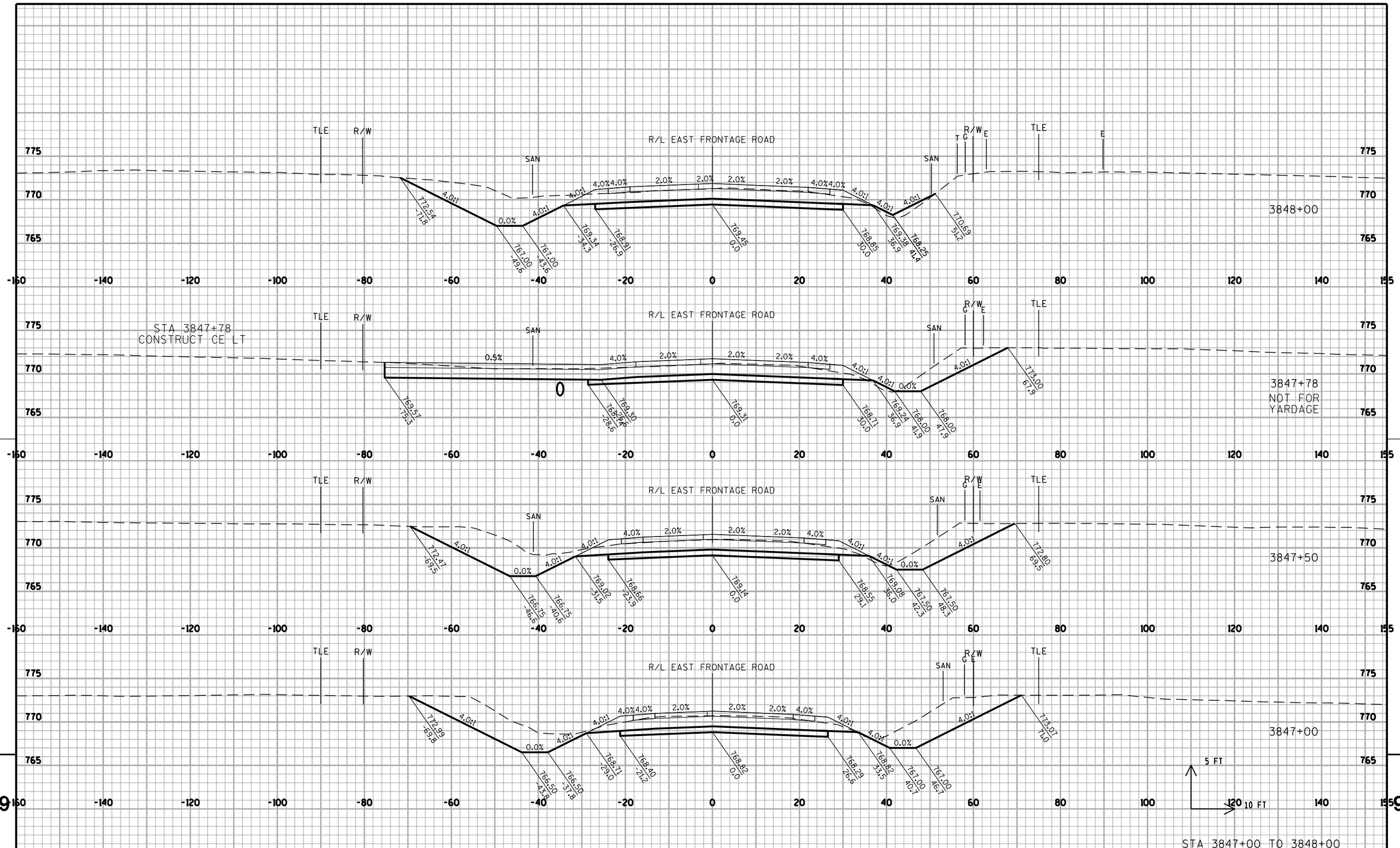

PROJECT NO: 1033-02-70	HWY: IH 94/STH 20	COUNTY: RACINE	CROSS SECTIONS: EAST FRONTAGE ROAD - SOUTH	SHEET 198	E

FILE NAME : S:\FinalDesign\20\10330270_E\Roads\cds\090201_xs_frse.dgn PLOT DATE : 07-DEC-2010 10:26 PLOT BY : MSCD1S PLOT NAME : 090201_xs_frse6 PLOT SCALE : 20:1

WISDOT/CADDS SHEET 21

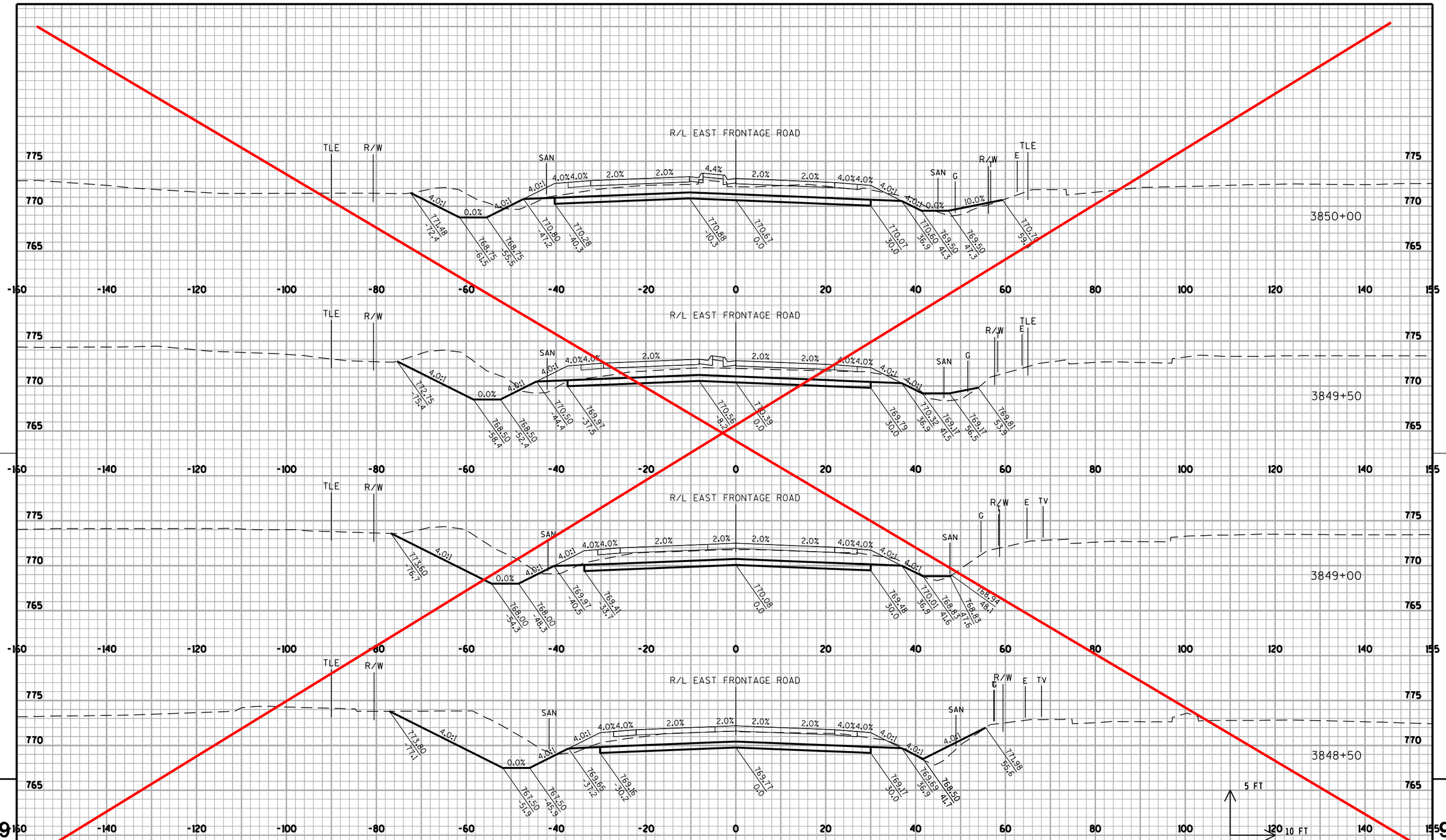

See new sheet #199

STA 3848+50 TO 3850+00

PROJECT NO: 1033-02-70	HWY: IH 94/STH 20	COUNTY: RACINE	CROSS SECTIONS: EAST FRONTAGE ROAD - SOUTH	SHEET 199	E

FILE NAME : S:\FinalDesign\20\10330270_E\Roads\cds\090201_xs_frse.dgn PLOT DATE : 07-DEC-2010 10:26 PLOT BY : MSCD1S PLOT NAME : 090201_xs_frse7 PLOT SCALE : 20:1

WISDOT/CADDS SHEET 21

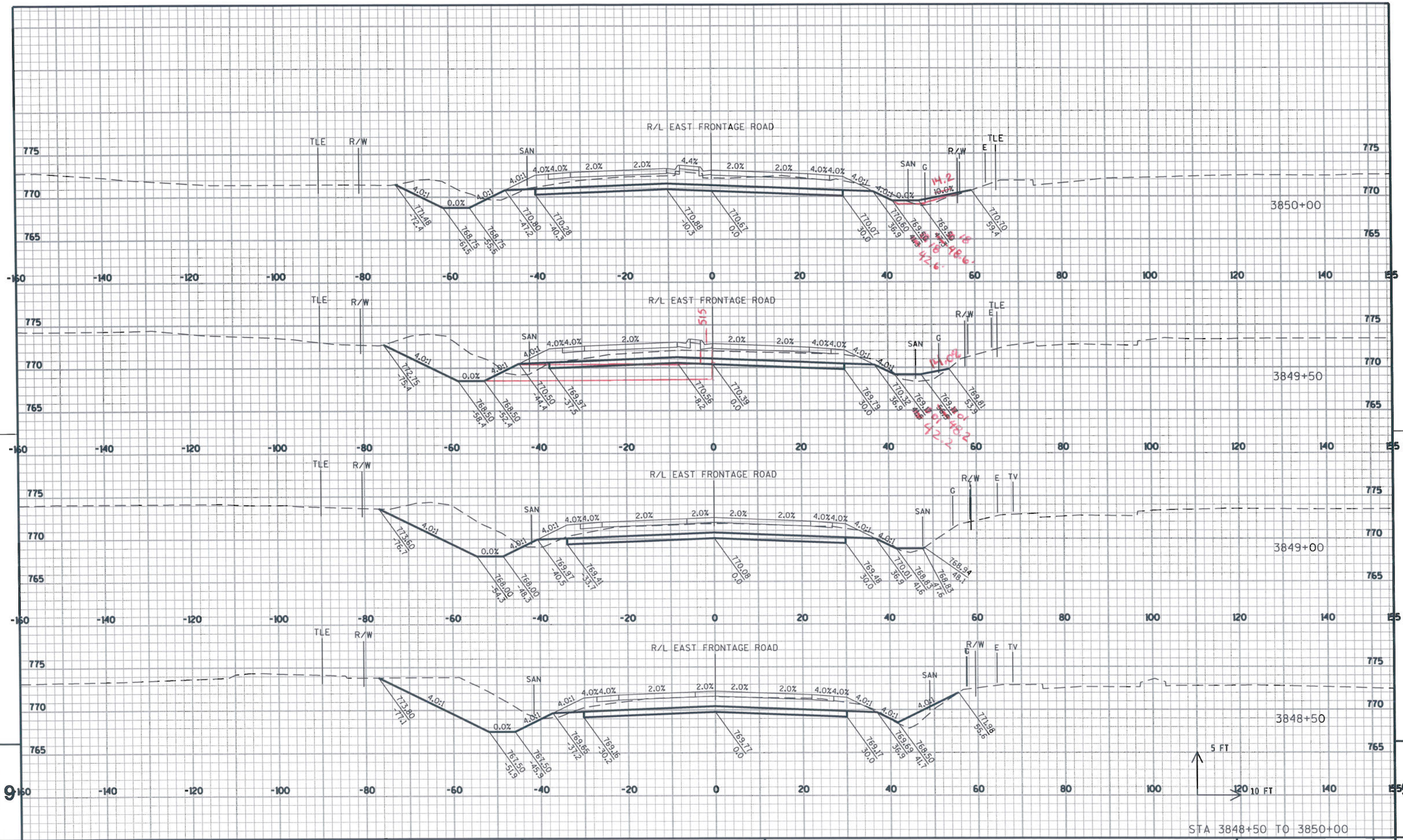

STA 3848+50 TO 3850+00

PROJECT NO: 1033-02-70	HWY: IH 94/STH 20	COUNTY: RACINE	CROSS SECTIONS: EAST FRONTAGE ROAD - SOUTH	SHEET 199	E

FILE NAME : S:\FinalDesign\20\10330270_E\Roads\cds\090201_xs_frse.dgn PLOT DATE : 07-DEC-2010 10:26 PLOT BY : MSCD1S PLOT NAME : 090201_xs_frse7 PLOT SCALE : 20:1

WISDOT/CADDS SHEET 21

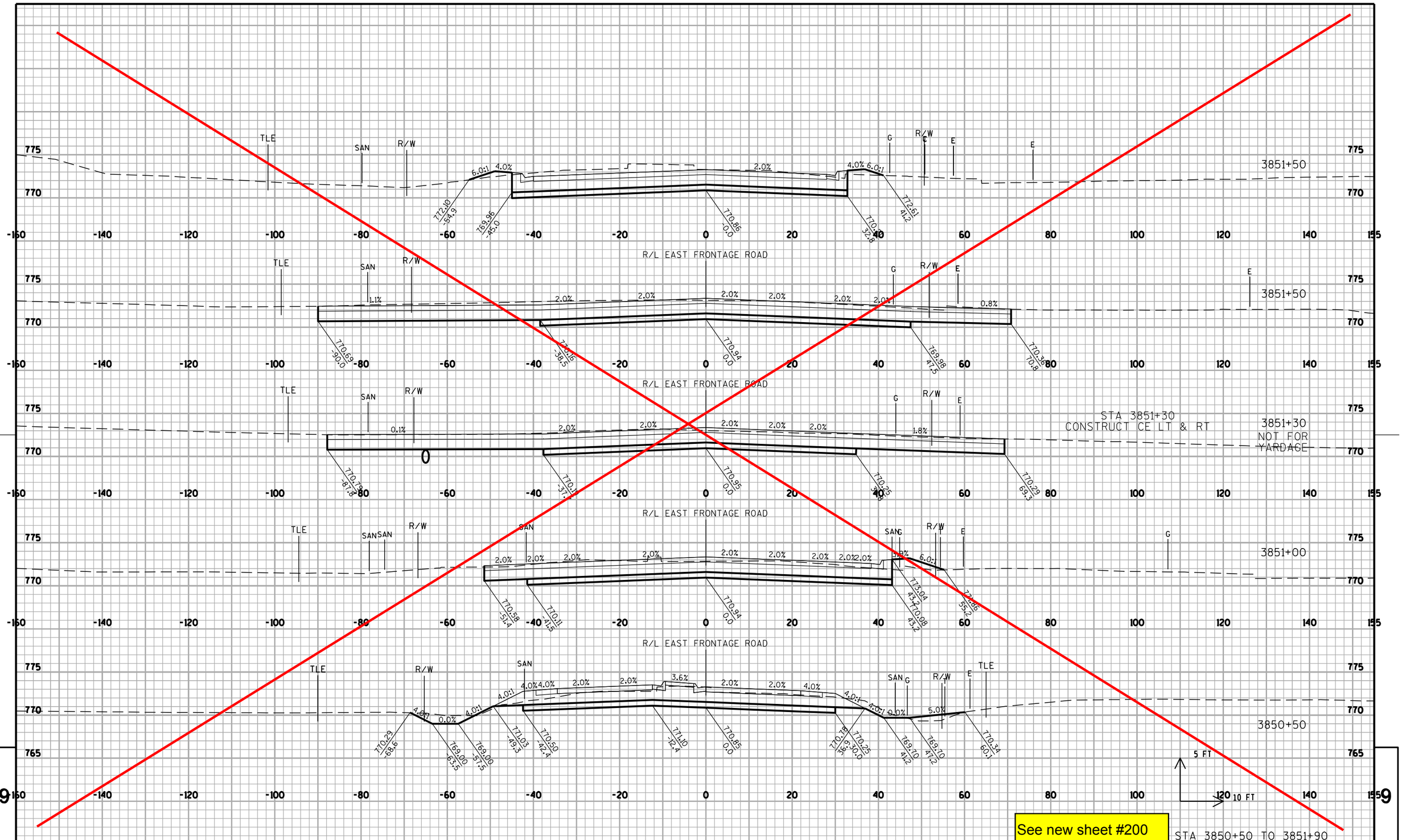

PROJECT NO:1033-02-70	HWY:IH 94/STH 20	COUNTY: RACINE	CROSS SECTIONS: EAST FRONTAGE ROAD - SOUTH	SHEET 200	E

FILE NAME : S:\FinalDesign\20\10330270_E\Roads\cds\090201_xs_frse.dgn PLOT DATE : 07-DEC-2010 10:26 PLOT BY : MSCD1S PLOT NAME : 090201_xs_frse8 PLOT SCALE : 20:1

WISDOT/CADDS SHEET 21

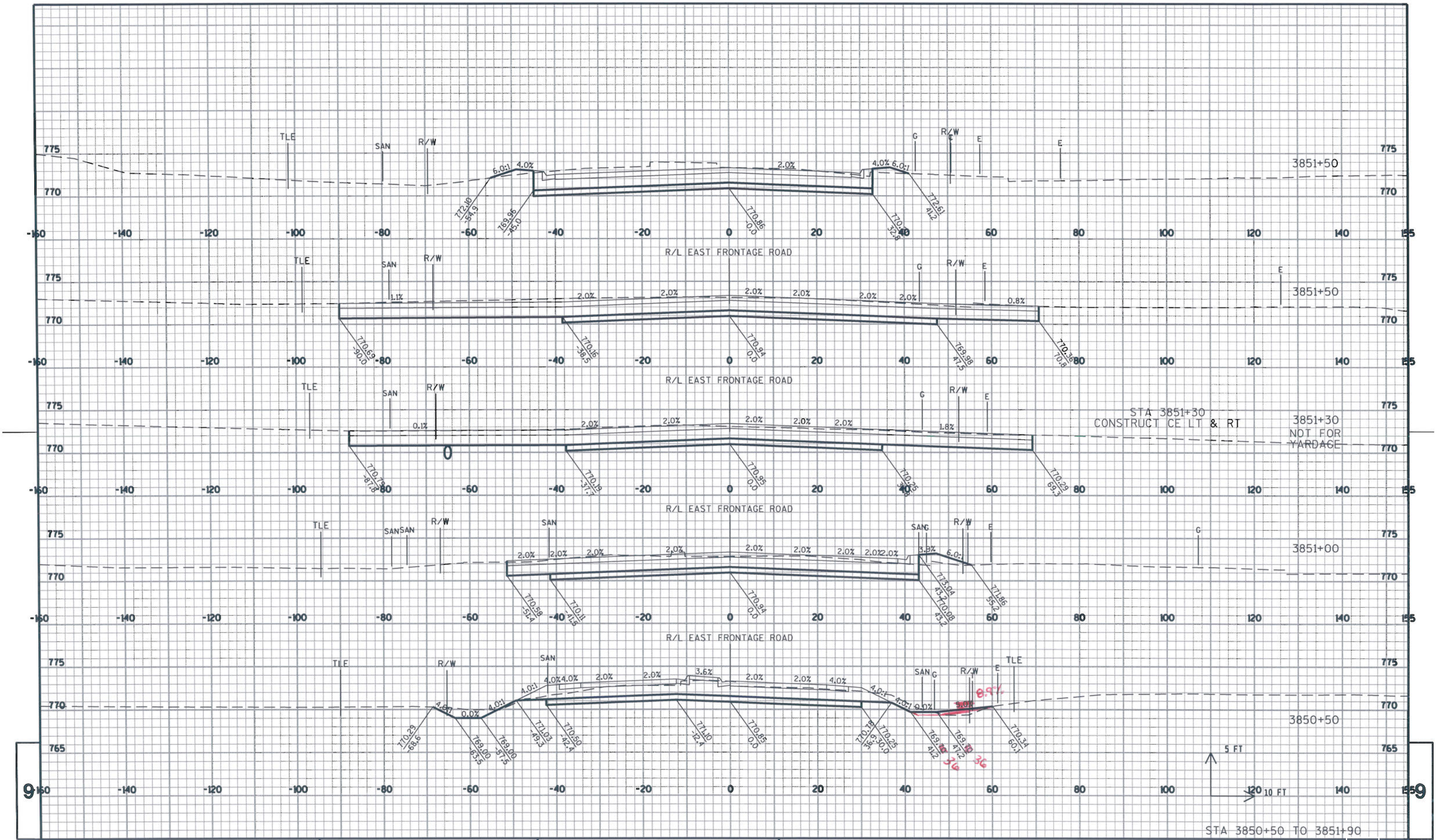

PROJECT NO: 1033-02-70	HWY: IH 94/STH 20	COUNTY: RACINE	CROSS SECTIONS: EAST FRONTAGE ROAD - SOUTH	SHEET 200	E

FILE NAME : S:\FinalDesign\20\10330270_E\Roads\cds\090201_xs_frse.dgn PLOT DATE : 07-DEC-2010 10:26 PLOT BY : WSCD1S PLOT NAME : 090201_xs_frse8 PLOT SCALE : 20:1

WISDOT/CADDS SHEET 21

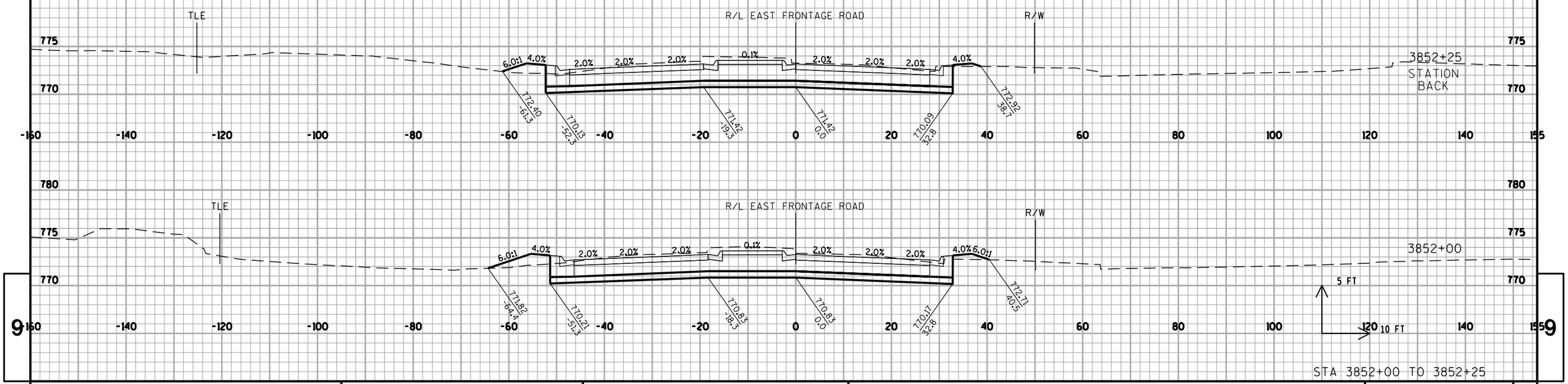

PROJECT NO: 1033-02-70	HWY: IH 94/STH 20	COUNTY: RACINE	CROSS SECTIONS: EAST FRONTAGE ROAD - SOUTH	SHEET 201	E

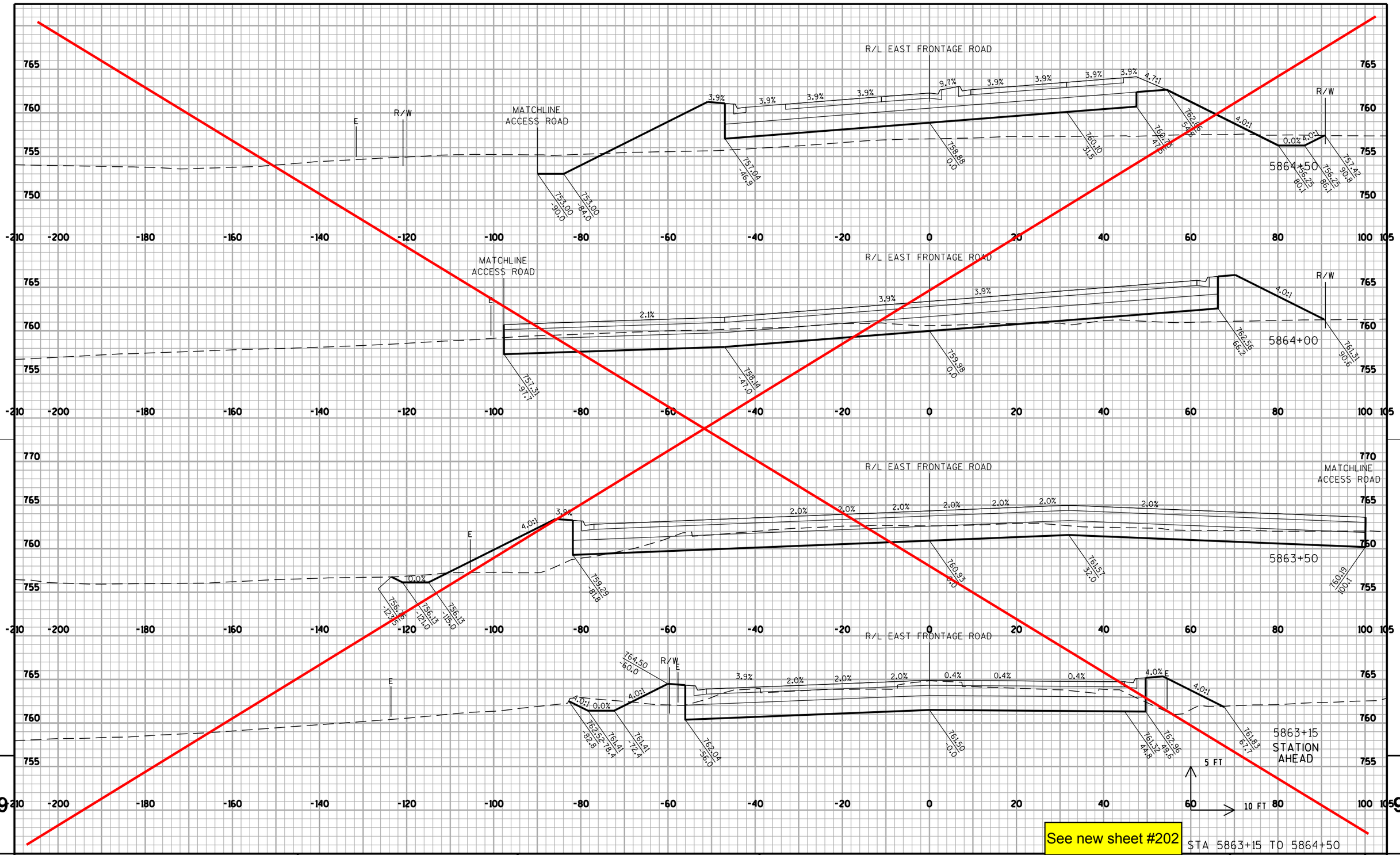

STA 5863+15 TO 5864+50

PROJECT NO: 1033-02-70	HWY: IH 94/STH 20	COUNTY: RACINE	CROSS SECTIONS: EAST FRONTAGE ROAD - NORTH	SHEET 202	E

FILE NAME : s:\FinalDesign\20\10330270_E\Roads\cds\090202_xs_frne.dgn PLOT DATE : 06-DEC-2010 20:32 PLOT BY : MSCD1S PLOT NAME : 090202_xs_frne PLOT SCALE : 20:1

WISDOT/CADDS SHEET 21

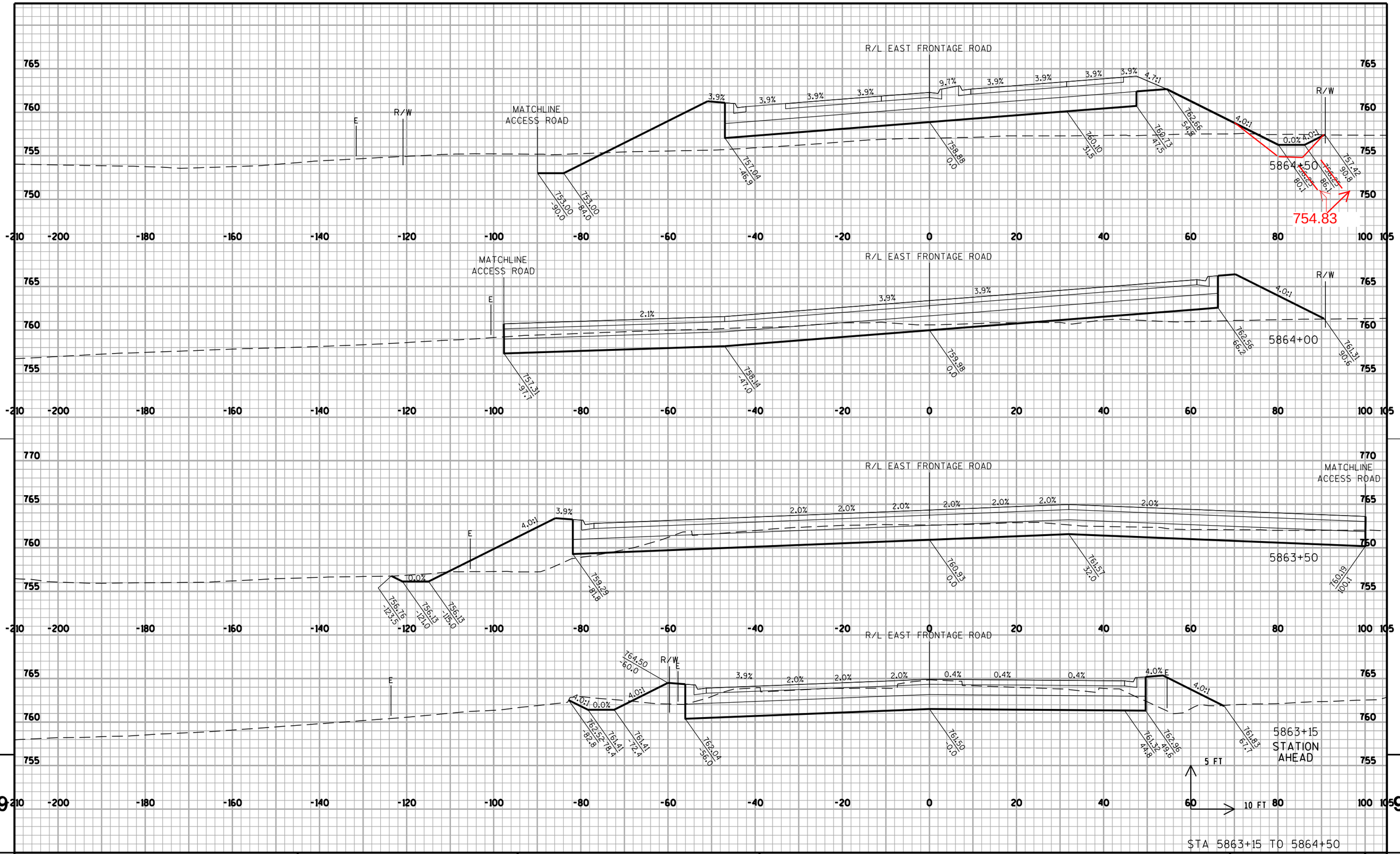

PROJECT NO: 1033-02-70	HWY: IH 94/STH 20	COUNTY: RACINE	CROSS SECTIONS: EAST FRONTAGE ROAD - NORTH	SHEET 202	E

FILE NAME : s:\FinalDesign\20\10330270_E\Roads\cds\090202_xs_frne.dgn PLOT DATE : 06-DEC-2010 20:32 PLOT BY : MSCD1S PLOT NAME : 090202_xs_frne PLOT SCALE : 20:1

WISDOT/CADDS SHEET 21

See new sheet #203

STA 5865+00 TO 5866+50

PROJECT NO:1033-02-70	HWY:IH 94/STH 20	COUNTY: RACINE	CROSS SECTIONS: EAST FRONTAGE ROAD - NORTH	SHEET 203	E

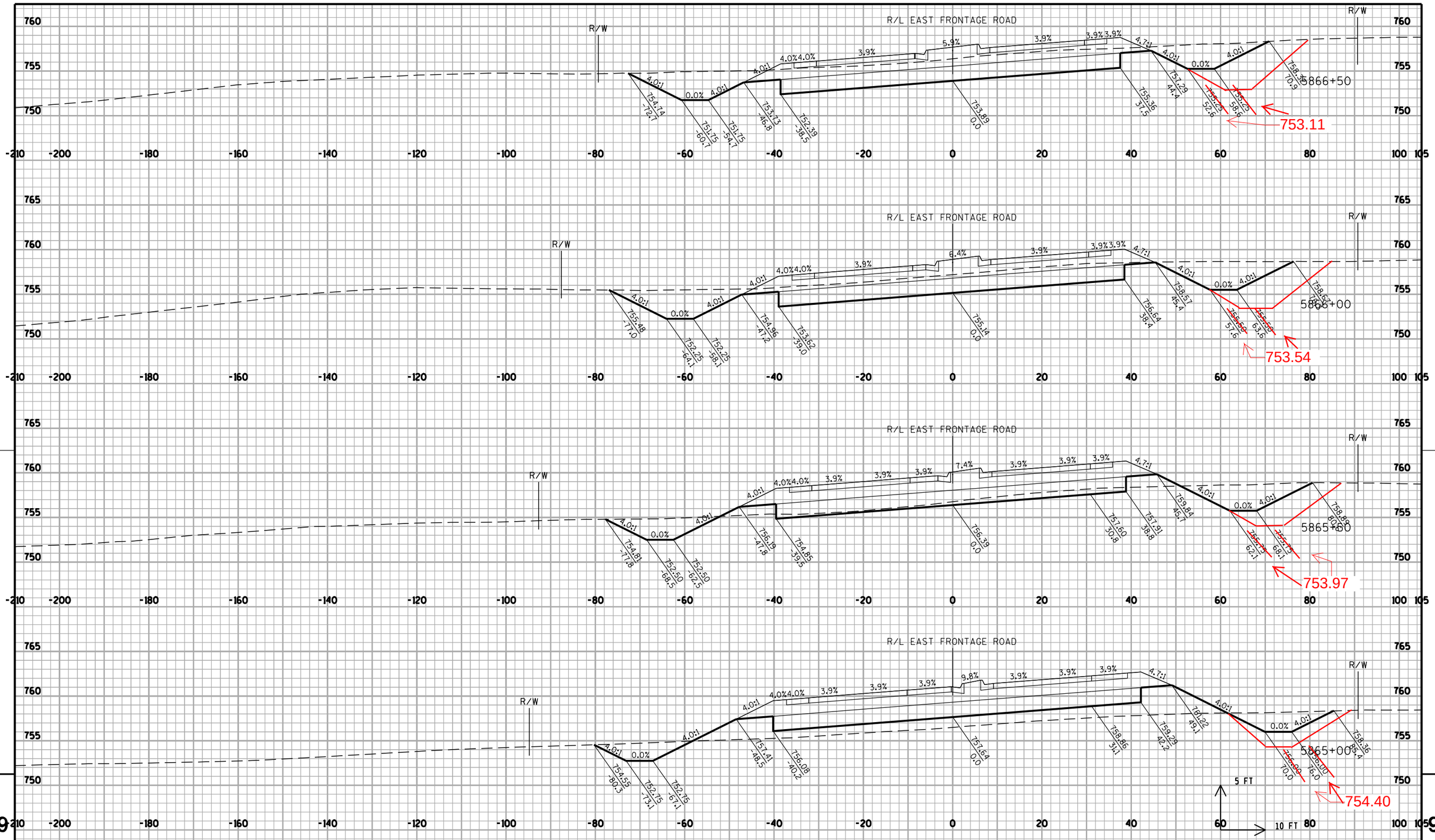

STA 5865+00 TO 5866+50

PROJECT NO:1033-02-70	HWY:IH 94/STH 20	COUNTY: RACINE	CROSS SECTIONS: EAST FRONTAGE ROAD - NORTH	SHEET 203	E

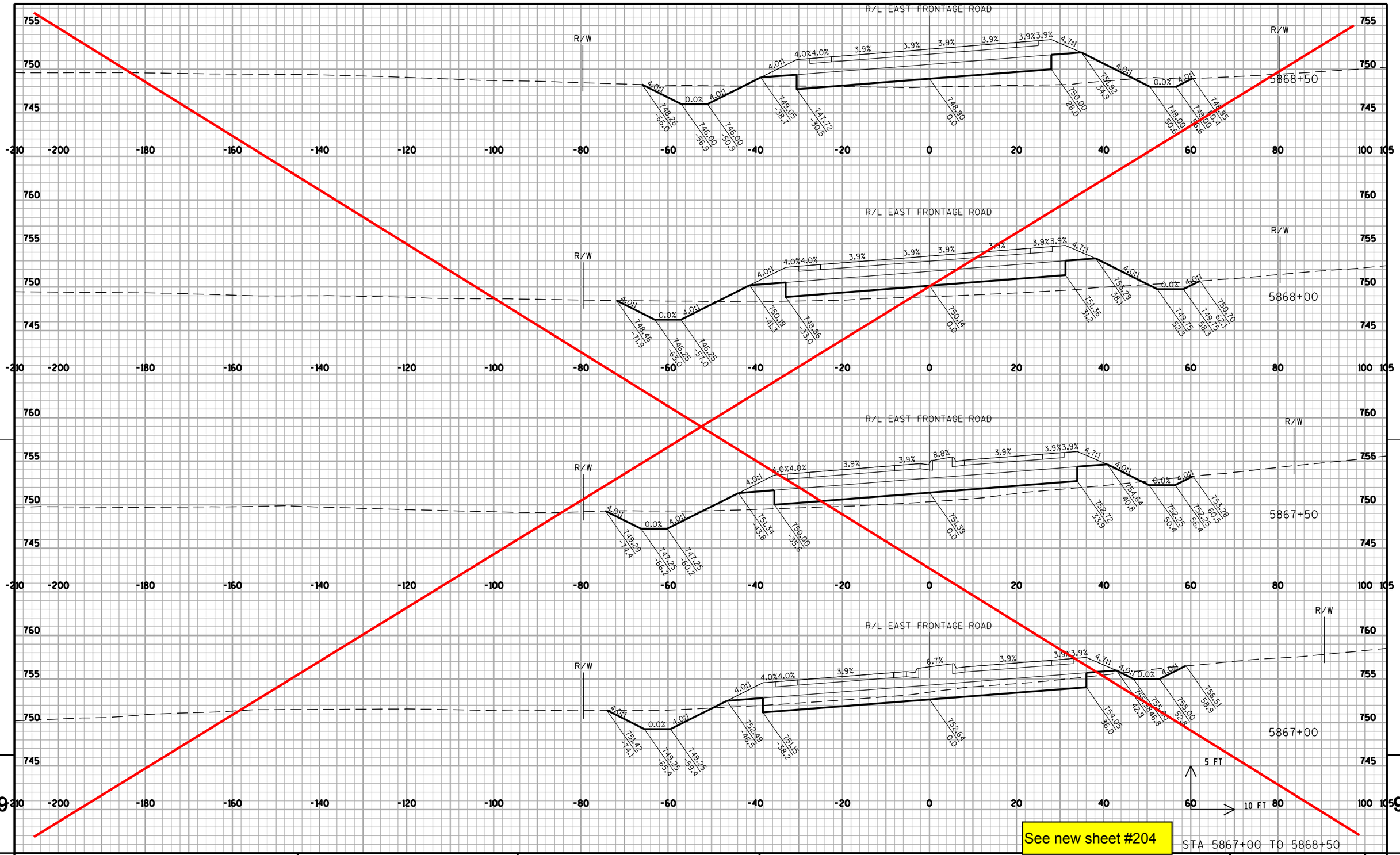

See new sheet #204

STA 5867+00 TO 5868+50

PROJECT NO: 1033-02-70	HWY: IH 94/STH 20	COUNTY: RACINE	CROSS SECTIONS: EAST FRONTAGE ROAD - NORTH	SHEET 204	E

FILE NAME : s:\FinalDesign\20\10330270_E\Roads\cds\090202_xs_frne.dgn PLOT DATE : 06-DEC-2010 20:32 PLOT BY : MSCD1S PLOT NAME : 090202_xs_frne2 PLOT SCALE : 20:1

WISDOT/CADDS SHEET 21

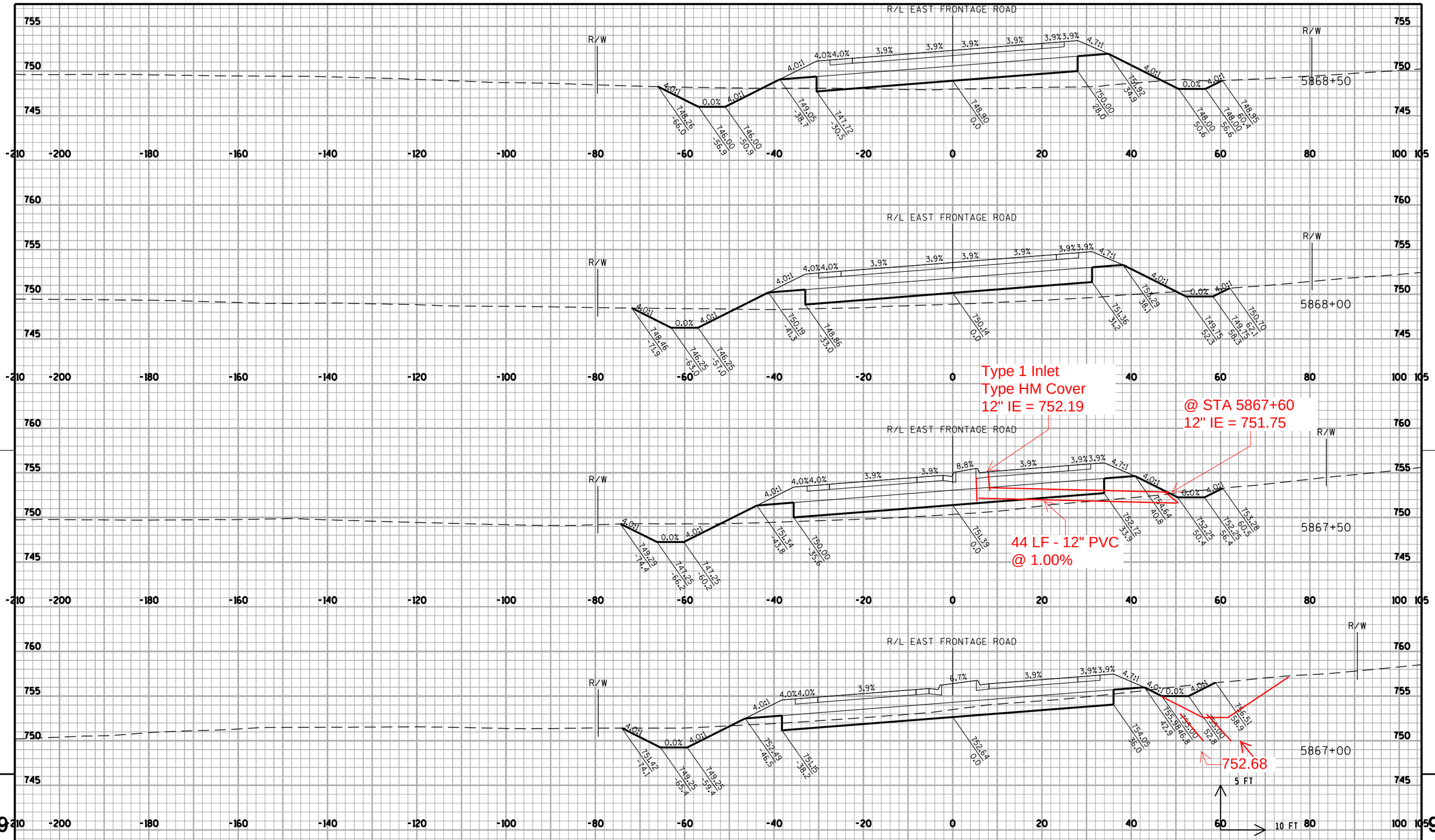

PROJECT NO:1033-02-70	HWY:IH 94/STH 20	COUNTY: RACINE	CROSS SECTIONS: EAST FRONTAGE ROAD - NORTH	SHEET 204	E

FILE NAME : s:\FinalDesign\20\10330270_E\Roads\cds\090202_xs_frne.dgn PLOT DATE : 06-DEC-2010 20:32 PLOT BY : MSCD1S PLOT NAME : 090202_xs_frne2 PLOT SCALE : 20:1

WISDOT/CADDS SHEET 21

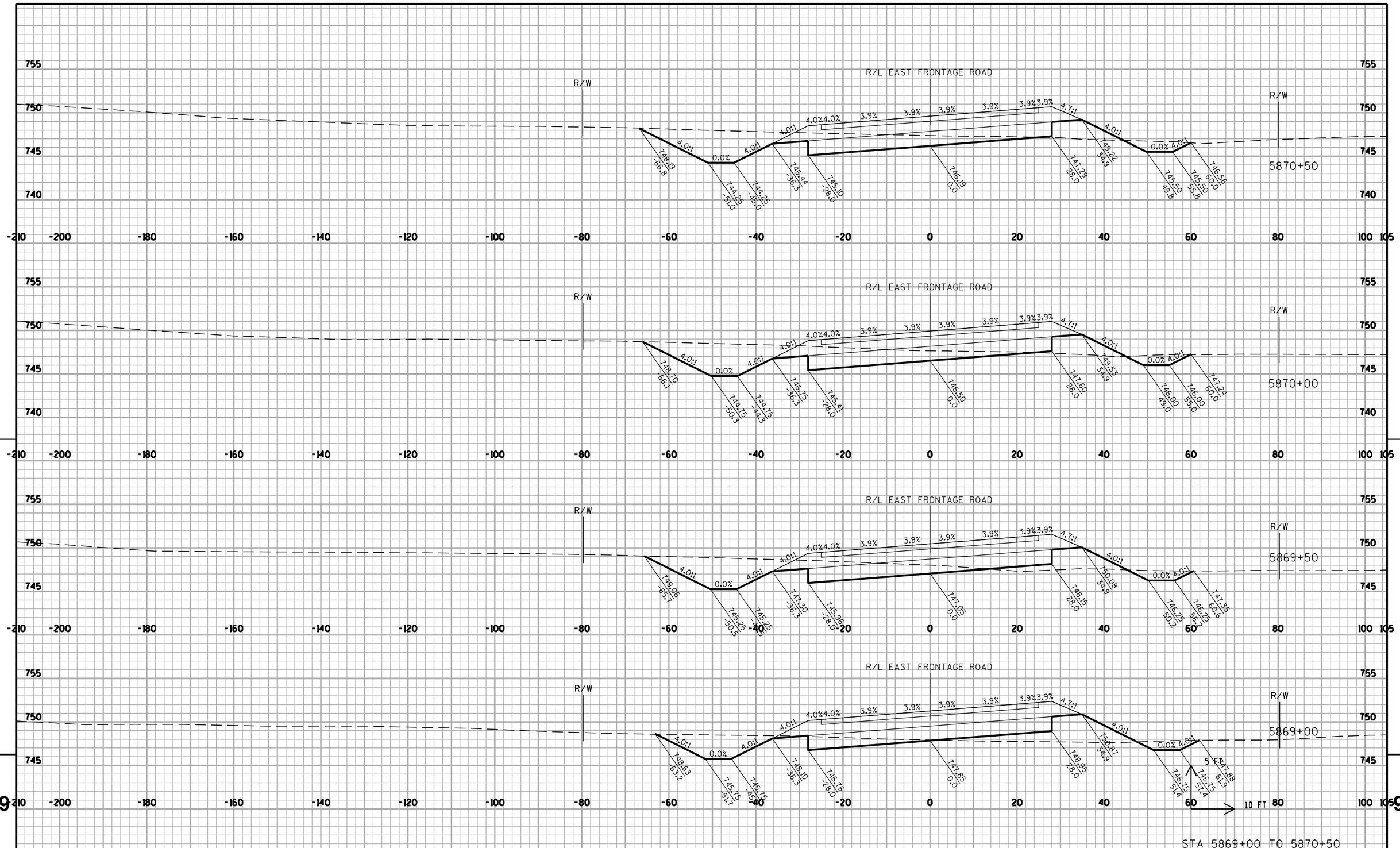

PROJECT NO: 1033-02-70	HWY: IH 94/STH 20	COUNTY: RACINE	CROSS SECTIONS: EAST FRONTAGE ROAD - NORTH	SHEET 205	E

FILE NAME : s:\FinalDesign\20\10330270_E\Roads\cds\090202_xs_frne.dgn PLOT DATE : 06-DEC-2010 20:32 PLOT BY : MSCD1S PLOT NAME : 090202_xs_frne3 PLOT SCALE : 20:1

WISDOT/CADDS SHEET 21

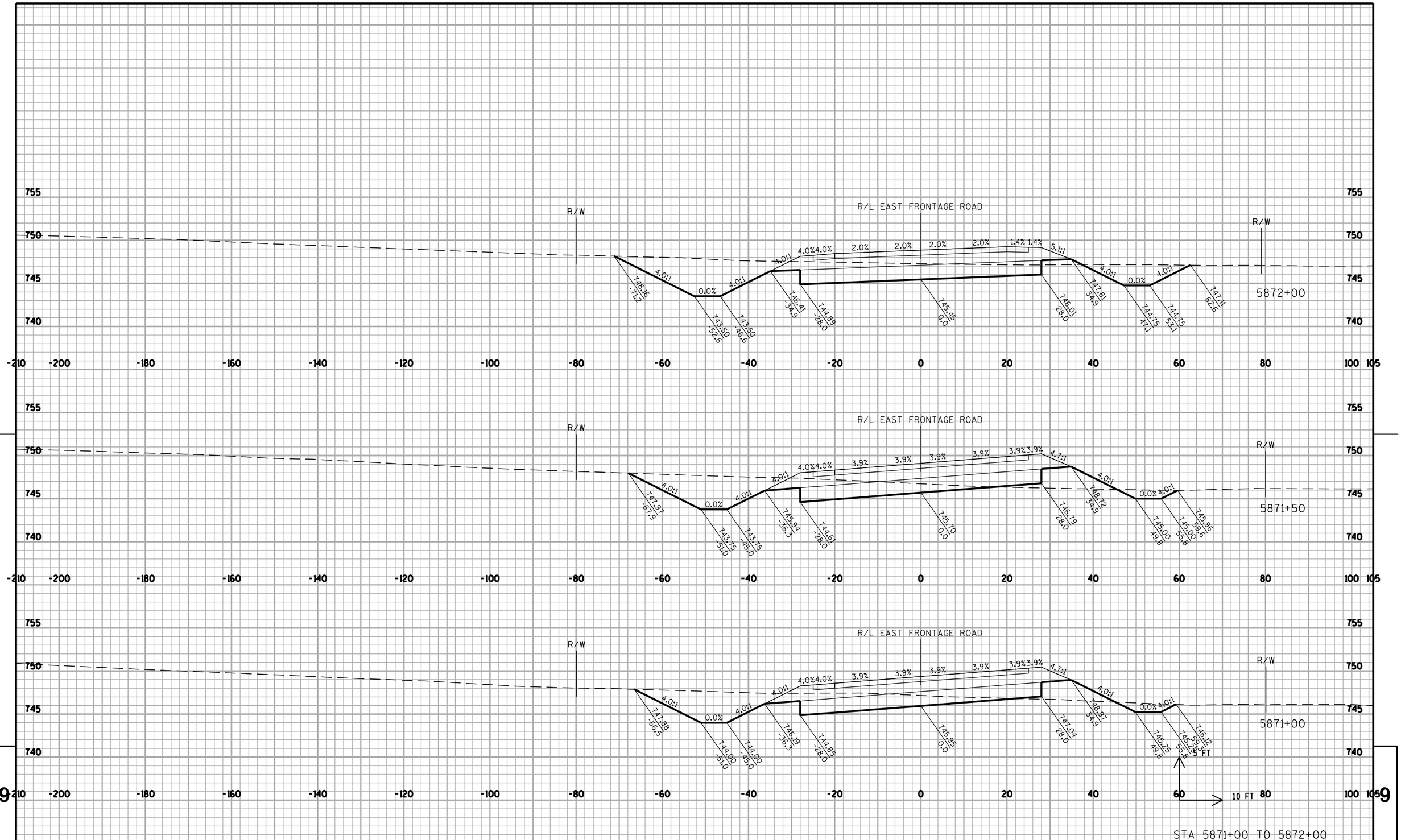

PROJECT NO: 1033-02-70	HWY: IH 94/STH 20	COUNTY: RACINE	CROSS SECTIONS: EAST FRONTAGE ROAD - NORTH	SHEET 206	E

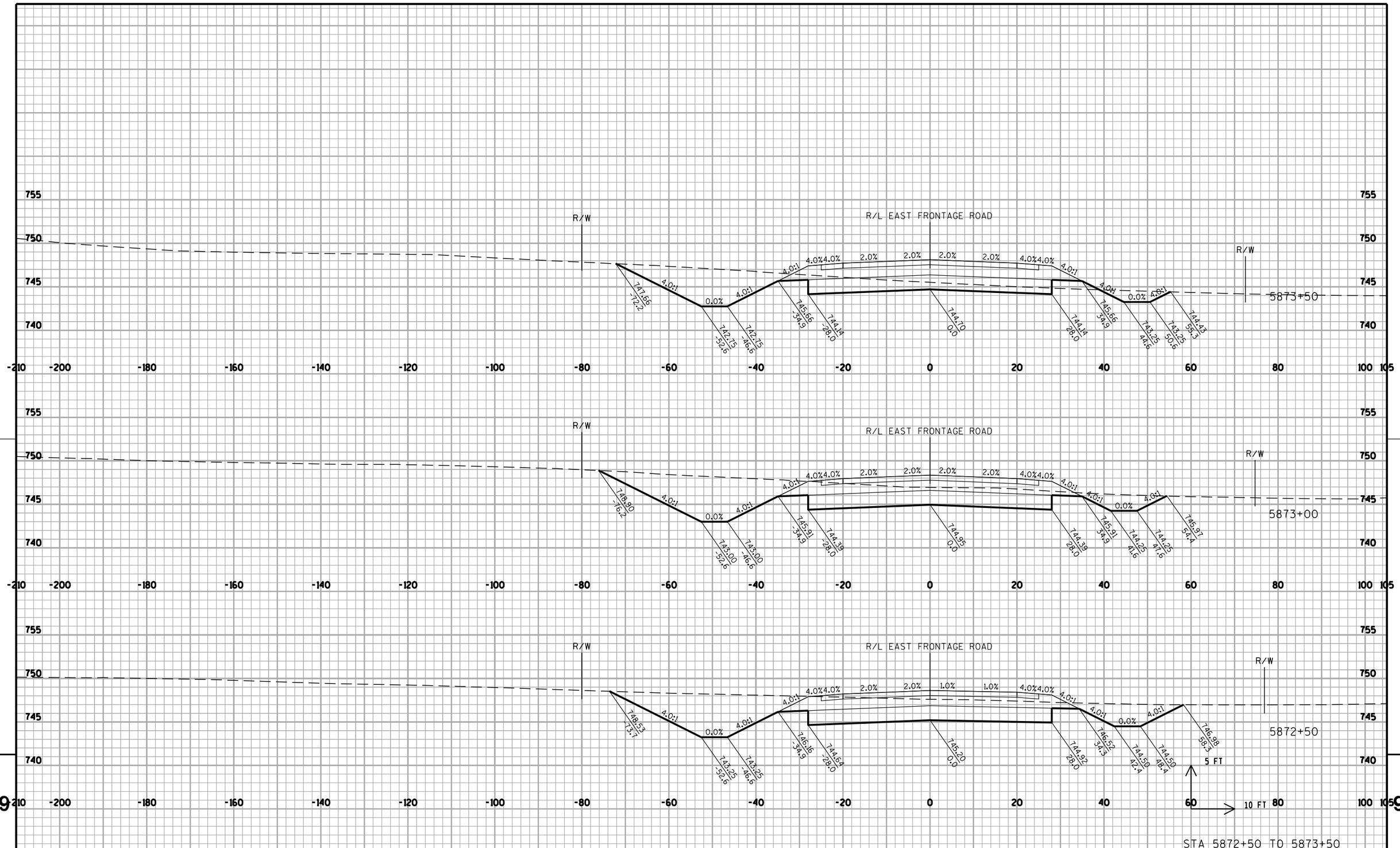

PROJECT NO: 1033-02-70	HWY: IH 94/STH 20	COUNTY: RACINE	CROSS SECTIONS: EAST FRONTAGE ROAD - NORTH	SHEET 207	E

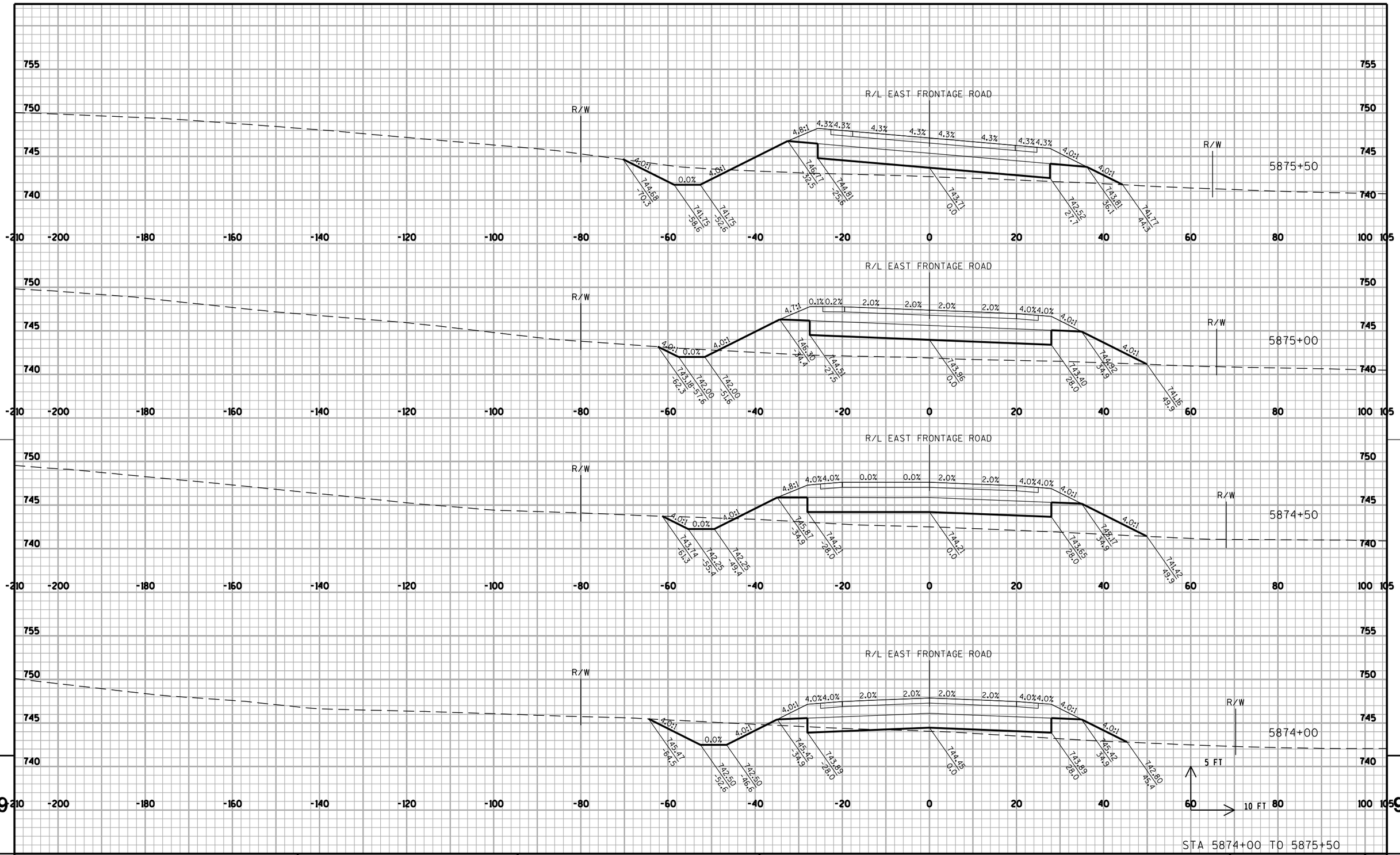

PROJECT NO: 1033-02-70	HWY: IH 94/STH 20	COUNTY: RACINE	CROSS SECTIONS: EAST FRONTAGE ROAD - NORTH	SHEET 208	E

FILE NAME : s:\FinalDesign\20\10330270_E\Roads\cds\090202_xs_frne.dgn PLOT DATE : 06-DEC-2010 20:32 PLOT BY : MSCD1S PLOT NAME : 090202_xs_frne6 PLOT SCALE : 20:1

WISDOT/CADDS SHEET 21

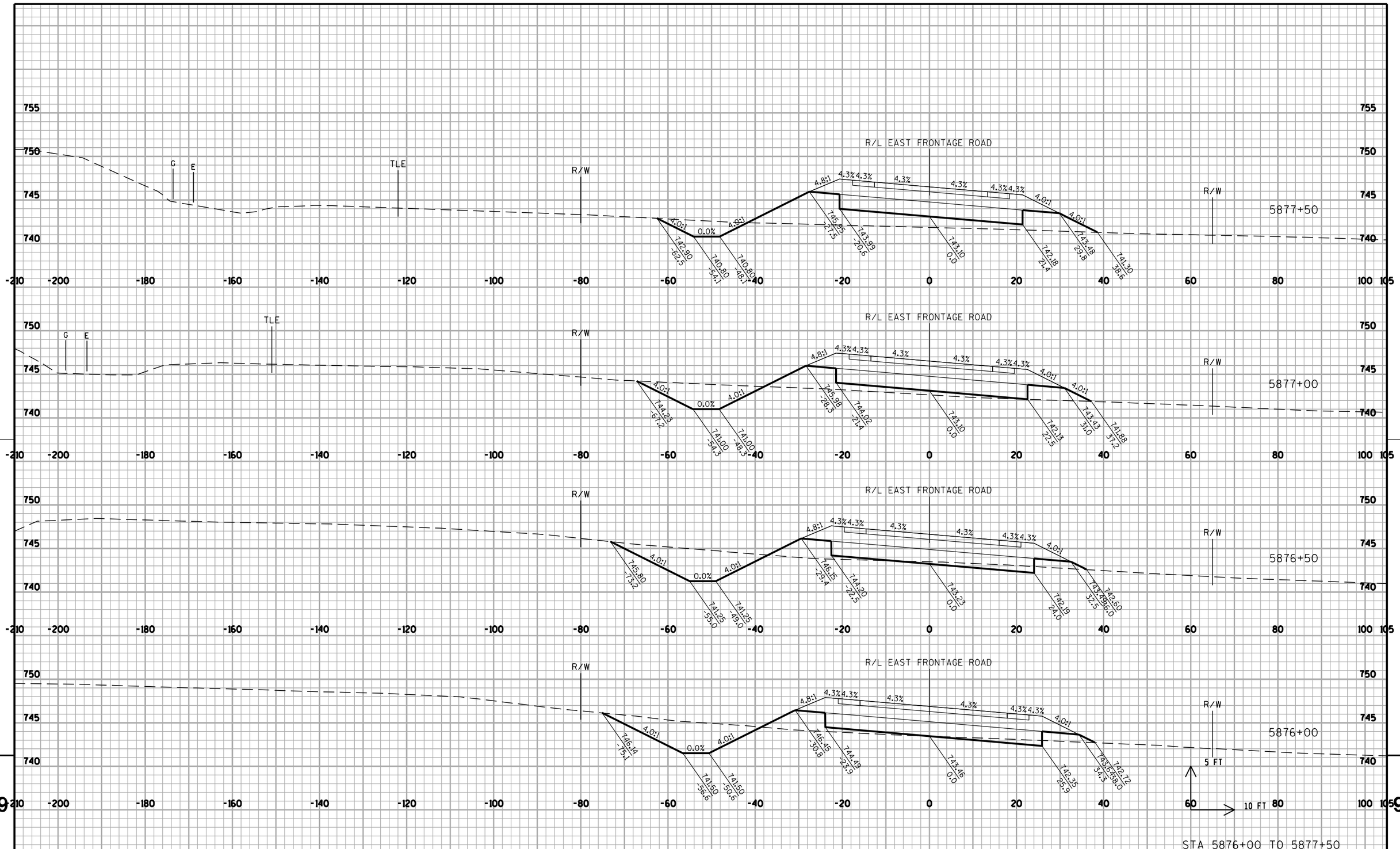

PROJECT NO: 1033-02-70	HWY: IH 94/STH 20	COUNTY: RACINE	CROSS SECTIONS: EAST FRONTAGE ROAD - NORTH	SHEET 209	E

FILE NAME : s:\FinalDesign\20\10330270_E\Roads\cds\090202_xs_frne.dgn PLOT DATE : 06-DEC-2010 20:32 PLOT BY : MSCD1S PLOT NAME : 090202_xs_frne7 PLOT SCALE : 20:1

WISDOT/CADDS SHEET 21

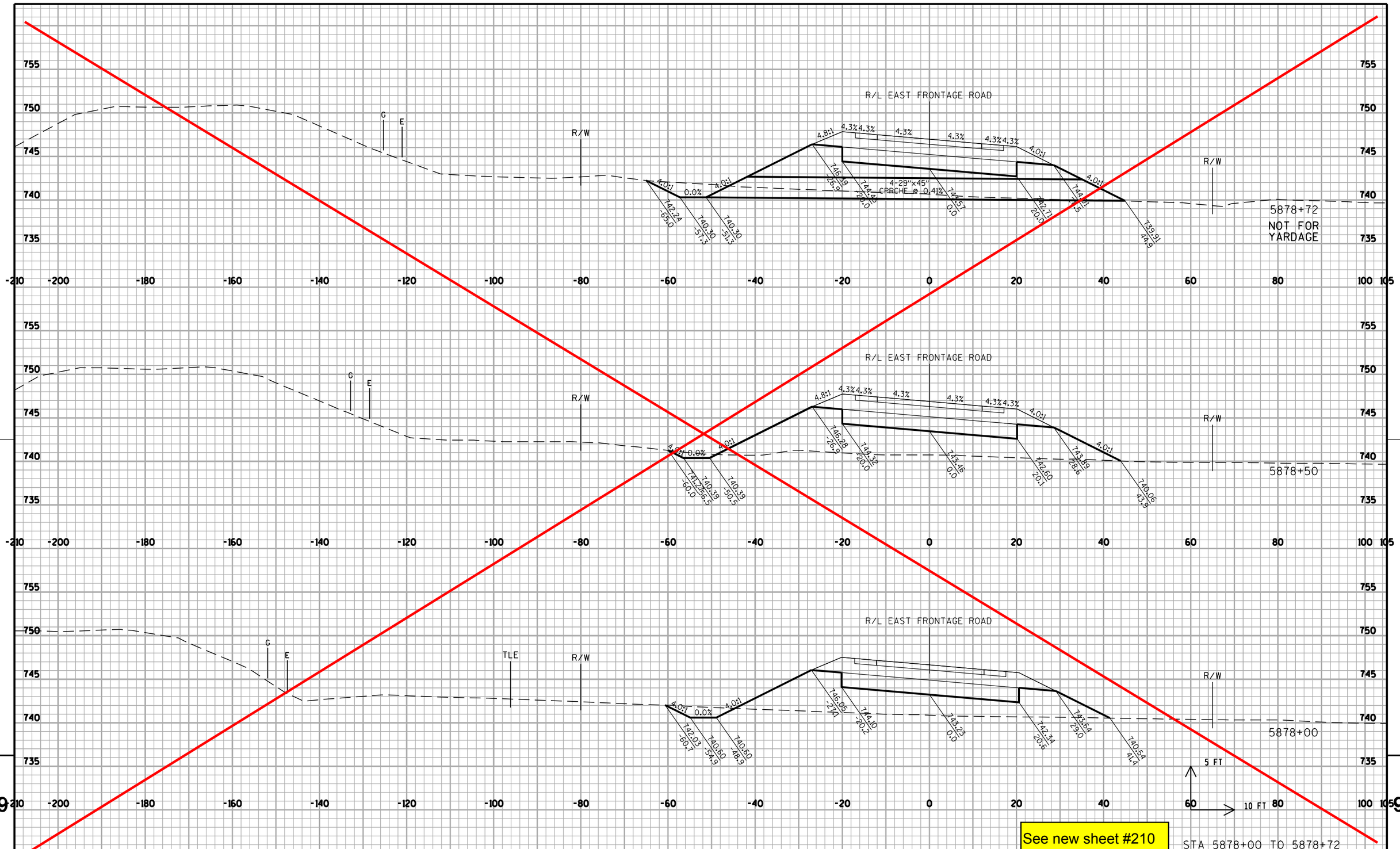

STA 5878+00 TO 5878+72

PROJECT NO: 1033-02-70	HWY: IH 94/STH 20	COUNTY: RACINE	CROSS SECTIONS: EAST FRONTAGE ROAD - NORTH	SHEET 210	E

FILE NAME : s:\FinalDesign\20\10330270_E\Roads\cds\090202_xs_frne.dgn PLOT DATE : 06-DEC-2010 20:32 PLOT BY : MSCD1S PLOT NAME : 090202_xs_frne8 PLOT SCALE : 20:1

WISDOT/CADDS SHEET 21

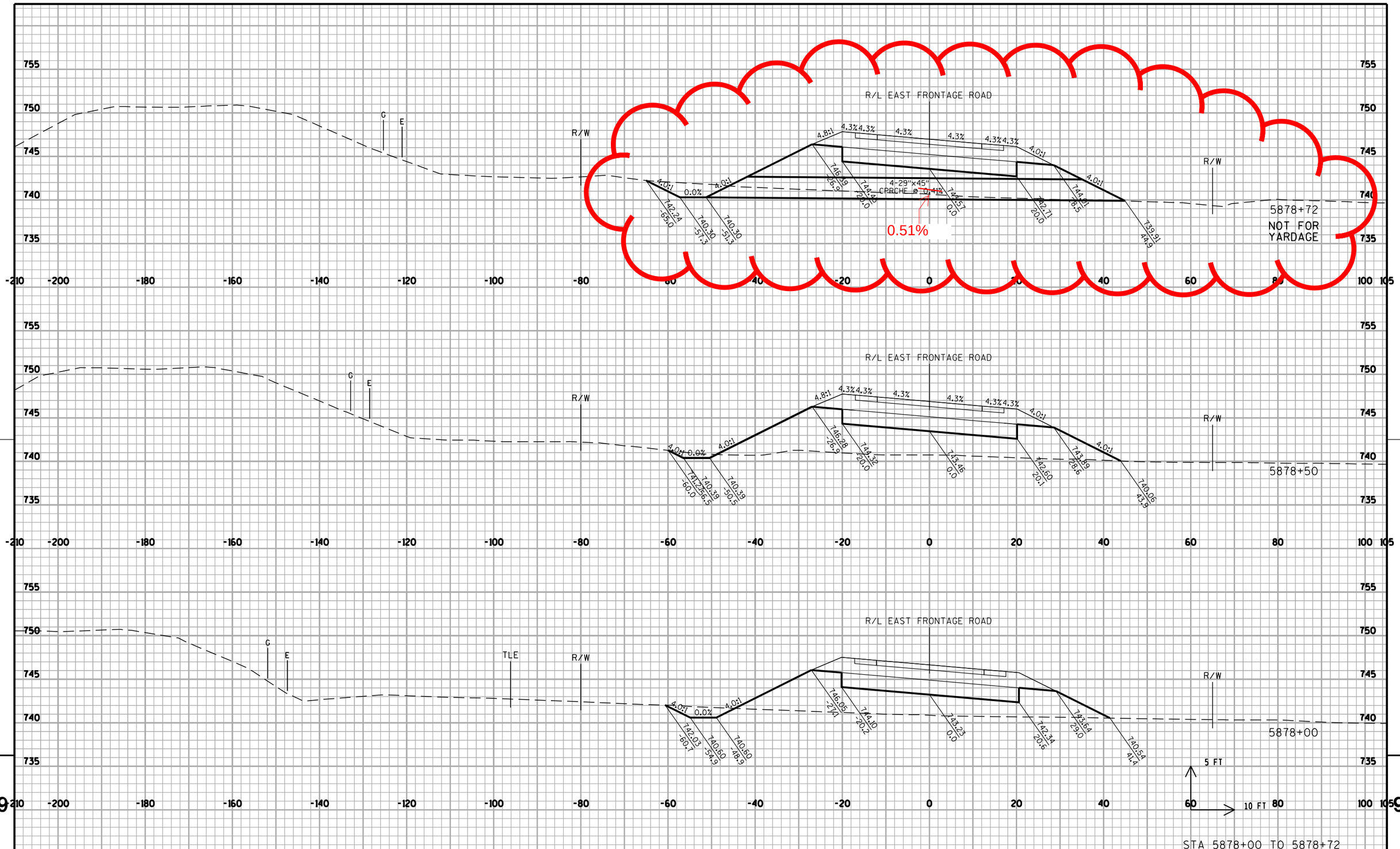

PROJECT NO:1033-02-70	HWY:IH 94/STH 20	COUNTY: RACINE	CROSS SECTIONS: EAST FRONTAGE ROAD - NORTH	SHEET 210	E

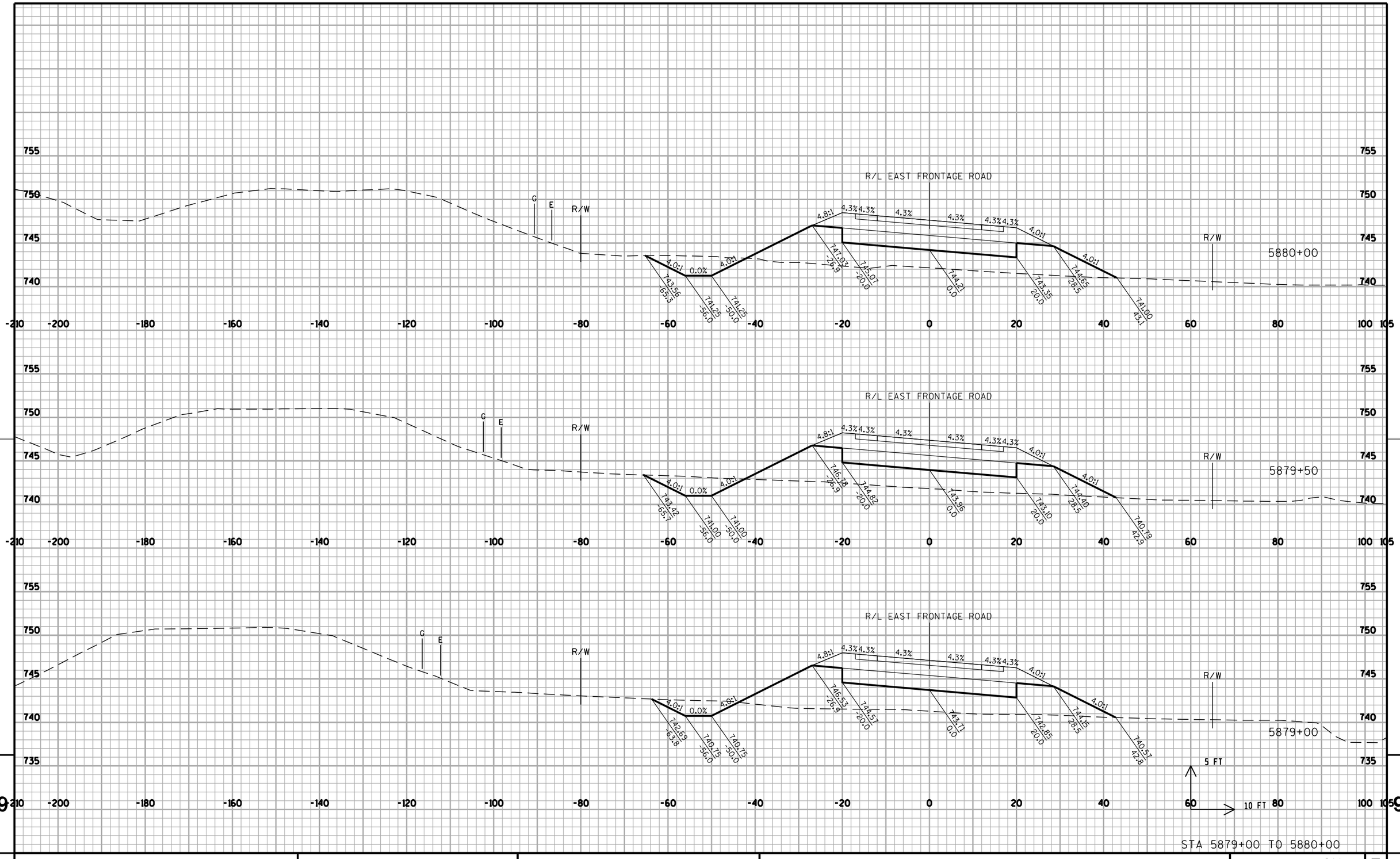

PROJECT NO: 1033-02-70	HWY: IH 94/STH 20	COUNTY: RACINE	CROSS SECTIONS: EAST FRONTAGE ROAD - NORTH	SHEET 211	E

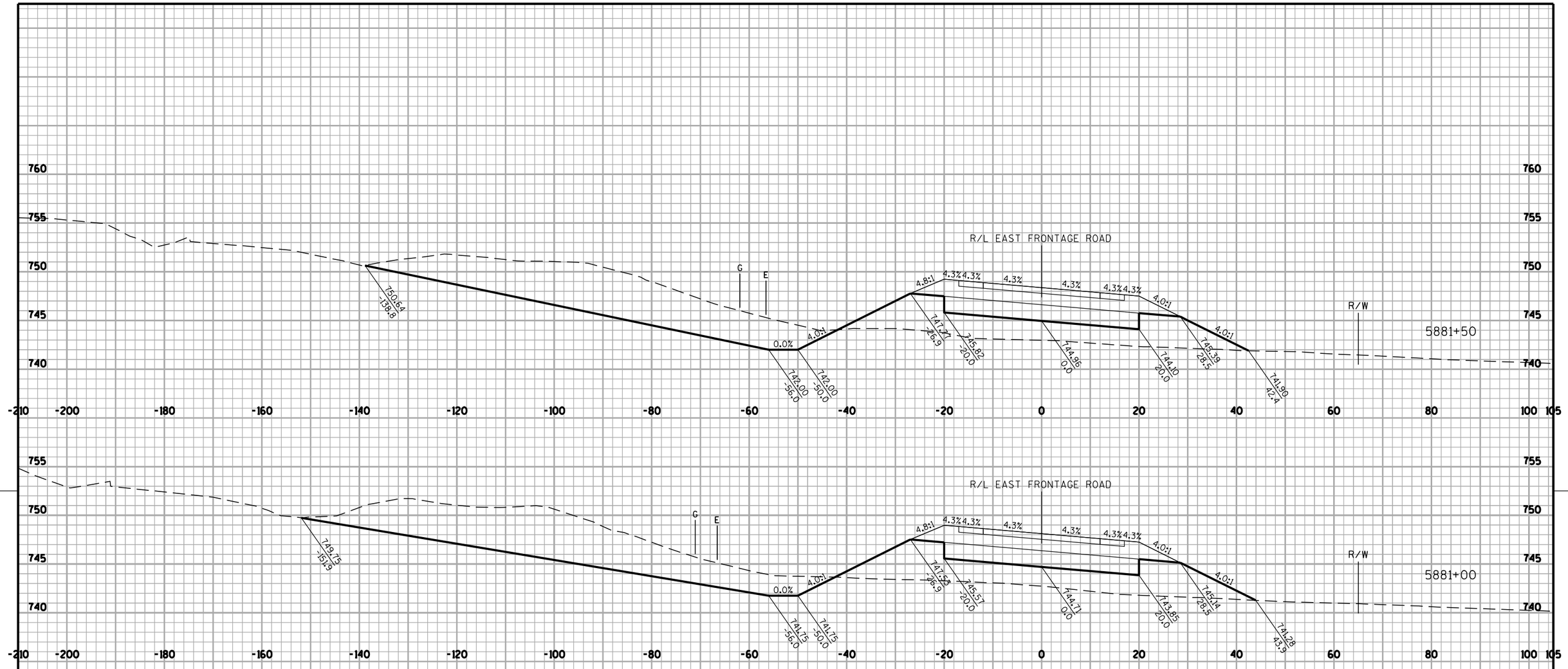

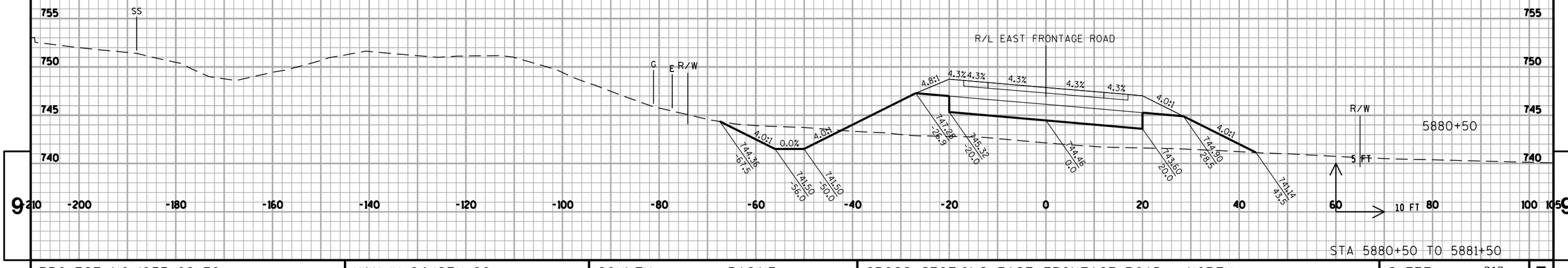

STA 5880+50 TO 5881+50

PROJECT NO: 1033-02-70	HWY: IH 94/STH 20	COUNTY: RACINE	CROSS SECTIONS: EAST FRONTAGE ROAD - NORTH	SHEET 212	E

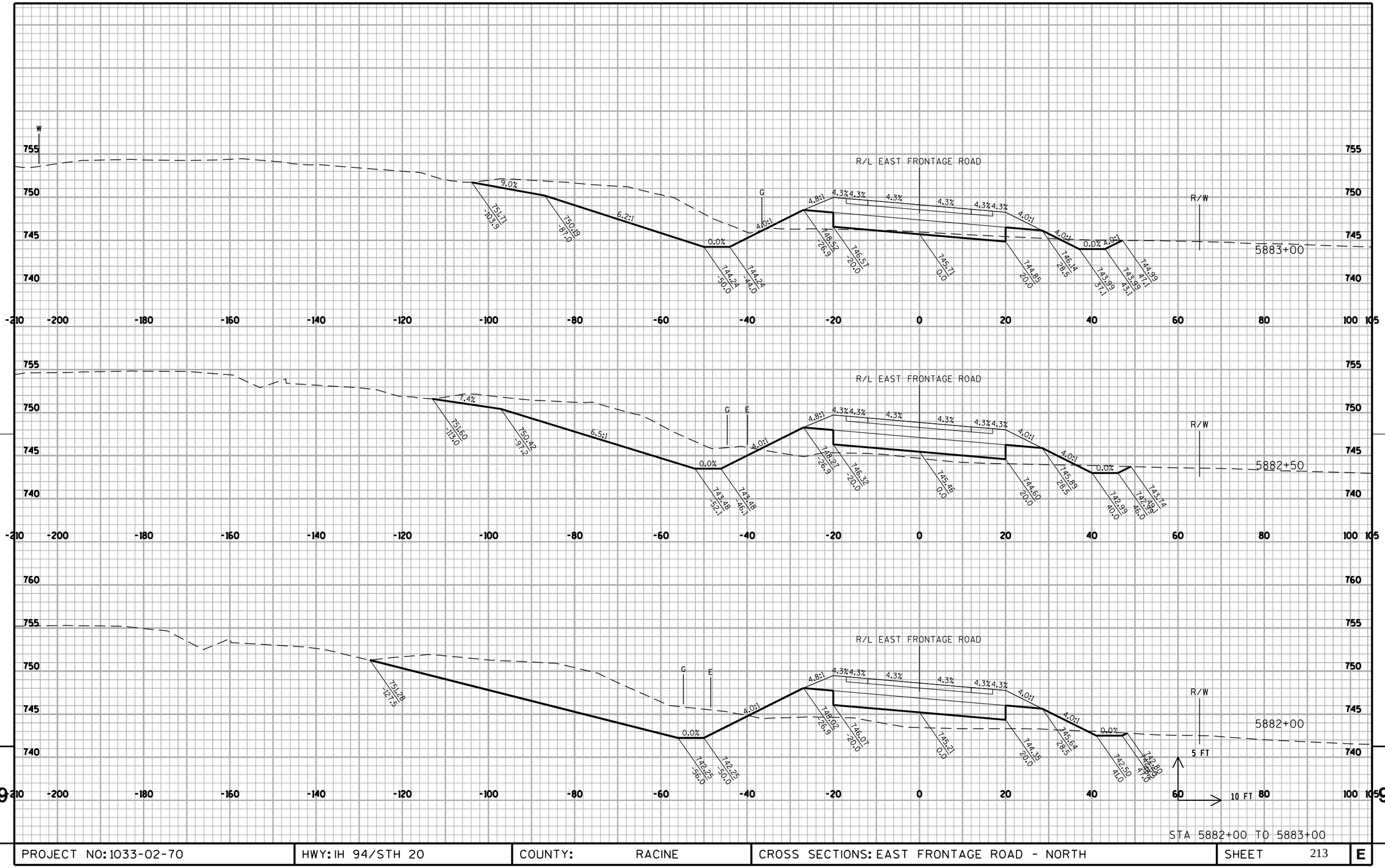

STA 5882+00 TO 5883+00

PROJECT NO: 1033-02-70	HWY: IH 94/STH 20	COUNTY: RACINE	CROSS SECTIONS: EAST FRONTAGE ROAD - NORTH	SHEET 213	E

FILE NAME : s:\FinalDesign\20\10330270_E\Roads\cds\090202_xs_frne.dgn PLOT DATE : 06-DEC-2010 20:32 PLOT BY : MSCD1S PLOT NAME : 090202_xs_frne11 PLOT SCALE : 20:1

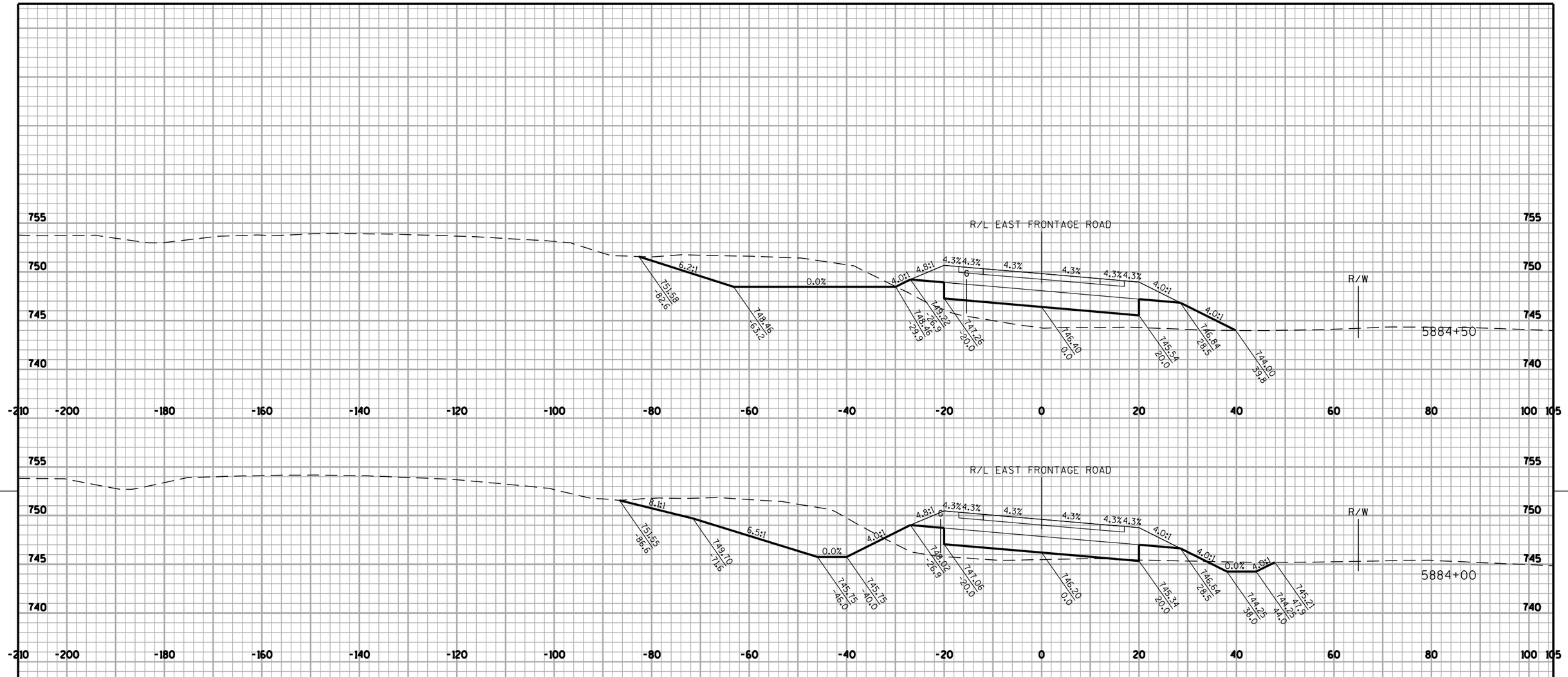

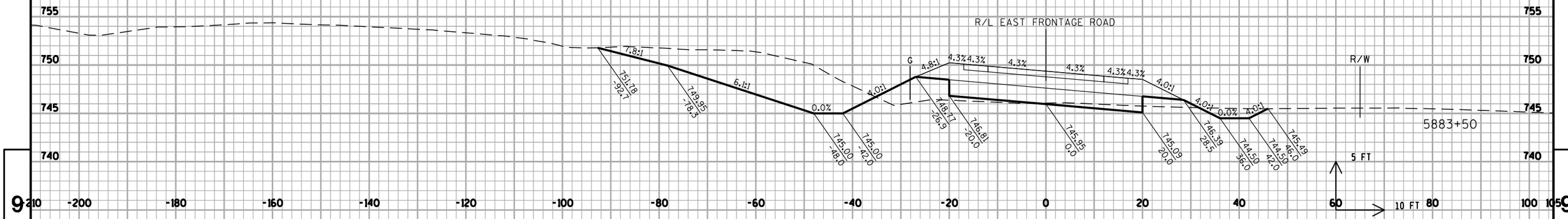

STA 5883+50 TO 5884+50

PROJECT NO: 1033-02-70	HWY: IH 94/STH 20	COUNTY: RACINE	CROSS SECTIONS: EAST FRONTAGE ROAD - NORTH	SHEET 214	E

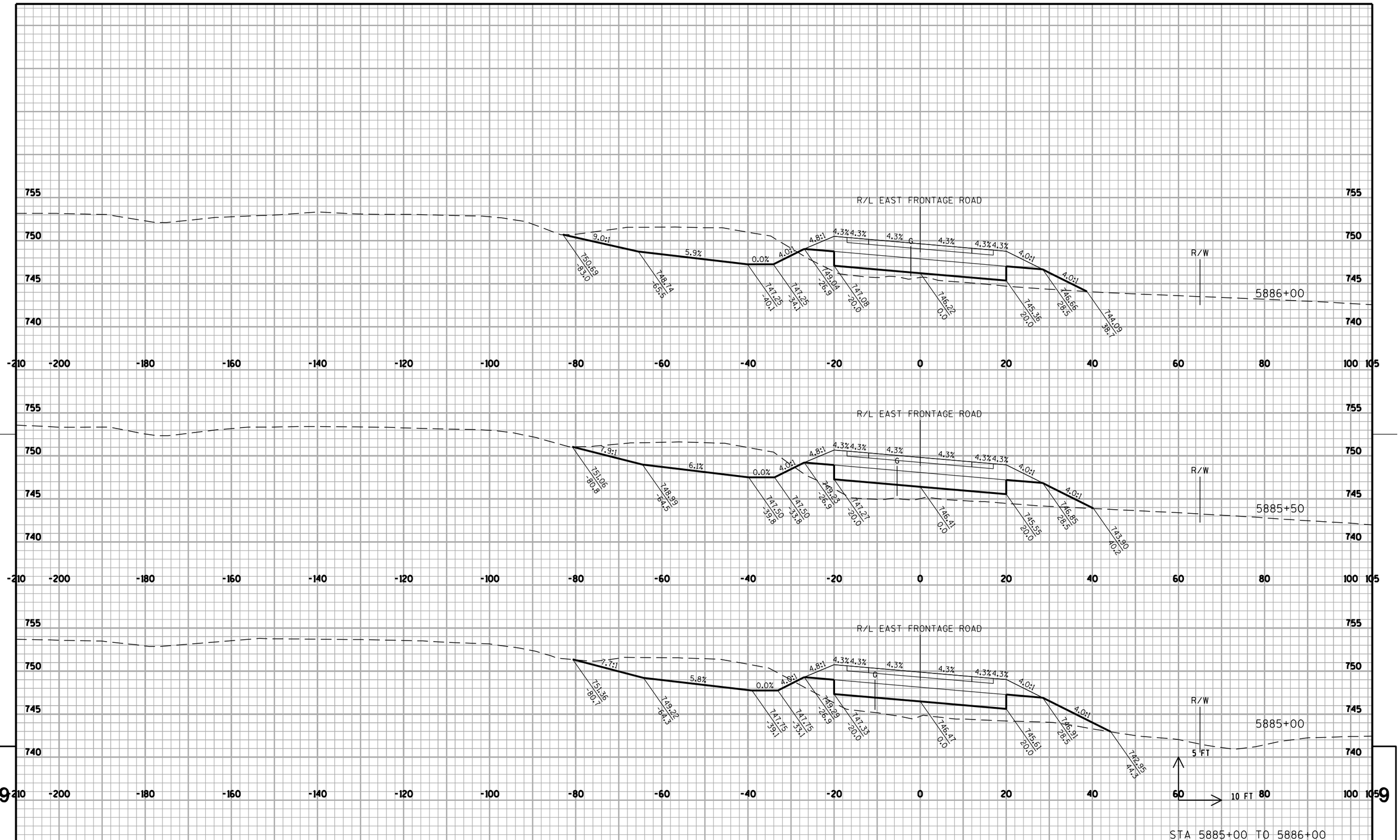

PROJECT NO:1033-02-70	HWY:IH 94/STH 20	COUNTY: RACINE	CROSS SECTIONS: EAST FRONTAGE ROAD - NORTH	SHEET 215	E

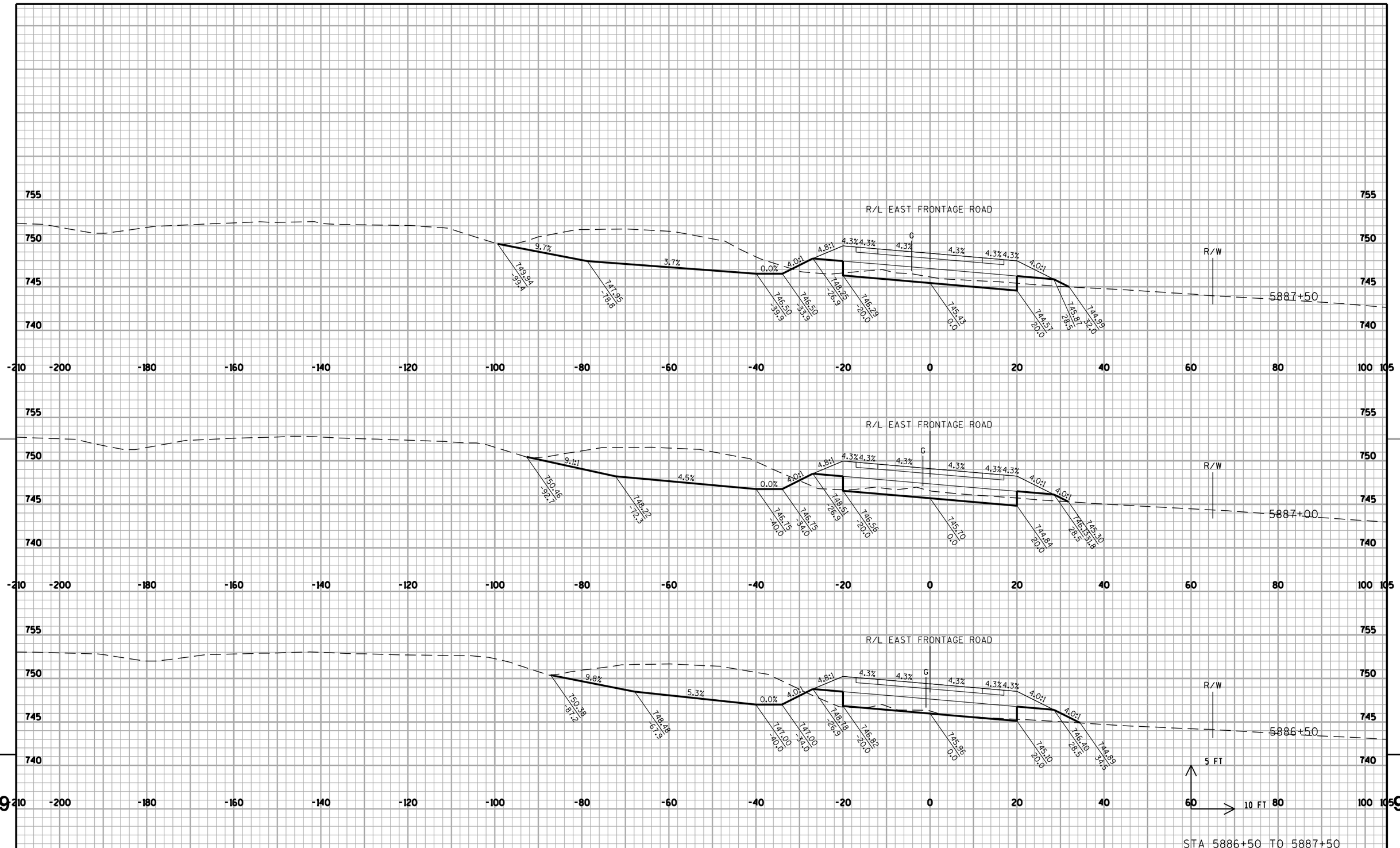

PROJECT NO: 1033-02-70	HWY: IH 94/STH 20	COUNTY: RACINE	CROSS SECTIONS: EAST FRONTAGE ROAD - NORTH	SHEET 216	E

PROJECT NO: 1033-02-70	HWY: IH 94/STH 20	COUNTY: RACINE	CROSS SECTIONS: EAST FRONTAGE ROAD - NORTH	SHEET 217	E

FILE NAME : s:\FinalDesign\20\10330270_E\Roads\cds\090202_xs_frne.dgn PLOT DATE : 06-DEC-2010 20:33 PLOT BY : MSCD1S PLOT NAME : 090202_xs_frne15 PLOT SCALE : 20:1

WISDOT/CADDS SHEET 21

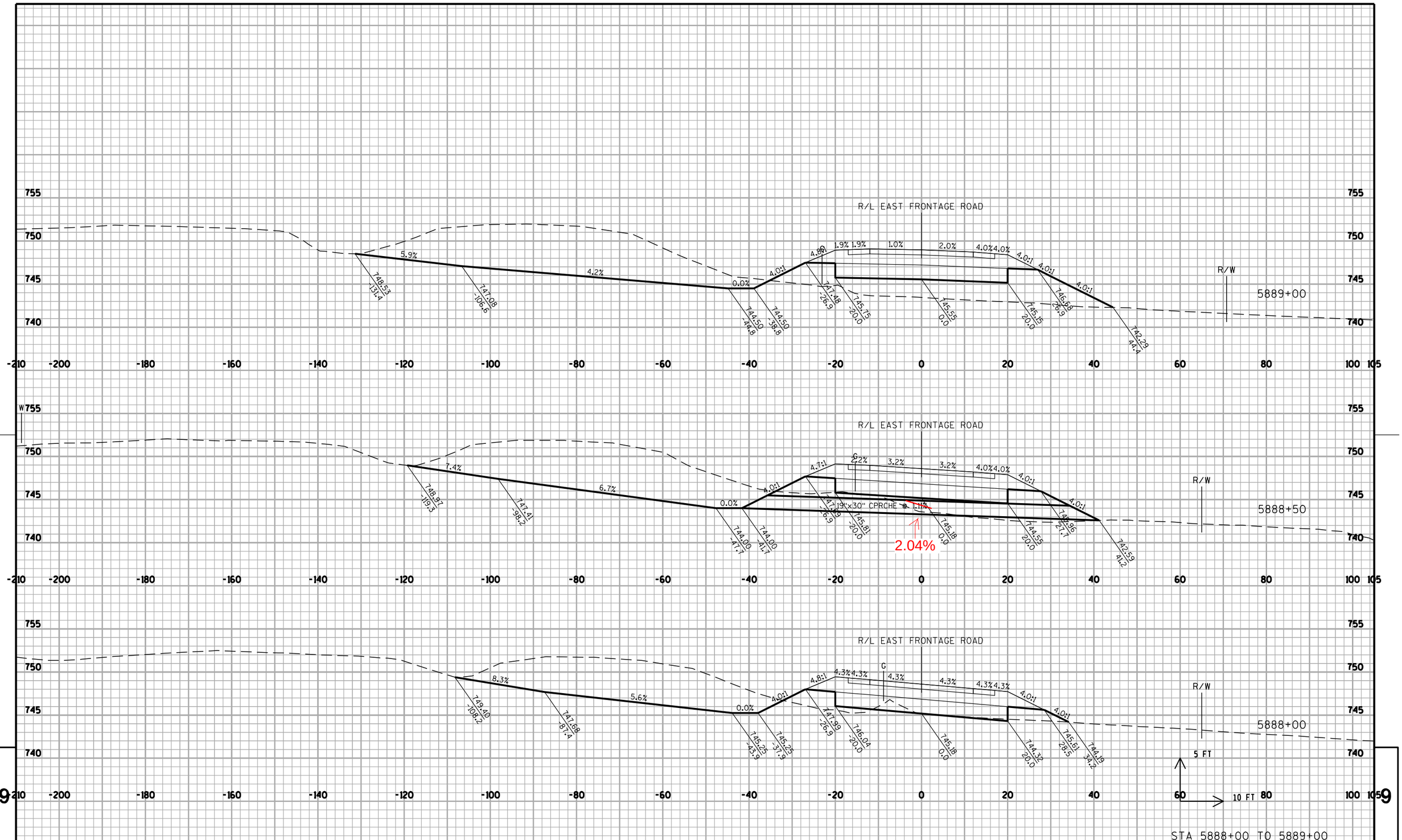

PROJECT NO: 1033-02-70	HWY: IH 94/STH 20	COUNTY: RACINE	CROSS SECTIONS: EAST FRONTAGE ROAD - NORTH	SHEET 217	E

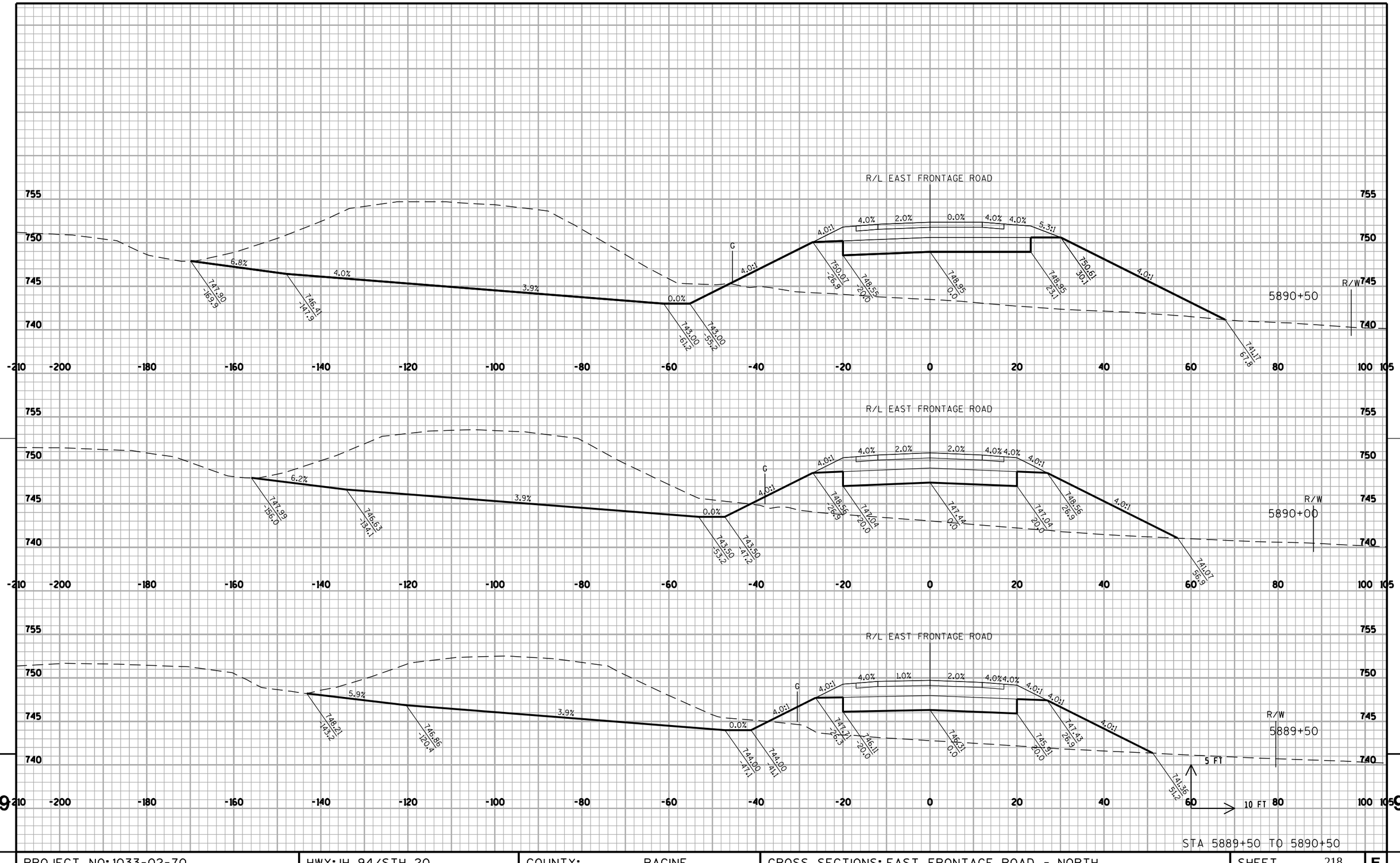

PROJECT NO: 1033-02-70	HWY: IH 94/STH 20	COUNTY: RACINE	CROSS SECTIONS: EAST FRONTAGE ROAD - NORTH	SHEET 218	E

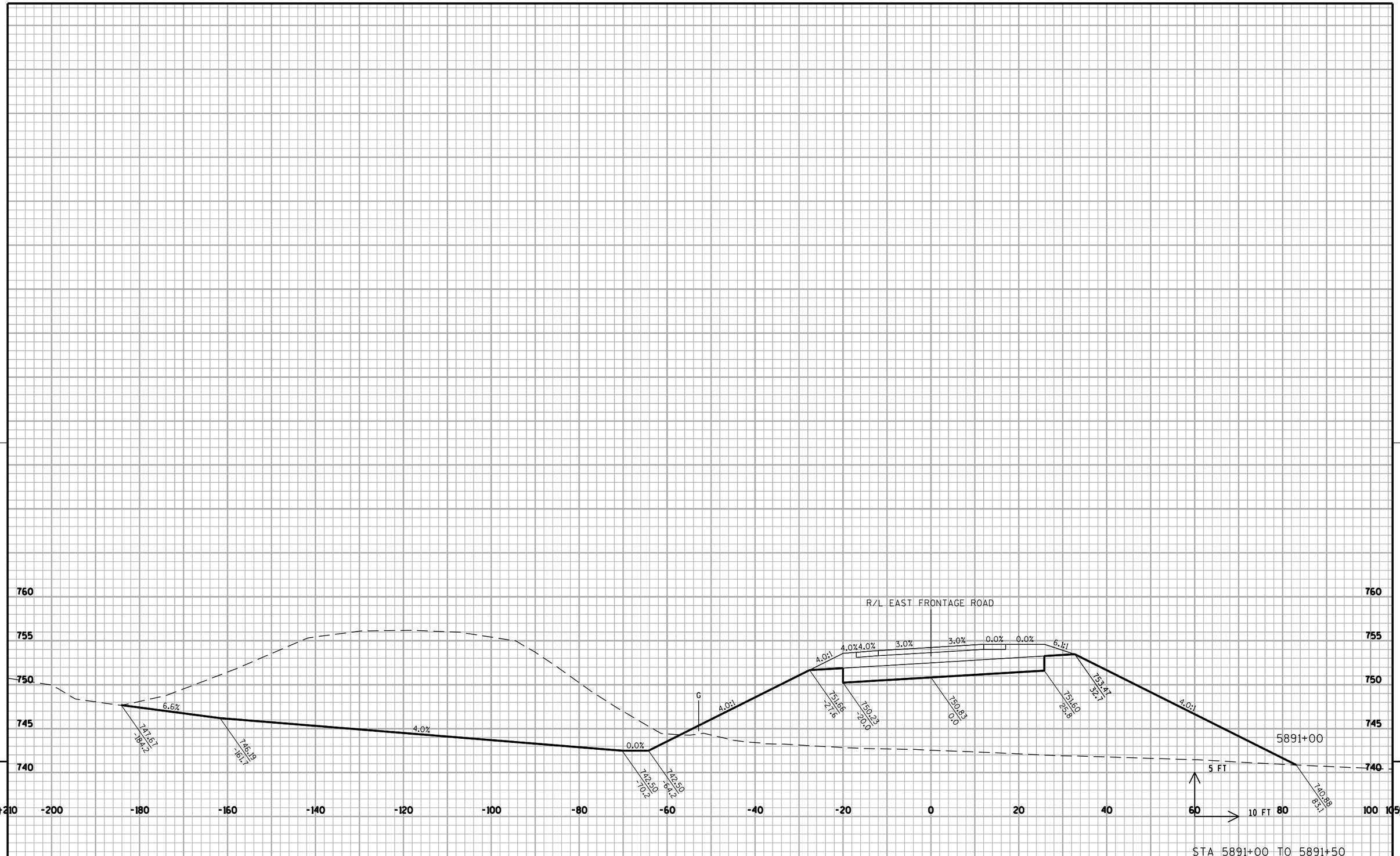

PROJECT NO: 1033-02-70	HWY: IH 94/STH 20	COUNTY: RACINE	CROSS SECTIONS: EAST FRONTAGE ROAD - NORTH	SHEET 219	E

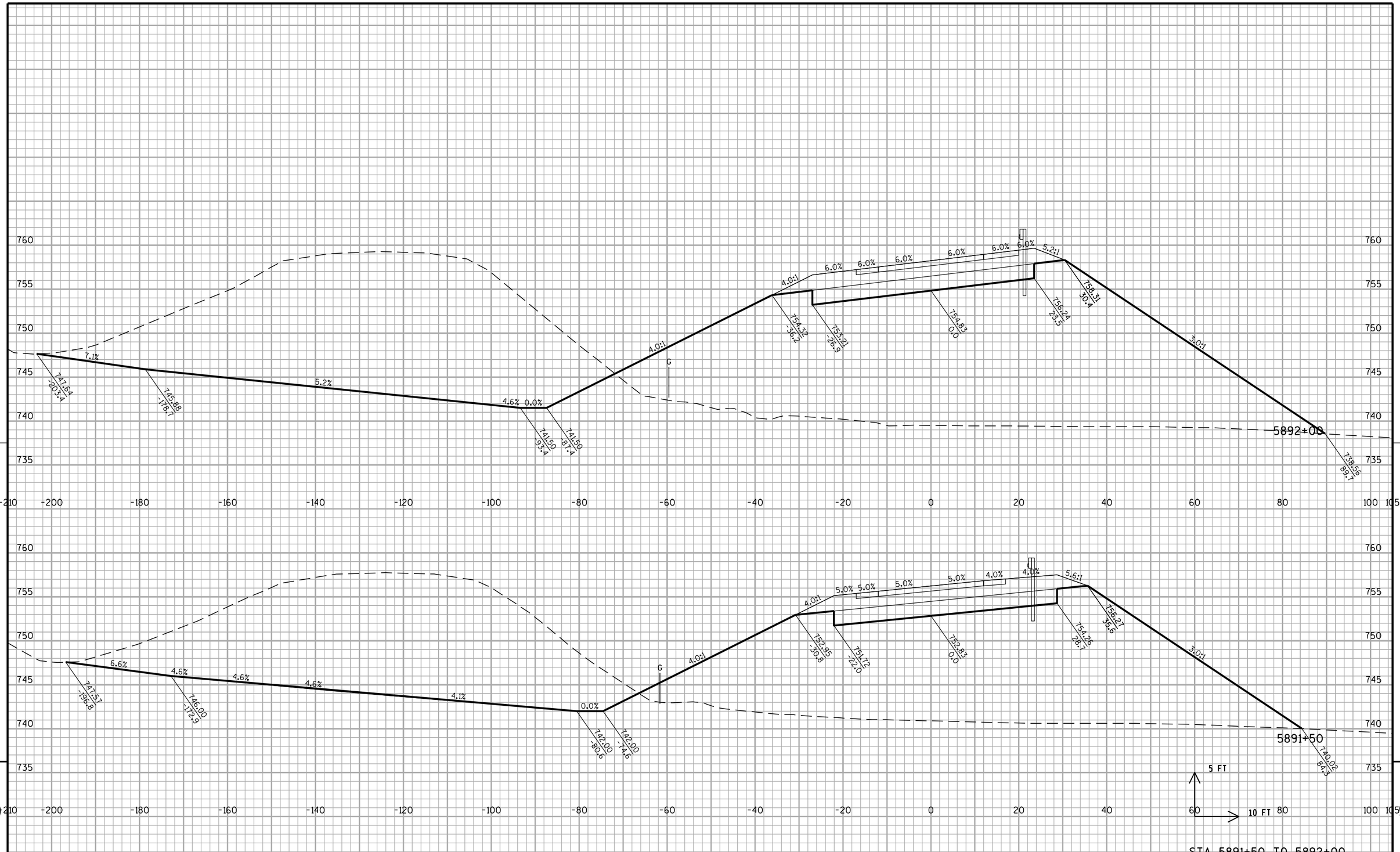

PROJECT NO: 1033-02-70	HWY: IH 94/STH 20	COUNTY: RACINE	CROSS SECTIONS: EAST FRONTAGE ROAD - NORTH	SHEET 220	E

FILE NAME : s:\FinalDesign\20\10330270_E\Roads\cds\090202_xs_frne.dgn PLOT DATE : 06-DEC-2010 20:33 PLOT BY : MSCD1S PLOT NAME : 090202_xs_frne18 PLOT SCALE : 20:1

WISDOT/CADDS SHEET 21

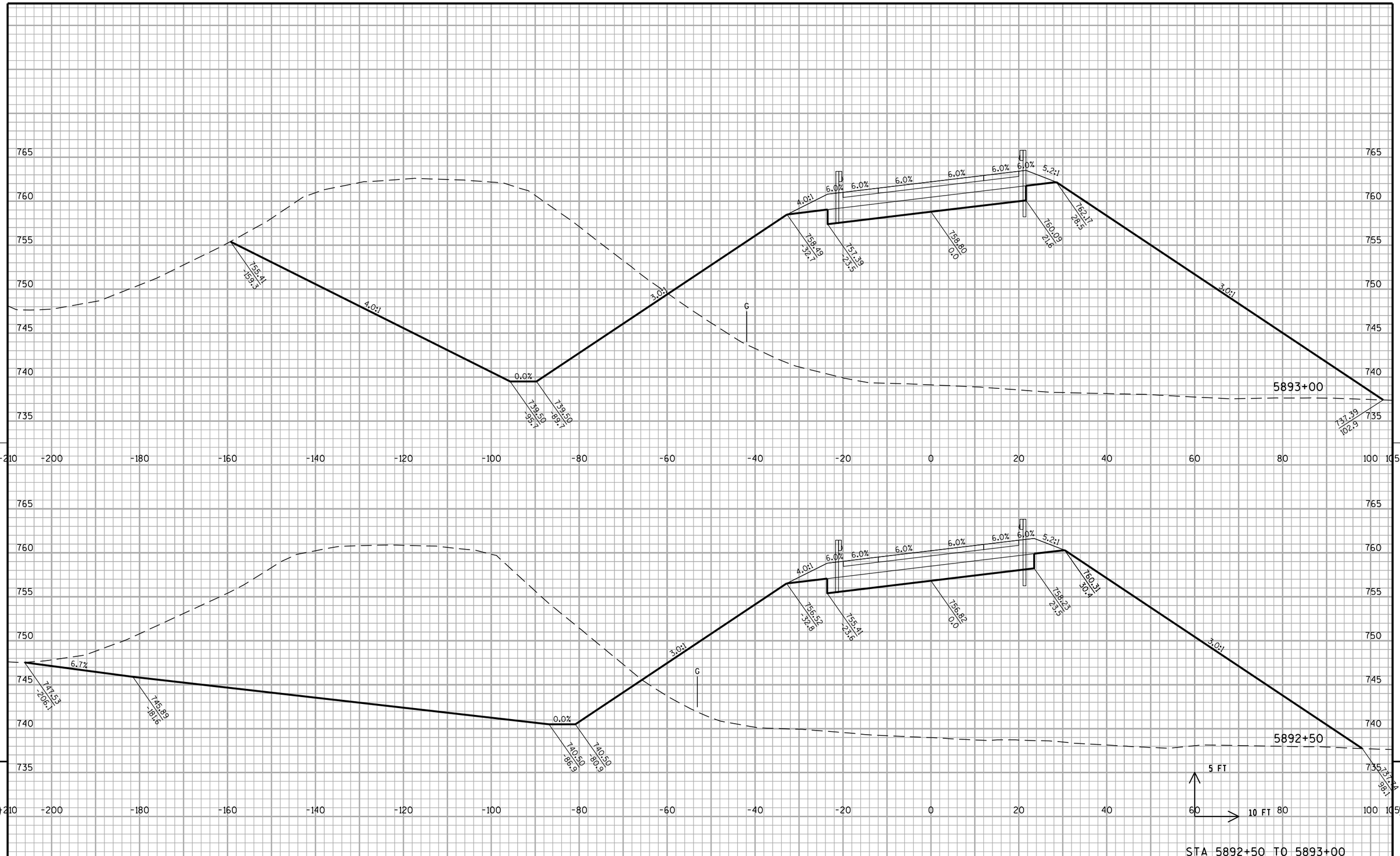

PROJECT NO: 1033-02-70	HWY: IH 94/STH 20	COUNTY: RACINE	CROSS SECTIONS: EAST FRONTAGE ROAD - NORTH	SHEET 221	E

FILE NAME : s:\FinalDesign\20\10330270_E\Roads\cds\090202_xs_frne.dgn PLOT DATE : 06-DEC-2010 20:33 PLOT BY : MSCD1S PLOT NAME : 090202_xs_frne19 PLOT SCALE : 20:1

WISDOT/CADDS SHEET 21

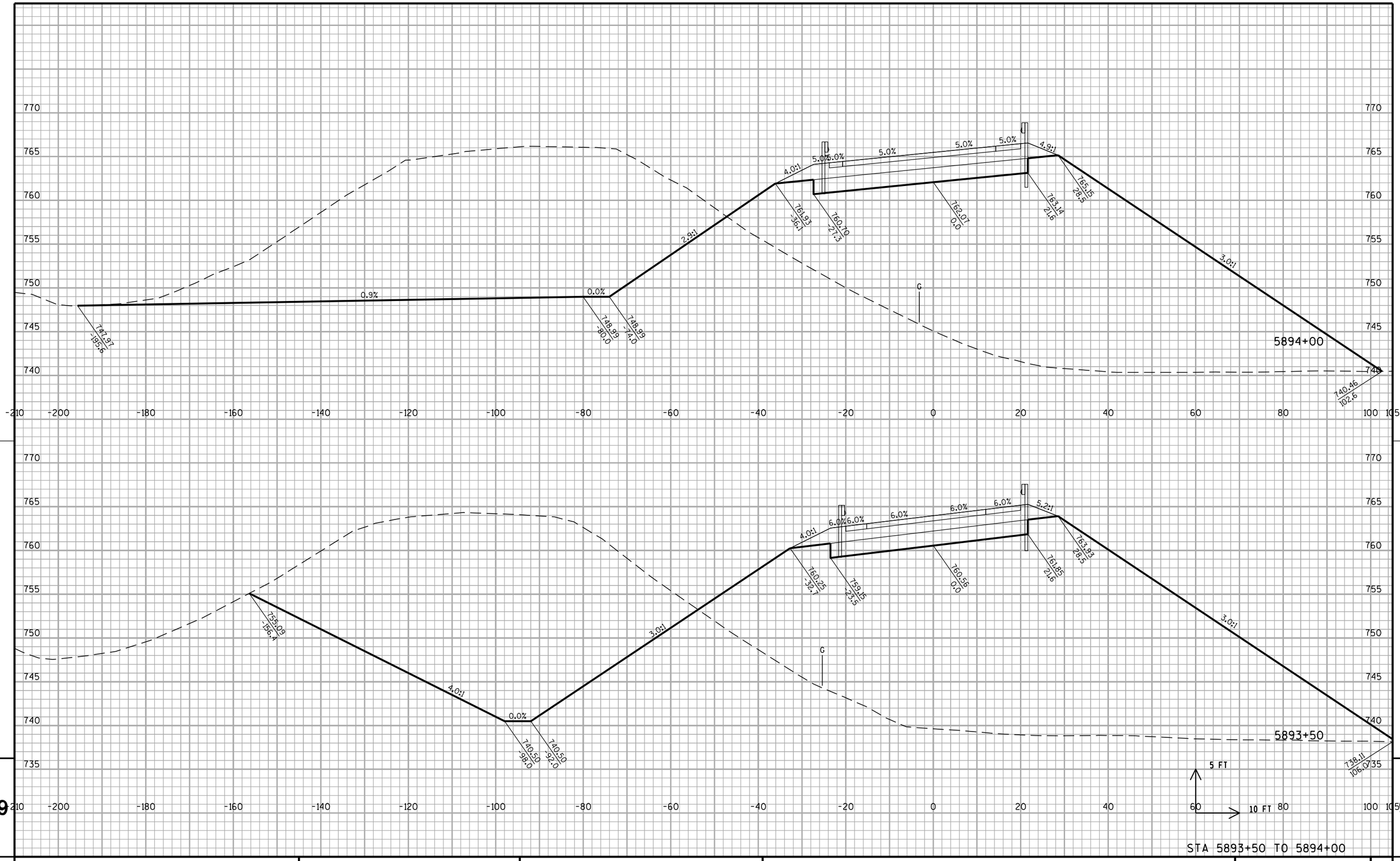

PROJECT NO: 1033-02-70	HWY: IH 94/STH 20	COUNTY: RACINE	CROSS SECTIONS: EAST FRONTAGE ROAD - NORTH	SHEET 222	E

FILE NAME : s:\FinalDesign\20\10330270_E\Roads\cds\090202_xs_frne.dgn PLOT DATE : 06-DEC-2010 20:33 PLOT BY : MSCD1S PLOT NAME : 090202_xs_frne20 PLOT SCALE : 20:1

WISDOT/CADDS SHEET 21

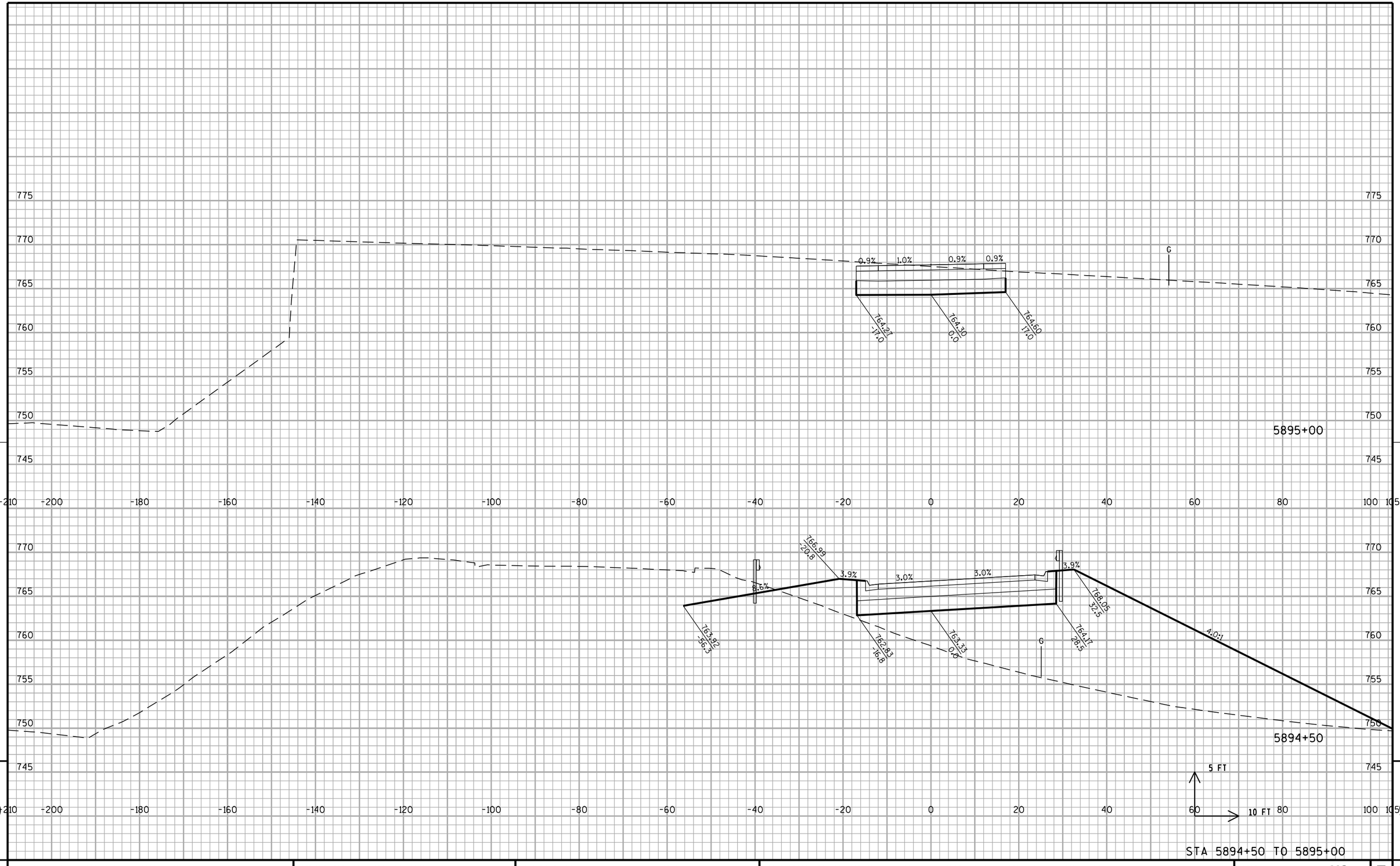

PROJECT NO: 1033-02-70	HWY: IH 94/STH 20	COUNTY: RACINE	CROSS SECTIONS: EAST FRONTAGE ROAD - NORTH	SHEET 223	E

FILE NAME : s:\FinalDesign\20\10330270_E\Roads\cds\090202_xs_frne.dgn PLOT DATE : 06-DEC-2010 20:33 PLOT BY : MSCD1S PLOT NAME : 090202_xs_frne21 PLOT SCALE : 20:1

WISDOT/CADDS SHEET 21

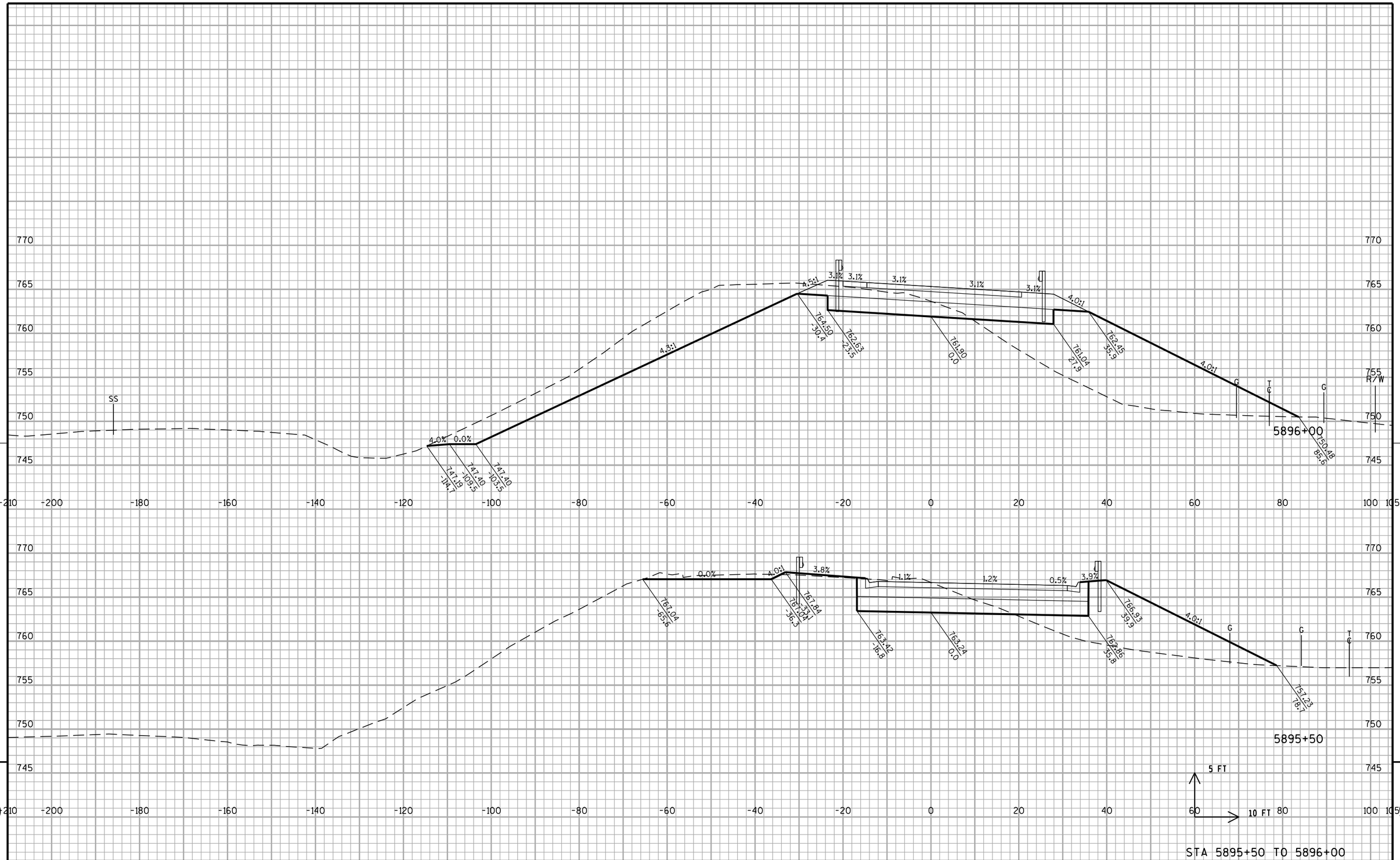

PROJECT NO:1033-02-70	HWY:IH 94/STH 20	COUNTY: RACINE	CROSS SECTIONS: EAST FRONTAGE ROAD - NORTH	SHEET 224	E

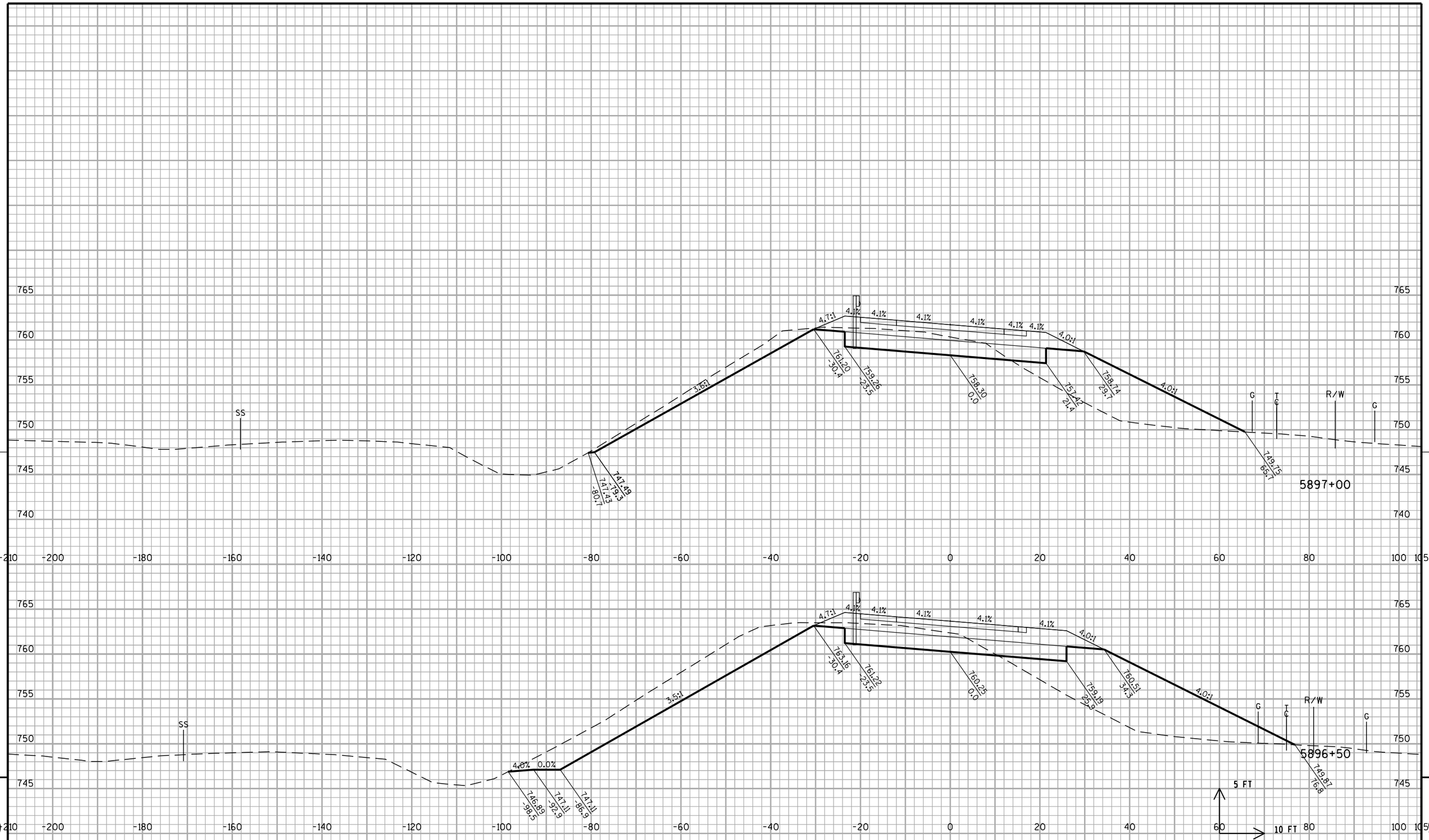

PROJECT NO: 1033-02-70	HWY: IH 94/STH 20	COUNTY: RACINE	CROSS SECTIONS: EAST FRONTAGE ROAD - NORTH	SHEET 225	E

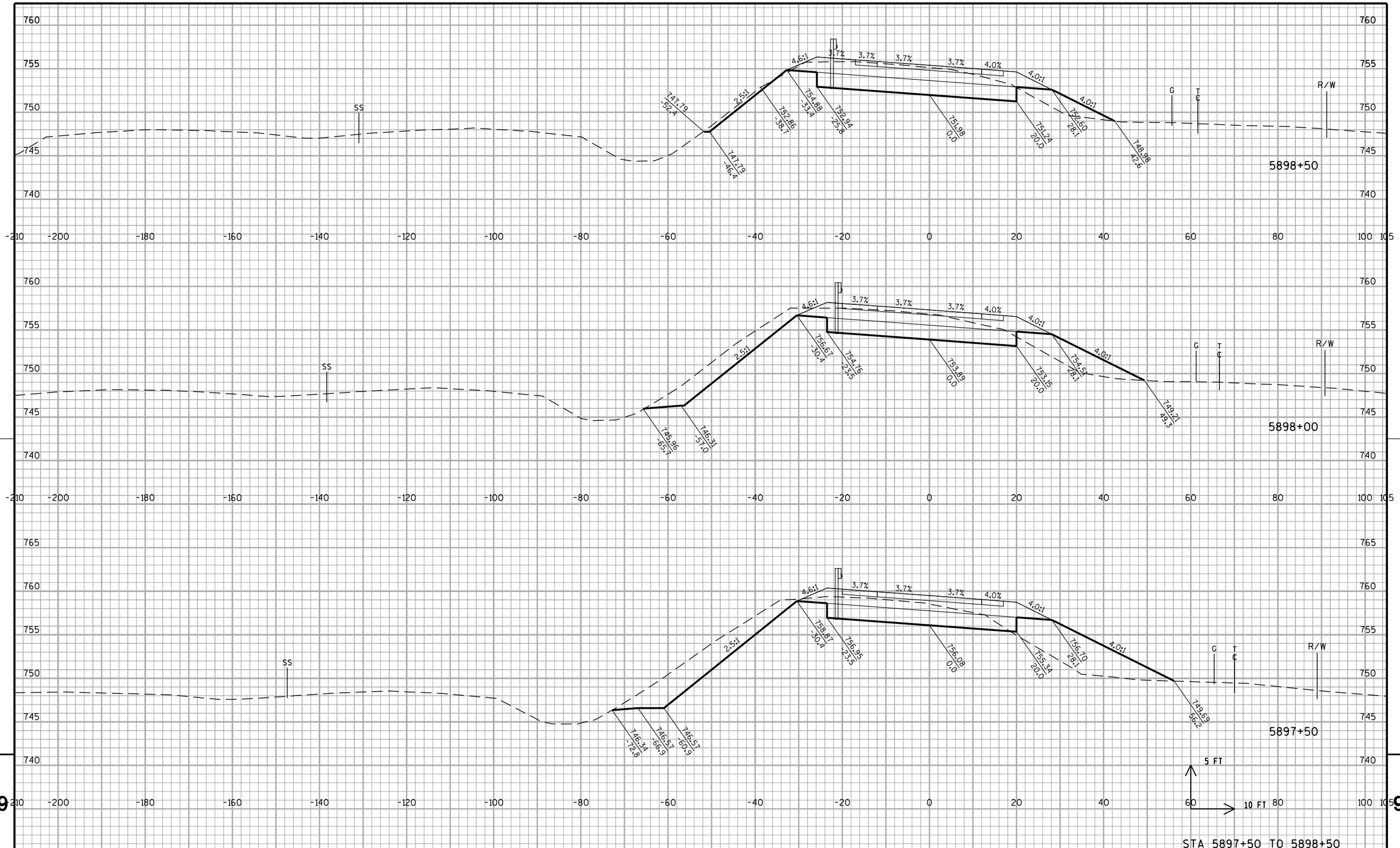

PROJECT NO: 1033-02-70	HWY: IH 94/STH 20	COUNTY: RACINE	CROSS SECTIONS: EAST FRONTAGE ROAD - NORTH	SHEET 226	E

FILE NAME : s:\FinalDesign\20\10330270_E\Roads\cds\090202_xs_frne.dgn PLOT DATE : 06-DEC-2010 20:33 PLOT BY : MSCD1S PLOT NAME : 090202_xs_frne24 PLOT SCALE : 20:1

WISDOT/CADDS SHEET 21

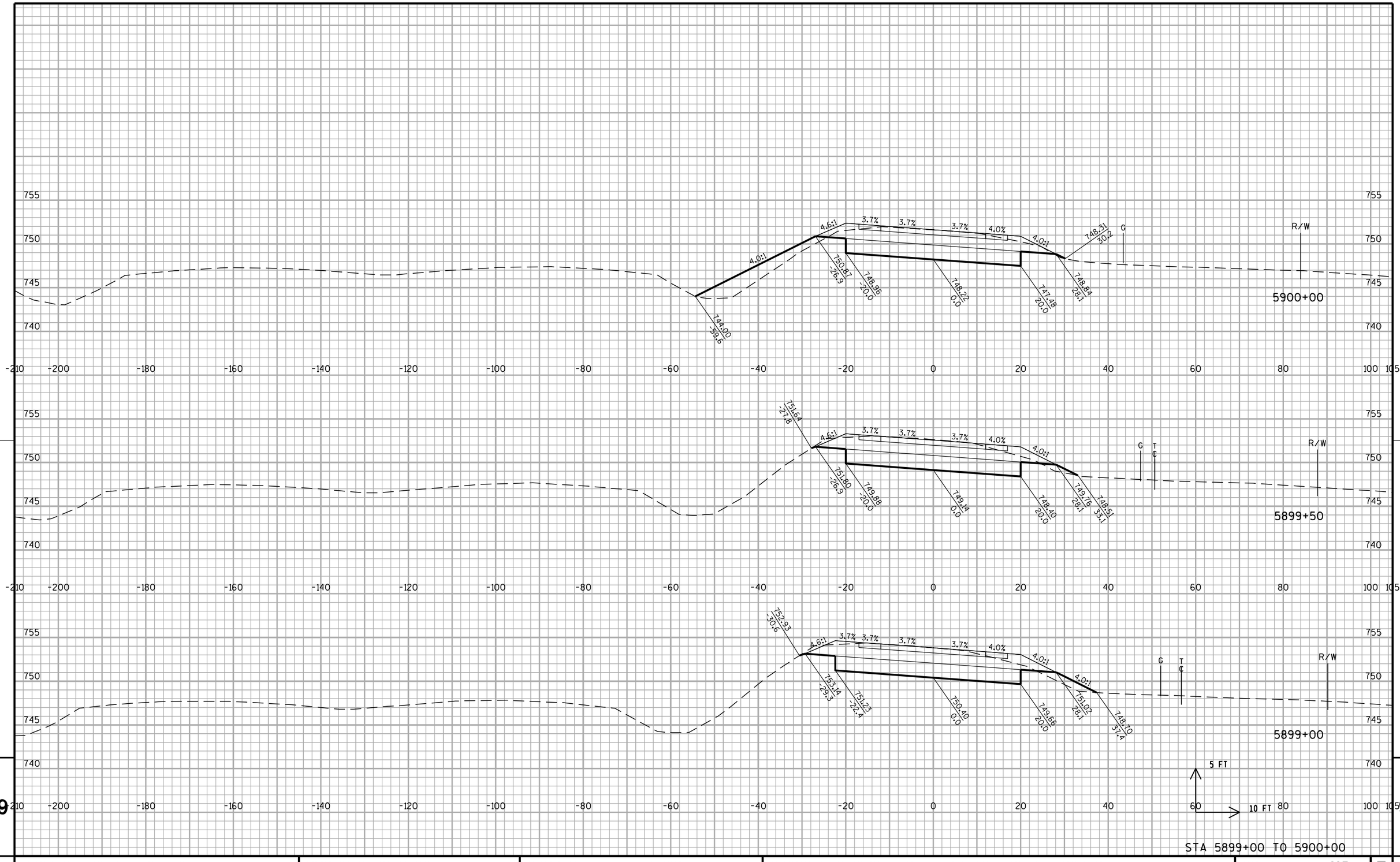

PROJECT NO: 1033-02-70	HWY: IH 94/STH 20	COUNTY: RACINE	CROSS SECTIONS: EAST FRONTAGE ROAD - NORTH	SHEET 227	E

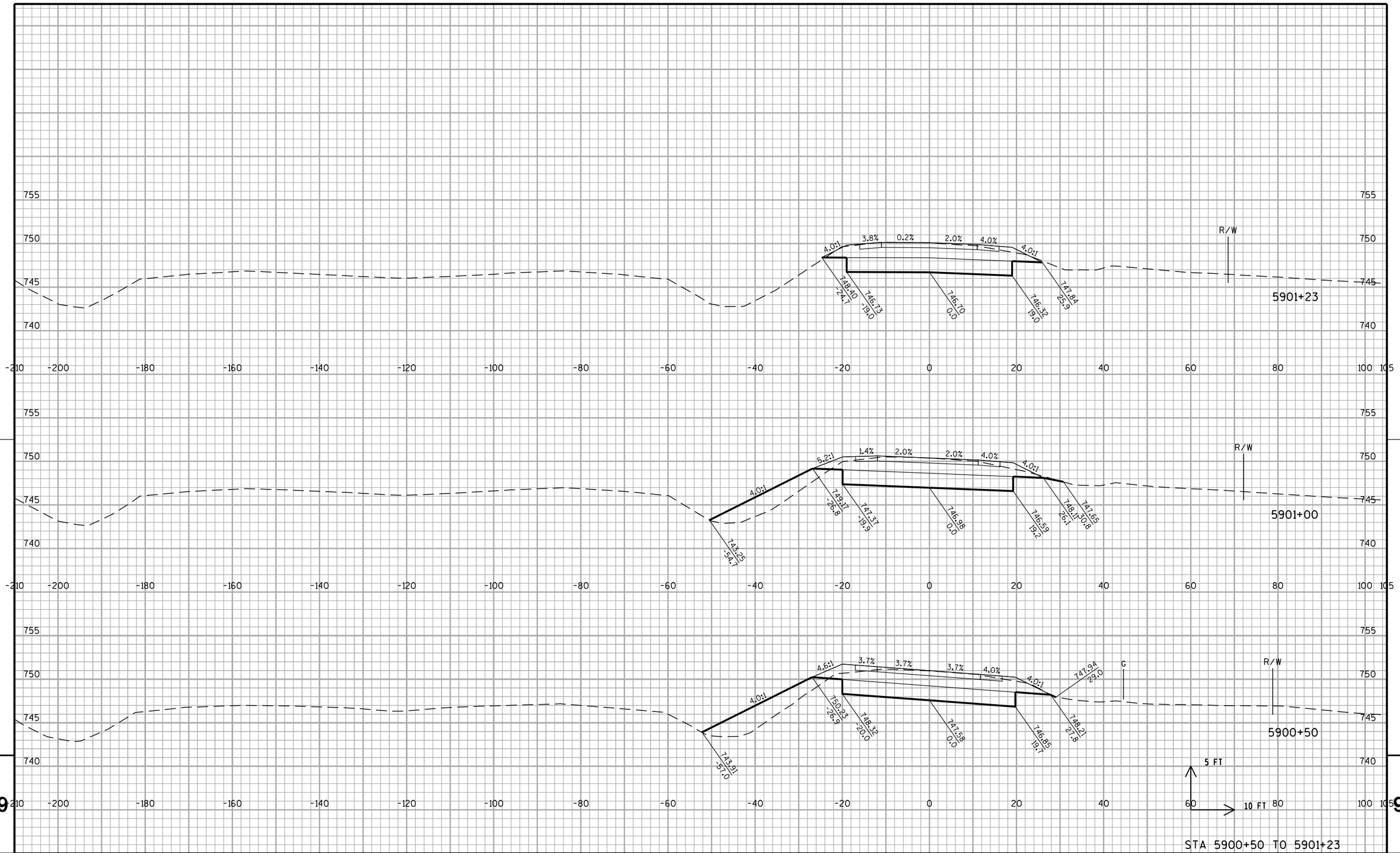

PROJECT NO: 1033-02-70	HWY: IH 94/STH 20	COUNTY: RACINE	CROSS SECTIONS: EAST FRONTAGE ROAD - NORTH	SHEET 228	E

FILE NAME : s:\FinalDesign\20\10330270_E\Roads\cds\090202_xs_frne.dgn PLOT DATE : 06-DEC-2010 20:33 PLOT BY : MSCD1S PLOT NAME : 090202_xs_frne26 PLOT SCALE : 20:1

WISDOT/CADDS SHEET 21

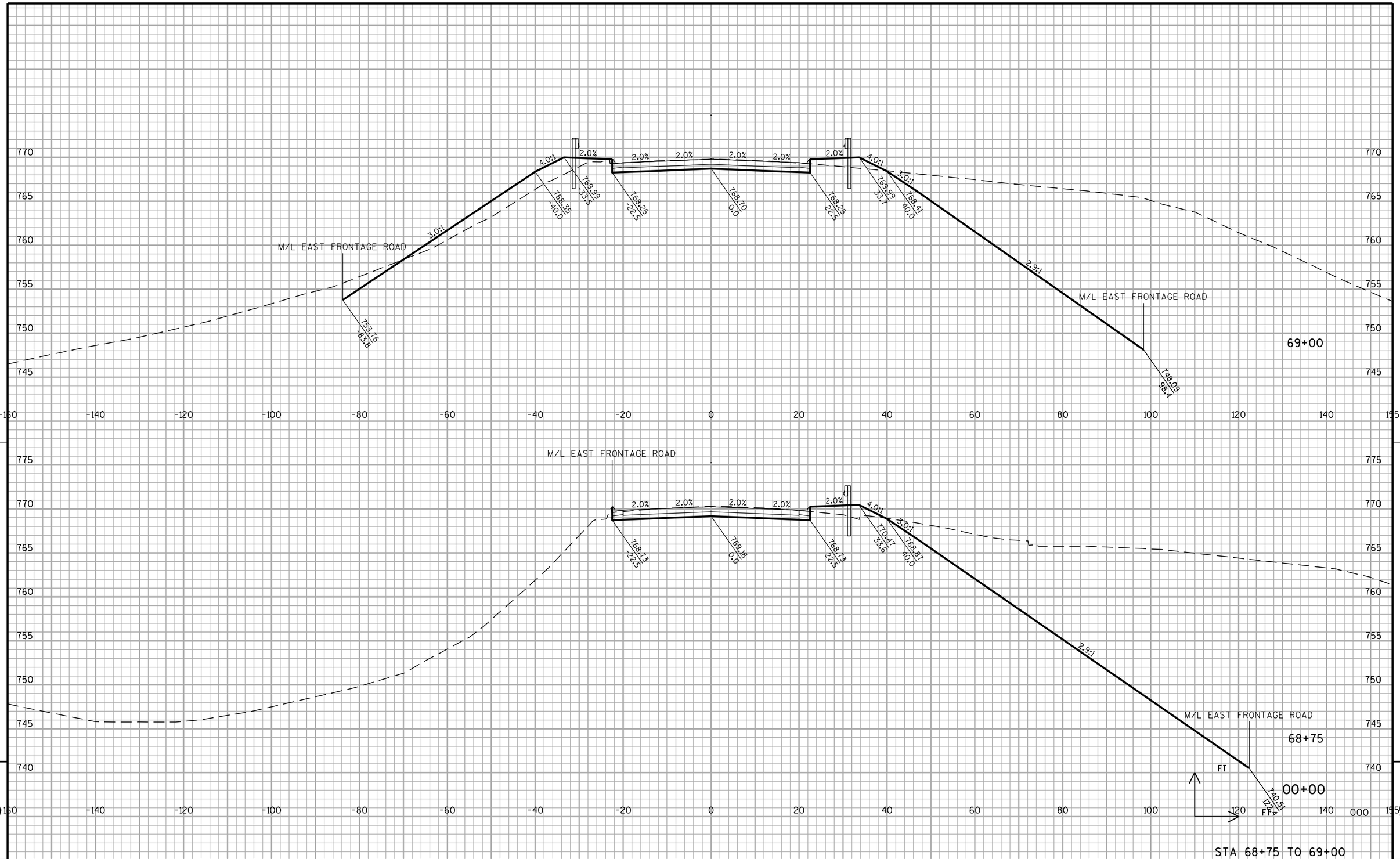

PROJECT NO:1033-02-70	HWY:IH 94/STH 20	COUNTY: RACINE	CROSS SECTIONS: CTH C	SHEET 229	E

FILE NAME : s:\FinalDesign\20\10330270_E\Roads\cds\090203_xs_cthc.dgn PLOT DATE : 06-DEC-2010 20:33 PLOT BY : MSCD1S PLOT NAME : 090203_xs_cthc PLOT SCALE : 20:1

WISDOT/CADDS SHEET 21

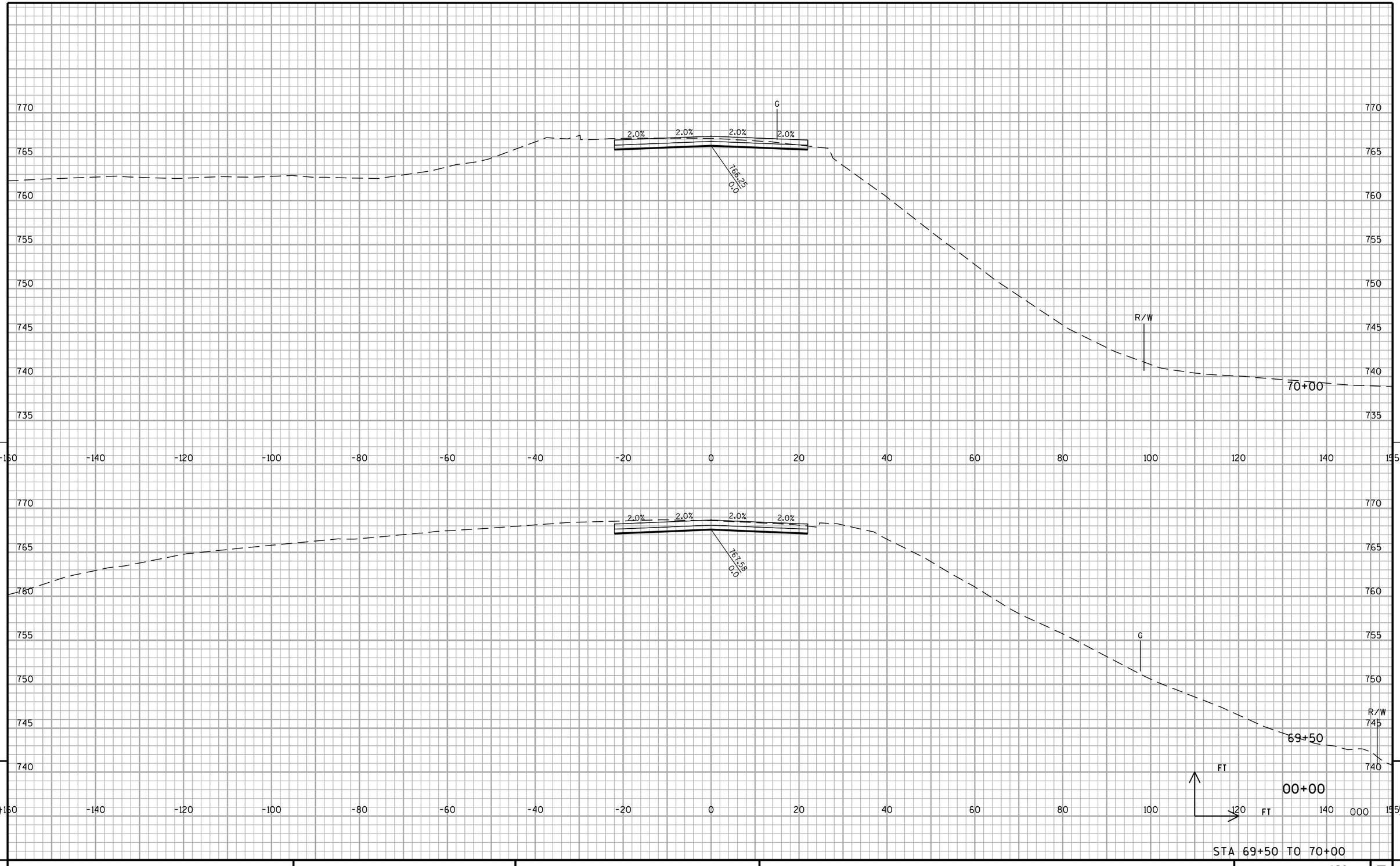

9 9

PROJECT NO:1033-02-70	HWY:IH 94/STH 20	COUNTY: RACINE	CROSS SECTIONS: CTH C	SHEET 230	E

FILE NAME : s:\FinalDesign\20\10330270_E\Roads\cds\090203_xs_cthc.dgn PLOT DATE : 06-DEC-2010 20:33 PLOT BY : MSCD1S PLOT NAME : 090203_xs_cthc1 PLOT SCALE : 20:1

WISDOT/CADDS SHEET 21

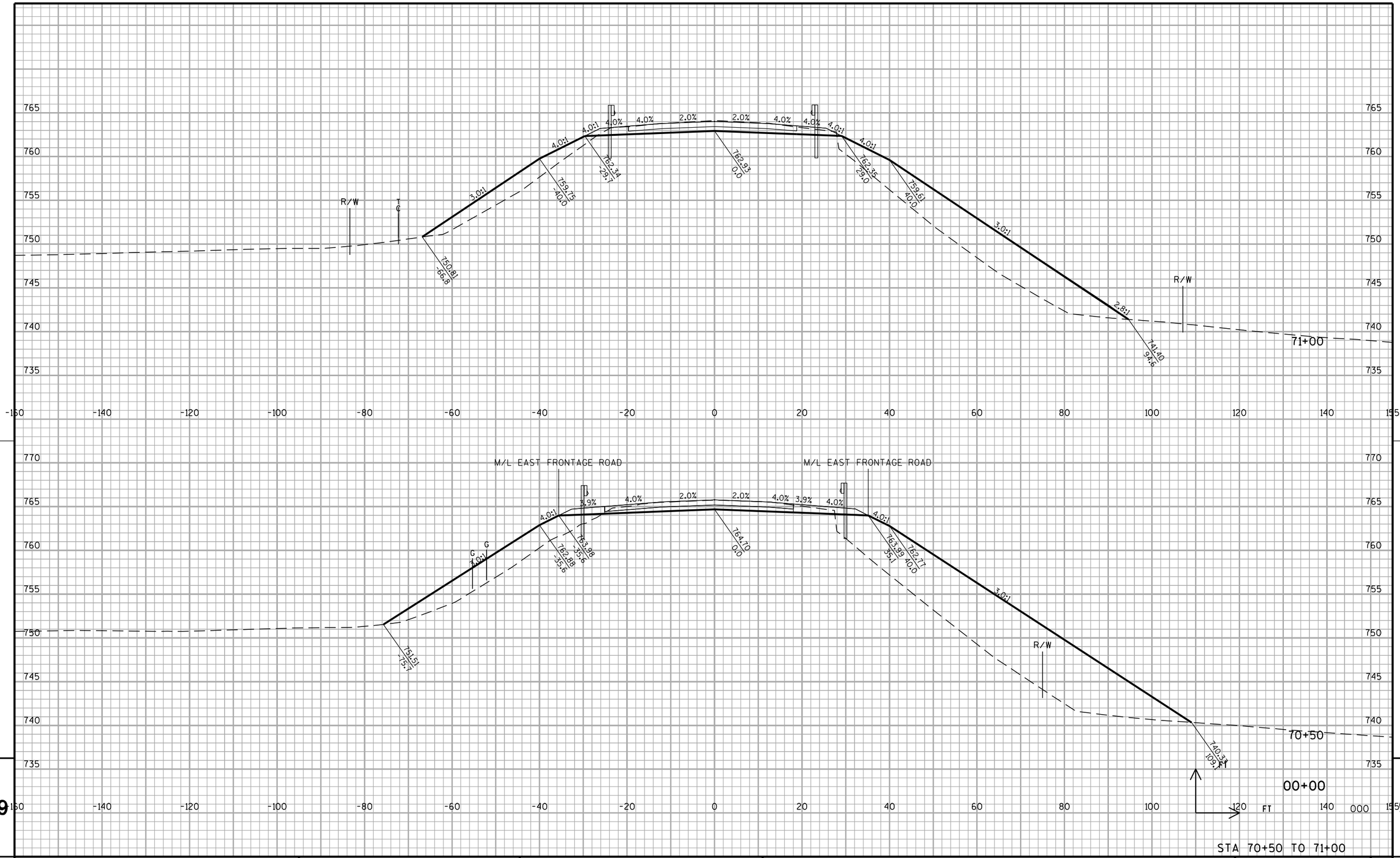

STA 70+50 TO 71+00

PROJECT NO: 1033-02-70	HWY: IH 94/STH 20	COUNTY: RACINE	CROSS SECTIONS: CTH C	SHEET 231	E

FILE NAME : s:\FinalDesign\20\10330270_E\Roads\cds\090203_xs_cthc.dgn PLOT DATE : 06-DEC-2010 20:34 PLOT BY : MSCD1S PLOT NAME : 090203_xs_cthc2 PLOT SCALE : 20:1

WISDOT/CADDS SHEET 21

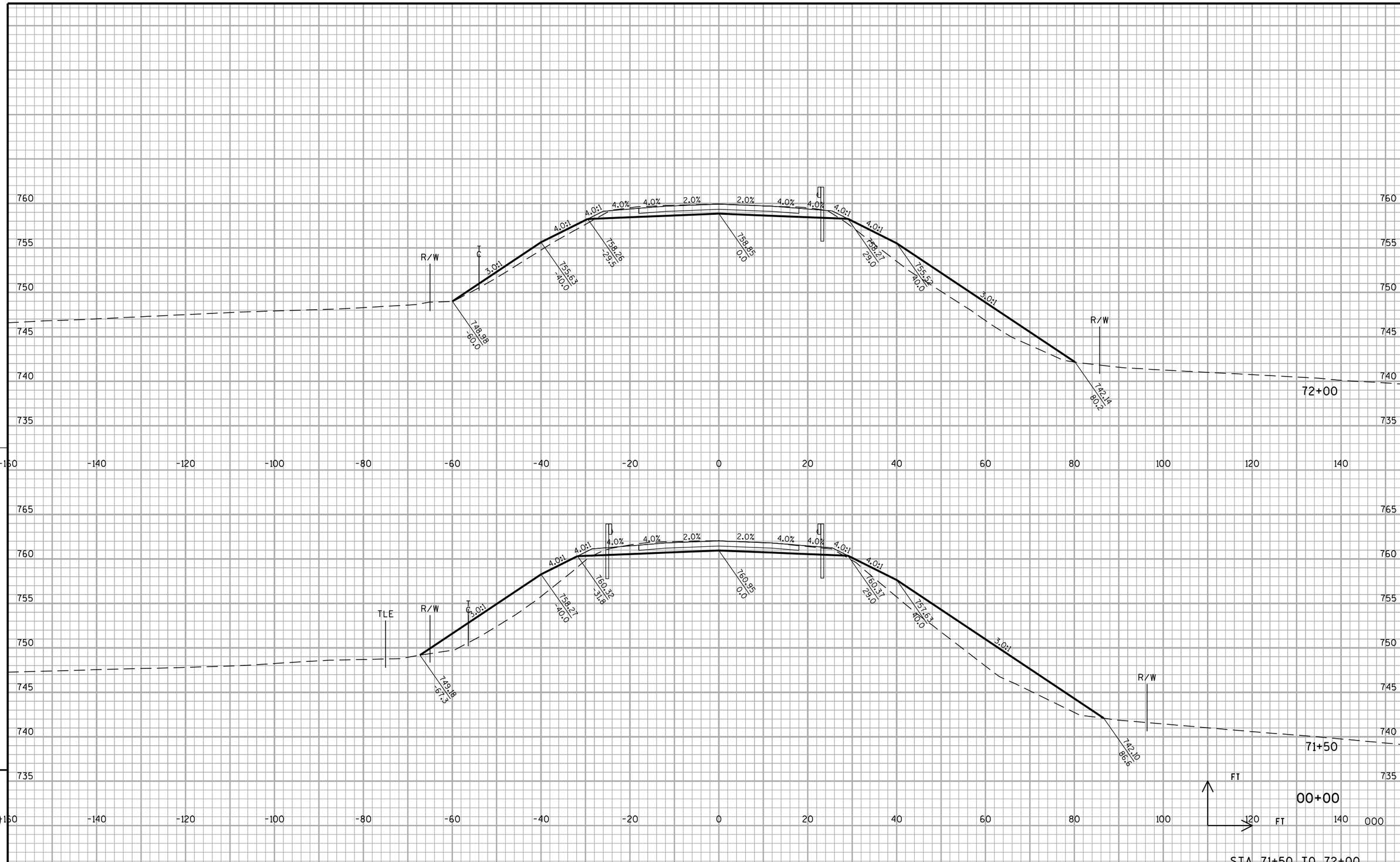

PROJECT NO: 1033-02-70	HWY: IH 94/STH 20	COUNTY: RACINE	CROSS SECTIONS: CTH C	SHEET 232	E

FILE NAME : s:\FinalDesign\20\10330270_E\Roads\cds\090203_xs_cthc.dgn PLOT DATE : 06-DEC-2010 20:34 PLOT BY : MSCD1S PLOT NAME : 090203_xs_cthc3 PLOT SCALE : 20:1

WISDOT/CADDS SHEET 21

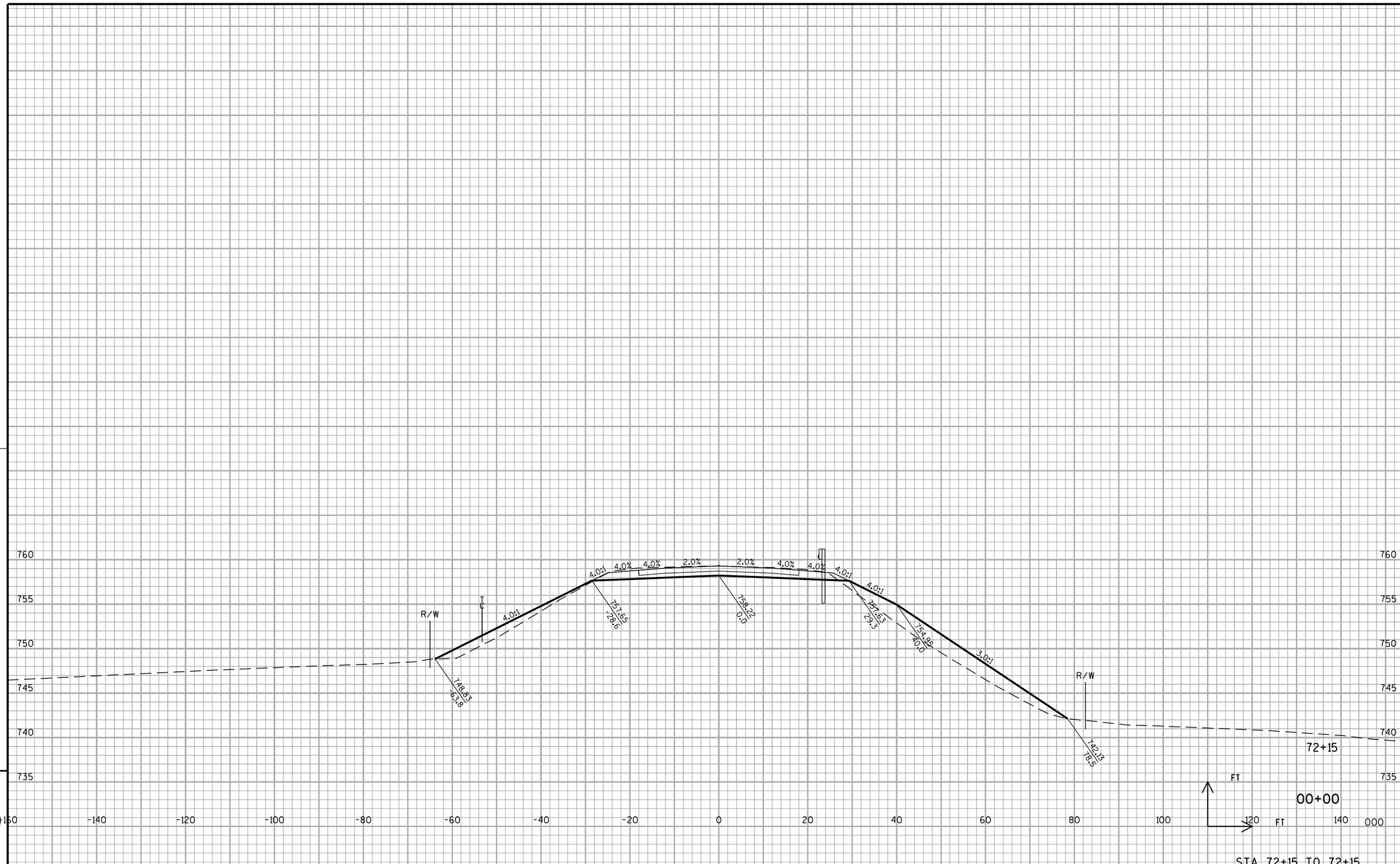

PROJECT NO:1033-02-70	HWY:IH 94/STH 20	COUNTY: RACINE	CROSS SECTIONS: CTH C	SHEET 233	E

FILE NAME : s:\FinalDesign\20\10330270_E\Roads\cds\090203_xs_cthc.dgn PLOT DATE : 06-DEC-2010 20:34 PLOT BY : MSCD1S PLOT NAME : 090203_xs_cthc4 PLOT SCALE : 20:1

WISDOT/CADDS SHEET 21

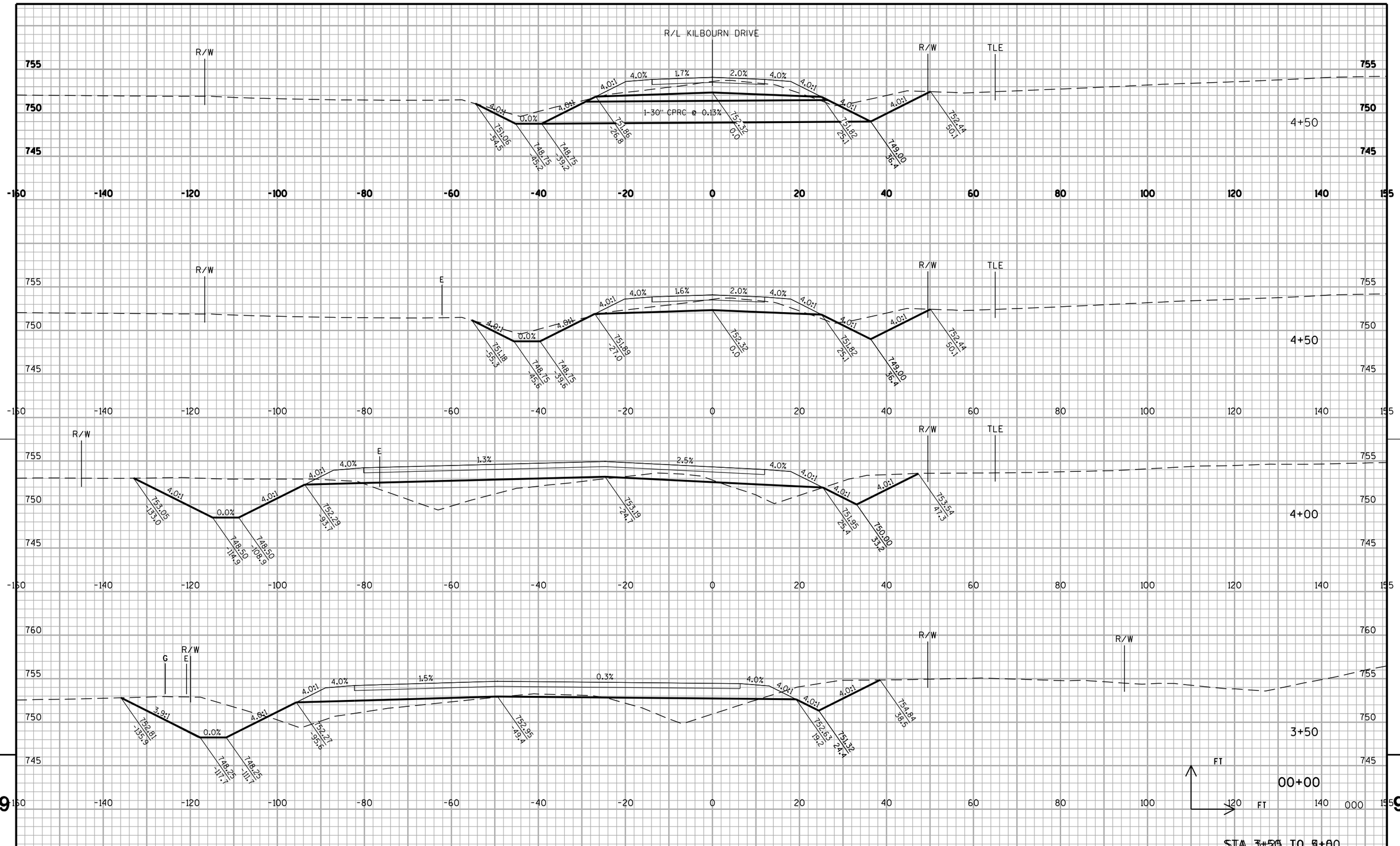

PROJECT NO:1033-02-70	HWY:IH 94/STH 20	COUNTY: RACINE	CROSS SECTIONS: KILBOURN DRIVE	SHEET 234	E

FILE NAME : s:\FinalDesign\20\10330270_E\Roads\cds\090204_xs_kilbourn.dgn PLOT DATE : 06-DEC-2010 20:34 PLOT BY : MSCD1S PLOT NAME : 090204_xs_kilbourn PLOT SCALE : 20:1

WISDOT/CADDS SHEET 21

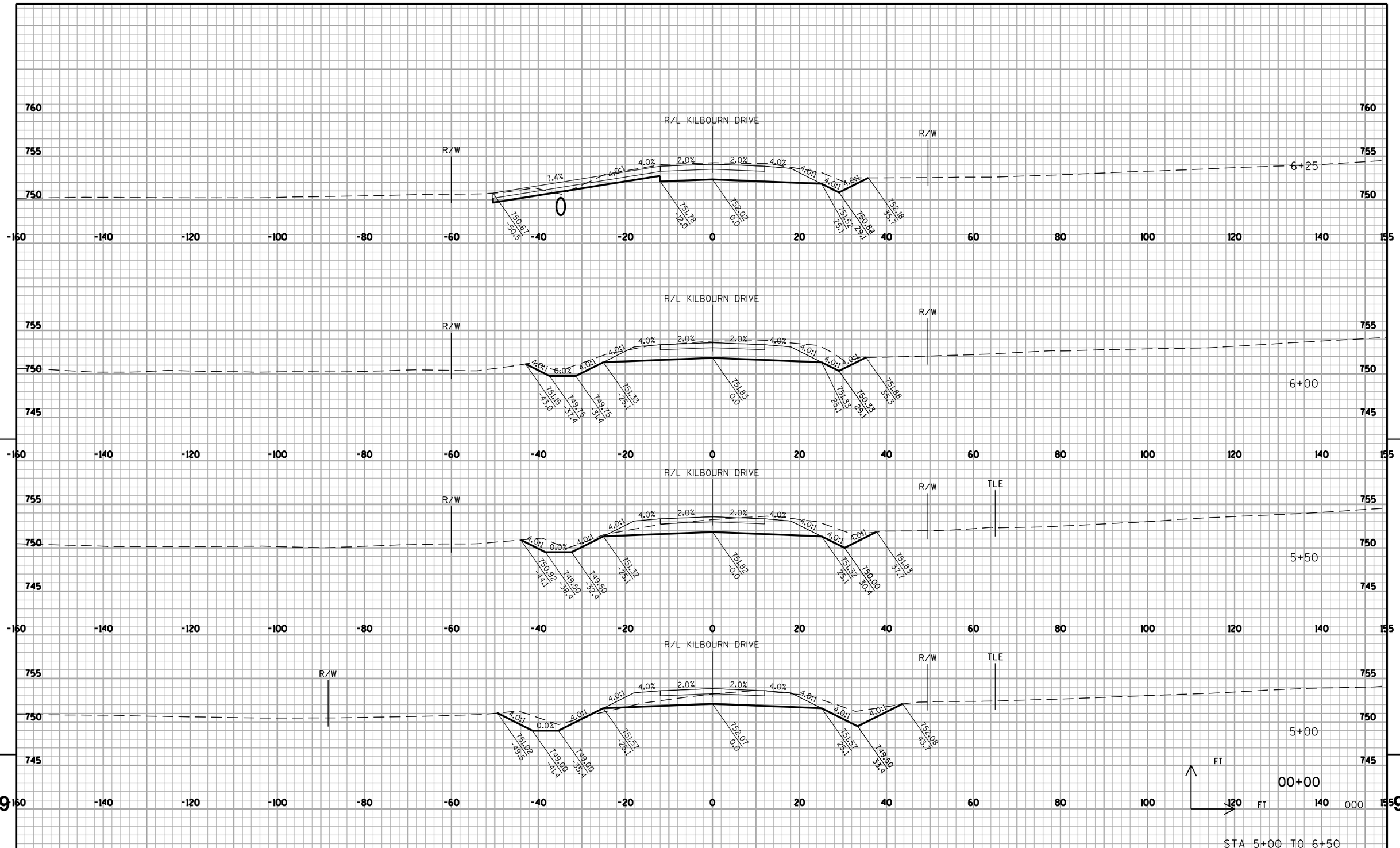

PROJECT NO:1033-02-70	HWY:IH 94/STH 20	COUNTY: RACINE	CROSS SECTIONS: KILBOURN DRIVE	SHEET 235	E

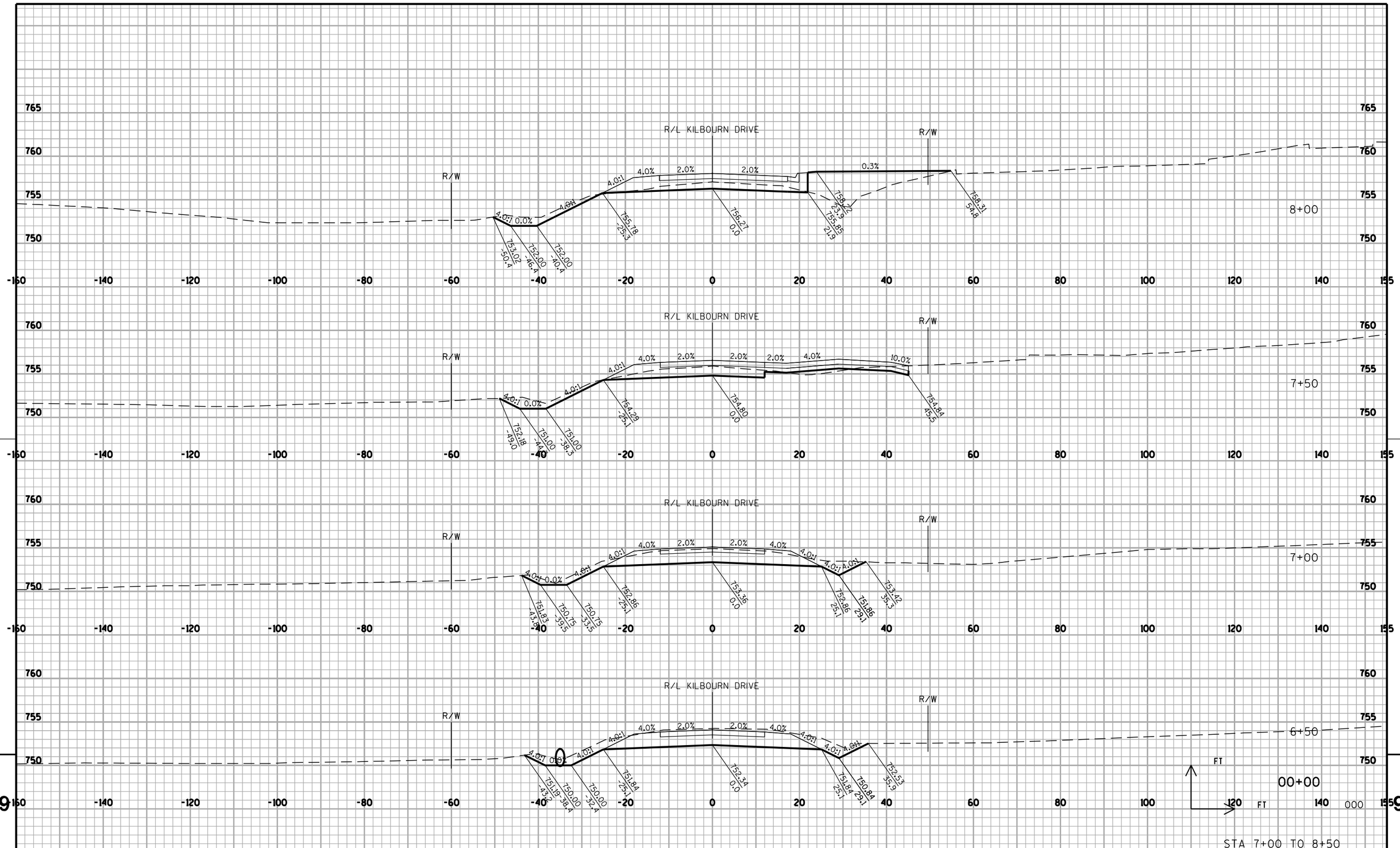

PROJECT NO: 1033-02-70	HWY: IH 94/STH 20	COUNTY: RACINE	CROSS SECTIONS: KILBOURN DRIVE	SHEET 236	E

FILE NAME : s:\FinalDesign\20\10330270_E\Roads\cds\090204_xs_kilbourn.dgn PLOT DATE : 06-DEC-2010 20:34 PLOT BY : MSCD1S PLOT NAME : 090204_xs_kilbourn2 PLOT SCALE : 20:1

WISDOT/CADDS SHEET 21

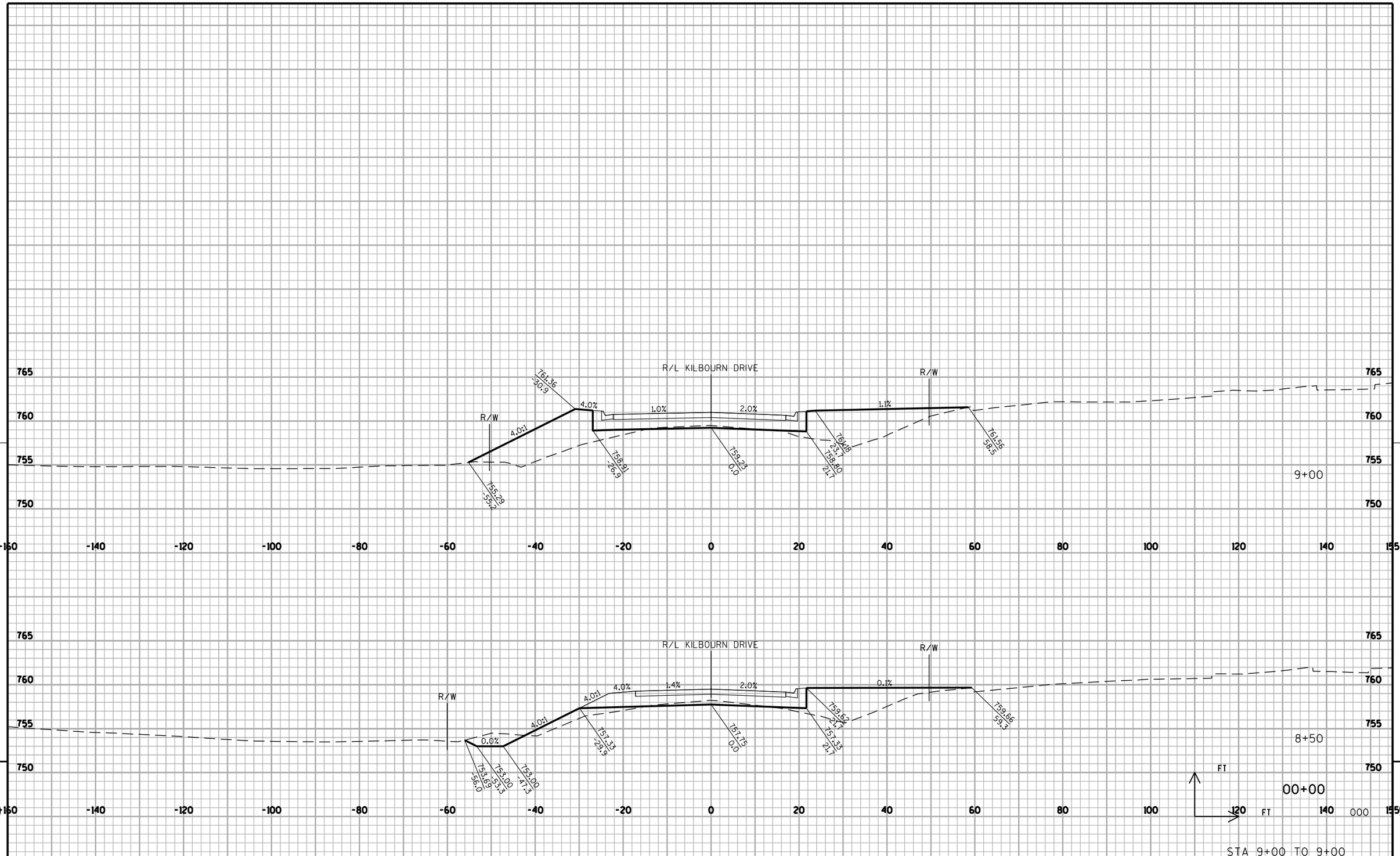

PROJECT NO: 1033-02-70	HWY: IH 94/STH 20	COUNTY: RACINE	CROSS SECTIONS: KILBOURN DRIVE	SHEET 237	E

FILE NAME : s:\FinalDesign\20\10330270_E\Roads\cds\090204_xs_kilbourn.dgn PLOT DATE : 06-DEC-2010 20:34 PLOT BY : MSCD1S PLOT NAME : 090204_xs_kilbourn3 PLOT SCALE : 20:1

WISDOT/CADDS SHEET 21

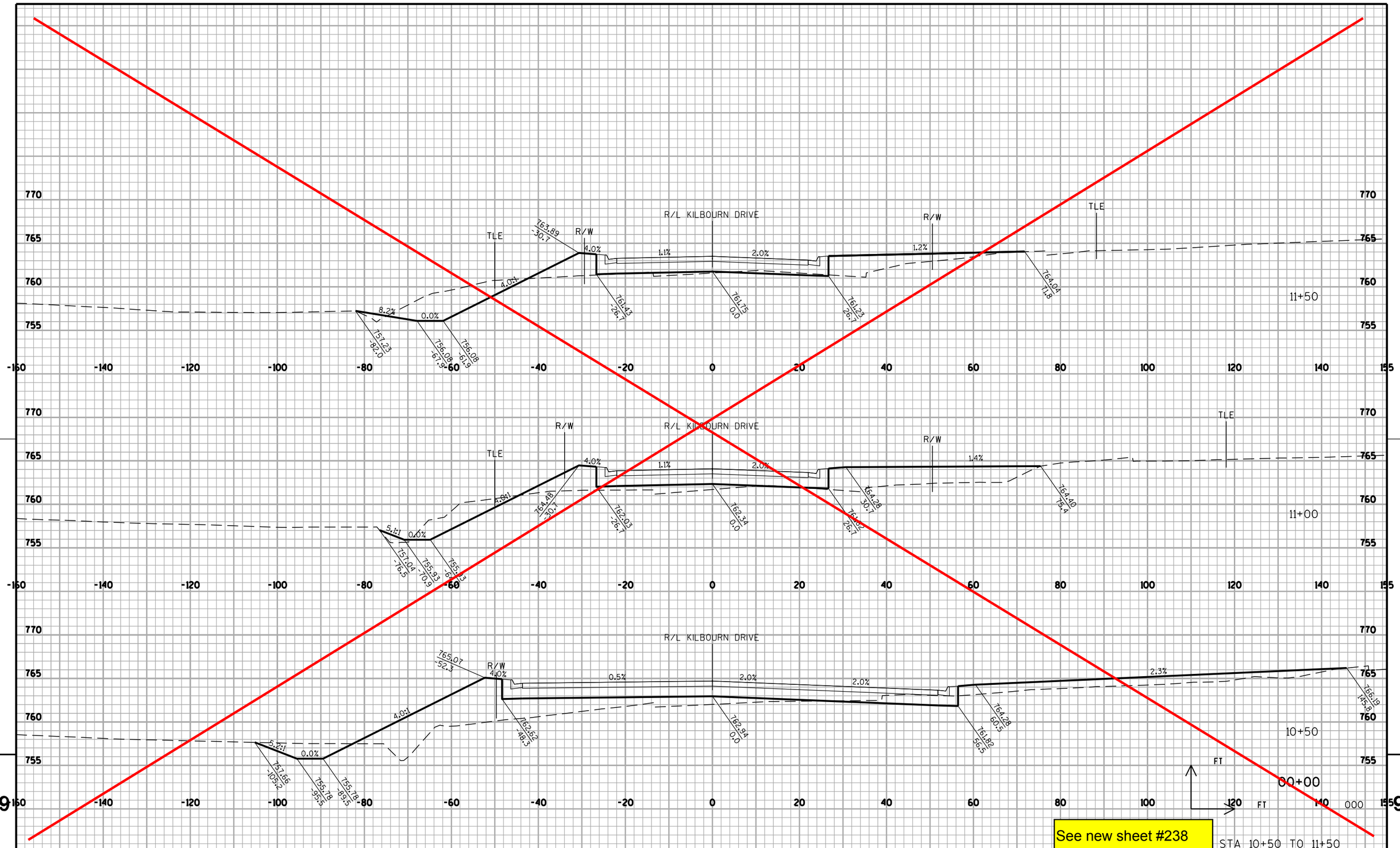

PROJECT NO: 1033-02-70	HWY: IH 94/STH 20	COUNTY: RACINE	CROSS SECTIONS: KILBOURN DRIVE	SHEET 238	E

FILE NAME : s:\FinalDesign\20\10330270_E\Roads\cds\090204_xs_kilbourn.dgn PLOT DATE : 06-DEC-2010 20:34 PLOT BY : MSCD1S PLOT NAME : 090204_xs_kilbourn PLOT SCALE : 20:1

WISDOT/CADDS SHEET 21

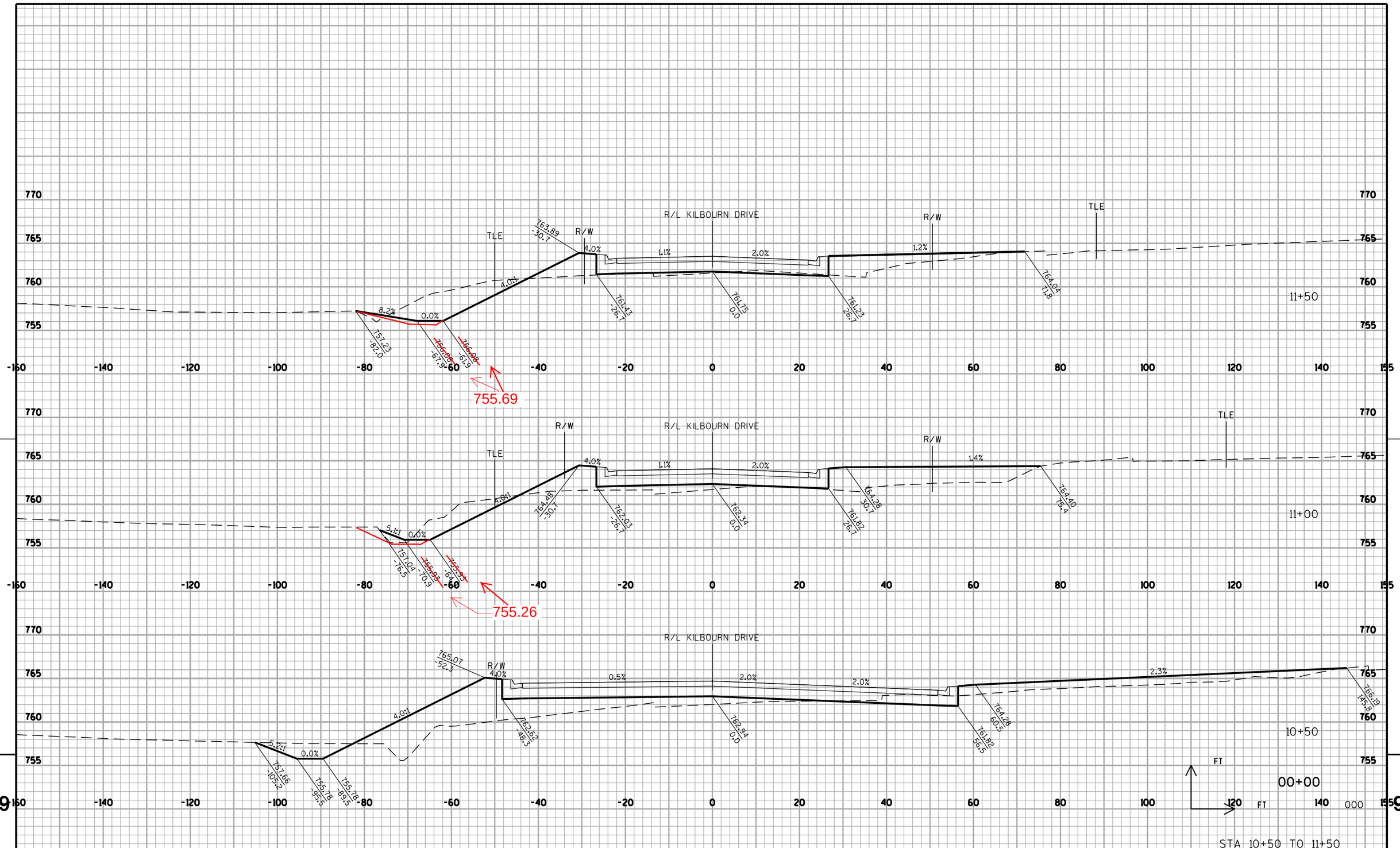

PROJECT NO: 1033-02-70	HWY: IH 94/STH 20	COUNTY: RACINE	CROSS SECTIONS: KILBOURN DRIVE	SHEET 238	E

FILE NAME : s:\FinalDesign\20\10330270_E\Roads\cds\090204_xs_kilbourn.dgn PLOT DATE : 06-DEC-2010 20:34 PLOT BY : MSCD1S PLOT NAME : 090204_xs_kilbourn PLOT SCALE : 20:1

WISDOT/CADDS SHEET 21

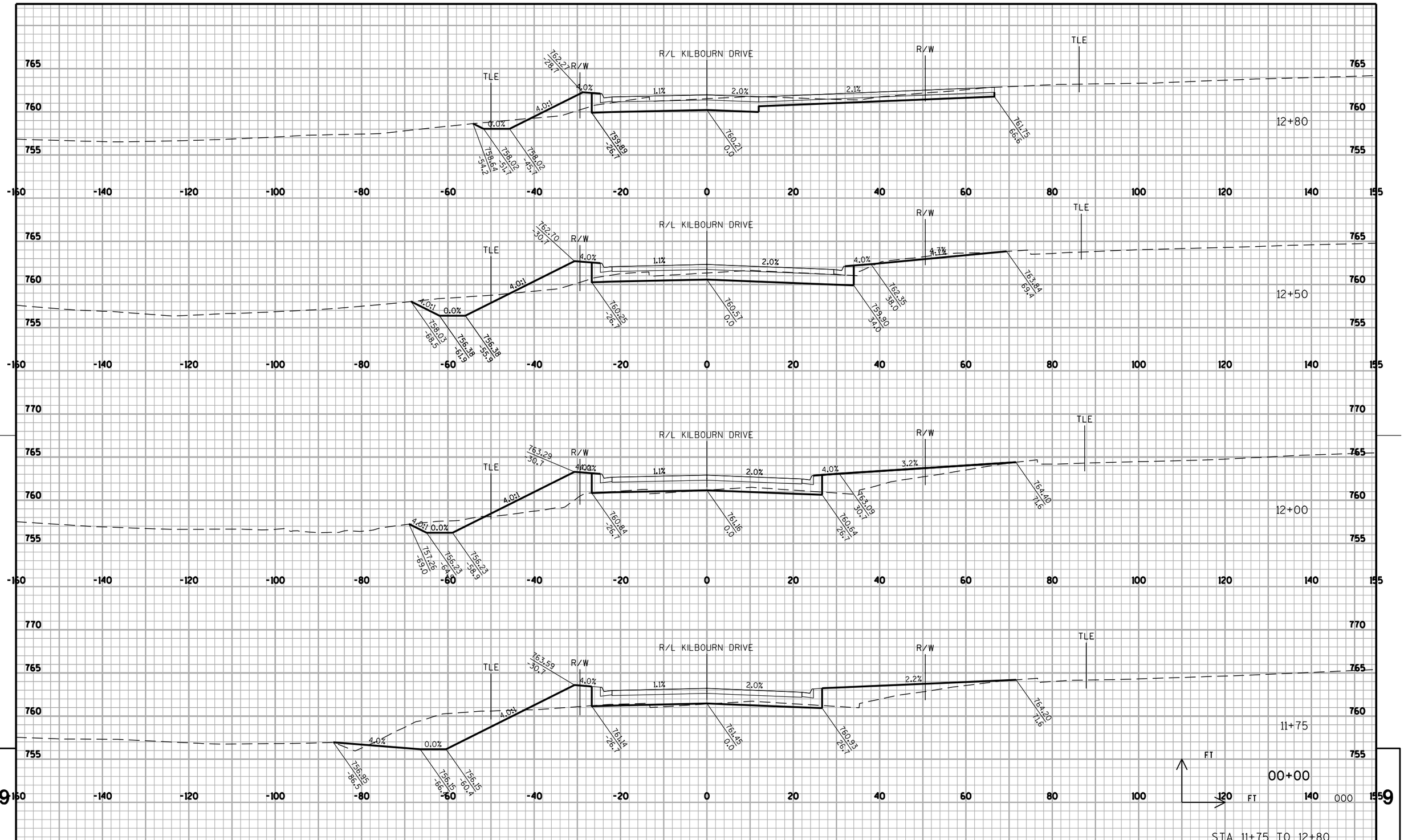

PROJECT NO: 1033-02-70	HWY: IH 94/STH 20	COUNTY: RACINE	CROSS SECTIONS: KILBOURN DRIVE	SHEET 239	E

FILE NAME : s:\FinalDesign\20\10330270_E\Roads\cds\090204_xs_kilbourn.dgn PLOT DATE : 06-DEC-2010 20:34 PLOT BY : MSCD1S PLOT NAME : 090204_xs_kilbourn PLOT SCALE : 20:1

WISDOT/CADDS SHEET 21

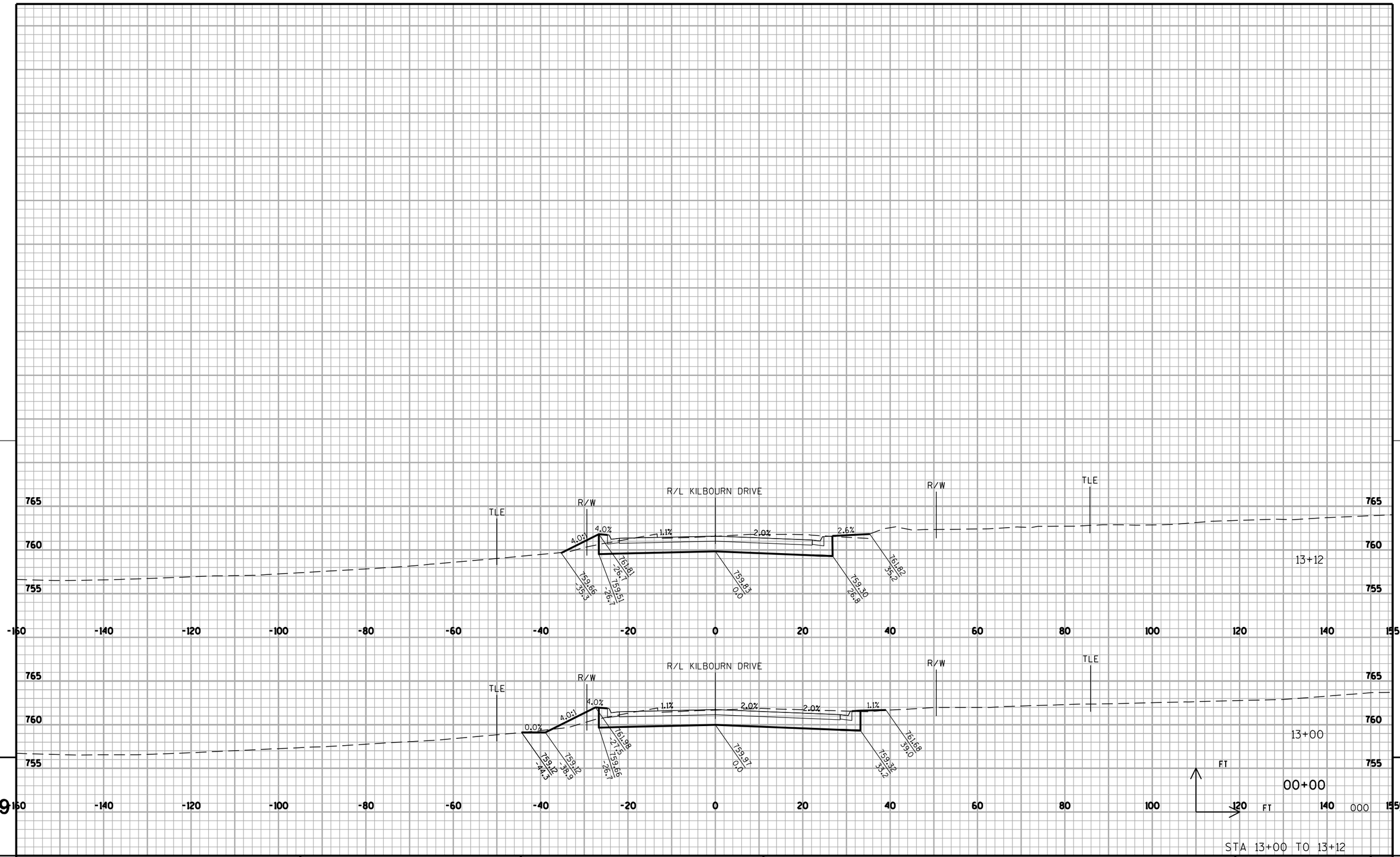

STA 13+00 TO 13+12

PROJECT NO: 1033-02-70	HWY: IH 94/STH 20	COUNTY: RACINE	CROSS SECTIONS: KILBOURN DRIVE	SHEET 240	E

FILE NAME : s:\FinalDesign\20\10330270_E\Roads\cds\090204_xs_kilbourn.dgn PLOT DATE : 06-DEC-2010 20:34 PLOT BY : MSCD1S PLOT NAME : 090204_xs_kilbourn PLOT SCALE : 20:1

WISDOT/CADDS SHEET 21

Notes

Wisconsin Department of Transportation

Dedicated people creating transportation solutions
through innovation and exceptional service.

http://www.dot.wisconsin.gov