WKE

JULY 12

ORDER OF SHEETS

Section No.	1	Title
Section No.	2	Typical Sections and Details
Section No.	3	Estimate of Quantities
Section No.	3	Miscellaneous Quantities
Section No.	5	Plan
Section No.	6	Standard Detail Drawings
Section No.	7	Sign Plates
~~Section No.~~	~~8~~	~~Structure Plans~~

TOTAL SHEETS = 270

PROJECT ID: 2240-00-67
WITH:

COUNTY: RACINE

STATE PROJECT	FEDERAL PROJECT	
	PROJECT	CONTRACT
2240-00-67		

STATE OF WISCONSIN
DEPARTMENT OF TRANSPORTATION

ROADWAY MAINTENANCE PROJECT

MILWAUKEE AVENUE

STH 20 TO CTH Y

STH 36

RACINE COUNTY

STATE PROJECT NUMBER
2240-00-67

N

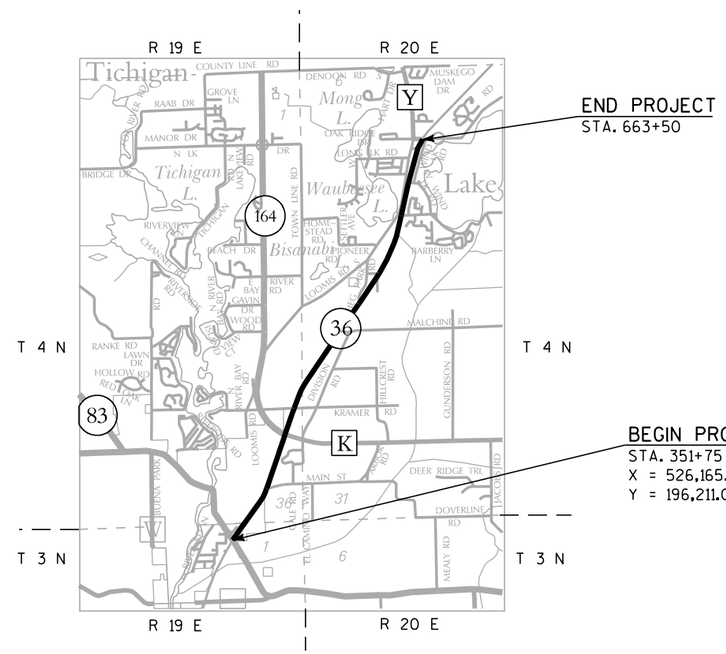

DESIGN DESIGNATION

		STH 20 - E. MAIN DR.	E. MAIN DR. - CTH K	CTH K - CTH Y
A.A.D.T. (2012)	=	13,900	15,700	13,300
A.A.D.T. (2032)	=	17,700	18,800	16,200
D.H.V.	=	1557	1758	1490
D.D.	=	58/42	58/42	58/42
T.	=	5.5%	5.5%	5.5%
DESIGN SPEED	=	60 MPH	60 MPH	60 MPH
ESALS	=	2,013,800	2,198,700	1,880,000

CONVENTIONAL SYMBOLS

PLAN

CORPORATE LIMITS

REFERENCE LINE

COMBUSTIBLE FLUIDS — CAUTION

UTILITIES

ELECTRIC — E —
FIBER OPTIC — FO —
GAS — G —
SANITARY SEWER — SAN —
STORM SEWER — SS —
TELEPHONE — T —
WATER — W —
UTILITY PEDESTAL
POWER POLE
TELEPHONE POLE

LAYOUT
SCALE 0 — 1 MI.

TOTAL NET LENGTH OF CENTERLINE = 5.904 MI.

-"COORDINATES ON THIS PLAN ARE REFERENCED TO THE WISCONSIN COUNTY COORDINATE SYSTEM (WCCS), 'RACINE' COUNTY, NAD 83 (2007)."
-"ELEVATIONS SHOWN ON THIS PLAN ARE REFERENCED TO THE NORTH AMERICA VERTICAL DATUM OF 1988 NAVD 88 (2007)."

ALIGNMENT DATA IS BASED ON AS-BUILT PLANS WITHOUT ANY FIELD SURVEY AND IS TO BE USED FOR REFERENCE ONLY. RW IS SHOWN BASED ON GIS MAPPING WITHOUT ANY FIELD SURVEY AND IS TO BE USED FOR REFERENCE ONLY.

STATE OF WISCONSIN
DEPARTMENT OF TRANSPORTATION

PREPARED BY

Surveyor	GRAEF
Designer	WISDOT
Project Manager	JANET CANNON
Regional Examiner	
Regional Supervisor	JAMES FORSETH
C.O. Examiner	Carl Wojanowski

APPROVED FOR THE DEPARTMENT

DATE: 1/12/12 (Signature)

E

2

GENERAL NOTES

1. UNDERDRAIN OUTFALLS ALONG LENGTH OF PROJECT. CONTRACTOR SHALL NOT DAMAGE OR BURY ANY OUTFALLS.
2. THE LOCATION OF EXISTING UTILITY INSTALLATIONS SHOWN ON THE PLANS ARE APPROXIMATE. THERE MAY BE OTHER UTILITIES INSTALLATIONS IN THE AREA THAT ARE NOT SHOWN.
3. NO SHRUBS OR TREES ARE TO BE REMOVED WITHOUT APPROVAL OF THE ENGINEER.
4. WHEN TEMPORARY PAVEMENT MARKING REMOVABLE TAPE IS REQURIED, IT SHALL BE CUT TRHOUGH ITS FULL WIDTH AND THICKNESS AT 25 FOOT INTERVALS.
5. RE-TOPSOIL GRADED AREAS, AS DESIGNATED BY ENGINEER, IMMEDIATESLY AFTRE GRADING IS COMPLETED WITHIN THOSE AREAS. SEED, FERTILIZE, AND MULCH ALL TOPSOILED AREAS WITHIN SEVEN CALENDAR DAYS AFTER PLACEMENT OF TOPSOIL.

DESIGN INDEX OF SECTION 2 SHEETS

GENERAL NOTES, UTILITIES, DESIGN INDEX
PROJECT OVERVIEW
TYPICAL SECTIONS
CONSTRUCTION DETAILS
UTILITY PLAN
PERMANENT SIGNING
TRAFFIC SIGNALS
PAVEMENT MARKING
TRAFFIC CONTROL AND CONSTRUCTION STAGING

UTILITY CONTACTS

MR. DAN SANDE, PROJECT MANAGER
WE ENERGIES (ELECTRIC)
333 W. EVERETT ST A279
MILWAUKEE, WI 53203
PHONE: (414)221-4578
DAN.SANDE@WE-ENERGIES.COM

MR. STEVE CRAMER, UTILITY COORD
TIME WARNER CABLE
1320 N. MARTIN LUTHER KING JR. DR.
MILWAUKEE, WI 53212
PHONE: (414)277-4045
STEVE.CRAMER@TWCABLE.COM

MR. DAN SANDE, PROJECT MANAGER
WE ENERGIES (GAS OPERATIONS)
333 W. EVERETT ST A279
MILWAUKEE, WI 53203
PHONE: (414)221-4578
DAN.SANDE@WE-ENERGIES.COM

MR. LARRY HUBER, PROPERTY RIGHTS SP
ANR PIPELINE CO
W3925 PIPELINE LANE
EDEN, WI 53019
PHONE: (920)477-2235 EXT. 13
LAWRENCE_HUBER@TRANSCANADA.COM

MR. MIKE OLSEN
ATC MANAGEMENT, INC
801 O'KEEFE ROAD
PO BOX 6113
DEPERE, WI 54115-6113
PHONE: (920)338-6582
MOLSEN@ATCLLC.COM

MR. DENNIS CAULEY
WISDOT SIGNALS - ELECTRICAL SHOP
935 S. 60TH STREET
WEST ALLIS, WI 53214
PHONE: (414)266-1170
DENNIS.CAULEY@DOT.WI.GOV

MS. CAROL KUNOVAR
NORWAY SANITARY DISTRICT
6419 HEG PARK ROAD
WINDLAKE, WI 53185
PHONE: (262)895-6400

WISDOT SIGNALS
141 NW BARSTOW
P.O. BOX 0798
WAUKESHA, WI 53187-0798
(414)750-2605

MR. JEFF DOLEZAL, WATER DEPARTMENT
VILLAGE OF WATERFORD DPW
123 N RIVER ST
WATERFORD, WI 53185
PHONE: (262)534-3801

REBECKA EWALD, ADMINISTRATOR
VILLAGE OF WATERFORD
123 N RIVER ST
WATERFORD, WI 53185
PHONE: (262)534-3801

MR. MICHAEL JOHNSON, OSP ENGINEERING
TDS TELECOM
20875 CROSSROADS CIRCLE, SUITE 800
WAUKESHA, WI 53186
PHONE: (262)754-3052
MICHAEL.JOHNSON@TDSTELECOM.COM

MR. KEVIN ANDERSON, AREA MANAGER
AT&T WISCONSIN
7721 W. FOND DU LAC AVE. 1ST FL
MILWAUKEE, WI 53218
PHONE: (414)536-2971
KA8421@ATT.COM

DNR CONTACT

DEPARTMENT OF NATURAL RESOURCES
141 N.W. BARSTOW STREET
WAUKESHA, WI 53188
ATTN. CRAIG WEBSTER
WISCONSIN DNR, SOUTHEAST REGION
PHONE: (262)574-2141

DOT CONTACT

DEPARTMENT OF TRANSPORTATION
141 N.W. BARSTOW STREET
WAUKESHA, WI 53188
JANET CANNON
WISCONSIN DOT, SOUTHEAST REGION
PHONE: (262)548-6890
JANET.CANNON@DOT.WI.GOV

HMA PAVEMENT

LOCATION	TYPE	ASPHALTIC MATERIAL	NOMINAL SIZE	DEPTH
STH 36	E-3	PG 58-28	12.5MM	2-INCHES

DIGGERS HOTLINE

Call 811 3 Work Days Before You Dig
Or Toll Free (800) 242-8511
Hearing Impaired TDD (800) 542-2289
www.DiggersHotline.com

2

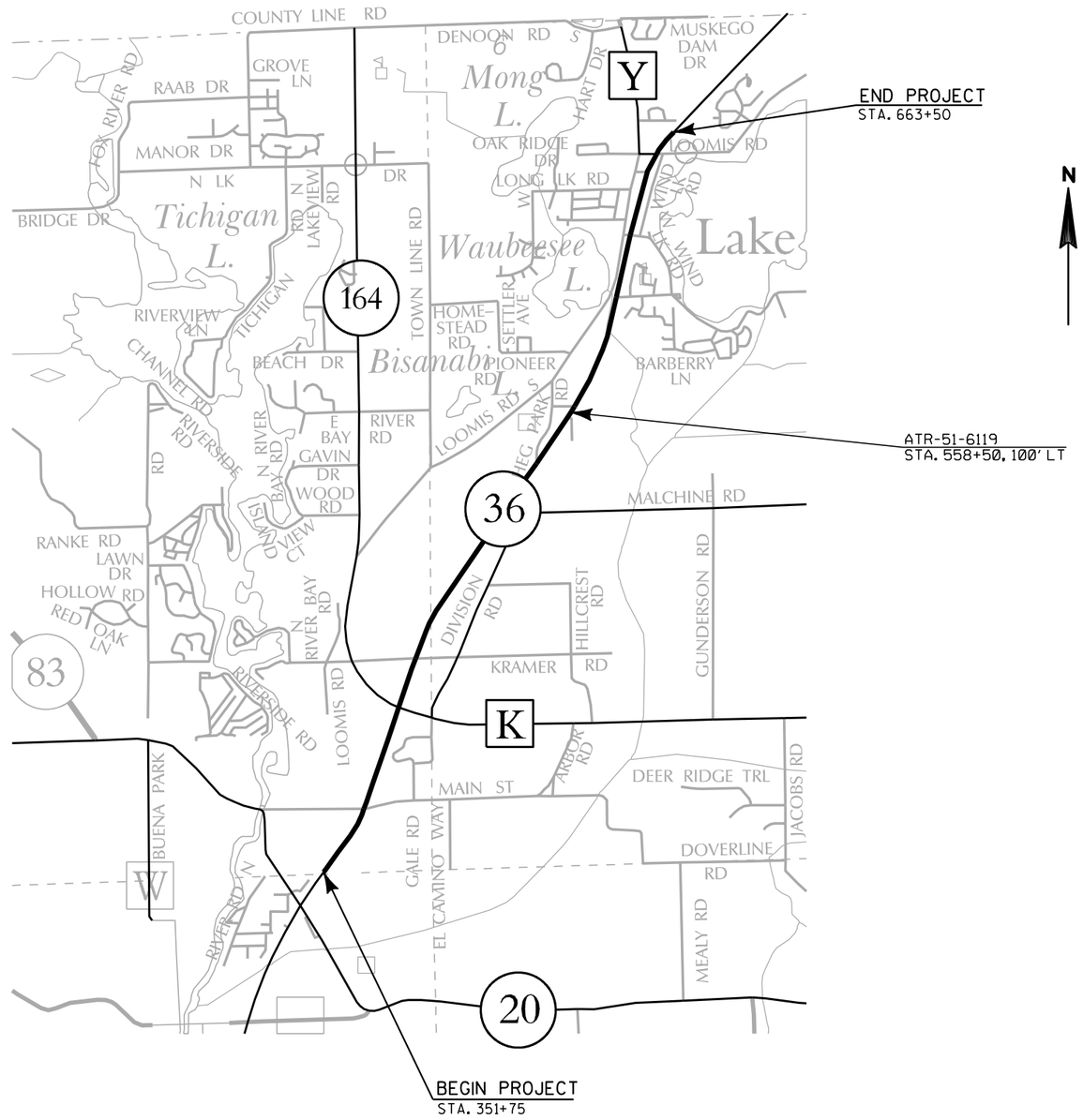

PROJECT NO:2240-00-67	HWY:STH 36	COUNTY:RACINE	PROJECT OVERVIEW	SHEET	E

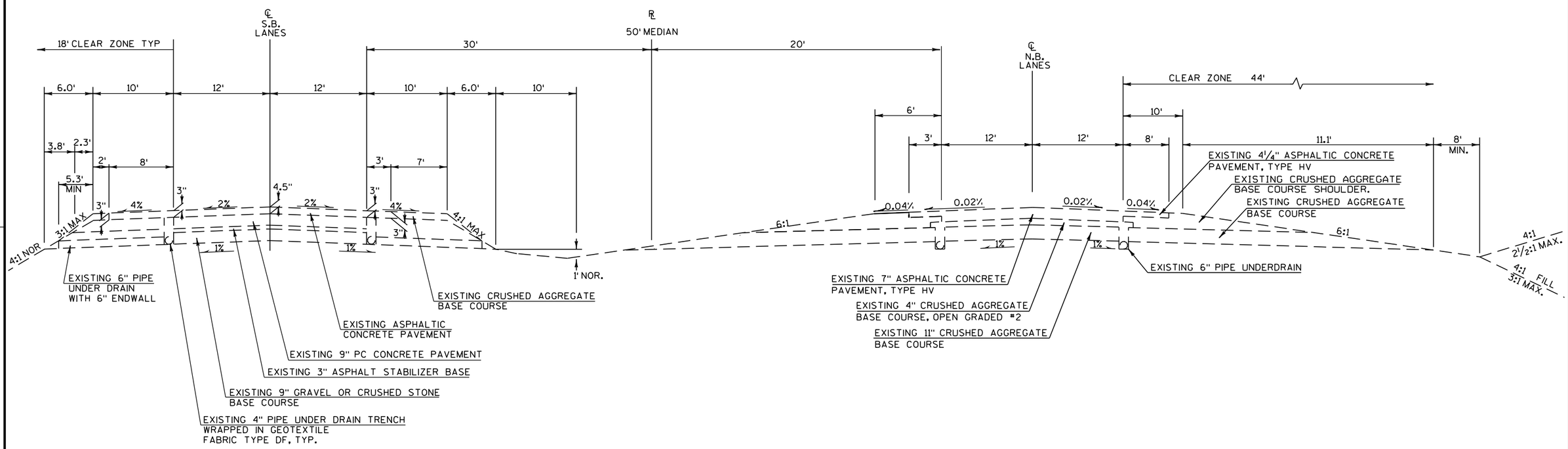

STH 36 (MAINLINE)

EXISTING TYPICAL SECTION
STA. 358+80 TO STA. 373+80
STA. 392+50 TO STA. 443+80
STA. 481+80 TO STA. 550+10
STA. 601+50 TO STA. 620+70
STA. 633+80 TO STA. 644+80

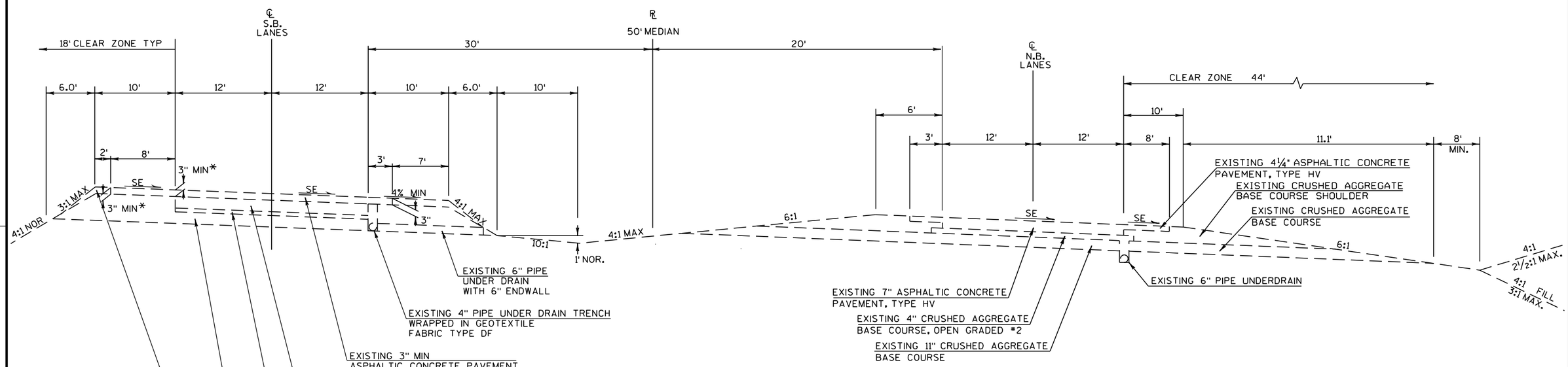

*VARIES 3"-6"

STA. 351+75 - STA. 358+80
STA. 443+80 - STA. 481+80
STA. 620+70 - STA. 633+80

STH 36 (MAINLINE)

EXISTING TYPICAL SECTION SUPER ELEVATED
STA. 351+75 TO STA. 358+80
STA. 443+80 TO STA. 481+80
STA. 620+70 TO STA. 633+80
STA. 644+80 TO STA. 663+50

PROJECT NO:2240-00-67	HWY:STH 36	COUNTY:RACINE	TYPICAL SECTIONS	SHEET	E

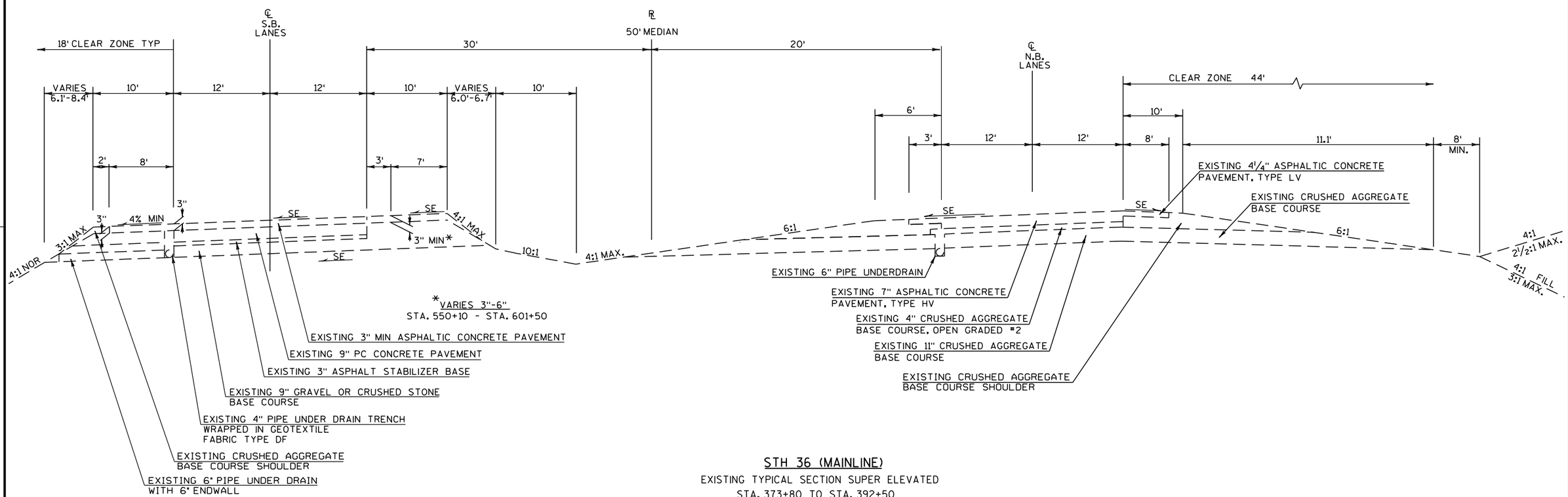

STH 36 (MAINLINE)

EXISTING TYPICAL SECTION SUPER ELEVATED
STA. 373+80 TO STA. 392+50
STA. 550+10 TO STA. 601+50

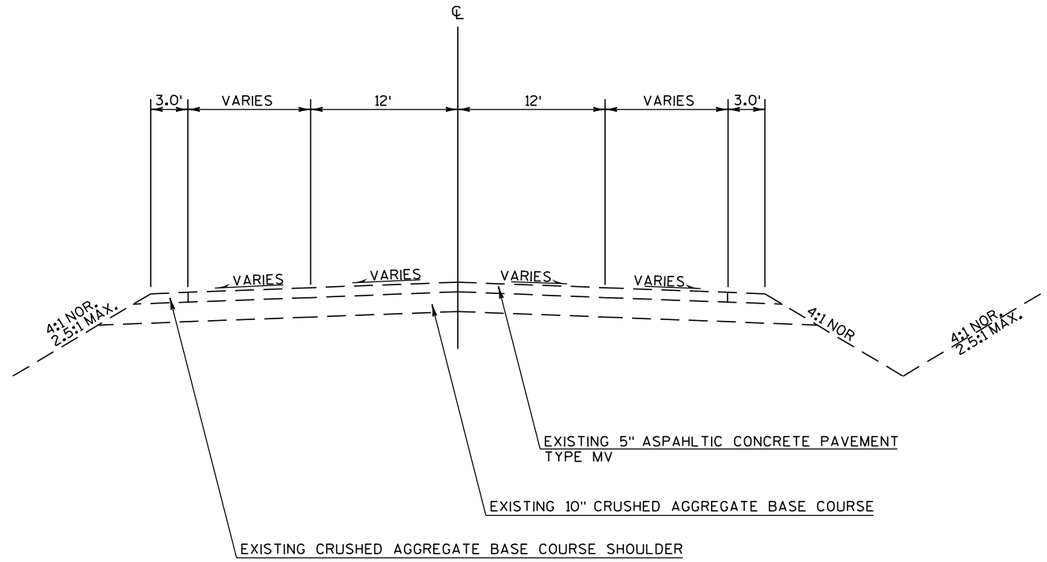

SIDE ROADS

EXISTING TYPICAL SECTION

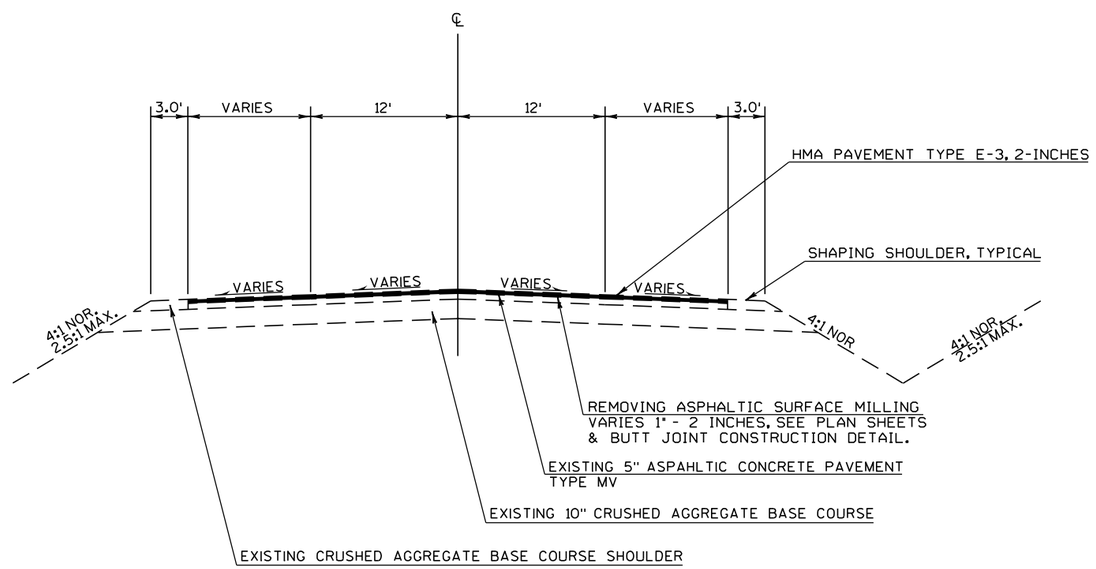

SIDE ROADS

PROPOSED TYPICAL SECTION

PROJECT NO:2240-00-67	HWY:STH 36	COUNTY:RACINE	TYPICAL SECTIONS	SHEET 7	E

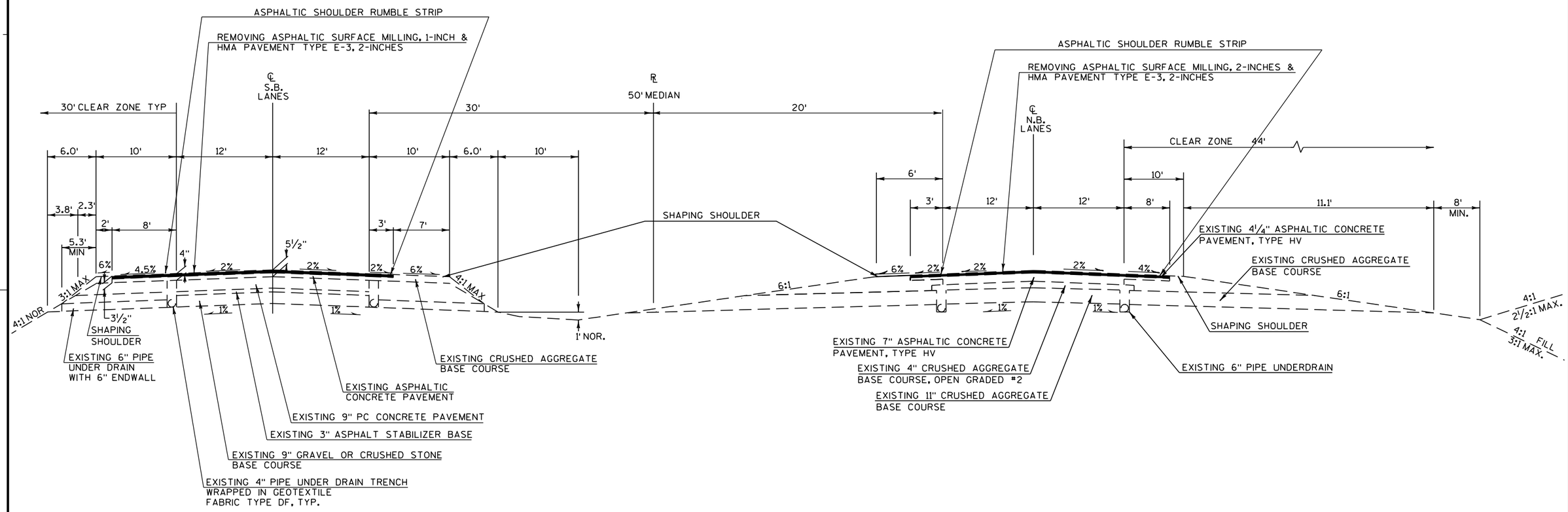

STH 36 (MAINLINE)

PROPOSED TYPICAL SECTION
STA. 358+80 TO STA. 373+80
STA. 392+50 TO STA. 443+80
STA. 481+80 TO STA. 550+10
STA. 601+50 TO STA. 620+70
STA. 633+80 TO STA. 644+80

PROJECT NO:2240-00-67	HWY:STH 36	COUNTY:RACINE	TYPICAL SECTIONS	SHEET	E

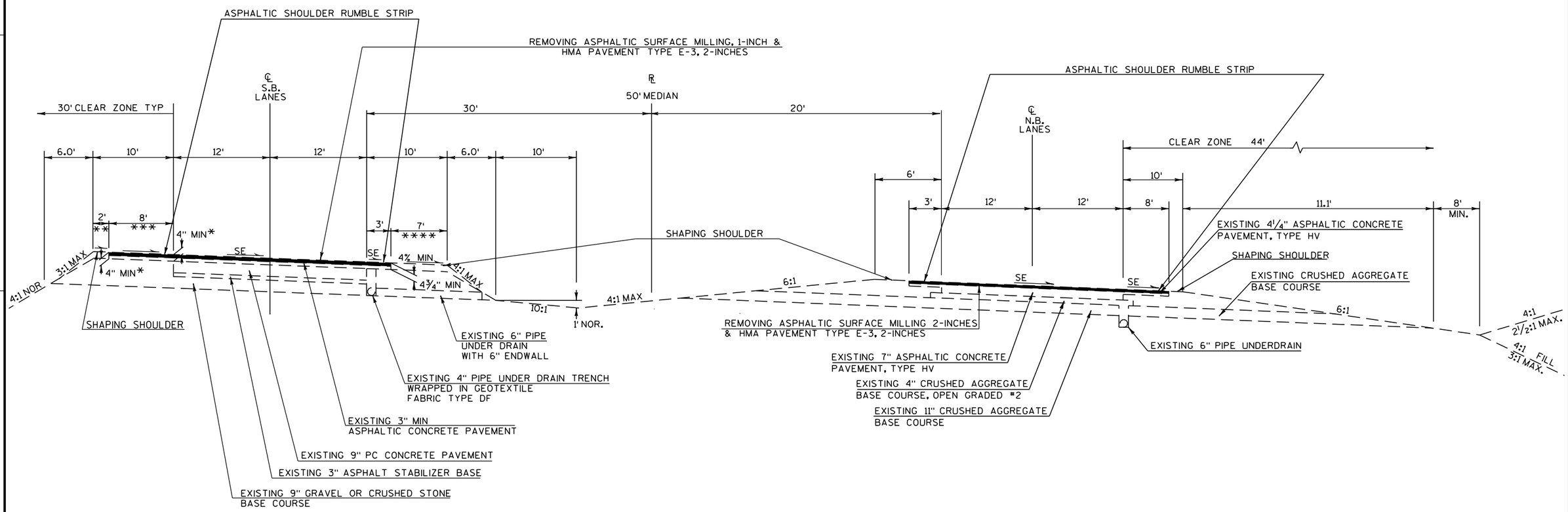

*VARIES 4"-7"

STA. 351+75 TO STA. 358+80
STA. 443+80 TO STA. 841+80
STA. 620+70 TO STA. 633+80

STH 36 (MAINLINE)

PROPOSED TYPICAL SECTION SUPER ELEVATED
STA. 351+75 TO STA. 358+80
STA. 443+80 TO STA. 481+80
STA. 620+70 TO STA. 633+80
STA. 644+80 TO STA. 663+50

	**	***	****
STA. 351+75 TO STA. 358+80	-2.0%	2.0%	6.0%
STA. 443+80 TO STA. 481+80	-2.0%	2.0%	6.0%
STA. 620+70 TO STA. 633+80	-2.0%	2.0%	6.0%
STA. 644+80 TO STA. 663+50	2.9%	2.9%	5.1%

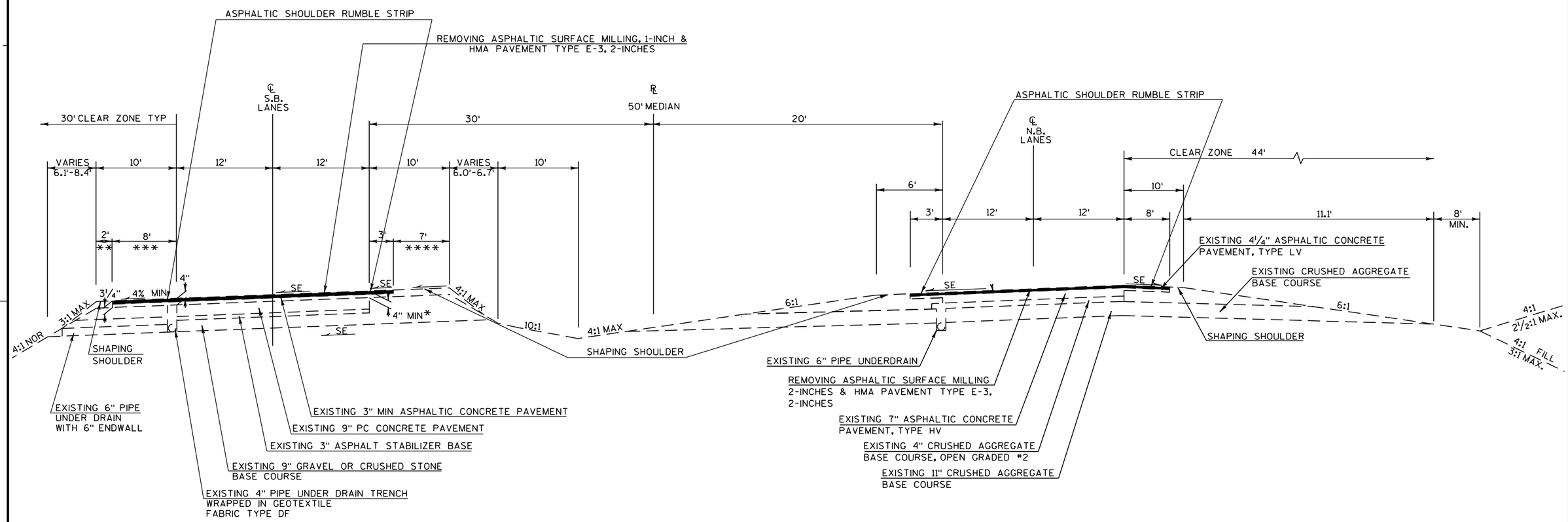

STH 36 (MAINLINE)
PROPOSED TYPICAL SECTION SUPER ELEVATED
STA. 373+80 TO STA. 392+50
STA. 550+10 TO STA. 601+50

*VARIES 4"-7"
STA. 550+10 - STA. 601+50

	**	***	****
STA. 373+80 TO STA. 392+50	4.9%	4.9%	3.0%
STA. 550+10 TO STA. 601+50	4.8%	4.8%	0.9%

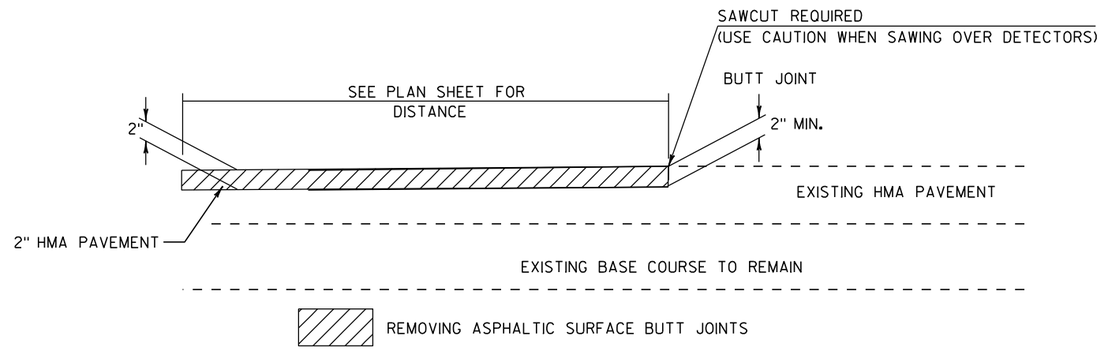

BUTT JOINT DETAIL FOR NB LANES & SIDE ROADS

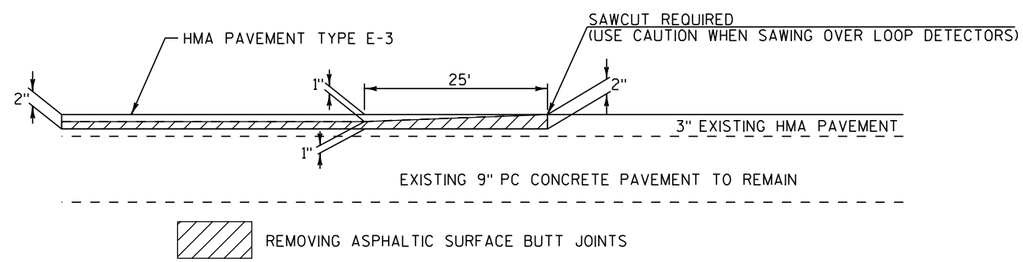

BUTT JOINT DETAIL FOR SB LANES & SIDE ROADS

2

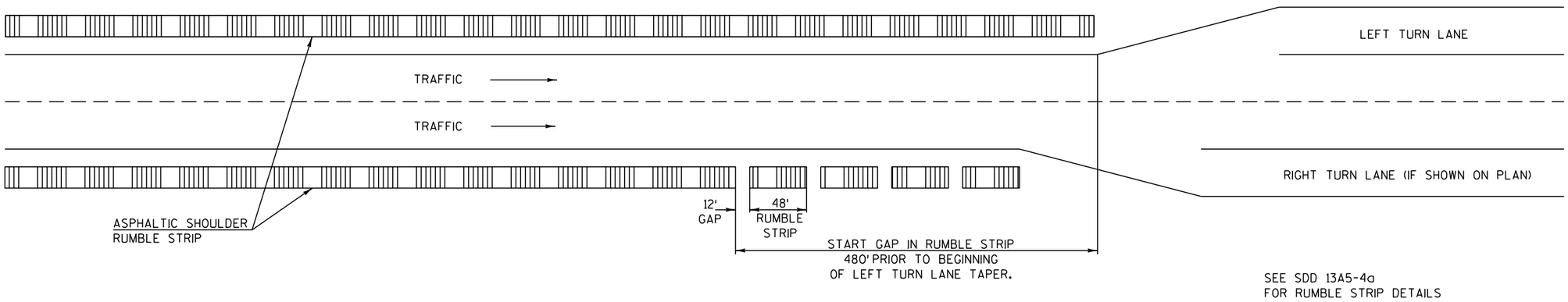

RUMBLE STRIP PRIOR TO INTERSECTION

PROJECT NO: 2240-00-67	HWY: STH 36	COUNTY: RACINE	CONSTRUCTION DETAIL	SHEET 12	E

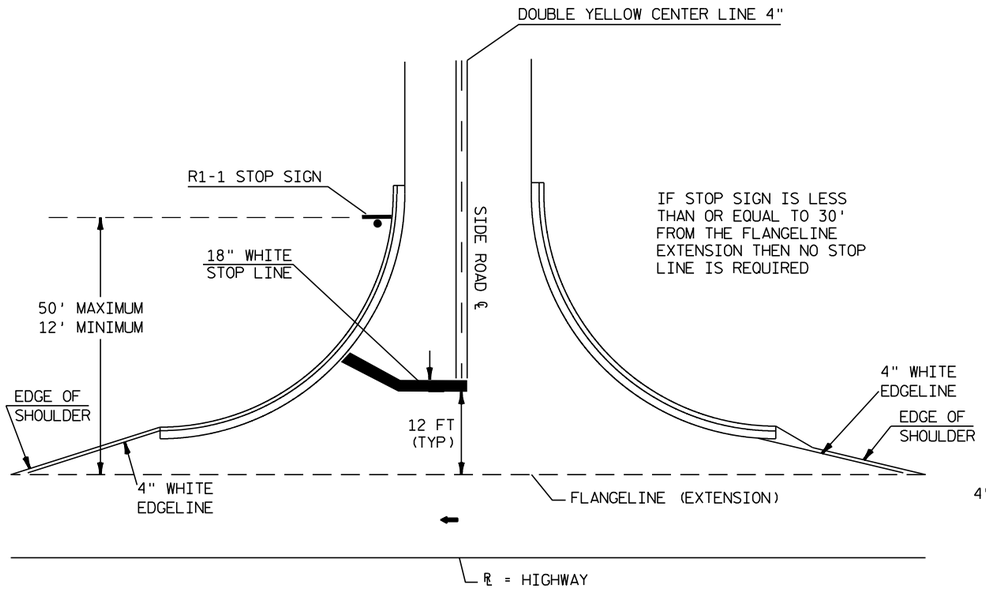

TYPICAL PAVEMENT MARKING FOR SIDEROADS

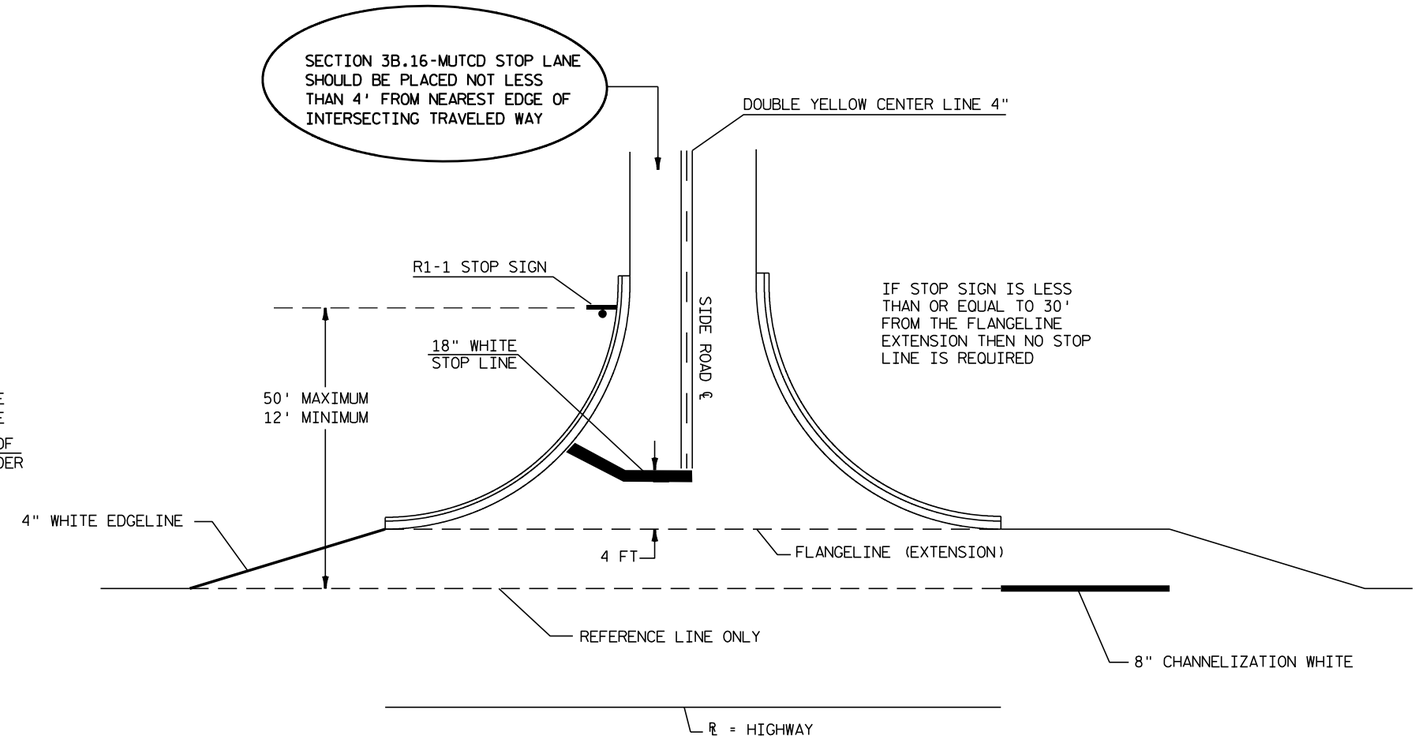

TYPICAL PAVEMENT MARKING FOR SIDEROADS WITH RIGHT TURN LANE

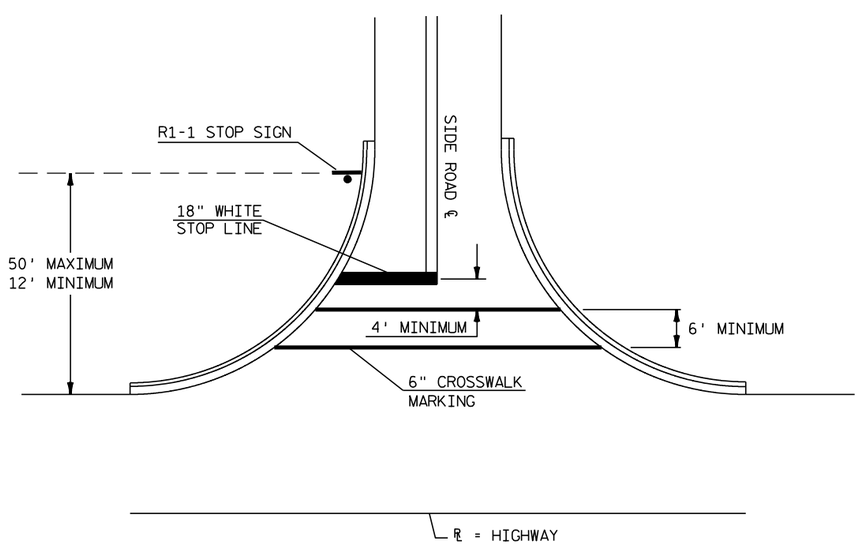

TYPICAL PAVEMENT MARKING FOR SIDEROADS WITH CROSSWALK MARKING

NOTES:

18-INCH STOP LINES MAY BE DELETED OR ADDED BY THE PROJECT ENGINEER BASED ON VISIBILITY AND SIGHT LINES.

STOP LINES REQUIRED WHERE:

- CROSSWALK MARKINGS EXIST OR BEING PROVIDED
- LARGE RADII
- OFFSET LEFT TURNS WHERE STOP BAR FOR LEFT TURN IS SET BACK FROM THRU MOVEMENT.

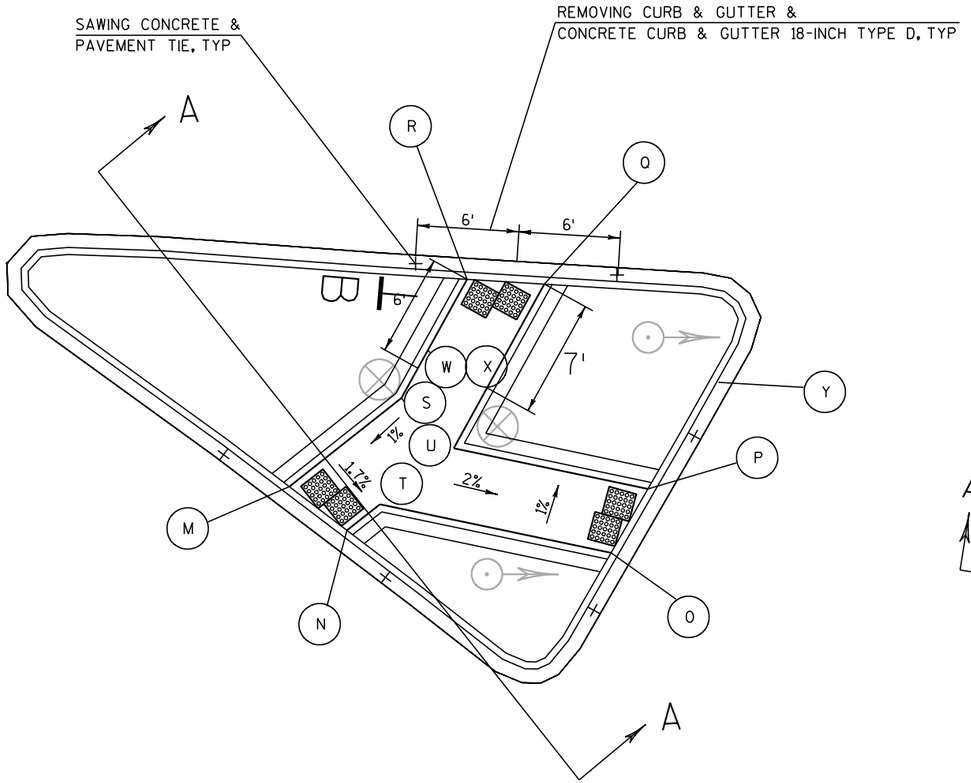

LOOMIS ISLAND WEST OF STH 36

STA. 658+80, LT

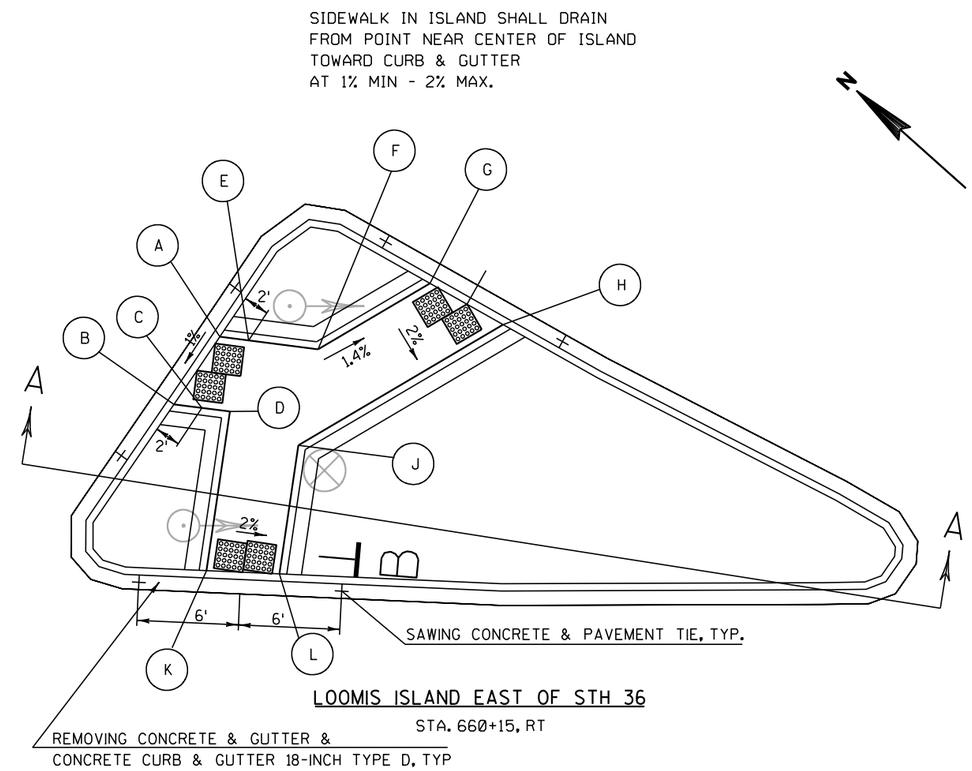

LOOMIS ISLAND EAST OF STH 36

STA. 660+15, RT

	STATION	OFFSET	ELEVATION
A	660+18.16	57.0' RT	792.35
B	660+12.47	57.0' RT	792.30
C	660+13.38	58.7' RT	792.32
D	660+14.28	60.5' RT	792.30
E	660+19.76	60.0' RT	792.37
F	660+21.36	63.0' RT	792.33
G	660+29.62	66.8' RT	792.19
H	660+30.17	72.5' RT	792.09
J	660+15.06	65.7' RT	792.18
K	660+4.18	65.4' RT	792.08
L	660+6.89	69.6' RT	792.00
M	658+64.59	91.0' LT	793.76
N	658+64.16	85.9' LT	793.67
O	658+72.76	69.1' LT	793.50
P	658+77.92	69.3' LT	793.45
Q	658+86.08	83.5' LT	793.82
R	658+83.44	88.3' LT	793.87
S	658+73.99	87.7' LT	793.87
T	658+66.93	84.9' LT	793.72
U	658+73.00	82.6' LT	793.77
W	658+78.72	87.9' LT	793.95
X	658+79.54	83.0' LT	793.90
Y	658+82.22	69.0' LT	793.41 INLET

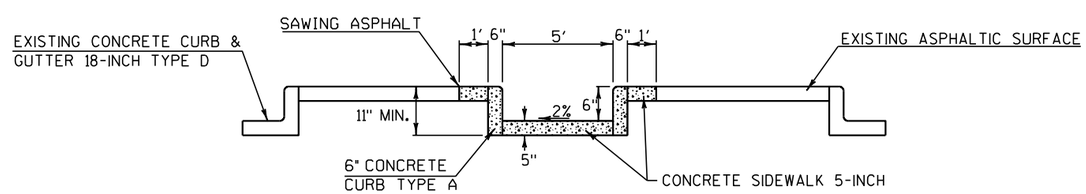

SECTION A-A

CONCRETE ISLAND

STH 36 AND WEST LOOMIS ROAD (CTH Y)

PROPOSED BIKE BUTTON (SEE SIGNAL PLAN)

EXISTING PULL BOX

EXISTING TRAFFIC SIGNAL POLE

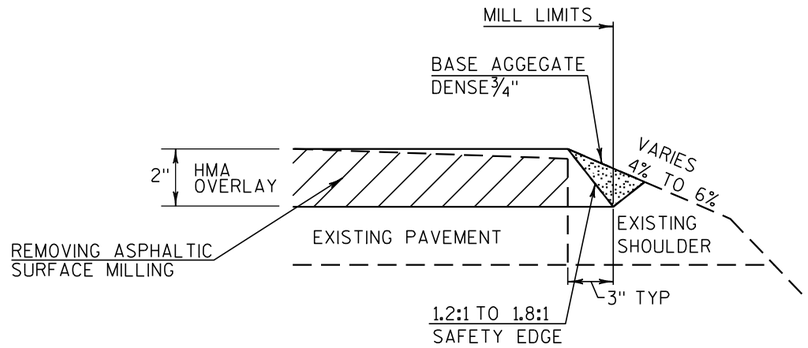

NORTH BOUND,
LEFT AND RIGHT SHOULDERS

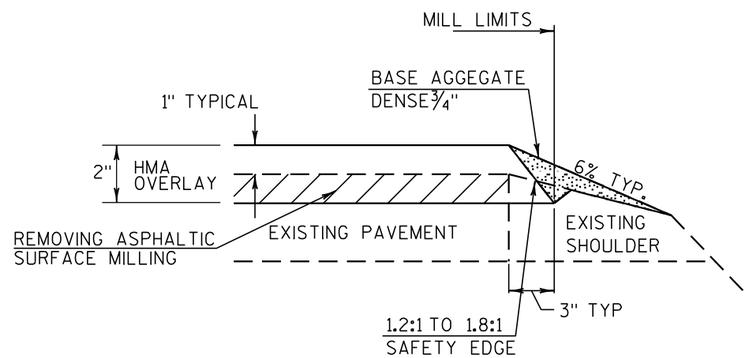

SOUTH BOUND,
LEFT AND RIGHT SHOULDERS

PAVEMENT SAFETY EDGE ON HMA OVERLAY

NOTE: PAVEMENT SAFETY EDGE WILL BE PAID AS HMA PAVEMENT.
REFER TO PAVEMENT SAFETY EDGE SPECIAL PROVISIONS.

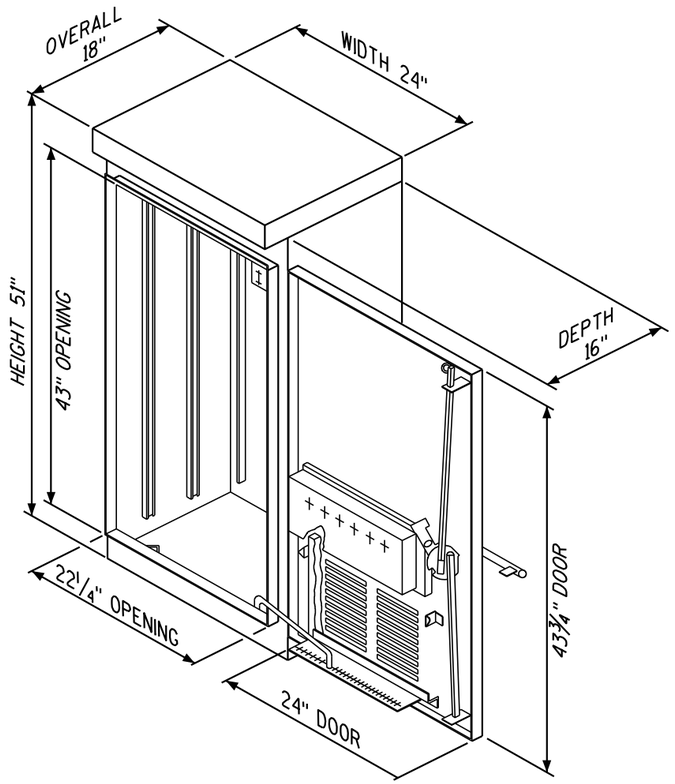

CCTV POLE-MOUNTED CABINET
USED IN SOLAR INSTALLATION

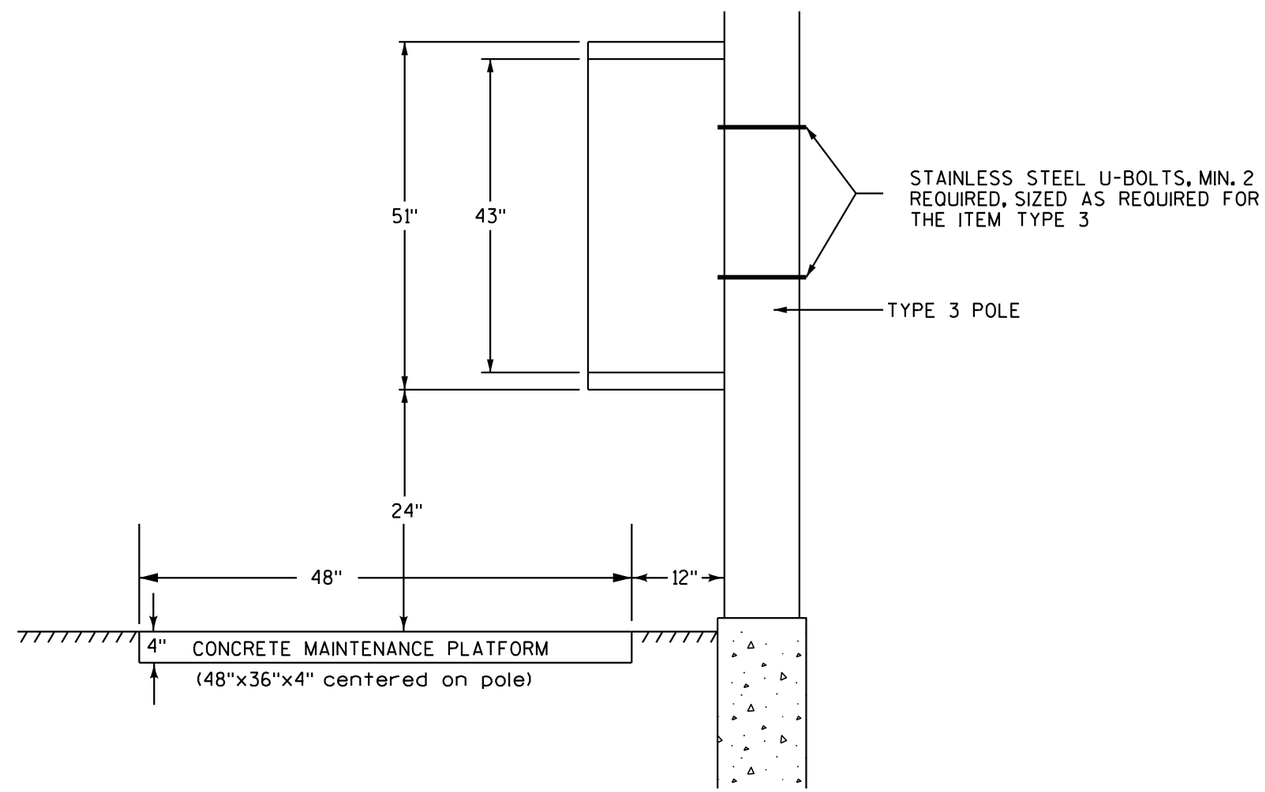

CCTV POLE-MOUNTED CABINET

ATR - WAVETRONIX

PROJECT NO: 2240-00-67	HWY: STH 36	COUNTY: RACINE	INSTALLATION OF ATR CABINET - WAVETRONIX DETECTOR	SHEET	E

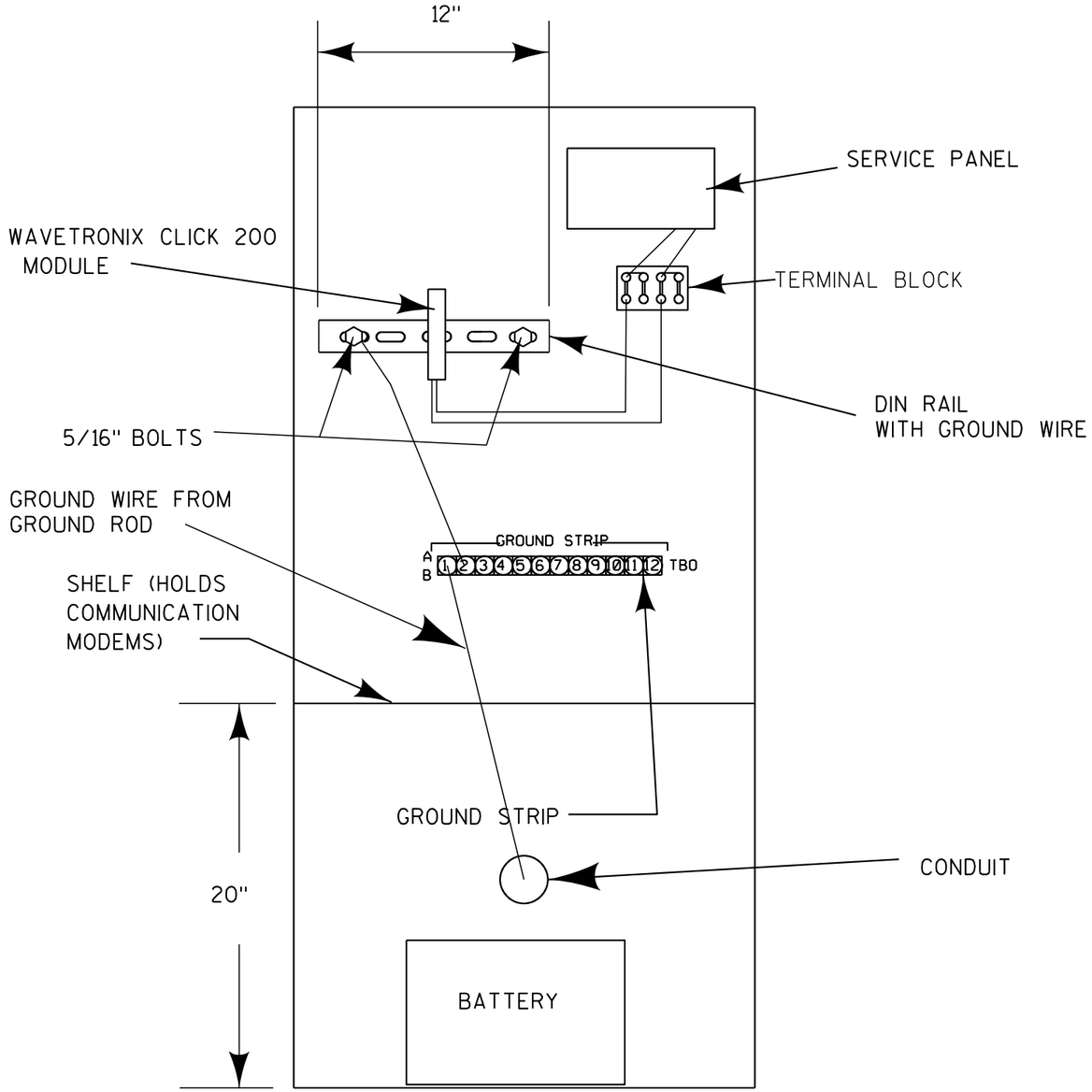

FRONT VIEW/LAYOUT
(NOT TO SCALE)

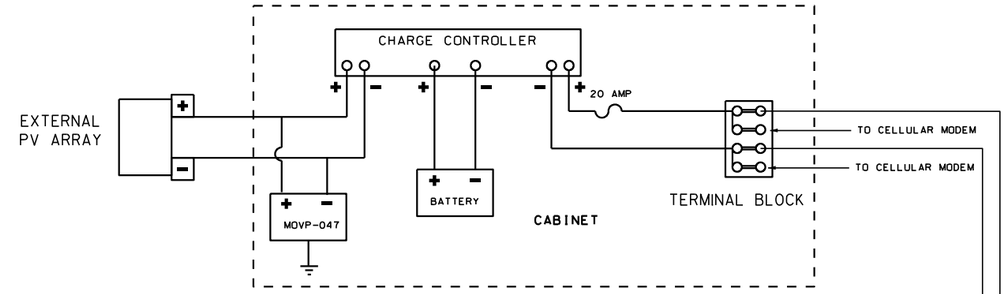

SERVICE PANEL WIRING DIAGRAM
(NOT TO SCALE)

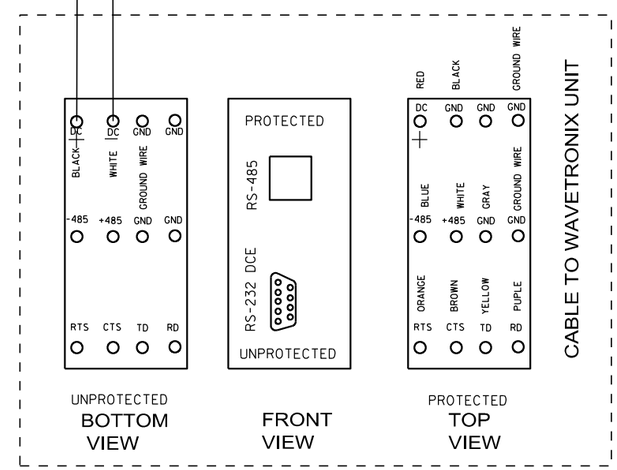

WAVETRONIX CLICK 200 MODULE
WIRING DIAGRAM
(NOT TO SCALE)

CCTV POLE-MOUNTED CABINET LAYOUT

ATR - WAVETRONIX

CCTV POLE-MOUNTED CABINET
USED IN SOLAR INSTALLATION

PROJECT NO: 2240-00-67	HWY: STH 36	COUNTY: RACINE	INSTALLATION OF ATR - WAVETRONIX DETECTOR	SHEET	E

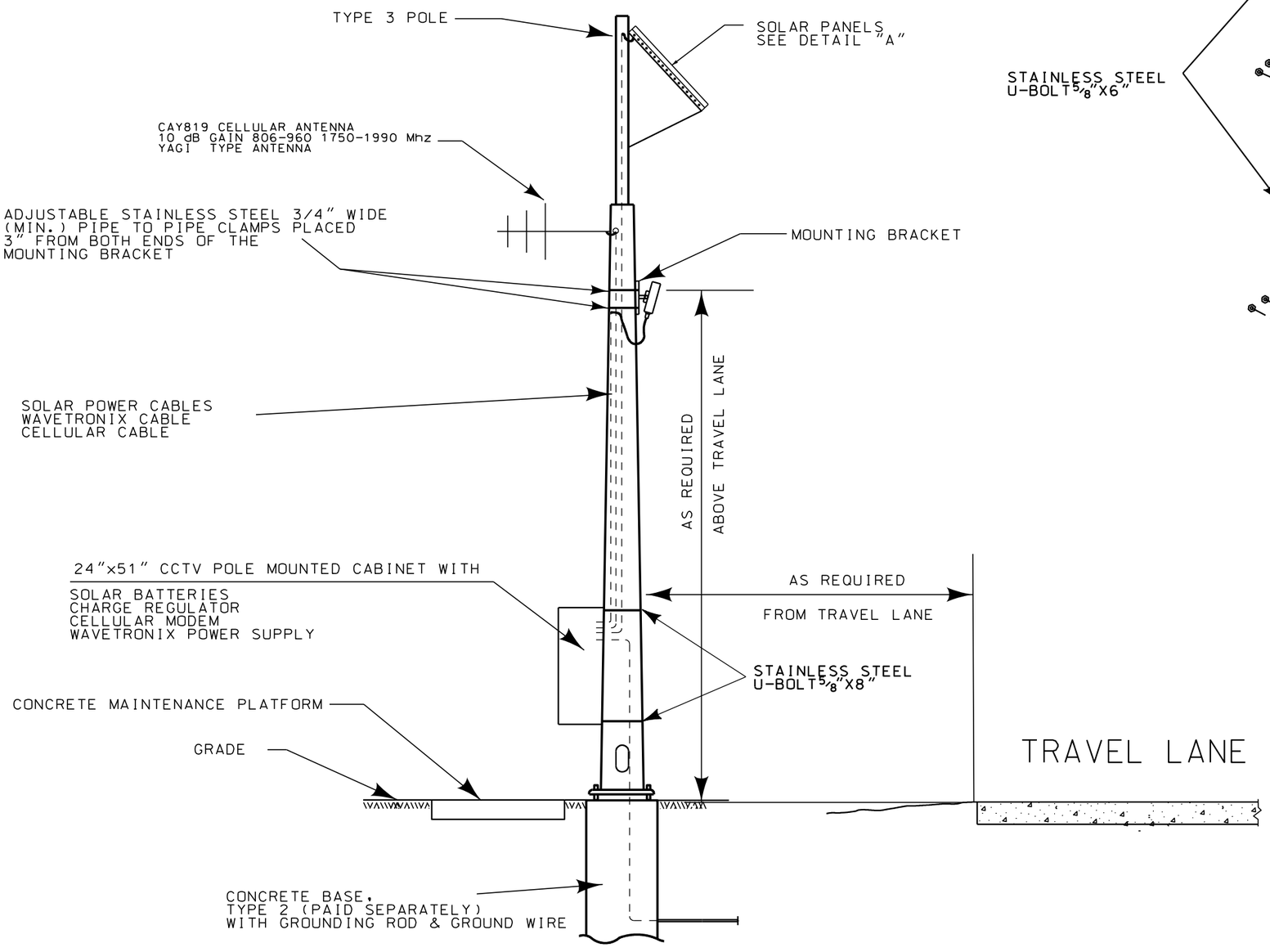

WAVETRONIX DETECTOR INSTALLATION

INCLUDES SOLAR POWER, TELEPHONE LINE ON TYPE 3 POLE

(NOT TO SCALE)

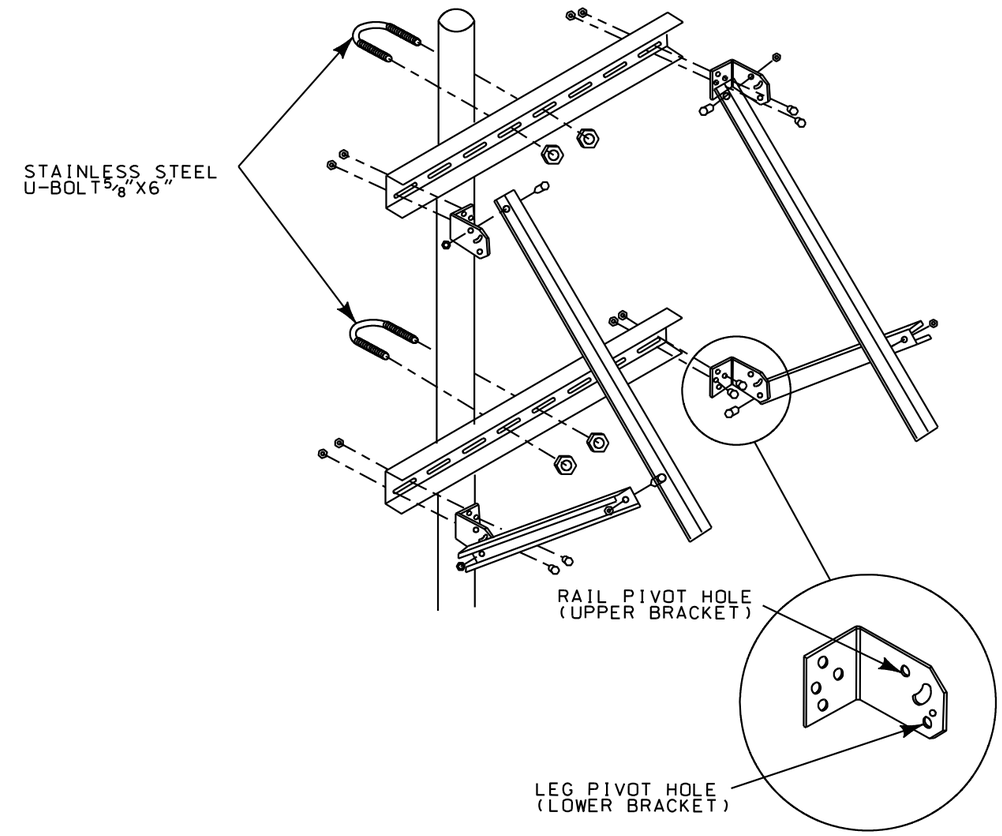

SOLAR PANELS
DETAIL "A"

NOTE: SOLAR PANELS TO BE POINTED DUE SOUTH

PROJECT NO: 2240-00-67	HWY: STH 36	COUNTY: RACINE	INSTALLATION OF ATR - WAVETRONIX DETECTOR POLE LAYOUT	SHEET	E

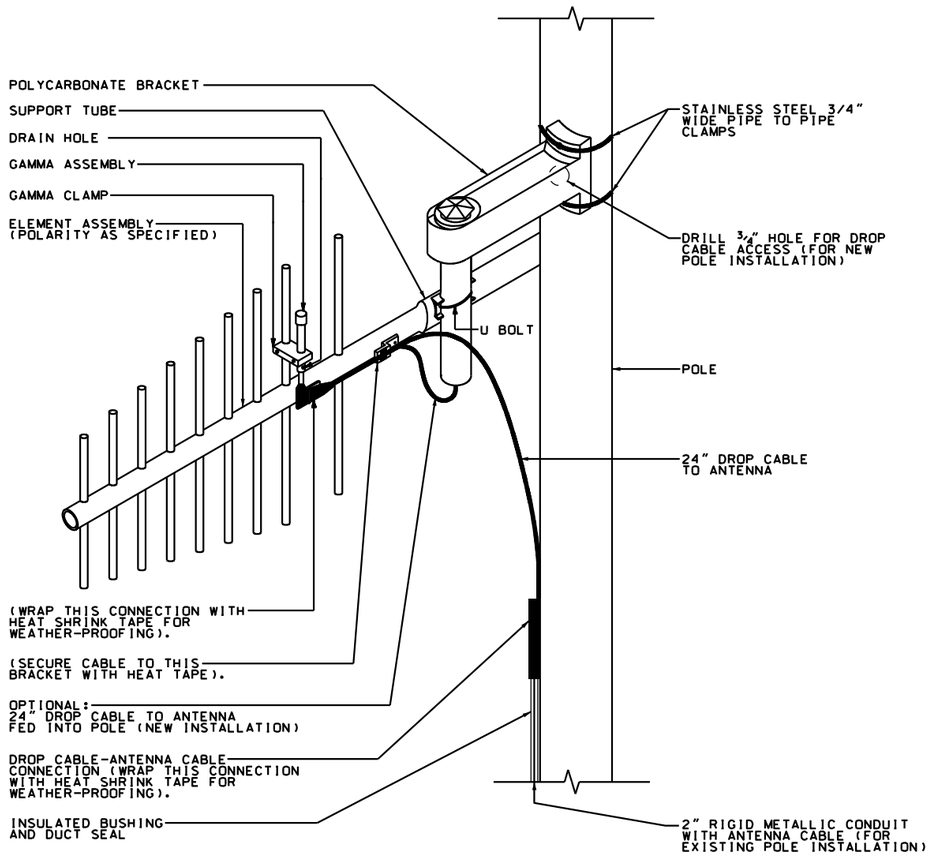

CELLULAR ANTENNA
MOUNTING ASSEMBLY DETAIL
(YAGI TYPE)
(NOT TO SCALE)

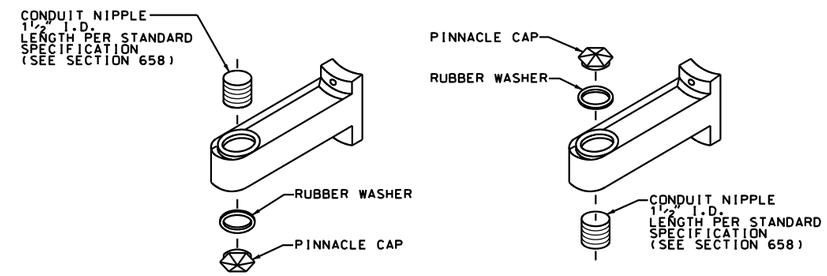

POLYCARBONATE BRACKET
(NOT TO SCALE)

2

2

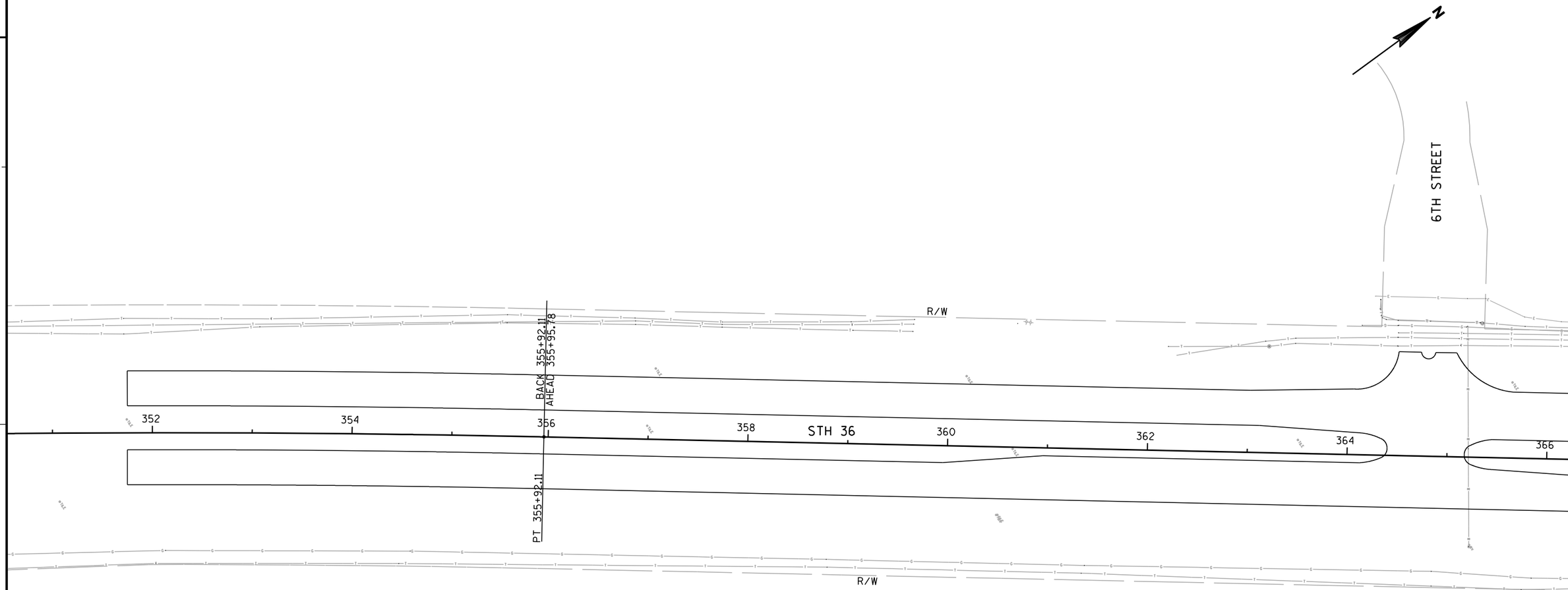

INFORMATION ONLY

PROJECT NO:2240-00-67	HWY:STH 36	COUNTY:RACINE	UTILITY PLAN	SHEET	E

FILE NAME : j:\projects\d2_22400036\67\023001_UP.dgn PLOT DATE : 12-JAN-2012 10:03 PLOT BY : dotshw PLOT NAME : PLOT SCALE : 100:1 WISDOT/CADDS SHEET 42

2

2

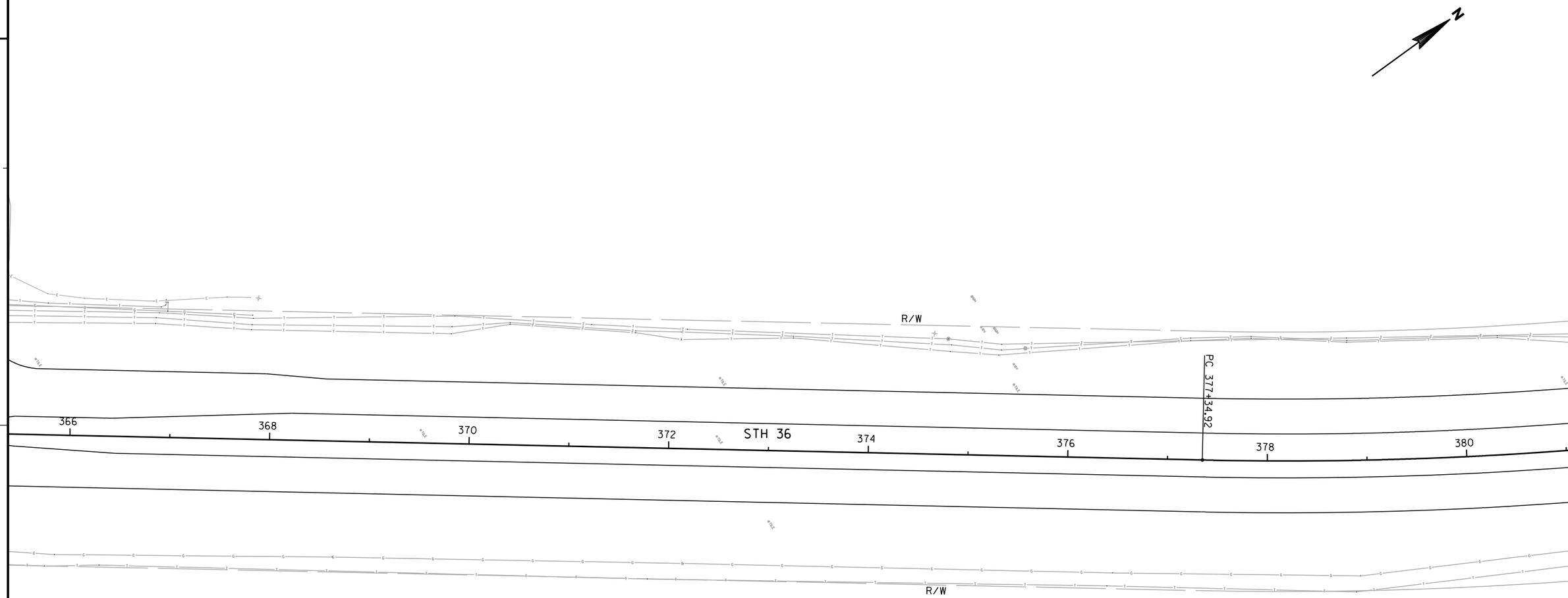

INFORMATION ONLY

PROJECT NO:2240-00-67	HWY:STH 36	COUNTY:RACINE	UTILITY PLAN	SHEET	E

FILE NAME : j:\projects\d2_22400036\67\023002_UP.dgn PLOT DATE : 12-JAN-2012 10:03 PLOT BY : dotshw PLOT NAME : PLOT SCALE : 100:1 WISDOT/CADDS SHEET 42

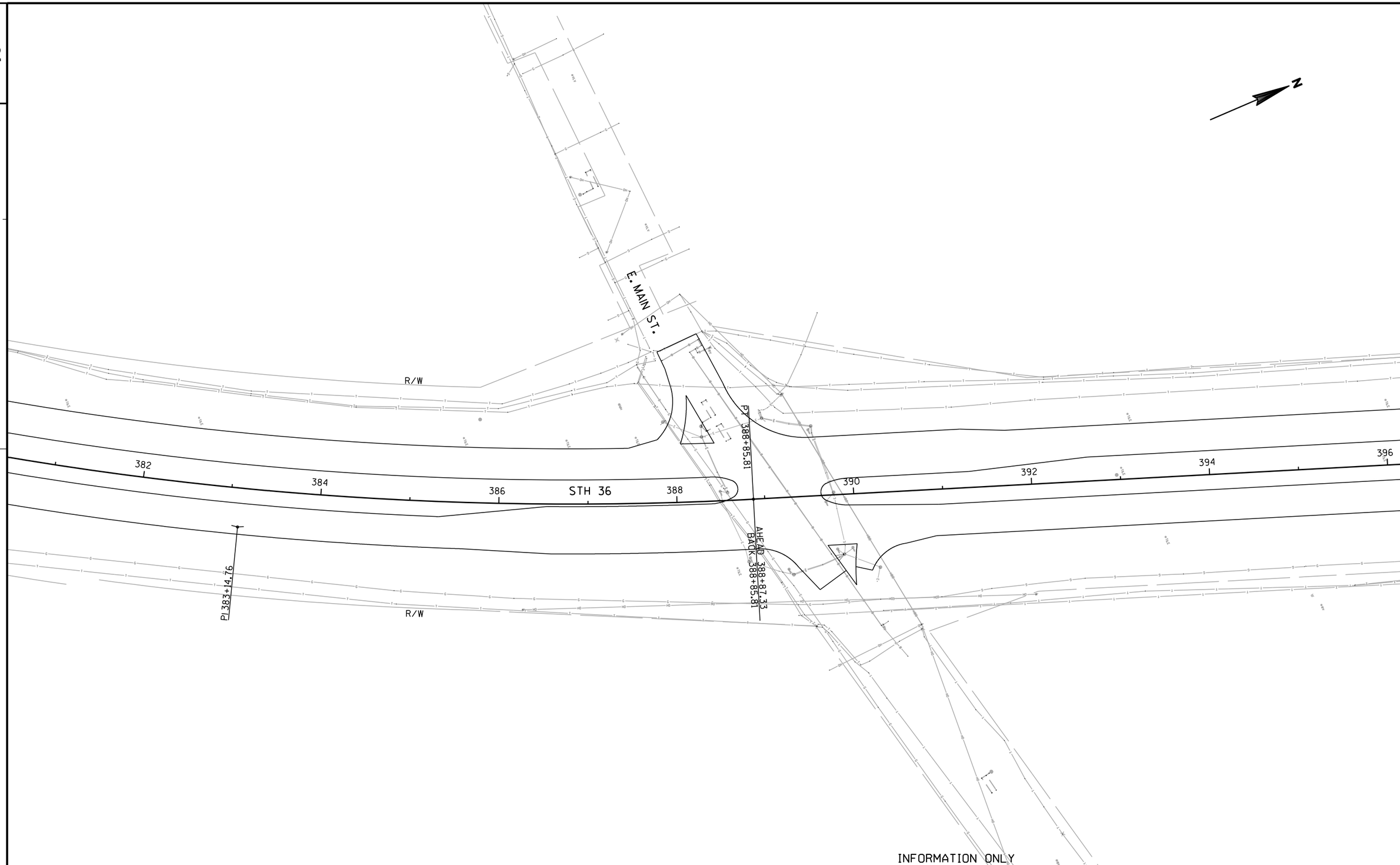

PROJECT NO:2240-00-67	HWY:STH 36	COUNTY:RACINE	UTILITY PLAN	SHEET	E

FILE NAME : j:\projects\d2_22400036\67\023003_UP.dgn PLOT DATE : 12-JAN-2012 10:03 PLOT BY : dotshw PLOT NAME : PLOT SCALE : 100:1

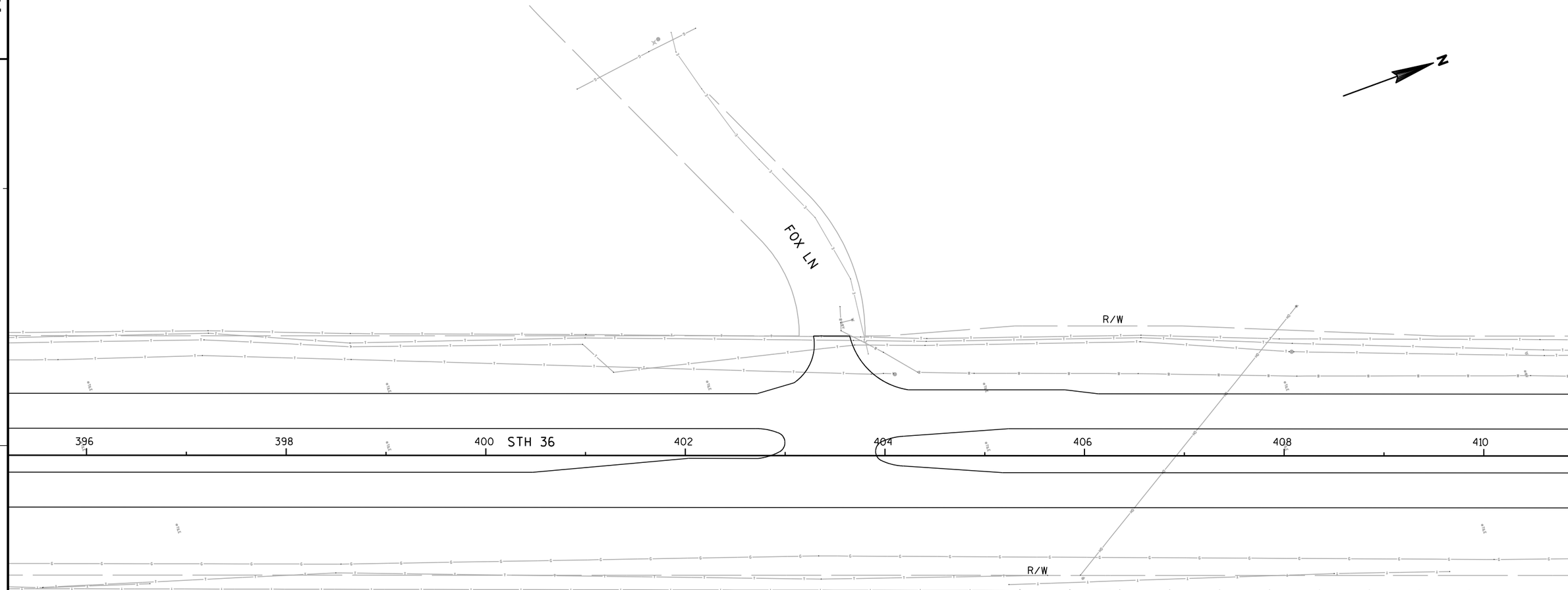

INFORMATION ONLY

PROJECT NO:2240-00-67	HWY:STH 36	COUNTY:RACINE	UTILITY PLAN	SHEET	E

FILE NAME : j:\projects\d2_22400036\67\023004_UP.dgn PLOT DATE : 12-JAN-2012 10:03 PLOT BY : dotshw PLOT NAME : PLOT SCALE : 100:1 WISDOT/CADDS SHEET 42

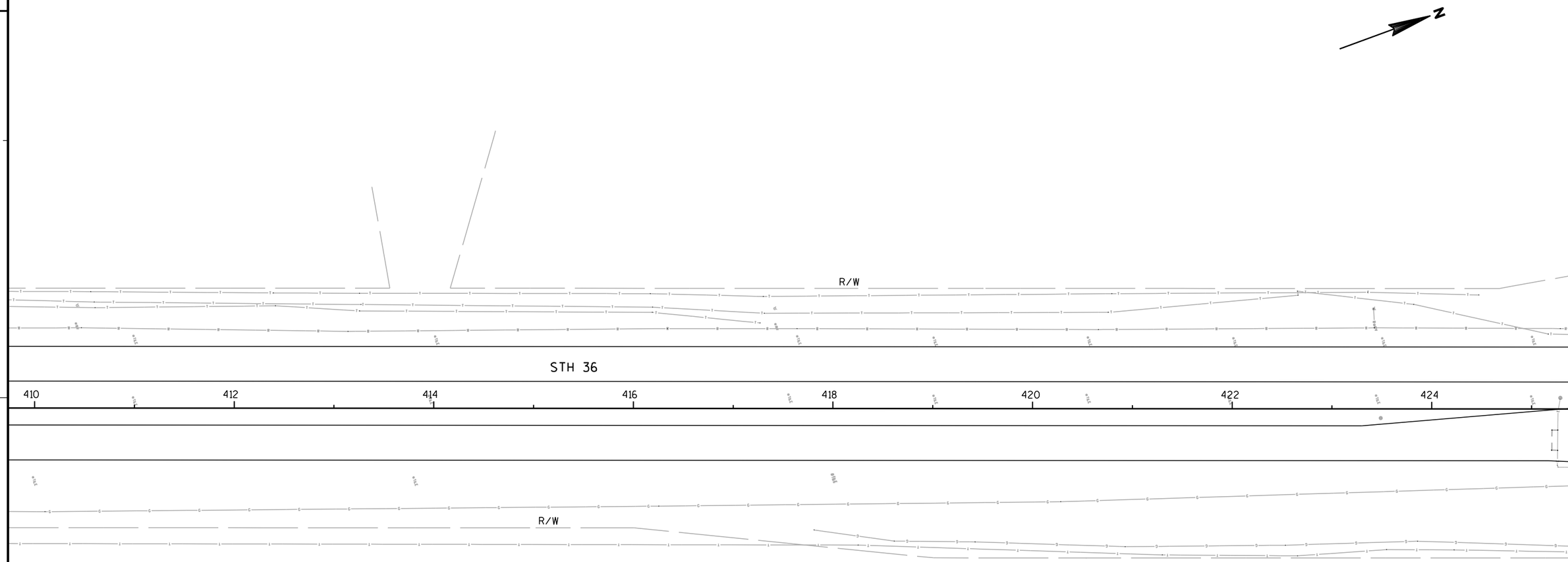

INFORMATION ONLY

PROJECT NO:2240-00-67	HWY:STH 36	COUNTY:RACINE	UTILITY PLAN	SHEET	E

FILE NAME : j:\projects\d2_22400036\67\023005_UP.dgn PLOT DATE : 12-JAN-2012 10:03 PLOT BY : dotshw PLOT NAME : PLOT SCALE : 100:1 WISDOT/CADDS SHEET 42

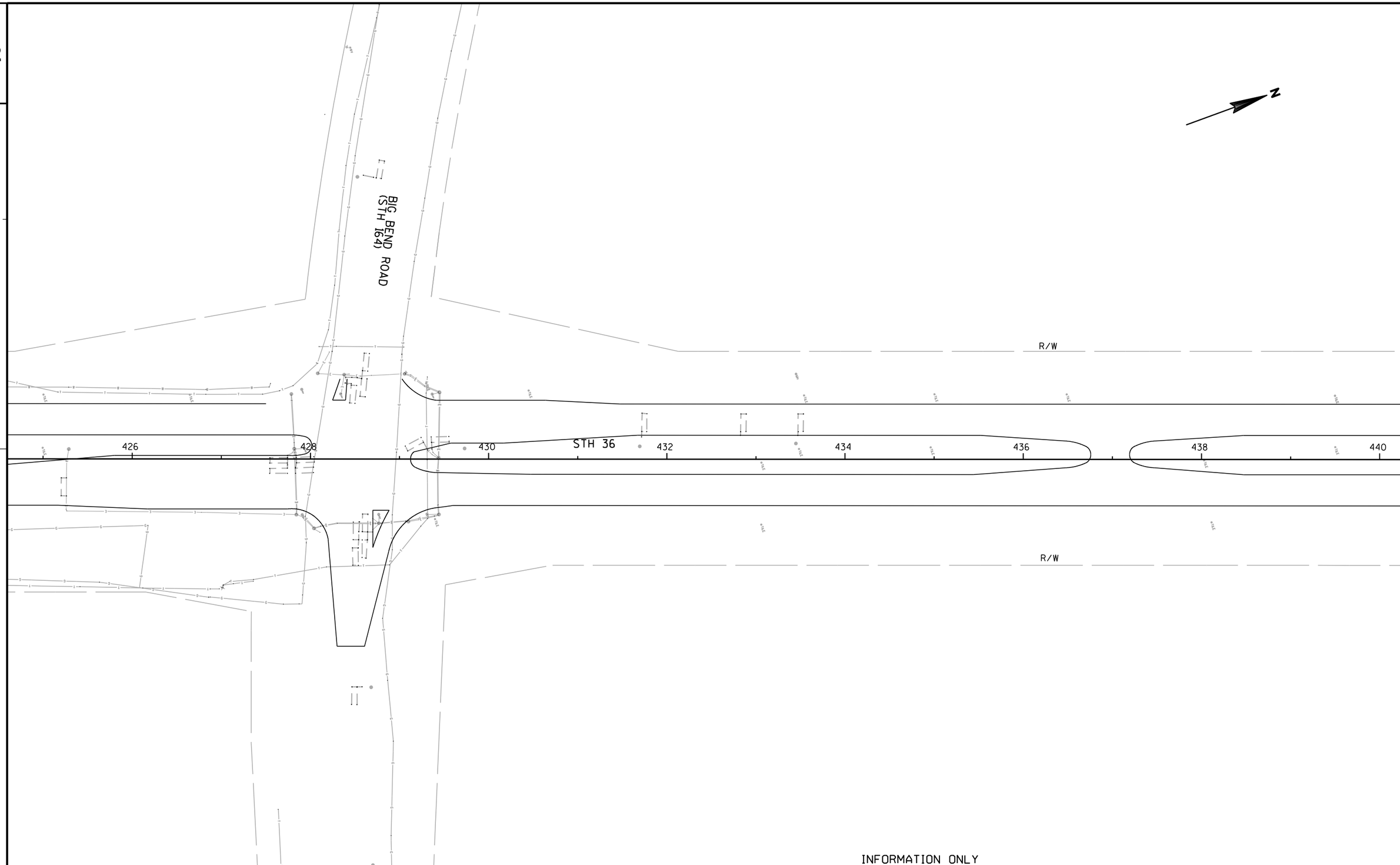

INFORMATION ONLY

PROJECT NO:2240-00-67	HWY:STH 36	COUNTY:RACINE	UTILITY PLAN	SHEET	E

FILE NAME : j:\projects\d2_22400036\67\023006_UP.dgn PLOT DATE : 12-JAN-2012 10:03 PLOT BY : dotshw PLOT NAME : PLOT SCALE : 100:1 WISDOT/CADDS SHEET 42

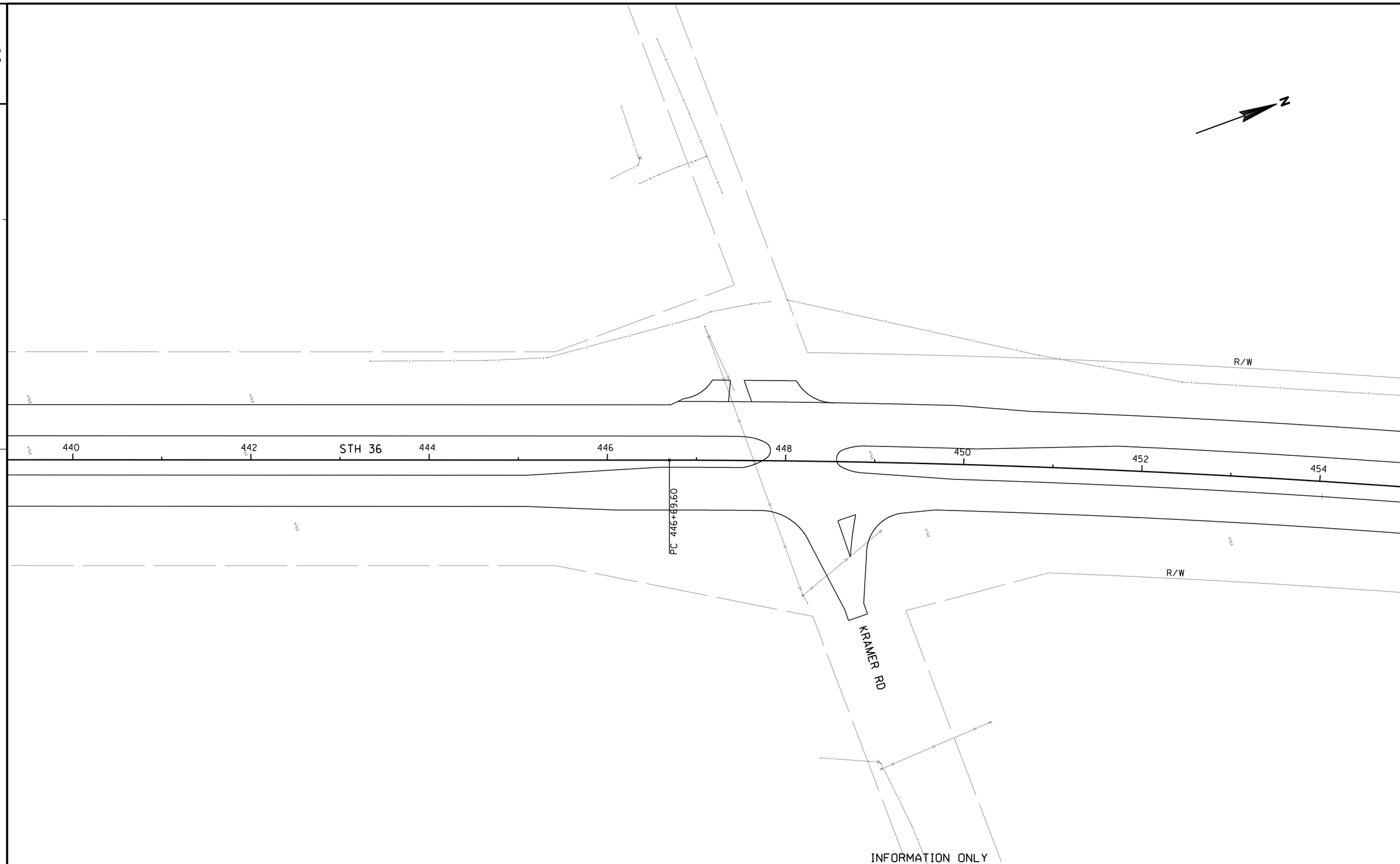

PROJECT NO:2240-00-67	HWY:STH 36	COUNTY:RACINE	UTILITY PLAN	SHEET	E

FILE NAME : j:\projects\d2_22400036\67\023008_UP.dgn PLOT DATE : 12-JAN-2012 10:03 PLOT BY : dotshw PLOT NAME : PLOT SCALE : 100:1 WISDOT/CADDS SHEET 42

PI STATION = 462+92.33 (STH 36)
RADIUS = 11459.16
SE = .02%

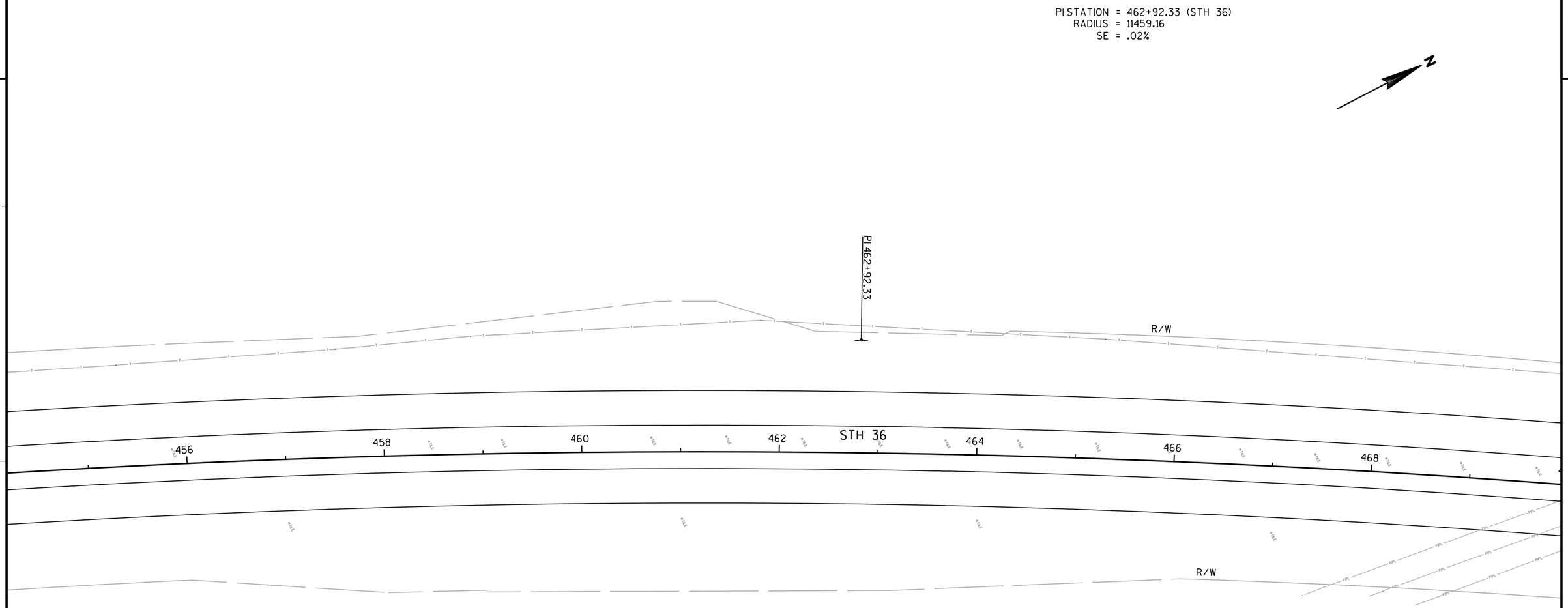

INFORMATION ONLY

PROJECT NO:2240-00-67	HWY:STH 36	COUNTY:RACINE	UTILITY PLAN	SHEET	E

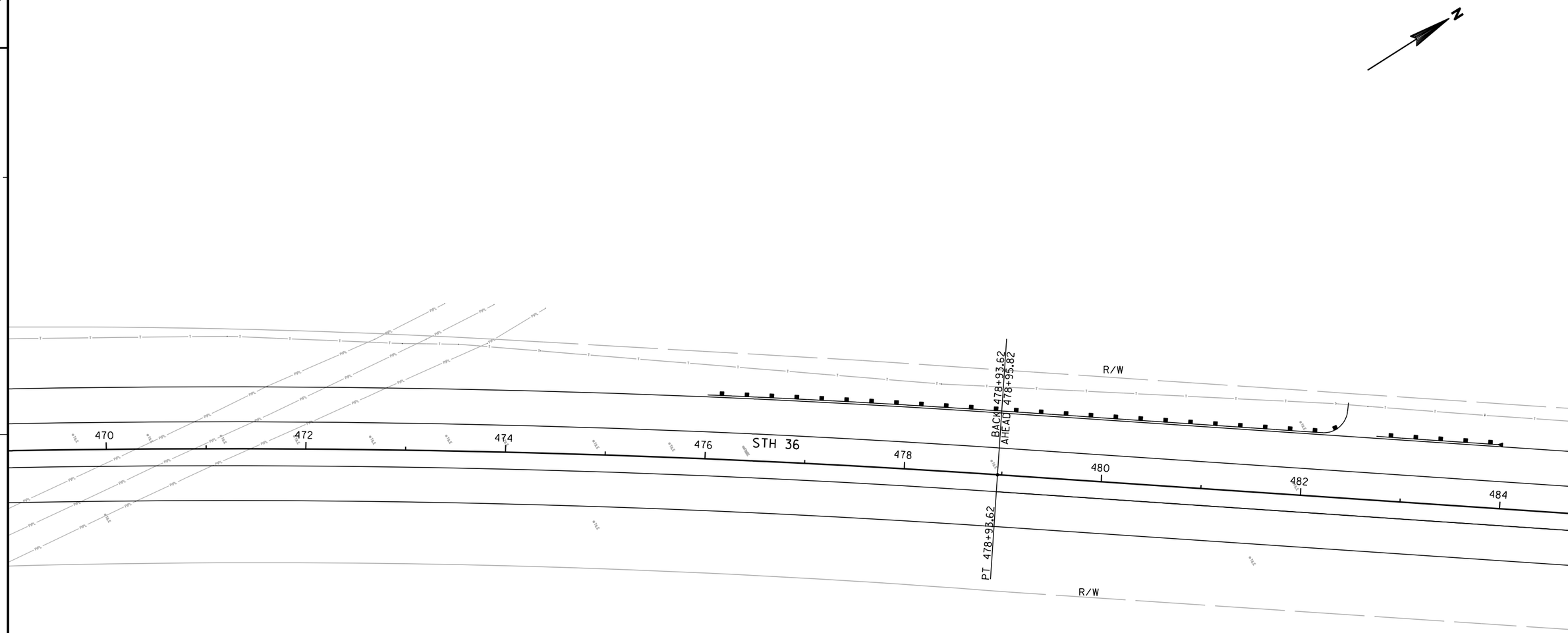

INFORMATION ONLY

PROJECT NO:2240-00-67	HWY:STH 36	COUNTY:RACINE	UTILITY PLAN	SHEET	E

FILE NAME : j:\projects\d2_22400036\67\023010_UP.dgn PLOT DATE : 12-JAN-2012 10:03 PLOT BY : dotshw PLOT NAME : PLOT SCALE : 100:1 WISDOT/CADDS SHEET 42

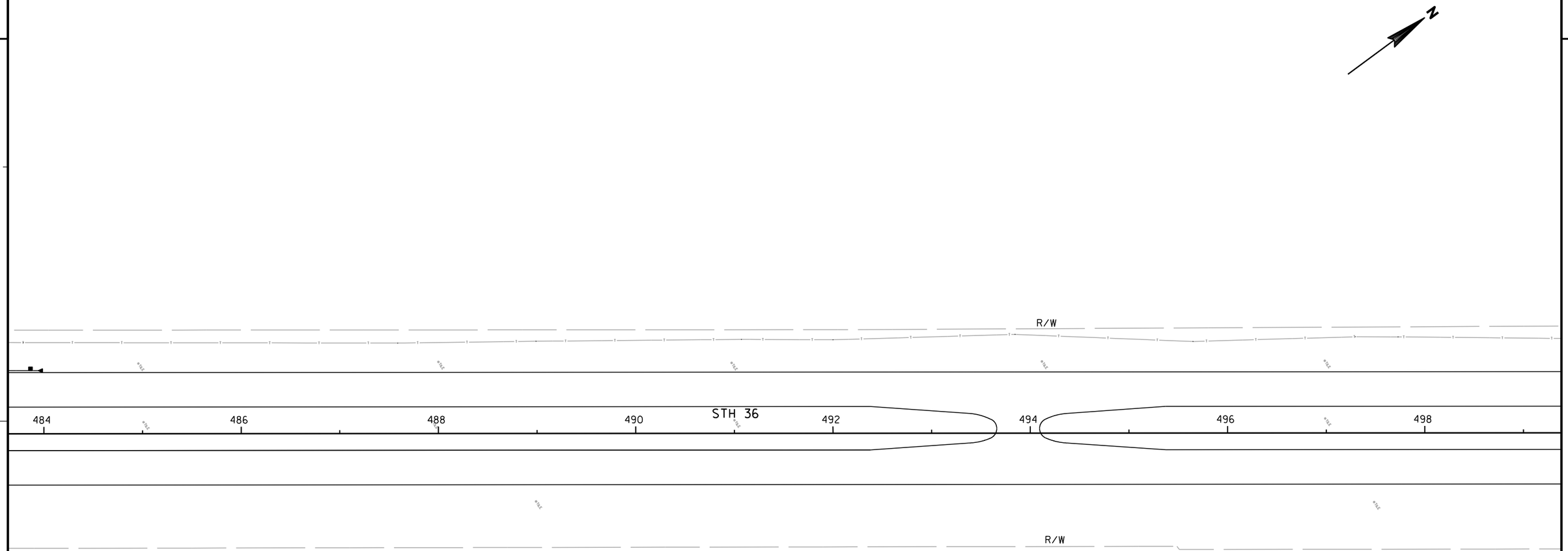

INFORMATION ONLY

PROJECT NO:2240-00-67	HWY:STH 36	COUNTY:RACINE	UTILITY PLAN	SHEET	E

FILE NAME : j:\projects\d2_22400036\67\023011_UP.dgn PLOT DATE : 12-JAN-2012 10:03 PLOT BY : dotshw PLOT NAME : PLOT SCALE : 100:1 WISDOT/CADDS SHEET 42

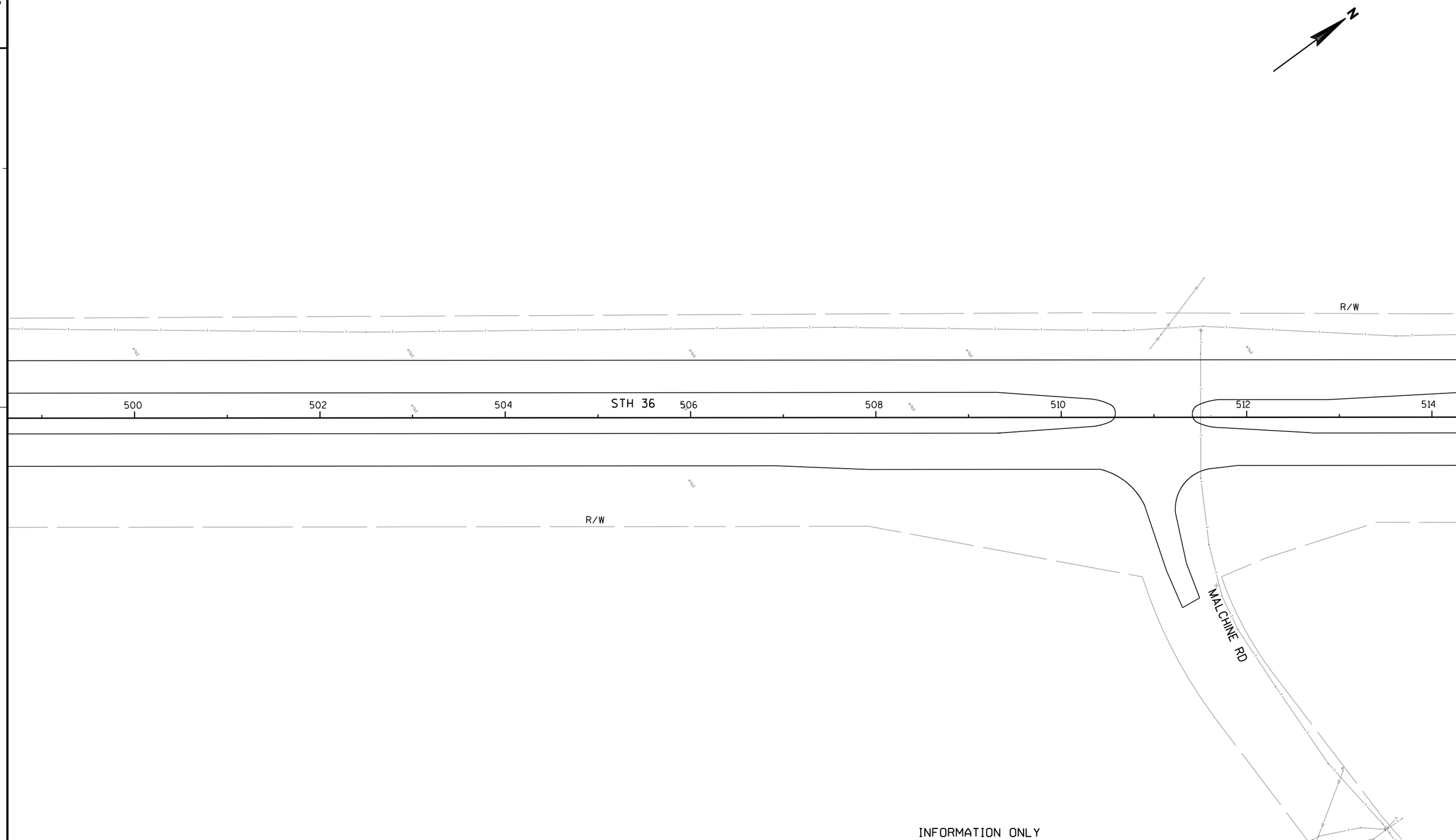

PROJECT NO:2240-00-67	HWY:STH 36	COUNTY:RACINE	UTILITY PLAN	SHEET	E

FILE NAME : j:\projects\d2_22400036\67\023012_UP.dgn PLOT DATE : 12-JAN-2012 10:03 PLOT BY : dotshw PLOT NAME : PLOT SCALE : 100:1

2

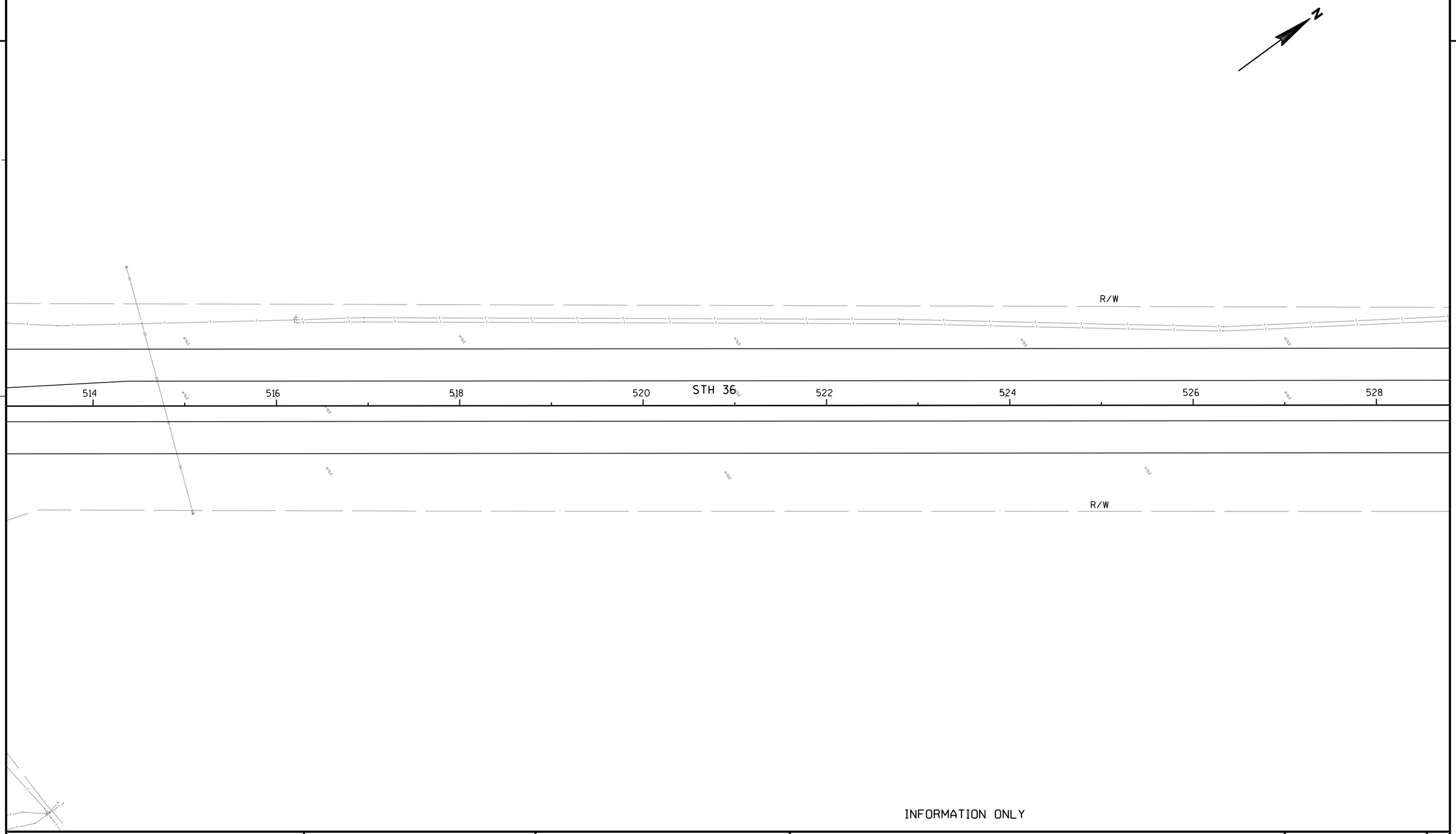

PROJECT NO:2240-00-67	HWY:STH 36	COUNTY:RACINE	UTILITY PLAN	SHEET	E

FILE NAME : j:\projects\d2_22400036\67\023013_UP.dgn PLOT DATE : 12-JAN-2012 10:03 PLOT BY : dotshw PLOT NAME : PLOT SCALE : 100:1 WISDOT/CADDS SHEET 42

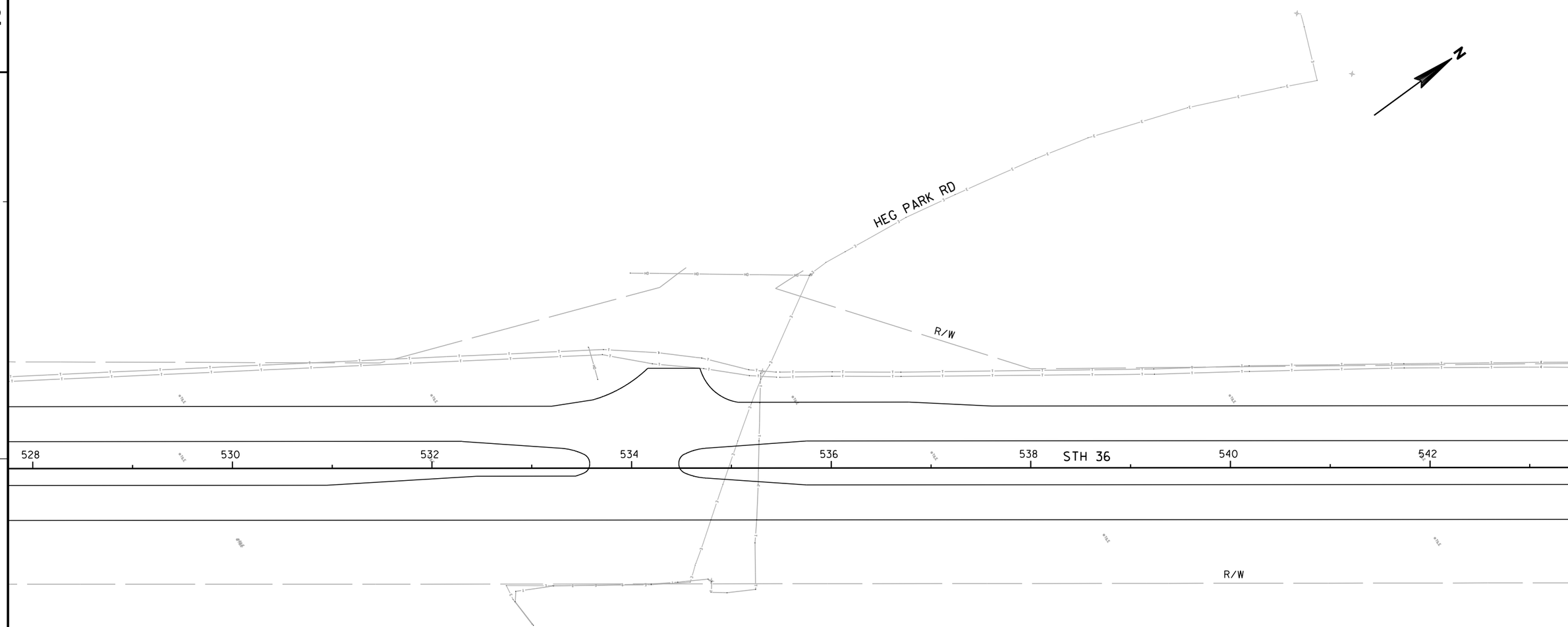

INFORMATION ONLY

PROJECT NO:2240-00-67	HWY:STH 36	COUNTY:RACINE	UTILITY PLAN	SHEET	E

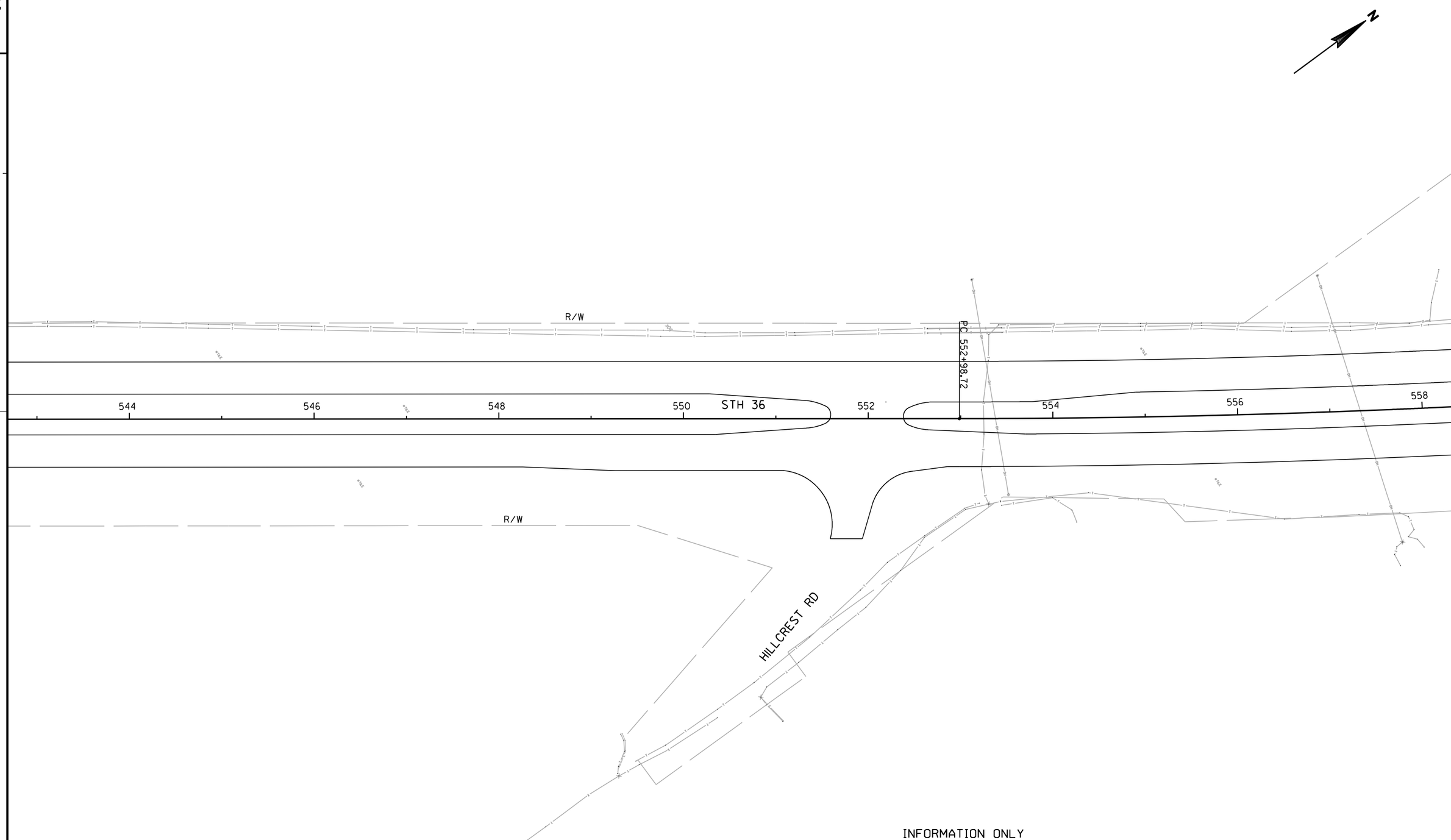

INFORMATION ONLY

PROJECT NO:2240-00-67	HWY:STH 36	COUNTY:RACINE	UTILITY PLAN	SHEET	E

FILE NAME : j:\projects\d2_22400036\67\023015_UP.dgn PLOT DATE : 12-JAN-2012 10:03 PLOT BY : dotshw PLOT NAME : PLOT SCALE : 100:1 WISDOT/CADDS SHEET 42

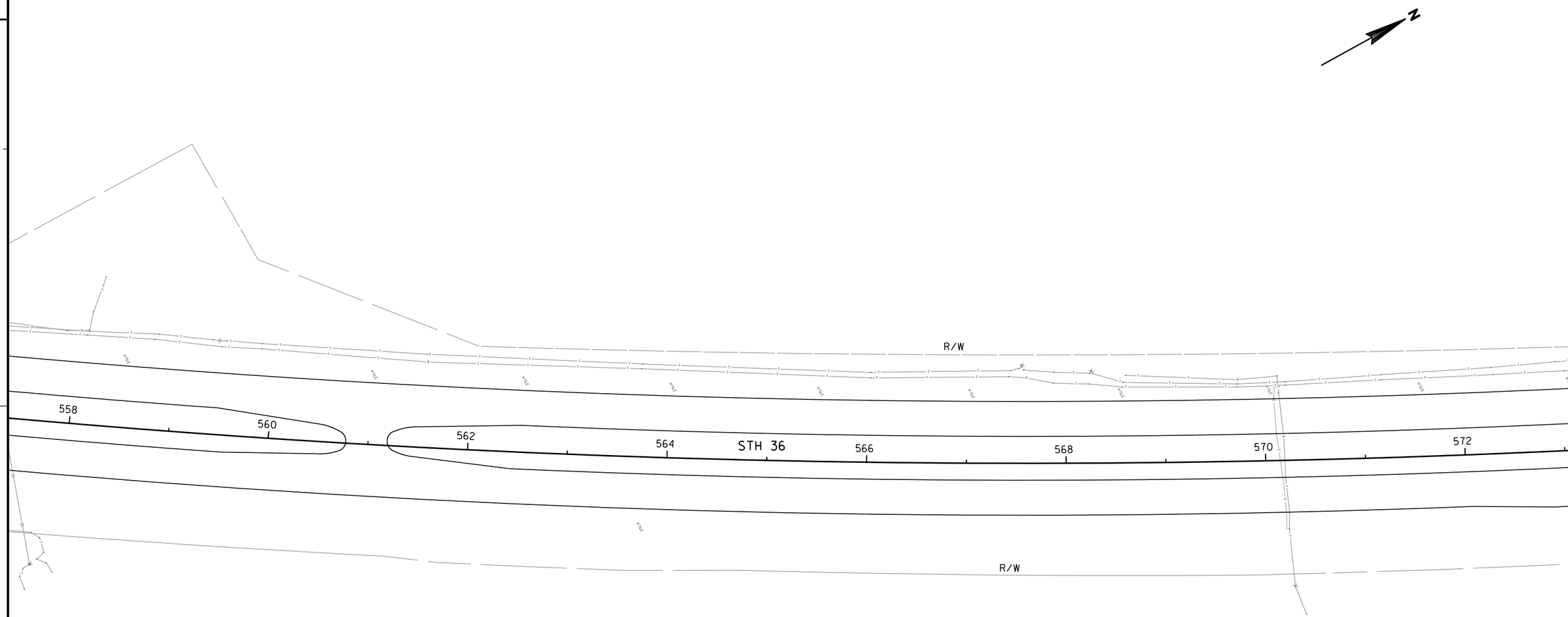

INFORMATION ONLY

PROJECT NO:2240-00-67	HWY:STH 36	COUNTY:RACINE	UTILITY PLAN	SHEET	E

FILE NAME : j:\projects\d2_22400036\67\023016_UP.dgn PLOT DATE : 12-JAN-2012 10:03 PLOT BY : dotshw PLOT NAME : PLOT SCALE : 100:1 WISDOT/CADDS SHEET 42

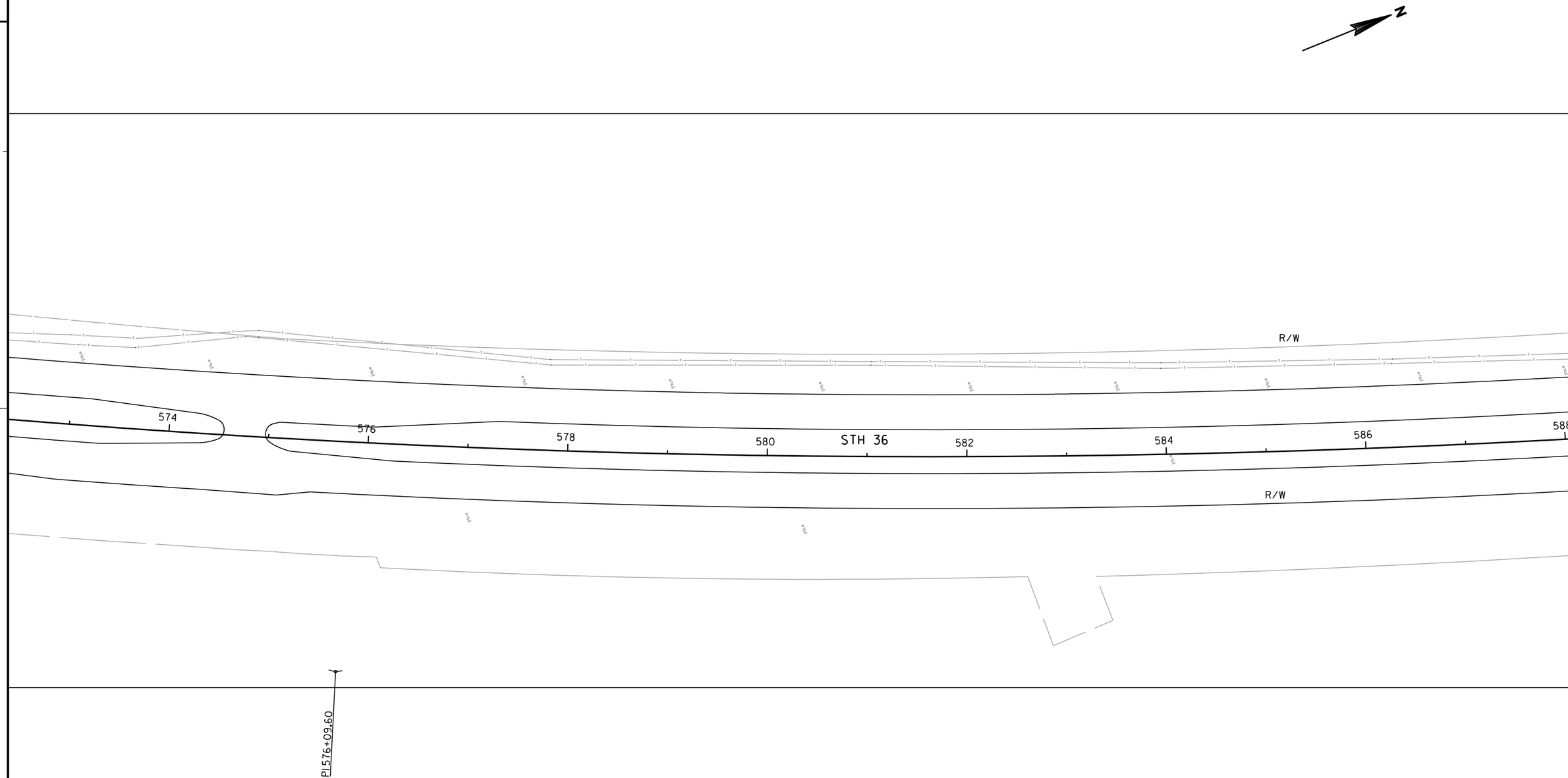

INFORMATION ONLY

PROJECT NO:2240-00-67	HWY:STH 36	COUNTY:RACINE	UTILITY PLAN	SHEET	E

FILE NAME : j:\projects\d2_22400036\67\023017_UP.dgn PLOT DATE : 12-JAN-2012 10:03 PLOT BY : dotshw PLOT NAME : PLOT SCALE : 100:1 WISDOT/CADDS SHEET 42

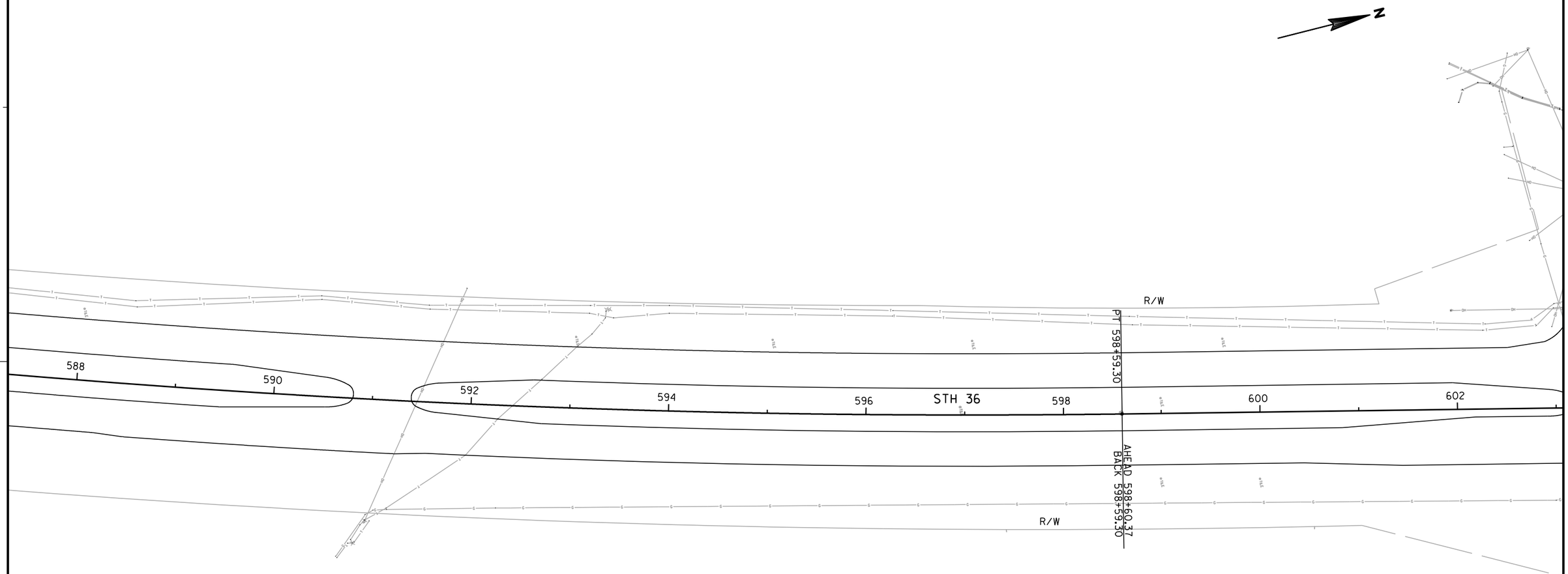

INFORMATION ONLY

PROJECT NO:2240-00-67	HWY:STH 36	COUNTY:RACINE	UTILITY PLAN	SHEET	E

FILE NAME : j:\projects\d2_22400036\67\023018_UP.dgn PLOT DATE : 12-JAN-2012 10:03 PLOT BY : dotshw PLOT NAME : PLOT SCALE : 100:1 WISDOT/CADDS SHEET 42

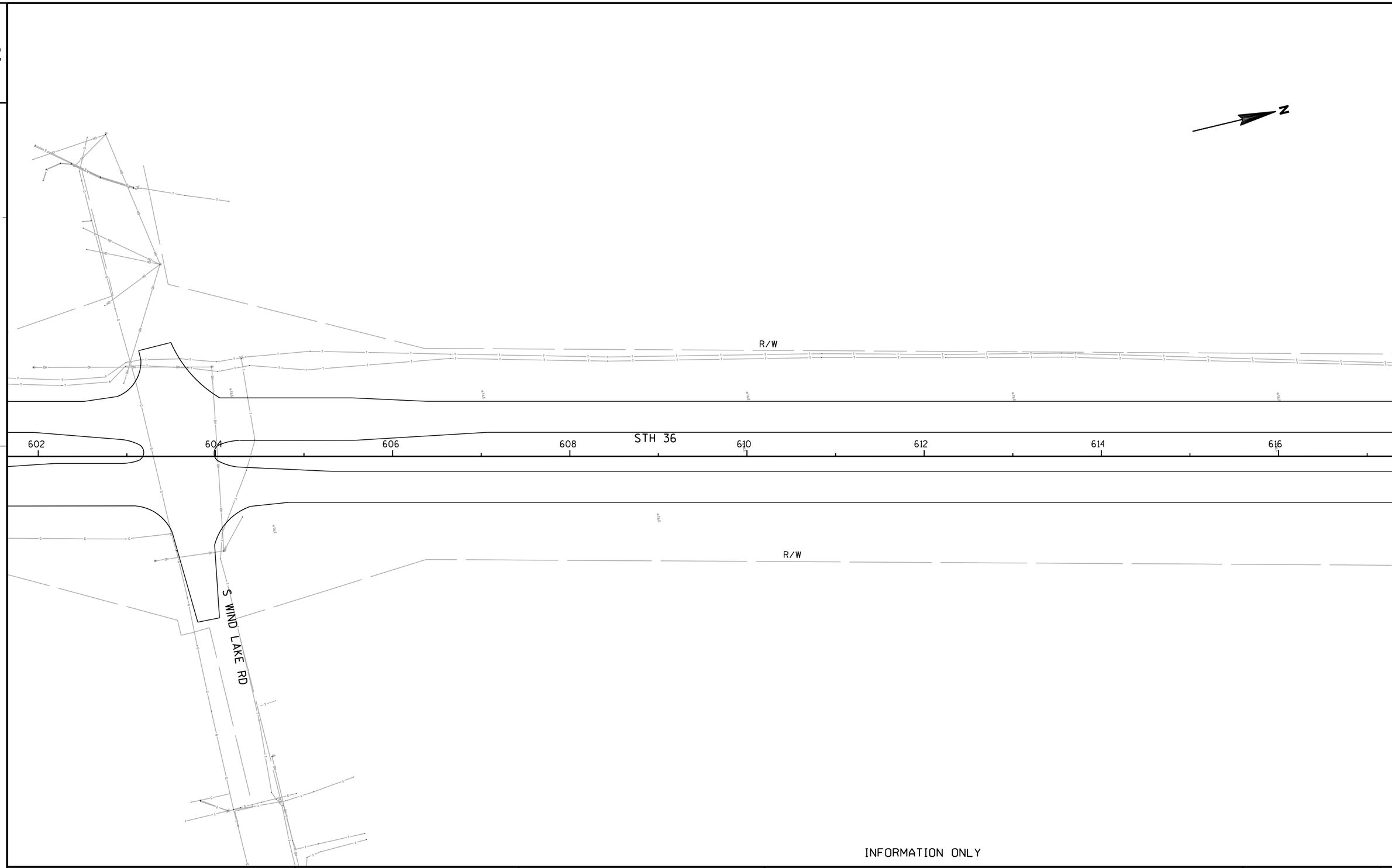

INFORMATION ONLY

PROJECT NO:2240-00-67	HWY:STH 36	COUNTY:RACINE	UTILITY PLAN	SHEET	E

FILE NAME : j:\projects\d2_22400036\67\023019_UP.dgn PLOT DATE : 12-JAN-2012 10:03 PLOT BY : dotshw PLOT NAME : PLOT SCALE : 100:1 WISDOT/CADDS SHEET 42

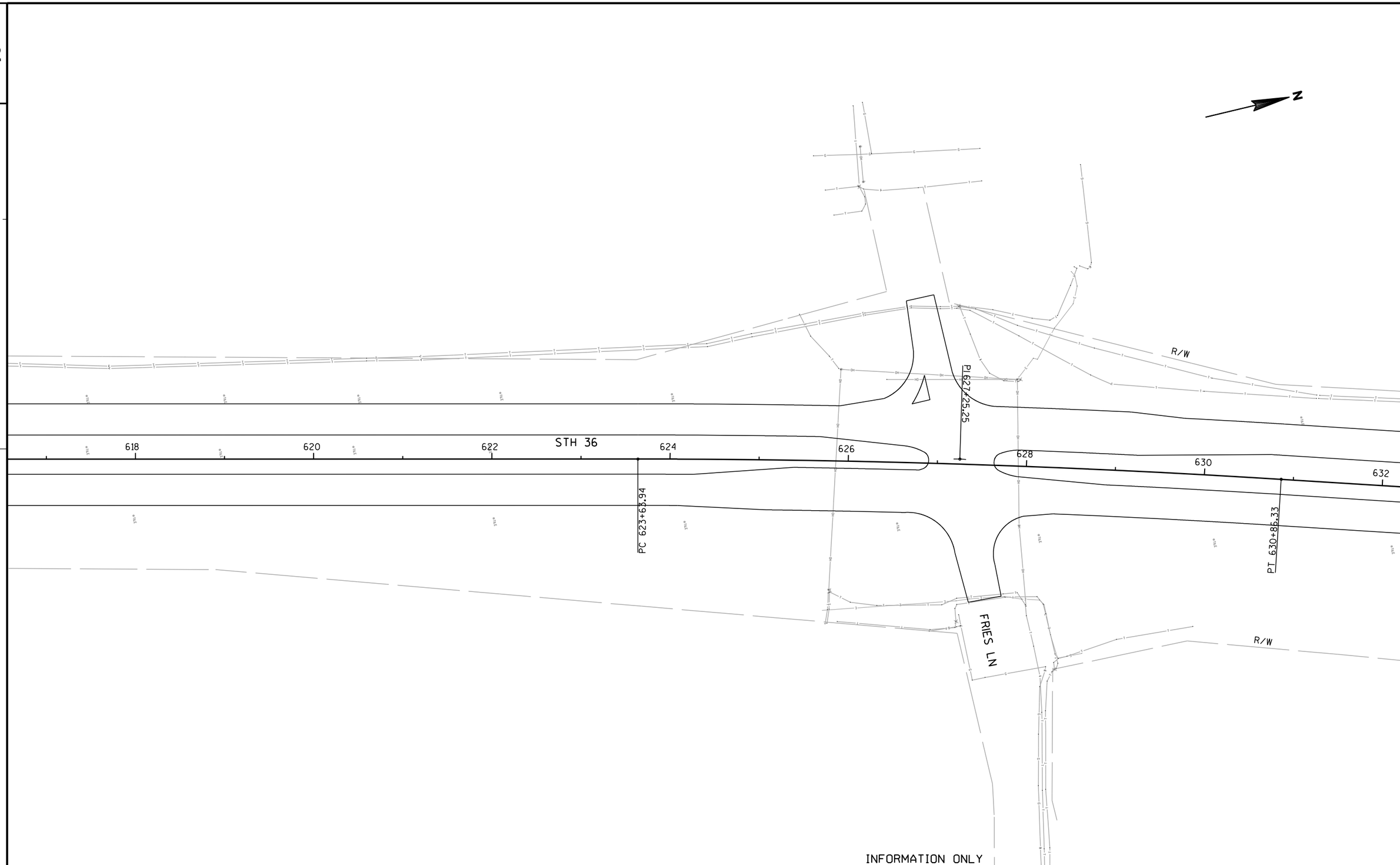

PROJECT NO:2240-00-67	HWY:STH 36	COUNTY:RACINE	UTILITY PLAN	SHEET	E

FILE NAME : j:\projects\d2_22400036\67\023020_UP.dgn PLOT DATE : 12-JAN-2012 10:03 PLOT BY : dotshw PLOT NAME : PLOT SCALE : 100:1 WISDOT/CADDS SHEET 42

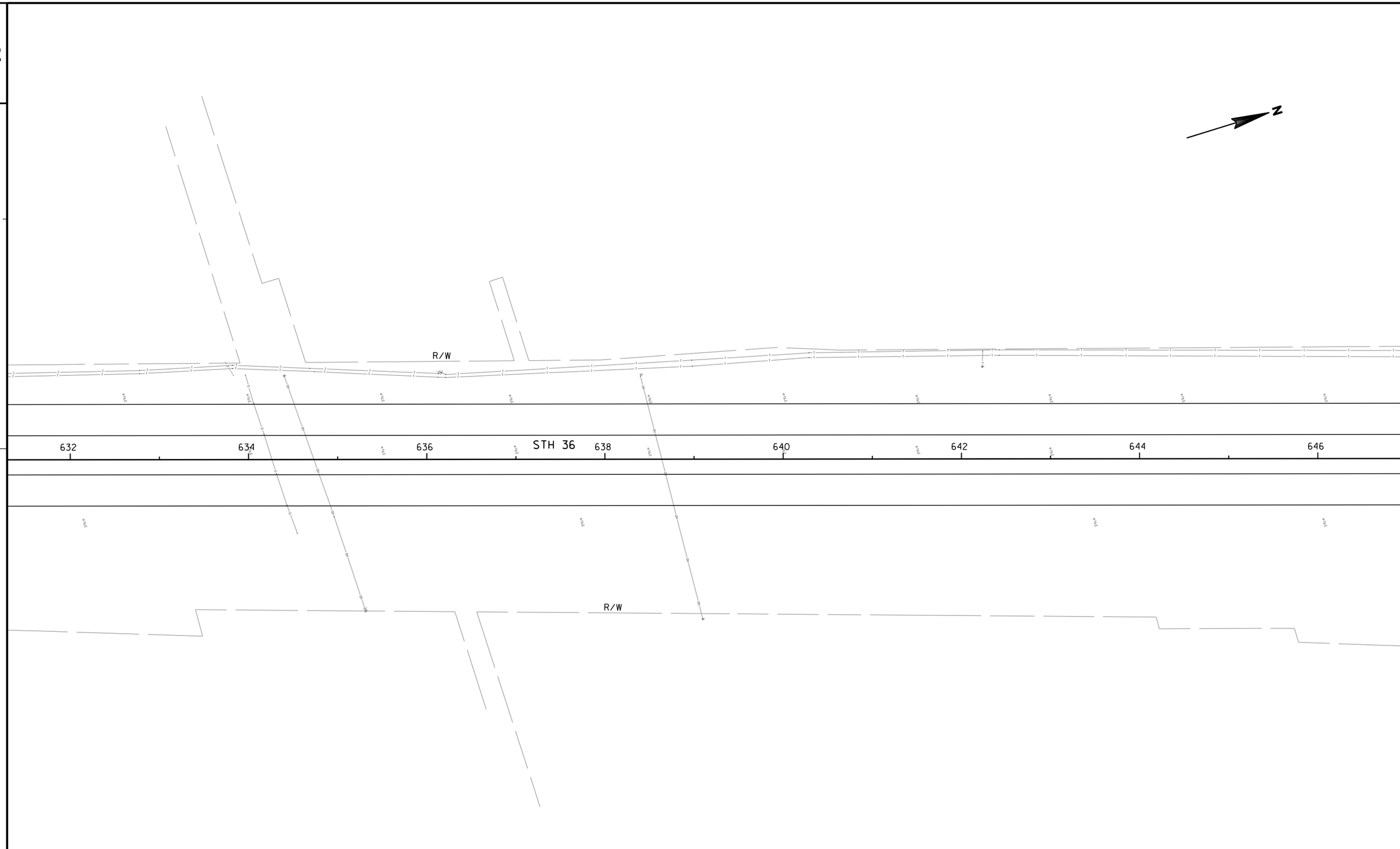

INFORMATION ONLY

PROJECT NO:2240-00-67	HWY:STH 36	COUNTY:RACINE	UTILITY PLAN	SHEET	E

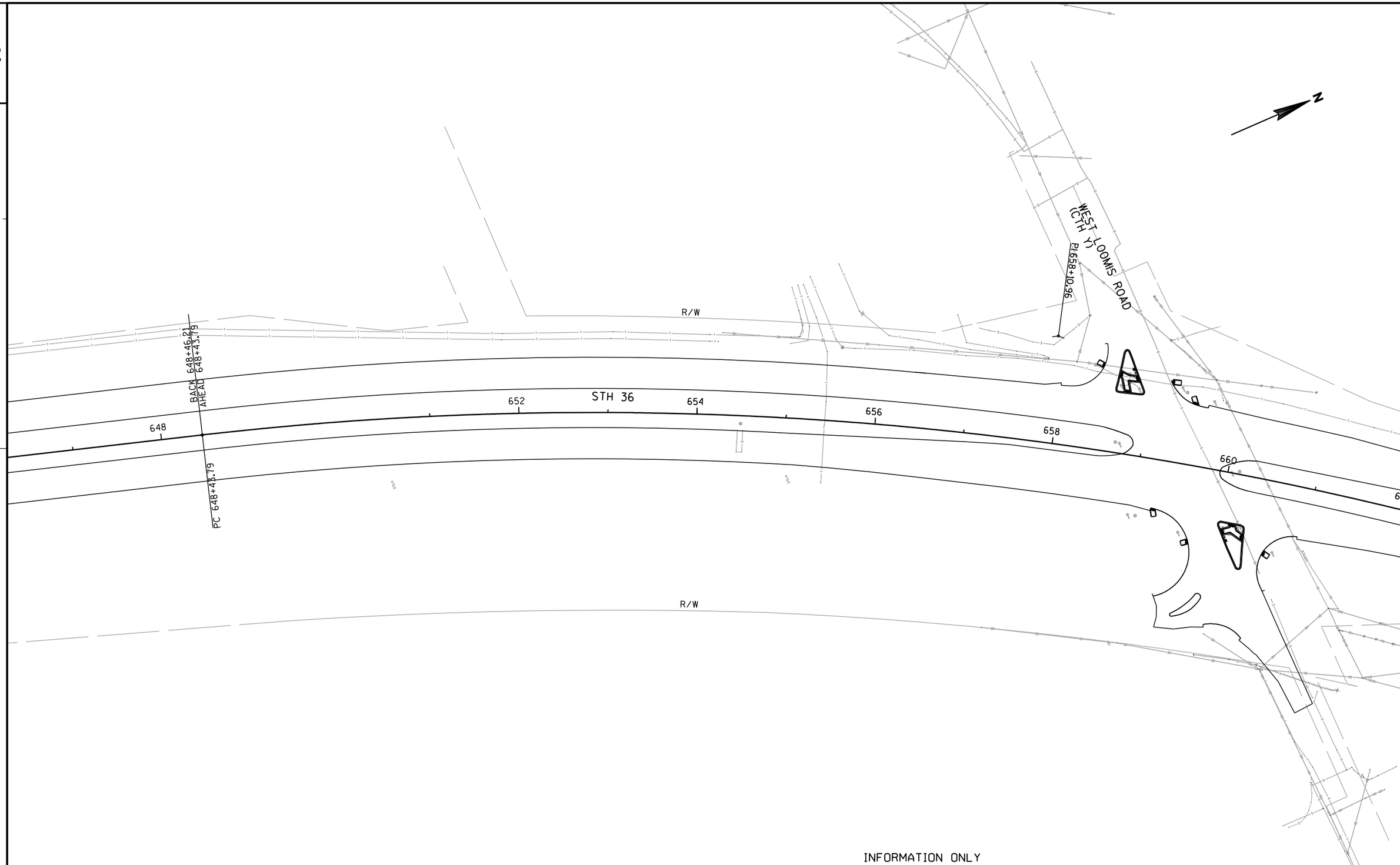

INFORMATION ONLY

PROJECT NO:2240-00-67	HWY:STH 36	COUNTY:RACINE	UTILITY PLAN	SHEET	E

FILE NAME : j:\projects\d2_22400036\67\023022_UP.dgn PLOT DATE : 12-JAN-2012 10:03 PLOT BY : dotshw PLOT NAME : PLOT SCALE : 100:1

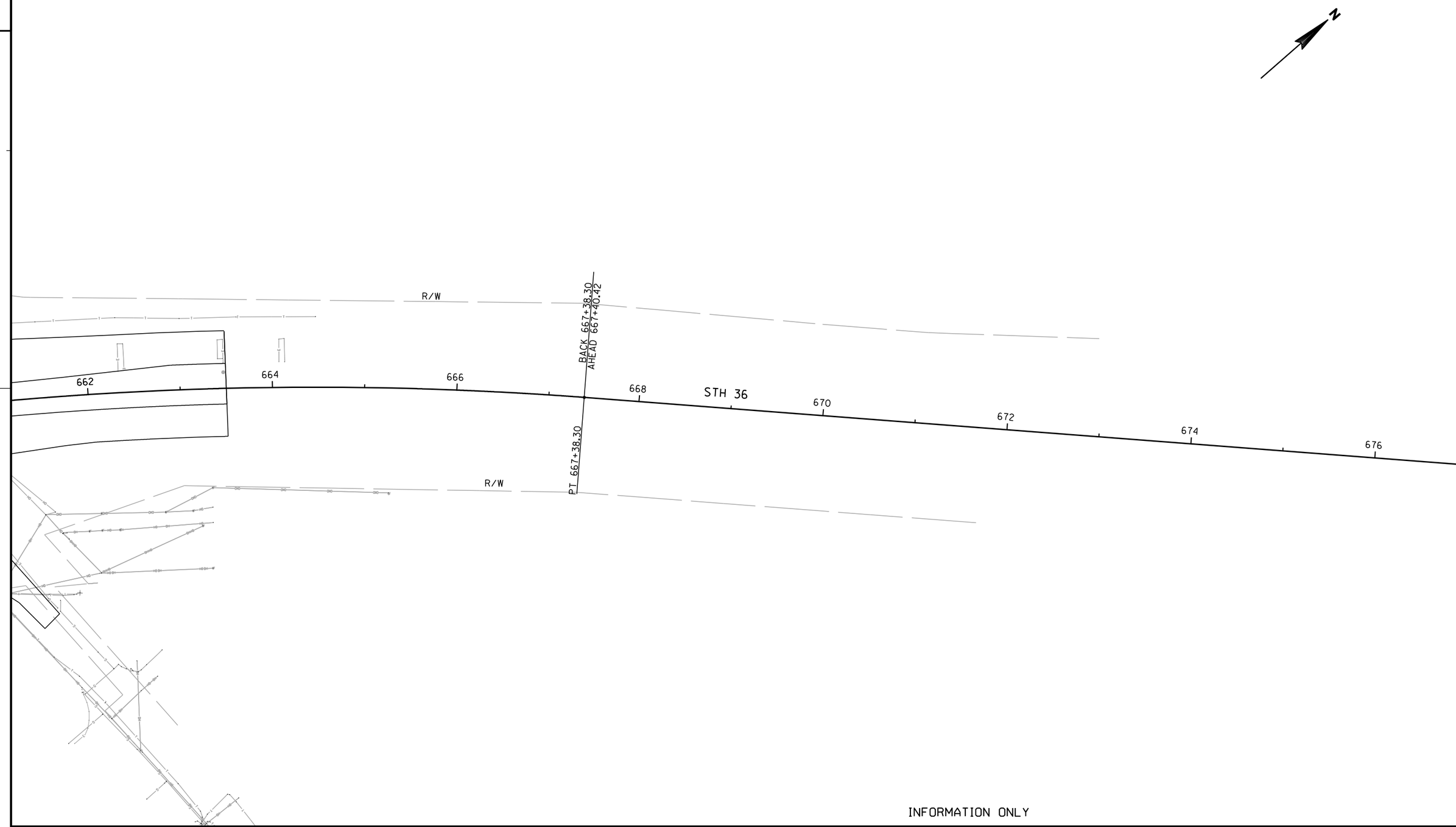

PROJECT NO:2240-00-67	HWY:STH 36	COUNTY:RACINE	UTILITY PLAN	SHEET	E

FILE NAME : j:\projects\d2_22400036\67\023023_UP.dgn PLOT DATE : 12-JAN-2012 10:03 PLOT BY : dotshw PLOT NAME : PLOT SCALE : 100:1

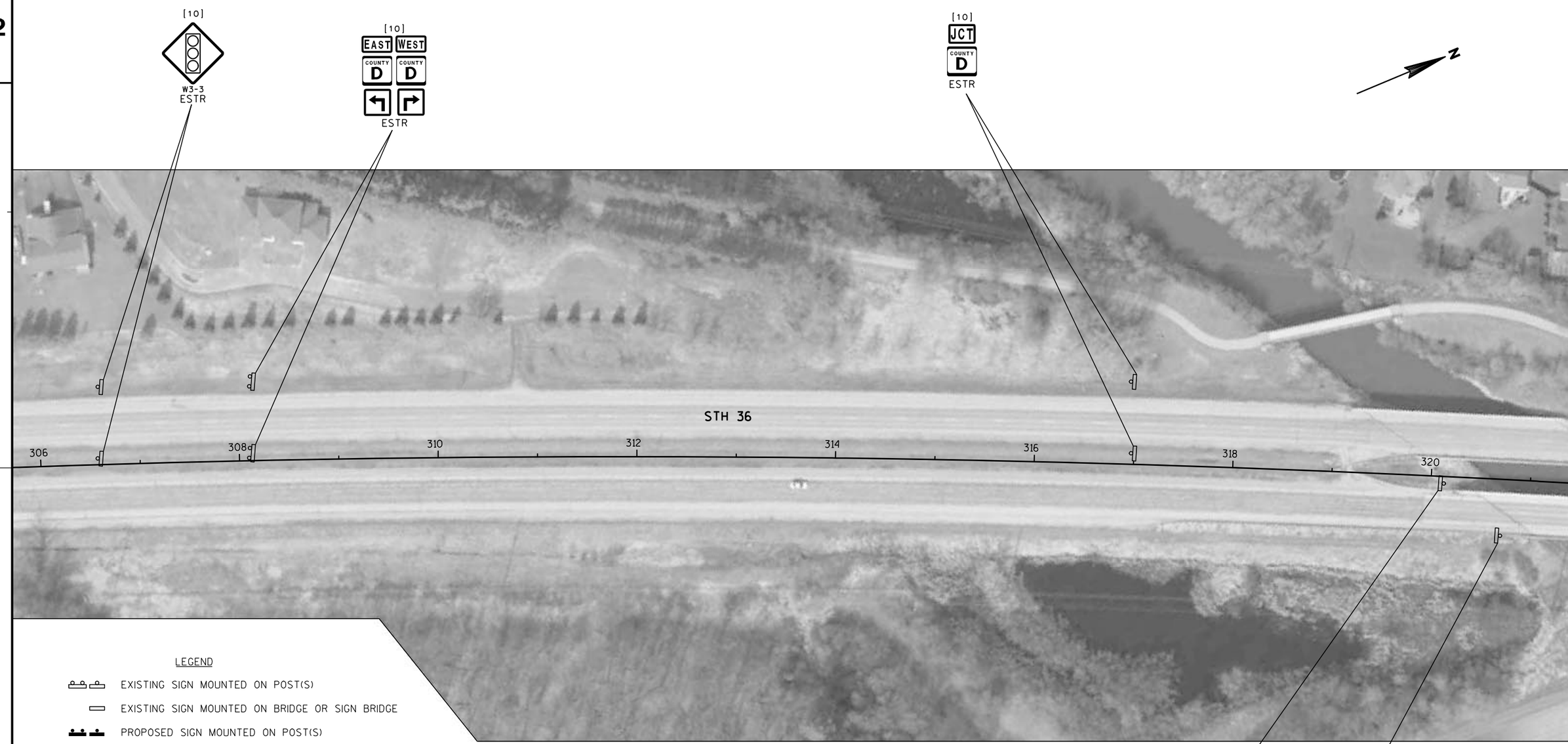

LEGEND

- EXISTING SIGN MOUNTED ON POST(S)
- EXISTING SIGN MOUNTED ON BRIDGE OR SIGN BRIDGE
- PROPOSED SIGN MOUNTED ON POST(S)
- PROPOSED SIGN MOUNTED ON BRIDGE OR SIGN BRIDGE
- EXISTING LIGHT OR SIGNAL POLE
- (XXX) DENOTES SIGN NUMBER
- (X) INDICATES SIGN SIZE
- [09] INDICATES YEAR OF SIGN
- ESTR EXISTING SIGN TO REMAIN

SHEET 1 OF 26

PROJECT NO:2240-00-67	HWY:STH 36	COUNTY:RACINE	PERMANENT SIGNING	SHEET 42	E

LEGEND

- EXISTING SIGN MOUNTED ON POST(S)
- EXISTING SIGN MOUNTED ON BRIDGE OR SIGN BRIDGE
- PROPOSED SIGN MOUNTED ON POST(S)
- PROPOSED SIGN MOUNTED ON BRIDGE OR SIGN BRIDGE
- EXISTING LIGHT OR SIGNAL POLE
- (XXX) DENOTES SIGN NUMBER
- (X) INDICATES SIGN SIZE
- [09] INDICATES YEAR OF SIGN
- ESTR EXISTING SIGN TO REMAIN

SHEET 2 OF 26

PROJECT NO:2240-00-67	HWY:STH 36	COUNTY:RACIRE	PERMANENT SIGNING	SHEET 43	E

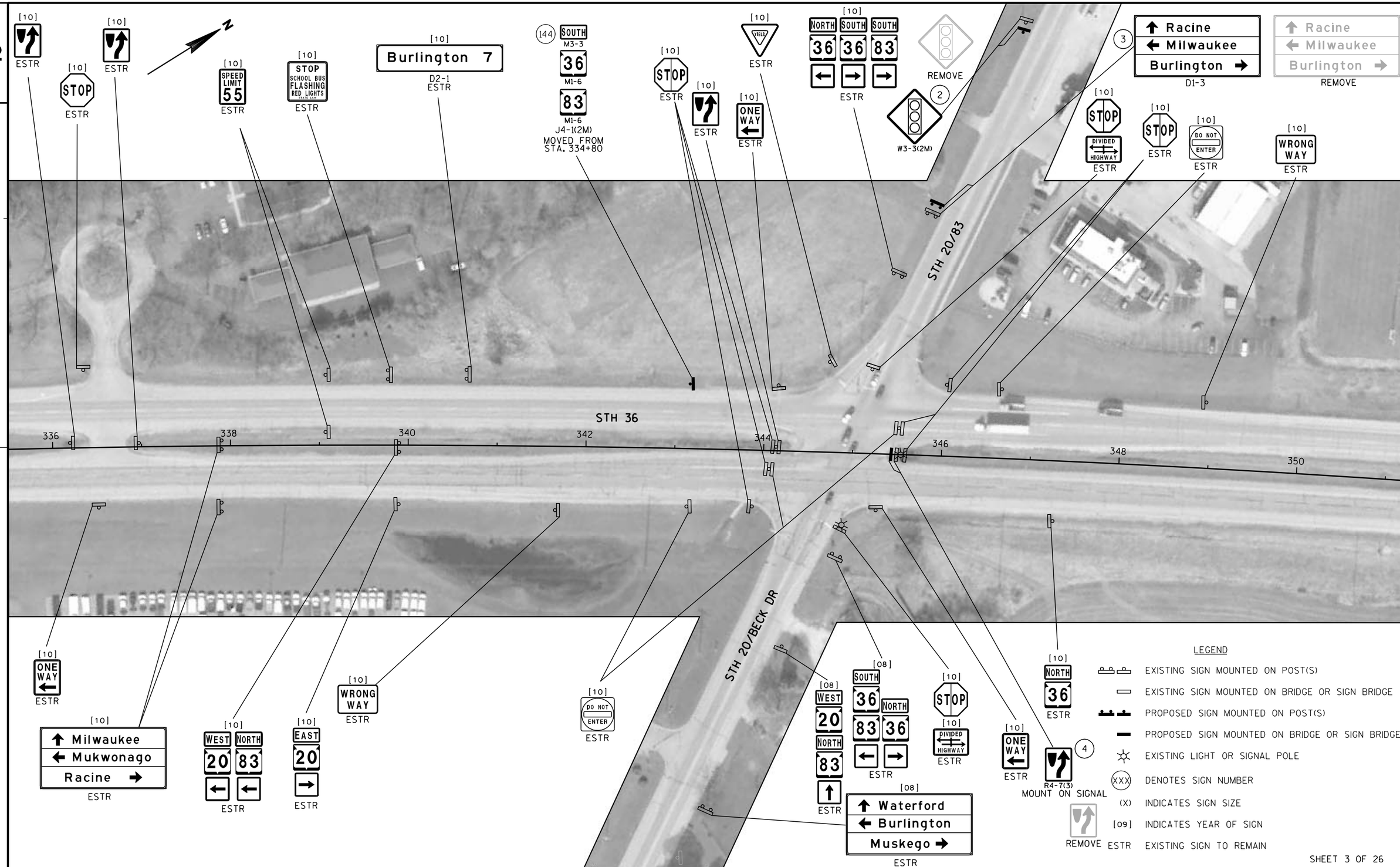

PROJECT NO:2240-00-67	HWY:STH 36	COUNTY:RACINE	PERMANENT SIGNING	SHEET 44	E

2

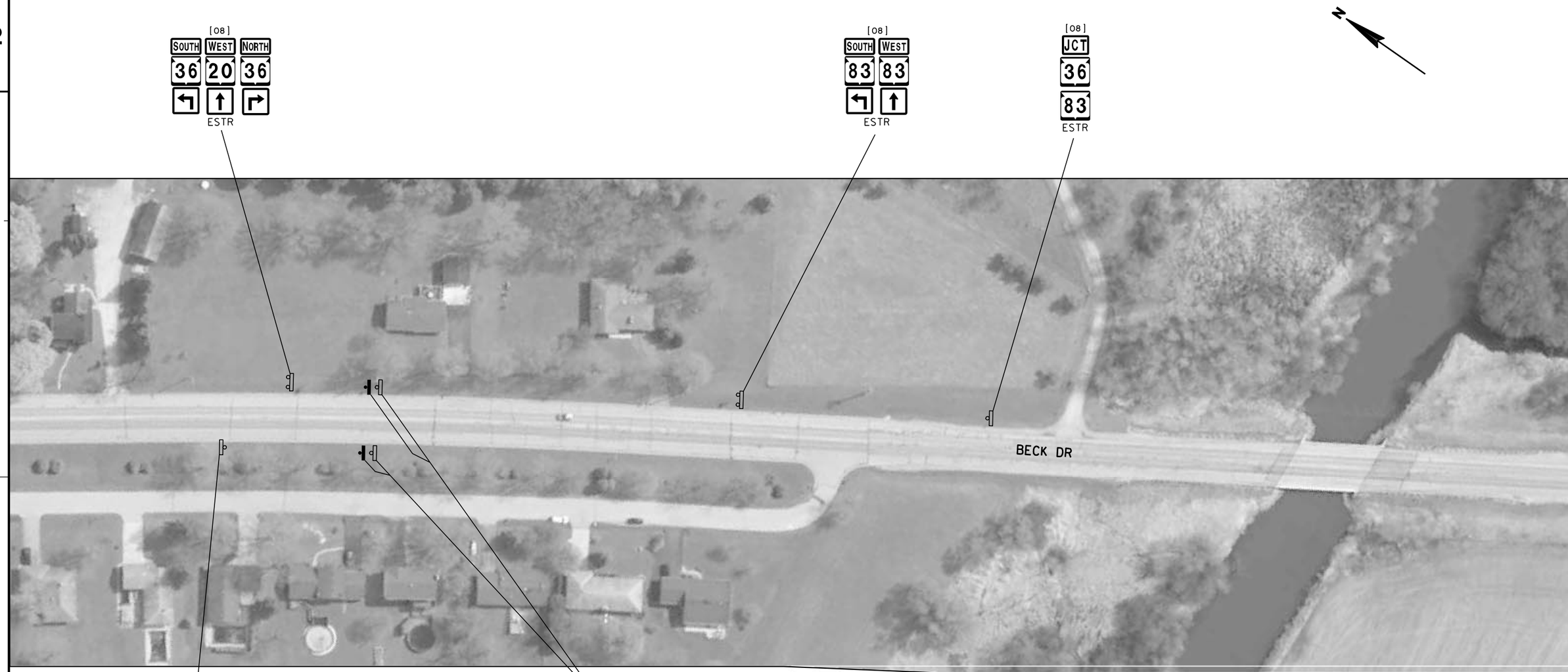

[08]
EAST
20
ESTR

1 116
W3-3(2M)

REMOVE

LEGEND

- EXISTING SIGN MOUNTED ON POST(S)
- EXISTING SIGN MOUNTED ON BRIDGE OR SIGN BRIDGE
- PROPOSED SIGN MOUNTED ON POST(S)
- PROPOSED SIGN MOUNTED ON BRIDGE OR SIGN BRIDGE
- EXISTING LIGHT OR SIGNAL POLE
- (XXX) DENOTES SIGN NUMBER
- (X) INDICATES SIGN SIZE
- [09] INDICATES YEAR OF SIGN
- ESTR EXISTING SIGN TO REMAIN

SHEET 3a OF 26

PROJECT NO:2240-00-67	HWY:STH 36	COUNTY:RACINE	PERMANENT SIGNING	SHEET 45	E

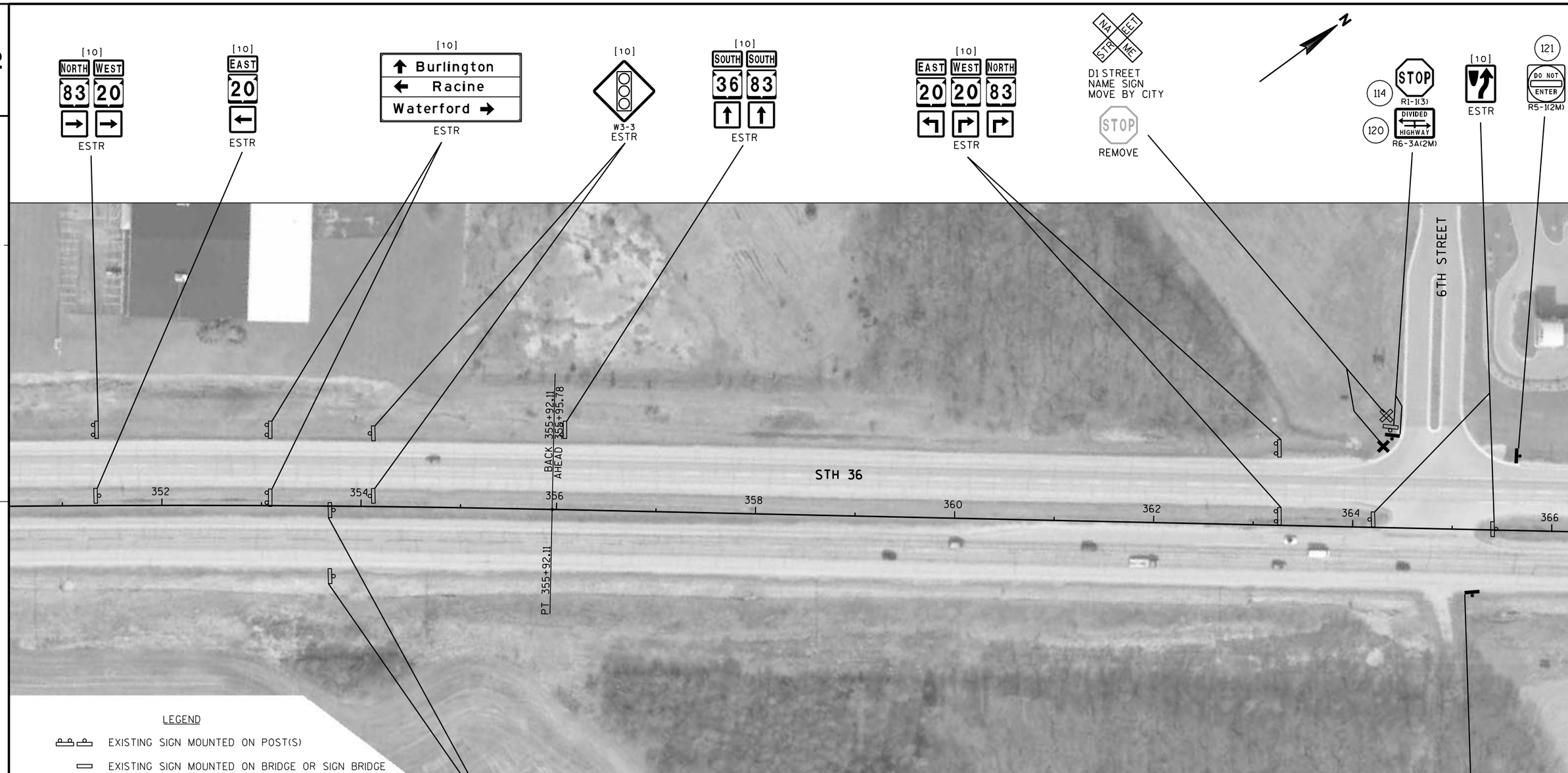

LEGEND

- EXISTING SIGN MOUNTED ON POST(S)
- EXISTING SIGN MOUNTED ON BRIDGE OR SIGN BRIDGE
- PROPOSED SIGN MOUNTED ON POST(S)
- PROPOSED SIGN MOUNTED ON BRIDGE OR SIGN BRIDGE
- EXISTING LIGHT OR SIGNAL POLE
- (XXX) DENOTES SIGN NUMBER
- (X) INDICATES SIGN SIZE
- [09] INDICATES YEAR OF SIGN
- ESTR EXISTING SIGN TO REMAIN

SHEET 4 OF 26

PROJECT NO:2240-00-67	HWY:STH 36	COUNTY:RACINE	PERMANENT SIGNING	SHEET 46	E

LEGEND

- EXISTING SIGN MOUNTED ON POST(S)
- EXISTING SIGN MOUNTED ON BRIDGE OR SIGN BRIDGE
- PROPOSED SIGN MOUNTED ON POST(S)
- PROPOSED SIGN MOUNTED ON BRIDGE OR SIGN BRIDGE
- EXISTING LIGHT OR SIGNAL POLE
- (XXX) DENOTES SIGN NUMBER
- (X) INDICATES SIGN SIZE
- [09] INDICATES YEAR OF SIGN
- ESTR EXISTING SIGN TO REMAIN

SHEET 5 OF 26

PROJECT NO:2240-00-67	HWY:STH 36	COUNTY:RACINE	PERMANENT SIGNING	SHEET 47	E

2

LEGEND

- EXISTING SIGN MOUNTED ON POST(S)
- EXISTING SIGN MOUNTED ON BRIDGE OR SIGN BRIDGE
- PROPOSED SIGN MOUNTED ON POST(S)
- PROPOSED SIGN MOUNTED ON BRIDGE OR SIGN BRIDGE
- EXISTING LIGHT OR SIGNAL POLE
- (XXX) DENOTES SIGN NUMBER
- (X) INDICATES SIGN SIZE
- [09] INDICATES YEAR OF SIGN
- ESTR EXISTING SIGN TO REMAIN

SHEET 6 OF 26

PROJECT NO:2240-00-67	HWY:STH 36	COUNTY:RACINE	PERMANENT SIGNING	SHEET 48	E

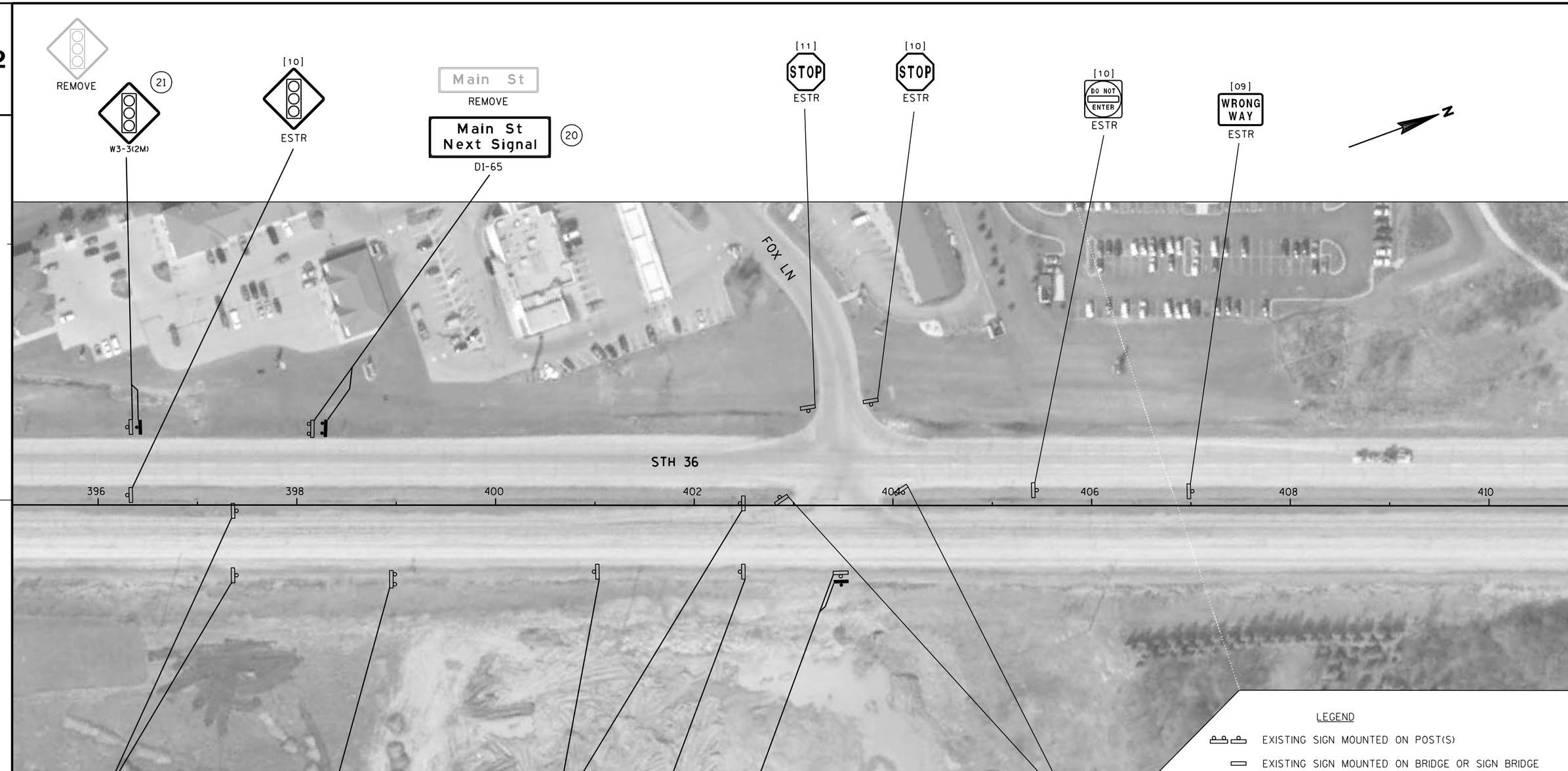

LEGEND

- EXISTING SIGN MOUNTED ON POST(S)
- EXISTING SIGN MOUNTED ON BRIDGE OR SIGN BRIDGE
- PROPOSED SIGN MOUNTED ON POST(S)
- PROPOSED SIGN MOUNTED ON BRIDGE OR SIGN BRIDGE
- EXISTING LIGHT OR SIGNAL POLE
- (XXX) DENOTES SIGN NUMBER
- (X) INDICATES SIGN SIZE
- [09] INDICATES YEAR OF SIGN
- ESTR EXISTING SIGN TO REMAIN

SHEET 7 OF 26

PROJECT NO:2240-00-67	HWY:STH 36	COUNTY:RACINE	PERMANENT SIGNING	SHEET 49	E

2

LEGEND

- EXISTING SIGN MOUNTED ON POST(S)
- EXISTING SIGN MOUNTED ON BRIDGE OR SIGN BRIDGE
- PROPOSED SIGN MOUNTED ON POST(S)
- PROPOSED SIGN MOUNTED ON BRIDGE OR SIGN BRIDGE
- EXISTING LIGHT OR SIGNAL POLE
- (XXX) DENOTES SIGN NUMBER
- (X) INDICATES SIGN SIZE
- [09] INDICATES YEAR OF SIGN
- ESTR EXISTING SIGN TO REMAIN

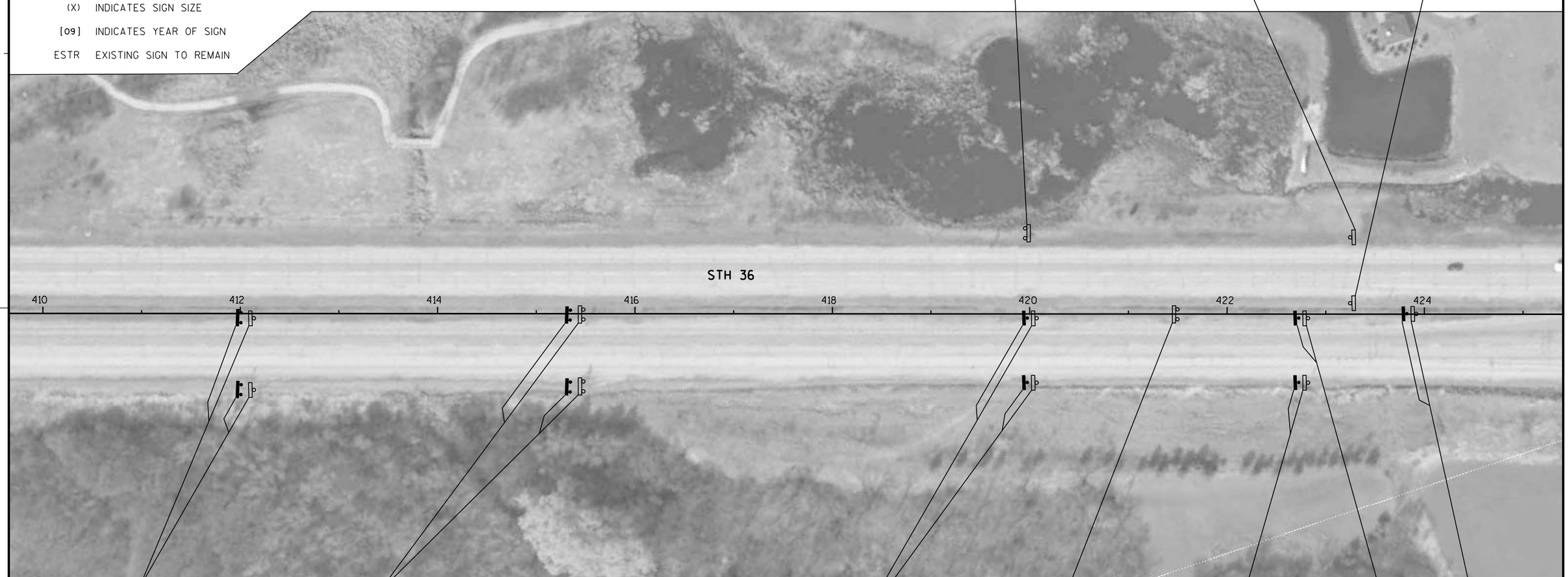

23 24 JCT M 2-1 JCT M 2-1 164 M1-6 COUNTY K M1-5A J1-1(3)

JCT 164 COUNTY K REMOVE

25 26 NORTH M 3-1 NORTH M 3-1 EAST M 3-2 164 M1-6 36 M1-6 COUNTY K M1-5A M 5-1L M 6-1 M 5-1R J2-3(3)

NORTH NORTH EAST 164 36 COUNTY K REMOVE

28 27 W3-3(2M)

REMOVE

[11] Milwaukee Big Bend Waukesha D2-1 ESTR

29 EAST M 3-2 COUNTY K M1-5A M 6-1 J3-1(3)

EAST COUNTY K REMOVE

30 NORTH M 3-1 164 M1-6 M 6-1 J1-3(3)

NORTH 164 REMOVE

31 BEGIN LEFT TURN LANE R3-20L(3)

ONLY ONLY REMOVE

SHEET 8 OF 26

PROJECT NO:2240-00-67	HWY:STH 36	COUNTY:RACINE	PERMANENT SIGNING	SHEET 50	E

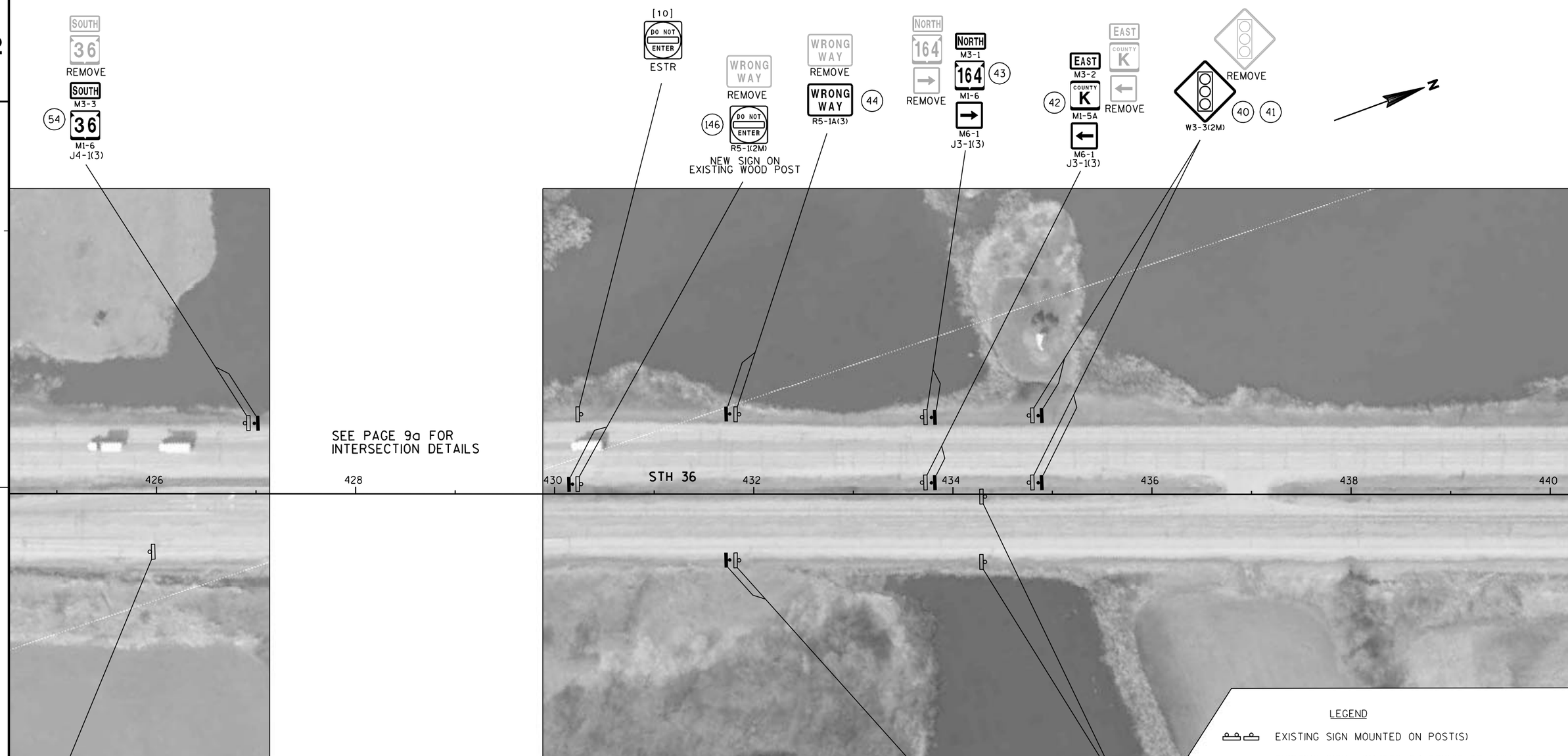

PROJECT NO:2240-00-67	HWY:STH 36	COUNTY:RACINE	PERMANENT SIGNING	SHEET 51	E

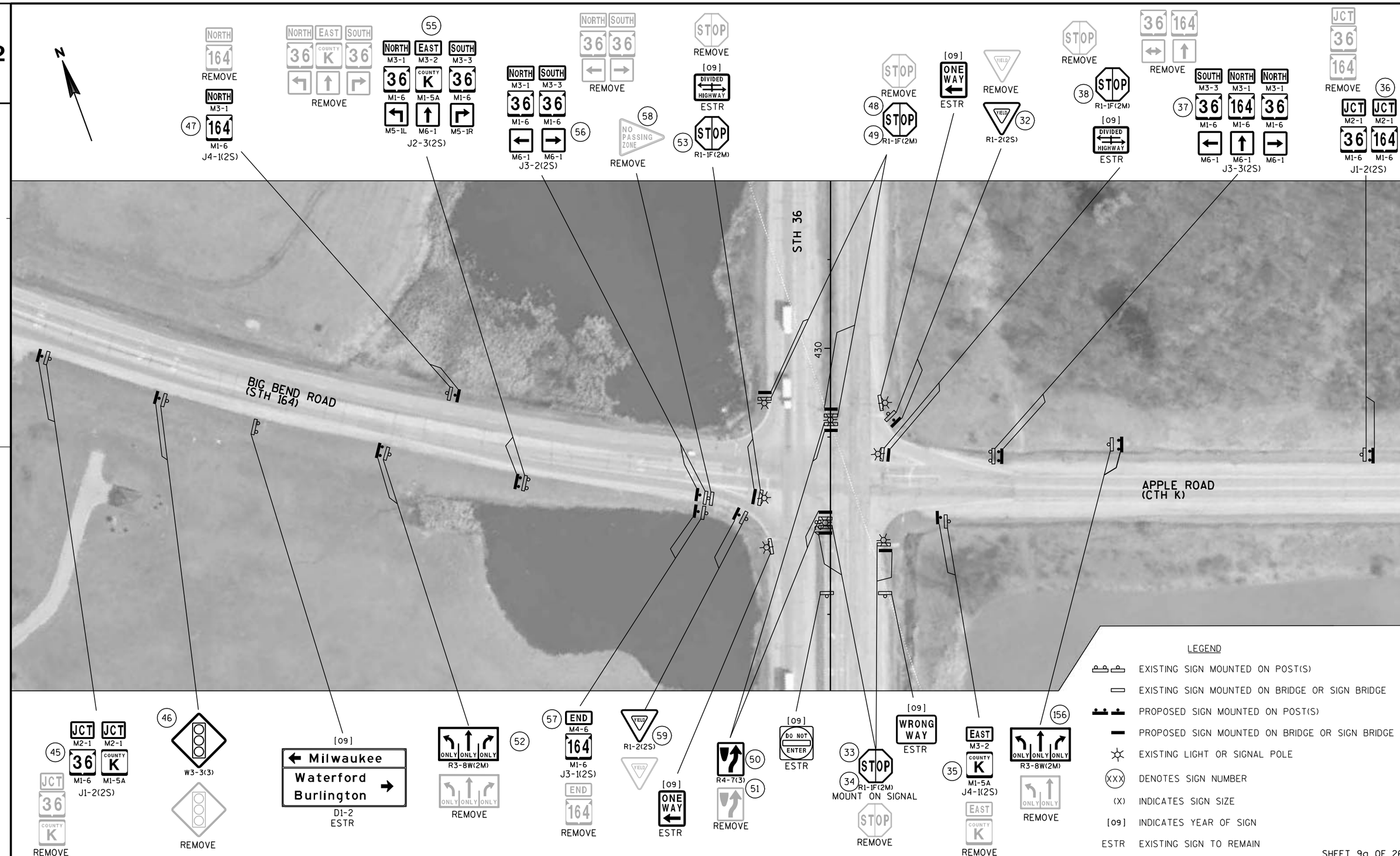

PROJECT NO:2240-00-67	HWY:STH 36	COUNTY:RACINE	PERMANENT SIGNING	SHEET 52	E

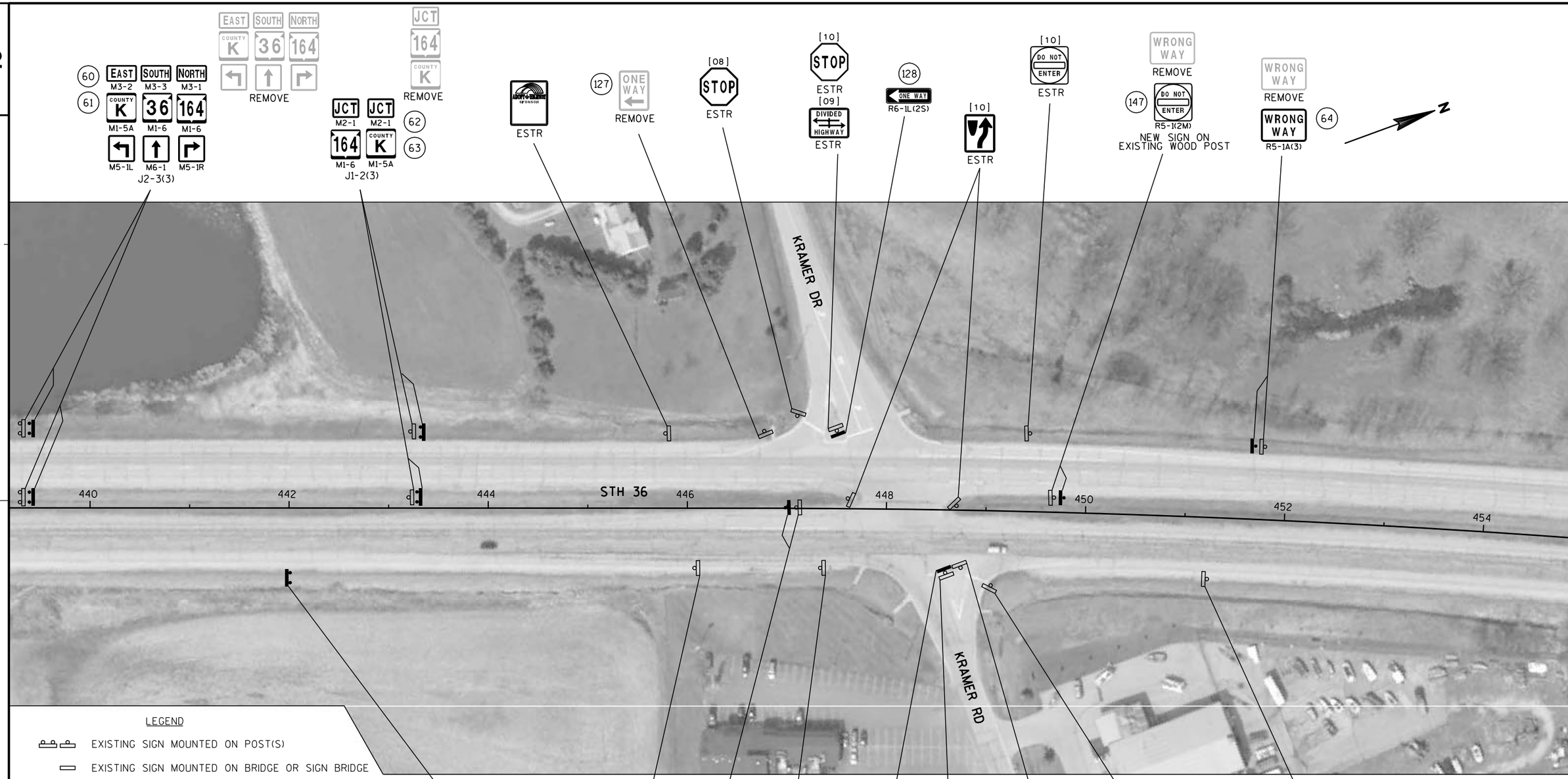

LEGEND

- EXISTING SIGN MOUNTED ON POST(S)
- EXISTING SIGN MOUNTED ON BRIDGE OR SIGN BRIDGE
- PROPOSED SIGN MOUNTED ON POST(S)
- PROPOSED SIGN MOUNTED ON BRIDGE OR SIGN BRIDGE
- EXISTING LIGHT OR SIGNAL POLE
- (XXX) DENOTES SIGN NUMBER
- (X) INDICATES SIGN SIZE
- [09] INDICATES YEAR OF SIGN
- ESTR EXISTING SIGN TO REMAIN

SHEET 10 OF 26

PROJECT NO:2240-00-67	HWY:STH 36	COUNTY:RACINE	PERMANENT SIGNING	SHEET 53	E

LEGEND

- EXISTING SIGN MOUNTED ON POST(S)
- EXISTING SIGN MOUNTED ON BRIDGE OR SIGN BRIDGE
- PROPOSED SIGN MOUNTED ON POST(S)
- PROPOSED SIGN MOUNTED ON BRIDGE OR SIGN BRIDGE
- EXISTING LIGHT OR SIGNAL POLE
- (XXX) DENOTES SIGN NUMBER
- (X) INDICATES SIGN SIZE
- [09] INDICATES YEAR OF SIGN
- ESTR EXISTING SIGN TO REMAIN

SHEET 11 OF 26

PROJECT NO:2240-00-67	HWY:STH 36	COUNTY:RACINE	PERMANENT SIGNING	SHEET 54	E

2

2

LEGEND

- EXISTING SIGN MOUNTED ON POST(S)
- EXISTING SIGN MOUNTED ON BRIDGE OR SIGN BRIDGE
- PROPOSED SIGN MOUNTED ON POST(S)
- PROPOSED SIGN MOUNTED ON BRIDGE OR SIGN BRIDGE
- EXISTING LIGHT OR SIGNAL POLE
- (XXX) DENOTES SIGN NUMBER
- (X) INDICATES SIGN SIZE
- [09] INDICATES YEAR OF SIGN
- ESTR EXISTING SIGN TO REMAIN

SHEET 12 OF 26

PROJECT NO:2240-00-67	HWY:STH 36	COUNTY:RACINE	PERMANENT SIGNING	SHEET 55	E

2

2

LEGEND

- EXISTING SIGN MOUNTED ON POST(S)
- EXISTING SIGN MOUNTED ON BRIDGE OR SIGN BRIDGE
- PROPOSED SIGN MOUNTED ON POST(S)
- PROPOSED SIGN MOUNTED ON BRIDGE OR SIGN BRIDGE
- EXISTING LIGHT OR SIGNAL POLE
- (XXX) DENOTES SIGN NUMBER
- (X) INDICATES SIGN SIZE
- [09] INDICATES YEAR OF SIGN
- ESTR EXISTING SIGN TO REMAIN

SHEET 13 OF 26

PROJECT NO:2240-00-67	HWY:STH 36	COUNTY:RACINE	PERMANENT SIGNING	SHEET 56	E

LEGEND

- EXISTING SIGN MOUNTED ON POST(S)
- EXISTING SIGN MOUNTED ON BRIDGE OR SIGN BRIDGE
- PROPOSED SIGN MOUNTED ON POST(S)
- PROPOSED SIGN MOUNTED ON BRIDGE OR SIGN BRIDGE
- EXISTING LIGHT OR SIGNAL POLE
- (XXX) DENOTES SIGN NUMBER
- (X) INDICATES SIGN SIZE
- [09] INDICATES YEAR OF SIGN
- ESTR EXISTING SIGN TO REMAIN

[10] ESTR

ONE WAY REMOVE

ONE WAY (67) R6-2L(3)

[10] ESTR

WRONG WAY REMOVE

(148) DO NOT ENTER R5-1(2M)

NEW SIGN ON EXISTING WOOD POST

[09] DO NOT ENTER ESTR

[08] WRONG WAY ESTR

(65) JCT MR2-1

RUSTIC ROAD MR1-99

MR6-1 J1-1(3)

JCT RUSTIC ROAD REMOVE

(130) Malchine Rd → M1-94(mod)

HISTORICAL MARKER 1/2 MILE D5-63(2M) (66)

HISTORICAL MARKER 1/2 MILE REMOVE

[09] WRONG WAY ESTR

(153) DO NOT ENTER R5-1(2M)

NEW SIGN ON EXISTING WOOD POST

WRONG WAY REMOVE

[10] DO NOT ENTER ESTR

[08] STOP ESTR

[09] DIVIDED HIGHWAY ESTR

SHEET 14 OF 26

PROJECT NO:2240-00-67	HWY:STH 36	COUNTY:RACINE	PERMANENT SIGNING	SHEET 57	E

LEGEND

- EXISTING SIGN MOUNTED ON POST(S)
- EXISTING SIGN MOUNTED ON BRIDGE OR SIGN BRIDGE
- PROPOSED SIGN MOUNTED ON POST(S)
- PROPOSED SIGN MOUNTED ON BRIDGE OR SIGN BRIDGE
- EXISTING LIGHT OR SIGNAL POLE
- (XXX) DENOTES SIGN NUMBER
- (X) INDICATES SIGN SIZE
- [09] INDICATES YEAR OF SIGN
- ESTR EXISTING SIGN TO REMAIN

SHEET 15 OF 26

PROJECT NO:2240-00-67	HWY:STH 36	COUNTY:RACINE	PERMANENT SIGNING	SHEET 58	E

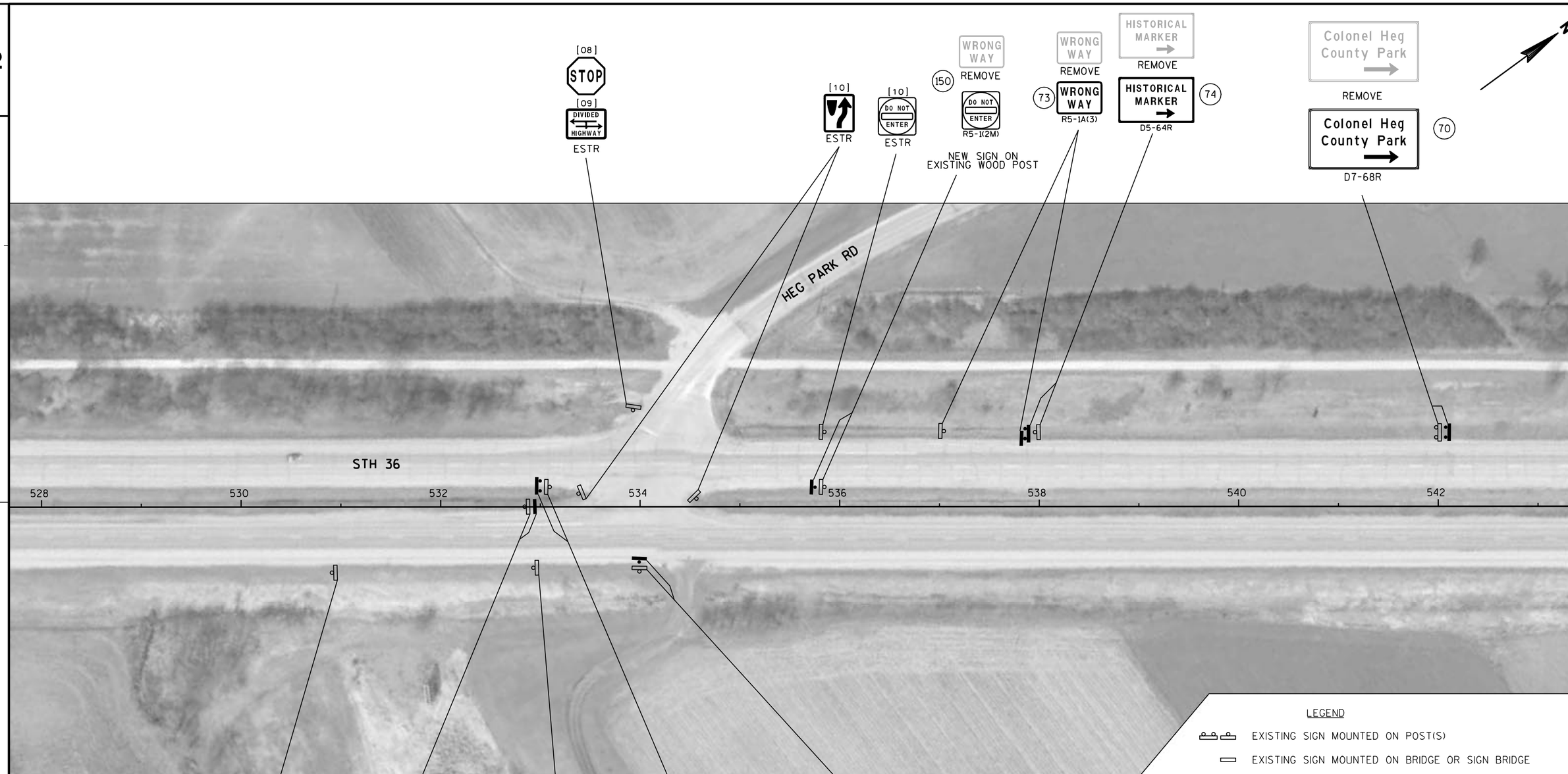

SHEET 16 OF 26

PROJECT NO:2240-00-67	HWY:STH 36	COUNTY:RACIONE	PERMANENT SIGNING	SHEET 59	E

2

LEGEND

- EXISTING SIGN MOUNTED ON POST(S)
- EXISTING SIGN MOUNTED ON BRIDGE OR SIGN BRIDGE
- PROPOSED SIGN MOUNTED ON POST(S)
- PROPOSED SIGN MOUNTED ON BRIDGE OR SIGN BRIDGE
- EXISTING LIGHT OR SIGNAL POLE
- (XXX) DENOTES SIGN NUMBER
- (X) INDICATES SIGN SIZE
- [09] INDICATES YEAR OF SIGN
- ESTR EXISTING SIGN TO REMAIN

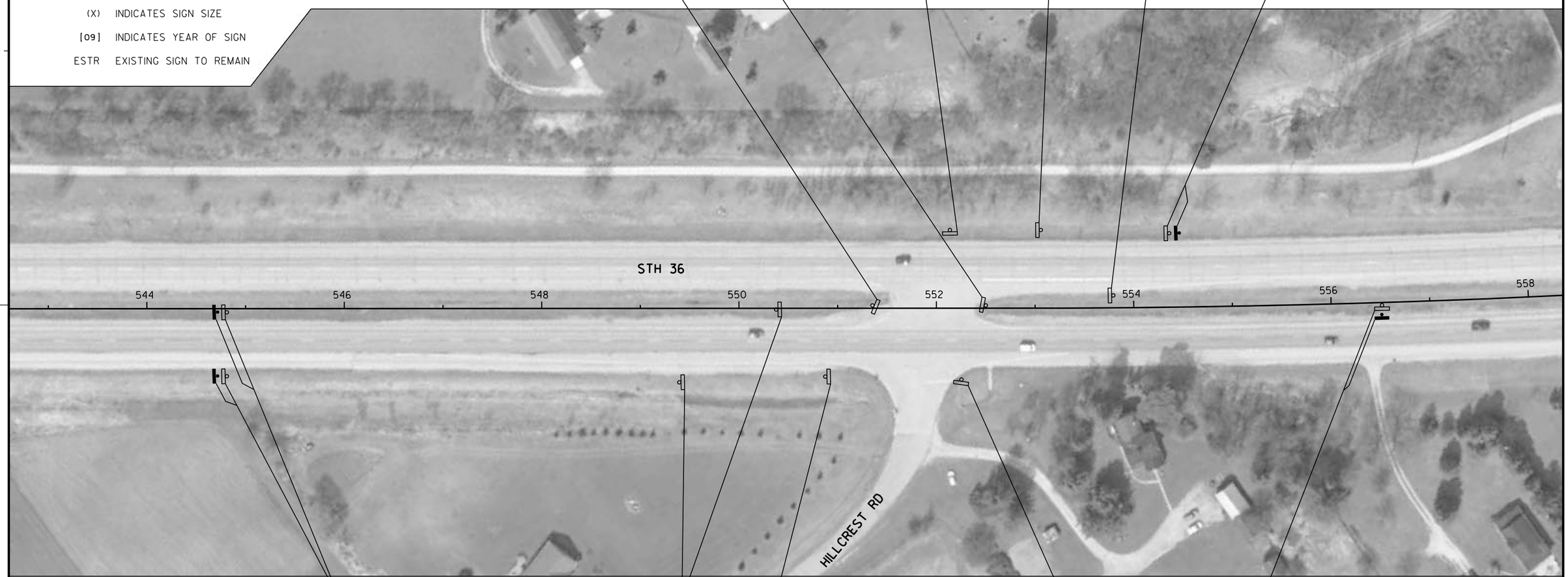

2

SHEET 17 OF 26

PROJECT NO:2240-00-67	HWY:STH 36	COUNTY:RACINE	PERMANENT SIGNING	SHEET 60	E

2

2

LEGEND

- EXISTING SIGN MOUNTED ON POST(S)
- EXISTING SIGN MOUNTED ON BRIDGE OR SIGN BRIDGE
- PROPOSED SIGN MOUNTED ON POST(S)
- PROPOSED SIGN MOUNTED ON BRIDGE OR SIGN BRIDGE
- EXISTING LIGHT OR SIGNAL POLE
- (XXX) DENOTES SIGN NUMBER
- (X) INDICATES SIGN SIZE
- [09] INDICATES YEAR OF SIGN
- ESTR EXISTING SIGN TO REMAIN

SHEET 18 OF 26

PROJECT NO:2240-00-67	HWY:STH 36	COUNTY:RACINE	PERMANENT SIGNING	SHEET 61	E

LEGEND

- EXISTING SIGN MOUNTED ON POST(S)
- EXISTING SIGN MOUNTED ON BRIDGE OR SIGN BRIDGE
- PROPOSED SIGN MOUNTED ON POST(S)
- PROPOSED SIGN MOUNTED ON BRIDGE OR SIGN BRIDGE
- EXISTING LIGHT OR SIGNAL POLE
- (XXX) DENOTES SIGN NUMBER
- (X) INDICATES SIGN SIZE
- [09] INDICATES YEAR OF SIGN
- ESTR EXISTING SIGN TO REMAIN

SHEET 19 OF 26

PROJECT NO:2240-00-67	HWY:STH 36	COUNTY:RACINE	PERMANENT SIGNING	SHEET 62	E

2

LEGEND

- EXISTING SIGN MOUNTED ON POST(S)
- EXISTING SIGN MOUNTED ON BRIDGE OR SIGN BRIDGE
- PROPOSED SIGN MOUNTED ON POST(S)
- PROPOSED SIGN MOUNTED ON BRIDGE OR SIGN BRIDGE
- EXISTING LIGHT OR SIGNAL POLE
- (XXX) DENOTES SIGN NUMBER
- (X) INDICATES SIGN SIZE
- [09] INDICATES YEAR OF SIGN
- ESTR EXISTING SIGN TO REMAIN

SHEET 20 OF 26

PROJECT NO:2240-00-67	HWY:STH 36	COUNTY:RACINE	PERMANENT SIGNING	SHEET 63	E

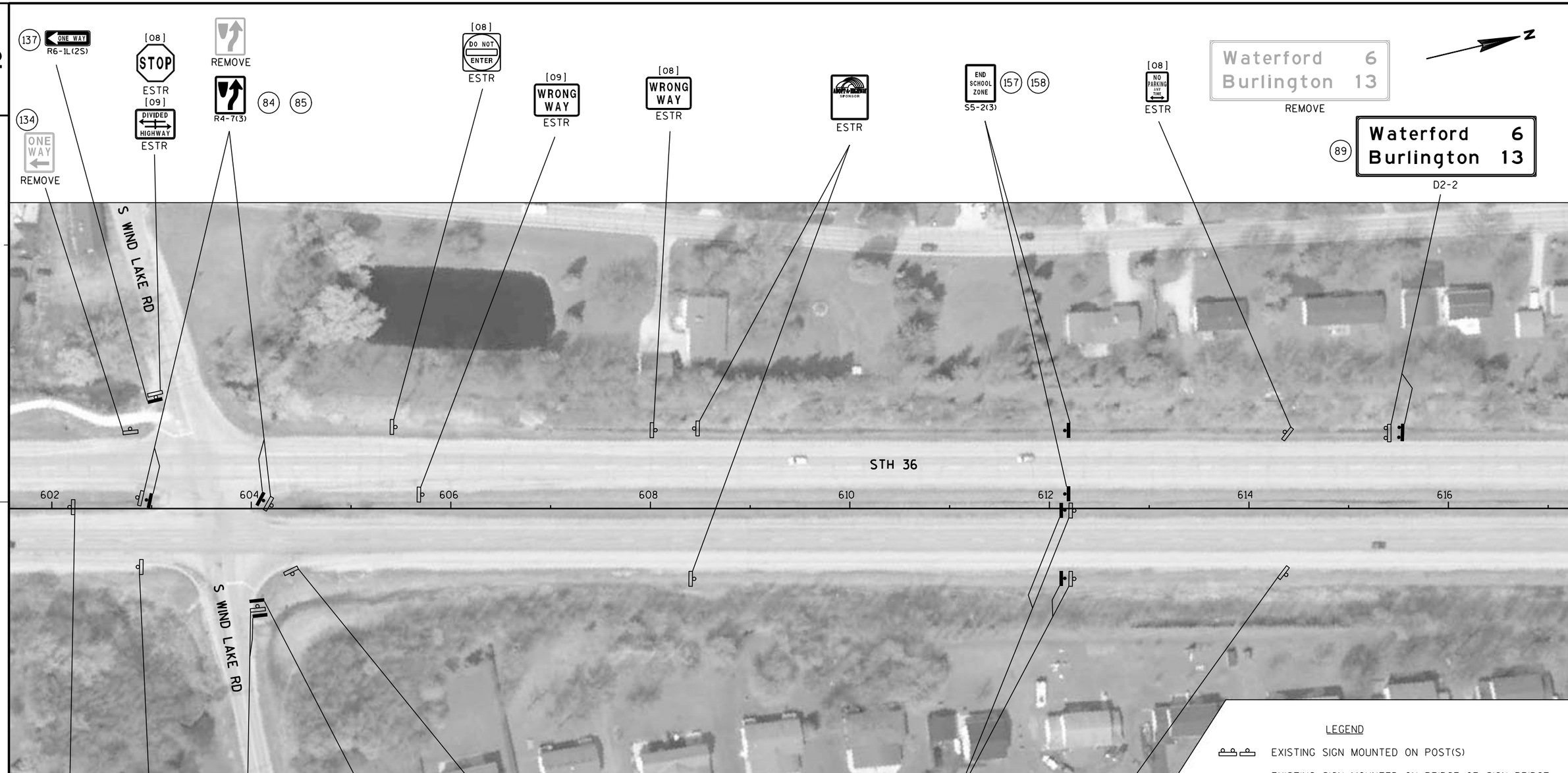

PROJECT NO:2240-00-67	HWY:STH 36	COUNTY:RACINE	PERMANENT SIGNING	SHEET 64	E

LEGEND

- EXISTING SIGN MOUNTED ON POST(S)
- EXISTING SIGN MOUNTED ON BRIDGE OR SIGN BRIDGE
- PROPOSED SIGN MOUNTED ON POST(S)
- PROPOSED SIGN MOUNTED ON BRIDGE OR SIGN BRIDGE
- EXISTING LIGHT OR SIGNAL POLE
- (XXX) DENOTES SIGN NUMBER
- (X) INDICATES SIGN SIZE
- [09] INDICATES YEAR OF SIGN
- ESTR EXISTING SIGN TO REMAIN

SHEET 22 OF 26

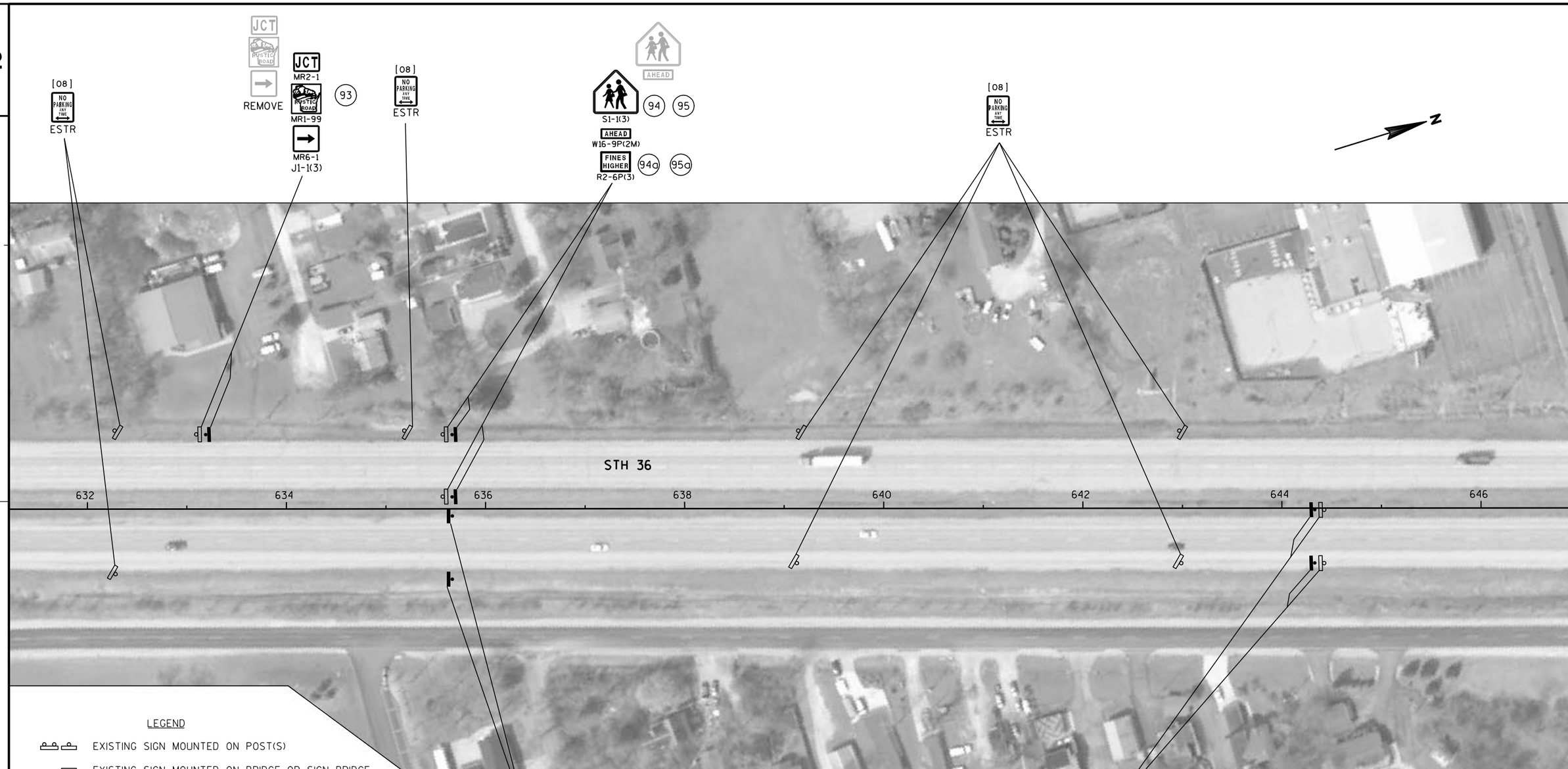

END SCHOOL ZONE
S5-2(3)
159
160

JCT
M2-1
COUNTY Y
M1-5A
J1-1(3)
96
97

JCT
COUNTY Y
REMOVE

LEGEND

- EXISTING SIGN MOUNTED ON POST(S)
- EXISTING SIGN MOUNTED ON BRIDGE OR SIGN BRIDGE
- PROPOSED SIGN MOUNTED ON POST(S)
- PROPOSED SIGN MOUNTED ON BRIDGE OR SIGN BRIDGE
- EXISTING LIGHT OR SIGNAL POLE
- (XXX) DENOTES SIGN NUMBER
- (X) INDICATES SIGN SIZE
- [09] INDICATES YEAR OF SIGN
- ESTR EXISTING SIGN TO REMAIN

SHEET 23 OF 26

PROJECT NO:2240-00-67	HWY:STH 36	COUNTY:RACINE	PERMANENT SIGNING	SHEET 66	E

LEGEND

- EXISTING SIGN MOUNTED ON POST(S)
- EXISTING SIGN MOUNTED ON BRIDGE OR SIGN BRIDGE
- PROPOSED SIGN MOUNTED ON POST(S)
- PROPOSED SIGN MOUNTED ON BRIDGE OR SIGN BRIDGE
- EXISTING LIGHT OR SIGNAL POLE
- (XXX) DENOTES SIGN NUMBER
- (X) INDICATES SIGN SIZE
- [09] INDICATES YEAR OF SIGN
- ESTR EXISTING SIGN TO REMAIN

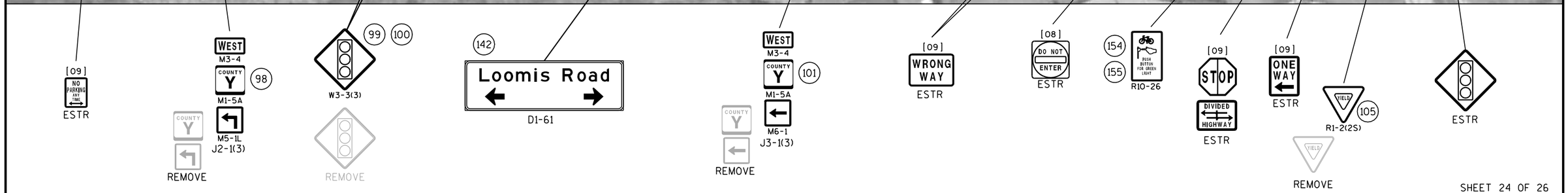

SHEET 24 OF 26

PROJECT NO:2240-00-67	HWY:STH 36	COUNTY:RACINE	PERMANENT SIGNING	SHEET 67	E

2

LEGEND

- EXISTING SIGN MOUNTED ON POST(S)
- EXISTING SIGN MOUNTED ON BRIDGE OR SIGN BRIDGE
- PROPOSED SIGN MOUNTED ON POST(S)
- PROPOSED SIGN MOUNTED ON BRIDGE OR SIGN BRIDGE
- EXISTING LIGHT OR SIGNAL POLE
- (XXX) DENOTES SIGN NUMBER
- (X) INDICATES SIGN SIZE
- [09] INDICATES YEAR OF SIGN
- ESTR EXISTING SIGN TO REMAIN

SHEET 24a OF 26

PROJECT NO:2240-00-67	HWY:STH 36	COUNTY:RACINE	PERMANENT SIGNING	SHEET 68	E

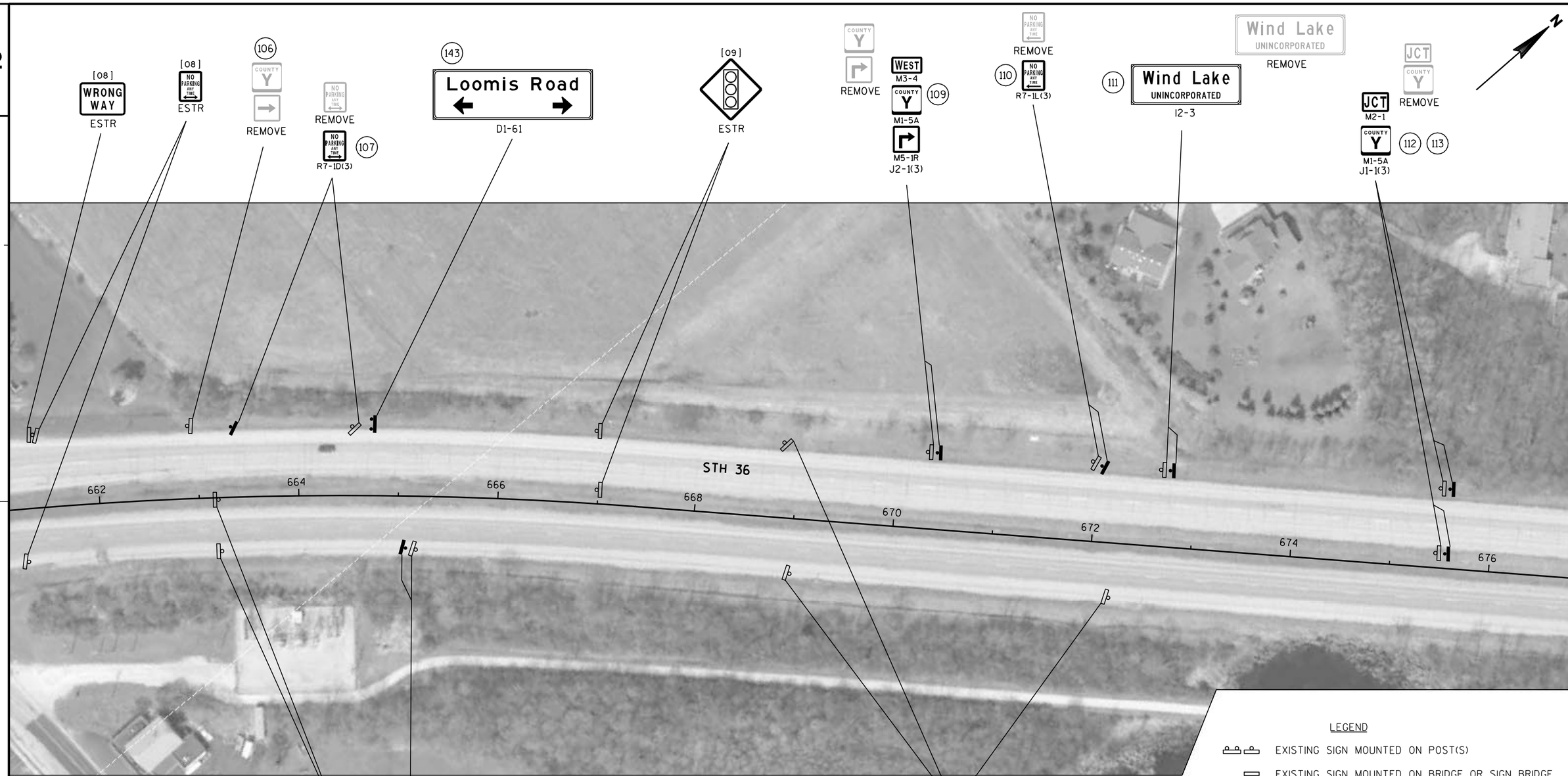

LEGEND

- EXISTING SIGN MOUNTED ON POST(S)
- EXISTING SIGN MOUNTED ON BRIDGE OR SIGN BRIDGE
- PROPOSED SIGN MOUNTED ON POST(S)
- PROPOSED SIGN MOUNTED ON BRIDGE OR SIGN BRIDGE
- EXISTING LIGHT OR SIGNAL POLE
- (XXX) DENOTES SIGN NUMBER
- (X) INDICATES SIGN SIZE
- [09] INDICATES YEAR OF SIGN
- ESTR EXISTING SIGN TO REMAIN

SHEET 25 OF 26

PROJECT NO:2240-00-67	HWY:STH 36	COUNTY:RACINE	PERMANENT SIGNING	SHEET 69	E

2

2

STATION 676+00 TO 722+00
ALL SIGNS ARE
EXISTING SIGNS TO REMAIN

LEGEND

- EXISTING SIGN MOUNTED ON POST(S)
- EXISTING SIGN MOUNTED ON BRIDGE OR SIGN BRIDGE
- PROPOSED SIGN MOUNTED ON POST(S)
- PROPOSED SIGN MOUNTED ON BRIDGE OR SIGN BRIDGE
- EXISTING LIGHT OR SIGNAL POLE
- (XXX) DENOTES SIGN NUMBER
- (X) INDICATES SIGN SIZE
- [09] INDICATES YEAR OF SIGN
- ESTR EXISTING SIGN TO REMAIN

SHEET 26 OF 26

PROJECT NO:2240-00-67	HWY:STH 36	COUNTY:RACINE	PERMANENT SIGNING	SHEET 70	E

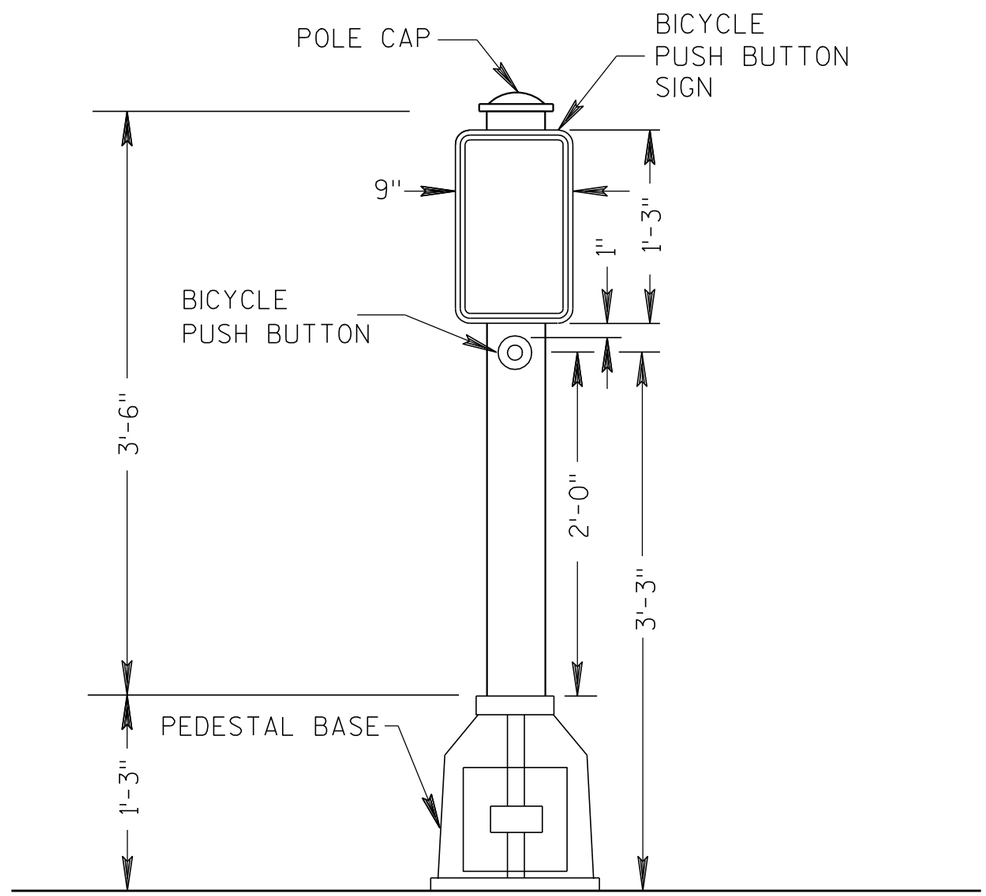

BICYCLE PUSH BUTTON TYPICAL MOUNTING

GENERAL NOTES

DETAILS OF CONSTRUCTION, MATERIALS AND WORKMANSHIP NOT SHOWN ON THIS DRAWING SHALL CONFORM TO THE PERTINENT REQUIREMENTS OF THE CONTRACT.

LOCATIONS SHALL BE AS SHOWN ON THE PLANS AND MISCELLANIOUS QUANTITIES

ALL PEDESTAL BASES SHALL BE MOUNTED ON CONCRETE BASE - TYPE 1.

LENGTH OF TRAFFIC STANDARD SHALL BE AS SHOWN.

MOUNTINGS AND BRACKETS SHALL BE AS SHOWN ON THE PLANS OR DESCRIBED IN THE SPECIAL PROVISIONS (BY THE DISTRICT TRAFFIC ENGINEER).

BICYCLE PUSH BUTTON SIGN SHALL BE AS DESIGNATED IN THE PLANS.

FURNISH AND INSTALL VENTILATED, CAST, METALLIC (ALUMINUM ALLOY) CAPS. FASTEN CAPS WITH ONE (1) 1/4" X 3/4" - 20 TPI STAINLESS STEEL, HEX HEAD BOLT.

2

LEGEND

- SERVICE POLE
- CONTROL CABINET
- NONMETALLIC CONDUIT 2", UNLESS OTHERWISE NOTED
- LOOP DETECTOR CONDUIT 1" NONMETALLIC
- OHE — CABLE-OVERHEAD
- SIGNAL HEAD, TRAFFIC SIGNAL STANDARD, PEDESTAL BASE
- (XX) SIGNAL HEAD, TRAFFIC SIGNAL POLE, TRANSFORMER BASE
- PUSH BUTTON
- LUMINAIRE, TRAFFIC POLE, TRANSFORMER BASE
- LOOP DETECTOR CONDUIT 1" NONMETALLIC
- LOOP DETECTOR IN 1" NONMETALLIC CONDUIT
- PULL BOX, 24" X 36"
- SIGNAL HEAD NUMBER
- R RED CIRCULAR INDICATOR
- Y YELLOW CIRCULAR INDICATOR
- G GREEN CIRCULAR INDICATOR
- S STOP SIGN

NOTE: ALL LENSES ARE 12-INCH
GRAYSHADE REPRESENTS EXISTING

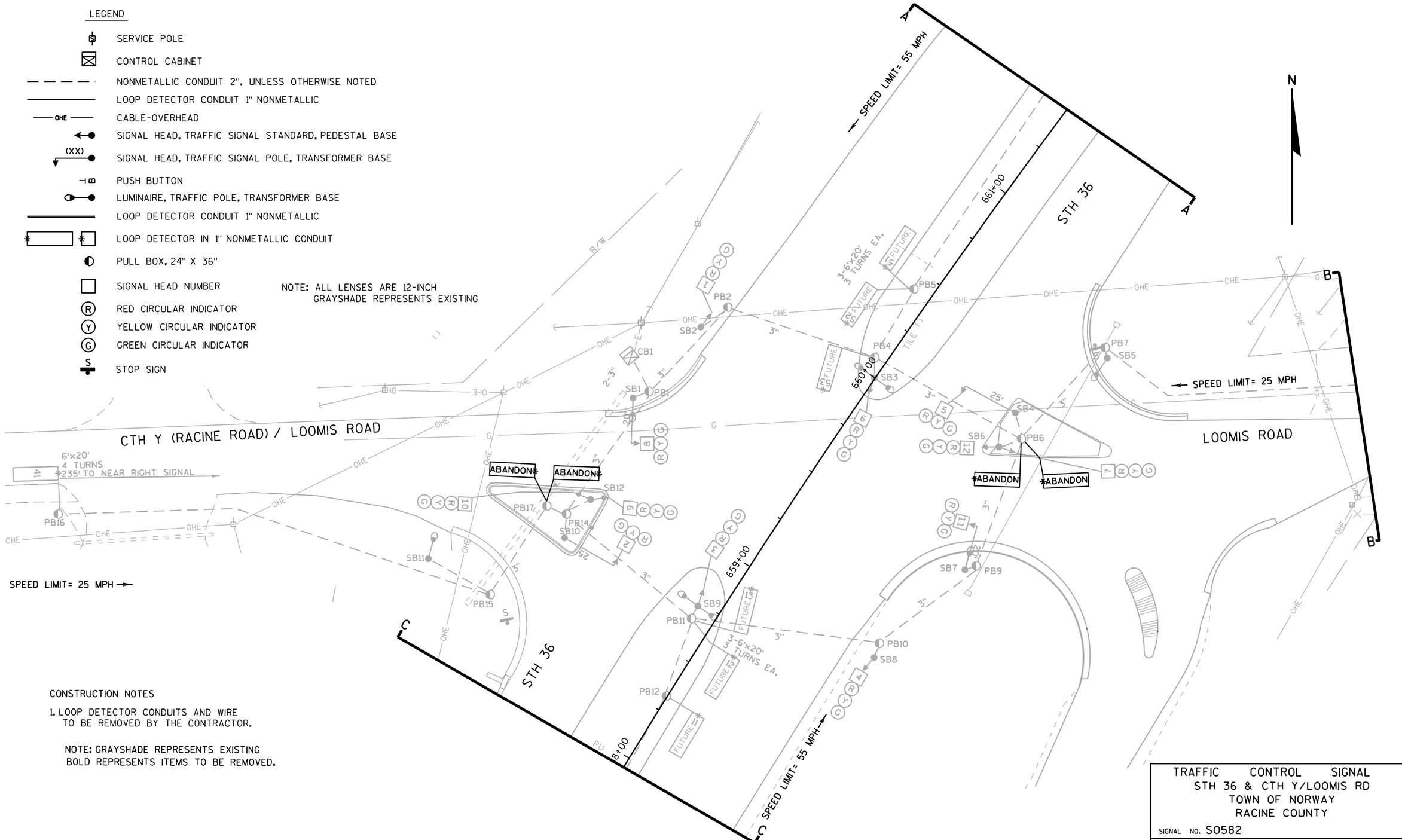

CONSTRUCTION NOTES

1. LOOP DETECTOR CONDUITS AND WIRE TO BE REMOVED BY THE CONTRACTOR.

NOTE: GRAYSHADE REPRESENTS EXISTING
BOLD REPRESENTS ITEMS TO BE REMOVED.

TRAFFIC CONTROL SIGNAL
STH 36 & CTH Y/LOOMIS RD
TOWN OF NORWAY
RACINE COUNTY

SIGNAL NO. S0582

REGION CONTACT: B. BARNES
DESIGNED BY:
REVISED BY: M. BORCK

PAGE 1 OF 2

PROJECT NO:2240-00-67	HWY:STH 36	COUNTY:RACINE	TRAFFIC SIGNAL REMOVAL PLAN	SHEET 72	E

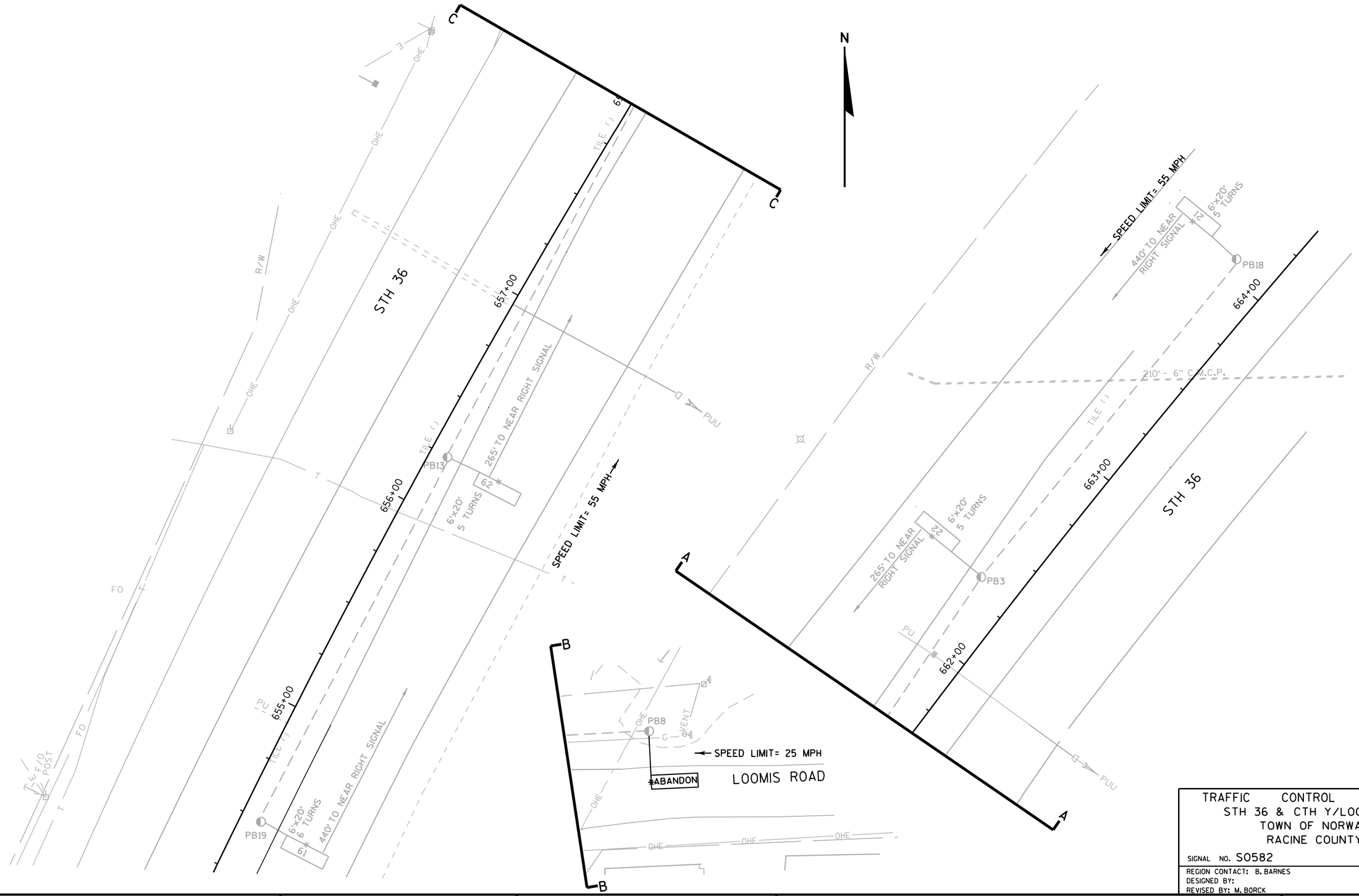

TRAFFIC CONTROL SIGNAL
STH 36 & CTH Y/LOOMIS RD
TOWN OF NORWAY
RACINE COUNTY

SIGNAL NO. S0582

REGION CONTACT: B. BARNES
DESIGNED BY:
REVISED BY: M. BORCK

PAGE 2 OF 2

PROJECT NO:2240-00-67	HWY:STH 36	COUNTY:RACINE	TRAFFIC SIGNAL REMOVAL PLAN	SHEET 73	E

2

LEGEND

- SERVICE POLE
- CONTROL CABINET
- NONMETALLIC CONDUIT 2", UNLESS OTHERWISE NOTED
- LOOP DETECTOR CONDUIT 1" NONMETALLIC
- OHE — CABLE-OVERHEAD
- SIGNAL HEAD, TRAFFIC SIGNAL STANDARD, PEDESTAL BASE
- (XX) SIGNAL HEAD, TRAFFIC SIGNAL POLE, TRANSFORMER BASE
- PUSH BUTTON
- LUMINAIRE, TRAFFIC POLE, TRANSFORMER BASE
- LOOP DETECTOR CONDUIT 1" NONMETALLIC
- LOOP DETECTOR IN 1" NONMETALLIC CONDUIT
- PULL BOX, 24" X 36"
- SIGNAL HEAD NUMBER
- (R) RED CIRCULAR INDICATOR
- (Y) YELLOW CIRCULAR INDICATOR
- (G) GREEN CIRCULAR INDICATOR
- Y YIELD SIGN

NOTE: ALL LENSES ARE 12-INCH
GRAYSHADE REPRESENTS EXISTING

DETAIL "A"

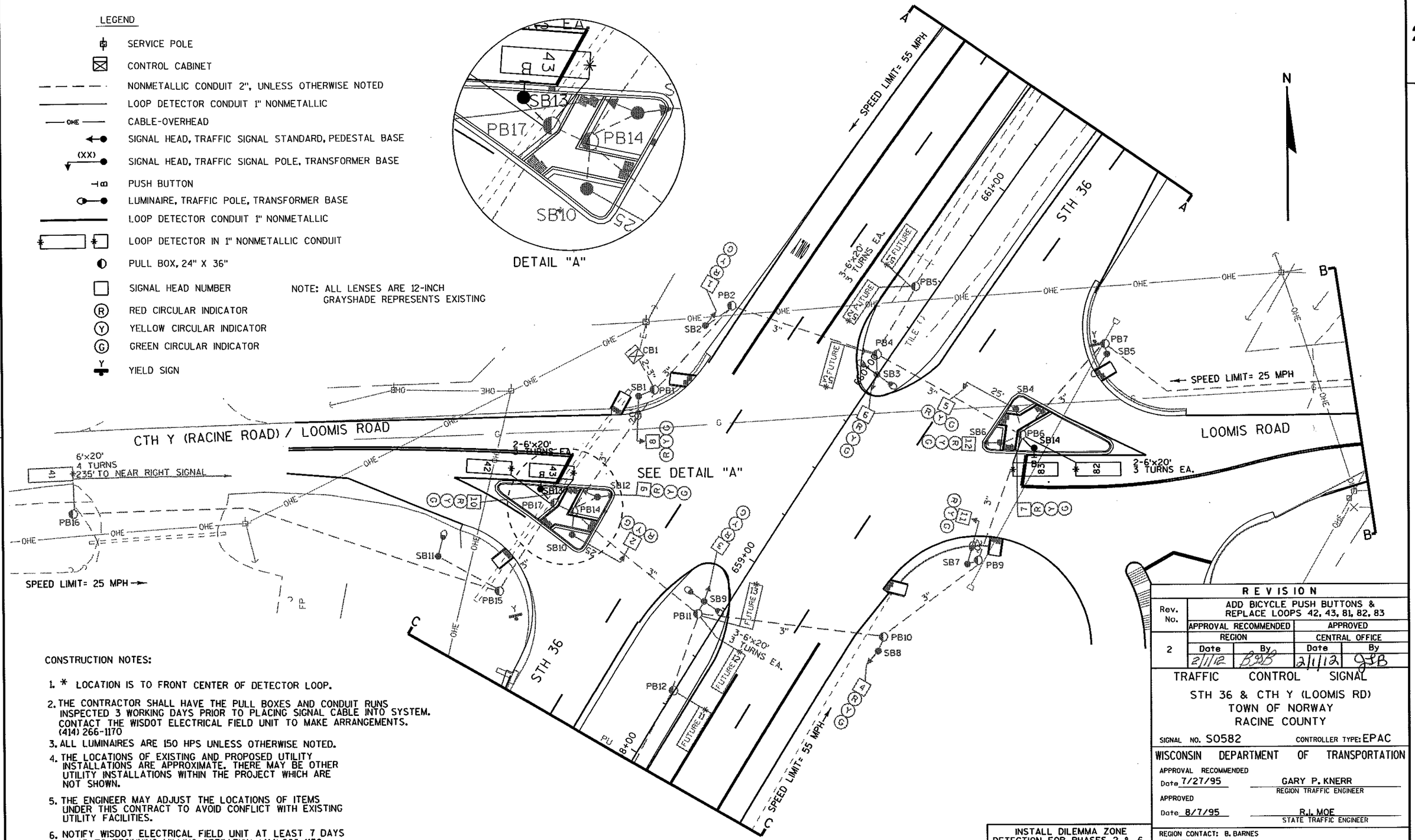

CONSTRUCTION NOTES:

1. * LOCATION IS TO FRONT CENTER OF DETECTOR LOOP.
2. THE CONTRACTOR SHALL HAVE THE PULL BOXES AND CONDUIT RUNS INSPECTED 3 WORKING DAYS PRIOR TO PLACING SIGNAL CABLE INTO SYSTEM. CONTACT THE WISDOT ELECTRICAL FIELD UNIT TO MAKE ARRANGEMENTS. (414) 266-1170
3. ALL LUMINAIRES ARE 150 HPS UNLESS OTHERWISE NOTED.
4. THE LOCATIONS OF EXISTING AND PROPOSED UTILITY INSTALLATIONS ARE APPROXIMATE. THERE MAY BE OTHER UTILITY INSTALLATIONS WITHIN THE PROJECT WHICH ARE NOT SHOWN.
5. THE ENGINEER MAY ADJUST THE LOCATIONS OF ITEMS UNDER THIS CONTRACT TO AVOID CONFLICT WITH EXISTING UTILITY FACILITIES.
6. NOTIFY WISDOT ELECTRICAL FIELD UNIT AT LEAST 7 DAYS PRIOR TO BEGINNING MILLING OPERATION. (414) 266-1170

INSTALL DILEMMA ZONE DETECTION FOR PHASES 2 & 6. 10/98

REVISION				
Rev. No.	ADD BICYCLE PUSH BUTTONS & REPLACE LOOPS 42, 43, 81, 82, 83			
	APPROVAL RECOMMENDED		APPROVED	
	REGION		CENTRAL OFFICE	
	Date	By	Date	By
2	2/1/12	BJB	2/1/12	JJB

TRAFFIC CONTROL SIGNAL

STH 36 & CTH Y (LOOMIS RD)
TOWN OF NORWAY
RACINE COUNTY

SIGNAL NO. S0582 CONTROLLER TYPE: EPAC

WISCONSIN DEPARTMENT OF TRANSPORTATION

APPROVAL RECOMMENDED
Date 7/27/95 GARY P. KNERR
REGION TRAFFIC ENGINEER

APPROVED
Date 8/7/95 R.L. MOE
STATE TRAFFIC ENGINEER

REGION CONTACT: B. BARNES
DESIGNED BY:
REVISED BY: M. BORCK

PAGE 1 OF 3

2-1-12

PROJECT NO: 2240-00-67	HWY: STH 36	COUNTY: RACINE	TRAFFIC SIGNAL PLAN	SHEET 74	E

FILE NAME : J:\projects\d2_22400036\67\Signals\S0582_B.DGN PLOT DATE : 31-JAN-2012 13:21 PLOT BY : MSCMWB PLOT NAME : PLOT SCALE : 40:1 WISDOT/CADDS SHEET 42

2

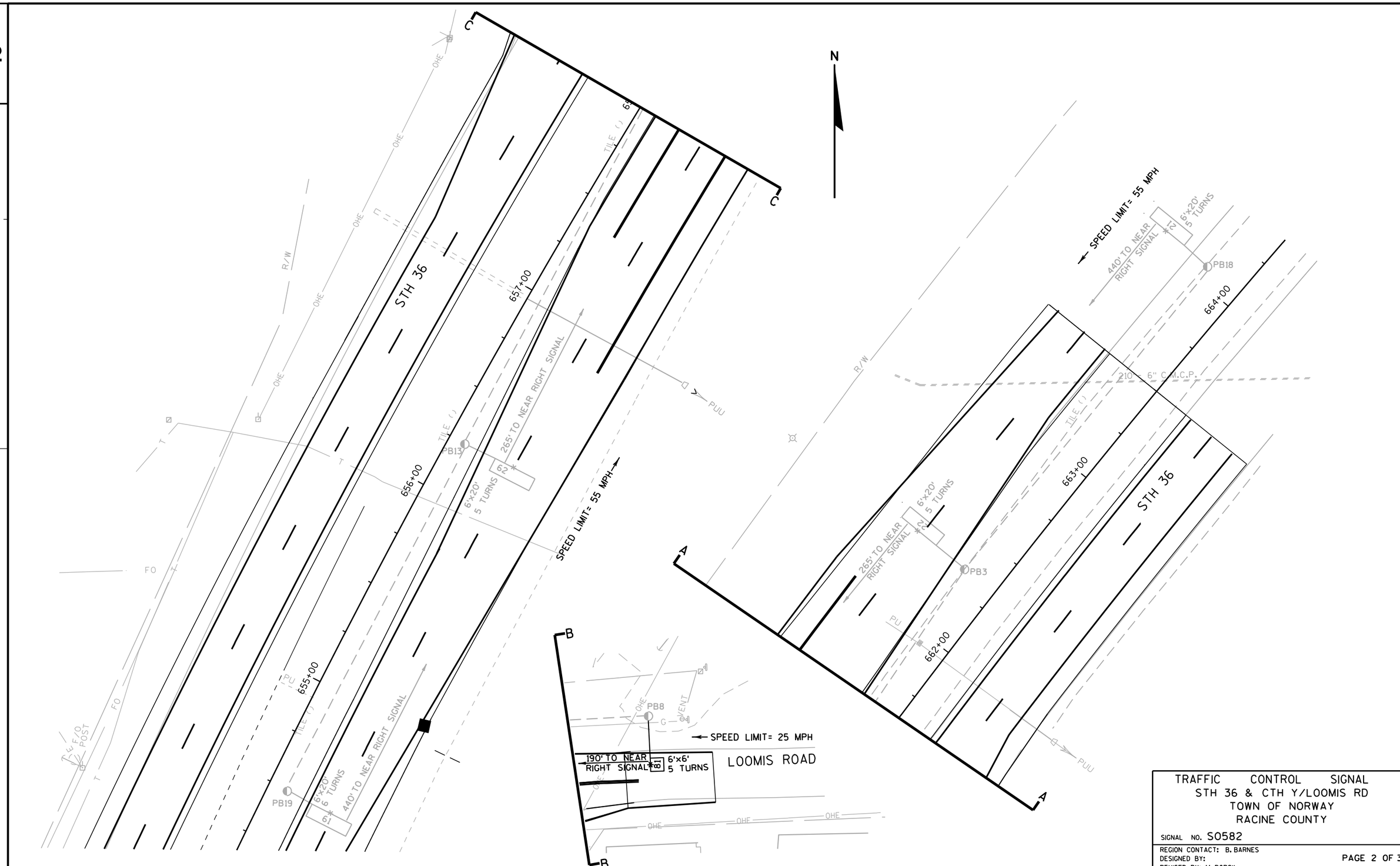

TRAFFIC CONTROL SIGNAL
STH 36 & CTH Y/LOOMIS RD
TOWN OF NORWAY
RACINE COUNTY

SIGNAL NO. S0582

REGION CONTACT: B. BARNES
DESIGNED BY:
REVISED BY: M. BORCK

PAGE 2 OF 3

PROJECT NO:2240-00-67	HWY:STH 36	COUNTY:RACINE	TRAFFIC SIGNAL PLAN	SHEET 75	E

FILE NAME : j:\projects\d2_22400036\67\Signals\S0582_B.DGN PLOT DATE : 01-FEB-2012 07:44 PLOT BY : MSCMWB PLOT NAME : PLOT SCALE : 40:1

SEQUENCE OF OPERATION

NOT USED ⇓ | NOT USED ⇒

RING 1	HEAD NUMBERS	01 R/W	01 CLEAR TO **	02 R/W	02 CLEAR TO **	03 R/W	03 CLEAR TO **	04 R/W	04 CLEAR TO **	FLASH
01										
02	1,2,3			G Y R				R R R		R
03										
04	10,11,12			R R R				G Y R		R
05										
06	4,5,6			R R R				R R R		R
07										
08	7,8,9			R R R				R R R		R
02P										
04P										
06P										
08P										

NOT USED ⇑ | NOT USED ⇐

RING 2	HEAD NUMBERS	05 R/W	05 CLEAR TO **	06 R/W	06 CLEAR TO **	07 R/W	07 CLEAR TO **	08 R/W	08 CLEAR TO **
01									
02	1,2,3			R R R				R R R	
03									
04	10,11,12			R R R				R R R	
05									
06	4,5,6			G Y R				R R R	
07									
08	7,8,9			R R R				G Y R	
02P									
04P									
06P									
08P									

N

BARRIER

** CLEARANCE TO A PHASE IN CONFLICT WITH THIS PHASE ON (SEE CHART 1)

* WHEN CALLED, TIMED STEADY WALK, THEN FLASHING DON'T WALK, THEN GOES TO STEADY DON'T WALK

CHART 1

PHASE ON	NONCONFLICTING PHASE ALLOWED TO TIME CONCURRENTLY	PHASES IN CONFLICT WITH PHASE ON
1		
2	6	4,8
3		
4	8	2,6
5		
6	2	4,8
7		
8	4	2,6

DETECTOR LOGIC

DETECTOR NUMBER	AMPLIFIER CHANNEL NUMBER	DETECTOR OPERATION: CALLS AND EXTENDS	CALLS ONLY	EXTENDS ONLY	PHASE CALLED	PHASE EXTENDED	DETECTOR DISCONNECT PHASE	CALLING DELAY	EXTENSION STRETCH	SIZE	NUMBER OF TURNS
11	1	FUTURE								6'X20'	3
12	2	FUTURE								6'X20'	3
13	2	FUTURE								6'X20'	3
21	3	X			2	2				6'X20'	5
22	3	X			2	2				6'X20'	5
41	4			X		4			X	6'X20'	4
42	5	X			4	4				6'X20'	3
43	5	X			4	4				6'X20'	3
51	6	FUTURE								6'X20'	3
52	7	FUTURE								6'X20'	3
53	7	FUTURE								6'X20'	3
61	8	X			6	6				6'X20'	6
62	8	X			6	6				6'X20'	5
81	9			X		8			X	6'X6'	5
82	10	X			8	8				6'X20'	3
83	10	X			8	8				6'X20'	3

CONTROLLER LOGIC

PHASE NUMBER	PHASE LOCKING	DUAL ENTRY W / Ø	PHASE RECALL	PHASE ACTIVE
1				
2	X	6	MIN.	X
3				
4		8		X
5				
6	X	2	MIN.	X
7				
8		4		X

OVERLAPS

O.L. "A" =
O.L. "B" =
O.L. "C" =
O.L. "D" =

TYPE OF INTERCONNECT COMMUNICATION	
NONE	X
TBC	
CLOSED LOOP TWISTED PAIR*	
CLOSED LOOP FIBER OPTIC*	
FIBER OPTIC	
RADIO	
*LOCATION OF MASTER CONTROLLER NO: S-	
SIGNAL SYSTEM #: SS- -	

TYPE OF PRE-EMPT	
NONE	X
RAILROAD	
EMERGENCY VEHICLE	
3M	
TOMAR	
HARDWIRE	
OTHER	
LIFT BRIDGE	
QUEUE DETECTOR	

TYPE OF LIGHTING	
BY OTHER AGENCY	
IN TRAFFIC SIGNAL CABINET	X
IN SEPARATE DOT LIGHTING CABINET	

GENERAL NOTES:

1. ANY ACTUATED PHASE FOR WHICH THERE IS NO CALL SHALL BE SKIPPED.
2. WHEN ONE PHASE IS ON ALONE, ANY NONCONFLICTING PHASE MAY START TIMING CONCURRENTLY WITHOUT A CLEARANCE INTERVAL. (SEE CHART 1 AT LEFT.)
3. BUTTONS ON SB13 AND SB14 USED TO CALL PHASE 4 AND PHASE 8 GREEN FOR BICYCLISTS VIA PROGRAMMED PED TIMING.

STH 36 & CTH Y/LOOMIS RD
TOWN OF NORWAY
RACINE COUNTY

SIGNAL NO. S0582
CONTROLLER TYPE: EPAC
DATE 1/12
PAGE NO. 3 OF 3

PROJECT ID:	2240-00-77
INTERSECTION:	STH 36 & CTH Y (RACINE)

Signal Wire Color Coding	BLK - black	RED - red	GRN - green
	WHT - white	BLU - blue	ORG - orange

CB1 TO	AWG14 # OF CONDUCTORS	HEAD NO.	PHASE	SIGNAL INDICATION WIRE COLOR									PED BUTTON	OTHER
				RED	YELLOW	GREEN	<RED>	<YELLOW>	<GREEN>	<FLASHING> <YELLOW>	D/WALK	WALK		
SB13	7	BUTTON	4										BLK	
SB14	7	BUTTON	8										BLK	

Equipment grounding conductor 10 AWG Green XLP	
From	TO
SB10	SB13
SB13	SB12
SB4	SB14
SB14	SB6

*Use the white conductor in the cable assembly as the grounded conductor for all traffic signal indications
*Ensure the grounded conductor in the feeder cable and the pole cables are both 18" longer than the ungrounded conductors.
*At the signal bases, connect one terminal from the pedestrian push buttons to the color indicated in the chart. Connect the other terminal to the grounded conductor.

SHEET 1 OF 1

LEGEND

- CONTROL CABINET
- NONMETALLIC CONDUIT 2", UNLESS OTHERWISE NOTED
- LOOP DETECTOR CONDUIT 1" NONMETALLIC
- SIGNAL HEAD, TRAFFIC SIGNAL STANDARD, PEDESTAL BASE
- (XX) SIGNAL HEAD, TRAFFIC SIGNAL POLE, TRANSFORMER BASE
- LUMINAIRE, TRAFFIC POLE, TRANSFORMER BASE
- LOOP DETECTOR IN 1" NONMETALLIC CONDUIT
- PULL BOX, 24" X 36"

CONSTRUCTION NOTES:

1. * LOCATION IS TO FRONT CENTER OF DETECTOR LOOP.
2. THE CONTRACTOR SHALL HAVE THE PULL BOXES AND CONDUIT RUNS INSPECTED 5 WORKING DAYS PRIOR TO PLACING SIGNAL CABLE INTO SYSTEM. CONTACT THE WISDOT ELECTRICAL FIELD UNIT TO MAKE ARRANGEMENTS. (414) 266-1170
3. ALL LUMINAIRES ARE 150 HPS UNLESS OTHERWISE NOTED.
4. THE LOCATIONS OF EXISTING AND PROPOSED UTILITY INSTALLATIONS ARE APPROXIMATE. THERE MAY BE OTHER UTILITY INSTALLATIONS WITHIN THE PROJECT WHICH ARE NOT SHOWN.
5. THE ENGINEER MAY ADJUST THE LOCATIONS OF ITEMS UNDER THIS CONTRACT TO AVOID CONFLICT WITH EXISTING UTILITY FACILITIES.

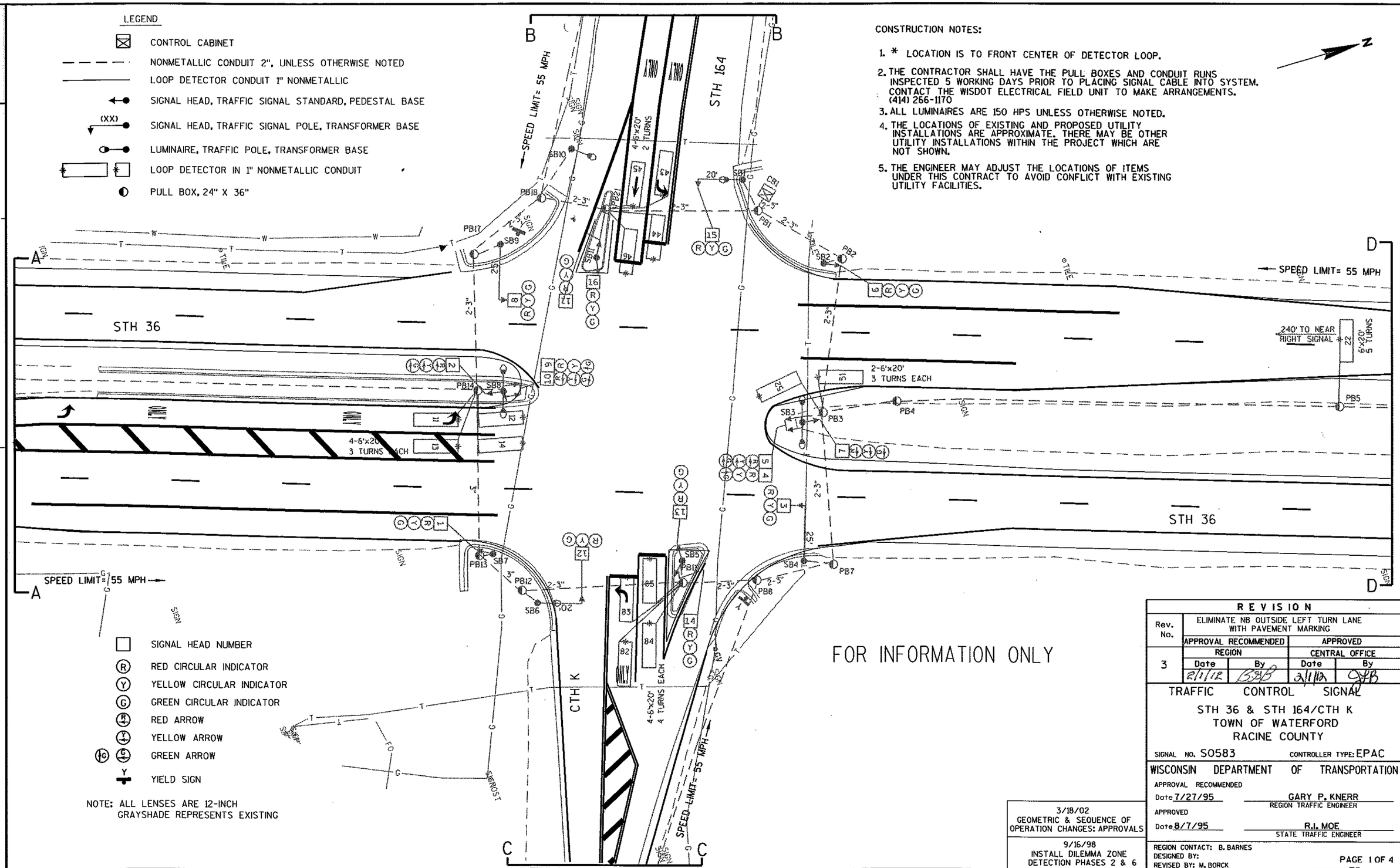

- SIGNAL HEAD NUMBER
- (R) RED CIRCULAR INDICATOR
- (Y) YELLOW CIRCULAR INDICATOR
- (G) GREEN CIRCULAR INDICATOR
- RED ARROW
- YELLOW ARROW
- GREEN ARROW
- Y YIELD SIGN

NOTE: ALL LENSES ARE 12-INCH
GRAYSHADE REPRESENTS EXISTING

REVISION				
Rev. No.	ELIMINATE NB OUTSIDE LEFT TURN LANE WITH PAVEMENT MARKING			
	APPROVAL RECOMMENDED		APPROVED	
	REGION		CENTRAL OFFICE	
3	Date	By	Date	By
	2/1/12	BJB	2/1/12	GJB

TRAFFIC CONTROL SIGNAL

STH 36 & STH 164/CTH K
TOWN OF WATERFORD
RACINE COUNTY

SIGNAL NO. S0583 CONTROLLER TYPE: EPAC

WISCONSIN DEPARTMENT OF TRANSPORTATION

APPROVAL RECOMMENDED
Date 7/27/95 GARY P. KNERR, REGION TRAFFIC ENGINEER

APPROVED
Date 8/7/95 R.I. MOE, STATE TRAFFIC ENGINEER

3/18/02 GEOMETRIC & SEQUENCE OF OPERATION CHANGES: APPROVALS

9/16/98 INSTALL DILEMMA ZONE DETECTION PHASES 2 & 6

REGION CONTACT: B. BARNES
DESIGNED BY:
REVISED BY: M. BORCK

PAGE 1 OF 4

2-1-12

PROJECT NO: 2240-00-67	HWY: STH 36	COUNTY: RACINE	TRAFFIC SIGNAL PLAN	SHEET 78	E

FILE NAME : J:\projects\d2_22400036\67\Signals\S0583_D.dgn PLOT DATE : 01-FEB-2012 07:04 PLOT BY : MSCMWB PLOT NAME : PLOT SCALE : 40:1

WISDOT/CADDS SHEET 42

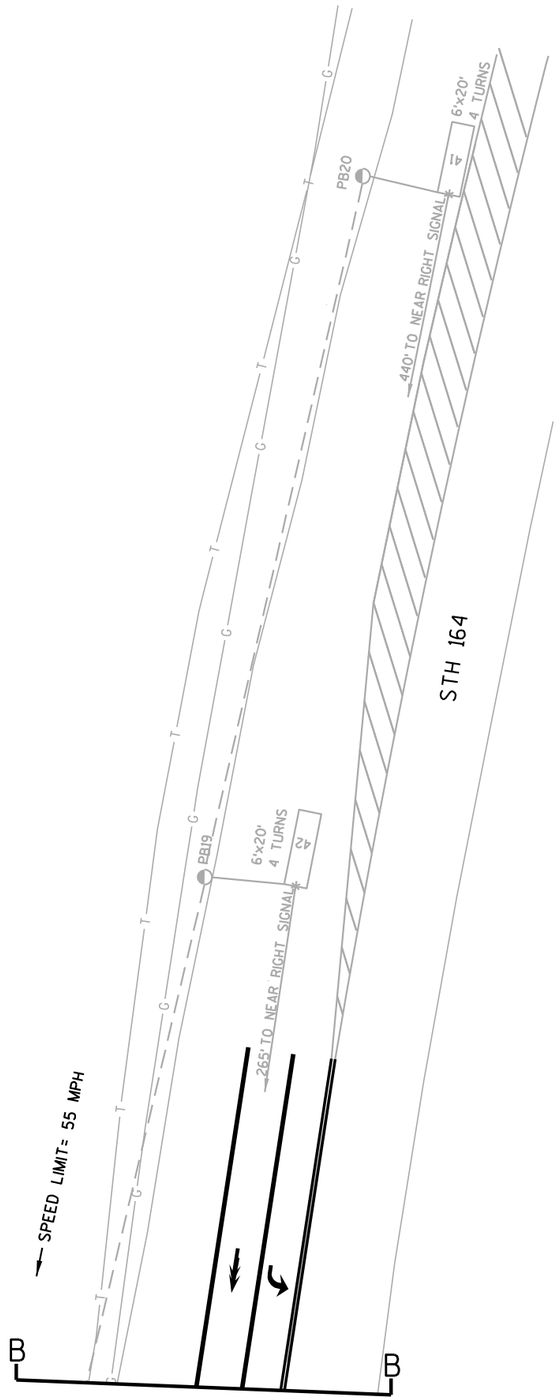

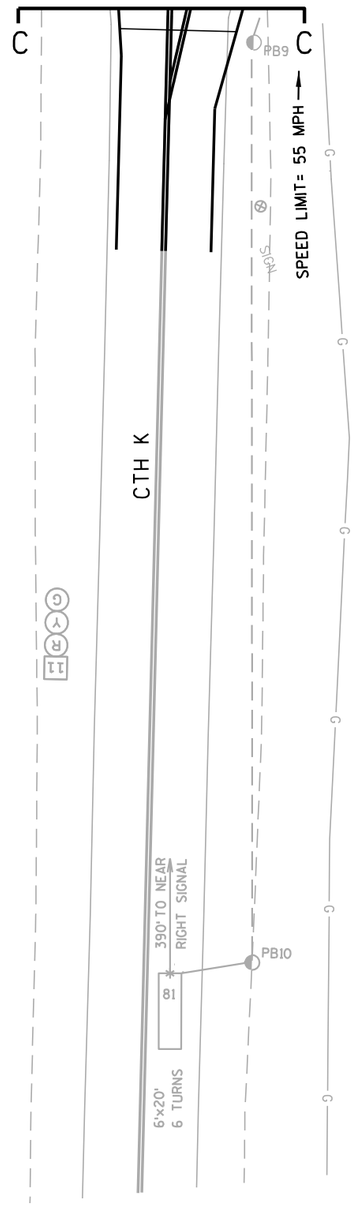

N

FOR INFORMATION ONLY

TRAFFIC CONTROL SIGNAL
STH 36 & STH 164/CTH K
TOWN OF WATERFORD
RACINE COUNTY

SIGNAL NO. S0583

REGION CONTACT: B. BARNES
DESIGNED BY:
REVISED BY: M. BORCK

PAGE 2 OF 4

PROJECT NO:2240-00-67	HWY:STH 36	COUNTY:RACINE	TRAFFIC SIGNAL PLAN	SHEET 79	E

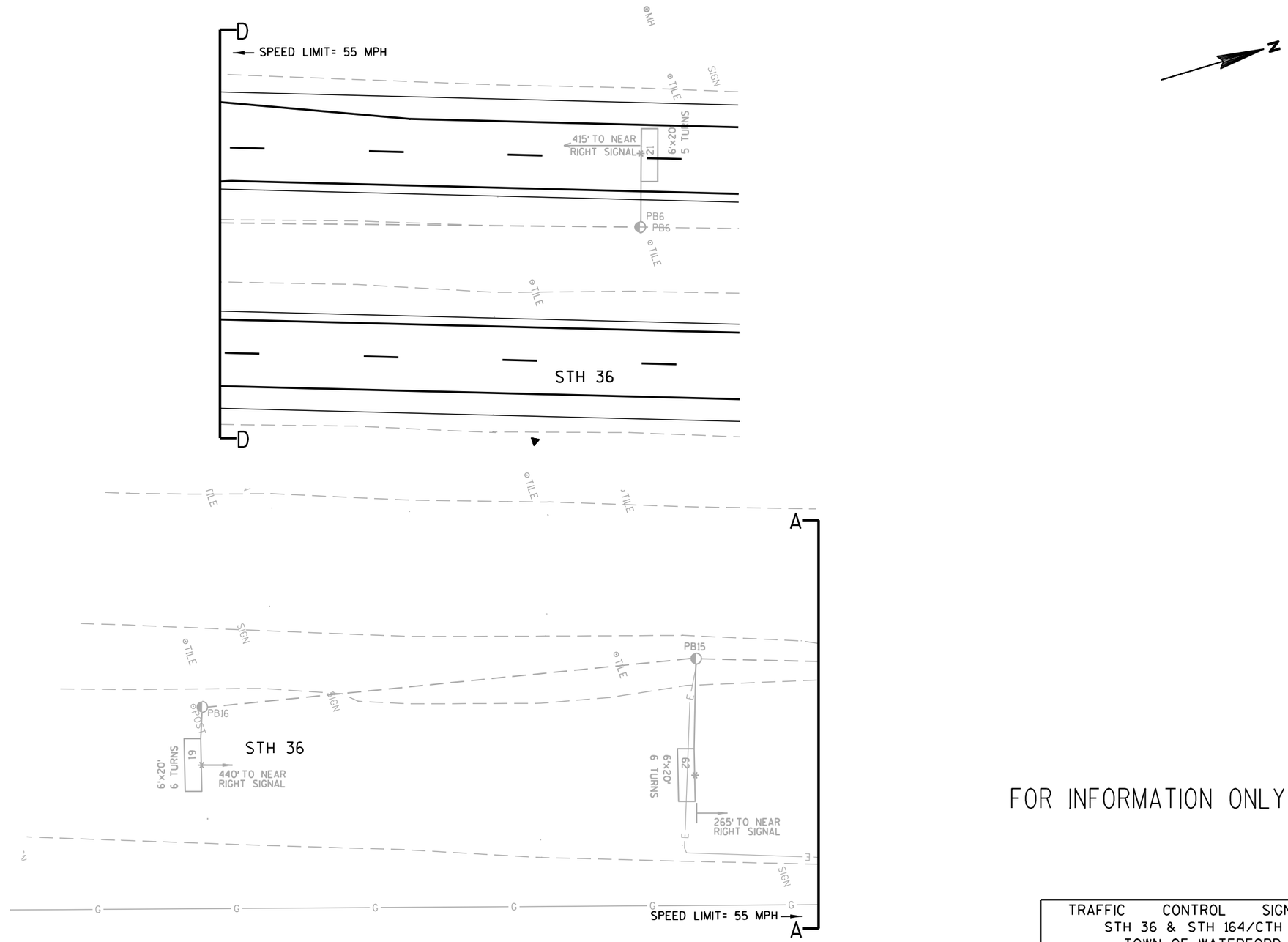

FOR INFORMATION ONLY

TRAFFIC CONTROL SIGNAL
STH 36 & STH 164/CTH K
TOWN OF WATERFORD
RACINE COUNTY

SIGNAL NO. S0583

REGION CONTACT: B. BARNES
DESIGNED BY:
REVISED BY: M. BORCK

PAGE 3 OF 4

PROJECT NO:2240-00-67	HWY:STH 36	COUNTY:RACINE	TRAFFIC SIGNAL PLAN	SHEET 80	E

2

SEQUENCE OF OPERATION

NOT USED

NOT USED

RING 1	HEAD NUMBERS	Ø1 R/W	Ø1 CLEAR TO **	Ø2 R/W	Ø2 CLEAR TO **	Ø3 R/W	Ø3 CLEAR TO **	Ø4 R/W	Ø4 CLEAR TO **	FLASH
Ø1	2,5	G	Y R	R	R R			R	R R	R
Ø2	6,8,9	R	R R	G, G	Y R			R	R R	R
Ø3										
Ø4	11,12,13	R	R R	R	R R			G	Y R	R
Ø5	7,10	R	R R	R	R R			R	R R	R
Ø6	1,3,4	R	R R	R	R R			R	R R	R
Ø7										
Ø8	14,15,16	R	R R	R	R R			R	R R	R
Ø2P										
Ø4P										
Ø6P										
Ø8P										

RING 2	HEAD NUMBERS	Ø5 R/W	Ø5 CLEAR TO **	Ø6 R/W	Ø6 CLEAR TO **	Ø7 R/W	Ø7 CLEAR TO **	Ø8 R/W	Ø8 CLEAR TO **
Ø1	2,5	R	R R	R	R R			R	R R
Ø2	6,8,9	R	R R	R	R R			R	R R
Ø3									
Ø4	11,12,13	R	R R	R	R R			R	R R
Ø5	7,10	G	Y R	R	R R			R	R R
Ø6	1,3,4	R	R R	G, G	Y R			R	R R
Ø7									
Ø8	14,15,16	R	R R	R	R R			G	Y R
Ø2P									
Ø4P									
Ø6P									
Ø8P									

BARRIER

** CLEARANCE TO A PHASE IN CONFLICT WITH THIS PHASE ON (SEE CHART 1)

CHART 1

PHASE ON	NONCONFLICTING PHASE ALLOWED TO TIME CONCURRENTLY	PHASES IN CONFLICT WITH PHASE ON
1	5 OR 6	2,4,8
2	5 OR 6	1,4,8
3		
4	8	1,2,5,6
5	1 OR 2	4,6,8
6	1 OR 2	4,5,8
7		
8	4	1,2,5,6

DETECTOR LOGIC

DETECTOR NUMBER	AMPLIFIER CHANNEL NUMBER	DETECTOR OPERATION: CALLS AND EXTENDS	CALLS ONLY	EXTENDS ONLY	PHASE CALLED	PHASE EXTENDED	DETECTOR DISCONNECT PHASE	CALLING DELAY	EXTENSION STRETCH	SIZE	NUMBER OF TURNS
11	1	X			1	1				6' X 20'	3
12	1	X			1	1				6' X 20'	3
13	2	X			1	1				6' X 20'	3
14	2	X			1	1				6' X 20'	3
21	3	X			2	2				6' X 20'	5
22	3	X			2	2				6' X 20'	5
41	4			X		4			X	6' X 20'	4
42	4			X		4			X	6' X 20'	4
43	5	X			4	4		X		6' X 20'	2
44	5	X			4	4		X		6' X 20'	2
45	6	X			4	4				6' X 20'	2
46	6	X			4	4				6' X 20'	2
51	7	X			5	5				6' X 20'	3
52	7	X			5	5				6' X 20'	3
61	8	X			6	6				6' X 20'	6
62	8	X			6	6				6' X 20'	6
81	9			X		8			X	6' X 20'	6
82	10	X			8	8		X		6' X 20'	4
83	10	X			8	8		X		6' X 20'	4
84	11	X			8	8				6' X 20'	4
85	11	X			8	8				6' X 20'	4

CONTROLLER LOGIC

PHASE NUMBER	PHASE LOCKING	DUAL ENTRY W / Ø	PHASE RECALL	PHASE ACTIVE
1		6		X
2	X	6	MIN.	X
3				
4		8		X
5		2		X
6	X	2	MIN.	X
7				
8		4		X

OVERLAPS

O.L. "A" =
O.L. "B" =
O.L. "C" =
O.L. "D" =

TYPE OF INTERCONNECT COMMUNICATION	
NONE	X
TBC	
CLOSED LOOP TWISTED PAIR*	
CLOSED LOOP FIBER OPTIC*	
FIBER OPTIC	
RADIO	
*LOCATION OF MASTER CONTROLLER NO: S-	
SIGNAL SYSTEM #: SS- -	

TYPE OF PRE-EMPT	
NONE	X
RAILROAD	
EMERGENCY VEHICLE	
3M	
TOMAR	
HARDWIRE	
OTHER	
LIFT BRIDGE	
QUEUE DETECTOR	

TYPE OF LIGHTING	
BY OTHER AGENCY	
IN TRAFFIC SIGNAL CABINET	X
IN SEPARATE DOT LIGHTING CABINET	

GENERAL NOTES:

1. ANY ACTUATED PHASE FOR WHICH THERE IS NO CALL SHALL BE SKIPPED.
2. WHEN ONE PHASE IS ON ALONE, ANY NONCONFLICTING PHASE MAY START TIMING CONCURRENTLY WITHOUT A CLEARANCE INTERVAL. (SEE CHART 1 AT LEFT.)

FOR INFORMATION ONLY

STH 36 & STH 164/CTH K
VILLAGE OF WATERFORD
RACINE COUNTY

SIGNAL NO. S0583
CONTROLLER TYPE: EPAC
DATE 1/12 PAGE NO. 4 OF 4

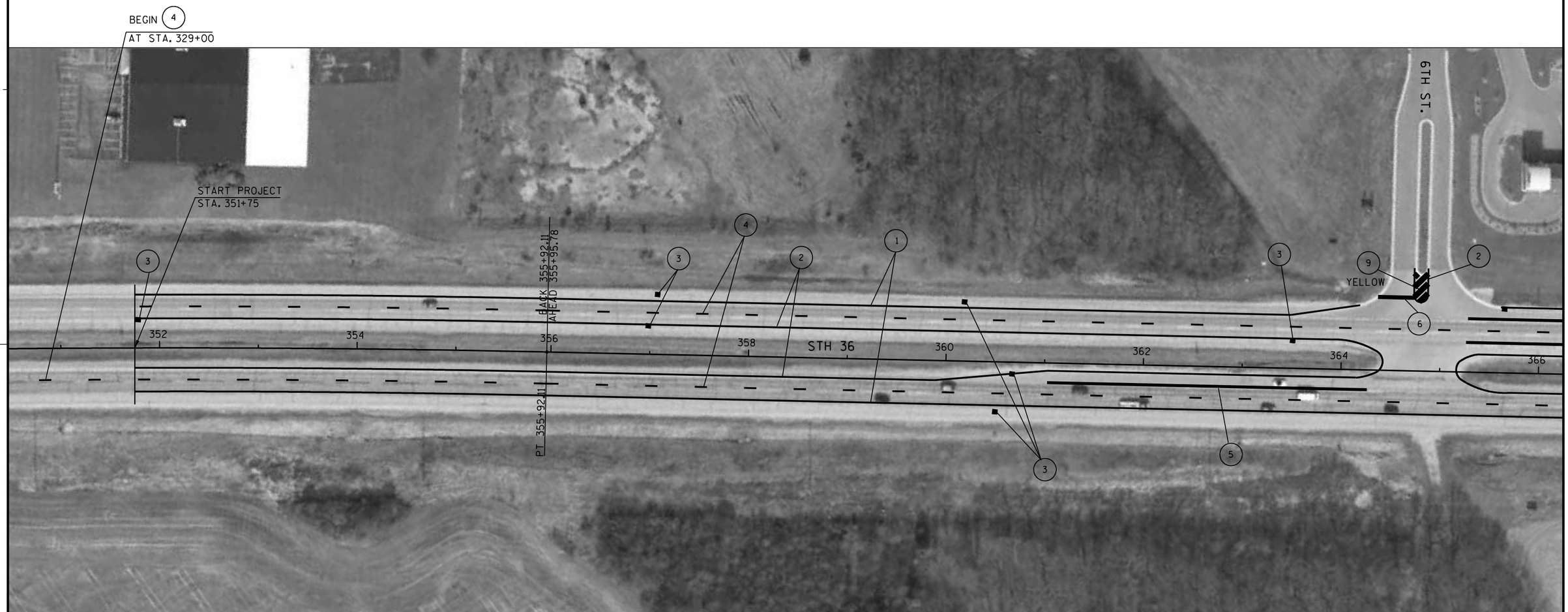

LEGEND

1. PAVEMENT MARKING EPOXY 4-INCH WHITE
2. PAVEMENT MARKING EPOXY 4-INCH YELLOW
3. PAVEMENT MARKING OUTFALL
4. PAVEMENT MARKING GROOVED WET REFLECTIVE CONTRAST TAPE 4-INCH (WHITE)
5. PAVEMENT MARKING GROOVED WET REFLECTIVE CONTRAST TAPE 8-INCH
6. PAVEMENT MARKING GROOVED PREFORMED THERMOPLASTIC STOP BAR, 18-INCH, SEE NOTE
7. PAVEMENT MARKING GROOVED WET REFLECTIVE TAPE 8-INCH
9. PAVEMENT MARKING DIAGONAL EPOXY 12-INCH (10' SPACING)
10. PAVEMENT MARKING GROOVED PREFORMED THERMOPLASTIC WORDS
11. PAVEMENT MARKING GROOVED PREFORMED THERMOPLASTIC ARROW
12. PAVEMENT MARKING EPOXY 8-INCH
13. PAVEMENT MARKING GROOVED WET REFLECTIVE TAPE 4-INCH (YELLOW)
14. PAVEMENT MARKING EPOXY ARROW
15. PAVEMENT MARKING EPOXY WORDS

NOTES:

REFER TO STOP BAR CONSTRUCTION DETAIL
FOR LOCATIONS UNLESS OTHERWISE DIMENSIONED.

PROJECT NO:2240-00-67	HWY:STH 36	COUNTY:RACINE	PAVEMENT MARKING	SHEET	E

2

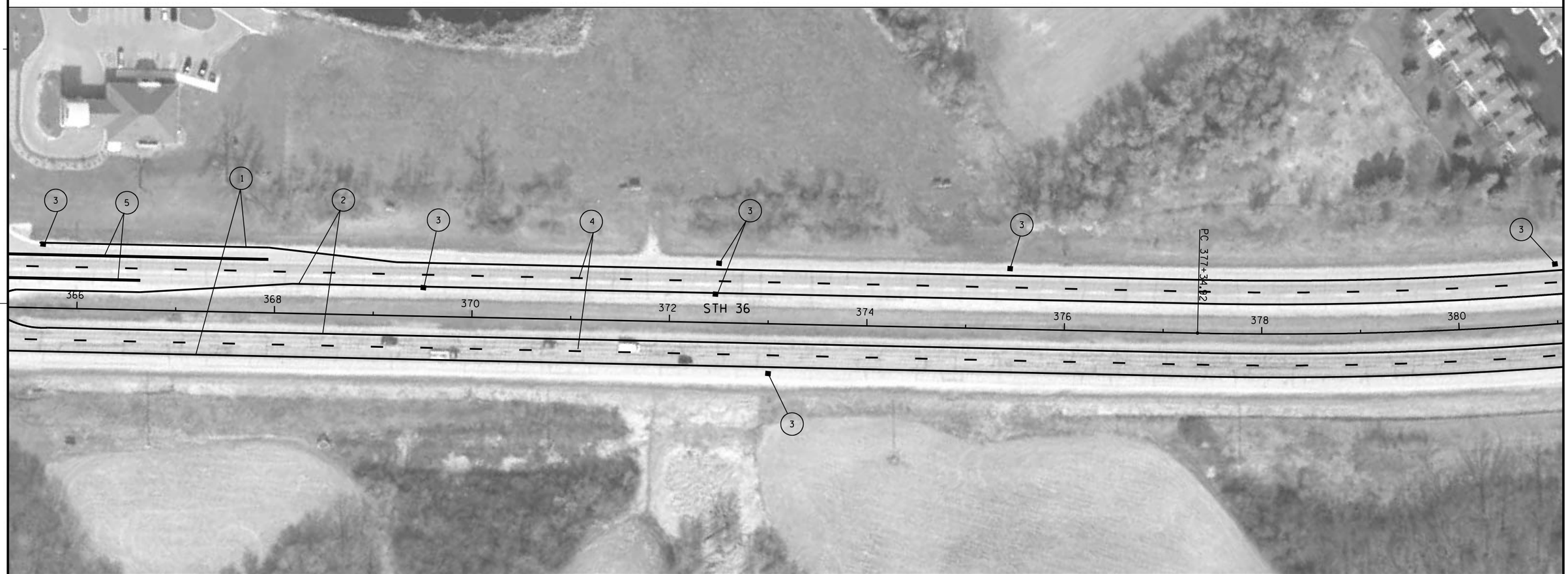

LEGEND

1. PAVEMENT MARKING EPOXY 4-INCH WHITE
2. PAVEMENT MARKING EPOXY 4-INCH YELLOW
3. PAVEMENT MARKING OUTFALL
4. PAVEMENT MARKING GROOVED WET REFLECTIVE CONTRAST TAPE 4-INCH (WHITE)
5. PAVEMENT MARKING GROOVED WET REFLECTIVE CONTRAST TAPE 8-INCH
6. PAVEMENT MARKING GROOVED PREFORMED THERMOPLASTIC STOP BAR, 18-INCH, SEE NOTE
7. PAVEMENT MARKING GROOVED WET REFLECTIVE TAPE 8-INCH
9. PAVEMENT MARKING DIAGONAL EPOXY 12-INCH (10' SPACING)
10. PAVEMENT MARKING GROOVED PREFORMED THERMOPLASTIC WORDS
11. PAVEMENT MARKING GROOVED PREFORMED THERMOPLASTIC ARROW
12. PAVEMENT MARKING EPOXY 8-INCH
13. PAVEMENT MARKING GROOVED WET REFLECTIVE TAPE 4-INCH (YELLOW)
14. PAVEMENT MARKING EPOXY ARROW
15. PAVEMENT MARKING EPOXY WORDS

NOTES:

REFER TO STOP BAR CONSTRUCTION DETAIL
FOR LOCATIONS UNLESS OTHERWISE DIMENSIONED.

PROJECT NO:2240-00-67	HWY:STH 36	COUNTY:RACINE	PAVEMENT MARKING	SHEET	E

2

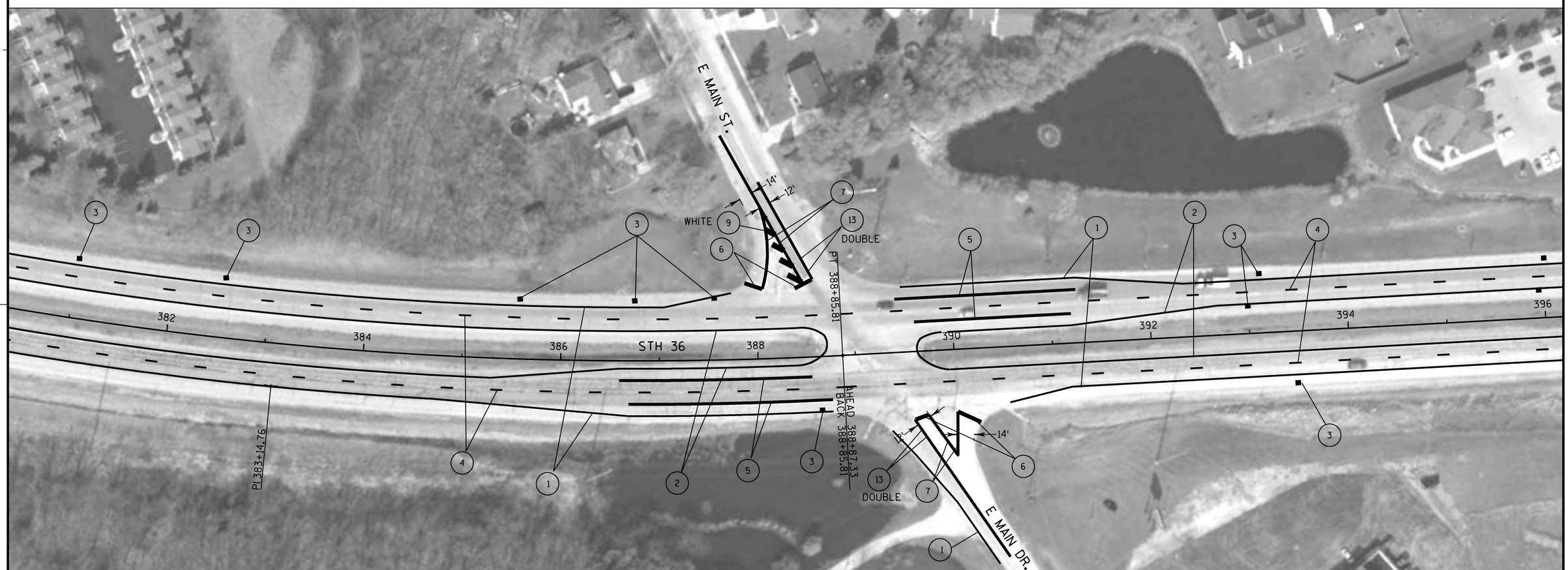

LEGEND

1. PAVEMENT MARKING EPOXY 4-INCH WHITE
2. PAVEMENT MARKING EPOXY 4-INCH YELLOW
3. PAVEMENT MARKING OUTFALL
4. PAVEMENT MARKING GROOVED WET REFLECTIVE CONTRAST TAPE 4-INCH (WHITE)
5. PAVEMENT MARKING GROOVED WET REFLECTIVE CONTRAST TAPE 8-INCH
6. PAVEMENT MARKING GROOVED PREFORMED THERMOPLASTIC STOP BAR, 18-INCH, SEE NOTE
7. PAVEMENT MARKING GROOVED WET REFLECTIVE TAPE 8-INCH
9. PAVEMENT MARKING DIAGONAL EPOXY 12-INCH (10' SPACING)
10. PAVEMENT MARKING GROOVED PREFORMED THERMOPLASTIC WORDS
11. PAVEMENT MARKING GROOVED PREFORMED THERMOPLASTIC ARROW
12. PAVEMENT MARKING EPOXY 8-INCH
13. PAVEMENT MARKING GROOVED WET REFLECTIVE TAPE 4-INCH (YELLOW)
14. PAVEMENT MARKING EPOXY ARROW
15. PAVEMENT MARKING EPOXY WORDS

NOTES:

REFER TO STOP BAR CONSTRUCTION DETAIL
FOR LOCATIONS UNLESS OTHERWISE DIMENSIONED.

PROJECT NO:2240-00-67	HWY:STH 36	COUNTY:RACINE	PAVEMENT MARKING	SHEET	E

2

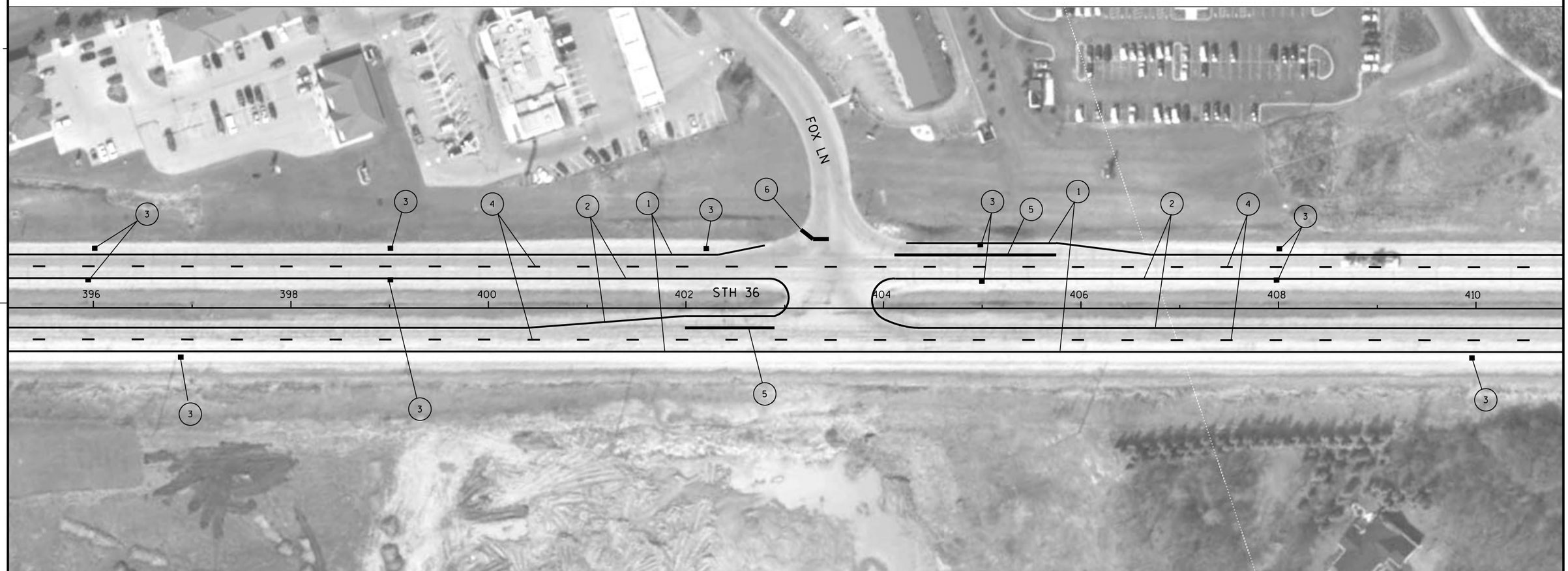

LEGEND

1. PAVEMENT MARKING EPOXY 4-INCH WHITE
2. PAVEMENT MARKING EPOXY 4-INCH YELLOW
3. PAVEMENT MARKING OUTFALL
4. PAVEMENT MARKING GROOVED WET REFLECTIVE CONTRAST TAPE 4-INCH (WHITE)
5. PAVEMENT MARKING GROOVED WET REFLECTIVE CONTRAST TAPE 8-INCH
6. PAVEMENT MARKING GROOVED PREFORMED THERMOPLASTIC STOP BAR, 18-INCH, SEE NOTE
7. PAVEMENT MARKING GROOVED WET REFLECTIVE TAPE 8-INCH
9. PAVEMENT MARKING DIAGONAL EPOXY 12-INCH (10' SPACING)
10. PAVEMENT MARKING GROOVED PREFORMED THERMOPLASTIC WORDS
11. PAVEMENT MARKING GROOVED PREFORMED THERMOPLASTIC ARROW
12. PAVEMENT MARKING EPOXY 8-INCH
13. PAVEMENT MARKING GROOVED WET REFLECTIVE TAPE 4-INCH (YELLOW)
14. PAVEMENT MARKING EPOXY ARROW
15. PAVEMENT MARKING EPOXY WORDS

NOTES:

REFER TO STOP BAR CONSTRUCTION DETAIL
FOR LOCATIONS UNLESS OTHERWISE DIMENSIONED.

PROJECT NO:2240-00-67	HWY:STH 36	COUNTY:RACINE	PAVEMENT MARKING	SHEET	E

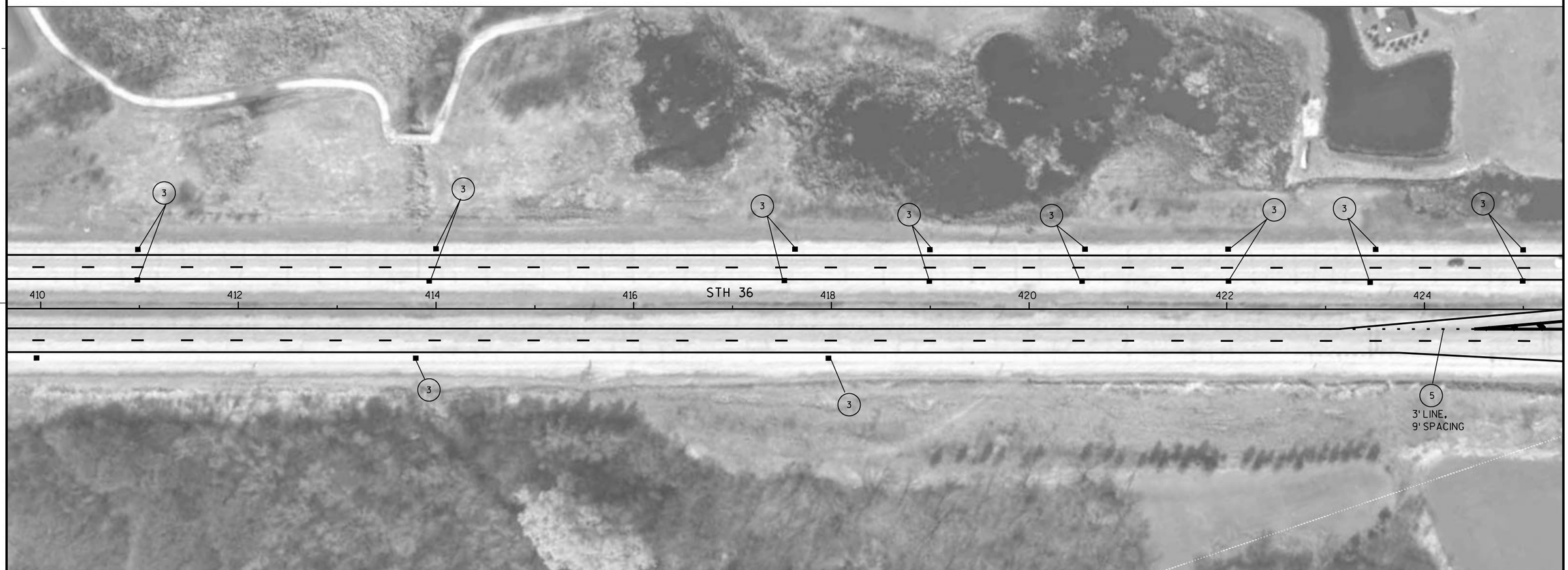

LEGEND

1. PAVEMENT MARKING EPOXY 4-INCH WHITE
2. PAVEMENT MARKING EPOXY 4-INCH YELLOW
3. PAVEMENT MARKING OUTFALL
4. PAVEMENT MARKING GROOVED WET REFLECTIVE CONTRAST TAPE 4-INCH (WHITE)
5. PAVEMENT MARKING GROOVED WET REFLECTIVE CONTRAST TAPE 8-INCH
6. PAVEMENT MARKING GROOVED PREFORMED THERMOPLASTIC STOP BAR, 18-INCH, SEE NOTE
7. PAVEMENT MARKING GROOVED WET REFLECTIVE TAPE 8-INCH
9. PAVEMENT MARKING DIAGONAL EPOXY 12-INCH (10' SPACING)
10. PAVEMENT MARKING GROOVED PREFORMED THERMOPLASTIC WORDS
11. PAVEMENT MARKING GROOVED PREFORMED THERMOPLASTIC ARROW
12. PAVEMENT MARKING EPOXY 8-INCH
13. PAVEMENT MARKING GROOVED WET REFLECTIVE TAPE 4-INCH (YELLOW)
14. PAVEMENT MARKING EPOXY ARROW
15. PAVEMENT MARKING EPOXY WORDS

NOTES:

REFER TO STOP BAR CONSTRUCTION DETAIL
FOR LOCATIONS UNLESS OTHERWISE DIMENSIONED.

PROJECT NO:2240-00-67	HWY:STH 36	COUNTY:RACINE	PAVEMENT MARKING	SHEET	E

2

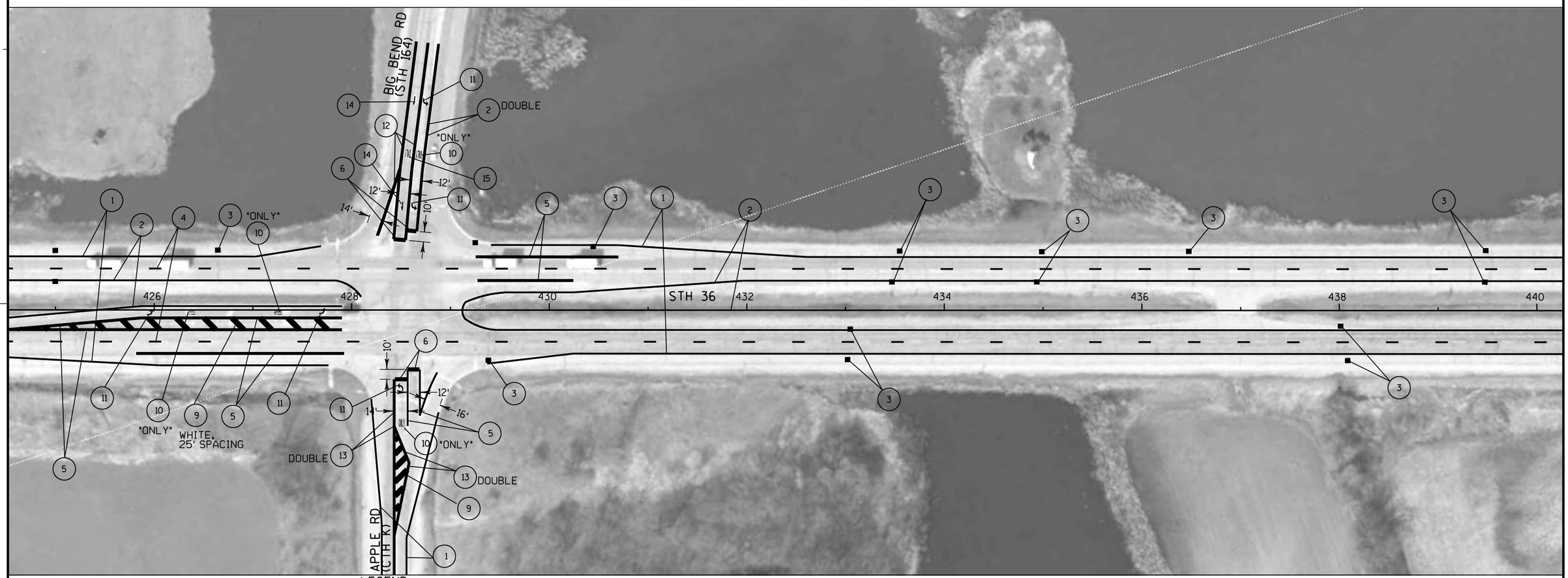

LEGEND

1. PAVEMENT MARKING EPOXY 4-INCH WHITE
2. PAVEMENT MARKING EPOXY 4-INCH YELLOW
3. PAVEMENT MARKING OUTFALL
4. PAVEMENT MARKING GROOVED WET REFLECTIVE CONTRAST TAPE 4-INCH (WHITE)
5. PAVEMENT MARKING GROOVED WET REFLECTIVE CONTRAST TAPE 8-INCH
6. PAVEMENT MARKING GROOVED PREFORMED THERMOPLASTIC STOP BAR, 18-INCH, SEE NOTE
7. PAVEMENT MARKING GROOVED WET REFLECTIVE TAPE 8-INCH
9. PAVEMENT MARKING DIAGONAL EPOXY 12-INCH (10' SPACING)
10. PAVEMENT MARKING GROOVED PREFORMED THERMOPLASTIC WORDS
11. PAVEMENT MARKING GROOVED PREFORMED THERMOPLASTIC ARROW
12. PAVEMENT MARKING EPOXY 8-INCH
13. PAVEMENT MARKING GROOVED WET REFLECTIVE TAPE 4-INCH (YELLOW)
14. PAVEMENT MARKING EPOXY ARROW
15. PAVEMENT MARKING EPOXY WORDS

NOTES:

REFER TO STOP BAR CONSTRUCTION DETAIL
FOR LOCATIONS UNLESS OTHERWISE DIMENSIONED.

PROJECT NO:2240-00-67	HWY:STH 36	COUNTY:RACINE	PAVEMENT MARKING	SHEET	E

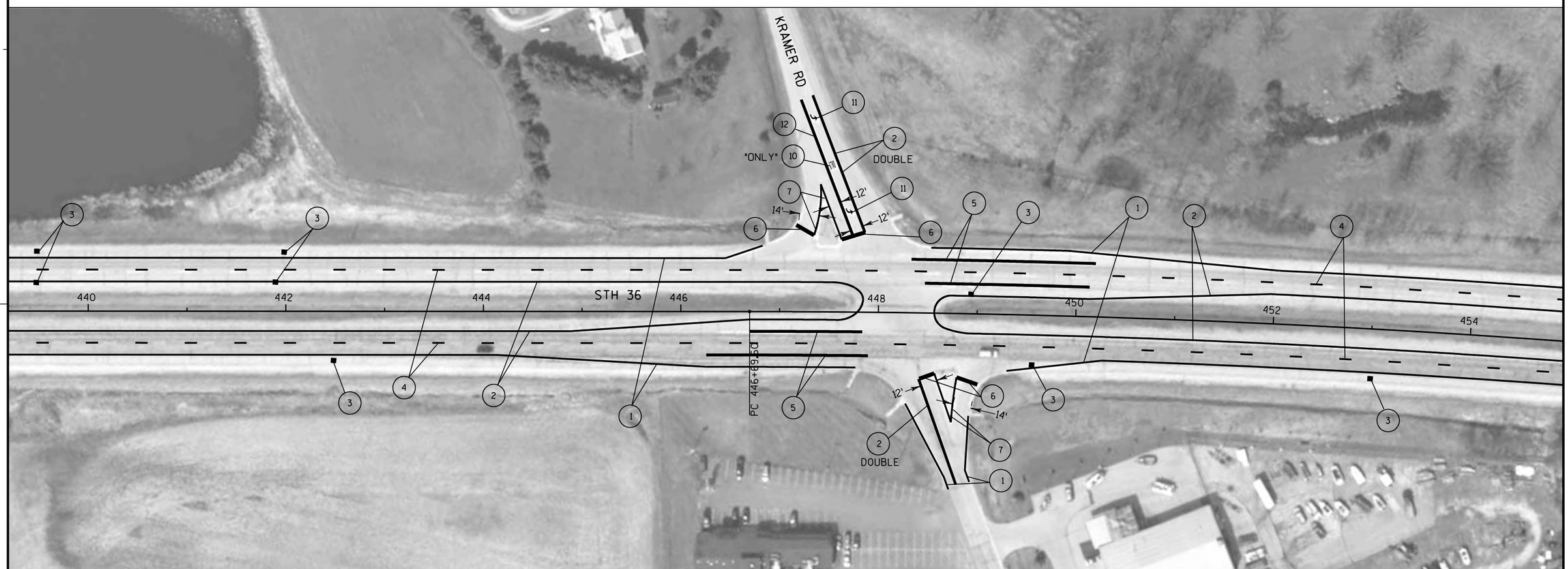

LEGEND

1. PAVEMENT MARKING EPOXY 4-INCH WHITE
2. PAVEMENT MARKING EPOXY 4-INCH YELLOW
3. PAVEMENT MARKING OUTFALL
4. PAVEMENT MARKING GROOVED WET REFLECTIVE CONTRAST TAPE 4-INCH (WHITE)
5. PAVEMENT MARKING GROOVED WET REFLECTIVE CONTRAST TAPE 8-INCH
6. PAVEMENT MARKING GROOVED PREFORMED THERMOPLASTIC STOP BAR, 18-INCH, SEE NOTE
7. PAVEMENT MARKING GROOVED WET REFLECTIVE TAPE 8-INCH
9. PAVEMENT MARKING DIAGONAL EPOXY 12-INCH (10' SPACING)
10. PAVEMENT MARKING GROOVED PREFORMED THERMOPLASTIC WORDS
11. PAVEMENT MARKING GROOVED PREFORMED THERMOPLASTIC ARROW
12. PAVEMENT MARKING EPOXY 8-INCH
13. PAVEMENT MARKING GROOVED WET REFLECTIVE TAPE 4-INCH (YELLOW)
14. PAVEMENT MARKING EPOXY ARROW
15. PAVEMENT MARKING EPOXY WORDS

NOTES:

REFER TO STOP BAR CONSTRUCTION DETAIL
FOR LOCATIONS UNLESS OTHERWISE DIMENSIONED.

PROJECT NO:2240-00-67	HWY:STH 36	COUNTY:RACINE	PAVEMENT MARKING	SHEET	E

2

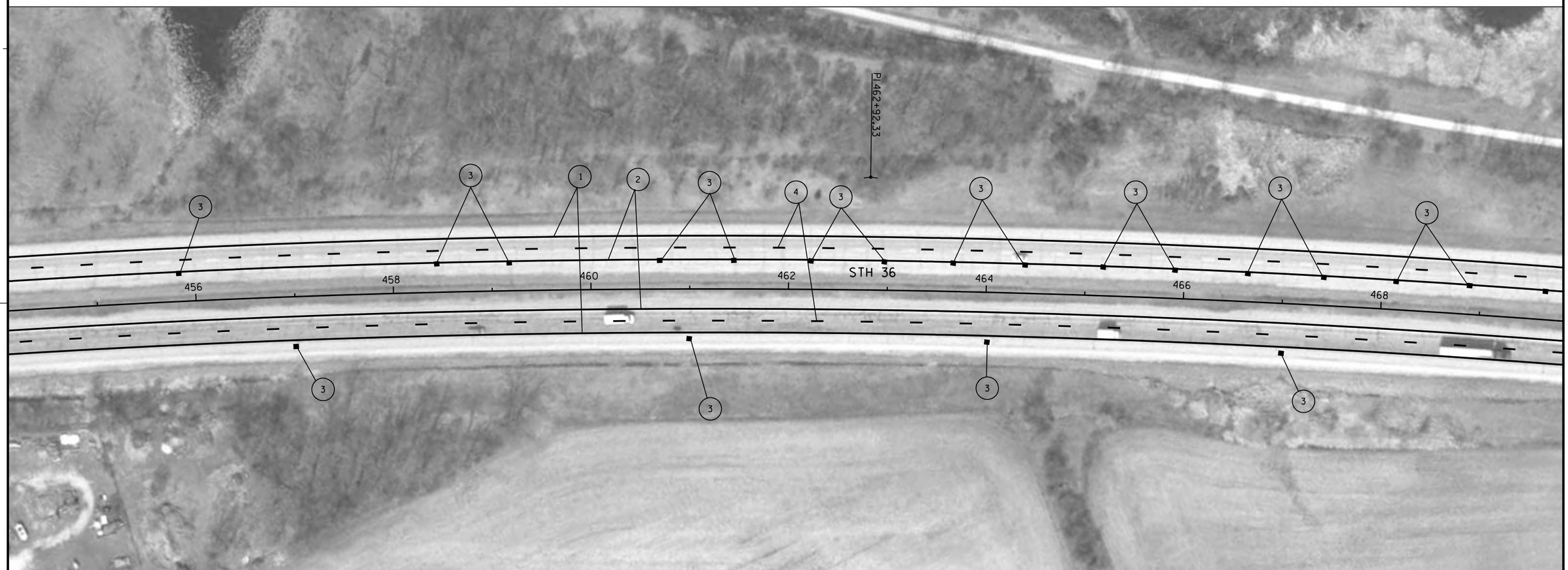

LEGEND

1. PAVEMENT MARKING EPOXY 4-INCH WHITE
2. PAVEMENT MARKING EPOXY 4-INCH YELLOW
3. PAVEMENT MARKING OUTFALL
4. PAVEMENT MARKING GROOVED WET REFLECTIVE CONTRAST TAPE 4-INCH (WHITE)
5. PAVEMENT MARKING GROOVED WET REFLECTIVE CONTRAST TAPE 8-INCH
6. PAVEMENT MARKING GROOVED PREFORMED THERMOPLASTIC STOP BAR, 18-INCH, SEE NOTE
7. PAVEMENT MARKING GROOVED WET REFLECTIVE TAPE 8-INCH
9. PAVEMENT MARKING DIAGONAL EPOXY 12-INCH (10' SPACING)
10. PAVEMENT MARKING GROOVED PREFORMED THERMOPLASTIC WORDS
11. PAVEMENT MARKING GROOVED PREFORMED THERMOPLASTIC ARROW
12. PAVEMENT MARKING EPOXY 8-INCH
13. PAVEMENT MARKING GROOVED WET REFLECTIVE TAPE 4-INCH (YELLOW)
14. PAVEMENT MARKING EPOXY ARROW
15. PAVEMENT MARKING EPOXY WORDS

NOTES:

REFER TO STOP BAR CONSTRUCTION DETAIL
FOR LOCATIONS UNLESS OTHERWISE DIMENSIONED.

PROJECT NO:2240-00-67	HWY:STH 36	COUNTY:RACINE	PAVEMENT MARKING	SHEET	E

2

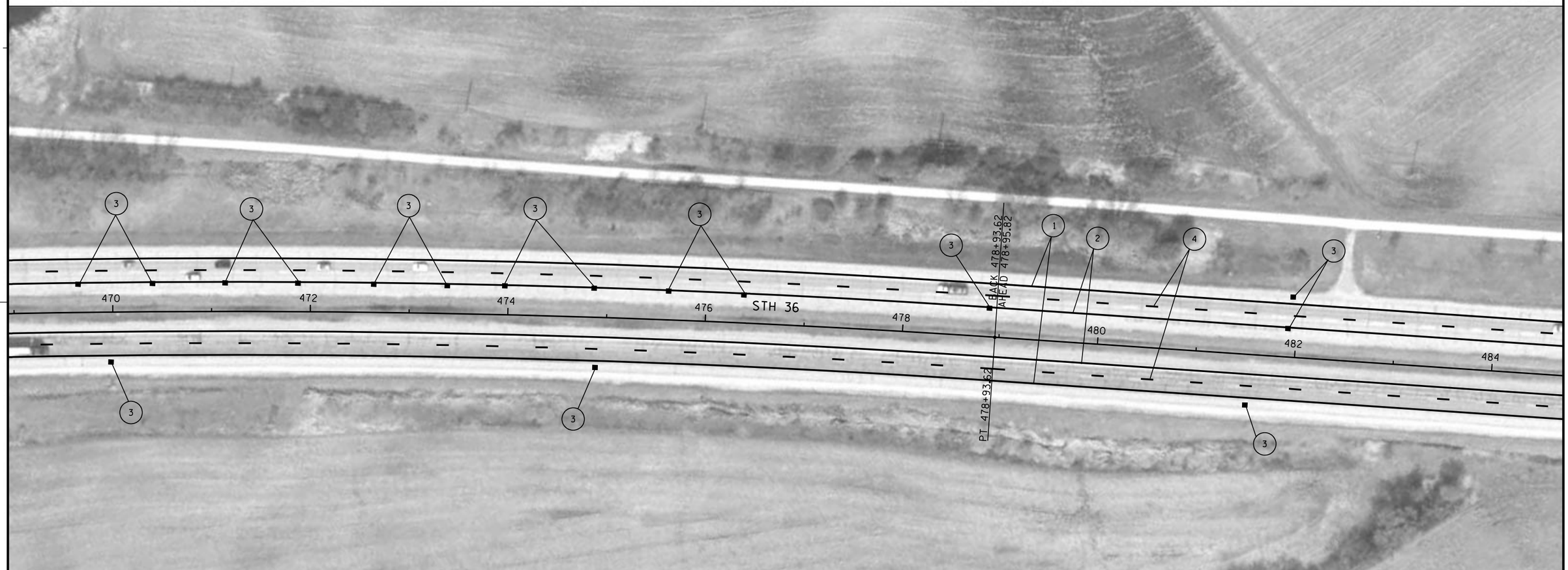

LEGEND

1. PAVEMENT MARKING EPOXY 4-INCH WHITE
2. PAVEMENT MARKING EPOXY 4-INCH YELLOW
3. PAVEMENT MARKING OUTFALL
4. PAVEMENT MARKING GROOVED WET REFLECTIVE CONTRAST TAPE 4-INCH (WHITE)
5. PAVEMENT MARKING GROOVED WET REFLECTIVE CONTRAST TAPE 8-INCH
6. PAVEMENT MARKING GROOVED PREFORMED THERMOPLASTIC STOP BAR, 18-INCH, SEE NOTE
7. PAVEMENT MARKING GROOVED WET REFLECTIVE TAPE 8-INCH
9. PAVEMENT MARKING DIAGONAL EPOXY 12-INCH (10' SPACING)
10. PAVEMENT MARKING GROOVED PREFORMED THERMOPLASTIC WORDS
11. PAVEMENT MARKING GROOVED PREFORMED THERMOPLASTIC ARROW
12. PAVEMENT MARKING EPOXY 8-INCH
13. PAVEMENT MARKING GROOVED WET REFLECTIVE TAPE 4-INCH (YELLOW)
14. PAVEMENT MARKING EPOXY ARROW
15. PAVEMENT MARKING EPOXY WORDS

NOTES:

REFER TO STOP BAR CONSTRUCTION DETAIL
FOR LOCATIONS UNLESS OTHERWISE DIMENSIONED.

PROJECT NO:2240-00-67	HWY:STH 36	COUNTY:RACINE	PAVEMENT MARKING	SHEET	E

2

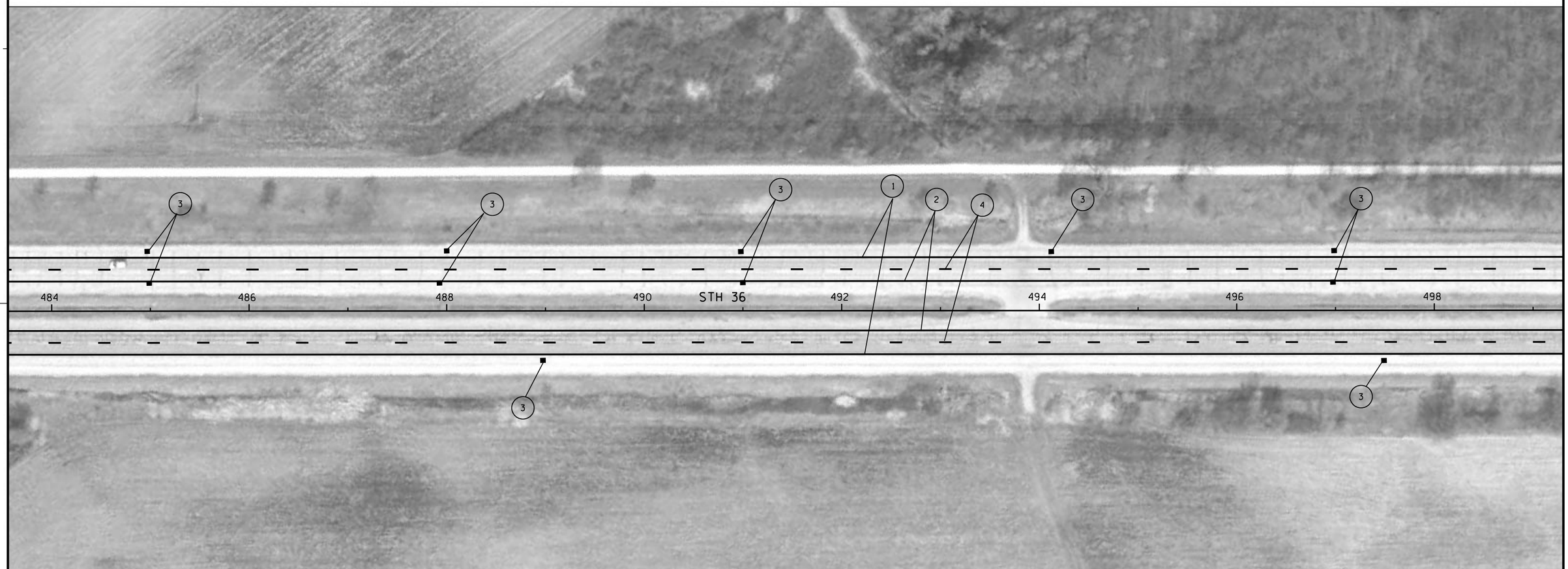

LEGEND

1. PAVEMENT MARKING EPOXY 4-INCH WHITE
2. PAVEMENT MARKING EPOXY 4-INCH YELLOW
3. PAVEMENT MARKING OUTFALL
4. PAVEMENT MARKING GROOVED WET REFLECTIVE CONTRAST TAPE 4-INCH (WHITE)
5. PAVEMENT MARKING GROOVED WET REFLECTIVE CONTRAST TAPE 8-INCH
6. PAVEMENT MARKING GROOVED PREFORMED THERMOPLASTIC STOP BAR, 18-INCH, SEE NOTE
7. PAVEMENT MARKING GROOVED WET REFLECTIVE TAPE 8-INCH
9. PAVEMENT MARKING DIAGONAL EPOXY 12-INCH (10' SPACING)
10. PAVEMENT MARKING GROOVED PREFORMED THERMOPLASTIC WORDS
11. PAVEMENT MARKING GROOVED PREFORMED THERMOPLASTIC ARROW
12. PAVEMENT MARKING EPOXY 8-INCH
13. PAVEMENT MARKING GROOVED WET REFLECTIVE TAPE 4-INCH (YELLOW)
14. PAVEMENT MARKING EPOXY ARROW
15. PAVEMENT MARKING EPOXY WORDS

NOTES:

REFER TO STOP BAR CONSTRUCTION DETAIL
FOR LOCATIONS UNLESS OTHERWISE DIMENSIONED.

PROJECT NO:2240-00-67	HWY:STH 36	COUNTY:RACINE	PAVEMENT MARKING	SHEET	E

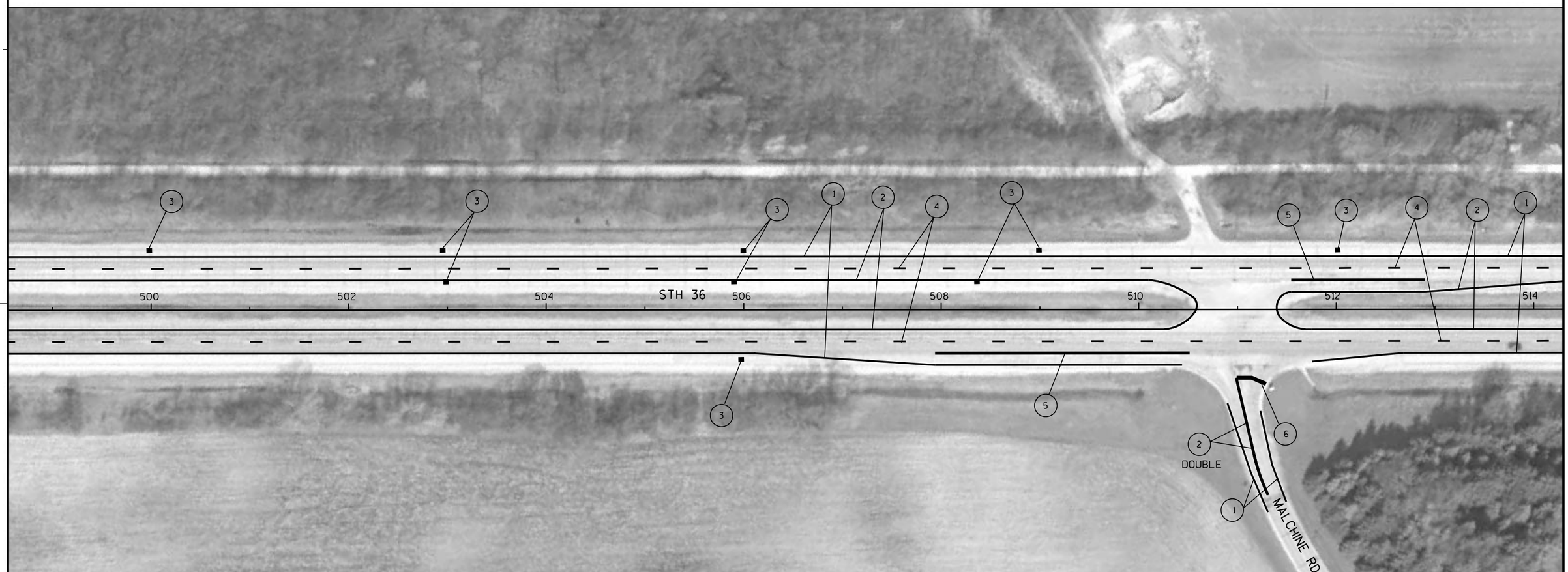

LEGEND

1. PAVEMENT MARKING EPOXY 4-INCH WHITE
2. PAVEMENT MARKING EPOXY 4-INCH YELLOW
3. PAVEMENT MARKING OUTFALL
4. PAVEMENT MARKING GROOVED WET REFLECTIVE CONTRAST TAPE 4-INCH (WHITE)
5. PAVEMENT MARKING GROOVED WET REFLECTIVE CONTRAST TAPE 8-INCH
6. PAVEMENT MARKING GROOVED PREFORMED THERMOPLASTIC STOP BAR, 18-INCH, SEE NOTE
7. PAVEMENT MARKING GROOVED WET REFLECTIVE TAPE 8-INCH
9. PAVEMENT MARKING DIAGONAL EPOXY 12-INCH (10' SPACING)
10. PAVEMENT MARKING GROOVED PREFORMED THERMOPLASTIC WORDS
11. PAVEMENT MARKING GROOVED PREFORMED THERMOPLASTIC ARROW
12. PAVEMENT MARKING EPOXY 8-INCH
13. PAVEMENT MARKING GROOVED WET REFLECTIVE TAPE 4-INCH (YELLOW)
14. PAVEMENT MARKING EPOXY ARROW
15. PAVEMENT MARKING EPOXY WORDS

NOTES:

REFER TO STOP BAR CONSTRUCTION DETAIL
FOR LOCATIONS UNLESS OTHERWISE DIMENSIONED.

PROJECT NO:2240-00-67	HWY:STH 36	COUNTY:RACINE	PAVEMENT MARKING	SHEET	E

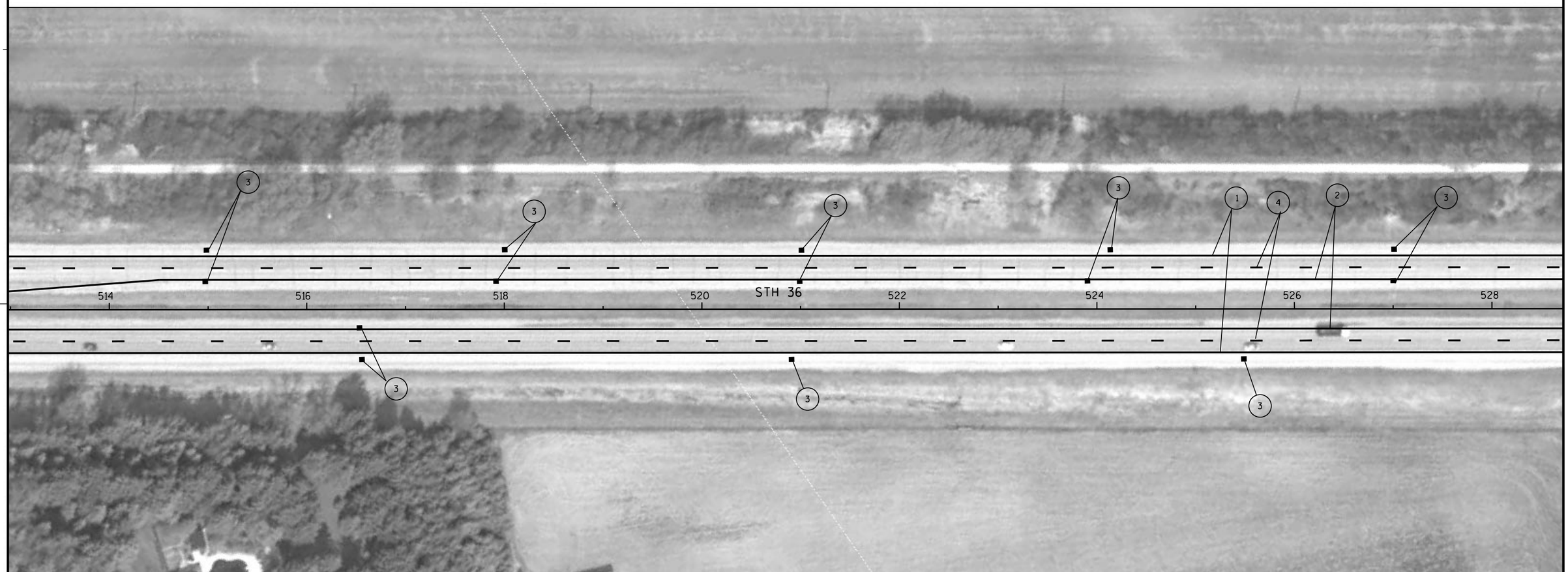

LEGEND

1. PAVEMENT MARKING EPOXY 4-INCH WHITE
2. PAVEMENT MARKING EPOXY 4-INCH YELLOW
3. PAVEMENT MARKING OUTFALL
4. PAVEMENT MARKING GROOVED WET REFLECTIVE CONTRAST TAPE 4-INCH (WHITE)
5. PAVEMENT MARKING GROOVED WET REFLECTIVE CONTRAST TAPE 8-INCH
6. PAVEMENT MARKING GROOVED PREFORMED THERMOPLASTIC STOP BAR, 18-INCH, SEE NOTE
7. PAVEMENT MARKING GROOVED WET REFLECTIVE TAPE 8-INCH
9. PAVEMENT MARKING DIAGONAL EPOXY 12-INCH (10' SPACING)
10. PAVEMENT MARKING GROOVED PREFORMED THERMOPLASTIC WORDS
11. PAVEMENT MARKING GROOVED PREFORMED THERMOPLASTIC ARROW
12. PAVEMENT MARKING EPOXY 8-INCH
13. PAVEMENT MARKING GROOVED WET REFLECTIVE TAPE 4-INCH (YELLOW)
14. PAVEMENT MARKING EPOXY ARROW
15. PAVEMENT MARKING EPOXY WORDS

NOTES:

REFER TO STOP BAR CONSTRUCTION DETAIL
FOR LOCATIONS UNLESS OTHERWISE DIMENSIONED.

PROJECT NO:2240-00-67	HWY:STH 36	COUNTY:RACINE	PAVEMENT MARKING	SHEET	E

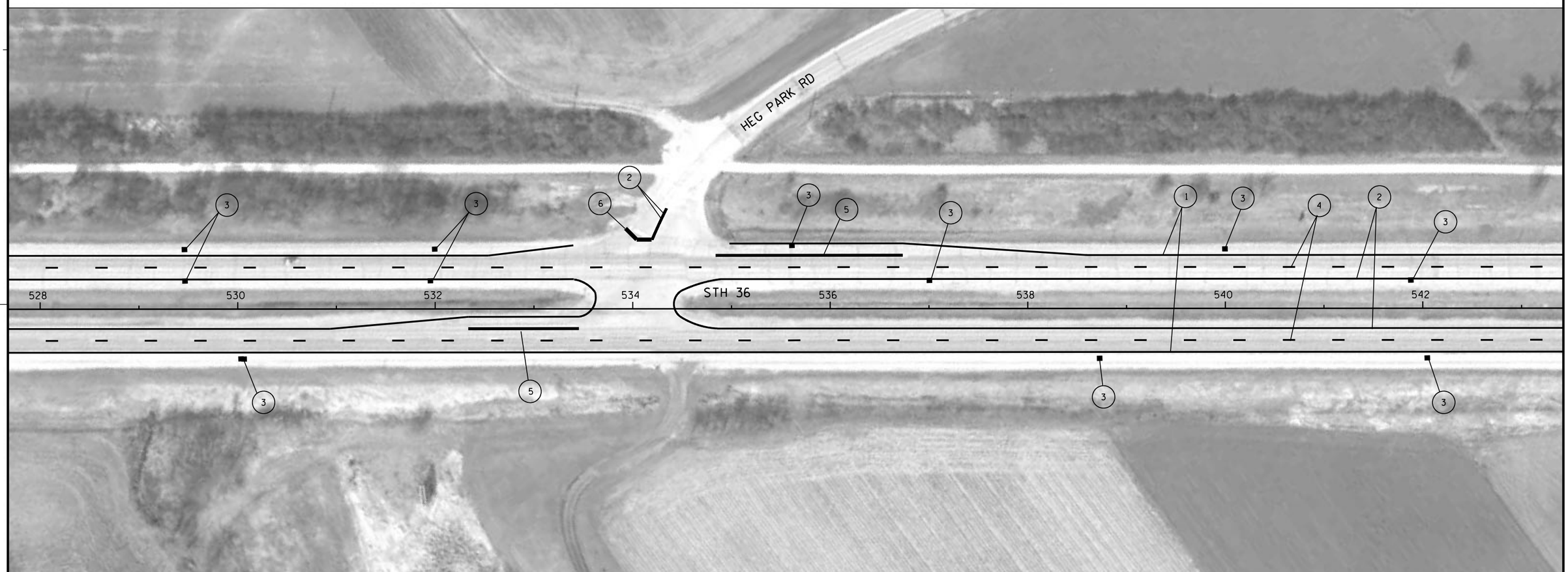

LEGEND

1. PAVEMENT MARKING EPOXY 4-INCH WHITE
2. PAVEMENT MARKING EPOXY 4-INCH YELLOW
3. PAVEMENT MARKING OUTFALL
4. PAVEMENT MARKING GROOVED WET REFLECTIVE CONTRAST TAPE 4-INCH (WHITE)
5. PAVEMENT MARKING GROOVED WET REFLECTIVE CONTRAST TAPE 8-INCH
6. PAVEMENT MARKING GROOVED PREFORMED THERMOPLASTIC STOP BAR, 18-INCH, SEE NOTE
7. PAVEMENT MARKING GROOVED WET REFLECTIVE TAPE 8-INCH
9. PAVEMENT MARKING DIAGONAL EPOXY 12-INCH (10' SPACING)
10. PAVEMENT MARKING GROOVED PREFORMED THERMOPLASTIC WORDS
11. PAVEMENT MARKING GROOVED PREFORMED THERMOPLASTIC ARROW
12. PAVEMENT MARKING EPOXY 8-INCH
13. PAVEMENT MARKING GROOVED WET REFLECTIVE TAPE 4-INCH (YELLOW)
14. PAVEMENT MARKING EPOXY ARROW
15. PAVEMENT MARKING EPOXY WORDS

NOTES:

REFER TO STOP BAR CONSTRUCTION DETAIL
FOR LOCATIONS UNLESS OTHERWISE DIMENSIONED.

PROJECT NO:2240-00-67	HWY:STH 36	COUNTY:RACINE	PAVEMENT MARKING	SHEET	E

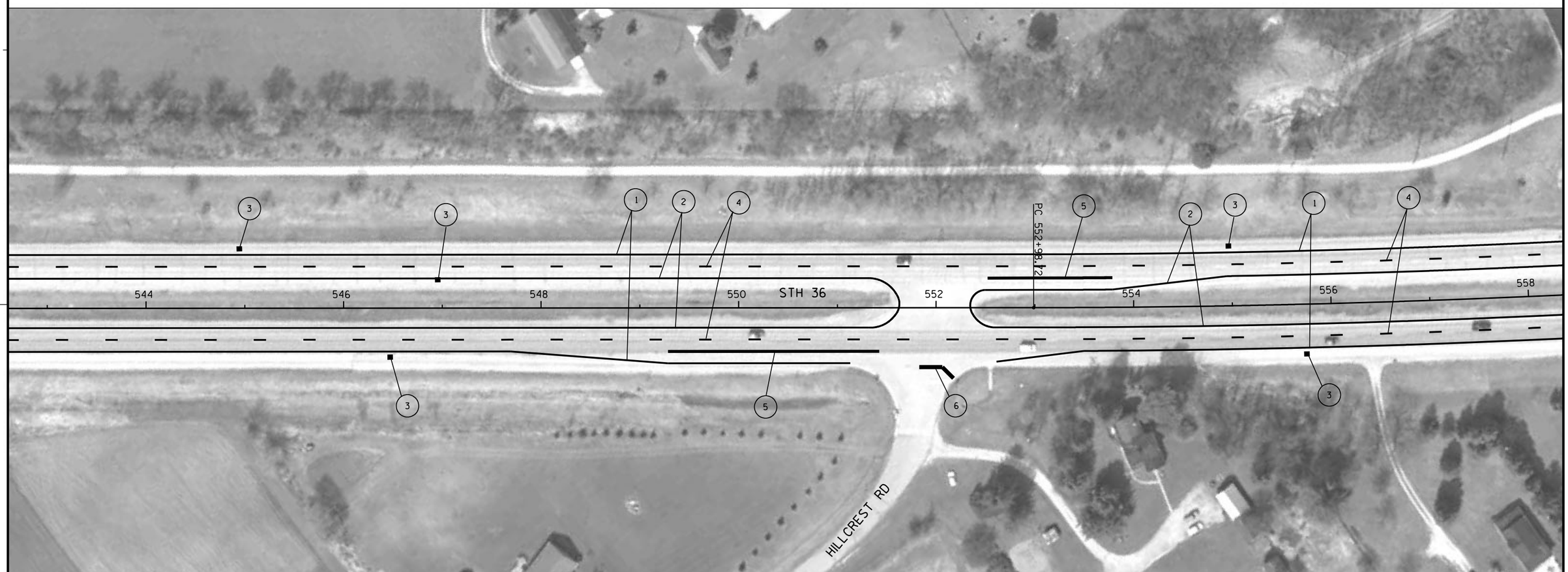

LEGEND

1. PAVEMENT MARKING EPOXY 4-INCH WHITE
2. PAVEMENT MARKING EPOXY 4-INCH YELLOW
3. PAVEMENT MARKING OUTFALL
4. PAVEMENT MARKING GROOVED WET REFLECTIVE CONTRAST TAPE 4-INCH (WHITE)
5. PAVEMENT MARKING GROOVED WET REFLECTIVE CONTRAST TAPE 8-INCH
6. PAVEMENT MARKING GROOVED PREFORMED THERMOPLASTIC STOP BAR, 18-INCH, SEE NOTE
7. PAVEMENT MARKING GROOVED WET REFLECTIVE TAPE 8-INCH
9. PAVEMENT MARKING DIAGONAL EPOXY 12-INCH (10' SPACING)
10. PAVEMENT MARKING GROOVED PREFORMED THERMOPLASTIC WORDS
11. PAVEMENT MARKING GROOVED PREFORMED THERMOPLASTIC ARROW
12. PAVEMENT MARKING EPOXY 8-INCH
13. PAVEMENT MARKING GROOVED WET REFLECTIVE TAPE 4-INCH (YELLOW)
14. PAVEMENT MARKING EPOXY ARROW
15. PAVEMENT MARKING EPOXY WORDS

NOTES:

REFER TO STOP BAR CONSTRUCTION DETAIL
FOR LOCATIONS UNLESS OTHERWISE DIMENSIONED.

PROJECT NO:2240-00-67	HWY:STH 36	COUNTY:RACINE	PAVEMENT MARKING	SHEET	E

LEGEND

1. PAVEMENT MARKING EPOXY 4-INCH WHITE
2. PAVEMENT MARKING EPOXY 4-INCH YELLOW
3. PAVEMENT MARKING OUTFALL
4. PAVEMENT MARKING GROOVED WET REFLECTIVE CONTRAST TAPE 4-INCH (WHITE)
5. PAVEMENT MARKING GROOVED WET REFLECTIVE CONTRAST TAPE 8-INCH
6. PAVEMENT MARKING GROOVED PREFORMED THERMOPLASTIC STOP BAR, 18-INCH, SEE NOTE
7. PAVEMENT MARKING GROOVED WET REFLECTIVE TAPE 8-INCH
9. PAVEMENT MARKING DIAGONAL EPOXY 12-INCH (10' SPACING)
10. PAVEMENT MARKING GROOVED PREFORMED THERMOPLASTIC WORDS
11. PAVEMENT MARKING GROOVED PREFORMED THERMOPLASTIC ARROW
12. PAVEMENT MARKING EPOXY 8-INCH
13. PAVEMENT MARKING GROOVED WET REFLECTIVE TAPE 4-INCH (YELLOW)
14. PAVEMENT MARKING EPOXY ARROW
15. PAVEMENT MARKING EPOXY WORDS

NOTES:

REFER TO STOP BAR CONSTRUCTION DETAIL
FOR LOCATIONS UNLESS OTHERWISE DIMENSIONED.

PROJECT NO:2240-00-67	HWY:STH 36	COUNTY:RACINE	PAVEMENT MARKING	SHEET	E

2

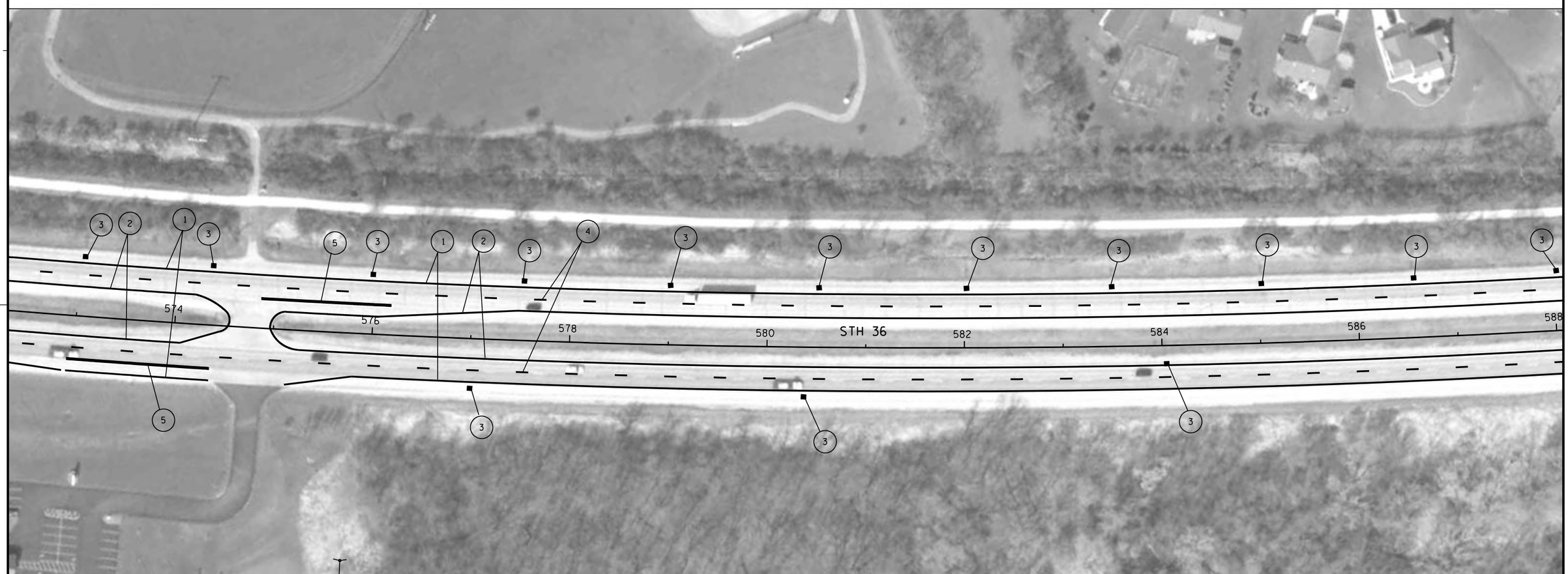

NOTES:

REFER TO STOP BAR CONSTRUCTION DETAIL
FOR LOCATIONS UNLESS OTHERWISE DIMENSIONED.

LEGEND

1. PAVEMENT MARKING EPOXY 4-INCH WHITE
2. PAVEMENT MARKING EPOXY 4-INCH YELLOW
3. PAVEMENT MARKING OUTFALL
4. PAVEMENT MARKING GROOVED WET REFLECTIVE CONTRAST TAPE 4-INCH (WHITE)
5. PAVEMENT MARKING GROOVED WET REFLECTIVE CONTRAST TAPE 8-INCH
6. PAVEMENT MARKING GROOVED PREFORMED THERMOPLASTIC STOP BAR, 18-INCH, SEE NOTE
7. PAVEMENT MARKING GROOVED WET REFLECTIVE TAPE 8-INCH
9. PAVEMENT MARKING DIAGONAL EPOXY 12-INCH (10' SPACING)
10. PAVEMENT MARKING GROOVED PREFORMED THERMOPLASTIC WORDS
11. PAVEMENT MARKING GROOVED PREFORMED THERMOPLASTIC ARROW
12. PAVEMENT MARKING EPOXY 8-INCH
13. PAVEMENT MARKING GROOVED WET REFLECTIVE TAPE 4-INCH (YELLOW)
14. PAVEMENT MARKING EPOXY ARROW
15. PAVEMENT MARKING EPOXY WORDS

PROJECT NO:2240-00-67	HWY:STH 36	COUNTY:RACINE	PAVEMENT MARKING	SHEET	E

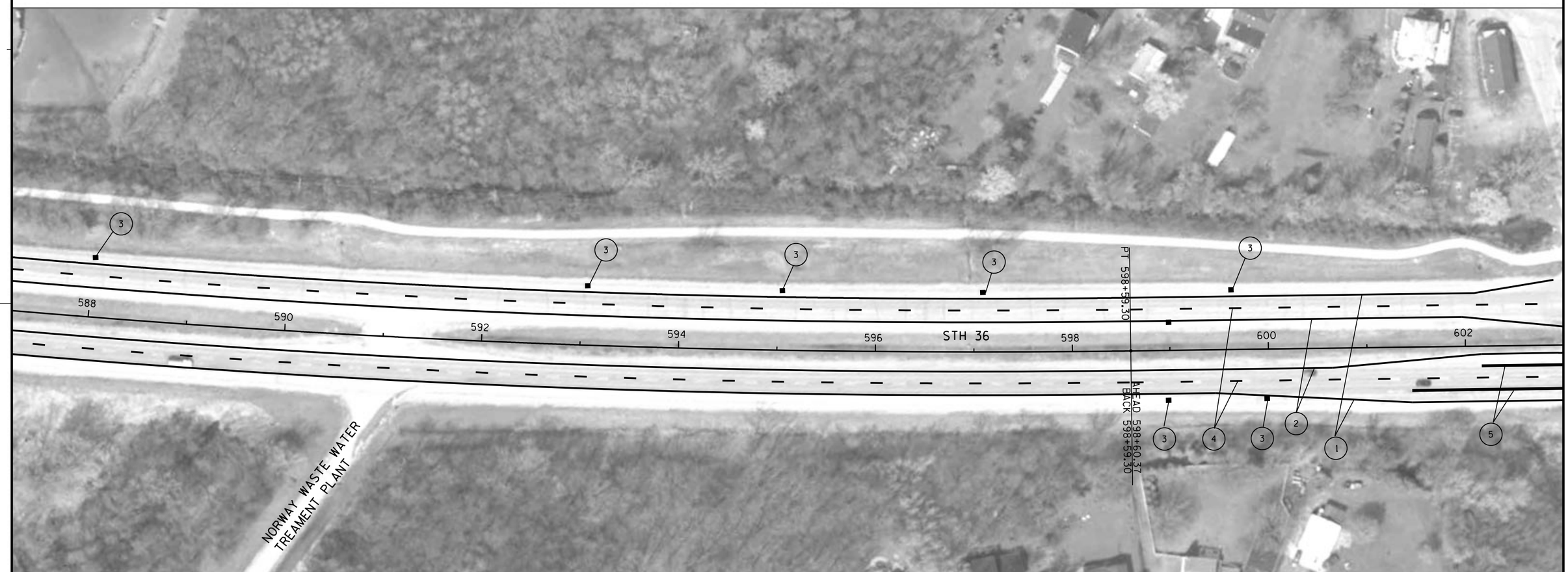

LEGEND

1. PAVEMENT MARKING EPOXY 4-INCH WHITE
2. PAVEMENT MARKING EPOXY 4-INCH YELLOW
3. PAVEMENT MARKING OUTFALL
4. PAVEMENT MARKING GROOVED WET REFLECTIVE CONTRAST TAPE 4-INCH (WHITE)
5. PAVEMENT MARKING GROOVED WET REFLECTIVE CONTRAST TAPE 8-INCH
6. PAVEMENT MARKING GROOVED PREFORMED THERMOPLASTIC STOP BAR, 18-INCH, SEE NOTE
7. PAVEMENT MARKING GROOVED WET REFLECTIVE TAPE 8-INCH
9. PAVEMENT MARKING DIAGONAL EPOXY 12-INCH (10' SPACING)
10. PAVEMENT MARKING GROOVED PREFORMED THERMOPLASTIC WORDS
11. PAVEMENT MARKING GROOVED PREFORMED THERMOPLASTIC ARROW
12. PAVEMENT MARKING EPOXY 8-INCH
13. PAVEMENT MARKING GROOVED WET REFLECTIVE TAPE 4-INCH (YELLOW)
14. PAVEMENT MARKING EPOXY ARROW
15. PAVEMENT MARKING EPOXY WORDS

NOTES:

REFER TO STOP BAR CONSTRUCTION DETAIL FOR LOCATIONS UNLESS OTHERWISE DIMENSIONED.

PROJECT NO:2240-00-67	HWY:STH 36	COUNTY:RACINE	PAVEMENT MARKING	SHEET	E

2

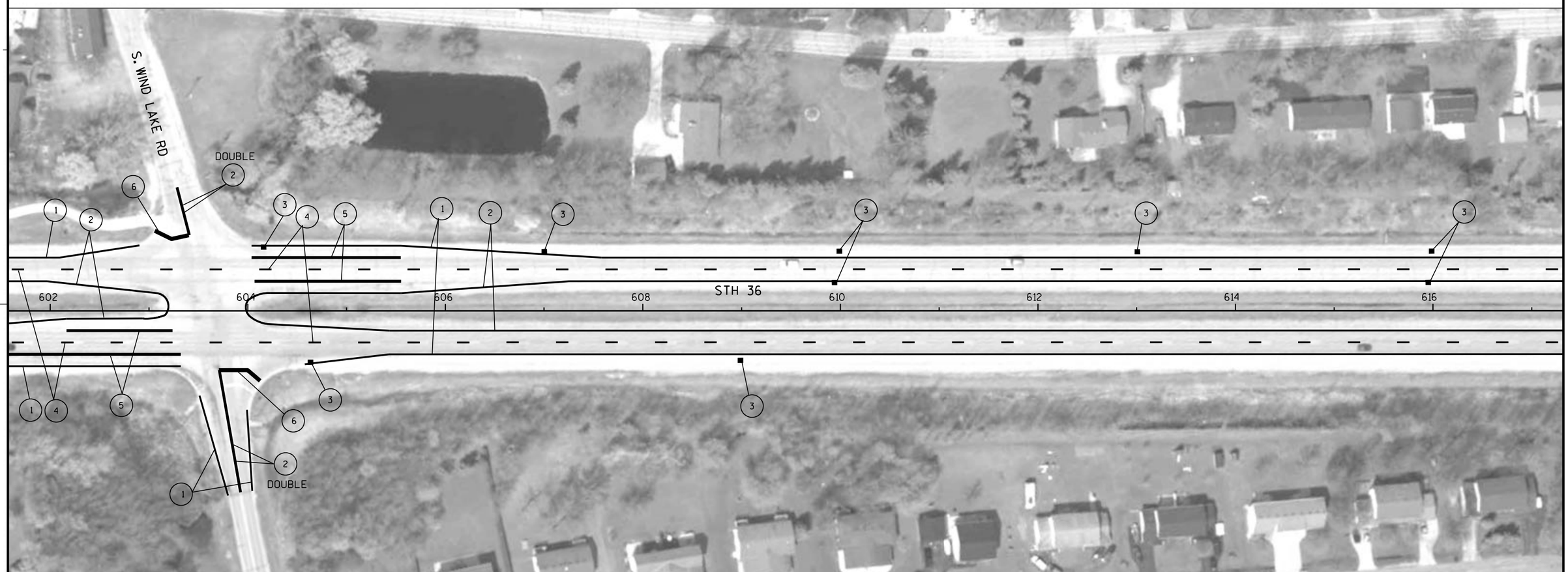

LEGEND

1. PAVEMENT MARKING EPOXY 4-INCH WHITE
2. PAVEMENT MARKING EPOXY 4-INCH YELLOW
3. PAVEMENT MARKING OUTFALL
4. PAVEMENT MARKING GROOVED WET REFLECTIVE CONTRAST TAPE 4-INCH (WHITE)
5. PAVEMENT MARKING GROOVED WET REFLECTIVE CONTRAST TAPE 8-INCH
6. PAVEMENT MARKING GROOVED PREFORMED THERMOPLASTIC STOP BAR, 18-INCH, SEE NOTE
7. PAVEMENT MARKING GROOVED WET REFLECTIVE TAPE 8-INCH
9. PAVEMENT MARKING DIAGONAL EPOXY 12-INCH (10' SPACING)
10. PAVEMENT MARKING GROOVED PREFORMED THERMOPLASTIC WORDS
11. PAVEMENT MARKING GROOVED PREFORMED THERMOPLASTIC ARROW
12. PAVEMENT MARKING EPOXY 8-INCH
13. PAVEMENT MARKING GROOVED WET REFLECTIVE TAPE 4-INCH (YELLOW)
14. PAVEMENT MARKING EPOXY ARROW
15. PAVEMENT MARKING EPOXY WORDS

NOTES:

REFER TO STOP BAR CONSTRUCTION DETAIL
FOR LOCATIONS UNLESS OTHERWISE DIMENSIONED.

PROJECT NO:2240-00-67	HWY:STH 36	COUNTY:RACIONE	PAVEMENT MARKING	SHEET	E

2

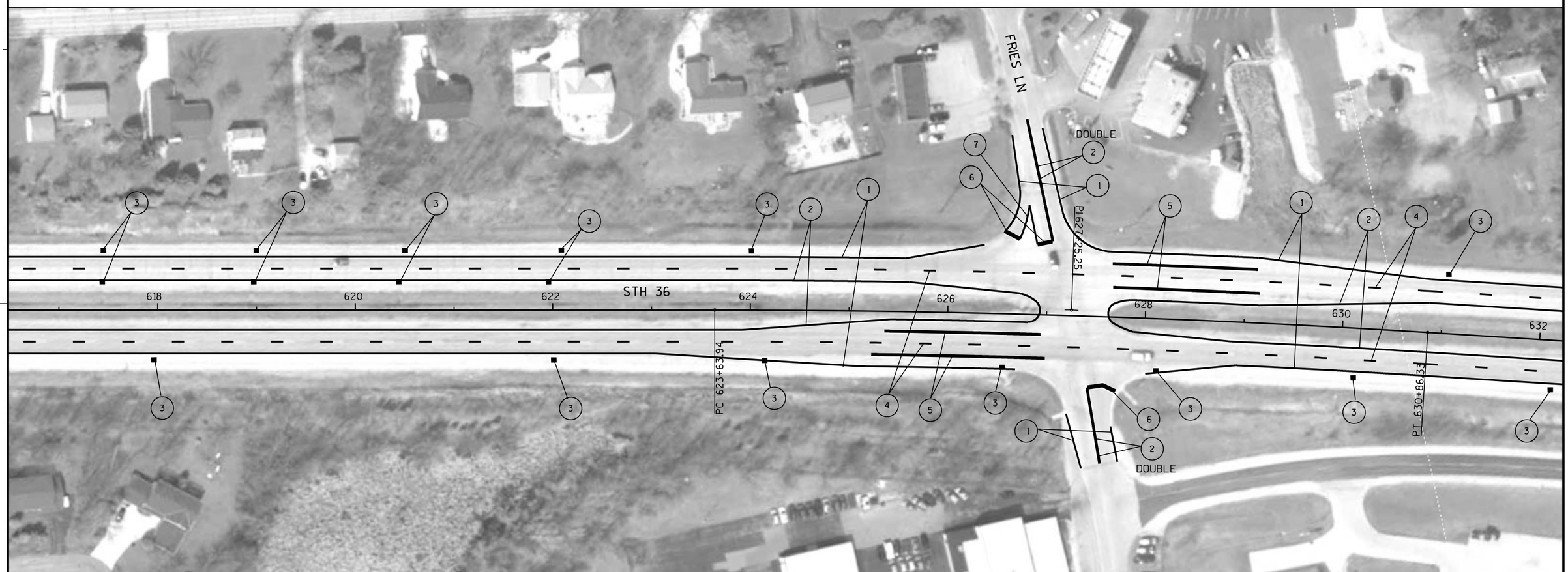

LEGEND

1. PAVEMENT MARKING EPOXY 4-INCH WHITE
2. PAVEMENT MARKING EPOXY 4-INCH YELLOW
3. PAVEMENT MARKING OUTFALL
4. PAVEMENT MARKING GROOVED WET REFLECTIVE CONTRAST TAPE 4-INCH (WHITE)
5. PAVEMENT MARKING GROOVED WET REFLECTIVE CONTRAST TAPE 8-INCH
6. PAVEMENT MARKING GROOVED PREFORMED THERMOPLASTIC STOP BAR, 18-INCH, SEE NOTE
7. PAVEMENT MARKING GROOVED WET REFLECTIVE TAPE 8-INCH
9. PAVEMENT MARKING DIAGONAL EPOXY 12-INCH (10' SPACING)
10. PAVEMENT MARKING GROOVED PREFORMED THERMOPLASTIC WORDS
11. PAVEMENT MARKING GROOVED PREFORMED THERMOPLASTIC ARROW
12. PAVEMENT MARKING EPOXY 8-INCH
13. PAVEMENT MARKING GROOVED WET REFLECTIVE TAPE 4-INCH (YELLOW)
14. PAVEMENT MARKING EPOXY ARROW
15. PAVEMENT MARKING EPOXY WORDS

NOTES:

REFER TO STOP BAR CONSTRUCTION DETAIL
FOR LOCATIONS UNLESS OTHERWISE DIMENSIONED.

PROJECT NO:2240-00-67	HWY:STH 36	COUNTY:RACIONE	PAVEMENT MARKING	SHEET	E

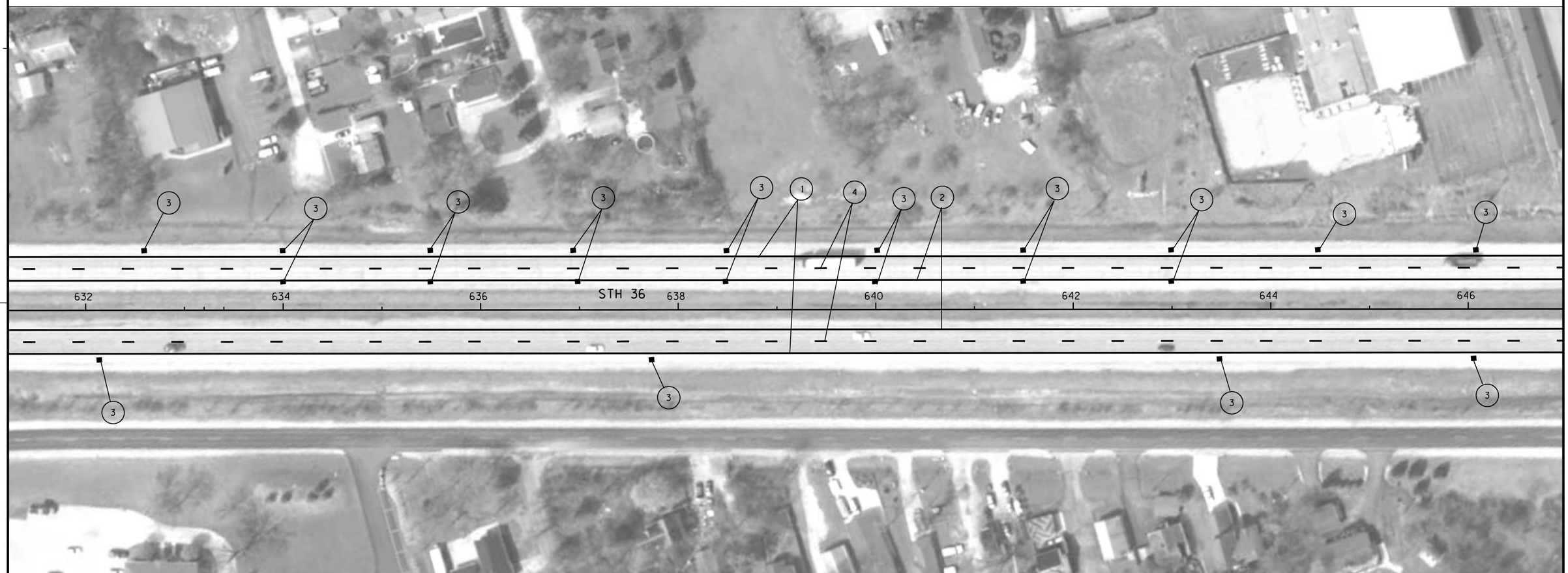

LEGEND

1. PAVEMENT MARKING EPOXY 4-INCH WHITE
2. PAVEMENT MARKING EPOXY 4-INCH YELLOW
3. PAVEMENT MARKING OUTFALL
4. PAVEMENT MARKING GROOVED WET REFLECTIVE CONTRAST TAPE 4-INCH (WHITE)
5. PAVEMENT MARKING GROOVED WET REFLECTIVE CONTRAST TAPE 8-INCH
6. PAVEMENT MARKING GROOVED PREFORMED THERMOPLASTIC STOP BAR, 18-INCH, SEE NOTE
7. PAVEMENT MARKING GROOVED WET REFLECTIVE TAPE 8-INCH
9. PAVEMENT MARKING DIAGONAL EPOXY 12-INCH (10' SPACING)
10. PAVEMENT MARKING GROOVED PREFORMED THERMOPLASTIC WORDS
11. PAVEMENT MARKING GROOVED PREFORMED THERMOPLASTIC ARROW
12. PAVEMENT MARKING EPOXY 8-INCH
13. PAVEMENT MARKING GROOVED WET REFLECTIVE TAPE 4-INCH (YELLOW)
14. PAVEMENT MARKING EPOXY ARROW
15. PAVEMENT MARKING EPOXY WORDS

NOTES:

REFER TO STOP BAR CONSTRUCTION DETAIL
FOR LOCATIONS UNLESS OTHERWISE DIMENSIONED.

PROJECT NO:2240-00-67	HWY:STH 36	COUNTY:RACINE	PAVEMENT MARKING	SHEET	E

2

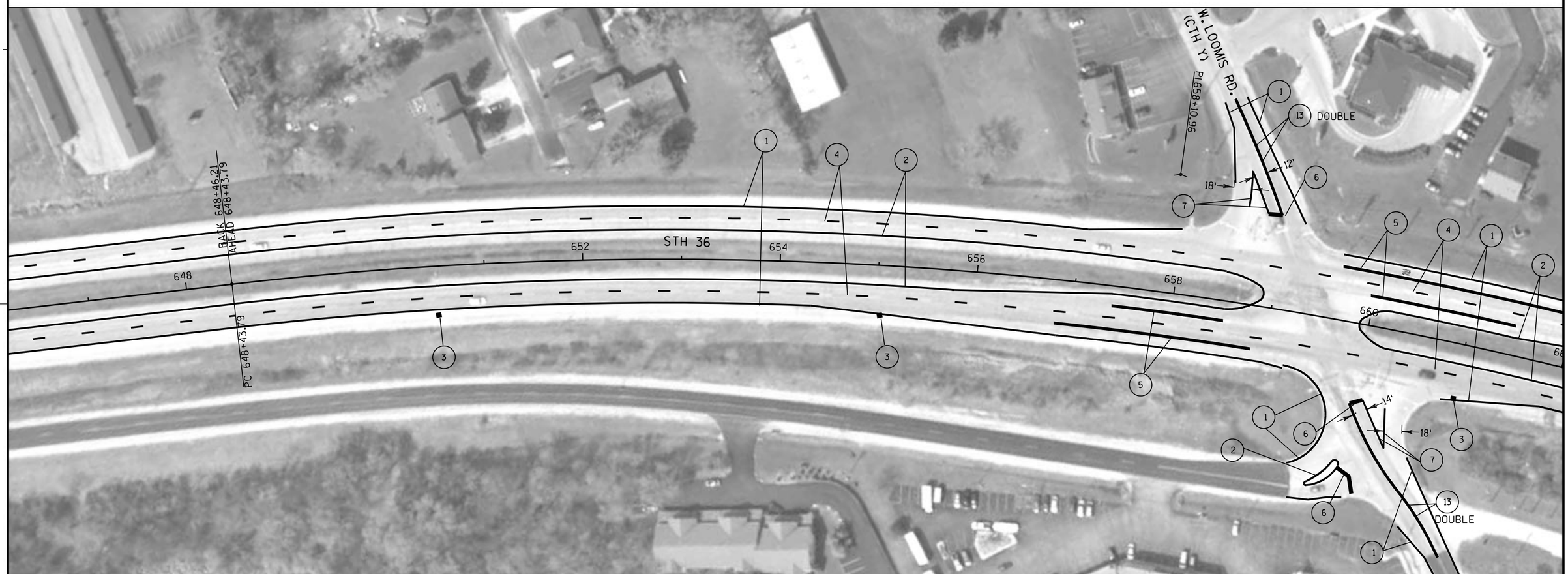

LEGEND

1. PAVEMENT MARKING EPOXY 4-INCH WHITE
2. PAVEMENT MARKING EPOXY 4-INCH YELLOW
3. PAVEMENT MARKING OUTFALL
4. PAVEMENT MARKING GROOVED WET REFLECTIVE CONTRAST TAPE 4-INCH (WHITE)
5. PAVEMENT MARKING GROOVED WET REFLECTIVE CONTRAST TAPE 8-INCH
6. PAVEMENT MARKING GROOVED PREFORMED THERMOPLASTIC STOP BAR, 18-INCH, SEE NOTE
7. PAVEMENT MARKING GROOVED WET REFLECTIVE TAPE 8-INCH
9. PAVEMENT MARKING DIAGONAL EPOXY 12-INCH (10' SPACING)
10. PAVEMENT MARKING GROOVED PREFORMED THERMOPLASTIC WORDS
11. PAVEMENT MARKING GROOVED PREFORMED THERMOPLASTIC ARROW
12. PAVEMENT MARKING EPOXY 8-INCH
13. PAVEMENT MARKING GROOVED WET REFLECTIVE TAPE 4-INCH (YELLOW)
14. PAVEMENT MARKING EPOXY ARROW
15. PAVEMENT MARKING EPOXY WORDS

NOTES:

1. REFER TO STOP BAR SEE CONSTRUCTION DETAIL FOR LOCATIONS UNLESS DIMENSION OTHERWISE.
2. STOP BARS AT LOOMIS SHALL BE PLACED 7 FT. BEHIND ℄ OF SIDEWALK RAMPS.

PROJECT NO:2240-00-67	HWY:STH 36	COUNTY:RACINE	PAVEMENT MARKING	SHEET	E

2

LEGEND

1. PAVEMENT MARKING EPOXY 4-INCH WHITE
2. PAVEMENT MARKING EPOXY 4-INCH YELLOW
3. PAVEMENT MARKING OUTFALL
4. PAVEMENT MARKING GROOVED WET REFLECTIVE CONTRAST TAPE 4-INCH (WHITE)
5. PAVEMENT MARKING GROOVED WET REFLECTIVE CONTRAST TAPE 8-INCH
6. PAVEMENT MARKING GROOVED PREFORMED THERMOPLASTIC STOP BAR, 18-INCH, SEE NOTE
7. PAVEMENT MARKING GROOVED WET REFLECTIVE TAPE 8-INCH
9. PAVEMENT MARKING DIAGONAL EPOXY 12-INCH (10' SPACING)
10. PAVEMENT MARKING GROOVED PREFORMED THERMOPLASTIC WORDS
11. PAVEMENT MARKING GROOVED PREFORMED THERMOPLASTIC ARROW
12. PAVEMENT MARKING EPOXY 8-INCH
13. PAVEMENT MARKING GROOVED WET REFLECTIVE TAPE 4-INCH (YELLOW)
14. PAVEMENT MARKING EPOXY ARROW
15. PAVEMENT MARKING EPOXY WORDS

NOTES:

REFER TO STOP BAR CONSTRUCTION DETAIL
FOR LOCATIONS UNLESS OTHERWISE DIMENSIONED.

PROJECT NO: 2240-00-67	HWY: STH 36	COUNTY: RACINE	PAVEMENT MARKING	SHEET	E

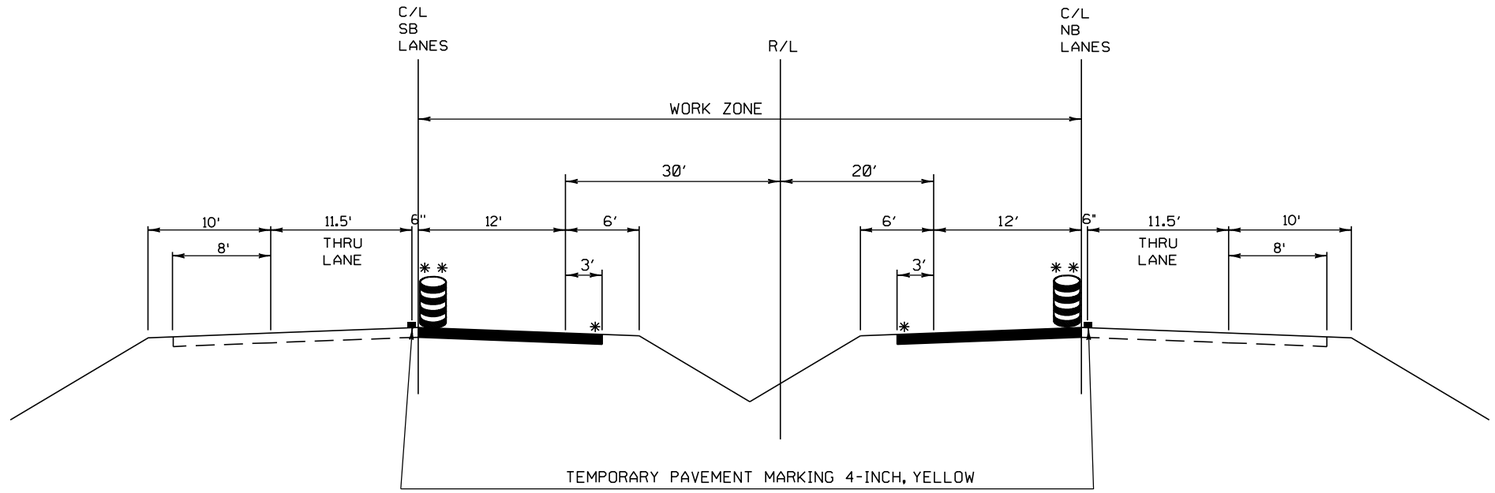

STAGE 1

INSIDE LANES WILL BE CLOSED FULL TIME.
LEFT TURN LANES WILL REMAIN OPEN
EXCEPT FOR CLOSURES ALLOWED DURING OFF
PEAK HOURS.

* DO NOT CONSTRUCT RUMBLE STRIP UNTIL AFTER STAGE 2

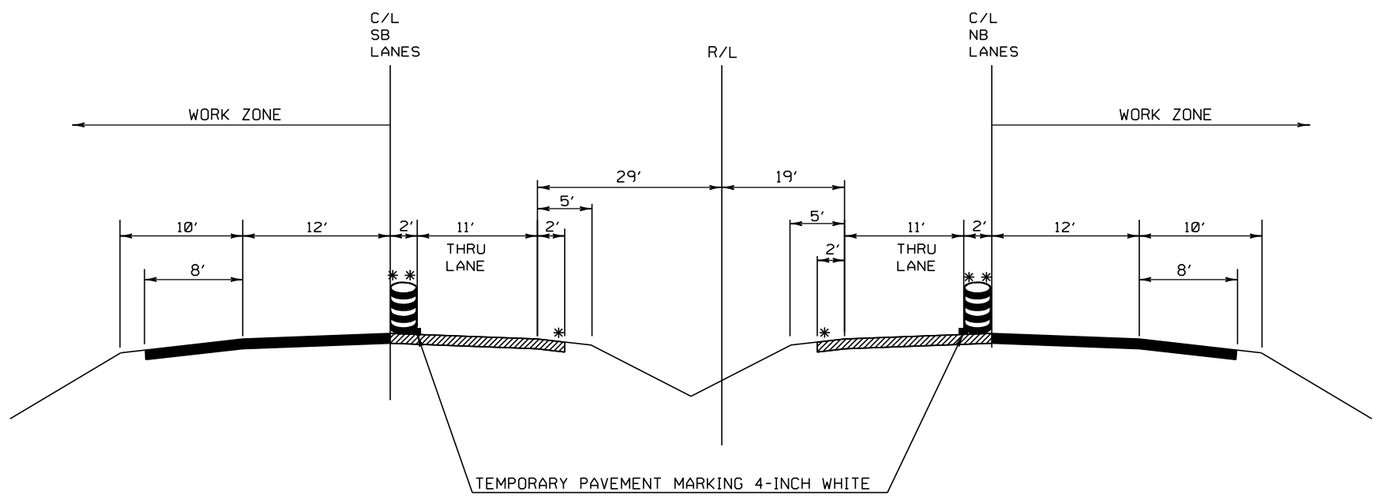

** AFTER MILLING & PAVING OPERATIONS ARE
COMPLETE MOVE DRUMS ONTO NEW ASPHALT
TO PROVIDE 2'SHY DISTANCE BETWEEN
EDGE OF DRIVING LANE & DRUM.

STAGE 2

OUTSIDE LANES WILL BE CLOSED FULL TIME.
RIGHT TURN LANES WILL REMAIN OPEN
EXCEPT FOR CLOSURES ALLOWED DURING OFF
PEAK HOURS.

2

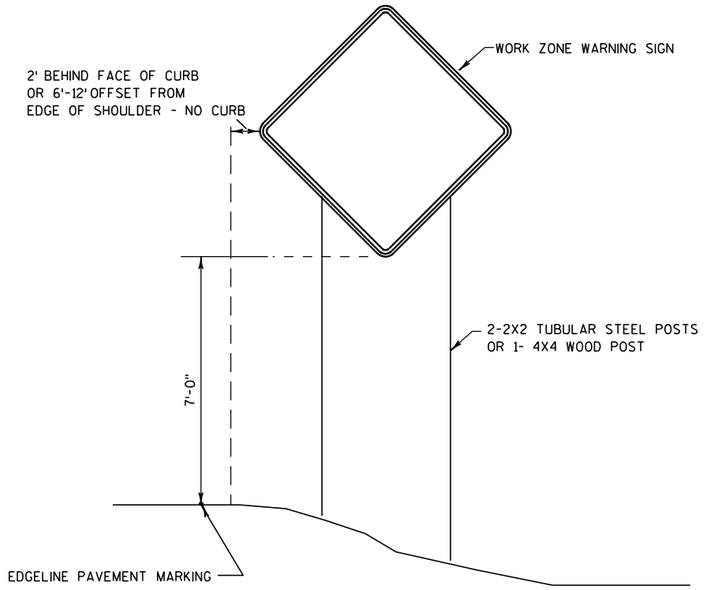

TYPICAL TEMPORARY TRAFFIC CONTROL DETAIL
MOUNTING ON FIXED SUPPORT

LONG TERM
7 DAYS OR MORE

GENERAL NOTES FOR TRAFFIC CONTROL

1. TRAFFIC CONTROL DRUMS IN TAPERS, SHALL BE EQUIPPED WITH WARNING LIGHTS, TYPE "C", ONE WAY LIGHTS IN TAPERS ONLY, UNLESS OTHERWISE SHOWN.
2. SIGN LOCATIONS ARE APPROXIMATE. THE ACTUAL LOCATION SPACING MAY BE ADJUSTED AS DIRECTED BY THE ENGINEER TO MEET FIELD CONDITIONS.
3. "WO" SIGNS ARE THE SAME AS "W" SIGNS EXCEPT THE BACKGROUND IS REFLECTIVE ORANGE.
4. ALL TRAFFIC CONTROL SIGNS SHALL BE 48" X 48" UNLESS OTHERWISE NOTED IN THE PLANS.
5. BARRICADE STRIPES ARE TO BE SLOPED DOWNWARD IN THE DIRECTION OF TRAFFIC FLOW.

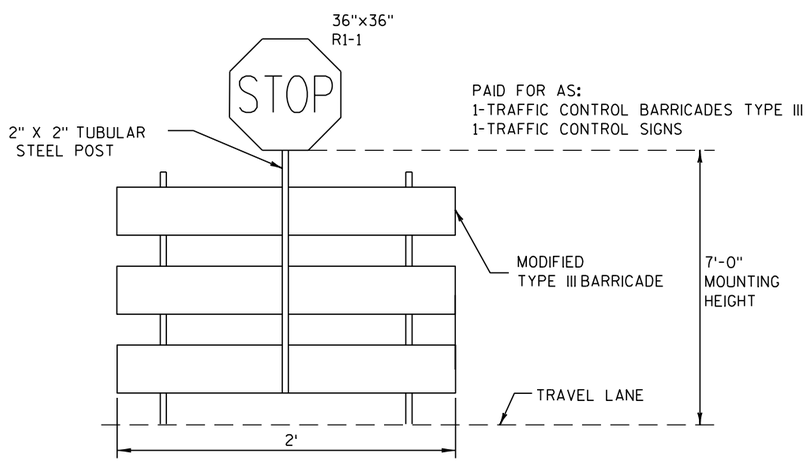

TEMPORARY STOP SIGN

PROJECT NO:2240-00-67	HWY:STH 36	COUNTY:RACINE	TEMPORARY TRAFFIC CONTROL DETAIL	SHEET	E

2

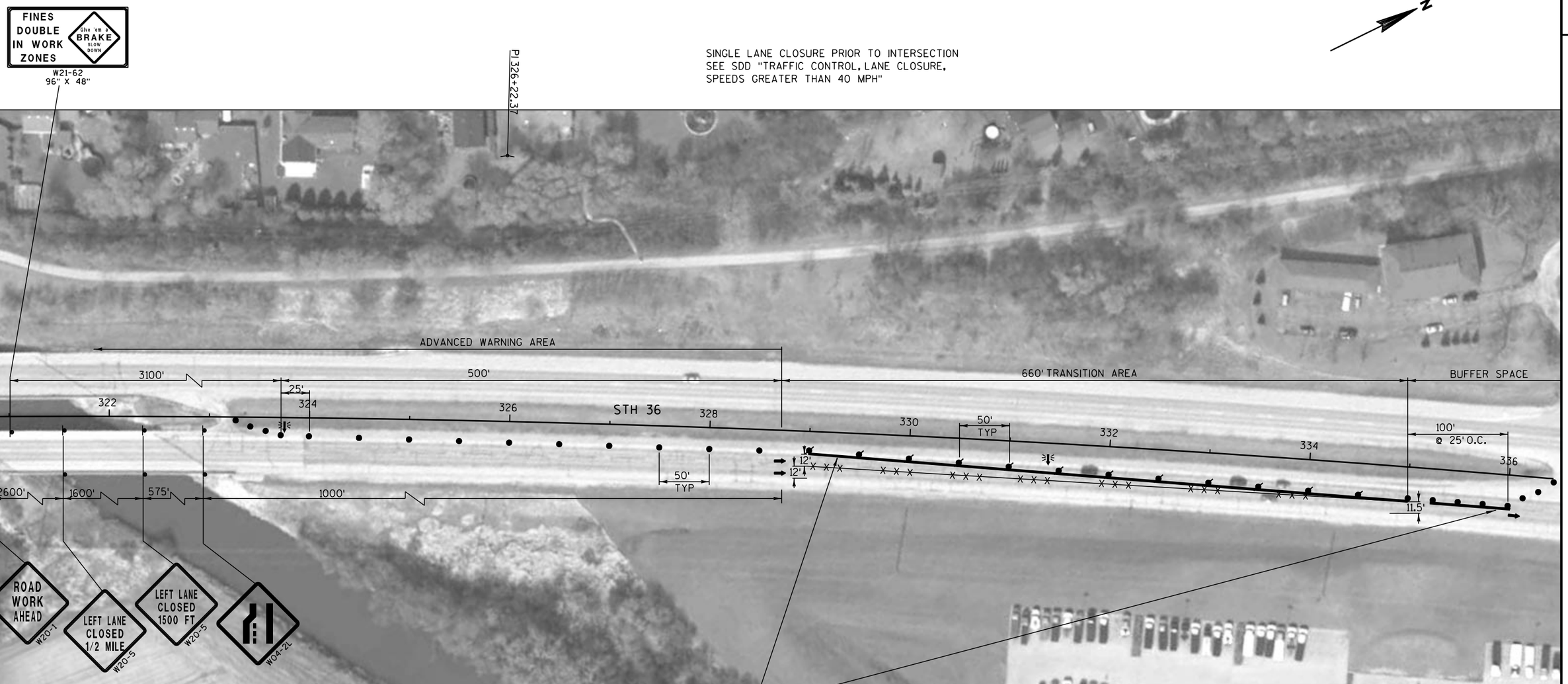

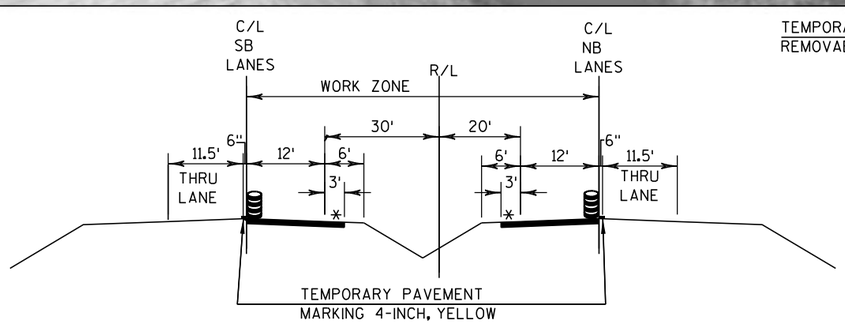

TEMPORARY PAVEMENT MARKING
REMOVABLE TAPE 4-INCH, YELLOW

LEGEND

- TYPE III BARRICADE WITH ATTACHED SIGN
- TRAFFIC CONTROL DRUM
- TRAFFIC CONTROL DRUM WITH WARNING LIGHT (TYPE C)
- ARROW BOARD
- SIGN ATTACHED TO POST
- SIGN ON PORTABLE SUPPORT (5' MIN. MOUNTING HEIGHT)
- DIRECTION OF TRAFFIC FLOW
- WORK ZONE
- AREA TO BE MAINTAINED AT ALL TIMES EXCEPT DURING WORK OPERATIONS ALLOWED DURING OFF PEAK HOURS (FLAGGING REQUIRED)
- (A) TEMPORARY PAVEMENT MARKING, 4-INCH, YELLOW
- (B) TEMPORARY PAVEMENT MARKING, 8-INCH, WHITE
- REMOVING PAVEMENT MARKINGS

PROJECT NO:2240-00-67	HWY:STH 36	COUNTY:RACINE	TRAFFIC CONTROL STAGE 1	SHEET	E

SINGLE LANE CLOSURE THROUGH INTERSECTION
SEE SDD "TRAFFIC CONTROL, INTERSECTION
WITHIN SINGLE LANE CLOSURE."

LEGEND

W01-6
48" X 24"

TEMPORARY PAVEMENT MARKING
REMOVABLE TAPE 4-INCH, YELLOW

- TYPE III BARRICADE WITH ATTACHED SIGN
- TRAFFIC CONTROL DRUM
- TRAFFIC CONTROL DRUM WITH WARNING LIGHT (TYPE C)
- ARROW BOARD
- SIGN ATTACHED TO POST
- SIGN ON PORTABLE SUPPORT (5' MIN. MOUNTING HEIGHT)
- DIRECTION OF TRAFFIC FLOW
- WORK ZONE
- AREA TO BE MAINTAINED AT ALL TIMES EXCEPT DURING WORK OPERATIONS ALLOWED DURING OFF PEAK HOURS (FLAGGING REQUIRED)
- (A) TEMPORARY PAVEMENT MARKING, 4-INCH, YELLOW
- (B) TEMPORARY PAVEMENT MARKING, 8-INCH, WHITE
- REMOVING PAVEMENT MARKINGS

TEMPORARY PAVEMENT MARKING
REMOVABLE TAPE 4-INCH, YELLOW

SINGLE LANE CLOSURE PRIOR TO INTERSECTION
SEE SDD "TRAFFIC CONTROL, LANE CLOSURE,
SPEEDS GREATER THAN 40 MPH"

PROJECT NO:2240-00-67	HWY:STH 36	COUNTY:RACINE	TRAFFIC CONTROL STAGE 1	SHEET	E

SINGLE LANE CLOSURE THROUGH INTERSECTION
SEE SDD "TRAFFIC CONTROL, INTERSECTION
WITHIN SINGLE LANE CLOSURE."

TEMPORARY LANE CLOSURES THROUGH
INTERSECTIONS, SEE SDD "MOVING OPERATIONS."

LEGEND

- TYPE III BARRICADE WITH ATTACHED SIGN
- TRAFFIC CONTROL DRUM
- TRAFFIC CONTROL DRUM WITH WARNING LIGHT (TYPE C)
- ARROW BOARD
- SIGN ATTACHED TO POST
- SIGN ON PORTABLE SUPPORT (5' MIN. MOUNTING HEIGHT)
- DIRECTION OF TRAFFIC FLOW
- WORK ZONE
- AREA TO BE MAINTAINED AT ALL TIMES EXCEPT DURING WORK OPERATIONS ALLOWED DURING OFF PEAK HOURS (FLAGGING REQUIRED)
- (A) TEMPORARY PAVEMENT MARKING, 4-INCH, YELLOW
- (B) TEMPORARY PAVEMENT MARKING, 8-INCH, WHITE
- REMOVING PAVEMENT MARKINGS

PROJECT NO:2240-00-67	HWY:STH 36	COUNTY:RACINE	TRAFFIC CONTROL STAGE 1	SHEET	E

LEGEND

- TYPE III BARRICADE WITH ATTACHED SIGN
- TRAFFIC CONTROL DRUM
- TRAFFIC CONTROL DRUM WITH WARNING LIGHT (TYPE C)
- ARROW BOARD
- SIGN ATTACHED TO POST
- SIGN ON PORTABLE SUPPORT (5' MIN. MOUNTING HEIGHT)
- DIRECTION OF TRAFFIC FLOW
- WORK ZONE
- AREA TO BE MAINTAINED AT ALL TIMES EXCEPT DURING WORK OPERATIONS ALLOWED DURING OFF PEAK HOURS (FLAGGING REQUIRED)
- (A) TEMPORARY PAVEMENT MARKING, 4-INCH, YELLOW
- (B) TEMPORARY PAVEMENT MARKING, 8-INCH, WHITE
- REMOVING PAVEMENT MARKINGS

PROJECT NO:2240-00-67	HWY:STH 36	COUNTY:RACINE	TRAFFIC CONTROL STAGE 1	SHEET	E

2

SINGLE LANE CLOSURE THROUGH INTERSECTION
SEE SDD "TRAFFIC CONTROL, INTERSECTION
WITHIN SINGLE LANE CLOSURE."

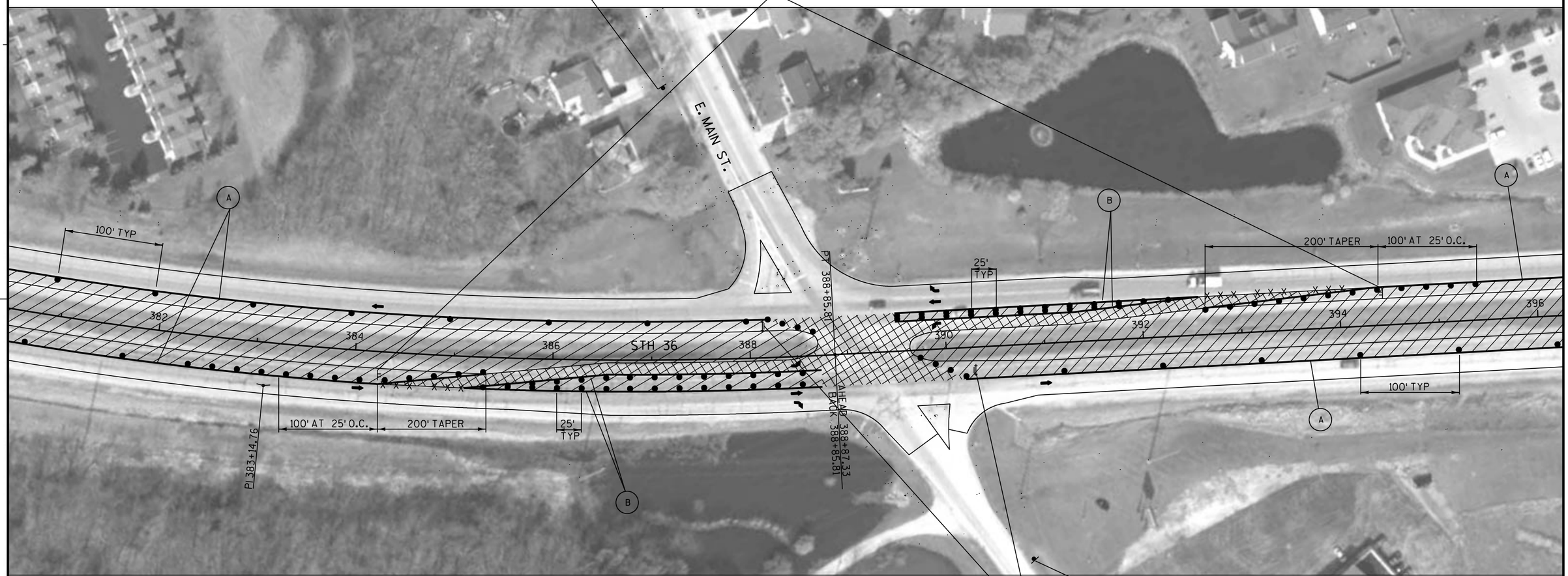

LEGEND

- TYPE III BARRICADE WITH ATTACHED SIGN
- TRAFFIC CONTROL DRUM
- TRAFFIC CONTROL DRUM WITH WARNING LIGHT (TYPE C)
- ARROW BOARD
- SIGN ATTACHED TO POST
- SIGN ON PORTABLE SUPPORT (5' MIN. MOUNTING HEIGHT)
- DIRECTION OF TRAFFIC FLOW
- WORK ZONE
- AREA TO BE MAINTAINED AT ALL TIMES EXCEPT DURING WORK OPERATIONS ALLOWED DURING OFF PEAK HOURS (FLAGGING REQUIRED)
- (A) TEMPORARY PAVEMENT MARKING, 4-INCH, YELLOW
- (B) TEMPORARY PAVEMENT MARKING, 8-INCH, WHITE
- REMOVING PAVEMENT MARKINGS

PROJECT NO:2240-00-67	HWY:STH 36	COUNTY:RACINE	TRAFFIC CONTROL STAGE 1	SHEET	E

2

SINGLE LANE CLOSURE THROUGH INTERSECTION
SEE SDD "TRAFFIC CONTROL, INTERSECTION
WITHIN SINGLE LANE CLOSURE."

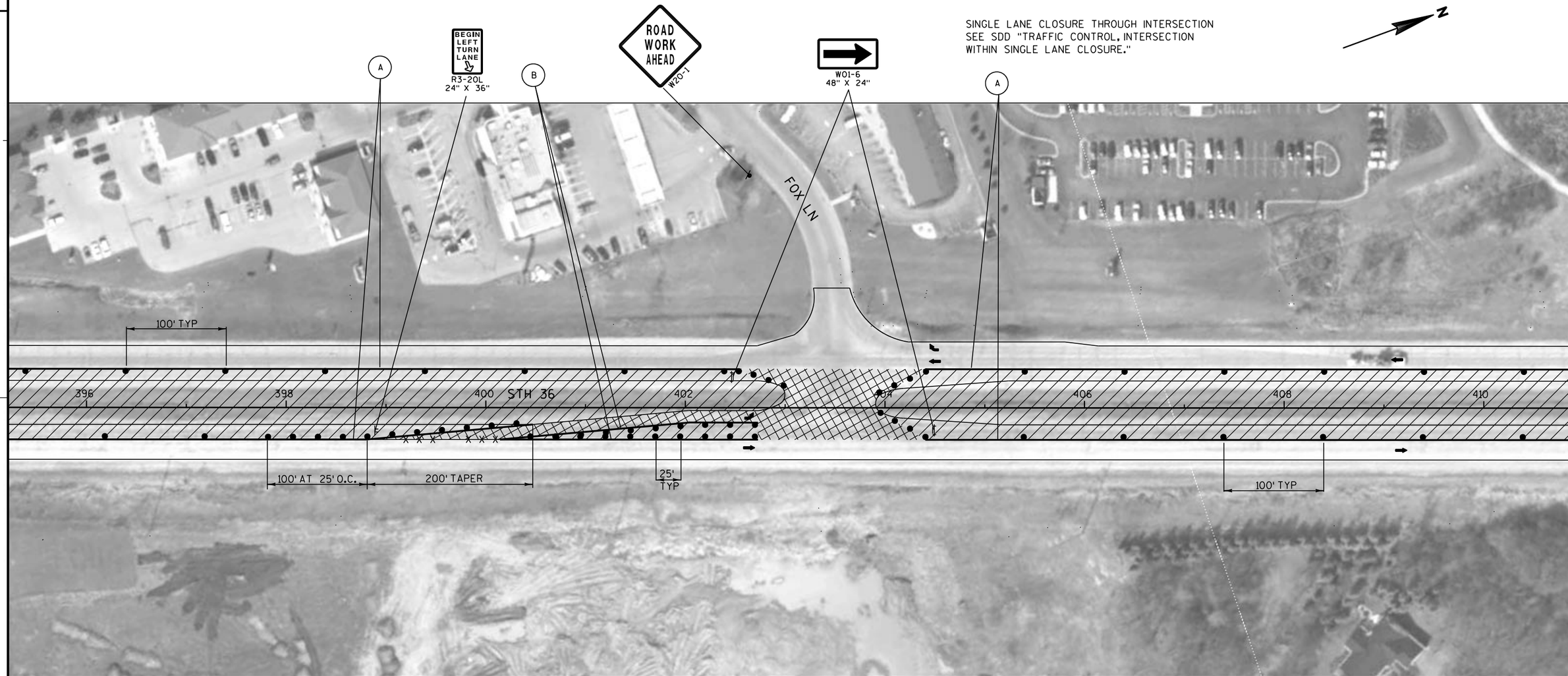

LEGEND

- TYPE III BARRICADE WITH ATTACHED SIGN
- TRAFFIC CONTROL DRUM
- TRAFFIC CONTROL DRUM WITH WARNING LIGHT (TYPE C)
- ARROW BOARD
- SIGN ATTACHED TO POST
- SIGN ON PORTABLE SUPPORT (5' MIN. MOUNTING HEIGHT)
- DIRECTION OF TRAFFIC FLOW
- WORK ZONE
- AREA TO BE MAINTAINED AT ALL TIMES EXCEPT DURING WORK OPERATIONS ALLOWED DURING OFF PEAK HOURS (FLAGGING REQUIRED)
- (A) TEMPORARY PAVEMENT MARKING, 4-INCH, YELLOW
- (B) TEMPORARY PAVEMENT MARKING, 8-INCH, WHITE
- REMOVING PAVEMENT MARKINGS

PROJECT NO:2240-00-67	HWY:STH 36	COUNTY:RACINE	TRAFFIC CONTROL STAGE 1	SHEET	E

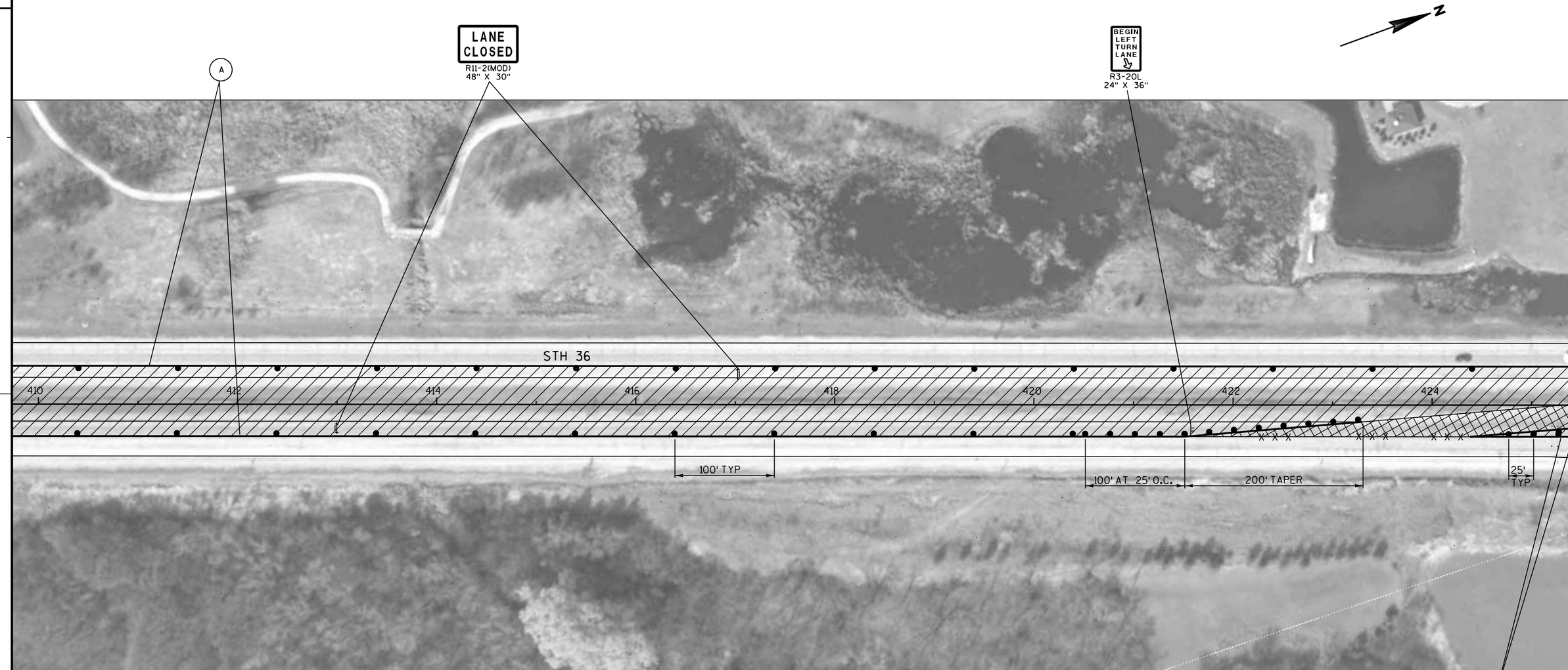

LEGEND

- TYPE III BARRICADE WITH ATTACHED SIGN
- TRAFFIC CONTROL DRUM
- TRAFFIC CONTROL DRUM WITH WARNING LIGHT (TYPE C)
- ARROW BOARD
- SIGN ATTACHED TO POST
- SIGN ON PORTABLE SUPPORT (5' MIN. MOUNTING HEIGHT)
- DIRECTION OF TRAFFIC FLOW
- WORK ZONE
- AREA TO BE MAINTAINED AT ALL TIMES EXCEPT DURING WORK OPERATIONS ALLOWED DURING OFF PEAK HOURS (FLAGGING REQUIRED)
- (A) TEMPORARY PAVEMENT MARKING, 4-INCH, YELLOW
- (B) TEMPORARY PAVEMENT MARKING, 8-INCH, WHITE
- REMOVING PAVEMENT MARKINGS

PROJECT NO:2240-00-67	HWY:STH 36	COUNTY:RACINE	TRAFFIC CONTROL STAGE 1	SHEET	E

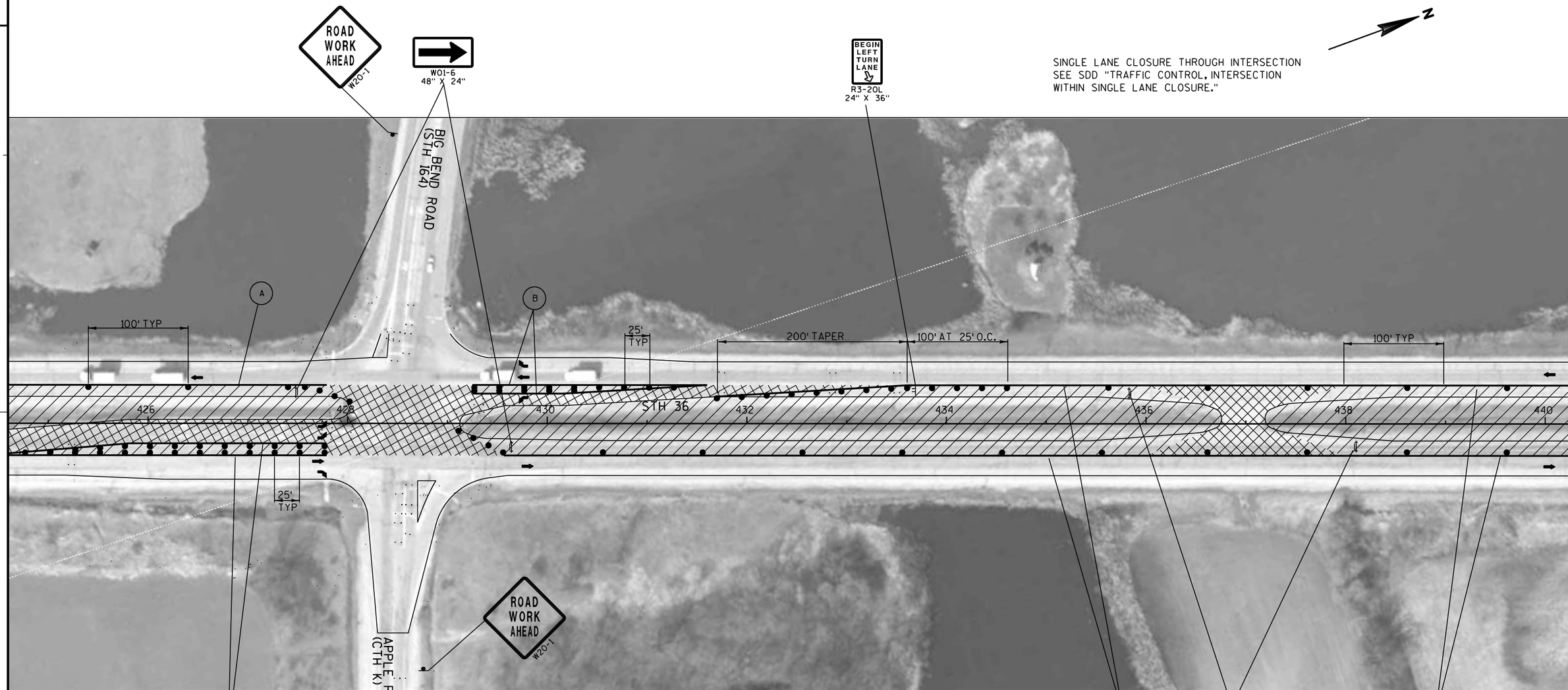

LEGEND

- TYPE III BARRICADE WITH ATTACHED SIGN
- TRAFFIC CONTROL DRUM
- TRAFFIC CONTROL DRUM WITH WARNING LIGHT (TYPE C)
- ARROW BOARD
- SIGN ATTACHED TO POST
- SIGN ON PORTABLE SUPPORT (5' MIN. MOUNTING HEIGHT)
- DIRECTION OF TRAFFIC FLOW
- WORK ZONE
- AREA TO BE MAINTAINED AT ALL TIMES EXCEPT DURING WORK OPERATIONS ALLOWED DURING OFF PEAK HOURS (FLAGGING REQUIRED)
- (A) TEMPORARY PAVEMENT MARKING, 4-INCH, YELLOW
- (B) TEMPORARY PAVEMENT MARKING, 8-INCH, WHITE
- REMOVING PAVEMENT MARKINGS

PROJECT NO:2240-00-67	HWY:STH 36	COUNTY:RACINE	TRAFFIC CONTROL STAGE 1	SHEET	E

SINGLE LANE CLOSURE THROUGH INTERSECTION
SEE SDD "TRAFFIC CONTROL, INTERSECTION
WITHIN SINGLE LANE CLOSURE."

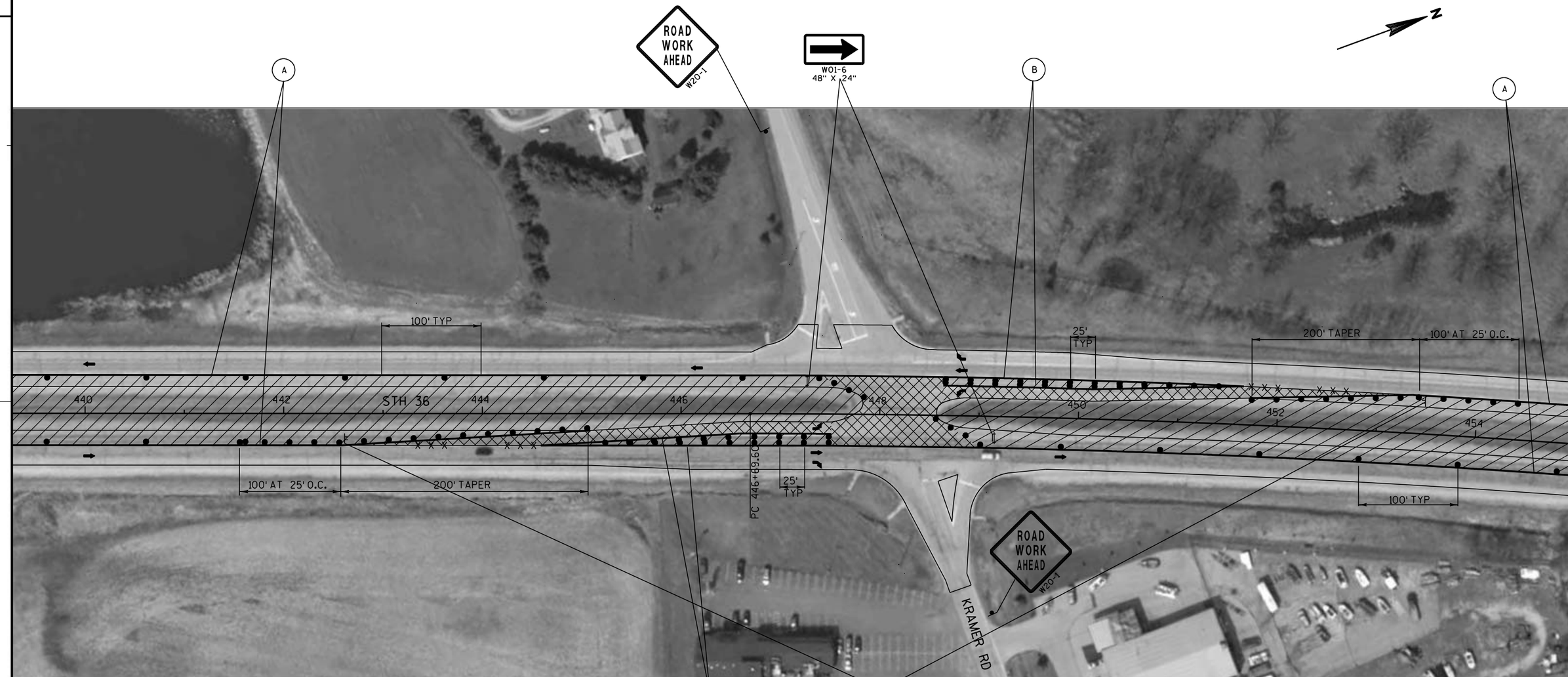

LEGEND

- TYPE III BARRICADE WITH ATTACHED SIGN
- TRAFFIC CONTROL DRUM
- TRAFFIC CONTROL DRUM WITH WARNING LIGHT (TYPE C)
- ARROW BOARD
- SIGN ATTACHED TO POST
- SIGN ON PORTABLE SUPPORT (5' MIN. MOUNTING HEIGHT)
- DIRECTION OF TRAFFIC FLOW
- WORK ZONE
- AREA TO BE MAINTAINED AT ALL TIMES EXCEPT DURING WORK OPERATIONS ALLOWED DURING OFF PEAK HOURS (FLAGGING REQUIRED)
- (A) TEMPORARY PAVEMENT MARKING, 4-INCH, YELLOW
- (B) TEMPORARY PAVEMENT MARKING, 8-INCH, WHITE
- REMOVING PAVEMENT MARKINGS

PROJECT NO:2240-00-67	HWY:STH 36	COUNTY:RACINE	TRAFFIC CONTROL STAGE 1	SHEET	E

2

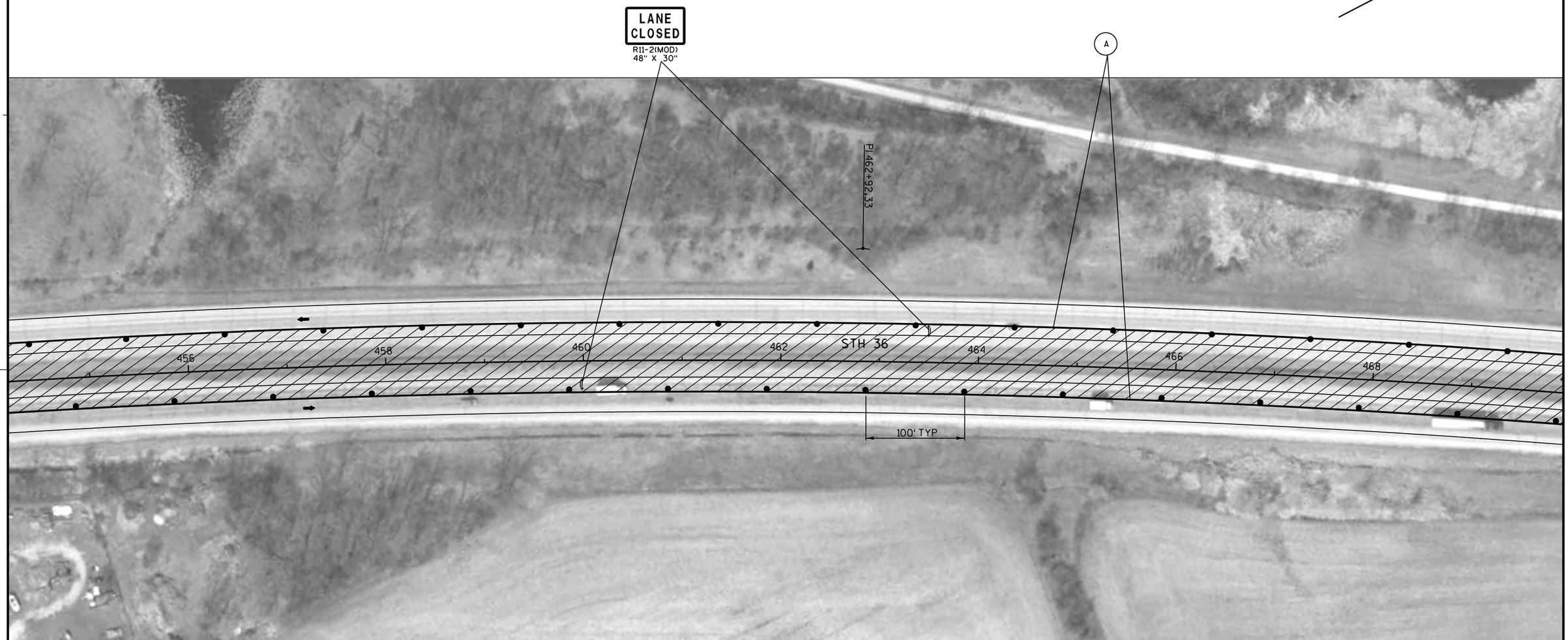

LEGEND

- TYPE III BARRICADE WITH ATTACHED SIGN
- TRAFFIC CONTROL DRUM
- TRAFFIC CONTROL DRUM WITH WARNING LIGHT (TYPE C)
- ARROW BOARD
- SIGN ATTACHED TO POST
- SIGN ON PORTABLE SUPPORT (5' MIN. MOUNTING HEIGHT)
- DIRECTION OF TRAFFIC FLOW
- WORK ZONE
- AREA TO BE MAINTAINED AT ALL TIMES EXCEPT DURING WORK OPERATIONS ALLOWED DURING OFF PEAK HOURS (FLAGGING REQUIRED)
- (A) TEMPORARY PAVEMENT MARKING, 4-INCH, YELLOW
- (B) TEMPORARY PAVEMENT MARKING, 8-INCH, WHITE
- REMOVING PAVEMENT MARKINGS

PROJECT NO:2240-00-67	HWY:STH 36	COUNTY:RACINE	TRAFFIC CONTROL STAGE 1	SHEET	E

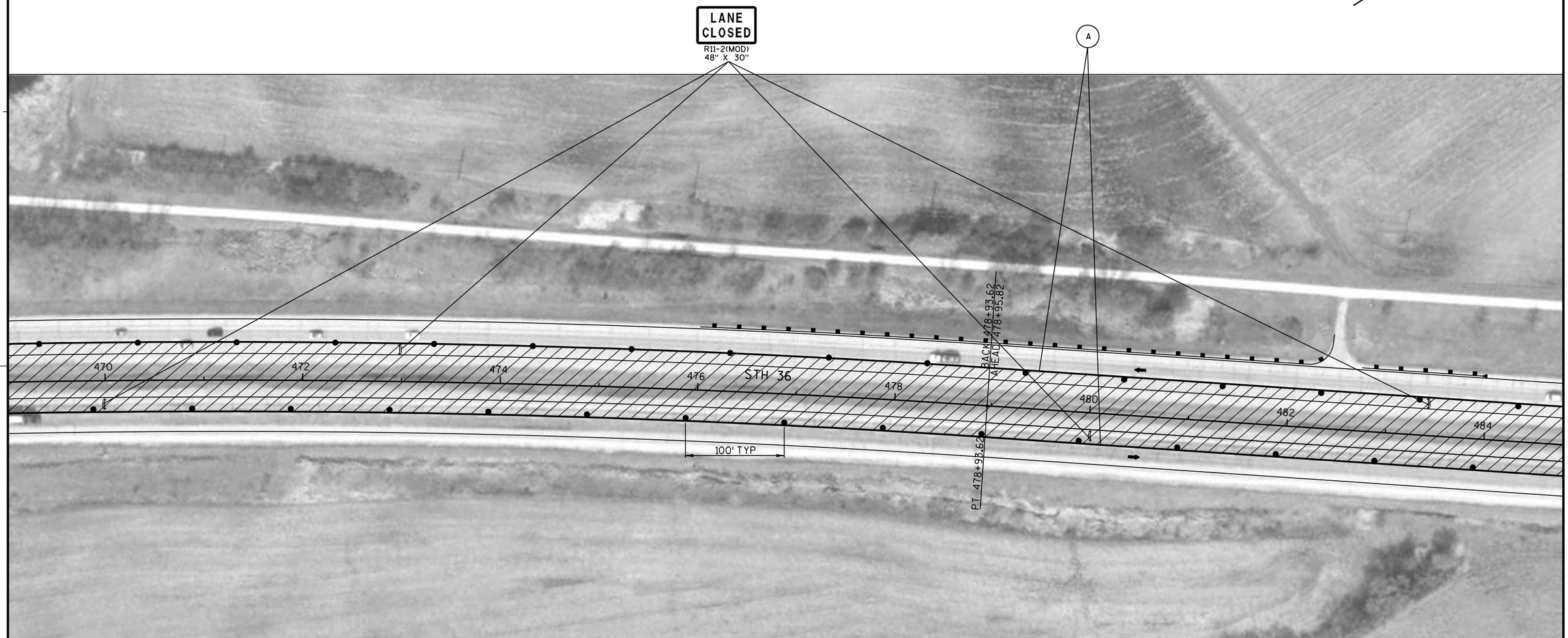

LEGEND

- TYPE III BARRICADE WITH ATTACHED SIGN
- TRAFFIC CONTROL DRUM
- TRAFFIC CONTROL DRUM WITH WARNING LIGHT (TYPE C)
- ARROW BOARD
- SIGN ATTACHED TO POST
- SIGN ON PORTABLE SUPPORT (5' MIN. MOUNTING HEIGHT)
- DIRECTION OF TRAFFIC FLOW
- WORK ZONE
- AREA TO BE MAINTAINED AT ALL TIMES EXCEPT DURING WORK OPERATIONS ALLOWED DURING OFF PEAK HOURS (FLAGGING REQUIRED)
- (A) TEMPORARY PAVEMENT MARKING, 4-INCH, YELLOW
- (B) TEMPORARY PAVEMENT MARKING, 8-INCH, WHITE
- REMOVING PAVEMENT MARKINGS

PROJECT NO:2240-00-67	HWY:STH 36	COUNTY:RACINE	TRAFFIC CONTROL STAGE 1	SHEET	E

SINGLE LANE CLOSURE THROUGH INTERSECTION
SEE SDD "TRAFFIC CONTROL, INTERSECTION
WITHIN SINGLE LANE CLOSURE."

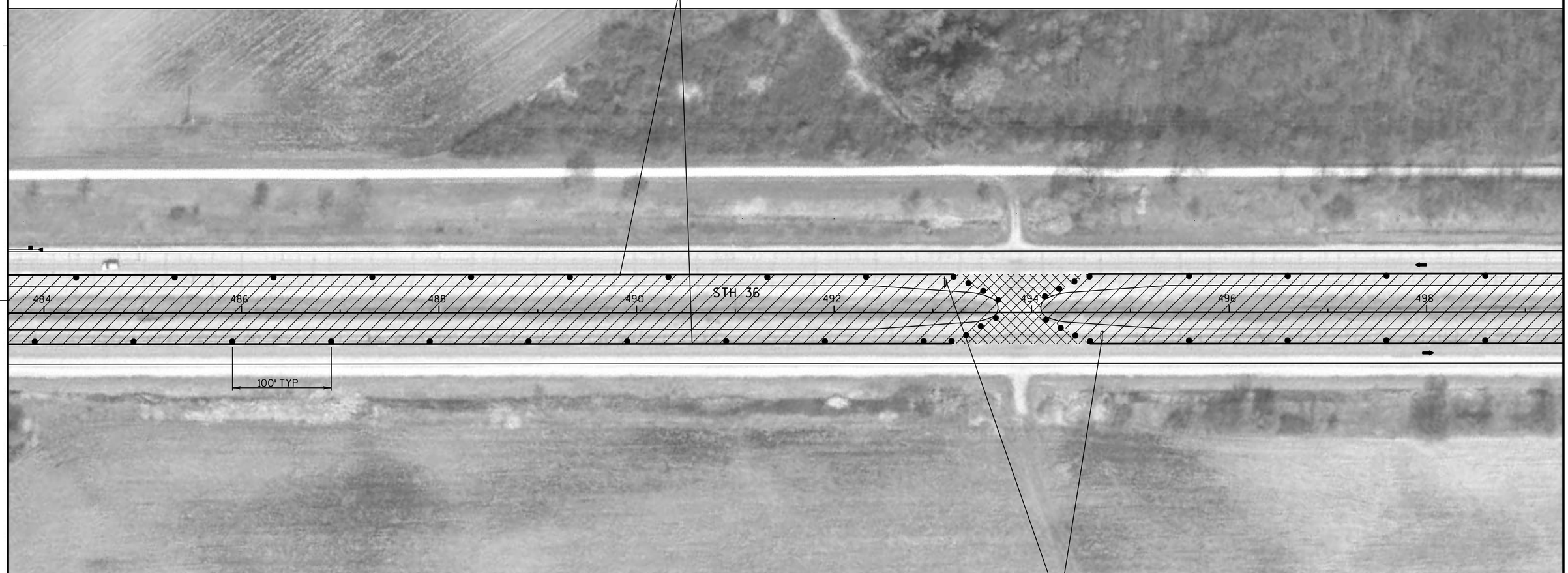

LEGEND

- TYPE III BARRICADE WITH ATTACHED SIGN
- TRAFFIC CONTROL DRUM
- TRAFFIC CONTROL DRUM WITH WARNING LIGHT (TYPE C)
- ARROW BOARD
- SIGN ATTACHED TO POST
- SIGN ON PORTABLE SUPPORT (5' MIN. MOUNTING HEIGHT)
- DIRECTION OF TRAFFIC FLOW
- WORK ZONE
- AREA TO BE MAINTAINED AT ALL TIMES EXCEPT DURING WORK OPERATIONS ALLOWED DURING OFF PEAK HOURS (FLAGGING REQUIRED)
- (A) TEMPORARY PAVEMENT MARKING, 4-INCH, YELLOW
- (B) TEMPORARY PAVEMENT MARKING, 8-INCH, WHITE
- REMOVING PAVEMENT MARKINGS

PROJECT NO:2240-00-67	HWY:STH 36	COUNTY:RACINE	TRAFFIC CONTROL STAGE 1	SHEET	E

2

SINGLE LANE CLOSURE THROUGH INTERSECTION
SEE SDD "TRAFFIC CONTROL, INTERSECTION
WITHIN SINGLE LANE CLOSURE."

LEGEND

- TYPE III BARRICADE WITH ATTACHED SIGN
- TRAFFIC CONTROL DRUM
- TRAFFIC CONTROL DRUM WITH WARNING LIGHT (TYPE C)
- ARROW BOARD
- SIGN ATTACHED TO POST
- SIGN ON PORTABLE SUPPORT (5' MIN. MOUNTING HEIGHT)
- DIRECTION OF TRAFFIC FLOW
- WORK ZONE
- AREA TO BE MAINTAINED AT ALL TIMES EXCEPT DURING WORK OPERATIONS ALLOWED DURING OFF PEAK HOURS (FLAGGING REQUIRED)
- (A) TEMPORARY PAVEMENT MARKING, 4-INCH, YELLOW
- (B) TEMPORARY PAVEMENT MARKING, 8-INCH, WHITE
- REMOVING PAVEMENT MARKINGS

PROJECT NO:2240-00-67	HWY:STH 36	COUNTY:RACINE	TRAFFIC CONTROL STAGE 1	SHEET	E

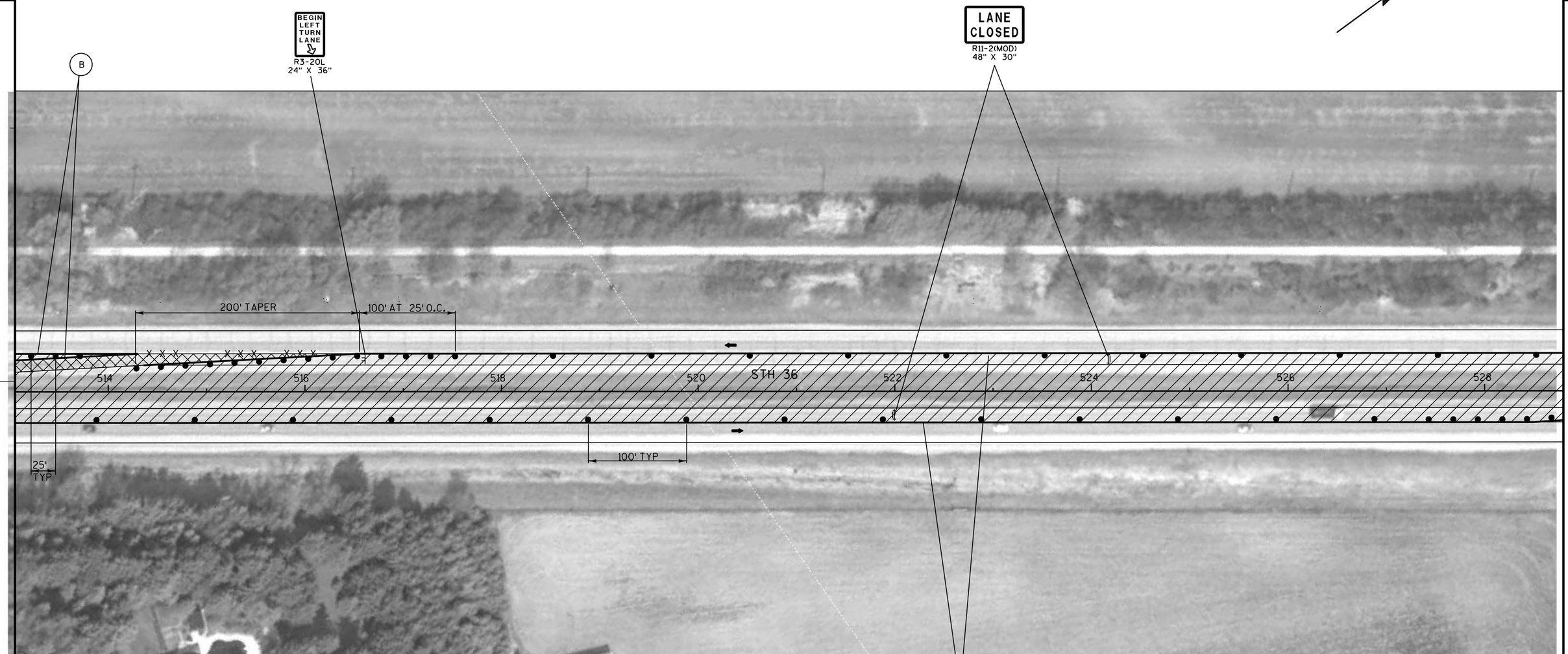

LEGEND

- TYPE III BARRICADE WITH ATTACHED SIGN
- TRAFFIC CONTROL DRUM
- TRAFFIC CONTROL DRUM WITH WARNING LIGHT (TYPE C)
- ARROW BOARD
- SIGN ATTACHED TO POST
- SIGN ON PORTABLE SUPPORT (5' MIN. MOUNTING HEIGHT)
- DIRECTION OF TRAFFIC FLOW
- WORK ZONE
- AREA TO BE MAINTAINED AT ALL TIMES EXCEPT DURING WORK OPERATIONS ALLOWED DURING OFF PEAK HOURS (FLAGGING REQUIRED)
- (A) TEMPORARY PAVEMENT MARKING, 4-INCH, YELLOW
- (B) TEMPORARY PAVEMENT MARKING, 8-INCH, WHITE
- REMOVING PAVEMENT MARKINGS

PROJECT NO:2240-00-67	HWY:STH 36	COUNTY:RACINE	TRAFFIC CONTROL STAGE 1	SHEET	E

SINGLE LANE CLOSURE THROUGH INTERSECTION
SEE SDD "TRAFFIC CONTROL, INTERSECTION
WITHIN SINGLE LANE CLOSURE."

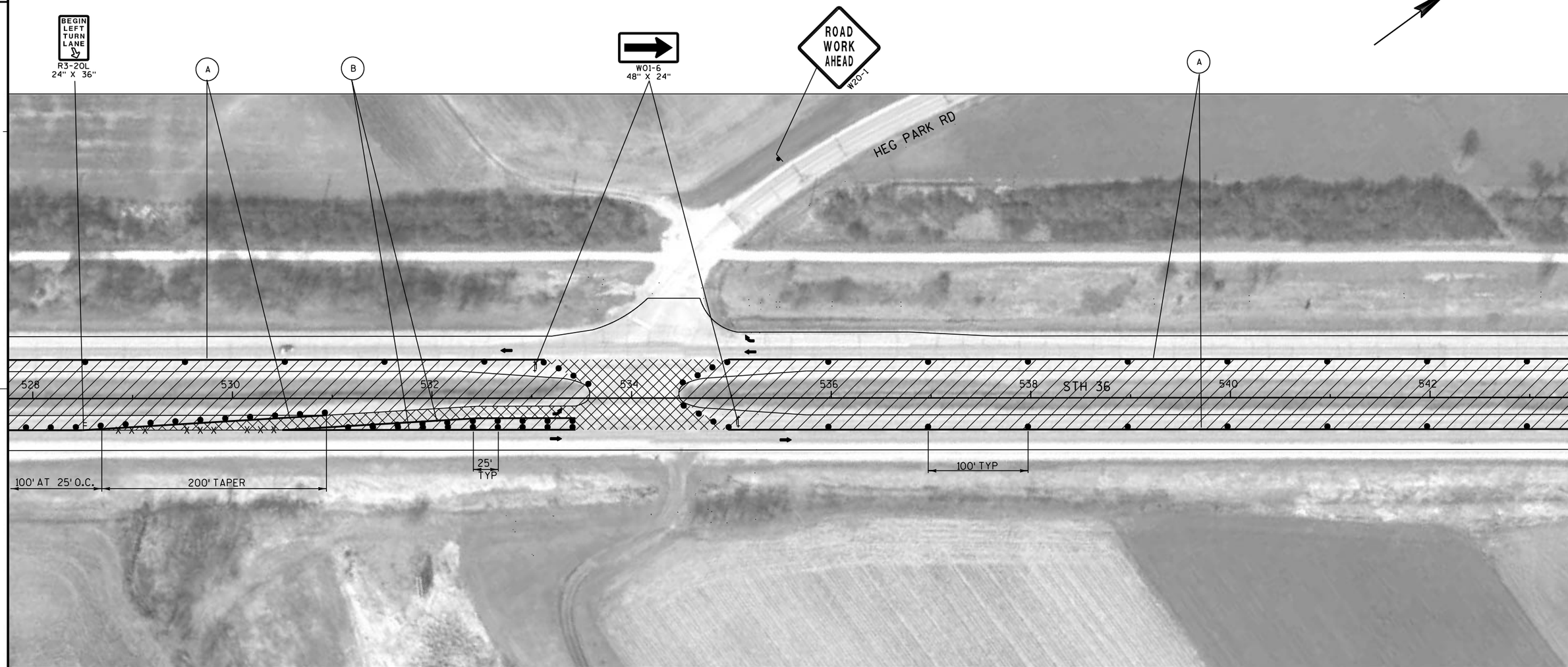

LEGEND

- TYPE III BARRICADE WITH ATTACHED SIGN
- TRAFFIC CONTROL DRUM
- TRAFFIC CONTROL DRUM WITH WARNING LIGHT (TYPE C)
- ARROW BOARD
- SIGN ATTACHED TO POST
- SIGN ON PORTABLE SUPPORT (5' MIN. MOUNTING HEIGHT)
- DIRECTION OF TRAFFIC FLOW
- WORK ZONE
- AREA TO BE MAINTAINED AT ALL TIMES EXCEPT DURING WORK OPERATIONS ALLOWED DURING OFF PEAK HOURS (FLAGGING REQUIRED)
- (A) TEMPORARY PAVEMENT MARKING, 4-INCH, YELLOW
- (B) TEMPORARY PAVEMENT MARKING, 8-INCH, WHITE
- REMOVING PAVEMENT MARKINGS

PROJECT NO:2240-00-67	HWY:STH 36	COUNTY:RACINE	TRAFFIC CONTROL STAGE 1	SHEET	E

SINGLE LANE CLOSURE THROUGH INTERSECTION
SEE SDD "TRAFFIC CONTROL, INTERSECTION
WITHIN SINGLE LANE CLOSURE."

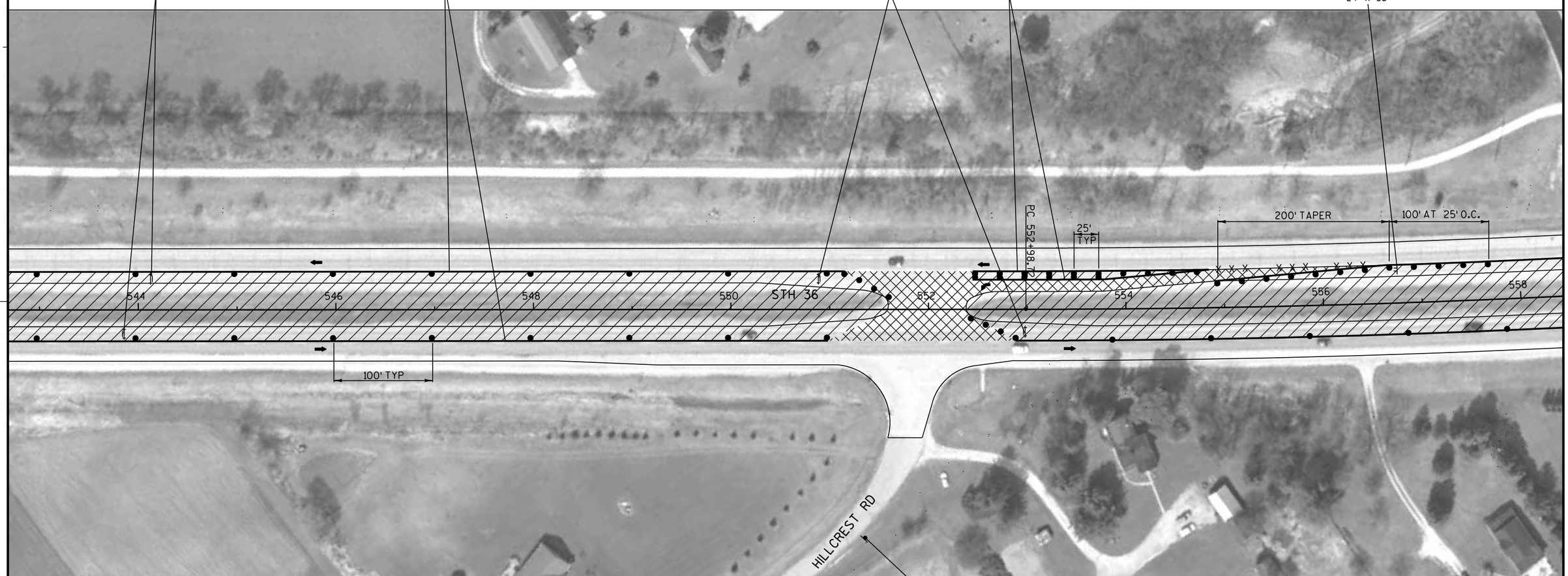

LEGEND

- TYPE III BARRICADE WITH ATTACHED SIGN
- TRAFFIC CONTROL DRUM
- TRAFFIC CONTROL DRUM WITH WARNING LIGHT (TYPE C)
- ARROW BOARD
- SIGN ATTACHED TO POST
- SIGN ON PORTABLE SUPPORT (5' MIN. MOUNTING HEIGHT)
- DIRECTION OF TRAFFIC FLOW
- WORK ZONE
- AREA TO BE MAINTAINED AT ALL TIMES EXCEPT DURING WORK OPERATIONS ALLOWED DURING OFF PEAK HOURS (FLAGGING REQUIRED)
- (A) TEMPORARY PAVEMENT MARKING, 4-INCH, YELLOW
- (B) TEMPORARY PAVEMENT MARKING, 8-INCH, WHITE
- REMOVING PAVEMENT MARKINGS

PROJECT NO:2240-00-67	HWY:STH 36	COUNTY:RACINE	TRAFFIC CONTROL STAGE 1	SHEET	E

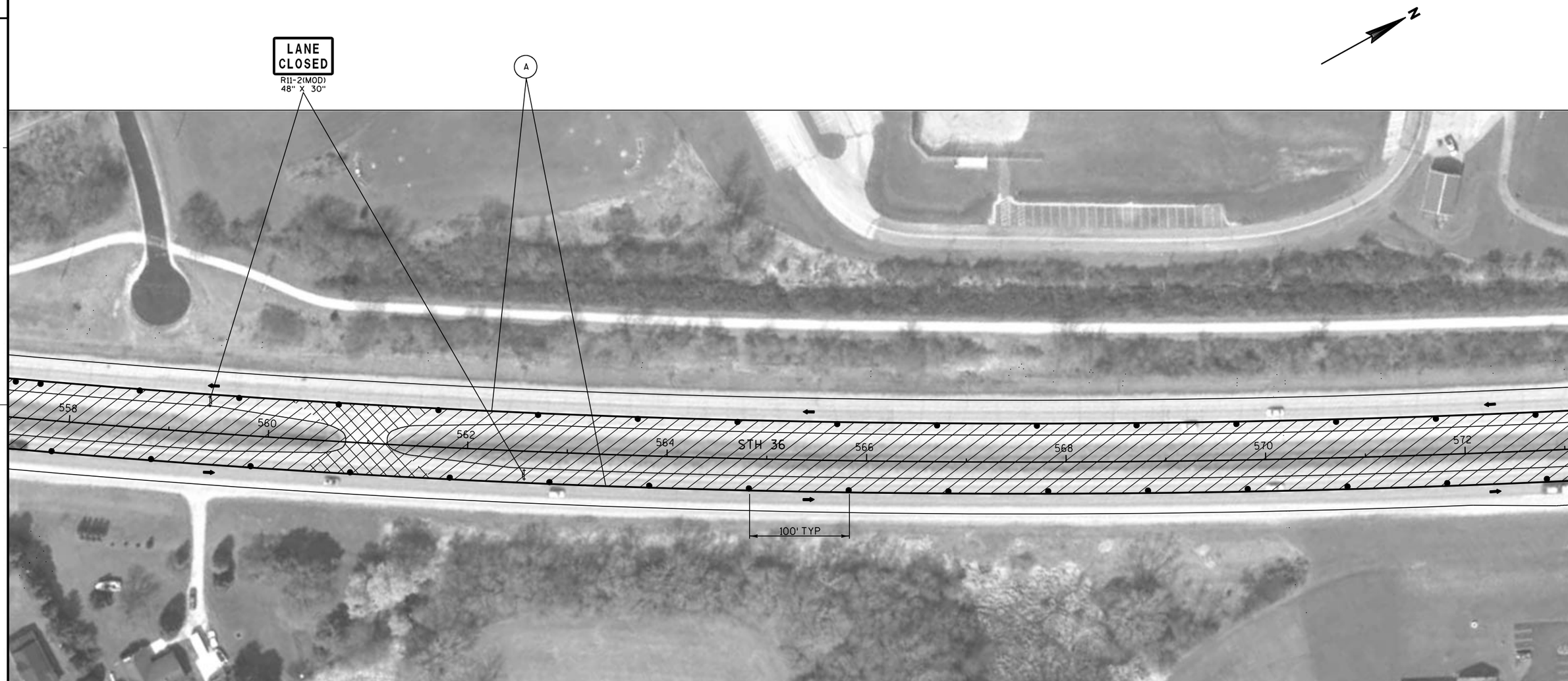

LEGEND

- TYPE III BARRICADE WITH ATTACHED SIGN
- TRAFFIC CONTROL DRUM
- TRAFFIC CONTROL DRUM WITH WARNING LIGHT (TYPE C)
- ARROW BOARD
- SIGN ATTACHED TO POST
- SIGN ON PORTABLE SUPPORT (5' MIN. MOUNTING HEIGHT)
- DIRECTION OF TRAFFIC FLOW
- WORK ZONE
- AREA TO BE MAINTAINED AT ALL TIMES EXCEPT DURING WORK OPERATIONS ALLOWED DURING OFF PEAK HOURS (FLAGGING REQUIRED)
- (A) TEMPORARY PAVEMENT MARKING, 4-INCH, YELLOW
- (B) TEMPORARY PAVEMENT MARKING, 8-INCH, WHITE
- REMOVING PAVEMENT MARKINGS

PROJECT NO:2240-00-67	HWY:STH 36	COUNTY:RACINE	TRAFFIC CONTROL STAGE 1	SHEET	E

SINGLE LANE CLOSURE THROUGH INTERSECTION
SEE SDD "TRAFFIC CONTROL, INTERSECTION
WITHIN SINGLE LANE CLOSURE."

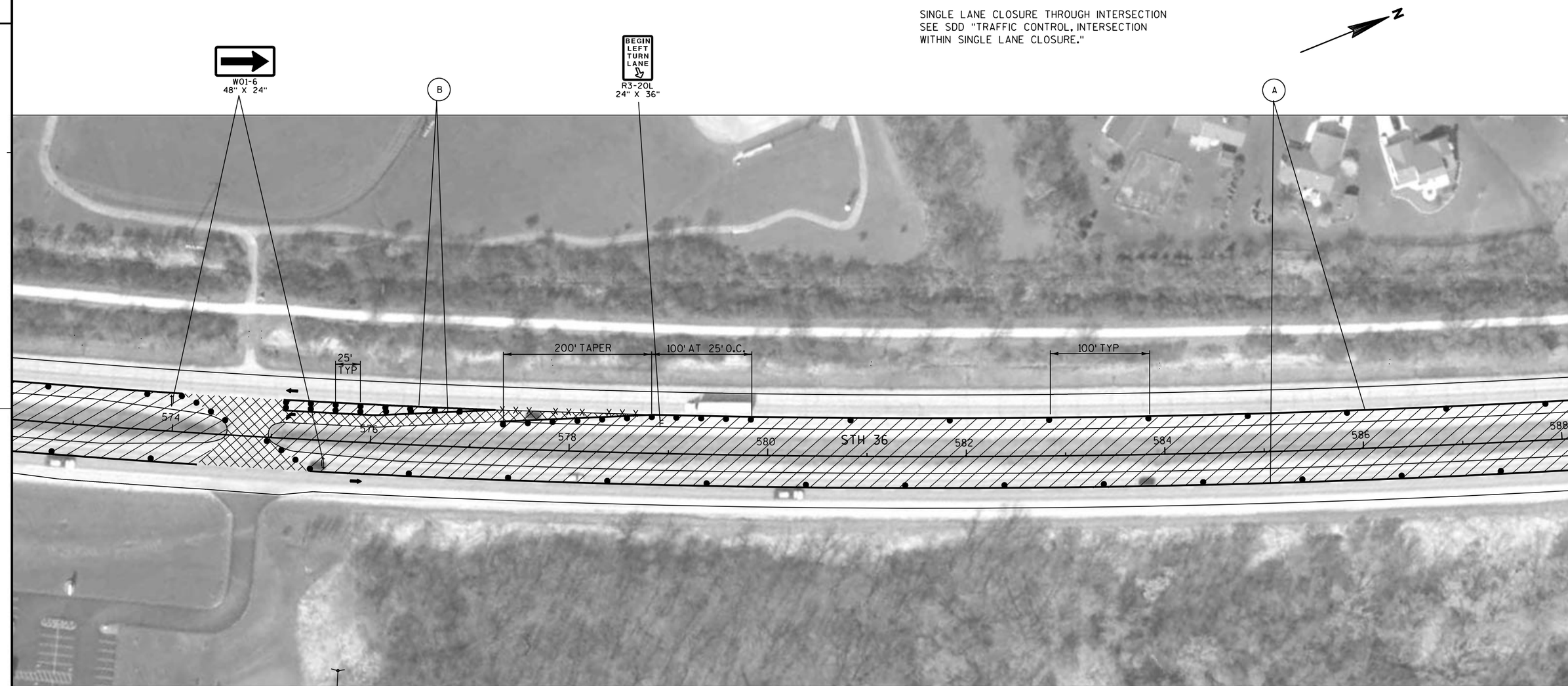

LEGEND

- TYPE III BARRICADE WITH ATTACHED SIGN
- TRAFFIC CONTROL DRUM
- TRAFFIC CONTROL DRUM WITH WARNING LIGHT (TYPE C)
- ARROW BOARD
- SIGN ATTACHED TO POST
- SIGN ON PORTABLE SUPPORT (5' MIN. MOUNTING HEIGHT)
- DIRECTION OF TRAFFIC FLOW
- WORK ZONE
- AREA TO BE MAINTAINED AT ALL TIMES EXCEPT DURING WORK OPERATIONS ALLOWED DURING OFF PEAK HOURS (FLAGGING REQUIRED)
- (A) TEMPORARY PAVEMENT MARKING, 4-INCH, YELLOW
- (B) TEMPORARY PAVEMENT MARKING, 8-INCH, WHITE
- REMOVING PAVEMENT MARKINGS

PROJECT NO:2240-00-67	HWY:STH 36	COUNTY:RACINE	TRAFFIC CONTROL STAGE 1	SHEET	E

SINGLE LANE CLOSURE THROUGH INTERSECTION
SEE SDD "TRAFFIC CONTROL, INTERSECTION
WITHIN SINGLE LANE CLOSURE."

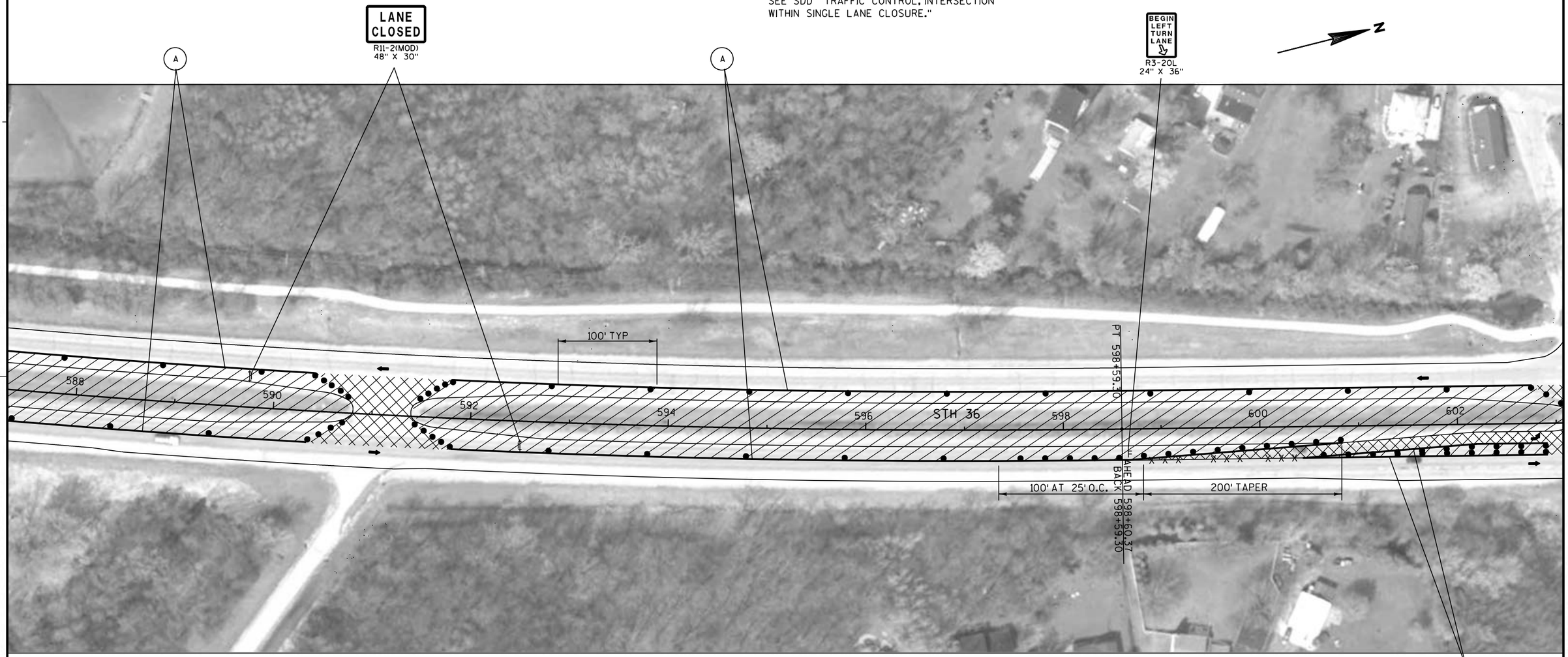

LEGEND

- TYPE III BARRICADE WITH ATTACHED SIGN
- TRAFFIC CONTROL DRUM
- TRAFFIC CONTROL DRUM WITH WARNING LIGHT (TYPE C)
- ARROW BOARD
- SIGN ATTACHED TO POST
- SIGN ON PORTABLE SUPPORT (5' MIN. MOUNTING HEIGHT)
- DIRECTION OF TRAFFIC FLOW
- WORK ZONE
- AREA TO BE MAINTAINED AT ALL TIMES EXCEPT DURING WORK OPERATIONS ALLOWED DURING OFF PEAK HOURS (FLAGGING REQUIRED)
- (A) TEMPORARY PAVEMENT MARKING, 4-INCH, YELLOW
- (B) TEMPORARY PAVEMENT MARKING, 8-INCH, WHITE
- REMOVING PAVEMENT MARKINGS

PROJECT NO: 2240-00-67	HWY: STH 36	COUNTY: RACINE	TRAFFIC CONTROL STAGE 1	SHEET 124	E

SINGLE LANE CLOSURE THROUGH INTERSECTION
SEE SDD "TRAFFIC CONTROL, INTERSECTION
WITHIN SINGLE LANE CLOSURE."

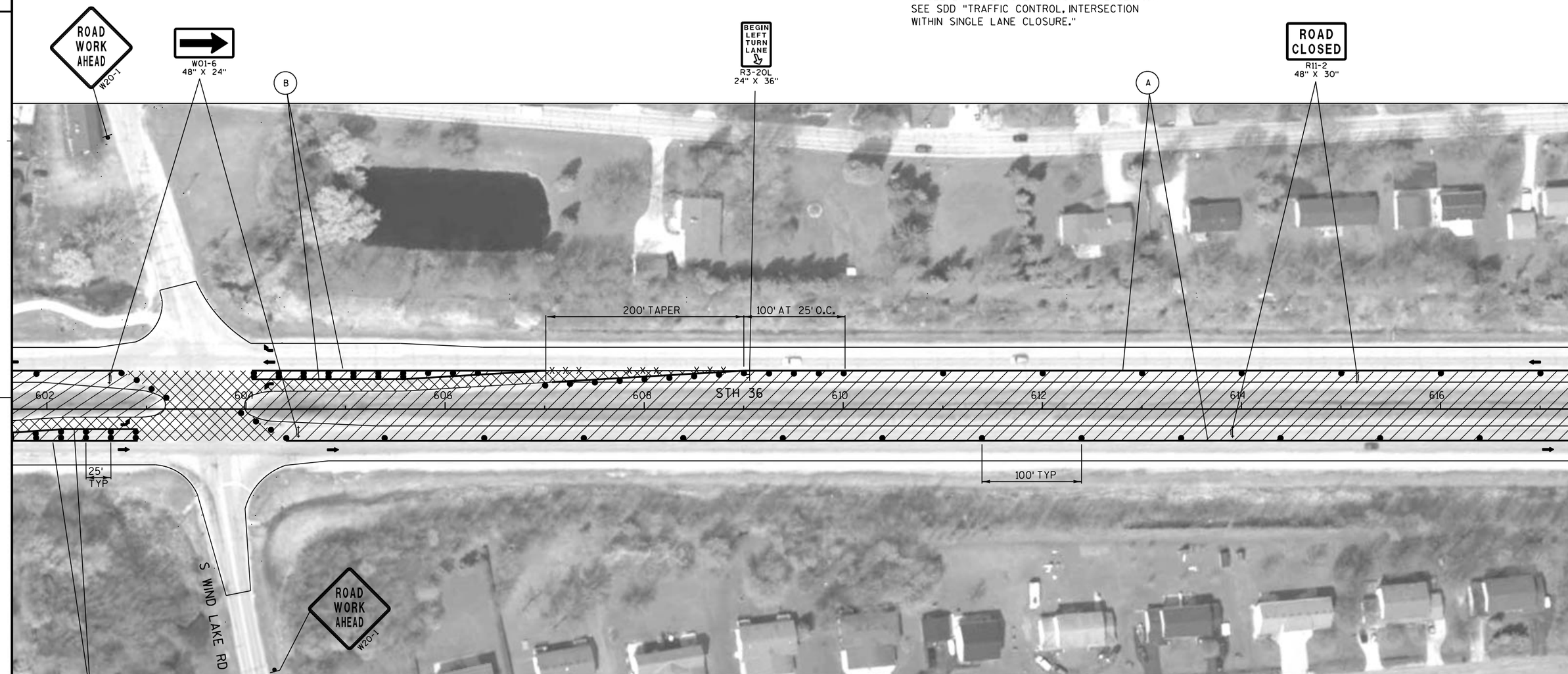

LEGEND

- (B) TYPE III BARRICADE WITH ATTACHED SIGN
- TRAFFIC CONTROL DRUM
- TRAFFIC CONTROL DRUM WITH WARNING LIGHT (TYPE C)
- ARROW BOARD
- SIGN ATTACHED TO POST
- SIGN ON PORTABLE SUPPORT (5' MIN. MOUNTING HEIGHT)
- DIRECTION OF TRAFFIC FLOW
- WORK ZONE
- AREA TO BE MAINTAINED AT ALL TIMES EXCEPT DURING WORK OPERATIONS ALLOWED DURING OFF PEAK HOURS (FLAGGING REQUIRED)
- (A) TEMPORARY PAVEMENT MARKING, 4-INCH, YELLOW
- (B) TEMPORARY PAVEMENT MARKING, 8-INCH, WHITE
- REMOVING PAVEMENT MARKINGS

PROJECT NO:2240-00-67	HWY:STH 36	COUNTY:RACINE	TRAFFIC CONTROL STAGE 1	SHEET	E

2

SINGLE LANE CLOSURE THROUGH INTERSECTION
SEE SDD "TRAFFIC CONTROL, INTERSECTION
WITHIN SINGLE LANE CLOSURE."

N

ROAD WORK AHEAD
W20-1

W01-6
48" X 24"

A

B

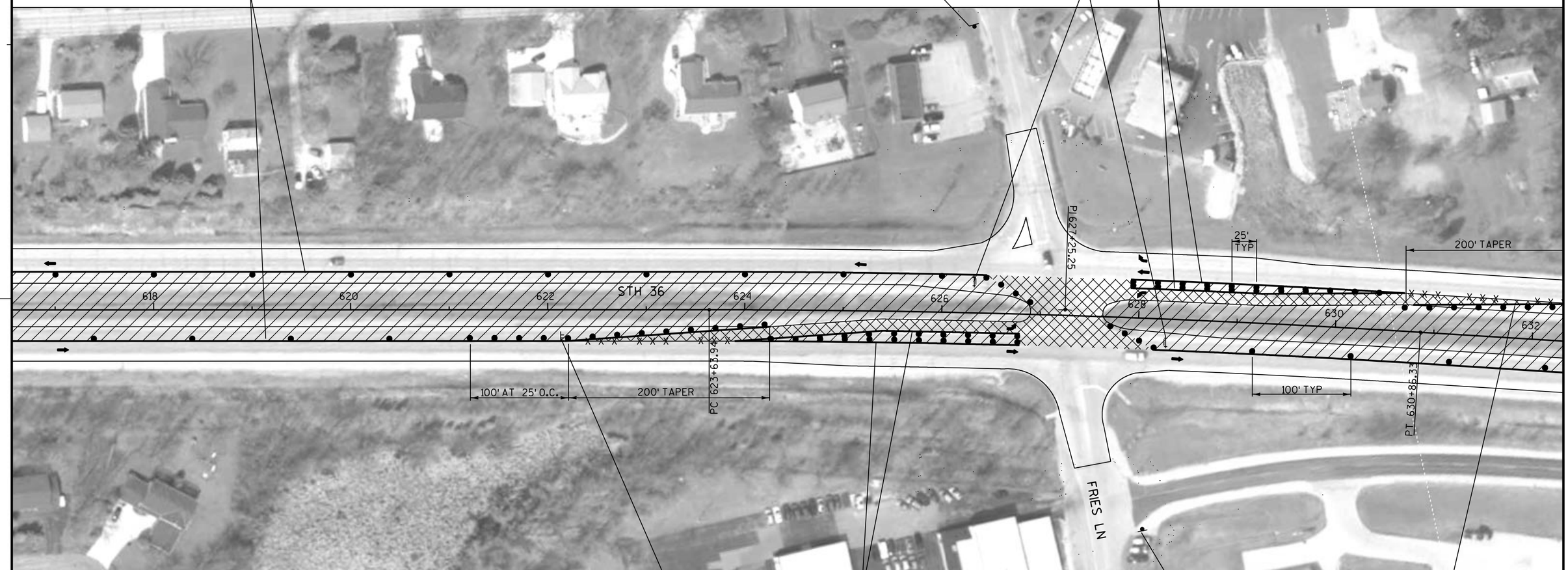

BEGIN LEFT TURN LANE
R3-20L
24" X 36"

B

ROAD WORK AHEAD
W20-1

A

LEGEND

- TYPE III BARRICADE WITH ATTACHED SIGN
- TRAFFIC CONTROL DRUM
- TRAFFIC CONTROL DRUM WITH WARNING LIGHT (TYPE C)
- ARROW BOARD
- SIGN ATTACHED TO POST
- SIGN ON PORTABLE SUPPORT (5' MIN. MOUNTING HEIGHT)
- DIRECTION OF TRAFFIC FLOW
- WORK ZONE
- AREA TO BE MAINTAINED AT ALL TIMES EXCEPT DURING WORK OPERATIONS ALLOWED DURING OFF PEAK HOURS (FLAGGING REQUIRED)
- (A) TEMPORARY PAVEMENT MARKING, 4-INCH, YELLOW
- (B) TEMPORARY PAVEMENT MARKING, 8-INCH, WHITE
- REMOVING PAVEMENT MARKINGS

PROJECT NO: 2240-00-67	HWY: STH 36	COUNTY: RACINE	TRAFFIC CONTROL STAGE 1	SHEET	E

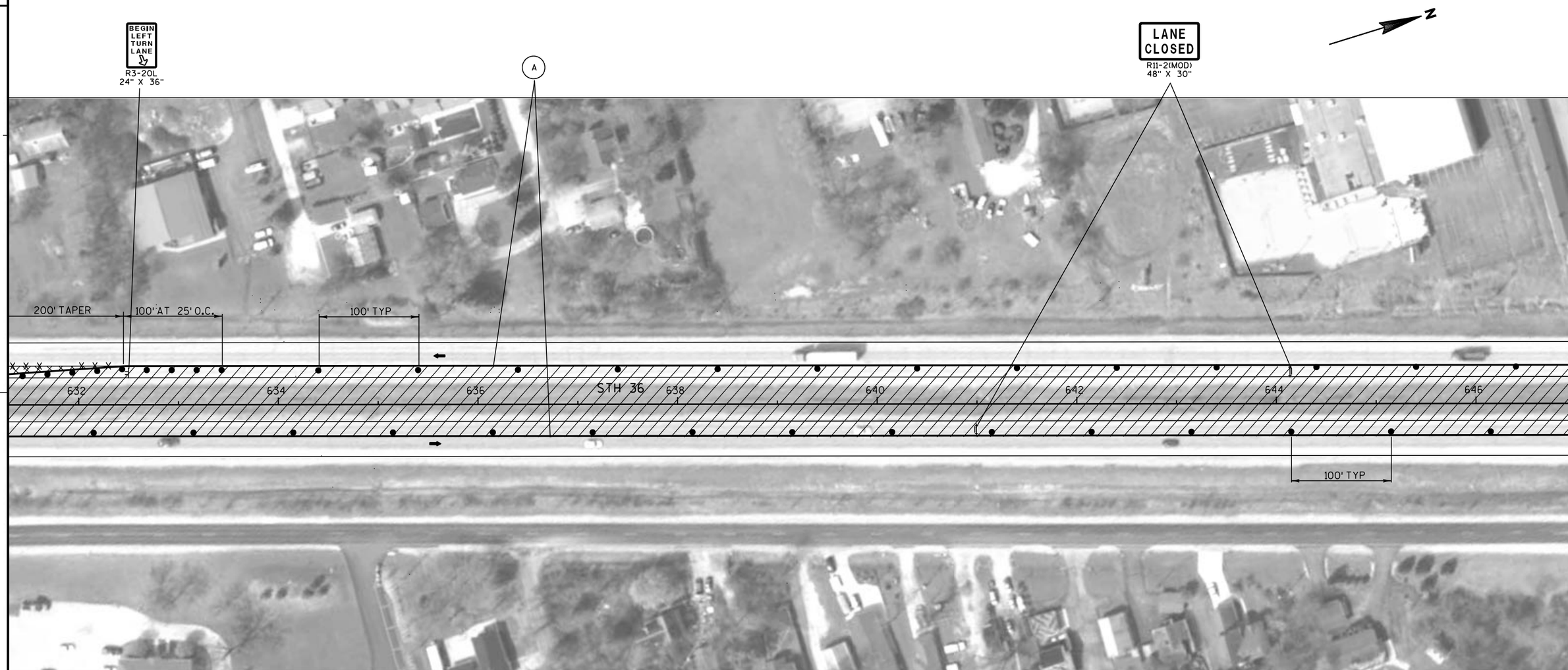

LEGEND

- TYPE III BARRICADE WITH ATTACHED SIGN
- TRAFFIC CONTROL DRUM
- TRAFFIC CONTROL DRUM WITH WARNING LIGHT (TYPE C)
- ARROW BOARD
- SIGN ATTACHED TO POST
- SIGN ON PORTABLE SUPPORT (5' MIN. MOUNTING HEIGHT)
- DIRECTION OF TRAFFIC FLOW
- WORK ZONE
- AREA TO BE MAINTAINED AT ALL TIMES EXCEPT DURING WORK OPERATIONS ALLOWED DURING OFF PEAK HOURS (FLAGGING REQUIRED)
- (A) TEMPORARY PAVEMENT MARKING, 4-INCH, YELLOW
- (B) TEMPORARY PAVEMENT MARKING, 8-INCH, WHITE
- REMOVING PAVEMENT MARKINGS

PROJECT NO:2240-00-67	HWY:STH 36	COUNTY:RACINE	TRAFFIC CONTROL STAGE 1	SHEET	E

SINGLE LANE CLOSURE THROUGH INTERSECTION
SEE SDD "TRAFFIC CONTROL, INTERSECTION
WITHIN SINGLE LANE CLOSURE."

LEGEND

- TYPE III BARRICADE WITH ATTACHED SIGN
- TRAFFIC CONTROL DRUM
- TRAFFIC CONTROL DRUM WITH WARNING LIGHT (TYPE C)
- ARROW BOARD
- SIGN ATTACHED TO POST
- SIGN ON PORTABLE SUPPORT (5' MIN. MOUNTING HEIGHT)
- DIRECTION OF TRAFFIC FLOW
- WORK ZONE
- AREA TO BE MAINTAINED AT ALL TIMES EXCEPT DURING WORK OPERATIONS ALLOWED DURING OFF PEAK HOURS (FLAGGING REQUIRED)
- (A) TEMPORARY PAVEMENT MARKING, 4-INCH, YELLOW
- (B) TEMPORARY PAVEMENT MARKING, 8-INCH, WHITE
- REMOVING PAVEMENT MARKINGS

PROJECT NO:2240-00-67	HWY:STH 36	COUNTY:RACINE	TRAFFIC CONTROL STAGE 1	SHEET	E

SINGLE LANE CLOSURE THROUGH INTERSECTION
SEE SDD "TRAFFIC CONTROL, INTERSECTION
WITHIN SINGLE LANE CLOSURE."

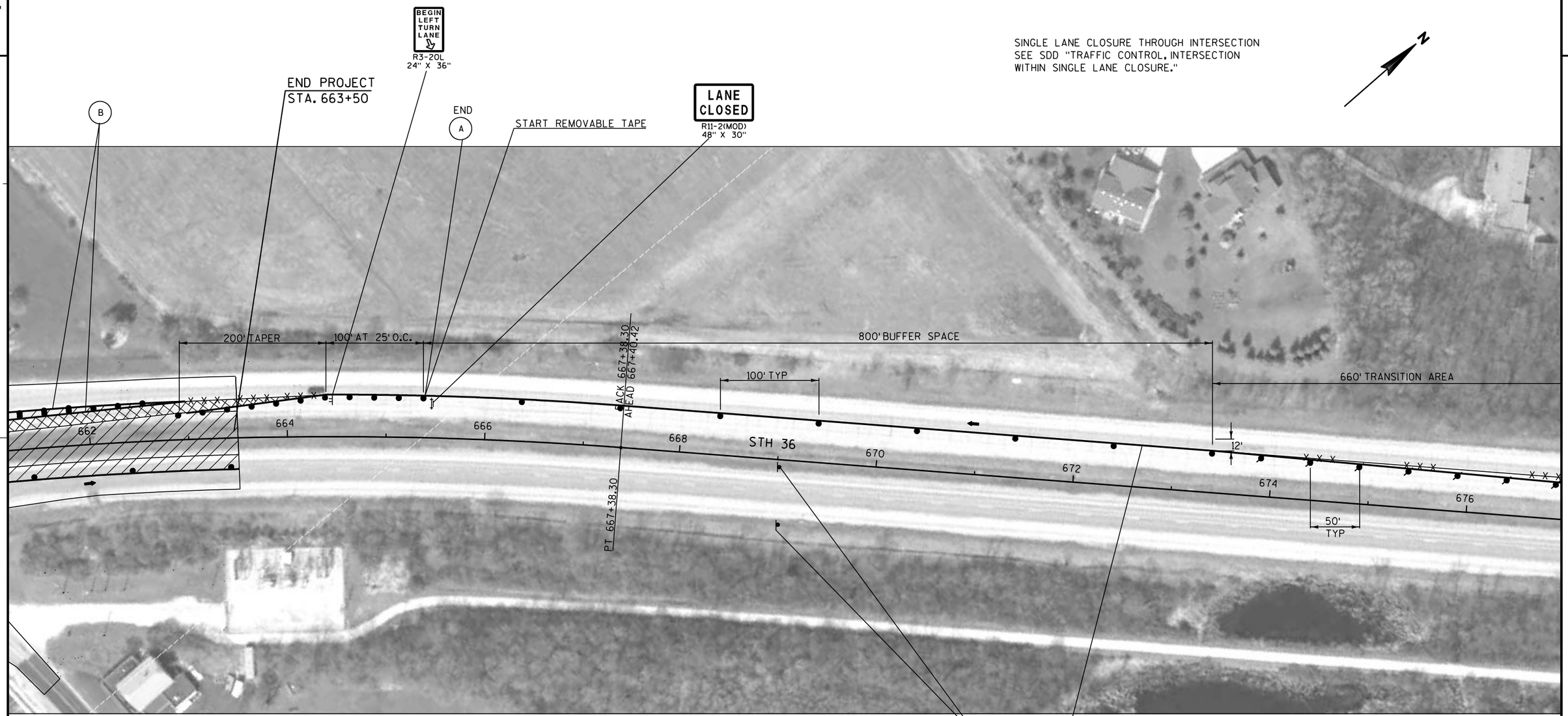

LEGEND

- TYPE III BARRICADE WITH ATTACHED SIGN
- TRAFFIC CONTROL DRUM
- TRAFFIC CONTROL DRUM WITH WARNING LIGHT (TYPE C)
- ARROW BOARD
- SIGN ATTACHED TO POST
- SIGN ON PORTABLE SUPPORT (5' MIN. MOUNTING HEIGHT)
- DIRECTION OF TRAFFIC FLOW
- WORK ZONE
- AREA TO BE MAINTAINED AT ALL TIMES EXCEPT DURING WORK OPERATIONS ALLOWED DURING OFF PEAK HOURS (FLAGGING REQUIRED)
- (A) TEMPORARY PAVEMENT MARKING, 4-INCH, YELLOW
- (B) TEMPORARY PAVEMENT MARKING, 8-INCH, WHITE
- REMOVING PAVEMENT MARKINGS

PROJECT NO:2240-00-67	HWY:STH 36	COUNTY:RACINE	TRAFFIC CONTROL STAGE 1	SHEET	E

SINGLE LANE CLOSURE THROUGH INTERSECTION
SEE SDD "TRAFFIC CONTROL, INTERSECTION WITHIN SINGLE LANE CLOSURE."

SINGLE LANE CLOSURE PRIOR TO INTERSECTION
SEE SDD "TRAFFIC CONTROL, LANE CLOSURE, SPEEDS GREATER THAN 40 MPH"

TEMPORARY PAVEMENT MARKING REMOVABLE TAPE
4-INCH, YELLOW

LEGEND

- TYPE III BARRICADE WITH ATTACHED SIGN
- TRAFFIC CONTROL DRUM
- TRAFFIC CONTROL DRUM WITH WARNING LIGHT (TYPE C)
- ARROW BOARD
- SIGN ATTACHED TO POST
- SIGN ON PORTABLE SUPPORT (5' MIN. MOUNTING HEIGHT)
- DIRECTION OF TRAFFIC FLOW
- WORK ZONE
- AREA TO BE MAINTAINED AT ALL TIMES EXCEPT DURING WORK OPERATIONS ALLOWED DURING OFF PEAK HOURS (FLAGGING REQUIRED)
- (A) TEMPORARY PAVEMENT MARKING, 4-INCH, YELLOW
- (B) TEMPORARY PAVEMENT MARKING, 8-INCH, WHITE
- REMOVING PAVEMENT MARKINGS

PROJECT NO:2240-00-67	HWY:STH 36	COUNTY:RACINE	TRAFFIC CONTROL STAGE 1	SHEET	E

2

2

NOTE:

SINGLE LANE CLOSURE THROUGH INTERSECTION
SEE SDD "TRAFFIC CONTROL, INTERSECTION
WITHIN SINGLE LANE CLOSURE."

NOTE:

SINGLE LANE CLOSURE PRIOR TO INTERSECTION
SEE SDD "TRAFFIC CONTROL, INTERSECTION
LANE CLOSURE, SPEED GREATER THAN 40 M.P.H."

N

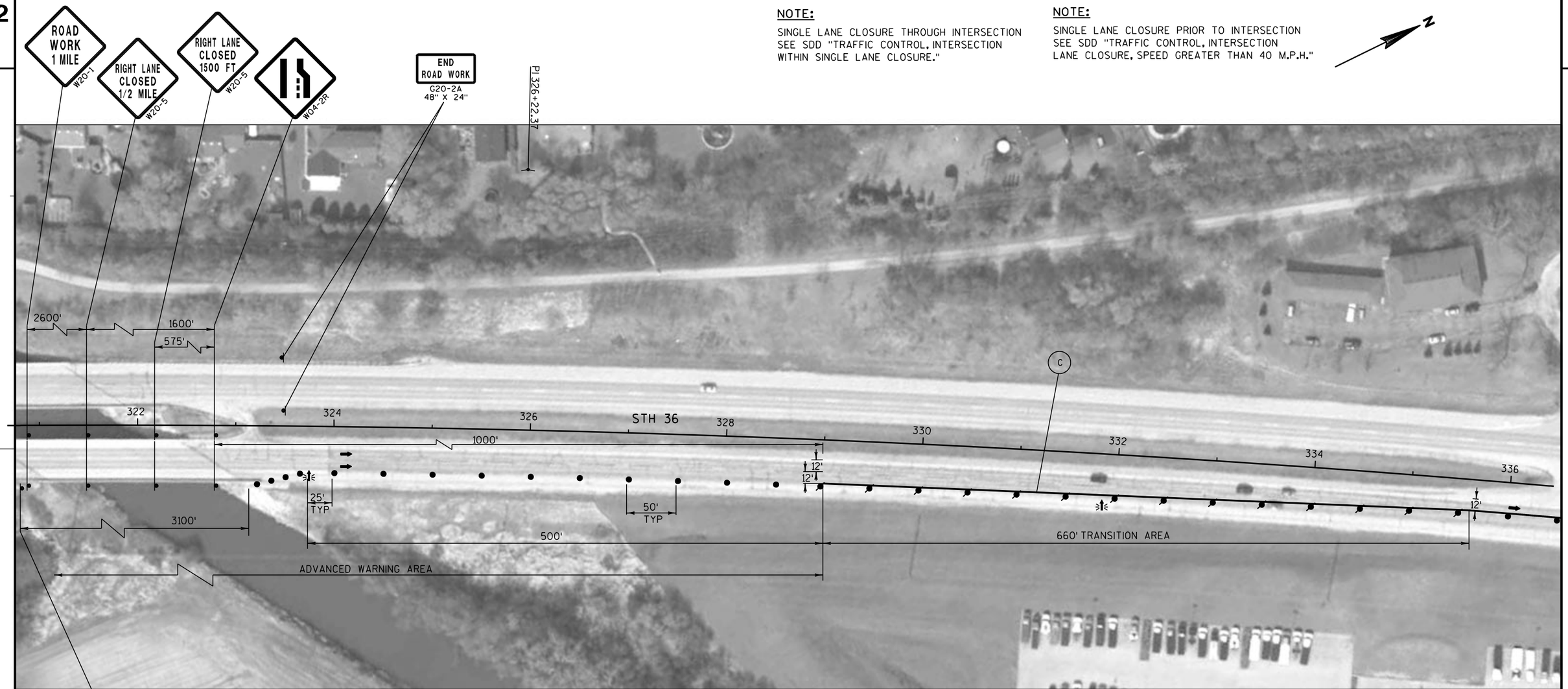

W21-62
96" X 48"

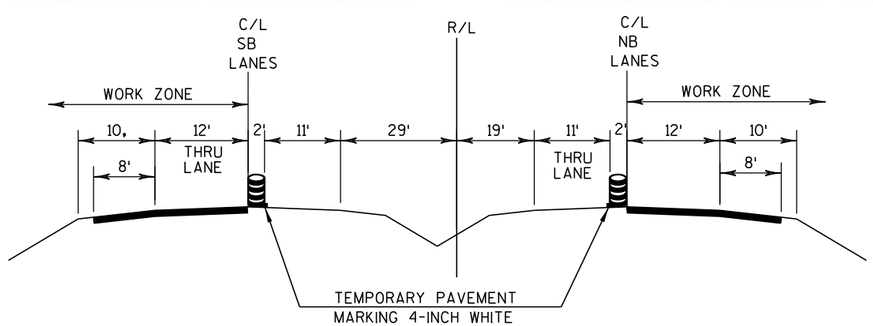

LEGEND

- TYPE III BARRICADE WITH ATTACHED SIGN
- TRAFFIC CONTROL DRUM
- TRAFFIC CONTROL DRUM WITH WARNING LIGHT (TYPE C)
- ARROW BOARD
- SIGN ATTACHED TO POST
- SIGN ON PORTABLE SUPPORT (5' MIN. MOUNTING HEIGHT)
- DIRECTION OF TRAFFIC FLOW
- WORK ZONE
- AREA TO BE MAINTAINED AT ALL TIMES EXCEPT DURING WORK OPERATIONS ALLOWED DURING OFF PEAK HOURS (FLAGGING REQUIRED)
- (B) TEMPORARY PAVEMENT MARKING, 8-INCH, WHITE
- (C) TEMPORARY PAVEMENT MARKING, 4-INCH, WHITE
- REMOVING PAVEMENT MARKINGS

PROJECT NO:2240-00-67	HWY:STH 36	COUNTY:RACINE	TRAFFIC CONTROL STAGE 2	SHEET	E

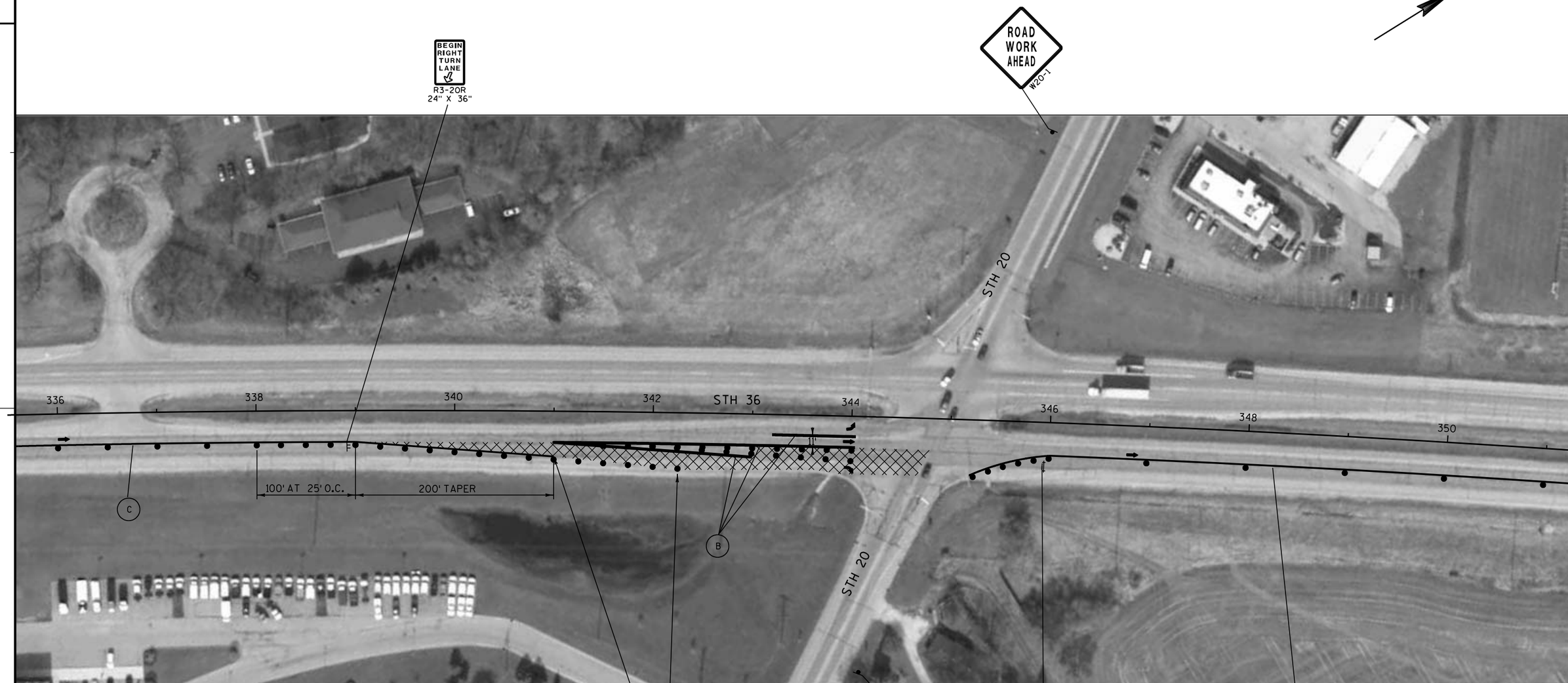

LEGEND

- TYPE III BARRICADE WITH ATTACHED SIGN
- TRAFFIC CONTROL DRUM
- TRAFFIC CONTROL DRUM WITH WARNING LIGHT (TYPE C)
- ARROW BOARD
- SIGN ATTACHED TO POST
- SIGN ON PORTABLE SUPPORT (5' MIN. MOUNTING HEIGHT)
- DIRECTION OF TRAFFIC FLOW
- WORK ZONE
- AREA TO BE MAINTAINED AT ALL TIMES EXCEPT DURING WORK OPERATIONS ALLOWED DURING OFF PEAK HOURS (FLAGGING REQUIRED)
- (B) TEMPORARY PAVEMENT MARKING, 8-INCH, WHITE
- (C) TEMPORARY PAVEMENT MARKING, 4-INCH, WHITE
- REMOVING PAVEMENT MARKINGS

NOTE:

SINGLE LANE CLOSURE THROUGH INTERSECTION SEE SDD "TRAFFIC CONTROL, INTERSECTION WITHIN SINGLE LANE CLOSURE."

NOTE:

SINGLE LANE CLOSURE PRIOR TO INTERSECTION SEE SDD "TRAFFIC CONTROL, INTERSECTION LANE CLOSURE, SPEED GREATER THAN 40 M.P.H."

PROJECT NO:2240-00-67	HWY:STH 36	COUNTY:RACINE	TRAFFIC CONTROL STAGE 2	SHEET	E

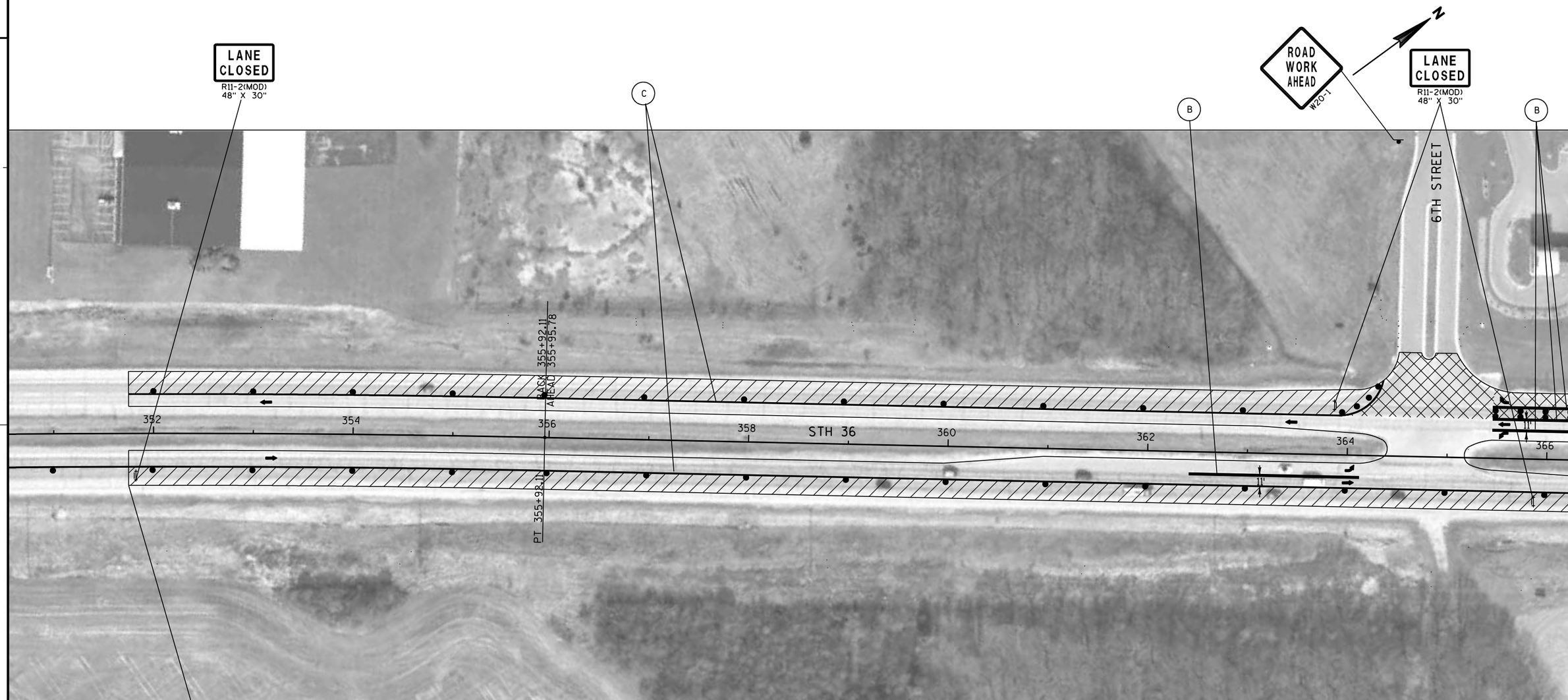

BEGIN PROJECT
STA. 351+75

LEGEND

- TYPE III BARRICADE WITH ATTACHED SIGN
- TRAFFIC CONTROL DRUM
- TRAFFIC CONTROL DRUM WITH WARNING LIGHT (TYPE C)
- ARROW BOARD
- SIGN ATTACHED TO POST
- SIGN ON PORTABLE SUPPORT (5' MIN. MOUNTING HEIGHT)
- DIRECTION OF TRAFFIC FLOW
- WORK ZONE
- AREA TO BE MAINTAINED AT ALL TIMES EXCEPT DURING WORK OPERATIONS ALLOWED DURING OFF PEAK HOURS (FLAGGING REQUIRED)
- (B) TEMPORARY PAVEMENT MARKING, 8-INCH, WHITE
- (C) TEMPORARY PAVEMENT MARKING, 4-INCH, WHITE
- REMOVING PAVEMENT MARKINGS

NOTE:

SINGLE LANE CLOSURE THROUGH INTERSECTION
SEE SDD "TRAFFIC CONTROL, INTERSECTION
WITHIN SINGLE LANE CLOSURE."

NOTE:

SINGLE LANE CLOSURE PRIOR TO INTERSECTION
SEE SDD "TRAFFIC CONTROL, INTERSECTION
LANE CLOSURE, SPEED GREATER THAN 40 M.P.H."

PROJECT NO: 2240-00-67	HWY: STH 36	COUNTY: RACINE	TRAFFIC CONTROL STAGE 2	SHEET	E

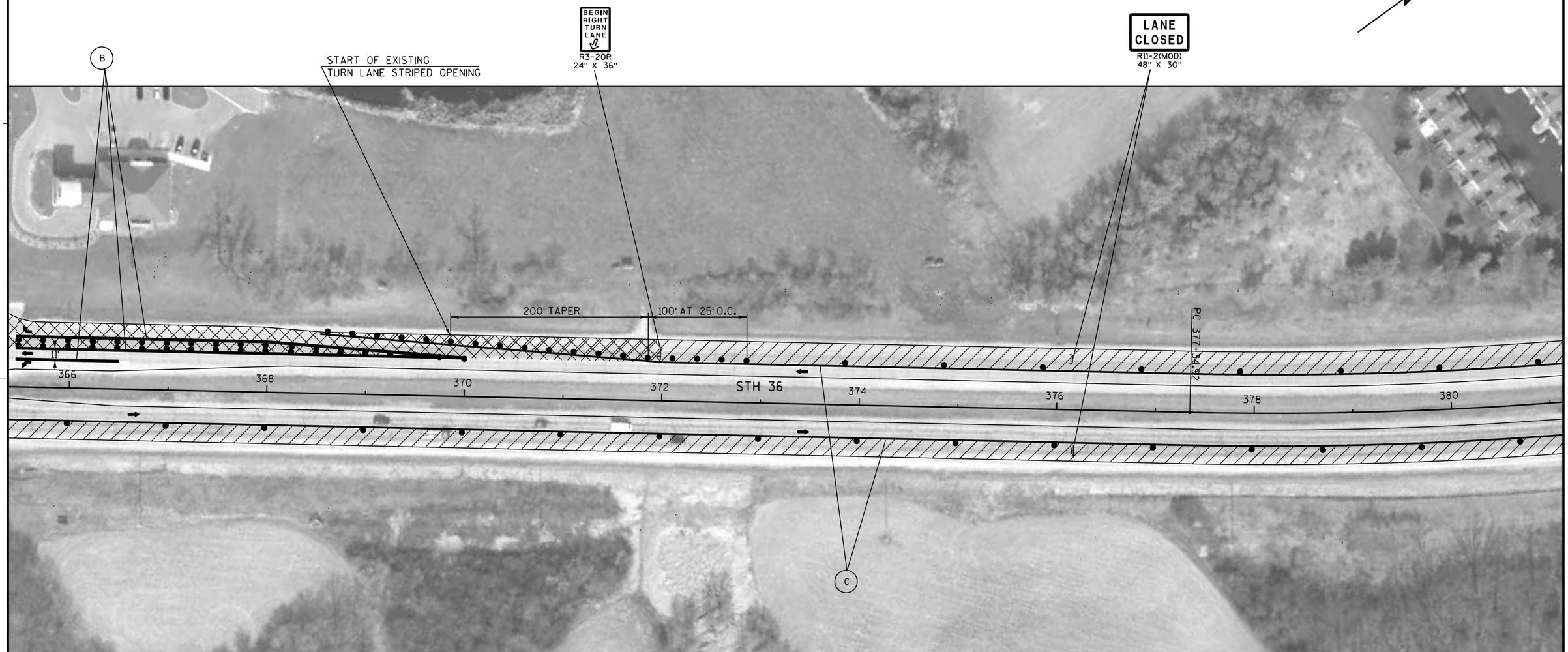

LEGEND

- TYPE III BARRICADE WITH ATTACHED SIGN
- TRAFFIC CONTROL DRUM
- TRAFFIC CONTROL DRUM WITH WARNING LIGHT (TYPE C)
- ARROW BOARD
- SIGN ATTACHED TO POST
- SIGN ON PORTABLE SUPPORT (5' MIN. MOUNTING HEIGHT)
- DIRECTION OF TRAFFIC FLOW
- WORK ZONE
- AREA TO BE MAINTAINED AT ALL TIMES EXCEPT DURING WORK OPERATIONS ALLOWED DURING OFF PEAK HOURS (FLAGGING REQUIRED)
- (B) TEMPORARY PAVEMENT MARKING, 8-INCH, WHITE
- (C) TEMPORARY PAVEMENT MARKING, 4-INCH, WHITE
- REMOVING PAVEMENT MARKINGS

NOTE:

SINGLE LANE CLOSURE THROUGH INTERSECTION
SEE SDD "TRAFFIC CONTROL, INTERSECTION
WITHIN SINGLE LANE CLOSURE."

NOTE:

SINGLE LANE CLOSURE PRIOR TO INTERSECTION
SEE SDD "TRAFFIC CONTROL, INTERSECTION
LANE CLOSURE, SPEED GREATER THAN 40 M.P.H."

PROJECT NO:2240-00-67	HWY:STH 36	COUNTY:RACINE	TRAFFIC CONTROL STAGE 2	SHEET	E

FILE NAME : j:\projects\d2_22400036\67\026102_S2.dgn PLOT DATE : 12-JAN-2012 10:05 PLOT BY : dotshw PLOT NAME : PLOT SCALE : 100:1 WISDOT/CADDS SHEET 42

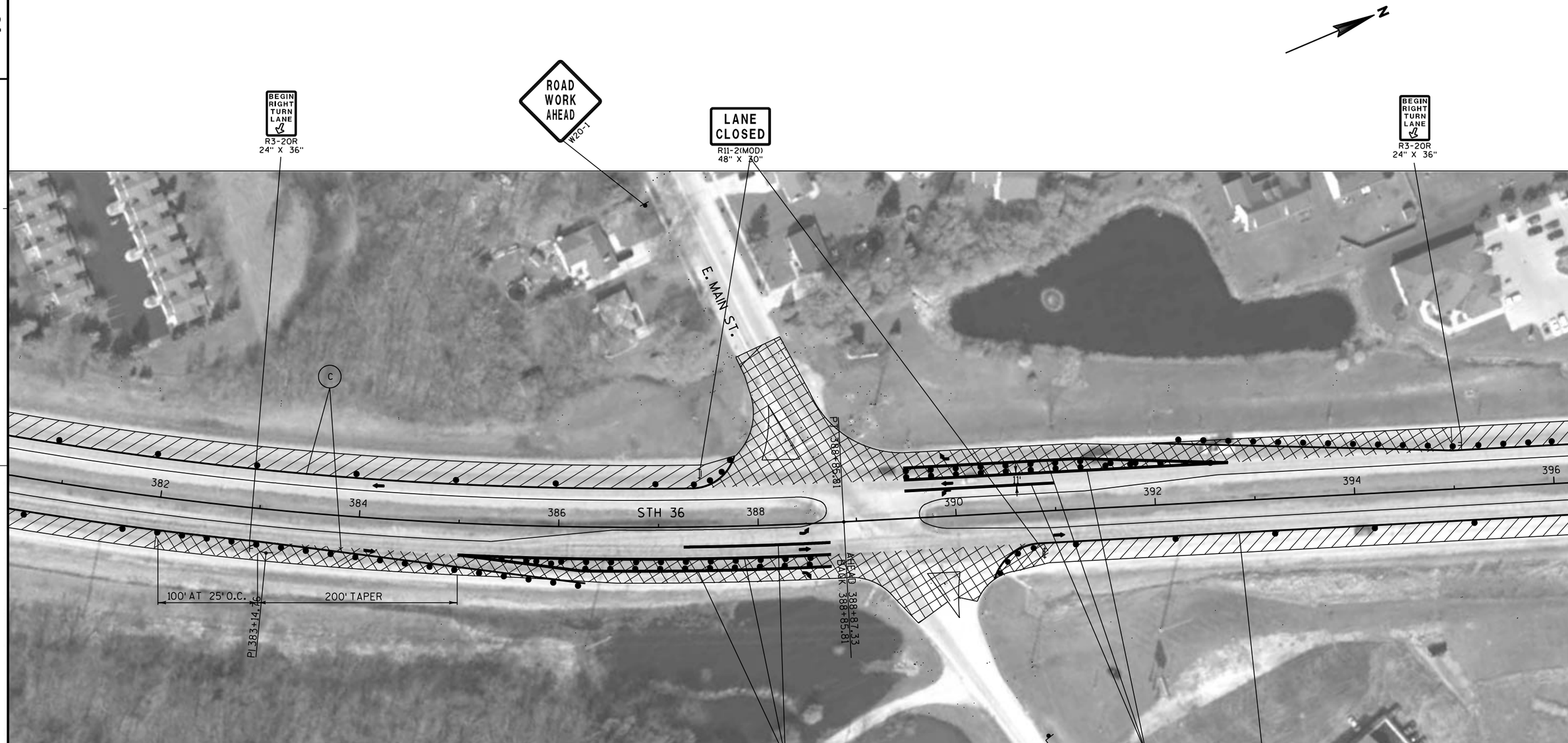

LEGEND

- TYPE III BARRICADE WITH ATTACHED SIGN
- TRAFFIC CONTROL DRUM
- TRAFFIC CONTROL DRUM WITH WARNING LIGHT (TYPE C)
- ARROW BOARD
- SIGN ATTACHED TO POST
- SIGN ON PORTABLE SUPPORT (5' MIN. MOUNTING HEIGHT)
- DIRECTION OF TRAFFIC FLOW
- WORK ZONE
- AREA TO BE MAINTAINED AT ALL TIMES EXCEPT DURING WORK OPERATIONS ALLOWED DURING OFF PEAK HOURS (FLAGGING REQUIRED)
- (B) TEMPORARY PAVEMENT MARKING, 8-INCH, WHITE
- (C) TEMPORARY PAVEMENT MARKING, 4-INCH, WHITE
- REMOVING PAVEMENT MARKINGS

NOTE:

SINGLE LANE CLOSURE THROUGH INTERSECTION
SEE SDD "TRAFFIC CONTROL, INTERSECTION WITHIN SINGLE LANE CLOSURE."

NOTE:

SINGLE LANE CLOSURE PRIOR TO INTERSECTION
SEE SDD "TRAFFIC CONTROL, INTERSECTION LANE CLOSURE, SPEED GREATER THAN 40 M.P.H."

PROJECT NO: 2240-00-67	HWY: STH 36	COUNTY: RACINE	TRAFFIC CONTROL STAGE 2	SHEET	E

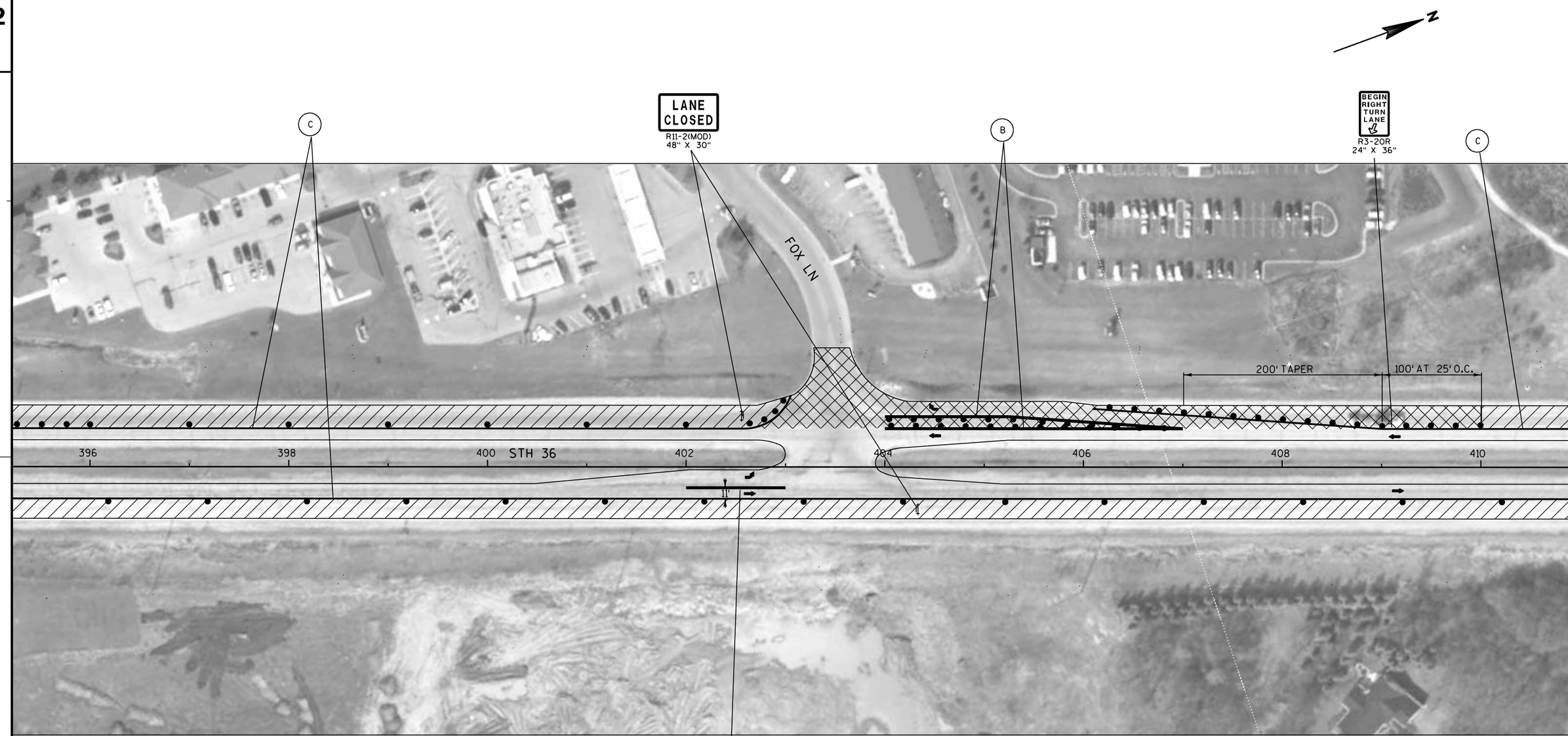

LEGEND

- TYPE III BARRICADE WITH ATTACHED SIGN
- TRAFFIC CONTROL DRUM
- TRAFFIC CONTROL DRUM WITH WARNING LIGHT (TYPE C)
- ARROW BOARD
- SIGN ATTACHED TO POST
- SIGN ON PORTABLE SUPPORT (5' MIN. MOUNTING HEIGHT)
- DIRECTION OF TRAFFIC FLOW
- WORK ZONE
- AREA TO BE MAINTAINED AT ALL TIMES EXCEPT DURING WORK OPERATIONS ALLOWED DURING OFF PEAK HOURS (FLAGGING REQUIRED)
- (B) TEMPORARY PAVEMENT MARKING, 8-INCH, WHITE
- (C) TEMPORARY PAVEMENT MARKING, 4-INCH, WHITE
- REMOVING PAVEMENT MARKINGS

NOTE:

SINGLE LANE CLOSURE THROUGH INTERSECTION
SEE SDD "TRAFFIC CONTROL, INTERSECTION
WITHIN SINGLE LANE CLOSURE."

NOTE:

SINGLE LANE CLOSURE PRIOR TO INTERSECTION
SEE SDD "TRAFFIC CONTROL, INTERSECTION
LANE CLOSURE, SPEED GREATER THAN 40 M.P.H."

PROJECT NO:2240-00-67	HWY:STH 36	COUNTY:RACINE	TRAFFIC CONTROL STAGE 2	SHEET	E

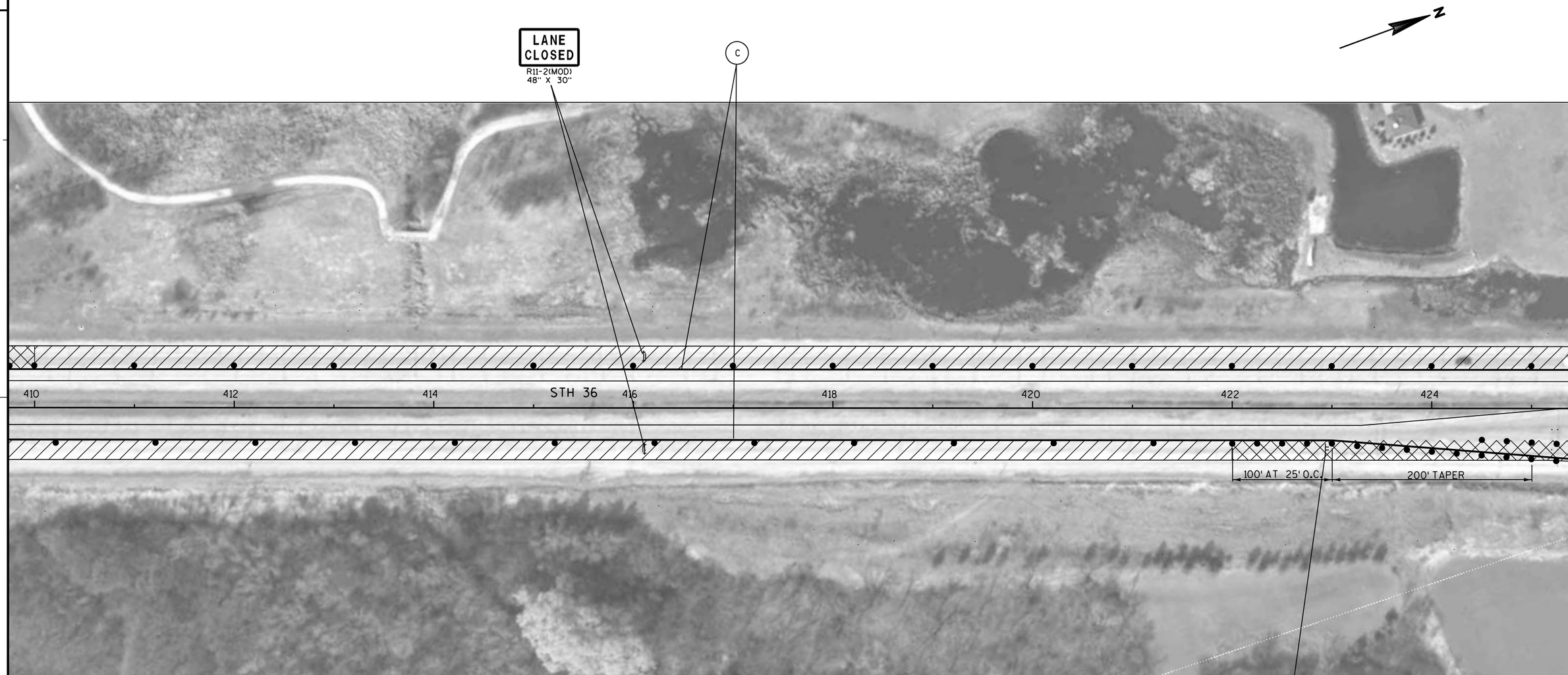

LEGEND

- TYPE III BARRICADE WITH ATTACHED SIGN
- TRAFFIC CONTROL DRUM
- TRAFFIC CONTROL DRUM WITH WARNING LIGHT (TYPE C)
- ARROW BOARD
- SIGN ATTACHED TO POST
- SIGN ON PORTABLE SUPPORT (5' MIN. MOUNTING HEIGHT)
- DIRECTION OF TRAFFIC FLOW
- WORK ZONE
- AREA TO BE MAINTAINED AT ALL TIMES EXCEPT DURING WORK OPERATIONS ALLOWED DURING OFF PEAK HOURS (FLAGGING REQUIRED)
- (B) TEMPORARY PAVEMENT MARKING, 8-INCH, WHITE
- (C) TEMPORARY PAVEMENT MARKING, 4-INCH, WHITE
- REMOVING PAVEMENT MARKINGS

NOTE:

SINGLE LANE CLOSURE THROUGH INTERSECTION
SEE SDD "TRAFFIC CONTROL, INTERSECTION
WITHIN SINGLE LANE CLOSURE."

NOTE:

SINGLE LANE CLOSURE PRIOR TO INTERSECTION
SEE SDD "TRAFFIC CONTROL, INTERSECTION
LANE CLOSURE, SPEED GREATER THAN 40 M.P.H."

PROJECT NO: 2240-00-67	HWY: STH 36	COUNTY: RACINE	TRAFFIC CONTROL STAGE 2	SHEET	E

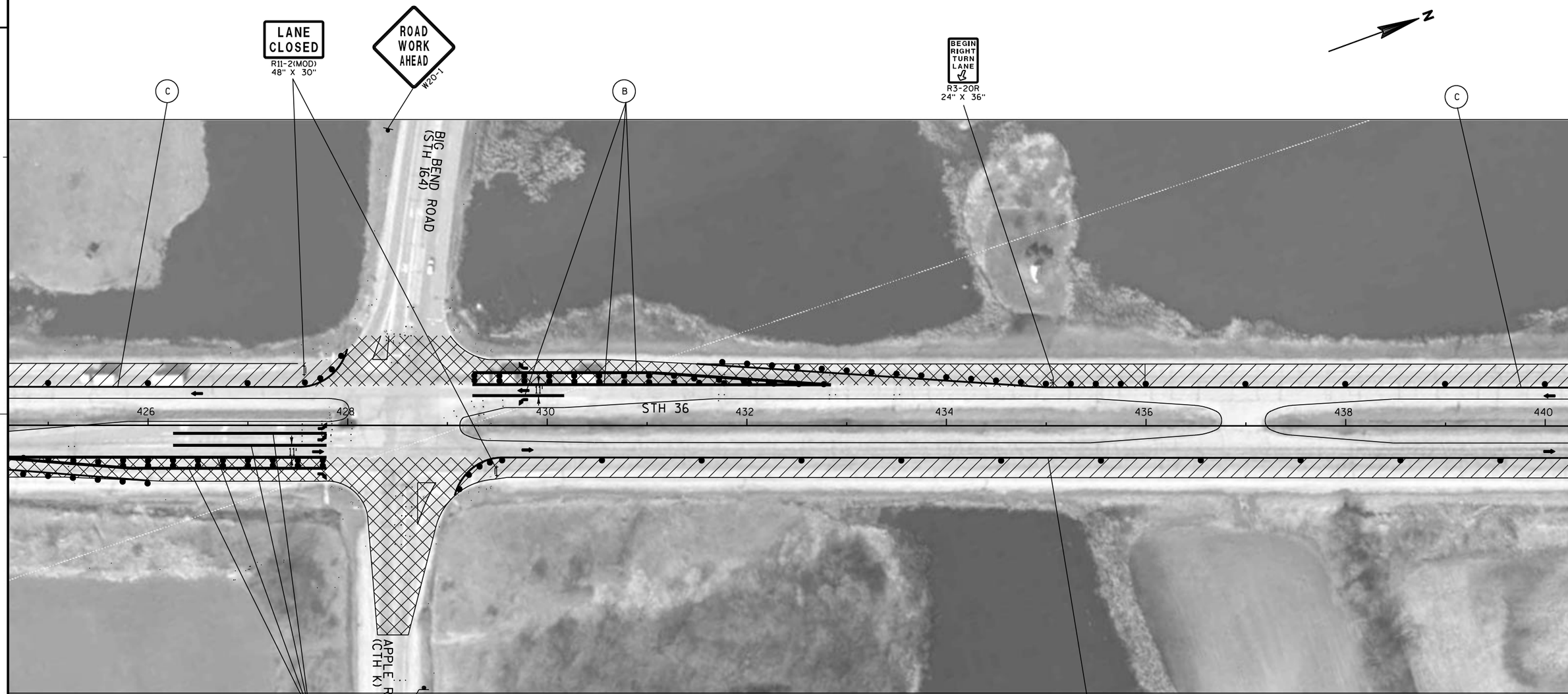

LEGEND

- TYPE III BARRICADE WITH ATTACHED SIGN
- TRAFFIC CONTROL DRUM
- TRAFFIC CONTROL DRUM WITH WARNING LIGHT (TYPE C)
- ARROW BOARD
- SIGN ATTACHED TO POST
- SIGN ON PORTABLE SUPPORT (5' MIN. MOUNTING HEIGHT)
- DIRECTION OF TRAFFIC FLOW
- WORK ZONE
- AREA TO BE MAINTAINED AT ALL TIMES EXCEPT DURING WORK OPERATIONS ALLOWED DURING OFF PEAK HOURS (FLAGGING REQUIRED)
- (B) TEMPORARY PAVEMENT MARKING, 8-INCH, WHITE
- (C) TEMPORARY PAVEMENT MARKING, 4-INCH, WHITE
- REMOVING PAVEMENT MARKINGS

NOTE:

SINGLE LANE CLOSURE THROUGH INTERSECTION SEE SDD "TRAFFIC CONTROL, INTERSECTION WITHIN SINGLE LANE CLOSURE."

NOTE:

SINGLE LANE CLOSURE PRIOR TO INTERSECTION SEE SDD "TRAFFIC CONTROL, INTERSECTION LANE CLOSURE, SPEED GREATER THAN 40 M.P.H."

PROJECT NO:2240-00-67	HWY:STH 36	COUNTY:RACINE	TRAFFIC CONTROL STAGE 2	SHEET	E

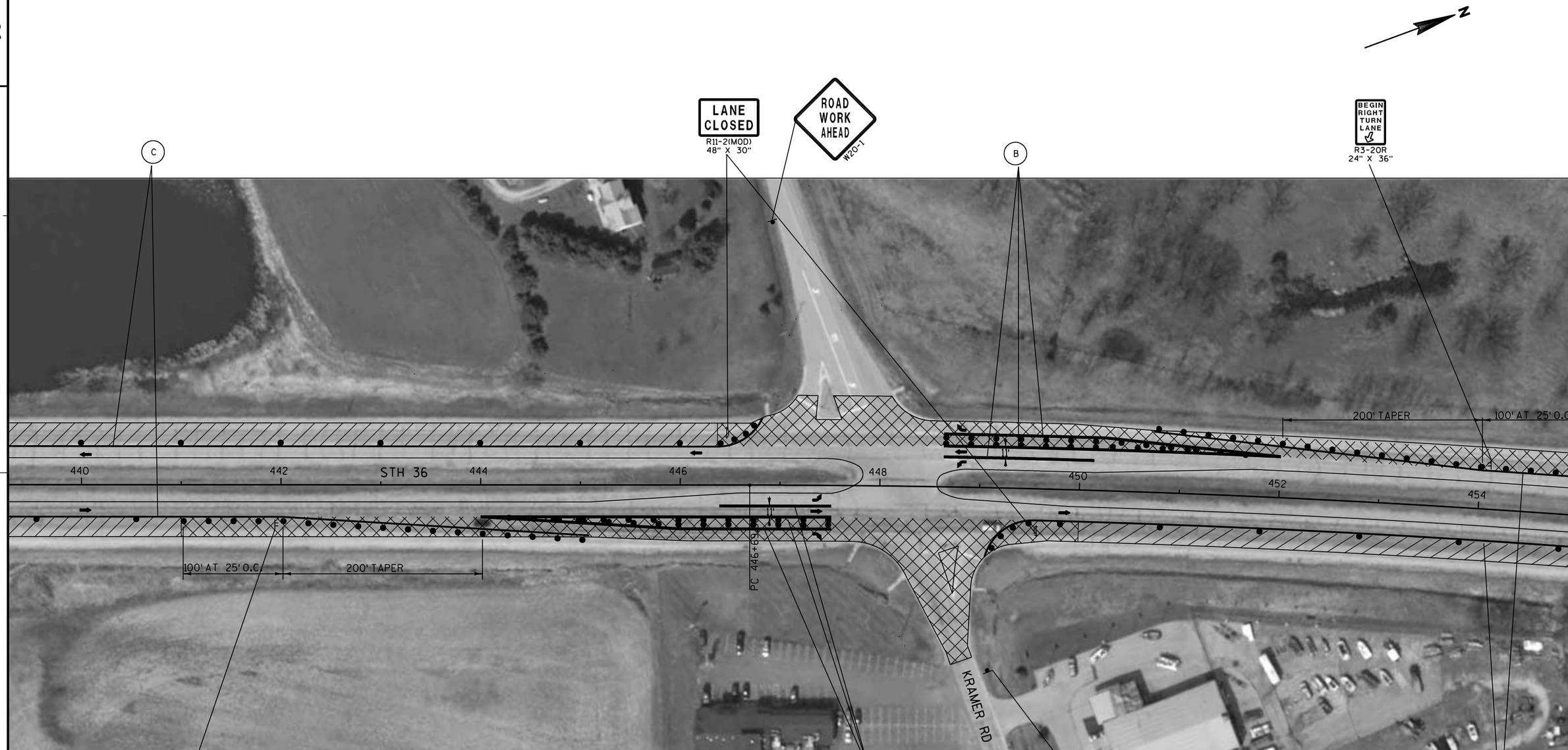

LEGEND

- TYPE III BARRICADE WITH ATTACHED SIGN
- TRAFFIC CONTROL DRUM
- TRAFFIC CONTROL DRUM WITH WARNING LIGHT (TYPE C)
- ARROW BOARD
- SIGN ATTACHED TO POST
- SIGN ON PORTABLE SUPPORT (5' MIN. MOUNTING HEIGHT)
- DIRECTION OF TRAFFIC FLOW
- WORK ZONE
- AREA TO BE MAINTAINED AT ALL TIMES EXCEPT DURING WORK OPERATIONS ALLOWED DURING OFF PEAK HOURS (FLAGGING REQUIRED)
- (B) TEMPORARY PAVEMENT MARKING, 8-INCH, WHITE
- (C) TEMPORARY PAVEMENT MARKING, 4-INCH, WHITE
- REMOVING PAVEMENT MARKINGS

NOTE:

SINGLE LANE CLOSURE THROUGH INTERSECTION
SEE SDD "TRAFFIC CONTROL, INTERSECTION
WITHIN SINGLE LANE CLOSURE."

NOTE:

SINGLE LANE CLOSURE PRIOR TO INTERSECTION
SEE SDD "TRAFFIC CONTROL, INTERSECTION
LANE CLOSURE, SPEED GREATER THAN 40 M.P.H."

PROJECT NO:2240-00-67	HWY:STH 36	COUNTY:RACINE	TRAFFIC CONTROL STAGE 2	SHEET	E

2

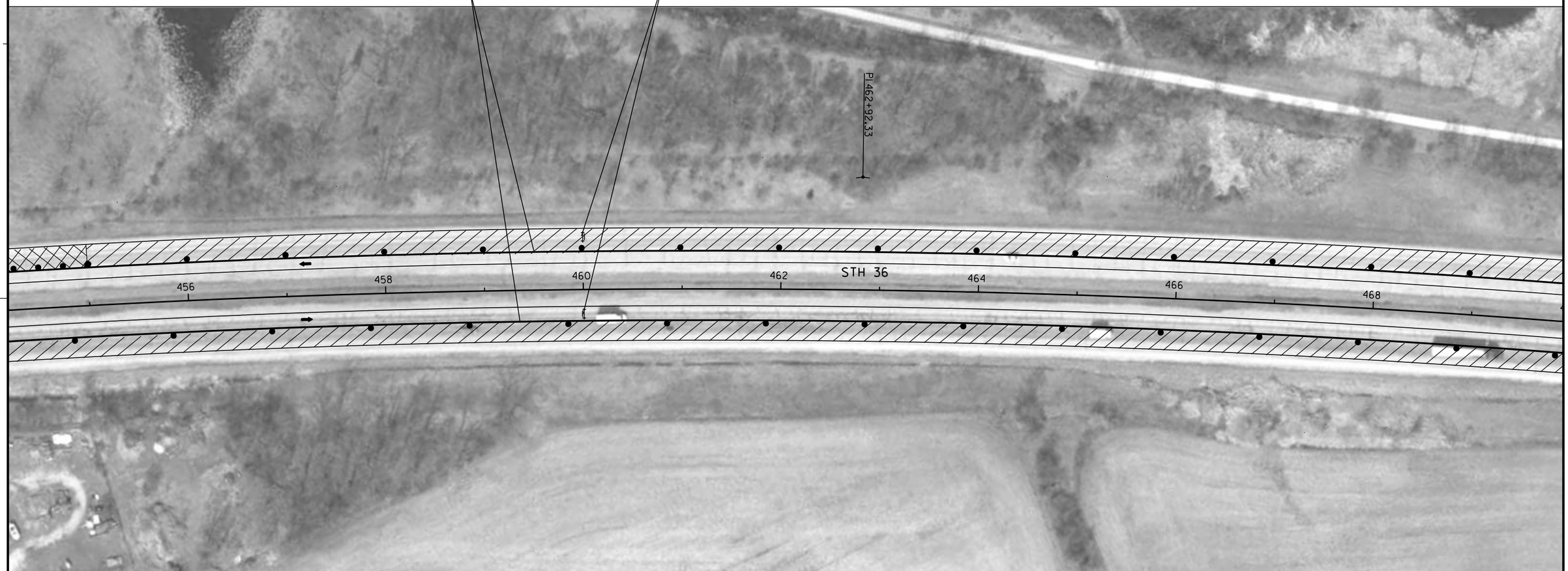

LEGEND

- TYPE III BARRICADE WITH ATTACHED SIGN
- TRAFFIC CONTROL DRUM
- TRAFFIC CONTROL DRUM WITH WARNING LIGHT (TYPE C)
- ARROW BOARD
- SIGN ATTACHED TO POST
- SIGN ON PORTABLE SUPPORT (5' MIN. MOUNTING HEIGHT)
- DIRECTION OF TRAFFIC FLOW
- WORK ZONE
- AREA TO BE MAINTAINED AT ALL TIMES EXCEPT DURING WORK OPERATIONS ALLOWED DURING OFF PEAK HOURS (FLAGGING REQUIRED)
- (B) TEMPORARY PAVEMENT MARKING, 8-INCH, WHITE
- (C) TEMPORARY PAVEMENT MARKING, 4-INCH, WHITE
- REMOVING PAVEMENT MARKINGS

NOTE:

SINGLE LANE CLOSURE THROUGH INTERSECTION
SEE SDD "TRAFFIC CONTROL, INTERSECTION
WITHIN SINGLE LANE CLOSURE."

NOTE:

SINGLE LANE CLOSURE PRIOR TO INTERSECTION
SEE SDD "TRAFFIC CONTROL, INTERSECTION
LANE CLOSURE, SPEED GREATER THAN 40 M.P.H."

PROJECT NO:2240-00-67	HWY:STH 36	COUNTY:RACINE	TRAFFIC CONTROL STAGE 2	SHEET	E

LEGEND

- TYPE III BARRICADE WITH ATTACHED SIGN
- TRAFFIC CONTROL DRUM
- TRAFFIC CONTROL DRUM WITH WARNING LIGHT (TYPE C)
- ARROW BOARD
- SIGN ATTACHED TO POST
- SIGN ON PORTABLE SUPPORT (5' MIN. MOUNTING HEIGHT)
- DIRECTION OF TRAFFIC FLOW
- WORK ZONE
- AREA TO BE MAINTAINED AT ALL TIMES EXCEPT DURING WORK OPERATIONS ALLOWED DURING OFF PEAK HOURS (FLAGGING REQUIRED)
- (B) TEMPORARY PAVEMENT MARKING, 8-INCH, WHITE
- (C) TEMPORARY PAVEMENT MARKING, 4-INCH, WHITE
- REMOVING PAVEMENT MARKINGS

NOTE:

SINGLE LANE CLOSURE THROUGH INTERSECTION
SEE SDD "TRAFFIC CONTROL, INTERSECTION
WITHIN SINGLE LANE CLOSURE."

NOTE:

SINGLE LANE CLOSURE PRIOR TO INTERSECTION
SEE SDD "TRAFFIC CONTROL, INTERSECTION
LANE CLOSURE, SPEED GREATER THAN 40 M.P.H."

PROJECT NO: 2240-00-67	HWY: STH 36	COUNTY: RACINE	TRAFFIC CONTROL STAGE 2	SHEET	E

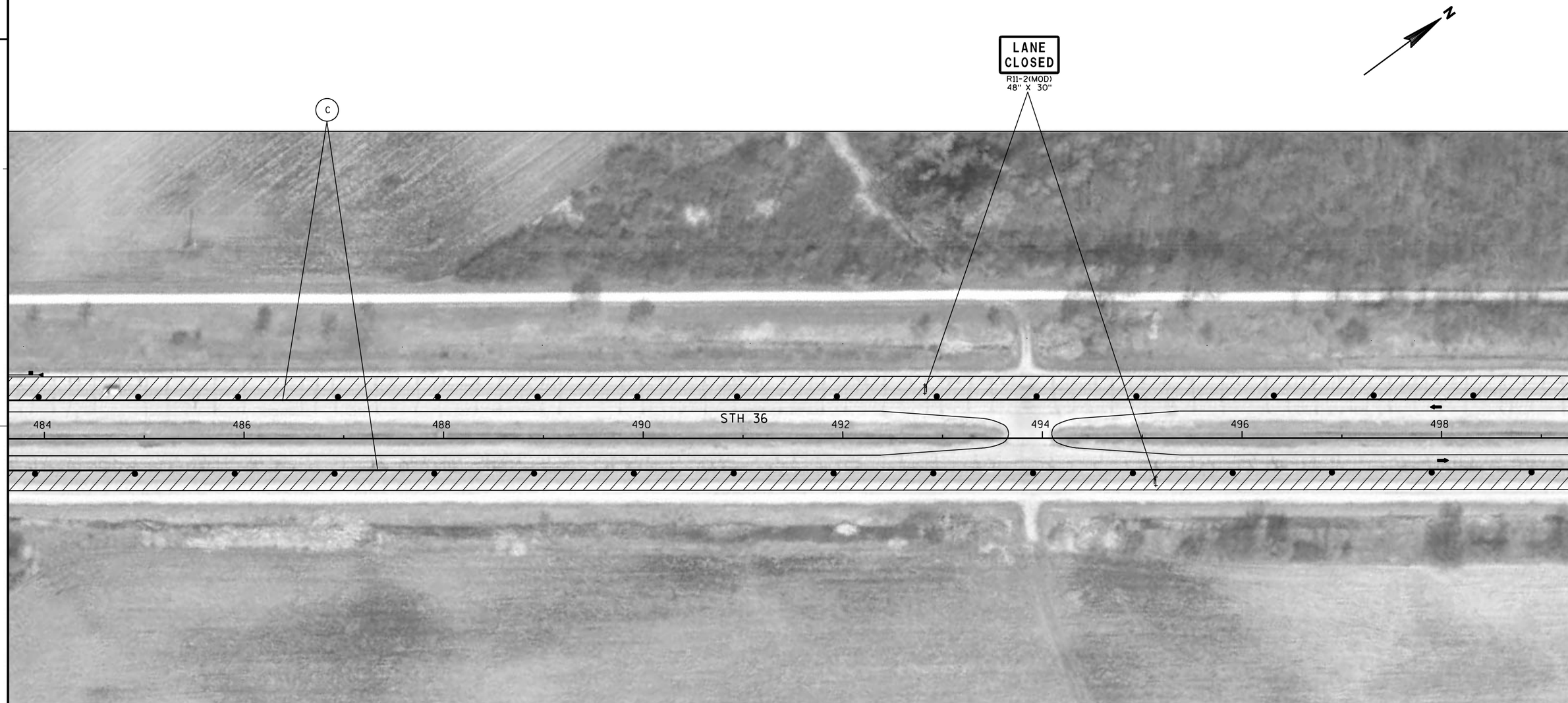

LEGEND

- TYPE III BARRICADE WITH ATTACHED SIGN
- TRAFFIC CONTROL DRUM
- TRAFFIC CONTROL DRUM WITH WARNING LIGHT (TYPE C)
- ARROW BOARD
- SIGN ATTACHED TO POST
- SIGN ON PORTABLE SUPPORT (5' MIN. MOUNTING HEIGHT)
- DIRECTION OF TRAFFIC FLOW
- WORK ZONE
- AREA TO BE MAINTAINED AT ALL TIMES EXCEPT DURING WORK OPERATIONS ALLOWED DURING OFF PEAK HOURS (FLAGGING REQUIRED)
- (B) TEMPORARY PAVEMENT MARKING, 8-INCH, WHITE
- (C) TEMPORARY PAVEMENT MARKING, 4-INCH, WHITE
- REMOVING PAVEMENT MARKINGS

NOTE:

SINGLE LANE CLOSURE THROUGH INTERSECTION
SEE SDD "TRAFFIC CONTROL, INTERSECTION
WITHIN SINGLE LANE CLOSURE."

NOTE:

SINGLE LANE CLOSURE PRIOR TO INTERSECTION
SEE SDD "TRAFFIC CONTROL, INTERSECTION
LANE CLOSURE, SPEED GREATER THAN 40 M.P.H."

PROJECT NO:2240-00-67	HWY:STH 36	COUNTY:RACINE	TRAFFIC CONTROL STAGE 2	SHEET	E

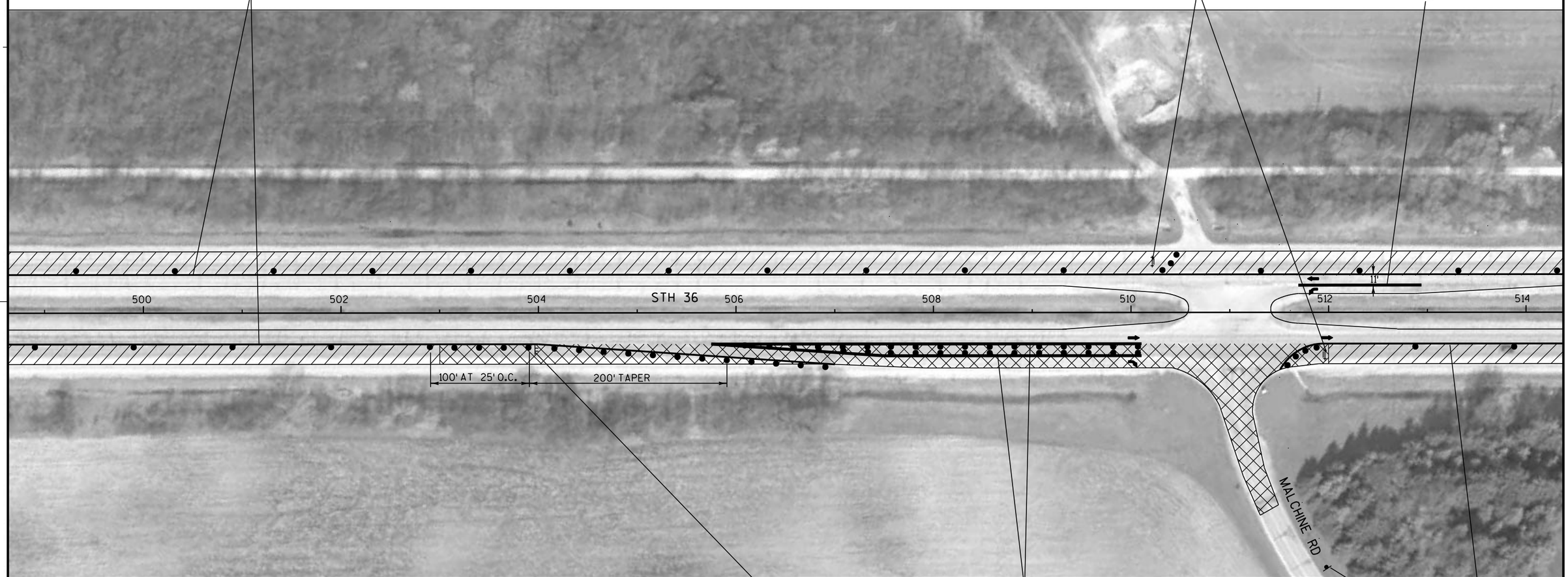

LEGEND

- TYPE III BARRICADE WITH ATTACHED SIGN
- TRAFFIC CONTROL DRUM
- TRAFFIC CONTROL DRUM WITH WARNING LIGHT (TYPE C)
- ARROW BOARD
- SIGN ATTACHED TO POST
- SIGN ON PORTABLE SUPPORT (5' MIN. MOUNTING HEIGHT)
- DIRECTION OF TRAFFIC FLOW
- WORK ZONE
- AREA TO BE MAINTAINED AT ALL TIMES EXCEPT DURING WORK OPERATIONS ALLOWED DURING OFF PEAK HOURS (FLAGGING REQUIRED)
- (B) TEMPORARY PAVEMENT MARKING, 8-INCH, WHITE
- (C) TEMPORARY PAVEMENT MARKING, 4-INCH, WHITE
- REMOVING PAVEMENT MARKINGS

NOTE:

SINGLE LANE CLOSURE THROUGH INTERSECTION
SEE SDD "TRAFFIC CONTROL, INTERSECTION
WITHIN SINGLE LANE CLOSURE."

NOTE:

SINGLE LANE CLOSURE PRIOR TO INTERSECTION
SEE SDD "TRAFFIC CONTROL, INTERSECTION
LANE CLOSURE, SPEED GREATER THAN 40 M.P.H."

PROJECT NO: 2240-00-67	HWY: STH 36	COUNTY: RACINE	TRAFFIC CONTROL STAGE 2	SHEET	E

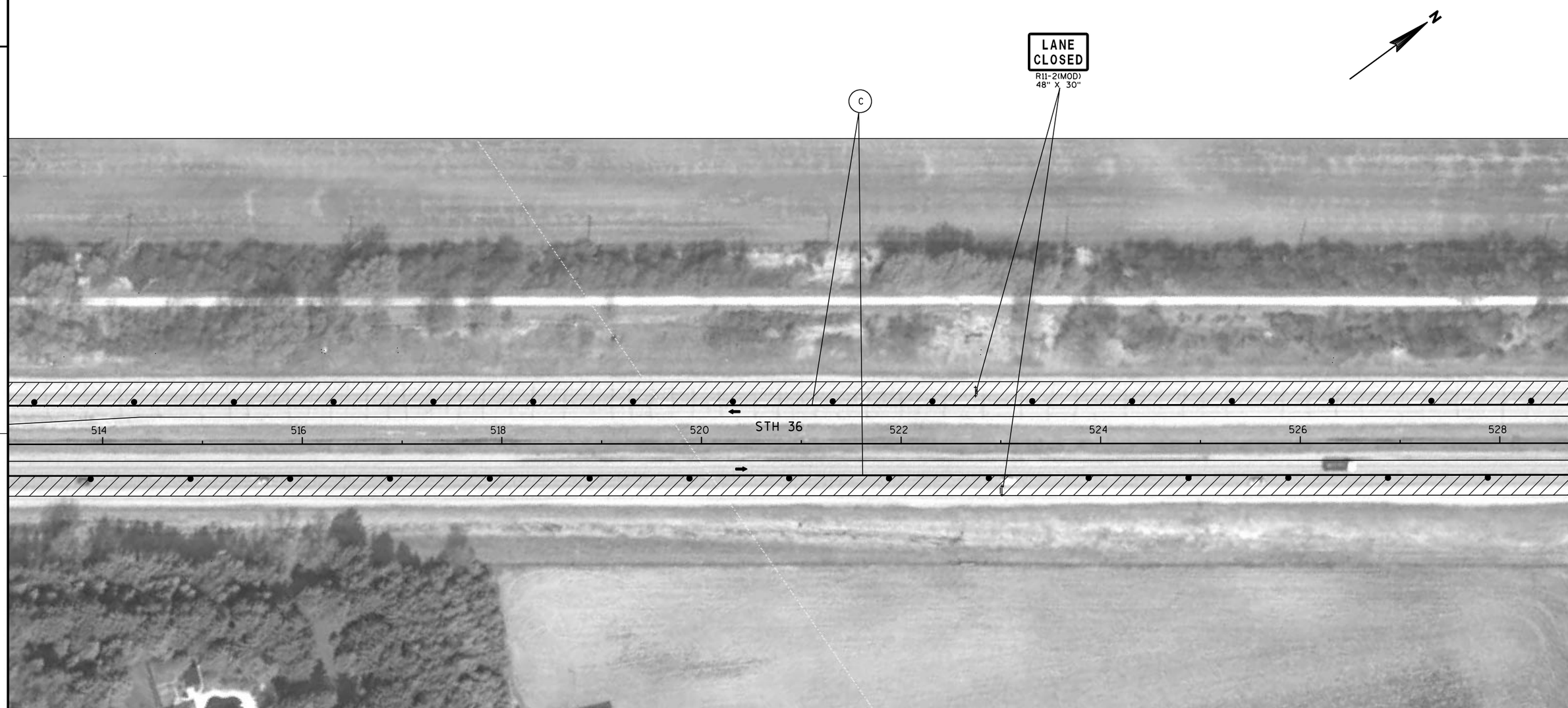

LEGEND

- TYPE III BARRICADE WITH ATTACHED SIGN
- TRAFFIC CONTROL DRUM
- TRAFFIC CONTROL DRUM WITH WARNING LIGHT (TYPE C)
- ARROW BOARD
- SIGN ATTACHED TO POST
- SIGN ON PORTABLE SUPPORT (5' MIN. MOUNTING HEIGHT)
- DIRECTION OF TRAFFIC FLOW
- WORK ZONE
- AREA TO BE MAINTAINED AT ALL TIMES EXCEPT DURING WORK OPERATIONS ALLOWED DURING OFF PEAK HOURS (FLAGGING REQUIRED)
- (B) TEMPORARY PAVEMENT MARKING, 8-INCH, WHITE
- (C) TEMPORARY PAVEMENT MARKING, 4-INCH, WHITE
- REMOVING PAVEMENT MARKINGS

NOTE:

SINGLE LANE CLOSURE THROUGH INTERSECTION
SEE SDD "TRAFFIC CONTROL, INTERSECTION
WITHIN SINGLE LANE CLOSURE."

NOTE:

SINGLE LANE CLOSURE PRIOR TO INTERSECTION
SEE SDD "TRAFFIC CONTROL, INTERSECTION
LANE CLOSURE, SPEED GREATER THAN 40 M.P.H."

PROJECT NO:2240-00-67	HWY:STH 36	COUNTY:RACINE	TRAFFIC CONTROL STAGE 2	SHEET	E

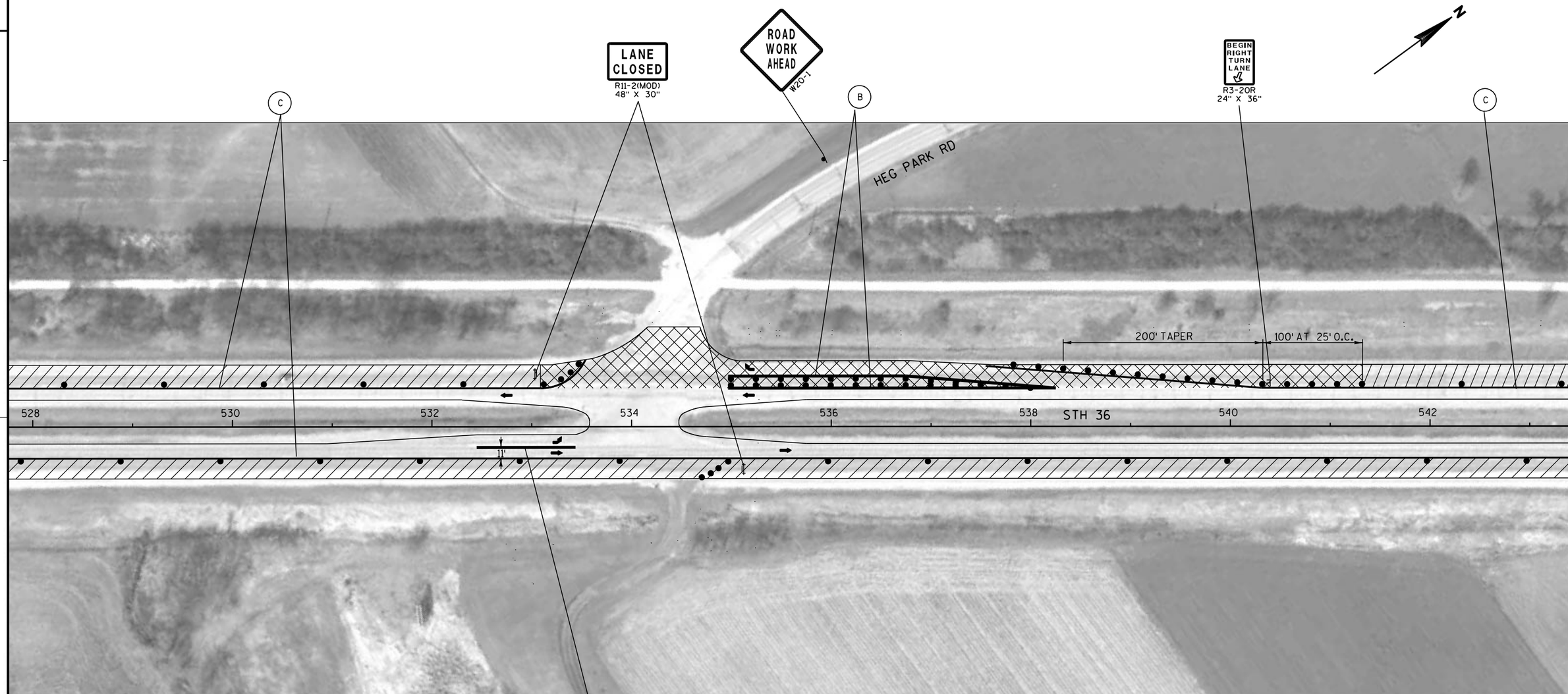

LEGEND

- TYPE III BARRICADE WITH ATTACHED SIGN
- TRAFFIC CONTROL DRUM
- TRAFFIC CONTROL DRUM WITH WARNING LIGHT (TYPE C)
- ARROW BOARD
- SIGN ATTACHED TO POST
- SIGN ON PORTABLE SUPPORT (5' MIN. MOUNTING HEIGHT)
- DIRECTION OF TRAFFIC FLOW
- WORK ZONE
- AREA TO BE MAINTAINED AT ALL TIMES EXCEPT DURING WORK OPERATIONS ALLOWED DURING OFF PEAK HOURS (FLAGGING REQUIRED)
- (B) TEMPORARY PAVEMENT MARKING, 8-INCH, WHITE
- (C) TEMPORARY PAVEMENT MARKING, 4-INCH, WHITE
- REMOVING PAVEMENT MARKINGS

NOTE:

SINGLE LANE CLOSURE THROUGH INTERSECTION
SEE SDD "TRAFFIC CONTROL, INTERSECTION
WITHIN SINGLE LANE CLOSURE."

NOTE:

SINGLE LANE CLOSURE PRIOR TO INTERSECTION
SEE SDD "TRAFFIC CONTROL, INTERSECTION
LANE CLOSURE, SPEED GREATER THAN 40 M.P.H."

PROJECT NO:2240-00-67	HWY:STH 36	COUNTY:RACINE	TRAFFIC CONTROL STAGE 2	SHEET	E

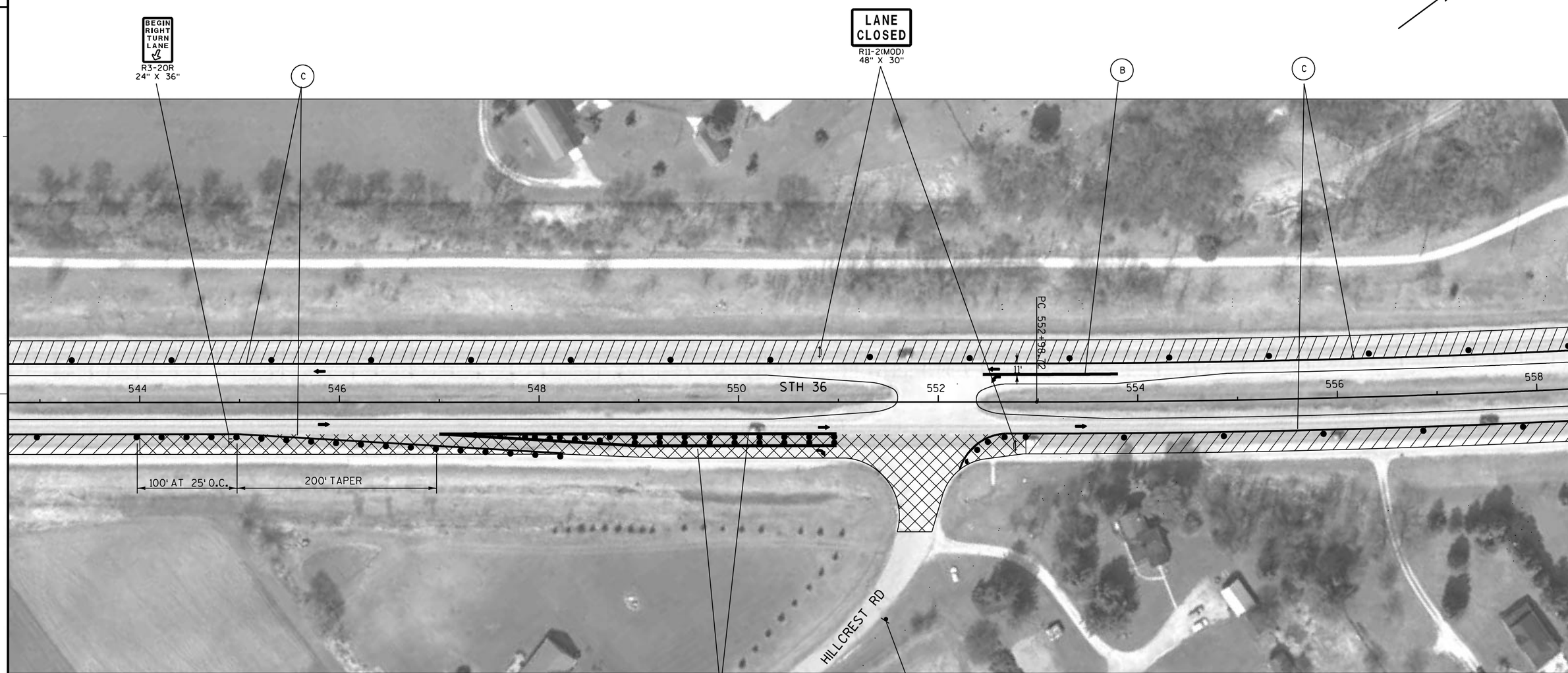

LEGEND

- TYPE III BARRICADE WITH ATTACHED SIGN
- TRAFFIC CONTROL DRUM
- TRAFFIC CONTROL DRUM WITH WARNING LIGHT (TYPE C)
- ARROW BOARD
- SIGN ATTACHED TO POST
- SIGN ON PORTABLE SUPPORT (5' MIN. MOUNTING HEIGHT)
- DIRECTION OF TRAFFIC FLOW
- WORK ZONE
- AREA TO BE MAINTAINED AT ALL TIMES EXCEPT DURING WORK OPERATIONS ALLOWED DURING OFF PEAK HOURS (FLAGGING REQUIRED)
- (B) TEMPORARY PAVEMENT MARKING, 8-INCH, WHITE
- (C) TEMPORARY PAVEMENT MARKING, 4-INCH, WHITE
- REMOVING PAVEMENT MARKINGS

NOTE:

SINGLE LANE CLOSURE THROUGH INTERSECTION
SEE SDD "TRAFFIC CONTROL, INTERSECTION WITHIN SINGLE LANE CLOSURE."

NOTE:

SINGLE LANE CLOSURE PRIOR TO INTERSECTION
SEE SDD "TRAFFIC CONTROL, INTERSECTION LANE CLOSURE, SPEED GREATER THAN 40 M.P.H."

PROJECT NO: 2240-00-67	HWY: STH 36	COUNTY: RACINE	TRAFFIC CONTROL STAGE 2	SHEET	E

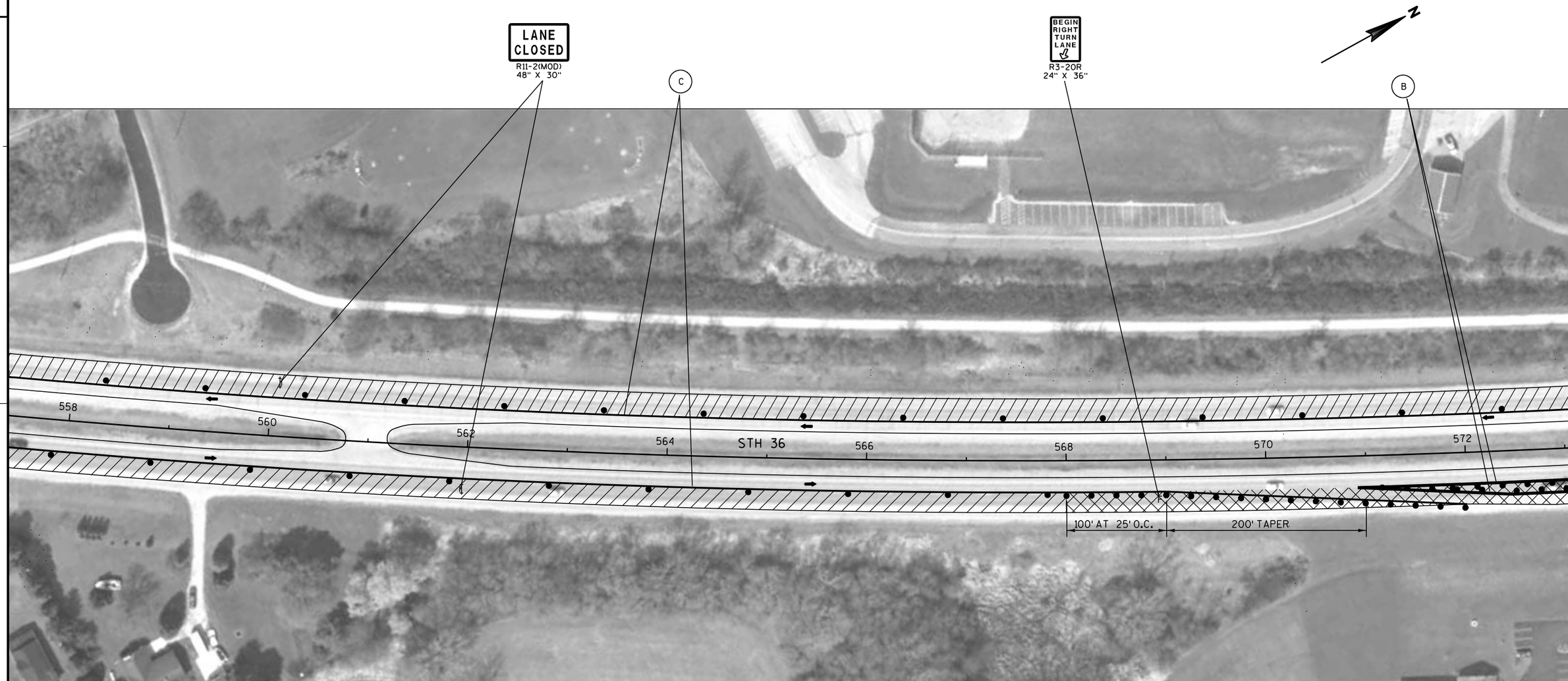

LEGEND

- TYPE III BARRICADE WITH ATTACHED SIGN
- TRAFFIC CONTROL DRUM
- TRAFFIC CONTROL DRUM WITH WARNING LIGHT (TYPE C)
- ARROW BOARD
- SIGN ATTACHED TO POST
- SIGN ON PORTABLE SUPPORT (5' MIN. MOUNTING HEIGHT)
- DIRECTION OF TRAFFIC FLOW
- WORK ZONE
- AREA TO BE MAINTAINED AT ALL TIMES EXCEPT DURING WORK OPERATIONS ALLOWED DURING OFF PEAK HOURS (FLAGGING REQUIRED)
- (B) TEMPORARY PAVEMENT MARKING, 8-INCH, WHITE
- (C) TEMPORARY PAVEMENT MARKING, 4-INCH, WHITE
- REMOVING PAVEMENT MARKINGS

NOTE:

SINGLE LANE CLOSURE THROUGH INTERSECTION
SEE SDD "TRAFFIC CONTROL, INTERSECTION
WITHIN SINGLE LANE CLOSURE."

NOTE:

SINGLE LANE CLOSURE PRIOR TO INTERSECTION
SEE SDD "TRAFFIC CONTROL, INTERSECTION
LANE CLOSURE, SPEED GREATER THAN 40 M.P.H."

PROJECT NO: 2240-00-67	HWY: STH 36	COUNTY: RACINE	TRAFFIC CONTROL STAGE 2	SHEET	E

LEGEND

- TYPE III BARRICADE WITH ATTACHED SIGN
- TRAFFIC CONTROL DRUM
- TRAFFIC CONTROL DRUM WITH WARNING LIGHT (TYPE C)
- ARROW BOARD
- SIGN ATTACHED TO POST
- SIGN ON PORTABLE SUPPORT (5' MIN. MOUNTING HEIGHT)
- DIRECTION OF TRAFFIC FLOW
- WORK ZONE
- AREA TO BE MAINTAINED AT ALL TIMES EXCEPT DURING WORK OPERATIONS ALLOWED DURING OFF PEAK HOURS (FLAGGING REQUIRED)
- (B) TEMPORARY PAVEMENT MARKING, 8-INCH, WHITE
- (C) TEMPORARY PAVEMENT MARKING, 4-INCH, WHITE
- REMOVING PAVEMENT MARKINGS

NOTE:

SINGLE LANE CLOSURE THROUGH INTERSECTION
SEE SDD "TRAFFIC CONTROL, INTERSECTION
WITHIN SINGLE LANE CLOSURE."

NOTE:

SINGLE LANE CLOSURE PRIOR TO INTERSECTION
SEE SDD "TRAFFIC CONTROL, INTERSECTION
LANE CLOSURE, SPEED GREATER THAN 40 M.P.H."

PROJECT NO:2240-00-67	HWY:STH 36	COUNTY:RACINE	TRAFFIC CONTROL STAGE 2	SHEET	E

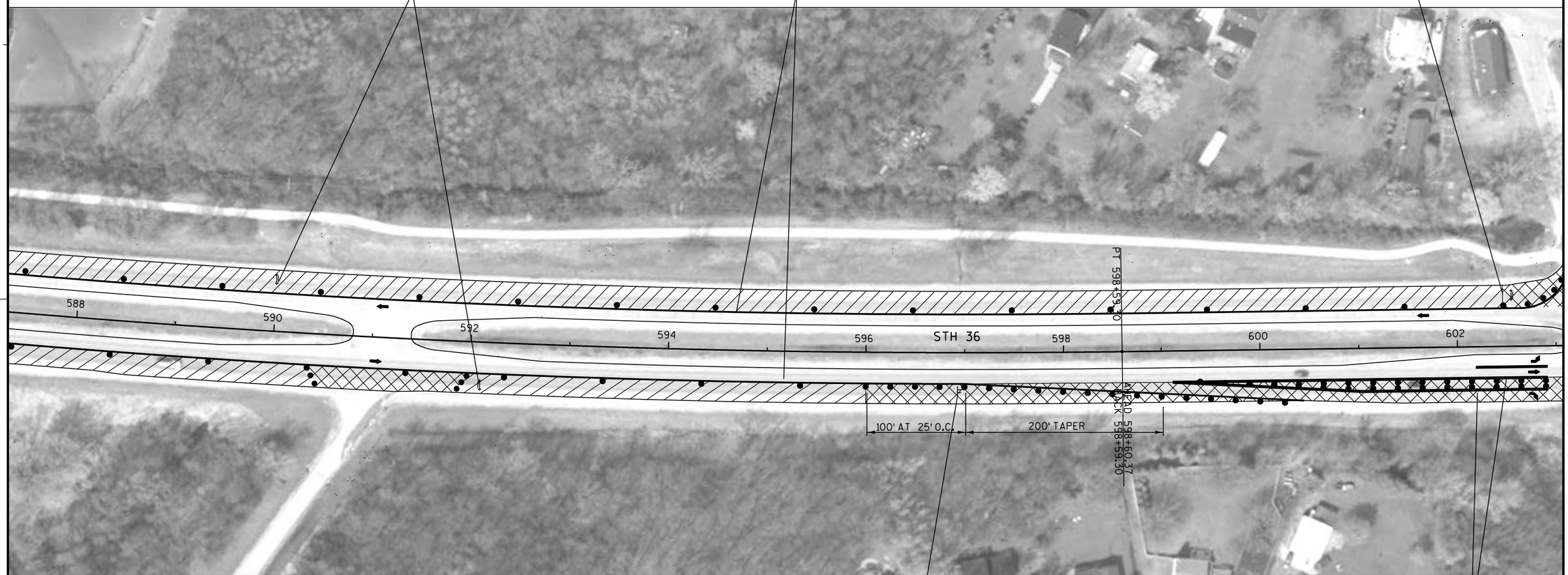

LEGEND

- TYPE III BARRICADE WITH ATTACHED SIGN
- TRAFFIC CONTROL DRUM
- TRAFFIC CONTROL DRUM WITH WARNING LIGHT (TYPE C)
- ARROW BOARD
- SIGN ATTACHED TO POST
- SIGN ON PORTABLE SUPPORT (5' MIN. MOUNTING HEIGHT)
- DIRECTION OF TRAFFIC FLOW
- WORK ZONE
- AREA TO BE MAINTAINED AT ALL TIMES EXCEPT DURING WORK OPERATIONS ALLOWED DURING OFF PEAK HOURS (FLAGGING REQUIRED)
- (B) TEMPORARY PAVEMENT MARKING, 8-INCH, WHITE
- (C) TEMPORARY PAVEMENT MARKING, 4-INCH, WHITE
- REMOVING PAVEMENT MARKINGS

BEGIN RIGHT TURN LANE
R3-20R
24" X 36"

NOTE:

SINGLE LANE CLOSURE THROUGH INTERSECTION
SEE SDD "TRAFFIC CONTROL, INTERSECTION
WITHIN SINGLE LANE CLOSURE."

NOTE:

SINGLE LANE CLOSURE PRIOR TO INTERSECTION
SEE SDD "TRAFFIC CONTROL, INTERSECTION
LANE CLOSURE, SPEED GREATER THAN 40 M.P.H."

PROJECT NO: 2240-00-67	HWY: STH 36	COUNTY: RACINE	TRAFFIC CONTROL STAGE 2	SHEET	E

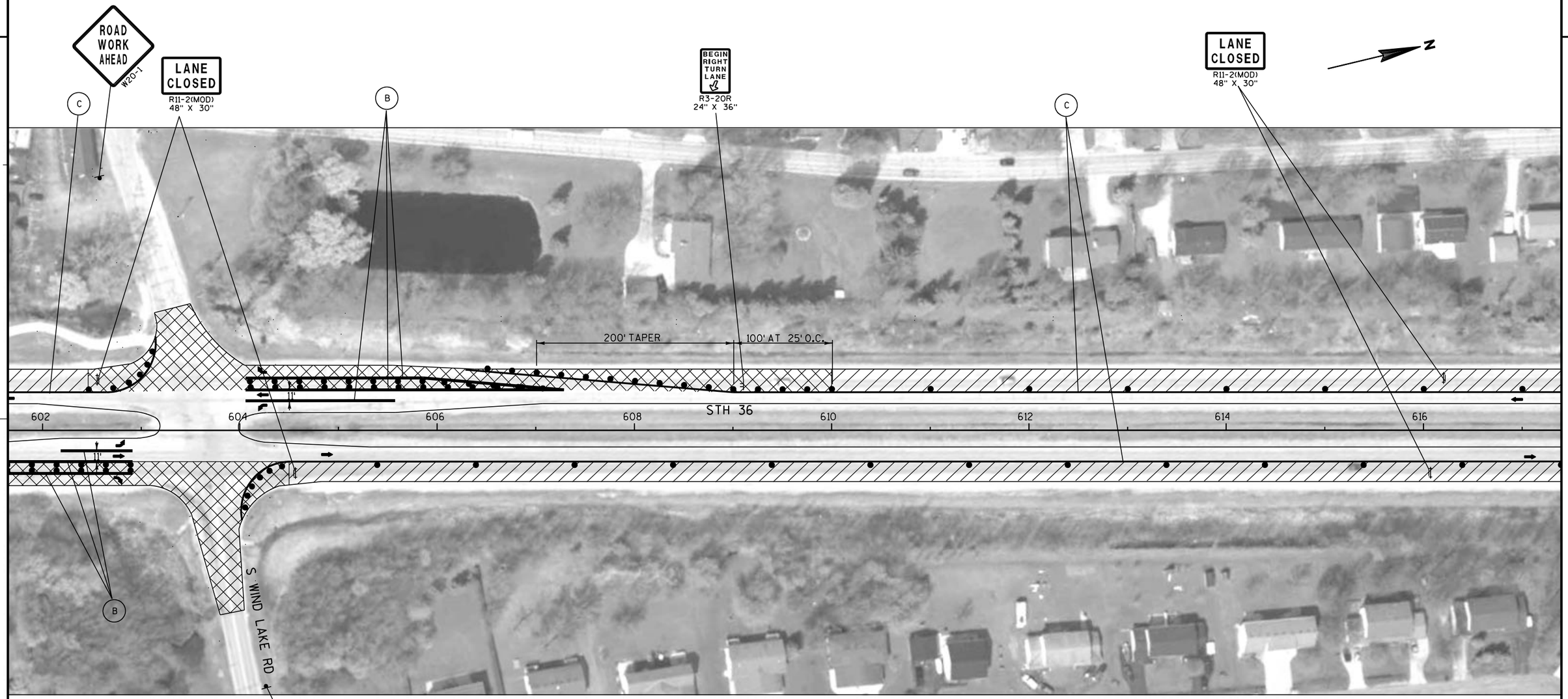

LEGEND

- TYPE III BARRICADE WITH ATTACHED SIGN
- TRAFFIC CONTROL DRUM
- TRAFFIC CONTROL DRUM WITH WARNING LIGHT (TYPE C)
- ARROW BOARD
- SIGN ATTACHED TO POST
- SIGN ON PORTABLE SUPPORT (5' MIN. MOUNTING HEIGHT)
- DIRECTION OF TRAFFIC FLOW
- WORK ZONE
- AREA TO BE MAINTAINED AT ALL TIMES EXCEPT DURING WORK OPERATIONS ALLOWED DURING OFF PEAK HOURS (FLAGGING REQUIRED)
- (B) TEMPORARY PAVEMENT MARKING, 8-INCH, WHITE
- (C) TEMPORARY PAVEMENT MARKING, 4-INCH, WHITE
- REMOVING PAVEMENT MARKINGS

NOTE:

SINGLE LANE CLOSURE THROUGH INTERSECTION
SEE SDD "TRAFFIC CONTROL, INTERSECTION
WITHIN SINGLE LANE CLOSURE."

NOTE:

SINGLE LANE CLOSURE PRIOR TO INTERSECTION
SEE SDD "TRAFFIC CONTROL, INTERSECTION
LANE CLOSURE, SPEED GREATER THAN 40 M.P.H."

PROJECT NO: 2240-00-67	HWY: STH 36	COUNTY: RACINE	TRAFFIC CONTROL STAGE 2	SHEET	E

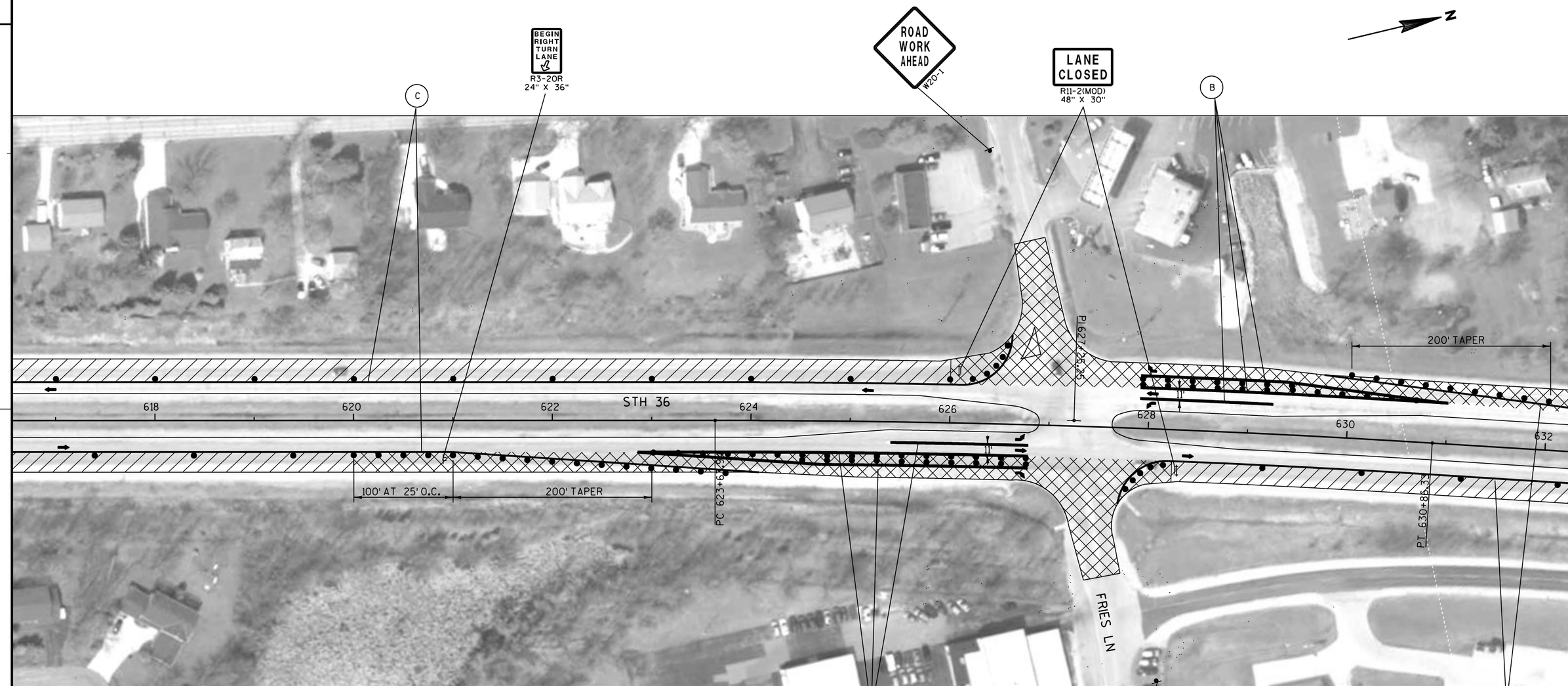

LEGEND

- TYPE III BARRICADE WITH ATTACHED SIGN
- TRAFFIC CONTROL DRUM
- TRAFFIC CONTROL DRUM WITH WARNING LIGHT (TYPE C)
- ARROW BOARD
- SIGN ATTACHED TO POST
- SIGN ON PORTABLE SUPPORT (5' MIN. MOUNTING HEIGHT)
- DIRECTION OF TRAFFIC FLOW
- WORK ZONE
- AREA TO BE MAINTAINED AT ALL TIMES EXCEPT DURING WORK OPERATIONS ALLOWED DURING OFF PEAK HOURS (FLAGGING REQUIRED)
- (B) TEMPORARY PAVEMENT MARKING, 8-INCH, WHITE
- (C) TEMPORARY PAVEMENT MARKING, 4-INCH, WHITE
- REMOVING PAVEMENT MARKINGS

NOTE:

SINGLE LANE CLOSURE THROUGH INTERSECTION
SEE SDD "TRAFFIC CONTROL, INTERSECTION
WITHIN SINGLE LANE CLOSURE."

NOTE:

SINGLE LANE CLOSURE PRIOR TO INTERSECTION
SEE SDD "TRAFFIC CONTROL, INTERSECTION
LANE CLOSURE, SPEED GREATER THAN 40 M.P.H."

PROJECT NO: 2240-00-67	HWY: STH 36	COUNTY: RACINE	TRAFFIC CONTROL STAGE 2	SHEET	E

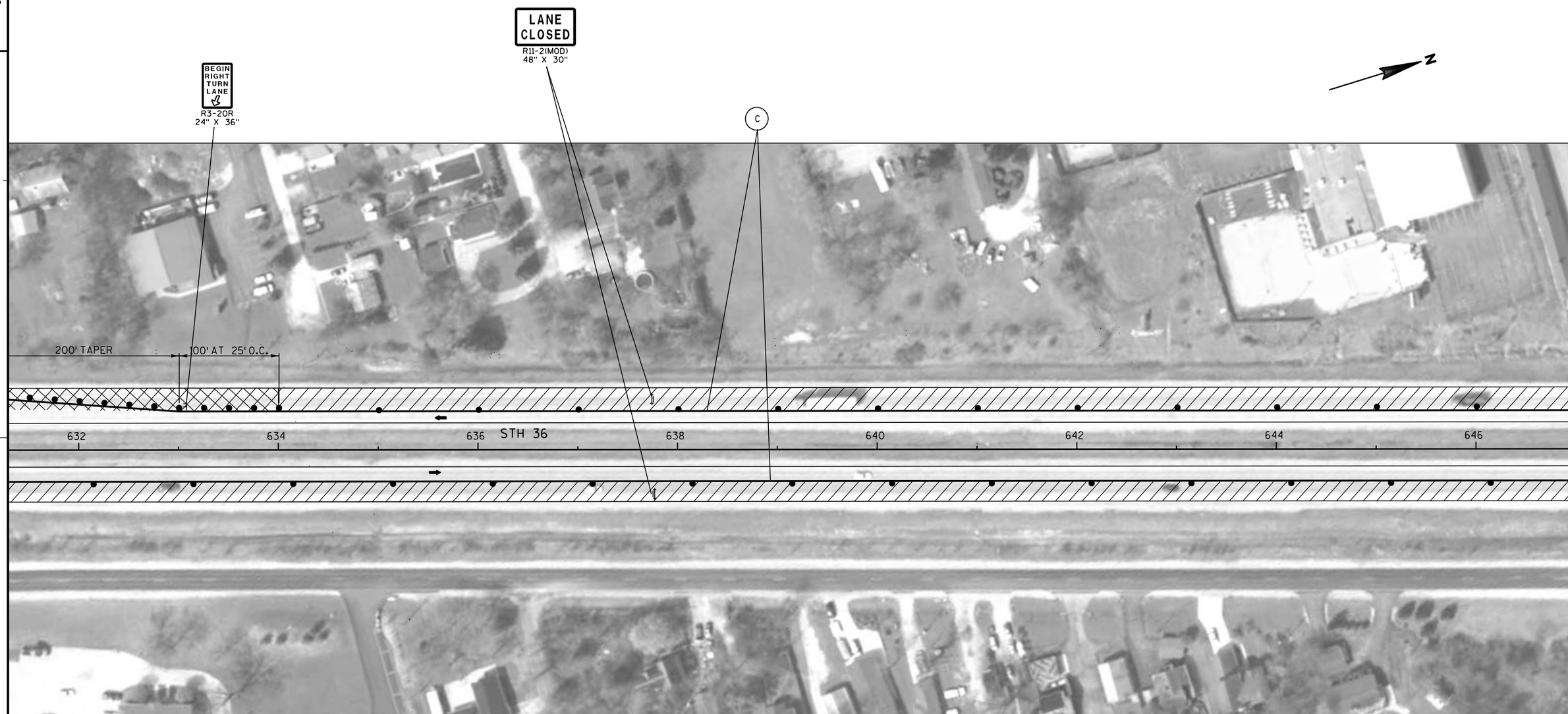

LEGEND

- TYPE III BARRICADE WITH ATTACHED SIGN
- TRAFFIC CONTROL DRUM
- TRAFFIC CONTROL DRUM WITH WARNING LIGHT (TYPE C)
- ARROW BOARD
- SIGN ATTACHED TO POST
- SIGN ON PORTABLE SUPPORT (5' MIN. MOUNTING HEIGHT)
- DIRECTION OF TRAFFIC FLOW
- WORK ZONE
- AREA TO BE MAINTAINED AT ALL TIMES EXCEPT DURING WORK OPERATIONS ALLOWED DURING OFF PEAK HOURS (FLAGGING REQUIRED)
- (B) TEMPORARY PAVEMENT MARKING, 8-INCH, WHITE
- (C) TEMPORARY PAVEMENT MARKING, 4-INCH, WHITE
- REMOVING PAVEMENT MARKINGS

NOTE:

SINGLE LANE CLOSURE THROUGH INTERSECTION
SEE SDD "TRAFFIC CONTROL, INTERSECTION
WITHIN SINGLE LANE CLOSURE."

NOTE:

SINGLE LANE CLOSURE PRIOR TO INTERSECTION
SEE SDD "TRAFFIC CONTROL, INTERSECTION
LANE CLOSURE, SPEED GREATER THAN 40 M.P.H."

PROJECT NO:2240-00-67	HWY:STH 36	COUNTY:RACINE	TRAFFIC CONTROL STAGE 2	SHEET	E

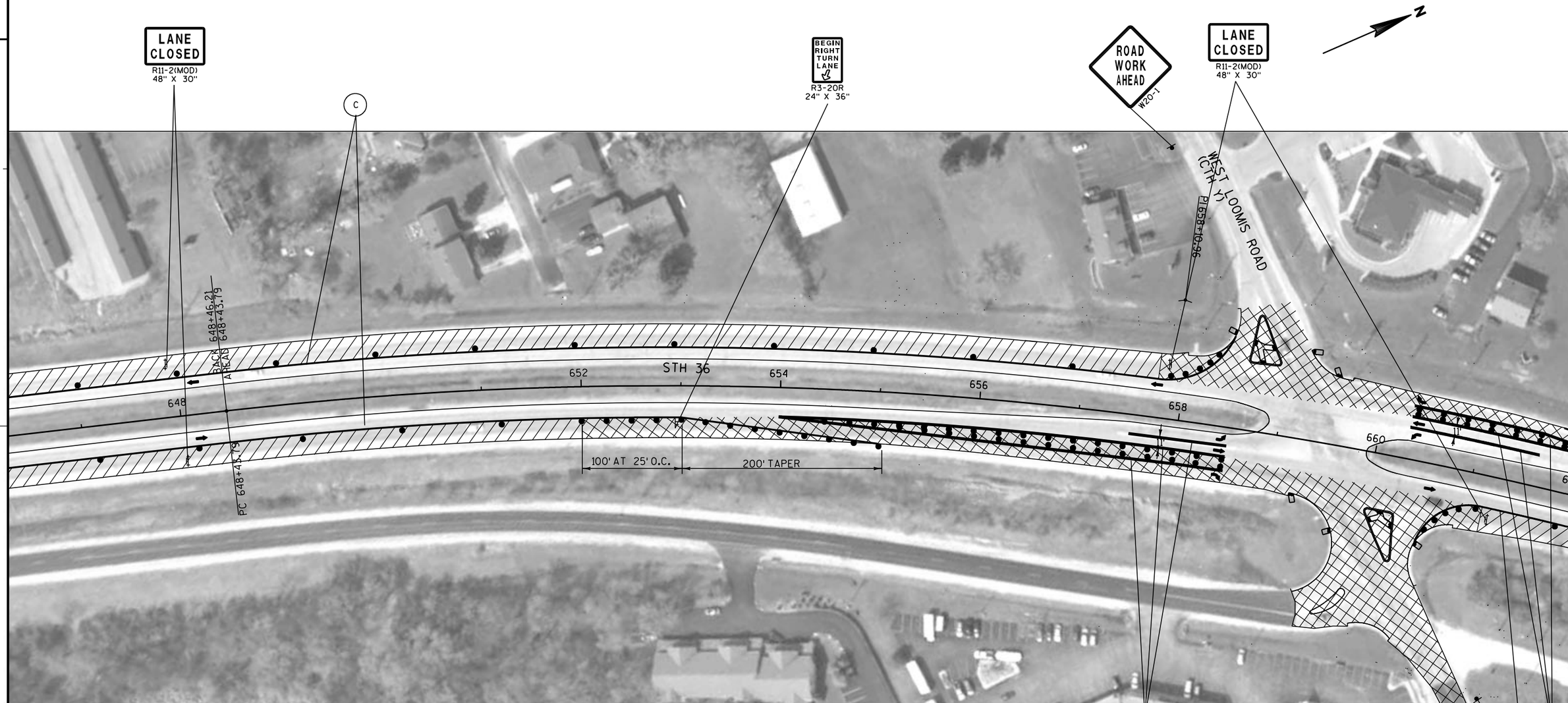

LEGEND

- TYPE III BARRICADE WITH ATTACHED SIGN
- TRAFFIC CONTROL DRUM
- TRAFFIC CONTROL DRUM WITH WARNING LIGHT (TYPE C)
- ARROW BOARD
- SIGN ATTACHED TO POST
- SIGN ON PORTABLE SUPPORT (5' MIN. MOUNTING HEIGHT)
- DIRECTION OF TRAFFIC FLOW
- WORK ZONE
- AREA TO BE MAINTAINED AT ALL TIMES EXCEPT DURING WORK OPERATIONS ALLOWED DURING OFF PEAK HOURS (FLAGGING REQUIRED)
- (B) TEMPORARY PAVEMENT MARKING, 8-INCH, WHITE
- (C) TEMPORARY PAVEMENT MARKING, 4-INCH, WHITE
- REMOVING PAVEMENT MARKINGS

NOTE:

SINGLE LANE CLOSURE THROUGH INTERSECTION
SEE SDD "TRAFFIC CONTROL, INTERSECTION
WITHIN SINGLE LANE CLOSURE."

NOTE:

SINGLE LANE CLOSURE PRIOR TO INTERSECTION
SEE SDD "TRAFFIC CONTROL, INTERSECTION
LANE CLOSURE, SPEED GREATER THAN 40 M.P.H."

PROJECT NO:2240-00-67	HWY:STH 36	COUNTY:RACINE	TRAFFIC CONTROL STAGE 2	SHEET	E

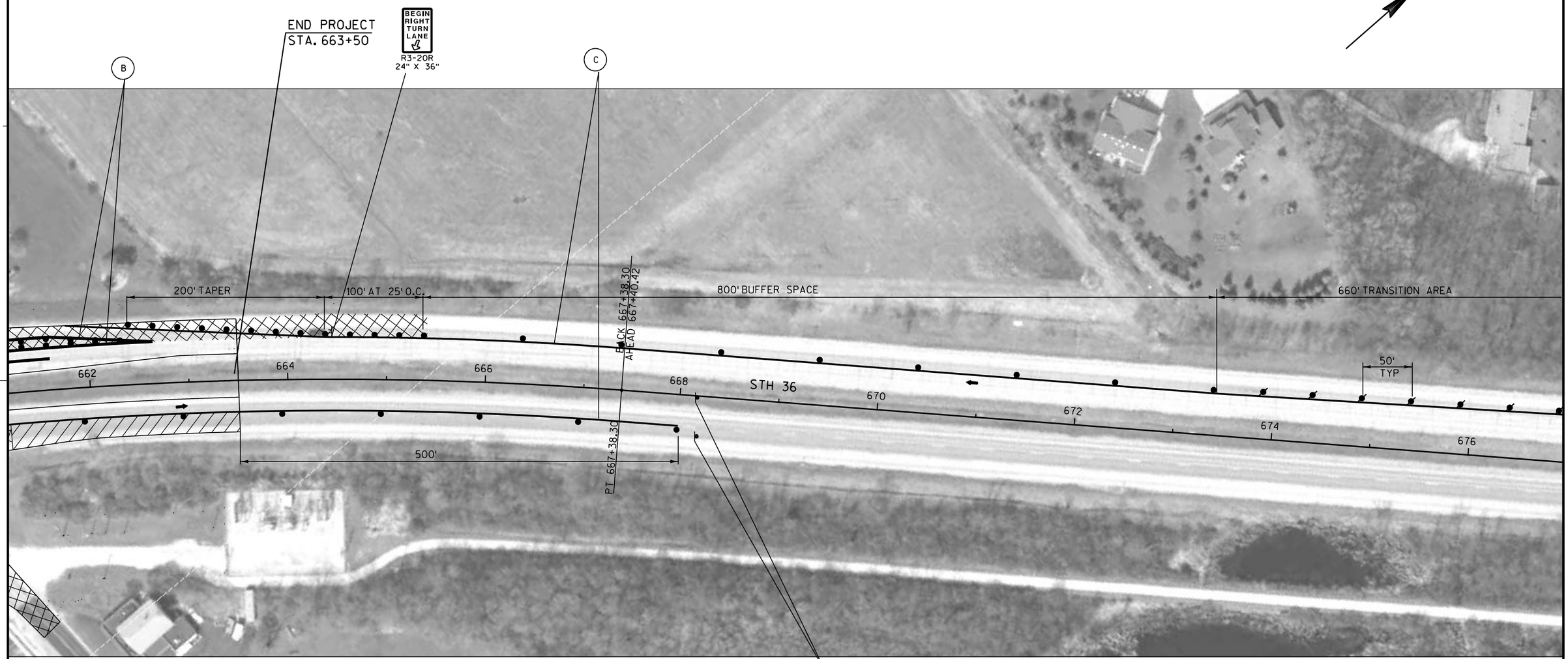

LEGEND

- TYPE III BARRICADE WITH ATTACHED SIGN
- TRAFFIC CONTROL DRUM
- TRAFFIC CONTROL DRUM WITH WARNING LIGHT (TYPE C)
- ARROW BOARD
- SIGN ATTACHED TO POST
- SIGN ON PORTABLE SUPPORT (5' MIN. MOUNTING HEIGHT)
- DIRECTION OF TRAFFIC FLOW
- WORK ZONE
- AREA TO BE MAINTAINED AT ALL TIMES EXCEPT DURING WORK OPERATIONS ALLOWED DURING OFF PEAK HOURS (FLAGGING REQUIRED)
- (B) TEMPORARY PAVEMENT MARKING, 8-INCH, WHITE
- (C) TEMPORARY PAVEMENT MARKING, 4-INCH, WHITE
- REMOVING PAVEMENT MARKINGS

NOTE:

SINGLE LANE CLOSURE THROUGH INTERSECTION
SEE SDD "TRAFFIC CONTROL, INTERSECTION
WITHIN SINGLE LANE CLOSURE."

NOTE:

SINGLE LANE CLOSURE PRIOR TO INTERSECTION
SEE SDD "TRAFFIC CONTROL, INTERSECTION
LANE CLOSURE, SPEED GREATER THAN 40 M.P.H."

PROJECT NO: 2240-00-67	HWY: STH 36	COUNTY: RACINE	TRAFFIC CONTROL STAGE 2	SHEET	E

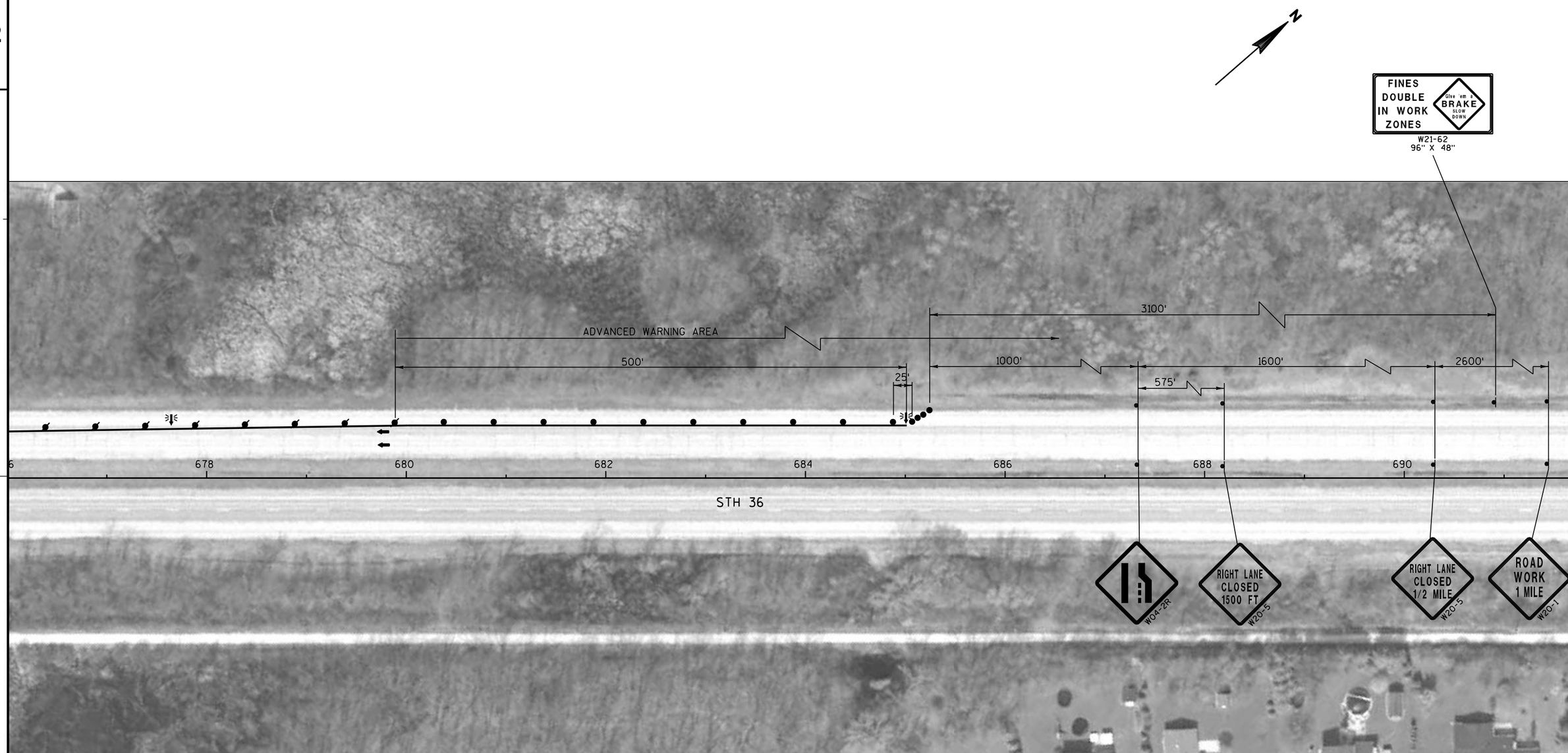

LEGEND

- TYPE III BARRICADE WITH ATTACHED SIGN
- TRAFFIC CONTROL DRUM
- TRAFFIC CONTROL DRUM WITH WARNING LIGHT (TYPE C)
- ARROW BOARD
- SIGN ATTACHED TO POST
- SIGN ON PORTABLE SUPPORT (5' MIN. MOUNTING HEIGHT)
- DIRECTION OF TRAFFIC FLOW
- WORK ZONE
- AREA TO BE MAINTAINED AT ALL TIMES EXCEPT DURING WORK OPERATIONS ALLOWED DURING OFF PEAK HOURS (FLAGGING REQUIRED)
- (B) TEMPORARY PAVEMENT MARKING, 8-INCH, WHITE
- (C) TEMPORARY PAVEMENT MARKING, 4-INCH, WHITE
- REMOVING PAVEMENT MARKINGS

NOTE:

SINGLE LANE CLOSURE THROUGH INTERSECTION
SEE SDD "TRAFFIC CONTROL, INTERSECTION
WITHIN SINGLE LANE CLOSURE."

NOTE:

SINGLE LANE CLOSURE PRIOR TO INTERSECTION
SEE SDD "TRAFFIC CONTROL, INTERSECTION
LANE CLOSURE, SPEED GREATER THAN 40 M.P.H."

PROJECT NO: 2240-00-67	HWY: STH 36	COUNTY: RACINE	TRAFFIC CONTROL STAGE 2	SHEET	E

3

DATE 01MAY12 E S T I M A T E O F Q U A N T I T I E S

LINE NUMBER	ITEM	ITEM DESCRIPTION	UNIT	TOTAL	2240-00-67 QUANTITY
0010	201.0105	CLEARING	STA	13.000	13.000
0020	204.0110	REMOVING ASPHALTIC SURFACE	SY	336.000	336.000
0030	204.0115	REMOVING ASPHALTIC SURFACE BUTT JOINTS	SY	10,330.000	10,330.000
0040	204.0120	REMOVING ASPHALTIC SURFACE MILLING	SY	259,660.000	259,660.000
0050	204.0150	REMOVING CURB & GUTTER	LF	132.000	132.000
0060	204.9060.S	REMOVING (ITEM DESCRIPTION) 01. APRON ENDWALL	EACH	1.000	1.000
0070	204.9060.S	REMOVING (ITEM DESCRIPTION) 02. POST	EACH	2.000	2.000
0080	205.0100	EXCAVATION COMMON	CY	24.000	24.000
0090	213.0100	FINISHING ROADWAY (PROJECT) 01. 2240-00-67	EACH	1.000	1.000
0100	305.0110	BASE AGGREGATE DENSE 3/4-INCH	TON	1,190.000	1,190.000
0110	305.0500	SHAPING SHOULDERS	STA	625.000	625.000
0120	416.0610	DRILLED TIE BARS	EACH	24.000	24.000
0130	440.4410.S	INCENTIVE IRI RIDE	DOL	48,000.000	48,000.000
0140	455.0105	ASPHALTIC MATERIAL PG58-28	TON	2,090.000	2,090.000
0150	455.0605	TACK COAT	GAL	9,000.000	9,000.000
0160	460.1103	HMA PAVEMENT TYPE E-3	TON	31,050.000	31,050.000
0170	460.2000	INCENTIVE DENSITY HMA PAVEMENT	DOL	19,780.000	19,780.000
0180	465.0110	ASPHALTIC SURFACE PATCHING	TON	139.000	139.000
0190	465.0400	ASPHALTIC SHOULDER RUMBLE STRIP	LF	102,790.000	102,790.000
0200	521.1515	APRON ENDWALLS FOR CULVERT PIPE SLOPED SECTION STEEL 15-INCH	EACH	1.000	1.000
0210	601.0105	CONCRETE CURB TYPE A	LF	123.000	123.000
0220	601.0407	CONCRETE CURB & GUTTER 18-INCH TYPE D	LF	72.000	72.000
0230	601.0557	CONCRETE CURB AND GUTTER 6-INCH SLOPED 36-INCH TYPE D	LF	60.000	60.000
0240	602.0410	CONCRETE SIDEWALK 5-INCH	SF	700.000	700.000
0250	602.0505	CURB RAMP DETECTABLE WARNING FIELD YELLOW	SF	72.000	72.000
0260	614.0010	BARRIER SYSTEM GRADING SHAPING FINISHING	EACH	1.000	1.000
0270	614.0305	STEEL PLATE BEAM GUARD CLASS A	LF	663.000	663.000
0280	614.0345	STEEL PLATE BEAM GUARD SHORT RADIUS	LF	51.000	51.000
0290	614.0370	STEEL PLATE BEAM GUARD ENERGY ABSORBING TERMINAL	EACH	1.000	1.000
0300	614.0390	STEEL PLATE BEAM GUARD SHORT RADIUS TERMINAL	EACH	1.000	1.000
0310	619.1000	MOBILIZATION	EACH	1.000	1.000
0320	625.0100	TOPSOIL	SY	230.000	230.000
0330	628.1504	SILT FENCE	LF	700.000	700.000
0340	628.1520	SILT FENCE MAINTENANCE	LF	70.000	70.000
0350	628.1905	MOBILIZATIONS EROSION CONTROL	EACH	3.000	3.000
0360	628.1910	MOBILIZATIONS EMERGENCY EROSION CONTROL	EACH	3.000	3.000
0370	628.2004	EROSION MAT CLASS I TYPE B	SY	385.000	385.000
0380	628.7020	INLET PROTECTION TYPE D	EACH	2.000	2.000
0390	628.7504	TEMPORARY DITCH CHECKS	LF	60.000	60.000
0400	628.7570	ROCK BAGS	EACH	20.000	20.000
0410	629.0210	FERTILIZER TYPE B	CWT	0.400	0.400
0420	630.0130	SEEDING MIXTURE NO. 30	LB	6.000	6.000
0430	630.0200	SEEDING TEMPORARY	LB	3.000	3.000
0440	634.0618	POSTS WOOD 4X6-INCH X 18-FT	EACH	170.000	170.000
0450	637.0202	SIGNS REFLECTIVE TYPE II	SF	1,951.470	1,951.470
0460	637.0402	SIGNS REFLECTIVE FOLDING TYPE II	SF	59.680	59.680
0470	638.2102	MOVING SIGNS TYPE II	EACH	16.000	16.000
0480	638.2602	REMOVING SIGNS TYPE II	EACH	150.000	150.000

3

3

DATE 01MAY12 E S T I M A T E O F Q U A N T I T I E S

LINE NUMBER	ITEM	ITEM DESCRIPTION	UNIT	TOTAL	2240-00-67 QUANTITY
0490	638.3000	REMOVING SMALL SIGN SUPPORTS	EACH	137.000	137.000
0500	642.5201	FIELD OFFICE TYPE C	EACH	1.000	1.000
0510	643.0200	TRAFFIC CONTROL SURVEILLANCE AND MAINTENANCE (PROJECT) 01. 2240-00-67	DAY	78.000	78.000
0520	643.0300	TRAFFIC CONTROL DRUMS	DAY	114,322.000	114,322.000
0530	643.0420	TRAFFIC CONTROL BARRICADES TYPE III	DAY	2,964.000	2,964.000
0540	643.0705	TRAFFIC CONTROL WARNING LIGHTS TYPE A	DAY	2,964.000	2,964.000
0550	643.0715	TRAFFIC CONTROL WARNING LIGHTS TYPE C	DAY	2,340.000	2,340.000
0560	643.0800	TRAFFIC CONTROL ARROW BOARDS	DAY	312.000	312.000
0570	643.0900	TRAFFIC CONTROL SIGNS	DAY	4,836.000	4,836.000
0580	643.1050	TRAFFIC CONTROL SIGNS PCMS	DAY	64.000	64.000
0590	646.0106	PAVEMENT MARKING EPOXY 4-INCH	LF	125,234.000	125,234.000
0600	646.0126	PAVEMENT MARKING EPOXY 8-INCH	LF	610.000	610.000
0610	646.0600	REMOVING PAVEMENT MARKINGS	LF	1,320.000	1,320.000
0620	646.0805.S	PAVEMENT MARKING OUTFALL	EACH	239.000	239.000
0630	646.0841.S	PAVEMENT MARKING GROOVED WET REFLECTIVE CONTRAST TAPE 4-INCH	LF	17,220.000	17,220.000
0640	646.0843.S	PAVEMENT MARKING GROOVED WET REFLECTIVE CONTRAST TAPE 8-INCH	LF	6,765.000	6,765.000
0650	646.0883.S	PAVEMENT MARKING GROOVED WET REFLECTIVE TAPE 8-INCH	LF	810.000	810.000
0660	647.0156	PAVEMENT MARKING ARROWS EPOXY TYPE 1	EACH	2.000	2.000
0670	647.0356	PAVEMENT MARKING WORDS EPOXY	EACH	1.000	1.000
0680	647.0726	PAVEMENT MARKING DIAGONAL EPOXY 12-INCH	LF	344.000	344.000
0690	649.0100	TEMPORARY PAVEMENT MARKING 4-INCH	LF	124,700.000	124,700.000
0700	649.0400	TEMPORARY PAVEMENT MARKING REMOVABLE TAPE 4-INCH	LF	2,640.000	2,640.000
0710	649.0701	TEMPORARY PAVEMENT MARKING 8-INCH	LF	3,600.000	3,600.000
0720	650.8000	CONSTRUCTION STAKING RESURFACING REFERENCE	LF	31,175.000	31,175.000
0730	650.9910	CONSTRUCTION STAKING SUPPLEMENTAL CONTROL (PROJECT) 01. 2240-00-67	LS	1.000	1.000
0740	652.0225	CONDUIT RIGID NONMETALLIC SCHEDULE 40 2-INCH	LF	18.000	18.000
0750	652.0800	CONDUIT LOOP DETECTOR	LF	424.000	424.000
0760	654.0101	CONCRETE BASES TYPE 1	EACH	2.000	2.000
0770	654.0102	CONCRETE BASES TYPE 2	EACH	1.000	1.000
0780	655.0240	CABLE TRAFFIC SIGNAL 7-14 AWG	LF	403.000	403.000
0790	655.0515	ELECTRICAL WIRE TRAFFIC SIGNALS 10 AWG	LF	220.000	220.000
0800	655.0700	LOOP DETECTOR LEAD IN CABLE	LF	12.000	12.000
0810	655.0800	LOOP DETECTOR WIRE	LF	936.000	936.000
0820	657.0100	PEDESTAL BASES	EACH	2.000	2.000
0830	657.0405	TRAFFIC SIGNAL STANDARDS ALUMINUM 3.5-FT	EACH	2.000	2.000
0840	658.0500	PEDESTRIAN PUSH BUTTONS	EACH	2.000	2.000
0850	658.5069	SIGNAL MOUNTING HARDWARE (LOCATION) 01. STH 36 & CTH Y/LOOMIS RD	LS	1.000	1.000
0860	690.0150	SAWING ASPHALT	LF	1,808.000	1,808.000
0870	690.0250	SAWING CONCRETE	LF	54.000	54.000
0880	SPV.0060	SPECIAL 01. INSTALL POLES TYPE 3	EACH	1.000	1.000
0890	SPV.0060	SPECIAL 02. INSTALL SOLAR POWER UNIT 120 WATT	EACH	1.000	1.000
0900	SPV.0060	SPECIAL 03. INSTALL WAVETRONIX DETECTOR HD 125 MODULE AND CABLE	EACH	1.000	1.000
0910	SPV.0060	SPECIAL 04. INSTALL WAVETRONIX CLICK 200 MODULE	EACH	1.000	1.000

3

DATE 01MAY12 E S T I M A T E O F Q U A N T I T I E S

LINE NUMBER	ITEM	ITEM DESCRIPTION	UNIT	TOTAL	2240-00-67 QUANTITY
0920	SPV.0060	SPECIAL 05. INSTALL POLE MOUNTED CABINET 24"X51"	EACH	1.000	1.000
0930	SPV.0060	SPECIAL 06. INSTALL CELLULAR ANTENNA AND ANTENNA CABLE	EACH	1.000	1.000
0940	SPV.0060	SPECIAL 07. CONCRETE MAINTENANCE PLATFORM 48"X36"X4"	EACH	1.000	1.000
0950	SPV.0060	SPECIAL 09. PAVEMENT MARKING GROOVED PREFORMED THERMOPLASTIC ARROWS TYPE 2	EACH	7.000	7.000
0960	SPV.0060	SPECIAL 10. PAVEMENT MARKING GROOVED PREFORMED THERMOPLASTIC WORDS	EACH	5.000	5.000
0970	SPV.0075	SPECIAL 01. CONSTRUCTION STAKING MISCELLANEOUS	HRS	4.000	4.000
0980	SPV.0090	SPECIAL 01. REPAIRING CONDUIT LOOP DETECTOR & LOOP DETECTOR WIRE UNCLASSIFIED	LF	104.000	104.000
0990	SPV.0090	SPECIAL 02. REMOVING PAVEMENT MARKINGS WATER BLASTING 4-INCH	LF	62,350.000	62,350.000
1000	SPV.0090	SPECIAL 03. REMOVING PAVEMENT MARKINGS WATER BLASTING 8-INCH	LF	3,600.000	3,600.000
1010	SPV.0090	SPECIAL 04. PAVEMENT MARKING PREFORMED THERMOPLASTIC STOP BAR 18-INCH	LF	498.000	498.000
1020	SPV.0105	SPECIAL 01. REMOVE LOOP DETECTOR CONDUIT & WIRE STH36 & CTH Y/LOOMIS RD	LS	1.000	1.000

3

3

3

CATEGORY 0010

CLEARING

STAGE	STATION	TO	STATION	LOCATION	202.0105 CLEARING (STA)
2	577+50	-	578+50	STH 36, 90 FT LT	1
2	610+00	-	622+00	STH 36, 88 FT LT	12
TOTALS					**13**

CATEGORY 0010

REMOVING POST

STAGE	STATION	LOCATION	204.9060.S.02 REMOVING POST (EACH)
2	534+00	STH 36, 70 FT LT	2
TOTALS			**2**

3

REMOVING ASPHALTIC SURFACE MILLING AND ASPHALT

CATEGORY 0010

	LOCATION	STATION	TO	STATION	204.0120 REMOVING ASPHALTIC SURFACE MILLING (SY)	204.0115 REMOVING ASPHALTIC SURFACE BUTT JOINT (SY)	455.0105 ASPHALTIC MATERIAL PG 58-28 (TON)	455.0605 TACK COAT (GAL)	460.1103 HMA PAVEMENT E-3 (TON)
	STAGE 1								
NB	6TH STREET	351+75		364+75	2,770	0	20	100	320
SB					2,900	0	30	100	340
NB	MAIN STREET	364+75		389+33	4,490	0	40	200	520
SB					4,880	0	40	200	560
NB	FOX LANE	389+33		403+50	3,180	0	30	100	370
SB					2,630	0	20	100	310
NB	STH 164	403+50		428+50	5,330	0	40	200	610
SB					4,940	0	40	200	570
NB	KRAMER ROAD	428+50		448+00	3,890	0	30	100	450
SB					3,830	0	30	100	440
NB	MALCHINE ROAD	448+00		511+00	11,450	0	80	300	1,310
SB					11,360	0	80	300	1,300
NB	HEG PARK ROAD	511+00		534+00	4,160	0	30	200	480
SB					4,230	0	30	200	490
NB	HILLCREST ROAD	534+00		552+00	3,030	0	30	100	350
SB					3,870	0	30	100	450
NB	DRIVEWAY	552+00		574+75	4,280	0	30	200	490
SB					4,470	0	40	200	520
NB	S WIND LAKE RD	574+75		603+50	5,440	0	40	200	630
SB					5,580	0	40	200	640
NB	FRIES LANE	603+50		627+25	4,240	0	30	200	490
SB					4,600	0	40	200	530
NB	W LOOMIS ROAD	627+25		663+50	6,310	0	50	200	730
SB					6,710	0	50	200	770
	SUBTOTAL				118,570	0	920	4,200	13,670

REMOVING ASPHALTIC SURFACE MILLING AND ASPHALT

	LOCATION	STATION	TO	STATION	204.0120 REMOVING ASPHALTIC SURFACE MILLING (SY)	204.0115 REMOVING ASPHALTIC SURFACE BUTT JOINT (SY)	455.0105 ASPHALTIC MATERIAL PG 58-28 (TON)	455.0605 TACK COAT (GAL)	460.1103 HMA PAVEMENT E-3 (TON)
	STAGE 2								
NB	6TH STREET	351+75		364+75	2,950	0	30	100	340
SB					3,440	370	30	100	440
NB	MAIN STREET	364+75		389+33	5,770	350	50	200	700
SB					5,670	850	50	200	750
NB	FOX LANE	389+33		403+50	3,100	110	30	100	370
SB					3,450	410	30	100	450
NB	STH 164	403+50		428+50	5,890	1,020	50	200	790
SB					5,880	250	50	200	700
NB	KRAMER ROAD	428+50		448+00	4,600	700	40	200	610
SB					4,040	390	40	200	510
NB	MALCHINE ROAD	448+00		511+00	14,320	560	110	400	1,700
SB					13,950	0	100	400	1,600
NB	HEG PARK ROAD	511+00		534+00	5,140	560	40	200	660
SB					5,130	0	40	200	590
NB	HILLCREST ROAD	534+00		552+00	4,330	480	40	200	550
SB					3,740	0	30	100	430
NB	DRIVEWAY	552+00		574+75	5,250	480	40	200	660
SB					5,140	0	40	200	590
NB	S WIND LAKE RD	574+75		603+50	6,670	770	60	200	850
SB					6,390	400	50	200	780
NB	FRIES LANE	603+50		627+25	5,460	530	50	200	690
SB					4,980	590	40	200	640
NB	W LOOMIS ROAD	627+25		663+50	8,440	1,510	70	300	1,140
SB					7,360	0	60	200	840
	SUBTOTAL				141,090	10,330	1,170	4,800	17,380
	TOTAL				**259,660**	**10,330**	**2,090**	**9,000**	**31,050**

CATEGORY 0010

3

BASE PATCHING ITEMS

STAGE	LOCATION	204.0110 REMOVING ASPHALTIC SURFACE (SY)	465.0110 ASPHALTIC SURFACE PATCHING (TON)	690.0150 SAWING ASPHALT * (LF)
1	STH 20 RT	20	10	70
2	STH 20 RT	95	40	130
2	MAIN ST LT	10	4	40
2	CTH Y LT	94	38	164
2	CTH Y RT	117	47	170
TOTALS		**336**	**139**	**574**

* ADDITIONAL QUANTITIES FOUND ELSEWHERE

CATEGORY 0010

SAWING

STAGE	LOCATION	690.0150 SAWING ASPHALT * (LF)
1	MAINLINE	60
2	MAINLINE	80
2	SIDE STREETS	852
2	DRIVEWAYS	130
TOTALS		**1,122**

* ADDITIONAL QUANTITIES FOUND ELSEWHERE

3

CATEGORY 0010

CONCRETE CURB AND GUTTER

STAGE	STATION	LOCATION	204.0150 REMOVING CURB AND GUTTER (LF)	205.0100 EXCAVATION COMMON (CY)	416.0610 DRILLED TIE BARS (EA)	601.0105 CONCRETE CURB TYPE A (LF)	601.0407 CONCRETE CURB & GUTTER 18-INCH TYPE D (LF)	601.0557 CONCRETE CURB & GUTTER 6-INCH SLOPED 36-INCH TYPE D (LF)	602.0410 CONCRETE SIDEWALK 5-INCH (SF)	602.0505 CURB RAMP DETECTABLE WARNING FIELD YELLOW (SF)	690.0150 SAWING ASPHALT * (LF)	690.0250 SAWING CONCRETE (LF)
2	658+80, LT	ISLAND	36	11	6	67	36	--	250	24	62	9
2	660+15, RT	ISLAND	36	9	6	56	36	--	210	24	50	9
2	CTH Y	CURB RAMPS	60	4	12	--	--	60	240	24	--	36
TOTALS			**132**	**24**	**24**	**123**	**72**	**60**	**700**	**72**	**112**	**54**

* ADDITIONAL QUANTITIES FOUND ELSEWHERE

3

CATEGORY 0010

BASE AGGREGATE DENSE

STAGE	LOCATION	305.0110 3/4-INCH (TON)	305.0500 SHAPING SHOULDERS (STA)
1 NB	SHOULDERS	60	301
1 SB	SHOULDERS	925	301
SUBTOTAL		985	602
2 NB	SHOULDERS	60	-
2 SB	SHOULDERS	110	-
SIDE STREETS		35	23
SUBTOTAL		205	23
UNDISTRUBITED		400	
TOTALS		**1,190**	**625**

*UNDISTRIBUTED QUANTITY IS FOR AREAS WHERE EXISITING SHOULDERS ARE LOW

CATEGORY 0010

APRON ENDWALLS

STAGE	STATION	LOCATION	204.9060.S.01 REMOVING APRON ENDWALL (EACH)	521.1515 APRON ENDWALL FOR CULVERT PIPE SLOPED SECTION STEEL 15-INCH (EACH)
2	365+40	STH 36, LT	1	1
TOTALS			**1**	**1**

3

CATEGORY 0010

BEAM GUARD

STAGE	STATION	-	STATION	LOCATION	614.0010 BARRIER SYSTEM GRADING SHAPING FINISHING (EA)	614.0305 STEEL PLATE BEAM GUARD CLASS A (LF)	614.0345 STEEL PLATE BEAM GUARD SHORT RADIUS (LF)	614.0370 STEEL PLATE BEAM GUARD ENERGY ABSORBING TERMINAL (EA)	614.0390 STEEL PLATE BEAM GUARD SHORT RADIUS TERMINAL (EA)
2	476+00	-	484+00	STH 36	1	663	51	1	1
TOTALS					**1**	**663**	**51**	**1**	**1**

BARRIER SYSTEM GRADING SHAPING FINISHING

		BORROW* (CY)	SALVAGED TOPSOIL* (SY)	FERTILIZER TYPE B* (CWT)	SEEDING* (LB)	MULCHING* (SY)
STA.	484+00	12	156	1.0	5	0

*ITEMS AND QUANTITIES LISTED FOR BID INFORMATION ONLY

3

CATEGORY 0010

TRAFFIC CONTROL, BARRICADES, WARNING LIGHTS AND SIGNS

STAGE	STATION	-	STATION	LOCATION	643.0200 SURVEILLANCE AND MAINTENANCE (DAYS)	643.0300 DRUMS (EA)	643.0300 DRUMS (DAYS)	643.0420 BARRICADES TYPE III (EA)	643.0420 BARRICADES TYPE III (DAYS)	643.0705 WARNING LIGHTS TYPE A (EA)	643.0705 WARNING LIGHTS TYPE A (DAYS)	643.0715 WARNING LIGHTS TYPE C (EA)	643.0715 WARNING LIGHTS TYPE C (DAYS)	643.0800 ARROW BOARD (EA)	643.0800 ARROW BOARD (DAYS)	643.0900 SIGNS (EA)	643.0900 SIGNS (DAYS)
1	351+75	-	663+50	MAINLINE	19	1,463	27,805	38	722	38	722	30	570	4	76	62	1,178
2	351+75	-	663+50	MAINLINE	59	1,466	86,518	38	2,242	38	2,242	30	1,770	4	236	62	3,658
TOTALS					**78**		**114,322**		**2,964**		**2,964**		**2,340**		**312**		**4,836**

3

CATEGORY 0010

TEMPORARY PAVEMENT MARKINGS

STAGE	STATION	-	STATION	LOCATION	649.0100 TEMPORARY PAVEMENT MARKING 4-INCH (LF)	649.0400 TEMPORARY PAVEMENT MARKING REMOVABLE TAPE 4-INCH (LF)	649.0701 TEMPORARY PAVEMENT MARKING 8-INCH (LF)	646.0600 REMOVING PAVEMENT MARKINGS 4-INCH (LF)	SPV.0090.02 REMOVING PAVEMENT MARKINGS WATER BLASTING 4-INCH (LF)	SPV.0090.03 REMOVING PAVEMENT MARKINGS WATER BLASTING 8-INCH (LF)
1	351+75	-	663+50	MAINLINE	62,350	1,320	-	1,320	-	-
2	351+75	-	663+50	MAINLINE	62,350	1,320	3,600	-	62,350	3,600
TOTALS					**124,700**	**2,640**	**3,600**	**1,320**	**62,350**	**3,600**

CATEGORY 0010

CHANGEABLE MESSAGE SIGNS

STAGE	DAYS	EACH	643.1050 TRAFFIC CONTROL SIGNS PCMS (DAY)
1	6	2	12
2	6	2	12
UNDISTRIBUTED	20	2	40
TOTALS			**64**

NOTE: TRAFFIC CONTROL SIGNS PCMS WILL BE USED AT EACH PROJECT LIMIT FOR 4 DAYS PRIOR, AND FIRST 2 DAYS AFTER EACH STAGE CHANGE. FIELD ENGINEER WILL MARK OUT LOCATIONS.

UNDISTRUBITED QUANTITY IS FOR USE AT SIDE ROADS AS DIRECTED BY ENGINEER

CATEGORY 0010

PAVEMENT MARKING

STATION	- STATION	LOCATION	646.0106 EPOXY 4-INCH YELLOW EDGE LINE (LF)	646.0106 EPOXY 4-INCH WHITE EDGE LINE (LF)	646.0841.S GROOVED WET REFLECTIVE CONTRAST TAPE 4-INCH (LF)	646.0843.S GROOVED WET REFLECTIVE CONTRAST TAPE 8-INCH WHITE (LF)	646.0883.S GROOVED WET REFLECTIVE TAPE 8-INCH WHITE (LF)	SPV .0090.04 GROOVED PREFORMED THERMOPLASTIC STOP BAR 18-INCH (LF)	646.0126 EPOXY 8-INCH (EACH)	647.0726 DIAGONAL EPOXY 12-INCH (LF)	646.0805.S OUTFALL WHITE (EACH)	SPV.0060.09 GROOVED PREFORMED THERMOPLASTIC ARROWS TYPE 2 (EACH)	SPV.0060.10 GROOVED PREFORMED THERMO-PLASTIC WORDS (EACH)	647.0156 ARROWS EPOXY TYPE 1 (EACH)	647.0356 WORDS EPOXY (EACH)
329+00	364+75	6TH ST	2,600	2,500	1,220	320	-	34	-	20	7	-	-	-	-
364+75	389+20	MAIN ST	5,170	4,790	1,230	815	350	62	-	90	12	-	-	-	-
389+20	403+50	FOX LN	2,860	2,760	720	445	-	20	-	-	9	-	-	-	-
403+50	428+50	STH 164	5,500	4,900	1,250	820	-	50	460	234	26	7	5	2	1
428+50	448+25	KRAMER RD	4,190	3,850	990	585	180	66	150	-	17	-	-	-	-
448+25	511+00	MALCHINE RD	12,830	12,450	3,140	510	-	30	-	-	57	-	-	-	-
511+00	534+00	HEG PARK RD	4,640	4,500	1,150	260	-	30	-	-	20	-	-	-	-
534+00	552+00	HILLCREST RD	3,600	3,500	900	410	-	30	-	-	9	-	-	-	-
552+00	574+80	CHURCH ENT	4,560	4,460	1,140	300	-	-	-	-	14	-	-	-	-
591+00	603+50	S WIND LAKE RD	5,962	5,540	1,440	630	-	72	-	-	19	-	-	-	-
603+50	627+25	FRIES LN	5,122	4,650	1,190	650	80	48	-	-	22	-	-	-	-
627+25	680+00	LOOMIS RD	7,250	7,050	2,850	1,020	200	56	-	-	27	-	-	-	-
SUBTOTALS			**64284**	**60950**											
TOTALS			**125,234**		**17,220**	**6,765**	**810**	**498**	**610**	**344**	**239**	**7**	**5**	**2**	**1**

CATEGORY 0010

RESTORATION

STATION	- STATION	LOCATION	DESCRIPTION	625.0100 TOPSOIL (SY)	629.0210 FERTILIZER TYPE B (CWT)	630.0130 SEEDING MIXTURE NO.30 (LB)	630.0200 TEMPORARY SEEDING (LB)	628.2004 EROSION MAT CLASS I, TYPE B* (SY)
577+00	- 579+00	70' LT	CLEARING	30	0.1	1	1	30
610+00	- 622+00	88' LT	CLEARING	140	0.1	3	2	140
658+00	- 660+00	60' LT	CURB RAMPS	30	0.1	1	1	30
658+00	- 660+00	50' RT	CURB RAMPS	30	0.1	1	1	30
TOTALS				**230**	**0.4**	**6**	**3**	230

* ADDITIONAL QUANTITIES FOUND ELSEWHERE

3

CATEGORY 0010

CONSTRUCTION STAKING

STATION	-	STATION	LOCATION	650.8000 CONSTRUCTION STAKING RESURFACING REFERENCE (LF)	650.9910 CONSTRUCTION STAKING SUPPLEMENTAL CONTROL (LS)	SPV.0075.01 CONSTRUCTION STAKING MISCELLANEOUS (HRS)
351+75	-	663+50	STH 36	31,175	1	4
TOTALS				**31,175**	**1**	**4**

CATEGORY 0010

ASPHALTIC SHOULDER RUMBLE STRIP

STAGE	LOCATION	465.0400 ASPHALTIC SHOULDER RUMBLE STRIP (LF)
2	NB OUTSIDE	24,800
2	SB OUTSIDE	25,380
2	NB MEDIAN	26,140
2	SB MEDIAN	26,470
TOTALS		**102,790**

3

CATEGORY 0010

EROSION CONTROL SCHEDULE

STAGE	STATION	LOCATION	628.1504 SILT FENCE (LF)	628.1520 SILT FENCE MAINTENANCE (LF)	628.1905 MOBILIZATION EROSION CONTROL (EACH)	628.1910 MOBILIZATION EMERGENCY EROSION CONTROL (EACH)	628.2004 EROSION MAT CLASS I TYPE B * (SY)	628.7020 INLET PROTECTION TYPE D (EACH)	628.7504 TEMPORARY DITCH CHECKS (LF)	628.7570 ROCK BAGS (EACH)
2	PROJECT		--	--	3	3	--	--	--	20
2	482+60 - 485+00	STH 36, LT	300	30	--	--	155	--	--	--
2	577+00 - 579+00	STH 36, LT	220	22	--	--	--	--	--	--
2	609+00	STH 36, LT	--	--	--	--	--	--	15	--
2	622+50	STH 36, LT	--	--	--	--	--	--	15	--
2	657+80	STH 36, LT	--	--	--	--	--	--	15	--
2	658+60	STH 36, LT	--	--	--	--	--	2	15	--
2	660+00	STH 36, LT	80	8	--	--	--	--	--	--
2	660+50	STH 36, RT	100	10	--	--	--	--	--	--
TOTALS			**700**	**70**	**3**	**3**	**155**	**2**	**60**	**20**

* ADDITIONAL QUANTITIES FOUND ELSEWHERE

3

ATR - WAVETRONIX DETECTOR

CONTRACTOR

ATR - WAVETRONIX DETECTOR

LOCATION	STATION	654.0102 CONCRETE BASE TYPE 2 (EACH)	SPV.0060.01 INSTALL POLES TYPE 3 (EACH)	SPV.0060.02 INSTALL SOLAR POWER UNIT 120 WATT (EACH)	SPV.0060.03 INSTALL WAVETRONIX DECECTOR HD 125 MODULE AND CABLE (EACH)	SPV.0060.04 INSTALL WAVETRONIX CLICK 200 MODULE (EACH)	SPV.0060.05 INSTALL POLE MOUNTED CABINET 24"X51" (EACH)	SPV.0060.06 INSTALL CELLULAR ANTENNA AND ANTENNA CABLE (EACH)	SPV.0060.07 CONCRETE MAINTENANCE PLATFORM 48" X 36"X 4" (EACH)
ATR-51-6119	558+50 +/-	1	1	1	1	1	1	1	1
Totals		1	1	1	1	1	1	1	1

STATE FURNISHED MATERIAL

ATR - WAVETRONIX DETECTOR

LOCATION	STATION	POLE TYPE 3 (EACH)	SOLAR POWER UNIT 120 WATT (EACH)	WAVETRONIX DETECTOR HD 125 MODULE (EACH)	WAVETRONIX HD 125 CABLE (L.F.)	WAVETRONIX CLICK 200 MODULE (EACH)	**CELLULAR MODEM (EACH)	CCTV POLE MOUNTED CABINET 24"X51" (EACH)	CELLULAR ANTENNA (EACH)	CELLULAR ANTENNA CABLE (L.F.)
ATR-51-6119	558+50 +/-	1	1	1	40	1	1	1	1	33
Totals		1	1	1	40	1	1	1	1	33

** To be installed by WisDOT

TYPE I&II PERMANENT SIGNING - **2240-00-67**

CATEGORY CODE 0010

SIGN NO.	SIGN CODE	SIGN SIZE	SIGN MESSAGE	SIGN SIZE W [IN.]	x x	H [IN.]	637.0202 SIGNS REFLC TYPE II [SF]	637.0402 SIGNS REFLC FOLDING TYPE II [SF]	638.2602 REM SIGNS TYPE II (EA)	638.3000 REM SMALL SIGN SUP (EA)	634.0618 WOOD POSTS 4"X 6"x18' [EA]	638.2102 MOVE SIGNS TYPE II [EA]	MOUNT ON SAME POST AS SIGN #	REMARKS / NEW SIGN LOCATION
1	W3-3	2M	---	36	X	36	9		1	1	1			SEE SHT 3a
2	W3-3	2M	---	36	X	36	9		1	1	1			SEE SHT 3
3	D1-3	---	---	102	X	54	38.25		1	2	2			
4	R4-7	3	---	36	X	48	12		1					MOUNT ON SIGNAL
5	W3-3	2M	---	36	X	36	9		1	1	1			SEE SHT 6
6	W3-3	2M	---	36	X	36	9		1	1	1			SEE SHT 6
7	D1-65	---	MAIN ST, NEXT SIGNAL	72	X	30	15		1	2	2			
8	R1-1F	2M	---	36	X	36		7.46	1					MOUNT ON SIGNAL
9	J3-2	2S					19		1	1	1			
	M3-3			24	X	12								
	M1-6		STH 36	24	X	24								
	M6-1			21	X	21								
	M3-1			24	X	12								
	M1-6		STH 36	24	X	24								
	M6-1			21	X	21								
10	R1-2	2S	---	36	X	31	3.88		1	1	1			
11	J4-1	3					13.5		1	1	1			
	M3-1			36	X	18								
	M1-6		STH 36	36	X	36								
12	D1-1		WATERFORD --->	96	X	21	14		1	2	2			
13 & 14			NO.S NOT USED											
15	R5-1	2M	---	36	X	36	9		1	1	1			
16	R1-1F	2M	---	36	X	36		7.46	1					MOUNT ON SIGNAL
17	J3-2	2S					19		1	1	1			
	M3-3			24	X	12								
	M1-6		STH 36	24	X	24								
	M6-1			21	X	21								
	M3-1			24	X	12								
	M1-6		STH 36	24	X	24								
	M6-1			21	X	21								
18	R1-2	2S	---	36	X	31	3.88		1	1	1			
19	J4-1	3					13.5		1	1	1			
	M3-3			36	X	18								
	M1-6		STH 36	36	X	36								
20	D1-65	---	MAIN ST, NEXT SIGNAL	72	X	30	15		1	2	2			
21	W3-3	2M	---	36	X	36	9		1	1	1			
22	R6-2L	2M	---	30	X	36	7.5		1	1	1			
23	J1-2	3					28.5		1	1	2			
	M2-1			30	X	21								
	M1-6		STH 164	36	X	36								
	M2-1			30	X	21								
	M1-5A		CTH K	36	X	36								

TYPE I&II PERMANENT SIGNING - **2240-00-67**

CATEGORY CODE 0010

SIGN NO.	SIGN CODE	SIGN SIZE	SIGN MESSAGE	SIGN SIZE W [IN.] x x H [IN.]	637.0202 SIGNS REFLC TYPE II [SF]	637.0402 SIGNS REFLC FOLDING TYPE II [SF]	638.2602 REM SIGNS TYPE II (EA)	638.3000 REM SMALL SIGN SUP (EA)	634.0618 WOOD POSTS 4"X 6"x18' [EA]	638.2102 MOVE SIGNS TYPE II [EA]	MOUNT ON SAME POST AS SIGN #	REMARKS / NEW SIGN LOCATION
24	J1-2	3			28.5		1	1	2			
	M2-1			30 X 21								
	M1-6		STH 164	36 X 36								
	M2-1			30 X 21								
	M1-5A		CTH K	36 X 36								
25	J2-3	3			63		1	2	2			
	M3-1			36 X 18								
	M1-6		STH 164	36 X 36								
	M5-1L			30 X 30								
	M3-1			36 X 18								
	M1-6		STH 36	36 X 36								
	M6-1			30 X 30								
	M3-2			36 X 18								
	M1-5A		CTH K	36 X 36								
	M5-1R			30 X 30								
26	J2-3	3			63		1	2	2			
	M3-1			36 X 18								
	M1-6		STH 164	36 X 36								
	M5-1L			30 X 30								
	M3-1			36 X 18								
	M1-6		STH 36	36 X 36								
	M6-1			30 X 30								
	M3-2			36 X 18								
	M1-5A		CTH K	36 X 36								
	M5-1R			30 X 30								
27	W3-3	2M	---	36 X 36	9		1	1	1			
28	W3-3	2M	---	36 X 36	9		1	1	1			
29	J3-1	3			21		1	1	1			
	M3-2			36 X 18								
	M1-5A		CTH K	36 X 36								
	M6-1			30 X 30								
30	J3-1	3			21		1	1	1			
	M3-1			36 X 18								
	M1-6		STH 164	36 X 36								
	M6-1			30 X 30								
31	R3-20L	3		36 X 54	13.5		1	1	1			
32	R1-2	2S	---	36 X 31	3.88		1	1	1			
33	R1-1F	2M	---	36 X 36		7.46	1					MOUNT ON SIGNAL
34	R1-1F	2M	---	36 X 36		7.46	1					MOUNT ON SIGNAL
35	J4-1	2S			6		1	1	1			
	M3-2			24 X 12								
	M1-5A		CTH K	24 X 24								
36	J1-2	2S			13		1	1	2			SEE SHT 9a
	M2-1			21 X 15								
	M1-6		STH 36	24 X 24								
	M2-1			21 X 15								
	M1-6		STH 164	24 X 24								

SHEET 2 OF 7

TYPE I&II PERMANENT SIGNING - **2240-00-67**

CATEGORY CODE 0010

SIGN NO.	SIGN CODE	SIGN SIZE	SIGN MESSAGE	SIGN SIZE W [IN.] x x H [IN.]	637.0202 SIGNS REFLC TYPE II [SF]	637.0402 SIGNS REFLC FOLDING TYPE II [SF]	638.2602 REM SIGNS TYPE II (EA)	638.3000 REM SMALL SIGN SUP (EA)	634.0618 WOOD POSTS 4"X 6"x18' [EA]	638.2102 MOVE SIGNS TYPE II [EA]	MOUNT ON SAME POST AS SIGN #	REMARKS / NEW SIGN LOCATION
37	J3-3	2S			30		1	2	2			SEE SHT 9a
	M3-3			24 X 12								
	M1-6		STH 36	24 X 24								
	M6-1			24 X 24								
	M3-1			24 X 12								
	M1-6		STH 164	24 X 24								
	M6-1			24 X 24								
	M3-1			24 X 12								
	M1-6		STH 36	24 X 24								
	M6-1			24 X 24								
38	R1-1F	2M	---	36 X 36		7.46	1					MOUNT ON SIGNAL
39	J4-1	3			13.5		1	1	1			SEE SHT 9
	M3-1			36 X 18								
	M1-6		STH 36	36 X 36								
40	W3-3	2M	---	36 X 36	9		1	1	1			
41	W3-3	2M	---	36 X 36	9		1	1	1			
42	J3-1	3			21		1	1	1			
	M3-2			36 X 18								
	M1-5A		CTH K	36 X 36								
	M6-1			30 X 30								
43	J3-1	3			21		1	1	1			
	M3-1			36 X 18								
	M1-6		STH 164	36 X 36								
	M6-1			30 X 30								
44	R5-1A	3	---	42 X 30	8.75		1	1	1			
45	J1-2	2S			13		1	1	1			SEE SHT 9a
	M2-1			21 X 15								
	M1-6		STH 36	24 X 24								
	M2-1			21 X 15								
	M1-5A		CTH K	24 X 24								
46	W3-3	3	---	36 X 36	9		1	1	1			
47	J4-1	2S			6		1	1	1			SEE SHT 9a
	M3-1			24 X 12								
	M1-6		STH 164	24 X 24								
48	R1-1F	2M	---	36 X 36		7.46	1					MOUNT ON SIGNAL
49	R1-1F	2M	---	36 X 36		7.46	1					MOUNT ON SIGNAL
50	R4-7	3	---	36 X 48	12		1					MOUNT ON SIGNAL
51	R4-7	3	---	36 X 48	12		1					MOUNT ON SIGNAL
52	R3-8W	2M	---	54 X 30	11.25		1	1	2			SEE SHT 9a
53	R1-1F	2M	---	36 X 36		7.46	1					MOUNT ON SIGNAL
54	J4-1	3			13.5		1	1	1			
	M3-3			36 X 18								
	M1-6		STH 36	36 X 36								

SHEET 3 OF 7

TYPE I&II PERMANENT SIGNING - **2240-00-67**

CATEGORY CODE 0010

SIGN NO.	SIGN CODE	SIGN SIZE	SIGN MESSAGE	SIGN SIZE W [IN.] x x H [IN.]	637.0202 SIGNS REFLC TYPE II [SF]	637.0402 SIGNS REFLC FOLDING TYPE II [SF]	638.2602 REM SIGNS TYPE II (EA)	638.3000 REM SMALL SIGN SUP (EA)	634.0618 WOOD POSTS 4"X 6"x18' [EA]	638.2102 MOVE SIGNS TYPE II [EA]	MOUNT ON SAME POST AS SIGN #	REMARKS / NEW SIGN LOCATION
55	J2-3	2S			30		1	2	2			SEE SHT 9a
	M3-1			24 X 12								
	M1-6		STH 36	24 X 24								
	M5-1L			24 X 24								
	M3-2			24 X 12								
	M1-5A		CTH K	24 X 24								
	M6-1			24 X 24								
	M3-3			24 X 12								
	M1-6		STH 36	24 X 24								
	M5-1R			24 X 24								
56	J3-2	2S			20		1	1	1			SEE SHT 9a
	M3-1			24 X 12								
	M1-6		STH 36	24 X 24								
	M6-1			24 X 24								
	M3-3			24 X 12								
	M1-6		STH 36	24 X 24								
	M6-1			24 X 24								
57	J3-1	2S			6		1	1	1			SEE SHT 9a
	M4-6			24 X 12								
	M1-6		STH 36	24 X 24								
58			NO PASSING ZONE SIGN				1					
59	R1-2	2S	---	36 X 31	3.88		1	1	1			
60	J2-3	3			63		1	2	2			
	M3-2			36 X 18								
	M1-5A		CTH K	36 X 36								
	M5-1L			30 X 30								
	M3-3			36 X 18								
	M1-6		STH 36	36 X 36								
	M6-1			30 X 30								
	M3-1			36 X 18								
	M1-6		STH 164	36 X 36								
	M5-1R			30 X 30								
61	J2-3	3			63		1	2	2			
	M3-2			36 X 18								
	M1-5A		CTH K	36 X 36								
	M5-1L			30 X 30								
	M3-3			36 X 18								
	M1-6		STH 36	36 X 36								
	M6-1			30 X 30								
	M3-1			36 X 18								
	M1-6		STH 164	36 X 36								
	M5-1R			30 X 30								
62	J1-2	3			28.5		1	1	2			
	M2-1			30 X 21								
	M1-6		STH 164	36 X 36								
	M2-1			30 X 21								
	M1-5A		CTH K	36 X 36								

TYPE I&II PERMANENT SIGNING - 2240-00-67

CATEGORY CODE 0010

SIGN NO.	SIGN CODE	SIGN SIZE	SIGN MESSAGE	SIGN SIZE W [IN.] x x H [IN.]	637.0202 SIGNS REFLC TYPE II [SF]	637.0402 SIGNS REFLC FOLDING TYPE II [SF]	638.2602 REM SIGNS TYPE II (EA)	638.3000 REM SMALL SIGN SUP (EA)	634.0618 WOOD POSTS 4"X 6"x18' [EA]	638.2102 MOVE SIGNS TYPE II [EA]	MOUNT ON SAME POST AS SIGN #	REMARKS / NEW SIGN LOCATION
63	J1-2	3			28.5		1	1	2			
	M2-1			30 X 21								
	M1-6		STH 164	36 X 36								
	M2-1			30 X 21								
	M1-5A		CTH K	36 X 36								
64	R5-1A	3	---	42 X 30	8.75		1	1	1			SEE SHT 10
65	J1-1	3			21.75		1	1	1			SEE SHT 14
	MR2-1			30 X 21								
	MR1-99			36 X 36								
	MR6-1			30 X 30								
66	D5-63	2M	---	60 36	15		1	2	2			
67	R6-2L	3	---	36 48	12		1	1	1			
68	J1-1	3			21.75		1	1	1			SHT 15
	MR2-1			30 X 21								
	MR1-99			36 X 36								
	MR6-1			30 X 30								
69	D7-68L		COLONEL HEG/ CO.PARK -->	66 X 36	16.5		1	2	2			
70	D7-68R		COLONEL HEG/ CO.PARK -->	66 X 36	16.5		1	2	2			
71	R6-2L	3		36 48	12		1	1	1			
72	*NOT USED*		---	X								*NOT USED*
73	R5-1A	3	---	42 X 30	8.75		1	1			74	
74	D5-64R	2M	---	60 X 36	15		1	1	2			
75	S3-1	3	---	36 X 36	9		1	1	1			
76	S3-1	3	---	36 X 36	9		1	1	1			
77	R6-2R	3	---	36 X 48	12		1	1	1			
78	R5-1A	3	---	42 X 30	8.75		1	1	1			
79	R6-2R	3	---	36 X 48	12		1	1	1			
80	R5-1	2M	---	36 X 36	9		1	1	1			
81	R4-7	3	---	36 X 48	12		1	1	1			
82	R4-7	3	---	36 X 48	12		1	1	1			
83	R1-1	3		36 X 36	7.46		1	1	1	1		MOVE R6-3 TO NEW POST/SHT 20
84	R4-7	3	---	36 X 48	12		1	1	1			
85	R4-7	3	---	36 X 48	12		1	1	1			
86	R1-1	3	---	36 X 36	7.46		1	1	1	1		MOVE R6-3 TO NEW POST/SHT 20
87	S1-1	3	---	36 X 36	6.75		1	1	1			
	W16-9P	2M	---	30 X 18	3.75		1					
87a	R2-6P	3	---	36 X 24	6						87	
88	S1-1	3	---	36 X 36	6.75		1	1	1			
	W16-9P	2M	---	30 X 18	3.75		1					
88A	R2-6P	3	---	36 X 24	6						88	
89	D2-2		WATERFORD 6/BURLINGTON 13	108 X 36	27		1	2	2			
90	I2-3		WIND LAKE, UNINCORP.	66 X 24	11		1		2			
91	W5-52L	2S	---	12 X 36	3		1				117,141,92	MOUNT TO EXISTING POST
92	W5-52R	2S	---	12 X 36	3		1				117,141,91	MNT TO EXIST POST USE 4X6"X12" SPACER BLK
93	J1-1	3			21.75		1	1	1			
	MR2-1			30 X 21								
	MR1-99			36 X 36								
	MR6-1			30 X 30								

SHEET 5 OF 7

TYPE I&II PERMANENT SIGNING - **2240-00-67**

CATEGORY CODE 0010

SIGN NO.	SIGN CODE	SIGN SIZE	SIGN MESSAGE	SIGN SIZE W [IN.] x x H [IN.]	637.0202 SIGNS REFLC TYPE II [SF]	637.0402 SIGNS REFLC FOLDING TYPE II [SF]	638.2602 REM SIGNS TYPE II (EA)	638.3000 REM SMALL SIGN SUP (EA)	634.0618 WOOD POSTS 4"X 6"x18' [EA]	638.2102 MOVE SIGNS TYPE II [EA]	MOUNT ON SAME POST AS SIGN #	REMARKS / NEW SIGN LOCATION
94	S1-1	3	---	36 X 36	6.75		1	1	1			
	W16-9P	2M	---	30 X 18	3.75		1					
94a	R2-6P	3	---	36 X 24	6						94	
95	S1-1	3	---	36 X 36	6.75		1	1	1			
	W16-9P	2M	---	30 X 18	3.75		1					
95a	R2-6P	3	---	36 X 24	6						95	
96	J1-1	3			14.25		1	1	1			
	M2-1			30 X 21								
	M1-5A		CTH Y	36 X 36								
97	J1-1	3			14.25		1	1	1			
	M2-1			30 X 21								
	M1-5A		CTH Y	36 X 36								
98	J2-1	3			21		1	1	1			
	M3-4			36 X 18								
	M1-5A			36 X 36								
	M5-1L			30 X 30								
99	W3-3	3	---	36 X 36	9		1	1	1			
100	W3-3	3	---	36 X 36	9		1	1	1			
101	J3-1	3			21		1	1	1			
	M3-4			36 X 18								
	M1-5A			36 X 36								
	M6-1			30 X 30								
102	J4-1	2S			6				1			SEE SHT 24
	M3-4			24 X 12								
	M1-5A			24 X 24								
103	J1-2	2S			6.5		1	1	1			SEE SHT 24a
	M2-1			21 X 15								
	M1-6		STH 36	24 X 24								
104	R1-2	2S	---	36 X 31	3.88		1	1	1			SEE SHT 24
105	R1-2	2S	---	36 X 31	3.88		1	1	1			
106	J3-1	3			21		1	1	1			SEE SHT 24/25
	M3-4			36 X 18								
	M1-5A			36 X 36								
	M6-1			30 X 30								
107	R7-1D	3		24 X 30	5		1	1	1			
108	R7-1D	3		24 X 30	5		1	1	1			
109	J2-1	3			21		1	1	1			
	M3-4			36 X 18								
	M1-5A			36 X 36								
	M5-1R			30 X 30								
110	R7-1L	3		24 X 30	5		1	1	1			
111	I2-3		WIND LAKE, UNINCORP.	66 X 24	11		1	1	2			
112	J1-1	3			14.25		1	1	1			
	M2-1			30 X 21								
	M1-5A		CTH Y	36 X 36								
113	J1-1	3			14.25		1	1	1			
	M2-1			30 X 21								
	M1-5A		CTH Y	36 X 36								
114	R1-1	3	---	36 X 36	7.46		1	1	1			SEE SHT 4
			STR. NAME SIGN						1	1		

TYPE I&II PERMANENT SIGNING - 2240-00-67

CATEGORY CODE 0010

SIGN NO.	SIGN CODE	SIGN SIZE	SIGN MESSAGE	SIGN SIZE W [IN.] x x H [IN.]	637.0202 SIGNS REFLC TYPE II [SF]	637.0402 SIGNS REFLC FOLDING TYPE II [SF]	638.2602 REM SIGNS TYPE II (EA)	638.3000 REM SMALL SIGN SUP (EA)	634.0618 WOOD POSTS 4"X 6"x18' [EA]	638.2102 MOVE SIGNS TYPE II [EA]	MOUNT ON SAME POST AS SIGN #	REMARKS / NEW SIGN LOCATION
115	R2-1	2M		30 X 36	7.5		1	1	1			SEE SHT 24
			CTH Y				1					
116	W3-3	2M	---	36 X 36	9		1	1	1			SEE SHT 3a
117	R1-1	3	---	36 X 36	7.46		1	1	1	1		MOVE R6-3 TO NEW POST/ SEE SHT 22
118	D5-64L	2M	---	60 36	15		1	1	2			SEE SHT 16
119	J1-1	3			21.75		1	1	1			SEE SHT 22
	MR2-1			30 X 21								
	MR1-99			36 X 36								
	MR6-1			30 X 30								
120	R6-3A	2M	---	24 X 30	5						114	SEE SHT 4
121	R5-1	2M	---	36 X 36	9				1			SEE SHT 4
122	R5-1A	2M	---	42 X 30	8.75							MOUNT ON J-12 JCT 20/83 / SEE SHT 5
123	R6-2L	2M	---	30 X 36	7.5				1			SEE SHT 4
124	D1-61		<-- KRAMER DR -->	84 X 30	17.5				2			SEE SHT 10
125	D1-61		<-- KRAMER DR -->	84 X 30	17.5				2			SEE SHT 11
126			ONE WAY				1	1				SEE SHT 10
127			ONE WAY				1	1				SEE SHT 10
128	R6-1L	2S	---	54 X 18	6.75							MOUNT ON EXISTING SIGN POST / SHT 10
129	R6-1L	2S	---	54 X 18	6.75							MOUNT ON EXISTING SIGN POST / SHT 10
130	M1-94(mod)		MALCHINE RD ---->	114 X 21	16.63				2			SEE SHT 14
131	M1-94(mod)		MALCHINE RD ---->	114 X 21	16.63				2			SEE SHT 15
132	R6-2L	3	---	36 X 48	12				1			SEE SHT 19
133	R5-1	3	---	36 X 36	9				1			SEE SHT 20
134			ONE WAY				1	1				SEE SHT 21
135			ONE WAY				1	1				SEE SHT 21
136	R6-1L	2S	---	54 X 18	6.75						86	SEE SHT 21
137	R6-1L	2S	---	54 X 18	6.75							MOUNT ON EXISTING SIGN POST / SHT 21
138			ONE WAY				1	1				SEE SHT 22
139			ONE WAY				1	1				SEE SHT 22
140	R6-1L	2S	---	54 X 18	6.75							MOUNT ON EXISTING SIGN POST / SHT 22
141	R6-1L	2S	---	54 X 18	6.75						117	SEE SHT 22
142	D1-61		<-- LOOMIS ROAD -->	96 X 30	20				2			SEE SHT 24
143	D1-61		<-- LOOMIS ROAD -->	96 X 30	20				2			SEE SHT 25
144	J4-1								1	1		MOVE SIGN FROM STA 334+80 TO 343+15
145	R5-1	2M	---	36 X 36	9		1					NEW SIGN ON EXIST WOOD POST / SHT 6
146	R5-1	2M	---	36 X 36	9		1					NEW SIGN ON EXIST WOOD POST / SHT 9
147	R5-1	2M	---	36 X 36	9		1					NEW SIGN ON EXIST WOOD POST / SHT 10
148	R5-1	2M	---	36 X 36	9		1					NEW SIGN ON EXIST WOOD POST / SHT 14
149	R5-1	2M	---	36 X 36	9		1					NEW SIGN ON EXIST WOOD POST / SHT 16
150	R5-1	2M	---	36 X 36	9		1					NEW SIGN ON EXIST WOOD POST / SHT 16
151	R7-1D	3	---	42 X 30	8.75			1	1	1		NEW SIGN ON EXIST WOOD POST / SHT 10
152	R5-1	2M	---	36 X 36	9		1					NEW SIGN ON EXIST WOOD POST / SHT 10
153	R5-1	2M	---	36 X 36	9		1					NEW SIGN ON EXIST WOOD POST / SHT 14
154	R10-26		---	9 X 15	0.94							MOUNT ON EXISTING SIGNAL POST
155	R10-26		---	9 X 15	0.94							MOUNT ON EXISTING SIGNAL POST
156	R3-8W	2M	---	30 X 54	11.25		1	1	2			
157	S5-2	3	---	36 X 42	10.5				1			
158	S5-2	3	---	36 X 42	10.5				1			
159	S5-2	3	---	36 X 42	10.5				1			
160	S5-2	3	---	36 X 42	10.5				1			
			UNDISTRIBUTED	x	--	--	15	15	20	10	--	--
	TOTALS				1951.47	59.68	150.00	137.00	170.00	16.00	--	

SHEET 7 OF 7

3

CATEGORY 0010

POLES

SIG. BASE NO.	657.0100 PED. BASE EACH	657.0405 3.5-FOOT STAND. EACH	658.0500 PUSH BUTTON EACH
SB 13	1	1	1
SB 14	1	1	1
TOTAL	2	2	2

CONDUIT

LOC.	TO	LOC.	652.0225 CONDUIT NONMET. 2-INCH L.F.
PB17		SB13	9
PB6		SB14	9
		TOTAL	18

REMOVE LOOP DETECTOR CONDUIT & WIRE

LOCATION	SPV.0105.01 REMOVE LOOP DETECTOR CONDUIT & WIRE L.S.
STH 36 & CTH Y/LOOMIS RD TOWN OF NORWAY RACINE COUNTY	1
TOTAL	1

TRAFFIC SIGNAL MOUNTING HARDWARE

LOCATION	658.5069 SIGNAL MOUNTING HARDWARE L.S.
STH 36 & CTH Y/LOOMIS RD TOWN OF NORWAY RACINE COUNTY	1
TOTAL	1

CONCRETE BASES

SIGNAL BASE NO.	LOCATION**	654.0101 CONCRETE BASES TYPE 1 EACH
13	658+75.5, 98'LT	1
14	660+12.5, 76' RT	1
	TOTAL	2

* * FINAL LOCATION TO BE DETERMINED BY THE ENGINEER IN THE FIELD.

SIGNAL CABLE AND WIRE

LOC.	TO	LOC.	655.0240 CABLE TRAFFIC SIGNAL 7-14 AWG L.F.	655.0515 ELECTRICAL WIRE TRAFFIC SIGNALS 10 AWG L.F.
CB1		SB13	139	
CB1		SB14	264	
SB10		SB13		61
SB13		SB12		60
SB4		SB14		49
SB14		SB6		50
		TOTAL	403	220

REPAIR CONDUIT LOOP DETECTOR LOOP DETECTOR WIRE

LOCATION	SPV.0090.01 REPAIR CONDUIT LOOP DETECTOR & LOOP DETECTOR WIRE L.F.
UNCLASSIFIED	104
TOTAL	104

SIGNAL CABLE AND WIRE

LOC.	To	LOC.	655.0700 LOOP DETECTOR LEAD-IN CABLE L.F.
SB13		BUTTON	6
SB14		BUTTON	6
		TOTAL	12

TRAFFIC DETECTOR LOOPS

LOOP NO.	HOME RUN PB	LOCATION*	SIZE (FT)x(FT)	NO. OF TURNS	PAVEMENT TYPE	SDD INSTALLATION REFERENCE	652.0800 CONDUIT LOOP DETECTOR L.F.	655.0800 LOOP DETECTOR WIRE L.F.
42	PB17	658+76, 114' LT	6X20	3	ASPHALTIC	LOOP DETECTOR INSTALLED IN BASE COURSEWITH PULL (SPLICE) BOX OFF ROADWAY (OPTION 1)	98	202
43	PB17	658+90, 90' LT	6X20	3	ASPHALTIC	LOOP DETECTOR INSTALLED IN BASE COURSEWITH PULL (SPLICE) BOX OFF ROADWAY (OPTION 1)	79	183
81	PB8	661+27, 216' RT	6X6	5	ASPHALTIC	LOOP DETECTOR INSTALLED IN BASE COURSEWITH PULL (SPLICE) BOX OFF ROADWAY (OPTION 1)	62	158
82	PB6	660+15, 97' RT	6X20	3	ASPHALTIC	LOOP DETECTOR INSTALLED IN BASE COURSEWITH PULL (SPLICE) BOX OFF ROADWAY (OPTION 1)	106	210
83	PB6	660+00, 74' RT	6X20	3	ASPHALTIC	LOOP DETECTOR INSTALLED IN BASE COURSEWITH PULL (SPLICE) BOX OFF ROADWAY (OPTION 1)	79	183
						TOTAL	424	936

* LOCATION IS TO FRONT CENTER OF DETECTOR LOOP

SHEET 1 OF 1

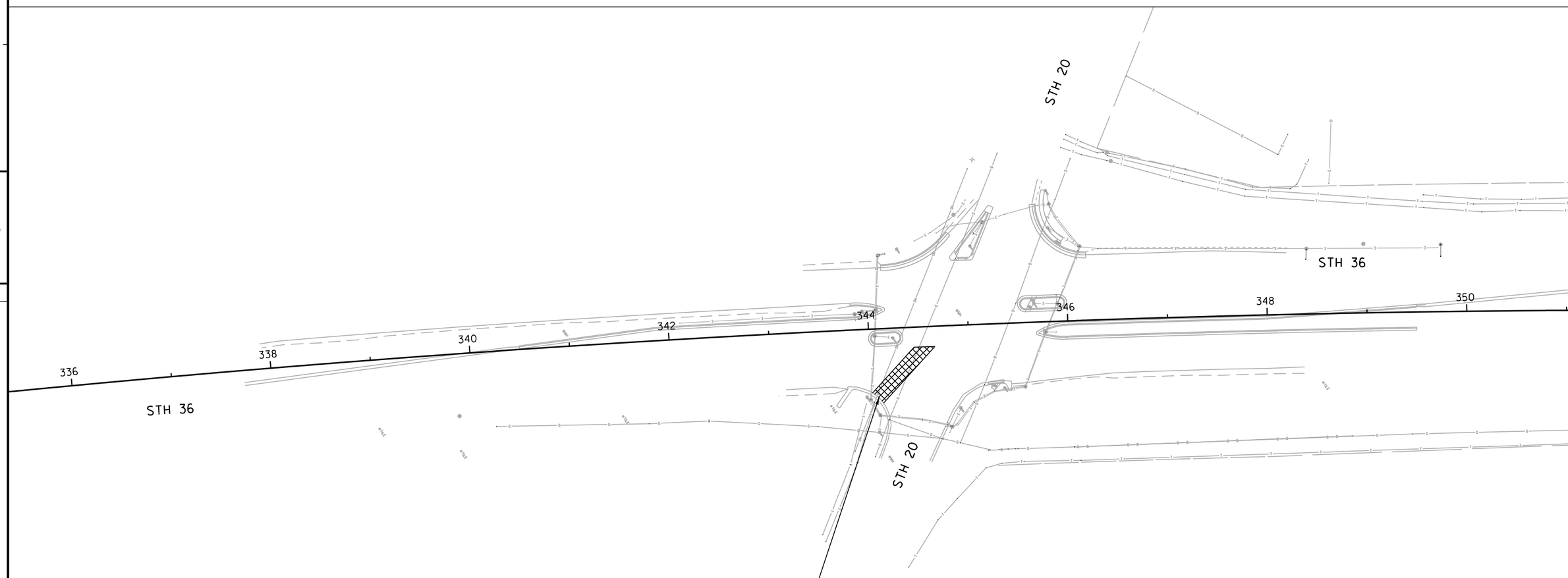

5

5

PROJECT NO:2240-00-67	HWY:STH 36	COUNTY:RACINE	PLAN SHEET	SHEET	E

PI STATION = 326+22.37 (STH 36)
RADIUS = 17,188.73
SE = .02%

LEGEND

- (A) REMOVE ASPHALTIC SURFACE MILLING
- (B) REMOVING ASPHALTIC SURFACE BUTT JOINTS
- (C) HMA PAVEMENT TYPE E-3 (2-INCH DEPTH)

PROJECT NO:2240-00-67	HWY:STH 36	COUNTY:RACINE	PLAN SHEET	SHEET	E

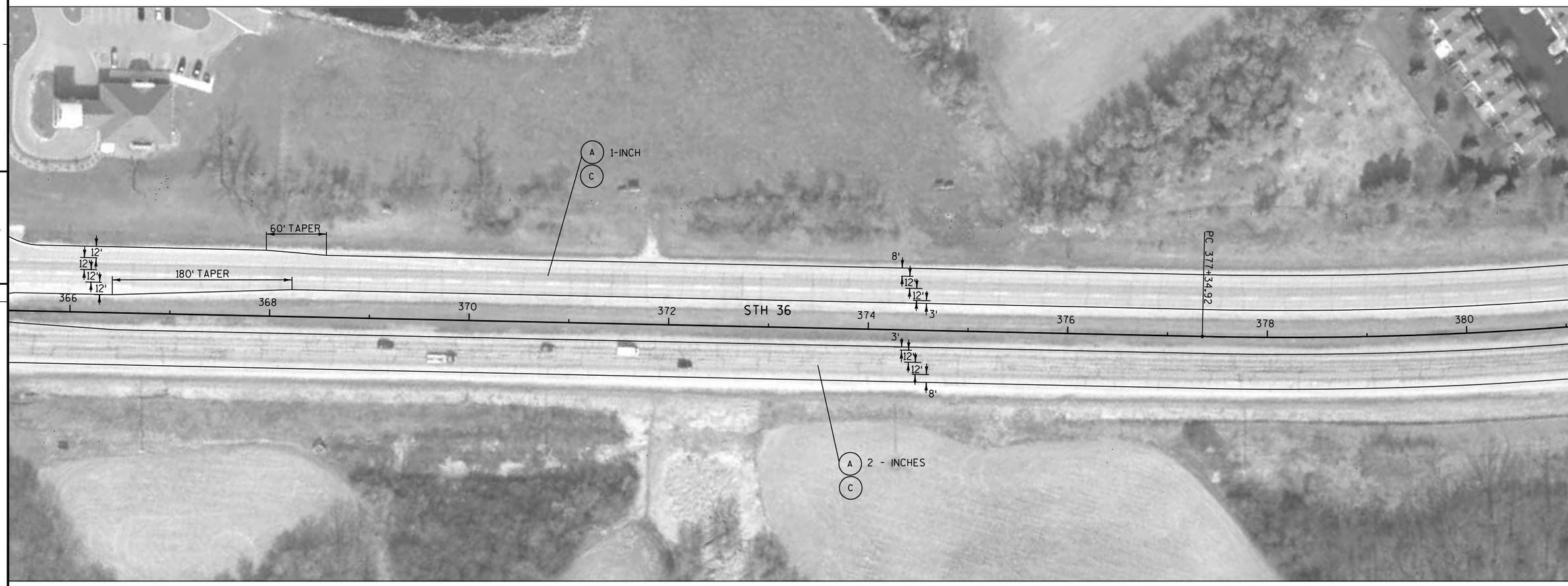

LEGEND

- (A) REMOVE ASPHALTIC SURFACE MILLING
- (B) REMOVING ASPHALTIC SURFACE BUTT JOINTS
- (C) HMA PAVEMENT TYPE E-3 (2-INCH DEPTH)

PROJECT NO:2240-00-67	HWY:STH 36	COUNTY:RACINE	PLAN SHEET	SHEET	E

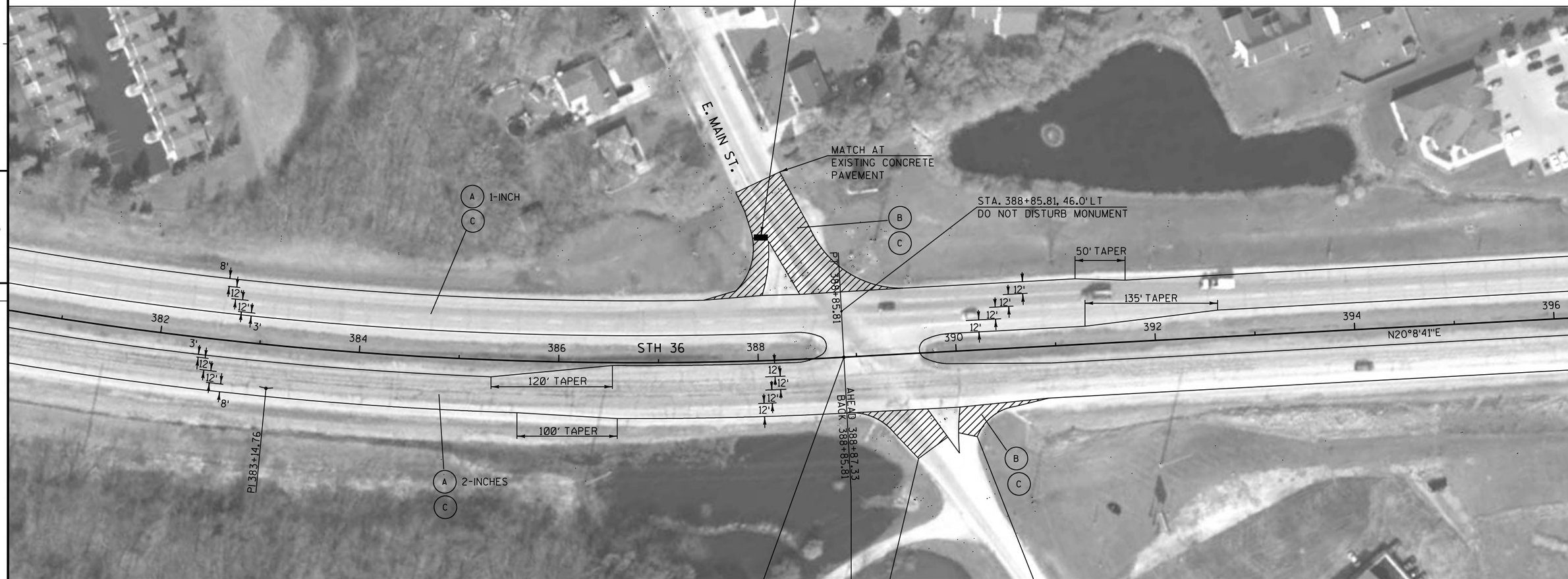

PI STATION = 383+14.76 (STH 36)
RADIUS = 3819.72
SE = .041%

LEGEND

- (A) REMOVE ASPHALTIC SURFACE MILLING
- (B) REMOVING ASPHALTIC SURFACE BUTT JOINTS
- (C) HMA PAVEMENT TYPE E-3 (2-INCH DEPTH)

PROJECT NO:2240-00-67	HWY:STH 36	COUNTY:RACIONE	PLAN SHEET	SHEET	E

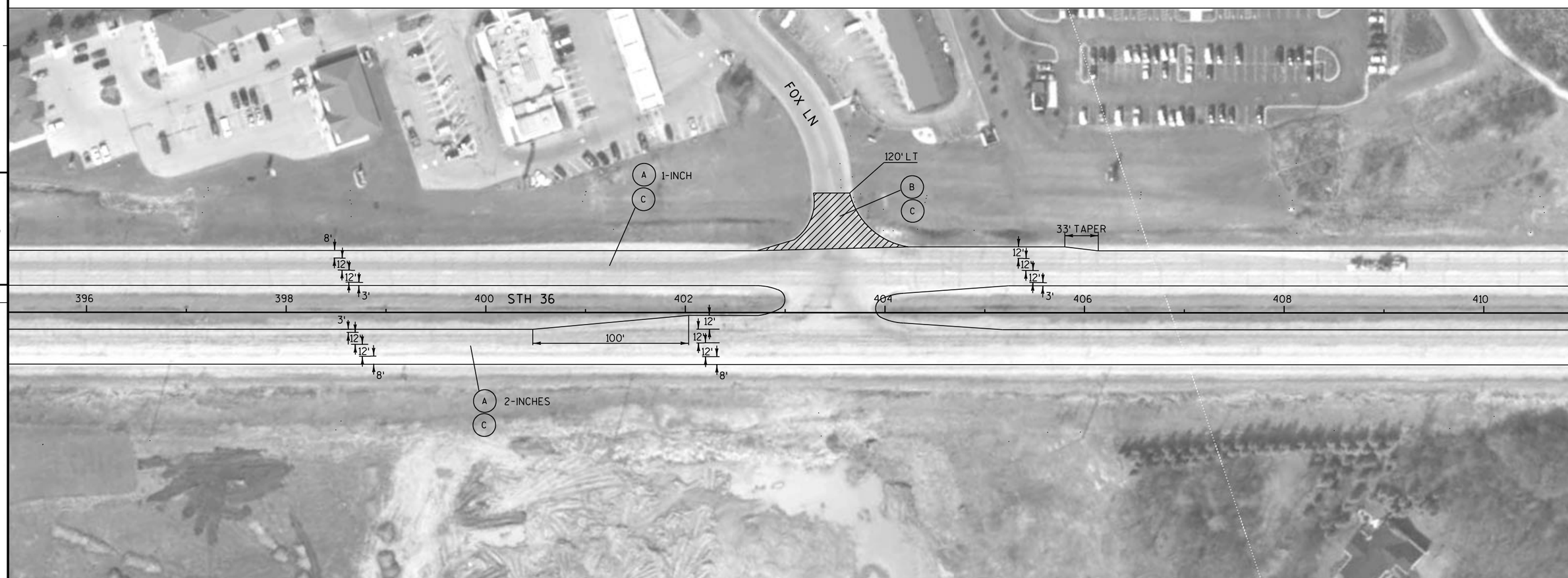

5

5

LEGEND

- (A) REMOVE ASPHALTIC SURFACE MILLING
- (B) REMOVING ASPHALTIC SURFACE BUTT JOINTS
- (C) HMA PAVEMENT TYPE E-3 (2-INCH DEPTH)

PROJECT NO:2240-00-67	HWY:STH 36	COUNTY:RACINE	PLAN SHEET	SHEET	E

FILE NAME : j:\projects\d2_22400036\67\050107_PD.dgn PLOT DATE : 12-JAN-2012 10:05 PLOT BY : dotshw PLOT NAME : PLOT SCALE : 100:1 WISDOT/CADDS SHEET 44

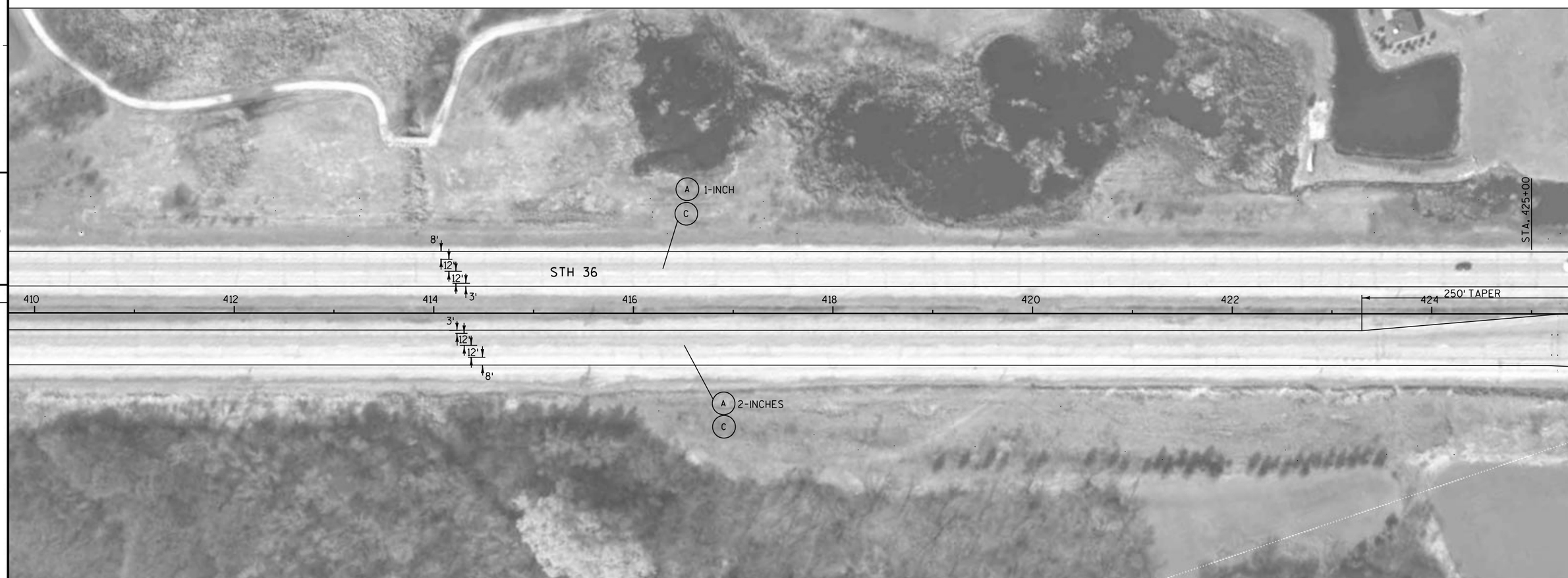

LEGEND

- (A) REMOVE ASPHALTIC SURFACE MILLING
- (B) REMOVING ASPHALTIC SURFACE BUTT JOINTS
- (C) HMA PAVEMENT TYPE E-3 (2-INCH DEPTH)

PROJECT NO:2240-00-67	HWY:STH 36	COUNTY:RACINE	PLAN SHEET	SHEET	E

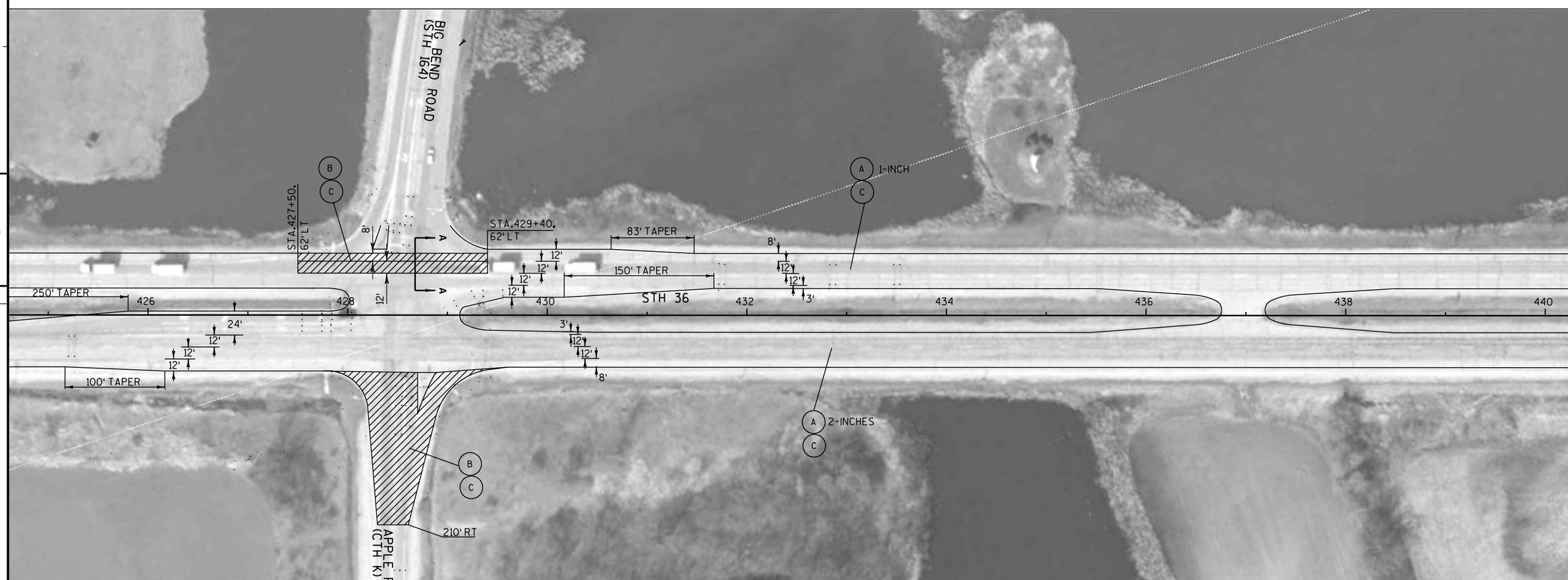

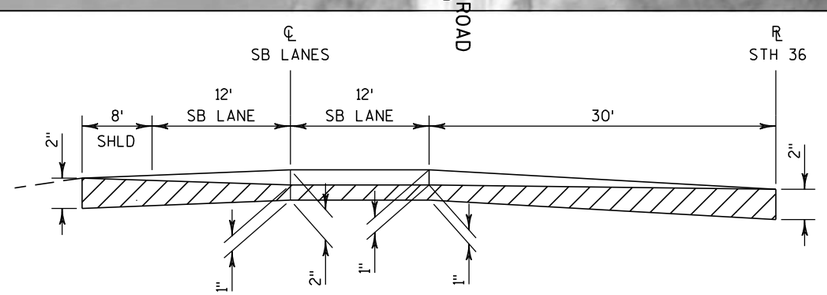

REMOVING ASPHALTIC SURFACE BUTT JOINTS

LEGEND

- (A) REMOVE ASPHALTIC SURFACE MILLING
- (B) REMOVING ASPHALTIC SURFACE BUTT JOINTS
- (C) HMA PAVEMENT TYPE E-3 (2-INCH DEPTH)

PROJECT NO:2240-00-67	HWY:STH 36	COUNTY:RACINE	PLAN SHEET	SHEET	E

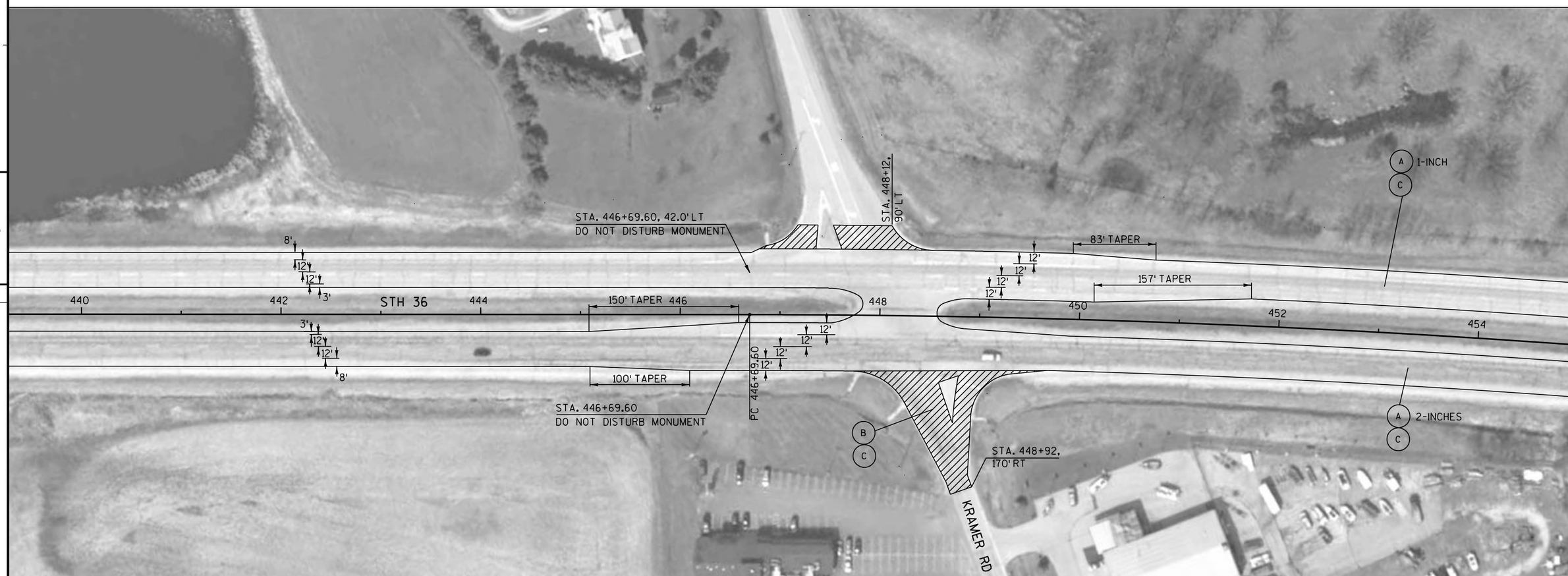

LEGEND

- (A) REMOVE ASPHALTIC SURFACE MILLING
- (B) REMOVING ASPHALTIC SURFACE BUTT JOINTS
- (C) HMA PAVEMENT TYPE E-3 (2-INCH DEPTH)

PROJECT NO:2240-00-67	HWY:STH 36	COUNTY:RACINE	PLAN SHEET	SHEET	E

PI STATION = 462+92.33 (STH 36)
RADIUS = 11459.16
SE = .02%

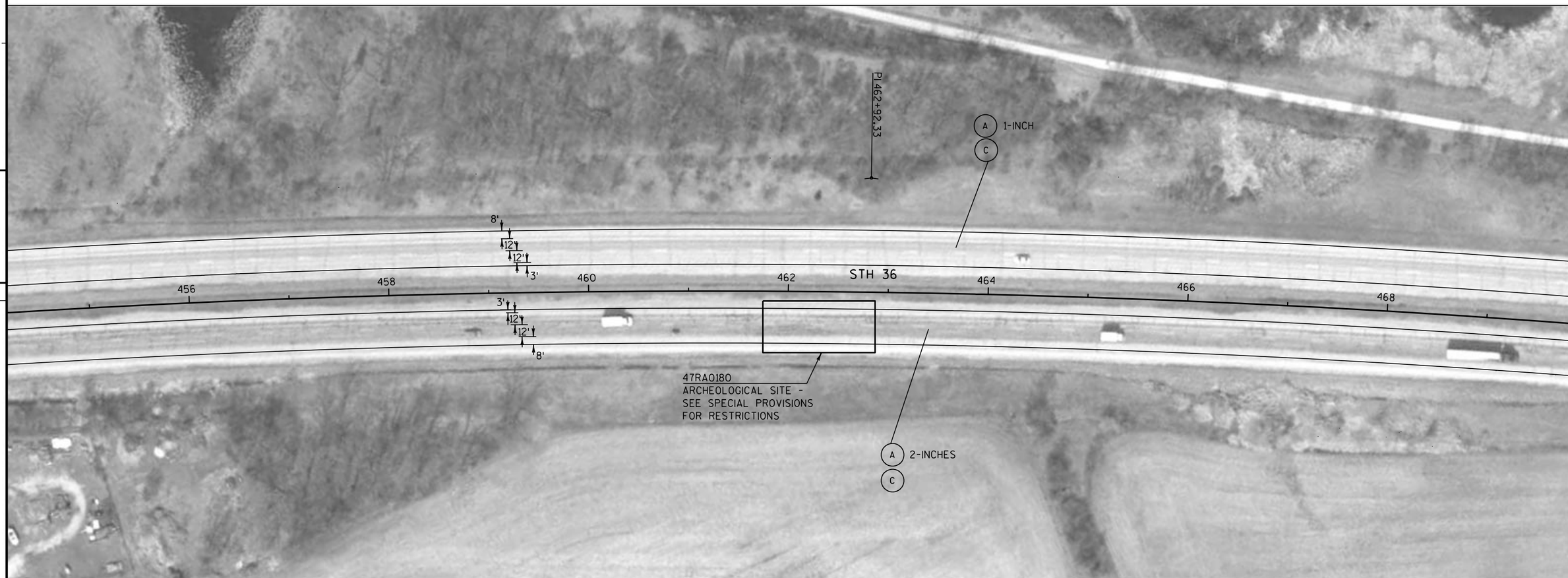

5

5

LEGEND

- (A) REMOVE ASPHALTIC SURFACE MILLING
- (B) REMOVING ASPHALTIC SURFACE BUTT JOINTS
- (C) HMA PAVEMENT TYPE E-3 (2-INCH DEPTH)

PROJECT NO:2240-00-67	HWY:STH 36	COUNTY:RACINE	PLAN SHEET	SHEET	E

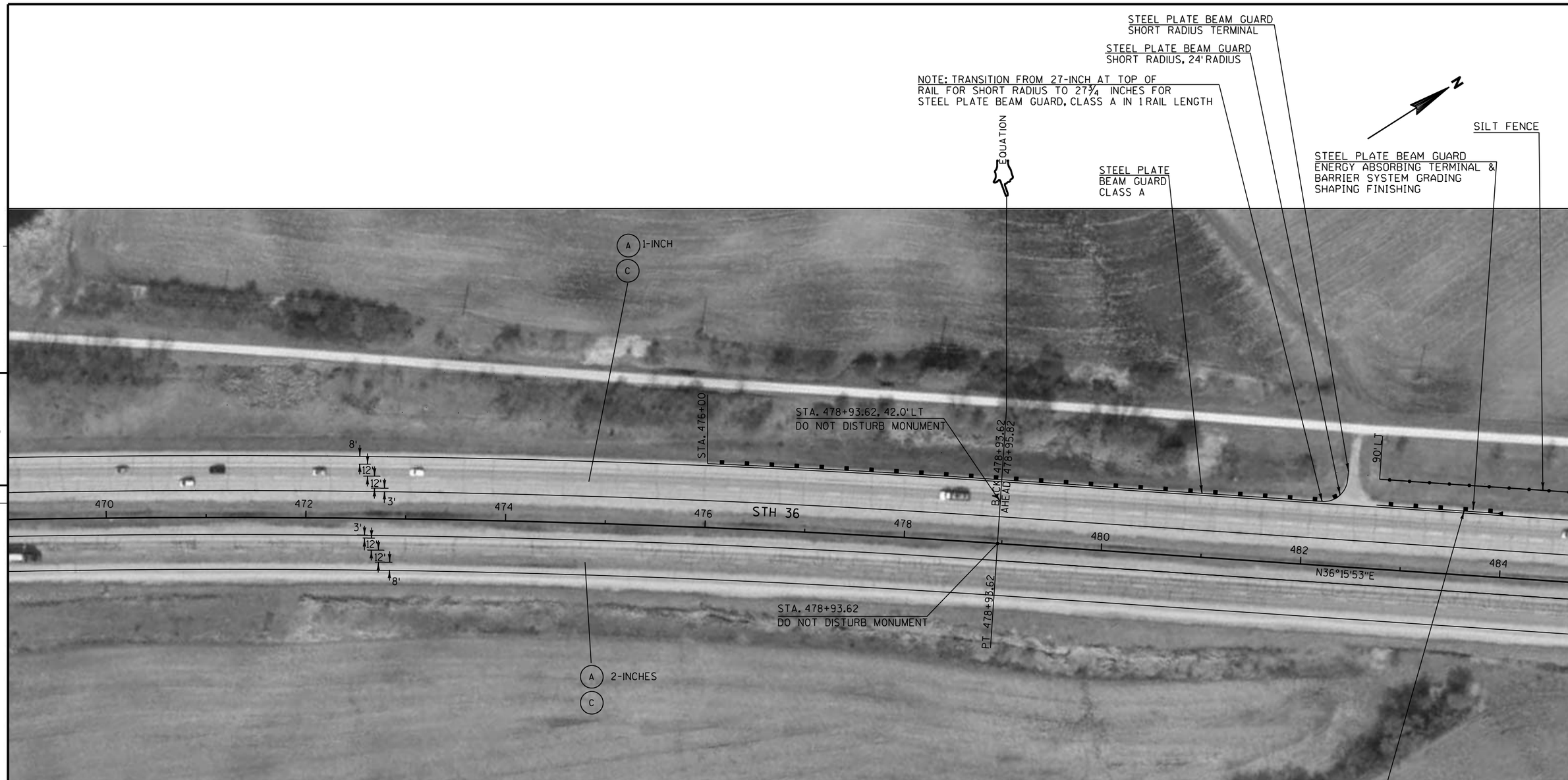

5

5

LEGEND

- (A) REMOVE ASPHALTIC SURFACE MILLING
- (B) REMOVING ASPHALTIC SURFACE BUTT JOINTS
- (C) HMA PAVEMENT TYPE E-3 (2-INCH DEPTH)

PROJECT NO:2240-00-67	HWY:STH 36	COUNTY:RACINE	PLAN SHEET	SHEET	E

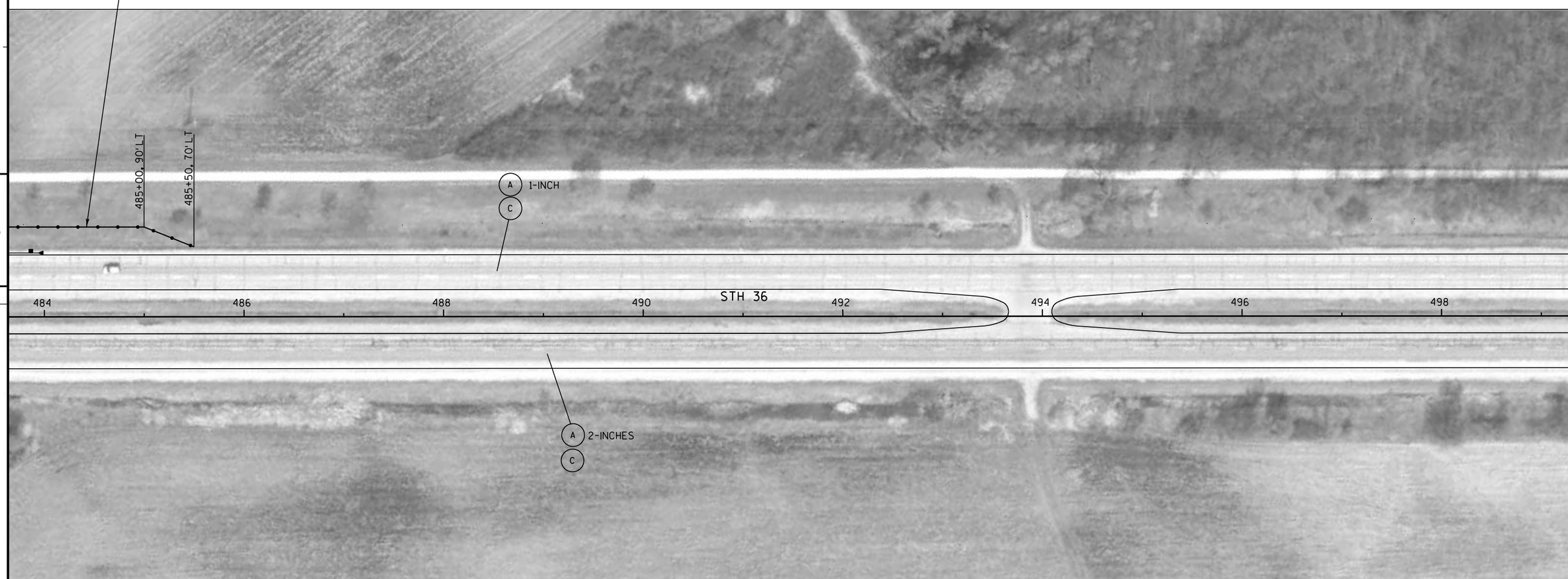

LEGEND

- (A) REMOVE ASPHALTIC SURFACE MILLING
- (B) REMOVING ASPHALTIC SURFACE BUTT JOINTS
- (C) HMA PAVEMENT TYPE E-3 (2-INCH DEPTH)

PROJECT NO:2240-00-67	HWY:STH 36	COUNTY:RACINE	PLAN SHEET	SHEET	E

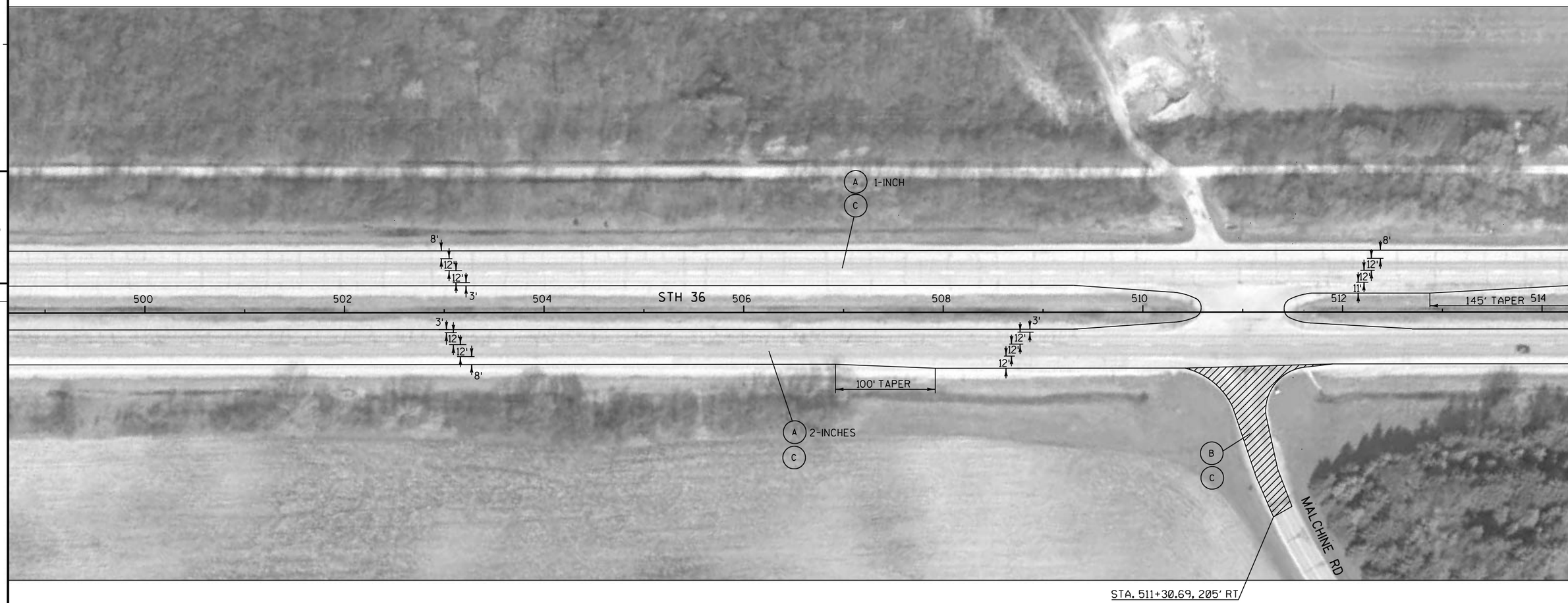

LEGEND

- (A) REMOVE ASPHALTIC SURFACE MILLING
- (B) REMOVING ASPHALTIC SURFACE BUTT JOINTS
- (C) HMA PAVEMENT TYPE E-3 (2-INCH DEPTH)

PROJECT NO:2240-00-67	HWY:STH 36	COUNTY:RACINE	PLAN SHEET	SHEET	E

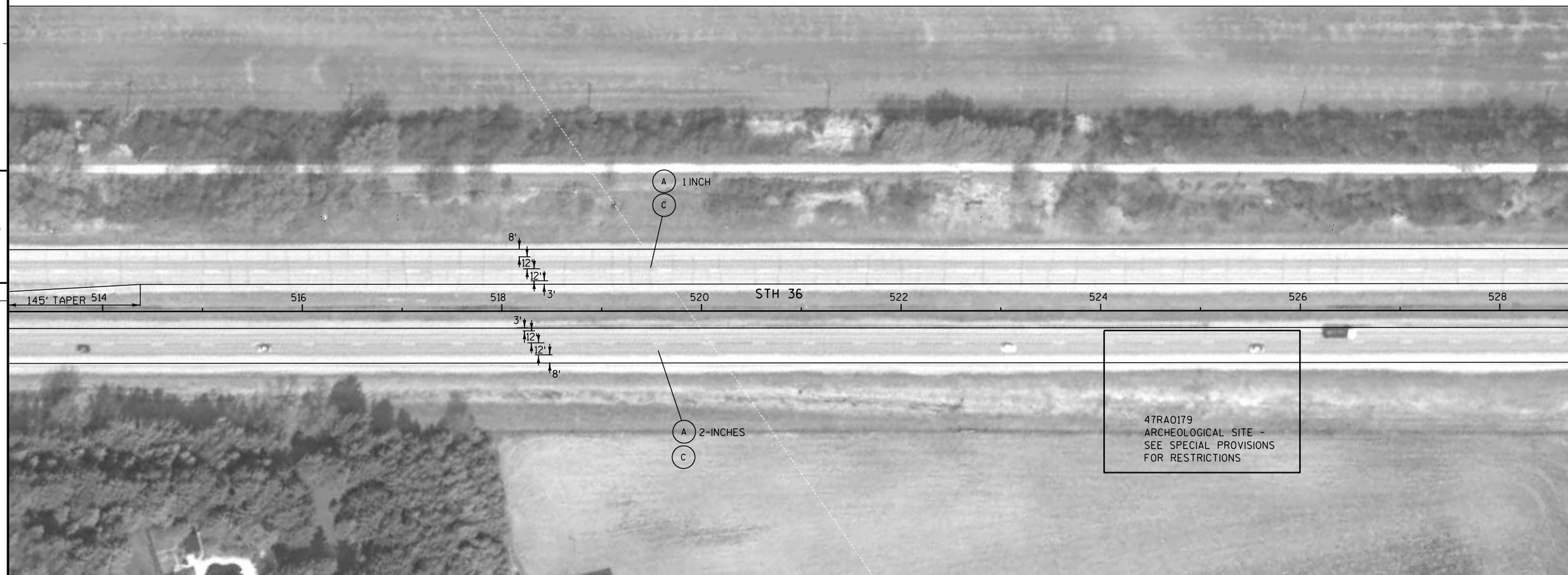

LEGEND

- (A) REMOVE ASPHALTIC SURFACE MILLING
- (B) REMOVING ASPHALTIC SURFACE BUTT JOINTS
- (C) HMA PAVEMENT TYPE E-3 (2-INCH DEPTH)

PROJECT NO:2240-00-67	HWY:STH 36	COUNTY:RACINE	PLAN SHEET	SHEET	E

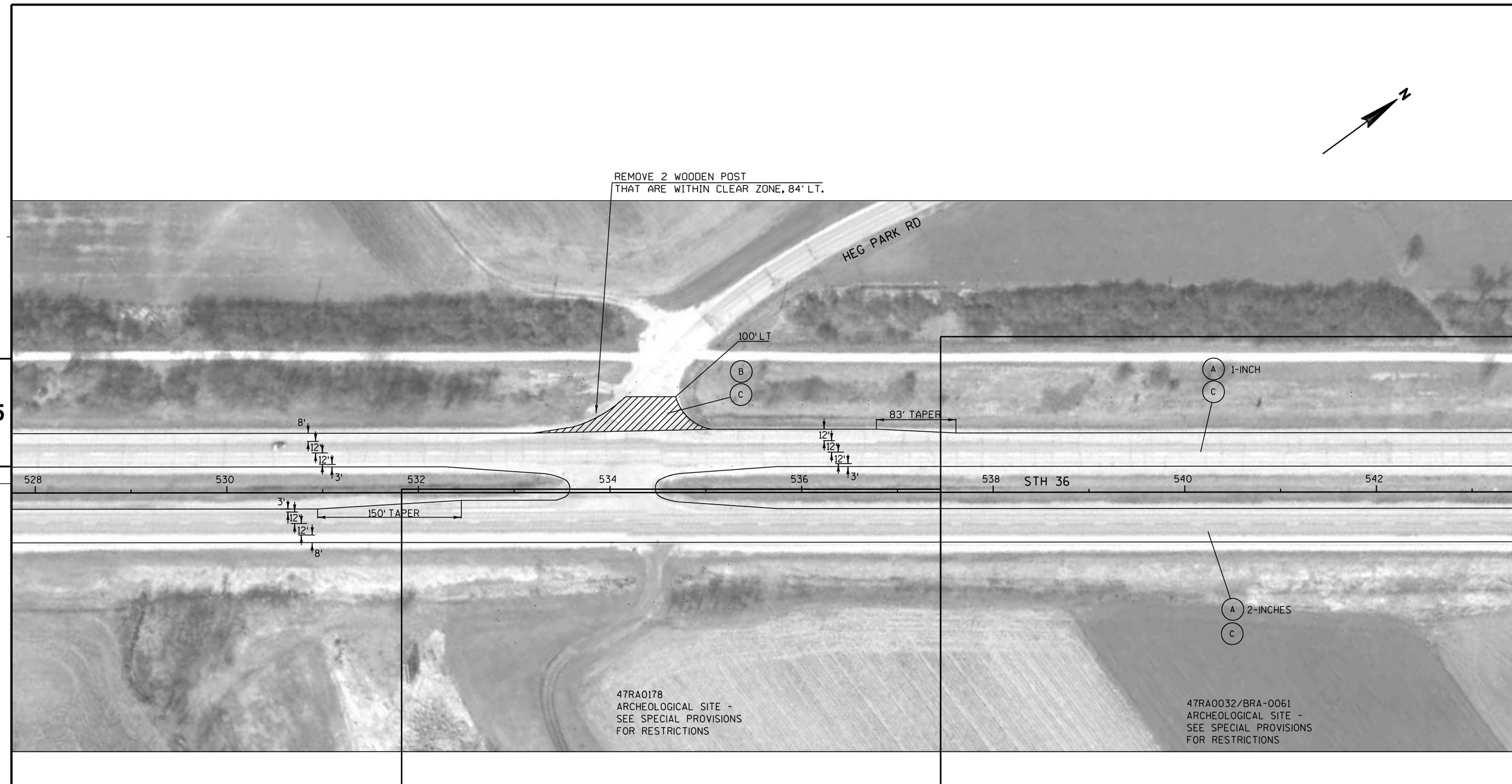

LEGEND

- (A) REMOVE ASPHALTIC SURFACE MILLING
- (B) REMOVING ASPHALTIC SURFACE BUTT JOINTS
- (C) HMA PAVEMENT TYPE E-3 (2-INCH DEPTH)

PROJECT NO:2240-00-67	HWY:STH 36	COUNTY:RACINE	PLAN SHEET	SHEET	E

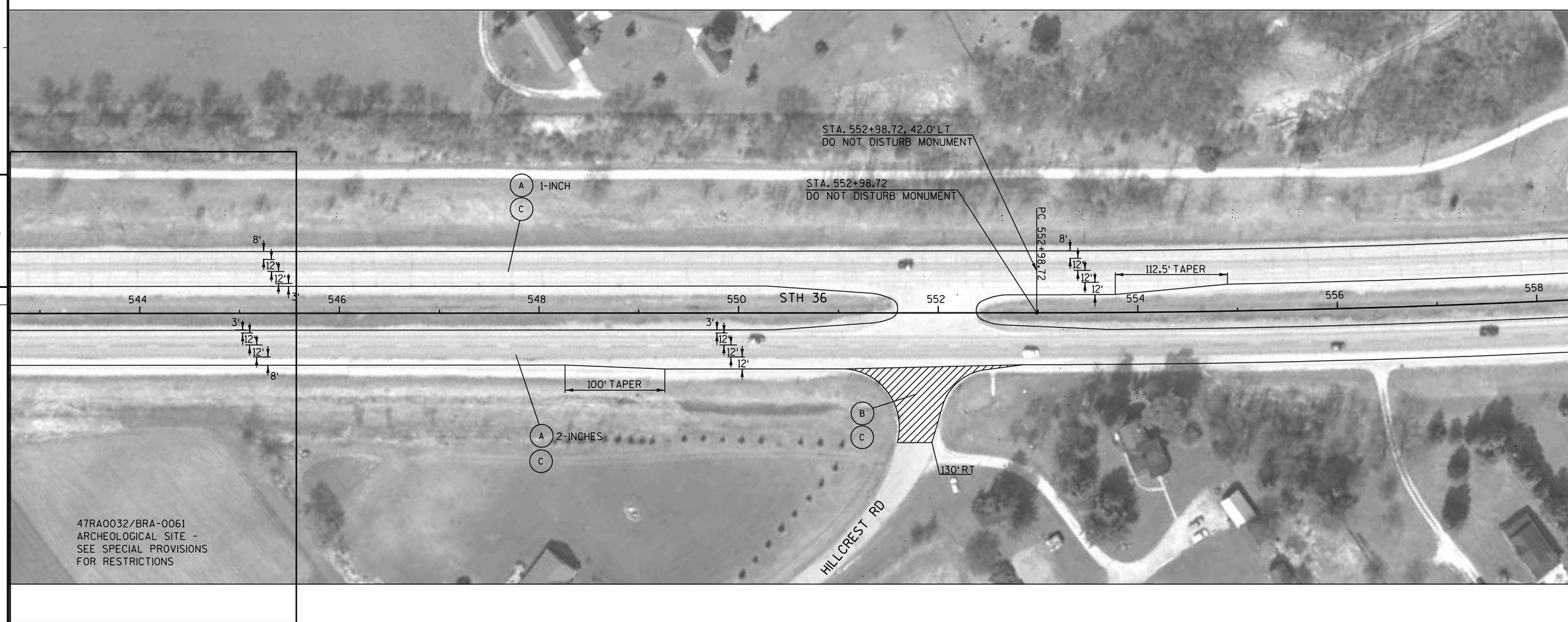

LEGEND

- (A) REMOVE ASPHALTIC SURFACE MILLING
- (B) REMOVING ASPHALTIC SURFACE BUTT JOINTS
- (C) HMA PAVEMENT TYPE E-3 (2-INCH DEPTH)

PROJECT NO:2240-00-67	HWY:STH 36	COUNTY:RACINE	PLAN SHEET	SHEET	E

LEGEND

- (A) REMOVE ASPHALTIC SURFACE MILLING
- (B) REMOVING ASPHALTIC SURFACE BUTT JOINTS
- (C) HMA PAVEMENT TYPE E-3 (2-INCH DEPTH)

PROJECT NO:2240-00-67	HWY:STH 36	COUNTY:RACINE	PLAN SHEET	SHEET	E

PI STATION = 576+09.59 (STH 36)
RADIUS = 11,459.16
SE = .02%

LEGEND

- (A) REMOVE ASPHALTIC SURFACE MILLING
- (B) REMOVING ASPHALTIC SURFACE BUTT JOINTS
- (C) HMA PAVEMENT TYPE E-3 (2-INCH DEPTH)

PROJECT NO:2240-00-67	HWY:STH 36	COUNTY:RACINE	PLAN SHEET	SHEET	E

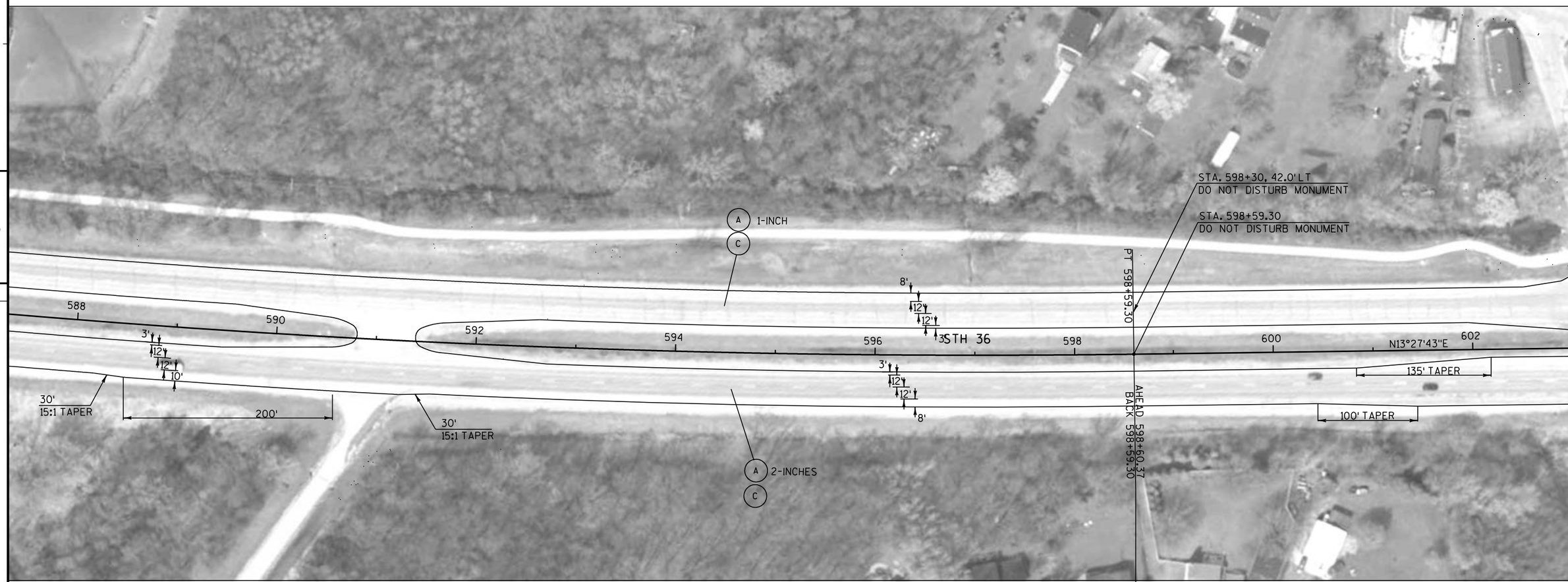

LEGEND

- (A) REMOVE ASPHALTIC SURFACE MILLING
- (B) REMOVING ASPHALTIC SURFACE BUTT JOINTS
- (C) HMA PAVEMENT TYPE E-3 (2-INCH DEPTH)

PROJECT NO:2240-00-67	HWY:STH 36	COUNTY:RACINE	PLAN SHEET	SHEET	E

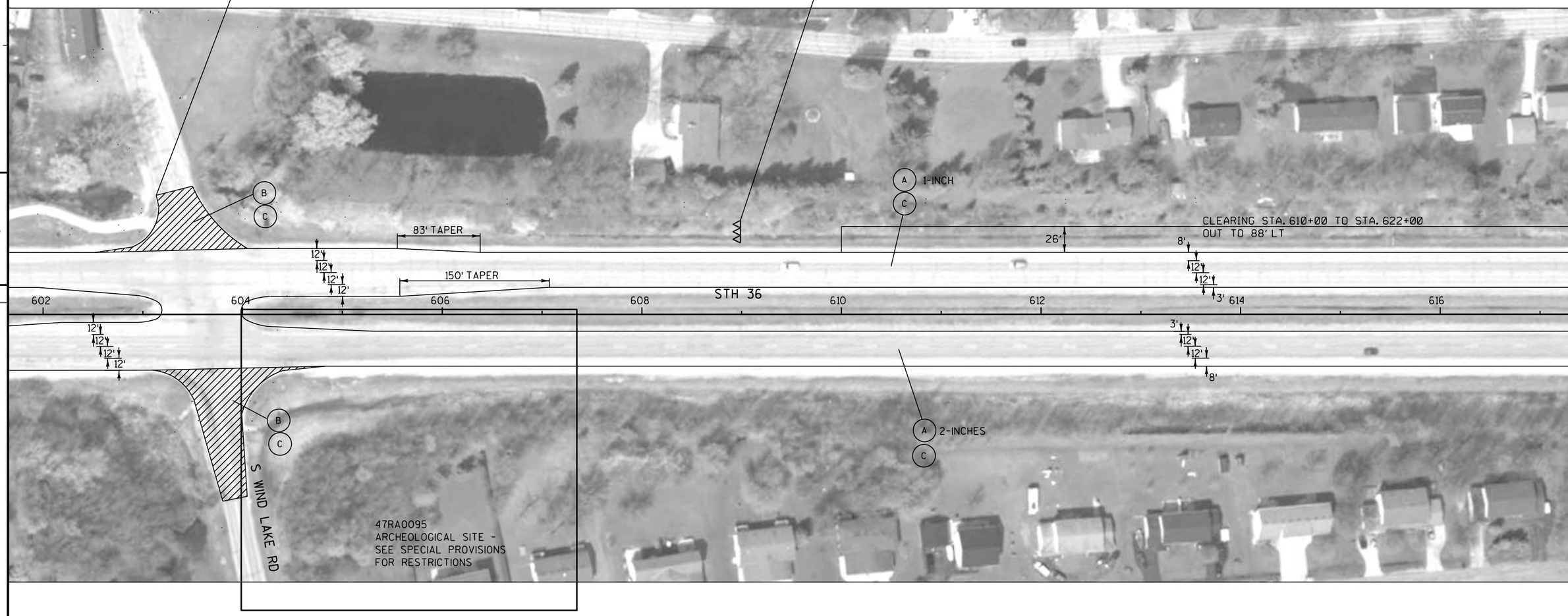

LEGEND

- (A) REMOVE ASPHALTIC SURFACE MILLING
- (B) REMOVING ASPHALTIC SURFACE BUTT JOINTS
- (C) HMA PAVEMENT TYPE E-3 (2-INCH DEPTH)

PROJECT NO:2240-00-67	HWY:STH 36	COUNTY:RACINE	PLAN SHEET	SHEET	E

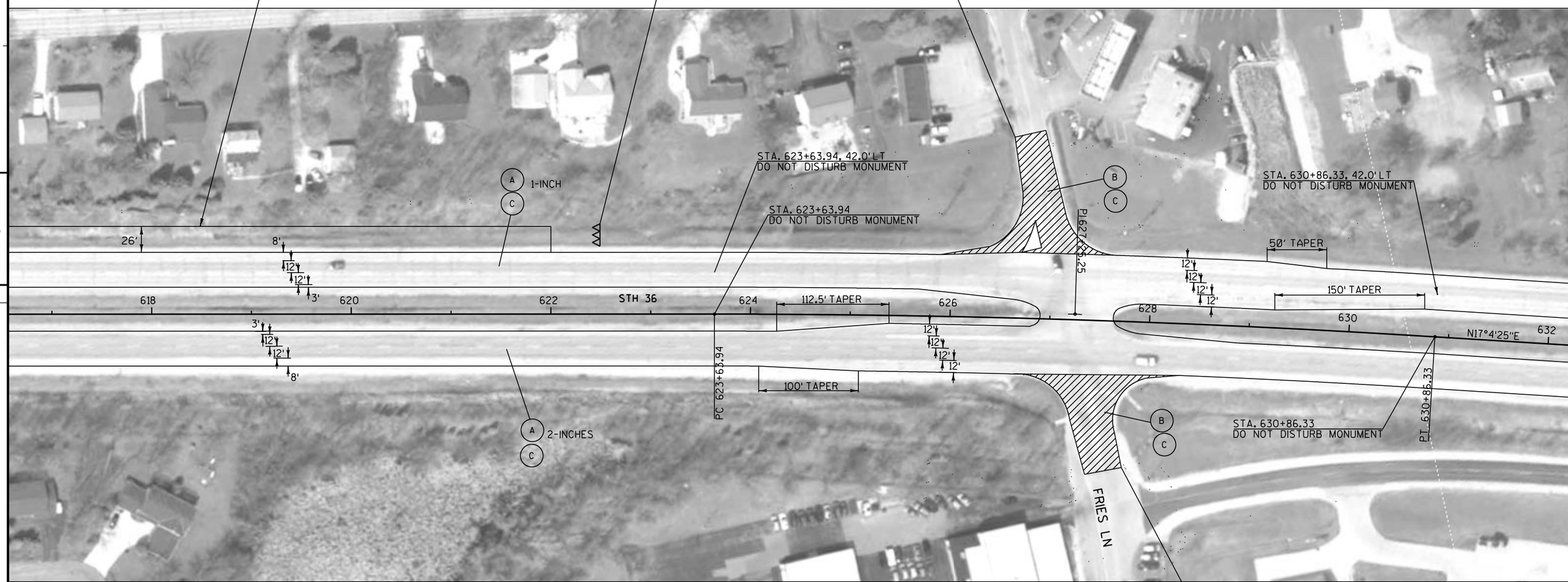

PI STATION = 627+25.26 (STH 36)
RADIUS = 11,429.16
SE = .02%

LEGEND

- (A) REMOVE ASPHALTIC SURFACE MILLING
- (B) REMOVING ASPHALTIC SURFACE BUTT JOINTS
- (C) HMA PAVEMENT TYPE E-3 (2-INCH DEPTH)

PROJECT NO:2240-00-67	HWY:STH 36	COUNTY:RACINE	PLAN SHEET	SHEET	E

FILE NAME : j:\projects\d2_22400036\67\050122_PD.dgn PLOT DATE : 12-JAN-2012 10:06 PLOT BY : dotshw PLOT NAME : PLOT SCALE : 100:1 WISDOT/CADDS SHEET 44

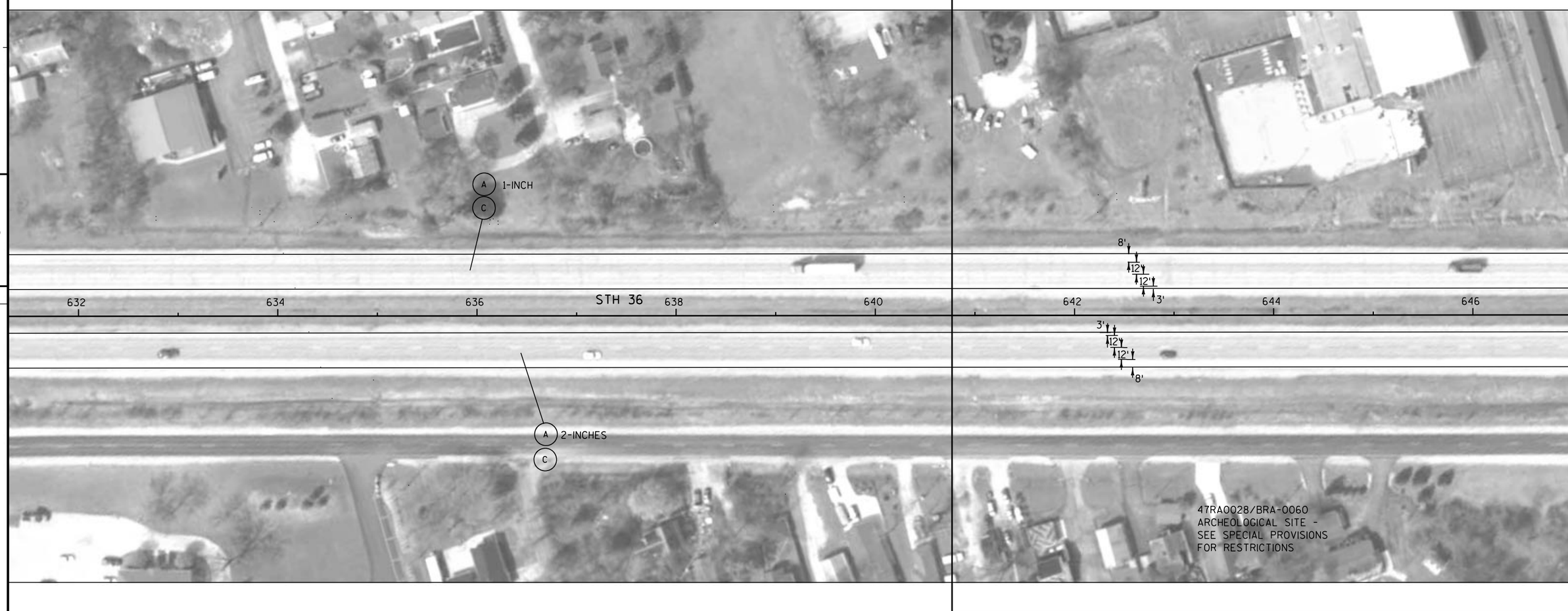

LEGEND

- (A) REMOVE ASPHALTIC SURFACE MILLING
- (B) REMOVING ASPHALTIC SURFACE BUTT JOINTS
- (C) HMA PAVEMENT TYPE E-3 (2-INCH DEPTH)

PROJECT NO:2240-00-67	HWY:STH 36	COUNTY:RACINE	PLAN SHEET	SHEET	E

FILE NAME : j:\projects\d2_22400036\67\050123_PD.dgn PLOT DATE : 12-JAN-2012 10:06 PLOT BY : dotshw PLOT NAME : PLOT SCALE : 100:1 WISDOT/CADDS SHEET 44

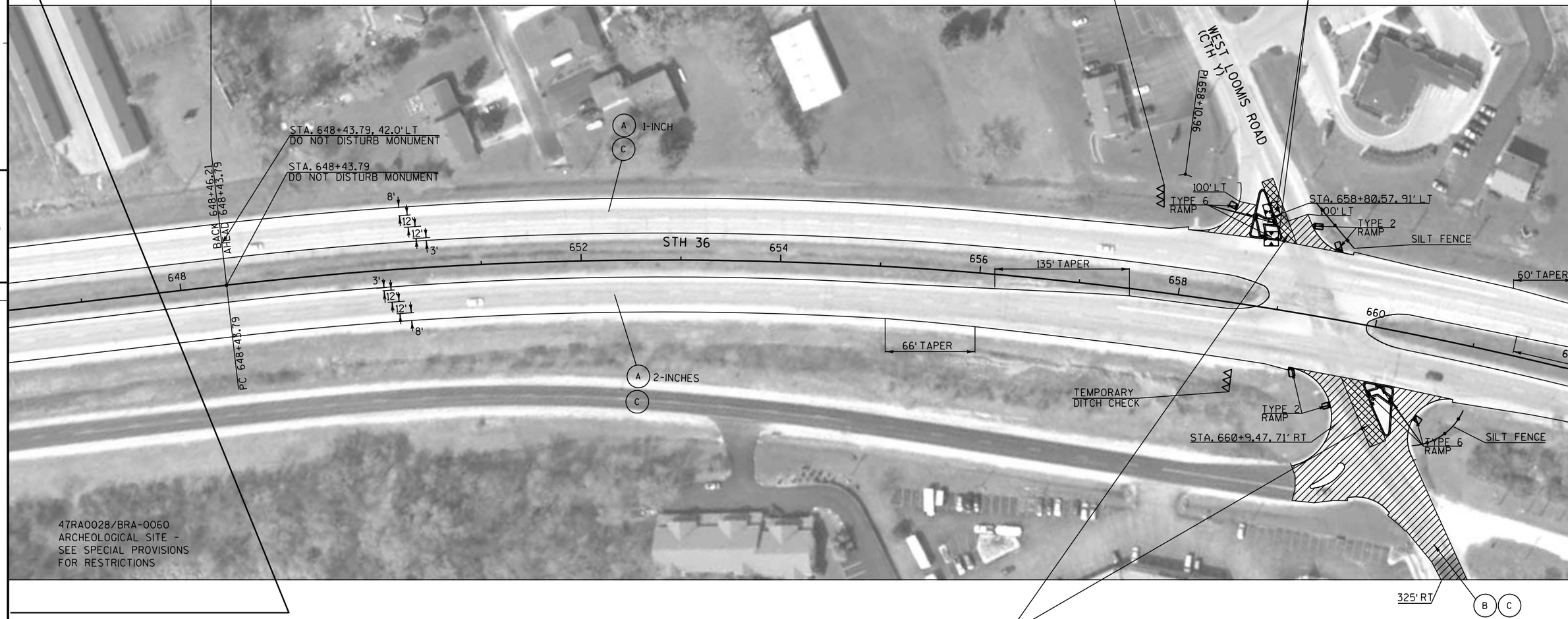

5

5

SAWING ASPHALT, REMOVING ASPHALTIC SURFACE,
PLACE LOOP DETECTORS PER SIGNALS PLAN,
ASPHALTIC SURFACE PATCHING, 7-INCHES.

PI STATION = 658+10.95
RADIUS = 3819.72
SE = .037% NB, .042% SB

LEGEND

- (A) REMOVE ASPHALTIC SURFACE MILLING
- (B) REMOVING ASPHALTIC SURFACE BUTT JOINTS
- (C) HMA PAVEMENT TYPE E-3 (2-INCH DEPTH)

PROJECT NO:2240-00-67	HWY:STH 36	COUNTY:RACINE	PLAN SHEET	SHEET	E

LEGEND

(A) REMOVE ASPHALTIC SURFACE MILLING

(B) REMOVING ASPHALTIC SURFACE BUTT JOINTS

(C) HMA PAVEMENT TYPE E-3 (2-INCH DEPTH)

PROJECT NO:2240-00-67	HWY:STH 36	COUNTY:RACINE	PLAN SHEET	SHEET	E

Standard Detail Drawing List

08D01-17	CONCRETE CURB, CONCRETE CURB AND GUTTER AND TIES
08D05-14A	CURB RAMPS TYPES 1 AND 1-A
08D05-14B	CURB RAMPS TYPES 2 AND 3
08D05-14C	CURB RAMPS TYPE 4A
08D05-14D	CURB RAMPS TYPE 4B
08D05-14E	CURB RAMPS TYPES 5, 6, 7A, 7B & 8
08D15-04A	EDGEDRAIN OUTLET AND OUTFALL MARKERS
08E08-03	TYPICAL INSTALLATIONS OF EROSION BALES / TEMPORARY DITCH CHECKS
08E09-06	SILT FENCE
08E10-02	INLET PROTECTION TYPE A, B, C AND D
08F01-11	APRON ENDWALLS FOR CULVERT PIPE
08F07-03	STEEL APRON ENDWALLS FOR CULVERT PIPE AND PIPE ARCH SIDE DRAINS SLOPED SECTION
09B02-07	CONDUIT
09C02-06	CONCRETE BASES, TYPES 1, 2 & 5
09E01-11G	HARDWARE DETAILS FOR POLE MOUNTINGS
09F15-03A	LOOP DETECTOR INSTALLED IN BASE COURSE WITH PULL (SPLICE) BOX OFF ROADWAY (OPTION 1)
13A05-04A	SHOULDER RUMBLE STRIP, MILLING
13A05-04B	SHOULDER RUMBLE STRIP, MILLING
14B15-07A	STEEL PLATE BEAM GUARD, CLASS "A" INSTALLATION & ELEMENTS
14B15-07B	STEEL PLATE BEAM GUARD, CLASS "A" INSTALLATION & ELEMENTS
14B15-07C	STEEL PLATE BEAM GUARD, CLASS "A", INSTALLATION & ELEMENTS
14B24-07A	STEEL PLATE BEAM GUARD ENERGY ABSORBING TERMINAL
14B24-07B	STEEL PLATE BEAM GUARD ENERGY ABSORBING TERMINAL
14B24-07C	STEEL PLATE BEAM GUARD ENERGY ABSORBING TERMINAL
14B27-01A	STEEL PLATE BEAM GUARD SHORT RADIUS TERMINAL
14B27-01B	STEEL PLATE BEAM GUARD SHORT RADIUS TERMINAL
14B27-01C	STEEL PLATE BEAM GUARD SHORT RADIUS TERMINAL
15C07-12B	PAVEMENT MARKING WORDS
15C07-12C	PAVEMENT MARKING ARROWS
15C08-14A	PAVEMENT MARKING (MAINLINE)
15C08-14B	PAVEMENT MARKING (INTERSECTIONS)
15C08-14E	PAVEMENT MARKING (LEFT TURN LANE)
15C08-14F	PAVEMENT MARKING (ISLANDS, STOP LINE & CROSS WALK)
15C12-03	TRAFFIC CONTROL FOR LANE CLOSURE (SUITABLE FOR MOVING OPERATIONS)
15C18-03	MEDIAN ISLAND MARKING
15D12-02	TRAFFIC CONTROL, LANE CLOSURE, SPEEDS GREATER THAN 40 M.P.H.
15D21-01	TRAFFIC CONTROL, INTERSECTION WITHIN SINGLE LANE CLOSURE
15D27-01	TRAFFIC CONTROL, SHOULDER CLOSURE ON DIVIDED ROADWAY, SPEEDS GREATER THAN 40 MPH

6

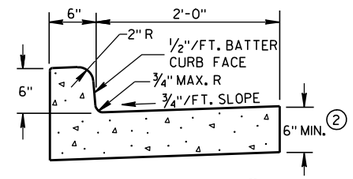

TYPES A & D ①

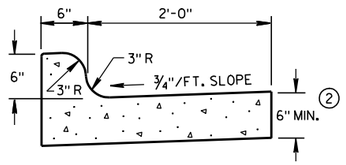

TYPES K & L ①

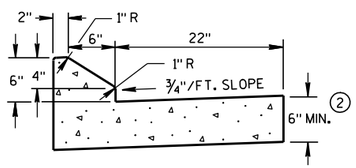

6" SLOPED CURB TYPES G & J ①

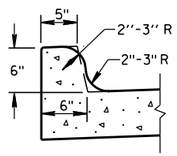

OPTIONAL CURB SHAPE FOR TYPES K & L ①

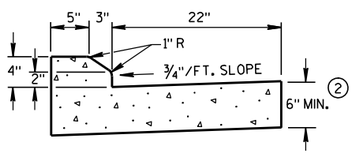

4" SLOPED CURB TYPES G & J ①

CONCRETE CURB & GUTTER 30"

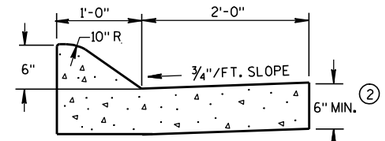

(6" SLOPED CURB)

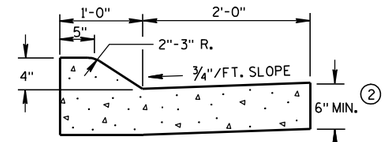

(4" SLOPED CURB)

TYPES A & D ①

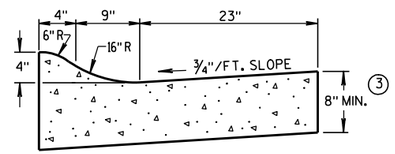

4" SLOPED CURB TYPES R & T ① ④

CONCRETE CURB & GUTTER 36"

GENERAL NOTES

DETAILS OF CONSTRUCTION, MATERIALS AND WORKMANSHIP NOT SHOWN ON THIS DRAWING SHALL CONFORM TO THE PERTINENT REQUIREMENTS OF THE CONTRACT.

PAVEMENT TIES AND TIE BARS SHALL BE EPOXY COATED IN CONFORMANCE WITH SUBSECTION 505.2.6.2 OF THE STANDARD SPECIFICATIONS.

INTEGRAL CURB & GUTTER SHALL CONFORM TO THE DETAILS SHOWN FOR CONCRETE CURB & GUTTER INCLUDING THE TRANSVERSE GUTTER SLOPE. A LONGITUDINAL CONSTRUCTION JOINT IS NOT REQUIRED WITH INTEGRAL CURB AND GUTTER.

WHERE THE TRANSVERSE JOINTS IN THE PAVEMENT ARE REQUIRED TO BE SEALED, THE JOINTS IN THE INTEGRAL CURB AND GUTTER SHALL BE SEALED TO THE FACE OF CURB WITH THE SAME TYPE OF SEALANT. THE COST OF FURNISHING AND INSTALLING THIS SEALANT SHALL BE INCIDENTAL TO THE ITEM CONCRETE CURB AND GUTTER.

UNLESS OTHERWISE SHOWN ON THE TYPICAL CROSS SECTIONS, THE BASE AGGREGATE AND COMMON EXCAVATION LIMITS ARE 2'-0" BEHIND THE BACK OF CURBS.

① TIE BARS ARE REQUIRED FOR CURB AND GUTTER TYPES A, G, K AND R.

② THE BOTTOM OF CURB AND GUTTER MAY BE CONSTRUCTED EITHER LEVEL OR PARALLEL TO THE SLOPE OF THE SUBGRADE OR BASE AGGREGATE PROVIDED A 6" MINIMUM GUTTER THICKNESS IS MAINTAINED.

③ THE BOTTOM OF CURB AND GUTTER MAY BE CONSTRUCTED EITHER LEVEL OR PARALLEL TO THE SLOPE OF THE SUBGRADE OR BASE AGGREGATE PROVIDED A 8" MINIMUM GUTTER THICKNESS IS MAINTAINED.

④ THE FACE OF CURB IS 6" FROM THE BACK OF CURB.

⑤ WHEN REVERSE SLOPE GUTTER IS REQUIRED, THE LOCATION(S) WILL BE SHOWN ELSEWHERE IN THE PLAN.

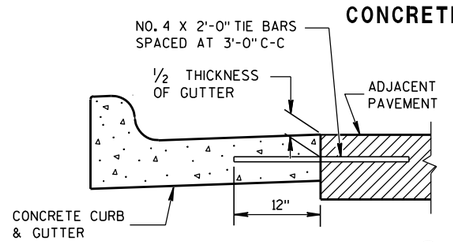

TYPICAL TIE BAR LOCATION ①

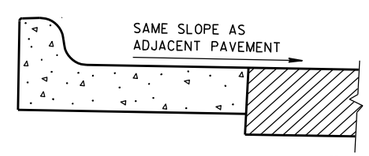

REVERSE SLOPE GUTTER ⑤
(TYPICAL FOR ALL CURB & GUTTER TYPES)

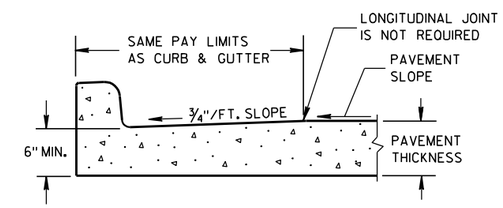

PARTIAL SECTION OF PAVEMENT WITH INTEGRAL CURB & GUTTER

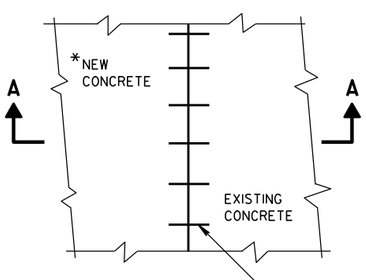

*NEW CURB & GUTTER, SURFACE DRAINS, CONCRETE PAVEMENT OR OTHER NEW CONCRETE.

PLAN VIEW

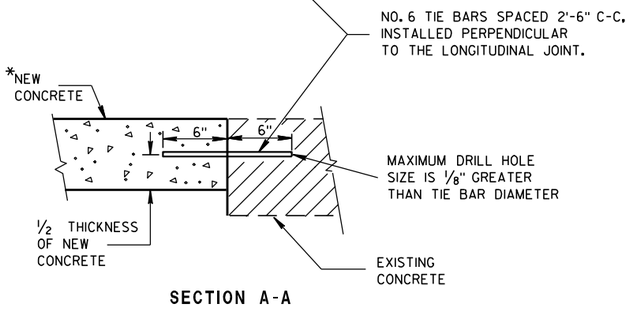

SECTION A-A

TIE BARS DRILLED INTO EXISTING PAVEMENT

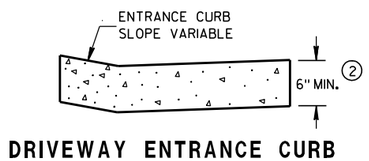

DRIVEWAY ENTRANCE CURB
(WHEN DIRECTED BY THE ENGINEER)

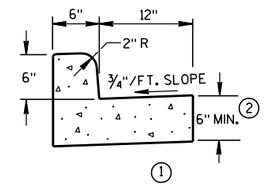

① TYPES A & D

CONCRETE CURB & GUTTER 18"

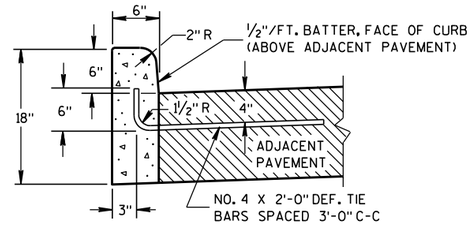

① TYPES A & D

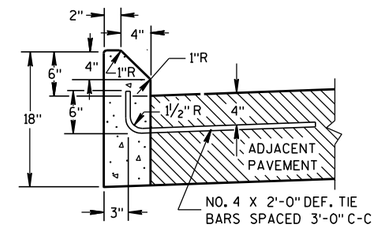

① TYPES G & J

CONCRETE CURB

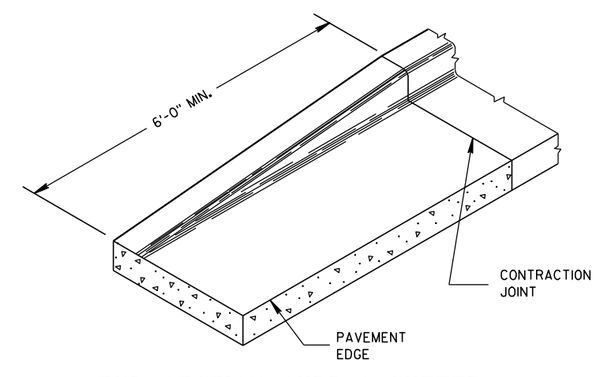

END SECTION CURB & GUTTER

CONCRETE CURB, CONCRETE CURB & GUTTER AND TIES

STATE OF WISCONSIN
DEPARTMENT OF TRANSPORTATION

APPROVED
9/4/08 — DATE
/S/ Jerry H. ---- — ROADWAY STANDARDS ENGINEER
FHWA

6

S.D.D. 8 D 1-17

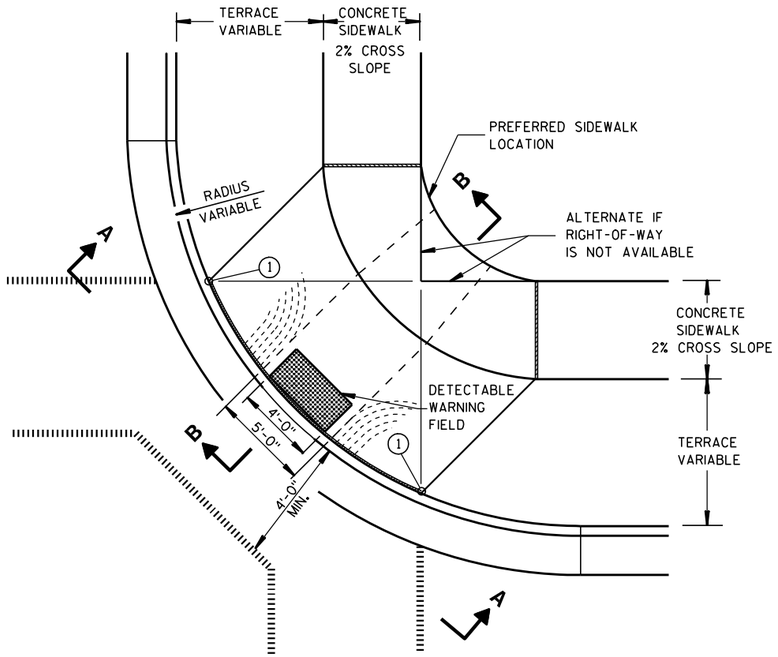

PLAN VIEW

TYPE 1 RAMP

(CENTER OF CORNER RADIUS)

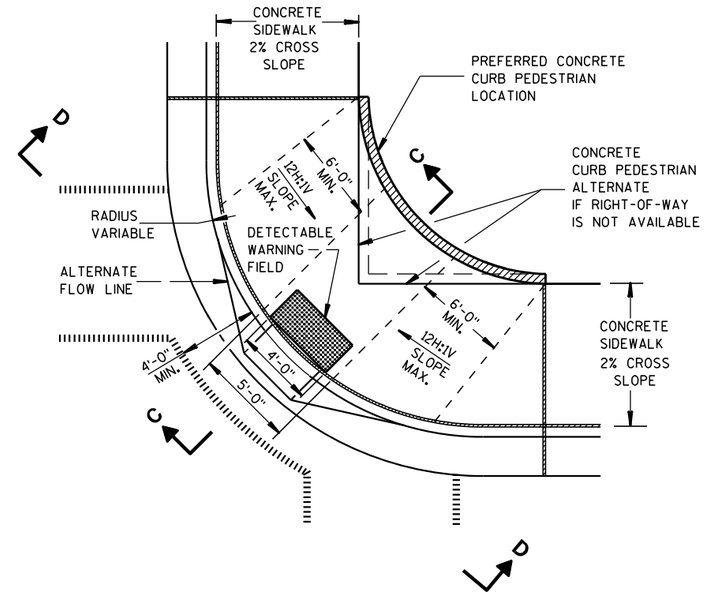

PLAN VIEW

TYPE 1-A RAMP

(NO TERRACE)

GENERAL NOTES

DETAILS OF CONSTRUCTION, MATERIALS AND WORKMANSHIP NOT SHOWN ON THIS DRAWING SHALL CONFORM TO THE PERTINENT REQUIREMENTS OF THE STANDARD SPECIFICATIONS AND THE APPLICABLE SPECIAL PROVISIONS.

RAMPS SHALL BE BUILT AT 12H:1V OR FLATTER. WHEN NECESSARY, THE SIDEWALK ELEVATION MAY BE LOWERED TO MEET THE HIGH POINT ON THE RAMP.

TYPE 1 RAMPS SHALL HAVE A NORMAL SIDEWALK APRON AND CURB ON BOTH SIDES OF RAMP.

DETECTABLE WARNING FIELD SHALL BE MEASURED AND PAID BY THE SQUARE FOOT AS "CURB RAMP DETECTABLE WARNING FIELD". THE CONCRETE PEDESTRIAN CURB, IF NEEDED, SHALL BE MEASURED AND PAID BY THE LINEAL FOOT AS "CONCRETE CURB PEDESTRIAN". CONCRETE SIDEWALK IN THE CURB RAMP AREA SHALL BE MEASURED AND PAID BY THE SQUARE FOOT AS CONCRETE SIDEWALK, INCLUDING THE AREA UNDER THE DETECTABLE WARNING FIELD.

SELECT CURB RAMP DETECTABLE WARNING FIELD MATERIALS AND DEVICES FROM THE DEPARTMENT'S APPROVED MATERIALS LIST. THE COLOR OF THE DETECTABLE WARNING FIELD IS SPECIFIED ELSEWHERE AND IS INCIDENTAL TO THE BID ITEM OF "CURB RAMP DETECTABLE WARNING FIELD".

SURFACE TEXTURE OF THE RAMP SHALL BE OBTAINED BY COARSE BROOMING TRANSVERSE TO THE SLOPE OF THE RAMP.

(1) THIS POINT IS AN EXTENSION OF OUTSIDE EDGE OF APPROACHING SIDEWALK WHERE IT MEETS THE BACK OF CONCRETE CURB.

(2) GRADE CHANGE BETWEEN GUTTER FLAG SLOPE AND THE CURB RAMP SLOPE SHALL NOT EXCEED 11%. PROVIDE DRAINAGE AWAY FROM CURB RAMP AT GUTTER FLAG INTERFACE.

LEGEND

- ½" EXPANSION JOINT-SIDEWALK
- CONTRACTION JOINT FIELD LOCATED
- PAVEMENT MARKING CROSSWALK (WHITE)
- ALTERNATIVE LAYOUT

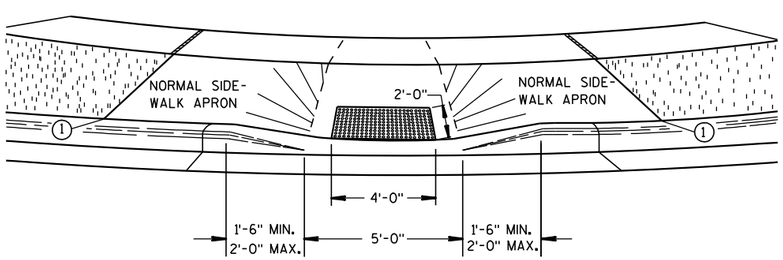

VIEW A-A

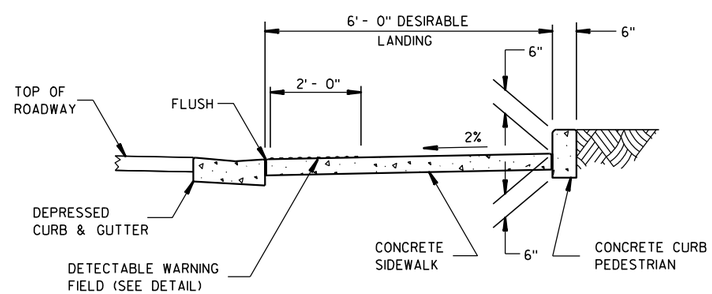

SECTION C-C

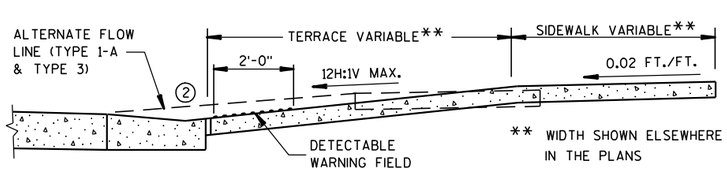

SECTION B-B

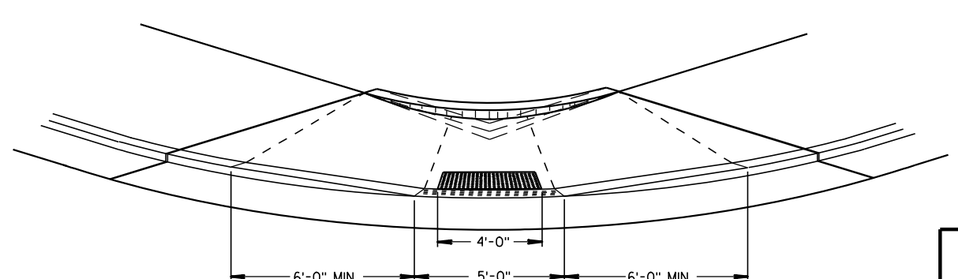

VIEW D-D

CURB RAMPS
TYPES 1 AND 1-A

STATE OF WISCONSIN
DEPARTMENT OF TRANSPORTATION

6

6

S.D.D. 8 D 5-14a

S.D.D. 8 D 5-14a

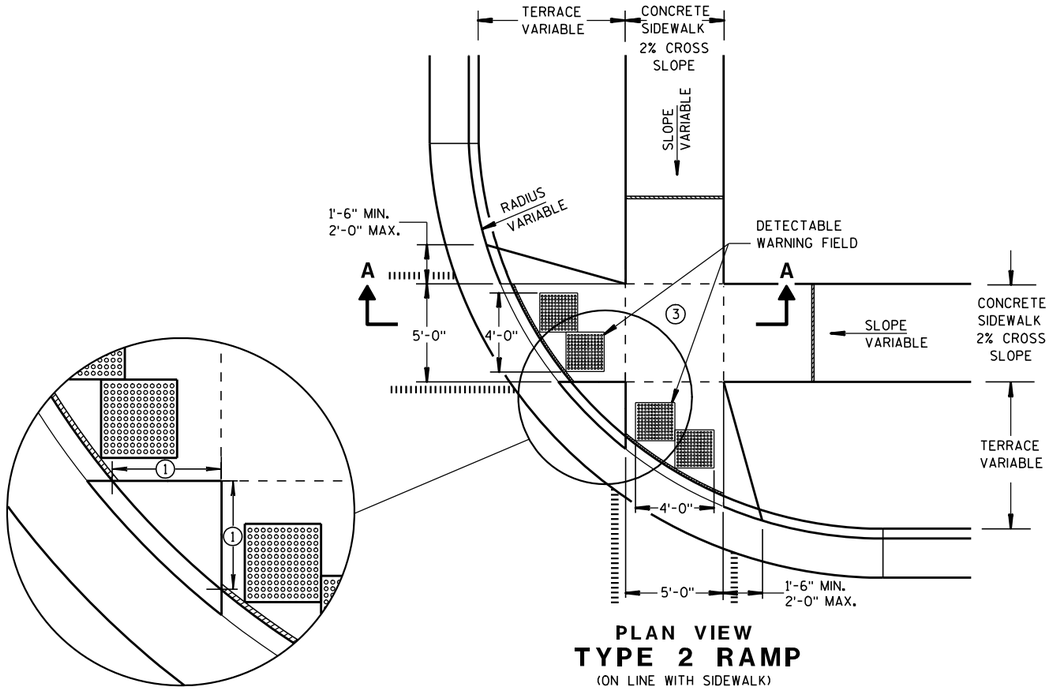

PLAN VIEW
TYPE 2 RAMP
(ON LINE WITH SIDEWALK)

GENERAL NOTES

USE THE TYPE 3 RAMP ONLY WHEN A TYPE 1 OR TYPE 2 CANNOT BE ACHIEVED BECAUSE OF FIELD CONDITIONS.

1. WHEN THIS DISTANCE IS LESS THAN 6'-0" IT MAY BE DIFFICULT TO ACHIEVE A 12H:1V SLOPE, OR FLATTER, ON THE RAMP. REDUCE CURB HEIGHT IN TRIANGLE AREA TO ACHIEVE 12H:1V SLOPE, OR FLATTER, ON RAMP. 2" MINIMUM CURB HEIGHT.

2. GRADE CHANGE BETWEEN GUTTER FLAG SLOPE AND THE CURB RAMP SLOPE SHALL NOT EXCEED 11%. PROVIDE DRAINAGE AWAY FROM CURB RAMP AT GUTTER FLAG INTERFACE.

3. PROVIDE LANDING AT TOP OF RAMP WITH NO MORE THAN 2% SLOPE IN ANY DIRECTION.

LEGEND

- ½" EXPANSION JOINT-SIDEWALK
- CONTRACTION JOINT FIELD LOCATED
- PAVEMENT MARKING CROSSWALK (WHITE)
- ALTERNATIVE LAYOUT

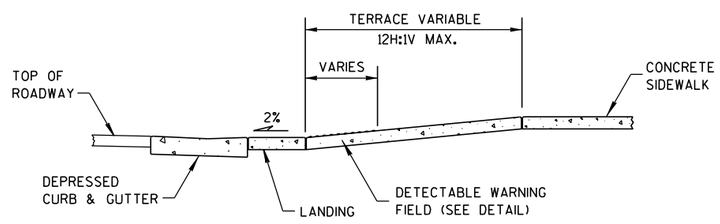

SECTION A-A

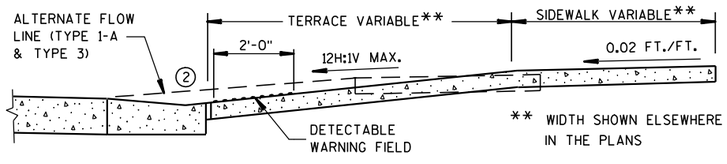

SECTION B-B

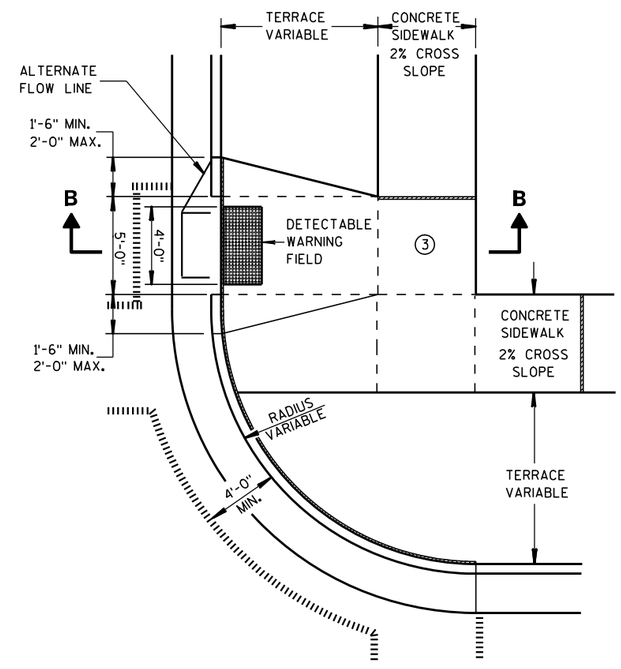

PLAN VIEW
TYPE 3 RAMP
(OUTSIDE OF CROSSWALK AREA)

CURB RAMPS
TYPES 2 AND 3

STATE OF WISCONSIN
DEPARTMENT OF TRANSPORTATION

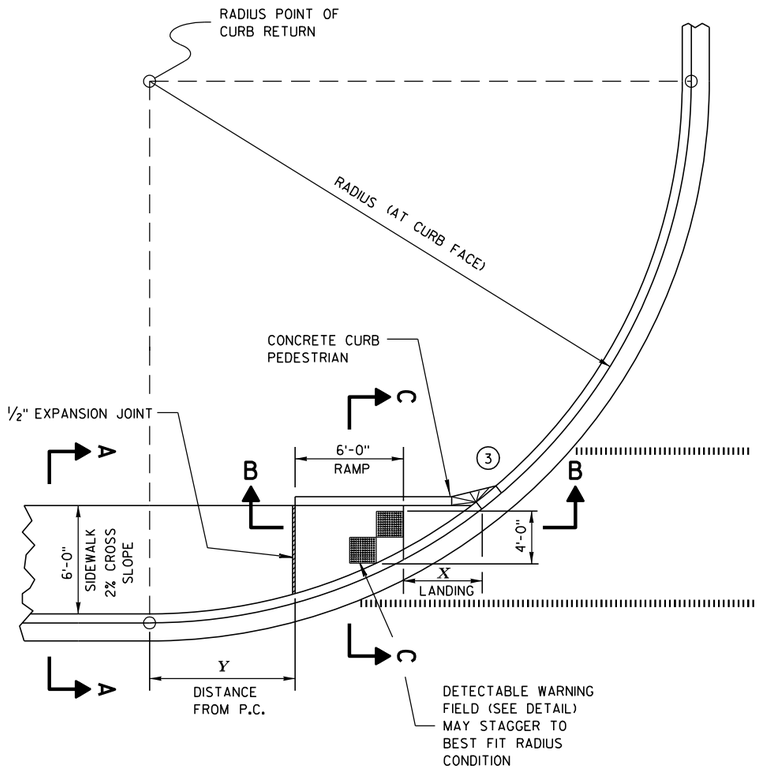

CURB RAMP TYPE 4A
PLAN VIEW

RADIUS (AT CURB FACE)	X	Y
20 FEET	6'-1¾"	2'-7¼"
30 FEET	7'-11¾"	4'-8¼"
40 FEET	9'-5¼"	6'-5"
50 FEET	10'-8¾"	7'-11¼"
60 FEET	11'-10¼"	9'-3½"

INTERMEDIATE RADII CAN BE INTERPOLATED

GENERAL NOTES

AVOID PLACING DRAINAGE STRUCTURES, JUNCTION BOXES OR OTHER OBSTRUCTIONS IN FRONT OF RAMP ACCESS AREAS.

RAMP SLOPES SHALL NOT BE STEEPER THAN 12:1.

SIDEWALK CROSS SLOPE SHALL NOT EXCEED 2%.

(3) INSTALL TRANSITION NOSE. (INCIDENTAL TO OTHER PAY ITEMS.) DO NOT MARK TRANSITION NOSE.

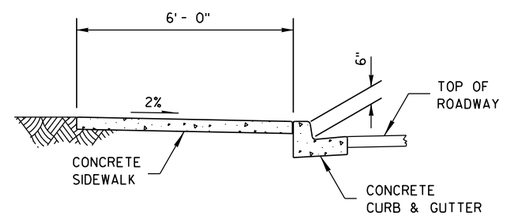

SECTION A-A

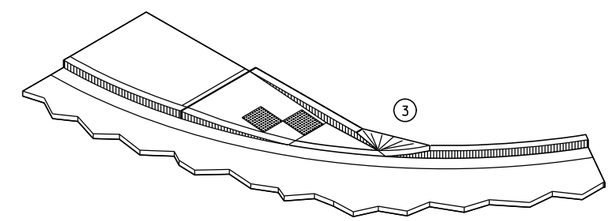

ISOMETRIC VIEW

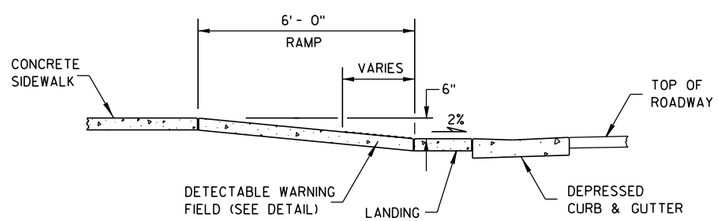

SECTION B-B

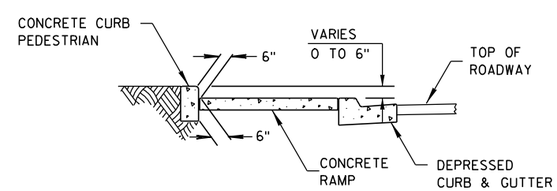

SECTION C-C

LEGEND

- ½" EXPANSION JOINT-SIDEWALK
- CONTRACTION JOINT FIELD LOCATED
- PAVEMENT MARKING CROSSWALK (WHITE)

CURB RAMPS
TYPE 4A

STATE OF WISCONSIN
DEPARTMENT OF TRANSPORTATION

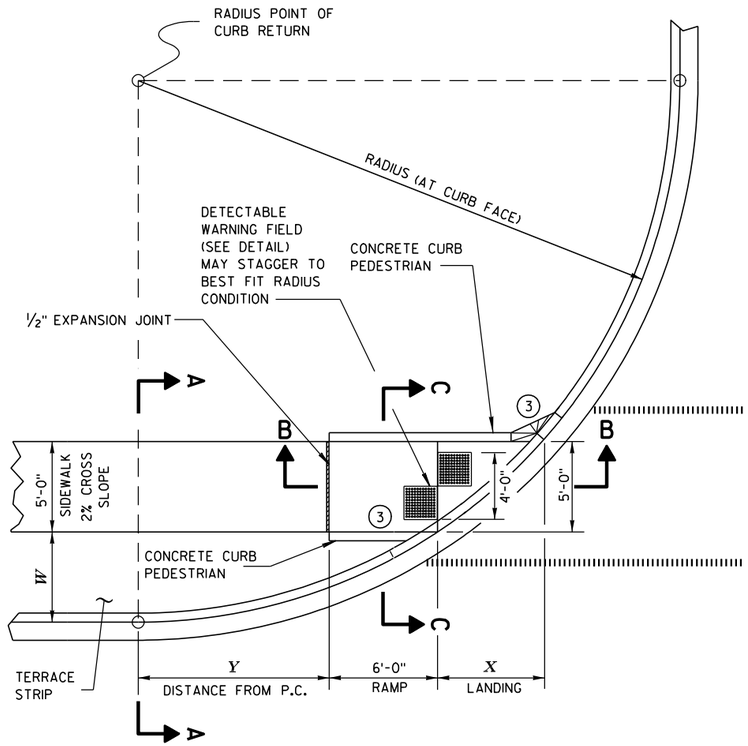

CURB RAMP TYPE 4B
PLAN VIEW

GENERAL NOTES

AVOID PLACING DRAINAGE STRUCTURES, JUNCTION BOXES OR OTHER OBSTRUCTIONS IN FRONT OF RAMP ACCESS AREAS.

RAMP SLOPES SHALL NOT BE STEEPER THAN 12:1.

SIDEWALK CROSS SLOPE SHALL NOT EXCEED 2%.

(3) INSTALL TRANSITION NOSE. (INCIDENTAL TO OTHER PAY ITEMS.) DO NOT MARK TRANSITION NOSE.

RADIUS (AT CURB FACE)	W = 3'- 0"		W = 4'- 0"		W = 5'- 0"		W = 6'- 0"		W = 7'- 0"	
	X	Y	X	Y	X	Y	X	Y	X	Y
20 FEET	5'-5 1/2"	4'-6 1/2"	4'-8 1/2"	6'-0"	4'-1"	7'-2 3/4"	3'-7"	8'-3 1/2"	3'-1 1/2"	9'-2 1/2"
30 FEET	7'-3 3/4"	7'-1"	6'-5 1/2"	8'-11 1/2"	5'-9 1/4"	10'-7"	5'-2 1/2"	12'-0"	4'-8 3/4"	13'-3 1/4"
40 FEET	8'-9 1/2"	9'-2 1/2"	7'-10"	11'-5 1/4"	7'-1"	13'-4 1/2"	6'-5 3/4"	15'-3/4"	5'-11 1/2"	16'-7 1/4"
50 FEET	10'-3/4"	11'-3/4"	9'-1/4"	13'-7 1/4"	8'-2 1/2"	15'-9 1/2"	7'-6 1/2"	17'-9"	6'-11 3/4"	19'-6 1/4"
60 FEET	11'-2 1/2"	12'-8 3/4"	10'-3/4"	15'-6 1/2"	9'-2 1/4"	17'-11 3/4"	8'-5 3/4"	20'-1 3/4"	7'-10 1/2"	22'-1 1/2"
70 FEET	12'-2 3/4"	14'-3 1/4"	11'-1/4"	17'-4"	10'-1"	19'-11 3/4"	9'-3 3/4"	22'-4 1/4"	8'-8 1/4"	24'-6 1/4"
80 FEET	13'-2"	15'-8 1/2"	11'-10 1/2"	18'-11 3/4"	10'-10 3/4"	21'-10"	10'-1"	24'-4 3/4"	9'-5"	26'-8 3/4"
90 FEET	14'- 1/2"	17'-1/2"	12'-8 1/4"	20'-6 1/2"	11'-7 3/4"	23'-7"	10'-9 3/4"	26'-3 3/4"	10'-1 1/4"	28'-9 1/2"
100 FEET	14'-10 1/2"	18'-3 3/4"	13'-5 1/2"	22'-0"	12'-4 1/4"	25'-2 3/4"	11'-5 3/4"	28'-1 1/2"	10'-9"	30'-9"

INTERMEDIATE RADII CAN BE INTERPOLATED

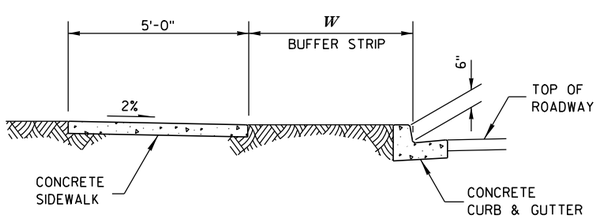

SECTION A-A

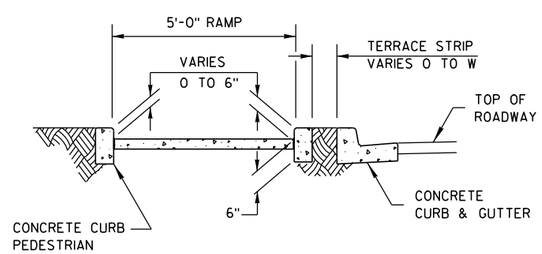

SECTION C-C

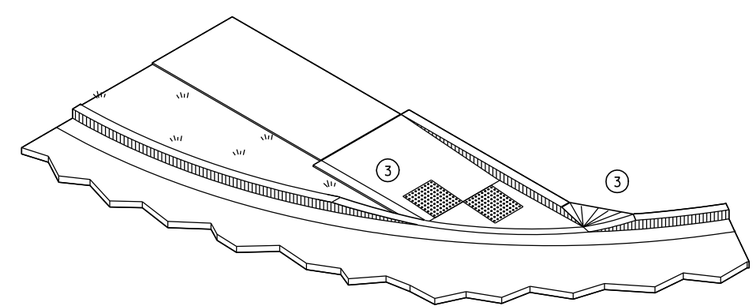

ISOMETRIC VIEW

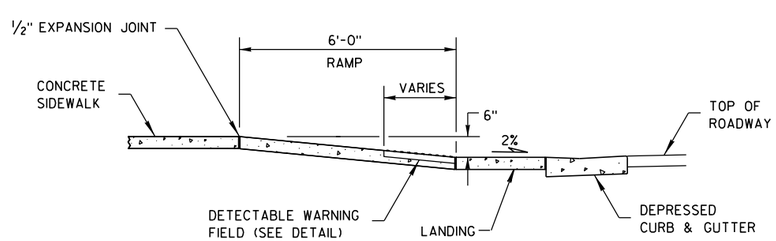

SECTION B-B

LEGEND

- 1/2" EXPANSION JOINT-SIDEWALK
- CONTRACTION JOINT FIELD LOCATED
- PAVEMENT MARKING CROSSWALK (WHITE)

CURB RAMPS TYPE 4B

STATE OF WISCONSIN
DEPARTMENT OF TRANSPORTATION

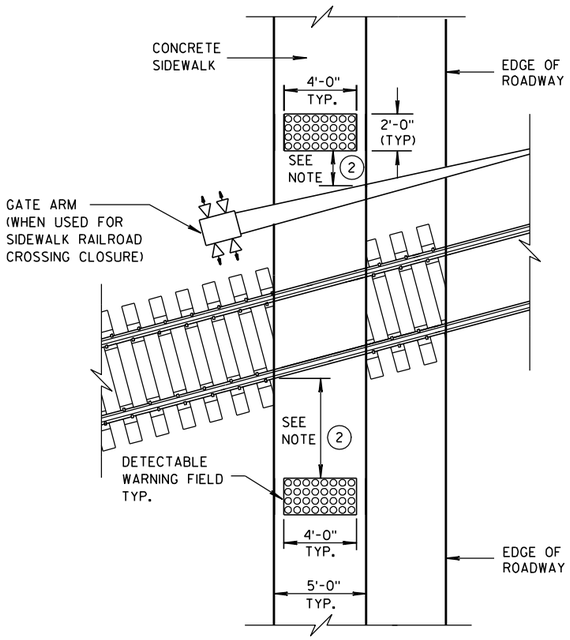

TYPE 8
DETECTABLE WARNINGS AT RAILROAD CROSSING

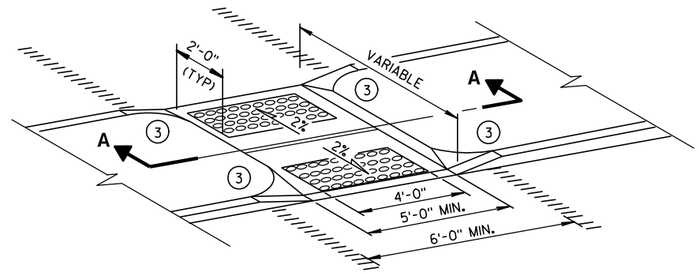

MEDIAN ISLAND
NON-ELEVATED CROSSING
TYPE 5

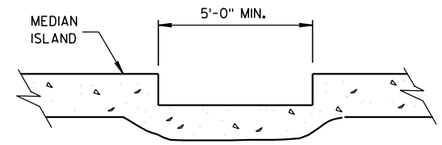

SECTION A-A

GENERAL NOTES

SIDEWALK CROSS SLOPE SHALL NOT EXCEED 2%.

1. SLOPE SIDEWALK TOWARD LANDING AS SHOWN WHERE THERE IS NO TERRACE OR WHERE THE TERRACE WIDTH IS LESS THAN 6 FEET WIDE.
2. THE EDGE OF THE DETECTABLE WARNING FIELD NEAREST TO A RAILROAD CROSSING SHALL BE 1.5 FEET ± 0.1' FROM THE FACE OF THE GATE ARM IF THE GATE ARM EXTENDS ACROSS THE SIDEWALK. WHERE THERE IS NO PEDESTRIAN GATE, THE EDGE OF THE DETECTABLE WARNING FIELD NEAREST TO THE RAILROAD CROSSING SHALL BE 15 FEET FROM THE NEAREST RAIL.
3. INSTALL TRANSITION NOSE. (INCIDENTAL TO OTHER PAY ITEMS.) DO NOT MARK TRANSITION NOSE.

LEGEND

- ½" EXPANSION JOINT-SIDEWALK
- CONTRACTION JOINT FIELD LOCATED
- PAVEMENT MARKING CROSSWALK (WHITE)

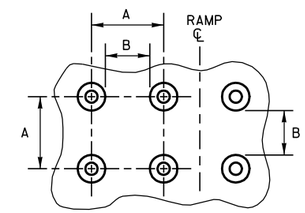

PLAN VIEW

	MIN.	MAX.
A	1.6"	2.4"
B	0.65"	1.5"
C	*	*
D	0.9"	1.4"

* THE C DIMENSION IS 50% TO 65% OF THE D DIMENSION.

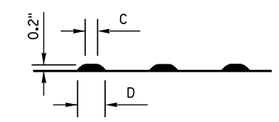

ELEVATION VIEW

TRUNCATED DOMES
DETECTABLE WARNING PATTERN DETAIL

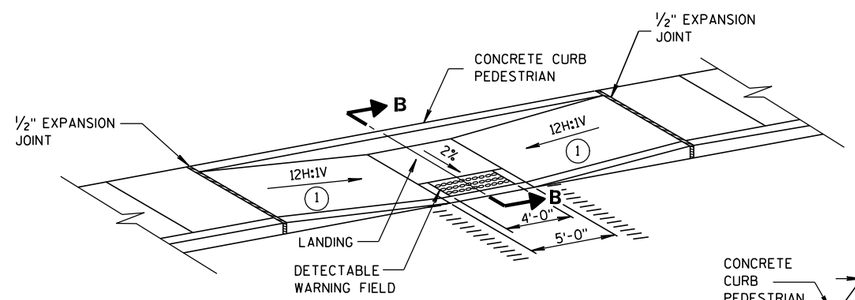

MID-BLOCK CROSSING
TYPE 7A

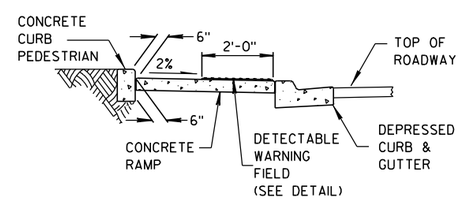

SECTION B-B

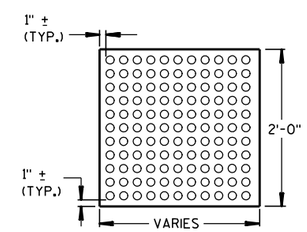

PLAN VIEW
DETECTABLE WARNING FIELD (TYPICAL)

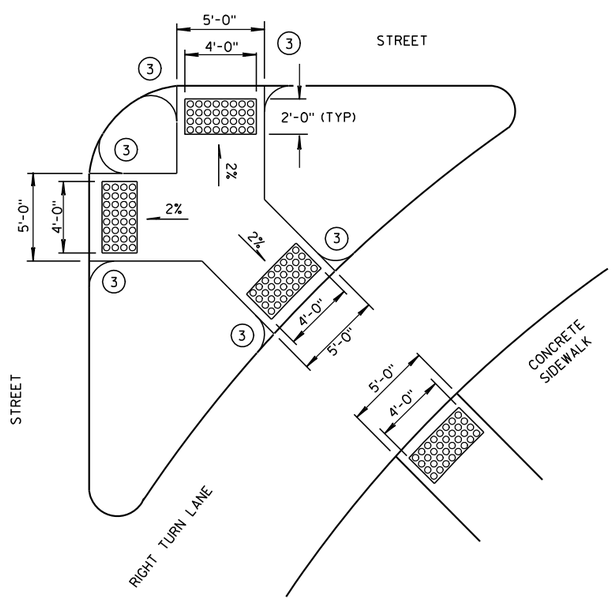

TYPE 6
DETECTABLE WARNING AT ISLANDS

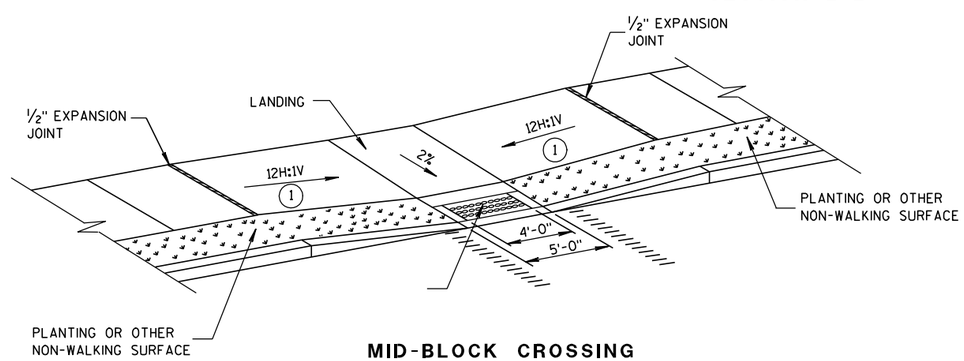

MID-BLOCK CROSSING
TYPE 7B

NOTE: THESE PARALLEL AND PARALLEL/PERPENDICULAR CURB RAMPS MAY BE USED AT INTERSECTIONS AND MID BLOCK LOCATIONS.

CURB RAMPS
TYPES 5, 6, 7A, 7B & 8

STATE OF WISCONSIN
DEPARTMENT OF TRANSPORTATION

APPROVED
2-9-10 DATE
/S/ Jerry H. Zogg ROADWAY STANDARDS ENGINEER
FHWA

6

S.D.D. 8 D 5-14e

GENERAL NOTES

DETAILS OF CONSTRUCTION, MATERIALS AND WORKMANSHIP NOT SHOWN ON THIS DRAWING SHALL CONFORM TO THE PERTINENT REQUIREMENTS OF THE STANDARD SPECIFICATIONS AND THE APPLICABLE SPECIAL PROVISIONS.

(1) UNPERFORATED PIPE UNDERDRAIN AND FITTINGS FURNISHED FOR OUTFALL PIPE SHALL MEET THE REQUIREMENTS OF ONE OF THE FOLLOWING SPECIFICATIONS:

POLYVINYL CHLORIDE (PVC) PLASTIC DRAIN, WASTE, AND VENT PIPE AND FITTINGS, ASTM D 2665, SCHEDULE 40 PVC.

TYPE PSM POLYVINYL CHLORIDE (PVC) SEWER PIPE AND FITTINGS, ASTM D 3034, SDR 23.5 PVC SEWER PIPE.

(2) MAXIMUM SPACING OF EDGEDRAIN OUTLETS SHALL BE 250 FEET UNLESS OTHERWISE SPECIFIED IN THE CONTRACT OR DIRECTED BY THE ENGINEER.

(3) EDGEDRAIN SHALL BE CONNECTED TO INLETS REGARDLESS OF FLOW DIRECTION FOR DRAINAGE AND MAINTENANCE ACCESS.

(4) EDGEDRAIN SHALL BE LAID PARALLEL TO THE GRADE OF ROADWAY.

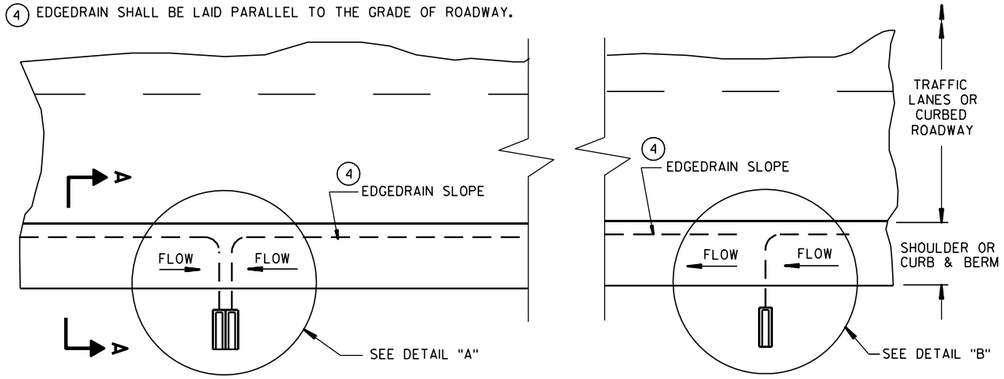

PLAN VIEW

ROADWAY WITH SHOULDERS OR CURBS

(EDGEDRAIN OUTLETS TO ROADSIDE)(2)

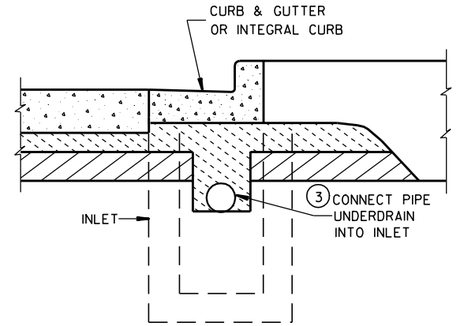

SECTION B-B

URBAN CROSS SECTION

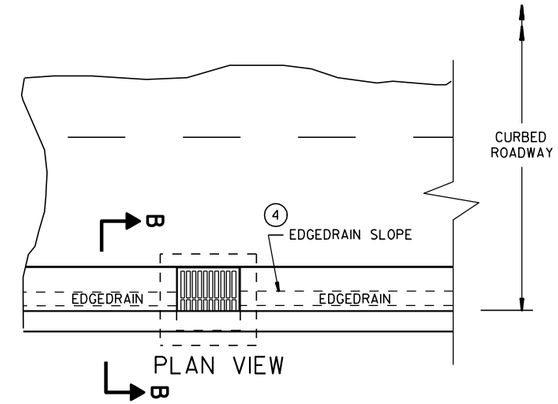

PLAN VIEW

ROADWAY WITH CURBS

(EDGEDRAIN CONNECTS INTO INLET STRUCTURE)

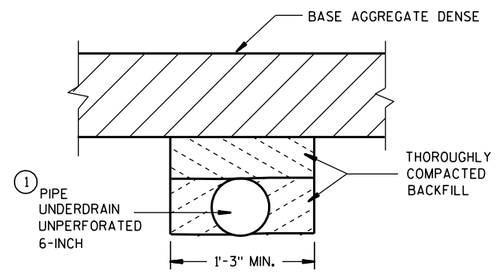

SECTION C-C

(TRENCH FOR OUTFALL PIPE)

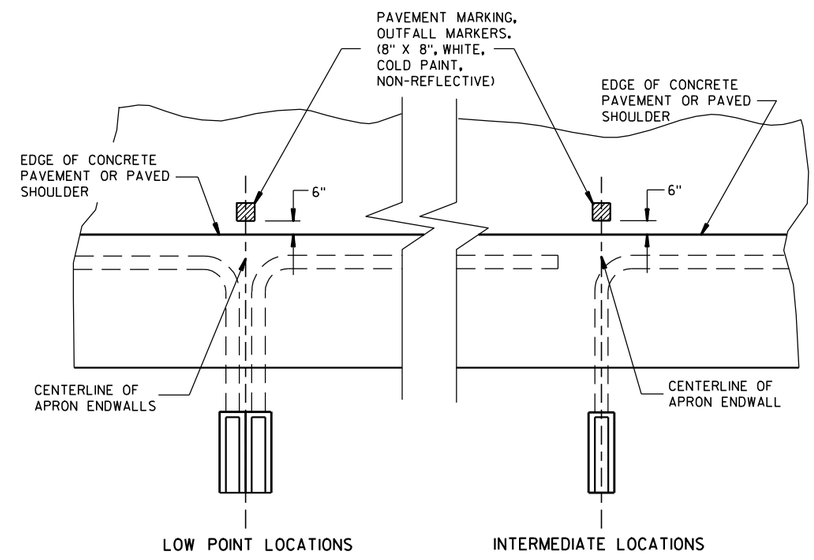

PLAN VIEW

PAVEMENT MARKING FOR OUTFALL MARKERS

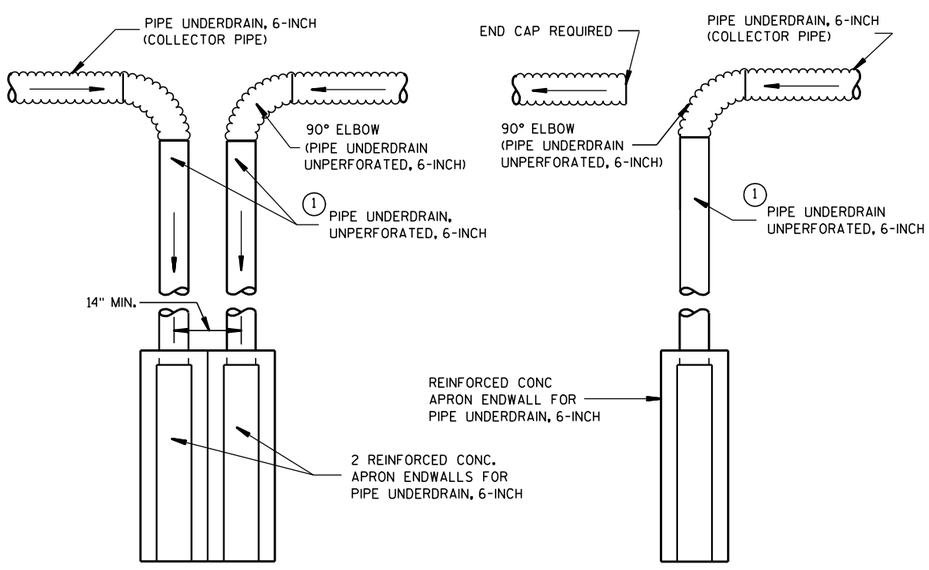

DETAIL "A"
TO BE USED AT LOW POINT LOCATIONS

DETAIL "B"
TO BE USED AT INTERMEDIATE LOCATIONS

TYPICAL DRAIN OUT DETAILS

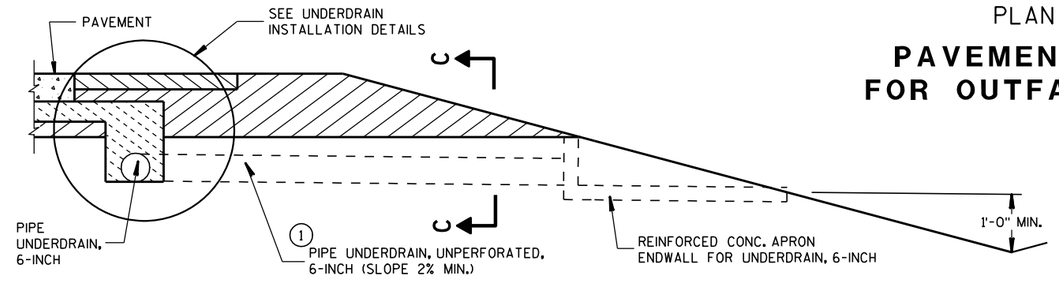

SECTION A-A

RURAL CROSS SECTION

EDGEDRAIN OUTLET AND OUTFALL MARKERS

STATE OF WISCONSIN
DEPARTMENT OF TRANSPORTATION

6

6

S.D.D. 8 D 15-4a

S.D.D. 8 D 15-4a

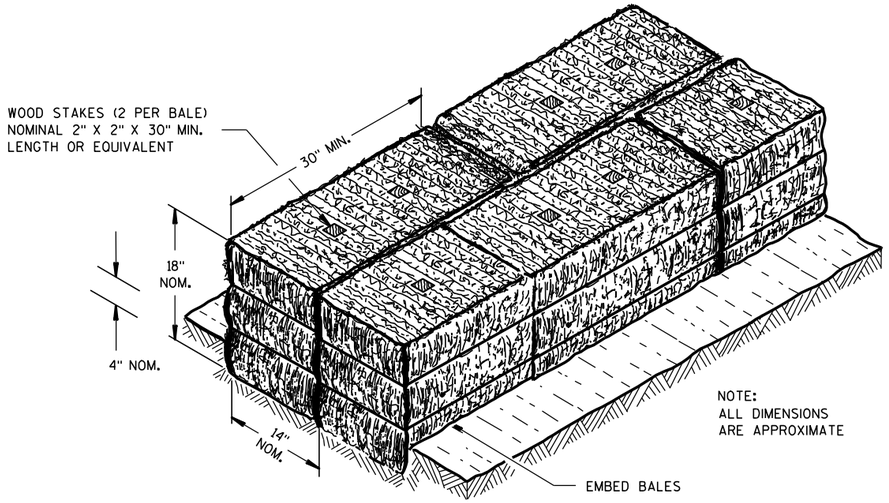

SECTION A-A

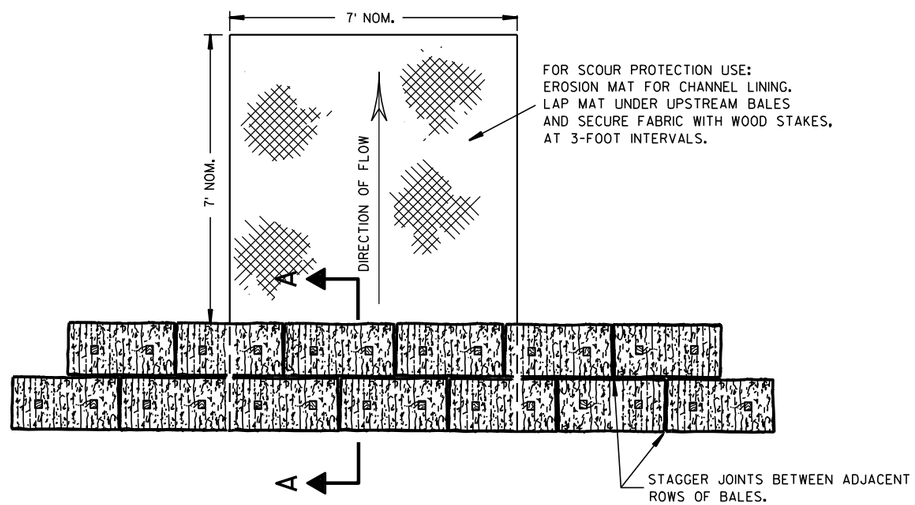

PLAN VIEW

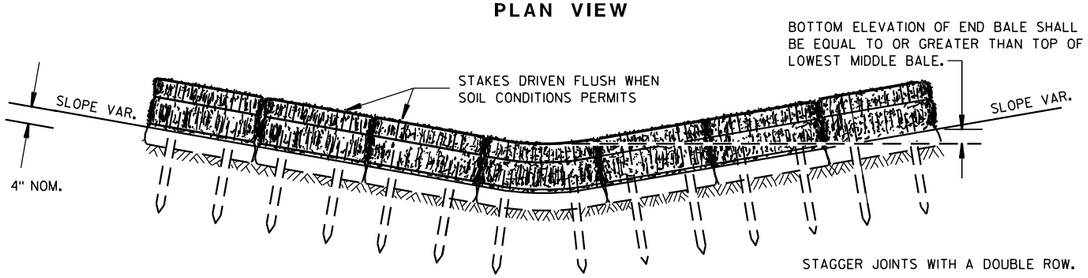

FRONT ELEVATION

TEMPORARY DITCH CHECK USING EROSION BALES ①

GENERAL NOTES

DETAILS OF CONSTRUCTION, MATERIALS AND WORKMANSHIP NOT SHOWN ON THIS DRAWING SHALL CONFORM TO THE PERTINENT REQUIREMENTS OF THE STANDARD SPECIFICATIONS AND THE APPLICABLE SPECIAL PROVISIONS.

① TEMPORARY DITCH CHECKS EITHER EROSION BALES OR MANUFACTURED SHALL BE PAID FOR UNDER THE BID ITEM OF TEMPORARY DITCH CHECK. THE DEPARTMENT WILL NOT PAY FOR TEMPORARY DITCH CHECKS CONSTRUCTED OF A SINGLE ROW OF EROSION BALES.

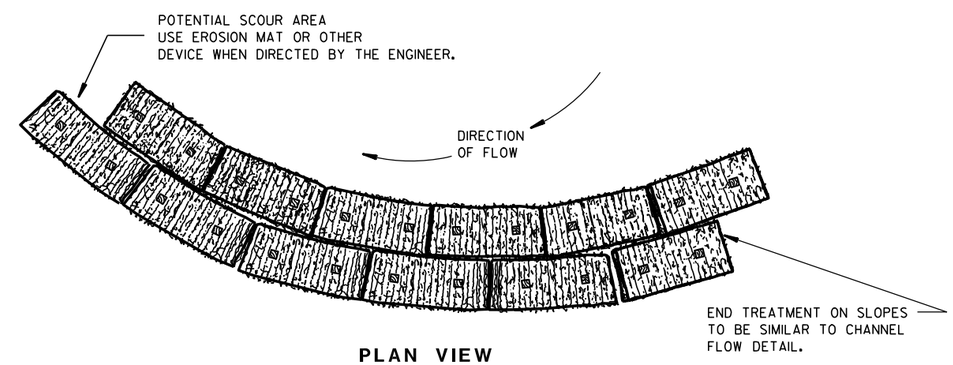

PLAN VIEW

WHEN ALTERING THE DIRECTION OF FLOW

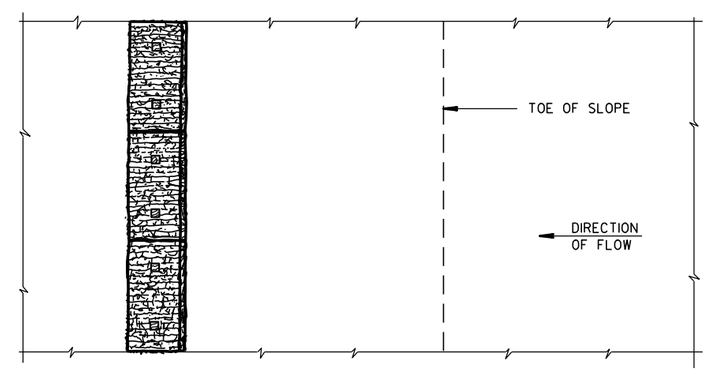

PLAN VIEW

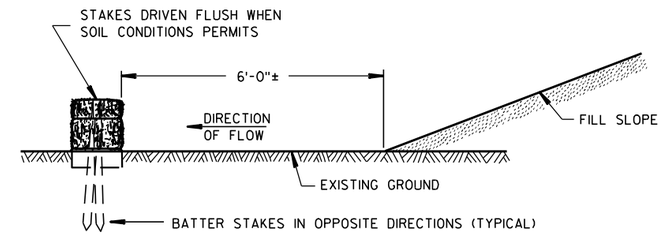

FRONT ELEVATION

WHEN EXISTING GROUND SLOPES AWAY FROM FILL SLOPE

EROSION BALES FOR SHEET FLOW

TYPICAL INSTALLATIONS OF EROSION BALES / TEMPORARY DITCH CHECKS

STATE OF WISCONSIN
DEPARTMENT OF TRANSPORTATION

APPROVED
6/04/02 — DATE
/S/ Beth Cann — CHIEF ROADWAY DEVELOPMENT ENGINEER
FHWA

6

6

S.D.D. 8 E 8-3

S.D.D. 8 E 8-3

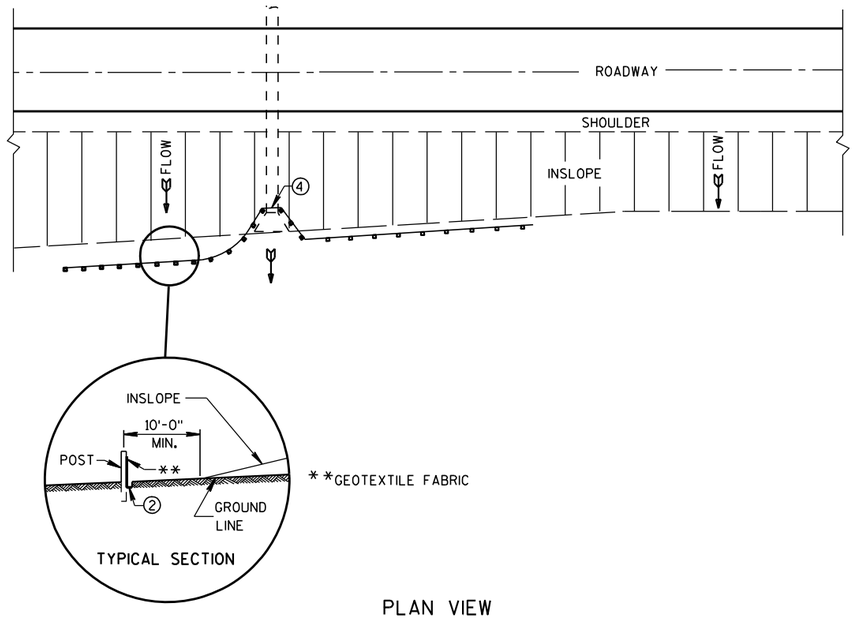

PLAN VIEW

TYPICAL APPLICATION OF SILT FENCE

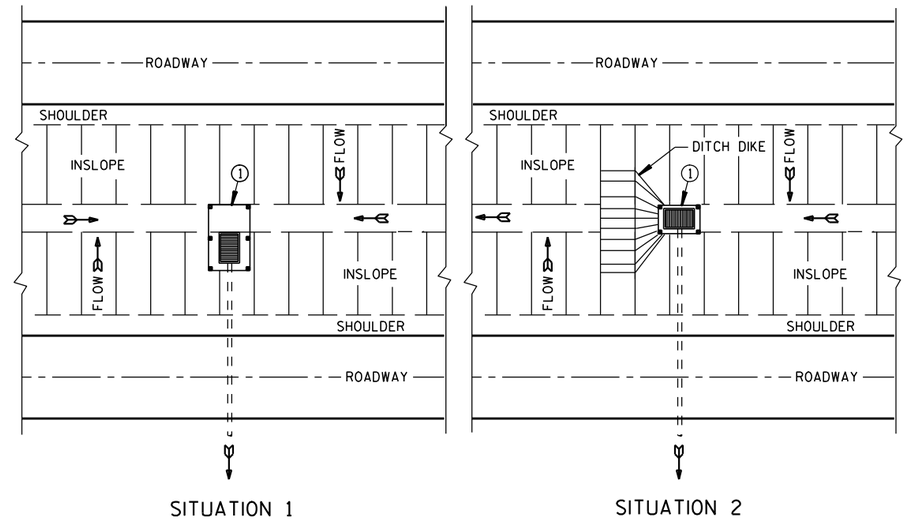

PLAN VIEW

SILT FENCE AT MEDIAN SURFACE DRAINS

GENERAL NOTES

DETAILS OF CONSTRUCTION NOT SHOWN ON THIS DRAWING SHALL CONFORM TO THE PERTINENT REQUIREMENTS OF THE STANDARD SPECIFICATIONS AND APPLICABLE SPECIAL PROVISIONS.

① HORIZONTAL BRACE REQUIRED WITH 2" X 4" WOODEN FRAME OR EQUIVALENT AT TOP OF POSTS.

② FOR MANUAL INSTALLATIONS THE TRENCH SHALL BE A MINIMUM OF 4" WIDE & 6" DEEP TO BURY AND ANCHOR THE GEOTEXTILE FABRIC. FOLD MATERIAL TO FIT TRENCH AND BACKFILL & COMPACT TRENCH WITH EXCAVATED SOIL.

③ WOOD POSTS SHALL BE A MINIMUM SIZE OF 1⅛" X 1⅛" OF OAK OR HICKORY.

④ SILT FENCE TO EXTEND ACROSS THE TOP OF THE PIPE.

⑤ CONSTRUCT SILT FENCE FROM A CONTINUOUS ROLL IF POSSIBLE BY CUTTING LENGTHS TO AVOID JOINTS. IF A JOINT IS NECESSARY USE ONE OF THE FOLLOWING TWO METHODS; A) OVERLAP THE END POSTS AND TWIST, OR ROTATE, AT LEAST 180 DEGREES. B) HOOK THE END OF EACH SILT FENCE LENGTH.

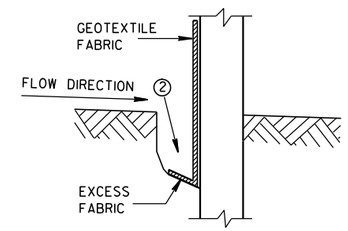

TRENCH DETAIL

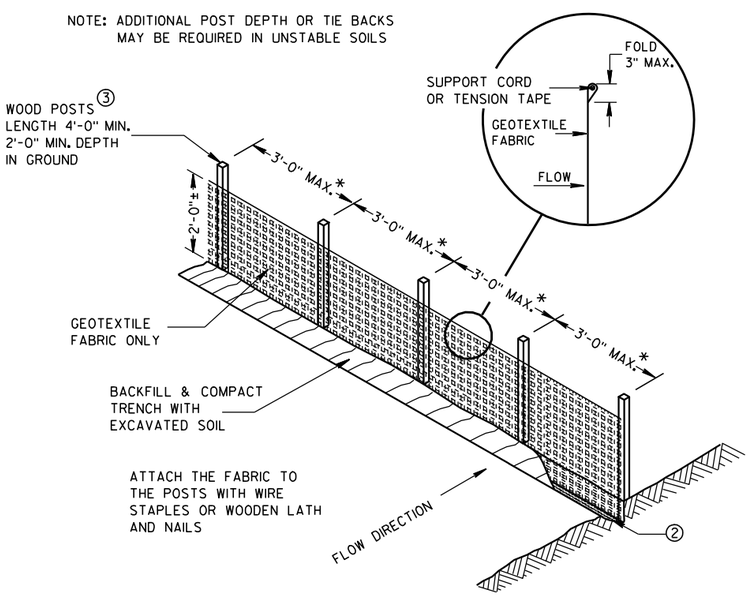

*NOTE: 8'-0" POST SPACING ALLOWED IF A WOVEN GEOTEXTILE FABRIC IS USED.

SILT FENCE

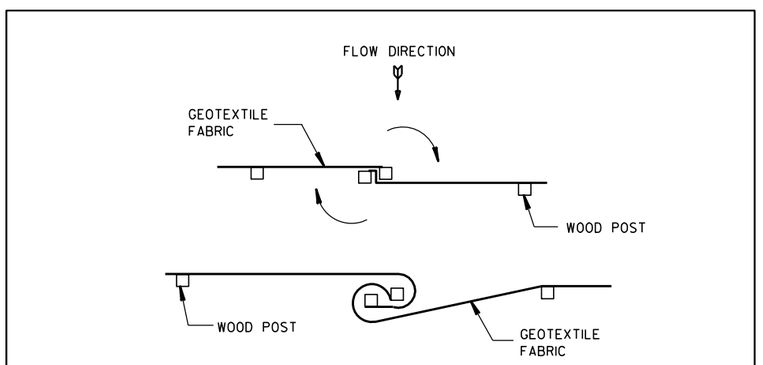

TWIST METHOD

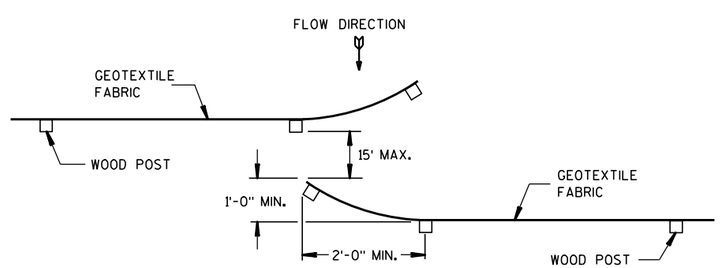

HOOK METHOD

JOINING TWO LENGTHS OF SILT FENCE ⑤

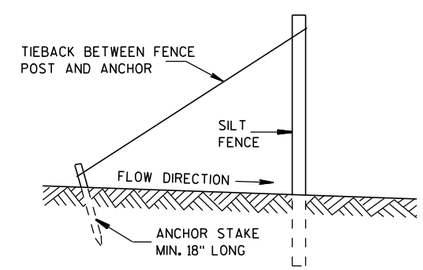

SILT FENCE TIE BACK

(WHEN REQUIRED BY THE ENGINEER)

SILT FENCE
STATE OF WISCONSIN DEPARTMENT OF TRANSPORTATION
APPROVED 4-29-05 DATE — /S/ Beth Cann-- CHIEF ROADWAY DEVELOP ENGINEER FHWA

6

6

S.D.D. 8 E 9-6

S.D.D. 8 E 9-6

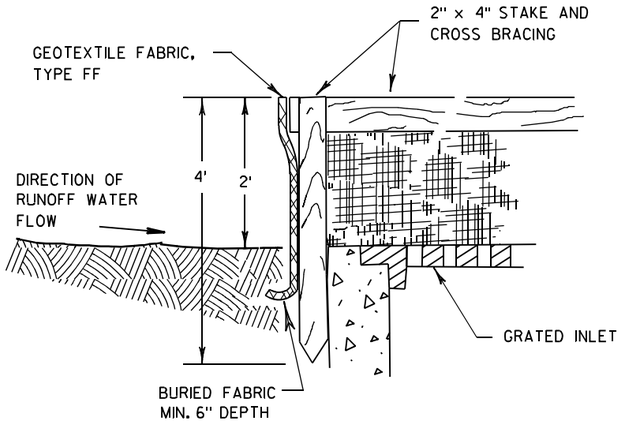

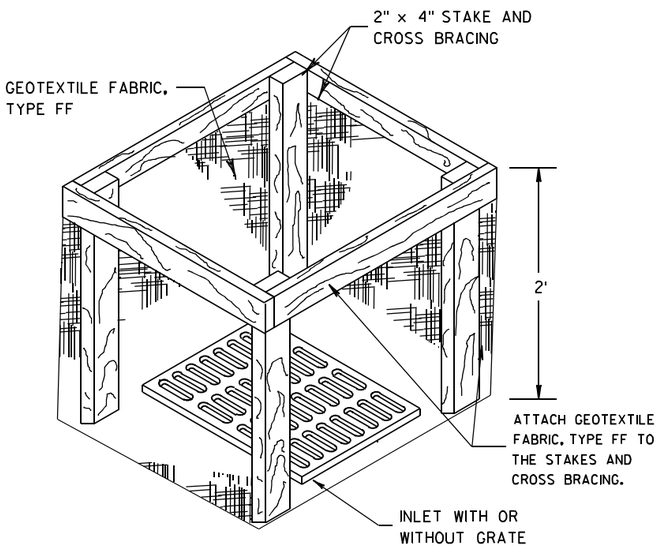

INLET PROTECTION, TYPE A

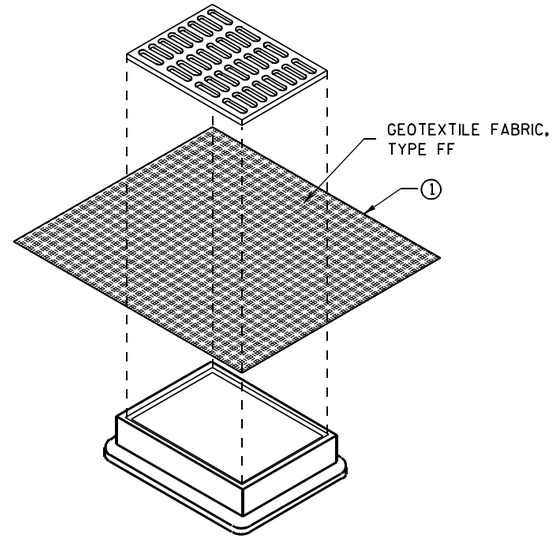

INLET PROTECTION, TYPE B (WITHOUT CURB BOX)

(CAN BE INSTALLED IN ANY INLET WITHOUT A CURB BOX)

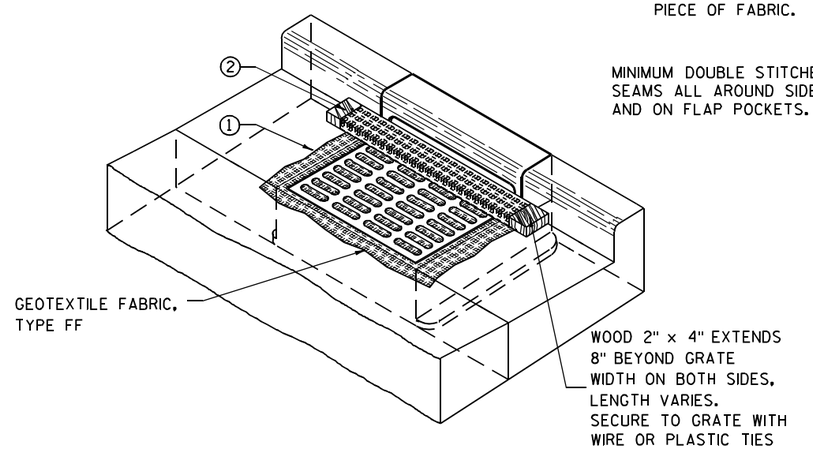

INLET PROTECTION, TYPE C (WITH CURB BOX)

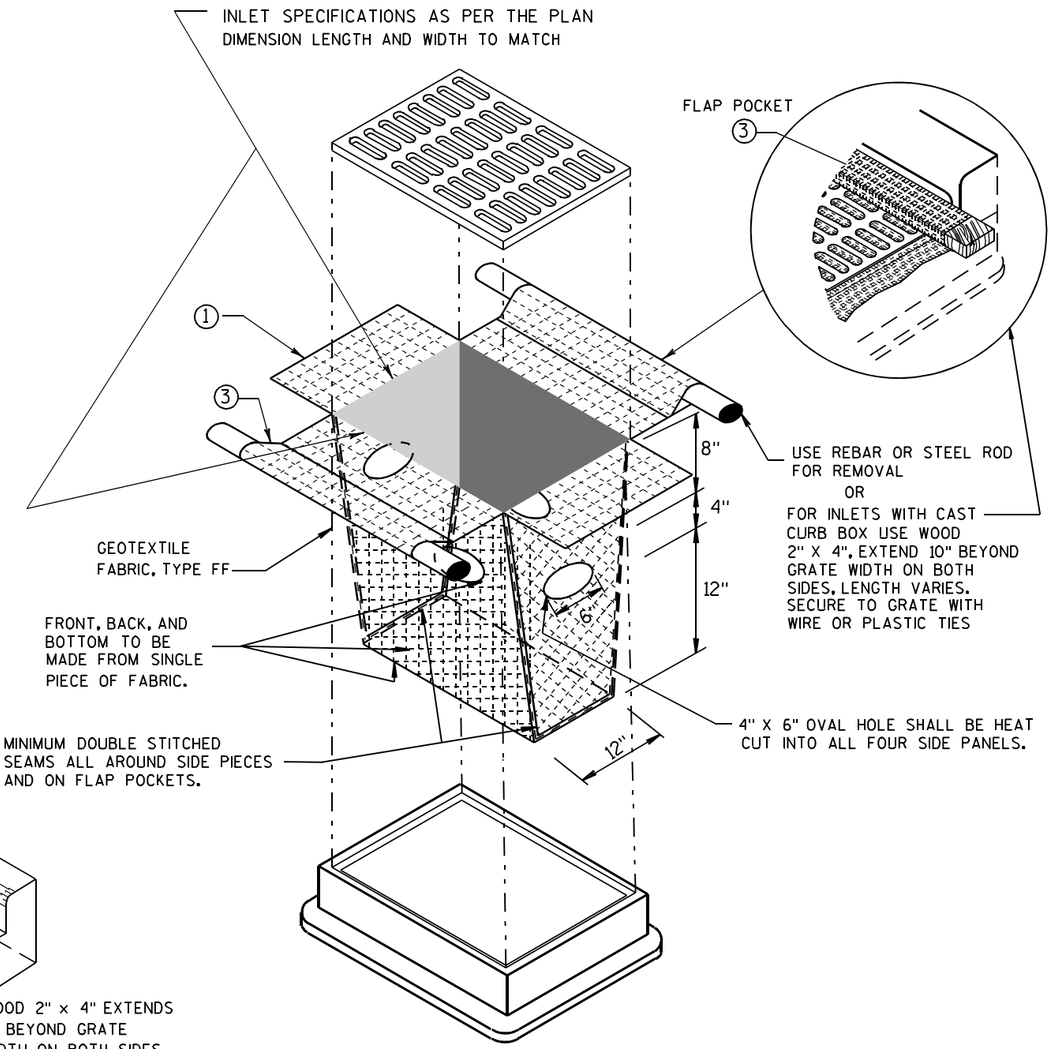

INLET PROTECTION, TYPE D

(CAN BE INSTALLED IN ANY INLET TYPE WITH OR WITHOUT A CURB BOX AS PER NOTE ②)

GENERAL NOTES

INLET PROTECTION DEVICES SHALL BE MAINTAINED OR REPLACED AT THE DIRECTION OF THE ENGINEER.

MANUFACTURED ALTERNATIVES APPROVED AND LISTED ON THE DEPARTMENT'S EROSION CONTROL PRODUCT ACCEPTABILITY LIST MAY BE SUBSTITUTED.

WHEN REMOVING OR MAINTAINING INLET PROTECTION, CARE SHALL BE TAKEN SO THAT THE SEDIMENT TRAPPED ON THE GEOTEXTILE FABRIC DOES NOT FALL INTO THE INLET. ANY MATERIAL FALLING INTO THE INLET SHALL BE REMOVED IMMEDIATELY.

① FINISHED SIZE, INCLUDING FLAP POCKETS WHERE REQUIRED, SHALL EXTEND A MINIMUM OF 10" AROUND THE PERIMETER TO FACILITATE MAINTENANCE OR REMOVAL.

② FOR INLET PROTECTION, TYPE C (WITH CURB BOX), AN ADDITIONAL 18" OF FABRIC IS WRAPPED AROUND THE WOOD AND SECURED WITH STAPLES. THE WOOD SHALL NOT BLOCK THE ENTIRE HEIGHT OF THE CURB BOX OPENING.

③ FLAP POCKETS SHALL BE LARGE ENOUGH TO ACCEPT WOOD 2X4.

INSTALLATION NOTES

TYPE B & C

TRIM EXCESS FABRIC IN THE FLOW LINE TO WITHIN 3" OF THE GRATE.

THE CONTRACTOR SHALL DEMONSTRATE A METHOD OF MAINTENANCE, USING A SEWN FLAP, HAND HOLDS OR OTHER METHOD TO PREVENT ACCUMULATED SEDIMENT FROM ENTERING THE INLET.

TYPE D

DO NOT INSTALL INLET PROTECTION TYPE D IN INLETS SHALLOWER THAN 30", MEASURED FROM THE BOTTOM OF THE INLET TO THE TOP OF THE GRATE.

TRIM EXCESS FABRIC IN THE FLOW LINE TO WITHIN 3" OF THE GRATE.

THE INSTALLED BAG SHALL HAVE A MINIMUM SIDE CLEARANCE, BETWEEN THE INLET WALLS AND THE BAG, MEASURED AT THE BOTTOM OF THE OVERFLOW HOLES, OF 3". WHERE NECESSARY THE CONTRACTOR SHALL CINCH THE BAG, USING PLASTIC ZIP TIES, TO ACHIEVE THE 3" CLEARANCE. THE TIES SHALL BE PLACED AT A MAXIMUM OF 4" FROM THE BOTTOM OF THE BAG.

INLET PROTECTION
TYPE A, B, C, AND D

STATE OF WISCONSIN
DEPARTMENT OF TRANSPORTATION

APPROVED
10/16/02 — DATE
/S/ Beth Cannestra — CHIEF ROADWAY DEVELOPMENT ENGINEER
FHWA

6

S.D.D. 8 E 10-2

METAL APRON ENDWALLS

PIPE DIA. (IN.)	MIN. THICK. (Inches) STEEL	MIN. THICK. (Inches) ALUM.	DIMENSIONS (Inches) A (±1")	B (MAX.)	H (±1")	L (±1 1/2")	L1 ①	L2 ①	W (±2")	APPROX. SLOPE	BODY
12	.064	.060	6	6	6	21	12	17 1/2	24	2 1/2 to 1	1 Pc.
15	.064	.060	7	8	6	26	14	21 3/4	30	2 1/2 to 1	1 Pc.
18	.064	.060	8	10	6	31	15	28 1/4	36	2 1/2 to 1	1 Pc.
21	.064	.060	9	12	6	36	18	29 5/8	42	2 1/2 to 1	1 Pc.
24	.064	.075	10	13	6	41	18	37 1/4	48	2 1/2 to 1	1 Pc.
30	.079	.075	12	16	8	51	18	52 1/4	60	2 1/2 to 1	1 Pc.
36	.079	.105	14	19	9	60	24	59 3/4	72	2 1/2 to 1	2 Pc.
42	.109	.105	16	22	11	69	24	75 5/8	84	2 1/2 to 1	2 Pc.
48	.109	.105	18	27	12	78	24	81	90	2 1/4 to 1	3 Pc.
54	.109	.105	18	30	12	84	30	85 1/2	102	2 1/4 to 1	3 Pc.
60	.109×	.105×	18	33	12	87	—	—	114	2 to 1	3 Pc.
66	.109×	.105×	18	36	12	87	—	—	120	2 to 1	3 Pc.
72	.109×	.105×	18	39	12	87	—	—	126	2 to 1	3 Pc.
78	.109×	.105×	18	42	12	87	—	—	132	1 1/2 to 1	3 Pc.
84	.109×	.105×	18	45	12	87	—	—	138	1 1/2 to 1	3 Pc.
90	.109×	.105×	18	37	12	87	—	—	144	1 1/2 to 1	3 Pc.
96	.109×	.105×	18	35	12	87	—	—	150	1 1/2 to 1	3 Pc.

× EXCEPT CENTER PANEL
SEE GENERAL NOTES

REINFORCED CONCRETE APRON ENDWALLS

PIPE DIA. (IN.)	DIMENSIONS (Inches) T	A	B	C	D	E	G	APPROX. SLOPE
12	2	4	24	48 7/8	72 7/8	24	2	3 to 1
15	2 1/4	6	27	46	73	30	2 1/4	3 to 1
18	2 1/2	9	27	46	73	36	2 1/2	3 to 1
21	2 3/4	9	36	37 1/2	73 1/2	42	2 3/4	3 to 1
24	3	9 1/2	43 1/2	30	73 1/2	48	3	3 to 1
27	3 1/4	10 1/2	49 1/2	24	73 1/2	54	3 1/4	3 to 1
30	3 1/2	12	54	19 3/4	73 1/2	60	3 1/2	3 to 1
36	4	15	63	34 3/4	97 3/4	72	4	3 to 1
42	4 1/2	21	63	35	98	78	4 1/2	3 to 1
48	5	24	72	26	98	84	5	3 to 1
54	5 1/2	27	65	*33 1/4-**35	*98 1/4-**100	90	5 1/2	2 2/5 to 1
60	6	*30-**35	60	39	99	96	5	2 to 1
66	6 1/2	*24-**30	*72-**78	*21-**27	99	102	5 1/2	2 to 1
72	7	*24-**36	78	21	99	108	6	2 to 1
78	7 1/2	*24-**36	78	21	99	114	6 1/2	2 to 1
84	8	36	90 1/2	21	111 1/2	120	6 1/2	1 1/2 to 1
90	8 1/2	41	87 1/2	24	111 1/2	132	6 1/2	1 1/2 to 1

*MINIMUM
**MAXIMUM

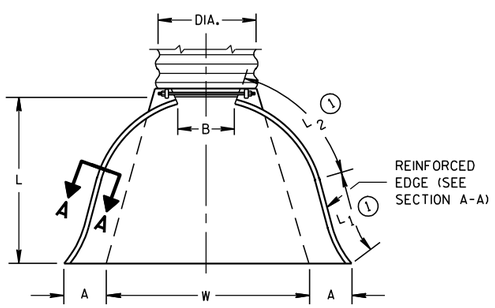

PLAN VIEW

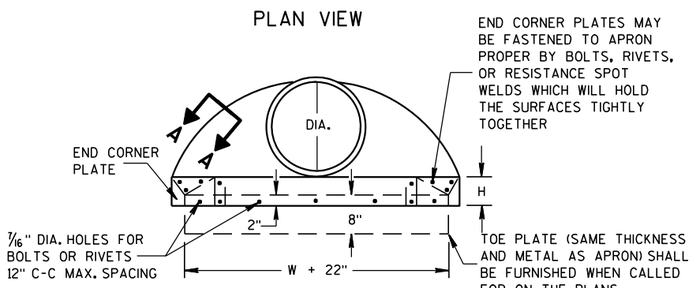

END VIEW

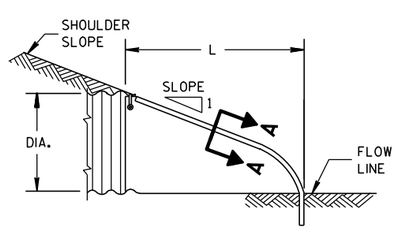

SIDE ELEVATION

METAL ENDWALLS

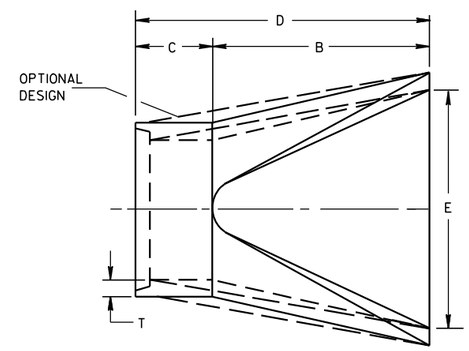

PLAN

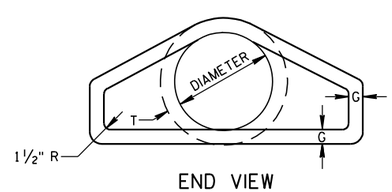

END VIEW

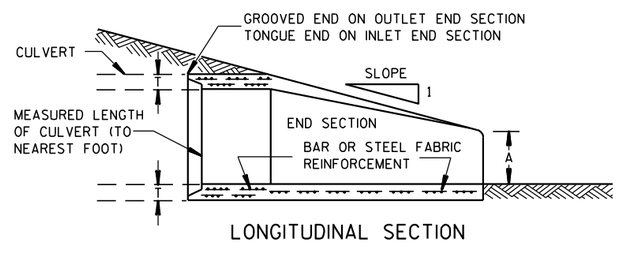

LONGITUDINAL SECTION

CONCRETE ENDWALLS

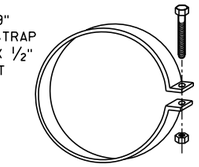

ALTERNATE FOR TYPE 1 CONNECTION

END SECTION CONNECTOR STRAP

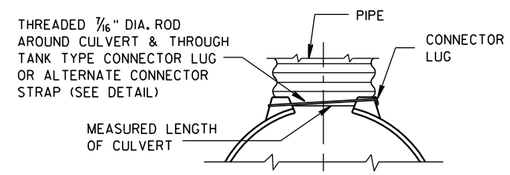

TYPE 1
FOR 12" THRU 24" CORR. PIPE

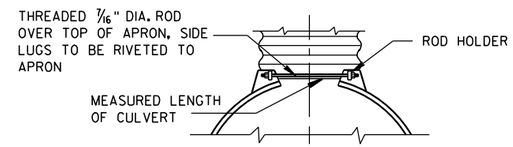

TYPE 2
FOR 30" THRU 96" CORR. PIPE

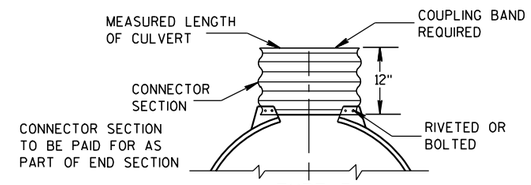

TYPE 3
FOR 42" THRU 96" CORR. PIPE

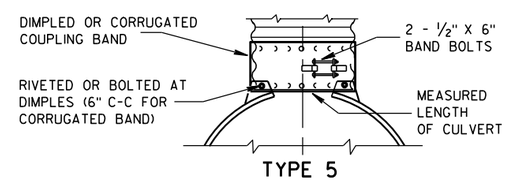

TYPE 5
ALTERNATE FOR:
ALL SIZES CORRUGATED CIRCULAR PIPE

NOTE: DIMPLED BAND FITS OVER OUTSIDE OF ENDWALL, AND CORRUGATED BAND FITS INSIDE ENDWALL. DIMPLED BAND MAY BE USED WITH HELICALLY CORRUGATED PIPE.

FOR CIRCUMFERENTIALLY CORRUGATED PIPE USE ENDWALL CONNECTION DETAILS 1, 2, 3 OR 5 AS APPLICABLE.

FOR HELICALLY CORRUGATED PIPE USE ENDWALL CONNECTION DETAILS 1, 2 OR 5.

FOR HELICALLY CORRUGATED PIPES WITH TWO CIRCUMFERENTIAL CORRUGATIONS AT EACH END USE ENDWALL CONNECTION DETAILS 1, 2 OR 3.

CONNECTION DETAILS

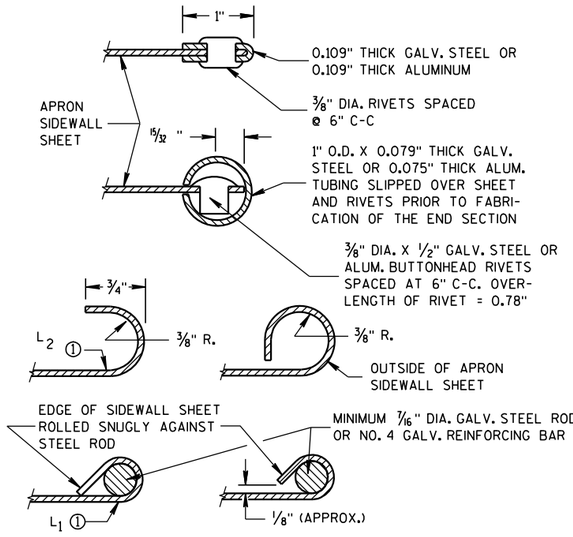

SECTION A-A

GENERAL NOTES

DETAILS OF CONSTRUCTION, MATERIALS AND WORKMANSHIP NOT SHOWN ON THIS DRAWING SHALL CONFORM TO THE PERTINENT REQUIREMENTS OF THE STANDARD SPECIFICATIONS AND THE APPLICABLE SPECIAL PROVISIONS.

CONCRETE CULVERT ENDWALLS MAY NOT BE USED WITH GALVANIZED STEEL OR ALUMINUM CULVERT PIPE OR VISE VERSA. GALVANIZED STEEL OR ALUMINUM ENDWALLS SHALL NORMALLY BE INSTALLED ON CULVERT PIPE OF THE SAME METAL.

ALL THREE PIECE STEEL APRON ENDWALLS FOR 60" DIAMETER PIPE AND LARGER SHALL HAVE 0.109" SIDES AND 0.138" CENTER PANELS. ALL THREE PIECE ALUMINUM APRON ENDWALLS FOR 60" DIAMETER PIPE AND LARGER SHALL HAVE 0.105" SIDES AND 0.134" CENTER PANELS. THE WIDTH OF CENTER PANELS SHALL BE GREATER THAN 20 PERCENT OF THE PIPE PERIMETER.

LAP SEAMS SHALL BE TIGHTLY JOINED BY GALVANIZED RIVETS OR BOLTS FOR STEEL UNITS AND ALUMINUM RIVETS AND BOLTS FOR ALUMINUM UNITS. FOR THE 60" THROUGH 96" DIAMETER APRON ENDWALL SIZES, THE REINFORCED EDGES AND CENTER PANEL SEAMS SHALL BE FURTHER REINFORCED WITH GALVANIZED STEEL OR ALUMINUM STIFFENER ANGLES. THE ANGLES SHALL BE ATTACHED BY GALVANIZED NUTS AND BOLTS FOR STEEL UNITS AND ALUMINUM NUTS AND BOLTS FOR ALUMINUM UNITS.

WHERE TWO OR MORE PIPES WITH APRON ENDWALLS ARE LAID ADJACENT TO EACH OTHER, THEY SHALL BE SEPARATED BY A DISTANCE SUFFICIENT TO PROVIDE A MINIMUM CLEARANCE OF 6 INCHES BETWEEN APRON ENDWALLS.

① FOR PIPE SIZES UP TO 60" DIAMETER, A 180° ROLLED EDGE MAY BE USED INSTEAD OF STEEL ROD REINFORCEMENT. SEE SECTION A-A.

APRON ENDWALLS FOR CULVERT PIPE

STATE OF WISCONSIN
DEPARTMENT OF TRANSPORTATION

APPROVED
11/30/94 — DATE
/S/ Rory L. Rhinesmith — CHIEF ROADWAY DEVELOPMENT ENGINEER
FHWA

6
S.D.D. 8 F 1-11

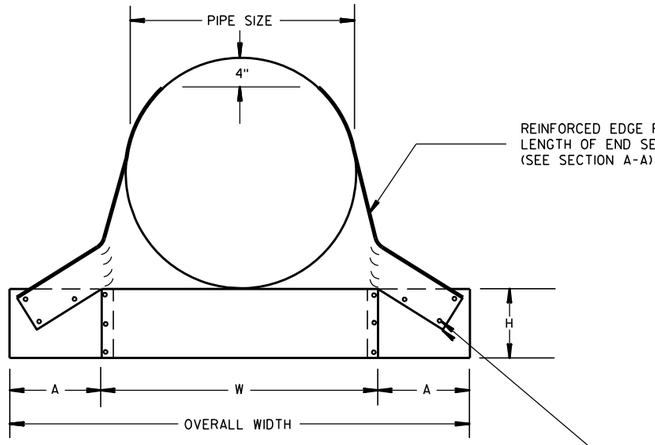

FRONT VIEW

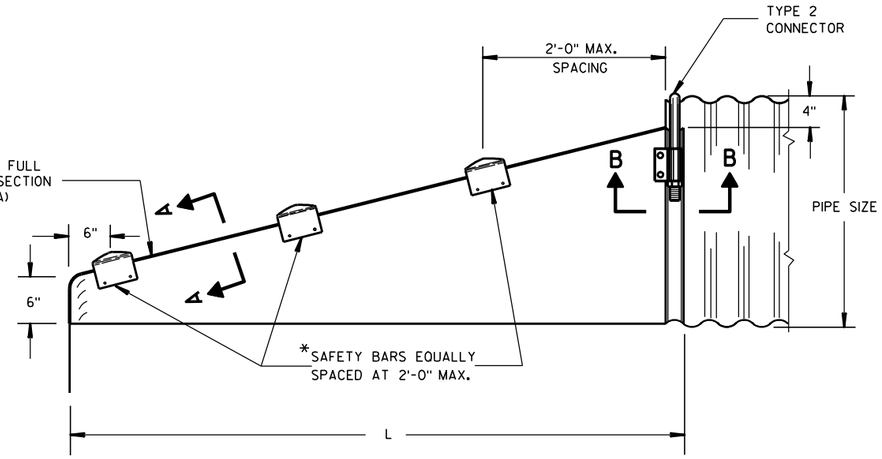

SIDE VIEW

*NOTE:
THREE SAFETY BARS ARE SHOWN. ACTUAL NUMBER OF BARS REQUIRED AT A 2'-0" C-C MAX. SPACING WILL VARY DEPENDING ON THE LENGTH OF THE END SECTION.

GENERAL NOTES

DETAILS OF CONSTRUCTION, MATERIALS AND WORKMANSHIP NOT SHOWN ON THIS DRAWING SHALL CONFORM TO THE PERTINENT REQUIREMENTS OF THE STANDARD SPECIFICATIONS AND THE APPLICABLE SPECIAL PROVISIONS.

SLOPED END SECTIONS SHALL CONFORM TO THE REQUIREMENTS OF THE STANDARD SPECIFICATIONS, SECTION 521 FOR STEEL APRON ENDWALLS.

SAFETY BARS SHALL BE FABRICATED FROM GALVANIZED STEEL PIPE MEETING THE REQUIREMENTS OF ASTM A-53, GRADE B, SCHEDULE 40 OR APPROVED EQUAL.

STEEL APRON ENDWALLS FOR CULVERT PIPE

PIPE DIA. (IN.)	MIN. THICK. (Inches)	DIMENSIONS (Inches)				L DIMENSIONS	
		A	H	W	OVERALL WIDTH	SLOPE	LENGTH INCHES
15	.064	8	6	21	37	6:1	30
18	.064	8	6	24	40	6:1	48
21	.064	8	6	27	43	6:1	66
24	.064	8	6	30	46	6:1	84
30	.109	12	9	36	60	6:1	120
36	.109	12	9	42	66	6:1	156
42	.109	16	12	48	80	5.63 TO 1	180
48	.109	16	12	54	86	4.74 TO 1	180
54	.109	16	12	60	92	——	——

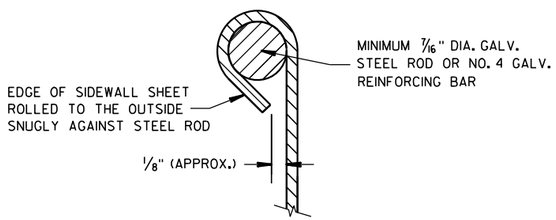

SECTION A-A

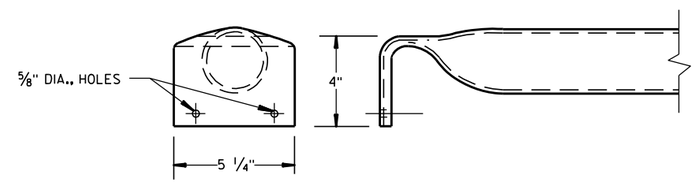

DETAIL OF SAFETY BAR

STEEL APRON ENDWALLS FOR PIPE ARCH

EQUIV. DIA. (Inches)	(Inches)		MIN. THICK. (Inches)	DIMENSIONS (Inches)				L DIMENSIONS	
	SPAN	RISE		A	H	W	OVERALL WIDTH	SLOPE	LENGTH INCHES
15	17	13	.064	8	6	23	39	6:1	18
18	21	15	.064	8	6	27	43	6:1	30
21	24	18	.064	8	6	30	46	6:1	48
24	28	20	.064	8	6	34	50	6:1	60
30	35	24	.079	12	9	41	65	6:1	84
36	42	29	.109	12	9	48	72	6:1	114
42	49	33	.109	16	12	55	87	6:1	138
48	57	38	.109	16	12	63	95	6:1	168
54	64	43	.109	16	12	70	102	5.45 TO 1	180

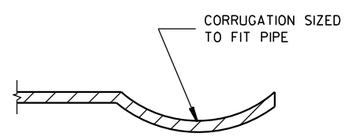

SECTION B-B

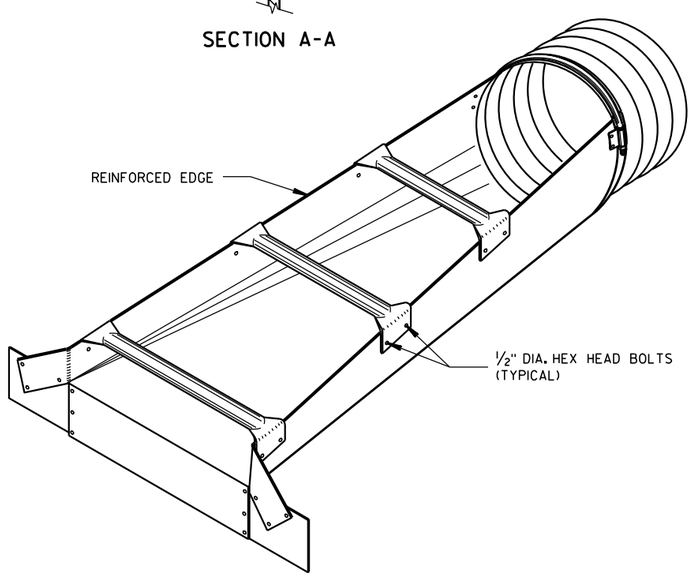

ISOMETRIC VIEW

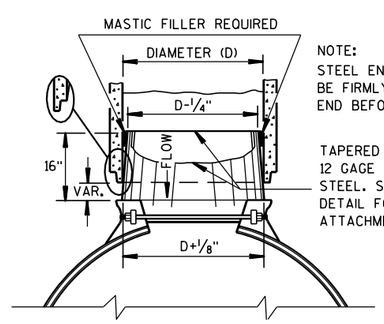

NOTE:
STEEL END SECTION SHALL BE FIRMLY WEDGED INTO PIPE END BEFORE BACKFILLING

TAPERED SLEEVE TO BE 12 GAGE SMOOTH GALVANIZED STEEL. SEE SECTION B-B DETAIL FOR END SECTION ATTACHMENT.

STEEL ADAPTER SLEEVE FOR CONCRETE PIPE

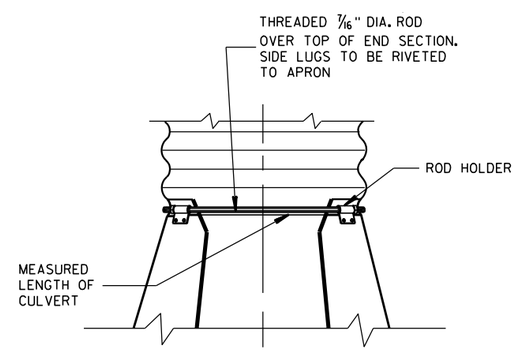

TYPE 2
CONNECTION DETAIL

STEEL APRON ENDWALLS FOR CULVERT PIPE AND PIPE ARCH SIDE DRAINS SLOPED SECTION

STATE OF WISCONSIN
DEPARTMENT OF TRANSPORTATION

APPROVED
4/17/95 — DATE
/S/ Rory L. Rhinesmith — CHIEF ROADWAY DEVELOP ENGINEER
FHWA

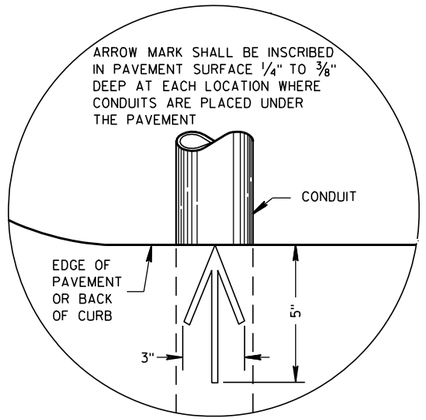

PLAN VIEW

ARROW MARK

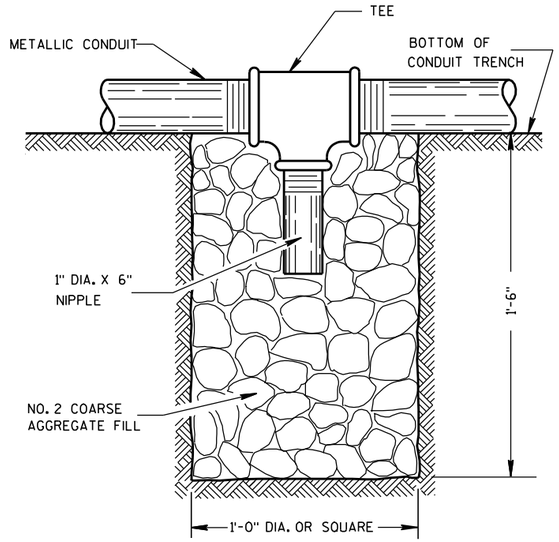

NOTE: INSTALL AT LOCATIONS WHERE METALLIC CONDUITS CANNOT BE PITCHED TO DRAIN INTO A PULL BOX.

DRAIN SUMP FOR METALLIC CONDUIT

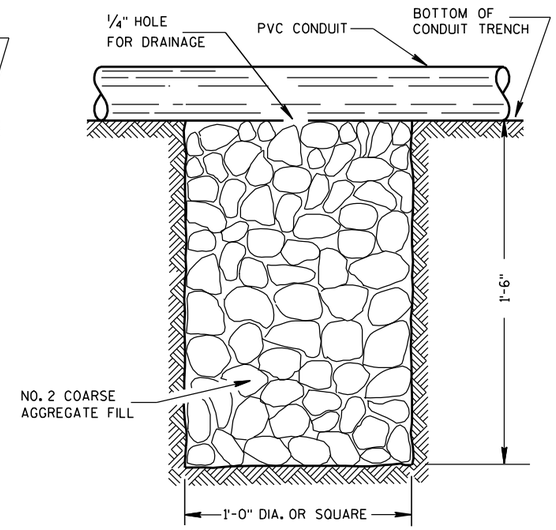

NOTE: INSTALL AT LOCATIONS WHERE PVC CONDUITS CANNOT BE PITCHED TO DRAIN INTO A PULL BOX.

DRAIN SUMP FOR PVC CONDUIT

GENERAL NOTES

DETAILS OF CONSTRUCTION, MATERIALS AND WORKMANSHIP NOT SHOWN ON THIS DRAWING SHALL CONFORM TO THE PERTINENT REQUIREMENTS OF THE CONTRACT.

METALLIC (STANDARD SPECIFICATION 652.2.2) OR NONMETALLIC (STANDARD SPECIFICATION 652.2.3) CONDUIT SHALL BE FURNISHED AND PLACED AS SHOWN.

DEPTH OF CONDUIT INSTALLED BELOW THE TRAVELED WAY SHALL BE 24 INCHES MINIMUM AND 36 INCHES MAXIMUM.

DEPTH OF CONDUIT INSTALLED THAT IS NOT BELOW THE TRAVELED WAY SHALL BE 18 INCHES MINIMUM AND 36 INCHES MAXIMUM.

ANY EXCEPTION TO THE MAXIMUM DEPTH SHALL BE ONLY WITH THE WRITTEN APPROVAL OF THE ENGINEER.

THE TRENCH SHALL NOT BE BACKFILLED PRIOR TO INSPECTION OF THE CONDUIT.

ALL METALLIC CONDUIT RACEWAY ENDS SHALL BE REAMED AND THREADED.

ALL METALLIC CONDUIT IN WHICH WIRE OR CABLE IS TO BE INSTALLED SHALL BE BUSHED WITH APPROVED THREADED BUSHINGS BEFORE INSTALLATION OF THE WIRE OR CABLE.

ALL METALLIC CONDUITS IN WHICH WIRE OR CABLE IS NOT TO BE INSTALLED SHALL BE CAPPED WITH THREADED PROTECTIVE CAPS, AS APPROVED BY THE ENGINEER.

ALL NONMETALLIC CONDUIT SHALL BE CAPPED OR PLUGGED IMMEDIATELY AFTER INSTALLATION AND SHALL REMAIN CAPPED OR PLUGGED UNTIL WIRE/CABLES ARE INSTALLED.

NONMETALLIC CONDUITS IN WHICH WIRE OR CABLE IS NOT BEING INSTALLED SHALL REMAIN CAPPED OR PLUGGED.

BENDING OF PVC ELECTRICAL CONDUIT SHALL BE ACCOMPLISHED BY USING A BLANKET OR EMERSION TYPE TANK DESIGNED FOR THE PURPOSE OF BENDING PVC ELECTRICAL CONDUIT.

ALL CUT ENDS SHALL BE TRIMMED INSIDE AND OUTSIDE TO REMOVE ALL ROUGH EDGES ON NONMETALLIC CONDUIT. (SEE NEC 347.5)

WHEN REQUIRED TO CONNECT NONMETALLIC CONDUIT TO METALLIC CONDUIT, ONLY U.L. LISTED ADAPTER FITTINGS SHALL BE USED.

PRIOR TO CONDUIT ACCEPTANCE, CONDUIT CAPS OR PLUGS SHALL BE REMOVED, AND THE CAPS, PLUGS AND CONDUIT ENDS SHALL BE THOROUGHLY CLEANED AND THEN THE CAPS OR PLUGS REINSTALLED TO ENSURE THAT THE CAPS OR PLUGS CAN BE EASILY REMOVED IN THE FUTURE.

ALL CONDUIT BEING FURNISHED AND INSTALLED SHALL HAVE THE U.L. LABEL FIRMLY ATTACHED.

CONDUIT RUNS SHALL BE THE SAME SIZE OF CONDUIT FROM ONE END TO THE OTHER (FROM PULL BOX TO PULL BOX-OR-JUNCTION BOX TO JUNCTION BOX-OR-BASE TO BASE, ETC.).

POLY ROPE OR A PULL WIRE SHALL BE INSTALLED AS STATED IN THE STANDARD SPECIFICATION, ITEM 652.3.1.1.

ALL CONDUIT RUNS SHALL BE STRAIGHT (WITHOUT BENDS) FROM PULL BOX TO PULL BOX, PULL BOX TO BASE AND BASE TO BASE AS SHOWN ON THE PLANS.

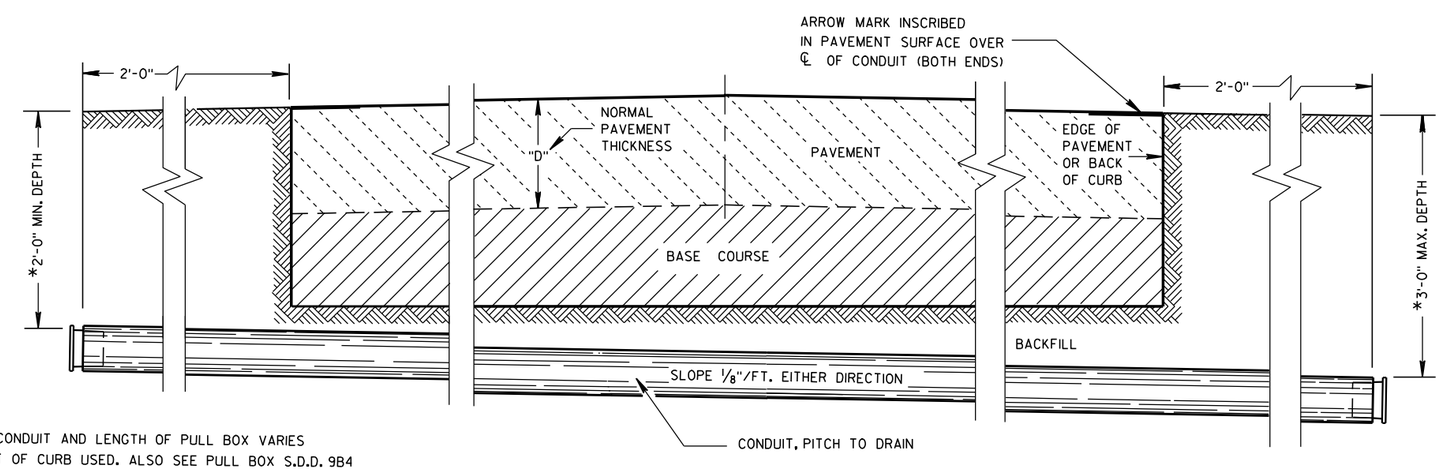

*DEPTH OF CONDUIT AND LENGTH OF PULL BOX VARIES WITH HEIGHT OF CURB USED. ALSO SEE PULL BOX S.D.D. 9B4

SIDE ELEVATION

DETAIL FOR CONDUIT UNDER PAVED HIGHWAYS

CONDUIT

STATE OF WISCONSIN
DEPARTMENT OF TRANSPORTATION

APPROVED

10/23/03 — DATE

/S/ Balu Ananthanarayanan — STATE ELECTRICAL ENGI 210 HWYS

FHWA

6

S.D.D. 9 B 2-7

6

S.D.D. 9 B 2-7

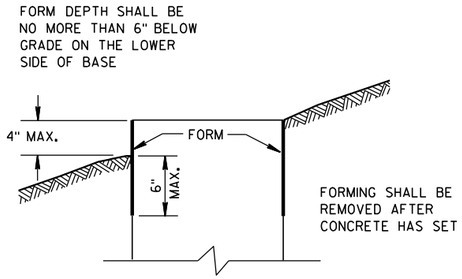

FORMING DETAIL

QUANTITY REQUIREMENTS	CONCRETE BASE TYPE		
	1	2	5
APPROX. CUBIC YARDS OF CONCRETE	0.40	0.57	0.40
LBS. OF HOOP BAR STEEL	NONE	23	16
LBS. OF VERTICAL BAR STEEL	NONE	60	18

GENERAL NOTES

DETAILS OF CONSTRUCTION, MATERIALS AND WORKMANSHIP NOT SHOWN ON THIS DRAWING SHALL CONFORM TO THE PERTINENT REQUIREMENTS OF THE CONTRACT.

BASES SHALL BE EXCAVATED BY USE OF A CIRCULAR AUGER.

TOP SURFACES OF CONCRETE BASES SHALL BE TROWEL FINISHED SMOOTH AND LEVEL.

CONDUIT SIZES AND LOCATIONS SHALL BE AS SHOWN ON THE PLANS.

THE FINAL OR TERMINATING CONCRETE BASE IN A CONDUIT RUN SHALL HAVE A 6" EXIT STUB INSTALLED FOR FUTURE CABLING USE. THE EXIT STUB SHALL BE SIZED AS USED THROUGHOUT THE CONDUIT RUN AS SHOWN AT THE ENTRANCE OF THE BASE.

MINIMUM BENDING RADIUS OF CONDUIT IS EQUAL TO 6 X THE DIAMETER.

CONDUIT HEIGHT ABOVE CONCRETE BASES SHALL BE 1 INCH. ALL METALLIC CONDUIT ENDS SHALL BE REAMED AND THREADED.

ALL CONDUIT ENDS AT THE TOP OF CONCRETE BASES SHALL BE CAPPED IF METALLIC OR PLUGGED IF NONMETALLIC IMMEDIATELY AFTER PLACEMENT AND BEFORE CONCRETE IS POURED. CONDUITS IN WHICH WIRE OR CABLE IS NOT INSTALLED SHALL REMAIN CAPPED OR PLUGGED.

GENERAL NOTES (CONTINUED)

BELL ENDS SHALL BE INSTALLED ON ALL PVC CONDUIT EXPOSED AT THE TOP OF CONCRETE BASES BEFORE INSTALLATION OF CABLE OR WIRE.

ENDS OF CONDUIT INSTALLED BELOW GRADE FOR FUTURE USE SHALL BE CAPPED IF METALLIC OR PLUGGED IF NONMETALLIC.

WHEN REQUIRED TO CONNECT NONMETALLIC CONDUIT TO METALLIC CONDUIT, ONLY ADAPTER FITTINGS, U.L. LISTED FOR ELECTRICAL USE, SHALL BE USED.

IF A BASE REQUIRES A DEEP FORM BECAUSE OF LOOSE DIRT OR FILL, THE FORM SHALL BE REMOVED BEFORE BACKFILLING AROUND THE BASE. BACKFILL SHALL BE TAMPED TIGHT AGAINST THE BARE CONCRETE BASE IN LAYERS OF 1 FOOT OR LESS.

A NO. 4 AWG, STRANDED COPPER EQUIPMENT GROUNDING CONDUCTOR SHALL BE EXOTHERMICALLY WELDED TO THE EQUIPMENT GROUNDING ELECTRODE (GROUND ROD) FOR TYPE 2 AND TYPE 5 BASES.

THE EQUIPMENT GROUNDING CONDUCTOR SHALL BE FURNISHED AND INSTALLED TO ENTER THE BASE OF THE TYPE 2 AND TYPE 5 BASES THROUGH A 1 INCH CONDUIT INSTALLED FOR GROUNDING PURPOSES, LEAVING A 4 FOOT COIL OF WIRE ABOVE THE CONCRETE BASE. THE EQUIPMENT GROUNDING CONDUCTOR SHALL BE NEATLY COILED AND THE COILS TIED TOGETHER.

ANCHOR RODS SHALL BE THREADED 12" IN LENGTH ON EACH END OF THE ROD. ANCHOR RODS SHALL BE MANUFACTURED IN ACCORDANCE WITH SECTION 654.2.1 AND 641.2.2 OF THE STANDARD SPECIFICATIONS, ASTM A-449, OR ASTM A-687 (GRADE 105).

WASHERS AND LOCK WASHERS ARE REQUIRED ON ALL ANCHOR RODS.

WHEN ANCHOR RODS USING THE ALTERNATE "L" BEND ARE FURNISHED, THE 4" "L" BEND SHALL BE IN ADDITION TO THE SPECIFIED ANCHOR ROD BAR LENGTH. THE "L" BEND END SHALL NOT BE THREADED.

ANCHOR RODS SHALL BE INSTALLED WITH MISALIGNMENTS OF LESS THAN 1:40 FROM VERTICAL.

WELDING OF THE ANCHOR RODS TO THE CAGE IS UNACCEPTABLE. TIE WIRES SHALL BE USED.

BAR STEEL REINFORCEMENT SHALL BE COATED WITH POWDERED EPOXY RESIN IN ACCORDANCE WITH SECTION 505 OF THE STANDARD SPECIFICATIONS (LATEST EDITION).

(1) THE MINIMUM DEPTH OF CONDUIT EXITING THE CONCRETE BASE AND INSTALLED BELOW THE TRAVELED WAY SHALL BE 24 INCHES. THE MINIMUM DEPTH OF CONDUIT EXITING THE CONCRETE BASE THAT IS NOT INSTALLED BELOW THE TRAVELED WAY SHALL BE 18 INCHES. THE MAXIMUM DEPTH OF ALL CONDUIT SHALL BE 36 INCHES EXCEPT WITH WRITTEN APPROVAL BY THE ENGINEER.

(2) (4) 1" DIA. X 3'-6" ANCHOR RODS.

(3) (4) 1" DIA. X 5'-0" ANCHOR RODS.

(4) (6) NO. 6 X 6'-8" BAR STEEL REINFORCEMENT.

(5) (7) NO. 4 X 5'-1" BAR STEEL REINFORCEMENT @ 1'-0" C-C.

(6) (4) 1" DIA. X 3'-6" ANCHOR RODS.

(7) (6) NO.4 X 4'-8" BAR STEEL REINFORCEMENT.

(8) (5) NO. 4 X 5'-1" BAR STEEL REINFORCEMENT @ 1'-0" C-C.

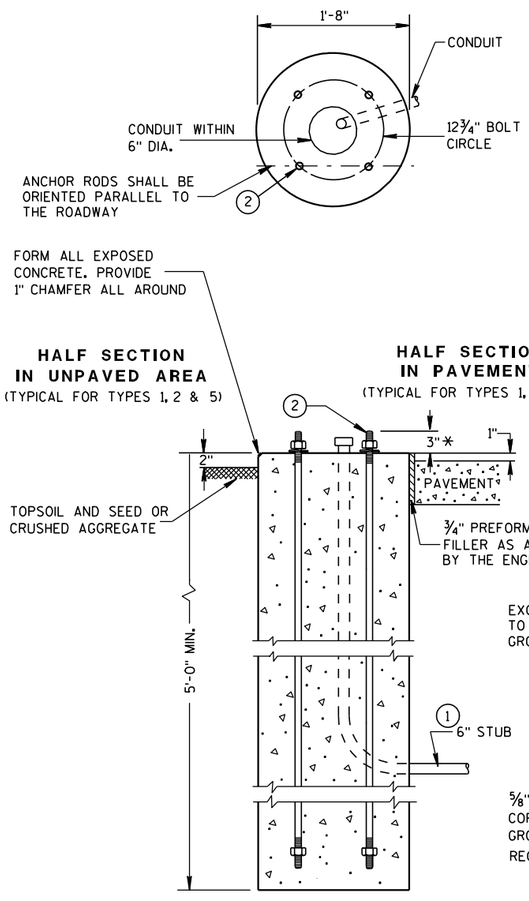

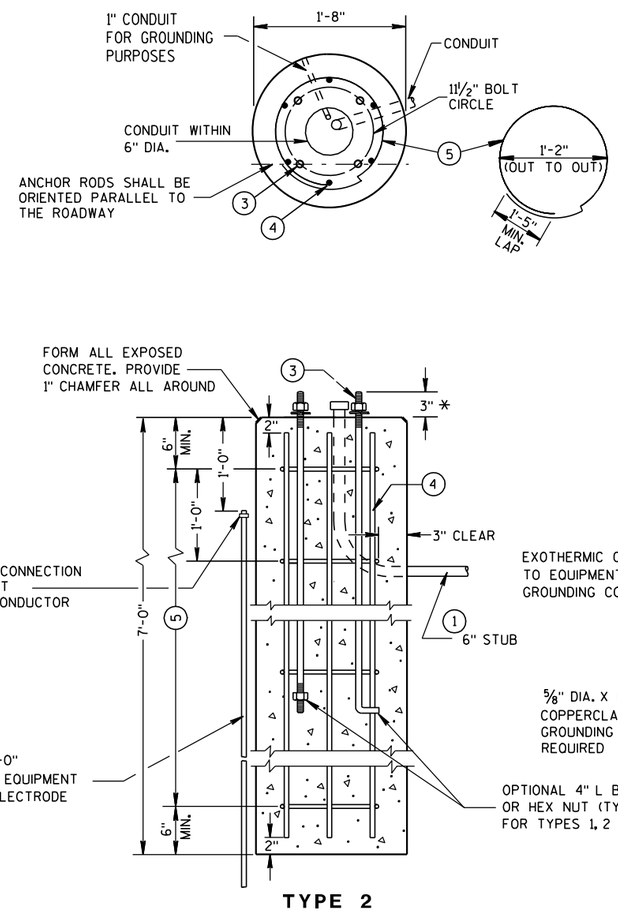

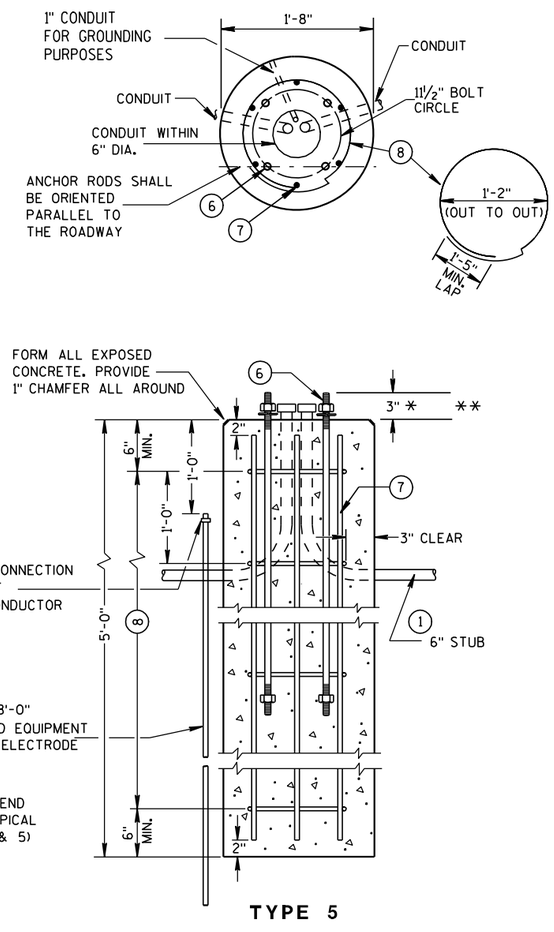

CONCRETE BASES

* ANY ANCHOR ROD PROJECTION SHORTER THAN 2¾" OR LONGER THAN 3¼" SHALL REQUIRE THE BASE TO BE REMOVED AND REPLACED AT THE CONTRACTORS EXPENSE.

** FOR NONBREAKAWAY INSTALLATIONS, 4½" ± ANCHOR ROD PROJECTION WITH THE USE OF LEVELING NUTS. RODENT SCREEN REQUIRED.

CONCRETE BASES, TYPES 1, 2 & 5

STATE OF WISCONSIN
DEPARTMENT OF TRANSPORTATION

APPROVED
3/3/10 — DATE
/S/ Joanna L. Rush — STATE ELECTRICAL ENGI 211 — HWYS
FHWA

6

S.D.D. 9 C 2-6

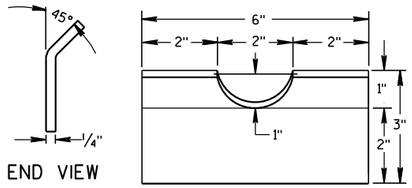

FRONT VIEW

RECTANGULAR CLAMP SHIM

(4 TO A SET)

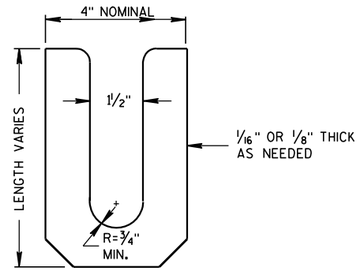

LEVELING SHIM (15)

SHALL BE ALUMINUM

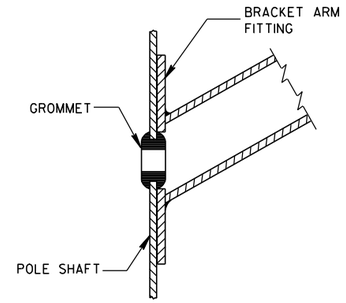

TYPICAL APPLICATION OF GROMMET IN POLE SHAFT

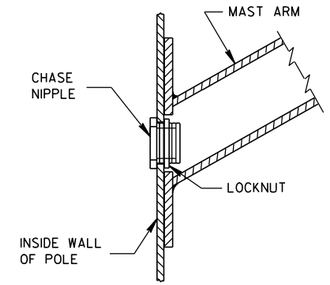

TYPICAL APPLICATION OF CHASE NIPPLE IN POLE SHAFT

GENERAL NOTES

CLAMP BOLT-NUT TIGHTENING TORQUE SHALL BE INDICATED BY INDENT STAMPING (1/2 INCH NUMERALS AND LETTERS) OR WEATHERPROOF PRINTING ON THE INSIDE OF THE CLAMP THAT IS WELDED TO THE ARM MEMBER.

(10.) 4.5" I.D. FOR LUMINAIRE MAST ARM CLAMP.
6.625" I.D. FOR TROMBONE MAST ARM CLAMP.

(11.) INDIVIDUAL BASE PLATE ANCHOR ROD COVERS. (4 REQUIRED)

(12.) BASE PLATE SLOTTED TO ACCEPT 11" THROUGH 12" BOLT CIRCLE USING 1" DIAMETER ANCHOR RODS.

(13.) OUTSIDE SHIM DIAMETER - (4.5" O.D. FOR LUMINAIRE MAST ARM)
(6.625" O.D. FOR TROMBONE MAST ARM)

(14.) VARIABLE SHIM THICKNESS - (0.10", 0.25", 0.35", 0.53" OR 0.70")

SHIM THICKNESS FOR TROMBONE MAST ARMS MAY BE TYPICALLY 0.25", 0.35", 0.53" OR 0.70".

SHIM THICKNESS FOR LUMINAIRE MAST ARMS MAY BE TYPICALLY 0.10", 0.25" OR 0.35".

SHIM MATERIAL SHALL BE ALUMINUM ALLOY.

SHIM THICKNESS SHALL BE IMPRESSED INTO EACH SHIM. NUMERALS SHALL BE 1/4" HIGH AND LEGIBLE.

THE CONTRACTOR SHALL SUBMIT TWO COPIES OF ALL SHIM SHOP DRAWINGS TO THE ENGINEER FOR APPROVAL.

(15.) LEVELING SHIMS, DESIGNED FOR THE PURPOSE, SHALL BE USED WHEN PLUMBING POLES. THE USE OF WASHERS IN LIEU OF PROPER LEVELING SHIMS IS NOT ACCEPTABLE. LEVELING SHIMS SHALL BE USED ONLY BETWEEN THE TOP OF THE CONCRETE BASE AND A METALLIC BASE PLATE.

SHIMS SHALL BE LONG ENOUGH AND WIDE ENOUGH TO COMPLETELY COVER THE AREA UNDER THE LENGTH AND WIDTH OF THE BASE MOUNTING FLANGE.

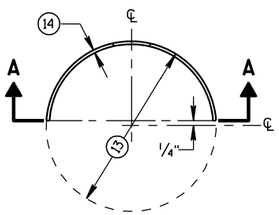

PLAN VIEW

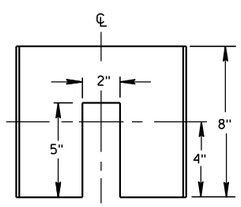

SECTION A-A

CIRCULAR CLAMP SHIM

(2 TO A SET)

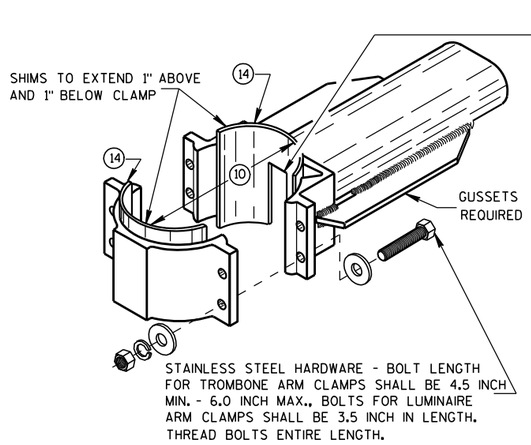

TYPICAL TROMBONE MAST ARM AND SINGLE LUMINAIRE MAST ARM MOUNTING CLAMP

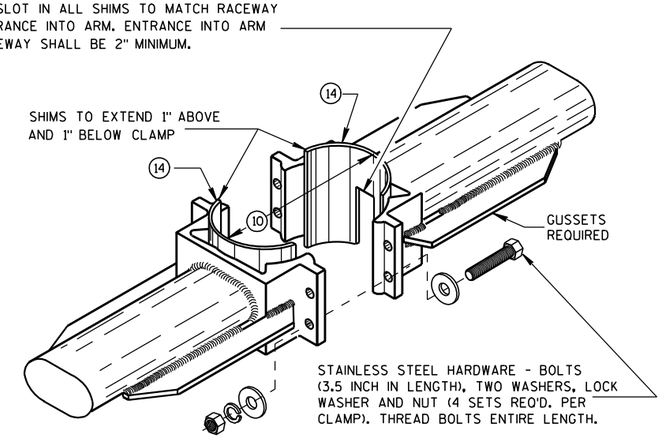

TYPICAL LUMINAIRE MAST ARM (DOUBLE) MOUNTING BRACKETS

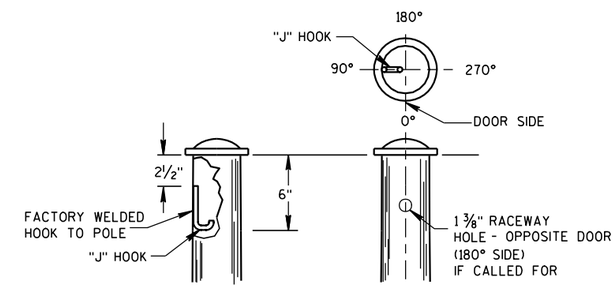

TYPICAL "J" HOOK LOCATION

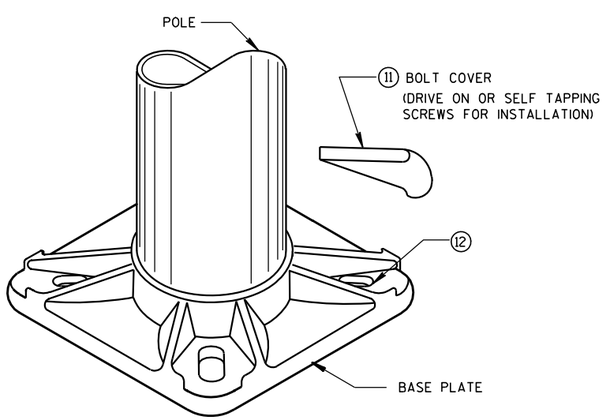

BASE PLATE

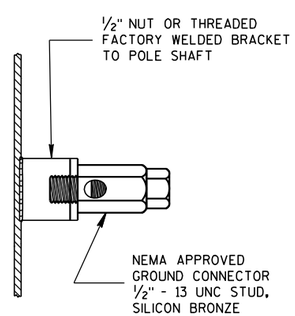

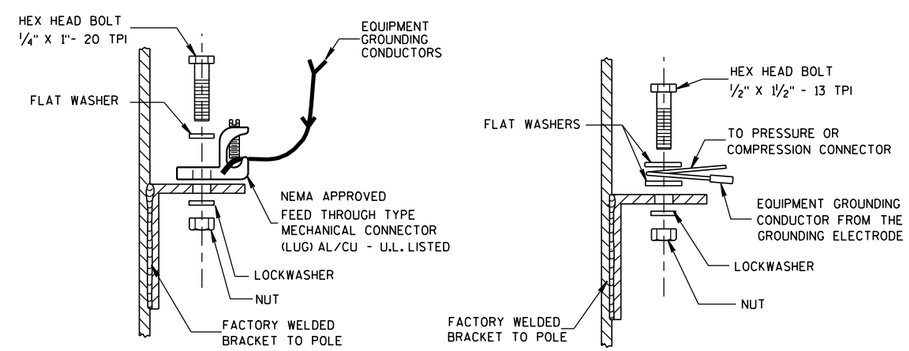

TYPICAL GROUNDING CONNECTIONS

NUT, BOLT AND WASHERS SHALL BE STAINLESS STEEL

HARDWARE DETAILS FOR POLE MOUNTINGS	
STATE OF WISCONSIN DEPARTMENT OF TRANSPORTATION	
APPROVED	
3/2/11 DATE	/S/ Thomas J. Gosling STATE ELECTRICAL ENGI 212 HWYS
FHWA	

6

6

S.D.D. 9 E 1-11g

S.D.D. 9 E 1-11g

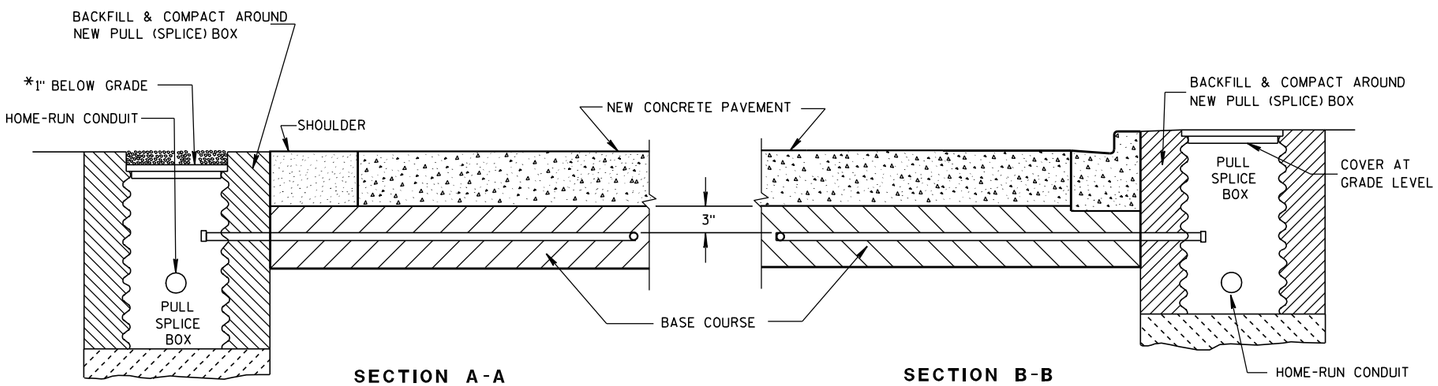

SECTION A-A
NO CURB & GUTTER

*RECESS PULL (SPLICE) BOX SO THAT THE COVER IS 3" BELOW GRADE IN SHOULDER AREAS OF CRUSHED AGGREGATE. BACKFILL OVER COVER WITH THE CRUSHED AGGREGATE TO BRING THE AREA TO GRADE LEVEL.

SECTION B-B
CURB & GUTTER

LOOP DETECTOR INSTALLATION DETAIL

GENERAL NOTES

DETAILS OF CONSTRUCTION, MATERIALS AND WORKMANSHIP NOT SHOWN ON THIS DRAWING SHALL CONFORM TO THE PERTINENT REQUIREMENTS OF THE CONTRACT.

LOOP SIZE, CONFIGURATION LOCATION, NUMBER OF TURNS OF WIRE AND ASSOCIATED SIGNAL PHASE SHALL BE AS SHOWN ON THE PLANS.

PITCH LEAD OUT CONDUIT TO DRAIN TO ROADSIDE PULL (SPLICE) BOX.

SPLICES SHALL BE INSTALLED BY USING CAST IN PLACE SPLICE KITS SUCH AS 3M TYPE 82A1 OR APPROVED EQUAL. NON-INSULATED BUTT SPLICES TO FIT #12 AWG STRANDED WIRE SHALL BE USED. SPLICES SHALL BE SOLDERED AND INSULATED FROM EACH OTHER AS PER INSTRUCTIONS INCLUDED IN THE SPLICE KIT.

MEASURE GROUND RESISTANCE USING A MEGGER. REPLACE LOOP WIRE NOT ATTAINING A READING OF INFINITY TO GROUND.

AFTER SPLICING THE LOOP WIRE TO THE LOOP LEAD-IN CABLE, THE CONTRACTOR SHALL MEASURE INDUCTANCE, GROUND RESISTANCE AND WIRE RESISTANCE AT THE CABINET END OF THE LEAD-IN CABLE AND FURNISH A COPY OF THE READINGS TO THE PROJECT ENGINEER FOR EVALUATION.

LOOP DETECTOR LEADS SHALL BE IDENTIFIED WITH THEIR ASSOCIATED LOOP BY USE OF WATERPROOF TAGS AT BOTH ENDS OF THE CABLE. A LISTING OF THE CABLE IDENTIFICATION PER INDIVIDUAL LOOP LEAD-IN SHALL BE PLACED IN THE CABINET.

THE #12 AWG. LOOP WIRE IN THE PULL (SPLICE) BOX SHALL BE HAND TWISTED AT LEAST 3 TWISTS PER FOOT BEFORE BEING SPLICED TO THE LOOP LEAD-IN CABLE.

SPLICES OF LOOP WIRE TO LEAD-IN CABLE SHALL BE MADE ONLY IN PULL (SPLICE) BOXES AT THE SIDE OF THE ROAD.

THE #12 AWG LOOP WIRE SHALL BE INSTALLED FROM THE ROADSIDE PULL (SPLICE) BOX THROUGH THE LOOP CONDUIT, BACK TO THE ROADSIDE PULL (SPLICE) BOX, AND BE INSTALLED IN ONE, NON-SPLICE CONTINUOUS LENGTH.

PROTECTION OF THE CONDUIT IN THE BASE COURSE, SHALL BE REQUIRED AFTER INSTALLATION AND BEFORE NEW PAVEMENT IS INSTALLED.

SHOULD INSTALLATION REPAIR BE REQUIRED, IT SHALL BE DONE UNDER THE DIRECTION OF THE PROJECT ENGINEER.

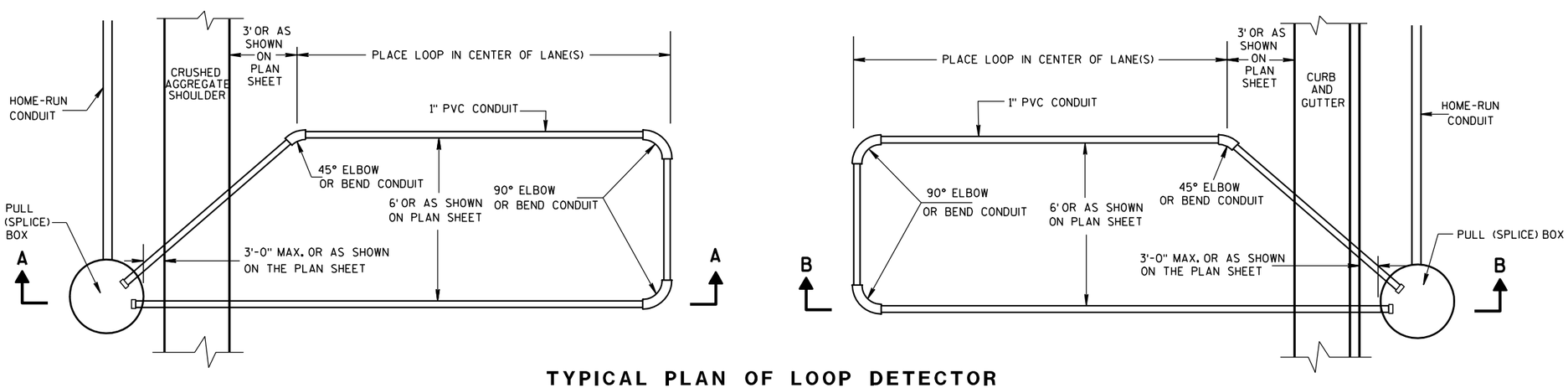

TYPICAL PLAN OF LOOP DETECTOR WITH 18" OR 24" PULL (SPLICE) BOX

LOOP DETECTOR INSTALLED IN BASE COURSE WITH PULL (SPLICE) BOX OFF ROADWAY (OPTION 1)

STATE OF WISCONSIN
DEPARTMENT OF TRANSPORTATION

APPROVED
6/7/06 — DATE
/S/ Balu Ananthanarayanan — STATE ELECTRICAL ENGI 213 — HWYS
FHWA

6
S.D.D. 9 F 15-3a

GENERAL NOTES

DETAILS OF CONSTRUCTION SHOWN ON THIS DRAWING SHALL CONFORM TO THE PERTINENT REQUIREMENTS OF THE STANDARD SPECIFICATIONS AND APPLICABLE SPECIAL PROVISIONS.

RUMBLE STRIPS ON EXPRESSWAYS

DO NOT INSTALL RUMBLE STRIPS ACROSS SIDE ROAD INTERSECTIONS, COMMERCIAL DRIVEWAYS OR ADJACENT TO RIGHT TURN LANES, LEFT TURN LANES OR TURN LANE TAPERS. THE ATTACHED STANDARD DETAIL DRAWING SHOWS THE LOCATION OF THE RUMBLE STRIPS AT INTERCHANGE AREAS.

(1) CONCRETE PAVEMENT - RUMBLE STRIPS SHALL BE A MINIMUM OF 6" AWAY FROM TRANSVERSE JOINTS.

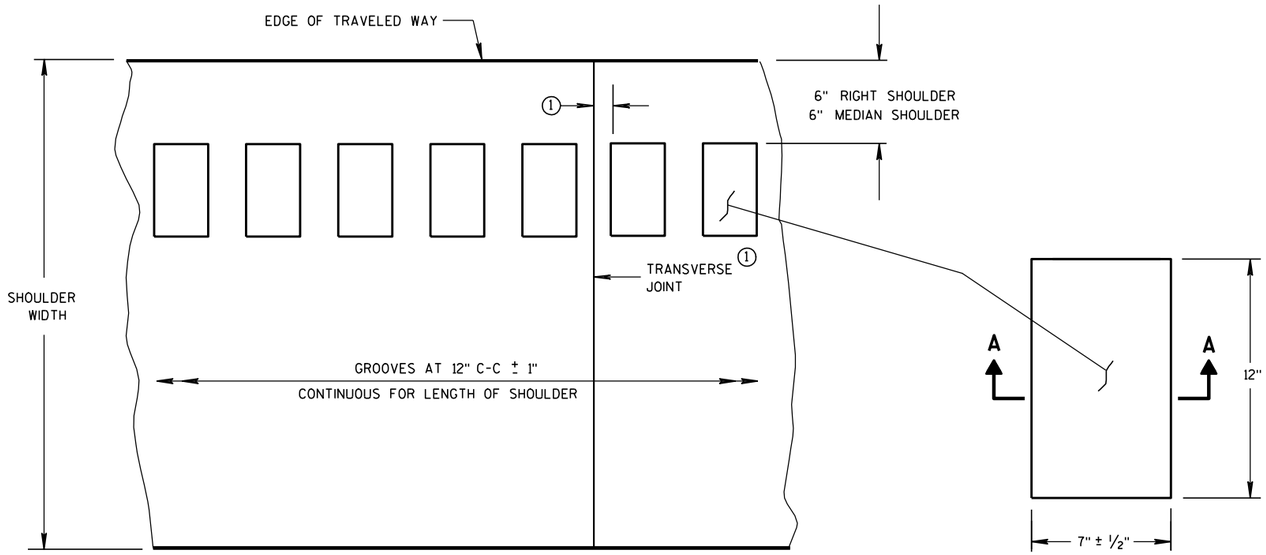

PLAN VIEW
SHOULDER WITH GROOVES

PLAN VIEW
(SINGLE GROOVE)

PLACEMENT DETAIL FOR MILLED RUMBLE STRIP

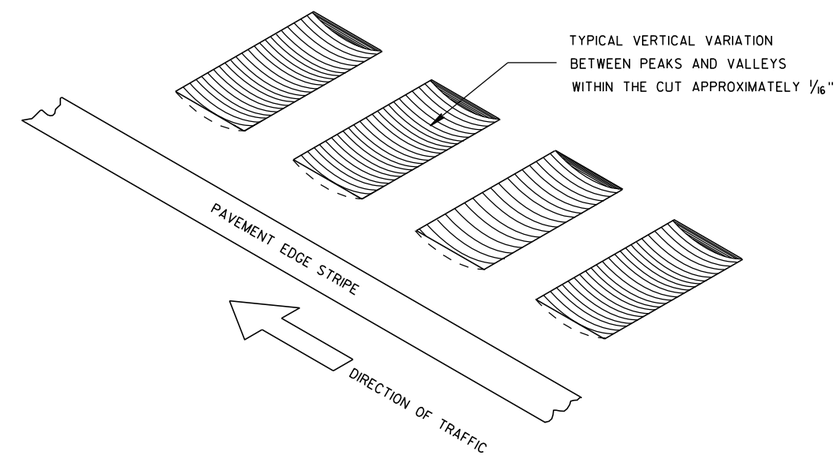

ISOMETRIC

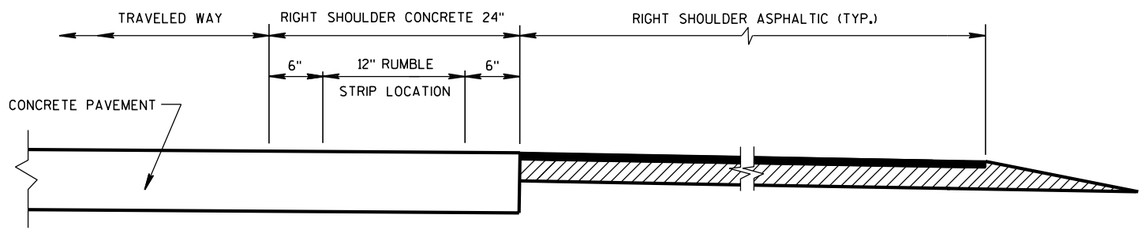

SECTION VIEW
CONCRETE PAVEMENT EXTENDS INTO RIGHT SHOULDER)

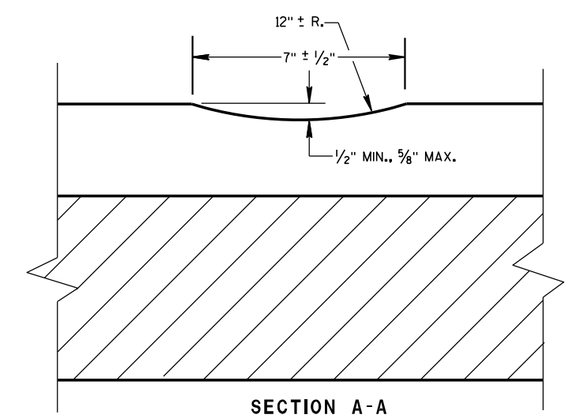

SECTION A-A

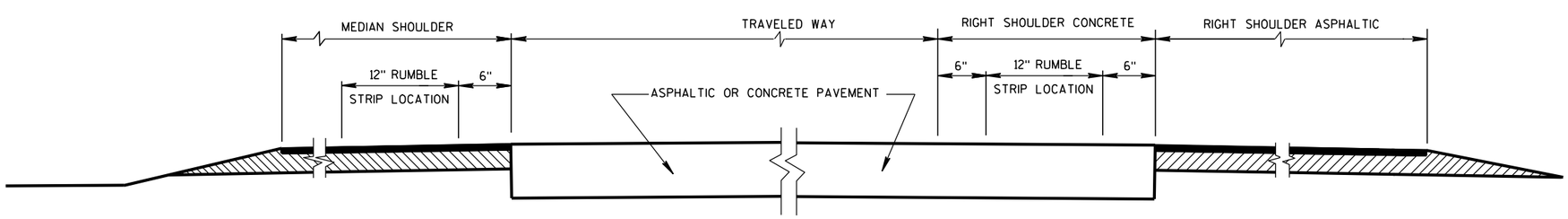

SECTION VIEW

TYPICAL LOCATIONS OF SHOULDER RUMBLE STRIPS
IN RURAL DIVIDED HIGHWAYS
(ONE ROADWAY IS SHOWN)

SHOULDER RUMBLE STRIP, MILLING

STATE OF WISCONSIN
DEPARTMENT OF TRANSPORTATION

6

6

S.D.D. 13 A 5-4a

S.D.D. 13 A 5-4a

NOTES:

NO RUMBLE STRIP ON EXIT, DIRECTIONAL, OR ENTRANCE RAMPS, EXCEPT NEAR THE ENTRANCE TAPER END AS SHOWN.

PAVEMENT MARKING DETAILS AND SPECIFICATIONS ARE PROVIDED ELSEWHERE IN THE CONTRACT.

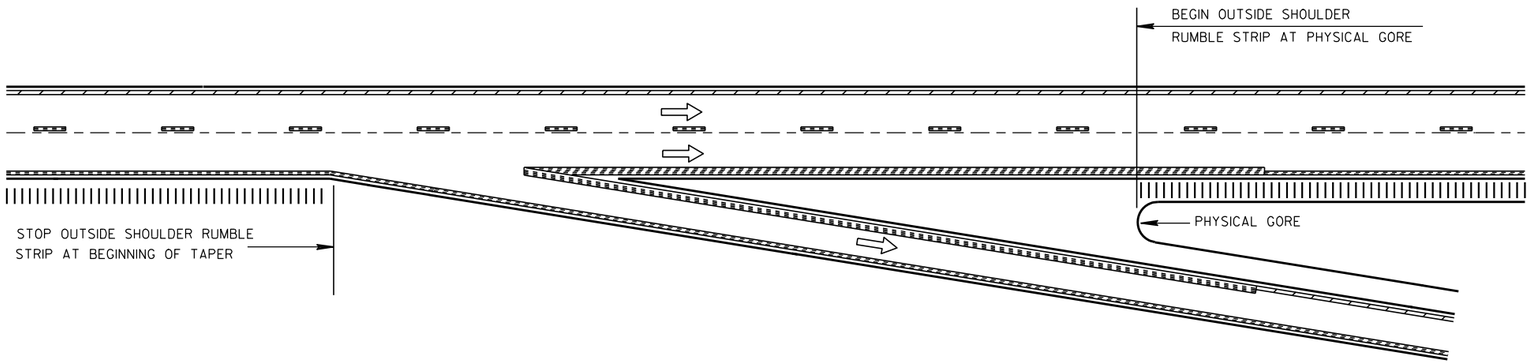

TYPICAL EXIT RAMP

NOTE:
ARROW SYMBOL (⇨)
SHOWS DIRECTION OF TRAVEL

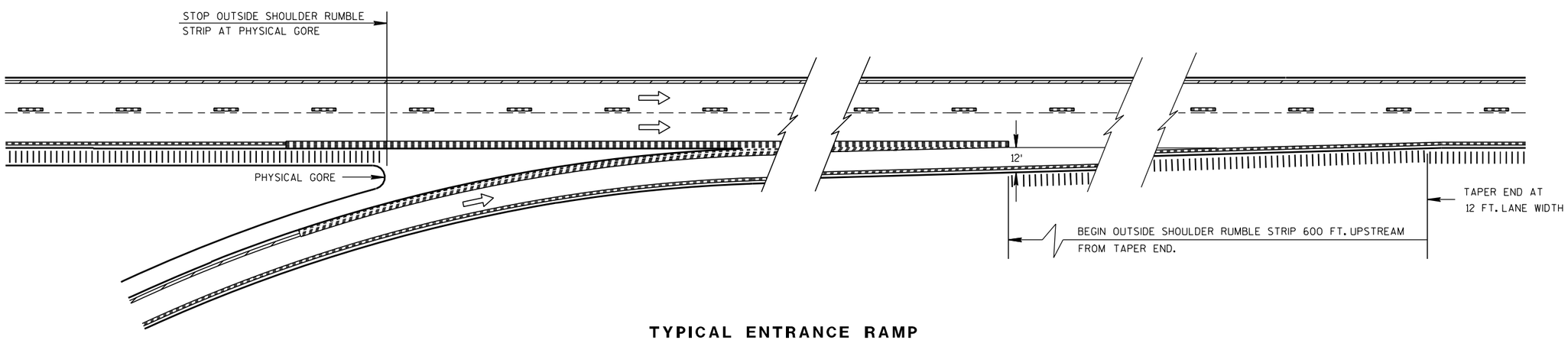

TYPICAL ENTRANCE RAMP

RAMP AND GORE RUMBLE STRIP LOCATIONS

SHOULDER RUMBLE STRIP, MILLING	
STATE OF WISCONSIN DEPARTMENT OF TRANSPORTATION	
APPROVED 8/17/2011 DATE FHWA	/S/ Jerry H. Zogg ROADWAY STANDARDS ENGINEER

6

6

S.D.D. 13 A 5-4b

S.D.D. 13 A 5-4b

GENERAL NOTES

DETAILS OF CONSTRUCTION, MATERIALS AND WORKMANSHIP NOT SHOWN ON THIS DRAWING SHALL CONFORM TO THE PERTINENT REQUIREMENTS OF THE STANDARD SPECIFICATIONS, AND THE APPLICABLE SPECIAL PROVISIONS.

(1) W6 X 9 OR W6 X 8.5 STEEL POSTS AND NOTCHED PLASTIC BLOCKOUTS ARE ACCEPTABLE ALTERNATIVES FOR 6" X 8" WOOD POSTS WITH WOOD OR PLASTIC BLOCKOUTS. USE APPROVED NOTCHED PLASTIC BLOCKOUTS WITH STEEL POSTS. APPROVED PLASTIC BLOCKOUT DESIGNS MAY VARY FROM THIS TYPICAL DETAIL WHEN USED IN CONJUNCTION WITH STEEL POSTS.

DO NOT MIX STEEL POSTS AND WOOD POSTS IN A SINGLE INSTALLATION.

(2) USE STRUCTURAL STEEL POSTS CONFORMING TO ASTM A 36. GALVANIZED POSTS ACCORDING TO AASHTO M 111. EITHER SET THE POSTS IN DRILLED HOLES OR DRIVE TO GRADE. REMOVE MUSHROOMING CAUSED BY DRIVING AND REPAIR DAMAGED SPELTER COATING ON GALVANIZED POSTS.

(3) INSTALL STEEL POSTS WITH HOLES ON APPROACHING TRAFFIC SIDE.

(4) USE EITHER WOOD OR APPROVED PLASTIC BLOCKOUTS ON WOOD POSTS.

(5) IF THE DISTANCE FROM BACK OF POST TO SHOULDER HINGE POINT IS LESS THAN 2 FEET INSTALL LONGER POST AT HALF POST SPACING, W BEAM (LHW).

(6) IF ROCK IS ENCOUNTERED DURING EXCAVATION, THE ENGINEER MAY APPROVE USING A 12 INCH DIAMETER POST HOLE EXTENDING 20 INCHES DEEP INTO THE ROCK. PLACE GRANULAR MATERIAL IN THE BOTTOM OF THE HOLE APPROXIMATELY 2½ INCHES DEEP. CUT THE POSTS TO LENGTH AND PLACE IN YHE HOLE. BACKFILL WITH MATERIAL EXCAVATED FROM THE HOLE AND COMPACT ADEQUATEY.

INSTALL BEAM GUARD SECTIONS AND ALL NECESSARY HARDWARE ACCORDING TO THE APPLICABLE PLAN AND CURRENT STANDARD AND SUPPLEMENTAL SPECIFICATIONS.

ALL DIMENSIONS ARE SUBJECT TO MANUFACTURER'S TOLERANCES EXCEPT WHERE ALLOWABLE TOLERANCES ARE SHOWN.

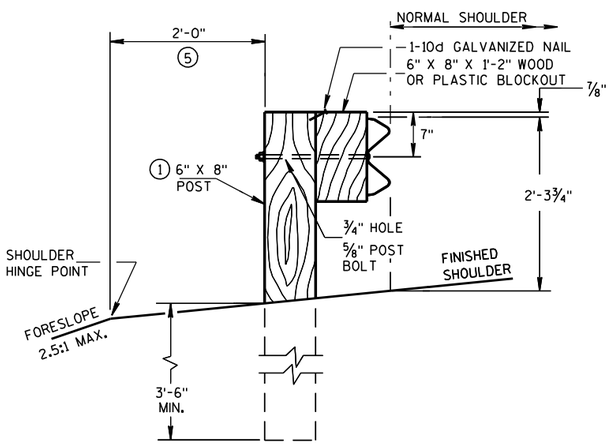

END VIEW
LOCATED ALONG A ROADWAY SHOULDER
STANDARD INSTALLATION

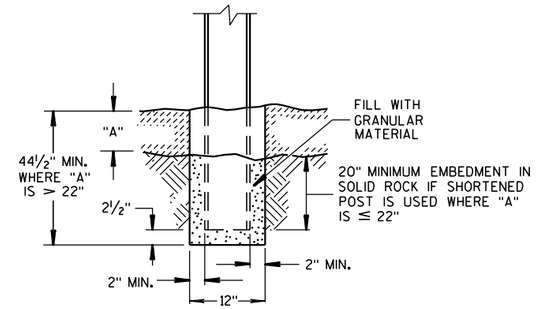

END VIEW
SETTING STEEL OR WOOD POST IN ROCK (6)

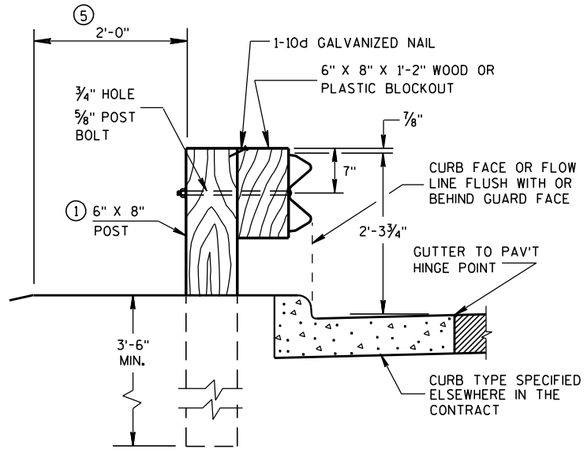

END VIEW
LOCATED ALONG A CURBED ROADWAY

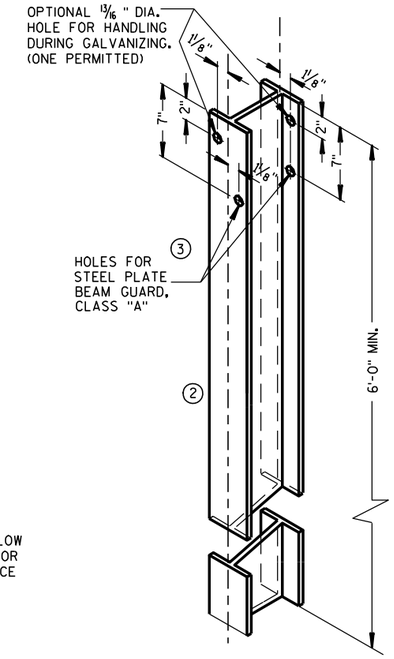

STEEL POST &
HOLE PUNCHING DETAIL
(W6 X 9) (1)

ALL HOLES 13/16" DIAMETER EXCEPT AS NOTED

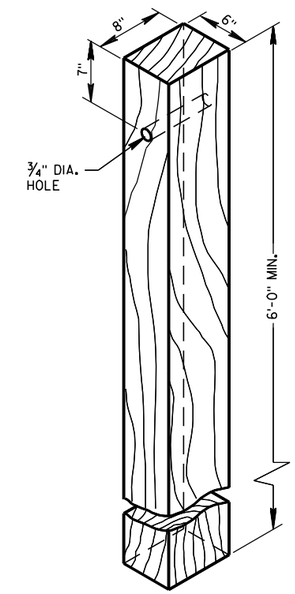

WOOD POST
(6"X8") NOMINAL

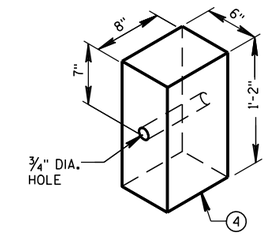

WOOD OR PLASTIC
BLOCKOUT FOR
WOOD POSTS

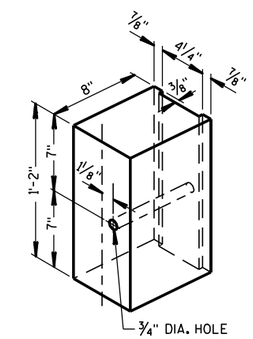

TYPICAL NOTCHED
PLASTIC BLOCKOUT (1)
FOR STEEL POSTS

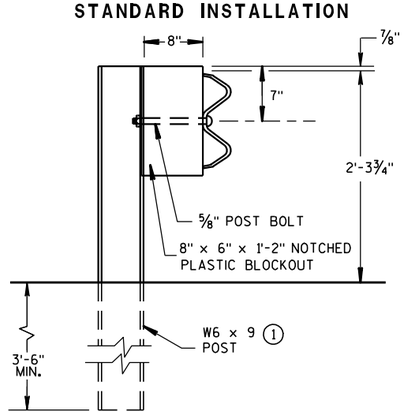

END VIEW
STEEL POST & NOTCHED
PLASTIC BLOCKOUT ALTERNATIVE
STANDARD INSTALLATION

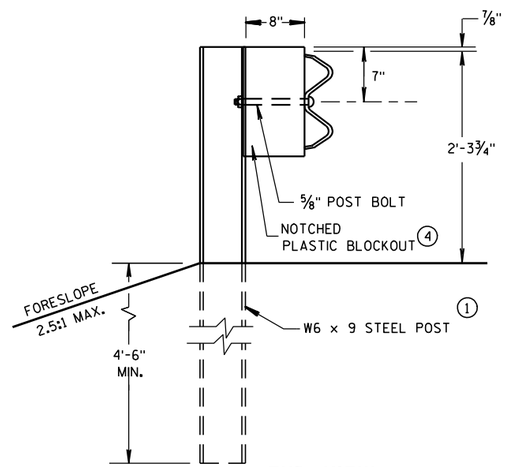

END VIEW
LONGER POST AT HALF
POST SPACING W BEAM
(LHW)

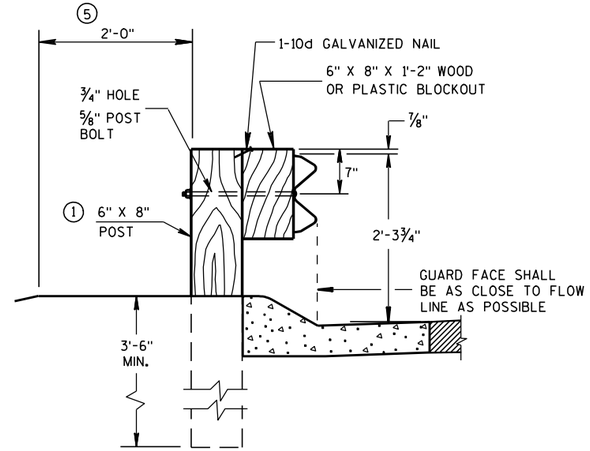

END VIEW
LOCATED ALONG A
MOUNTABLE CURBED ROADWAY

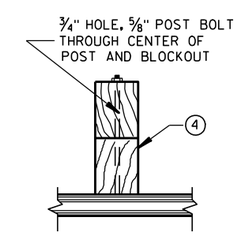

PLAN VIEW
WOOD POST,
BLOCKOUT & BEAM

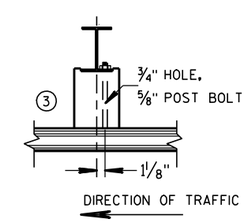

PLAN VIEW
STEEL POST, NOTCHED
PLASTIC BLOCKOUT & BEAM

TYPICAL INSTALLATION OF STEEL PLATE BEAM GUARD

STEEL PLATE BEAM GUARD,
CLASS "A"
INSTALLATION & ELEMENTS

STATE OF WISCONSIN
DEPARTMENT OF TRANSPORTATION

6

6

S.D.D. 14 B 15-7a

S.D.D. 14 B 15-7a

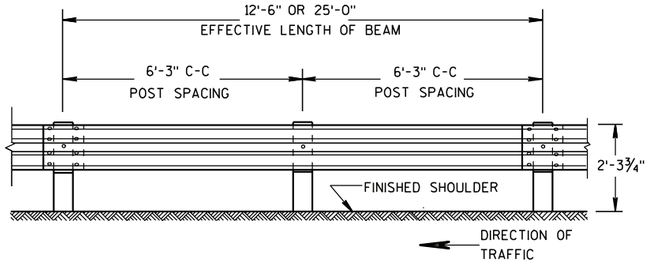

FRONT VIEW

POST SPACING STANDARD INSTALLATION

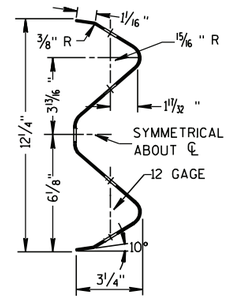

SECTION THRU W BEAM

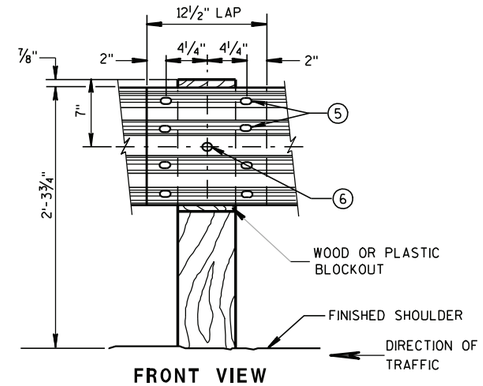

FRONT VIEW

BEAM SPLICE AT WOOD POST AND POST MOUNTING DETAIL

GENERAL NOTES

1. PROVIDE TYPE "H" SILVER REFLECTIVE SHEETING ON ALL REFLECTORS EXCEPT THOSE LOCATED ALONG THE LEFT EDGE OF ONE-WAY ROADWAYS, WHICH SHALL BE PROVIDED WITH TYPE "H" YELLOW REFLECTIVE SHEETING.
2. DO NOT INSTALL REFLECTORS ON THE FIRST 50 FEET OF THE APPROACH END OF THE ENERGY ABSORBING TERMINAL.
3. REVERSE EVERY OTHER REFLECTOR FOR 2-WAY VISIBILITY. THE CONTRACTOR MAY FURNISH TWO-SIDED REFLECTORS IN LIEU OF ONE-SIDED REFLECTORS.
4. PROVIDE AN ANGLE OF BEND OF 90° ± 1° FOR TWO-SIDED REFLECTORS.
5. 8 -⅝" Φ X 2 " BUTTON HEAD BOLTS WITH OVAL SHOULDERS & RECESS NUTS.
6. ⅝" Φ X 1'-6" BUTTON HEAD BOLT AND AND RECESS NUT WITH ROUND WASHER UNDER NUT.

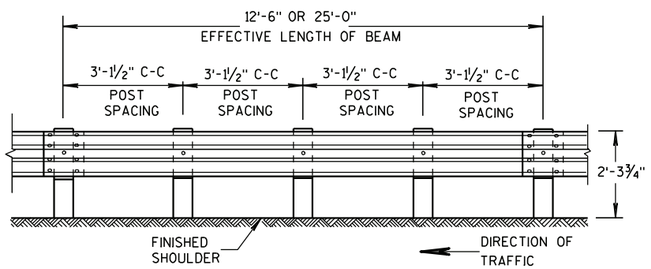

FRONT VIEW

POST SPACING FOR LONGER POST AT HALF POST SPACING W BEAM (LHW)

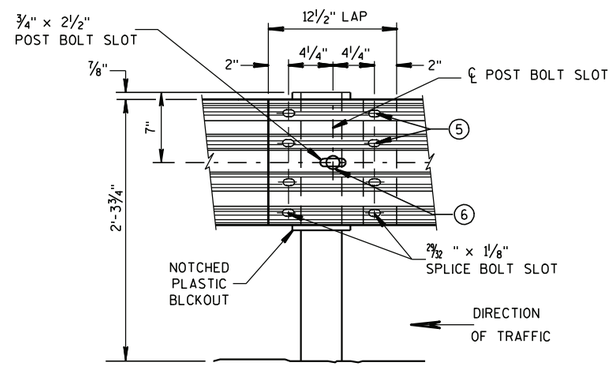

FRONT VIEW
BEAM SPLICE AT STEEL POST

TYPICAL SPLICING DETAILS OF STEEL PLATE BEAM GUARD

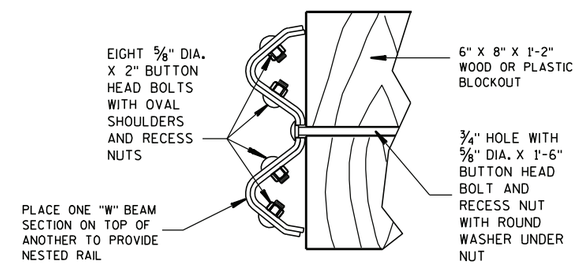

NESTED W BEAM (NW)

USE ALL OTHER STANDARD BEAM GUARD DETAILS FOR CONSTRUCTING NESTED W BEAM (NW)

REFLECTOR SPACING (2)

	BEAM GUARD LENGTH	REFLECTOR SPACING	NO. SURFACES REFLECTORIZED	MIN. NO. REFLECTORS
ONE WAY TRAFFIC	< 200' > 200'	50' C-C 100' C-C	1 1	3
TWO WAY TRAFFIC	< 200' > 200'	25' C-C 50' C-C	1 (3) 1	6
TWO WAY TRAFFIC	< 200' > 200'	50' C-C 100' C-C	2 (4) 2	3

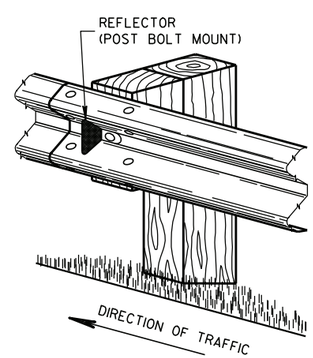

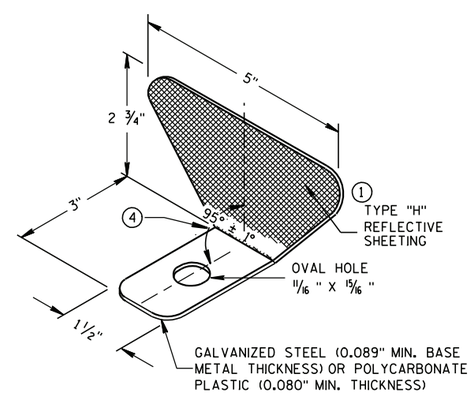

ONE SIDED REFLECTOR DETAIL AND TYPICAL INSTALLATION (1)

STEEL PLATE BEAM GUARD,
CLASS "A",
INSTALLATION & ELEMENTS

STATE OF WISCONSIN
DEPARTMENT OF TRANSPORTATION

6

6

S.D.D. 14 B 15-7b

S.D.D. 14 B 15-7b

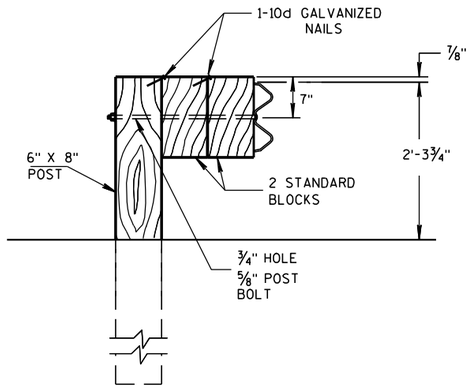

DETAIL FOR DOUBLE BLOCKS

THE NUMBER OF DOUBLE BLOCK POSTS WITHIN A BARRIER RUN IS UNLIMITED

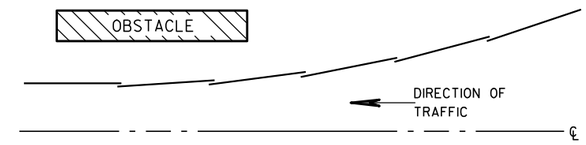

PLAN VIEW
BEAM LAPPING DETAIL

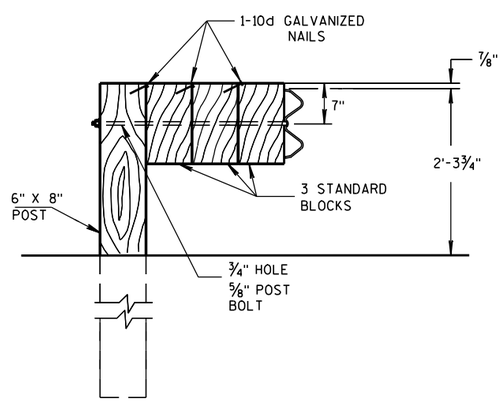

DETAIL FOR TRIPLE BLOCKS

TRIPLE BLOCK DETAIL IS LIMITED TO ONE LOCATION WITHIN A BEAM GUARD RUN.

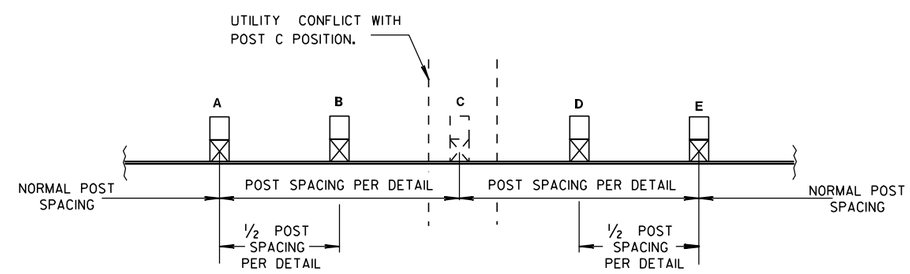

POST DRIVING FOR CONTINUOUS UNDERGROUND OBSTRUCTION

NOTES: USE DOUBLE OR TRIPLE BLOCKS WHEN UNDERGROUND OBSTACLES PREVENT THE POST FROM BEING INSTALLED.

DO NOT USE EXTRA BLOCKOUTS IF IT CAUSES THE POST TO BE DRIVEN BEYOND SHOULDER HINGE POINT OR CAUSES A FIXED OBJECT TO BE WITHIN THE DEFLECTION DISTANCE OF THE BARRIER.

STEEL PLATE BEAM GUARD, CLASS "A", INSTALLATION & ELEMENTS

STATE OF WISCONSIN
DEPARTMENT OF TRANSPORTATION

APPROVED

5/23/11	/S/ Jerry H. Zogg	
DATE	ROADWAY STANDARDS ENGINEER	ENT

FHWA

6

S.D.D. 14 B 15-7c

BILL OF MATERIALS

NOTE NO.	QTY.	DESCRIPTION
1	4	WOOD BREAKAWAY TERMINAL POST: 5½" X 7½" X 3'-9"
2	**	STEEL TUBE: OPTION 1 - QUANITY OF 4 TS 8" X 6" X 0.188", 4'-6" LONG OR OPTION 2 - QUANITY OF 2 TS 8" X 6" X 0.188", 6'-0" AND 2 TS 8" X 6" X 0.188", 4'-6" LONG
3	2	SOIL PLATE: 2'-0" X 1'-6" X ¼" **
4	4	WOOD BREAKAWAY CRT POST: 6" X 8" X 6'-0"
5	6	WOOD OFFSET BLOCKS: 6' X 8" X 1'-2"
6	1	PIPE SLEEVE: 2" X 5 ½" STANDARD PIPE
7	1	BEARING PLATE
8	1	BCT CABLE ASSEMBLY
9	1	CABLE ANCHOR BOX
10	1	STRUT & YOKE
11	1	STEEL PLATE BEAM, END PANEL 12 GA. 13'-6½" LONG FOR SKT-350, ET-2000 AND ET-2000 PLUS
12	3	STEEL PLATE BEAM: 12 GA. 13'-6½"
13	1	ET-2000/ET-2000 PLUS GUARDRAIL EXTRUDER OR SKT-350 IMPACT HEAD: AS FURNISHED BY MANUFACTURER
14	1	REFLECTIVE SHEETING TYPE H: 18" X 18"
15	1	E.A.T. MARKER POST

GENERAL NOTES

FOLLOW MANUFACTURE'S BOLTING RECOMMENDATIONS. IF NONE ARE AVAILABLE, INSTALL ⅝" ø X 1'-6" BUTTON HEAD BOLTS AT ALL POSTS EXCEPT FOR POST 1.

(A) THE SLOPE IN THE AREA BOUNDED BY THE EXTENDED VEHICLE RUNOUT PATH (EVRP), THE HINGE POINT LINE (HPL), AND THE CLEAR ZONE LIMITS (CZL) SHALL BE 4:1 OR FLATTER.

(B) AFTER FINAL ASSEMBLY, RECHECK CABLE TO BE SURE IT IS TAUT AND HAS NOT RELAXED.

(C) THE 13 SLOT FIRST RAIL PANEL MAY BE USED IN LIEU OF THE 3 SLOT RAIL PANEL ON SKT-350 ONLY.

(D) THE TOP OF THE STEEL TUBE ON POSTS 1 THROUGH 4 SHALL NOT BE MORE THAN 3" ABOVE THE FINISH GROUND ELEVATION.

(E) THE CENTER OF THE UPPER 3½" DIAMETER HOLE ON POST 5 THROUGH 8 SHALL BE ¾" ABOVE THE FINISHED GROUND LINE.

(F) SHEETING IS ATTACHED TO 0.040 ALUMINUM SHEET AND ATTACHED TO E.A.T. HEAD USING 4 STAINLESS STEEL SELF-TAPPING SCREWS. ONE SCREW PER CORNER OF E.A.T.

STEEL POSTS SHALL NOT BE ALLOWED FOR USE WITH ENERGY ABSORBING TERMINALS.

DO NOT INSTALL REFLECTORS ON THE FIRST 50 FEET OF THE APPROACH END OF THE ENERGY ABSORBING TERMINAL.

* DO NOT ATTACH BLOCKOUTS TO POSTS 1 AND 2.

** SDD SHOWS 4 - 54 INCH STEEL TUBES WITH SOIL PLATES INSTALLED ON POST 1 AND POST 2. POST 3 AND 4 DO NOT NEED SOIL PLATES. AN ALTERNATIVE INSTALLATION WOULD CONSIST OF 2 - 72 INCH STEEL TUBES ON POST 1 AND POST 2 AND 54 INCH SOIL TUBES ON POSTS 3 AND 4. THE ALTERNATIVE INSTALLATION DOES NOT REQUIRE SOIL PLATES.

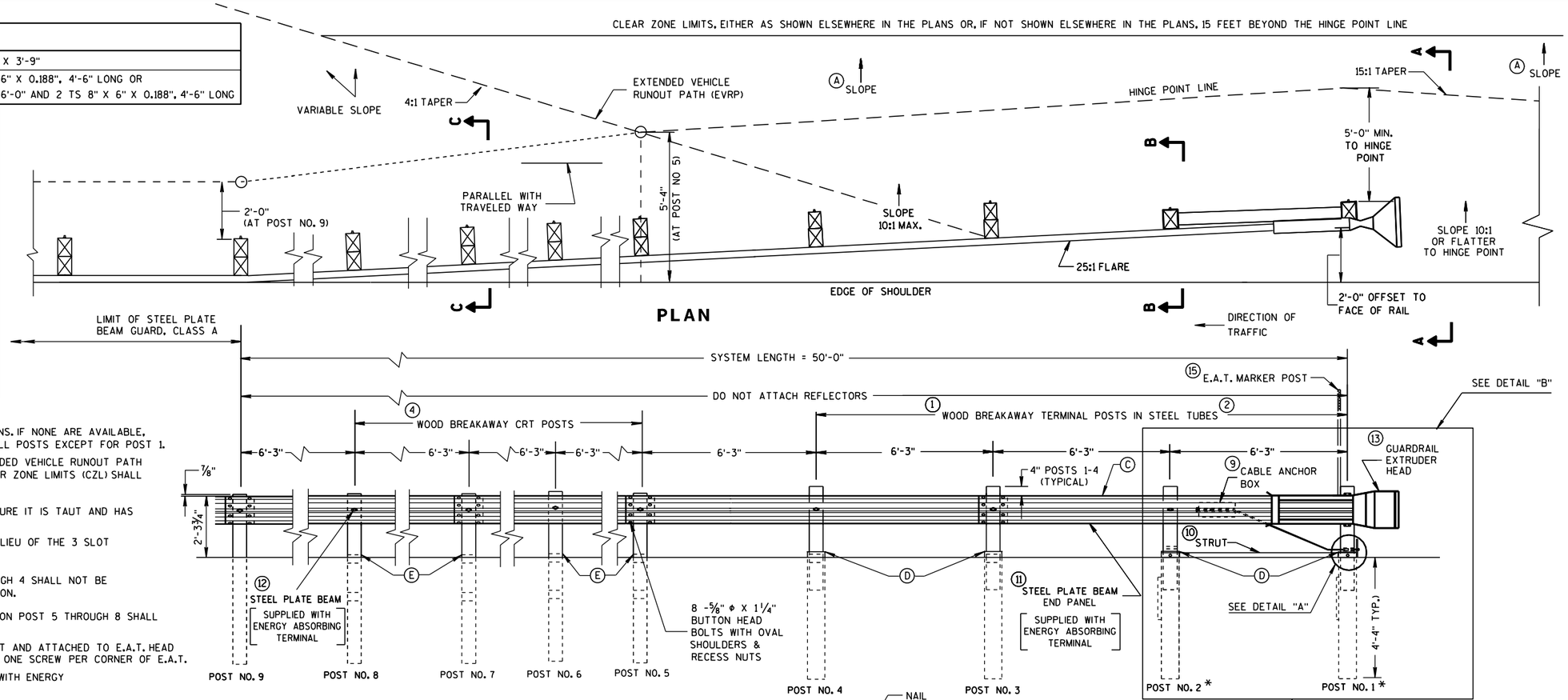

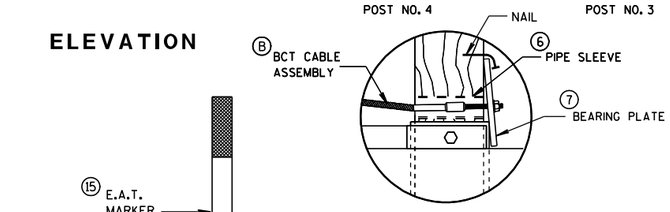

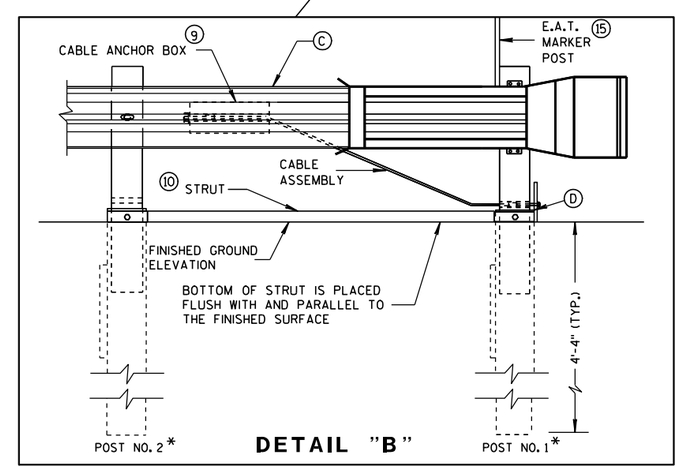

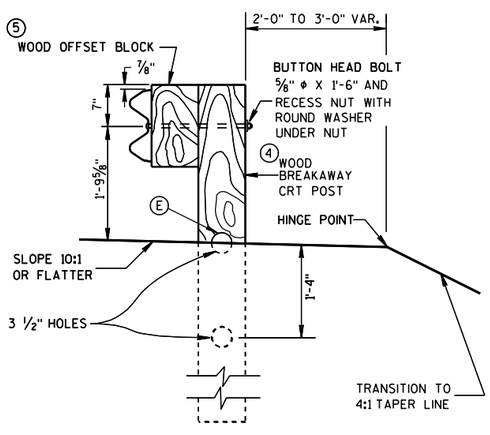

SECTION C-C

TYPICAL AT POST NOS. 6, 8

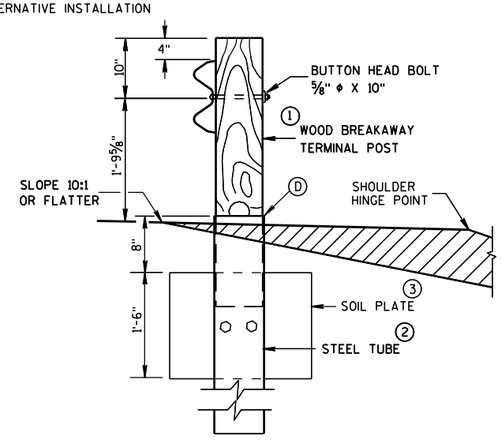

SECTION B-B

TYPICAL AT POST NO. 2*

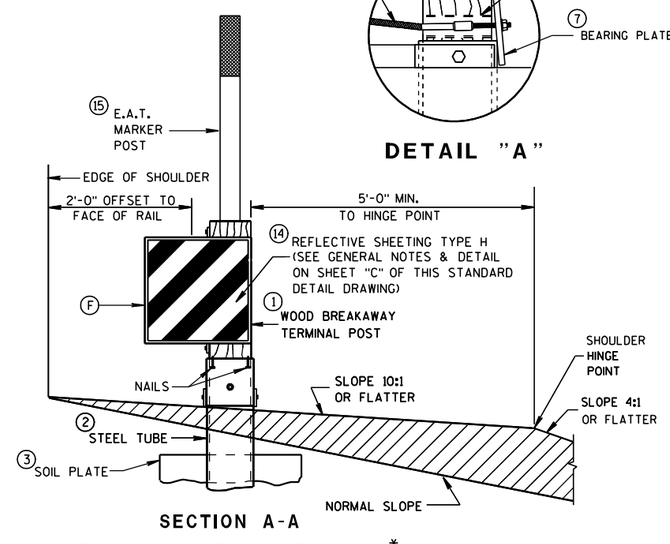

SECTION A-A

TYPICAL AT POST NO. 1*

STEEL PLATE BEAM GUARD ENERGY ABSORBING TERMINAL

STATE OF WISCONSIN
DEPARTMENT OF TRANSPORTATION

6

6

S.D.D. 14 B 24-7a

S.D.D. 14 B 24-7a

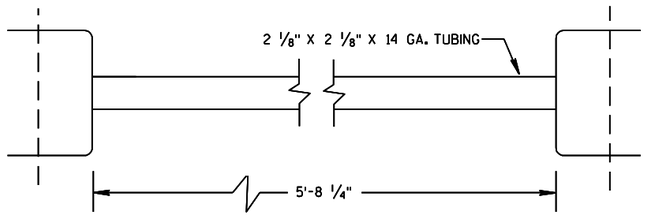

⑩ STRUT DETAIL (SKT-350)

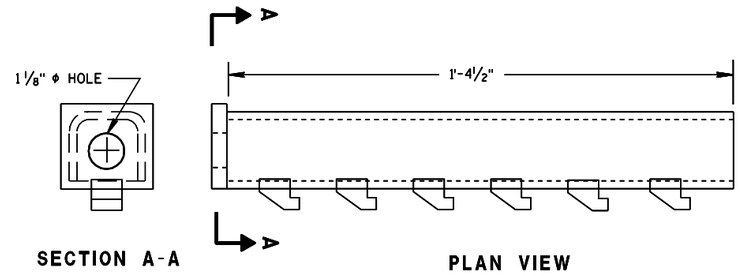

⑨ CABLE ANCHOR BOX (ET-2000/ET-2000 PLUS)

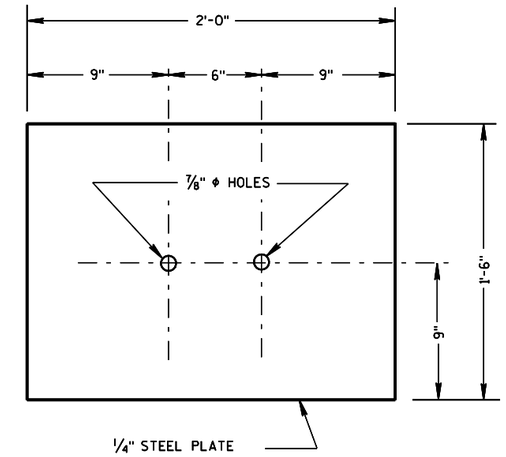

③ SOIL PLATE

(SKT-350, ET-2000/ET-2000 PLUS)

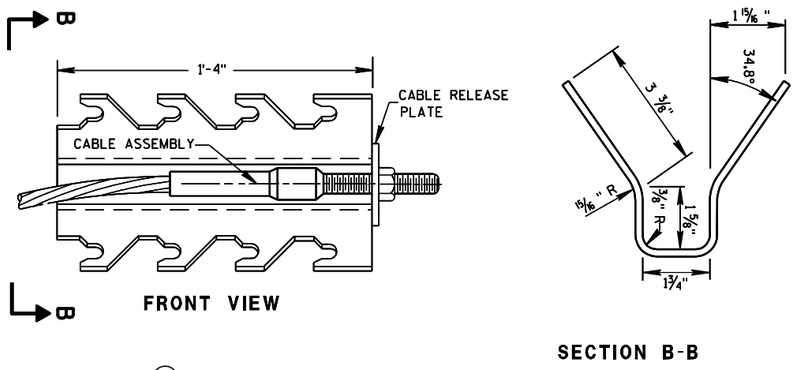

⑨ CABLE ANCHOR BOX (SKT-350)

(SKT-350)

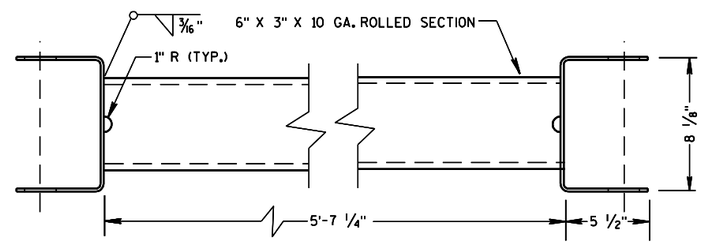

⑩ STRUT DETAIL (ET-2000/ET-2000 PLUS)

(ET-2000/ET-2000 PLUS)

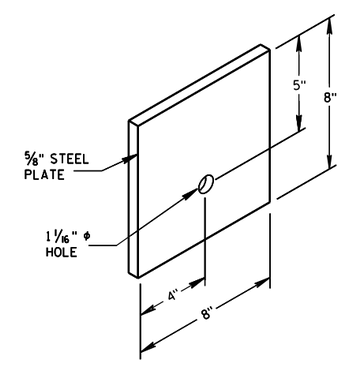

⑦ STEEL BEARING PLATE

(SKT-350, ET-2000/ET-2000 PLUS)

6

6

S.D.D. 14 B 24-7b

S.D.D. 14 B 24-7b

STEEL PLATE BEAM GUARD
ENERGY ABSORBING TERMINAL

STATE OF WISCONSIN
DEPARTMENT OF TRANSPORTATION

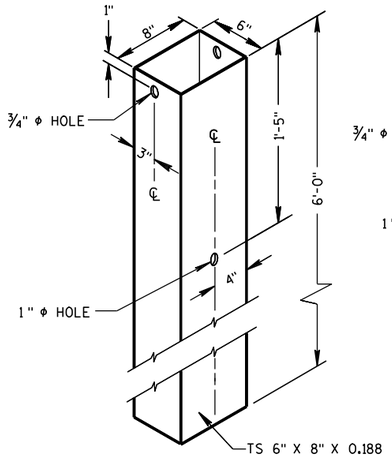

② 72" STEEL TUBE
(POSTS NO. 1-4

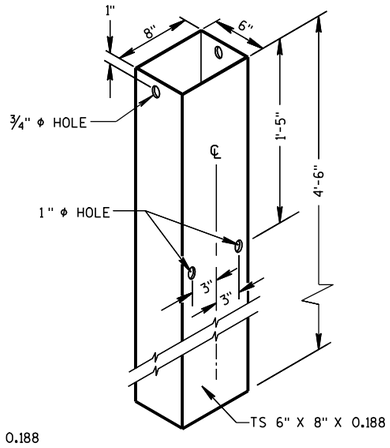

② 54" STEEL TUBE
(POSTS NO. 1-4

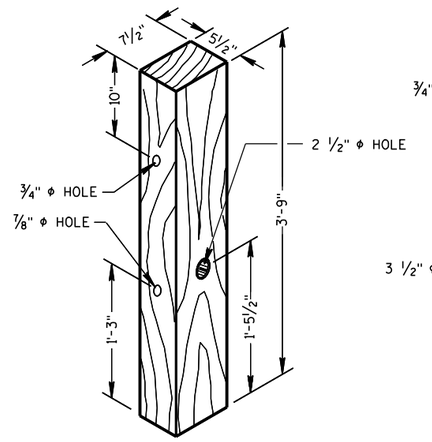

① TERMINAL POST
(POSTS NO. 1-4

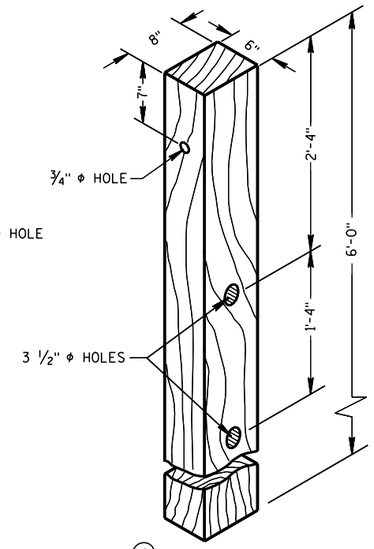

④ CRT POST
(POSTS NO'S 5-8

WOOD BREAKAWAY POSTS

GENERAL NOTES

STEEL PLATE BEAM GUARD, ENERGY ABSORBING TERMINAL SHALL BE PAID FOR AT THE CONTRACT UNIT PRICE EACH, WHICH SHALL INCLUDE HARDWARE, STEEL PLATE BEAM GUARD, POSTS, REFLECTIVE SHEETING AND INSTALLATION AS SHOWN.

WHEN ROCK IS ENCOUNTERED DURING EXCAVATION, A 12 INCH DIA. POST HOLE EXTENDING 20 INCHES DEEP INTO THE ROCK MAY BE USED IF APPROVED BY THE ENGINEER. GRANULAR MATERIAL SHALL BE PLACED IN THE BOTTOM OF THE HOLE APPROXIMATELY 2 ½" INCHES DEEP TO PROVIDE DRAINAGE. THE SOIL TUBES SHALL BE FIELD CUT TO LENGTH, PLACED IN THE HOLE AND BACKFILLED WITH ADEQUATELY COMPACTED MATERIAL EXCAVATED FROM THE HOLE.

SEE APPROVED PRODUCTS LIST FOR ACCEPTABLE E. A. T. MARKER POST.

Ⓖ ½" DIA. X 3" LAG BOLT WITH WASHER.

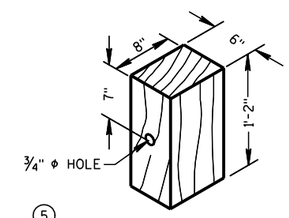

⑤ WOOD OFFSET BLOCK
REQ'D. AT ALL POSTS EXCEPT POST NO'S 1 & 2

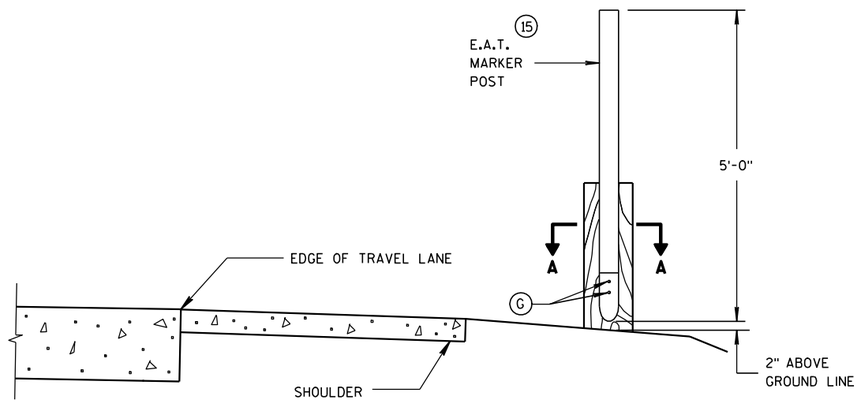

TYPICAL INSTALLATION OF E.A.T.
MARKER POST BACKSIDE OF POST NO. 1
(E.A.T. AND RAIL REMOVED FOR CLARITY)

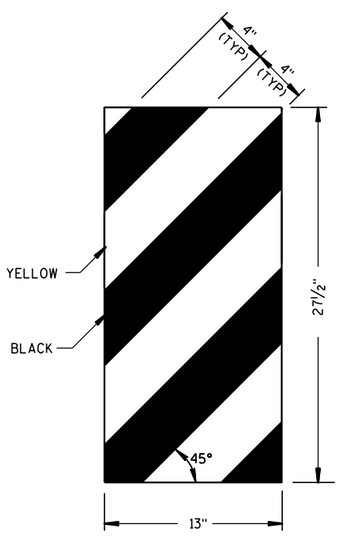

ET-2000 PLUS ONLY

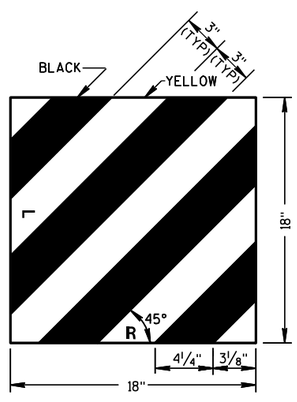

ET-2000 AND SKT-350

⑭ REFLECTIVE SHEETING DETAILS

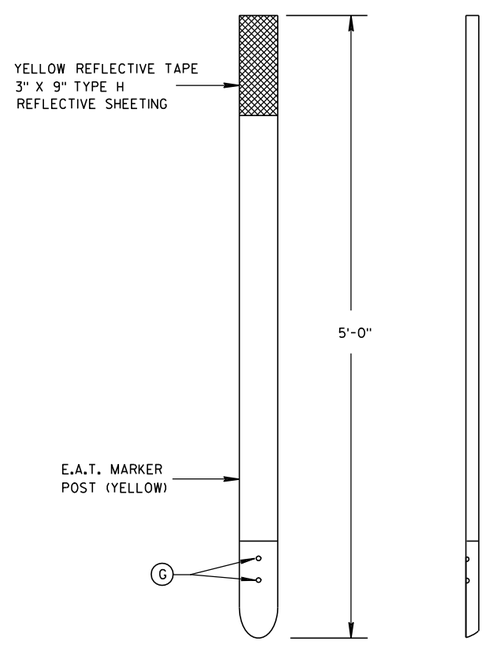

FRONT VIEW SIDE VIEW

⑮ E.A.T. MARKER POST

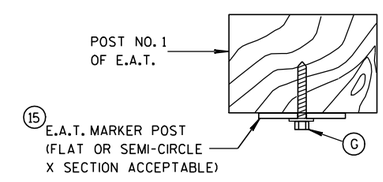

SECTION A-A

STEEL PLATE BEAM GUARD
ENERGY ABSORBING TERMINAL

STATE OF WISCONSIN
DEPARTMENT OF TRANSPORTATION

APPROVED
4-12-10 /S/ Jerry H. Zogg
DATE ROADWAY STANDARDS ENGINEER
FHWA

6

6

S.D.D. 14 B 24-7c

S.D.D. 14 B 24-7c

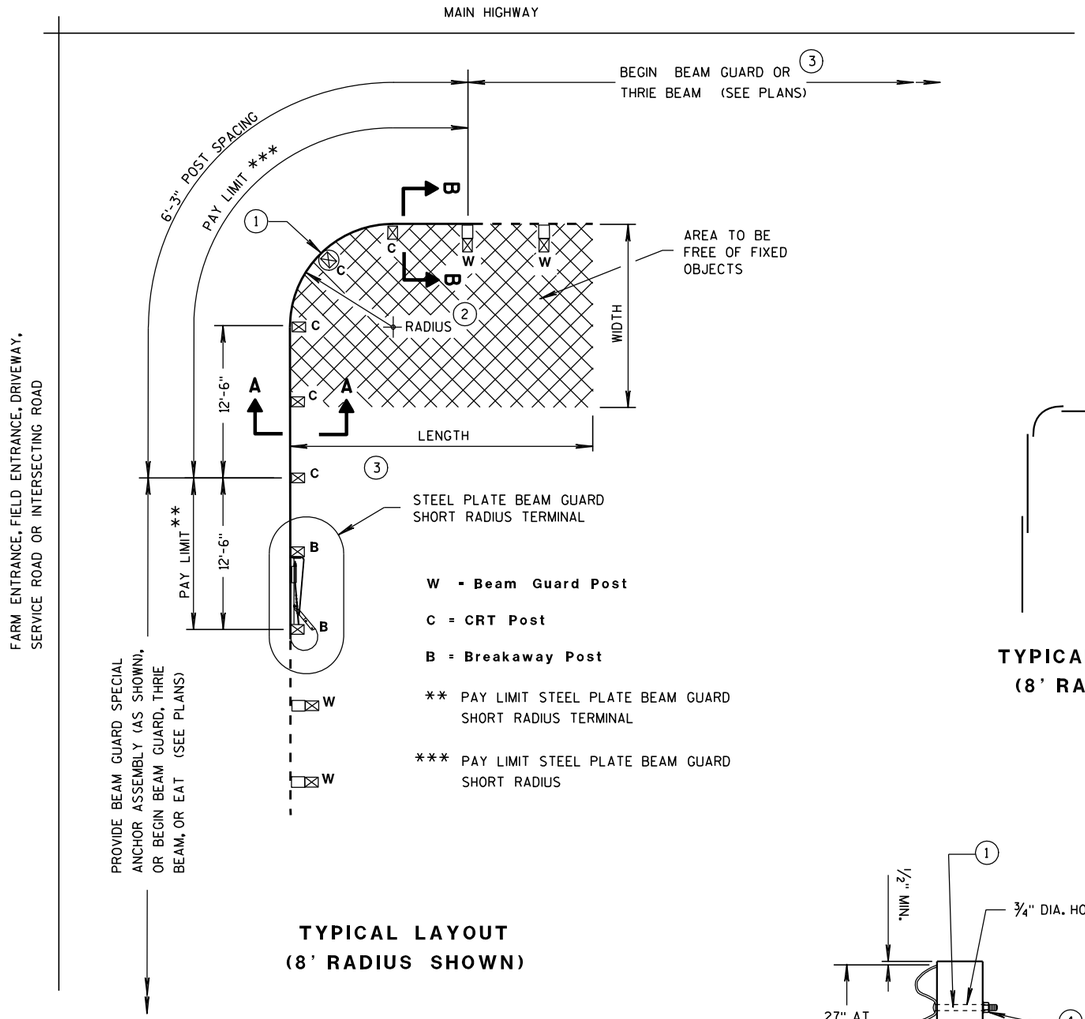

TYPICAL LAYOUT
(8' RADIUS SHOWN)

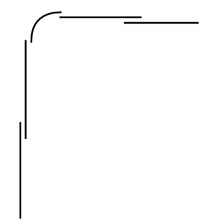

TYPICAL LAP SPLICES
(8' RADIUS SHOWN)

GENERAL NOTES

ALL ANGLES, CHANNELS, AND PLATES SHALL CONFORM TO THE REQUIREMENTS OF ASTM A36 AND THE STRUCTURAL TUBING SHALL CONFORM TO ASTM A 500. WELDING SHALL MEET THE CURRENT REQUIREMENTS OF THE AMERICAN WELDING SOCIETY STRUCTURAL WELDING CODE ANSI/AWS D1.1. ALL STRUCTURAL STEEL SHALL BE GALVANIZED IN ACCORDANCE WITH ASTM A 123. PUNCHING, DRILLING, CUTTING, OR WELDING WILL NOT BE PERMITTED AFTER GALVANIZING. FURNISH AND INSTALL HARDWARE PER STANDARD SPECIFICATION 614.2. UNLESS NOTED OTHERWISE.

SHOP BEND CURVED RAIL SECTIONS.

SEE STANDARD DETAIL DRAWING 14 B 15 FOR OTHER DETAIL.

1. ON THE 8 FOOT RADIUS INSTALLATION, DO NOT INSTALL BUTTON HEAD BOLT AT CENTER CRT POST.
2. RADIUS FROM 8' - 36'. SEE PLAN.
3. HEIGHT TRANSITION MAY BE REQUIRED. SEE PLAN OR PROJECT ENGINEER.
4. 5/8" ø X 1'-6" BUTTON HEAD BOLT AND RECESS NUT WITH ROUND WASHER UNDER NUT.

RADIUS	NUMBER OF CRT POSTS	* NUMBER AND LENGTH OF CURVED RAILS	REQUIRED AREA FREE OF FIXED OBJECTS (LENGTH x WIDTH)
8'	5	1 at 12.5'	25' x 15'
16'	7	1 at 25'	30' x 15'
24'	9	1 at 25' and 1 at 12.5'	40' x 20'
32'	11	2 at 25'	50' x 20'

* THE NUMBER OF RAILS IS BASED ON A 90° INTERSECTION. SEE PLAN FOR NON 90° INSTALLATIONS.

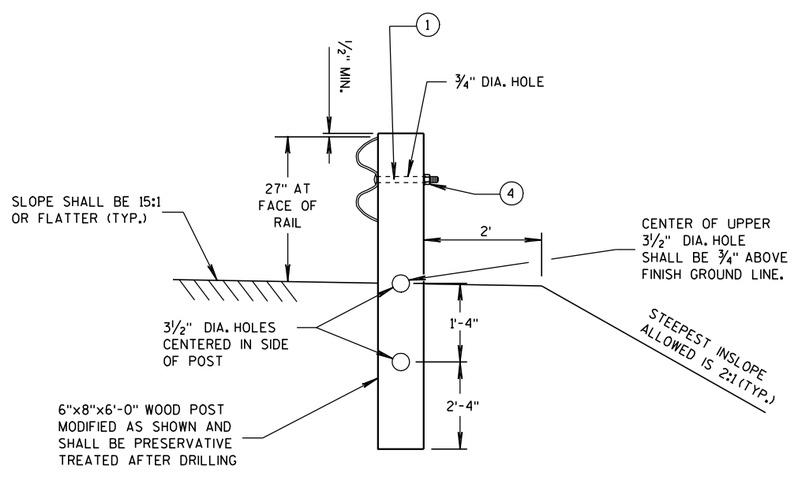

SECTION A-A
(CRT POST)

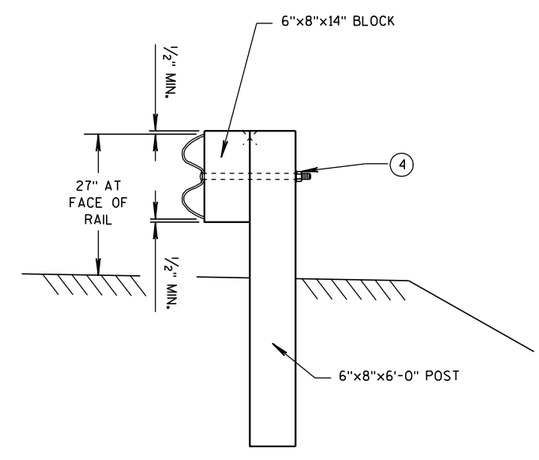

SECTION B-B
(BEAM GUARD POST)

STEEL PLATE BEAM GUARD SHORT RADIUS TERMINAL

STEEL PLATE BEAM GUARD SHORT RADIUS TERMINAL

STATE OF WISCONSIN
DEPARTMENT OF TRANSPORTATION

6

S.D.D. 14 B 27-1a

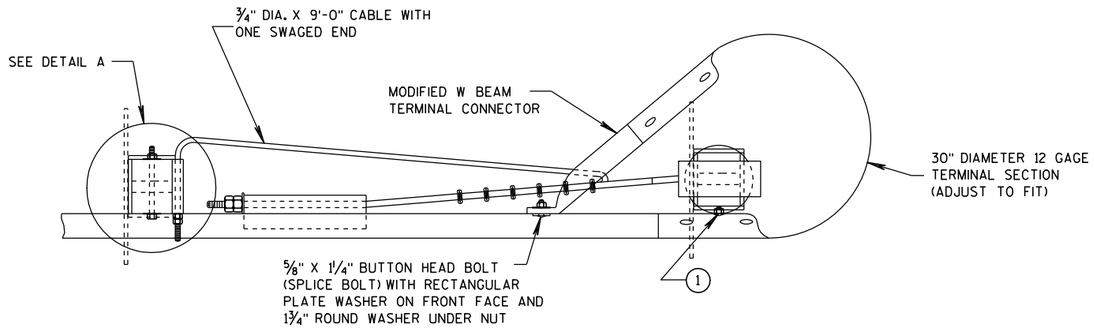

PLAN VIEW

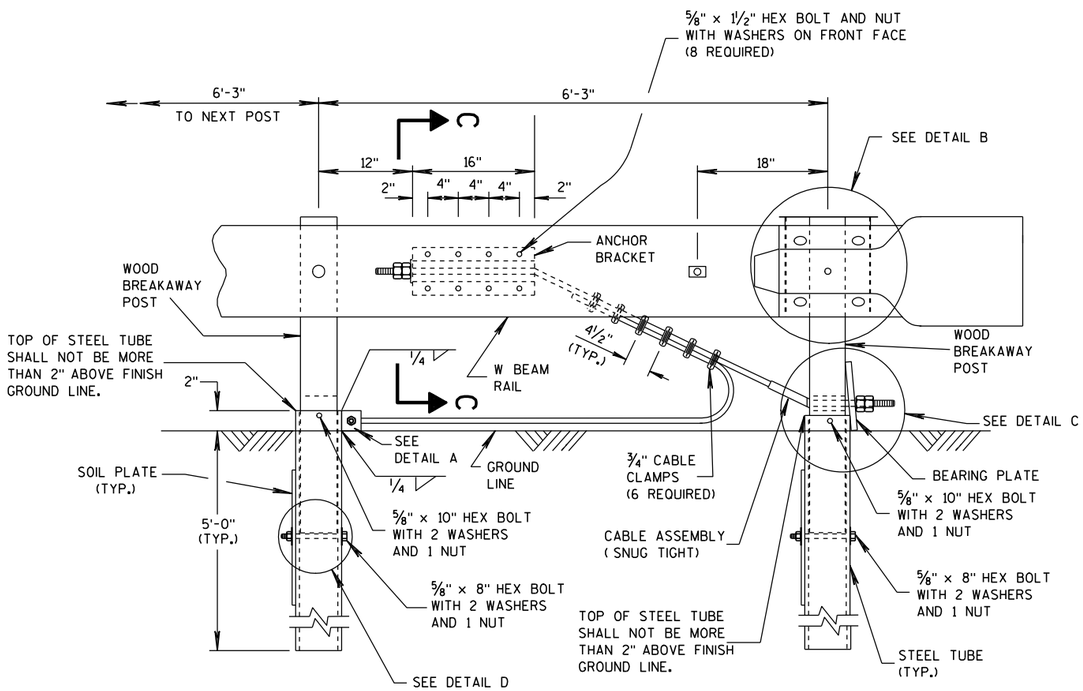

ELEVATION VIEW

STEEL PLATE BEAM GUARD SHORT RADIUS TERMINAL

GENERAL NOTES

(1) ATTACH W BEAM RAIL TO THE STEEL PIPE WITH A 5/8" X 2" BUTTON HEAD BOLT WITH NO WASHER. CONNECTION TO THE POST IS NOT REQUIRED.

INSTALL GALVANIZED 3/4" (6X19) PREFORMED WIRE OR INDEPENDENT WIRE ROPE CORE CONFORMING TO AASHTO M 30. MANUFACTURE WIRE ROPE OUT OF IMPROVED PLOW STEEL WITH A MINIMUM BREAKING STRENGTH OF 42,800 PSI.

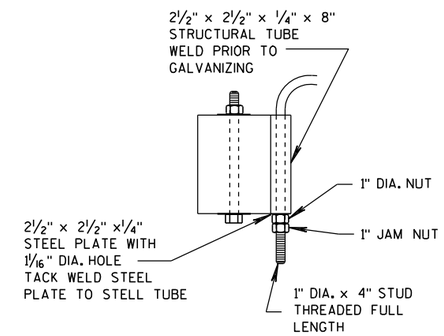

DETAIL A

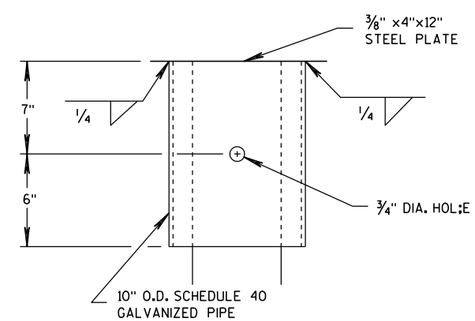

DETAIL B

(BEAM GUARD AND TERMINAL SECTION NOT SHOWN)

STEEL PLATE BEAM GUARD SHORT RADIUS TERMINAL

STATE OF WISCONSIN
DEPARTMENT OF TRANSPORTATION

6

S.D.D. 14 B 27-1b

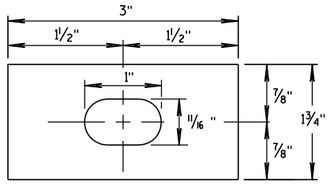

RECTANGULAR PLATE WASHER

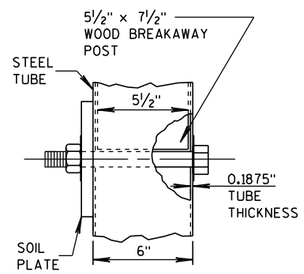

DETAIL D

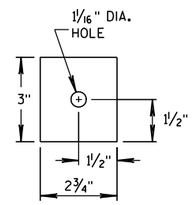

END PLATE

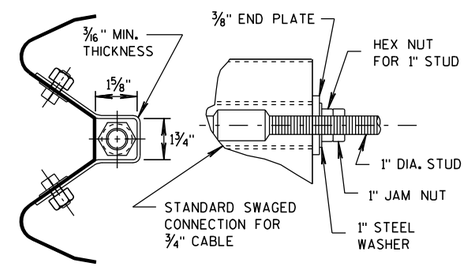

SECTION C-C
(END PLATE REMOVED)

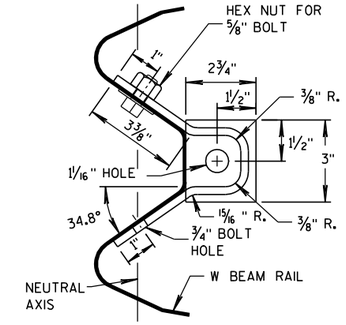

ANCHOR BRACKET

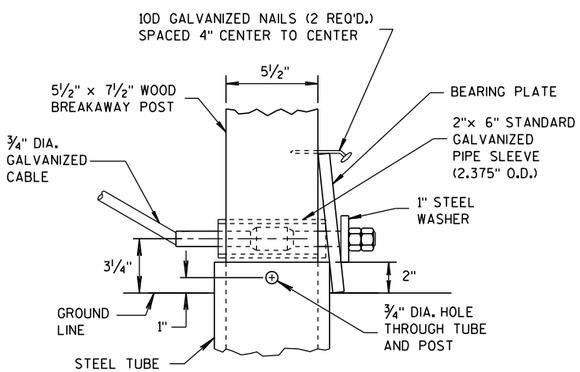

DETAIL C

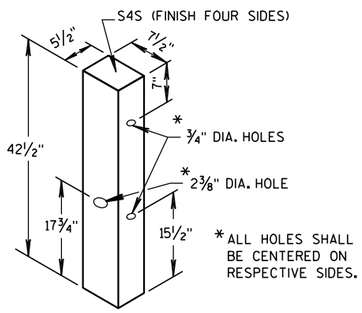

WOOD BREAKAWAY POST

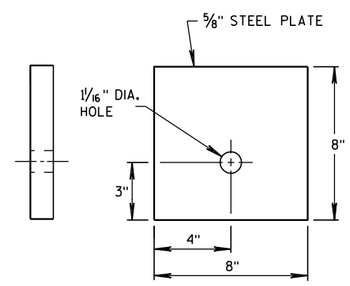

BEARING PLATE

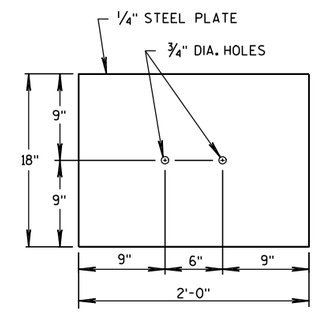

SOIL PLATE

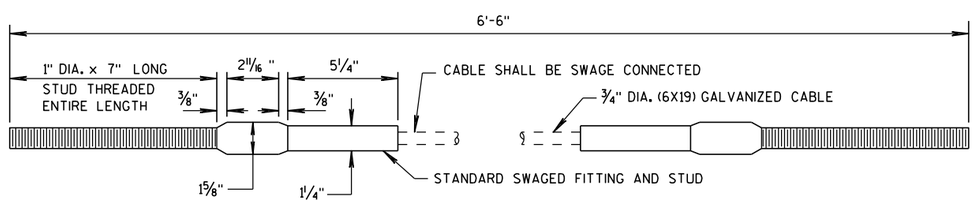

CABLE ASSEMBLY

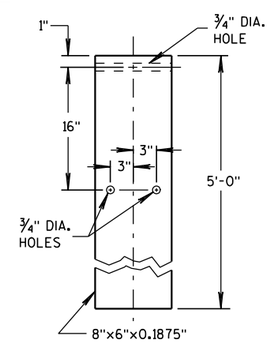

STEEL TUBE

STEEL PLATE BEAM GUARD
SHORT RADIUS TERMINAL

STATE OF WISCONSIN
DEPARTMENT OF TRANSPORTATION

APPROVED
12/18/08 — DATE
/S/ Jerry H. Zogg — ROADWAY STANDARDS ENGINEER
FHWA

6

S.D.D. 14 B 27-1c

GENERAL NOTES

DETAILS OF INSTALLATION, MATERIALS AND WORKMANSHIP NOT SHOWN ON THIS DRAWING SHALL CONFORM TO THE PERTINENT REQUIREMENTS OF THE STANDARD SPECIFICATIONS AND APPLICABLE SPECIAL PROVISIONS.

ALL LETTERS, ARROWS AND SYMBOLS SHALL BE IN CONFORMANCE WITH REQUIREMENTS INCLUDED IN "STANDARD ALPHABETS FOR HIGHWAY SIGNS AND PAVEMENT MARKING" BOOK BY THE FEDERAL HIGHWAY ADMINISTRATION. ALL LETTERS, ARROWS AND SYMBOLS SHALL BE WHITE AND REFLECTORIZED. SMALL DIFFERENCES IN DIMENSIONS WITHIN THE TOLERANCES OF THAT BOOK ARE ACCEPTABLE.

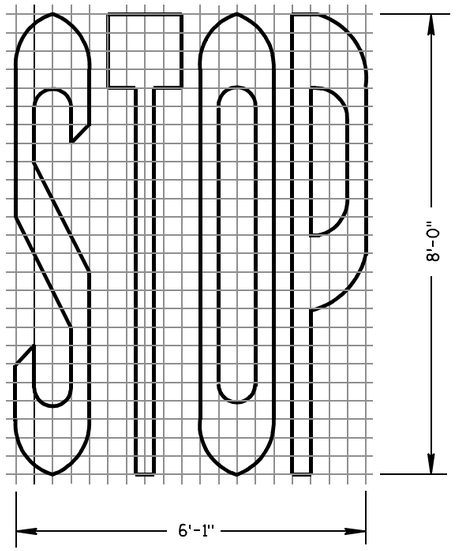

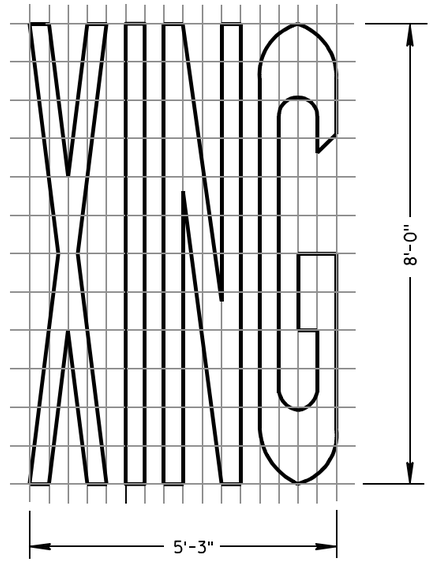

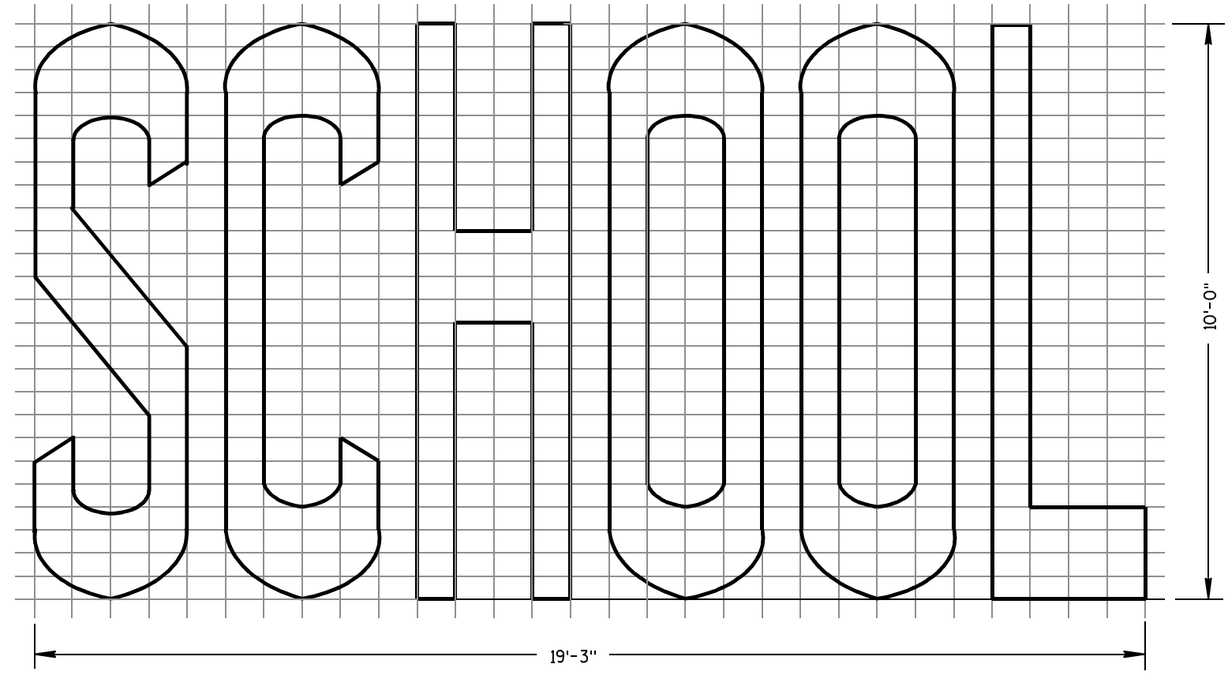

TWO-LANE

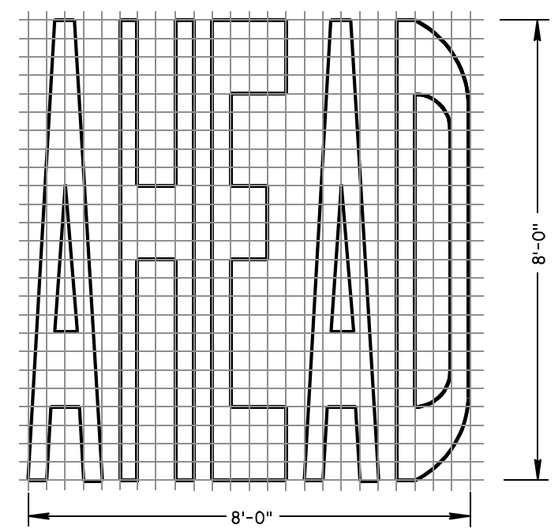

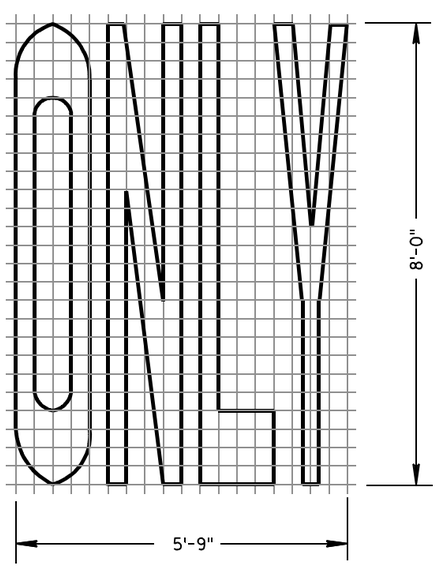

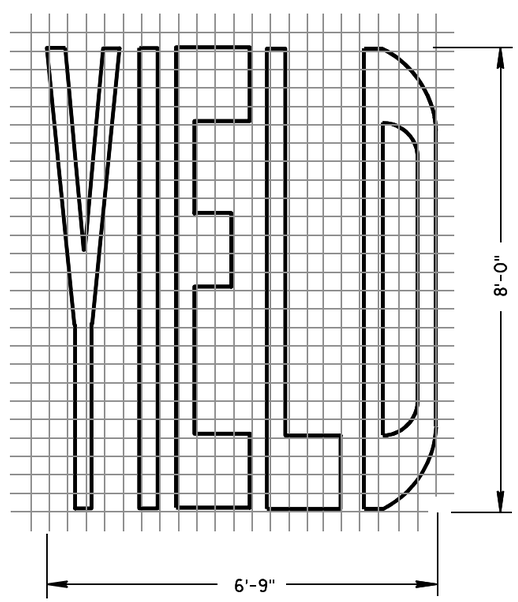

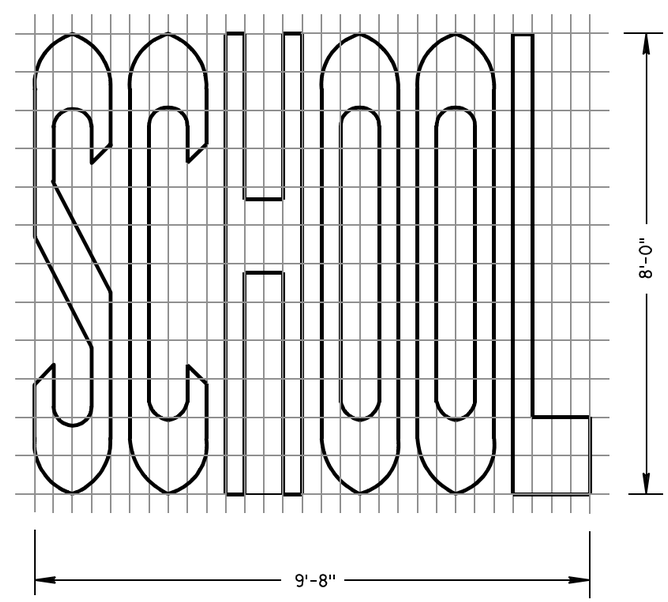

SINGLE-LANE

6

6

S.D.D. 15 C 7-12b

S.D.D. 15 C 7-12b

PAVEMENT MARKING WORDS

STATE OF WISCONSIN
DEPARTMENT OF TRANSPORTATION

APPROVED

7-1-11 — DATE

/S/ Thomas N. Notbohm — STATE TRAFFIC ENGINEER

FHWA

GENERAL NOTES

DETAILS OF INSTALLATION, MATERIALS AND WORKMANSHIP NOT SHOWN ON THIS DRAWING SHALL CONFORM TO THE PERTINENT REQUIREMENTS OF THE STANDARD SPECIFICATIONS AND APPLICABLE SPECIAL PROVISIONS.

ALL LETTERS, ARROWS AND SYMBOLS SHALL BE IN CONFORMANCE WITH REQUIREMENTS INCLUDED IN "STANDARD ALPHABETS FOR HIGHWAY SIGNS AND PAVEMENT MARKING" BOOK BY THE FEDERAL HIGHWAY ADMINISTRATION. ALL LETTERS, ARROWS AND SYMBOLS SHALL BE WHITE AND REFLECTORIZED. SMALL DIFFERENCES IN DIMENSIONS WITHIN THE TOLERANCES OF THAT BOOK ARE ACCEPTABLE.

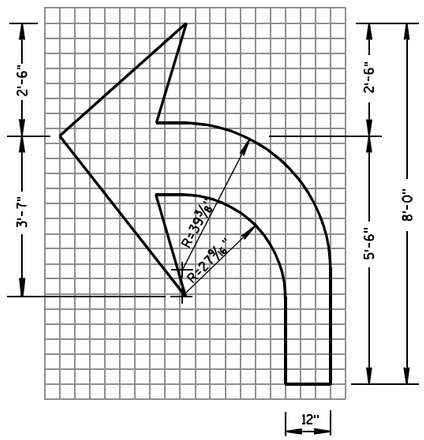

TYPE 2

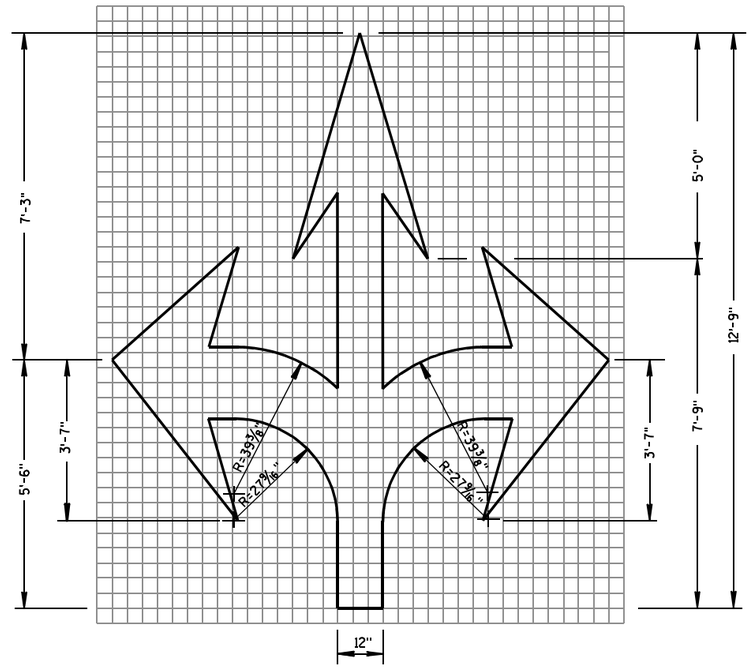

TYPE 6

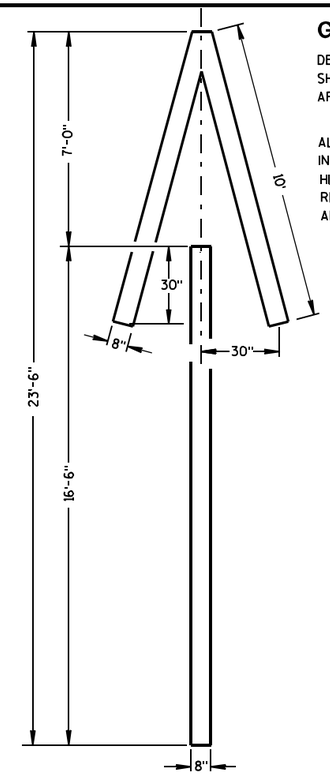

TYPE 4

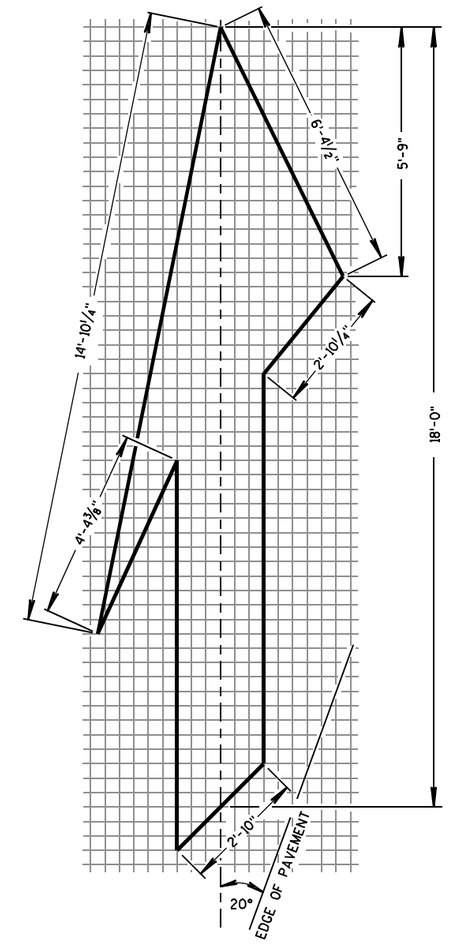

TYPE 5 LANE DROP ARROW

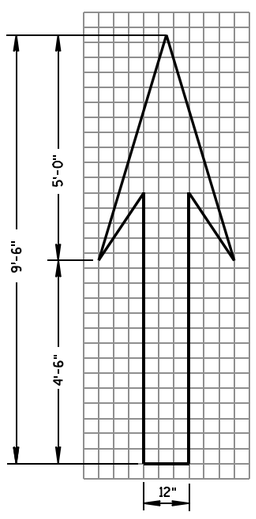

TYPE 1

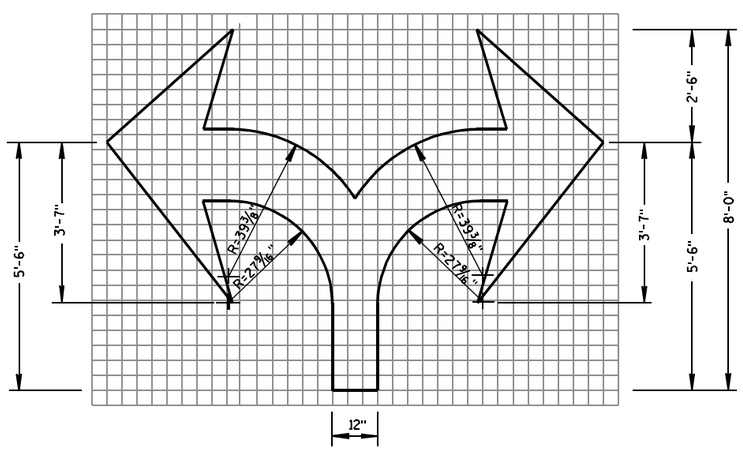

TYPE 7

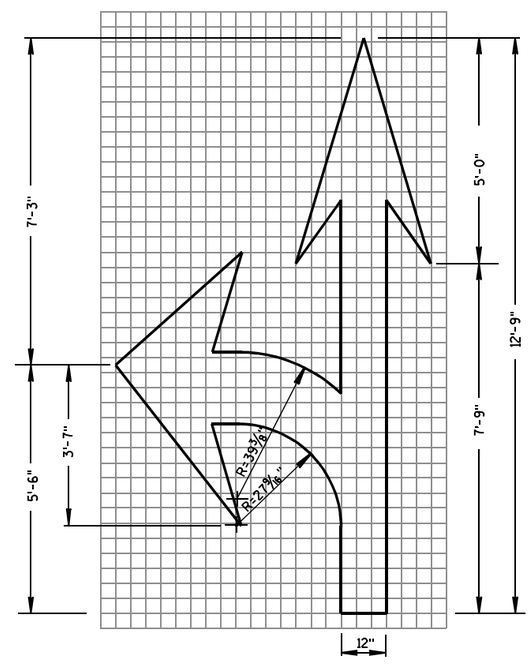

TYPE 3

6

6

S.D.D. 15 C 7-12c

S.D.D. 15 C 7-12c

PAVEMENT MARKING ARROWS	
STATE OF WISCONSIN DEPARTMENT OF TRANSPORTATION	
APPROVED 7/1/11 DATE	/S/ Thomas N. Nothohm STATE TRAFFIC ENGINEER
FHWA	

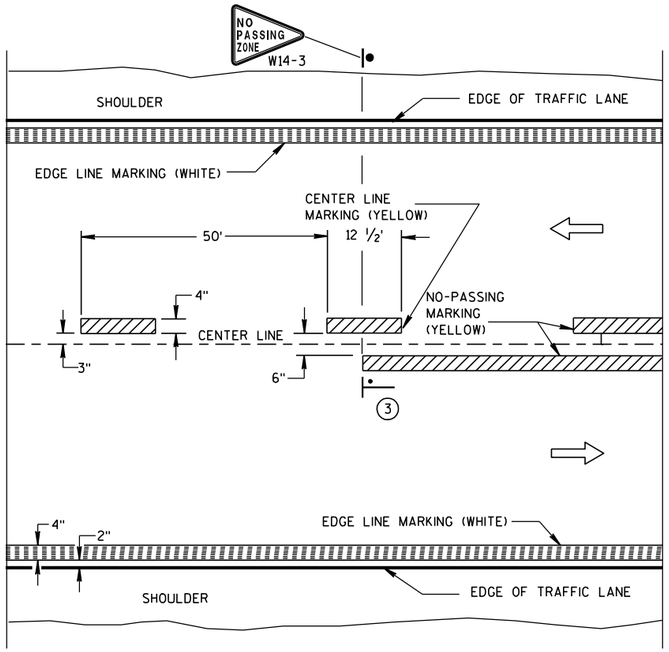

TWO WAY TRAFFIC

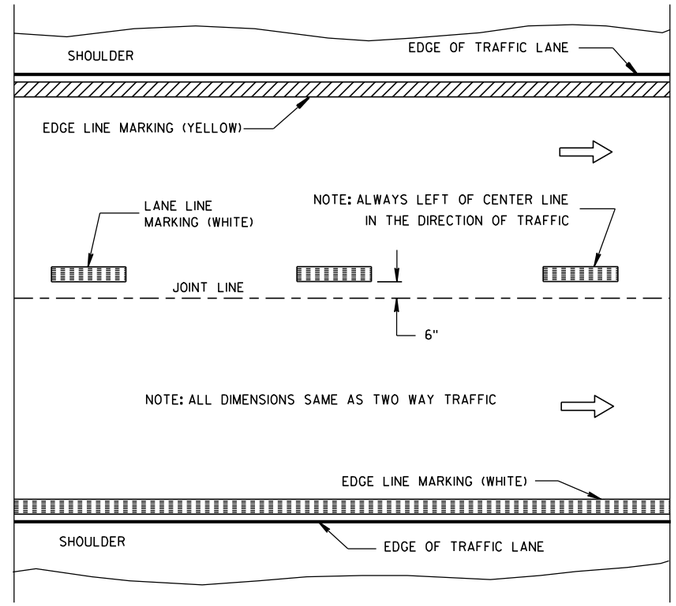

ONE WAY TRAFFIC

PERMANENT PAVEMENT MARKING

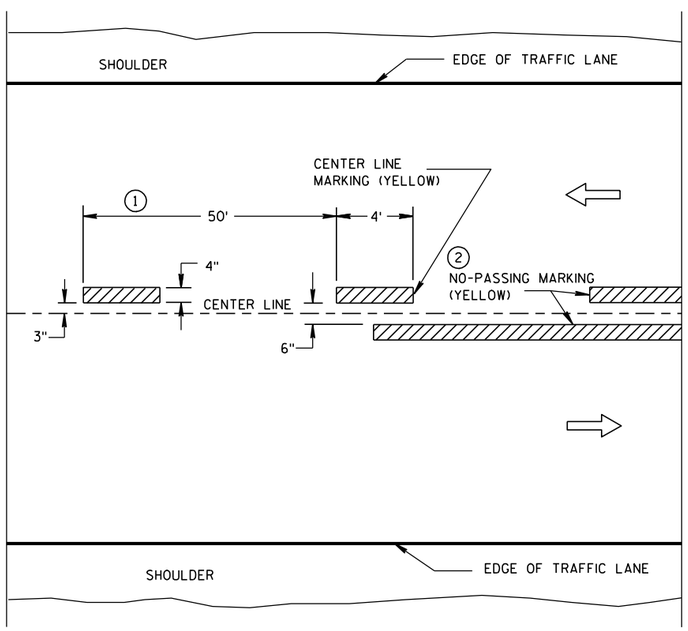

TWO WAY TRAFFIC

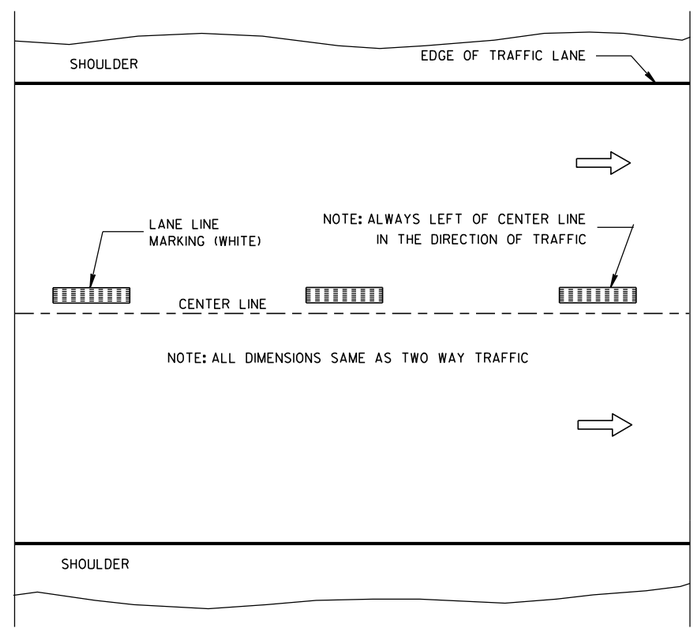

ONE WAY TRAFFIC

TEMPORARY (INTERMEDIATE) PAVEMENT MARKING

(SHOWS CYCLE FOR TEMPORARY CENTER LINE OR TEMPORARY LANE LINE MARKING)

GENERAL NOTES

DETAILS OF CONSTRUCTION NOT SHOWN ON THIS DRAWING SHALL CONFORM TO STANDARD SPECIFICATIONS AND SPECIAL PROVISIONS.

1. HALF CYCLE LENGTHS (25'±) WITH 2' MINIMUM STRIPE LENGTHS SHALL BE PROVIDED ON ROADWAYS (INCLUDING TEMPORARY TRAVELED WAYS) WITH REVERSE CURVATURE, CURVATURE OF OVER 5 DEGREES OR WHEN DIRECTED BY THE ENGINEER TO MARK UNUSUAL ALIGNMENT OF THE TRAVELED WAY.
2. NO PASSING ZONE TEMPORARY PAVEMENT MARKING IS REQUIRED TO BE PLACED, WHERE APPROPRIATE, ALONG WITH CENTERLINE TEMPORARY PAVEMENT MARKING WHEN A SAME DAY PERMANENT PAVEMENT MARKING ITEM IS INCLUDED IN THE CONTRACT.
3. NO PASSING ZONE MARKINGS ARE PLACED ACCORDING TO "T" MARKINGS. IF EXISTING NO PASSING ZONE W14-3 SIGNS ARE BEYOND 50 FEET IN EITHER DIRECTION, THE SIGNS SHALL BE MOVED TO THE "T" MARKINGS.

NOTE

ARROW SYMBOL (⇨) SHOWS DIRECTION OF TRAVEL

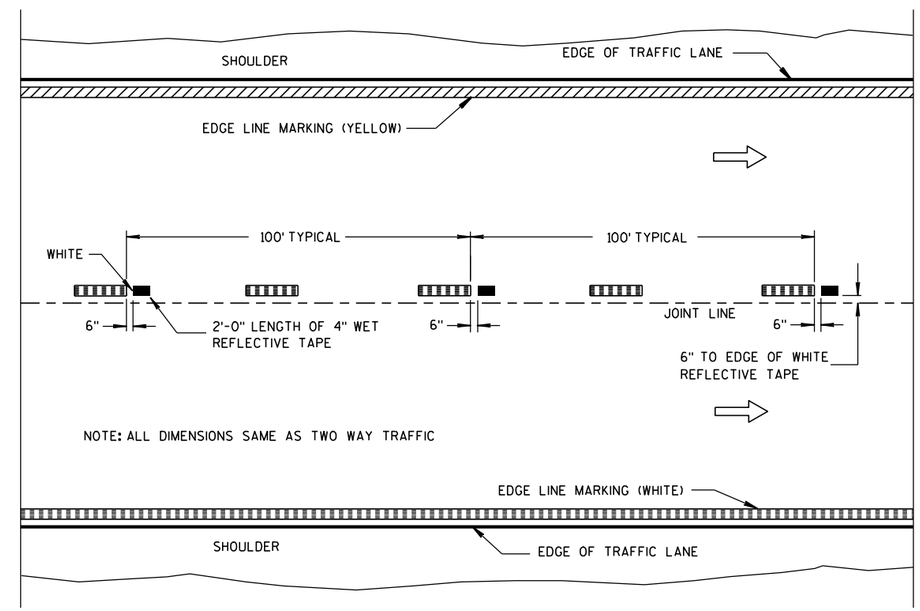

WET REFLECTIVE TAPE SUPPLEMENT TO SPRAYED OR NON WET REFLECTIVE TAPE LANE LINE

LEGEND

"T" MARKING

POST MOUNTED SIGN

PAVEMENT MARKING (MAINLINE)

STATE OF WISCONSIN
DEPARTMENT OF TRANSPORTATION

APPROVED
6-23-11 /S/ Thomas N. Notbohm
DATE STATE TRAFFIC ENGINEER
FHWA

6
S.D.D. 15 C 8-14a

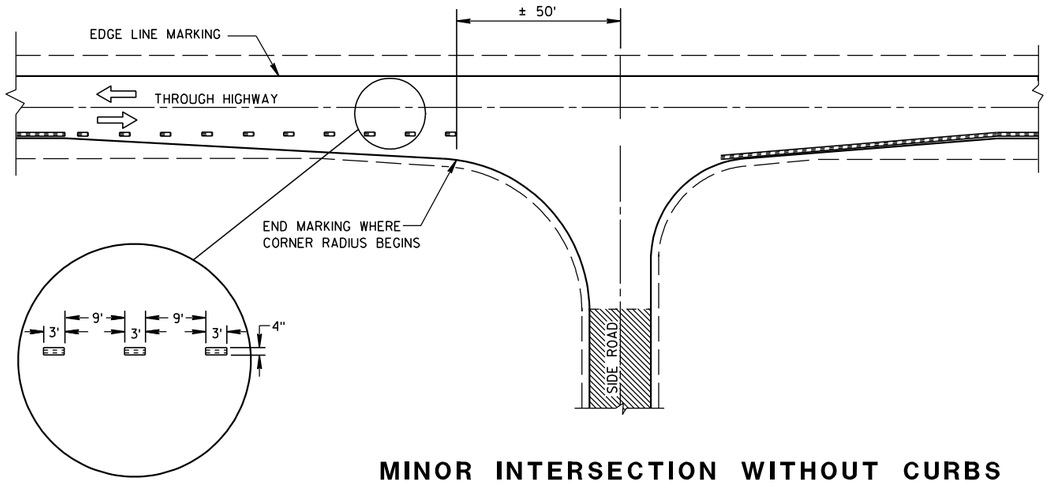

MINOR INTERSECTION WITHOUT CURBS

GENERAL NOTES

EDGE LINES SHALL BE OMITTED THROUGH INTERSECTIONS. EDGE LINES SHALL BE CONTINUED THROUGH DRIVEWAYS.

(1) WHEN DISTANCE "A" IS LESS THAN 250 FEET, OMIT LANE LINE.

(2) WHEN DISTANCE "B" IS LESS THAN 100 FEET, OMIT CHANNELIZING LANE LINE.

(3) ALTERNATIVE MARKING SHALL BE PROVIDED WHEN SPECIFIED IN THE CONTRACT. TYPICAL SITUATIONS WHERE THIS MARKING MAY BE REQUIRED ARE WHERE THE INTERSECTION IS ON A SHARP HORIZONTAL CURVE OR CREST VERTICAL CURVE IN AN UNLIGHTED AREA SUCH THAT THE EDGE LINE MAY BE MISLEADING TO THE MOTORIST OR DISAPPEAR FROM SIGHT.

(4) THE EDGE LINE IN THE TAPER AREAS OF THE BYPASS LANE AND THE BYPASS LANE SHALL BE LOCATED 1-FOOT FROM EDGE OF PAVEMENT TO THE OUTSIDE EDGE OF EDGE LINE.

(5) BARRIER LINE ENDS AT SIDE ROAD PAVEMENT/SURFACE EDGE EXTENSION.

(6) BARRIER LINE STARTS 500 FEET PRIOR TO THE BYPASS TAPER.

(7) IF THE DISTANCE BETWEEN 2 SUCCESSIVE NO-PASSING ZONES IS LESS THAN THE MINIMUM DISTANCE BETWEEN ZONES, CONNECT THE 2 ZONES.

(8) 3' LINE 9' GAP, EXCEPT RETRACE THE EXISTING LINE - GAP PATTERN WHERE EXISTING MARKINGS ARE IN PLACE.

ARROW SYMBOL (⇨) SHOWS DIRECTION OF TRAVEL

(7)

POSTED SPEED (MPH)	MINIMUM DISTANCE BETWEEN ZONES (FEET)
25 - 30	528
35 - 40	528
45 - 50	686
55	792

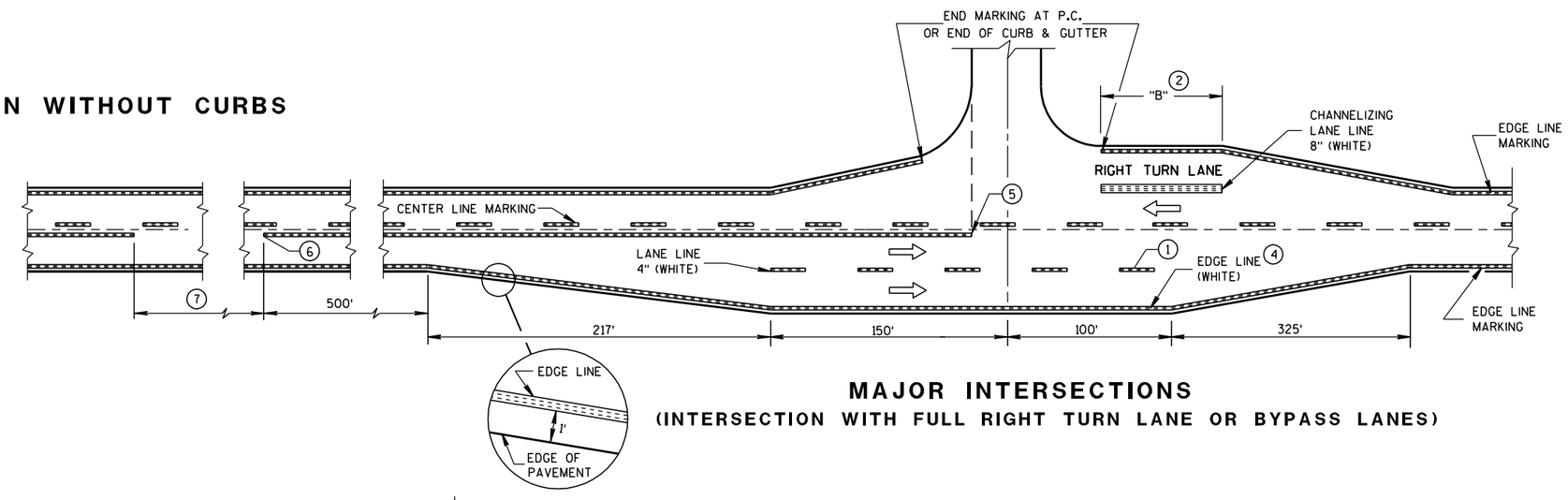

MAJOR INTERSECTIONS
(INTERSECTION WITH FULL RIGHT TURN LANE OR BYPASS LANES)

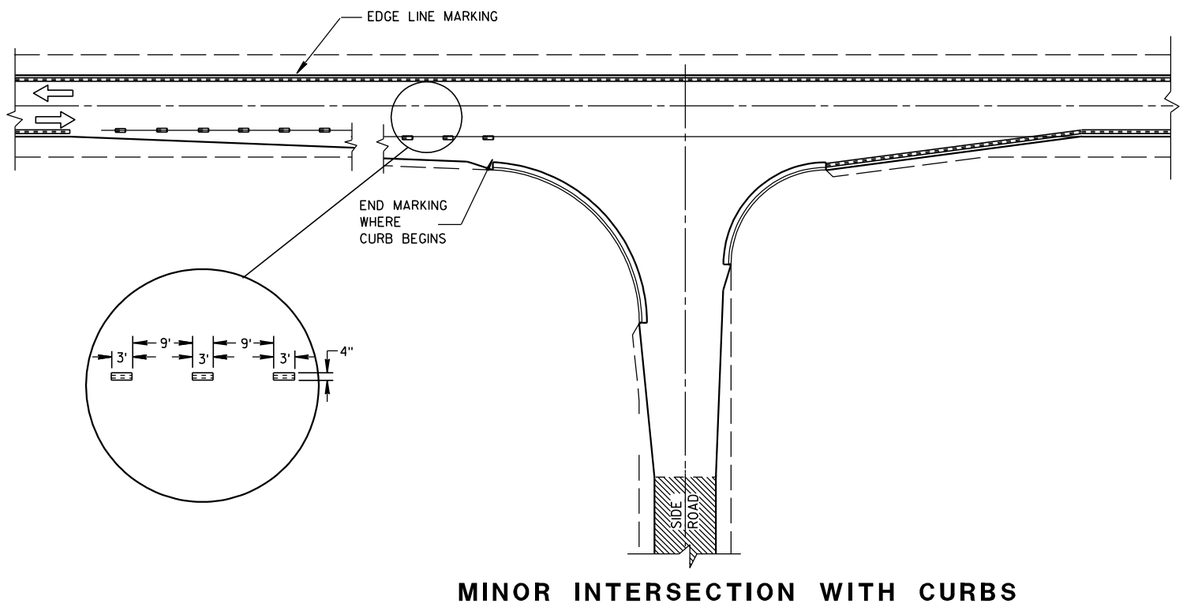

MINOR INTERSECTION WITH CURBS
(TYPICAL MARKING)

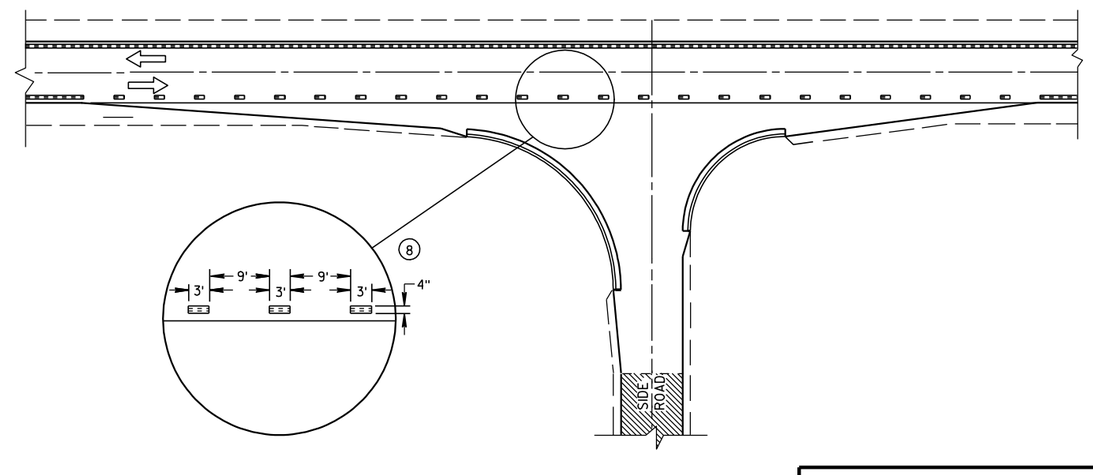

MINOR INTERSECTION WITH CURBS
(3) (FOR SPECIAL CONDITIONS AS SPECIFIED)

PAVEMENT MARKING
(INTERSECTIONS)

STATE OF WISCONSIN
DEPARTMENT OF TRANSPORTATION

6

6

S.D.D. 15 C 8-14b

S.D.D. 15 C 8-14b

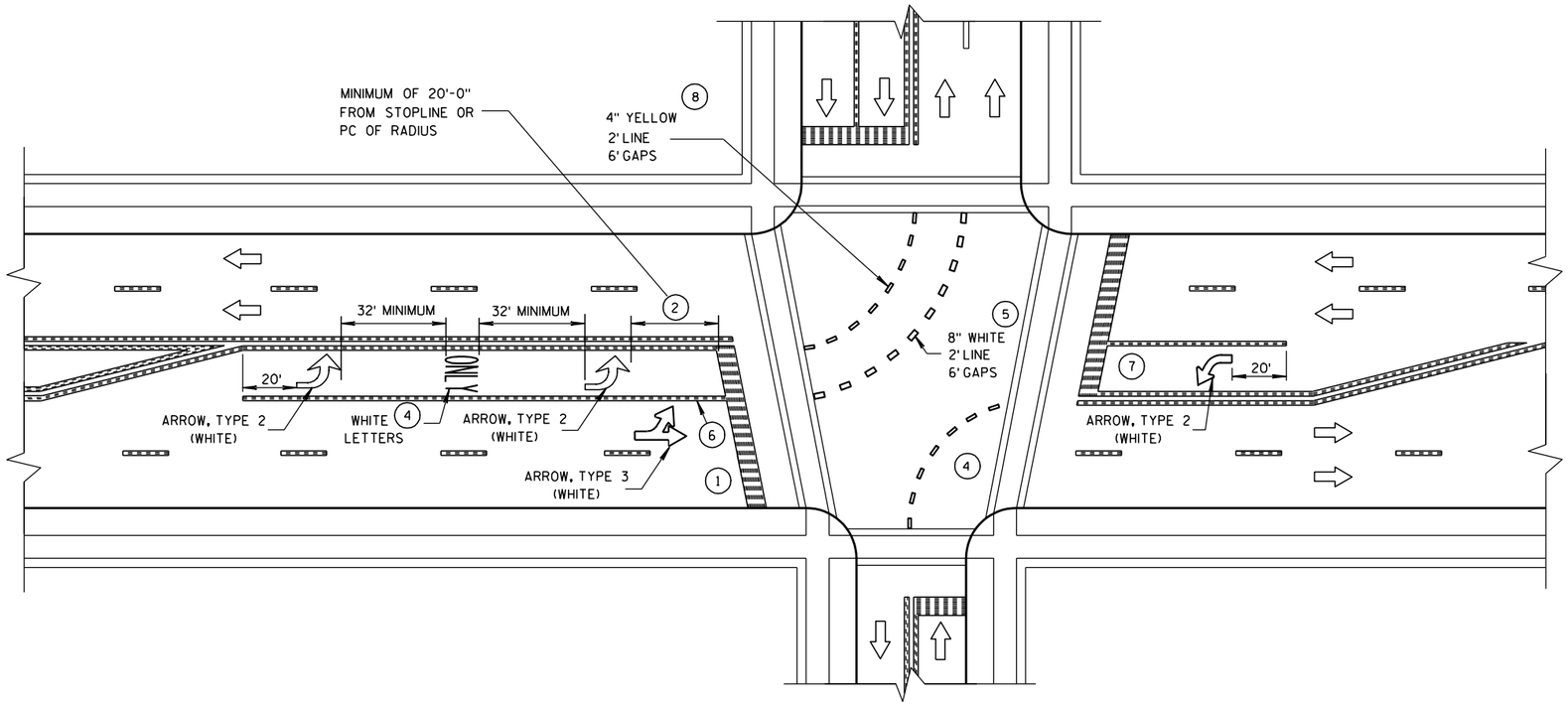

GENERAL NOTES

1. STOP BAR IS REQUIRED ONLY WHEN SPECIFIED IN THE CONTRACT.
2. DISTANCE MAY BE ADJUSTED TO ACCOMODATE SHORT LEFT TURN LANES. AS APPROVED BY THE ENGINEER.
3. A SET OF ARROWS IS REQUIRED EVERY 400' OR NEAR INTERSECTIONS OR DRIVEWAYS WITH TURNING TRAFFIC.
4. ADD EXTRA ARROW AND ONLY PER 160' OR WHEN ON A CURVE.
5. 8" WHITE WITH 2' LINE 6' GAPS FOR DUAL TURN LANE.
6. 8" WHITE
7. ADD SECOND ARROW WHEN TURN BAY IS GREATER THAN OR EQUAL TO 108'.
8. REQUIRED ONLY WHEN SPECIFIED IN THE CONTRACT.

NOTE:
ARROW SYMBOL (⇨)
SHOWS DIRECTION OF TRAVEL

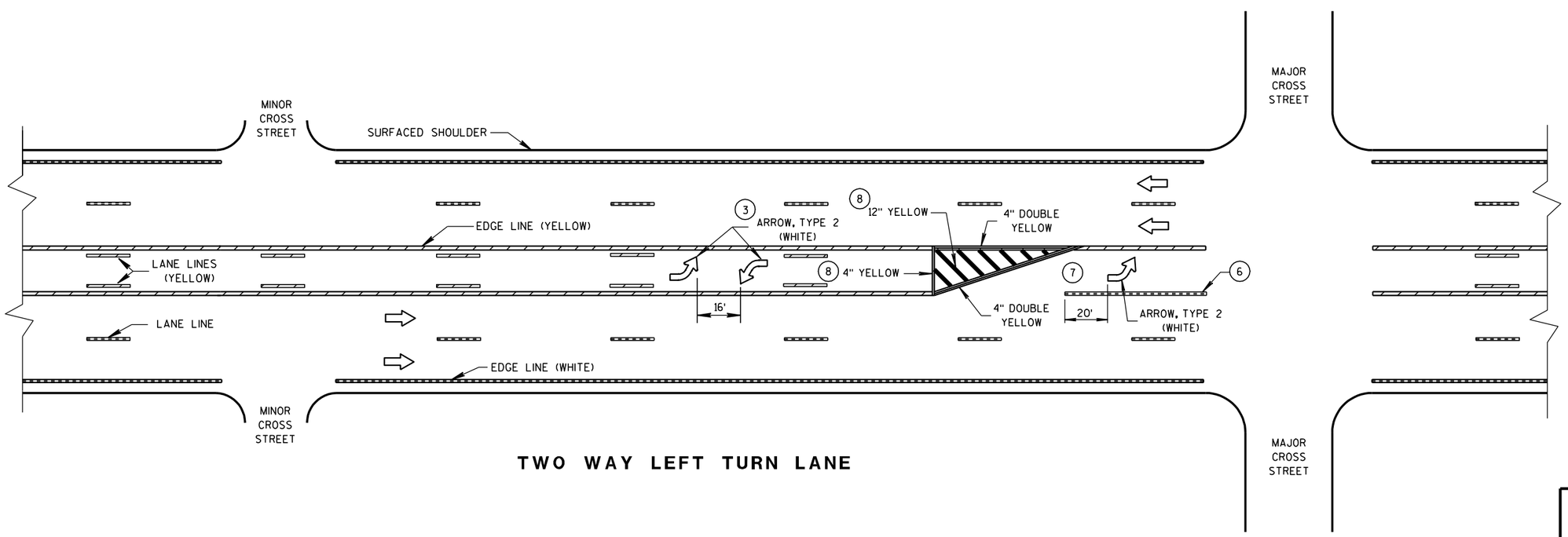

TWO WAY LEFT TURN LANE

PAVEMENT MARKING
(LEFT TURN LANE)

STATE OF WISCONSIN
DEPARTMENT OF TRANSPORTATION

6

S.D.D. 15 C 8-14e

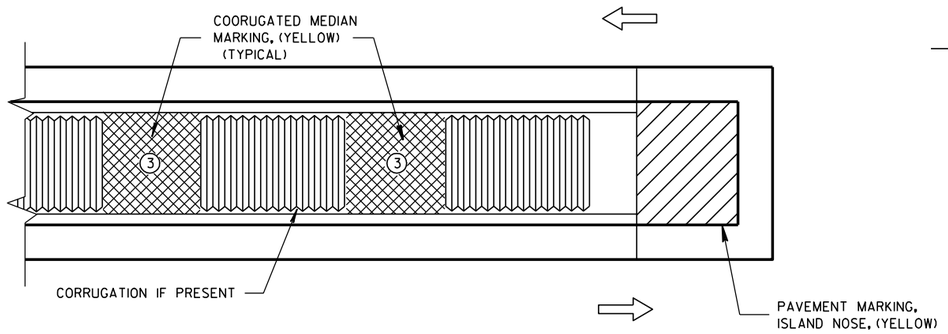

MEDIAN ISLAND WITH SQUARE BLUNT NOSE

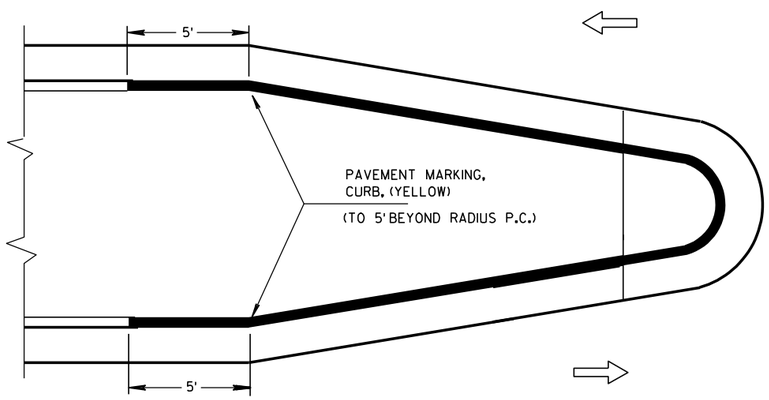

MEDIAN ISLAND WITH ROUND BLUNT NOSE

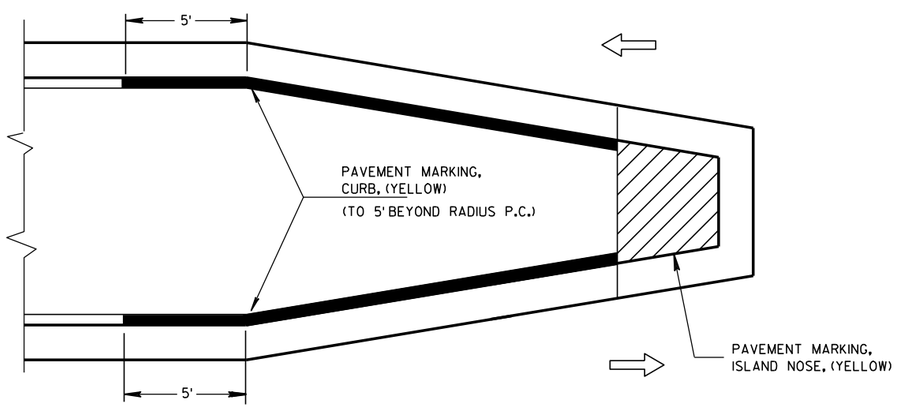

MEDIAN ISLAND WITH SLOPED NOSE

TYPICAL PLACEMENT OF PAVEMENT MARKING ON MEDIAN ISLANDS

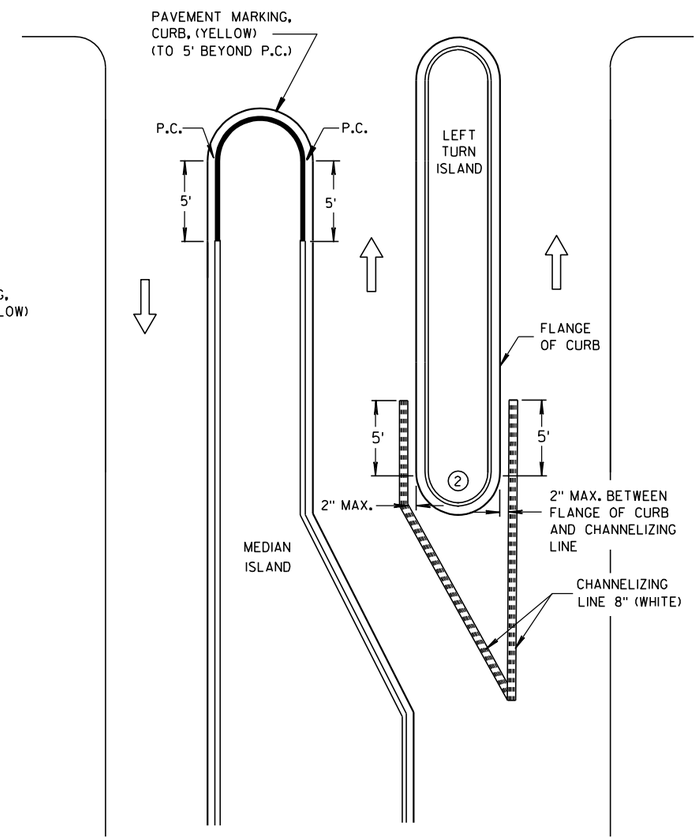

LEFT TURN & MEDIAN ISLAND

GENERAL NOTES

1. STOP LINE IS REQUIRED ONLY WHEN SPECIFIED IN THE CONTRACT.
2. DO NOT MARK CURB NOSES THAT SEPARATE LANES OF TRAFFIC TRAVELING IN THE SAME DIRECTION.
3. WHEN CONCRETE CORRUGATED MEDIAN IS CONSTRUCTED TO SEPARATE TRAFFIC OPERATING IN THE OPPOSING DIRECTION YELLOW PAVEMENT MARKING SHALL BE APPLIED TO THE FLAT PORTION OF THE CONCRETE CORRUGATED MEDIAN. THE ITEM OF PAVEMENT MARKING, CONCRETE CORRUGATED MEDIAN, WILL BE MEASURED IN PLACE AND AND ACCEPTED IN ACCORDANCE WITH THE CONTRACT AND PAID FOR AT THE CONTRACT UNIT PRICE PER SQUARE FOOT.

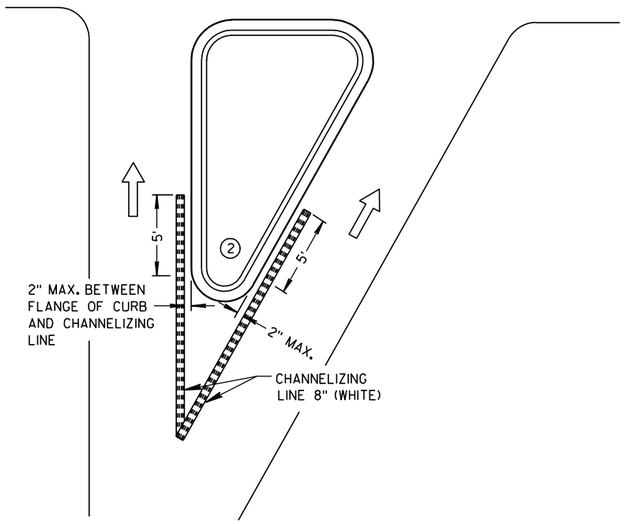

RIGHT TURN ISLAND

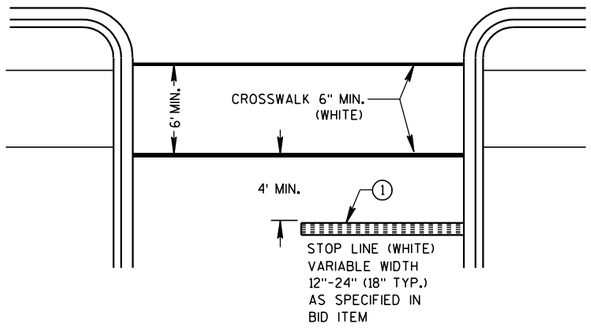

STOP LINE AND CROSSWALK

LEGEND

- ISLAND NOSE MARKING
- CURB MAKING
- CORRUGATED MEDIAN MARKING
- DIRECTION OF TRAVEL

PAVEMENT MARKING (ISLANDS, STOP LINE & CROSS WALK)

STATE OF WISCONSIN
DEPARTMENT OF TRANSPORTATION

6

6

S.D.D. 15 C 8-14f

S.D.D. 15 C 8-14f

TWO-LANE ROADWAY

SYMBOLS

WORK AREA

FLAGGER, EQUIPPED WITH STOP/SLOW PADDLE FASTENED ON SUPPORT STAFF

SIGN ON PORTABLE OR PERMANENT SUPPORT

USE OF THE "BE PREPARED TO STOP" SIGN IS OPTIONAL. WHEN USED, THIS SIGN SHALL BE LOCATED BETWEEN THE W20-7a AND W20-4 SIGNS. A 500' TYPICAL SPACING SHALL BE PROVIDED BETWEEN THE SIGNS.

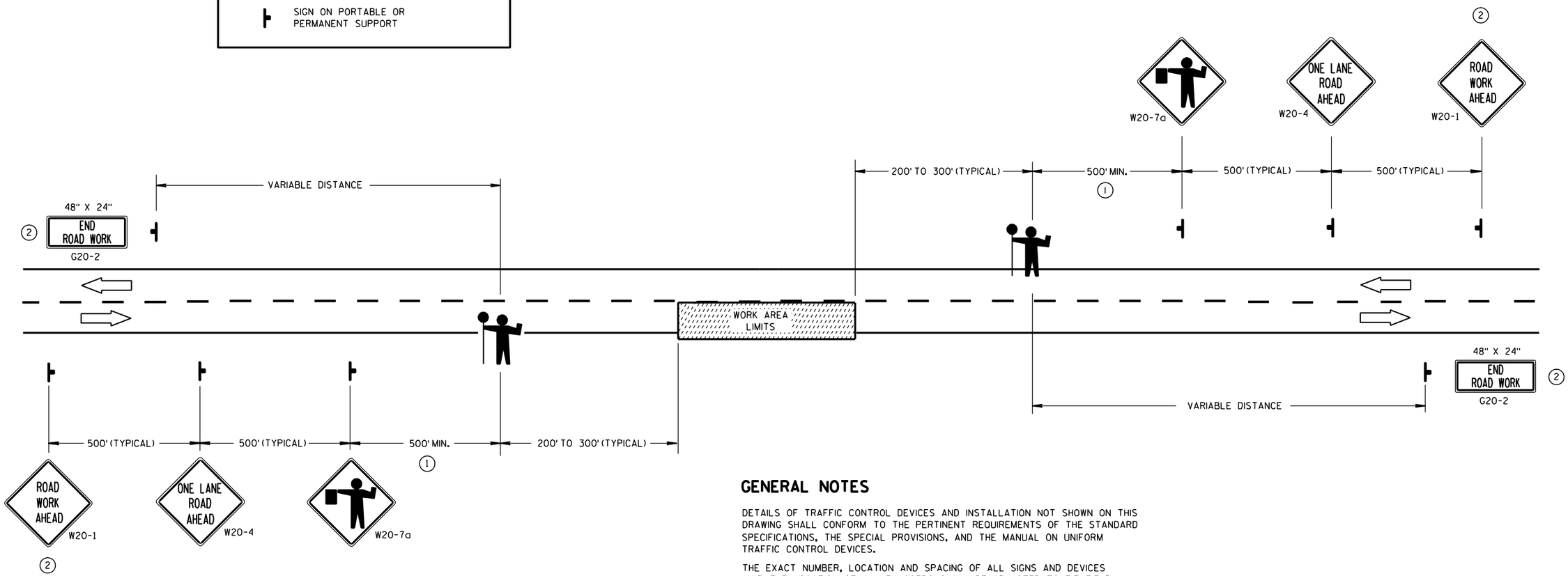

1. FOR A MOVING WORK OPERATION, SIGNING FOR BOTH DIRECTIONS SHALL BE REESTABLISHED (AS SIMULTANEOUSLY AS PRACTICAL) AT APPROXIMATELY 3500 FOOT INTERVALS IN THE MOVING WORK OPERATION OR AS APPROVED BY THE ENGINEER.

2. SIGN NOT REQUIRED IF FLAGGING OPERATION OCCURS WITHIN A SIGNED ROAD WORK ZONE AREA.

GENERAL NOTES

DETAILS OF TRAFFIC CONTROL DEVICES AND INSTALLATION NOT SHOWN ON THIS DRAWING SHALL CONFORM TO THE PERTINENT REQUIREMENTS OF THE STANDARD SPECIFICATIONS, THE SPECIAL PROVISIONS, AND THE MANUAL ON UNIFORM TRAFFIC CONTROL DEVICES.

THE EXACT NUMBER, LOCATION AND SPACING OF ALL SIGNS AND DEVICES (AND THE LOCATION OF ALL FLAGGERS) SHALL BE ADJUSTED TO FIT FIELD CONDITIONS AS APPROVED BY THE ENGINEER.

THE FIRST ADVANCE WARNING SIGN SHOULD TYPICALLY BE LOCATED IN ADVANCE OF THE ANTICIPATED TRAFFIC BACKUP OR QUEUE.

WHEN A SIDE ROAD OR RAMP INTERSECTS THE FACILITY ON WHICH THE WORK IS BEING PERFORMED, ADDITIONAL TRAFFIC CONTROLS SHALL BE PROVIDED AS SPECIFIED IN THE PLANS AND/OR THE SPECIAL PROVISIONS OR AS APPROVED BY THE ENGINEER.

FLAGGERS SHALL BE IN SIGHT OF EACH OTHER OR IN DIRECT COMMUNICATION AT ALL TIMES. THEY SHALL BE EQUIPPED WITH STOP/SLOW PADDLES FASTENED ON SUPPORT STAFFS. WHEN THE FLAGGING OPERATION IS NOT IN EFFECT, THE "FLAGGER AHEAD", THE "ROAD WORK AHEAD" AND THE ONE LANE ROAD AHEAD" SIGNS SHALL BE COVERED OR REMOVED AND THE HIGHWAY RESTORED TO NORMAL OPERATION.

ALL SIGNS ARE 48" X 48" UNLESS OTHERWISE NOTED.

TRAFFIC CONTROL FOR LANE CLOSURE (SUITABLE FOR MOVING OPERATIONS)

STATE OF WISCONSIN
DEPARTMENT OF TRANSPORTATION

APPROVED
9/5/06 — DATE
/S/ Thomas N. Nothohm — STATE TRAFFIC ENGINEER
FHWA

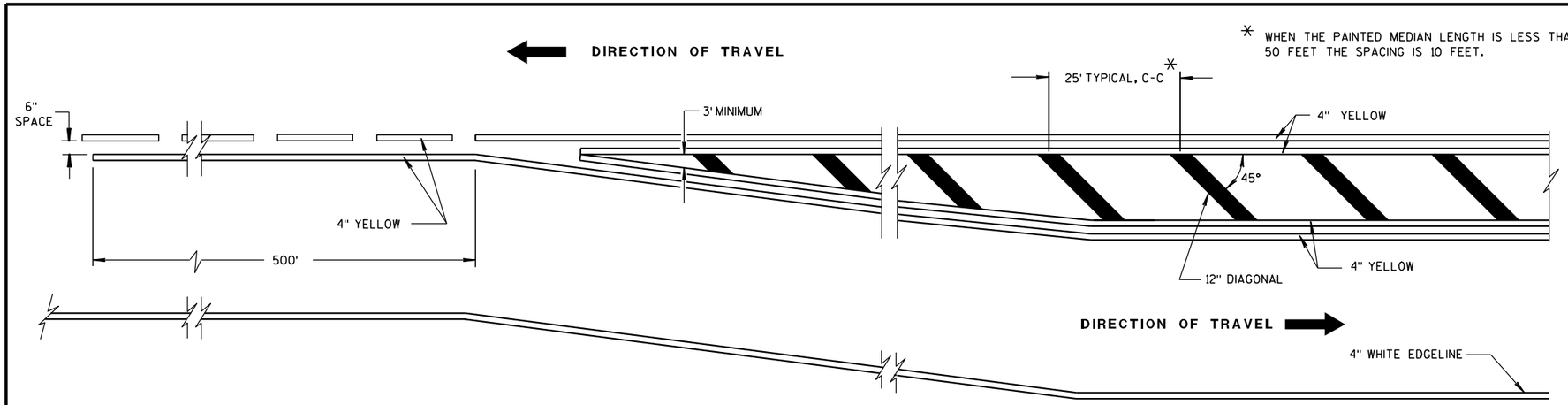

MEDIAN ISLAND DETAIL

GENERAL NOTE

DIAGONALS ARE OPTIONAL WHEN PAINTED ISLAND IS LESS THAN 6 FEET AT WIDEST POINT.

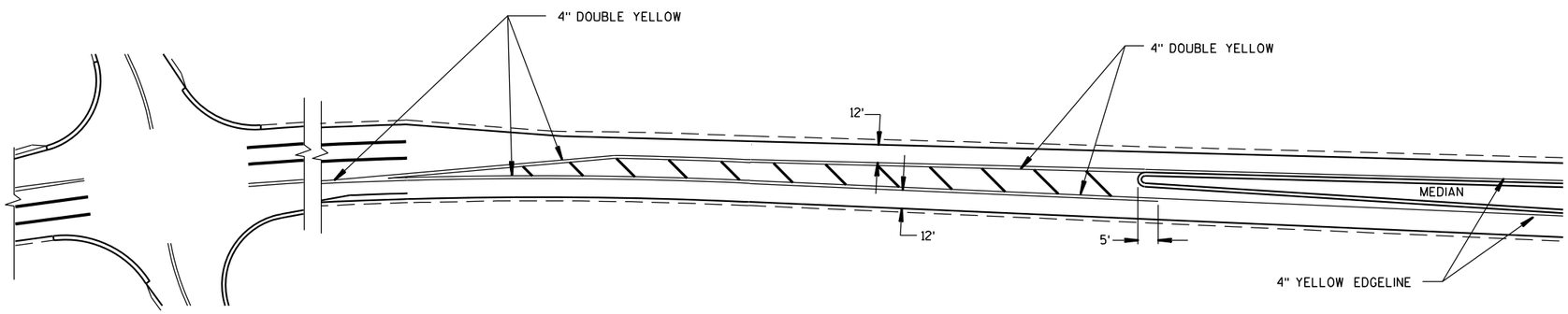

APPROACH MARKINGS FOR OTHER MEDIAN TYPES

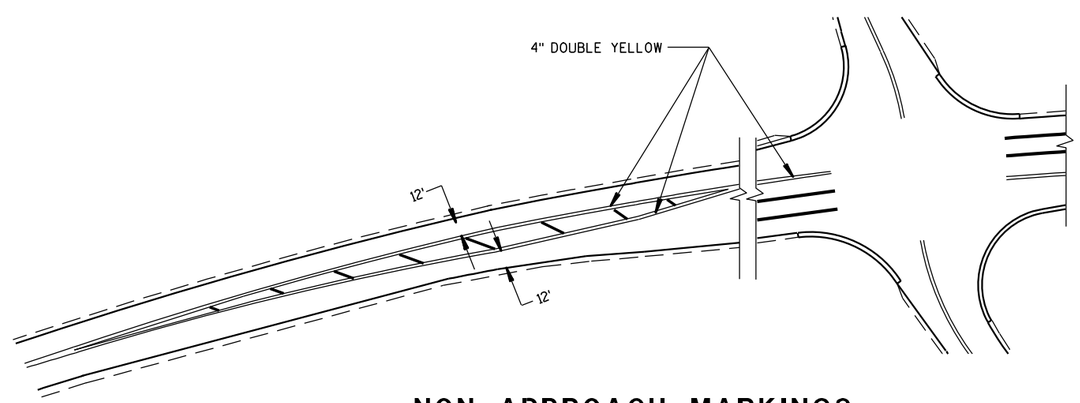

NON APPROACH MARKINGS

6

6

S.D.D. 15 C 18-3

S.D.D. 15 C 18-3

MEDIAN ISLAND MARKING

STATE OF WISCONSIN
DEPARTMENT OF TRANSPORTATION

APPROVED

2-5-09	/S/ Thomas N. Nothohm
DATE	STATE TRAFFIC ENGINEER

232 IGN

FHWA

LEGEND

- POST WITH ATTACHED SIGN
- POST WITH ATTACHED SIGN IN DRUM
- DRUM WITH WARNING LIGHT (TYPE C)
- DRUM
- ARROW BOARD
- 8' TYPE III BARRICADE
- REMOVING PAVEMENT MARKING
- DIRECTION OF TRAFFIC

GENERAL NOTES :

THE EXACT NUMBER, LOCATION, AND SPACING OF ALL SIGNS AND DEVICES SHALL BE ADJUSTED TO FIT FIELD CONDITIONS AS APPROVED BY THE ENGINEER.

THE SPACING BETWEEN SIGNS SHOULD BE ADJUSTED TO NOT CONFLICT WITH AND TO PROVIDE A MINIMUM OF 200 FEET, (500 FEET DESIREABLE) DISTANCE TO EXISTING SIGNS.

THIS LANE CLOSURE IS TYPICAL FOR CLOSING RIGHT LANE - REVERSE FOR CLOSING LEFT LANE.

ALL SIGNS ARE 48"x48" UNLESS OTHERWISE NOTED.

"WO" IS THE SAME AS "W" EXCEPT THE BACKGROUND IS ORANGE.

ANY SIGNS TEMPORARY OR EXISTING, WHICH CONFLICT WITH TRAFFIC CONTROL "IN USE" SHALL BE REMOVED OR COVERED AS NEEDED AND AS APPROVED BY THE ENGINEER. NO WARNING LIGHTS SHALL BE WORKING ON "COVERED" OR "DOWNED" SIGNS.

(1) CONSIDER GEOMETRICS WHEN LOCATING SIGNS AND ARROW BOARD SO THE DRIVER HAS A CLEAR VIEW OF THE ARROW BOARD AND LANE CLOSURE DRUMS FOR A MINIMUM 1500 FEET IN FRONT OF DRUMS.

FOR A LANE CLOSURE THAT IS IN PLACE LESS THAN 7 CONTINUOUS DAYS AND NIGHTS, THE ADVANCED WARNING SIGNS MAY BE MOUNTED ON PORTABLE SUPPORTS.

GENERAL NOTES CONTINUED:

REMOVE PAVEMENT MARKINGS IF LANE CLOSURE IS TO BE IN PLACE FOR LONGER THAN 7 CONTINUOUS DAYS AND NIGHTS.

WARNING LIGHTS ARE NOT REQUIRED IF THE LANE CLOSURE IS A DAYTIME ONLY OPERATION.

IF THE HORIZONTAL ALIGNMENT IS SUCH THAT A CURVE MAY REQUIRE ADDITIONAL DELINEATION, THE DEVICE SPACING MAY BE DECREASED TO 50 FEET.

IF LANE CLOSURE IS MORE THAN 1 MILE, PLACE A TYPE III BARRICADE APPROXIMATELY EVERY 1/4 MILE ACROSS THE CLOSED LANE TO HELP ENFORCE THE DRUM LINE.

ADJUSTMENTS IN BUFFER SPACE NEED TO BE INCORPORATED WHEN THE LANE CLOSURE OCCURS NEAR AN INTERCHANGE EXIT OR ENTRANCE RAMP. THE LANE CLOSURE MUST MUST TAKE PLACE FAR ENOUGH IN ADVANCE OF AN EXIT OR ENTRANCE RAMP TO STILL ALLOW FOR ADEQUATE BUFFER SPACE. THE MINIMUM LENGTH OF THE BUFFER SPACE BEFORE AN EXIT RAMP SHOULD BE 1/2 THE LENGTH OF THE TRANSITION AREA. THE ENTRANCE RAMP SHOULD BE FOLLOWED BY THE ORIGINAL BUFFER SPACE LENGTH OF 800 FEET DESIRABLE PRIOR TO ANOTHER TRAFFIC CONTROL CHANGE SUCH AS A CROSSOVER MANEUVER.

* THE LEFT REVERSE CURVE SIGN (WO1-4L) IS ONLY REQUIRED WHEN THIS DETAIL IS USED IN COMBINATION WITH "SINGLE LANE CROSSOVER" DETAIL.

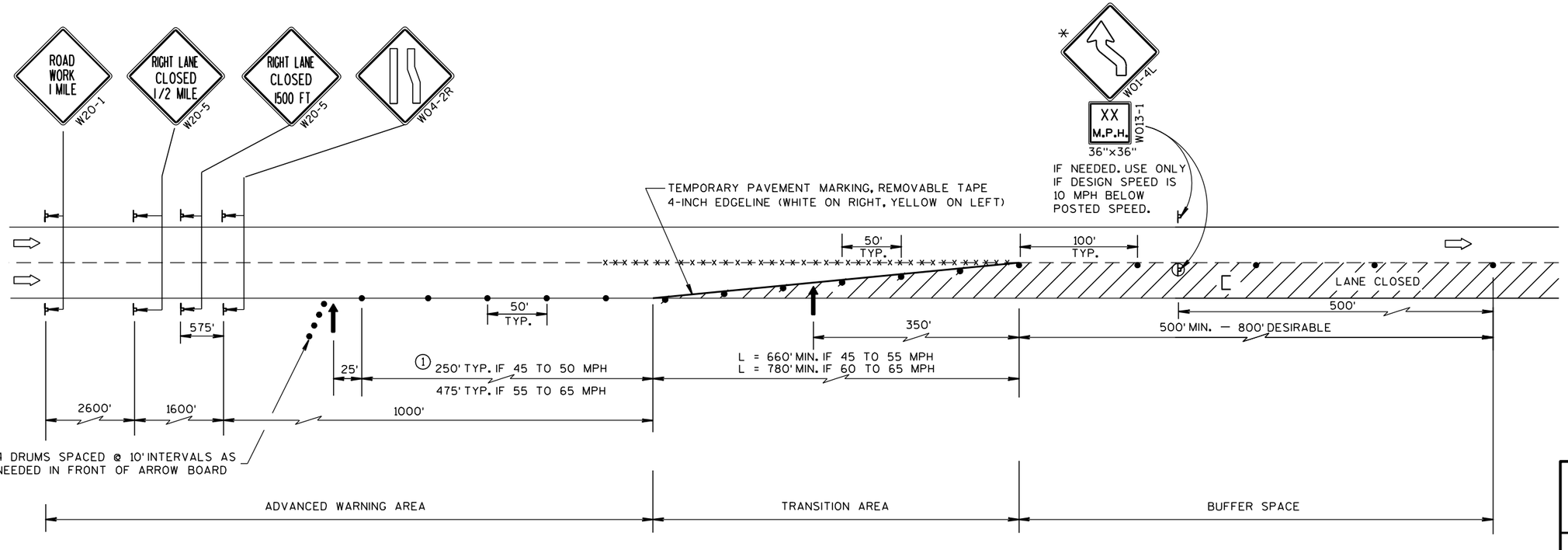

TRAFFIC CONTROL, LANE CLOSURE, SPEEDS GREATER THAN 40 M.P.H.

STATE OF WISCONSIN
DEPARTMENT OF TRANSPORTATION

APPROVED
8-7-95 — DATE
/S/ Chester J. [illegible] — DIRECTOR, OFFICE OF [illegible]
FHWA

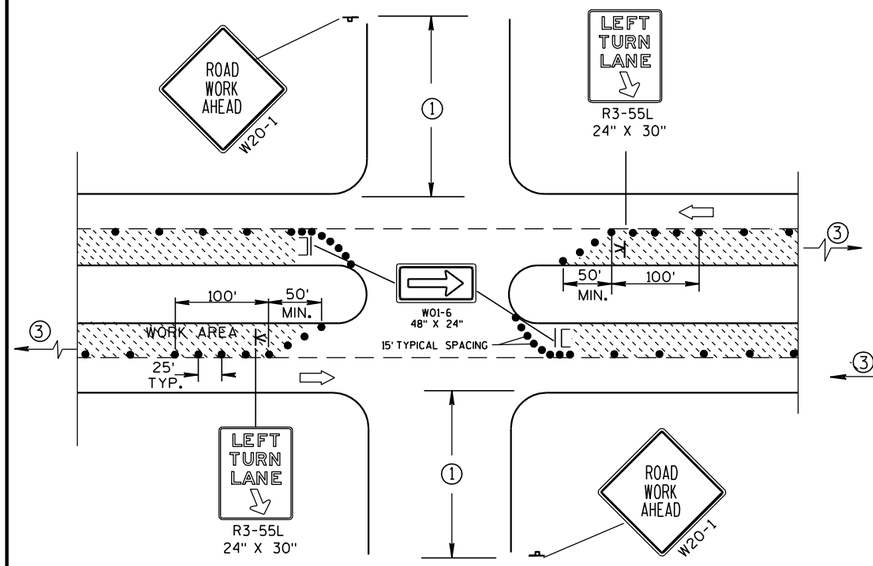

DETAIL A

FOR LEFT LANE CLOSURE AT INTERSECTION OR MEDIAN OPENING

PROVIDE TURN LANES AT INTERSECTIONS WHENEVER STAGING OF WORK ALLOWS. TAPER AND TURN LANE LENGTHS BASED ON FIELD CONDITIONS AS APPROVED BY THE ENGINEER.

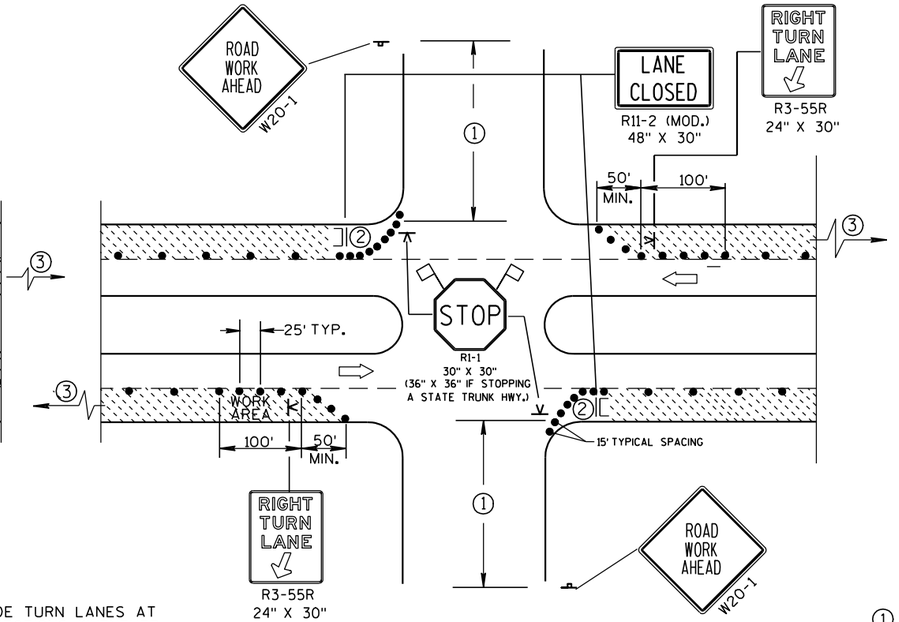

DETAIL B

FOR RIGHT LANE CLOSURE AT INTERSECTION

GENERAL NOTES

THE EXACT NUMBER, LOCATION, AND SPACING OF ALL SIGNS AND DEVICES SHALL BE ADJUSTED TO FIT FIELD CONDITIONS AS APPROVED BY THE ENGINEER.

THE SPACING BETWEEN SIGNS SHOULD BE ADJUSTED TO NOT CONFLICT WITH AND SHOULD PROVIDE A DESIRABLE MINIMUM OF 200 FEET CLEARANCE TO EXISTING SIGNS THAT WILL REMAIN IN PLACE.

ALL SIGNS ARE 48"×48" UNLESS OTHERWISE NOTED. IF NECESSARY DUE TO SPACE CONSTRAINTS IN URBAN AREAS, 36" X 36" SIGNS MAY BE USED IF APPROVED BY DISTRICT TRAFFIC UNIT.

"WO" SIGNS ARE THE SAME AS "W" SIGNS EXCEPT THE BACKGROUND IS ORANGE.

SIGN LAYOUTS SHALL BE IN ACCORDANCE WITH THE FHWA'S MANUAL OF STANDARD HIGHWAY SIGNS OR THE WISCONSIN STANDARD SIGN PLATES.

SIGNS THAT WILL BE IN PLACE LESS THAN 7 CONTINUOUS DAYS AND NIGHTS, OR THAT WILL BE PLACED IN A CLOSED LANE, MAY BE MOUNTED ON PORTABLE SUPPORTS.

ANY SIGNS TEMPORARY OR EXISTING, WHICH CONFLICT WITH TRAFFIC CONTROL "IN USE" SHALL BE REMOVED OR COVERED AS NEEDED AND AS APPROVED BY THE ENGINEER.

CHANNELIZING DEVICES PLACED ADJACENT TO WORK AREA SHALL BE PULLED BACK FROM THE TRAVEL LANE WHEN WORK IS NOT IN PROGRESS.

BARRICADES IN A CLOSED LANE THAT MUST BE MOVED FOR A WORK OPERATION SHALL BE IMMEDIATELY RE-ESTABLISHED UPON COMPLETION OF THE OPERATION OR, FOR CONTINUING OPERATIONS, AT THE END OF EACH WORKING DAY.

① 500' TYPICAL OR AT LAST INTERSECTION, WHICHEVER IS CLOSER.
350' IF 35-40 MPH.
200' IF 25-30 MPH.

② ALSO USE BARRICADE AND 15' TYPICAL DRUM SPACING AT COMMERCIAL DRIVEWAYS.

③ SEE SEPARATE LANE CLOSURE DETAIL FOR ADDITIONAL TRAFFIC CONTROL.

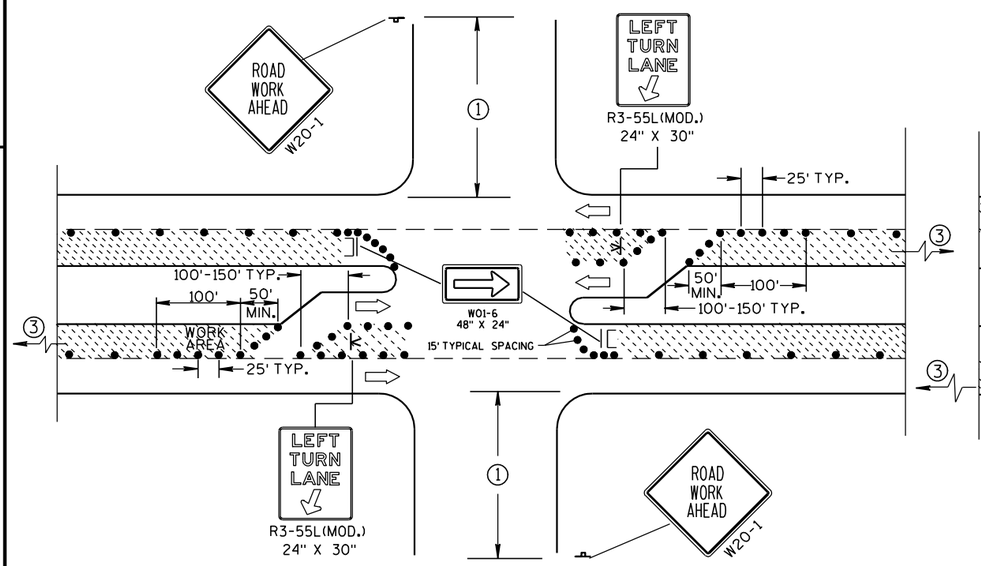

DETAIL C

FOR LEFT LANE CLOSURE AT INTERSECTION OR MEDIAN OPENING (WITH LEFT TURN BAY OPEN)

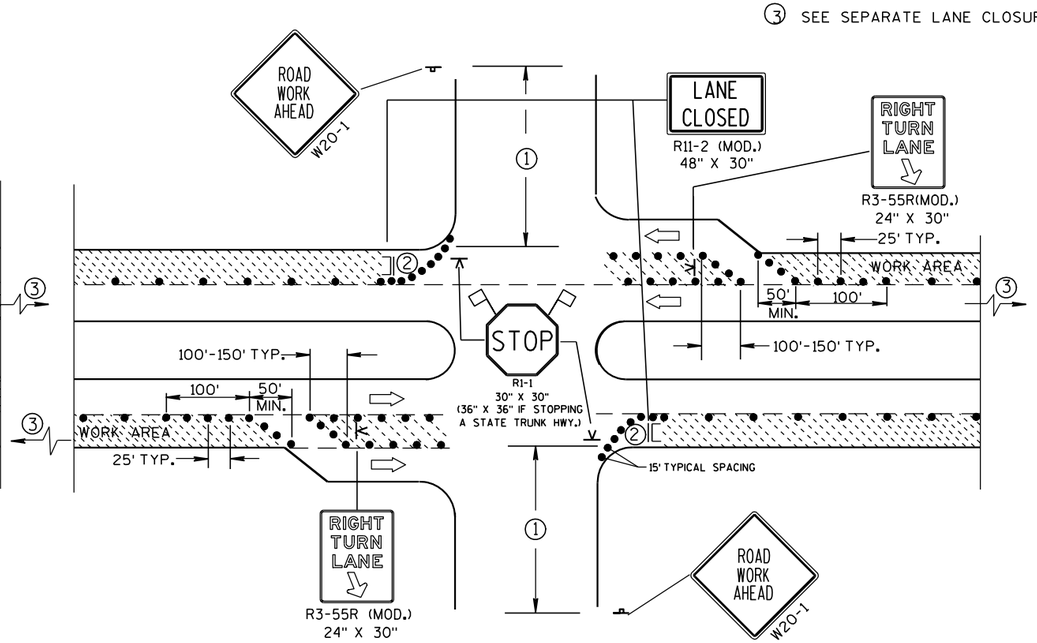

DETAIL D

FOR RIGHT LANE CLOSURE AT INTERSECTION (WITH RIGHT TURN BAY OPEN)

LEGEND

- DRUM
- POST MOUNTED SIGN
- SIGN ON PORTABLE SUPPORT (5' MIN. MOUNTING HEIGHT)
- TYPE III BARRICADE (8' EQUIVALENT) AND WARNING LIGHT, TYPE A (FLASHING) WITH SIGN
- DIRECTION OF TRAFFIC FLOW
- FLAGS, 16" X 16" MIN., ORANGE

TRAFFIC CONTROL, INTERSECTION WITHIN SINGLE LANE CLOSURE

STATE OF WISCONSIN
DEPARTMENT OF TRANSPORTATION

APPROVED
5/23/00 — DATE
/S/ Chester J. Spang — CHIEF SIGNS AND MAR INEER
FHWA

6

S.D.D. 15 D 21-1

SYMBOLS

- TRAFFIC CONTROL DRUM
- POST MOUNTED SIGN
- DIRECTION OF TRAFFIC FLOW
- ARROW BOARD IN CAUTION MODE

GENERAL NOTES

THIS DETAIL IS TYPICAL FOR CLOSING THE RIGHT SHOULDER. FOR CLOSING THE LEFT SHOULDER, REVERSE THE TRAFFIC CONTROL.

THIS DETAIL MAY BE USED FOR DIVIDED ROADWAYS WITH ANY NUMBER OF TRAVEL LANES.

THE EXACT NUMBER, LOCATION AND SPACING OF ALL SIGNS AND DEVICES SHALL BE ADJUSTED TO FIT FIELD CONDITIONS AS APPROVED BY THE ENGINEER.

ALL SIGNS ARE 48" X 48" UNLESS OTHERWISE NOTED.

SIGN LAYOUTS SHALL BE IN ACCORDANCE WITH THE FHWA'S MANUAL OF STANDARD HIGHWAY SIGNS OR THE WISCONSIN STANDARD SIGN PLATES.

SIGNS THAT WILL BE IN PLACE LESS THAN 7 CONTINUOUS DAYS AND NIGHTS MAY BE MOUNTED ON PORTABLE SUPPORTS.

ANY SIGNS TEMPORARY OR EXISTING, WHICH CONFLICT WITH TRAFFIC CONTROL "IN USE" SHALL BE REMOVED OR COVERED AS NEEDED AND AS APPROVED BY THE ENGINEER.

CHANNELIZING DEVICES PLACED ADJACENT TO THE WORK AREA SHALL BE PULLED BACK FROM THE TRAVEL LANE WHEN WORK IS NOT IN PROGRESS.

WHEN A RAMP INTERSECTS THE FACILITY ON WHICH THE WORK IS BEING PERFORMED, ADDITIONAL TRAFFIC CONTROLS SHALL BE PROVIDED AS SPECIFIED IN THE PLANS AND/OR THE SPECIAL PROVISIONS OR AS APPROVED BY THE ENGINEER.

*FOR SHORT DURATION SHOULDER WORK OF LESS THAN ONE HOUR, THE W21-5a SIGN MAY BE OMITTED.

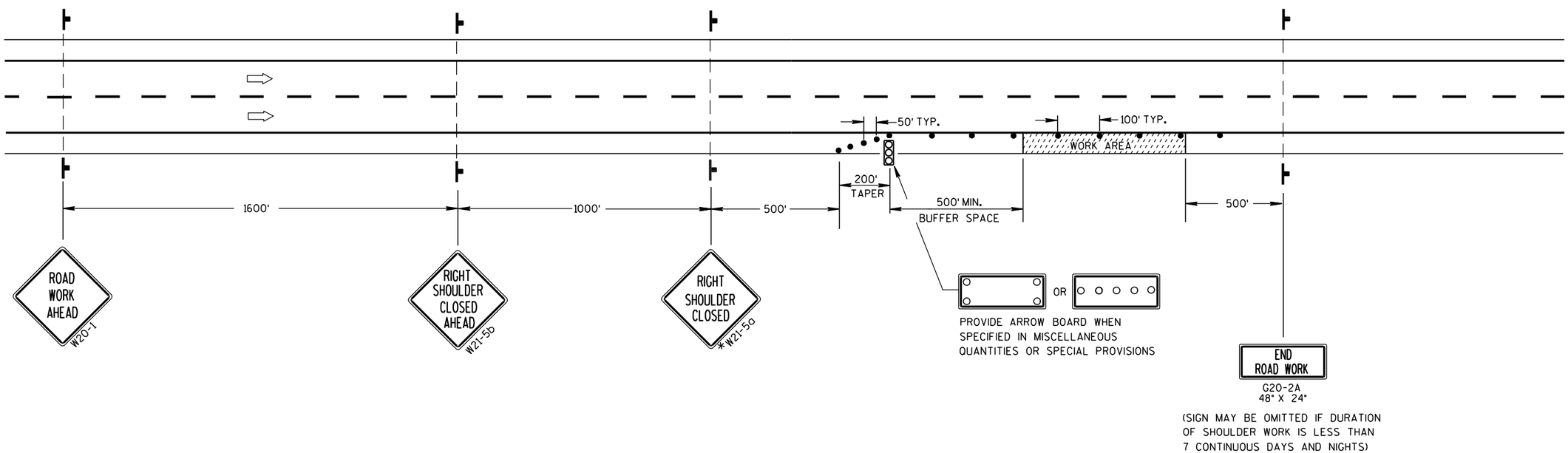

TRAFFIC CONTROL SHOULDER CLOSURE ON DIVIDED ROADWAY, SPEEDS GREATER THAN 40 MPH

STATE OF WISCONSIN
DEPARTMENT OF TRANSPORTATION

APPROVED

5/23/00 — DATE

/S/ Chester J Spong — CHIEF SIGNS AND MAR INEER

FHWA

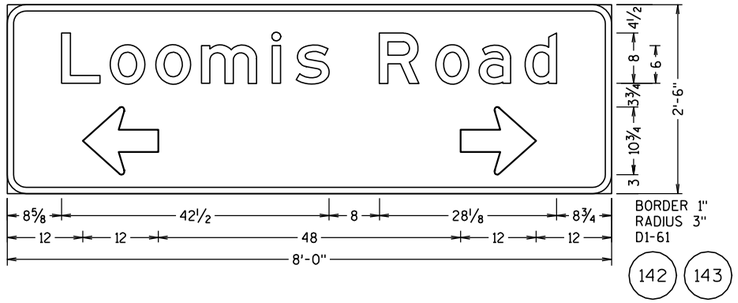

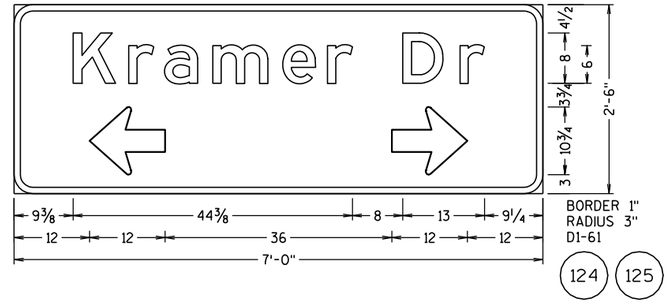

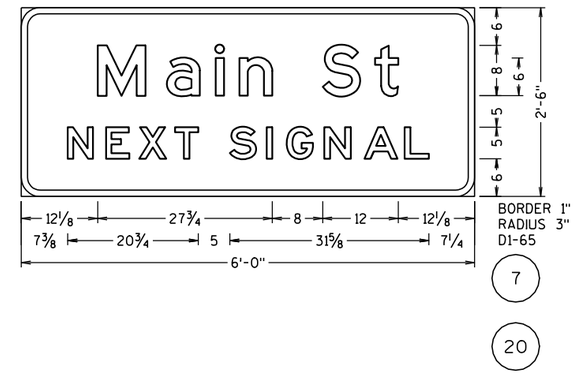

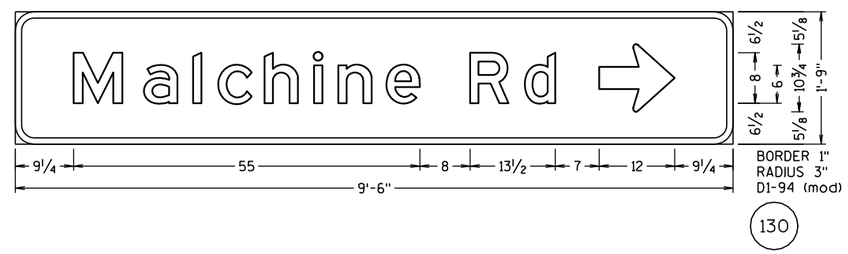

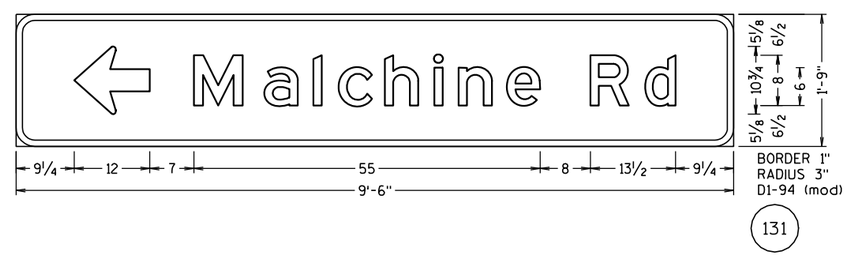

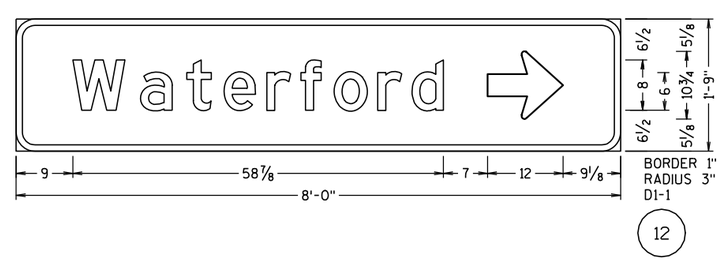

GENERAL NOTES:

1. DETAILS OF CONSTRUCTION, MATERIALS, AND WORKMANSHIP NOT SHOWN ON THIS DRAWING SHALL CONFORM TO THE PERTINENT REQUIREMENTS OF THE STANDARD SPECIFICATIONS, THE SPECIAL PROVISIONS, AND THE PLANS.
2. UNLESS OTHERWISE NOTED, ALL SIGNS SHOWN ON THIS SHEET ARE "SIGNS, TYPE II".
3. UNLESS OTHERWISE NOTED, TYPE II SIGNS ON THIS SHEET SHALL HAVE "TYPE H REFLECTIVE SHEETING" AND, "TYPE H MESSAGE MATERIAL". TYPE I SIGNS SHALL HAVE TYPE SH REFLECTIVE SHEETING.
4. UNLESS OTHERWISE NOTED, ALL SIGNS SHOWN ON THIS SHEET SHALL HAVE A GREEN BACKGROUND AND WHITE MESSAGE.
5. TYPE II SIGNS ALL UPPER CASE MESSAGE (EXCEPT ON SHIELDS OR WHERE OTHERWISE NOTED) SHALL BE "SERIES E. ALL LOWER CASE MESSAGE WITH AN INITIAL UPPER CASE LETTER SHALL BE "SERIES E.
6. TYPE I SIGNS - ALL UPPER CASE MESSAGE (EXCEPT ON SHIELDS OR WHERE OTHERWISE NOTED) SHALL BE SERIES "E" MODIFIED. ALL LOWER CASE MESSAGE WITH AN INITIAL UPPER CASE LETTER SHALL BE SERIES "E" MODIFIED. ALL CAP WORDS ARE "SERIES E"
7. UNLESS OTHERWISE NOTED, ALL SIGNS SHOWN ON THIS SHEET SHALL HAVE "TYPE A" OR "TYPE C" ARROWS AS SHOWN. SEE THE STANDARD SIGN PLATES FOR FURTHER DETAILS.
8. SEE THE STANDARD SIGN PLATES FOR FURTHER DETAILS ON ROUTE MARKER SHIELDS.
9. THE SIGN NUMBER IS DENOTED IN THE CIRCLE NEAR EACH DETAIL.
10. NUMBER FRACTIONS FOR INTERCHANGE SEQUENCE SIGNS SHALL BE SERIES "E" PER PLATES ALL-7 AND ALL-10
11. DO NOT SCALE.

7

7

SHEET 1 OF 2

PROJECT NO:2240-00-67	HWY:STH 36	COUNTY:RACINE	SIGNING DETAIL - TYPE II SIGNS	SCALE: 0 1/2" 1"	SHEET 236	E

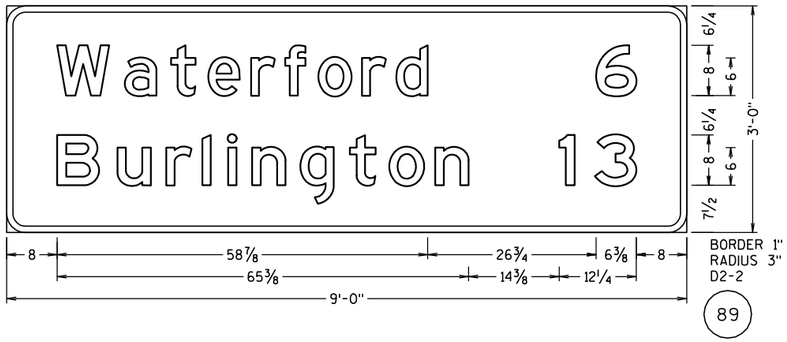

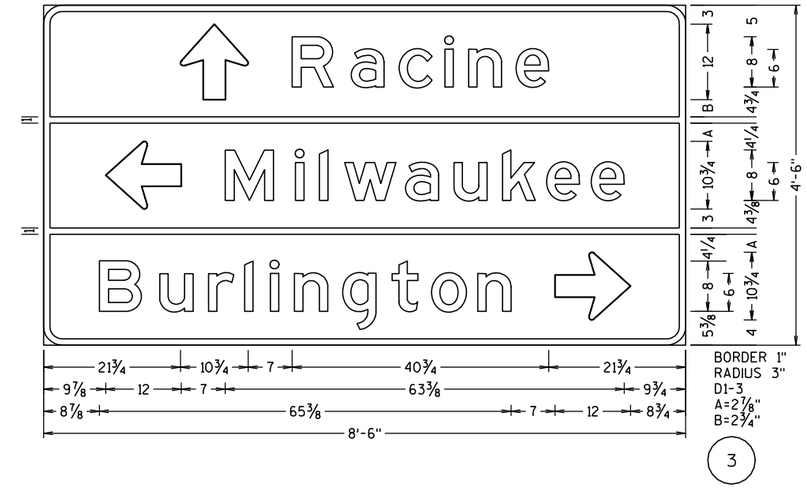

GENERAL NOTES:

1. DETAILS OF CONSTRUCTION, MATERIALS, AND WORKMANSHIP NOT SHOWN ON THIS DRAWING SHALL CONFORM TO THE PERTINENT REQUIREMENTS OF THE STANDARD SPECIFICATIONS, THE SPECIAL PROVISIONS, AND THE PLANS.

2. UNLESS OTHERWISE NOTED, ALL SIGNS SHOWN ON THIS SHEET ARE "SIGNS, TYPE II".

3. UNLESS OTHERWISE NOTED, TYPE II SIGNS ON THIS SHEET SHALL HAVE "TYPE H REFLECTIVE SHEETING" AND, "TYPE H MESSAGE MATERIAL". TYPE I SIGNS SHALL HAVE TYPE SH REFLECTIVE SHEETING.

4. UNLESS OTHERWISE NOTED, ALL SIGNS SHOWN ON THIS SHEET SHALL HAVE A GREEN BACKGROUND AND WHITE MESSAGE.

5. TYPE II SIGNS ALL UPPER CASE MESSAGE (EXCEPT ON SHIELDS OR WHERE OTHERWISE NOTED) SHALL BE "SERIES E. ALL LOWER CASE MESSAGE WITH AN INITIAL UPPER CASE LETTER SHALL BE "SERIES E.

6. TYPE I SIGNS - ALL UPPER CASE MESSAGE (EXCEPT ON SHIELDS OR WHERE OTHERWISE NOTED) SHALL BE SERIES "E" MODIFIED. ALL LOWER CASE MESSAGE WITH AN INITIAL UPPER CASE LETTER SHALL BE SERIES "E" MODIFIED. ALL CAP WORDS ARE "SERIES E"

7. UNLESS OTHERWISE NOTED, ALL SIGNS SHOWN ON THIS SHEET SHALL HAVE "TYPE A" OR "TYPE C" ARROWS AS SHOWN. SEE THE STANDARD SIGN PLATES FOR FURTHER DETAILS.

8. SEE THE STANDARD SIGN PLATES FOR FURTHER DETAILS ON ROUTE MARKER SHIELDS.

9. THE SIGN NUMBER IS DENOTED IN THE CIRCLE NEAR EACH DETAIL.

NUMBER FRACTIONS FOR INTERCHANGE SEQUENCE SIGNS SHALL BE SERIES "E" PER PLATES ALL-7 AND ALL-10

DO NOT SCALE.

SERIES D LETTERS

BROWN BACKGROUND
WHITE LETTERING

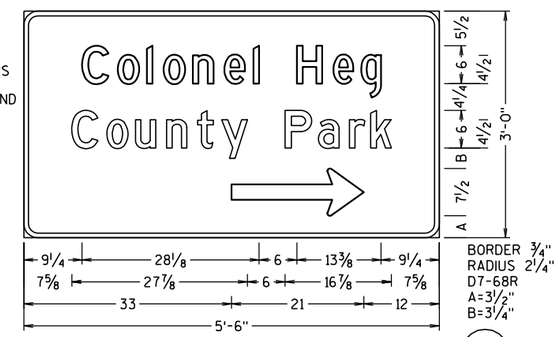

SERIES D LETTERS

SERIES C LETTERS

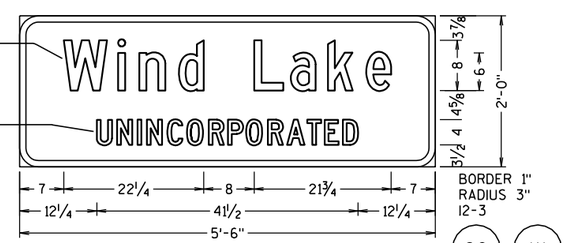

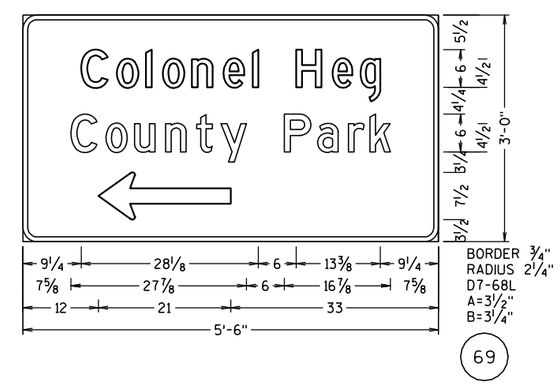

7

7

SHEET 2 OF 2

PROJECT NO:2240-00-67	HWY:STH 36	COUNTY:RACINE	SIGNING DETAIL - TYPE II SIGNS	SCALE: 0 1/2" 1"	SHEET 237	E

TYPICAL ASSEMBLIES

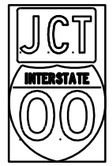

J1-1

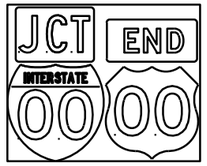

J1-2

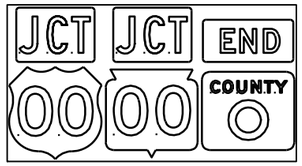

J1-3

JV

J2-1

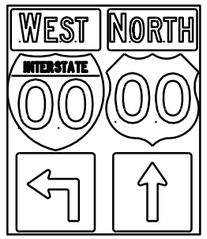

J2-2

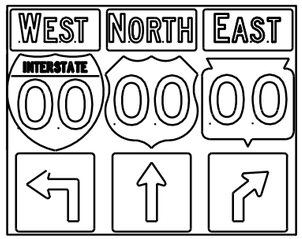

J2-3

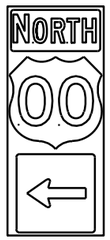

J3-1

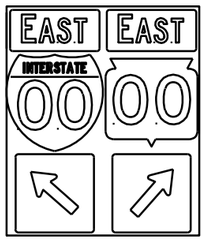

J3-2

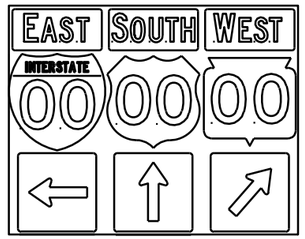

J3-3

J4-1

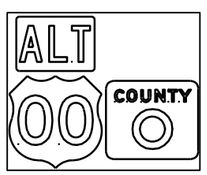

J4-2

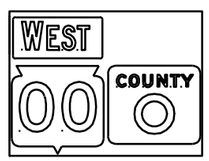

J4-2

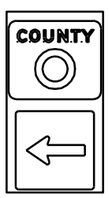

J13-1

J12-1

J32-1

J33-1

J23-1

J22-1

NOTES

1. Signs are Type II - Type H Reflective - reference WIS DOT Standard Specification for HIGHWAY and STRUCTURE CONSTRUCTION latest edition.
2. Color:
   Background - Black Non-reflective
   Message - see Note 5
3. Message Series - See Note 5
4. Corners shall be square since base material is plywood.
5. The colors and message spacing on each marker shall be according to the applicable route marker panel specifications.
6. Certain marker heads require the component pieces to be the same color. As an example, all the components used with an M1-1 Interstate marker shall be blue.
7. Single panel j-assemblies shall only be used with route marker shields that are same size. If the route marker shields are different size use multiple piece component.
8. Route assemblies that have 24 inch route shields and have dimensions greater than 48 inches (both vertical and horizontal) shall have one horizontal splice between the arrows and route shields. Vertical splices shall not be used on route assemblies with a horizontal dimension of 144 inches or less. The contractor shall not use more than one vertical joint per sign and the joint shall be between route shields.
9. Route assemblies that have 36 inch shields and have dimensions greater than 48 inchs (both vertical and horizontal) shall have two horizontal splices. One horizontal splice shall be between the cardinal direction and route shields and the other horizontal splice shall be between the arrows and route shields. Vertical splices shall not be used on route assemblies with a horizontal dimension of 144 or less. The contractor shall not use more than one vertical joint per sign and the joint shall be between route shields.

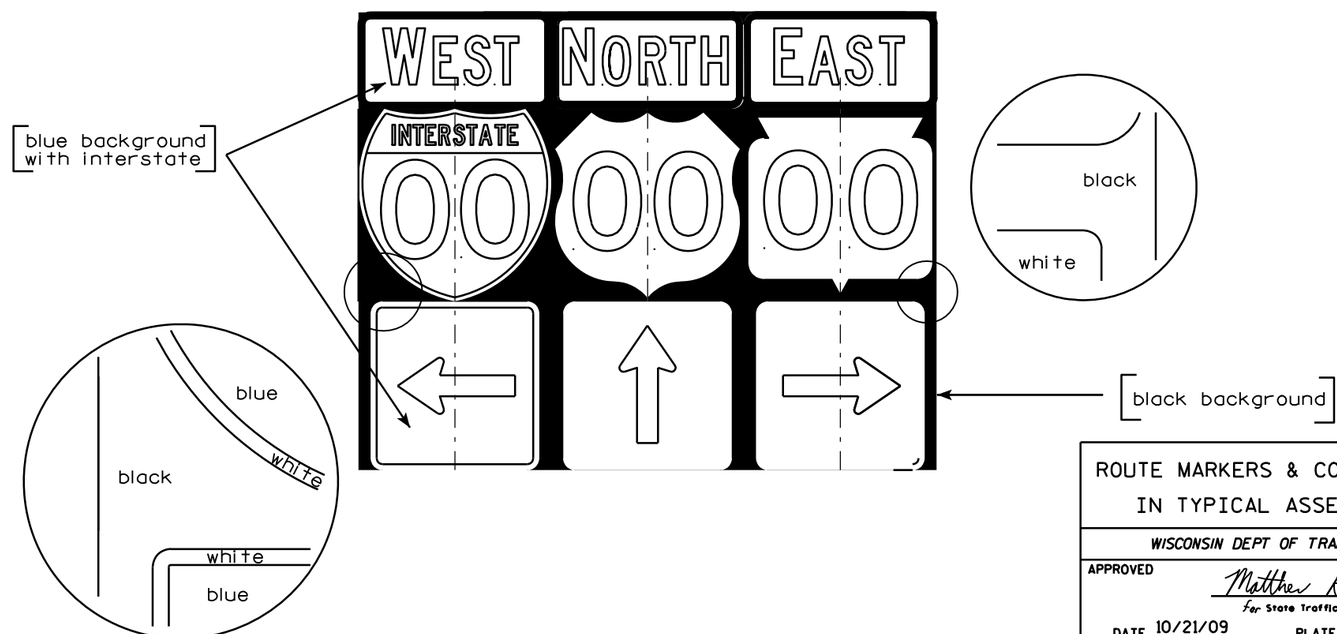

ROUTE MARKERS & COMPONENTS IN TYPICAL ASSEMBLIES

WISCONSIN DEPT OF TRANSPORTATION

APPROVED Matthew R Rauch
for State Traffic Engineer

DATE 10/21/09 PLATE NO. A2-1S.6

7

7

PROJECT NO:

SHEET NO: 238 E

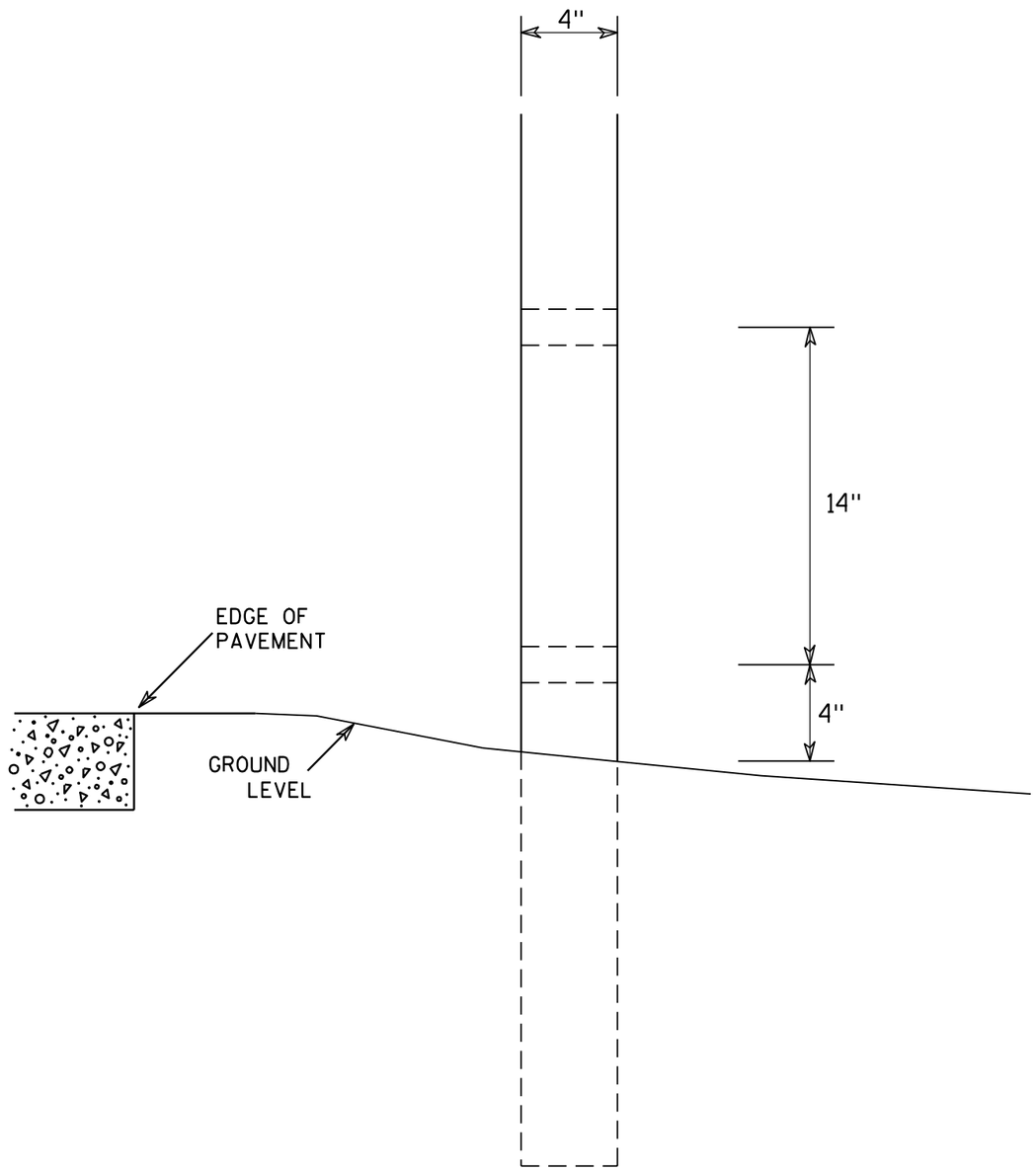

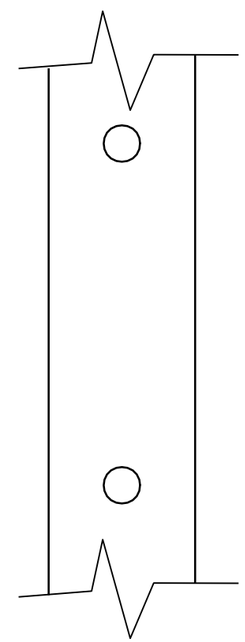

SIDE VIEW

GENERAL NOTES

1. All 4 x 6 Wood Posts shall be modified by having two 1½" diameter holes drilled perpendicular to the roadway centerline.

7

7

4 X 6 WOOD POST MODIFICATIONS

WISCONSIN DEPT OF TRANSPORTATION

APPROVED Chester J Spang for State Traffic Engineer

DATE 3/27/97 PLATE NO. A4-11.2

PROJECT NO:	HWY:	COUNTY:		SHEET NO: 239	E

URBAN AREA

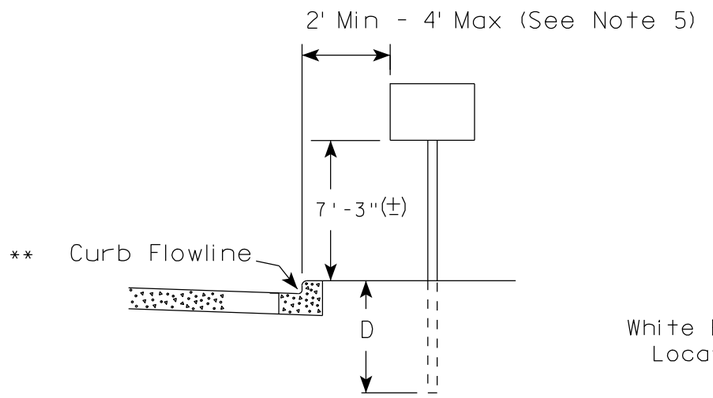

RURAL AREA (See Note 2)

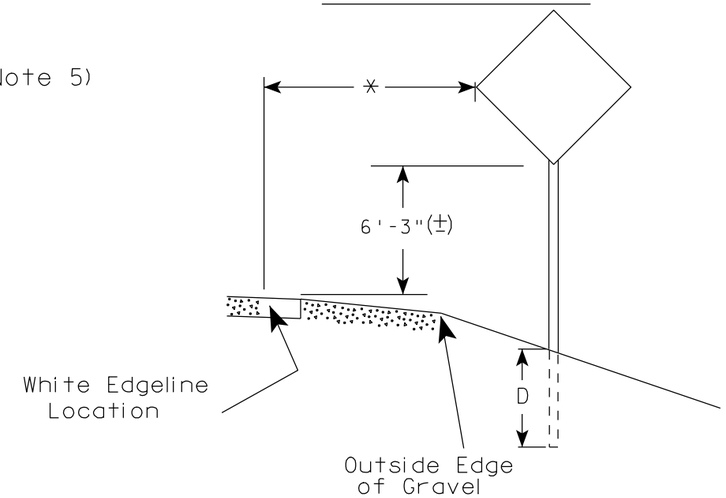

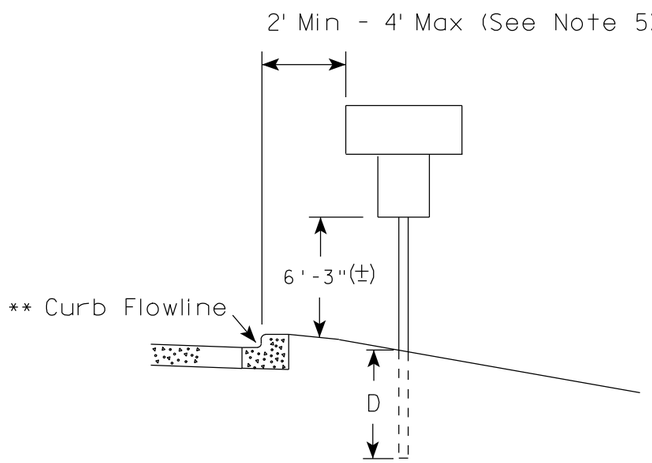

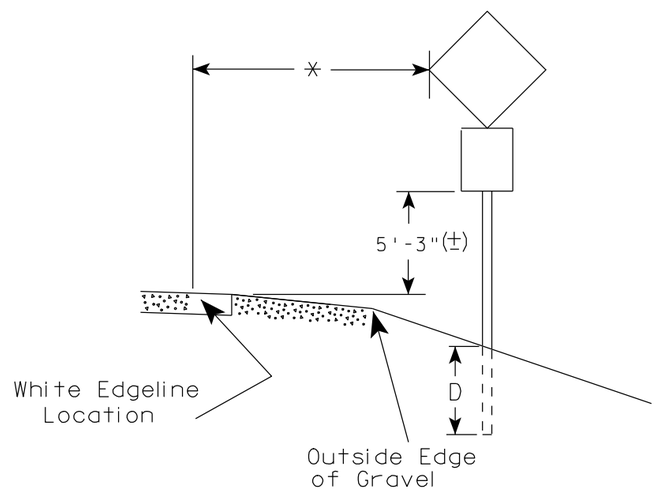

** The existence of curb and gutter does not in itself mandate the vertical clearance illustrated. That height is typically measured where there is sidewalk adjacent to the roadway or parking is permitted. In the absence of sidewalk vertical clearance is measured from the top of the curb. Offset of signs is measured from the flow line.

* 6 feet from edge of a paved shoulder or 12 feet from the edge of pavement (edge line location) or 2 feet from outside edge of gravel, whichever is greater unless directed by project engineer.

GENERAL NOTES

1. Signs wider than 4 feet or larger than 20 sq. ft. shall be mounted on multiple posts. Refer to plate A4-4.
2. If signs are mounted on barrier wall, see A4-10 sign plate.
3. For expressways and freeways, mounting height is 7'- 3" (±) or 6'-3" (±) depending upon existence of a sub-sign.
4. Minimum mounting height for J assemblies (A4-5) is 7'-3" (±) or 6'-3" (±) per urban or rural detail respectively.
5. Minimum mounting height for signs mounted on traffic signal poles is 5'- 3" (±).
6. Offset distance shall be consistent with existing signs or consistent throughout length of project.
7. The (±) tolerance for mounting height is 3 inches.
8. Folding stop signs (R1-1F) shall be mounted at a height of 5'-3" (±) or as directed by the Engineer.
9. The Double Arrow sign (W12-1) shall be mounted at a height of 2'-3" (±). The Chevron sign (W1-8), Roundabout Chevron panel (R6-4B), Clearance Markers (W5-52), Mile Markers (D10 series) & End of Road Markers (W5-56 & W5-56A) shall be mounted at a height of 4'-3" (±).

POST EMBEDMENT DEPTH

Area of Sign Installation (Sq. Ft.)	D (Min)
20 or Less	4'
Greater than 20	5'

TYPICAL INSTALLATION OF PERMANENT TYPE II SIGNS ON SINGLE POSTS

WISCONSIN DEPT OF TRANSPORTATION

APPROVED Matthew R Rauch for State Traffic Engineer

DATE 9/21/2011 PLATE NO. A4-3.16

7

7

PROJECT NO:	HWY:	COUNTY:		SHEET NO: 240	E

URBAN AREA

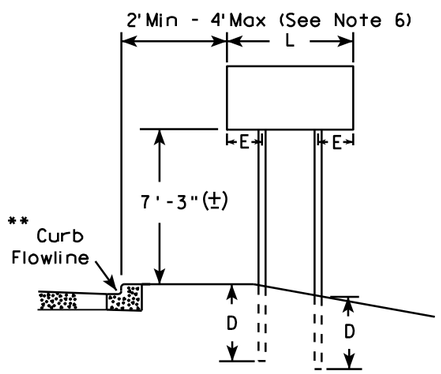

RURAL AREA (See Note 3)

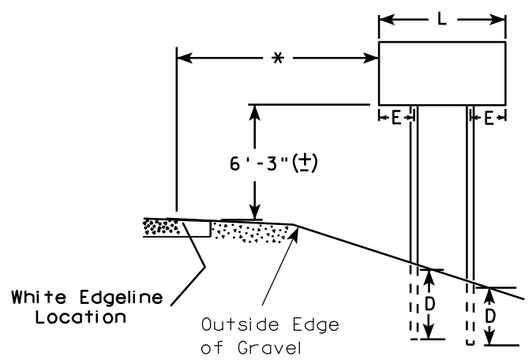

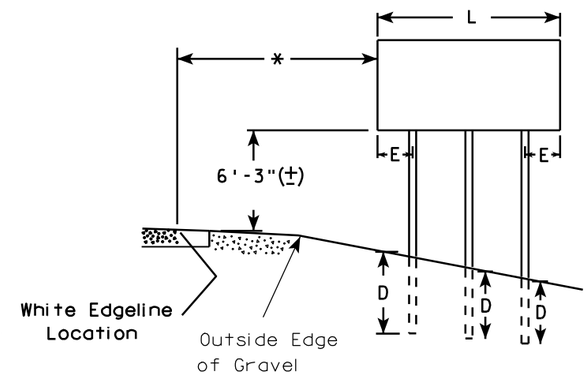

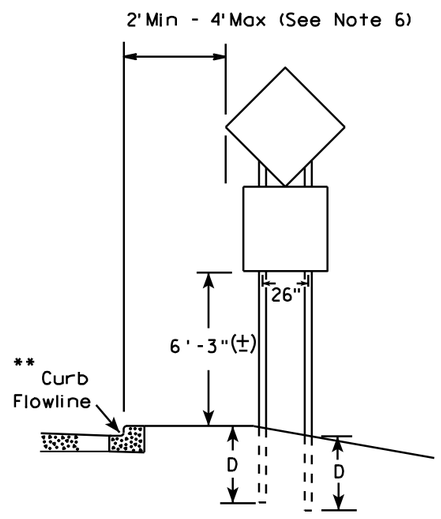

48" DIAMOND WARNING SIGN

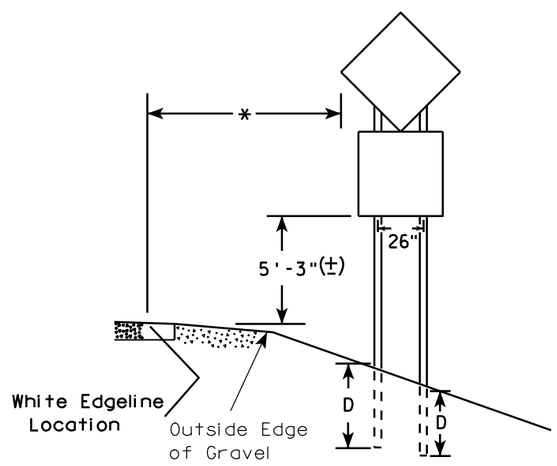

48" DIAMOND WARNING SIGN

GENERAL NOTES

1. For multiple post installations, individual post spacing shall be greater than 3'-6".
2. See tables below for required number of posts.
3. For expressways and freeways, mounting height is 7'-3" (±) or 6'-3" (±) depending upon existence of sub-sign.
4. The (±) tolerance for mounting height is 3 inches.
5. Minimum mounting height for J assemblies (A4-5) is 7'-3" (±) or 6'-3" (±) per urban or rural detail respectively.
6. Offset distance shall be consistent with existing signs or consistent throughout length of project.
7. Folding stop signs (R1-1F) shall be mounted at a height of 5'-3" (±) or as directed by the engineer.
8. The Double Arrow sign (W12-1) shall be mounted at a height of 2'-3" (±). The Chevron sign (W1-8), Roundabout Chevron panel (R6-4B), Clearance Markers (W5-52), Mile Markers (D10 series) & End of Road Markers (W5-56 & W5-56A) shall be mounted at a height of 4"-3" (±).

* 6 feet from edge of a paved shoulder or 12 feet from the edge of pavement (edge line location) or 2 feet from outside edge of gravel, whichever is greater unless directed by project engineer.

** The existence of curb and gutter does not in itself mandate the vertical clearance illustrated. That height is typically measured where there is sidewalk adjacent to the roadway or parking is permitted. In the absence of sidewalk vertical clearance is measured from the top of the curb. Offset of signs is measured from the flow line.

*** See A4-3 sign plate for signs 4' or less in width or 20 S.F. or less in area.

SIGN SHAPE OTHER THAN DIAMOND (TWO POSTS REQUIRED)	
L	E
*** Greater than 48" Less than 60"	12"
60" to 120"	L/5

SIGN SHAPE OTHER THAN DIAMOND (THREE POSTS REQUIRED)	
L	E
Greater than 120" less than 168"	12"

SIGN SHAPE OTHER THAN DIAMOND (FOUR POSTS REQUIRED)	
L	E
168" and greater	12"

POST EMBEDMENT DEPTH

Area of Sign Installation (Sq. Ft.)	D (Min)
20 or Less	4'
Greater than 20	5'

TYPICAL INSTALLATION OF TYPE II SIGNS ON MULTIPLE POSTS

WISCONSIN DEPT OF TRANSPORTATION

APPROVED Matthew R Rauch
for State Traffic Engineer

DATE 9/21/2011 PLATE NO. A4-4.11

PROJECT NO:	HWY:	COUNTY:		SHEET NO: 241	E

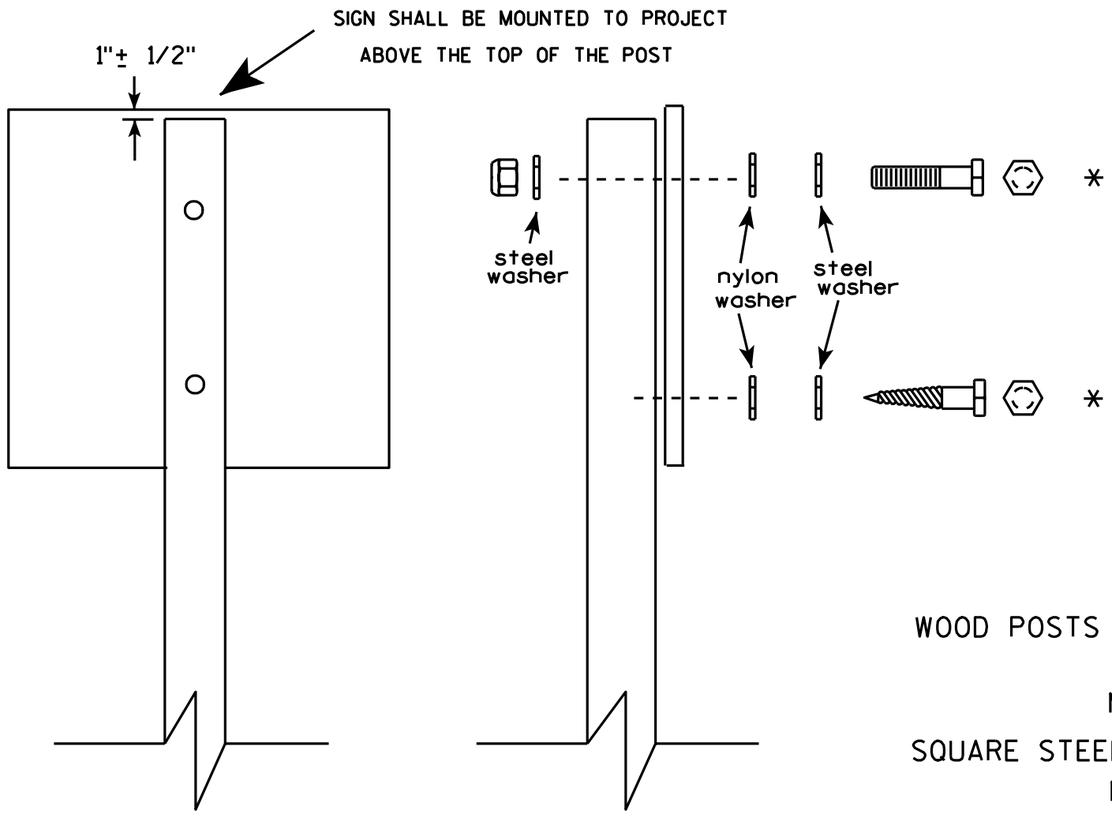

Nuts, bolts and lags used for mounting signs shall have hexagonal heads and shall be either :

a. Hot dip galvanized in accordance with ASTM Designation: A 153, Class D, or SC 3

b. Electro-galvanized in accordance with ASTM Designation : B 633, TYPE III, SC 3.

Threads on bolts and nuts shall be manufactured with sufficient allowance for the cadmium plate or galvanized coating to permit the nuts to run freely on the bolts.

WOOD POSTS (4" x 4" or 4" x 6")

LAG SCREWS - 3/8" X 3"

MACHINE BOLTS - 5/16" X 6-1/2" or 7" Length w/ nuts

SQUARE STEEL POSTS (2" x 2")

MACHINE BOLTS - 3/8" X 3-1/4" Length w/ nuts

RIVETS - 9/32 " (6605-9-6) BULB-TITE, TRI-FOLD, ALUMINUM BODY/MANDREL O.D. FLANGE .720-.765 INCH, GRIP RANGE .042-.375 INCH

WASHERS (ALL POSTS) -

1-1/4" O.D. X 3/8" I.D. X 1/16" STEEL

1-1/4" O.D. X 3/8" I.D. X .080 NYLON for all Type H signs.

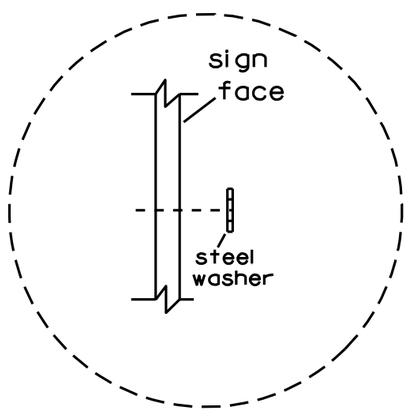

Washer Placement when Sign Has Other Than Type H or Type F Face

* Two different fastening systems are shown for illustration purposes. On any individual sign, either one or the other system shall be used. Actual number of fasteners per sign varies with the sign area, but normally there are two. For a single post installation, all signs greater than 9 sq. ft. require the use of 3 fasteners.

ATTACHMENT OF SIGNS TO POSTS

WISCONSIN DEPT OF TRANSPORTATION

APPROVED Matthew R Rauch
for State Traffic Engineer

DATE 3/23/10 PLATE NO. A4-8.7

PROJECT NO:

SHEET NO: 242 E

BRACE BANDING

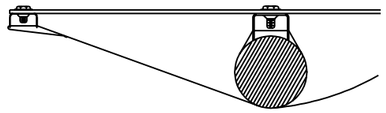

DETAIL C
CADMIUM PLATED STEEL BOLT
THROUGH BLACK BORDER

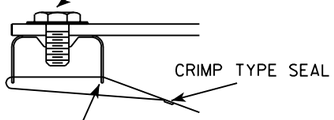

DETAIL C

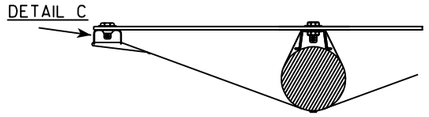

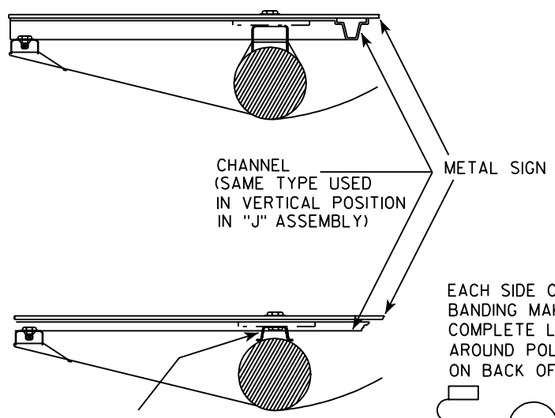

EACH SIDE OF BRACE
BANDING MAKES ONE
COMPLETE LOOP
AROUND POLE-SEAL
ON BACK OF POLE

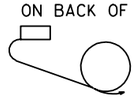

INTERRUPT VERTICAL CHANNEL
AT HORIZONTAL STIFFENERS

BRACKET BANDING

SINGLE SIGN

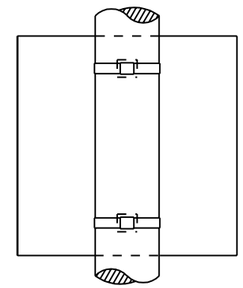

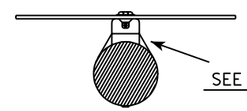

SEE DETAIL A

"J" ASSEMBLY

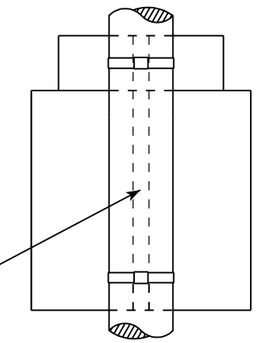

CHANNEL
SEE TYPICAL PANEL
INSTALLATION SHEET

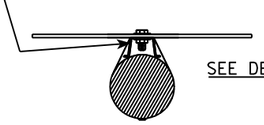

SEE DETAIL B

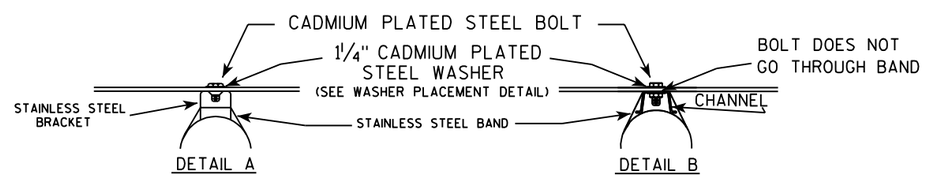

GENERAL NOTES

1. Signs 4' or greater in width shall have one brace band installed at the center of the sign.
2. Signs 3' or greater in height shall have three bracket bands installed. Signs less than 3' in height shall have two bracket bands installed.
3. Banding and assembly bracket shall be stainless steel. All bands shall be ¾" in width and 0.025" thickness.

WASHER PLACEMENT

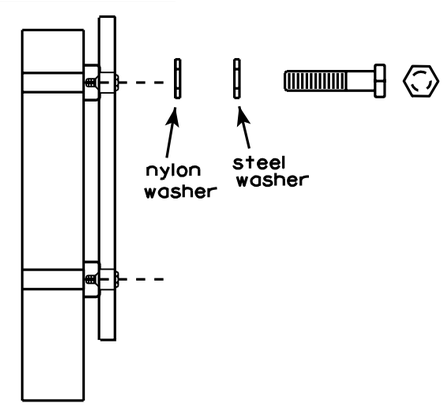

WASHERS (ALL POSTS) -
1-1/4" O.D. X 3/8" I.D. X 1/16" STEEL
1-1/4" O.D. X 3/8" I.D. X .080 NYLON
FOR ALL TYPE H SIGNS

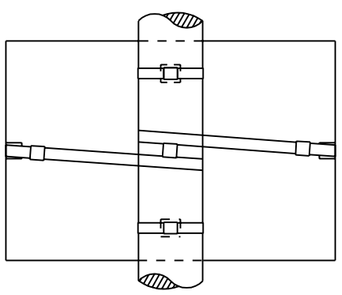

BRACE BANDING

BRACE BANDING SHALL BE TIGHTENED FIRMLY BUT NOT SO TIGHT AS TO APPRECIABLY CURVE FACE OF SIGN.

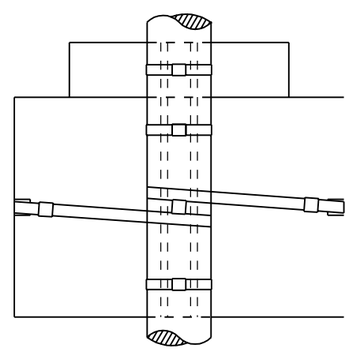

STANDARD SIGN
SIGN BANDING DETAILS

WISCONSIN DEPT OF TRANSPORTATION

APPROVED Matthew R Rauch
for State Traffic Engineer

DATE 11/08/05 PLATE NO. A5-9.2

PROJECT NO:	HWY:	COUNTY:		SHEET NO: 243	E

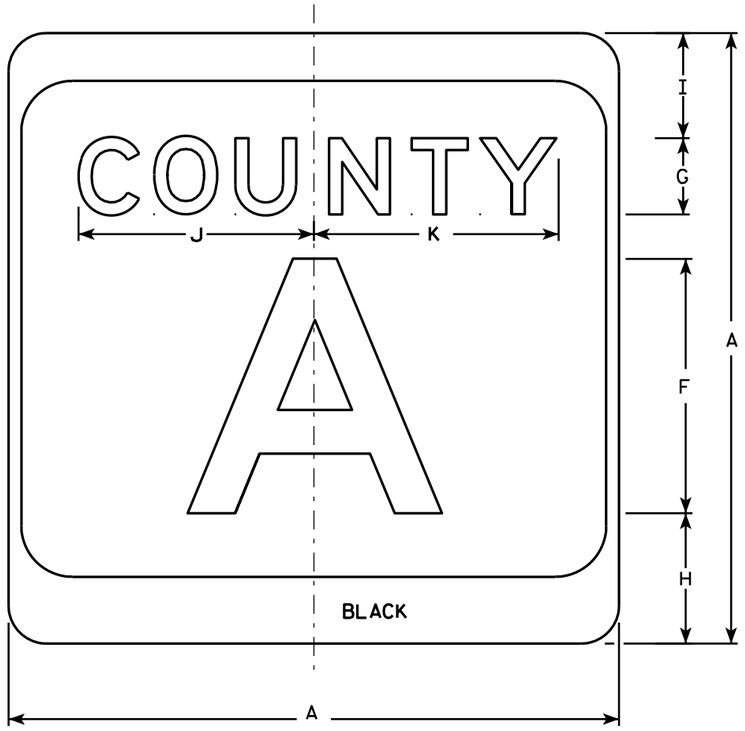

M1-5A

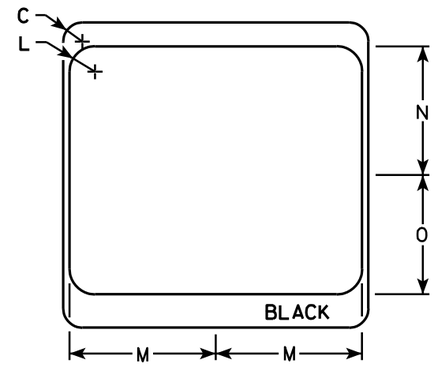

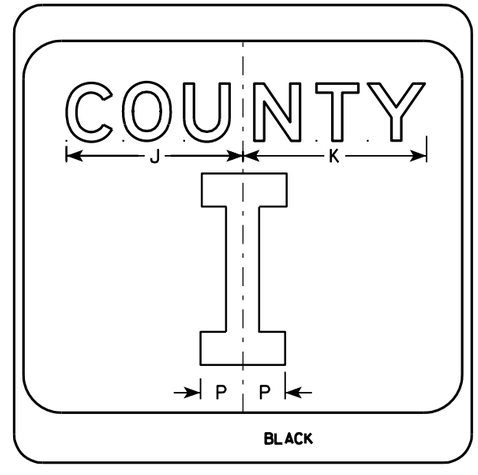

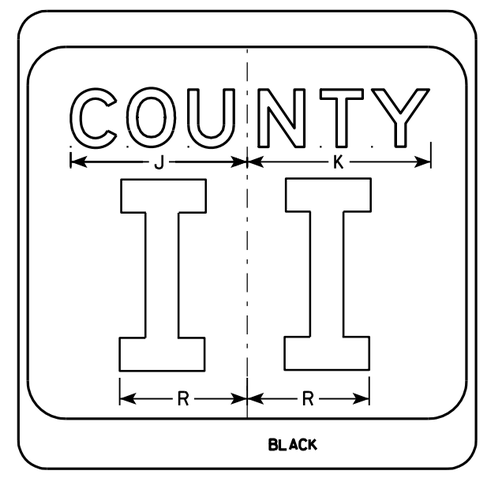

NOTES

1. Sign is Type II - see Note 7 - reference WIS DOT Standard Specification for HIGHWAY and STRUCTURE CONSTRUCTION latest edition.
2. Color:
   Background - White & Black - See Note 7
   Message - Black
3. Message Series - see Note 5
4. Corners may be square or rounded when base material is plywood but borders shall be rounded as shown. When base material is metal, the corners and borders shall be rounded.
5. Message Series E for 1 letter.
   Message Series D for 2 letters unless message is too big then Series C.
   Message Series C for 3 letters unless message is too big then Series B.
6. Substitute appropriate letters & optically center to achieve proper balance.
7. Permanent Signs
   Background - Type H Reflective
   Detour or temporary Signs
   Background - Reflective

SIZE	A	B	C	D	E	F	G	H	I	J	K	L	M	N	O	P	Q	R	S	T	U	V	W	X	Y	Z	Area sq. ft.
1																											
2	24		1 1/2			10	3	5 1/8	4 1/8	9 1/4	9 5/8	2	11 1/2	10 1/8	9 3/8	2 1/4		6 5/8									4.0
3	36		2 1/4			16	4	7 5/8	5 5/8	12 1/4	12 7/8	3	17 1/8	15 1/4	14	3 3/8		10									9.0
4	36		2 1/4			16	4	7 5/8	5 5/8	12 1/4	12 7/8	3	17 1/8	15 1/4	14	3 3/8		10									9.0
5	36		2 1/4			16	4	7 5/8	5 5/8	12 1/4	12 7/8	3	17 1/8	15 1/4	14	3 3/8		10									9.0

CTH MARKER
M1-5A FOR ASSEMBLIES

WISCONSIN DEPT OF TRANSPORTATION

APPROVED Matthew R Rauch
for State Traffic Engineer

DATE 9/27/11 PLATE NO. M1-5A.8

PROJECT NO:	HWY:	COUNTY:		SHEET NO: 244	E

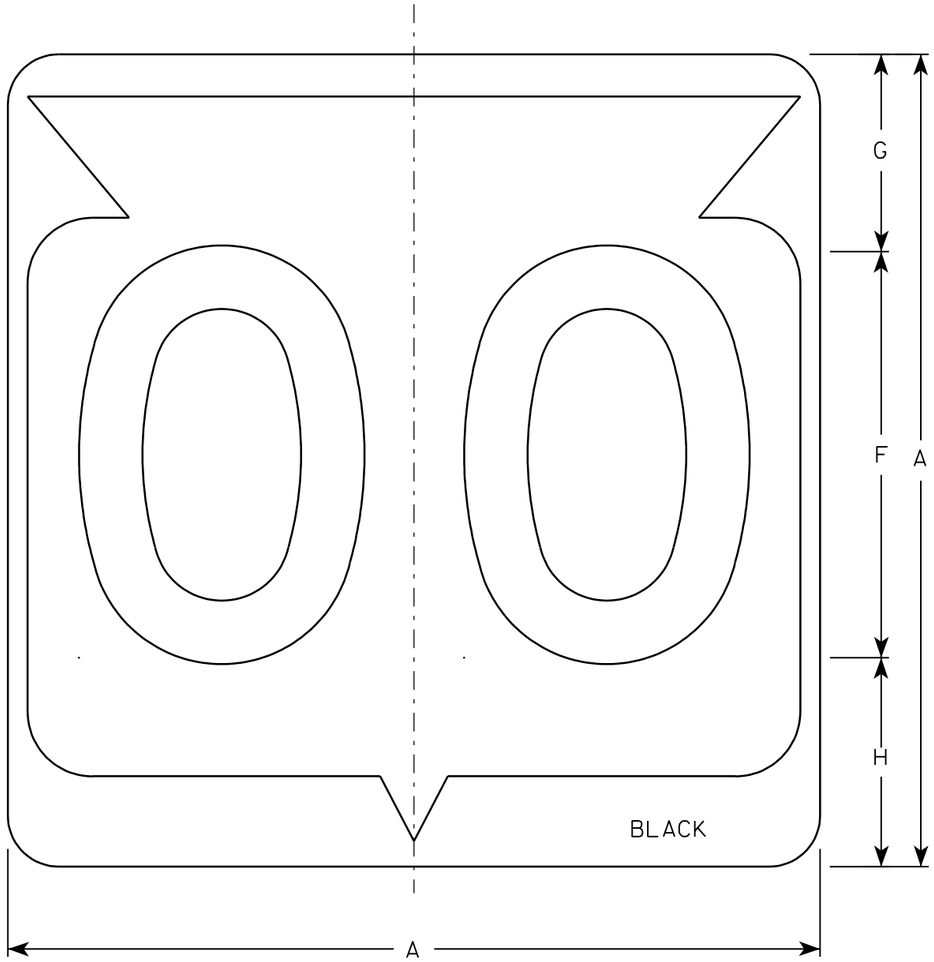

M1-6

NOTES

1. Sign is Type II - See Note 6 - reference WIS DOT Standard Specification for HIGHWAY and STRUCTURE CONSTRUCTION latest edition.
2. Color:
   Background - White & Black - See Note 6
   Message - Black
3. Message Series - See note 5
4. Corners may be square or rounded when base material is plywood but borders shall be rounded as shown. When base material is metal, the corners and borders shall be rounded.
5. Substitute appropriate Series numerals and adjust spacing as per plate A10-1.
6. Permanent Signs
   Background - Type H Reflective
   Detour or temporary Signs
   Background - Reflective

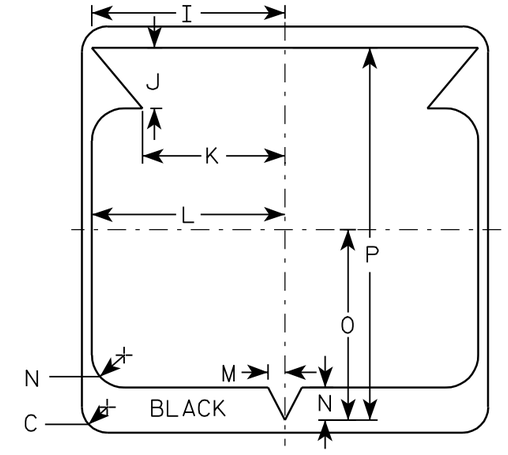

Metric equivalent for this sign is:

SIZE	
1	
2	600 mm X 600 mm
3	900 mm X 900 mm
4	900 mm X 900 mm
5	900 mm X 900 mm

SIZE	A	B	C	D	E	F	G	H	I	J	K	L	M	N	O	P	Q	R	S	T	U	V	W	X	Y	Z	Area sq. ft.	Area m2
1																												
2	24		1 1/2			12	5 1/2	6 1/2	10 1/4	2 1/2	8 7/8	11 1/2	1	1 7/8	11 1/4	21 7/8											4.0	.36
3	36		2 1/4			18	8 3/4	9 1/4	15 3/8	5 3/8	12 5/8	17 1/8	1 1/2	2 7/8	16 7/8	33											9.0	.81
4	36		2 1/4			18	8 3/4	9 1/4	15 3/8	5 3/8	12 5/8	17 1/8	1 1/2	2 7/8	16 7/8	33											9.0	.81
5	36		2 1/4			18	8 3/4	9 1/4	15 3/8	5 3/8	12 5/8	17 1/8	1 1/2	2 7/8	16 7/8	33											9.0	.81

STATE ROUTE MARKER
M1-6 FOR ASSEMBLIES

WISCONSIN DEPT OF TRANSPORTATION

APPROVED Chester J Spang
for State Traffic Engineer

DATE 3/20/02 PLATE NO. M1-6.9

PROJECT NO: | HWY: | COUNTY: | SHEET NO: 245 | E

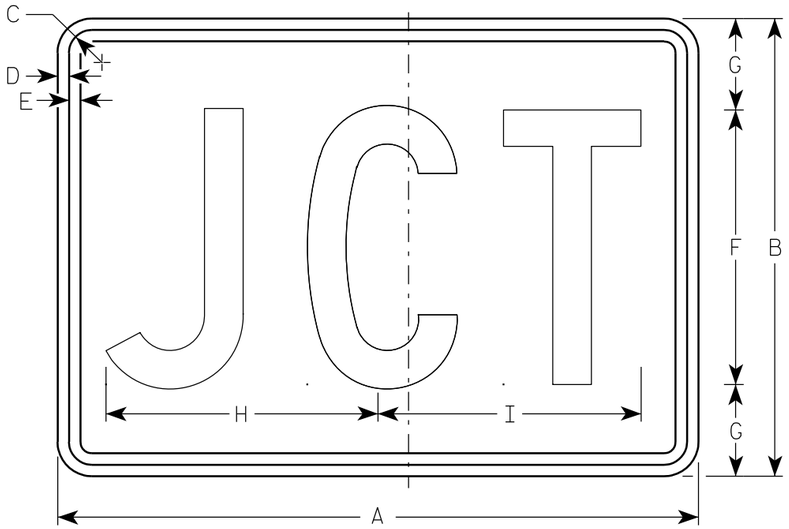

M2-1
MK2-1
MM2-1
MR2-1

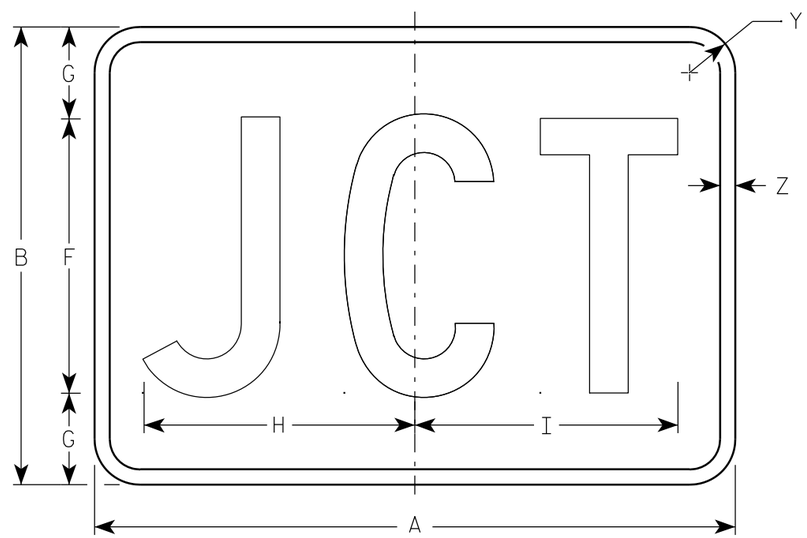

MB2-1
MG2-1
MN2-1

NOTES

1. Sign is Type II - See Note 5 - reference WIS DOT Standard Specification for HIGHWAY and STRUCTURE CONSTRUCTION latest edition.
2. Color:
   Background - See note 5
   Message - See note 5
3. Message Series - C
4. Corners may be square or rounded when base material is plywood but borders shall be rounded as shown. When base material is metal, the corners and borders shall be rounded.
5. M2-1 Background - White - Type H Reflective
   (Detour or temporary Signs - Reflective)
   Message - Black
   MB2-1 Background - Blue
   Message - White - Type H Reflective
   (Detour or temporary Signs - Reflective)
   MG2-1 Background - Green
   Message - White - Type H Reflective
   MK2-1 Background - Green
   Message - White - Type H Reflective
   MM2-1 Background - White - Type H Reflective
   Message - Green
   MN2-1 Background - Brown
   Message - White - Type H Reflective
   MR2-1 Background - Brown
   Message - Yellow - Type H Reflective

7

7

Metric equivalent for this sign is:

SIZE	
1	
2	525 mm X 375 mm
3	750 mm X 525 mm
4	750 mm X 525 mm
5	750 mm X 525 mm

SIZE	A	B	C	D	E	F	G	H	I	J	K	L	M	N	O	P	Q	R	S	T	U	V	W	X	Y	Z	Area sq. ft.	Area m2
1																												
2	21	15	1 1/8	3/8	3/8	9	3	8 7/8	8 5/8																1 1/2	1/2	2.20	0.20
3	30	21	1 1/8	3/8	3/8	13	4	12 7/8	12 3/8																1 1/2	1/2	4.40	0.20
4	30	21	1 1/8	3/8	3/8	13	4	12 7/8	12 3/8																1 1/2	1/2	4.40	0.20
5	30	21	1 1/8	3/8	3/8	13	4	12 7/8	12 3/8																1 1/2	1/2	4.40	0.20

STANDARD SIGN
M2-1

WISCONSIN DEPT OF TRANSPORTATION

APPROVED Matthew R Rauch
for State Traffic Engineer

DATE 3/16/10 PLATE NO. M2-1.10

PROJECT NO: | HWY: | COUNTY: | SHEET NO: 246 | E

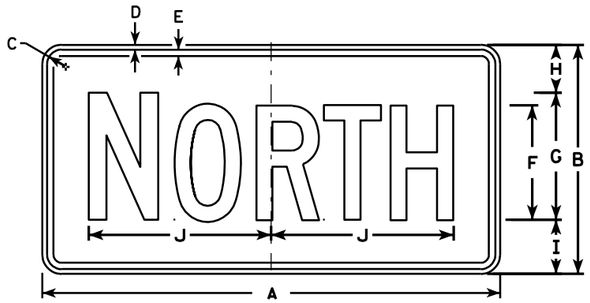

M3-1
MK3-1
MO3-1

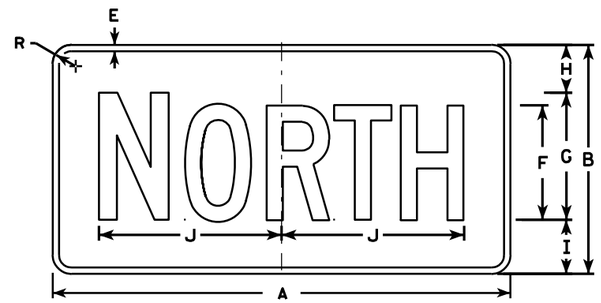

MB3-1
MG3-1
MM3-1
MN3-1

M3-2
MK3-2
MO3-2

MB3-2
MG3-2
MM3-2
MN3-2

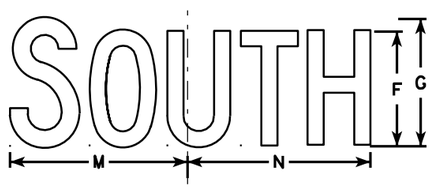

M3-3
MK3-3
MO3-3

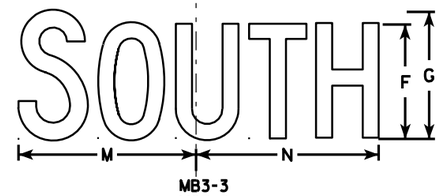

MB3-3
MG3-3
MM3-3
MN3-3

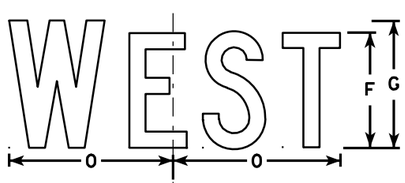

M3-4
MK3-4
MO3-4

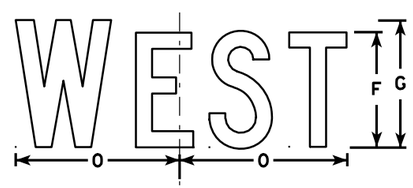

MB3-4
MG3-4
MM3-4
MN3-4

NOTES

1. All Signs Type II - See Note 5 - reference WIS DOT Standard Specification for HIGHWAY and STRUCTURE CONSTRUCTION latest edition.
2. Color:
   Background - See note 5
   Message - See note 5
3. Message Series - C
4. Corners may be square or rounded when base material is plywood but borders shall be rounded as shown. When base material is metal, the corners and borders shall be rounded.
5. M3-1 thru M3-4 Background - White - Type H Reflective
   (Detour or temporary signs - Reflective)
   Message - Black
   MB3-1 thru MB3-4 Background - Blue
   Message - White - Type H Reflective
   (Detour or temporary signs - Reflective)
   MG3-1 thru MG3-4 Background - Green
   Message - White - Type H Reflective
   MK3-1 thru MK3-4 Background - Green
   Message - White - Type H Reflective
   MM3-1 thru MM3-4 Background - White - Type H Reflective
   Message - Green
   MN3-1 thru MN3-4 Background - Brown
   Message - White - Type H Reflective
   MO3-1 thru MO3-4 Background - Orange - Reflective
   Message - Black
6. Note the first letter of each direction is larger than the remainder of the message.

SIZE	A	B	C	D	E	F	G	H	I	J	K	L	M	N	O	P	Q	R	S	T	U	V	W	X	Y	Z	Area sq. ft.
1																											
2	24	12	1 1/8	3/8	3/8	6	7	2 1/4	2 3/4	10 1/4	7 7/8	8 3/8	10 1/4	9 3/4	8 3/4			1 1/2									2.00
3	36	18	1 1/8	3/8	1/2	9	10	3 3/4	4 1/4	14 3/8	12	12 1/8	14	14 1/8	13			1 1/2									4.5
4	36	18	1 1/8	3/8	1/2	9	10	3 3/4	4 1/4	14 3/8	12	12 1/8	14	14 1/8	13			1 1/2									4.5
5	36	18	1 1/8	3/8	1/2	9	10	3 3/4	4 1/4	14 3/8	12	12 1/8	14	14 1/8	13			1 1/2									4.5

STANDARD SIGNS
M3-1 thur M3-4
SERIES

WISCONSIN DEPT OF TRANSPORTATION

APPROVED Matthew R Rauch
for State Traffic Engineer

DATE 11/10/10 PLATE NO. M3-1.12

PROJECT NO: | HWY: | COUNTY: | SHEET NO: 247 | E

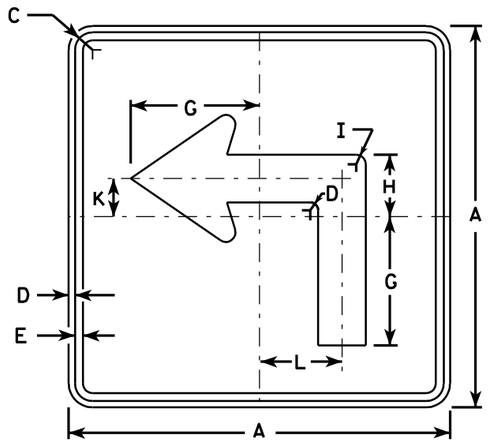

M5-1L
MK5-1L
MM5-1L
MO5-1L
MR5-1L

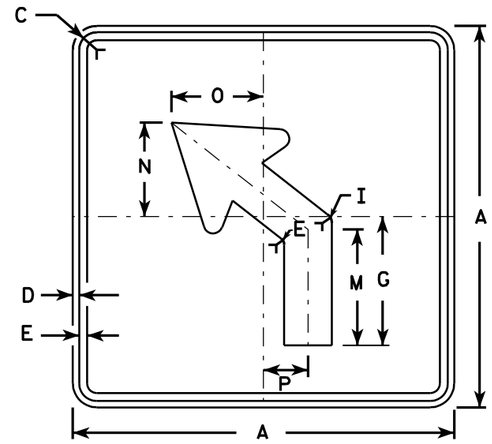

M5-2L
MK5-2L
MM5-2L
MO5-2L
MR5-2L

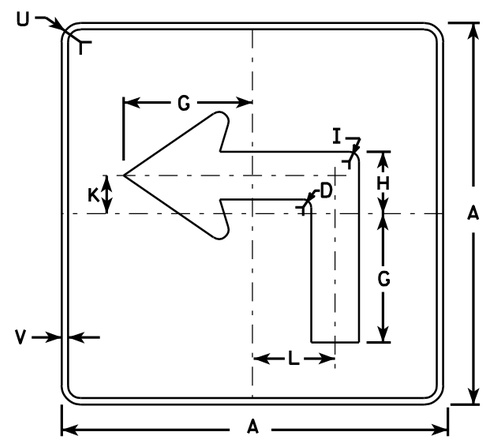

MB5-1L
MG5-1L
MN5-1L

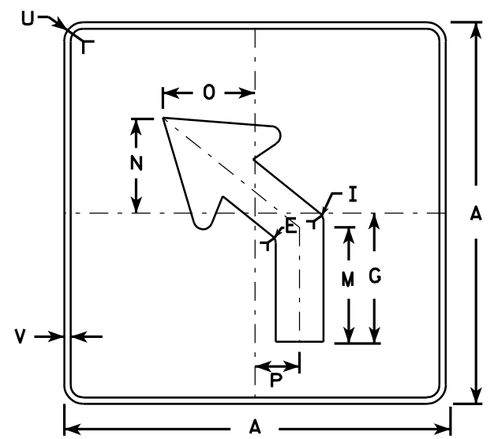

MB5-2L
MG5-2L
MN5-2L

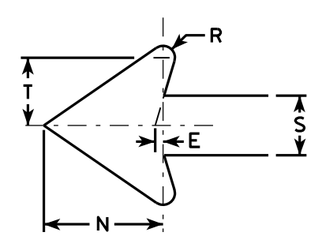

NOTES

1. Signs are Type II - See Note 4 - reference WIS DOT Standard Specification for HIGHWAY and STRUCTURE CONSTRUCTION latest edition.
2. Color:
   Background - See note 4
   Message - See note 4
3. Corners may be square or rounded when base material is plywood but borders shall be rounded as shown. When base material is metal, the corners and borders shall be rounded.
4. M5-1 and M5-2 Background - White - Type H Reflective (Detour or temporary Signs - Reflective) Message - Black
   MB5-1 and MB5-2 Background - Blue Message - White - Type H Reflective (Detour or temporary Signs - Reflective)
   MG5-1 and MG5-2 Background - Green Message - White - Type H Reflective
   MK5-1 and MK5-2 Background - Green Message - White Type H Reflective
   MM5-1 and MM5-2 Background - White - Type H Reflective Message - Green
   MN5-1 and MN5-2 Background - Brown Message - White - Type H Reflective
   MO5-1 and MO5-2 Background - Orange - Reflective Message - Black
   MR5-1 and MR5-2 Background - Brown Message - Yellow - Type H Reflective
5. M5-1R same as M5-1L except arrow points right.
6. M5-2R same as M5-2L except arrow tilts right.

Metric equivalent for this sign is:

SIZE	
1	
2	525 mm X 525 mm
3	750 mm X 750 mm
4	750 mm X 750 mm
5	750 mm X 750 mm

SIZE	A	B	C	D	E	F	G	H	I	J	K	L	M	N	O	P	Q	R	S	T	U	V	W	X	Y	Z	Area sq. ft.	Area m2
1																												
2	21		1 1/8	3/8	3/8		7	3 3/8	5/8		2 1/8	4 1/2	6 3/8	5 1/4	5	2 1/2		1/2	2 5/8	3	1 1/2	1/2					3.06	0.28
3	30		1 3/8	1/2	5/8		10 1/8	4 7/8	7/8		3	6 1/2	9 1/8	7 1/2	7 1/4	3 1/2		3/4	3 3/4	4 1/4	1 7/8	1/2					6.25	0.56
4	30		1 3/8	1/2	5/8		10 1/8	4 7/8	7/8		3	6 1/2	9 1/8	7 1/2	7 1/4	3 1/2		3/4	3 3/4	4 1/4	1 7/8	1/2					6.25	0.56
5	30		1 3/8	1/2	5/8		10 1/8	4 7/8	7/8		3	6 1/2	9 1/8	7 1/2	7 1/4	3 1/2		3/4	3 3/4	4 1/4	1 7/8	1/2					6.25	0.56

STANDARD SIGN
M5-1 & M5-2

WISCONSIN DEPT OF TRANSPORTATION

APPROVED Matthew R Rauch
for State Traffic Engineer

DATE 3/16/10 PLATE NO. M5-1.11

PROJECT NO: | HWY: | COUNTY: | SHEET NO: 248 | E

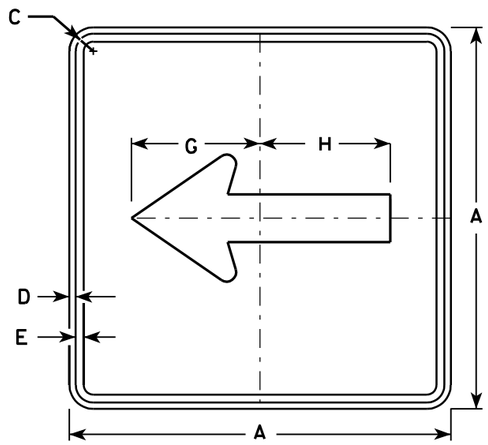

M6-1
MK6-1
MM6-1
MO6-1
MR6-1

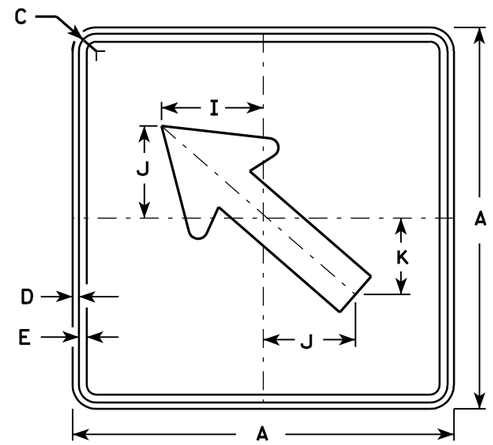

M6-2
MK6-2
MM6-2
MO6-2
MR6-2

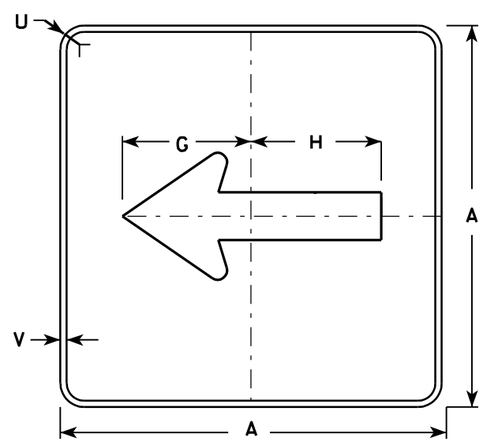

MB6-1
MG6-1
MN6-1

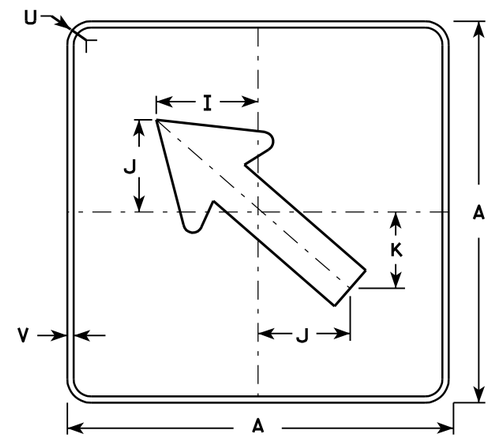

MB6-2
MG6-2
MN6-2

NOTES

1. Signs are Type II - See Note 4 - reference WIS DOT Standard Specification for HIGHWAY and STRUCTURE CONSTRUCTION latest edition.
2. Color:
   Background - See note 4
   Message - See note 4
3. Corners may be square or rounded when base material is plywood but borders shall be rounded as shown. When base material is metal, the corners and borders shall be rounded.
4. M6-1 and M6-2 Background - White - Type H Reflective
   (Detour or temporary Signs - Reflective)
   Message - Black
   MB6-1 and MB6-2 Background - Blue
   Message - White - Type H Reflective
   (Detour or temporary Signs - Reflective)
   MG6-1 and MG6-2 Background - Green
   Message - White - Type H Reflective
   MK6-1 and MK6-2 Background - Green
   Message - White - Type H Reflective
   MM6-1 and MM6-2 Background - White - Type H Reflective
   Message - Green
   MN6-1 and MN6-2 Background - Brown
   Message - White - Type H Reflective
   MO6-1 and MO6-2 Background - Orange - Reflective
   Message - Black
   MR6-1 and MR6-2 Background - Brown
   Message - Yellow - Type H Reflective

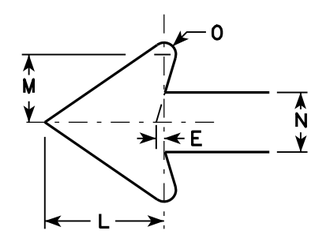

Metric equivalent for this sign is:

SIZE	
1	
2	525 mm X 525 mm
3	750 mm X 750 mm
4	750 mm X 750 mm
5	750 mm X 750 mm

SIZE	A	B	C	D	E	F	G	H	I	J	K	L	M	N	O	P	Q	R	S	T	U	V	W	X	Y	Z	Area sq. ft.	Area m2
1																												
2	21		1 1/8	3/8	3/8		7 1/2	7 1/8	5 5/8	5	4 1/4	5 1/4	3	2 5/8	1/2						1 1/2	1/2					3.06	0.28
3	30		1 3/8	1/2	5/8		10 3/4	10 1/4	8	7 1/4	6	7 1/2	4 1/4	3 3/4	3/4						1 7/8	1/2					6.25	0.56
4	30		1 3/8	1/2	5/8		10 3/4	10 1/4	8	7 1/4	6	7 1/2	4 1/4	3 3/4	3/4						1 7/8	1/2					6.25	0.56
5	30		1 3/8	1/2	5/8		10 3/4	10 1/4	8	7 1/4	6	7 1/2	4 1/4	3 3/4	3/4						1 7/8	1/2					6.25	0.56

STANDARD SIGN
M6-1 & M6-2
SERIES

WISCONSIN DEPT OF TRANSPORTATION

APPROVED Matthew R Rauch
for State Traffic Engineer

DATE 3/16/10 PLATE NO. M6-1.12

PROJECT NO:	HWY:	COUNTY:		SHEET NO: 249	E

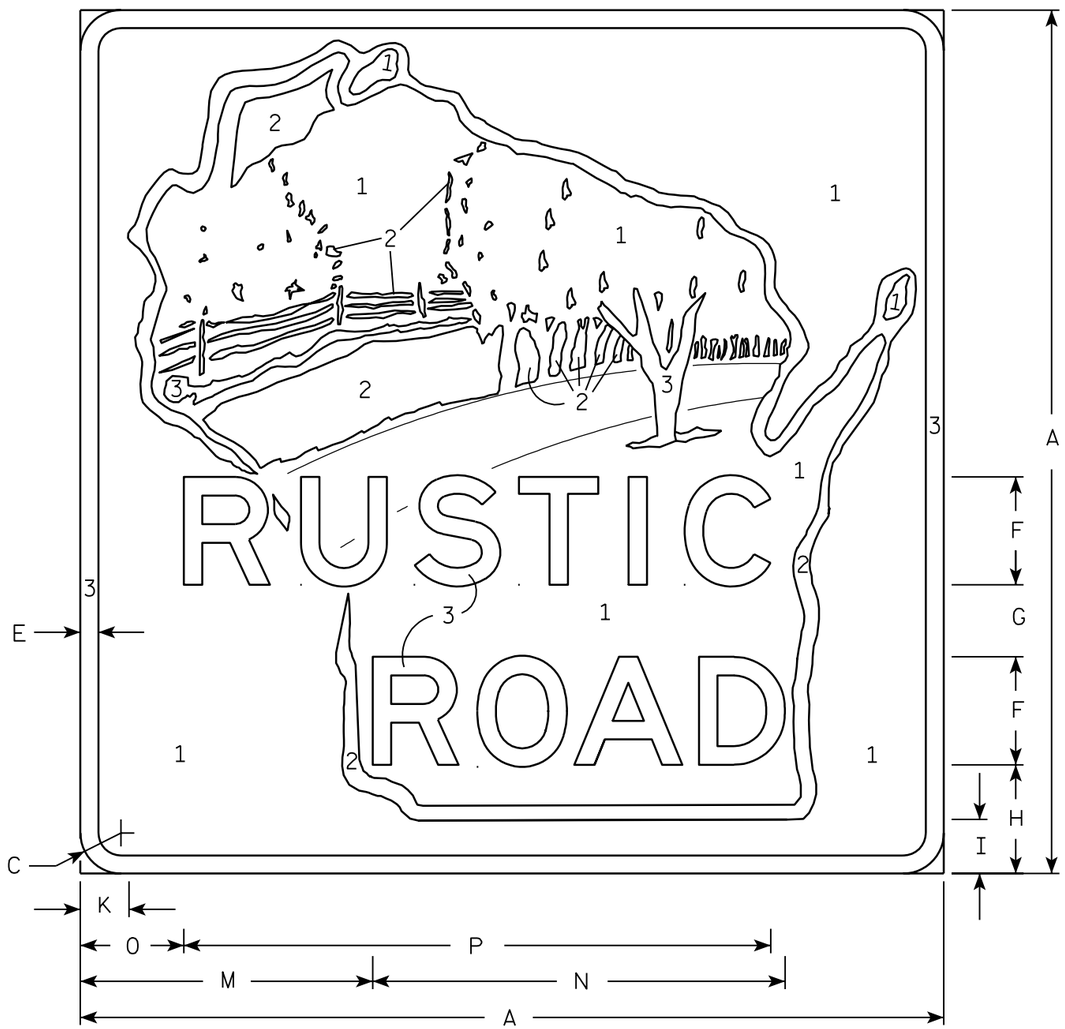

NOTES

1. Sign is Type II - Type H Reflective - reference WIS DOT Standard Specification for HIGHWAY and STRUCTURE CONSTRUCTION latest edition.
2. Color:
   Background - See note 5
   Message - See note 5.
3. Message Series - Modified E
4. Corners may be square or rounded when base material is plywood but borders shall be rounded as shown. When base material is metal, the corners and borders shall be rounded.
5. The sign will be color coded by numerical designation Numeral *1 Brown
   2 Type H Reflective White
   3 Reflective Yellow

   Exact color descriptions will be furnished upon request.

Metric equivalent for this sign is:

SIZE	
1	
2	600 mm X 600 mm
3	
4	
5	

SIZE	A	B	C	D	E	F	G	H	I	J	K	L	M	N	O	P	Q	R	S	T	U	V	W	X	Y	Z	Area sq. ft.	Area m2
1																												
2	24		1 1/8		1/2	3	2	3	1 1/2		1 3/8		8 1/8	11 1/4	2 7/8	16 1/4											4.0	0.36
3																												
4																												
5																												

STANDARD SIGN
MR1-99

WISCONSIN DEPT OF TRANSPORTATION

APPROVED Matthew R Rauch
for State Traffic Engineer

DATE 10/18/05 PLATE NO. MR1-99.5

PROJECT NO:	HWY:	COUNTY:		SHEET NO: 250	E

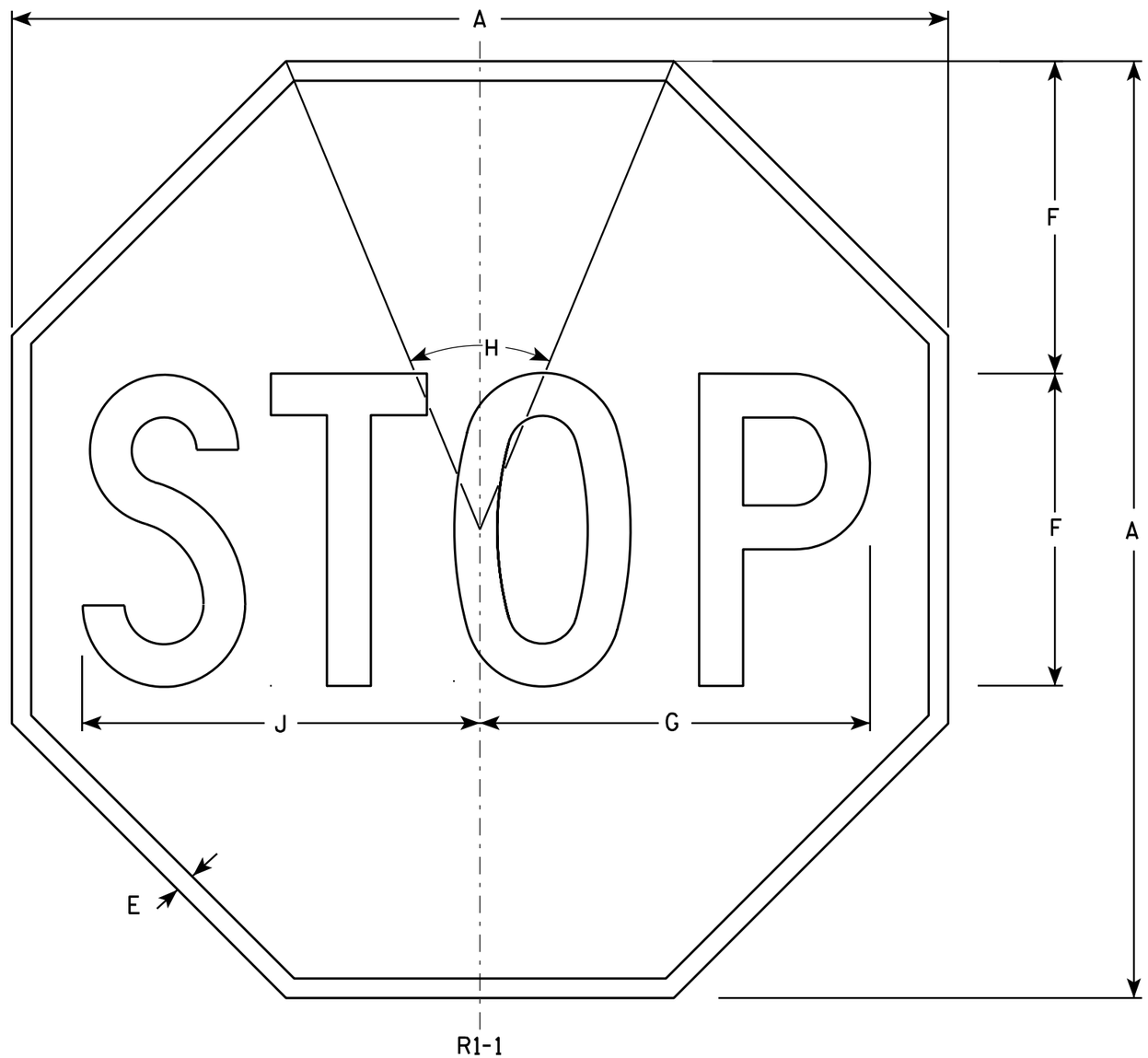

NOTES

1. Sign is Type II - Type H Reflective - reference WIS DOT Standard Specification for HIGHWAY and STRUCTURE CONSTRUCTION latest edition.
2. Color:
   Background - Red
   Message - White
3. Message Series - C

SIZE	A	B	C	D	E	F	G	H	I	J	K	L	M	N	O	P	Q	R	S	T	U	V	W	X	Y	Z	Area sq. ft.
1	24				3/8	8	10	45°		10 1/4																	3.31
2S	30				5/8	10	12 1/2	45°		12 3/4																	5.18
2M	36				3/4	12	15	45°		15 3/8																	7.46
3	36				3/4	12	15	45°		15 3/8																	7.46
4	48				1	16	20	45°		20 1/2																	13.25
5	48				1	16	20	45°		20 1/2																	13.25
6	18				3/8	6	7 3/4	45°		7 3/4																	1.86
7	12				1/4	4	5	45°		5 1/8																	0.78

STANDARD SIGN
R1-1

WISCONSIN DEPT OF TRANSPORTATION

APPROVED Matthew R Rauch
for State Traffic Engineer

DATE 12/03/10 PLATE NO. R1-1.12

PROJECT NO: | HWY: | COUNTY: | SHEET NO: 251 | E

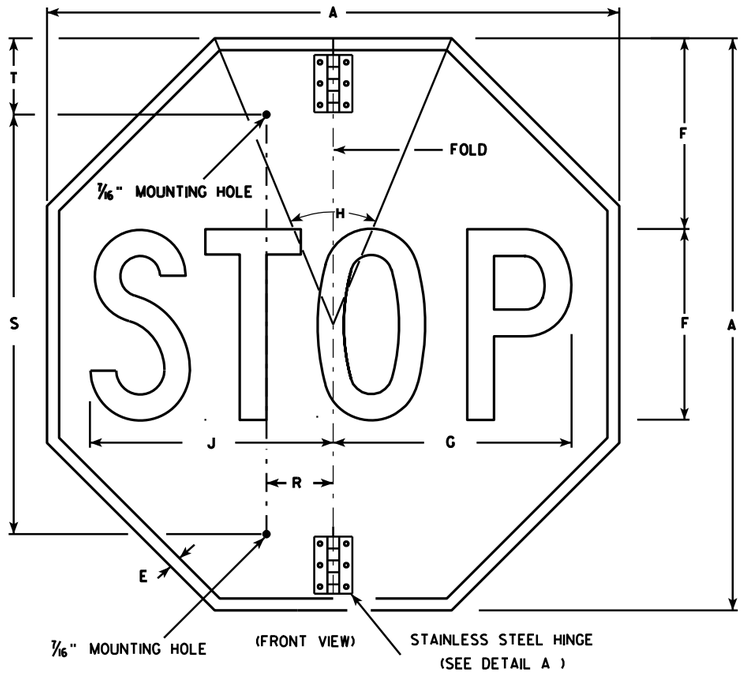

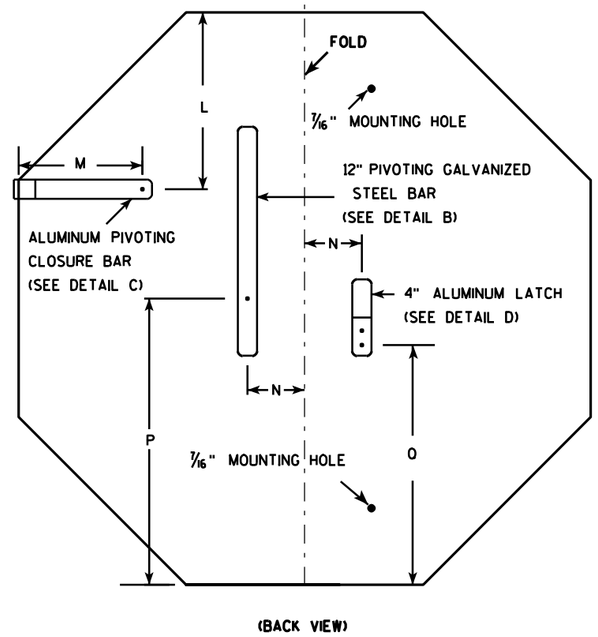

NOTES

1. Sign is Type II - Type H Reflective - reference WIS DOT Standard Specification for HIGHWAY and STRUCTURE CONSTRUCTION latest edition.
2. Color:
   Background - Red
   Message - White
3. Message Series - C
4. All hardware used on the folding STOP sign installation shall conform to 637.2.4 of the WIS DOT Standard Specification.

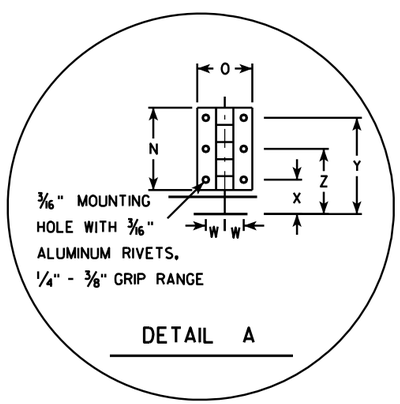

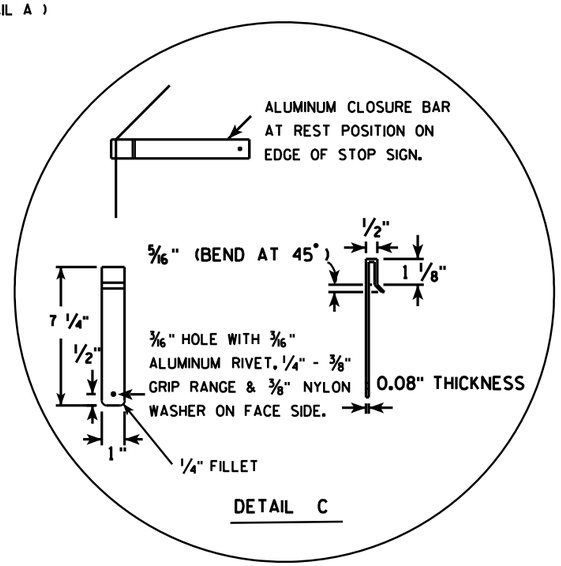

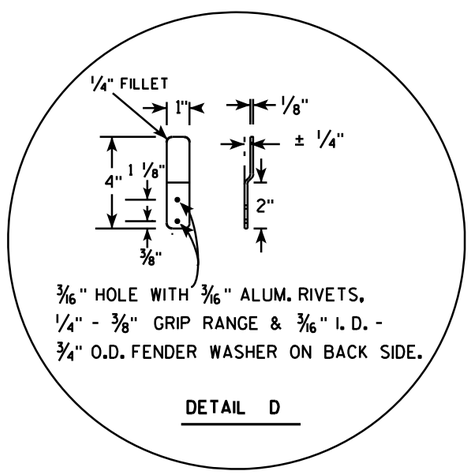

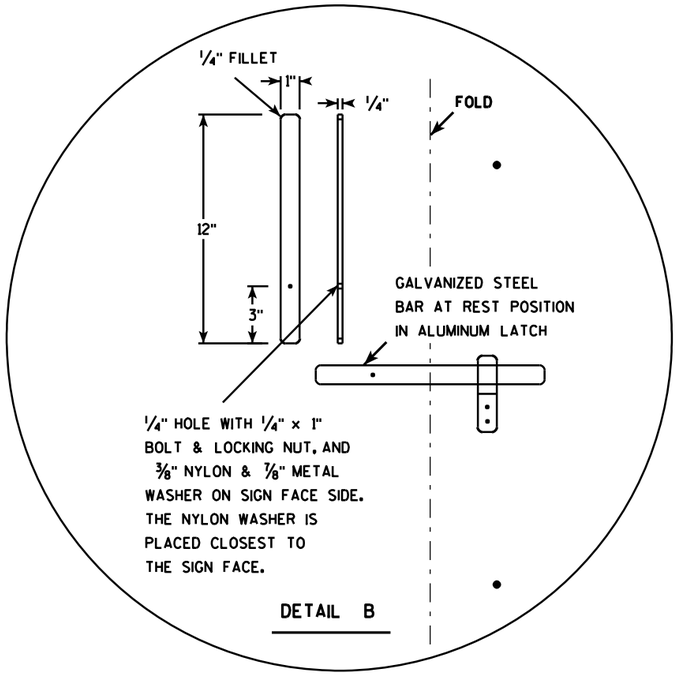

SIZE	A	B	C	D	E	F	G	H	I	J	K	L	M	N	O	P	Q	R	S	T	U	V	W	X	Y	Z	Area sq. ft.
1																											
2S	30				5/8	10	12 1/2	45		12 3/4		9 1/4	6 1/2	3	2	15	12 3/8	2 1/2	22	5			11/16	1 1/4	3 1/2	2 3/8	5.18
2M	36				3/4	12	15	45		15 3/8		11	6 1/2	3	2	18	15 3/8	2 1/2	26	5			11/16	1 1/4	3 1/2	2 3/8	7.46
3	36				3/4	12	15	45		15 3/8		11	6 1/2	3	2	18	15 3/8	2 1/2	26	5			11/16	1 1/4	3 1/2	2 3/8	7.46
4																											
5																											

STANDARD SIGN
R1-1F

WISCONSIN DEPT OF TRANSPORTATION

APPROVED Matthew R Rauch
for State Traffic Engineer

DATE 12/03/10 PLATE NO. R1-1F.3

PROJECT NO:	HWY:	COUNTY:		SHEET NO: 252	E

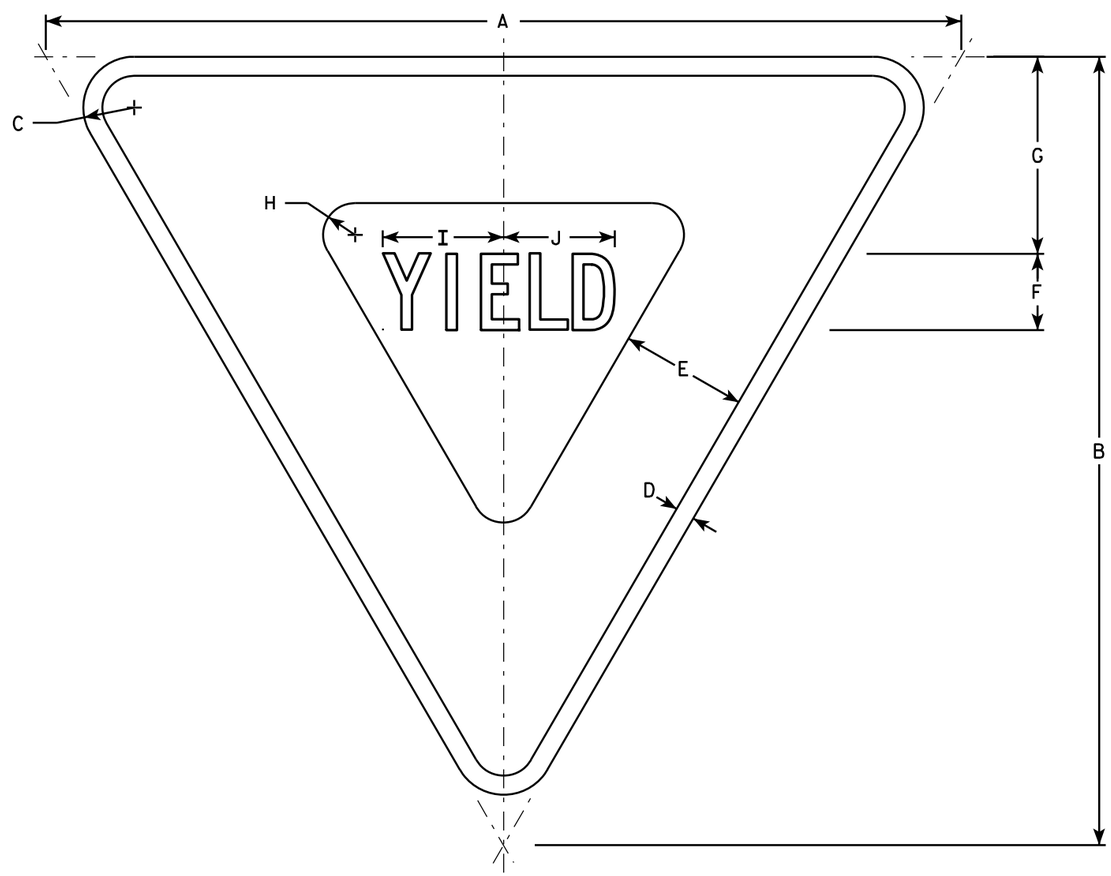

R1-2

NOTES

1. Sign is Type II - Type H Reflective - reference WIS DOT Standard Specification for HIGHWAY and STRUCTURE CONSTRUCTION latest edition.
2. Color:
   Background - White
   Message - See note 5
3. Message Series - C
4. Corners may be square or rounded when base material is plywood but borders shall be rounded as shown. When base material is metal, the corners and borders shall be rounded.
5. The border strip and word message are reflectorized red.

SIZE	A	B	C	D	E	F	G	H	I	J	K	L	M	N	O	P	Q	R	S	T	U	V	W	X	Y	Z	Area sq. ft.
1	30	26	1 1/2	5/8	4	2 1/2	6 3/8	7/8	4	3 5/8																	2.71
2S	36	31	2	3/4	5	3	7 3/4	1 1/4	4 3/4	4 3/8																	3.88
2M	48	42	3	1	6	4	9 3/4	2	6 1/4	5 7/8																	7.00
3	48	42	3	1	6	4	9 3/4	2	6 1/4	5 7/8																	7.00
4	48	42	3	1	6	4	9 3/4	2	6 1/4	5 7/8																	7.00
5	60	52	3	1 1/2	8	5	13	2 1/2	7 7/8	7 1/4																	10.83
6	24	21	1 1/2	3/8	3	2	4 3/4	7/8	3 1/4	3																	1.75
7	18	15 1/2	1	3/8	2 1/2	1 1/2	3 7/8	5/8	2 3/8	2 1/4																	0.97

STANDARD SIGN
R1-2

WISCONSIN DEPT OF TRANSPORTATION

APPROVED Matthew R Rauch
for State Traffic Engineer

DATE 11/02/10 PLATE NO. R1-2.11

PROJECT NO: | HWY: | COUNTY: | SHEET NO: 253 | E

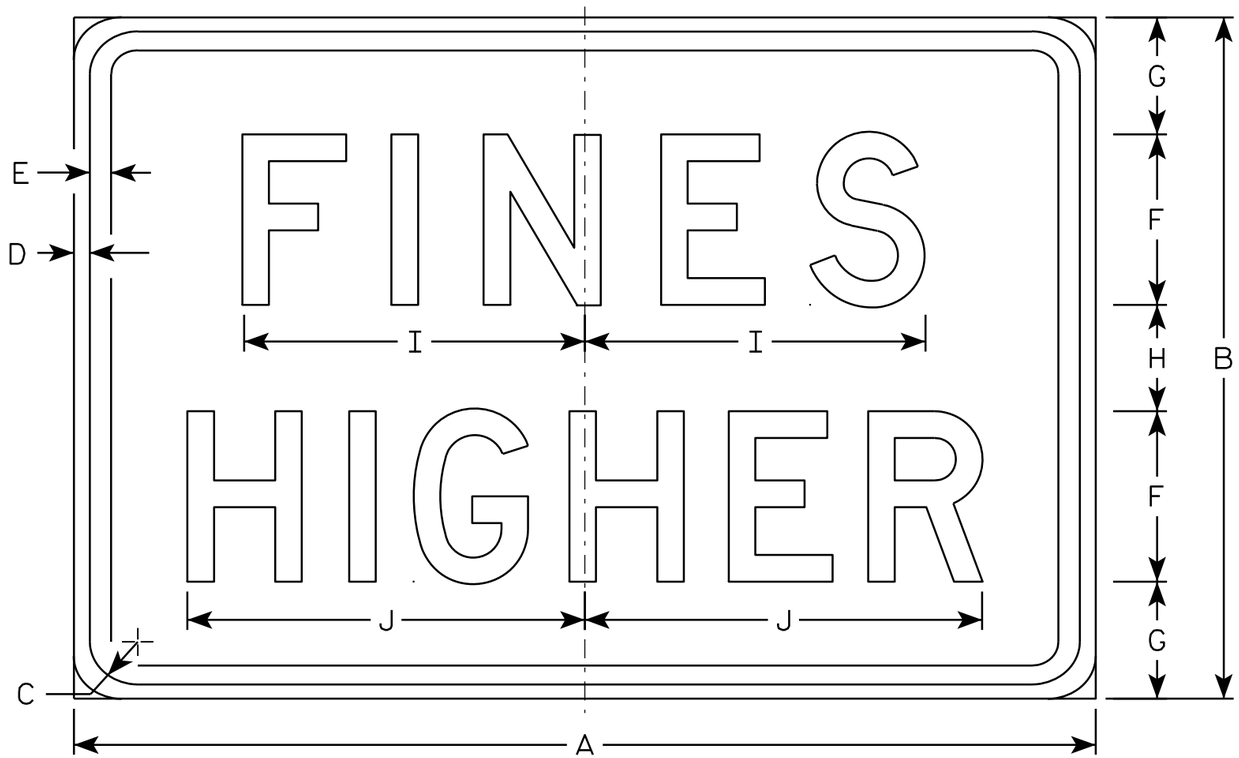

R2-6P

NOTES

1. Sign is Type II - Type H Reflective - reference WIS DOT Standard Specification for HIGHWAY and STRUCTURE CONSTRUCTION latest edition.
2. Color:
   Background - White
   Message - Black
3. Message Series - D
4. Corners may be square or rounded when base material is plywood but borders shall be rounded as shown. When base material is metal, the corners and borders shall be rounded.

SIZE	A	B	C	D	E	F	G	H	I	J	K	L	M	N	O	P	Q	R	S	T	U	V	W	X	Y	Z	Area sq. ft.
1																											
2S	24	18	1 1/8	3/8	3/8	4	3 1/2	3	7 5/8	9 1/4																	3.0
2M	24	18	1 1/8	3/8	3/8	4	3 1/2	3	7 5/8	9 1/4																	3.0
3	36	24	1 1/8	3/8	1/2	6	4 1/8	3 3/4	12	14																	6.0
4	36	24	1 1/8	3/8	1/2	6	4 1/8	3 3/4	12	14																	6.0
5	48	36	1 3/8	1/2	5/8	8	7	6	15 1/8	19																	12.0

STANDARD SIGN
R2-6P

WISCONSIN DEPT OF TRANSPORTATION

APPROVED Matthew R Rauch
for State Traffic Engineer

DATE 12/20/10 PLATE NO. R2-6P.2

PROJECT NO: | HWY: | COUNTY: | SHEET NO: 254 | E

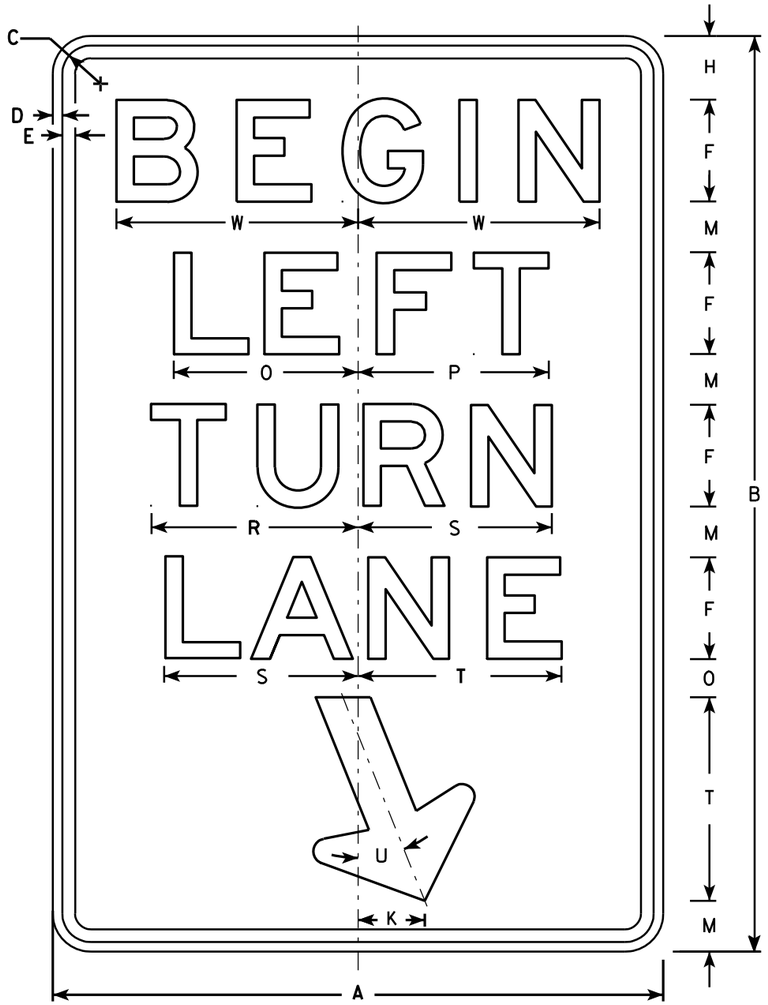

R3-20L

NOTES

1. Sign is Type II - Type H Reflective - reference WIS DOT Standard Specification for HIGHWAY and STRUCTURE CONSTRUCTION latest edition.
2. Color:
   Background - White
   Message - Black
3. Message Series - E
4. Corners may be square or rounded when base material is plywood but borders shall be rounded as shown. When base material is metal, the corners and borders shall be rounded.

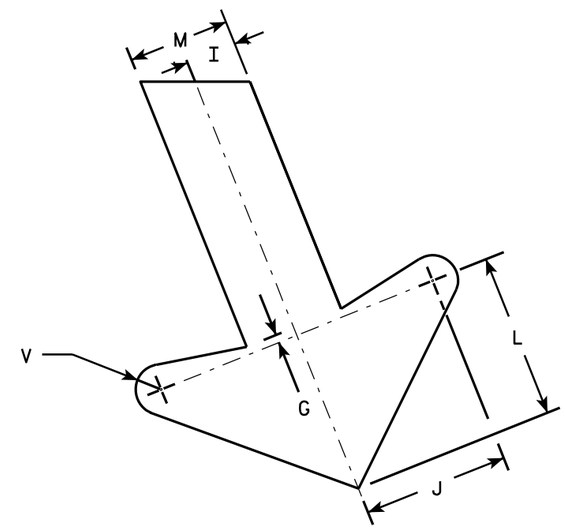

ARROW DETAIL

SIZE	A	B	C	D	E	F	G	H	I	J	K	L	M	N	O	P	Q	R	S	T	U	V	W	X	Y	Z	Area sq. ft.
1																											
2S	24	36	1 1/8	3/8	1/2	4	1/4	2 1/2	1	2 7/8	2 5/8	3 1/4	2	1 1/2	7 1/4	7 1/2		8 1/8	7 5/8	8	22°	1/2	9 1/2				6.0
2M	24	36	1 1/8	3/8	1/2	4	1/4	2 1/2	1	2 7/8	2 5/8	3 1/4	2	1 1/2	7 1/4	7 1/2		8 1/8	7 5/8	8	22°	1/2	9 1/2				6.0
3	36	54	1 3/4	1/2	5/8	6	3/8	3 3/4	1 1/2	4 1/4	4	4 7/8	3	2 1/4	10 7/8	11 1/4		12 1/4	11 1/2	12	22°	3/4	13 1/4				13.5
4																											
5																											

STANDARD SIGN
R3-20L

WISCONSIN DEPT OF TRANSPORTATION

APPROVED Matthew R Rauch
for State Traffic Engineer

DATE 10/18/10 PLATE NO. R3-20L.7

PROJECT NO: | HWY: | COUNTY: | SHEET NO: 255 | E

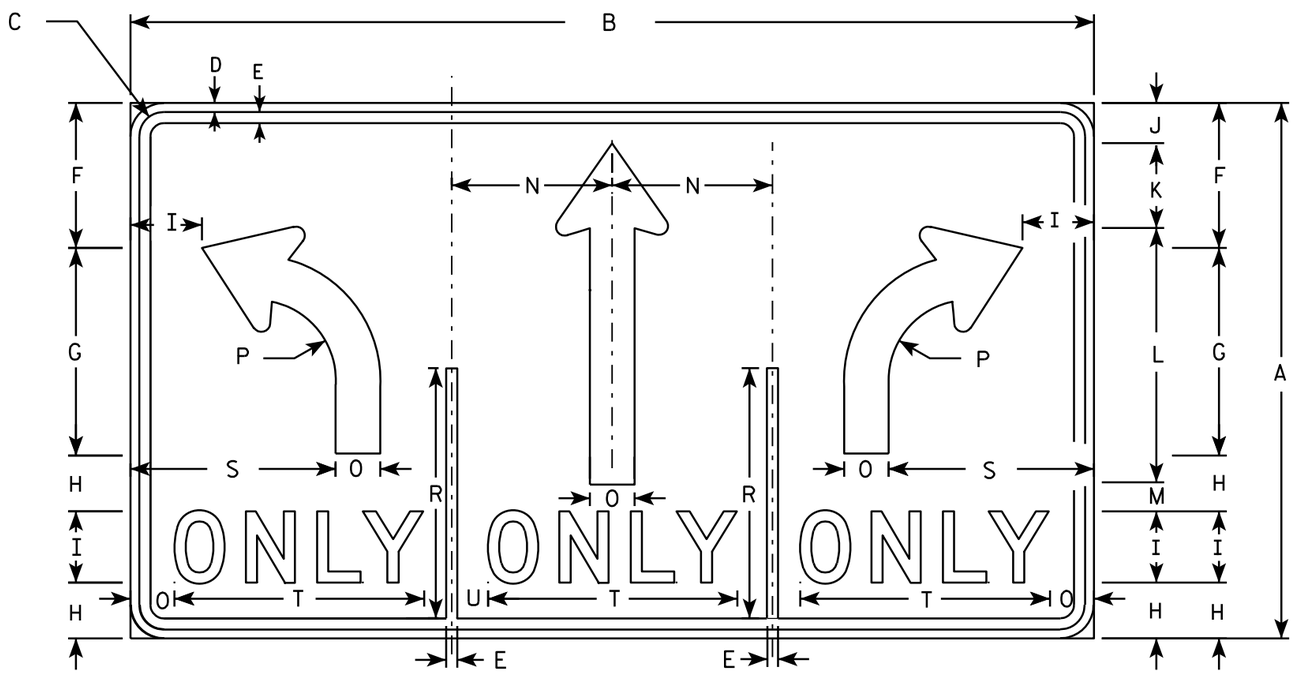

R3-8W

NOTES

1. Sign is Type II - Type H Reflective - reference WIS DOT Standard Specification for HIGHWAY and STRUCTURE CONSTRUCTION latest edition.
2. Color:
   Background - WHITE
   Message - BLACK
3. Message Series - D
4. Corners may be square or rounded when base material is plywood but borders shall be rounded as shown. When base material is metal, the corners and borders shall be rounded.

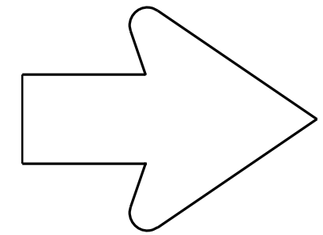

SEE R3-8 FOR ARROW DETAIL

SIZE	A	B	C	D	E	F	G	H	I	J	K	L	M	N	O	P	Q	R	S	T	U	V	W	X	Y	Z	Area sq. ft.
1																											
2S	30	54	1 3/8	1/2	5/8	8 1/8	11 5/8	3 1/8	4	2 1/4	4 3/4	14 1/4	1 5/8	9	2 1/2	4 1/2		14	11 1/2	14	2						11.25
2M	30	54	1 3/8	1/2	5/8	8 1/8	11 5/8	3 1/8	4	2 1/4	4 3/4	14 1/4	1 5/8	9	2 1/2	4 1/2		14	11 1/2	14	2						11.25
3																											
4	48	84	2 1/4	3/4	1	13	18 1/2	5 1/4	6	3 3/4	7	29 1/8	2 3/8	14	3 3/4	7 1/4		22 3/8	17 1/4	20 1/2	3 1/4						28.0
5	48	84	2 1/4	3/4	1	13	18 1/2	5 1/4	6	3 3/4	7	29 1/8	2 7/8	14	3 3/4	7 1/4		22 3/8	17 1/4	20 1/2	3 1/4						28.0

STANDARD SIGN
R3-8W

WISCONSIN DEPT OF TRANSPORTATION

APPROVED Matthew R Rauch for State Traffic Engineer

DATE 3/24/2011 PLATE NO. R3-8W.4

PROJECT NO:

SHEET NO: 256 E

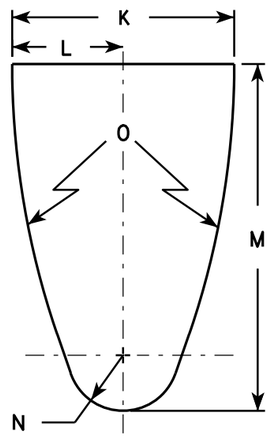

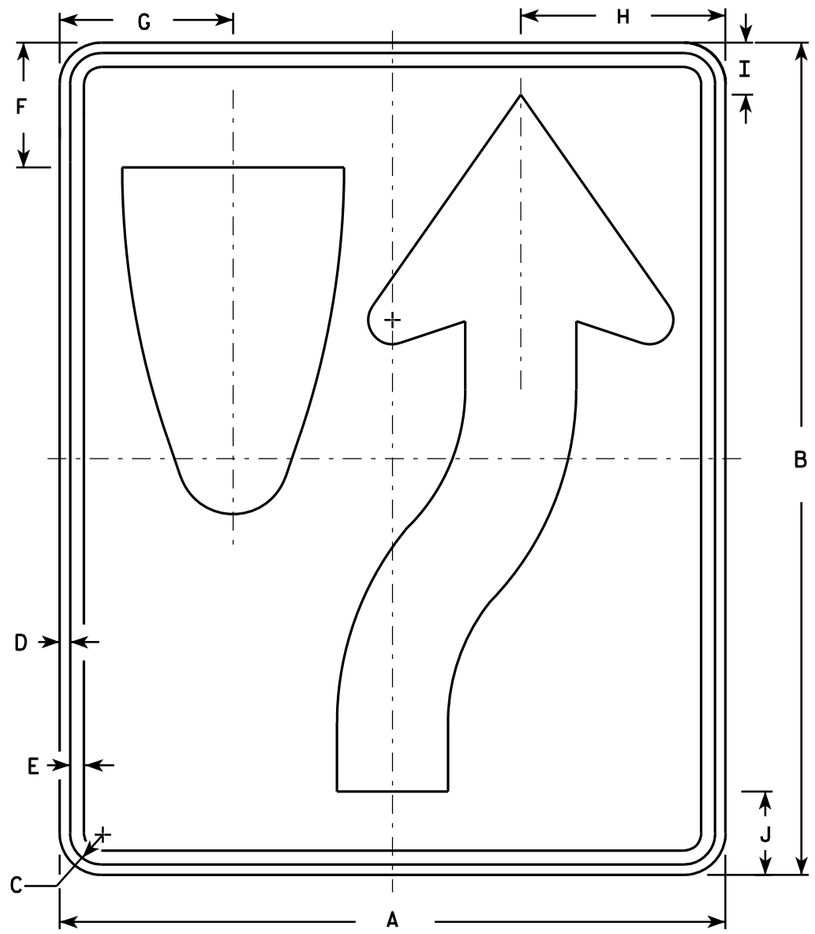

R4-7

NOTES

1. Sign is Type II - Type H Reflective - reference WIS DOT Standard Specification for HIGHWAY and STRUCTURE CONSTRUCTION latest edition. material is plywood but borders shall be rounded
2. Color:
   Background - White
   Message - Black
3. Corners may be square or rounded when base as shown. When base material is metal, the corners and borders shall be rounded.
4. R4-8 is the same as R4-7 except Legend is reversed.

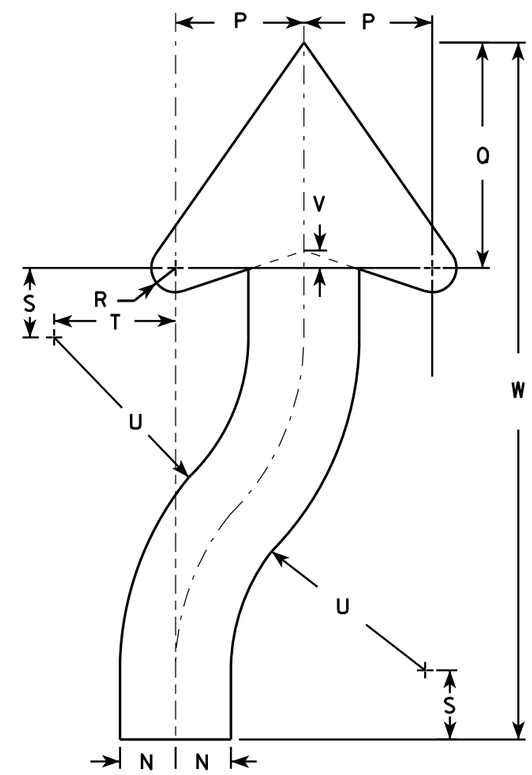

ARROW DETAIL

SIZE	A	B	C	D	E	F	G	H	I	J	K	L	M	N	O	P	Q	R	S	T	U	V	W	X	Y	Z	Area sq. ft.
1	18	24	1 1/8	3/8	1/2	3 3/8	4 3/4	5 1/2	1 3/8	2 1/4	6	3	9 3/8	1 1/2	22 1/2	3 1/2	6 1/8	5/8	1 7/8	3 1/4	6 3/4	1/2	20 3/8				3.0
2S	24	30	1 1/8	3/8	1/2	4 1/2	6 1/4	7 3/8	1 7/8	3	8	4	12 1/2	2	30	4 5/8	8 1/8	7/8	2 1/2	4 3/8	9	5/8	25 1/8				5.0
2M	24	30	1 1/8	3/8	1/2	4 1/2	6 1/4	7 3/8	1 7/8	3	8	4	12 1/2	2	30	4 5/8	8 1/8	7/8	2 1/2	4 3/8	9	5/8	25 1/8				5.0
3	36	48	1 3/4	1/2	5/8	6 3/4	9 3/8	11 1/8	2 7/8	4 1/2	12	6	18 3/4	3	45	6 7/8	12 1/4	1 1/4	3 3/4	6 5/8	13 1/2	1	40 3/4				12.0
4	36	48	1 3/4	1/2	5/8	6 3/4	9 3/8	11 1/8	2 7/8	4 1/2	12	6	18 3/4	3	45	6 7/8	12 1/4	1 1/4	3 3/4	6 5/8	13 1/2	1	40 3/4				12.0
5	48	60	2 1/4	3/4	1	9	12 1/2	14 3/4	3 3/4	6	16	8	25	4	60	9 1/4	16 1/4	1 5/8	5	8 3/4	18	1 1/4	50 1/4				20.0

STANDARD SIGN
R4-7 & R4-8

WISCONSIN DEPT OF TRANSPORTATION

APPROVED Matthew R Rauch for State Traffic Engineer

DATE 3/25/2011 PLATE NO. R4-7.8

PROJECT NO:	HWY:	COUNTY:		SHEET NO: 257	E

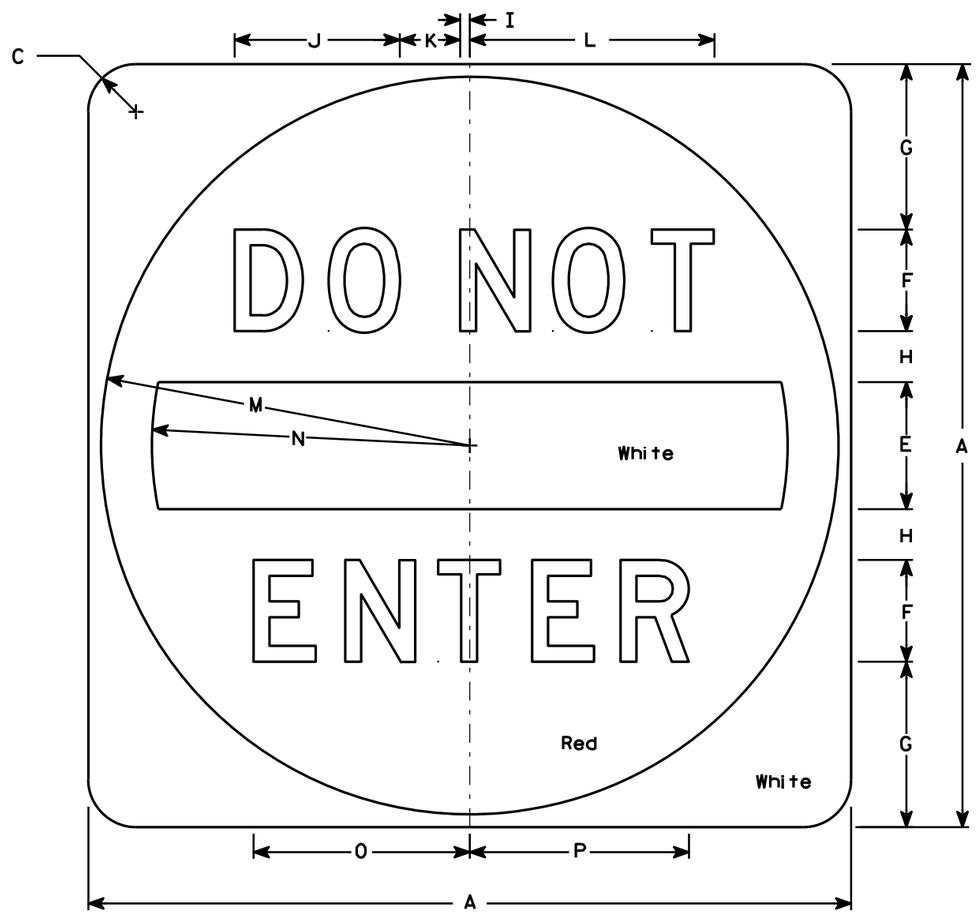

R5-1

NOTES

1. Sign is Type II - Type H Reflective - reference WIS DOT Standard Specification for HIGHWAY and STRUCTURE CONSTRUCTION latest edition.
2. Color:
   Background - See detail
   Message - White - Type H Reflective
3. Message Series - D
4. Corners may be square or rounded when base material is plywood but when base material is metal, the cornors shall be rounded.

SIZE	A	B	C	D	E	F	G	H	I	J	K	L	M	N	O	P	Q	R	S	T	U	V	W	X	Y	Z	Area sq. ft.
1																											
2S	30		1 7/8		5	4	6 1/2	2	3/8	6 1/2	2 3/8	9 5/8	14 1/2	12 1/2	8 1/2	8 5/8											6.26
2M	36		2 1/4		6	5	7 1/2	2 1/2	1/2	8 1/8	3	12 1/8	17 1/2	15	10 5/8	10 3/4											9.0
3	36		2 1/4		6	5	7 1/2	2 1/2	1/2	8 1/8	3	12 1/8	17 1/2	15	10 5/8	10 3/4											9.0
4	36		2 1/4		6	5	7 1/2	2 1/2	1/2	8 1/8	3	12 1/8	17 1/2	15	10 5/8	10 3/4											9.0
5	48		3		8	6	11	3	5/8	9 3/4	3 5/8	14 1/2	23 1/2	20	12 3/4	12 7/8											16.0

STANDARD SIGN
R5-1

WISCONSIN DEPT OF TRANSPORTATION

APPROVED Matthew R Rauch
for State Traffic Engineer

DATE 12/17/10 PLATE NO. R5-1.15

PROJECT NO: | HWY: | COUNTY: | SHEET NO: 258 | E

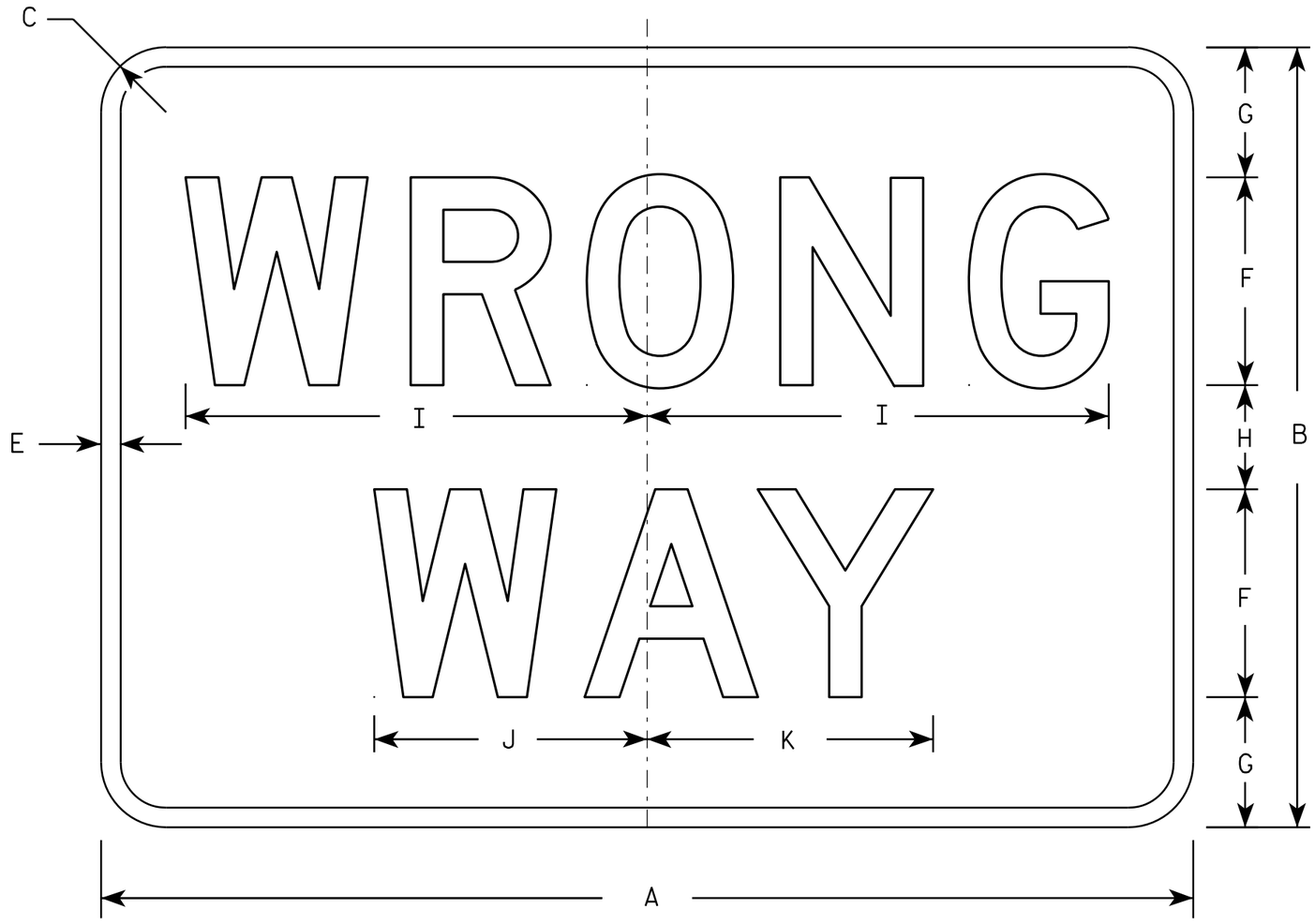

R5-1A

NOTES

1. Sign is Type II - Type H Reflective - reference WIS DOT Standard Specification for HIGHWAY and STRUCTURE CONSTRUCTION latest edition.
2. Color:
   Background - Red
   Message - White
3. Message Series - D
4. Corners may be square or rounded when base material is plywood but borders shall be rounded as shown. When base material is metal, the corners and borders shall be rounded.

SIZE	A	B	C	D	E	F	G	H	I	J	K	L	M	N	O	P	Q	R	S	T	U	V	W	X	Y	Z	Area sq. ft.
1	30	18	1 1/2		1/2	5	3	2	11	6 1/2	6 7/8																3.75
2S	36	24	2		5/8	6	4 1/2	3	13 1/4	7 7/8	8 1/4																6.00
2M	42	30	2 1/2		3/4	8	5	4	17 3/4	10 1/2	11																8.75
3	42	30	2 1/2		3/4	8	5	4	17 3/4	10 1/2	11																8.75
4	42	30	2 1/2		3/4	8	5	4	17 3/4	10 1/2	11																8.75
5	42	30	2 1/2		3/4	8	5	4	17 3/4	10 1/2	11																8.75

STANDARD SIGN
R5-1A

WISCONSIN DEPT OF TRANSPORTATION

APPROVED Matthew R Rauch
for State Traffic Engineer

DATE 12/17/10 PLATE NO. R5-1A.2

PROJECT NO: | HWY: | COUNTY: | SHEET NO: 259 | E

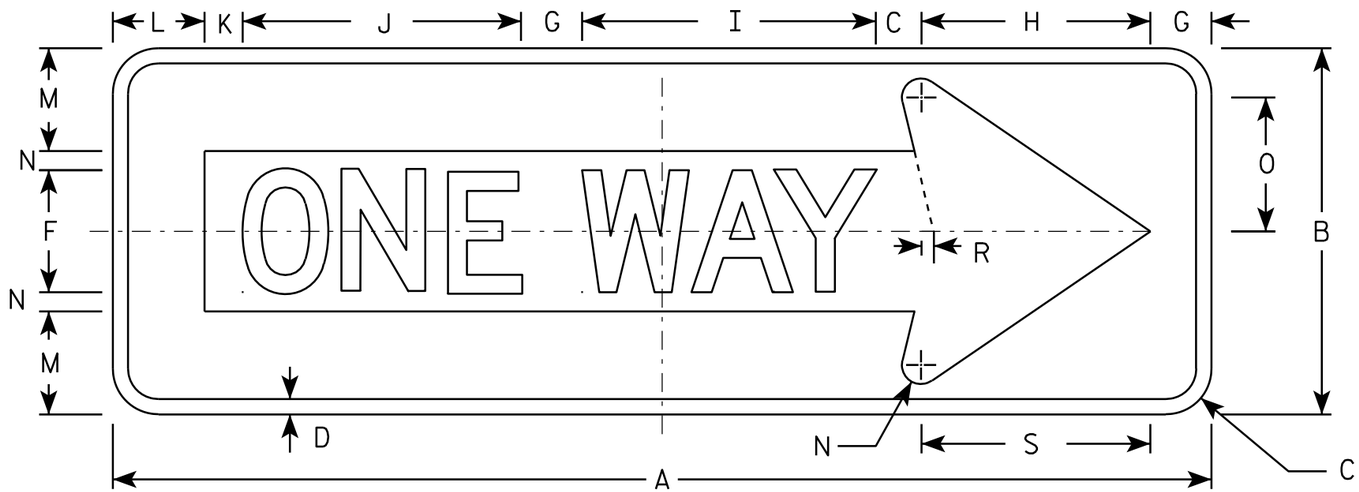

R6-1 R

NOTES

1. Sign is Type II - Type H Reflective - reference WIS DOT Standard Specification for HIGHWAY and STRUCTURE CONSTRUCTION latest edition.
2. Color:
   Background - BLACK
   Message - BLACK LEGEND & WHITE ARROW & BORDER
3. Message Series - D
4. Corners may be square or rounded when base material is plywood but borders shall be rounded as shown. When base material is metal, the corners and borders shall be rounded.

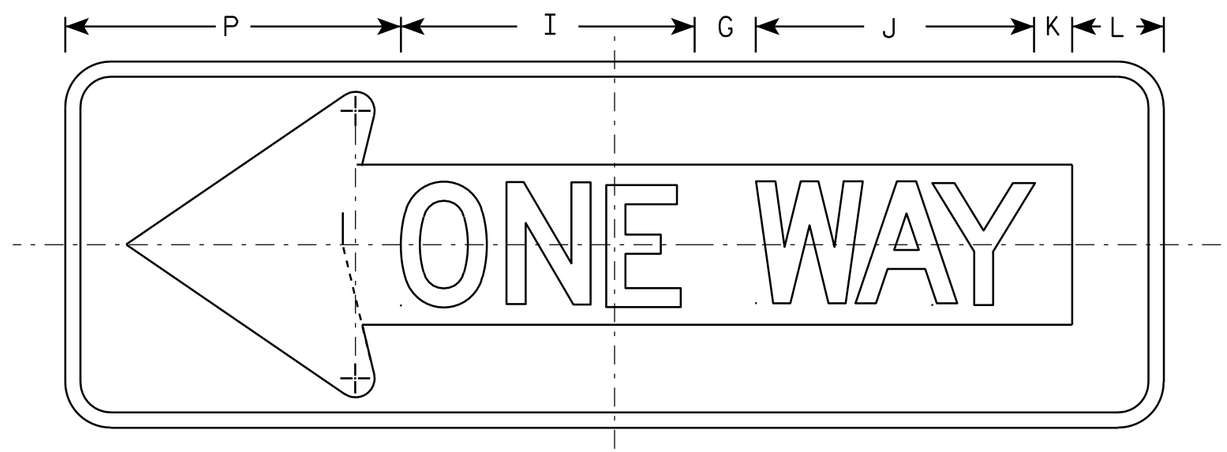

R6-1 L

SIZE	A	B	C	D	E	F	G	H	I	J	K	L	M	N	O	P	Q	R	S	T	U	V	W	X	Y	Z	Area sq. ft.
1																											
2S	36	12	1 1/2	1/2		4	2	7 1/2	9 5/8	9 1/8	1 1/4	3	3 3/8	5/8	4 3/8	11		3/8	7 1/2								3.0
2M	54	18	2 1/4	3/4		6	3	11 1/4	14 1/2	13 5/8	1 7/8	4 1/2	5	1	6 1/2	16 1/2		5/8	11 1/4								6.75
3	54	18	2 1/4	3/4		6	3	11 1/4	14 1/2	13 5/8	1 7/8	4 1/2	5	1	6 1/2	16 1/2		5/8	11 1/4								6.75
4	54	18	2 1/4	3/4		6	3	11 1/4	14 1/2	13 5/8	1 7/8	4 1/2	5	1	6 1/2	16 1/2		5/8	11 1/4								6.75
5																											

STANDARD SIGN
R6-1 L & R

WISCONSIN DEPT OF TRANSPORTATION

APPROVED Matthew R Rauch
for State Traffic Engineer

DATE 12/17/10 PLATE NO. R6-1.2

PROJECT NO:

SHEET NO: 260 E

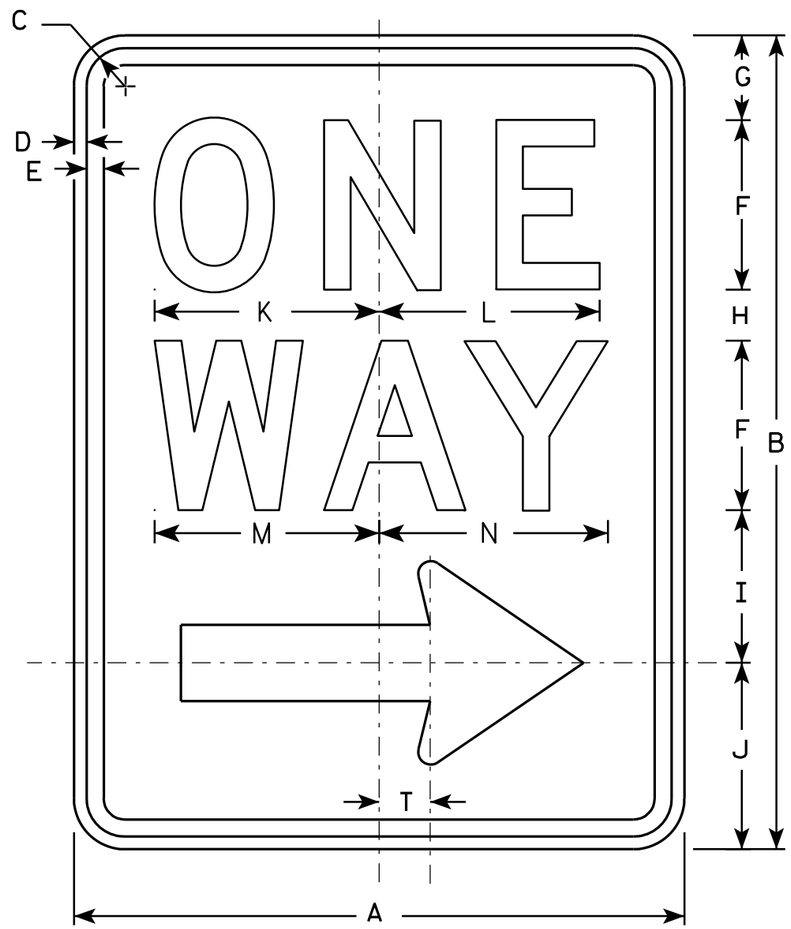

R6-2R

NOTES

1. Sign is Type II - Type H Reflective - reference WIS DOT Standard Specification for HIGHWAY and STRUCTURE CONSTRUCTION latest edition.
2. Color:
   Background - White
   Message - Black
3. Message Series - D
4. Corners may be square or rounded when base material is plywood but borders shall be rounded as shown. When base material is metal, the corners and borders shall be rounded.
5. R6-2L same as R6-2R except arrow points to the left.

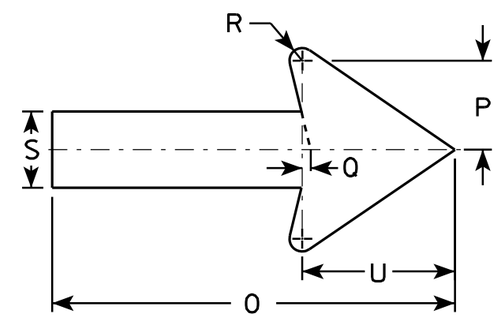

SIZE	A	B	C	D	E	F	G	H	I	J	K	L	M	N	O	P	Q	R	S	T	U	V	W	X	Y	Z
1	18	24	1 1/8	3/8	1/2	5	2 1/2	1 1/2	4 1/2	5 1/2	6 5/8	6 1/2	6 5/8	6 3/4	11 7/8	2 5/8	1/4	3/8	2 1/4	1 1/2	4 1/2					
2S	24	30	1 1/8	3/8	1/2	6	3	2 1/2	5 1/2	7	8 1/8	8 1/8	8 1/2	8 5/8	16	3 1/2	3/8	1/2	3	2	6					
2M	30	36	1 3/8	1/2	5/8	8	2 1/2	2 5/8	6 7/8	8	10 1/2	10 1/2	11 1/4	11 1/4	20	4 3/8	1/2	5/8	3 3/4	2 1/2	7 1/2					
3	36	48	1 7/8	1/2	5/8	10	5 1/4	3 1/4	9	10 1/2	12 3/4	12 3/4	13 1/4	13 1/2	24	5 5/8	1/2	3/4	4 3/4	3	9					
4	36	48	1 7/8	1/2	5/8	10	5 1/4	3 1/4	9	10 1/2	12 3/4	12 3/4	13 1/4	13 1/2	24	5 5/8	1/2	3/4	4 3/4	3	9					
5																										

STANDARD SIGN
R6-2 R&L

WISCONSIN DEPT OF TRANSPORTATION

APPROVED Matthew R Rauch
for State Traffic Engineer

DATE 11/2/10 PLATE NO. R6-2.8

PROJECT NO:	HWY:	COUNTY:		SHEET NO: 261	E

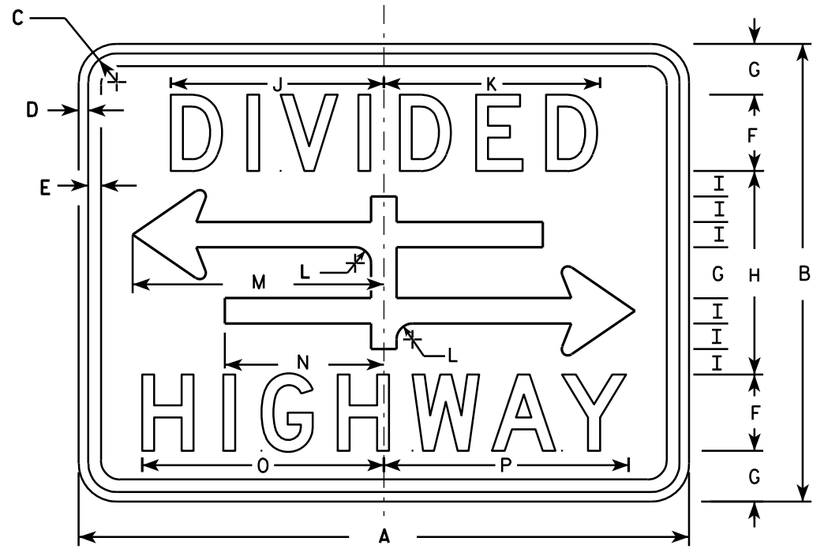

R6-3

NOTES

1. Sign is Type II - Type H Reflective - reference WIS DOT Standard Specification for HIGHWAY and STRUCTURE CONSTRUCTION latest edition.
2. Color:
   Background - White
   Message - Black
3. Message Series - D
4. Corners may be square or rounded when base material is plywood but borders shall be rounded as shown. When base material is metal, the corners and borders shall be rounded.

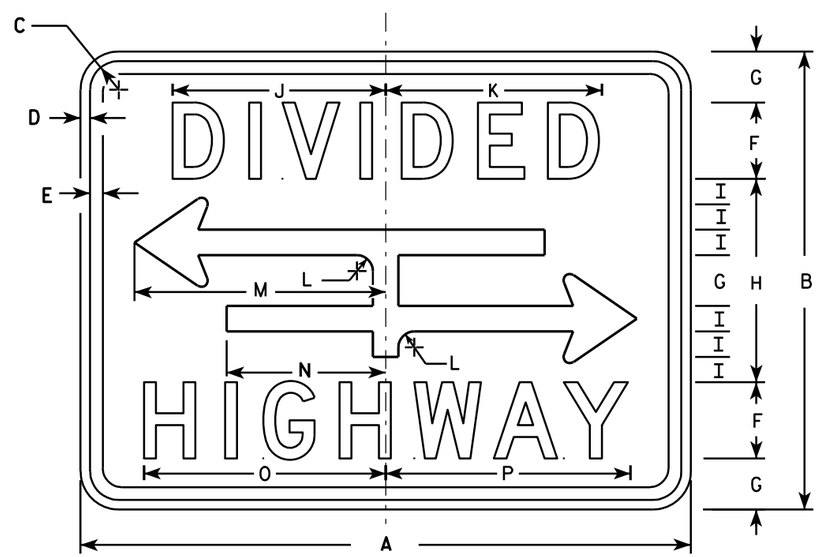

R6-3A

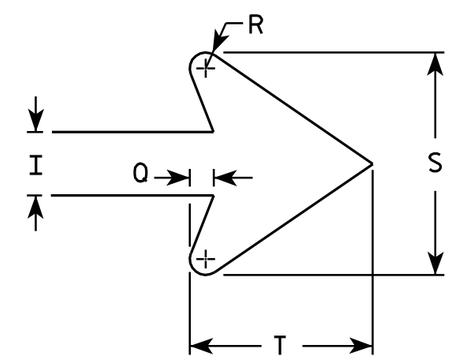

ARROW DETAIL

SIZE	A	B	C	D	E	F	G	H	I	J	K	L	M	N	O	P	Q	R	S	T	U	V	W	X	Y	Z	Area sq. ft.
1	24	18	1 1/8	3/8	3/8	3	2	8	1	8 3/8	8 1/2	5/8	9 7/8	6 1/4	9 1/2	9 5/8	3/8	1/4	3 1/2	2 3/4							3.0
2S	30	24	1 1/8	3/8	1/2	4	2 5/8	10 3/4	1 3/8	10 1/2	10 5/8	7/8	12 1/2	7 7/8	12 1/4	12 3/8	1/2	3/8	4 5/8	3 5/8							5.0
2M	30	24	1 1/8	3/8	1/2	4	2 5/8	10 3/4	1 3/8	10 1/2	10 5/8	7/8	12 1/2	7 7/8	12 1/4	12 3/8	1/2	3/8	4 5/8	3 5/8							5.0
3																											
4																											
5																											

STANDARD SIGN
R6-3 & R6-3A

WISCONSIN DEPT OF TRANSPORTATION

APPROVED Matthew R Rauch
for State Traffic Engineer

DATE 3/31/2011 PLATE NO. R6-3.5

PROJECT NO:

SHEET NO: 262 E

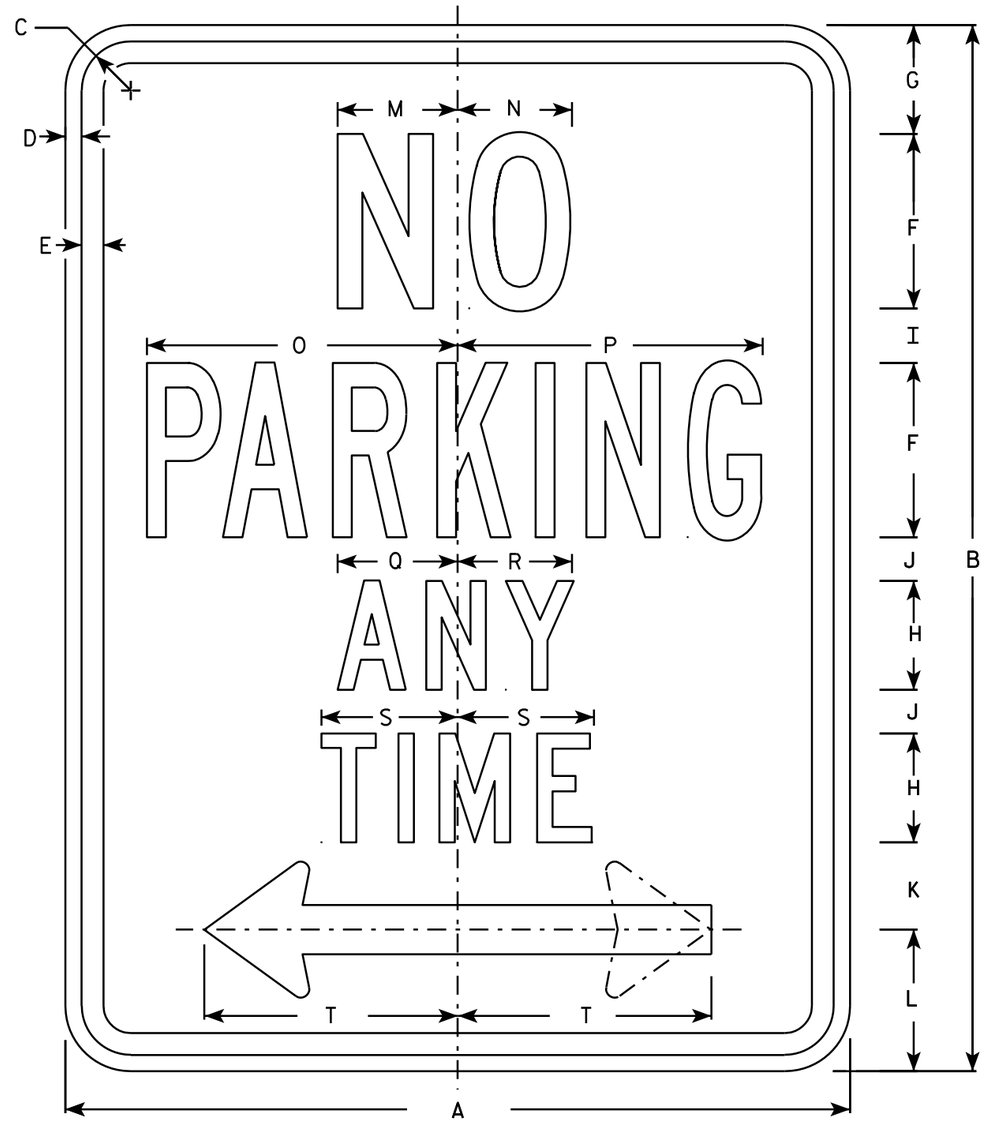

R7-1

NOTES

1. Sign is Type II - Type H Reflective - reference WIS DOT Standard Specification for HIGHWAY and STRUCTURE CONSTRUCTION latest edition.
2. Color:
   Background - White
   Message - Red
3. Message Series - See Note 5
4. Corners may be square or rounded when base material is plywood but borders shall be rounded as shown. When base material is metal, the corners and borders shall be rounded.
5. Lines 1, 3 and 4 are series C, line 2 is series B.
6. R7-1D (double arrow)
   R7-1L (left arrow)
   R7-1R (right arrow)

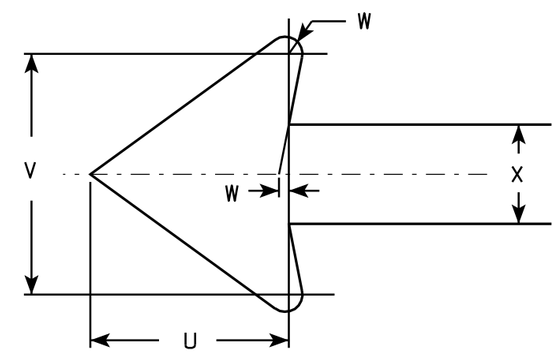

SIZE	A	B	C	D	E	F	G	H	I	J	K	L	M	N	O	P	Q	R	S	T	U	V	W	X	Y	Z	Area sq. ft.
1	12	18	1 1/8	3/8	3/8	3	1 7/8	2	7/8	5/8	1 1/2	2 1/2	2	2	4 7/8	4 7/8	2 1/4	2 1/8	2 1/2	3 7/8	1 1/2	1 3/4	1/8	3/4			1.5
2S	18	24	1 1/8	3/8	1/2	4	2 1/2	2 1/2	1 1/4	1	2	3 1/4	2 3/4	2 5/8	7 1/8	7	2 3/4	2 5/8	3 1/8	5 7/8	2 1/4	2 5/8	1/4	1 1/8			3.0
2M	24	30	1 1/8	3/8	1/2	5	3	3	2	1 1/4	2 1/2	4	3 1/4	3 3/8	9 1/4	9 1/4	3 1/4	3 1/4	3 3/4	7 3/4	3	3 1/2	1/4	1 1/2			5.0
3	24	30	1 1/8	3/8	1/2	5	3	3	2	1 1/4	2 1/2	4	3 1/4	3 3/8	9 1/4	9 1/4	3 1/4	3 1/4	3 3/4	7 3/4	3	3 1/2	1/4	1 1/2			5.0
4																											
5																											

STANDARD SIGN
R7-1

WISCONSIN DEPT OF TRANSPORTATION

APPROVED Matthew R Rauch
for State Traffic Engineer

DATE 3/31/2011 PLATE NO. R7-1.9

PROJECT NO:	HWY:	COUNTY:		SHEET NO: 263	E

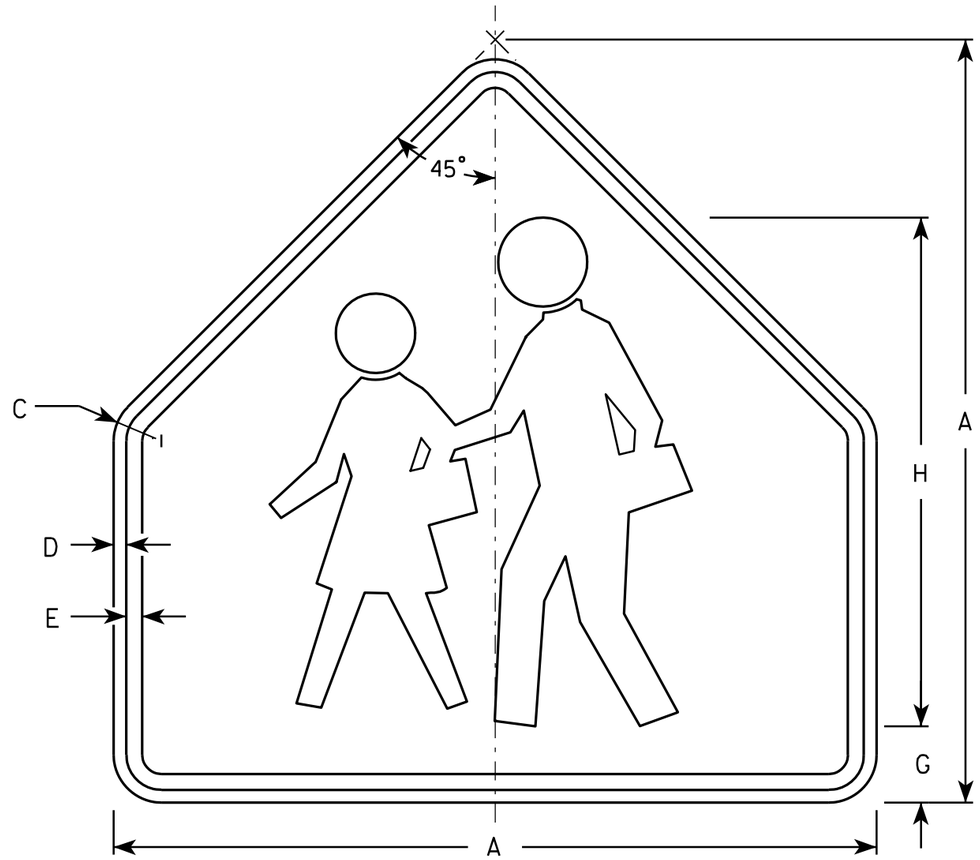

S1-1

NOTES

1. Sign is Type II - Type F Reflective - reference WIS DOT Standard Specification for HIGHWAY and STRUCTURE CONSTRUCTION latest edition.
2. Color:
   Background - Yellow-Green
   Message - Black
3. Corners may be square or rounded when base material is plywood but borders shall be rounded as shown. When base material is metal, the corners and borders shall be rounded.

SIZE	A	B	C	D	E	F	G	H	I	J	K	L	M	N	O	P	Q	R	S	T	U	V	W	X	Y	Z	Area sq. ft.
1	30		1 3/8	1/2	5/8		3	20																			4.69
2	36		1 5/8	5/8	3/4		3 1/2	24																			6.75
3	36		1 5/8	5/8	3/4		3 1/2	24																			6.75
4	48		2 1/4	3/4	1		4 3/4	32																			12
5																											

STANDARD SIGN
S1-1

WISCONSIN DEPT OF TRANSPORTATION

APPROVED Matthew R Rauch
for State Traffic Engineer
DATE 6/30/05 PLATE NO. S1-1.8

PROJECT NO:	HWY:	COUNTY:		SHEET NO: 264	E

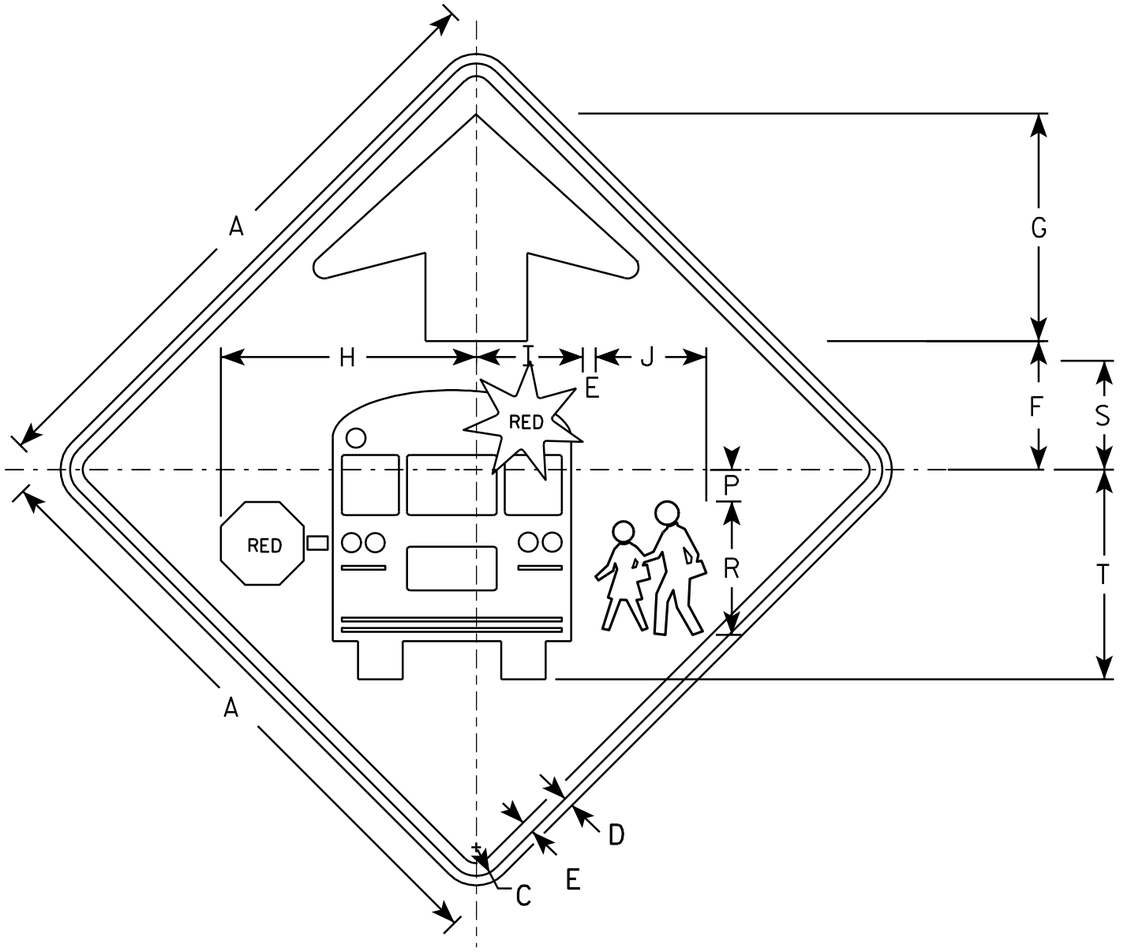

S3-1

NOTES

1. All Signs Type II - Type F Reflective - reference WIS DOT Standard Specification for HIGHWAY and STRUCTURE CONSTRUCTION latest edition.
2. Color:
   Background - YELLOW-GREEN
   Message - BLACK except as noted
   Circles except PEDS- RED BACKGROUND
3. Corners may be square or rounded when base material is plywood but borders shall be rounded as shown. When base material is metal, the corners and borders shall be rounded.

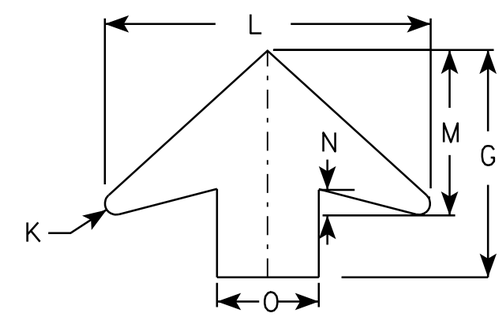

ARROW DETAIL

SIZE	A	B	C	D	E	F	G	H	I	J	K	L	M	N	O	P	Q	R	S	T	U	V	W	X	Y	Z	Area sq. ft.
1	30		1 3/8	1/2	5/8	6 1/4	11 1/4	12 1/2	5 1/4	5 1/2	1/2	16	8	1 1/4	5	1 1/2		6 5/8	5 3/8	10 3/8							6.25
2	36		1 5/8	5/8	3/4	7 1/2	13 1/2	15 1/8	6 1/4	6 1/2	5/8	19 1/4	9 3/4	1 5/8	6	1 7/8		7 7/8	6 3/8	12 3/8							9.0
3	48		2 1/4	3/4	1	10	17 7/8	20 1/8	8 3/8	8 3/4	7/8	25 5/8	13	2	8	2 1/2		10 1/2	8 1/2	16 1/2							16.0
4	48		2 1/4	3/4	1	10	17 7/8	20 1/8	8 3/8	8 3/4	7/8	25 5/8	13	2	8	2 1/2		10 1/2	8 1/2	16 1/2							16.0
5																											

STANDARD SIGN
S3-1

WISCONSIN DEPT OF TRANSPORTATION

APPROVED Matthew R Rauch
for State Traffic Engineer

DATE 6/8/10 PLATE NO. S3-1.6

PROJECT NO:

SHEET NO: 265 E

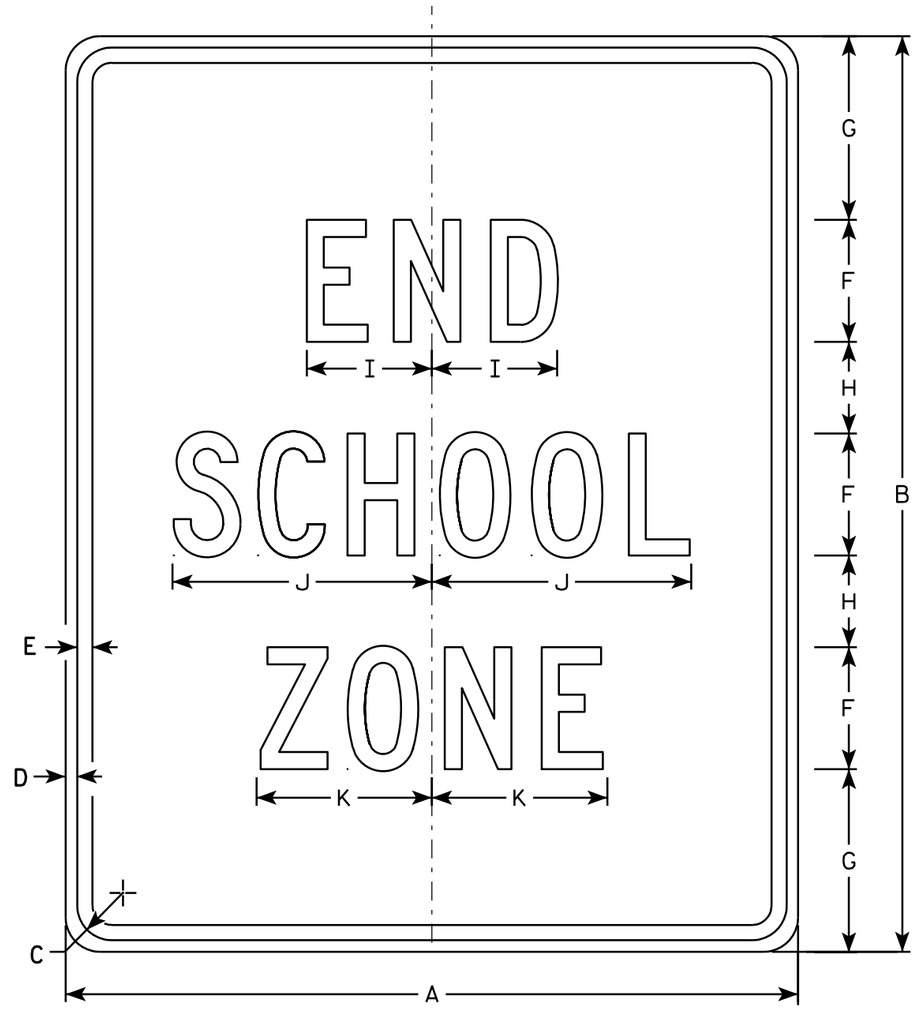

S5-2

NOTES

1. Sign is Type II - Type H Reflective - reference WIS DOT Standard Specification for HIGHWAY and STRUCTURE CONSTRUCTION latest edition.
2. Color:
   Background - White
   Message - Black
3. Message Series - C
4. Corners may be square or rounded when base material is plywood but borders shall be rounded as shown. When base material is metal, the corners and borders shall be rounded.

SIZE	A	B	C	D	E	F	G	H	I	J	K	L	M	N	O	P	Q	R	S	T	U	V	W	X	Y	Z	Area sq. ft.
1																											
2	24	30	1 1/8	3/8	1/2	4	6	3	4 1/8	8 1/2	5 3/4																5.0
3	36	42	1 5/8	5/8	3/4	6	7	5	6 1/8	12 5/8	8 5/8																10.5
4																											
5																											

STANDARD SIGN
S5-2

WISCONSIN DEPT OF TRANSPORTATION

APPROVED Matthew R Rauch
for State Traffic Engineer

DATE 3/8/11 PLATE NO. S5-2.2

PROJECT NO: | HWY: | COUNTY: | SHEET NO: 266 | E

NOTES

1. Sign is Type II - Type F Reflective - reference WIS DOT Standard Specification for HIGHWAY and STRUCTURE CONSTRUCTION latest edition.
2. Color:
   Background - Yellow
   Message - Black
3. Message Series - C
4. Corners may be square or rounded when base material is plywood but borders shall be rounded as shown. When base material is metal, the corners and borders shall be rounded.

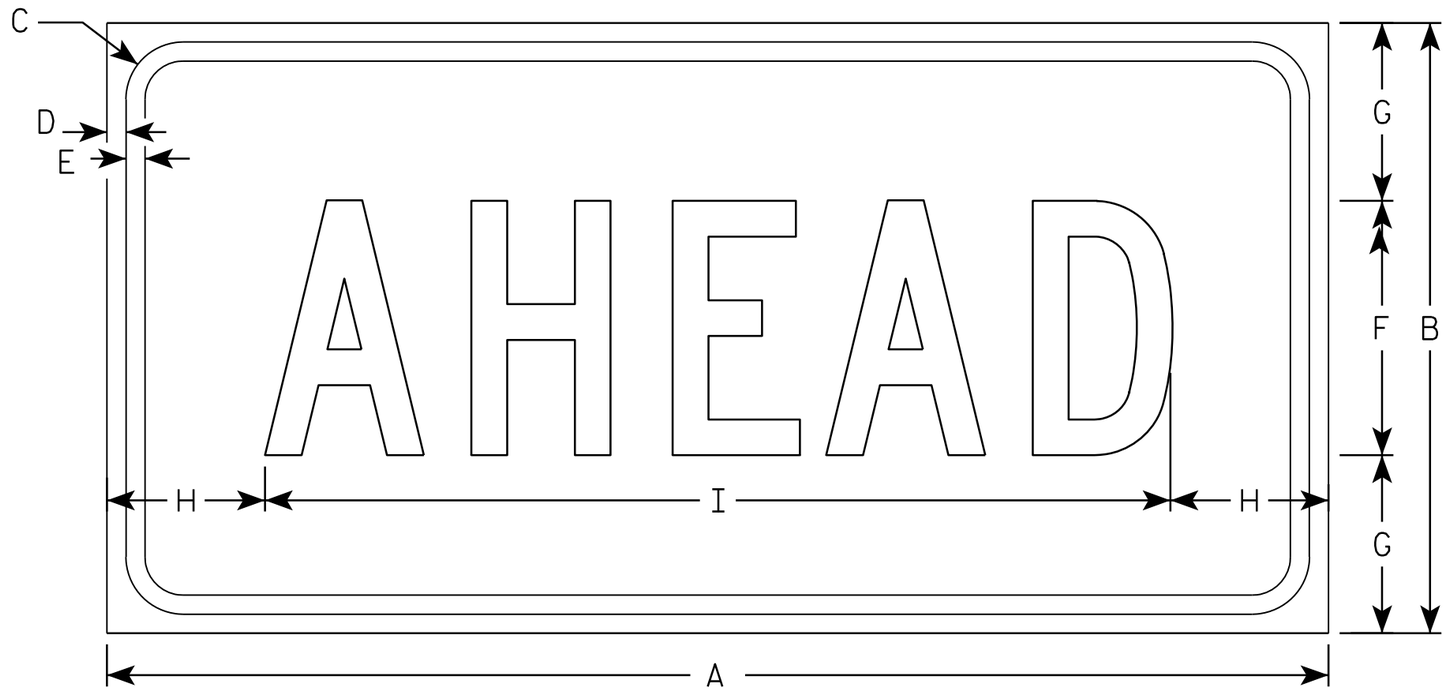

W16-9P

SIZE	A	B	C	D	E	F	G	H	I	J	K	L	M	N	O	P	Q	R	S	T	U	V	W	X	Y	Z	Area sq. ft.
1																											
2S	24	12	1 1/8	3/8	3/8	5	3 1/2	3 1/8	17 3/4																		2.0
2M	30	18	1 1/8	3/8	1/2	7	5 1/2	2 3/4	24 1/2																		3.75
3	30	18	1 1/8	3/8	1/2	7	3 1/2	2 3/4	24 1/2																		3.75
4	48	24	1 3/8	1/2	5/8	10	7	6 1/8	35 3/4																		8.0
5																											

STANDARD SIGN
W16-9P

WISCONSIN DEPT OF TRANSPORTATION

APPROVED Matthew R Rauch
for State Traffic Engineer

DATE 12/28/10 PLATE NO. W16-9P.6

PROJECT NO: | HWY: | COUNTY: | SHEET NO: 267 | E

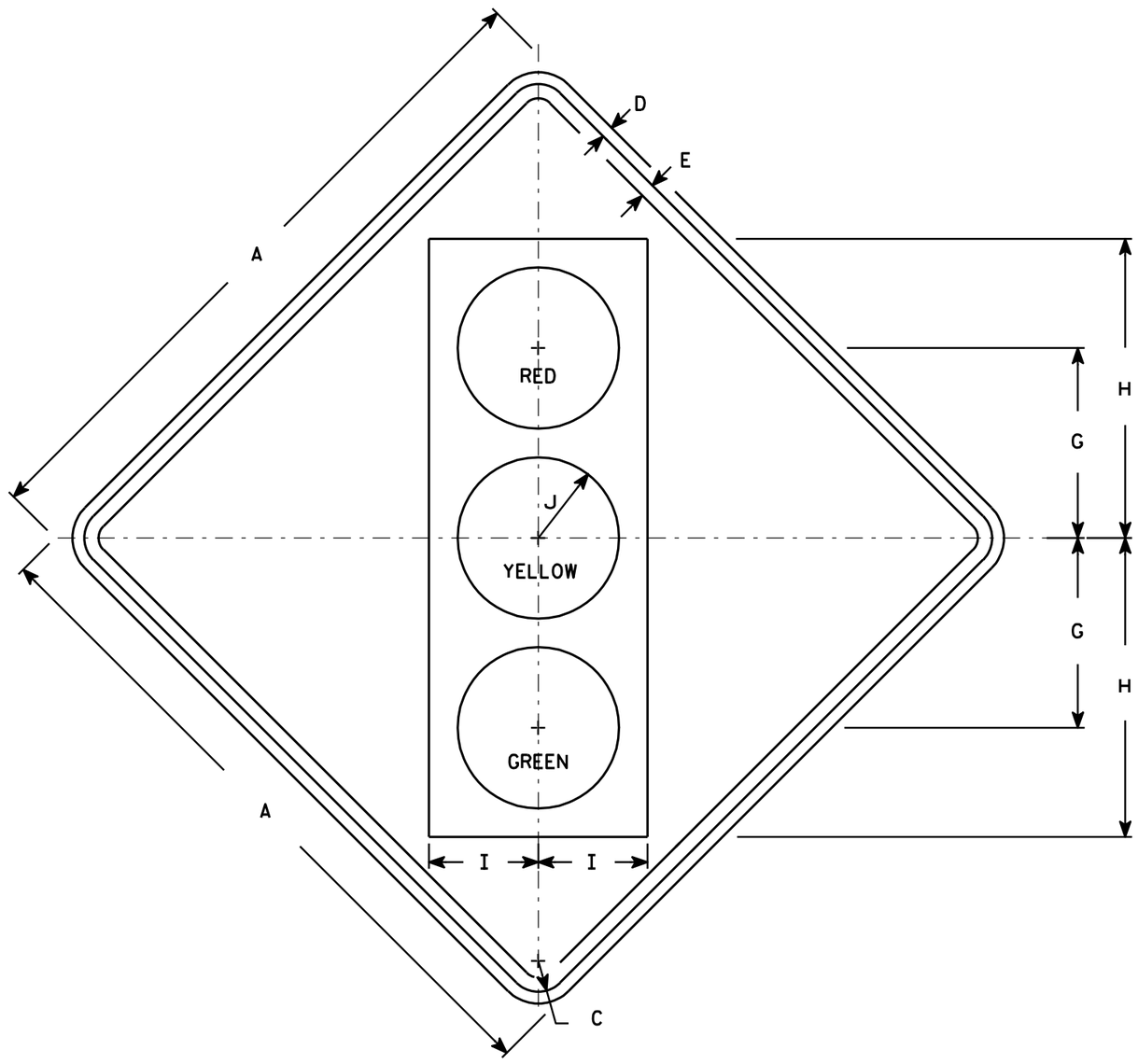

W3-3

NOTES

1. Sign is Type II - Type F Reflective - reference WIS DOT Standard Specification for HIGHWAY and STRUCTURE CONSTRUCTION latest edition.
2. Color:
   Background - Yellow
   Message - See Note 4
3. Corners may be square or rounded when base material is plywood but borders shall be rounded as shown. When base material is metal, the corners and borders shall be rounded.
4. Symbol and border are non-reflective black.
   Top circle - Type H Reflectorized Red
   Center circle - Same as background
   Bottom circle - Type H Reflectorized Green

SIZE	A	B	C	D	E	F	G	H	I	J	K	L	M	N	O	P	Q	R	S	T	U	V	W	X	Y	Z	Area sq. ft.
1	30		1 3/8	1/2	5/8		8 3/4	13 3/4	5	3 3/4																	6.25
2S	36		1 5/8	5/8	3/4		10	15 3/4	5 3/4	4 1/4																	9.0
2M	36		1 5/8	5/8	3/4		10	15 3/4	5 3/4	4 1/4																	9.0
3	36		1 5/8	5/8	3/4		10	15 3/4	5 3/4	4 1/4																	9.0
4	48		2 1/4	3/4	1		12 1/2	20	7 1/2	5																	16.0
5	48		2 1/4	3/4	1		12 1/2	20	7 1/2	5																	16.0

STANDARD SIGN
W3-3

WISCONSIN DEPT OF TRANSPORTATION

APPROVED Matthew R Rauch
for State Traffic Engineer

DATE 6/7/10 PLATE NO. W3-3.11

PROJECT NO: | HWY: | COUNTY: | SHEET NO: 268 | E

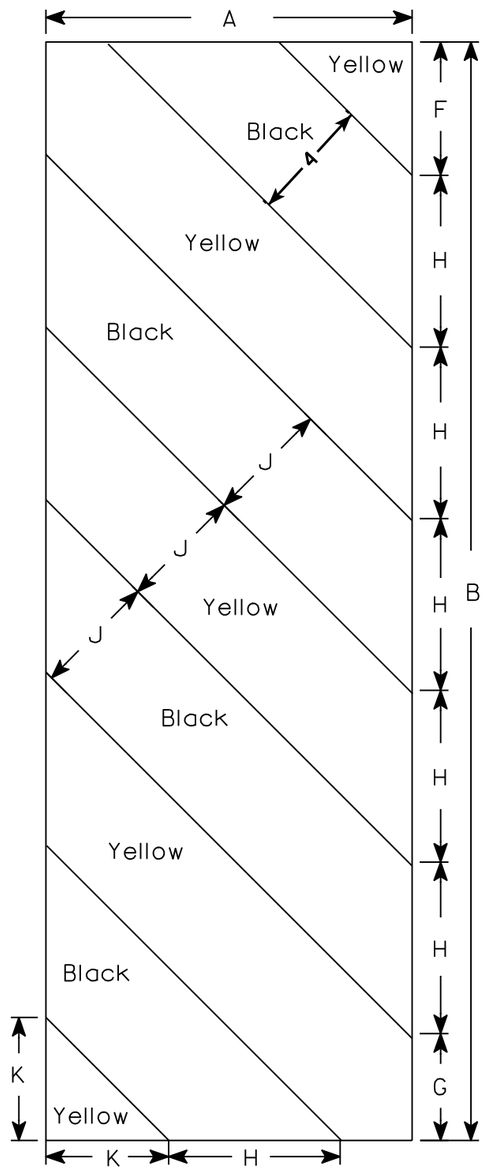

W5-52L

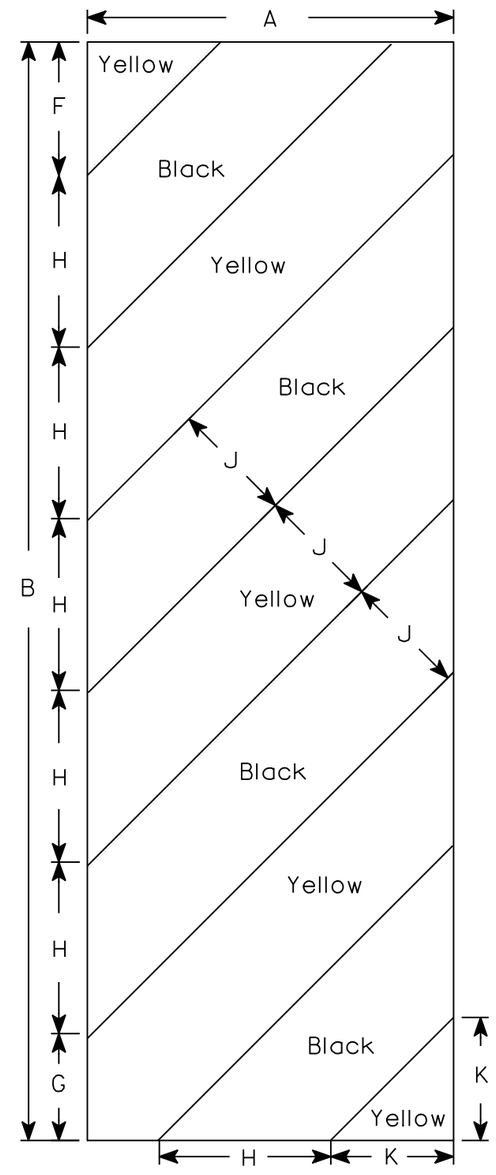

W5-52R

NOTES

1. Sign is Type II - Type H Reflective - reference WIS DOT Standard Specification for HIGHWAY and STRUCTURE CONSTRUCTION latest edition.
2. Color:
   Background - Yellow
   Message - Black
3. Corners may be square or rounded when base material is plywood but borders shall be rounded as shown. When base material is metal, the corners and borders shall be rounded.
4. Alternate colors of stripes as shown.

SIZE	A	B	C	D	E	F	G	H	I	J	K	L	M	N	O	P	Q	R	S	T	U	V	W	X	Y	Z	Area sq. ft.
1																											
2S	12	36				4 3/8	3 1/2	5 5/8	45°	4	4																3.0
2M	12	36				4 3/8	3 1/2	5 5/8	45°	4	4																3.0
3	18	54				6	5 1/2	8 1/2	45°	6	6 9/16																6.75
4																											
5																											

STANDARD SIGN
W5-52L & W5-52R

WISCONSIN DEPT OF TRANSPORTATION

APPROVED Matthew R Rauch
for State Traffic Engineer

DATE 3/22/11 PLATE NO. W5-52.8

PROJECT NO: | HWY: | COUNTY: | SHEET NO: 269 | E

Wisconsin Department of Transportation

Dedicated people creating transportation solutions through innovation and exceptional service.

http://www.dot.wisconsin.gov

CATEGORY 0010

PAVEMENT MARKING

STATION	- STATION	LOCATION	646.0106 EPOXY 4-INCH YELLOW EDGE LINE (LF)	646.0106 EPOXY 4-INCH WHITE EDGE LINE (LF)	646.0841.S GROOVED WET REFLECTIVE CONTRAST TAPE 4-INCH (LF)	646.0843.S GROOVED WET REFLECTIVE CONTRAST TAPE 8-INCH WHITE (LF)	646.0881.S GROOVED WET REFLECTIVE TAPE 4-INCH YELLOW (LF)	646.0883.S GROOVED WET REFLECTIVE TAPE 8-INCH WHITE (LF)	SPV.0090.04 GROOVED PREFORMED THERMOPLASTIC STOP BAR 18-INCH (LF)	646.0126 EPOXY 8-INCH (EACH)	647.0726 DIAGONAL EPOXY 12-INCH (LF)	646.0805.S OUTFALL WHITE (EACH)	SPV.0060.09 GROOVED PREFORMED THERMOPLASTIC ARROWS TYPE 2 (EACH)	SPV.0060.10 GROOVED PREFORMED THERMO-PLASTIC WORDS (EACH)	647.0156 ARROWS EPOXY TYPE 1 (EACH)
329+00	364+75	6TH ST	2,600	2,500	1,220	320	-	-	34	-	20	7	-	-	-
364+75	389+20	MAIN ST	5,170	4,790	1,230	815	480	350	62	-	90	12	-	-	-
389+20	403+50	FOX LN	2,860	2,760	720	445	-	-	20	-	-	9	-	-	-
403+50	428+50	STH 164	5,500	4,900	1,250	820	360	-	50	460	234	26	7	5	2
428+50	448+25	KRAMER RD	4,190	3,850	990	585	-	180	66	150	-	17	-	-	-
448+25	511+00	MALCHINE RD	12,830	12,450	3,140	510	-	-	30	-	-	57	-	-	-
511+00	534+00	HEG PARK RD	4,640	4,500	1,150	260	-	-	30	-	-	20	-	-	-
534+00	552+00	HILLCREST RD	3,600	3,500	900	410	-	-	30	-	-	9	-	-	-
552+00	574+80	CHURCH ENT	4,560	4,460	1,140	300	-	-	-	-	-	14	-	-	-
591+00	603+50	S WIND LAKE RD	5,962	5,540	1,440	630	-	-	72	-	-	19	-	-	-
603+50	627+25	FRIES LN	5,122	4,650	1,190	650	-	80	48	-	-	22	-	-	-
627+25	680+00	LOOMIS RD	7,250	7,050	2,850	1,020	600	200	56	-	-	27	-	-	-
SUBTOTALS			**64284**	**60950**											
TOTALS			**125,234**		**17,220**	**6,765**	**1,440**	**810**	**498**	**610**	**344**	**239**	**7**	**5**	**2**

CATEGORY 0010

RESTORATION

STATION	- STATION	LOCATION	DESCRIPTION	625.0100 TOPSOIL (SY)	629.0210 FERTILIZER TYPE B (CWT)	630.0130 SEEDING MIXTURE NO.30 (LB)	630.0200 TEMPORARY SEEDING (LB)	628.2004 EROSION MAT CLASS I, TYPE B* (SY)
577+00	- 579+00	70' LT	CLEARING	30	0.1	1	1	30
610+00	- 622+00	88' LT	CLEARING	140	0.1	3	2	140
658+00	- 660+00	60' LT	CURB RAMPS	30	0.1	1	1	30
658+00	- 660+00	50' RT	CURB RAMPS	30	0.1	1	1	30
TOTALS				**230**	**0.4**	**6**	**3**	230

* ADDITIONAL QUANTITIES FOUND ELSEWHERE

Addendum No.1
ID 2240-00-67
Revised Sheet 163
June 28, 2012