AS-BUILT

WKE

MAY 10

ORDER OF SHEETS

TOTAL SHEETS = 290

WITH: PROJECT ID: 2150-05-70

COUNTY: MILWAUKEE

22

STATE OF WISCONSIN
DEPARTMENT OF TRANSPORTATION

PLAN OF PROPOSED IMPROVEMENT

BROWN DEER ROAD

124TH STREET TO 91ST STREET

STH 100

MILWAUKEE COUNTY

STATE PROJECT	FEDERAL PROJECT	
	PROJECT	CONTRACT
2150-05-70	WISC 2010464	1

PRIME - PAYNE + DOLAN
SUBS: ARBOR GREEN
CENTURY FENCE
CON-COR COMPANY
HIGHWAY TECHNOLOGIES
J+A POHL, INC.
JWE
KM GOLDEN CO.
RSV ENGINEERING
ZENITH TECH.

PROJECT MANAGER - RICK MARZ
PROJECT LEADER - MIKE HADKE - STRAND
STAFF - AARON MCFARLIN
- VIRGINIA WENDT

STARTED ON - 6-28-10
COMPLETED ON - 6-6-11

AWARD: $3,615,217.68
CURRENT: $4,306,307.31

STATE PROJECT NUMBER
2150-05-70

N

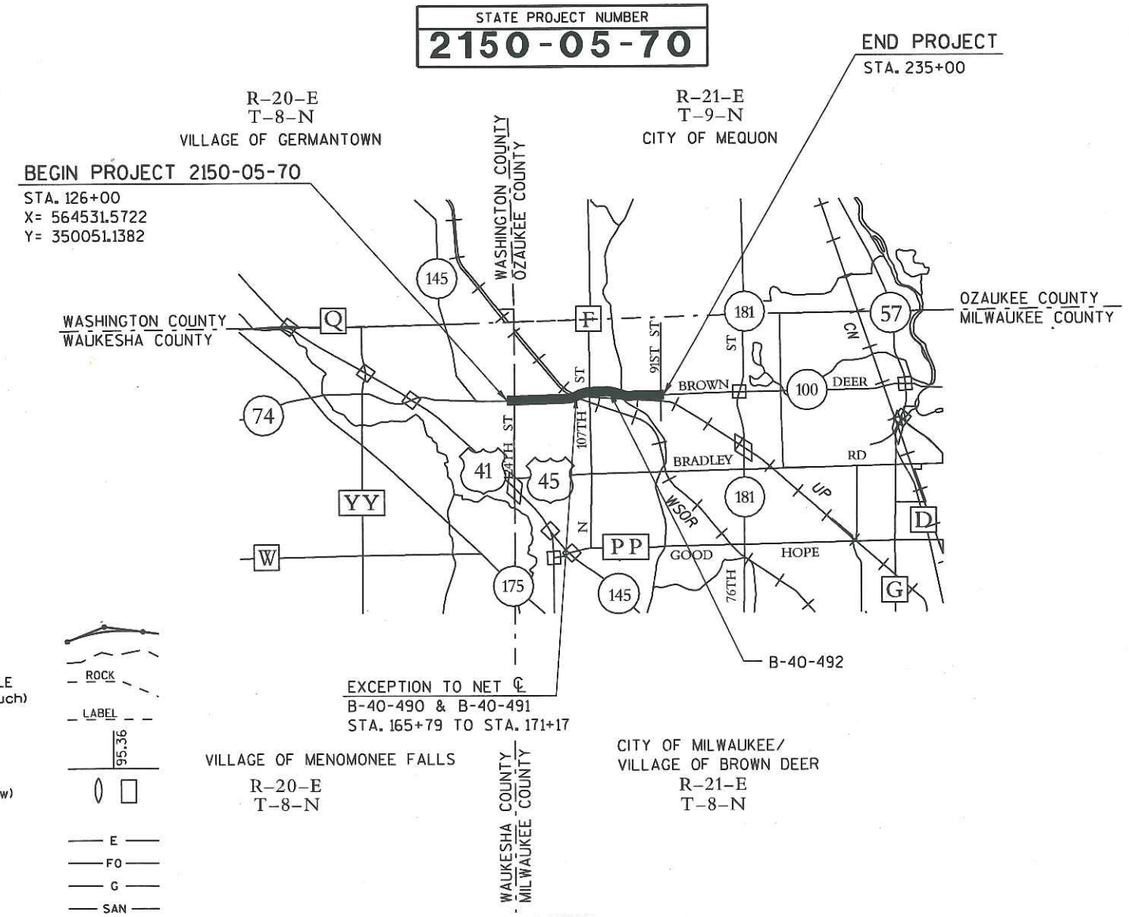

LAYOUT

SCALE 0 1 MI.

TOTAL NET LENGTH OF CENTERLINE = 1.991 MI.

Coordinates on this plan are referenced to the Wisconsin County Coordinate System (WCCS), Milwaukee County, NAD 1983 (2007)

Elevations shown on this plan are referenced to the North American Vertical Datum 1988 NAVD88 (91).

DESIGN DESIGNATION

A.A.D.T.	2005	=	25,300
A.A.D.T.	2031	=	30,600
D.H.V.		=	3,500
D.D.		=	58/42
T.		=	5.3
DESIGN SPEED		=	45 MPH
ESALS		=	2,555,000

CONVENTIONAL SYMBOLS

PLAN
- CORPORATE LIMITS
- PROPERTY LINE
- LOT LINE
- LIMITED HIGHWAY EASEMENT
- EXISTING RIGHT OF WAY
- PROPOSED OR NEW R/W LINE
- SLOPE INTERCEPT
- REFERENCE LINE
- EXISTING CULVERT
- PROPOSED CULVERT (Box or Pipe)
- COMBUSTIBLE FLUIDS — CAUTION
- MARSH AREA
- WOODED OR SHRUB AREA

PROFILE
- GRADE LINE
- ORIGINAL GROUND
- MARSH OR ROCK PROFILE (To be noted as such) — ROCK
- SPECIAL DITCH — LABEL
- GRADE ELEVATION — 95.36
- CULVERT (Profile View)

UTILITIES
- ELECTRIC — E
- FIBER OPTIC — FO
- GAS — G
- SANITARY SEWER — SAN
- STORM SEWER — SS
- TELEPHONE — T
- WATER — W
- UTILITY PEDESTAL
- POWER POLE
- TELEPHONE POLE

STATE OF WISCONSIN
DEPARTMENT OF TRANSPORTATION

PREPARED BY

Surveyor	WISDOT
Designer	LARRY PFEIL
Project Manager	STEVE ROTIER
Regional Examiner	
Regional Supervisor	ANITA PUSCH
C.O. Examiner	Carl Wlaznowski

APPROVED FOR THE DEPARTMENT

DATE: 2/1/10 (Signature)

E

GENERAL NOTES

THE LOCATION OF EXISTING AND PROPOSED UTILITY INSTALLATIONS AS SHOWN ON THE PLANS IS APPROXIMATE. THERE MAY BE OTHER UTILITY INSTALLATIONS WITHIN THE PROJECT AREA THAT ARE NOT SHOWN.

THE EXACT LOCATION OF THE EROSION CONTROL DEVICES SHALL BE DETERMINED BY THE ENGINEER IN THE FIELD OR BASED ON THE EROSION CONTROL IMPLEMENTATION PLAN (ECIP).

ALL DISTURBED AREAS SHALL BE COVERED WITH 4-INCHES OF TOPSOIL AND LANDSCAPED ACCORDING TO THE PLAN OR AS DIRECTED BY THE ENGINEER.

ALL TOPSOIL PLACED SHALL BE STABILIZED WITHIN 5 DAYS OF PLACEMENT.

STATIONING, DISTANCES AND OFFSETS FOR SIGNS SHOWN ON THE PLANS ARE APPROXIMATE AND THE LOCATIONS OF SIGNS ARE TO BE DETERMINED IN THE FIELD BY THE ENGINEER.

REMOVING PAVEMENT SHALL BE DONE TO THE CLOSEST TRANSVERSE/LONGTIDINAL JOINT, OR AS DIRECTED BY THE ENGINEER

NO TREES OR SHRUBS SHALL BE REMOVED WITHOUT APPROVAL OF THE ENGINEER.

THE CONTRACTOR SHALL NOTIFY DIGGERS HOTLINE AND AFFECTED UTILITIES PRIOR TO THE START OF WORK. ANY LOCAL MUNICIPAL UTILITY WHICH IS NOT A MEMBER OF THE DIGGERS HOTLINE MUST BE CONTACTED SEPARATELY.

WHEN THE QUANTITY OF HMA PAVEMENT OR BASE AGGREGATE IS MEASURED FOR PAYMENT BY THE TON, THE DEPTH OR THICKNESS OF THE LAYER SHOWN ON THE PLAN IS APPROXIMATE AND THE ACTUAL THICKNESS WILL DEPEND ON THE DISTRIBUTION OF THE MATERIAL AS DIRECTED BY THE ENGINEER.

EXISTING DRIVEWAYS AND FIELD ENTRANCES SHALL BE RESTORED IN KIND AS DIRECTED BY THE ENGINEER IN THE FIELD AND AT THE LOCATION DETERMINED BY THE ENGINEER.

TEMPORARY STORAGE OF ANY EXCAVATED MATERIAL WILL NOT BE PERMITTED IN OR NEAR WETLANDS.

CROSS SECTIONS SHOWN INCLUDE THE THICKNESS OF TOPSOIL WHERE REQUIRED. TOPSOIL SHALL BE REPLACED WITH 4-INCH TYPICAL DEPTH.

A BUTT JOINT IS REQUIRED WHERE HMA PAVEMENT MEETS EXISTING ASPHALT OR CONCRETE SURFACES.

ALL HMA PAVEMENT TYPE E-3 SHALL BE CONSTRUCTED UTILIZING THE FOLLOWING LAYER THICKNESSES AND GRADIATIONS:

Pavement Type	Total Pavement Thickness	Layers	Nominal Maximum Gradiation	Asphaltic Material
E-3	4"	1 3/4" Upper 2 1/4" Lower	12.5 mm 19.0 mm	PG64-22 PG64-28

2

STANDARD ABBREVIATIONS

AC	Acre
AGG	Aggregate
AADT	Annual Average Daily Traffic
ASPH	Asphaltic
APM	Asphaltic Plant Mix
AVG	Average
CL or C/L	Center Line
CONC	Concrete
CABC	Crushed Aggregate Base Course
C & G	Curb and Gutter
D	Degree of Curve
DHV	Design Hour Volume
DIA	Diameter
X	East Grid Coordinate
ELEC	Electric (al)
EL or ELEV	Elevation
ESALS	Equivalent Single Axle Loads
EBS	Excavation Below Subgrade
FL or F/L	Flow Line
FT	Foot
HES	High Early Strength
CWT	Hundredweight
IN DIA	Inch Diameter
ID	Inside Diameter
I	Intersection Angle
INV	Invert
L	Length of Curve
LF	Linear Foot
LC	Long Chord of Curve
LS	Lump Sum
MH	Manhole
ML or M/L	Match Line
Y	North Grid Coordinate
OD	Outside Diameter
PAVT	Pavement
PT	Point
LB	Pound
R	Radius
RP	Radius Point
RL or R/L	Reference Line
RP	Reference Point
REINF	Reinforcing or Reinforcement
RHF	Right-Hand Forward
R/W	Right-of-Way
SAN S	Sanitary Sewer
SHLDR	Shoulder
SP	Special
SPECS	Specifications
SQ	Square
SF	Square Feet
SY	Square Yard
STD	Standard
SDD	Standard Detail Drawings
SSD	Stopping Sight Distance
STR	Structure or Structural
SL or S/L	Survey Line
TEL	Telephone
TPM	Temporary Pavement Marking
T	Ton
T	Trucks (percent of)
UG	Underground
VAR	Variable
VC	Vertical Curve
W	Water
WM	Water Main
WV	Water Valve
W	Well
YD	Yard

DIGGERS HOTLINE

Call 811 3 Work Days Before You Dig
Or Toll Free (800) 242-8511
Hearing Impaired TDD (800) 542-2289
www.DiggersHotline.com

UTILITY CONTACTS

Mr. Dan Sande, Project Manager
We Energies (Electric)
Wisc. Gas Co. d/b/a We Energies
333 W. Everett St - A279
Milwaukee, WI 53203
Phone: (414) 221-4578
Fax: (414) 221-2336
dan.sande@we-energies.com

Mr. Jim Burton
Sprint Communications, L.P.
5600 N River Road Suite 500
Rosemont, IL 60018
Phone: (800) 788-0751
Fax: (414) 535-5197
tbl368@att.com

Mr. Don Dietsch, Project Manager
Northwind Technical Services
W307 N1299 Golf Road
TCG of Milw. d/b/a/ AT&T Local Network
Delafield, WI 53018
Phone: (262) 646-5602
Fax: (262) 646-5603
d.deitsch@northwindtech.com

Mr. Jeff Polenske, City Engineer
Milwaukee, City of
841 N Broadway Rm 701
Milwaukee, WI 53202
Phone: (414) 286-3701
Fax: (414) 286-5994
jpolen@mpw.net
Fax: (704) 649-5418

Ms. Carrie Lewis, Superintendent
Milwaukee Water Works
841 N Broadway Rm 409
Milwaukee, WI 53202
Phone: (414) 286-2830
Fax: (414) 286-2672

Mr. Ben Meighan
Wisconsin & Southern Railroad Company
1890 E Johnson Street
Madison, WI 53704
Phone: (608) 243-9129
Fax: (608) 243-9225
bmeighan@wsorrailroad.com

Mr. Todd Bartels, Area Manager
AT&T Wisconsin
7721 W. Fond du Lac Ave., 1st Fl.
Milwaukee, WI 53218
Phone: (414) 536-2971
Fax: (414) 535-5197
tbl368@att.com

Mr. Steve Cramer, Utility Coord.
Time Warner Cable
1320 N. Martin Luther King Jr. Dr.
Milwaukee, WI 53212
Phone: (414) 277-4045
steve.cramer@twcable.com

Mr. Richard Ellison
Union Pacific Railroad Company
301 West Lake Street
North Lake, IL 60164
Phone: (708) 649-5214
Fax: (414) 277-0638

Mr. James Birkenheier, Supervisor - OSP Network
PAETEC (formerly McLeod USA)
731 N. Jackson St, STE 410
Milwaukee, WI 53202
Phone: (414) 831-5252
Fax: (414) 831-5070
james.birkenheier@paetec.com

WisDOT Signals
141 NW Barstow
PO Box 798
Waukesha, WI 53187 0798
Phone: (414) 750-2605

Mr. Mike Olsen
ATC Management, Inc.
801 O'Keefe Road
PO Box 6113
DePere, WI 54115-6113
Phone: (920) 338-6582
molsen@atcllc.com

Mr. David Lehman, Pipeline Technician
West Shore Pipeline Company
11115 W. County Line Road
Milwaukee, WI 53224
Phone: (414) 354-8660
Fax: (414) 354-3554
dlehman@buckeye.com

Mr. Jim Kostuch
Norlight Telecommunications
13935 Bishops Drive
Brookfield, WI 53005
Phone: (262) 792-7938
jkostuch@kolinc.com

Ms. Debra Jensen, Planning Services Supervisor
Milwaukee Metro Sewerage Dist.
260 W Seeboth St
Milwaukee, WI 53204 1446
Phone: (414) 272-5100
djensen@mmsd.com

WisDOT Electrical Field Unit
935 South 60th St
West Allis, WI 53214
Phone: (414) 266-1170

OTHER CONTACTS

WDNR
Toni Revane
SE Region, WISDOT Liason
2300 N. Dr. Martin Luther King JR. Dr
Milwaukee, WI 53212
Phone: (414) 263-8517
Fax: (414) 263-8483
toni.revane@wisconsin.gov

Steve Rotier
SE Region, WISDOT Project Manager
141 NW Barstow
PO Box 798
Waukesha, WI 53187 0798
Phone: (262) 548-5679

Don Simon
SEWRPC
PO Box 1607
Waukesha, WI 53189
Phone: (262) 574-4237

David Ziarek
Milwaukee County Transit System
1942 N. 17th St.
Milwaukee, WI 53205
(414) 343-1764
dziarek@mcts.org

ORDER OF SECTION 2 DETAIL SHEETS

PLAN GRADES DO NOT MATCH
EXISTING FIELD CONDITIONS.
NEW CURB GRADES FROM 199+75
TO 207+50 SET OFF OF EXISTING ROADWAY.
PLAN GRADES 0.4' TO 0.5' OFF FROM EXISTING

WARPED CURB & GUTTER ELEVATION TABLE

STATION	ELEVATION		OFFSET	DIRECTION
	GUTTER	FLANGE		
140+75	791.30	791.47	50' LT	WB
140+75	791.48	791.65	15' LT	WB
141+00	791.43	791.59	50' LT	WB
141+00	791.61	791.77	15' LT	WB
141+00	791.63	791.81	50' RT	EB
141+00	791.81	791.99	15' RT	EB
141+25	791.55	791.65	50' LT	WB
141+25	791.73	791.83	15' LT	WB
141+25	791.76	793.92	50' RT	EB
141+25	791.94	792.10	15' RT	EB
141+50	791.58	791.65	50' LT	WB
141+50	791.76	791.83	15' LT	WB
141+50	791.88	791.97	50' RT	EB
141+50	792.06	792.15	15' RT	EB
141+75	791.46	791.60	50' LT	WB
141+75	791.64	791.78	15' LT	WB
141+75	791.87	791.97	50' RT	EB
141+75	791.95	792.15	15' RT	EB
142+00	791.33	791.49	50' LT	WB
142+00	791.75	791.91	50' RT	EB
142+00	791.93	792.09	15' RT	EB
142+00	791.51	791.67	15' LT	WB
142+25	791.80	791.97	15' RT	EB
142+25	791.62	791.79	50' RT	EB
158+00	767.63	767.82	50' RT	EB
158+25	767.58	767.81	50' RT	EB
158+50	767.63	767.85	50' RT	EB
158+75	767.76	767.92	50' RT	EB
158+00	766.33	766.49	15' RT	EB
158+25	766.21	766.40	15' RT	EB
158+50	766.20	766.39	15' RT	EB
158+75	766.44	766.48	15' RT	EB
187+25	726.74	726.90	50' RT	EB
187+50	726.64	726.87	50' RT	EB
187+75	726.61	726.85	50' RT	EB
188+00	726.64	726.84	50' RT	EB
188+25	726.70	726.83	50' RT	EB
188+50	726.60	726.76	50' RT	EB
193+50	725.01	725.25	15' RT	EB
194+00	724.77	724.89	50' RT	EB
194+30	725.01	725.07	15' LT	WB

STATION	ELEVATION		OFFSET	DIRECTION
	GUTTER	FLANGE		
194+30	724.83	724.95	15' RT	EB
194+50	724.62	724.76	50' RT	EB
195+00	724.52	724.75	50' RT	EB
195+50	724.65	724.87	50' RT	EB
196+00	724.83	725.03	50' RT	EB
196+50	724.98	725.12	50' RT	EB
197+00	724.83	725.05	50' RT	EB
197+50	724.68	724.84	50' RT	EB
199+75	721.07	721.29	50' LT	WB
199+75	723.63	723.79	50' RT	EB
199+75	722.30	722.53	15' RT	EB
200+00	721.01	721.22	50' LT	WB
200+00	722.32	722.48	15' LT	WB
200+00	723.50	723.73	50' RT	EB
200+00	722.25	722.47	15' RT	EB
200+25	721.04	721.17	50' LT	WB
200+25	722.28	722.44	15' LT	WB
200+25	723.57	723.70	50' RT	EB
200+25	722.30	722.44	15' RT	EB
200+50	721.00	721.17	50' LT	WB
200+50	722.24	722.43	15' LT	WB
200+50	723.49	723.69	50' RT	EB
200+50	722.26	722.43	15' RT	EB
200+75	720.95	721.19	50' LT	WB
200+75	722.21	722.45	15' LT	WB
200+75	723.46	723.71	50' RT	EB
200+75	722.22	722.45	15' RT	EB
201+00	721.07	721.24	50' LT	WB
201+00	722.27	722.50	15' LT	WB
201+00	723.55	723.76	50' RT	EB
201+00	722.28	722.50	15' RT	EB
201+25	721.14	721.30	50' LT	WB
201+25	722.32	722.56	15' LT	WB
201+25	723.60	723.82	50' RT	EB
201+25	722.40	722.56	15' RT	EB
201+50	721.26	721.37	50' LT	WB
201+50	722.40	722.63	15' LT	WB
201+50	723.68	723.89	50' RT	EB
201+50	722.52	722.63	15' RT	EB
201+75	721.39	721.43	50' LT	WB
201+75	722.49	722.69	15' LT	WB

STATION	ELEVATION		OFFSET	DIRECTION
	GUTTER	FLANGE		
201+75	723.72	723.95	50' RT	EB
201+75	722.65	722.69	15' RT	EB
202+00	721.28	721.49	50' LT	WB
202+00	722.54	722.75	15' LT	WB
202+00	723.80	724.01	50' RT	EB
202+00	722.54	722.75	15' RT	EB
202+25	721.36	721.56	50' LT	WB
202+25	722.58	722.82	15' LT	WB
202+25	723.88	724.08	50' RT	EB
202+25	722.60	722.82	15' RT	EB
202+50	721.43	721.62	50' LT	WB
202+50	722.65	722.88	15' LT	WB
202+50	723.96	724.14	50' RT	EB
202+50	722.72	722.88	15' RT	EB
202+75	721.55	721.71	50' LT	WB
202+75	724.01	724.18	50' RT	EB
202+75	722.70	722.94	15' LT	WB
202+75	722.85	722.94	15' RT	EB
203+00	722.78	723.01	15' LT	WB
203+00	723.95	724.18	50' RT	EB
203+00	722.97	723.01	15' RT	EB
203+25	722.83	723.07	15' LT	WB
203+25	723.90	724.15	50' RT	EB
203+25	722.85	723.07	15' RT	EB
203+50	722.89	723.13	15' LT	WB
203+50	723.85	724.07	50' RT	EB
203+50	722.90	723.13	15' RT	EB
203+75	722.98	723.21	15' LT	WB
203+75	723.72	723.91	50' RT	EB
203+75	723.07	723.21	15' RT	EB
204+00	723.22	723.27	15' RT	EB
204+25	722.64	722.80	50' LT	WB
204+25	723.15	723.33	15' LT	WB
204+25	723.51	723.67	50' RT	EB
204+25	723.12	723.29	15' RT	EB
204+50	723.08	723.31	15' RT	EB
204+75	722.76	722.99	50' LT	WB
204+75	723.25	723.45	15' LT	WB
204+75	723.37	723.54	50' RT	EB
204+75	723.16	723.32	15' RT	EB

2

*SEE NOTE ON SHEET 5

WARPED CURB & GUTTER ELEVATION TABLE

STATION	ELEVATION GUTTER	ELEVATION FLANGE	OFFSET	DIRECTION
205+00	723.30	723.53	50' RT	EB
205+00	723.36	723.40	15' RT	EB
205+25	723.01	723.22	50' LT	WB
205+25	723.37	723.57	15' LT	WB
205+25	723.31	723.42	15' RT	EB
205+50	723.45	723.64	15' LT	WB
205+50	723.50	723.55	50' RT	EB
205+50	723.18	723.43	15' RT	EB
205+75	723.38	723.42	50' LT	WB
205+75	723.53	723.69	15' LT	WB
205+75	723.45	723.55	50' RT	EB
205+75	723.21	723.44	15' RT	EB
206+00	723.26	723.42	50' LT	WB
206+00	723.37	723.60	50' RT	EB
206+15	723.30	723.44	15' LT	WB
206+15	723.30	723.44	15' RT	EB
206+25	723.45	723.63	50' RT	EB
206+40	723.53	723.76	50' LT	WB
206+40	723.48	723.69	15' LT	WB
206+40	723.60	723.81	15' RT	EB
206+40	723.60	723.81	15' RT	EB
206+50	723.60	723.71	50' RT	EB
206+60	723.49	723.79	50' LT	WB
206+60	723.45	723.73	15' LT	WB
206+75	723.53	723.75	50' LT	WB
206+75	723.62	723.77	15' LT	WB
206+75	723.65	723.75	50' RT	EB
206+75	723.72	723.93	15' RT	EB
207+00	723.62	723.81	50' LT	WB
207+00	723.70	723.81	50' RT	EB
207+00	723.84	723.99	15' RT	EB
207+25	723.74	723.90	50' LT	WB
207+25	723.74	723.90	50' RT	EB
207+25	723.96	724.08	15' RT	EB
207+50	724.08	724.22	15' RT	EB
215+75	740.03	740.19	50' RT	EB
215+75	740.21	740.37	15' RT	EB
216+00	740.28	740.41	50' RT	EB
216+00	740.34	740.59	15' RT	EB
216+25	740.40	740.60	50' RT	EB

STATION	ELEVATION GUTTER	ELEVATION FLANGE	OFFSET	DIRECTION
216+25	740.50	740.75	15' RT	EB
216+50	740.56	740.76	50' RT	EB
216+50	740.66	740.87	15' RT	EB
216+75	740.68	740.89	50' RT	EB
216+75	740.75	740.96	15' RT	EB
217+00	740.76	740.99	50' RT	EB
217+00	740.82	741.03	15' RT	EB
217+25	740.84	741.07	50' RT	EB
217+25	740.94	741.10	15' RT	EB
217+50	740.97	741.11	50' RT	EB
217+50	741.05	741.21	15' RT	EB
217+75	741.09	741.13	50' RT	EB
217+75	741.23	741.39	15' RT	EB
218+00	740.97	741.11	50' RT	EB
218+00	741.34	741.50	15' RT	EB
218+00	742.19	742.35	15' LT	WB
218+25	740.89	741.07	50' RT	EB
218+50	740.81	741.00	50' RT	EB
218+60	741.73	741.90	15' LT	WB
218+75	742.34	742.58	15' LT	WB
219+00	742.39	742.51	15' LT	WB
219+00	740.66	740.83	50' RT	EB
223+50	739.15	739.31	50' RT	EB
223+75	739.08	739.22	50' RT	EB
224+00	739.01	739.17	50' RT	EB
224+25	738.94	739.16	50' RT	EB
224+50	739.05	739.21	50' RT	EB
223+50	739.31	739.49	15' RT	EB
223+75	739.17	739.40	15' RT	EB
224+00	740.55	740.69	50' LT	WB
224+00	739.11	739.35	15' RT	EB
224+25	740.50	740.65	50' LT	WB
224+25	739.23	739.39	15' RT	EB
224+50	740.44	740.65	50' LT	WB
224+50	739.23	739.39	15' RT	EB
224+75	740.55	740.71	50' LT	WB

EXISTING SUPER ELEVATION TABLE

FOR INFORMATION

DIRECTION	STATION	RATE	COMMENTS
WB	126+89	-1.7%	UNILATERAL SLOPE
WB	131+17	- 2%	UNILATERAL SLOPE
EB	126+89	+0.6% & +1.8%	SE TRANSITION POINT
EB	131+10	+2.1%	BEGIN SE
EB	134+25	+2.0%	END SE
EB & WB	124+50	- 1.1% & 1.5%	SE TRANSITION POINT
EB & WB	135+05	1.5%	NC
EB & WB	154+60	1.5%	BEGIN SE
EB & WB	158+20	+ 4.0%	END SE
EB & WB	162+90	+ 4.0%	BEGIN SE
EB & WB	165+90	1.5%	END SE
EB & WB	168+90	1.5%	BEGIN SE
EB & WB	172+45	- 4.0%	END SE
EB & WB	174+90	- 4.0%	BEGIN PAVT TRANSITION
EB & WB	178+35	- 2.5%	BEGIN PAVT TRANSITION
EB & WB	181+35	- 1.5%	SE TRANSITION POINT
EB & WB	182+90	- 3.0% & - 2.5%	END PAVT TRANSITION
EB & WB	187+25	-2.5%	BEGIN SE TRANSITION
EB & WB	190+50	1.5%	END SE
EB & WB	193+75	1.5%	BEGIN SE
EB & WB	197+00	+3.5%	END SE
EB & WB	202+70	+ 3.5%	BEGIN SE
EB & WB	207+00	1.5%	END SE

NOTES: (-), NEGATIVE RATE , INDICATES SLOPES TOWARD R/L
(+), POSTIVE RATE , INDICATES SLOPES TOWARDS R/L
NO SIGN, INDICATES NORMAL CROWN

TRANSITION CROSS-SLOPE

ALONG STH 100 (BROWN DEER ROAD)

LOCATION	STATION		STATION	RATE
116TH STREET	148+40	--	149+50	1.5%
96TH STREET	217+80	--	218+70	1.5%
95TH STREET	222+25	--	223+20	1.5%
91ST STREET	223+20	--	235+00	1.5%

NOTES.: MAINTAIN THE EXISTING CROSS-SLOPE OF THE MAINLINE
AS INDICATED ABOVE. ALSO REFER TO THE
CONSTRUCTION DETAILS SECTION OF THE PLAN
FOR ADDITIONAL INFORMATION

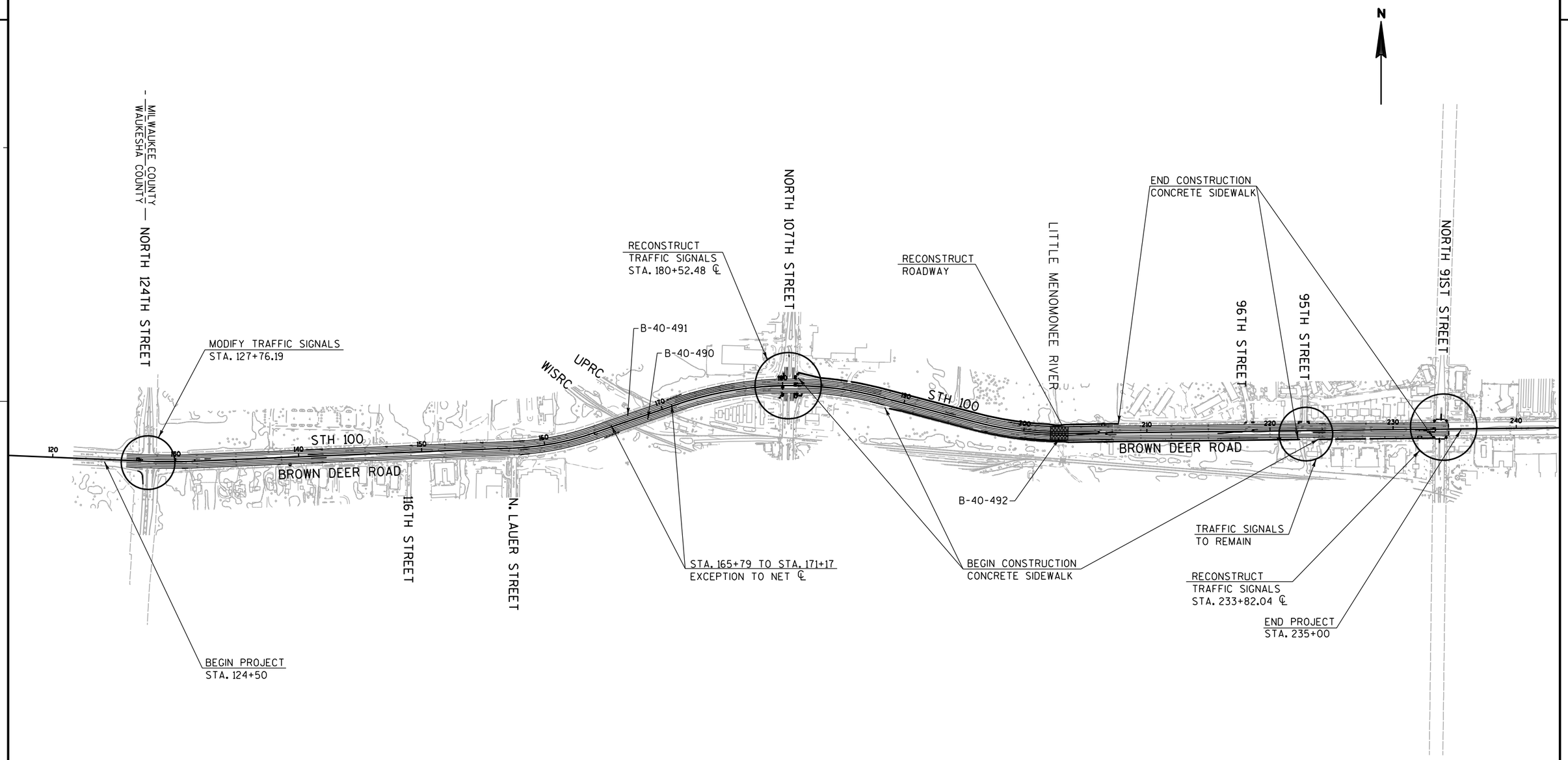

PROJECT NO: 2150-05-70	HWY: STH 100	COUNTY: MILWAUKEE	PROJECT OVERVIEW	SHEET	E

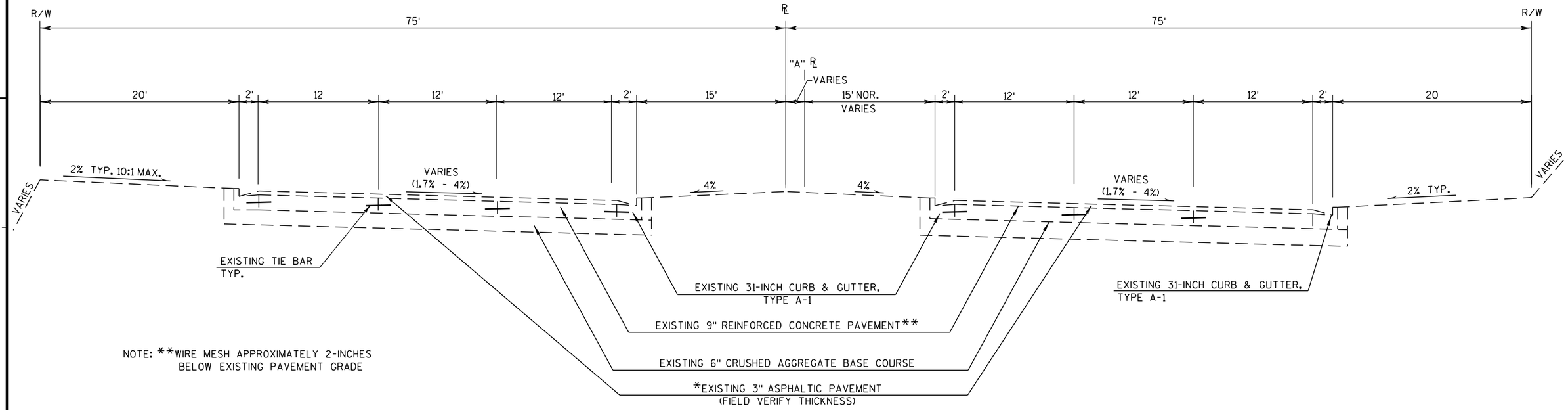

NOTE: **WIRE MESH APPROXIMATELY 2-INCHES BELOW EXISTING PAVEMENT GRADE

EXISTING TYPICAL SUPER ELEVATED SECTION - STH 100 (BROWN DEER ROAD)

STA. 124+50 - STA. 134+25 *STA. 126+25 - STA. 129+50 (ONLY LOCATION)
STA. 154+60 - STA. 165+90
STA. 168+90 - STA. 190+50
STA. 193+75 - STA. 207+00

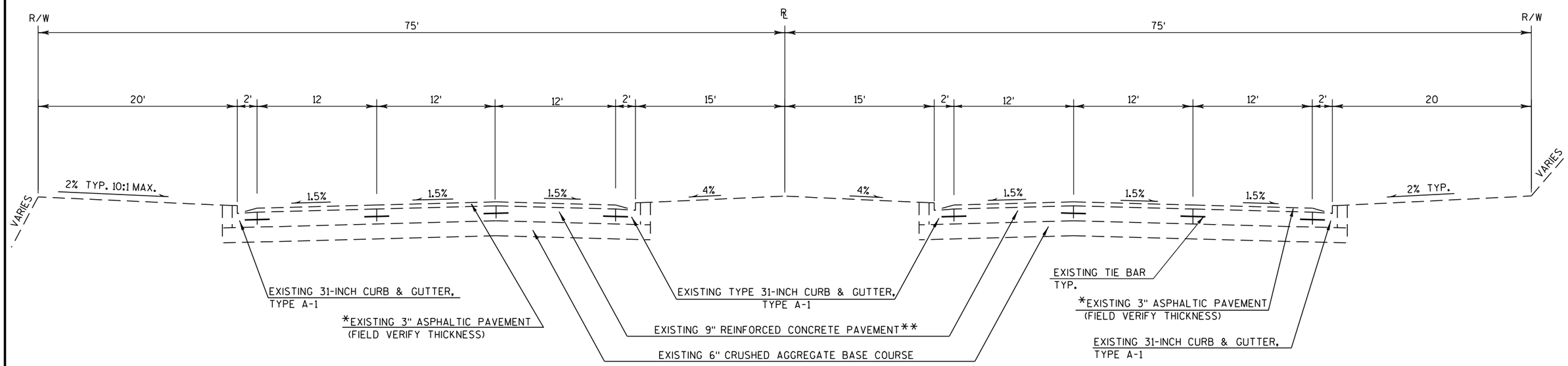

NOTE: **WIRE MESH APPROXIMATELY 2-INCHES BELOW EXISTING PAVEMENT GRADE

EXISTING TYPICAL SECTION (NORMAL CROWN) - STH 100 (BROWN DEER ROAD)

STA. 134+25 - STA. 154+60 *STA. 232+75 - STA. 235+00 (ONLY LOCATION)
STA. 165+90 - STA. 168+90
STA. 190+50 - STA. 193+75
STA. 207+00 - STA. 235+00

PROJECT NO: 2150-05-70	HWY: STH 100	COUNTY: MILWAUKEE	TYPICAL SECTIONS	SHEET 9	E

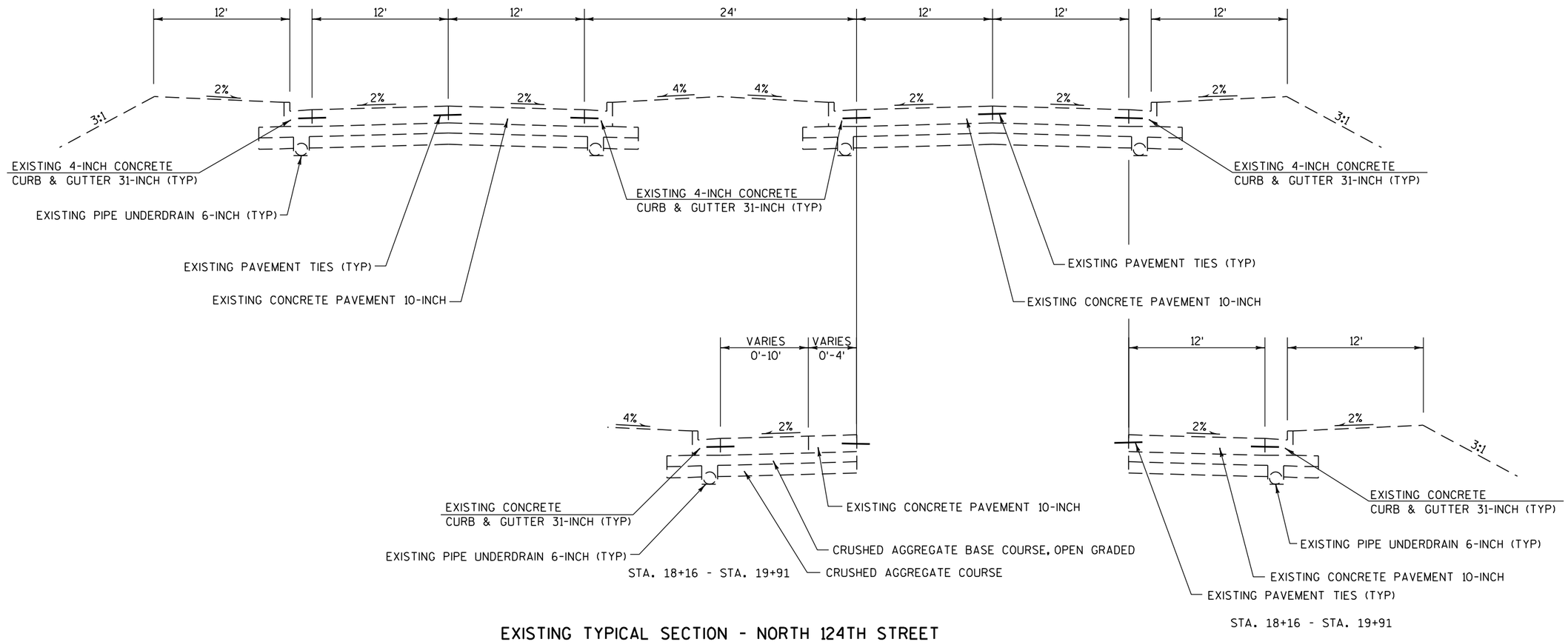

EXISTING TYPICAL SECTION - NORTH 124TH STREET

STA. 18+16 - STA. 20+75

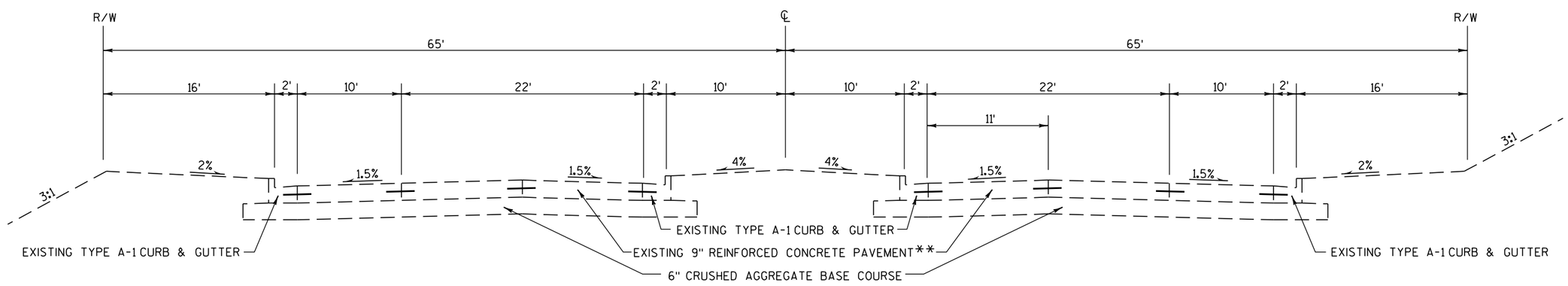

NOTE: **WIRE MESH APPROXIMATELY 2-INCHES BELOW EXISTING PAVEMENT GRADE

EXISTING TYPICAL SECTION - NORTH 107TH STREET

STA. 18+40 - STA. 21+50

PROJECT NO: 2150-05-70	HWY: STH 100	COUNTY: MILWAUKEE	TYPICAL SECTIONS	SHEET 10	E

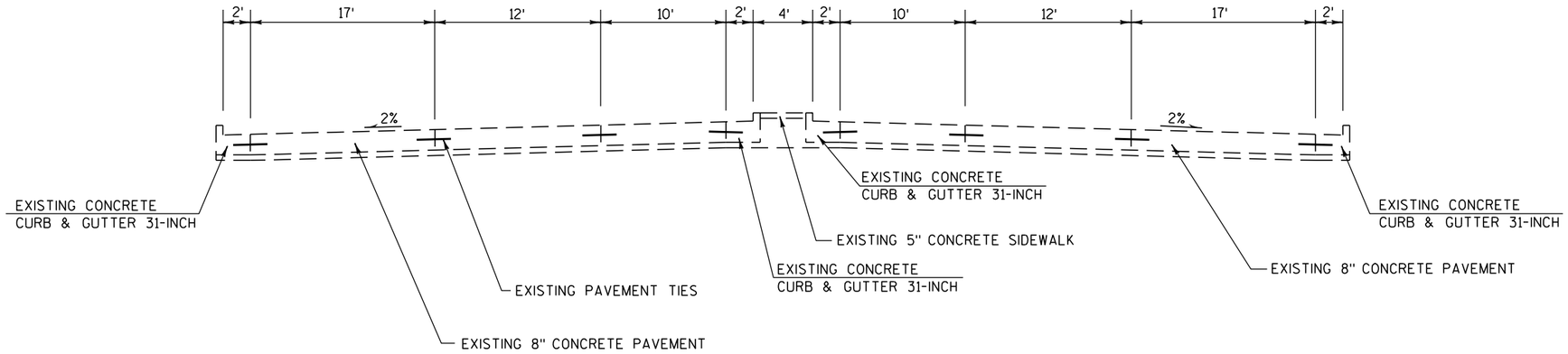

EXISTING TYPICAL SECTION - NORTH 91ST STREET

STA. 18+60 - STA. 21+25

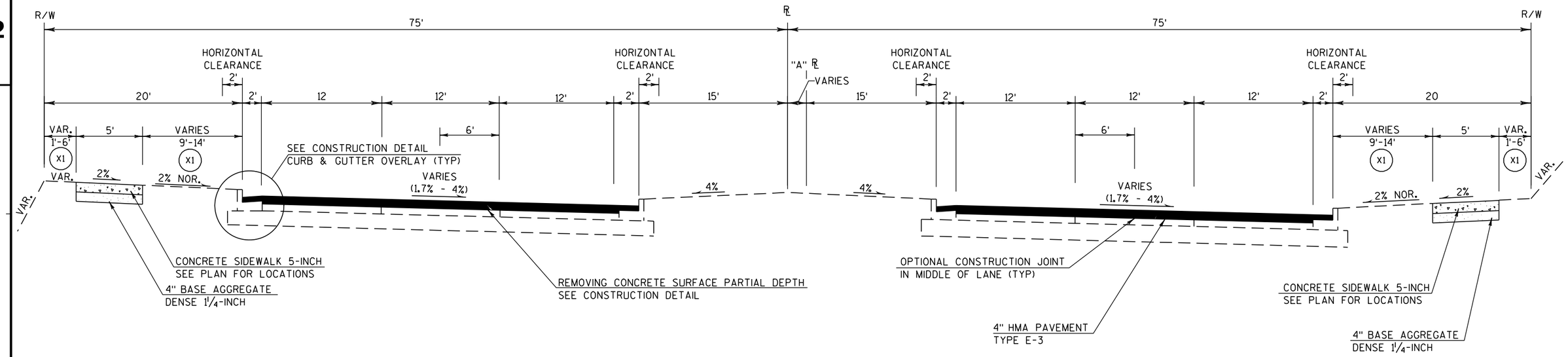

FINISHED TYPICAL SUPER ELEVATED SECTION - STH 100 (BROWN DEER ROAD)

STA. 124+50 - STA. 134+25
STA. 154+60 - STA. 165+90
STA. 168+90 - STA. 190+50
STA. 193+75 - STA. 207+00

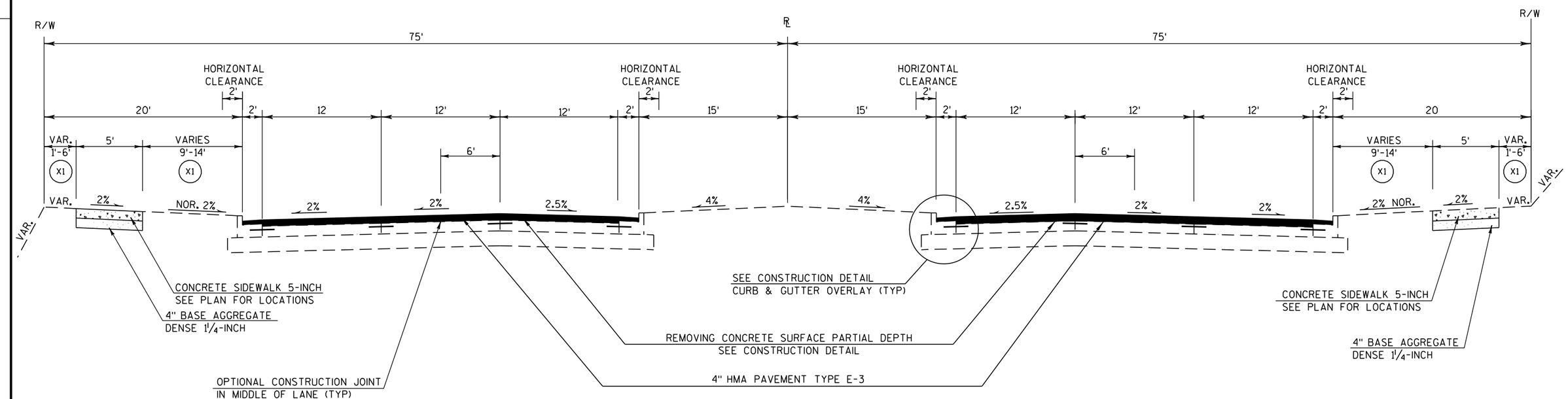

FINISHED TYPICAL SECTION (NORMAL CROWN) - STH 100 (BROWN DEER ROAD)

STA. 134+25 - STA. 154+60
STA. 165+90 - STA. 168+90
STA. 190+50 - STA. 193+75
STA. 207+00 - STA. 235+00

LEGEND

X1 TOPSOIL, SEEDING MIXTURE NO. 30
FERTILIZER TYPE B AND EROSION MAT URBAN CLASS 1 TYPE B

PROJECT NO: 2150-05-70	HWY: STH 100	COUNTY: MILWAUKEE	TYPICAL SECTIONS	SHEET 12	E

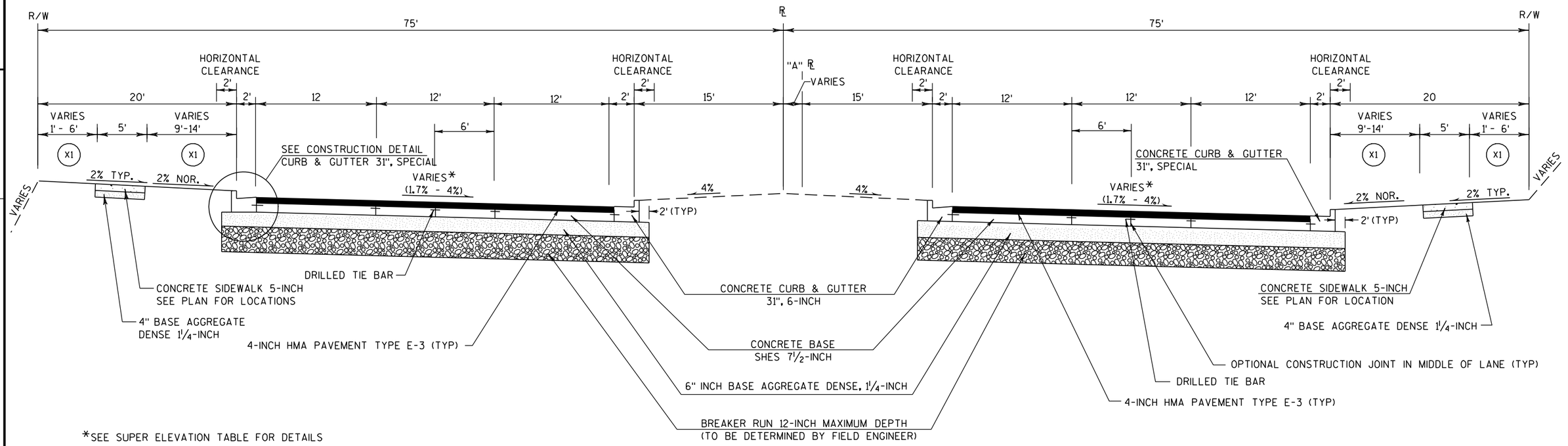

FINISHED TYPICAL SUPER ELEVATED SECTION (RECONSTRUCTED SECTION) - STH 100 (BROWN DEER ROAD)

STA. 202+09 - STA. 203+61

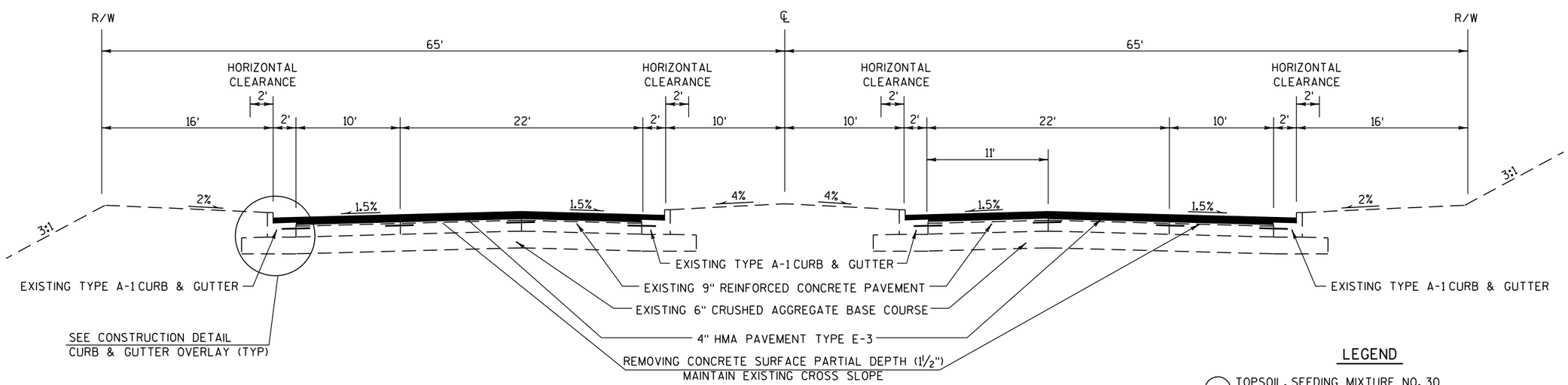

FINISHED TYPICAL SECTION - NORTH 107TH STREET

STA. 18+40 - STA. 21+50

PROJECT NO: 2150-05-70	HWY: STH 100	COUNTY: MILWAUKEE	TYPICAL SECTIONS	SHEET 13	E

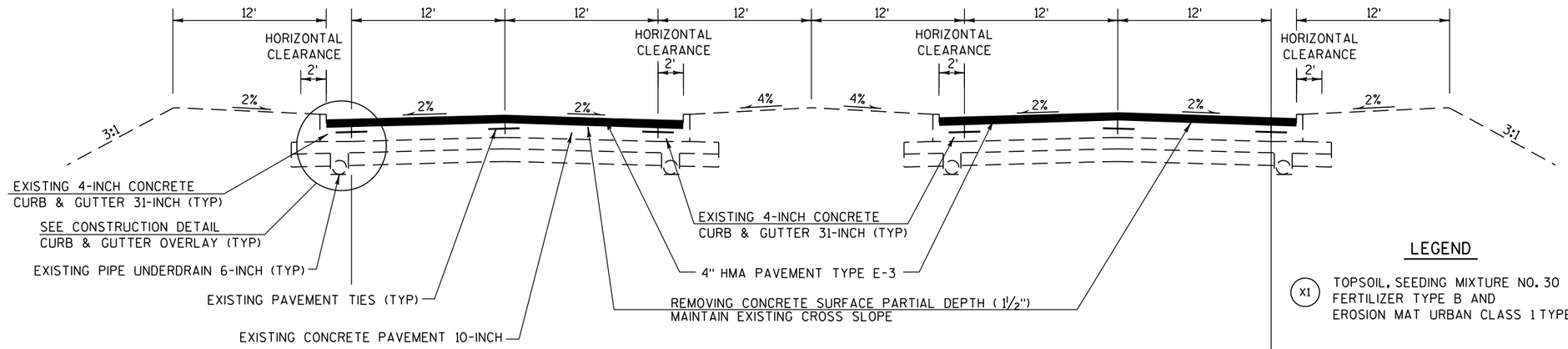

LEGEND

(X1) TOPSOIL, SEEDING MIXTURE NO. 30
FERTILIZER TYPE B AND
EROSION MAT URBAN CLASS 1 TYPE B

FINISHED TYPICAL SECTION - NORTH 124TH STREET

STA. 19+25 - STA. 20+75

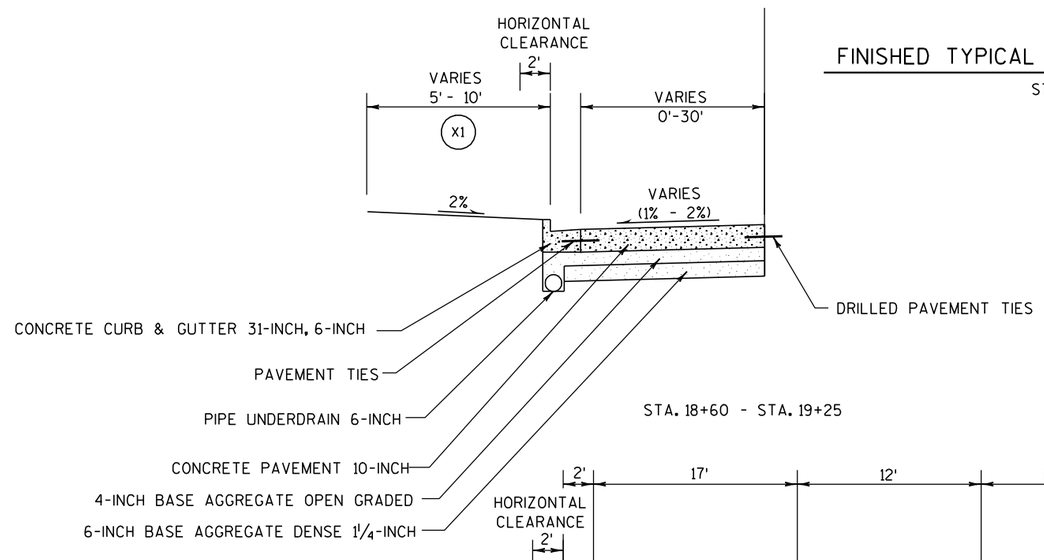

STA. 18+60 - STA. 19+25

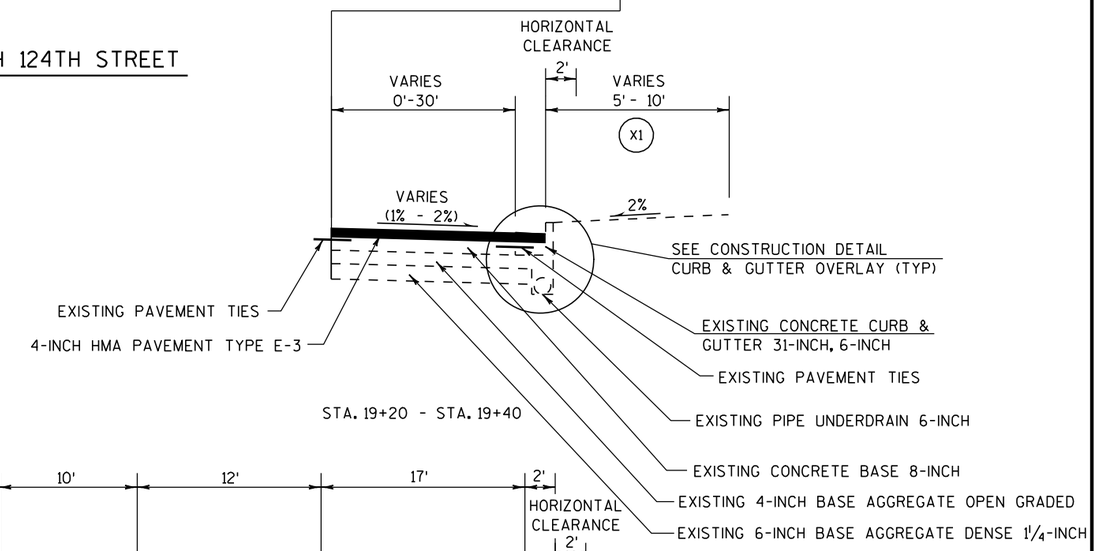

STA. 19+20 - STA. 19+40

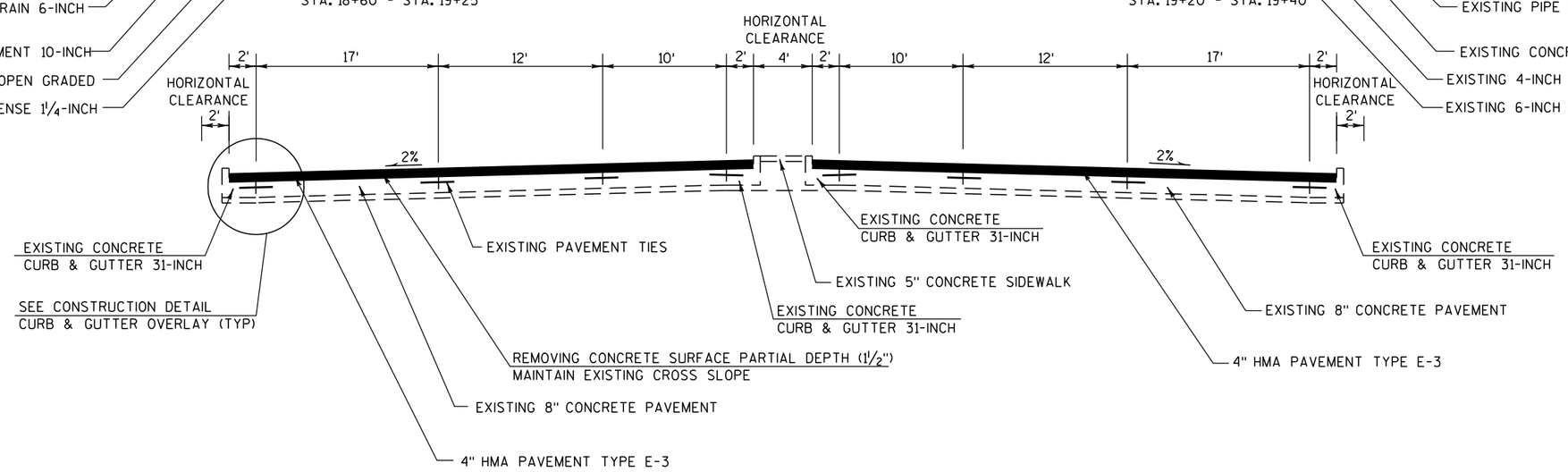

FINISHED TYPICAL SECTION - NORTH 91ST STREET

STA. 18+60 - STA. 21+25

PROJECT NO: 2150-05-70	HWY: STH 100	COUNTY: MILWAUKEE	TYPICAL SECTIONS	SHEET 14	E

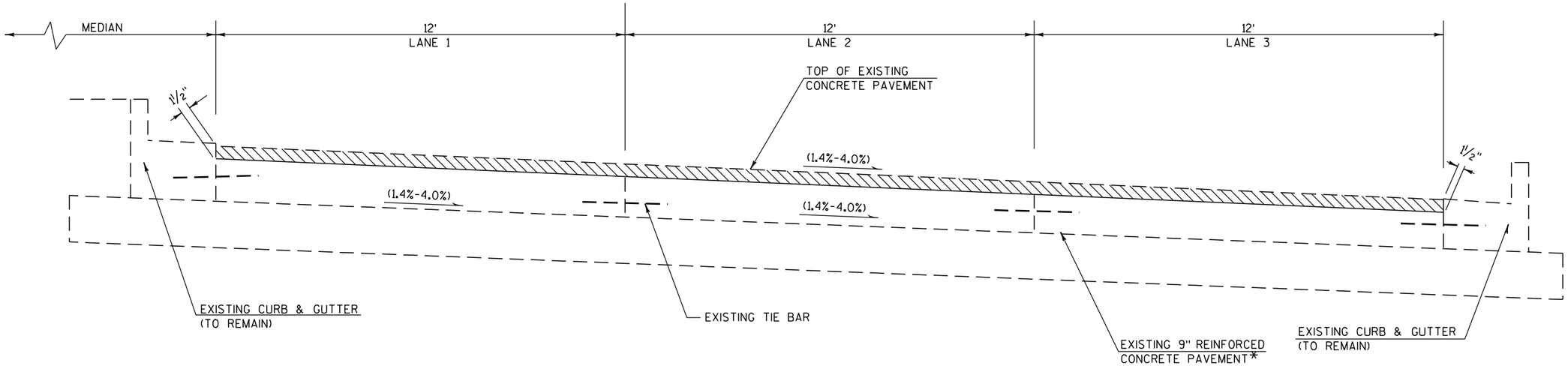

NOTE: *WIRE MESH APPROXIMATELY 2-INCHES BELOW EXISTING CONCRETE PAVEMENT GRADE

REMOVING CONCRETE SURFACE PARTIAL DEPTH

SUPER ELEVATION REMOVING CONCRETE SURFACE PARTIAL DEPTH DETAIL - STH 100 (BROWN DEER ROAD)

1/2 SECTION SHOWN (SYMMETRIC ABOUT ℄)
STA. 124+50 - STA. 134+25
STA. 154+60 - STA. 165+90
STA. 168+90 - STA. 190+50
STA. 193+75 - STA. 207+00

NOTE: LIMITS WITHIN TURN LANES, THRU INTERSECTIONS AND 124TH, 107TH, 91ST APPROACHES SHALL BE MILLED 1 1/2-INCHES CONSTANT DEPTH AND MAINTAIN EXISTING CROSS SLOPE IN THESE AREAS. 124TH AND 91ST INTERSECTIONS BETWEEN STA 126+25 - STA 129+50 AND STA 232+75 - STA 235+00, RESPECTIVELY, HAVE A 3-INCH ASPHALTIC OVERLAY, (FIELD VERIFY).

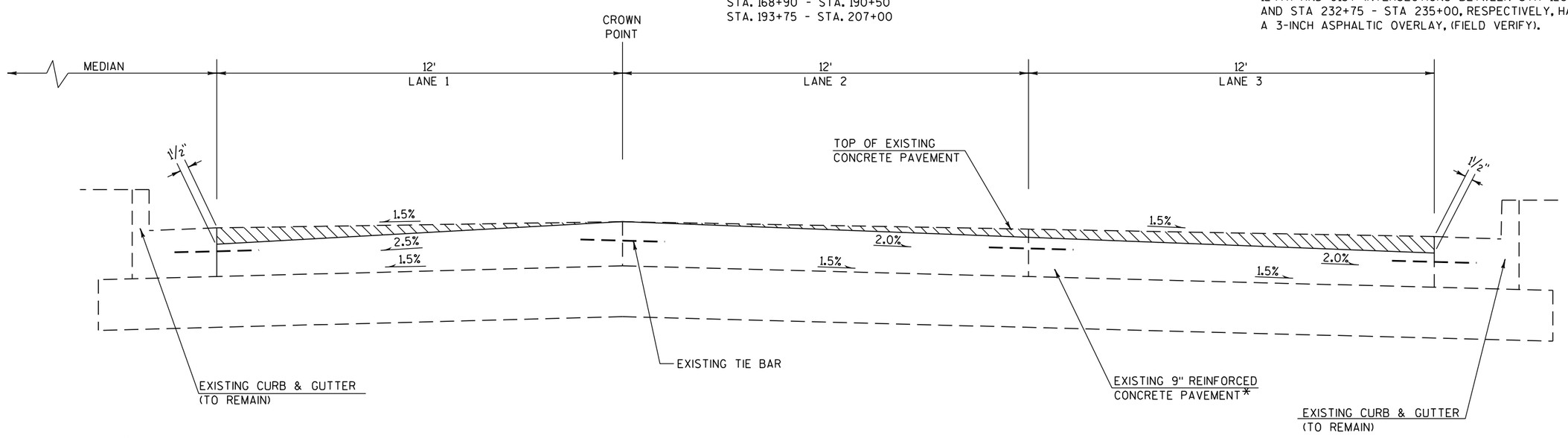

NOTE: *WIRE MESH APPROXIMATELY 2-INCHES BELOW EXISTING CONCRETE PAVEMENT GRADE

REMOVING CONCRETE SURFACE PARTIAL DEPTH

REMOVING CONCRETE SURFACE PARTIAL DEPTH DETAIL - STH 100 (BROWN DEER ROAD)

1/2 SECTION SHOWN (SYMMETRIC ABOUT ℄)
STA. 134+25 - STA. 154+60
STA. 165+90 - STA. 168+90
STA. 190+50 - STA. 193+75
STA. 207+00 - STA. 235+00

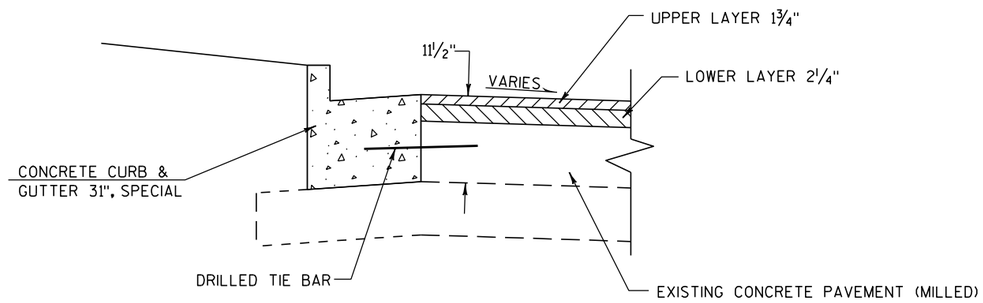

HMA PAVING AT CURB & GUTTER 31-INCH, SPECIAL

SEE PLAN SHEETS FOR LOCATIONS

NOTE: INSTALL CURB & GUTTER PER DETAILS;
SEE GENERAL NOTES AND PLAN SHEETS.

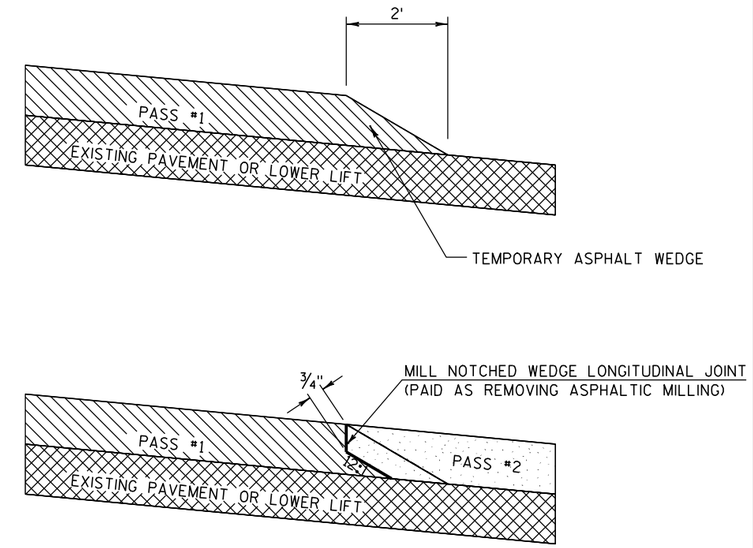

NOTCHED WEDGE LONGITUDINAL JOINT

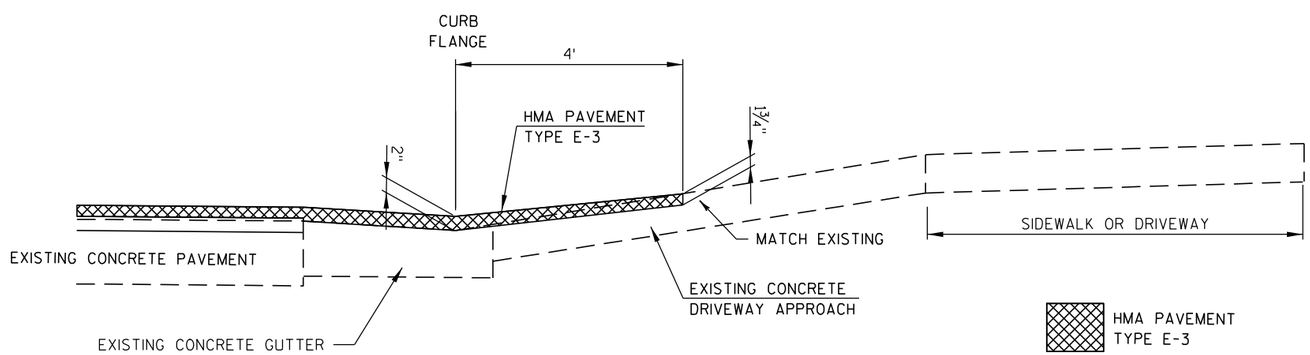

MILLING AT EXISTING CONCRETE DRIVEWAY APPROACH

SEE PLAN SHEETS FOR LOCATIONS

NOTE: MILL EXISTING CONCRETE PAVEMENT
4-FOOT INTO DRIVE APPROACH. OVERLAY WITH
HMA PAVEMENT TYPE E-3 AS SHOWN.
MILLING PAID AS REMOVING CONCRETE SURFACE PARTIAL DEPTH.

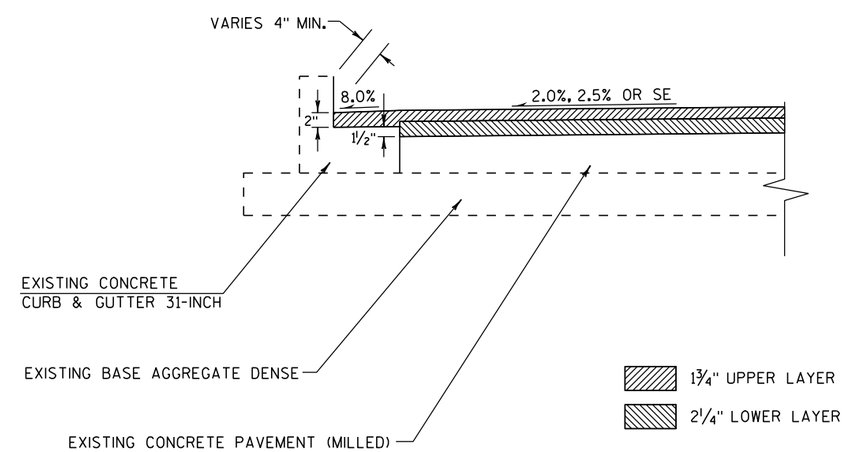

CURB & GUTTER OVERLAY

PROJECT NO:2150-05-70	HWY: STH 100	COUNTY: MILWAUKEE	CONSTRUCTION DETAILS	SHEET 16	E

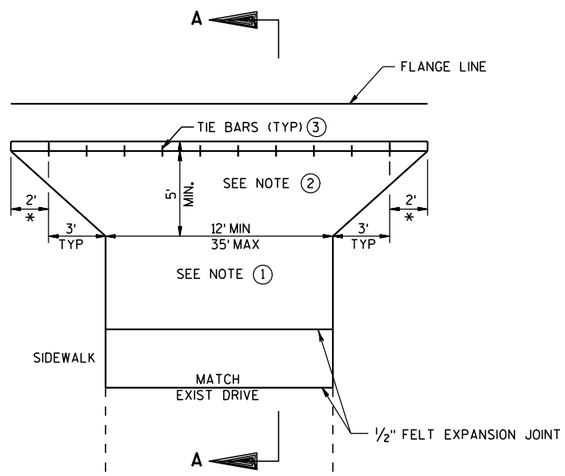

PLAN VIEW

NOTES:
MATCH EXISTING TYPE:
1 ASPHALTIC SURFACE (3-INCH) DRIVEWAYS AND FIELD ENTRANCES
OVER BASE AGGREGATE DENSE 3/4-INCH (4-INCH)
OR
CONCRETE DRIVEWAY 7-INCH OVER
BASE AGGREGATE DENSE 3/4-INCH (4-INCH)
OR
BASE AGGREGATE DENSE 3/4-INCH (6-INCH)

2 ALL URBAN DRIVEWAYS TO BACK OF APRON
SHALL BE PAID FOR AS CONCRETE DRIVEWAY 7-INCH

3 TIE BARS ARE INCIDENTAL TO THE BID ITEM
"CONCRETE DRIVEWAY 7-INCH"

JOINTING IN DRIVE APPROACHES SHALL BE IN LINE WITH
SIDEWALK JOINTS OR AS DIRECTED BY THE ENGINEER

* TAPER CURB HEAD

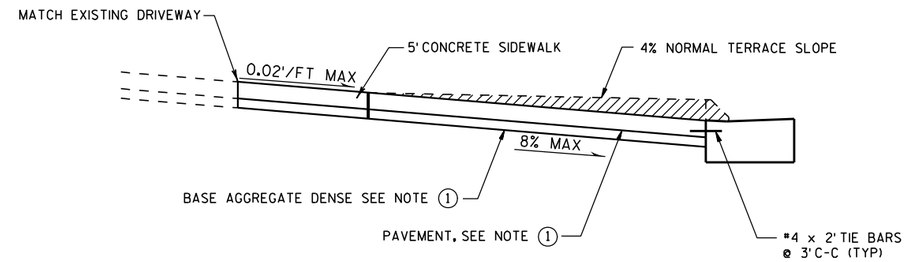

SECTION A-A

URBAN DRIVEWAY

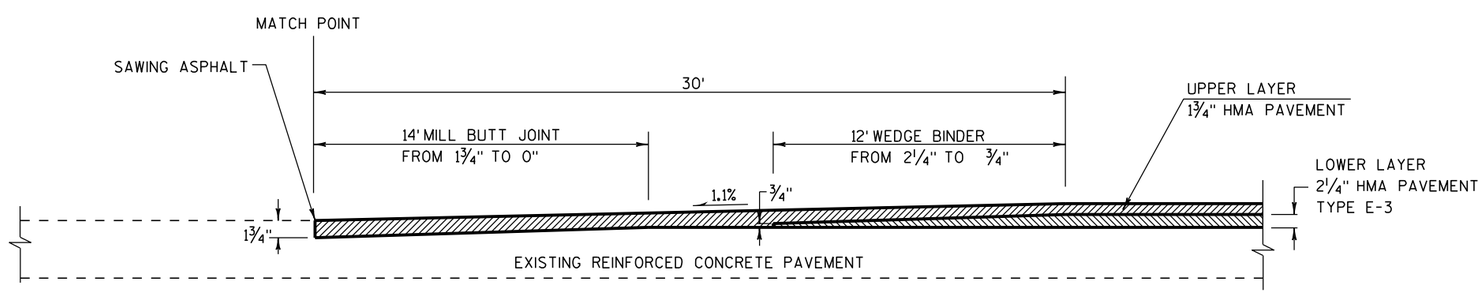

BUTT JOINTS

MAINLINE

NOTE: BUTT JOINT LOCATIONS, REFER TO INTERSECTION DETAILS.

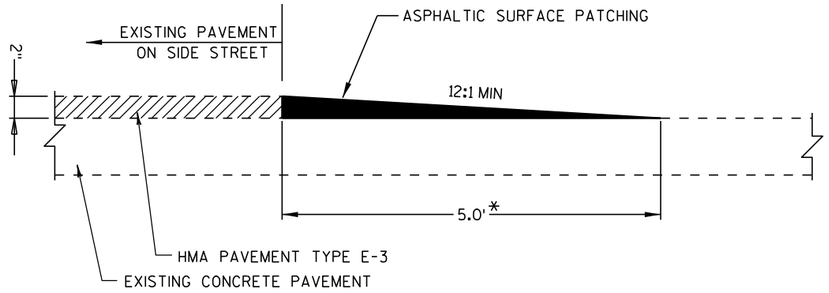

NOTE: REMOVAL OF ASPHALTIC WEDGES WILL BE PAID UNDER THE BID ITEM REMOVING ASPHALTIC SURFACE, BUTT JOINTS.

*WIDTH = 10.0' AT PROJECT LIMITS ON STH 100, 91ST STREET, 107TH STREET, 124TH STREET

TEMPORARY WEDGES AT SIDE STREETS/MEDIAN OPENINGS

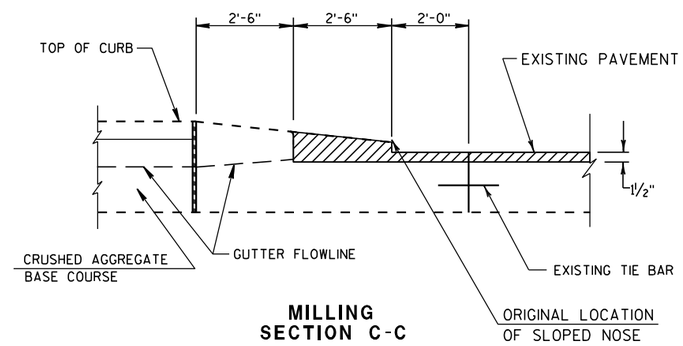

MILLING SECTION C-C

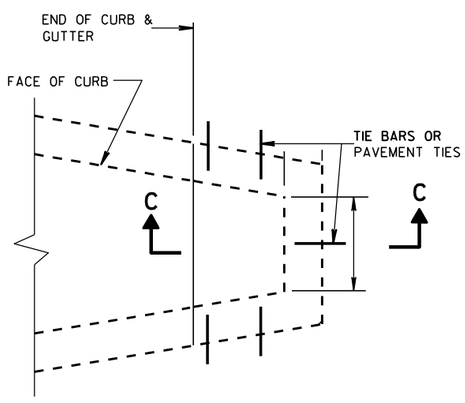

PLAN VIEW

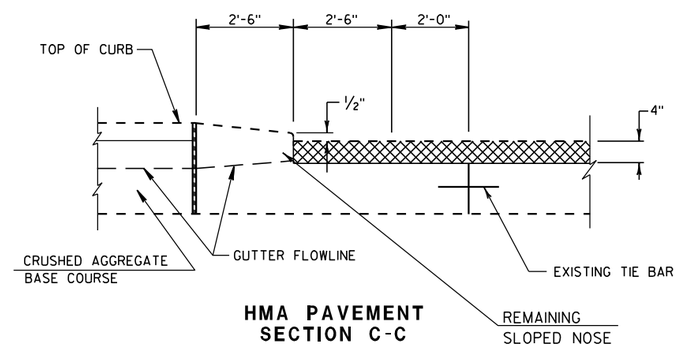

HMA PAVEMENT SECTION C-C

MILLING EXISTING MEDIAN SLOPED NOSE

STA. 128+20, 137+40, 138+00, 145+70, 146+20, 158+00, 180+00, 188+40, 189+00, 218+00, 218+55, 223+00

REMOVING CONCRETE SURFACE PARTIAL DEPTH

HMA PAVEMENT TYPE E-3

NOTE: MAINTAIN ACCEPTABLE DRAINAGE ADJACENT TO SLOPED MEDIANS, AS APPROVED BY THE ENGINEER.

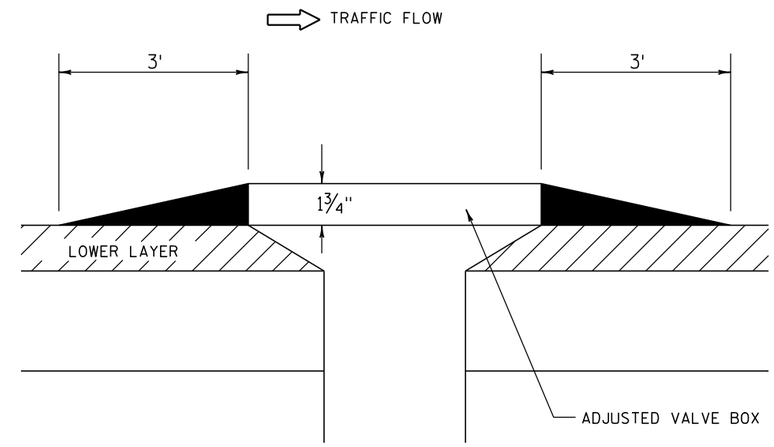

ASPHALT RAMPING WATER VALVE BOXES

ASPHALTIC SURFACE PATCHING

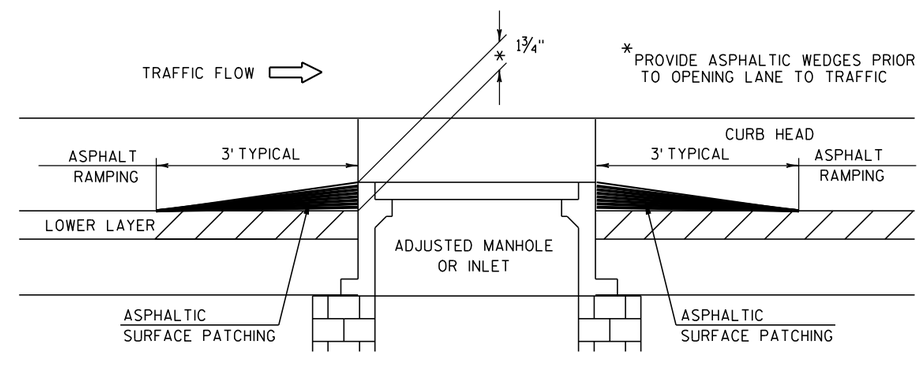

NOTE: REMOVAL OF ASPHALTIC IS INCIDENTAL TO ASPHALT SURFACE PATCHING ITEM

ASPHALT RAMPING MANHOLES AND INLETS

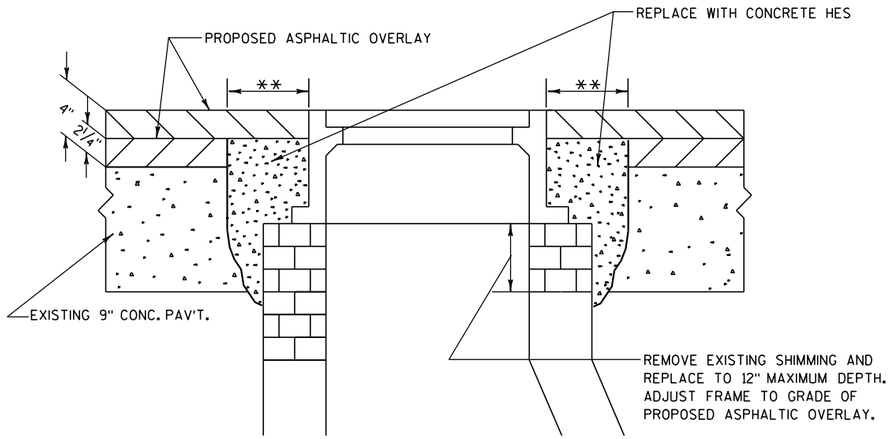

NOTE: AIR-ENTRAINED MORTAR SHALL BE USED.

SECTION A-A

MANHOLES

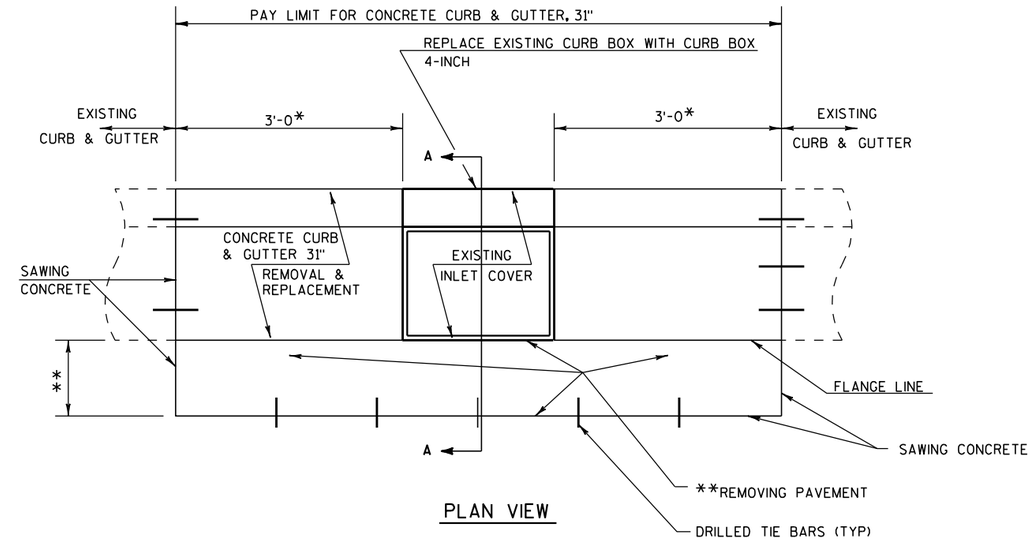

PLAN VIEW

NOTE:

* REMOVE 3'-0" CURB & GUTTER MIN.
OR TO THE NEAREST JOINT 6'-0 MAX.
UNLESS OTHERWISE DIRECTED BY THE ENGINEER.

** 9" WHEN ADJUSTING INLETS OR MANHOLES.
1'-6" WHEN RECONSTRUCTING INLETS OR MANHOLES.

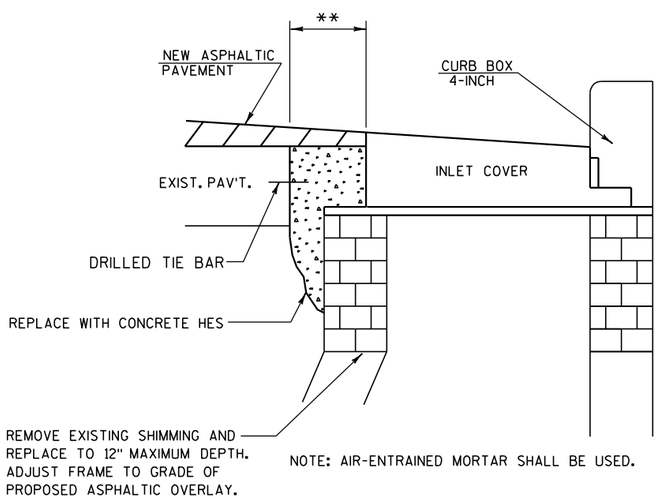

NOTE: AIR-ENTRAINED MORTAR SHALL BE USED.

WHEN THE ENGINEER DIRECTS WORK IN EXCESS OF 12", WORK WILL BE PAID FOR AS RECONSTRUCTING INLETS.

SECTION A-A

INLETS

GENERAL DRAINAGE STRUCTURE NOTES

1. MANHOLE ADJUSTMENTS IN ASPHALTIC PAVEMENT SHALL BE MADE AFTER THE LOWER LAYER IS PLACED.
2. ALL USED FRAMES, GRATES, AND CURB BOXES BECOME THE PROPERTY OF THE CONTRACTOR.
3. THE EXISTING CURB BOX SHALL BE REPLACED WITH CURB BOX 4-INCH.
4. SAWING OF EXISTING CURB & GUTTER AND PAVEMENT SHALL BE PAID UNDER BID ITEM SAWING CONCRETE.

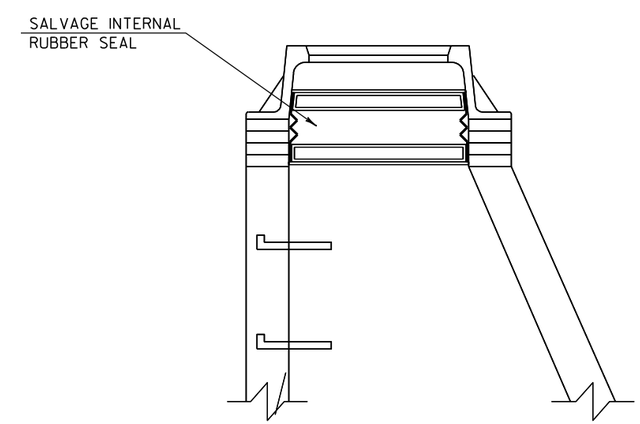

NOTE: EXISTING INTERNAL SEALS SHALL BE SALVAGED AND REPLACED.
THE INTERNAL SEAL IS TO BE INSTALLED TO A CLEAN, SMOOTH AND FREE OF ANY LOOSE MATERIAL & VOIDS.

SALVAGE INTERNAL RUBBER, SANITARY SEWER MANHOLE SEAL

ADJUSTING OR RECONSTRUCTING INLETS OR MANHOLES (AT CURB & GUTTER LOCATIONS)

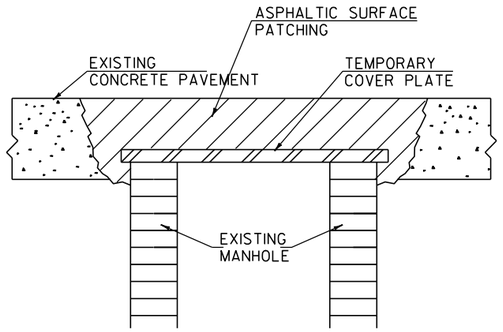

STEP 1

PRIOR TO REMOVING CONCRETE
SURFACE PARTIAL DEPTH

A. REMOVE AND STORE MANHOLE COVER

B. FURNISH AND INSTALL TEMP. COVER PLATE.*

C. BACKFILL USING ASPHALT SURFACE, PATCHING.*

* TO BE PAID FOR UNDER CONTRACT ITEMS

STEP 1A MAY BE DONE BY OTHERS (UTILITY CO. OR MUNICIPALITY)
STEP 1B AND 1C BY CONTRACTOR

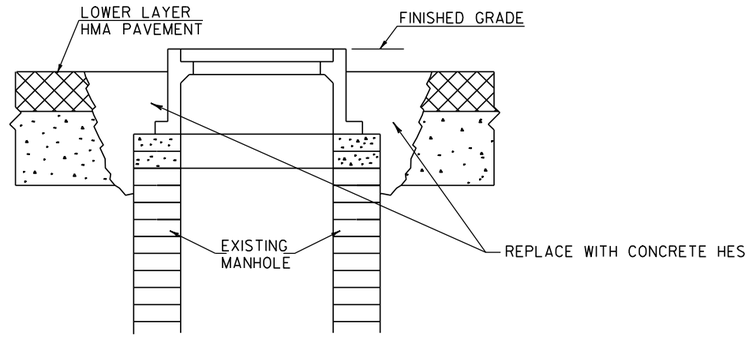

STEP 2

AFTER PAVING LOWER LAYER HMA PAVEMENT

A. EXCAVATE AND REMOVE TEMPORARY COVER PLATE.

B. ADJUST MANHOLE AND REINSTALL MANHOLE COVER
TO FINISH GRADE.

(BACKFILL AND OTHER WORK TO BE DONE IN ACCORDANCE
WITH ITEM - ADJUSTING MANHOLE COVERS)

ALL WORK DONE MAY BE DONE BY OTHERS (UTILITY CO. OR MUNICIPALITY)
TEMPORARY COVER PLATES TO BE RETURNED TO CONTRACTOR.

NOTE:

ADJUSTING MANHOLE COVERS WILL NOT BE PAID FOR AS A SEPARATE ITEM OF WORK WHEN ADJUSTMENTS ARE MADE BY OTHERS (UTILITY CO. OR MUNICIPALITY).

ADJUSTING MANHOLE COVERS

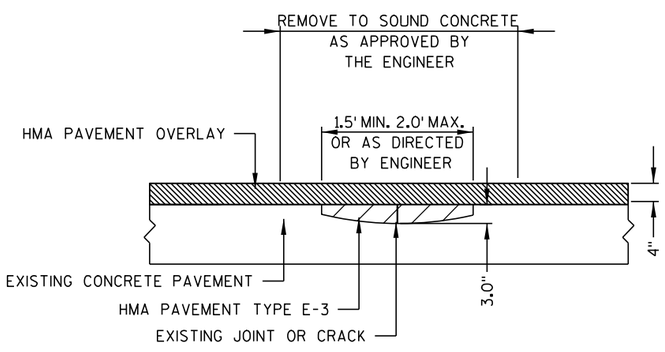

NOTE: IN ALL AREAS OF JOINT REPAIR REMOVE ASPHALTIC MATERIAL AND/OR LOOSE, DETERIORATED CONCRETE. CLEAN AND REPLACE WITH HMA PAVEMENT AS DIRECTED BY THE ENGINEER.

REMOVAL OF GREATER THAN 3" TO BE PAID AS "BASE PATCHING, CONCRETE".

LOCATIONS FOR JOINT REPAIR TO BE APPROVED BY THE ENGINEER PRIOR TO COMMENCEMENT OF REPAIR WORK.

JOINT AND CRACK REPAIR

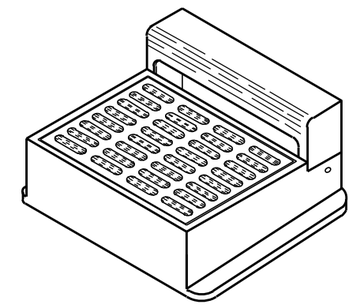

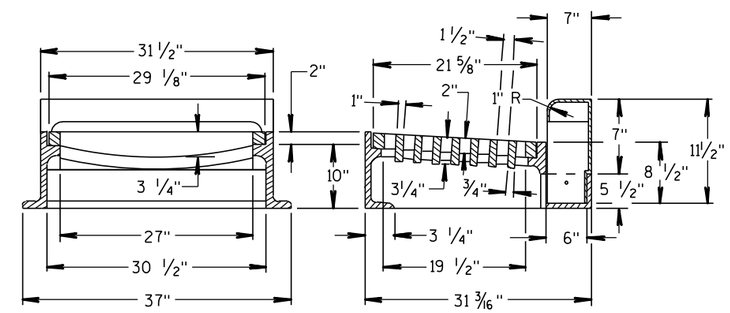

INLET COVER, TYPE "W", SPECIAL

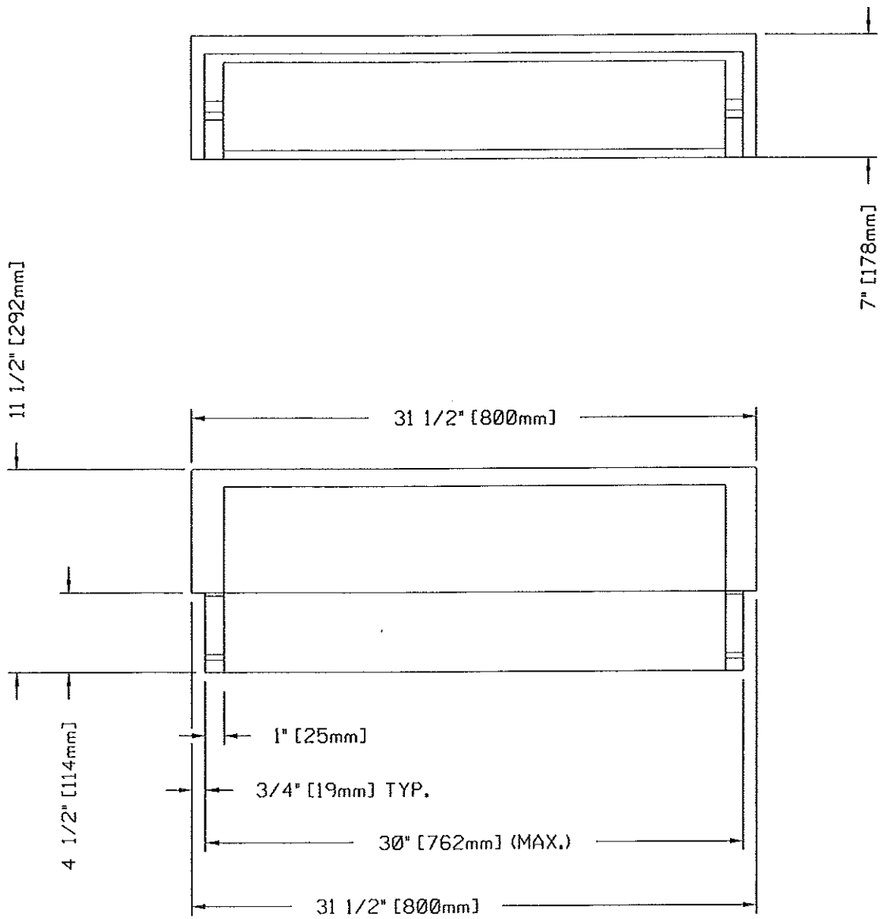

CURB BOX, 4-INCH

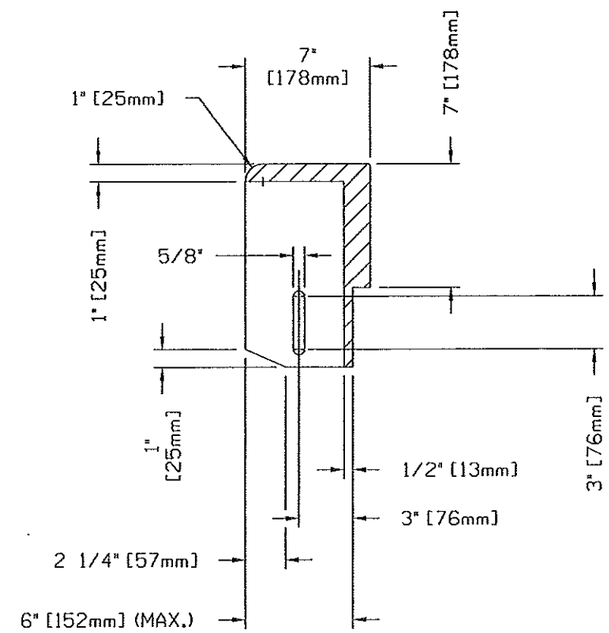

MATERIAL: CAST GRAY IRON ASTM A-48, CLASS 35B
FINISH: NO PAINT
WEIGHT: 130#

PROJECT NO:2150-05-70	HWY:STH 100	COUNTY:MILWAUKEE	CONSTRUCTION DETAILS	SHEET 21	E

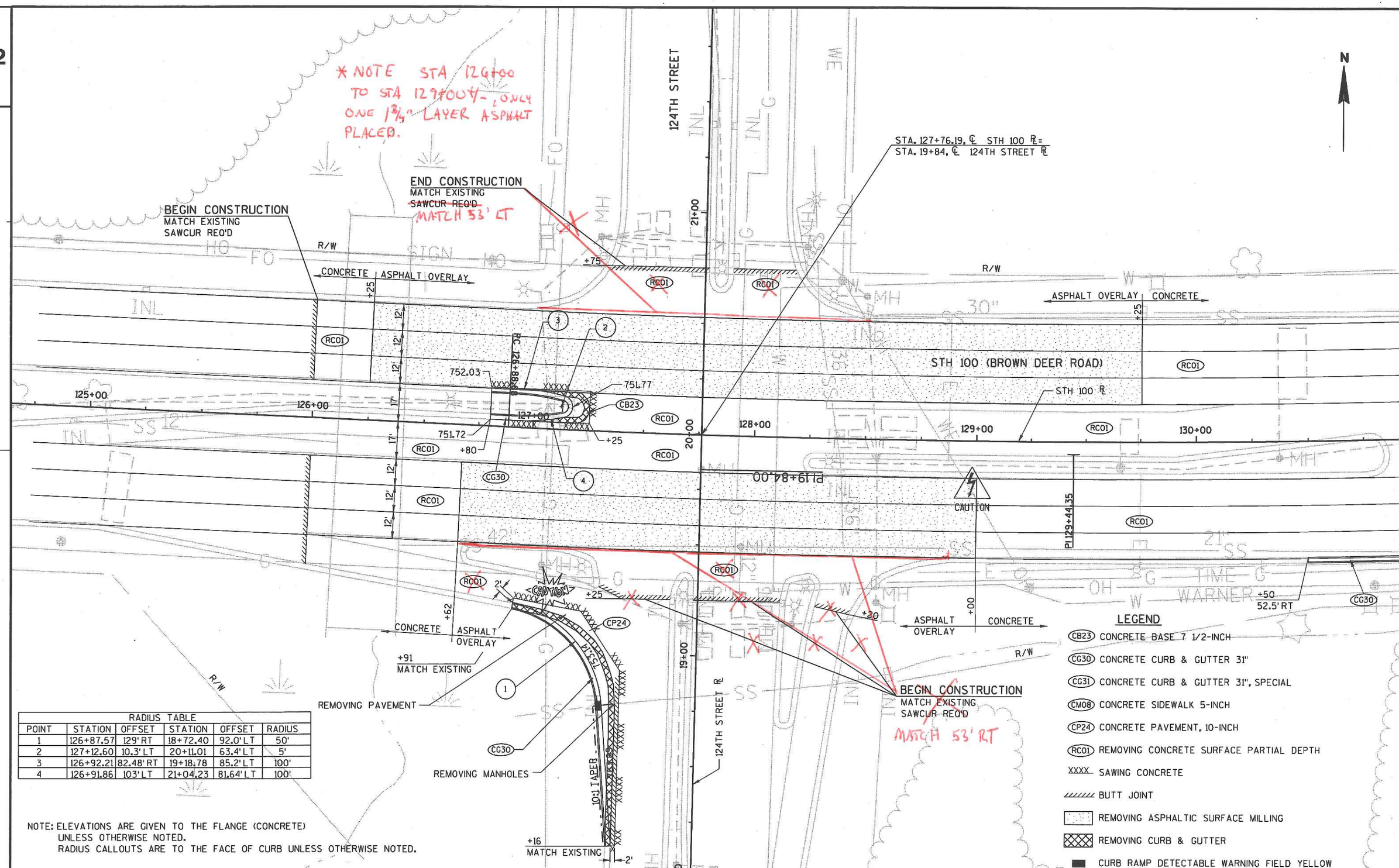

RADIUS TABLE					
POINT	STATION	OFFSET	STATION	OFFSET	RADIUS
1	126+87.57	129' RT	18+72.40	92.0' LT	50'
2	127+12.60	10.3' LT	20+11.01	63.4' LT	5'
3	126+92.21	82.48' RT	19+18.78	85.2' LT	100'
4	126+91.86	103' LT	21+04.23	81.64' LT	100'

NOTE: ELEVATIONS ARE GIVEN TO THE FLANGE (CONCRETE) UNLESS OTHERWISE NOTED.
RADIUS CALLOUTS ARE TO THE FACE OF CURB UNLESS OTHERWISE NOTED.

PROJECT NO: 2150-05-70	HWY: STH 100	COUNTY: MILWAUKEE	INTERSECTION DETAIL - 124TH STREET	SHEET	E

FILE NAME : j:\projects\D2_215005100\021101_id.dgn PLOT DATE : 09-MAR-2010 14:55 PLOT BY : dotshw PLOT NAME : PLOT SCALE : 40:1

RADIUS TABLE					
POINT	STATION	OFFSET	STATION	OFFSET	RADIUS
1	179+91.19	60.53' LT	20+57.89	66.17' LT	2'
2	180+05.27	61.44' LT	20+59.57	50.06' LT	3'
3	180+01.88	11.76' RT	19+86.29	50.01' LT	3'
4	180+01.60	17.85' RT	19+81.20	50.0' LT	3'
5	3A+83.75	59.81' RT	19+32.29	49.90' LT	3'
6	3A+82.98	74.06' RT	19+18.06	49.93' LT	3'
7	3A+45.07	126.36' RT	18+64.67	87.57' RT	40'
8	4A+82.91	62.26' RT	19+32.62	47.84' RT	3'
9	5A+01.23	61.90' RT	19+33.49	66.14' RT	3'
10	5A+59.17	97.52' RT	18+99.18	123.50' RT	45'
11	4A+85.06	5.08' LT	20+05.99	47.94' RT	3'
12	4A+85.25	11.53' LT	20+12.44	47.94' RT	3'
13	181+03.25	59' LT	20+60.04	48.0' RT	3'
14	181+03.90	72.75' LT	20+73.67	48.02' RT	3'
15	181+42.18	126.59' LT	21+27.70	90.03' RT	43'
16	179+40.32	92.62' LT	20+89.14	118.13' LT	40'

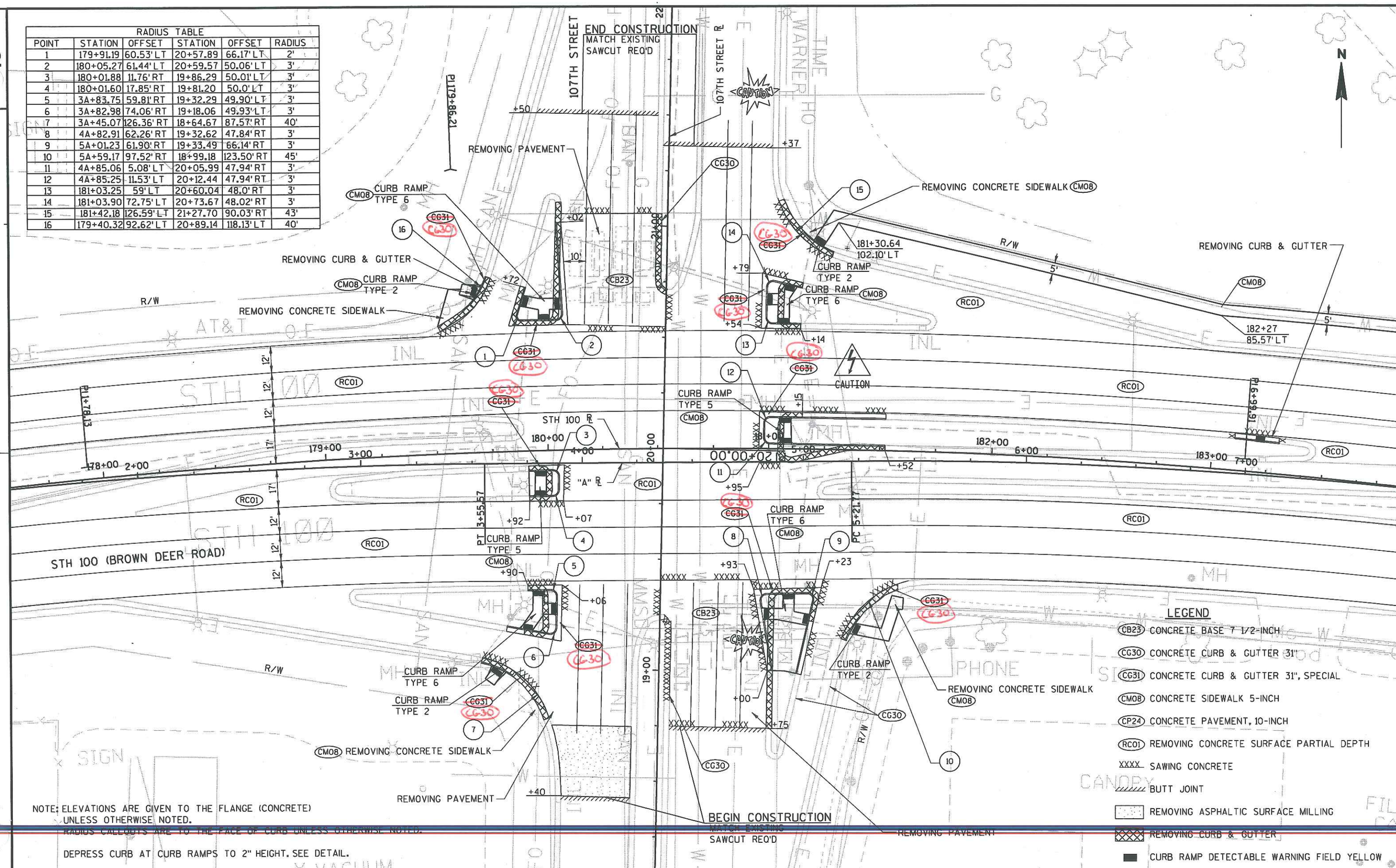

NOTE: ELEVATIONS ARE GIVEN TO THE FLANGE (CONCRETE) UNLESS OTHERWISE NOTED.
RADIUS CALLOUTS ARE TO THE FACE OF CURB UNLESS OTHERWISE NOTED.

DEPRESS CURB AT CURB RAMPS TO 2" HEIGHT. SEE DETAIL.

PROJECT NO: 2150-05-70	HWY: STH 100	COUNTY: MILWAUKEE	INTERSECTION DETAIL - 107TH STREET	SHEET	E

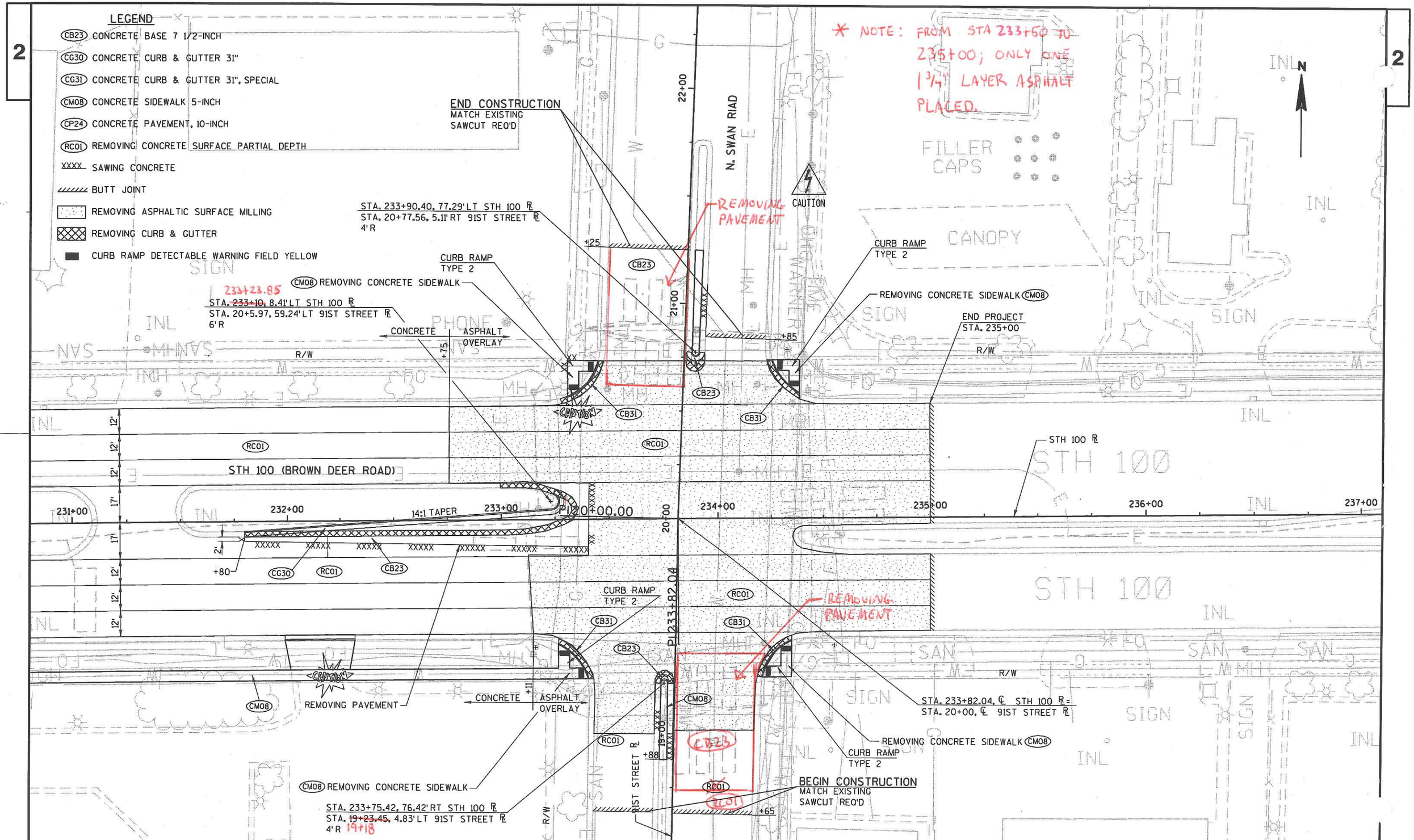

PROJECT NO: 2150-05-70	HWY: STH 100	COUNTY: MILWAUKEE	INTERSECTION DETAIL - 91ST STREET	SHEET	E

FILE NAME : j:\projects\D2_215005100\021103_id.dgn PLOT DATE : 09-MAR-2010 14:55 PLOT BY : dotshw PLOT NAME : PLOT SCALE : 40:1

WISDOT/CADDS SHEET 42

DUPLICATE SHEET

RADIUS TABLE					
POINT	STATION	OFFSET	STATION	OFFSET	RADIUS
1	179+91.19	60.53' LT	20+57.89	66.17' LT	2'
2	180+05.27	61.44' LT	20+59.57	50.06' LT	3'
3	180+01.88	11.76' RT	19+86.29	50.01' LT	3'
4	180+01.60	17.85' RT	19+81.20	50.0' LT	3'
5	3A+83.75	59.81' RT	19+32.29	49.90' LT	3'
6	3A+82.98	74.06' RT	19+18.06	49.93' LT	3'
7	3A+45.07	126.36' RT	18+64.67	87.57' RT	40'
8	4A+82.91	62.26' RT	19+32.62	47.84' RT	3'
9	5A+01.23	61.90' RT	19+33.49	66.14' RT	3'
10	5A+59.17	97.52' RT	18+99.18	123.50' RT	45'
11	4A+85.06	5.08' LT	20+05.99	47.94' RT	3'
12	4A+85.25	11.53' LT	20+12.44	47.94' RT	3'
13	181+03.25	59' LT	20+60.04	48.0' RT	3'
14	181+03.90	72.75' LT	20+73.67	48.02' RT	3'
15	181+42.18	126.59' LT	21+27.70	90.03' RT	43'
16	179+40.32	92.62' LT	20+89.14	118.13' LT	40'

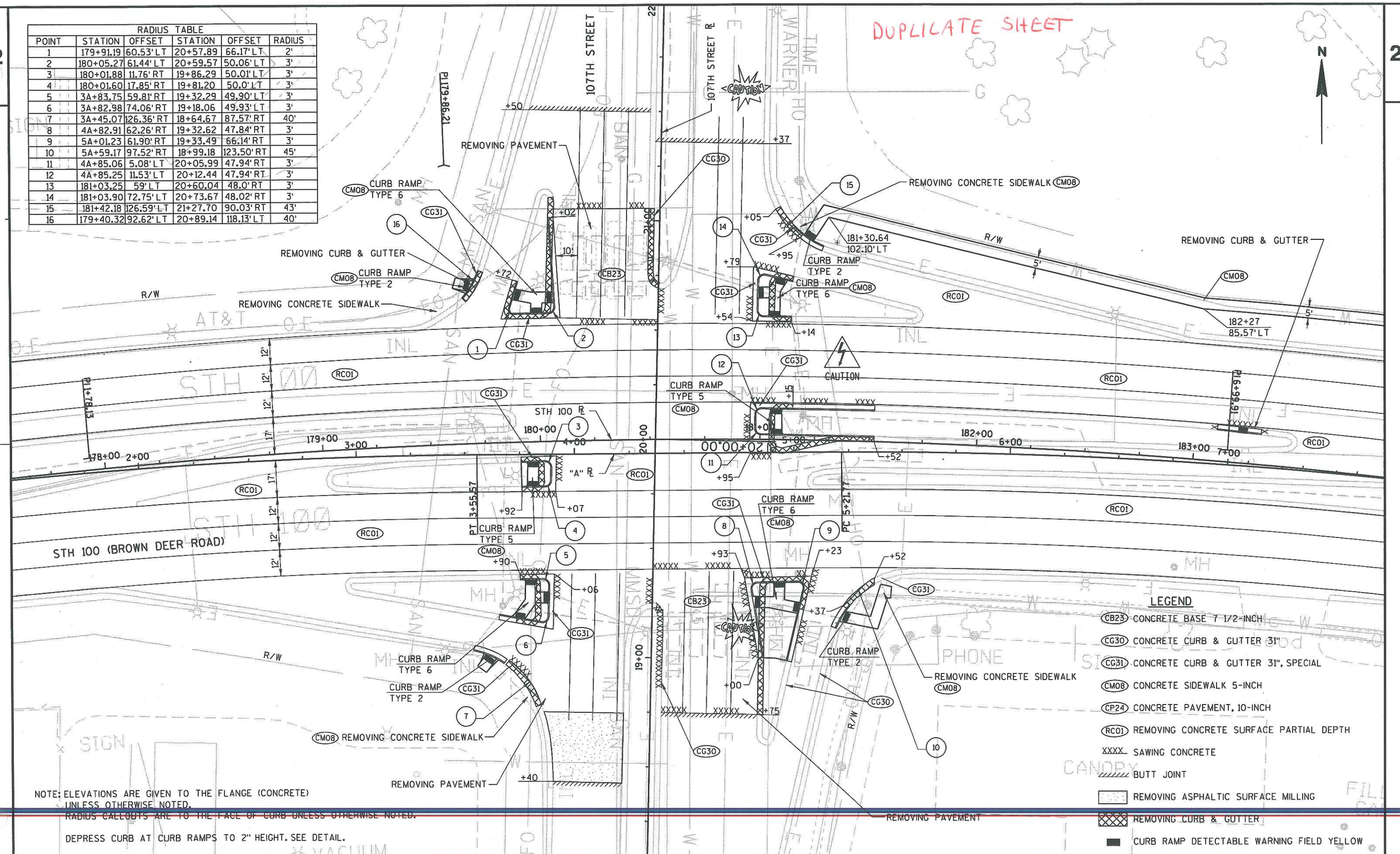

NOTE: ELEVATIONS ARE GIVEN TO THE FLANGE (CONCRETE) UNLESS OTHERWISE NOTED.
RADIUS CALLOUTS ARE TO THE FACE OF CURB UNLESS OTHERWISE NOTED.
DEPRESS CURB AT CURB RAMPS TO 2" HEIGHT. SEE DETAIL.

PROJECT NO: 2150-05-70	HWY: STH 100	COUNTY: MILWAUKEE	INTERSECTION DETAIL - 107TH STREET	SHEET 25	E

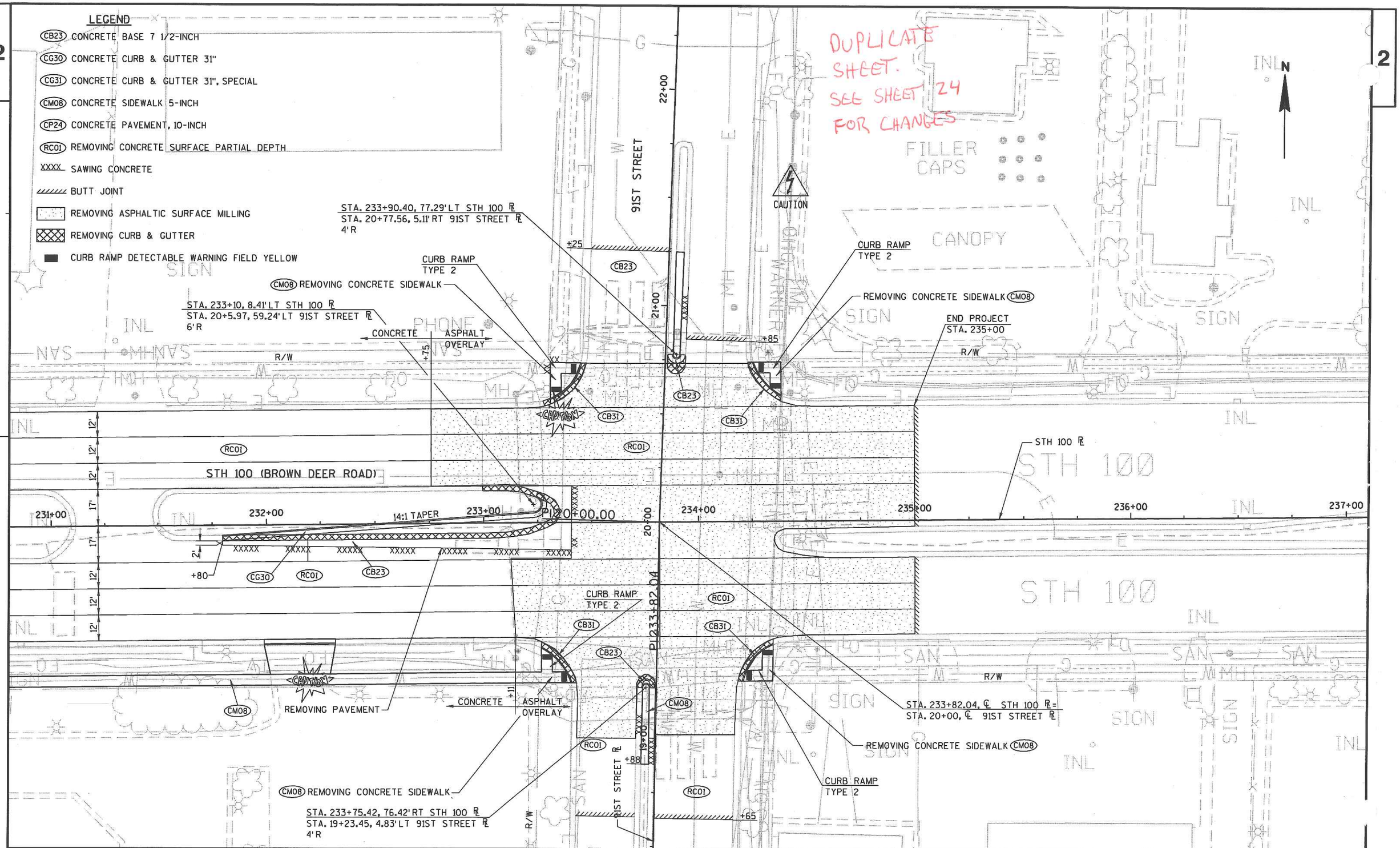

PROJECT NO: 2150-05-70	HWY: STH 100	COUNTY: MILWAUKEE	INTERSECTION DETAIL - 91ST STREET	SHEET	E

FILE NAME : j:\projects\D2_215005100\021103_id.dgn PLOT DATE : 28-JAN-2010 13:20 PLOT BY : dotmll PLOT NAME : PLOT SCALE : 40:1

WISDOT/CADDS SHEET 42

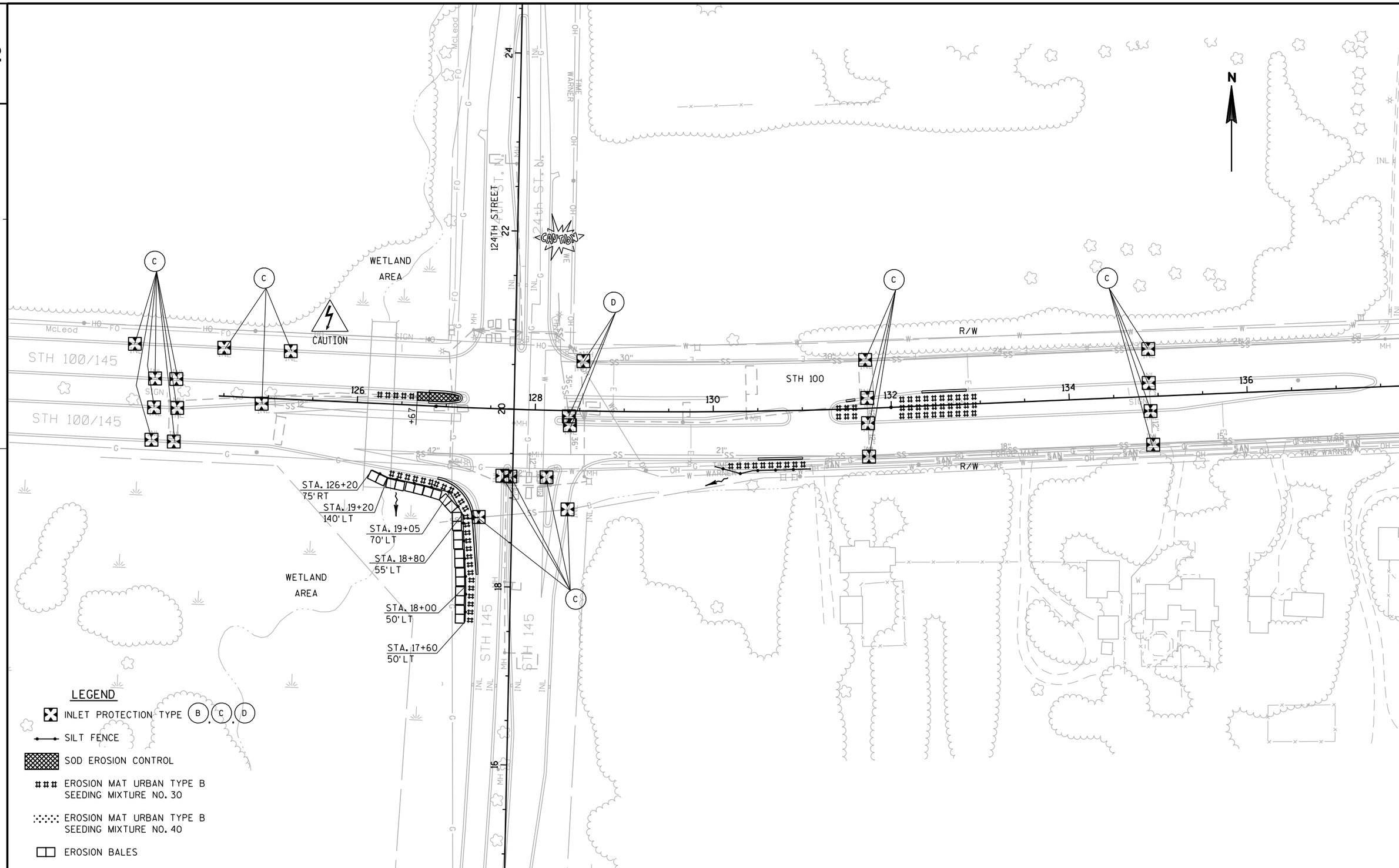

PROJECT NO: 2150-05-70	HWY: STH 100	COUNTY: MILWAUKEE	EROSION CONTROL	SHEET	E

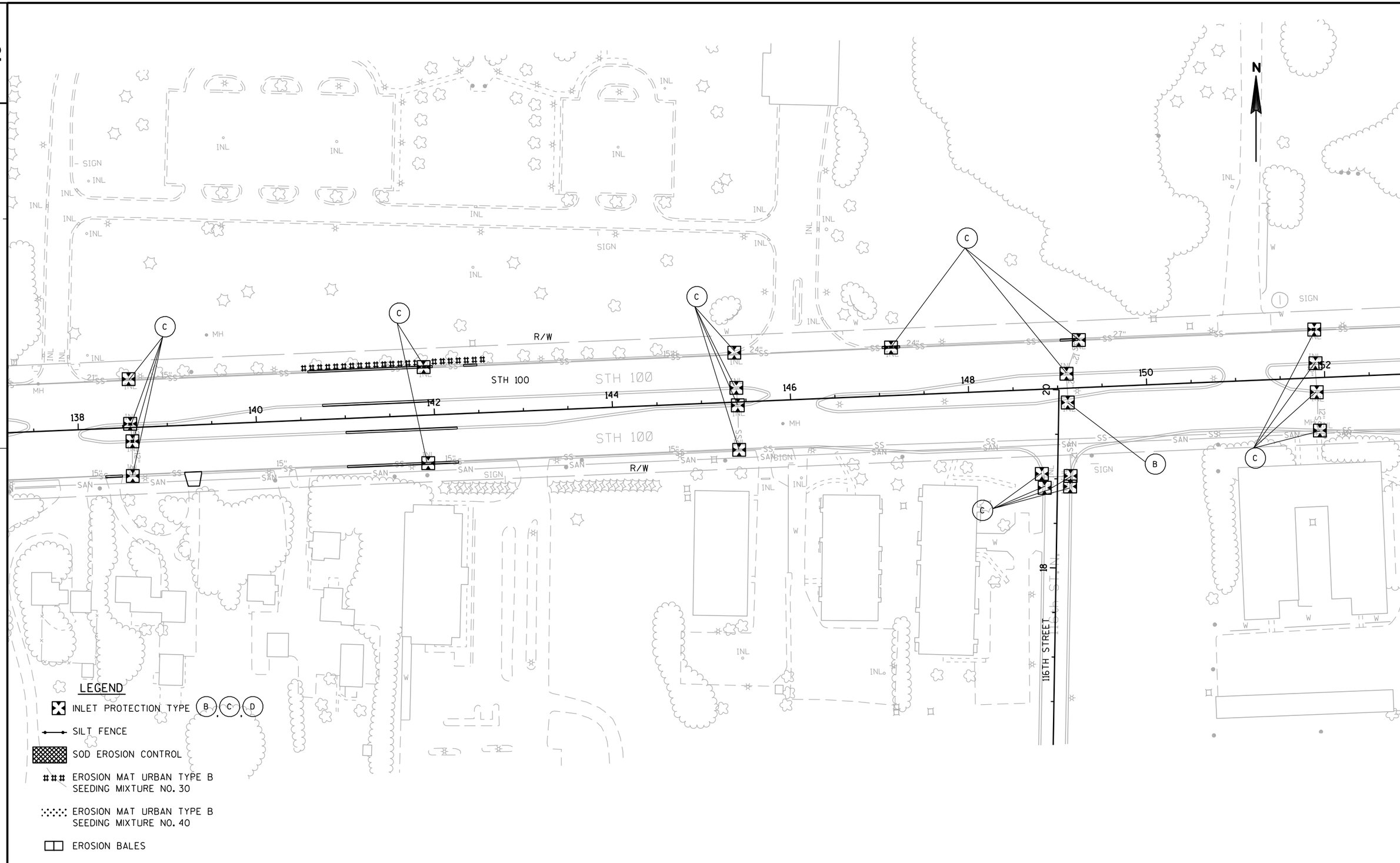

PROJECT NO: 2150-05-70	HWY: STH 100	COUNTY: MILWAUKEE	EROSION CONTROL	SHEET	E

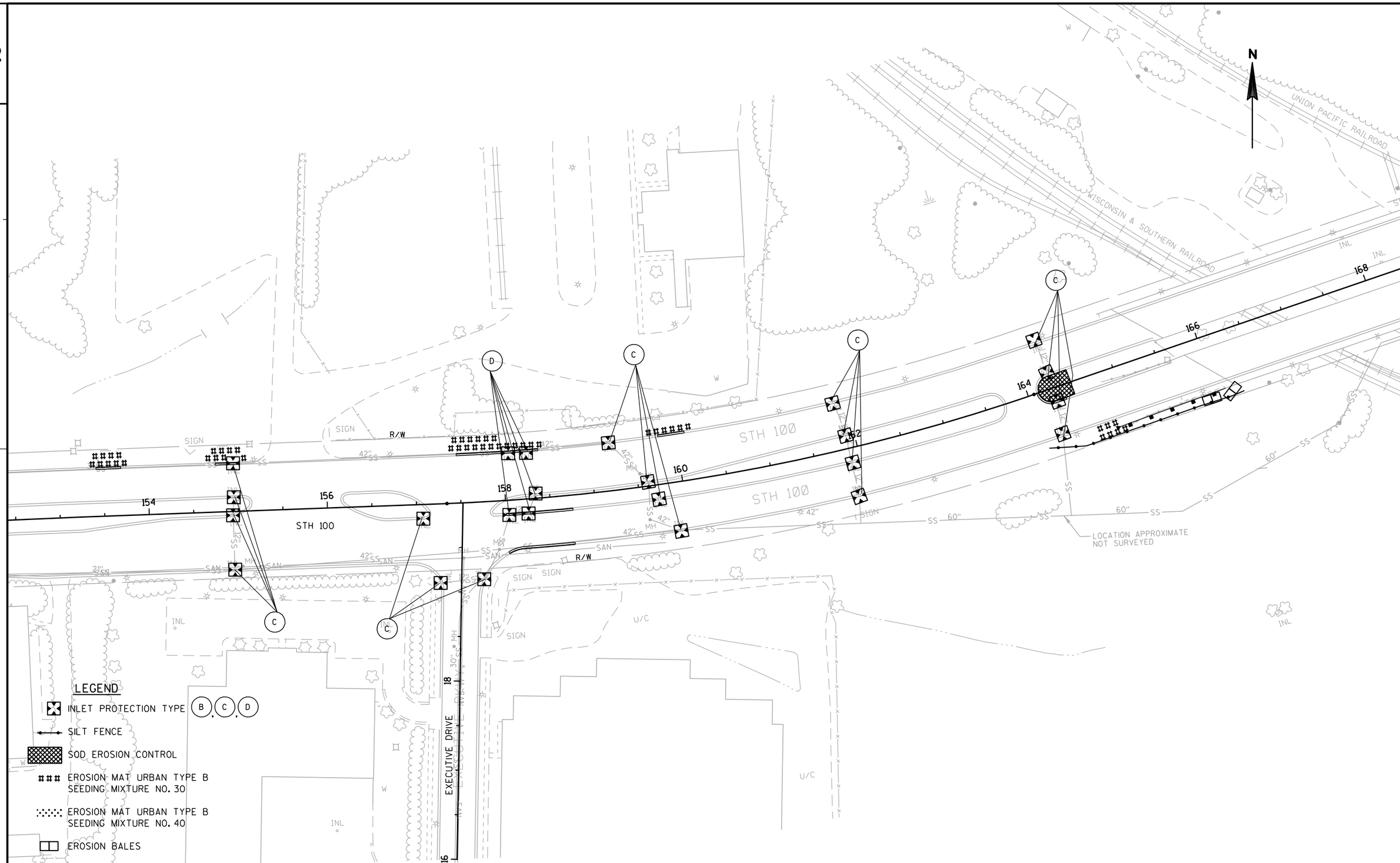

PROJECT NO:2150-05-70	HWY:STH 100	COUNTY:MILWAUKEE	EROSION CONTROL	SHEET	E

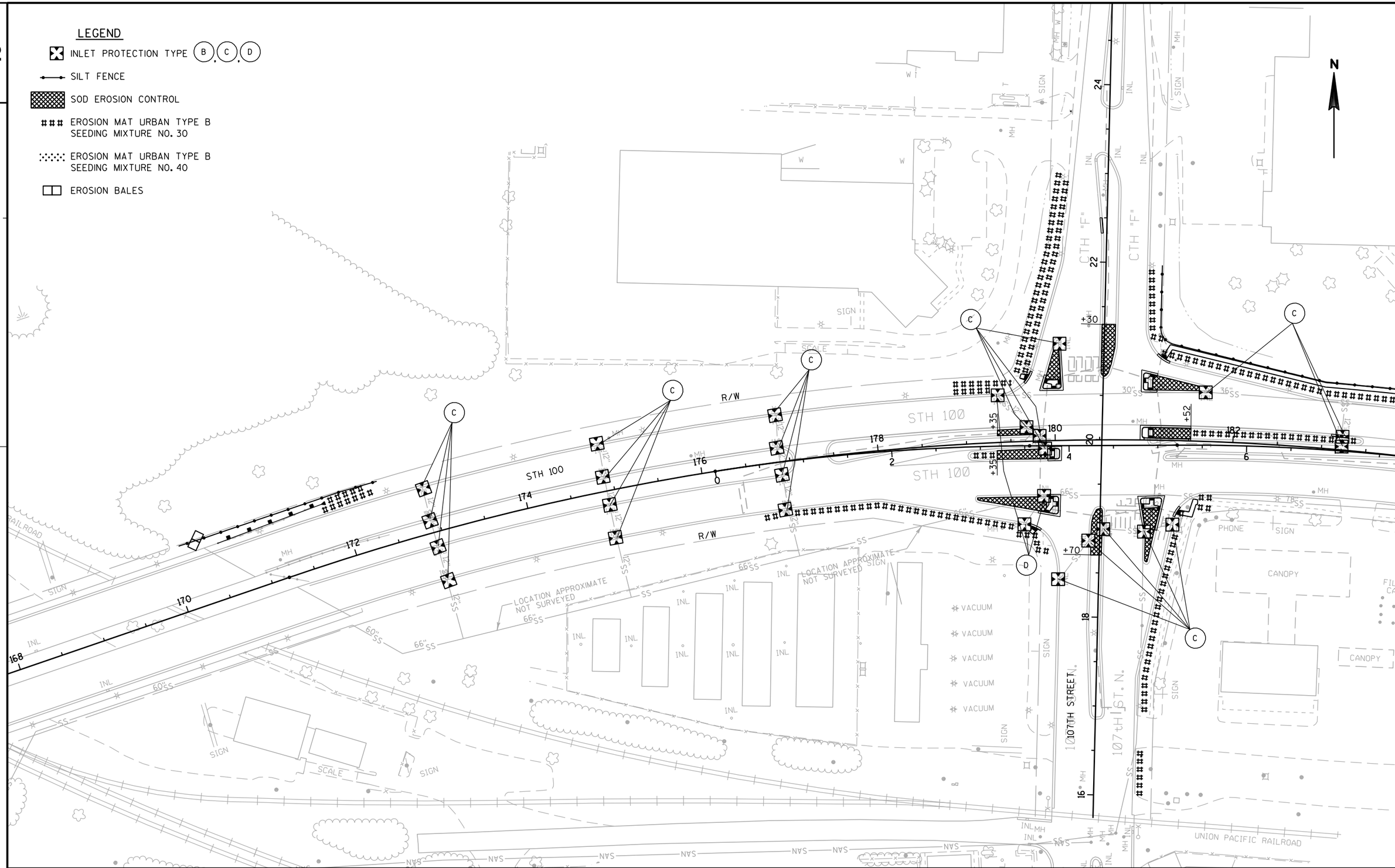

2

PROJECT NO:2150-05-70	HWY:STH 100	COUNTY:MILWAUKEE	EROSION CONTROL	SHEET	E

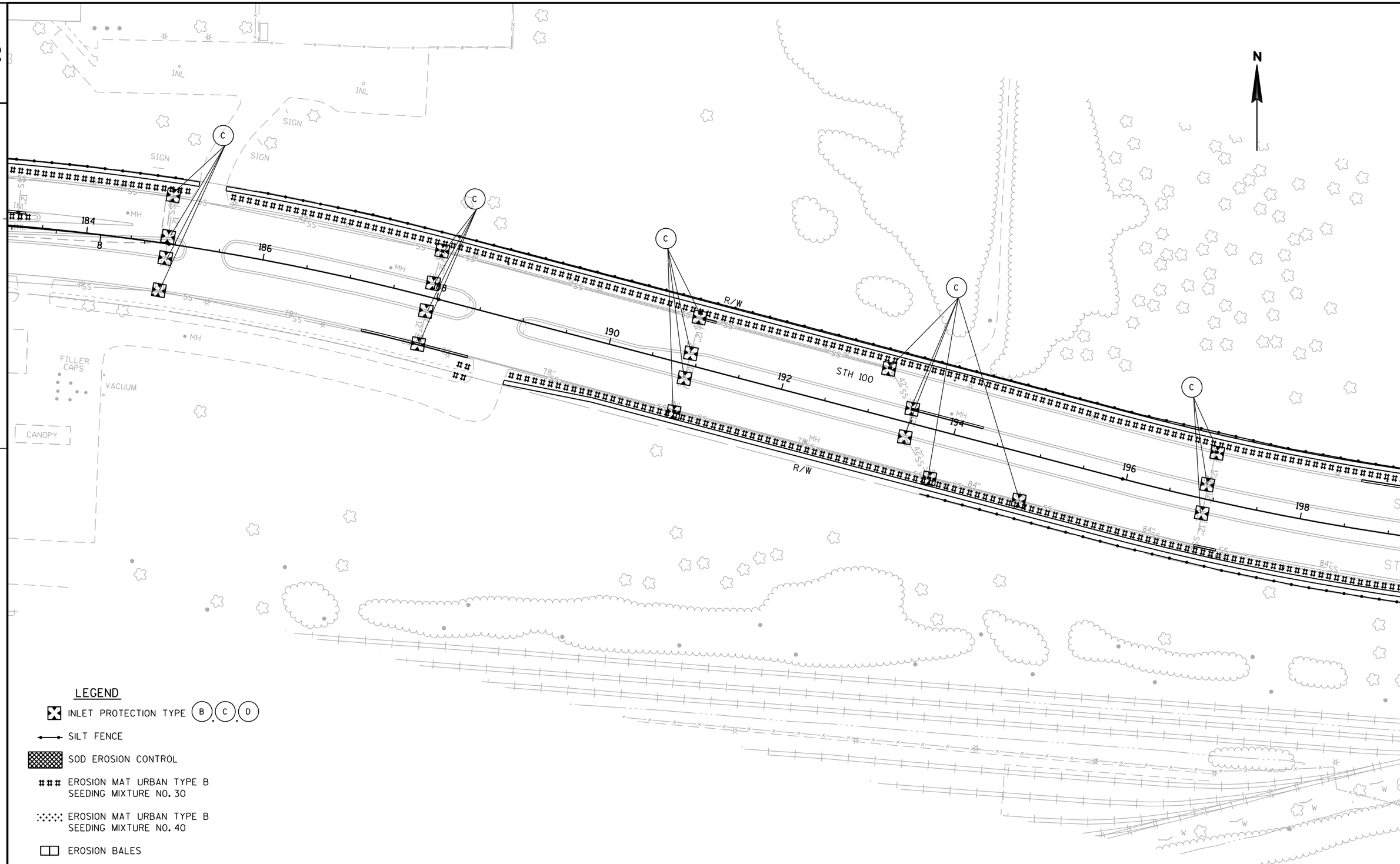

PROJECT NO: 2150-05-70	HWY: STH 100	COUNTY: MILWAUKEE	EROSION CONTROL	SHEET	E

FILE NAME : j:\projects\D2_215005100\022005_ec.dgn PLOT DATE : 28-JAN-2010 13:21 PLOT BY : dotmll PLOT NAME : PLOT SCALE : 100:1

WISDOT/CADDS SHEET 42

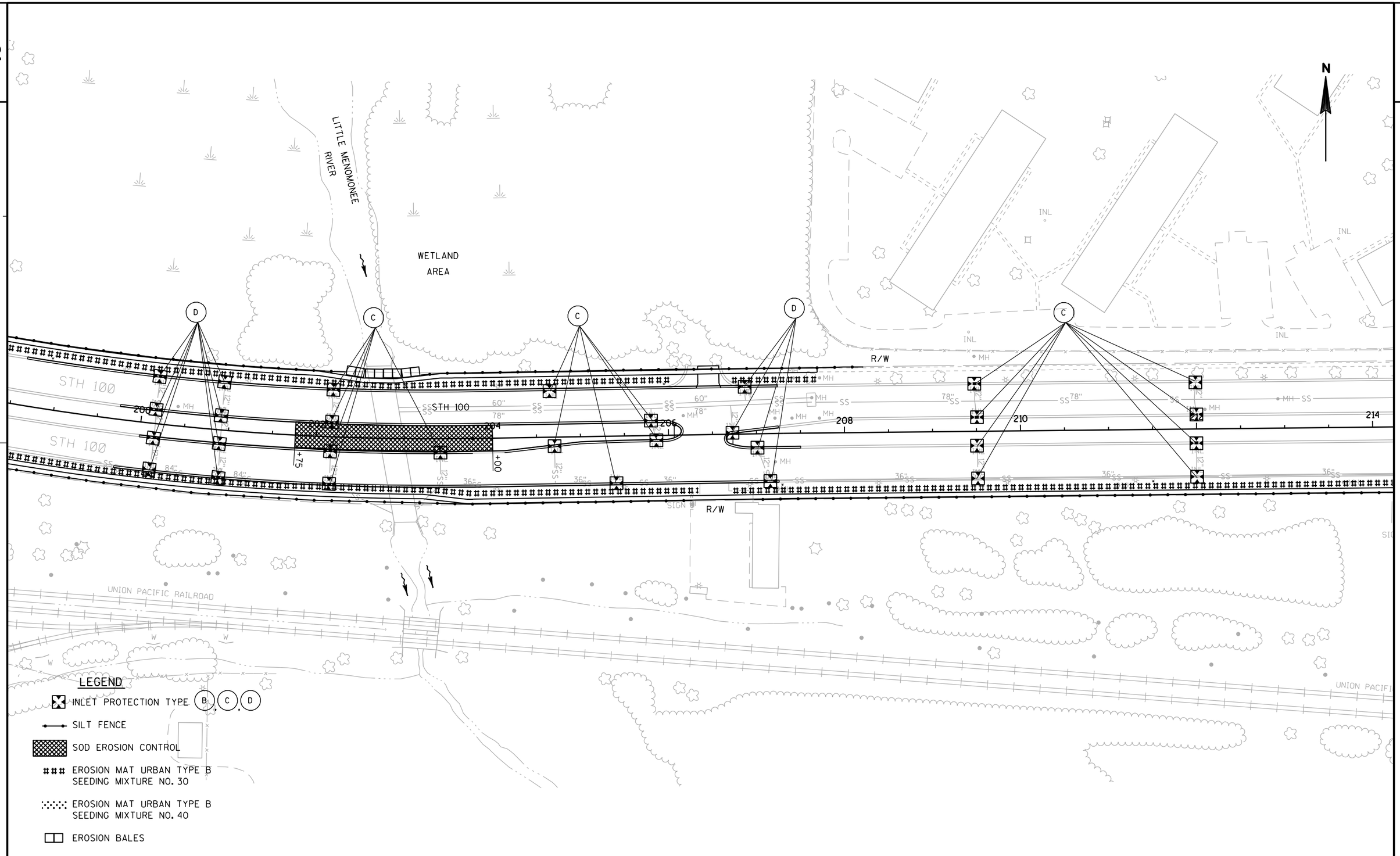

PROJECT NO: 2150-05-70	HWY: STH 100	COUNTY: MILWAUKEE	EROSION CONTROL	SHEET	E

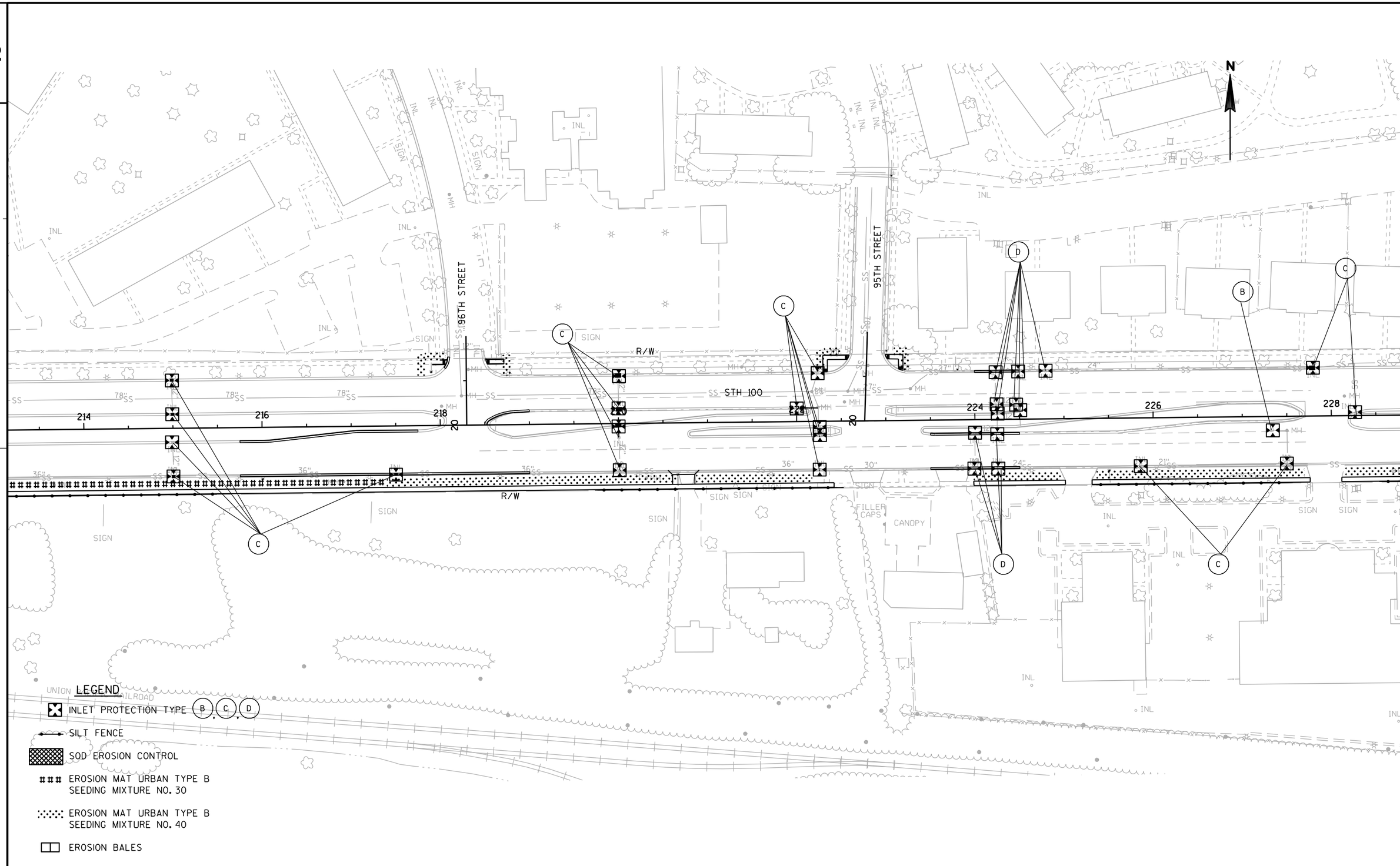

PROJECT NO: 2150-05-70	HWY: STH 100	COUNTY: MILWAUKEE	EROSION CONTROL	SHEET	E

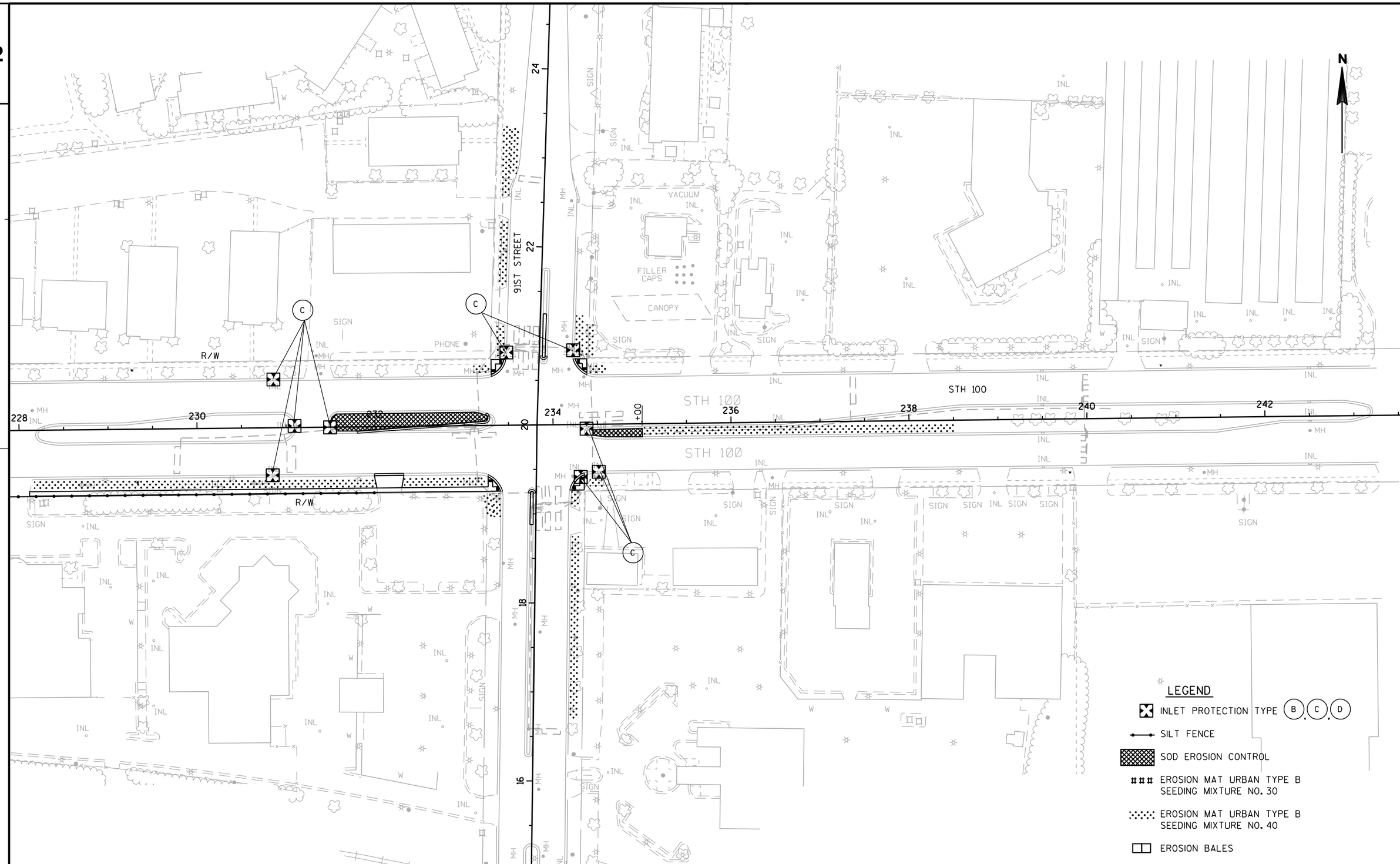

2

PROJECT NO: 2150-05-70	HWY: STH 100	COUNTY: MILWAUKEE	EROSION CONTROL	SHEET	E

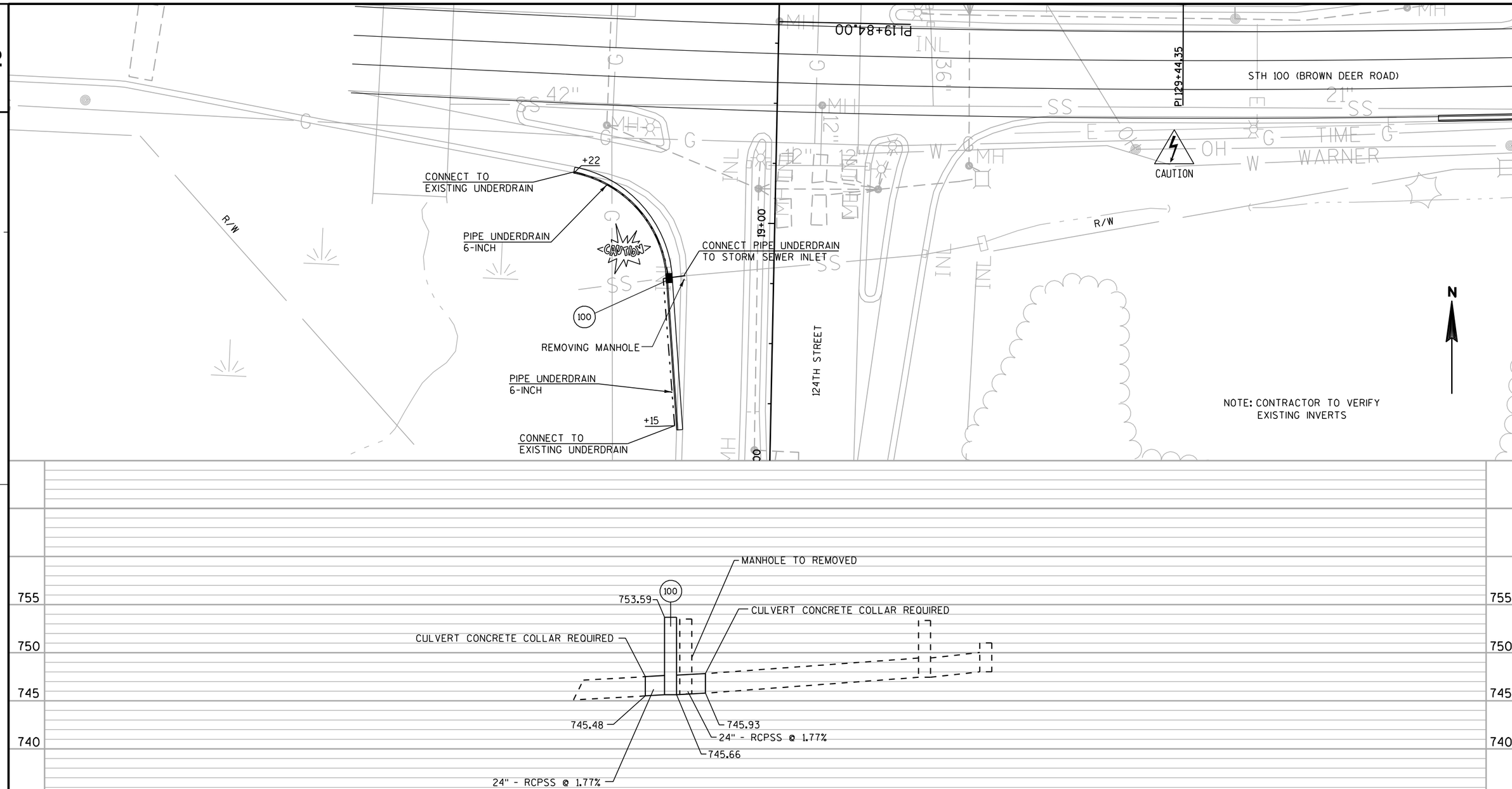

PROJECT NO: 2150-05-70	HWY: STH 100	COUNTY: MILWAUKEE	STORM SEWER - 124TH STREET	SHEET	E

FILE NAME : j:\projects\D2_215005100\022501_ss.dgn PLOT DATE : 09-MAR-2010 15:03 PLOT BY : dotshw PLOT NAME : PLOT SCALE : 40:1 WISDOT/CADDS SHEET 41

LEGEND

- EXISTING SIGN MOUNTED ON POST(S)
- EXISTING SIGN MOUNTED ON POLE
- PROPOSED SIGN MOUNTED ON POST(S)
- PROPOSED SIGN MOUNTED ON BRIDGE OR SIGN BRIDGE
- EXISTING LIGHT OR SIGNAL POLE
- (XXX) DENOTES SIGN NUMBER
- (X) INDICATES SIGN SIZE
- ESTR EXISTING SIGN TO REMAIN

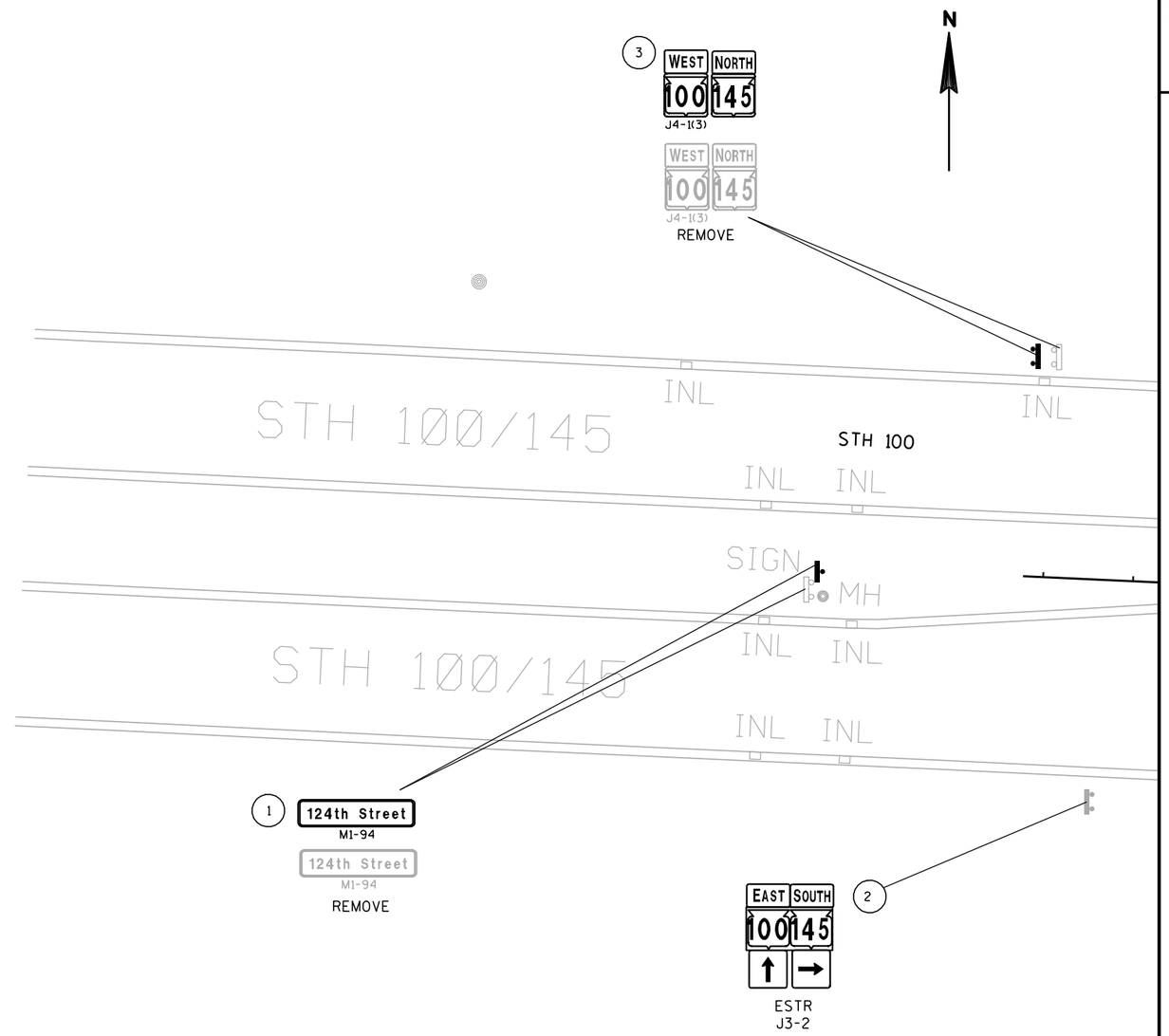

SHEET 1 OF 12

PROJECT NO:2150-05-70	HWY:STH 100	COUNTY:MILWAUKEE	PERMANENT SIGNING	SHEET	E

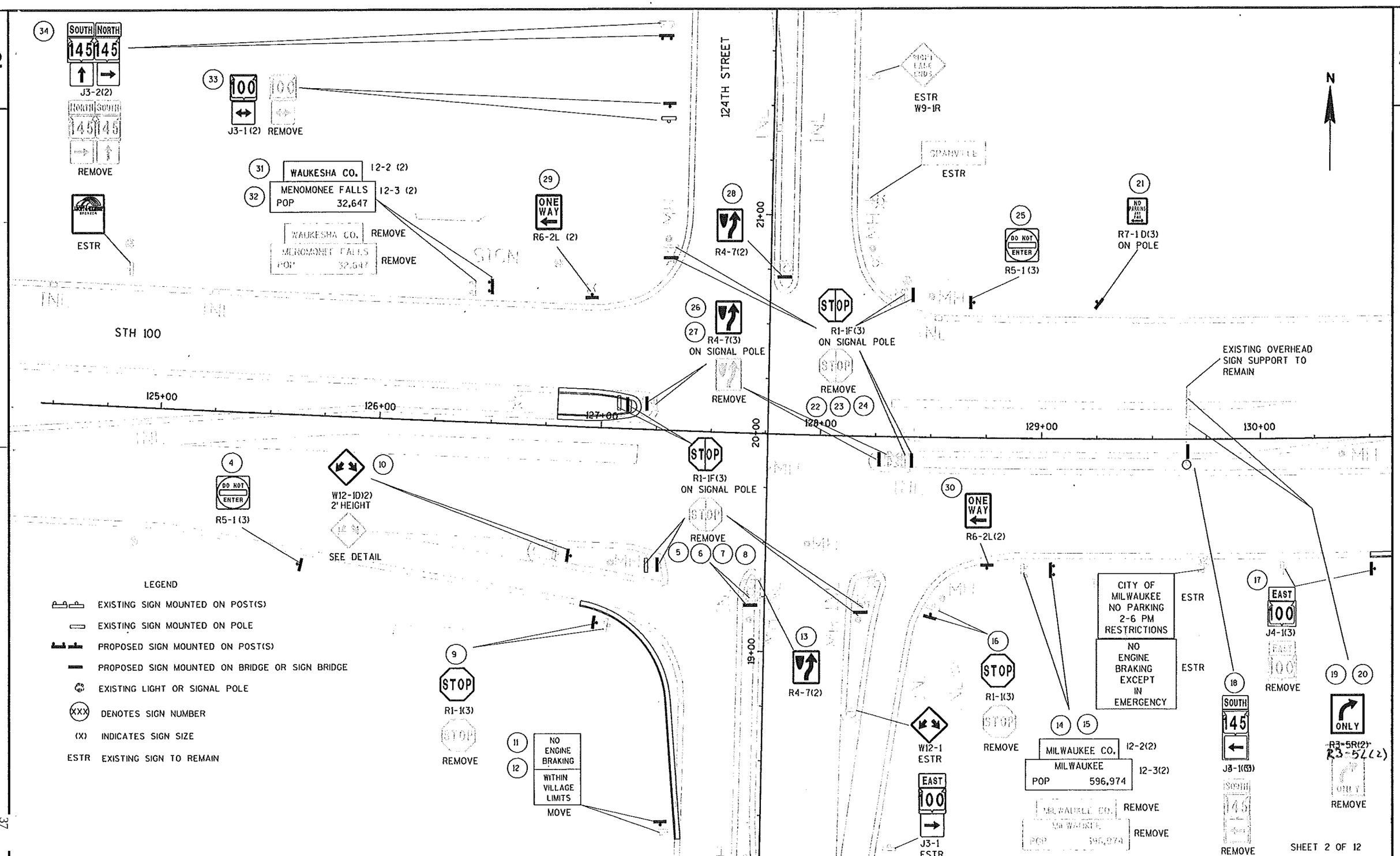

PROJECT NO:2150-05-70	HWY: STH 100	COUNTY: MILWAUKEE	PERMANENT SIGNING	SHEET	E

FILE NAME : J:\projects\02_215005100\023202_ps.dgn PLOT DATE : 28-JAN-2010 13:22 PLOT BY : dotmll PLOT NAME : PLOT SCALE : 40:1 WISDOT/CADDS SHEET 42

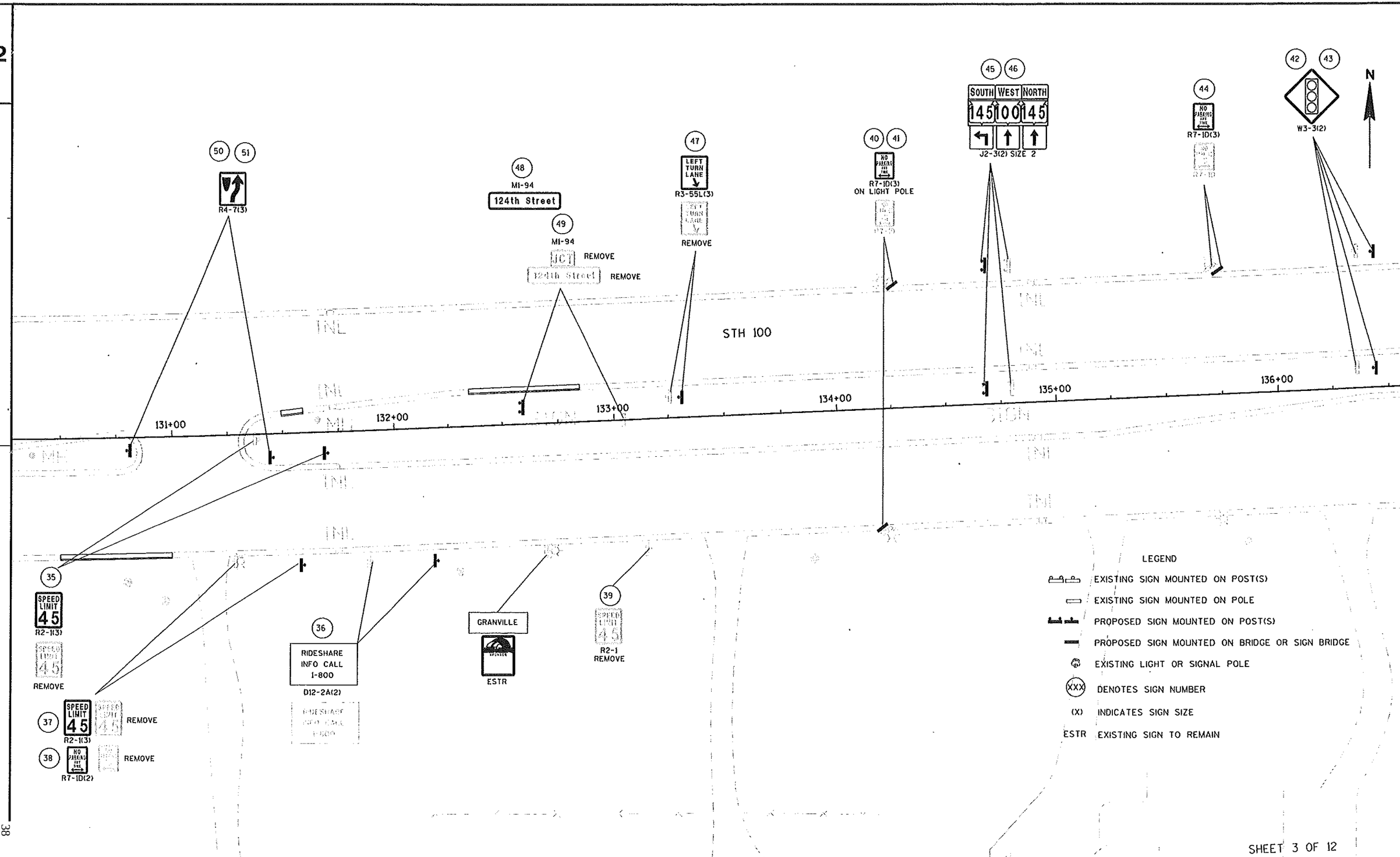

PROJECT NO:2150-05-70	HWY: STH 100	COUNTY: MILWAUKEE	PERMANENT SIGNING	SHEET	E

FILE NAME : J:\projects\02_215005100\023203_ps.dgn PLOT DATE : 28-JAN-2010 13:22 PLOT BY : dotmil PLOT NAME : PLOT SCALE : 40:1 WISDOT/CADDS

2

LEGEND

- EXISTING SIGN MOUNTED ON POST(S)
- EXISTING SIGN MOUNTED ON POLE
- PROPOSED SIGN MOUNTED ON POST(S)
- PROPOSED SIGN MOUNTED ON BRIDGE OR SIGN BRIDGE
- EXISTING LIGHT OR SIGNAL POLE
- XXX DENOTES SIGN NUMBER
- (X) INDICATES SIGN SIZE
- ESTR EXISTING SIGN TO REMAIN

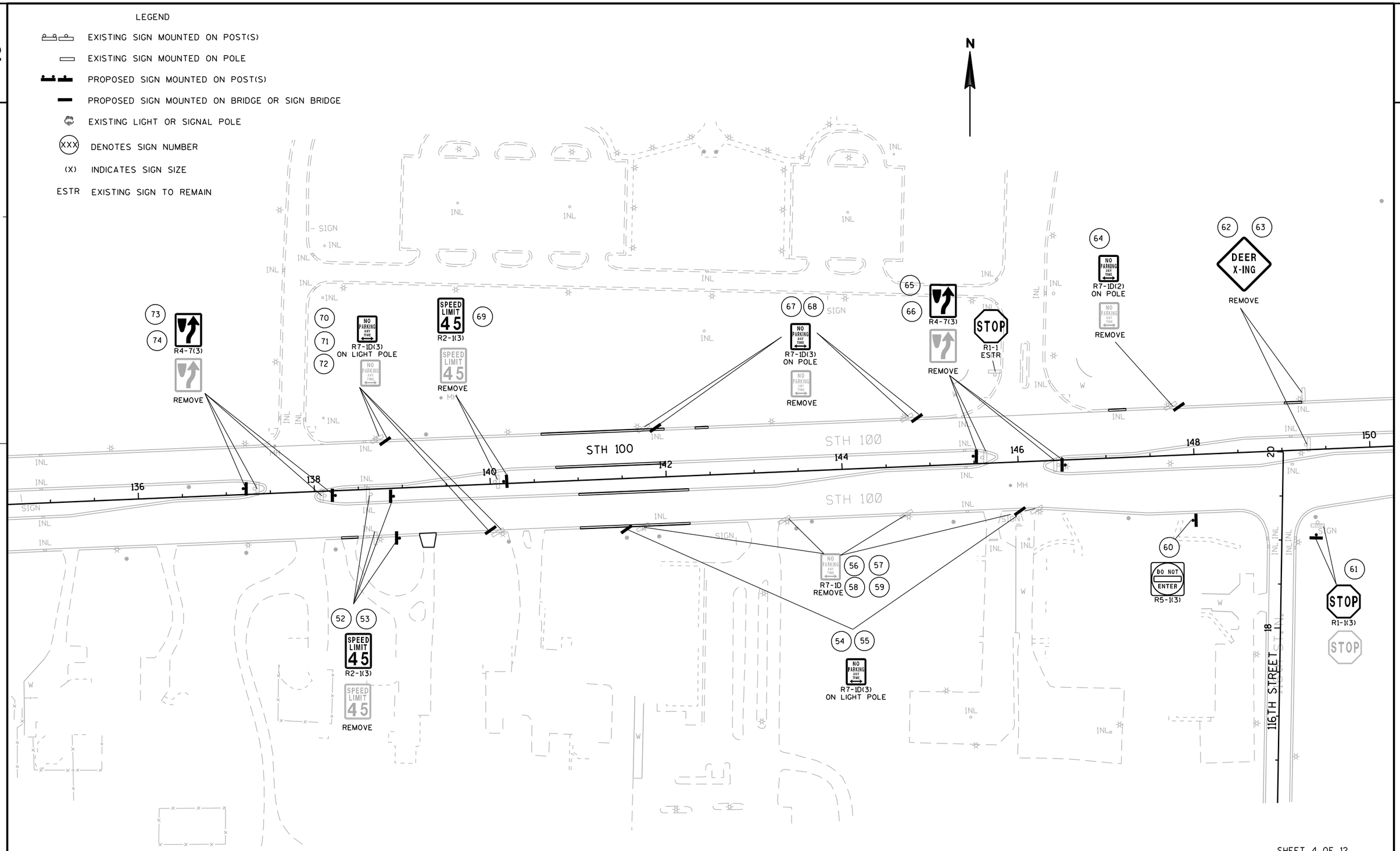

SHEET 4 OF 12

PROJECT NO:2150-05-70	HWY:STH 100	COUNTY:MILWAUKEE	PERMANENT SIGNING	SHEET	E

FILE NAME : j:\projects\D2_215005100\023204_ps.dgn PLOT DATE : 28-JAN-2010 13:22 PLOT BY : dotmll PLOT NAME : PLOT SCALE : 100:1

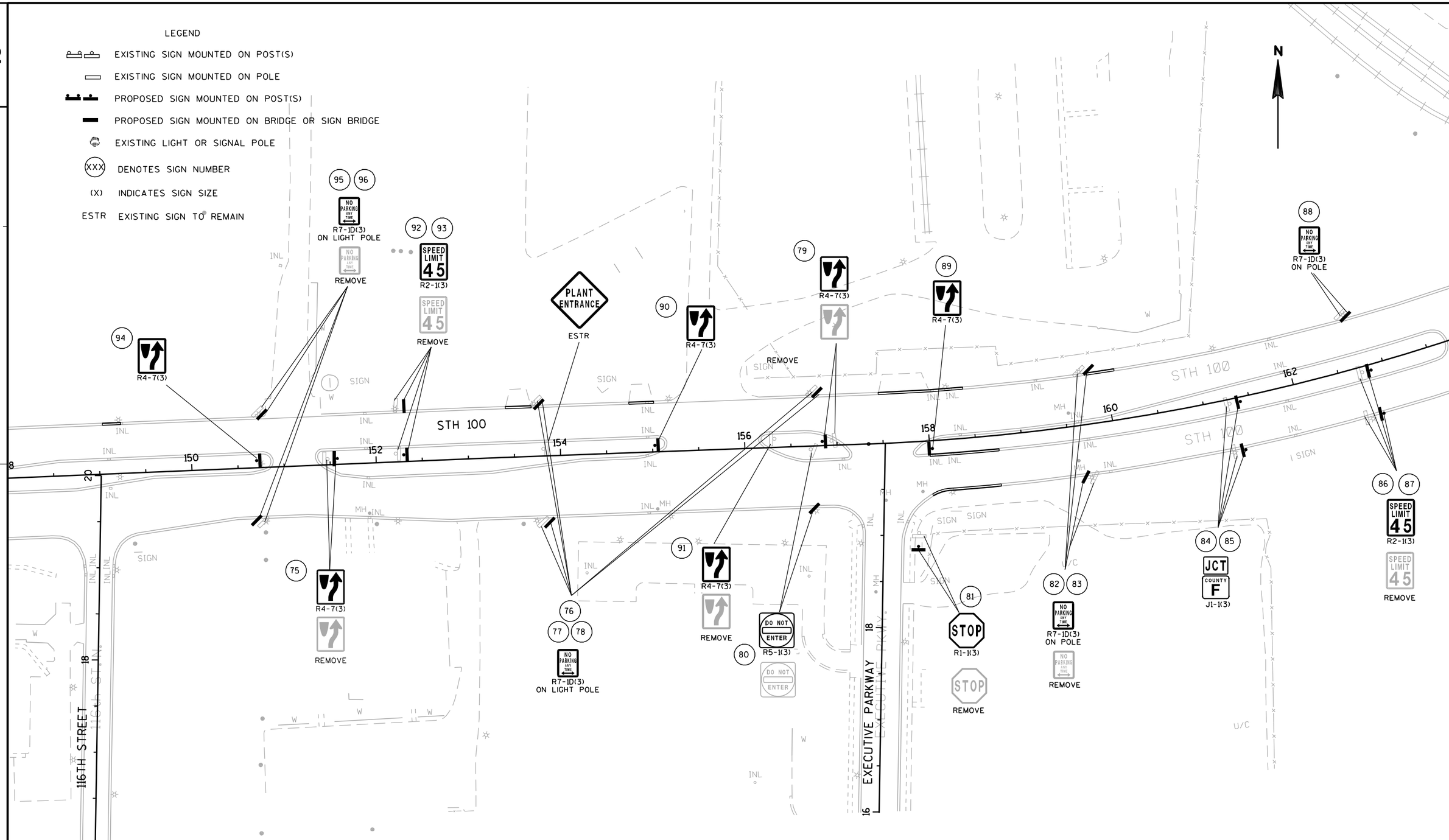

SHEET 5 OF 12

PROJECT NO:2150-05-70	HWY:STH 100	COUNTY:MILWAUKEE	PERMANENT SIGNING	SHEET	E

FILE NAME : j:\projects\D2_215005100\023205_ps.dgn PLOT DATE : 28-JAN-2010 13:22 PLOT BY : dotmll PLOT NAME : PLOT SCALE : 100:1

WISDOT/CADDS SHEET 42

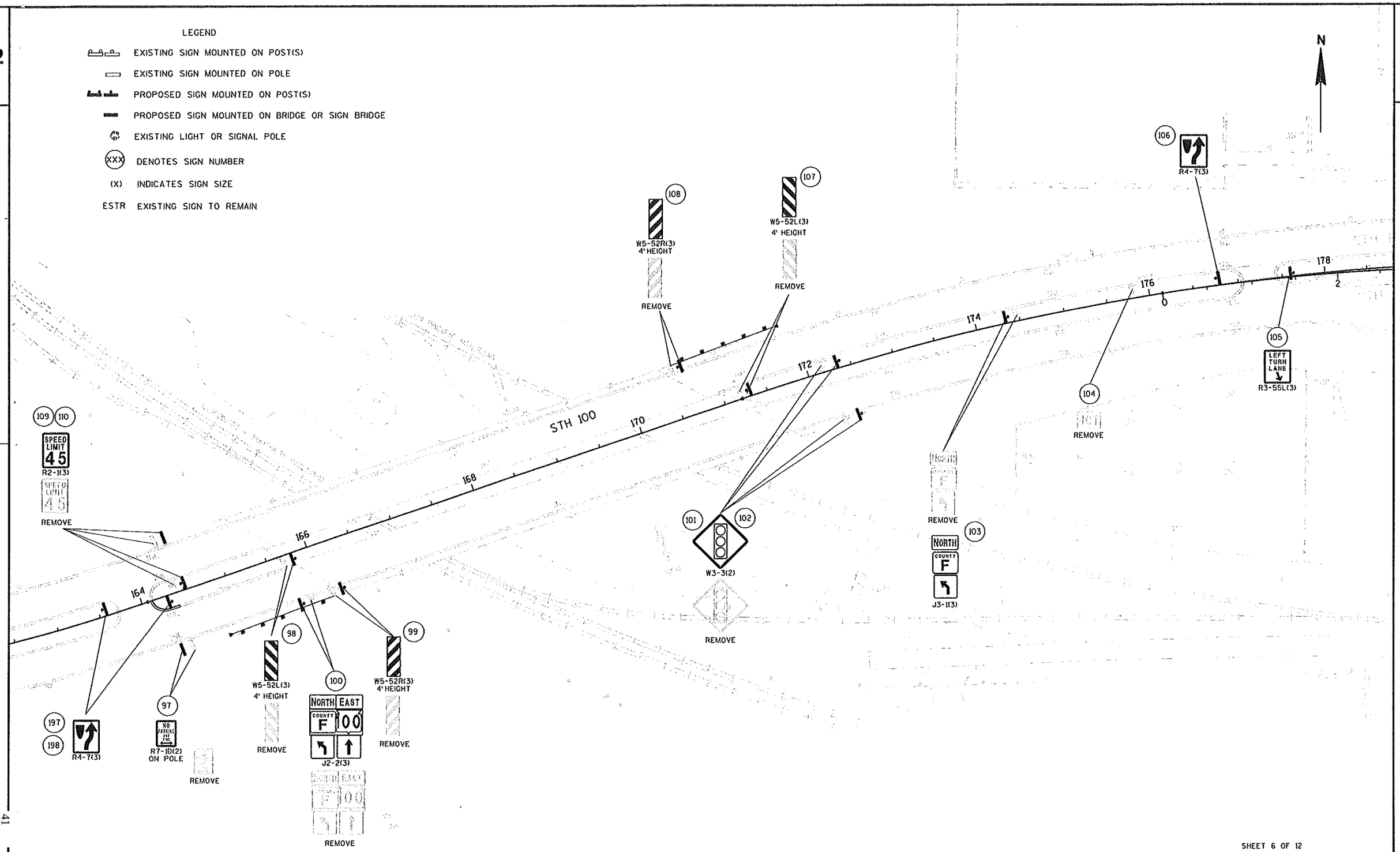

SHEET 6 OF 12

PROJECT NO:2150-05-70	HWY:STH 100	COUNTY:MILWAUKEE	PERMANENT SIGNING	SHEET	E

FILE NAME : j:\projects\02_215005100\023206_ps.dgn PLOT DATE : 28-JAN-2010 13:22 PLOT BY : dotmll PLOT NAME : PLOT SCALE : 100:1 WISDOT/CADDS

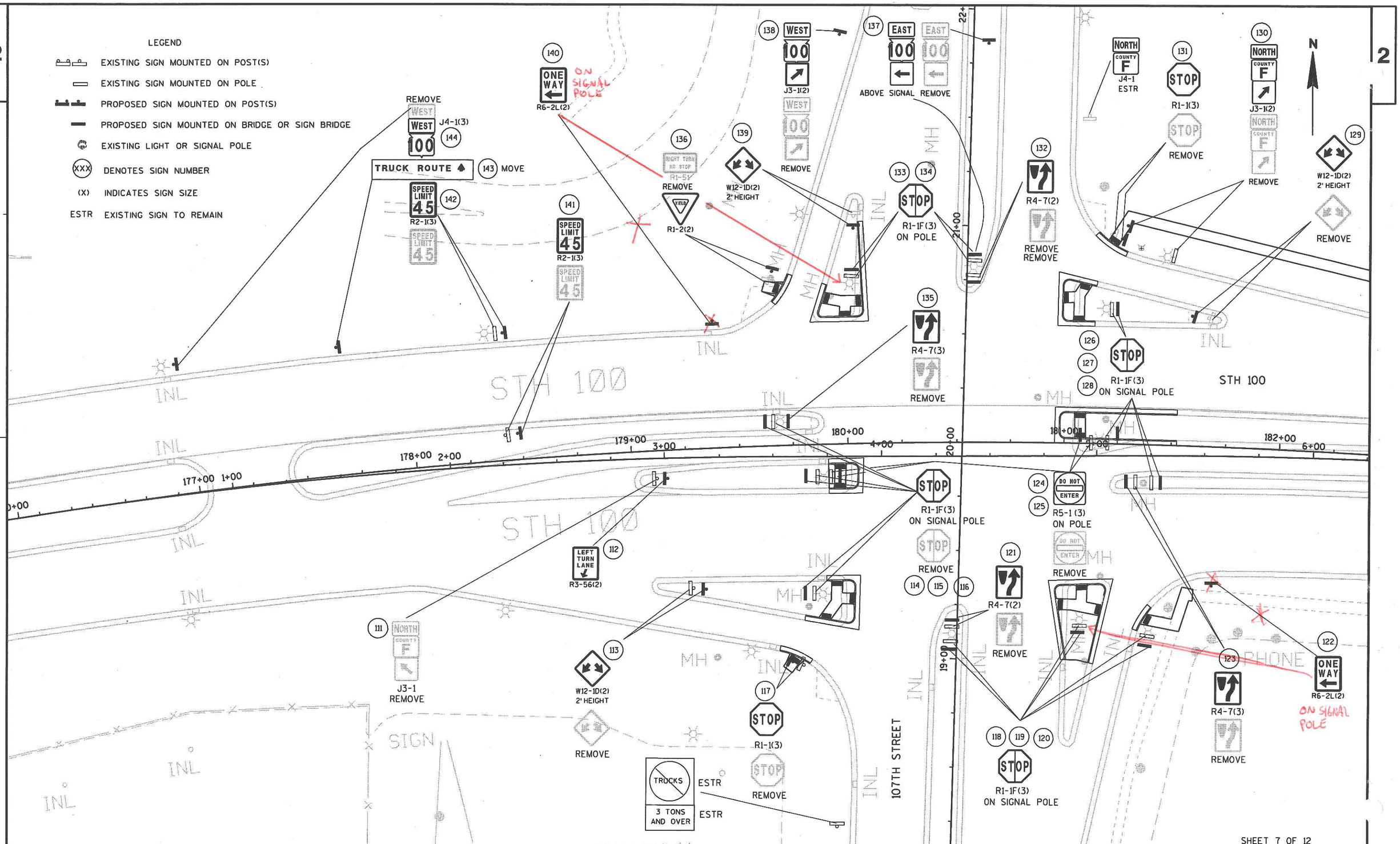

PROJECT NO: 2150-05-70	HWY: STH 100	COUNTY: MILWAUKEE	PERMANENT SIGNING	SHEET	E

FILE NAME : j:\projects\D2_215005100\023207_ps.dgn PLOT DATE : 28-JAN-2010 13:22 PLOT BY : dotmll PLOT NAME : PLOT SCALE : 40:1

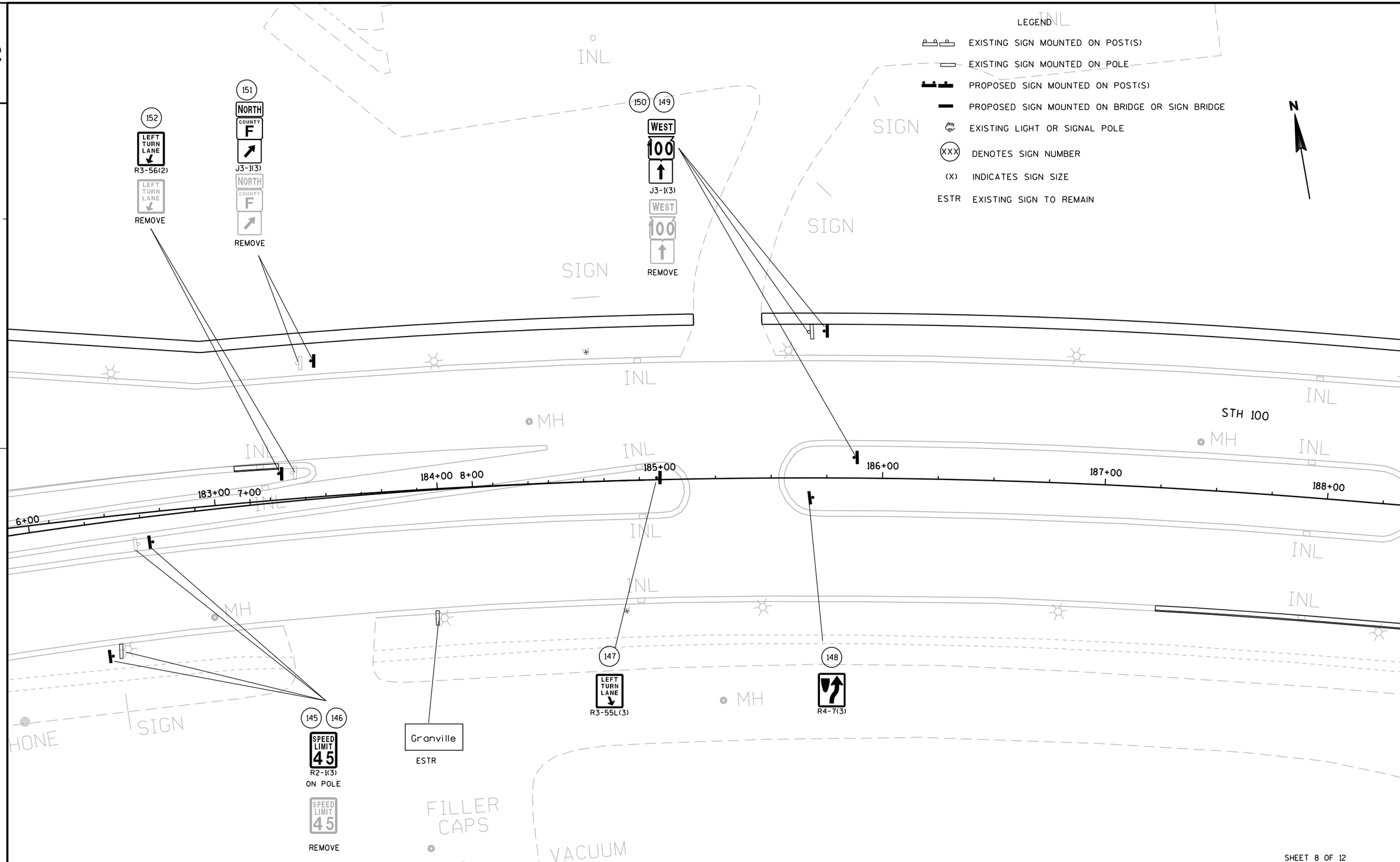

PROJECT NO: 2150-05-70	HWY: STH 100	COUNTY: MILWAUKEE	PERMANENT SIGNING	SHEET	E

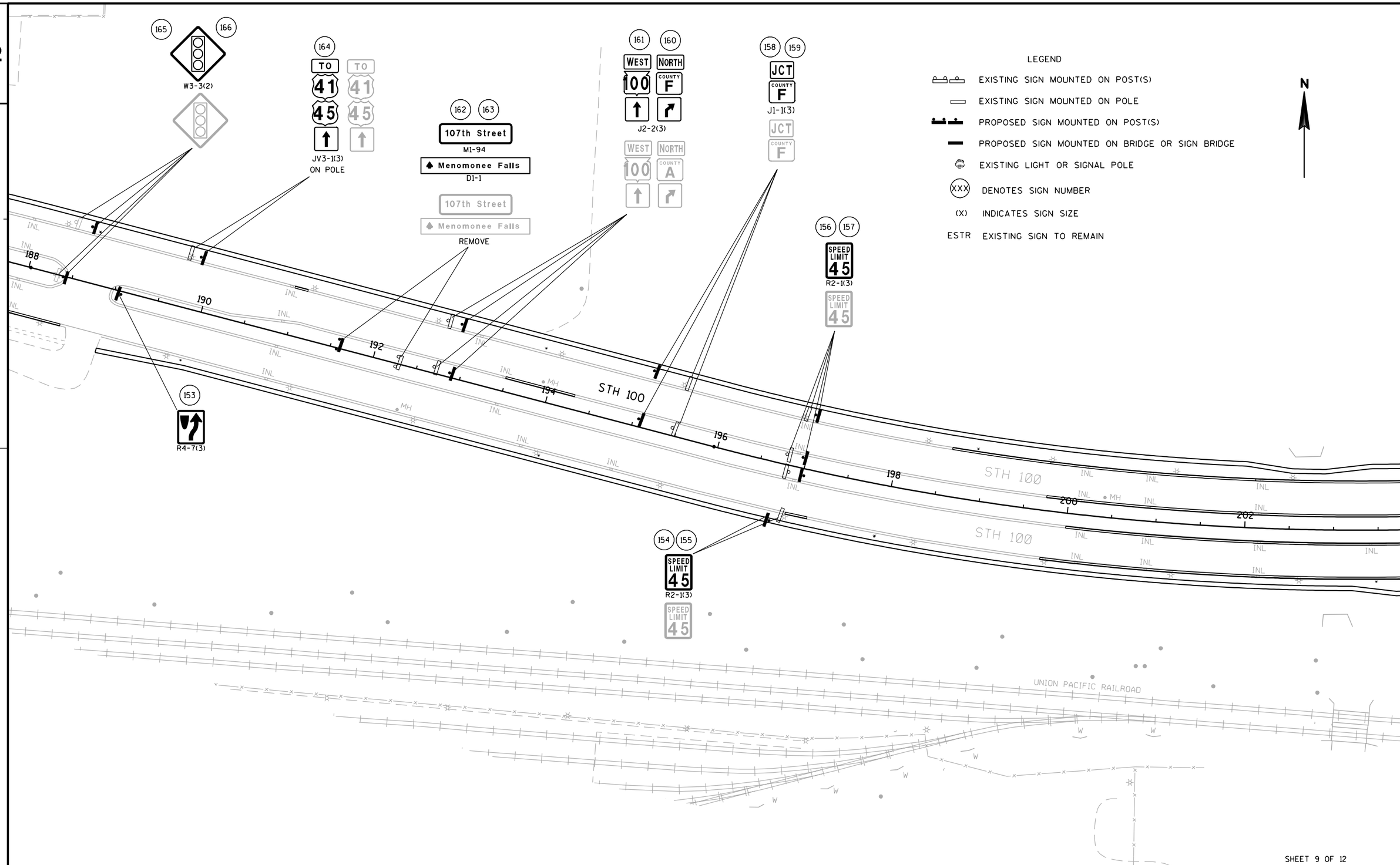

SHEET 9 OF 12

PROJECT NO: 2150-05-70	HWY: STH 100	COUNTY: MILWAUKEE	PERMANENT SIGNING	SHEET	E

FILE NAME : j:\projects\D2_215005100\023209_ps.dgn PLOT DATE : 08-MAR-2010 15:06 PLOT BY : dotwjf PLOT NAME : PLOT SCALE : 100:1 WISDOT/CADDS SHEET 42

LEGEND

- EXISTING SIGN MOUNTED ON POST(S)
- EXISTING SIGN MOUNTED ON POLE
- PROPOSED SIGN MOUNTED ON POST(S)
- PROPOSED SIGN MOUNTED ON BRIDGE OR SIGN BRIDGE
- EXISTING LIGHT OR SIGNAL POLE
- (XXX) DENOTES SIGN NUMBER
- (X) INDICATES SIGN SIZE
- ESTR EXISTING SIGN TO REMAIN

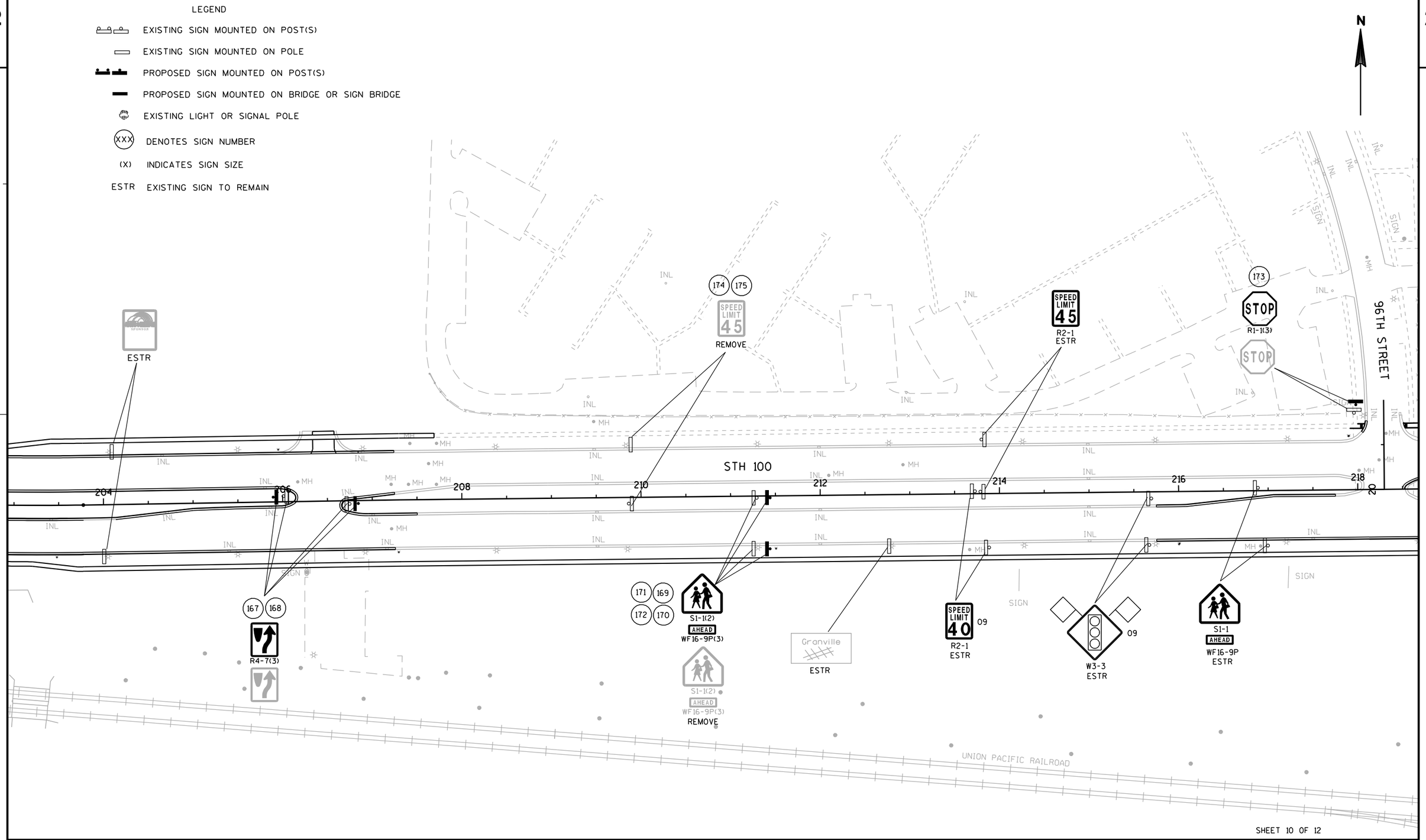

SHEET 10 OF 12

PROJECT NO: 2150-05-70	HWY: STH 100	COUNTY: MILWAUKEE	PERMANENT SIGNING	SHEET	E

2

LEGEND

- EXISTING SIGN MOUNTED ON POST(S)
- EXISTING SIGN MOUNTED ON POLE
- PROPOSED SIGN MOUNTED ON POST(S)
- PROPOSED SIGN MOUNTED ON BRIDGE OR SIGN BRIDGE
- EXISTING LIGHT OR SIGNAL POLE
- (XXX) DENOTES SIGN NUMBER
- (X) INDICATES SIGN SIZE
- ESTR EXISTING SIGN TO REMAIN

N

96TH STREET

95TH STREET

STH 100

R9-3A(2) 205 207

USE CROSSWALK 200 208

R9-3B(2) MODIFIED MOUNT ON POST

R9-3A(2) 206

USE CROSSWALK 199

R9-3B(2) MOUNT ON POST

176

91st Street

M1-94

91st Street

REMOVE

SIGNS REPLACED IN 2009

218 220 222 224 226 228 230 232

SHEET 11 OF 12

PROJECT NO:2150-05-70	HWY:STH 100	COUNTY:MILWAUKEE	PERMANENT SIGNING	SHEET	E

FILE NAME : j:\projects\D2_215005100\023211_ps.dgn PLOT DATE : 28-JAN-2010 13:23 PLOT BY : dotmll PLOT NAME : PLOT SCALE : 100:1

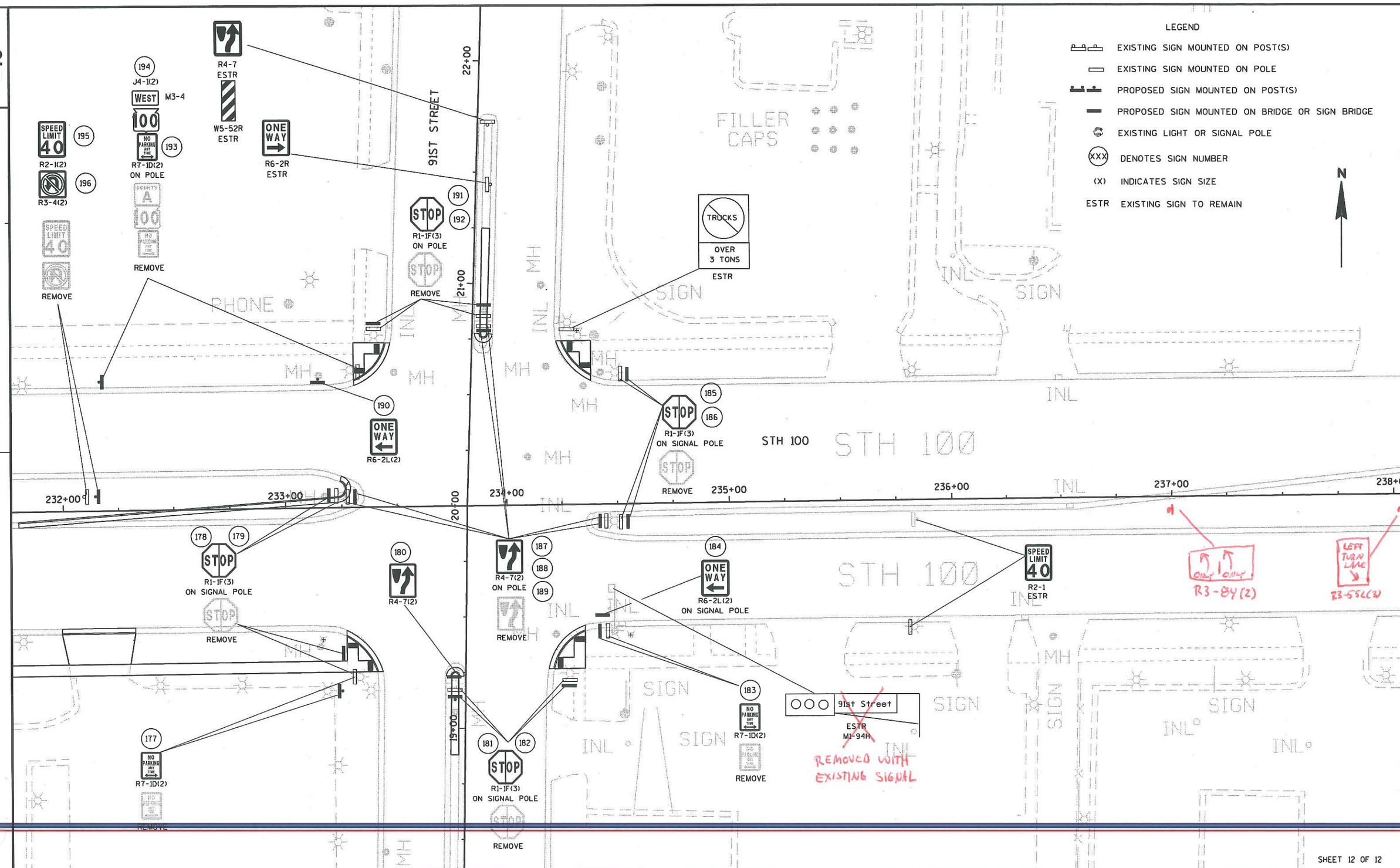

PROJECT NO:2150-05-70	HWY:STH 100	COUNTY:MILWAUKEE	PERMANENT SIGNING	SHEET	E

FILE NAME : j:\projects\D2_215005100\023212_ps.dgn PLOT DATE : 28-JAN-2010 13:23 PLOT BY : dotmll PLOT NAME : PLOT SCALE : 40:1 WISDOT/CADDS SHEET 42

LEGEND

- CONTROL CABINET
- NONMETALLIC CONDUIT 2", UNLESS OTHERWISE NOTED
- LOOP DETECTOR CONDUIT 1" NONMETALLIC
- SIGNAL HEAD, TRAFFIC SIGNAL STANDARD, PEDESTAL BASE
- SIGNAL HEAD, DUAL MOUNT TRAFFIC SIGNAL POLE, 20-FOOT, TRANSFORMER BASE
- (XX) SIGNAL HEAD, TRAFFIC SIGNAL POLE, TRANSFORMER BASE
- LUMINAIRE, TRAFFIC POLE, TRANSFORMER BASE
- LOOP DETECTOR CONDUIT 1" NONMETALLIC
- LOOP DETECTOR IN 1" NONMETALLIC CONDUIT
- PULL BOX, 24" X 36"
- PULL BOX, 24" X 42"
- SIGNAL HEAD NUMBER

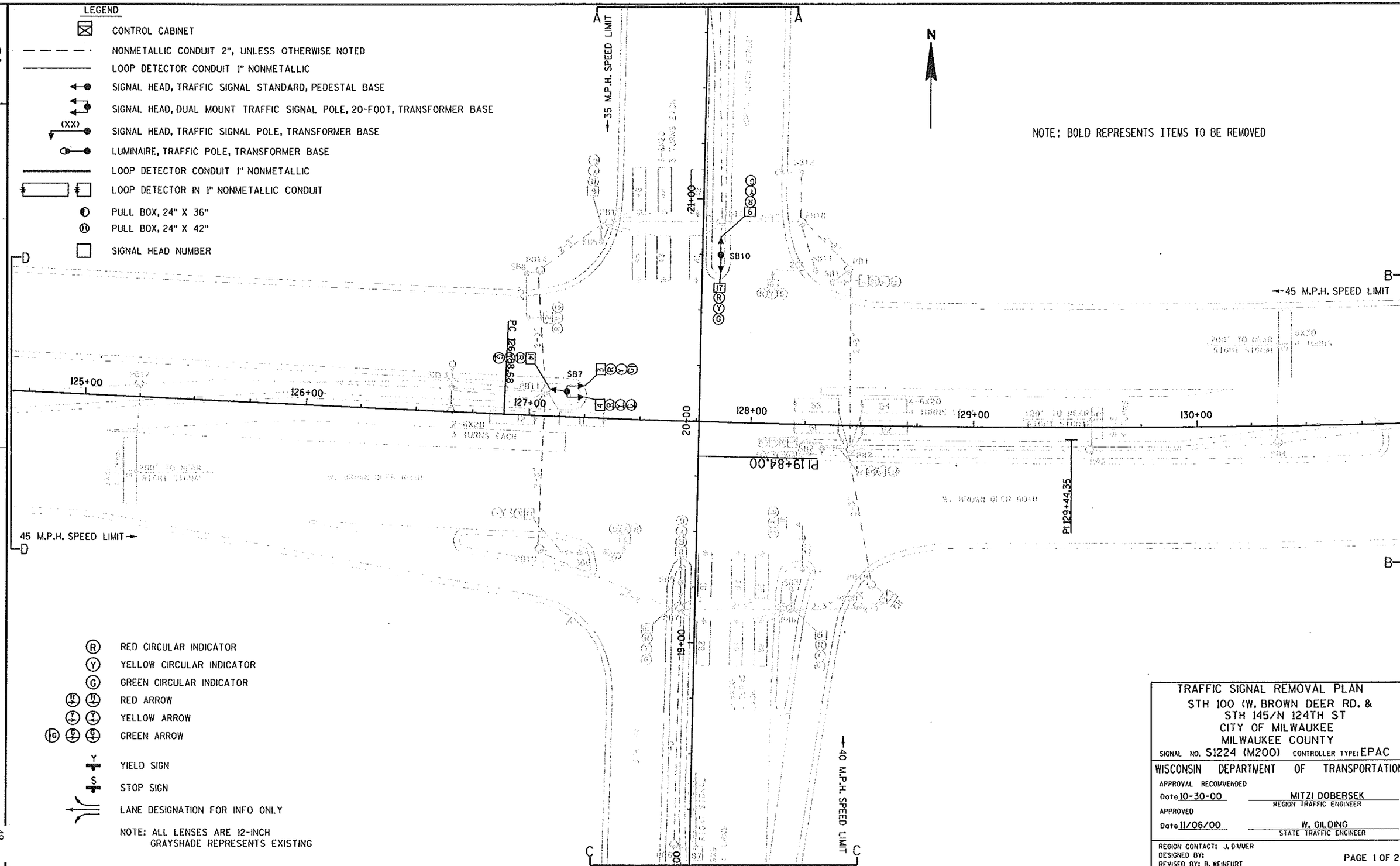

- (R) RED CIRCULAR INDICATOR
- (Y) YELLOW CIRCULAR INDICATOR
- (G) GREEN CIRCULAR INDICATOR
- RED ARROW
- YELLOW ARROW
- GREEN ARROW
- Y YIELD SIGN
- S STOP SIGN
- LANE DESIGNATION FOR INFO ONLY

NOTE: ALL LENSES ARE 12-INCH
GRAYSHADE REPRESENTS EXISTING

TRAFFIC SIGNAL REMOVAL PLAN
STH 100 (W. BROWN DEER RD. &
STH 145/N 124TH ST
CITY OF MILWAUKEE
MILWAUKEE COUNTY

SIGNAL NO. S1224 (M200) CONTROLLER TYPE: EPAC

WISCONSIN DEPARTMENT OF TRANSPORTATION

APPROVAL RECOMMENDED
Date 10-30-00 — MITZI DOBERSEK, REGION TRAFFIC ENGINEER

APPROVED
Date 11/06/00 — W. GILDING, STATE TRAFFIC ENGINEER

REGION CONTACT: J. DIMMER
DESIGNED BY:
REVISED BY: B. WEINFURT

PAGE 1 OF 2

PROJECT NO: 2150-05-00	HWY: STH 100	COUNTY: MILWAUKEE	TRAFFIC SIGNAL REMOVAL PLAN	SHEET	E

FILE NAME : j:\projects\D2_215005100\Slg\S1224_rem.dgn PLOT DATE : 28-JAN-2010 10:35 PLOT BY : dotbgw PLOT NAME : PLOT SCALE : 40:1 WISDOT/CADDS SHEET 42

NOTE: BOLD REPRESENTS ITEMS TO BE REMOVED

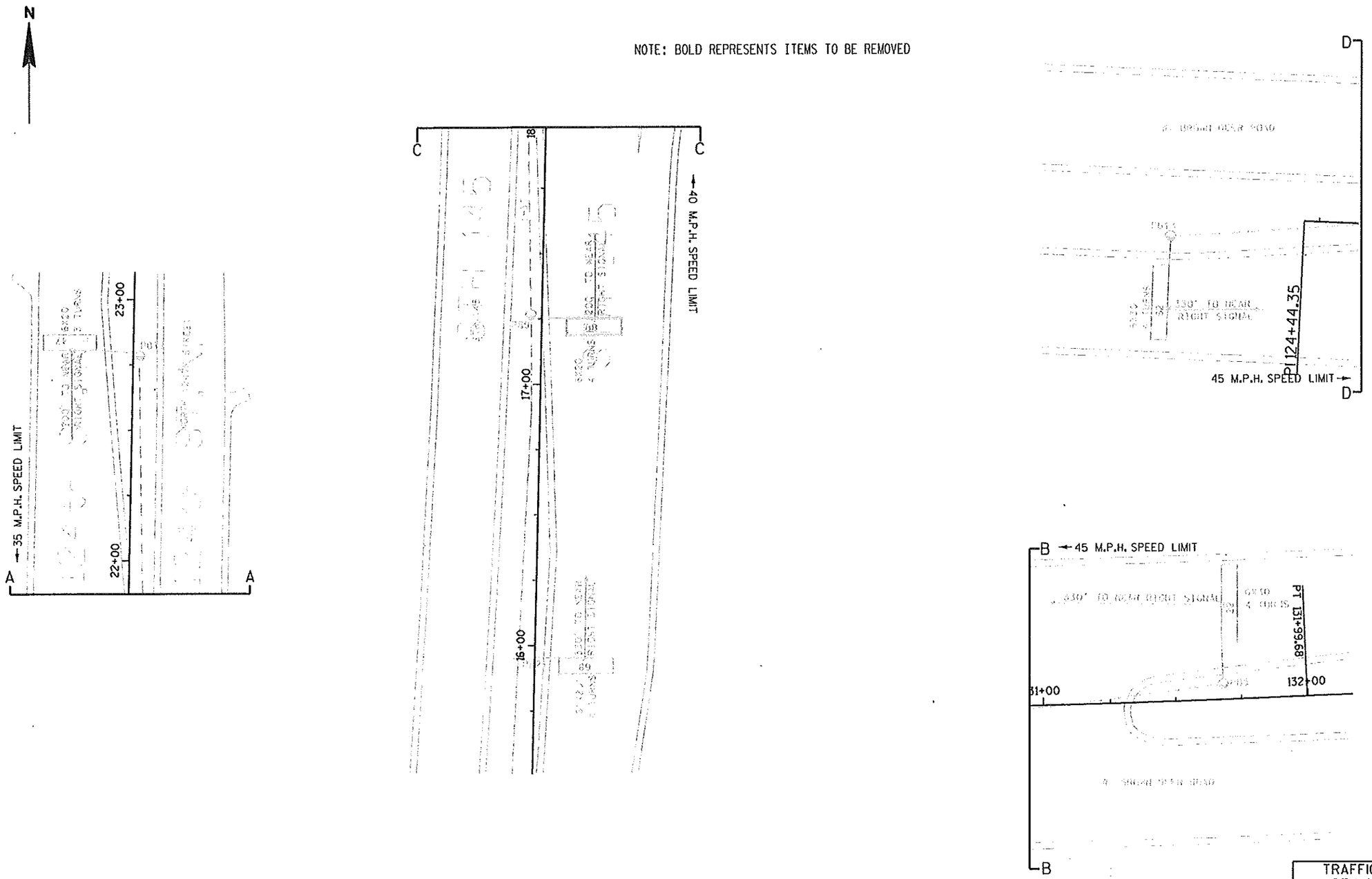

TRAFFIC SIGNAL REMOVAL PLAN
STH 100 (W. BROWN DEER RD.) &
STH 145/N 124TH ST
CITY OF MILWAUKEE
MILWAUKEE COUNTY

SIGNAL NO. S1224 (M200)

REGION CONTACT: J. DIMMER
DESIGNED BY:
REVISED BY: B. WEINFURT

PAGE 2 OF 2

PROJECT NO: 2150-05-00	HWY: STH 100	COUNTY: MILWAUKEE	TRAFFIC SIGNAL REMOVAL PLAN	SHEET	E

FILE NAME : j:\projects\D2_215005100\Sig\S1224_rem.dgn PLOT DATE : 28-JAN-2010 10:35 PLOT BY : dotbgw PLOT NAME : PLOT SCALE : 40:1 WISDOT/CADDS SHEET 42

LEGEND

- CONTROL CABINET
- NONMETALLIC CONDUIT 2", UNLESS OTHERWISE NOTED
- LOOP DETECTOR CONDUIT 1" NONMETALLIC
- SIGNAL HEAD, TRAFFIC SIGNAL STANDARD, PEDESTAL BASE
- SIGNAL HEAD, DUAL MOUNT TRAFFIC SIGNAL POLE, 20-FOOT, TRANSFORMER BASE
- (XX) SIGNAL HEAD, TRAFFIC SIGNAL POLE, TRANSFORMER BASE
- LUMINAIRE, TRAFFIC POLE, TRANSFORMER BASE
- LOOP DETECTOR CONDUIT 1" NONMETALLIC
- LOOP DETECTOR IN 1" NONMETALLIC CONDUIT
- PULL BOX, 24" X 36"
- PULL BOX, 24" X 42"
- SIGNAL HEAD NUMBER

CONSTRUCTION NOTES:

1. * LOCATION IS TO FRONT CENTER OF DETECTOR LOOP.
2. THE CONTRACTOR SHALL HAVE THE PULL BOXES AND CONDUIT RUNS INSPECTED 3 WORKING DAYS PRIOR TO PLACING SIGNAL CABLE INTO SYSTEM. CONTACT THE WISDOT ELECTRICAL FIELD UNIT TO MAKE ARRANGEMENTS. (414) 266-1170
3. THE LOCATIONS OF EXISTING AND PROPOSED UTILITY INSTALLATIONS ARE APPROXIMATE. THERE MAY BE OTHER UTILITY INSTALLATIONS WITHIN THE PROJECT WHICH ARE NOT SHOWN.
4. THE ENGINEER SHALL ADJUST THE LOCATIONS OF ITEMS UNDER THIS CONTRACT TO AVOID CONFLICT WITH EXISTING UTILITY FACILITIES.

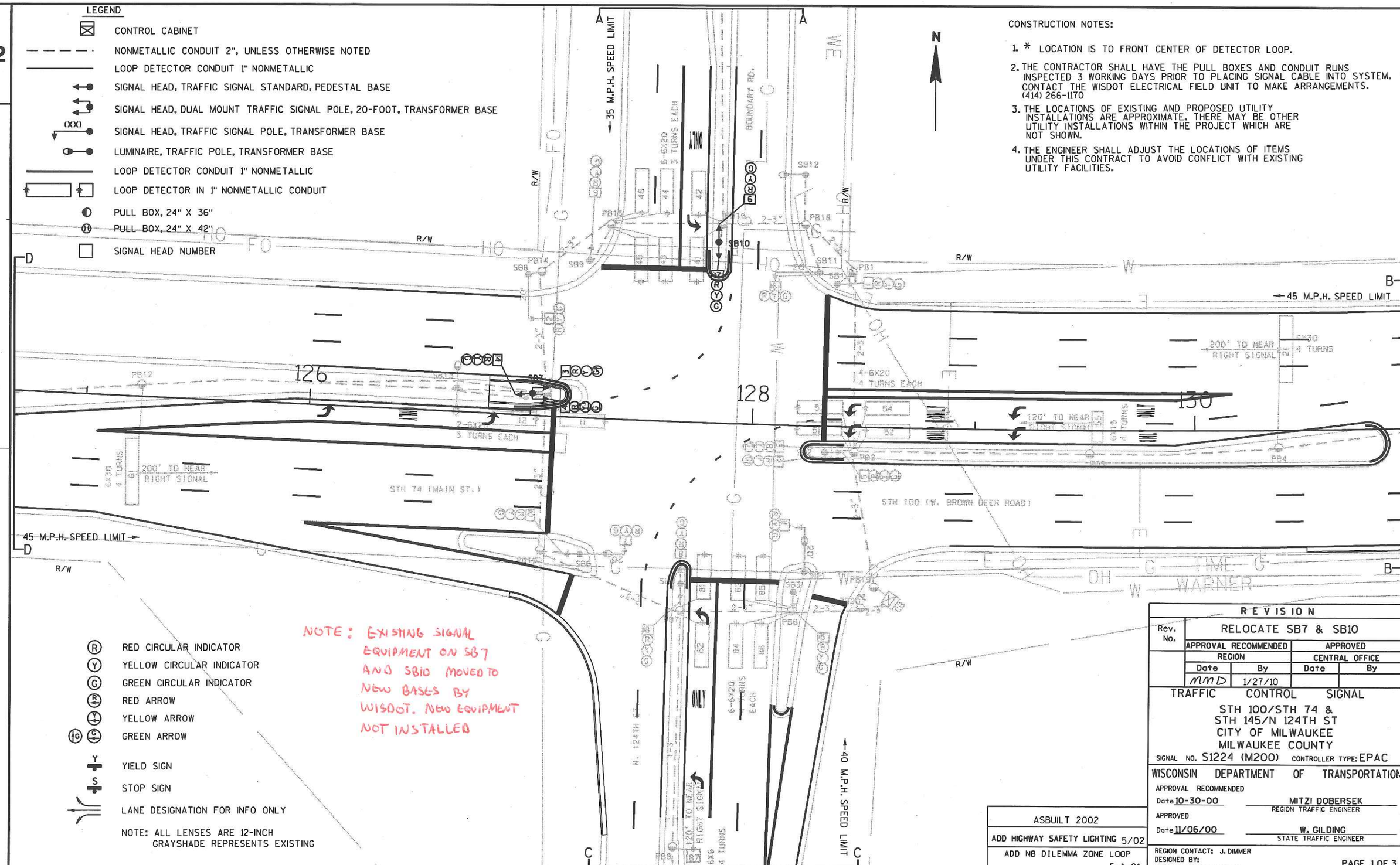

NOTE: EXISTING SIGNAL EQUIPMENT ON SB7 AND SB10 MOVED TO NEW BASES BY WISDOT. NEW EQUIPMENT NOT INSTALLED

- (R) RED CIRCULAR INDICATOR
- (Y) YELLOW CIRCULAR INDICATOR
- (G) GREEN CIRCULAR INDICATOR
- (R) RED ARROW
- (Y) YELLOW ARROW
- (G) GREEN ARROW
- Y YIELD SIGN
- S STOP SIGN
- LANE DESIGNATION FOR INFO ONLY

NOTE: ALL LENSES ARE 12-INCH
GRAYSHADE REPRESENTS EXISTING

ASBUILT 2002

ADD HIGHWAY SAFETY LIGHTING 5/02

ADD NB DILEMMA ZONE LOOP 5-1-01

REVISION				
Rev. No.	RELOCATE SB7 & SB10			
	APPROVAL RECOMMENDED		APPROVED	
	REGION		CENTRAL OFFICE	
	Date	By	Date	By
	MMD	1/27/10		

TRAFFIC CONTROL SIGNAL
STH 100/STH 74 &
STH 145/N 124TH ST
CITY OF MILWAUKEE
MILWAUKEE COUNTY

SIGNAL NO. S1224 (M200) CONTROLLER TYPE: EPAC

WISCONSIN DEPARTMENT OF TRANSPORTATION

APPROVAL RECOMMENDED
Date 10-30-00 MITZI DOBERSEK
REGION TRAFFIC ENGINEER

APPROVED
Date 11/06/00 W. GILDING
STATE TRAFFIC ENGINEER

REGION CONTACT: J. DIMMER
DESIGNED BY:
REVISED BY: B. WEINFURT

PAGE 1 OF 3

PROJECT NO: 2150-05-70	HWY: STH 100	COUNTY: MILWAUKEE	TRAFFIC SIGNAL PLAN	SHEET	E

FILE NAME : j:\projects\D2_215005100\Sig\S1224_D.dgn PLOT DATE : 28-JAN-2010 10:34 PLOT BY : dotbgw PLOT NAME : PLOT SCALE : 40:1

WISDOT/CADDS SHEET 42

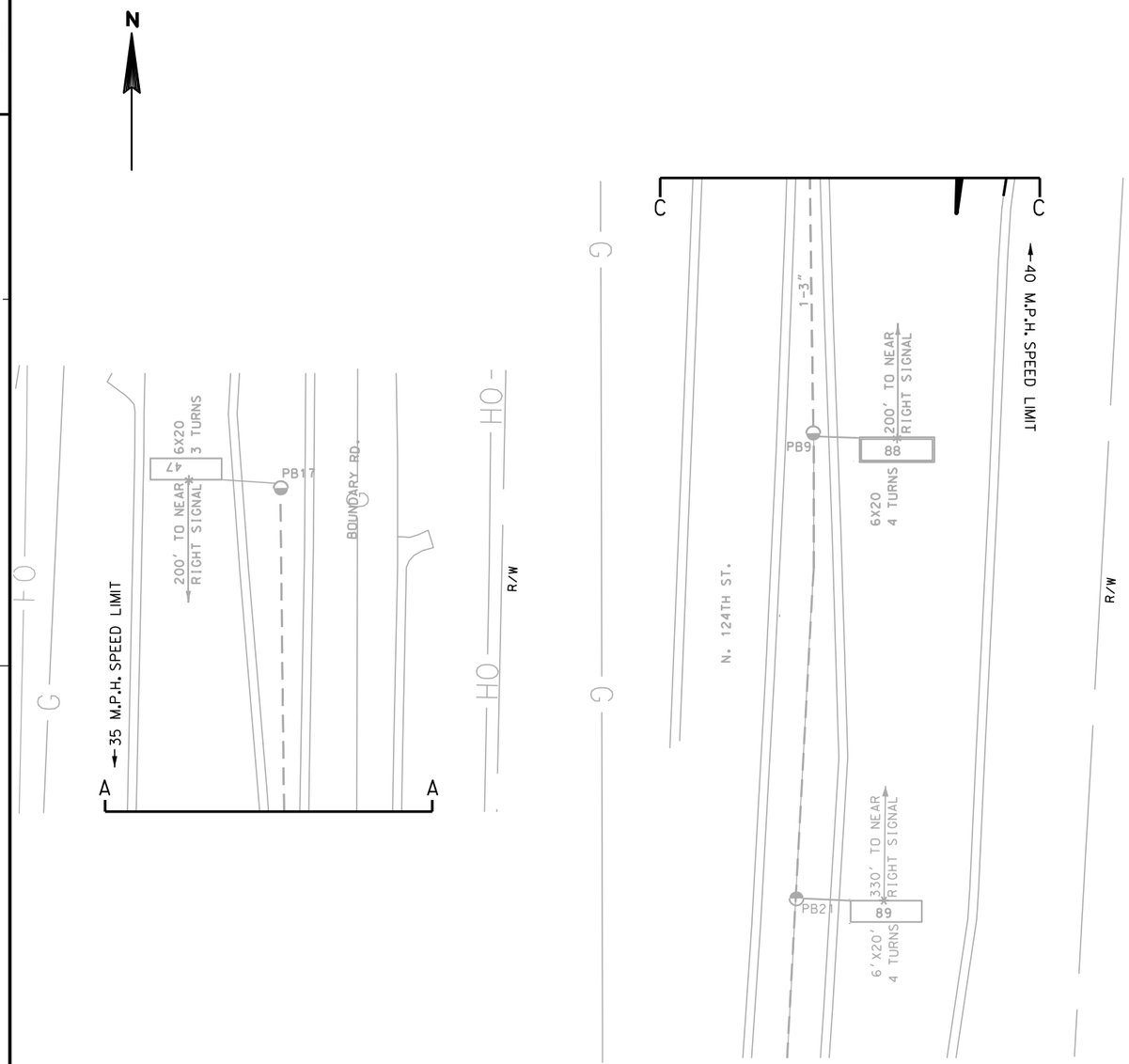

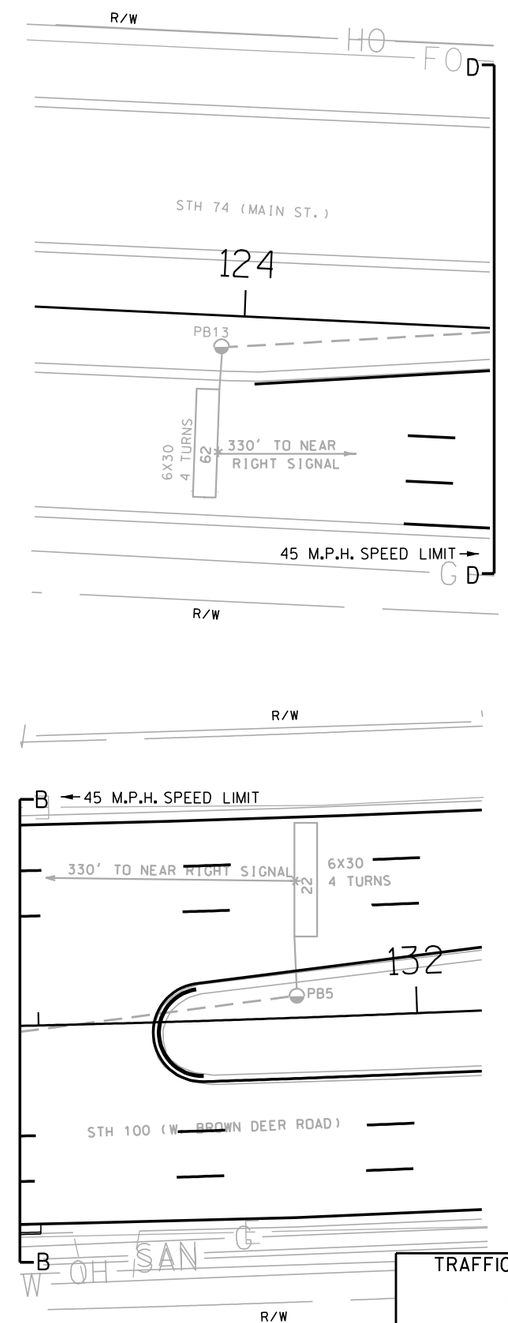

TRAFFIC CONTROL SIGNAL
STH 100/STH 74 &
STH 145/N 124TH ST
CITY OF MILWAUKEE
MILWAUKEE COUNTY

SIGNAL NO. S1224 (M200)

REGION CONTACT: J. DIMMER
DESIGNED BY:
REVISED BY: B. WEINFURT

PAGE 2 OF 3

PROJECT NO: 2150-05-70	HWY: STH 100	COUNTY: MILWAUKEE	TRAFFIC SIGNAL PLAN	SHEET	E

SEQUENCE OF OPERATION

	HEAD NUMBERS	01 R/W	01 CLEAR TO **			02 R/W	02 CLEAR TO **			03 R/W	03 CLEAR TO **			04 R/W	04 CLEAR TO **			FLASH
01	13,14	G	Y	R		R	R	R						R	R	R		R
02	1,2,3	R	R	R		G	Y	R						R	R	R		R
03																		
04	6,7,8,9	R	R	R		R	R	R						G	Y	R		R
RING 1 05	4,5	R	R	R		R	R	R						R	R	R		R
06	10,11,12	R	R	R		R	R	R						R	R	R		R
07																		
08	15,16,17,18	R	R	R		R	R	R						R	R	R		R
02P																		
04P																		
06P																		
08P																		

	HEAD NUMBERS	05 R/W	05 CLEAR TO **			06 R/W	06 CLEAR TO **			07 R/W	07 CLEAR TO **			08 R/W	08 CLEAR TO **		
01	13,14	R	R	R		R	R	R						R	R	R	
02	1,2,3	R	R	R		R	R	R						R	R	R	
03																	
04	6,7,8,9	R	R	R		R	R	R						R	R	R	
RING 2 05	4,5	G	Y	R		R	R	R						R	R	R	
06	10,11,12	R	R	R		G	Y	R						R	R	R	
07																	
08	15,16,17,18	R	R	R		R	R	R						G	Y	R	
02P																	
04P																	
06P																	
08P																	

NOT USED

NOT USED

N

BARRIER

** CLEARANCE TO A PHASE IN CONFLICT WITH THIS PHASE ON (SEE CHART 1 BELOW)

* WHEN CALLED, TIMED STEADY WALK, THEN FLASHING DON'T WALK, THEN GOES TO STEADY DON'T WALK.

CHART 1

PHASE ON	NONCONFLICTING PHASE ALLOWED TO TIME CONCURRENTLY	PHASES IN CONFLICT WITH PHASE ON
01	5 OR 6	2,4,8
02	5 OR 6	1,4,8
03		
04	8	1,2,5,6
05	1 OR 2	4,6,8
06	1 OR 2	4,5,8
07		
08	4	1,2,5,6

DETECTOR LOGIC

DETECTOR NUMBER	AMPLIFIER CHANNEL NUMBER	DETECTOR OPERATION: CALLS AND EXTENDS	CALLS ONLY	EXTENDS ONLY	PHASE CALLED	PHASE EXTENDED	DETECTOR DISCONNECT PHASE	CALLING DELAY	EXTENSION STRETCH	SIZE	NUMBER OF TURNS
11	1	X			1	1				6X20	3
12	1	X			1	1				6X20	3
21	2	X			2	2				6X30	4
22	2	X			2	2				6X30	4
41	3	X			4	4				6X20	3
42	3	X			4	4				6X20	3
43	4	X			4	4				6X20	3
44	4	X			4	4				6X20	3
45	5	X			4	4		X		6X20	3
46	5	X			4	4		X		6X20	3
47	6			X		4			X	6X20	3
51	7	X			5	5				6X20	4
52	7	X			5	5				6X20	4
53	8	X			5	5				6X20	4
54	8	X			5	5				6X20	4
55	9			X		5			X	6X15	4
61	10	X			6	6				6X30	4
62	10	X			6	6				6X30	4
81	11	X			8	8				6X20	4
82	11	X			8	8				6X20	4
83	12	X			8	8				6X20	4
84	12	X			8	8				6X20	4
85	13	X			8	8				6X20	4
86	13	X			8	8				6X20	4
87	14			X		8			X	6X6	4
88	15			X		8			X	6X20	4
89	15			X		8			X	6X20	4

CONTROLLER LOGIC

PHASE NUMBER	PHASE LOCKING	DUAL ENTRY W / Ø	PHASE RECALL
1		6	
2	X	6	MIN
3			
4		8	
5		2	
6	X	2	MIN
7			
8		4	

OVERLAPS

O.L. "A" = NOT USED
O.L. "B" = NOT USED
O.L. "C" = NOT USED
O.L. "D" = NOT USED

TYPE OF INTERCONNECT	
NONE	X
TBC	
CLOSED LOOP	
HARDWIRE (7 WIRE)	
TONE (FREQ)	

TYPE OF PRE-EMPT	
NONE	X
RAILROAD	
EMERGENCY VEHICLE	

TYPE OF LIGHTING	
NONE	
IN TRAFFIC CONTROL CABINET	X
IN SEPARATE CONTROL CABINET	

GENERAL NOTES:

1. ANY ACTUATED PHASE FOR WHICH THERE IS NO CALL SHALL BE SKIPPED.
2. WHEN ONE PHASE IS ON ALONE, ANY NONCONFLICTING PHASE MAY START TIMING CONCURRENTLY WITHOUT A CLEARANCE INTERVAL. (SEE CHART 1 AT LEFT.)

STH 100/STH 74 &
STH 145/N 124TH ST
CITY OF MILWAUKEE
MILWAUKEE COUNTY

SIGNAL NO. S1224 (M200)

DATE 11/09

2

LEGEND

- CLASS 4 WOOD POLE
- SPAN WIRE
- TEMPORARY SIGNAL OVERHEAD MOUNT
- RED CIRCULAR INDICATOR
- YELLOW CIRCULAR INDICATOR
- GREEN CIRCULAR INDICATOR
- RED ARROW
- YELLOW ARROW
- GREEN ARROW
- LUMINAIRE

NOTE: ALL LENSES ARE 12-INCH

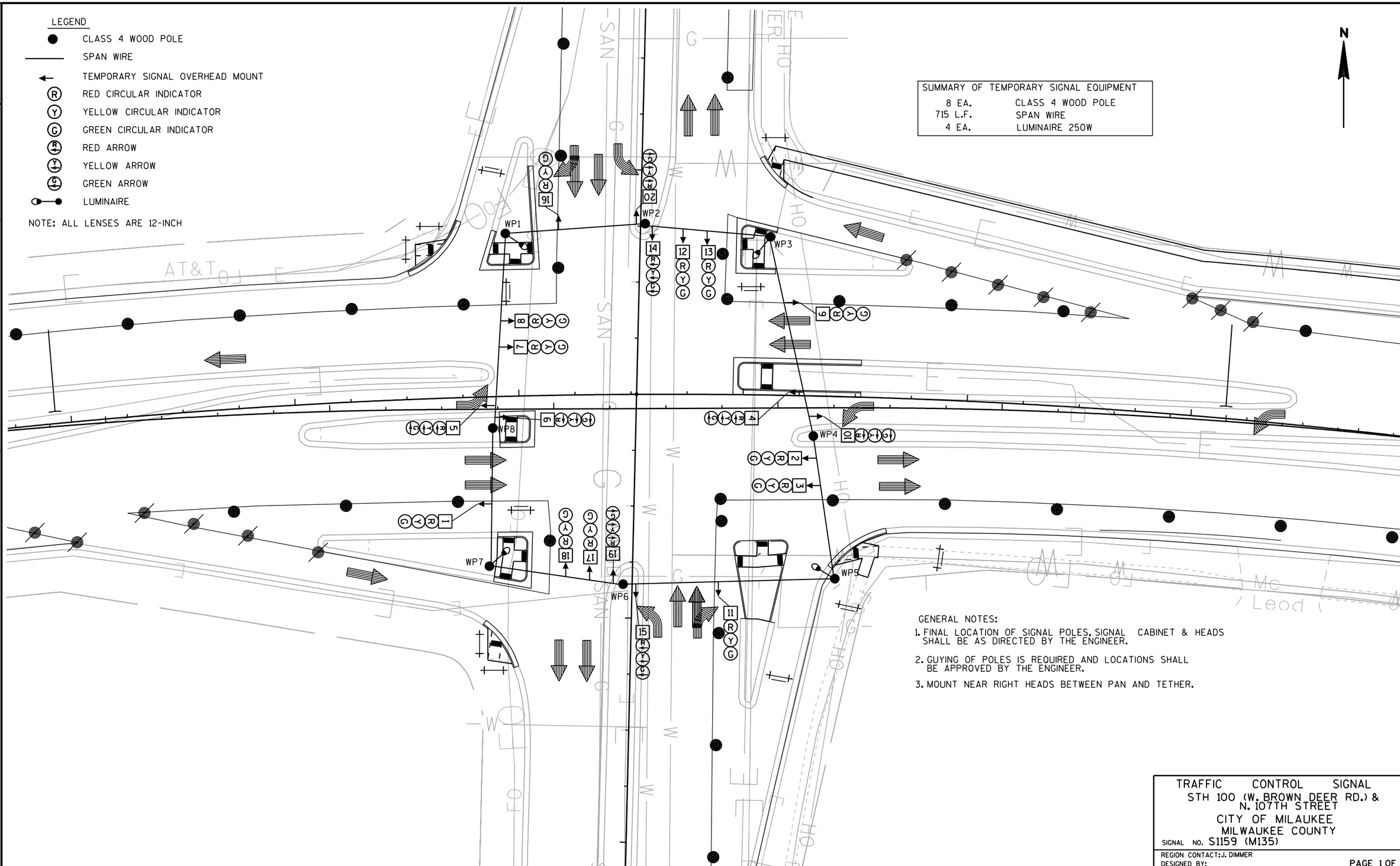

SUMMARY OF TEMPORARY SIGNAL EQUIPMENT

8 EA.	CLASS 4 WOOD POLE
715 L.F.	SPAN WIRE
4 EA.	LUMINAIRE 250W

GENERAL NOTES:

1. FINAL LOCATION OF SIGNAL POLES, SIGNAL CABINET & HEADS SHALL BE AS DIRECTED BY THE ENGINEER.
2. GUYING OF POLES IS REQUIRED AND LOCATIONS SHALL BE APPROVED BY THE ENGINEER.
3. MOUNT NEAR RIGHT HEADS BETWEEN PAN AND TETHER.

TRAFFIC CONTROL SIGNAL
STH 100 (W. BROWN DEER RD.) &
N. 107TH STREET
CITY OF MILAUKEE
MILWAUKEE COUNTY
SIGNAL NO. S1159 (M135)

REGION CONTACT: J. DIMMER
DESIGNED BY:
REVISED BY: B. WEINFURT

PAGE 1 OF 3

PROJECT NO: 2150-05-70	HWY: STH 100	COUNTY: MILWAUKEE	TEMPORARY TRAFFIC SIGNAL STAGES 1C & 3	SHEET	E

FILE NAME : j:\projects\D2_215005100\Sig\s1159TEMP_1C_3.dgn PLOT DATE : 28-JAN-2010 10:34 PLOT BY : dotbgw PLOT NAME : PLOT SCALE : 40:1

WISDOT/CADDS SHEET 42

LEGEND

- CLASS 4 WOOD POLE
- SPAN WIRE
- TEMPORARY SIGNAL OVERHEAD MOUNT
- RED CIRCULAR INDICATOR
- YELLOW CIRCULAR INDICATOR
- GREEN CIRCULAR INDICATOR
- RED ARROW
- YELLOW ARROW
- GREEN ARROW
- LUMINAIRE

NOTE: ALL LENSES ARE 12-INCH

SUMMARY OF TEMPORARY SIGNAL EQUIPMENT	
8 EA.	CLASS 4 WOOD POLE
715 L.F.	SPAN WIRE
4 EA.	LUMINAIRE 250W

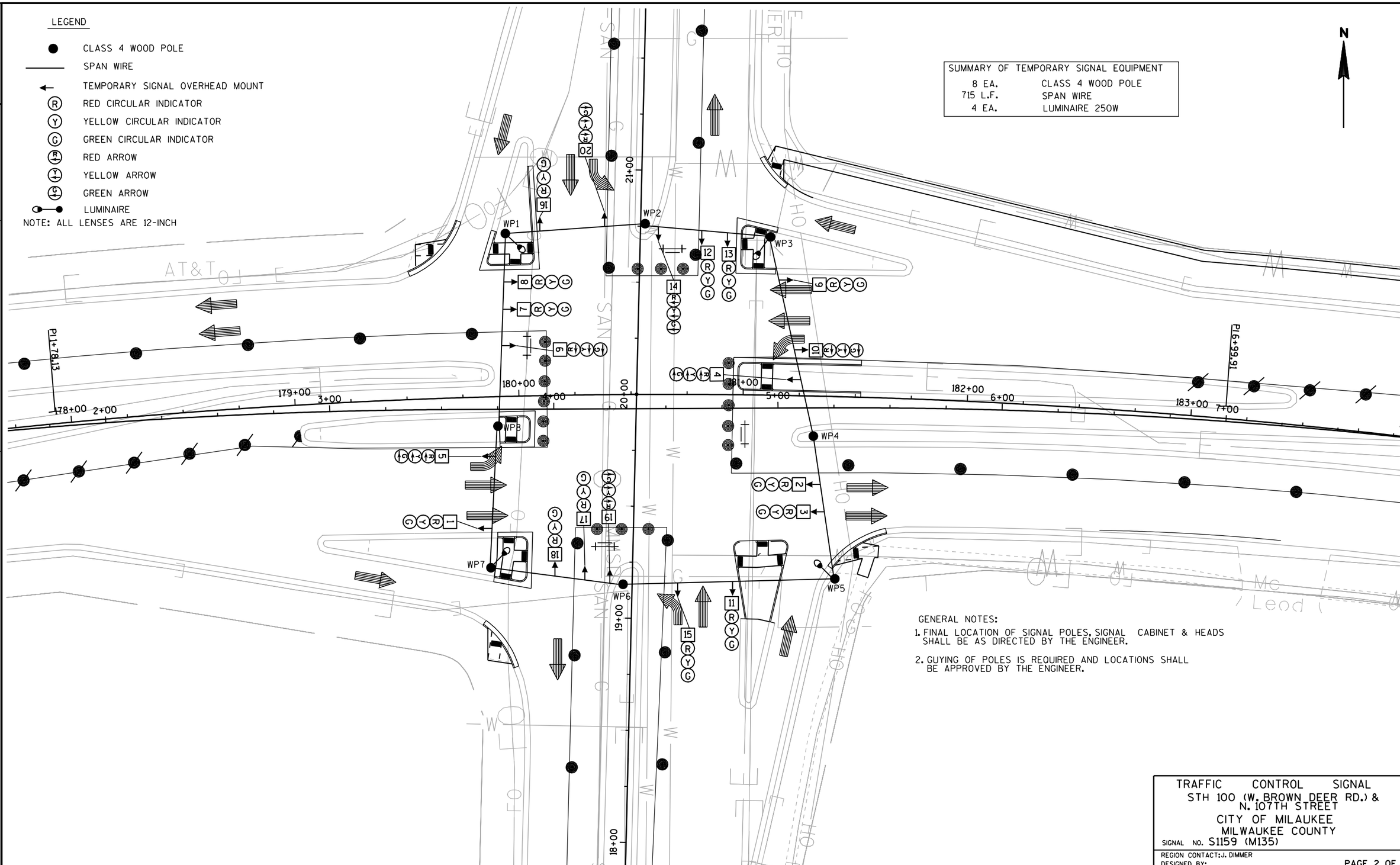

GENERAL NOTES:

1. FINAL LOCATION OF SIGNAL POLES, SIGNAL CABINET & HEADS SHALL BE AS DIRECTED BY THE ENGINEER.
2. GUYING OF POLES IS REQUIRED AND LOCATIONS SHALL BE APPROVED BY THE ENGINEER.

TRAFFIC CONTROL SIGNAL
STH 100 (W. BROWN DEER RD.) & N. 107TH STREET
CITY OF MILAUKEE
MILWAUKEE COUNTY
SIGNAL NO. S1159 (M135)

REGION CONTACT: J. DIMMER
DESIGNED BY:
REVISED BY: B. WEINFURT

PAGE 2 OF 3

PROJECT NO: 2150-05-00	HWY: STH 100	COUNTY: MILWAUKEE	TEMPORARY TRAFFIC SIGNAL STAGE 2B	SHEET	E

SEQUENCE OF OPERATION

	HEAD NUMBERS	01 R/W	01 CLEAR TO **			02 R/W	02 CLEAR TO **			03 R/W	03 CLEAR TO **			04 R/W	04 CLEAR TO **			FLASH
01	4,5	G	Y	R		R	R	R		R	R	R		R	R	R		R
02	6,7,8	R	R	R		G	Y	R		R	R	R		R	R	R		R
03	14,15	R	R	R		R	R	R		G	Y	R		R	R	R		R
04	16,17,18	R	R	R		R	R	R		R	R	R		G	Y	R		R
RING 1 05	9,10	R	R	R		R	R	R		R	R	R		R	R	R		R
06	1,2,3	R	R	R		R	R	R		R	R	R		R	R	R		R
07	19,20	R	R	R		R	R	R		R	R	R		R	R	R		R
08	11,12,13	R	R	R		R	R	R		R	R	R		R	R	R		R
02P																		
04P																		
06P																		
08P																		

	HEAD NUMBERS	05 R/W	05 CLEAR TO **			06 R/W	06 CLEAR TO **			07 R/W	07 CLEAR TO **			08 R/W	08 CLEAR TO **		
01	4,5	R	R	R		R	R	R		R	R	R		R	R	R	
02	6,7,8	R	R	R		R	R	R		R	R	R		R	R	R	
03	14,15	R	R	R		R	R	R		R	R	R		R	R	R	
RING 2 04	16,17,18	R	R	R		R	R	R		R	R	R		R	R	R	
05	9,10	G	Y	R		R	R	R		R	R	R		R	R	R	
06	1,2,3	R	R	R		G	Y	R		R	R	R		R	R	R	
07	19,20	R	R	R		R	R	R		G	Y	R		R	R	R	
08	11,12,13	R	R	R		R	R	R		R	R	R		G	Y	R	
02P																	
04P																	
06P																	
08P																	

BARRIER

N

** CLEARANCE TO A PHASE IN CONFLICT WITH THIS PHASE ON (SEE CHART 1)

* WHEN CALLED, TIMED STEADY WALK, THEN FLASHING DON'T WALK, THEN GOES TO STEADY DON'T WALK

CHART 1

PHASE ON	NONCONFLICTING PHASE ALLOWED TO TIME CONCURRENTLY	PHASES IN CONFLICT WITH PHASE ON
1	5 OR 6	2,3,4,7,8
2	5 OR 6	1,3,4,7,8
3	7 OR 8	1,2,4,5,6
4	7 OR 8	1,2,3,5,6
5	1 OR 2	3,4,6,7,8
6	1 OR 2	3,4,5,7,8
7	3 OR 4	1,2,5,6,8
8	3 OR 4	1,2,5,6,7

CONTROLLER LOGIC

PHASE NUMBER	PHASE LOCKING	DUAL ENTRY W / Ø	PHASE RECALL	PHASE ACTIVE
1		6	MAX	X
2		6	MAX	X
3		8	MAX	X
4		8	MAX	X
5		2	MAX	X
6		2	MAX	X
7		4	MAX	X
8		4	MAX	X

OVERLAPS

O.L. "A" =
O.L. "B" =
O.L. "C" =
O.L. "D" =

TYPE OF INTERCONNECT COMMUNICATION	
NONE	X
TBC	
CLOSED LOOP TWISTED PAIR*	
CLOSED LOOP FIBER OPTIC*	
RADIO	
*LOCATION OF MASTER CONTROLLER NO: S-	
SIGNAL SYSTEM #: SS- -	

TYPE OF PRE-EMPT	
NONE	X
RAILROAD	
EMERGENCY VEHICLE	
3M	
TOMAR	
HARDWIRE	
OTHER	
LIFT BRIDGE	
QUEUE DETECTOR	

TYPE OF LIGHTING	
BY OTHER AGENCY	
IN TRAFFIC SIGNAL CABINET	X
IN SEPARATE DOT LIGHTING CABINET	

GENERAL NOTES:

1. WHEN ONE PHASE IS ON ALONE, ANY NONCONFLICTING PHASE MAY START TIMING CONCURRENTLY WITHOUT A CLEARANCE INTERVAL. (SEE CHART 1 AT LEFT.)

STH 100 (W. BROWN DEER RD.) & N. 107TH STREET
CITY OF MILAUKEE
MILWAUKEE COUNTY

SIGNAL NO. S1159 (M135)

CONTROLLER TYPE:

DATE

PAGE NO. 3 OF 3

PROJECT NO: 2150-05-70	HWY: STH 100	COUNTY: MILWAUKEE	TEMPORARY SEQUENCE OF OPERATIONS- ALL STAGES	SHEET	E

LEGEND

- CONTROL CABINET
- NONMETALLIC CONDUIT 2", UNLESS OTHERWISE NOTED
- CABLE-OVERHEAD
- SIGNAL HEAD, TRAFFIC SIGNAL STANDARD, PEDESTAL BASE
- (XX) SIGNAL HEAD, TRAFFIC SIGNAL POLE, TRANSFORMER BASE
- LUMINAIRE UNDER PERMIT TO LOCAL MUNICIPALITY

NOTE:
1. BOLD REPRESENTS ITEMS TO BE REMOVED
2. SB2 & SB10 TO BE REMOVED BY OTHERS.

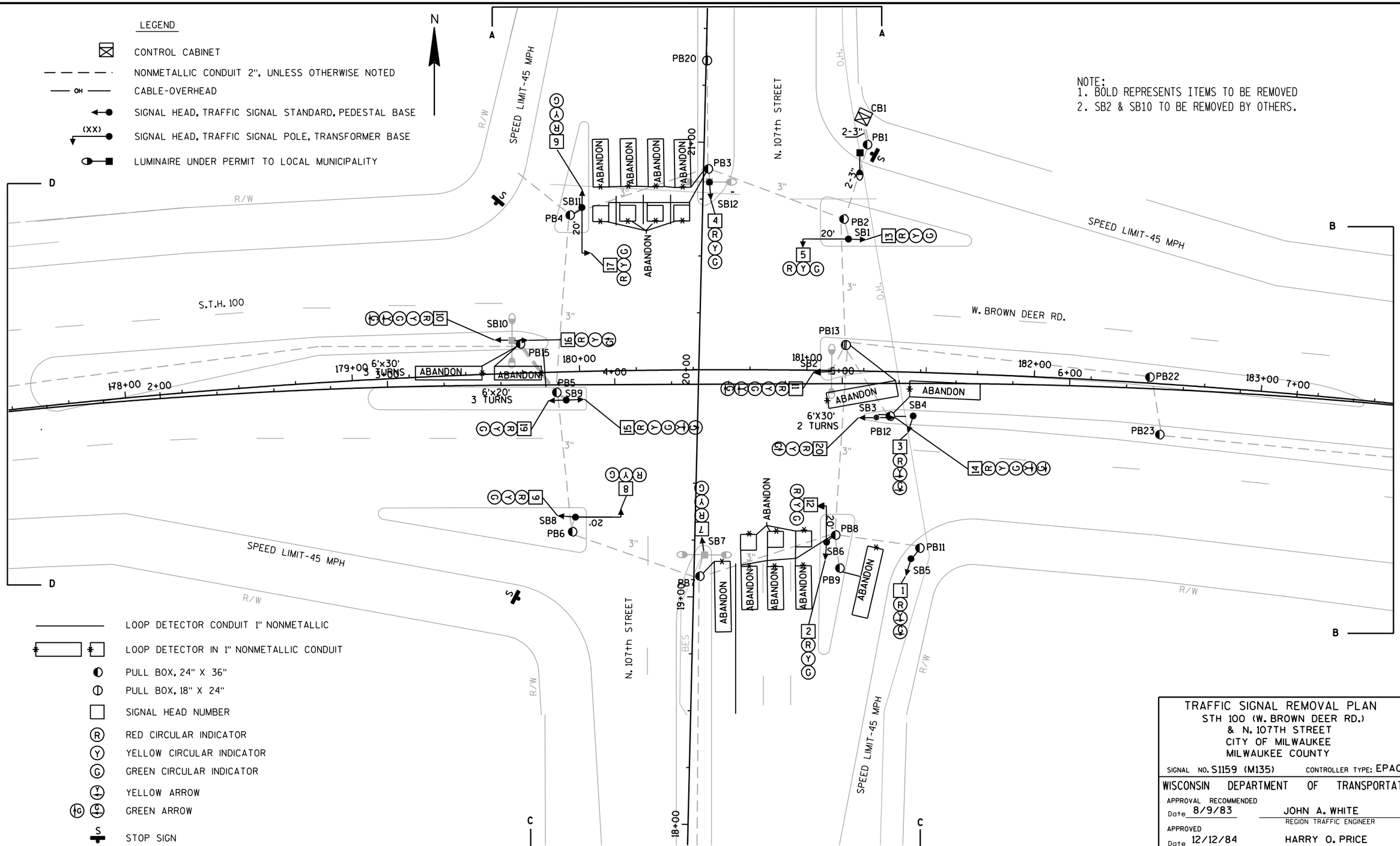

LOOP DETECTOR CONDUIT 1" NONMETALLIC

LOOP DETECTOR IN 1" NONMETALLIC CONDUIT

- PULL BOX, 24" X 36"
- PULL BOX, 18" X 24"
- SIGNAL HEAD NUMBER
- RED CIRCULAR INDICATOR
- YELLOW CIRCULAR INDICATOR
- GREEN CIRCULAR INDICATOR
- YELLOW ARROW
- GREEN ARROW
- STOP SIGN

NOTE: ALL LENSES ARE 12-INCH
GRAYSHADE REPRESENTS EXISTING

TRAFFIC SIGNAL REMOVAL PLAN
STH 100 (W. BROWN DEER RD.)
& N. 107TH STREET
CITY OF MILWAUKEE
MILWAUKEE COUNTY

SIGNAL NO. S1159 (M135) CONTROLLER TYPE: EPAC

WISCONSIN DEPARTMENT OF TRANSPORTATION

APPROVAL RECOMMENDED
Date 8/9/83 JOHN A. WHITE
REGION TRAFFIC ENGINEER

APPROVED
Date 12/12/84 HARRY O. PRICE
STATE TRAFFIC ENGINEER

REGION CONTACT:
DESIGNED BY:
REVISED BY: B. WEINFURT

PAGE 1 OF 2

PROJECT NO: 2150-05-70	HWY: STH 100	COUNTY: MILWAUKEE	TRAFFIC SIGNAL REMOVAL PLAN	SHEET	E

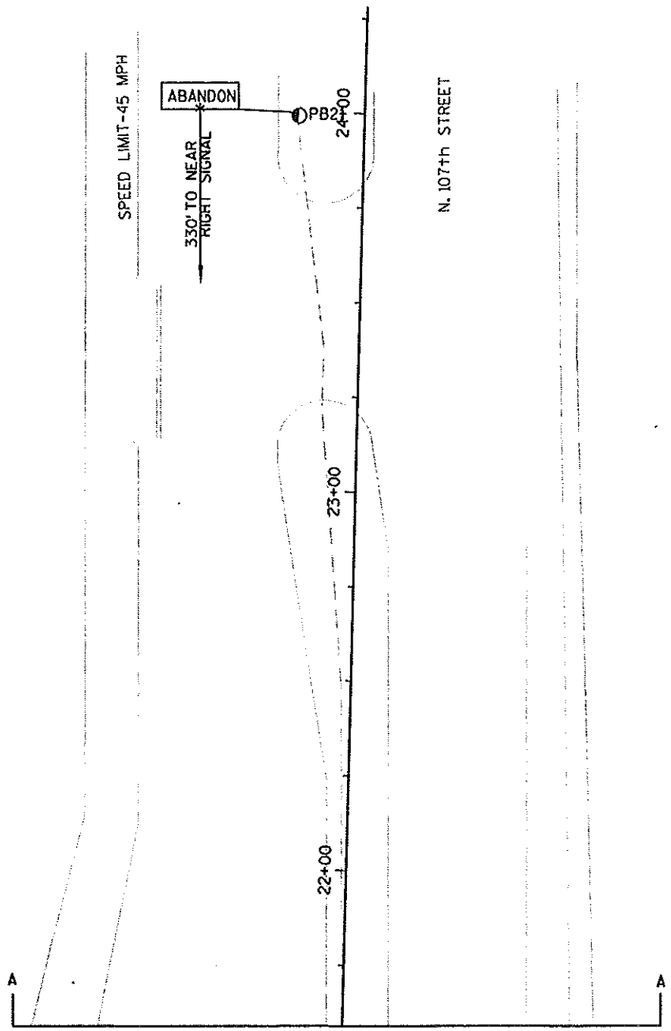

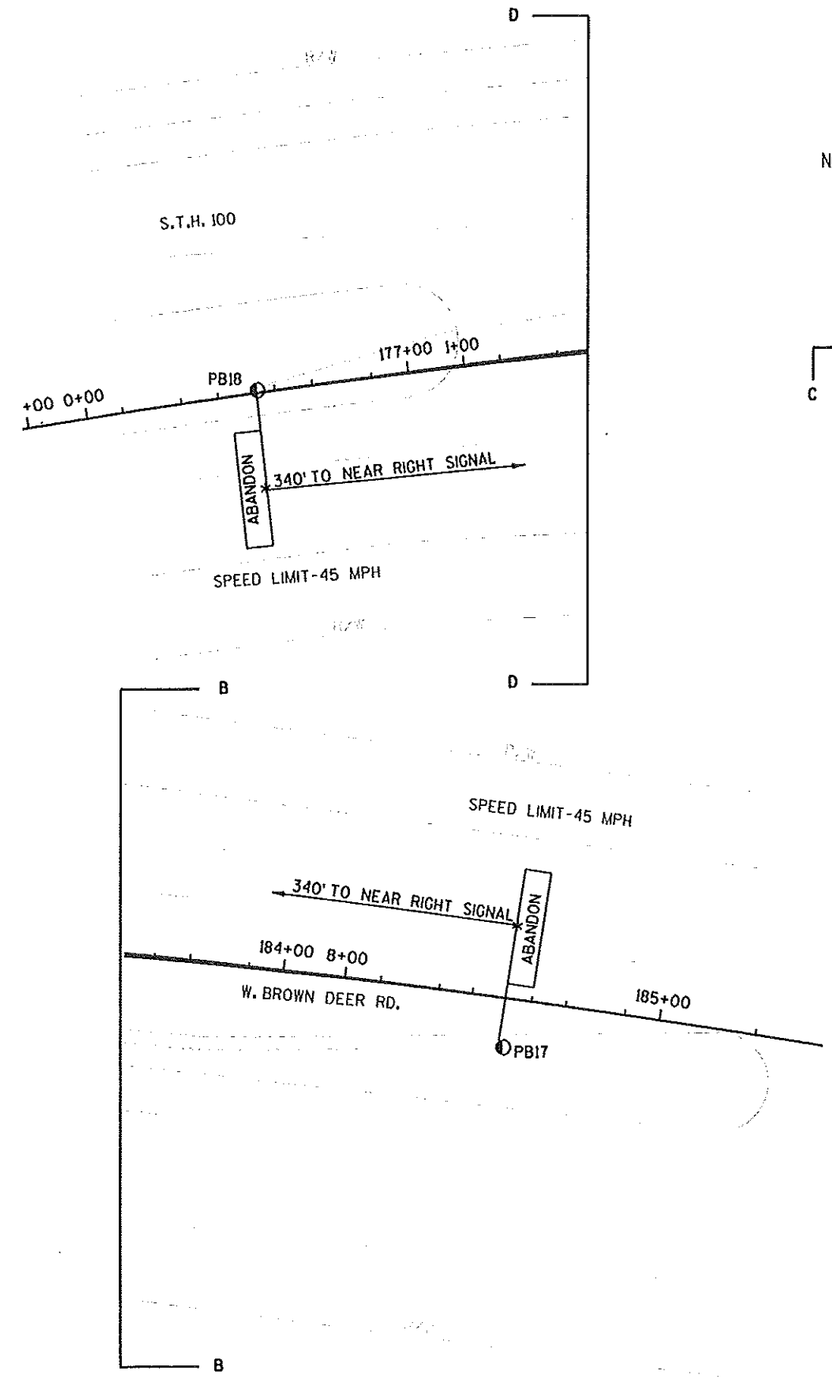

NOTE: BOLD REPRESENTS ITEMS TO BE REMOVED

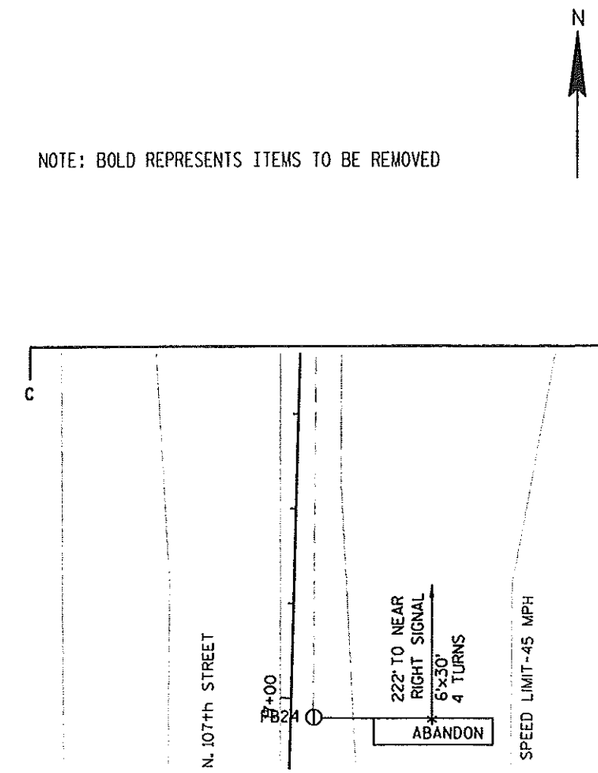

TRAFFIC SIGNAL REMOVAL PLAN
STH 100 (W. BROWN DEER RD.)
& N. 107TH STREET
CITY OF MILWAUKEE
MILWAUKEE COUNTY

SIGNAL NO. S1159 (M135)

REGION CONTACT:
DESIGNED BY:
REVISED BY: B. WENFURT

PAGE 2 OF 2

PROJECT NO: 2150-05-70	HWY: STH 100	COUNTY: MILWAUKEE	TRAFFIC SIGNAL REMOVAL PLAN	SHEET	E

FILE NAME : J:\projects\D2_215005100\Sig\s1159_rem.dgn PLOT DATE : 28-JAN-2010 10:34 PLOT BY : dotbgw PLOT NAME : PLOT SCALE : 40:1 WISDOT/CADDS SHEET 42

LEGEND

- CONTROL CABINET
- NONMETALLIC CONDUIT 2", UNLESS OTHERWISE NOTED
- LOOP DETECTOR CONDUIT 1" NONMETALLIC
- SIGNAL HEAD, TRAFFIC SIGNAL STANDARD, PEDESTAL BASE
- (XX) MONOTUBE BASE, POLE, 35'-55' ARM
- LUMINAIRE UNDER PERMIT TO LOCAL MUNICIPALITY (BOLD LUMINAIRE'S TO BE RELOCATED BY MUNICIPALITY.)
- LOOP DETECTOR CONDUIT 1" NONMETALLIC
- LOOP DETECTOR IN 1" NONMETALLIC CONDUIT

CONSTRUCTION NOTES:

1. * LOCATION IS TO FRONT CENTER OF DETECTOR LOOP.
2. THE CONTRACTOR SHALL HAVE THE PULL BOXES AND CONDUIT RUNS INSPECTED 3 WORKING DAYS PRIOR TO PLACING SIGNAL CABLE INTO SYSTEM. CONTACT THE WISDOT ELECTRICAL FIELD UNIT TO MAKE ARRANGEMENTS. (414) 266-1170
3. THE LOCATIONS OF EXISTING AND PROPOSED UTILITY INSTALLATIONS ARE APPROXIMATE. THERE MAY BE OTHER UTILITY INSTALLATIONS WITHIN THE PROJECT WHICH ARE NOT SHOWN.
4. THE ENGINEER MAY ADJUST THE LOCATIONS OF ITEMS UNDER THIS CONTRACT TO AVOID CONFLICT WITH EXISTING UTILITY FACILITIES.

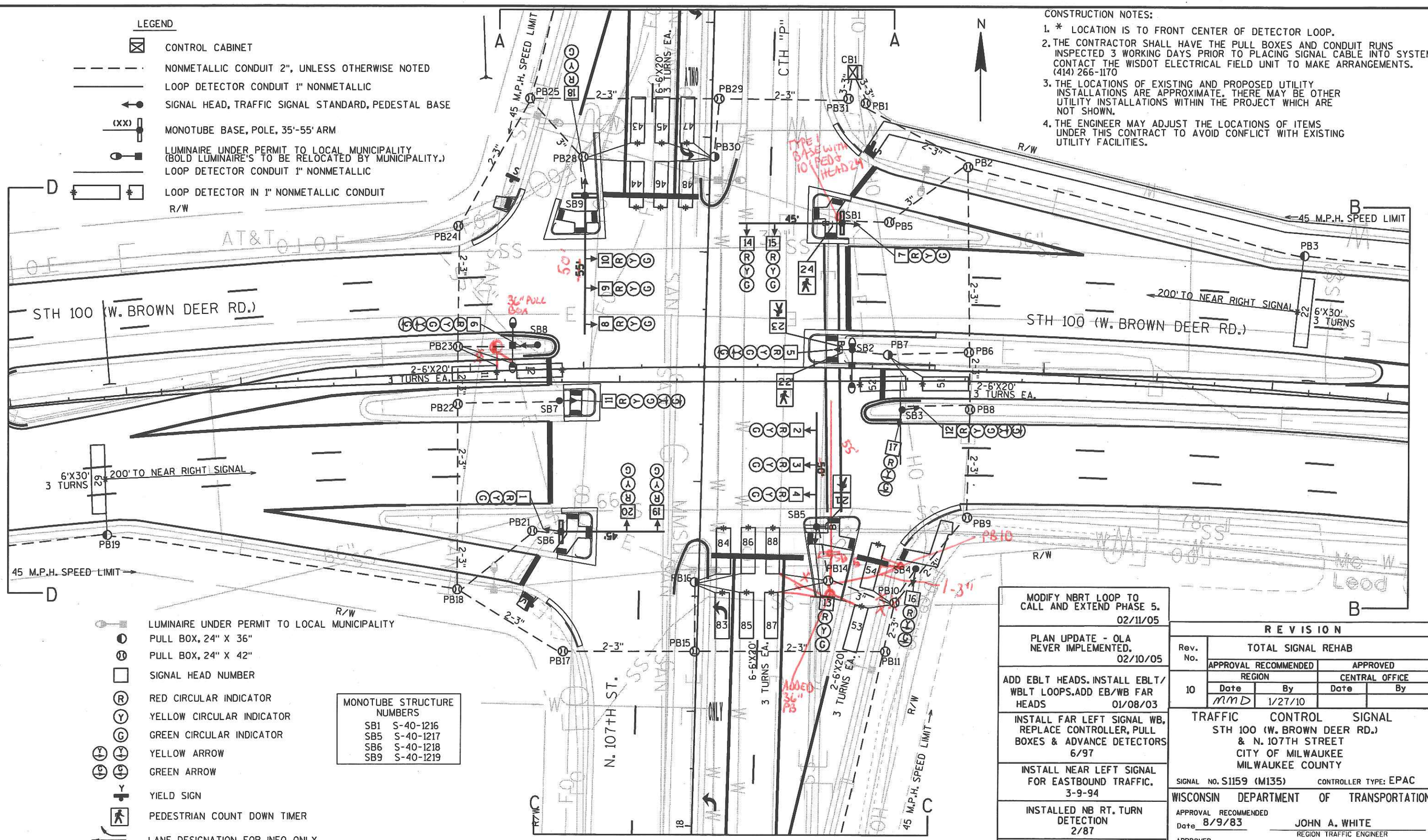

- LUMINAIRE UNDER PERMIT TO LOCAL MUNICIPALITY
- PULL BOX, 24" X 36"
- PULL BOX, 24" X 42"
- SIGNAL HEAD NUMBER
- (R) RED CIRCULAR INDICATOR
- (Y) YELLOW CIRCULAR INDICATOR
- (G) GREEN CIRCULAR INDICATOR
- YELLOW ARROW
- GREEN ARROW
- YIELD SIGN
- PEDESTRIAN COUNT DOWN TIMER
- LANE DESIGNATION FOR INFO ONLY

NOTE: ALL LENSES ARE 12-INCH
GRAYSHADE REPRESENTS EXISTING

MONOTUBE STRUCTURE NUMBERS	
SB1	S-40-1216
SB5	S-40-1217
SB6	S-40-1218
SB9	S-40-1219

INSTALL LOOP #81 & PB24 12/06/06	INSTALL SB3 & SB4. ADD AHEAD ARROWS TO HEADS 16,20 02/05

MODIFY NBRT LOOP TO CALL AND EXTEND PHASE 5. 02/11/05
PLAN UPDATE - OLA NEVER IMPLEMENTED. 02/10/05
ADD EBLT HEADS. INSTALL EBLT/WBLT LOOPS. ADD EB/WB FAR HEADS 01/08/03
INSTALL FAR LEFT SIGNAL WB, REPLACE CONTROLLER, PULL BOXES & ADVANCE DETECTORS 6/97
INSTALL NEAR LEFT SIGNAL FOR EASTBOUND TRAFFIC. 3-9-94
INSTALLED NB RT. TURN DETECTION 2/87
REVISED UPDATE JULY 1977
DATE OF INTIAL INSTALLATION 1/21/77

REVISION

Rev. No.	TOTAL SIGNAL REHAB			
	APPROVAL RECOMMENDED		APPROVED	
	REGION		CENTRAL OFFICE	
	Date	By	Date	By
10	MMD	1/27/10		

TRAFFIC CONTROL SIGNAL
STH 100 (W. BROWN DEER RD.)
& N. 107TH STREET
CITY OF MILWAUKEE
MILWAUKEE COUNTY

SIGNAL NO. S1159 (M135) CONTROLLER TYPE: EPAC

WISCONSIN DEPARTMENT OF TRANSPORTATION

APPROVAL RECOMMENDED
Date 8/9/83 JOHN A. WHITE
REGION TRAFFIC ENGINEER

APPROVED
Date 12/12/84 HARRY O. PRICE
STATE TRAFFIC ENGINEER

REGION CONTACT: J. DIMMER
DESIGNED BY: B. WEINFURT
REVISED BY:

PAGE 1 OF 3

PROJECT NO: 2150-05-70	HWY: STH 100	COUNTY: MILWAUKEE	TRAFFIC SIGNAL PLAN	SHEET	E

2

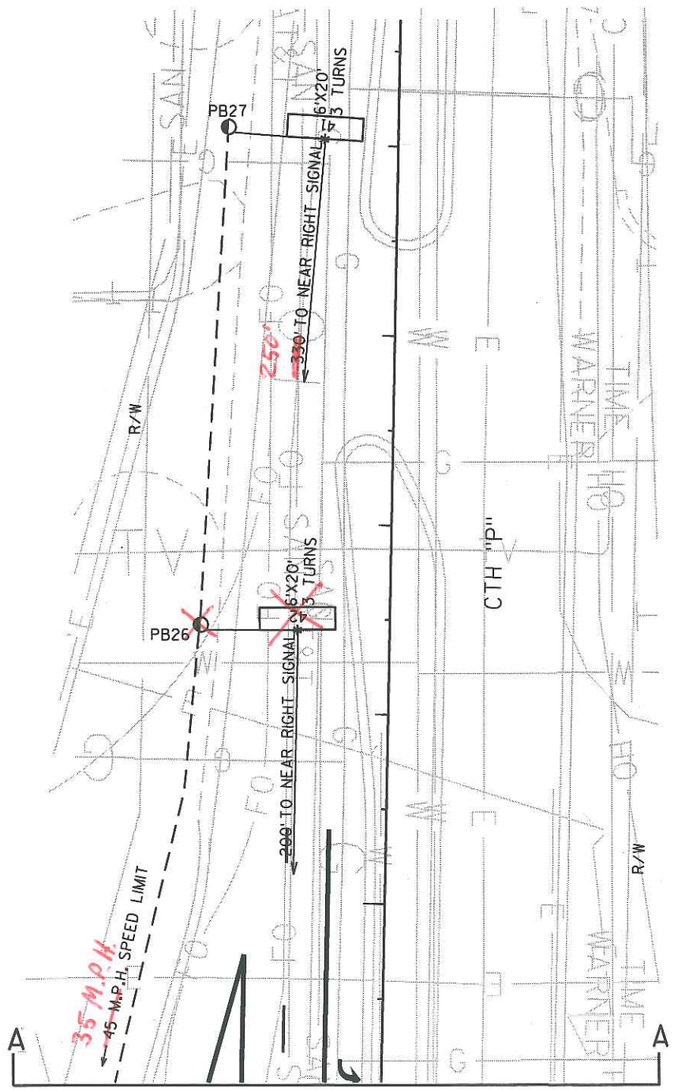

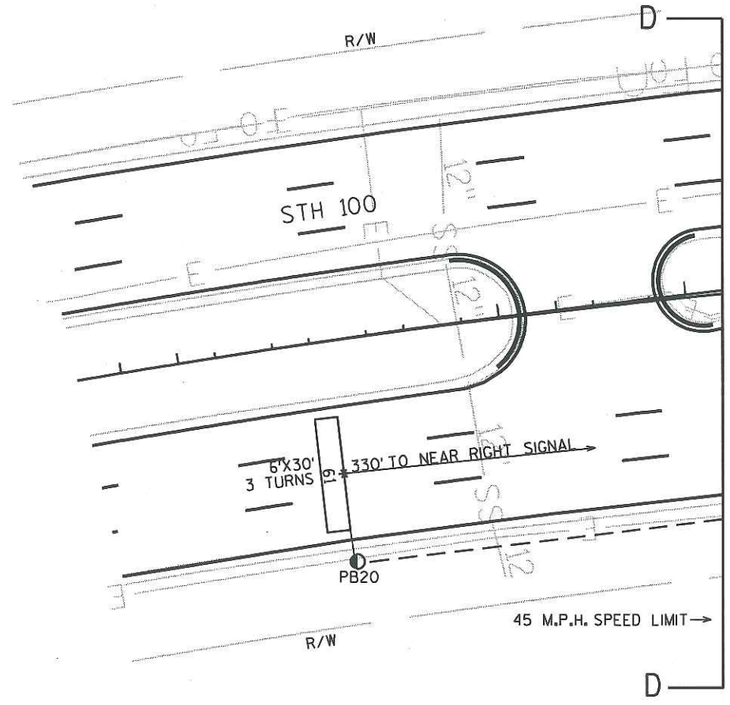

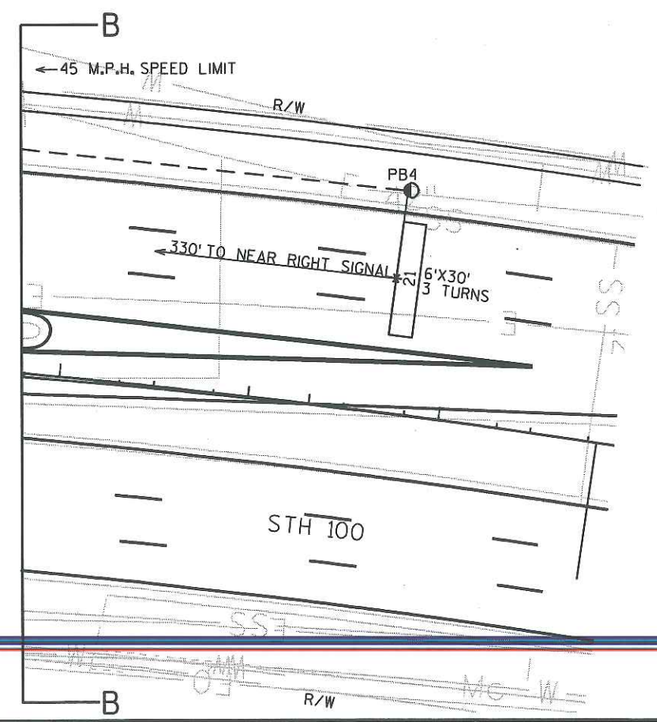

TRAFFIC CONTROL SIGNAL
STH 100 (W. BROWN DEER RD.)
& N. 107TH STREET
CITY OF MILWAUKEE
MILWAUKEE COUNTY

SIGNAL NO. S1159 (M135)

REGION CONTACT: J. DIMMER
DESIGNED BY: B. WEINFURT
REVISED BY:

PAGE 2 OF 3

PROJECT NO: 2150-05-70	HWY: STH 100	COUNTY: MILWAUKEE	TRAFFIC SIGNAL PLAN	SHEET	E

FILE NAME : j:\projects\D2_215005100\Sig\s1159_I.dgn PLOT DATE : 28-JAN-2010 10:33 PLOT BY : dotbgw PLOT NAME : PLOT SCALE : 40:1

2

SEQUENCE OF OPERATION

RING 1

	HEAD NUMBERS	01 R/W	01 CLEAR TO			02 R/W	02 CLEAR TO			03 R/W	03 CLEAR TO			04 R/W	04 CLEAR TO			FLASH
			**				**				**				**			
01	5,6	G	Y	-		-	-	-						-	-	-		-
02	7,8,9,10,11,12	R	R	R		G	Y	R						R	R	R		R
03																		
04	18,19,20	R	R	R		R	R	R						G	Y	R		R
05	11,12,16,17	-,R	-,R	-,R		-,R	-,R	-,R						-,R	-,R	-,R		-,R
06	1,2,3,4,5,6	R	R	R		R	R	R						R	R	R		R
07																		
08	13,14,15	R	R	R		R	R	R						R	R	R		R
02P																		
04P																		
06P																		
08P	21,22,23,24	DW	DW	DW		DW	DW	DW						DW	DW	DW		

RING 2

	HEAD NUMBERS	05 R/W	05 CLEAR TO			06 R/W	06 CLEAR TO			07 R/W	07 CLEAR TO			08 R/W	08 CLEAR TO		
			**				**				**				**		
01	5,6	-	-	-		-	-	-						-	-	-	
02	7,8,9,10,11,12	R	R	R		R	R	R						R	R	R	
03																	
04	18,19,20	R	R	R		R	R	R						R	R	R	
05	11,12,16,17	G, G	Y Y	-R		-,R	-,R	-,R						-,R	-,R	-,R	
06	1,2,3,4,5,6	R	R	R		G	Y	R						R	R	R	
07																	
08	13,14,15	R	R	R		R	R	R						G	Y	R	
02P																	
04P																	
06P	.																
08P	21,22,23,24	DW	DW	DW		DW	DW	DW						*	DW	DW	

NOT USED

NOT USED

N

BARRIER

** CLEARANCE TO A PHASE IN CONFLICT WITH THIS PHASE ON (SEE CHART 1)

* WHEN CALLED, TIMED STEADY WALK, THEN FLASHING DON'T WALK, THEN GOES TO STEADY DON'T WALK

CHART 1

PHASE ON	NONCONFLICTING PHASE ALLOWED TO TIME CONCURRENTLY	PHASES IN CONFLICT WITH PHASE ON
1	5 OR 6	2,4,8
2	5 OR 6	1,4,8
3		
4	8	1,2,5,6
5	1 OR 2	4,6,8
6	1 OR 2	4,5,8
7		
8	4	1,2,5,6

DETECTOR LOGIC

DETECTOR NUMBER	AMPLIFIER CHANNEL NUMBER	DETECTOR OPERATION: CALLS AND EXTENDS	CALLS ONLY	EXTENDS ONLY	PHASE CALLED	PHASE EXTENDED	DETECTOR DISCONNECT PHASE	CALLING DELAY	EXTENSION STRETCH	SIZE	NUMBER OF TURNS
11	1	X			1	1				6'X20'	3
12	1	X			1	1				6'X20'	3
21	2	X			2	2				6'X30'	3
22	2	X			2	2				6'X30'	3
41	3			X		4				6'X20'	3
42	3			X		4				6'X20'	3
43	4	X			4	4				6'X20'	3
44	4	X			4	4				6'X20'	3
45	5	X			4	4				6'X20'	3
46	5	X			4	4				6'X20'	3
47	6	X			4	4				6'X20'	3
48	6	X			4	4				6'X20'	3
51	7	X			5	5				6'X20'	3
52	7	X			5	5				6'X20'	3
53	8	X			5	5		X		6'X20'	3
54	8	X			5	5		X		6'X20'	3
61	9	X			6	6				6'X30'	3
62	9	X			6	6				6'X30'	3
81	10			X		8				6'X20'	3
82	10			X		8				6'X20'	3
83	11	X			8	8				6'X20'	3
84	11	X			8	8				6'X20'	3
85	12	X			8	8				6'X20'	3
86	12	X			8	8				6'X20'	3
87	13	X			8	8				6'X20'	3
88	13	X			8	8				6'X20'	3

CONTROLLER LOGIC

PHASE NUMBER	PHASE LOCKING	DUAL ENTRY W / Ø	PHASE RECALL	PHASE ACTIVE
1				X
2	X	6	MIN.	X
3				
4		8		X
5				X
6	X	2	MIN.	X
7				
8		4		X

OVERLAPS

O.L. "A" =
O.L. "B" =
O.L. "C" =
O.L. "D" =

TYPE OF INTERCONNECT COMMUNICATION	
NONE	X
TBC	
CLOSED LOOP TWISTED PAIR*	
CLOSED LOOP FIBER OPTIC*	
RADIO	
*LOCATION OF MASTER CONTROLLER NO: S-	
SIGNAL SYSTEM #: SS- -	

TYPE OF PRE-EMPT	
NONE	X
RAILROAD	
EMERGENCY VEHICLE	
3M	
TOMAR	
HARDWIRE	
OTHER	
LIFT BRIDGE	
QUEUE DETECTOR	

TYPE OF LIGHTING	
BY OTHER AGENCY	X
IN TRAFFIC SIGNAL CABINET	
IN SEPARATE DOT LIGHTING CABINET	

GENERAL NOTES:

1. ANY ACTUATED PHASE FOR WHICH THERE IS NO CALL SHALL BE SKIPPED.
2. WHEN ONE PHASE IS ON ALONE, ANY NONCONFLICTING PHASE MAY START TIMING CONCURRENTLY WITHOUT A CLEARANCE INTERVAL. (SEE CHART 1 AT LEFT.)

STH 100 (W. BROWN DEER RD.)
& N. 107TH STREET
CITY OF MILWAUKEE
MILWAUKEE COUNTY

SIGNAL NO. S1159 (M135)

CONTROLLER TYPE: EPAC

DATE 9/11 PAGE NO. 3 OF 3

2

60

PROJECT NO: 2150-05-70	HWY: STH 100	COUNTY: MILWAUKEE	SEQUENCE OF OPERATIONS	SHEET	E

PROJECT ID:	2150-05-70
INTERSECTION:	STH 100 & N. 107TH ST.

Signal Wire Color Coding			
	BLK - black	RED - red	GRN - green
	WHT - white	BLU - blue	ORG - orange

CB1 TO	AWG14 # OF CONDUCTORS	HEAD NO.	PHASE	SIGNAL INDICATION WIRE COLOR								PED BUTTON	OTHER
				RED	YELLOW	GREEN	<RED>	<YELLOW>	<GREEN>	D/WALK	WALK		
SB1	12	14	8	RED	ORG	GRN							
		15	8	RED	ORG	GRN							
		7	2	RED/BLK	ORG/BLK	GRN/BLK							
		24*	8							BLK	BLU		
		BUTTON*	8									WHT/BLK	
SB2	12	5	1 & 6	RED	ORG	GRN		BLK	BLU				
		22	8							RED/BLK	GRN/BLK		
		23	8							BLK/WHT	BLU/BLK		
		BUTTON	8									WHT/BLK	
SB3	12	12	2 & 5	RED	ORG	GRN		BLK	BLU				
		17	5 OLA	RED/BLK				ORG/BLK	GRN/BLK				
SB4	12	16	5 OLA	RED				ORG	GRN				
SB5	12	13	8	RED	ORG	GRN							
		2	6	RED/BLK	ORG/BLK	GRN/BLK							
		3	6	RED/BLK	ORG/BLK	GRN/BLK							
		4	6	RED/BLK	ORG/BLK	GRN/BLK							
		21	8							BLK	BLU		
		BUTTON	8									WHT/BLK	
SB6	12	19	4	RED	ORG	GRN							
		20	4	RED	ORG	GRN							
		1	6	RED/BLK	ORG/BLK	GRN/BLK							
SB7	12	11	2 & 5	RED		ORGGRN		BLK	BLU				
SB8	12	6	1 & 6	RED	ORG	GRN		BLK	BLU				
SB9	12	18	4	RED	ORG	GRN							
		8	2	RED/BLK	ORG/BLK	GRN/BLK							
		9	2	RED/BLK	ORG/BLK	GRN/BLK							
		10	2	RED/BLK	ORG/BLK	GRN/BLK							

* MOUNTED ON ADDED TYPE 1 BASE WITH 10' POLE

Equipment grounding conductor 10 AWG Green XLP	
From	TO
CB1	SB1
SB1	SB2
SB2	SB3
SB3	SB4
SB4	SB5
SB5	SB6
SB6	SB7
SB7	SB8
SB8	SB9
SB9	CB1

Pull Box Bonding Jumper 10 AWG	
From	To
PB1	CB1
PB2	CB1
PB5	SB1
PB6	SB2
PB7	SB2
PB8	SB3
PB9	SB4
PB10	SB4
PB11	SB4
PB14	SB5
PB15	SB4

Pull Box Bonding Jumper 10 AWG Green XLP	
From	To
PB17	SB6
PB18	SB6
PB21	SB6
PB22	SB7
PB23	SB8
PB24	SB8
PB25	SB9
PB28	SB9
PB29	CB1
PB31	CB1

*Use the white conductor in the cable assembly as the grounded conductor for all traffic signal indications
*Ensure the grounded conductor in the feeder cable and the pole cables are both 18" longer than the ungrounded conductors.
*At the signal

LEGEND

- CLASS 4 WOOD POLE
- SPAN WIRE
- TEMPORARY SIGNAL OVERHEAD MOUNT
- LUMINAIRE
- RED CIRCULAR INDICATOR
- YELLOW CIRCULAR INDICATOR
- GREEN CIRCULAR INDICATOR
- RED ARROW
- YELLOW ARROW
- GREEN ARROW

NOTE: ALL LENSES ARE 12-INCH

SUMMARY OF TEMPORARY SIGNAL EQUIPMENT	
4 EA.	CLASS 4 WOOD POLE
565 L.F.	SPAN WIRE
4 EA.	LUMINAIRE 250w

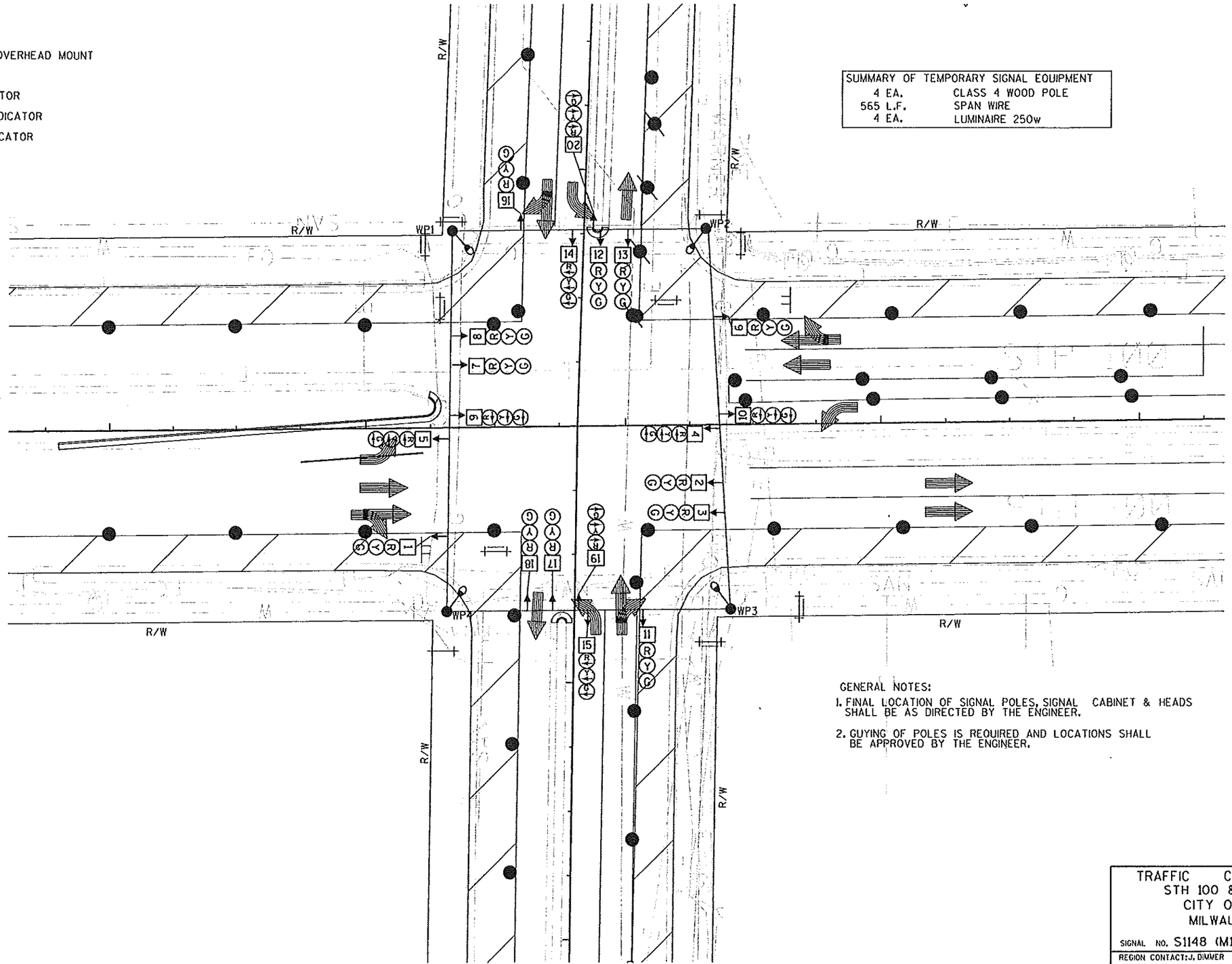

GENERAL NOTES:

1. FINAL LOCATION OF SIGNAL POLES, SIGNAL CABINET & HEADS SHALL BE AS DIRECTED BY THE ENGINEER.
2. GUYING OF POLES IS REQUIRED AND LOCATIONS SHALL BE APPROVED BY THE ENGINEER.

TRAFFIC CONTROL SIGNAL
STH 100 & N. 91ST. STREET
CITY OF MILAUKEE
MILWAUKEE COUNTY

SIGNAL NO. S1148 (M124)

REGION CONTACT: J. DIMMER
DESIGNED BY:
REVISED BY: B. WEINFURT

PAGE 1 OF 3

PROJECT NO: 2150-05-70	HWY: STH 100	COUNTY: MILWAUKEE	TEMPORARY TRAFFIC SIGNAL - STAGES 1C & 3	SHEET	E

FILE NAME : j:\projects\D2_215005100\Sig\s1148temp_1c_3.dgn PLOT DATE : 28-JAN-2010 10:26 PLOT BY : dotbgw PLOT NAME : PLOT SCALE : 40:1

2

LEGEND

- CLASS 4 WOOD POLE
- SPAN WIRE
- LUMINAIRE
- TEMPORARY SIGNAL OVERHEAD MOUNT
- RED CIRCULAR INDICATOR
- YELLOW CIRCULAR INDICATOR
- GREEN CIRCULAR INDICATOR
- RED ARROW
- YELLOW ARROW
- GREEN ARROW

NOTE: ALL LENSES ARE 12-INCH

SUMMARY OF TEMPORARY SIGNAL EQUIPMENT

4 EA.	CLASS 4 WOOD POLE
565 L.F.	SPAN WIRE
4 EA.	LUMINAIRE 250w

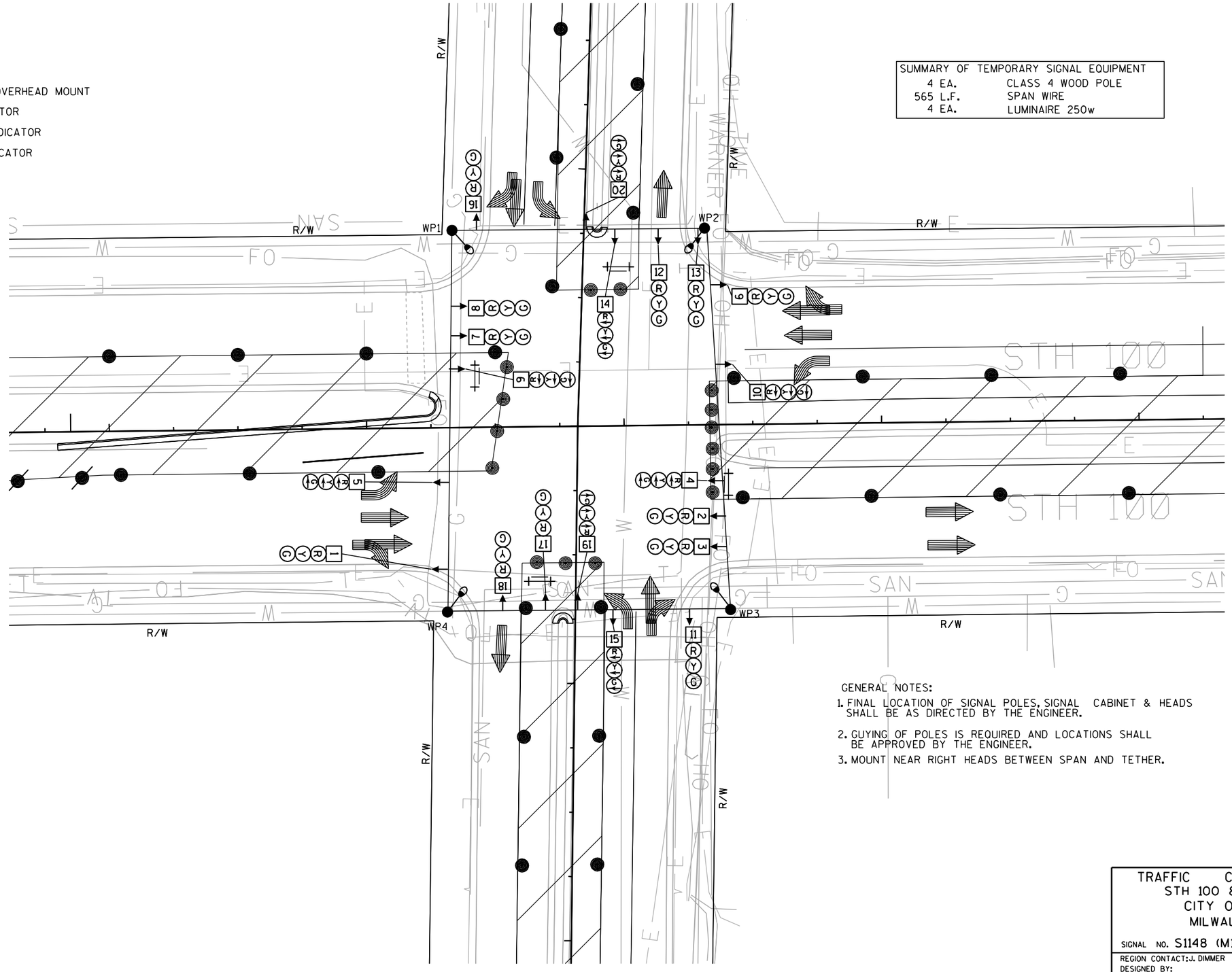

GENERAL NOTES:

1. FINAL LOCATION OF SIGNAL POLES, SIGNAL CABINET & HEADS SHALL BE AS DIRECTED BY THE ENGINEER.
2. GUYING OF POLES IS REQUIRED AND LOCATIONS SHALL BE APPROVED BY THE ENGINEER.
3. MOUNT NEAR RIGHT HEADS BETWEEN SPAN AND TETHER.

TRAFFIC CONTROL SIGNAL
STH 100 & N. 91ST. STREET
CITY OF MILAUKEE
MILWAUKEE COUNTY

SIGNAL NO. S1148 (M124)

REGION CONTACT: J. DIMMER
DESIGNED BY:
REVISED BY: B. WEINFURT

PAGE 2 OF 3

PROJECT NO: 2150-05-70	HWY: STH 100	COUNTY: MILWAUKEE	TEMPORARY TRAFFIC SIGNAL- STAGE 2B	SHEET	E

FILE NAME : j:\projects\D2_215005100\Sig\s1148temp_2.dgn PLOT DATE : 28-JAN-2010 11:07 PLOT BY : dotbgw PLOT NAME : PLOT SCALE : 40:1

SEQUENCE OF OPERATION

RING 1

	HEAD NUMBERS	01 R/W	01 CLEAR TO **		02 R/W	02 CLEAR TO **		03 R/W	03 CLEAR TO **		04 R/W	04 CLEAR TO **		FLASH
01	4,5	G	Y	R	R	R	R	R	R	R	R	R	R	R
02	6,7,8	R	R	R	G	Y	R	R	R	R	R	R	R	R
03	14,15	R	R	R	R	R	R	G	Y	R	R	R	R	R
04	16,17,18	R	R	R	R	R	R	R	R	R	G	Y	R	R
05	9,10	R	R	R	R	R	R	R	R	R	R	R	R	R
06	1,2,3	R	R	R	R	R	R	R	R	R	R	R	R	R
07	19,20	R	R	R	R	R	R	R	R	R	R	R	R	R
08	11,12,13	R	R	R	R	R	R	R	R	R	R	R	R	R
02P														
04P														
06P														
08P														

RING 2

	HEAD NUMBERS	05 R/W	05 CLEAR TO **		06 R/W	06 CLEAR TO **		07 R/W	07 CLEAR TO **		08 R/W	08 CLEAR TO **	
01	4,5	R	R	R	R	R	R	R	R	R	R	R	R
02	6,7,8	R	R	R	R	R	R	R	R	R	R	R	R
03	14,15	R	R	R	R	R	R	R	R	R	R	R	R
04	16,17,18	R	R	R	R	R	R	R	R	R	R	R	R
05	9,10	G	Y	R	R	R	R	R	R	R	R	R	R
06	1,2,3	R	R	R	G	Y	R	R	R	R	R	R	R
07	19,20	R	R	R	R	R	R	G	Y	R	R	R	R
08	11,12,13	R	R	R	R	R	R	R	R	R	G	Y	R
02P													
04P													
06P													
08P													

BARRIER

N

** CLEARANCE TO A PHASE IN CONFLICT WITH THIS PHASE ON (SEE CHART 1)

* WHEN CALLED, TIMED STEADY WALK, THEN FLASHING DON'T WALK, THEN GOES TO STEADY DON'T WALK

CHART 1

PHASE ON	NONCONFLICTING PHASE ALLOWED TO TIME CONCURRENTLY	PHASES IN CONFLICT WITH PHASE ON
1	5 OR 6	2,3,4,7,8
2	5 OR 6	1,3,4,7,8
3	7 OR 8	1,2,4,5,6
4	7 OR 8	1,2,3,5,6
5	1 OR 2	3,4,6,7,8
6	1 OR 2	3,4,5,7,8
7	3 OR 4	1,2,5,6,8
8	3 OR 4	1,2,5,6,7

CONTROLLER LOGIC

PHASE NUMBER	PHASE LOCKING	DUAL ENTRY W / Ø	PHASE RECALL	PHASE ACTIVE
1		6	MAX	X
2		6	MAX	X
3		8	MAX	X
4		8	MAX	X
5		2	MAX	X
6		2	MAX	X
7		4	MAX	X
8		4	MAX	X

OVERLAPS

O.L. "A" =
O.L. "B" =
O.L. "C" =
O.L. "D" =

TYPE OF INTERCONNECT COMMUNICATION	
NONE	X
TBC	
CLOSED LOOP TWISTED PAIR*	
CLOSED LOOP FIBER OPTIC*	
RADIO	
*LOCATION OF MASTER CONTROLLER NO: S-	
SIGNAL SYSTEM #: SS- -	

TYPE OF PRE-EMPT	
NONE	X
RAILROAD	
EMERGENCY VEHICLE	
3M	
TOMAR	
HARDWIRE	
OTHER	
LIFT BRIDGE	
QUEUE DETECTOR	

TYPE OF LIGHTING	
BY OTHER AGENCY	
IN TRAFFIC SIGNAL CABINET	X
IN SEPARATE DOT LIGHTING CABINET	

GENERAL NOTES:

1. WHEN ONE PHASE IS ON ALONE, ANY NONCONFLICTING PHASE MAY START TIMING CONCURRENTLY WITHOUT A CLEARANCE INTERVAL. (SEE CHART 1 AT LEFT.)

STH 100 & N. 91ST. STREET
CITY OF MILAUKEE
MILWAUKEE COUNTY

SIGNAL NO. S1159 (M135)

CONTROLLER TYPE:

DATE

PAGE NO. 3 OF 3

PROJECT NO: 2150-05-70	HWY: STH 100	COUNTY: MILWAUKEE	TEMPORARY SEQUENCE OF OPERATIONS- ALL STAGES	SHEET	E

NOTE: BOLD REPRESENTS ITEMS TO BE REMOVED

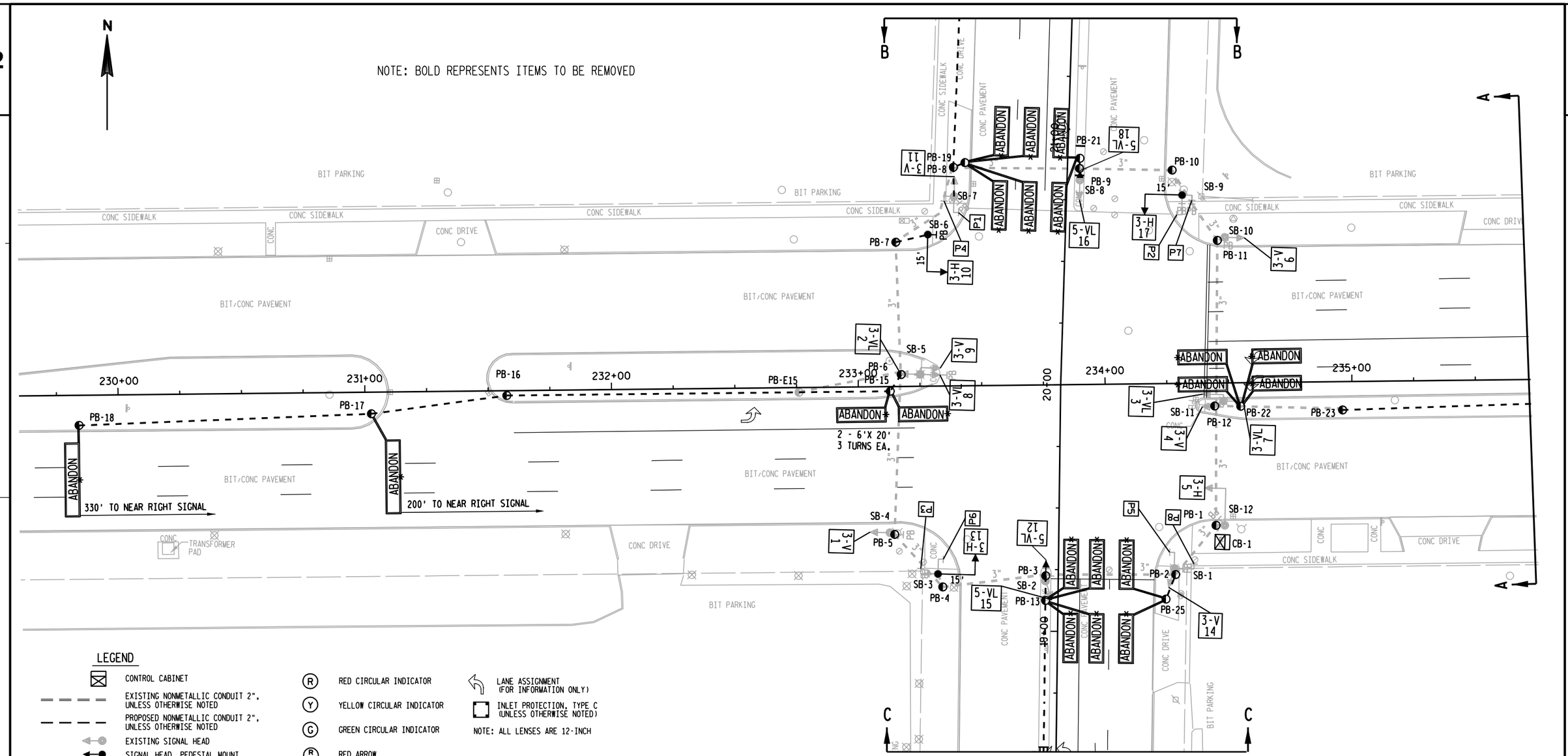

LEGEND

- CONTROL CABINET
- EXISTING NONMETALLIC CONDUIT 2", UNLESS OTHERWISE NOTED
- PROPOSED NONMETALLIC CONDUIT 2", UNLESS OTHERWISE NOTED
- EXISTING SIGNAL HEAD
- SIGNAL HEAD, PEDESTAL MOUNT
- (XX) SIGNAL HEAD, MAST-ARM MOUNT
- PB PEDESTRIAN HEAD WITH PUSH BUTTON
- LOOP DETECTOR CONDUIT 1" NONMETALLIC
- EXISTING LOOP DETECTOR
- PROPOSED LOOP DETECTOR IN 1" NONMETALLIC CONDUIT
- EXISTING PULL BOX
- PULL BOX, 24" X 36"
- P8 PEDESTRIAN SIGNAL HEAD NUMBER
- 3-V 5 MOUNTING CONFIGURATION SIGNALS HEAD NUMBER
- R RED CIRCULAR INDICATOR
- Y YELLOW CIRCULAR INDICATOR
- G GREEN CIRCULAR INDICATOR
- R RED ARROW
- Y YELLOW ARROW
- G GREEN ARROW
- R Y G OPTICALLY PROGRAMMED HEAD
- DW DON'T WALK INDICATOR 12"
- W WALK INDICATOR 12"
- Y YIELD SIGN
- S STOP SIGN
- STOP LINE (FOR INFORMATION ONLY)
- LANE ASSIGNMENT (FOR INFORMATION ONLY)
- INLET PROTECTION, TYPE C (UNLESS OTHERWISE NOTED)

NOTE: ALL LENSES ARE 12-INCH

TRAFFIC SIGNAL REMOVAL PLAN

STH 100 & N. 91st STREET
CITY OF MILWAUKEE
MILWAUKEE COUNTY

SIGNAL NO. S1148 (M124) CONTROLLER TYPE: EPAC

WISCONSIN DEPARTMENT OF TRANSPORTATION

APPROVAL RECOMMENDED
Date 2-24-86 — JOHN A. WHITE, REGION TRAFFIC ENGINEER

APPROVED
Date 2-24-86 — H. O. PRICE, STATE TRAFFIC ENGINEER

REGION CONTACT: JOYCE DIMMER
DESIGNED BY: B. WEINFURT
REVISED BY:

PAGE 1 OF 2

PROJECT NO: 2150-05-00	HWY: STH 100	COUNTY: MILWAUKEE	TRAFFIC SIGNAL REMOVAL PLAN	SHEET	E

FILE NAME : j:\projects\D2_215005100\Sig\S1148_REM.dgn PLOT DATE : 28-JAN-2010 10:26 PLOT BY : dotbgw PLOT NAME : PLOT SCALE : 40:1

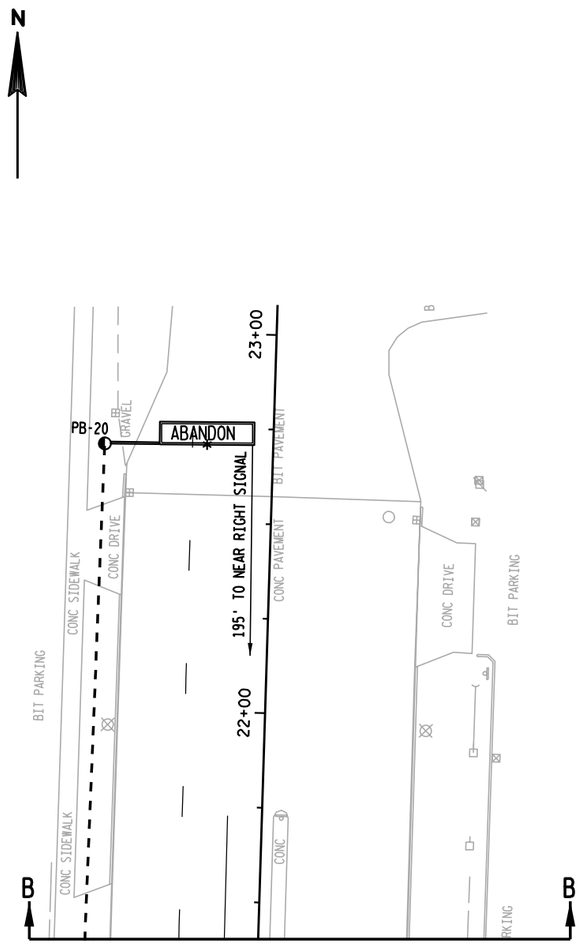

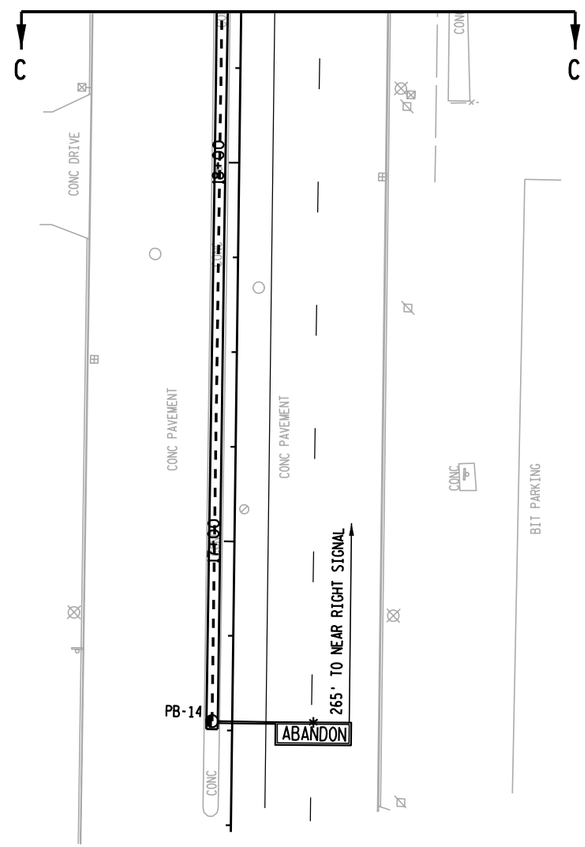

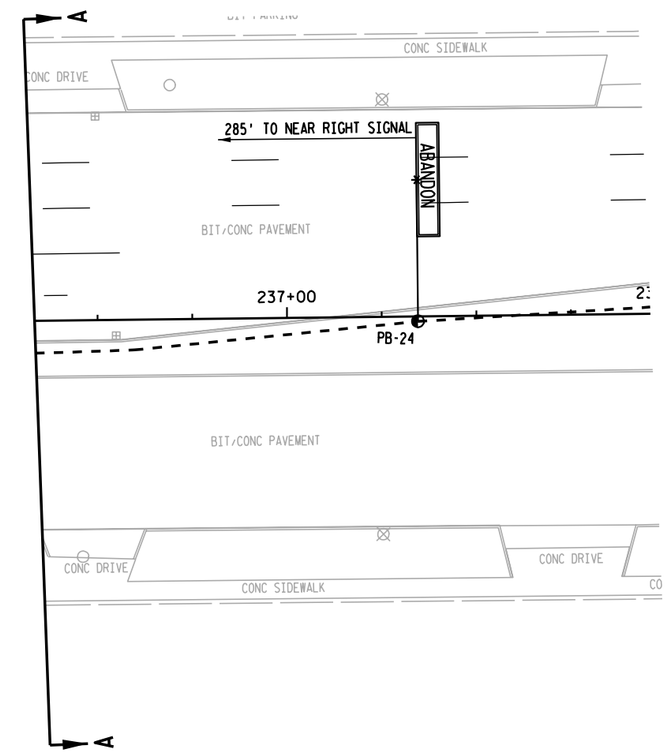

NOTE: BOLD REPRESENTS ITEMS TO BE REMOVED

TRAFFIC SIGNAL REMOVAL PLAN
STH 100 & N. 91st STREET
CITY OF MILWAUKEE
MILWAUKEE COUNTY

SIGNAL NO. S1148 (M124)

REGION CONTACT: J. DIMMER
DESIGNED BY: B. WEINFURT
REVISED BY:

PAGE 2 OF 2

PROJECT NO: 2150-05-00	HWY: STH 100	COUNTY: MILWAUKEE	TRAFFIC SIGNAL REMOVAL PLAN	SHEET	E

FILE NAME : j:\projects\D2_215005100\Sig\S1148_REM.dgn PLOT DATE : 28-JAN-2010 10:26 PLOT BY : dotbgw PLOT NAME : PLOT SCALE : 40:1 WISDOT/CADDS SHEET 42

LEGEND

- CONTROL CABINET
- NONMETALLIC CONDUIT 2", UNLESS OTHERWISE NOTED
- LOOP DETECTOR CONDUIT 1" NONMETALLIC
- SIGNAL HEAD, TRAFFIC SIGNAL STANDARD, PEDESTAL BASE
- (XX) MONOTUBE BASE, POLE, 35'-55' ARM
- (XX) MONOTUBE BASE, POLE, 15'-30' ARM

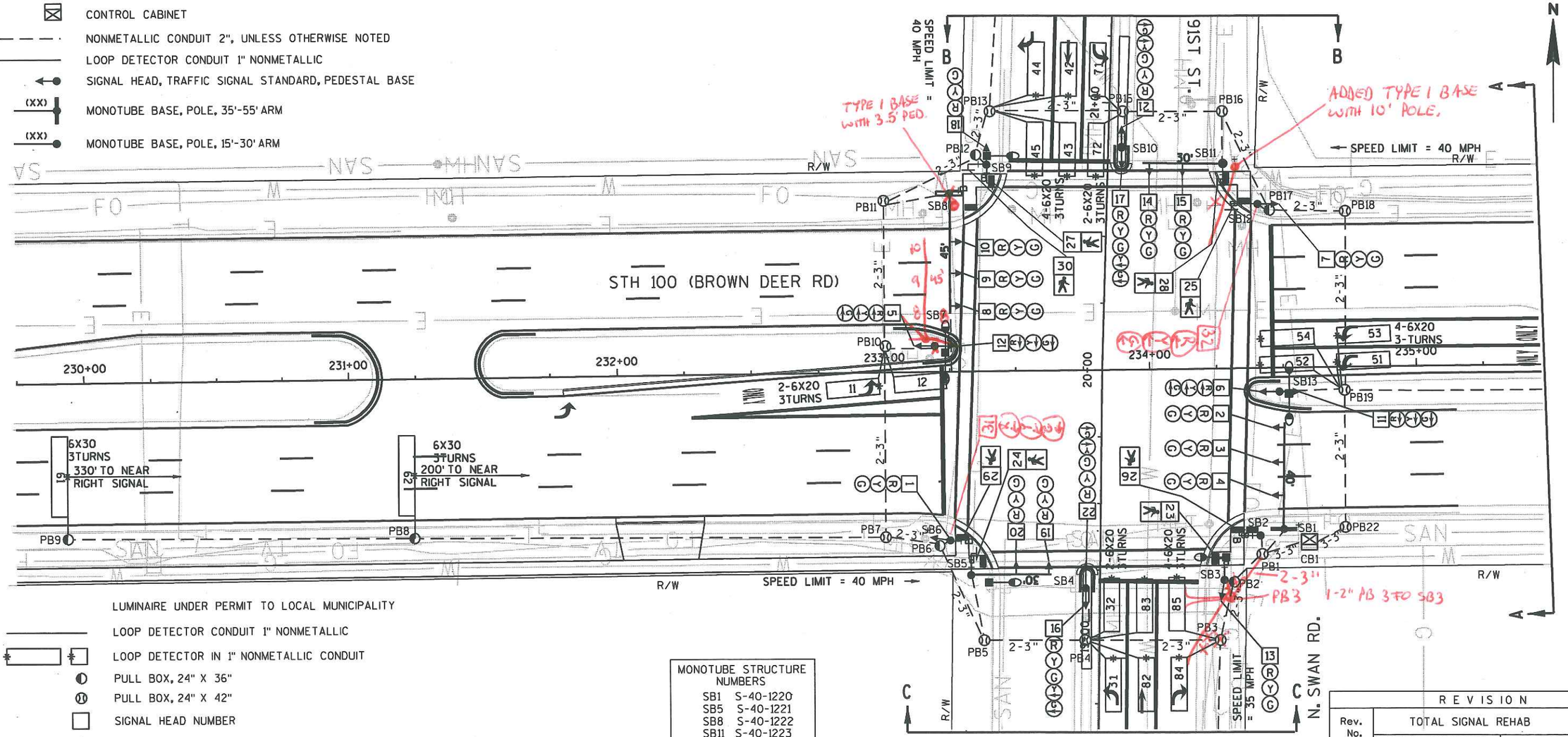

- LUMINAIRE UNDER PERMIT TO LOCAL MUNICIPALITY
- LOOP DETECTOR CONDUIT 1" NONMETALLIC
- LOOP DETECTOR IN 1" NONMETALLIC CONDUIT
- PULL BOX, 24" X 36"
- PULL BOX, 24" X 42"
- SIGNAL HEAD NUMBER
- (R) RED CIRCULAR INDICATOR
- (Y) YELLOW CIRCULAR INDICATOR
- (G) GREEN CIRCULAR INDICATOR
- RED ARROW
- YELLOW ARROW
- GREEN ARROW
- PEDESTRIAN COUNT DOWN TIMER
- LUMINAIRE UNDER PERMIT TO LOCAL MUNICIPALITY
- LUMINAIRE, TRAFFIC POLE, TRANSFORMER BASE
- LANE DESIGNATION FOR INFO ONLY

NOTE: ALL LENSES ARE 12-INCH
GRAYSHADE REPRESENTS EXISTING

MONOTUBE STRUCTURE NUMBERS	
SB1	S-40-1220
SB5	S-40-1221
SB8	S-40-1222
SB11	S-40-1223

CONSTRUCTION NOTES:

1. * LOCATION IS TO FRONT CENTER OF DETECTOR LOOP.
2. THE CONTRACTOR SHALL HAVE THE PULL BOXES AND CONDUIT RUNS INSPECTED 3 WORKING DAYS PRIOR TO PLACING SIGNAL CABLE INTO SYSTEM. CONTACT THE WISDOT ELECTRICAL FIELD UNIT TO MAKE ARRANGEMENTS. (414) 266-1170
3. BOLD MUNICIPAL LIGHT POLES TO BE RELOCATED BY MUNICIPALITY.
4. THE LOCATIONS OF EXISTING AND PROPOSED UTILITY INSTALLATIONS ARE APPROXIMATE. THERE MAY BE OTHER UTILITY INSTALLATIONS WITHIN THE PROJECT WHICH ARE NOT SHOWN.
5. THE ENGINEER SHALL ADJUST THE LOCATIONS OF ITEMS UNDER THIS CONTRACT TO AVOID CONFLICT WITH EXISTING UTILITY FACILITIES.

REVISION	
4-11-01	REPLACED POLES AND MAST ARMS ADDED NB, SB, EB LT, WB LT STOPLINE LOOPS ADDED ADVANCE LOOPS ALL
	APPROACHES INSTALLED EPAC CONTR. & CABINET ADD SB LT PHASE 7
10-4-99	CHANGE YELLOW FLASH TO RED
	REV. WB & NB LEFT TURN LANES, ADDED ARROWS AND DETECTION NB & EB, CHANGE CONTROLLER TO LC8000
5-94	DUAL WB LEFT TURN LANE ADDED CAPACITY NB LEFT TURN LANE
12-4-91	INSTALL PED HEADS ACTUATE E / W PED HEADS
10-9-86	RECONSTRUCT N & S APPROACHES
2-24-86	PLAN APPROVAL

Rev. No.	TOTAL SIGNAL REHAB			
	APPROVAL RECOMMENDED		APPROVED	
	REGION		CENTRAL OFFICE	
	Date	By	Date	By
8	MMD	1/27/10		

TRAFFIC CONTROL SIGNAL

STH 100 & N. 91ST STREET
CITY OF MILWAUKEE
MILWAUKEE COUNTY

SIGNAL NO. S1148 (M124) CONTROLLER TYPE: EPAC

WISCONSIN DEPARTMENT OF TRANSPORTATION

APPROVAL RECOMMENDED
Date 2-24-86 JOHN A. WHITE
REGION TRAFFIC ENGINEER

APPROVED
Date 2-24-86 R. D. PRICE
STATE TRAFFIC ENGINEER

REGION CONTACT: JOYCE DIMMER
DESIGNED BY: B. WEINFURT
REVISED BY:

PAGE 1 OF 3

PROJECT NO: 2150-05-00	HWY: STH 100	COUNTY: MILWAUKEE	TRAFFIC SIGNAL PLAN	SHEET	E

FILE NAME : j:\projects\D2_215005100\Sig\s1148_h.dgn PLOT DATE : 28-JAN-2010 10:20 PLOT BY : dotbgw PLOT NAME : PLOT SCALE : 40:1 WISDOT/CADDS SHEET 42

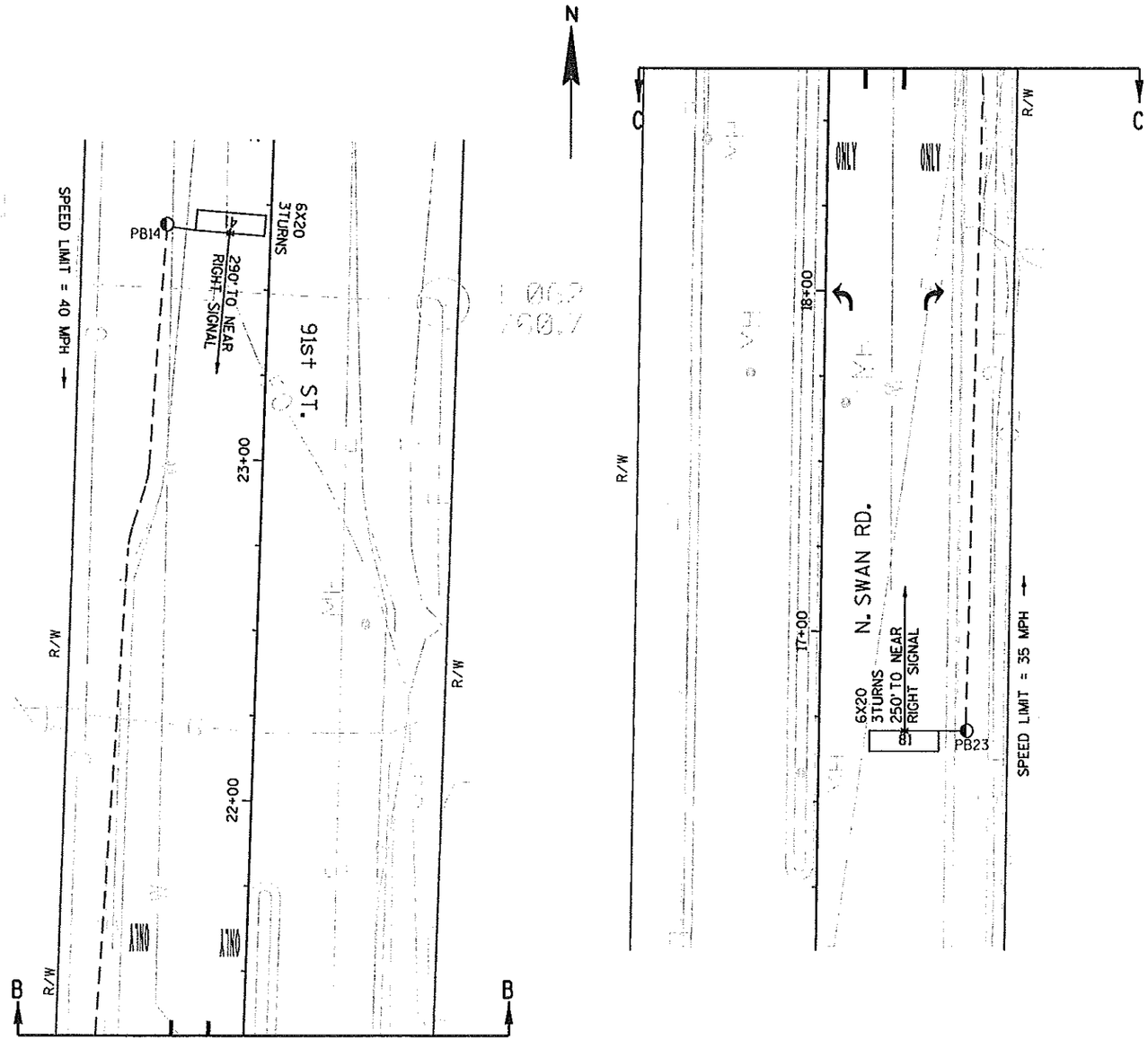

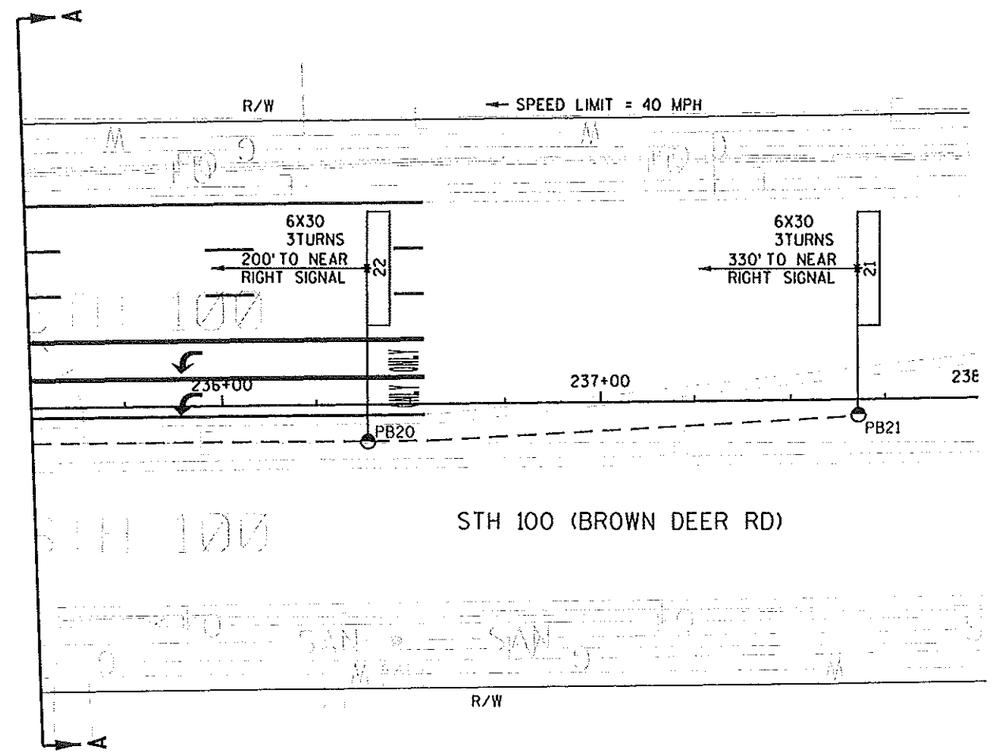

TRAFFIC CONTROL SIGNAL
STH 100 & N. 91ST STREET
CITY OF MILWAUKEE
MILWAUKEE COUNTY

SIGNAL NO. S1148 (M124)

REGION CONTACT: JOYCE DIMMER
DESIGNED BY: B. WEINFURT
REVISED BY:

PAGE 2 OF 3

PROJECT NO: 2150-05-00	HWY: STH 100	COUNTY: MILWAUKEE	TRAFFIC SIGNAL PLAN	SHEET	E

FILE NAME : j:\projects\D2_215005100\Sig\s1148_h.dgn PLOT DATE : 28-JAN-2010 10:19 PLOT BY : dotbgw PLOT NAME : PLOT SCALE : 40:1

SEQUENCE OF OPERATION

RING 1

	HEAD NUMBERS	01 R/W	01 CLEAR TO **			02 R/W	02 CLEAR TO **			03 R/W	03 CLEAR TO **			04 R/W	04 CLEAR TO **			FLASH
01	5,6	G	Y	R		R	R	R		R	R	R		R	R	R		R
02	7,8,9,10	R	R	R		G	Y	R		R	R	R		R	R	R		R
03	16,17	-	-	-		-	-	-		G	Y	-		-	-	-		-
04	18,19,20,21,22	R	R	R		R	R	R		R	R	R		G	Y	R		R
05	11,12	R	R	R		R	R	R		R	R	R		R	R	R		R
06	1,2,3,4	R	R	R		R	R	R		R	R	R		R	R	R		R
07	21,22	-	-	-		-	-	-		-	-	-		-	-	-		-
08	13,14,15,16,17	R	R	R		R	R	R		R	R	R		R	R	R		R
02P	27,28	DW	DW	DW		*	DW	DW		DW	DW	DW		DW	DW	DW		
04P	29,30	DW	DW	DW		DW	DW	DW		DW	DW	DW		*	DW	DW		
06P	23,24	DW	DW	DW		DW	DW	DW		DW	DW	DW		DW	DW	DW		
08P	25,26	DW	DW	DD		DW	DW	DW		DW	DW	DW		DW	DW	DW		

RING 2

	HEAD NUMBERS	05 R/W	05 CLEAR TO **			06 R/W	06 CLEAR TO **			07 R/W	07 CLEAR TO **			08 R/W	08 CLEAR TO **		
01	5,6	R	R	R		R	R	R		R	R	R		R	R	R	
02	7,8,9,10	R	R	R		R	R	R		R	R	R		R	R	R	
03	16,17	-	-	-		-	-	-		-	-	-		-	-	-	
04	18,19,20,21,22	R	R	R		R	R	R		R	R	R		R	R	R	
05	11,12	G	Y	R		R	R	R		R	R	R		R	R	R	
06	1,2,3,4	R	R	R		G	Y	R		R	R	R		R	R	R	
07	21,22	-	-	-		-	-	-		G	Y	-		-	-	-	
08	13,14,15,16,17	R	R	R		R	R	R		R	R	R		G	Y	R	
02P	27,28	DW	DW	DW		DW	DW	DW		DW	DW	DW		DW	DW	DW	
04P	29,30	DW	DW	DW		DW	DW	DW		DW	DW	DW		DW	DW	DW	
06P	23,24	DW	DW	DW		*	DW	DW		DW	DW	DW		DW	DW	DW	
08P	25,26	DW	DW	DD		DW	DW	DW		DW	DW	DW		*	DW	DW	

N

BARRIER

** CLEARANCE TO A PHASE IN CONFLICT WITH THIS PHASE ON (SEE CHART 1)

* WHEN CALLED, TIMED STEADY WALK, THEN FLASHING DON'T WALK, THEN GOES TO STEADY DON'T WALK

CHART 1

PHASE ON	NONCONFLICTING PHASE ALLOWED TO TIME CONCURRENTLY	PHASES IN CONFLICT WITH PHASE ON
01	5 OR 6	2,3,4,7,8
02	5 OR 6	1,3,4,7,8
03	7 OR 8	1,2,4,5,6
04	7 OR 8	1,2,3,5,6
05	1 OR 2	3,4,6,7,8
06	1 OR 2	3,4,5,7,8
07	3 OR 4	1,2,5,6,8
08	3 OR 4	1,2,5,6,7

DETECTOR LOGIC

DETECTOR NUMBER	AMPLIFIER CHANNEL NUMBER	DETECTOR OPERATION: CALLS AND EXTENDS	CALLS ONLY	EXTENDS ONLY	PHASE CALLED	PHASE EXTENDED	DETECTOR DISCONNECT PHASE	CALLING DELAY	EXTENSION STRETCH	SIZE	NUMBER OF TURNS
11	1	X			1	1				6x20	3
12	1	X			1	1				6x20	3
21	2	X			2	2				6x30	3
22	2	X			2	2				6x30	3
31	3	X			3	3				6x20	3
32	3	X			3	3				6x20	3
41	4			X		4			X	6x20	3
42	5	X			4	4				6x20	3
43	5	X			4	4				6x20	3
44	6	X			4	4		X		6x20	3
45	6	X			4	4		X		6x20	3
51	9	X			5	5				6x20	3
52	9	X			5	5				6x20	3
53	10	X			5	5				6x20	3
54	10	X			5	5				6x20	3
61	11	X			6	6				6x30	3
62	11	X			6	6				6x30	3
71	12	X			7	7				6x20	3
72	12	X			7	7				6x20	3
81	13			X		8			X	6x20	3
82	14	X			8	8				6x20	3
83	14	X			8	8				6x20	3
84	15	X			8	8		X		6x20	3
85	15	X			8	8		X		6x20	3

CONTROLLER LOGIC

PHASE NUMBER	PHASE LOCKING	DUAL ENTRY W / Ø	PHASE RECALL	PHASE ACTIVE
1				X
2	X	6	MIN.	X
3				X
4		8		X
5				X
6	X	2	MIN.	X
7				X
8		4		X

OVERLAPS

O.L. "A" =
O.L. "B" =
O.L. "C" =
O.L. "D" =

TYPE OF INTERCONNECT COMMUNICATION	
NONE	
TBC	X
CLOSED LOOP TWISTED PAIR*	
CLOSED LOOP FIBER OPTIC*	
RADIO	
*LOCATION OF MASTER CONTROLLER NO: S-	
SIGNAL SYSTEM #: SS- -	

TYPE OF PRE-EMPT	
NONE	X
RAILROAD	
EMERGENCY VEHICLE	
3M	
TOMAR	
HARDWIRE	
OTHER	
LIFT BRIDGE	
QUEUE DETECTOR	

TYPE OF LIGHTING	
BY OTHER AGENCY	X
IN TRAFFIC SIGNAL CABINET	
IN SEPARATE DOT LIGHTING CABINET	

GENERAL NOTES:

1. ANY ACTUATED PHASE FOR WHICH THERE IS NO CALL SHALL BE SKIPPED.
2. WHEN ONE PHASE IS ON ALONE, ANY NONCONFLICTING PHASE MAY START TIMING CONCURRENTLY WITHOUT A CLEARANCE INTERVAL. (SEE CHART 1 AT LEFT.)
3. IF ANY OPPOSING THRU PHASES ARE TIMING CONCURRENTLY, THEY SHALL TERMINATE TOGETHER DUE TO PERMISSIVE LEFT TURN CONFLICT.

STH 100 & N. 91ST STREET
CITY OF MILWAUKEE
MILWAUKEE COUNTY

SIGNAL NO. S1148 (M124)
CONTROLLER TYPE: EPAC
DATE 11/09
PAGE NO. 3 OF 3

PROJECT ID:	2150-05-70
INTERSECTION:	STH 100 & N. 91 ST.

Signal Wire Color Coding	BLK - black	RED - red	GRN - green
	WHT - white	BLU - blue	ORG - orange

CB1 TO	AWG14 # OF CONDUCTORS	HEAD NO.	PHASE	SIGNAL INDICATION WIRE COLOR								PED BUTTON	OTHER
				RED	YELLOW	GREEN	<RED>	<YELLOW>	<GREEN>	D/WALK	WALK		
SB1	12	2	6	RED	ORG	GRN							
		3	6	RED	ORG	GRN							
		4	6	RED	ORG	GRN							
SB2	12	26	8							BLK	BLU		
		BUTTON	8									WHT/BLK	
SB3	12	13	8	RED	ORG	GRN							
		23	6							BLK	BLU		
		BUTTON	6									WHT/BLK	
SB4	12	16	3 & 8	RED	ORG	GRN		BLK	BLU				
		22	4 & 7	RED/BLK	ORG/BLK	GRN/BLK		BLK/WHT	BLU/BLK				
SB5	12	19	4	RED	ORG	GRN							
		20	4	RED	ORG	GRN							
		24	6							BLK	BLU		
		BUTTON	6									WHT/BLK	
SB6	12	1	6	RED	ORG	GRN							
		29	4							BLK	BLU		
		BUTTON	4									WHT/BLK	
SB7	12	5	1				RED	ORG	GRN				
		12	5				RED/BLK	ORG/BLK	GRN/BLK				
SB8	12	8	2	RED	ORG	GRN							
		9	2	RED	ORG	GRN							
		10	2	RED	ORG	GRN							
		BUTTON	4									WHT/BLK	
SB9	12	18	4	RED	ORG	GRN							
		27	2							BLK	BLU		
		30	4							RED/BLK	GRN/BLK		
		BUTTON	2									WHT/BLK	
SB10	12	17	3 & 8	RED	ORG	GRN		BLK	BLU				
		21	4 & 7	RED/BLK	ORG/BLK	GRN/BLK		BLK/WHT	BLU/BLK				
SB11	12	14	8	RED	ORG	GRN							
		15	8	RED	ORG	GRN							
		28	2							BLK	BLU		
		BUTTON	2									WHT/BLK	
SB12	12	7	2	RED	ORG	GRN							
		25	8							BLK	BLU		
		BUTTON	8									WHT/BLK	
SB13	12	6	1				RED	ORG	GRN				
		11	5				RED/BLK	ORG/BLK	GRN/BLK				

Equipment grounding conductor 10 AWG Green XLP	
From	TO
CB1	SB1
SB1	SB2
SB2	SB3
SB3	SB4
SB4	SB5
SB5	SB6
SB6	SB7
SB7	SB8
SB8	SB9
SB9	SB10
SB10	SB11
SB11	SB12
SB12	SB13
SB13	CB1

Pull Box Bonding Jumper 10 AWG	
From	To
PB1	CB1
PB2	SB3
PB3	SB3
PB4	SB4
PB5	SB5
PB6	SB6
PB7	SB6
PB10	SB7
PB11	SB8
PB12	SB9
PB13	SB9
PB15	SB10
PB16	SB11
PB17	SB12
PB18	SB12
PB19	SB13
PB22	CB1

*Use the white conductor in the cable assembly as the grounded conductor for all traffic signal indications
*Ensure the grounded conductor in the feeder cable and the pole cables are both 18" longer than the ungrounded conductors.
*At the signal bases, connect one terminal from the pedestrian push buttons to the color indicated in the chart. Connect the other terminal to the grounded conductor.

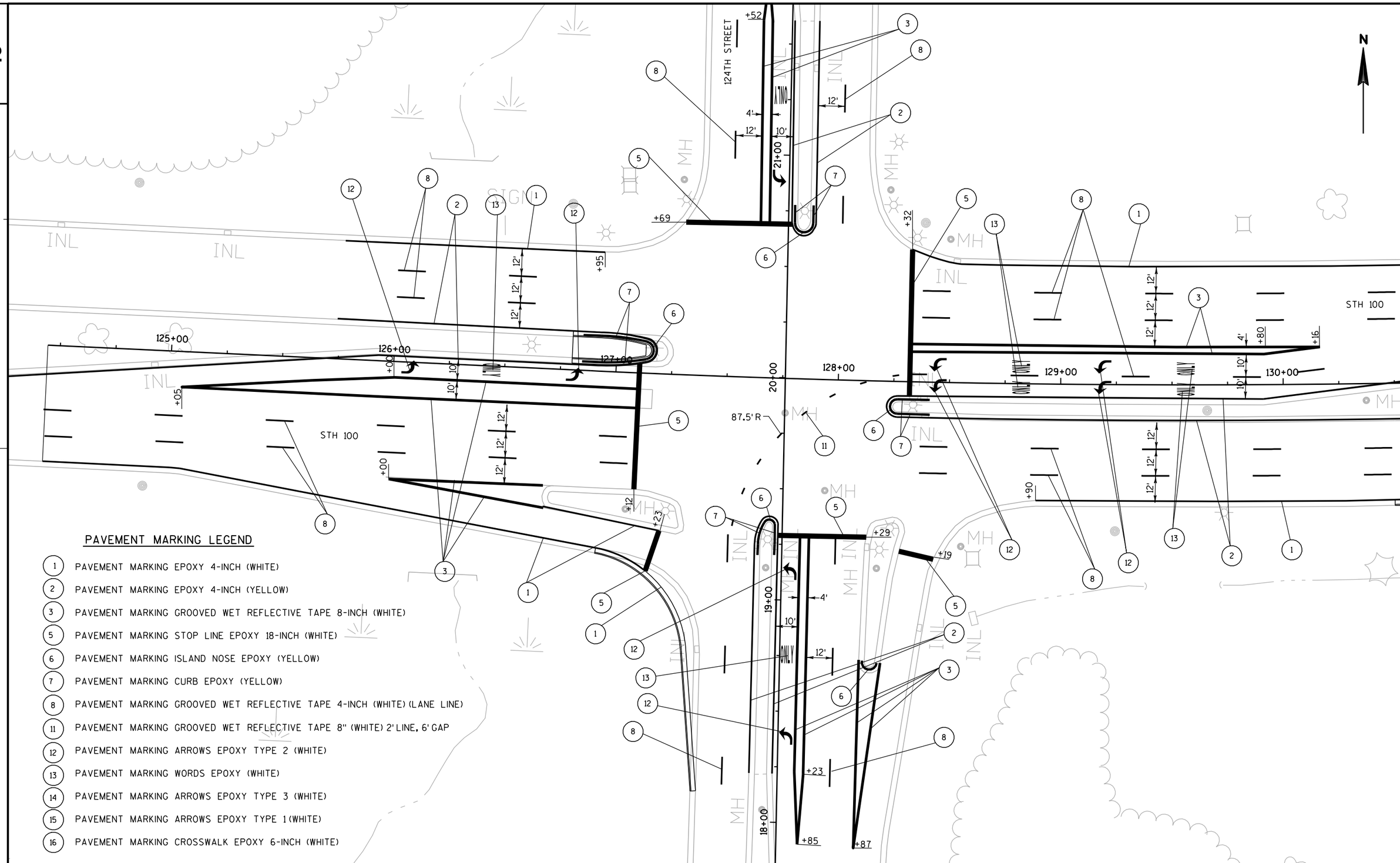

PAVEMENT MARKING LEGEND

1. PAVEMENT MARKING EPOXY 4-INCH (WHITE)
2. PAVEMENT MARKING EPOXY 4-INCH (YELLOW)
3. PAVEMENT MARKING GROOVED WET REFLECTIVE TAPE 8-INCH (WHITE)
5. PAVEMENT MARKING STOP LINE EPOXY 18-INCH (WHITE)
6. PAVEMENT MARKING ISLAND NOSE EPOXY (YELLOW)
7. PAVEMENT MARKING CURB EPOXY (YELLOW)
8. PAVEMENT MARKING GROOVED WET REFLECTIVE TAPE 4-INCH (WHITE) (LANE LINE)
11. PAVEMENT MARKING GROOVED WET REFLECTIVE TAPE 8" (WHITE) 2' LINE, 6' GAP
12. PAVEMENT MARKING ARROWS EPOXY TYPE 2 (WHITE)
13. PAVEMENT MARKING WORDS EPOXY (WHITE)
14. PAVEMENT MARKING ARROWS EPOXY TYPE 3 (WHITE)
15. PAVEMENT MARKING ARROWS EPOXY TYPE 1 (WHITE)
16. PAVEMENT MARKING CROSSWALK EPOXY 6-INCH (WHITE)

PROJECT NO: 2150-05-70	HWY: STH 100	COUNTY: MILWAUKEE	PAVEMENT MARKING - 124TH STREET	SHEET	E

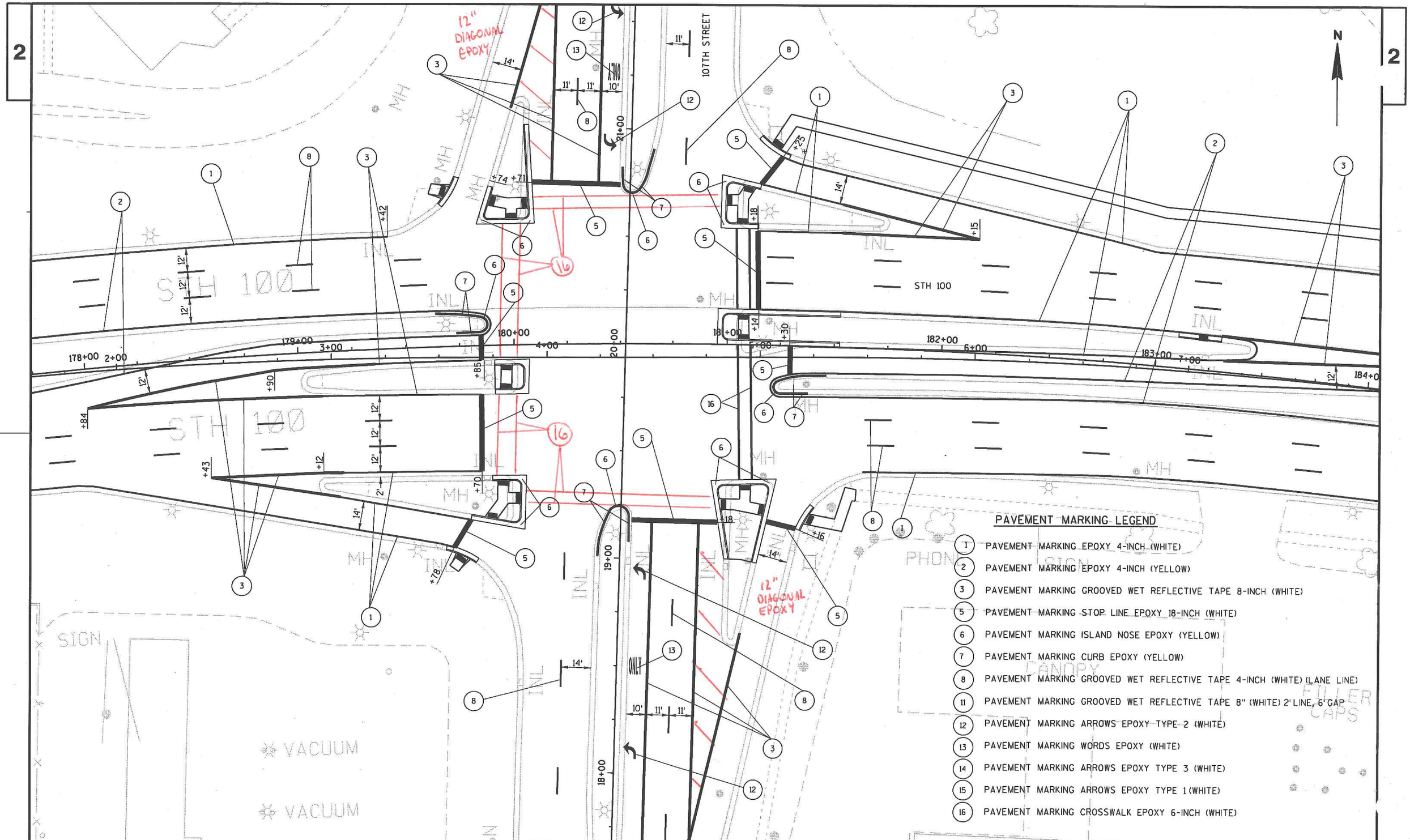

PROJECT NO: 2150-05-70	HWY: STH 100	COUNTY: MILWAUKEE	PAVEMENT MARKING - 107TH STREET	SHEET	E

FILE NAME : J:\projects\D2_215005100\024502_pm.dgn PLOT DATE : 09-MAR-2010 15:04 PLOT BY : dotshw PLOT NAME : PLOT SCALE : 40:1

WISDOT/CADDS SHEET 42

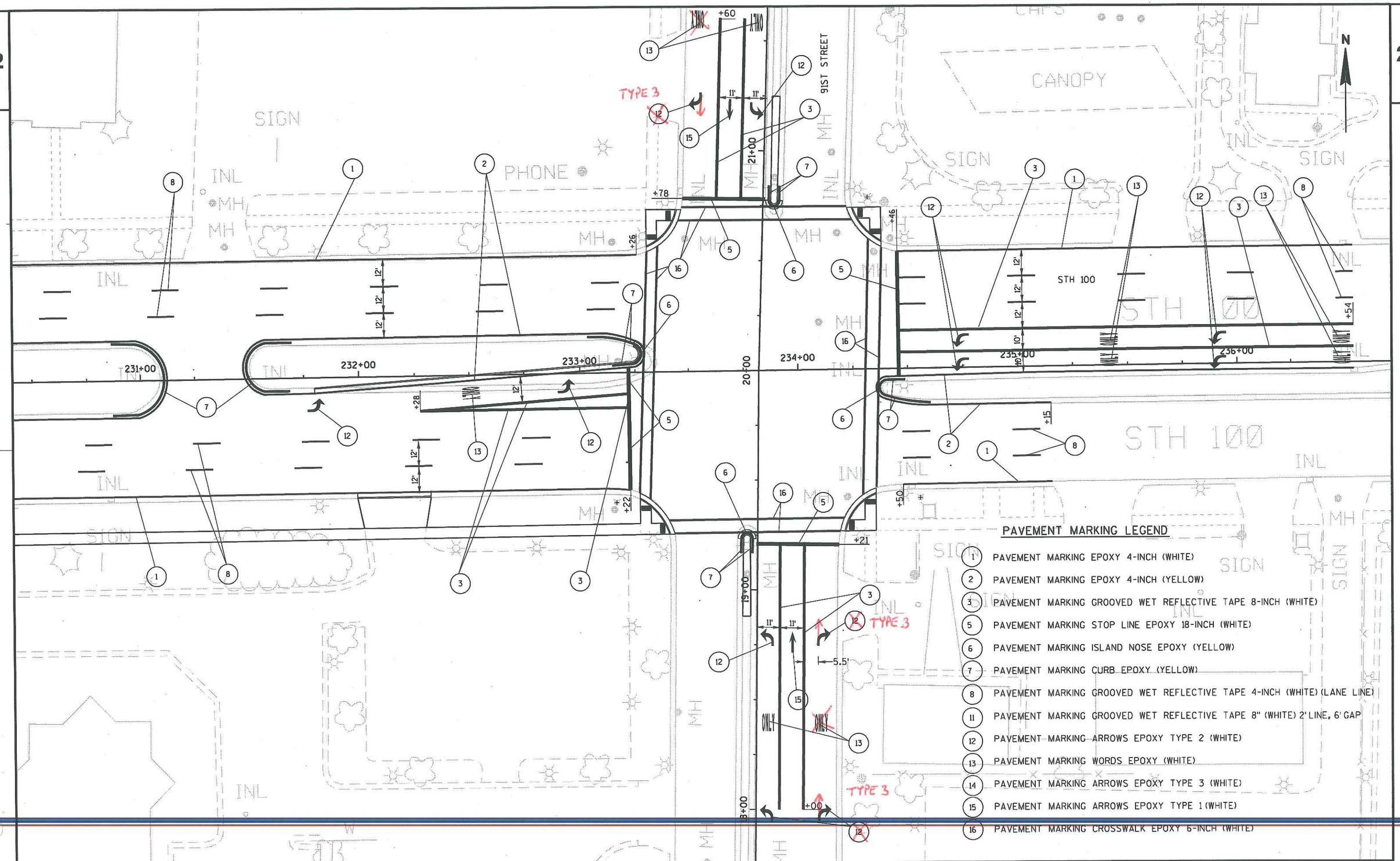

PROJECT NO: 2150-05-70	HWY: STH 100	COUNTY: MILWAUKEE	PAVEMENT MARKING - 91ST STREET	SHEET	E

FILE NAME : j:\projects\D2_215005100\024503_pm.dgn PLOT DATE : 09-MAR-2010 15:05 PLOT BY : dotshw PLOT NAME : PLOT SCALE : 40:1 WISDOT/CADDS SHEET 42

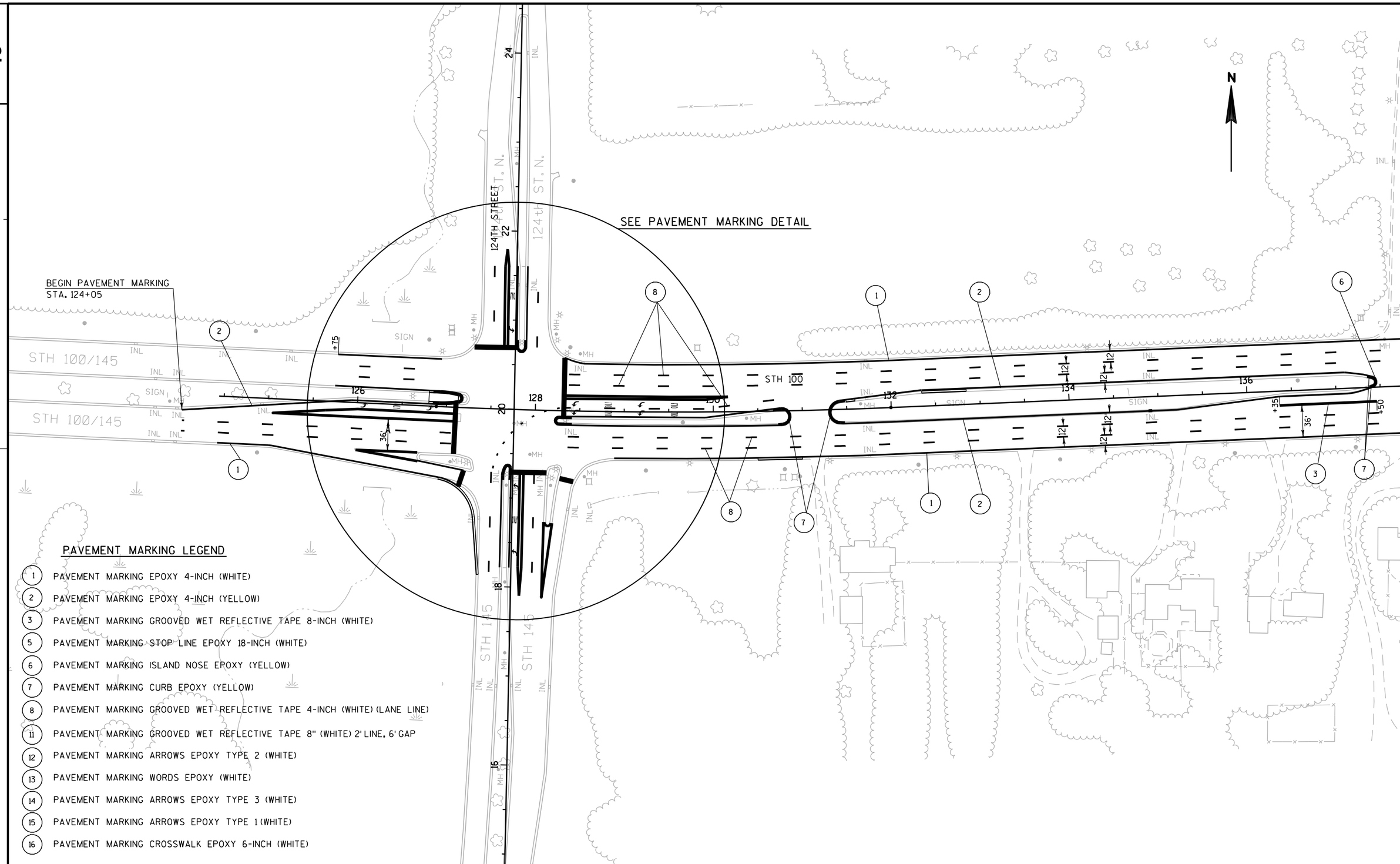

PAVEMENT MARKING LEGEND

1. PAVEMENT MARKING EPOXY 4-INCH (WHITE)
2. PAVEMENT MARKING EPOXY 4-INCH (YELLOW)
3. PAVEMENT MARKING GROOVED WET REFLECTIVE TAPE 8-INCH (WHITE)
5. PAVEMENT MARKING STOP LINE EPOXY 18-INCH (WHITE)
6. PAVEMENT MARKING ISLAND NOSE EPOXY (YELLOW)
7. PAVEMENT MARKING CURB EPOXY (YELLOW)
8. PAVEMENT MARKING GROOVED WET REFLECTIVE TAPE 4-INCH (WHITE) (LANE LINE)
11. PAVEMENT MARKING GROOVED WET REFLECTIVE TAPE 8" (WHITE) 2' LINE, 6' GAP
12. PAVEMENT MARKING ARROWS EPOXY TYPE 2 (WHITE)
13. PAVEMENT MARKING WORDS EPOXY (WHITE)
14. PAVEMENT MARKING ARROWS EPOXY TYPE 3 (WHITE)
15. PAVEMENT MARKING ARROWS EPOXY TYPE 1 (WHITE)
16. PAVEMENT MARKING CROSSWALK EPOXY 6-INCH (WHITE)

PROJECT NO: 2150-05-70	HWY: STH 100	COUNTY: MILWAUKEE	PAVEMENT MARKING	SHEET	E

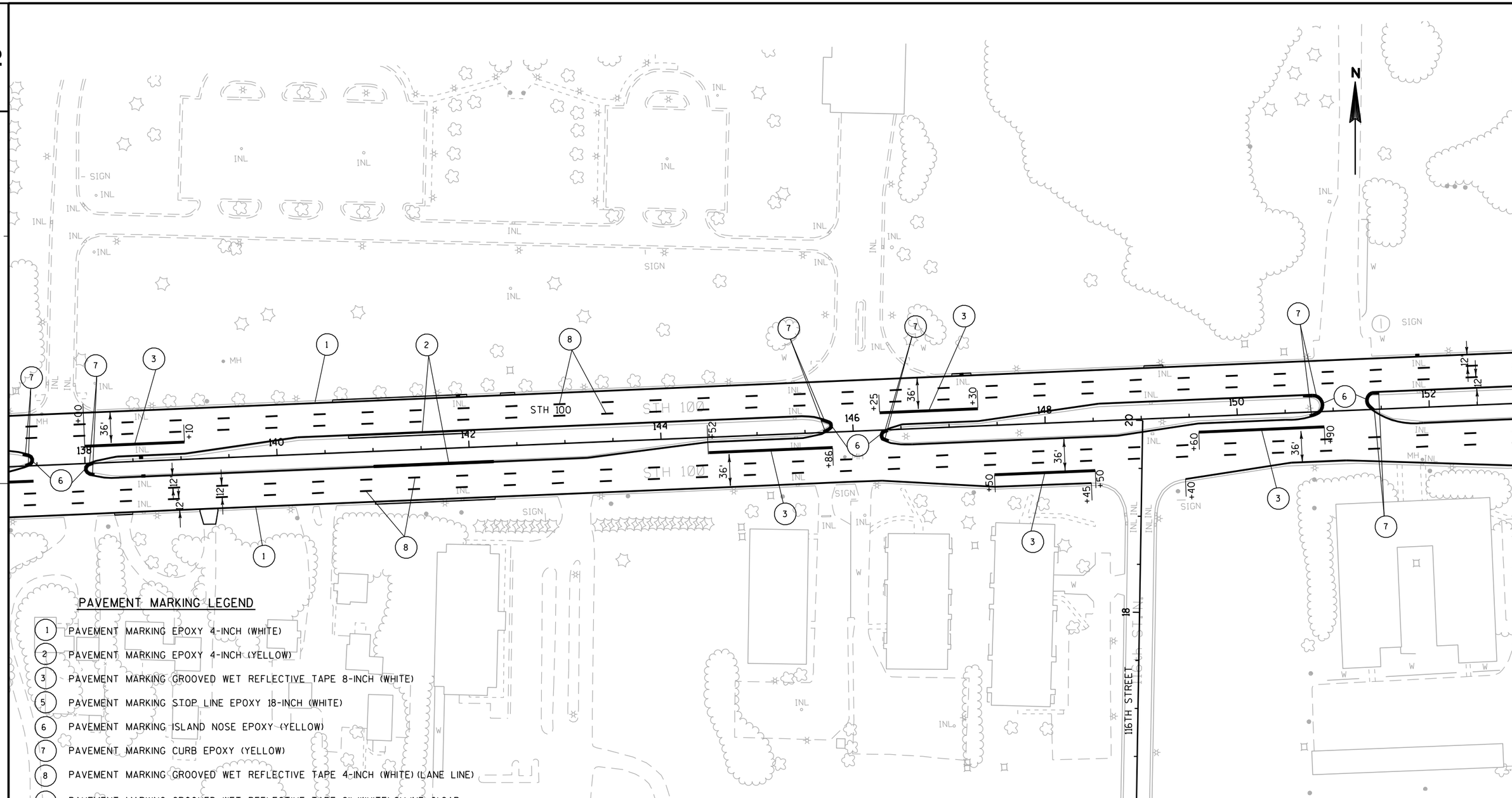

PAVEMENT MARKING LEGEND

1. PAVEMENT MARKING EPOXY 4-INCH (WHITE)
2. PAVEMENT MARKING EPOXY 4-INCH (YELLOW)
3. PAVEMENT MARKING GROOVED WET REFLECTIVE TAPE 8-INCH (WHITE)
5. PAVEMENT MARKING STOP LINE EPOXY 18-INCH (WHITE)
6. PAVEMENT MARKING ISLAND NOSE EPOXY (YELLOW)
7. PAVEMENT MARKING CURB EPOXY (YELLOW)
8. PAVEMENT MARKING GROOVED WET REFLECTIVE TAPE 4-INCH (WHITE)(LANE LINE)
11. PAVEMENT MARKING GROOVED WET REFLECTIVE TAPE 8" (WHITE) 2' LINE, 6' GAP
12. PAVEMENT MARKING ARROWS EPOXY TYPE 2 (WHITE)
13. PAVEMENT MARKING WORDS EPOXY (WHITE)
14. PAVEMENT MARKING ARROWS EPOXY TYPE 3 (WHITE)
15. PAVEMENT MARKING ARROWS EPOXY TYPE 1 (WHITE)
16. PAVEMENT MARKING CROSSWALK EPOXY 6-INCH (WHITE)

PROJECT NO: 2150-05-70	HWY: STH 100	COUNTY: MILWAUKEE	PAVEMENT MARKING	SHEET	E

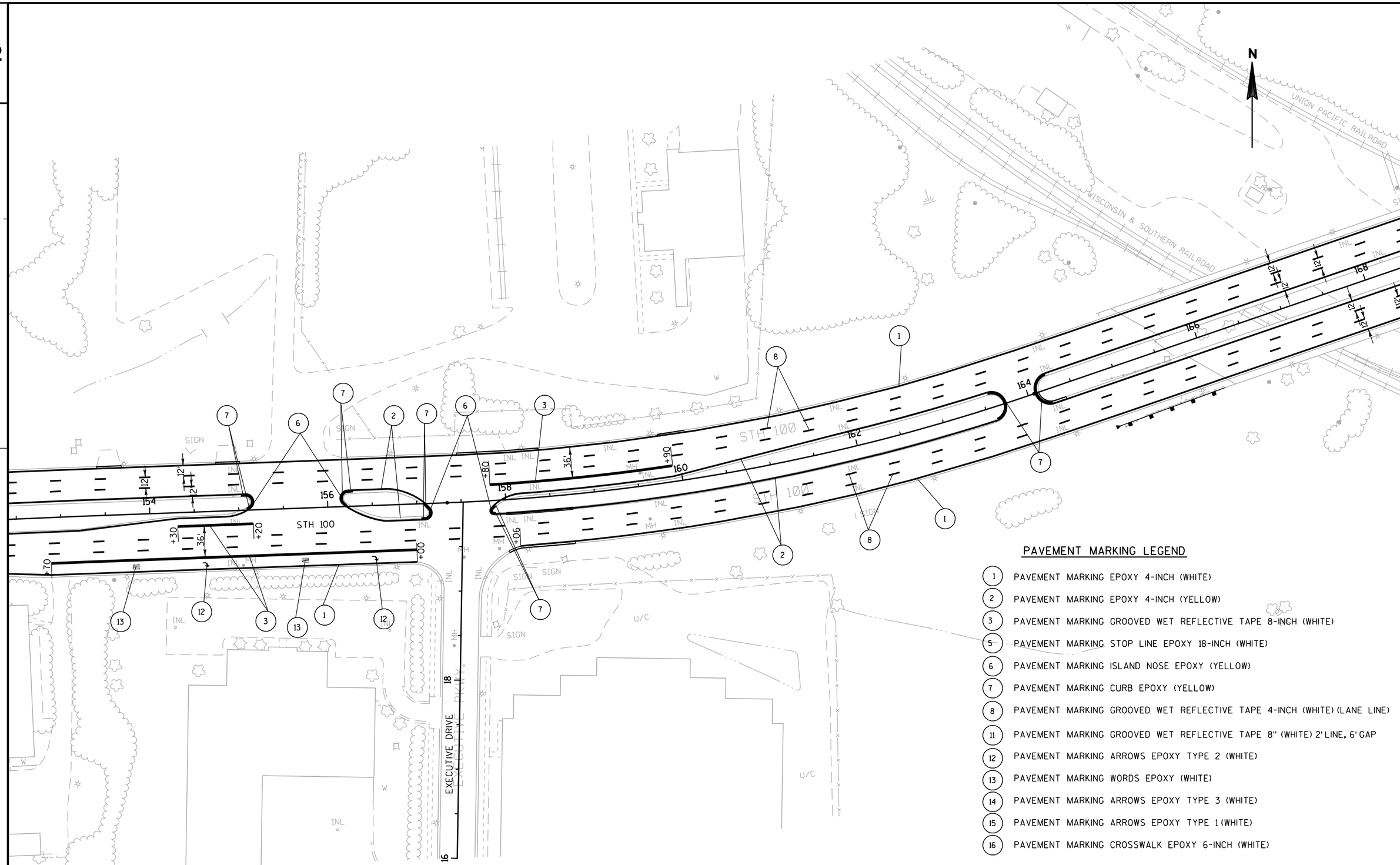

PAVEMENT MARKING LEGEND

1. PAVEMENT MARKING EPOXY 4-INCH (WHITE)
2. PAVEMENT MARKING EPOXY 4-INCH (YELLOW)
3. PAVEMENT MARKING GROOVED WET REFLECTIVE TAPE 8-INCH (WHITE)
5. PAVEMENT MARKING STOP LINE EPOXY 18-INCH (WHITE)
6. PAVEMENT MARKING ISLAND NOSE EPOXY (YELLOW)
7. PAVEMENT MARKING CURB EPOXY (YELLOW)
8. PAVEMENT MARKING GROOVED WET REFLECTIVE TAPE 4-INCH (WHITE) (LANE LINE)
11. PAVEMENT MARKING GROOVED WET REFLECTIVE TAPE 8" (WHITE) 2' LINE, 6' GAP
12. PAVEMENT MARKING ARROWS EPOXY TYPE 2 (WHITE)
13. PAVEMENT MARKING WORDS EPOXY (WHITE)
14. PAVEMENT MARKING ARROWS EPOXY TYPE 3 (WHITE)
15. PAVEMENT MARKING ARROWS EPOXY TYPE 1 (WHITE)
16. PAVEMENT MARKING CROSSWALK EPOXY 6-INCH (WHITE)

PROJECT NO: 2150-05-70	HWY: STH 100	COUNTY: MILWAUKEE	PAVEMENT MARKING	SHEET	E

FILE NAME : j:\projects\D2_215005100\024506_pm.dgn PLOT DATE : 09-MAR-2010 15:05 PLOT BY : dotshw PLOT NAME : PLOT SCALE : 100:1

2

PAVEMENT MARKING LEGEND

1. PAVEMENT MARKING EPOXY 4-INCH (WHITE)
2. PAVEMENT MARKING EPOXY 4-INCH (YELLOW)
3. PAVEMENT MARKING GROOVED WET REFLECTIVE TAPE 8-INCH (WHITE)
5. PAVEMENT MARKING STOP LINE EPOXY 18-INCH (WHITE)
6. PAVEMENT MARKING ISLAND NOSE EPOXY (YELLOW)
7. PAVEMENT MARKING CURB EPOXY (YELLOW)
8. PAVEMENT MARKING GROOVED WET REFLECTIVE TAPE 4-INCH (WHITE)(LANE LINE)
11. PAVEMENT MARKING GROOVED WET REFLECTIVE TAPE 8" (WHITE) 2'LINE, 6'GAP
12. PAVEMENT MARKING ARROWS EPOXY TYPE 2 (WHITE)
13. PAVEMENT MARKING WORDS EPOXY (WHITE)
14. PAVEMENT MARKING ARROWS EPOXY TYPE 3 (WHITE)
15. PAVEMENT MARKING ARROWS EPOXY TYPE 1 (WHITE)
16. PAVEMENT MARKING CROSSWALK EPOXY 6-INCH (WHITE)

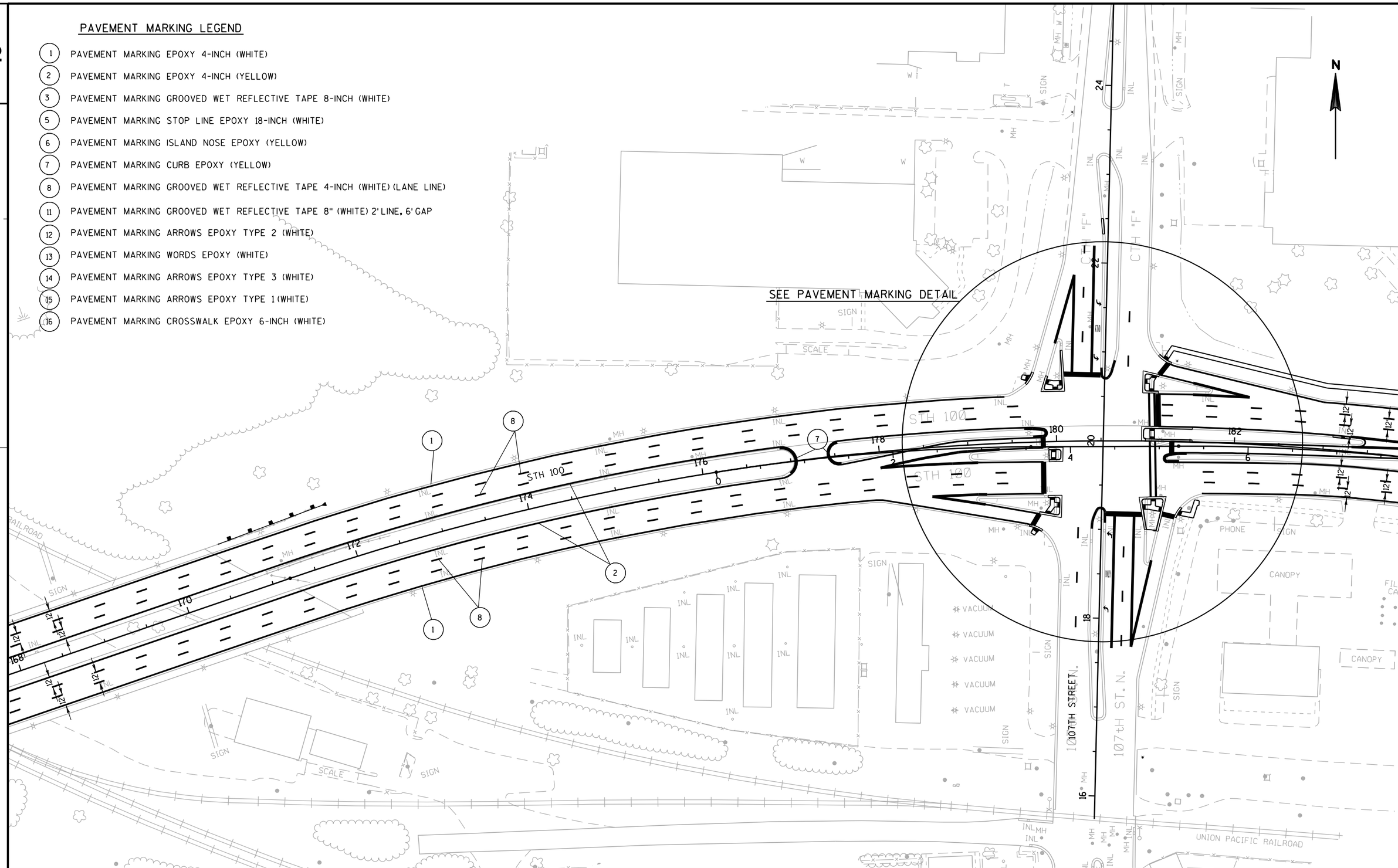

PROJECT NO: 2150-05-70	HWY: STH 100	COUNTY: MILWAUKEE	PAVEMENT MARKING	SHEET	E

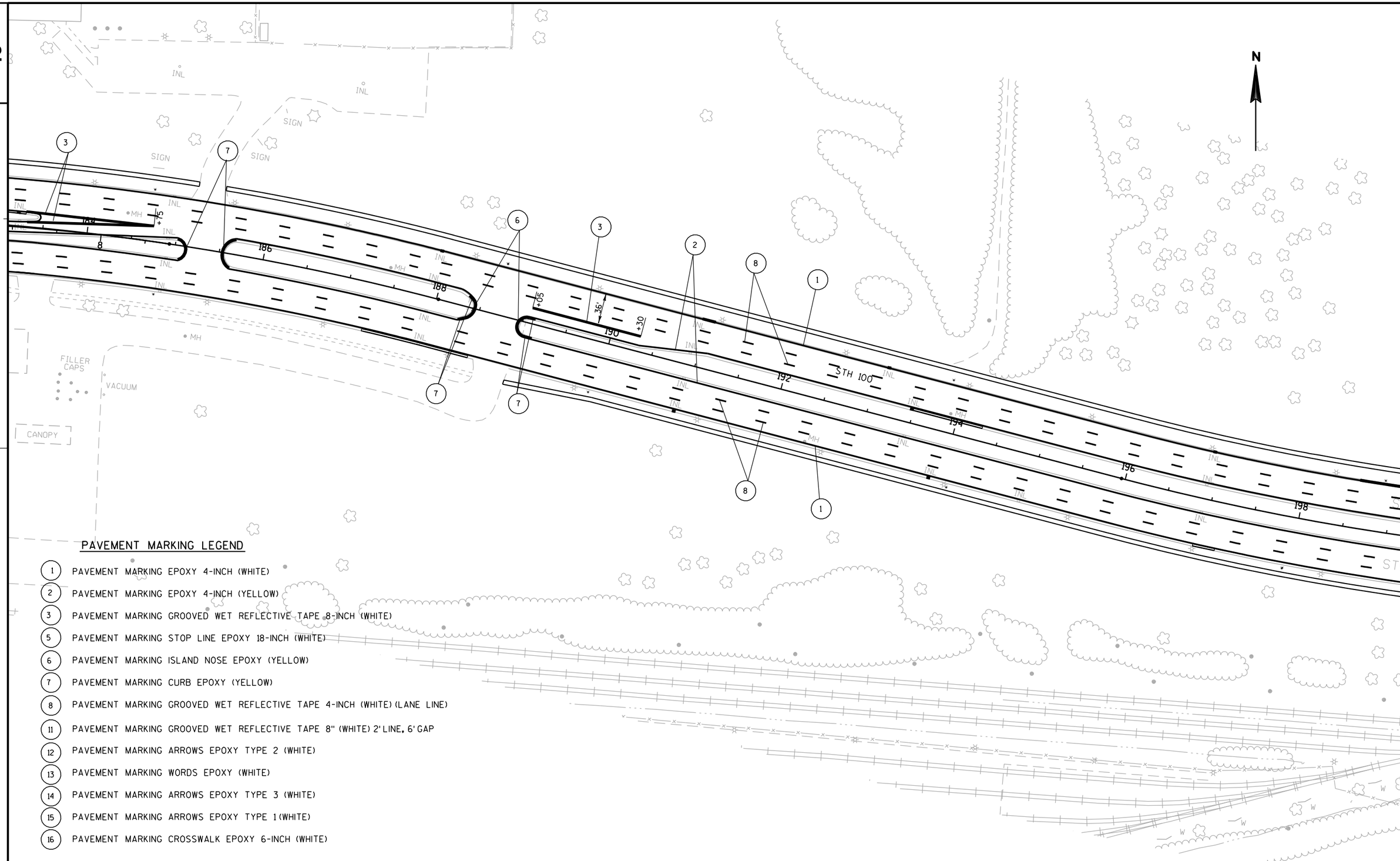

PAVEMENT MARKING LEGEND

1. PAVEMENT MARKING EPOXY 4-INCH (WHITE)
2. PAVEMENT MARKING EPOXY 4-INCH (YELLOW)
3. PAVEMENT MARKING GROOVED WET REFLECTIVE TAPE 8-INCH (WHITE)
5. PAVEMENT MARKING STOP LINE EPOXY 18-INCH (WHITE)
6. PAVEMENT MARKING ISLAND NOSE EPOXY (YELLOW)
7. PAVEMENT MARKING CURB EPOXY (YELLOW)
8. PAVEMENT MARKING GROOVED WET REFLECTIVE TAPE 4-INCH (WHITE) (LANE LINE)
11. PAVEMENT MARKING GROOVED WET REFLECTIVE TAPE 8" (WHITE) 2' LINE, 6' GAP
12. PAVEMENT MARKING ARROWS EPOXY TYPE 2 (WHITE)
13. PAVEMENT MARKING WORDS EPOXY (WHITE)
14. PAVEMENT MARKING ARROWS EPOXY TYPE 3 (WHITE)
15. PAVEMENT MARKING ARROWS EPOXY TYPE 1 (WHITE)
16. PAVEMENT MARKING CROSSWALK EPOXY 6-INCH (WHITE)

PROJECT NO: 2150-05-70	HWY: STH 100	COUNTY: MILWAUKEE	PAVEMENT MARKING	SHEET	E

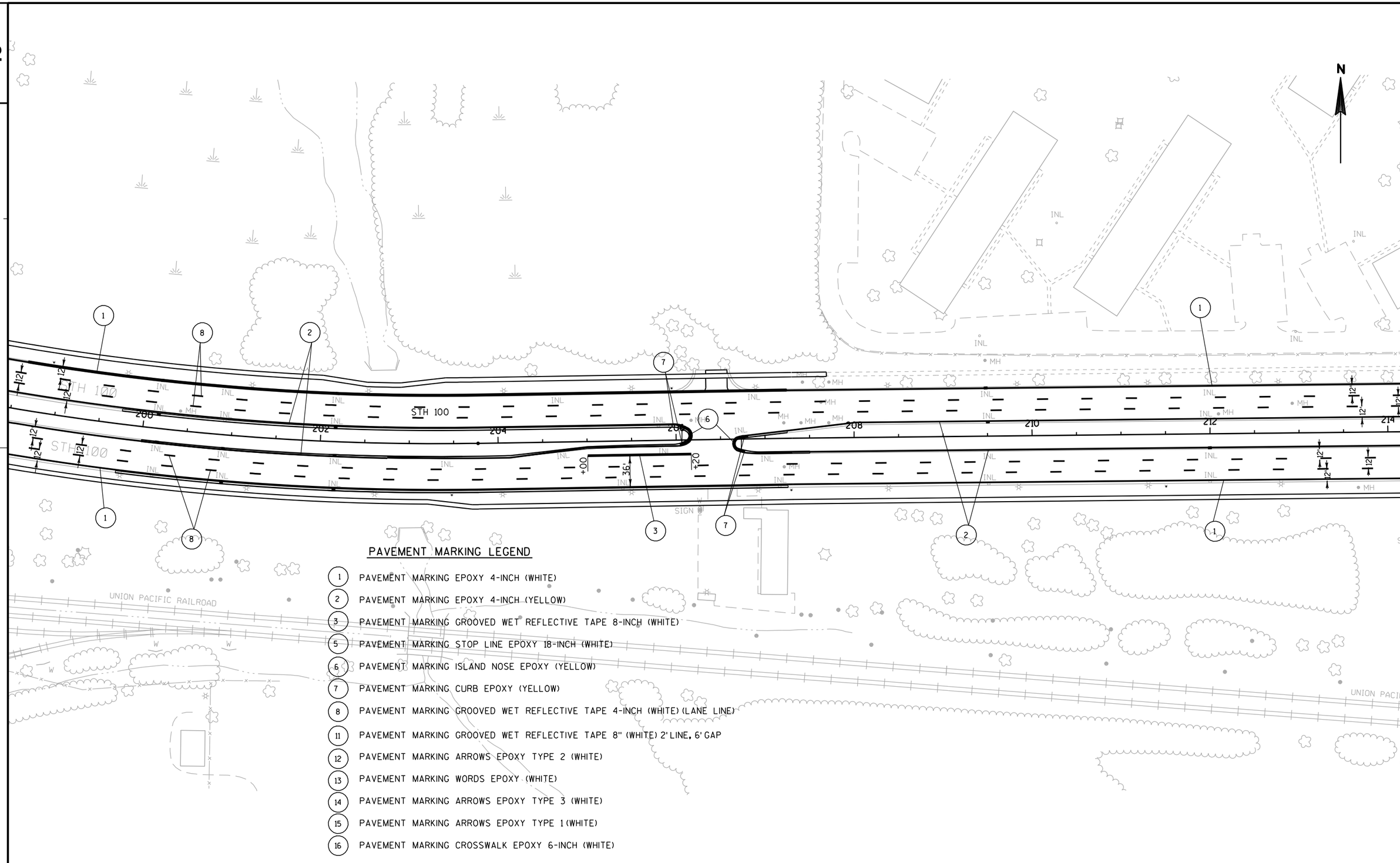

PAVEMENT MARKING LEGEND

1. PAVEMENT MARKING EPOXY 4-INCH (WHITE)
2. PAVEMENT MARKING EPOXY 4-INCH (YELLOW)
3. PAVEMENT MARKING GROOVED WET REFLECTIVE TAPE 8-INCH (WHITE)
5. PAVEMENT MARKING STOP LINE EPOXY 18-INCH (WHITE)
6. PAVEMENT MARKING ISLAND NOSE EPOXY (YELLOW)
7. PAVEMENT MARKING CURB EPOXY (YELLOW)
8. PAVEMENT MARKING GROOVED WET REFLECTIVE TAPE 4-INCH (WHITE)(LANE LINE)
11. PAVEMENT MARKING GROOVED WET REFLECTIVE TAPE 8" (WHITE) 2' LINE, 6' GAP
12. PAVEMENT MARKING ARROWS EPOXY TYPE 2 (WHITE)
13. PAVEMENT MARKING WORDS EPOXY (WHITE)
14. PAVEMENT MARKING ARROWS EPOXY TYPE 3 (WHITE)
15. PAVEMENT MARKING ARROWS EPOXY TYPE 1 (WHITE)
16. PAVEMENT MARKING CROSSWALK EPOXY 6-INCH (WHITE)

PROJECT NO: 2150-05-70	HWY: STH 100	COUNTY: MILWAUKEE	PAVEMENT MARKING	SHEET	E

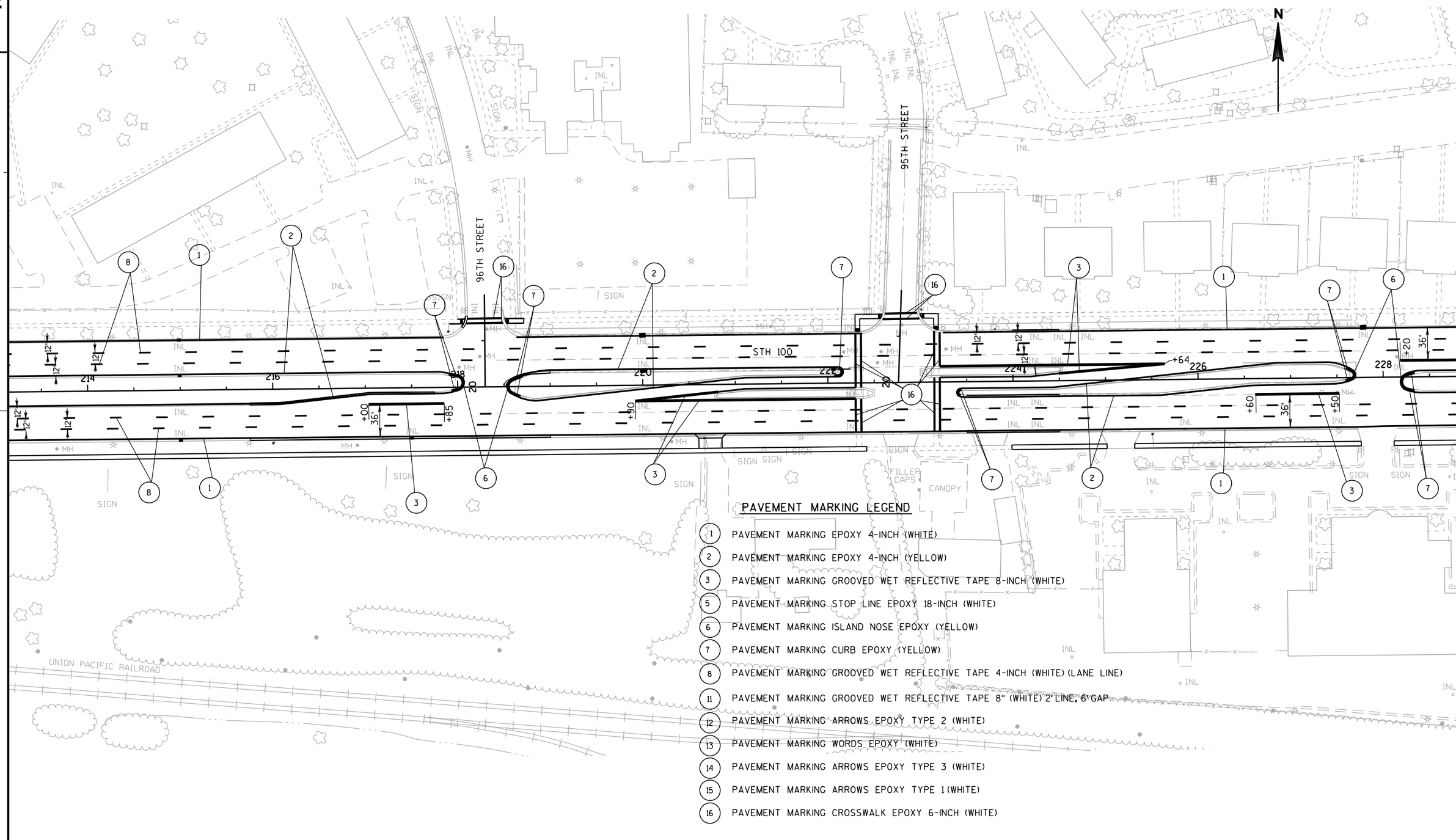

PAVEMENT MARKING LEGEND

1. PAVEMENT MARKING EPOXY 4-INCH (WHITE)
2. PAVEMENT MARKING EPOXY 4-INCH (YELLOW)
3. PAVEMENT MARKING GROOVED WET REFLECTIVE TAPE 8-INCH (WHITE)
5. PAVEMENT MARKING STOP LINE EPOXY 18-INCH (WHITE)
6. PAVEMENT MARKING ISLAND NOSE EPOXY (YELLOW)
7. PAVEMENT MARKING CURB EPOXY (YELLOW)
8. PAVEMENT MARKING GROOVED WET REFLECTIVE TAPE 4-INCH (WHITE)(LANE LINE)
11. PAVEMENT MARKING GROOVED WET REFLECTIVE TAPE 8" (WHITE) 2' LINE, 6' GAP
12. PAVEMENT MARKING ARROWS EPOXY TYPE 2 (WHITE)
13. PAVEMENT MARKING WORDS EPOXY (WHITE)
14. PAVEMENT MARKING ARROWS EPOXY TYPE 3 (WHITE)
15. PAVEMENT MARKING ARROWS EPOXY TYPE 1 (WHITE)
16. PAVEMENT MARKING CROSSWALK EPOXY 6-INCH (WHITE)

PROJECT NO: 2150-05-70	HWY: STH 100	COUNTY: MILWAUKEE	PAVEMENT MARKING	SHEET	E

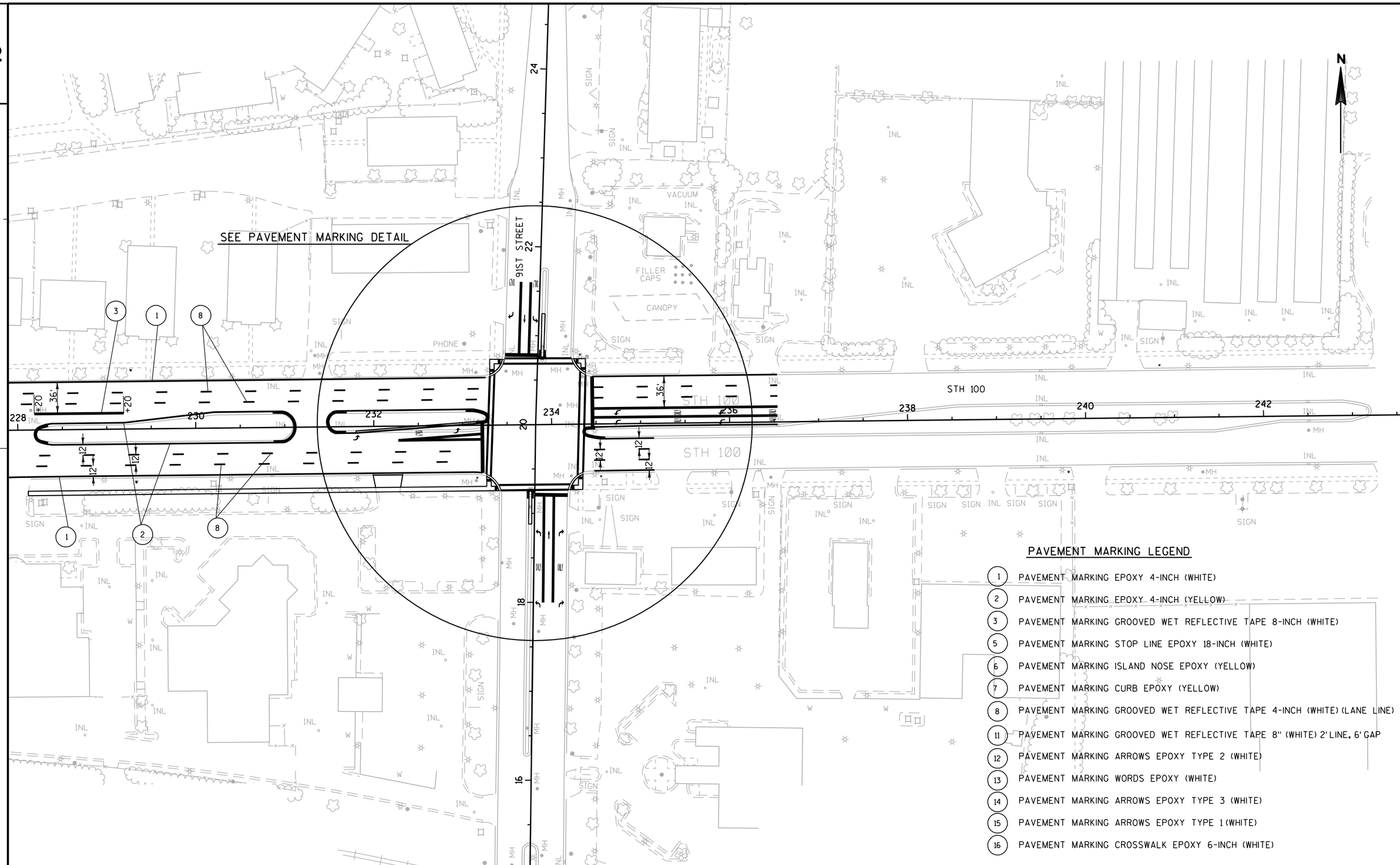

PAVEMENT MARKING LEGEND

1. PAVEMENT MARKING EPOXY 4-INCH (WHITE)
2. PAVEMENT MARKING EPOXY 4-INCH (YELLOW)
3. PAVEMENT MARKING GROOVED WET REFLECTIVE TAPE 8-INCH (WHITE)
5. PAVEMENT MARKING STOP LINE EPOXY 18-INCH (WHITE)
6. PAVEMENT MARKING ISLAND NOSE EPOXY (YELLOW)
7. PAVEMENT MARKING CURB EPOXY (YELLOW)
8. PAVEMENT MARKING GROOVED WET REFLECTIVE TAPE 4-INCH (WHITE)(LANE LINE)
11. PAVEMENT MARKING GROOVED WET REFLECTIVE TAPE 8" (WHITE) 2' LINE, 6' GAP
12. PAVEMENT MARKING ARROWS EPOXY TYPE 2 (WHITE)
13. PAVEMENT MARKING WORDS EPOXY (WHITE)
14. PAVEMENT MARKING ARROWS EPOXY TYPE 3 (WHITE)
15. PAVEMENT MARKING ARROWS EPOXY TYPE 1 (WHITE)
16. PAVEMENT MARKING CROSSWALK EPOXY 6-INCH (WHITE)

PROJECT NO: 2150-05-70	HWY: STH 100	COUNTY: MILWAUKEE	PAVEMENT MARKING	SHEET	E

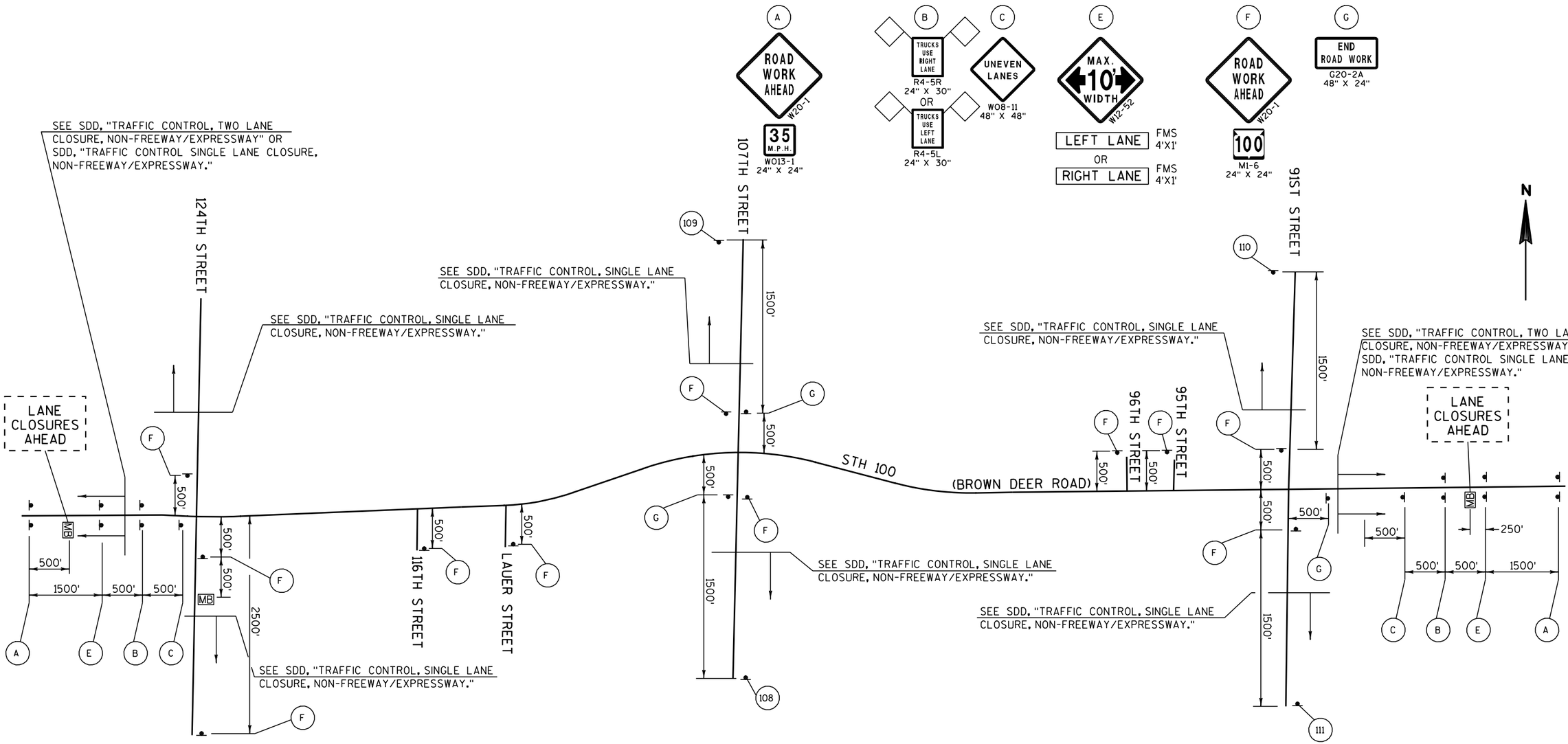

TRAFFIC CONTROL GENERAL NOTES

1.) NO LONGITUDINAL OR TRANSVERSE DROP-OFFS OF 1-INCH OR GREATER SHALL REMAIN BETWEEN LANES OPEN TO LIVE TRAFFIC. WEDGES SHALL BE PAID UNDER THE CONTRACT ITEM ASPHALTIC SURFACE TEMPORARY

2.) ALL TRAFFIC CONTROL SIGNS SHALL BE OPERATIONAL PRIOR TO THE BEGINNING OF ANY WORK UNLESS CONTRACTOR OBTAINS WRITTEN APPROVAL FROM THE ENGINEER.

3.) SIDE ROAD LANE AND MAINLINE CLOSURES REQUIRED. REFER TO SDD, "TRAFFIC CONTROL, SINGLE LANE CLOSURE, NON-FREEWAY/EXPRESSWAY." OR SDD, "TRAFFIC CONTROL , TWO LANE CLOSURE NON-FREEWAY/EXPRESSWAY."

4.) PROTECT MEDIAN NOSE, CURB RAMPS WITH TRAFFIC CONTROL DRUMS UNTIL CONCRETE HAS REACHED CURE AND AS DIRECTED BY THE ENGINEER.

LEGEND

- PERMANENT SIGN SUPPORT
- MB TRAFFIC CONTROL SIGN PORTABLE CHANGEABLE MESSAGE
- SIGN OR FIXED MESSAGE CALLOUT
- 16-INCH ORANGE FLAGS
- INTENDED MESSAGE

PROJECT NO: 2150-05-70	HWY: STH 100	COUNTY: MILWAUKEE	ADVANCED SIGNING DETAIL	SHEET	E

2

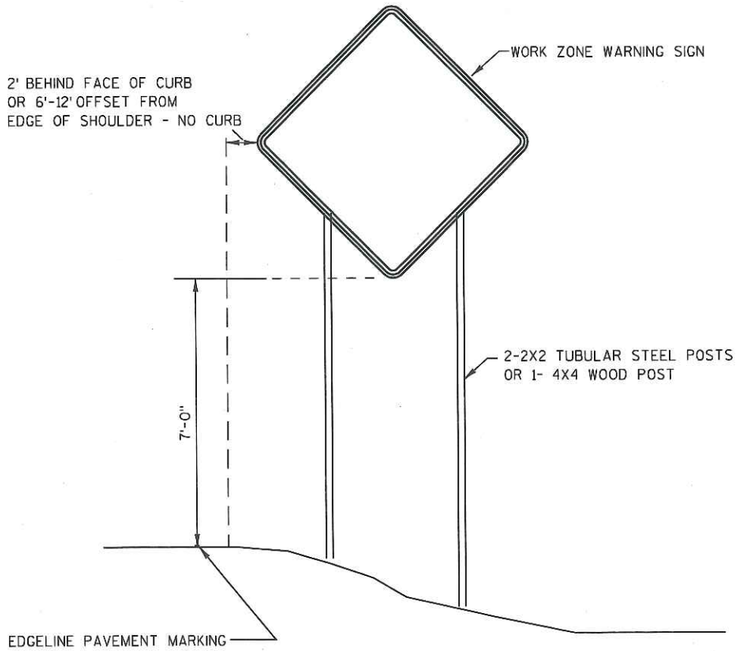

TYPICAL TEMPORARY TRAFFIC CONTROL DETAIL
MOUNTING ON FIXED SUPPORT

LONG TERM
7 DAYS OR MORE

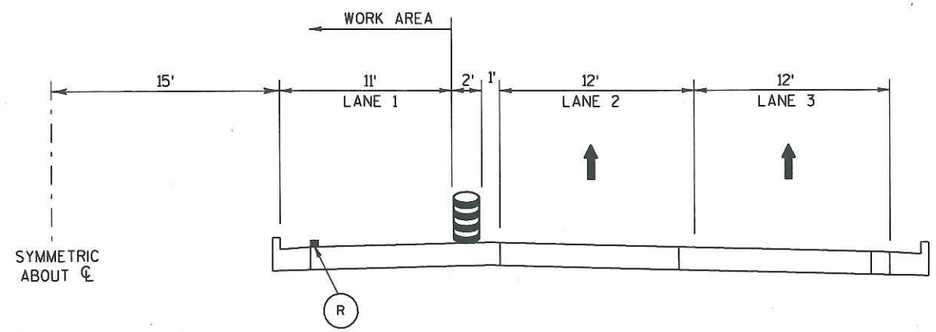

STAGE 1A - OFF PEAK
LOOKING EAST
STH 100 (BROWN DEER ROAD)

STAGE 1A CONSTRUCTION
-REPAIR & REPLACE ANY MEDIAN CURB & GUTTER AS INDICATED ON PLANS, OR AS DIRECTED BY THE ENGINEER

TRAFFIC
-CLOSE MEDIAN, LANE 1

LEGEND
- (DW) TEMPORARY PAVEMENT MARKING REFLECTIVE PAINT 4-INCH (12.5 FT LINE, 37.5 FT SKIP) (WHITE)
- (R) REMOVING PAVEMENT MARKING
- (W) TEMPORARY PAVEMENT MARKING REFLECTIVE PAINT 4-INCH (WHITE)
- (TW) TEMPORARY PAVEMENT MARKING REMOVABLE TAPE 4-INCH (WHITE) (12.5 FT LINE, 37. FT SKIP)
- (Y) TEMPORARY PAVEMENT MARKING REFLECTIVE PAINT 4-INCH (WHITE)

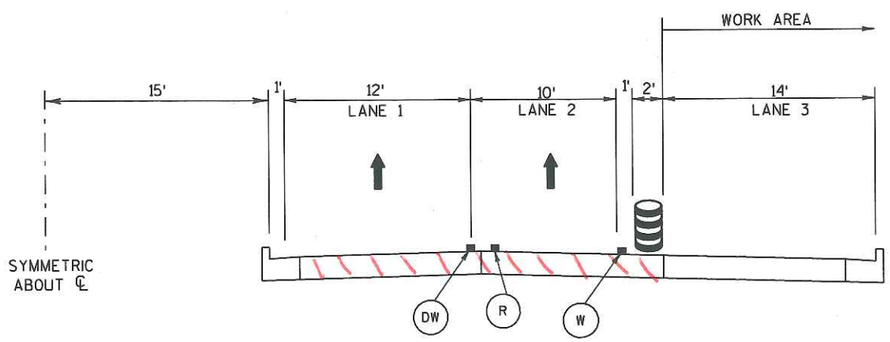

STAGE 1B - PEAK HOURS
LOOKING EAST
STH 100 (BROWN DEER ROAD)

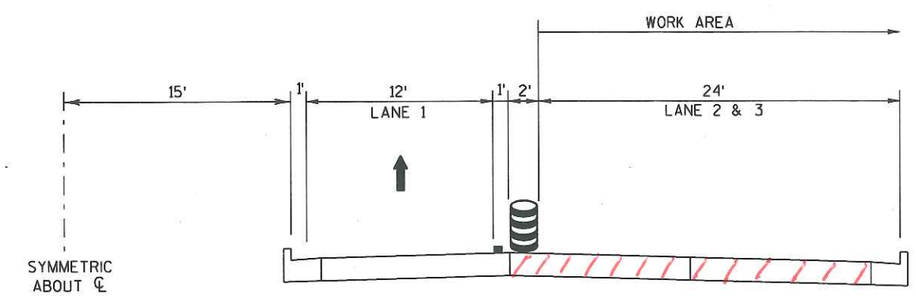

= STAGE 1 B PAVING LIMITS

STAGE 1B - OFF PEAK
LOOKING EAST
STH 100 (BROWN DEER ROAD)

TRAFFIC
-REDUCE EB & WB TO TWO LANES THROUGHOUT PROJECT LIMITS
-CLOSE OUTSIDE LANE 3

STAGE 1B & 1C CONSTRUCTION
-MILL LANE 2 & 3
-JOINT & CRACK REPAIR LANE 2 & 3
-RECONSTRUCT LANE 3 & ½ LANE 2 (STAGE 1C)
-PAVE LOWER LIFT LANE 3 & ~~½ LANE 2~~ ENTIRE LANE 2
-BASE PATCH LANE 3 & ~~½ LANE 2~~ ENTIRE LANE 2

TRAFFIC
-CLOSE LANE 2
-MAINTAIN 1 LANE FOR EB & WB THROUGHOUT PROJECT LIMITS

PROJECT NO: 2150-05-70	HWY: STH 100	COUNTY: MILWAUKEE	TRAFFIC CONTROL - TYPICAL SECTIONS	SHEET 83	E

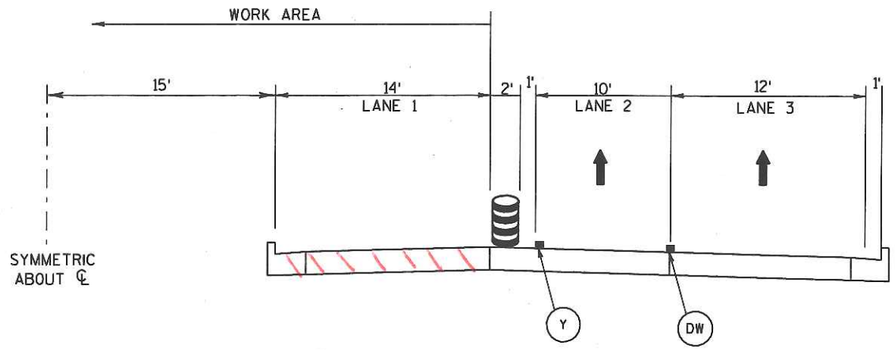

TRAFFIC
-MAINTAIN TWO LANES FOR EB & WB
THROUGHOUT PROJECT LIMITS
-SHIFT TRAFFIC TO OUTSIDE LANES

STAGE 2B - PEAK HOURS
LOOKING EAST
STH 100 (BROWN DEER ROAD)

STAGE 2 CONSTRUCTION
-MILL LANE 1, TURN BAYS & INTERSECTIONS
-RECONSTRUCT LANE 1 & 1/2 LANE 2 (STAGE 2A)
-JOINT & CRACK REPAIR LANE 1 ~~& 1/2 LANE 2~~
-PAVE LOWER & UPPER LANE 1 ~~& 1/2 LANE 2~~

= STAGE 2 PAVING AREA

LEGEND

- (DW) TEMPORARY PAVEMENT MARKING REFLECTIVE PAINT 4-INCH (12.5 FT LINE, 37.5 FT SKIP) (WHITE)
- (R) REMOVING PAVEMENT MARKING
- (W) TEMPORARY PAVEMENT MARKING REFLECTIVE PAINT 4-INCH (WHITE)
- (TW) TEMPORARY PAVEMENT MARKING REMOVABLE TAPE 4-INCH (WHITE) (12.5 FT LINE, 37. FT SKIP)
- (Y) TEMPORARY PAVEMENT MARKING REFLECTIVE PAINT 4-INCH (WHITE)
- (T) TEMPORARY PAVEMENT MARKING REMOVABLE TAPE 4-INCH (WHITE) SOLID

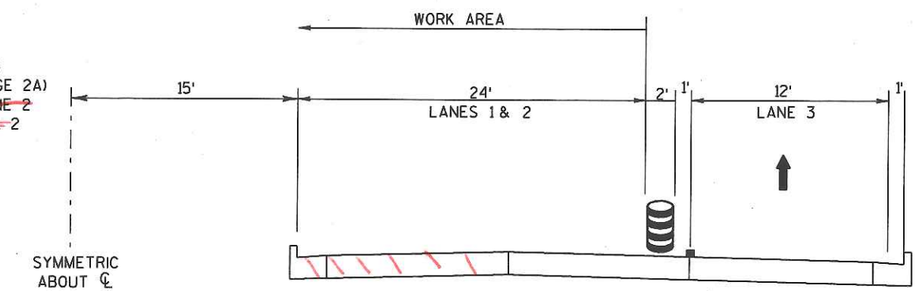

STAGE 2B - OFF PEAK
LOOKING EAST
STH 100 (BROWN DEER ROAD)

TRAFFIC
-CLOSE LANE 2
-MAINTAIN ONE LANE FOR EB & WB
THROUGHOUT PROJECT LIMITS

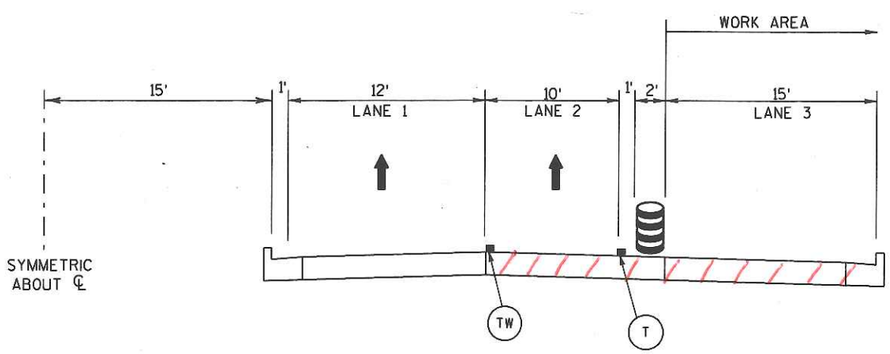

TRAFFIC
-SHIFT TRAFFIC TO MEDIAN SIDE
-MAINTAIN TWO LANES FOR EB & WB
THROUGHOUT PROJECT LIMITS

STAGE 3 - PEAK HOURS
LOOKING EAST
STH 100 (BROWN DEER ROAD)

STAGE 3 CONSTRUCTION
-PAVE UPPER LIFT LANE 3 & ~~1/2 LANE 2~~ ENTIRE LANE 2
-COMPLETE SIDEWALK CONSTRUCTION

= STAGE 3 PAVING AREA

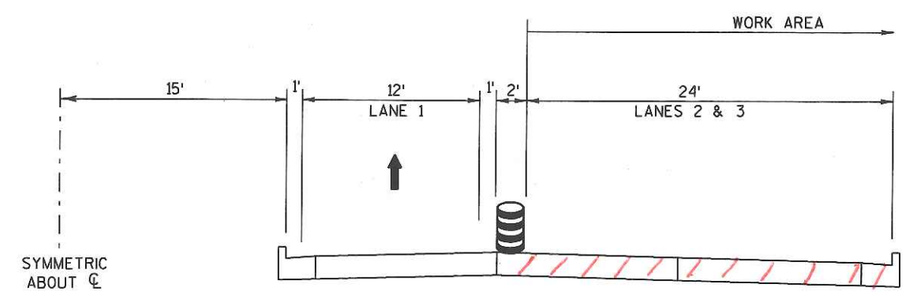

STAGE 3 - OFF HOUR
LOOKING EAST
STH 100 (BROWN DEER ROAD)

TRAFFIC
-REDUCE TRAFFIC TO MEDIAN LANE FOR EB & WB
-THROUGHOUT PROJECT LIMITS
-CLOSE LANE 2

FIXED MESSAGE SIGNS (DETAILS SHEETS)

GENERAL NOTES:

1. ALL SIGNS TO HAVE STANDARD REFLECTIVE SHEETING - REFERENCE: "WISDOT STANDARD SPECIFICATIONS FOR ROAD AND BRIDGE CONSTRUCTION," LATEST EDITION.
2. AFTER SIGNS HAVE BEEN LOCATED IN THE FIELD, BUT BEFORE INSTALLATION, THE SIGNING AND MARKING SUPERVISOR SHALL VERIFY EACH SIGN LOCATION.
3. ALL SIGNS TO BE MOUNTED ON WOODEN POST SUPPORTS (4"x6"). THE NUMBER OF POSTS REQUIRED FOR EACH LAYOUT IS SHOWN.
4. SIGNS ON THIS SHEET TO BE PAID UNDER THE ITEM "FIXED MESSAGE SIGNS."
5. SIGNS SHALL BE BLACK NON-REFLECTIVE MESSAGE ON ORANGE REFLECTIVE BACKGROUND PER SPEC 643.2.9.3.
6. ALL SIGNS SHALL HAVE CAPITAL LETTERS AND NUMERALS:
   12" CAPS SHALL BE SERIES "D"
   6" CAPS SHALL BE SERIES "C"
7. BEGIN XXX XX SIGNS SHALL BE SEPARATE PANELS, BUT SHALL BE CONSIDERED AS PART OF THE SIGN AND SHOULD BE REMOVED OR COVERED AFTER THEIR EFFECTIVE DATE. THE MONTH AND DAY SHALL BE AS DIRECTED BY THE ENGINEER IN THE FIELD.
8. CONTRACTOR SHALL SUBMIT SHOP DRAWINGS TO ENGINEER FOR REVIEW PRIOR TO MANUFACTURING.
9. SIGN BASE MATERIAL SHALL BE ACCORDING TO SECTION 643.2.9.3 (FIXED MESSAGE SIGNS).
10. SIGNS TO BE IN PLACE 10 DAYS PRIOR TO CONSTRUCTION.

(XXX) = SIGN NUMBER

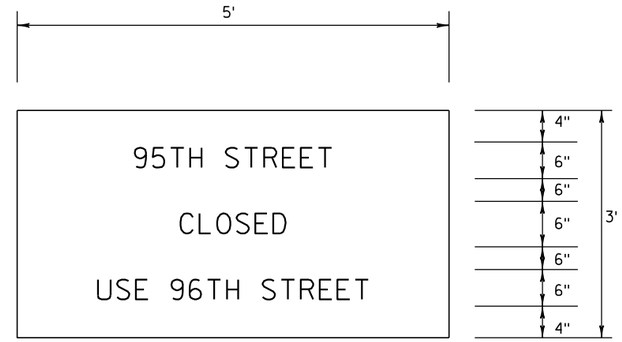

104 105

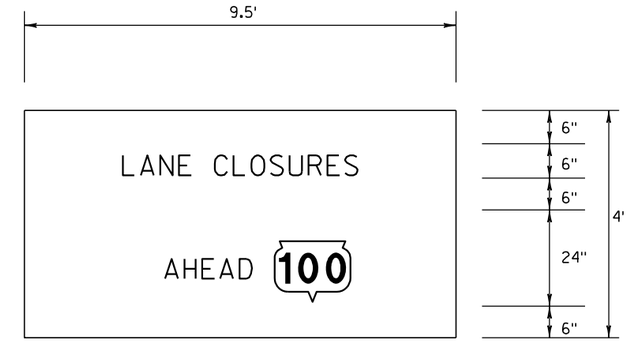

108 109 110 111

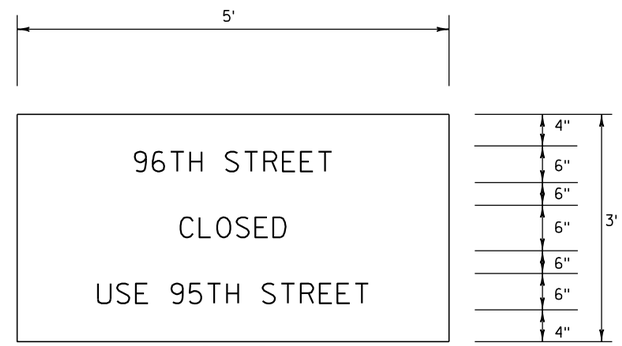

106 107

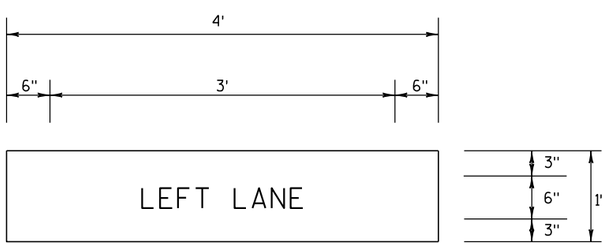

100 101

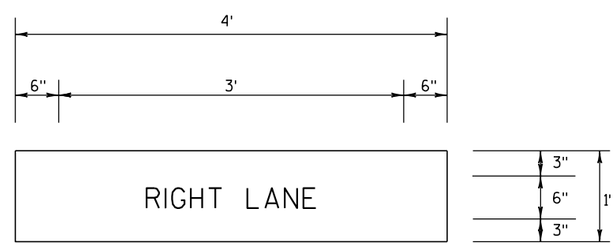

102 103

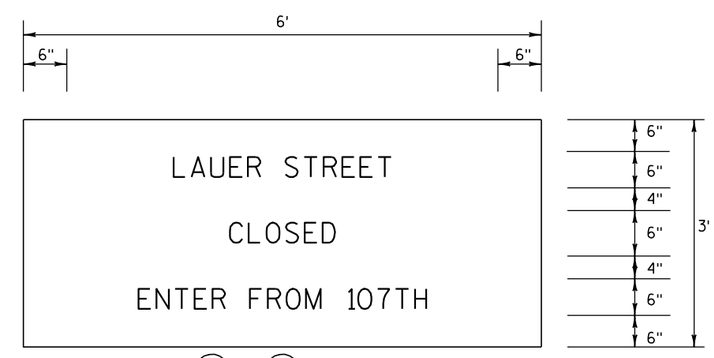

108 109

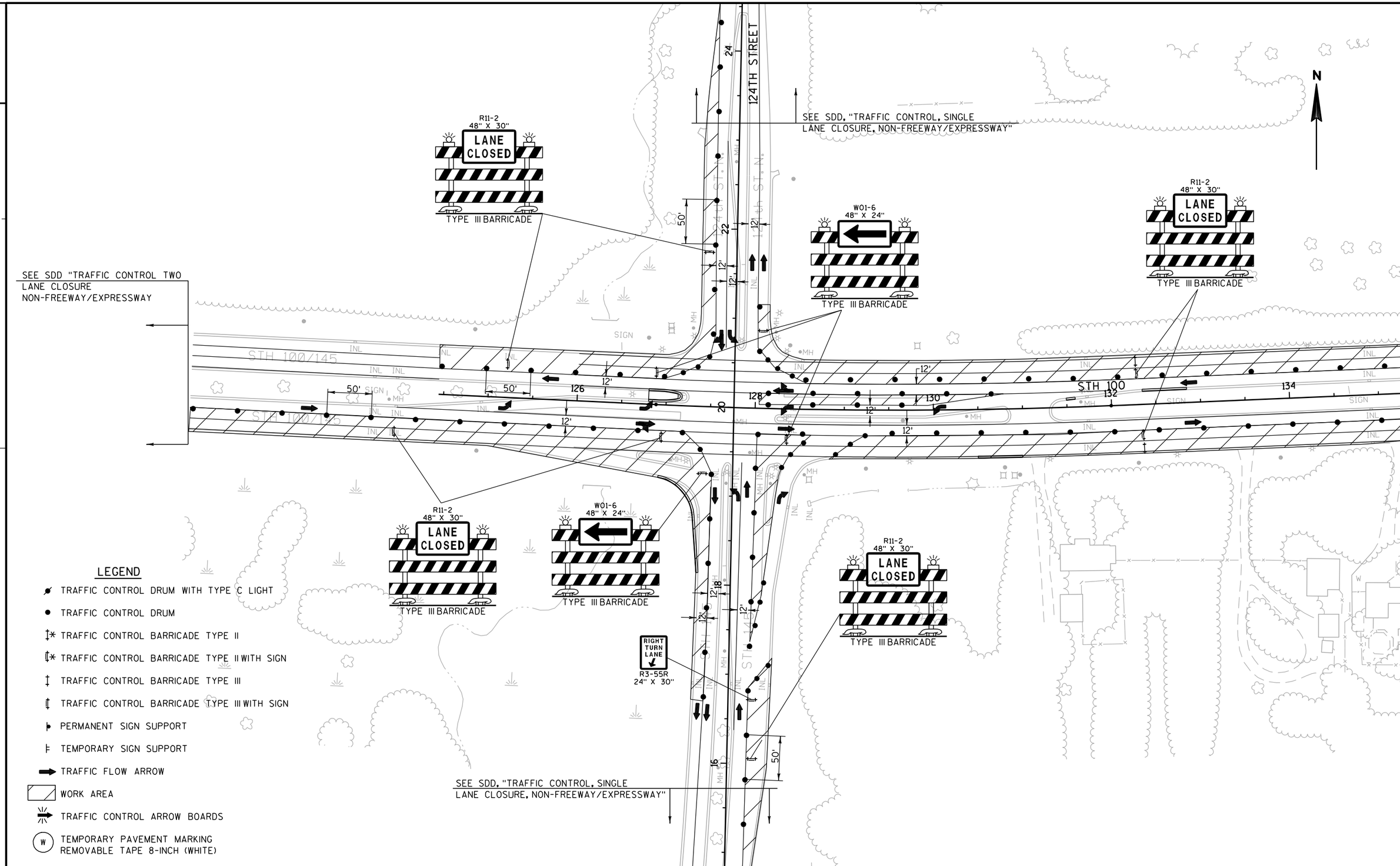

PROJECT NO:2150-05-70	HWY:STH 100	COUNTY:MILWAUKEE	TRAFFIC CONTROL - STAGE 1B & 3 OFF PEAK HOUR	SHEET	E

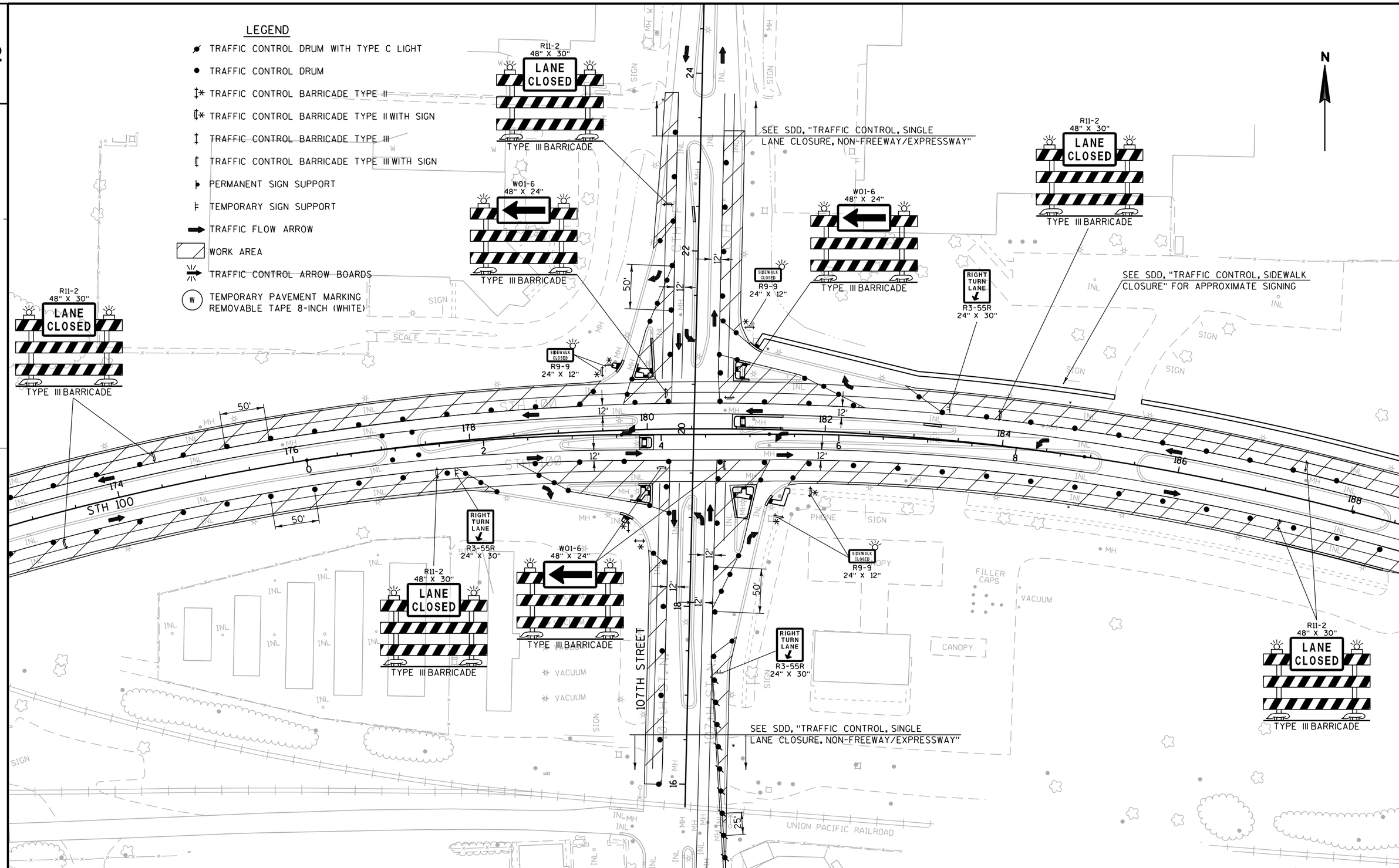

PROJECT NO: 2150-05-70	HWY: MILWAUKEE	COUNTY: MILWAUKEE	TRAFFIC CONTROL - STAGE 1B & 3 OFF PEAK HOUR	SHEET	E

FILE NAME : j:\projects\D2_215005100\026002_S1.dgn PLOT DATE : 09-MAR-2010 15:07 PLOT BY : dotshw PLOT NAME : PLOT SCALE : 100:1

WISDOT/CADDS SHEET 42

2

2

SEE SDD, "TRAFFIC CONTROL, SINGLE LANE CLOSURE, NON-FREEWAY/EXPRESSWAY"

R11-2
48" X 30"
LANE CLOSED
TYPE III BARRICADE

R11-2
48" X 30"
LANE CLOSED
TYPE III BARRICADE

R11-2
48" X 30"
LANE CLOSED
TYPE III BARRICADE

W01-6
48" X 24"
TYPE III BARRICADE

SIDEWALK CLOSED
R9-9
24" X 12"

SIDEWALK CLOSED
R9-9
24" X 12"

SIDEWALK CLOSED
R9-9
24" X 12"

91ST STREET

STH 100

SEE SDD, "TRAFFIC CONTROL, SIDEWALK CLOSURE FOR APPROXIMATE SIGNING

SEE SDD "TRAFFIC CONTROL TWO LANE CLOSURE NON-FREEWAY/EXPRESSWAY

SEE SDD, "TRAFFIC CONTROL, SINGLE LANE CLOSURE, NON-FREEWAY/EXPRESSWAY"

N

LEGEND

- TRAFFIC CONTROL DRUM WITH TYPE C LIGHT
- TRAFFIC CONTROL DRUM
- TRAFFIC CONTROL BARRICADE TYPE II
- TRAFFIC CONTROL BARRICADE TYPE II WITH SIGN
- TRAFFIC CONTROL BARRICADE TYPE III
- TRAFFIC CONTROL BARRICADE TYPE III WITH SIGN
- PERMANENT SIGN SUPPORT
- TEMPORARY SIGN SUPPORT
- TRAFFIC FLOW ARROW
- WORK AREA
- TRAFFIC CONTROL ARROW BOARDS
- (W) TEMPORARY PAVEMENT MARKING REMOVABLE TAPE 8-INCH (WHITE)

PROJECT NO:2150-05-70	HWY:STH 100	COUNTY:MILWAUKEE	TRAFFIC CONTROL - STAGE 1B & 3 OFF PEAK HOUR	SHEET	E

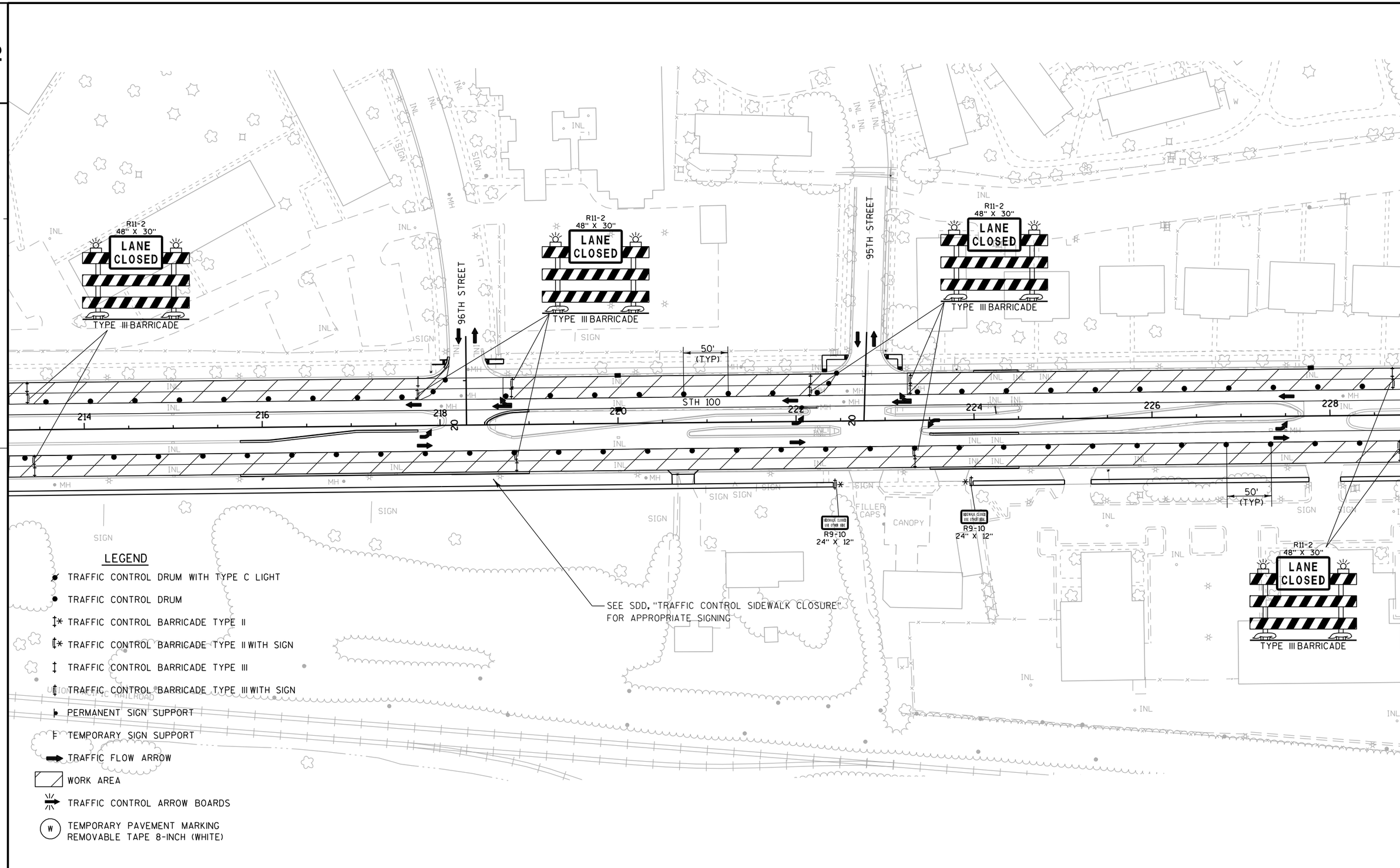
R11-2
48" X 30"
LANE CLOSED
TYPE III BARRICADE
96TH STREET
95TH STREET
STH 100
50'
(TYP)
214
216
218
220
222
224
226
228
20
R9-10
24" X 12"
SIDEWALK CLOSED USE OTHER SIDE
FILLER CAPS
CANOPY
SIGN
INL
MH
W
SEE SDD, "TRAFFIC CONTROL SIDEWALK CLOSURE" FOR APPROPRIATE SIGNING
LEGEND
TRAFFIC CONTROL DRUM WITH TYPE C LIGHT
TRAFFIC CONTROL DRUM
TRAFFIC CONTROL BARRICADE TYPE II
TRAFFIC CONTROL BARRICADE TYPE II WITH SIGN
TRAFFIC CONTROL BARRICADE TYPE III
TRAFFIC CONTROL BARRICADE TYPE III WITH SIGN
PERMANENT SIGN SUPPORT
TEMPORARY SIGN SUPPORT
TRAFFIC FLOW ARROW
WORK AREA
TRAFFIC CONTROL ARROW BOARDS
TEMPORARY PAVEMENT MARKING REMOVABLE TAPE 8-INCH (WHITE)

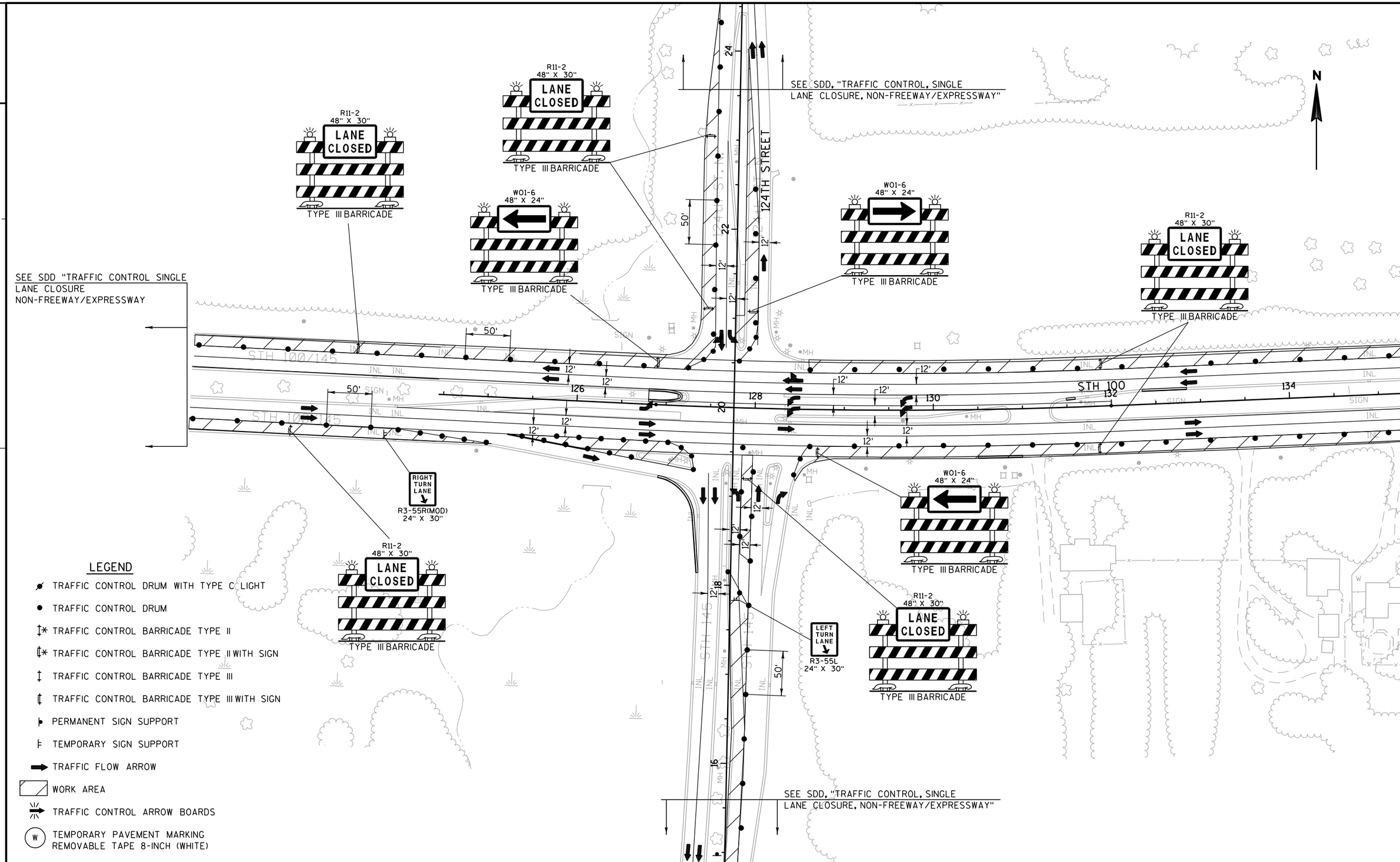

PROJECT NO: 2150-05-70	HWY: STH 100	COUNTY: MILWAUKEE	TRAFFIC CONTROL - STAGE 1B & 3 PEAK HOUR	SHEET	E

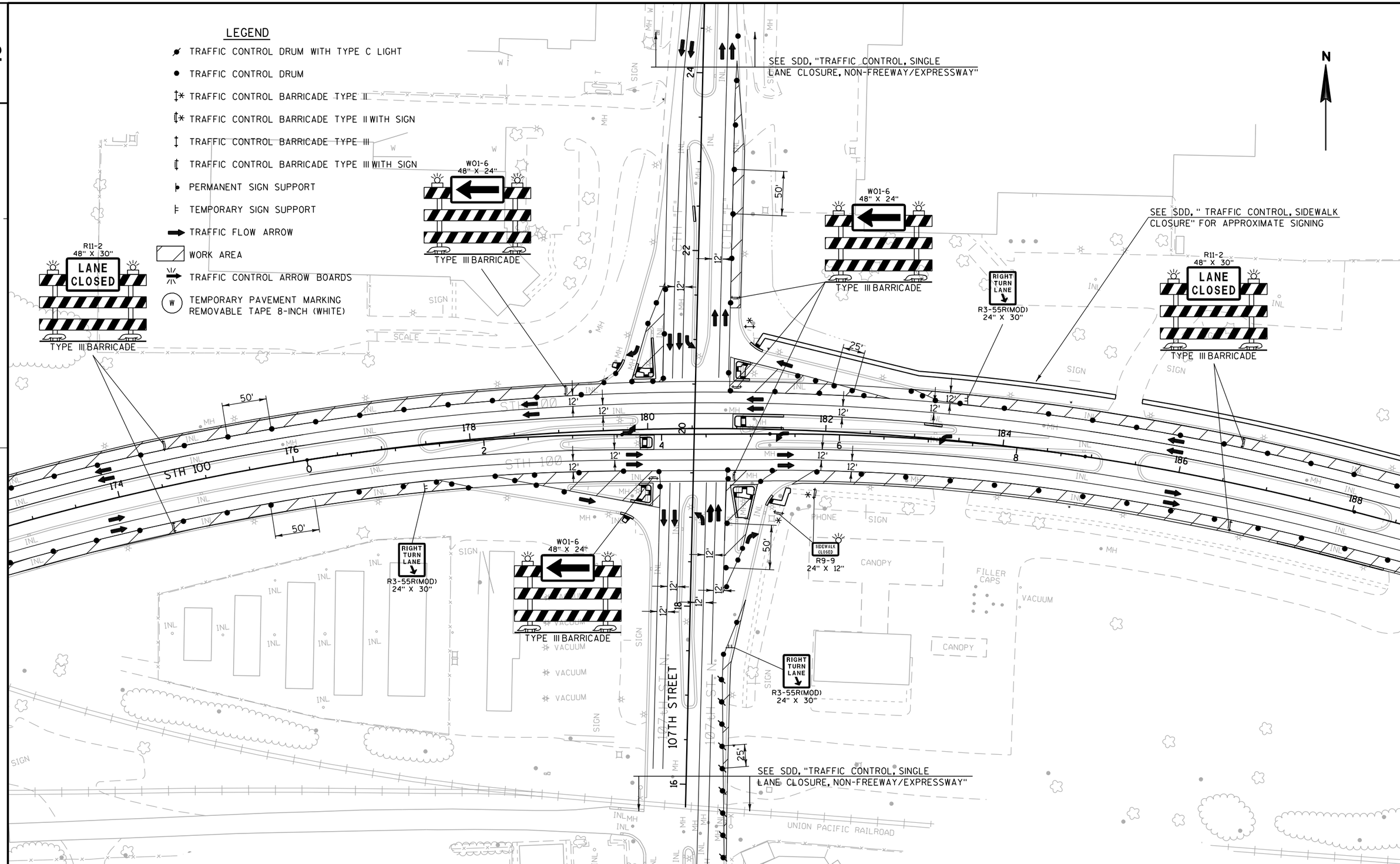

PROJECT NO:2150-05-70	HWY:MILWAUKEE	COUNTY:MILWAUKEE	TRAFFIC CONTROL - STAGE 1B & 3 PEAK HOUR	SHEET	E

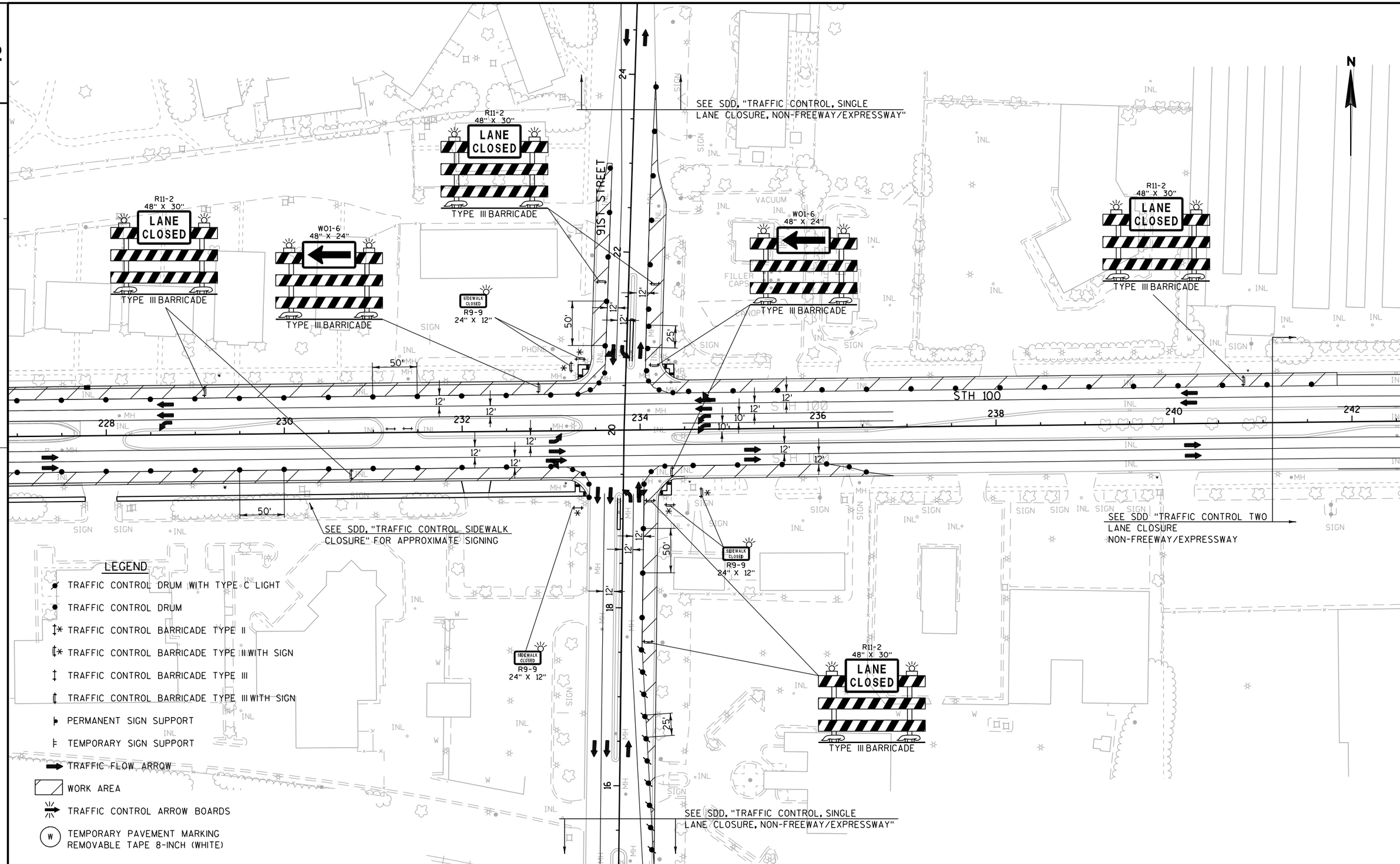

PROJECT NO:2150-05-70	HWY:STH 100	COUNTY:MILWAUKEE	TRAFFIC CONTROL - STAGE 1B & 3 PEAK HOUR	SHEET	E

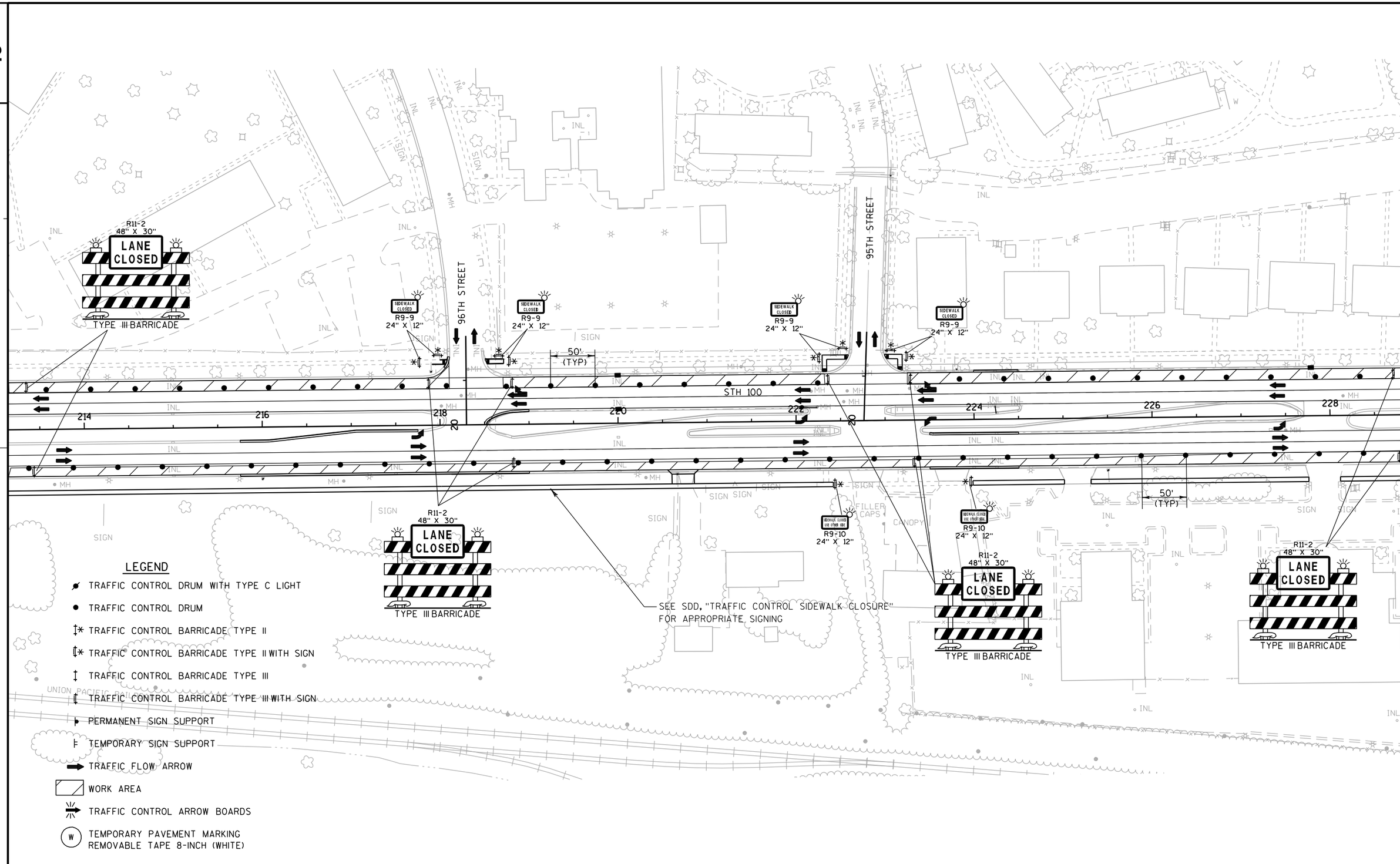

PROJECT NO: 2150-05-70	HWY: STH 100	COUNTY: MILWAUKEE	TRAFFIC CONTROL - STAGE 1B & 3 PEAK HOUR	SHEET	E

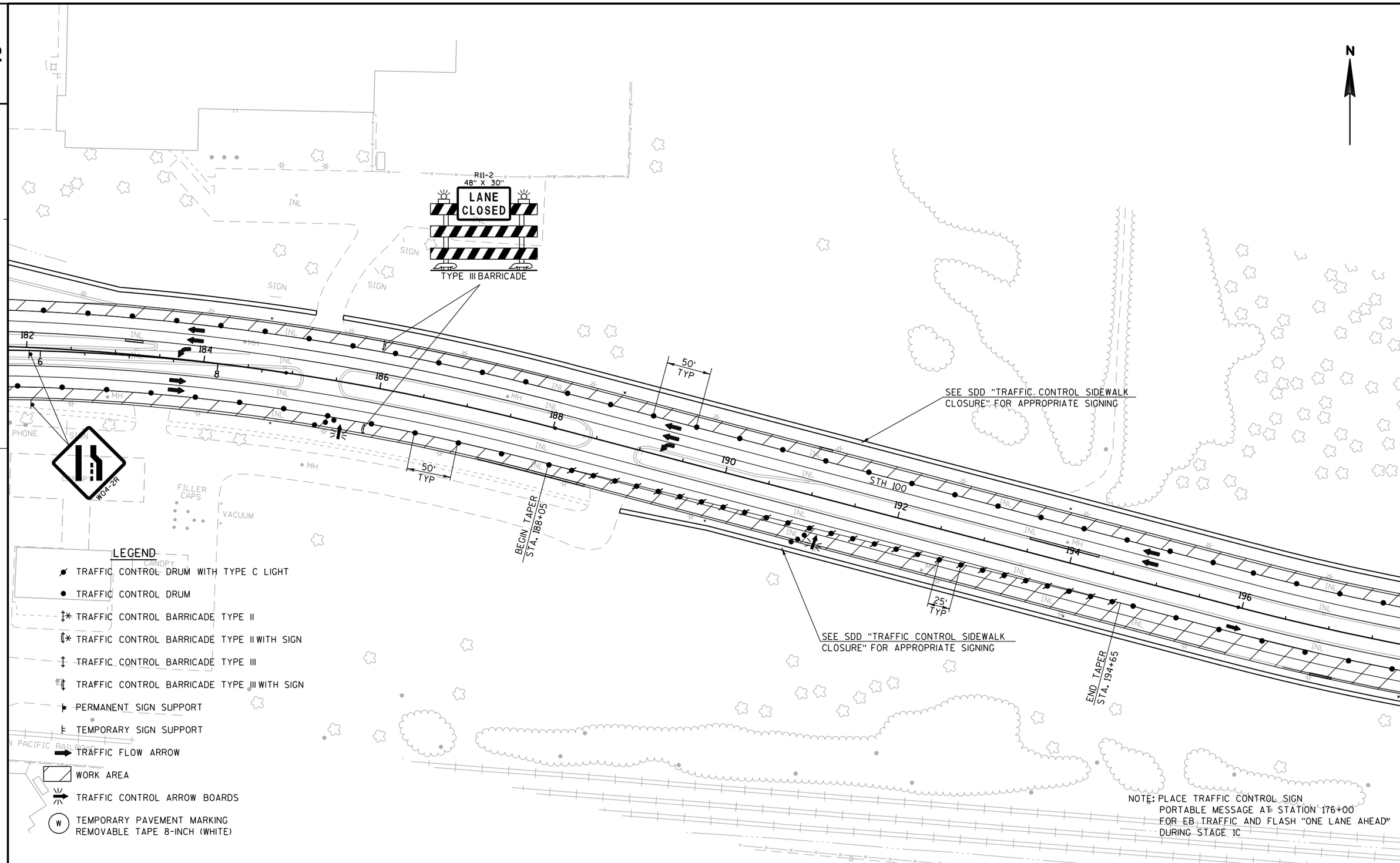

PROJECT NO: 2150-05-70	HWY: MILWAUKEE	COUNTY: MILWAUKEE	TRAFFIC CONTROL - STAGE 1C WEEKEND HOUR	SHEET	E

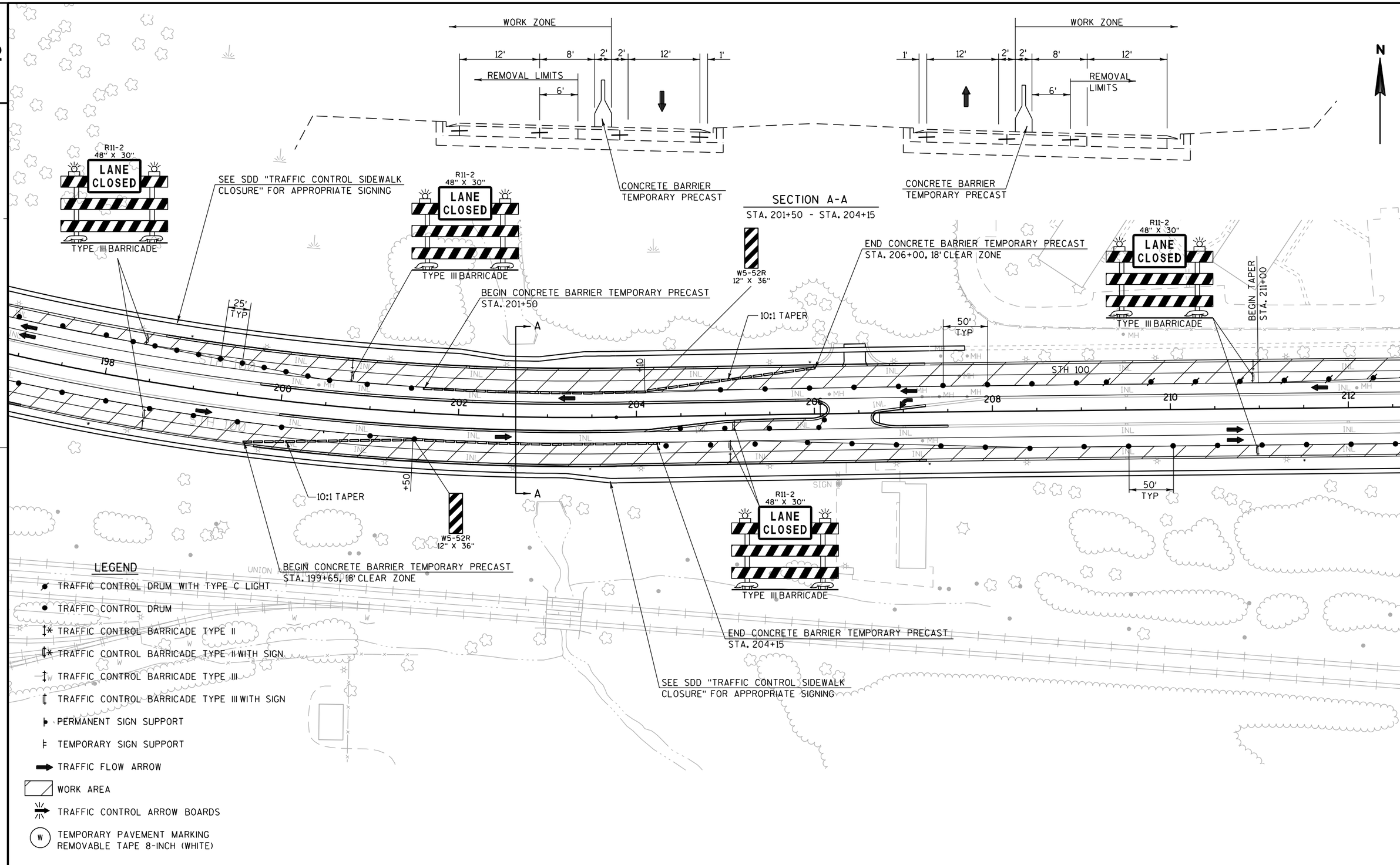

PROJECT NO: 2150-05-70	HWY: MILWAUKEE	COUNTY: MILWAUKEE	TRAFFIC CONTROL - STAGE 1C WEEKEND HOUR	SHEET	E

FILE NAME : j:\projects\D2_215005100\026202_S1.dgn PLOT DATE : 09-MAR-2010 15:11 PLOT BY : dotshw PLOT NAME : PLOT SCALE : 100:1

WISDOT/CADDS SHEET 42

2

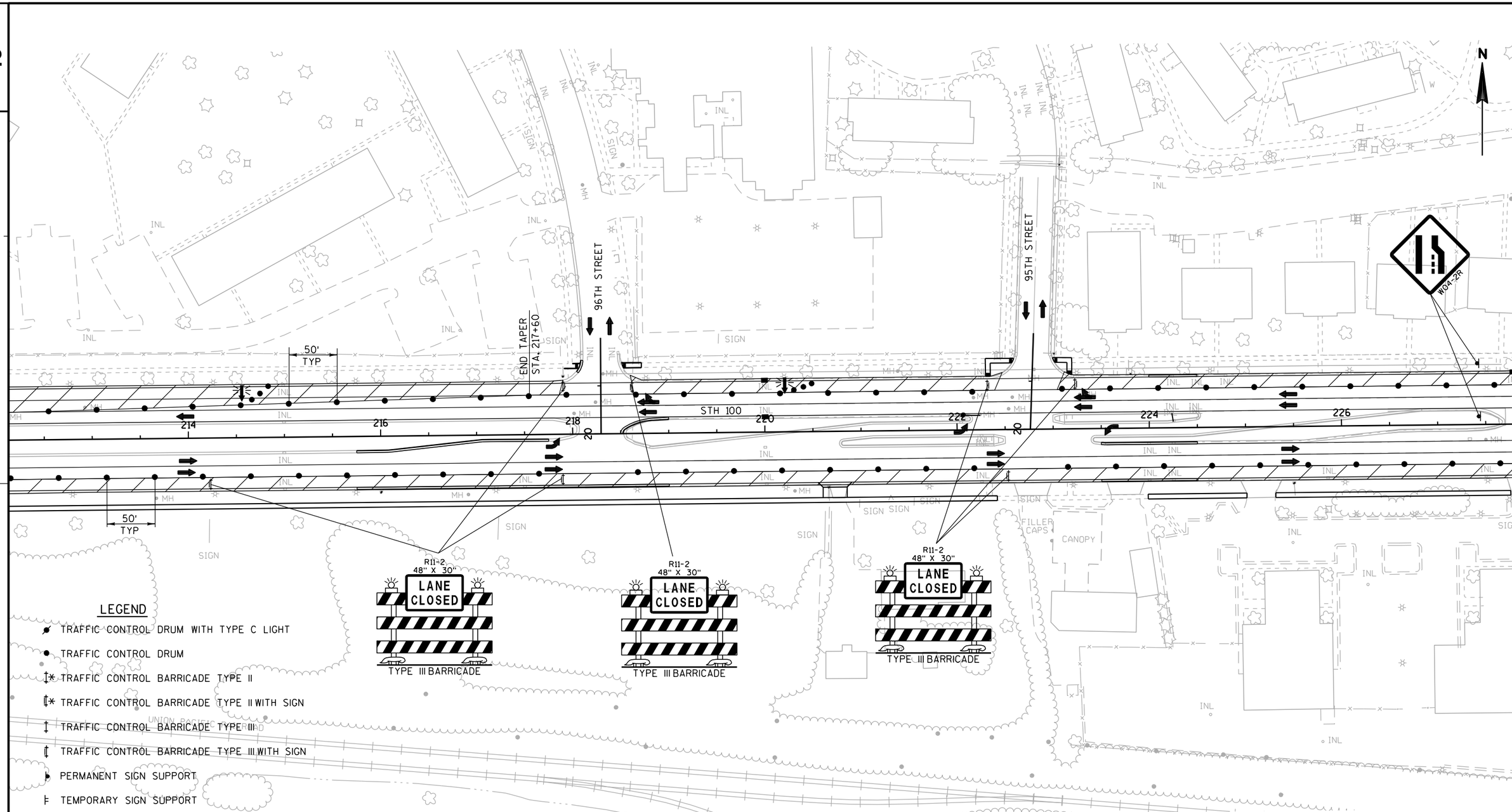

LEGEND

- TRAFFIC CONTROL DRUM WITH TYPE C LIGHT
- TRAFFIC CONTROL DRUM
- TRAFFIC CONTROL BARRICADE TYPE II
- TRAFFIC CONTROL BARRICADE TYPE II WITH SIGN
- TRAFFIC CONTROL BARRICADE TYPE III
- TRAFFIC CONTROL BARRICADE TYPE III WITH SIGN
- PERMANENT SIGN SUPPORT
- TEMPORARY SIGN SUPPORT
- TRAFFIC FLOW ARROW
- WORK AREA
- TRAFFIC CONTROL ARROW BOARDS
- (W) TEMPORARY PAVEMENT MARKING REMOVABLE TAPE 8-INCH (WHITE)

NOTE: PLACE TRAFFIC CONTROL SIGN PORTABLE MESSAGE, EAST OF 91ST STREET SHALL FLASH "ONE LANE AHEAD" FOR WB TRAFFIC DURING STAGE 1C.

PROJECT NO: 2150-05-70	HWY: MILWAUKEE	COUNTY: MILWAUKEE	TRAFFIC CONTROL - STAGE 1C WEEKEND HOUR	SHEET	E

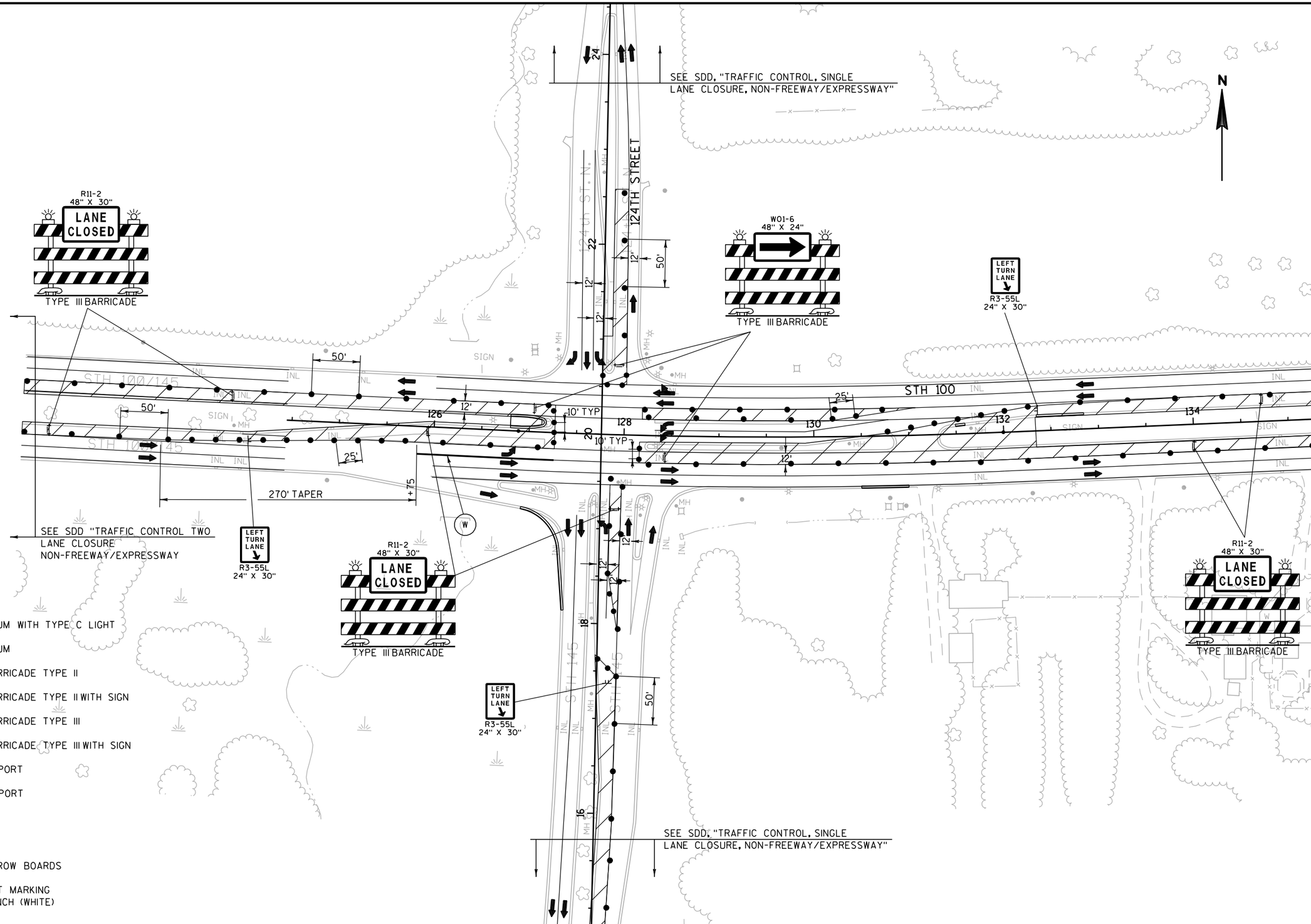

LEGEND

- TRAFFIC CONTROL DRUM WITH TYPE C LIGHT
- TRAFFIC CONTROL DRUM
- TRAFFIC CONTROL BARRICADE TYPE II
- TRAFFIC CONTROL BARRICADE TYPE II WITH SIGN
- TRAFFIC CONTROL BARRICADE TYPE III
- TRAFFIC CONTROL BARRICADE TYPE III WITH SIGN
- PERMANENT SIGN SUPPORT
- TEMPORARY SIGN SUPPORT
- TRAFFIC FLOW ARROW
- WORK AREA
- TRAFFIC CONTROL ARROW BOARDS
- (W) TEMPORARY PAVEMENT MARKING REMOVABLE TAPE 8-INCH (WHITE)

PROJECT NO:2150-05-70	HWY:STH 100	COUNTY:MILWAUKEE	TRAFFIC CONTROL - STAGE 2B PEAK HOUR	SHEET	E

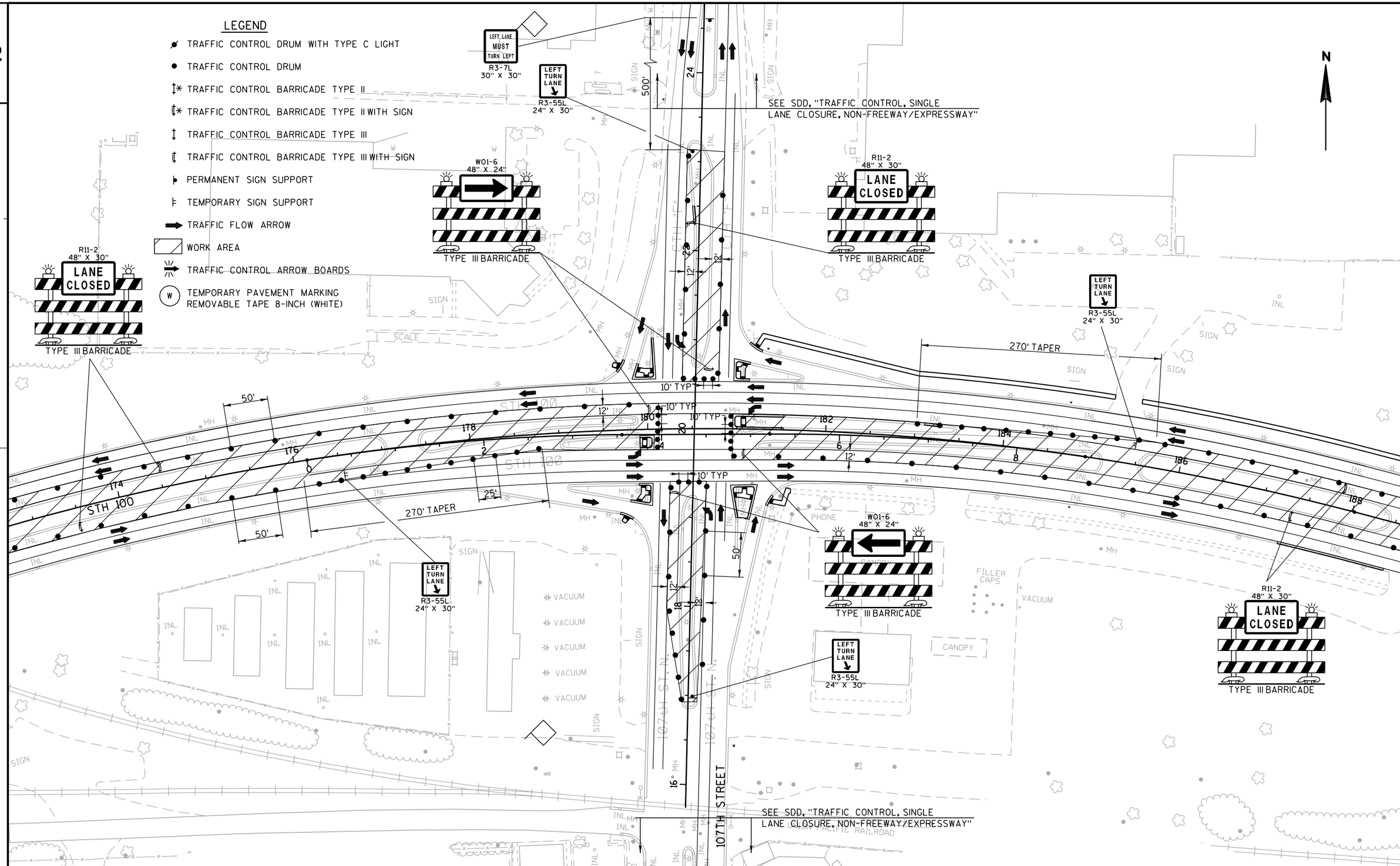

PROJECT NO:2150-05-70	HWY:MILWAUKEE	COUNTY:MILWAUKEE	TRAFFIC CONTROL - STAGE 2B PEAK HOUR	SHEET	E

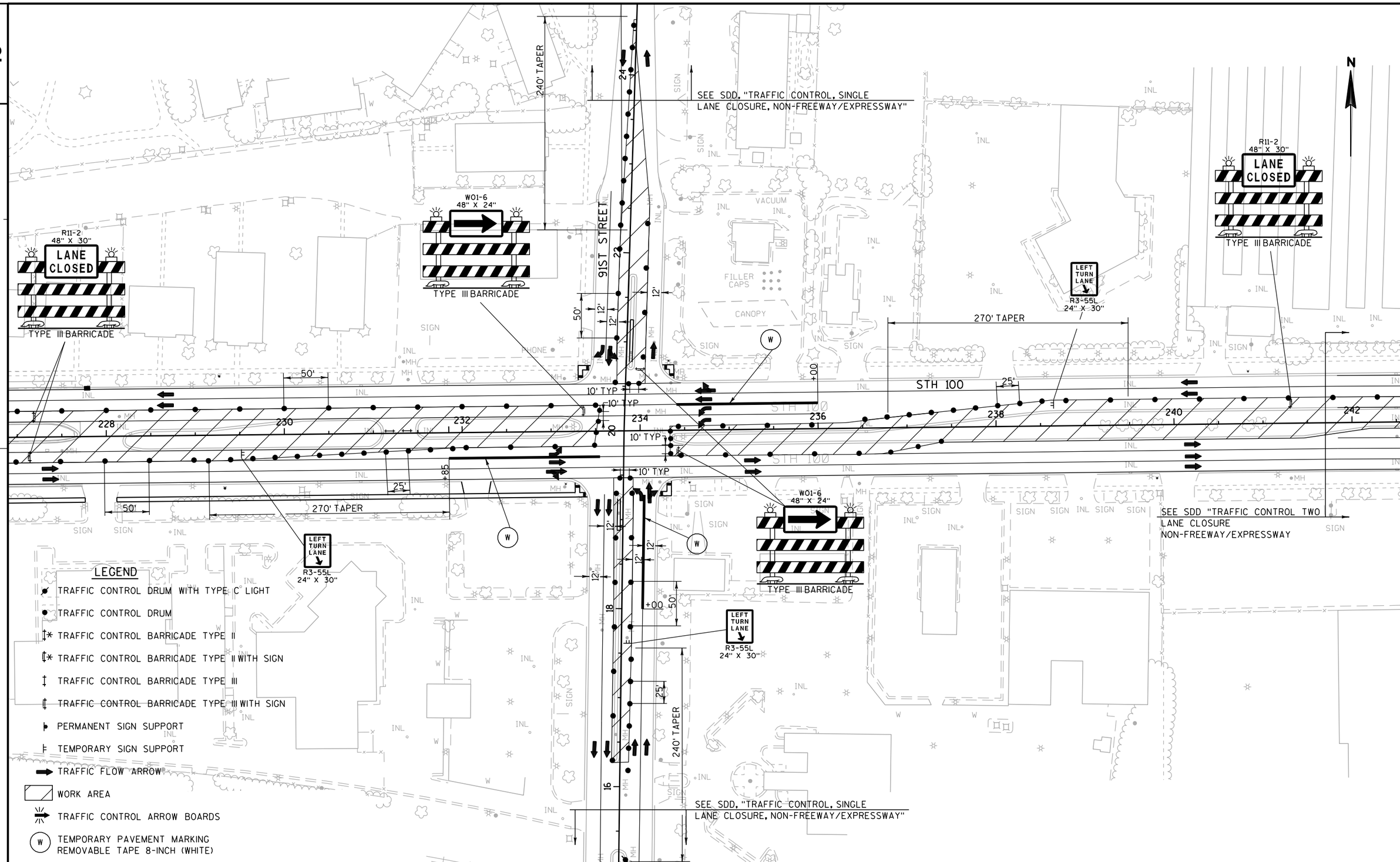

PROJECT NO:2150-05-70	HWY:STH 100	COUNTY:MILWAUKEE	TRAFFIC CONTROL - STAGE 2B PEAK HOUR	SHEET	E

2

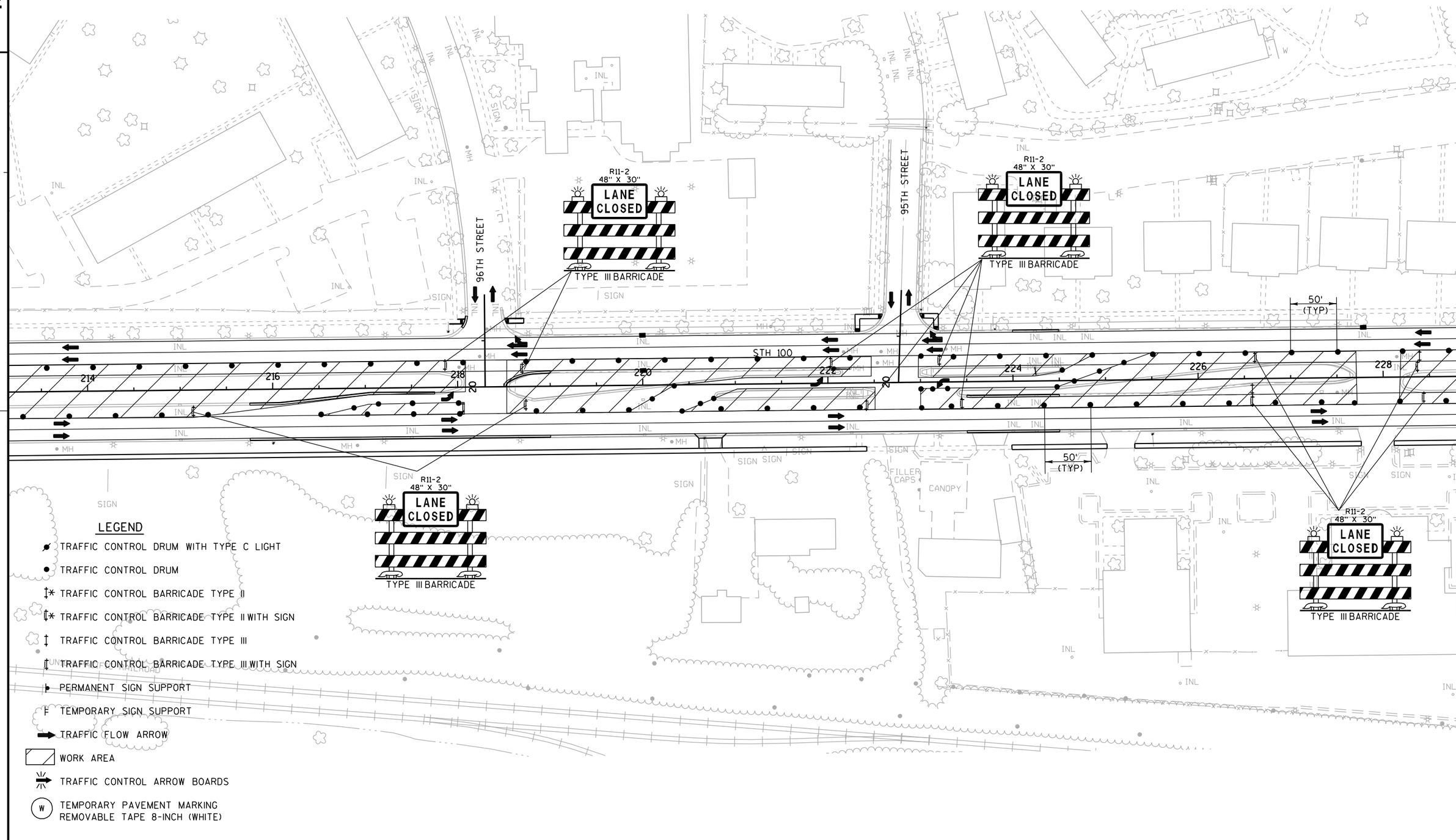

2

PROJECT NO:2150-05-70	HWY:STH 100	COUNTY:MILWAUKEE	TRAFFIC CONTROL - STAGE 2B PEAK HOUR	SHEET	E

FILE NAME : j:\projects\D2_215005100\026254_S2.dgn PLOT DATE : 09-MAR-2010 15:13 PLOT BY : dotshw PLOT NAME : PLOT SCALE : 100:1

WISDOT/CADDS SHEET 42

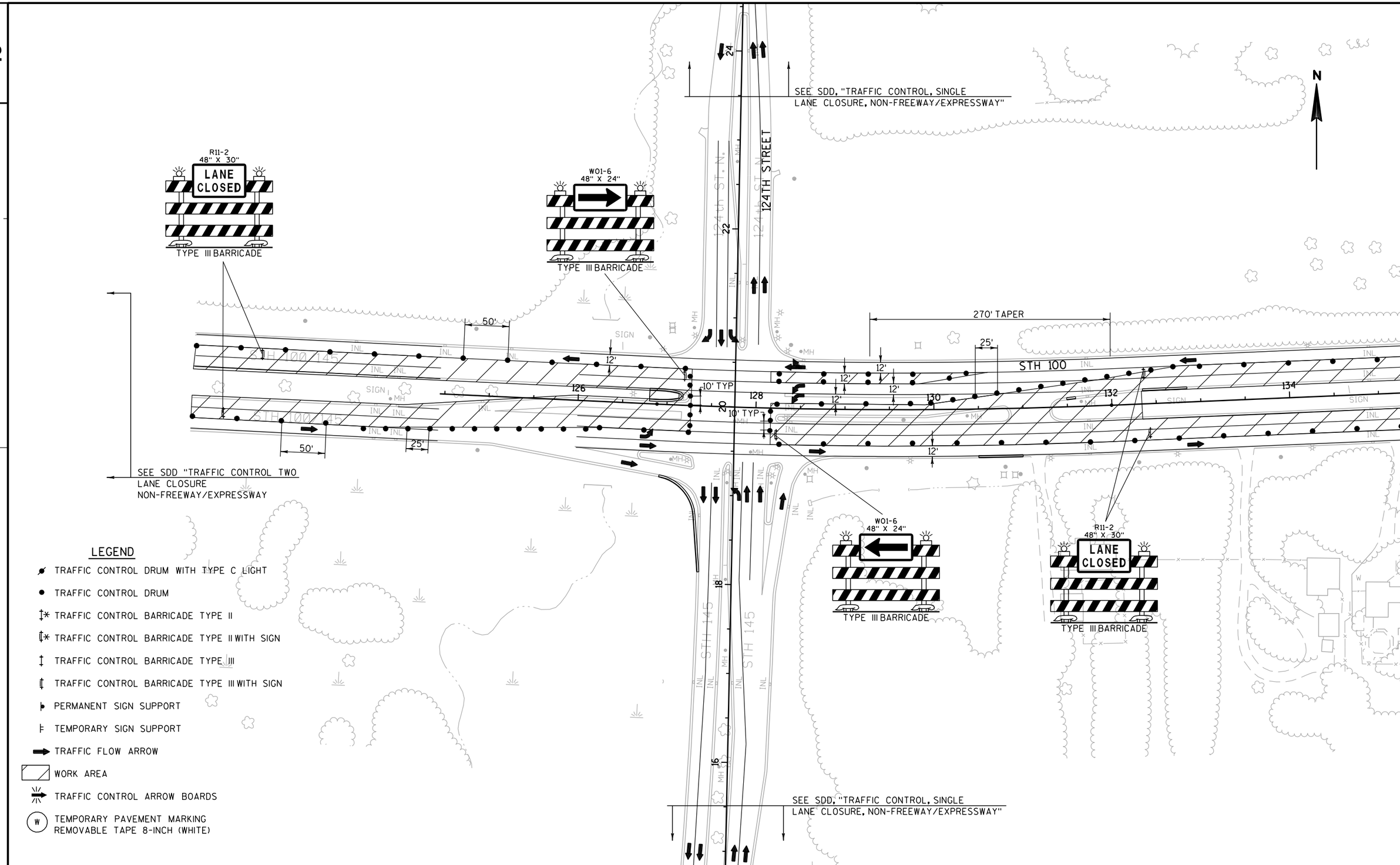

PROJECT NO: 2150-05-70	HWY: STH 100	COUNTY: MILWAUKEE	TRAFFIC CONTROL - STAGE 2B OFF PEAK HOUR	SHEET	E

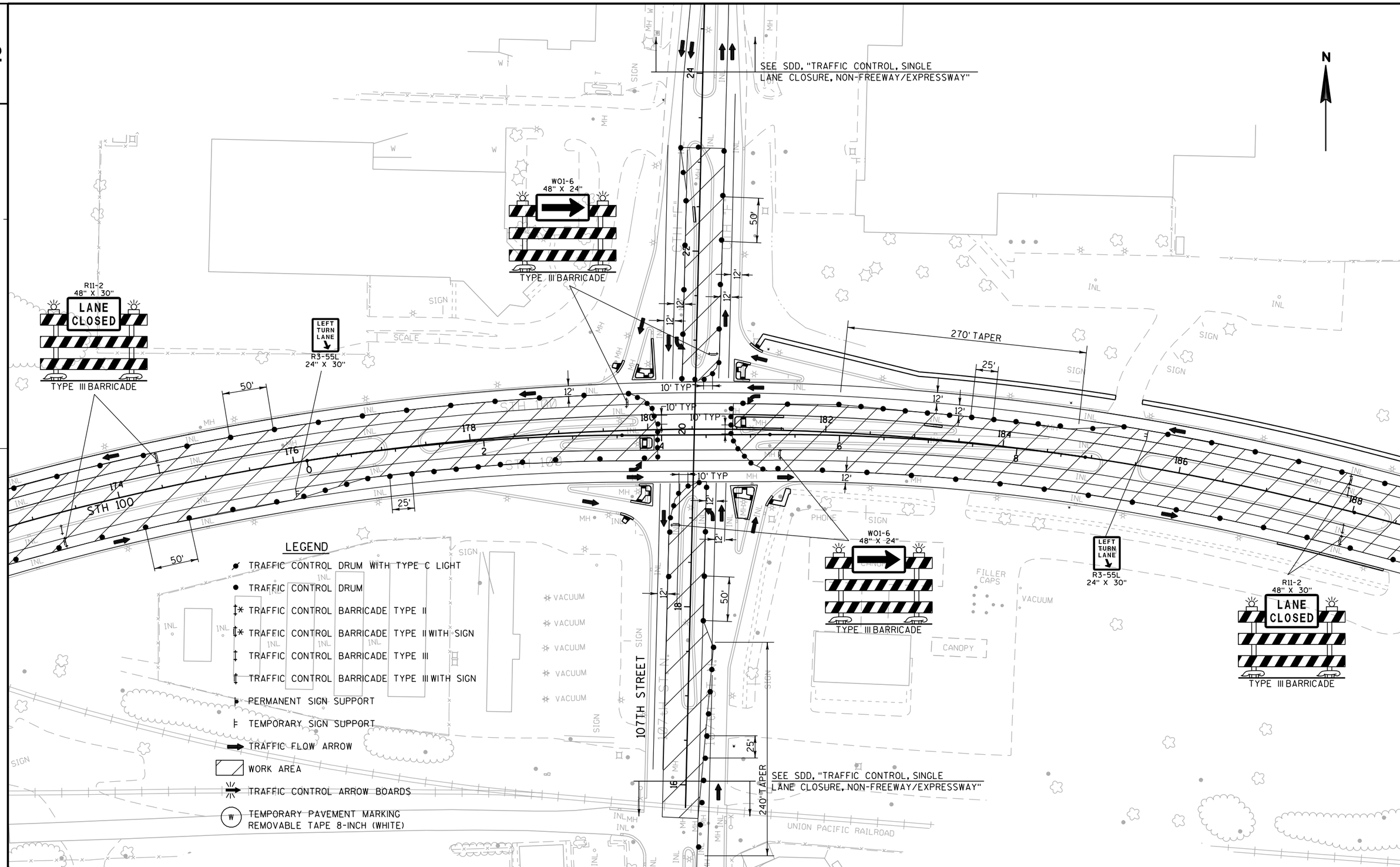

PROJECT NO: 2150-05-70	HWY: MILWAUKEE	COUNTY: MILWAUKEE	TRAFFIC CONTROL - STAGE 2B OFF PEAK HOUR	SHEET	E

FILE NAME : j:\projects\D2_215005100\026302_S2.dgn PLOT DATE : 09-MAR-2010 15:13 PLOT BY : dotshw PLOT NAME : PLOT SCALE : 100:1

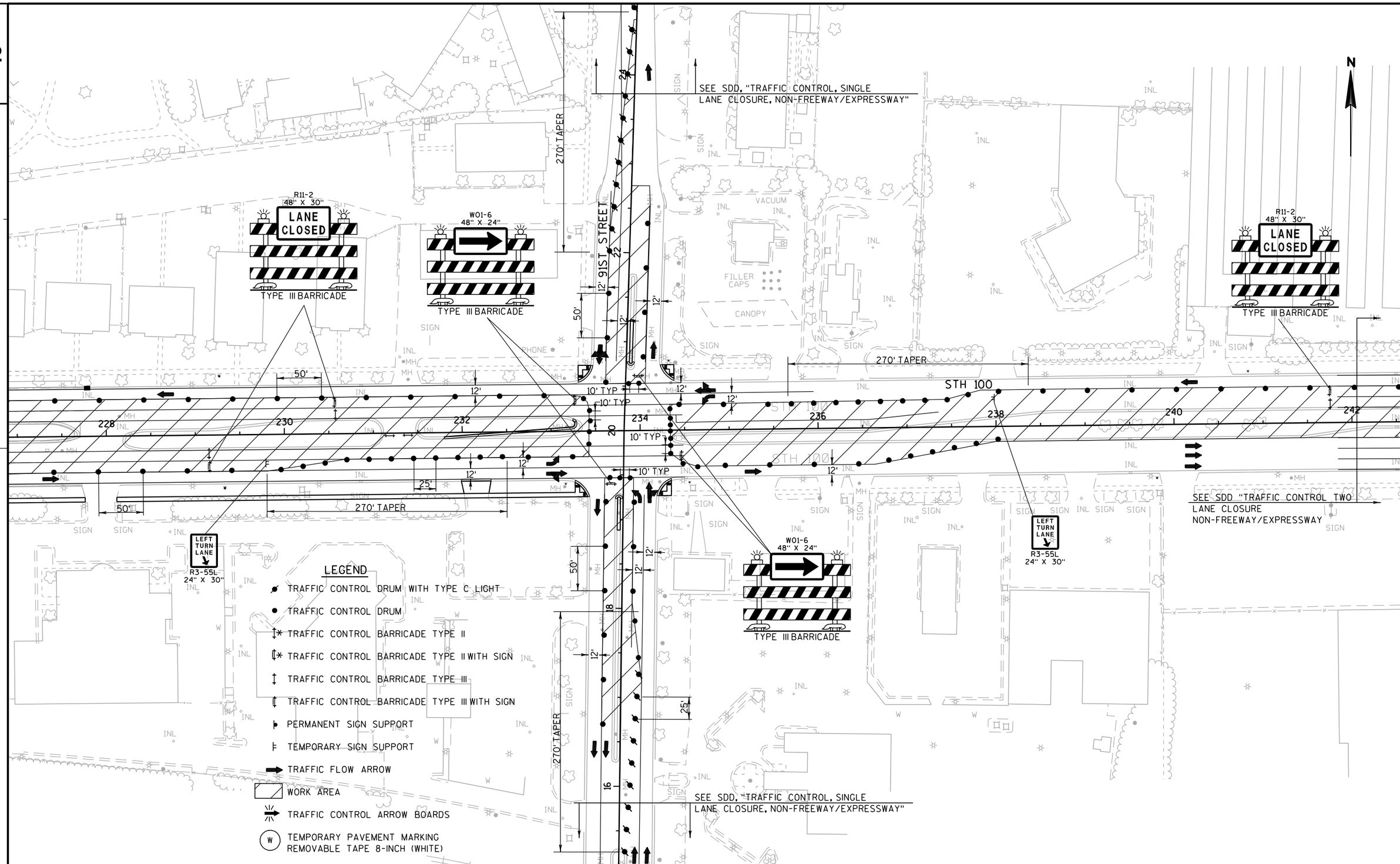

PROJECT NO: 2150-05-70	HWY: STH 100	COUNTY: MILWAUKEE	TRAFFIC CONTROL - STAGE 2B OFF PEAK HOUR	SHEET	E

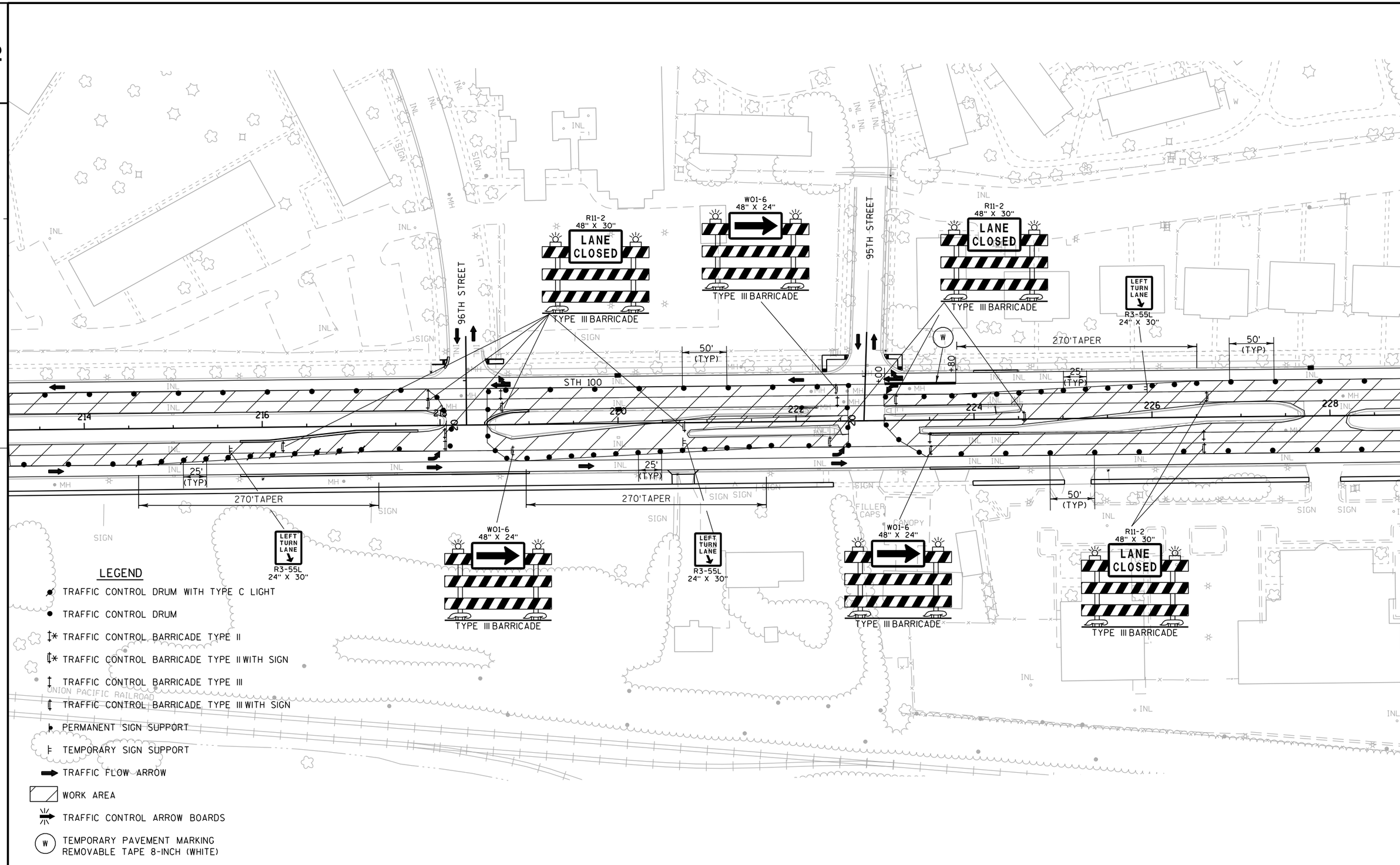

PROJECT NO:2150-05-70	HWY:STH 100	COUNTY:MILWAUKEE	TRAFFIC CONTROL - STAGE 2B OFF PEAK HOUR	SHEET	E

FILE NAME : j:\projects\D2_215005100\026304_S2.dgn PLOT DATE : 09-MAR-2010 15:14 PLOT BY : dotshw PLOT NAME : PLOT SCALE : 100:1

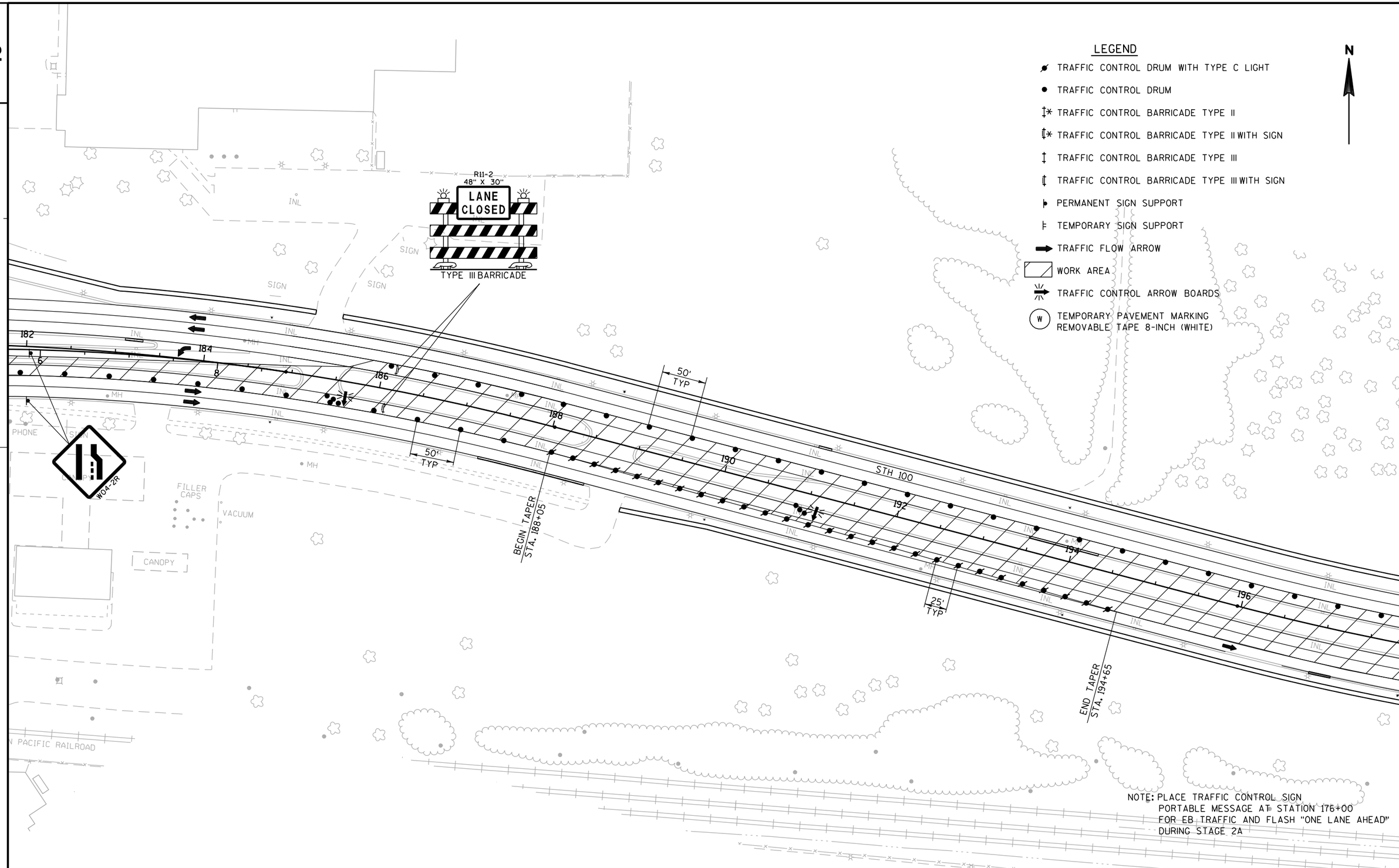

NOTE: PLACE TRAFFIC CONTROL SIGN
PORTABLE MESSAGE AT STATION 176+00
FOR EB TRAFFIC AND FLASH "ONE LANE AHEAD"
DURING STAGE 2A

PROJECT NO: 2150-05-70	HWY: MILWAUKEE	COUNTY: MILWAUKEE	TRAFFIC CONTROL - STAGE 2A WEEKEND HOUR	SHEET	E

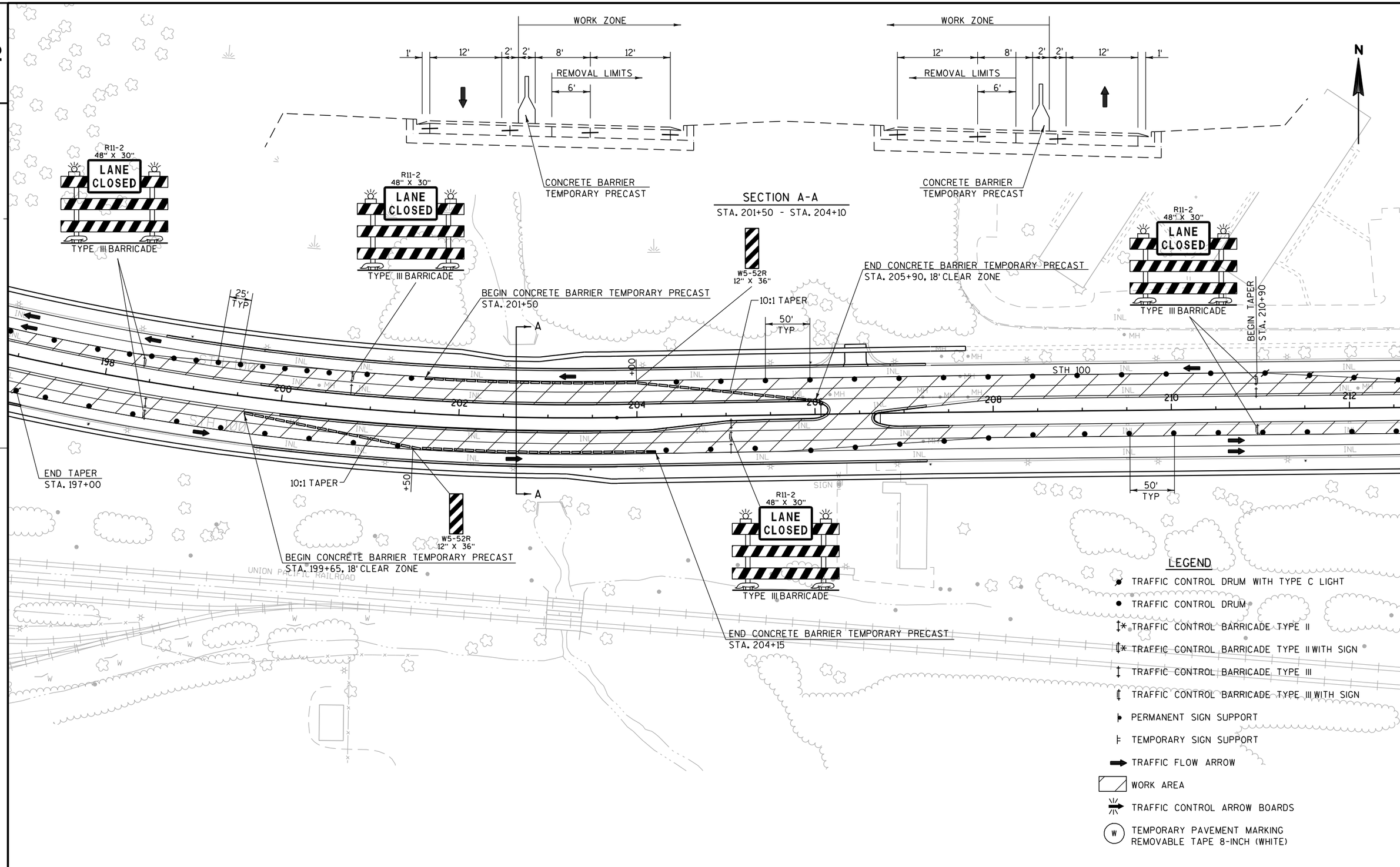

PROJECT NO: 2150-05-70	HWY: MILWAUKEE	COUNTY: MILWAUKEE	TRAFFIC CONTROL - STAGE 2A WEEKEND HOUR	SHEET	E

2

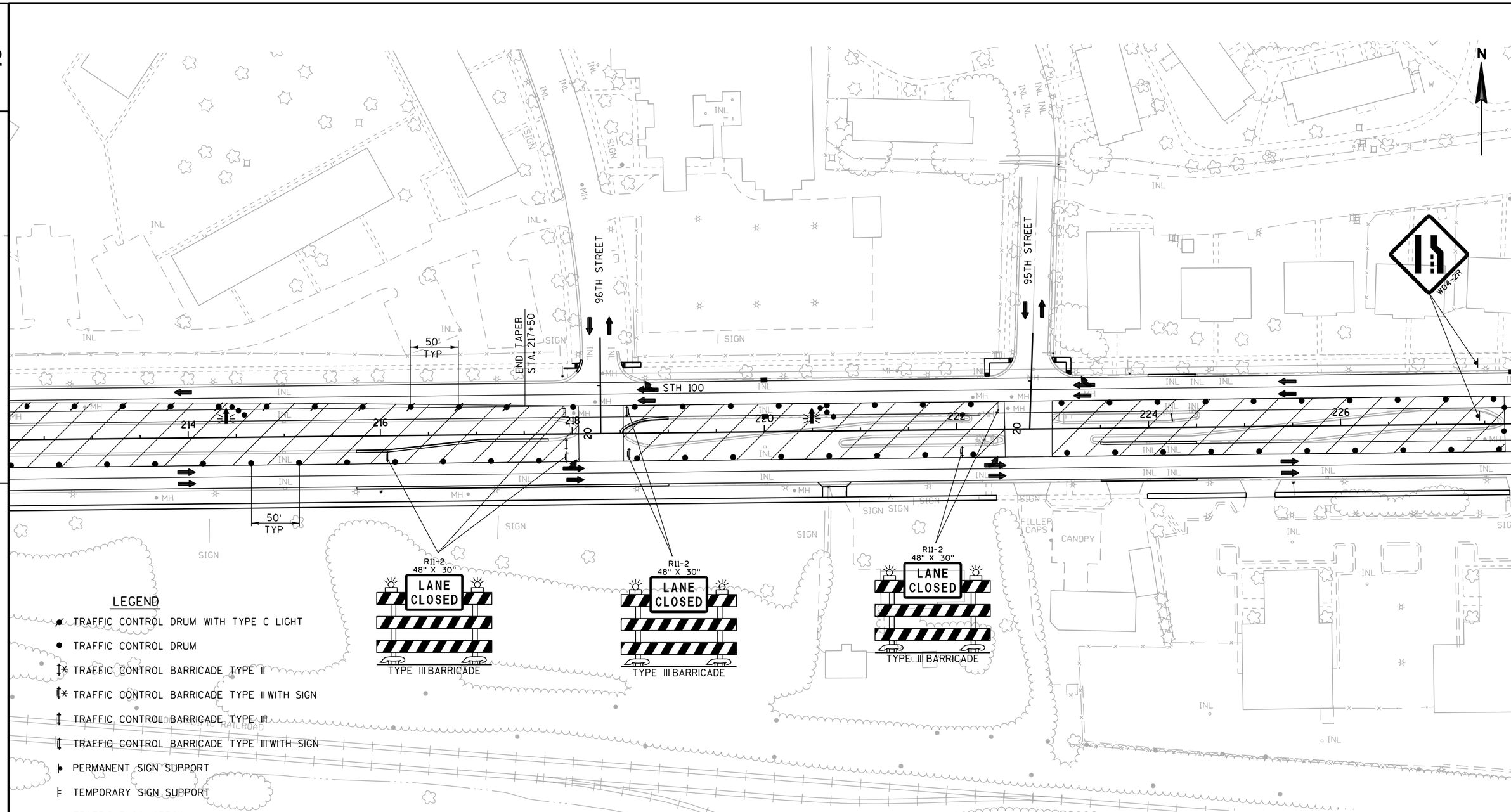

LEGEND

- TRAFFIC CONTROL DRUM WITH TYPE C LIGHT
- TRAFFIC CONTROL DRUM
- TRAFFIC CONTROL BARRICADE TYPE II
- TRAFFIC CONTROL BARRICADE TYPE II WITH SIGN
- TRAFFIC CONTROL BARRICADE TYPE III
- TRAFFIC CONTROL BARRICADE TYPE III WITH SIGN
- PERMANENT SIGN SUPPORT
- TEMPORARY SIGN SUPPORT
- TRAFFIC FLOW ARROW
- WORK AREA
- TRAFFIC CONTROL ARROW BOARDS
- (W) TEMPORARY PAVEMENT MARKING REMOVABLE TAPE 8-INCH (WHITE)

NOTE: PLACE TRAFFIC CONTROL SIGN PORTABLE MESSAGE, EAST OF 91ST STREET SHALL FLASH "ONE LANE AHEAD" DURING STAGE 2A

PROJECT NO: 2150-05-70	HWY: MILWAUKEE	COUNTY: MILWAUKEE	TRAFFIC CONTROL - STAGE 2A WEEKEND HOUR	SHEET	E

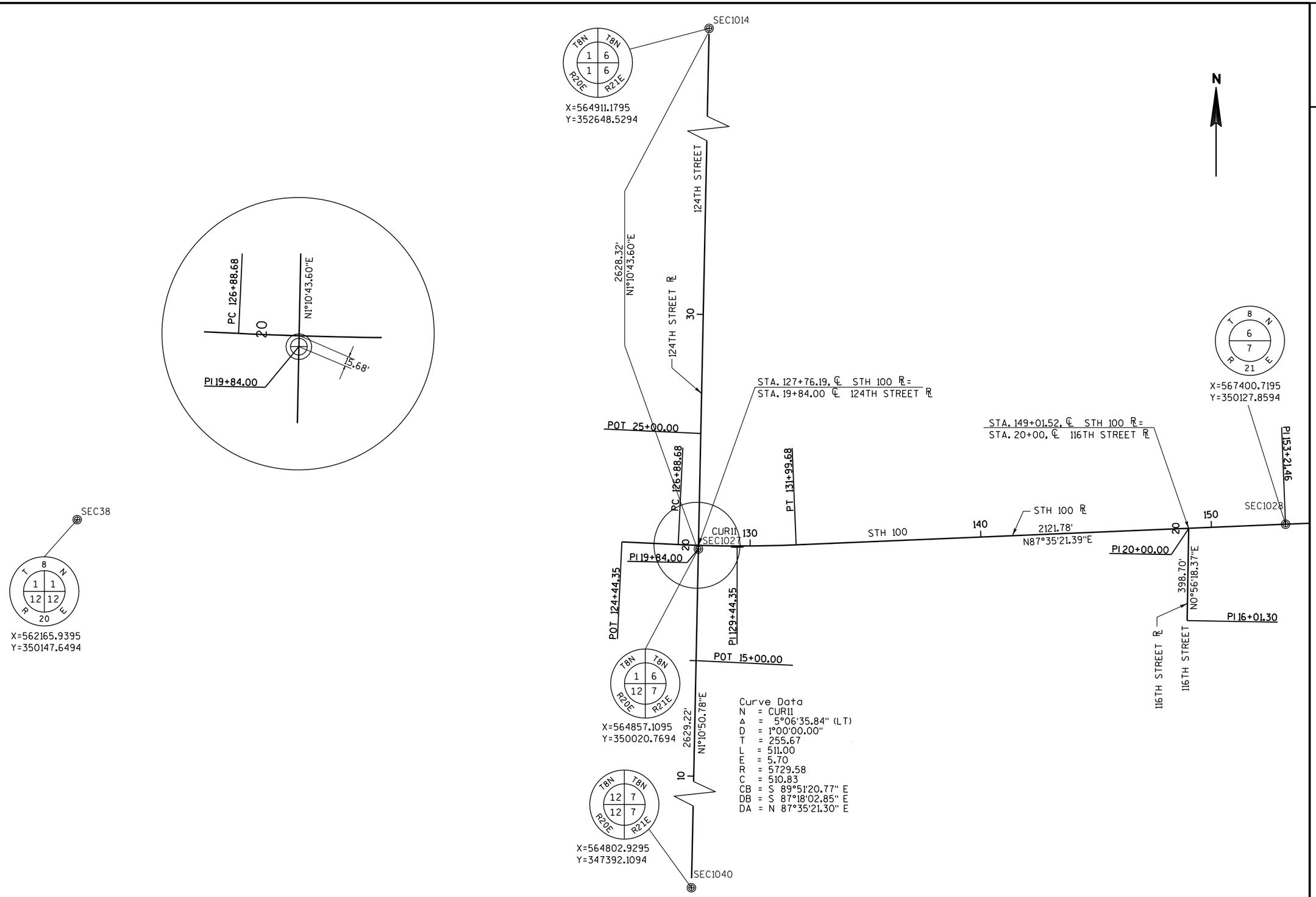

Curve Data
N = CUR11
Δ = 5°06'35.84" (LT)
D = 1°00'00.00"
T = 255.67
L = 511.00
E = 5.70
R = 5729.58
C = 510.83
CB = S 89°51'20.77" E
DB = S 87°18'02.85" E
DA = N 87°35'21.30" E

PROJECT NO: 2150-05-70	HWY: STH 100	COUNTY: MILWAUKEE	ALIGNMENT LAYOUT	SHEET	E

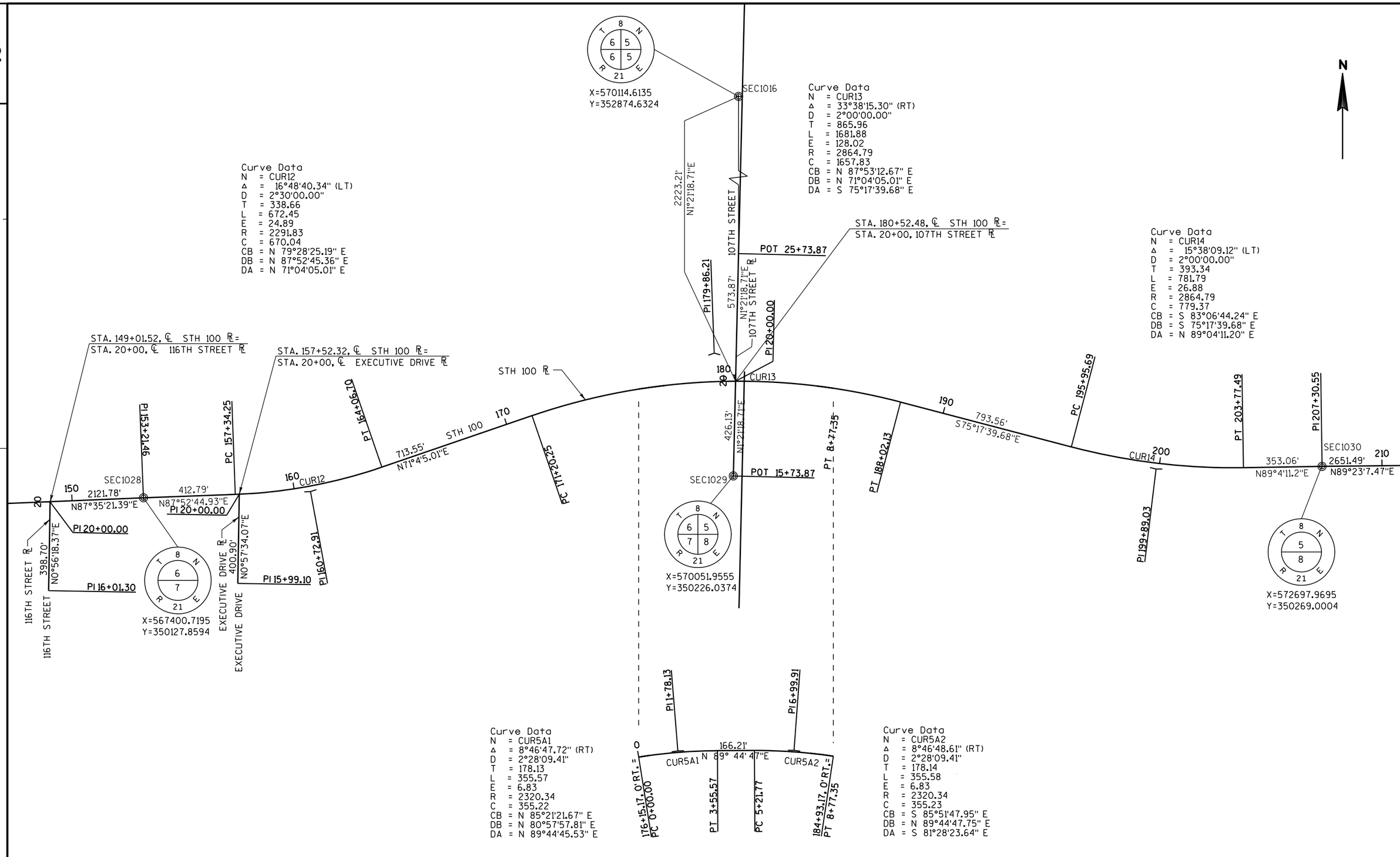
N
X=570114.6135
Y=352874.6324
SEC1016
Curve Data
N = CUR13
Δ = 33°38'15.30" (RT)
D = 2°00'00.00"
T = 865.96
L = 1681.88
E = 128.02
R = 2864.79
C = 1657.83
CB = N 87°53'12.67" E
DB = N 71°04'05.01" E
DA = S 75°17'39.68" E
Curve Data
N = CUR12
Δ = 16°48'40.34" (LT)
D = 2°30'00.00"
T = 338.66
L = 672.45
E = 24.89
R = 2291.83
C = 670.04
CB = N 79°28'25.19" E
DB = N 87°52'45.36" E
DA = N 71°04'05.01" E
2223.21'
N1°21'18.71"E
107TH STREET
STA. 180+52.48, ℄ STH 100 ℞ =
STA. 20+00, 107TH STREET ℞
POT 25+73.87
PI 179+86.21
573.87'
N1°21'18.71"E
107TH STREET ℞
PI 28+00.00
Curve Data
N = CUR14
Δ = 15°38'09.12" (LT)
D = 2°00'00.00"
T = 393.34
L = 781.79
E = 26.88
R = 2864.79
C = 779.37
CB = S 83°06'44.24" E
DB = S 75°17'39.68" E
DA = N 89°04'11.20" E
STA. 149+01.52, ℄ STH 100 ℞ =
STA. 20+00, ℄ 116TH STREET ℞
STA. 157+52.32, ℄ STH 100 ℞ =
STA. 20+00, ℄ EXECUTIVE DRIVE ℞
STH 100 ℞
180
CUR13
PI 153+21.46
PC 157+34.25
PT 164+09.70
713.55'
N71°4'5.01"E
STH 100
170
PC 171+20.25
426.13'
N1°21'18.71"E
PT 8+77.35
PT 188+02.13
190
793.56'
S75°17'39.68"E
PC 195+95.69
PT 203+77.49
PI 207+30.55
SEC1030
2651.49'
N89°23'7.47"E
210
353.06'
N89°4'11.2"E
CUR14
200
PI 199+89.03
SEC1029
POT 15+73.87
X=570051.9555
Y=350226.0374
X=572697.9695
Y=350269.0004
SEC1028
150
2121.78'
N87°35'21.39"E
412.79'
N87°52'44.93"E
PI 20+00.00
160
CUR12
PI 160+72.91
PI 20+00.00
398.70'
N0°56'18.37"E
PI 16+01.30
400.90'
N0°57'34.07"E
PI 15+99.10
116TH STREET ℞
116TH STREET
EXECUTIVE DRIVE ℞
EXECUTIVE DRIVE
X=567400.7195
Y=350127.8594
PI 1+78.13
PI 6+99.91
166.21'
N 89° 44' 47"E
CUR5A1
CUR5A2
176+15.17, 0' RT. =
PC 0+00.00
PT 3+55.57
PC 5+21.77
184+93.17, 0' RT. =
PT 8+77.35
Curve Data
N = CUR5A1
Δ = 8°46'47.72" (RT)
D = 2°28'09.41"
T = 178.13
L = 355.57
E = 6.83
R = 2320.34
C = 355.22
CB = N 85°21'21.67" E
DB = N 80°57'57.81" E
DA = N 89°44'45.53" E
Curve Data
N = CUR5A2
Δ = 8°46'48.61" (RT)
D = 2°28'09.41"
T = 178.14
L = 355.58
E = 6.83
R = 2320.34
C = 355.23
CB = S 85°51'47.95" E
DB = N 89°44'47.75" E
DA = S 81°28'23.64" E

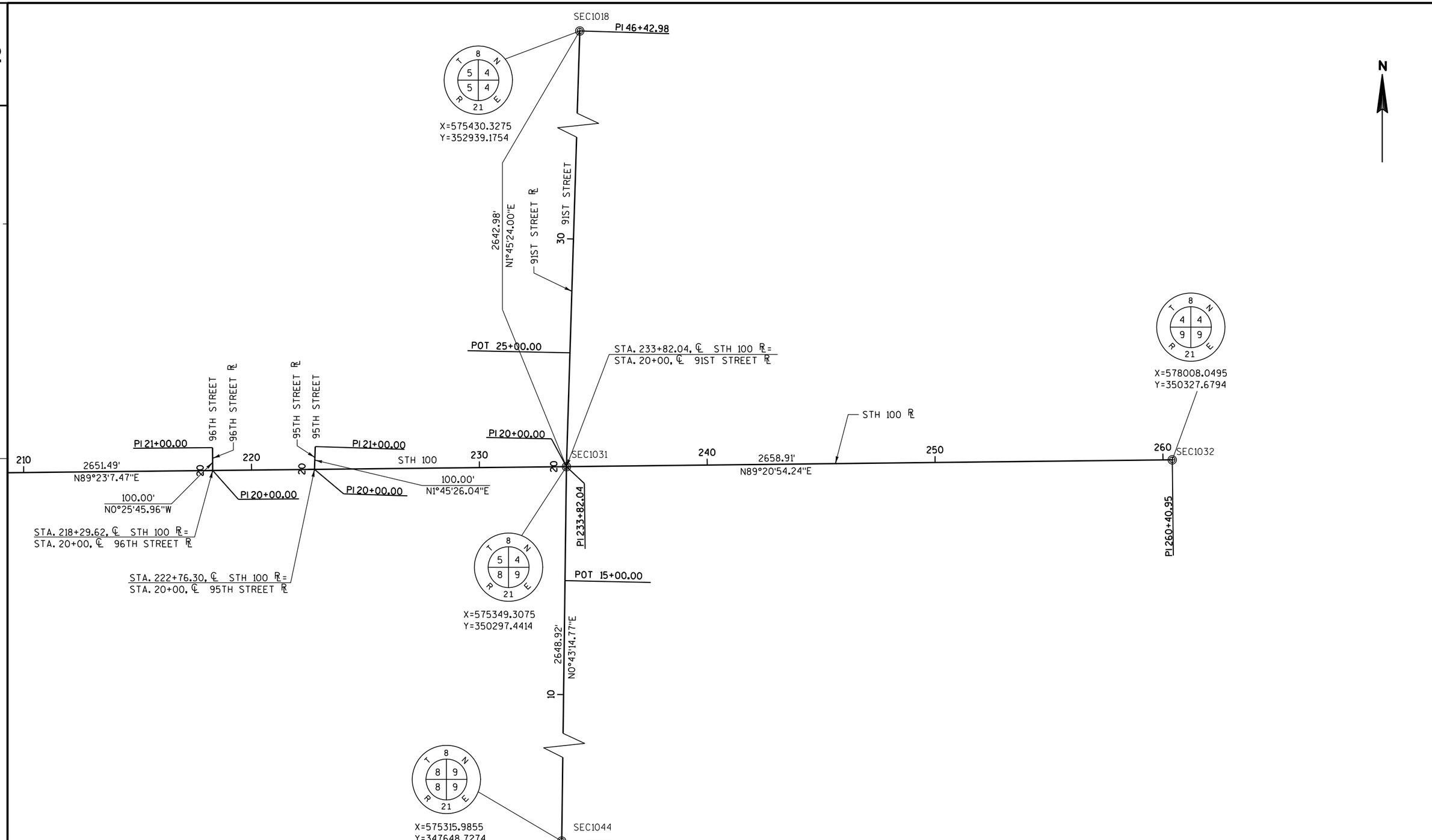

PROJECT NO: 2150-05-70	HWY: STH 100	COUNTY: MILWAUKEE	ALIGNMENT LAYOUT	SHEET	E

3

DATE 16MAR10 E S T I M A T E O F Q U A N T I T I E S

LINE NUMBER	ITEM	ITEM DESCRIPTION	UNIT	TOTAL	2150-05-70 QUANTITY
0010	204.0100	REMOVING PAVEMENT	SY	2,093.000	2,093.000
0020	204.0109.S	REMOVING CONCRETE SURFACE PARTIAL DEPTH	SF	97,633.000	97,633.000
0030	204.0115	REMOVING ASPHALTIC SURFACE BUTT JOINTS	SY	1,308.000	1,308.000
0040	204.0120	REMOVING ASPHALTIC SURFACE MILLING	SY	10,231.000	10,231.000
0050	204.0150	REMOVING CURB & GUTTER	LF	8,294.000	8,294.000
0060	204.0155	REMOVING CONCRETE SIDEWALK	SY	174.000	174.000
0070	204.0165	REMOVING GUARDRAIL	LF	240.000	240.000
0080	204.0195	REMOVING CONCRETE BASES	EACH	22.000	22.000
0090	204.0210	REMOVING MANHOLES	EACH	1.000	1.000
0100	205.0100	EXCAVATION COMMON	CY	2,185.000	2,185.000
0110	205.9006.S	GRADING SHAPING & FINISHING FOR BARRIER TERMINALS	EACH	2.000	2.000
0120	209.0200.S	BACKFILL CONTROLLED LOW STRENGTH	CY	5.000	5.000
0130	305.0120	BASE AGGREGATE DENSE 1 1/4-INCH	TON	1,501.000	1,501.000
0140	310.0110	BASE AGGREGATE OPEN GRADED	TON	25.000	25.000
0150	311.0110	BREAKER RUN	TON	901.000	901.000
0160	320.0140	CONCRETE BASE 7 1/2-INCH	SY	664.000	664.000
0170	390.0303	BASE PATCHING CONCRETE	SY	3,228.000	3,228.000
0180	390.0403	BASE PATCHING CONCRETE SHES	SY	1,272.000	1,272.000
0190	415.0100	CONCRETE PAVEMENT 10-INCH	SY	95.000	95.000
0200	415.2000.S	INCENTIVE STRENGTH CONCRETE PAVEMENT	DOL	500.000	500.000
0210	416.0170	CONCRETE DRIVEWAY 7-INCH	SY	221.000	221.000
0220	416.0610	DRILLED TIE BARS	EACH	4,258.000	4,258.000
0230	416.0620	DRILLED DOWEL BARS	EACH	8,693.000	8,693.000
0240	440.4410.S	INCENTIVE IRI RIDE	DOL	24,000.000	24,000.000
0250	455.0115	ASPHALTIC MATERIAL PG64-22	TON	679.000	679.000
0260	455.0120	ASPHALTIC MATERIAL PG64-28	TON	834.000	834.000
0270	455.0605	TACK COAT	GAL	5,595.000	5,595.000
0280	460.1103	HMA PAVEMENT TYPE E-3	TON	25,121.000	25,121.000
0290	460.2000	INCENTIVE DENSITY HMA PAVEMENT	DOL	15,816.000	15,816.000
0300	465.0110	ASPHALTIC SURFACE PATCHING	TON	402.000	402.000
0310	520.8000.S	CULVERT PIPE CONCRETE COLLAR	EACH	2.000	2.000
0320	601.0331	CONCRETE CURB & GUTTER 31-INCH	LF	2,761.000	2,761.000
0330	601.0600	CONCRETE CURB PEDESTRIAN	LF	46.000	46.000
0340	602.0410	CONCRETE SIDEWALK 5-INCH	SF	32,475.000	32,475.000
0350	602.0505	CURB RAMP DETECTABLE WARNING FIELD YELLOW	SF	855.000	855.000
0360	603.0500	CONCRETE BARRIER TEMPORARY PRECAST CONTRACTOR FURNISHED & DELIVERED	LF	1,780.000	1,780.000
0370	603.0801	CONCRETE BARRIER TEMPORARY PRECAST CONTRACTOR INSTALLED	LF	3,560.000	3,560.000
0380	608.0324	STORM SEWER PIPE REINFORCED CONCRETE CLASS III 24-INCH	LF	25.000	25.000
0390	611.0201	MANHOLES TYPE 1	EACH	1.000	1.000
0400	611.0430	RECONSTRUCTING INLETS	EACH	26.000	26.000
0410	611.8110	ADJUSTING MANHOLE COVERS	EACH	35.000	35.000
0420	611.8115	ADJUSTING INLET COVERS	EACH	141.000	141.000
0430	611.8120.S	COVER PLATES TEMPORARY	EACH	50.000	50.000
0440	612.0106	PIPE UNDERDRAIN 6-INCH	LF	276.000	276.000
0450	614.0200	STEEL THRIE BEAM STRUCTURE APPROACH	LF	42.000	42.000
0460	614.0305	STEEL PLATE BEAM GUARD CLASS A	LF	125.000	125.000
0470	614.0370	STEEL PLATE BEAM GUARD ENERGY ABSORBING TERMINAL	EACH	2.000	2.000
0480	614.0396	GUARDRAIL MOW STRIP ASPHALT	SY	302.000	302.000
0490	619.1000	MOBILIZATION	EACH	1.000	1.000

3

3

DATE 16MAR10 E S T I M A T E O F Q U A N T I T I E S

LINE NUMBER	ITEM	ITEM DESCRIPTION	UNIT	TOTAL	2150-05-70 QUANTITY
0500	620.0200	CONCRETE MEDIAN BLUNT NOSE	SF	227.000	227.000
0510	620.0300	CONCRETE MEDIAN SLOPED NOSE	SF	471.000	471.000
0520	625.0100	TOPSOIL	SY	14,834.000	14,834.000
0530	628.1104	EROSION BALES	EACH	150.000	150.000
0540	628.1504	SILT FENCE	LF	6,470.000	6,470.000
0550	628.1520	SILT FENCE MAINTENANCE	LF	6,470.000	6,470.000
0560	628.1905	MOBILIZATIONS EROSION CONTROL	EACH	6.000	6.000
0570	628.1910	MOBILIZATIONS EMERGENCY EROSION CONTROL	EACH	3.000	3.000
0580	628.2008	EROSION MAT URBAN CLASS I TYPE B	SY	14,834.000	14,834.000
0590	628.7010	INLET PROTECTION TYPE B	EACH	14.000	14.000
0600	628.7015	INLET PROTECTION TYPE C	EACH	148.000	148.000
0610	628.7020	INLET PROTECTION TYPE D	EACH	40.000	40.000
0620	629.0210	FERTILIZER TYPE B	CWT	9.300	9.300
0630	630.0130	SEEDING MIXTURE NO. 30	LB	220.000	220.000
0640	630.0140	SEEDING MIXTURE NO. 40	LB	44.000	44.000
0650	630.0200	SEEDING TEMPORARY	LB	189.000	189.000
0660	631.1100	SOD EROSION CONTROL	SY	1,700.000	1,700.000
0670	634.0616	POSTS WOOD 4X6-INCH X 16-FT	EACH	109.000	109.000
0680	637.0202	SIGNS REFLECTIVE TYPE II	SF	1,808.440	1,808.440
0690	638.2102	MOVING SIGNS TYPE II	EACH	3.000	3.000
0700	638.2602	REMOVING SIGNS TYPE II	EACH	165.000	165.000
0710	638.3000	REMOVING SMALL SIGN SUPPORTS	EACH	75.000	75.000
0720	642.5201	FIELD OFFICE TYPE C	EACH	1.000	1.000
0730	643.0200	TRAFFIC CONTROL SURVEILLANCE AND MAINTENANCE (PROJECT) 01.2150-05-70	DAYS	131.000	131.000
0740	643.0300	TRAFFIC CONTROL DRUMS	DAYS	168,247.000	168,247.000
0750	643.0410	TRAFFIC CONTROL BARRICADES TYPE II	DAYS	2,850.000	2,850.000
0760	643.0420	TRAFFIC CONTROL BARRICADES TYPE III	DAYS	17,801.000	17,801.000
0770	643.0705	TRAFFIC CONTROL WARNING LIGHTS TYPE A	DAYS	35,158.000	35,158.000
0780	643.0715	TRAFFIC CONTROL WARNING LIGHTS TYPE C	DAYS	14,253.000	14,253.000
0790	643.0800	TRAFFIC CONTROL ARROW BOARDS	DAYS	820.000	820.000
0800	643.0900	TRAFFIC CONTROL SIGNS	DAYS	26,784.000	26,784.000
0810	643.0905.S	TRAFFIC CONTROL COVERING SIGNS	EACH	7.000	7.000
0820	643.1000	TRAFFIC CONTROL SIGNS FIXED MESSAGE	SF	264.000	264.000
0830	643.1050.S	TRAFFIC CONTROL SIGNS PORTABLE CHANGEABLE MESSAGE	DAY	401.000	401.000
0840	645.0111	GEOTEXTILE FABRIC TYPE DF SCHEDULE A	SY	101.000	101.000
0850	646.0106	PAVEMENT MARKING EPOXY 4-INCH	LF	42,770.000	42,770.000
0860	646.0156	PAVEMENT MARKING EPOXY 18-INCH	LF	755.000	755.000
0870	646.0600	REMOVING PAVEMENT MARKINGS	LF	38,455.000	38,455.000
0880	646.0881.S	PAVEMENT MARKING GROOVED WET REFLECTIVE TAPE 4-INCH	LF	10,960.000	10,960.000
0890	646.0883.S	PAVEMENT MARKING GROOVED WET REFLECTIVE TAPE 8-INCH	LF	6,558.000	6,558.000
0900	647.0156	PAVEMENT MARKING ARROWS EPOXY TYPE 1	EACH	2.000	2.000
0910	647.0166	PAVEMENT MARKING ARROWS EPOXY TYPE 2	EACH	28.000	28.000
0920	647.0356	PAVEMENT MARKING WORDS EPOXY	EACH	20.000	20.000
0930	647.0456	PAVEMENT MARKING CURB EPOXY	LF	1,113.000	1,113.000
0940	647.0606	PAVEMENT MARKING ISLAND NOSE EPOXY	EACH	33.000	33.000
0950	647.0766	PAVEMENT MARKING CROSSWALK EPOXY 6-INCH	LF	1,495.000	1,495.000
0960	649.0200	TEMPORARY PAVEMENT MARKING REFLECTIVE PAINT 4-INCH	LF	94,962.000	94,962.000
0970	649.0400	TEMPORARY PAVEMENT MARKING REMOVABLE TAPE 4-INCH	LF	31,650.000	31,650.000

3

3

DATE 16MAR10 E S T I M A T E O F Q U A N T I T I E S

LINE NUMBER	ITEM	ITEM DESCRIPTION	UNIT	TOTAL	2150-05-70 QUANTITY
0980	650.4000	CONSTRUCTION STAKING STORM SEWER SYSTEM	EACH	1.000	1.000
0990	650.4500	CONSTRUCTION STAKING SUBGRADE	LF	302.000	302.000
1000	650.5000	CONSTRUCTION STAKING BASE	LF	7,084.000	7,084.000
1010	650.5500	CONSTRUCTION STAKING CURB GUTTER AND CURB & GUTTER	LF	5,515.000	5,515.000
1020	650.8000	CONSTRUCTION STAKING RESURFACING REFERENCE	LF	13,093.000	13,093.000
1030	650.9910	CONSTRUCTION STAKING SUPPLEMENTAL CONTROL (PROJECT) 01. 2150-05-70	LS	1.000	1.000
1040	652.0225	CONDUIT RIGID NONMETALLIC SCHEDULE 40 2-INCH	LF	2,796.000	2,796.000
1050	652.0235	CONDUIT RIGID NONMETALLIC SCHEDULE 40 3-INCH	LF	968.000	968.000
1060	652.0615	CONDUIT SPECIAL 3-INCH	LF	2,366.000	2,366.000
1070	652.0800	CONDUIT LOOP DETECTOR	LF	3,457.000	3,457.000
1080	652.0900	LOOP DETECTOR SLOTS	LF	3,043.000	3,043.000
1090	653.0135	PULL BOXES STEEL 24X36-INCH	EACH	21.000	21.000
1100	653.0140	PULL BOXES STEEL 24X42-INCH	EACH	33.000	33.000
1110	653.0905	REMOVING PULL BOXES	EACH	57.000	57.000
1120	654.0101	CONCRETE BASES TYPE 1	EACH	16.000	16.000
1130	654.0110	CONCRETE BASES TYPE 10	EACH	2.000	2.000
1140	654.0113	CONCRETE BASES TYPE 13	EACH	6.000	6.000
1150	654.0217	CONCRETE CONTROL CABINET BASES TYPE 9 SPECIAL	EACH	2.000	2.000
1160	655.0220	CABLE TRAFFIC SIGNAL 4-14 AWG	LF	216.000	216.000
1170	655.0230	CABLE TRAFFIC SIGNAL 5-14 AWG	LF	1,461.000	1,461.000
1180	655.0240	CABLE TRAFFIC SIGNAL 7-14 AWG	LF	184.000	184.000
1190	655.0260	CABLE TRAFFIC SIGNAL 12-14 AWG	LF	6,046.000	6,046.000
1200	655.0515	ELECTRICAL WIRE TRAFFIC SIGNALS 10 AWG	LF	5,981.000	5,981.000
1210	655.0700	LOOP DETECTOR LEAD IN CABLE	LF	13,533.000	13,533.000
1220	655.0800	LOOP DETECTOR WIRE	LF	9,087.000	9,087.000
1230	656.0200	ELECTRICAL SERVICE METER BREAKER PEDESTAL (LOCATION) 01. STH 100 & 107TH STREET	LS	1.000	1.000
1240	656.0200	ELECTRICAL SERVICE METER BREAKER PEDESTAL (LOCATION) 02. STH 100 & 91ST STREET	LS	1.000	1.000
1250	661.0200	TEMPORARY TRAFFIC SIGNALS FOR INTERSECTIONS (LOCATION) 01. STH 100 & 91ST STREET	LS	1.000	1.000
1260	661.0200	TEMPORARY TRAFFIC SIGNALS FOR INTERSECTIONS (LOCATION) 02. 107TH STREET	LS	1.000	1.000
1270	690.0150	SAWING ASPHALT	LF	240.000	240.000
1280	690.0250	SAWING CONCRETE	LF	19,920.000	19,920.000
1290	ASP.1T0A	ON-THE-JOB TRAINING APPRENTICE AT $5. 00/HR	HRS	300.000	300.000
1300	ASP.1T0G	ON-THE-JOB TRAINING GRADUATE AT $5.00/HR	HRS	1,400.000	1,400.000
1310	SPV.0055	SPECIAL 01. LANE RENTAL ASSESSMENT	DOL	1.000	1.000
1320	SPV.0060	SPECIAL 01. EXPOSING EXISTING UTILITY	EACH	6.000	6.000
1330	SPV.0060	SPECIAL 02. ROCK BAGS	EACH	24.000	24.000
1340	SPV.0060	SPECIAL 03. INTERNAL SANITARY MANHOLE SEALS	EACH	13.000	13.000
1350	SPV.0060	SPECIAL 05. ADJUSTING WATER VALVE BOXES	EACH	75.000	75.000
1360	SPV.0060	SPECIAL 06. ADJUSTING WATER MANHOLES	EACH	5.000	5.000
1370	SPV.0060	SPECIAL 07. INLET COVERS TYPE W SPECIAL	EACH	78.000	78.000

3

DATE 16MAR10 E S T I M A T E O F Q U A N T I T I E S

LINE NUMBER	ITEM	ITEM DESCRIPTION	UNIT	TOTAL	2150-05-70 QUANTITY
1380	SPV.0060	SPECIAL 08. CURB BOX 4-INCH	EACH	67.000	67.000
1390	SPV.0060	SPECIAL 10. ADJUSTING SANITARY MANHOLE COVERS	EACH	13.000	13.000
1400	SPV.0090	SPECIAL 02. CONCRETE CURB AND GUTTER 31-INCH, SPECIAL	LF	4,314.000	4,314.000
1410	SPV.0105	SPECIAL 05. TRAFFIC SIGNALS AND INTERSECTION LIGHTING, STH 100 & N. 91ST STREET	LS	1.000	1.000
1420	SPV.0105	SPECIAL 06. REMOVE TRAFFIC SIGNALS STH 100 & N. 91ST STREET	LS	1.000	1.000
1430	SPV.0105	SPECIAL 07. TRAFFIC SIGNALS AND INTERSECTION LIGHTING, STH 100 & 107TH STREET	LS	1.000	1.000
1440	SPV.0105	SPECIAL 08. REMOVE TRAFFIC SIGNALS STH 100 & 107TH STREET	LS	1.000	1.000
1450	SPV.0105	SPECIAL 09. TRAFFIC SIGNALS AND INTERSECTION LIGHTING, STH 100 & 124TH STREET	LS	1.000	1.000
1460	SPV.0105	SPECIAL 10. REMOVE TRAFFIC SIGNALS STH 100 & 124TH STREET	LS	1.000	1.000
1470	SPV.0180	SPECIAL 01. CONCRETE BASE SHES 7 1/2-INCH	SY	1,527.000	1,527.000
1480	SPV.0195	SPECIAL 01. JOINT AND CRACK REPAIR	TON	540.000	540.000

3

3

3

EARTHWORK SUMMARY

Division	From / To Station	Location	Common Excavation (1)	(Bid Item # 205.0100)	Salvaged / Unusable Pavement Material (4)	Available Material (5)	Reduced EBS in Fill (6)	Expanded EBS Backfill (7)	Unexpanded Fill	Expanded Fill (9)	Mass Ordinate + / - (10)
			Cut (2)	EBS Excavation (3)			Factor	Factor		Factor	
							0.80	1.30		1.20	
1	189+00 TO 202+10	STH 100 EB SIDEWALK	180	0	0	180	0	0	12	15	165
	203+58 TO 233+00	STH 100 EB SIDEWALK	429	0	0	429	0	0	111	134	295
Division 1 Subtotal			608	0	0	608	0	0	124	148	460
2	181+50 TO 202+10	STH 100 WB SIDEWALK	341	0	0	341	0	0	38	46	295
	203+58 TO 207+00	STH 100 WB SIDEWALK	53	0	0	53	0	0	6	7	46
Division 2 Subtotal			394	0	0	394	0	0	44	53	342
3	202+10 TO 203+58	STH 100 RECONSTRUCT	689	493	340	349	0	0	5	6	837
Division 3 Subtotal			689	493	340	349	0	0	5	6	837
Grand Total			1,692	493	340	1,352	0	0	172	207	--
			Total Common Exc	2,185		(11)					

1) Common Excavation is the sum of the Cut and EBS Excavation columns. Item number 205.0100
2) Salvaged/Unsuable Pavement Material is included in Cut.
3) EBS Excavation to be backfilled with Select Crushed Material.
4) Amount of Cut that is Unusable Pavement Material
5) Available Material = Cut - Salvaged/Unusable Pavement Material
6) Excavated EBS material is usable in Fills outside the 1:1 slope. EBS in Fill Reduction factor = 0.8. This condition does not occur on this project.
7) Expanded EBS Backfill - This is to be filled with Select Crushed Material. EBS Backfill Factor = 1.3.
8) The estimated area outside the 1:1 fill slopes where excavated EBS or excess topsoil material is placed.
9) Expanded Fill. Factor = Expanded Fill = (Unexpanded Fill - Reduced EBS) * Fill Factor
10) The Mass Ordinate + or - Qty calculated for the Division. Plus quantity indicates an excess of material within the Division. Minus indicates a shortage of material within the Division.
11) Minor fill placement at sidewalk can done with the salvaged topsoil.
12) Waste material from Division 1 and 2 is salvaged topsoil and not suitable for Division 3 borrow.
13) Waste includes EBS + Available Material - Expanded Fill. Does not include concrete pavement.

3

REMOVAL ITEMS

DESCRIPTION	STATION		STATION	204.0100 REMOVING PAVEMENT SY	204.0115 REMOVING ASPHALTIC BUTT JOINTS SY	204.0120 REMOVING ASPHALTIC SURFACE MILLING SY	204.0150 REMOVING CURB & GUTTER LF	204.0155 REMOVING CONCRETE SIDEWALK SY	204.0165 REMOVING GUARDRAIL LF	204.0210 REMOVING MANHOLES EACH	204.0109.S REMOVING CONCRETE SURFACE PARTIAL DEPTH SY	SPV.0195.01 JOINT AND CRACK REPAIR TON
124TH STREET												
	18+36	--	19+47	41	134	1,360	130	--	--	1	--	--
	20+55	--	20+75	3	115	916	40	--	--	--	--	--
107TH STREET												
	18+40	--	19+40	367	120	--	245	34	--	--	--	--
	20+53	--	21+50	304	136	--	278	25	--	--	--	--
91ST STREET												
	18+65	--	19+47	--	100	880	62	29	--	--	--	--
	20+54	--	21+25	--	100	720	87	25	--	--	--	--
STH 100												
	124+50	--	126+00	--	17	--	--	--	--	--	--	--
	126+00	--	146+00	--	131	1,780	763	--	--	--	18,790	43
	146+00	--	166+00	--	172	214	671	34	120	--	18,679	53
	166+00	--	186+00	--	140	--	190	27	120	--	17,097	86
	186+00	--	206+00	1,200	--	1,780	3,307	--	--	--	15,423	95
	206+00	--	226+00	--	--	1,780	1,834	--	--	--	18,205	147
	226+00	--	235+00	178	143	801	287	--	--	--	9,439	66
SUBTOTAL				2,093	1,308	10,231	7,894	174	240	1	97,633	490
	INLET/MANHOLE ADJUST/RECONSTRUCT			318	--	--	--	--	--	--	--	--
UNDISTRIBUTED				--	--	--	400	--	--	--	--	50
	TOTAL			2,093	1,308	10,231	8,294	174	240	1	97,633	540

3

BEAM GUARD ITEMS

CATEGORY	LOCATION	STATION		STATION	205.9006.S GRADING, SHAPING & FINISHING FOR BEAM GUARD TERMINALS EACH	209.0200.S BACKFILL CONTROLLED LOW STRENGTH CY	614.0200 STEEL THRIE BEAM STRUCTURE APPROACH LF	614.0305 STEEL PLATE BEAM GUARD CLASS A LF	614.0396 GUARDRAIL MOW STRIP ASPHALT SY	614.0370 STEEL PLATE BEAMGUARD ERGY ABSORBING TERMINAL EACH
0010										
	STH 100									
		164+75	TO	166+10	1	2.5	21	62.5	151	1
		170+50	TO	171+90	1	2.5	21	62.5	151	1
		TOTAL			2	5	42	125	302	2

3

GRADING, SHAPING & FINISHING FOR BEAM GUARD TERMINALS ITEMS

BID INFORMATION ONLY

(NOT INCLUDED IN CONTRACT QUANTITY)

LOCATION	STATION	TO	STATION	COMMON EXCAVATION CY	TOPSOIL SY	EROSION MAT URBAN CLASS 1 TYPE B SY	FERTILIZER TYPE B CWT	SEEDING MIXTURE NO. 30 LB	SEEDING TEMPORARY LB
STH 100									
	164+75	--	166+10	26	157	157	1	3	2
	170+50	--	171+90	26	157	157	1	3	2
	TOTAL			52	314	314	2	6	4

3

BASE ITEMS

CATEGORY	DESCRIPTION	STATION		STATION	305.0120 BASE AGGREGATE DENSE 1 1/4-INCH TON	310.0110 BASE AGGREGATE OPEN GRADED TON	311.0110 BREAKER RUN TON	SPV.0060.01 EXPOSING EXISTING UTILITIES EA
0010								
	124TH STREET	18+36	--	19+25	32	25	--	--
	107TH STREET	17+50	--	19+45	--	--	--	4
	91ST STREET	18+65	--	19+46	4	--	--	2
		20+55	--	21+25	9	-	-	-
	STH 100							
		186+00	--	206+00	515	--	901	--
	UNDISTRIBUTED				82	--	--	--
	0010 SUBTOTAL				628	25	901	6
0030								
	124TH STREET	18+36	--	19+25				
	107TH STREET	17+50	--	19+45	5	-	-	-
		20+55		21+25	4	-	-	-
	91ST STREET	18+65	--	19+46	9	-	-	-
	STH 100	126+00	--	146+00	--	--	--	--
		146+00	--	166+00	--	--	--	--
		166+00	--	186+00	53	--	--	--
		186+00	--	206+00	456	--	--	--
		206+00	--	226+00	251	--	--	--
		226+00	--	235+00	80	--	--	--
			--					
	UNDISTRIBUTED				114	--	--	--
	0030 SUBTOTAL				873	--	--	--
		TOTAL			1,502	25	901	6

3

ASPHALTIC ITEMS

CATEGORY	DESCRIPTION	STATION		STATION	455.0115 ASPHALTIC MATERIAL PG64-22 TON	455.0120 ASPHALTIC MATERIAL PG64-28 TON	455.0605 TACK COAT GAL	460.1103 HMA PAVEMENT TYPE E-3 TON	465.0110 ASPHALTIC SURFACE PATCHING TON	460.2000 INCENTIVE DENSITY HMA PAVEMENT DOL
0010										
	STH 100	124+50	--	137+50	78	96	632	2,901	43	1,857
		137+50	--	152+50	96	114	728	3,486	49	2,231
		152+50	--	167+25	84	104	677	3,103	53	1,986
		167+25	--	182+00	102	125	825	3,785	54	2,422
		182+00	--	198+00	90	116	761	3,425	58	2,192
		198+00	--	214+00	89	109	713	3,264	64	2,089
		214+00	--	227+00	69	85	553	2,533	51	1,621
		227+00	--	235+00	60	74	483	2,216	30	1,418
	NOTCHED TEMPORARY WEDGE	126+00	--	235+00	11	11	223	408	--	--
		TOTAL			679	834	5,595	25,121	402	15,816

3

CONCRETE ITEMS

CATEGORY	DESCRIPTION	STATION		STATION	320.0140 CONCRETE BASE 7 1/2-INCH SY	390.0303 BASE PATCHING CONCRETE SY	390.0403 BASE PATCHING CONCRETE SHES SY	415.0100 CONCRETE PAVEMENT 10-INCH SY	416.0170 CONCRETE DRIVEWAY 7-INCH SY	416.0610 DRILLED TIE BARS EACH	416.0620 DRILLED DOWEL BARS EACH	SPV.0180.01 CONCRETE BASE SHES 7 1/2-INCH SY
0010												
	124TH STREET											
		18+36	--	19+47	--	--	--	95	--	59	--	--
		20+55	--	20+75	--	--	--		--	--	--	--
	107TH STREET											
		18+40	--	19+40	313	--	--	--	--	108	45	--
		20+53	--	21+50	252	--	--	--	--	100	45	--
	91ST STREET											
		18+65	--	19+47	--	--	--	--	--	27	--	--
		20+54	--	21+25	99	--	--	--	--	83	37	--
	STH 100	126+00	--	146+00	--	352	224	--	29	514	1160	--
		146+00	--	166+00	--	304	138	--	--	518	1100	--
		166+00	--	186+00	--	136	64	--	--	379	547	--
		186+00	--	206+00	--	288	104	--	--	679	1084	1208
		206+00	--	226+00	--	848	304	--	130	1135	3220	--
		226+00	--	235+00	--	224	88	--	62	274	665	--
	INLET/MANHOLE ADJUST/RECONSTRUCT				--	--	--	--	--	--	--	160
	UNDISTRIBUTED				--	1,076	350	--	--	382	790	--
		TOTAL			664	3,228	1,272	95	221	4,258	8,693	1,527

3

3

CONCRETE CURB & SIDEWALK ITEMS

CATEGORY	DESCRIPTION	STATION		STATION	601.0600 CONCRETE CURB PEDESTRIAN LF	601.0331 CONCRETE CURB & GUTTTER 31-INCH LF	602.0410 CONCRETE SIDEWALK 5-INCH SF	602.0505 CURB RAMP DETECTABLE WARNING FIELD YELLOW SF	620.0200 CONCRETE MEDIAN BLUNT NOSE SF	620.0300 CONCRETE MEDIAN SLOPED NOSE SF	SPV.0090.02 CONCRETE CURB & GUTTER 31-INCH LF
0010											
	124TH STREET										
		18+36	--	19+47	--	130	--	--	--	--	--
		20+55	--	20+75	--		--	--	--	--	--
	107TH STREET										
		18+40	--	19+40	--	--	410	64	--	--	--
		20+53	--	21+50	--	--	410	647	--	--	--
	91ST STREET										
		18+65	--	19+47	--	--	--	32	--	--	--
		20+54	--	21+25	--	--	--	32	--	--	--
	STH 100	126+00	--	146+00	--	419	--	--	--	76	535
		146+00	--	166+00	--	435	--	-	227	--	160
		166+00	--	186+00	--	766	120	32	--	--	155
		186+00	--	206+00	--	325	--	--	--	--	2454
		206+00	--	226+00	46	306	180	48	--	243	1010
		226+00	--	235+00	--	380	240	--	--	152	--
	0010 SUBTOTAL				46	2761	1360	855	227	471	4314
0030											
	107TH STREET										
		18+40	--	19+40	--	--	70	--	--	--	--
		20+53	--	21+50	--	--	45	--	--	--	--
	91ST STREET										
		18+65	--	19+47	--	--	-	--	--	--	--
		20+54	--	21+25	--	--	-	--	--	--	--
	STH 100	126+00	--	146+00	--	--	--	--	--	--	--
		146+00	--	166+00	--	--	--	--	--	--	--
		166+00	--	186+00	--	--	--	--	--	--	--
		186+00	--	206+00	--	--	17650	--	--	--	--
		206+00	--	226+00	--	--	9770	--	--	--	--
		226+00	--	235+00	--	--	3580	--	--	--	--
	0030 SUBTOTAL				--	--	31115	--	--	--	--
		TOTAL			46	2,761	32,475	855	227	471	4,314

3

CONCRETE BARRIER TEMPORARY PRECAST ITEMS

CATERGORY	LOCATION	STATION	TO	STATION	603.0500 CONTRACTOR FURNISHED & DELIVERED LF	603.0801 CONTRACTOR INSTALLED LF
0010						
	STH 100					
		199+65	--	204+15	890	1780
		201+50	--	206+00	890	1780
		TOTAL			1,780	3,560

STORM SEWER ITEMS

CATEGORY	DESCRIPTION	STRUCTURE NUMBER	STATION	OFFSET FEET	RIM OR FLANGE ELEV	STR DEPTH FT	FROM STR	TO STR	INLET ELEV	DISCH ELEV	SLOPE	611.0201 MANHOLES TYPE 1 EACH	608.0324 STORM SEWER PIPE REINFORCED CONCRETE CLASS III 24-INCH LF	520.8000.S CULVERT PIPE CONCRETE COLLAR EA	612.0106 PIPE UNDERDRAIN 6-INCH LF	645.0111 GEOTEXTILE FABRIC TYPE DF SCHEDULE A SY	NOTES
0010	124TH STREET																
		100	18+74	43' LT	753.59	6.93	EXIST	100	745.92	745.66	0.0177	1	15	1	--	--	CENTER STRUCTURE OVER SS
		--	--	--	--	--	100	EXIST	745.66	745.48	0.0177	--	10	1	--	--	--
		--	18+30	38' LT	--	--	--	--	--	--	--	--	--	--	70	49	REPAIR & RECONNECT TO 100
			18+50										--	--	130		
		--	19+22	90' LT	--	--	--	--	--	--	--	--	--	--	76	53	REPAIR & RECONNECT TO 100
		TOTALS										1	25	2	276	101	

NOTES

1) STATIONS AND OFFSETS ARE TO THE CENTER OF STRUCTURE
2) PIPE LENGTHS ARE MEASURED FROM CENTER OF STRUCTURE TO CENTER OF STRUCTURE.
3) RIM ELEVATIONS ARE GIVEN AT THE FLANGE LINE
4) STRUCTURE DEPTH = RIM ELEVATION MINUS LOWEST INVERT MINUS CASTING HEIGHT MINUS ADJUSTMENT RING
   CASTING HEIGHT = 0.67 FT
   ADJUSTMENT (RINGS) = 0.33 FT

3

ADJUSTING MANHOLES

CATEGORY	DESCRIPTION	STATION		OFFSET	611.8110 ADJUSTING MANHOLE COVERS	611.8120.S COVER PLATES TEMPORARY	CATEGORY	SPV.0060.03 INTERNAL SANITARY MANHOLE SEALS	SPV.0060.10 ADJUSTING SANITARY MANHOLE COVER
0010	STH 100				EACH	EACH	0040	EACH	EACH
		127+90.11	--	49.9' R.T	1	1		--	--
		127+76.81	--	15.5' RT	1	1		--	--
		137+42.77	--	53.4' LT	1	1		--	--
		145+90.27	--	26.4' RT	1	1		--	--
		155+03.12	--	61.9' RT	1	1		--	--
		157+50.91	--	61.8' RT	1	1		--	--
		157+90.83	--	54.4' RT	1	1		--	--
		159+55	--	15.0' LT	1	1		--	--
		159+57	--	37.5' RT	1	1		--	--
		171+17.13	--	22.06 ' LT	1	1		--	--
		175+91.82	--	21.68' LT	1	1		--	--
		181+15.90	--	78.17' RT	1	1		--	--
		180+87.99	--	27.10' LT	1	1		--	--
		182+93.43	--	49.9' RT	1	1		--	--
		184+42.98	--	28.0' LT	1	1		--	--
		187+42.02	--	21.4' LT	1	1		--	--
		192+40.72	--	50.0' RT	1	1		--	--
		193+91.70	--	21.8' LT	1	1		--	--
		200+40.01	--	22.1' LT	1	1		--	--
		206+17.13	--	22.0' LT	1	1		--	--
		207+21.32	--	17.5' LT	--	1		1	1
		207+21.00	--	32.2' RT	--	1		1	1
		207+22.52	--	62.8' RT	--	1		1	1
		207+42.94	--	63.0' LT	--	1		1	1
		207+63.45	--	40.2' LT	--	1		1	1
		207+71.76	--	16.7' LT	--	1		1	1
		207+72.69	--	62.7' LT	--	1		1	1
		211+04.90	--	63.3' RT	--	1		1	1
		212+96.69	--	22.3' LT	1	1		--	--
		212+92.69	--	33.2' LT	1	1		--	--
		213+66.10	--	62.2' RT	--	1		1	1
		216+90.92	--	61.8' RT	--	1		1	1
		217+01.65	--	21.5' LT	1	1		--	--
		218+24.12	--	33.0' LT	1	1		--	--
		218+32.11	--	62.5' LT	--	1		1	1
		222+17.34	--	33.6' LT	1	1		--	--
		222+53.81	--	21.6' LT	1	1		--	--
		222+57.77	--	33.6' LT	1	1		--	--
		222+80.71	--	62.2' LT	1	1		--	--
		223+27.94	--	35.6' LT	1	1		--	--
		227+50.10	--	15.8' RT	1	1		--	--
		228+14.85	--	22.1' LT	1	1		--	--
		228+65.17	--	62.1' RT	--	1		1	1
		230+66.54	--	62.1' RT	--	1		1	1
		233+49.39	--	60.5' LT	1	1		--	--
		234+09.75	--	53.3' LT	1	1		--	--
		234+18.53	--	62.2' LT	1	1		--	--
		234+21.49	--	58.1' RT	1	1		--	--
		UNDISTRIBUTED			--	2		--	--
CATEGORY 0010		TOTAL			35	50		--	--
CATEGORY 0040		TOTAL			--	--		13	13

WATER ADJUSTMENTS

CATEGORY	STATION	SPV.0060.05 ADJUSTING WATER VALVE BOXES	SPV.0060.06 ADJUSTING WATER MANHOLES
0040		EACH	EACH
	Project	75	5
	TOTAL	75	5

3

3

INLET ITEMS

CATEGORY	DESC.	STATION	OFFSET	611.0430 RECONTRUCTING INLETS	611.8115 ADJUSTING INLET COVERS	SPV.0060.07 INLET COVERS TYPE W, SPECIAL	SPV.0060.08 CURB BOX, 4-INCH	628.7010 INLET PROTECTION TYPE B	628.7015 INLET PROTECTION TYPE C	628.7020 INLET PROTECTION TYPE D
0010				EACH	EACH	EACH	EACH	EACH	EACH	EACH
	124TH STREET	18+75	43' LT	--	--	1	--	--	1	--
	STH 100	123+48	54'LT	--	--	--	--	--	1	--
		123+71	16' LT	--	--	--	--	--	1	--
		123+71	16' RT	--	--	--	--	--	1	--
		123+71	54' RT	--	--	--	--	--	1	--
		123+98	16' LT	--	--	--	--	--	1	--
		123+98	16' RT	--	--	--	--	--	1	--
		123+98	54' LT	--	--	--	--	--	1	--
		124+47	54' LT	--	--	--	--	--	1	--
		124+92	6' RT	--	--	--	--	--	1	--
		125+22	54' LT	--	--	--	--	--	1	--
		127+65	75' RT	--	--	--	--	--	1	--
		127+74	75' RT	--	--	--	--	--	1	--
		128+14	75' RT	--	--	--	--	--	1	--
		128+39	7' RT	--	1	--	--	--	--	1
		128+39	14' RT	--	1	--	--	--	--	1
		128+52	54' LT	--	1	--	1	--	--	1
		131+72	54' LT	--	1	1	--	--	1	--
		131+72	11.5' LT	--	1	--	1	--	1	--
		131+72	15.5' RT	1	--	1	--	--	1	--
		131+72	54' RT	--	1	1	--	--	1	--
		134+89	54' LT	--	1	--	1	--	1	--
		134+89	16' LT	--	1	--	1	--	1	--
		134+89	16' RT	--	1	1	--	--	1	--
		134+89	54' RT	1	--	1	--	--	1	--
		138+59	54' LT	--	1	1	--	--	1	--
		138+59	4.5' LT	--	1	1	--	--	1	--
		138+59	16' RT	--	1	1	--	--	1	--
		138+59	54' RT	--	1	1	--	--	1	--
		141+90	54' LT	--	1	1	--	--	1	--
		141+90	54' RT	--	1	1	--	--	1	--
		145+40	54' LT	--	1	--	--	1	--	--
		145+40	16'LT	--	1	--	1	--	1	--
		145+40	3' RT	--	1	1	--	--	1	--
		145+40	54' RT	--	1	1	--	--	1	--
	SUBTOTAL			2	19	14	5	1	31	3

(CONTINUED)

INLET ITEMS

STATION	OFFSET	611.0430 RECONTRUCTING INLETS	611.8115 ADJUSTING INLET COVERS	SPV.0060.07 INLET COVERS TYPE W, SPECIAL	SPV.0060.08 CURB BOX, 4-INCH	628.7010 INLET PROTECTION TYPE B	628.7015 INLET PROTECTION TYPE C	628.7020 INLET PROTECTION TYPE D
		EACH	EACH	EACH	EACH	EACH	EACH	EACH
147+15	54' LT	--	1	1	--	--	1	--
148+79	98' RT	--	--	--	--	1	--	--
148+79	107' RT	--	--	--	--	1	--	--
149+10	16.5' LT	--	1	1	--	--	1	--
149+10	15' RT	--	1	--	--	1	--	--
149+11	100' RT	--	--	--	--	1	--	--
149+11	110' RT	--	--	--	--	1	--	--
149+25	54' LT	--	1	1	--	--	1	--
151+90	54' LT	1	--	1	--	--	1	--
151+90	16'LT	--	1	--	1	--	1	--
151+90	16' RT	--	1	--	1	--	1	--
151+90	54' RT	--	1	--	1	--	1	--
154+95	54' LT	--	1	1	--	--	1	--
154+95	16' LT	--	1	--	1	--	1	--
154+95	3.5' RT	--	1	1	--	--	1	--
154+95	54' RT	--	1	--	1	--	1	--
157+05	15' RT	--	1	--	1	--	1	--
157+25	88' RT	--	--	--	--	1	--	--
157+72	85' RT	--	--	--	--	1	--	--
158+04	15' RT	--	1	--	1	--	--	1
158+06	54' LT	--	1	1	--	--	--	1
158+23	15' RT	--	1	--	1	--	--	1
158+27	54' LT	--	1	1	--	--	--	1
158+34	5' LT	--	1	--	1	--	--	1
159+22	54' LT	--	1	1	--	--	1	--
159+62	5' LT	--	1	--	--	--	1	--
159+71	15' RT	--	1	1	--	--	1	--
159+90	54' RT	1	--	1	--	--	1	--
161+85	54' LT	--	1	--	1	--	1	--
161+90	16' LT	--	1	--	1	--	1	--
161+90	16' RT	--	1	1	--	--	1	--
161+90	54' RT	--	1	--	1	--	1	--
164+24	54' LT	--	1	--	1	--	1	--
164+23	16'LT	--	1	--	1	--	1	--
164+27	16' RT	--	1	--	1	--	1	--
164+28	54' RT	--	1	1	--	--	1	--
SUBTOTAL		2	28	13	15	7	24	5

(CONTINUED ON NEXT PAGE)

3

3

INLET ITEMS

STATION	OFFSET	611.0430 RECONTRUCTING INLETS	611.8115 ADJUSTING INLET COVERS	SPV.0060.07 INLET COVERS TYPE W, SPECIAL	SPV.0060.08 CURB BOX, 4-INCH	628.7010 INLET PROTECTION TYPE B	628.7015 INLET PROTECTION TYPE C	628.7020 INLET PROTECTION TYPE D
		EACH	EACH	EACH	EACH	EACH	EACH	EACH
172+92	54' LT	--	1	--	1	--	1	--
172+92	16' LT	--	1	1	--	--	1	--
172+92	16' RT	--	1	1	--	--	1	--
172+92	54' RT	--	1	1	--	--	1	--
174+92	54' LT	--	1	1	--	--	1	--
174+92	16' LT	--	1	1	--	--	1	--
174+92	16' RT	--	1	1	--	--	1	--
174+92	54' RT	--	1	1	--	--	1	--
176+92	54' LT	--	1	1	--	--	1	--
176+92	16'LT	--	1	--	1	--	1	--
176+92	16' RT	--	1	1	--	--	1	--
176+92	54' RT	--	1	1	--	--	1	--
179+37	54' LT	--	1	--	1	--	--	1
179+62	92' RT	--	1	1	--	--	--	1
179+67	15' LT	--	1	1	--	--	1	--
179+81	6' LT	--	1	1	--	--	1	--
179+86	61' RT	--	1	1	--	--	--	1
179+87	7' RT	--	1	1	--	--	1	--
180+06	110' LT	--	1	--	--	1	--	--
180+38	112' RT	--	1	--	1	1	--	--
180+54	100' RT	--	1	--	1	1	--	--
181+01	103' RT	--	1	--	--	1	--	--
181+33	93' RT	--	1	--	--	1	--	--
181+67	56' LT	--	1	1	--	--	1	--
183+23	15' LT	1	--	1	--	--	1	--
183+23	6' LT	--	1	1	--	--	1	--
184+91	54' LT	1	--	1	--	--	1	--
184+91	16' LT	--	1	1	--	--	1	--
184+91	16' RT	--	1	1	--	--	1	--
184+91	54' RT	--	1	1	--	--	1	--
SUBTOTAL		2	28	22	5	5	22	3

(CONTINUED)

INLET ITEMS

STATION	OFFSET	611.0430 RECONTRUCTING INLETS	611.8115 ADJUSTING INLET COVERS	SPV.0060.07 INLET COVERS TYPE W, SPECIAL	SPV.0060.08 CURB BOX, 4-INCH	628.7010 INLET PROTECTION TYPE B	628.7015 INLET PROTECTION TYPE C	628.7020 INLET PROTECTION TYPE D
		EACH	EACH	EACH	EACH	EACH	EACH	EACH
187+92	54' LT	--	1	1	--	--	1	--
187+92	4'LT	--	1	1	--	--	1	--
187+92	16' RT	--	1	--	1	--	1	--
187+92	54' RT	1	--	--	1	--	1	--
190+90	54' LT	--	1	1	--	--	1	--
190+90	13' LT	--	1	1	--	--	1	--
190+90	16' RT	--	1	--	1	--	1	--
190+90	54' RT	1	--	--	1	--	1	--
193+12	54' LT	--	1	--	1	--	1	--
193+42	16' LT	1	--	--	1	--	1	--
193+48	16' RT	1	--	--	1	--	1	--
193+85	54' RT	1	--	--	1	--	1	--
194+90	54' RT	--	1	--	1	--	1	--
196+91	54' LT	1	--	--	1	--	1	--
196+91	16' LT	1	--	1	--	--	1	--
196+91	16' RT	--	1	--	1	--	1	--
200+16	54' LT	--	1	--	1	--	--	1
200+16	16' LT	1	--	--	1	--	--	1
200+16	16' RT	--	1	1	--	--	--	1
200+16	54' RT	1	--	--	1	--	--	1
200+91	54' LT	--	1	--	1	--	--	1
200+91	16' LT	--	1	--	1	--	--	1
200+91	16' RT	--	1	1	--	--	--	1
200+91	54' RT	1	--	--	1	--	--	1
202+17	54' LT	--	1	--	1	--	1	--
202+17	16' LT	1	--	1	--	--	1	--
202+17	16' RT	1	--	1	--	--	1	--
202+17	54' RT	--	1	--	1	--	1	--
203+41	16' RT	--	1	1	--	--	1	--
204+66	54' LT	--	1	1	--	--	1	--
204+71	10' RT	--	1	1	--	--	1	--
205+39	54' RT	--	1	--	1	--	1	--
205+80	16' LT	--	1	--	1	--	1	--
205+86	6' RT	--	1	1	--	--	1	--
SUBTOTAL		12	22	13	21	--	26	8

(CONTINUED ON NEXT PAGE)

3

3

INLET ITEMS

STATION	OFFSET	611.0430 RECONTRUCTING INLETS	611.8115 ADJUSTING INLET COVERS	SPV.0060.07 INLET COVERS TYPE W, SPECIAL	SPV.0060.08 CURB BOX, 4-INCH	628.7010 INLET PROTECTION TYPE B	628.7015 INLET PROTECTION TYPE C	628.7020 INLET PROTECTION TYPE D
		EACH	EACH	EACH	EACH	EACH	EACH	EACH
206+73	2' LT	--	1	--	1	--	--	1
206+86	54' LT	--	1	--	1	--	--	1
207+00	16' RT	--	1	1	--	--	--	1
207+15	54' RT	--	1	--	1	--	--	1
209+50	54' LT	--	1	1	--	--	1	--
209+50	16' LT	--	1	1	--	--	1	--
209+50	16' RT	--	1	--	1	--	1	--
209+50	54' RT	--	1	--	1	--	1	--
211+99	54' LT	--	1	1	--	--	1	--
211+99	16' LT	1	--	--	1	--	1	--
211+99	16' RT	1	--	1	--	--	1	--
211+99	54' RT	--	1	--	1	--	1	--
214+99	54' LT	--	1	1	--	--	1	--
214+99	16' LT	--	1	1	--	--	1	--
214+99	16' RT	--	1	1	--	--	1	--
214+99	54' RT	--	1	1	--	--	1	--
217+50	54' RT	--	1	--	1	--	1	--
220+00	54' LT	1	--	1	--	--	1	--
220+00	16' LT	1	--	1	--	--	1	--
220+00	3' RT	--	1	--	1	--	1	--
220+00	54' RT	--	1	--	1	--	1	--
222+05	8' LT	--	1	--	--	--	1	--
222+05	14' LT	--	1	--	--	--	1	--
222+23	54' LT	--	1	--	--	--	1	--
222+25	5' RT	--	1	--	--	--	1	--
222+25	54' RT	1	--	--	--	--	1	--
222+25	16' RT	--	1	--	--	--	1	--
224+00	54' RT	--	1	--	1	--	--	1
224+00	16' RT	--	1	--	--	--	--	1
224+25	54' LT	--	1	1	--	--	--	1
224+25	16' LT	--	1	--	--	--	--	1
224+25	5' LT	--	1	--	--	--	--	1
224+25	16' RT	--	1	--	1	--	--	1
224+25	54' RT	--	1	1	--	--	--	1
224+45	16' LT	--	1	--	--	--	--	1
224+48	9' LT	--	1	--	--	--	--	1
224+50	54' LT	--	1	1	--	--	--	1
224+80	54' LT	--	1	1	--	--	--	1
225+85	54' RT	--	1	--	1	--	--	1
SUBTOTAL		5	34	15	13	--	23	16

(CONTINUED)

INLET ITEMS

STATION	OFFSET	611.0430 RECONTRUCTING INLETS	611.8115 ADJUSTING INLET COVERS	SPV.0060.07 INLET COVERS TYPE W, SPECIAL	SPV.0060.08 CURB BOX, 4-INCH	628.7010 INLET PROTECTION TYPE B	628.7015 INLET PROTECTION TYPE C	628.7020 INLET PROTECTION TYPE D
		EACH	EACH	EACH	EACH	EACH	EACH	EACH
227+30	16' RT	--	1	--	--	1	--	--
227+50	54' RT	--	1	--	1	--	1	--
227+79	54' LT	1	--	1	--	--	1	--
228+26	4' LT	1	--	--	1	--	1	--
230+85	54' RT	--	1	--	1	--	1	--
230+87	54' LT	1	--	--	1	--	1	--
231+11	1' LT	--	1	--	1	--	1	--
231+50	1' RT	--	1	--	1	--	1	--
233+40	82' LT	--	1	--	--	--	1	--
234+23	83' LT	--	1	--	1	--	1	--
234+30	58' RT	--	1	--	--	--	1	--
234+37	6' RT	--	1	--	1	--	1	--
234+51	54' RT	--	1	--	--	--	1	--
SUBTOTAL		3	10	1	8	1	12	--
UNDISTRIBUTED		--	--	--	--	--	10	5
TOTAL		26	141	78	67	14	148	40

3

3

EROSION CONTROL ITEMS

CATEGORY	DESCRIPTION	STATION		STATION	628.1504 SILT FENCE LF	628.1104 EROSION BALES EACH	628.1520 SILT FENCE MAINTENANCE LF	628.1905 MOBILIZATIONS EROSION CONTROL EACH	628.1910 MOBILIZATIONS EMERGENCY EROSION CONTROL EACH	SPV.0060.02 ROCK BAGS EACH
0010										
	STH 100									
		126+00	--	152+00	340	92	340	--	--	--
		152+00	--	183+50	465	24	465	--	--	--
		183+50	--	214+00	--	--	--	--	--	--
		214+00	--	240+00	--	--	--	--	--	--
	STAGE 1	--	--	--	--	--	--	2	1	--
	STAGE 2	--	--	--	--	--	--	2	1	--
	STAGE 3	--	--	--	--	--	--	2	1	--
	UNDISTRIBUTED				--	--	--	--	--	24
	0010 SUBTOTAL				805	116	805	6	3	24
0030										
	STH 100									
		126+00	--	152+00	--	--	--	--	--	--
		152+00	--	183+50	360	--	360	--	--	--
		183+50	--	214+00	4330	34	4330	--	--	--
		214+00	--	240+00	975	--	975	--	--	--
	0030 SUBTOTAL				5,665	34	5,665	--	--	--
		TOTAL			6,470	180	6,470	6	3	24

3

RESTORATION ITEMS

CATEGORY	DESCRIPTION	STATION		STATION	625.0100 TOPSOIL SY	628.2008 EROSION MAT URBAN CLASS 1 TYPE B SY	629.0210 FERTILIZER TYPE B CWT	630.0130 SEEDING MIXTURE NO. 30 LB	630.0140 SEEDING MIXTURE NO. 40 LB	630.0200 TEMPORARY SEEDING LB	631.1100 SOD EROSION CONTROL SY
0010											
	STH 100										
		126+00	--	152+00	1382	1382	0.9	25	--	19	45
		152+00	--	183+50	2889	2889	1.8	52	--	39	597
		183+50	--	214+00	--		--	--	--	--	721
		214+00	--	240+00	1452	1452	0.9	10	14	8	337
	0010 SUBTOTAL				5,723	5,723	3.6	87	14	66	1,700
0030											
	STH 100										
		126+00	--	152+00	--	--	--	--	--	--	--
		152+00	--	183+50	355	355	0.2	6	--	5	--
		183+50	--	214+00	6718	6718	4.2	121	--	91	--
		214+00	--	240+00	2038	2038	1.3	6	30	28	--
	0030 SUBTOTAL				9,111	9,111	5.7	133	30	123	--
		TOTAL			14,834	14,834	9.3	220	44	189	1,700

3

TRAFFIC CONTROL ITEMS

CATEGORY	STAGE	DESCRIPTION	X- STREET		X-STREET	STAGE DURATION DAYS**	643.0200.001 TRAFFIC CONTROL SURVEILLANCE AND MAINTENANCE 2150-05-70 DAYS	643.0300 TRAFFIC CONTROL DRUMS EACH**	643.0300 DAYS	643.0410 TRAFFIC CONTROL BARRICADES TYPE II EACH**	643.0410 DAYS	643.0420 TRAFFIC CONTROL BARRICADES TYPE III EACH**	643.0420 DAYS	643.0705 TRAFFIC CONTROL WARNING LIGHTS TYPE A EACH**	643.0705 DAYS	643.0715 TRAFFIC CONTROL WARNING LIGHTS TYPE C EACH**	643.0715 DAYS	643.0800 TRAFFIC CONTROL ARROW BOARDS EACH**	643.0800 DAYS	643.0900 TRAFFIC CONTROL SIGNS EACH**	643.0900 DAYS	643.0905.S TRAFFIC CONTROL COVERING SIGNS EACH	643.1050.S TRAFFIC CONTROL SIGNS PORTABLE CHANGEABLE MESSAGE EACH**	643.1050.S DAYS
0010				STH 100																				
	ALL	ADVANCED SIGNING	STA 120+00		STA 240+00	131	131	--	--	--	--	--	--	--	--	--	--	--	--	--	--	--	--	--
								100	13,100	--	--	4	524	4	524	40	5,240	4	524	65	8,515		3	393
			ALL SUBTOTAL																					
								100	13,100	--	--	4	524	4	524	40	5,240	4	524	65	8,515	--	3	393
	1A	EB & WB				10																		
			124TH	-	107TH		--	241	2,410	--	--	10	100	20	200	42	420	--	--	10	100	--	--	--
			107TH	-	91ST		--	250	2,500	--	--	14	140	28	280	34	340	--	--	14	140	--	--	--
			STAGE 1A SUBTOTAL																					
								491	4,910	--	--	24	240	48	480	76	760	--	--	24	240	--	--	--
	1B	EB & WB				41																		
			124TH	-	107TH		--	836	34,276	10	410	100	4,100	165	6,765	67	2,747	2	82	114	4,674	--	--	--
			107TH	-	91ST		--	455	18,655	28	1,148	63	2,583	157	6,437	22	902	--	--	49	2,009	--	--	--
																						--	--	--
			STAGE 1B SUBTOTAL																					
								1,291	52,931	38	1,558	163	6,683	322	13,202	89	3,649	2	82	163	6,683	--	--	--
	1C	EB & WB				4																		
			107TH	-	91ST		--	211	844	--	--	21	84	42	168	38	152	4	16	24	96	1	1	4
			STAGE 1C SUBTOTAL																					
								211	844	--	--	21	84	42	168	38	152	4	16	24	96	1	1	4
	2A	EB & WB				4																		
			107TH	-	91ST		--	203	812	--	--	23	92	46	184	43	172	4	16	21	84	6	1	4
			STAGE 2A SUBTOTAL																					
								203	812	--	--	23	92	46	184	43	172	4	16	21	84	6	1	4
	2B					38																		
		EB & WB	124TH	-	107TH		--	748	28,424	--	--	60	2,280	120	4,560	22	836	2	76	79	3,002	--	--	--
			107TH	-	91ST		--	614	23,332	--	--	62	2,356	134	5,092	11	418	1	38	69	2,622	--	--	--
			STAGE 2B SUBTOTAL																					
								1,362	51,756	--	--	122	4,636	254	9,652	33	1,254	3	114	148	5,624	--	--	--
	3					34																		
		EB & WB	124TH	-	107TH		--	836	28,424	10	340	100	3,400	165	5,610	67	2,278	2	68	114	3,876	--	--	--
			107TH	-	91ST		--	455	15,470	28	952	63	2,142	157	5,338	22	748	--	--	49	1,666	--	--	--
			STAGE 3 SUBTOTAL																					
								1,291	43,894	38	1,292	163	5,542	322	10,948	89	3,026	2	68	163	5,542	--	--	--
			TOTAL				131		168,247		2,850		17,801		35,158		14,253		820		26,784	7		401

** FOR INFORMATION ONLY

3

TRAFFIC CONTROL PAVEMENT MARKING

CATEGORY	STAGE	DESCRIPTION		X-STREET		X-STREET	646.0600 REMOVING PAVEMENT MARKINGS LF	649.0200 TEMPORARY PAVEMENT MARKING REFLECTIVE PAINT 4-INCH SOLID WHITE LF	649.0200 TEMPORARY PAVEMENT MARKING REFLECTIVE PAINT 4-INCH SKIPS WHITE LF	649.0400 TEMPORARY PAVEMENT MARKING REMOVABLE TAPE 4-INCH SOLID WHITE LF	649.0400 TEMPORARY PAVEMENT MARKING REMOVABLE TAPE 4-INCH SKIPS WHITE LF
0010											
	1A	EB & WB									
				124TH	-	107TH	10,095	--	--	--	--
			STAGE 1A	107H	-	91ST	4,560	--	--	--	--
			SUBTOTAL				14,655	--	--	--	--
	1B	EB & WB									
				124TH	-	107TH	12,700	17,400	4,275	--	--
				107H	-	91ST	10,600	11,000	2,650	--	--
			STAGE 1B SUBTOTAL				23,300	28,400	6,925	--	--
	2B	EB & WB									
				124TH	-	107TH	--	13,750	3,312	300	--
				107H	-	91ST	--	9,300	2,650	350	--
			STAGE 2B SUBTOTAL				--	23,050	5,962	650	--
	3	EB & WB									
				124TH	-	107TH	--	13,100	3,275	13,100	3,275
				107H	-	91ST	--	10,600	2,650	10,600	2,650
			STAGE 3 SUBTOTAL		-		--	23,700	5,925	25,700	5,300
		UNDISTRIBUTED					500	500	500	--	--
		TOTAL					38,455	75,650	19,312	26,350	5,300

TRAFFIC CONTROL SIGNS FIXED MESSAGE

CATEGORY	STAGE	LOCATION	SIGN NO.	SIGN SIZE W X H FT X FT	643.1000 TRAFFIC CONTROL SIGNS FIXED MESSAGE SF	SIGN MESSAGE
0010	ALL	STH 100	100	1 X 4	4.0	LEFT LANE
			101	1 X 4	4.0	LEFT LANE
			102	1 X 4	4.0	RIGHT LANE
			103	1 X 4	4.0	RIGHT LANE
			104	5 X 3	15.0	95TH STREET CLOSED USE 96TH STREET
			105	5 X 3	15.0	95TH STREET CLOSED USE 96TH STREET
			106	5 X 3	15.0	96TH STREET CLOSED USE 95TH STREET
			107	5 X 3	15.0	96TH STREET CLOSED USE 95TH STREET
			108	9.5 X 4	38.0	LANE CLOSURES AHEAD STH 100
			109	9.5 X 4	38.0	LANE CLOSURES AHEAD STH 100
			110	9.5 X 4	38.0	LANE CLOSURES AHEAD STH 100
			111	9.5 X 4	38.0	LANE CLOSURES AHEAD STH 100
			112	6 X 3	18.0	LAUER STREET CLOSED ENTER FROM 107TH
			113	6 X 3	18.0	LAUER STREET CLOSED ENTER FROM 107TH
TOTAL					264.0	

3

PAVEMENT MARKING ITEMS

CATEGORY	DESCRIPTION	STATION	TO	STATION	646.0106 PAVEMENT MARKING EPOXY 4-INCH WHITE LF	646.0106 PAVEMENT MARKING EPOXY 4-INCH YELLOW LF	646.0883.S PAVEMENT MARKING GROOVED WET REFLECTIVE TAPE 8-INCH WHITE LF	646.0881.S PAVEMENT MARKING GROOVED WET REFLECTIVE TAPE 4-INCH WHITE LF	647.0566 PAVMENT MARKING STOP LINE EPOXY 18-INCH LF	647.0156 PAVEMENT MARKING ARROWS EPOXY TYPE 1 EACH	647.0166 PAVEMENT MARKING ARROWS EPOXY TYPE 2 EACH	647.0356 PAVEMENT MARKING WORDS EPOXY EACH	647.0456 PAVEMENT MARKING CURB EPOXY YELLOW LF	647.0606 PAVEMENT MARKING ISLAND NOSE EPOXY YELLOW EACH	647.0766 PAVEMENT MARKING CROSSWALK EPOXY 6-INCH EACH
0010															
	STH 100														
		123+98	--	146+00	3,901	3,887	1,261	1,987	142	--	6	5	187	5	--
		146+00	--	166+00	3,785	3,583	1,040	1,999	--	--	2	2	196	7	--
		166+00	--	186+00	4,395	3,721	785	1,872	226	--	--	--	247	2	201
		186+00	--	206+00	4,000	3,936	225	1,990	--	--	--	--	90	--	--
		206+00	--	226+00	4,112	3,630	785	2,000	--	--	--	--	97	6	533
		226+00	--	236+00	1,724	1,661	797	860	113	--	6	5	162	6	451
		124TH STREET			--	435	690	114	103	--	3	2	45	3	--
		107TH STREET			--	--	738	138	96	--	4	2	62	2	--
		91ST STREET			--	--	237	--	75	2	7	4	27	2	310
		TOTAL			21,917	20,853	6,558	10,960	755	2	28	20	1,113	33	1,495

3

SAWING ITEMS

CATEGORY	DESCRIPTION	STATION		STATION	690.0150 SAWING ASPHALT LF	690.0250 SAWING CONCRETE LF
0010						
	124TH STREET	--	--	--	--	283
	107TH STREET	--	--	--	240	1160
	91ST STREET	--	--	--	--	786
	STH 100					
		124+50	--	126+00	--	2,508
		126+00	--	146+00	--	2,514
		146+00	--	166+00	--	1,461
		166+00	--	186+00	--	2,252
		186+00	--	206+00	--	6,426
		206+00	--	226+00	--	1,530
	UNDISTRIBUTED				--	1,000
	TOTAL				240	19,920

3

CONSTRUCTION STAKING ITEMS

CATEGORY	DESCRIPTION	STATION	TO	STATION	650.4000 CONSTRUCTION STAKING STORM SEWER SYSTEM EA	650.4500 CONSTRUCTION STAKING SUBGRADE LF	650.5000 CONSTRUCTION STAKING BASE LF	650.5500 CONSTRUCTION STAKING CURB & GUTTER LF	650.8000 CONSTRUCTION STAKING RESURFACING REFERENCE LF	650.9910 CONSTRUCTION STAKING SUPPLEMENTAL CONTROL 2150-05-70 LS
0010										
	124TH STREET	18+36	--	19+47	1	--	--	--	--	--
	STH 100									
		124+50	--	202+09	--	--	--	2,217	6,817	0.2
		202+09	--	203+62	--	302	302	850	--	0.4
		203+62	--	235+00	--	--	--	2448	6276	0.4
	0010 SUBTOTAL				1	302	302	5515	13093	1
0030										
	STH 100									
		124+50	--	235+00	--	--	6782	--	--	--
	0030 SUBTOTAL				--	--	6782	--	--	--
	TOTAL				1	302	7,084	5,515	13,093	1

3

CATEGORY 0020
STH 74/STH 100 & N. 124TH ST/ BBOUNDARY RD.

3

SPV.0105.09 TRAFFIC SIGNALS & INTERSECTION LIGHTING

LOCATION	L.S.
STH 74/STH 100 & N. 124TH ST./BOUNDARY RD.	1
TOTAL	1

SUMMARY OF STATE FURNISHED MATERIALS

EACH	DESCRIPTION
1	TRAFFIC SIGNAL CONTROLLER, FULLY ACTUATED, 8 PHASE
1	TRAFFIC SIGNAL CABINET
2	PEDESTAL BASES
2	TRAFFIC SIGNAL STANDARDS, ALUMINUM, 13'
5	TRAFFIC SIGNAL FACES, 3-12 INCH VERTICAL, LED MODULES
2	TRAFFIC SIGNAL FACE, ARROW, RED, LED MODULES
2	TRAFFIC SIGNAL FACE, ARROW, YELLOW, LED MODULES
3	TRAFFIC SIGNAL FACE, ARROW, GREEN, LED MODULES
5	BACKPLATES, 3 SECTION, 12" SIGNAL FACES

NOTE: THIS TABLE IS FOR INFORMATION ONLY

PEDESTAL BASES*
TRAFFIC SIGNAL STANDARDS, ALUMINUM, 13-FOOT

SIG. BASE NO.	PED. BASE EACH	13-FOOT STAND. EACH
SB7	1	1
SB10	1	1
TOTAL *	2	2

* INCIDENTAL TO ITEM "TRAFFIC SIGNALS, STH 74/STH 100 & N. 124TH ST/BOUNDARY RD."

REMOVING CONCRETE BASES

SIGNAL BASE NO.	LOCATION	204.0195 REMOVING CONCRETE BASES EACH
SB10	20+75.0', 9.0' RT	1
SB7	127+17.0', 11.0' LT	1
	TOTAL	1

3

NOTE: THIS TABLE IS FOR INFORMATION ONLY

TRAFFIC SIGNAL FACES, 3-12 INCH VERTICAL, LED MODULES
TRAFFIC SIGNAL FACE, ARROW, RED, LED MODULES
TRAFFIC SIGNAL FACE, ARROW, YELLOW, LED MODULES
TRAFFIC SIGNAL FACE, ARROW, GREEN, LED MODULES
BACKPLATES, 3 SECTION, 12-INCH SIGNAL FACES

SIG. HEAD NO.	SIG. BASE NO.	3-12" VERT. EACH	RED ARROW EACH	YELLOW ARROW EACH	GREEN ARROW EACH	BCKPLT 3-SEC. EACH
3	SB7	1			1	1
4	SB7	1	1	1	1	1
9	SB10	1				1
14	SB7	1	1	1	1	1
17	SB10	1				1
TOTAL*		5	2	2	3	5

* INCIDENTAL TO ITEM "TRAFFIC SIGNALS, STH 74/STH 100 & N. 124TH ST./BOUNDARY RD."

REMOVE TRAFFIC SIGNALS

LOCATION	SPV.0105.10 REMOVE TRAFFIC SIGNALS L.S.
STH 74/STH 100 & N. 124TH ST./ BOUNDARY RD.	1
TOTAL	1

CONDUIT

LOC.	TO	LOC.	652.0225 CONDUIT NONMET. 2-INCH L.F.
PB11	TO	SB7	7.00
PB16	TO	SB10	9.00
		TOTAL	16

CONCRETE BASES

SIGNAL BASE NO.	LOCATION*	654.0101 CONCRETE BASE TYPE 1 EACH
SB7	127+00, 10.0' LT	1
SB10	20+80.0', 7.0' RT	1
	TOTAL	2

* FINAL LOCATION TO BE DETERMINED BY THE ENGINEER IN THE FIELD.

SHEET 1 OF 1

3

SPV.0105.07 TRAFFIC SIGNALS & INTERSECTION LIGHTING

LOCATION	L.S.
STH 100 (W. BROWN DEER RD.) & N. 107TH ST.	1
TOTAL	1

SUMMARY OF STATE FURNISHED MATERIALS

EACH	DESCRIPTION
1	TRAFFIC SIGNAL CONTROLLER, FULLY ACTUATED, 8 PHASE
1	TRAFFIC SIGNAL CABINET
5	PEDESTAL BASES
1	TRAFFIC SIGNAL STANDARDS, ALUMINUM, 13'
4	TRAFFIC SIGNAL STANDARDS, ALUMINUM, 15'
2	POLES, TYPE 12, 45' MONOTUBE ARM
1	POLES, TYPE 12, 50' MONOTUBE ARM
1	POLES, TYPE 12, 50' MONOTUBE ARM
16	TRAFFIC SIGNAL FACES, 3-12 INCH VERTICAL, LED MODULES
4	TRAFFIC SIGNAL FACES, 5-12 INCH VERTICAL, LED MODULES
6	TRAFFIC SIGNAL FACE, ARROW, YELLOW, LED MODULES
6	TRAFFIC SIGNAL FACE, ARROW, GREEN, LED MODULES
16	BACKPLATES, 3 SECTION, 12" SIGNAL FACES
4	BACKPLATES, 5 SECTION, 12" SIGNAL FACES
4	PEDESTRIAN SIGNAL FACES, 16", COUNTDOWN TIMERS
3	PEDESTRIAN PUSH BUTTONS
1	TRAFFIC SIGNAL MOUNTING HARDWARE,

NOTE: THIS TABLE IS FOR INFORMATION ONLY

TRAFFIC SIGNAL FACES, 3-12 INCH VERTICAL, LED MODULES
TRAFFIC SIGNAL FACES, 5-12 INCH VERTICAL, LED MODULES
TRAFFIC SIGNAL FACE, ARROW, YELLOW, LED MODULES
TRAFFIC SIGNAL FACE, ARROW, GREEN, LED MODULES
BACKPLATES, 3 SECTION, 12-INCH SIGNAL FACES
BACKPLATES, 5 SECTION, 12-INCH SIGNAL FACES
PEDESTRIAN SIGNAL FACES, 16-INCH, LED MODULES

SIG. HEAD NO.	SIG. BASE NO.	3-12" VERT. EACH	5-12" VERT. EACH	YELLOW ARROW EACH	GREEN ARROW EACH	BCKPLT 3-SEC. EACH	BCKPLT 5-SEC. EACH	PED. FACE 16" EACH
1	SB6	1				1		
2	SB5	1				1		
3	SB5	1				1		
4	SB5	1				1		
5	SB2		1	1	1		1	
6	SB8		1	1	1		1	
7	SB1	1				1		
8	SB9	1				1		
9	SB9	1				1		
10	SB9	1				1		
11	SB7		1	1	1		1	
12	SB3		1	1	1		1	
13	SB5	1				1		
14	SB1	1				1		
15	SB1	1				1		
16	SB4	1		1	1	1		
17	SB3	1		1	1	1		
18	SB9	1				1		
19	SB6	1				1		
20	SB6	1				1		
21	SB5							1
22	SB2							1
23	SB2							1
24	SB1							1
TOTAL*		16	4	6	6	16	4	4

* INCIDENTAL TO ITEM "TRAFFIC SIGNALS, STH 100 (W. BROWN DEER RD.) & N. 107TH ST."

CATEGORY 0020
STH 100 (W. BROWN DEER RD.) & N. 107TH STREET

3

LOC.	TO	LOC.	652.0225 CONDUIT NONMET. 2-INCH L.F.	652.0235 CONDUIT NONMET. 3-INCH L.F.	652.0615 CONDUIT SPECIAL 3-INCH L.F.
CB1	TO	PB1		45.00	
PB1	TO	PB2			100.00
PB2	TO	PB3	153.00		
PB3	TO	PB4	130.00		
PB2	TO	PB5			45.00
PB5	TO	SB1	22.00		
PB2	TO	PB6			168.00
PB6	TO	PB7	35.00		
PB7	TO	SB2	17.00		
PB6	TO	PB8			50.00
PB8	TO	SB3	30.00		
PB8	TO	PB9			100.00
PB9	TO	PB10		100.00	
PB10	TO	SB4	24.00		
PB10	TO	PB14			32.00
PB14	TO	SB5	25.00		
PB10	TO	PB11		44.00	
PB11	TO	PB12	150.00		
PB12	TO	PB13	130.00		
PB11	TO	PB15			164.00
PB15	TO	PB16	30.00		
PB15	TO	PB17			116.00
PB17	TO	PB18		110.00	
PB18	TO	PB21			43.00
PB21	TO	SB6	13.00		
PB18	TO	PB19	155.00		
PB19	TO	PB20	130.00		
PB18	TO	PB22			160.00
PB22	TO	SB7	46.00		
PB22	TO	PB23			50.00
PB23	TO	SB8	36.00		
PB23	TO	PB24			104.00
PB24	TO	PB25		128.00	
PB25	TO	PB26	164.00		
PB26	TO	PB27	133.00		
PB25	TO	PB28			35.00
PB28	TO	SB9	18.00		
PB25	TO	PB29			164.00
PB29	TO	PB30	26.00		
PB29	TO	PB31			114.00
PB31	TO	CB1		40.00	
		TOTAL	1467	467	1445

SIGNAL CABLE AND WIRE

LOC.	TO	LOC.	655.0260 CABLE TRAFFIC SIGNAL 12-14 AWG L.F.	655.0515 ELECTRICAL WIRE TRAFFIC SIGNALS 10 AWG L.F.
CB1		SB1	171	
CB1		SB2	251	
CB1		SB3	254	
CB1		SB4	361	
CB1		SB5	405	
CB1		SB6	472	
CB1		SB7	409	
CB1		SB8	364	
CB1		SB9	254	
CB1		PB1		46
CB1		PB2		109
CB1		PB29		110
CB1		PB30		145
CB1		PB31		42
SB1		SB2		247
SB1		PB5		51
SB2		SB3		146
SB2		PB6		91
SB2		PB7		47
SB3		SB4		189
SB3		PB8		60
SB4		SB5		109
SB4		PB9		111
SB4		PB10		53
SB4		PB11		74
SB4		PB15		168
SB4		PB16		207
SB5		SB6		411
SB5		PB14		54
SB6		SB7		226
SB6		PB17		163
SB6		PB18		98
SB6		PB21		48
SB7		SB8		138
SB7		PB22		76
SB8		SB9		256
SB8		PB23		66
SB8		PB24		118
SB9		PB25		92
SB9		PB28		47
		TOTALS	2941	3798

3

SHEET 2 OF 5

PROJECT NO:2150-05-70	HWY:STH 100	COUNTY:MILWAUKEE	TRAFFIC SIGNAL QUANTITIES	SHEET	E

FILE NAME : j:\projects\D2_215005100\Sig\s1159_QTY.dgn PLOT DATE : 28-JAN-2010 10:10 PLOT BY : dotbgw PLOT NAME : PLOT SCALE : 200:1 WISDOT/CADDS SHEET 43

CATEGORY 0020
STH 100 (W. BROWN DEER RD.) & N. 107TH STREET

3

METER BREAKER PEDESTAL

LOCATION*	656.0200 METER BREAKER PEDESTAL L.S.
21+28.0', 61.0' RT	1
TOTAL	1

* FINAL LOCATION TO BE DETERMINED BY THE ENGINEER IN TH FIELD

REMOVING CONCRETE BASES

SIGNAL BASE NO.	LOCATION	204.0195 REMOVING CONCRETE BASES EACH
SB1	181+20.0', 58.0' LT	1
SB2	181+16.0', 8.0' LT	1
SB3	181+30.0', 20.0' RT	1
SB4	19+20.0', 95.0' RT	1
SB5	19+30.0', 50.0' RT	1
SB6	19+26.0', 61.0' RT	1
SB7	179+88.0', 14.0' RT	1
SB8	179+80.0', 10.0' LT	1
SB9	20+72.0', 54.0' LT	1
	TOTAL	9

REMOVE TRAFFIC SIGNALS

LOCATION	SPV.0105.08 REMOVE TRAFFIC SIGNALS L.S.
STH 100 (W. BROWN DEER RD.) & N. 107TH ST.	1
TOTAL	1

3

TRAFFIC DETECTOR LOOPS

LOOP NO.	HOME RUN PB	LOCATION*	SIZE (FT)x(FT)	NO. OF TURNS	PAVEMENT TYPE	SDD INSTALLATION REFERENCE	652.0800 CONDUIT LOOP DETECTOR L.F.	652.0900 LOOP DETECTOR SLOT L.F.	655.0700 LEAD IN CABLE L.F.	655.0800 LOOP DETECTOR WIRE L.F.
11	PB23	179+62.0', C/L	6X20	3	CONCRETE	LOOP DETECTOR INSTALLED IN EXISTING CONCRETE WITH NEW ASPHALTIC OVERLAY	79	59	292	216
12	PB23	179+91.0', C/L	6X20	3	CONCRETE	LOOP DETECTOR INSTALLED IN EXISTING CONCRETE WITH NEW ASPHALTIC OVERLAY	79	59	292	216
21	PB4	184+35.0', 59.0' LT	6X30	3	CONCRETE	LOOP DETECTOR INSTALLED IN EXISTING CONCRETE WITH NEW ASPHALTIC OVERLAY	81	74	348	232
22	PB3	183+5.0', 35.0' LT	6X30	3	CONCRETE	LOOP DETECTOR INSTALLED IN EXISTING CONCRETE WITH NEW ASPHALTIC OVERLAY	82	75	218	236
41	PB27	24+2.0', 20.0' LT	6X20	3	CONCRETE	LOOP DETECTOR INSTALLED IN EXISTING CONCRETE PAVEMENT	69	54	443	188
42	PB26	22+72.0', 24.0' LT	6X20	3	CONCRETE	LOOP DETECTOR INSTALLED IN EXISTING CONCRETE PAVEMENT	90	59	313	212
43	PB28	20+97.0', 32.0' LT	6X20	3	CONCRETE	LOOP DETECTOR PLACED IN CRUSHED AGGREGATE BASE(NEW CONCRETE PAVEMENT)	74	65	200	198
44	PB28	20+69.0', 32.0' LT	6X20	3	CONCRETE	LOOP DETECTOR PLACED IN CRUSHED AGGREGATE BASE(NEW CONCRETE PAVEMENT)	72	65	200	196
45	PB30	20+97.0', 21.0' LT	6X20	3	CONCRETE	LOOP DETECTOR PLACED IN CRUSHED AGGREGATE BASE(NEW CONCRETE PAVEMENT)	73	66	105	200
46	PB30	20+69.0', 21.0' LT	6X20	3	CONCRETE	LOOP DETECTOR PLACED IN CRUSHED AGGREGATE BASE(NEW CONCRETE PAVEMENT)	73	65	105	198
47	PB30	20+97.0', 10.0' LT	6X20	3	CONCRETE	LOOP DETECTOR PLACED IN CRUSHED AGGREGATE BASE(NEW CONCRETE PAVEMENT)	63	55	105	178
48	PB30	20+69.0', 10.0' LT	6X20	3	CONCRETE	LOOP DETECTOR PLACED IN CRUSHED AGGREGATE BASE(NEW CONCRETE PAVEMENT)	62	55	105	178
51	PB7	181+47.0', 6.0' RT	6X20	3	CONCRETE	LOOP DETECTOR INSTALLED IN EXISTING CONCRETE WITH NEW ASPHALTIC OVERLAY	70	58	206	96
52	PB7	181+20.0', 7.0' RT	6X20	3	CONCRETE	LOOP DETECTOR INSTALLED IN EXISTING CONCRETE WITH NEW ASPHALTIC OVERLAY	64	56	206	80
61	PB20	176+55.0', 35.0' RT	6X30	3	CONCRETE	LOOP DETECTOR INSTALLED IN EXISTING CONCRETE WITH NEW ASPHALTIC OVERLAY	81	75	680	234
62	PB19	177+90.0', 36.0' RT	6X30	3	CONCRETE	LOOP DETECTOR INSTALLED IN EXISTING CONCRETE WITH NEW ASPHALTIC OVERLAY	82	75	555	236
81	PB13	16+00, 30.0' RT	6X20	3	CONCRETE	LOOP DETECTOR INSTALLED IN EXISTING CONCRETE PAVEMENT	62	57	572	228
82	PB12	17+31.0', 22.0' RT	6X20	3	CONCRETE	LOOP DETECTOR INSTALLED IN EXISTING CONCRETE PAVEMENT	70	64	443	196
83	PB16	19+2.0', 10.0' RT	6X20	3	CONCRETE	LOOP DETECTOR PLACED IN CRUSHED AGGREGATE BASE(NEW CONCRETE PAVEMENT)	62	55	420	176
84	PB16	19+30.0', 10.0' RT	6X20	3	CONCRETE	LOOP DETECTOR PLACED IN CRUSHED AGGREGATE BASE(NEW CONCRETE PAVEMENT)	62	55	420	176
85	PB16	19+2.0', 20.0' RT	6X20	3	CONCRETE	LOOP DETECTOR PLACED IN CRUSHED AGGREGATE BASE(NEW CONCRETE PAVEMENT)	71	65	420	196
86	PB16	19+30.0', 20.0' RT	6X20	3	CONCRETE	LOOP DETECTOR PLACED IN CRUSHED AGGREGATE BASE(NEW CONCRETE PAVEMENT)	72	65	420	196
87	PB14	19.0'+2.0', 31.0' RT	6X20	3	CONCRETE	LOOP DETECTOR PLACED IN CRUSHED AGGREGATE BASE(NEW CONCRETE PAVEMENT)	74	68	325	200
88	PB14	19+30.0', 31.0' RT	6X20	3	CONCRETE	LOOP DETECTOR PLACED IN CRUSHED AGGREGATE BASE(NEW CONCRETE PAVEMENT)	74	67	325	200
						TOTAL	1741	1511	7718	4662

* LOCATION IS TO FRONT CENTER OF DETECTOR LOOP
* * FINAL LOCATION TO BE DETERMINED BY THE ENGINEER IN THE FIELD.

CATEGORY 0020
STH 100 (W. BROWN DEER RD.) & N. 107TH STREET

3

PULL BOXES

PULL BOX NO.	LOCATION*	653.0135 PULL BOXES 24"x36" EACH	653.0140 PULL BOXES 24"x42" EACH
PB1	21+16.0', 66.0' RT		1
PB2	181+64.0', 89.0' LT		1
PB3	183+13.0', 59.0' LT	1	
PB4	184+40.0', 60.0' LT	1	
PB5	181+30.0', 64.0' LT		1
PB6	181+68.0', 8.0' LT		1
PB7	181+32.0', 6.0' LT	1	
PB8	181+68.0', 17.0' RT		1
PB9	181+68.0', 64.0' RT		1
PB10	18+99.0', 85.0' RT		1
PB11	18+76.0', 83.0' RT		1
PB12	17+31.0', 49.0' RT	1	
PB13	16+00, 48.0' RT	1	
PB14	19+8.0', 56.0' RT		1
PB15	18+76.0', C/L		1
PB16	19+6.0', C/L	1	
PB17	18+76.0', 57.0' LT		1
PB18	179+44.0', 94.0' RT		1
PB19	177+90.0', 60.0' RT	1	
PB20	176+56.0', 59.0' RT	1	
PB21	179+77.0', 70.0' RT		1
PB22	179+44.0', 14.0' RT		1
PB23	179+44.0', 11.0' LT		1
PB24	179+45.0', 64.0' LT		1
PB25	21+17.0', 79.0' LT		1
PB26	22+72.0', 50.0' LT	1	
PB27	24+4.0', 46.0' LT	1	
PB28	20+92.0', 55.0' LT		1
PB29	21+17.0', 3.0' RT		1
PB30	20+91.0', 1.0' RT	1	
PB31	21+17.0' 59.0' RT		1
	TOTAL	11	20

* FINAL LOCATION TO BE DETERMINED BY THE ENGINEER IN THE FIELD.

REMOVE PULL BOXES

PULL BOX NO.	LOCATION	653.0905 REMOVE PULL BOX EACH
PB1	21+15.0', 66.0' RT	1
PB2	181+67.0', 89.0' LT	1
PB3	183+5.0', 59.0' LT	1
PB4	184+36.0', 60.0' LT	1
PB5	181+30.0', 64.0' LT	1
PB6	181+67.0', 8.0' LT	1
PB7	181+32.0', 6.0' LT	1
PB8	181+68.0', 17.0' RT	1
PB9	181+67.0', 64.0' RT	1
PB10	18+99.0', 85.0' RT	1
PB11	18+76.0', 83.0' RT	1
PB12	17+31.0', 50.0' RT	1
PB13	16+1.0', 47.0' RT	1
PB14	19+8.0', 56.0' RT	1
PB15	18+76.0' C/L	1
PB16	19+6.0', C/L	1
PB17	18+75.0', 58.0' LT	1
PB18	179+45.0', 94.0' RT	1
PB19	177+87.0', 60.0' RT	1
PB20	176+56.0', 60.0' RT	1
PB21	179+77.0', 70.0' RT	1
PB22	179+45.0', 14.0' RT	1
PB23	179+45.0', 11.0' LT	1
PB24	179+44.0', 64.0' LT	1
PB25	21+16.0', 80.0' LT	1
PB26	22+72.0', 51.0' LT	1
PB27	24+2.0', 46.0' LT	1
PB28	20+91.0', 55.0' LT	1
PB29	21+17.0', 2.0' RT	1
PB30	20+91.0', 1.0' RT	1
PB31	21+17.0', 58.0' RT	1
	TOTAL	31

SIGNAL CABLE AND WIRE

LOC.	To	LOC.	655.0220 CABLE TRAFFIC SIGNAL 4-14 AWG L.F.	655.0230 CABLE TRAFFIC SIGNAL 5-14 AWG L.F.	655.0240 CABLE TRAFFIC SIGNAL 7-14 AWG L.F.	655.0700 LOOP DETECTOR LEAD IN CABLE L.F.
SB1		HEAD 14		70		
SB1		HEAD 15		60		
SB1		HEAD 7		19		
SB1		HEAD 24	18			
SB1		BUTTON				6
SB2		HEAD 5			23	
SB2		HEAD 22	18			
SB2		HEAD 23	18			
SB2		BUTTON				6
SB3		HEAD 12			23	
SB3		HEAD 17		19		
SB4		HEAD 16		19		
SB5		HEAD 13		19		
SB5		HEAD 2		75		
SB5		HEAD 3		65		
SB5		HEAD 4		55		
SB5		HEAD 21	18			
SB5		BUTTON				6
SB6		HEAD 19		70		
SB6		HEAD 20		60		
SB6		HEAD 1		19		
SB7		HEAD 11			23	
SB8		HEAD 6			23	
SB9		HEAD 18		19		
SB9		HEAD 8		75		
SB9		HEAD 9		65		
SB9		HEAD 10		55		
		TOTALS	72	764	92	18

3

SHEET 4 OF 5

PROJECT NO: 2150-05-70	HWY: STH 100	COUNTY: MILWAUKEE	TRAFFIC SIGNAL QUANTITIES	SHEET	E

3

CONCRETE BASES

SIGNAL BASE NO.	LOCATION*	654.0101 CONCRETE BASE TYPE 1 EACH	654.0113 CONCRETE BASE TYPE 13 EACH	654.0217 CONCRETE BASES TYPE 9 SPECIAL EACH
CB1	21+29.0', 61.0' RT			1
SB1	20+62.0', 58.0' RT		1	
SB2	20+7.0', 64.0' RT	1		
SB3	19+83.0', 86.0' RT	1		
SB4	19+19.0', 95.0' RT	1		
SB5	19+32.0', 51.0' RT		1	
SB6	19+28.0', 60.0' LT		1	
SB7	179+89.0', 14.0' RT	1		
SB8	179+80.0', 11.0' LT	1		
SB9	20+74.0', 54.0' LT		1	
	TOTAL	5	4	1

* FINAL LOCATION TO BE DETERMINED BY THE ENGINEER IN THE FIELD.

NOTE: THIS TABLE IS FOR INFORMATION ONLY

PEDESTAL BASES*
POLES, TYPE 10, 45' MONOTUBE ARM
POLES, TYPE 10, 50' MONOTUBE ARM
POLES, TYPE 10, 55' MONOTUBE ARM
TRAFFIC SIGNAL STANDARDS, ALUMINUM, 13-FOOT
TRAFFIC SIGNAL STANDARDS, ALUMINUM, 15-FOOT
PEDESTRIAN PUSH BUTTONS

SIG. BASE NO.	PED. BASE EACH	13-FOOT STAND. EACH	15-FOOT STAND. EACH	POLE TYPE 12 45' ARM EACH	POLE TYPE 12 50' ARM EACH	POLE TYPE 12 55' ARM EACH	PUSH BUTTON EACH
SB1				1			1
SB2	1		1				1
SB3	1		1				
SB4	1	1					
SB5					1		1
SB6				1			
SB7	1		1				
SB8	1		1				
SB9						1	
TOTAL *	5	1	4	2	1	1	3

* INCIDENTAL TO ITEM "TRAFFIC SIGNALS, STH 100 (W. BROWN DEER RD.) & N. 107TH ST."

TEMPORARY TRAFFIC SIGNALS

LOCATION	661.0200 TEMPORARY TRAFFIC SIGNALS L.S.
STH 100 (W. BROWN DEER RD.) & N. 107TH ST.	1
TOTA	1

3

SPV.0105.05 TRAFFIC SIGNALS & INTERSECTION LIGHTING

LOCATION	L.S.
STH 100 & N. 91ST	1
TOTAL	1

SUMMARY OF STATE FURNISHED MATERIALS

EACH	DESCRIPTION
1	TRAFFIC SIGNAL CONTROLLER, FULLY ACTUATED, 8 PHASE
1	TRAFFIC SIGNAL CABINET
9	PEDESTAL BASES
1	TRAFFIC SIGNAL STANDARDS, ALUMINUM, 10'
6	TRAFFIC SIGNAL STANDARDS, ALUMINUM, 13'
2	TRAFFIC SIGNAL STANDARDS, ALUMINUM, 15'
2	POLES, TYPE 9, 30' MONOTUBE ARM
1	POLES, TYPE 12, 40' MONOTUBE ARM
1	POLES, TYPE 12, 45' MONOTUBE ARM
18	TRAFFIC SIGNAL FACES, 3-12 INCH VERTICAL, LED MODULES
4	TRAFFIC SIGNAL FACES, 5-12 INCH VERTICAL, LED MODULES
4	TRAFFIC SIGNAL FACE, ARROW, RED, LED MODULES
8	TRAFFIC SIGNAL FACE, ARROW, YELLOW, LED MODULES
8	TRAFFIC SIGNAL FACE, ARROW, GREEN, LED MODULES
18	BACKPLATES, 3 SECTION, 12" SIGNAL FACES
4	BACKPLATES, 5 SECTION, 12" SIGNAL FACES
8	PEDESTRIAN SIGNAL FACES, 16", COUNTDOWN TIMERS
8	PEDESTRIAN PUSH BUTTONS
1	TRAFFIC SIGNAL MOUNTING HARDWARE,

NOTE: THIS TABLE IS FOR INFORMATION ONLY

TRAFFIC SIGNAL FACES, 3-12 INCH VERTICAL, LED MODULES
TRAFFIC SIGNAL FACES, 5-12 INCH VERTICAL, LED MODULES
TRAFFIC SIGNAL FACES, 3-12 INCH HORIZONTAL, LED MODULES
TRAFFIC SIGNAL FACE, ARROW, RED, LED MODULES
TRAFFIC SIGNAL FACE, ARROW, YELLOW, LED MODULES
TRAFFIC SIGNAL FACE, ARROW, GREEN, LED MODULES
BACKPLATES, 3 SECTION, 12-INCH SIGNAL FACES
BACKPLATES, 5 SECTION, 12-INCH SIGNAL FACES
PEDESTRIAN SIGNAL FACES, 16-INCH, LED MODULES

SIG. HEAD NO.	SIG. BASE NO.	3-12" VERT. EACH	5-12" VERT. EACH	RED ARROW EACH	YELLOW ARROW EACH	GREEN ARROW EACH	BCKPLT 3-SEC. EACH	BCKPLT 5-SEC. EACH	PED. FACE 16" EACH
1	SB6	1					1		
2	SB1	1					1		
3	SB1	1					1		
4	SB1	1					1		
5	SB7	1		1	1	1	1		
6	SB13	1		1	1	1	1		
7	SB12	1					1		
8	SB8	1					1		
9	SB8	1					1		
10	SB8	1					1		
11	SB13	1		1	1	1	1		
12	SB7	1		1	1	1	1		
13	SB3	1					1		
14	SB11	1					1		
15	SB11	1					1		
16	SB4		1		1	1		1	
17	SB10		1		1	1		1	
18	SB9	1					1		
19	SB5	1					1		
20	SB5	1					1		
21	SB10		1		1	1		1	
22	SB4		1		1	1		1	
23	SB3								1
24	SB5								1
25	SB12								1
26	SB2								1
27	SB9								1
28	SB11								1
29	SB6								1
30	SB9								1
TOTAL*		18	4	4	8	8	18	4	8

* INCIDENTAL TO ITEM "TRAFFIC SIGNALS, STH 100 N. 91st

CATEGORY 0020
STH 100 & N. 91ST

3

NOTE: THIS TABLE IS FOR INFORMATION ONLY

PEDESTAL BASES*
TRANSFORMER BASES, BREAKAWAY, 11 1/2 INCH BOLT CIRCLE
POLES, TYPE 9, 30' MONOTUBE ARM
POLES, TYPE 12, 40' MONOTUBE ARM
POLES, TYPE 12, 45' MONOTUBE ARM
TRAFFIC SIGNAL STANDARDS, ALUMINUM, 13-FOOT
TRAFFIC SIGNAL STANDARDS, ALUMINUM, 15-FOOT
PEDESTRIAN PUSH BUTTONS

SIG. BASE NO.	PED. BASE EACH	10-FOOT STAND. EACH	13-FOOT STAND. EACH	15-FOOT STAND. EACH	POLE TYPE 9 30' ARM EACH	POLE TYPE 12 40' ARM EACH	POLE TYPE 12 45' ARM EACH	PUSH BUTTON EACH
SB1						1		
SB2	1	1						1
SB3	1		1					1
SB4	1			1				
SB5					1			1
SB6	1		1					1
SB7	1		1					
SB8							1	1
SB9	1		1					1
SB10	1			1				
SB11					1			1
SB12	1		1					1
SB13	1		1					
TOTAL *	9	1	6	2	2	1	1	8

* INCIDENTAL TO ITEM "TRAFFIC SIGNALS, STH 100 & N. 91st. STREET"

PULL BOXES

PULL BOX NO.	LOCATION*	653.0135 PULL BOXES 24"x36" EACH	653.0140 PULL BOXES 24"x42" EACH
PB1	19+32.0', 61.0' RT		1
PB2	19+21.0', 50.0' RT	1	
PB3	19+00, 46.0' RT		1
PB4	19+00, 5.0' LT		1
PB5	19+00, 43.0' LT		1
PB6	19+34.0', 61.0' LT	1	
PB7	233+00, 62.0' RT		1
PB8	231+24.0', 60.0' RT	1	
PB9	229+93.0', 58.0' RT	1	
PB10	233+00, 10.0' LT		1
PB11	233+00, 64.0' LT		1
PB12	20+79.0', 50.0' LT	1	
PB13	21+2.0', 45.0' LT		1
PB14	23+68.0', 30.0' LT	1	
PB15	21+2.0', 5.0' RT		1
PB16	21+2.0', 42.0' RT		1
PB17	234+46.0', 59.0' LT	1	
PB18	234+73.0', 59.0' LT		1
PB19	234+73.0', 9.0' RT		1
PB20	236+39.0', 9.0' RT	1	
PB21	237+67.0', 5.0' RT	1	
PB22	234+73.0', 60.0' RT		1
PB23	16+70.0', 42.0' RT	1	
	TOTAL	10	13

* FINAL LOCATION TO BE DETERMINED BY THE ENGINEER IN THE FIELD.

LOC.	TO	LOC.	652.0225 CONDUIT NONMET. 2-INCH L.F.	652.0235 CONDUIT NONMET. 3-INCH L.F.	652.0615 CONDUIT SPECIAL 3-INCH L.F.
CB1	TO	PB1		60.00	
PB1	TO	SB1	16.00		
PB1	TO	SB2	8.00		
PB1	TO	PB2		30.00	
PB2	TO	SB3	4.00		
PB2	TO	PB3		50.00	
PB3	TO	PB23	230.00		
PB3	TO	PB4			104.00
PB4	TO	SB4	20.00		
PB4	TO	PB5			77.00
PB5	TO	SB5	25.00		
PB5	TO	PB6			76.00
PB6	TO	SB6	5.00		
PB6	TO	PB7		44.00	
PB7	TO	PB8	180.00		
PB8	TO	PB9	130.00		
PB7	TO	PB10			144.00
PB10	TO	SB7	20.00		
PB10	TO	PB11			108.00
PB11	TO	SB8	30.00		
PB11	TO	PB12		78.00	
PB12	TO	SB9	6.00		
PB12	TO	PB13		44.00	
PB13	TO	PB14	270.00		
PB13	TO	PB15			100.00
PB15	TO	SB10	18.00		
PB15	TO	PB16			75.00
PB16	TO	SB11	25.00		
PB16	TO	PB17		90.00	
PB17	TO	SB12	5.00		
PB17	TO	PB18		60.00	
PB18	TO	PB19			133.00
PB19	TO	SB13	25.00		
PB19	TO	PB20	166.00		
PB20	TO	PB21	130.00		
PB19	TO	PB22			104.00
PB22	TO	CB1		45.00	
		TOTAL	1313	501	921

3

SHEET 2 OF 5

PROJECT NO: 2150-05-00	HWY: STH 100	COUNTY: MILWAUKEE	TRAFFIC SIGNAL QUANTITIES	SHEET	E

CATEGORY 0020
STH 100 & N. 91ST

METER BREAKER PEDESTAL

LOCATION*	656.0200 METER BREAKER PEDESTAL L.S.
STH 100 & N. 91st. STREET	1
TOTAL	1

* FINAL LOCATION TO BE DETERMINED BY THE ENGINEER IN TH FIELD

REMOVE TRAFFIC SIGNALS

LOCATION	SPV.0105.06 REMOVE TRAFFIC SIGNALS L.S.
STH 100 & N. 91ST STREET	1
TOTAL	1

TEMPORARY TRAFFIC SIGNALS

LOCATION	661.0200 TEMPORARY TRAFFIC SIGNALS L.S.
STH 100 & N. 91ST STREET	1
TOTA	1

TRAFFIC DETECTOR LOOPS

LOOP NO.	HOME RUN PB	LOCATION*	SIZE (FT)x(FT)	NO. OF TURNS	PAVEMENT TYPE	SDD INSTALLATION REFERENCE	652.0800 CONDUIT LOOP DETECTOR L.F.	652.0900 LOOP DETECTOR SLOT L.F.	655.0700 LEAD IN CABLE L.F.	655.0800 LOOP DETECTOR WIRE L.F.
11	PB10	232+98.0', 5.0' RT	6X20	3	CONCRETE	LOOP DETECTOR PLACED IN CRUSHED AGGREGATE BASE(NEW CONCRETE PAVEMENT	65	55	342	180
12	PB10	233+23.0', 3.0' RT	6X20	3	CONCRETE	LOOP DETECTOR PLACED IN CRUSHED AGGREGATE BASE(NEW CONCRETE PAVEMENT	65	55	342	180
21	PB21	237+68.0', 34.0' LT	6X30	3	CONCRETE	LOOP DETECTOR INSTALLED IN EXISTING CONCRETE PAVEMENT	96	83	360	266
22	PB20	236+38.0', 36.0' LT	6X30	3	CONCRETE	LOOP DETECTOR INSTALLED IN EXISTING CONCRETE PAVEMENT	102	96	231	276
31	PB4	18+92.0', 5.0' RT	6X20	3	CONCRETE	LOOP DETECTOR INSTALLED IN EXISTING CONCRETE WITH NEW ASPHALTIC OVERLA	68	56	107	174
32	PB4	19+22.0', 4.0' RT	6X20	3	CONCRETE	LOOP DETECTOR INSTALLED IN EXISTING CONCRETE WITH NEW ASPHALTIC OVERLA	68	56	107	174
41	PB14	23+66.0', 12.0' LT	6X20	3	CONCRETE	LOOP DETECTOR INSTALLED IN EXISTING CONCRETE PAVEMENT	68	56	575	174
42	PB13	21+2.0', 15.0' LT	6X20	3	CONCRETE	LOOP DETECTOR INSTALLED IN EXISTING CONCRETE WITH NEW ASPHALTIC OVERLA	79	70	315	194
43	PB13	20+73.0', 15.0' LT	6X20	3	CONCRETE	LOOP DETECTOR INSTALLED IN EXISTING CONCRETE WITH NEW ASPHALTIC OVERLA	80	72	315	216
44	PB13	21+2.0', 27.0' LT	6X20	3	CONCRETE	LOOP DETECTOR INSTALLED IN EXISTING CONCRETE WITH NEW ASPHALTIC OVERLA	67	62	315	216
45	PB13	20+2.0', 27.0' LT	6X20	3	CONCRETE	LOOP DETECTOR INSTALLED IN EXISTING CONCRETE WITH NEW ASPHALTIC OVERLA	69	62	315	171
51	PB19	234+70.0', 2.0' LT	6X20	3	CONCRETE	LOOP DETECTOR INSTALLED IN EXISTING CONCRETE WITH NEW ASPHALTIC OVERLA	60	55	80	186
52	PB19	234+41.0', 1.0' LT	6X20	3	CONCRETE	LOOP DETECTOR INSTALLED IN EXISTING CONCRETE WITH NEW ASPHALTIC OVERLA	60	55	80	186
53	PB19	234+70.0', 12.0' LT	6X20	3	CONCRETE	LOOP DETECTOR INSTALLED IN EXISTING CONCRETE WITH NEW ASPHALTIC OVERLA	72	66	80	196
54	PB19	234+41.0', 11.0' LT	6X20	3	CONCRETE	LOOP DETECTOR INSTALLED IN EXISTING CONCRETE WITH NEW ASPHALTIC OVERLA	72	66	80	196
61	PB9	229+93.0', 35.0' RT	6X30	3	CONCRETE	LOOP DETECTOR INSTALLED IN EXISTING CONCRETE WITH NEW ASPHALTIC OVERLA	81	75	550	232
62	PB8	231+25.0', 36.0' RT	6X30	3	CONCRETE	LOOP DETECTOR INSTALLED IN EXISTING CONCRETE WITH NEW ASPHALTIC OVERLA	80	75	419	234
71	PB15	21+2.0', 5.0' LT	6X20	3	CONCRETE	LOOP DETECTOR INSTALLED IN EXISTING CONCRETE WITH NEW ASPHALTIC OVERLA	58	55	260	170
72	PB15	20+72.0', 4.0' LT	6X20	3	CONCRETE	LOOP DETECTOR INSTALLED IN EXISTING CONCRETE WITH NEW ASPHALTIC OVERLA	64	57	260	178
81	PB23	16+70.0', 25.0' RT	6X20	3	CONCRETE	LOOP DETECTOR INSTALLED IN EXISTING CONCRETE PAVEMENT	61	55	290	172
82	PB4	18+92.0', 18.0' RT	6X20	3	CONCRETE	LOOP DETECTOR INSTALLED IN EXISTING CONCRETE WITH NEW ASPHALTIC OVERLA	73	68	107	198
83	PB4	19+22.0', 17.0' RT	6X20	3	CONCRETE	LOOP DETECTOR INSTALLED IN EXISTING CONCRETE WITH NEW ASPHALTIC OVERLA	73	67	107	92
84	PB3	18+92.0', 30.0' RT	6X20	3	CONCRETE	LOOP DETECTOR INSTALLED IN EXISTING CONCRETE WITH NEW ASPHALTIC OVERLA	68	57	56	82
85	PB3	19+22.0', 29.0' RT	6X20	3	CONCRETE	LOOP DETECTOR INSTALLED IN EXISTING CONCRETE WITH NEW ASPHALTIC OVERLA	67	58	56	82
						TOTAL	1716	1532	5749	4425

* LOCATION IS TO FRONT CENTER OF DETECTOR LOOP
* * FINAL LOCATION TO BE DETERMINED BY THE ENGINEER IN THE FIELD.

3

CONCRETE BASES

SIGNAL BASE NO.	LOCATION*	654.0101 CONCRETE BASE TYPE 1 EACH	654.0110 CONCRETE BASE TYPE 10 EACH	654.0113 CONCRETE BASE TYPE 13 EACH	654.0217 CONCRETE BASES TYPE 9 SPECIAL EACH
CB1	234+59.0', 65.0' RT				1
SB1	234+55.0', 61.0' RT			1	
SB2	19+37.0', 60.0' RT	1			
SB3	19+21.0', 48.0' RT	1			
SB4	19+19.0', 5.0' LT	1			
SB5	19+23.0', 48.0' LT		1		
SB6	19+37.0', 56.0' LT	1			
SB7	233+19.0', 10.0' LT	1			
SB8	233+26.0', 67.0' LT			1	
SB9	20+75.0', 45.0' LT	1			
SB10	20+84.0', 5.0' RT	1			
SB11	20+77.0', 43.0' RT		1		
SB12	234+41.0', 61.0' LT	1			
SB13	234+48.0', 9.0' LT	1			
	TOTAL	9	2	2	1

* FINAL LOCATION TO BE DETERMINED BY THE ENGINEER IN THE FIELD.

REMOVING CONCRETE BASES

SIGNAL BASE NO.	LOCATION	204.0195 REMOVING CONCRETE BASES EACH
SB1	19+25.0', 47.0' RT	1
SB2	19+20.0', 5.0' LT	1
SB3	19+23.0', 49.0' LT	1
SB4	233+14.0', 59.0' RT	1
SB5	233+25.0', 5.0' LT	1
SB6	20+60.0', 56.0' LT	1
SB7	20+76.0', 46.0' LT	1
SB8	20+83.0', 5.0' RT	1
SB9	20+76.0', 47.0' RT	1
SB10	234+50.0', 59.0' LT	1
SB11	234+48.0', 7.0' RT	1
SB12	234+50, 58.0' RT	1
	TOTAL	12

SIGNAL CABLE AND WIRE

LOC.	TO	LOC.	655.0260 CABLE TRAFFIC SIGNAL 12-14 AWG L.F.	655.0515 ELECTRICAL WIRE TRAFFIC SIGNALS 10 AWG L.F.
CB1		SB1	56	
CB1		SB2	46	
CB1		SB3	68	
CB1		SB4	177	
CB1		SB5	231	
CB1		SB6	260	
CB1		SB7	388	
CB1		SB8	458	
CB1		SB9	411	
CB1		SB10	334	
CB1		SB11	292	
CB1		SB12	216	
CB1		SB13	120	
CB1		PB1	48	
CB1		PB22		45
SB1		SB2		44
SB2		SB3		56
SB3		SB4		124
SB3		PB2		35
SB3		PB3		56
SB4		SB5		112
SB4		PB4		50
SB5		SB6		112
SB5		PB5		55
SB6		SB7		157
SB6		PB6		35
SB6		PB7		67
SB7		SB8		130
SB7		PB10		49
SB8		SB9		102
SB8		PB11		56
SB9		SB10		137
SB9		PB12		36
SB9		PB13		68
SB10		SB11		111
SB10		PB15		48
SB11		SB12		105
SB11		PB16		55
SB12		SB13		175
SB12		PB17		35
SB12		PB18		73
SB13		PB19		55
		TOTALS	3105	2183

3

3

SIGNAL CABLE AND WIRE

LOC.	To	LOC.	655.0220 CABLE TRAFFIC SIGNAL 4-14 AWG L.F.	655.0230 CABLE TRAFFIC SIGNAL 5-14 AWG L.F.	655.0240 CABLE TRAFFIC SIGNAL 7-14 AWG L.F.	655.0700 LOOP DETECTOR LEAD IN CABLE L.F.
SB1		HEAD 2		65		
SB1		HEAD 3		55		
SB1		HEAD 4		45		
SB2		HEAD 26	18			
SB2		BUTTON				6
SB3		HEAD 13		19		
SB3		HEAD 23	18			
SB3		BUTTON				6
SB4		HEAD 16			23	
SB4		HEAD 22			23	
SB5		HEAD 19		55		
SB5		HEAD 20		45		
SB5		HEAD 24	18			
SB5		BUTTON				6
SB6		HEAD 1		19		
SB6		HEAD 29	18			
SB6		BUTTON				6
SB7		HEAD 5		19		
SB7		HEAD 12		19		
SB8		HEAD 8		70		
SB8		HEAD 9		60		
SB8		HEAD 10		50		
SB8		BUTTON				6
SB9		HEAD 18		19		
SB9		HEAD 27	18			
SB9		HEAD 30	18			
SB9		BUTTON				6
SB10		HEAD 17			23	
SB10		HEAD 21			23	
SB11		HEAD 14		55		
SB11		HEAD 15		45		
SB11		HEAD 28	18			
SB11		BUTTON				6
SB12		HEAD 7		19		
SB12		HEAD 25	18			
SB12		BUTTON				6
SB13		HEAD 6		19		
SB13		HEAD 11		19		
		TOTALS	144	697	92	48

REMOVE PULL BOXES

PULL BOX NO.	LOCATION	653.0905 REMOVE PULL BOX EACH
PB1	234+44.0', 58.0' RT	1
PB2	19+24.0', 48.0' RT	1
PB3	19+22.0', 6.0' LT	1
PB4	19+19.0', 46.0' LT	1
PB5	233+15.0', 60.0' RT	1
PB6	233+17.0', 6.0' RT	1
PB7	233+17.0', 58.0' LT	1
PB8	20+88.0', 47.0' LT	1
PB9	20+88.0', 5.0' RT	1
PB10	20+88.0', 43.0' RT	1
PB11	234+45.0', 58.0' LT	1
PB12	234+44.0', 9.0' RT	1
PB13	19+12.0', 6.0' LT	1
PB14	16+52.0', 6.0' LT	1
PB15	233+13.0', 2.0' RT	1
PB E15	232+76.0', 2.0' RT	1
PB16	231+58.0', 2.0' RT	1
PB17	231+3.0', 9.0' RT	1
PB18	229+84.0', 12.0' RT	1
PB19	20+90.0', 41.0' LT	1
PB20	22+71.0', 44.0' LT	1
PB21	20+92.0', 5.0' LT	1
PB22	234+55.0', 10.0' RT	1
PB23	234+96.0', 12.0' RT	1
PB24	237+35.0', 2.0'RT	1
PB25	19+12.0', 44.0' RT	1
	TOTAL	26

3

3

SIGN NO.	SIGN CODE	SIGN MESSAGE	SIGN SIZE W [IN.]	x	H [IN.]	637.0202 SIGNS REFLC TYPE II [SF]	638.2602 REM SIGNS TYPE II [EA]	638.3000 REM SMALL SIGN SUPPORT [EA]	638.2102 MOVE SIGNS TYPE II [EA]	634.0616 WOOD POSTS 4"X 6"x16' [EA]	MOUNT ON SAME POST AS SIGN #	REMARKS
1	M1-94	124TH STREET	102	x	21	14.88	1	1	--	2	--	--
2	--	* NOT USED *	--	x	--	--	--	--	--	--	--	* NOT USED *
3	J4-1(3)	--	36	x	51	12.75	1	1	--	1	--	--
	M3-4		30	x	15							
	M1-6		36	x	36							
	M3-1		30	x	15							
	M1-6		36	x	36							
4	R5-1(3)	--	36	x	36	9.00	--	--	--	1	--	--
5	R1-1F(3)	--	36	x	36	7.46	1	--	--	--	--	MOUNT ON SIGNAL POLE
6	R1-1F(3)	--	36	x	36	7.46	1	--	--	--	--	MOUNT ON SIGNAL POLE
7	R1-1F(3)	--	36	x	36	7.46	1	--	--	--	--	MOUNT ON SIGNAL POLE
8	R1-1F(3)	--	36	x	36	7.46	1	--	--	--	--	MOUNT ON SIGNAL POLE
9	R1-1(3)	--	36	x	36	7.46	1	1	--	1	--	--
10	W12-1D(2)	--	24	x	24	4.00	1	1	--	1	--	2' MOUNTING HEIGHT
11	--	NO ENGINE BRAKING	--	x	--	--	--	1	1	1	--	--
12	--	WITHIN VILLAGE LIMITS	--	x	--	--	--	--	1	--	#11	--
13	R4-7(2)	--	24	x	30	5.00	1	--	--	--	--	MOUNT ON SIGNAL POLE
14	I2-2(2)	MILWAUKEE CO	78	x	15	8.13	1	2	--	2	--	--
15	I2-3(2)	MILWAUKEE POPULATION 596,974	72	x	24	12.00	1	--	--	--	#14	--
16	R1-1(3)	--	36	x	36	7.46	1	1	--	1	--	--
17	J4-1(3)	--	36	x	51	12.75	1	1	--	1	--	--
	M3-2		30	x	15							
	M1-6		36	x	36							
18	J3-1(3)	--	36	x	81	20.25	1	--	--	--	--	MOUNT ON LIGHT POLE
	M3-3		30	x	15							
	M1-6	--	36	x	36							
	M6-1	--	30	x	30							
19	R3-5R(2)	--	42	x	48	14.00	1	--	--	--	--	INSTALL ON EXISTING SUPPORT
20	R3-5R(2)	--	42	x	48	14.00	1	--	--	--	--	INSTALL ON EXISTING SUPPORT
21	R7-1D(3)	--	24	x	30	5.00	1	--	--	--	--	MOUNT ON LIGHT POLE
22	R1-1F(3)	--	36	x	36	7.46	1	--	--	--	--	MOUNT ON SIGNAL POLE
23	R1-1F(3)	--	36	x	36	7.46	1	--	--	--	--	MOUNT ON SIGNAL POLE

3

SIGN NO.	SIGN CODE	SIGN MESSAGE	SIGN SIZE W [IN.]	x	H [IN.]	637.0202 SIGNS REFLC TYPE II [SF]	638.2602 REM SIGNS TYPE II [EA]	638.3000 REM SMALL SIGN SUPPORT [EA]	638.2102 MOVE SIGNS TYPE II [EA]	634.0616 WOOD POSTS 4"X 6"x16' [EA]	MOUNT ON SAME POST AS SIGN #	REMARKS
24	R1-1F(3)	--	36	x	36	7.46	1	--	--	--	--	MOUNT ON SIGNAL POLE
25	R5-1(3)	--	36	x	36	9.00	--	--	--	1	--	--
26	R4-7(3)	--	36	x	48	12.00	1	--	--	--	--	MOUNT ON SIGNAL POLE
27	R4-7(3)	--	36	x	48	12.00	1	--	--	--	--	MOUNT ON SIGNAL POLE
28	R4-7(2)	--	24	x	30	5.00	1	--	--	--	--	MOUNT ON SIGNAL POLE
29	R6-2L(2)	--	18	x	24	3.00	--	--	--	--	--	MOUNT ON SIGNAL POLE
30	R6-2L(2)	--	18	x	24	3.00	--	--	--	1	--	--
31	I2-2(2)	WAUKESHA CO	72	x	15	7.50	1	--	--	--	#32	--
32	I2-3(2)	MENOMONEEE FALLS POPULATION 32,647	102	x	24	17.00	1	2	--	2	--	--
33	J3-1(2)	--	24	x	45	7.50	1	1	--	1	--	--
	M1-6		24	x	24							
	M6-4		21	x	21							
34	J3-2(2)	--	48	x	57	19.00	1	2	--	2	--	--
	M3-1		24	x	12							
	M1-6	--	24	x	24							
	M6-1	--	21	x	21							
	M3-3		24	x	12							
	M1-6	--	24	x	24							
	M6-1	--	21	x	21							
35	R2-1(3)	SPEED LIMIT 45	36	x	48	12.00	1	1	--	1	--	--
36	D12-2A(2)	RIDESHARE INFO CALL	60	x	42	17.50	1	1	--	2	--	--
37	R2-1(3)	SPEED LIMIT 45	36	x	48	12.00	1	--	--	1	--	--
38	R7-1D(2)	--	18	x	24	3.00	1	--	--	--	#37	--
39	R2-1	--	--	x	--	--	1	1	--	--	--	--
40	R7-1D(3)	--	24	x	30	5.00	1	--	--	--	--	MOUNT ON LIGHT POLE
41	R7-1D(3)	--	24	x	30	5.00	1	--	--	--	--	MOUNT ON LIGHT POLE
42	W3-3(2)	--	36	x	36	9.00	1	1	--	1	--	--
43	W3-3(2)	--	36	x	36	9.00	1	1	--	1	--	--
44	R7-1D(2)	--	18	x	24	3.00	1	--	--	--	--	MOUNT ON LIGHT POLE

3

SIGN NO.	SIGN CODE	SIGN MESSAGE	SIGN SIZE W [IN.]	x x	H [IN.]	637.0202 SIGNS REFLC TYPE II [SF]	638.2602 REM SIGNS TYPE II [EA]	638.3000 REM SMALL SIGN SUPPORT [EA]	638.2102 MOVE SIGNS TYPE II [EA]	634.0616 WOOD POSTS 4"X 6"x16' [EA]	MOUNT ON SAME POST AS SIGN #	REMARKS
45	J2-3(2)	--	72	x	57	28.50	1	2	--	2	--	--
	M3-1		24	x	12							
	M1-6	--	24	x	24							
	M5-1L	--	21	x	21							
	M3-4		24	x	12							
	M1-6	--	24	x	24							
	M6-1	--	21	x	21							
	M3-3		24	x	12							
	M1-6	--	24	x	24							
	M6-1	--	21	x	21							
46	J2-3(2)	--	72	x	57	28.50	1	2	--	2	--	--
	M3-1		24	x	12							
	M1-6	--	24	x	24							
	M5-1L	--	21	x	21							
	M3-4		24	x	12							
	M1-6	--	24	x	24							
	M6-1	--	21	x	21							
	M3-3		24	x	12							
	M1-6	--	24	x	24							
	M6-1	--	21	x	21							
47	R3-55L(3)	--	36	x	48	12.00	1	1	--	1	--	--
48	M1-94	124TH STREET	102	x	21	14.88	1	1	--	2	--	--
49	M2-1		--	x	--	--	1	--	--	--	--	--
50	R4-7(3)	--	36	x	48	12.00	--	--	--	1	--	--
51	R4-7(3)	--	36	x	48	12.00	--	--	--	1	--	--
52	R2-1(3)	SPEED LIMIT 45	36	x	48	12.00	1	1	--	1	--	--
53	R2-1(3)	SPEED LIMIT 45	36	x	48	12.00	1	--	--	--	--	MOUNT ON LIGHT POLE
54	R7-1D(3)	--	24	x	30	5.00	--	--	--	--	--	MOUNT ON LIGHT POLE
55	R7-1D(3)	--	24	x	30	5.00	--	--	--	--	--	MOUNT ON LIGHT POLE
56	R7-1D	--	--	x	--	--	1	--	--	--	--	--
57	R7-1D	--	--	x	--	--	1	--	--	--	--	--
58	R7-1D	--	--	x	--	--	1	--	--	--	--	--
59	R7-1D	--	--	x	--	--	1	--	--	--	--	--
60	R5-1(3)	--	36	x	36	9.00	--	--	--	1	--	--
61	R1-1(3)	--	36	x	36	7.46	1	1	--	1	--	--

3

SIGN NO.	SIGN CODE	SIGN MESSAGE	SIGN SIZE W [IN.]	x	H [IN.]	637.0202 SIGNS REFLC TYPE II [SF]	638.2602 REM SIGNS TYPE II [EA]	638.3000 REM SMALL SIGN SUPPORT [EA]	638.2102 MOVE SIGNS TYPE II [EA]	634.0616 WOOD POSTS 4"X 6"x16' [EA]	MOUNT ON SAME POST AS SIGN #	REMARKS
62	W11-3	--	--	x	--	--	1	1	--	--	--	--
63	W11-3	--	--	x	--	--	1	--	--	--	--	--
64	R7-1D(2)	--	18	x	24	3.00	1	--	--	--	--	MOUNT ON LIGHT POLE
65	R4-7(3)	--	36	x	48	12.00	--	--	--	1	--	--
66	R4-7(3)	--	36	x	48	12.00	--	--	--	1	--	--
67	R7-1D(3)	--	24	x	30	5.00	1	--	--	--	--	MOUNT ON LIGHT POLE
68	R7-1D(3)	--	24	x	30	5.00	1	--	--	--	--	MOUNT ON LIGHT POLE
69	R2-1(3)	SPEED LIMIT 45	36	x	48	12.00	1	1	--	1	--	--
70	R7-1D(3)	--	24	x	30	5.00	1	--	--	--	--	MOUNT ON LIGHT POLE
71	R7-1D(3)	--	24	x	30	5.00	1	--	--	--	--	MOUNT ON LIGHT POLE
72	R7-1D(3)	--	24	x	30	5.00	1	--	--	--	--	MOUNT ON LIGHT POLE
73	R4-7(3)	--	36	x	48	12.00	1	1	--	1	--	--
74	R4-7(3)	--	36	x	48	12.00	1	1	--	1	--	--
75	R4-7(3)	--	36	x	48	12.00	1	1	--	1	--	--
76	R7-1D(3)	--	24	x	30	5.00	1	--	--	--	--	MOUNT ON LIGHT POLE
77	R7-1D(3)	--	24	x	30	5.00	1	--	--	--	--	MOUNT ON LIGHT POLE
78	R7-1D(3)	--	24	x	30	5.00	1	--	--	--	--	MOUNT ON LIGHT POLE
79	R4-7(3)	--	36	x	48	12.00	1	1	--	1	--	--
80	R5-1(3)	--	36	x	36	9.00	1	1	--	1	--	--
81	R1-1(3)	--	36	x	36	7.46	1	1	--	1	--	--
82	R7-1D(3)	--	24	x	30	5.00	1	--	--	--	--	MOUNT ON LIGHT POLE
83	R7-1D(3)	--	24	x	30	5.00	1	--	--	--	--	MOUNT ON LIGHT POLE
84	J1-1(3)	--	36	x	57	14.25	1	1	--	1	--	--
	M2-1	--	30	x	21	--	--	--	--	--	--	--
	M1-5A	--	36	x	36	--	--	--	--	--	--	--
85	J1-1(3)	--	36	x	57	14.25	1	1	--	1	--	--
	M2-1	--	30	x	21	--	--	--	--	--	--	--
	M1-5A	--	36	x	36	--	--	--	--	--	--	--
86	R2-1(3)	SPEED LIMIT 45	36	x	48	12.00	1	1	--	1	--	--
87	R2-1(3)	SPEED LIMIT 45	36	x	48	12.00	1	--	--	--	--	MOUNT ON LIGHT POLE
88	R7-1D(3)	--	24	x	30	5.00	1	--	--	--	--	MOUNT ON LIGHT POLE
89	R4-7(3)	--	36	x	48	12.00	--	--	--	1	--	--
90	R4-7(3)	--	36	x	48	12.00	--	--	--	1	--	--

3

SIGN NO.	SIGN CODE	SIGN MESSAGE	SIGN SIZE W [IN.]	x	H [IN.]	637.0202 SIGNS REFLC TYPE II [SF]	638.2602 REM SIGNS TYPE II [EA]	638.3000 REM SMALL SIGN SUPPORT [EA]	638.2102 MOVE SIGNS TYPE II [EA]	634.0616 WOOD POSTS 4"X 6"x16' [EA]	MOUNT ON SAME POST AS SIGN #	REMARKS
91	R4-7(3)	--	36	x	48	12.00	1	1	--	1	--	--
92	R2-1(3)	SPEED LIMIT 45	36	x	48	12.00	1	1	--	1	--	--
93	R2-1(3)	SPEED LIMIT 45	36	x	48	12.00	1	--	--	--	--	MOUNT ON LIGHT POLE
94	R4-7(3)	--	36	x	48	12.00	--	--	--	1	--	--
95	R7-1D(3)	--	24	x	30	5.00	1	--	--	--	--	MOUNT ON LIGHT POLE
96	R7-1D(3)	--	24	x	30	5.00	1	--	--	--	--	MOUNT ON LIGHT POLE
97	R7-1D(3)	--	24	x	30	5.00	1	--	--	--	--	MOUNT ON LIGHT POLE
98	W5-52L(3)	--	18	x	54	6.75	1	1	--	1	--	4' MOUNTING HEIGHT
99	W5-52R(3)	--	18	x	54	6.75	1	1	--	1	--	4' MOUNTING HEIGHT
100	J2-2(3)	--	72	x	81	40.50	1	1	--	1	--	--
	M3-1		30	x	15							
	M1-5A	--	36	x	36							
	M5-2L	--	30	x	30							
	M3-2		30	x	15							
	M1-6		36	x	36							
	M6-1	--	30	x	30							
101	W3-3(2)	--	36	x	36	9.00	1	1	--	1	--	--
102	W3-3(2)	--	36	x	36	9.00	1	1	--	1	--	--
103	J3-1(3)	--	36	x	81	20.25	1	1	--	1	--	--
	M3-1		30	x	15							
	M1-5A	--	36	x	36							
	M5-2L	--	30	x	30							
104	M2-1		--	x	--	--	1	--	--	--	--	--
105	R3-55L(3)	--	36	x	48	12.00	--	--	--	1	--	--
106	R4-7(3)	--	36	x	48	12.00	--	--	--	1	--	--
107	W5-52L(3)	--	18	x	54	6.75	1	1	--	1	--	4' MOUNTING HEIGHT
108	W5-52R(3)	--	18	x	54	6.75	1	1	--	1	--	4' MOUNTING HEIGHT
109	R2-1(3)	SPEED LIMIT 45	36	x	48	12.00	1	1	--	1	--	--
110	R2-1(3)	SPEED LIMIT 45	36	x	48	12.00	1	--	--	--	--	MOUNT ON LIGHT POLE
111	J3-1	--	--	x	--	--	1	1	--	--	--	--
	M3-1		--	x	--							
	M1-5A	--	--	x	--							
	M6-2	--	--	x	--							

3

SIGN NO.	SIGN CODE	SIGN MESSAGE	SIGN SIZE W [IN.]	x	H [IN.]	637.0202 SIGNS REFLC TYPE II [SF]	638.2602 REM SIGNS TYPE II [EA]	638.3000 REM SMALL SIGN SUPPORT [EA]	638.2102 MOVE SIGNS TYPE II [EA]	634.0616 WOOD POSTS 4"X 6"x16' [EA]	MOUNT ON SAME POST AS SIGN #	REMARKS
112	R3-56(2)	--	24	x	30	5.00	--	--	--	1	--	--
113	W12-1D(2)	--	24	x	24	4.00	1	1	--	1	--	2' MOUNTING HEIGHT
114	R1-1F(3)	--	36	x	36	7.46	1	--	--	--	--	MOUNT ON SIGNAL POLE
115	R1-1F(3)	--	36	x	36	7.46	1	--	--	--	--	MOUNT ON SIGNAL POLE
116	R1-1F(3)	--	36	x	36	7.46	1	--	--	--	--	MOUNT ON SIGNAL POLE
117	R1-1(3)	--	36	x	36	7.46	1	1	--	1	--	--
118	R1-1F(3)	--	36	x	36	7.46	1	--	--	--	--	MOUNT ON SIGNAL POLE
119	R1-1F(3)	--	36	x	36	7.46	1	--	--	--	--	MOUNT ON SIGNAL POLE
120	R1-1F(3)	--	36	x	36	7.46	1	--	--	--	--	MOUNT ON SIGNAL POLE
121	R4-7(2)	--	24	x	30	5.00	1	--	--	--	--	MOUNT ON SIGNAL POLE
122	R6-2L(2)	--	24	x	30	5.00	--	--	--	1	--	--
123	R4-7(3)	--	36	x	48	12.00	1	--	--	--	--	MOUNT ON SIGNAL POLE
124	R5-1(3)	--	36	x	36	9.00	1	--	--	--	--	MOUNT ON SIGNAL POLE
125	R5-1(3)	--	36	x	36	9.00	1	--	--	--	--	MOUNT ON SIGNAL POLE
126	R1-1F(3)	--	36	x	36	7.46	1	--	--	--	--	MOUNT ON SIGNAL POLE
127	R1-1F(3)	--	36	x	36	7.46	1	--	--	--	--	MOUNT ON SIGNAL POLE
128	R1-1F(3)	--	36	x	36	7.46	1	--	--	--	--	MOUNT ON SIGNAL POLE
129	W12-1D(2)	--	24	x	24	4.00	1	1	--	1	--	2' MOUNTING HEIGHT
130	J3-1(2)	--	24	x	57	9.50	1	--	--	1	--	--
	M3-1		24	x	12							
	M1-5A	--	24	x	24							
	M6-2	--	21	x	21							
131	R1-1(3)	--	36	x	36	7.46	1	1	--	1	--	--
132	R4-7(2)	--	24	x	30	5.00	1	--	--	--	--	MOUNT ON SIGNAL POLE
133	R1-1F(3)	--	36	x	36	7.46	1	--	--	--	--	MOUNT ON SIGNAL POLE
134	R1-1F(3)	--	36	x	36	7.46	1	--	--	--	--	MOUNT ON SIGNAL POLE
135	R4-7(3)	--	36	x	48	12.00	1	--	--	--	--	MOUNT ON SIGNAL POLE
136	R1-1	--	--	x	--	--	1	1	--	--	--	--
	R1-2(2)	--	36	x	31	3.88	--	--	--	1	--	--
137	J3-1(2)	--	24	x	57	9.50	1	--	--	--	--	MOUNT ABOVE SIGNAL
	M3-2		24	x	12							
	M1-6	--	24	x	24							
	M6-1	--	21	x	21							
138	J3-1(2)	--	24	x	57	9.50	1	1	--	1	--	--
	M3-4		24	x	12							
	M1-6	--	24	x	24							
	M6-2	--	21	x	21							

3

SIGN NO.	SIGN CODE	SIGN MESSAGE	SIGN SIZE W [IN.]	x	H [IN.]	637.0202 SIGNS REFLC TYPE II [SF]	638.2602 REM SIGNS TYPE II [EA]	638.3000 REM SMALL SIGN SUPPORT [EA]	638.2102 MOVE SIGNS TYPE II [EA]	634.0616 WOOD POSTS 4"X 6"x16' [EA]	MOUNT ON SAME POST AS SIGN #	REMARKS
139	W12-1D(2)	--	24	x	24	4.00	--	--	--	1	--	2' MOUNTING HEIGHT
140	R6-2L(2)	--	24	x	30	5.00	--	--	--	1	--	--
141	R2-1(3)	SPEED LIMIT 45	36	x	48	12.00	1	1	--	1	--	--
142	R2-1(3)	SPEED LIMIT 45	36	x	48	12.00	1	--	--	1	--	--
143	--	TRUCK ROUTE [A]	--	x	--	--	--	--	1	1	--	--
144	J4-1(3)	--	36	x	51	12.75	1	--	--	--	--	MOUNT ON LIGHT POLE
	M3-4		30	x	15							
	M1-6		36	x	36							
145	R2-1(3)	SPEED LIMIT 45	36	x	48	12.00	1	1	--	1	--	--
146	R2-1(3)	SPEED LIMIT 45	36	x	48	12.00	1	--	--	--	--	MOUNT ON LIGHT POLE
147	R3-55L(3)	--	36	x	48	12.00	--	--	--	1	--	--
148	R4-7(3)	--	36	x	48	12.00	--	--	--	1	--	--
149	J3-1(3)	--	36	x	81	20.25	1	1	--	1	--	--
	M3-4		30	x	15							
	M1-6	--	36	x	36							
	M6-1	--	30	x	30							
150	J3-1(3)	--	36	x	81	20.25	--	--	--	1	--	--
	M3-4		30	x	15							
	M1-6	--	36	x	36							
	M6-1	--	30	x	30							
151	J3-1(3)	--	36	x	81	20.25	1	1	--	1	--	--
	M3-1		30	x	15							
	M1-5A	--	36	x	36							
	M6-2	--	30	x	30							
152	R3-56(2)	--	24	x	30	5.00	--	--	--	1	--	--
153	R4-7(3)	--	36	x	48	12.00	--	--	--	1	--	--
154	R2-1(3)	SPEED LIMIT 45	36	x	48	12.00	1	1	--	1	--	--
155	R2-1(3)	SPEED LIMIT 45	36	x	48	12.00	1	--	--	--	--	MOUNT ON LIGHT POLE
156	R2-1(3)	SPEED LIMIT 45	36	x	48	12.00	1	1	--	1	--	--
157	R2-1(3)	SPEED LIMIT 45	36	x	48	12.00	1	--	--	--	--	MOUNT ON LIGHT POLE
158	J1-1(3)	--	36	x	57	14.25	1	1	--	1	--	--
	M2-1	--	30	x	21	--	--	--	--	--	--	--
	M1-5A	--	36	x	36	--	--	--	--	--	--	--
159	J1-1(3)	--	36	x	57	14.25	1	--	--	--	--	MOUNT ON LIGHT POLE
	M2-1	--	30	x	21	--	--	--	--	--	--	--
	M1-5A	--	36	x	36	--	--	--	--	--	--	--

3

SIGN NO.	SIGN CODE	SIGN MESSAGE	SIGN SIZE W [IN.]	x	H [IN.]	637.0202 SIGNS REFLC TYPE II [SF]	638.2602 REM SIGNS TYPE II [EA]	638.3000 REM SMALL SIGN SUPPORT [EA]	638.2102 MOVE SIGNS TYPE II [EA]	634.0616 WOOD POSTS 4"X 6"x16' [EA]	MOUNT ON SAME POST AS SIGN #	REMARKS
160	J2-2(3)	--	72	x	81	40.50	1	1	--	1	--	--
	M3-4		30	x	15							
	M1-6		36	x	36							
	M6-1	--	30	x	30							
	M3-1		30	x	15							
	M1-5A	--	36	x	36							
	M5-2R	--	30	x	30							
161	J2-2(3)	--	72	x	81	40.50	1	1	--	1	--	--
	M3-4		30	x	15							
	M1-6		36	x	36							
	M6-1	--	30	x	30							
	M3-1		30	x	15							
	M1-5A	--	36	x	36							
	M5-2R	--	30	x	30							
162	M1-94	107TH STREET	96	x	21	14.00	1	--	--	--	#163	--
163	D1-1	[A] MENOMONEE FALLS	144	x	21	21.00	1	2	--	2	--	--
164	JV3-1(3)	--	36	x	117	29.25	1	--	--	--	--	MOUNT ON LIGHT POLE
	M4-5	--	30	x	15							
	M1-4		36	x	36							
	M1-4		36	x	36							
	M6-1	--	30	x	30							
165	W3-3(2)	--	36	x	36	9.00	1	1	--	1	--	--
166	W3-3(2)	--	36	x	36	9.00	1	1	--	1	--	--
167	R4-7(3)	--	36	x	48	12.00	1	1	--	1	--	--
168	R4-7(3)	--	36	x	48	12.00	1	1	--	1	--	--
169	S1-1(2)	--	36	x	36	6.75	1	--	--	--	--	MOUNT ON LIGHT POLE
170	WF16-9(3)	--	36	x	14	3.50	1	--	--	--	#169	--
171	S1-1(2)	--	36	x	36	6.75	1	1	--	1	--	--
172	WF16-9(3)	--	36	x	14	3.50	1	--	--	--	#171	--
173	R1-1(3)	--	36	x	36	7.46	1	1	--	1	--	--
174	R2-1	SPEED LIMIT 45	--	x	--	--	1	--	--	--	--	--
175	R2-1	SPEED LIMIT 45	--	x	--	--	1	1	--	--	--	--
176	M1-94	91TH STREET	72	x	15	7.50	1	--	--	--	--	--
177	R7-1D(2)	--	18	x	24	3.00	1	--	--	--	--	MOUNT ON SIGNAL POLE
178	R1-1F(3)	--	36	x	36	7.46	1	--	--	--	--	MOUNT ON SIGNAL POLE
179	R1-1F(3)	--	36	x	36	7.46	1	--	--	--	--	MOUNT ON SIGNAL POLE

3

SIGN NO.	SIGN CODE	SIGN MESSAGE	SIGN SIZE W [IN.]	x	H [IN.]	637.0202 SIGNS REFLC TYPE II [SF]	638.2602 REM SIGNS TYPE II [EA]	638.3000 REM SMALL SIGN SUPPORT [EA]	638.2102 MOVE SIGNS TYPE II [EA]	634.0616 WOOD POSTS 4"X 6"x16' [EA]	MOUNT ON SAME POST AS SIGN #	REMARKS
180	R4-7(2)	--	24	x	30	5.00	1	--	--	--	--	MOUNT ON SIGNAL POLE
181	R1-1F(3)	--	36	x	36	7.46	1	--	--	--	--	MOUNT ON SIGNAL POLE
182	R1-1F(3)	--	36	x	36	7.46	1	--	--	--	--	MOUNT ON SIGNAL POLE
183	R7-1D(2)	--	18	x	24	3.00	1	--	--	--	--	MOUNT ON BASE OF UPRIGHT
184	R6-2L(2)	--	18	x	24	3.00	--	--	--	--	--	MOUNT ON BASE OF UPRIGHT
185	R1-1F(3)	--	36	x	36	7.46	1	--	--	--	--	MOUNT ON SIGNAL POLE
186	R1-1F(3)	--	36	x	36	7.46	1	--	--	--	--	MOUNT ON SIGNAL POLE
187	R4-7(2)	--	24	x	30	5.00	1	--	--	--	--	MOUNT ON SIGNAL POLE
188	R4-7(2)	--	24	x	30	5.00	1	--	--	--	--	MOUNT ON SIGNAL POLE
189	R4-7(2)	--	24	x	30	5.00	1	--	--	--	--	MOUNT ON SIGNAL POLE
190	R6-2L(2)	--	24	x	30	5.00	--	--	--	1	--	--
191	R1-1F(3)	--	36	x	36	7.46	1	--	--	--	--	MOUNT ON SIGNAL POLE
192	R1-1F(3)	--	36	x	36	7.46	1	--	--	--	--	MOUNT ON SIGNAL POLE
193	R7-1D(2)	--	18	x	24	3.00	1	--	--	--	--	MOUNT ON SIGNAL POLE
194	J4-1(3)	--	36	x	51	12.75	1	--	--	1	--	--
	M3-4		30	x	15							
	M1-6		36	x	36							
195	R2-1(2)	SPEED LIMIT 40	24	x	30	5.00	1	1	--	1	--	--
196	R3-4(2)	NO U TURN	24	x	24	4.00	1	--	--	--	#195	--
197	R4-7(3)	--	36	x	48	12.00	--	--	--	1	--	SHEET 6
198	R4-7(3)	--	36	x	48	12.00	--	--	--	1	--	SHEET 6
199	R9-3B(2)	--	18	x	12	1.5	--	--	--	--	--	MOUNT UNDER SIGN #206
200	R9-3B(2) MOD	--	18	x	12	1.5	--	--	--	--	--	MOUNT UNDER SIGN #205
												ARROW LEFT INSTEAD OF RIGHT
201	NOT USED	--	--	x	--	--	--	--	--	--	--	--
202	NOT USED	--	--	x	--	--	--	--	--	--	--	--
203	NOT USED	--	--	x	--	--	--	--	--	--	--	--
204	NOT USED	--	--	x	--	--	--	--	--	--	--	--
205	R9-3A(2)	--	24	x	24	4	--	--	--	1	--	--
206	R9-3A(2)	--	24	x	24	4	--	--	--	1	--	--
207	R9-3A(2)	--	24	x	24	4	--	--	--	1	--	--
208	R9-3B(2)	--	18	x	12	1.5	--	--	--	--	--	MOUNT UNDER SIGN #207
	TOTALS					1808.44	165	75	3	109	--	

BENCH MARKS

NO.	STATION	DESCRIPTION	ELEV.
4851	124+30	UPPER FLN 6 BOLT HYDRANT, 67.2'LT	753.080

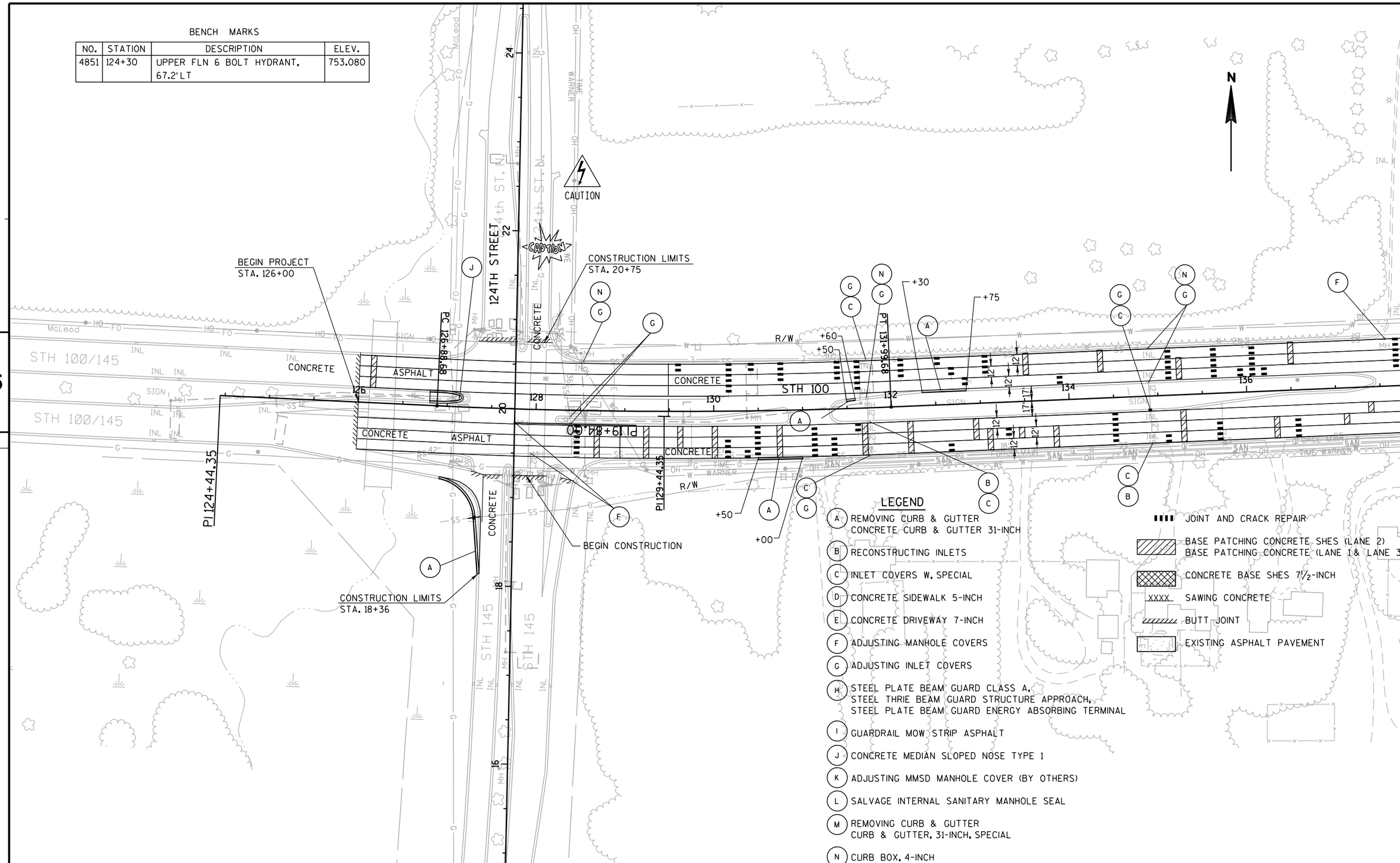

PROJECT NO: 2150-05-70	HWY: STH 100	COUNTY: MILWAUKEE	PLAN SHEET	SHEET E

FILE NAME : j:\projects\D2_215005100\051201_pd.dgn PLOT DATE : 28-JAN-2010 13:29 PLOT BY : dotmll PLOT NAME : PLOT SCALE : 100:1

WISDOT/CADDS SHEET 44

31" CURB AND GUTTER
SPECIAL NOT REQUIRED
BASED ON FIELD CONDITIONS

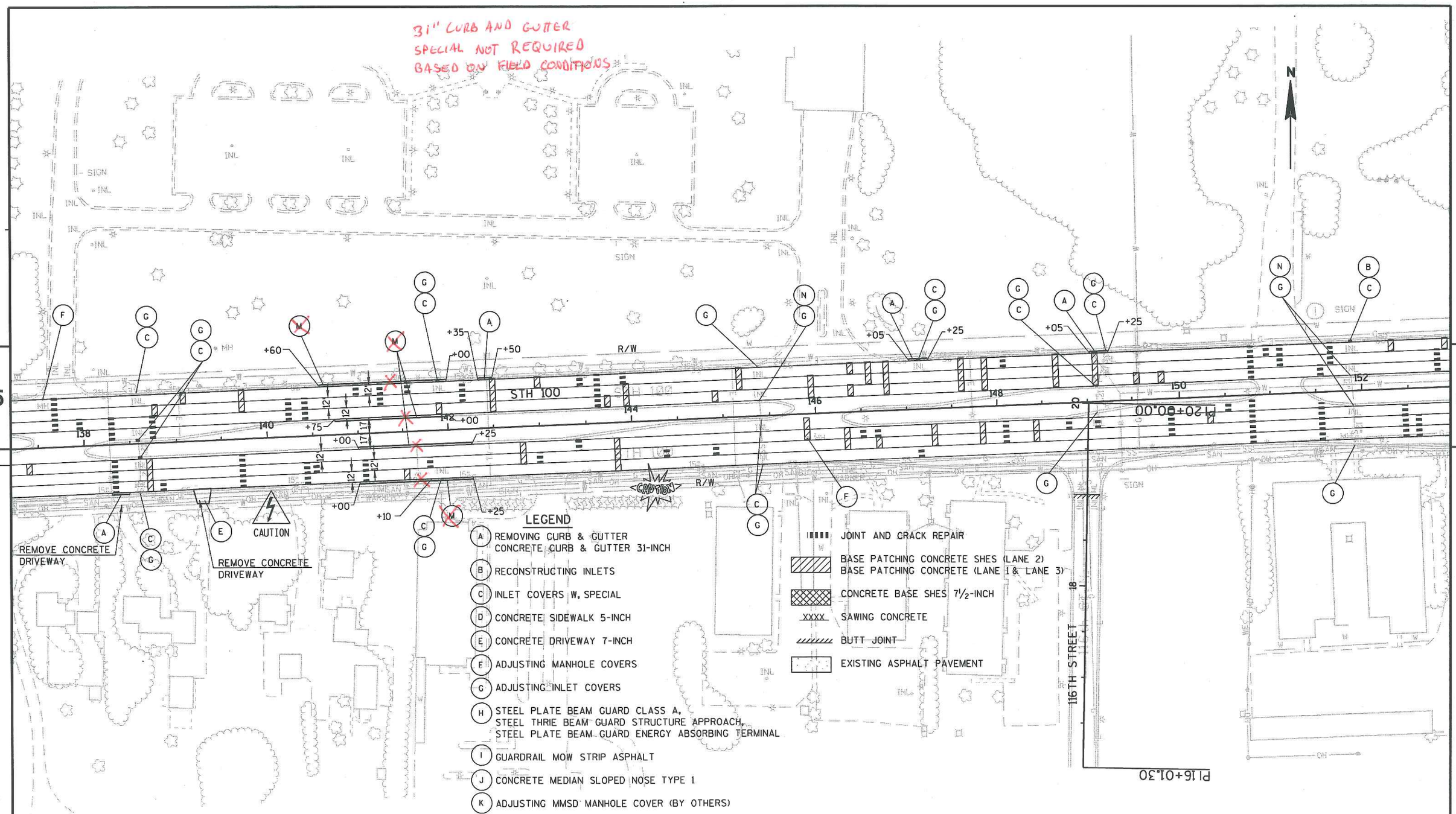

LEGEND

- (A) REMOVING CURB & GUTTER
  CONCRETE CURB & GUTTER 31-INCH
- (B) RECONSTRUCTING INLETS
- (C) INLET COVERS W, SPECIAL
- (D) CONCRETE SIDEWALK 5-INCH
- (E) CONCRETE DRIVEWAY 7-INCH
- (F) ADJUSTING MANHOLE COVERS
- (G) ADJUSTING INLET COVERS
- (H) STEEL PLATE BEAM GUARD CLASS A,
  STEEL THRIE BEAM GUARD STRUCTURE APPROACH,
  STEEL PLATE BEAM GUARD ENERGY ABSORBING TERMINAL
- (I) GUARDRAIL MOW STRIP ASPHALT
- (J) CONCRETE MEDIAN SLOPED NOSE TYPE 1
- (K) ADJUSTING MMSD MANHOLE COVER (BY OTHERS)
- (L) SALVAGE INTERNAL SANITARY MANHOLE SEAL
- (M) REMOVING CURB & GUTTER
  CURB & GUTTER, 31-INCH, SPECIAL
- (N) CURB BOX, 4-INCH

- JOINT AND CRACK REPAIR
- BASE PATCHING CONCRETE SHES (LANE 2)
  BASE PATCHING CONCRETE (LANE 1 & LANE 3)
- CONCRETE BASE SHES 7½-INCH
- XXXX SAWING CONCRETE
- BUTT JOINT
- EXISTING ASPHALT PAVEMENT

BENCH MARKS

NO.	STATION	DESCRIPTION	ELEV.
4852	141+77	UPPER FLN 5 BOLT HYDRANT, 58.9' LT	793.540

PROJECT NO: 2150-05-70	HWY: STH 100	COUNTY: MILWAUKEE	PLAN SHEET	SHEET	E

LEGEND

- (A) REMOVING CURB & GUTTER
  CONCRETE CURB & GUTTER 31-INCH
- (B) RECONSTRUCTING INLETS
- (C) INLET COVERS W. SPECIAL
- (D) CONCRETE SIDEWALK 5-INCH
- (E) CONCRETE DRIVEWAY 7-INCH
- (F) ADJUSTING MANHOLE COVERS
- (G) ADJUSTING INLET COVERS
- (H) STEEL PLATE BEAM GUARD CLASS A,
  STEEL THRIE BEAM GUARD STRUCTURE APPROACH,
  STEEL PLATE BEAM GUARD ENERGY ABSORBING TERMINAL
- (I) GUARDRAIL MOW STRIP ASPHALT
- (J) CONCRETE MEDIAN SLOPED NOSE TYPE 1
- (K) ADJUSTING MMSD MANHOLE COVER (BY OTHERS)
- (L) SALVAGE INTERNAL SANITARY MANHOLE SEAL
- (M) REMOVING CURB & GUTTER
  CURB & GUTTER, 31-INCH, SPECIAL
- (N) CURB BOX, 4-INCH

- JOINT AND CRACK REPAIR
- BASE PATCHING CONCRETE SHES (LANE 2)
  BASE PATCHING CONCRETE (LANE 1 & LANE 3)
- CONCRETE BASE SHES 7½-INCH
- XXXX SAWING CONCRETE
- BUTT JOINT
- EXISTING ASPHALT PAVEMENT

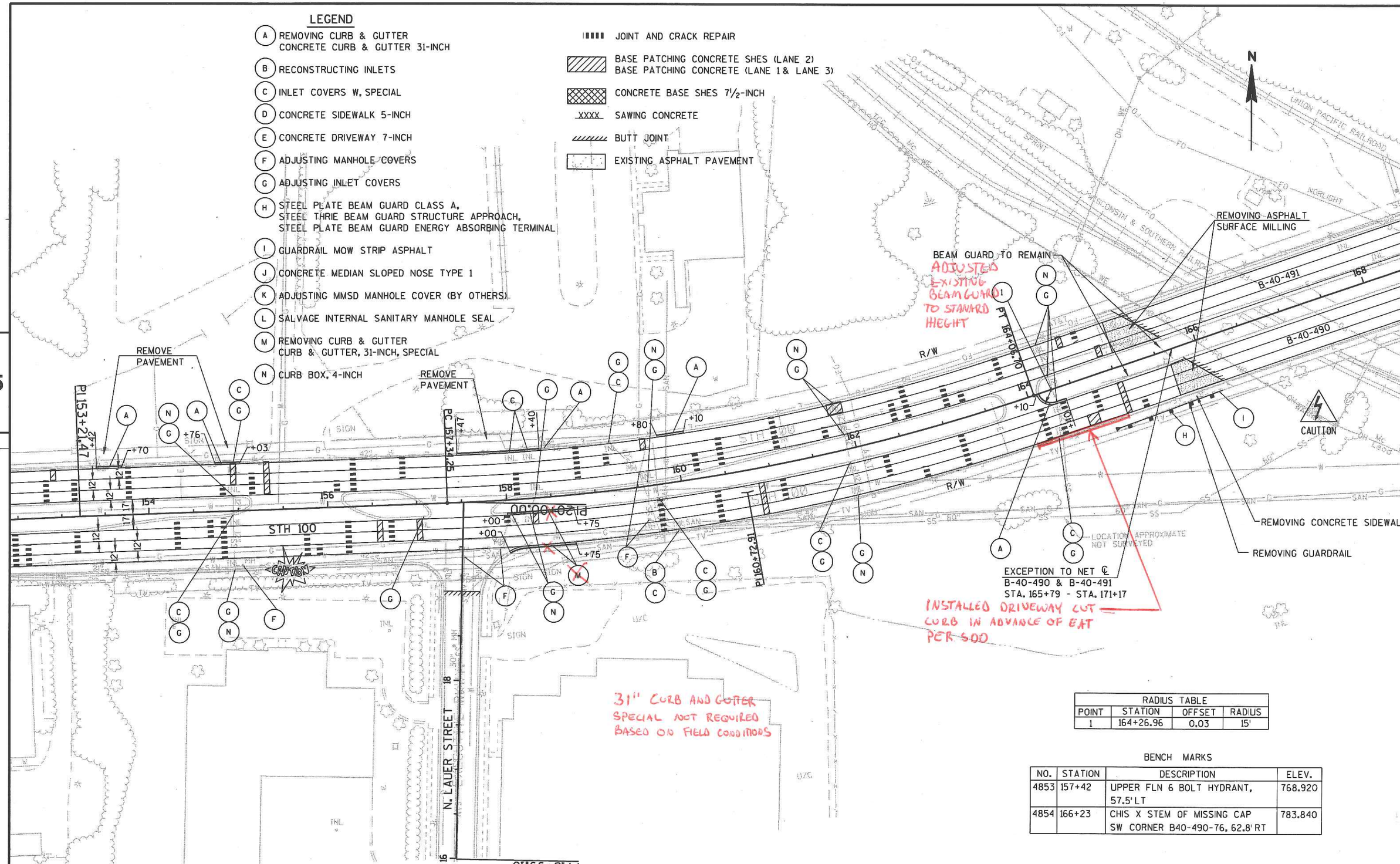

RADIUS TABLE			
POINT	STATION	OFFSET	RADIUS
1	164+26.96	0.03	15'

BENCH MARKS

NO.	STATION	DESCRIPTION	ELEV.
4853	157+42	UPPER FLN 6 BOLT HYDRANT, 57.5' LT	768.920
4854	166+23	CHIS X STEM OF MISSING CAP SW CORNER B40-490-76, 62.8' RT	783.840

PROJECT NO: 2150-05-70	HWY: STH 100	COUNTY: MILWAUKEE	PLAN SHEET	SHEET	E

FILE NAME : j:\projects\D2_215005100\051203_pd.dgn PLOT DATE : 09-MAR-2010 15:16 PLOT BY : dotshw PLOT NAME : PLOT SCALE : 100:1 WISDOT/CADDS SHEET 44

LEGEND

- (A) REMOVING CURB & GUTTER
  CONCRETE CURB & GUTTER 31-INCH
- (B) RECONSTRUCTING INLETS
- (C) INLET COVERS W, SPECIAL
- (D) CONCRETE SIDEWALK 5-INCH
- (E) CONCRETE DRIVEWAY 7-INCH
- (F) ADJUSTING MANHOLE COVERS
- (G) ADJUSTING INLET COVERS
- (H) STEEL PLATE BEAM GUARD CLASS A,
  STEEL THRIE BEAM GUARD STRUCTURE APPROACH,
  STEEL PLATE BEAM GUARD ENERGY ABSORBING TERMINAL
- (I) GUARDRAIL MOW STRIP ASPHALT
- (J) CONCRETE MEDIAN SLOPED NOSE TYPE 1
- (K) ADJUSTING MMSD MANHOLE COVER (BY OTHERS)
- (L) SALVAGE INTERNAL SANITARY MANHOLE SEAL
- (M) REMOVING CURB & GUTTER
  CURB & GUTTER, 31-INCH, SPECIAL
- (N) CURB BOX, 4-INCH

- JOINT AND CRACK REPAIR
- BASE PATCHING CONCRETE SHES (LANE 2)
  BASE PATCHING CONCRETE (LANE 1 & LANE 3)
- CONCRETE BASE SHES 7½-INCH
- SAWING CONCRETE
- BUTT JOINT
- EXISTING ASPHALT PAVEMENT

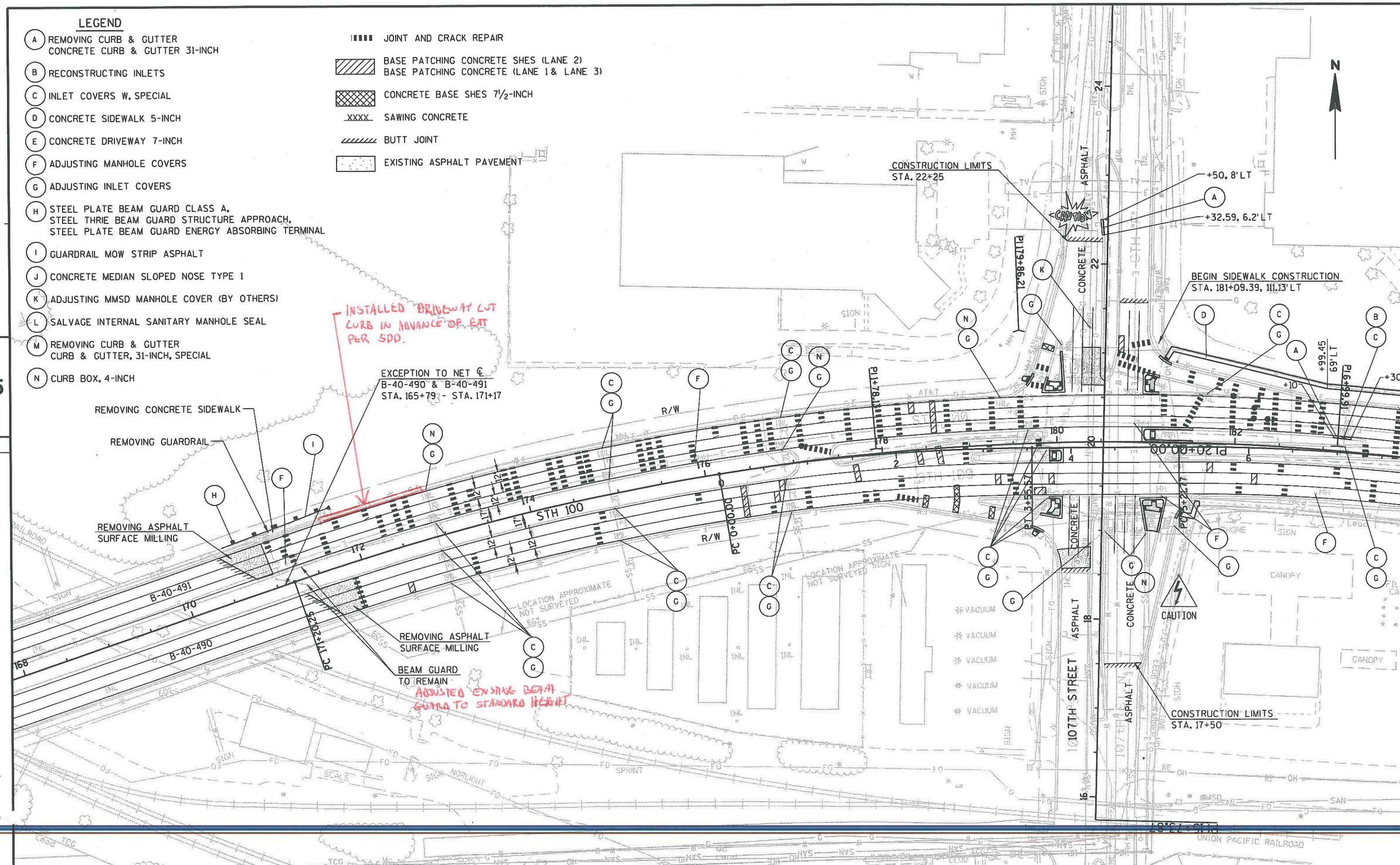

PROJECT NO: 2150-05-70	HWY: STH 100	COUNTY: MILWAUKEE	PLAN SHEET	SHEET	E

FILE NAME : j:\projects\D2_215005100\051204_pd.dgn PLOT DATE : 09-MAR-2010 15:16 PLOT BY : dotshw PLOT NAME : PLOT SCALE : 100:1 WISDOT/CADDS SHEET 44

31" SPECIAL CURB AND GUTTER NOT REQUIRED BASED ON FIELD CONDITIONS

N

STH 100

R/W

PT 188+07.85

PT 188+07.85

+96.25 63' RT

PC 195+95.69

BEGIN SIDEWALK CONSTRUCTION
STA. 188+95, 74' RT

CAUTION

LEGEND

- (A) REMOVING CURB & GUTTER
  CONCRETE CURB & GUTTER 31-INCH
- (B) RECONSTRUCTING INLETS
- (C) INLET COVERS, W. SPECIAL
- (D) CONCRETE SIDEWALK 5-INCH
- (E) CONCRETE DRIVEWAY 7-INCH
- (F) ADJUSTING MANHOLE COVERS
- (G) ADJUSTING INLET COVERS
- (H) STEEL PLATE BEAM GUARD CLASS A,
  STEEL THRIE BEAM GUARD STRUCTURE APPROACH,
  STEEL PLATE BEAM GUARD ENERGY ABSORBING TERMINAL
- (I) GUARDRAIL MOW STRIP ASPHALT
- (J) CONCRETE MEDIAN SLOPED NOSE TYPE 1
- (K) ADJUSTING MMSD MANHOLE COVER (BY OTHERS)
- (L) SALVAGE INTERNAL SANITARY MANHOLE SEAL
- (M) REMOVING CURB & GUTTER
  CURB & GUTTER, 31-INCH, SPECIAL
- (N) CURB BOX, 4-INCH

- JOINT AND CRACK REPAIR
- BASE PATCHING CONCRETE SHES (LANE 2)
  BASE PATCHING CONCRETE (LANE 1 & LANE 3)
- CONCRETE BASE SHES 7½-INCH
- SAWING CONCRETE
- BUTT JOINT
- EXISTING ASPHALT PAVEMENT

BENCH MARKS

NO.	STATION	DESCRIPTION	ELEV.
26259	189+91	UPPER FLN 6 BOLT HYDRANT, 57.4' RT	728.740
9515	185+85	DISK IN CONCRETE, 0'	729.221

PROJECT NO: 2150-05-70	HWY: STH 100	COUNTY: MILWAUKEE	PLAN SHEET	SHEET	E

FILE NAME : j:\projects\D2_215005100\051205_pd.dgn PLOT DATE : 28-JAN-2010 13:30 PLOT BY : dotmll PLOT NAME : PLOT SCALE : 100:1 WISDOT/CADDS SHEET 44

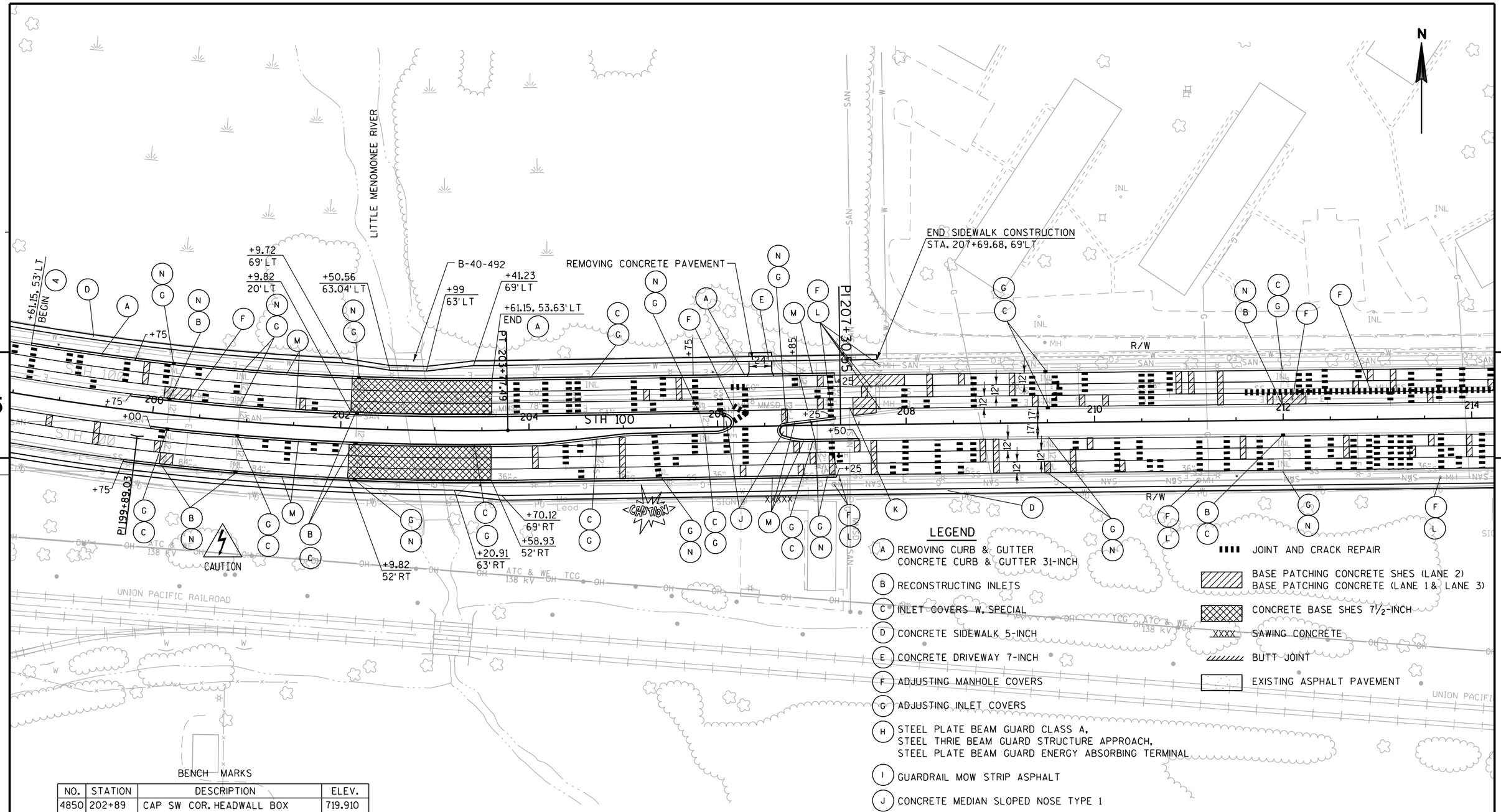

LEGEND

- (A) REMOVING CURB & GUTTER
  CONCRETE CURB & GUTTER 31-INCH
- (B) RECONSTRUCTING INLETS
- (C) INLET COVERS W, SPECIAL
- (D) CONCRETE SIDEWALK 5-INCH
- (E) CONCRETE DRIVEWAY 7-INCH
- (F) ADJUSTING MANHOLE COVERS
- (G) ADJUSTING INLET COVERS
- (H) STEEL PLATE BEAM GUARD CLASS A,
  STEEL THRIE BEAM GUARD STRUCTURE APPROACH,
  STEEL PLATE BEAM GUARD ENERGY ABSORBING TERMINAL
- (I) GUARDRAIL MOW STRIP ASPHALT
- (J) CONCRETE MEDIAN SLOPED NOSE TYPE 1
- (K) ADJUSTING MMSD MANHOLE COVER (BY OTHERS)
- (L) SALVAGE INTERNAL SANITARY MANHOLE SEAL
- (M) REMOVING CURB & GUTTER
  CURB & GUTTER, 31-INCH, SPECIAL
- (N) CURB BOX, 4-INCH

- JOINT AND CRACK REPAIR
- BASE PATCHING CONCRETE SHES (LANE 2)
  BASE PATCHING CONCRETE (LANE 1 & LANE 3)
- CONCRETE BASE SHES 7½-INCH
- XXXX SAWING CONCRETE
- BUTT JOINT
- EXISTING ASPHALT PAVEMENT

BENCH MARKS

NO.	STATION	DESCRIPTION	ELEV.
4850	202+89	CAP SW COR. HEADWALL BOX CULVERT, 94.8' RT	719.910
4855	211+50	CHIS X FLN 6 BOLT HYDRANT, 57.9' RT	733.960

PROJECT NO: 2150-05-70	HWY: STH 100	COUNTY: MILWAUKEE	PLAN SHEET	SHEET	E

31" CURB AND GUTTER NOT REQUIRED AT ALL LOCATIONS BASED ON FIELD CONDITIONS.

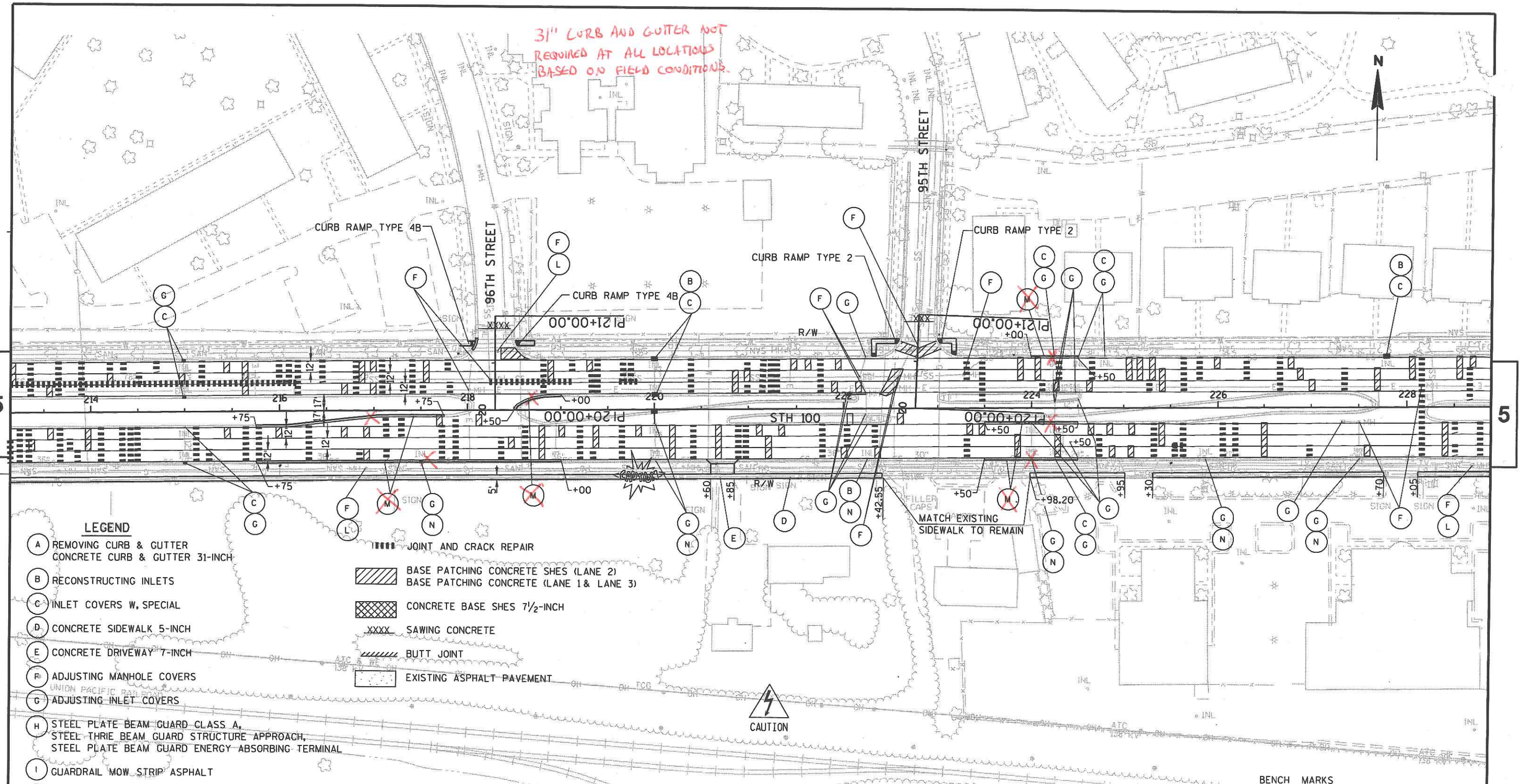

LEGEND

- (A) REMOVING CURB & GUTTER
  CONCRETE CURB & GUTTER 31-INCH
- (B) RECONSTRUCTING INLETS
- (C) INLET COVERS W, SPECIAL
- (D) CONCRETE SIDEWALK 5-INCH
- (E) CONCRETE DRIVEWAY 7-INCH
- (F) ADJUSTING MANHOLE COVERS
- (G) ADJUSTING INLET COVERS
- (H) STEEL PLATE BEAM GUARD CLASS A,
  STEEL THRIE BEAM GUARD STRUCTURE APPROACH,
  STEEL PLATE BEAM GUARD ENERGY ABSORBING TERMINAL
- (I) GUARDRAIL MOW STRIP ASPHALT
- (J) CONCRETE MEDIAN SLOPED NOSE TYPE 1
- (K) ADJUSTING MMSD MANHOLE COVER (BY OTHERS)
- (L) SALVAGE INTERNAL SANITARY MANHOLE SEAL
- (M) REMOVING CURB & GUTTER
  CURB & GUTTER, 31-INCH, SPECIAL
- (N) CURB BOX, 4-INCH

BENCH MARKS

NO.	STATION	DESCRIPTION	ELEV.
1150	220+66	CHIS X FLN 6 BOLT HYDRANT, 57.8' RT	742.420
1151	225+50	CHIS X LOWER FLN 6 BOLT HYDRANT, 58.9' RT	741.440

PROJECT NO: 2150-05-70	HWY: STH 100	COUNTY: MILWAUKEE	PLAN SHEET	SHEET	E

BENCH MARKS

NO.	STATION	DESCRIPTION	ELEV.
2136	234+33	NE CORNER NLY SQ. BOLT HYDRANT, 79' LT	759.710

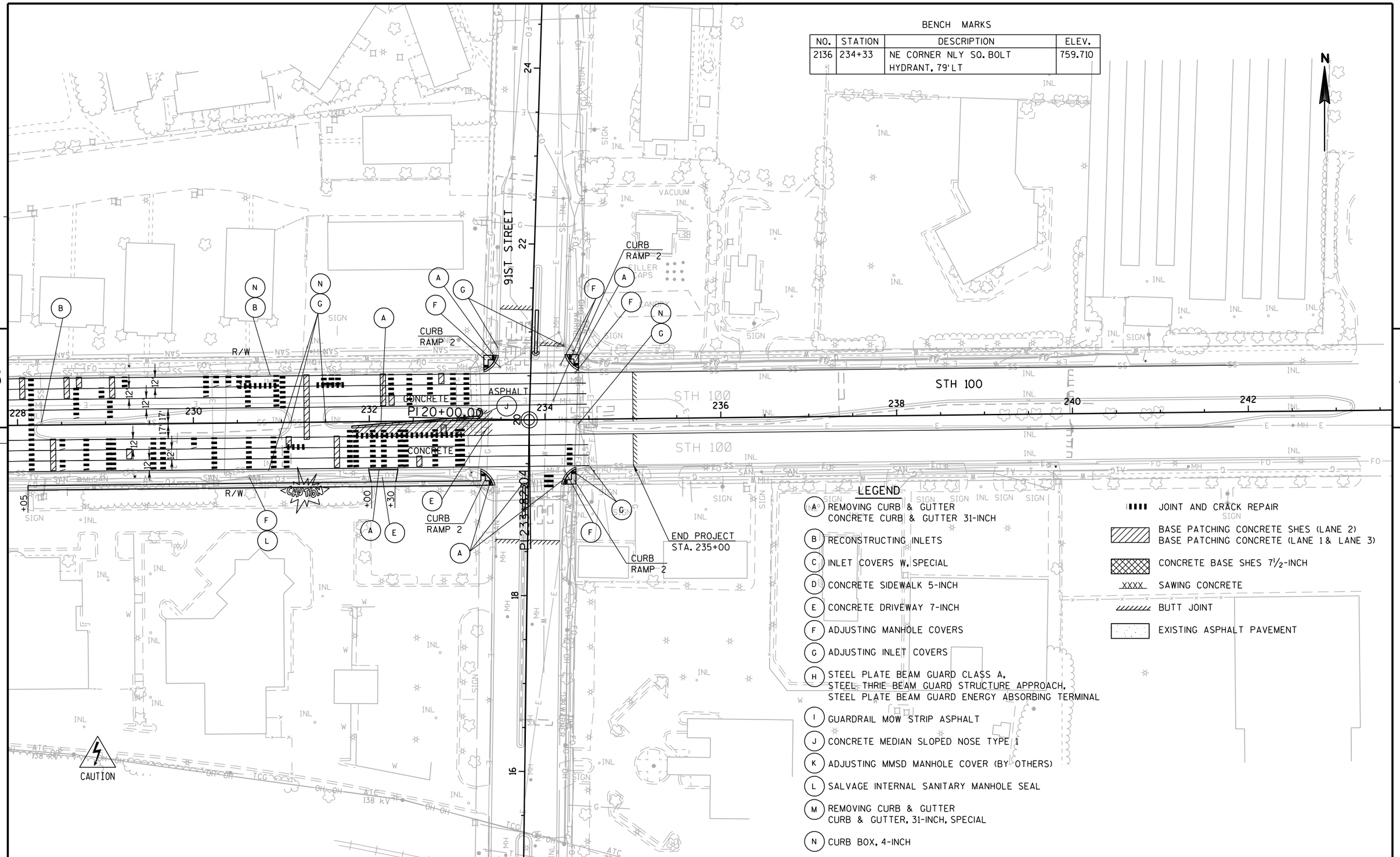

LEGEND

- (A) REMOVING CURB & GUTTER
  CONCRETE CURB & GUTTER 31-INCH
- (B) RECONSTRUCTING INLETS
- (C) INLET COVERS W, SPECIAL
- (D) CONCRETE SIDEWALK 5-INCH
- (E) CONCRETE DRIVEWAY 7-INCH
- (F) ADJUSTING MANHOLE COVERS
- (G) ADJUSTING INLET COVERS
- (H) STEEL PLATE BEAM GUARD CLASS A,
  STEEL THRIE BEAM GUARD STRUCTURE APPROACH,
  STEEL PLATE BEAM GUARD ENERGY ABSORBING TERMINAL
- (I) GUARDRAIL MOW STRIP ASPHALT
- (J) CONCRETE MEDIAN SLOPED NOSE TYPE 1
- (K) ADJUSTING MMSD MANHOLE COVER (BY OTHERS)
- (L) SALVAGE INTERNAL SANITARY MANHOLE SEAL
- (M) REMOVING CURB & GUTTER
  CURB & GUTTER, 31-INCH, SPECIAL
- (N) CURB BOX, 4-INCH

- JOINT AND CRACK REPAIR
- BASE PATCHING CONCRETE SHES (LANE 2)
  BASE PATCHING CONCRETE (LANE 1 & LANE 3)
- CONCRETE BASE SHES 7½-INCH
- XXXX SAWING CONCRETE
- BUTT JOINT
- EXISTING ASPHALT PAVEMENT

PROJECT NO: 2150-05-70	HWY: STH 100	COUNTY: MILWAUKEE	PLAN SHEET	SHEET	E

FILE NAME : j:\projects\D2_215005100\051208_pd.dgn PLOT DATE : 09-MAR-2010 15:17 PLOT BY : dotshw PLOT NAME : PLOT SCALE : 100:1

WISDOT/CADDS SHEET 44

Standard Detail Drawing List

08B6-4	MANHOLES TYPE 1
08D5-13A	CURB RAMPS TYPES 1 AND 1-A
08D5-13B	CURB RAMPS TYPES 2 AND 3
08D5-13C	CURB RAMPS TYPE 4A
08D5-13D	CURB RAMPS TYPE 4B
08D5-13E	CURB RAMPS TYPES 5, 6, 7A, 7B & 8
08M1-9	CONCRETE GUTTER, CURB AND GUTTER AND PAVEMENT TIES
08M3-5	MANHOLES, MANHOLE AND INLET COVERS
08E8-3	TYPICAL INSTALLATIONS OF EROSION BALES / TEMPORARY DITCH CHECKS
08E9-6	SILT FENCE
08E10-2	INLET PROTECTION TYPE A, B, C AND D
09B2-7	CONDUIT
09B4-9	PULL BOX
09C2-4	CONCRETE BASES, TYPES 1, 2 & 5
09C3-2	TRANSFORMER/PEDESTAL BASES
09C6-5	CONCRETE CONTROL CABINET BASE, TYPE 9, SPECIAL
09D1-3	CABINET SERVICE INSTALLATION (METER BREAKER PEDESTAL)
09D2-2	SIGNAL OR LIGHTING CONTROL CABINET
09E5-4	TRAFFIC SIGNAL STANDARD ORNAMENTAL BRACKET MOUNTINGS TYPICAL FOR 13 FT. OR 15 FT.
09E6-3	TRAFFIC SIGNAL STANDARD POLY BRACKET MOUNTINGS (TYPICAL) 13 FT. OR 15 FT.
09E8-2A	TYPE 9 POLE 15'-30' MONOTUBE ARM
09E8-2C	TYPE 12 POLE 35'-55' MONOTUBE ARM
09E8-3E	GENERAL NOTES AND HARDWARE DETAILS FOR TYPE 9, 10, 12 & 13 POLES WITH MONOTUBE ARMS
09E9-2	CONCRETE BASE TYPE 10
09E10-2	CONCRETE BASE TYPE 13
09F11-3	LOOP DETECTOR INSTALLED IN EXISTING CONCRETE PAVEMENT WITH NEW ASPHALTIC OVERLAY
09F12-3	LOOP DETECTOR INSTALLED IN EXISTING CONCRETE PAVEMENT
09F15-3A	LOOP DETECTOR INSTALLED IN BASE COURSE WITH PULL (SPLICE) BOX OFF ROADWAY (OPTION 1)
09F15-3B	LOOP DETECTOR INSTALLED IN BASE COURSE WITH PULL (SPLICE) BOX OFF ROADWAY (OPTION 2)
09G1-3A	SPAN WIRE TEMPORARY TRAFFIC SIGNAL
09G1-3B	SPAN WIRE TEMPORARY TRAFFIC SIGNAL
09G1-3C	SPAN WIRE TEMPORARY TRAFFIC SIGNAL
09G1-3D	SPAN WIRE TEMPORARY TRAFFIC SIGNAL
09G1-3E	SPAN WIRE TEMPORARY TRAFFIC SIGNAL
09G1-3F	SPAN WIRE TEMPORARY TRAFFIC SIGNAL
09G1-3G	SPAN WIRE TEMPORARY TRAFFIC SIGNAL
11B2-2	CONCRETE MEDIAN NOSE
13C14-3A	BASE PATCHING CONCRETE
13C14-3B	BASE PATCHING CONCRETE
13C14-3C	BASE PATCHING CONCRETE
13C15-4A	CONCRETE BASE
13C15-4B	CONCRETE BASE
14B7-11A	CONCRETE BARRIER TEMPORARY PRECAST, 12'-6"
14B7-11B	CONCRETE BARRIER TEMPORARY PRECAST, 12'-6"
14B7-11C	CONCRETE BARRIER TEMPORARY PRECAST, 12'-6"
14B7-11D	CONCRETE BARRIER TEMPORARY PRECAST, 12'-6"
14B15-6A	STEEL PLATE BEAM GUARD, CLASS "A" INSTALLATION & ELEMENTS
14B15-6B	STEEL PLATE BEAM GUARD, CLASS "A" INSTALLATION & ELEMENTS
14B15-6C	STEEL PLATE BEAM GUARD, CLASS "A", INSTALLATION & ELEMENTS
14B15-6D	STEEL PLATE BEAM GUARD, CLASS "A", MOW STRIP DETAIL
14B18-6A	STEEL PLATE BEAM GUARD, CLASS "A" (AT BRIDGES, OBSTACLES AND SIDEROADS/DRIVEWAYS)
14B20-7A	STEEL THRIE BEAM STRUCTURE APPROACH
14B20-6B	STEEL THRIE BEAM STRUCTURE APPROACH, CONNECTION TO SQUARE END AND VERTICAL FACED PARAPETS
14B20-6C	STEEL THRIE BEAM STRUCTURE APPROACH, CONNECTION TO SLOPED END PARAPETS
14B24-6A	STEEL PLATE BEAM GUARD ENERGY ABSORBING TERMINAL
14B24-6B	STEEL PLATE BEAM GUARD ENERGY ABSORBING TERMINAL
14B24-6C	STEEL PLATE BEAM GUARD ENERGY ABSORBING TERMINAL
15C3-1	BARRICADES AND SIGNS FOR SIDEROAD CLOSURES
15C7-10B	PAVEMENT MARKING WORDS
15C7-10D	PAVEMENT MARKING ARROWS
15C8-11A	PAVEMENT MARKING (MAINLINE)
15C8-10B	PAVEMENT MARKING (INTERSECTIONS)
15C8-11D	PAVEMENT MARKING (LEFT TURN LANE)
15C8-11E	PAVEMENT MARKING (ISLANDS, STOP LINE & CROSS WALK)
15C12-3	TRAFFIC CONTROL FOR LANE CLOSURE (SUITABLE FOR MOVING OPERATIONS)
15D3-1	TRAFFIC CONTROL, LANE CLOSURE, SPEEDS GREATER THAN 40 M.P.H. WITH BARRIER
15D20-1	TRAFFIC CONTROL, SINGLE LANE CLOSURE, NON-FREEWAY/EXPRESSWAY
15D21-1	TRAFFIC CONTROL, INTERSECTION WITHIN SINGLE LANE CLOSURE

6

Standard Detail Drawing List

15D22-1	TRAFFIC CONTROL, TWO LANE CLOSURE, NON-FREEWAY/EXPRESSWAY
15D23-1	TRAFFIC CONTROL, INTERSECTION WITHIN TWO LANE CLOSURE
15D30-1	TRAFFIC CONTROL, SIDEWALK CLOSURE

6

6

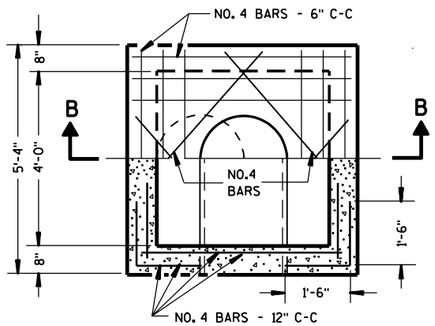

HALF SECTION A-A

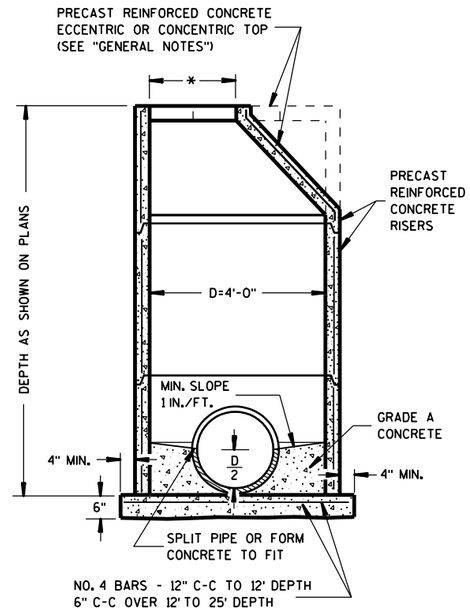

PRECAST REINFORCED CONCRETE

GENERAL NOTES

DETAILS OF CONSTRUCTION, MATERIALS AND WORKMANSHIP NOT SHOWN ON THIS DRAWING SHALL CONFORM TO THE PERTINENT REQUIREMENTS OF THE STANDARD SPECIFICATIONS AND THE APPLICABLE SPECIAL PROVISIONS.

DETAILED DRAWINGS FOR PROPOSED ALTERNATE DESIGNS FOR UNDERGROUND DRAINAGE STRUCTURES SHALL BE SUBMITTED TO THE ENGINEER FOR APPROVAL PROVIDING THAT SUCH ALTERNATE DESIGNS MAKE PROVISION FOR EQUIVALENT CAPACITY AND STRENGTH.

ALL DRAINAGE STRUCTURES ARE DESIGNATED ON THE PLANS AS "MANHOLES 1-C", "CATCH BASINS 1-B", "INLETS 3-H", ETC. THE FIRST DIGIT DESIGNATES THE MASONRY PORTION OF THE STRUCTURE, AND THE FOLLOWING LETTER DESIGNATES THE TYPE OF COVER TO BE USED TO COMPRISE THE COMPLETE UNIT.

PRECAST REINFORCED BASES SHALL BE PLACED ON A BED OF MATERIAL AT LEAST 6 INCHES IN DEPTH, WHICH MEETS THE REQUIREMENTS OF GRANULAR BACKFILL. THIS BEDDING SHALL BE COMPACTED AND PROVIDE UNIFORM SUPPORT FOR THE ENTIRE AREA OF THE BASE.

PRECAST REINFORCED CONE TOPS (ECCENTRIC OR CONCENTRIC) MAY BE USED ON CONCRETE BLOCK STRUCTURES. THE CONE TOPS SHALL BE INSTALLED ON A BED OF MORTAR.

ECCENTRIC CONE TOPS MAY BE USED ON ALL STRUCTURES, AND CONCENTRIC CONE TOPS SHALL BE USED ONLY ON STRUCTURES 5 FEET OR LESS IN DEPTH, UNLESS OTHERWISE DIRECTED BY THE ENGINEER.

STEPS CONFORMING TO AASHTO M 199 SHALL BE INSTALLED IN ALL STRUCTURES OVER 5 FEET IN DEPTH.

SOLID ALUMINUM STEPS SHALL HAVE A MINIMUM CROSS SECTIONAL DIMENSION OF 0.75 INCH. ALUMINUM SURFACES TO BE EMBEDDED IN CONCRETE SHALL BE GIVEN ONE COAT OF SUITABLE QUALITY PAINT, SUCH AS ZINC CHROMATE PRIMER CONFORMING TO FEDERAL SPECIFICATION TT-P-645 OR EQUIVALENT.

ALL BAR STEEL REINFORCEMENT SHALL BE EMBEDDED 2 INCHES CLEAR UNLESS OTHERWISE SHOWN OR NOTED.

PRECAST REINFORCED CONCRETE RISERS MAY BE PLACED WITH TONGUE UP OR DOWN.

ALL PRECAST INLET UNITS AND MANHOLES SHALL CONFORM TO THE PERTINENT REQUIREMENTS OF AASHTO DESIGNATION M 199.

* USE 2'-0" DIAMETER OPENING WITH TYPE "C", "L" AND "J" COVERS, OR 3'-0" DIAMETER WITH TYPE "K" AND "M" COVERS.

① 2 COURSES 6" BLOCK.

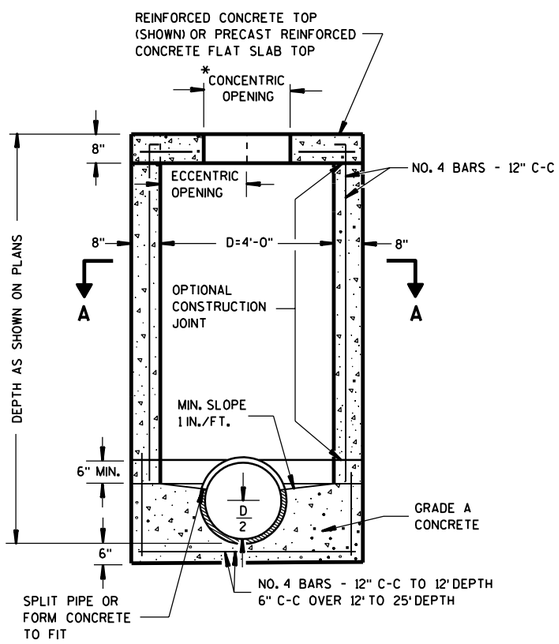

SECTION B-B
REINFORCED CONCRETE

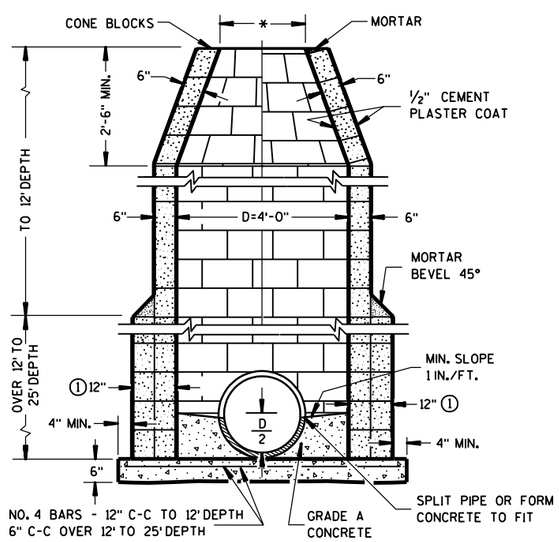

CONCRETE BLOCK

MANHOLES TYPE 1

6

6

S.D.D. 8 B 6-4

S.D.D. 8 B 6-4

MANHOLES TYPE I

STATE OF WISCONSIN
DEPARTMENT OF TRANSPORTATION

APPROVED
9/9/05
DATE
/S/ Jerry H. Zogg
ROADWAY STANDARDS DEVELOPMENT ENGINEER
FHWA

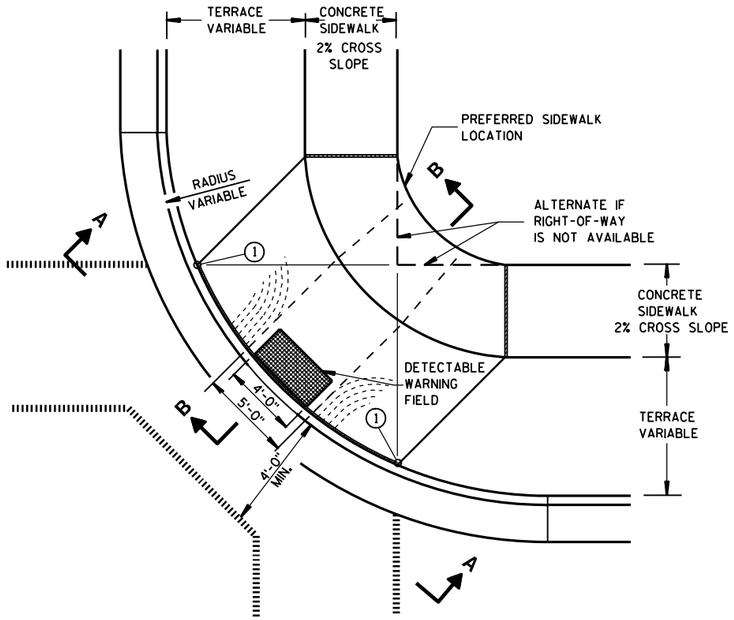

PLAN VIEW

TYPE 1 RAMP

(CENTER OF CORNER RADIUS)

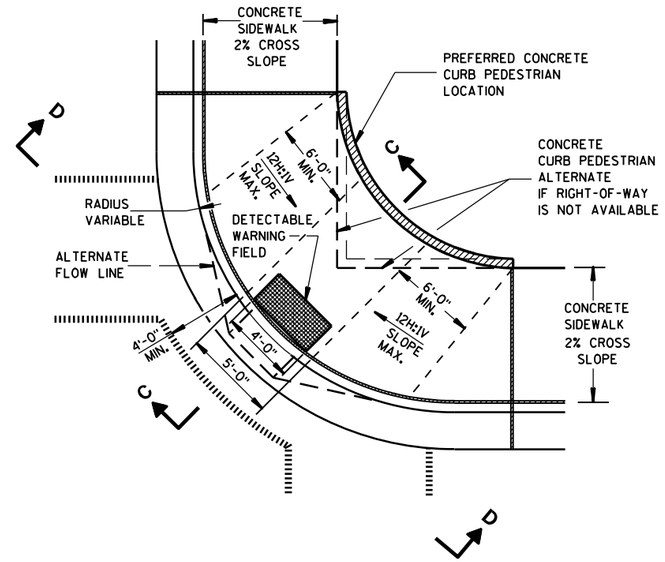

PLAN VIEW

TYPE 1-A RAMP

(NO TERRACE)

GENERAL NOTES

DETAILS OF CONSTRUCTION, MATERIALS AND WORKMANSHIP NOT SHOWN ON THIS DRAWING SHALL CONFORM TO THE PERTINENT REQUIREMENTS OF THE STANDARD SPECIFICATIONS AND THE APPLICABLE SPECIAL PROVISIONS.

RAMPS SHALL BE BUILT AT 12H:1V OR FLATTER. WHEN NECESSARY, THE SIDEWALK ELEVATION MAY BE LOWERED TO MEET THE HIGH POINT ON THE RAMP.

TYPE 1 RAMPS SHALL HAVE A NORMAL SIDEWALK APRON AND CURB ON BOTH SIDES OF RAMP.

DETECTABLE WARNING FIELD SHALL BE MEASURED AND PAID BY THE SQUARE FOOT AS "CURB RAMP DETECTABLE WARNING FIELD". THE CONCRETE PEDESTRIAN CURB, IF NEEDED, SHALL BE MEASURED AND PAID BY THE LINEAL FOOT AS "CONCRETE CURB PEDESTRIAN". CONCRETE SIDEWALK IN THE CURB RAMP AREA SHALL BE MEASURED AND PAID BY THE SQUARE FOOT AS CONCRETE SIDEWALK, INCLUDING THE AREA UNDER THE DETECTABLE WARNING FIELD.

SELECT CURB RAMP DETECTABLE WARNING FIELD MATERIALS AND DEVICES FROM THE DEPARTMENT'S APPROVED MATERIALS LIST. THE COLOR OF THE DETECTABLE WARNING FIELD IS SPECIFIED ELSEWHERE AND IS INCIDENTAL TO THE BID ITEM OF "CURB RAMP DETECTABLE WARNING FIELD".

SURFACE TEXTURE OF THE RAMP SHALL BE OBTAINED BY COARSE BROOMING TRANSVERSE TO THE SLOPE OF THE RAMP.

(1) THIS POINT IS AN EXTENSION OF OUTSIDE EDGE OF APPROACHING SIDEWALK WHERE IT MEETS THE BACK OF CONCRETE CURB.

(2) GRADE CHANGE BETWEEN GUTTER FLAG SLOPE AND THE CURB RAMP SLOPE SHALL NOT EXCEED 11%. PROVIDE DRAINAGE AWAY FROM CURB RAMP AT GUTTER FLAG INTERFACE.

LEGEND

- ½" EXPANSION JOINT-SIDEWALK
- CONTRACTION JOINT FIELD LOCATED
- PAVEMENT MARKING CROSSWALK (WHITE)
- ALTERNATIVE LAYOUT

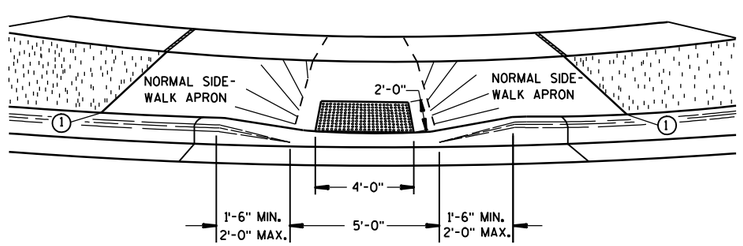

VIEW A-A

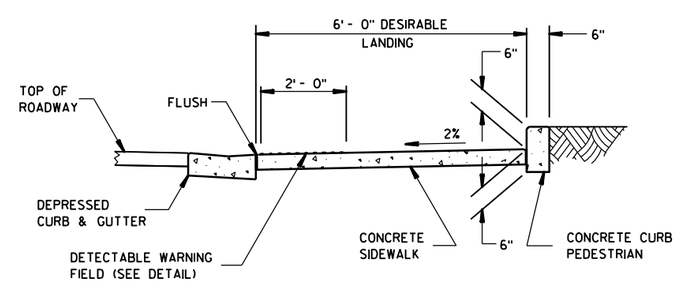

SECTION C-C

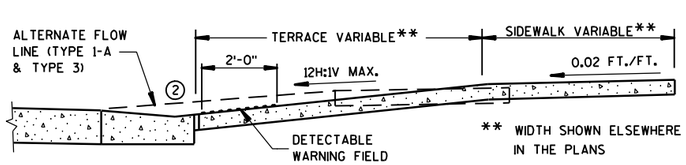

SECTION B-B

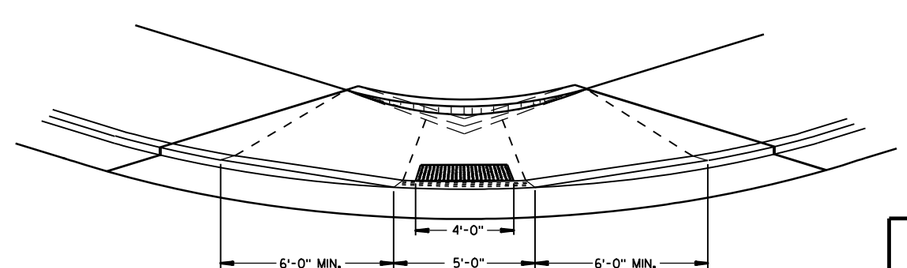

VIEW D-D

CURB RAMPS
TYPES 1 AND 1-A

STATE OF WISCONSIN
DEPARTMENT OF TRANSPORTATION

6

S.D.D. 8 D 5-13a

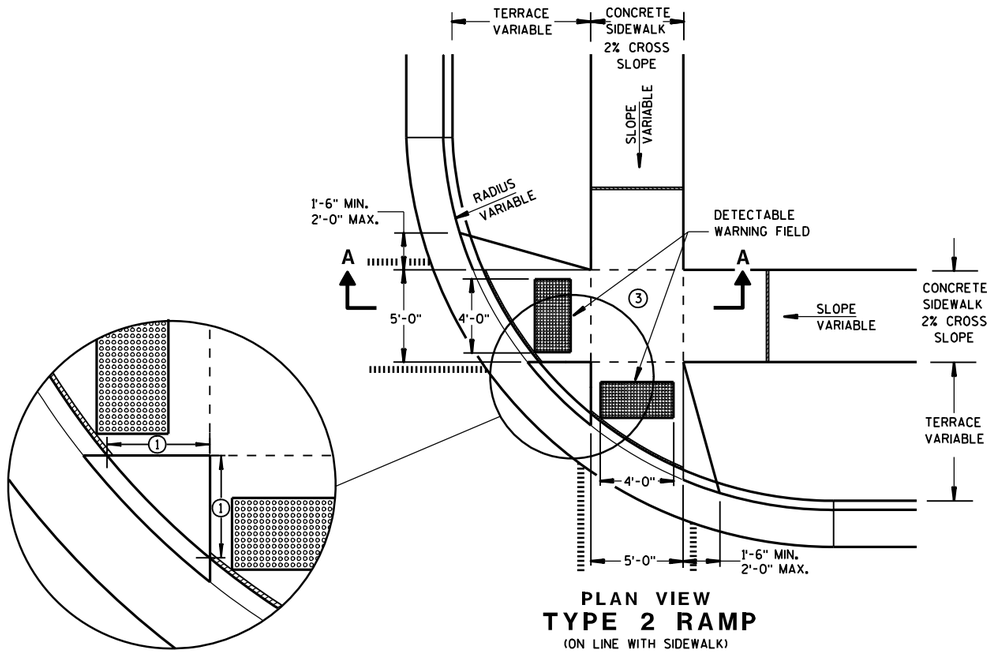

PLAN VIEW
TYPE 2 RAMP
(ON LINE WITH SIDEWALK)

GENERAL NOTES

USE THE TYPE 3 RAMP ONLY WHEN A TYPE 1 OR TYPE 2 CANNOT BE ACHIEVED BECAUSE OF FIELD CONDITIONS.

1. WHEN THIS DISTANCE IS LESS THAN 6'-0" IT MAY BE DIFFICULT TO ACHIEVE A 12H:1V SLOPE, OR FLATTER, ON THE RAMP. REDUCE CURB HEIGHT IN TRIANGLE AREA TO ACHIEVE 12H:1V SLOPE, OR FLATTER, ON RAMP. 2" MINIMUM CURB HEIGHT.

2. GRADE CHANGE BETWEEN GUTTER FLAG SLOPE AND THE CURB RAMP SLOPE SHALL NOT EXCEED 11%. PROVIDE DRAINAGE AWAY FROM CURB RAMP AT GUTTER FLAG INTERFACE.

3. PROVIDE LANDING AT TOP OF RAMP WITH NO MORE THAN 2% SLOPE IN ANY DIRECTION.

LEGEND

- ½" EXPANSION JOINT-SIDEWALK
- CONTRACTION JOINT FIELD LOCATED
- PAVEMENT MARKING CROSSWALK (WHITE)
- ALTERNATIVE LAYOUT

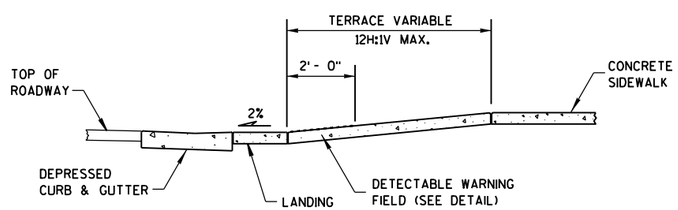

SECTION A-A

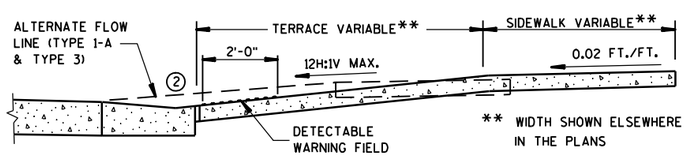

SECTION B-B

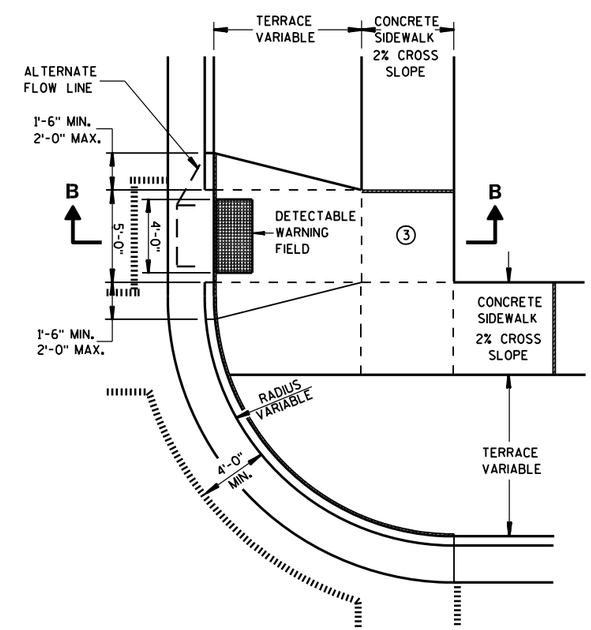

PLAN VIEW
TYPE 3 RAMP
(OUTSIDE OF CROSSWALK AREA)

CURB RAMPS
TYPES 2 AND 3

STATE OF WISCONSIN
DEPARTMENT OF TRANSPORTATION

6

S.D.D. 8 D 5-13b

6

S.D.D. 8 D 5-13b

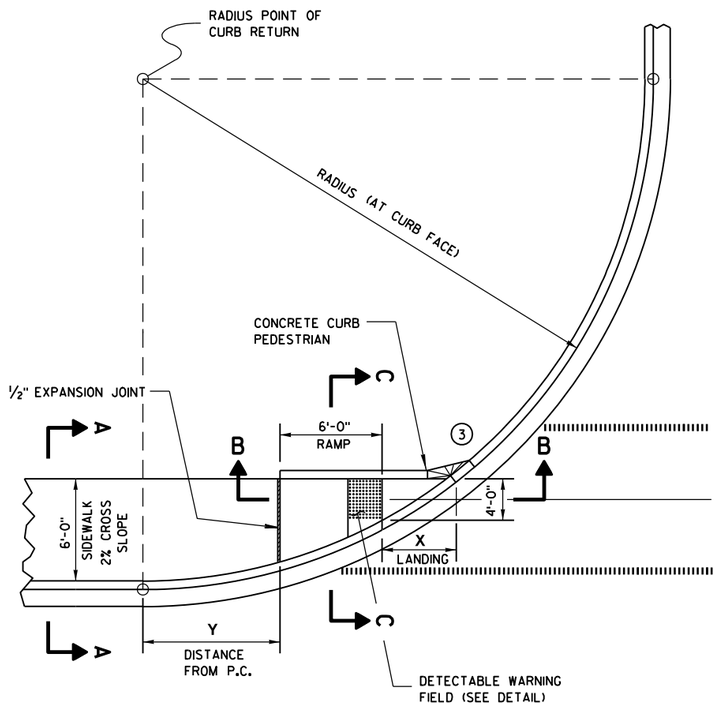

CURB RAMP TYPE 4A
PLAN VIEW

RADIUS (AT CURB FACE)	X	Y
20 FEET	6'-1¾"	2'-7¼"
30 FEET	7'-11¾"	4'-8¼"
40 FEET	9'-5¼"	6'-5"
50 FEET	10'-8¾"	7'-11¼"
60 FEET	11'-10¼"	9'-3½"

INTERMEDIATE RADII CAN BE INTERPOLATED

GENERAL NOTES

AVOID PLACING DRAINAGE STRUCTURES, JUNCTION BOXES OR OTHER OBSTRUCTIONS IN FRONT OF RAMP ACCESS AREAS.

RAMP SLOPES SHALL NOT BE STEEPER THAN 12:1.

SIDEWALK CROSS SLOPE SHALL NOT EXCEED 2%.

3 INSTALL TRANSITION NOSE. (INCIDENTAL TO OTHER PAY ITEMS.) DO NOT MARK TRANSITION NOSE.

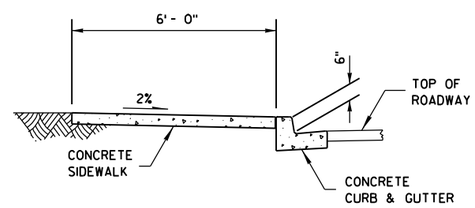

SECTION A-A

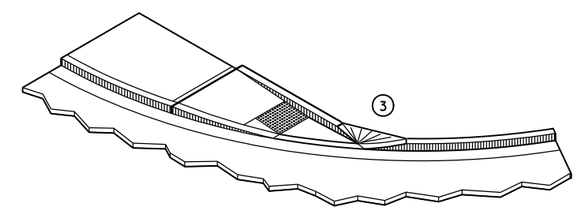

ISOMETRIC VIEW

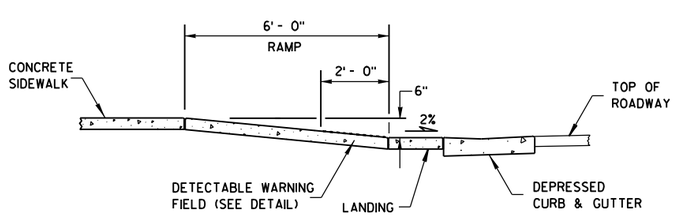

SECTION B-B

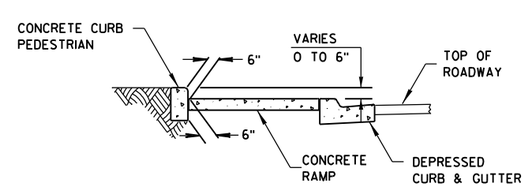

SECTION C-C

LEGEND

- ½" EXPANSION JOINT-SIDEWALK
- CONTRACTION JOINT FIELD LOCATED
- PAVEMENT MARKING CROSSWALK (WHITE)

CURB RAMPS
TYPE 4A

STATE OF WISCONSIN
DEPARTMENT OF TRANSPORTATION

6

S.D.D. 8 D 5-13c

6

S.D.D. 8 D 5-13c

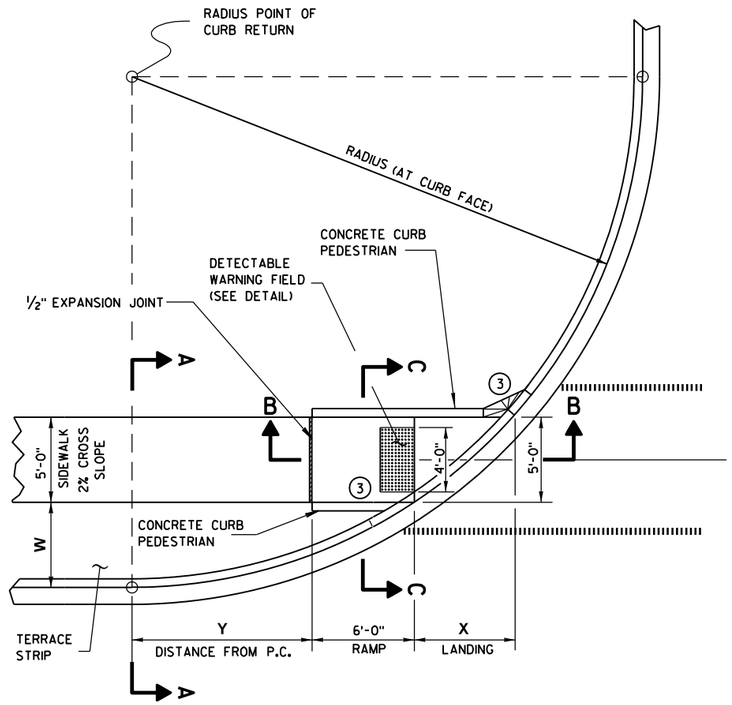

CURB RAMP TYPE 4B
PLAN VIEW

GENERAL NOTES

AVOID PLACING DRAINAGE STRUCTURES, JUNCTION BOXES OR OTHER OBSTRUCTIONS IN FRONT OF RAMP ACCESS AREAS.

RAMP SLOPES SHALL NOT BE STEEPER THAN 12:1.

SIDEWALK CROSS SLOPE SHALL NOT EXCEED 2%.

(3) INSTALL TRANSITION NOSE. (INCIDENTAL TO OTHER PAY ITEMS.) DO NOT MARK TRANSITION NOSE.

RADIUS (AT CURB FACE)	W = 3' - 0"		W = 4' - 0"		W = 5' - 0"		W = 6' - 0"		W = 7' - 0"	
	X	Y	X	Y	X	Y	X	Y	X	Y
20 FEET	5'-5½"	4'-6½"	4'-8½"	6'-0"	4'-1"	7'-2¾"	3'-7"	8'-3½"	3'-1½"	9'-2½"
30 FEET	7'-3¾"	7'-1"	6'-5½"	8'-11½"	5'-9¼"	10'-7"	5'-2½"	12'-0"	4'-8¾"	13'-3¼"
40 FEET	8'-9½"	9'-2½"	7'-10"	11'-5¼"	7'-1"	13'-4½"	6'-5¾"	15'-¾"	5'-11½"	16'-7¼"
50 FEET	10'-¾"	11'-¾"	9'-¼"	13'-7¼"	8'-2½"	15'-9½"	7'-6½"	17'-9"	6'-11¾"	19'-6¼"
60 FEET	11'-2½"	12'-8¾"	10'-¾"	15'-6½"	9'-2¼"	17'-11¾"	8'-5¾"	20'-1¾"	7'-10½"	22'-1½"
70 FEET	12'-2¾"	14'-3¼"	11'-¼"	17'-4"	10'-1"	19'-11¾"	9'-3¾"	22'-4¼"	8'-8¼"	24'-6¼"
80 FEET	13'-2"	15'-8½"	11'-10½"	18'-11¾"	10'-10¾"	21'-10"	10'-1"	24'-4¾"	9'-5"	26'-8¾"
90 FEET	14'- ½"	17'-½"	12'-8¼"	20'-6½"	11'-7¾"	23'-7"	10'-9¾"	26'-3¾"	10'-1¼"	28'-9½"
100 FEET	14'-10½"	18'-3¾"	13'-5½"	22'-0"	12'-4¼"	25'-2¾"	11'-5¾"	28'-1½"	10'-9"	30'-9"

INTERMEDIATE RADII CAN BE INTERPOLATED

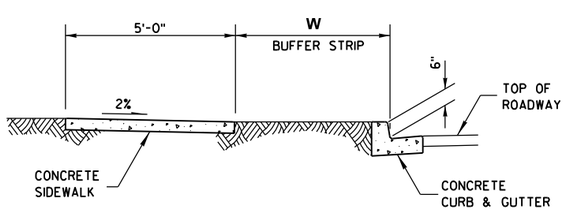

SECTION A-A

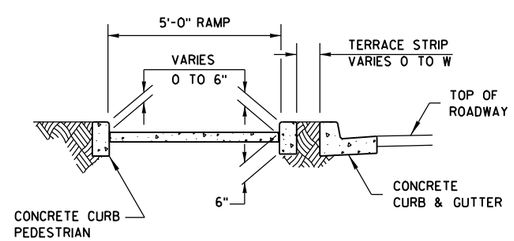

SECTION C-C

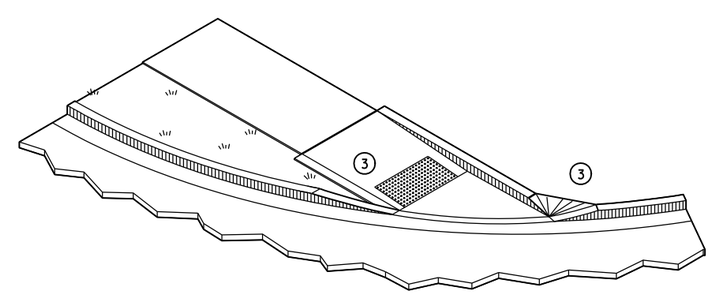

ISOMETRIC VIEW

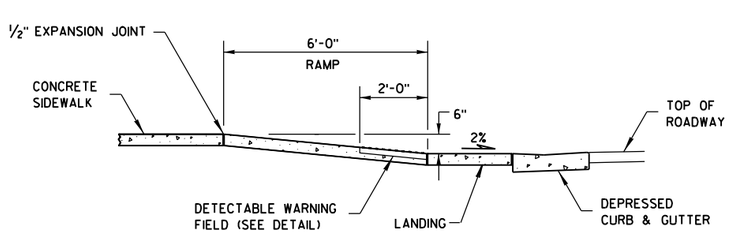

SECTION B-B

LEGEND

- 1/2" EXPANSION JOINT-SIDEWALK
- CONTRACTION JOINT FIELD LOCATED
- PAVEMENT MARKING CROSSWALK (WHITE)

CURB RAMPS
TYPE 4B

STATE OF WISCONSIN
DEPARTMENT OF TRANSPORTATION

6

S.D.D. 8 D 5-13d

6

S.D.D. 8 D 5-13d

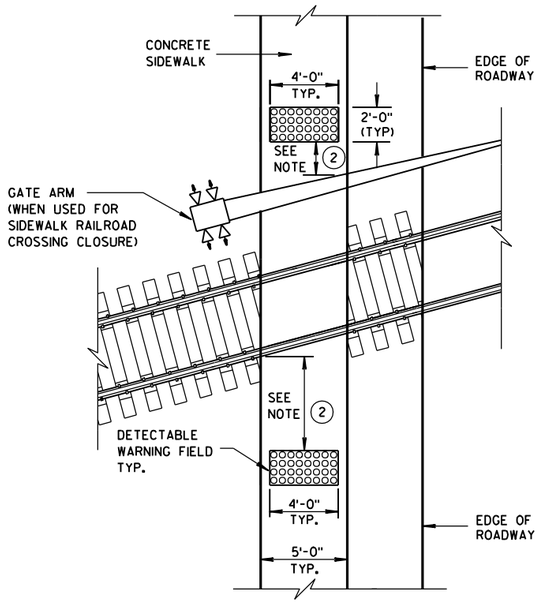

TYPE 8
DETECTABLE WARNINGS AT RAILROAD CROSSING

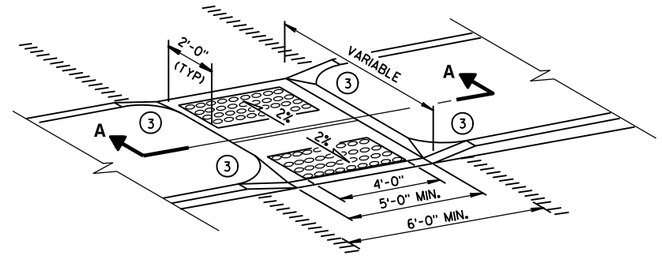

MEDIAN ISLAND
NON-ELEVATED CROSSING
TYPE 5

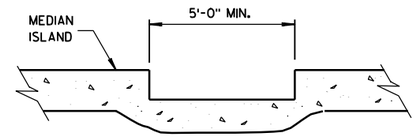

SECTION A-A

GENERAL NOTES

SIDEWALK CROSS SLOPE SHALL NOT EXCEED 2%.

1. SLOPE SIDEWALK TOWARD LANDING AS SHOWN WHERE THERE IS NO TERRACE OR WHERE THE TERRACE WIDTH IS LESS THAN 6 FEET WIDE.
2. THE EDGE OF THE DETECTABLE WARNING FIELD NEAREST TO A RAILROAD CROSSING SHALL BE 1.5 FEET ± 0.1' FROM THE FACE OF THE GATE ARM IF THE GATE ARM EXTENDS ACROSS THE SIDEWALK. WHERE THERE IS NO PEDESTRIAN GATE, THE EDGE OF THE DETECTABLE WARNING FIELD NEAREST TO THE RAILROAD CROSSING SHALL BE 15 FEET FROM THE NEAREST RAIL.
3. INSTALL TRANSITION NOSE. (INCIDENTAL TO OTHER PAY ITEMS.) DO NOT MARK TRANSITION NOSE.

LEGEND

- ½" EXPANSION JOINT-SIDEWALK
- CONTRACTION JOINT FIELD LOCATED
- PAVEMENT MARKING CROSSWALK (WHITE)

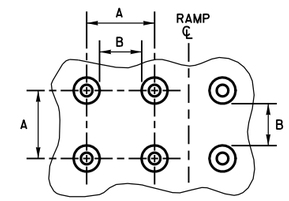

PLAN VIEW

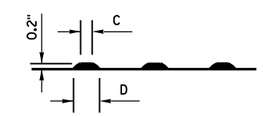

ELEVATION VIEW

	MIN.	MAX.
A	1.6"	2.4"
B	0.65"	1.5"
C	*	*
D	0.9"	1.4"

* THE C DIMENSION IS 50% TO 65% OF THE D DIMENSION.

TRUNCATED DOMES
DETECTABLE WARNING PATTERN DETAIL

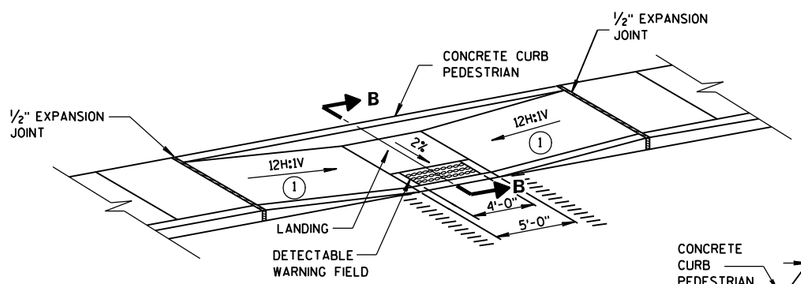

MID-BLOCK CROSSING
TYPE 7A

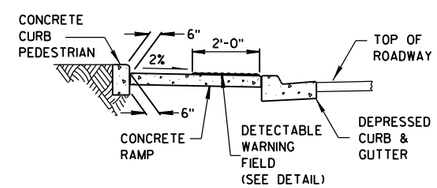

SECTION B-B

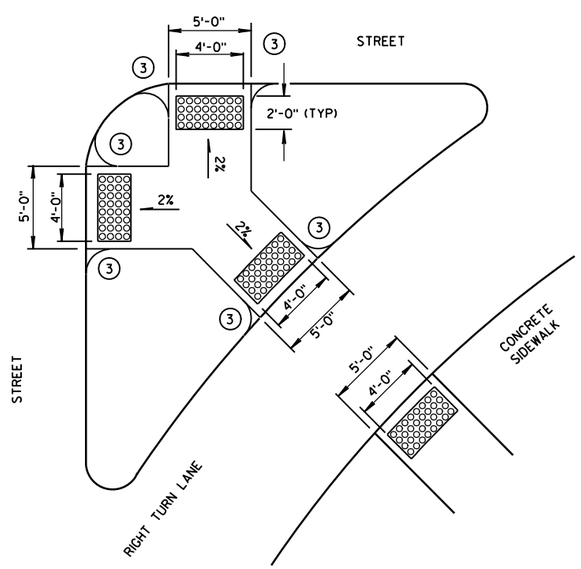

TYPE 6
DETECTABLE WARNING AT ISLANDS

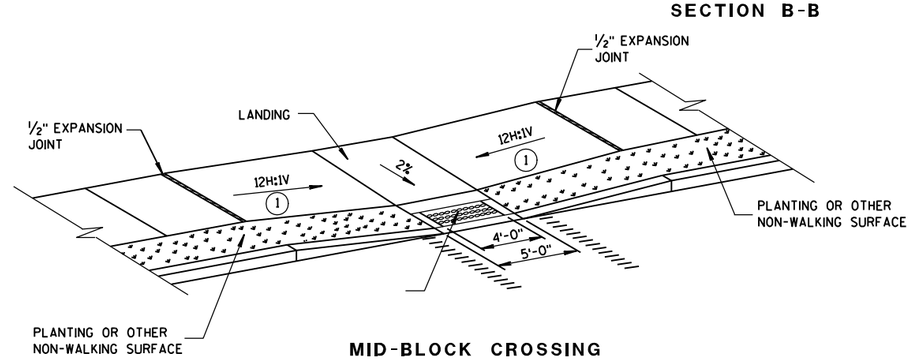

MID-BLOCK CROSSING
TYPE 7B

NOTE: THESE PARALLEL AND PARALLEL/PERPENDICULAR CURB RAMPS MAY BE USED AT INTERSECTIONS AND MID BLOCK LOCATIONS.

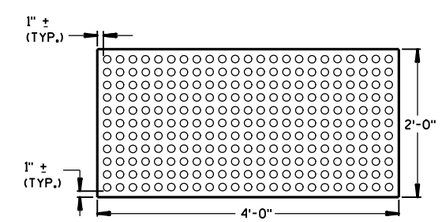

PLAN VIEW
DETECTABLE WARNING FIELD (TYPICAL)

CURB RAMPS
TYPES 5, 6, 7A, 7B & 8

STATE OF WISCONSIN
DEPARTMENT OF TRANSPORTATION

APPROVED

4-28-09 — DATE — FHWA

/S/ Jerry H. Zogg — ROADWAY STANDARDS DEVELOPMENT ENGINEER

6

S.D.D. 8 D 5-13e

6

S.D.D. 8 D 5-13e

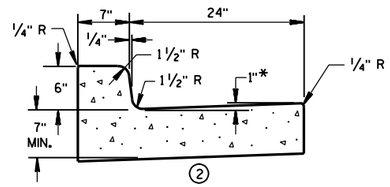

1 CONCRETE CURB & GUTTER 31"

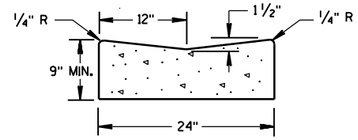

1 CONCRETE GUTTER 24"

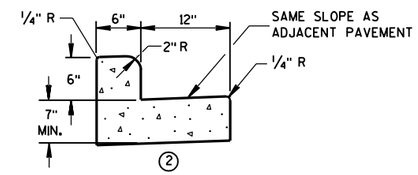

1 CONCRETE CURB & GUTTER 18"

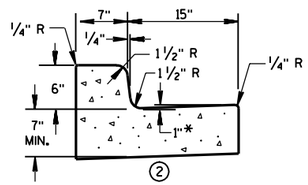

1 CONCRETE CURB & GUTTER 22"

* TO BE MEASURED TO A MAXIMUM OF 3" WHERE DRAINAGE PROBLEMS EXIST.

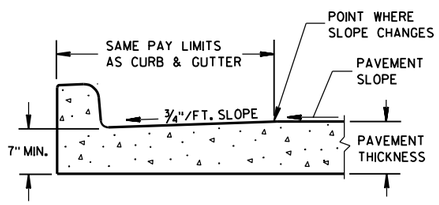

PARTIAL SECTION OF PAVEMENT WITH INTEGRAL CURB & GUTTER

GENERAL NOTES

DETAILS OF CONSTRUCTION, MATERIALS AND WORKMANSHIP NOT SHOWN ON THIS DRAWING SHALL CONFORM TO THE PERTINENT REQUIREMENTS OF THE CONTRACT.

PAVEMENT TIES AND TIE BARS SHALL BE EPOXY COATED IN CONFORMANCE WITH SUBSECTION 505.2.6.2 OF THE STANDARD SPECIFICATIONS.

INTEGRAL CURB & GUTTER SHALL CONFORM TO THE DETAILS SHOWN FOR CONCRETE CURB & GUTTER INCLUDING THE TRANSVERSE GUTTER SLOPE. A LONGITUDINAL CONSTRUCTION JOINT IS NOT REQUIRED WITH INTEGRAL CURB AND GUTTER.

WHERE THE TRANSVERSE JOINTS IN THE PAVEMENT ARE REQUIRED TO BE SEALED, THE JOINTS IN THE INTEGRAL CURB AND GUTTER SHALL BE SEALED TO THE FACE OF CURB WITH THE SAME TYPE OF SEALANT. THE COST OF FURNISHING AND INSTALLING THIS SEALANT SHALL BE INCIDENTAL TO THE ITEM CONCRETE CURB AND GUTTER.

UNLESS OTHERWISE SHOWN ON THE TYPICAL CROSS SECTIONS, THE BASE COURSE AND UNCLASSIFIED EXCAVATION LIMITS ARE 2'-0" BEHIND THE BACK OF CURB.

1 WHEN PLACED ADJACENT TO NEW CONCRETE, TIE BARS ARE REQUIRED FOR CURB AND GUTTER 31", 22", 18" AND CONCRETE GUTTER 24".

2 THE BOTTOM OF CURB AND GUTTER MAY BE CONSTRUCTED EITHER LEVEL OR PARALLEL TO THE SLOPE OF THE SUBGRADE OR BASE COURSE PROVIDED A 7" MIMIMUM GUTTER THICKNESS IS MAINTAINED.

3 WHEN HIGH SIDE CURB SECTION IS REQUIRED, THE LOCATION(S) WILL BE NOTED ON THE PLAN.

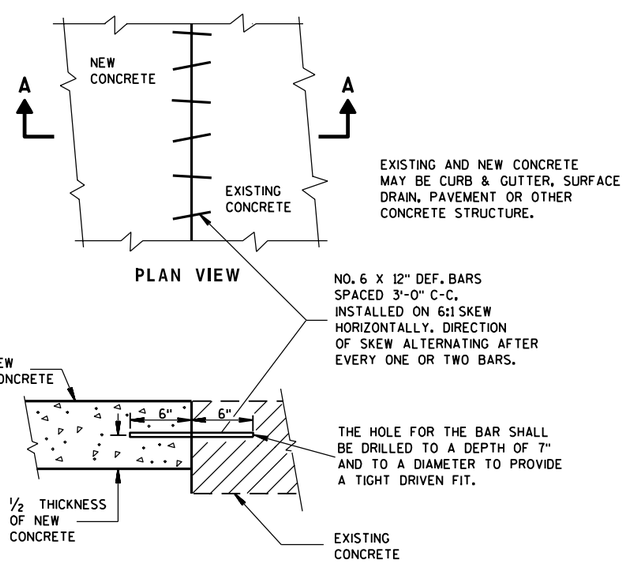

PLAN VIEW

SECTION A-A

PAVEMENT TIES

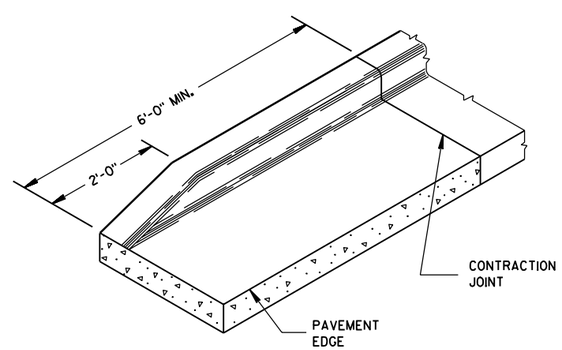

END SECTION CURB & GUTTER

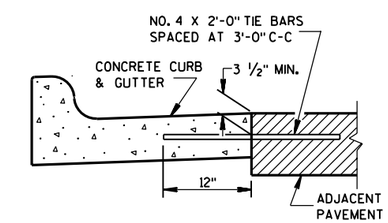

1 TYPICAL TIE BAR LOCATION

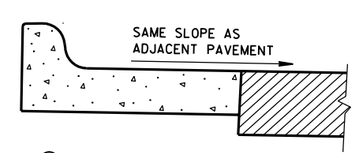

3 HIGH SIDE SECTION

(TYPICAL FOR ALL CURB & GUTTER)

CONCRETE GUTTER, CURB AND GUTTER AND PAVEMENT TIES

(For Optional Use in Milwaukee Co. Only)

STATE OF WISCONSIN
DEPARTMENT OF TRANSPORTATION

APPROVED
10/22/96
DATE

CHIEF ROADWAY DEVELOPMENT ENGINEER

FHWA

6

S.D.D. 8 M 1-9

6

S.D.D. 8 M 1-9

INLET COVERS

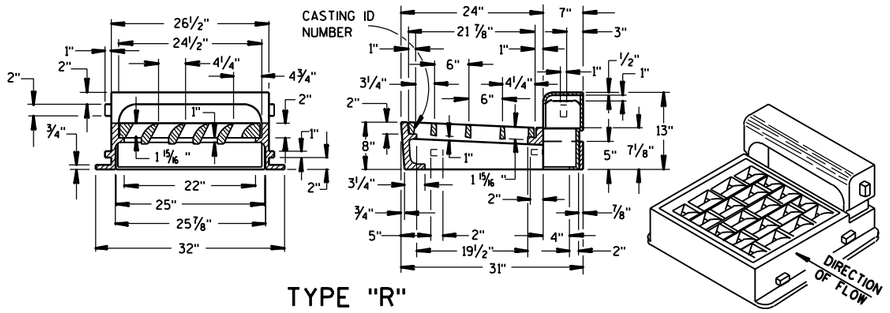

TYPE "R"

SHOWING SPECIAL GRATE NO. 1
(TO BE NOTED AS R-1 IN DRAINAGE TABLE)

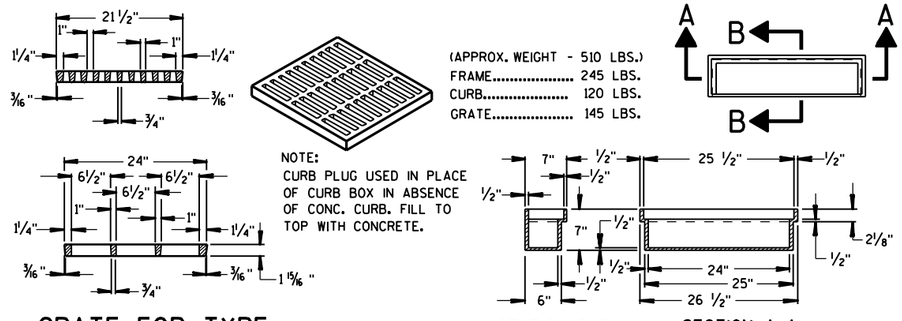

GRATE FOR TYPE "R" INLET COVER

(GRATE..... 150 LBS.)
(TO BE USED UNLESS OTHERWISE NOTED IN DRAINAGE TABLE)

SPECIAL CURB PLUG "P"

(CURB PLUG..... 85 LBS.)
(TO BE NOTED AS R-P IN DRAINAGE TABLE)

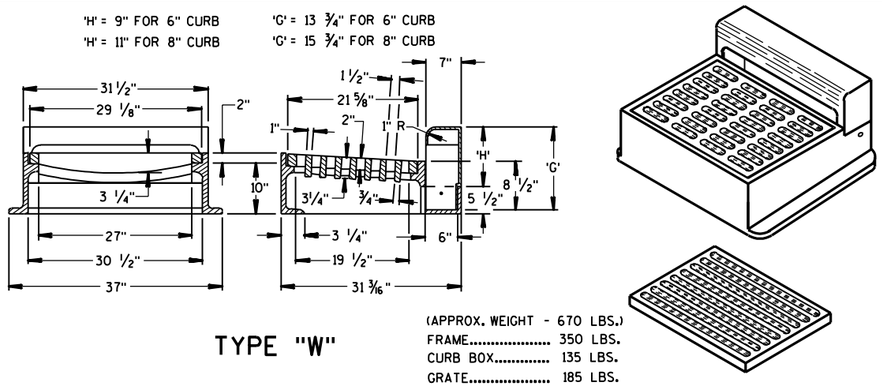

TYPE "W"

ALTERNATE GRATE

(FOR EXPRESSWAY RAMPS)

TYPES "W" & "X"

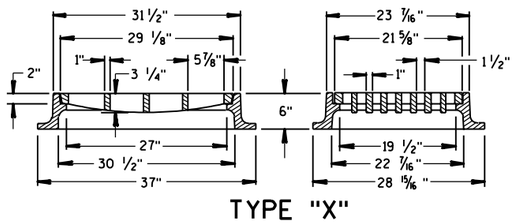

TYPE "X"

(APPROX. WEIGHT - 470 LBS.)

MANHOLE COVER

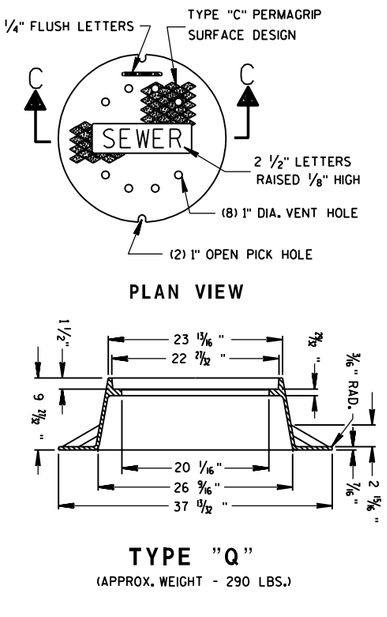

SECTION C-C

PLAN VIEW

TYPE "Q"

(APPROX. WEIGHT - 290 LBS.)

TABLE OF DIMENSIONS

TYPE	'A'	'B'	'C'
11	3'-6"	2'-8"	12" - 36"*
12	4'-0"	3'-8"	12" - 42"**
13	5'-0"	5'-8"	42" - 48"
14	6'-0"	7'-8"	54" - 60"

* 12" - 21" FOR PRECAST MANHOLES
** 12" - 24" FOR PRECAST MANHOLES

THE FIRST STEP SHALL BE PLACED 16" ABOVE THE BENCH.

MANHOLE

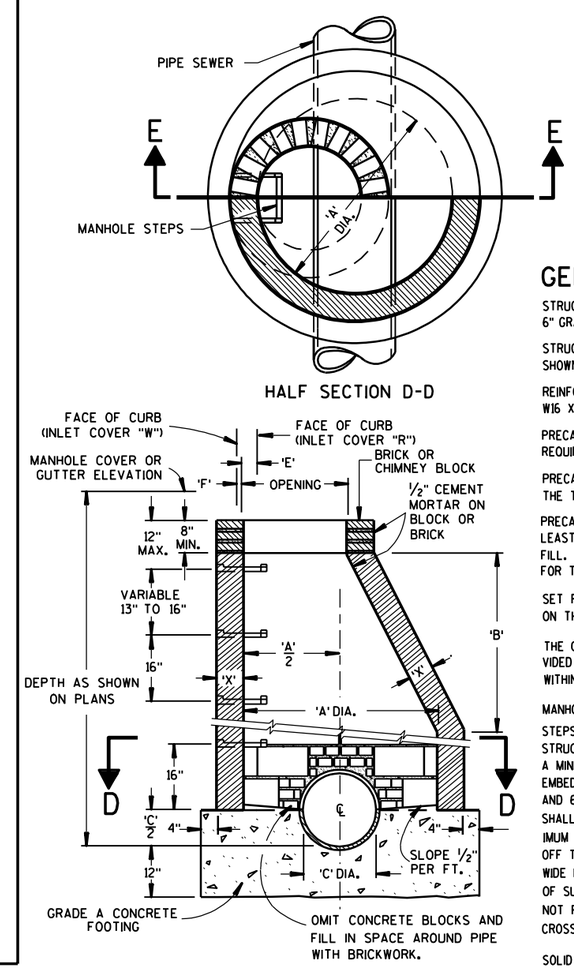

TABLE OF OPENING DIMENSIONS

COVER				
TYPE	DESCRIPTION	OPENING	'E'	'F'
"O"	ROUND	2'-2" DIA.	—	—
"W"	CURB BOX	1'-8" X 2'-6"	—	1"
"X"	INLET	1'-10" X 2'-6"	—	—
"R"	CURB BOX	2'-0" X 2'-1"	4"	—

GENERAL NOTES

STRUCTURE WALL THICKNESS 'X' TO BE 8" BRICK, 6" CONCRETE BLOCK, 6" GRADE A CONCRETE OR 5" PRECAST REINFORCED CONCRETE.

STRUCTURE FOOTINGS ARE TO BE GRADE A CONCRETE OF THE THICKNESS SHOWN IN THE DETAIL OR 5" PRECAST REINFORCED CONCRETE.

REINFORCEMENT FOR 5" PRECAST REINFORCED CONCRETE SHALL BE 6" X 6" W16 X W16 WELDED SREEL WIRE FABRIC AND SHALL BE EMBEDDED 2" CLEAR.

PRECAST INLET UNITS AND BASES SHALL CONFORM TO THE PERTINENT REQUIREMENTS OF AASHTO DESIGNATION M 199.

PRECAST CONCRETE FLAT SLAB TOPS MAY BE USED ON THE STRUCTURES. THE TOPS SHALL BE INSTALLED ON A BED OF MORTAR.

PRECAST REINFORCED BASES SHALL BE PLACED ON A BED OF MATERIAL AT LEAST 6" IN DEPTH, WHICH MEETS THE REQUIREMENTS FOR GRANULAR BACK-FILL. THIS BEDDING SHALL BE COMPACTED AND PROVIDE UNIFORM SUPPORT FOR THE ENTIRE AREA OF THE BASE.

SET FRAME ELEVATION 0.03 FT. LOWER THAN ELEVATION INDICATED ON THE PLANS.

THE CONTRACTOR MAY FORM AND POUR MONOLITHIC CONCRETE INVERT PROVIDED THE PIPE ENDS ARE EXTENDED INTO THE M.H. AND NOT TERMINATED WITHIN THE M.H. WALLS.

MANHOLE STEPS

STEPS MEETING THE FOLLOWING REQUIREMENTS SHALL BE INSTALLED IN ALL STRUCTURES OVER 5 FEET IN DEPTH; 16 INCH C-C MAX. SPACING; PROJECT A MINIMUM CLEAR DISTANCE OF 4 INCHES FROM THE WALL AT THE POINT OF EMBEDMENT; MINIMUM WALL EMBEDMENT OF 3 INCHES IN PRECAST MANHOLE AND 6 INCHES IN 8 INCH BRICK OR 6 INCH BLOCK MANHOLE; TREAD OF STEP SHALL HAVE A NON-SKID SURFACE AND BE FLANKED BY CLEATS, WITH A MINIMUM OF 10 INCHES CLEAR BETWEEN CLEATS. TO PREVENT FOOT SLIPPING OFF THE EDGE CLEATS SHALL BE A MINIMUM OF ¾ INCH HIGH BY ¾ INCH WIDE HAVING A MINIMUM THICKNESS OF ⅜ INCH. STEPS SHALL BE CAPABLE OF SUPPORTING A CONCENTRATED LOAD OF 300 LBS. FERROUS METAL STEPS NOT PAINTED OR TREATED TO RESIST CORROSION SHALL HAVE A MINIMUM CROSS SECTIONAL DIMENSION OF 1 INCH.

SOLID ALUMINUM STEPS SHALL HAVE A MINIMUM CROSS SECTIONAL DIMENSION OF 0.75 INCH. ALUMINUM SURFACES TO BE EMBEDDED IN CONCRETE SHALL BE GIVEN ONE COAT OF SUITABLE QUALITY PAINT, SUCH AS ZINC CHROMATE PRIMER CONFORMING TO FEDERAL SPECIFICATION TT-P-645 OR EQUIVALENT. STEPS OF APPROVED POLYPROPYLENE PLASTIC COATED REINFORCING BAR WILL BE ACCEPTABLE.

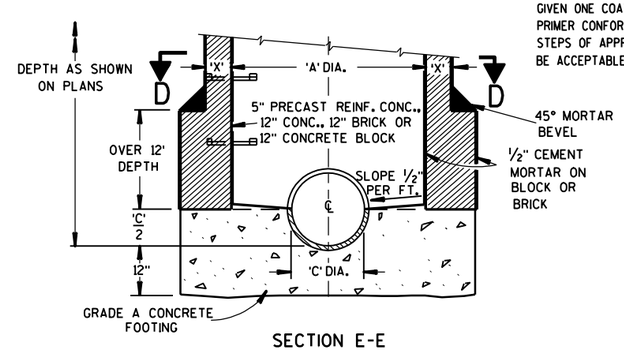

TYPES 11, 12, 13 & 14

MANHOLES, MANHOLE & INLET COVERS

STATE OF WISCONSIN
DEPARTMENT OF TRANSPORTATION

APPROVED 8/27/98 DATE — CHIEF ROADWAY DEVELOPMENT ENGINEER
FHWA

6

S.D.D. 8 M 3-5

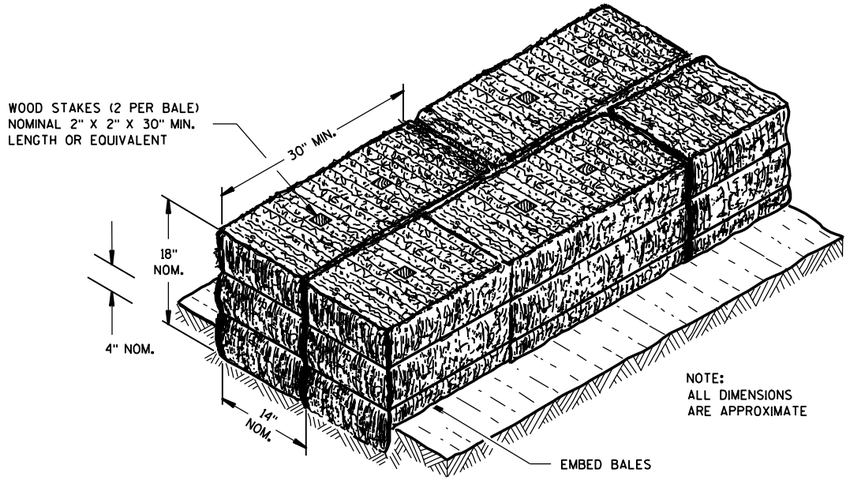

SECTION A-A

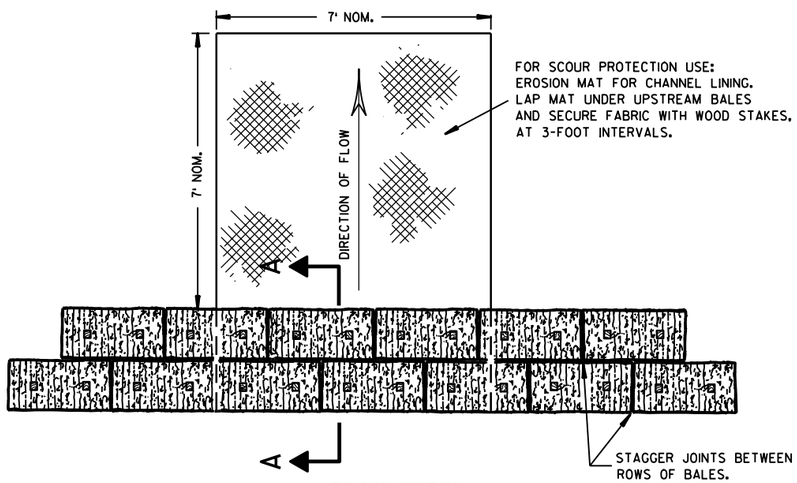

PLAN VIEW

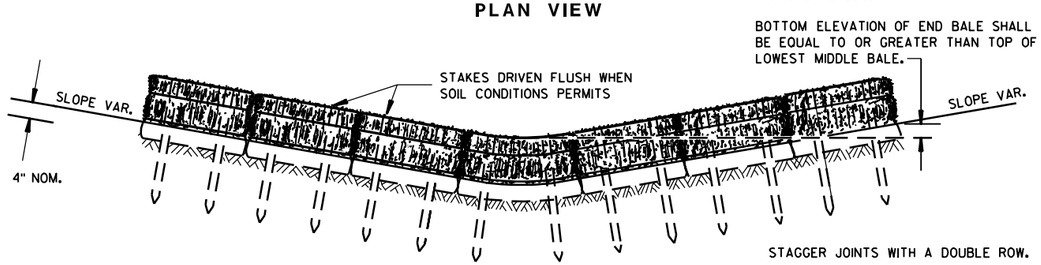

FRONT ELEVATION

TEMPORARY DITCH CHECK USING EROSION BALES ①

GENERAL NOTES

DETAILS OF CONSTRUCTION, MATERIALS AND WORKMANSHIP NOT SHOWN ON THIS DRAWING SHALL CONFORM TO THE PERTINENT REQUIREMENTS OF THE STANDARD SPECIFICATIONS AND THE APPLICABLE SPECIAL PROVISIONS.

① TEMPORARY DITCH CHECKS EITHER EROSION BALES OR MANUFACTURED SHALL BE PAID FOR UNDER THE BID ITEM OF TEMPORARY DITCH CHECK. THE DEPARTMENT WILL NOT PAY FOR TEMPORARY DITCH CHECKS CONSTRUCTED OF A SINGLE ROW OF EROSION BALES.

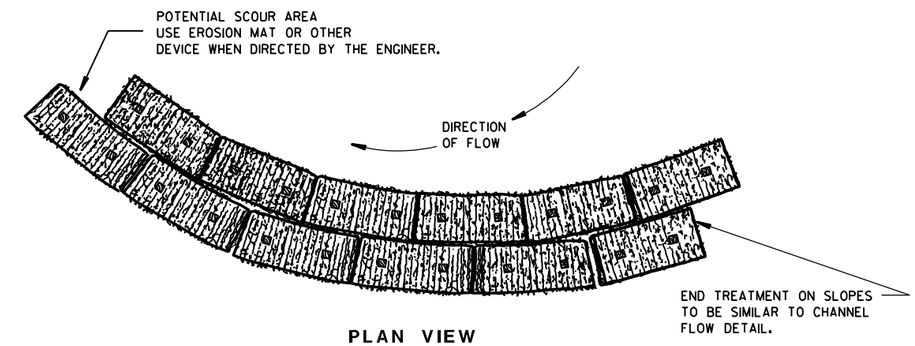

PLAN VIEW

WHEN ALTERING THE DIRECTION OF FLOW

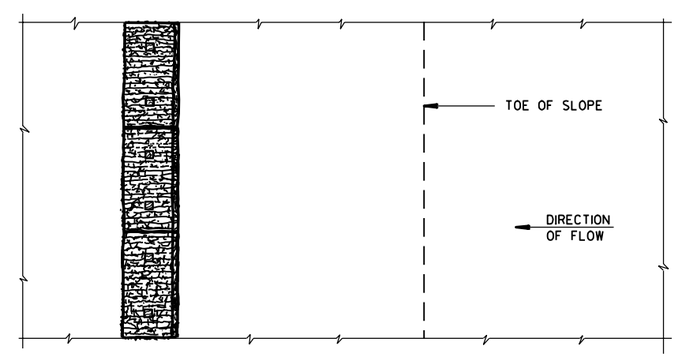

PLAN VIEW

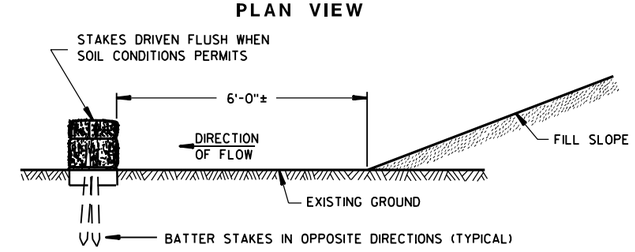

FRONT ELEVATION

WHEN EXISTING GROUND SLOPES AWAY FROM FILL SLOPE

EROSION BALES FOR SHEET FLOW

TYPICAL INSTALLATIONS OF EROSION BALES / TEMPORARY DITCH CHECKS

STATE OF WISCONSIN
DEPARTMENT OF TRANSPORTATION

APPROVED
6/04/02
DATE
CHIEF ROADWAY DEVELOPMENT ENGINEER
FHWA

6

S.D.D. 8 E 8-3

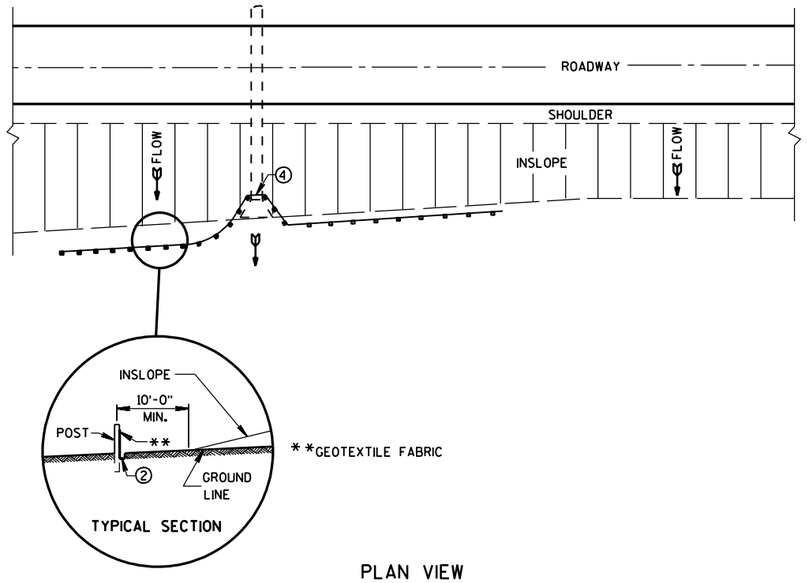

PLAN VIEW

TYPICAL APPLICATION OF SILT FENCE

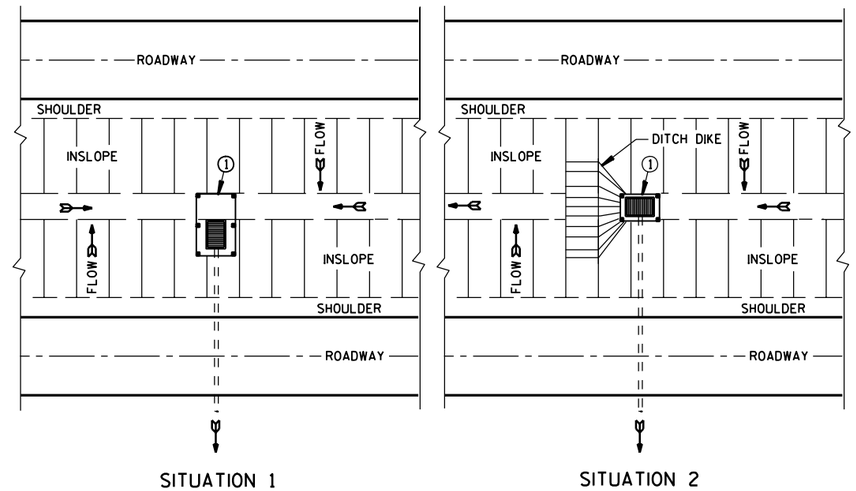

PLAN VIEW

SILT FENCE AT MEDIAN SURFACE DRAINS

GENERAL NOTES

DETAILS OF CONSTRUCTION NOT SHOWN ON THIS DRAWING SHALL CONFORM TO THE PERTINENT REQUIREMENTS OF THE STANDARD SPECIFICATIONS AND APPLICABLE SPECIAL PROVISIONS.

① HORIZONTAL BRACE REQUIRED WITH 2" X 4" WOODEN FRAME OR EQUIVALENT AT TOP OF POSTS.

② FOR MANUAL INSTALLATIONS THE TRENCH SHALL BE A MINIMUM OF 4" WIDE & 6" DEEP TO BURY AND ANCHOR THE GEOTEXTILE FABRIC. FOLD MATERIAL TO FIT TRENCH AND BACKFILL & COMPACT TRENCH WITH EXCAVATED SOIL.

③ WOOD POSTS SHALL BE A MINIMUM SIZE OF 1 1/8" X 1 1/8" OF OAK OR HICKORY.

④ SILT FENCE TO EXTEND ACROSS THE TOP OF THE PIPE.

⑤ CONSTRUCT SILT FENCE FROM A CONTINUOUS ROLL IF POSSIBLE BY CUTTING LENGTHS TO AVOID JOINTS. IF A JOINT IS NECESSARY USE ONE OF THE FOLLOWING TWO METHODS; A) OVERLAP THE END POSTS AND TWIST, OR ROTATE, AT LEAST 180 DEGREES, B) HOOK THE END OF EACH SILT FENCE LENGTH.

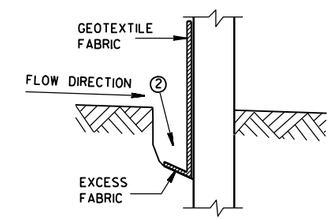

TRENCH DETAIL

NOTE: ADDITIONAL POST DEPTH OR TIE BACKS MAY BE REQUIRED IN UNSTABLE SOILS

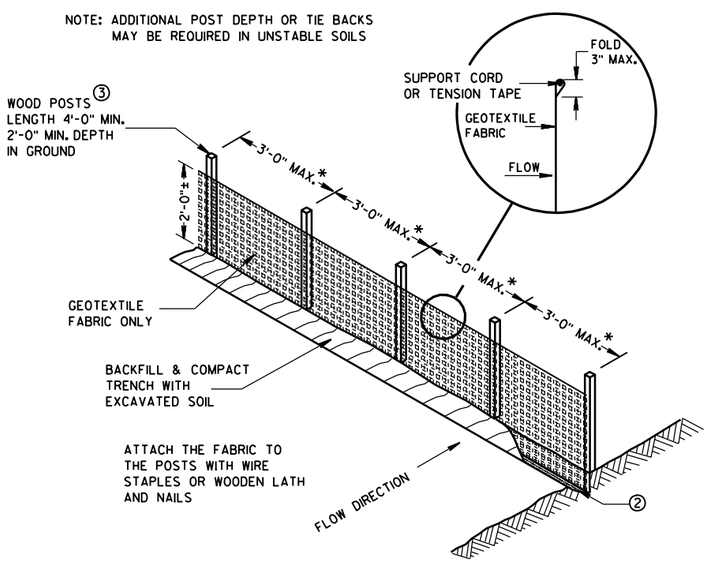

*NOTE: 8'-0" POST SPACING ALLOWED IF A WOVEN GEOTEXTILE FABRIC IS USED.

SILT FENCE

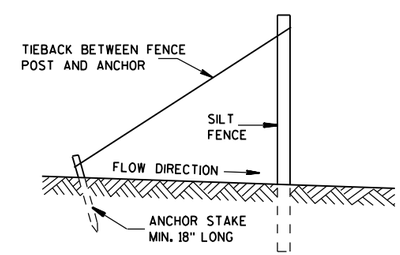

SILT FENCE TIE BACK

(WHEN REQUIRED BY THE ENGINEER)

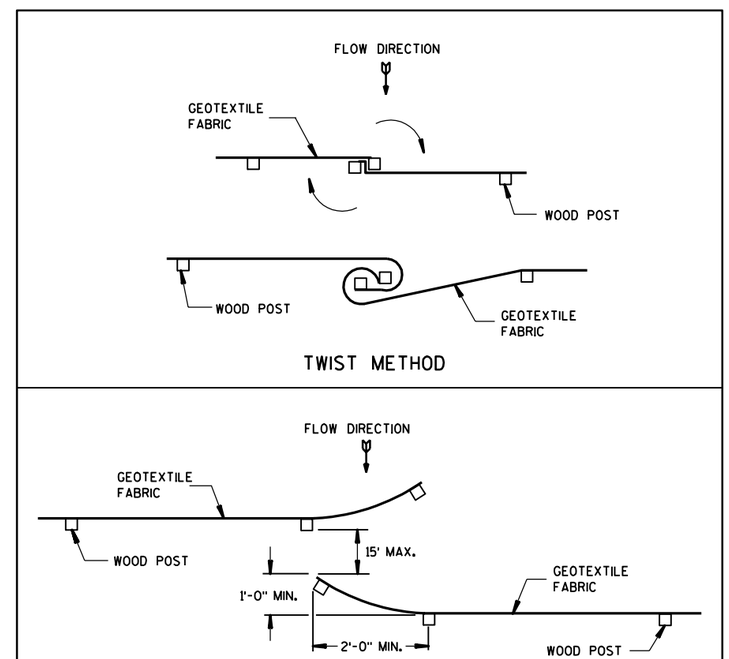

JOINING TWO LENGTHS OF SILT FENCE ⑤

SILT FENCE

STATE OF WISCONSIN
DEPARTMENT OF TRANSPORTATION

APPROVED
4-29-05
DATE
FHWA

CHIEF ROADWAY DEVELOPMENT ENGINEER

6

S.D.D. 8 E 9-6

S.D.D. 8 E 9-6

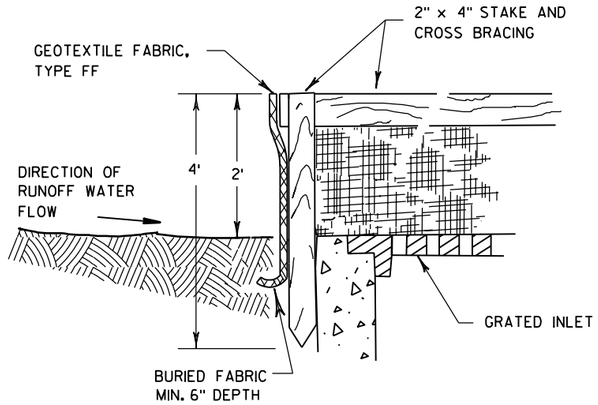

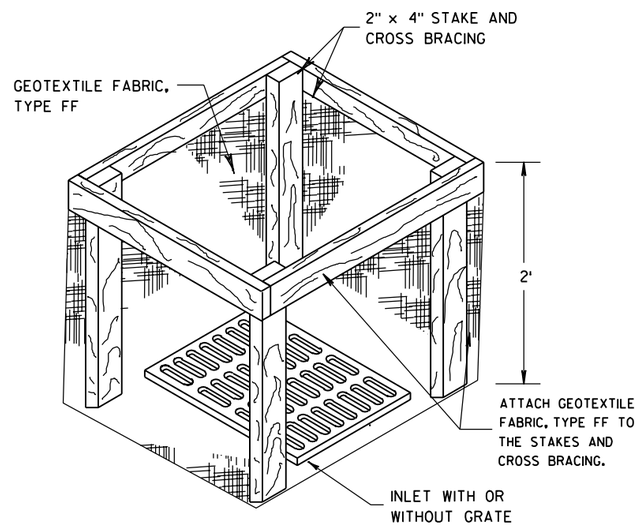

INLET PROTECTION, TYPE A

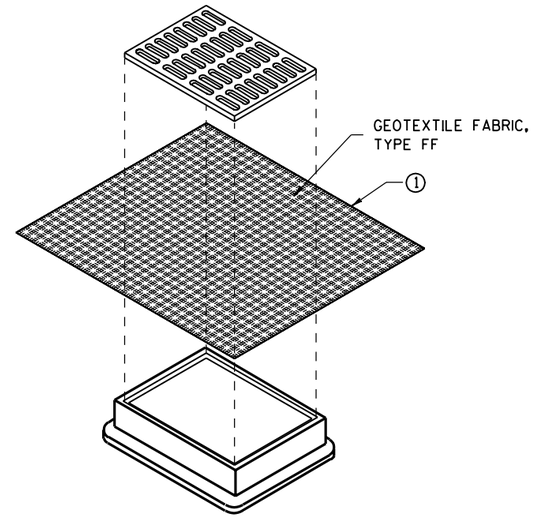

INLET PROTECTION, TYPE B (WITHOUT CURB BOX)

(CAN BE INSTALLED IN ANY INLET WITHOUT A CURB BOX)

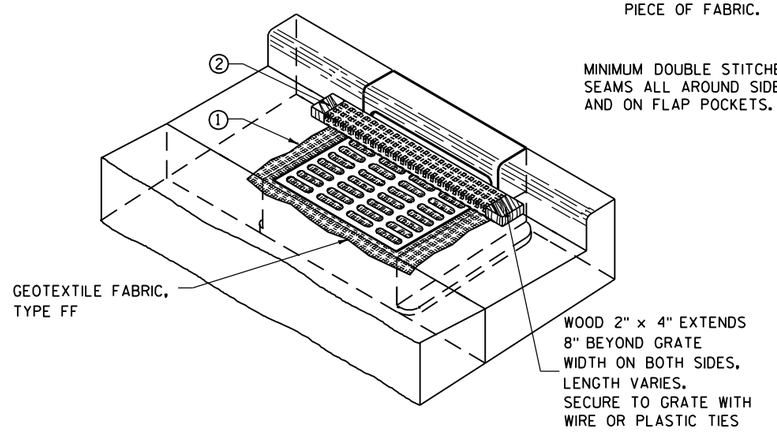

INLET PROTECTION, TYPE C (WITH CURB BOX)

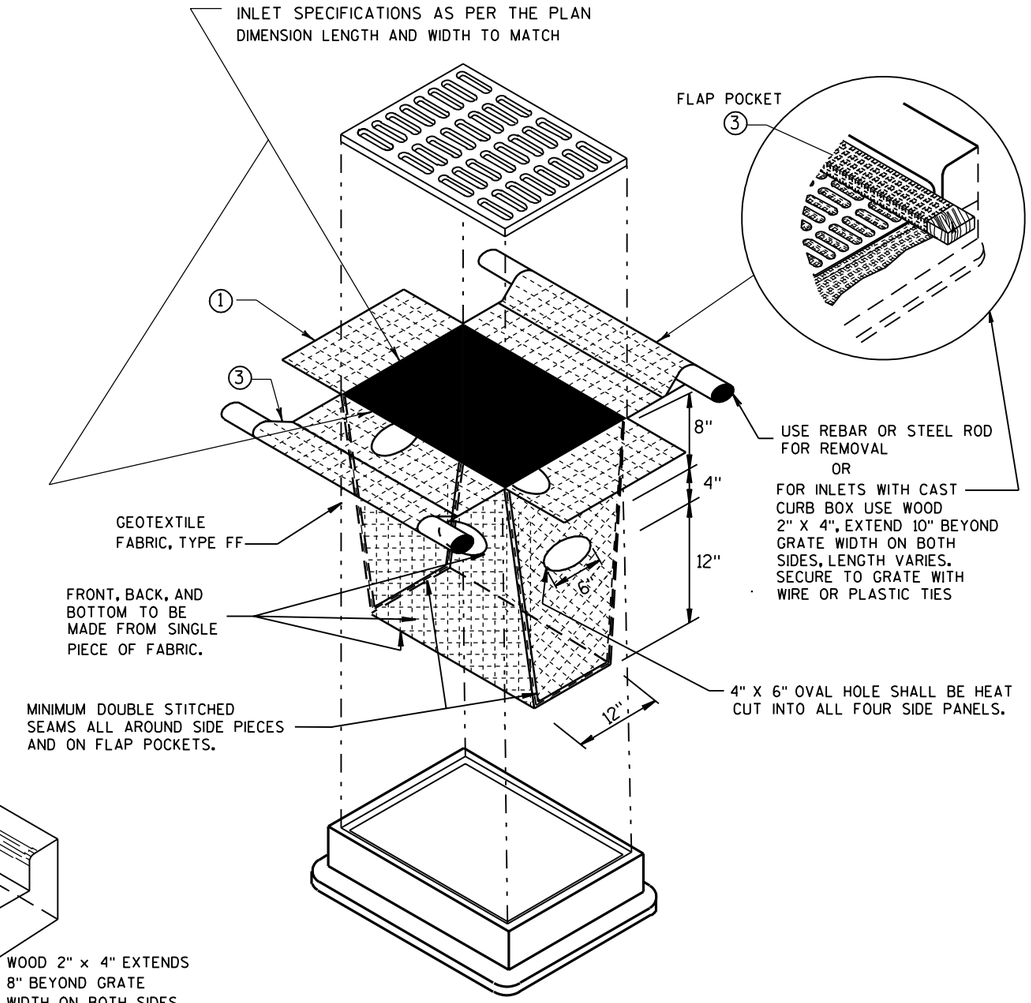

INLET PROTECTION, TYPE D

(CAN BE INSTALLED IN ANY INLET TYPE WITH OR WITHOUT A CURB BOX AS PER NOTE ②)

GENERAL NOTES

INLET PROTECTION DEVICES SHALL BE MAINTAINED OR REPLACED AT THE DIRECTION OF THE ENGINEER.

MANUFACTURED ALTERNATIVES APPROVED AND LISTED ON THE DEPARTMENT'S EROSION CONTROL PRODUCT ACCEPTABILITY LIST MAY BE SUBSTITUTED.

WHEN REMOVING OR MAINTAINING INLET PROTECTION, CARE SHALL BE TAKEN SO THAT THE SEDIMENT TRAPPED ON THE GEOTEXTILE FABRIC DOES NOT FALL INTO THE INLET. ANY MATERIAL FALLING INTO THE INLET SHALL BE REMOVED IMMEDIATELY.

① FINISHED SIZE, INCLUDING FLAP POCKETS WHERE REQUIRED, SHALL EXTEND A MINIMUM OF 10" AROUND THE PERIMETER TO FACILITATE MAINTENANCE OR REMOVAL.

② FOR INLET PROTECTION, TYPE C (WITH CURB BOX), AN ADDITIONAL 18" OF FABRIC IS WRAPPED AROUND THE WOOD AND SECURED WITH STAPLES. THE WOOD SHALL NOT BLOCK THE ENTIRE HEIGHT OF THE CURB BOX OPENING.

③ FLAP POCKETS SHALL BE LARGE ENOUGH TO ACCEPT WOOD 2X4.

INSTALLATION NOTES

TYPE B & C

TRIM EXCESS FABRIC IN THE FLOW LINE TO WITHIN 3" OF THE GRATE.

THE CONTRACTOR SHALL DEMONSTRATE A METHOD OF MAINTENANCE, USING A SEWN FLAP, HAND HOLDS OR OTHER METHOD TO PREVENT ACCUMULATED SEDIMENT FROM ENTERING THE INLET.

TYPE D

DO NOT INSTALL INLET PROTECTION TYPE D IN INLETS SHALLOWER THAN 30", MEASURED FROM THE BOTTOM OF THE INLET TO THE TOP OF THE GRATE.

TRIM EXCESS FABRIC IN THE FLOW LINE TO WITHIN 3" OF THE GRATE.

THE INSTALLED BAG SHALL HAVE A MINIMUM SIDE CLEARANCE, BETWEEN THE INLET WALLS AND THE BAG, MEASURED AT THE BOTTOM OF THE OVERFLOW HOLES, OF 3". WHERE NECESSARY THE CONTRACTOR SHALL CINCH THE BAG, USING PLASTIC ZIP TIES, TO ACHIEVE THE 3" CLEARANCE. THE TIES SHALL BE PLACED AT A MAXIMUM OF 4" FROM THE BOTTOM OF THE BAG.

INLET PROTECTION
TYPE A, B, C, AND D

STATE OF WISCONSIN
DEPARTMENT OF TRANSPORTATION

APPROVED
10/16/02
DATE
FHWA

CHIEF ROADWAY DEVELOPMENT ENGINEER

6

S.D.D. 8 E 10-2

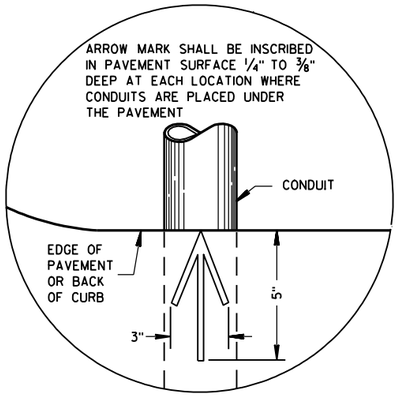

PLAN VIEW
ARROW MARK

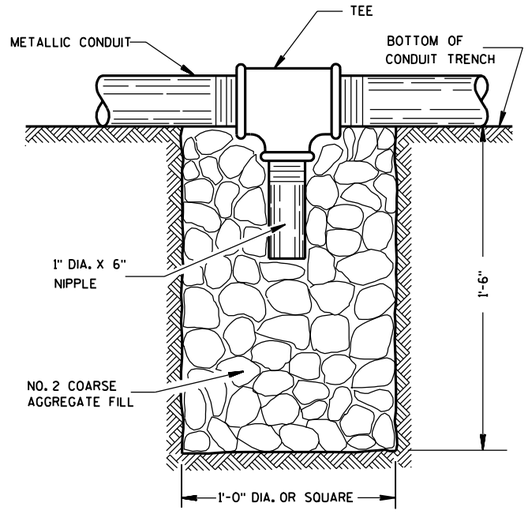

NOTE: INSTALL AT LOCATIONS WHERE METALLIC CONDUITS CANNOT BE PITCHED TO DRAIN INTO A PULL BOX.

DRAIN SUMP FOR METALLIC CONDUIT

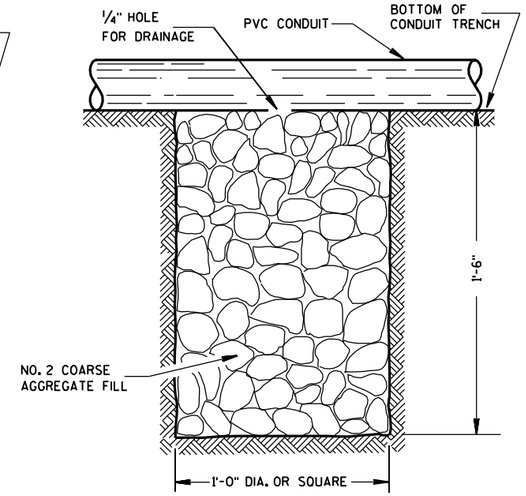

NOTE: INSTALL AT LOCATIONS WHERE PVC CONDUITS CANNOT BE PITCHED TO DRAIN INTO A PULL BOX.

DRAIN SUMP FOR PVC CONDUIT

GENERAL NOTES

DETAILS OF CONSTRUCTION, MATERIALS AND WORKMANSHIP NOT SHOWN ON THIS DRAWING SHALL CONFORM TO THE PERTINENT REQUIREMENTS OF THE CONTRACT.

METALLIC (STANDARD SPECIFICATION 652.2.2) OR NONMETALLIC (STANDARD SPECIFICATION 652.2.3) CONDUIT SHALL BE FURNISHED AND PLACED AS SHOWN.

DEPTH OF CONDUIT INSTALLED BELOW THE TRAVELED WAY SHALL BE 24 INCHES MINIMUM AND 36 INCHES MAXIMUM.

DEPTH OF CONDUIT INSTALLED THAT IS NOT BELOW THE TRAVELED WAY SHALL BE 18 INCHES MINIMUM AND 36 INCHES MAXIMUM.

ANY EXCEPTION TO THE MAXIMUM DEPTH SHALL BE ONLY WITH THE WRITTEN APPROVAL OF THE ENGINEER.

THE TRENCH SHALL NOT BE BACKFILLED PRIOR TO INSPECTION OF THE CONDUIT.

ALL METALLIC CONDUIT RACEWAY ENDS SHALL BE REAMED AND THREADED.

ALL METALLIC CONDUIT IN WHICH WIRE OR CABLE IS TO BE INSTALLED SHALL BE BUSHED WITH APPROVED THREADED BUSHINGS BEFORE INSTALLATION OF THE WIRE OR CABLE.

ALL METALLIC CONDUITS IN WHICH WIRE OR CABLE IS NOT TO BE INSTALLED SHALL BE CAPPED WITH THREADED PROTECTIVE CAPS, AS APPROVED BY THE ENGINEER.

ALL NONMETALLIC CONDUIT SHALL BE CAPPED OR PLUGGED IMMEDIATELY AFTER INSTALLATION AND SHALL REMAIN CAPPED OR PLUGGED UNTIL WIRE/CABLES ARE INSTALLED.

NONMETALLIC CONDUITS IN WHICH WIRE OR CABLE IS NOT BEING INSTALLED SHALL REMAIN CAPPED OR PLUGGED.

BENDING OF PVC ELECTRICAL CONDUIT SHALL BE ACCOMPLISHED BY USING A BLANKET OR EMERSION TYPE TANK DESIGNED FOR THE PURPOSE OF BENDING PVC ELECTRICAL CONDUIT.

ALL CUT ENDS SHALL BE TRIMMED INSIDE AND OUTSIDE TO REMOVE ALL ROUGH EDGES ON NONMETALLIC CONDUIT. (SEE NEC 347.5)

WHEN REQUIRED TO CONNECT NONMETALLIC CONDUIT TO METALLIC CONDUIT, ONLY U.L. LISTED ADAPTER FITTINGS SHALL BE USED.

PRIOR TO CONDUIT ACCEPTANCE, CONDUIT CAPS OR PLUGS SHALL BE REMOVED, AND THE CAPS, PLUGS AND CONDUIT ENDS SHALL BE THOROUGHLY CLEANED AND THEN THE CAPS OR PLUGS REINSTALLED TO ENSURE THAT THE CAPS OR PLUGS CAN BE EASILY REMOVED IN THE FUTURE.

ALL CONDUIT BEING FURNISHED AND INSTALLED SHALL HAVE THE U.L. LABEL FIRMLY ATTACHED.

CONDUIT RUNS SHALL BE THE SAME SIZE OF CONDUIT FROM ONE END TO THE OTHER (FROM PULL BOX TO PULL BOX-OR-JUNCTION BOX TO JUNCTION BOX-OR-BASE TO BASE, ETC.).

POLY ROPE OR A PULL WIRE SHALL BE INSTALLED AS STATED IN THE STANDARD SPECIFICATION, ITEM 652.3.1.1.

ALL CONDUIT RUNS SHALL BE STRAIGHT (WITHOUT BENDS) FROM PULL BOX TO PULL BOX, PULL BOX TO BASE AND BASE TO BASE AS SHOWN ON THE PLANS.

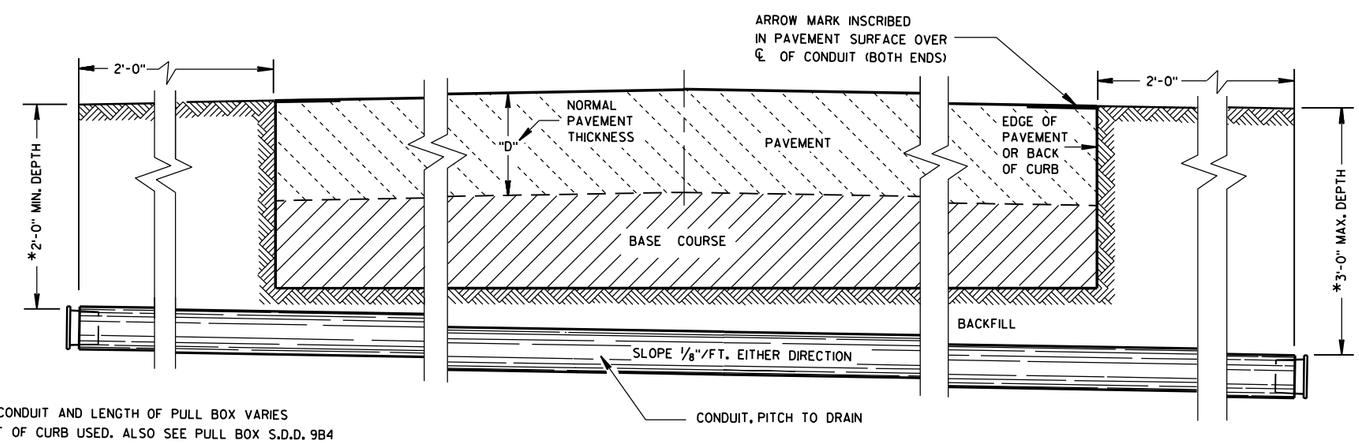

*DEPTH OF CONDUIT AND LENGTH OF PULL BOX VARIES WITH HEIGHT OF CURB USED. ALSO SEE PULL BOX S.D.D. 9B4

SIDE ELEVATION
DETAIL FOR CONDUIT UNDER PAVED HIGHWAYS

CONDUIT

STATE OF WISCONSIN
DEPARTMENT OF TRANSPORTATION

APPROVED
10/23/03
DATE
FHWA

STATE ELECTRICAL ENGINEER FOR HIGHWAYS

6

S.D.D. 9 B 2-7

TABLE OF NOMINAL DIMENSIONS AND WEIGHTS

DIMENSION IN INCHES		CORRUGATED STEEL PIPE								
PIPE DIAMETER (INSIDE)	A	12	12	12	18	18	18	24	24	24
PIPE LENGTH **	B	24	30	36	24	30	36	36	42	48
WALL THICKNESS	C	0.064	0.064	0.064	0.064	0.064	0.064	0.064	0.064	0.064
COVER	D	10 1/4	10 1/4	10 1/4	16 1/4	16 1/4	16 1/4	22 1/4	22 1/4	22 1/4
FRAME	E	14 1/2	14 1/2	14 1/2	20 1/2	20 1/2	20 1/2	26 1/2	26 1/2	26 1/2
FRAME	F	8 1/2	8 1/2	8 1/2	14 1/2	14 1/2	14 1/2	20 1/2	20 1/2	20 1/2
FRAME	G	11 1/2	11 1/2	11 1/2	17 1/2	17 1/2	17 1/2	23 1/2	23 1/2	23 1/2
WEIGHT IN POUNDS *										
FRAME AND COVER		60	60	60	110	110	110	155	155	155

* THE ACTUAL WEIGHT OF THE MANHOLE FRAME AND COVER MAY VARY WITHIN 5 PERCENT PLUS OR MINUS OF THE WEIGHTS SHOWN.

** NORMALLY USED LENGTHS. THE PROJECT ENGINEER SHALL DETERMINE IF PIPE LENGTHS, OTHER THAN THOSE SPECIFIED, SHALL BE USED, TO A MAXIMUM OF 48" (CONTINUOUS LENGTH, NON-SPLICED). THE ADDITIONAL LENGTH SHALL BE INCIDENTAL TO THE PULL BOX BID PRICE.

GENERAL NOTES

DETAILS OF CONSTRUCTION, MATERIALS AND WORKMANSHIP NOT SHOWN ON THIS DRAWING SHALL CONFORM TO THE PERTINENT REQUIREMENTS OF THE CONTRACT.

ALL FRAMES AND COVERS SHALL BE HEAVY DUTY TYPE, SUITABLE FOR VEHICULAR TRAFFIC LOADS.

PULL BOXES LOCATED IN THE ROADWAYS SHALL HAVE LOCKING COVERS.

ENTRANCE HOLES INTO PULL BOXES SHALL BE CUT WITH A CIRCULAR HOLE SAW OR HYDRAULIC CONDUIT PUNCH. HOLE SIZE SHALL BE THE OUTSIDE DIAMETER OF THE CONDUIT THAT IS TO FIT IN THE OPENING PLUS NO MORE THAN 1/4".

THE CONTRACTOR SHALL NOT INSTALL WIRE IN ANY PULL BOX UNTIL ITS INSTALLATION HAS BEEN INSPECTED AND ACCEPTED BY THE ENGINEER.

GROUNDING LUGS (MECHANICAL CONNECTORS) SHALL BE U.L. LISTED AND APPROVED FOR USE WITH COPPER WIRE. THE MECHANICAL CONNECTION (INSIDE AND OUTSIDE) TO THE PULL BOX, SHALL BE TOTALLY AND PERMANENTLY SEALED WITH A SILICONE OR RUBBERIZED CAULKING COMPOUND AS APPROVED BY THE ENGINEER.

GROUNDING LUGS ARE NOT REQUIRED IN PULL BOXES WHEN VOLTAGES OF LESS THAN 50 VOLTS AC ARE THE ONLY VOLTAGES ENCOUNTERED IN THE BOXES.

ALL METALLIC CONDUIT IN WHICH WIRE AND/OR CABLE IS TO BE INSTALLED, SHALL BE BUSHED BEFORE INSTALLATION OF THE WIRE AND/OR CABLE.

S.D.D. 9B2, "CONDUIT", APPLIES TO THIS DRAWING.

WHEN PULL BOXES ARE INSTALLED FOR FUTURE USE, DO NOT INSTALL THE EQUIPMENT GROUNDING LUG. THE EQUIPMENT GROUNDING LUG, THE EQUIPMENT GROUNDING ELECTRODE AND THE EQUIPMENT GROUNDING CONDUCTOR SHALL BE REQUIRED AND INSTALLED UNDER A FUTURE WIRING CONTRACT.

IF PULL BOX EQUIPMENT GROUNDING IS REQUIRED USING AN EQUIPMENT GROUNDING ELECTRODE IN EACH PULL BOX, THE EQUIPMENT GROUNDING ELECTRODE SHALL BE 5/8" X 8'-0", COPPERCLAD AND BE EXOTHERMICALLY WELDED TO A #4 AWG, COPPER, STRANDED WIRE (BARE OR GREEN INSULATED). THE #4 AWG WIRE SHALL BE 4 FEET IN LENGTH, NEATLY COILED, TAPED AND AVAILABLE FOR USE WHEN REQUIRED.

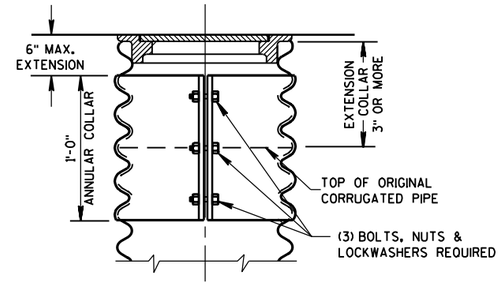

CORRUGATED PIPE EXTENDER

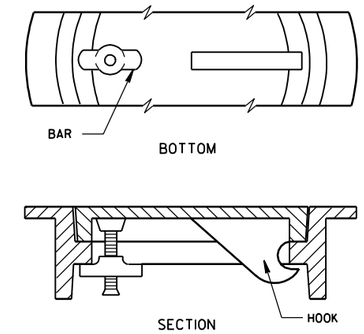

ALTERNATE COVER (LOCKING)

TIGHTENING BAR TYPE

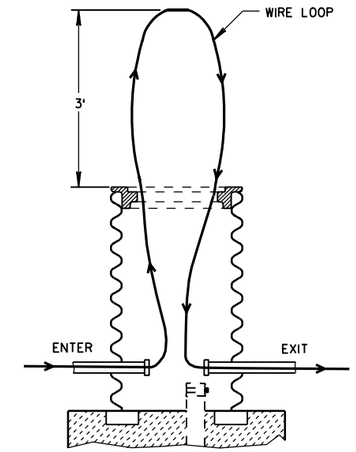

MEASUREMENT DETAIL FOR WIRE/CABLE IN THE PULL BOX

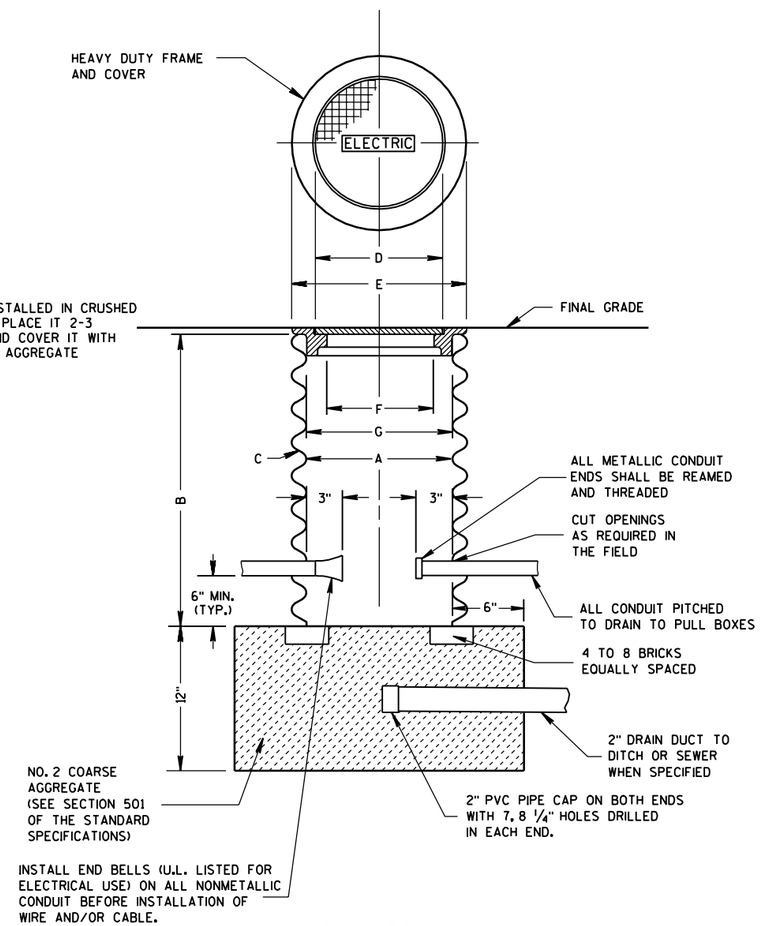

PULL BOX

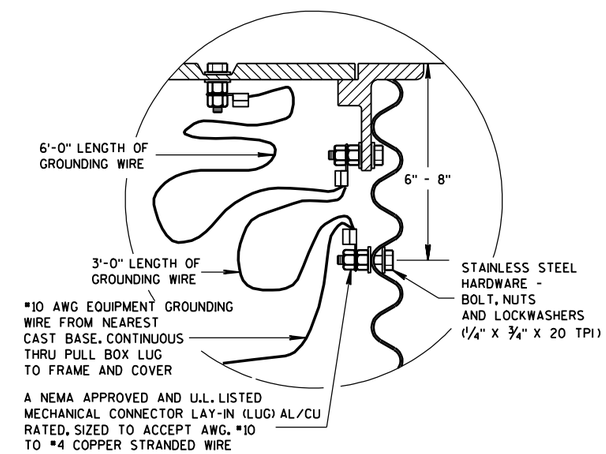

EQUIPMENT GROUNDING LUG AND LOCATION IN STEEL PULL BOXES

PULL BOX

STATE OF WISCONSIN
DEPARTMENT OF TRANSPORTATION

APPROVED
9/27/06 — DATE
/S/ Balu Ananthanarayanan — STATE ELECTRICAL ENGINEER FOR HIGHWAYS
FHWA

6

S.D.D. 9 B 4-9

6

S.D.D. 9 B 4-9

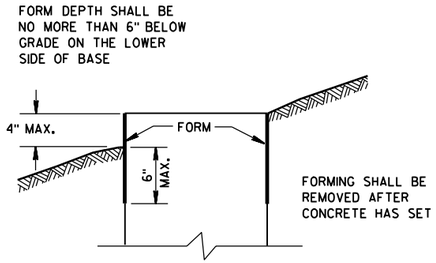

FORMING DETAIL

QUANTITY REQUIREMENTS	CONCRETE BASE TYPE		
	1	2	5
APPROX. CUBIC YARDS OF CONCRETE	0.40	0.57	0.40
LBS. OF HOOP BAR STEEL	NONE	23	16
LBS. OF VERTICAL BAR STEEL	NONE	60	18

GENERAL NOTES

DETAILS OF CONSTRUCTION, MATERIALS AND WORKMANSHIP NOT SHOWN ON THIS DRAWING SHALL CONFORM TO THE PERTINENT REQUIREMENTS OF THE CONTRACT.

BASES SHALL BE EXCAVATED BY USE OF A CIRCULAR AUGER.

TOP SURFACES OF CONCRETE BASES SHALL BE TROWEL FINISHED SMOOTH AND LEVEL.

CONDUIT SIZES AND LOCATIONS SHALL BE AS SHOWN ON THE PLANS.

THE FINAL OR TERMINATING CONCRETE BASE IN A CONDUIT RUN SHALL HAVE A 6" EXIT STUB INSTALLED FOR FUTURE CABLING USE. THE EXIT STUB SHALL BE SIZED AS USED THROUGHOUT THE CONDUIT RUN AS SHOWN AT THE ENTRANCE OF THE BASE.

MINIMUM BENDING RADIUS OF CONDUIT IS EQUAL TO 6 X THE DIAMETER.

CONDUIT HEIGHT ABOVE CONCRETE BASES SHALL BE 1 INCH. ALL METALLIC CONDUIT ENDS SHALL BE REAMED AND THREADED.

ALL CONDUIT ENDS AT THE TOP OF CONCRETE BASES SHALL BE CAPPED IF METALLIC OR PLUGGED IF NONMETALLIC IMMEDIATELY AFTER PLACEMENT AND BEFORE CONCRETE IS POURED. CONDUITS IN WHICH WIRE OR CABLE IS NOT INSTALLED SHALL REMAIN CAPPED OR PLUGGED.

GENERAL NOTES (CONTINUED)

BELL ENDS SHALL BE INSTALLED ON ALL PVC CONDUIT EXPOSED AT THE TOP OF CONCRETE BASES BEFORE INSTALLATION OF CABLE OR WIRE.

ENDS OF CONDUIT INSTALLED BELOW GRADE FOR FUTURE USE SHALL BE CAPPED IF METALLIC OR PLUGGED IF NONMETALLIC.

WHEN REQUIRED TO CONNECT NONMETALLIC CONDUIT TO METALLIC CONDUIT, ONLY ADAPTER FITTINGS, U.L. LISTED FOR ELECTRICAL USE, SHALL BE USED.

IF A BASE REQUIRES A DEEP FORM BECAUSE OF LOOSE DIRT OR FILL, THE FORM SHALL BE REMOVED BEFORE BACKFILLING AROUND THE BASE. BACKFILL SHALL BE TAMPED TIGHT AGAINST THE BARE CONCRETE BASE IN LAYERS OF 1 FOOT OR LESS.

A NO. 4 AWG, STRANDED COPPER EQUIPMENT GROUNDING CONDUCTOR SHALL BE EXOTHERMICALLY WELDED TO THE EQUIPMENT GROUNDING ELECTRODE (GROUND ROD) FOR TYPE 2 AND TYPE 5 BASES.

THE EQUIPMENT GROUNDING CONDUCTOR SHALL BE FURNISHED AND INSTALLED TO ENTER THE BASE OF THE TYPE 2 AND TYPE 5 BASES THROUGH A 1 INCH CONDUIT INSTALLED FOR GROUNDING PURPOSES, LEAVING A 4 FOOT COIL OF WIRE ABOVE THE CONCRETE BASE. THE EQUIPMENT GROUNDING CONDUCTOR SHALL BE NEATLY COILED AND THE COILS TIED TOGETHER.

ANCHOR RODS SHALL BE THREADED 12" IN LENGTH ON EACH END OF THE ROD. ANCHOR RODS SHALL BE MANUFACTURED IN ACCORDANCE WITH SECTION 654.2.1 AND 641.2.2 OF THE STANDARD SPECIFICATIONS, ASTM A-449, OR ASTM A-687 (GRADE 105).

WASHERS AND LOCK WASHERS ARE REQUIRED ON ALL ANCHOR RODS.

WHEN ANCHOR RODS USING THE ALTERNATE "L" BEND ARE FURNISHED, THE 4" "L" BEND SHALL BE IN ADDITION TO THE SPECIFIED ANCHOR ROD BAR LENGTH. THE "L" BEND END SHALL NOT BE THREADED.

ANCHOR RODS SHALL BE INSTALLED WITH MISALIGNMENTS OF LESS THAN 1:40 FROM VERTICAL PER SECTION 5.17.6.3, AASHTO 2001 4TH EDITION STANDARD SPECIFICATIONS FOR STRUCTURAL SUPPORTS FOR HIGHWAY SIGNS, LUMINARIES AND TRAFFIC SIGNALS.

WELDING OF THE ANCHOR RODS TO THE CAGE IS UNACCEPTABLE. TIE WIRES SHALL BE USED.

BAR STEEL REINFORCEMENT SHALL BE COATED WITH POWDERED EPOXY RESIN IN ACCORDANCE WITH SECTION 505 OF THE STANDARD SPECIFICATIONS (LATEST EDITION).

(1) THE MINIMUM DEPTH OF CONDUIT EXITING THE CONCRETE BASE AND INSTALLED BELOW THE TRAVELED WAY SHALL BE 24 INCHES. THE MINIMUM DEPTH OF CONDUIT EXITING THE CONCRETE BASE THAT IS NOT INSTALLED BELOW THE TRAVELED WAY SHALL BE 18 INCHES. THE MAXIMUM DEPTH OF ALL CONDUIT SHALL BE 36 INCHES EXCEPT WITH WRITTEN APPROVAL BY THE ENGINEER.

(2) (4) 1" DIA. X 3'-6" ANCHOR RODS.

(3) (4) 1" DIA. X 5'-0" ANCHOR RODS.

(4) (6) NO. 6 X 6'-8" BAR STEEL REINFORCEMENT.

(5) (7) NO. 4 X 5'-1" BAR STEEL REINFORCEMENT @ 1'-0" C-C.

(6) (4) 1" DIA. X 3'-6" ANCHOR RODS.

(7) (6) NO.4 X 4'-8" BAR STEEL REINFORCEMENT

(8) (5) NO. 4 X 5'-1" BAR STEEL REINFORCEMENT @ 1'-0" C-C.

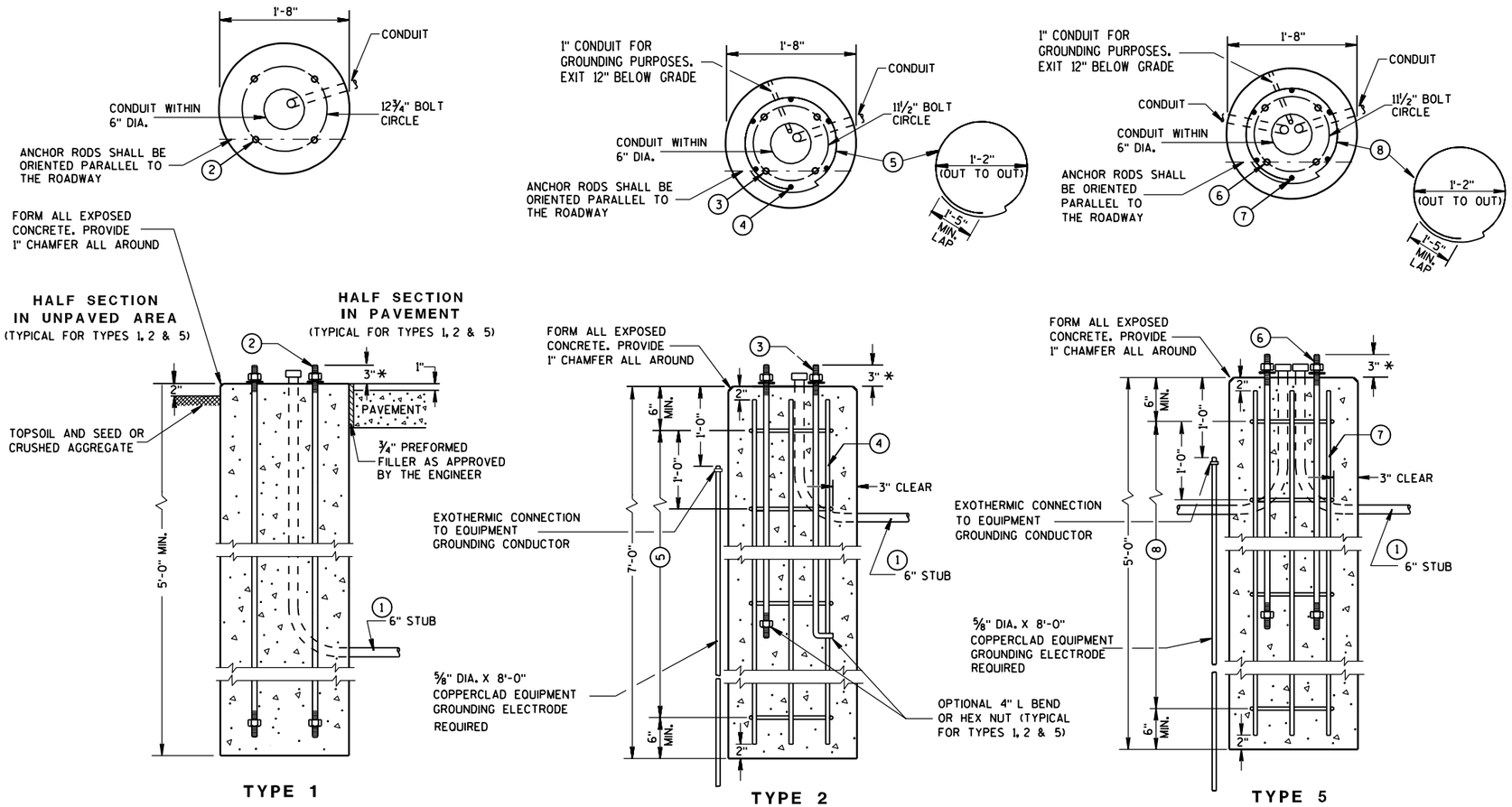

CONCRETE BASES

* ANY ANCHOR ROD PROJECTION SHORTER THAN 2¾" OR LONGER THAN 3¼" SHALL REQUIRE THE BASE TO BE REMOVED AND REPLACED AT THE CONTRACTORS EXPENSE.

CONCRETE BASES, TYPES 1, 2 & 5

STATE OF WISCONSIN
DEPARTMENT OF TRANSPORTATION

APPROVED 1/12/05 DATE
FHWA
STATE ELECTRICAL ENGINEER FOR HIGHWAYS

6

S.D.D. 9 C 2-4

S.D.D. 9 C 2-4

GENERAL NOTES

DETAILS OF CONSTRUCTION, MATERIALS AND WORKMANSHIP NOT SHOWN ON THIS DRAWING SHALL CONFORM TO THE PERTINENT REQUIREMENTS OF THE CONTRACT.

FOUR (4) BOLTS SHALL BE FURNISHED WITH EACH TRANSFORMER BASE. BOLTS SHALL BE 1" DIAMETER, 4" IN LENGTH, WITH WASHERS, LOCK WASHERS AND NUTS. BOLTS, NUTS AND WASHERS SHALL BE MANUFACTURED IN ACCORDANCE WITH SECTION 641.2.2 OF THE STANDARD SPECIFICATIONS, ASTM A-325, (92,000 YIELD) HEAVY HEX NUT AND BE GALVANIZED IN ACCORDANCE WITH ASTM A-153, CLASS C.

LEVELING SHIMS, IF NEEDED, SHALL BE DESIGNED FOR THE PURPOSE AND USED UNDER CAST BASES WHEN PLUMBING POLES OR STANDARDS DURING INSTALLATION. THE USE OF WASHERS IN LIEU OF PROPER LEVELING SHIMS IS NOT ACCEPTABLE.

SHIM LENGTH SHALL BE LONG ENOUGH TO COMPLETELY COVER THE AREA UNDER THE LENGTH AND WIDTH OF THE BASE MOUNTING FLANGE.

DOUBLE NUTTING IS NOT ACCEPTABLE FOR LEVELING OR MOUNTING PURPOSES.

A NEMA APPROVED AND U.L. LISTED MECHANICAL CONNECTOR (LUG) AL/CU RATED AND SIZED TO ACCEPT #10 AWG STRANDED WIRE, SHALL BE FURNISHED AND INSTALLED IN THE PEDESTAL AND TRANSFORMER BASES.

THE MECHANICAL CONNECTOR SHALL BE INSTALLED USING A 1/4" - 20 (TPI) STAINLESS STEEL HEX HEAD BOLT OF SUFFICIENT LENGTH TO FIRMLY ATTACH THE LUG TO THE BASE.

SHOULD THE MANNER OF ATTACHMENT OF THE LUG REQUIRE WASHERS, HEX NUTS, LOCK WASHER - THEY SHALL BE STAINLESS STEEL AS IS THE BOLT. THE MANNER OF ATTACHMENT SHALL NOT BLOCK ACCESSIBILITY TO WIRE PLACEMENT IN THE CONNECTOR.

PEDESTAL BASE COLLAR THREADING SHALL BE TAPERED AND IN ACCORDANCE WITH NATIONAL PIPE THREADING DIMENSIONS.

BASE COLLAR THREADING SHALL EXTEND INTO THE BASE COLLAR WITH SUFFICIENT DEPTH TO ACCEPT THE INSTALLATION OF TRAFFIC SIGNAL STANDARDS TO A DEPTH OF 1 1/2", THEN TIGHTENING TO A POINT OF BEING IMMOVABLE.

THE ACCESS DOOR SHALL BE OF THE SAME MATERIAL AS THE BASE.

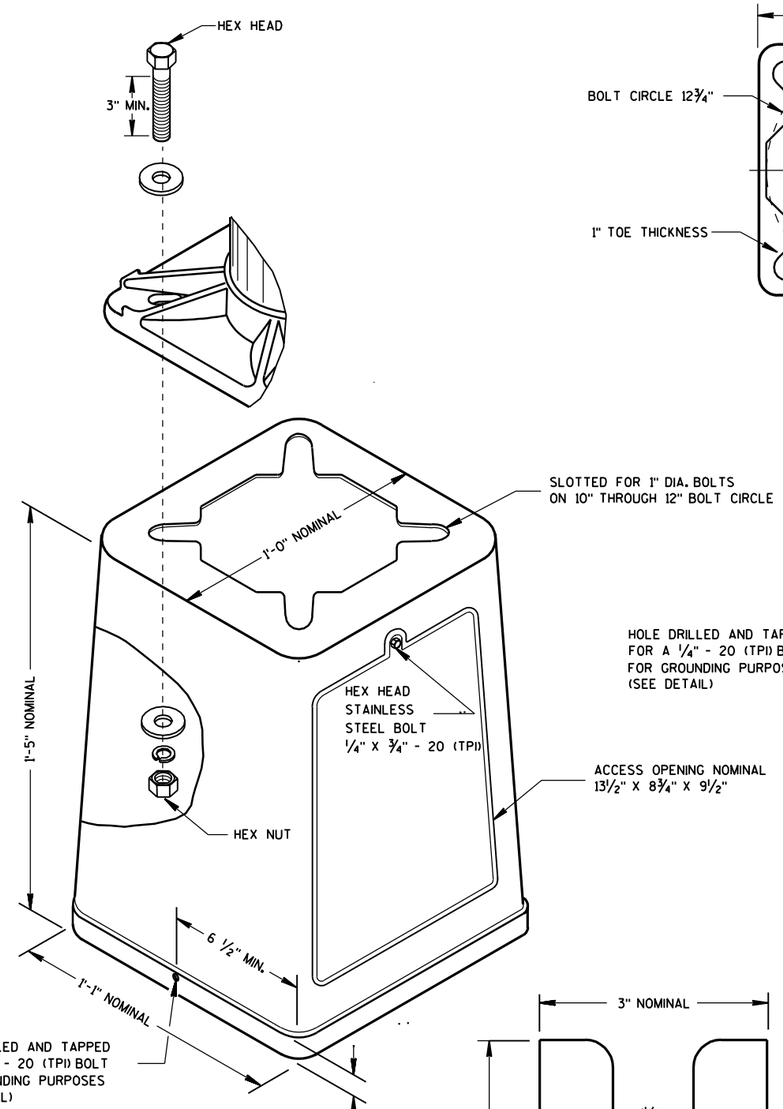

ISOMETRIC VIEW

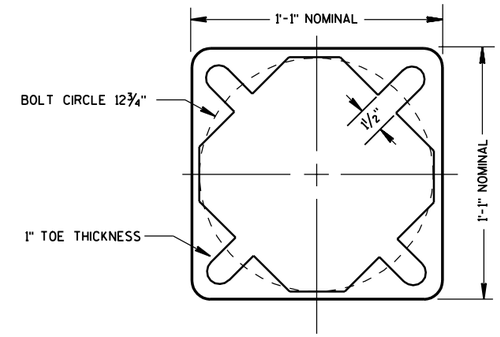

BOTTOM VIEW
(PEDESTAL BASE)

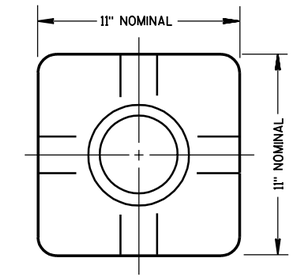

TOP VIEW
(PEDESTAL BASE)

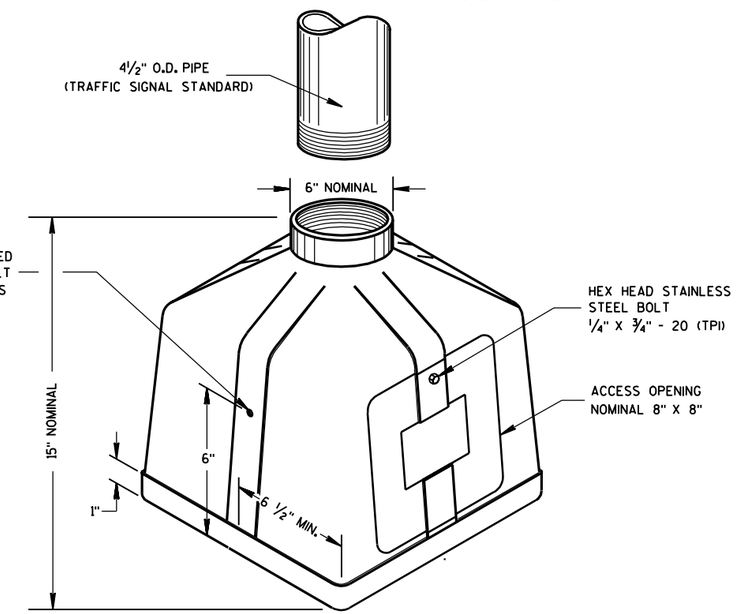

ISOMETRIC VIEW
PEDESTAL BASE

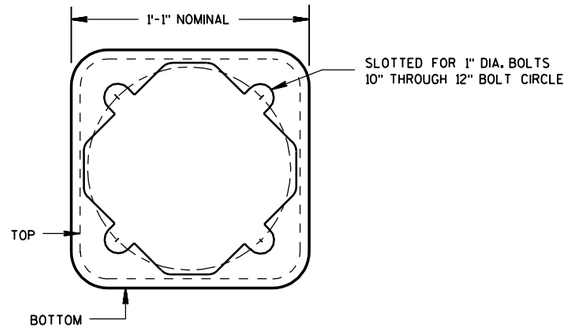

BOTTOM VIEW
(TRANSFORMER BASE)

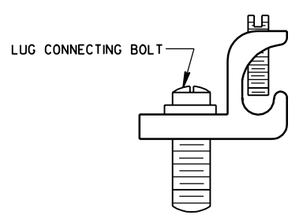

TYPICAL MECHANICAL
CONNECTOR LUG
TO BE FURNISHED WITH EACH BASE

TRANSFORMER BASE
INTENDED FOR USE WITH TYPE 2, 3, 4, 5 & 6 POLES

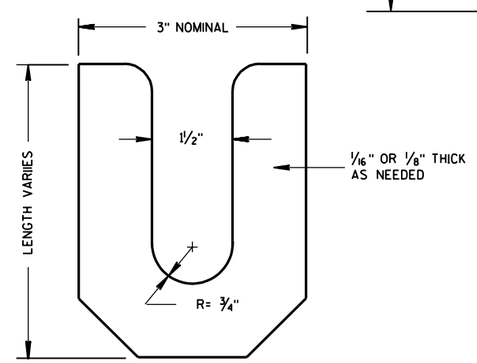

LEVELING SHIM

TRANSFORMER/PEDESTAL BASES
STATE OF WISCONSIN DEPARTMENT OF TRANSPORTATION
APPROVED 10/21/96 DATE FHWA STATE ELECTRICAL ENGINEER FOR HIGHWAYS

6

S.D.D. 9 C 3-2

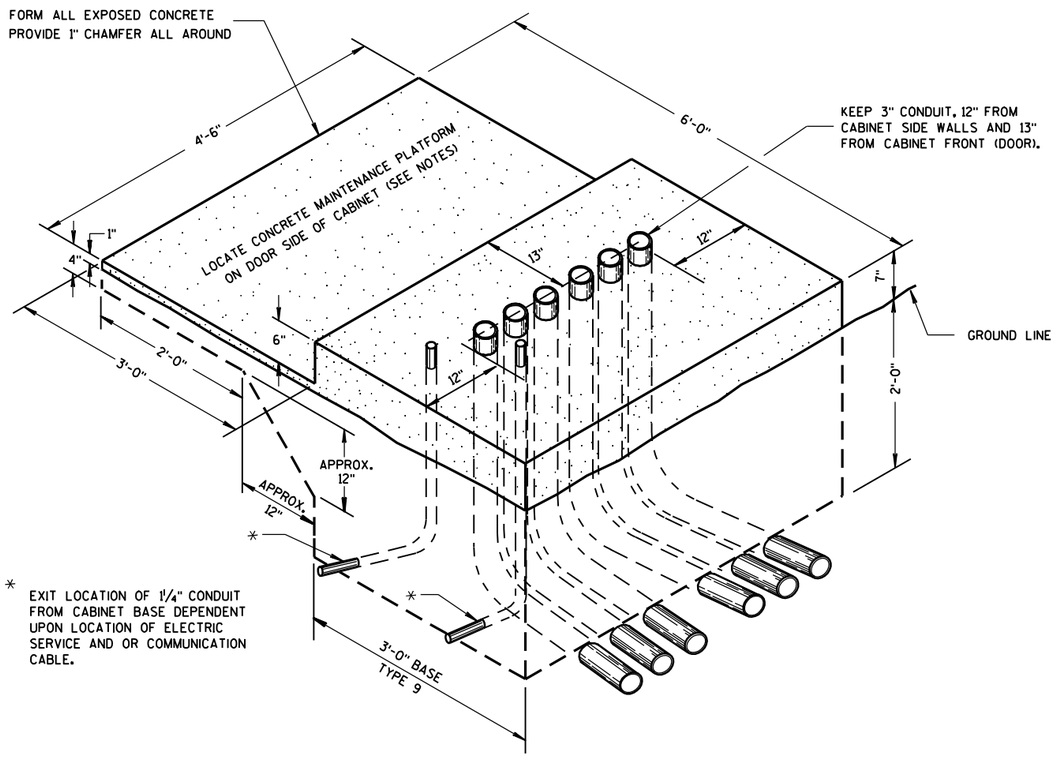

ISOMETRIC VIEW

TYPE 9, SPECIAL

(C.Y. CONCRETE = APPROX. 1.56)

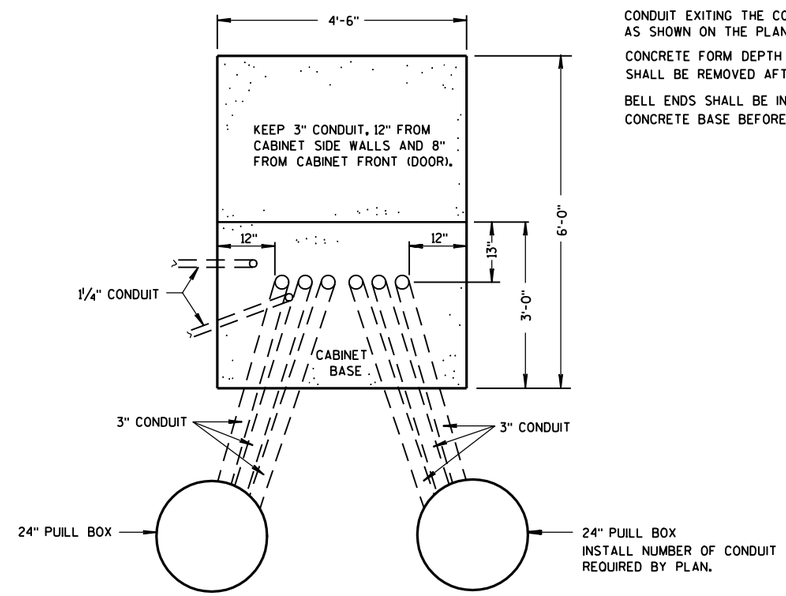

PLAN VIEW

CONCRETE CONTROL CABINET BASE, TYPE 9, SPECIAL

GENERAL NOTES

DETAILS OF CONSTRUCTION, MATERIALS AND WORKMANSHIP NOT SHOWN ON THIS DRAWING SHALL CONFORM TO THE PERTINENT REQUIREMENTS OF THE CONTRACT.

INSTALL FOUR ½ INCH MINIMUM DIAMETER X 4 INCH MINIMUM LENGTH STAINLESS STEEL APPROVED CONCRETE MASONRY ANCHORS TO ANCHOR THE CABINET TO TYPE 6, 7, 8, AND 9 BASES. THE ANCHOR STUDS SHALL BE LOCATED AS DIRECTED BY THE ENGINEER TO PROPERLY ANCHOR THE CONTROL CABINET TO THE BASE.

WHEN REQUIRED TO CONNECT NONMETALLIC CONDUIT TO METALLIC CONDUIT, ONLY ADAPTER FITTINGS, U.L. LISTED FOR ELECTRICAL USE, SHALL BE USED.

CONDUIT HEIGHT ABOVE THE CONCRETE BASE SHALL BE 1 INCH.

DEPTH OF CONDUIT INSTALLED BELOW THE TRAVELED WAY SHALL BE 24 INCHES MINIMUM AND 36 INCHES MAXIMUM.

DEPTH OF CONDUIT INSTALLED THAT IS NOT BELOW THE TRAVELED WAY SHALL BE 18 INCHES MINIMUM AND 36 INCHES MAXIMUM.

ANY EXCEPTION TO THE MAXIMUM DEPTH SHALL BE ONLY WITH THE WRITTEN APPROVAL OF THE ENGINEER.

CONTROL CABINET BASE TOP SURFACE SHALL BE TROWEL FINISHED SMOOTH AND LEVEL.

MAINTENANCE PLATFORM SHALL BE FLOAT OR BROOM FINISHED AND BE LEVEL.

MAINTENANCE PLATFORMS ARE NOT REQUIRED WHEN THE SURROUNDING AREA IS PAVED.

MINIMUM BENDING RADIUS OF CONDUIT = 6 X THE DIAMETER.

ALL METALLIC CONDUIT ENDS SHALL BE REAMED AND THREADED.

CAP ALL BELOW GRADE METALLIC CONDUIT ENDS IN WHICH WIRE OR CABLE IS NOT BEING INSTALLED.

PLUG ALL BELOW GRADE NONMETALLIC CONDUIT ENDS IN WHICH WIRE OR CABLE IS NOT BEING INSTALLED.

ALL CONDUIT ENDS AT THE TOP OF CONCRETE BASES SHALL BE CAPPED IF METALLIC OR PLUGGED IF NONMETALLIC IMMEDIATELY AFTER PLACEMENT AND BEFORE CONCRETE IS POURED. CONDUITS IN WHICH WIRE OR CABLE IS NOT BEING INSTALLED SHALL REMAIN CAPPED OR PLUGGED.

CONDUIT EXITING THE CONCRETE BASE (SIX THREE INCH) SHALL TERMINATE IN PULL BOXES AS SHOWN ON THE PLANS.

CONCRETE FORM DEPTH BELOW FINISHED GRADE SHALL BE 6" MAXIMUM. CONCRETE FORMS SHALL BE REMOVED AFTER CONCRETE HAS SET.

BELL ENDS SHALL BE INSTALLED ON ALL PVC CONDUIT EXPOSED AT THE TOP OF THE CONCRETE BASE BEFORE INSTALLATION OF CABLE OR WIRE.

CONCRETE CONTROL CABINET BASE, TYPE 9, SPECIAL
STATE OF WISCONSIN DEPARTMENT OF TRANSPORTATION
APPROVED 2/27/07 DATE — /S/ Balu Ananthanarayanan, STATE ELECTRICAL ENGINEER FOR HIGHWAYS — FHWA

6

S.D.D. 9 C 6-5

6

S.D.D. 9 C 6-5

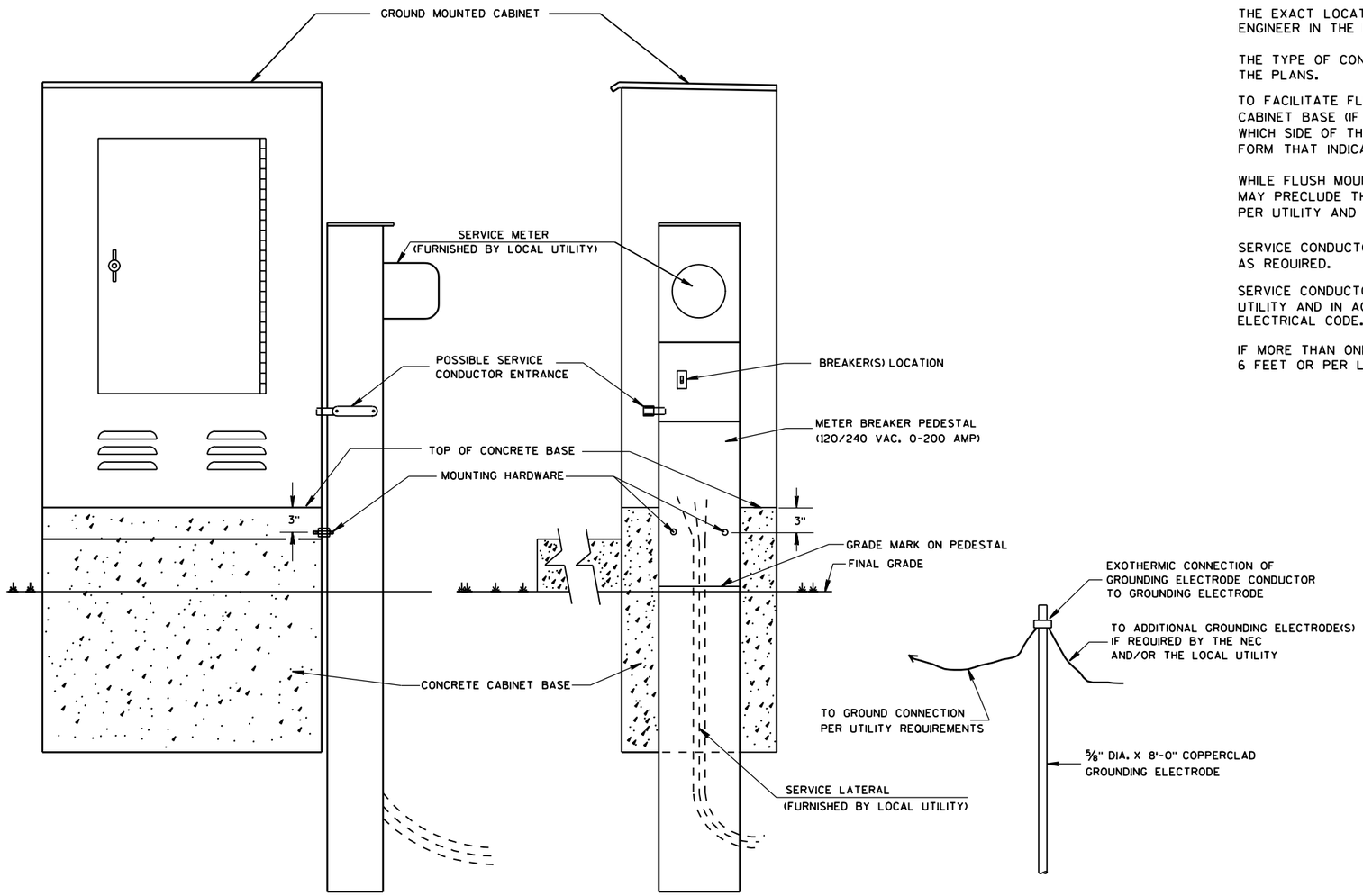

TYPICAL CABINET SERVICE INSTALLATION

GENERAL NOTES

DETAILS OF CONSTRUCTION, MATERIALS AND WORKMANSHIP NOT SHOWN ON THIS DRAWING SHALL CONFORM TO THE PERTINENT REQUIREMENTS OF THE CONTRACT.

THE EXACT LOCATION OF THE METER BREAKER PEDESTAL SHALL BE DETERMINED BY THE ENGINEER IN THE FIELD.

THE TYPE OF CONCRETE CABINET BASE TO BE INSTALLED SHALL BE AS CALLED FOR IN THE PLANS.

TO FACILITATE FLUSH MOUNTING OF THE METER BREAKER PEDESTAL AGAINST THE SIDE OF THE CABINET BASE (IF FLUSH MOUNTING POSSIBLE. CONFER WITH THE LOCAL UTILITY TO DETERMINE WHICH SIDE OF THE CONCRETE BASE THE ELECTRICAL SERVICE LATERAL WILL APPROACH. THEN FORM THAT INDICATED SIDE FOR FULL SIDE DEPTH.

WHILE FLUSH MOUNTING IS THE MOST DESIRABLE MOUNTING CONFIGURATION UTILITY REQUIREMENTS MAY PRECLUDE THIS OPTION. CONTRACTOR MUST PROVIDE UTILITY APPROVED PEDESTAL AND INSTALL PER UTILITY AND MANUFACTURERS REQUIREMENTS.

SERVICE CONDUCTOR ENTRANCES SHALL BE RIGID METALLIC CONDUIT, NIPPLES AND/OR CONDULETS AS REQUIRED.

SERVICE CONDUCTOR ENTRANCES SHALL BE SIZED AND LOCATED AS REQUIRED BY THE LOCAL UTILITY AND IN ACCORDANCE WITH APPROPRIATE ARTICLES OF THE LATEST ACCEPTED NATIONAL ELECTRICAL CODE.

IF MORE THAN ONE GROUNDING ELECTRODE IS REQUIRED, THE DISTANCE APART SHALL BE 6 FEET OR PER LOCAL UTILITY REGULATIONS.

CABINET SERVICE INSTALLATION
(METER BREAKER PEDESTAL)

STATE OF WISCONSIN
DEPARTMENT OF TRANSPORTATION

APPROVED
1/12/05
DATE
FHWA

STATE ELECTRICAL ENGINEER FOR HIGHWAYS

6

S.D.D. 9 D 1-3

6

S.D.D. 9 D 1-3

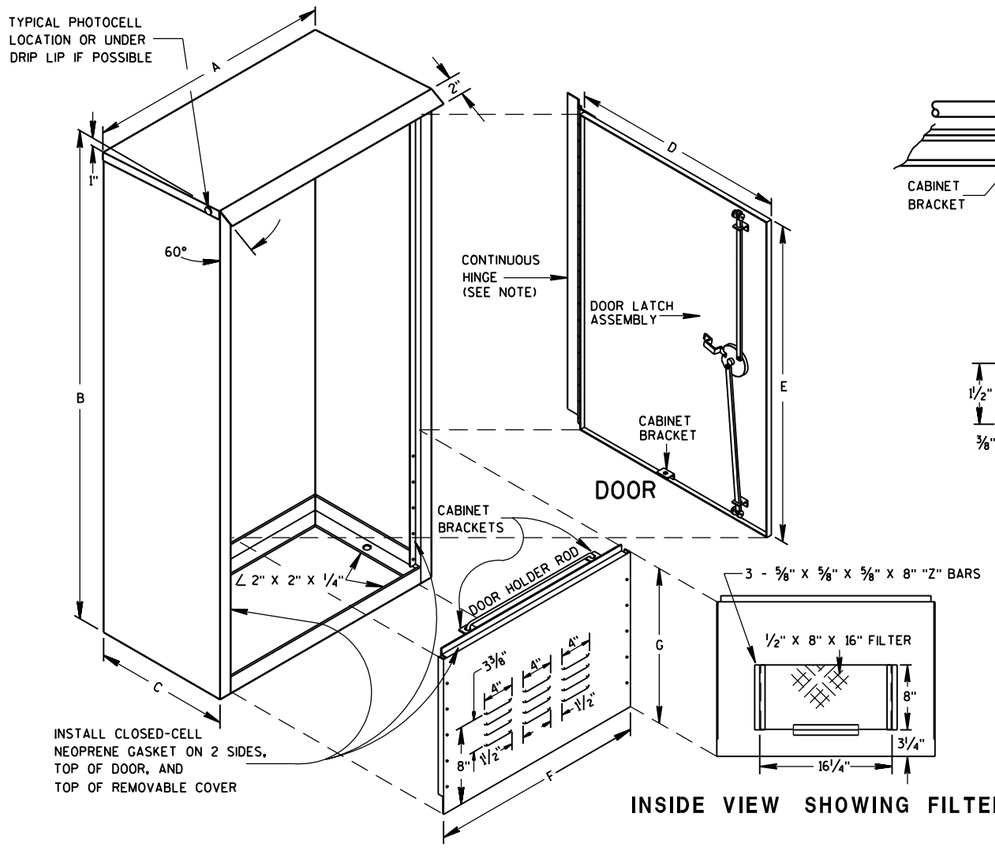

INSIDE VIEW SHOWING FILTER

REMOVABLE COVER

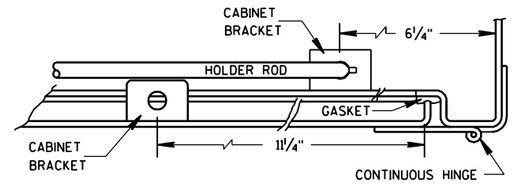

HINGE & DOOR HOLDER

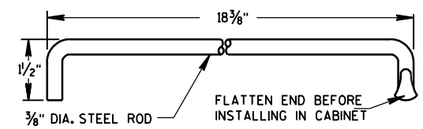

HOLDER ROD

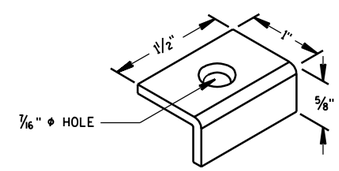

CABINET BRACKET

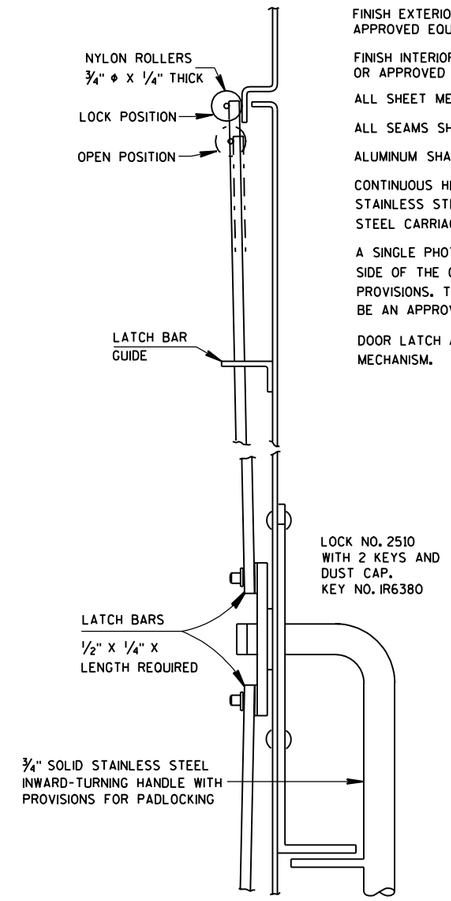

SIDE VIEW

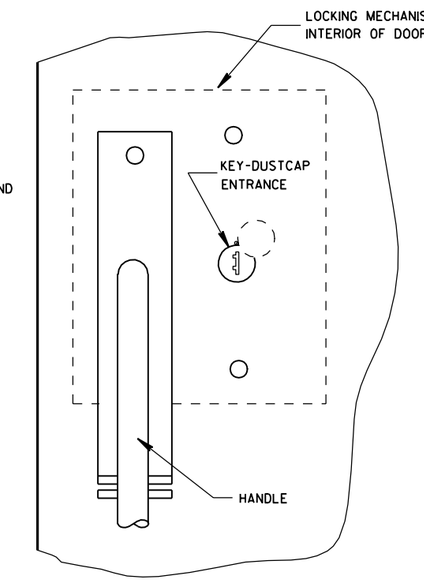

FRONT VIEW

LATCH ASSEMBLY

GENERAL NOTES

DETAILS OF CONSTRUCTION, MATERIALS AND WORKMANSHIP NOT SHOWN ON THIS DRAWING SHALL CONFORM TO THE PERTINENT REQUIREMENTS OF THE STANDARD SPECIFICATIONS AND APPLICABLE SPECIAL PROVISIONS.

PRIME WITH PHOSPHATE TREATMENT AND PRIMER.

FINISH EXTERIOR SURFACES WITH RUSTOLEUM #906 SILVER GRAY OR APPROVED EQUAL.

FINISH INTERIOR WITH RUSTOLEUM #2766 HIGH GLOSS WHITE ENAMEL OR APPROVED EQUAL.

ALL SHEET METAL PARTS SHALL BE .125 INCH THICK ALUMINUM.

ALL SEAMS SHALL BE CONTINUOUSLY WELDED.

ALUMINUM SHALL BE TYPE 5052-H32.

CONTINUOUS HINGE SHALL BE HEAVY GAUGE ALUMINUM WITH 1/4" DIAMETER STAINLESS STEEL HINGE PIN. HINGE IS SECURED WITH 1/4" X 20 TPI STAINLESS STEEL CARRIAGE BOLTS AND STAINLESS STEEL NYLOCK NUTS.

A SINGLE PHOTOCELL SHALL BE LOCATED ON THE NORTH-NORTHEAST SIDE OF THE CABINET UNLESS OTHERWISE CALLED FOR IN THE SPECIAL PROVISIONS. THE PHOTOCELL SHALL BE PLACED AS SHOWN AND SHALL BE AN APPROVED TYPE.

DOOR LATCH ASSEMBLY TO BE PROVIDED WITH THREE-POINT LOCKING MECHANISM.

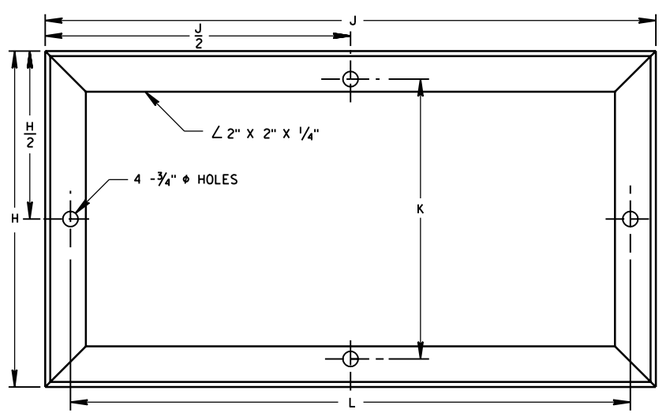

MOUNTING BASE

TABLE OF DIMENSIONS (INCHES)

MARK	CABINET TYPE		
	3060	3860	3866
A	30	38	38
B	60	60	66
C	16 1/2	16 1/2	24
D	26 1/2	34 3/4	33 3/4
E	38 3/4	38 3/4	38 3/4
F	26 1/2	34 3/4	33 3/4
G	19	19	25
H	16 1/2	16 1/2	24
H/2	8 1/4	8 1/4	12
J	30	38	38
J/2	15	19	19
K	13 3/4	13 3/4	21 1/4
L	27 1/2	35 1/2	35 1/2

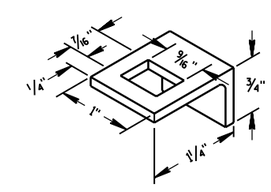

LATCH BAR GUIDE

SIGNAL OR LIGHTING CONTROL CABINET

STATE OF WISCONSIN
DEPARTMENT OF TRANSPORTATION

APPROVED
10/21/96
DATE
FHWA

STATE ELECTRICAL ENGINEER FOR HIGHWAYS

6

S.D.D. 9 D 2-2

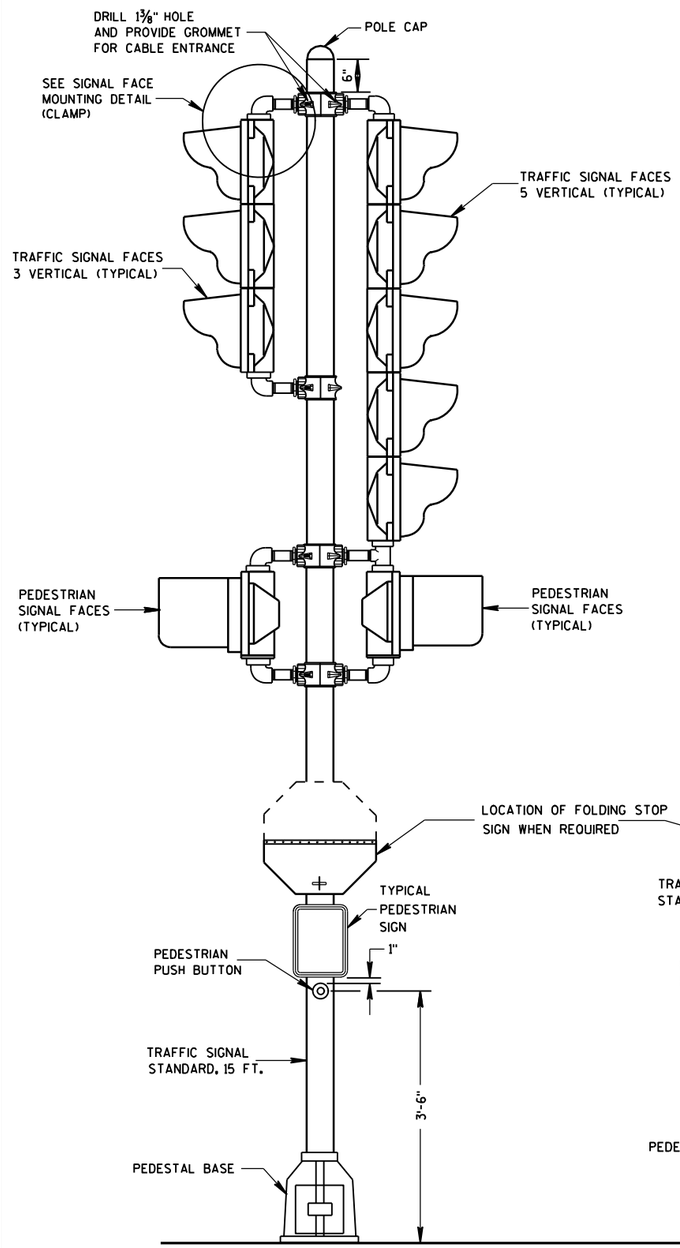

TRAFFIC SIGNAL STANDARD-15 FT.

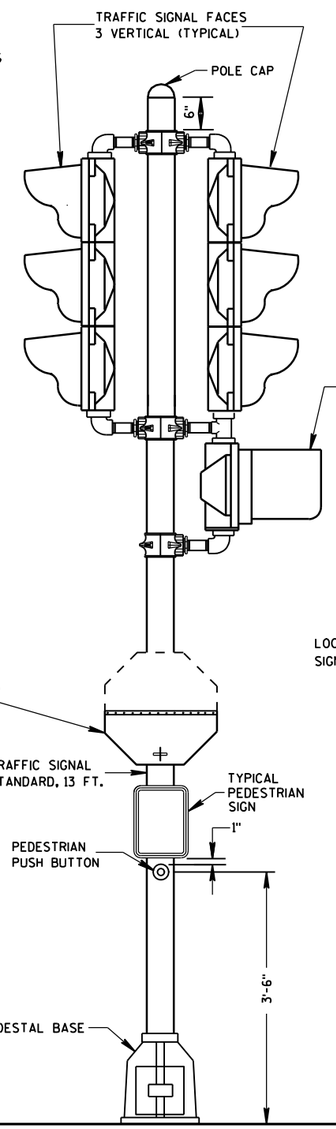

TRAFFIC SIGNAL STANDARD-13 FT.

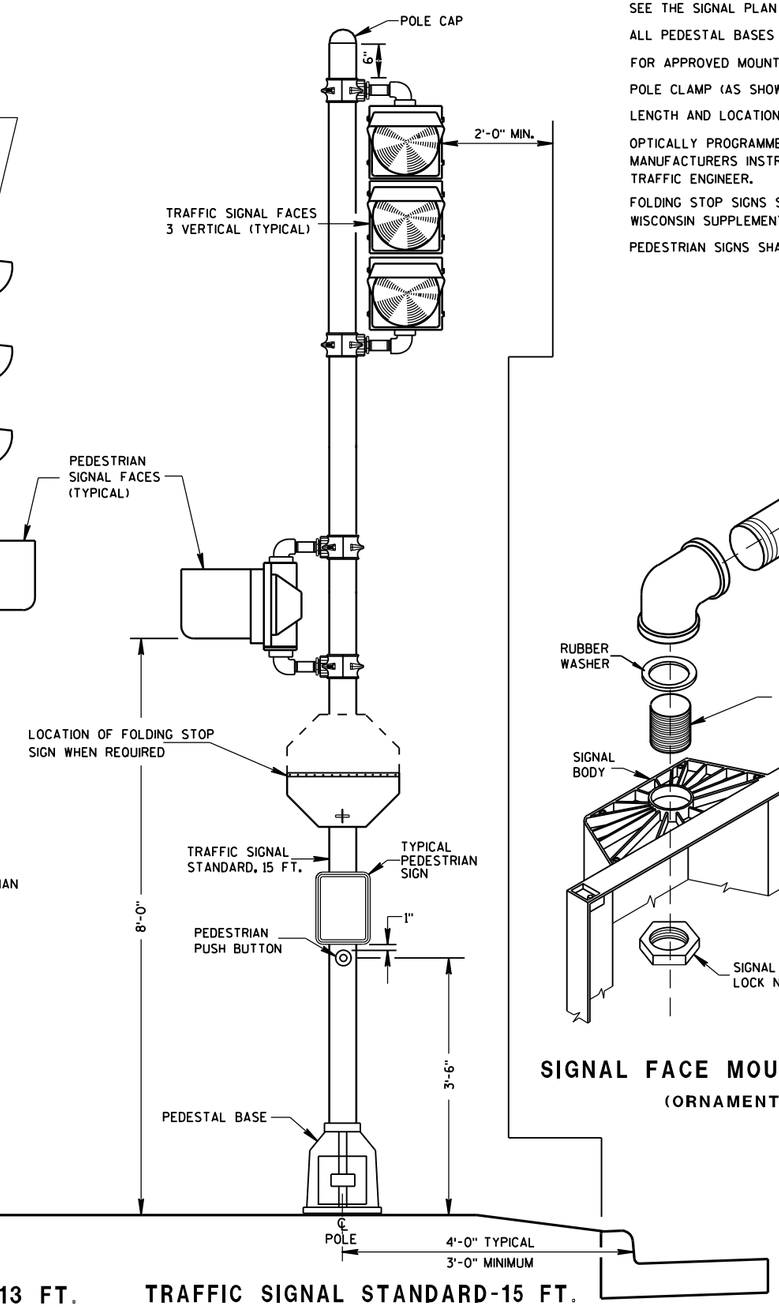

TRAFFIC SIGNAL STANDARD-15 FT.
3M MOUNTING (TYPICAL)

GENERAL NOTES

DETAILS OF CONSTRUCTION, MATERIALS AND WORKMANSHIP NOT SHOWN ON THIS DRAWING SHALL CONFORM TO THE PERTINENT REQUIREMENTS OF THE CONTRACT.

SEE THE SIGNAL PLAN FOR REQUIRED SIGNAL FACE SIZES.

ALL PEDESTAL BASES SHALL BE MOUNTED ON CONCRETE BASE - TYPE 1.

FOR APPROVED MOUNTING HARDWARE, SEE THE CONTRACT SPECIAL PROVISIONS.

POLE CLAMP (AS SHOWN) MOUNTING BRACKETS SHALL BE USED.

LENGTH AND LOCATION OF TRAFFIC SIGNAL STANDARDS SHALL BE AS SHOWN ON THE PLANS.

OPTICALLY PROGRAMMED SIGNAL FACES SHALL BE MASKED IN ACCORDANCE WITH MANUFACTURERS INSTRUCTIONS, AND UNDER THE DIRECTIONS OF THE DISTRICT TRAFFIC ENGINEER.

FOLDING STOP SIGNS SHALL BE IN ACCORDANCE WITH THE MUTCD AND/OR THE LATEST WISCONSIN SUPPLEMENT. THE SIGNS SHALL BE SIZED AND LOCATED AS CALLED FOR IN THE PLANS.

PEDESTRIAN SIGNS SHALL BE AS DESIGNATED IN THE PLANS.

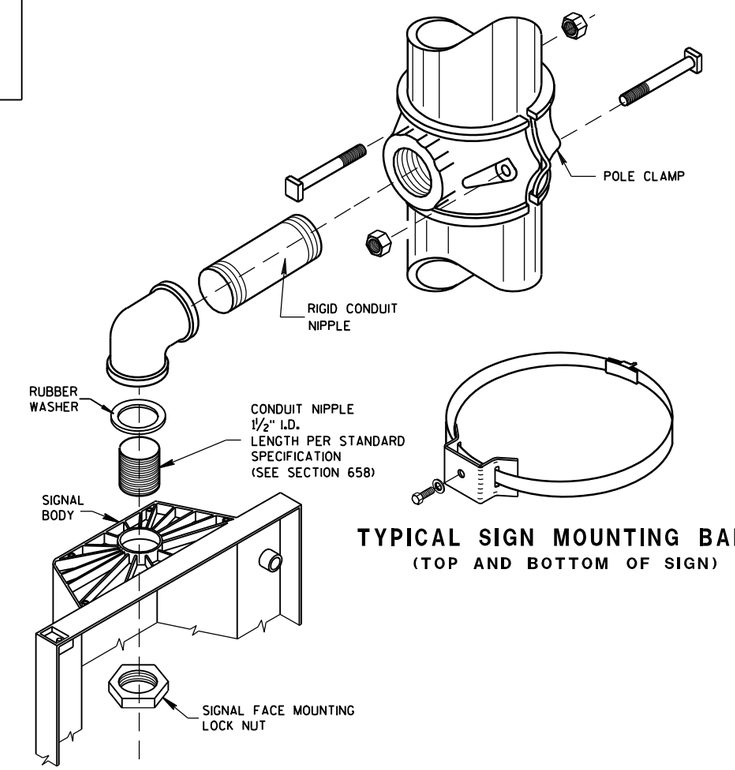

SIGNAL FACE MOUNTING DETAIL
(ORNAMENTAL)

TYPICAL SIGN MOUNTING BAND
(TOP AND BOTTOM OF SIGN)

TRAFFIC SIGNAL STANDARD
ORNAMENTAL BRACKET MOUNTINGS
TYPICAL FOR 13 FT. OR 15 FT.

STATE OF WISCONSIN
DEPARTMENT OF TRANSPORTATION

APPROVED
4/24/09
DATE
/S/ Joanna L. Bush
STATE ELECTRICAL ENGINEER FOR HIGHWAYS
FHWA

6

S.D.D. 9 E 5-4

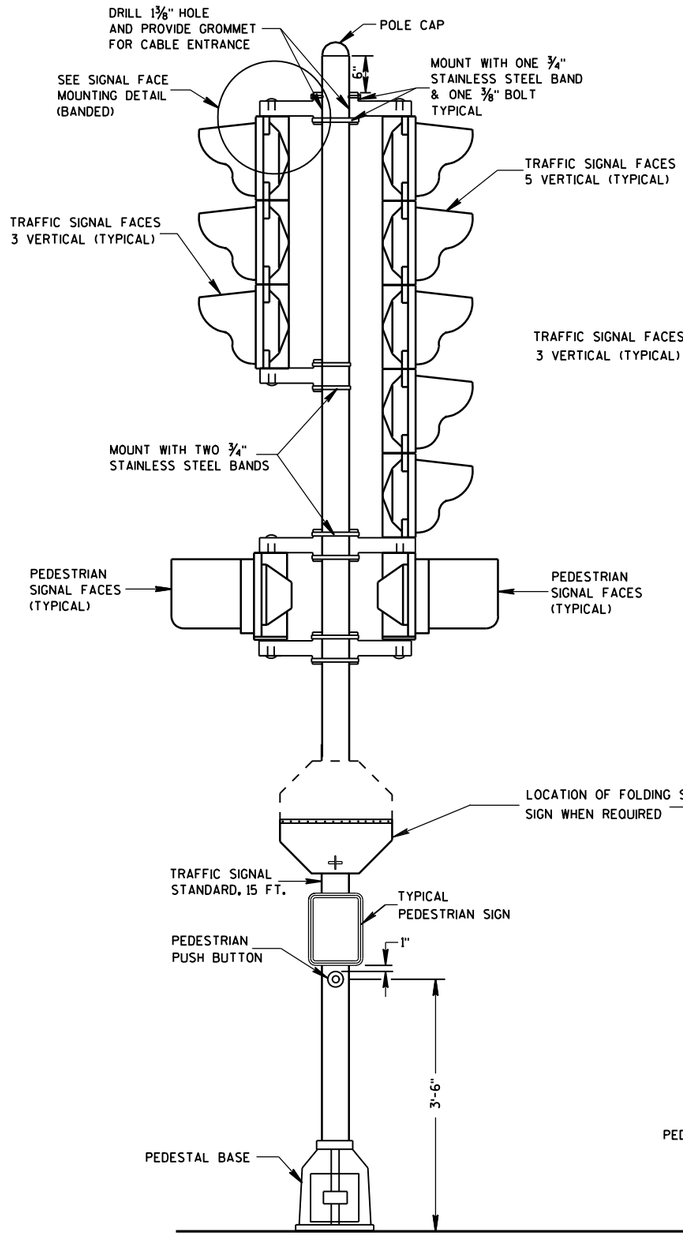

TRAFFIC SIGNAL STANDARD-15 FT.

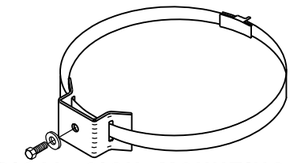

TYPICAL SIGN MOUNTING BAND

(TOP AND BOTTOM OF SIGN)

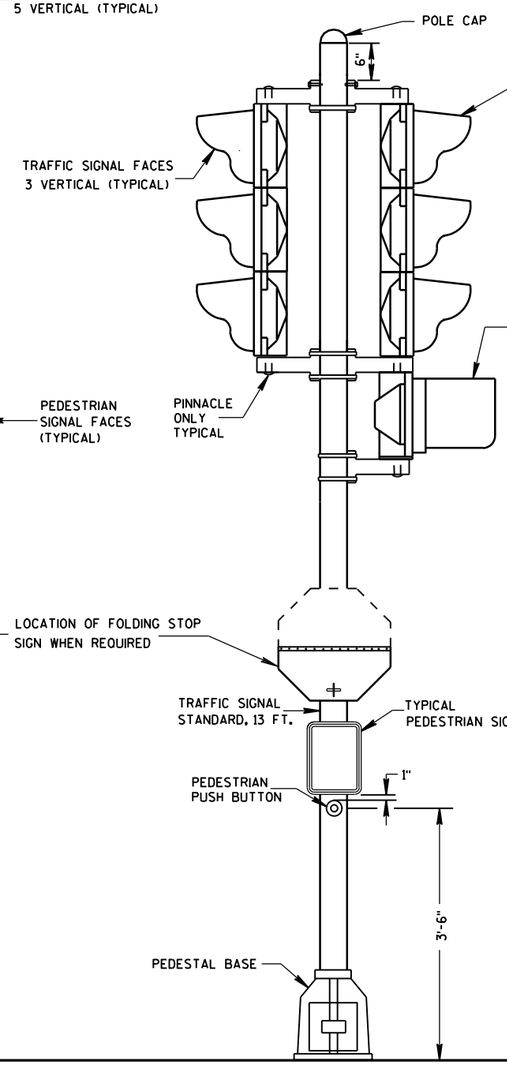

TRAFFIC SIGNAL STANDARD-13 FT.

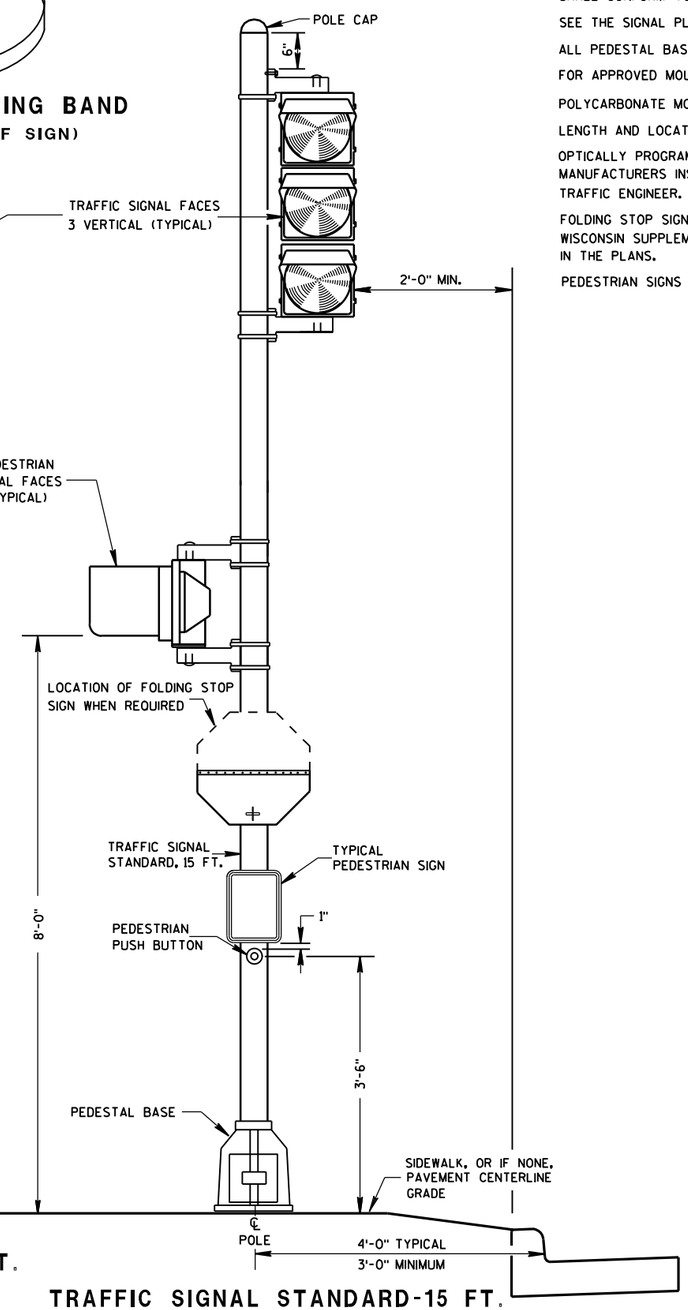

TRAFFIC SIGNAL STANDARD-15 FT.

3M MOUNTING (TYPICAL)

GENERAL NOTES

DETAILS OF CONSTRUCTION, MATERIALS AND WORKMANSHIP NOT SHOWN ON THIS DRAWING SHALL CONFORM TO THE PERTINENT REQUIREMENTS OF THE CONTRACT.

SEE THE SIGNAL PLAN FOR REQUIRED SIGNAL FACE SIZES.

ALL PEDESTAL BASES SHALL BE MOUNTED ON CONCRETE BASE - TYPE 1.

FOR APPROVED MOUNTING HARDWARE, SEE THE CONTRACT SPECIAL PROVISIONS.

POLYCARBONATE MOUNTING BRACKETS SHALL BE USED.

LENGTH AND LOCATION OF TRAFFIC SIGNAL STANDARDS SHALL BE AS SHOWN ON THE PLANS.

OPTICALLY PROGRAMMED SIGNAL FACES SHALL BE MASKED IN ACCORDANCE WITH MANUFACTURERS INSTRUCTIONS, AND UNDER THE DIRECTIONS OF THE DISTRICT TRAFFIC ENGINEER.

FOLDING STOP SIGNS SHALL BE IN ACCORDANCE WITH THE MUTCD AND/OR THE LATEST WISCONSIN SUPPLEMENT. THE SIGNS SHALL BE SIZED AND LOCATED AS CALLED FOR IN IN THE PLANS.

PEDESTRIAN SIGNS SHALL BE AS DESIGNATED IN THE PLANS.

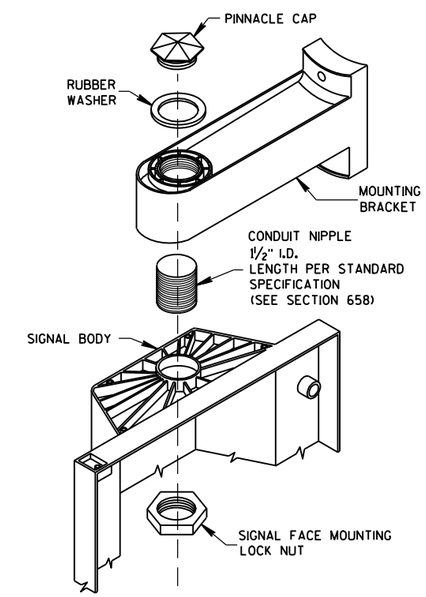

SIGNAL FACE MOUNTING DETAIL

(BANDED)

TRAFFIC SIGNAL STANDARD POLY BRACKET MOUNTINGS (TYPICAL) 13 FT. OR 15 FT.	
STATE OF WISCONSIN DEPARTMENT OF TRANSPORTATION	
APPROVED 4/24/09 DATE FHWA	/S/ Joanna L. Bush STATE ELECTRICAL ENGINEER FOR HIGHWAYS

6

S.D.D. 9 E 6-3

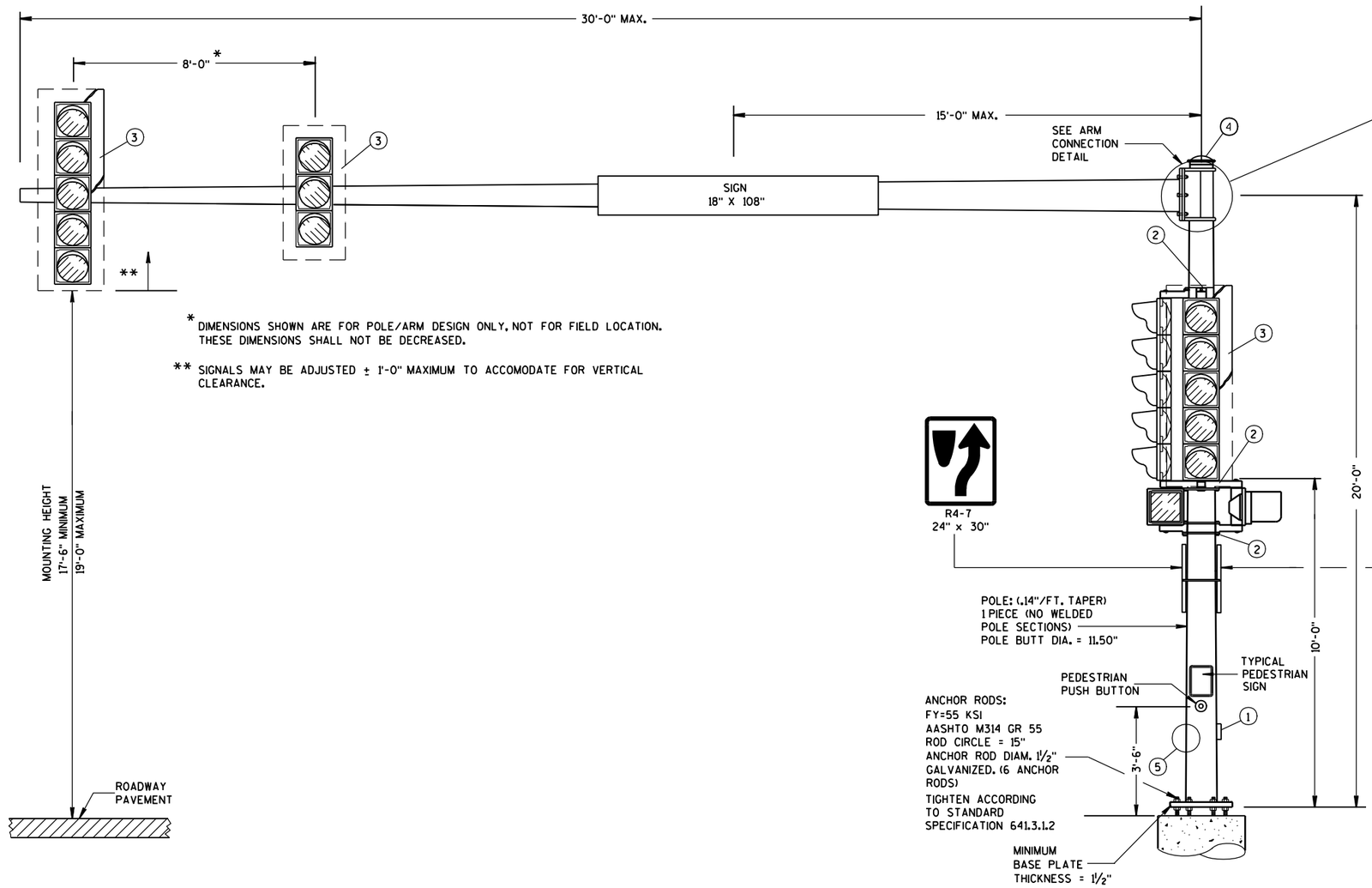

* DIMENSIONS SHOWN ARE FOR POLE/ARM DESIGN ONLY, NOT FOR FIELD LOCATION. THESE DIMENSIONS SHALL NOT BE DECREASED.

** SIGNALS MAY BE ADJUSTED ± 1'-0" MAXIMUM TO ACCOMODATE FOR VERTICAL CLEARANCE.

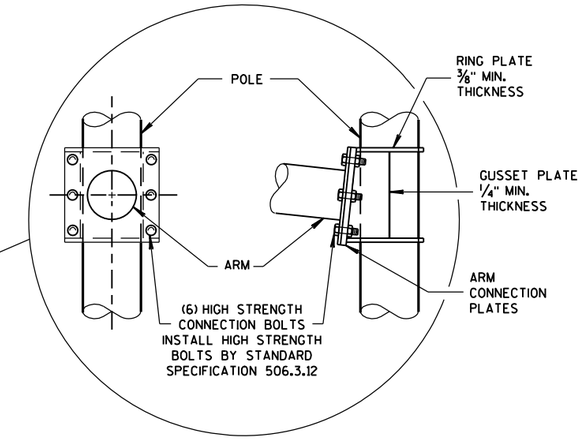

6 BOLT ARM CONNECTION DETAIL

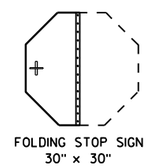

FOLDING STOP SIGN 30" x 30"

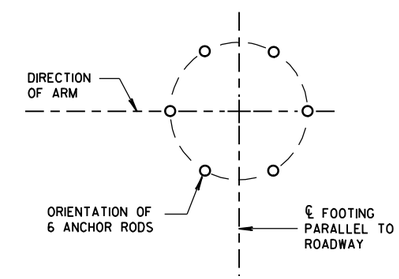

ANCHOR ROD LOCATION

(MAXIMUM LOAD)

TYPE 9 POLE 15'- 30' MONOTUBE ARM

TYPE 9 POLE 15'-30' MONOTUBE ARM
STATE OF WISCONSIN DEPARTMENT OF TRANSPORTATION
APPROVED 10-28-08 — DATE /S/ Joanna L. Bush — STATE ELECTRICAL ENGINEER FOR HWYS. FHWA

6

S.D.D. 9 E 8-2a

6

S.D.D. 9 E 8-2a

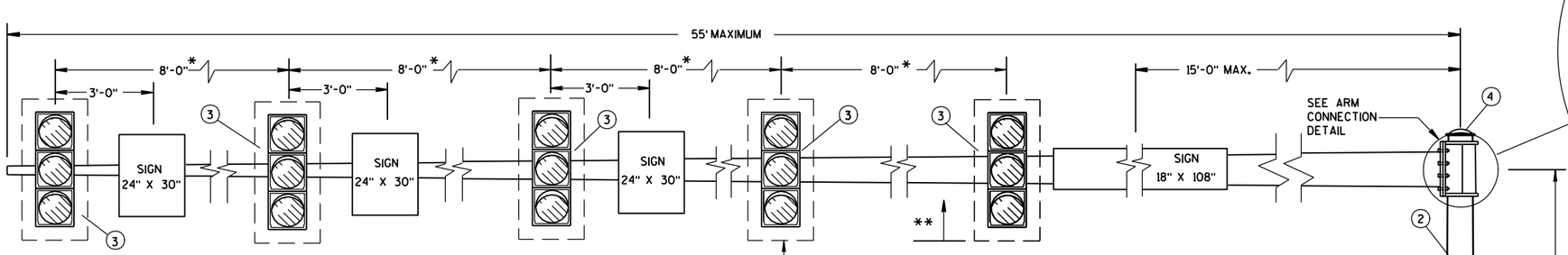

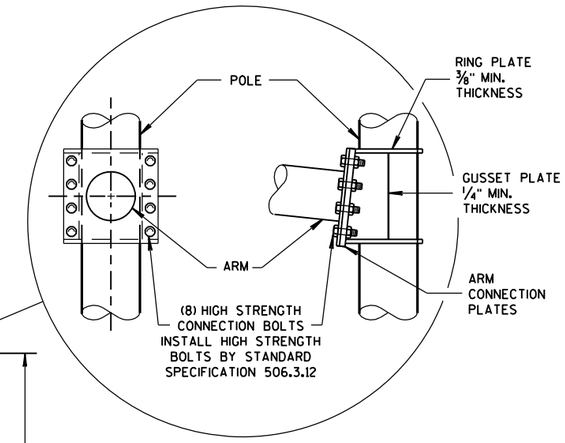

8 BOLT ARM CONNECTION DETAIL

* DIMENSIONS SHOWN ARE FOR POLE/ARM DESIGN ONLY, NOT FOR FIELD LOCATION. THESE DIMENSIONS SHALL NOT BE DECREASED.

** SIGNALS MAY BE ADJUSTED ± 1'-0" MAXIMUM TO ACCOMODATE FOR VERTICAL CLEARANCE.

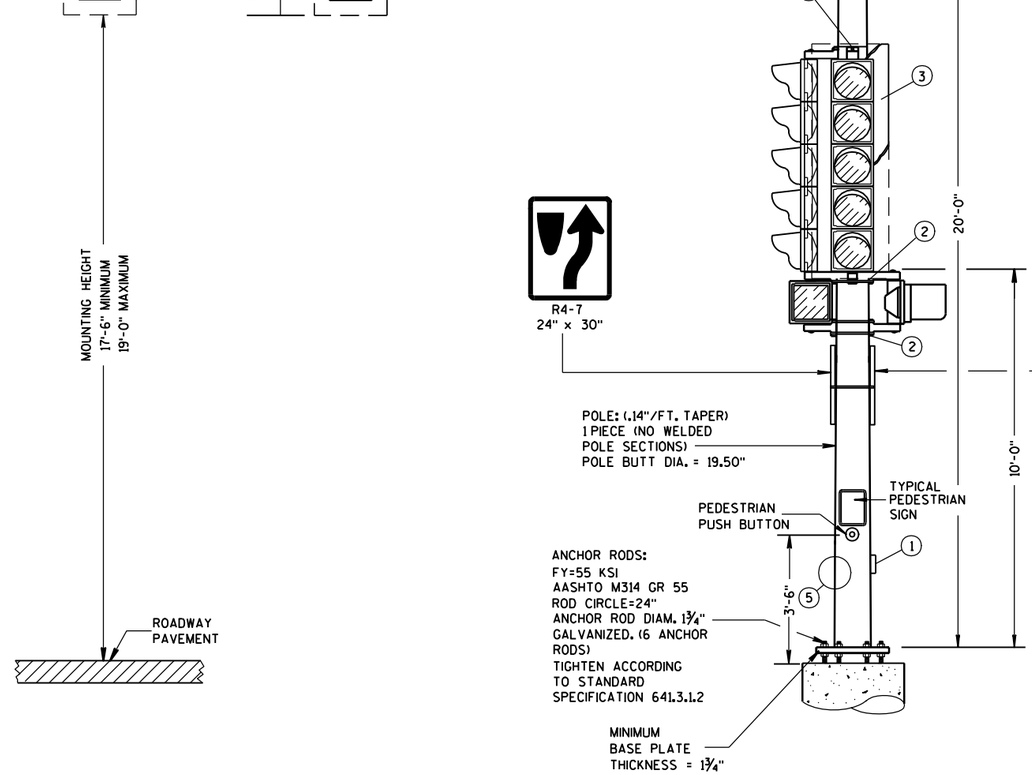

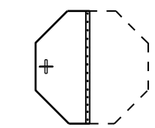

FOLDING STOP SIGN
30" x 30"

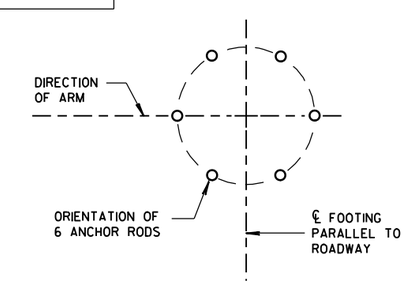

ANCHOR ROD LOCATION

(MAXIMUM LOAD)

TYPE 12 POLE 35'- 55' MONOTUBE ARM

TYPE 12 POLE 35'-55' MONOTUBE ARM
STATE OF WISCONSIN DEPARTMENT OF TRANSPORTATION
APPROVED 10-28-08 DATE — /S/ Joanna L. Bush STATE ELECTRICAL ENGINEER FOR HWYS. FHWA

6

S.D.D. 9 E 8-2c

6

S.D.D. 9 E 8-2c

GENERAL NOTES

DETAILS OF CONSTRUCTION, MATERIALS AND WORKMANSHIP NOT SHOWN ON THIS DRAWING SHALL CONFORM TO THE PERTINENT REQUIREMENTS OF THE CONTRACT.

POLE TYPES 9 AND 10 ARE FOR ARM LENGTHS 15-FOOT TO 30-FOOT.

POLE TYPES 12 AND 13 ARE FOR ARM LENGTHS 35-FOOT TO 55-FOOT.

MONOTUBE POLE AND ARM SHALL BE GALVANIZED STEEL.

RING-STIFFENED BUILT-UP BOX TYPE OF ATTACHMENT FOR TRAFFIC SIGNAL ARM.

ONE (1) PIECE POLE CONSTRUCTION (NO WELDED POLE SECTIONS).

STANDARD STRAIGHT ARM DESIGN (3 % ± RISE).

SECTION 657, POLES OF THE STANDARD SPECIFICATIONS SHALL APPLY TO THIS DRAWING.

PROVIDE WIREWAY THRU POLE WALL AND ARM CONNECTION PLATES. PROVIDE ROUND, SMOOTH INSIDE SURFACE.

MANUFACTURER'S SUBMITTED POLE DESIGNS AND DRAWINGS SHALL BE SIGNED AND STAMPED BY A REGISTERED PROFESSIONAL ENGINEER AND CERTIFIED AS BEING IN COMPLIANCE WITH THE LATEST AASHTO AND ALL PERTINENT WISDOT SPECIFICATIONS AND DRAWINGS FOR TRAFFIC AND LIGHTING STRUCTURES AND AS FOLLOWS:

- CATEGORY III FATIGUE LOADS OF GALLOPING, TRUCK GUSTS (AT 45 MPH VEHICLE VELOCITY) AND NATURAL WIND GUSTS FOR DESIGN OF TYPE 9 AND TYPE 10 STRUCTURES.
- CATEGORY II FATIGUE LOADS OF GALLOPING, TRUCK GUSTS (AT 45 MPH VEHICLE VELOCITY) AND NATURAL WIND GUSTS FOR DESIGN OF TYPE 12 AND TYPE 13 STRUCTURES.
- 90 MPH (3-SECOND GUST) WIND SPEED AND A 50 YEAR DESIGN LIFE.

SECURE THE OPENING BELOW THE BASE PLATE WITH STAINLESS STEEL MESH AND SECURE THE MESH WITH ¾" S.S. BANDING AROUND THE LEVELING NUTS.

INDENT PRINT (NOMINAL ½" HIGH) THE POLE LENGTH AND FIRST TWO LETTERS OF THE MANUFACTURERS NAME ON TWO SIDES OF THE BASE PLATE 180 DEGREES APART, BEFORE GALVANIZING. THE ARM SHALL BE IDENTIFIED WITH THE SAME INFORMATION BY INDENT PRINT.

SIGNAL FACE SHALL BE MOUNTED 6 INCHES (NOMINAL) FROM THE END OF THE MONOTUBE ARM OR AS SHOWN ON THE PLAN CONSTRUCTION DETAIL OR AS DIRECTED BY THE PROJECT ENGINEER/ELECTRICAL OPERATIONS PERSONNEL. MOUNT ALL LIKE HEADS AT SAME ELEVATION.

SIGN MOUNTING BRACKETS SHALL BE FURNISHED IN ACCORDANCE WITH SECTION 637 OF THE STANDARD SPECIFICATIONS FOR HIGHWAY AND STRUCTURE CONSTRUCTION.

6

1. DESIGN FOR MAXIMUM ALLOWABLE HANDHOLE WITH COVER ASSEMBLY WITH TWO ¼" X ¾" - 20 TPI STAINLESS STEEL HEX HEAD BOLTS.
2. SIGNAL MOUNTING BRACKETS FOR POLE MOUNTING, MOUNT WITH CAP SCREW AND BANDING, (SEE SPECIFICATIONS SEC. 658).
3. SECURELY MOUNT BACKPLATES, PROJECTING 5" BEYOND ALL SIDES OF THE SIGNAL FACE HOUSING, PER MANUFACTURERS RECOMMENDATIONS.
4. THE TOP OF THE POLE SHAFT AND THE END OF THE MONOTUBE ARM SHALL BE EQUIPPED WITH A REMOVABLE, VENTILATED CAP HELD SECURELY IN PLACE WITH SET SCREWS.
5. FACTORY-WELDED BRACKET FOR GROUNDING LUG, OPPOSITE HANDHOLE, (LUG AND HARDWARE PAID UNDER SEPARATE ITEM). PROVIDE HOLE IN BRACKET FOR ¼" X ¾" - 20 TPI STAINLESS STEEL HEX HEAD BOLT.
6. FACTORY-WELDED "J" HOOK FOR STRAIN RELIEF FOR POLE LUMINAIRE WIRE.
7. INSTALL DEPARTMENT PROVIDED STRUCTURAL IDENTIFICATION PLAQUES.

STRUCTURAL IDENTIFICATION PLAQUES SHALL BE PLACED ON THE POLES IN THE SAME DIRECTION AS THE ARM.

MOUNTING HEIGHT SHALL BE 5'-0" ABOVE THE CURB OR SHOULDER . ADJUST IF IT IS KNOWN THAT REQUIRED TRAFFIC SIGNS WILL BE OBSTRUCTED.

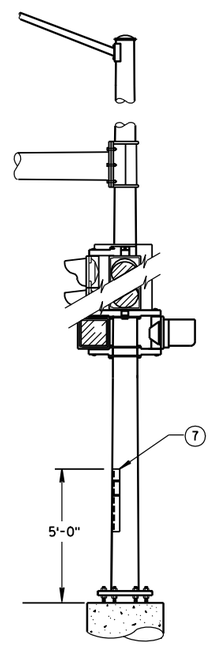

STRUCTURAL IDENTIFICATION PLAQUE PLACEMENT

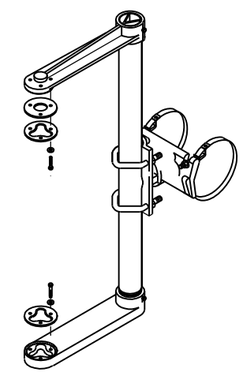

SIGNAL FACE MOUNTING BRACKET DETAIL FOR MONOTUBE ARM

(MOUNT PER MANUFACTURER'S RECOMMENDATION)

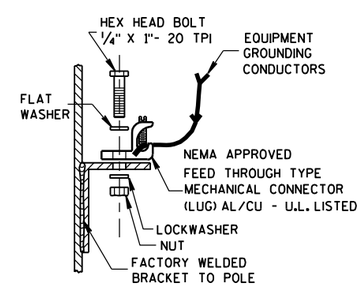

TYPICAL GROUNDING CONNECTIONS 5

NUT, BOLT AND WASHERS SHALL BE STAINLESS STEEL

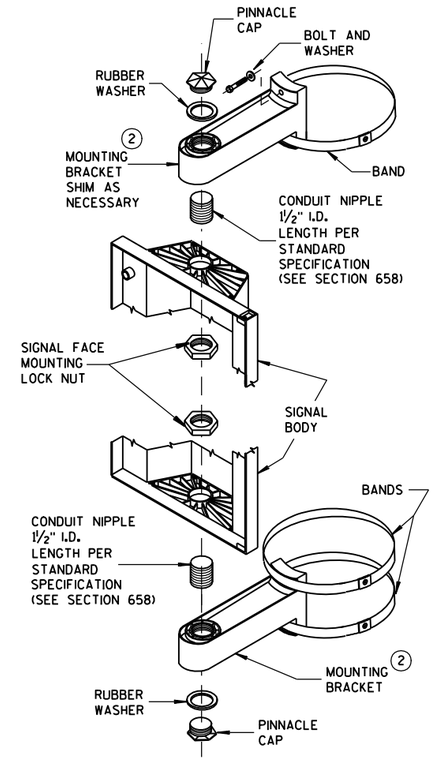

SIGNAL FACE VERTICAL MOUNTING DETAIL

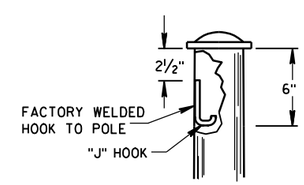

"J" HOOK WIRE SUPPORT 6

6

GENERAL NOTES AND HARDWARE DETAILS FOR TYPE 9, 10, 12 & 13 POLES WITH MONOTUBE ARMS

STATE OF WISCONSIN
DEPARTMENT OF TRANSPORTATION

APPROVED

2/3/09 — DATE

/S/ Joanna L. Bush — STATE ELECTRICAL ENGINEER FOR HWYS.

FHWA

S.D.D. 9 E 8-3e

S.D.D. 9 E 8-3e

GENERAL NOTES

DETAILS OF CONSTRUCTION, MATERIALS AND WORKMANSHIP NOT SHOWN ON THIS DRAWING SHALL CONFORM TO THE PERTINENT REQUIREMENTS OF THE CONTRACT.

BASES SHALL BE EXCAVATED BY USE OF A CIRCULAR AUGER.

TOP SURFACES OF CONCRETE BASES SHALL BE TROWEL FINISHED AND LEVEL.

CONDUIT SIZES AND LOCATIONS SHALL BE AS SHOWN ON THE PLANS.

THE FINAL OR TERMINATING CONCRETE BASE IN A CONDUIT RUN SHALL HAVE A 6" EXIT STUB INSTALLED FOR FUTURE CABLING USE. THE EXIT STUB SHALL BE SIZED AS USED THROUGHOUT THE CONDUIT RUN AS SHOWN AT THE ENTRANCE OF THE BASE.

MINIMUM BENDING RADIUS OF CONDUIT IS EQUAL TO 6 X THE DIAMETER.

CONDUIT HEIGHT ABOVE CONCRETE BASES SHALL BE 4 INCHES. ALL METALLIC CONDUIT ENDS SHALL BE REAMED AND THREADED. NONMETALLIC CONDUIT SHALL HAVE BELL END INSTALLED. ALL CONDUIT SHALL BE SLOPED TO PULL BOX.

ALL CONDUIT ENDS AT THE TOP OF CONCRETE BASES SHALL BE CAPPED IF METALLIC OR PLUGGED IF NONMETALLIC IMMEDIATELY AFTER PLACEMENT AND BEFORE CONCRETE IS POURED. CONDUIT IN WHICH WIRE OR CABLE IS NOT INSTALLED SHALL REMAIN CAPPED OR PLUGGED.

BELL ENDS SHALL BE INSTALLED ON ALL PVC CONDUIT EXPOSED AT THE TOP OF CONCRETE BASES BEFORE INSTALLATION OF CABLE OR WIRE.

ENDS OF CONDUIT INSTALLED BELOW GRADE FOR FUTURE USE SHALL BE CAPPED IF METALLIC OR PLUGGED IF NONMETALLIC.

WHEN REQUIRED TO CONNECT NONMETALLIC CONDUIT TO METALLIC CONDUIT, ONLY ADAPTER FITTINGS, U.L. LISTED FOR ELECTRICAL USE, SHALL BE USED.

IF A BASE REQUIRES A DEEP FORM BECAUSE OF LOOSE DIRT OR FILL, THE FORM SHALL BE REMOVED BEFORE BACKFILLING AROUND THE BASE. BACKFILL SHALL BE TAMPED TIGHT AGAINST THE BARE CONCRETE BASE IN LAYERS OF 1 FOOT OR LESS.

A NO. 4 AWG, STRANDED COPPER EQUIPMENT GROUNDING CONDUCTOR SHALL BE EXOTHERMICALLY WELDED TO THE EQUIPMENT GROUNDING ELECTRODE (GROUND ROD).

THE EQUIPMENT GROUNDING CONDUCTOR SHALL ENTER THE BASE THROUGH A 1 INCH CONDUIT INSTALLED FOR GROUNDING PURPOSES, LEAVING A 4 FOOT COIL OF WIRE ABOVE THE CONCRETE BASE. THE EQUIPMENT GROUNDING CONDUCTOR SHALL BE NEATLY COILED AND THE COILS TIED TOGETHER.

WELDING OF THE ANCHOR RODS TO THE CAGE IS UNACCEPTABLE. TEMPLATES SHALL BE USED.

BAR STEEL REINFORCEMENT SHALL BE COATED WITH POWDERED EPOXY RESIN IN ACCORDANCE WITH SECTION 505 OF THE STANDARD SPECIFICATIONS (LATEST EDITION).

ANCHOR RODS SHALL BE INSTALLED VERTICAL.

(1) THE MINIMUM DEPTH OF CONDUIT EXITING THE CONCRETE BASE AND INSTALLED BELOW THE TRAVELED WAY SHALL BE 24 INCHES. THE MINIMUM DEPTH OF CONDUIT EXITING THE CONCRETE BASE THAT IS NOT INSTALLED BELOW THE TRAVELED WAY SHALL BE 18 INCHES. THE MAXIMUM DEPTH OF ALL CONDUIT SHALL BE 36 INCHES, (GREATER THAN 36 INCHES IF INSTALLED IN BREAKER-RUN), EXCEPT WITH WRITTEN APPROVAL BY THE ENGINEER.

(2) (6) ANCHOR RODS SHALL BE EITHER 1½" DIA. X 60", NUTTED AT BOTTOM OR 1½" DIA. X 60" LONG INCLUDING A 6" BEND. ANCHOR RODS WITH "L" BEND SHALL BE THREADED 8" MINIMUM AT TOP END ONLY WITH (2) NUTS AND (2) WASHERS AS SHOWN. ANCHOR RODS, WITH ADDITIONAL BOTTOM NUT, SHALL BE THREADED 8" MINIMUM AT EACH END OF ANCHOR ROD FOR A TOTAL OF (3) NUTS AND (2) WASHERS PER ANCHOR BOLT AS SHOWN. ANCHOR RODS, NUTS AND WASHERS SHALL CONFORM TO AASHTO M314, GRADE 55.

(3) (6) NO. 6 X 13'-7" BAR STEEL REINFORCEMENT.

(4) (15) NO. 4 X 7'-4" BAR STEEL REINFORCEMENT @ 1'-0" C-C.

CONCRETE MASONRY ---------- fc=3,500 p.s.i.
HIGH STRENGTH BAR STEEL REINFORCEMENT, GRADE 60 ---------- fy=60,000 p.s.i.

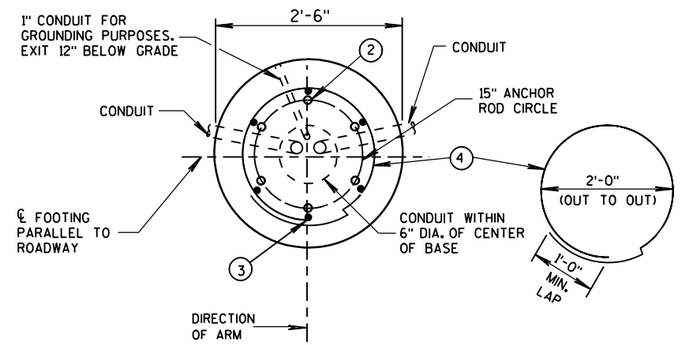

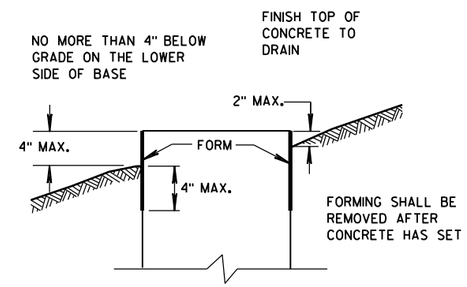

FORMING DETAIL

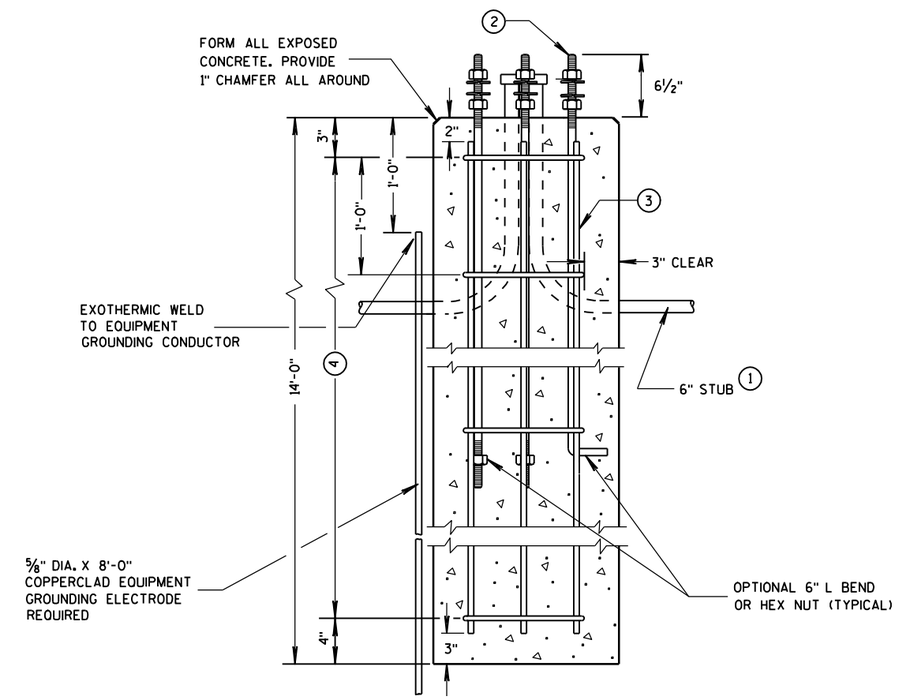

QUANTITY REQUIREMENTS	
APPROX. CUBIC YARDS OF CONCRETE	2.5
LBS. OF HOOP BAR STEEL	69
LBS. OF VERTICAL BAR STEEL	122

CONCRETE BASE TYPE 10

(FOR TYPE 9 & 10 POLES)

TO BE USED WHEN GROUND ELEVATION AT BASE EQUALS OR IS GREATER THAN HIGH POINT OF ROADWAY ELEVATION. SEE S.D.D. 9E11-1 WHEN GROUND ELEVATION AT BASE IS LOWER THAN HIGH POINT OF ROADWAY ELEVATION.

CONCRETE BASE TYPE 10

STATE OF WISCONSIN
DEPARTMENT OF TRANSPORTATION

APPROVED
10-28-08 — DATE
/S/ Joanna L. Bush — STATE ELECTRICAL ENGINEER FOR HWYS.
FHWA

6

S.D.D. 9 E 9-2

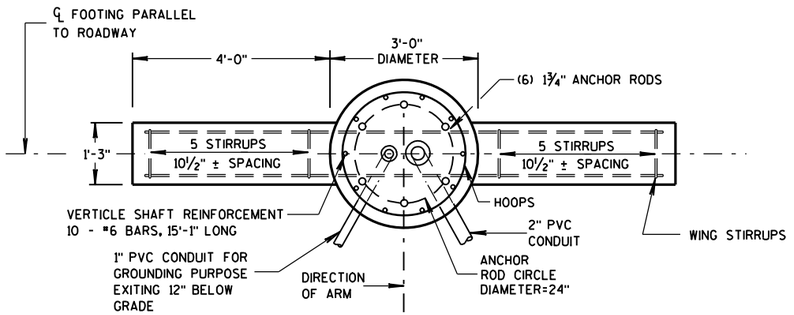

PLAN VIEW

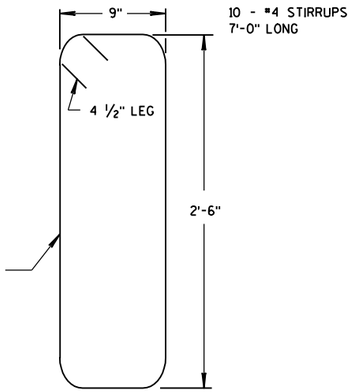

WING STIRRUP

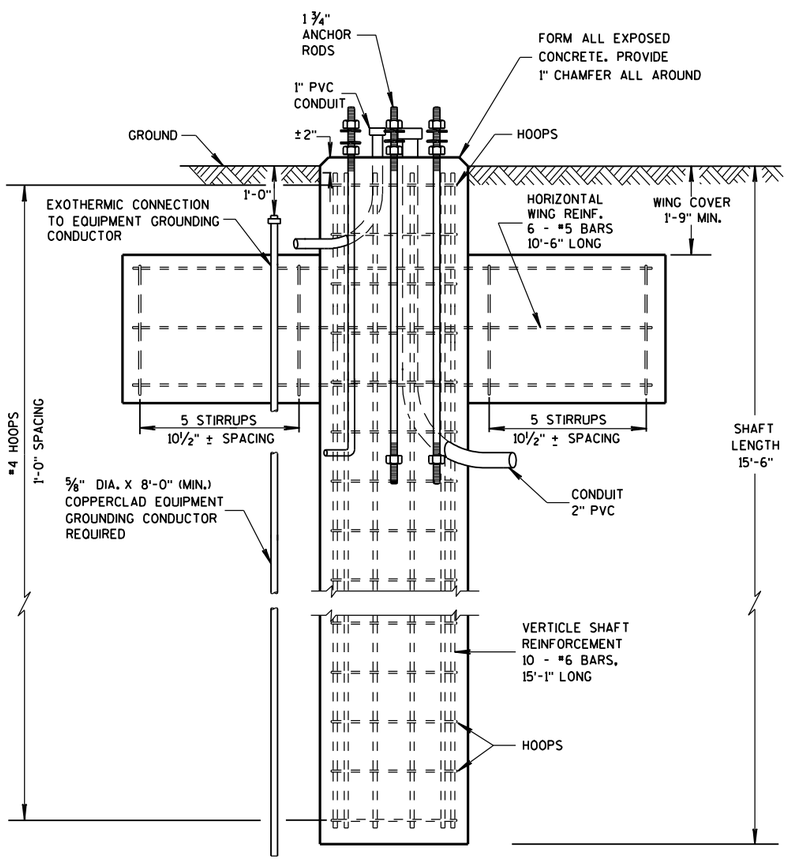

ELEVATION VIEW

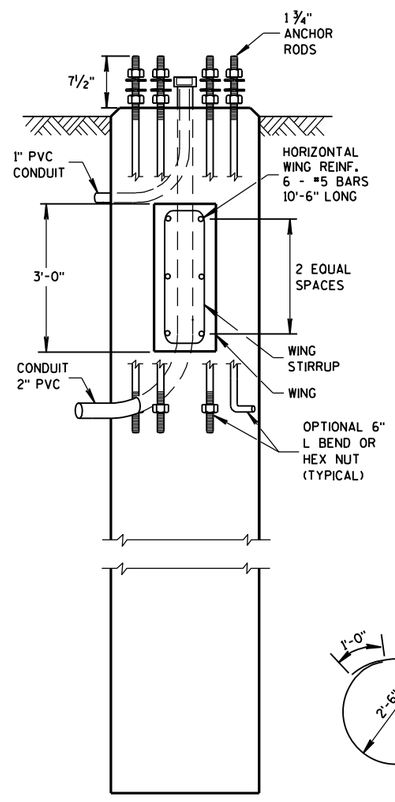

SIDE VIEW

DOES NOT SHOW HOOPS OR VERTICAL SHAFT REINFORCEMENT

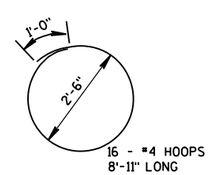

HOOP DETAIL

CONCRETE BASE TYPE 13

(FOR TYPE 12 & 13 POLES)

CONCRETE = 5.2 C.Y.
H.S. REINFORCEMENT = 435 LBS.

TO BE USED WHEN GROUND ELEVATION AT BASE EQUALS OR IS GREATER THAN HIGH POINT OF ROADWAY ELEVATION.
SEE S.D.D. 9E11-1 WHEN GROUND ELEVATION AT BASE IS LOWER THAN HIGH POINT OF ROADWAY ELEVATION.

GENERAL NOTES

DETAILS OF CONSTRUCTION, MATERIALS AND WORKMANSHIP NOT SHOWN ON THIS DRAWING SHALL CONFORM TO THE PERTINENT REQUIREMENTS OF THE CONTRACT.

ORIENT ANCHOR RODS IN FOOTING AND PROVIDE ANCHOR ROD PROJECTION ABOVE TOP OF CONCRETE FOOTING BASE PER THIS SHEET.

BENDING DIMENSIONS FOR REINFORCING BARS ARE OUT TO OUT.

USE 3" CLEAR FOR ALL REINFORCEMENT UNLESS NOTED OTHERWISE.

THE CONTRACTOR IS RESPONSIBLE FOR MAKING HIS OWN DETERMINATION AS TO THE TYPE AND LOCATION OF THE UNDERGROUND UTILITIES AS MAY BE NECESSARY TO AVOID DAMAGE THERETO.

WELDING OF ANCHOR RODS TO THE CAGE IS UNACCEPTABLE. TEMPLATES SHALL BE USED.

BASES (SHAFT), BELOW THE WING, SHALL BE EXCAVATED BY THE USE OF A CIRCULAR AUGER. IF A BASE REQUIRES A DEEP FORM BECAUSE OF LOOSE SOIL, THE FORM SHALL BE REMOVED BEFORE BACKFILLING AROUNG THE BASE. BACKFILL SHALL BE TAMPED TIGHT AGAINST THE BARE CONCRETE BASE IN LAYERS OF 1 FOOT OR LESS.

TOP SURFACE OF THE CONCRETE BASE SHALL BE TROWEL FINISHED AND LEVEL.

CONDUIT SIZE AND LOCATIONS SHALL BE AS SHOWN ON THE PLANS.

MINIMUM BENDING RADIUS OF CONDUIT IS EQUAL TO 6 X THE DIAMETER.

CONDUIT HEIGHT ABOVE CONCRETE BASE SHALL BE 4½" INCHES. ALL METALLIC CONDUIT ENDS SHALL BE REAMED AND THREADED. NONMETALLIC CONDUIT SHALL HAVE BELL ENDS INSTALLED. ALL CONDUIT SHALL SLOPE TO PULL BOX.

ALL CONDUIT ENDS AT THE TOP OF THE BASES SHALL BE CAPPED IF METALLIC OR PLUGGED IF NONMETALLIC IMMEDIATELY AFTER PLACEMENT AND BEFORE CONCRETE IS POURED. CONDUITS IN WHICH WIRE OR CABLE IS NOT INSTALLED SHALL REMAIN CAPPED OR PLUGGED.

BELL ENDS SHALL BE INSTALLED ON ALL PVC CONDUIT EXPOSED AT THE TOP OF CONCRETE BASES BEFORE INSTALLATION OF CABLE OR WIRE.

WHEN REQUIRED TO CONNECT NONMETALLIC CONDUIT TO METALLIC CONDUIT, ONLY ADAPTOR FITTINGS, UL LISTED FOR ELECTRICAL USE, SHALL BE USED.

A NO. 4 AWG, STRANDED COPPER EQUIPMENT GROUNDING CONDUCTOR SHALL BE EXOTHERMICALLY WELDED TO THE EQUIPMENT GROUNDING ELECTRODE (GROUND ROD).

THE EQUIPMENT GROUNDING CONDUCTOR SHALL BE FURNISHED AND INSTALLED TO ENTER THE BASE THROUGH A 1-INCH CONDUIT INSTALLED FOR GROUNDING PURPOSES, LEAVING A 4-FOOT COIL OF WIRE ABOVE THE CONCRETE BASE. THE EQUIPMENT GROUNDING CONDUCTOR SHALL BE NEATLY COILED AND THE COILS TIED TOGETHER.

BAR STEEL REINFORCEMENT SHALL BE COATED WITH POWDERED EPOXY RESIN IN ACCORDANCE WITH SECTION 505 OF THE STANDARD SPECIFICATIONS.

THE MINIMUM DEPTH OF CONDUIT EXITING THE CONCRETE BASE AND INSTALLED BELOW THE TRAVEL WAY SHALL BE 24-INCHES. THE MINIMUM DEPTH OF CONDUIT EXITING THE CONCRETE BASE THAT IS NOT INSTALLED BELOW THE TRAVELED WAY SHALL BE 18-INCHES. THE MAXIMUM DEPTH OF ALL CONDUIT SHALL BE 36-INCHES, (GREATER THAN 36-INCHES IF INSTALLED IN BREAKER-RUN), EXCEPT WITH THE WRITTEN APPROVAL OF THE ENGINEER.

(6) ANCHOR RODS SHALL BE EITHER 1¾" DIA. X 90", NUTTED AT BOTTOM OR 1¾" DIA. X 90" LONG INCLUDING A 6" BEND. ANCHOR RODS WITH "L" BEND SHALL BE THREADED 8" MINIMUM AT TOP END ONLY WITH (2) NUTS AND (2) WASHERS AS SHOWN. ANCHOR RODS, WITH ADDITIONAL BOTTOM NUT, SHALL BE THREADED 8" MINIMUM AT EACH END OF ANCHOR ROD FOR A TOTAL OF (3) NUTS AND (2) WASHERS PER ANCHOR ROD AS SHOWN. ANCHOR RODS, NUTS AND WASHERS SHALL CONFORM TO AASHTO M314, GRADE 55.

ANCHOR RODS SHALL BE INSTALLED VERTICAL.

CONCRETE MASONRY ---------- fc=3,500 p.s.i.
HIGH STRENGTH BAR STEEL REINFORCEMENT, GRADE 60 ---------- fy=60,000 p.s.i.

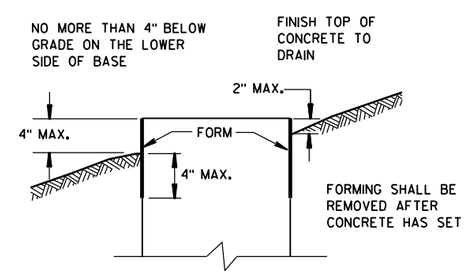

FORMING DETAIL

CONCRETE BASE TYPE 13

STATE OF WISCONSIN
DEPARTMENT OF TRANSPORTATION

APPROVED
10-28-08 /S/ Joanna L. Bush
DATE STATE ELECTRICAL ENGINEER FOR HWYS.
FHWA

6

S.D.D. 9 E 10-2

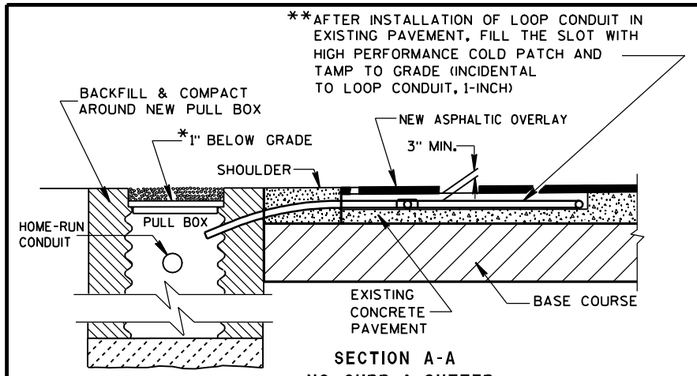

SECTION A-A
NO CURB & GUTTER

LOOP DETECTOR INSTALLATION DETAIL

*RECESS PULL BOX SO THAT THE COVER IS 3" BELOW GRADE IN SHOULDER AREAS OF CRUSHED AGGREGATE. BACKFILL OVER COVER WITH THE CRUSHED AGGREGATE TO BRING THE AREA TO GRADE LEVEL.

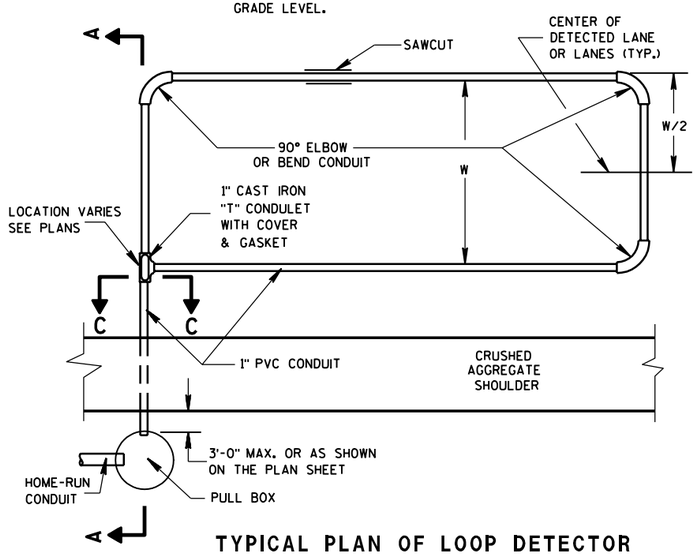

TYPICAL PLAN OF LOOP DETECTOR

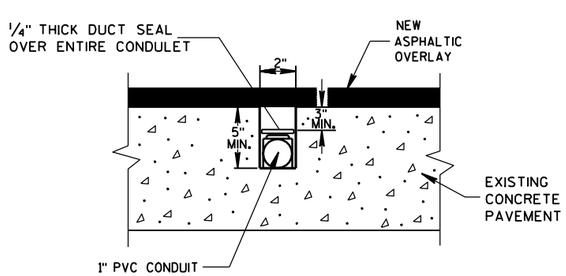

SIDE VIEW
SECTION C-C

LOOP DETECTOR SLOT DETAIL

GENERAL NOTES

DETAILS OF CONSTRUCTION, MATERIALS AND WORKMANSHIP NOT SHOWN ON THIS DRAWING SHALL CONFORM TO THE PERTINENT REQUIREMENTS OF THE CONTRACT.

LOOP SIZE, LOCATION, NUMBER OF TURNS OF WIRE AND ASSOCIATED SIGNAL PHASE SHALL BE AS SHOWN ON THE PLANS.

PITCH LEAD OUT CONDUIT TO DRAIN TO ROADSIDE PULL BOX.

SPLICES SHALL BE INSTALLED BY USING CAST IN PLACE SPLICE KITS SUCH AS 3M TYPE 82A1 OR APPROVED EQUAL. NON-INSULATED BUTT SPLICES TO FIT #12 AWG STRANDED WIRE SHALL BE USED. SPLICES SHALL BE SOLDERED AND INSULATED FROM EACH OTHER AS PER INSTRUCTIONS INCLUDED IN THE SPLICE KIT.

MEASURE GROUND RESISTANCE USING A MEGGER. REPLACE LOOP WIRE NOT ATTAINING A READING OF INFINITY TO GROUND.

AFTER SPLICING THE LOOP WIRE TO THE LOOP LEAD-IN CABLE, THE CONTRACTOR SHALL MEASURE INDUCTANCE, GROUND RESISTANCE AND WIRE RESISTANCE AT THE CABINET END OF THE LEAD-IN CABLE AND FURNISH A COPY OF THE READINGS TO THE PROJECT ENGINEER FOR EVALUATION.

IN THE EVENT EPOXY IS USED AS A LOOP SLOT FILLER, THE SLOT SHALL BE TOTALLY CLEAN AND DRY BEFORE ITS INSTALLATION.

BEFORE PLACING THE 1 INCH CONDUIT IN THE CLEANED OUT SLOT, PLACE SOME OF THE TAR OR EPOXY SEALANT IN THE SLOT TO A DEPTH OF APPROXIMATELY 1/2 INCH.

ONCE THE 2" LOOP SLOT HAS BEEN CHIPPED OUT, THE LOOP INSTALLATION SHALL BE COMPLETED PRIOR TO OPENING THE LANE(S) TO TRAFFIC.

ANTI-SIEZE LUBRICATING MATERIAL SHALL BE USED ON ALL THREADS OF THREADED ASSEMBLIES BEFORE INSTALLATION.

LOOP DETECTOR LEADS SHALL BE IDENTIFIED WITH THEIR ASSOCIATED LOOP BY USE OF WATERPROOF TAGS AT BOTH ENDS OF THE CABLE. A LISTING OF THE CABLE IDENTIFICATION PER INDIVIDUAL LOOP LEAD-IN SHALL BE PLACED IN THE CABINET.

THE #12 AWG LOOP WIRE FROM THE LOOP TO THE ROADSIDE PULL BOX, SHALL BE HAND TWISTED AT LEAST 3 TWISTS PER FOOT BEFORE INSTALLATION.

SPLICES OF LOOP WIRE TO LEAD-IN CABLE SHALL BE MADE ONLY IN PULL BOXES AT THE SIDE OF THE ROAD.

THE #12 AWG LOOP WIRE SHALL BE INSTALLED FROM THE ROADSIDE PULL BOX, THROUGH THE LOOP CONDUIT BACK TO THE ROADSIDE PULL BOX, AND BE INSTALLED IN ONE, NON-SPLICED, CONTINUOUS LENGTH.

DRIVE A 1 1/2" MAX. PK NAIL INTO THE NEW ASPHALTIC OVERLAY AND ON TOP OF THE CONDULET AFTER THE NEW ASPHALTIC OVERLAY IS INSTALLED, IF REQUESTED BY THE DISTRICT TRAFFIC SECTION.

** AFTER THE HIGH PERFORMANCE COLD PATCH HAS BEEN TAMPED, SEAL THE SLOT/HIGH PERFORMANCE COLD PATCH/ PAVEMENT OPENING WITH HOT POURED ELASTIC TYPE MATERIAL CONFORMING TO THE REQUIREMENTS OF THE "SPECIFICATION FOR JOINT SEALANTS, HOT POURED, FOR CONCRETE AND ASPHALT PAVEMENTS, ASTM DESIGNATION: D3405".

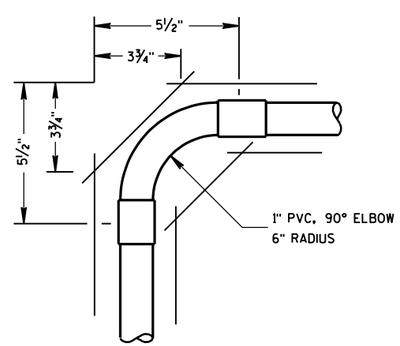

TOP VIEW

CORNER SAW SLOT DETAIL

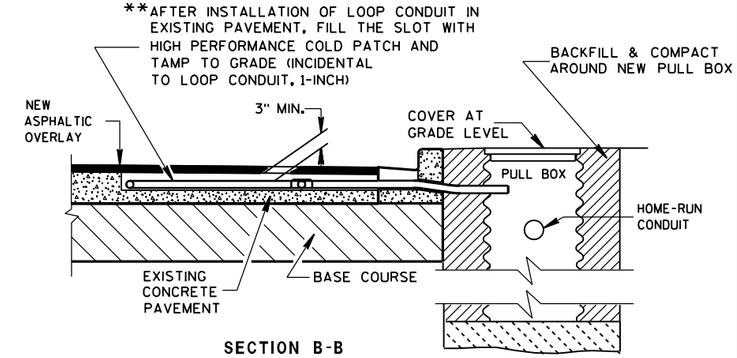

SECTION B-B
CURB & GUTTER

LOOP DETECTOR INSTALLATION DETAIL

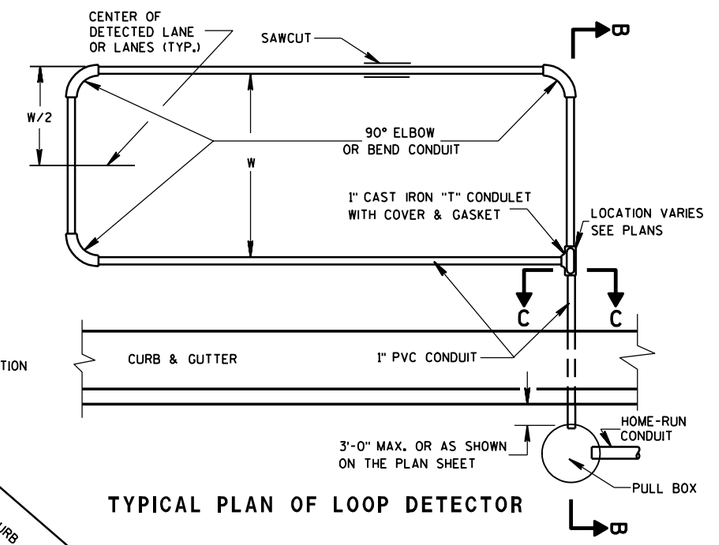

TYPICAL PLAN OF LOOP DETECTOR

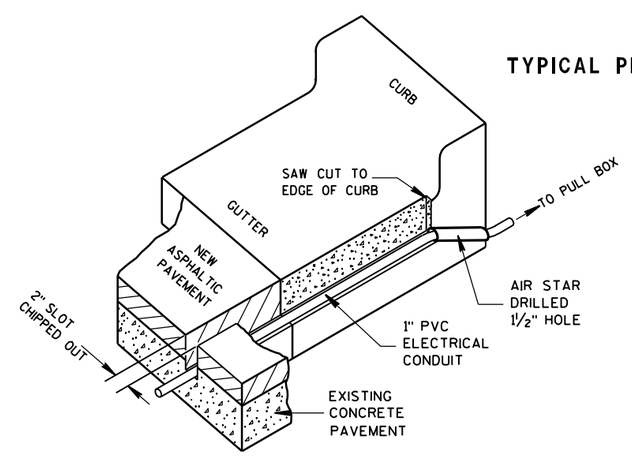

ISOMETRIC VIEW

TYPICAL SAW CUT DETAIL FOR LEAD-IN CONDUIT

LOOP DETECTOR INSTALLED IN EXISTING CONCRETE PAVEMENT WITH NEW ASPHALTIC OVERLAY

STATE OF WISCONSIN
DEPARTMENT OF TRANSPORTATION

APPROVED
6/7/06 — DATE
/S/ Balu Ananthanarayanan — STATE ELECTRICAL ENGINEER FOR HIGHWAYS
FHWA

6

S.D.D. 9 F 11-3

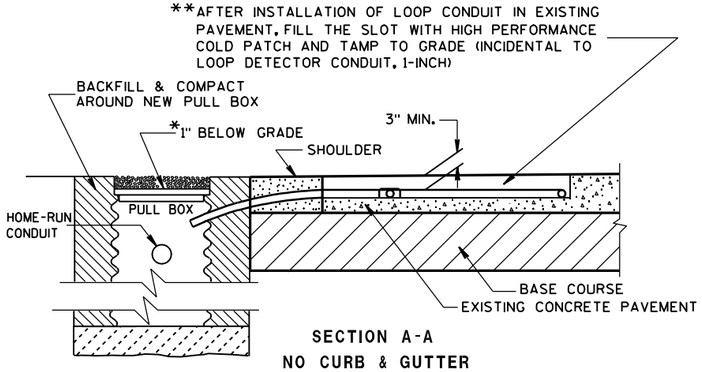

SECTION A-A
NO CURB & GUTTER

LOOP DETECTOR INSTALLATION DETAIL

*RECESS PULL BOX SO THAT THE COVER IS 3" BELOW GRADE IN SHOULDER AREAS OF CRUSHED AGGREGATE. BACKFILL OVER COVER WITH THE CRUSHED AGGREGATE TO BRING THE AREA TO GRADE LEVEL.

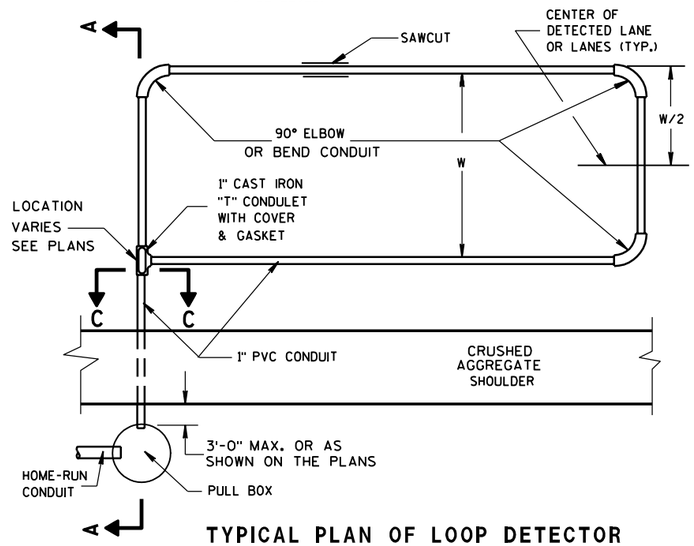

TYPICAL PLAN OF LOOP DETECTOR

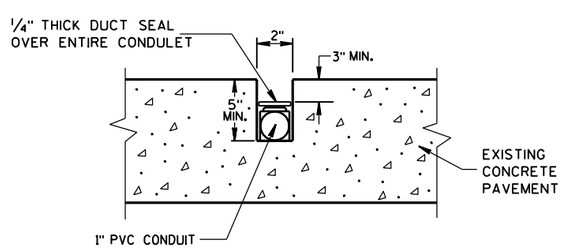

SIDE VIEW
SECTION C-C

LOOP DETECTOR SLOT DETAIL

GENERAL NOTES

DETAILS OF CONSTRUCTION, MATERIALS AND WORKMANSHIP NOT SHOWN ON THIS DRAWING SHALL CONFORM TO THE PERTINENT REQUIREMENTS OF THE CONTRACT.

LOOP SIZE, LOCATION, NUMBER OF TURNS OF WIRE AND ASSOCIATED SIGNAL PHASE SHALL BE AS SHOWN ON THE PLANS.

PITCH LEAD OUT CONDUIT TO DRAIN TO ROADSIDE PULL BOX.

SPLICES SHALL BE INSTALLED BY USING CAST IN PLACE SPLICE KITS SUCH AS 3M TYPE 82A1 OR APPROVED EQUAL. NON-INSULATED BUTT SPLICES TO FIT #12 AWG STRANDED WIRE SHALL BE USED. SPLICES SHALL BE SOLDERED AND INSULATED FROM EACH OTHER AS PER INSTRUCTIONS INCLUDED IN THE SPLICE KIT.

MEASURE GROUND RESISITANCE USING A MEGGER. REPLACE LOOP WIRE NOT ATTAINING A READING OF INFINITY TO GROUND.

AFTER SPLICING THE LOOP WIRE TO THE LOOP LEAD-IN CABLE, THE CONTRACTOR SHALL MEASURE INDUCTANCE, GROUND RESISTANCE AND WIRE RESISTANCE AT THE CABINET END OF THE LEAD-IN CABLE AND FURNISH A COPY OF THE READINGS TO THE PROJECT ENGINEER FOR EVALUATION.

BEFORE PLACING THE 1 INCH CONDUIT IN THE CLEANED OUT SLOT, PLACE SOME OF THE TAR OR EPOXY SEALANT IN THE SLOT TO A DEPTH OF APPROXIMATELY 1/2 INCH.

ONCE THE 2" LOOP SLOT HAS BEEN CHIPPED OUT, THE LOOP INSTALLATION SHALL BE COMPLETED PRIOR TO OPENING THE LANE(S) TO TRAFFIC.

ANTI-SIEZE LUBRICATING MATERIAL SHALL BE USED ON ALL THREADS OF THREADED ASSEMBLIES BEFORE INSTALLATION.

LOOP DETECTOR LEADS SHALL BE IDENTIFIED WITH THEIR ASSOCIATED LOOP BY USE OF WATERPROOF TAGS AT BOTH ENDS OF THE CABLE. A LISTING OF THE CABLE IDENTIFICATION PER INDIVIDUAL LOOP LEAD-IN SHALL BE PLACED IN THE CABINET.

THE #12 AWG LOOP WIRE FROM THE LOOP TO THE ROADSIDE PULL BOX, SHALL BE HAND TWISTED AT LEAST 3 TWISTS PER FOOT BEFORE INSTALLATION.

SPLICES OF LOOP WIRE TO LEAD-IN CABLE SHALL BE MADE ONLY IN PULL BOXES AT THE SIDE OF THE ROAD.

THE #12 AWG LOOP WIRE SHALL BE INSTALLED FROM THE ROADSIDE PULL BOX, THROUGH THE LOOP CONDUIT BACK TO THE ROADSIDE PULL BOX, AND BE INSTALLED IN ONE, NON-SPLICED, CONTINUOUS LENGTH.

** AFTER THE HIGH PERFORMANCE COLD PATCH HAS BEEN TAMPED, SEAL THE SLOT/HIGH PERFORMANCE COLD PATCH/ PAVEMENT OPENING WITH HOT POURED ELASTIC TYPE MATERIAL CONFORMING TO THE REQUIREMENTS OF THE "SPECIFICATION FOR JOINT SEALANTS, HOT POURED, FOR CONCRETE AND ASPHALT PAVEMENTS, ASTM DESIGNATION: D3405".

IN THE EVENT HIGH PERFORMANCE COLD PATCH IS NOT AVAILABLE, AND FLEXIBLE TYPE EPOXY IS USED AS A LOOP SLOT FILLER, THE 2 INCH SLOT SHALL BE TOTALLY CLEAN AND DRY BEFORE ITS INSTALLATION. EPOXY USE SHALL BE APPROVED BY THE DISTRICT TRAFFIC ENGINEER AND THE FURNISHED EPOXY SHALL BE INSTALLED AFTER WRITTEN APPROVAL BY THE PROJECT ENGINEER.

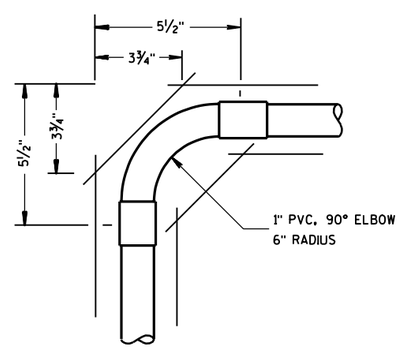

TOP VIEW

CORNER SAW SLOT DETAIL

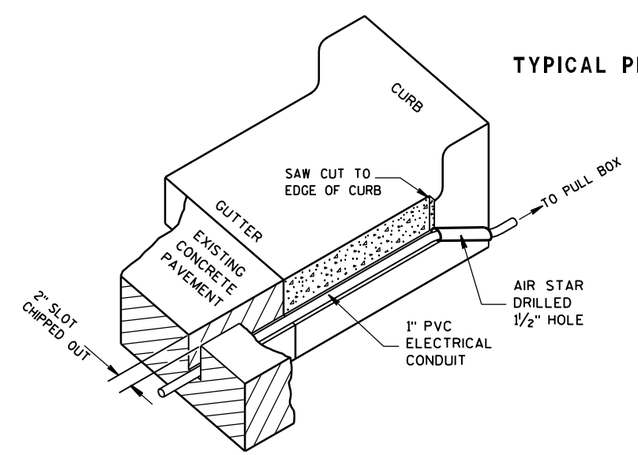

ISOMETRIC VIEW

TYPICAL SAW CUT DETAIL FOR LEAD-IN CONDUIT

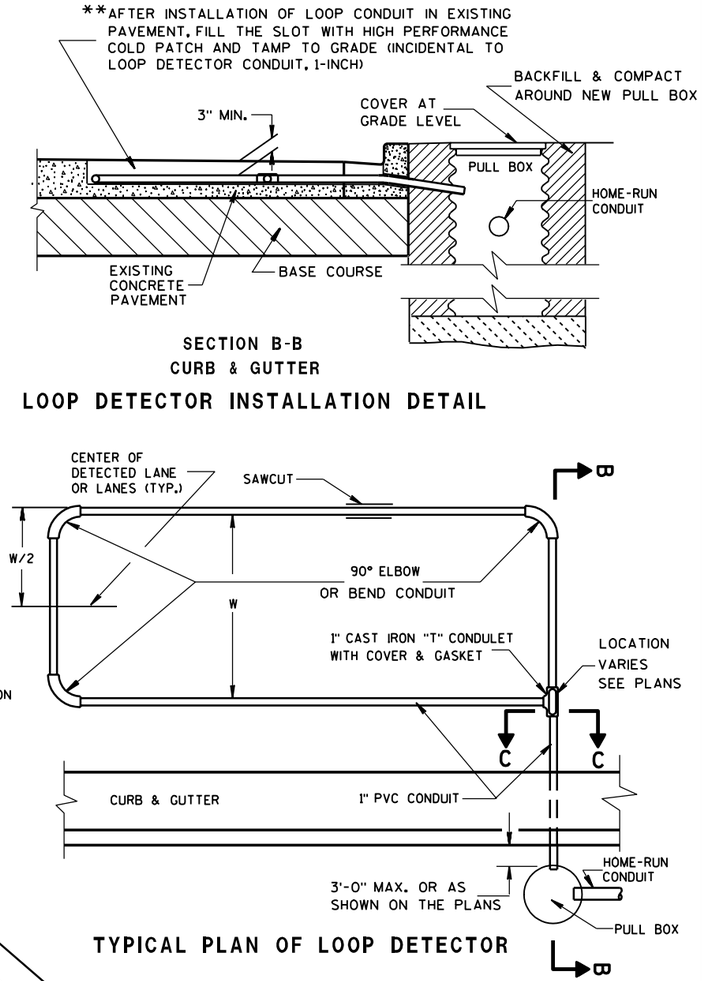

SECTION B-B
CURB & GUTTER

LOOP DETECTOR INSTALLATION DETAIL

TYPICAL PLAN OF LOOP DETECTOR

LOOP DETECTOR INSTALLED IN EXISTING CONCRETE PAVEMENT

STATE OF WISCONSIN
DEPARTMENT OF TRANSPORTATION

APPROVED
6/7/06 — DATE
/S/ Balu Ananthanarayanan — STATE ELECTRICAL ENGINEER FOR HIGHWAYS
FHWA

6

S.D.D. 9 F 12-3

6

S.D.D. 9 F 12-3

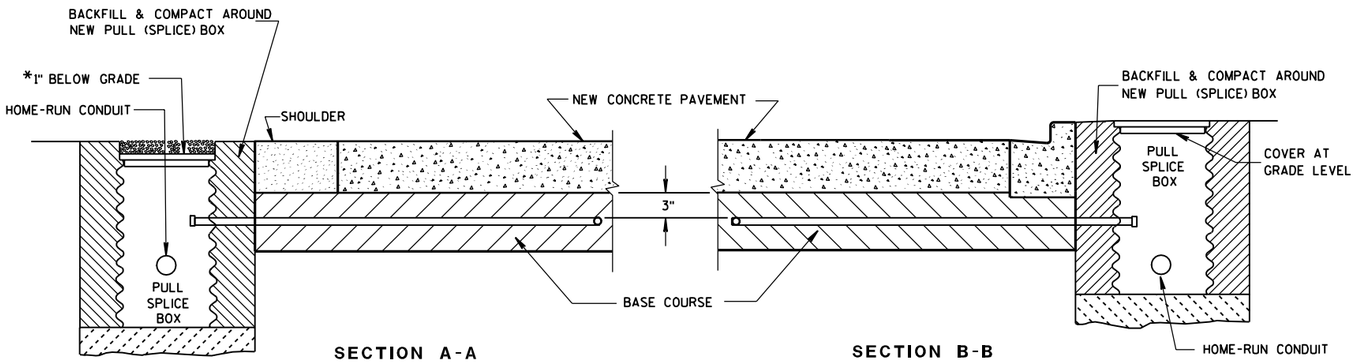

SECTION A-A
NO CURB & GUTTER

*RECESS PULL (SPLICE) BOX SO THAT THE COVER IS 3" BELOW GRADE IN SHOULDER AREAS OF CRUSHED AGGREGATE. BACKFILL OVER COVER WITH THE CRUSHED AGGREGATE TO BRING THE AREA TO GRADE LEVEL.

SECTION B-B
CURB & GUTTER

LOOP DETECTOR INSTALLATION DETAIL

GENERAL NOTES

DETAILS OF CONSTRUCTION, MATERIALS AND WORKMANSHIP NOT SHOWN ON THIS DRAWING SHALL CONFORM TO THE PERTINENT REQUIREMENTS OF THE CONTRACT.

LOOP SIZE, CONFIGURATION LOCATION, NUMBER OF TURNS OF WIRE AND ASSOCIATED SIGNAL PHASE SHALL BE AS SHOWN ON THE PLANS.

PITCH LEAD OUT CONDUIT TO DRAIN TO ROADSIDE PULL (SPLICE) BOX.

SPLICES SHALL BE INSTALLED BY USING CAST IN PLACE SPLICE KITS SUCH AS 3M TYPE 82A1 OR APPROVED EQUAL. NON-INSULATED BUTT SPLICES TO FIT #12 AWG STRANDED WIRE SHALL BE USED. SPLICES SHALL BE SOLDERED AND INSULATED FROM EACH OTHER AS PER INSTRUCTIONS INCLUDED IN THE SPLICE KIT.

MEASURE GROUND RESISTANCE USING A MEGGER. REPLACE LOOP WIRE NOT ATTAINING A READING OF INFINITY TO GROUND.

AFTER SPLICING THE LOOP WIRE TO THE LOOP LEAD-IN CABLE, THE CONTRACTOR SHALL MEASURE INDUCTANCE, GROUND RESISTANCE AND WIRE RESISTANCE AT THE CABINET END OF THE LEAD-IN CABLE AND FURNISH A COPY OF THE READINGS TO THE PROJECT ENGINEER FOR EVALUATION.

LOOP DETECTOR LEADS SHALL BE IDENTIFIED WITH THEIR ASSOCIATED LOOP BY USE OF WATERPROOF TAGS AT BOTH ENDS OF THE CABLE. A LISTING OF THE CABLE IDENTIFICATION PER INDIVIDUAL LOOP LEAD-IN SHALL BE PLACED IN THE CABINET.

THE #12 AWG. LOOP WIRE IN THE PULL (SPLICE) BOX SHALL BE HAND TWISTED AT LEAST 3 TWISTS PER FOOT BEFORE BEING SPLICED TO THE LOOP LEAD-IN CABLE.

SPLICES OF LOOP WIRE TO LEAD-IN CABLE SHALL BE MADE ONLY IN PULL (SPLICE) BOXES AT THE SIDE OF THE ROAD.

THE #12 AWG LOOP WIRE SHALL BE INSTALLED FROM THE ROADSIDE PULL (SPLICE) BOX THROUGH THE LOOP CONDUIT, BACK TO THE ROADSIDE PULL (SPLICE) BOX, AND BE INSTALLED IN ONE, NON-SPLICE CONTINUOUS LENGTH.

PROTECTION OF THE CONDUIT IN THE BASE COURSE, SHALL BE REQUIRED AFTER INSTALLATION AND BEFORE NEW PAVEMENT IS INSTALLED.

SHOULD INSTALLATION REPAIR BE REQUIRED, IT SHALL BE DONE UNDER THE DIRECTION OF THE PROJECT ENGINEER.

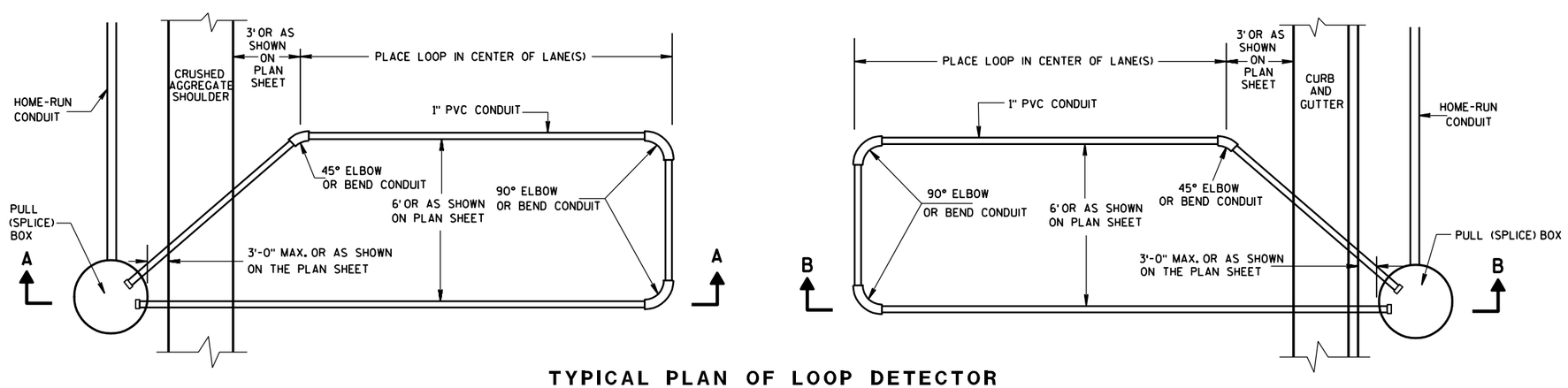

TYPICAL PLAN OF LOOP DETECTOR WITH 18" OR 24" PULL (SPLICE) BOX

LOOP DETECTOR INSTALLED IN BASE COURSE WITH PULL (SPLICE) BOX OFF ROADWAY (OPTION I)
STATE OF WISCONSIN DEPARTMENT OF TRANSPORTATION
APPROVED 6/7/06 — DATE /S/ Balu Ananthanarayanan — STATE ELECTRICAL ENGINEER FOR HIGHWAYS FHWA

6

S.D.D. 9 F 15-3a

6

S.D.D. 9 F 15-3a

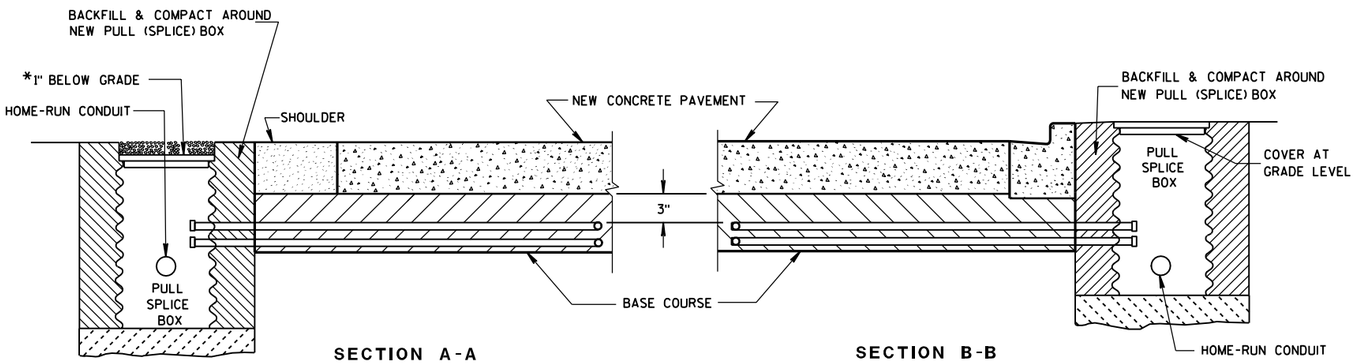

SECTION A-A
NO CURB & GUTTER

SECTION B-B
CURB & GUTTER

*RECESS PULL (SPLICE) BOX SO THAT THE COVER IS 3" BELOW GRADE IN SHOULDER AREAS OF CRUSHED AGGREGATE. BACKFILL OVER COVER WITH THE CRUSHED AGGREGATE TO BRING THE AREA TO GRADE LEVEL.

LOOP DETECTOR INSTALLATION DETAIL

GENERAL NOTES

DETAILS OF CONSTRUCTION, MATERIALS AND WORKMANSHIP NOT SHOWN ON THIS DRAWING SHALL CONFORM TO THE PERTINENT REQUIREMENTS OF THE CONTRACT.

LOOP SIZE, CONFIGURATION LOCATION, NUMBER OF TURNS OF WIRE AND ASSOCIATED SIGNAL PHASE SHALL BE AS SHOWN ON THE PLANS.

PITCH LEAD OUT CONDUIT TO DRAIN TO ROADSIDE PULL (SPLICE) BOX.

SPLICES SHALL BE INSTALLED BY USING CAST IN PLACE SPLICE KITS SUCH AS 3M TYPE 82A1 OR APPROVED EQUAL. NON-INSULATED BUTT SPLICES TO FIT #12 AWG STRANDED WIRE SHALL BE USED. SPLICES SHALL BE SOLDERED AND INSULATED FROM EACH OTHER AS PER INSTRUCTIONS INCLUDED IN THE SPLICE KIT.

MEASURE GROUND RESISTANCE USING A MEGGER. REPLACE LOOP WIRE NOT ATTAINING A READING OF INFINITY TO GROUND.

AFTER SPLICING THE LOOP WIRE TO THE LOOP LEAD-IN CABLE, THE CONTRACTOR SHALL MEASURE INDUCTANCE, GROUND RESISTANCE AND WIRE RESISTANCE AT THE CABINET END OF THE LEAD-IN CABLE AND FURNISH A COPY OF THE READINGS TO THE PROJECT ENGINEER FOR EVALUATION.

LOOP DETECTOR LEADS SHALL BE IDENTIFIED WITH THEIR ASSOCIATED LOOP BY USE OF WATERPROOF TAGS AT BOTH ENDS OF THE CABLE. A LISTING OF THE CABLE IDENTIFICATION PER INDIVIDUAL LOOP LEAD-IN SHALL BE PLACED IN THE CABINET.

THE #12 AWG. LOOP WIRE IN THE PULL (SPLICE) BOX SHALL BE HAND TWISTED AT LEAST 3 TWISTS PER FOOT BEFORE BEING SPLICED TO THE LOOP LEAD-IN CABLE.

SPLICES OF LOOP WIRE TO LEAD-IN CABLE SHALL BE MADE ONLY IN PULL (SPLICE) BOXES AT THE SIDE OF THE ROAD.

THE #12 AWG LOOP WIRE SHALL BE INSTALLED FROM THE ROADSIDE PULL (SPLICE) BOX, THROUGH THE LOOP CONDUIT, BACK TO THE ROADSIDE PULL (SPLICE) BOX, AND BE INSTALLED IN ONE, NON-SPLICED CONTINUOUS LENGTH.

PROTECTION OF THE CONDUITS IN THE BASE COURSE SHALL BE REQUIRED AFTER INSTALLATION AND BEFORE NEW PAVEMENT IS INSTALLED.

SHOULD INSTALLATION REPAIR BE REQUIRED, IT SHALL BE DONE UNDER THE DIRECTION OF THE PROJECT ENGINEER.

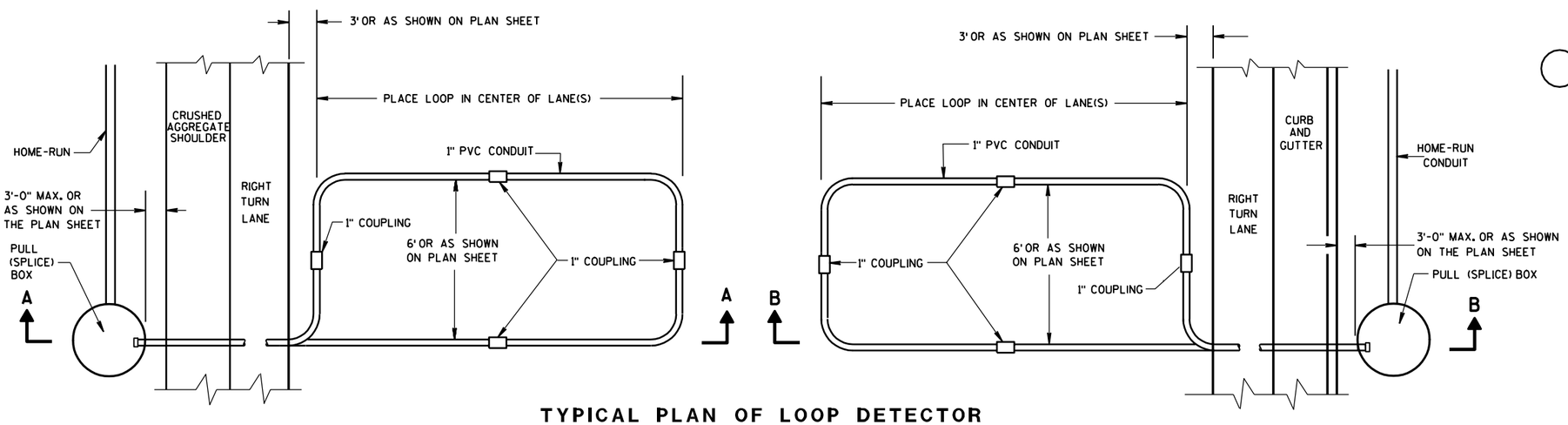

TYPICAL PLAN OF LOOP DETECTOR WITH 24" PULL (SPLICE) BOX

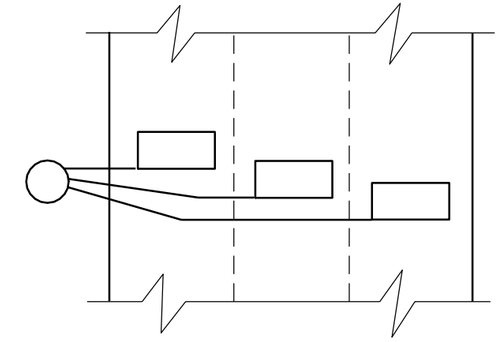

MULTI-LANE INSTALLATION

LOOP DETECTOR INSTALLED IN BASE COURSE WITH PULL (SPLICE) BOX OFF ROADWAY (OPTION 2)
STATE OF WISCONSIN DEPARTMENT OF TRANSPORTATION
APPROVED 6/7/06 DATE — /S/ Balu Ananthanarayanan, STATE ELECTRICAL ENGINEER FOR HIGHWAYS — FHWA

6

S.D.D. 9 F 15-3b

6

S.D.D. 9 F 15-3b

GENERAL NOTES

DETAILS OF CONSTRUCTION, MATERIALS AND WORKMANSHIP NOT SHOWN ON THIS DRAWING SHALL CONFORM TO THE PERTINENT REQUIREMENTS OF THE CONTRACT.

1. WOOD POLES SHALL BE CLASS 4. LENGTH DETERMINED BY SIGNAL PLAN.

2. SIGNAL FACES:
   A. ALL SECTIONS SHALL BE 12" AND POLYCARBONATE.
   B. EACH SHALL CONTAIN A 5" WIDE DULL BLACK POLYCARBONATE BACKPLATE.
   C. EACH SHALL BE WIRED FROM THE TOP SIGNAL MOUNTING BRACKET.
   D. NEAR RIGHT SIGNAL FACE SUSPENDED ON THE TETHER (NO BACKPLATE) SHALL NOT BE OVER THE TRAVELED WAY. IF THE POLE IS WITHIN 5 FEET OF THE TRAVELED WAY MOUNT THE SIGNAL FACE ON THE WOOD POLE WITH BACKPLATE.

3. SPAN WIRE:
   A. EACH SPAN WIRE SHALL BE INDIVIDUALLY DOWN GUYED.
   B. SIGNAL AND LIGHTING CABLES SHALL ONLY BE ATTACHED TO THE UPPER SPAN WIRE.
   C. THE SIGNAL ASSEMBY SHALL HAVE A 17' MIN. HEIGHT ABOVE THE ROADWAY. THIS SHALL BE MEASURED AFTER THE SPAN WIRE INSTALLATION IS COMPLETED WITH ALL CABLES AND SIGNAL FACES IN PLACE. MAINTAIN MINIMUM AND MAXIMUM HEIGHTS AS ROADWAY WORK PROGRESSES.

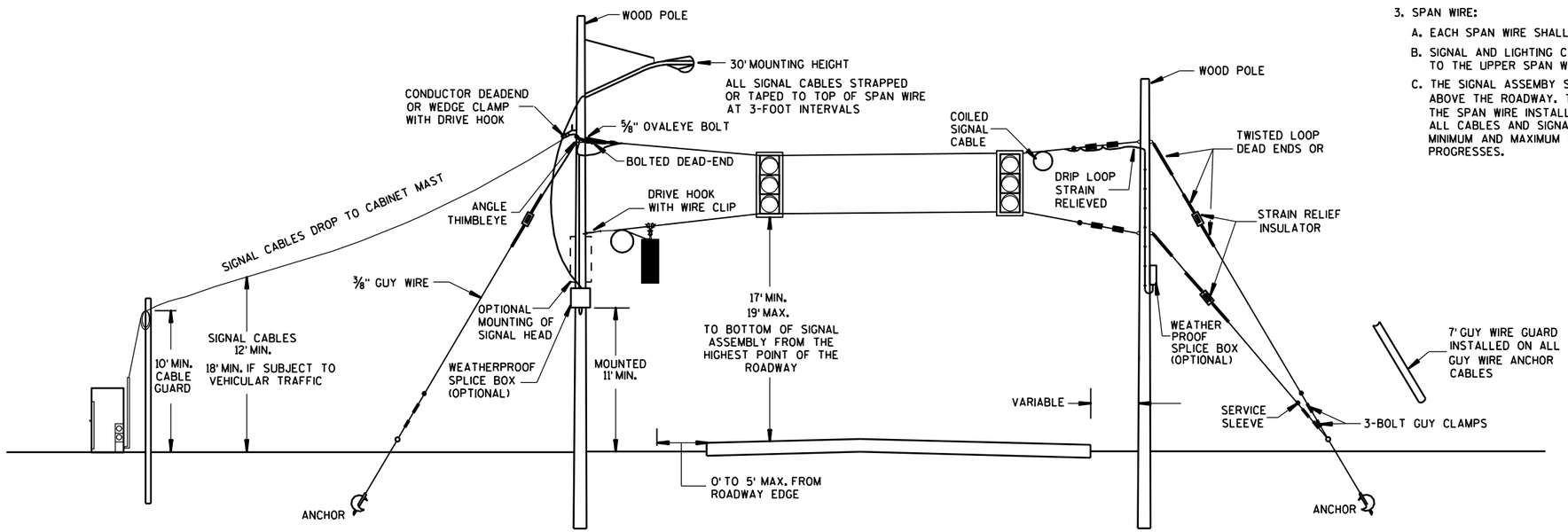

SPAN WIRE
TEMPORARY SIGNALS

MINIMUM POLE LENGTHS	POLE BURIEL DEPTHS
25'	5'
30'	6'
35'	7'
40'	8'
45'	9'

SPAN WIRE
TEMPORARY TRAFFIC SIGNAL

STATE OF WISCONSIN
DEPARTMENT OF TRANSPORTATION

APPROVED
7-14-08 — DATE
/S/ Balu Ananthanarayanan — CHIEF ELECTRICAL ENGINEER FOR HIGHWAYS
FHWA

6

S.D.D. 9 G 1-3a

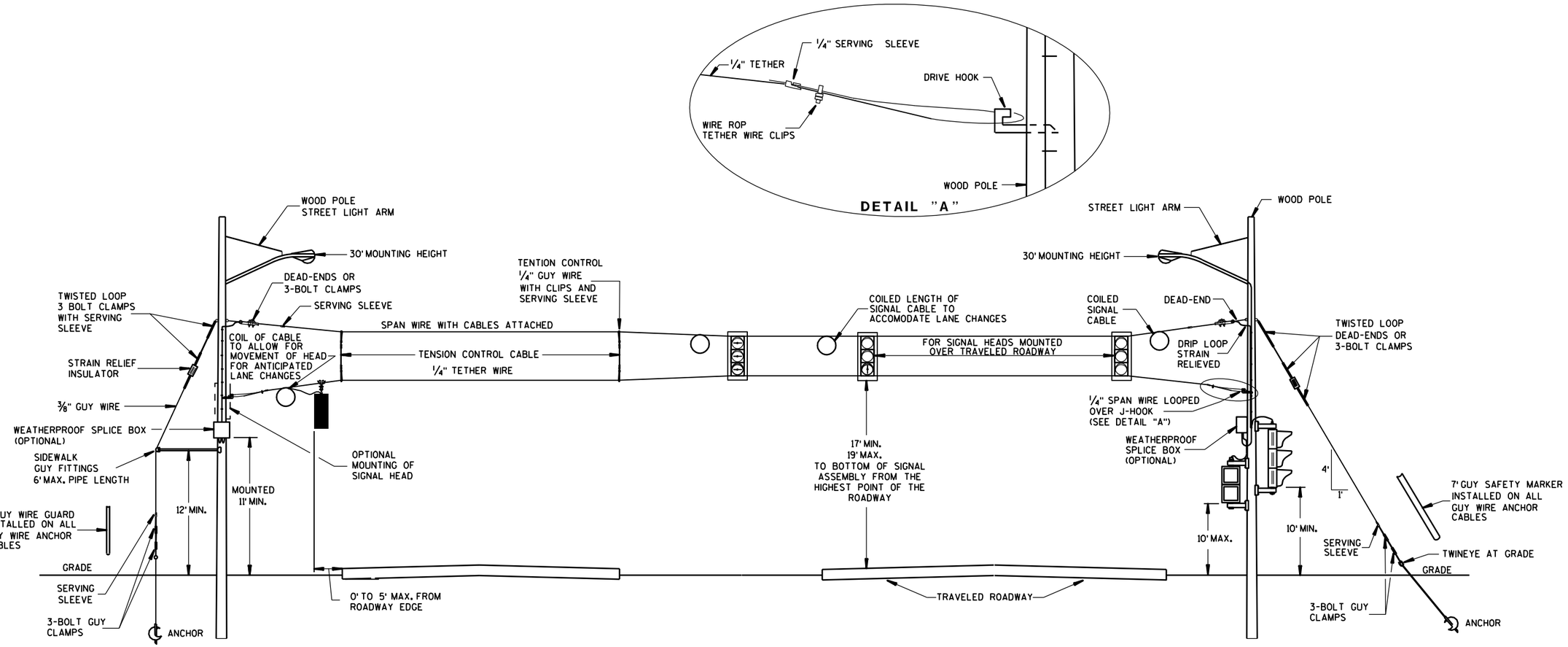

GENERAL NOTES

DETAILS OF CONSTRUCTION, MATERIALS AND WORKMANSHIP NOT SHOWN ON THIS DRAWING SHALL CONFORM TO THE PERTINENT REQUIREMENTS OF THE CONTRACT.

1. WOOD POLES SHALL BE CLASS 4. LENGTH DETERMINED BY SIGNAL PLAN.
2. SIGNAL FACES:
   A. ALL SECTIONS SHALL BE 12" AND POLYCARBONATE.
   B. EACH SHALL CONTAIN A 5" WIDE DULL BLACK POLYCARBONATE BACKPLATE.
   C. EACH SHALL BE WIRED FROM THE TOP SIGNAL MOUNTING BRACKET.
   D. NEAR RIGHT SIGNAL FACE SUSPENDED ON THE TETHER (NO BACKPLATE) SHALL NOT BE OVER THE TRAVELED WAY. IF THE POLE IS WITHIN 5 FEET OF THE TRAVELED WAY MOUNT THE SIGNAL FACE ON THE WOOD POLE WITH BACKPLATE.
   E. FAR INDICATION SHALL BE MAINTAINED OVER CENTER OF TRAFFIC LANE.
3. SPAN WIRE:
   A. EACH SPAN WIRE SHALL BE INDIVIDUALLY DOWN GUYED.
   B. SIGNAL AND LIGHTING CABLES SHALL ONLY BE ATTACHED TO THE UPPER SPAN WIRE.
   C. THE SIGNAL ASSEMBY SHALL HAVE A 17' MIN. HEIGHT ABOVE THE ROADWAY. THIS SHALL BE MEASURED AFTER THE SPAN WIRE INSTALLATION IS COMPLETED WITH ALL CABLES AND SIGNAL FACES IN PLACE. MAINTAIN MINIMUM AND MAXIMUM HEIGHTS AS ROADWAY WORK PROGRESSES.

SPAN WIRE
TEMPORARY SIGNALS
4 LANE ROADWAYS

MINIMUM POLE LENGTHS	CLASS	MIN. BURIAL DEPTHS
25'	V	5'
30'	V	6'
35'	IV	7'
40'	IV	8'
45'	IV	9'

SPAN WIRE
TEMPORARY TRAFFIC SIGNAL

STATE OF WISCONSIN
DEPARTMENT OF TRANSPORTATION

APPROVED

7-14-08	/S/ Balu Ananthanarayanan
DATE	CHIEF ELECTRICAL ENGINEER FOR HIGHWAYS

FHWA

6

S.D.D. 9 G 1-3b

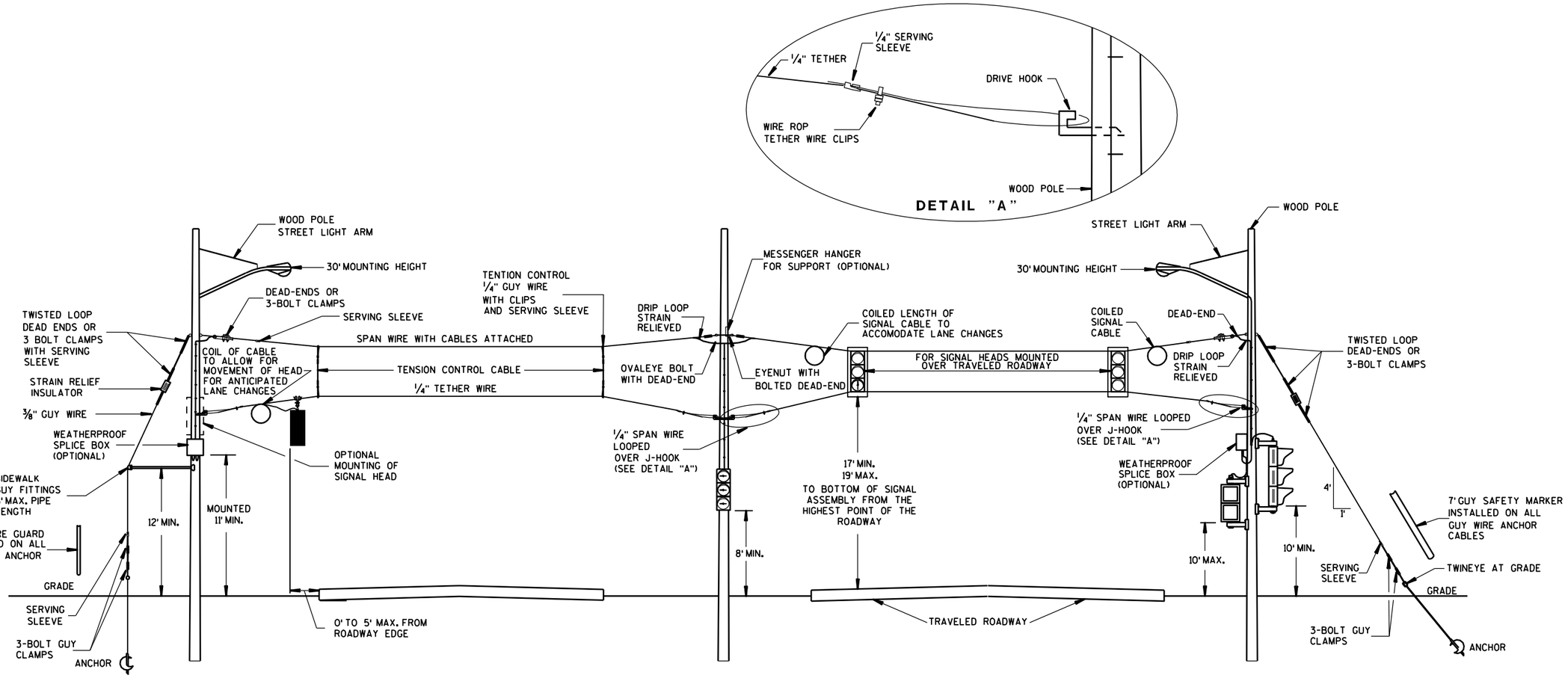

SPAN WIRE
TEMPORARY SIGNALS
4 LANE ROADWAYS

GENERAL NOTES

DETAILS OF CONSTRUCTION, MATERIALS AND WORKMANSHIP NOT SHOWN ON THIS DRAWING SHALL CONFORM TO THE PERTINENT REQUIREMENTS OF THE CONTRACT.

1. WOOD POLES SHALL BE CLASS 4. LENGTH DETERMINED BY SIGNAL PLAN.

2. SIGNAL FACES:
   A. ALL SECTIONS SHALL BE 12" AND POLYCARBONATE.
   B. EACH SHALL CONTAIN A 5" WIDE DULL BLACK POLYCARBONATE BACKPLATE.
   C. EACH SHALL BE WIRED FROM THE TOP SIGNAL MOUNTING BRACKET.
   D. NEAR RIGHT SIGNAL FACE SUSPENDED ON THE TETHER (NO BACKPLATE) SHALL NOT BE OVER THE TRAVELED WAY. IF THE POLE IS WITHIN 5 FEET OF THE TRAVELED WAY MOUNT THE SIGNAL FACE ON THE WOOD POLE WITH BACKPLATE.
   E. FAR INDICATION SHALL BE MAINTAINED OVER CENTER OF TRAFFIC LANE.

3. SPAN WIRE:
   A. EACH SPAN WIRE SHALL BE INDIVIDUALLY DOWN GUYED.
   B. SIGNAL AND LIGHTING CABLES SHALL ONLY BE ATTACHED TO THE UPPER SPAN WIRE.
   C. THE SIGNAL ASSEMBY SHALL HAVE A 17' MIN. HEIGHT ABOVE THE ROADWAY. THIS SHALL BE MEASURED AFTER THE SPAN WIRE INSTALLATION IS COMPLETED WITH ALL CABLES AND SIGNAL FACES IN PLACE. MAINTAIN MINIMUM AND MAXIMUM HEIGHTS AS ROADWAY WORK PROGRESSES.

MINIMUM POLE LENGTHS	CLASS	MIN. BURIAL DEPTHS
25'	V	5'
30'	V	6'
35'	IV	7'
40'	IV	8'
45'	IV	9'

SPAN WIRE
TEMPORARY TRAFFIC SIGNAL

STATE OF WISCONSIN
DEPARTMENT OF TRANSPORTATION

APPROVED

7-14-08 — DATE

/S/ Balu Ananthanarayanan — CHIEF ELECTRICAL ENGINEER FOR HIGHWAYS

FHWA

6

S.D.D. 9 G 1-3c

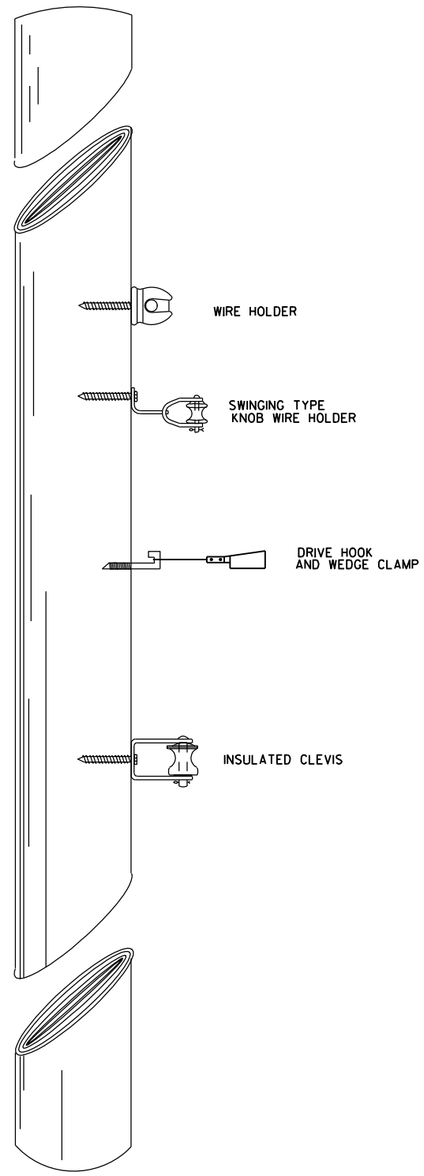

TYPICAL CABLE HANGERS

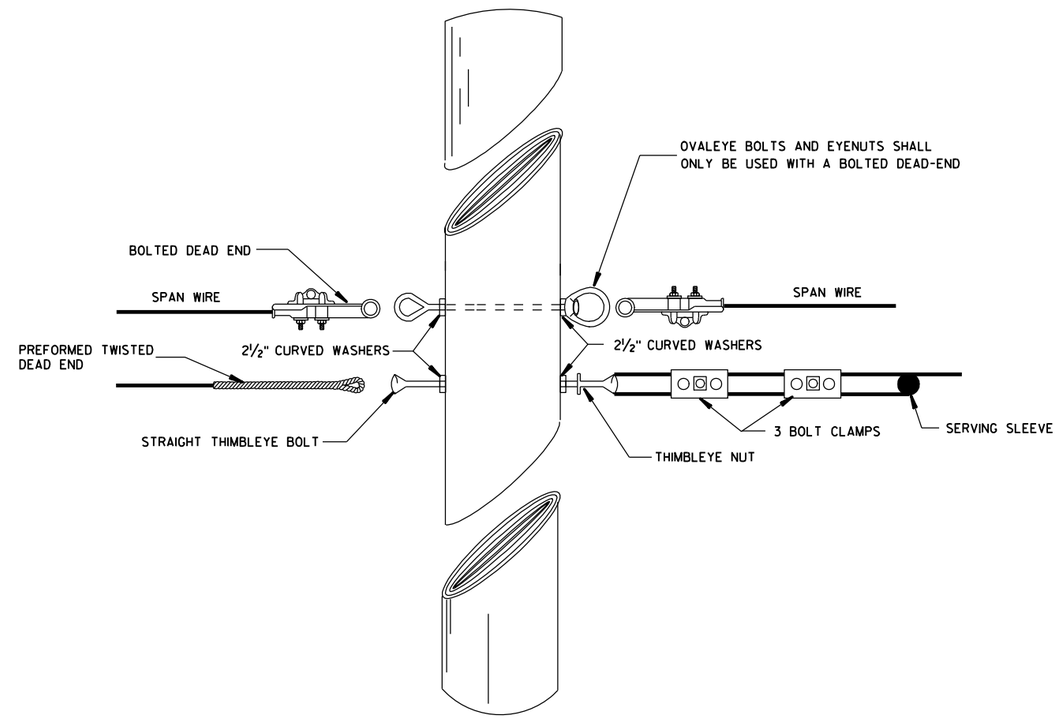

TYPICAL DEAD-ENDING

SPAN WIRE
TEMPORARY TRAFFIC SIGNAL

STATE OF WISCONSIN
DEPARTMENT OF TRANSPORTATION

APPROVED

7-14-08	/S/ Balu Ananthanarayanan
DATE	CHIEF ELECTRICAL ENGINEER FOR HIGHWAYS

FHWA

6

S.D.D. 9 G 1-3d

6

S.D.D. 9 G 1-3d

GENERAL NOTES

1. USE 3/4" DRILL IN WOOD POLE TO PROVIDE HOLE FOR 5/8" BOLTS.
2. SAFTY LOOP REQUIRED ON EACH END OF ALL SPAN WIRES.

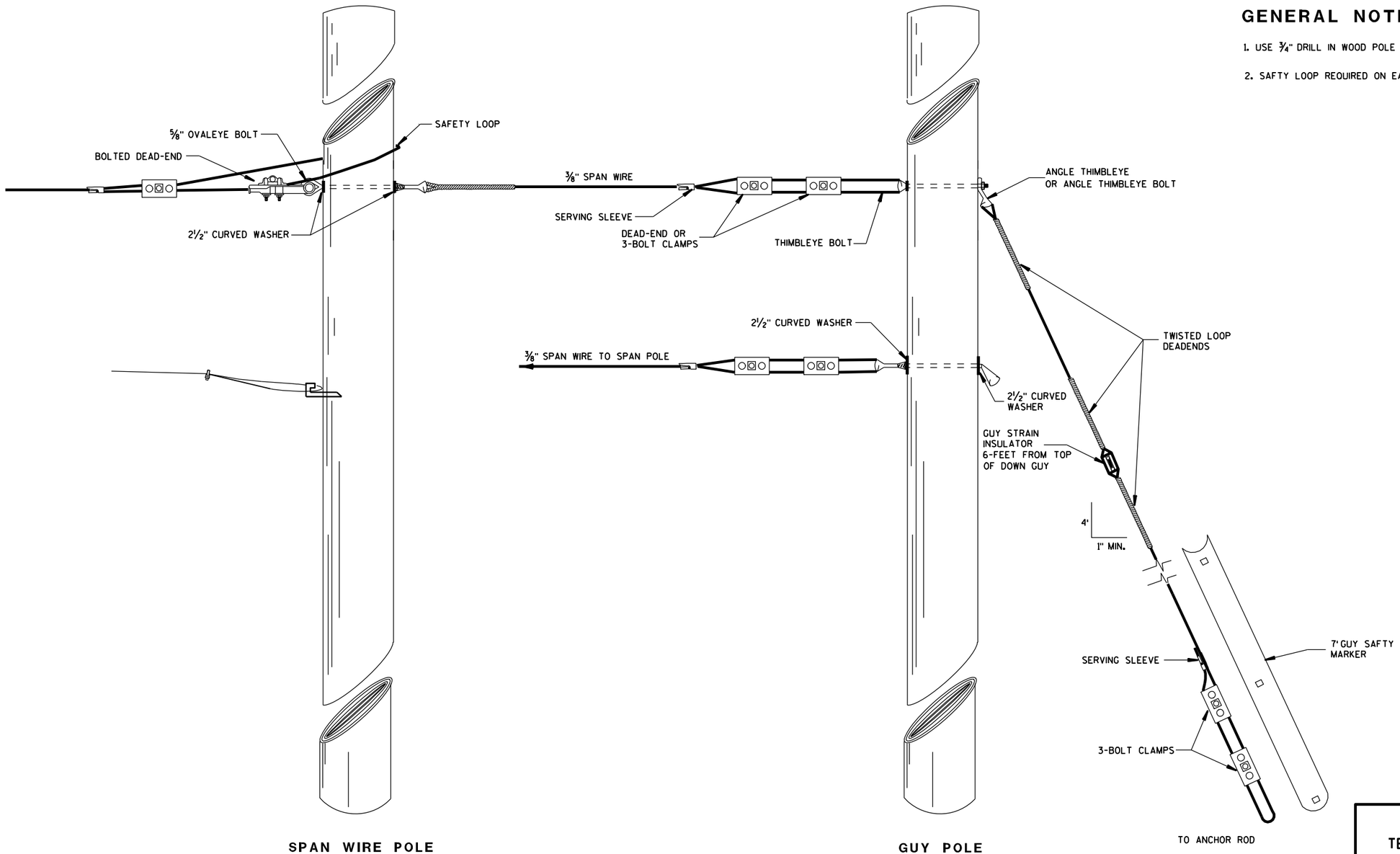

TYPICAL DEAD-ENDINGS OR GUYING

SPAN WIRE
TEMPORARY TRAFFIC SIGNAL

STATE OF WISCONSIN
DEPARTMENT OF TRANSPORTATION

APPROVED

7-14-08	/S/ Balu Ananthanarayanan
DATE	CHIEF ELECTRICAL ENGINEER FOR HIGHWAYS

FHWA

6

S.D.D. 9 G 1-3e

6

S.D.D. 9 G 1-3e

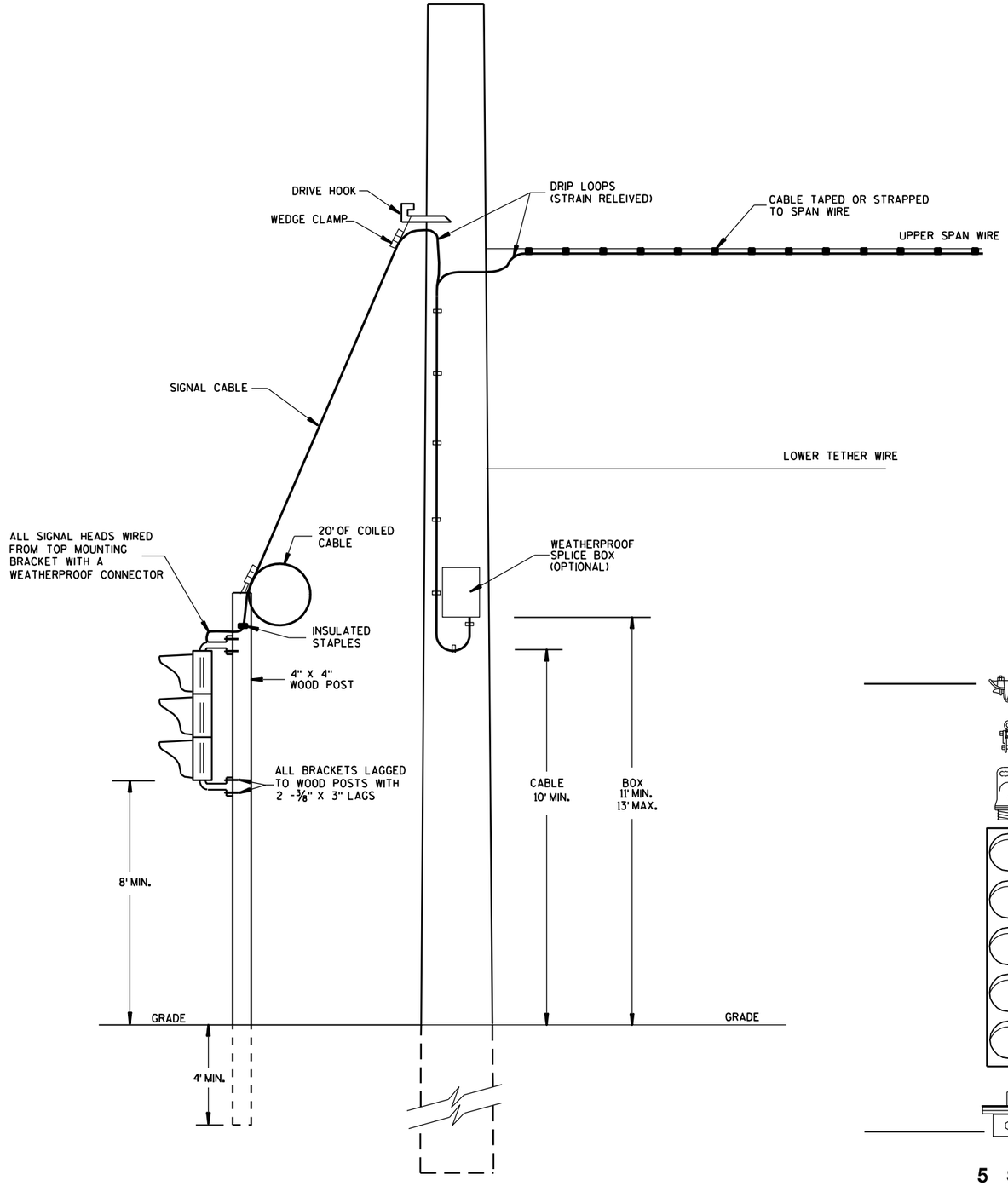

TYPICAL DROP TO TEMPORARY MOVEABLE SIGNAL

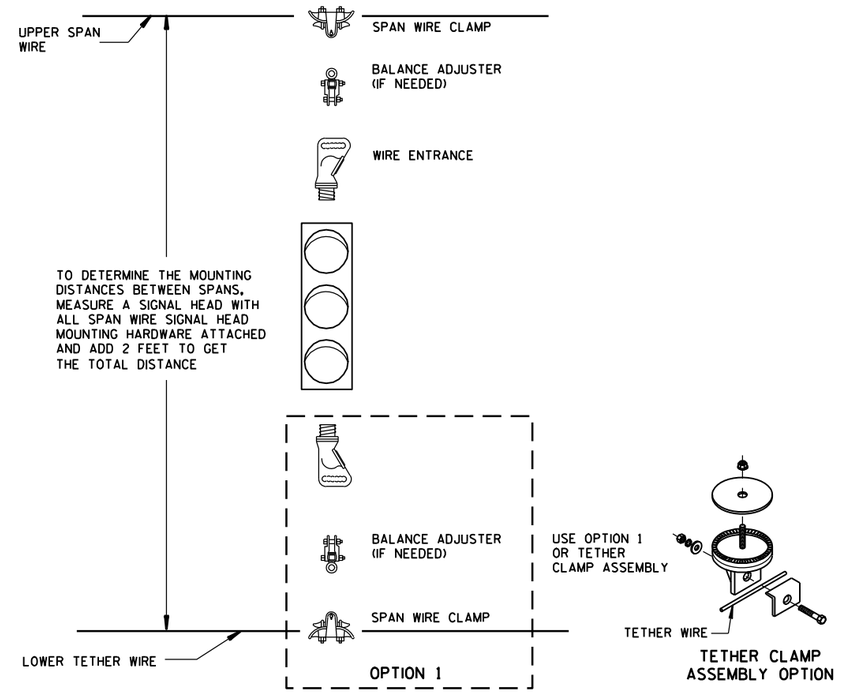

TYPICAL SPAN WIRE MOUNTING HARDWARE

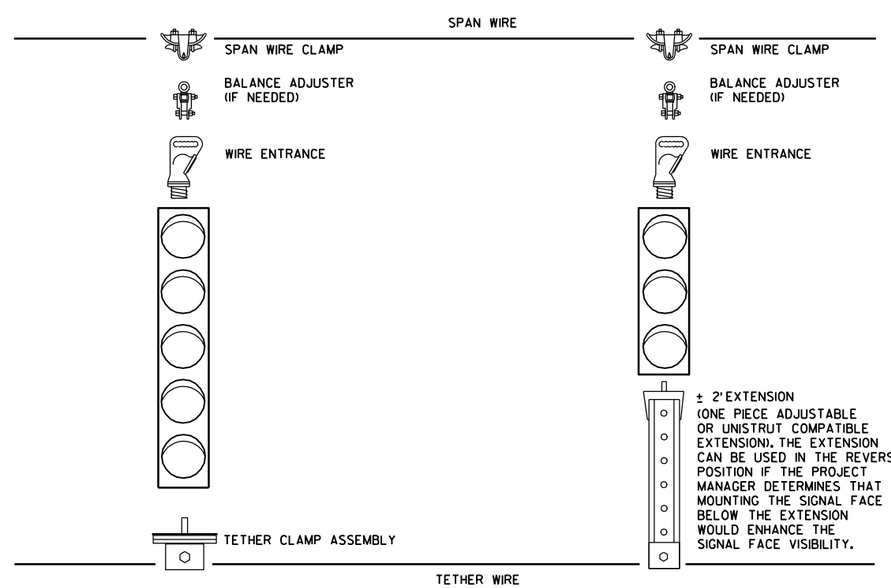

5 SECTION VERTICAL WITH 3 SECTION
VERTICAL ON ONE SPAN WIRE

SPAN WIRE
TEMPORARY TRAFFIC SIGNAL

STATE OF WISCONSIN
DEPARTMENT OF TRANSPORTATION

APPROVED

7-14-08	/S/ Balu Ananthanarayanan
DATE	CHIEF ELECTRICAL ENGINEER FOR HIGHWAYS

FHWA

6

S.D.D. 9 G 1-3f

6

S.D.D. 9 G 1-3f

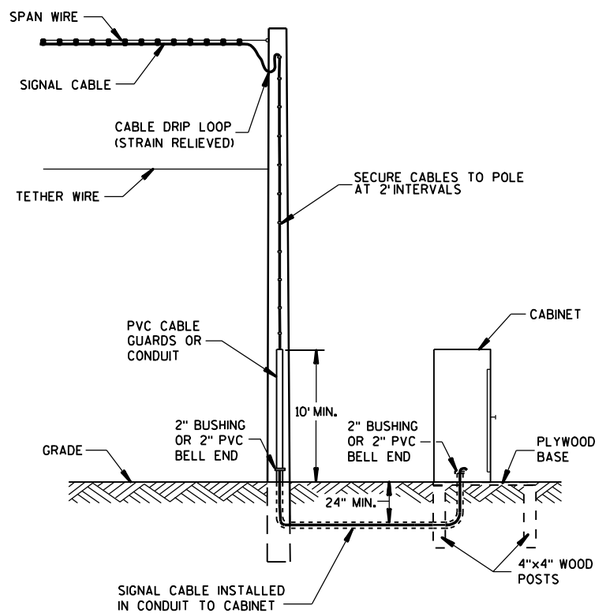

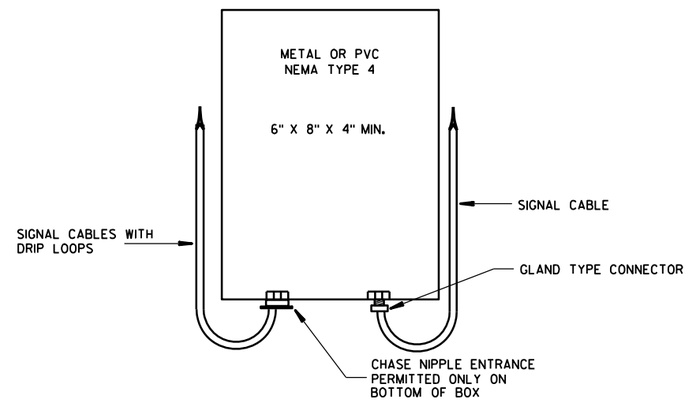

SPLICE BOX

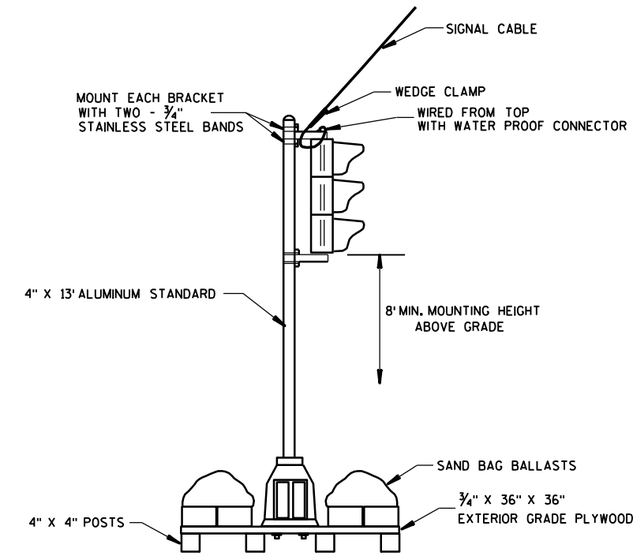

TYPICAL SKID TYPE TEMPORARY

6

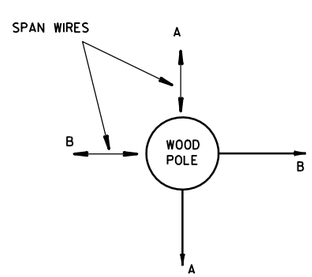

ALL DOWN OR SIDEWALK GUYS
SHALL BE INSTALLED IN THE
OPPOSITE DIRECTION OF THE
STRAIN OF THE SPAN WIRE

CORNER POLES

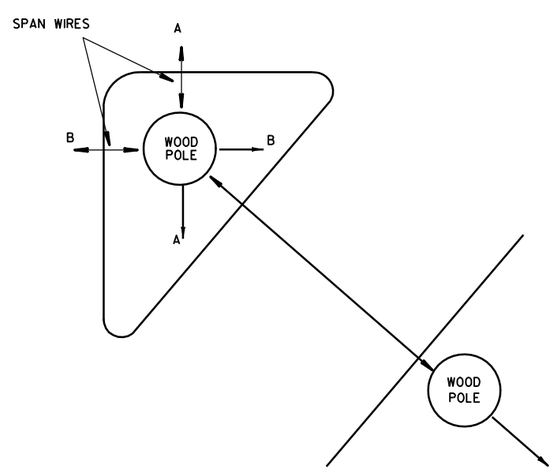

ISLAND POLES

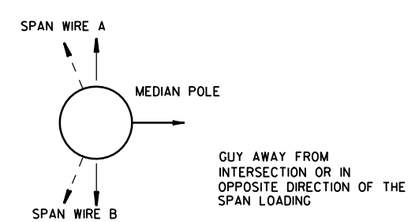

MEDIAN POLES

SPAN WIRE
TEMPORARY TRAFFIC SIGNAL

STATE OF WISCONSIN
DEPARTMENT OF TRANSPORTATION

APPROVED

7-14-08	/S/ Balu Ananthanarayanan
DATE	CHIEF ELECTRICAL ENGINEER FOR HIGHWAYS

FHWA

S.D.D. 9 G 1-3g

6

S.D.D. 9 G 1-3g

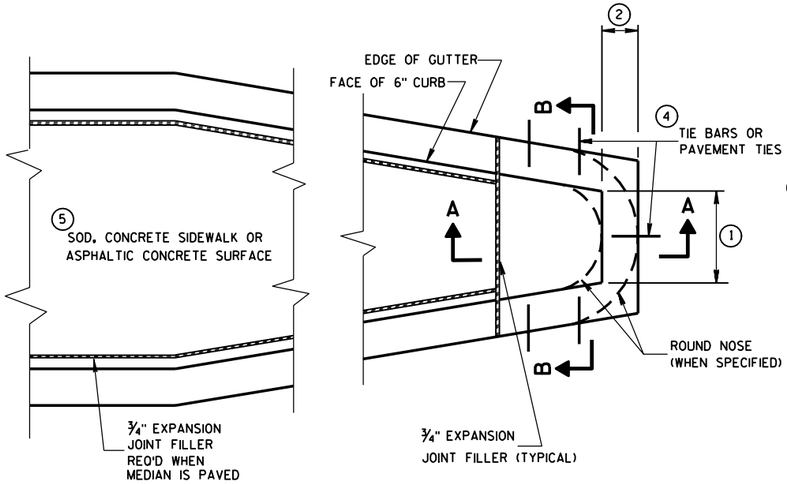

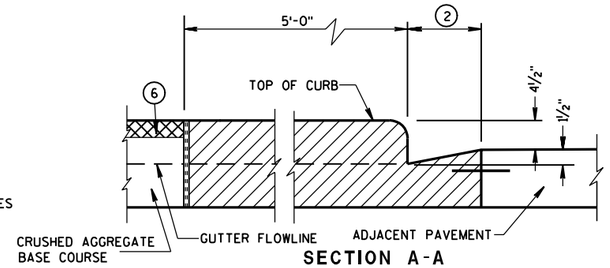

SECTION A-A

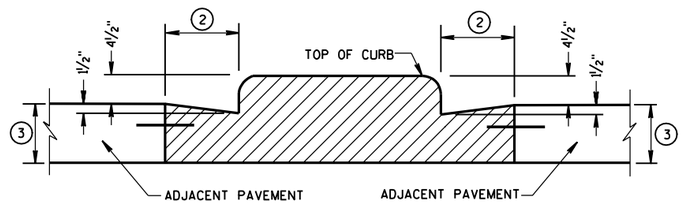

SECTION B-B

CONCRETE MEDIAN BLUNT NOSE DETAIL

GENERAL NOTES

DETAILS OF CONSTRUCTION, MATERIALS AND WORKMANSHIP NOT SHOWN ON THIS DRAWING SHALL CONFORM TO THE PERTINENT REQUIREMENTS OF THE STANDARD SPECIFICATIONS AND THE APPLICABLE SPECIAL PROVISIONS.

1. SEE PLAN FOR MEDIAN NOSE WIDTH AND RADIUS (FOR ROUND NOSE ALTERNATE).
2. WIDTH OF GUTTER TO MATCH EXISTING ADJACENT GUTTER OR AS SPECIFIED ELSEWHERE IN THE PLAN.
3. DEPTH EQUAL TO ADJACENT PAVEMENT. ADJACENT PAVEMENT STRUCTURE DETAILS ARE SHOWN ON THE PLAN. TYPICAL OPTIONS ARE:
   (1) NEW OR EXISTING CONCRETE PAVEMENT.
   (2) ASPHALTIC CONCRETE PAVEMENT OVER NEW OR EXISTING CONCRETE BASE COURSE.
   (3) ASPHALTIC CONCRETE PAVEMENT OVER CRUSHED AGGREGATE BASE COURSE.
4. TIE BARS OR PAVEMENT TIES REQUIRED IN NEW CONCRETE PAVEMENT OR CONCRETE BASE COURSE. TIE BARS SHALL BE NO. 4 X 2'-0" SPACED AT 2'-0" C-C.

   PAVEMENT TIES REQUIRED IN EXISTING CONCRETE BASE COURSE. PAVEMENT TIES SHALL BE NO. 6 X 1'-0" SPACED AT 3'-0" C-C INSTALLED ON A HORIZONTAL SKEW OF 6:1. THE DIRECTION OF SKEW SHALL ALTERNATE AFTER EVERY ONE OR TWO BARS.
5. SURFACE TYPE AND DETAILS ARE SHOWN ELSEWHERE IN THE PLAN.

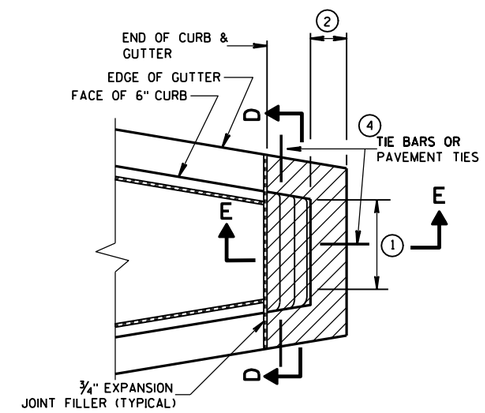

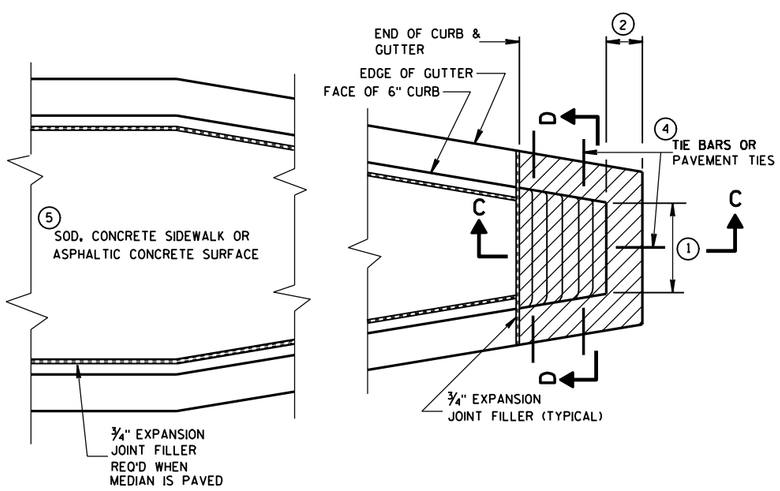

CONCRETE MEDIAN SLOPED NOSE TYPE 1

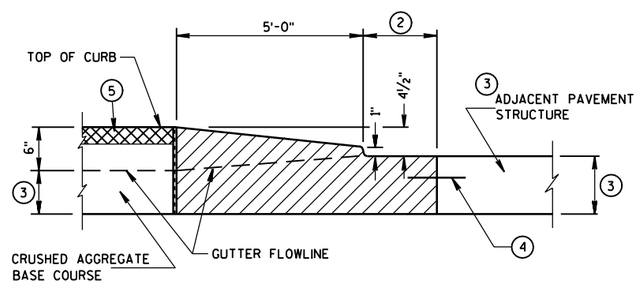

SECTION C-C

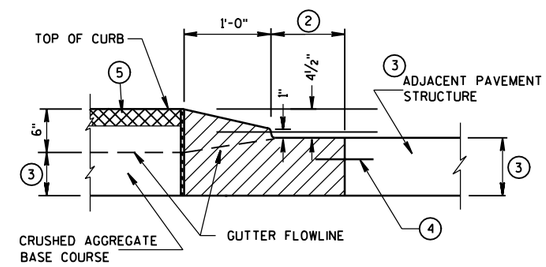

SECTION E-E

CONCRETE MEDIAN SLOPED NOSE TYPE 2

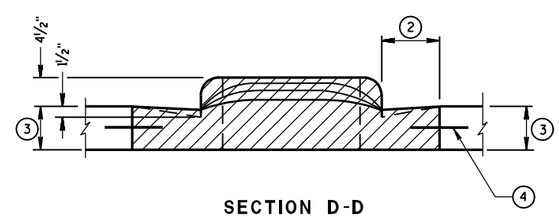

SECTION D-D

CONCRETE MEDIAN NOSE

STATE OF WISCONSIN
DEPARTMENT OF TRANSPORTATION

APPROVED
6/8/06 — DATE
/S/ Jerry H. Zogg — ROADWAY STANDARDS DEVELOPMENT ENGINEER
FHWA

6

S.D.D. 11B 2-2

GENERAL NOTES

DRILL AND LIFT OUT EXISTING CONCRETE PAVEMENT WITHIN THE BOUNDARIES OF BASE PATCHING CONCRETE AREAS. THE CONTRACTOR MAY MAKE ADDITIONAL SAW CUTS INSIDE THE REPAIR LIMITS TO REDUCE WEIGHT AND SIZE OF CONCRETE PIECES. PROVIDE 6-FOOT MINIMUM BOUNDARIES FROM BASE PATCHING CONCRETE REPAIR AREAS TO REMAINING TRANSVERSE JOINT OR CRACK.

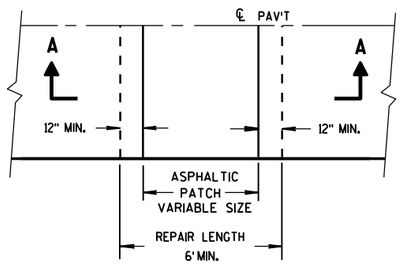

PLAN VIEW

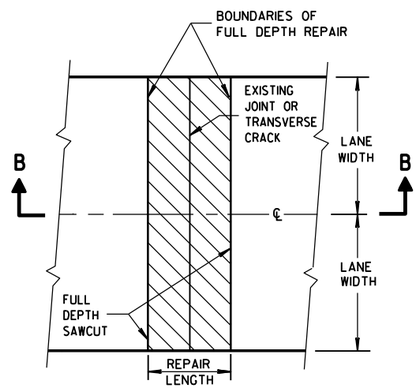

PLAN VIEW
(DOUBLE LANE REPAIR)

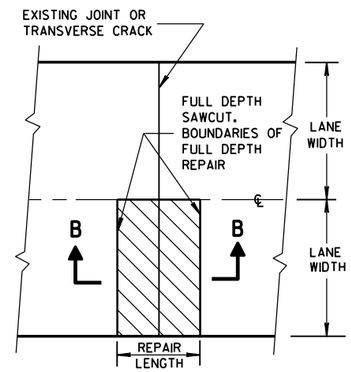

PLAN VIEW
(SINGLE LANE REPAIR)

FULL DEPTH CONCRETE PAVEMENT REMOVAL

(SEE NOTE)

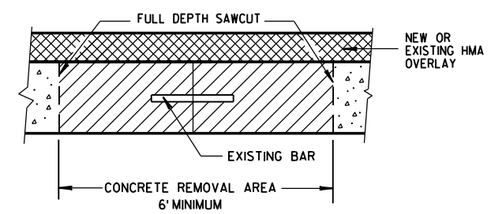

SECTION B-B

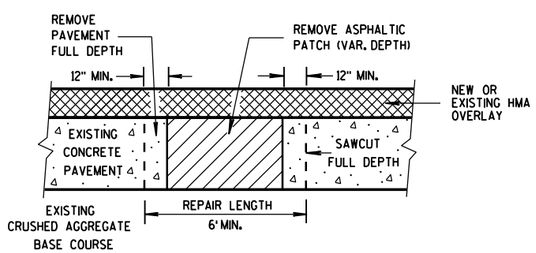

SECTION A-A

PATCH REMOVAL

6

6

S.D.D. 13 C 14-3a

S.D.D. 13 C 14-3a

BASE PATCHING CONCRETE

STATE OF WISCONSIN
DEPARTMENT OF TRANSPORTATION

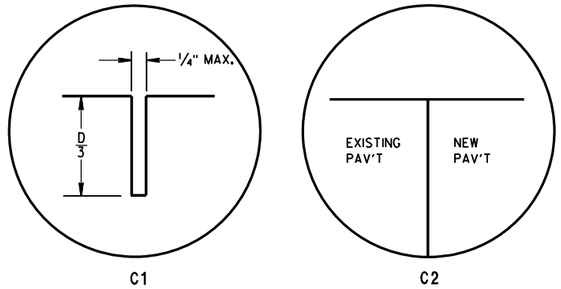

TRANSVERSE JOINTS

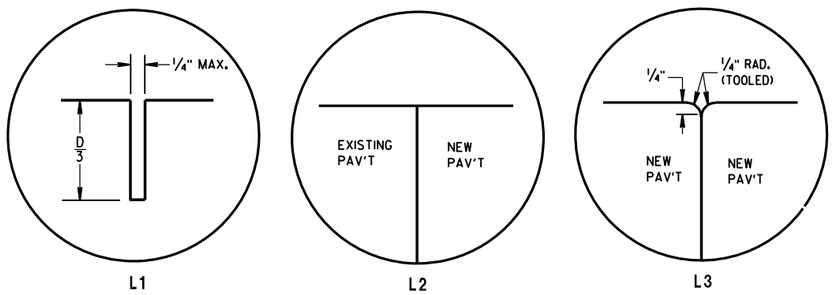

LONGITUDINAL JOINTS

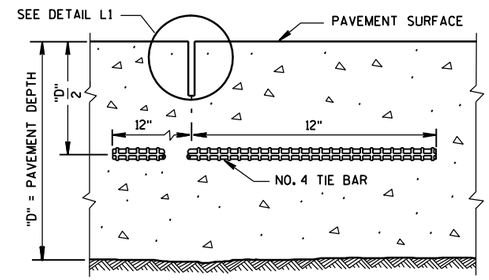

SECTION C-C

SAWED LONGITUDINAL JOINT

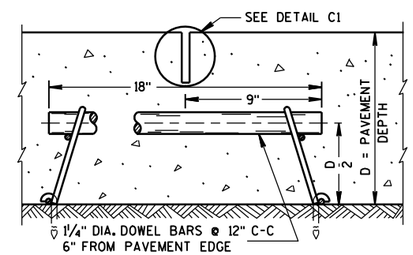

SECTION F-F

CONTRACTION JOINT

GENERAL NOTES

INSTALL DOWEL BARS PARALLEL TO THE PAVEMENT CENTERLINE AND PAVEMENT SURFACE.

CONCRETE BASE PATCHES OF EXISTING NONDOWELED CONCRETE PAVEMENTS DO NOT NEED TO BE DOWELED.

DO NOT SEAL OR FILL JOINTS.

1. ANCHOR DOWEL BARS INTO DRILLED HOLES WITH AN EPOXY.
2. APPLY A THIN UNIFORM COATING OF SURFACE TREATMENT TO THE FREE END OF DOWEL BARS TO PREVENT BONDING.
3. THE CONTRACTOR MAY USE AN ENGINEER-APPROVED BOND BREAKER IN LIEU OF TIE BARS FOR SINGLE LANE BASE PATCHES UP TO 15 FEET IN LENGTH.

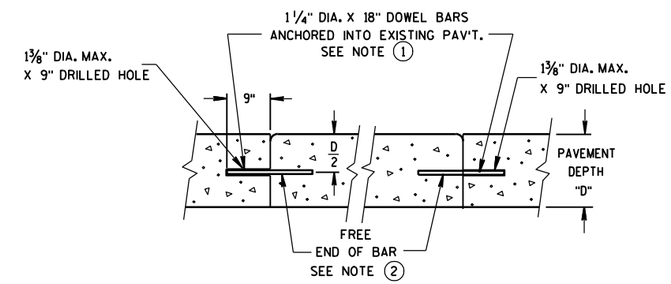

SECTION D-D

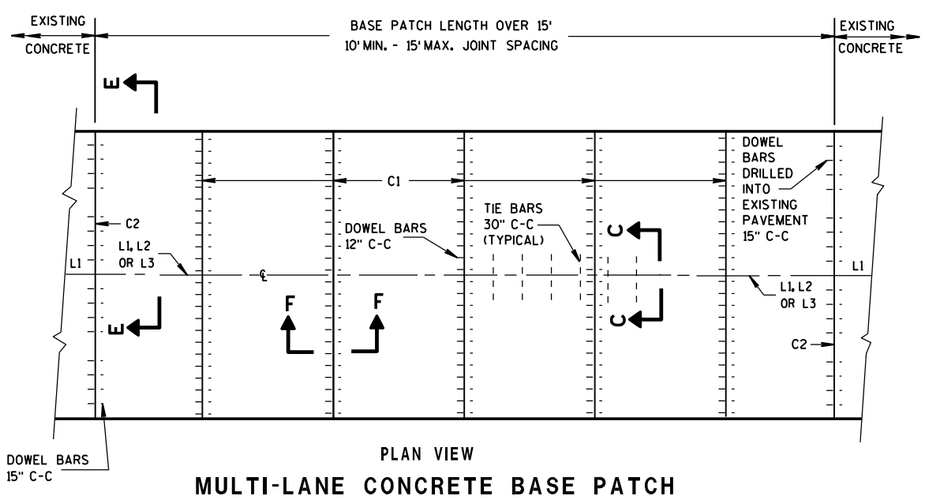

PLAN VIEW

MULTI-LANE CONCRETE BASE PATCH GREATER THAN 15' IN LENGTH

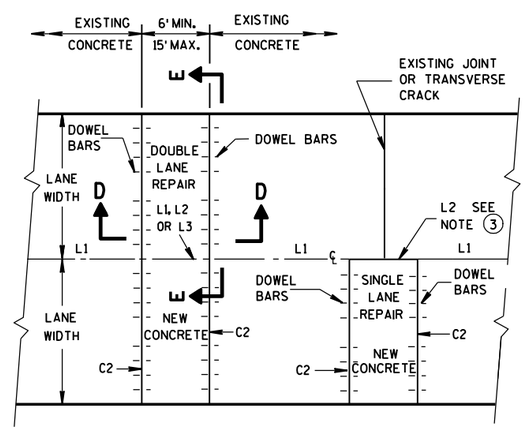

PLAN VIEW

CONCRETE BASE PATCH 15' MAXIMUM LENGTH

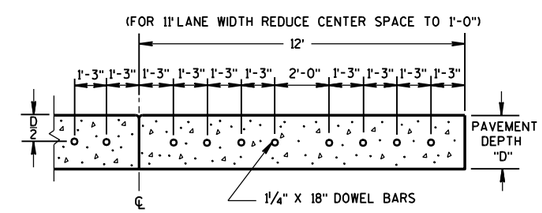

SECTION E-E

SPACING OF DOWEL BARS DRILLED INTO EXISTING PAVEMENT

BASE PATCHING CONCRETE

STATE OF WISCONSIN
DEPARTMENT OF TRANSPORTATION

6

S.D.D. 13 C 14-3b

6

S.D.D. 13 C 14-3b

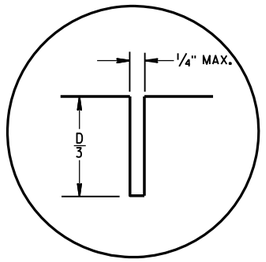

C1

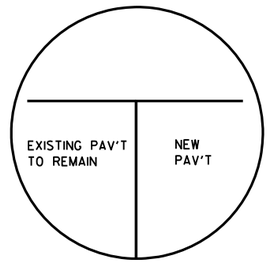

C2

TRANSVERSE JOINT

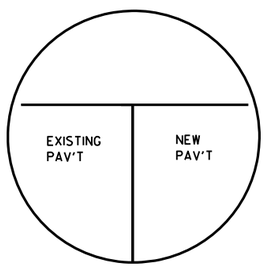

L2

LONGITUDINAL JOINT

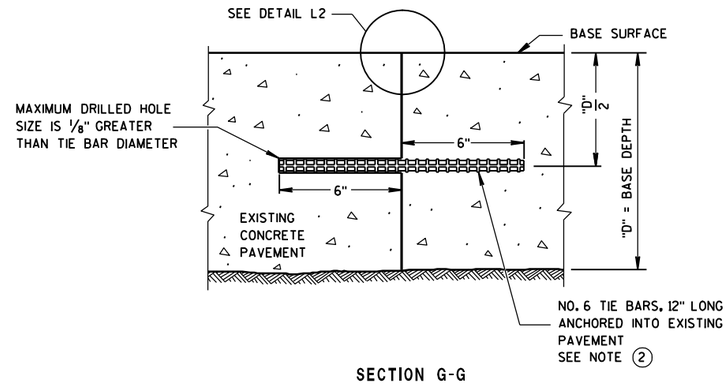

SECTION G-G

TIE BARS DRILLED INTO EXISTING PAVEMENT

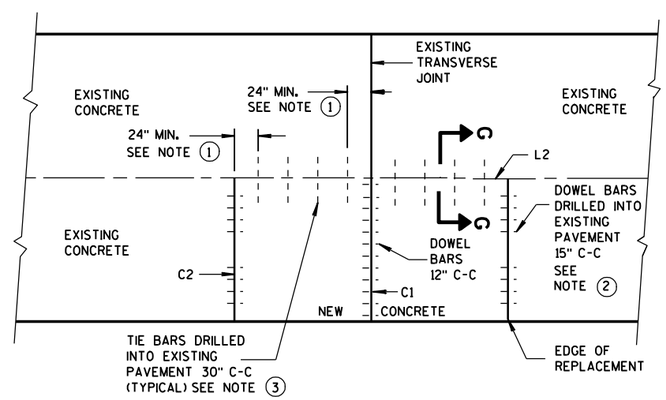

PLAN VIEW

SINGLE LANE CONCRETE BASE PATCH

GENERAL NOTES

1. PROVIDE A MINIMUM DISTANCE OF 24 INCHES FROM AN EXISTING TRANSVERSE JOINT OR THE EDGE OF REPLACEMENT TO THE CENTER OF THE TIE BAR NEAREST THAT JOINT OR EDGE.

2. ANCHOR TIE BARS AND DOWEL BARS INTO DRILLED HOLES WITH AN EPOXY.

3. WITH THE APPROVAL OF THE ENGINEER, FOR SINGLE LANE PAVEMENT REPLACEMENTS LESS THAN 30 FEET IN LENGTH, DRILLED TIE BARS MAY BE INSTALLED ON 6:1 SKEW HORIZONTALLY, DIRECTION OF SKEW ALTERNATING WITH EACH SUCCESSIVE BAR. DRIVE SKEWED TIE BARS TO A DEPTH OF 6 INCHES AND TO SUCH A DIAMETER AS TO PROVIDE A TIGHT DRIVEN FIT.

6

6

S.D.D. 13 C 14-3c

S.D.D. 13 C 14-3c

BASE PATCHING CONCRETE

STATE OF WISCONSIN
DEPARTMENT OF TRANSPORTATION

APPROVED
5-30-08 — DATE
/S/ Debra Bischoff — PAVEMENT POLICY & DESIGN ENGINEER
FHWA

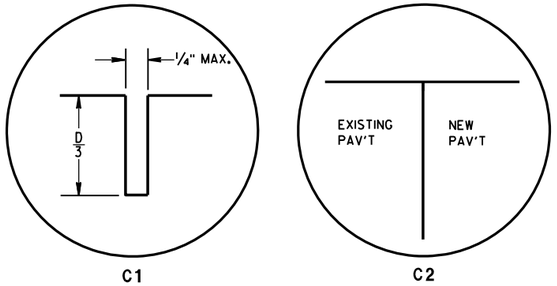

TRANSVERSE JOINTS

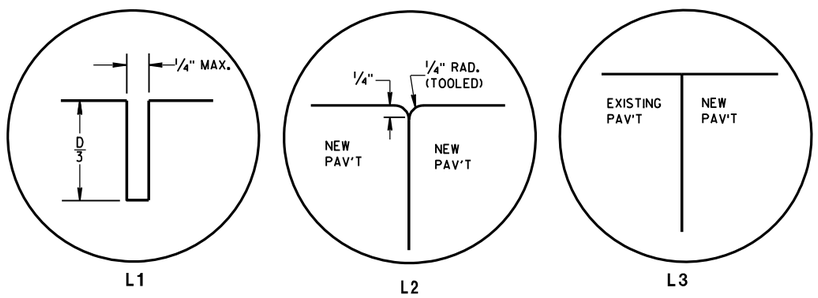

LONGITUDINAL JOINTS

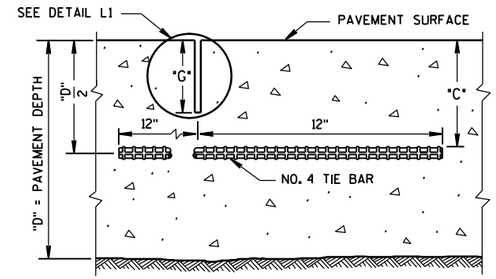

SECTION C-C

SAWED JOINT

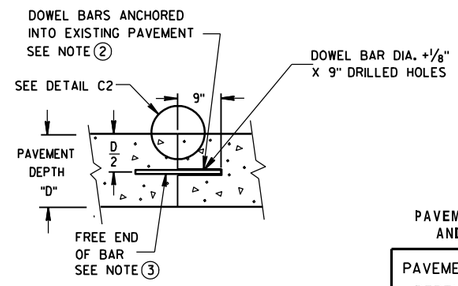

SECTION D-D

GENERAL NOTES

1. INSTALL DOWEL BARS PARALLEL TO THE PAVEMENT CENTERLINE AND PAVEMENT SURFACE.
2. ANCHOR TIE BARS AND DOWEL BARS INTO DRILLED HOLES WITH AN EPOXY.
3. APPLY A THIN UNIFORM COATING OF SURFACE TREATMENT TO THE FREE END OF DOWEL BARS TO PREVENT BONDING.
4. PROVIDE A MINIMUM DISTANCE OF 24 INCHES FROM AN EXISTING TRANSVERSE JOINT OR THE EDGE OF REPLACEMENT TO THE CENTER OF THE TIE BAR NEAREST THAT JOINT OR EDGE.

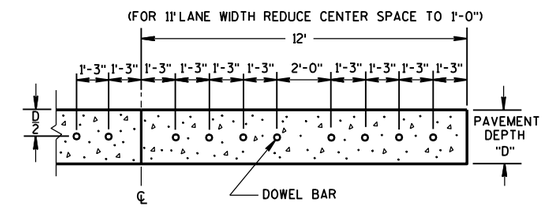

SECTION E-E

DOWEL BAR SPACING ABUTTING EXISTING PAVEMENT

PAVEMENT DEPTH, DOWEL BAR SIZE AND JOINT SPACING TABLE

PAVEMENT DEPTH "D"	DOWEL BAR DIAMETER	CONTRACTION JOINT SPACING
5½", 6, 6 ½"	NONE	12'
7, 7 ½"	1"	14'
8, 8 ½"	1 ¼"	15'
9, 9 ½"	1 ¼"	15'
10" & ABOVE	1 ½"	15'

TIE BAR LOCATION TABLE

PAVEMENT DEPTH "D"	CLEAR COVER "C"	SAW CUT GROOVE "G"	MAXIMUM TIE BAR SPACING C-C PAVEMENT WIDTH 24' OR 26'	MAXIMUM TIE BAR SPACING C-C PAVEMENT WIDTH ≥30'
6, 6 ½"	3"±½"	2"	48"	42"
7, 7 ½"	3 ¼"±1"	2 ¼"	45"	36"
8, 8 ½"	3 ¾"±1"	2 ½"	39"	30"
9, 9 ½"	4 ¼"±1"	3"	33"	27"
10, 10 ½"	4 ¾"±1"	3 ¼"	30"	24"
11, 11 ½"	5 ¼"±1"	3 ¾"	27"	21"
12"	5 ¾"±1"	4"	24"	21"

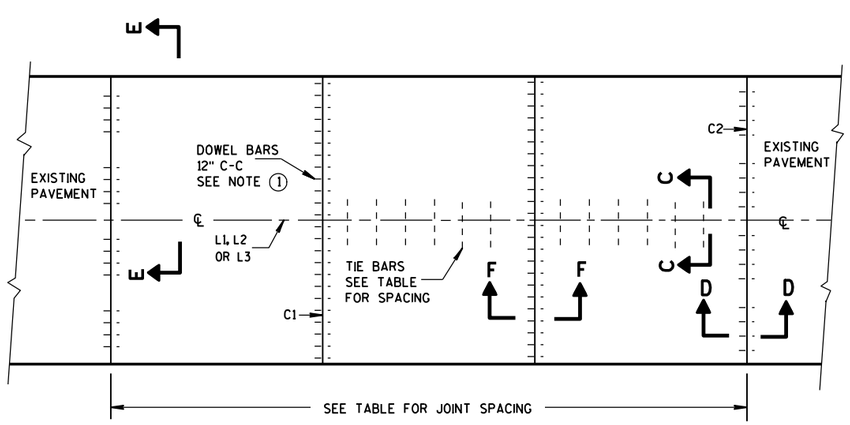

PLAN VIEW

CONCRETE BASE CONTRACTION JOINT LOCATIONS

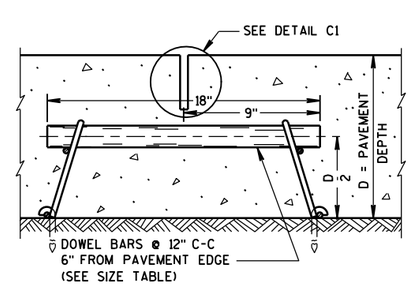

SECTION F-F

CONTRACTION JOINT

CONCRETE BASE

STATE OF WISCONSIN
DEPARTMENT OF TRANSPORTATION

6

S.D.D. 13 C 15-4a

6

S.D.D. 13 C 15-4a

GENERAL NOTES

SINGLE LANE CONCRETE BASE REPAIRS 15 FEET OR LESS IN LENGTH DO NOT NEED TO BE TIED TO THE EXISTING PAVEMENT AT THE LONGITUDINAL JOINT. USE AN ENGINEER-APPROVED BOND BREAKER INSTEAD.

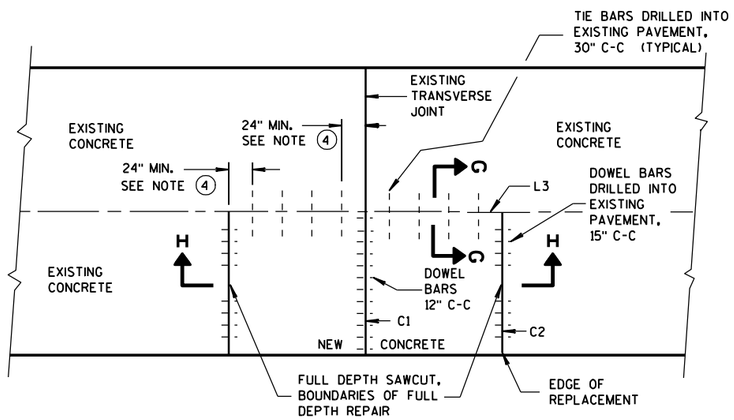

PLAN VIEW

SINGLE LANE CONCRETE BASE REPAIR 1

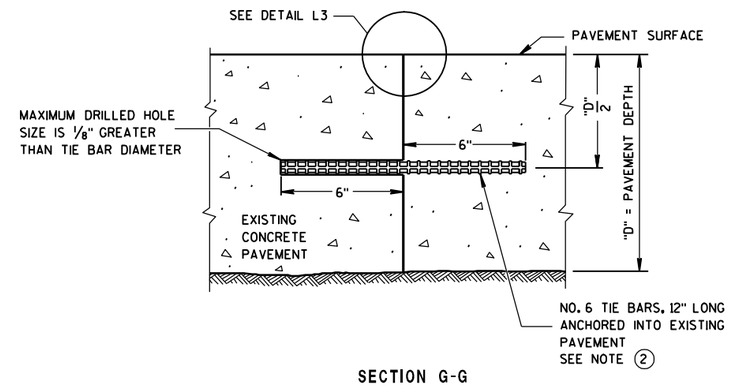

SECTION G-G

TIE BARS DRILLED INTO EXISTING PAVEMENT

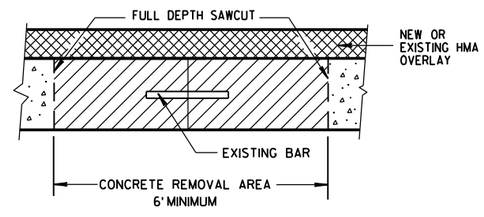

SECTION H-H

CONCRETE BASE

STATE OF WISCONSIN
DEPARTMENT OF TRANSPORTATION

APPROVED
5-30-08 DATE
/S/ Debra Bischoff
PAVEMENT POLICY & DESIGN ENGINEER
FHWA

6

S.D.D. 13 C 15-4b

6

S.D.D. 13 C 15-4b

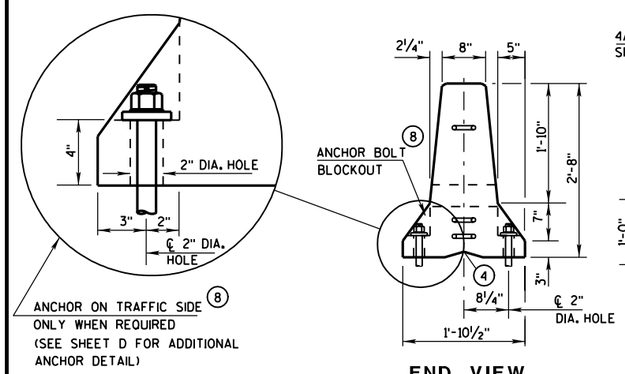

END VIEW

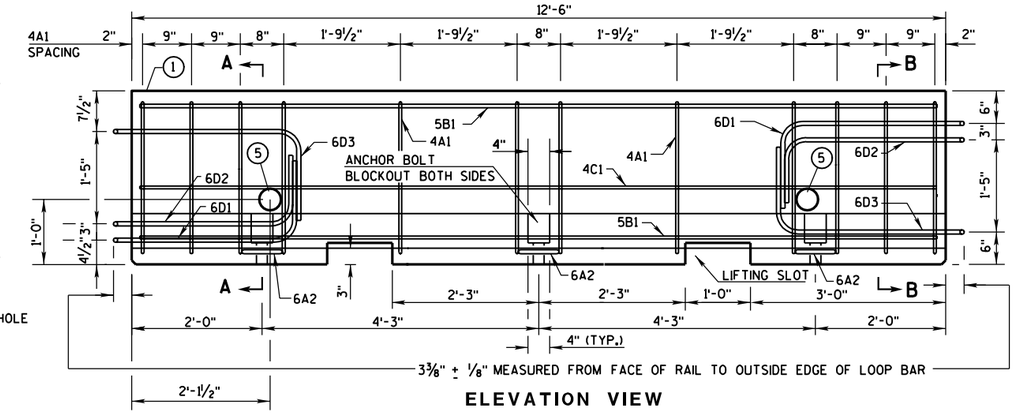

ELEVATION VIEW

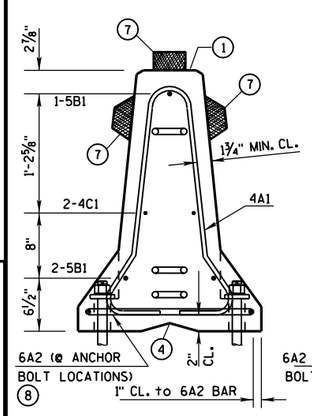

SECTION A-A
(STIRRUP PLACEMENT)

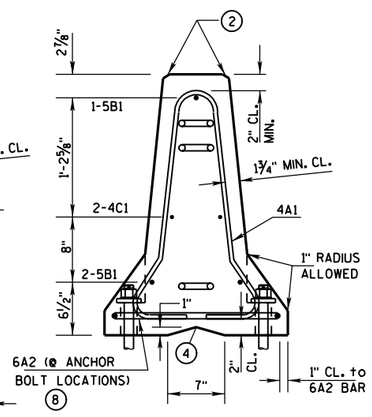

SECTION B-B
(STIRRUP PLACEMENT)

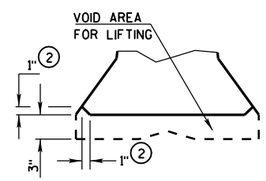

DETAIL "B"
LIFTING SLOT DETAIL

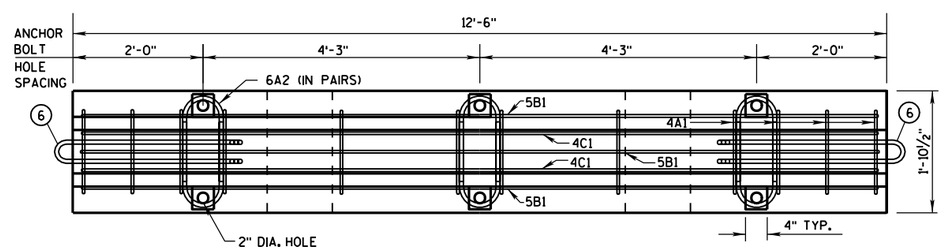

PLAN VIEW

DETAILS OF BARRIER SECTION

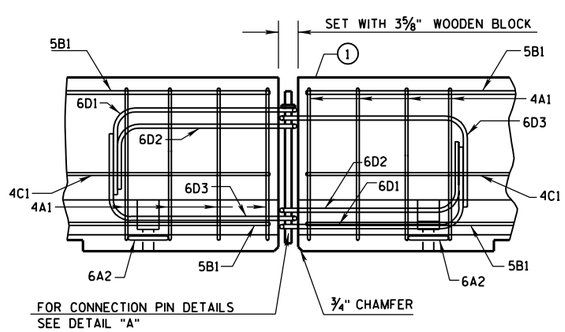

DETAILS OF BARRIER CONNECTION

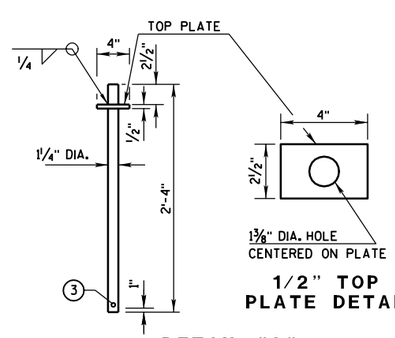

1/2" TOP
PLATE DETAIL

DETAIL "A"
CONNECTION PIN
(A36 STEEL (10.9 LB EACH))

GENERAL NOTES

THESE GENERAL NOTES APPLY TO SHEETS 14B7-11(a) THRU 14B7-11(d).

DETAILS OF CONSTRUCTION, MATERIALS AND WORKMANSHIP NOT SHOWN ON THIS DRAWING SHALL CONFORM TO THE PERTINENT REQUIREMENTS OF THE STANDARD SPECIFICATIONS AND THE APPLICABLE SPECIAL PROVISIONS.

THIS STANDARD DETAIL DRAWING CONSISTS OF 6 SHEETS, 14B7-11(a) THRU 14B7-11(f).

DETAILS AND REQUIREMENTS FOR THE FABRICATION AND INSTALLATION OF CONCRETE BARRIER TEMPORARY PRECAST, 12'-6" (CBTP12.5) ARE SHOWN ON 4 SHEETS, 14B7-11(a) THRU 14B7-11(d)

DETAILS AND REQUIREMENTS FOR CONCRETE BARRIER TEMPORARY PRECAST, 10'-0" (CBTP10.0) ARE SHOWN ON 2 SHEETS, 14B7-11(e) THRU 14B7-11(f). CONCRETE BARRIER TEMPORARY PRECAST, 10'-0" (CBTP10.0) MAY BE USED UNTIL MAY 31, 2013, BUT ONLY IF ALL THE FOLLOWING CONDITIONS ARE MET:

- THE CBTP10.0 WAS MANUFACTURED BEFORE JUNE 1, 2003.
- THE CBTP10.0 MEETS ALL THE REQUIREMENTS OF STANDARD DETAIL DRAWINGS 14B7-11(e) AND 14B7-11(f).
- THE CBTP10.0 IS IN GOOD CONDITION.

DO NOT INTERMIX CONCRETE BARRIER TEMPORARY PRCAST, 12'-6" (CBTP12.5) WITH CONCRETE BARRIER TEMPORARY PRECAST, 10'-0" (CBTP10.0) IN ANY SINGLE RUN OR INSTALLATION.

USE ASTM A-615, GRADE 60, DEFORMED STEEL BARS FOR BARS 4A1, 6A2, 5B1 AND 4C1 IN THE BARRIER SECTION AND FOR 4V1, 4V2, 4V3, 4V4, 4V5, 4V6, 4F1, 4F2 AND 5F3 IN THE BARRIER TAPER SECTION.

LOOP BARS 6D1, 6D2 AND 6D3 SHALL BE ¾" SMOOTH STEEL BARS WITH A MINIMUM YIELD STRENGTH OF 60 KSI, A TENSILE STRENGTH OF NOT LESS THAN 1.25 TIMES THE YIELD STRENGTH BUT A MINIMUM OF 80 KSI, A MINIMUM 14% ELONGATION IN 8 INCHES AND PASSING A 180 DEGREE BEND TEST USING A 3-½" PIN BEND DIAMETER FOR BEND TESTS. THE LOOPS SHALL BE INSTALLED WITHIN ⅛" OF THE PLAN DIMENSION.

CONSTRUCT LIFTING SLOTS AS SPECIFIED ON THE PLANS TO FACILITATE THE DRAINAGE OF WATER AFTER INSTALLATION.

PLACE BARRIER ON A PAVED SURFACE. REMOVE ALL LOOSE DIRT AND SAND FROM THE ROADWAY SURFACE PRIOR TO PLACEMENT OF THE BARRIER.

(1) MARK ONE END OF EACH BARRIER PERMANENTLY BY STAMPING OR FORMING INTO THE BARRIER THE FOLLOWING INFORMATION:
   a. TYPE CBTP
   b. MANUFACTURER
   c. DATE MANUFACTURED (MONTH AND YEAR)

(2) 1" CHAMFER TO PREVENT SPALLING.

(3) A ⅜" HOLE IN THE CONNECTION PIN, AT THE LOCATION SHOWN, IS ACCEPTABLE, BUT NOT REQUIRED..

(4) "V" NOTCH IS OPTIONAL.

(5) THE 4" DIAMETER, 11 GAUGE STEEL, ROUND MECHANICAL TUBING SLEEVE FOR LIFTING (OPTIONAL).

(6) NEVER USE LOOP BARS (6D1, 6D2 OR 6D3) TO LIFT, MOVE OR REPOSITION THE BARRIER.

(7) USE DELINEATORS CONFORMING TO SECTION 633 OF THE STANDARD SPECIFICATIONS. CONTRACTOR MAY USE ALTERNATE SHAPES AND HOUSING. INSTALL DELINEATORS ACCORDING TO MANUFACTURES INSTRUCTION. INSTALL YELLOW REFLECTORS WHEN BARRIER IS LOCATED TO THE LEFT OF TRAFFIC AND WHITE REFLECTORS WHEN BARRIER IS LOCATED TO THE RIGHT OF TRAFFIC. SPACE DELINEATORS A MAXIMUM OF 25 FEET APART. PROVIDE TOP MOUNTED DELINEATORS IN ADDITION TO THE SIDE MOUNTED DELINEATORS ON ALL BARRIER INSTALLATIONS LOCATED ON A CURVED ALIGNMENT LONGER THAN 200 FEET AND ON BARRIERS USED TO SEPARATE OPPOSING TRAFFIC.

(8) SEE SHEET D FOR ANCHORING CRITERIA.

CONCRETE BARRIER
TEMPORARY PRECAST, 12'-6"

STATE OF WISCONSIN
DEPARTMENT OF TRANSPORTATION

6

S.D.D. 14 B 7-11a

6

S.D.D. 14 B 7-11a

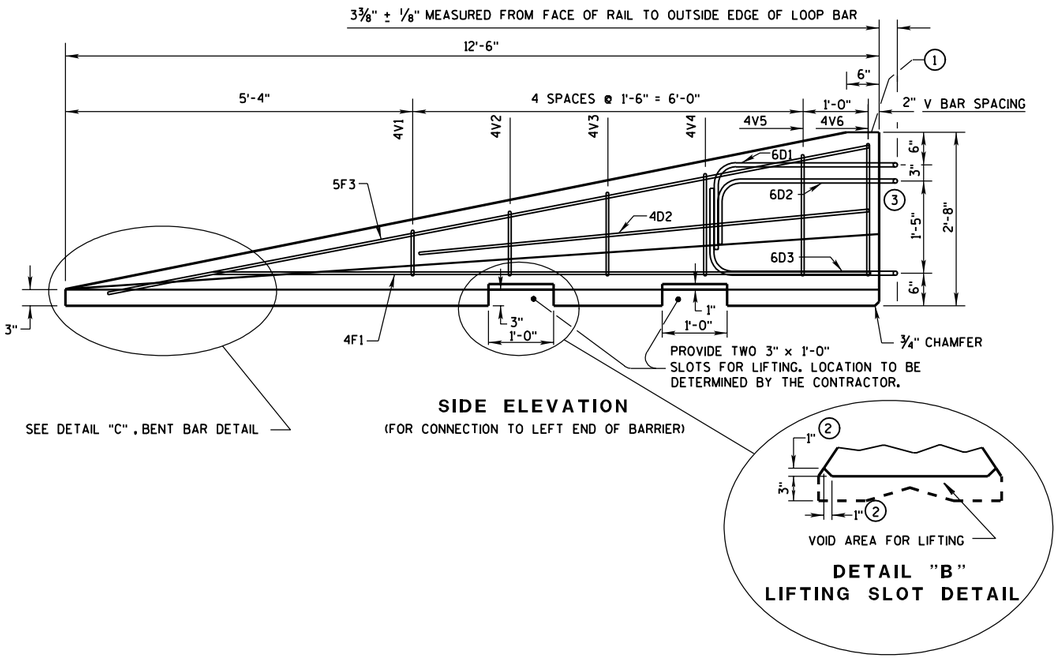

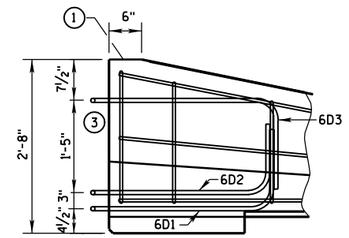

SIDE ELEVATION

LOOP BAR ASSEMBLY INVERTED FOR OPPOSITE END.
(FOR CONNECTION TO RIGHT END OF BARRIER)

GENERAL NOTES

THE GENERAL NOTES ON SHEET 14B7-11(a) APPLY TO THIS SHEET.

1. MARK ONE END OF EACH BARRIER PERMANENTLY BY STAMPING OR FORMING INTO THE BARRIER THE FOLLOWING INFORMATION:
   a. TYPE CBTP
   b. MANUFACTURER
   c. DATE MANUFACTURED (MONTH AND YEAR)
2. 1" CHAMFER TO PREVENT SPALLING.
3. NEVER USE LOOP BARS (6D1, 6D2 OR 6D3) TO LIFT, MOVE OR REPOSITION THE BARRIER.

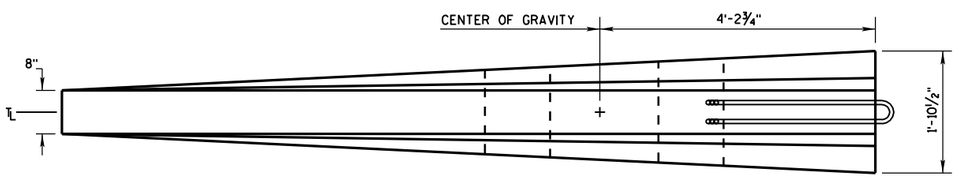

PLAN VIEW

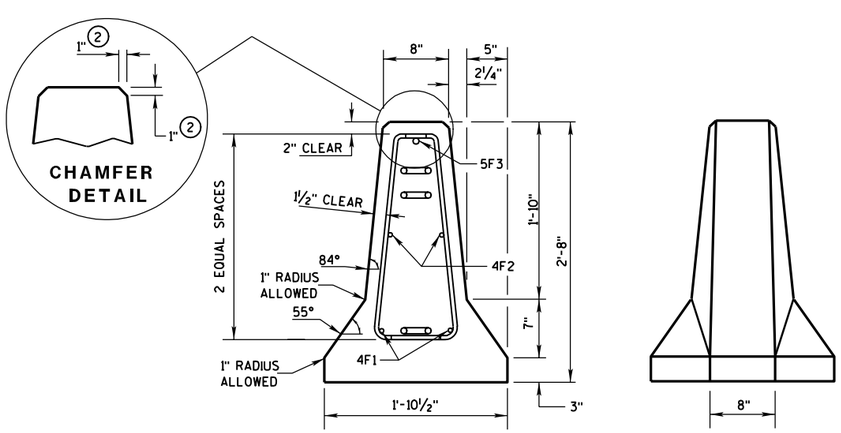

END SECTION

FRONT ELEVATION

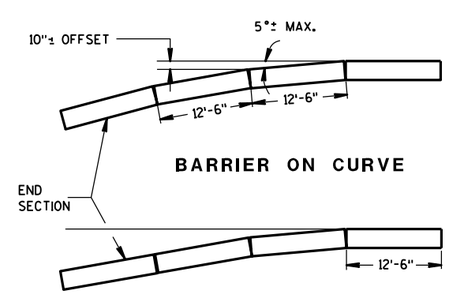

FLARE AT BARRIER END

POSTED SPEED, (MPH)	FLARE RATE
40 OR LESS	10:1
45 OR GREATER	15:1

DETAILS OF BARRIER TAPER SECTION

CONCRETE BARRIER
TEMPORARY PRECAST, 12'-6"

STATE OF WISCONSIN
DEPARTMENT OF TRANSPORTATION

6

6

S.D.D. 14 B 7-11b

S.D.D. 14 B 7-11b

GENERAL NOTES

THE GENERAL NOTES ON SHEET 14B7-11(a) APPLY TO THIS SHEET.

(1) NEVER USE LOOP BARS (6D1, 6D2 OR 6D3) TO LIFT, MOVE OR REPOSITION THE BARRIER.

BARRIER TAPER SECTION BILL OF MATERIALS

(PER 12'-6" BARRIER TAPER SECTION)

BAR	BAR SIZE	NO. OF BARS	LENGTH FT.
4V1	4	2	1'-11"
4V2	4	2	2'-2"
4V3	4	2	2'-6"
4V4	4	2	2'-9"
4V5	4	2	3'-2"
4V6	4	2	3'-4"
4F1	4	2	12'-0"
4F2	4	2	7'-6"
5F3	5	1	11'-9"
LOOP ASSEMBLY			
6D1	6	1	8'-5"
6D2	6	1	7'-7"
6D3	6	1	8'-6"

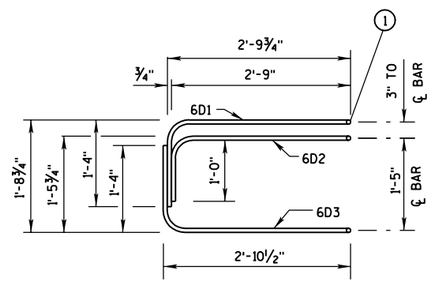

ELEVATION
LOOP BAR ASSEMBLY

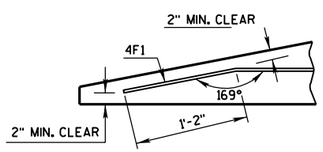

DETAIL "C"
BENT BAR DETAIL

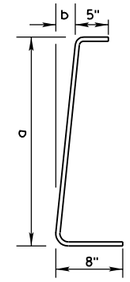

BAR	a	b
V1	10"	1"
V2	1'-1"	1¼"
V3	1'-5"	1⅝"
V4	1'-8"	1⅞"
V5	2'-0½"	2⅜"
V6	2'-3"	2¾"

4V BARS
2 AT EACH SIZE REQUIRED
FOR STIRRUP ASSEMBLY

TAPER BARRIER SECTION

BARRIER SECTION BILL OF MATERIALS

(PER 12'-6" BARRIER SECTION)

BAR	BAR SIZE	NO. OF BARS	LENGTH FT.
4A1	4	12	6'-0"
6A2	6	6	2'-11"
5B1	5	3	12'-2"
4C1	4	2	12'-2"
LOOP ASSEMBLY			
6D1	6	2	8'-5"
6D2	6	2	7'-7"
6D3	6	2	8'-6"

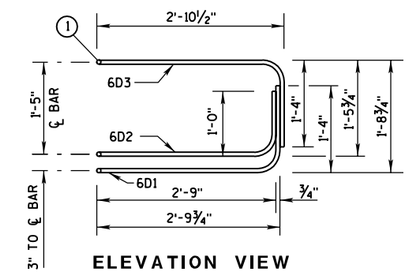

ELEVATION VIEW

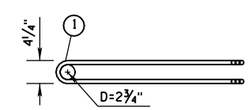

PLAN VIEW
LOOP BAR ASSEMBLY
(MARKED END SHOWN, INVERT FOR OTHER END)

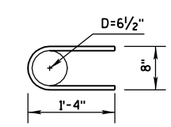

6A2

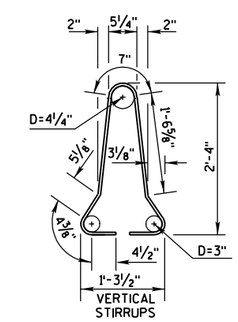

4A1

BARRIER SECTION

CONCRETE BARRIER
TEMPORARY PRECAST, 12'-6"

STATE OF WISCONSIN
DEPARTMENT OF TRANSPORTATION

6

6

S.D.D. 14 B 7-11c

S.D.D. 14 B 7-11c

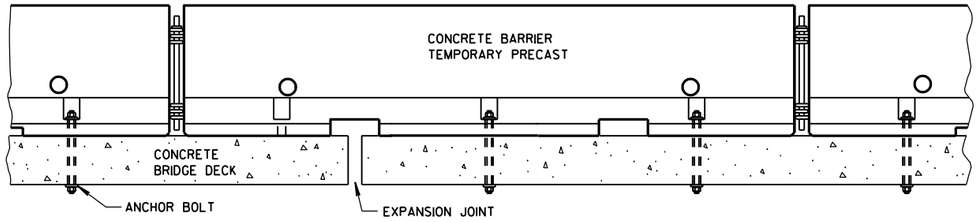

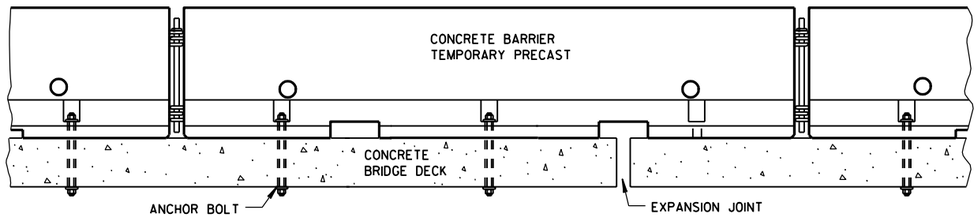

TREATMENT AT BRIDGE DECK EXPANSION JOINTS

(NO SINGLE CONCRETE BARRIER SECTION SHALL BE ANCHORED TO BOTH THE BRIDGE DECK AND THE APPROACH SLAB. ALL ANCHOR BOLT LOCATIONS SHALL BE ANCHORED TO THE DECK IN ACCORDANCE WITH THE DETAIL. NO MORE THAN ONE ANCHOR BOLT SHALL BE ELIMINATED FROM A BARRIER SECTION WHEN SPANNING AN EXPANSION JOINT.)

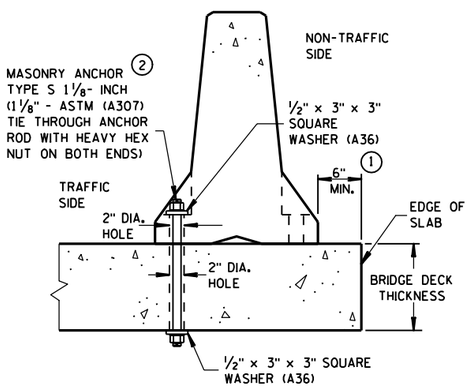

THROUGH BOLTED ANCHOR INSTALLATION ON BRIDGE DECK

(DO NOTUSE ON CONCRETE BRIDGE DECK WITH ASPHALT OVERLAY)

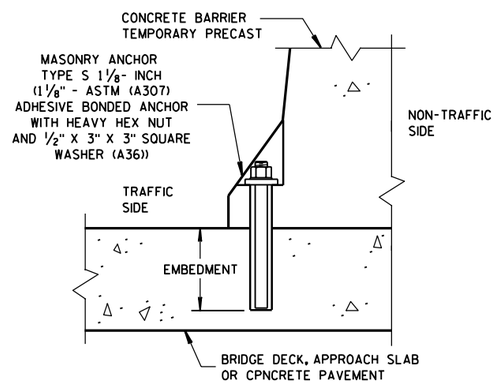

REMOVABLE ADHESIVE BONDED ANCHOR INSTALLATION ON CONCRETE BRIDGE DECK, CONCRETE APPROACH SLAB, OR CONCRETE PAVEMENT

(DO NOT USE ON CONCRETE WITH AN ASPHALTIC OVERLAY)

GENERAL NOTES

THE GENERAL NOTES ON SHEET 14B7-11(a) APPLY TO THIS SHEET.

1. CONCRETE BARRIER TEMPORARY PRECAST, 12'-6" SHALL BE ANCHORED IF:
   THE DISTANCE TO A 2 FOOT OR GREATER DROPOFF THAT IS STEEPER THAN 3H : 1V, FOR EXAMPLE THE EDGE OF A BRIDGE DECK OR A DROPOFF AT THE EDGE OF PAVEMENT, IS LESS THAN 4 FEET FROM THE SIDE OF THE BARRIER CLOSEST TO THE DROPOFF AND THE POSTED SPEED IS 45 MPH OR GREATER, OR

   THE DISTANCE TO A 2 FOOT OR GREATER DROPOFF THAT IS STEEPER THAN 3H : 1V, FOR EXAMPLE THE EDGE OF A BRIDGE DECK OR A DROPOFF AT THE EDGE OF PAVEMENT, IS LESS THAN 2 FEET FROM THE SIDE OF THE BARRIER CLOSEST TO THE DROPOFF AND THE POSTED SPEED IS 40 MPH OR LESS.

2. ANCHORING IS INCIDENTAL TO CONCRETE BARRIER TEMPORARY PRECAST.

   WITH THE APPROVAL OF THE ENGINEER, REMOVABLE ADHESIVE BONDED (EPOXY) ANCHOR BOLT INSTALLATION MAY BE USED IN LIEU OF THROUGH BOLTED ANCHOR INSTALLATION. THE ADHESIVE BONDED ANCHOR BOLT MUST BE REMOVABLE. USE ASTM (A307) MASONRY ANCHORS TYPE S 1 1/8-INCH, EMBEDDED TO A DEPTH SUFFICIENT TO DEVELOP THE ULTIMATE CAPACITY OF THE ANCHOR BOLT AND PROVIDE DOCUMENTATION TO CONFIRM THIS.

   UPON REMOVAL OR RELOCATION OF THE BARRIER UNITS, REMOVE ALLANCHOR BOLTS AND COMPLETELY FILL IN THE REMAINING HOLES IN CONCRETE BRIDGE DECKS, CONCRETE APPROACH SLABS AND CONCRETE PAVEMENTS THAT ARE TO REMAIN, WITH A NON-SHRINK COMMERICAL GROUT OR EPOXY MATERIAL IDENTIFIED ON THE CURRENT WISDOT APPROVED PRODUCTS LIST.

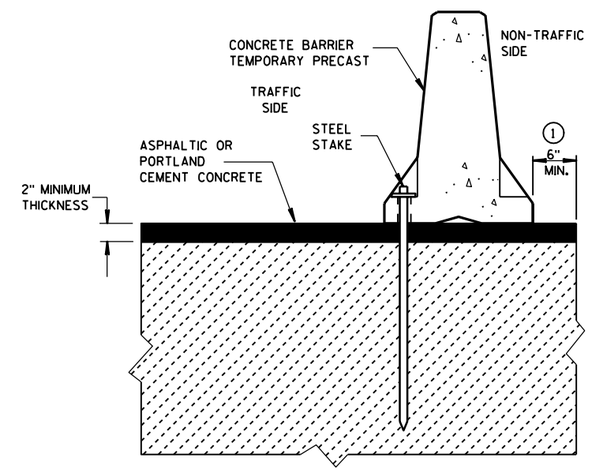

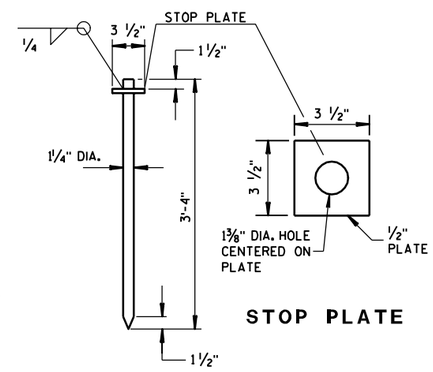

STOP PLATE

STEEL STAKE

(A36 STEEL)

STAKE DOWN INSTALLATION FOR ASPHALTIC OR PORTLAND CEMENT CONCRETE SURFACE

(STAKING IS INCIDENTAL TO CONCRETE BARRIER TEMPORARY PRECAST)

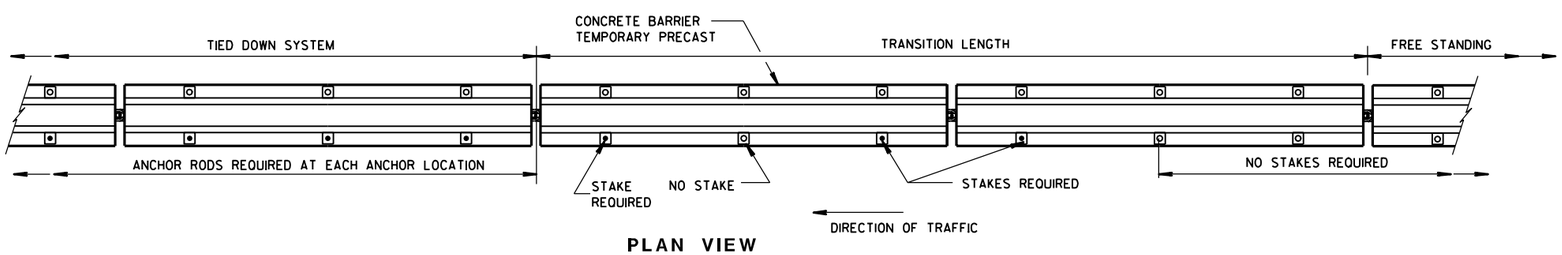

PLAN VIEW

FREE STANDING TRANSITION TO TIED-DOWN SYSTEM

(PLACE TRANSITION IN A TANGENT SECTION OF BARRIER PARALLEL TO THE ROADWAY. IF TRANSITION OCCURS ON STRUCTURAL SLAB, ANCHOR AS SHOWN.)

CONCRETE BARRIER
TEMPORARY PRECAST, 12'-6"

STATE OF WISCONSIN
DEPARTMENT OF TRANSPORTATION

APPROVED
10-24-06
DATE
FHWA

/S/ Jerry H. Zogg
ROADWAY STANDARD DEVELOPMENT ENGINEER

6

S.D.D. 14 B 7-11d

GENERAL NOTES

DETAILS OF CONSTRUCTION, MATERIALS AND WORKMANSHIP NOT SHOWN ON THIS DRAWING SHALL CONFORM TO THE PERTINENT REQUIREMENTS OF THE STANDARD SPECIFICATIONS, AND THE APPLICABLE SPECIAL PROVISIONS.

1. W6 X 9 OR W6 X 8.5 STEEL POSTS AND NOTCHED PLASTIC BLOCKOUTS ARE ACCEPTABLE ALTERNATIVES FOR 6" X 8" WOOD POSTS WITH WOOD OR PLASTIC BLOCKOUTS. USE APPROVED NOTCHED PLASTIC BLOCKOUTS WITH STEEL POSTS. APPROVED PLASTIC BLOCKOUT DESIGNS MAY VARY FROM THIS TYPICAL DETAIL WHEN USED IN CONJUNCTION WITH STEEL POSTS.

   DO NOT MIX STEEL POSTS AND WOOD POSTS IN A SINGLE INSTALLATION.
2. USE STRUCTURAL STEEL POSTS CONFORMING TO ASTM A 36. GALVANIZED POSTS ACCORDING TO AASHTO M 111. EITHER SET THE POSTS IN DRILLED HOLES OR DRIVE TO GRADE. REMOVE MUSHROOMING CAUSED BY DRIVING AND REPAIR DAMAGED SPELTER COATING ON GALVANIZED POSTS.
3. INSTALL STEEL POSTS WITH HOLES ON APPROACHING TRAFFIC SIDE.
4. USE EITHER WOOD OR APPROVED PLASTIC BLOCKOUTS ON WOOD POSTS.
5. IF THE DISTANCE FROM BACK OF POST TO SHOULDER HINGE POINT IS LESS THAN 2 FEET INSTALL LONGER POST AT HALF POST SPACING, W BEAM (LHW).
6. IF ROCK IS ENCOUNTERED DURING EXCAVATION, THE ENGINEER MAY APPROVE USING A 12 INCH DIAMETER POST HOLE EXTENDING 20 INCHES DEEP INTO THE ROCK. PLACE GRANULAR MATERIAL IN THE BOTTOM OF THE HOLE APPROXIMATELY 2½ INCHES DEEP. CUT THE POSTS TO LENGTH AND PLACE IN YHE HOLE. BACKFILL WITH MATERIAL EXCAVATED FROM THE HOLE AND COMPACT ADEQUATEY.

   INSTALL BEAM GUARD SECTIONS AND ALL NECESSARY HARDWARE ACCORDING TO THE APPLICABLE PLAN AND CURRENT STANDARD AND SUPPLEMENTAL SPECIFICATIONS.

   ALL DIMENSIONS ARE SUBJECT TO MANUFACTURER'S TOLERANCES EXCEPT WHERE ALLOWABLE TOLERANCES ARE SHOWN.

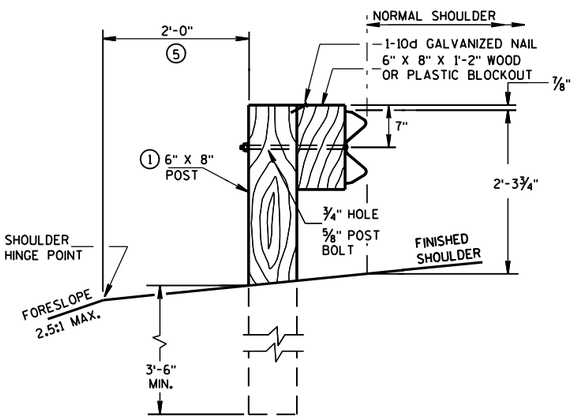

END VIEW
LOCATED ALONG A ROADWAY SHOULDER
STANDARD INSTALLATION

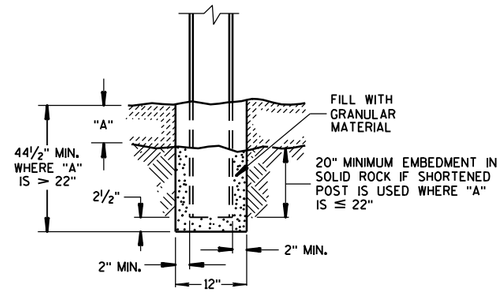

END VIEW
SETTING STEEL OR WOOD POST IN ROCK 6

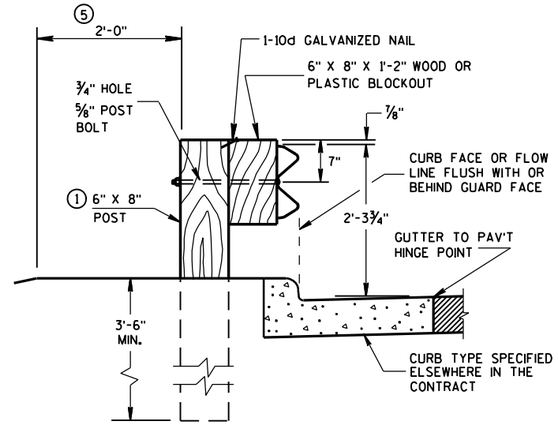

END VIEW
LOCATED ALONG A CURBED ROADWAY

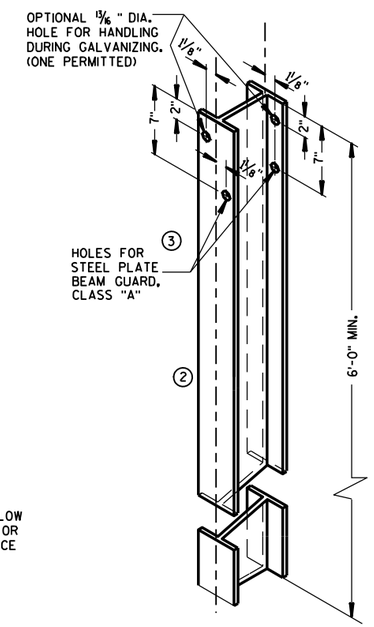

STEEL POST &
HOLE PUNCHING DETAIL
(W6 X 9) 1

ALL HOLES 13/16" DIAMETER EXCEPT AS NOTED

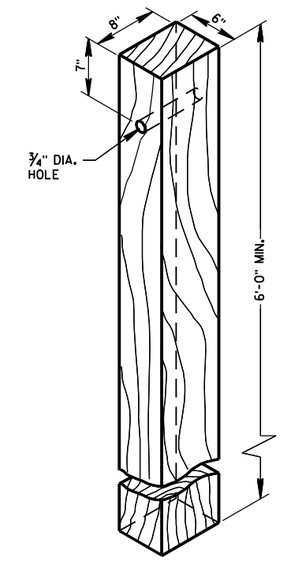

WOOD POST
(6"X8") NOMINAL

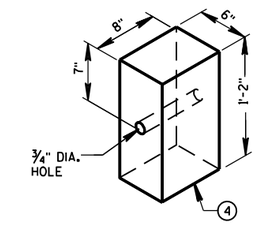

WOOD OR PLASTIC
BLOCKOUT FOR
WOOD POSTS

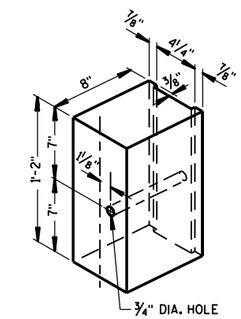

TYPICAL NOTCHED 1
PLASTIC BLOCKOUT
FOR STEEL POSTS

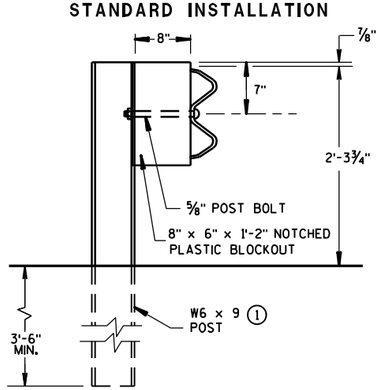

END VIEW
STEEL POST & NOTCHED
PLASTIC BLOCKOUT ALTERNATIVE
STANDARD INSTALLATION

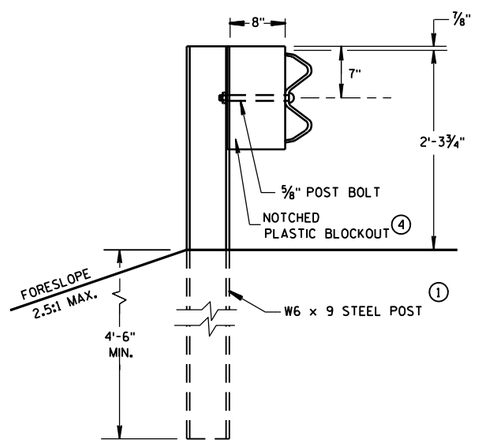

END VIEW
LONGER POST AT HALF
POST SPACING W BEAM
(LHW)

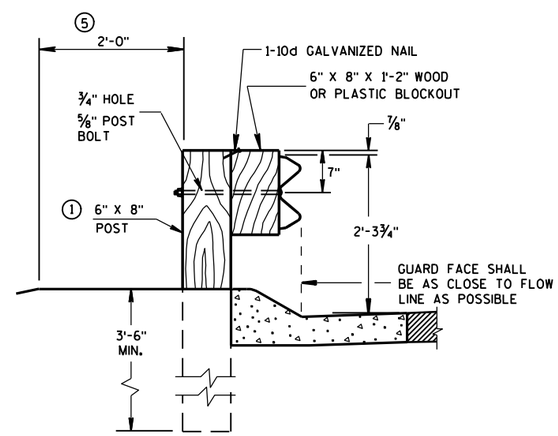

END VIEW
LOCATED ALONG A
MOUNTABLE CURBED ROADWAY

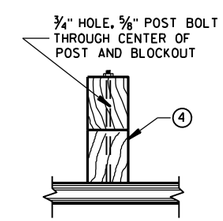

PLAN VIEW
WOOD POST,
BLOCKOUT & BEAM

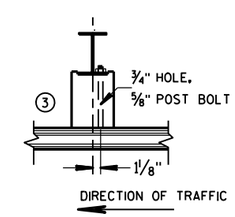

PLAN VIEW
STEEL POST, NOTCHED
PLASTIC BLOCKOUT & BEAM

TYPICAL INSTALLATION OF STEEL PLATE BEAM GUARD

STEEL PLATE BEAM GUARD,
CLASS "A"
INSTALLATION & ELEMENTS

STATE OF WISCONSIN
DEPARTMENT OF TRANSPORTATION

6

S.D.D. 14 B 15-6a

6

S.D.D. 14 B 15-6a

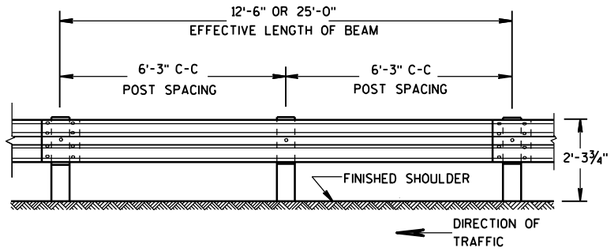

FRONT VIEW

POST SPACING STANDARD INSTALLATION

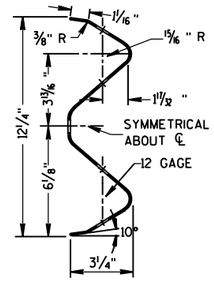

SECTION THRU W BEAM

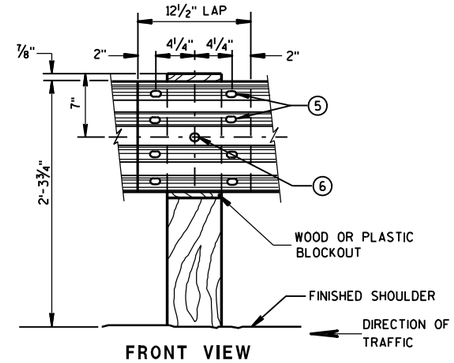

FRONT VIEW
BEAM SPLICE AT WOOD POST
AND POST MOUNTING DETAIL

GENERAL NOTES

1. PROVIDE TYPE "H" SILVER REFLECTIVE SHEETING ON ALL REFLECTORS EXCEPT THOSE LOCATED ALONG THE LEFT EDGE OF ONE-WAY ROADWAYS, WHICH SHALL BE PROVIDED WITH TYPE "H" YELLOW REFLECTIVE SHEETING.
2. DO NOT INSTALL REFLECTORS ON THE FIRST 50 FEET OF THE APPROACH END OF THE ENERGY ABSORBING TERMINAL.
3. REVERSE EVERY OTHER REFLECTOR FOR 2-WAY VISIBILITY. THE CONTRACTOR MAY FURNISH TWO-SIDED REFLECTORS IN LIEU OF ONE-SIDED REFLECTORS.
4. PROVIDE AN ANGLE OF BEND OF 90° ± 1° FOR TWO-SIDED REFLECTORS.
5. 8 -⅝" Φ X 2 " BUTTON HEAD BOLTS WITH OVAL SHOULDERS & RECESS NUTS.
6. ⅝" Φ X 1'-6" BUTTON HEAD BOLT AND AND RECESS NUT WITH ROUND WASHER UNDER NUT.

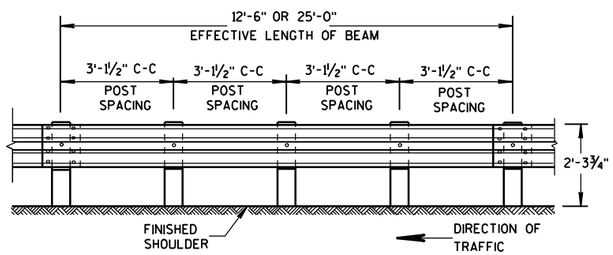

FRONT VIEW

POST SPACING FOR LONGER POST AT HALF POST SPACING W BEAM (LHW)

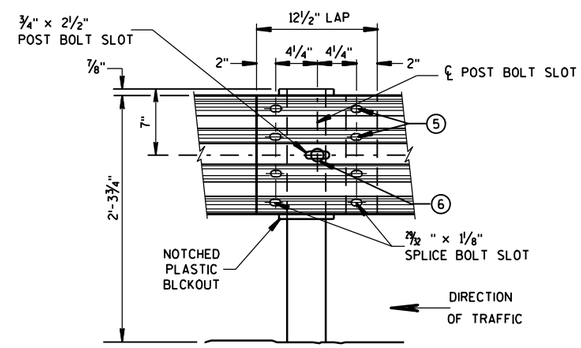

FRONT VIEW
BEAM SPLICE AT STEEL POST

TYPICAL SPLICING DETAILS OF STEEL PLATE BEAM GUARD

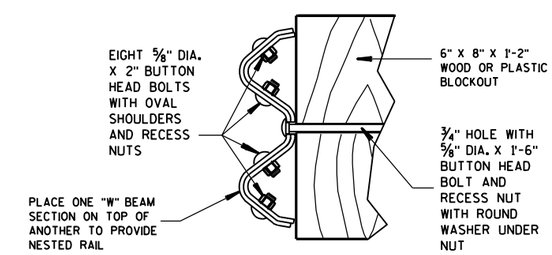

NESTED W BEAM (NW)

USE ALL OTHER STANDARD BEAM GUARD DETAILS FOR CONSTRUCTING NESTED W BEAM (NW)

REFLECTOR SPACING ②

	BEAM GUARD LENGTH	REFLECTOR SPACING	NO. SURFACES REFLECTORIZED	MIN. NO. REFLECTORS
ONE WAY TRAFFIC	< 200' > 200'	50' C-C 100' C-C	1 1	3
TWO WAY TRAFFIC	< 200' > 200'	25' C-C 50' C-C	1 ③ 1	6
TWO WAY TRAFFIC	< 200' > 200'	50' C-C 100' C-C	2 ④ 2	3

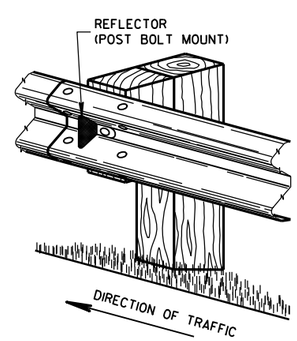

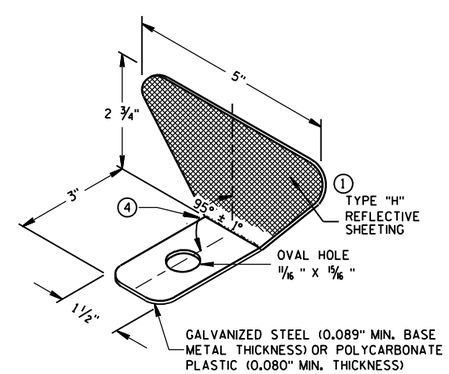

ONE SIDED REFLECTOR DETAIL AND TYPICAL INSTALLATION ①

STEEL PLATE BEAM GUARD,
CLASS "A",
INSTALLATION & ELEMENTS

STATE OF WISCONSIN
DEPARTMENT OF TRANSPORTATION

6

6

S.D.D. 14 B 15-6b

S.D.D. 14 B 15-6b

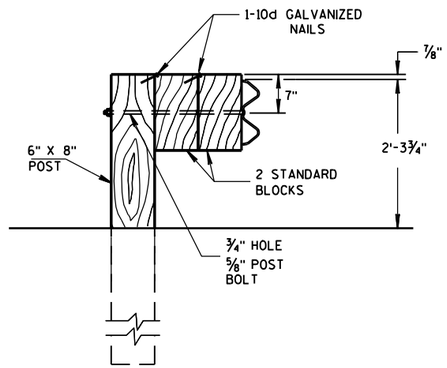

DETAIL FOR DOUBLE BLOCKS

THE NUMBER OF DOUBLE BLOCK POSTS WITHIN A BARRIER RUN IS UNLIMITED

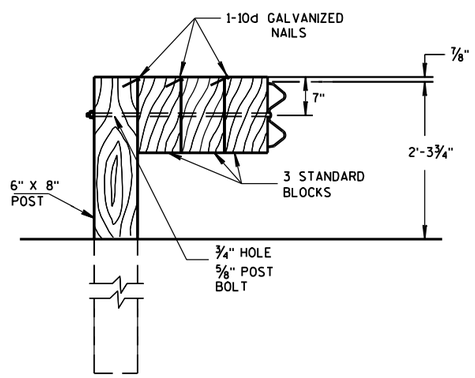

DETAIL FOR TRIPLE BLOCKS

TRIPLE BLOCK DETAIL IS LIMITED TO ONE LOCATION WITHIN A BEAM GUARD RUN.

NOTES: USE DOUBLE OR TRIPLE BLOCKS WHEN UNDERGROUND OBSTACLES PREVENT THE POST FROM BEING INSTALLED.

DO NOT USE EXTRA BLOCKOUTS IF IT CAUSES THE POST TO BE DRIVEN BEYOND SHOULDER HINGE POINT OR CAUSES A FIXED OBJECT TO BE WITHIN THE DEFLECTION DISTANCE OF THE BARRIER.

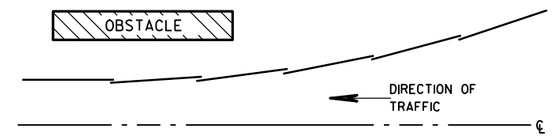

PLAN VIEW
BEAM LAPPING DETAIL

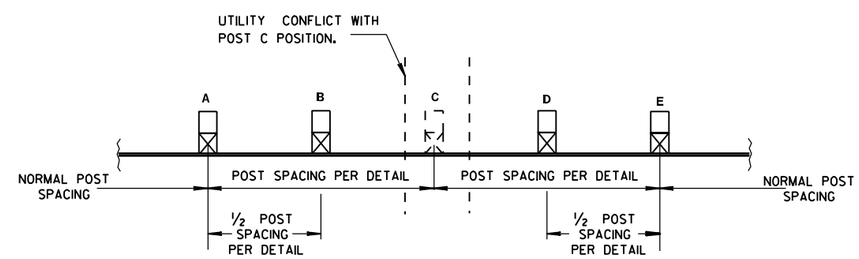

POST DRIVING FOR CONTINUOUS UNDERGROUND OBSTRUCTION

STEEL PLATE BEAM GUARD, CLASS "A", INSTALLATION & ELEMENTS

STATE OF WISCONSIN
DEPARTMENT OF TRANSPORTATION

6

S.D.D. 14 B 15-6c

6

S.D.D. 14 B 15-6c

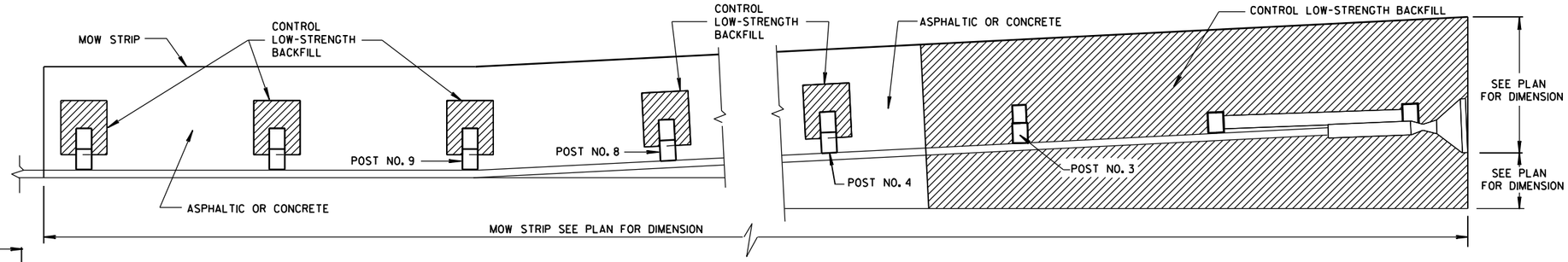

PLAN VIEW

MOW STRIP FOR STEEL PLATE BEAM GUARD ENERGY ABORBING TERMINAL

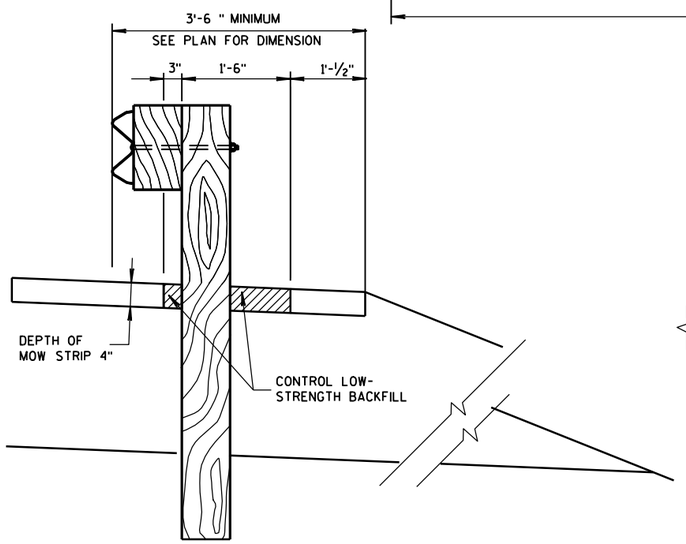

SECTION A-A

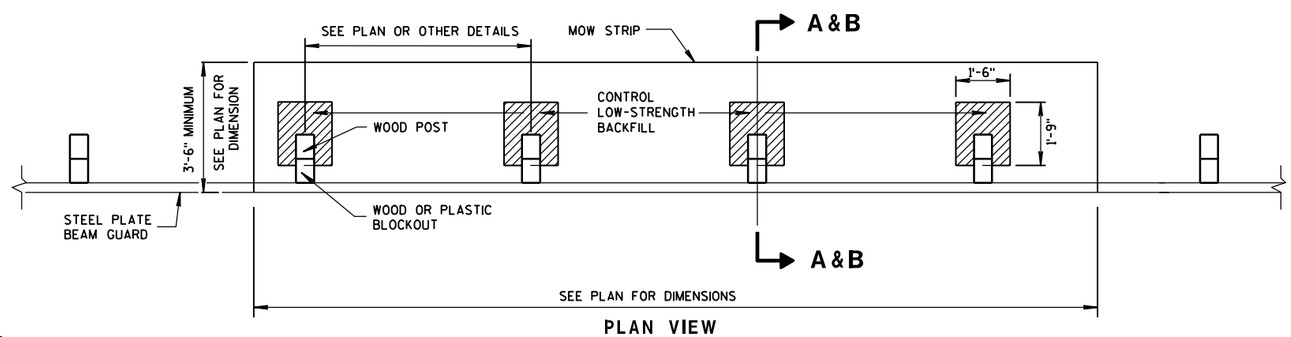

PLAN VIEW

MOW STRIP FOR TYPICAL BLOCKOUT LAYOUT

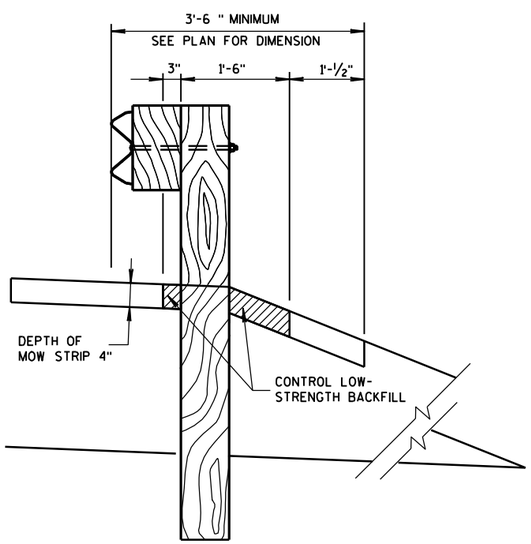

SECTION B-B

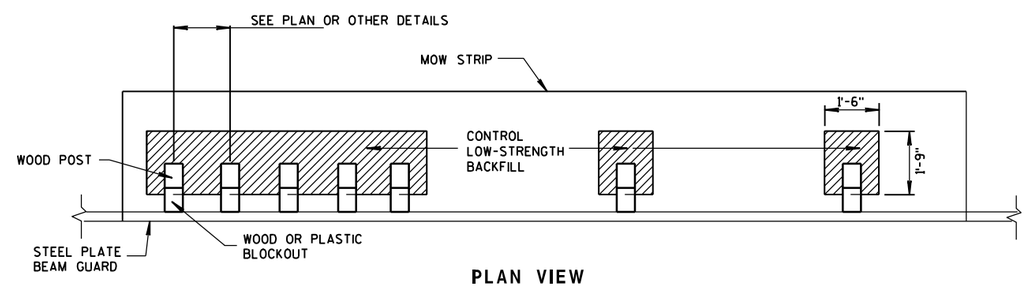

PLAN VIEW

MOW STRIP FOR TIGHT SPACING LAYOUT

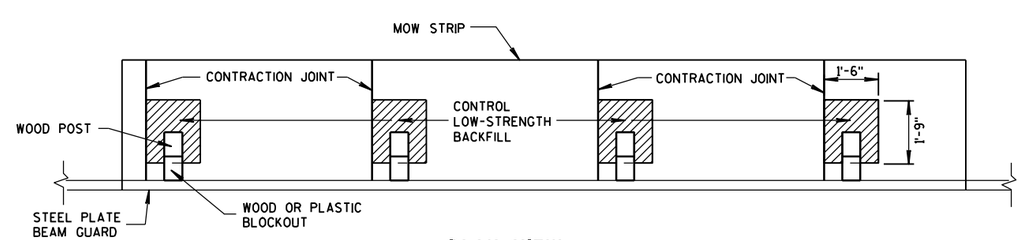

PLAN VIEW

JOINT PLACEMENT FOR CONCRETE MOW STRIP

STEEL PLATE BEAM GUARD, CLASS "A" MOW STRIP DETAIL

STATE OF WISCONSIN
DEPARTMENT OF TRANSPORTATION

APPROVED
7-13-09 — DATE
/S/ Jerry H. Zogg — ROADWAY STANDARDS DEVELOPMENT ENGINEER
FHWA

6

S.D.D. 14 B 15-6d

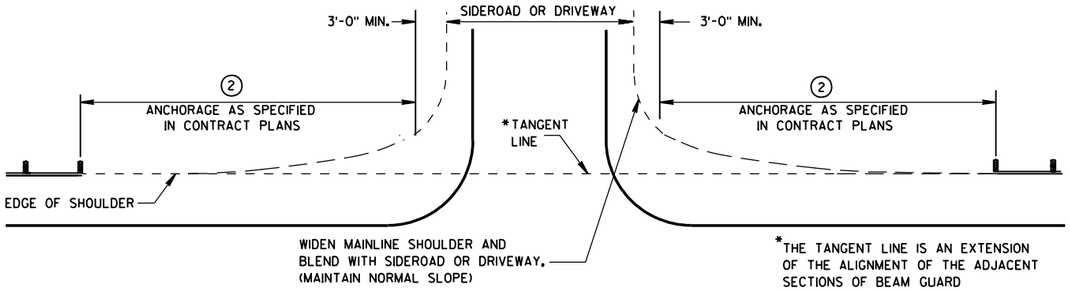

BEAM GUARD AT SIDEROADS OR DRIVEWAYS

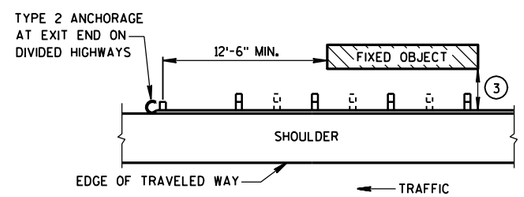

BEAM GUARD AT OBSTACLES EXIT END - ONE WAY TRAFFIC

GENERAL NOTES

DETAILS OF CONSTRUCTION, MATERIALS AND WORKMANSHIP SHALL CONFORM TO THE PERTINENT STANDARD SPECIFICATIONS AND THE APPLICABLE SPECIAL PROVISIONS.

W6 X 9 OR W6 X 8.5 STEEL POSTS WITH NOTCHED PLASTIC BLOCKOUTS ARE ACCEPTABLE ALTERNATIVES FOR 6" X 8" WOOD POSTS WITH WOOD OR PLASTIC BLOCKOUTS. USE APPROVED NOTCHED PLASTIC BLOCKOUTS WITH STEEL POSTS.

THE LOCATIONS AND LENGTHS OF BEAM GUARD ARE SHOWN ELSEWHERE IN THE PLAN.

1 STEEL THRIE BEAM STRUCTURAL APPROACH (STBSA) - SEE CURRENT SDD 14B20.

2 USE AN APPROVED END TREATMENT FOR THE TRAFFIC APPROACH SIDE OF BRIDGE/OBSTACLES. USE TYPE 2 ANCHORAGE ONLY AT THE DOWNSTREAM ENDS OF BEAM GUARD LOCATED ALONG ROADWAYS WITH ONE WAY TRAFFIC.

3

MINIMUM LATERAL DISTANCE FROM FACE OF BEAM GUARD TO FIXED OBJECT	POST SPACING
3'-6"	3' - 1½"
4'-6"	6' - 3"

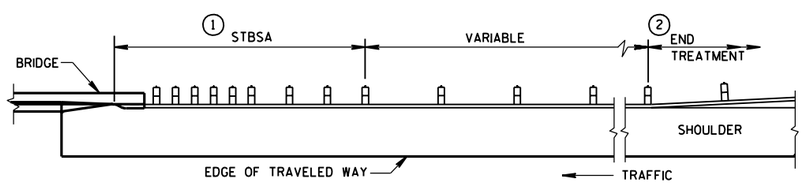

BEAM GUARD AT FULL WIDTH BRIDGES

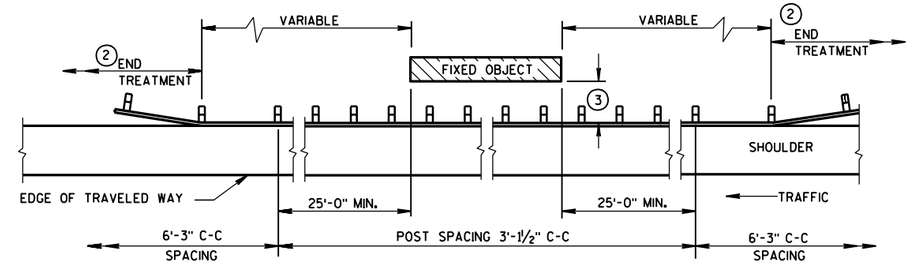

BEAM GUARD AT OBSTACLES - TWO WAY TRAFFIC

(RAIL TO OBSTACLE CLEARANCE 3'-6" TO 4'-6")

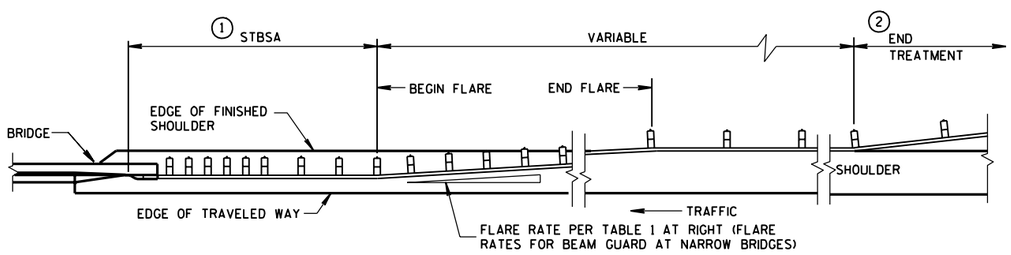

BEAM GUARD AT NARROW BRIDGES

(FLARED TO SHOULDER EDGE, THEN PARALLEL TO ROADWAY)

TABLE 1
FLARE RATES FOR BEAM GUARD AT NARROW BRIDGES

POSTED SPEED (MPH)	FLARE RATE
25	13:1
30	15:1
35	16:1
40	18:1
45	21:1
50	24:1
55	26:1
65	30:1

STEEL PLATE BEAM GUARD, CLASS "A" (AT BRIDGES, OBSTACLES AND SIDEROADS/DRIVEWAYS)

STATE OF WISCONSIN
DEPARTMENT OF TRANSPORTATION

APPROVED
8-21-07 — DATE
/S/ Jerry H. Zogg — ROADWAY STANDARDS DEVELOPMENT ENGINEER
FHWA

6

S.D.D. 14 B 18-6a

6

S.D.D. 14 B 18-6a

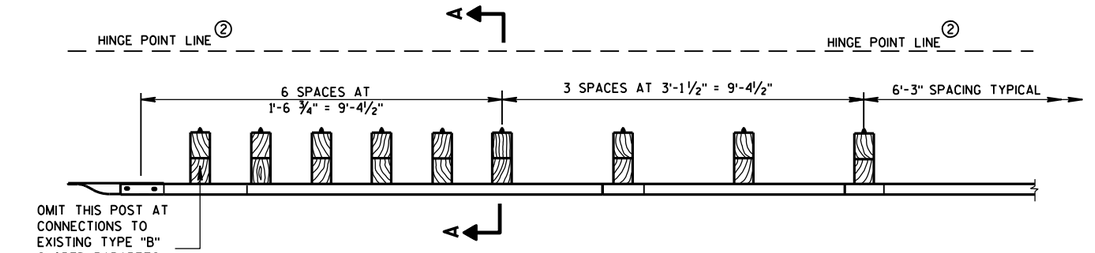

PLAN VIEW

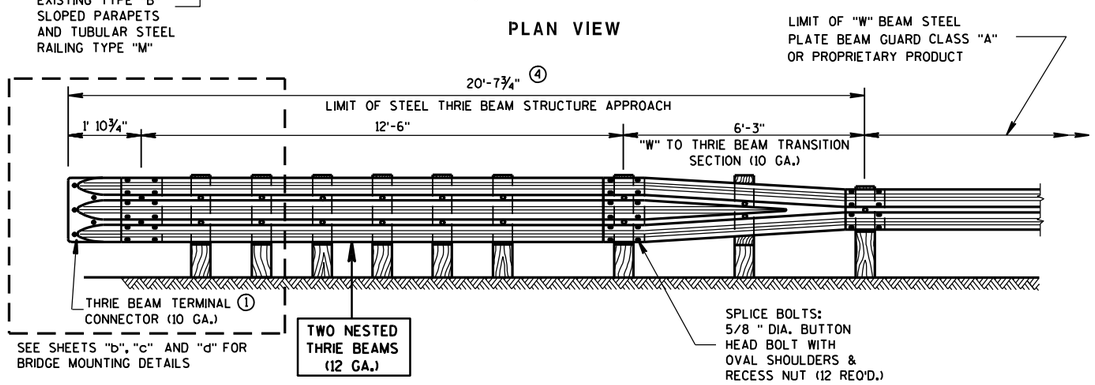

FRONT VIEW

GENERAL NOTES

DETAILS OF CONSTRUCTION, MATERIALS AND WORKMANSHIP NOT SHOWN ON THIS DRAWING SHALL CONFORM TO THE PERTINENT REQUIREMENTS OF THE STANDARD SPECIFICATIONS AND THE APPLICABLE SPECIAL PROVISIONS.

FURNISH AND CONSTRUCT THRIE BEAM STRUCTURAL APPROACH ACCORDING TO THE REQUIREMENTS OF SECTION 614 OF THE STANDARD SPECIFICATIONS. THRIE BEAM SECTIONS SHALL CONFORM TO THE REQUIREMENTS OF AASHTO DESIGNATION M180, CLASS "A", TYPE 2.

BOLT THE THRIE BEAM TO ALL POSTS AND BLOCKOUTS. DRILL OR PUNCH BOLT HOLES IN THE BEAM IF THE POST SPACING IS LESS THAN 6'-3.

DO NOT USE STEEL POSTS AND NOTCHED PLASTIC BLOCKOUTS IN THE STEEL THRIE BEAM STRUCTURAL APPROACH AND THE TRANSITION SECTION OF STEEL PLATE BEAM GUARD, CLASS "A" INSTALLATIONS.

IF ROCK IS ENCOUNTERED DURING EXCAVATION, THE ENGINEER MAY APPROVE USING A 12 INCH DIAMETER POST HOLE EXTENDING 20 INCHES DEEP INTO THE ROCK. PLACE GRANULAR MATERIAL IN THE BOTTOM OF THE HOLE APPROXIMATELY 2 1/2 INCHES DEEP. CUT THE POSTS TO LENGTH AND PLACE IN THE HOLE. BACKFILL WITH MATERIAL EXCAVATED FROM THE HOLE AND COMPACT ADEQUATELY. (SEE SDD 14 B 15-4a).

① BRIDGE RAILING TYPE "W" DOES NOT REQUIRE A TERMINAL CONNECTOR.

② MINIMUM EMBEDMENT SHALL BE 4'-0". WHERE EXISTING CONDITIONS DO NOT PERMIT THE APPROPRIATE EARTHWORK SHOWN ON THE PLAN TYPICAL SECTIONS OR DETAILS, THE ENGINEER MAY ALLOW THE REDUCTION OR ELIMINATION OF THE 2 FOOT DISTANCE TO THE HINGE POINT. OTHERWISE BUILD AS THE PLAN SHOWS OR AS THE ENGINEER DIRECTS. IF THE 2 FOOT DISTANCE TO THE HINGE POINT IS REDUCED OR ELIMINATED, INCREASE THE POST EMBEDMENT DEPTH TO 4'-6" OR MORE.

③ BOLTS SHALL CONFORM TO THE REQUIREMENTS OF ASTM F-1554, GRADE 55. NUTS SHALL CONFORM TO THE REQUIREMENTS OF ASTM A-563 DH.

④ ALL WOOD POSTS MUST BE 6" X 8" AND AT LEAST 7'-0" LONG.

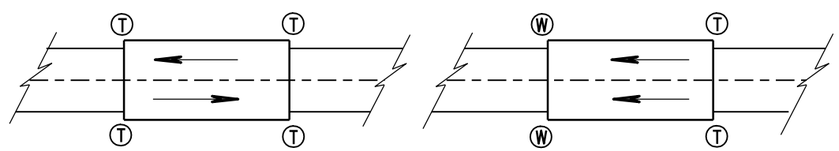

TWO WAY TRAFFIC

ONE WAY TRAFFIC

Ⓣ THRIE BEAM CONNECTION

Ⓦ W-BEAM CONNECTION WHEN REQUIRED

TYPICAL LOCATIONS OF THRIE BEAM AND W-BEAM CONNECTIONS TO BRIDGE

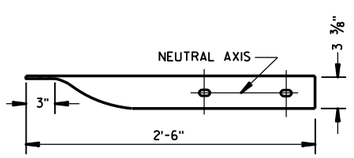

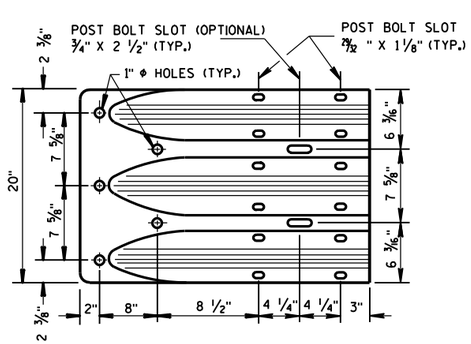

THRIE BEAM TERMINAL CONNECTOR

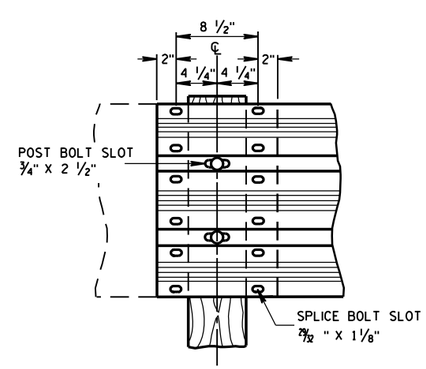

THRIE BEAM SPLICE

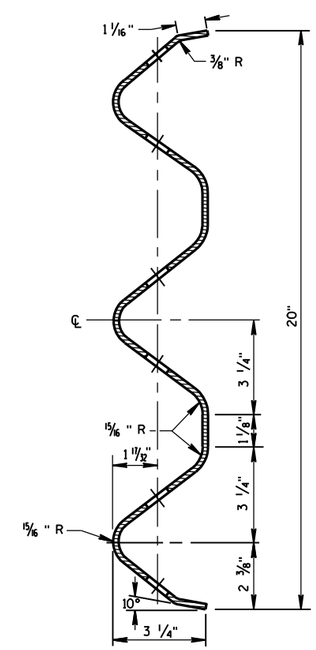

SECTION THRU THRIE BEAM RAIL ELEMENT

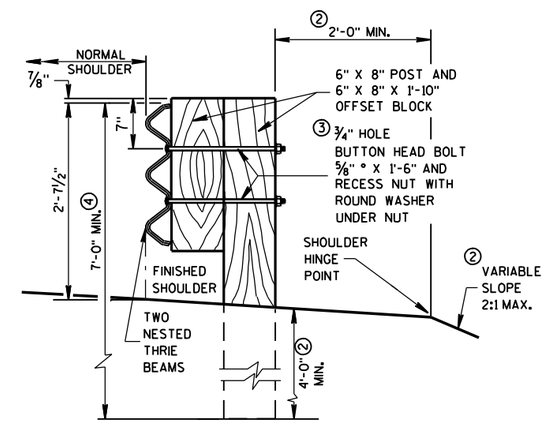

SECTION A-A

STEEL THRIE BEAM STRUCTURE APPROACH

STATE OF WISCONSIN
DEPARTMENT OF TRANSPORTATION

APPROVED
6/18/09 — DATE
/S/ Jerry H. Zogg — ROADWAY STANDARDS DEVELOPMENT ENGINEER
FHWA

6

S.D.D. 14 B 20-7a

6

S.D.D. 14 B 20-7a

GENERAL NOTES

THESE ARE TYPICAL CONNECTION DETAILS. ADJUST THE POSTION OF CONNECTIONS TO EXISTING BRIDGES TO FIT THE ACTUAL BRIDGE AND SITE DIMENSIONS.

BOLTS, PLATES, NUTS AND WASHERS SHALL CONFORM TO THE REQUIREMENTS OF ASTM SPECIFICATION A 325, AND BE GALVANIZED IN ACCORDANCE WITH ASTM A 153.

① INCLUDE THE PAYMENT FOR DRILLING BOLT HOLES THROUGH THE PARAPET, AND THE BACKUP PLATE AND ALL BOLTS, NUTS AND WASHERS IN THE ITEM "STEEL THRIE BEAM STRUCTURAL APPROACH".

② EACH BOLT AT THE BACK FACE OF THE PARAPET REQUIRES A HARDENED ROUND STEEL WASHER WITH A 2 1/4" O.D. X 5/32 " THICK.

③ THE RECESS FOR A W-BEAM CONNECTION, WHICH EXISTS ON SOME PARAPETS OF THIS TYPE, SHALL BE FILLED WITH A TREATED TIMBER BLOCKOUT. BLOCKOUT SIZE IS 1'-6" X 2'-0" X 3 1/2".

④ W6 X 9 OR W6 X 8.5 STEEL POSTS AND NOTCHED PLASTIC BLOCKOUTS ARE ACCEPTABLE ALTERNATIVES FOR 6" X 8" WOOD POST WITH WOOD OR PLASTIC BLOCKOUTS. USE APPROVED NOTCHED PLASTIC BLOCKOUTS WITH STEEL POSTS.

DO NOT USE STEEL POSTS AND NOTCHED PLASTIC BLOCKOUTS IN THE STEEL THRIE BEAM STRUCTURAL APPROACH AND THE TRANSITION SECTION OF STEEL PLATE BEAM GUARD, CLASS "A" INSTALLATIONS.

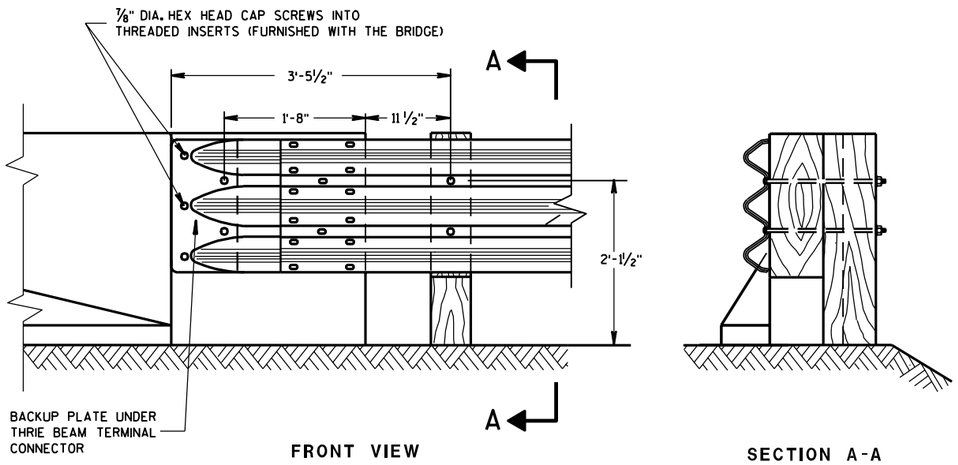

FRONT VIEW

SECTION A-A

THRIE BEAM CONNECTION TO BRIDGE PARAPET WITH SQUARE ENDS

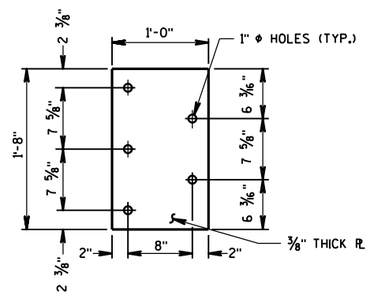

② BACKUP PLATE DETAIL
(USE ONLY AT BRIDGE PARAPET CONNECTIONS)

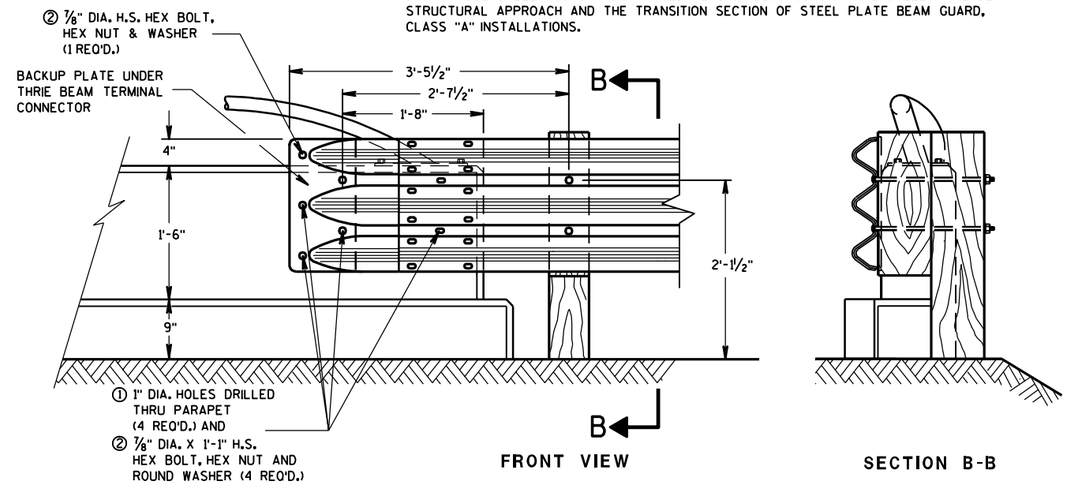

FRONT VIEW

SECTION B-B

THRIE BEAM CONNECTION TO VERTICAL FACED PARAPETS

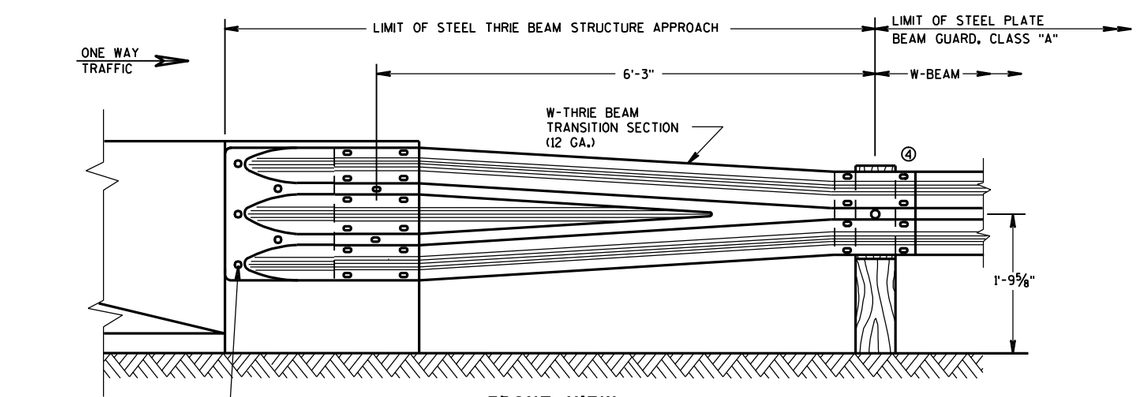

FRONT VIEW

W BEAM TRANSITION AND CONNECTION TO BRIDGE PARAPETS WITH SQUARE ENDS

(USE ONLY ON THE TRAFFIC EXIT END OF ONE WAY BRIDGES)

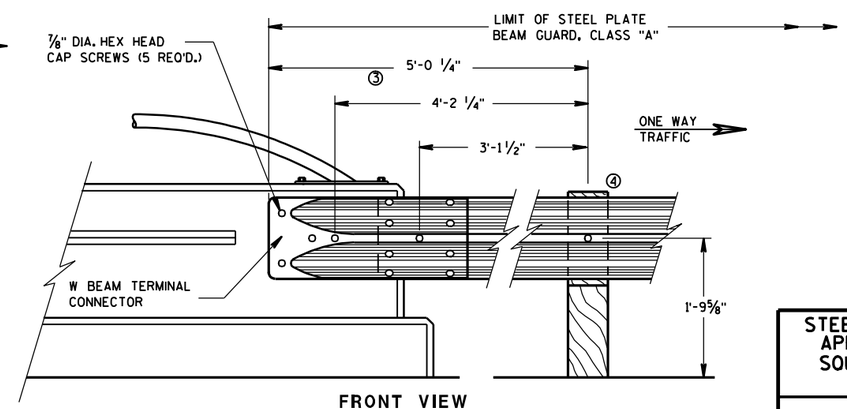

FRONT VIEW

W BEAM CONNECTION TO VERTICAL FACE PARAPET

(USE ONLY ON THE TRAFFIC EXIT END OF ONE WAY BRIDGES)

STEEL THRIE BEAM STRUCTURE APPROACH, CONNECTION TO SQUARE END AND VERTICAL FACED PARAPETS

STATE OF WISCONSIN
DEPARTMENT OF TRANSPORTATION

APPROVED
2-12-04
DATE
FHWA

CHIEF ROADWAY DEVELOPMENT ENGINEER

6

S.D.D. 14 B 20-6b

6

S.D.D. 14 B 20-6b

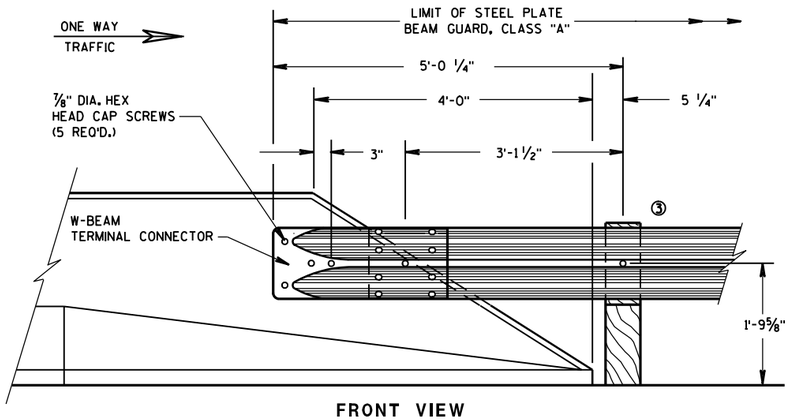

FRONT VIEW

W BEAM CONNECTION TO PARAPETS WITH SLOPED ENDS

(USE ONLY AT TRAFFIC EXIT END OF ONE WAY BRIDGE)

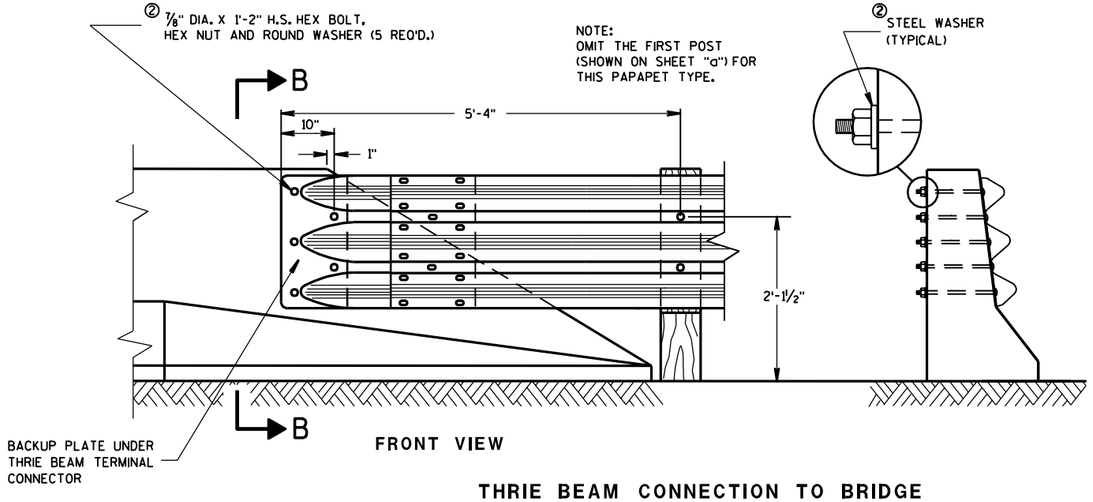

FRONT VIEW

THRIE BEAM CONNECTION TO BRIDGE PARAPETS WITH SLOPED ENDS

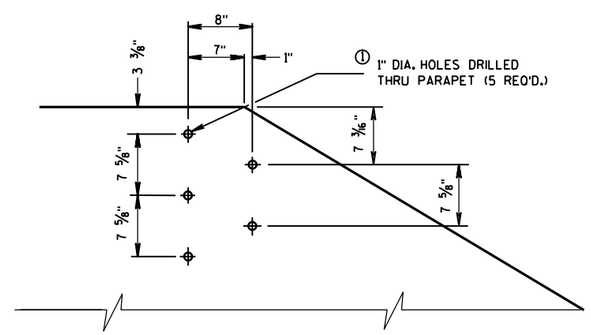

DRILL HOLE LOCATION AND PATTERN FOR THRIE BEAM CONNECTION

GENERAL NOTES

THESE ARE TYPICAL CONNECTION DETAILS. ADJUST THE POSTION OF CONNECTIONS TO EXISTING BRIDGES TO FIT THE ACTUAL BRIDGE AND SITE DIMENSIONS.

BOLTS, PLATES, NUTS AND WASHERS SHALL CONFORM TO THE REQUIREMENTS OF ASTM SPECIFICATION A 325, AND BE GALVANIZED IN ACCORDANCE WITH ASTM A 153.

① INCLUDE THE PAYMENT FOR DRILLING BOLT HOLES THROUGH THE PARAPET, AND THE BACKUP PLATE AND ALL BOLTS, NUTS AND WASHERS IN THE ITEM "STEEL THRIE BEAM STRUCTURAL APPROACH".

② EACH BOLT AT THE BACK FACE OF THE PARAPET REQUIRES A HARDENED ROUND STEEL WASHER WITH A 2 1/4" O.D. X 5/32 " THICK.

③ W6 X 9 OR W6 X 8.5 STEEL POSTS AND NOTCHED PLASTIC BLOCKOUTS ARE ACCEPTABLE ALTERNATIVES FOR 6" X 8" WOOD POST WITH WOOD OR PLASTIC BLOCKOUTS. USE APPROVED NOTCHED PLASTIC BLOCKOUTS WITH STEEL POSTS.

DO NOT USE STEEL POSTS AND NOTCHED PLASTIC BLOCKOUTS IN THE STEEL THRIE BEAM STRUCTURAL APPROACH AND THE TRANSITION SECTION OF STEEL PLATE BEAM GUARD, CLASS "A" INSTALLATIONS.

STEEL THRIE BEAM STRUCTURE APPROACH, CONNECTION TO SLOPED END PARAPETS

STATE OF WISCONSIN
DEPARTMENT OF TRANSPORTATION

APPROVED
2-12-04
DATE
FHWA

CHIEF ROADWAY DEVELOPMENT ENGINEER

6

S.D.D. 14 B 20-6c

6

S.D.D. 14 B 20-6c

BILL OF MATERIALS

NOTE NO.	QTY.	DESCRIPTION
1	4	WOOD BREAKAWAY TERMINAL POST: 5½" X 7½" X 3'-9"
2	4	STEEL TUBE: TS 8" X 6" X 0.188", 4'-6" LONG OR 6'-0" LONG **
3	3	SOIL PLATE: 2'-0" X 1'-6" X ¼" **
4	4	WOOD BREAKAWAY CRT POST: 6" X 8" X 6'-0"
5	6	WOOD OFFSET BLOCKS: 6' X 8" X 1'-2"
6	1	PIPE SLEEVE: 2" X 5 ½" STANDARD PIPE
7	1	BEARING PLATE
8	1	BCT CABLE ASSEMBLY
9	1	CABLE ANCHOR BOX
10	1	STRUT & YOKE
11	1	STEEL PLATE BEAM, END PANEL 12 GA. 13'-6½" LONG FOR SKT-350, ET-2000 AND ET-2000 PLUS
12	3	STEEL PLATE BEAM: 12 GA. 13'-6½"
13	1	ET-2000/ET-2000 PLUS GUARDRAIL EXTRUDER OR SKT-350 IMPACT HEAD: AS FURNISHED BY MANUFACTURER
14	1	REFLECTIVE SHEETING TYPE H: 18" X 18"
15	1	E.A.T. MARKER POST

GENERAL NOTES

FOLLOW MANUFACTURE'S BOLTING RECOMMENDATIONS. IF NONE ARE AVAILABLE, INSTALL ⅝" ø X 1'-6" BUTTON HEAD BOLTS AT ALL POSTS EXCEPT FOR POST 1.

** SDD SHOWS 4 - 54 INCH STEEL TUBES WITH SOIL PLATE INSTALLED ON POST 1 THROUGH POST 3. POST 4 DOES NOT REQUIRE A SOIL PLATE. AN ALTERNATIVE INSTALLATION WOULD CONSIST OF 4 - 72 INCH STEEL TUBES ON POST 1 THROUGH POST 4, WITHOUT SOIL PLATES.

(A) THE SLOPE IN THE AREA BOUNDED BY THE EXTENDED VEHICLE RUNOUT PATH (EVRP), THE HINGE POINT LINE (HPL), AND THE CLEAR ZONE LIMITS (CZL) SHALL BE 4:1 OR FLATTER.

(B) AFTER FINAL ASSEMBLY, RECHECK CABLE TO BE SURE IT IS TAUT AND HAS NOT RELAXED.

(C) THE 13 SLOT FIRST RAIL PANEL MAY BE USED IN LIEU OF THE 3 SLOT RAIL PANEL ON SKT-350 ONLY.

(D) THE TOP OF THE STEEL TUBE ON POSTS 1 THROUGH 4 SHALL NOT BE MORE THAN 3" ABOVE THE FINISH GROUND ELEVATION.

(E) THE CENTER OF THE UPPER 3½" DIAMETER HOLE ON POST 5 THROUGH 8 SHALL BE ¾" ABOVE THE FINISHED GROUND LINE.

(F) SHEETING IS ATTACHED TO 0.040 ALUMINUM SHEET AND ATTACHED TO E.A.T. HEAD USING 4 STAINLESS STEEL SELF-TAPPING SCREWS. ONE SCREW PER CORNER OF E.A.T.

STEEL POSTS SHALL NOT BE ALLOWED FOR USE WITH ENERGY ABSORBING TERMINALS.

DO NOT INSTALL REFLECTORS ON THE FIRST 50 FEET OF THE APPROACH END OF THE ENERGY ABSORBING TERMINAL.

* DO NOT ATTACH BLOCKOUTS TO POSTS 1 AND 2.

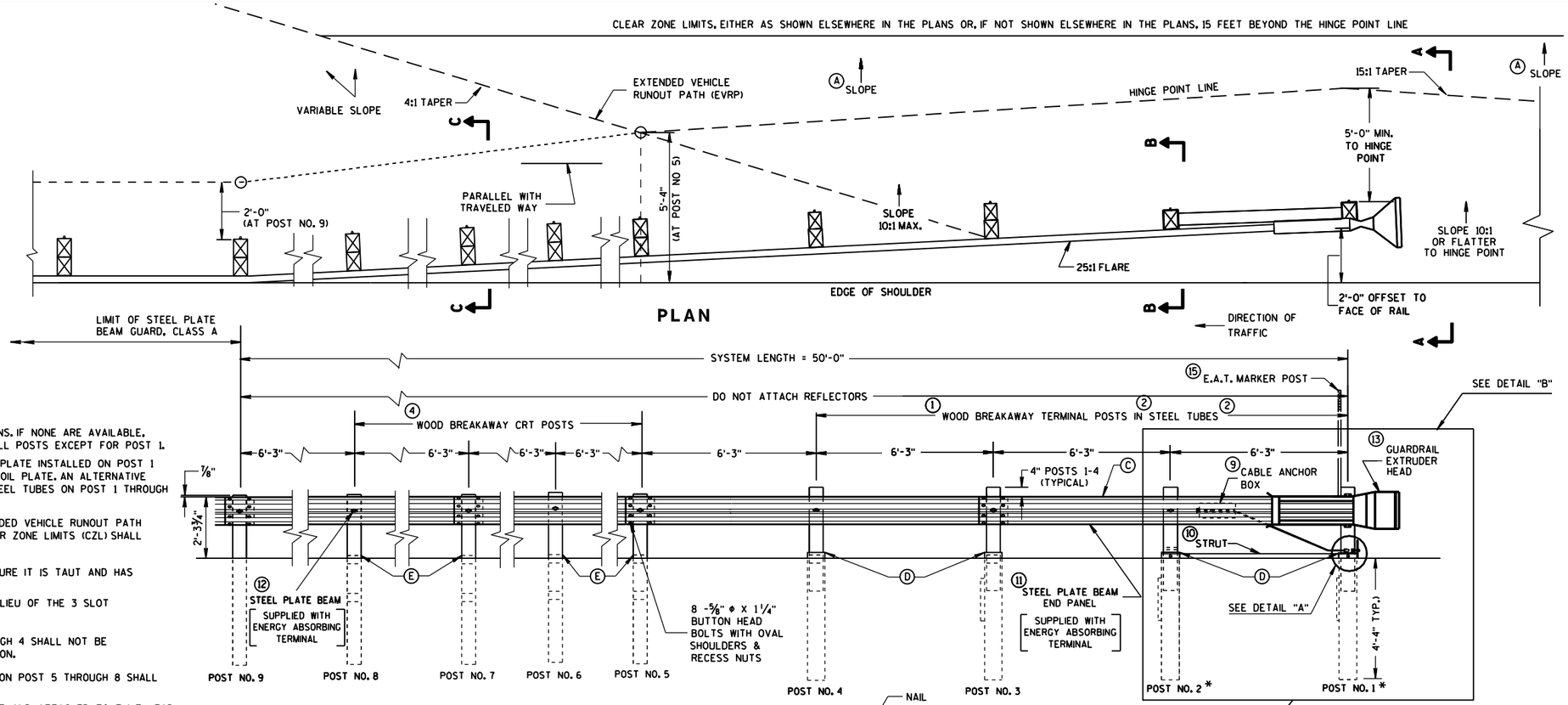

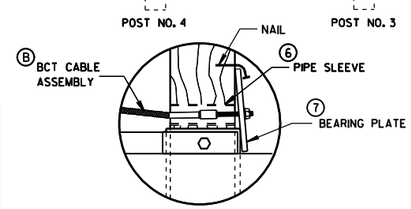

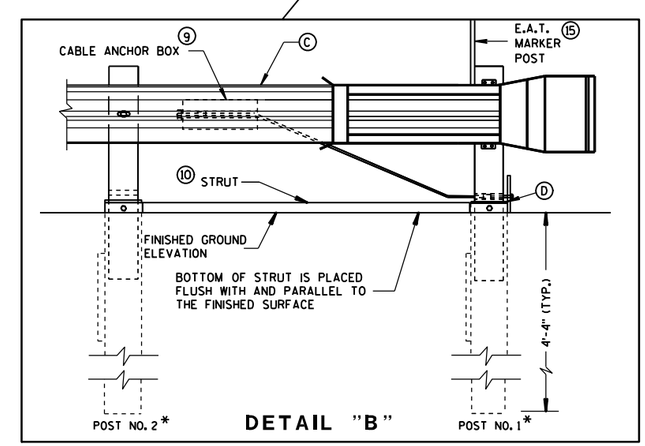

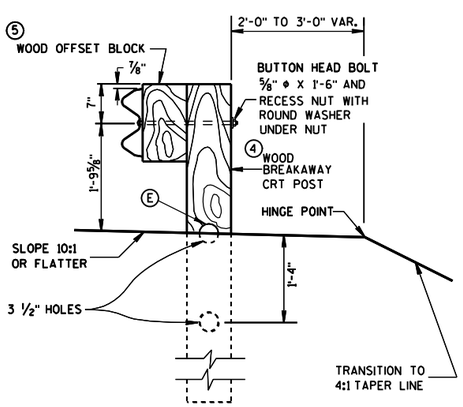

SECTION C-C
TYPICAL AT POST NOS. 6, 8

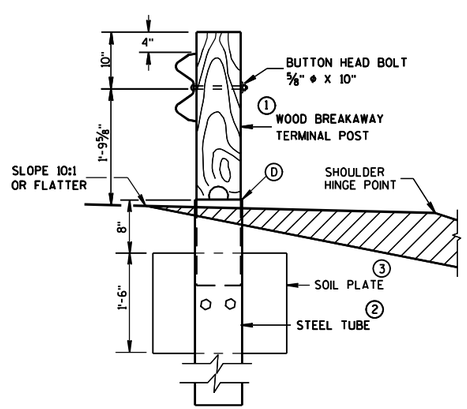

SECTION B-B
TYPICAL AT POST NO. 2*

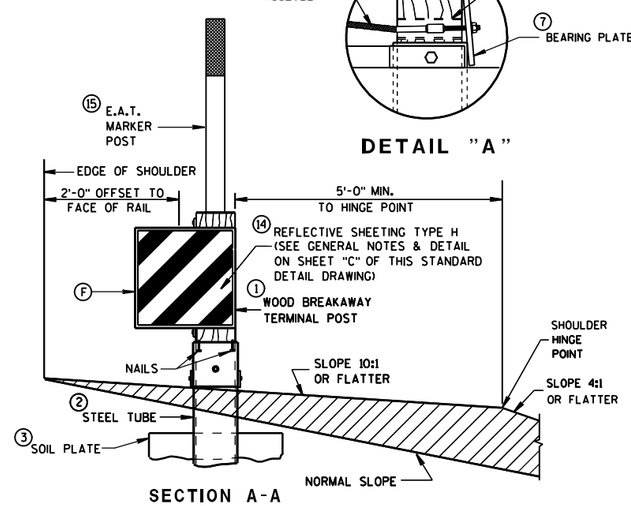

SECTION A-A
TYPICAL AT POST NO. 1*

STEEL PLATE BEAM GUARD
ENERGY ABSORBING TERMINAL

STATE OF WISCONSIN
DEPARTMENT OF TRANSPORTATION

6

S.D.D. 14 B 24-6a

6

S.D.D. 14 B 24-6a

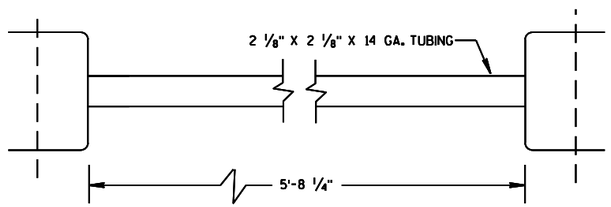

⑩ STRUT DETAIL (SKT-350)

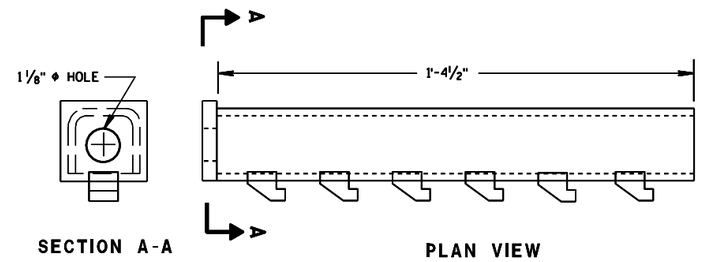

⑨ CABLE ANCHOR BOX (ET-2000/ET-2000 PLUS)

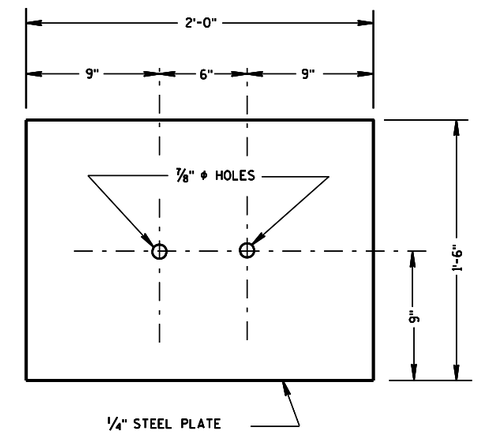

③ SOIL PLATE

(SKT-350, ET-2000/ET-2000 PLUS)

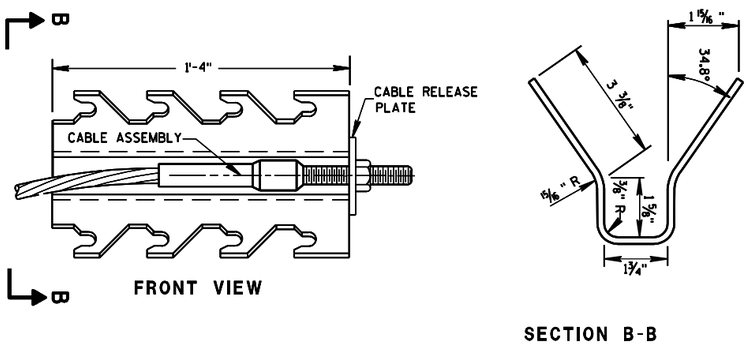

⑨ CABLE ANCHOR BOX (SKT-350)

(SKT-350)

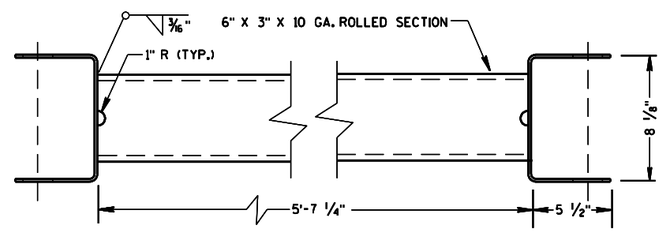

⑩ STRUT DETAIL (ET-2000/ET-2000 PLUS)

(ET-2000/ET-2000 PLUS)

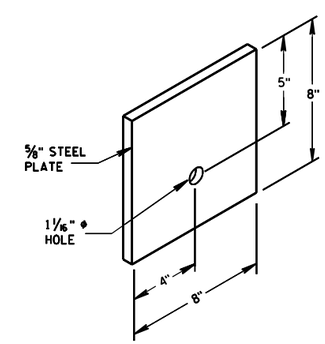

⑦ STEEL BEARING PLATE

(SKT-350, ET-2000/ET-2000 PLUS)

6

6

S.D.D. 14 B 24-6b

S.D.D. 14 B 24-6b

STEEL PLATE BEAM GUARD
ENERGY ABSORBING TERMINAL

STATE OF WISCONSIN
DEPARTMENT OF TRANSPORTATION

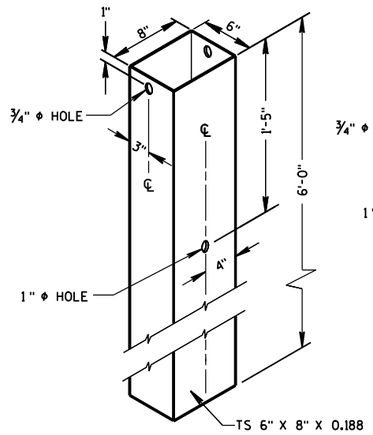

② 72" STEEL TUBE
(POSTS NO. 1-4

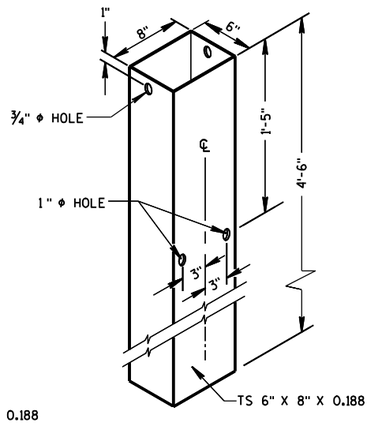

② 54" STEEL TUBE
(POSTS NO. 1-4

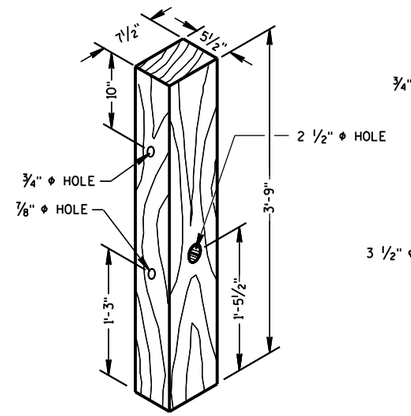

① TERMINAL POST
(POSTS NO. 1-4

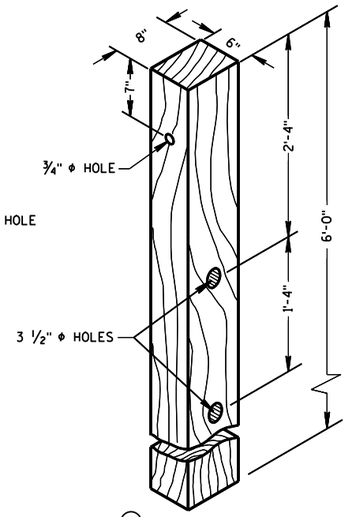

④ CRT POST
(POSTS NO'S 5-8

WOOD BREAKAWAY POSTS

GENERAL NOTES

STEEL PLATE BEAM GUARD, ENERGY ABSORBING TERMINAL SHALL BE PAID FOR AT THE CONTRACT UNIT PRICE EACH, WHICH SHALL INCLUDE HARDWARE, STEEL PLATE BEAM GUARD, POSTS, REFLECTIVE SHEETING AND INSTALLATION AS SHOWN.

WHEN ROCK IS ENCOUNTERED DURING EXCAVATION, A 12 INCH DIA. POST HOLE EXTENDING 20 INCHES DEEP INTO THE ROCK MAY BE USED IF APPROVED BY THE ENGINEER. GRANULAR MATERIAL SHALL BE PLACED IN THE BOTTOM OF THE HOLE APPROXIMATELY 2 1/2" INCHES DEEP TO PROVIDE DRAINAGE. THE SOIL TUBES SHALL BE FIELD CUT TO LENGTH, PLACED IN THE HOLE AND BACKFILLED WITH ADEQUATELY COMPACTED MATERIAL EXCAVATED FROM THE HOLE.

Ⓖ 1/2" DIA. X 3" LAG BOLT WITH WASHER.

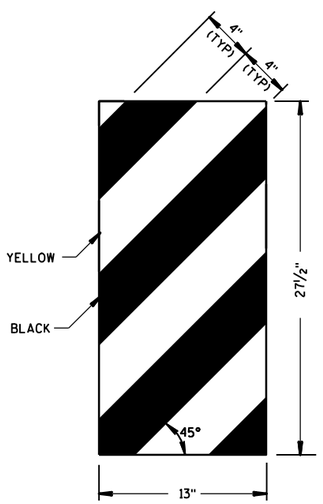

ET-2000 PLUS ONLY

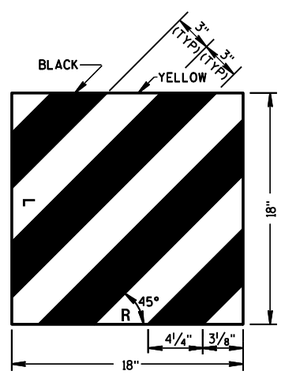

ET-2000 AND SKT-350

⑭ REFLECTIVE SHEETING DETAILS

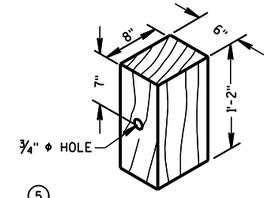

⑤ WOOD OFFSET BLOCK
REQ'D. AT ALL POSTS EXCEPT POST NO'S 1 & 2

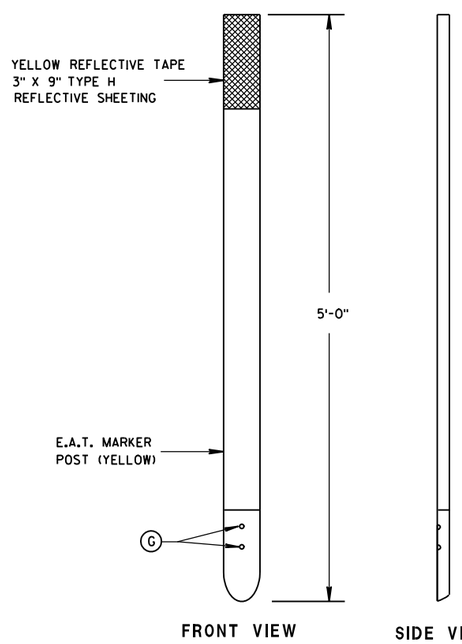

⑮ E.A.T. MARKER POST

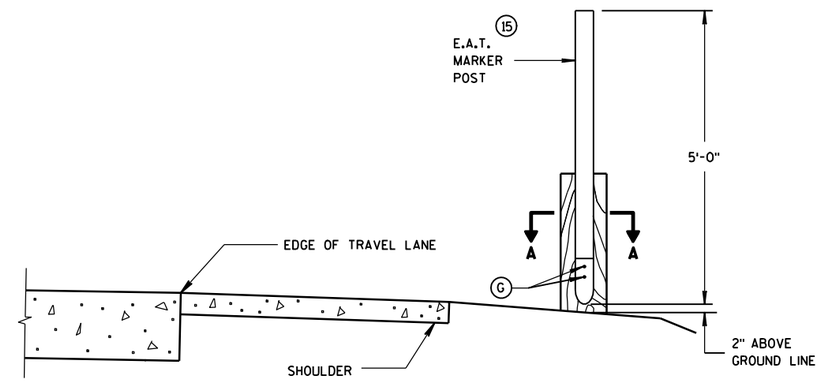

TYPICAL INSTALLATION OF E.A.T.
MARKER POST BACKSIDE OF POST NO. 1
(E.A.T. AND RAIL REMOVED FOR CLARITY)

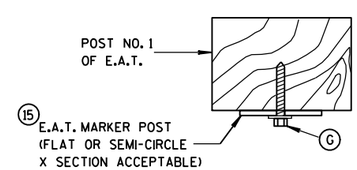

SECTION A-A

STEEL PLATE BEAM GUARD
ENERGY ABSORBING TERMINAL

STATE OF WISCONSIN
DEPARTMENT OF TRANSPORTATION

APPROVED
6-18-09 — DATE
/S/ Jerry H. Zogg — ROADWAY STANDARDS DEVELOPMENT ENGINEER
FHWA

6

S.D.D. 14 B 24-6c

6

S.D.D. 14 B 24-6c

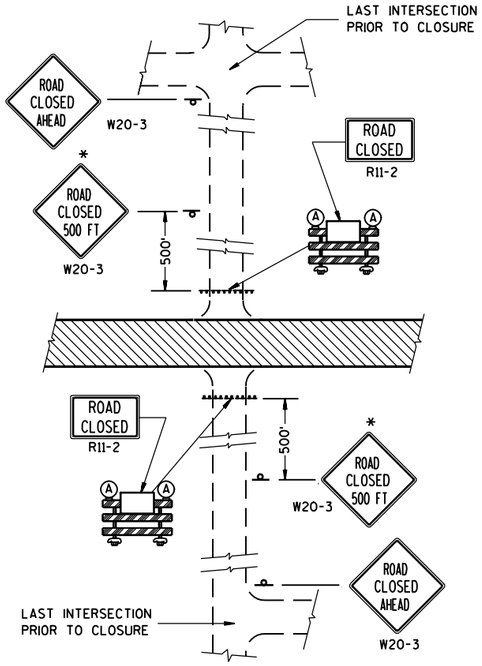

DETAIL 1

(NO ACCESS TO PROJECT)

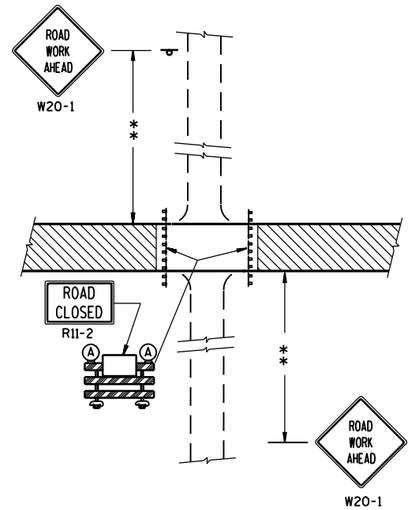

DETAIL 2

(PUBLIC CROSS-TRAFFIC MAINTAINED.
NO ACCESS TO PROJECT).

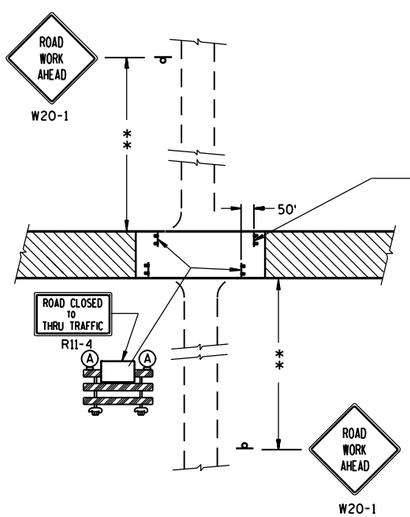

DETAIL 3

(PUBLIC CROSS-TRAFFIC MAINTAINED. CONTRACTOR,
LOCAL BUSINESS AND RESIDENT ACCESS).

FOR BRIDGE OR CULVERT REPLACEMENT, USE ADDITIONAL SIGN ON BARRICADE

BRIDGE OUT
XX MILES AHEAD
R11-3 (MOD.)

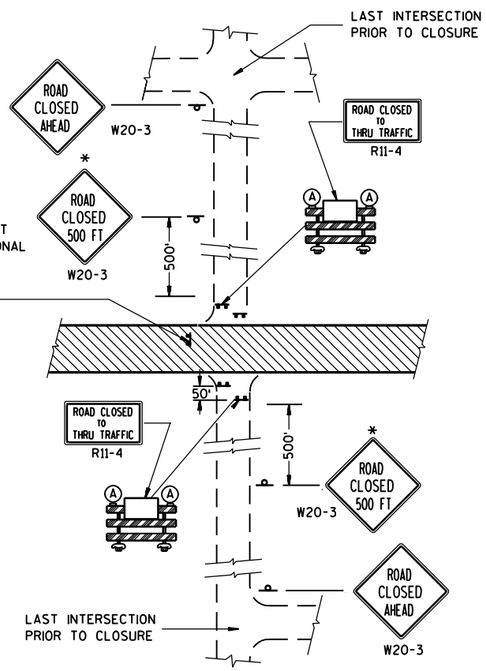

DETAIL 4

(CONTRACTOR, LOCAL BUSINESS AND
RESIDENT ACCESS TO PROJECT)

GENERAL NOTES

THE EXACT NUMBER, LOCATION, AND SPACING OF ALL SIGNS AND BARRICADES SHALL BE ADJUSTED TO FIT FIELD CONDITIONS AS APPROVED BY THE ENGINEER.

ANY SIGNS TEMPORARY OR EXISTING, WHICH CONFLICT WITH TRAFFIC CONTROL "IN USE" SHALL BE REMOVED OR COVERED AS NEEDED AND AS APPROVED BY THE ENGINEER.

THE SPACING BETWEEN TRAFFIC CONTROL SIGNS SHOULD BE ADJUSTED TO NOT CONFLICT WITH AND SHOULD PROVIDE A DESIRABLE MINIMUM OF 200 FEET CLEARANCE TO EXISTING SIGNS THAT WILL REMAIN IN PLACE.

IF A "STOP" SIGN MUST BE REMOVED FOR A WORK OPERATION, A TEMPORARY "STOP" SIGN SHALL BE PLACED PRIOR TO THE SIGN REMOVAL, OR A FLAGGER SHALL BE PROVIDED UNTIL THE SIGN IS RE-ESTABLISHED.

BARRICADES THAT MUST BE MOVED FOR A WORK OPERATION SHALL BE IMMEDIATELY RE-ESTABLISHED UPON COMPLETION OF THE OPERATION OR, FOR CONTINUING OPERATIONS, AT THE END OF EACH WORKING DAY.

SIGNS THAT WILL BE IN PLACE LESS THAN 7 CONTINUOUS DAYS AND NIGHTS MAY BE MOUNTED ON PORTABLE SUPPORTS.

ALL TYPE III BARRICADES SHALL HAVE RAILS REFLECTORIZED ON BOTH FACES. STRIPES SHALL BE PROPERLY SLOPED DOWN TOWARD THE TRAFFIC SIDE OR AS SHOWN IN THE ROAD CLOSURE BARRICADE DETAIL D FOR FULL ROAD CLOSURES.

TYPE "A" LOW-INTENSITY FLASHING WARNING LIGHTS SHALL BE VISIBLE ON BOTH SIDES OF THE BARRICADE.

THE R11-2, R11-3 AND R11-4 SIGNS PLACED ON BARRICADES SHALL COVER NO MORE THAN THE TOP RAIL. THE SIGNS SHALL NOT COVER ANY PORTION OF THE MIDDLE OR BOTTOM RAILS.

THE REFLECTIVE SHEETING USED ON R11-2, R11-3 AND R11-4 SIGNS SHALL COMPLY WITH SUBSECTION 637.2.2.2 OF THE STANDARD SPECIFICATIONS.

ALL SIGNS SHALL BE 48" X 48" UNLESS OTHERWISE NOTED BELOW:
R11-2 SHALL BE 48" X 30".
R11-4 AND R11-3 SHALL BE 60" X 30".

*OMIT THE "ROAD CLOSED 500 FT." SIGN IF THE LAST INTERSECTION IS 500 FT. OR LESS FROM THE WORK ZONE.

**500' MAX. OR AT LAST INTERSECTION WHICHEVER IS CLOSER.

LEGEND

- POST MOUNTED WARNING SIGN
- TYPE III BARRICADES
- (A) TYPE "A" LOW INTENSITY FLASHING WARNING LIGHT (FOR NIGHT USE)
- WORK AREA

BARRICADES AND SIGNS FOR SIDEROAD CLOSURES

STATE OF WISCONSIN
DEPARTMENT OF TRANSPORTATION

APPROVED
9-16-03
DATE
FHWA

Thomas N. Notthom for
CHIEF SIGNS AND MARKING ENGINEER

6

S.D.D. 15 C 3-1

GENERAL NOTES

DETAILS OF INSTALLATION, MATERIALS AND WORKMANSHIP NOT SHOWN ON THIS DRAWING SHALL CONFORM TO THE PERTINENT REQUIREMENTS OF THE STANDARD SPECIFICATIONS AND APPLICABLE SPECIAL PROVISIONS.

ALL LETTERS, ARROWS AND SYMBOLS SHALL BE IN CONFORMANCE WITH REQUIREMENTS INCLUDED IN "STANDARD ALPHABETS FOR HIGHWAY SIGNS AND PAVEMENT MARKING" BY THE FEDERAL HIGHWAY ADMINISTRATION. ALL LETTERS, ARROWS AND SYMBOLS SHALL BE WHITE AND REFLECTORIZED.

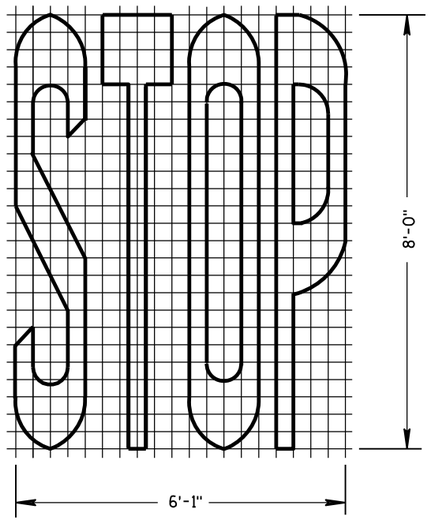

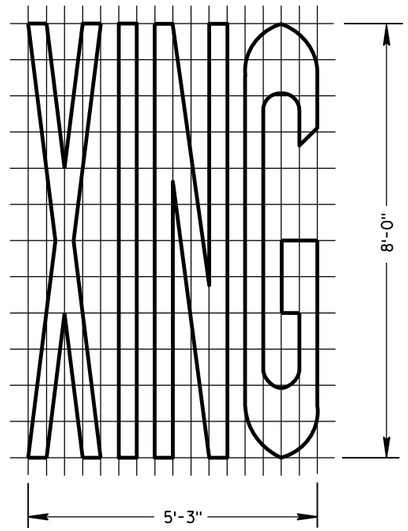

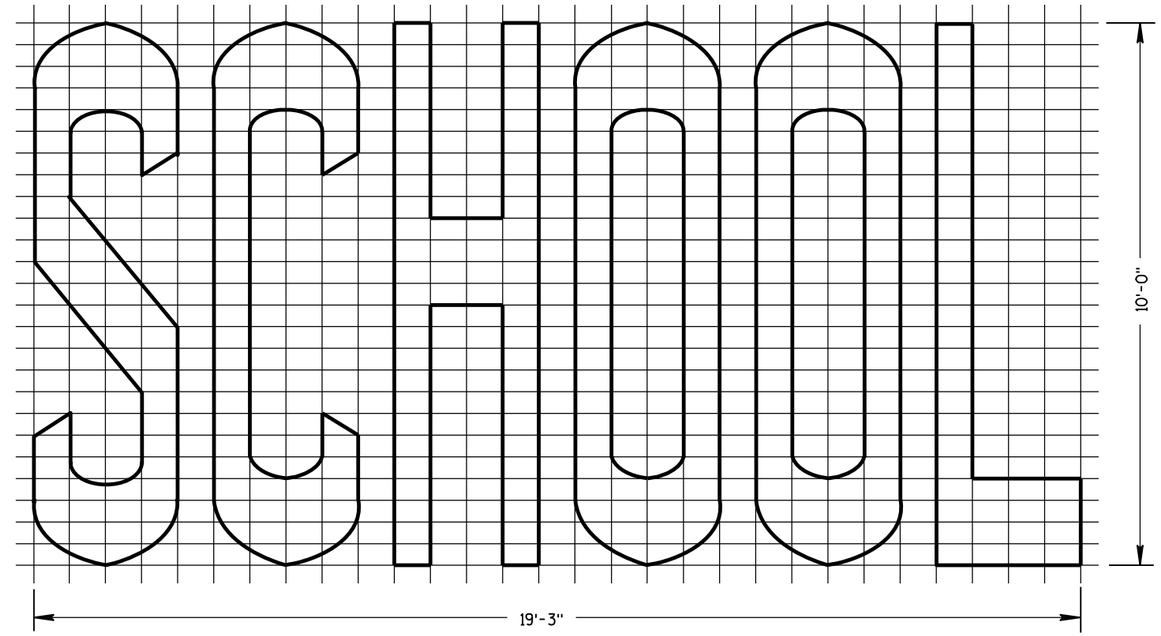

TWO-LANE

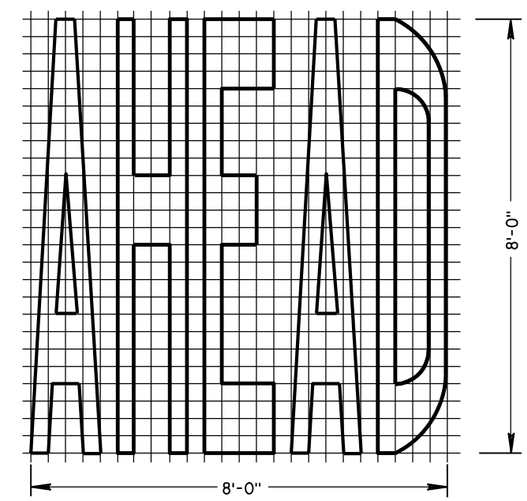

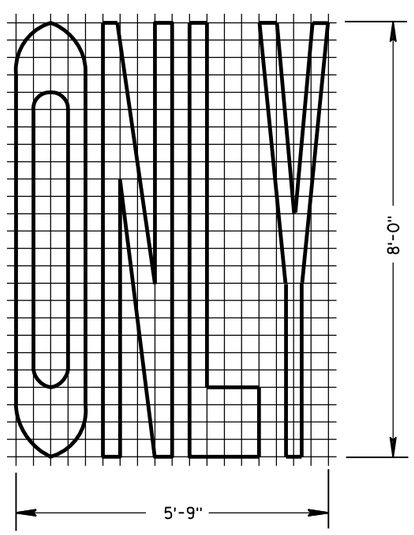

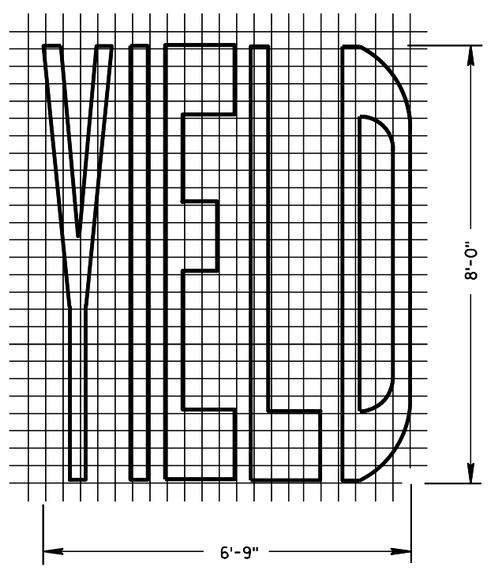

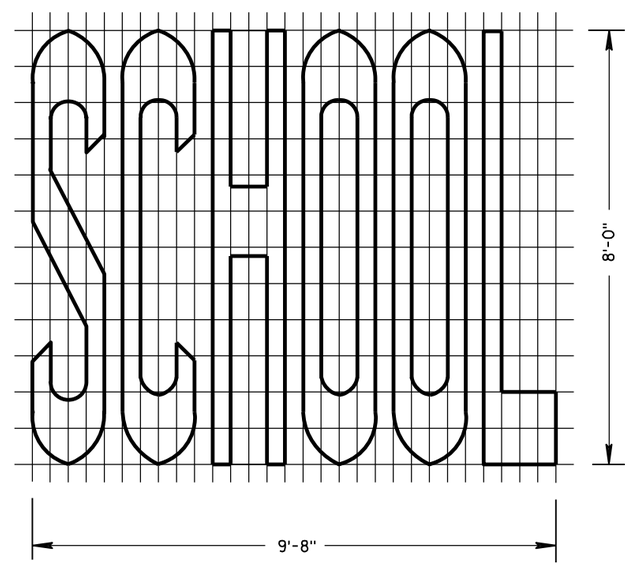

SINGLE-LANE

6

6

S.D.D. 15 C 7-10b

S.D.D. 15 C 7-10b

PAVEMENT MARKING WORDS

STATE OF WISCONSIN
DEPARTMENT OF TRANSPORTATION

APPROVED

9-4-09	/S/ Thomas N. Notbohm
DATE	STATE TRAFFIC ENGINEER OF DESIGN

FHWA

GENERAL NOTES

DETAILS OF INSTALLATION, MATERIALS AND WORKMANSHIP NOT SHOWN ON THIS DRAWING SHALL CONFORM TO THE PERTINENT REQUIREMENTS OF THE STANDARD SPECIFICATIONS AND APPLICABLE SPECIAL PROVISIONS.

ALL LETTERS AND SYMBOLS SHALL BE IN CONFORMANCE WITH REQUIREMENTS INCLUDED IN "STANDARD ALPHABETS FOR HIGHWAY SIGNS AND PAVEMENT MARKING" BY THE FEDERAL HIGHWAY ADMINISTRATION. ALL LETTERS, ARROWS AND SYMBOLS SHALL BE WHITE AND REFLECTORIZED.

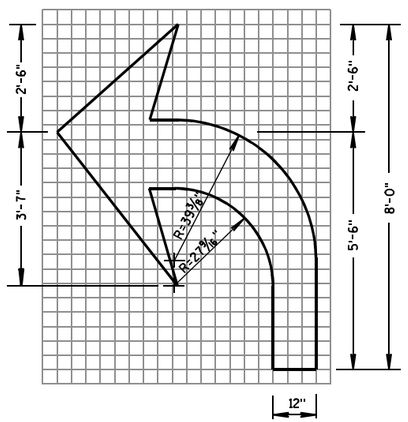

TYPE 2

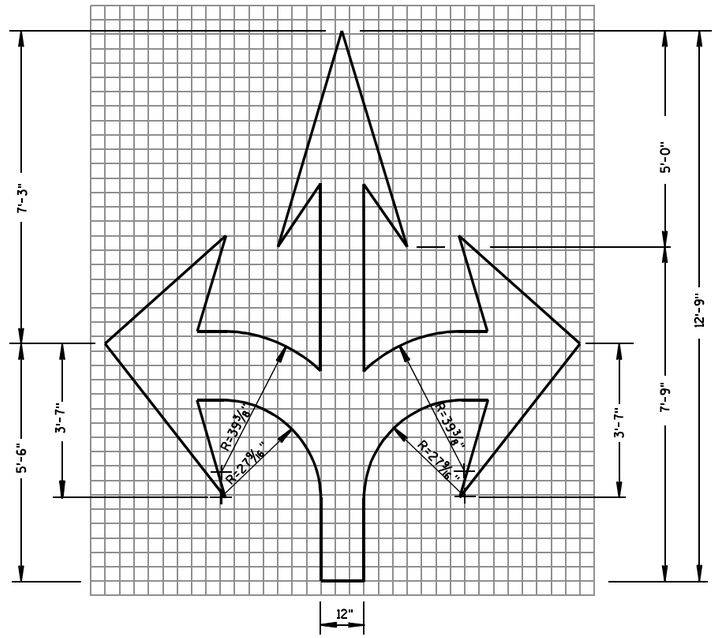

TYPE 6

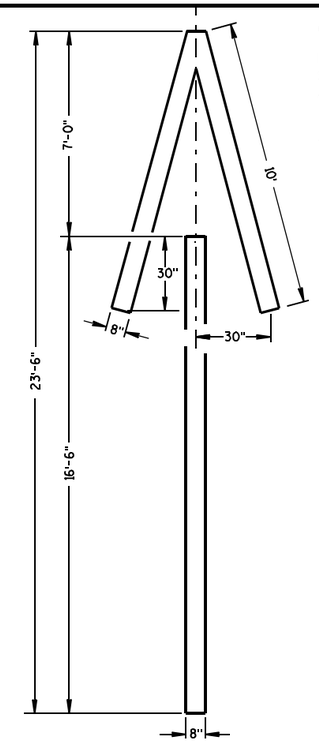

TYPE 4

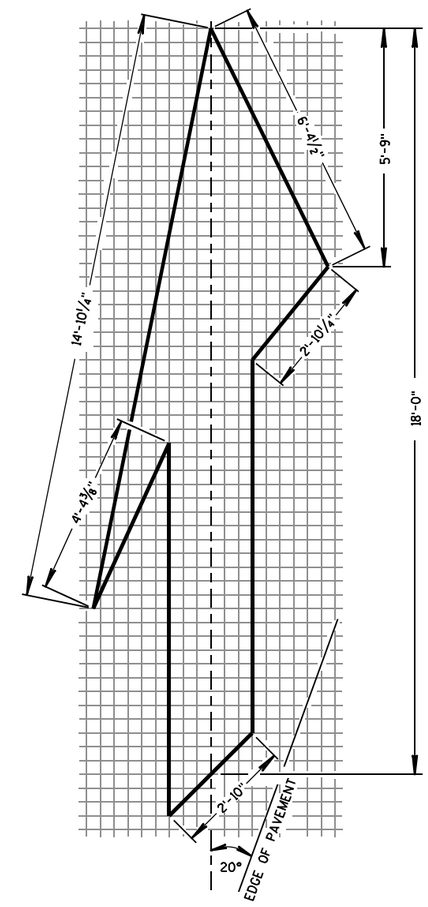

TYPE 5 LANE DROP ARROW

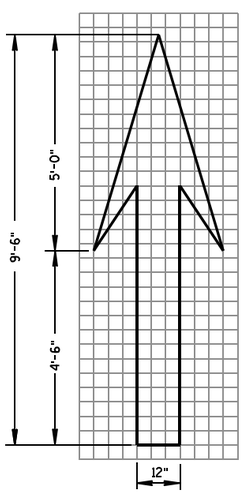

TYPE 1

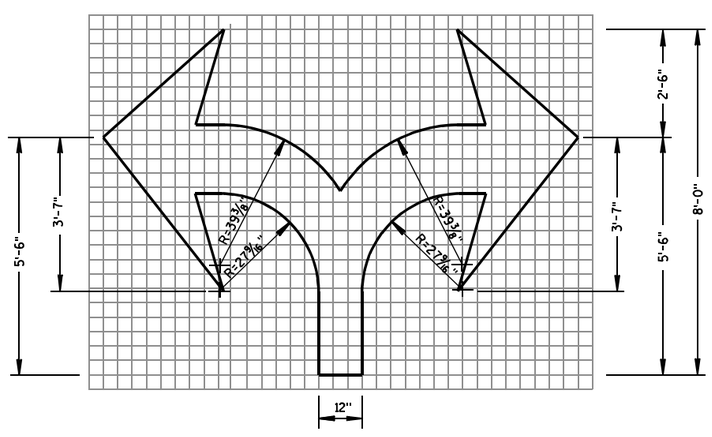

TYPE 7

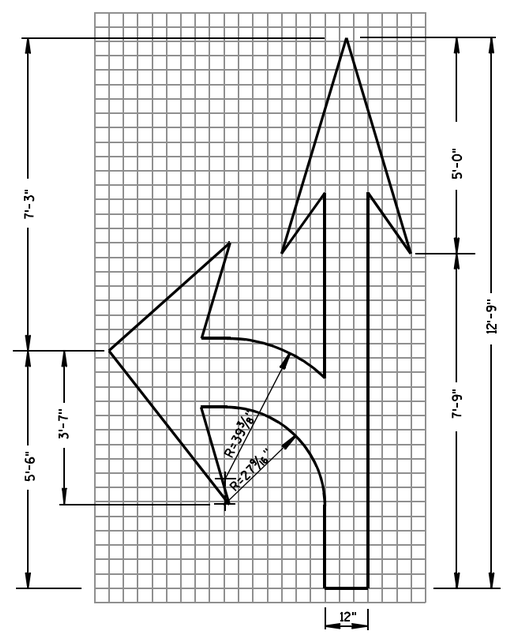

TYPE 3

PAVEMENT MARKING ARROWS	
STATE OF WISCONSIN DEPARTMENT OF TRANSPORTATION	
APPROVED 9/4/09 DATE	/S/ Thomas N. Notbohm STATE TRAFFIC ENGINEER OF DESIGN
FHWA	

6

S.D.D. 15 C 7-10d

6

S.D.D. 15 C 7-10d

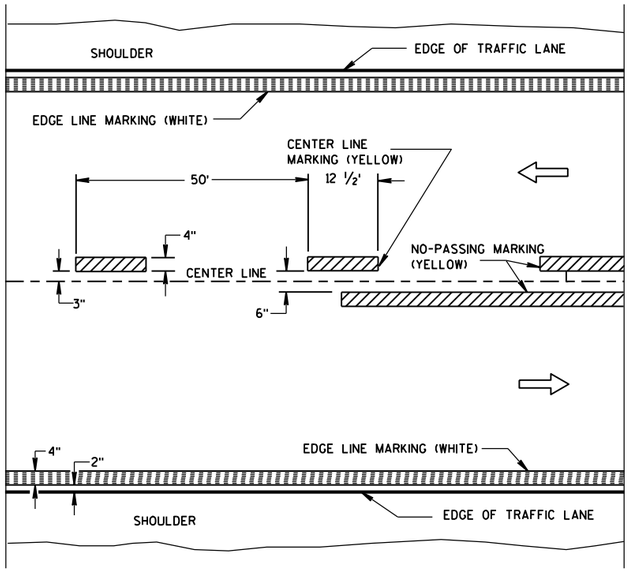

TWO WAY TRAFFIC

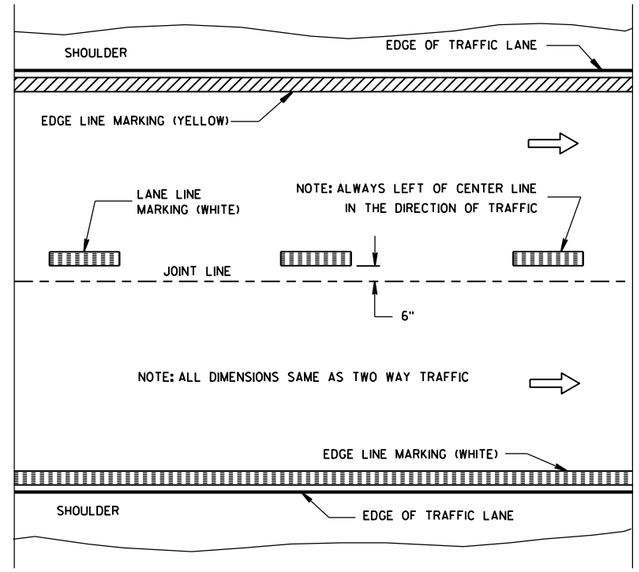

ONE WAY TRAFFIC

PERMANENT PAVEMENT MARKING

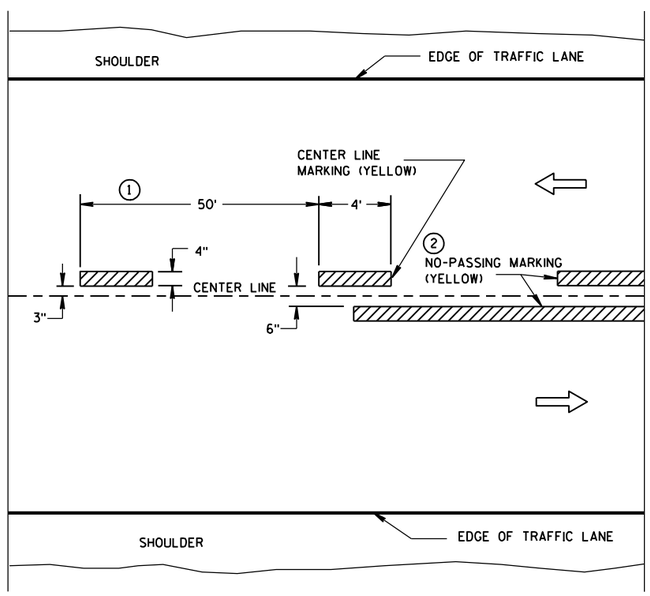

TWO WAY TRAFFIC

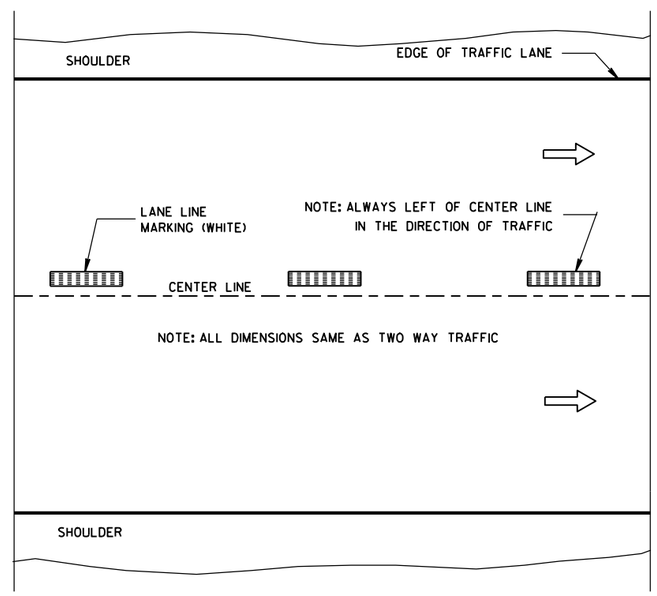

ONE WAY TRAFFIC

TEMPORARY (INTERMEDIATE) PAVEMENT MARKING

(SHOWS CYCLE FOR TEMPORARY CENTER LINE OR TEMPORARY LANE LINE MARKING)

GENERAL NOTES

DETAILS OF CONSTRUCTION NOT SHOWN ON THIS DRAWING SHALL CONFORM TO STANDARD SPECIFICATIONS AND SPECIAL PROVISIONS.

1. HALF CYCLE LENGTHS (25'±) WITH 2' MINIMUM STRIPE LENGTHS SHALL BE PROVIDED ON ROADWAYS (INCLUDING TEMPORARY TRAVELED WAYS) WITH REVERSE CURVATURE, CURVATURE OF OVER 5 DEGREES OR WHEN DIRECTED BY THE ENGINEER TO MARK UNUSUAL ALIGNMENT OF THE TRAVELED WAY.

2. NO PASSING ZONE TEMPORARY PAVEMENT MARKING IS REQUIRED TO BE PLACED, WHERE APPROPRIATE, ALONG WITH CENTERLINE TEMPORARY PAVEMENT MARKING WHEN A SAME DAY PERMANENT PAVEMENT MARKING ITEM IS INCLUDED IN THE CONTRACT.

NOTE

ARROW SYMBOL (⇨) SHOWS DIRECTION OF TRAVEL

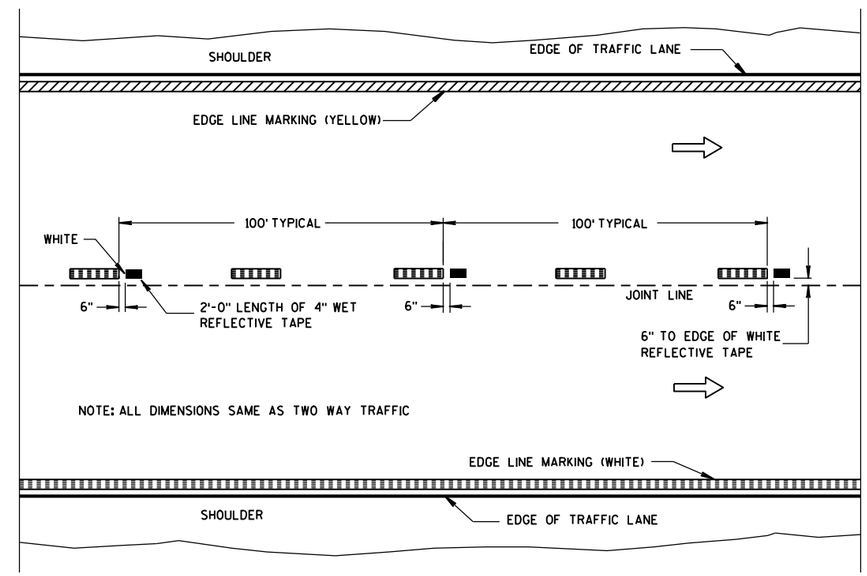

WET REFLECTIVE TAPE SUPPLEMENT TO SPRAYED OR NON WET REFLECTIVE TAPE LANE LINE

PAVEMENT MARKING (MAINLINE)

STATE OF WISCONSIN
DEPARTMENT OF TRANSPORTATION

APPROVED
2-5-09 — DATE
/S/ Thomas N. Notbohm — STATE TRAFFIC ENGINEER OF DESIGN
FHWA

6

S.D.D. 15 C 8-11a

6

S.D.D. 15 C 8-11a

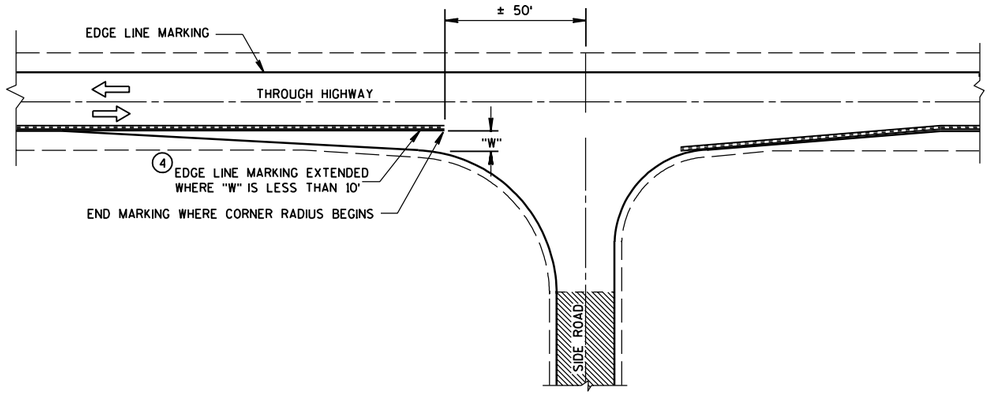

MINOR INTERSECTION WITHOUT CURBS

GENERAL NOTES

EDGE LINES SHALL BE OMITTED THROUGH INTERSECTIONS. EDGE LINES SHALL BE CONTINUED THROUGH DRIVEWAYS.

1. WHEN DISTANCE "A" IS LESS THAN 250 FEET, OMIT LANE LINE.
2. WHEN DISTANCE "B" IS LESS THAN 100 FEET, OMIT CHANNELIZING LANE LINE.
3. ALTERNATIVE MARKING SHALL BE PROVIDED WHEN SPECIFIED IN THE CONTRACT. TYPICAL SITUATIONS WHERE THIS MARKING MAY BE REQUIRED ARE WHERE THE INTERSECTION IS ON A SHARP HORIZONTAL CURVE OR CREST VERTICAL CURVE IN AN UNLIGHTED AREA SUCH THAT THE EDGE LINE MAY BE MISLEADING TO THE MOTORIST OR DISAPPEAR FROM SIGHT.
4. LOCATE THE EDGE LINE ALONG THE TAPER WHERE "W" IS 10' OR MORE.
5. THE EDGE LINE IN THE TAPER AREAS OF THE BYPASS LANE AND THE BYPASS LANE SHALL BE LOCATED 1-FOOT FROM EDGE OF PAVEMENT TO THE OUTSIDE EDGE OF EDGE LINE.
6. BARRIER LINE ENDS AT SIDE ROAD PAVEMENT/SURFACE EDGE EXTENSION.
7. BARRIER LINE STARTS 500 FEET PRIOR TO THE BYPASS TAPER.
8. IF THE DISTANCE BETWEEN 2 SUCCESSIVE NO-PASSING ZONES IS LESS THAN THE MINIMUM DISTANCE BETWEEN ZONES, CONNECT THE 2 ZONES.

ARROW SYMBOL (⇨) SHOWS DIRECTION OF TRAVEL

8

POSTED SPEED (MPH)	MINIMUM DISTANCE BETWEEN ZONES (FEET)
25 - 30	528
35 - 40	528
45 - 50	686
55	792

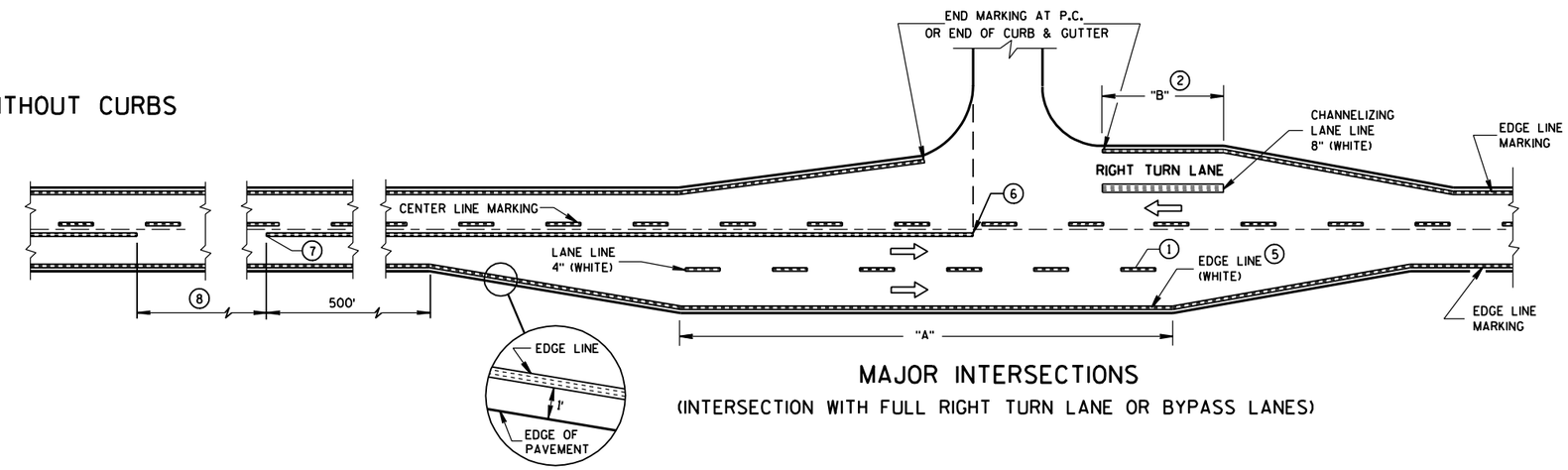

MAJOR INTERSECTIONS
(INTERSECTION WITH FULL RIGHT TURN LANE OR BYPASS LANES)

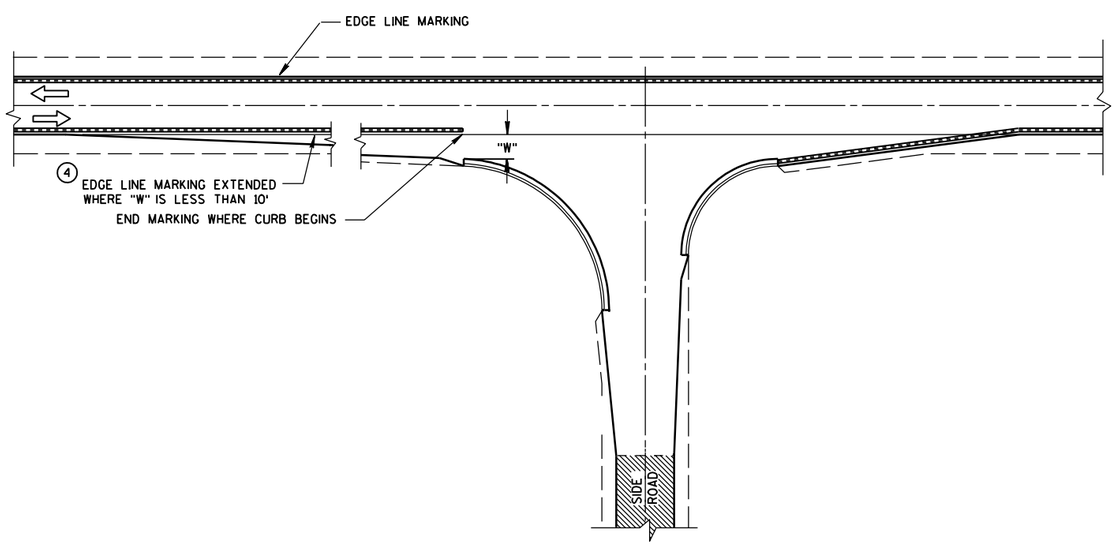

MINOR INTERSECTION WITH CURBS
(TYPICAL MARKING)

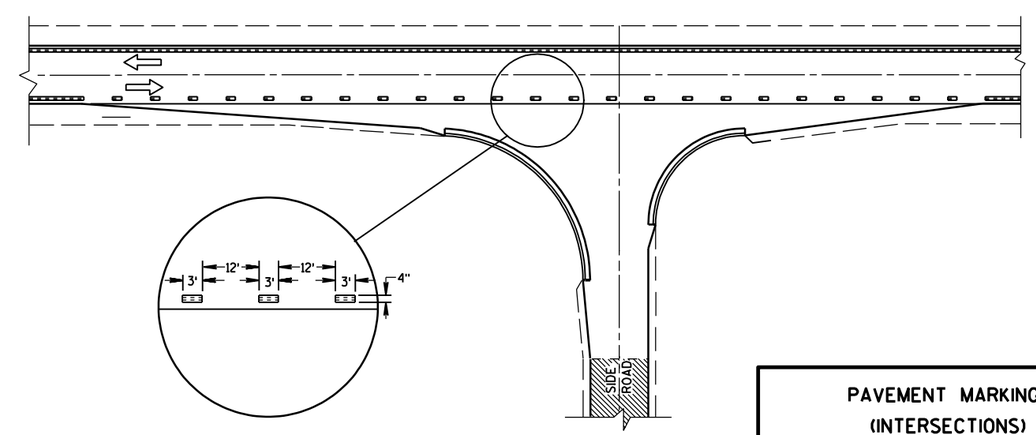

MINOR INTERSECTION WITH CURBS
3 (FOR SPECIAL CONDITIONS AS SPECIFIED)

PAVEMENT MARKING
(INTERSECTIONS)

STATE OF WISCONSIN
DEPARTMENT OF TRANSPORTATION

APPROVED
3/15/05
DATE
Thomas N. Notbohm
STATE TRAFFIC ENGINEER OF DESIGN
FHWA

6

S.D.D. 15 C 8-10b

6

S.D.D. 15 C 8-10b

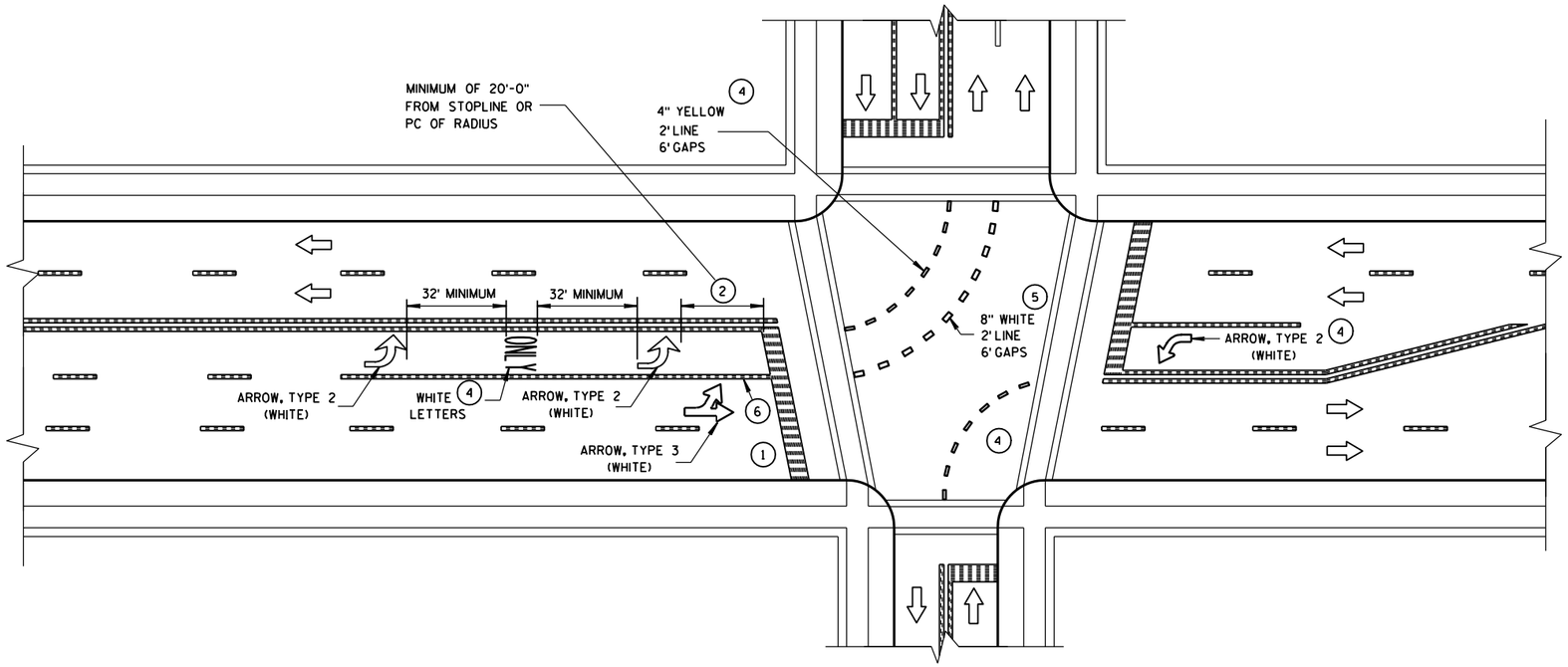

GENERAL NOTES

1. STOP BAR IS REQUIRED ONLY WHEN SPECIFIED IN THE CONTRACT.
2. DISTANCE MAY BE ADJUSTED TO ACCOMODATE SHORT LEFT TURN LANES. AS APPROVED BY THE ENGINEER.
3. A SET OF ARROWS IS REQUIRED EVERY 400' OR NEAR INTERSECTIONS OR DRIVEWAYS WITH TURNING TRAFFIC.
4. REQUIRED ONLY WHEN SPECIFIED IN THE CONTRACT.
5. 8" WHITE WITH 2' LINE 6' GAPS FOR DUAL TURN LANE.
6. 8" WHITE

NOTE:
ARROW SYMBOL (⇨)
SHOWS DIRECTION OF TRAVEL

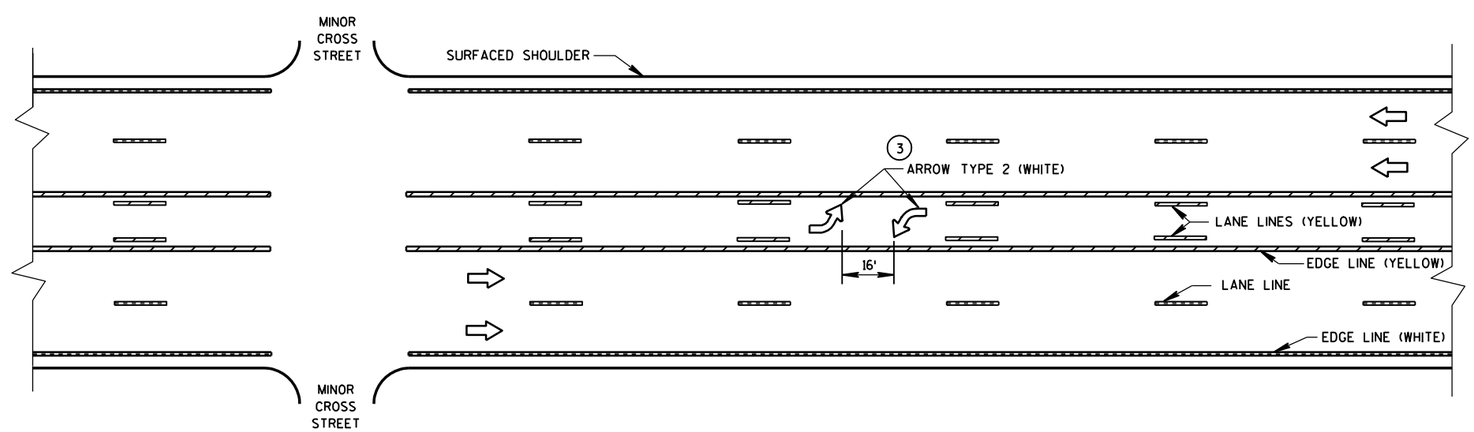

TWO WAY LEFT TURN LANE

PAVEMENT MARKING (LEFT TURN LANE)	
STATE OF WISCONSIN DEPARTMENT OF TRANSPORTATION	
APPROVED 2/24/09 DATE	/S/ Thomas N. Notbohm STATE TRAFFIC ENGINEER OF DESIGN
FHWA	

6

S.D.D. 15 C 8-11d

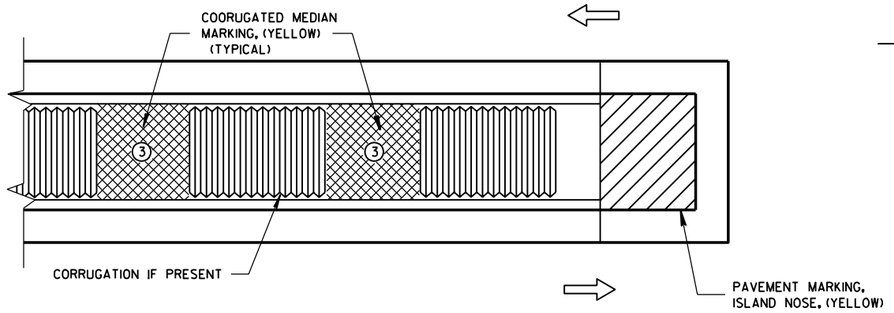

MEDIAN ISLAND WITH SQUARE BLUNT NOSE

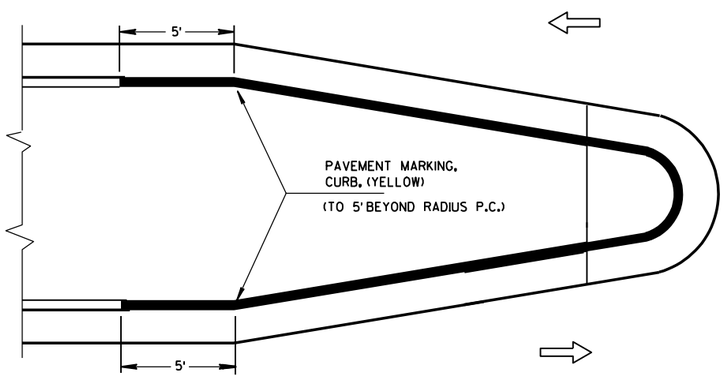

MEDIAN ISLAND WITH ROUND BLUNT NOSE

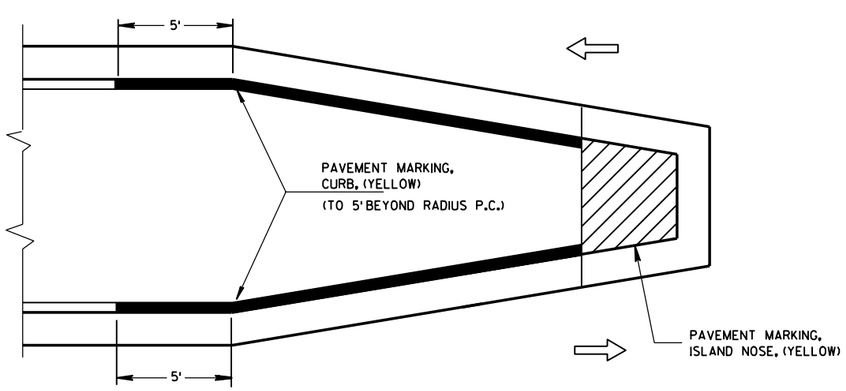

MEDIAN ISLAND WITH SLOPED NOSE

TYPICAL PLACEMENT OF PAVEMENT MARKING ON MEDIAN ISLANDS

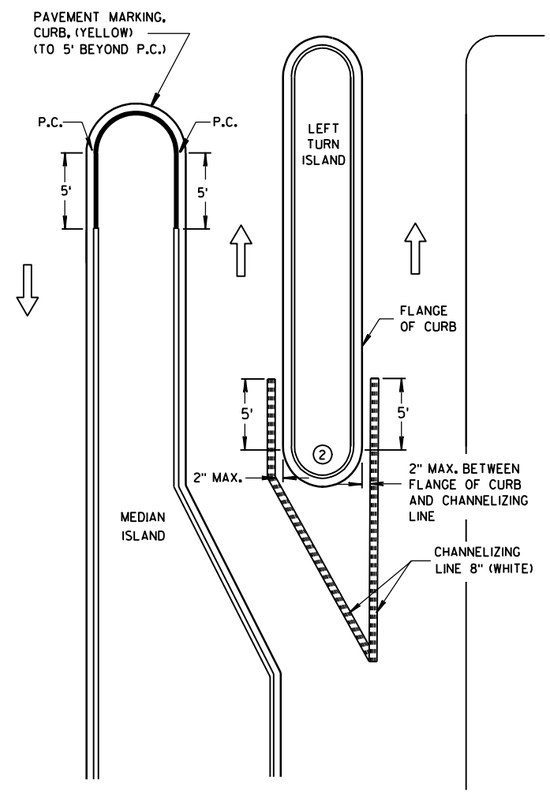

LEFT TURN & MEDIAN ISLAND

GENERAL NOTES

1. STOP LINE IS REQUIRED ONLY WHEN SPECIFIED IN THE CONTRACT.
2. DO NOT MARK CURB NOSES THAT SEPARATE LANES OF TRAFFIC TRAVELING IN THE SAME DIRECTION.
3. WHEN CONCRETE CORRUGATED MEDIAN IS CONSTRUCTED TO SEPARATE TRAFFIC OPERATING IN THE OPPOSING DIRECTION YELLOW PAVEMENT MARKING SHALL BE APPLIED TO THE FLAT PORTION OF THE CONCRETE CORRUGATED MEDIAN. THE ITEM OF PAVEMENT MARKING, CONCRETE CORRUGATED MEDIAN, WILL BE MEASURED IN PLACE AND AND ACCEPTED IN ACCORDANCE WITH THE CONTRACT AND PAID FOR AT THE CONTRACT UNIT PRICE PER SQUARE FOOT.

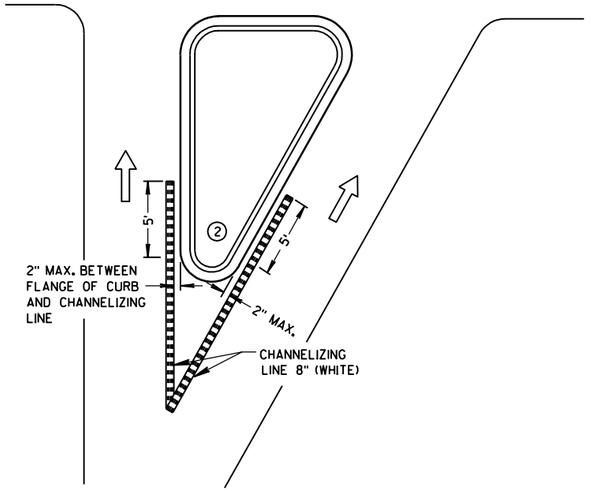

RIGHT TURN ISLAND

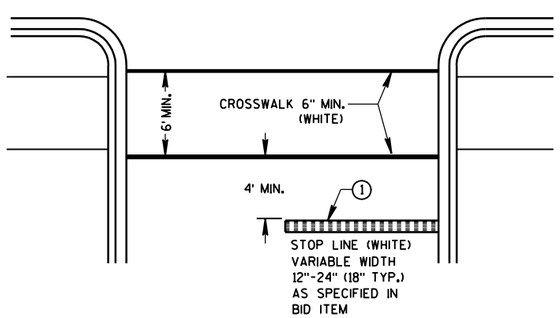

STOP LINE AND CROSSWALK

LEGEND

- ISLAND NOSE MARKING
- CURB MAKING
- CORRUGATED MEDIAN MARKING
- DIRECTION OF TRAVEL

PAVEMENT MARKING (ISLANDS, STOP LINE & CROSS WALK)

STATE OF WISCONSIN
DEPARTMENT OF TRANSPORTATION

APPROVED
9-21-07 — DATE
/S/ Thomas N. Notbohm — STATE TRAFFIC ENGINEER OF DESIGN
FHWA

6

S.D.D. 15 C 8-11e

6

S.D.D. 15 C 8-11e

TWO-LANE ROADWAY

SYMBOLS

- WORK AREA
- FLAGGER, EQUIPPED WITH STOP/SLOW PADDLE FASTENED ON SUPPORT STAFF
- SIGN ON PORTABLE OR PERMANENT SUPPORT

USE OF THE "BE PREPARED TO STOP" SIGN IS OPTIONAL. WHEN USED, THIS SIGN SHALL BE LOCATED BETWEEN THE W20-7a AND W20-4 SIGNS. A 500' TYPICAL SPACING SHALL BE PROVIDED BETWEEN THE SIGNS.

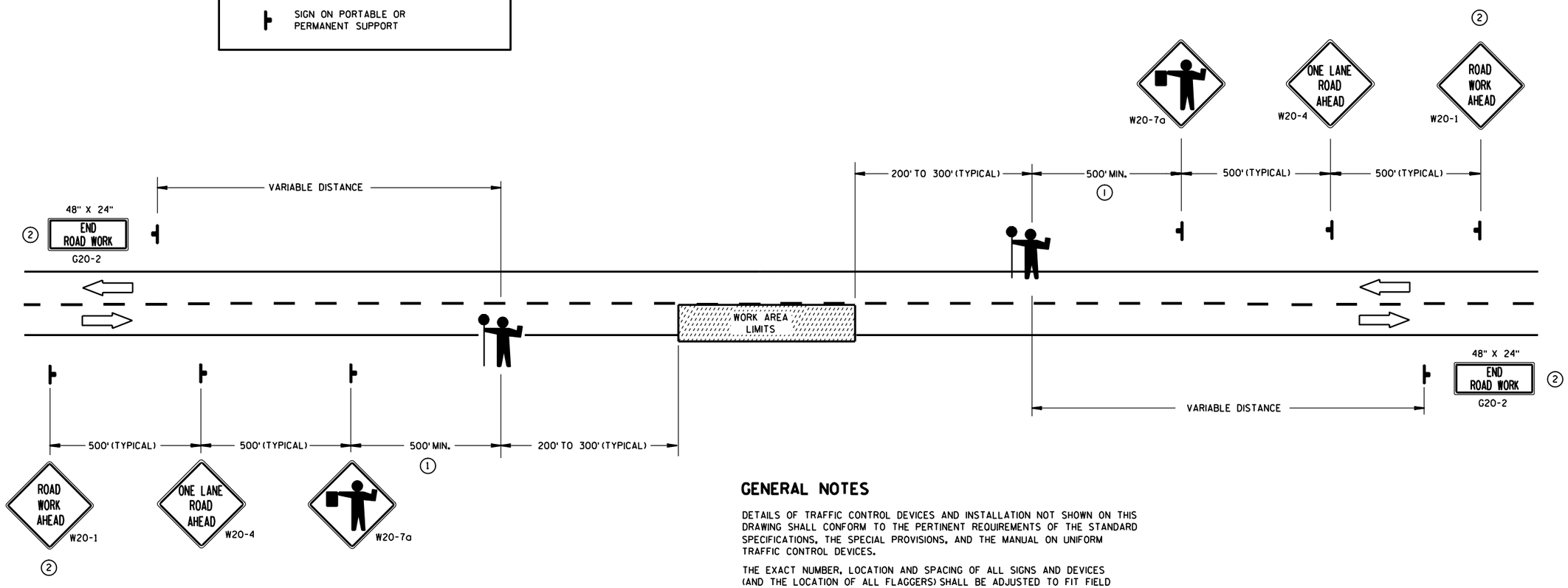

1. FOR A MOVING WORK OPERATION, SIGNING FOR BOTH DIRECTIONS SHALL BE REESTABLISHED (AS SIMULTANEOUSLY AS PRACTICAL) AT APPROXIMATELY 3500 FOOT INTERVALS IN THE MOVING WORK OPERATION OR AS APPROVED BY THE ENGINEER.

2. SIGN NOT REQUIRED IF FLAGGING OPERATION OCCURS WITHIN A SIGNED ROAD WORK ZONE AREA.

GENERAL NOTES

DETAILS OF TRAFFIC CONTROL DEVICES AND INSTALLATION NOT SHOWN ON THIS DRAWING SHALL CONFORM TO THE PERTINENT REQUIREMENTS OF THE STANDARD SPECIFICATIONS, THE SPECIAL PROVISIONS, AND THE MANUAL ON UNIFORM TRAFFIC CONTROL DEVICES.

THE EXACT NUMBER, LOCATION AND SPACING OF ALL SIGNS AND DEVICES (AND THE LOCATION OF ALL FLAGGERS) SHALL BE ADJUSTED TO FIT FIELD CONDITIONS AS APPROVED BY THE ENGINEER.

THE FIRST ADVANCE WARNING SIGN SHOULD TYPICALLY BE LOCATED IN ADVANCE OF THE ANTICIPATED TRAFFIC BACKUP OR QUEUE.

WHEN A SIDE ROAD OR RAMP INTERSECTS THE FACILITY ON WHICH THE WORK IS BEING PERFORMED, ADDITIONAL TRAFFIC CONTROLS SHALL BE PROVIDED AS SPECIFIED IN THE PLANS AND/OR THE SPECIAL PROVISIONS OR AS APPROVED BY THE ENGINEER.

FLAGGERS SHALL BE IN SIGHT OF EACH OTHER OR IN DIRECT COMMUNICATION AT ALL TIMES. THEY SHALL BE EQUIPPED WITH STOP/SLOW PADDLES FASTENED ON SUPPORT STAFFS. WHEN THE FLAGGING OPERATION IS NOT IN EFFECT, THE "FLAGGER AHEAD", THE "ROAD WORK AHEAD" AND THE ONE LANE ROAD AHEAD" SIGNS SHALL BE COVERED OR REMOVED AND THE HIGHWAY RESTORED TO NORMAL OPERATION.

ALL SIGNS ARE 48" X 48" UNLESS OTHERWISE NOTED.

TRAFFIC CONTROL FOR LANE CLOSURE (SUITABLE FOR MOVING OPERATIONS)

STATE OF WISCONSIN
DEPARTMENT OF TRANSPORTATION

APPROVED
9/5/06 — DATE
/S/ Thomas N. Notbohm — STATE TRAFFIC ENGINEER OF DESIGN
FHWA

6

S.D.D. 15 C 12-3

6

S.D.D. 15 C 12-3

LEGEND

- POST WITH ATTACHED SIGN
- DRUM WITH WARNING LIGHT (TYPE C)
- DRUM
- ARROW BOARD
- REMOVING PAVEMENT MARKING
- TEMPORARY PRECAST CONCRETE BARRIER
- DIRECTION OF TRAFFIC
- WORK ZONE

GENERAL NOTES :

THIS LANE CLOSURE IS TYPICAL FOR CLOSING RIGHT LANE - REVERSE FOR CLOSING LEFT LANE.

THE EXACT NUMBER, LOCATION, AND SPACING OF ALL SIGNS AND DEVICES SHALL BE ADJUSTED TO FIT FIELD CONDITIONS AS APPROVED BY THE ENGINEER.

THE SPACING BETWEEN SIGNS SHOULD BE ADJUSTED TO NOT CONFLICT WITH AND TO PROVIDE A MINIMUM OF 200 FEET, (500 FEET DESIRABLE) CLEARANCE TO EXISTING SIGNS.

ALL SIGNS ARE 48"×48" UNLESS OTHERWISE NOTED.

"WO" IS THE SAME AS "W" EXCEPT THE BACKGROUND IS ORANGE.

ANY SIGNS TEMPORARY OR EXISTING, WHICH CONFLICT WITH TRAFFIC CONTROL "IN USE" SHALL BE REMOVED OR COVERED AS NEEDED AND AS APPROVED BY THE ENGINEER.

(1) CONSIDER ROADWAY GEOMETRICS WHEN LOCATING SIGNS AND ARROW BOARD SO THE DRIVER HAS A CLEAR VIEW OF THE ARROW BOARD AND LANE CLOSURE DRUMS FOR A MINIMUM 1500 FEET IN FRONT OF DRUMS.

FOR A LANE CLOSURE THAT IS IN PLACE LESS THAN 7 CONTINUOUS DAYS AND NIGHTS, THE ADVANCED WARNING SIGNS MAY BE MOUNTED ON PORTABLE SUPPORTS.

REMOVE PAVEMENT MARKINGS IF LANE CLOSURE IS TO BE IN PLACE FOR LONGER THAN 7 CONTINUOUS DAYS AND NIGHTS.

IF THE HORIZONTAL ALIGNMENT IS SUCH THAT A CURVE MAY REQUIRE ADDITIONAL DELINEATION, THE DEVICE SPACING MAY BE DECREASED TO 50 FEET.

ADJUSTMENTS IN BUFFER SPACE NEED TO BE INCORPORATED WHEN THE LANE CLOSURE OCCURS NEAR AN INTERCHANGE EXIT OR ENTRANCE RAMP OR INTERSECTION. THE LANE CLOSURE MUST TAKE PLACE FAR ENOUGH IN ADVANCE OF AN EXIT OR ENTRANCE RAMP TO STILL ALLOW FOR ADEQUATE BUFFER SPACE. THE MINIMUM LENGTH OF THE BUFFER SPACE BEFORE AN EXIT RAMP SHOULD BE 1/2 THE LENGTH OF THE TRANSITION AREA. THE ENTRANCE RAMP SHOULD BE FOLLOWED BY THE ORIGINAL BUFFER SPACE LENGTH OF 800 FEET DESIRABLE PRIOR TO ANOTHER TRAFFIC CONTROL CHANGE SUCH AS A CROSSOVER MANEUVER.

NO EQUIPMENT OR MATERIAL SHALL BE LOCATED WITHIN THE WORK ZONE OTHER THAN BEHIND THE PRECAST CONCRETE BARRIER.

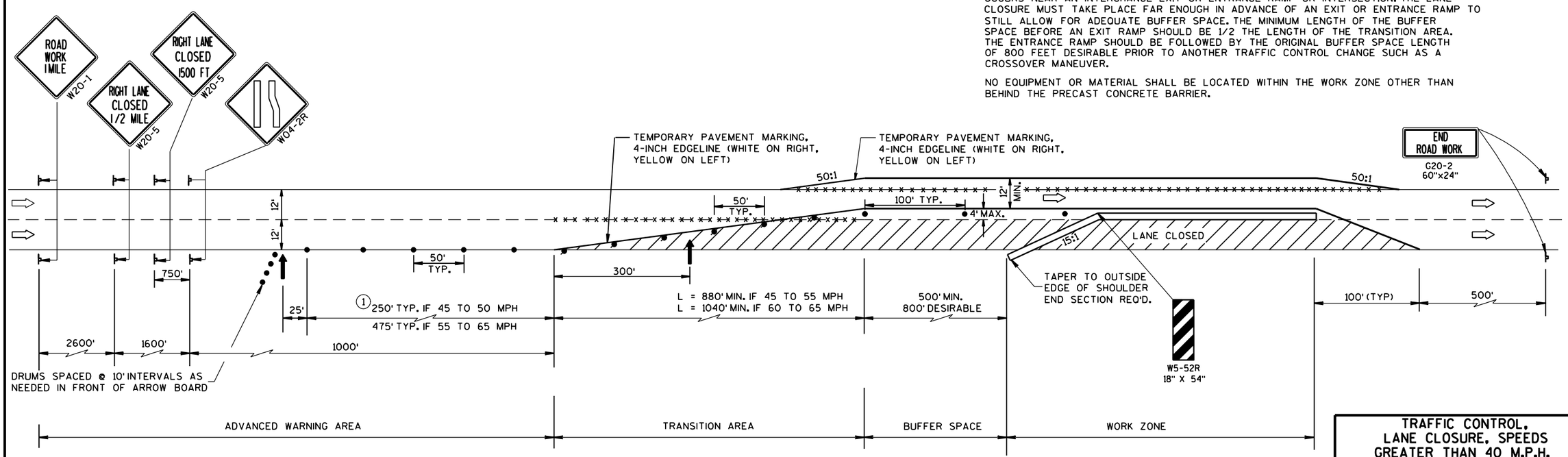

TRAFFIC CONTROL, LANE CLOSURE, SPEEDS GREATER THAN 40 M.P.H. WITH BARRIER

STATE OF WISCONSIN
DEPARTMENT OF TRANSPORTATION

APPROVED
7-14-94
DATE
FHWA

Charles J. Spong
for DIRECTOR, OFFICE OF TRAFFIC

6

S.D.D. 15 D 3-1

6

S.D.D. 15 D 3-1

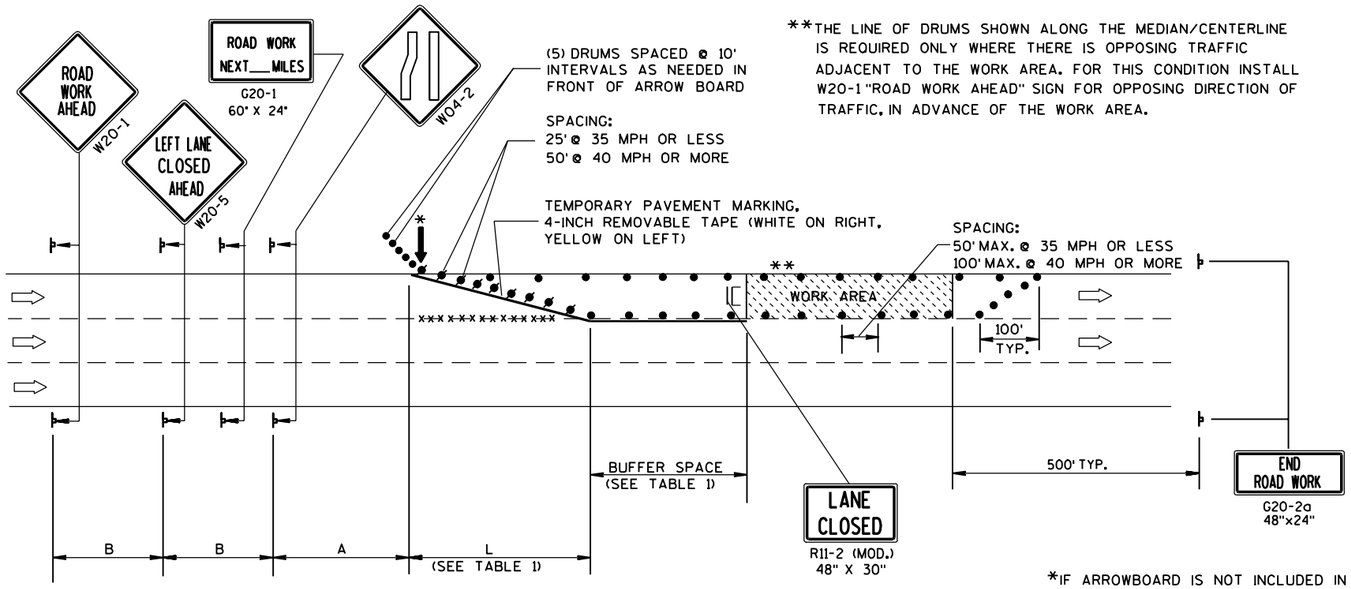

**THE LINE OF DRUMS SHOWN ALONG THE MEDIAN/CENTERLINE IS REQUIRED ONLY WHERE THERE IS OPPOSING TRAFFIC ADJACENT TO THE WORK AREA. FOR THIS CONDITION INSTALL W20-1 "ROAD WORK AHEAD" SIGN FOR OPPOSING DIRECTION OF TRAFFIC, IN ADVANCE OF THE WORK AREA.

B=400' AT 25-30 MPH
700' AT 35-40 MPH
1000' AT 45-55 MPH

A=200' AT 25-30 MPH
350' AT 35-40 MPH
500' AT 45-55 MPH

(PLACE BARRICADE AND SIGN APPROX. EVERY 1000' ACROSS THE CLOSED LANE)

*IF ARROWBOARD IS NOT INCLUDED IN MISCELLANEOUS QUANTITIES, SUBSTITUTE A TYPE III BARRICADE WITH W01-6 SIGN IN THE LANE CLOSURE TAPER.

W01-6
48"x24"

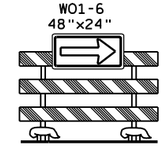

TABLE 1
TAPER AND BUFFER SPACE
FOR 12' LANE WIDTH

S	L	BUFFER SPACE
25	125'	55'
30	180'	85'
35	245'	120'
40	320'	170'
45	540'	220'
50	600'	280'
55	660'	335'

FOR LANE WIDTH OTHER THAN 12':

L = WS AT 45 MPH OR GREATER

$L = \frac{WS^2}{60}$ AT 40 MPH OR LESS

L = TAPER LENGTH IN FEET

S = NON-CONSTRUCTION SPEED LIMIT (MPH)

W = WIDTH OF LANE CLOSURE

LEGEND

- DRUM WITH/WITHOUT WARNING LIGHT, TYPE C (STEADY-BURN)
- POST MOUNTED SIGN
- ARROW BOARD
- TYPE III BARRICADE (8' EQUIVALENT) AND WARNING LIGHTS, TYPE A (FLASHING) WITH/WITHOUT SIGN
- DIRECTION OF TRAFFIC FLOW
- xxxx REMOVING PAVEMENT MARKING (SEE GENERAL NOTES)

GENERAL NOTES

THIS LANE CLOSURE DETAIL IS TYPICAL FOR CLOSING THE LEFT LANE. FOR A RIGHT LANE CLOSURE, REVERSE THE TRAFFIC CONTROL.

THIS DETAIL MAY BE USED FOR ROADWAYS WITH EITHER TWO OR THREE LANES IN EACH DIRECTION.

THE EXACT NUMBER, LOCATION, AND SPACING OF ALL SIGNS AND DEVICES SHALL BE ADJUSTED TO FIT FIELD CONDITIONS AS APPROVED BY THE ENGINEER.

THE SPACING BETWEEN TRAFFIC CONTROL SIGNS SHOULD BE ADJUSTED TO NOT CONFLICT WITH AND SHOULD PROVIDE A DESIRABLE MINIMUM OF 200 FEET CLEARANCE TO EXISTING SIGNS THAT WILL REMAIN IN PLACE.

ALL SIGNS ARE 48"x48" UNLESS OTHERWISE NOTED. IF NECESSARY DUE TO SPACE CONSTRAINTS IN URBAN AREAS, 36" X 36" SIGNS MAY BE USED IF APPROVED BY DISTRICT TRAFFIC UNIT.

"WO" SIGNS ARE THE SAME AS "W" SIGNS EXCEPT THE BACKGROUND IS ORANGE.

SIGNS THAT WILL BE IN PLACE LESS THAN 7 CONTINUOUS DAYS AND NIGHTS, OR THAT WILL BE PLACED IN A CLOSED LANE, MAY BE MOUNTED ON PORTABLE SUPPORTS.

ANY SIGNS TEMPORARY OR EXISTING, WHICH CONFLICT WITH TRAFFIC CONTROL "IN USE" SHALL BE REMOVED OR COVERED AS NEEDED AND AS APPROVED BY THE ENGINEER.

REMOVE PAVEMENT MARKINGS AND PLACE TEMPORARY PAVEMENT MARKING, REMOVABLE TAPE IF LANE CLOSURE IS TO BE IN PLACE FOR 7 OR MORE CONTINUOUS DAYS AND NIGHTS.

ON UNDIVIDED ROADWAYS, OMIT THE SIGNS SHOWN ON LEFT SIDE OF ROAD.

W20-1, G20-1 AND G20-2A SIGNS ARE NOT REQUIRED IF THE LANE CLOSURE IS WITHIN A LARGER WORK ZONE WHERE THESE SIGNS ARE ALREADY PRESENT.

OMIT G20-1 SIGNS IF LENGTH OF WORK AREA IS 2 MILES OR LESS.

CONSIDER GEOMETRICS WHEN LOCATING SIGNS AND ARROWBOARDS SO THE APPROACHING DRIVER HAS A CLEAR VIEW OF THE ARROWBOARDS AND LANE CLOSURE DRUMS.

PLACE THE ARROWBOARD AS CLOSE AS POSSIBLE TO THE BEGINNING OF THE LANE CLOSURE TAPER, PREFERABLY ON THE SHOULDER OR TERRACE.

CHANNELIZING DEVICES PLACED ADJACENT TO WORK AREA SHALL BE PULLED BACK FROM THE TRAVEL LANE WHEN WORK IS NOT IN PROGRESS.

BARRICADES IN A CLOSED LANE THAT MUST BE MOVED FOR A WORK OPERATION SHALL BE IMMEDIATELY RE-ESTABLISHED UPON COMPLETION OF THE OPERATION OR, FOR CONTINUING OPERATIONS, AT THE END OF EACH WORKING DAY.

WARNING LIGHTS ARE NOT REQUIRED IF THE LANE CLOSURE IS A DAYTIME ONLY OPERATION.

TRAFFIC CONTROL,
SINGLE LANE CLOSURE,
NON-FREEWAY/EXPRESSWAY

STATE OF WISCONSIN
DEPARTMENT OF TRANSPORTATION

APPROVED
5/23/00
DATE

Clinton J. Sparks
CHIEF SIGNS AND MARKING ENGINEER

FHWA

6

S.D.D. 15 D 20-1

6

S.D.D. 15 D 20-1

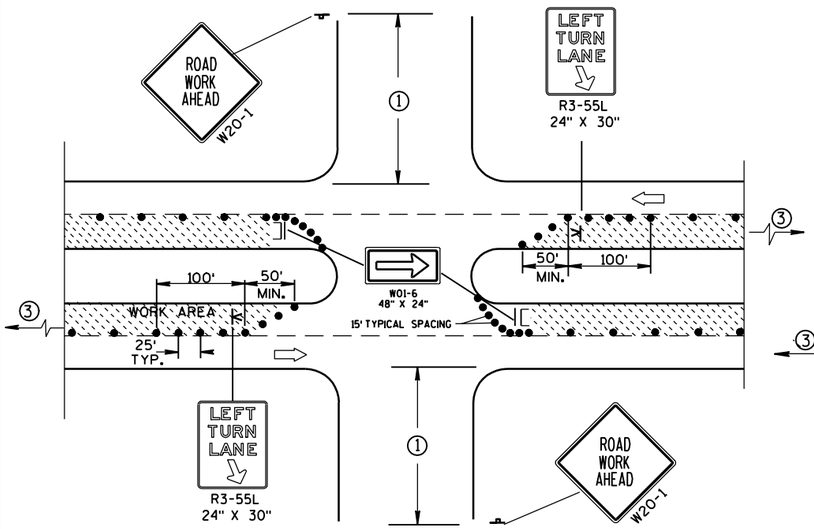

DETAIL A

FOR LEFT LANE CLOSURE AT INTERSECTION OR MEDIAN OPENING

PROVIDE TURN LANES AT INTERSECTIONS WHENEVER STAGING OF WORK ALLOWS. TAPER AND TURN LANE LENGTHS BASED ON FIELD CONDITIONS AS APPROVED BY THE ENGINEER.

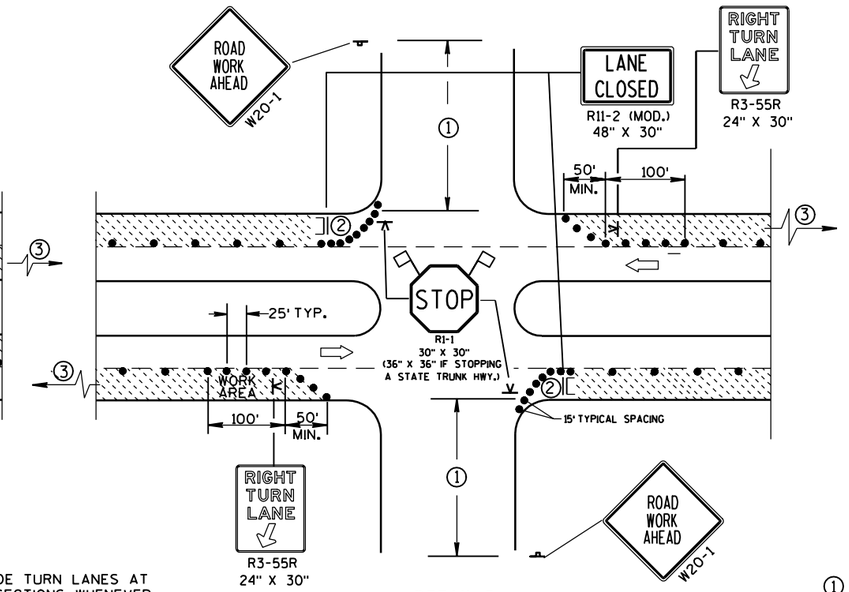

DETAIL B

FOR RIGHT LANE CLOSURE AT INTERSECTION

GENERAL NOTES

THE EXACT NUMBER, LOCATION, AND SPACING OF ALL SIGNS AND DEVICES SHALL BE ADJUSTED TO FIT FIELD CONDITIONS AS APPROVED BY THE ENGINEER.

THE SPACING BETWEEN SIGNS SHOULD BE ADJUSTED TO NOT CONFLICT WITH AND SHOULD PROVIDE A DESIRABLE MINIMUM OF 200 FEET CLEARANCE TO EXISTING SIGNS THAT WILL REMAIN IN PLACE.

ALL SIGNS ARE 48"x48" UNLESS OTHERWISE NOTED. IF NECESSARY DUE TO SPACE CONSTRAINTS IN URBAN AREAS, 36" X 36" SIGNS MAY BE USED IF APPROVED BY DISTRICT TRAFFIC UNIT.

"WO" SIGNS ARE THE SAME AS "W" SIGNS EXCEPT THE BACKGROUND IS ORANGE.

SIGN LAYOUTS SHALL BE IN ACCORDANCE WITH THE FHWA'S MANUAL OF STANDARD HIGHWAY SIGNS OR THE WISCONSIN STANDARD SIGN PLATES.

SIGNS THAT WILL BE IN PLACE LESS THAN 7 CONTINUOUS DAYS AND NIGHTS, OR THAT WILL BE PLACED IN A CLOSED LANE, MAY BE MOUNTED ON PORTABLE SUPPORTS.

ANY SIGNS TEMPORARY OR EXISTING, WHICH CONFLICT WITH TRAFFIC CONTROL "IN USE" SHALL BE REMOVED OR COVERED AS NEEDED AND AS APPROVED BY THE ENGINEER.

CHANNELIZING DEVICES PLACED ADJACENT TO WORK AREA SHALL BE PULLED BACK FROM THE TRAVEL LANE WHEN WORK IS NOT IN PROGRESS.

BARRICADES IN A CLOSED LANE THAT MUST BE MOVED FOR A WORK OPERATION SHALL BE IMMEDIATELY RE-ESTABLISHED UPON COMPLETION OF THE OPERATION OR, FOR CONTINUING OPERATIONS, AT THE END OF EACH WORKING DAY.

① 500' TYPICAL OR AT LAST INTERSECTION, WHICHEVER IS CLOSER.
350' IF 35-40 MPH.
200' IF 25-30 MPH.

② ALSO USE BARRICADE AND 15' TYPICAL DRUM SPACING AT COMMERCIAL DRIVEWAYS.

③ SEE SEPARATE LANE CLOSURE DETAIL FOR ADDITIONAL TRAFFIC CONTROL.

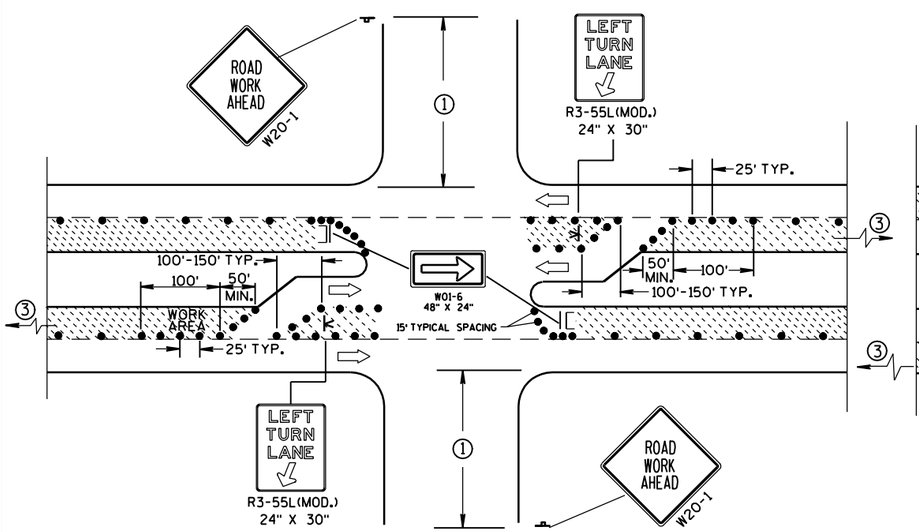

DETAIL C

FOR LEFT LANE CLOSURE AT INTERSECTION OR MEDIAN OPENING (WITH LEFT TURN BAY OPEN)

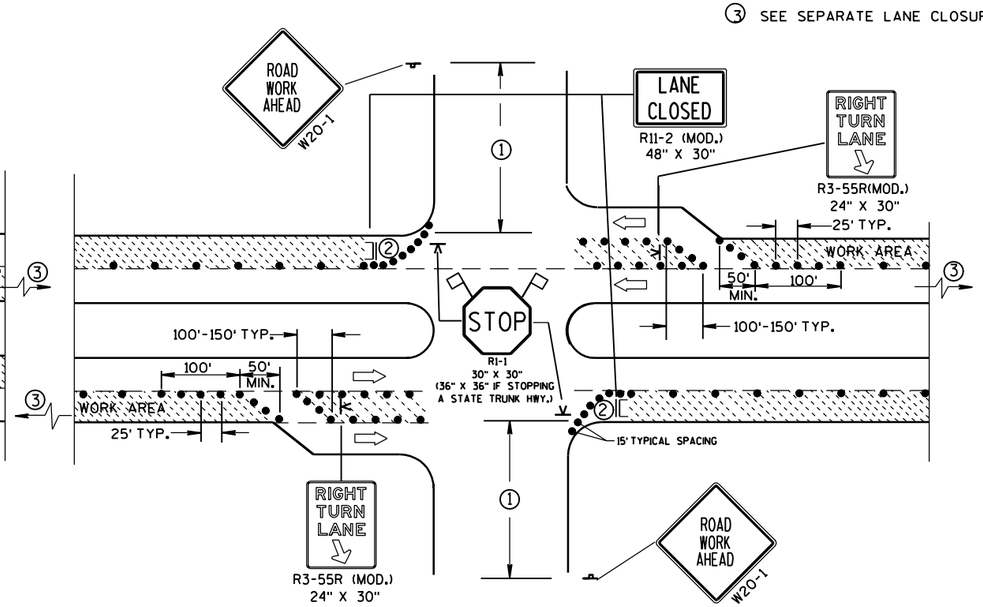

DETAIL D

FOR RIGHT LANE CLOSURE AT INTERSECTION (WITH RIGHT TURN BAY OPEN)

LEGEND

- ● DRUM
- POST MOUNTED SIGN
- SIGN ON PORTABLE SUPPORT (5' MIN. MOUNTING HEIGHT)
- TYPE III BARRICADE (8' EQUIVALENT) AND WARNING LIGHT, TYPE A (FLASHING) WITH SIGN
- DIRECTION OF TRAFFIC FLOW
- FLAGS, 16" X 16" MIN., ORANGE

TRAFFIC CONTROL, INTERSECTION WITHIN SINGLE LANE CLOSURE

STATE OF WISCONSIN
DEPARTMENT OF TRANSPORTATION

APPROVED
5/23/00 — DATE
/S/ Chester J. Spang — CHIEF SIGNS AND MARKING ENGINEER
FHWA

6

S.D.D. 15 D 21-1

TABLE 1
TAPER AND BUFFER SPACE
FOR 12' LANE WIDTH

S	L	BUFFER SPACE
25	125'	55'
30	180'	85'
35	245'	120'
40	320'	170'
45	540'	220'
50	600'	280'
55	660'	335'

FOR LANE WIDTH OTHER THAN 12':

L = WS AT 45 MPH OR GREATER

$L = \frac{WS^2}{60}$ AT 40 MPH OR LESS

L = TAPER LENGTH IN FEET

S = NON-CONSTRUCTION SPEED LIMIT (MPH)

W = WIDTH OF LANE CLOSURE

LEGEND

- DRUM WITH/WITHOUT WARNING LIGHT, TYPE C (STEADY-BURN)
- POST MOUNTED SIGN
- SIGN ON PORTABLE SUPPORT
- ARROW BOARD
- TYPE III BARRICADE (8' EQUIVALENT) AND WARNING LIGHTS, TYPE A (FLASHING) WITH/WITHOUT SIGN
- DIRECTION OF TRAFFIC FLOW
- xxxx REMOVING PAVEMENT MARKING (SEE GENERAL NOTES)

GENERAL NOTES

THIS DETAIL IS TYPICAL FOR CLOSING THE RIGHT TWO LANES. FOR CLOSING THE LEFT TWO LANES, REVERSE THE TRAFFIC CONTROL.

THE EXACT NUMBER, LOCATION, AND SPACING OF ALL SIGNS AND DEVICES SHALL BE ADJUSTED TO FIT FIELD CONDITIONS AS APPROVED BY THE ENGINEER.

THE SPACING BETWEEN SIGNS SHOULD BE ADJUSTED TO NOT CONFLICT WITH AND SHOULD PROVIDE A DESIRABLE MINIMUM OF 200 FEET CLEARANCE TO EXISTING SIGNS THAT WILL REMAIN IN PLACE.

ALL SIGNS ARE 48"x48" UNLESS OTHERWISE NOTED. IF NECESSARY DUE TO SPACE CONSTRAINTS IN URBAN AREAS, 36" X 36" SIGNS MAY BE USED IF APPROVED BY THE DISTRICT TRAFFIC UNIT.

"WO" SIGNS ARE THE SAME AS "W" SIGNS EXCEPT THE BACKGROUND IS ORANGE.

SIGNS THAT WILL BE IN PLACE LESS THAN 7 CONTINUOUS DAYS AND NIGHTS, OR THAT WILL BE PLACED IN A CLOSED LANE, MAY BE MOUNTED ON PORTABLE SUPPORTS.

ANY SIGNS TEMPORARY OR EXISTING, WHICH CONFLICT WITH TRAFFIC CONTROL "IN USE" SHALL BE REMOVED OR COVERED AS NEEDED AND AS APPROVED BY THE ENGINEER.

REMOVE PAVEMENT MARKINGS AND PLACE TEMPORARY PAVEMENT MARKING, REMOVABLE TAPE IF LANE CLOSURE IS TO BE IN PLACE FOR 7 OR MORE CONTINUOUS DAYS AND NIGHTS.

W20-1, G20-1 AND G20-2A SIGNS ARE NOT REQUIRED IF THE LANE CLOSURE IS WITHIN A LARGER WORK ZONE WHERE THESE SIGNS ARE ALREADY PRESENT.

OMIT G20-1 SIGNS IF LENGTH OF WORK AREA IS 2 MILES OR LESS.

CONSIDER GEOMETRICS WHEN LOCATING SIGNS AND ARROWBOARDS SO THE APPROACHING DRIVER HAS A CLEAR VIEW OF THE ARROWBOARDS AND LANE CLOSURE DRUMS.

WHERE THE SHOULDER OR TERRACE HAS INSUFFICIENT SPACE TO LOCATE THE ARROWBOARD AS SHOWN, PLACE THE ARROWBOARD IN THE LANE CLOSURE TAPER AS CLOSE AS POSSIBLE TO THE BEGINNING OF THE TAPER.

CHANNELIZING DEVICES PLACED ADJACENT TO WORK AREA SHALL BE PULLED BACK FROM THE TRAVEL LANE WHEN WORK IS NOT IN PROGRESS.

BARRICADES IN A CLOSED LANE THAT MUST BE MOVED FOR A WORK OPERATION SHALL BE IMMEDIATELY RE-ESTABLISHED UPON COMPLETION OF THE OPERATION OR, FOR CONTINUING OPERATIONS, AT THE END OF EACH WORKING DAY.

WARNING LIGHTS ARE NOT REQUIRED IF THE LANE CLOSURE IS A DAYTIME ONLY OPERATION.

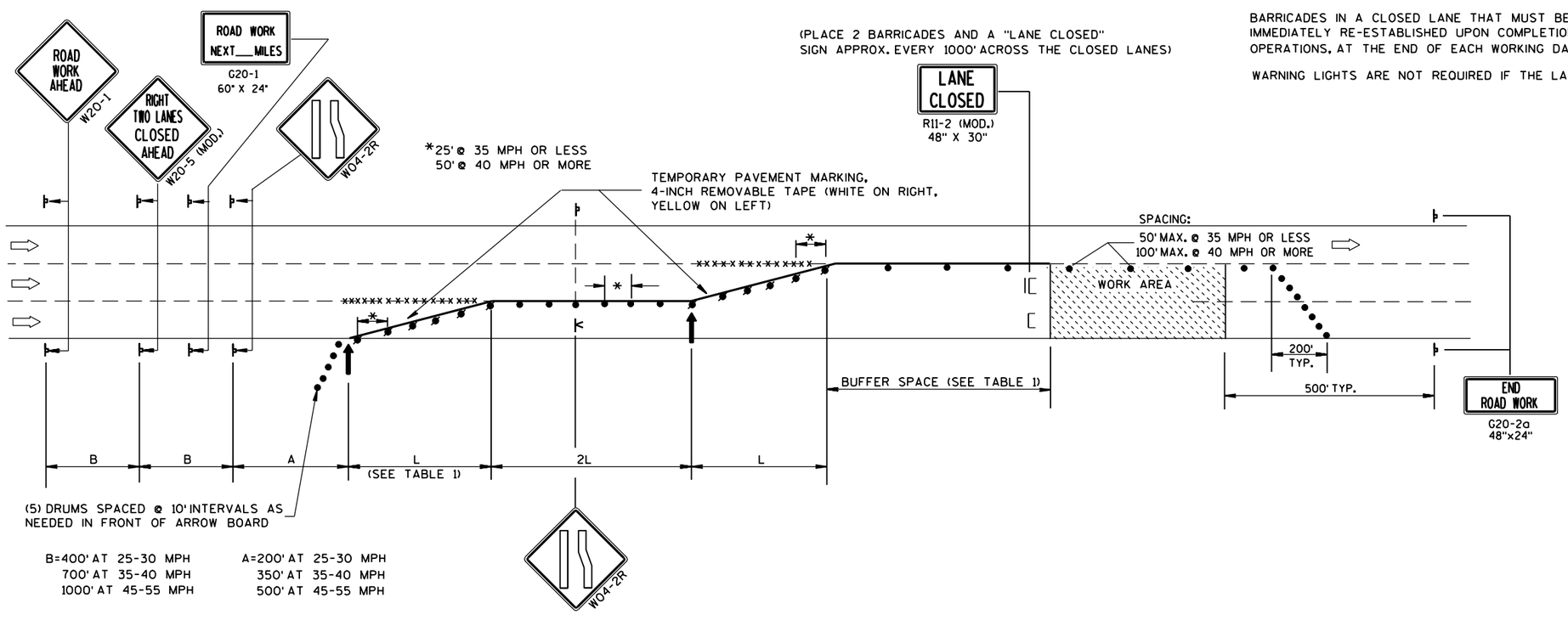

B=400' AT 25-30 MPH
700' AT 35-40 MPH
1000' AT 45-55 MPH

A=200' AT 25-30 MPH
350' AT 35-40 MPH
500' AT 45-55 MPH

TRAFFIC CONTROL,
TWO LANE CLOSURE,
NON-FREEWAY/EXPRESSWAY

STATE OF WISCONSIN
DEPARTMENT OF TRANSPORTATION

APPROVED
5/23/00
DATE
Clinton J. Sparg
CHIEF SIGNS AND MARKING ENGINEER
FHWA

6

S.D.D. 15 D 22-1

6

S.D.D. 15 D 22-1

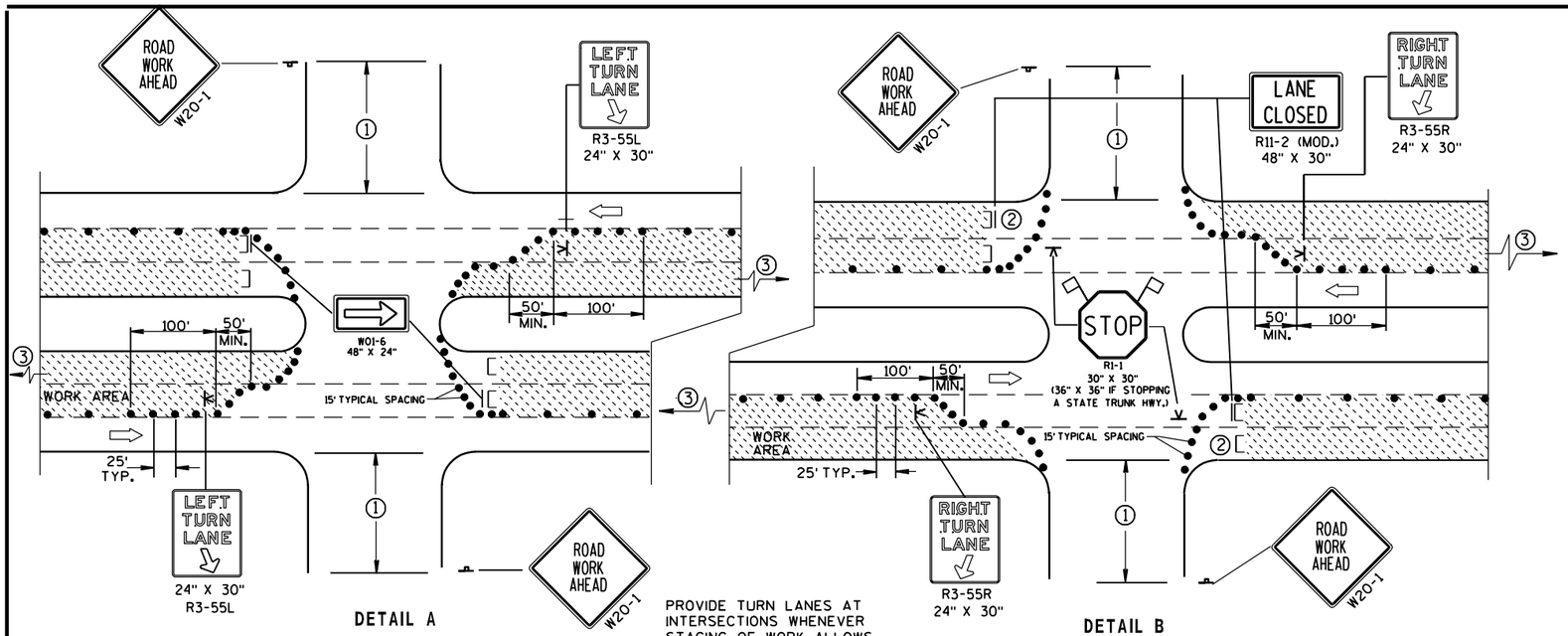

DETAIL A

FOR LEFT TWO LANES CLOSED AT INTERSECTION OR MEDIAN BREAK

PROVIDE TURN LANES AT INTERSECTIONS WHENEVER STAGING OF WORK ALLOWS. TAPER AND TURN LANE LENGTHS BASED ON FIELD CONDITIONS AS APPROVED BY THE ENGINEER.

DETAIL B

FOR RIGHT TWO LANES CLOSED AT INTERSECTION

GENERAL NOTES

THE EXACT NUMBER, LOCATION, AND SPACING OF ALL SIGNS AND DEVICES SHALL BE ADJUSTED TO FIT FIELD CONDITIONS AS APPROVED BY THE ENGINEER.

THE SPACING BETWEEN SIGNS SHOULD BE ADJUSTED TO NOT CONFLICT WITH AND SHOULD PROVIDE A DESIRABLE MINIMUM OF 200 FEET CLEARANCE TO EXISTING SIGNS THAT WILL REMAIN IN PLACE.

ALL SIGNS ARE 48"×48" UNLESS OTHERWISE NOTED. IF NECESSARY DUE TO SPACE CONSTRAINTS IN URBAN AREAS, 36" X 36" SIGNS MAY BE USED IF APPROVED BY DISTRICT TRAFFIC UNIT.

SIGN LAYOUTS SHALL BE IN ACCORDANCE WITH THE FHWA'S MANUAL OF STANDARD SIGNS OR THE WISCONSIN STANDARD SIGN PLATES.

SIGNS THAT WILL BE IN PLACE LESS THAN 7 CONTINUOUS DAYS AND NIGHTS, OR THAT WILL BE PLACED IN A CLOSED LANE, MAY BE MOUNTED ON PORTABLE SUPPORTS.

ANY SIGNS TEMPORARY OR EXISTING, WHICH CONFLICT WITH TRAFFIC CONTROL "IN USE" SHALL BE REMOVED OR COVERED AS NEEDED AND AS APPROVED BY THE ENGINEER.

CHANNELIZING DEVICES PLACED ADJACENT TO WORK AREA SHALL BE PULLED BACK FROM THE TRAVEL LANE WHEN WORK IS NOT IN PROGRESS.

BARRICADES IN A CLOSED LANE THAT MUST BE MOVED FOR A WORK OPERATION SHALL BE IMMEDIATELY RE-ESTABLISHED UPON COMPLETION OF THE OPERATION OR, FOR CONTINUING OPERATIONS, AT THE END OF EACH WORKING DAY.

① 500' TYPICAL OR AT LAST INTERSECTION, WHICHEVER IS CLOSER.
350' IF 35-40 MPH.
200' IF 25-30 MPH.

② ALSO USE BARRICADES AND 15' TYPICAL DRUM SPACING AT COMMERCIAL DRIVEWAYS.

③ SEE SEPARATE LANE CLOSURE DETAIL FOR ADDITIONAL TRAFFIC CONTROL.

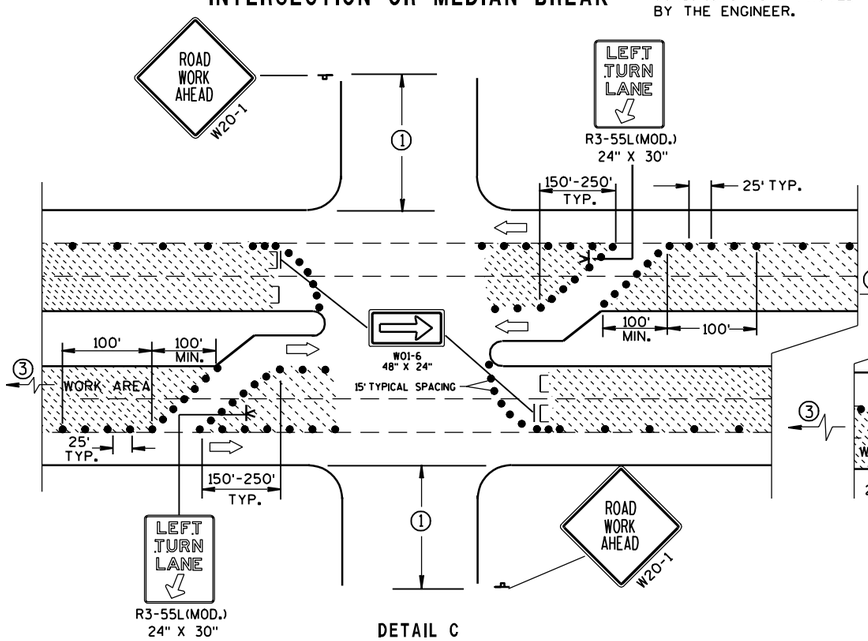

DETAIL C

FOR LEFT TWO LANES CLOSED AT INTERSECTION OR MEDIAN BREAK (WITH LEFT TURN BAY OPEN)

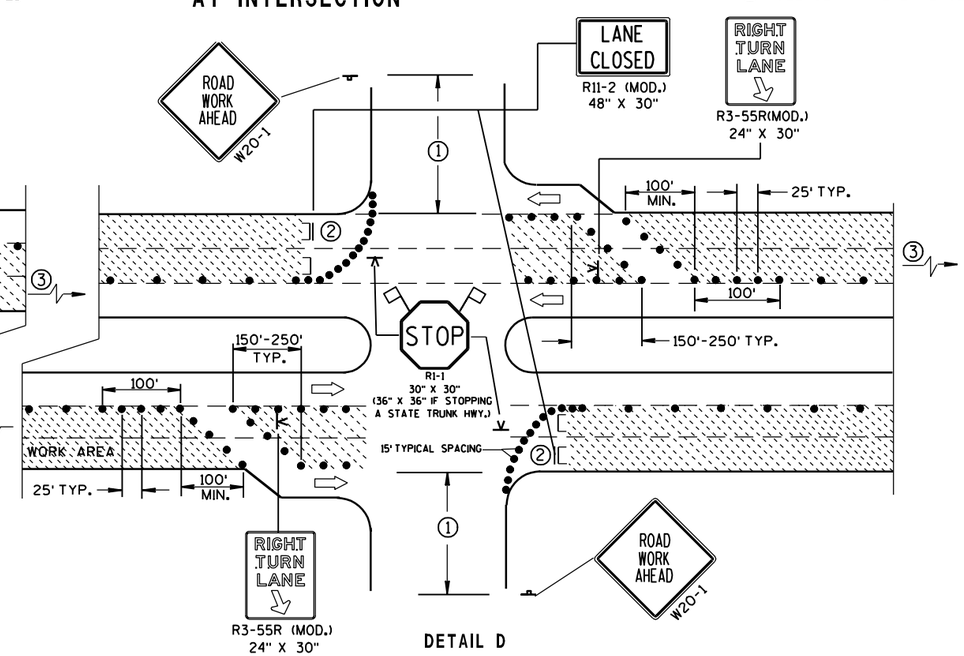

DETAIL D

FOR RIGHT TWO LANES CLOSED AT INTERSECTION (WITH RIGHT TURN BAY OPEN)

LEGEND

- ● DRUM
- POST MOUNTED SIGN
- SIGN ON PORTABLE SUPPORT (5' MIN. MOUNTING HEIGHT)
- TYPE III BARRICADE (8' EQUIVALENT) AND WARNING LIGHT, TYPE A (FLASHING) WITH/WITHOUT SIGN
- DIRECTION OF TRAFFIC FLOW
- FLAGS, 16" X 16" MIN., ORANGE

TRAFFIC CONTROL, INTERSECTION WITHIN TWO LANE CLOSURE

STATE OF WISCONSIN
DEPARTMENT OF TRANSPORTATION

APPROVED
5/23/00
DATE

Charles J. Sprang
CHIEF SIGNS AND MARKING ENGINEER

FHWA

6

S.D.D. 15 D 23-1

WARNING OF LOCALIZED SIDEWALK WORK AREAS

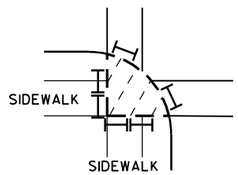

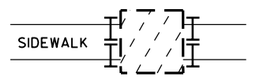

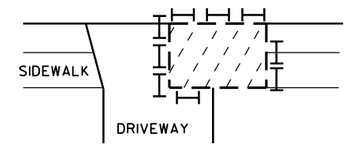

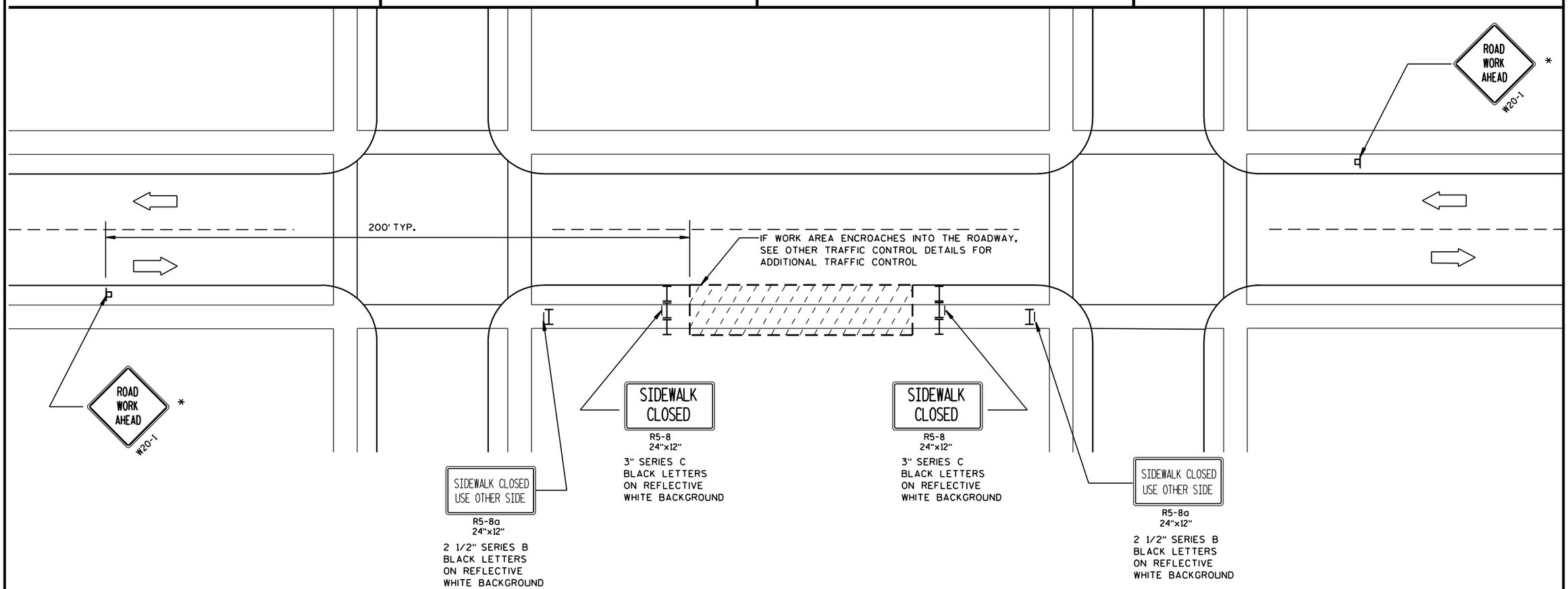

LEGEND

- POST MOUNTED SIGN
- TYPE II BARRICADE WITH/WITHOUT SIGN (ALL WITH ONE WARNING LIGHT, TYPE A, LOW-INTENSITY FLASHING)
- WORK AREA
- DIRECTION OF TRAFFIC FLOW

GENERAL NOTES :

ALL SIGNS ARE 48"x48" UNLESS OTHERWISE NOTED. IF NECESSARY DUE TO SPACE CONSTRAINTS, 36"x36" SIGNS MAY BE USED INSTEAD OF 48"x48" SIGNS, IF APPROVED BY DISTRICT TRAFFIC UNIT.

THE EXACT LOCATION AND PLACEMENT OF ALL SIGNS AND DEVICES SHALL BE ADJUSTED TO FIT FIELD CONDITIONS.

"WO" SIGNS ARE THE SAME AS "W" SIGNS EXCEPT THE BACKGROUND IS ORANGE.

* "ROAD WORK AHEAD" SIGNS ARE NOT REQUIRED IF THE SIDEWALK CLOSURE OCCURS WITHIN A LARGER WORK ZONE WHERE ADVANCE WARNING SIGNS ARE ALREADY PRESENT, OR IF THE WORK AREA AND EQUIPMENT ARE MORE THAN 2 FEET BEHIND THE CURB.

WARNING SIGNS THAT WILL BE IN PLACE LESS THAN 7 CONTINUOUS DAYS AND NIGHTS MAY BE MOUNTED ON PORTABLE SUPPORTS.

TRAFFIC CONTROL, SIDEWALK CLOSURE

STATE OF WISCONSIN
DEPARTMENT OF TRANSPORTATION

APPROVED
5/23/00
DATE

Chester J. Spang
CHIEF SIGNS AND MARKING ENGINEER

FHWA

6

S.D.D. 15 D 30-1

6

S.D.D. 15 D 30-1

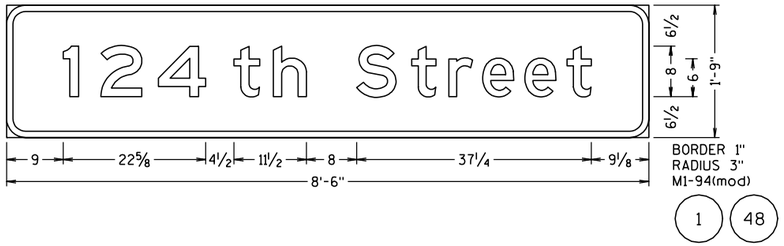

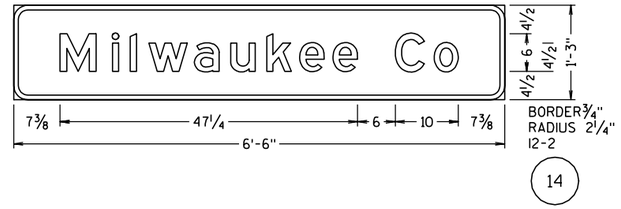

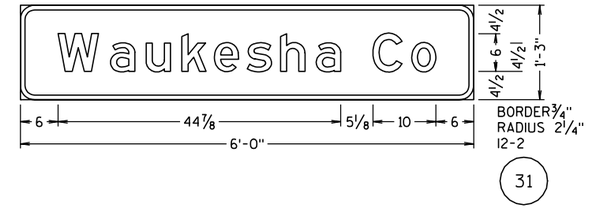

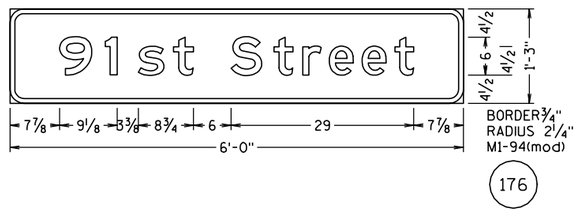

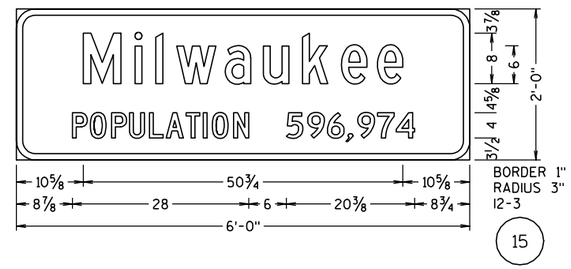

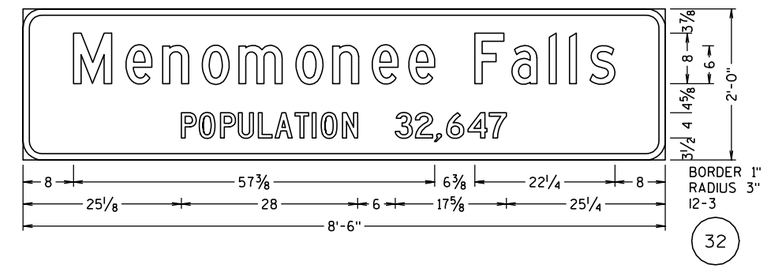

GENERAL NOTES:

1. DETAILS OF CONSTRUCTION, MATERIALS, AND WORKMANSHIP NOT SHOWN ON THIS DRAWING SHALL CONFORM TO THE PERTINENT REQUIREMENTS OF THE STANDARD SPECIFICATIONS, THE SPECIAL PROVISIONS, AND THE PLANS.

2. UNLESS OTHERWISE NOTED, ALL SIGNS SHOWN ON THIS SHEET ARE "SIGNS, TYPE II".

3. UNLESS OTHERWISE NOTED, TYPE II SIGNS ON THIS SHEET SHALL HAVE "TYPE H REFLECTIVE SHEETING" AND, "TYPE H MESSAGE MATERIAL". TYPE I SIGNS SHALL HAVE TYPE SH REFLECTIVE SHEETING.

4. UNLESS OTHERWISE NOTED, ALL SIGNS SHOWN ON THIS SHEET SHALL HAVE A GREEN BACKGROUND AND WHITE MESSAGE.

5. TYPE II SIGNS ALL UPPER CASE MESSAGE (EXCEPT ON SHIELDS OR WHERE OTHERWISE NOTED) SHALL BE "SERIES E. ALL LOWER CASE MESSAGE WITH AN INITIAL UPPER CASE LETTER SHALL BE "SERIES E.

6. TYPE I SIGNS - ALL UPPER CASE MESSAGE (EXCEPT ON SHIELDS OR WHERE OTHERWISE NOTED) SHALL BE SERIES "E" MODIFIED. ALL LOWER CASE MESSAGE WITH AN INITIAL UPPER CASE LETTER SHALL BE SERIES "E" MODIFIED. ALL CAP WORDS ARE "SERIES E"

7. UNLESS OTHERWISE NOTED, ALL SIGNS SHOWN ON THIS SHEET SHALL HAVE "TYPE A" OR "TYPE C" ARROWS AS SHOWN. SEE THE STANDARD SIGN PLATES FOR FURTHER DETAILS.

8. SEE THE STANDARD SIGN PLATES FOR FURTHER DETAILS ON ROUTE MARKER SHIELDS.

9. THE SIGN NUMBER IS DENOTED IN THE CIRCLE NEAR EACH DETAIL.

10. NUMBER FRACTIONS FOR INTERCHANGE SEQUENCE SIGNS SHALL BE SERIES "E" PER PLATES ALL-7 AND ALL-10

11. DO NOT SCALE.

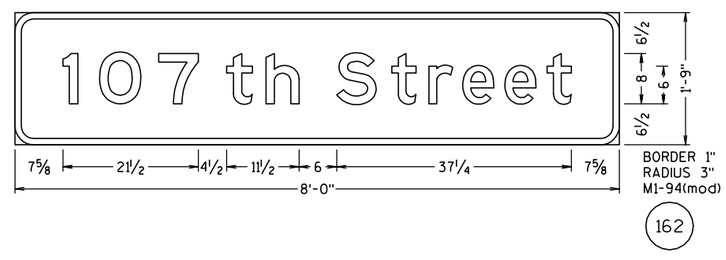

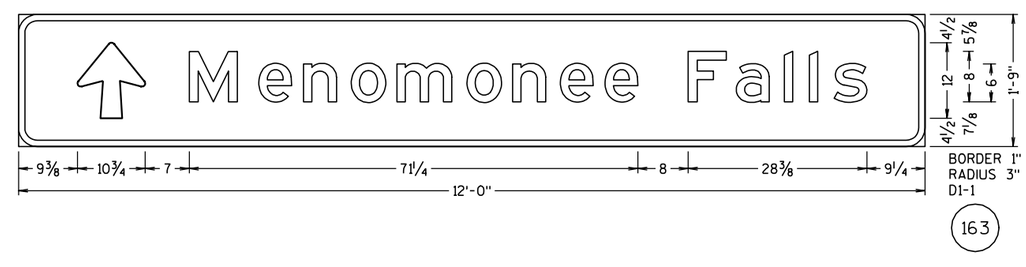

7

7

PROJECT NO: 2150-05-70	HWY: 100	COUNTY: MILWAUKEE	SIGNING DETAIL - TYPE II SIGNS	SCALE: 0 ½" 1"	SHEET	E

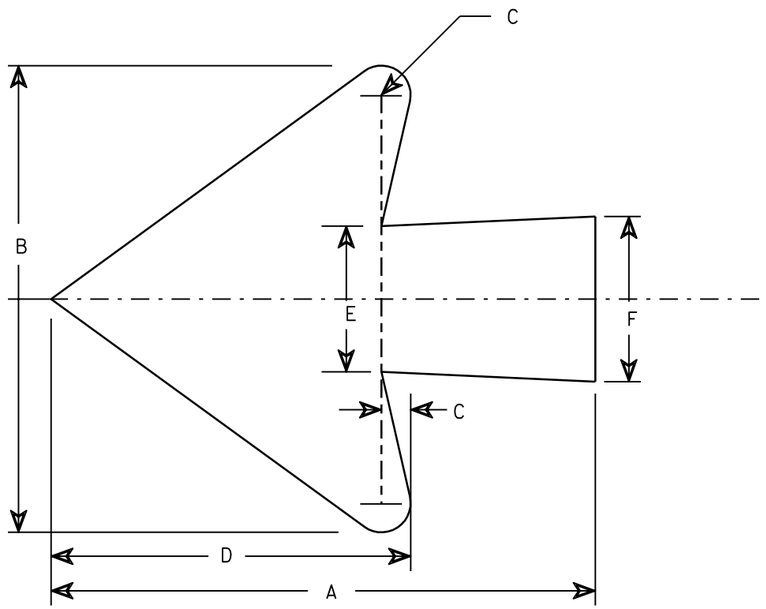

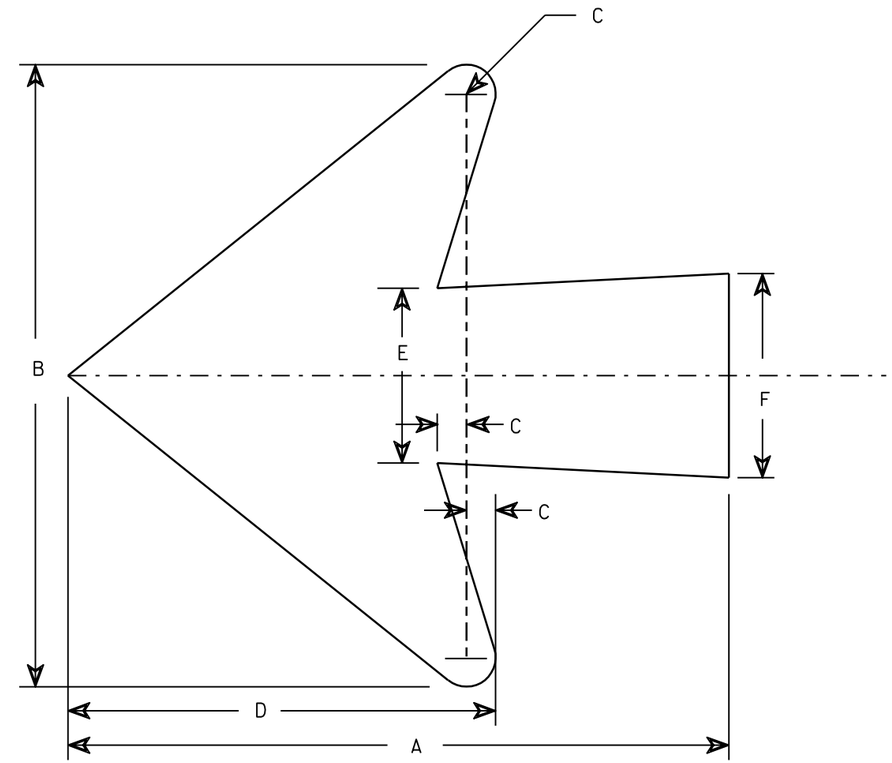

Lower Case Copy Size	A Right or Left	A * 2 Town	A * 3 Town	B	C	D	E	F
3¾ Series C	7	11	18	6	⅜	4⅝	1⅞	2⅛

* Indicates Ahead and Tilt for 2 & 3 Town applications.

Lower Case Copy Size	A Right or Left	A * 2 Town	A * 3 Town	B	C	D	E	F
4½ Series D&E	8½	11	18	8	⅜	5½	2¼	2⅝
6 Series D&E	12	18	24	10¾	½	7⅜	3¼	3½
8 Series E	15½	24	30	14¼	¾	9¾	4¼	4½

* Indicates Ahead and Tilt for 2 & 3 Town applications.

STANDARD ARROWS FOR D1 GUIDE SIGNS

WISCONSIN DEPT OF TRANSPORTATION

APPROVED Chester J Spang for State Traffic Engineer

DATE 8/10/92 PLATE NO. A1-2.3

PROJECT NO:

SHEET NO: 234 E

TYPICAL ASSEMBLIES

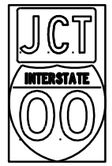

J1-1

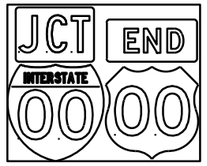

J1-2

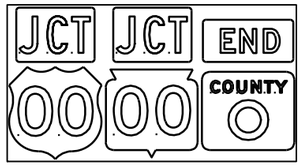

J1-3

JV

J2-1

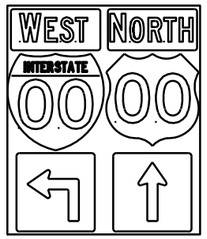

J2-2

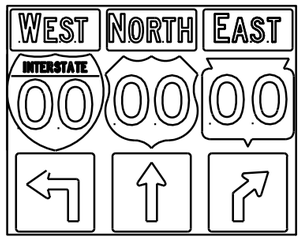

J2-3

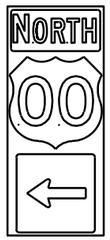

J3-1

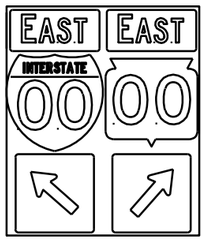

J3-2

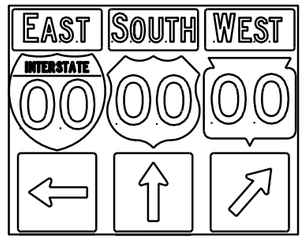

J3-3

J4-1

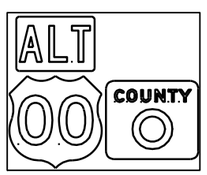

J4-2

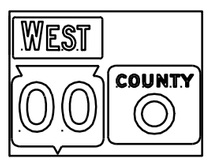

J4-2

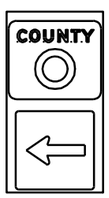

J13-1

J12-1

J32-1

J33-1

J23-1

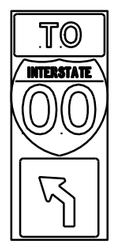

J22-1

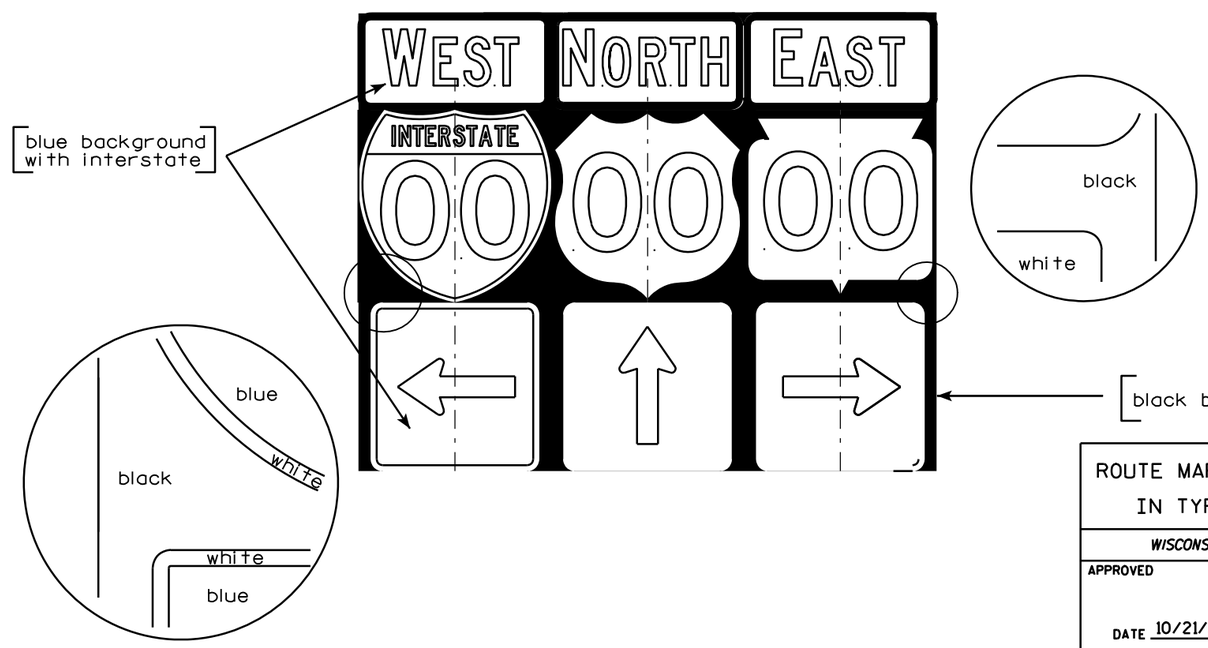

NOTES

1. Signs are Type II - Type H Reflective - reference WIS DOT Standard Specification for HIGHWAY and STRUCTURE CONSTRUCTION latest edition.
2. Color:
   Background - Black Non-reflective
   Message - see Note 5
3. Message Series - See Note 5
4. Corners shall be square since base material is plywood.
5. The colors and message spacing on each marker shall be according to the applicable route marker panel specifications.
6. Certain marker heads require the component pieces to be the same color. As an example, all the components used with an M1-1 Interstate marker shall be blue.
7. Single panel j-assemblies shall only be used with route marker shields that are same size. If the route marker shields are different size use multiple piece component.
8. Route assemblies that have 24 inch route shields and have dimensions greater than 48 inches (both vertical and horizontal) shall have one horizontal splice between the arrows and route shields. Vertical splices shall not be used on route assemblies with a horizontal dimension of 144 inches or less. The contractor shall not use more than one vertical joint per sign and the joint shall be between route shields.
9. Route assemblies that have 36 inch shields and have dimensions greater than 48 inchs (both vertical and horizontal) shall have two horizontal splices. One horizontal splice shall be between the cardinal direction and route shields and the other horizontal splice shall be between the arrows and route shields. Vertical splices shall not be used on route assemblies with a horizontal dimension of 144 or less. The contractor shall not use more than one vertical joint per sign and the joint shall be between route shields.

ROUTE MARKERS & COMPONENTS IN TYPICAL ASSEMBLIES

WISCONSIN DEPT OF TRANSPORTATION

APPROVED Matthew R Rauch
for State Traffic Engineer

DATE 10/21/09 PLATE NO. A2-1S.6

7

7

PROJECT NO:

SHEET NO: 235 E

URBAN AREA

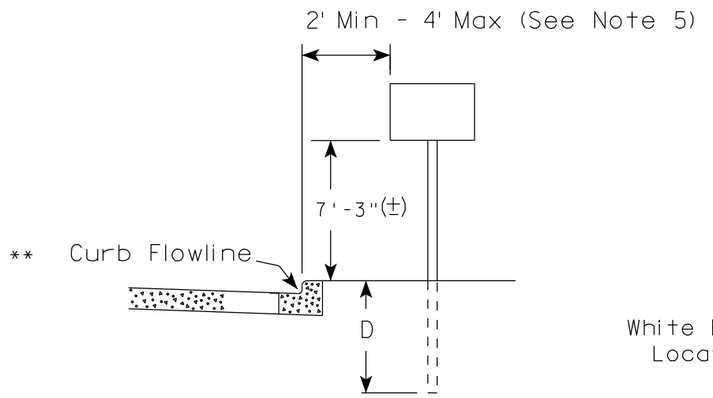

RURAL AREA (See Note 2)

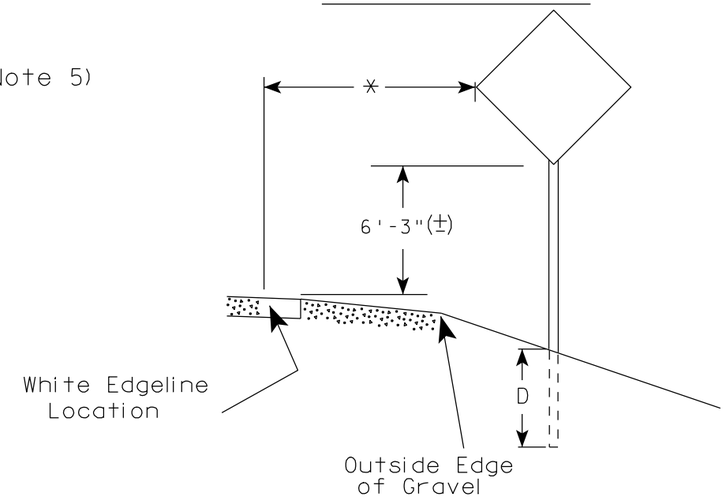

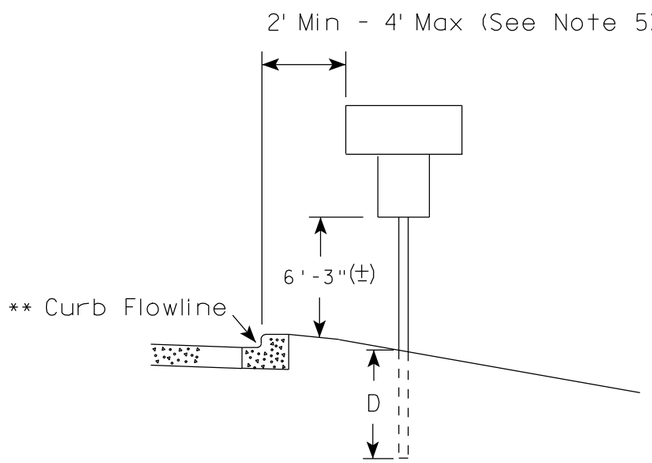

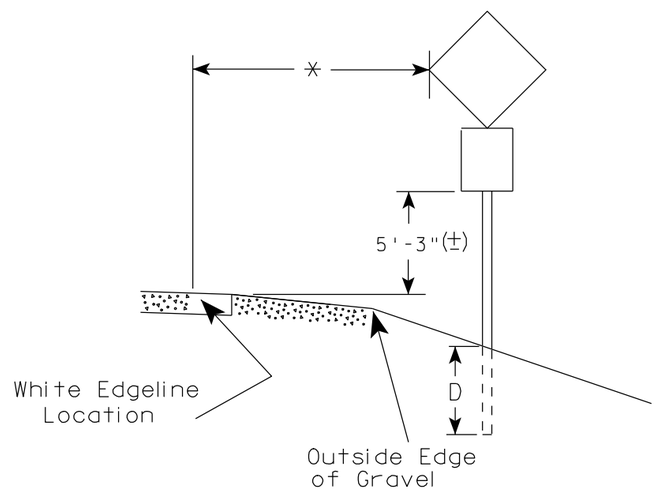

** The existence of curb and gutter does not in itself mandate the vertical clearance illustrated. That height is typically measured where there is sidewalk adjacent to the roadway or parking is permitted. In the absence of sidewalk vertical clearance is measured from the top of the curb. Offset of signs is measured from the flow line.

* 6 feet from edge of a paved shoulder or 12 feet from the edge of pavement (edge line location) or 2 feet from outside edge of gravel, whichever is greater unless directed by project engineer.

GENERAL NOTES

1. Signs wider than 4 feet or larger than 20 sq. ft. shall be mounted on multiple posts. Refer to plate A4-4.
2. If signs are mounted on barrier wall, see A4-10 sign plate.
3. For expressways and freeways, mounting height is 7'- 3" (±) or 6'-3" (±) depending upon existence of a sub-sign.
4. Minimum mounting height for J assemblies (A4-5) is 7'-3" (±) or 6'-3" (±) per urban or rural detail respectively.
5. Minimum mounting height for signs mounted on traffic signal poles is 5'- 3" (±).
6. Offset distance shall be consistent with existing signs or consistent throughout length of project.
7. The (±) tolerance for mounting height is 3 inches.
8. Folding stop signs (R1-1F) shall be mounted at a height of 5'-3" (±) or as directed by the Engineer.
9. The Double Arrow sign (W12-1) shall be mounted at a height of 2'-3" (±). The Chevron sign (W1-8), Roundabout Chevron panel (W1-8A), Clearance Markers (W5-52), Mile Markers (D10 series) & End of Road Markers (W5-56 & W5-56A) shall be mounted at a height of 4'-3" (±).

POST EMBEDMENT DEPTH

Area of Sign Installation (Sq. Ft.)	D (Min)
20 or Less	4'
Greater than 20	5'

TYPICAL INSTALLATION OF PERMANENT TYPE II SIGNS ON SINGLE POSTS

WISCONSIN DEPT OF TRANSPORTATION

APPROVED Matthew R Rauch for State Traffic Engineer

DATE 9/30/09 PLATE NO. A4-3.15

7 7

PROJECT NO:	HWY:	COUNTY:		SHEET NO: 236	E

URBAN AREA

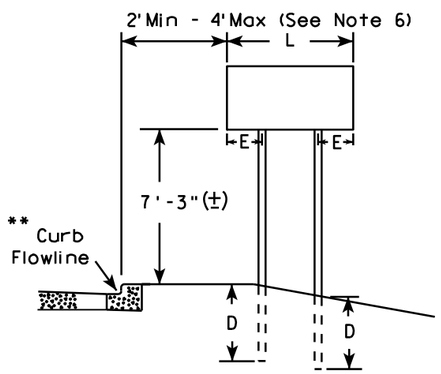

RURAL AREA (See Note 3)

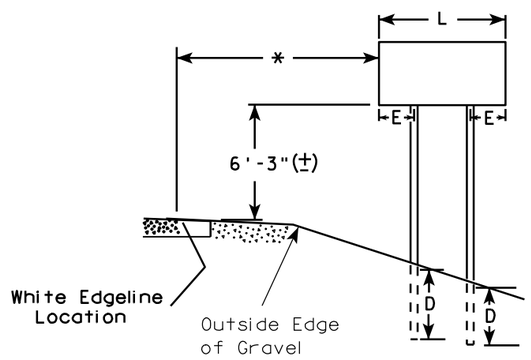

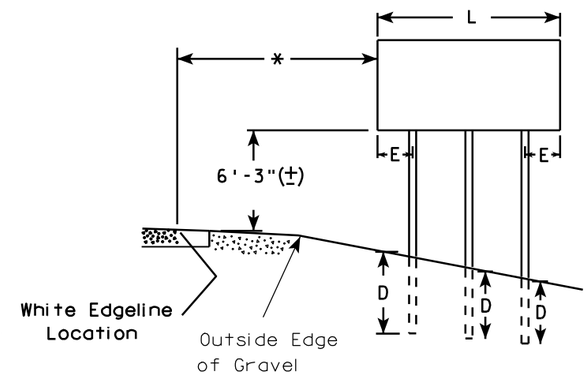

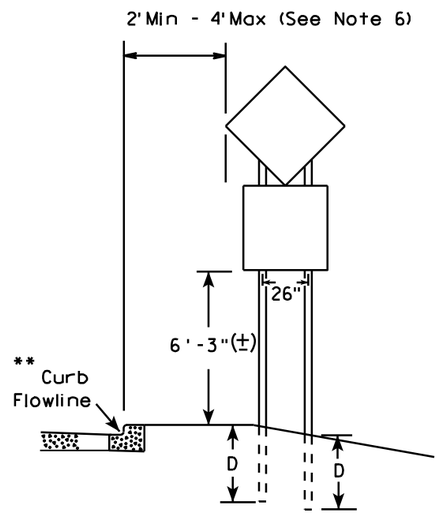

48" DIAMOND WARNING SIGN

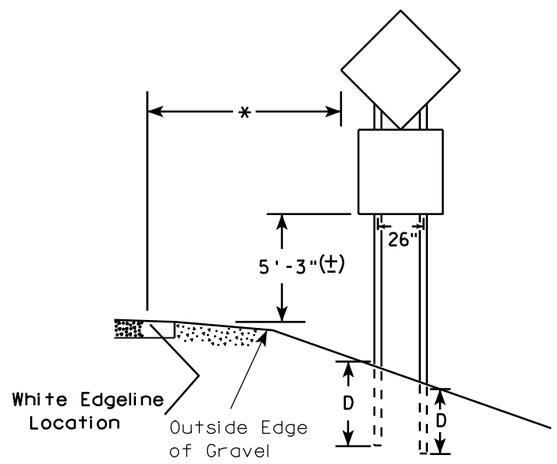

48" DIAMOND WARNING SIGN

GENERAL NOTES

1. For multiple post installations, individual post spacing shall be greater than 3'-6".
2. See tables below for required number of posts.
3. For expressways and freeways, mounting height is 7'-3" (±) or 6'-3" (±) depending upon existence of sub-sign.
4. The (±) tolerance for mounting height is 3 inches.
5. Minimum mounting height for J assemblies (A4-5) is 7'-3" (±) or 6'-3" (±) per urban or rural detail respectively.
6. Offset distance shall be consistent with existing signs or consistent throughout length of project.
7. Folding stop signs (R1-1F) shall be mounted at a height of 5'-3" (±) or as directed by the engineer.
8. The Double Arrow sign (W12-1) shall be mounted at a height of 2'-3" (±). The Chevron sign (W1-8), Roundabout Chevron panel (W1-8A), Clearance Markers (W5-52), Mile Markers (D10 series) & End of Road Markers (W5-56 & W5-56A) shall be mounted at a height of 4"-3" (±).

* 6 feet from edge of a paved shoulder or 12 feet from the edge of pavement (edge line location) or 2 feet from outside edge of gravel, whichever is greater unless directed by project engineer.

** The existence of curb and gutter does not in itself mandate the vertical clearance illustrated. That height is typically measured where there is sidewalk adjacent to the roadway or parking is permitted. In the absence of sidewalk vertical clearance is measured from the top of the curb. Offset of signs is measured from the flow line.

*** See A4-3 sign plate for signs 4' or less in width or 20 S.F. or less in area.

SIGN SHAPE OTHER THAN DIAMOND (TWO POSTS REQUIRED)	
L	E
*** Greater than 48" Less than 60"	12"
60" to 120"	L/5

SIGN SHAPE OTHER THAN DIAMOND (THREE POSTS REQUIRED)	
L	E
Greater than 120" less than 168"	12"

SIGN SHAPE OTHER THAN DIAMOND (FOUR POSTS REQUIRED)	
L	E
168" and greater	12"

POST EMBEDMENT DEPTH

Area of Sign Installation (Sq. Ft.)	D (Min)
20 or Less	4'
Greater than 20	5'

TYPICAL INSTALLATION OF TYPE II SIGNS ON MULTIPLE POSTS

WISCONSIN DEPT OF TRANSPORTATION

APPROVED Matthew R Rauch
for State Traffic Engineer

DATE 9/30/09 PLATE NO. A4-4.10

PROJECT NO:	HWY:	COUNTY:		SHEET NO: 237	E

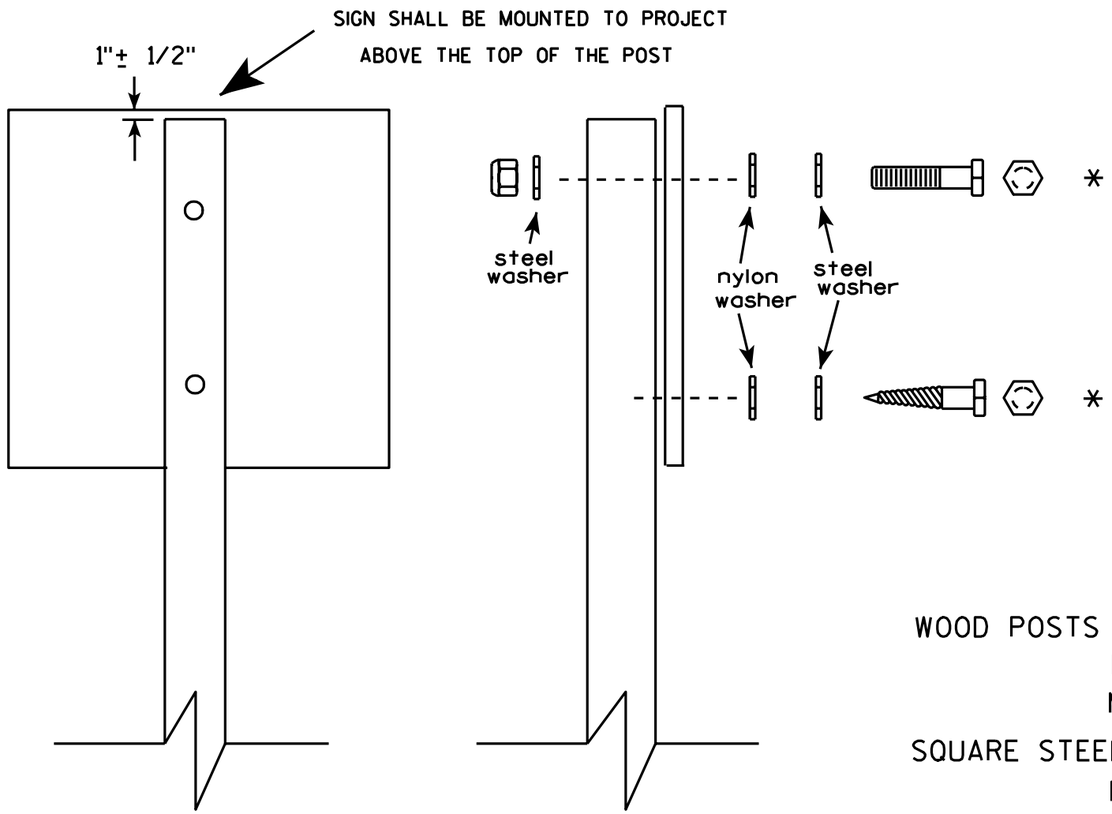

Nuts, bolts and lags used for mounting signs shall have hexagonal heads and shall be either :

a. Hot dip or mechanically galvanized in accordance with ASTM Designation: A 153, Class D, or
b. Cadmium plated in accordance with ASTM Designation : B 766 TYPE 3, Class 12, or
c. Electro-galvanized in accordance with ASTM Designation : B 633, TYPE III, SC 3.

Threads on bolts and nuts shall be manufactured with sufficient allowance for the cadmium plate or galvanized coating to permit the nuts to run freely on the bolts.

WOOD POSTS (4" x 4" or 4" x 6")
LAG SCREWS - 3/8" X 3"
MACHINE BOLTS - 5/16" X 6-1/2" or 7" Length w/ nuts

SQUARE STEEL POSTS (2" x 2")
MACHINE BOLTS - 3/8" X 3-1/4" Length w/ nuts

WASHERS (ALL POSTS) -
1-1/4" O.D. X 3/8" I.D. X 1/16" STEEL
1-1/4" O.D. X 3/8" I.D. X .080 NYLON for all Type H signs.

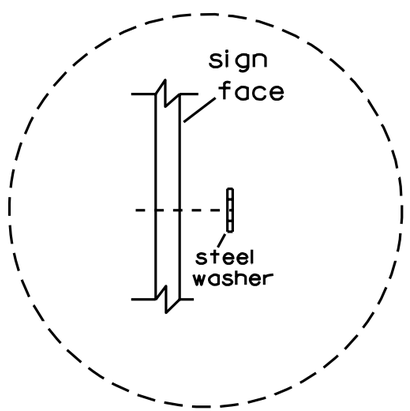

Washer Placement when Sign Has Other Than Type H or Type F Face

* Two different fastening systems are shown for illustration purposes. On any individual sign, either one or the other system shall be used. Actual number of fasteners per sign varies with the sign area, but normally there are two. For a single post installation, all signs greater than 9 sq. ft. require the use of 3 fasteners.

ATTACHMENT OF SIGNS TO POSTS

WISCONSIN DEPT OF TRANSPORTATION

APPROVED Matthew R Rauch
for State Traffic Engineer

DATE 8/30/06 PLATE NO. A4-8.6

PROJECT NO:

SHEET NO: 238 E

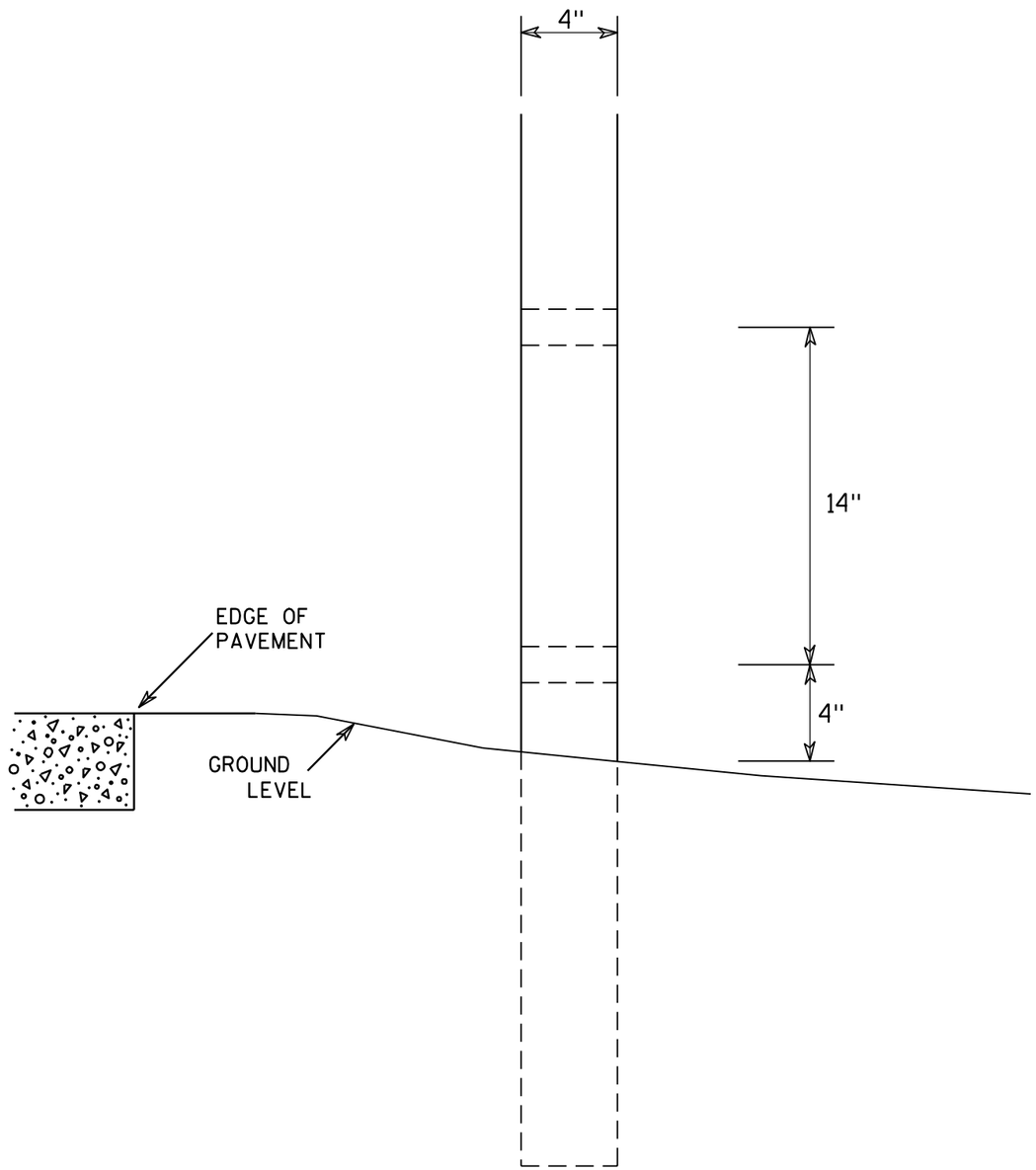

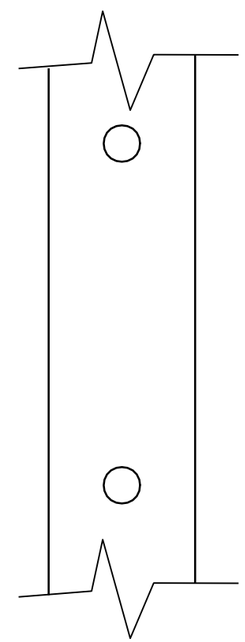

SIDE VIEW

GENERAL NOTES

1. All 4 x 6 Wood Posts shall be modified by having two 1½" diameter holes drilled perpendicular to the roadway centerline.

7

7

4 X 6 WOOD POST MODIFICATIONS

WISCONSIN DEPT OF TRANSPORTATION

APPROVED Chester J Spang for State Traffic Engineer

DATE 3/27/97 PLATE NO. A4-11.2

PROJECT NO:	HWY:	COUNTY:		SHEET NO: 239	E

BRACE BANDING

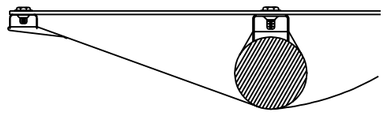

DETAIL C
CADMIUM PLATED STEEL BOLT
THROUGH BLACK BORDER

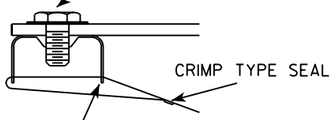

DETAIL C

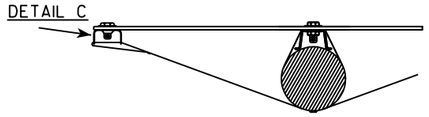

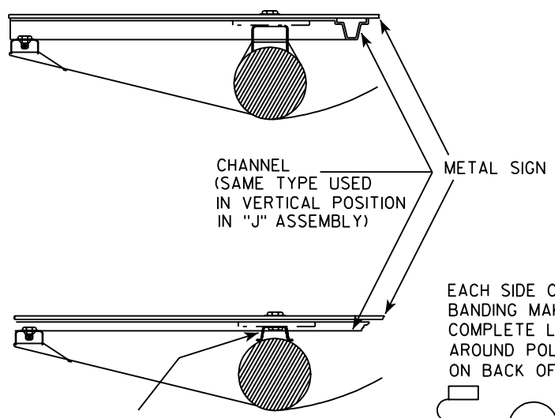

EACH SIDE OF BRACE
BANDING MAKES ONE
COMPLETE LOOP
AROUND POLE-SEAL
ON BACK OF POLE

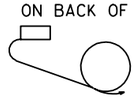

INTERRUPT VERTICAL CHANNEL
AT HORIZONTAL STIFFENERS

BRACKET BANDING

SINGLE SIGN

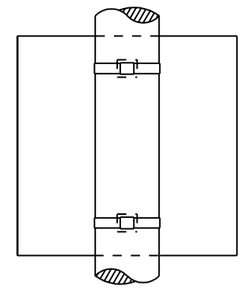

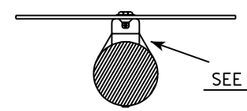

SEE DETAIL A

"J" ASSEMBLY

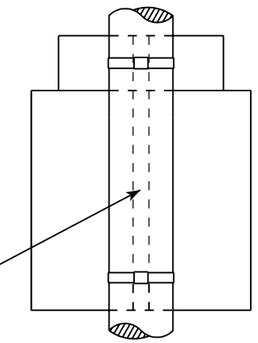

CHANNEL
SEE TYPICAL PANEL
INSTALLATION SHEET

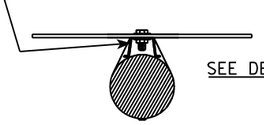

SEE DETAIL B

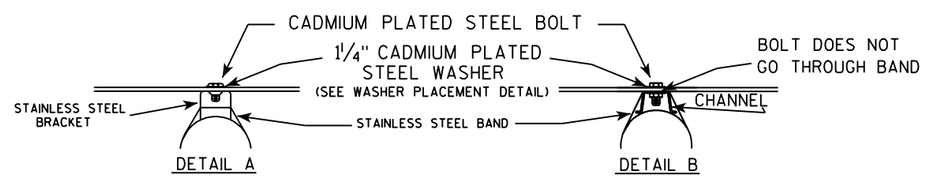

GENERAL NOTES

1. Signs 4' or greater in width shall have one brace band installed at the center of the sign.
2. Signs 3' or greater in height shall have three bracket bands installed. Signs less than 3' in height shall have two bracket bands installed.
3. Banding and assembly bracket shall be stainless steel. All bands shall be ¾" in width and 0.025" thickness.

WASHER PLACEMENT

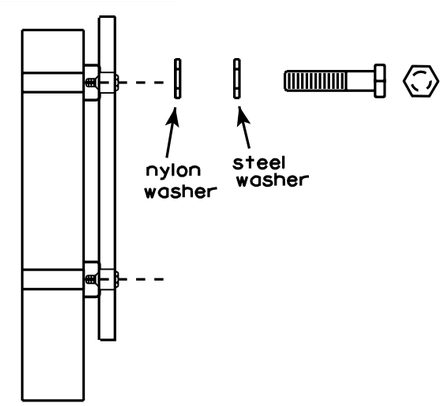

WASHERS (ALL POSTS) -
1-1/4" O.D. X 3/8" I.D. X 1/16" STEEL
1-1/4" O.D. X 3/8" I.D. X .080 NYLON
FOR ALL TYPE H SIGNS

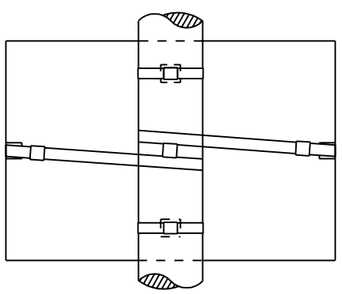

BRACE BANDING

BRACE BANDING SHALL BE TIGHTENED FIRMLY BUT NOT SO TIGHT AS TO APPRECIABLY CURVE FACE OF SIGN.

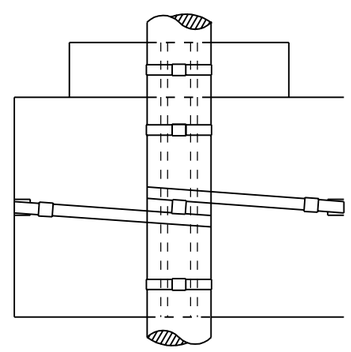

STANDARD SIGN
SIGN BANDING DETAILS

WISCONSIN DEPT OF TRANSPORTATION

APPROVED Matthew R Rauch
for State Traffic Engineer

DATE 11/08/05 PLATE NO. A5-9.2

PROJECT NO:	HWY:	COUNTY:		SHEET NO: 240	E

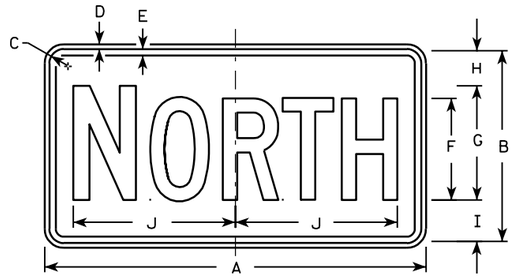

M3-1
MK3-1
MO3-1

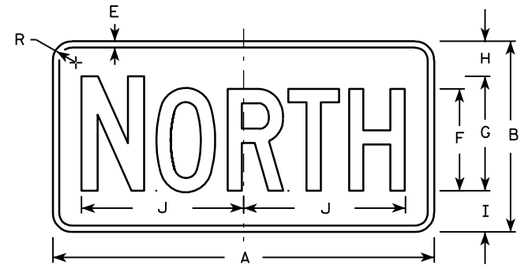

MB3-1
MG3-1
MM3-1*
MN3-1

M3-2
MK3-2
MO3-2

MB3-2
MG3-2
MM3-2*
MN3-2

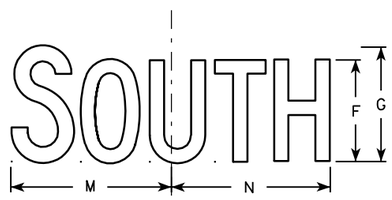

M3-3
MK3-3
MO3-3

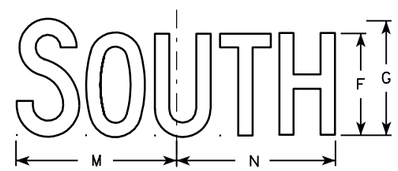

MB3-3
MG3-3
MM3-3*
MN3-3

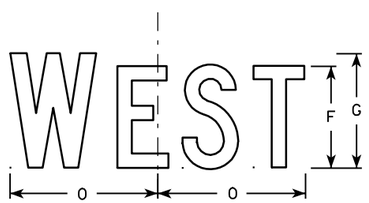

M3-4
MK3-4
MO3-4

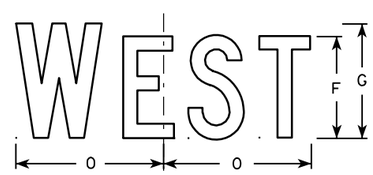

MB3-4
MG3-4
MM3-4*
MN3-4

NOTES

1. All Signs Type II - See Note 5 - reference WIS DOT Standard Specification for HIGHWAY and STRUCTURE CONSTRUCTION latest edition.
2. Color:
   Background - See note 5
   Message - See note 5
3. Message Series - C
4. Corners may be square or rounded when base material is plywood but borders shall be rounded as shown. When base material is metal, the corners and borders shall be rounded.
5. M3-1 thru M3-4 Background - White - Type H Reflective (Detour or temporary signs - Reflective) Message - Black
   MB3-1 thru MB3-4 Background - Blue Message - White - Type H Reflective (Detour or temporary signs - Reflective)
   MG3-1 thru MG3-4 Background - Green Message - White - Type H Reflective
   MK3-1 thru MK3-4 Background - Green Message - White - Type H Reflective
   MM3-1 thru MM3-4 Background - White - Type H Reflective Message - Green
   MN3-1 thru MN3-4 Background - Brown Message - White - Type H Reflective
   MO3-1 thru MO3-4 Background - Orange - Reflective Message - Black
6. Border shall be omitted on MM series.
7. Note the first letter of each direction is larger than the remainder of the message.

* See Note 6

Metric equivalent for this sign is:

SIZE	
1	
2	600 mm X 300 mm
3	750 mm X 375 mm
4	750 mm X 375 mm
5	750 mm X 375 mm

SIZE	A	B	C	D	E	F	G	H	I	J	K	L	M	N	O	P	Q	R	S	T	U	V	W	X	Y	Z	Area sq. ft.	Area m2
1																												
2	24	12	1 1/8	3/8	1/2	6	7	2 1/4	2 3/4	10 1/4	7 7/8	8 3/8	10 1/4	9 3/4	8 3/4			1 1/2									2.00	0.18
3	30	15	1 1/8	3/8	1/2	8	9	2 3/4	3 1/4	12 3/4	10 3/8	11 1/8	12 5/8	12 1/2	11 5/8			1 1/2									3.13	0.28
4	30	15	1 1/8	3/8	1/2	8	9	2 3/4	3 1/4	12 3/4	10 3/8	11 1/8	12 5/8	12 1/2	11 5/8			1 1/2									3.13	0.28
5	30	15	1 1/8	3/8	1/2	8	9	2 3/4	3 1/4	12 3/4	10 3/8	11 1/8	12 5/8	12 1/2	11 5/8			1 1/2									3.13	0.28

STANDARD SIGNS
M3-1 thur M3-4
SERIES

WISCONSIN DEPT OF TRANSPORTATION

APPROVED Chester J Spang for State Traffic Engineer

DATE 3/20/02 PLATE NO. M3-1.10

PROJECT NO: | HWY: | COUNTY: | SHEET NO: 241 | E

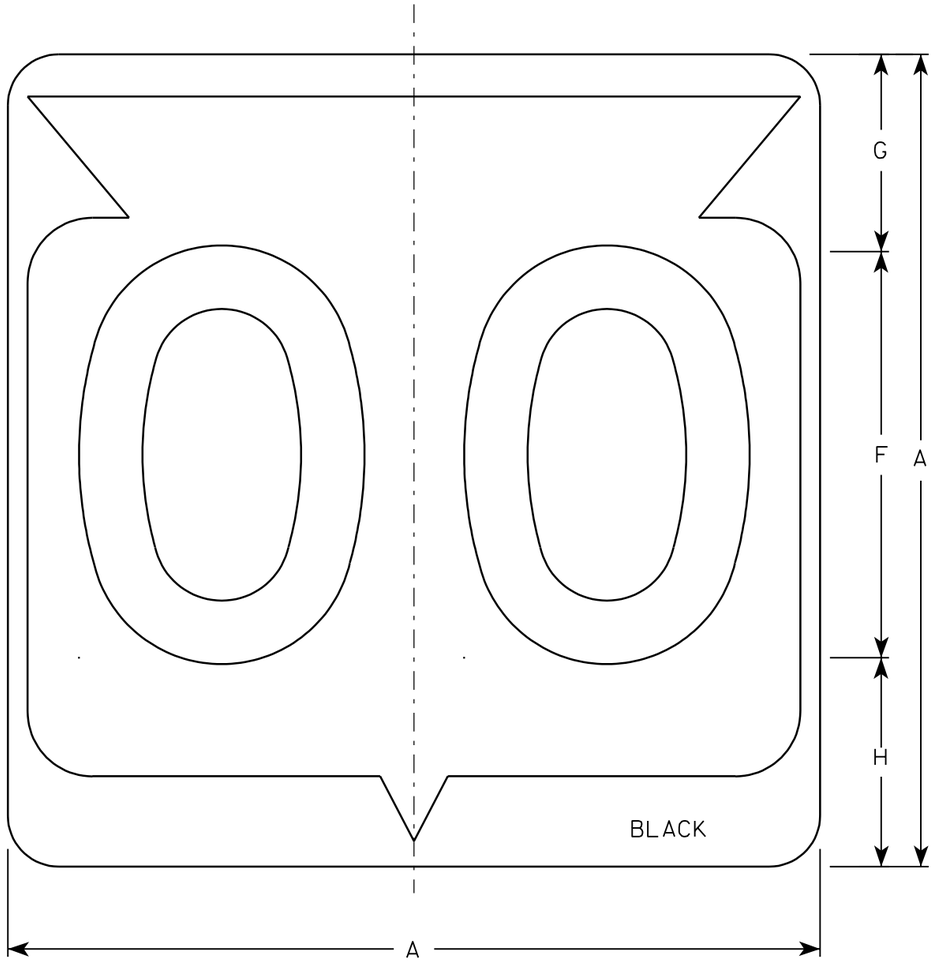

M1-6

NOTES

1. Sign is Type II - See Note 6 - reference WIS DOT Standard Specification for HIGHWAY and STRUCTURE CONSTRUCTION latest edition.
2. Color:
   Background - White & Black - See Note 6
   Message - Black
3. Message Series - See note 5
4. Corners may be square or rounded when base material is plywood but borders shall be rounded as shown. When base material is metal, the corners and borders shall be rounded.
5. Substitute appropriate Series numerals and adjust spacing as per plate A10-1.
6. Permanent Signs
   Background - Type H Reflective
   Detour or temporary Signs
   Background - Reflective

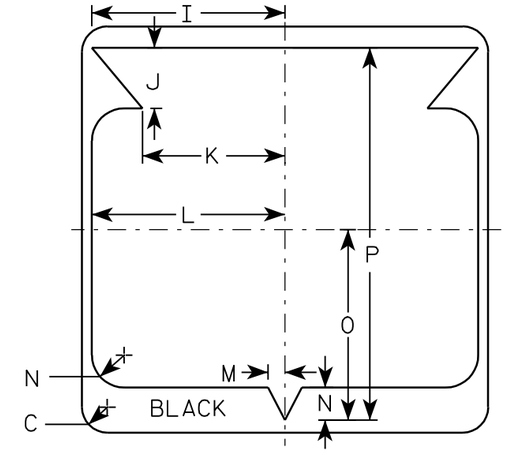

Metric equivalent for this sign is:

SIZE	
1	
2	600 mm X 600 mm
3	900 mm X 900 mm
4	900 mm X 900 mm
5	900 mm X 900 mm

SIZE	A	B	C	D	E	F	G	H	I	J	K	L	M	N	O	P	Q	R	S	T	U	V	W	X	Y	Z	Area sq. ft.	Area m2
1																												
2	24		1 1/2			12	5 1/2	6 1/2	10 1/4	2 1/2	8 7/8	11 1/2	1	1 7/8	11 1/4	21 7/8											4.0	.36
3	36		2 1/4			18	8 3/4	9 1/4	15 3/8	5 3/8	12 5/8	17 1/8	1 1/2	2 7/8	16 7/8	33											9.0	.81
4	36		2 1/4			18	8 3/4	9 1/4	15 3/8	5 3/8	12 5/8	17 1/8	1 1/2	2 7/8	16 7/8	33											9.0	.81
5	36		2 1/4			18	8 3/4	9 1/4	15 3/8	5 3/8	12 5/8	17 1/8	1 1/2	2 7/8	16 7/8	33											9.0	.81

STATE ROUTE MARKER
M1-6 FOR ASSEMBLIES

WISCONSIN DEPT OF TRANSPORTATION

APPROVED Chester J Spang
for State Traffic Engineer

DATE 3/20/02 PLATE NO. M1-6.9

PROJECT NO: | HWY: | COUNTY: | SHEET NO: 242 | E

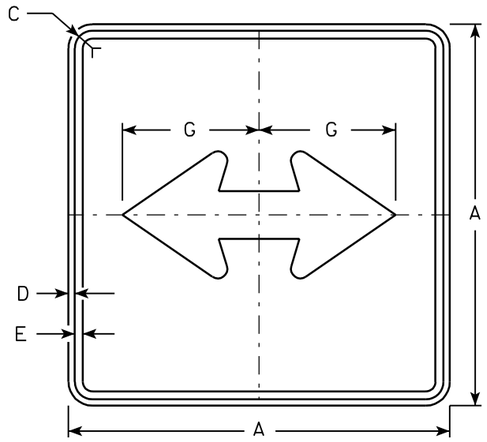

M6-4
MK6-4
MM6-4 (See Note 5)
MO6-4
MR6-4

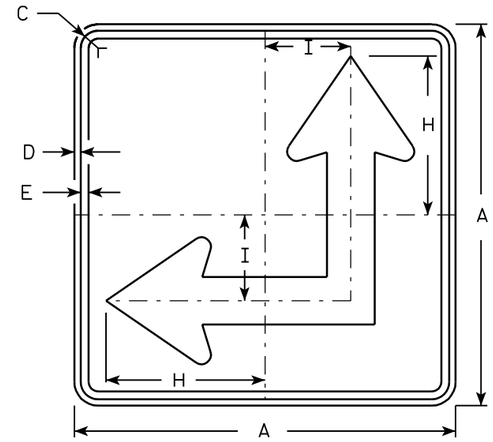

M6-6
MK6-6
MM6-6 (See Note 5)
MO6-6
MR6-6

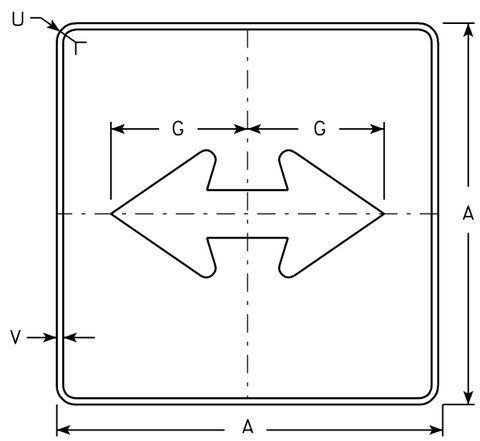

MB6-4
MG6-4
MN6-4

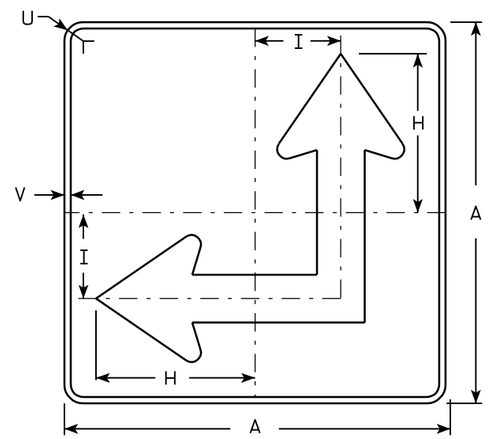

MB6-6
MG6-6
MN6-6

NOTES

1. Signs are Type II - See Note 4 - reference WIS DOT Standard Specification for HIGHWAY and STRUCTURE CONSTRUCTION latest edition.
2. Color:
   Background - See Note 4
   Message - See Note 4
3. Corners may be square or rounded when base material is plywood but borders shall be rounded as shown. When base material is metal, the corners and borders shall be rounded.
4. M6-4 and M6-6 Background - White - Type H Reflective (Detour or temporary Signs - Reflective)
   Message - Black
   MB6-4 and MB6-6 Background - Blue
   Message - White - Type H Reflective (Detour or temporary Signs - Reflective)
   MG6-4 and MG6-6 Background - Green
   Message - White - Type H Reflective
   MK6-4 and MK6-6 Background - Green
   Message - White - Type H Reflective
   MM6-4 and MM6-6 Background - White - Type H Reflective
   Message - Green
   MN6-4 and MN6-6 Background - Brown
   Message - White - Type H Reflective
   MO6-4 and MO6-6 Background - Orange - Reflective
   Message - Black
   MR6-4 and MR6-6 Background - Brown
   Message - Yellow - Type H Reflective
5. M6-6R same as M6-6L except arrow points ahead and right.
6. Border shall be omitted on MM series.

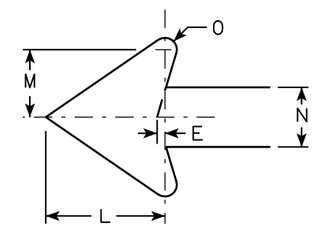

Metric equivalent for this sign is:

SIZE	
1	
2	525 mm X 525 mm
3	750 mm X 750 mm
4	750 mm X 750 mm
5	750 mm X 750 mm

SIZE	A	B	C	D	E	F	G	H	I	J	K	L	M	N	O	P	Q	R	S	T	U	V	W	X	Y	Z	Area sq. ft.	Area m2
1																												
2	21		1 1/8	3/8	3/8		7 1/2	8 3/4	4 1/4			5 1/4	3	2 5/8	1/2						1 1/2	1/2					3.06	0.28
3	30		1 3/8	1/2	5/8		10 3/4	12 1/2	6 3/4			7 1/2	4 1/4	3 3/4	3/4						1 7/8	1/2					6.25	0.56
4	30		1 3/8	1/2	5/8		10 3/4	12 1/2	6 3/4			7 1/2	4 1/4	3 3/4	3/4						1 7/8	1/2					6.25	0.56
5	30		1 3/8	1/2	5/8		10 3/4	12 1/2	6 3/4			7 1/2	4 1/4	3 3/4	3/4						1 7/8	1/2					6.25	0.56

STANDARD SIGN
M6-4 & M6-6
SERIES

WISCONSIN DEPT OF TRANSPORTATION

APPROVED Chester J Spang for State Traffic Engineer

DATE 3/20/02 PLATE NO. M6-4.6

PROJECT NO:	HWY:	COUNTY:		SHEET NO: 243	E

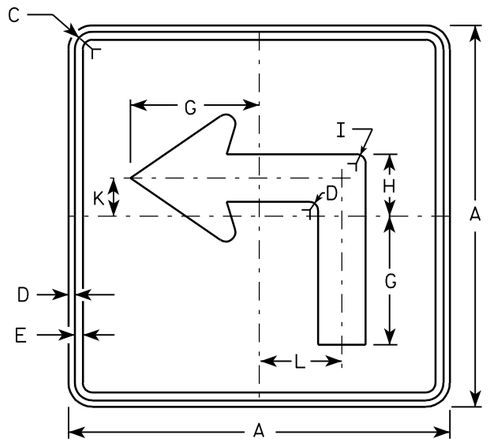

M5-1L
MK5-1L
MM5-1L (See Note 7)
MO5-1L
MR5-1L

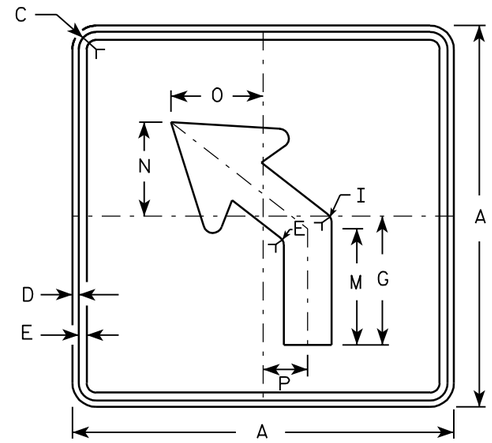

M5-2L
MK5-2L
MM5-2L (See Note 7)
MO5-2L
MR5-2L

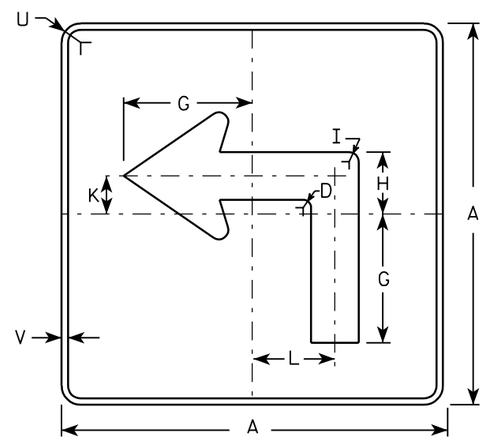

MB5-1L
MG5-1L
MN5-1L

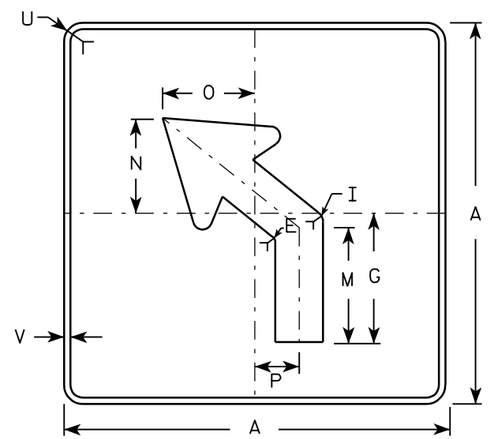

MB5-2L
MG5-2L
MN5-2L

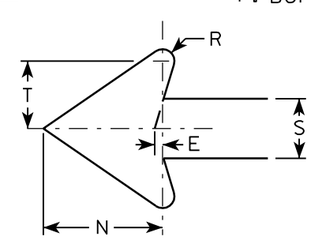

NOTES

1. Signs are Type II - See Note 4 - reference WIS DOT Standard Specification for HIGHWAY and STRUCTURE CONSTRUCTION latest edition.
2. Color:
   Background - See note 4
   Message - See note 4
3. Corners may be square or rounded when base material is plywood but borders shall be rounded as shown. When base material is metal, the corners and borders shall be rounded.
4. M5-1 and M5-2 Background - White - Type H Reflective (Detour or temporary Signs - Reflective) Message - Black
   MB5-1 and MB5-2 Background - Blue Message - White - Type H Reflective (Detour or temporary Signs - Reflective)
   MG5-1 and MG5-2 Background - Green Message - White - Type H Reflective
   MK5-1 and MK5-2 Background - Green Message - White Type H Reflective
   MM5-1 and MM5-2 Background - White - Type H Reflective Message - Green
   MN5-1 and MN5-2 Background - Brown Message - White - Type H Reflective
   MO5-1 and MO5-2 Background - Orange - Reflective Message - Black
   MR5-1 and MR5-2 Background - Brown Message - Yellow - Type H Reflective
5. M5-1R same as M5-1L except arrow points right.
6. M5-2R same as M5-2L except arrow tilts right.
7. Border shall be omitted on MM series.

Metric equivalent for this sign is:

SIZE	
1	
2	525 mm X 525 mm
3	750 mm X 750 mm
4	750 mm X 750 mm
5	750 mm X 750 mm

SIZE	A	B	C	D	E	F	G	H	I	J	K	L	M	N	O	P	Q	R	S	T	U	V	W	X	Y	Z	Area sq. ft.	Area m2
1																												
2	21		1 1/8	3/8	3/8		7	3 3/8	5/8		2 1/8	4 1/2	6 3/8	5 1/4	5	2 1/2		1/2	2 5/8	3	1 1/2	1/2					3.06	0.28
3	30		1 3/8	1/2	5/8		10 1/8	4 7/8	7/8		3	6 1/2	9 1/8	7 1/2	7 1/4	3 1/2		3/4	3 3/4	4 1/4	1 7/8	1/2					6.25	0.56
4	30		1 3/8	1/2	5/8		10 1/8	4 7/8	7/8		3	6 1/2	9 1/8	7 1/2	7 1/4	3 1/2		3/4	3 3/4	4 1/4	1 7/8	1/2					6.25	0.56
5	30		1 3/8	1/2	5/8		10 1/8	4 7/8	7/8		3	6 1/2	9 1/8	7 1/2	7 1/4	3 1/2		3/4	3 3/4	4 1/4	1 7/8	1/2					6.25	0.56

STANDARD SIGN
M5-1 & M5-2

WISCONSIN DEPT OF TRANSPORTATION

APPROVED Matthew R Rauch
for State Traffic Engineer

DATE 2/03/03 PLATE NO. M5-1.10

PROJECT NO: | HWY: | COUNTY: | SHEET NO: 244 | E

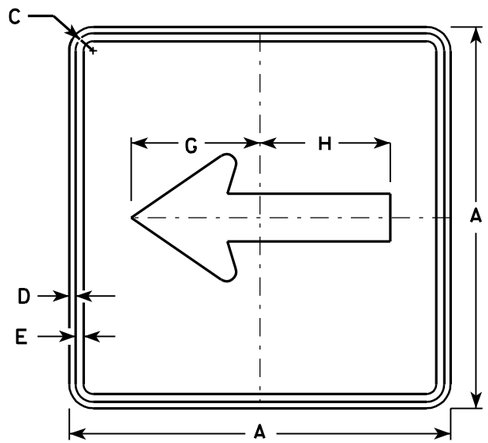

M6-1
MK6-1
MM6-1 (See Note 5)
MO6-1
MR6-1

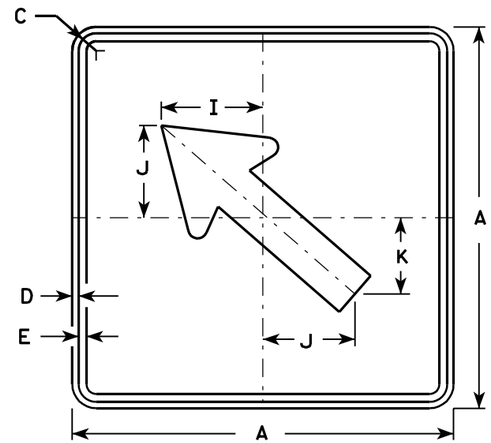

M6-2
MK6-2
MM6-2 (See Note 5)
MO6-2
MR6-2

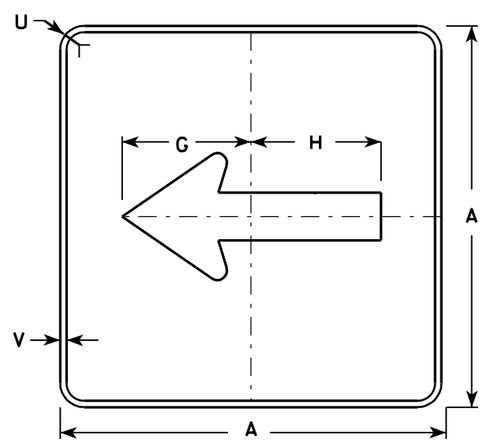

MB6-1
MG6-1
MN6-1

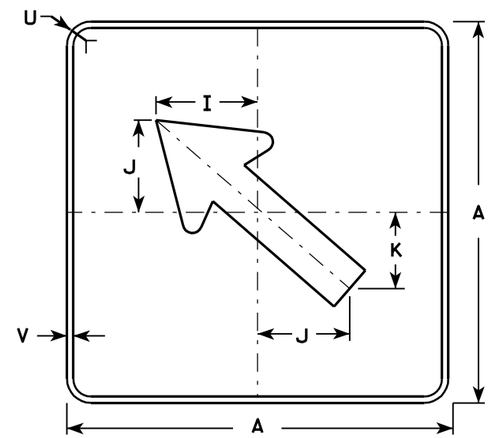

MB6-2
MG6-2
MN6-2

NOTES

1. Signs are Type II - See Note 4 - reference WIS DOT Standard Specification for HIGHWAY and STRUCTURE CONSTRUCTION latest edition.
2. Color:
   Background - See note 4
   Message - See note 4
3. Corners may be square or rounded when base material is plywood but borders shall be rounded as shown. When base material is metal, the corners and borders shall be rounded.
4. M6-1 and M6-2 Background - White - Type H Reflective (Detour or temporary Signs - Reflective)
   Message - Black
   MB6-1 and MB6-2 Background - Blue
   Message - White - Type H Reflective (Detour or temporary Signs - Reflective)
   MG6-1 and MG6-2 Background - Green
   Message - White - Type H Reflective
   MK6-1 and MK6-2 Background - Green
   Message - White - Type H Reflective
   MM6-1 and MM6-2 Background - White - Type H Reflective
   Message - Green
   MN6-1 and MN6-2 Background - Brown
   Message - White - Type H Reflective
   MO6-1 and MO6-2 Background - Orange - Reflective
   Message - Black
   MR6-1 and MR6-2 Background - Brown
   Message - Yellow - Type H Reflective
5. Border shall be omitted on MM series.

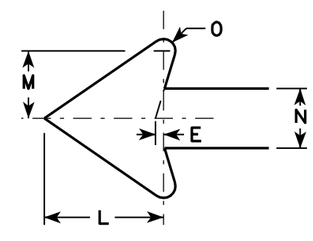

Metric equivalent for this sign is:

SIZE	
1	
2	525 mm X 525 mm
3	750 mm X 750 mm
4	750 mm X 750 mm
5	750 mm X 750 mm

SIZE	A	B	C	D	E	F	G	H	I	J	K	L	M	N	O	P	Q	R	S	T	U	V	W	X	Y	Z	Area sq. ft.	Area m2
1																												
2	21		1 1/8	3/8	3/8		7 1/2	7 1/8	5 5/8	5	4 1/4	5 1/4	3	2 5/8	1/2						1 1/2	1/2					3.06	0.28
3	30		1 3/8	1/2	5/8		10 3/4	10 1/4	8	7 1/4	6	7 1/2	4 1/4	3 3/4	3/4						1 7/8	1/2					6.25	0.56
4	30		1 3/8	1/2	5/8		10 3/4	10 1/4	8	7 1/4	6	7 1/2	4 1/4	3 3/4	3/4						1 7/8	1/2					6.25	0.56
5	30		1 3/8	1/2	5/8		10 3/4	10 1/4	8	7 1/4	6	7 1/2	4 1/4	3 3/4	3/4						1 7/8	1/2					6.25	0.56

STANDARD SIGN
M6-1 & M6-2
SERIES

WISCONSIN DEPT OF TRANSPORTATION

APPROVED Chester J Spang for State Traffic Engineer

DATE 3/20/02 PLATE NO. M6-1.11

PROJECT NO:	HWY:	COUNTY:		SHEET NO: 245	E

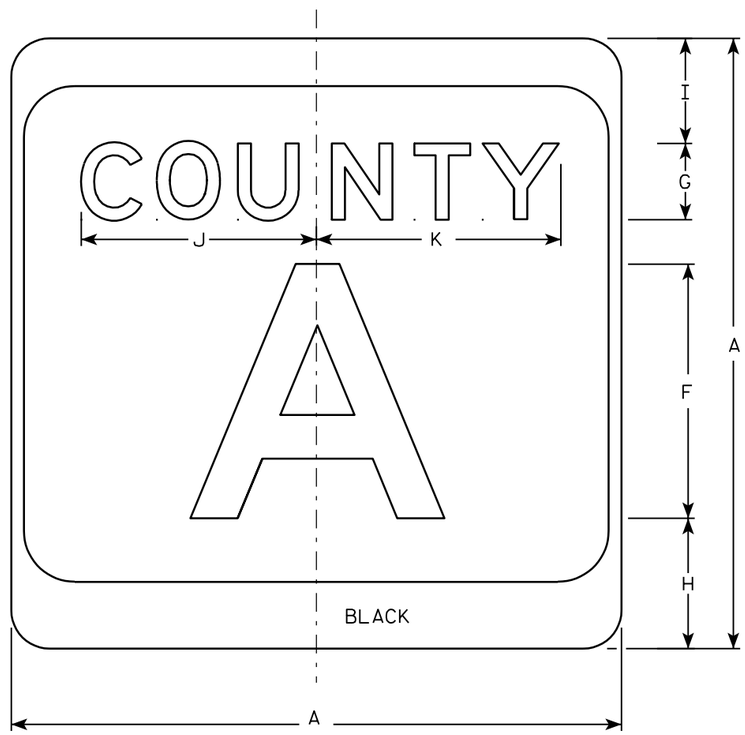

M1-5A

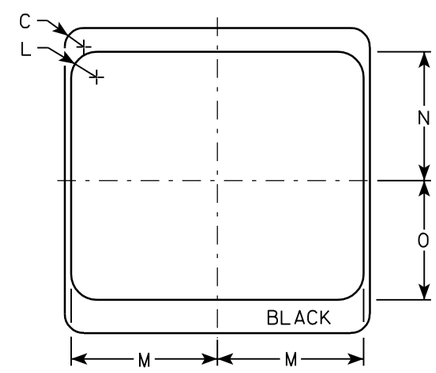

NOTES

1. Sign is Type II - see Note 7 - reference WIS DOT Standard Specification for HIGHWAY and STRUCTURE CONSTRUCTION latest edition.
2. Color:
   Background - White & Black - See Note 7
   Message - Black
3. Message Series - see Note 5
4. Corners may be square or rounded when base material is plywood but borders shall be rounded as shown. When base material is metal, the corners and borders shall be rounded.
5. Message Series E for 1 letter.
   Message Series D for 2 letters unless message is too big then Series C.
   Message Series C for 3 letters unless message is too big then Series B.
6. Substitute appropirate letters & optically adjust spacing to achieve proper balance.
7. Permanent Signs
   Background - Type H Reflective
   Detour or temporary Signs
   Background - Reflective

7

Metric equivalent for this sign is:

SIZE	
1	
2	600 mm X 600 mm
3	900 mm X 900 mm
4	900 mm X 900 mm
5	900 mm X 900 mm

SIZE	A	B	C	D	E	F	G	H	I	J	K	L	M	N	O	P	Q	R	S	T	U	V	W	X	Y	Z	Area sq. ft.	Area m2
1																												
2	24		1 1/2			10	3	5 1/8	4 1/8	9 1/4	9 5/8	2	11 1/2	10 1/8	9 3/8												4.0	.36
3	36		2 1/4			16	4	7 5/8	5 5/8	12 1/4	12 7/8	3	17 1/8	15 1/4	14												9.0	.81
4	36		2 1/4			16	4	7 5/8	5 5/8	12 1/4	12 7/8	3	17 1/8	15 1/4	14												9.0	.81
5	36		2 1/4			16	4	7 5/8	5 5/8	12 1/4	12 7/8	3	17 1/8	15 1/4	14												9.0	.81

CTH MARKER
M1-5A FOR ASSEMBLIES

WISCONSIN DEPT OF TRANSPORTATION

APPROVED Chester J Spagg for State Traffic Engineer

DATE 3/20/02 PLATE NO. M1-5A.7

PROJECT NO:	HWY:	COUNTY:		SHEET NO: 246	E

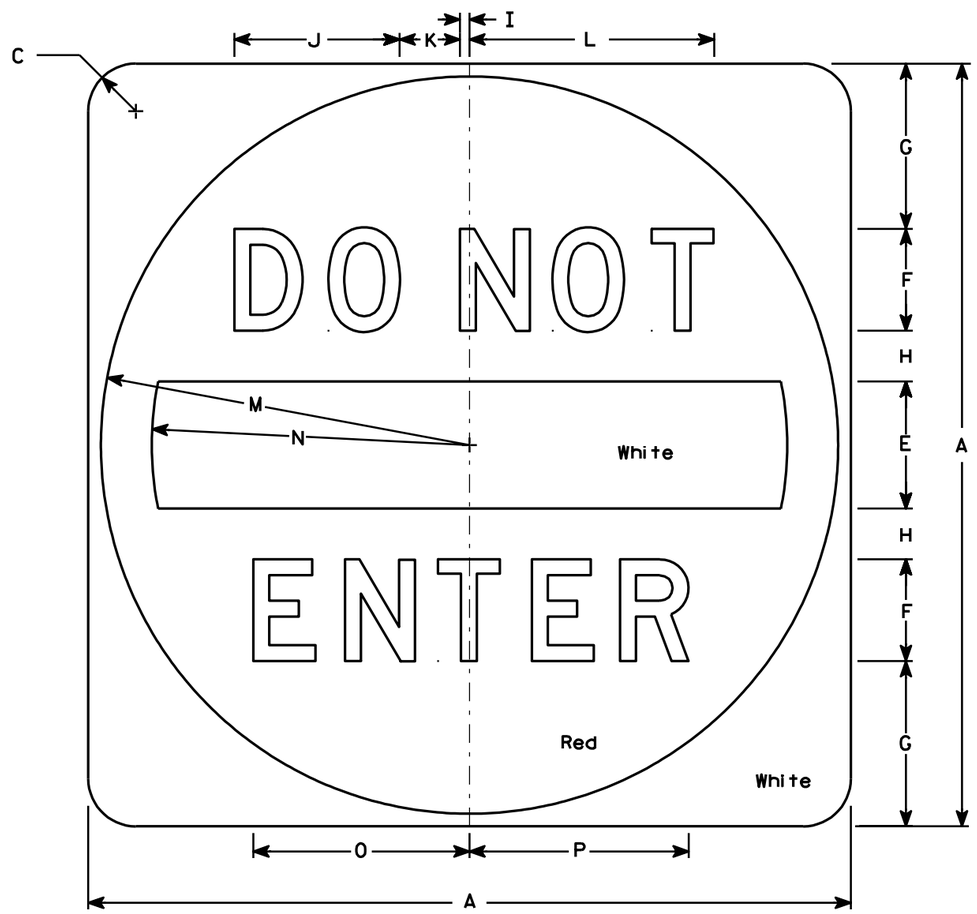

R5-1

NOTES

1. Sign is Type II - Type H Reflective - reference WIS DOT Standard Specification for HIGHWAY and STRUCTURE CONSTRUCTION latest edition.
2. Color:
   Background - See detail
   Message - White - Type H Reflective
3. Message Series - D
4. Corners may be square or rounded when base material is plywood but when base material is metal, the cornors shall be rounded.

Metric equivalent for this sign is:

SIZE	
1	
2	750 mm X 750 mm
3	900 mm X 900 mm
4	900 mm X 900 mm
5	1200 mm X 1200 mm

SIZE	A	B	C	D	E	F	G	H	I	J	K	L	M	N	O	P	Q	R	S	T	U	V	W	X	Y	Z	Area sq. ft.	Area m2
1																												
2	30		1 7/8		5	4	6 1/2	2	3/8	6 1/2	2 3/8	9 5/8	14 1/2	12 1/2	8 1/2	8 5/8											6.26	0.56
3	36		2 1/4		6	5	7 1/2	2 1/2	1/2	8 1/8	3	12 1/8	17 1/2	15	10 5/8	10 3/4											9.0	0.81
4	36		2 1/4		6	5	7 1/2	2 1/2	1/2	8 1/8	3	12 1/8	17 1/2	15	10 5/8	10 3/4											9.0	0.81
5	48		3		8	6	11	3	5/8	9 3/4	3 5/8	14 1/2	23 1/2	20	12 3/4	12 7/8											16.0	1.44

STANDARD SIGN
R5-1

WISCONSIN DEPT OF TRANSPORTATION

APPROVED Matthew R Rauch
for State Traffic Engineer

DATE 7/05/05 PLATE NO. R5-1.14

PROJECT NO: | HWY: | COUNTY: | SHEET NO: 247 | E

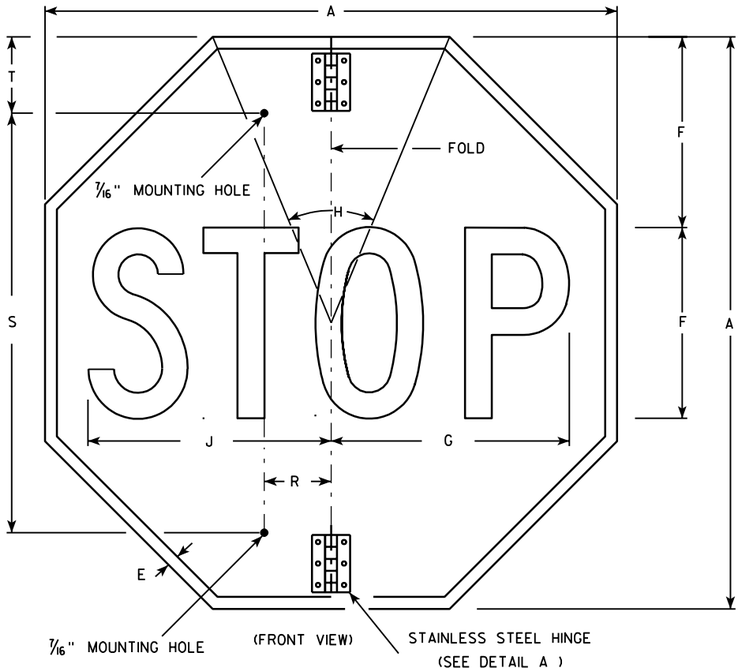

(FRONT VIEW)

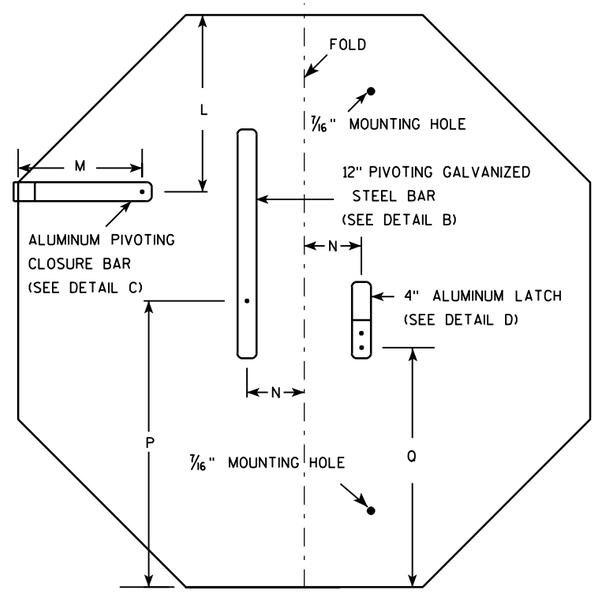

(BACK VIEW)

NOTES

1. Sign is Type II - Type H Reflective - reference WIS DOT Standard Specification for HIGHWAY and STRUCTURE CONSTRUCTION latest edition.
2. Color:
   Background - Red
   Message - White
3. Message Series - C
4. All hardware used on the folding STOP sign installation shall conform to 637.2.4 of the WIS DOT Standard Specification.

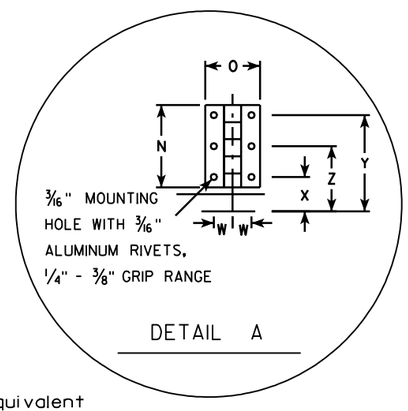

DETAIL A

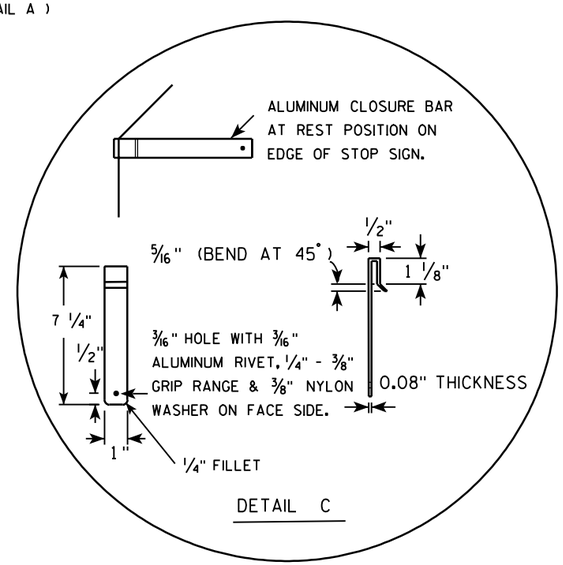

DETAIL C

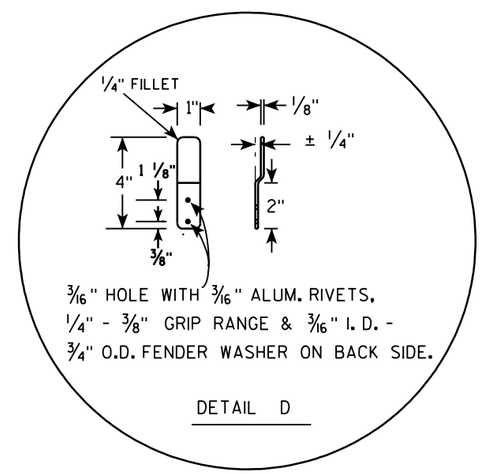

DETAIL D

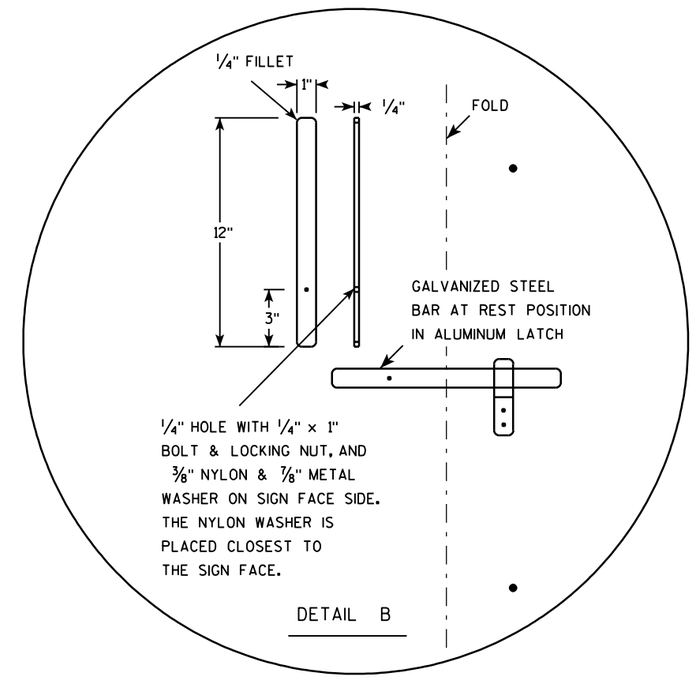

DETAIL B

Metric equivalent for this sign is:

SIZE	
1	
2	750 mm X 750 mm
3	900 mm X 900 mm
4	
5	

SIZE	A	B	C	D	E	F	G	H	I	J	K	L	M	N	O	P	Q	R	S	T	U	V	W	X	Y	Z	Area sq. ft.	Area m2
1																												
2	30				5/8	10	12 1/2	45		12 3/4		9 1/4	6 1/2	3	2	15	12 3/8	2 1/2	22	5			11/16	1 1/4	3 1/2	2 3/8	5.18	0.48
3	36				3/4	12	15	45		15 3/8		11	6 1/2	3	2	18	15 3/8	2 1/2	26	5			11/16	1 1/4	3 1/2	2 3/8	7.46	0.69
4																												
5																												

STANDARD SIGN
R1-1F

WISCONSIN DEPT OF TRANSPORTATION

APPROVED Chester J Spange for State Traffic Engineer

DATE 2/18/00 PLATE NO. R1-1F.2

PROJECT NO:	HWY:	COUNTY:		SHEET NO: 248	E

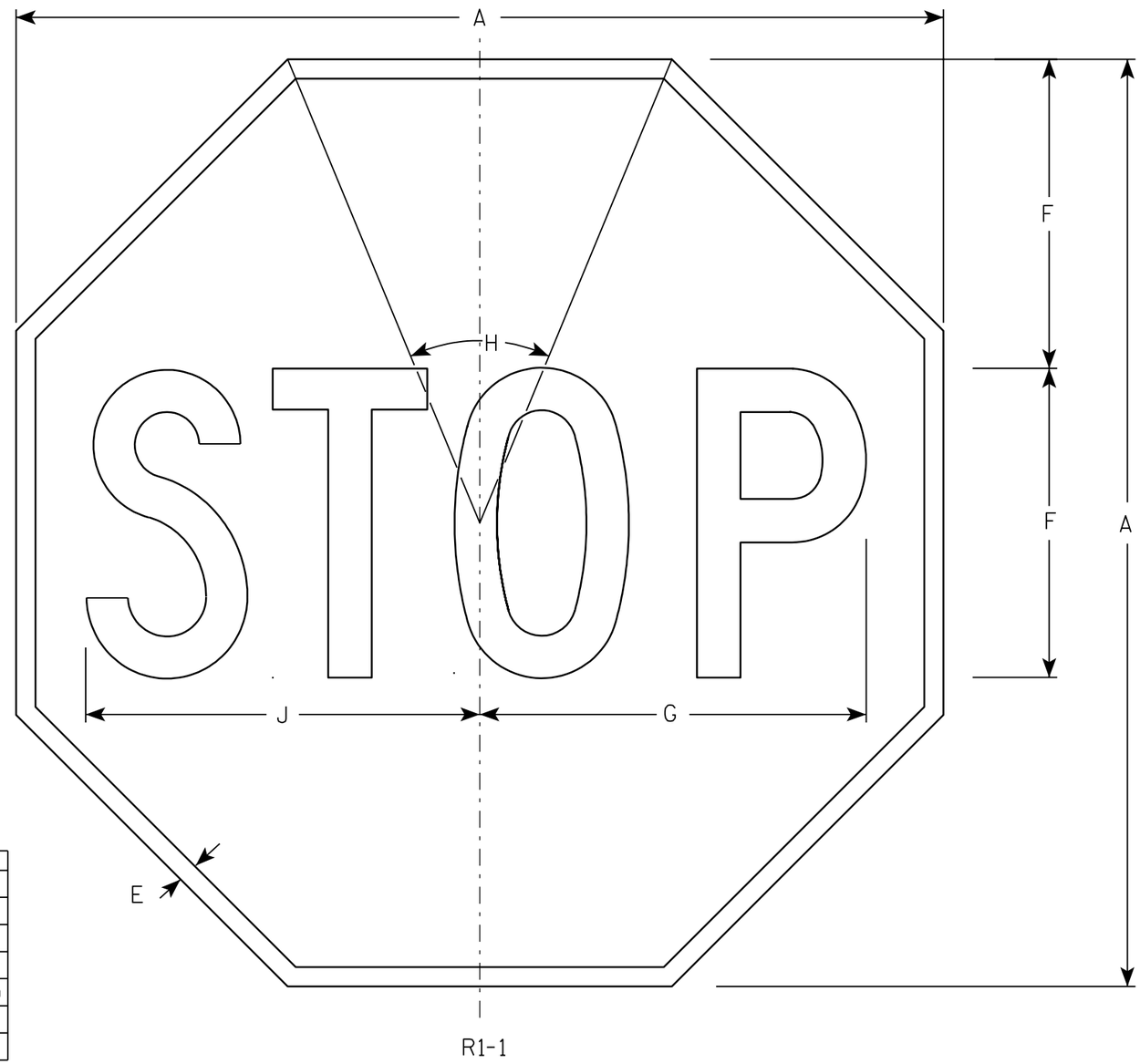

NOTES

1. Sign is Type II - Type H Reflective - reference WIS DOT Standard Specification for HIGHWAY and STRUCTURE CONSTRUCTION latest edition.
2. Color:
   Background - Red
   Message - White
3. Message Series - C

Metric equivalent for this sign is:

SIZE	
1	600 mm X 600 mm
2	750 mm X 750 mm
3	900 mm X 900 mm
4	1200 mm X 1200 mm
5	1200 mm X 1200 mm
6	450 mm X 450 mm
7	300 mm X 300 mm

SIZE	A	B	C	D	E	F	G	H	I	J	K	L	M	N	O	P	Q	R	S	T	U	V	W	X	Y	Z	Area sq. ft.	Area m2
1	24				3/8	8	10	45°		10 1/4																	3.31	0.31
2	30				5/8	10	12 1/2	45°		12 3/4																	5.18	0.48
3	36				3/4	12	15	45°		15 3/8																	7.46	0.69
4	48				1	16	20	45°		20 1/2																	13.25	1.23
5	48				1	16	20	45°		20 1/2																	13.25	1.23
6	18				3/8	6	7 3/4	45°		7 3/4																	1.86	0.17
7	12				1/4	4	5	45°		5 1/8																	0.78	0.07

STANDARD SIGN

R1-1

WISCONSIN DEPT OF TRANSPORTATION

APPROVED Chester J Spay
for State Traffic Engineer

DATE 10/15/98 PLATE NO. R1-1.11

PROJECT NO:	HWY:	COUNTY:		SHEET NO: 249	E

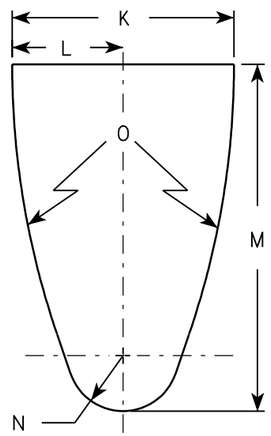

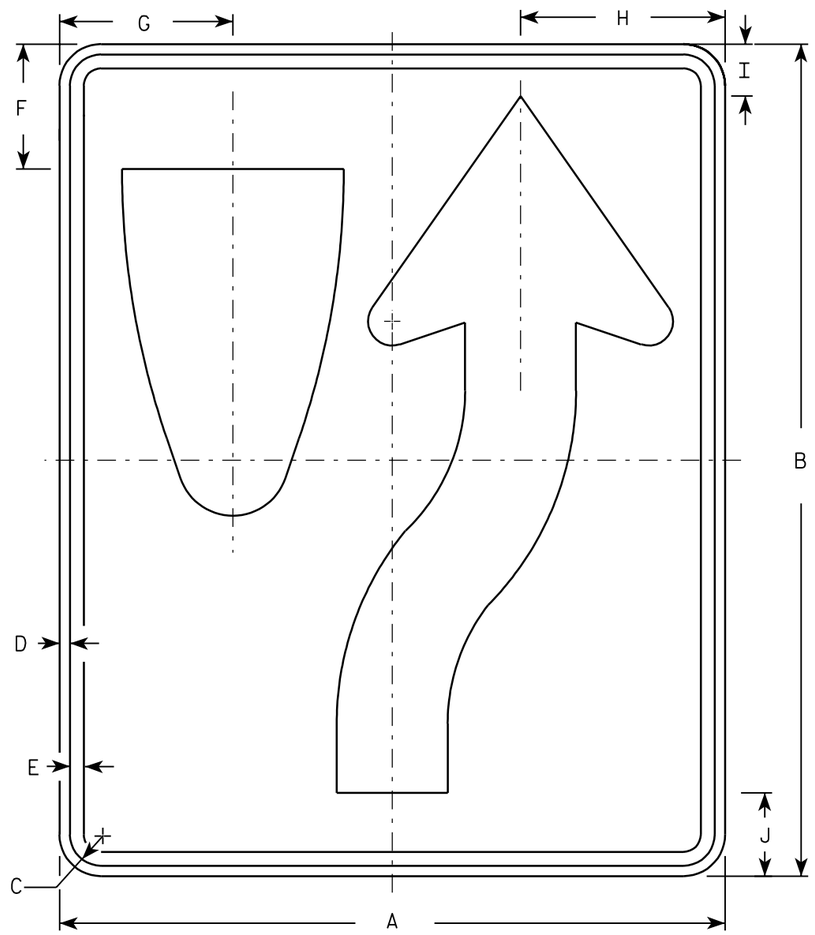

R4-7

NOTES

1. Sign is Type II - Type H Reflective - reference WIS DOT Standard Specification for HIGHWAY and STRUCTURE CONSTRUCTION latest edition. material is plywood but borders shall be rounded
2. Color:
   Background - White
   Message - Black
3. Corners may be square or rounded when base as shown. When base material is metal, the corners and borders shall be rounded.
4. R4-8 is the same as R4-7 except Legend is reversed.

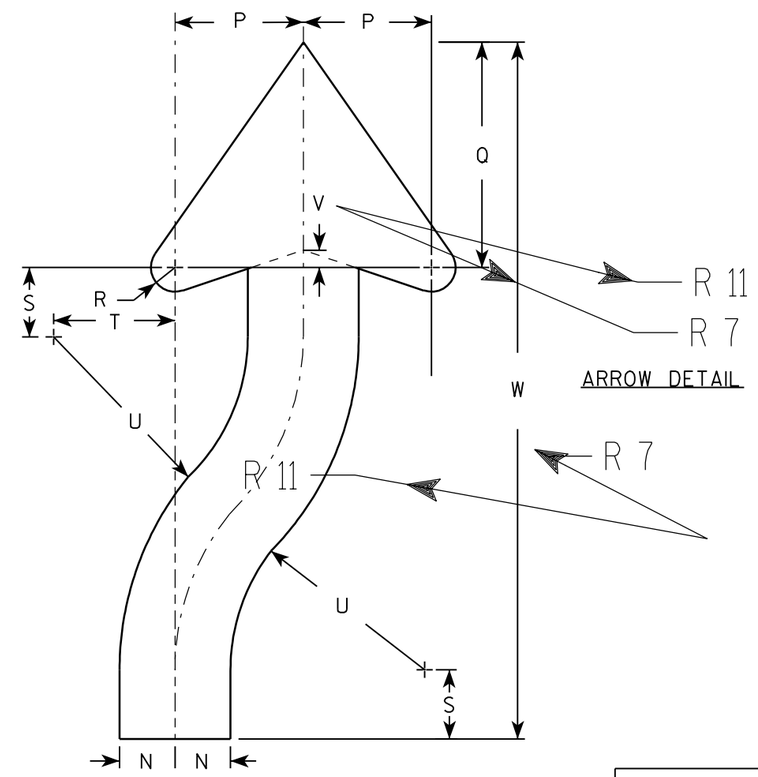

ARROW DETAIL

7

7

Metric equivalent for this sign is:

SIZE	
1	450 mm X 600 mm
2	600 mm X 750 mm
3	900 mm X 1200 mm
4	900 mm X 1200 mm
5	900 mm X 1200 mm

SIZE	A	B	C	D	E	F	G	H	I	J	K	L	M	N	O	P	Q	R	S	T	U	V	W	X	Y	Z	Area sq. ft.	Area m2
1	18	24	1 1/8	3/8	1/2	3 3/8	4 3/4	5 1/2	1 3/8	2 1/4	6	3	9 3/8	1 1/2	22 1/2	3 1/2	6 1/8	5/8	1 7/8	3 1/4	6 3/4	1/2	20 3/8				3.0	.27
2	24	30	1 1/8	3/8	1/2	4 1/2	6 1/4	7 3/8	1 7/8	3	8	4	12 1/2	2	30	4 5/8	8 1/8	7/8	2 1/2	4 3/8	9	5/8	25 1/8				5.0	.45
3	36	48	1 3/4	1/2	5/8	6 3/4	9 3/8	11 1/8	2 7/8	4 1/2	12	6	18 3/4	3	45	6 7/8	12 1/4	1 1/4	3 3/4	6 5/8	13 1/2	1	40 3/4				12.0	1.08
4	36	48	1 3/4	1/2	5/8	6 3/4	9 3/8	11 1/8	2 7/8	4 1/2	12	6	18 3/4	3	45	6 7/8	12 1/4	1 1/4	3 3/4	6 5/8	13 1/2	1	40 3/4				12.0	1.08
5	48	60	2 1/4	3/4	1	9	12 1/2	14 3/4	3 3/4	6	16	8	25	4	60	9 1/4	16 1/4	1 5/8	5	8 3/4	18	1 1/4	50 1/4				20.0	1.08

STANDARD SIGN
R4-7 & R4-8

WISCONSIN DEPT OF TRANSPORTATION

APPROVED Chester J Spang for State Traffic Engineer

DATE 2/6/02 PLATE NO. R4-7.7

PROJECT NO:	HWY:	COUNTY:		SHEET NO: 250	E

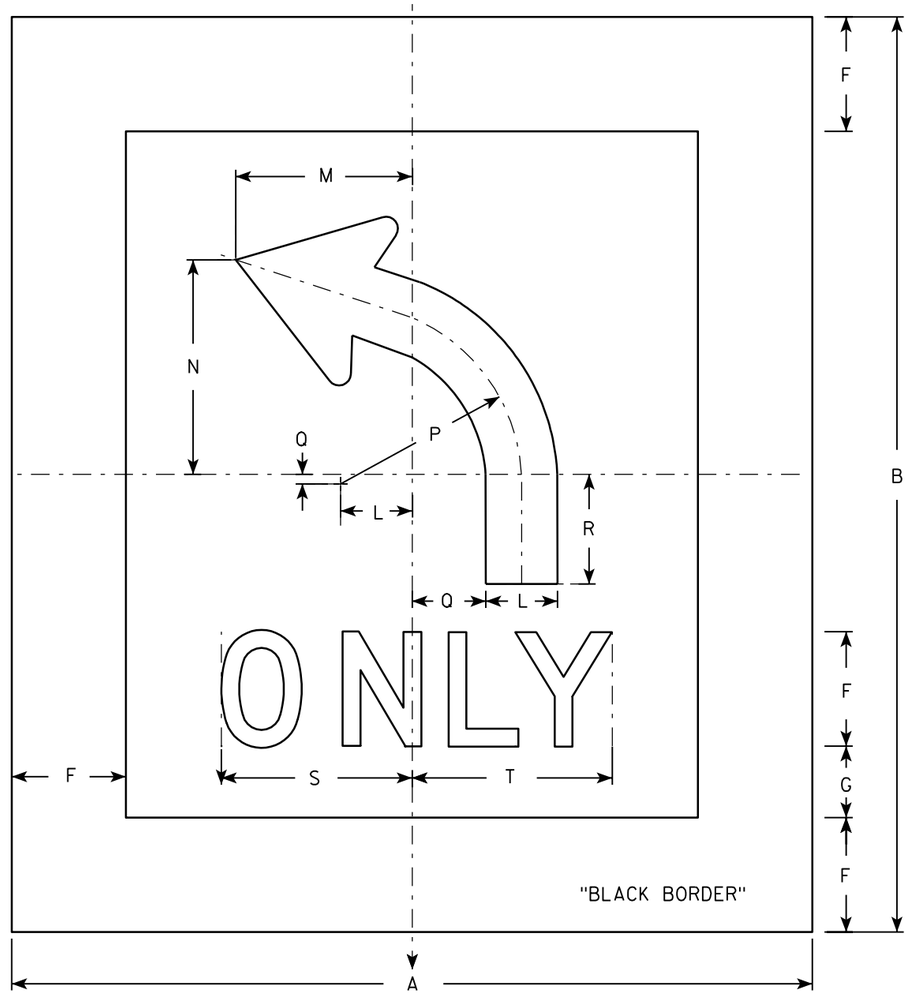

R3-5L

NOTES

1. Sign is Type II - Type H Reflective - reference WIS DOT Standard Specification for HIGHWAY and STRUCTURE CONSTRUCTION latest edition.
2. Color:
   Background - White
   Message - Black
3. Message Series - D
4. Corners may be square or rounded when base material is plywood. When base material is metal, the corners shall be rounded.
5. R3-5R is the same as R3-5L except curved portion of arrow points right.
6. The 6" border is non-reflective black.

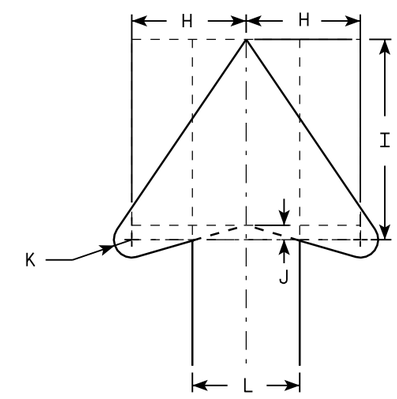

ARROW DETAIL

7

Metric equivalent for this sign is:

SIZE	
1	
2	1050 mm X 1200 mm
3	
4	
5	

SIZE	A	B	C	D	E	F	G	H	I	J	K	L	M	N	O	P	Q	R	S	T	U	V	W	X	Y	Z	Area sq. ft.	Area m2
1																												
2	42	48				6	3 3/4	4	7	1/2	5/8	3 3/4	9 1/4	11 1/4	1/2	9 1/2	3 7/8	5 3/4	10	10 1/2							14.0	1.26
3																												
4																												
5																												

STANDARD SIGN
R3-5

WISCONSIN DEPT OF TRANSPORTATION

APPROVED Chester J Spang for State Traffic Engineer

DATE 10/28/96 PLATE NO. R3-5.5

PROJECT NO:	HWY:	COUNTY:		SHEET NO: 251	E

R7-1

NOTES

1. Sign is Type II - Type H Reflective - reference WIS DOT Standard Specification for HIGHWAY and STRUCTURE CONSTRUCTION latest edition.
2. Color:
   Background - White
   Message - Red
3. Message Series - See Note 5
4. Corners may be square or rounded when base material is plywood but borders shall be rounded as shown. When base material is metal, the corners and borders shall be rounded.
5. Lines 1, 3 and 4 are series C, line 2 is series B.
6. R7-1D (double arrow)
   R7-1L (left arrow)
   R7-1R (right arrow)

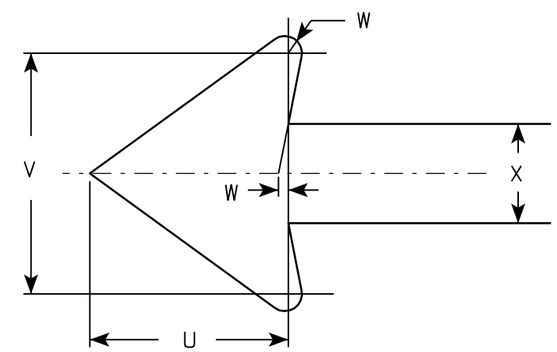

7

Metric equivalent for this sign is:

SIZE	
1	300 mm X 450 mm
2	450 mm X 600 mm
3	600 mm X 750 mm
4	
5	

SIZE	A	B	C	D	E	F	G	H	I	J	K	L	M	N	O	P	Q	R	S	T	U	V	W	X	Y	Z	Area sq. ft.	Area m2
1	12	18	1 1/8	3/8	3/8	3	1 7/8	2	7/8	5/8	1 1/2	2 1/2	2	2	4 7/8	4 7/8	2 1/4	2 1/8	2 1/2	3 7/8	1 1/2	1 3/4	1/8	3/4			1.5	0.14
2	18	24	1 1/8	3/8	1/2	4	2 1/2	2 1/2	1 1/4	1	2	3 1/4	2 3/4	2 5/8	7 1/8	7	2 3/4	2 5/8	3 1/8	5 7/8	2 1/4	2 5/8	1/4	1 1/8			3.0	0.27
3	24	30	1 1/8	3/8	1/2	5	3	3	2	1 1/4	2 1/2	4	3 1/4	3 3/8	9 1/4	9 1/4	3 1/4	3 1/4	3 3/4	7 3/4	3	3 1/2	1/4	1 1/2			5.0	0.45
4																												
5																												

STANDARD SIGN
R7-1

WISCONSIN DEPT OF TRANSPORTATION

APPROVED Chester J Spang for State Traffic Engineer

DATE 2/7/02 PLATE NO. R7-1.8

PROJECT NO:	HWY:	COUNTY:		SHEET NO: 252	E

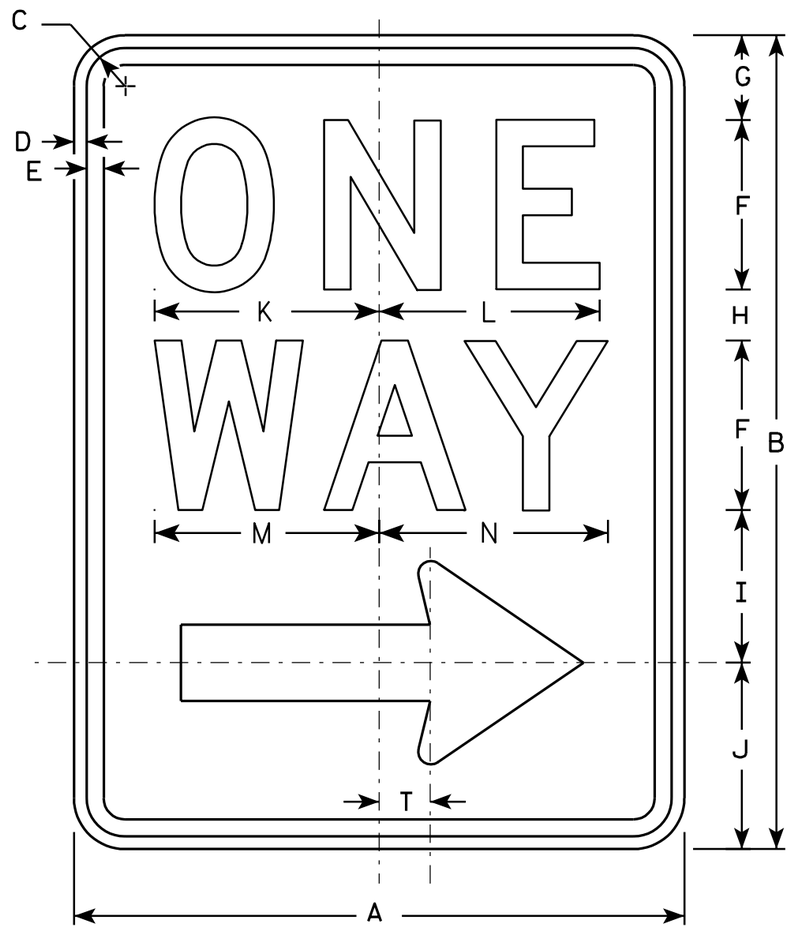

R6-2R

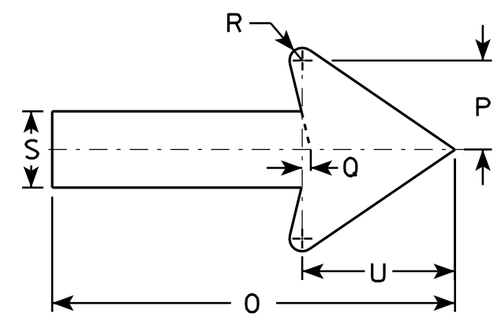

NOTES

1. Sign is Type II - Type H Reflective - reference WIS DOT Standard Specification for HIGHWAY and STRUCTURE CONSTRUCTION latest edition.
2. Color:
   Background - White
   Message - Black
3. Message Series - D
4. Corners may be square or rounded when base material is plywood but borders shall be rounded as shown. When base material is metal, the corners and borders shall be rounded.
5. R6-2L same as R6-2R except arrow points to the left.

Metric equivalent for this sign is:

SIZE	
1	450 mm X 600 mm
2	600 mm X 750 mm
3	900 mm X 1200 mm
4	900 mm X 1200 mm
5	900 mm X 1200 mm

SIZE	A	B	C	D	E	F	G	H	I	J	K	L	M	N	O	P	Q	R	S	T	U	V	W	X	Y	Z	Area sq. ft.	Area m2
1	18	24	1 1/8	3/8	1/2	5	2 1/2	1 1/2	4 1/2	5 1/2	6 5/8	6 1/2	6 5/8	6 3/4	11 7/8	2 5/8	1/4	3/8	2 1/4	1 1/2	4 1/2						3.0	0.27
2	24	30	1 1/8	3/8	1/2	6	3	2 1/2	5 1/2	7	8 1/8	8 1/8	8 1/2	8 5/8	16	3 1/2	3/8	1/2	3	2	6						5.0	0.45
3	24	30	1 1/8	3/8	1/2	6	3	2 1/2	5 1/2	7	8 1/8	8 1/8	8 1/2	8 5/8	16	3 1/2	3/8	1/2	3	2	6						5.0	0.45
4	36	48	1 7/8	1/2	5/8	10	5 1/4	3 1/4	9	10 1/2	12 3/4	12 3/4	13 1/4	13 1/2	24	5 5/8	1/2	3/4	4 3/4	3	9						12.0	1.08
5	36	48	1 7/8	1/2	5/8	10	5 1/4	3 1/4	9	10 1/2	12 3/4	12 3/4	13 1/4	13 1/2	24	5 5/8	1/2	3/4	4 3/4	3	9						12.0	1.08

STANDARD SIGN
R6-2 R&L

WISCONSIN DEPT OF TRANSPORTATION

APPROVED Matthew R Rauch
for State Traffic Engineer

DATE 10/18/05 PLATE NO. R6-2.7

PROJECT NO:	HWY:	COUNTY:		SHEET NO: 253	E

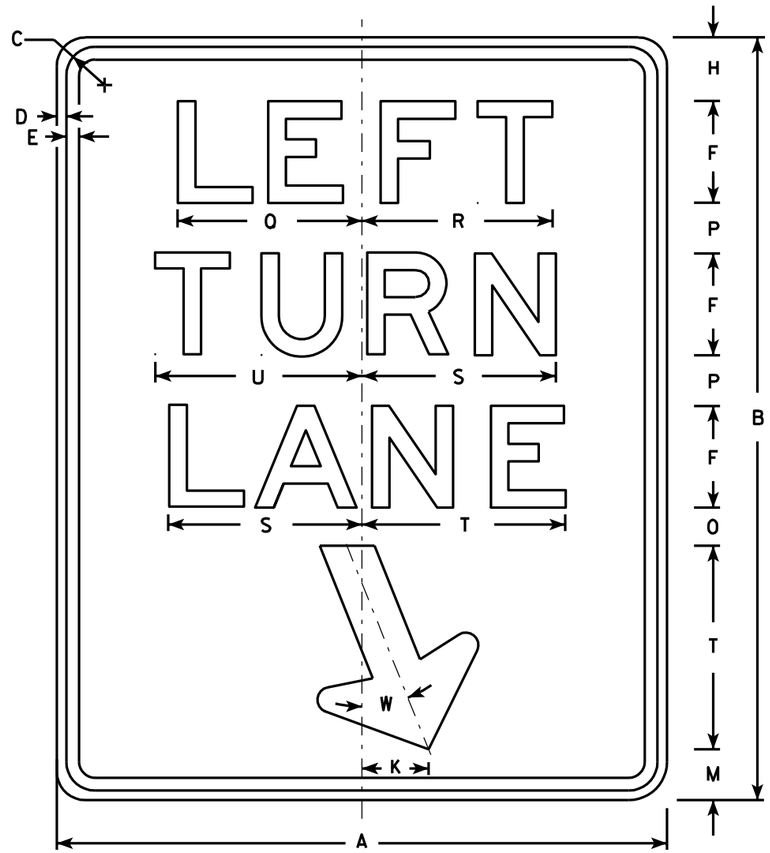

R3-55L

NOTES

1. Sign is Type II - Type H Reflective - reference WIS DOT Standard Specification for HIGHWAY and STRUCTURE CONSTRUCTION latest edition.
2. Color:
   Background - White
   Message - Black
3. Message Series - E
4. Corners may be square or rounded when base material is plywood but borders shall be rounded as shown. When base material is metal, the corners and borders shall be rounded.

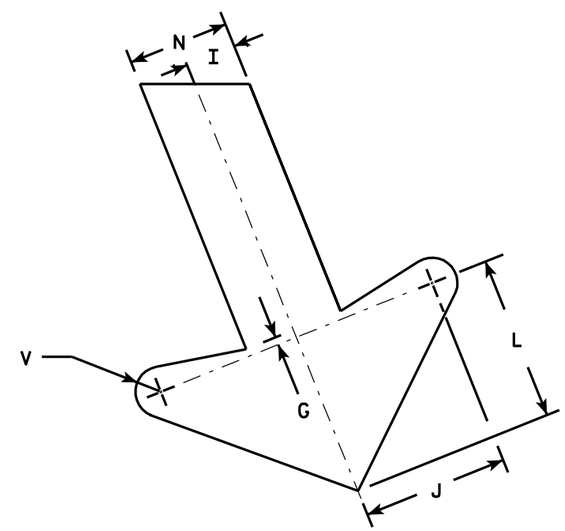

ARROW DETAIL

7

Metric equivalent for this sign is:

SIZE	
1	
2	600 mm X 750 mm
3	900 mm X 1200 mm
4	
5	

SIZE	A	B	C	D	E	F	G	H	I	J	K	L	M	N	O	P	Q	R	S	T	U	V	W	X	Y	Z	Area sq. ft.	Area m2
1																												
2	24	30	1 1/8	3/8	1/2	4	1/4	2 1/2	1	2 7/8	2 5/8	3 1/4	2	2	1 1/2	2	7 1/4	7 1/2	7 5/8	8	8 1/8	1/2	22°				5.0	0.45
3	36	48	1 3/4	1/2	5/8	6	3/8	4 1/4	1 1/2	4 1/4	4	4 7/8	3 1/4	3	3	3 3/4	10 7/8	11 1/4	11 1/2	12	12 1/4	3/4	22°				12.0	1.08
4																												
5																												

STANDARD SIGN
R3-55L

WISCONSIN DEPT OF TRANSPORTATION

APPROVED Matthew R Rauch
for State Traffic Engineer
DATE 7/05/05 PLATE NO. R3-55L.6

PROJECT NO:	HWY:	COUNTY:		SHEET NO: 254	E

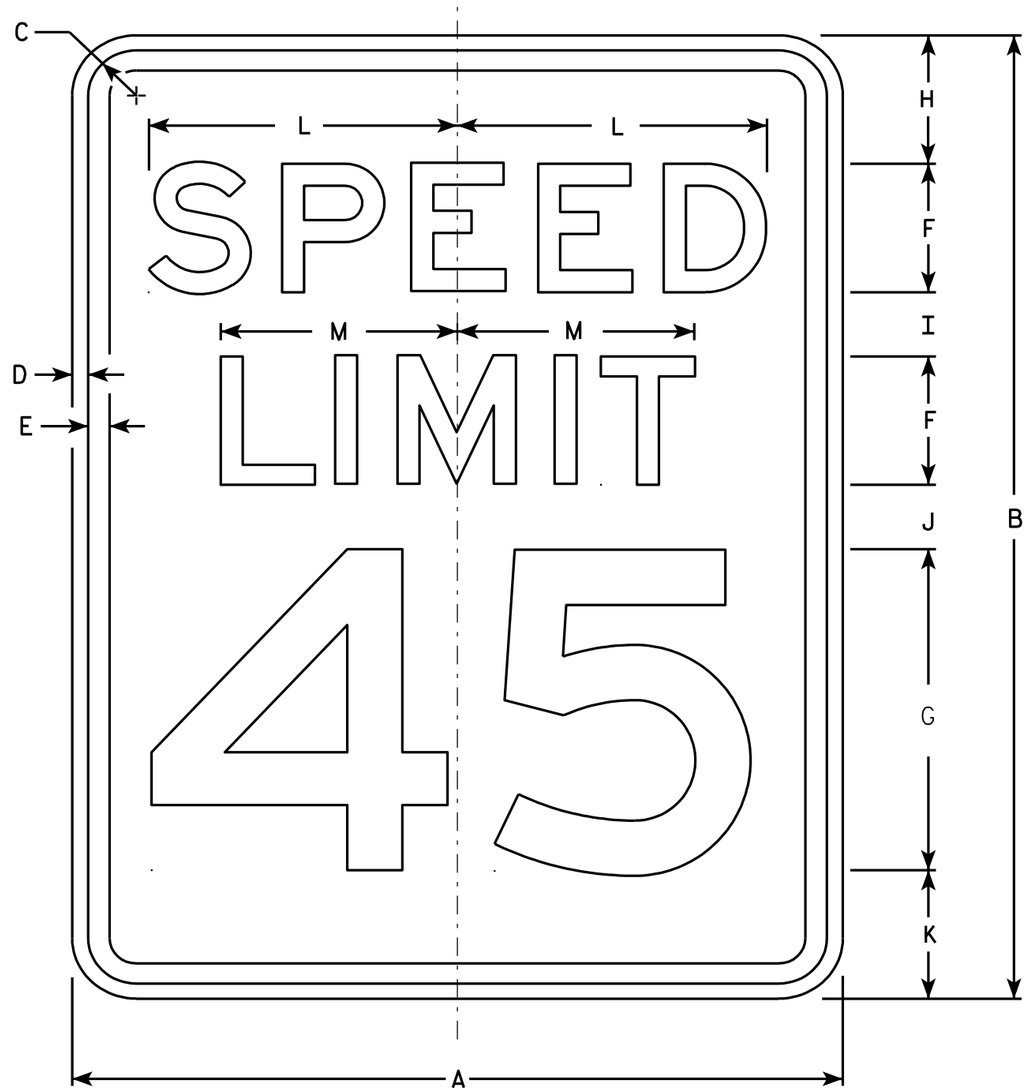

R2-1

NOTES

1. Sign is Type II - Type H Reflective - reference WIS DOT Standard Specification for HIGHWAY and STRUCTURE CONSTRUCTION latest edition.
2. Color:
   Background - White
   Message - Black
3. Message Series - E
4. Corners may be square or rounded when base material is plywood but borders shall be rounded as shown. When base material is metal, the corners and borders shall be rounded.
5. Substitute appropriate numerals and optically adjust spacing to achieve proper balance.

Metric equivalent for this sign is:

SIZE	
1	450 mm X 600 mm
2	600 mm X 750 mm
3	900 mm X 1200 mm
4	900 mm X 1200 mm
5	1200 mm X 1500 mm

SIZE	A	B	C	D	E	F	G	H	I	J	K	L	M	N	O	P	Q	R	S	T	U	V	W	X	Y	Z	Area sq. ft.	Area m2
1	18	24	1 1/8	3/8	1/2	3	8	3	2	2	3	7 1/4	5 1/2														3.0	.28
2	24	30	1 1/8	3/8	1/2	4	10	3	2 1/4	3 3/8	3 3/8	9 5/8	7 3/8														5.0	.46
3	36	48	1 3/8	1/2	5/8	6	14	6	5	5	6	14 3/8	11														12.0	1.11
4	36	48	1 3/8	1/2	5/8	6	14	6	5	5	6	14 3/8	11														12.0	1.11
5	48	60	2 1/4	3/4	1	8	20	6	4 1/2	6 3/4	6 3/4	19 1/4	14 5/8														20.0	1.86

STANDARD SIGN
R2-1

WISCONSIN DEPT OF TRANSPORTATION

APPROVED Matthew R Rauch
for State Traffic Engineer

DATE 7/05/05 PLATE NO. R2-1.12

PROJECT NO: | HWY: | COUNTY: | SHEET NO: 255 | E

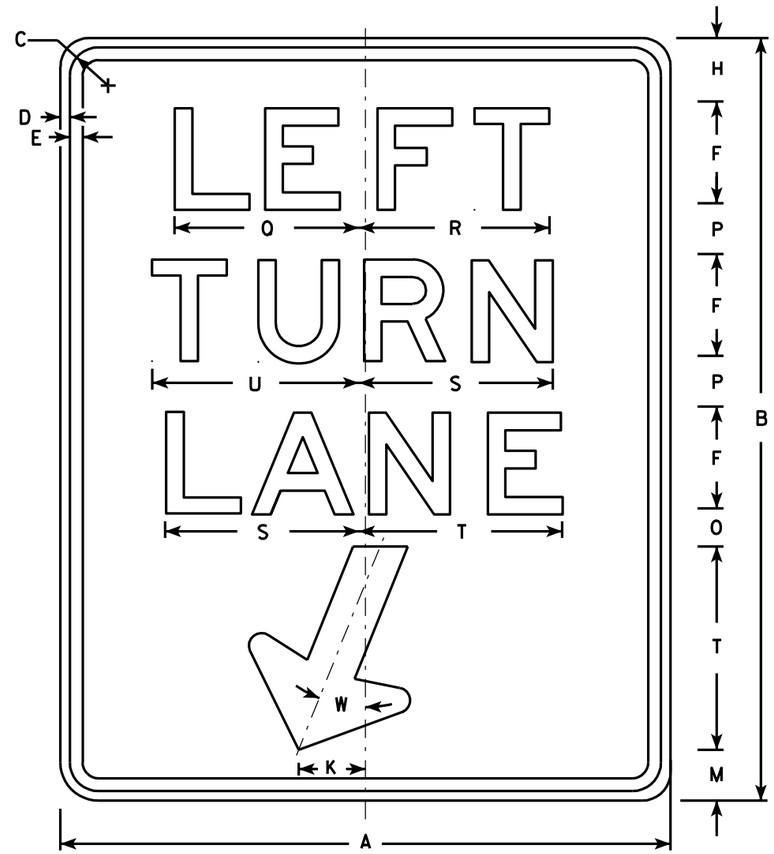

R3-56

NOTES

1. Sign is Type II - Type H Reflective - reference WIS DOT Standard Specification for HIGHWAY and STRUCTURE CONSTRUCTION latest edition.
2. Color:
   Background - White
   Message - Black
3. Message Series - E
4. Corners may be square or rounded when base material is plywood but borders shall be rounded as shown. When base material is metal, the corners and borders shall be rounded.

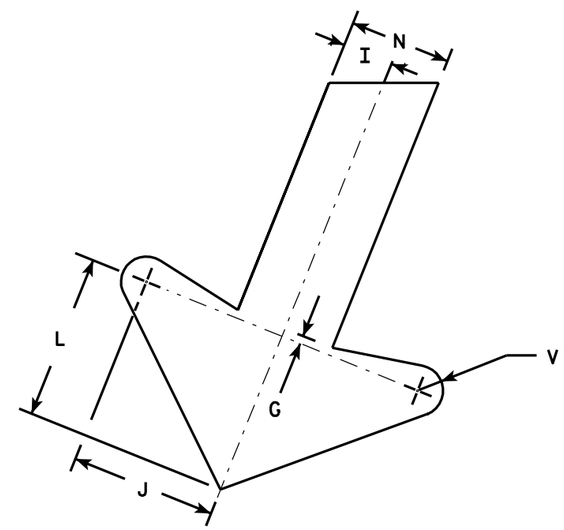

ARROW DETAIL

Metric equivalent for this sign is:

SIZE	
1	
2	600 mm X 750 mm
3	900 mm X 1200 mm
4	
5	

SIZE	A	B	C	D	E	F	G	H	I	J	K	L	M	N	O	P	Q	R	S	T	U	V	W	X	Y	Z	Area sq. ft.	Area m2
1																												
2	24	30	1 1/8	3/8	1/2	4	1/4	2 1/2	1	2 7/8	2 5/8	3 1/4	2	2	1 1/2	2	7 1/4	7 1/2	7 5/8	8	8 1/8	1/2	22°				5.0	0.45
3	36	48	1 3/4	1/2	5/8	6	3/8	4 1/4	1 1/2	4 1/4	4	4 7/8	3 1/4	3	3	3 3/4	10 7/8	11 1/4	11 1/2	12	12 1/4	3/4	22°				12.0	1.08
4																												
5																												

STANDARD SIGN
R3-56

WISCONSIN DEPT OF TRANSPORTATION

APPROVED Matthew R Rauch
for State Traffic Engineer

DATE 11/02/05 PLATE NO. R3-56.1

PROJECT NO:	HWY:	COUNTY:		SHEET NO: 256	E

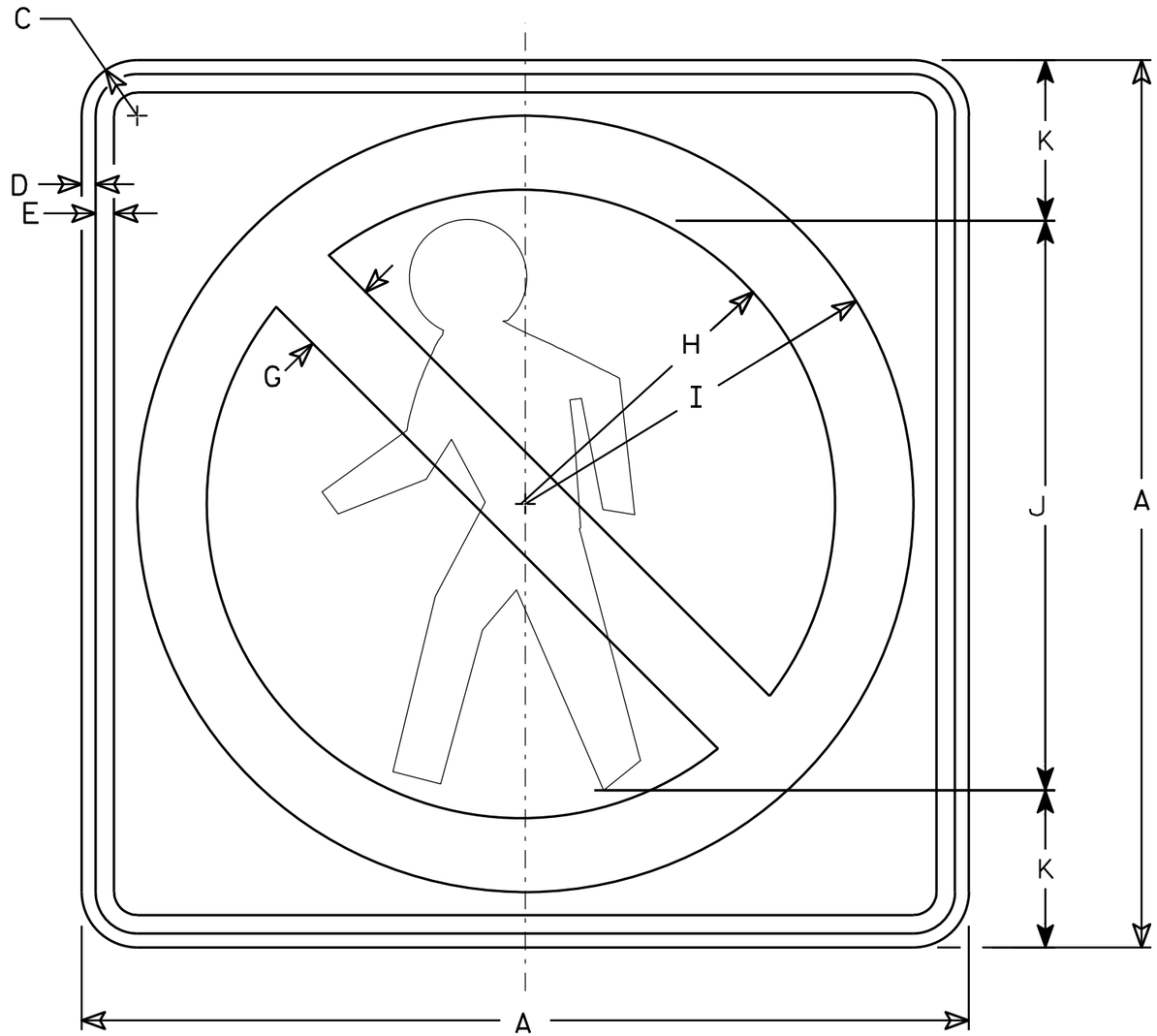

R9-3A

NOTES

1. Sign is Type II - Type H Reflective - reference WIS DOT Standard Specification for HIGHWAY and STRUCTURE CONSTRUCTION latest edition.
2. Color:
   Background - White
   Message - See note 4
3. Corners may be square or rounded when base material is plywood but borders shall be rounded as shown. When base material is metal, the corners and borders shall be rounded.
4. Border & Pedistrian are non-reflective black. Circle with diagonal bar is reflective red.

Metric equivalent for this sign is:

SIZE	
1	450 mm X 450 mm
2	600 mm X 600 mm
3	
4	
5	

SIZE	A	B	C	D	E	F	G	H	I	J	K	L	M	N	O	P	Q	R	S	T	U	V	W	X	Y	Z	Area sq. ft.	Area m2
1	18		1 1/8	3/8	3/8		1 1/2	6 3/8	7 7/8	12	3																2.25	0.20
2	24		1 1/8	3/8	1/2		2	8 1/2	10 1/2	15	4																4.00	0.36
3																												
4																												
5																												

STANDARD SIGN
R9-3A

WISCONSIN DEPT OF TRANSPORTATION

APPROVED Matthew R Rauch
for State Traffic Engineer

DATE 10/02/09 PLATE NO. R9-3A.1

PROJECT NO: | HWY: | COUNTY: | SHEET NO: 257

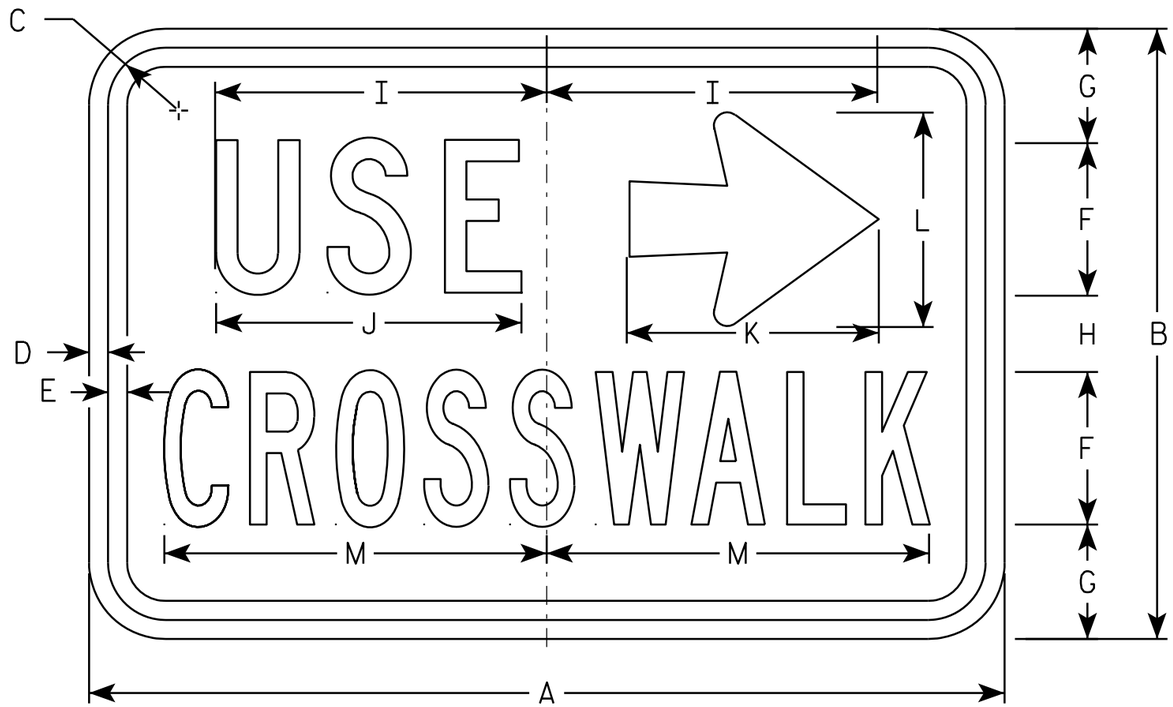

R9-3b

NOTES

1. Sign is Type II - Type H Reflective - reference WIS DOT Standard Specification for HIGHWAY and STRUCTURE CONSTRUCTION latest edition.
2. Color:
   Background - White
   Message - Black
3. Message Series - C Line 1, Series B Line 2
4. Corners may be square or rounded when base material is plywood but borders shall be rounded as shown. When base material is metal, the corners and borders shall be rounded.

7

Metric equivalent for this sign is:

SIZE	
1	
2	450 mm X 300 mm
3	
4	
5	

SIZE	A	B	C	D	E	F	G	H	I	J	K	L	M	N	O	P	Q	R	S	T	U	V	W	X	Y	Z	Area sq. ft.	Area m2
1																												
2	18	12	1 1/8	3/8	3/8	3	2 1/4	1 1/2	6 1/2	6	5	4 1/4	7 1/2														1.5	0.14
3																												
4																												
5																												

STANDARD SIGN
R9-3b

WISCONSIN DEPT OF TRANSPORTATION

APPROVED Matthew R Rauch
for State Traffic Engineer

DATE 3/05/10 PLATE NO. R9-3b.2

PROJECT NO:	HWY:	COUNTY:		SHEET NO: 258	E

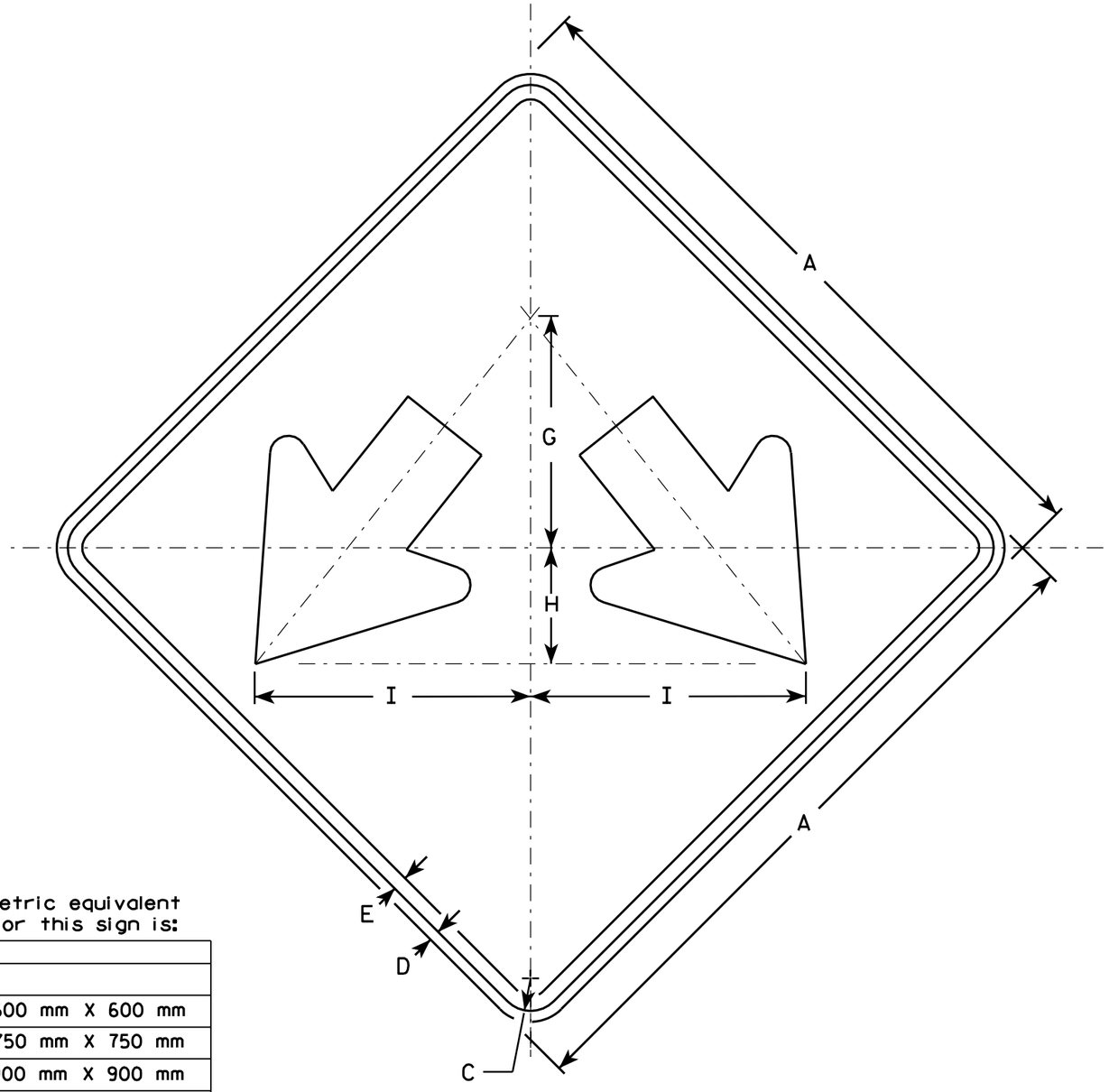

W12-1D

NOTES

1. Sign is Type II - Type H Reflective - reference WIS DOT Standard Specification for HIGHWAY and STRUCTURE CONSTRUCTION latest edition.
2. Color:
   Background - Yellow
   Message - Black
3. Corners may be square or rounded when base material is plywood but borders shall be rounded as shown. When base material is metal, the corners and borders shall be rounded.

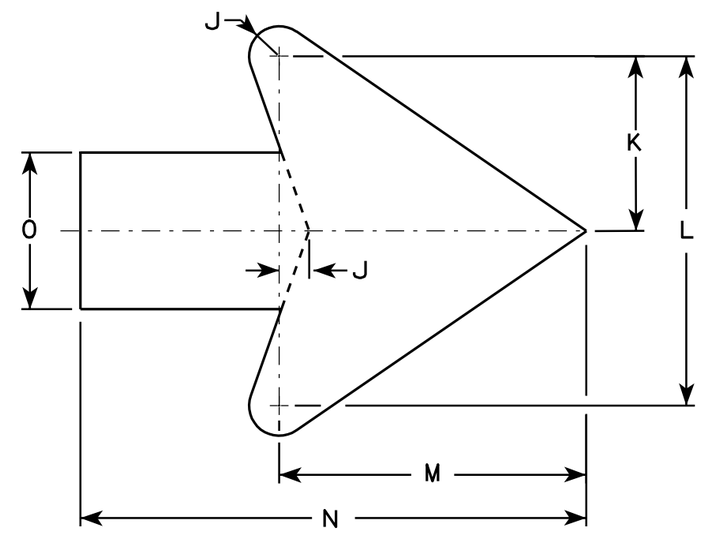

Arrow Detail

Metric equivalent for this sign is:

SIZE	
1	
2	600 mm X 600 mm
3	750 mm X 750 mm
4	900 mm X 900 mm
5	1200 mm X 1200 mm

SIZE	A	B	C	D	E	F	G	H	I	J	K	L	M	N	O	P	Q	R	S	T	U	V	W	X	Y	Z	Area sq. ft.	Area m^2
1																												
2	24		1 1/8	1/2	3/8		8	4	9 1/2	3/8	3 3/8	7 1/4	6 3/8	10 3/8	3 1/4												4.0	0.36
3	30		1 3/8	1/2	5/8		10	5	11 7/8	3/4	4 1/2	9	7 7/8	13	4												6.25	0.56
4	36		1 3/8	1/2	5/8		12	6	14 1/4	1	5 1/2	10 7/8	9 5/8	15 3/4	4 3/4												9.0	0.81
5	48		2 1/4	3/4	1		16	8	19	1 1/4	7 1/4	14 1/2	12 3/4	21	6 1/4												16.0	1.44

STANDARD SIGN
W12-1D

WISCONSIN DEPT OF TRANSPORTATION

APPROVED Matthew R Rauch
for State Traffic Engineer

DATE 3/14/06 PLATE NO. W12-1D.13

PROJECT NO:	HWY:	COUNTY:		SHEET NO: 259	E

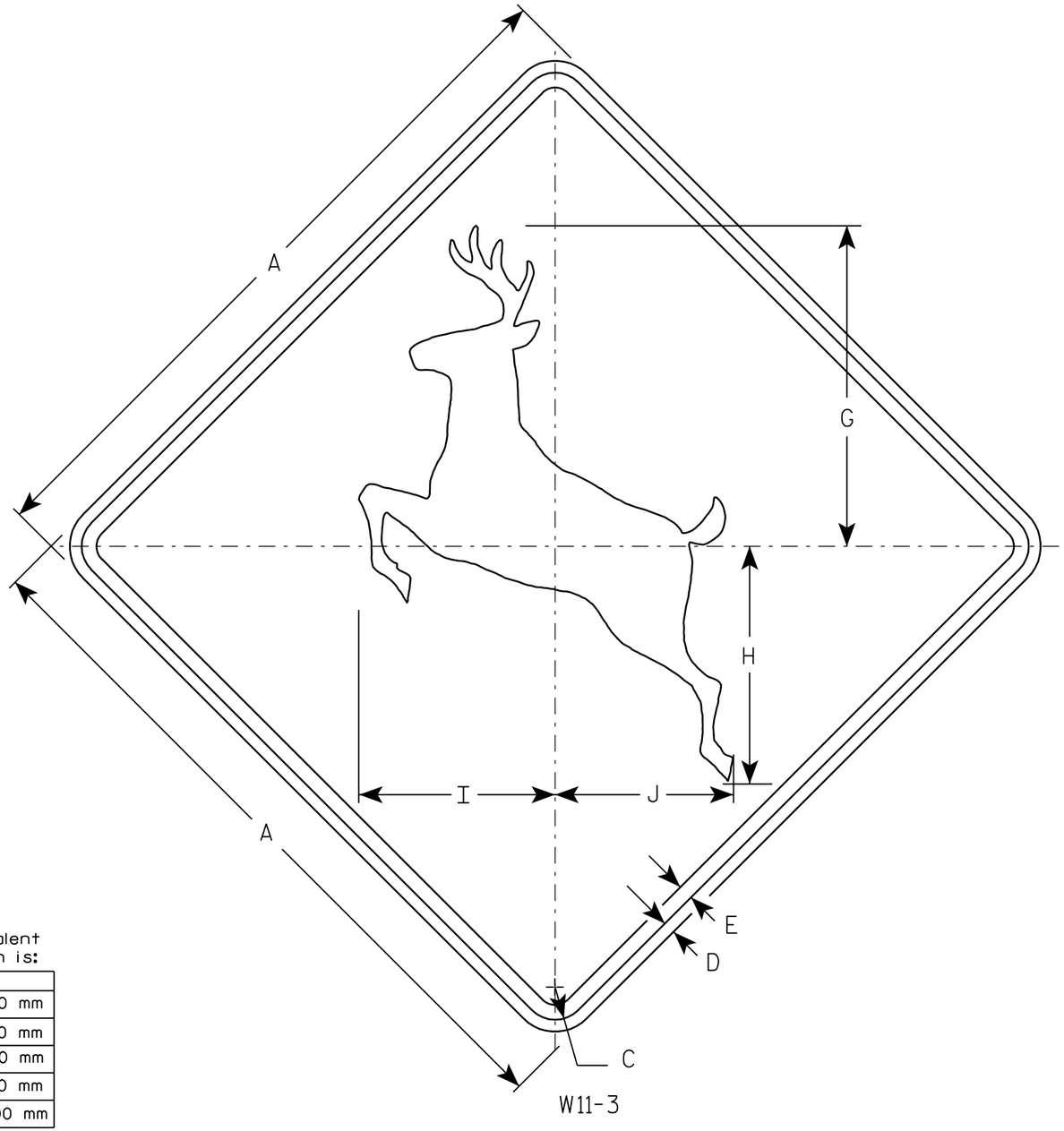

NOTES

1. Sign is Type II - Type H Reflective - reference WIS DOT Standard Specification for HIGHWAY and STRUCTURE CONSTRUCTION latest edition.
2. Color:
   Background - Yellow
   Message - Black
3. Corners may be square or rounded when base material is plywood but borders shall be rounded as shown. When base material is metal, the corners and borders shall be rounded.

Metric equivalent for this sign is:

SIZE	
1	600 mm X 600 mm
2	750 mm X 750 mm
3	900 mm X 900 mm
4	900 mm X 900 mm
5	1200 mm X 1200 mm

SIZE	A	B	C	D	E	F	G	H	I	J	K	L	M	N	O	P	Q	R	S	T	U	V	W	X	Y	Z	Area sq. ft.	Area m2
1	24		1 1/8	3/8	1/2		10 5/8	7 5/8	6 1/2	5 7/8																	4.0	0.36
2	30		1 3/8	1/2	5/8		13 5/8	10	8 1/4	7 1/2																	6.25	0.56
3	36		1 5/8	5/8	3/4		16 1/4	12	9 7/8	9																	9.0	0.81
4	36		1 5/8	5/8	3/4		16 1/4	12	9 7/8	9																	9.0	0.81
5	48		2 1/4	3/4	1		21 1/4	15 3/4	13	11 3/4																	16.0	1.44

STANDARD SIGN
W11-3

WISCONSIN DEPT OF TRANSPORTATION

APPROVED Chester J Spang for State Traffic Engineer

DATE 01/16/02 PLATE NO. W11-3.5

PROJECT NO:	HWY:	COUNTY:		SHEET NO: 260	E

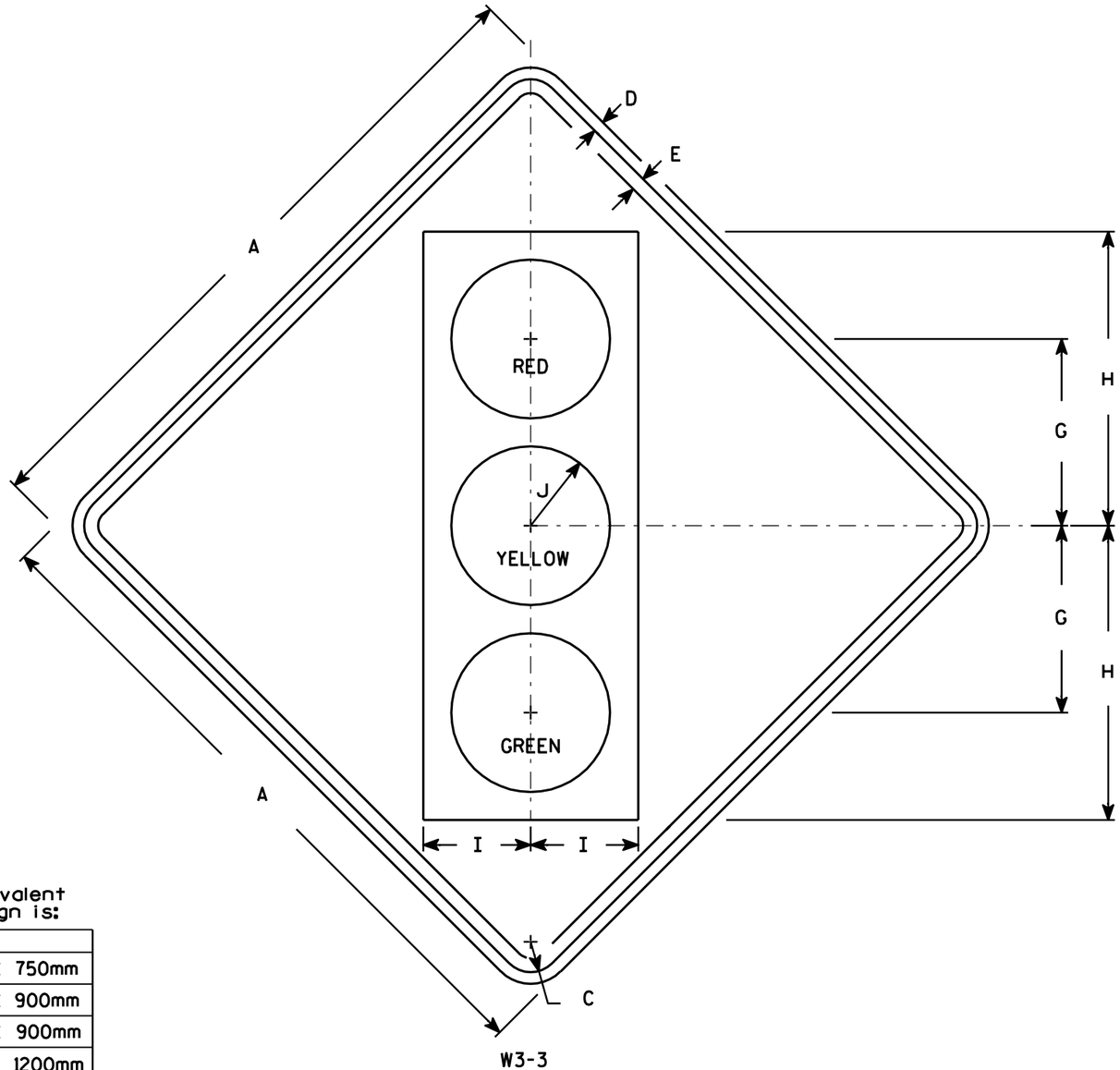

NOTES

1. Sign is Type II - Type H Reflective - reference WIS DOT Standard Specification for HIGHWAY and STRUCTURE CONSTRUCTION latest edition.
2. Color:
   Background - Yellow
   Message - See Note 4
3. Corners may be square or rounded when base material is plywood but borders shall be rounded as shown. When base material is metal, the corners and borders shall be rounded.
4. Symbol and border are non-reflective black.
   Top circle - Type H Reflectorized Red
   Center circle - Same as background
   Bottom circle - Type H Reflectorized Green

7

Metric equivalent for this sign is:

SIZE	
1	750mm X 750mm
2	900mm X 900mm
3	900mm X 900mm
4	1200mm X 1200mm
5	1200mm X 1200mm

SIZE	A	B	C	D	E	F	G	H	I	J	K	L	M	N	O	P	Q	R	S	T	U	V	W	X	Y	Z	Area sq. ft.	Area m2
1	30		1 3/8	1/2	5/8		8 3/4	13 3/4	5	3 3/4																	6.25	0.56
2	36		1 5/8	5/8	3/4		10	15 3/4	5 3/4	4 1/4																	9.0	0.81
3	36		1 5/8	5/8	3/4		10	15 3/4	5 3/4	4 1/4																	9.0	0.81
4	48		2 1/4	3/4	1		12 1/2	20	7 1/2	5																	16.0	1.44
5	48		2 1/4	3/4	1		12 1/2	20	7 1/2	5																	16.0	1.44

STANDARD SIGN
W3-3

WISCONSIN DEPT OF TRANSPORTATION

APPROVED Matthew R Rauch
for State Traffic Engineer

DATE 6/11/07 PLATE NO. W3-3.10

PROJECT NO:	HWY:	COUNTY:		SHEET NO: 261	E

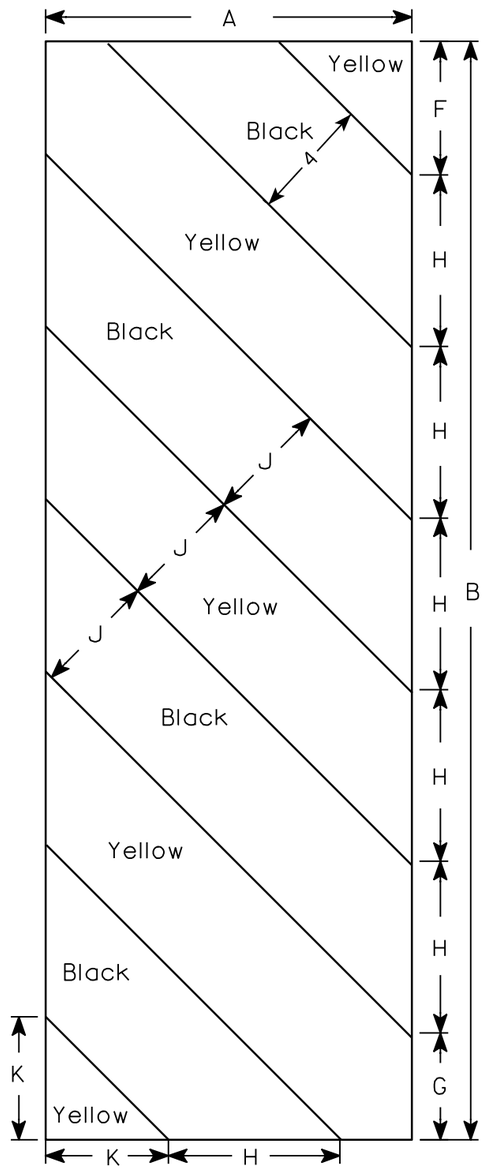

W5-52L

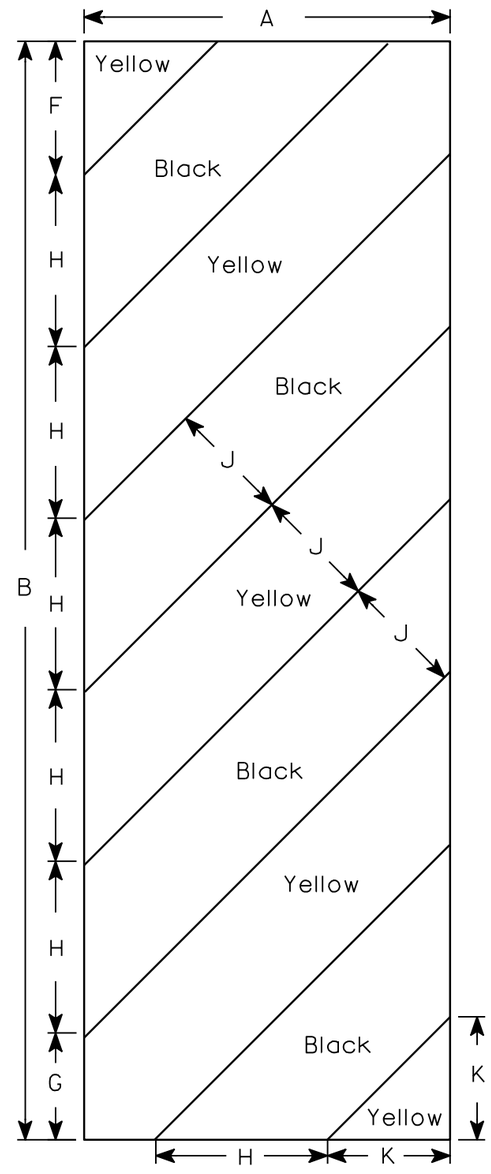

W5-52R

NOTES

1. Sign is Type II - Type H Reflective - reference WIS DOT Standard Specification for HIGHWAY and STRUCTURE CONSTRUCTION latest edition.
2. Color:
   Background - Yellow
   Message - Black
3. Corners may be square or rounded when base material is plywood but borders shall be rounded as shown. When base material is metal, the corners and borders shall be rounded.
4. Alternate colors of stripes as shown.

Metric equivalent for this sign is:

SIZE	
1	
2	300 mm X 900 mm
3	450 mm X 1350 mm
4	
5	

SIZE	A	B	C	D	E	F	G	H	I	J	K	L	M	N	O	P	Q	R	S	T	U	V	W	X	Y	Z	Area sq. ft.	Area m2
1																												
2	12	36				4 3/8	3 1/2	5 5/8	45°	4	4																3.0	0.27
3	18	54				6	5 1/2	8 1/2	45°	6	6 9/16																6.75	0.61
4																												
5																												

STANDARD SIGN
W5-52L & W5-52R

WISCONSIN DEPT OF TRANSPORTATION

APPROVED Chester J Spang for State Traffic Engineer

DATE 8/13/97 PLATE NO. W5-52.7

PROJECT NO: | HWY: | COUNTY: | SHEET NO: 262 | E

NOTES

1. Sign is Type II - Type F Reflective - reference WIS DOT Standard Specification for HIGHWAY and STRUCTURE CONSTRUCTION latest edition.
2. Color:
   Background - Yellow-Green
   Message - Black
3. Message Series - D
4. Corners may be square or rounded when base material is plywood but borders shall be rounded as shown. When base material is metal, the corners and borders shall be rounded.

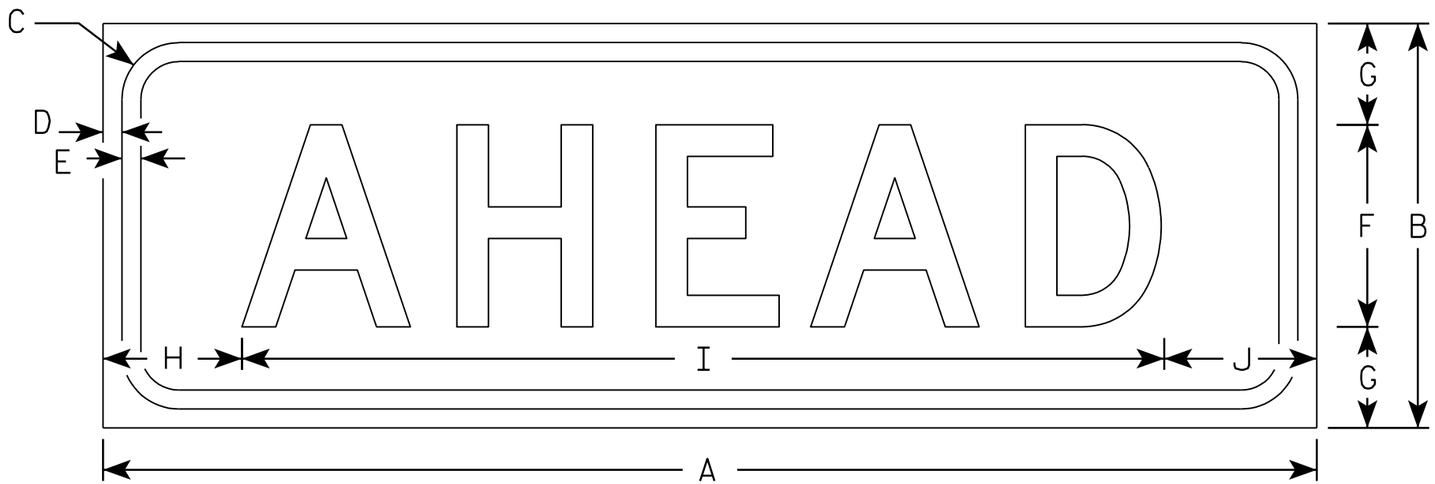

WF16-9P

7

Metric equivalent for this sign is:

SIZE	
1	600 mm X 200 mm
2	900 mm X 350 mm
3	900 mm X 350 mm
4	1200 mm X 450 mm
5	

SIZE	A	B	C	D	E	F	G	H	I	J	K	L	M	N	O	P	Q	R	S	T	U	V	W	X	Y	Z	Area sq. ft.	Area m2
1	24	8	1 1/8	3/8	3/8	4	2	2 3/4	18 1/4	3																	1.34	0.12
2	36	14	1 1/8	3/8	1/2	7	3 1/2	2 1/4	31	2 3/4																	3.5	0.32
3	36	14	1 1/8	3/8	1/2	7	3 1/2	2 1/4	31	2 3/4																	3.5	0.32
4	48	18	1 3/8	1/2	5/8	9	4 1/2	3 3/4	40 1/4	4																	6.0	0.54
5																												

STANDARD SIGN
WF16-9P

WISCONSIN DEPT OF TRANSPORTATION

APPROVED Matthew R Rauch
for State Traffic Engineer

DATE 12/17/08 PLATE NO. WF16-9P.2

PROJECT NO:	HWY:	COUNTY:		SHEET NO: 263	E

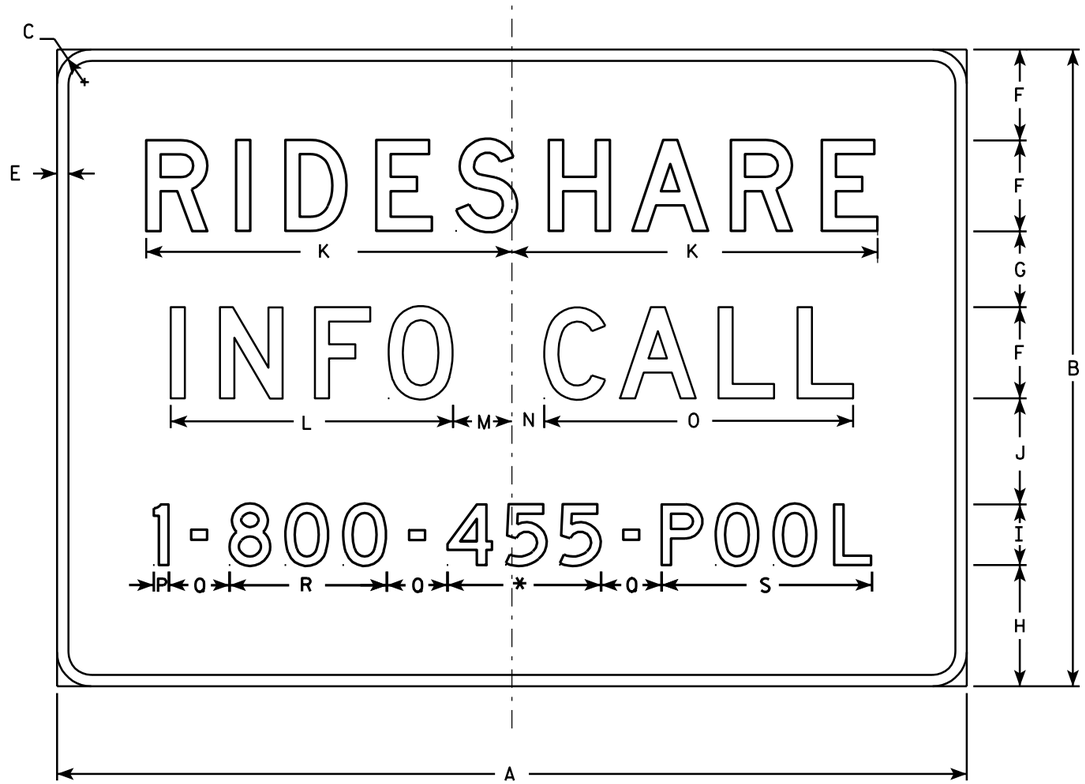

D12-2A

NOTES

1. Sign is Type II - Type H Reflective - reference WIS DOT Standard Specification for HIGHWAY and STRUCTURE CONSTRUCTION latest edition.
2. Color:
   Background - Blue
   Message - White - Type H Reflective
3. Message Series - D
4. Corners may be square or rounded when base material is plywood but borders shall be rounded as shown. When base material is metal, the corners and borders shall be rounded.
5. Substitute appropriate numerals and adjust spacing as required to achieve proper balance.

7

Metric equivalent for this sign is:

SIZE	
1	1200 mm X 525 mm
2	1500 mm X 1050 mm
3	
4	1500 mm X 1050 mm
5	1950 mm X 1350 mm

* Variable (See note 5)

SIZE	A	B	C	D	E	F	G	H	I	J	K	L	M	N	O	P	Q	R	S	T	U	V	W	X	Y	Z	Area sq. ft.	Area m2
1	48	21	1 1/2		1/2	3	2 3/4	3 1/2	3	2 3/4	12 1/8	9 3/8	2	1 1/8	10 1/4	3/4	3	7 3/4	10 5/8								7.0	0.63
2	60	42	2 1/4		3/4	6	5	8	4	7	24 1/8	18 5/8	3 7/8	2 1/8	20 1/8	1	4	10 3/8	13 7/8								17.5	1.58
3																												
4	60	42	2 1/4		3/4	6	5	8	4	7	24 1/8	18 5/8	3 7/8	2 1/8	20 1/8	1	4	10 3/8	13 7/8								17.5	1.58
5	78	54	3		1	8	6	10	6	8	30 7/8	23 5/8	4 7/8	2 1/8	26 3/8	1 1/2	5	15 1/2	21 1/4								29.25	2.63

STANDARD SIGN
D12-2A

WISCONSIN DEPT OF TRANSPORTATION

APPROVED Chester J Spay for State Traffic Engineer

DATE 1/16/02 PLATE NO. D12-2A.3

PROJECT NO:

SHEET NO: 264 E

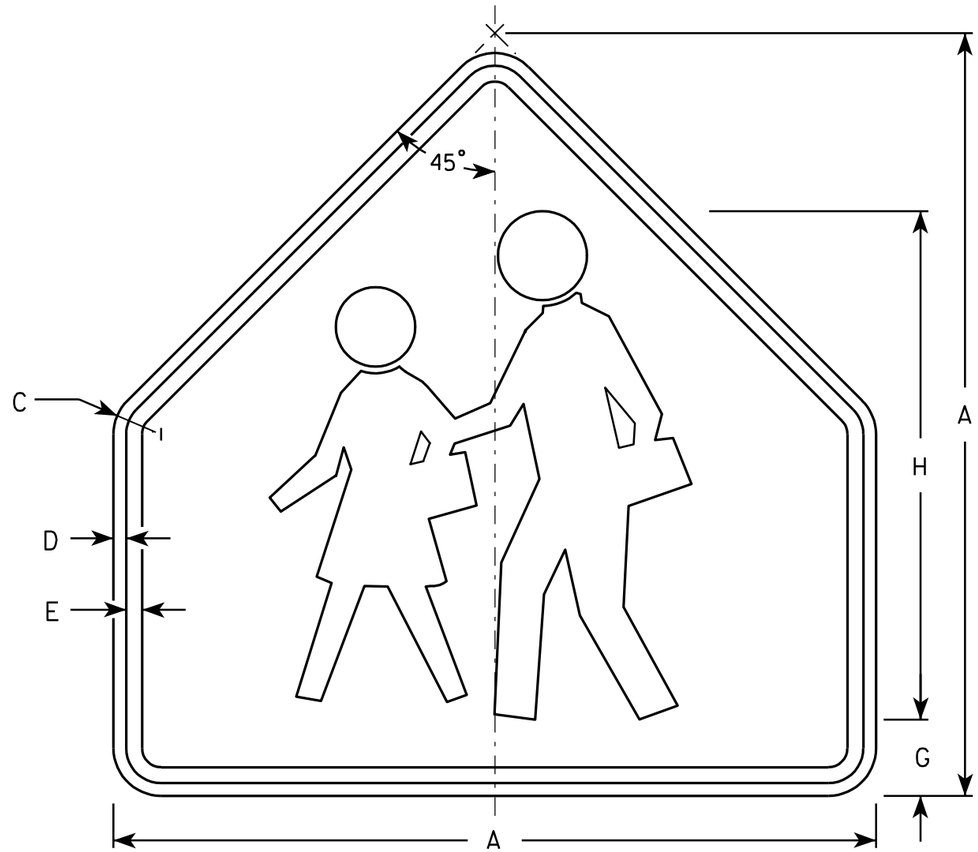

S1-1

NOTES

1. Sign is Type II - Type F Reflective - reference WIS DOT Standard Specification for HIGHWAY and STRUCTURE CONSTRUCTION latest edition.
2. Color:
   Background - Yellow-Green
   Message - Black
3. Corners may be square or rounded when base material is plywood but borders shall be rounded as shown. When base material is metal, the corners and borders shall be rounded.

7

Metric equivalent for this sign is:

SIZE	
1	750 mm X 750 mm
2	900 mm X 900 mm
3	900 mm X 900 mm
4	
5	

SIZE	A	B	C	D	E	F	G	H	I	J	K	L	M	N	O	P	Q	R	S	T	U	V	W	X	Y	Z	Area sq. ft.	Area m2
1	30		1 3/8	1/2	5/8		3	20																			4.69	0.44
2	36		1 5/8	5/8	3/4		3 1/2	24																			6.75	0.63
3	36		1 5/8	5/8	3/4		3 1/2	24																			6.75	0.63
4																												
5																												

STANDARD SIGN
S1-1

WISCONSIN DEPT OF TRANSPORTATION

APPROVED Matthew R Rauch
for State Traffic Engineer

DATE 6/30/05 PLATE NO. S1-1.8

PROJECT NO:	HWY:	COUNTY:		SHEET NO: 265	E

Division 1 STH 100 EASTBOUND SIDEWALK

STATION	Real Station	Distance	AREA (SF) Cut	Salvaged/ Unusable Pavement Material	Fill	EBS	Incremental Vol (CY) (Unadjusted) Cut Note 1	Salvaged/Unusable Pavement Material Note 2	Fill Note 3	EBS	Cumulative Vol (CY) Cut 1.00 Note 1	Expanded Fill 1.20	Expanded EBS Backfill 1.30 Note 4	Reduced EBS In Fill 0.80 Note 5	Mass Ordinate Note 6
189+00.00	18900.00	0	3.7	0.00	0.55	0.00	0.00	0.00	0.00	0.00	0.00	0.00	0.00	0.00	
189+50.00	18950.00	50	4.66	0.00	0	0.00	7.74	0.00	0.51	0.00	7.74	0.61	0.00	0.00	7.13
190+00.00	19000.00	50	5.18	0.00	0	0.00	9.11	0.00	0.00	0.00	16.85	0.61	0.00	0.00	16.24
190+50.00	19050.00	50	5.39	0.00	0	0.00	9.79	0.00	0.00	0.00	26.64	0.61	0.00	0.00	26.03
191+00.00	19100.00	50	4.73	0.00	0	0.00	9.37	0.00	0.00	0.00	36.01	0.61	0.00	0.00	35.40
191+50.00	19150.00	50	3.97	0.00	0	0.00	8.06	0.00	0.00	0.00	44.06	0.61	0.00	0.00	43.45
192+00.00	19200.00	50	3.7	0.00	0.53	0.00	7.10	0.00	0.49	0.00	51.17	1.20	0.00	0.00	49.97
192+50.00	19250.00	50	2.88	0.00	1.31	0.00	6.09	0.00	1.70	0.00	57.26	3.24	0.00	0.00	54.01
193+00.00	19300.00	50	4.62	0.00	0	0.00	6.94	0.00	1.21	0.00	64.20	4.70	0.00	0.00	59.50
193+50.00	19350.00	50	3.26	0.00	0	0.00	7.30	0.00	0.00	0.00	71.50	4.70	0.00	0.00	66.80
194+00.00	19400.00	50	3.81	0.00	0.45	0.00	6.55	0.00	0.42	0.00	78.05	5.20	0.00	0.00	72.85
194+50.00	19450.00	50	3.68	0.00	0	0.00	6.94	0.00	0.42	0.00	84.98	5.70	0.00	0.00	79.28
195+00.00	19500.00	50	3.83	0.00	0.47	0.00	6.95	0.00	0.44	0.00	91.94	6.22	0.00	0.00	85.71
195+50.00	19550.00	50	4.28	0.00	0	0.00	7.51	0.00	0.44	0.00	99.44	6.74	0.00	0.00	92.70
196+00.00	19600.00	50	3.52	0.00	0.19	0.00	7.22	0.00	0.18	0.00	106.67	6.96	0.00	0.00	99.71
196+50.00	19650.00	50	3.54	0.00	0.58	0.00	6.54	0.00	0.71	0.00	113.20	7.81	0.00	0.00	105.39
197+00.00	19700.00	50	3.25	0.00	0.66	0.00	6.29	0.00	1.15	0.00	119.49	9.19	0.00	0.00	110.30
197+50.00	19750.00	50	3.02	0.00	0.14	0.00	5.81	0.00	0.74	0.00	125.30	10.08	0.00	0.00	115.22
198+00.00	19800.00	50	2.5	0.00	0.15	0.00	5.11	0.00	0.27	0.00	130.41	10.40	0.00	0.00	120.01
198+50.00	19850.00	50	4.68	0.00	0.05	0.00	6.65	0.00	0.19	0.00	137.06	10.62	0.00	0.00	126.43
199+00.00	19900.00	50	2.05	0.00	0.11	0.00	6.23	0.00	0.15	0.00	143.29	10.80	0.00	0.00	132.49
199+50.00	19950.00	50	3.66	0.00	0.24	0.00	5.29	0.00	0.32	0.00	148.57	11.19	0.00	0.00	137.39
200+00.00	20000.00	50	3.36	0.00	0.31	0.00	6.50	0.00	0.51	0.00	155.07	11.80	0.00	0.00	143.27
200+50.00	20050.00	50	2.05	0.00	0	0.00	5.01	0.00	0.29	0.00	160.08	12.14	0.00	0.00	147.94
201+00.00	20100.00	50	3.67	0.00	0.35	0.00	5.30	0.00	0.32	0.00	165.38	12.53	0.00	0.00	152.85
201+50.00	20150.00	50	4.09	0.00	0.09	0.00	7.19	0.00	0.41	0.00	172.56	13.02	0.00	0.00	159.54
202+00.00	20200.00	50	2.29	0.00	1.29	0.00	5.91	0.00	1.28	0.00	178.47	14.56	0.00	0.00	163.92
202+10.00	20210.00	10	2.2	0.00	1.2	0.00	1.14	0.00	0.14	0.00	179.61	14.73	0.00	0.00	164.88
						COLUMN TOTALS	179.61	0.00	12.27	0.00					

Notes:	
1 - Cut	Cut includes Salvaged/Unusable Pavement material
2 - Salvaged/Unusable Pavement Material	This does not show up in cross sections
3 - Fill	Does not include Unusable Pavement Exc volume
4 - Expanded EBS	Will be backfilled with Borrow
5 - Reduced EBS in Fill	Reduced EBS Excavation that can be used in Fill
6 - Mass Ordinate	If EBS to be backfilled with Cut or Borrow: [(Cut + EBS) - ((Fill) - (Reduced EBS in Fill)) * Fill Factor)]

Division 1 STH 100 EASTBOUND SIDEWALK

STATION	Real Station	Distance	AREA (SF) Cut	Salvaged/ Unusable Pavement Material	Fill	EBS	Incremental Vol (CY) (Unadjusted) Cut Note 1	Salvaged/Unusable Pavement Material Note 2	Fill Note 3	EBS	Cumulative Vol (CY) Cut 1.00 Note 1	Expanded Fill 1.20	Expanded EBS Backfill 1.30 Note 4	Reduced EBS In Fill 0.80 Note 5	Mass Ordinate Note 6
203+58.00	20358.00	0	3.06	0.00	0.97	0.00	0.00	0.00	0.00	0.00	0.00	0.00	0.00	0.00	
204+00.00	20400.00	42	3.06	0.00	0.97	0.00	4.76	0.00	1.51	0.00	4.76	1.81	0.00	0.00	2.95
204+50.00	20450.00	50	1.35	0.00	2.3	0.00	4.08	0.00	2.62	0.00	4.08	3.14	0.00	0.00	4.42
205+00.00	20500.00	50	3.36	0.00	0.59	0.00	4.36	0.00	2.68	0.00	8.44	6.35	0.00	0.00	5.57
205+50.00	20550.00	50	1.72	0.00	2.25	0.00	4.70	0.00	2.63	0.00	13.15	9.51	0.00	0.00	7.12
206+00.00	20600.00	50	4.92	0.00	0.34	0.00	6.15	0.00	2.40	0.00	19.30	12.39	0.00	0.00	10.39
206+50.00	20650.00	50	3.93	0.00	1.52	0.00	8.19	0.00	1.72	0.00	27.49	14.45	0.00	0.00	16.52
207+00.00	20700.00	50	2.05	0.00	0	0.00	5.54	0.00	1.41	0.00	33.03	16.14	0.00	0.00	20.36
207+50.00	20750.00	50	4.47	0.00	0.76	0.00	6.04	0.00	0.70	0.00	39.06	16.99	0.00	0.00	25.56
208+00.00	20800.00	50	2.68	0.00	0.12	0.00	6.62	0.00	0.81	0.00	45.69	17.96	0.00	0.00	31.20
208+50.00	20850.00	50	2.86	0.00	0.1	0.00	5.13	0.00	0.20	0.00	50.81	18.21	0.00	0.00	36.08
209+00.00	20900.00	50	2.89	0.00	0.06	0.00	5.32	0.00	0.15	0.00	56.14	18.39	0.00	0.00	41.23
209+50.00	20950.00	50	2.34	0.00	3.95	0.00	4.84	0.00	3.71	0.00	60.98	22.84	0.00	0.00	41.62
210+00.00	21000.00	50	2.87	0.00	4.43	0.00	4.82	0.00	7.76	0.00	65.81	32.15	0.00	0.00	37.13
210+50.00	21050.00	50	6.59	0.00	0.64	0.00	8.76	0.00	4.69	0.00	74.56	37.79	0.00	0.00	40.26
211+00.00	21100.00	50	2.19	0.00	0.09	0.00	8.13	0.00	0.68	0.00	82.69	38.60	0.00	0.00	47.58
211+50.00	21150.00	50	1.95	0.00	0.16	0.00	3.83	0.00	0.23	0.00	86.53	38.87	0.00	0.00	51.13
212+00.00	21200.00	50	1.26	0.00	0.23	0.00	2.97	0.00	0.36	0.00	89.50	39.31	0.00	0.00	53.67
212+50.00	21250.00	50	1.66	0.00	0.22	0.00	2.70	0.00	0.42	0.00	92.20	39.81	0.00	0.00	55.87
213+00.00	21300.00	50	2.55	0.00	0.14	0.00	3.90	0.00	0.33	0.00	96.10	40.21	0.00	0.00	59.37
213+50.00	21350.00	50	3.48	0.00	2.36	0.00	5.58	0.00	2.31	0.00	101.69	42.99	0.00	0.00	62.18
214+00.00	21400.00	50	3.86	0.00	1.84	0.00	6.80	0.00	3.89	0.00	108.48	47.65	0.00	0.00	64.31
214+50.00	21450.00	50	2.89	0.00	0.05	0.00	6.25	0.00	1.75	0.00	114.73	49.75	0.00	0.00	68.46
215+00.00	21500.00	50	2.87	0.00	2.73	0.00	5.33	0.00	2.57	0.00	120.06	52.84	0.00	0.00	70.70
215+50.00	21550.00	50	2.42	0.00	5.15	0.00	4.90	0.00	7.30	0.00	124.96	61.60	0.00	0.00	66.84
216+00.00	21600.00	50	1.88	0.00	5.6	0.00	3.98	0.00	9.95	0.00	128.94	73.54	0.00	0.00	58.88
216+50.00	21650.00	50	3.38	0.00	2.65	0.00	4.87	0.00	7.64	0.00	133.81	82.71	0.00	0.00	54.58
217+00.00	21700.00	50	5.37	0.00	0.73	0.00	8.10	0.00	3.13	0.00	141.92	86.46	0.00	0.00	58.93
217+50.00	21750.00	50	5.96	0.00	0.87	0.00	10.49	0.00	1.48	0.00	152.41	88.24	0.00	0.00	67.64
218+00.00	21800.00	50	3.46	0.00	1.55	0.00	8.72	0.00	2.24	0.00	161.13	90.93	0.00	0.00	73.68

Notes:	
1 - Cut	Cut includes Salvaged/Unusable Pavement material
2 - Salvaged/Unusable Pavement Material	This does not show up in cross sections
3 - Fill	Does not include Unusable Pavement Exc volume
4 - Expanded EBS	Will be backfilled with Borrow
5 - Reduced EBS in Fill	Reduced EBS Excavation that can be used in Fill
6 - Mass Ordinate	If EBS to be backfilled with Cut or Borrow: [(Cut + EBS) - ((Fill) - (Reduced EBS in Fill)) * Fill Factor)]

(CONTINUED ON NEXT PAGE)

Division 1 STH 100 EASTBOUND SIDEWALK

STATION	Real Station	Distance	AREA (SF) Cut	Salvaged/ Unusable Pavement Material	Fill	EBS	Incremental Vol (CY) (Unadjusted) Cut Note 1	Salvaged/Unusable Pavement Material Note 2	Fill Note 3	EBS	Cumulative Vol (CY) Cut 1.00 Note 1	Expanded Fill 1.20	Expanded EBS Backfill 1.30 Note 4	Reduced EBS In Fill 0.80 Note 5	Mass Ordinate Note 6
218+50.00	21850.00	50	6.65	0.00	0	0.00	9.36	0.00	1.44	0.00	170.49	92.65	0.00	0.00	81.32
219+00.00	21900.00	50	3.92	0.00	0	0.00	9.79	0.00	0.00	0.00	180.28	92.65	0.00	0.00	91.10
219+50.00	21950.00	50	2.89	0.00	2.09	0.00	6.31	0.00	1.94	0.00	186.58	94.97	0.00	0.00	95.09
220+00.00	22000.00	50	2.83	0.00	2.09	0.00	5.30	0.00	3.87	0.00	191.88	99.62	0.00	0.00	95.74
220+50.00	22050.00	50	8.14	0.00	0	0.00	10.16	0.00	1.94	0.00	202.04	101.94	0.00	0.00	103.57
221+00.00	22100.00	50	6	0.00	0	0.00	13.09	0.00	0.00	0.00	215.13	101.94	0.00	0.00	116.67
221+50.00	22150.00	50	5.54	0.00	0.08	0.00	10.69	0.00	0.07	0.00	225.81	102.03	0.00	0.00	127.26
222+00.00	22200.00	50	2.05	0.00	0.03	0.00	7.03	0.00	0.10	0.00	232.84	102.15	0.00	0.00	134.17
222+50.00	22250.00	50	7.92	0.00	0.13	0.00	9.23	0.00	0.15	0.00	242.07	102.33	0.00	0.00	143.22
223+00.00	22300.00	50	7.26	0.00	0	0.00	14.06	0.00	0.12	0.00	256.13	102.47	0.00	0.00	157.13
223+50.00	22350.00	50	4.26	0.00	0.4	0.00	10.67	0.00	0.37	0.00	266.80	102.92	0.00	0.00	167.35
224+00.00	22400.00	50	2.05	0.00	0.02	0.00	5.84	0.00	0.39	0.00	272.64	103.39	0.00	0.00	172.73
224+50.00	22450.00	50	2.64	0.00	3.81	0.00	4.34	0.00	3.55	0.00	276.98	107.64	0.00	0.00	172.82
225+00.00	22500.00	50	5.91	0.00	0.05	0.00	7.92	0.00	3.57	0.00	284.90	111.93	0.00	0.00	176.45
225+50.00	22550.00	50	4.2	0.00	1.11	0.00	9.36	0.00	1.07	0.00	294.26	113.22	0.00	0.00	184.52
226+00.00	22600.00	50	3.3	0.00	3.09	0.00	6.94	0.00	3.89	0.00	301.20	117.89	0.00	0.00	186.80
226+50.00	22650.00	50	8.29	0.00	0	0.00	10.73	0.00	2.86	0.00	311.94	121.32	0.00	0.00	194.09
227+00.00	22700.00	50	3.17	0.00	0.03	0.00	10.61	0.00	0.03	0.00	322.55	121.35	0.00	0.00	204.67
227+50.00	22750.00	50	4.07	0.00	0.28	0.00	6.70	0.00	0.29	0.00	329.25	121.70	0.00	0.00	211.03
228+00.00	22800.00	50	6.31	0.00	0	0.00	9.61	0.00	0.26	0.00	338.86	122.01	0.00	0.00	220.33
228+50.00	22850.00	50	5.73	0.00	0.94	0.00	11.15	0.00	0.87	0.00	350.01	123.05	0.00	0.00	230.43
229+00.00	22900.00	50	4.76	0.00	0.07	0.00	9.71	0.00	0.94	0.00	359.72	124.17	0.00	0.00	239.03
229+50.00	22950.00	50	3.93	0.00	0.07	0.00	8.05	0.00	0.13	0.00	367.77	124.33	0.00	0.00	246.92
230+00.00	23000.00	50	3.97	0.00	0.36	0.00	7.31	0.00	0.40	0.00	375.08	124.81	0.00	0.00	253.75
230+50.00	23050.00	50	3.21	0.00	0.08	0.00	6.65	0.00	0.41	0.00	381.73	125.30	0.00	0.00	259.91
231+00.00	23100.00	50	2.14	0.00	1.72	0.00	4.95	0.00	1.67	0.00	386.69	127.30	0.00	0.00	262.87
231+50.00	23150.00	50	6.83	0.00	0	0.00	8.31	0.00	1.59	0.00	394.99	129.21	0.00	0.00	269.26
232+00.00	23200.00	50	5.24	0.00	0	0.00	11.18	0.00	0.00	0.00	406.17	129.21	0.00	0.00	280.44
232+50.00	23250.00	50	5.31	0.00	0.3	0.00	9.77	0.00	0.28	0.00	415.94	129.54	0.00	0.00	289.87
233+00.00	23300.00	50	3.81	0.00	2.02	0.00	7.90	0.00	1.85	0.00	423.83	131.76	0.00	0.00	296.10
						COLUMN TOTALS	428.59	0.00	111.31	0.00					

Notes:	
1 - Cut	Cut includes Salvaged/Unusable Pavement material
2 - Salvaged/Unusable Pavement Material	This does not show up in cross sections
3 - Fill	Does not include Unusable Pavement Exc volume
4 - Expanded EBS	Will be backfilled with Borrow
5 - Reduced EBS in Fill	Reduced EBS Excavation that can be used in Fill
6 - Mass Ordinate	If EBS to be backfilled with Cut or Borrow: [(Cut + EBS) - ((Fill) - (Reduced EBS in Fill)) * Fill Factor)]

Division 2 STH 100 WESTBOUND SIDEWALK

STATION	Real Station	Distance	AREA (SF) Cut	Salvaged/ Unusable Pavement Material	Fill	EBS	Incremental Vol (CY) (Unadjusted) Cut Note 1	Salvaged/Unusable Pavement Material Note 2	Fill Note 3	EBS	Cumulative Vol (CY) Cut 1.00 Note 1	Expanded Fill 1.20	Expanded EBS Backfill 1.30 Note 4	Reduced EBS In Fill 0.80 Note 5	Mass Ordinate Note 6
181+50.00	18150.00	0	2.05	0.00	1	0.00	0.00	0.00	0.00	0.00	0.00	0.00	0.00	0.00	
182+00.00	18200.00	50	3.28	0.00	1	0.00	4.94	0.00	1.85	0.00	4.94	2.22	0.00	0.00	2.71
182+50.00	18250.00	50	3.64	0.00	0.54	0.00	6.41	0.00	1.43	0.00	11.34	3.93	0.00	0.00	7.41
183+00.00	18300.00	50	4.65	0.00	0.12	0.00	7.68	0.00	0.61	0.00	19.02	4.67	0.00	0.00	14.35
183+50.00	18350.00	50	4.44	0.00	0.15	0.00	8.42	0.00	0.25	0.00	27.44	4.97	0.00	0.00	22.47
184+00.00	18400.00	50	4.02	0.00	0.28	0.00	7.83	0.00	0.40	0.00	35.27	5.44	0.00	0.00	29.82
184+50.00	18450.00	50	3.89	0.00	0.1	0.00	7.32	0.00	0.35	0.00	42.59	5.87	0.00	0.00	36.73
185+00.00	18500.00	50	3.56	0.00	0.35	0.00	6.90	0.00	0.42	0.00	49.49	6.37	0.00	0.00	43.12
185+50.00	18550.00	50	2.05	0.00	0	0.00	5.19	0.00	0.32	0.00	54.69	6.76	0.00	0.00	47.93
186+00.00	18600.00	50	2.05	0.00	0.06	0.00	3.80	0.00	0.06	0.00	58.48	6.82	0.00	0.00	51.66
186+50.00	18650.00	50	3.48	0.00	0.52	0.00	5.12	0.00	0.54	0.00	63.60	7.47	0.00	0.00	56.14
187+00.00	18700.00	50	6.67	0.00	0	0.00	9.40	0.00	0.48	0.00	73.00	8.04	0.00	0.00	64.96
187+50.00	18750.00	50	2.05	0.00	0.07	0.00	8.07	0.00	0.06	0.00	81.07	8.12	0.00	0.00	72.95
188+00.00	18800.00	50	5.92	0.00	0.03	0.00	7.38	0.00	0.09	0.00	88.45	8.23	0.00	0.00	80.22
188+50.00	18850.00	50	7.2	0.00	0	0.00	12.15	0.00	0.03	0.00	100.60	8.27	0.00	0.00	92.34
189+00.00	18900.00	50	5.7	0.00	0.45	0.00	11.94	0.00	0.42	0.00	112.55	8.77	0.00	0.00	103.78
189+50.00	18950.00	50	3.83	0.00	0.19	0.00	8.82	0.00	0.59	0.00	121.37	9.48	0.00	0.00	111.89
190+00.00	19000.00	50	3.08	0.00	1.63	0.00	6.40	0.00	1.69	0.00	127.77	11.50	0.00	0.00	116.27
190+50.00	19050.00	50	3.74	0.00	0.29	0.00	6.31	0.00	1.78	0.00	134.08	13.63	0.00	0.00	120.45
191+00.00	19100.00	50	4.46	0.00	1.55	0.00	7.59	0.00	1.70	0.00	141.68	15.68	0.00	0.00	126.00
191+50.00	19150.00	50	1.31	0.00	3.33	0.00	5.34	0.00	4.52	0.00	147.02	21.10	0.00	0.00	125.92
192+00.00	19200.00	50	3.81	0.00	2.31	0.00	4.74	0.00	5.22	0.00	151.76	27.37	0.00	0.00	124.39
192+50.00	19250.00	50	3.77	0.00	2.16	0.00	7.02	0.00	4.14	0.00	158.78	32.33	0.00	0.00	126.44
193+00.00	19300.00	50	4.29	0.00	0.05	0.00	7.46	0.00	2.05	0.00	166.24	34.79	0.00	0.00	131.45
193+50.00	19350.00	50	10.38	0.00	0	0.00	13.58	0.00	0.05	0.00	179.82	34.84	0.00	0.00	144.98
194+00.00	19400.00	50	5.05	0.00	0.24	0.00	14.29	0.00	0.22	0.00	194.11	35.11	0.00	0.00	159.00
194+50.00	19450.00	50	2.76	0.00	1.94	0.00	7.23	0.00	2.02	0.00	201.34	37.53	0.00	0.00	163.81
195+00.00	19500.00	50	3.31	0.00	0.46	0.00	5.62	0.00	2.22	0.00	206.96	40.20	0.00	0.00	166.76
195+50.00	19550.00	50	4.01	0.00	0.15	0.00	6.78	0.00	0.56	0.00	213.74	40.88	0.00	0.00	172.86
196+00.00	19600.00	50	6.21	0.00	0	0.00	9.46	0.00	0.14	0.00	223.20	41.04	0.00	0.00	182.16
196+50.00	19650.00	50	7.21	0.00	0	0.00	12.43	0.00	0.00	0.00	235.63	41.04	0.00	0.00	194.59
197+00.00	19700.00	50	6.09	0.00	0	0.00	12.31	0.00	0.00	0.00	247.94	41.04	0.00	0.00	206.90
197+50.00	19750.00	50	5.18	0.00	0	0.00	10.44	0.00	0.00	0.00	258.38	41.04	0.00	0.00	217.34
198+00.00	19800.00	50	5.41	0.00	0.04	0.00	9.81	0.00	0.04	0.00	268.19	41.09	0.00	0.00	227.10
198+50.00	19850.00	50	4.73	0.00	0.05	0.00	9.39	0.00	0.08	0.00	277.57	41.19	0.00	0.00	236.39
199+00.00	19900.00	50	3.91	0.00	0.66	0.00	8.00	0.00	0.66	0.00	285.57	41.98	0.00	0.00	243.60
199+50.00	19950.00	50	6.17	0.00	0.04	0.00	9.33	0.00	0.65	0.00	294.91	42.76	0.00	0.00	252.15
200+00.00	20000.00	50	4.46	1.00	0.35	0.00	9.84	0.00	0.36	0.00	304.75	43.19	0.00	0.00	261.56
200+50.00	20050.00	50	6.87	2.00	0.04	0.00	10.49	0.00	0.36	0.00	315.24	43.62	0.00	0.00	271.62
201+00.00	20100.00	50	4.03	3.00	0.61	0.00	10.09	0.00	0.60	0.00	325.33	44.34	0.00	0.00	280.99
201+50.00	20150.00	50	3.6	4.00	0.25	0.00	7.06	0.00	0.80	0.00	332.40	45.30	0.00	0.00	287.10
202+00.00	20200.00	50	4.23	5.00	0.06	0.00	7.25	0.00	0.29	0.00	339.65	45.64	0.00	0.00	294.00
202+10.00	20210.00	10	4.2	0.00	0.06	0.00	1.73	0.00	0.23	0.00	341.38	45.92	0.00	0.00	295.29
						COLUMN TOTALS	341.38	0.00	38.26	0.00					

9

9

Division 2 STH 100 WESTBOUND SIDEWALK

STATION	Real Station	Distance	AREA (SF) Cut	Salvaged/ Unusable Pavement Material	Fill	EBS	Incremental Vol (CY) (Unadjusted) Cut Note 1	Salvaged/Unusable Pavement Material Note 2	Fill Note 3	EBS	Cumulative Vol (CY) Cut 1.00 Note 1	Expanded Fill 1.20	Expanded EBS Backfill 1.30 Note 4	Reduced EBS In Fill 0.80 Note 5	Mass Ordinate Note 6
203+58.00	20358.00	0	4.95	0.00	0.24	0.00	0.00	0.00	0.00	0.00	0.00	0.00	0.00	0.00	0.00
204+00.00	20400.00	42	4.95	0.00	0.24	0.00	7.70	0.00	0.37	0.00	7.70	0.45	0.00	0.00	7.25
204+50.00	20450.00	50	3.39	0.00	0.67	0.00	7.72	0.00	0.71	0.00	7.72	0.85	0.00	0.00	14.60
205+00.00	20500.00	50	4.86	0.00	0.03	0.00	7.64	0.00	0.65	0.00	15.36	1.63	0.00	0.00	21.97
205+50.00	20550.00	50	3.63	0.00	0.61	0.00	7.86	0.00	0.59	0.00	23.22	2.34	0.00	0.00	28.60
206+00.00	20600.00	50	4.71	0.00	0.13	0.00	7.72	0.00	0.69	0.00	30.94	3.16	0.00	0.00	35.92
206+50.00	20650.00	50	3.56	0.00	0.99	0.00	7.66	0.00	1.04	0.00	38.60	4.41	0.00	0.00	42.02
207+00.00	20700.00	50	3.7	0.00	0.78	0.00	6.72	0.00	1.64	0.00	45.32	6.37	0.00	0.00	47.45
						COLUMN TOTALS	53.02	0.00	5.69	0.00					

Notes:	
1 - Cut	Cut includes Salvaged/Unusable Pavement material
2 - Salvaged/Unusable Pavement Material	This does not show up in cross sections
3 - Fill	Does not include Unusable Pavement Exc volume
4 - Expanded EBS	Will be backfilled with Borrow
5 - Reduced EBS in Fill	Reduced EBS Excavation that can be used in Fill
6 - Mass Ordinate	If EBS to be backfilled with Cut or Borrow: [(Cut + EBS) - ((Fill) - (Reduced EBS in Fill)) * Fill Factor)]

Division 3 STH 100 RECONSTRUCT

STATION	Real Station	Distance	AREA (SF) Cut	AREA (SF) Salvaged/ Unusable Pavement Material	AREA (SF) Fill	AREA (SF) EBS	Incremental Vol (CY) (Unadjusted) Cut Note 1	Incremental Vol (CY) (Unadjusted) Salvaged/Unusable Pavement Material Note 2	Incremental Vol (CY) (Unadjusted) Fill Note 3	Incremental Vol (CY) (Unadjusted) EBS	Cumulative Vol (CY) Cut 1.00 Note 1	Cumulative Vol (CY) Expanded Fill 1.20	Expanded EBS Backfill 1.30 Note 4	Reduced EBS In Fill 0.80 Note 5	Mass Ordinate Note 6
202+10.00	20210.00	0	122.73	62.00	1.47	90.00	0.00	0.00	0.00	0.00	0.00	0.00	0.00	0.00	
202+50.00	20250.00	40	124.23	62.00	0.9	90.00	182.93	91.85	1.76	133.33	182.93	-125.89	173.33	106.67	216.97
203+00.00	20300.00	50	127.19	62.00	0.09	90.00	232.80	114.81	0.92	166.67	415.73	-284.79	390.00	240.00	493.86
203+50.00	20350.00	50	123.1	62.00	1.96	90.00	231.75	114.81	1.90	166.67	647.48	-442.52	606.67	373.33	768.51
203+58.00	20358.00	8	141.18	62.00	0.73	90.00	41.83	18.37	0.22	26.67	689.31	-467.86	641.33	394.67	814.64
						COLUMN TOTALS	689.31	339.85	4.79	493.33					

Notes:	
1 - Cut	Cut includes Salvaged/Unusable Pavement material
2 - Salvaged/Unusable Pavement Material	This does not show up in cross sections
3 - Fill	Does not include Unusable Pavement Exc volume
4 - Expanded EBS	Will be backfilled with Borrow
5 - Reduced EBS in Fill	Reduced EBS Excavation that can be used in Fill
6 - Mass Ordinate	If EBS to be backfilled with Cut or Borrow: [(Cut + EBS) - ((Fill) - (Reduced EBS in Fill)) * Fill Factor)]

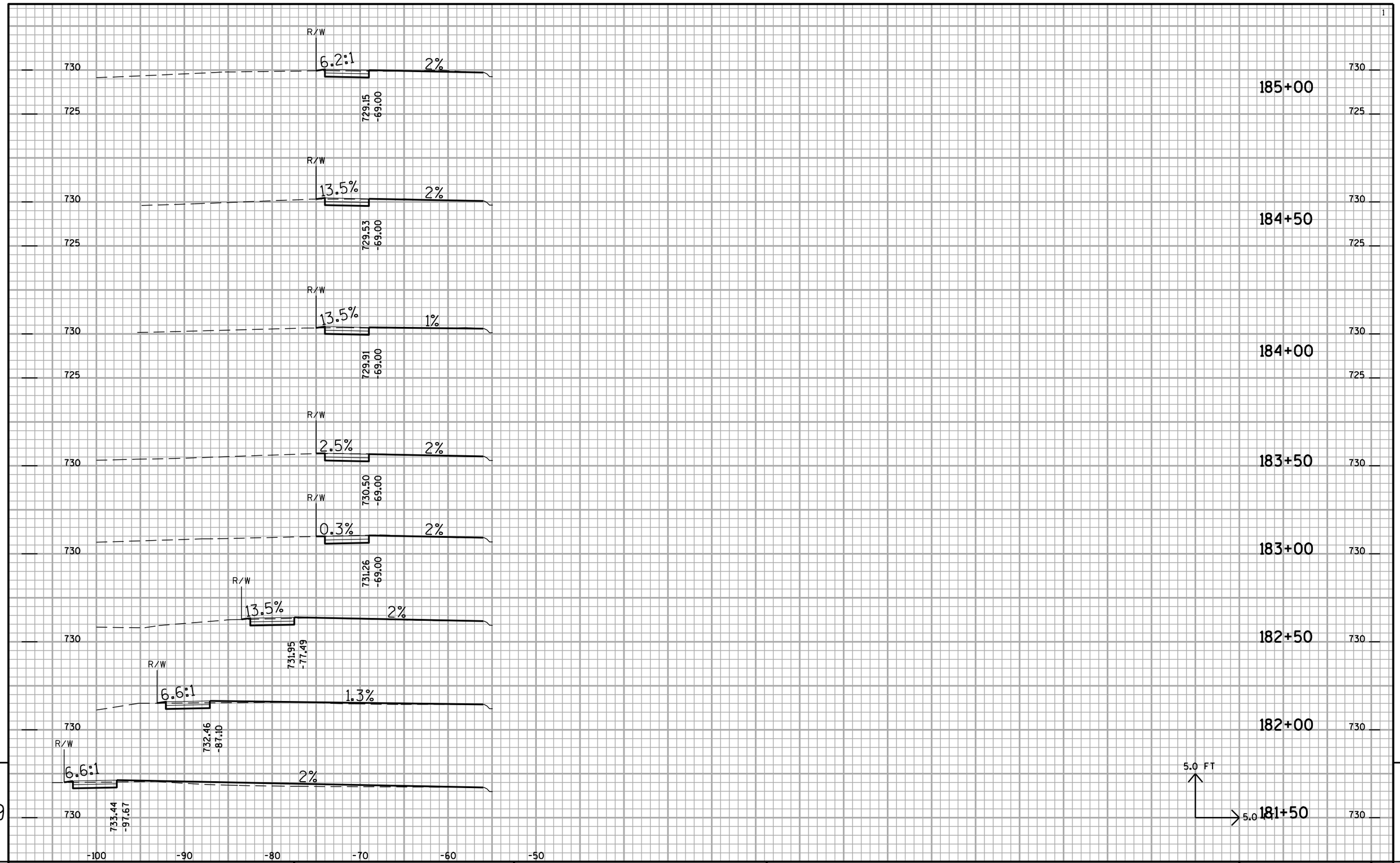

PROJECT NO: 2150-05-70	HWY: STH 100	COUNTY: MILWAUKEE	CROSS SECTIONS	SHEET NO: E

FILE NAME : j:\projects\D2_215005100\pdf\FINALCROSSSECTIONS.dgn PLOT DATE : 28-JAN-2010 14:30 PLOT BY : dotmll PLOT NAME : PLOT SCALE : 2:1

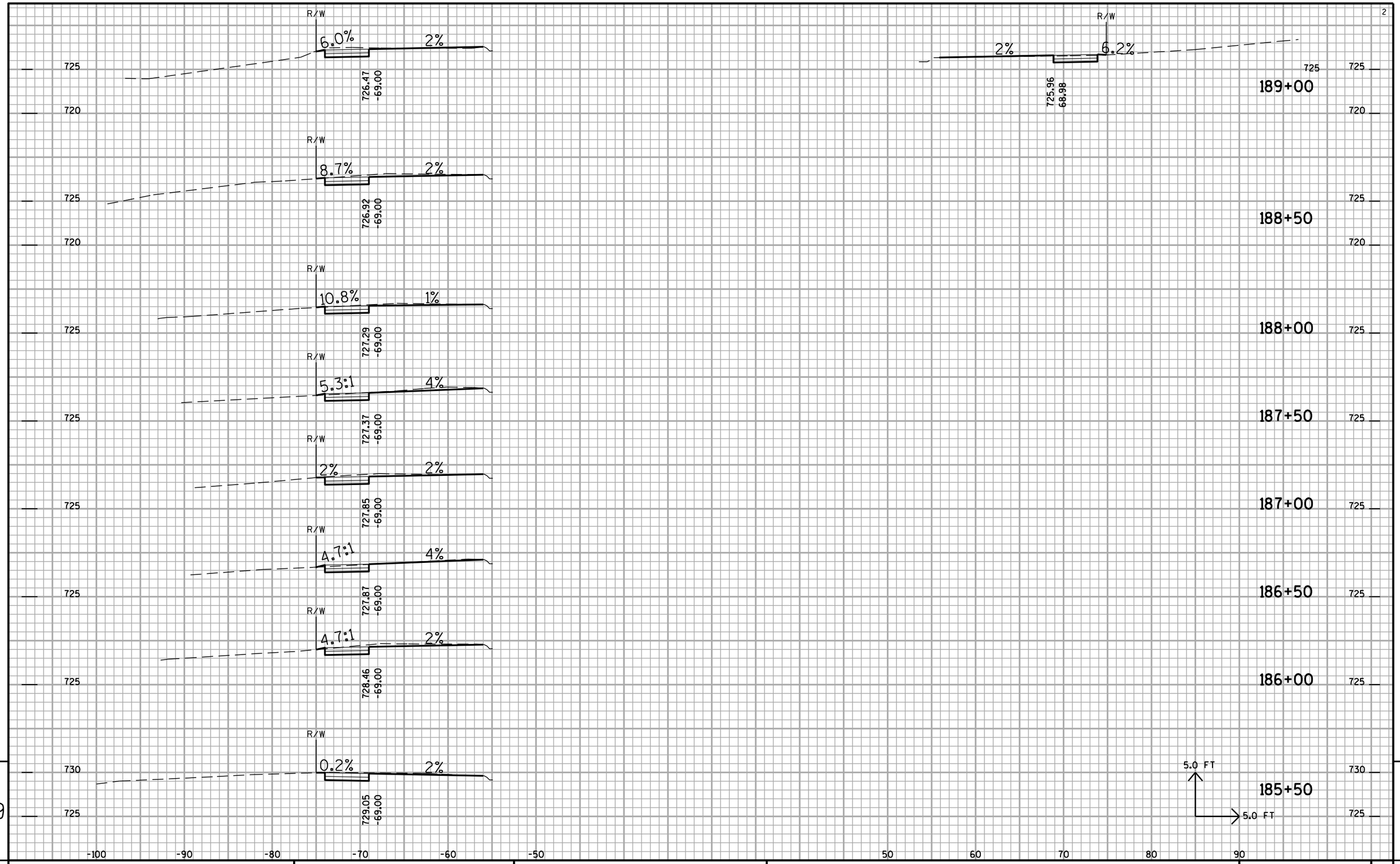

PROJECT NO: 2150-05-70	HWY: STH 100	COUNTY: MILWAUKEE	CROSS SECTIONS	SHEET NO: E

FILE NAME : j:\projects\D2_215005100\pdf\FINALCROSSSECTIONS.dgn PLOT DATE : 28-JAN-2010 14:30 PLOT BY : dotmll PLOT NAME : PLOT SCALE : 2:1

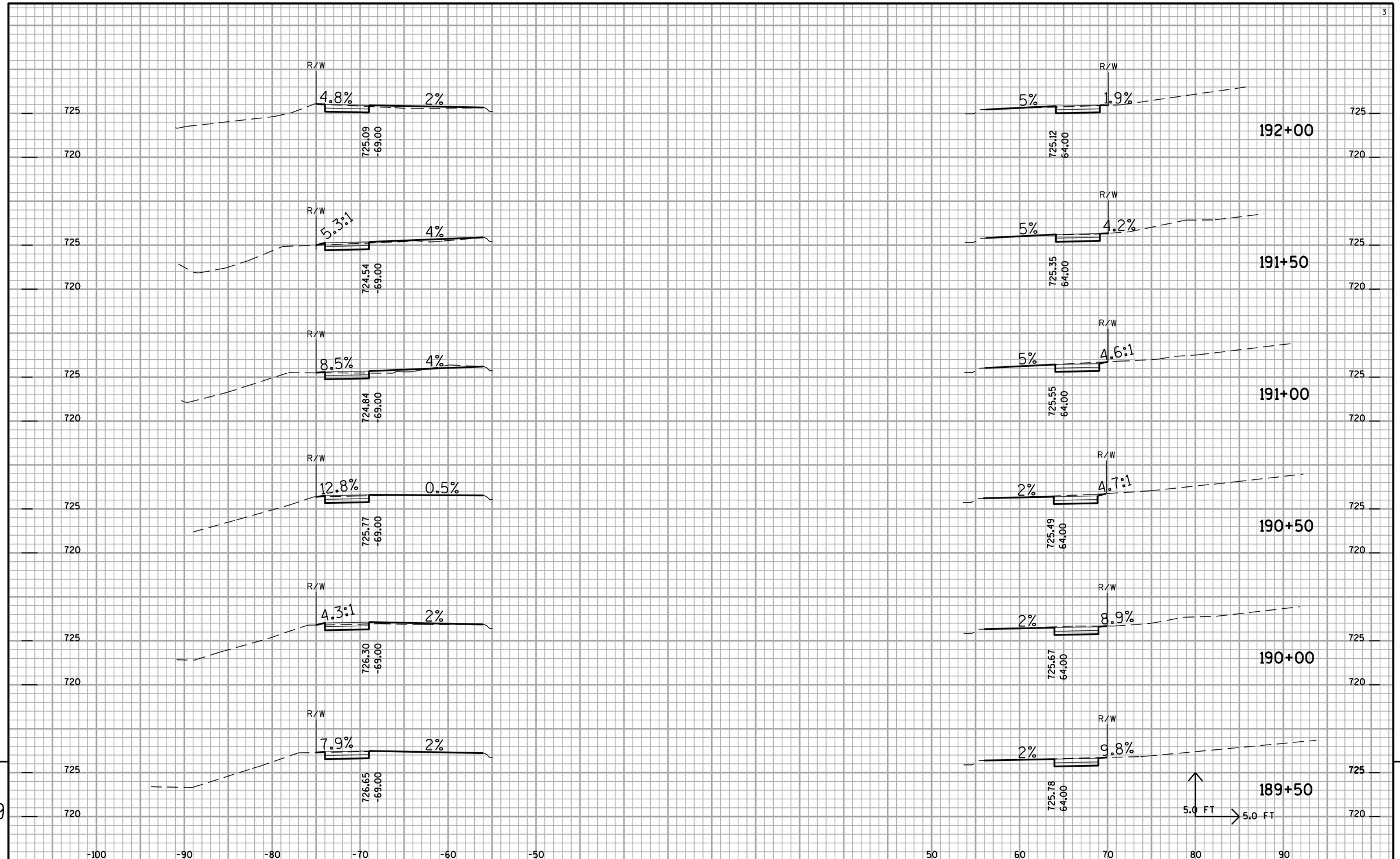

PROJECT NO: 2150-05-70	HWY: STH 100	COUNTY: MILWAUKEE	CROSS SECTIONS	SHEET NO:	E

FILE NAME : j:\projects\D2_215005100\pdf\FINALCROSSSECTIONS.dgn PLOT DATE : 28-JAN-2010 14:30 PLOT BY : dotmll PLOT NAME : PLOT SCALE : 2:1

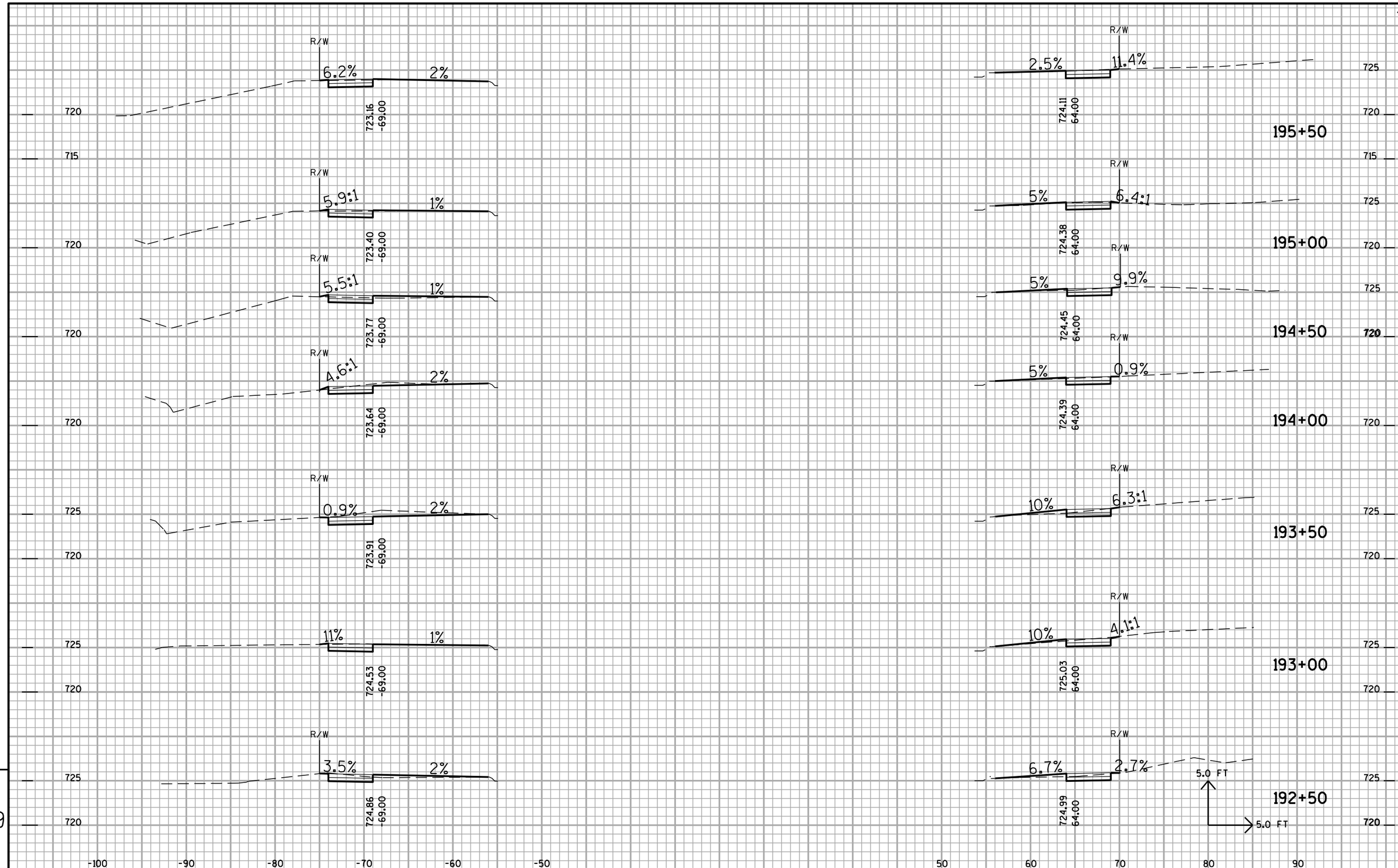

PROJECT NO: 2150-05-70	HWY: STH 100	COUNTY: MILWAUKEE	CROSS SECTIONS	SHEET NO: E

FILE NAME : j:±projects±D2_215005100±pdf±FINALCROSSSECTIONS.dgn PLOT DATE : 28-JAN-2010 14:30 PLOT BY : dotmll PLOT NAME : PLOT SCALE : 2:1

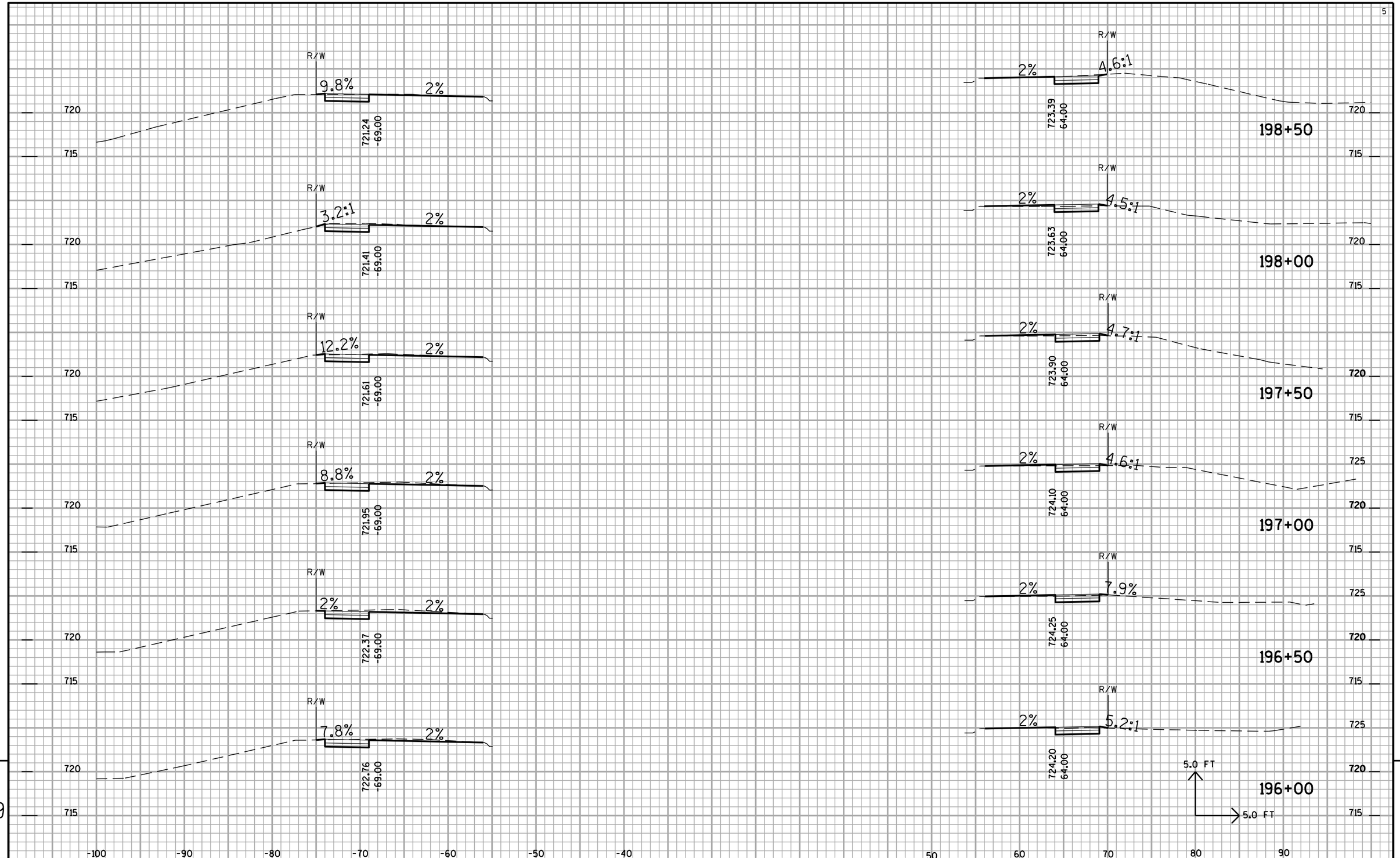

PROJECT NO: 2150-05-70	HWY: STH 100	COUNTY: MILWAUKEE	CROSS SECTIONS	SHEET NO: E

FILE NAME : j:±projects±D2_215005100±pdf±FINALCROSSSECTIONS.dgn PLOT DATE : 28-JAN-2010 14:30 PLOT BY : dotmll PLOT NAME : PLOT SCALE : 2:1

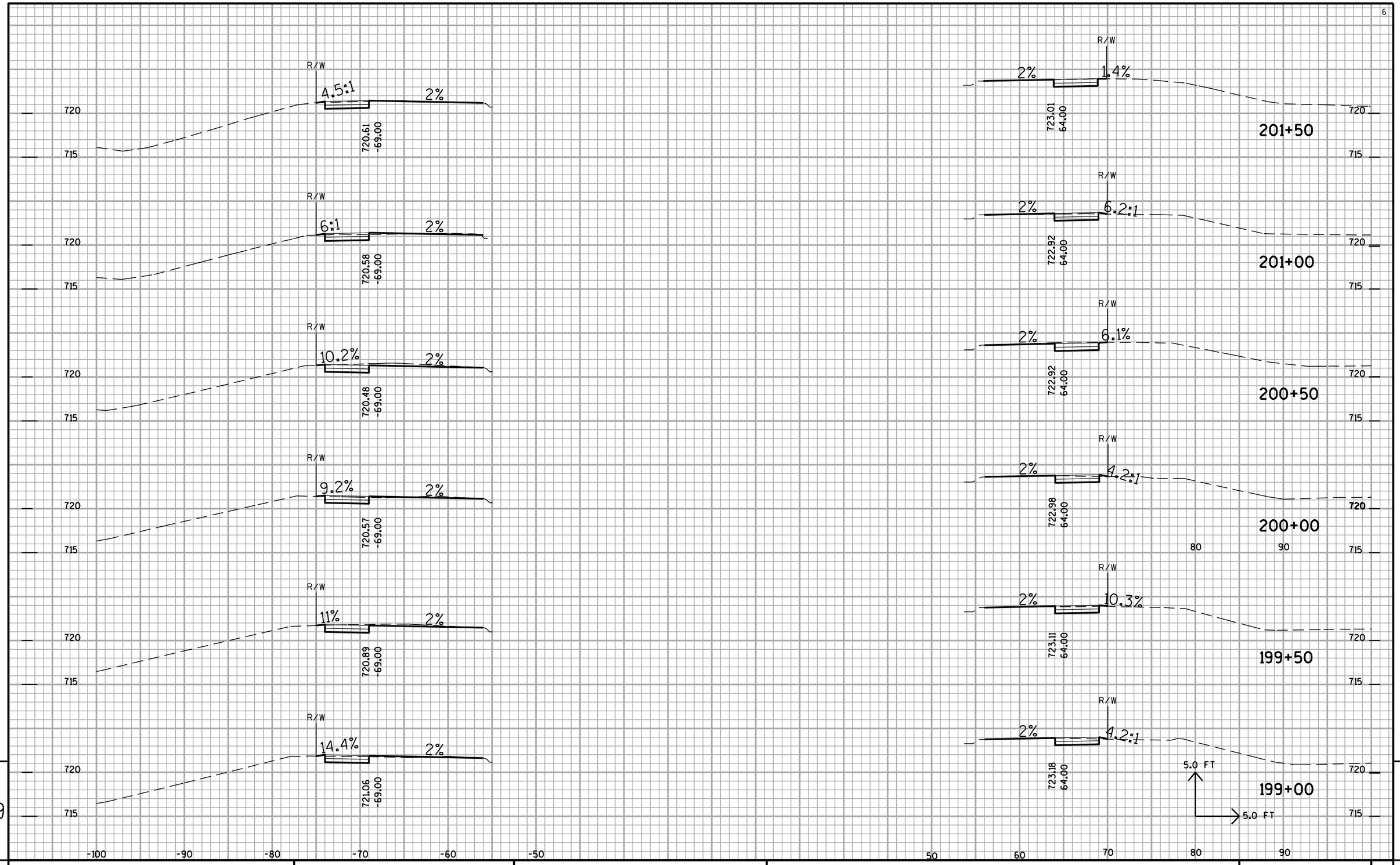

PROJECT NO: 2150-05-70	HWY: STH 100	COUNTY: MILWAUKEE	CROSS SECTIONS	SHEET NO:	E

FILE NAME : j:±projects±D2_215005100±pdf±FINALCROSSSECTIONS.dgn PLOT DATE : 28-JAN-2010 14:30 PLOT BY : dotmll PLOT NAME : PLOT SCALE : 2:1

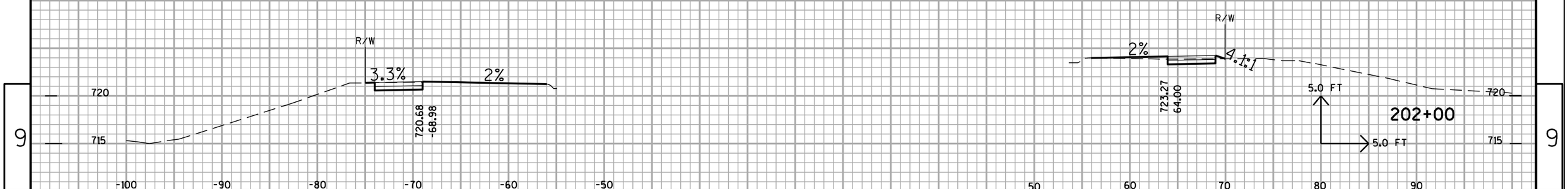

9

9

PROJECT NO: 2150-05-70	HWY: STH 100	COUNTY: MILWAUKEE	CROSS SECTIONS	SHEET NO:	E

FILE NAME : j:±projects±D2_215005100±pdf±FINALCROSSSECTIONS.dgn PLOT DATE : 28-JAN-2010 14:30 PLOT BY : dotmll PLOT NAME : PLOT SCALE : 2:1

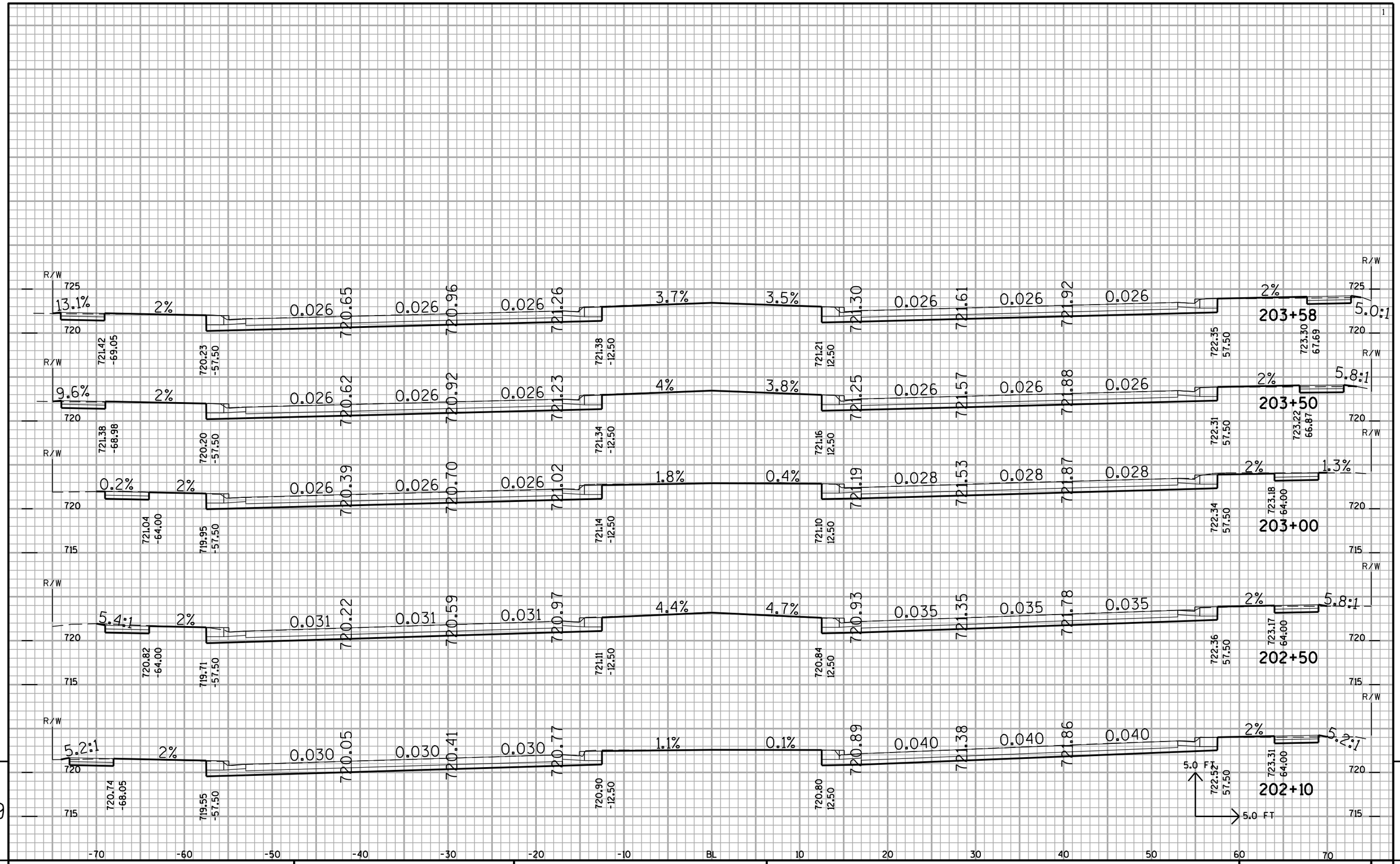

PROJECT NO:2150-05-70	HWY: STH 100	COUNTY:MILWAUKEE	CROSS SECTIONS	SHEET NO: E

FILE NAME : j:±projects±D2_215005100±pdf±FINALCROSSSECTIONS.dgn PLOT DATE : 28-JAN-2010 14:30 PLOT BY : dotmll PLOT NAME : PLOT SCALE : 2:1

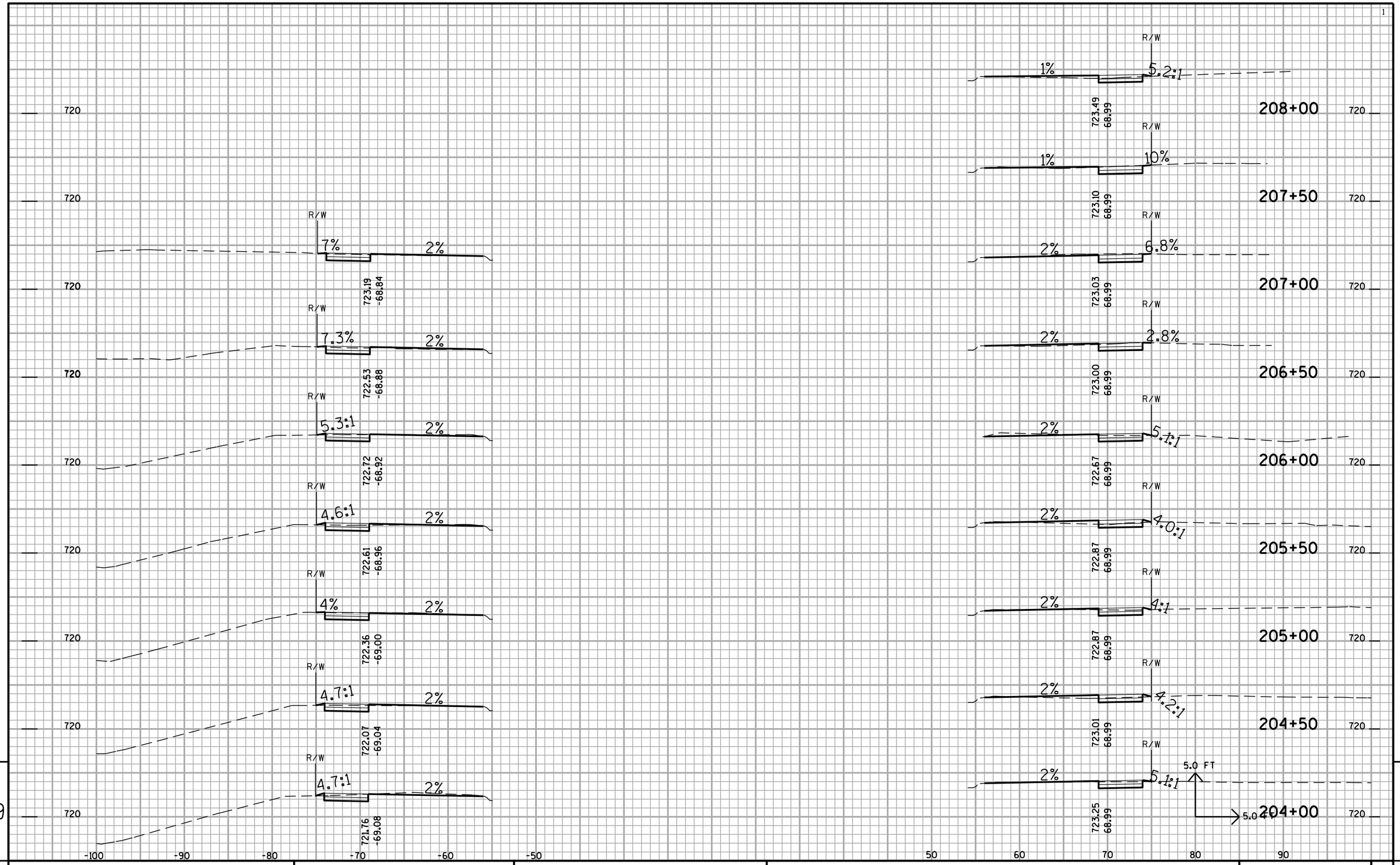

9

9

PROJECT NO: 2150-05-70	HWY: STH 100	COUNTY: MILWAUKEE	CROSS SECTIONS	SHEET NO:	E

FILE NAME : j:±projects±D2_21500510O±pdf±FINALCROSSSECTIONS.dgn PLOT DATE : 28-JAN-2010 14:30 PLOT BY : dotmll PLOT NAME : PLOT SCALE : 2:1

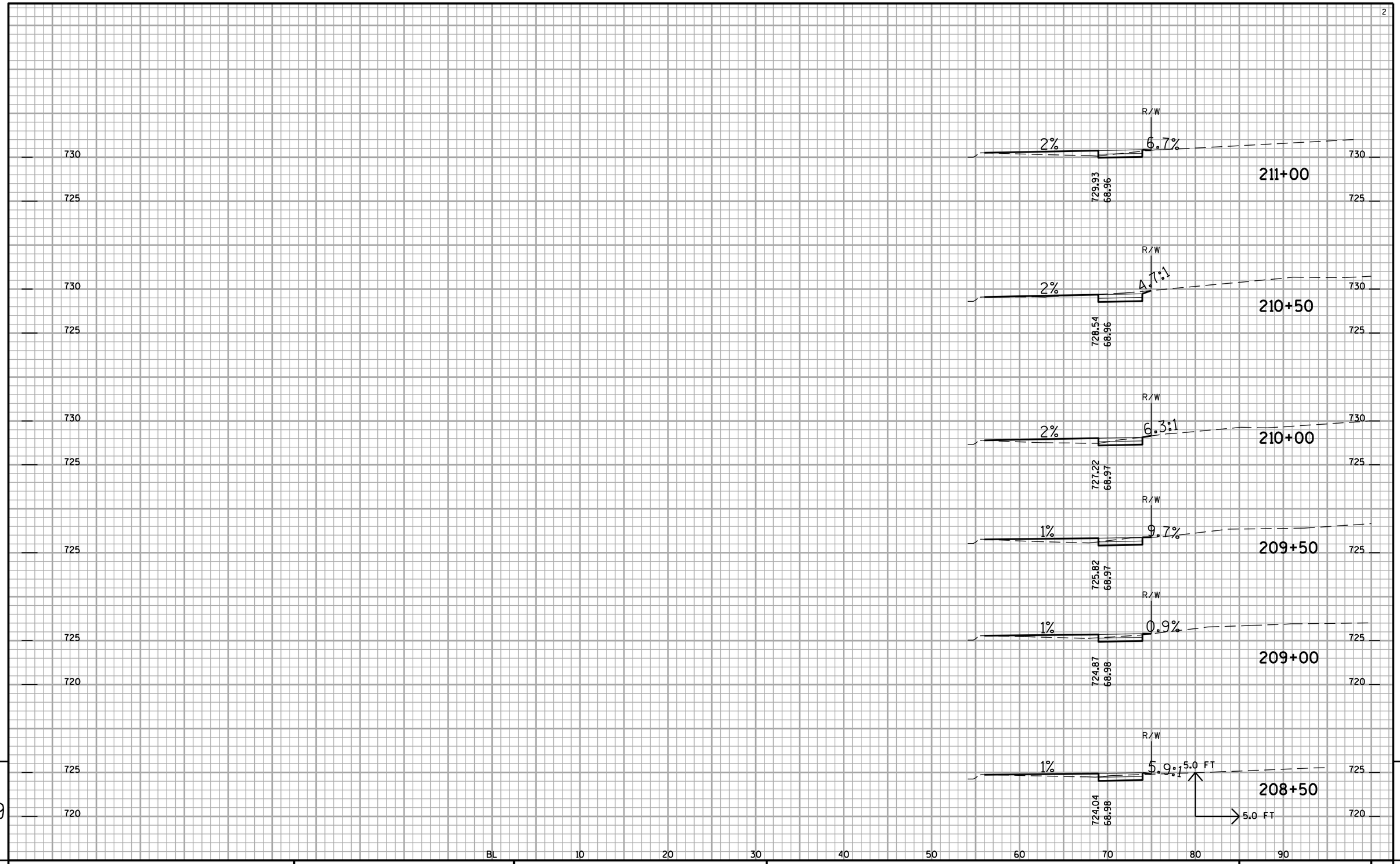

PROJECT NO: 2150-05-70	HWY: STH 100	COUNTY: MILWAUKEE	CROSS SECTIONS	SHEET NO:	E

FILE NAME : j:±projects±D2_215005100±pdf±FINALCROSSSECTIONS.dgn PLOT DATE : 28-JAN-2010 14:30 PLOT BY : dotmll PLOT NAME : PLOT SCALE : 2:1

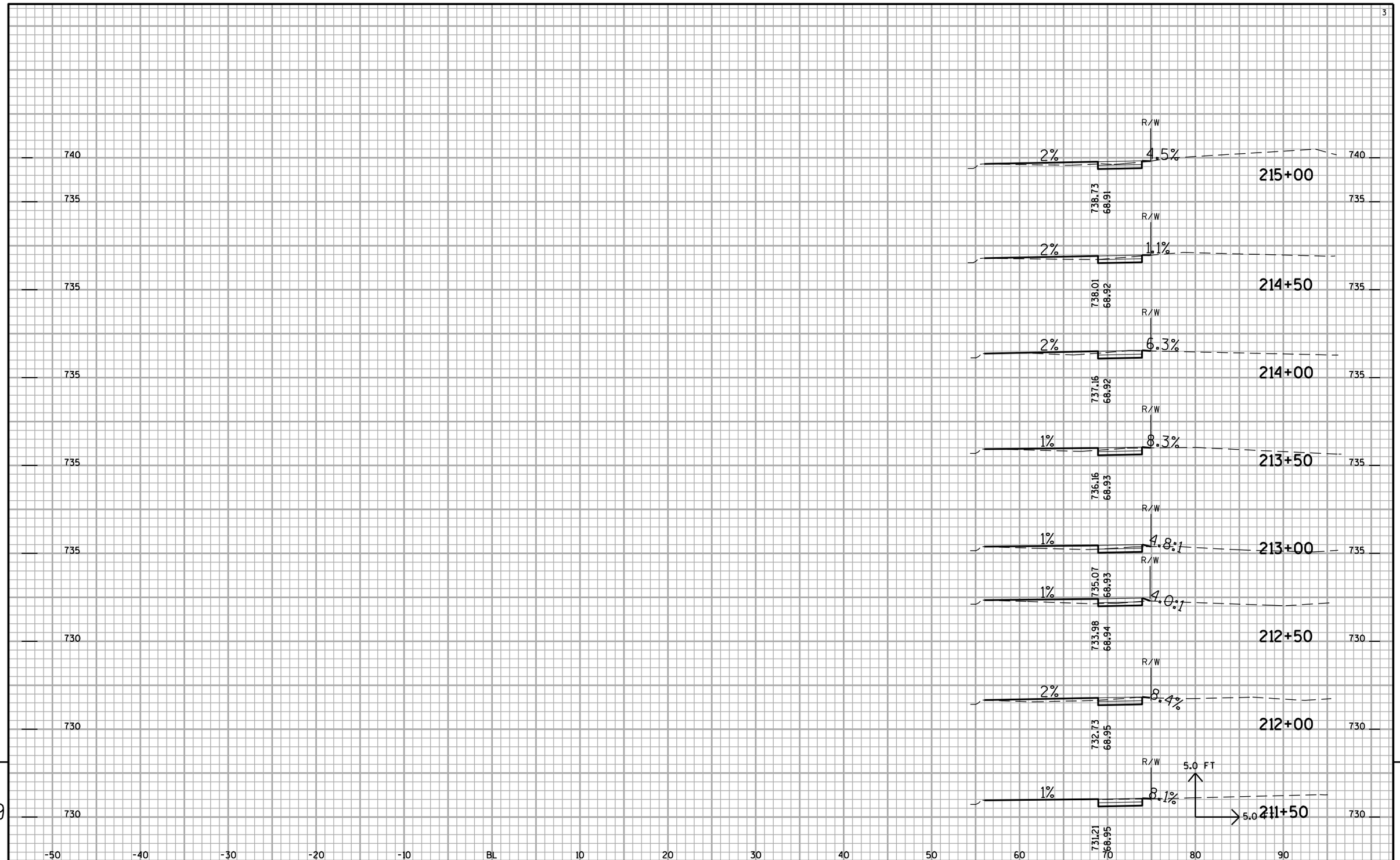

9

9

PROJECT NO: 2150-05-70	HWY: STH 100	COUNTY: MILWAUKEE	CROSS SECTIONS	SHEET NO:	E

FILE NAME : j:±projects±D2_215005100±pdf±FINALCROSSSECTIONS.dgn PLOT DATE : 28-JAN-2010 14:30 PLOT BY : dotmll PLOT NAME : PLOT SCALE : 2:1

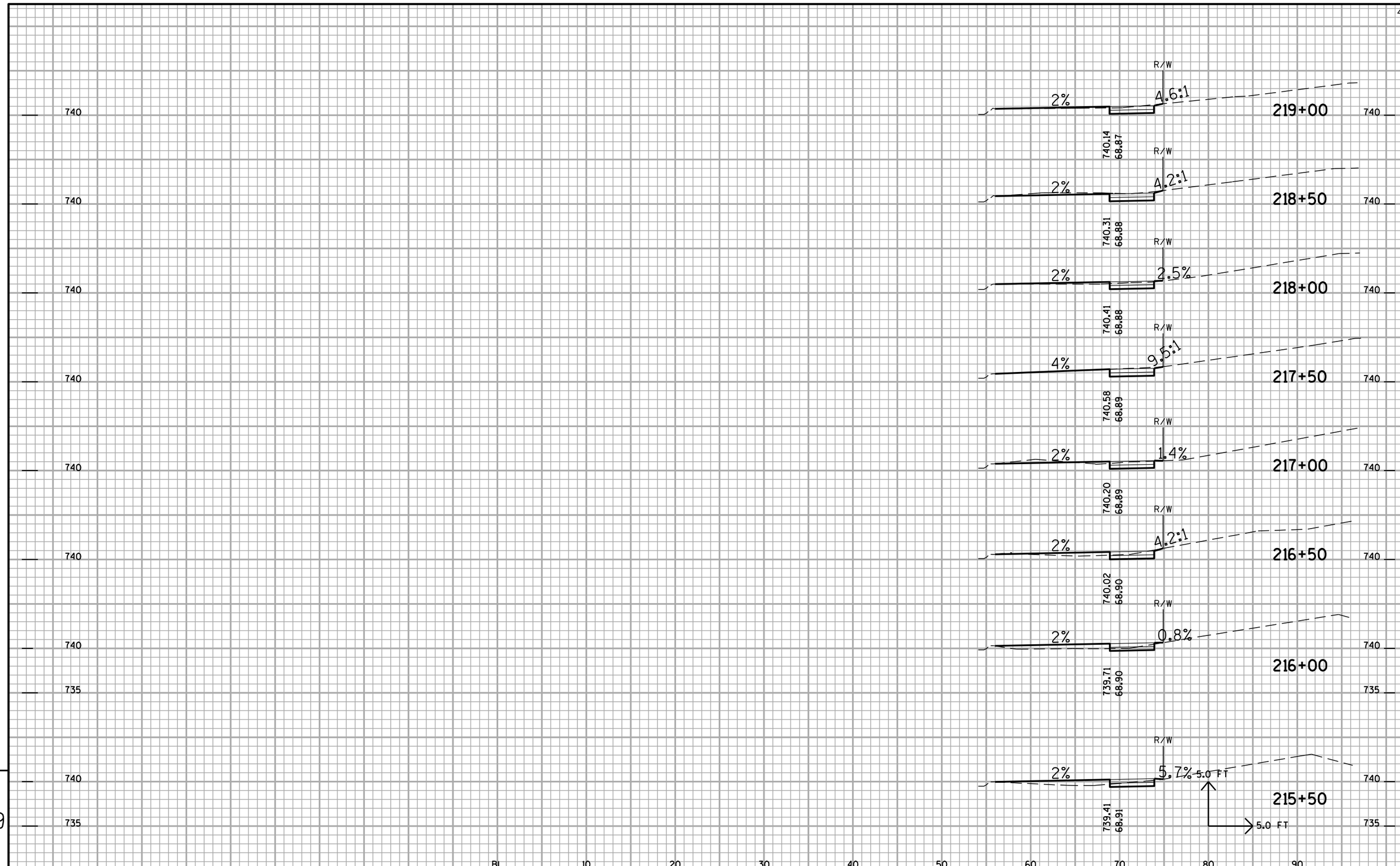

9

9

PROJECT NO: 2150-05-70	HWY: STH 100	COUNTY: MILWAUKEE	CROSS SECTIONS	SHEET NO:	E

FILE NAME : j:\projects\D2_215005100\pdf\FINALCROSSSECTIONS.dgn PLOT DATE : 28-JAN-2010 14:29 PLOT BY : dotmll PLOT NAME : PLOT SCALE : 2:1

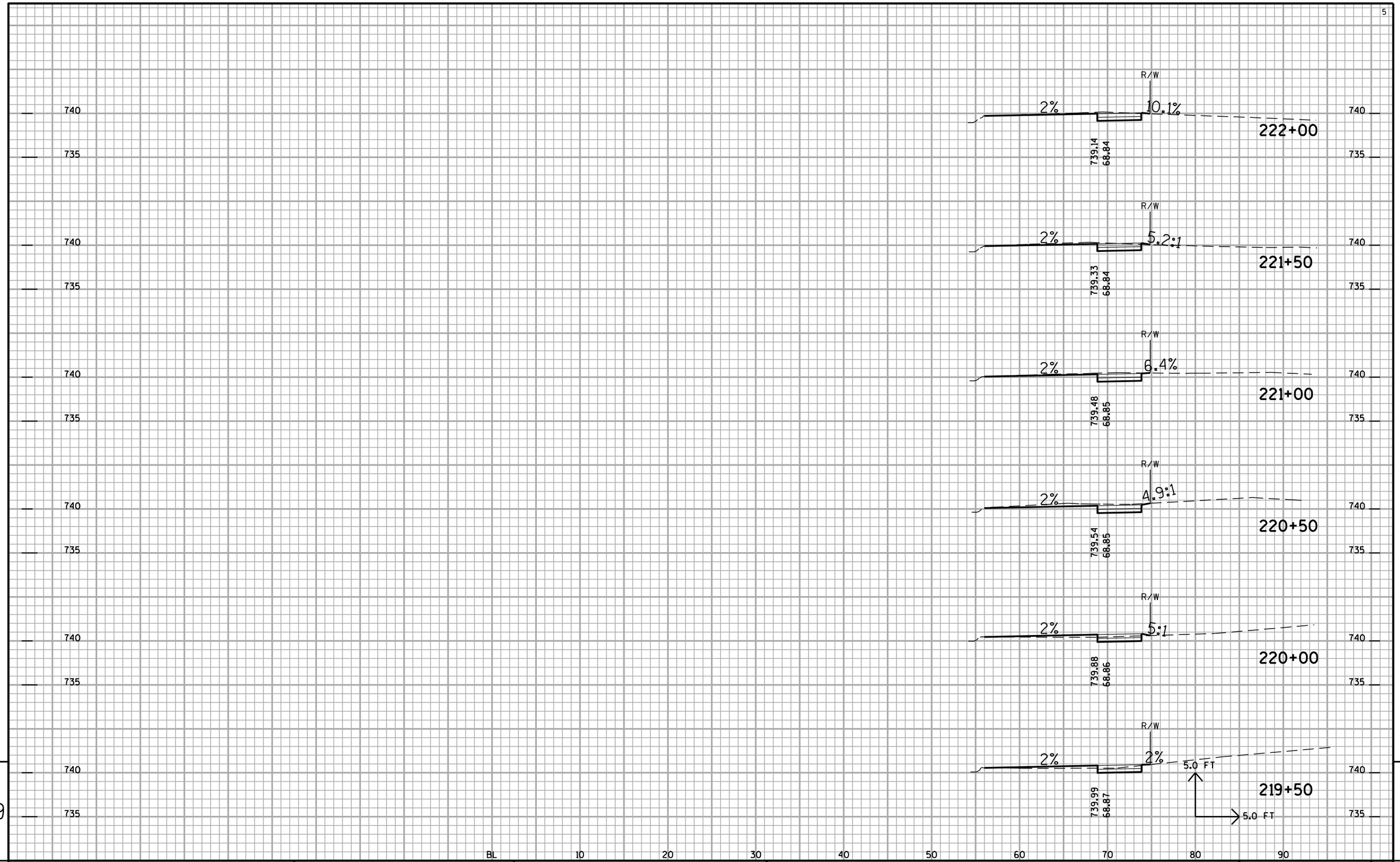

PROJECT NO: 2150-05-70	HWY: STH 100	COUNTY: MILWAUKEE	CROSS SECTIONS	SHEET NO: E

FILE NAME : j:±projects±D2_215005100±pdf±FINALCROSSSECTIONS.dgn PLOT DATE : 28-JAN-2010 14:29 PLOT BY : dotmll PLOT NAME : PLOT SCALE : 2:1

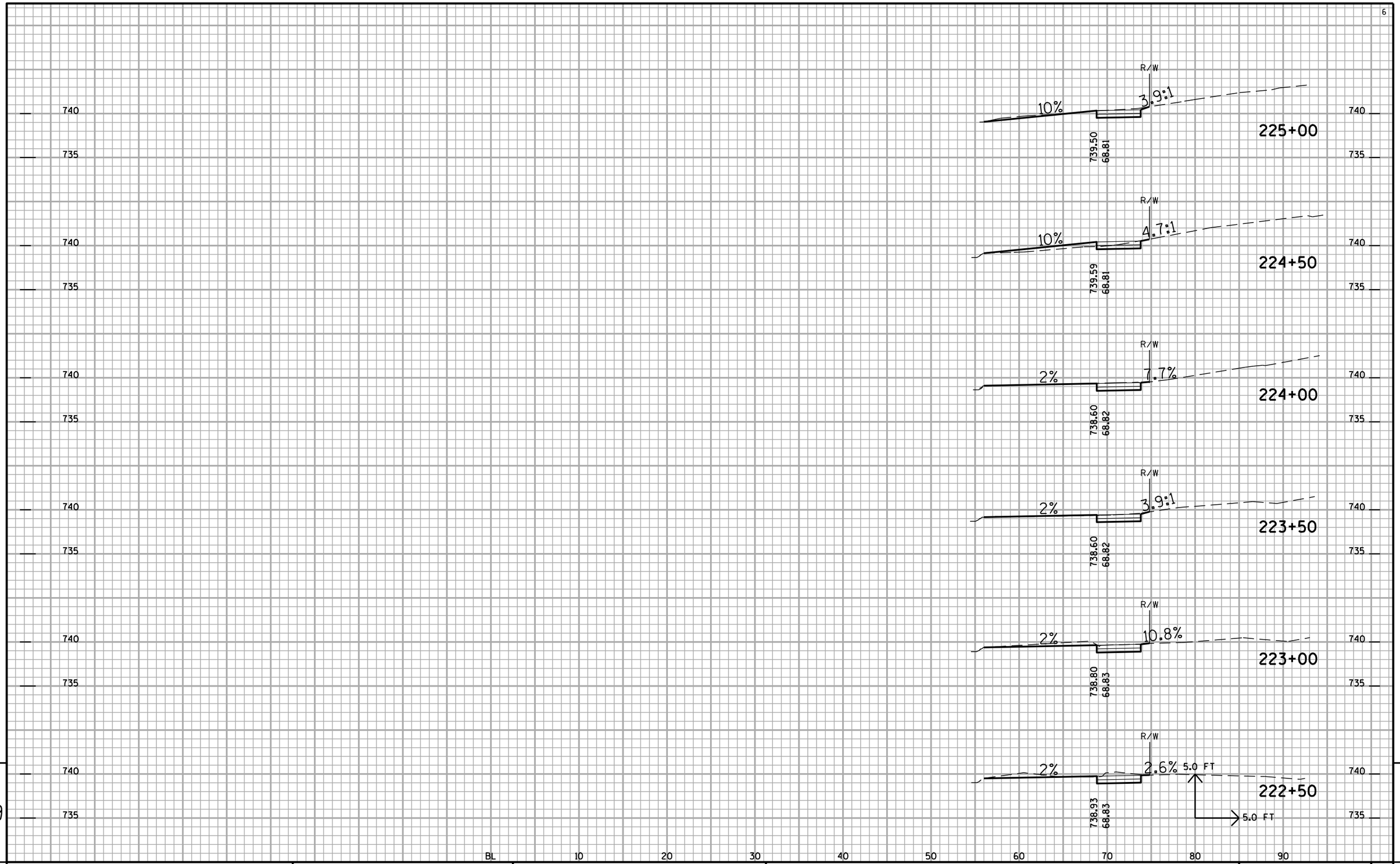

9

9

PROJECT NO: 2150-05-70	HWY: STH 100	COUNTY: MILWAUKEE	CROSS SECTIONS	SHEET NO: E

FILE NAME : j:\projects\D2_215005100\pdf\FINALCROSSSECTIONS.dgn PLOT DATE : 28-JAN-2010 14:29 PLOT BY : dotmll PLOT NAME : PLOT SCALE : 2:1

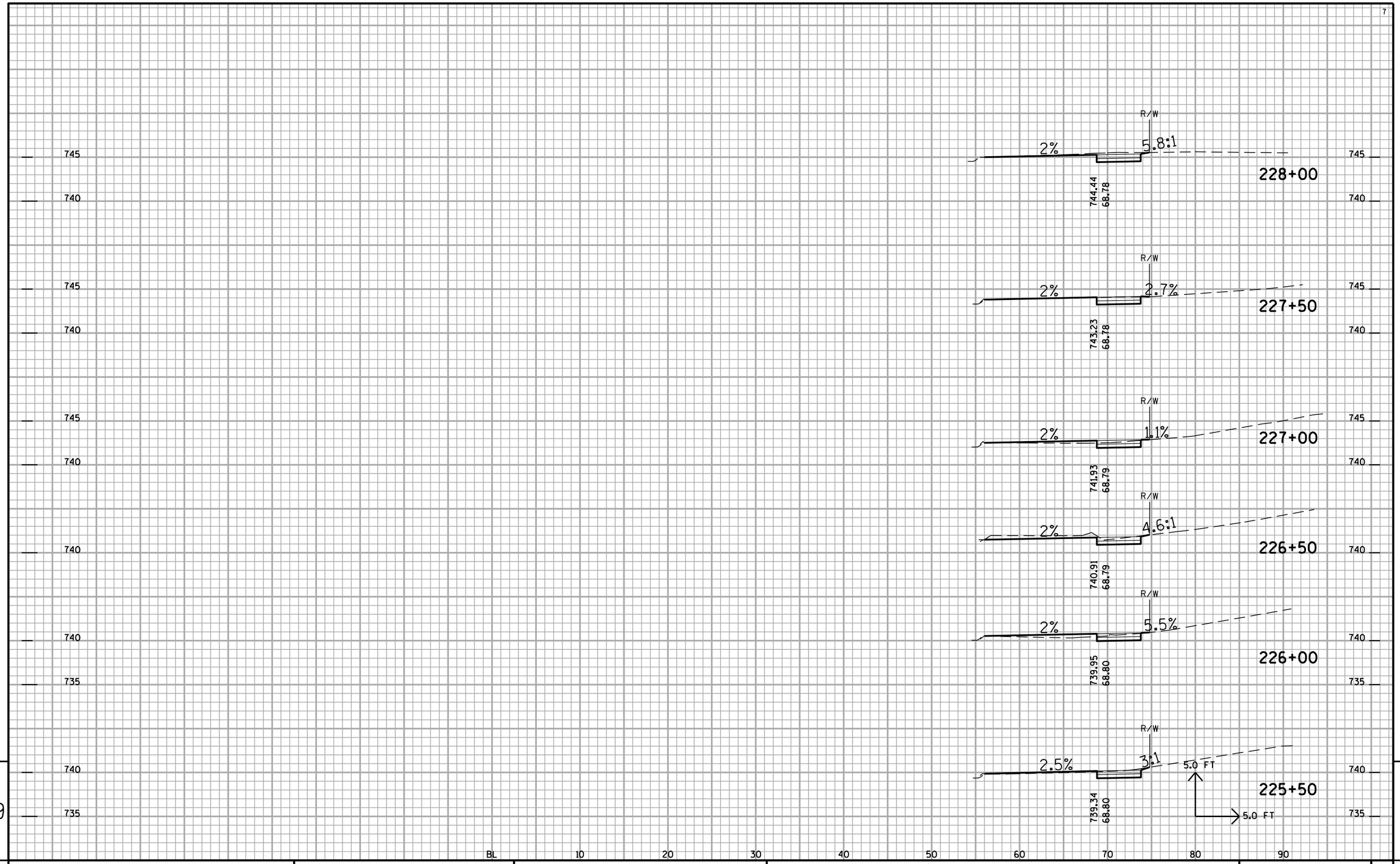

9

9

PROJECT NO: 2150-05-70	HWY: STH 100	COUNTY: MILWAUKEE	CROSS SECTIONS	SHEET NO:	E

FILE NAME : j:±projects±D2_215005100±pdf±FINALCROSSSECTIONS.dgn PLOT DATE : 28-JAN-2010 14:29 PLOT BY : dotmll PLOT NAME : PLOT SCALE : 2:1

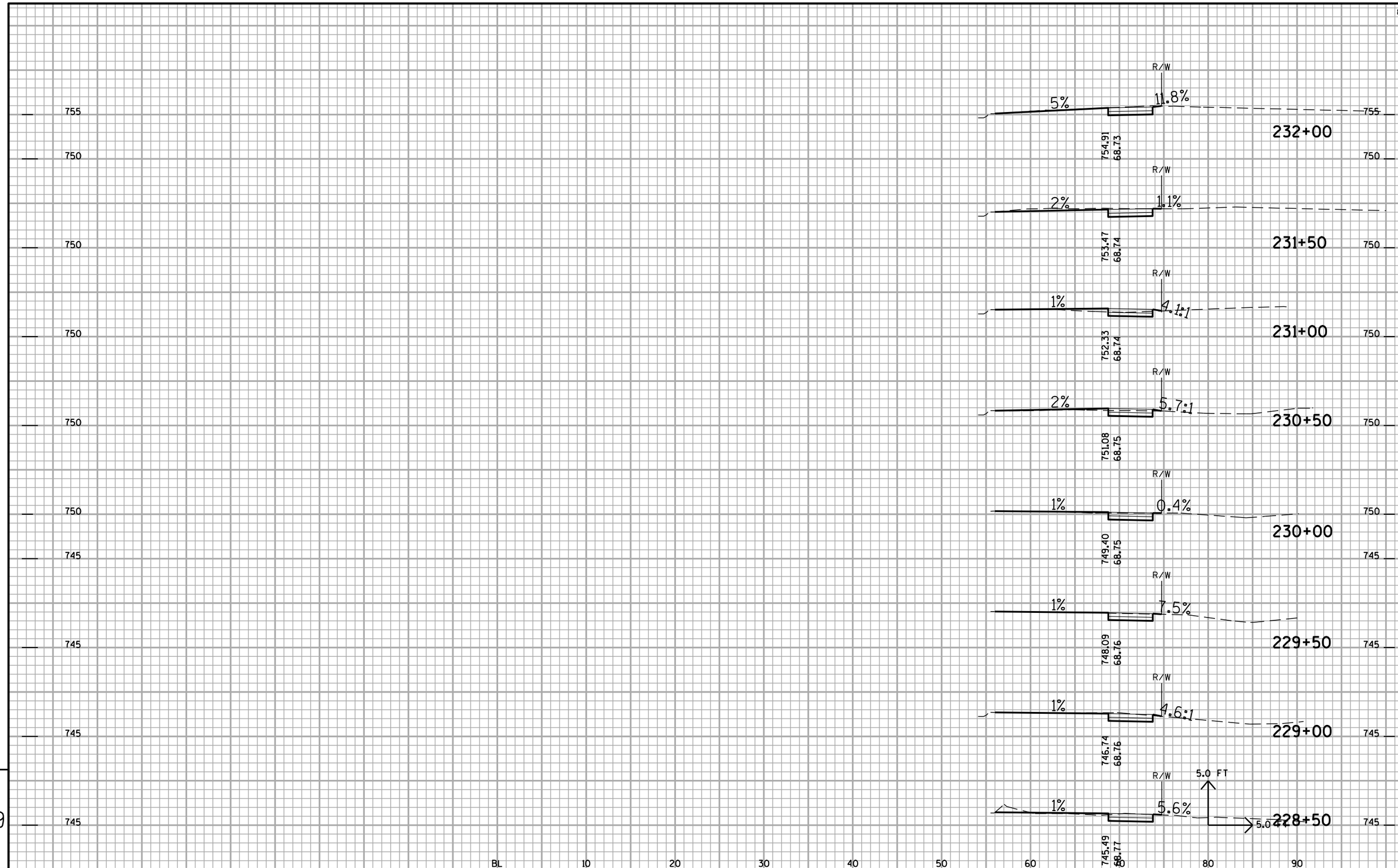

9

9

PROJECT NO: 2150-05-70	HWY: STH 100	COUNTY: MILWAUKEE	CROSS SECTIONS	SHEET NO:	E

FILE NAME : j:±projects±D2_215005100±pdf±FINALCROSSSECTIONS.dgn PLOT DATE : 28-JAN-2010 14:29 PLOT BY : dotmll PLOT NAME : PLOT SCALE : 2:1

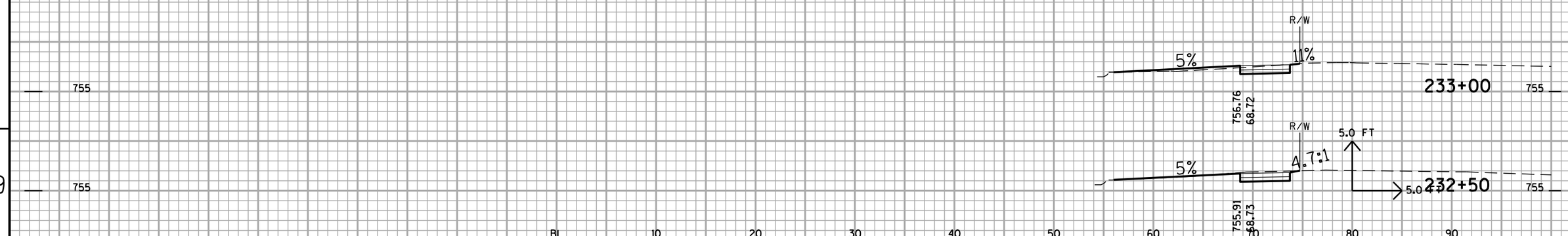

9

9

PROJECT NO: 2150-05-70	HWY: STH 100	COUNTY: MILWAUKEE	CROSS SECTIONS	SHEET NO:	E

FILE NAME : j:±projects±D2_215005100±pdf±FINALCROSSSECTIONS.dgn PLOT DATE : 28-JAN-2010 14:29 PLOT BY : dotmll PLOT NAME : PLOT SCALE : 2:1

Notes

Wisconsin Department of Transportation

Dedicated people creating transportation solutions through innovation and exceptional service.

http://www.dot.wisconsin.gov

GENERAL NOTES

DETAILS OF CONSTRUCTION, MATERIALS AND WORKMANSHIP NOT SHOWN ON THIS DRAWING SHALL CONFORM TO THE PERTINENT REQUIREMENTS OF THE CONTRACT.

BASES SHALL BE EXCAVATED BY USE OF A CIRCULAR AUGER.

TOP SURFACES OF CONCRETE BASES SHALL BE TROWEL FINISHED AND LEVEL.

CONDUIT SIZES AND LOCATIONS SHALL BE AS SHOWN ON THE PLANS.

THE FINAL OR TERMINATING CONCRETE BASE IN A CONDUIT RUN SHALL HAVE A 6" EXIT STUB INSTALLED FOR FUTURE CABLING USE. THE EXIT STUB SHALL BE SIZED AS USED THROUGHOUT THE CONDUIT RUN AS SHOWN AT THE ENTRANCE OF THE BASE.

MINIMUM BENDING RADIUS OF CONDUIT IS EQUAL TO 6 X THE DIAMETER.

CONDUIT HEIGHT ABOVE CONCRETE BASES SHALL BE 4 INCHES. ALL METALLIC CONDUIT ENDS SHALL BE REAMED AND THREADED. NONMETALLIC CONDUIT SHALL HAVE BELL END INSTALLED. ALL CONDUIT SHALL BE SLOPED TO PULL BOX.

ALL CONDUIT ENDS AT THE TOP OF CONCRETE BASES SHALL BE CAPPED IF METALLIC OR PLUGGED IF NONMETALLIC IMMEDIATELY AFTER PLACEMENT AND BEFORE CONCRETE IS POURED. CONDUIT IN WHICH WIRE OR CABLE IS NOT INSTALLED SHALL REMAIN CAPPED OR PLUGGED.

BELL ENDS SHALL BE INSTALLED ON ALL PVC CONDUIT EXPOSED AT THE TOP OF CONCRETE BASES BEFORE INSTALLATION OF CABLE OR WIRE.

ENDS OF CONDUIT INSTALLED BELOW GRADE FOR FUTURE USE SHALL BE CAPPED IF METALLIC OR PLUGGED IF NONMETALLIC.

WHEN REQUIRED TO CONNECT NONMETALLIC CONDUIT TO METALLIC CONDUIT, ONLY ADAPTER FITTINGS, U.L. LISTED FOR ELECTRICAL USE, SHALL BE USED.

IF A BASE REQUIRES A DEEP FORM BECAUSE OF LOOSE DIRT OR FILL, THE FORM SHALL BE REMOVED BEFORE BACKFILLING AROUND THE BASE. BACKFILL SHALL BE TAMPED TIGHT AGAINST THE BARE CONCRETE BASE IN LAYERS OF 1 FOOT OR LESS.

A NO. 4 AWG, STRANDED COPPER EQUIPMENT GROUNDING CONDUCTOR SHALL BE EXOTHERMICALLY WELDED TO THE EQUIPMENT GROUNDING ELECTRODE (GROUND ROD).

THE EQUIPMENT GROUNDING CONDUCTOR SHALL ENTER THE BASE THROUGH A 1 INCH CONDUIT INSTALLED FOR GROUNDING PURPOSES, LEAVING A 4 FOOT COIL OF WIRE ABOVE THE CONCRETE BASE. THE EQUIPMENT GROUNDING CONDUCTOR SHALL BE NEATLY COILED AND THE COILS TIED TOGETHER.

WELDING OF THE ANCHOR RODS TO THE CAGE IS UNACCEPTABLE. TEMPLATES SHALL BE USED.

BAR STEEL REINFORCEMENT SHALL BE COATED WITH POWDERED EPOXY RESIN IN ACCORDANCE WITH SECTION 505 OF THE STANDARD SPECIFICATIONS (LATEST EDITION).

ANCHOR RODS SHALL BE INSTALLED WITH MISALIGNMENTS OF LESS THAN 1:40 FROM VERTICAL.

(1) THE MINIMUM DEPTH OF CONDUIT EXITING THE CONCRETE BASE AND INSTALLED BELOW THE TRAVELED WAY SHALL BE 24 INCHES. THE MINIMUM DEPTH OF CONDUIT EXITING THE CONCRETE BASE THAT IS NOT INSTALLED BELOW THE TRAVELED WAY SHALL BE 18 INCHES. THE MAXIMUM DEPTH OF ALL CONDUIT SHALL BE 36 INCHES. (GREATER THAN 36 INCHES IF INSTALLED IN BREAKER-RUN), EXCEPT WITH WRITTEN APPROVAL BY THE ENGINEER.

(2) (6) NO. 6 X 13'-7" BAR STEEL REINFORCEMENT.

(3) (15) NO. 4 X 7'-4" BAR STEEL REINFORCEMENT @ 1'-0" C-C.

CONCRETE MASONRY	fc=3,500 p.s.i.
HIGH STRENGTH BAR STEEL REINFORCEMENT, GRADE 60	fy=60,000 p.s.i.
ANCHOR RODS, AASHTO M314 GRADE 55	fy=55,000 p.s.i.
TEMPLATES, ASTM, A709 GRADE 36	fy=36,000 p.s.i.

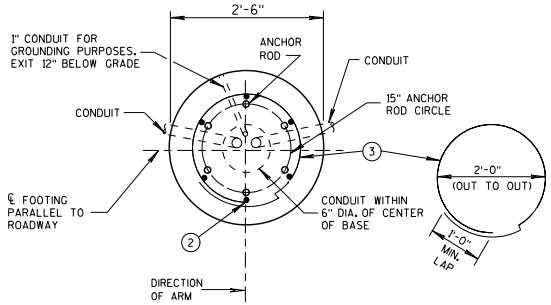

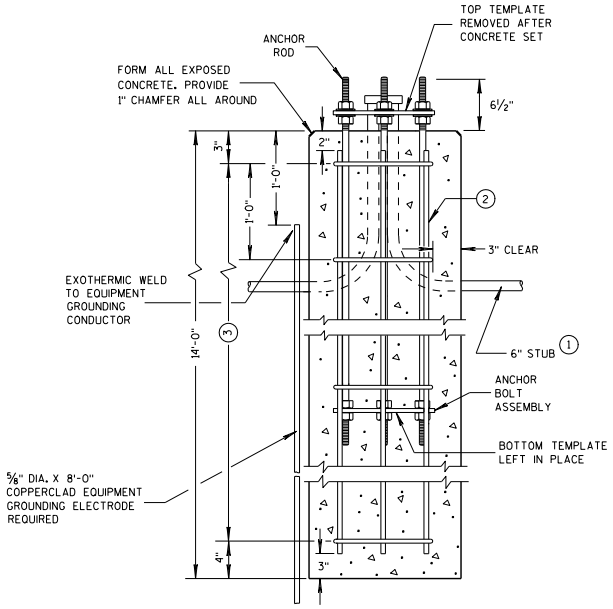

CONCRETE BASE TYPE 10

(FOR TYPE 9 & 10 POLES)

TO BE USED WHEN GROUND ELEVATION AT BASE EQUALS OR IS GREATER THAN HIGH POINT OF ROADWAY ELEVATION. SEE S.D.D. 9C13-1 WHEN GROUND ELEVATION AT BASE IS LOWER THAN HIGH POINT OF ROADWAY ELEVATION.

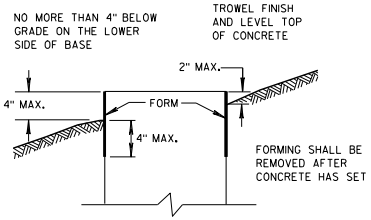

FORMING DETAIL

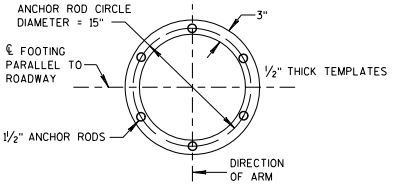

TOP AND BOTTOM TEMPLATES

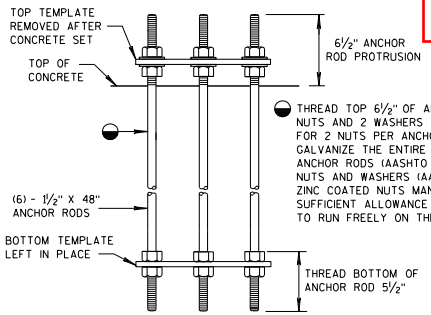

◒ THREAD TOP 6½" OF ANCHOR ROD FOR 2 NUTS AND 2 WASHERS AND BOTTOM 5½" FOR 2 NUTS PER ANCHOR ROD. HOT-DIP GALVANIZE THE ENTIRE LENGTH OF THE ANCHOR RODS (AASHTO M111) AND HOT-DIP NUTS AND WASHERS (AASHTO M232). USE ZINC COATED NUTS MANUFACTURED WITH SUFFICIENT ALLOWANCE TO ALLOW NUTS TO RUN FREELY ON THE THREADS.

ANCHOR BOLT ASSEMBLY DETAIL

CONCRETE BASE TYPE 10 ANCHOR ASSEMBLY

QUANTITY REQUIREMENTS	
APPROX. CUBIC YARDS OF CONCRETE	2.5
LBS. OF HOOP BAR STEEL	69
LBS. OF VERTICAL BAR STEEL	122

CONCRETE BASE TYPE 10

STATE OF WISCONSIN
DEPARTMENT OF TRANSPORTATION

APPROVED
3-3-10 /S/ Joanna L. Bush
DATE STATE ELECTRICAL ENGINEER FOR HWYS.
FHWA

Addendum #1
Revised Sheet 185
April 28, 2010

6

6

S.D.D. 9 C 11-1

S.D.D. 9 C 11-1

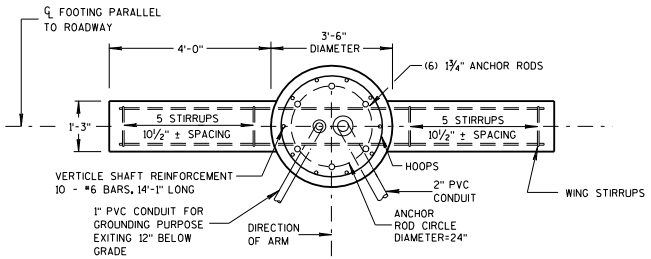

PLAN VIEW

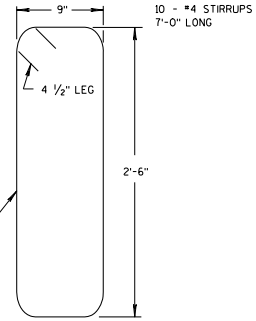

WING STIRRUP

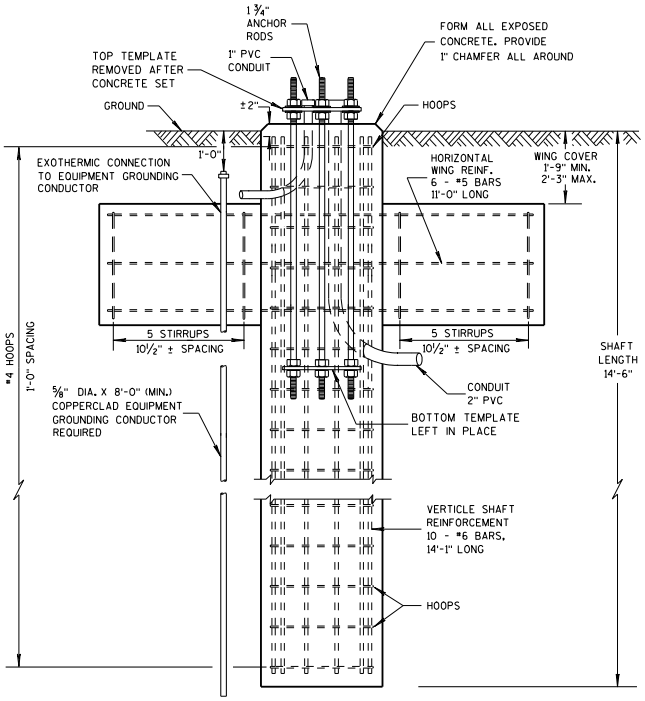

ELEVATION VIEW

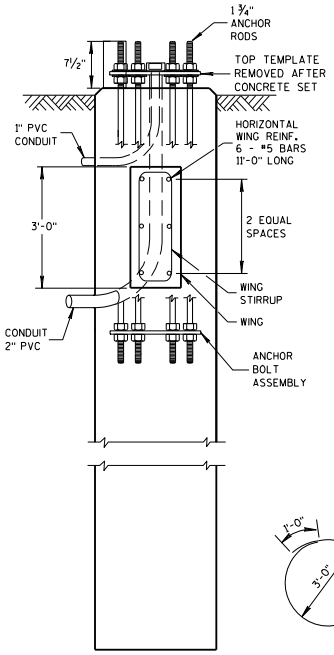

SIDE VIEW

DOES NOT SHOW HOOPS OR VERTICAL SHAFT REINFORCEMENT

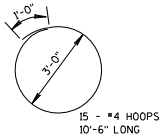

HOOP DETAIL

GENERAL NOTES

DETAILS OF CONSTRUCTION, MATERIALS AND WORKMANSHIP NOT SHOWN ON THIS DRAWING SHALL CONFORM TO THE PERTINENT REQUIREMENTS OF THE CONTRACT.

ORIENT ANCHOR RODS IN FOOTING AND PROVIDE ANCHOR ROD PROJECTION ABOVE TOP OF CONCRETE FOOTING BASE PER THIS SHEET.

BENDING DIMENSIONS FOR REINFORCING BARS ARE OUT TO OUT.

USE 3" CLEAR FOR ALL REINFORCEMENT UNLESS NOTED OTHERWISE.

THE CONTRACTOR IS RESPONSIBLE FOR MAKING HIS OWN DETERMINATION AS TO THE TYPE AND LOCATION OF THE UNDERGROUND UTILITIES AS MAY BE NECESSARY TO AVOID DAMAGE THERETO.

WELDING OF ANCHOR RODS TO THE CAGE IS UNACCEPTABLE. TEMPLATES SHALL BE USED.

BASES (SHAFT), BELOW THE WING, SHALL BE EXCAVATED BY THE USE OF A CIRCULAR AUGER. IF A BASE REQUIRES A DEEP FORM BECAUSE OF LOOSE SOIL, THE FORM SHALL BE REMOVED BEFORE BACKFILLING AROUNG THE BASE. BACKFILL SHALL BE TAMPED TIGHT AGAINST THE BARE CONCRETE BASE IN LAYERS OF 1 FOOT OR LESS.

TOP SURFACE OF THE CONCRETE BASE SHALL BE TROWEL FINISHED AND LEVEL.

CONDUIT SIZE AND LOCATIONS SHALL BE AS SHOWN ON THE PLANS.

MINIMUM BENDING RADIUS OF CONDUIT IS EQUAL TO 6 X THE DIAMETER.

CONDUIT HEIGHT ABOVE CONCRETE BASE SHALL BE 4½" INCHES. ALL METALLIC CONDUIT ENDS SHALL BE REAMED AND THREADED. NONMETALLIC CONDUIT SHALL HAVE BELL ENDS INSTALLED. ALL CONDUIT SHALL SLOPE TO PULL BOX.

ALL CONDUIT ENDS AT THE TOP OF THE BASES SHALL BE CAPPED IF METALLIC OR PLUGGED IF NONMETALLIC IMMEDIATELY AFTER PLACEMENT AND BEFORE CONCRETE IS POURED. CONDUITS IN WHICH WIRE OR CABLE IS NOT INSTALLED SHALL REMAIN CAPPED OR PLUGGED.

BELL ENDS SHALL BE INSTALLED ON ALL PVC CONDUIT EXPOSED AT THE TOP OF CONCRETE BASES BEFORE INSTALLATION OF CABLE OR WIRE.

WHEN REQUIRED TO CONNECT NONMETALLIC CONDUIT TO METALLIC CONDUIT, ONLY ADAPTOR FITTINGS, UL LISTED FOR ELECTRICAL USE, SHALL BE USED.

A NO. 4 AWG, STRANDED COPPER EQUIPMENT GROUNDING CONDUCTOR SHALL BE EXOTHERMICALLY WELDED TO THE EQUIPMENT GROUNDING ELECTRODE (GROUND ROD).

THE EQUIPMENT GROUNDING CONDUCTOR SHALL BE FURNISHED AND INSTALLED TO ENTER THE BASE THROUGH A 1-INCH CONDUIT INSTALLED FOR GROUNDING PURPOSES, LEAVING A 4-FOOT COIL OF WIRE ABOVE THE CONCRETE BASE. THE EQUIPMENT GROUNDING CONDUCTOR SHALL BE NEATLY COILED AND THE COILS TIED TOGETHER.

BAR STEEL REINFORCEMENT SHALL BE COATED WITH POWDERED EPOXY RESIN IN ACCORDANCE WITH SECTION 505 OF THE STANDARD SPECIFICATIONS.

THE MINIMUM DEPTH OF CONDUIT EXITING THE CONCRETE BASE AND INSTALLED BELOW THE TRAVEL WAY SHALL BE 24-INCHES. THE MINIMUM DEPTH OF CONDUIT EXITING THE CONCRETE BASE THAT IS NOT INSTALLED BELOW THE TRAVELED WAY SHALL BE 18-INCHES. THE MAXIMUM DEPTH OF ALL CONDUIT SHALL BE 36-INCHES, (GREATER THAN 36-INCHES IF INSTALLED IN BREAKER-RUN), EXCEPT WITH THE WRITTEN APPROVAL OF THE ENGINEER.

ANCHOR RODS SHALL BE INSTALLED WITH MISALIGNMENTS OF LESS THAN 1:40 FROM VERTICAL.

CONCRETE MASONRY	fc=3,500 p.s.i.
HIGH STRENGTH BAR STEEL REINFORCEMENT, GRADE 60	fy=60,000 p.s.i.
ANCHOR RODS, AASHTO M314 GRADE 55	fy=55,000 p.s.i.
TEMPLATES, ASTM A709 GRADE 36	fy=36,000 p.s.i.

Addendum #1
Revised Sheet 186
April 28, 2010

(FOR TYPE 12 & 13 POLES)

CONCRETE = 6.3 C.Y.
H.S. REINFORCEMENT = 433 LBS.

TO BE USED WHEN GROUND ELEVATION AT BASE EQUALS OR IS GREATER THAN HIGH POINT OF ROADWAY ELEVATION.
SEE S.D.D. 9C13-1 WHEN GROUND ELEVATION AT BASE IS LOWER THAN HIGH POINT OF ROADWAY ELEVATION.

CONCRETE BASE TYPE 13

STATE OF WISCONSIN
DEPARTMENT OF TRANSPORTATION

6

S.D.D. 9 C 12-1a

6

S.D.D. 9 C 12-1a

Addendum #1
New Sheet 186A
April 28, 2010

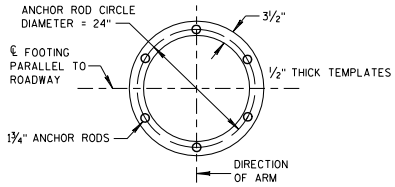

TOP AND BOTTOM TEMPLATES

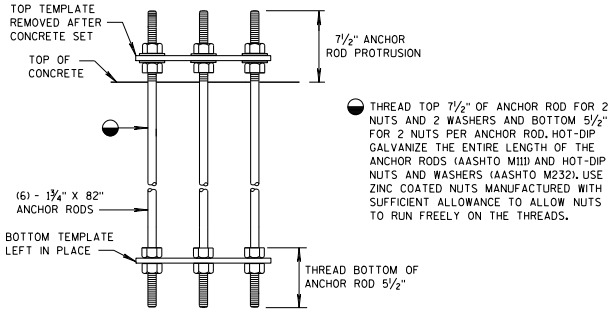

ANCHOR BOLT ASSEMBLY DETAIL

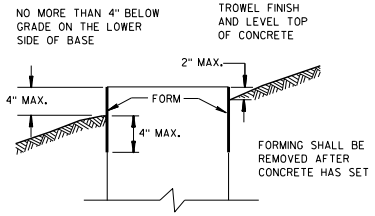

FORMING DETAIL

CONCRETE BASE TYPE 13 ANCHOR ASSEMBLY

CONCRETE BASE TYPE 13	
STATE OF WISCONSIN DEPARTMENT OF TRANSPORTATION	
APPROVED 3-3-10 DATE	/S/ Joanna L. Bush STATE ELECTRICAL ENGINEER FOR HWYS.
FHWA	

6

6

S.D.D. 9 C 12-1b

S.D.D. 9 C 12-1b