STATE PROJECT	FEDERAL PROJECT	
	PROJECT	CONTRACT
7210-07-71	STP 1997 (091)	1

INDEX OF SHEETS

Sheet No. 1 Title
Sheet No. 2-2.3 Typical Sections and Details
Sheet No. 3-3.2 Estimate of Quantities
Sheet No. 3A&3B Miscellaneous Quantities
Sheet No. 5-5.6 Plan
Sheet No. 6-6.11 Standard Detail Drawings
Sheet No. ——— Sign Plates
Sheet No. 9-9.3 Cross Sections

TOTAL SHEETS = 33

STATE OF WISCONSIN
DEPARTMENT OF TRANSPORTATION

PLAN OF PROPOSED IMPROVEMENT

ELLSWORTH - BALDWIN ROAD

USH 10 - STH 29 EAST

U.S.H. 63

PIERCE CO.

STATE PROJECT NUMBER
7210- 07-71

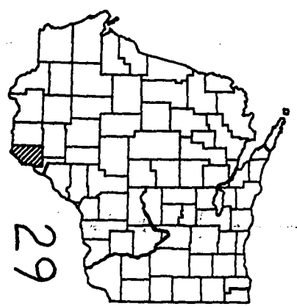

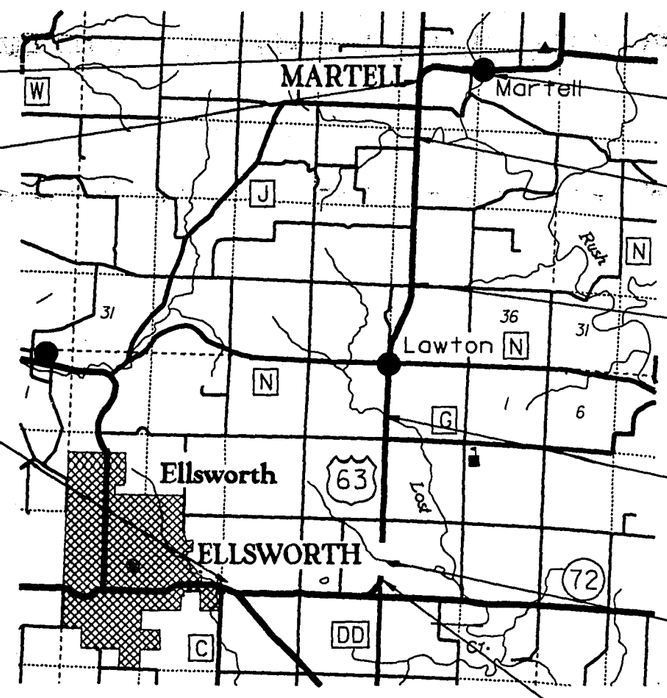

END PROJECT 7210-07-71
STA. 107+00

EQUATION 463+00 BK.=
0+16.8 AH.

EXCEPTION TO NET ℄ LENGTH
STA. 47+92 TO 49+42
B-47-170

EXCEPTION TO NET ℄ LENGTH
STA. 427+49.75 TO STA. 428+10.25
B-47-30

EQUATION 325+36.82 BK=
335+65.78AH

BEGIN PROJECT 7210-07-71
STA. 17+00

X=1,362,700' (±200)
Y= 337,500' (±200)

EXCEPTION TO NET ℄ LENGTH
STA. 226+54.50 TO STA. 227+31.50
B-47-29

EXCEPTION TO NET ℄ LENGTH
STA. 131+53.25 TO STA. 132+26.75
B-47-28

EQUATION 114+60.3 BK=
120+69.45 AH

COORDINATES ARE SCALED FROM U.S.G.S. TOPOGRAPHIC MAP, BALDWIN WISCONSIN QUADRANGLES FOR IDENTIFICATION

LAYOUT
SCALE 0 MI.

TOTAL NET LENGTH OF CENTERLINE = 10.092 MI.

DESIGN DESIGNATION

A.D.T.	2408 = 2004
A.D.T.	2632 = 2014
D.H.V.	395
D	60-40
T	11%
V	60 M.P.H.
ESAL'S	1,046,000

CONVENTIONAL SYMBOLS

COUNTY LINE
CORPORATE LIMITS
SURVEY LINE
COMBUSTIBLE FLUIDS — CAUTION
UNDERGROUND UTILITIES
GAS — G
ELECTRIC — E
TELEPHONE OR TELEGRAPH — T
FIBRE OPTIC — FO
SERVICE PEDESTAL
CABLE MARKER
POWER POLE
TELEPHONE POLE
RAILROADS

STATE OF WISCONSIN
DEPARTMENT OF TRANSPORTATION

PREPARED BY

Surveyor	DIST.6
Designer	M.M.HAYEK
District Examiner	S.E. HELLER
District Supervisor	C. LINDALL
C.O. Coordinator	L.A.STANEK
C.O. Examiner	N.R.AFFELDT

APPROVED FOR DISTRICT OFFICE
DATE: 10/15/96 (Signature)

AUTHORIZED FOR CENTRAL OFFICE DESIGN
DATE: 10/21/96 (Signature)

(7210-07-00)

FILE NAME: D6 7210077I:TITLE29.DGN

WISDOT/CADDS SHEET 14

GENERAL NOTES

LIST OF ABBREVIATIONS

AGG.	AGGREGATE
A.D.T.	AVERAGE DAILY TRAFFIC
ASPH.	ASPHALT
BK.	BACK
B.M.	BENCH MARK
C-C	CENTER TO CENTER
CH. CH.	CHANNEL CHANGE
COMM.	COMMERCIAL
CONC.	CONCRETE
C.T.H	COUNTY TRUNK HIGHWAY
D	DEGREE OF CURVE
DOT	DEPARTMENT OF TRANSPORTATION
D.H.V	DESIGN HOUR VOLUME
ELEV.	ELEVATION
EXC.	EXCAVATION
E.	EASTING
F.E.	FIELD ENTRANCE
A OR I	INTERSECTION ANGLE
INT.	INTERCEPTING
I.P.	IRON PIN OR PIPE
L.H.F.	LEFT HAND FORWARD
MAX.	MAXIMUM
MI.	MILE
MIN.	MINIMUM
N.	NORTHING
P.C.	POINT OF CURVATURE
P.I.	POINT OF INTERSECTION
P.T.	POINT OF TANGENCY
P.O.S.T.	POINT OF SUB-TANGENT
P.O.T.	POINT ON TANGENT
P.K.	P.K. NAIL
P.L.	PROPERTY LINE
P.S.D.	PASSING SIGHT DISTANCE
P.E.	PRIVATE ENTRANCE
REQ'D.	REQUIRED
R.H.F.	RIGHT HAND FORWARD
R/W	RIGHT OF WAY
SALV.	SALVAGE
SEC.	SECTION
SHR.	SHRINKAGE
S.T.H.	STATE TRUNK HIGHWAY
STA.	STATION
S.S.D.	STOPPING SIGHT DISTANCE
T.	TANGENT LENGTH OF CURVE
TN. RD.	TOWN ROAD
V.C.	VERTICAL CURV

GENERAL NOTES

WHEN THE QUANTITY OF THE ITEMS OF BASE OR SURFACE COURSE IS MEASURED FOR PAYMENT BY THE TON. THE DEPTH OR THE THICKNESS OF THE COURSE SHOWN ON THE PLANS IS APPROXIMATE AND THE ACTUAL THICKNESS WILL DEPEND ON THE DISTRIBUTION OF MATERIAL DIRECTED BY THE ENGINEER.

EXACT LOCATION OF ENTRANCES WILL BE DETERMINED BY THE ENGINEER IN THE FIELD.

THE LOCATION OF THE EXISTING AND PROPOSED UTILITY INSTALLATIONS AS SHOWN ON THE PLANS ARE APPROXIMATE. THERE MAY BE OTHER UTILITY INSTALLATIONS WITHIN THE PROJECT AREA THAT ARE NOT SHOWN.

NO TREES ARE TO BE REMOVED WITHOUT THE APPROVAL OF THE ENGINEER.

NO PASSING ZONES WILL BE LOCATED BY STATE FORCES.

ALL INTERSECTIONS SHALL BE TYPE "C" UNLESS OTHERWISE NOTED.

ALL DISTURBED AREAS EXCLUSIVE OF THE ROADBED SHALL BE SEEDED,FERTILIZED, & MULCHED.

TACK COAT SHALL BE PLACED AT A RATE OF .025 GAL./S.Y. BETWEEN THE LAYERS OF "ASPHALTIC CONCRETE PAVEMENT, TYPE MV", 3-INCH.

STANDARD DETAIL DRAWINGS

8 D1-11	CONCRETE CURB. CONCRETE CURB & GUTTER & PAVEMENT TIES
8 E9-4	SILT FENCE
8 F1-11	APRON ENDWALLS FOR CULVERT PIPE
9 A1-9a	AT-GRADE SIDE ROAD INTERSECTIONS. TYPES "B"."C" AND "D"
14 B15-2a	CLASS "A" STEEL PLATE BEAM GUARD. INSTALLATION AND ELEMENTS
14 B19-1 a,b,c,&d	CLASS "A" STEEL PLATE BEAM GUARD END TREATMENT WITH ANCHORAGE TYPE 3
14 B18-2a	CLASS "A" STEEL PLATE BEAM GUARD (AT BRIDGES. OBSTACLES. AND SIDEROADS/DRIVEWAYS)
15 C8-7a	PAVEMENT MARKING (MAINLINE)
15 C8-7b	PAVEMENT MARKING (INTERSECTIONS)

SURFACE BORING LOG

STATION	ASPHALT DEPTH INCHES
25+37	6½
38+58	7¾
51+77	7
64+97	8¼
78+17	6¾
91+37	7
104+57	8
123+86 AH.	4
137+06	5
150+26	4
163+46	4
176+66	4
189+86	4
203+06	4½
216+26	4
229+46	4
242+66	4¾
255+86	4
269+06	3½
282+26	3¾
295+46	4
308+66	3
321+86	3½
345+35 AH.	3
358+55	3
371+75	3½
384+95	4
398+15	3¼
411+35	3¼
424+55	3¼
437+75	3½
450+95	3½
1+32 AH.	6½
14+52	6
27+72	5½
40+92	5½
54+12	7
67+32	7
80+52	6
93+72	4½
106+92	5½

*NOTE: ALL BORINGS TAKEN 6 FEET RIGHT OF CENTERLINE

UTILITIES

* AMERITECH. INC.
  304 S. DEWEY STREET
  EAU CLAIRE. WI 54701
  PHONE: (715) 839-5807
  ATTN: C. LEVERCNTZ

* BALDWIN TELECOM. INC.
  BALDWIN. WI 54002
  PHONE (715) 684-3346
  ATTN: DUANE RUSSET

* NORTHERN NATURAL GAS CO.
  1600 W. 82nd ST.
  SUITE 210
  MINNEAPOLIS. MN 55431 - 1420
  PHONE (612) 887-1700
  ATTN: LARRY RICE

* PIERCE-PEPIN ELECTRIC COOPERATIVE
  ELLSWORTH. WI 54011
  PHONE (715) 273-4355
  ATTN: GEROLD DE WOLFE

* DAIRYLAND POWER COOPERATIVE
  3251 EAST AVE. SO.
  LA CROSSE. WI 54601
  PHONE: (608) 788-4000
  ATTN: AL DIAL

*FOR LOCATES 1 (800) 242-8511

LEVELS ON - 1,2,3,4,5,6,7,8,9,10,11,12,13,14,15,16,17,18,19,20,21,22,23,24,25,26,27,28,29,30,31,32,33,34,35,36,37,38,39,40,41,42,43,44,45,46,47,48,49,50,51,52,53,54,55,56,57,58,59,60,61,62,63

STATE PROJECT NUMBER	SHEET NO.
7210-07-71	2.1

PROPOSED TYPICAL SECTIONS

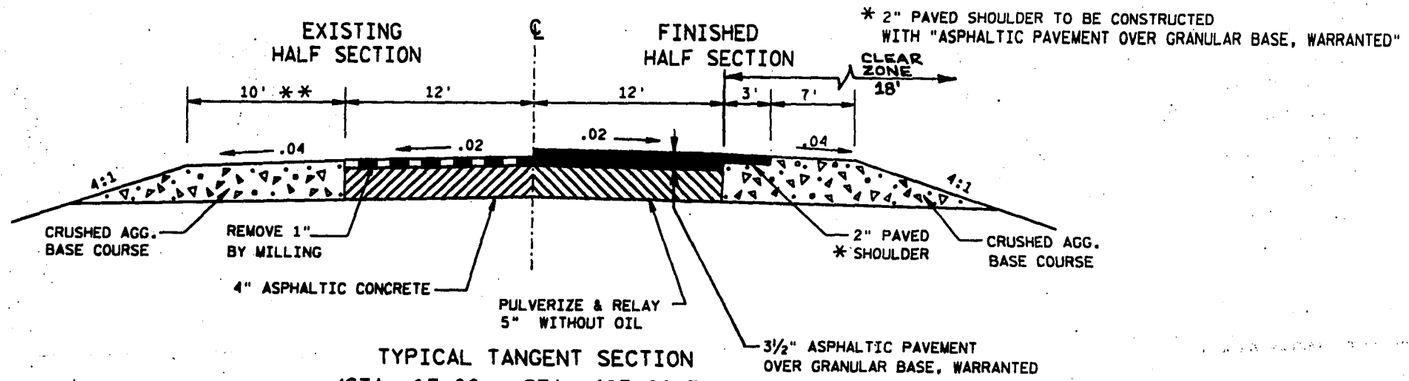

TYPICAL TANGENT SECTION
(STA. 17+00 - STA. 463+00 BK)
BEGIN PROJ.

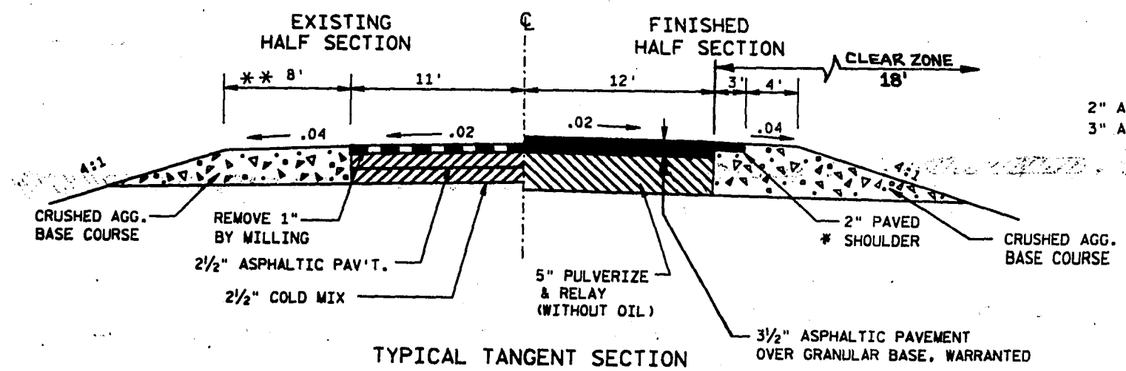

TYPICAL TANGENT SECTION
STA. 0+16.8 AH - STA. 107+00
END PROJ.

** SHAPING SHOULDERS RT. & LT. REQ'D.

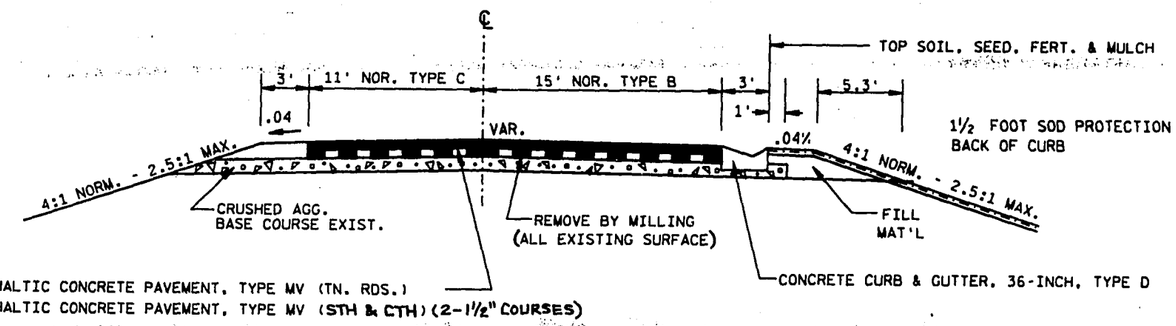

TYPICAL SIDE ROAD RADIUS CONSTRUCTION

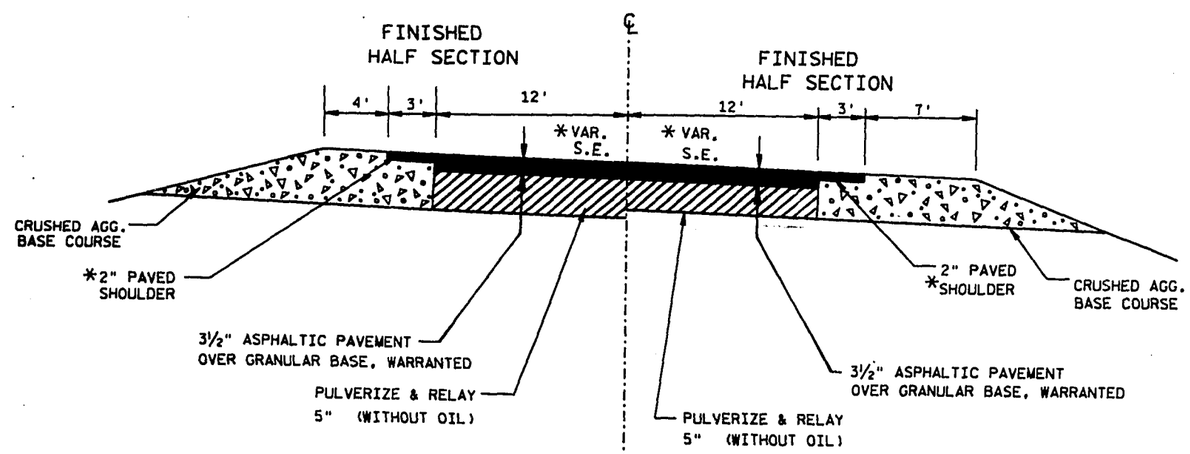

TYPICAL CURVE SECTION

* STA. 1+00 AH - STA. 15+99.54	6° 00'	0.07 %
* STA. 23+49.27 - STA. 28+82.60	2° 00'	0.045 %
* STA. 33+80.79 - STA. 40+78.29	2° 00'	0.045 %
* STA. 88+94.16 - STA. 106+23	5° 00'	0.06 %

TYPICAL CURVE SECTION

* STA. 39+42 - STA. 45+26	1° 30'	0.037 %
* STA. 49+79.74 - STA. 56+18.07	2° 30'	0.051 %
* STA. 59+33.05 - STA. 69+26.38	0° 45'	0.021 %
* STA. 92+16.55 - STA. 114+60.3	4° 00'	0.06 %
* STA. 271+43.87 - STA. 282+33.04	2° 00'	0.045 %
* STA. 298+30.03 - STA. 314+16.70	1° 30'	0.037 %

LEVELS ON - 1,2,3,4,5,6,7,8,9,10,11,12,13,14,15,16,17,18,19,20,21,22,23,24,25,26,27,28,29,30,31,32,33,34,35,36,37,38,39,40,41,42,43,44,45,46,47,48,49,50,51,52,53,54,55,56,57,58,59,60,61,62,63

STATE PROJECT NUMBER	SHEET NO.
7210-07-71	2.2

INTERSECTION DETAILS

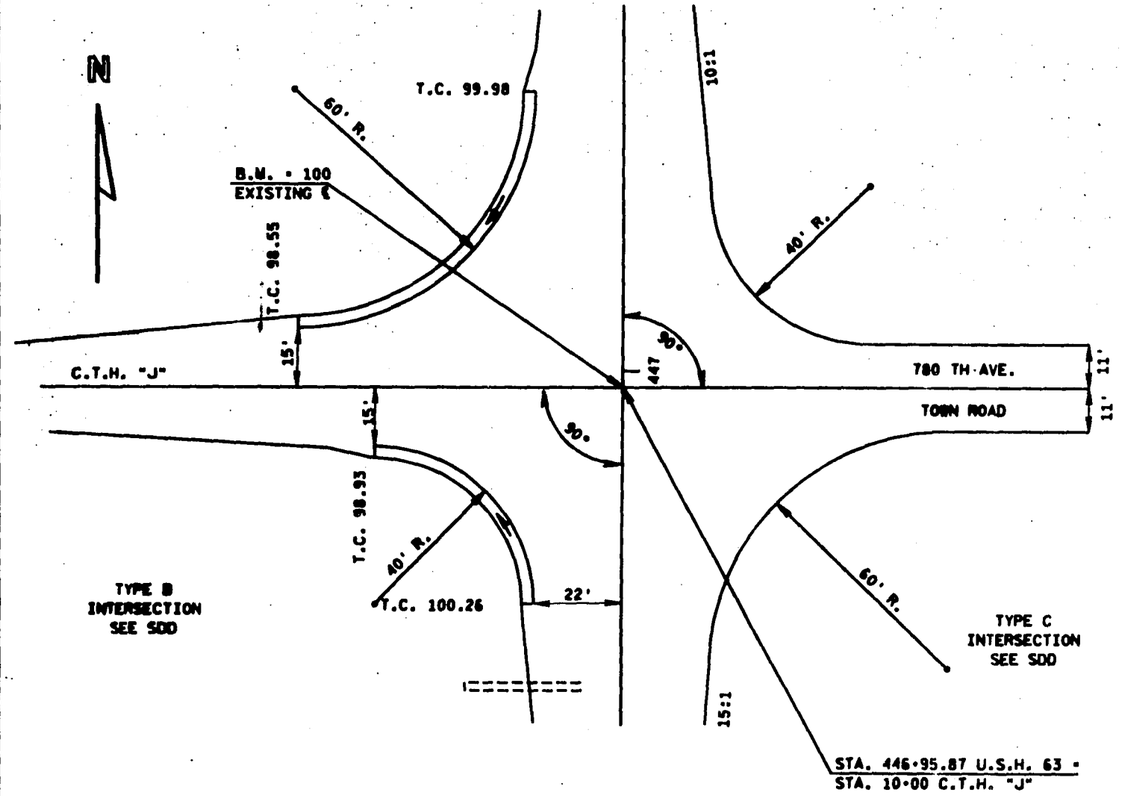

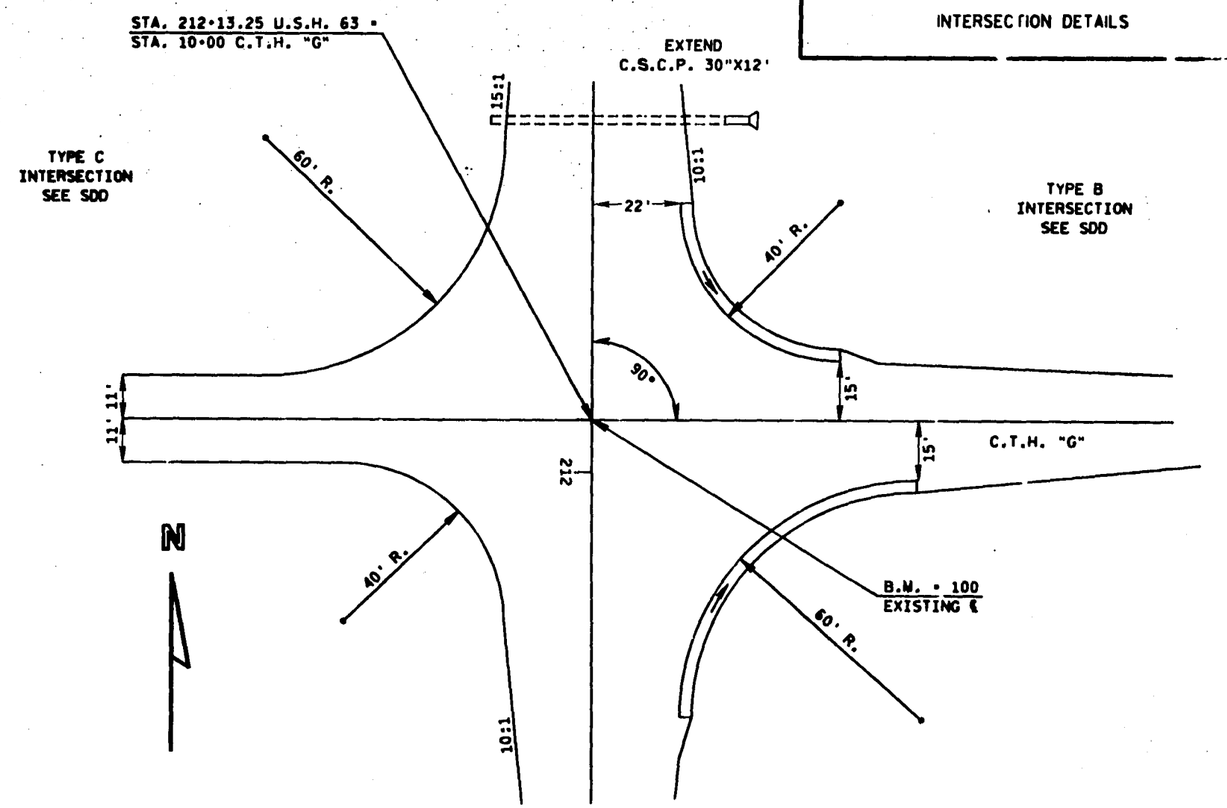

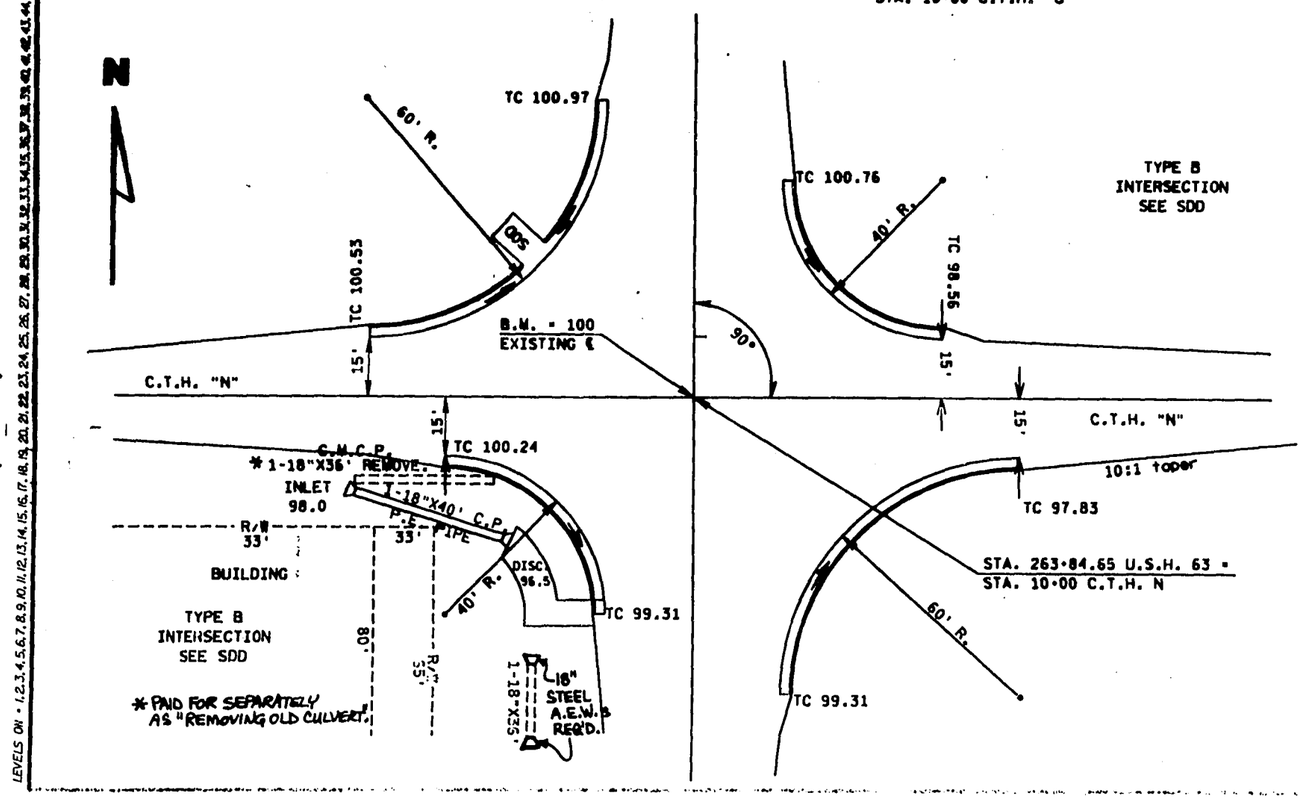

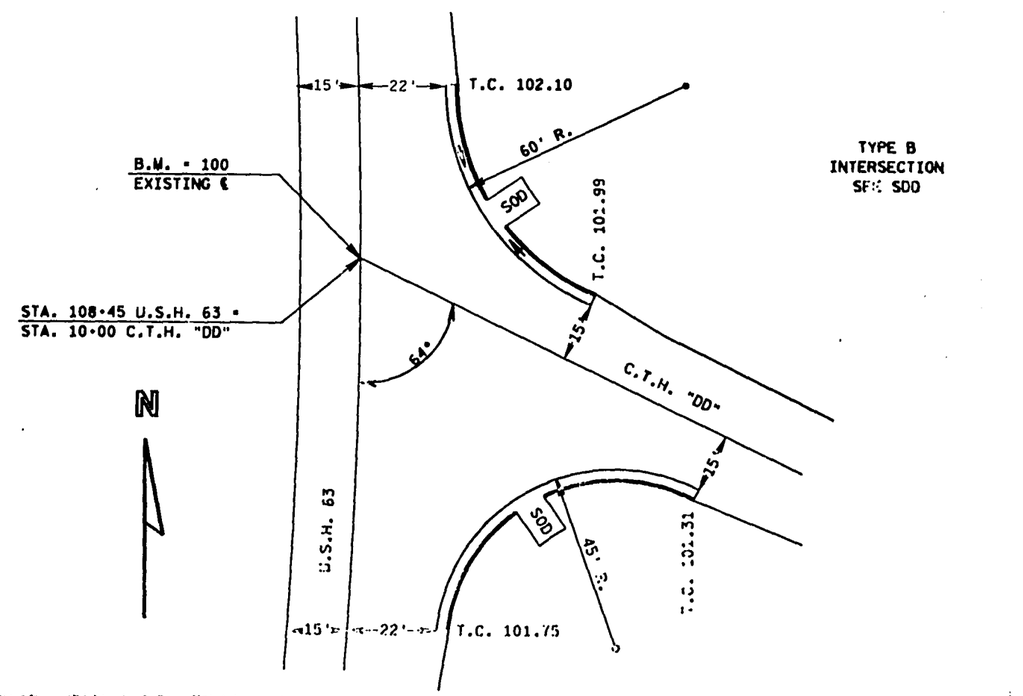

LEVELS ON • 1,2,3,4,5,6,7,8,9,10,11,12,13,14,15,16,17,18,19,20,21,22,23,24,25,26,27,28,29,30,31,32,33,34,35,36,37,38,39,40,41,42,43,44,45,46,47,48,49,50,51,52,53,54,55,56,57,58,59,60,61,62,63

STATE PROJECT NUMBER	SHEET NO.
7210-07-71	2.3

TRAFFIC CONTROL PLAN

LEGEND

K ..... PORTABLE SIGN

△ ..... CONE

..... FLAGMAN

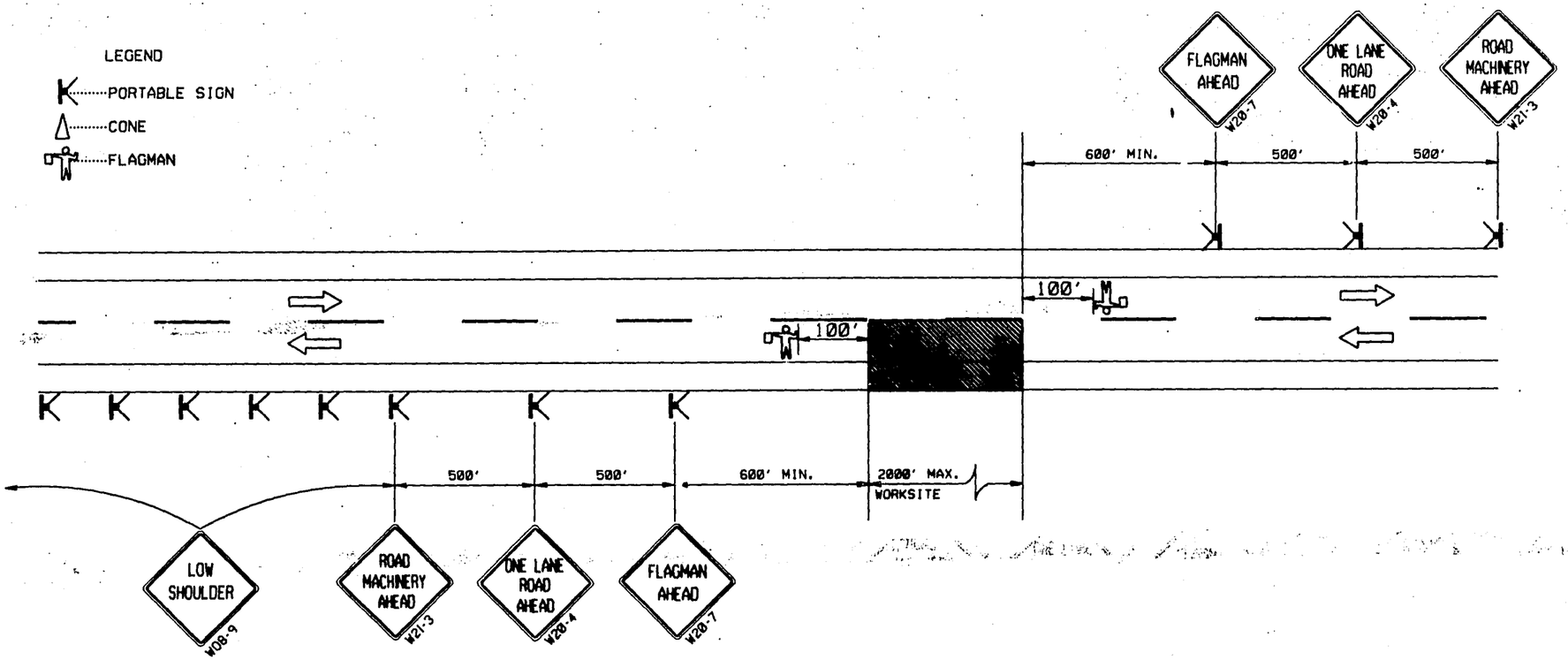

SPACE AS REQUIRED
2 PER MILE MINIMUM

DETAIL OF TRAFFIC CONTROL FOR MOVING WORK AREA

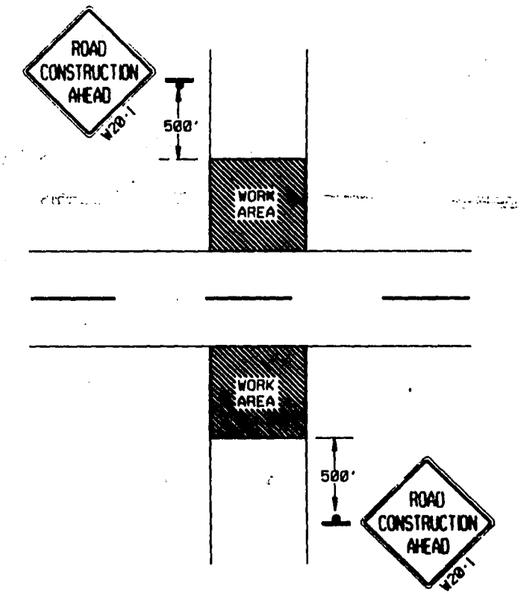

TYPICAL SIDE ROAD SIGNING

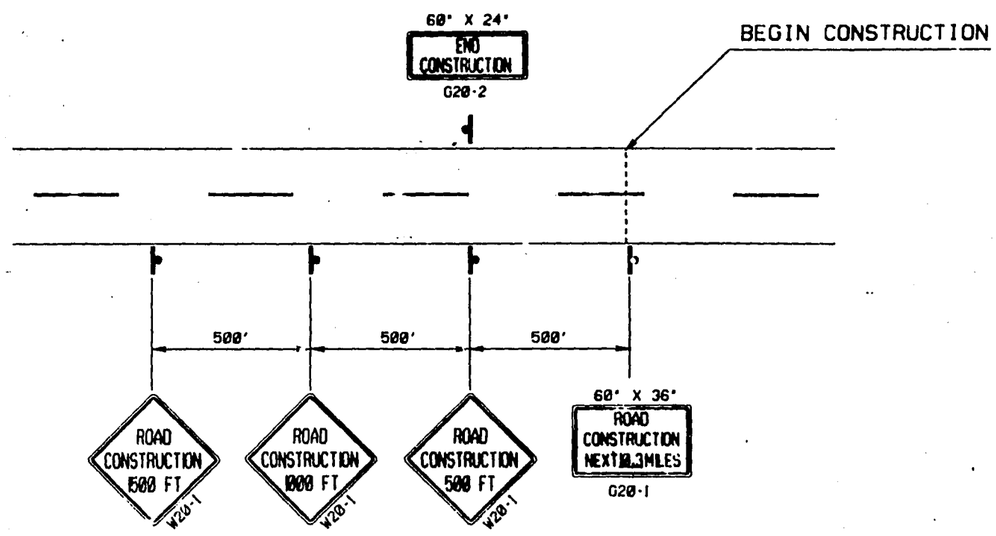

DETAIL OF TRAFFIC CONTROL AT TERMINII

SIGNING - GENERAL NOTES FOR TRAFFIC CONTROL

IF MORE THAN ONE OPERATION IS BEING PERFORMED, EACH OPERATION SHALL HAVE ITS OWN FLAGMAN.

DRAWINGS SHOW TRAFFIC CONTROL FOR A TYPICAL SITUATION. ADDITIONAL TRAFFIC CONTROL DEVICES MAY BE REQUIRED AND/OR LAYOUT DETAILS MODIFIED DEPENDING ON CONTRACTORS METHODS OR SEQUENCE OF OPERATION.

ALL SIGN LOCATIONS ARE APPROXIMATE. THE ACTUAL LOCATIONS WILL BE DETERMINED IN THE FIELD BY THE ENGINEER.

ROAD MACHINERY, TRUCK ENTRANCE, FLAGMAN AHEAD, ETC., SIGNS SHALL BE USED AS NEEDED AND SHALL BE REMOVED OR COVERED AT NIGHT, WEEKENDS OR WHEN THE ACTIVITY OR CONDITION DOES NOT EXIST. NO FLASHER SHALL BE USED WITH A COVERED SIGN.

ALL SIGNS ARE 48" X 48" UNLESS OTHERWISE NOTED.

"WO" SIGNS ARE THE SAME AS "W" SIGNS EXCEPT THE BACKGROUND IS ORANGE.

TRAFFIC CONTROL PLANS ARE NOT DRAWN TO SCALE.

LEVELS ON - 1,2,3,4,5,6,7,8,9,10,11,12,13,14,15,16,17,18,19,20,21,22,23,24,25,26,27,28,29,30,31,32,33,34,35,36,37,38,39,40,41,42,43,44,45,46,47,48,49,50,51,52,53,54,55,56,57,58,59,60,61,62,63

DATE 10/28/96

ESTIMATE OF QUANTITIES

ITEM	ITEM DESCRIPTION	UNIT	TOTAL	7210-07-71 QUANTITY
20330	REMOVING OLD CULVERTS	EACH	1.00	1.00
20411	REMOVING GUARDRAIL	L.F.	1,190.00	1,190.00
20421	REMOVING ASPHALTIC SURFACE, MILLING	TON	8,655.00	8,655.00
21302	FINISHING ROADWAY, PROJECT 7210-07-71	LS	1.00	1.00
30404	CRUSHED AGGREGATE BASE COURSE	TON	21,947.00	21,947.00
30409	SHAPING SHOULDERS	STA.	1,060.00	1,060.00
40204	ASPHALTIC MATERIAL FOR TACK COAT	GAL.	175.00	175.00
40301	QUALITY MANAGEMENT PROGRAM, ASPHALTIC MIXTURE	TON	2,102.00	2,102.00
40501	ASPHALTIC MATERIAL FOR PLANT MIXES	TON	126.00	126.00
40713	ASPHALTIC CONCRETE PAVEMENT, TYPE MV	TON	2,102.00	2,102.00
52003	CULVERT PIPE, CLASS III, 18-INCH	L.F.	40.00	40.00
52061	APRON ENDWALLS FOR CULVERT PIPE, 18-INCH	EACH	2.00	2.00
52109	CORRUGATED STEEL CULVERT PIPE, 30-INCH	L.F.	12.00	12.00
52149	STEEL APRON ENDWALLS FOR CULVERT PIPE, 18-INCH	EACH	2.00	2.00
52152	STEEL APRON ENDWALLS FOR CULVERT PIPE, 30-INCH	EACH	1.00	1.00
60170	CONCRETE CURB AND GUTTER, 36-INCH, TYPE D	L.F.	795.00	795.00
61408	STEEL PLATE BEAM GUARD, CLASS A	L.F.	2,187.00	2,187.00
61414	ANCHORAGES FOR STEEL PLATE BEAM GUARD, TYPE 3	EACH	5.00	5.00
61802	MAINTENANCE AND REPAIR OF HAUL ROADS, PROJECT 7210-07-71	LS	1.00	1.00
61910	MOBILIZATION	LS	.75	.75
62501	TOPSOIL	S.Y.	150.00	150.00
62702	MULCHING	S.Y.	150.00	150.00
62817	SILT FENCE MAINTENANCE	L.F.	150.00	150.00
62822	EROSION MAT, DELIVERED, CLASS I, TYPE A	S.Y.	20.00	20.00

SHEET 3.0

ITEM	ITEM DESCRIPTION	UNIT	TOTAL	7210-07-71 QUANTITY
62823	EROSION MAT, INSTALLED, CLASS I, TYPE A	S.Y.	20.00	20.00
62848	SILT FENCE, SILTY SOIL, DELIVERED	L.F.	150.00	150.00
62850	SILT FENCE, SILTY SOIL, INSTALLED	L.F.	150.00	150.00
62905	FERTILIZER, TYPE B	CWT.	62.00	62.00
63010	SEEDING, MIXTURE NO. 30	LB.	1,720.00	1,720.00
63101	SODDING	S.Y.	400.00	400.00
64202	FIELD OFFICE, TYPE B	LS	1.00	1.00
64302	TRAFFIC CONTROL, PROJECT 7210-07-71	LS	1.00	1.00
64318	TRAFFIC CONTROL, BARRICADES, TYPE III	DAYS	350.00	350.00
64326	TRAFFIC CONTROL, SIGNS	DAYS	4,910.00	4,910.00
64602	PAVEMENT MARKING, 4-INCH, EPOXY	L.F.	108,557.00	108,557.00
64626	PAVEMENT MARKING, SAME DAY, 4-INCH, EPOXY	L.F.	55,710.00	55,710.00
64710	PAVEMENT MARKING, STOP LINE, 18-INCH, EPOXY	L.F.	114.00	114.00
64901	TEMPORARY PAVEMENT MARKING, 4-INCH	L.F.	25,500.00	25,500.00
90001	CULVERT PIPE LINERS, 24-INCH	L.F.	146.00	146.00
90003	ASPHALTIC PAVEMENT OVER GRANULAR BASE, WARRANTED	TON	34,456.00	34,456.00
90004	ASPHALTIC SURFACE, PATCHING	TON	20.00	20.00
90310	REMOVING MARKER POSTS	EACH	35.00	35.00
90329	GRADING, SHAPING AND FINISHING FOR BEAM GUARD ANCHORAGES	EACH	5.00	5.00
90338	GRADING, SHAPING & FINISHING INTERSECTION, STA. 108+45 RT, CTH DD	LS	1.00	1.00
90339	GRADING, SHAPING & FINISHING INTERSECTION, STA. 212+13 RT, CTH G	LS	1.00	1.00
90340	GRADING, SHAPING & FINISHING INTERSECTION, STA. 263+84 RT, CTH N	LS	1.00	1.00
90341	GRADING, SHAPING & FINISHING INTERSECTION, STA. 263+84 LT, CTH N	LS	1.00	1.00

SHEET 3 of 3

ITEM	ITEM DESCRIPTION	UNIT	TOTAL	7210-07-71 QUANTITY
90342	GRADING, SHAPING & FINISHING INTERSECTION, STA. 446+95, LT, CTH J	LS	1.00	1.00
90357	PULVERIZE AND RELAY EXISTING BASE AND SURFACE	S.Y.	142,100.00	142,100.00
90365	QUALITY MANAGEMENT PROGRAM, BASE COURSES	TON	21,947.00	21,947.00
90394	PROFILOGRAPH , PROJECT 7210-07-71	LS	1.00	1.00
90999	ON-THE-JOB TRAINING	HRS.	250.00	250.00

SHEET 3.2

MISCELLANEOUS QUANTITIES

REMOVING MARKER POST

STA.	-	STA.	LOCATION.	EACH
53+47	-	56+47	RT.	12
87+50	-	92+50	RT.	23
			TOTAL	35

REMOVING GUARDRAIL

STA.	-	STA.	LOCATION.	L.F.	* REMOVE ANCHORS EA.
31+31	-	38+51	RT.	720	
47+15	-	47+92	RT. & LT.	154	
49+42	-	50+19	RT. & LT.	154	1 RT.
51+67	-	53+29	RT.	162	
			TOTAL	1190	

* FOR INFORMATION ONLY

GRADING SHAPING AND FINISHING INTERSECTIONS ESTIMATED QUANTITIES

STA.	LOCATION.	FILL C.Y.	TOPSOIL MULCH. S.Y.	SEED #30 LBS.	FERTILIZER TYPE B CWT.	BID ITEM LUMP SUM
108+45	C.T.H. "DD" RT.	80	400	10	.20	1
212+13	C.T.H. "G" RT.	550	1030	20	.70	1
263+84	C.T.H. "N" RT.	660	990	20	.65	1
263+84	C.T.H. "N" LT.	180	470	10	.20	1
446+95	C.T.H. "J" LT.	400	960	20	.60	1
	TOTAL	1870	3850	80	2.35	

CULVERT PIPE

STA.	LOCATION.	CULVERT PIPE	ENDWALLS (EA.)	STEEL THICKNESS (INCHES)
212+58	RT. EXTENSION	1-30"X12' C.S.C.P	(STEEL) 1	0.075
262+78	LT.		(STEEL) 1-18"	-
263+14	LT.		(STEEL) 1-18"	-
263+84	LT.	1-18"X40' C.P. CLASS III	2	0.060

CULVERT PIPE LINERS - 24"

STA. 23 + 70	70 L.F.
STA. 88 + 75	76 L.F.
TOTAL	146

SILT FENCE, FOR SILTY SOILS

LOCATION	DELIVERED L.F.	INSTALLED L.F.	MAINTENANCE L.F.
PROJECT	150	150	150

CONCRETE CURB AND GUTTER, 36" TYPE "D"

STA.		STA.		L.F.
107+65	(RT.) USH 63	9+15	(LT.) CTH DD	80'
9+35	(RT.) CTH DD	108+98	(RT.) USH 63	75'
211+38	(RT.) USH 63	10+83	(RT.) CTH G	95'
10+63	(LT.) CTH G	212+67	(RT.) USH 63	65'
263+10	(RT.) USH 63	10+82	(RT.) CTH N	95'
263+30	(LT.) USH 63	9+38	(RT.) CTH N	65'
9+18	(LT.) CTH N	264+60	(LT.) USH 63	95'
10+62	(LT.) CTH N	264+39	(RT.) USH 63	65'
446+42	(LT.) USH 63	9+38	(RT.) CTH J	65'
9+18	(LT.) CTH J	447+72	(LT.) USH 63	95'
			TOTAL	795

SODDING

STA.	LOCATION.	S.Y.
108+45	S.E. RADIUS	12
108+45	S.E. CURB DRAIN	7
108+45	S.W. RADIUS	13
108+45	S.W. CURB DRAIN	10
212+13	S.E. RADIUS	16
212+13	S.E. CURB DRAIN	17
212+13	N.E. RADIUS	11
212+13	N.E. CURB DRAIN	20
212+58	PIPE DISCHARGE	11
263+84	S.E. RADIUS	16
263+84	S.E. CURB DRAIN	13
263+84	S.W. RADIUS	11
263+84	S.W. CURB DRAIN	7
263+84	N.E. RADIUS	11
263+84	N.E. CURB DRAIN	20
263+84	N.W. RADIUS	16
263+84	N.W. CURB DRAIN	13
263+84	S.W. PIPE PROTECTION	33
446+95	S.W. RADIUS	11
446+95	S.W. CURB DRAIN	17
446+95	N.W. RADIUS	16
446+95	N.W. CURB DRAIN	13
	UNDISTRIBUTED	86
	TOTAL	400

STEEL PLATE BEAM GUARD, CLASS A

STA.	-	STA.	LOCATION.	L.F.	ANCHORAGES, TYPE 3 EACH
31+26	-	38+55	RT.	729'	2
49+42	-	53+19	RT.	377'	
53+43	-	56+95	RT.	352'	1
87+50	-	92+54	RT.	504'	2
47+15	-	47+92	RT.	75'	EXIST.
47+15	-	47+92	LT.	75'	EXIST.
49+72	-	53+19	LT.	75'	EXIST.
			TOTAL	2187	5

GRADING SHAPING AND FINISHING FOR BEAM GUARD ANCHORS

STA.	LOCATION.	EACH
31+26	RT.	1
38+55	RT.	1
56+95	RT.	1
87+50	RT.	1
92+54	RT.	1
	TOTAL	5

NON-BID ITEMS ARE LISTED HERE WITH APPROXIMATE QUANTITIES FOR A TYPICAL 1 EACH LOCATION; LISTED FOR BID INFORMATION ONLY.

BORROW EXC.	SEEDING #30	FERTILIZER, TYPE B	MULCH	SALVAGED TOPSOIL
C.Y.	LB.	CWT.	S.Y.	S.Y.
18	2	0.10	70	70

FINISHING ITEMS

ITEM	LOCATION	QUANTITY	UNIT
TOP SOIL	UNDISTRIBUTED	150	S.Y.
MULCHING	UNDISTRIBUTED	150	S.Y.
SEEDING #30	UNDISTRIBUTED	20	LBS.
SEEDING #30	SHOULDER SLOPES	1700	LBS.
FERTILIZER TYPE B	SHOULDER SLOPES	61	CWT.
FERTILIZER TYPE B	UNDISTRIBUTED	1	CWT.

MILLING & ASPHALTIC PAVING

	STA.	-	STA.		REMOVING ASPHALTIC PAVEMENT, MILLING TON	ASPHALTIC PAVEMENT OVER GRANULAR BASE, WARRANTED TON
SEC. I	17 + 00		114 + 60.3	BK.	1430	6312
	120 + 69.45	AH.	131 + 53.25		160	700
	132 + 26.75		226 + 54.50		1400	6097
	227 + 31.5		325 + 36.82	BK.	1440	6394
	335 + 65.78	AH.	427 + 49.75		1350	5938
	428 + 10.25		463 + 00	BK.	510	2257
SEC. II	0 + 16.8	AH.	47 + 92		640	3088
	49 + 42		107 + 00		775	3723
				TOTAL	34456	

INTERSECTION	STA.		ASPHALTIC CONCRETE PAVEMENT, TYPE MV
TN. RD.	53 + 42	LT. & RT.	60	112
TN. RD.	80 + 09	LT.	30	56
S.T.H. 72 RT.	+		130	408
C.T.H. "DD" RT.	+ -		50	106
TN. RD.	159 + 36.63	LT. & RT.	60	112
C.T.H. "G"	212 + 13.25	RT.	50	106
TN. RD.	212 + 13.25	LT.	30	56
C.T.H. "N"	263 + 84.65	LT. & RT.	60	212
TN. RD.	275 + 00	RT.	30	56
TN. RD.	318 + 38	LT. & RT.	60	112
TN. RD.	381 + 29	RT.	30	56
TN. RD.	420 + 65	LT.	30	56
TN. RD.	446 + 95.87	RT.	30	56
C.T.H. "J"	446 + 95.87	LT.	50	106
C.T.H. "Y"	3 + 00	LT.	50	106
C.T.H. "Y"	16 + 00	LT.	50	106
799 TH. AVE.	37 + 00	RT.	30	56
535 TH. ST.	41 + 20	LT. & RT.	60	112
TN. RD.	75 + 14	LT.	30	56
TN. RD.	104 + 00	RT.	30	56
		TOTAL	8655	2102

PAVEMENT MARKING, EPOXY 4-INCH SAME DAY (YELLOW)

LOCATION	L.F.	PAVEMENT MARKING EPOXY, 4-INCH L.F. (WHITE)
CENTERLINE	55,710	-
EDGELINE	-	108,557

TEMPORARY PAVEMENT MARKING

LOCATION	L.F.
CENTERLINE & NO PASSING	25,500

PAVEMENT MARKING, STOP LINE, EPOXY, 18 - INCH

STATION	LOCATION	L.F.
98+00 RT.	S.T.H. 72	18'
108+23 RT.	C.T.H. "DD"	18'
212+13 RT.	C.T.H. "G"	15'
263+84 LT. & RT.	C.T.H. "N"	30'
446+95 LT.	C.T.H. "J"	15'
3+00 LT.	C.T.H. "Y"	18'
	TOTAL	114

LEVELS ON • 1,2,3,4,5,6,7,8,9,10,11,12,13,14,15,16,17,18,19,20,21,22,23,24,25,26,27,28,29,30,31,32,33,34,35,36,37,38,39,40,41,42,43,44,45,46,47,48,49,50,51,52,53,54,55,56,57,58,59,60,61,62,63

STATE PROJECT NUMBER	SHEET NO.
7210-07-71	3B

MISCELLANEOUS QUANTITIES

CRUSHED AGG. BASE COURSE

LOCATION	TON
PROJECT	21,947

ASPHALTIC MATERIAL FOR TACK COAT
(FOR ASPH. CONC. PAV'T., TYPE MV, 3" AT STH & CTH SIDEROADS)

175 GAL.

EROSION MAT. CLASS I. TYPE A

LOCATION	DELIVERED	INSTALLED
PROJECT	20 S.Y.	20 S.Y.

ASPHALTIC MATERIAL FOR PLANT MIXES
(FOR ASPH. CONC. PAV'T., TYPE MV)

126 TON

TRAFFIC CONTROL

BARRICADES, TYPE III	SIGNS
350 DAYS	4910 DAYS

SHAPING SHOULDERS

LOCATION	STA.
PROJECT	1060

PULVERIZE & RELAY EXISTING BASE AND SURFACE

LOCATION	S.Y.
PROJECT	142,100

LEVELS ON - 1,2,3,4,5,6,7,8,9,10,11,12,13,14,15,16,17,18,19,20,21,22,23,24,25,26,27,28,29,30,31,32,33,34,35,36,37,38,39,40,41,42,43,44,45,46,47,48,49,50,51,52,53,54,55,56,57,58,59,60,61,62,63

STATE PROJECT NUMBER	SHEET NO.
7210-07-71	5.0

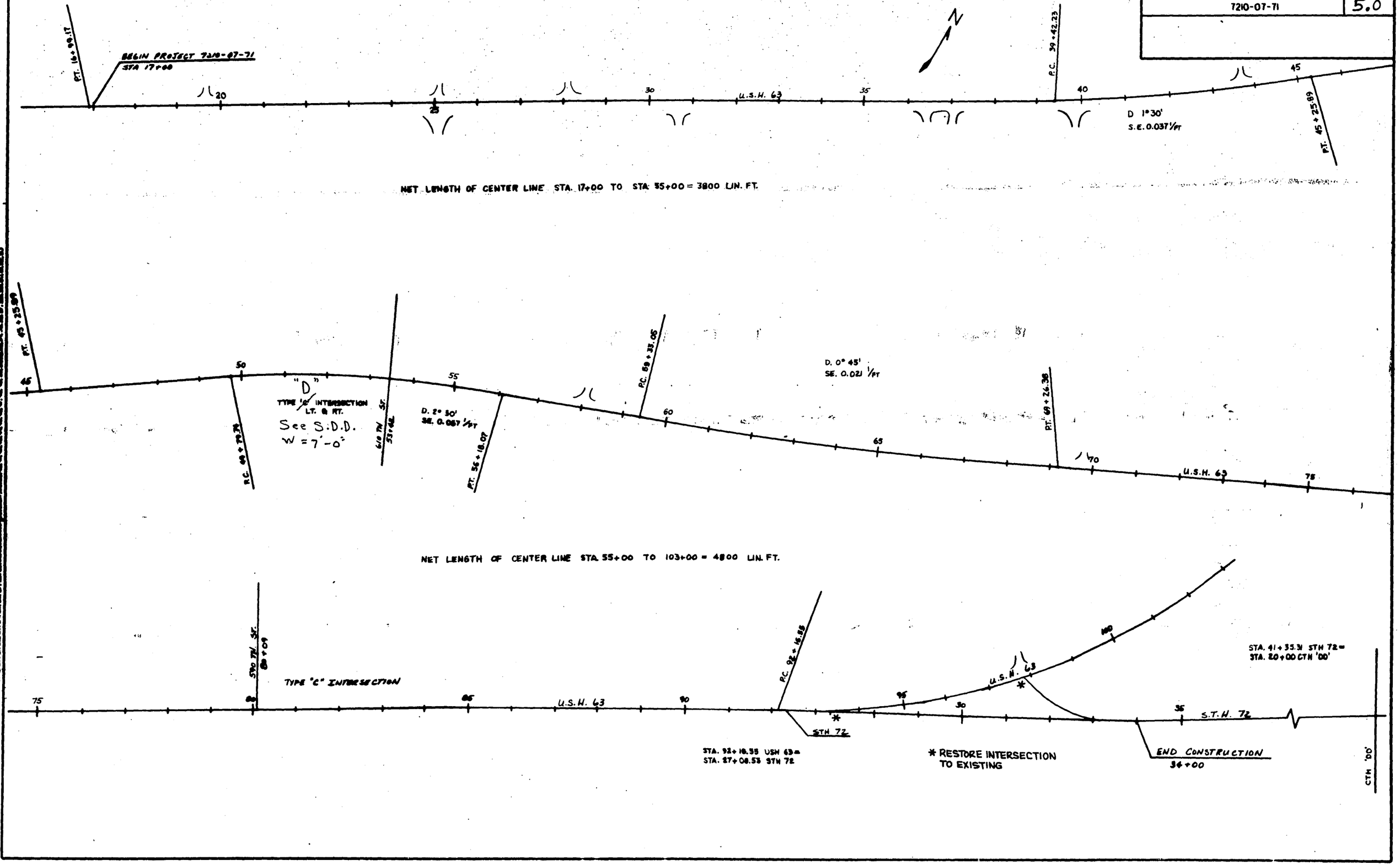

LEVELS ON - 1,2,3,4,5,6,7,8,9,10,11,12,13,14,15,16,17,18,19,20,21,22,23

FILE NAME: 7210

7210-07-71 SHEET 42

STATE PROJECT NUMBER	SHEET NO.
7210-07-71	5.1

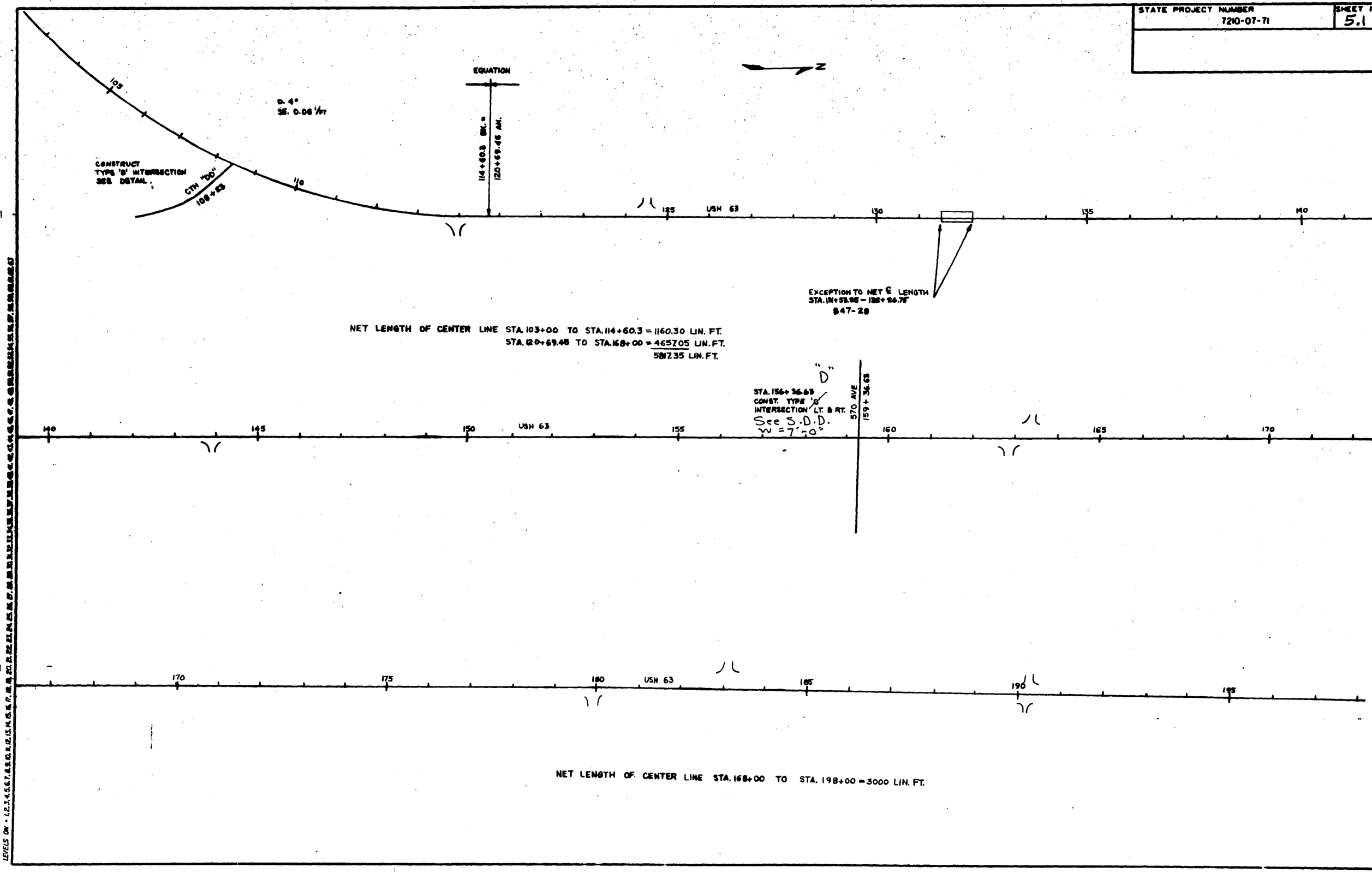

LEVELS ON • 1,2,3,4,5,6,7,8,9,10,11,12,13,14,15,16,17,18,19,20,21,22,23,24,25,26,27,28,29,30,31,32,33,34,35,36,37,38,39,40,41,42

FILE NAME: HDGN

WISDOT / DTSD DREC: 4X

STATE PROJECT NUMBER	SHEET NO.
7210-07-71	5.2

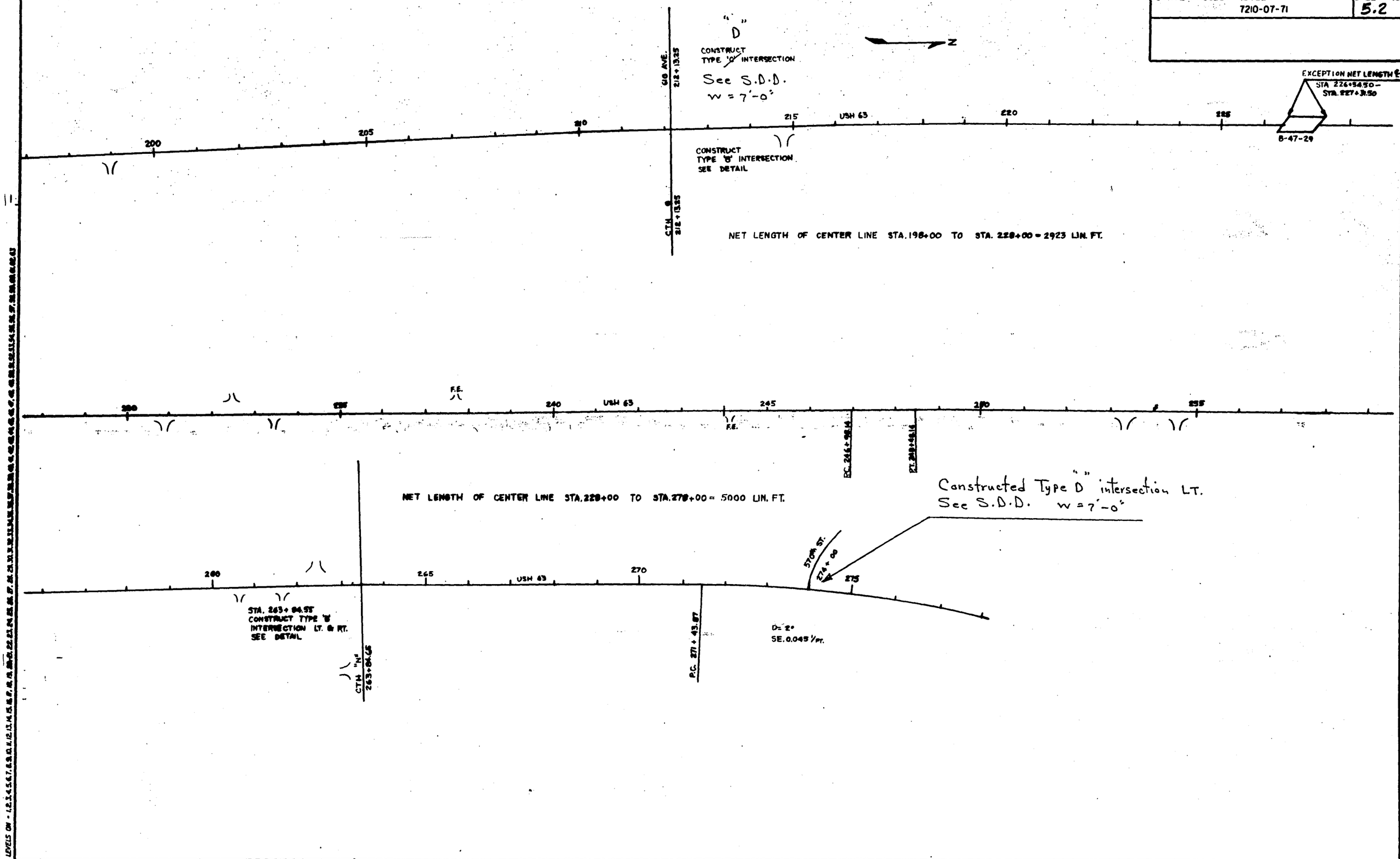

LEVELS ON - 1,2,3,4,5,6,7,8,9,10,11,12,13,14,15,16,17,18,19,20,21,22,23,24,25,26,27,28,29,30,31,32,33,34,35,36,37,38,39,40,41,42,43,44,45,46,47,48,49,50

FILE NAME: HDGN1

WISDOT/CADDS SHEET 42

STATE PROJECT NUMBER	SHEET NO.
7210-07-71	5.3

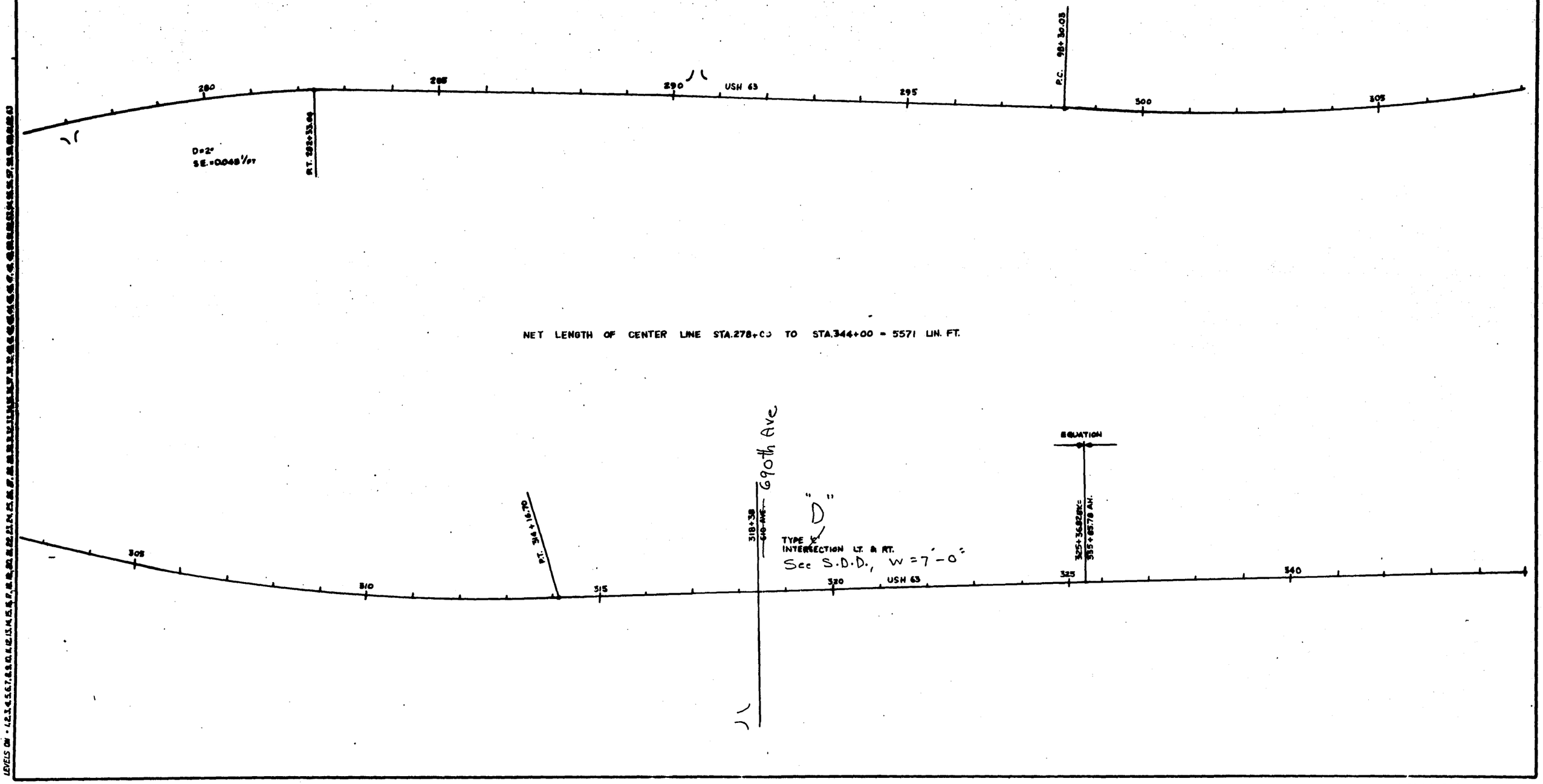

LEVELS ON - 1,2,3,4,5,6,7,8,9,10,11,12,13,14,15,16,17,18,19,20,21,22,23,24,25,26,27,28,29,30,31,32,33

FILE NAME: HDGN1

WISDOT/CADDS SHEET 42

STATE PROJECT NUMBER	SHEET NO.
7210-07-71	5.4

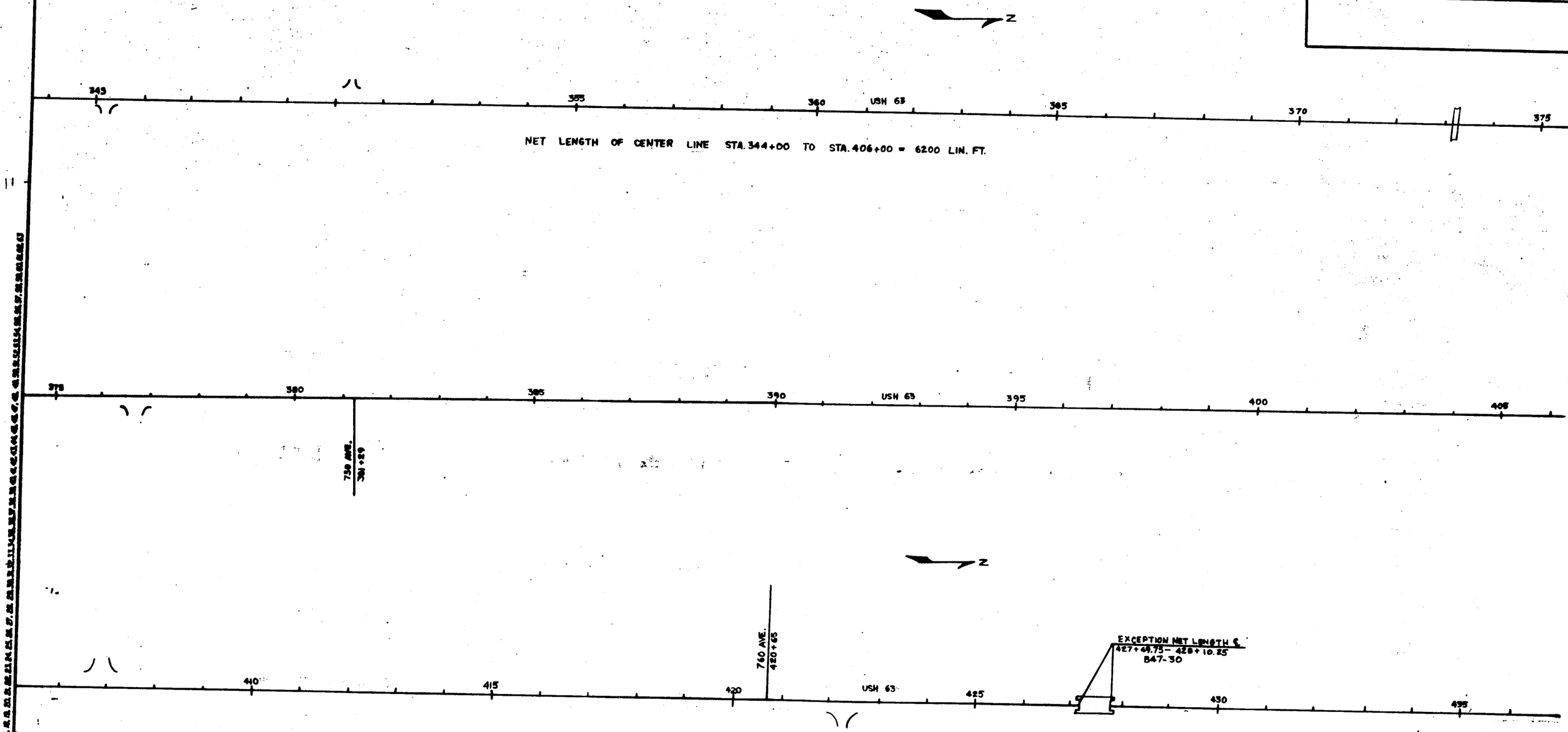

LEVELS ON - 1,2,3,4,5,6,7,8,9,10,11,12,13,14,15,16,17,18,19,20,21,22,23,24,25,26,27,28,29,30,31,32,33,34,35,36,37,38,39,40

FILE NAME: HDGN:

STATE PROJECT NUMBER	SHEET NO.
7210-07-71	5,5

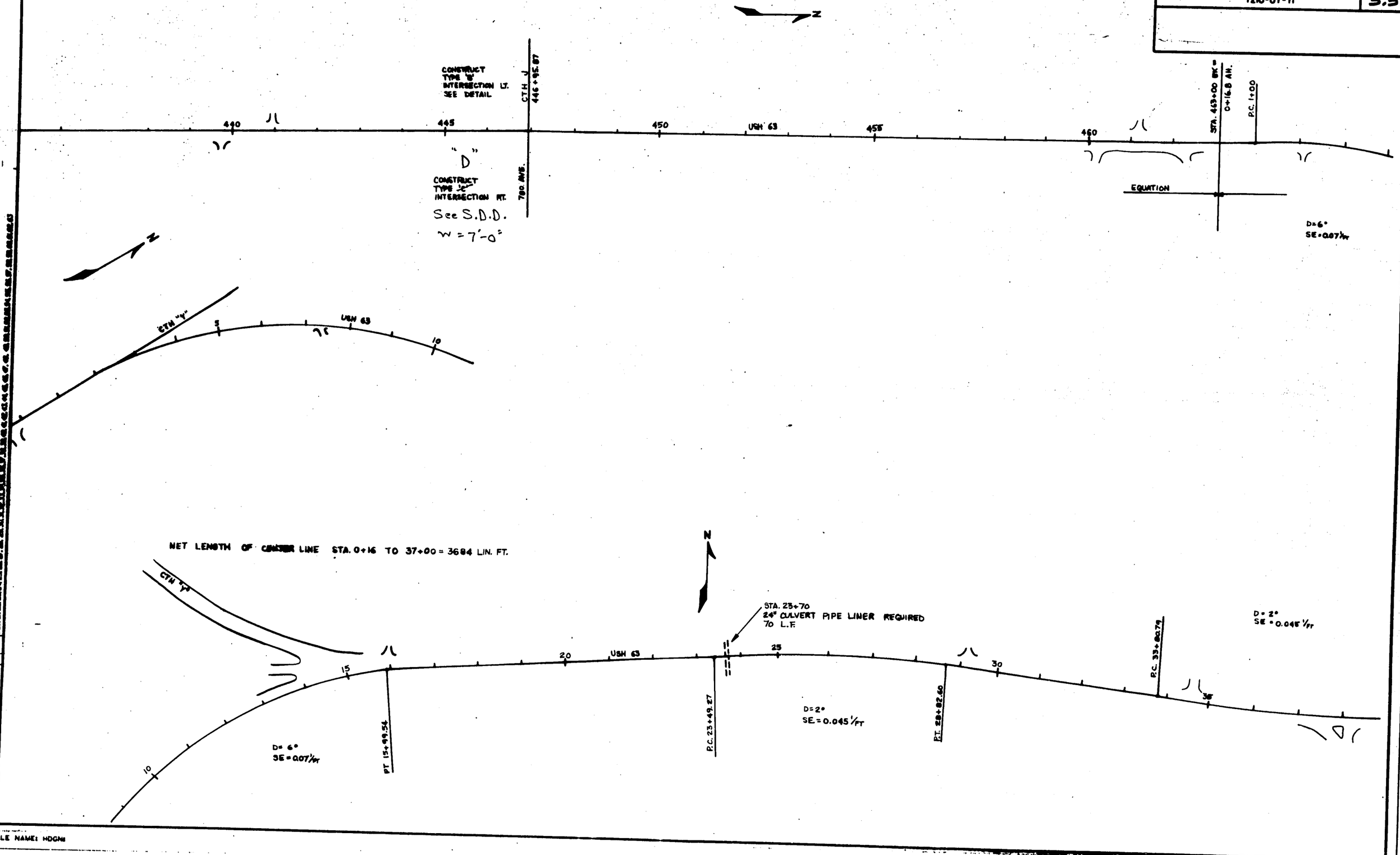

LEVELS ON - 1,2,3,4,5,6,7,8,9,10,11,12,13,14,15,16,17,18,19,20,21,22,23,24,25,26,27,28,29,30

FILE NAME: HDGN8

WISDOT/CADDS SHEET 42

STATE PROJECT NUMBER	SHEET NO.
7210-07-71	5.6

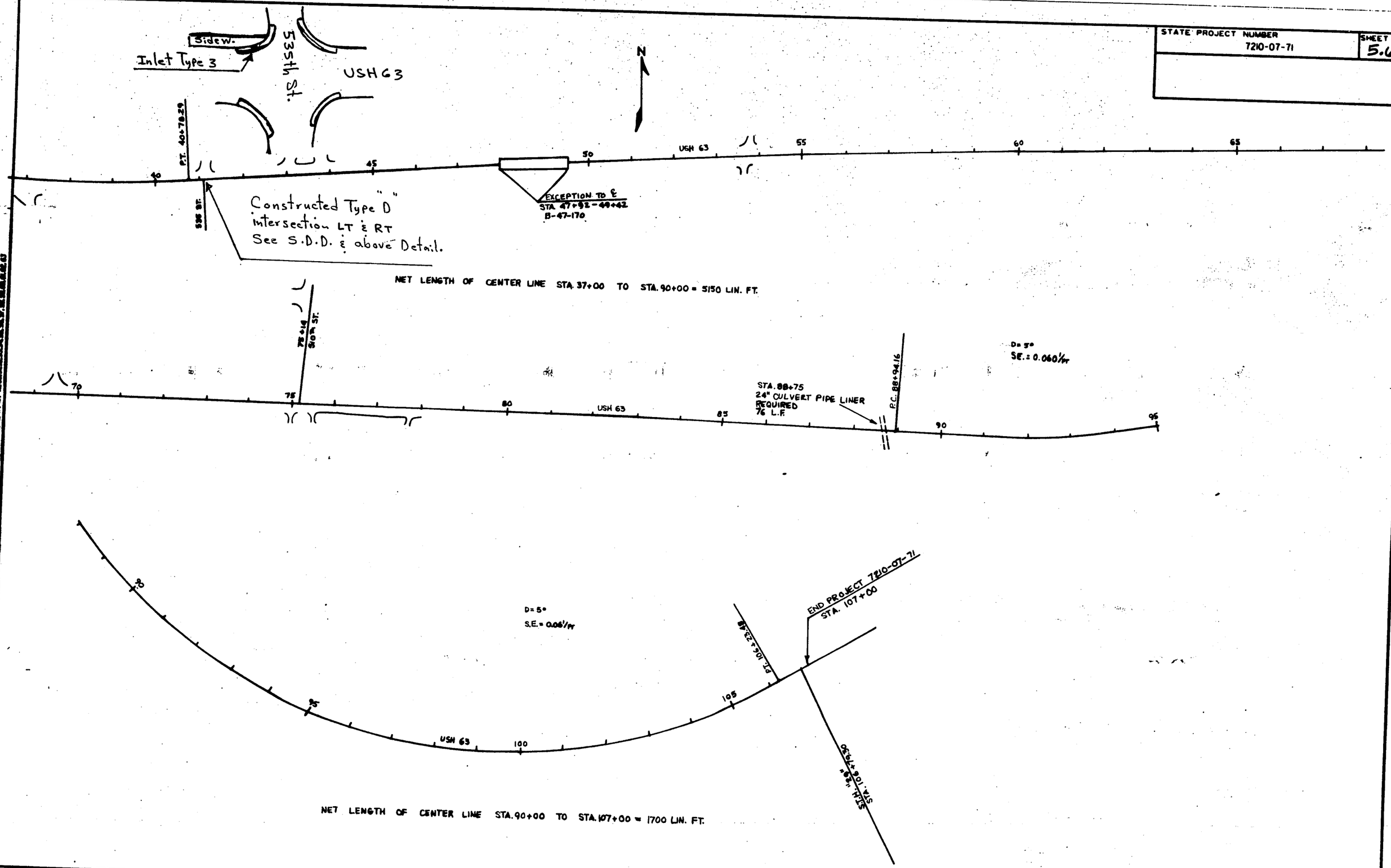

LEVELS OF - 1,2,3,4,5,6,7,8,9,10,11,12,13,14,15,16,17,18,19,20,21,22,23,24,25,26,27,28,29,30,31,32,33,34,35,36,37,38,39,40

FILE NAME: HOGN1

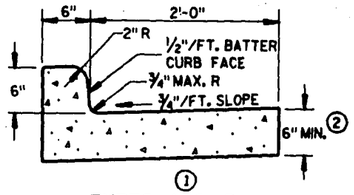

① TYPES A & D

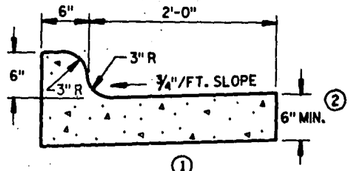

① TYPES K & L

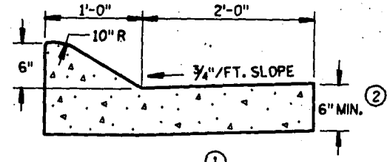

① TYPES A & D

CONCRETE CURB & GUTTER 36"

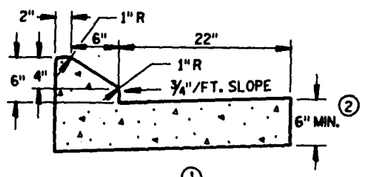

① TYPES G & J

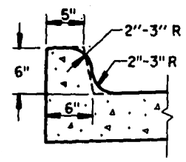

OPTIONAL CURB SHAPE FOR TYPES K & L ①

CONCRETE CURB & GUTTER 30"

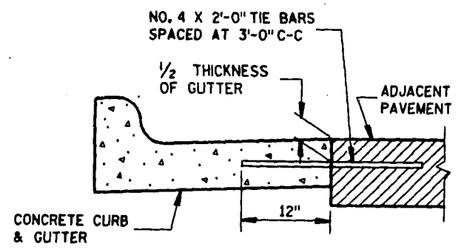

TYPICAL TIE BAR LOCATION ①

GENERAL NOTES

DETAILS OF CONSTRUCTION, MATERIALS AND WORKMANSHIP NOT SHOWN ON THIS DRAWING SHALL CONFORM TO THE PERTINENT REQUIREMENTS OF THE CONTRACT.

SEALANT IS NOT REQUIRED IN THE JOINTS OF CONCRETE CURB OR CONCRETE CURB & GUTTER EXCEPT AS REQUIRED FOR INTEGRAL GUTTER.

PAVEMENT TIES ARE REQUIRED, WHEN INCLUDED IN THE CONTRACT, WHERE CONCRETE CURB, CONCRETE CURB AND GUTTER OR CONCRETE PAVEMENT IS PLACED ADJACENT TO EXISTING CONCRETE.

PAVEMENT TIES AND TIE BARS SHALL BE EPOXY COATED IN CONFORMANCE WITH SUBSECTION 505.2.4 OF THE STANDARD SPECIFICATIONS.

INTEGRAL CURB & GUTTER SHALL CONFORM TO THE DETAILS SHOWN FOR CONCRETE CURB & GUTTER INCLUDING THE TRANSVERSE GUTTER SLOPE. TIE BARS AND A LONGITUDINAL CONSTRUCTION JOINT ARE NOT REQUIRED WITH THIS ALTERNATE.

PAVEMENT JOINTS SHALL BE EXTENDED THROUGH INTEGRAL CURB & GUTTER. JOINTS IN INTEGRAL GUTTER SHALL HAVE THE SAME DIMENSIONS AS THE JOINTS IN THE ADJACENT PAVEMENT. JOINTS IN INTEGRAL CURB SHALL BE 1/8" WIDE.

JOINTS IN INTEGRAL CURB & GUTTER SHALL BE SEALED TO THE FACE OF CURB WITH THE SAME SEALANT SPECIFIED FOR THE PAVEMENT JOINT. THE COST OF FURNISHING AND INSTALLING THIS SEALANT SHALL BE INCIDENTAL TO THE ITEM CONCRETE CURB & GUTTER.

UNLESS OTHERWISE SHOWN ON THE TYPICAL CROSS SECTIONS, THE BASE COURSE AND UNCLASSIFIED EXCAVATION LIMITS ARE TWO FEET BEHIND THE BACK OF CURBS.

① TIE BARS ARE REQUIRED FOR CURB AND GUTTER TYPES A, G AND K.

② THE BOTTOM OF CURB AND GUTTER MAY BE CONSTRUCTED EITHER LEVEL OR PARALLEL TO THE SLOPE OF THE SUBGRADE OR BASE COURSE PROVIDED A 6" MINIMUM GUTTER THICKNESS IS MAINTAINED.

③ WHEN REVERSE SLOPE GUTTER IS REQUIRED, THE LOCATIONS WILL BE SHOWN ELSEWHERE IN THE PLAN.

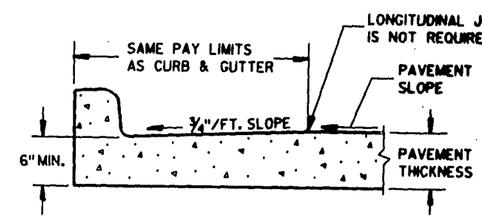

PARTIAL SECTION OF PAVEMENT WITH INTEGRAL CURB & GUTTER

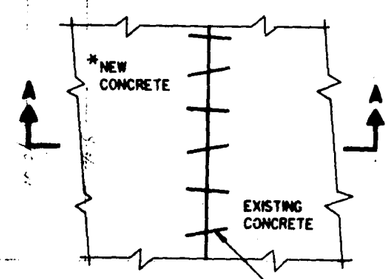

*NEW CURB & GUTTER, SURFACE DRAINS, CONCRETE PAVEMENT OR OTHER NEW CONCRETE.

PLAN VIEW

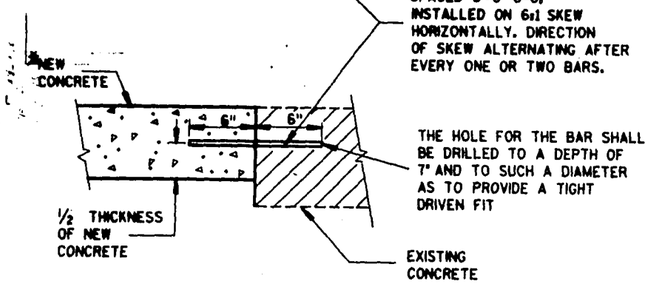

SECTION A-A
PAVEMENT TIES

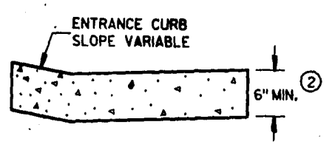

DRIVEWAY ENTRANCE CURB
(WHEN DIRECTED BY THE ENGINEER)

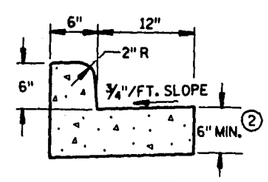

① TYPES A & D

CONCRETE CURB & GUTTER 18"

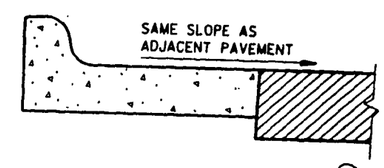

REVERSE SLOPE GUTTER ③
(TYPICAL FOR ALL CURB & GUTTER TYPES)

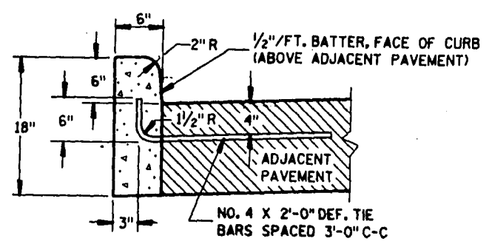

① TYPES A & D

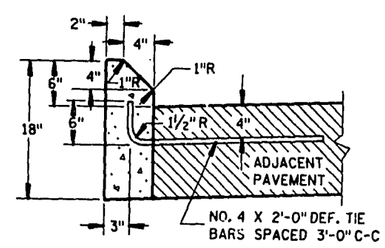

① TYPES G & J

CONCRETE CURB

CONCRETE CURB, CONCRETE CURB & GUTTER AND PAVEMENT TIES

STATE OF WISCONSIN
DEPARTMENT OF TRANSPORTATION

APPROVED
10-23-86
DATE
STATE DESIGN ENGINEER FOR HWYS
FHWA

S.D.D. 8 D 1-11

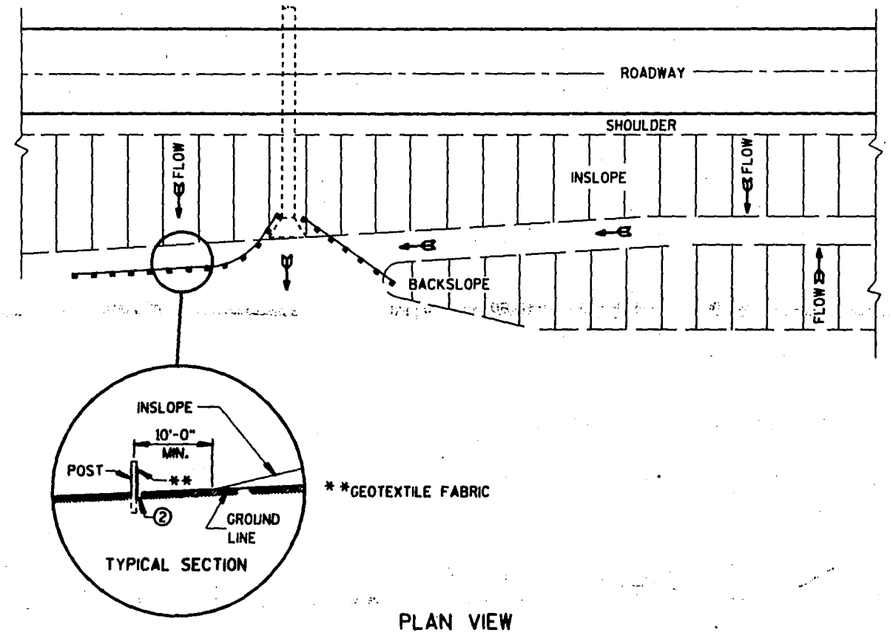

PLAN VIEW

TYPICAL APPLICATIONS OF SILT FENCE

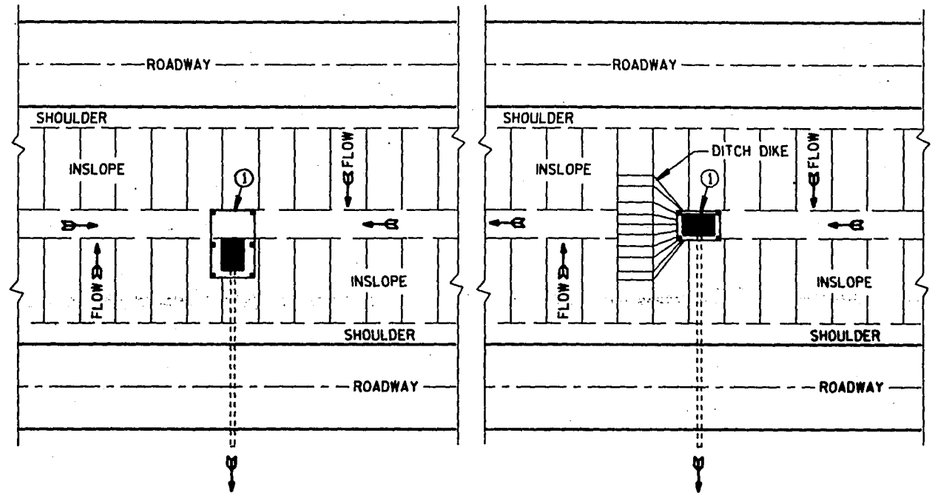

SITUATION 1

SITUATION 2

PLAN VIEW

SILT FENCE AT MEDIAN SURFACE DRAINS

GENERAL NOTES

DETAILS OF CONSTRUCTION NOT SHOWN ON THIS DRAWING SHALL CONFORM TO THE PERTINENT REQUIREMENTS OF THE STANDARD SPECIFICATIONS AND APPLICABLE SPECIAL PROVISIONS.

① HORIZONTAL BRACE WITH 2" X 4" WOODEN FRAME OR EQUIVALENT AT TOP OF POSTS AS DIRECTED BY THE ENGINEER.

② TRENCH SHALL BE A MINIMUM OF 4" WIDE & 6" DEEP TO BURY AND ANCHOR THE GEOTEXTILE FABRIC. FOLD MATERIAL TO FIT TRENCH AND BACKFILL & COMPACT TRENCH WITH EXCAVATED SOIL.

③ WOOD POSTS SHALL BE A MINIMUM SIZE OF 1 1/8" X 1 1/8" OF OAK OR HICKORY.

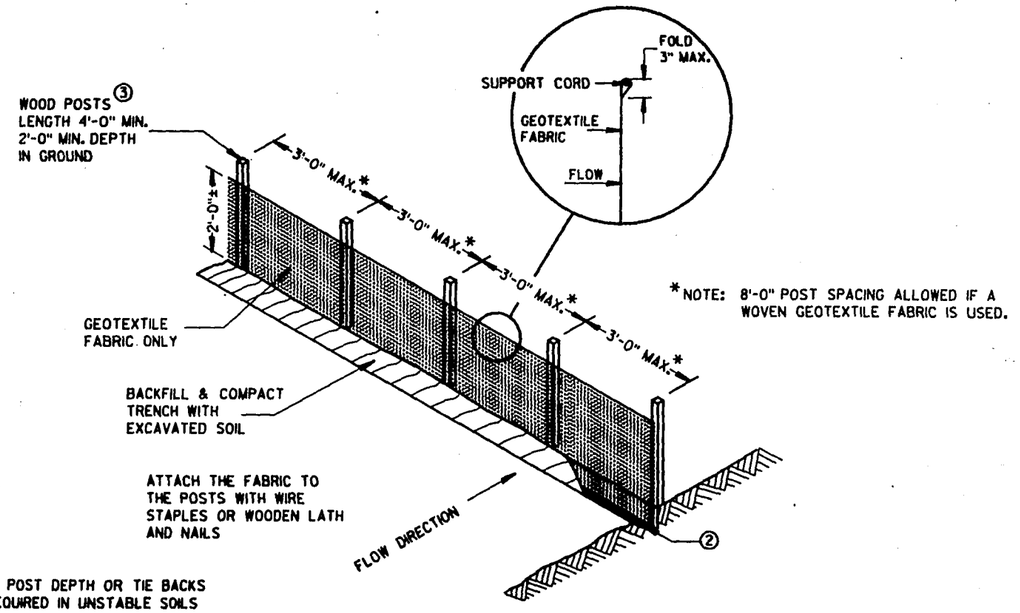

*NOTE: 8'-0" POST SPACING ALLOWED IF A WOVEN GEOTEXTILE FABRIC IS USED.

NOTE: ADDITIONAL POST DEPTH OR TIE BACKS MAY BE REQUIRED IN UNSTABLE SOILS

SILT FENCE
(NON-REINFORCED)

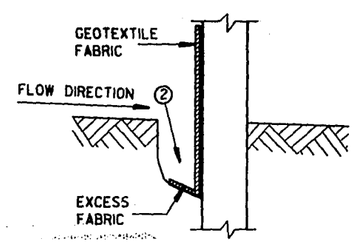

TRENCH DETAIL

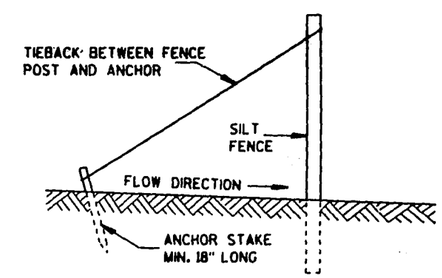

SILT FENCE TIE BACK
(WHEN REQUIRED BY THE ENGINEER)

SILT FENCE

STATE OF WISCONSIN
DEPARTMENT OF TRANSPORTATION

APPROVED
6/29/94 Roger A. Stimson
DATE CHIEF ROADWAY DEVELOPMENT ENGINEER
FHWA

S.D.D. 8 E 9-4

METAL APRON ENDWALLS

PIPE DIA. (IN.)	MIN. THICK. (inches) STEEL	MIN. THICK. (inches) ALUM.	DIMENSIONS (inches) A (±1")	B (MAX.)	H (±1")	L (±1 1/2")	L1 ①	L2 ①	W (±2")	APPROX. SLOPE	BODY
12	.064	.060	6	6	6	21	12	17 1/2	24	2 1/2 to 1	1 Pc.
15	.064	.060	7	8	6	26	14	21 3/4	30	2 1/2 to 1	1 Pc.
18	.064	.060	8	10	6	31	15	28 1/4	36	2 1/2 to 1	1 Pc.
21	.064	.060	9	12	6	36	18	29 5/8	42	2 1/2 to 1	1 Pc.
24	.064	.075	10	13	6	41	18	37 1/4	48	2 1/2 to 1	1 Pc.
30	.079	.075	12	16	8	51	18	52 1/4	60	2 1/2 to 1	1 Pc.
36	.079	.105	14	19	9	60	24	59 3/4	72	2 1/2 to 1	2 Pc.
42	.109	.105	16	22	11	69	24	75 5/8	84	2 1/2 to 1	2 Pc.
48	.109	.105	18	27	12	78	24	81	90	2 1/4 to 1	3 Pc.
54	.109	.105	18	30	12	84	30	85 1/2	102	2 1/4 to 1	3 Pc.
60	.109×	.105×	18	33	12	87	—	—	114	2 to 1	3 Pc.
66	.109×	.105×	18	36	12	87	—	—	120	2 to 1	3 Pc.
72	.109×	.105×	18	39	12	87	—	—	126	2 to 1	3 Pc.
78	.109×	.105×	18	42	12	87	—	—	132	1 1/2 to 1	3 Pc.
84	.109×	.105×	18	45	12	87	—	—	138	1 1/2 to 1	3 Pc.
90	.109×	.105×	18	37	12	87	—	—	144	1 1/2 to 1	3 Pc.
96	.109×	.105×	18	35	12	87	—	—	150	1 1/2 to 1	3 Pc.

× EXCEPT CENTER PANEL
SEE GENERAL NOTES

REINFORCED CONCRETE APRON ENDWALLS

PIPE DIA. (IN.)	DIMENSIONS (inches) T	A	B	C	D	E	G	APPROX. SLOPE
12	2	4	24	48 7/8	72 7/8	24	2	3 to 1
15	2 1/4	6	27	46	73	30	2 1/4	3 to 1
18	2 1/2	9	27	46	73	36	2 1/2	3 to 1
21	2 3/4	9	36	37 1/2	73 1/2	42	2 3/4	3 to 1
24	3	9 1/2	43 1/2	30	73 1/2	48	3	3 to 1
27	3 1/4	10 1/2	49 1/2	24	73 1/2	54	3 1/4	3 to 1
30	3 1/2	12	54	19 3/4	73 1/2	60	3 1/2	3 to 1
36	4	15	63	34 3/4	97 3/4	72	4	3 to 1
42	4 1/2	21	63	35	98	78	4 1/2	3 to 1
48	5	24	72	26	98	84	5	3 to 1
54	5 1/2	27	65	* 33 1/4-** 35	* 98 1/4- ** 100	90	5 1/2	2 2/5 to 1
60	6	* ** 30-35	60	39	99	96	5	2 to 1
66	6 1/2	* ** 24-30	* ** 72-78	* ** 21-27	99	102	5 1/2	2 to 1
72	7	* ** 24-36	78	21	99	108	6	2 to 1
78	7 1/2	* ** 24-36	78	21	99	114	6 1/2	2 to 1
84	8	36	90 1/2	21	111 1/2	120	6 1/2	1 1/2 to 1
90	8 1/2	41	87 1/2	24	111 1/2	132	6 1/2	1 1/2 to 1

*MINIMUM
**MAXIMUM

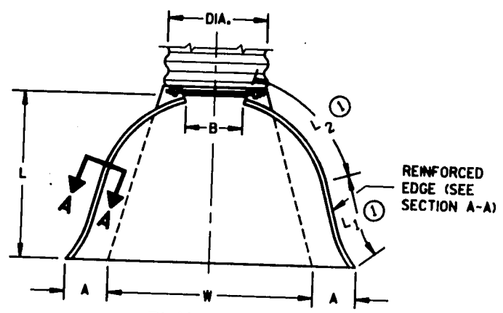

PLAN VIEW

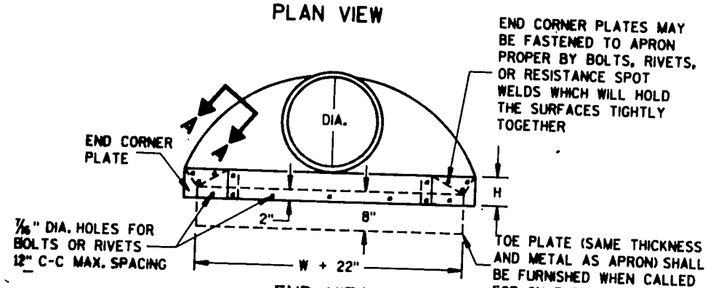

END VIEW

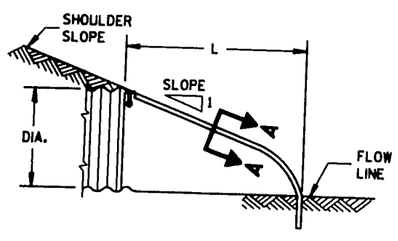

SIDE ELEVATION

METAL ENDWALLS

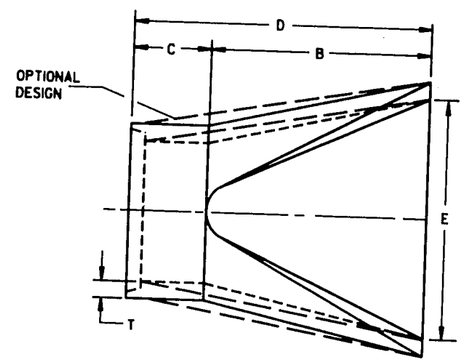

PLAN

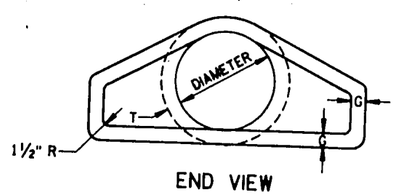

END VIEW

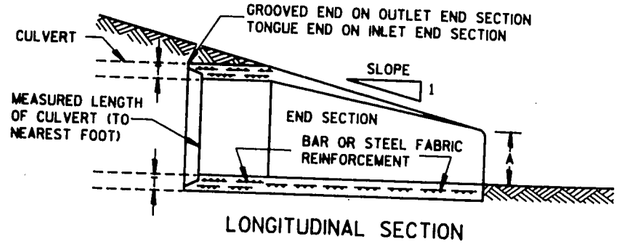

LONGITUDINAL SECTION

CONCRETE ENDWALLS

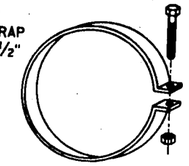

ALTERNATE FOR TYPE 1 CONNECTION

END SECTION CONNECTOR STRAP

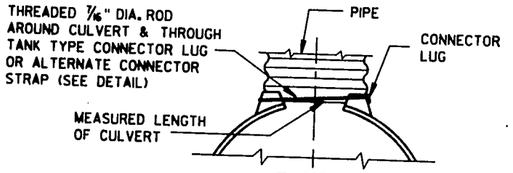

TYPE 1
FOR 12" THRU 24" CORR. PIPE

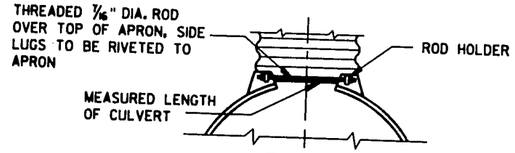

TYPE 2
FOR 30" THRU 96" CORR. PIPE

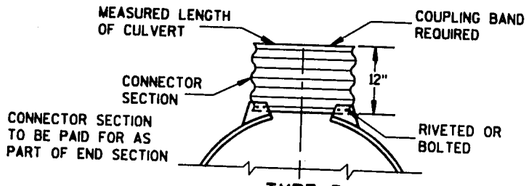

TYPE 3
FOR 42" THRU 96" CORR. PIPE

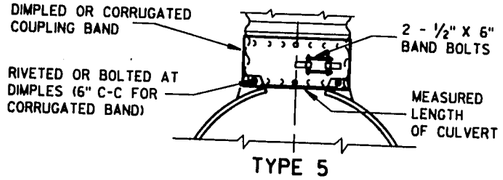

TYPE 5
ALTERNATE FOR:
ALL SIZES CORRUGATED CIRCULAR PIPE

NOTE: DIMPLED BAND FITS OVER OUTSIDE OF ENDWALL, AND CORRUGATED BAND FITS INSIDE ENDWALL. DIMPLED BAND MAY BE USED WITH HELICALLY CORRUGATED PIPE.

FOR CIRCUMFERENTIALLY CORRUGATED PIPE USE ENDWALL CONNECTION DETAILS 1, 2, 3 OR 5 AS APPLICABLE.

FOR HELICALLY CORRUGATED PIPE USE ENDWALL CONNECTION DETAILS 1, 2 OR 5.

FOR HELICALLY CORRUGATED PIPES WITH TWO CIRCUMFERENTIAL CORRUGATIONS AT EACH END USE ENDWALL CONNECTION DETAILS 1, 2 OR 3.

CONNECTION DETAILS

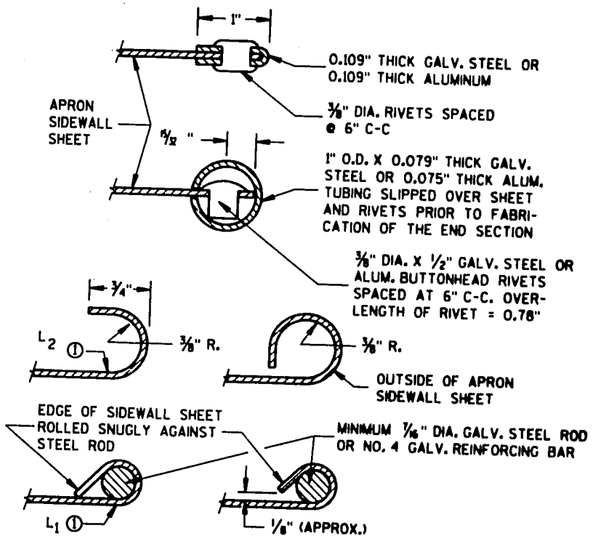

SECTION A-A

GENERAL NOTES

DETAILS OF CONSTRUCTION, MATERIALS AND WORKMANSHIP NOT SHOWN ON THIS DRAWING SHALL CONFORM TO THE PERTINENT REQUIREMENTS OF THE STANDARD SPECIFICATIONS AND THE APPLICABLE SPECIAL PROVISIONS.

CONCRETE CULVERT ENDWALLS MAY NOT BE USED WITH GALVANIZED STEEL OR ALUMINUM CULVERT PIPE OR VISE VERSA. GALVANIZED STEEL OR ALUMINUM ENDWALLS SHALL NORMALLY BE INSTALLED ON CULVERT PIPE OF THE SAME METAL.

ALL THREE PIECE STEEL APRON ENDWALLS FOR 60" DIAMETER PIPE AND LARGER SHALL HAVE 0.109" SIDES AND 0.138" CENTER PANELS. ALL THREE PIECE ALUMINUM APRON ENDWALLS FOR 60" DIAMETER PIPE AND LARGER SHALL HAVE 0.105" SIDES AND 0.134" CENTER PANELS. THE WIDTH OF CENTER PANELS SHALL BE GREATER THAN 20 PERCENT OF THE PIPE PERIMETER.

LAP SEAMS SHALL BE TIGHTLY JOINED BY GALVANIZED RIVETS OR BOLTS FOR STEEL UNITS AND ALUMINUM RIVETS AND BOLTS FOR ALUMINUM UNITS. FOR THE 60" THROUGH 96" DIAMETER APRON ENDWALL SIZES, THE REINFORCED EDGES AND CENTER PANEL SEAMS SHALL BE FURTHER REINFORCED WITH GALVANIZED STEEL OR ALUMINUM STIFFENER ANGLES. THE ANGLES SHALL BE ATTACHED BY GALVANIZED NUTS AND BOLTS FOR STEEL UNITS AND ALUMINUM NUTS AND BOLTS FOR ALUMINUM UNITS.

WHERE TWO OR MORE PIPES WITH APRON ENDWALLS ARE LAID ADJACENT TO EACH OTHER, THEY SHALL BE SEPARATED BY A DISTANCE SUFFICIENT TO PROVIDE A MINIMUM CLEARANCE OF 6 INCHES BETWEEN APRON ENDWALLS.

① FOR PIPE SIZES UP TO 60" DIAMETER, A 180° ROLLED EDGE MAY BE USED INSTEAD OF STEEL ROD REINFORCEMENT. SEE SECTION A-A.

APRON ENDWALLS FOR CULVERT PIPE

STATE OF WISCONSIN
DEPARTMENT OF TRANSPORTATION

APPROVED
11/30/94
DATE
CHIEF ROADWAY DEVELOPMENT ENGINEER
FHWA

S.D.D. 8 F 1-11

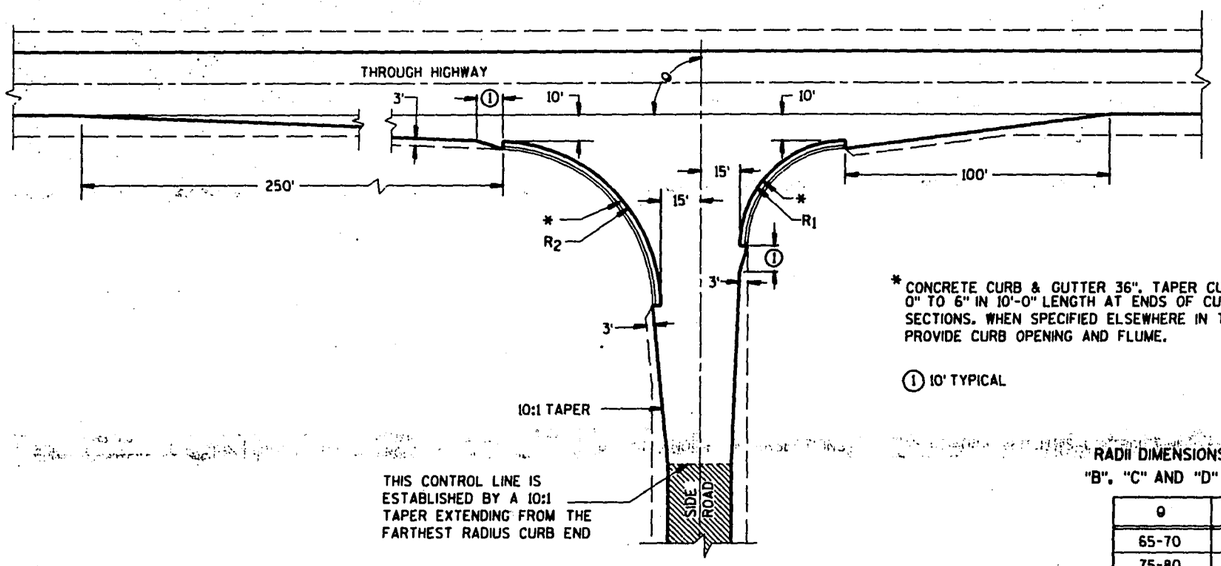

TYPE "B"

* CONCRETE CURB & GUTTER 36". TAPER CURB HEIGHT 0" TO 6" IN 10'-0" LENGTH AT ENDS OF CURB & GUTTER SECTIONS. WHEN SPECIFIED ELSEWHERE IN THE CONTRACT, PROVIDE CURB OPENING AND FLUME.

(1) 10' TYPICAL

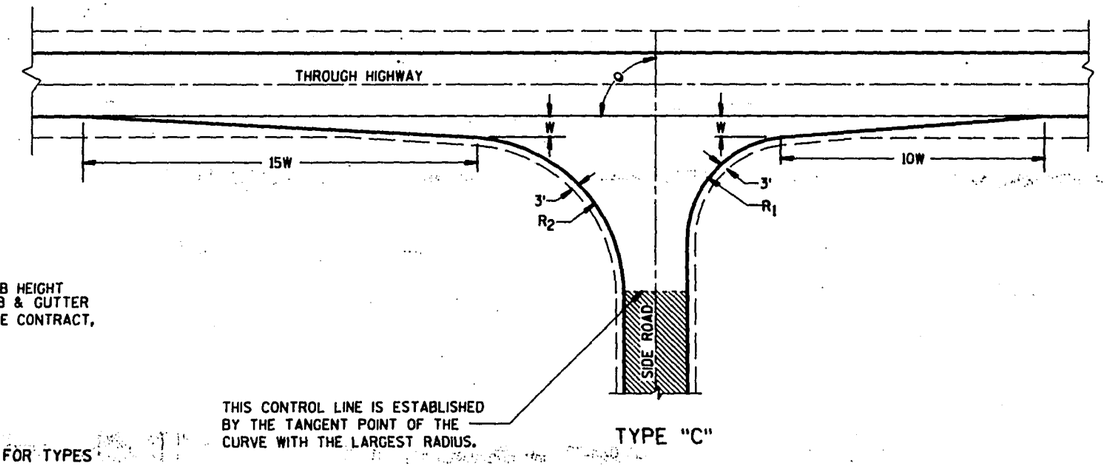

TYPE "C"

RADII DIMENSIONS FOR TYPES "B", "C" AND "D" INTERSECTIONS

θ	R_1	R_2
65-70	35	70
75-80	40	70
85-90	40	60
100	50	55
105-110	60	45

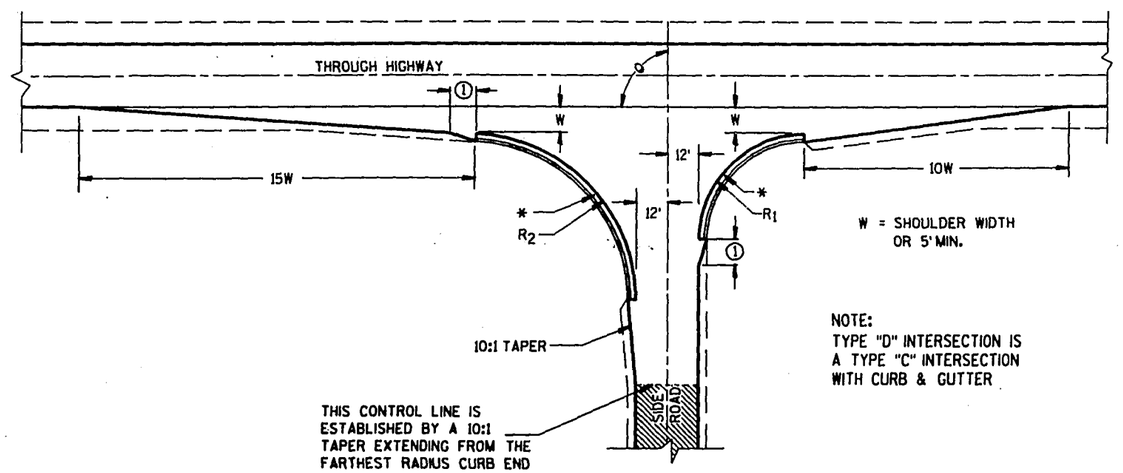

W = SHOULDER WIDTH OR 5' MIN.

NOTE:
TYPE "D" INTERSECTION IS A TYPE "C" INTERSECTION WITH CURB & GUTTER

TYPE "D"

GENERAL NOTES

DESIGNS MAY BE USED INTERCHANGEABLY IN COMBINATION OR SEPARATELY FOR ANY ONE COMPLETE INTERSECTION DEPENDING UPON INTERSECTION ANGLE AND SURFACING OF EACH APPROACH ROADWAY.

SIDE ROAD SURFACING NOTE

WHEN THE SIDE ROAD IS NOT PRESENTLY PAVED, PAVEMENT SHALL BE PLACED TO THE LIMITS SHOWN UNLESS OTHERWISE PROVIDED IN THE CONTRACT. WHERE THE CONSTRUCTION LIMITS ARE BEYOND THE PAVING LIMITS, CRUSHED AGGREGATE SURFACING SHALL BE PLACED BETWEEN THE PAVING LIMITS AND CONSTRUCTION LIMITS.

WHEN THE SIDE ROAD IS PRESENTLY PAVED, NEW PAVEMENT SHALL BE PLACED TO THE LIMITS OF DESIGN AS SHOWN AND BEYOND, IF NECESSARY, TO MEET EXISTING PAVEMENT.

WHEN THE SIDE ROAD IS THE CONSTRUCTION PROJECT, THE INTERSECTION SURFACING SHALL BE THE SAME AS FOR THE PROJECT.

EXISTING SURFACE

AT-GRADE SIDE ROAD INTERSECTION, TYPES "B", "C" AND "D"

STATE OF WISCONSIN
DEPARTMENT OF TRANSPORTATION

APPROVED
8/25/94 — DATE
Roy A. Thimsen — CHIEF ROADWAY DEVELOPMENT ENGINEER
FHWA

S.D.D. 9 A 1-9a

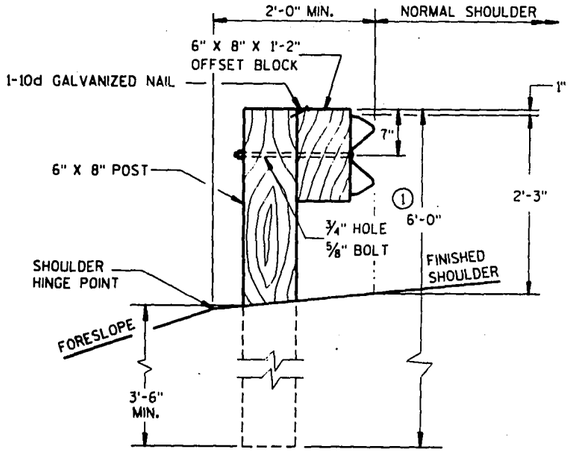

END VIEW

LOCATED ALONG A ROADWAY SHOULDER

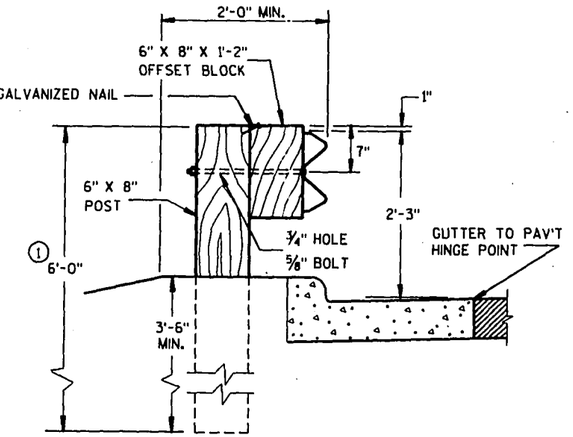

END VIEW

LOCATED ALONG A CURBED ROADWAY

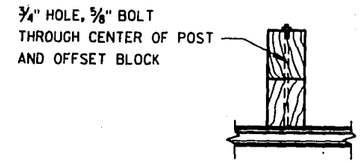

PLAN VIEW

POST, OFFSET BLOCK AND BEAM

GENERAL NOTES

DETAILS OF CONSTRUCTION, MATERIALS AND WORKMANSHIP NOT SHOWN ON THIS DRAWING SHALL CONFORM TO THE PERTINENT REQUIREMENTS OF THE STANDARD SPECIFICATIONS, AND THE APPLICABLE SPECIAL PROVISIONS.

① POST LENGTH SHALL BE INCREASED TO PROVIDE A MINIMUM EMBEDMENT OF 3'-6" WHERE THE SHOULDER HINGE POINT IS LOCATED IN FRONT OF THE POST.

② PROVIDE TYPE "H" SILVER REFLECTIVE SHEETING ON ALL REFLECTORS EXCEPT THOSE LOCATED ALONG THE LEFT EDGE OF ONE-WAY ROADWAYS, WHICH SHALL BE PROVIDED WITH TYPE "H" YELLOW REFLECTIVE SHEETING.

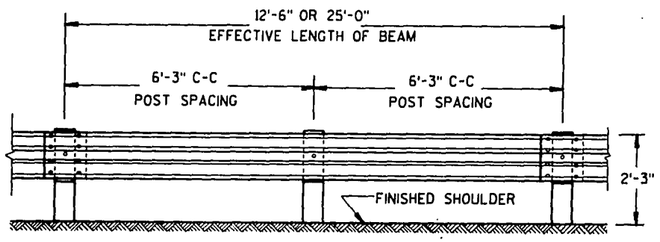

FRONT VIEW

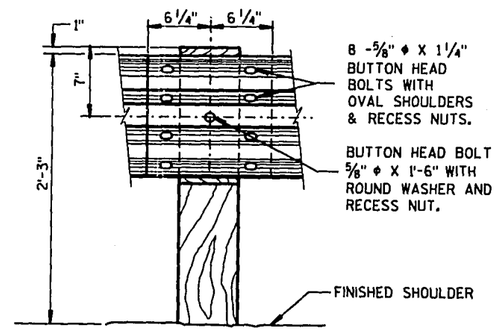

FRONT VIEW

BEAM SPLICING AND POST MOUNTING DETAIL

TYPICAL INSTALLATION OF STEEL PLATE BEAM GUARD

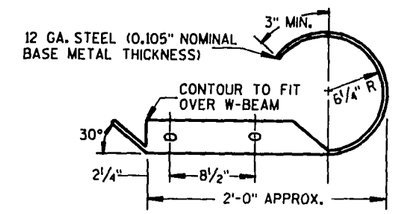

PLAN VIEW

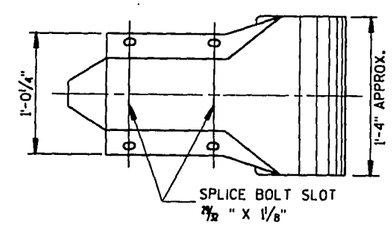

FRONT VIEW

W BEAM END SECTION (ROUNDED)

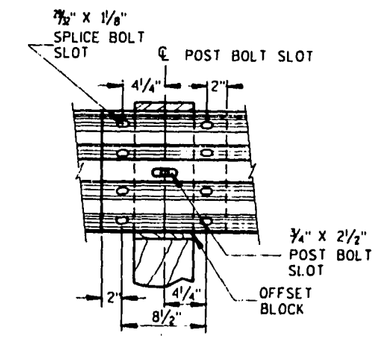

W BEAM SPLICE

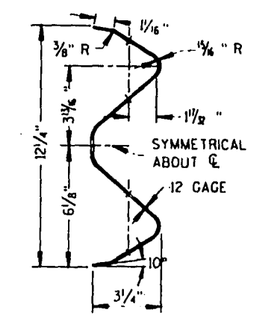

SECTION THRU W BEAM

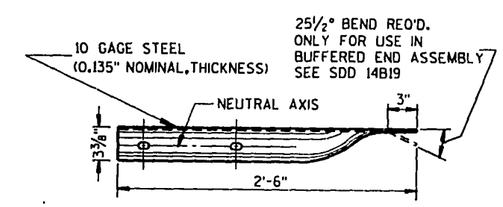

PLAN VIEW

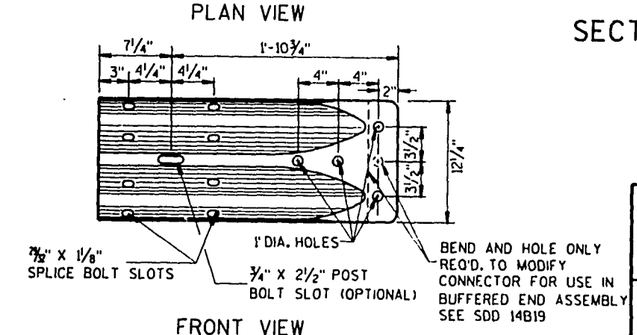

FRONT VIEW

W BEAM TERMINAL CONNECTOR

REFLECTOR SPACING

	BEAM GUARD LENGTH	REFLECTOR SPACING	NO. SURFACES REFLECTORIZED	MIN. NO. REFLECTORS
ONE WAY TRAFFIC	< 200' > 200'	50' C-C 100' C-C	1 1	3
TWO WAY TRAFFIC	< 200' * > 200' *	25' C-C 50' C-C	1 * 1 *	6
TWO WAY TRAFFIC	< 200' > 200'	50' C-C 100' C-C	2 ** 2 **	3

* EVERY OTHER REFLECTOR REVERSED FOR 2-WAY VISIBILITY. CONTRACTOR MAY FURNISH TWO-SIDED REFLECTORS IN LIEU OF ONE-SIDED RELECTORS.

** ANGLE OF BEND TO BE 90° ± 1° FOR TWO-SIDED REFLECTORS.

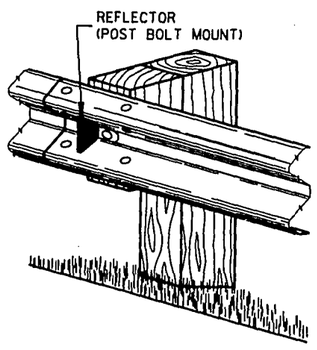

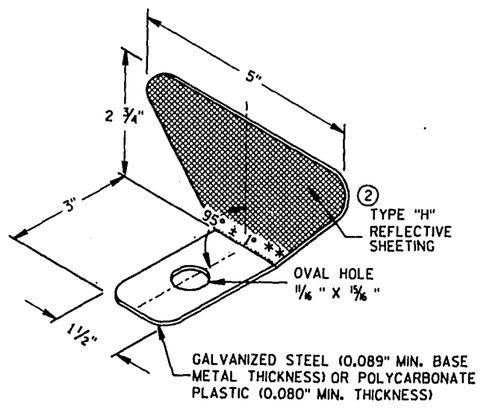

② REFLECTOR DETAIL AND TYPICAL INSTALLATION

CLASS "A"
STEEL PLATE BEAM GUARD, INSTALLATION & ELEMENTS

STATE OF WISCONSIN
DEPARTMENT OF TRANSPORTATION

APPROVED 10/25/95 DATE — CHIEF ROADWAY DEVELOPMENT ENGINEER

FHWA

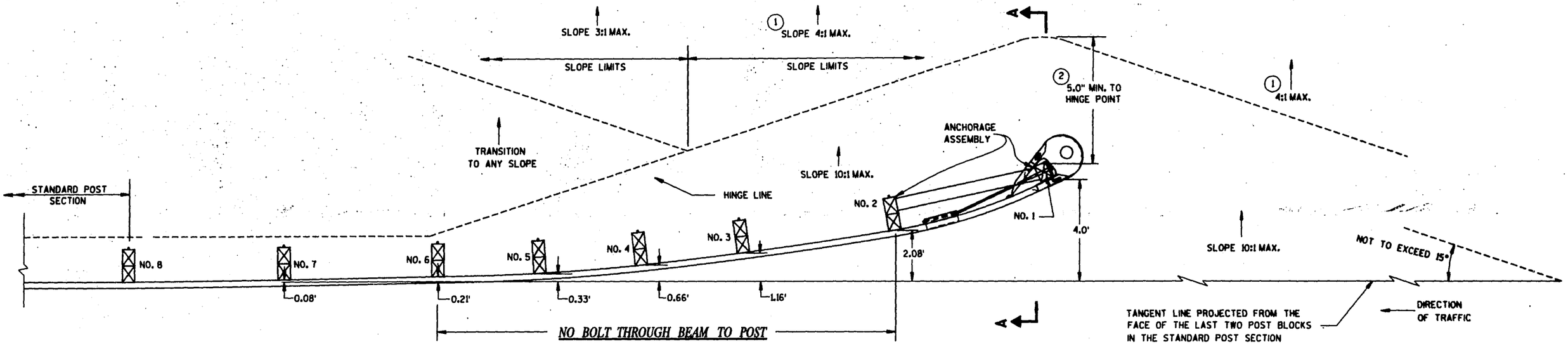

PLAN

NOTE: THE POST OFFSET DIMENSIONS ARE TO THE CENTER OF THE TRAFFIC FACE OF THE BLOCKOUTS EXCEPT THE FIRST POST WHERE THE DIMENSION IS TO THE CENTER OF THE TRAFFIC FACE OF THE POST.

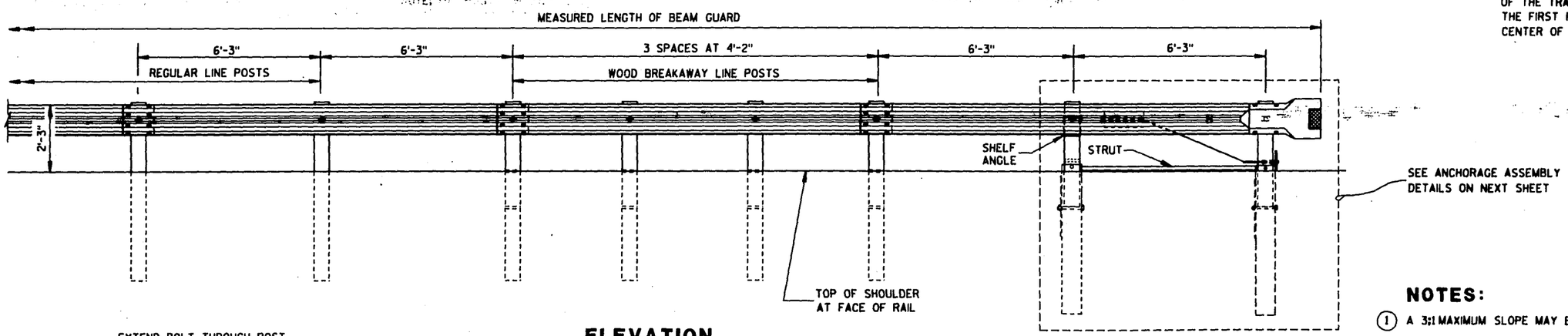

ELEVATION

NOTES:

(1) A 3:1 MAXIMUM SLOPE MAY BE USED FOR INSTALLATIONS ON EXISTING HIGHWAYS.

(2) THE 5'-0" MIN. WIDTH APPLIES TO ALL NEW CONSTRUCTION AND INSTALLATIONS ON EXISTING FREEWAYS AND EXPRESSWAYS. FOR INSTALLATIONS ON ALL OTHER EXISTING HIGHWAYS, THIS DIMENSION MAY BE REDUCED, BUT SHALL NOT BE LESS THAN 3'-0". SEE CROSS SECTIONS.

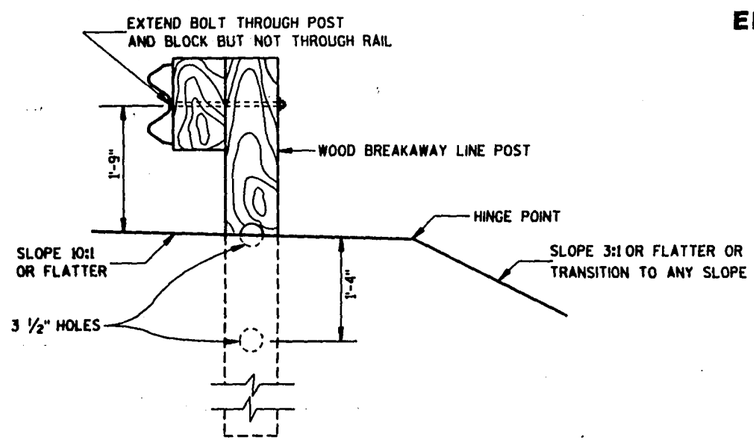

TYPICAL AT POST NOS. 3, 4, 5 & 6

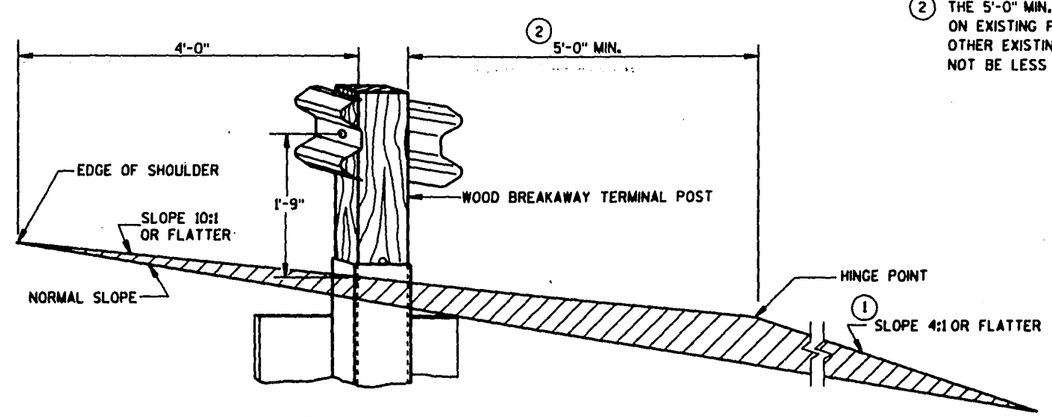

SECTION A-A

CLASS "A" STEEL PLATE BEAM GUARD END TERMINAL WITH ANCHORAGE TYPE 3

STATE OF WISCONSIN
DEPARTMENT OF TRANSPORTATION

S.D.D. 14 B 19-10

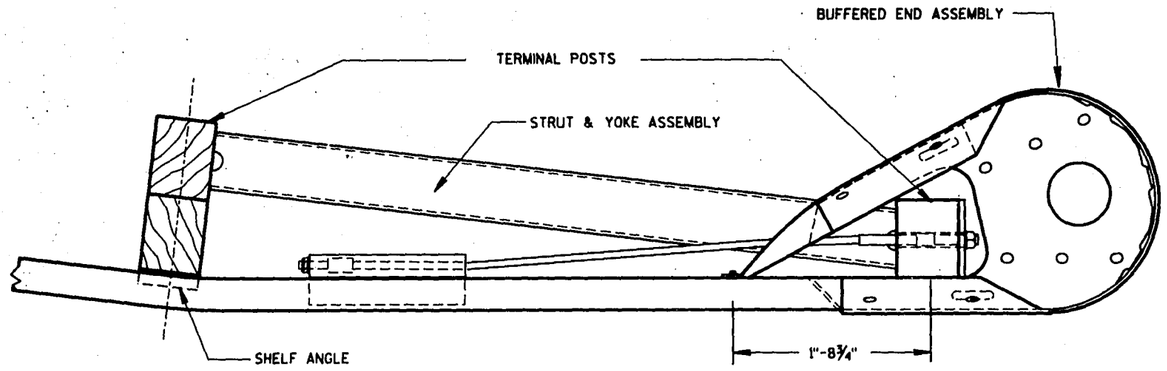

PLAN

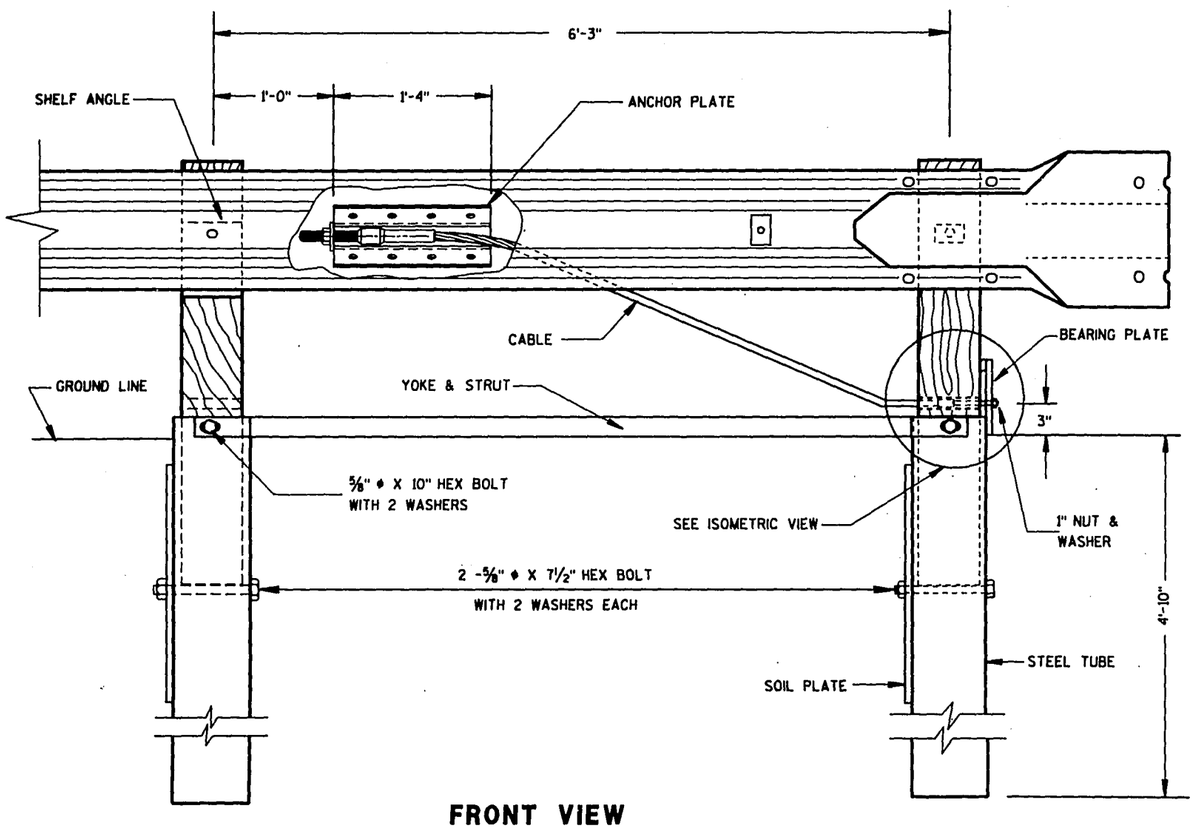

FRONT VIEW

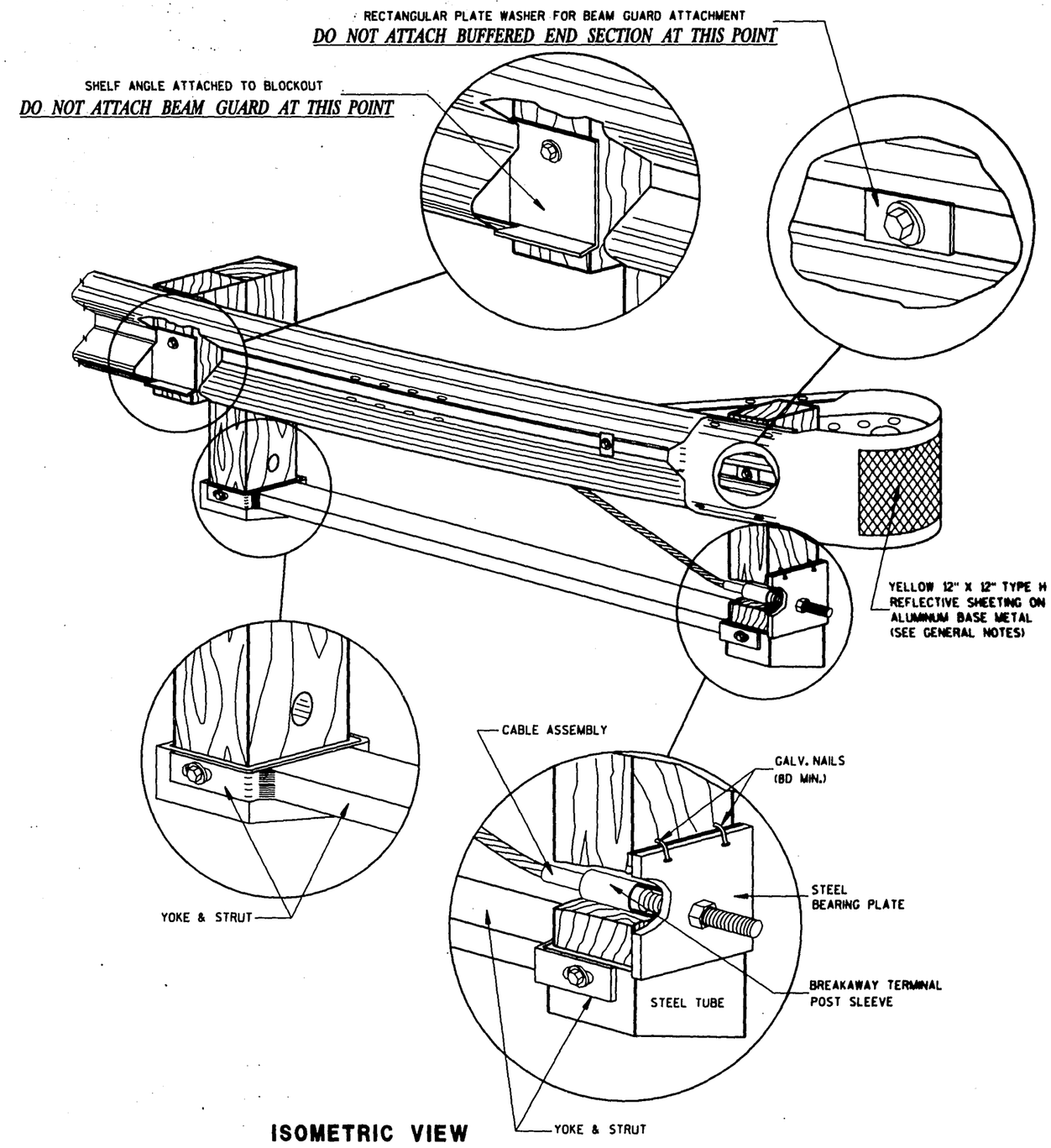

ISOMETRIC VIEW

END TERMINAL ANCHORAGE ASSEMBLY

CLASS "A" STEEL PLATE
BEAM GUARD END TERMINAL
WITH ANCHORAGE TYPE 3

STATE OF WISCONSIN
DEPARTMENT OF TRANSPORTATION

S.D.D. 14 B 19-1b

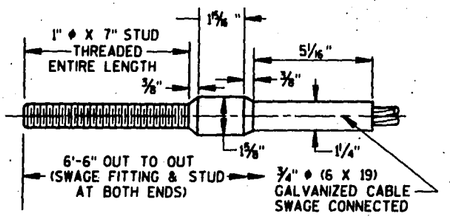

CABLE ASSEMBLY

CABLE, SWAGE FITTING, STUD AND NUT SHALL DEVELOP A MINIMUM BREAKING STRENGTH OF 40,000 LB. (TIGHTEN UNTIL TAUT)

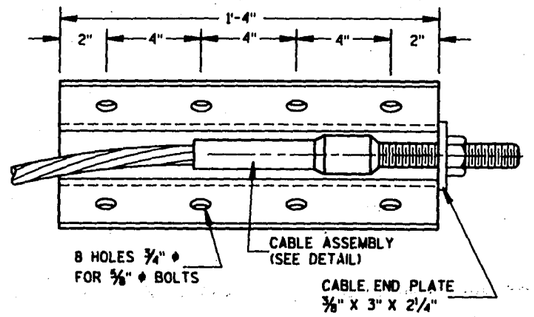

FRONT VIEW

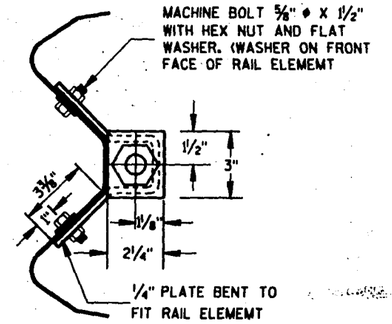

END VIEW

ANCHOR PLATE DETAIL

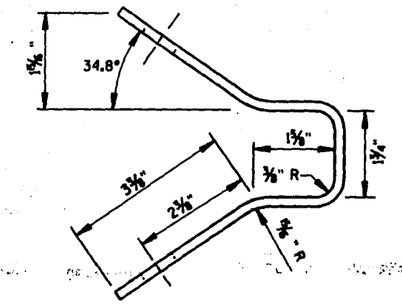

END VIEW

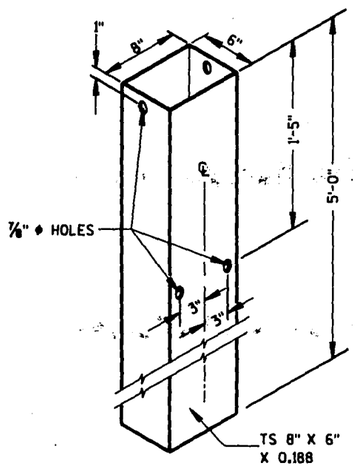

TERMINAL POST
(POSTS NO. 1 & 2)

STEEL TUBE

THE STEEL TUBE SHALL CONFORM TO REQUIREMENTS OF ASTM A500

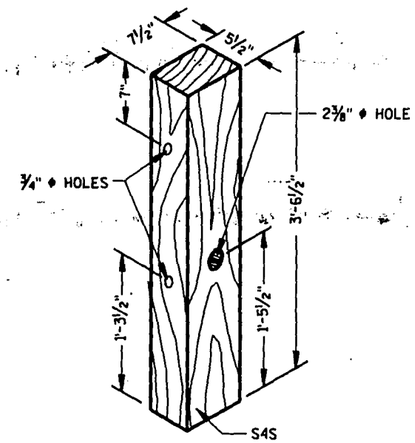

TERMINAL POST
(POSTS NO. 1 & 2)

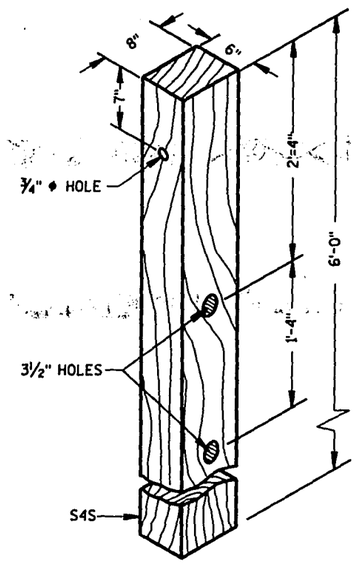

LINE POST
(POSTS NO. 3, 4, 5 & 6)

WOOD BREAKAWAY POSTS

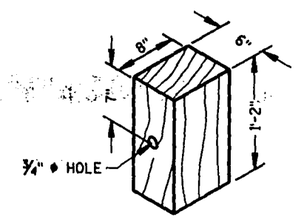

WOOD OFFSET BLOCK

REQ'D. AT ALL POSTS EXCEPT POST NO. 1

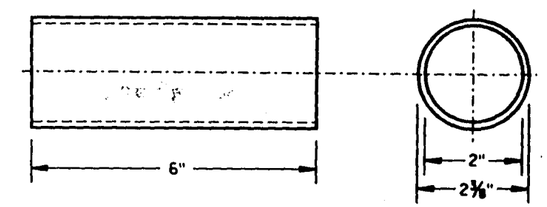

BREAKAWAY TERMINAL POST SLEEVE

STANDARD STRENGTH STEEL PIPE, ASTM A53 GRADE "B"

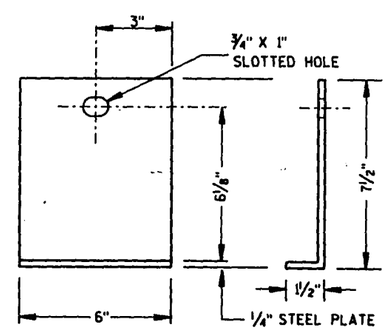

SHELF ANGLE

(ONE REQUIRED ON POST NO 2)

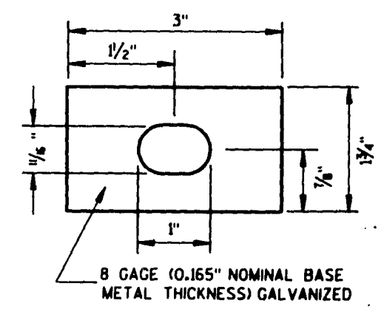

RECTANGULAR PLATE WASHER

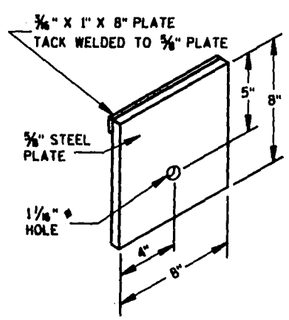

STEEL BEARING PLATE

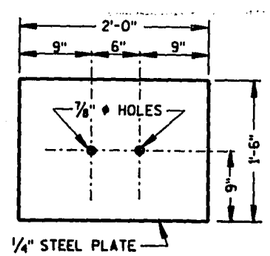

SOIL PLATE

CLASS "A" STEEL PLATE
BEAM GUARD END TERMINAL
WITH ANCHORAGE TYPE 3

STATE OF WISCONSIN
DEPARTMENT OF TRANSPORTATION

S.D.D. 14 B 19-1c

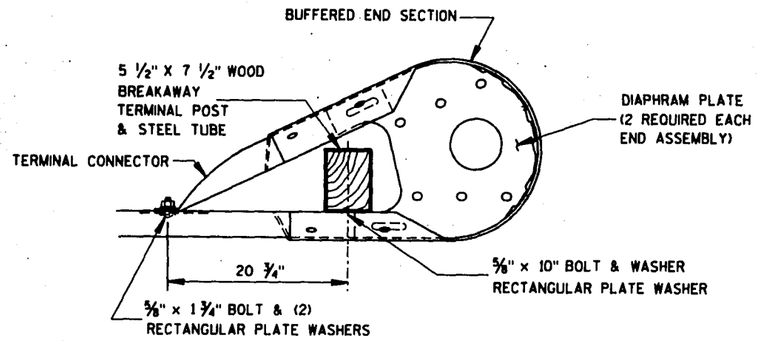

PLAN

BUFFERED END ASSEMBLY

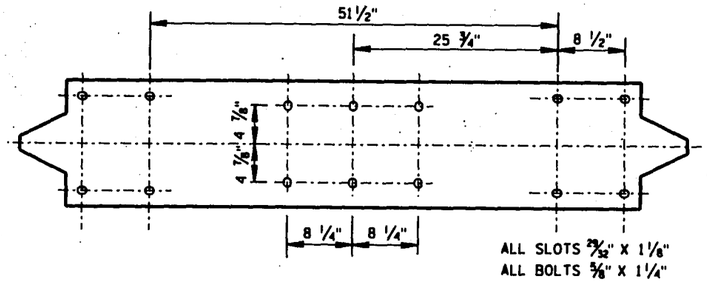

BUFFERED END SECTION FLAT PLATE LAYOUT

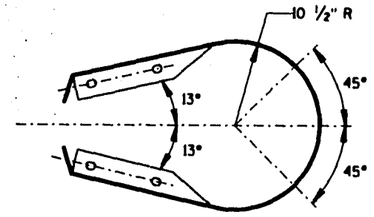

PLAN

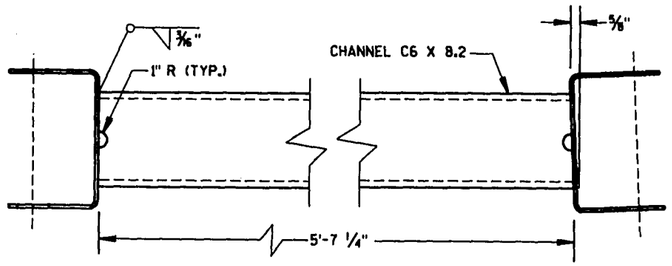

STRUT DETAIL

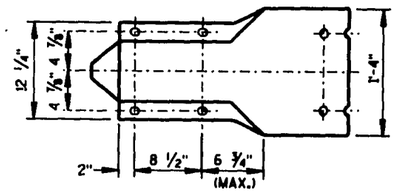

FRONT VIEW

BUFFERED END SECTION

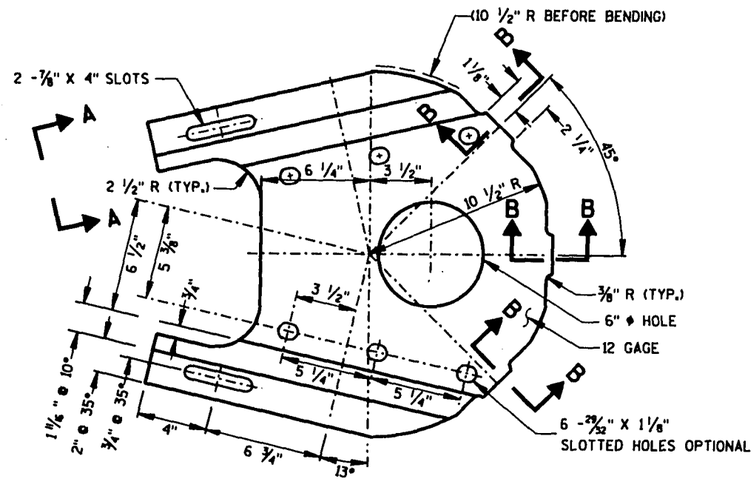

PLAN

DIAPHRAM PLATE DETAIL

(2 REQUIRED EACH TERMINAL)

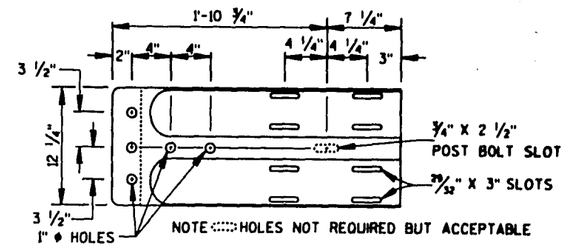

FRONT VIEW

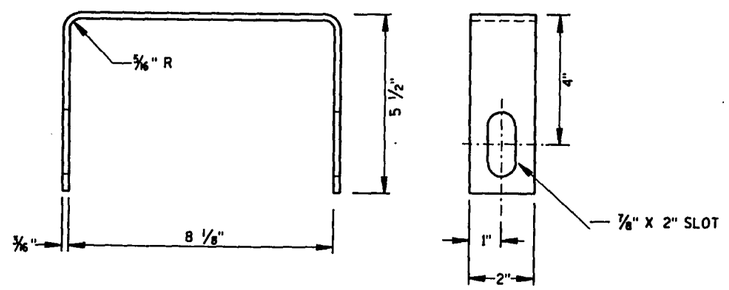

YOKE DETAIL

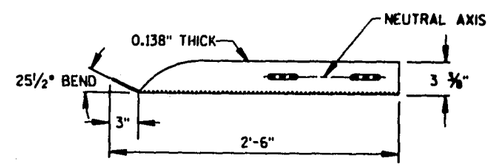

PLAN

TERMINAL CONNECTOR

GENERAL NOTES

DETAILS OF CONSTRUCTION, MATERIALS AND WORKMANSHIP NOT SHOWN ON THIS DRAWING SHALL CONFORM TO THE PERTINENT REQUIREMENTS OF THE STANDARD SPECIFICATIONS AND THE APPLICABLE SPECIAL PROVISIONS.

POSTS AT LOCATIONS 1 & 2 SHALL BE WOOD BREAKAWAY TERMINAL POSTS INSERTED AND BOLTED INTO STEEL TUBES.

ANCHORAGE SHALL CONSIST OF STEEL TUBES, SOIL PLATES, WOOD BREAKAWAY POSTS, BEARING PLATE, ANCHOR PLATE, CABLE ASSEMBLY AND ALL ASSOCIATED HARDWARE. ALL STEEL PARTS SHALL BE GALVANIZED.

YELLOW TYPE H REFLECTIVE SHEETING ON ALUMINUM BASE MATERIAL SHALL CONFORM TO SECTIONS 637.2.2.2 AND 637.2.3.3 OF THE STANDARD SPECIFICATIONS. THE SHEETING AND BASE SHALL BE CURVED AND ATTACHED TO THE OUTSIDE OF THE BUFFERED END SECTION. ATTACHMENT SHALL BE MADE USING DOUBLE FACED "HI-BOND" TAPE MANUFACTURED BY THE 3M COMPANY, ST PAUL, MN.

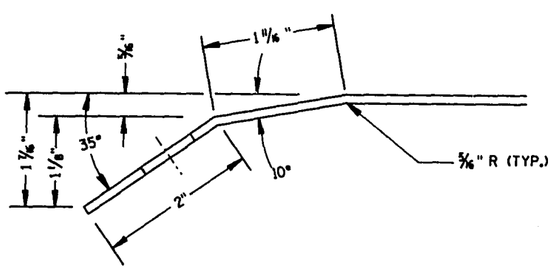

SECTION A-A

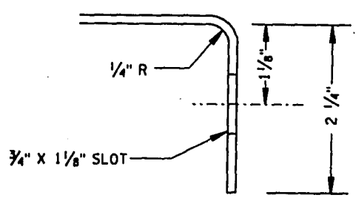

SECTION B-B

CLASS "A" STEEL PLATE BEAM GUARD END TERMINAL WITH ANCHORAGE TYPE 3

STATE OF WISCONSIN
DEPARTMENT OF TRANSPORTATION

APPROVED 10/25/95 DATE — CHIEF ROADWAY DEVELOPMENT ENGINEER

FHWA

S.D.D. 14 B 19-1d

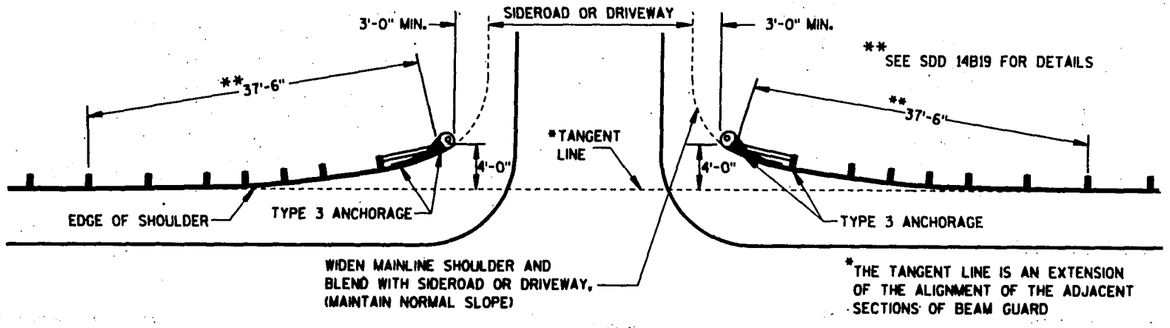

BEAM GUARD AT SIDEROADS OR DRIVEWAYS

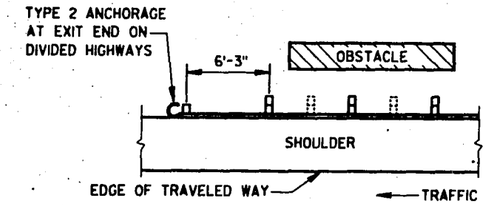

BEAM GUARD AT OBSTACLES EXIT END - ONE WAY TRAFFIC

GENERAL NOTES

DETAILS OF CONSTRUCTION, MATERIALS AND WORKMANSHIP NOT SHOWN ON THIS DRAWING SHALL CONFORM TO THE PERTINENT REQUIREMENTS OF THE STANDARD SPECIFICATIONS AND THE APPLICABLE SPECIAL PROVISIONS.

BEAM GUARD LOCATIONS AND LENGTHS ARE SHOWN ELSEWHERE IN THE PLAN.

1. STEEL THRIE BEAM STRUCTURE APPROACH.
2. UNLESS OTHERWISE INDICATED, THE FLARED END TREATMENT WITH A TYPE 3 ANCHORAGE SHALL BE USED TO TERMINATE BEAM GUARD ON THE TRAFFIC APPROACH SIDE OF BRIDGES/OBSTACLES. TYPE 2 ANCHORAGE SHALL BE USED ONLY AT THE DOWNSTREAM ENDS OF BEAM GUARD LOCATED ALONG ROADWAYS WITH ONE WAY TRAFFIC.

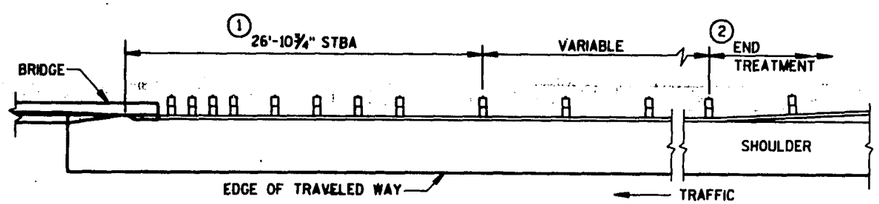

BEAM GUARD AT FULL WIDTH BRIDGES

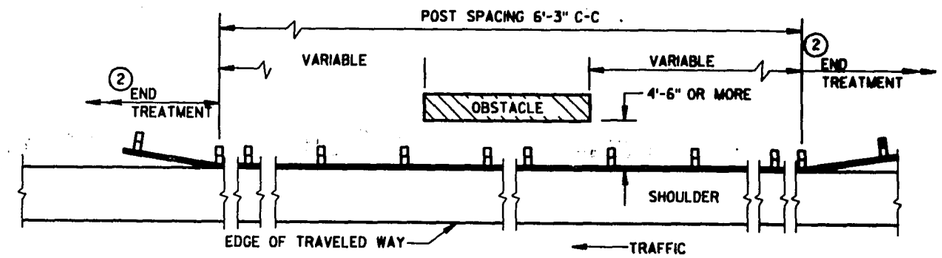

BEAM GUARD AT OSBSTACLES - TWO WAY TRAFFIC

(RAIL TO OBSTACLE CLEARANCE 4'-6" OR MORE)

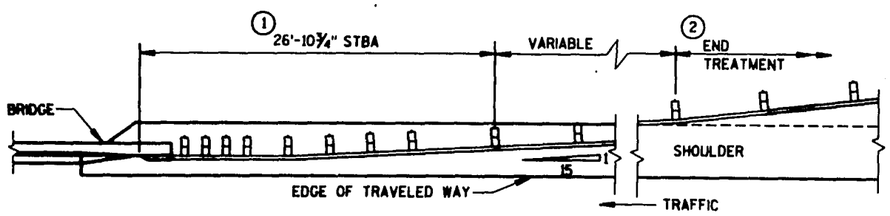

BEAM GUARD AT NARROW BRIDGES

(FLARED TO ANCHORAGE)

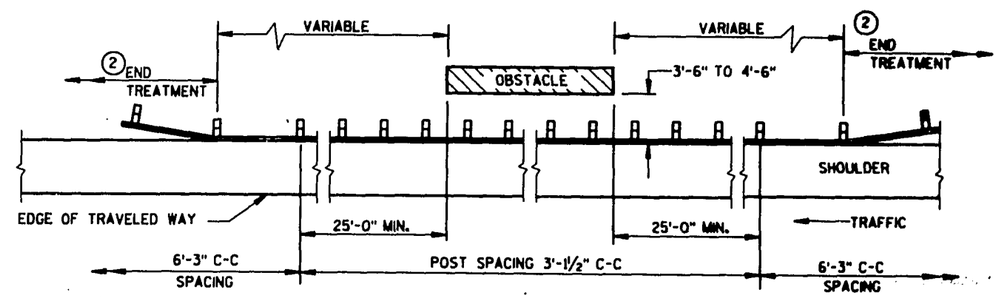

BEAM GUARD AT OSBSTACLES - TWO WAY TRAFFIC

(RAIL TO OBSTACLE CLEARANCE 3'-6" TO 4'-6")

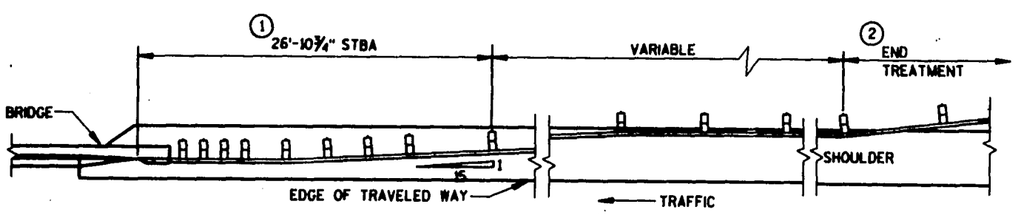

BEAM GUARD AT NARROW BRIDGES

(FLARED TO SHOULDER EDGE, THEN PARALLEL TO ROADWAY)

CLASS "A" STEEL PLATE BEAM GUARD (AT BRIDGES, OBSTACLES AND SIDEROADS/DRIVEWAYS)

STATE OF WISCONSIN
DEPARTMENT OF TRANSPORTATION

APPROVED 10/25/95
DATE
CHIEF ROADWAY DEVELOPMENT ENGINEER
FHWA

S.D.D. 14 B 18-2a

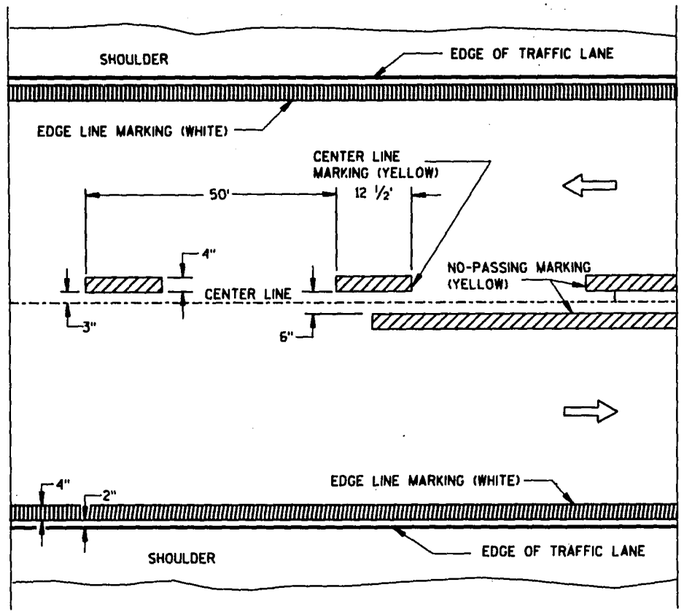

TWO WAY TRAFFIC

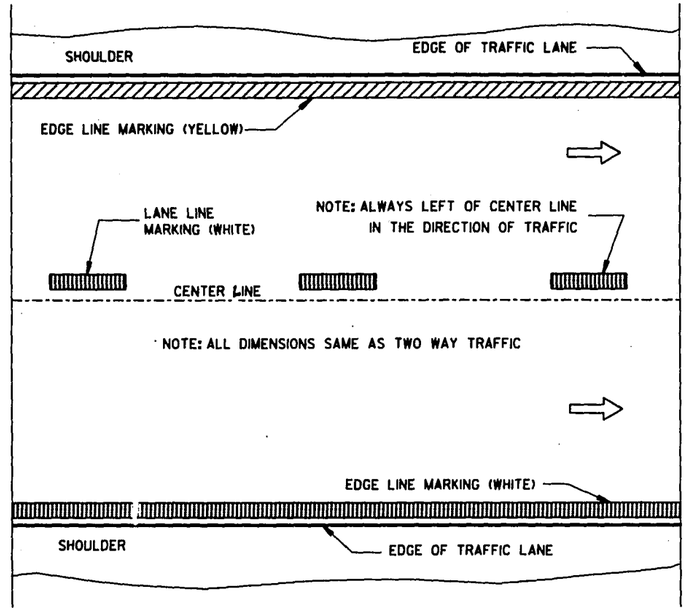

ONE WAY TRAFFIC

PERMANENT PAVEMENT MARKING

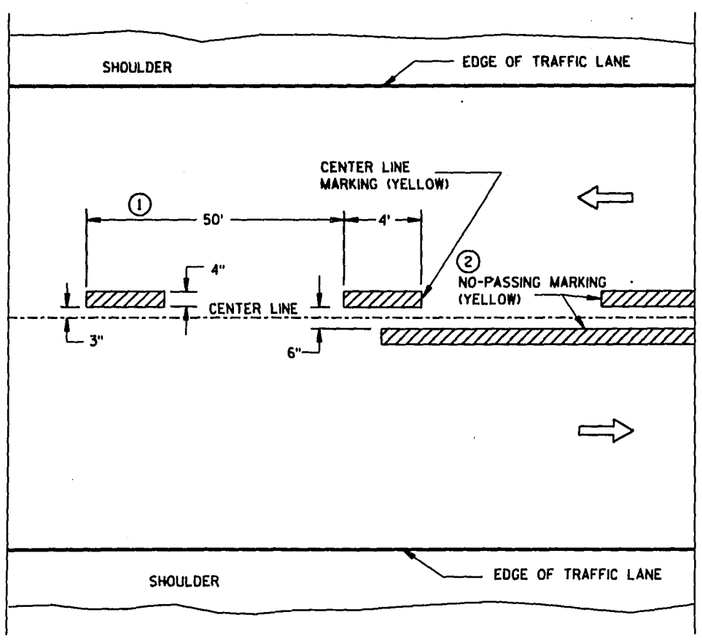

TWO WAY TRAFFIC

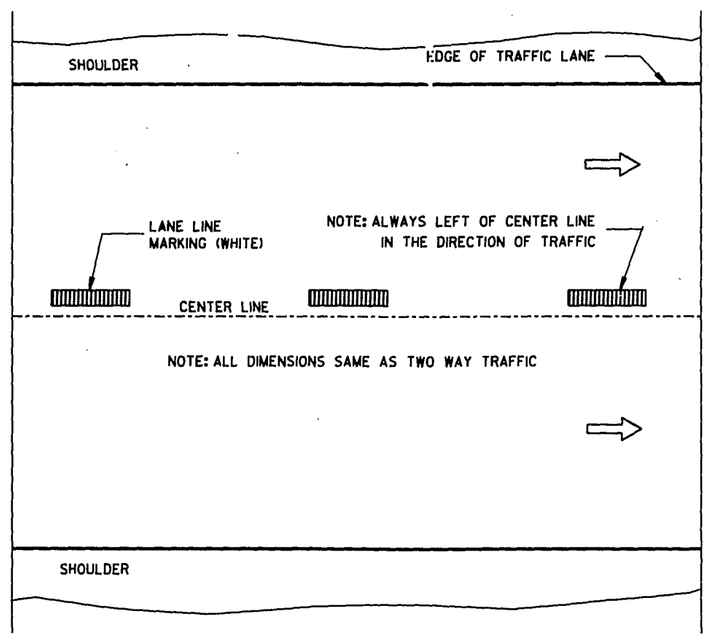

ONE WAY TRAFFIC

TEMPORARY (INTERMEDIATE) PAVEMENT MARKING

(SHOWS CYCLE FOR TEMPORARY CENTER LINE OR TEMPORARY LANE LINE MARKING)

GENERAL NOTES

DETAILS OF CONSTRUCTION NOT SHOWN ON THIS DRAWING SHALL CONFORM TO STANDARD SPECIFICATIONS AND SPECIAL PROVISIONS.

1. HALF CYCLE LENGTHS (25'±) WITH 2' MINIMUM STRIPE LENGTHS SHALL BE PROVIDED ON ROADWAYS (INCLUDING TEMPORARY TRAVELED WAYS) WITH REVERSE CURVATURE, CURVATURE OF OVER 5 DEGREES OR WHEN DIRECTED BY THE ENGINEER TO MARK UNUSUAL ALIGNMENT OF THE TRAVELED WAY.

2. NO PASSING ZONE TEMPORARY PAVEMENT MARKING IS REQUIRED TO BE PLACED, WHERE APPROPRIATE, ALONG WITH CENTERLINE TEMPORARY PAVEMENT MARKING WHEN A SAME DAY PERMANENT PAVEMENT MARKING ITEM IS INCLUDED IN THE CONTRACT.

NOTE

ARROW SYMBOL (⇨) SHOWS DIRECTION OF TRAVEL

PAVEMENT MARKING
(MAINLINE)

STATE OF WISCONSIN
DEPARTMENT OF TRANSPORTATION

APPROVED
8-7-95
DATE

Clifton J. Spang
for DIRECTOR, OFFICE OF TRAFFIC

FHWA

S.D.D. 15 C 8-7a

NOTES

EDGE LINES SHALL BE OMITTED THROUGH INTERSECTIONS. EDGE LINES SHALL BE CONTINUED THROUGH DRIVEWAYS.

1. WHEN DISTANCE "A" IS LESS THAN 250 FEET, OMIT LANE LINE.
2. WHEN DISTANCE "B" IS LESS THAN 100 FEET, OMIT CHANNELIZING LANE LINE.
3. ALTERNATIVE MARKING SHALL BE PROVIDED WHEN SPECIFIED IN THE CONTRACT. TYPICAL SITUATIONS WHERE THIS MARKING MAY BE REQUIRED ARE WHERE THE INTERSECTION IS ON A SHARP HORIZONTAL CURVE OR CREST VERTICAL CURVE IN AN UNLIGHTED AREA SUCH THAT THE EDGE LINE MAY BE MISLEADING TO THE MOTORIST OR DISAPPEAR FROM SIGHT.
4. LOCATE THE EDGE LINE ALONG THE TAPER WHERE "W" IS 10' OR MORE.

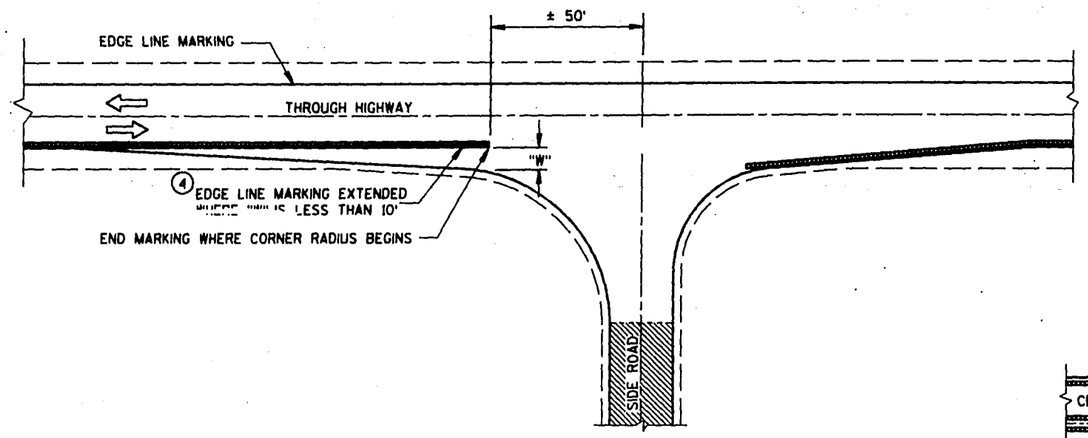

MINOR INTERSECTION WITHOUT CURBS

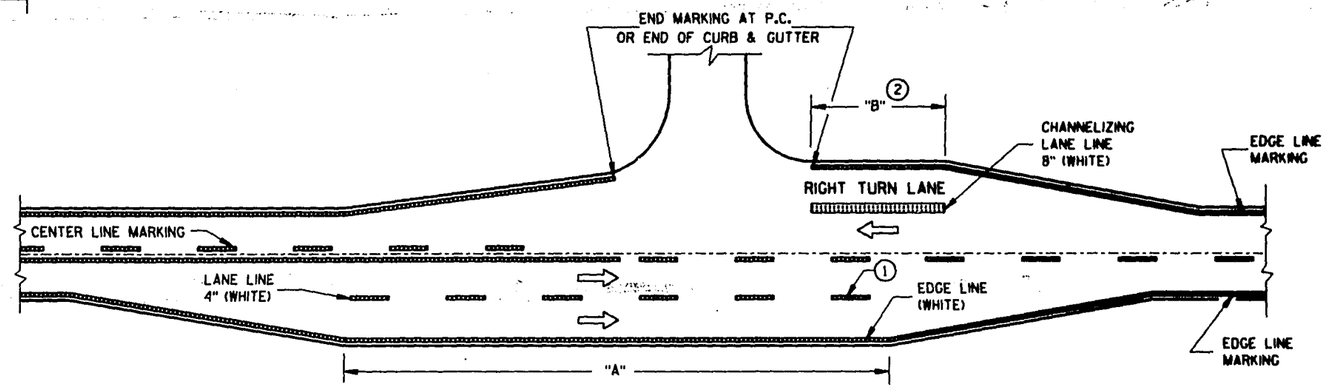

MAJOR INTERSECTIONS

(INTERSECTION WITH FULL RIGHT TURN LANE OR BYPASS LANES)

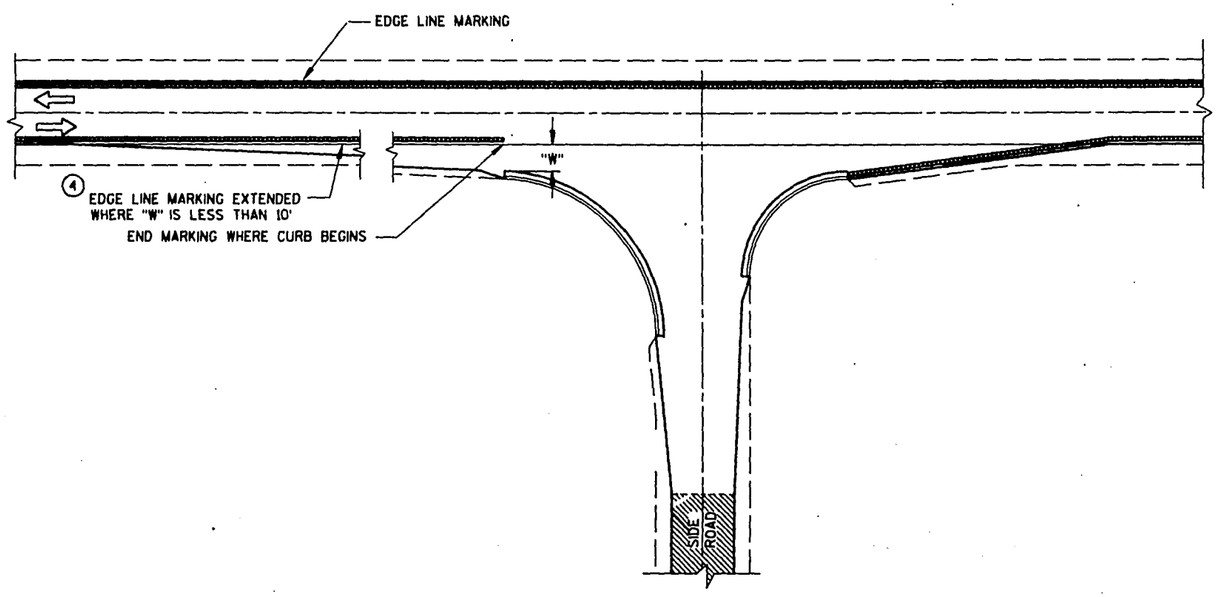

MINOR INTERSECTION WITH CURBS

(TYPICAL MARKING)

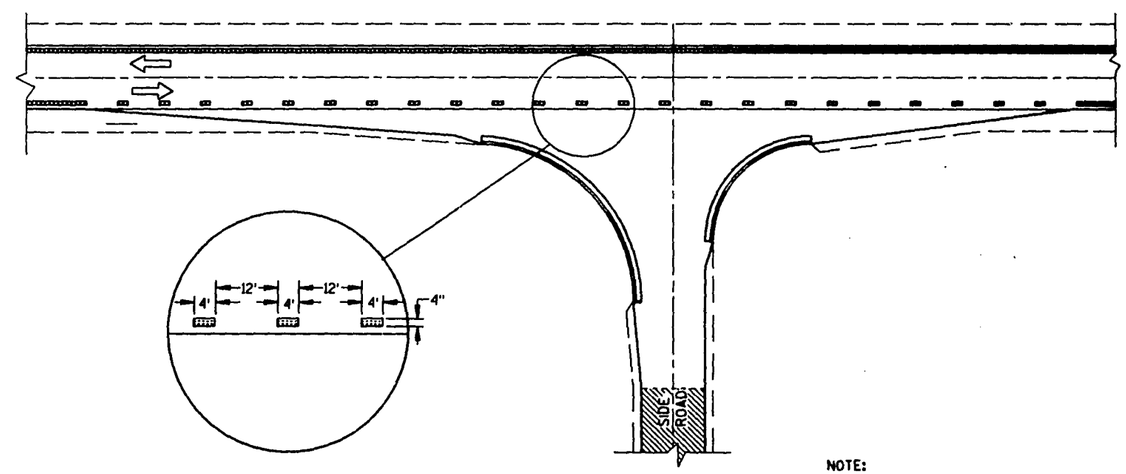

MINOR INTERSECTION WITH CURBS

3 (FOR SPECIAL CONDITIONS AS SPECIFIED)

NOTE:
SDD 15 C 8-7a IS REQUIRED WHEN THIS DRAWING IS CALLED FOR IN THE PLANS.

PAVEMENT MARKING (INTERSECTIONS)

STATE OF WISCONSIN
DEPARTMENT OF TRANSPORTATION

S.D.D. 15 C 8-7b

STA 108 + 45 C.T.H. "DD"

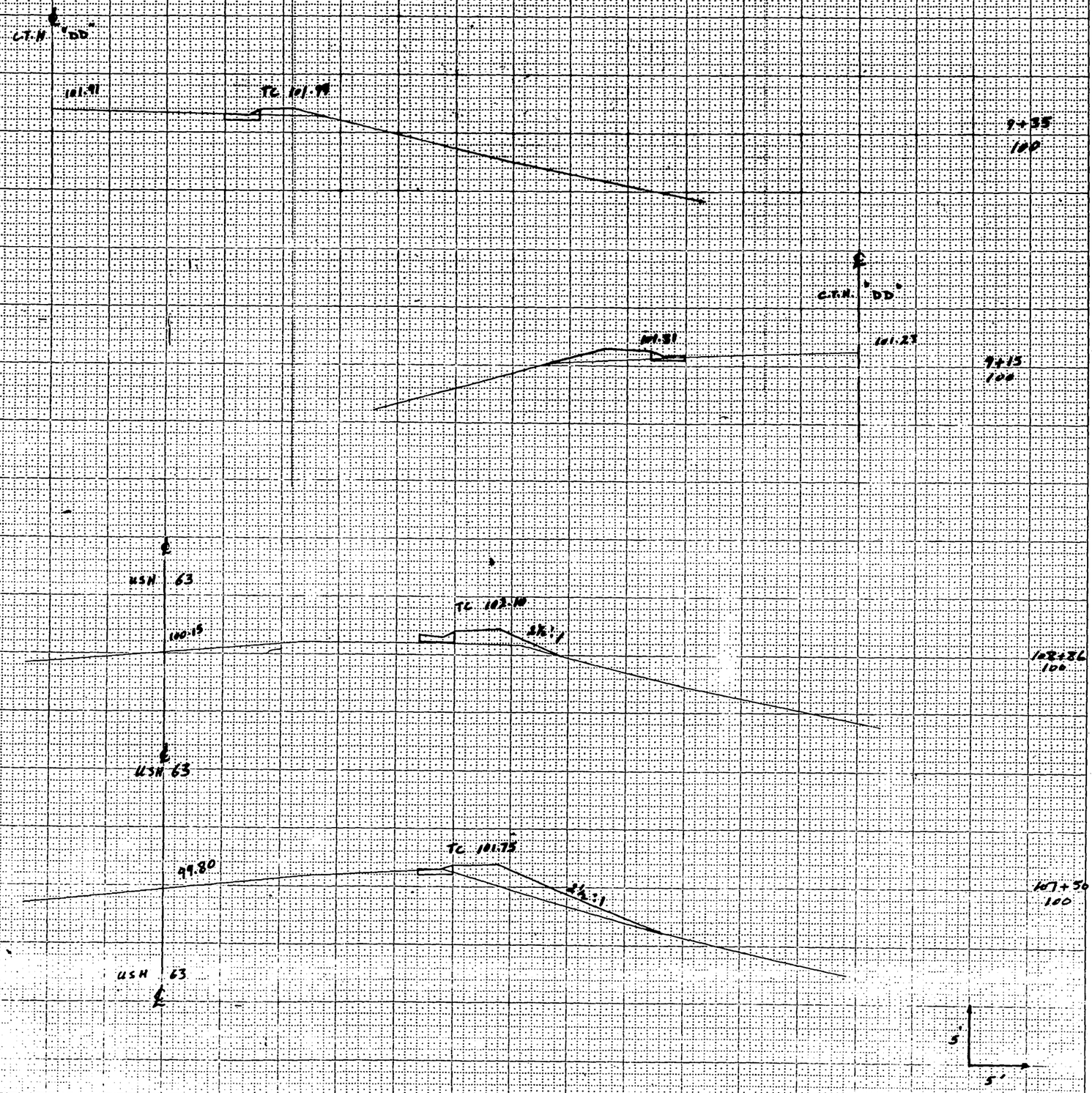

SHEET TOTAL

| STATION | | |

STA 212+13.25 C.T.H. "G"

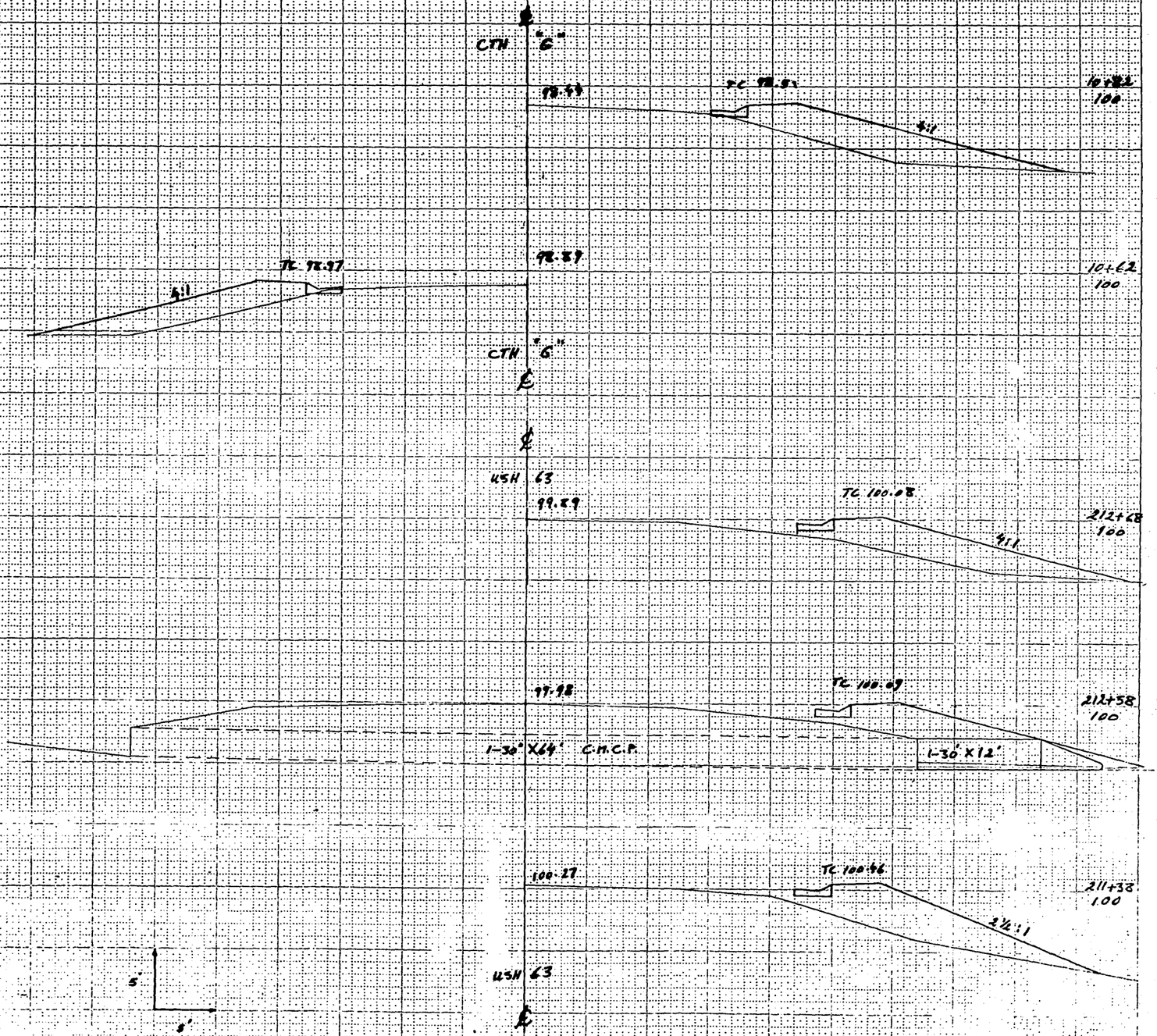

SHEET TOTAL

STATION	YARDAGE EXCAVATION	YARDAGE FILL
DISTANCE		

STATE PROJECT NUMBER 7210-07-71

SHEET 9.1 OF 11 SHEETS

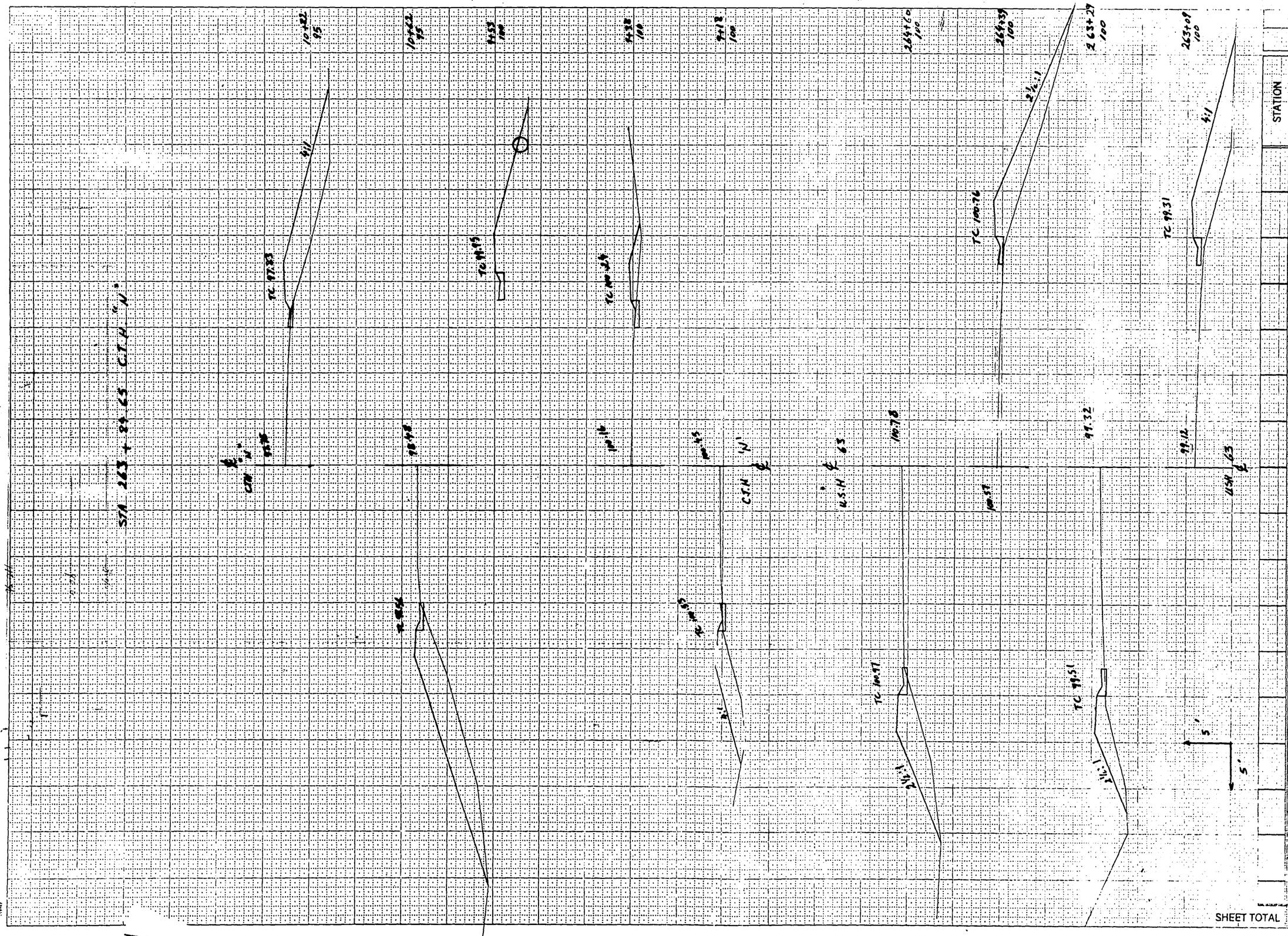

STATE PROJECT NUMBER	SHEET NUMBER
7210-07-71	9.2

STATION	DISTANCE	YARDAGE			
		EXCAVATION			FILL

SHEET TOTAL

STATE PROJECT NUMBER	SHEET NUMBER
7210-07-71	9.3

STATION	DISTANCE	YARDAGE			
		EXCAVATION			FILL

SHEET TOTAL