STATE PROJECT	FEDERAL PROJECT	
	PROJECT	CONTRACT
1633-06-71	F 08(16)	1

STATE OF WISCONSIN
DEPARTMENT OF TRANSPORTATION

PLAN OF PROPOSED IMPROVEMENT

GALESVILLE – BLAIR ROAD
(FRENCHVILLE — BLAIR)

U.S.H. 53
TREMPEALEAU COUNTY

STATE PROJECT NUMBER
1633-06-71

CONTRACTOR - MATHY CONST. CO. & SUBSIDIARIES
SUBCONTRACTOR - WILLIAMS CONST. CO.
SUBCONTRACTOR - EDWARD KRAEMER & SONS
SUBCONTRACTOR - CENTURY FENCE CO.
SUBCONTRACTOR - HERBERT A. CARLSON
PROJECT SUPERVISOR - DARWIN BRADLEY
AREA SUPERVISOR - ROD ENGEBRETSON
DATE STARTED - 6-8-82
DATE COMPLETED - 9-17-82

N

Index of Sheets

Sheet No.	1	Title
Sheet No.	2 – 2.4	Typical Sections and Details
Sheet No.	3 – 3.1	Estimate of Quantities
Sheet No.	3A & 3B	Miscellaneous Quantities
Sheet No.	——	Right of Way Plat
Sheet No.	5 – 5.4	Plan
Sheet No.	6 – 6.7	Standard Detail Drawings
Sheet No.	——	Standard Sign Plates
Sheet No.	——	Structure Plans
Sheet No.	——	Computer Earthwork Data
Sheet No.	9 – 9.3	Cross Sections

TOTAL SHEETS = 27

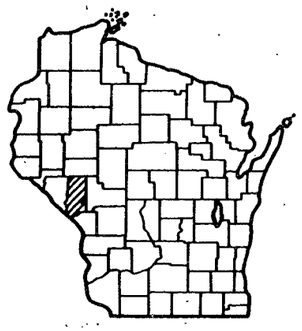

Design Designation

A.D.T.	(1982)	= 2800
A.D.T.	(2002)	= 3500
D.H.V.	(2002)	= 455
D.	(2002)	= 60-40
T.		= 9.8%
V.		= 55 M.P.H.

Conventional Signs

County Line
Township or Range Line
Section Line
Corporate or City Limits
Property line
Lot Line
Existing Right of Way Line
New Right of Way Line
Base or Survey Line
Slope Intercept
Existing Roadway or Private Entrance
Caution Symbol (Combustible fluids under pressure)
Railroads
Fence
Culverts in Place
Culverts Required
Power Pole
Telephone or Telegraph Pole
Right of Way Markers
Marsh
Wooded Area
Grade Elevation

Scales
PLANS 0 200 FT.
CROSS SECTIONS 1 FT. 0 5 FT.

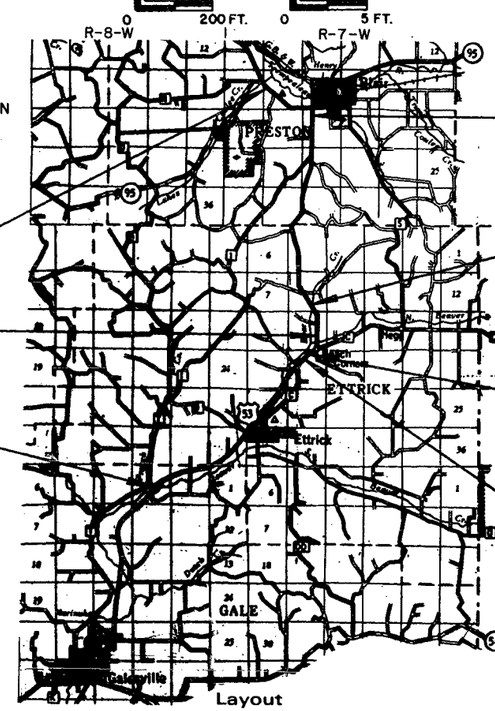

END PROJECT 1633-06-71
STA. 307+00

EXCEPTION TO NET ℄ LENGTH
STA. 17 + 15.41 - STA. 18 + 14.59
B-61-47

PROJECT 1633-06-71
(FRENCHVILLE INTERSECTION C.T.H. T)

EQUATION: 386 + 03 AH.
340 + 23 BK. =

EXCEPTION TO NET ℄ LENGTH
STA. 66 + 17.48 - STA. 66 + 62.52
B-61-46

EQUATION: STA. 0 + 00 AH.
331 + 00 .8 BK. =

BEGIN PROJECT 1633-06-71
STA. 330+17.8
N- 135,950
E- 1,674,500

Total Net Length of Centerline = 7.920 Mi

ALL COORDINATES ON THIS PLAN ARE REFERENCED TO THE WISCONSIN COORDINATE SYSTEM, CENTRAL ZONE.

STATE OF WISCONSIN
DEPARTMENT OF TRANSPORTATION

Surveyor M. E. W. District Checker C. E. C.
Designer D. G. G. C. O. Checker
District Supervisor G. W. P. C. O. Coordinator

Approved:
Date 1-12-82 T. R. Kinsey
District Transportation Director

Approved:
Date 1/28/82 D. D. Strand
Chief Design Engineer

Approved:
Date 2/3/82 E. J. Ryskit
Director of Development

U. S. DEPARTMENT OF TRANSPORTATION
FEDERAL HIGHWAY ADMINISTRATION
REGION 5 WISCONSIN DIVISION

Approved:
Date
Division Administrator

Vehicle No. 11

STATE PROJECT NUMBER	SHEET NO.
1633-06-71	2

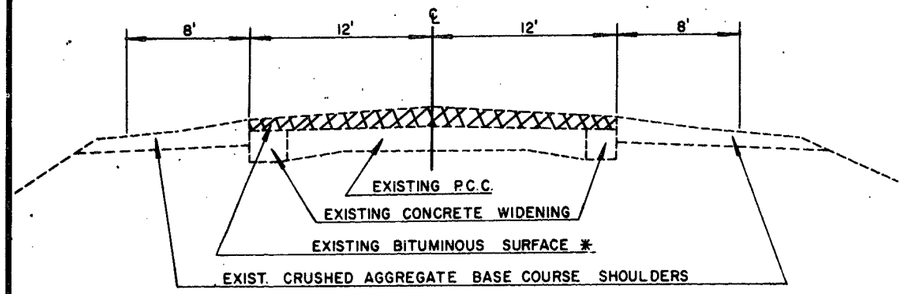

TYPICAL EXISTING TANGENT SECTION
STA. 0+00 - 120+00
162+00 - 173+00
202+00 - 244+00
266+00 - 340+23 BK.
386+03 AH. - 340+00

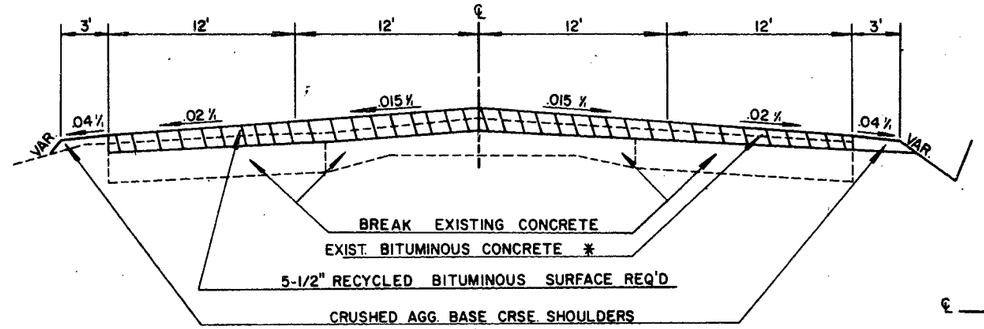

TYPICAL SECTION
STA. 175+00 - 191+00 RT. (NORTHBOUND)
189+00 - 200+00 LT. (SOUTHBOUND)

STATION	✱ APPROXIMATE DEPTH INCHES
2+00	3"-3 1/2"
30+00	3"
53+00	3"
88+50	5"
123+60	3"
146+00	3 1/4"
223+50	3"
240+50	3"
258+00	3"
299+00	5"
310+00	6"
325+00	3"

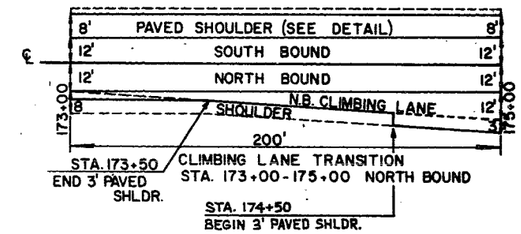

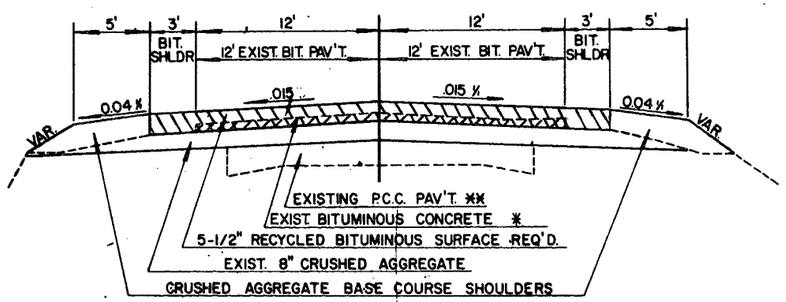

TYPICAL SECTION
STA. 120+00-162+00
244+00-266+00

✱✱ P.C.C. WILL NOT BE BROKEN

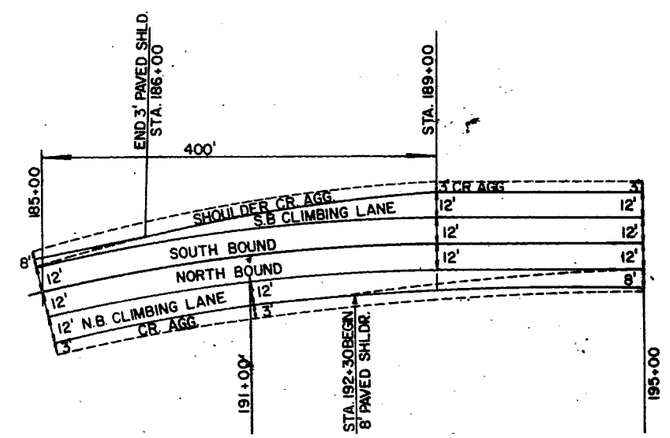

CLIMBING LANE TRANSITION
STA 185+00 - 189+00 SOUTH BOUND
191+00 - 195+00 NORTH BOUND

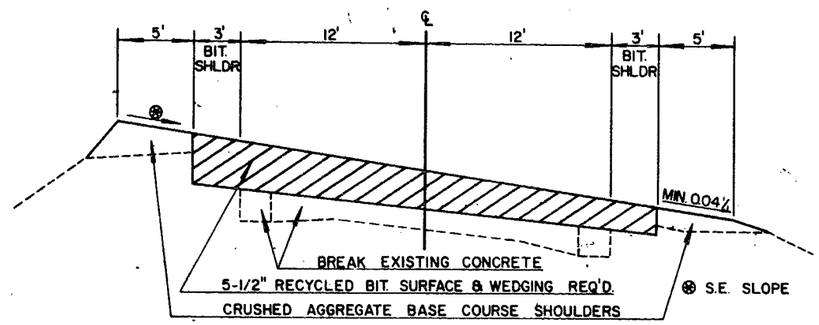

TYPICAL SUPERELEVATED SECTION

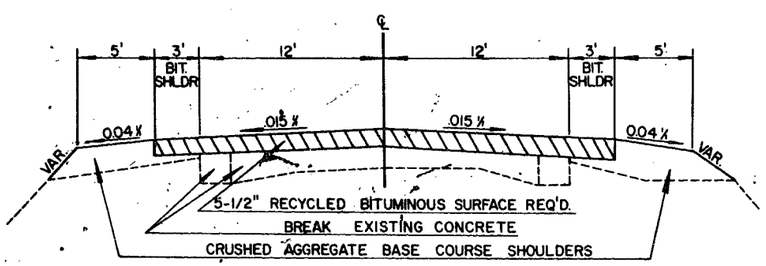

TYPICAL TANGENT SECTION
STA. 0+00 - 120+00
162+00 - 173+00
202+00 - 244+00
266+00 - 340+23 BK.
386+03 AH. - 340+00

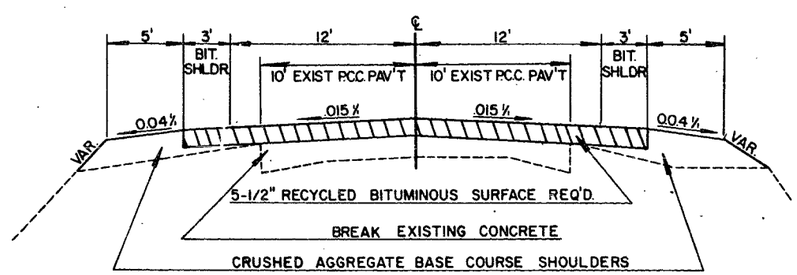

TYPICAL TANGENT SECTION
STA. 340+00-307+00

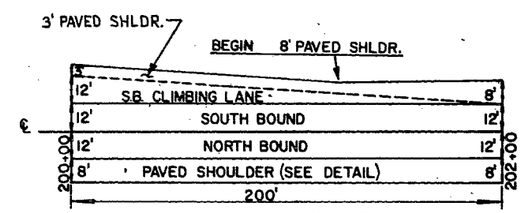

CLIMBING LANE TRANSITION
STA. 200+00 - 202+00 SOUTH BOUND

STATE PROJECT NUMBER	SHEET NO.
1633-06-71	2.1

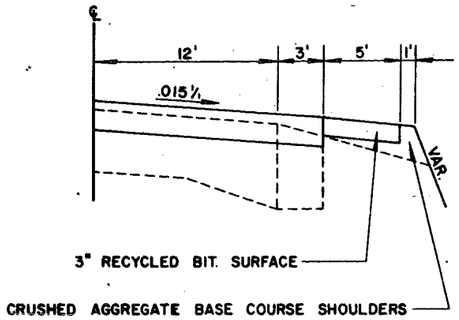

FULL WIDTH PAVED SHOULDERS

STANDARD DETAIL DRAWINGS

8F1-8	APRON ENDWALLS FOR CULVERT PIPE AND PIPE ARCH
9A1-5	LAYOUT DETAILS FOR AT-GRADE SIDE ROAD INTERSECTIONS
13B5-2	PAVEMENT MARKING
14B2-5a, 14B2-5b & 14B2-5c	CLASS "A" STEEL PLATE BEAM GUARD
15A2-2	DELINEATOR POSTS, MARKER POSTS AND DELINEATORS
15C1-7	CONSTRUCTION BARRICADES & STANDARD SIGNS

UTILITIES

GENERAL TELEPHONE
REP: BOB TEEPLES
PHONE: 715-284-4379
BLACK RIVER FALLS, WI 54615

TREMPEALEAU ELECTRIC CO-OP
REP: BRUCE MIESTAD
PHONE: 608-323-3381
ARCADIA, WI 54612

GENERAL NOTES

THE AMOUNT OF "SALVAGED BITUMINOUS PAVEMENT" AT SIDE ROADS WILL BE DETERMINED IN THE FIELD BY THE ENGINEER.

A SAWED JOINT WILL BE REQUIRED WHERE THE NEW BITUMINOUS PAVEMENT MEETS THE EXISTING BITUMINOUS SURFACE.

PRIOR TO PLACEMENT OF STEEL PLATE BEAM GUARD THE BIT. SHOULDERS SHALL BE IN PLACE, SHAPED AND COMPACTED.

THE EXISTING SURFACED ENTRANCES WILL BE RESTORED AS DIRECTED BY THE ENGINEER IN THE FIELD. TYPE "C" INTERSECTIONS ARE DESIGNATED ON THE PLAN.

THE TOP COURSE OF RECYCLED BITUMINOUS SURFACE SHALL BE 1-1/2 INCHES.

TOPSOIL OR SALVAGED TOPSOIL SHALL BE PLACED TO AN APPROXIMATE DEPTH OF 3-INCHES AT TIME OF PLACING, UNLESS OTHERWISE NOTED.

WHEN THE QUANTITY OF THE ITEM OF BASE OR SURFACE COURSE IS MEASURED FOR PAYMENT BY THE TON, THE DEPTH OF THICKNESS OF THE COURSE SHOWN ON THE PLANS IS APPROXIMATE AND THE ACTUAL THICKNESS WILL DEPEND ON THE DISTRIBUTION OF THE MATERIAL AS DIRECTED BY THE ENGINEER.

"THE LOCATIONS OF EXISTING AND PROPOSED UTILITY INSTALLATIONS AS SHOWN ON THE PLANS ARE APPROXIMATE. THERE MAY BE OTHER UTILITY INSTALLATIONS WITHIN THE PROJECT AREA THAT ARE NOT SHOWN."

THE FINISHED GRADES ON C.T.H. "C" SHALL BE AS INDICATED ON THE CROSS SECTIONS OR AS DIRECTED BY THE ENGINEER IN THE FIELD.

PAVEMENT MARKING, EPOXY SHALL BE USED FOR EDGELINE MARKING.

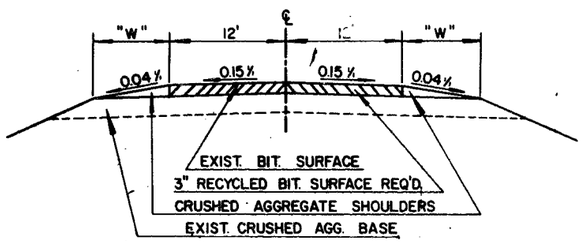

TYPICAL SECTION "Y", "YY" & "Z" LINE
"Y" AND "YY" LINE "W" = 8 FT.
"Z" LINE "W" = 6 FT.

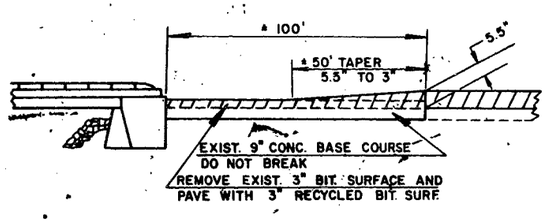

APPROACHES B-61-47

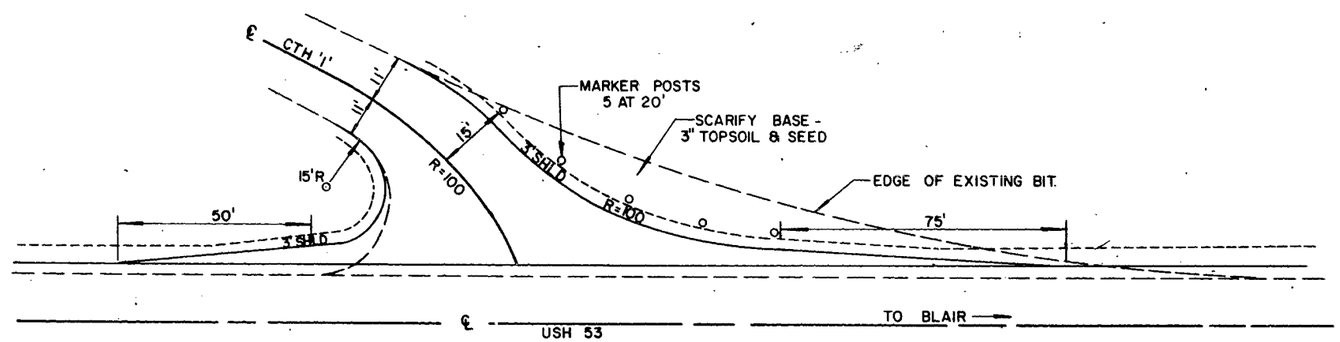

INTERSECTION DETAIL AT C.T.H. "I" (WEST), STA. 294+00

STATE PROJECT NUMBER	SHEET NO.
1633-06-71	2.2

FRENCHVILLE INTERSECTION
(USH 53 & CTH 'T')

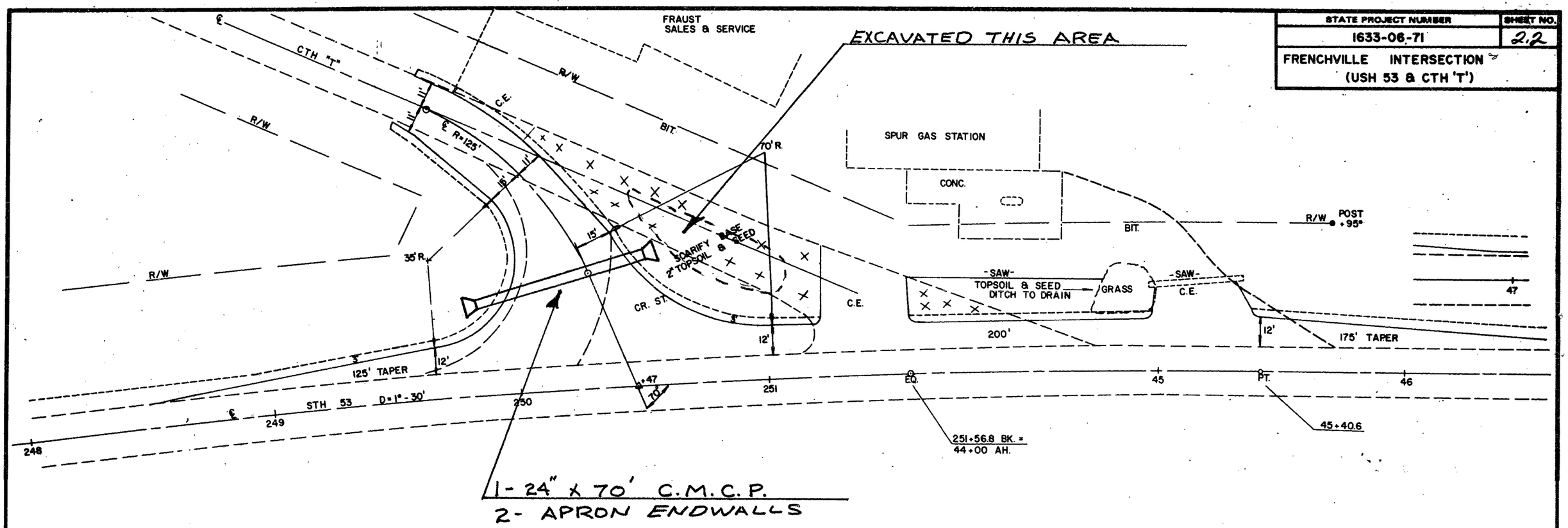

GRADING AND SHAPING INTERSECTION, C.T.H. T
1 - LUMP SUM

ESTIMATE OF QUANITIES (INFORMATIONAL ONLY)

ITEM	UNIT	ESTIMATED QUANITY
TOPSOIL	S. Y.	500
FERTILIZER 'B'	CWT	0.3
SEED *1	LB.	9

℄ USH 53
PI. = 247+86.7
Δ = 15°-25'
D = 1°-30'
T = 517.1
L = 1027.8
PC = 242+69.6

NOTE: STATIONING FROM B-391 (OVER BEAVER CR.)
NORTH END OF BRIDGE ℄ = STA. 239+59.35

STATE PROJECT NUMBER	SHEET NO.
1633-06-71	2.3

SPECIAL DETAIL
JUNCTION C.T.H. 'C' (EAST)

GRADING AND SHAPING INTERSECTION, C.T.H. C
1 - LUMP SUM

ESTIMATE OF QUANTITIES (INFORMATIONAL ONLY)

ITEM	UNIT	ESTIMATED QUANTITY
BURY ENDS & PLUG CULVERT, STA. 12+00	L.S.	1
OBLITERATE OLD ROAD	STA.	5.4
* BORROW EXCAVATON	C.Y.	900
UNCLASSIFIED EXCAVATON	C.Y.	169
TOPSOIL	S.Y.	2100
SALVAGED TOPSOIL	S.Y.	2100
FERTILIZER	C.W.T.	3
SEED # 1	LBS.	60

* FROM OLD ROAD OBLITERATION

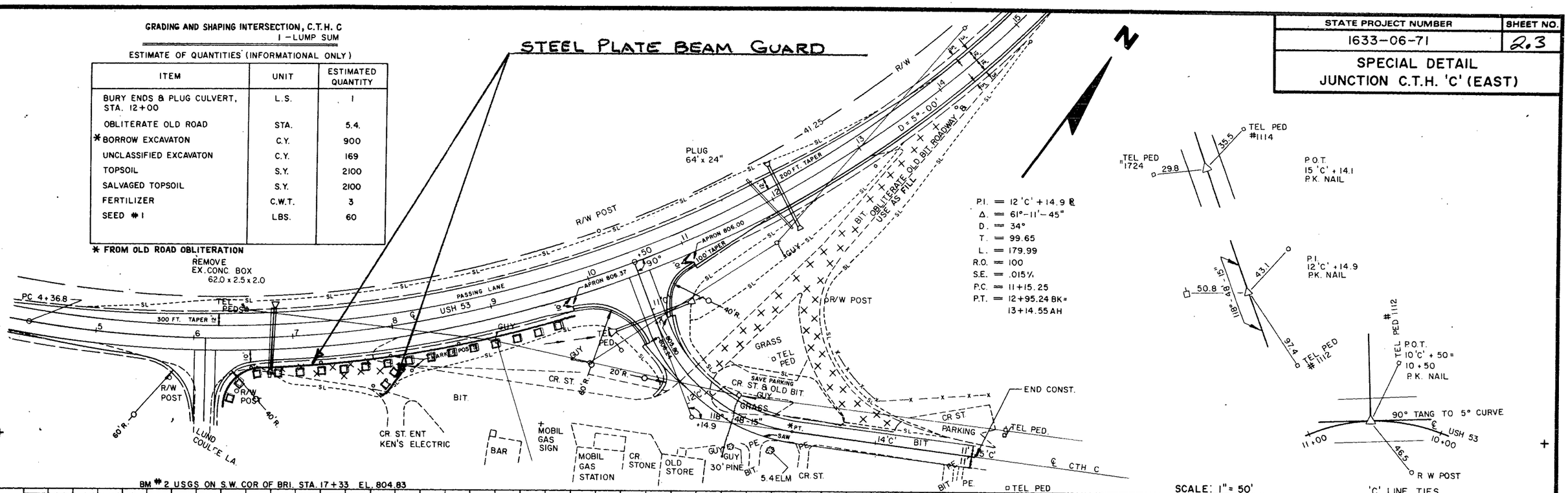

STA. 6+75 U.S.H. 53
1-(25" X 20") 64' CGR. ST. PIPE ARCH REQ'D.
2-APRON ENDWALLS REQ'D.

STA. 12+10 U.S.H. 53
1-24" X 64' CP, CL III REQ'D.
2-APRON ENDWALLS REQ'D.

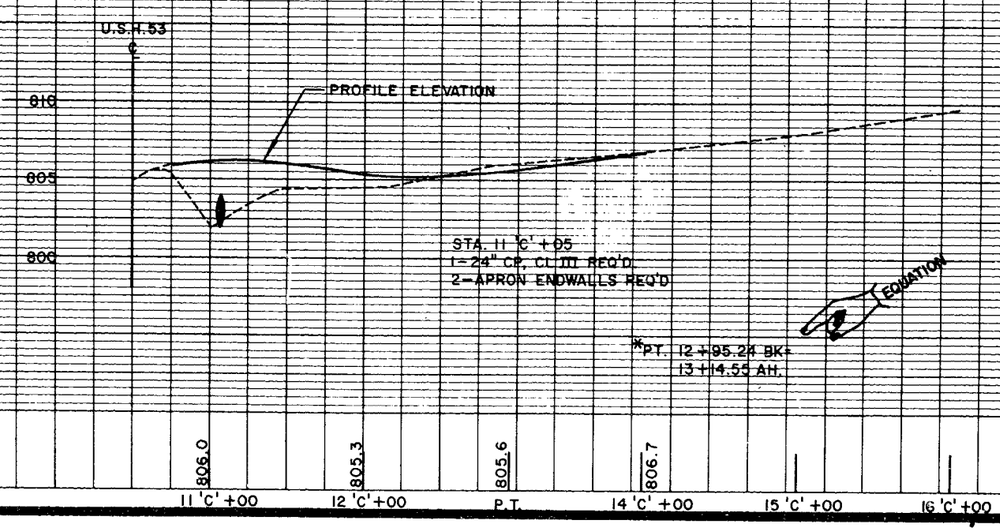

STA. 11 'C' + 05
1-24" CP, CL III REQ'D.
2-APRON ENDWALLS REQ'D

EQUATION

*PT. 12+95.24 BK = 13+14.55 AH.

Cat. No. 2130 - 0140
Cat. No. 2130 - 0142

STATE PROJECT NUMBER	SHEET NO.
1633-06-71	2.4

UNDERDRAIN DETAIL

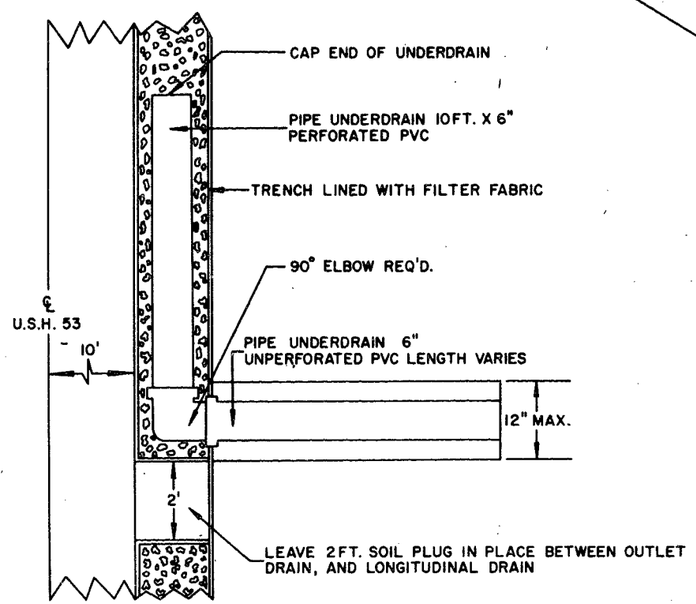

LONGITUDINAL AND LATERAL DRAIN PLAN VIEW

STA. 123+65 RT.
STA. 126+00 – 154+00RT. 200 FT. SPACING
STA. 127+00 – 141+00, 151+00 – 155+00 LT. 200FT. SPACING
STA. 141+00 – 151+00 LT. 100 FT. SPACING
STA 123+00 - 126+00 RT. 200' SPACING
STA 123+00 - 127+00 LT 200' SPACING
STA 104+99 - 110+51 RT 200' SPACING

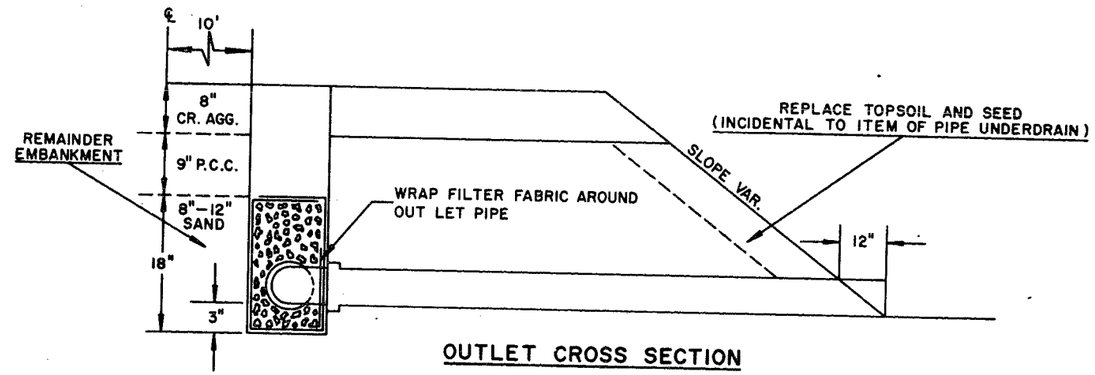

OUTLET CROSS SECTION

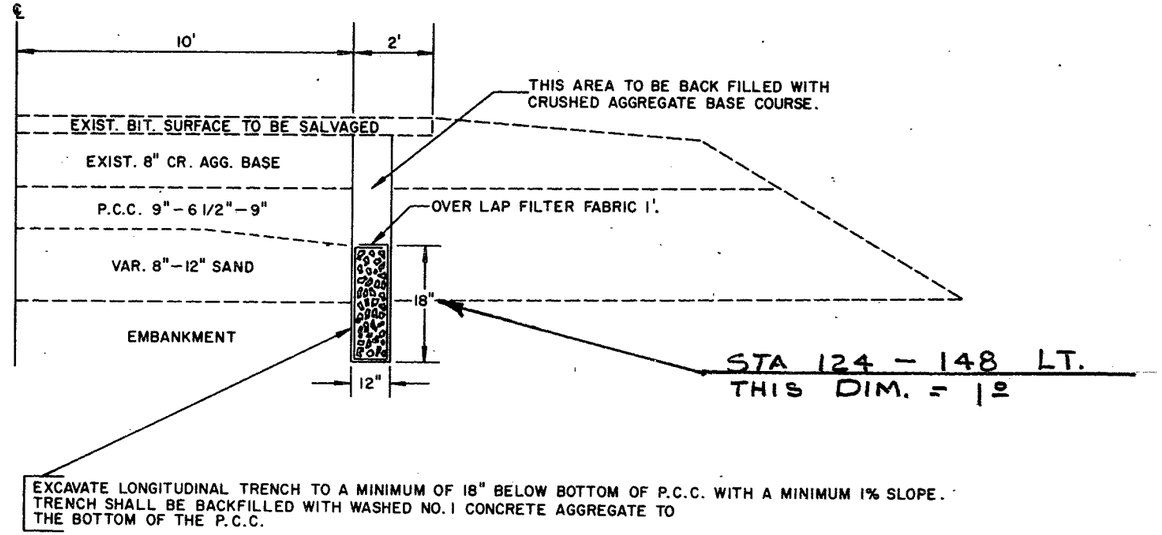

LONGITUDINAL DRAIN CROSS SECTION

STA. 127+00 — STA. 157+00 LT.
STA. 126+00 — STA. 156+00 RT.
STA 123+00 - STA 127+00 LT.
STA 123+00 - STA 126+00 RT.
STA 104+99 - STA 110+51 RT.

E S T I M A T E O F Q U A N T I T I E S

DATE 02/08/82

PROJECT ID: 1633-06-71
TREMPEALEAU COUNTY
GALESVILLE - BLAIR ROAD
FRENCHVILLE - BLAIR
U.S.H. 53

ITEM	ITEM DESCRIPTION	UNIT	TOTAL	1633-06-71 QUANTITY
20301	REMOVING OLD CULVERT, STATION 6+75	L.S.	1.00	1.00
20401	REMOVING PAVEMENT	S.Y.	200.00	200.00
20411	REMOVING GUARDRAIL	L.F.	2,855.00	2,855.00
21301	FINISHING ROADWAY	L.S.	1.00	1.00
30404	CRUSHED AGGREGATE BASE COURSE	TON	15,700.00	15,700.00
40501	BITUMINOUS MATERIAL FOR PLANT MIXES	TON	2,530.00	2,530.00
52005	CULVERT PIPE, CLASS III, 24-INCH	L.F.	140.00	140.00
52063	APRON ENDWALLS FOR CULVERT PIPE, 24-INCH	EACH	4.00	4.00
52138	CORRUGATED STEEL PIPE ARCH, 28X20-INCH	L.F.	64.00	64.00
52164	STEEL APRON ENDWALLS FOR PIPE ARCH, 28X20-INCH	EACH	2.00	2.00
60170	CONCRETE CURB AND GUTTER, 36-INCH, TYPE D	L.F.	149.00	149.00
61201	PIPE UNDERDRAIN, 6-INCH	L.F.	380.00	380.00
61211	PIPE UNDERDRAIN, UNPERFORATED, 6-INCH	L.F.	927.00	927.00
61406	ANCHORAGES FOR STEEL PLATE BEAM GUARD	EACH	23.00	23.00
61408	STEEL PLATE BEAM GUARD, CLASS A	L.F.	4,710.00	4,710.00
61421	MARKER POSTS	EACH	31.00	31.00
61801	MAINTENANCE AND REPAIR OF HAUL ROADS	L.S.	1.00	1.00
61910	MOBILIZATION	L.S.	1.00	1.00
63301	DELINEATOR POSTS	EACH	20.00	20.00
63305	DELINEATORS	EACH	98.00	98.00
64202	FIELD OFFICE, TYPE B	L.S.	1.00	1.00
64210	FIELD LABORATORY	L.S.	1.00	1.00
64301	TRAFFIC CONTROL	L.S.	1.00	1.00
64401	PAVEMENT MARKING, HOT PAINT	L.F.	49,450.00	49,450.00
64484	TEMPORARY PAVEMENT MARKING	L.F.	1,800.00	1,800.00

SHEET 3

DATE 02/16/82

ITEM	ITEM DESCRIPTION	UNIT	TOTAL	1633-06-71 QUANTITY	
90001	REMOVING MARKER POSTS	EACH	49.00	49.00	
90002	PAVEMENT MARKING, EPOXY	L.F.	84,100.00	84,100.00	
90003	BASE PATCHING, SPECIAL	C.Y.	134.00	134.00	
90004	TRENCH FOR AGGREGATE FILLED UNDERDRAIN	L.F.	5,940.00	5,940.00	
90005	AGGREGATE FOR UNDERDRAIN	TON	650.00	650.00	
90006	GRADING AND SHAPING INTERSECTION, C.T.H. "T"	L.S.	1.00	1.00	
90007	BLADING AND SHAPING SHOULDERS	L.S.	1.00	1.00	
90008	GRADING AND SHAPING INTERSECTION, C.T.H. "C"	L.S.	1.00	1.00	
90009	GRADING AND SHAPING INTERSECTION, C.T.H. "I" (WEST)	L.S.	1.00	1.00	
90051	BREAKING CONCRETE PAVEMENT	S.Y.	96,750.00	96,750.00	
90063	ANCHORAGES FOR STEEL PLATE BEAM GUARD, TYPE 1	EACH	1.00	1.00	
90090	SALVAGED BITUMINOUS PAVEMENT	TON	28,200.00	28,200.00	
90094	RECYCLED BITUMINOUS SURFACE	TON	56,200.00	56,200.00	54,291 USED IN FIELD
90098	MINORITY BUSINESS ENTERPRISE DEVELOPMENT	L.S.	1.00	1.00	
90099	ON THE JOB TRAINING	HRS.	250.00	250.00	

SHEET 3.1
R-1/2/16/82

STATE PROJECT NUMBER	SHEET NO.
1633-06-71	3A

DETAIL SUMMARY OF MISC QUANITIES

RECYCLED BITUMINOUS SURFACE

STATION	STATION	LOCATION	DEPTH	TONS	BIT. MAT'L. PLANT MIXES TONS	REMARKS
FRENCHVILLE INTERSECTION			3"	230		C.T.H. "T" INT. @ FRENCHVILLE
330+17.8	331+00.8 BK				2530	PROJECT QUANTITY
0+00 AH	340+23BK	MAINLINE	5-1/2"	43,300		30 FT. WIDTH
386+03 AH	307+00					
WEDGING		MAINLINE	VAR.	6,000		
173+00	195+00	N.B. CLIMB. LANE (RT.)	5-1/2"	590		
185+00	202+00	S.B. CLIMB. LANE (LT.)	5-1/2"	460		
4+00	14+00	PASSING LANE LT.	5-1/2"	340		C.T.H. "C" INTERSECTION
376+76	362+82	" "	5-1/2"	340		S.T.H. 95 INTERSECTION
15+41	17+00	5' PAVED SHLDR. LT.	3"	15		SEE DETAIL DRAWING
15+53	17+12	" " RT.	3"	15		"
18+17	19+46	5' PAVED SHLDR. LT.	3"	15		"
18+30	19+59	5' PAVED SHLDR. RT.	3"	15		"
65+00	67+51	5' PAVED SHLDR. LT.	3"	25		"
65+29	67+80	5' PAVED SHLDR. RT.	3"	25		"
88+41	90+00	5' PAVED SHLDR. LT. & RT.	3"	25		"
166+00	178+60	5' PAVED SHLDR. LT.	3"	120		"
174+50	178+60	3' PAVED SHLDR. RT.	3"	40		"
192+30	203+45	5' PAVED SHLDR. RT.	3"	100		"
196+78	209+00	3'-5' PAVED SHLDR. LT.	3"	115		"
210+58	215+18	5' PAVED SHLDR. RT.	3"	40		"
351+00	356+68	5' PAVED SHLDR. LT.	3"	50		"
9"Y"+10	6"Y"+99 BK	S.T.H. 95	3"	330		RESTORE INTERSECTION
4"YY"+09 AH	7"YY"+70	INTERSECTION				"
0"Z"+00	11"Z"+53.3	"Z" LINE	3"	580		
10"C"+62	14"C"+00		3"	190		C.T.H. "C" INTERSECTION
6+60	9+75	10' PAVED SHLDR. RT.	5-1/2"	115		
6+12		RT.	3"	80		LUND COULEE RD. *
42+70		LT.		30		TWINDLE RD. *
98+50		RT.	3"	60		BEAR CR. RD. *
104+10		LT.	3"	40		LARSON RD. *
190+50		LT.	3"	40		SKORSTAD RD. *
216+65		RT.	3"	40		LONE STAR RD. *
284+70		RT.	3"	35		C.T.H. "I" EAST *
294+00		LT.	3"	85		C.T.H. "I" WEST *
315+25		LT.	3"	20		TOWN ROAD *
246+34		LT.	2"	20		PRIVATE ENTRANCE **
326+00		LT.	2"	10		" **
UNDISTRIBUTED				2665		

* TYPE "C" INTERSECTION
** RESTORE

DELINEATOR POSTS, MARKER POSTS AND DELINEATORS

STA.	STA.	LOCATION	DELINEATOR POSTS EACH	MARKER POSTS EACH	SPACING FEET	DELINEATORS	REMARKS
6+50	8+50	RT.		4	70	8	
8+00		50' RT.		4	EQUAL DIST.	4	OLD C.T.H. "C"
12+00	16+00	RT.		5	100	10	
217+00	220+00	RT.	7		50	14	
267+50	271+50	RT.	5		100	10	
294+00		LT.		5	20	10	C.T.H. "I" WEST
378+00	371+00	RT.	8		100	16	
4"YY"+09	AH-USH 53	RT.		9	50	18	
5"Z"+00	TO RADIUS @ USH 53	RT.		4	50	8	

CRUSHED AGGREGATE BASE COURSE

STATION	STATION	LOCATION	TONS	REMARKS
FRENCHVILLE INTERSECTION		LT.	75	C.T.H. "T"
330+17.8	331+00.8 BK	SHLDRS. LT. & RT.	9280	
0+00 AH	340+23 BK			
386+03 AH	308+00	" "	2220	
6+12		RT.	5	LUND COULEE LA.
10+50		RT.	480	C.T.H. "C" INT.
42+70		LT.	5	TWINDLE RD.
98+50		RT.	5	BEAR CREEK RD.
104+10		LT.	10	LARSON COULEE RD.
190+50		LT.	10	SKORSTAD RD.
216+65		RT.	10	LONE STAR RD.
284+70		LT.	10	TOWN ROAD
284+70		RT.	10	C.T.H. "I"
294+00		LT.	10	C.T.H. "I"
315+25		LT.	5	TOWN ROAD
0"Z"+00	10"Z"+00	SHLDRS. LT. & RT.	60	
9"Y"+80	6"Y"+99 BK	" "	25	S.T.H. 95
4"YY"+09 AH	7"YY"+50	" "	25	S.T.H. 95
PROJECT			2000*	
UNDISTRIBUTED			1455	

* USE AS DIRECTED BY THE ENGINEER FOR DEFICIENT SUBGRADE.

STATE PROJECT NUMBER	SHEET NO.
1633-06-71	3B

DETAIL SUMMARY OF MISC. QUANITIES

BREAKING CONCRETE PAVEMENT

STA.	STA.	LOC.	WIDTH	S.Y.	REMARKS
330+17.8	331+00.8BK.	℄	24'	83,950	
0+00AH.	16+15				
19+15	65+18				
67+62	88+15				
90+39	120+00				
162+00	244+00				
266+00	340+00				
340+00	307+00	℄	20'	7,300	
175+00	195+00	RT.		2,540	NORTHBOUND CLIMBING LANE
185+00	202+00	LT.		1,870	SOUTHBOUND CLIMBING LANE
373+26	362+82	LT.		1,090	PASSING LANE

REMOVING MARKER POSTS

STA.	STA.	LOC.	EACH
173+00	176+75	LT.	15
217+00	220+00	RT.	7
267+50	271+50	RT.	5
378+00	371+00	RT.	9
"Z" LINE		LT.	4
"YY" LINE		RT.	9

REMOVING OLD CULVERT STATION 6+75

STATION	LOCATION	EACH
6+75	C/L	1

REMOVING GUARDRAIL

STA.	STA.	LOC.	L.F.
16+13	17+15	LT.	102
16+13	17+15	RT.	102
18+30	19+32	LT.	102
18+17	19+32	RT.	114
65+00	67+51	LT.	251
65+29	67+81	RT.	252
175+00	178+60	RT.	360
195+67	200+32	RT.	465
196+78	204+25	LT.	747
211+58	215+18	RT.	360

STEEL PLATE BEAM GUARD, CL. "A" & ANCHORAGES

STA.	STA.	LOC.	L.F.	ANCHORAGES	REMARKS
15+41	17+00	LT.	129	1	B-61-47
15+53	17+12	RT.	129	1	APPROACHES
18+17	19+46	LT.	129	1	"
18+30	19+59	RT.	129	1	"
65+00	67+51	LT.	251	2	
65+29	67+80	RT.	251	2	
88+41	90+00	LT.& RT.	282	4	
171+50	178+60	LT.	710	2	
195+17	200+32	RT.	515	2	
196+78	204+25	LT.	747	2	
210+58	215+18	RT.	460	2	
174+50	178+60	RT.	410	2	
349+00	343+32	LT.	568	1	WRAP AROUND P.E. (TYPE 1 ANCHORAGE REQ'D.)

SALVAGED BITUMINOUS PAVEMENT

STA.	STA.	LOC.	TONS	REMARKS
FRENCHVILLE		LT.	200	C.T.H. "T"

STA.	STA.	LOC.	TONS	REMARKS
330+17.8	331+00.8 BK			
0+00 AH	340+23 BK	C/L	28,000	THIS INCLUDES ALL SIDE ROAD INTERSECTIONS, PASSING LANES, AND CLIMBING LANES
386+03 AH	340+00			

CULVERT PIPES

STATION	LOC.	DIA. (IN.)	LENGTH (L.F.)	TYPE	CLASS	THICKNESS IN. ALUM.	THICKNESS IN. STEEL	APRON ENDWALLS
6+75	C/L	28 x 20	64	CORR. ST. PIPE ARCH			0.064	2
12+10	C/L	24	64	C.P.	III	0.075	0.064	2
11"C"+05	C/L	24	76	C.P.	III	0.075	0.064	2

MOUNTABLE CONCRETE CURB & GUTTER, 36"

LOCATION	STATION	LENGTH	TYPE
C.T.H. "C"	11"C" LT.	59	D
C.T.H. "C"	11"C" RT.	90	D

PIPE UNDERDRAINS (OUTLETS)

STATION	STATION	LOC.	PERFORATED L.F.	UNPERFORATED L.F.	SPACING FT.	NO. OF OUTLETS
123+65		RT.	10	23		1
127+00	141+00	LT.	90	208	200	9
142+00	151+00	LT.	100	200	100	10
153+00	155+00	LT.	20	44	200	2
126+00	154+00	RT.	160	452	200	16

STATE PROJECT NUMBER	SHEET NO.
1633-06-71	5

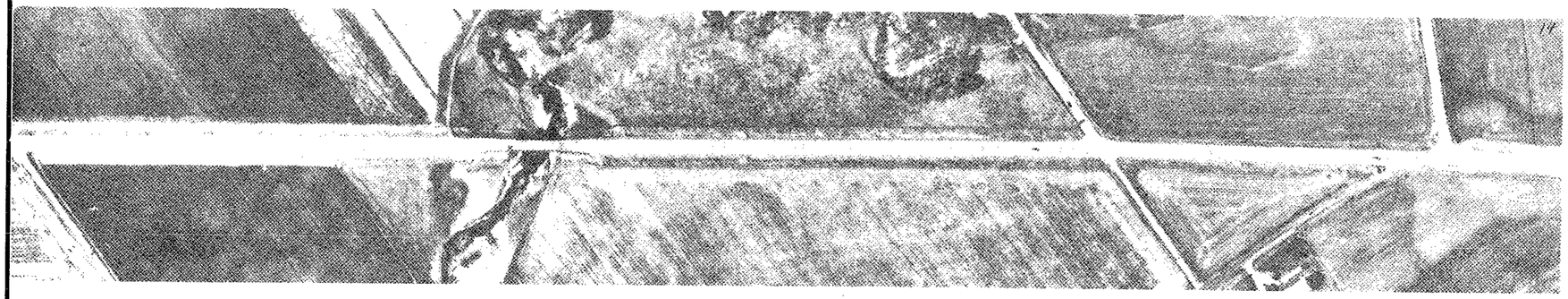

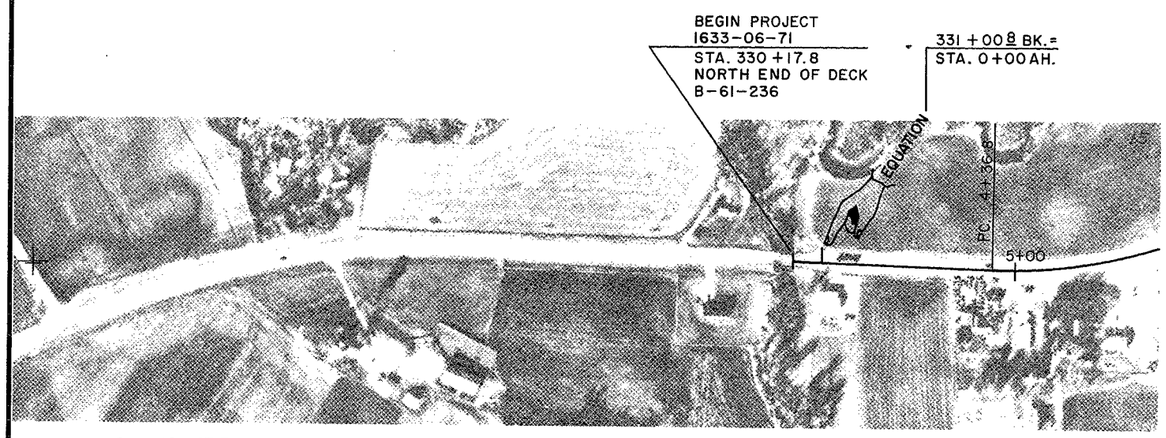

P.I. = 10+67.7
Δ = 57°-40'
D = 5°-00'
T = 630.9'
L = 1153.3'
S.E. = 0.05'/FT. (EXISTING P.C.C.)
= 0.059'/FT. (PROPOSED)
RO. = 165'

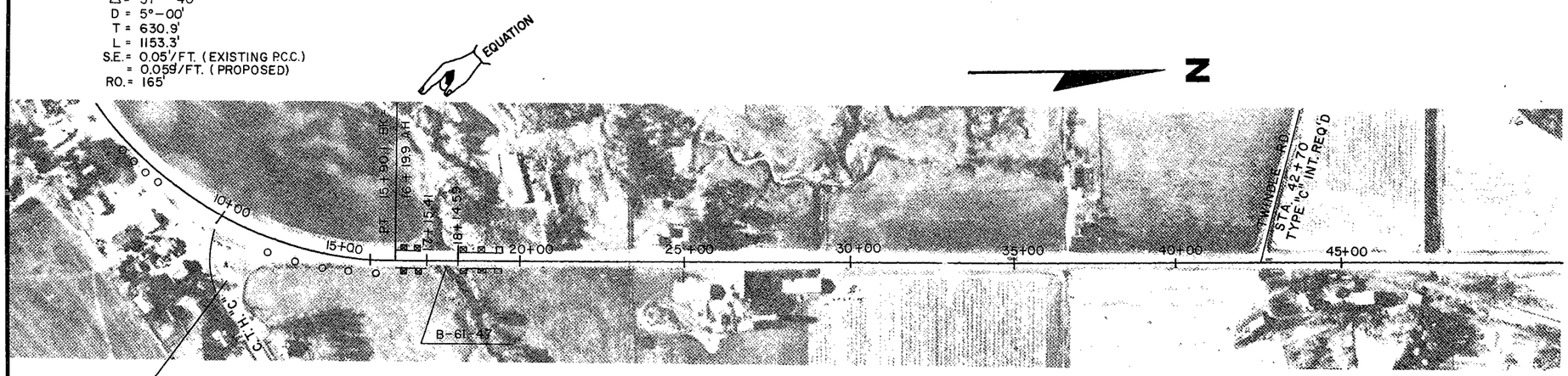

MARKER POSTS

⊗ ⊗ ⊗	REPLACED
○ ○ ○	ADDED
● ● ●	REMOVED

STEEL PLATE BEAM GUARD CLASS 'A'

⊠ ⊠ ⊠	REPLACED
□ □ □	ADDED

SEE DETAIL FOR RELOCATED C.T.H."C"
AND NEW PASSING LANE REQUIRED

EXCEPTION TO NET ℄ LENGTH, B-61-47
STA. 17+15.41 TO STA. 18+14.59

STATE PROJECT NUMBER	SHEET NO.
1633-06-71	5.1

P.I. = 54+75.1
Δ = 31°-40'
D = 4°-00'
T = 406.3'
S.E. = 0.04 '/FT.(EXISTING P.C.C.)
= 0.055'/FT. (PROPOSED)
RO. = 165'

EXCEPTION TO NET ℄ LENGTH, B-61-46
STA. 66+17.48 TO STA. 66+62.52

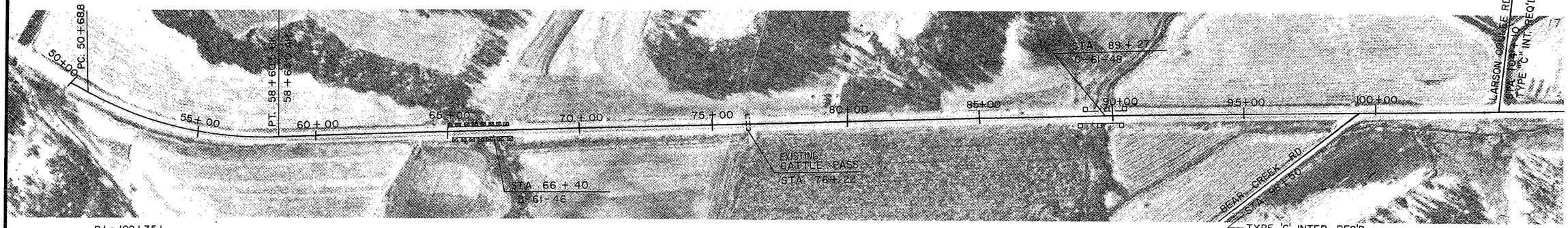

P.I. = 109+35.1
Δ = 31°-15'
D = 4°-00'
T = 400.6'
L = 781.3'
S.E. = 0.04 '/FT.(EXISTING P.C.C.)
= 0.055'/FT. (PROPOSED)
RO. = 165'

P.I. = 133+00
Δ = 2°-30'
D. = 0°-30'
T = 250.0'
L = 500.0'
SE. = RC (EXISTING BIT. PAV'T)
= RC (PROPOSED)
RO. = 165'

P.I. = 146+00
Δ = 8°-30'
D = 1°-00'
T = 425.8'
L = 850.0'
S.E. = 0.018'/FT.(EXISTING BIT. PAV'T)
= 0.025'/FT. (PROPOSED)
RO. = 165'

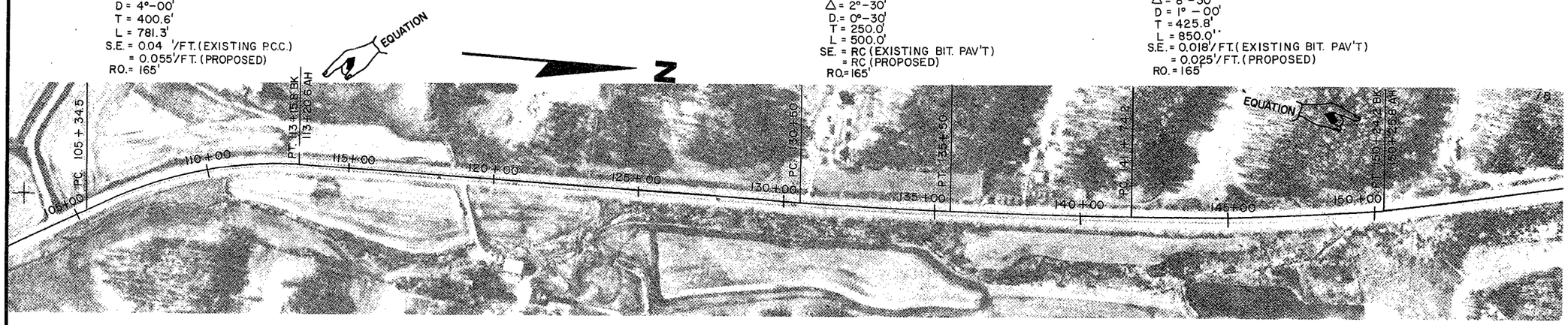

P.I. = 166+34.8
Δ = 23°-16'
D = 3°-00'
T = 393.2
L = 775.6'
S.E. = 0.05'/FT. (EXISTING P.C.C.)
= 0.048'/FT. (PROPOSED)
RO. = 165'

P.I. = 184+59.2
Δ = 77°-40'
D = 5°-00'
T = 922.5
L = 1553.3
S.E. = 0.05'/FT. (EXISTING P.C.C.)
= 0.059'/FT. (PROPOSED)
RO. = 165'

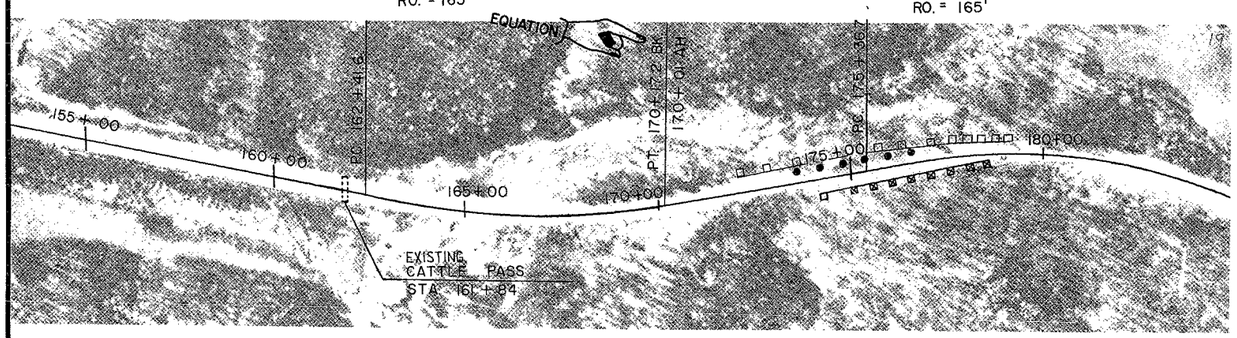

MARKER POSTS

⊗ ⊗ ⊗	REPLACED
○ ○ ○	ADDED
● ● ●	REMOVED

STEEL PLATE BEAM GUARD CLASS 'A'

⊠ ⊠ ⊠	REPLACED
□ □ □	ADDED

STATE PROJECT NUMBER	SHEET NO.
1633-06-71	5.2

P.I. = 214 + 03.5
Δ = 52°-30'
D = 4°-30'
T = 627.9'
L = 1166.7'
S.E. = 0.045'/FT. (EXISTING P.C.C.)
= 0.057'/FT. (PROPOSED)
R.O. = 165'

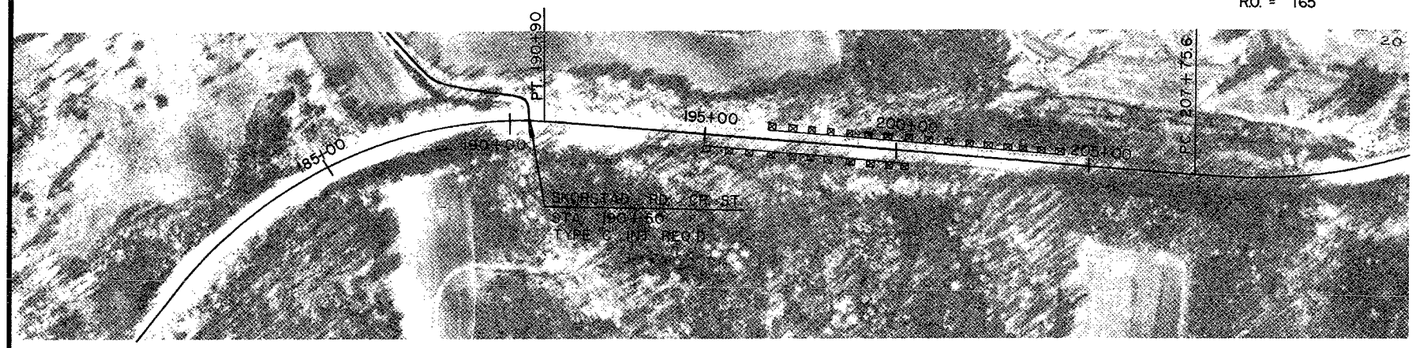

P.I. = 228 + 96.3
Δ = 18°-30'
D = 3°-00'
T = 311.1'
L = 616.7'
S.E. = 0.03'/FT. (EXISTING P.C.C.)
= 0.048'/FT. (PROPOSED)
R.O. = 165'

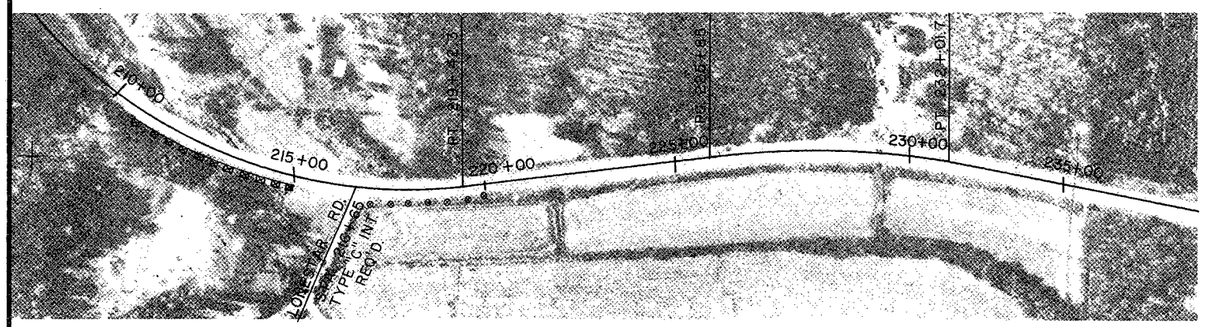

P.I. = 247 + 68.6
Δ = 6°-50'
D = 1°-30'
T = 228.1'
L = 455.6'
S.E. = 0.027'/FT. (EXISTING)
= 0.033'/FT. (PROPOSED)
R.O. = 165'

P.I. = 272 + 45
Δ = 14° - 20'
D = 1°-30'
T = 480.3'
L = 955.5'
S.E. = 0.015'/FT. (EXISTING)
= 0.033'/FT. (PROPOSED)
R.O. = 165'

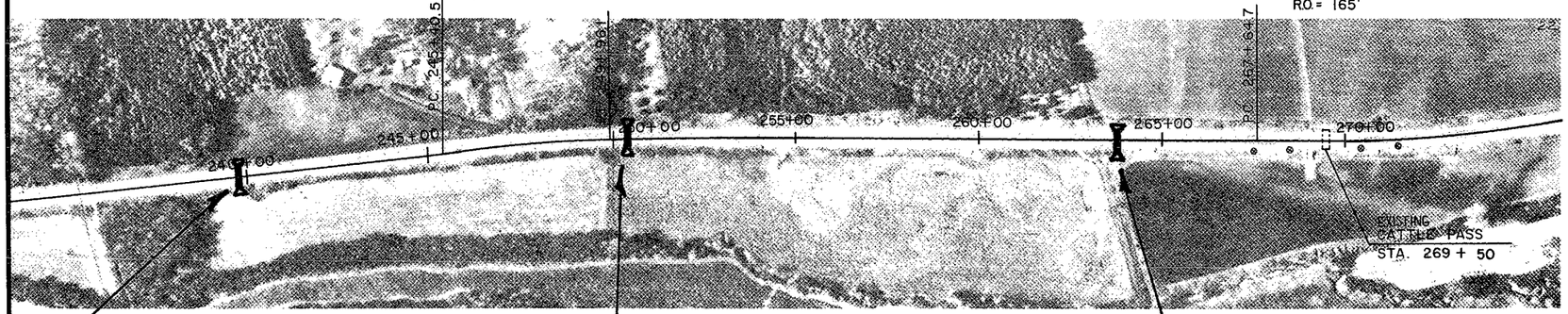

STA. 239+80 REPLACED EXIST. C. PIPE WITH 36" x 60' C.M.C.P. AND 2 APRON ENDWALLS

STA 250+45 REPLACED EXIST. C. PIPE WITH 36" x 68' C.M.C.P. AND 2 APRON ENDWALLS

STA. 263+80 REPLACED EXIST. C. PIPE WITH 24" x 50' C.M.C.P. AND 2 APRON ENDWALLS

MARKER POSTS
- REPLACED
- ADDED
- REMOVED

STEEL PLATE BEAM GUARD CLASS 'A'
- REPLACED
- ADDED

STATE PROJECT NUMBER	SHEET NO.
1633-06-71	5.3

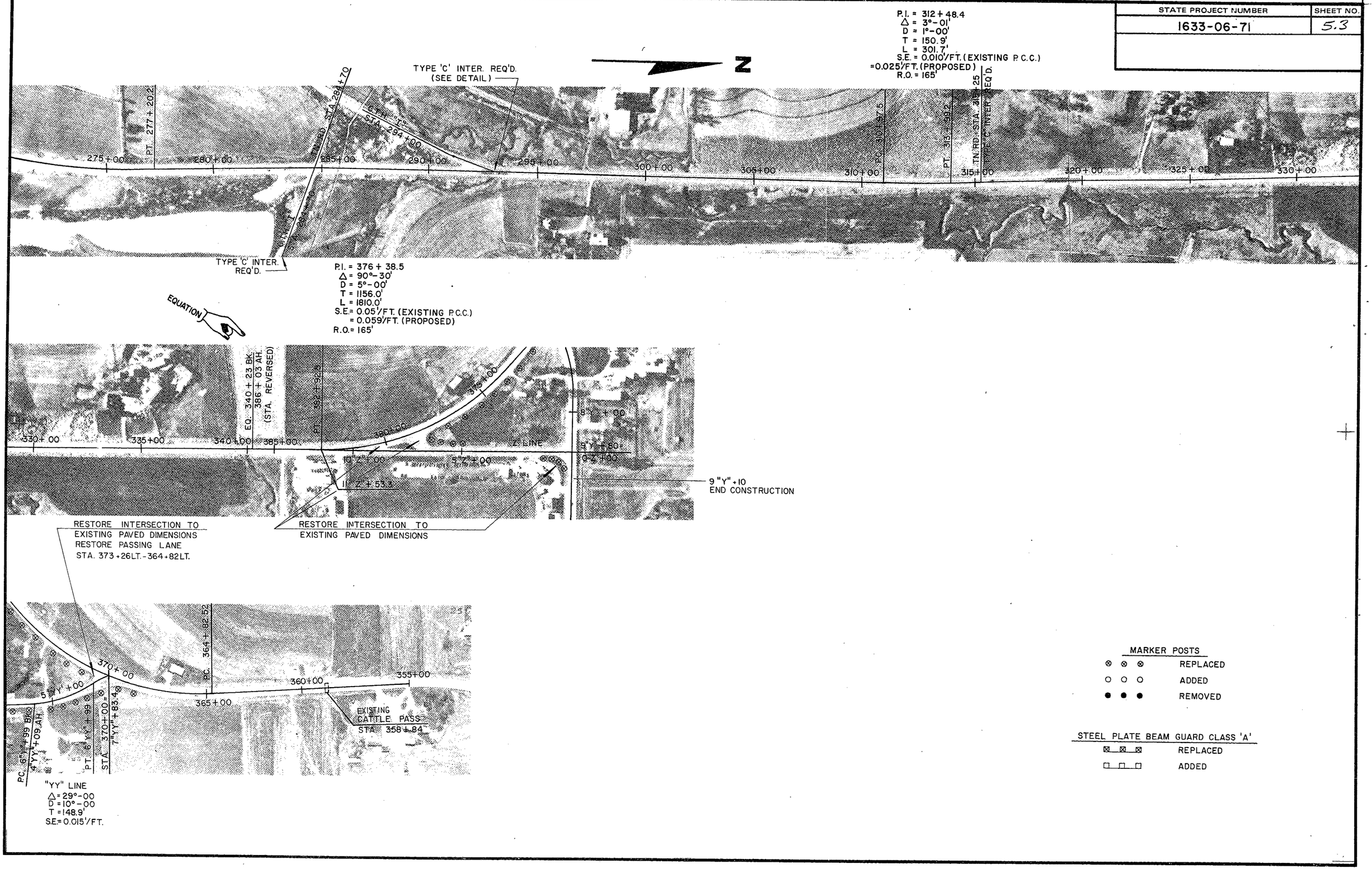

STATE PROJECT NUMBER	SHEET NO.
1633-06-71	5.4

PI. = 350 + 42.0
Δ = 40°-25'
D = 5°-00'
T = 421.8'
L = 808.3'
S.E. = 0.05'/FT. (EXISTING P.C.C.)
0.059'/FT. (PROPOSED)
R.O. = 165'

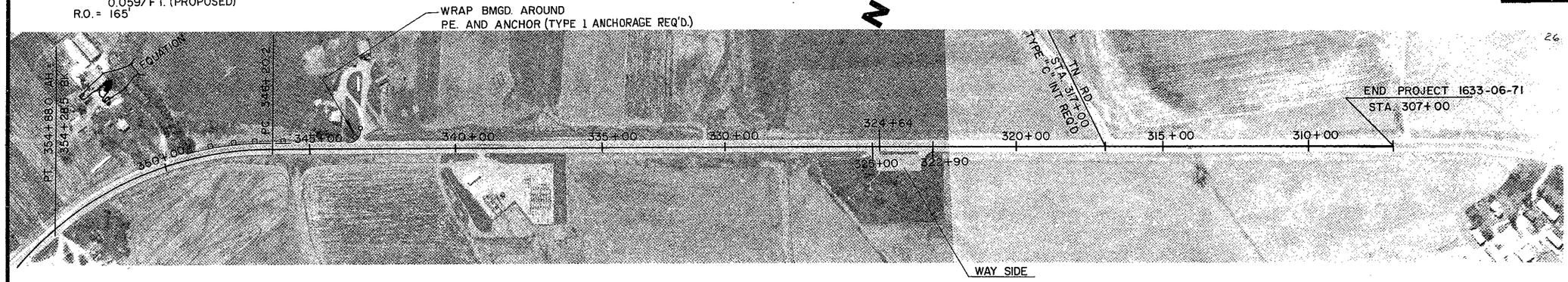

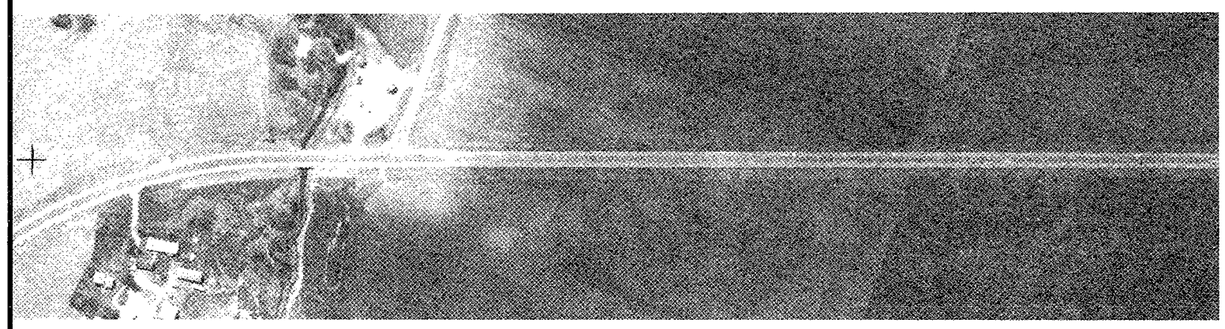

MARKER POSTS

⊗ ⊗ ⊗	REPLACED
○ ○ ○	ADDED
● ● ●	REMOVED

STEEL PLATE BEAM GUARD CLASS 'A'

⊠ ⊠ ⊠	REPLACED
□ □ □	ADDED

Cat. No. 2130 – D142

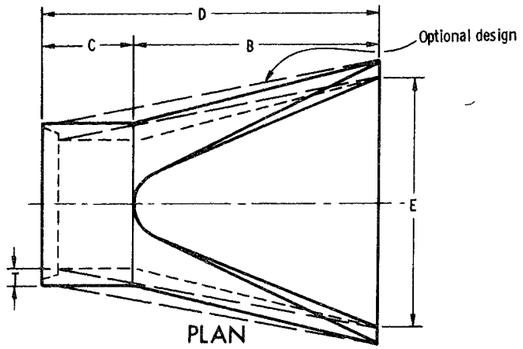

PLAN

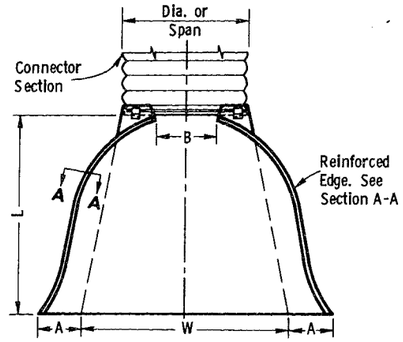

PLAN

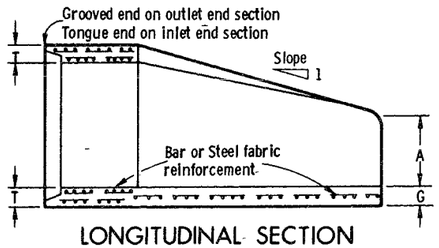

LONGITUDINAL SECTION

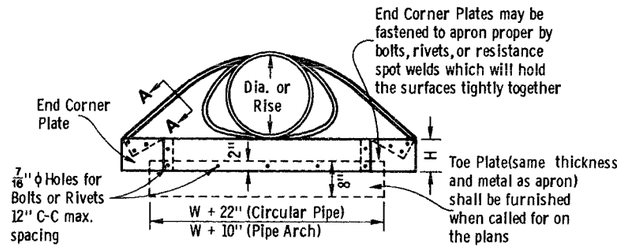

END VIEW

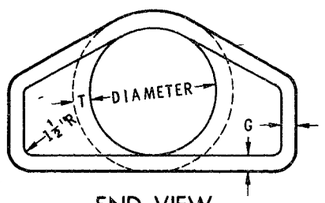

END VIEW

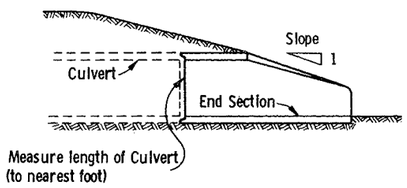

SIDE ELEVATION

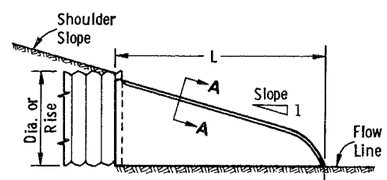

SIDE ELEVATION

DIA.	APPROX. WEIGHT/ SECTION	T	A	B	C	D	E	G	APPROX. SLOPE
12"	530	2"	4"	24"	48 7/8"	72 7/8"	24"	2"	3 to 1
15"	740	2 1/4"	6"	27"	46"	73"	30"	2 1/4"	↑
18"	990	2 1/2"	9"	27"	46"	73"	36"	2 1/2"	
21"	1,280	2 3/4"	9"	36"	37 1/2"	73 1/2"	42"	2 3/4"	
24"	1,520	3"	9 1/2"	43 1/2"	30"	73 1/2"	48"	3"	
27"	1,930	3 1/4"	10 1/2"	49 1/2"	24"	73 1/2"	54"	3 1/4"	
30"	2,190	3 1/2"	12"	54"	19 3/4"	73 3/4"	60"	3 1/2"	
36"	4,100	4"	15"	63"	34 3/4"	97 3/4"	72"	4"	
42"	5,380	4 1/2"	21"	63"	35"	98"	78"	4 1/2"	↓
48"	6,550	5"	24"	72"	26"	98"	84"	5"	3 to 1
54"	8,040	5 1/2"	27"	65"	**33 1/4" - *35"	**98 1/4" - *100"	90"	5"	2 2/5 to 1
60"	8,730	6"	** 30" - * 35"	60"	39"	99"	96"	5"	2 to 1
66"	10,630	6 1/2"	** 24" - * 30"	** 72" - * 78"	** 21" - * 27"	↑	102"	5 1/2"	↑
72"	12,520	7"	** 24" - * 36"	78"	21"	↓	108"	6"	↓
78"	14,430	7 1/2"	** 24" - * 36"	78"	21"	99"	114"	6 1/2"	2 to 1
84"	18,160	8"	36"	90 1/2"	21"	111 1/2"	120"	6 1/2"	1 1/2 to 1

** Minimum
* Maximum

REINFORCED CONCRETE APRON ENDWALLS

D PIPE DIAM.	MIN. METAL THICKNESS	MIN. ALUM. THICKNESS	DIMENSIONS A ± 1"	B MAX.	H ± 1"	L ± 1 1/2"	W ± 2"	APPROX. SLOPE
12"	0.064	0.060	6"	6"	6"	21"	24"	2 1/2 to 1
15"	↑	↑	7"	8"	↑	26"	30"	↑
18"		↓	8"	10"		31"	36"	
21"	↓	0.060	9"	12"	↓	36"	42"	
24"	0.064	0.075	10"	13"	6"	41"	48"	
30"	0.079	0.075	12"	16"	8"	51"	60"	
36"	0.079	0.105	14"	19"	9"	60"	72"	↓
42"	0.109	↑	16"	22"	11"	69"	84"	2 1/2 to 1
48"	↑	↓	18"	27"	12"	78"	90"	2 1/4 to 1
54"		0.105	↑	30"	↑	84"	102"	2 to 1
60"		NA		33"		87"	114"	1 3/4 to 1
66"		↑		36"		87"	120"	1 1/2 to 1
72"		↓		39"		87"	126"	1 1/3 to 1
78"	↓		↓	42"		87"	132"	1 1/4 to 1
84"	0.109	NA	18"	45"	12"	87"	138"	1 1/6 to 1

NOTE: All splices to be lap riveted or bolted

METAL OR ALUMINUM APRON ENDWALLS FOR CIRCULAR PIPES

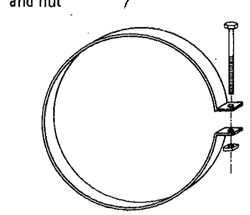

Alternate for Type 1 Connection

END SECTION CONNECTOR STRAP

PIPE — ARCH DIMENSIONS SPAN	RISE	MIN. METAL THICK.	DIMENSIONS A ± 1"	B MAX.	H ± 1"	L ± 1 1/2"	W ± 2"	APPROX. SLOPE
17"	13"	0.064	7"	9"	6"	19"	30"	2 1/2 to 1
21"	15"	↑	7"	10"	↑	23"	36"	↑
24"	18"	↓	8"	12"		28"	42"	
28"	20"	0.064	9"	14"	↓	32"	48"	
35"	24"	0.079	10"	16"	6"	39"	60"	
42"	29"	0.079	12"	18"	8"	46"	75"	
49"	33"	0.109	13"	21"	9"	53"	85"	↓
57"	38"	↑	18"	26"	12"	63"	90"	2 1/2 to 1
64"	43"		18"	30"	12"	70"	102"	2 1/4 to 1
71"	47"		18"	33"	12"	77"	114"	2 1/4 to 1
77"	52"	↓	18"	36"	12"	77"	126"	2 to 1
83"	57"	0.109	18"	39"	12"	77"	138"	2 to 1

NOTE: All splices to be lap riveted or bolted

METAL APRON ENDWALLS FOR PIPE ARCHES

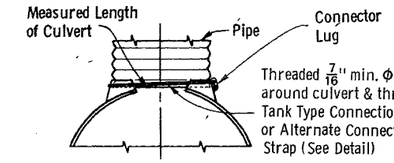

TYPE 1

For 12" thru 24" only (Circular Pipe)

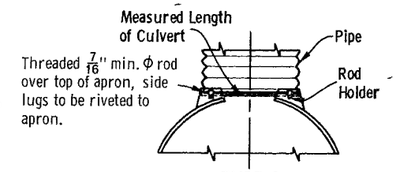

TYPE 2

For 30" and 36" only (Circular Pipe)
For 17" X 13" thru 57" X 38" only (Pipe Arch)

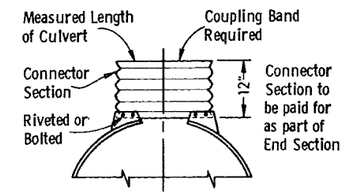

TYPE 3

For 42" thru 84" only (Circular Pipe)
For 64" X 43" & 71" X 47" (Pipe Arch)

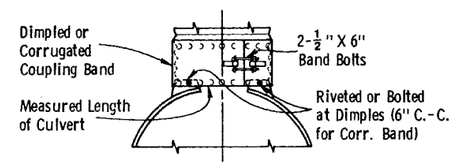

TYPE 5

Alternate for
All sizes Corrugated Circular Pipe and Pipe Arch

NOTE: Dimpled Band fits over Outside of Endwall, and Corr. Band fits Inside Endwall. Dimpled Band may be used with Helically Corrugated Pipe

CONNECTION DETAILS

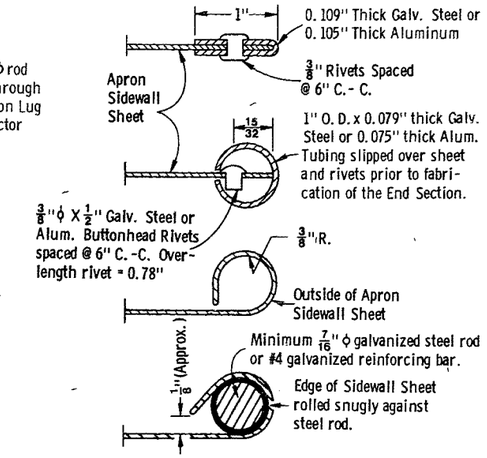

SECTION A-A

GENERAL NOTES

Details of construction, materials, and workmanship not shown on this drawing shall conform to the pertinent requirements of the Standard Specifications and the applicable Special Provisions.

Variations of the dimensions and designs shown hereon will be permitted providing equivilent capacity and structural integrity are attained, and prior approval of the Engineer is obtained.

Concrete culvert endwalls may not be used with galvanized steel or aluminum culvert pipe or vice versa.

Galvanized steel or aluminum endwalls shall normally be installed on culvert pipe of the same metal. The use of galvanized steel endwalls on aluminum pipes is permitted, provided the two metals at the joint interface are kept separated by a suitable insulating material approximately 1/16" thick or greater. Such material would be an asphalt impregnated fabric, a sheet plastic, a rubber gasket or other nondegradable material of substantial strength.

When two or more pipe arches with apron endwalls are to be laid adjacent to each other, they shall be separated by the following amount.

Pipes: Total width of apron endwall less the diameter of pipe plus 6 inches.
Pipe Arches: Total width of apron endwall less the span dimension of the pipe arch plus 6 inches.

CIRCULAR PIPE

For Circumferentially Corrugated Pipe use Endwall Connection Details 1, 2, 3, or 5 as applicable.

For Helically Corrugated Pipe use Endwall Connection Details 1, 2 or 5.

For Helically Corrugated Pipes with two Circumferential Corrugations at each end use Endwall Connection Details 1, 2, or 3

PIPE ARCH

Use Endwall Connection Details 2, 3, or 5 as applicable.

APRON ENDWALLS FOR CULVERT PIPE AND PIPE ARCH

State of Wisconsin
Department of Transportation
Division of Highways

APPROVED 7-14-78 DATE — SUPERVISING DEVELOPMENT ENGINEER
APPROVED 7-17-78 DATE — CHIEF OF FACILITIES DEVELOPMENT
FHWA

S.D.D. 8 F 1-8

S.D.D. 8 F 1-8

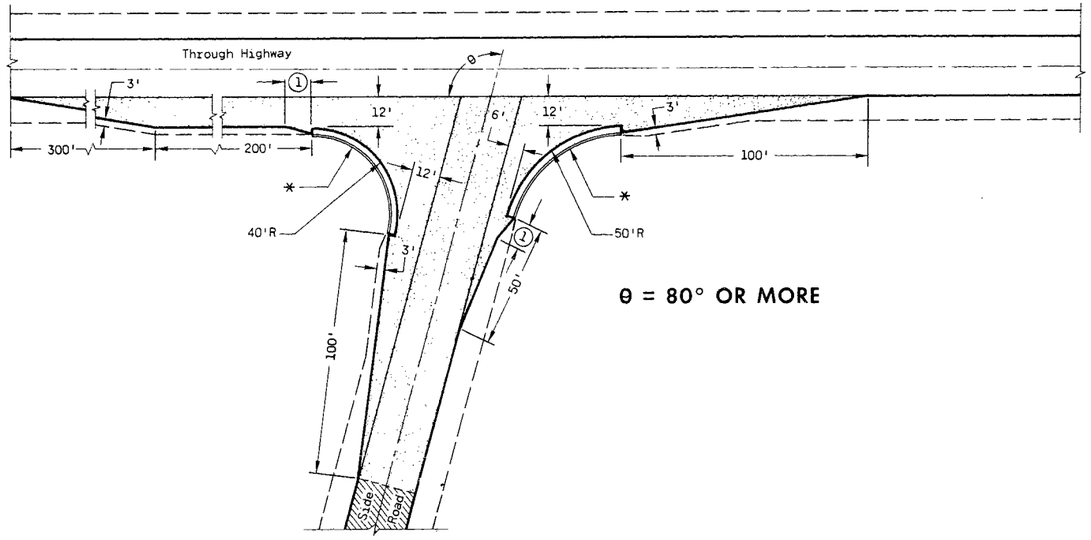

θ = 80° OR MORE

* Concrete Curb & Gutter 36". Taper curb height 0" to 6" in 10'-0" length at ends of curb & gutter sections.

Provide sod or salvaged topsoil & seed to a 3'-0" width in back of curb & gutter sections.

(1) 10' Typical

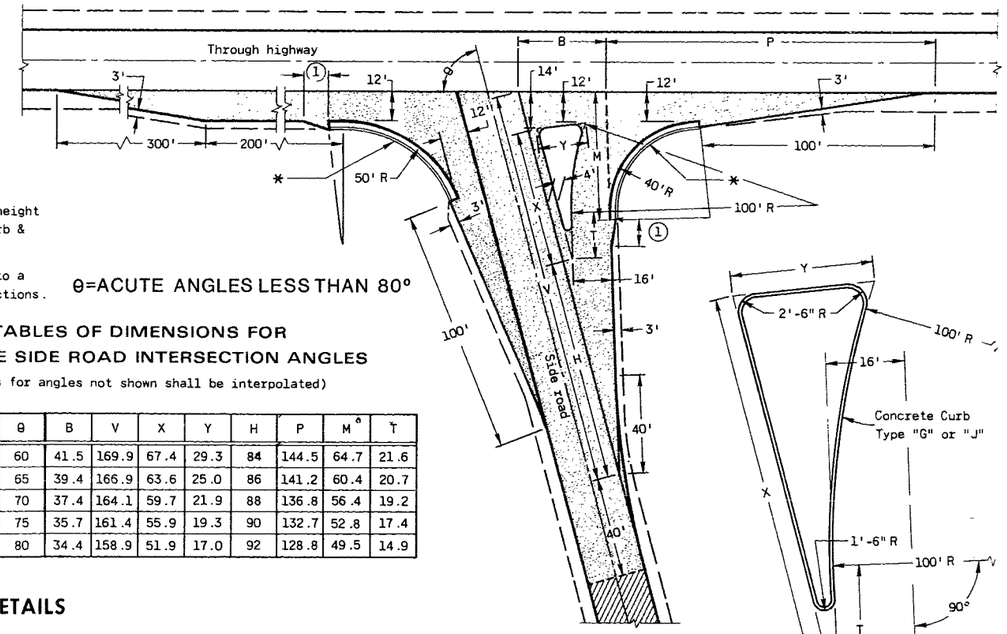

θ=ACUTE ANGLES LESS THAN 80°

TABLES OF DIMENSIONS FOR VARIABLE SIDE ROAD INTERSECTION ANGLES

(Values for angles not shown shall be interpolated)

θ	B	V	X	Y	H	P	M*	T
60	41.5	169.9	67.4	29.3	84	144.5	64.7	21.6
65	39.4	166.9	63.6	25.0	86	141.2	60.4	20.7
70	37.4	164.1	59.7	21.9	88	136.8	56.4	19.2
75	35.7	161.4	55.9	19.3	90	132.7	52.8	17.4
80	34.4	158.9	51.9	17.0	92	128.8	49.5	14.9

TYPE "A" SIDE ROAD INTERSECTION DETAILS

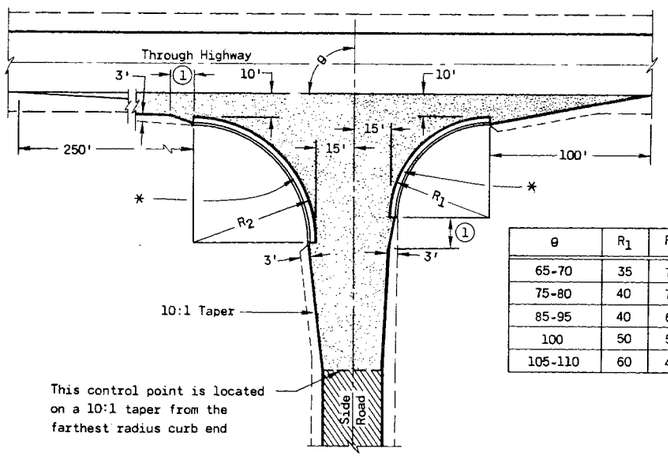

θ	R_1	R_2
65-70	35	70
75-80	40	70
85-95	40	60
100	50	55
105-110	60	45

TYPE "B" SIDE ROAD INTERSECTION DETAILS

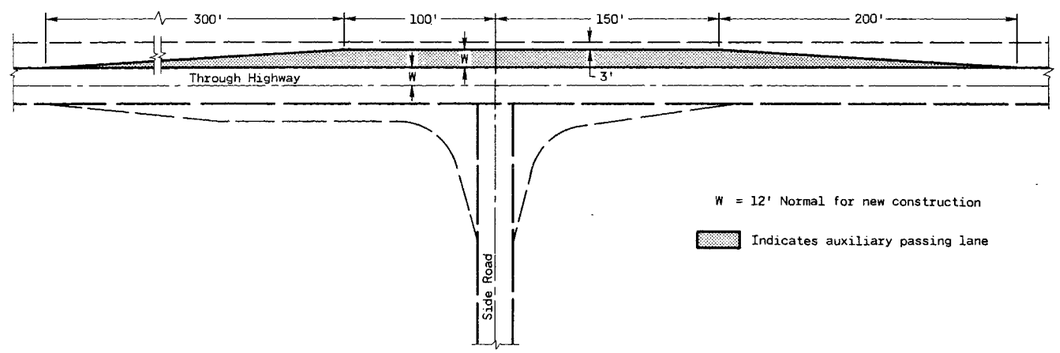

W = 12' Normal for new construction

Indicates auxiliary passing lane

PASSING LANE DETAIL

GENERAL NOTES

Designs may be used interchangeably in combination or separately for any one complete intersection depending upon intersection angle and surfacing of each approach roadway.

SIDE ROAD SURFACING NOTE

If the side road is not presently paved, pavement shall be placed to the limits shown. In the case where the construction limits are beyond the paving limits, crushed aggregate surfacing shall be placed between the paving limits and construction limits.

If the side road is presently paved, new pavement shall be placed to the limits of design as shown and beyond, if necessary, to meet existing pavement.

If the side road is the construction project, the intersection surfacing shall be the same as for the project.

New Pavement

Existing Surface

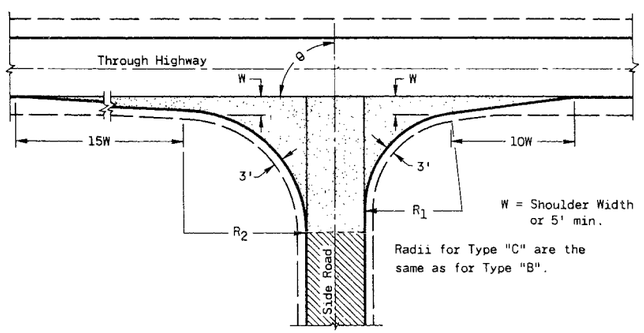

W = Shoulder Width or 5' min.

Radii for Type "C" are the same as for Type "B".

TYPE "C" SIDE ROAD INTERSECTION DETAILS

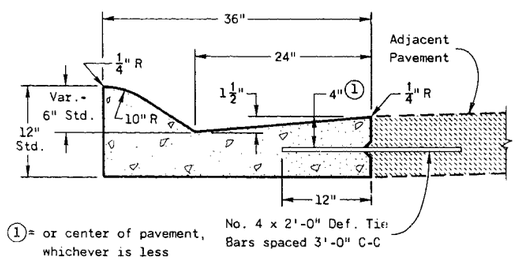

(1) = or center of pavement, whichever is less

TYPE "A" (INCLUDING TIE BARS)

TYPE "D" (EXCLUDING TIE BARS)

CONCRETE CURB & GUTTER 36"

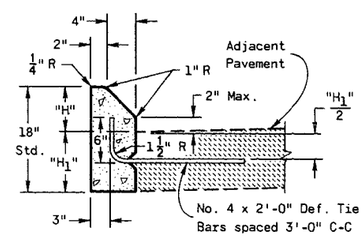

"H" = 6" Max. and 4" Min. and shall be 6" unless otherwise shown on the plans.

"H_1" = Same as adjacent pavement thickness for rigid pavement and 12" for non-rigid pavement (Tie Bars omitted).

TYPE "G" (INCLUDING TIE BARS)

TYPE "J" (EXCLUDING TIE BARS)

CONCRETE CURB

LAYOUT DETAILS FOR AT-GRADE SIDE ROAD INTERSECTIONS

State of Wisconsin
Department of Transportation

APPROVED 12-15-80 DATE — CHIEF DESIGN ENGINEER

FHWA

S.D.D. 9 A 1-5

S.D.D. 9 A 1-5

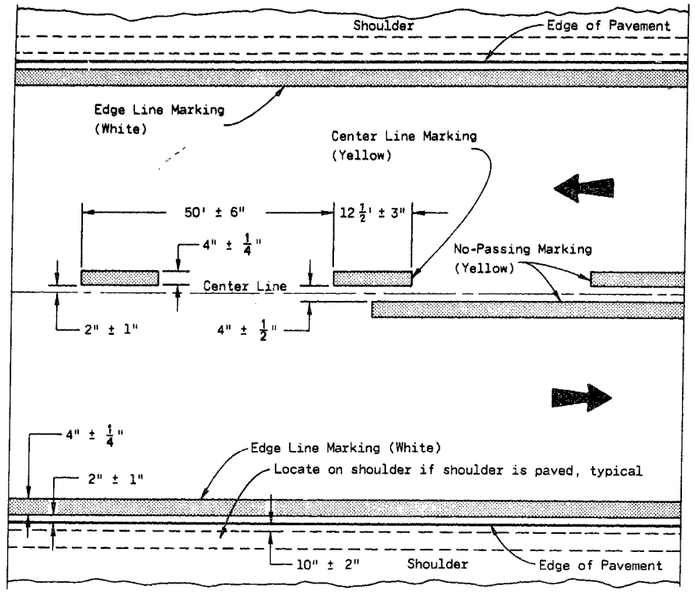

PERMANENT MARKING

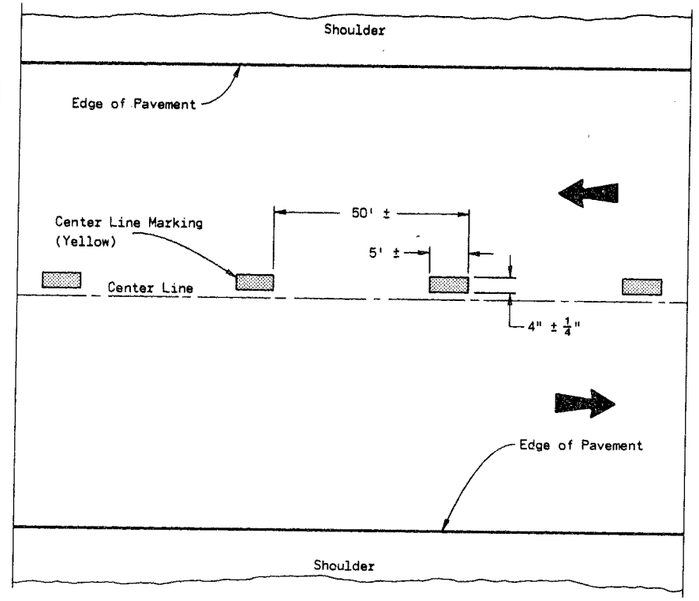

TEMPORARY MARKING

PAVEMENT MARKING - TWO WAY TRAFFIC

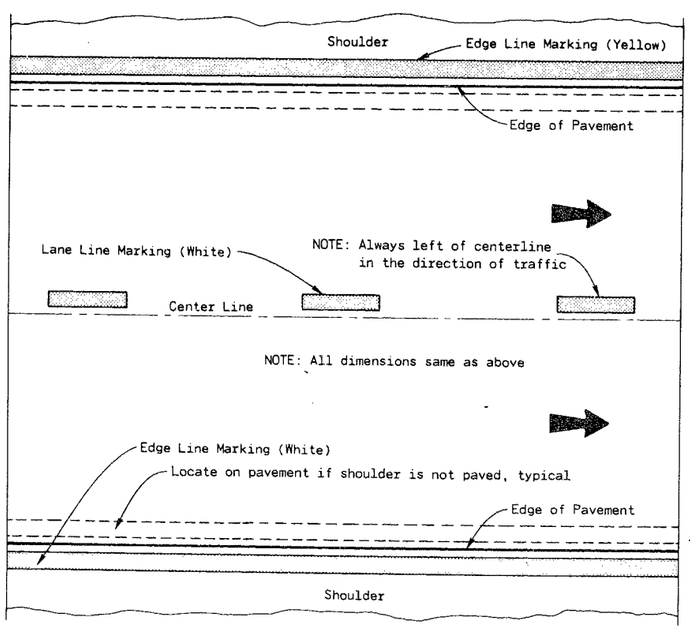

PERMANENT MARKING

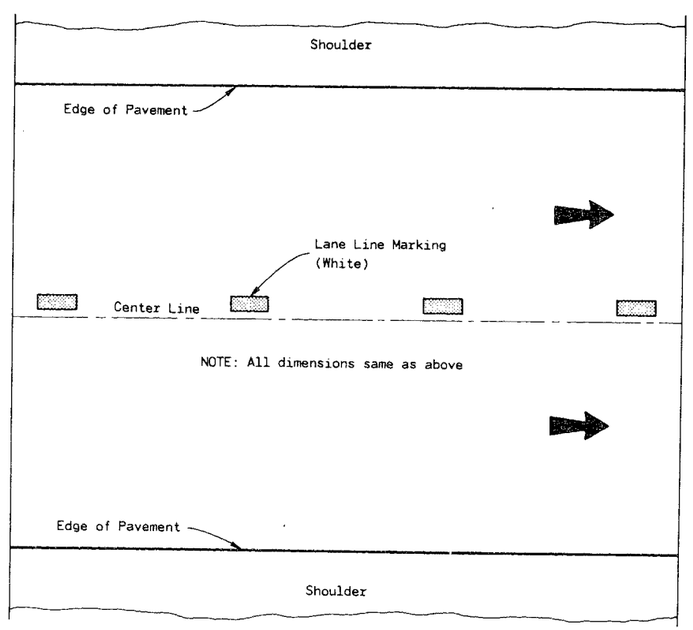

TEMPORARY MARKING

PAVEMENT MARKING - ONE WAY TRAFFIC

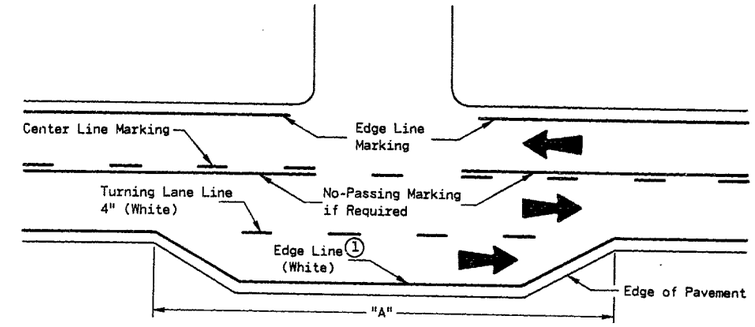

PASSING LANE MARKING

(1) When distance "A" is less than 750 feet, omit edge line and turning lane marking.

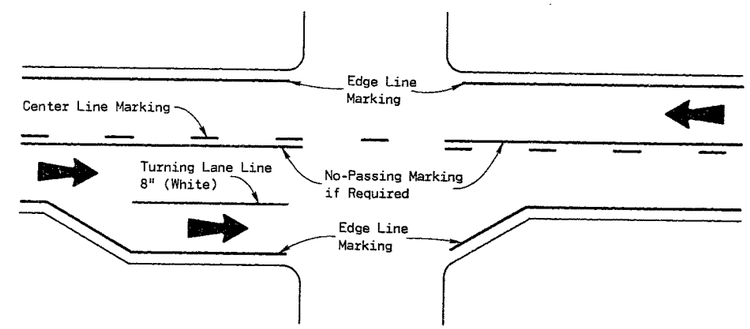

RIGHT TURN LANE MARKING

GENERAL NOTES

Details of construction not shown on this drawing shall conform to Standard Specifications and Special Provisions.

Where pavement marking tape is used, which would underlie the permanent markings, it shall be removed immediately prior to permanent painting. Other temporary markings shall be removed when required by the plans or Special Provisions.

PAVEMENT MARKING

State of Wisconsin
Department of Transportation

APPROVED 2/13/81 DATE — CHIEF DESIGN ENGINEER

FHWA

S.D.D. 13 B 5-2

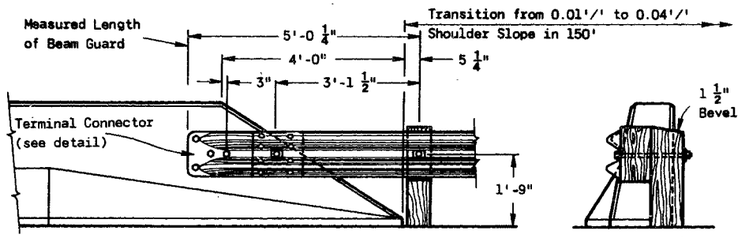

FRONT VIEW END VIEW

SLOPED FACE PARAPET

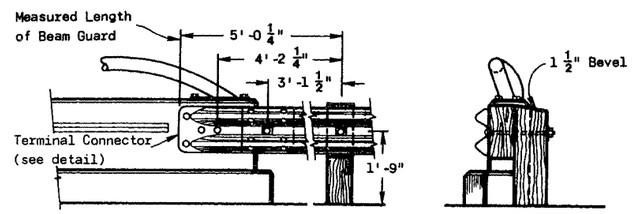

FRONT VIEW END VIEW

VERTICAL FACE PARAPET

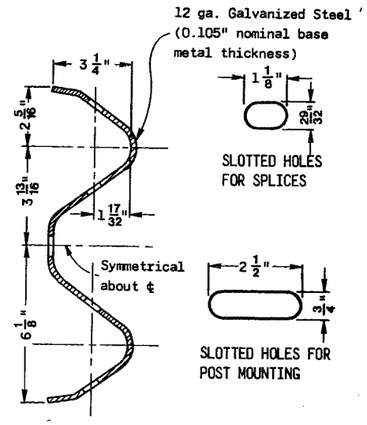

SECTION THRU RAIL ELEMENT

GENERAL NOTES

Details of construction, materials and workmanship not shown on this drawing shall conform to the pertinent requirements of the Standard Specifications and the applicable Special Provisions.

The type of anchorage and the exact location of the beginning and end of each beam guard installation shall be as shown on the plans or as directed by the Engineer.

Shoulder widening to accommodate the anchored end of the beam guard shall be accomplished at a rate of widening not to exceed 5 to 1.

Standard Anchorages - Upon approval of the Engineer, the 6 foot offset may be reduced to nothing where existing conditions will not permit the desirable offset. However, when no offset greater than or equal to 3 feet can be provided, the minimum length of guardrail in advance of an obstacle (obstacle to anchor) shall be 150 feet.

The "Post Footing Details at Piers" shall be used when beam guard posts are over structure footings and less than 3 feet - 6 inches of earth is provided over the top of the footing.

(1) The minimum clearance from the front face of beam guard to obstacle shall be 4 feet unless otherwise shown on contract plans. When clearance is less than 4 feet, post spacing shall be reduced to 3 feet - 1 1/2" C-C.

(2) This section shall include at least one 12'-6" Rail Element and a Terminal Connector when required for structure mounting.

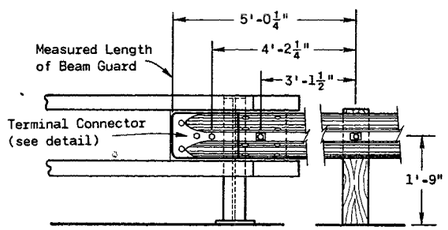

FRONT VIEW END VIEW

RAILING TYPE "F"

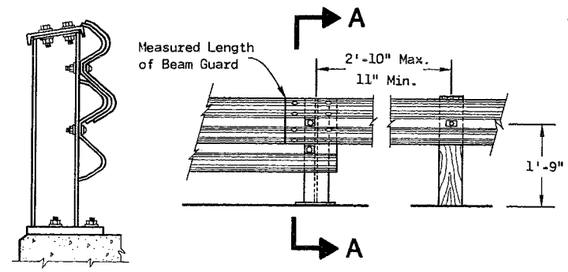

SECTION A-A FRONT VIEW

RAILING TYPE "W"

STRUCTURE MOUNTING DETAILS

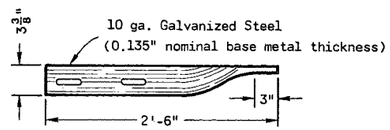

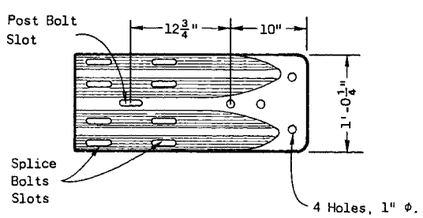

TERMINAL CONNECTOR

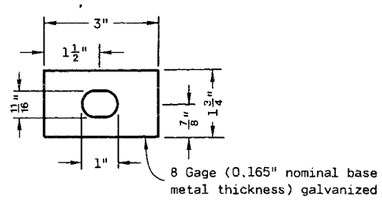

RECTANGULAR PLATE WASHER

(Shall be omitted at selected locations when Type 1 Anchorages are used. See TANGENT OFFSETS, Sheet 5c)

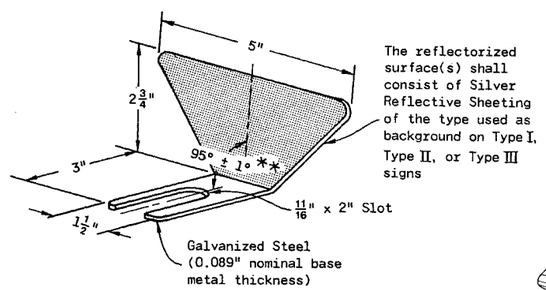

REFLECTOR SPACING

	Beam Guard Length	Reflector Spacing	No. Surfaces Reflectorized	Min. No. Reflectors
One Way Traffic	< 200'	50' C-C	1	3
	> 200'	100' C-C	1	
Two Way Traffic	< 200' *	25' C-C	1 *	6
	> 200' *	50' C-C	1 *	
Two Way Traffic	< 200'	50' C-C	2 **	3
	> 200'	100' C-C	2 **	

* Every other reflector reversed for 2-way visibility. Contractor may furnish two-sided reflectors in lieu of one-sided reflectors.

** Angle of bend to be 90° ± 1° for two-sided reflectors.

REFLECTOR DETAIL

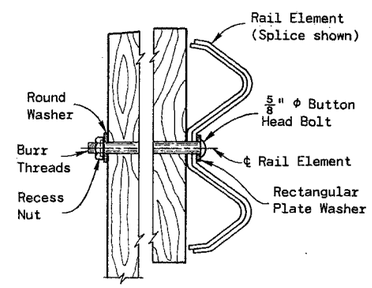

BUTTON HEAD BOLT DETAIL

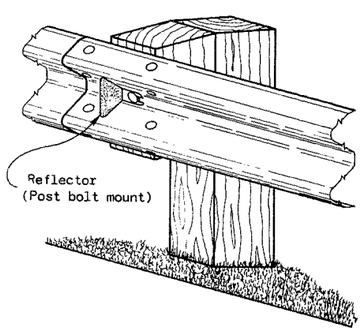

TYPICAL INSTALLATION

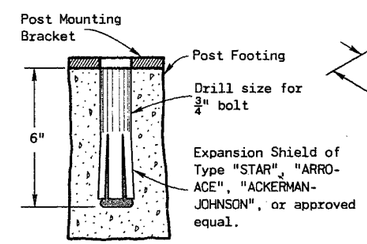

EXPANSION SHIELD DETAIL

NOTE:

Drill all holes in mounting bracket 7/8" ϕ.

Use 3/8" minimum thickness ASTM A 36 steel plate for all pieces and galvanize after fabrication & drilling.

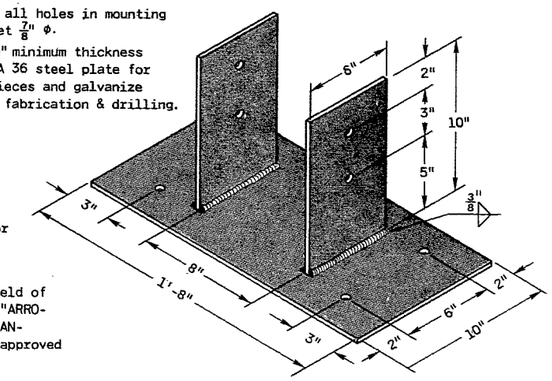

POST MOUNTING BRACKET

POST FOOTING DETAIL AT PIERS

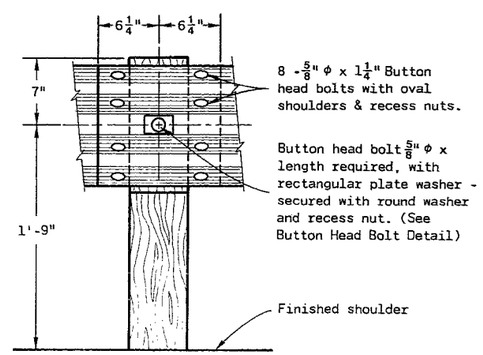

RAIL ELEMENT SPLICING AND POST MOUNTING DETAIL

NOTE:

THIS STANDARD DETAIL DRAWING HAS THREE SHEETS. SHEET 5c IS REQUIRED ONLY WHEN TYPE 1 OR TYPE 2 ANCHORAGES ARE SPECIFIED.

CLASS "A"

STEEL PLATE BEAM GUARD

State of Wisconsin
Department of Transportation

APPROVED 11-13-81 DATE

D. A. Strand CHIEF DESIGN ENGINEER

FHWA

S.D.D. 14 B 2-5a

S.D.D. 14 B 2-5a

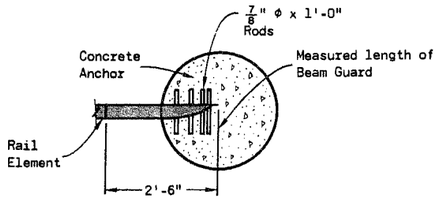

PLAN VIEW IN SECTION

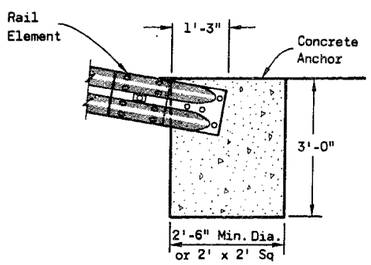

FRONT VIEW IN SECTION

STANDARD ANCHORAGE DETAIL

(Standard Specification Item "Anchorage for Steel Plate Beam Guard")

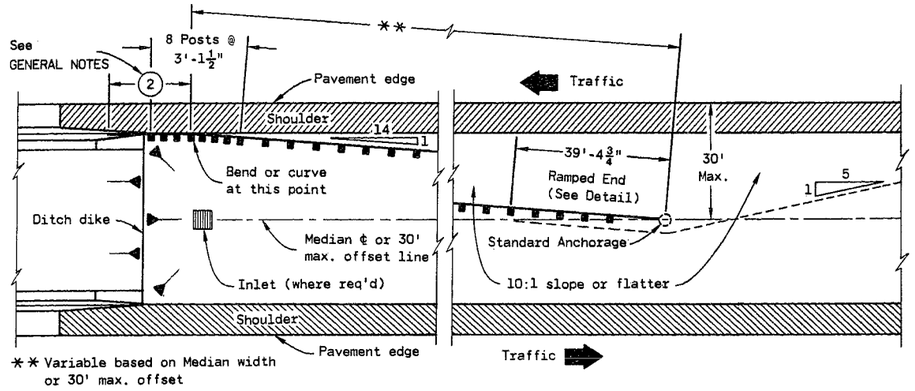

PLAN VIEW

TYPICAL MEDIAN INSTALLATION AT STRUCTURES

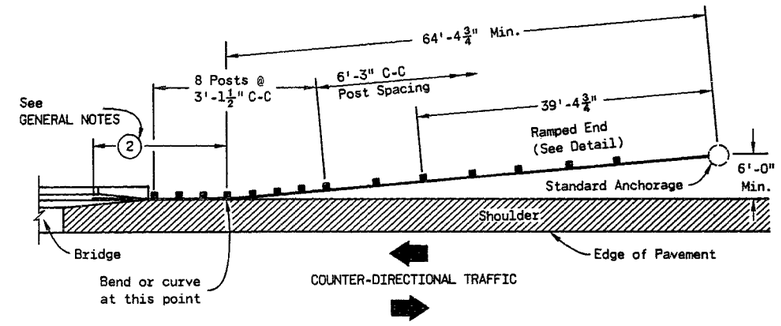

PLAN VIEW

TYPICAL INSTALLATION AT FULL WIDTH STRUCTURES

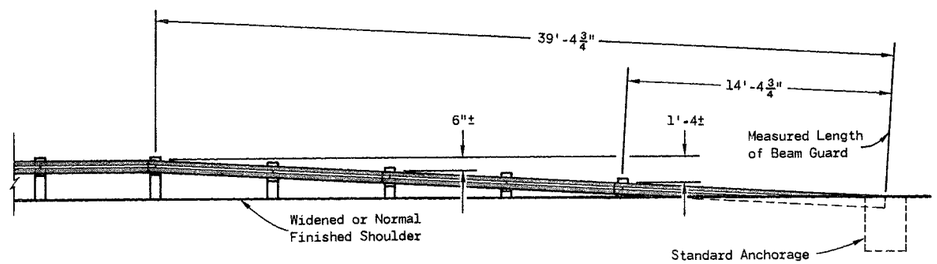

FRONT VIEW

TYPICAL RAMPED END

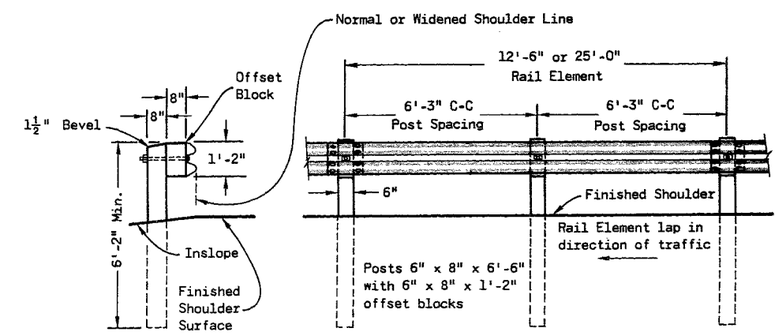

END VIEW FRONT VIEW

TYPICAL STEEL PLATE BEAM GUARD INSTALLATION

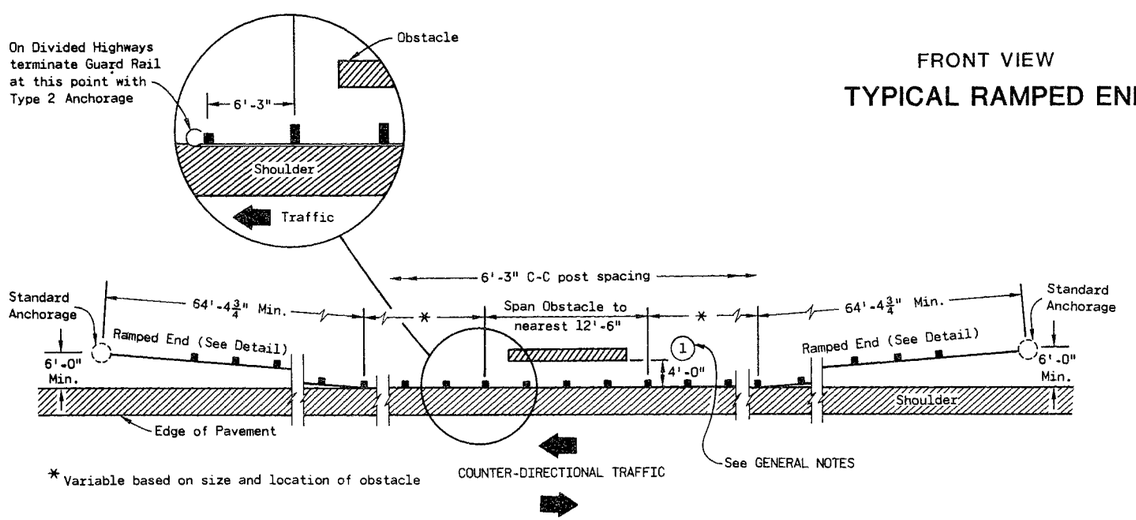

PLAN VIEW

TYPICAL INSTALLATION AT OBSTACLES

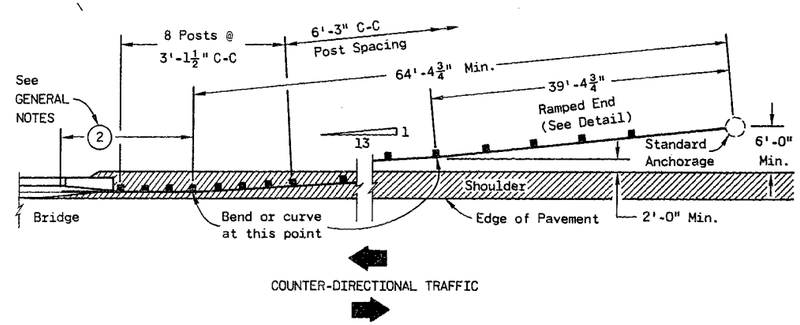

PLAN VIEW

TYPICAL INSTALLATION AT NARROW STRUCTURES

CLASS "A"
STEEL PLATE BEAM GUARD

State of Wisconsin
Department of Transportation

S.D.D. 14 B 2-5b

S.D.D. 14 B 2-5b

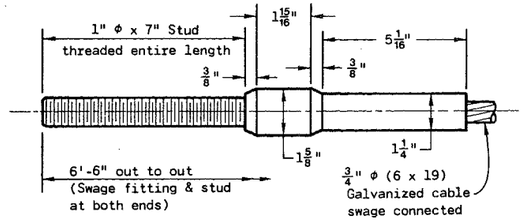

CABLE ASSEMBLY

Cable, Swage Fitting, Stud and Nut shall develop a minimum breaking strength of 40,000 lbs.

(Tighten until taut)

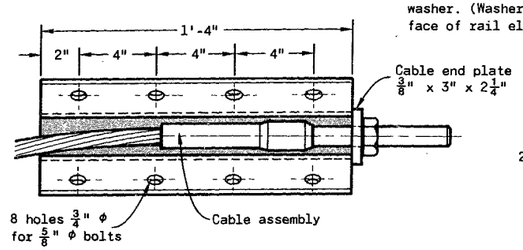

FRONT VIEW

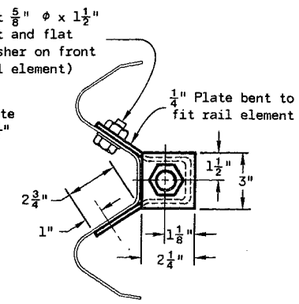

END VIEW

ANCHOR PLATE DETAIL

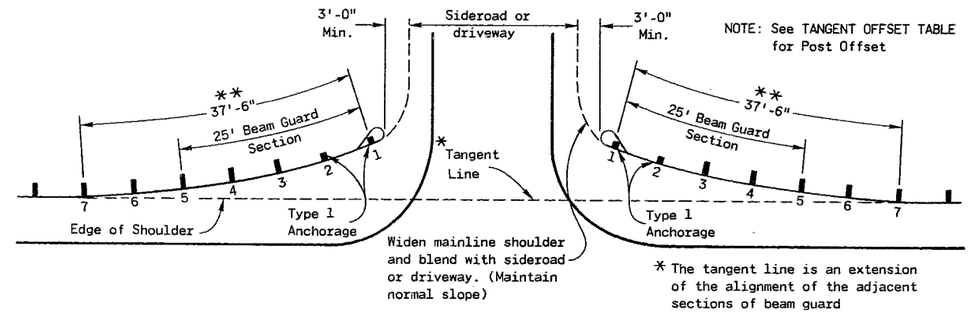

TYPICAL INSTALLATION AT MINOR SIDEROADS OR DRIVEWAYS

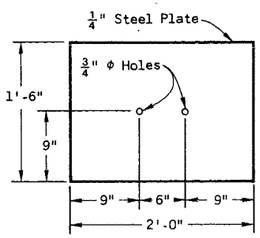

SOIL PLATE

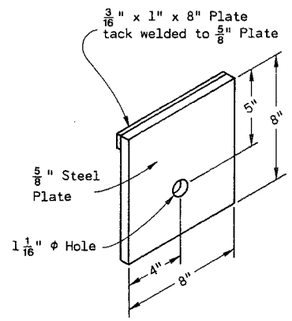

STEEL BEARING PLATE

NOTE:

Type 1 and Type 2 Anchorages shall consist of steel tube(s), soil plate(s), wood break-away post(s), bearing plate, anchor plate, cable assembly and all associated hardware. All steel parts shall be galvanized

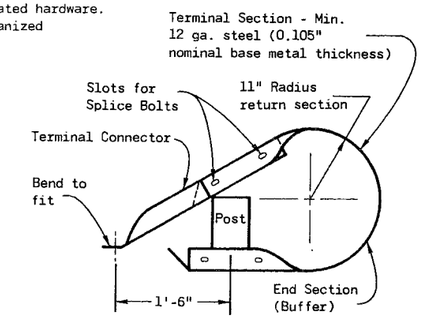

PLAN VIEW

TERMINAL SECTION DETAIL

NOTE:

This Terminal Section Detail illustrates two piece construction. A one piece Terminal Section conforming to this Detail is acceptable

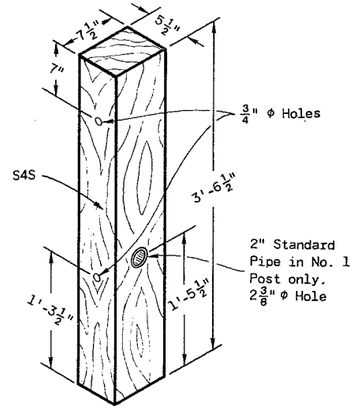

WOOD BREAKAWAY POST

TANGENT OFFSET TABLE	
Post No.	Offset (feet)
1	4.00
2	2.78
3	1.78
4	1.00
5	0.44
6	0.11
7	0.00

** 37'-6" installation, 6 spaces at 6'-3". Plate washers SHALL NOT be used

TANGENT OFFSET TABLE

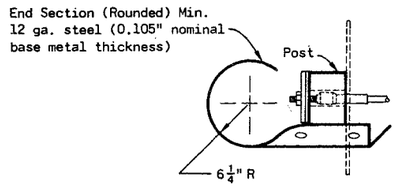

PLAN VIEW

END SECTION (ROUNDED)

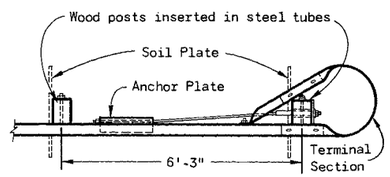

PLAN VIEW

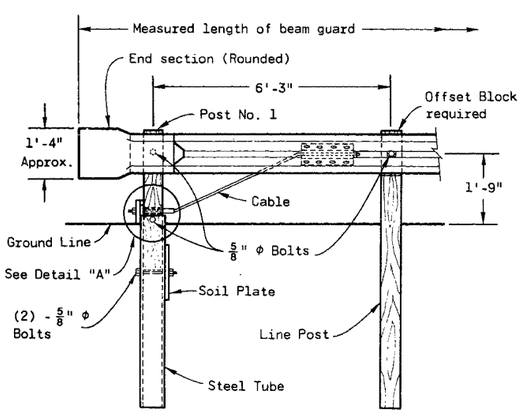

FRONT VIEW

TYPE 2 ANCHORAGE

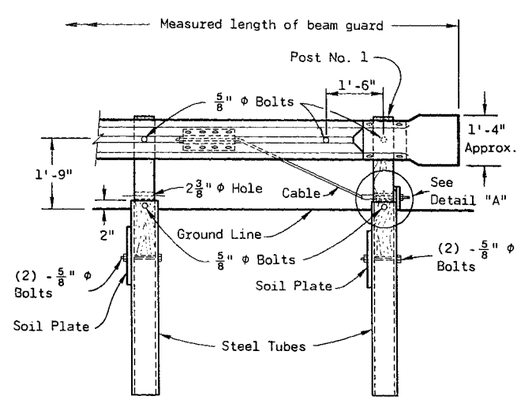

FRONT VIEW

TYPE 1 ANCHORAGE

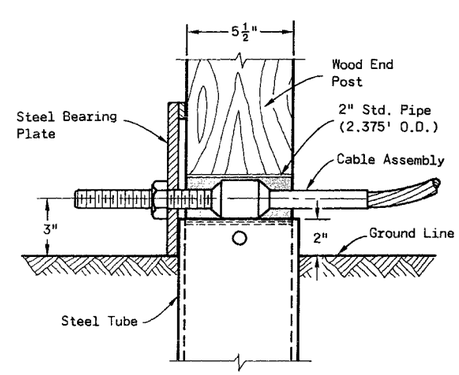

DETAIL "A"

(Post No. 1)

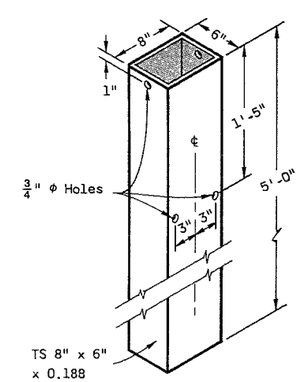

STEEL TUBE

The steel tube shall conform to requirements of ASTM A501

CLASS "A"

STEEL PLATE BEAM GUARD

State of Wisconsin

Department of Transportation

S.D.D. 14 B 2-5c

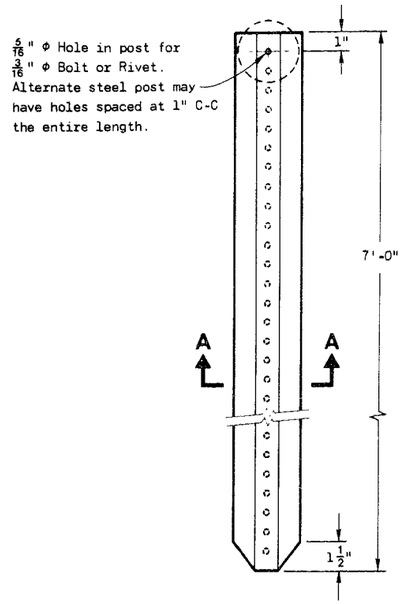

DELINEATOR POST

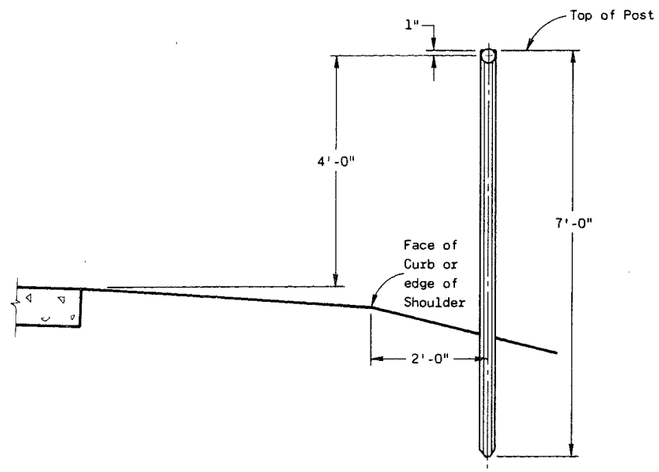

TYPICAL INSTALLATION OF DELINEATOR POSTS

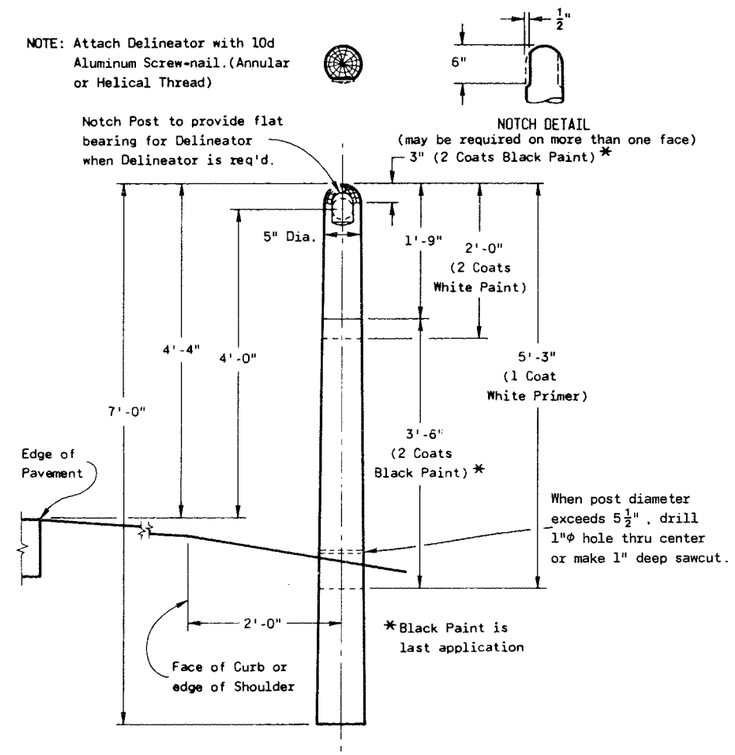

MARKER POST

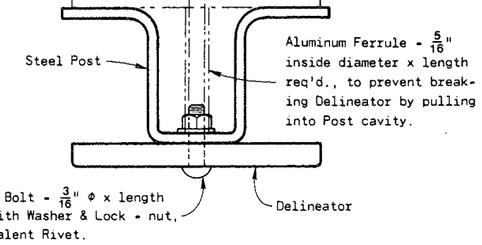

PLAN VIEW

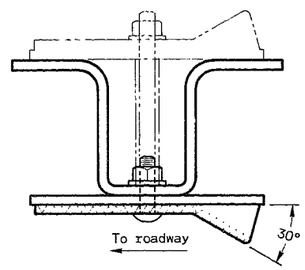

PLAN VIEW

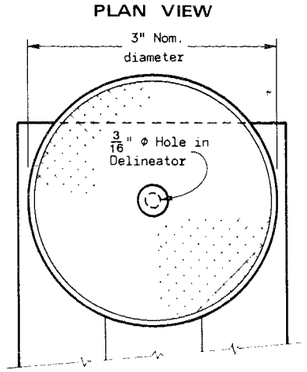

FRONT ELEVATION
3" CIRCULAR TYPE

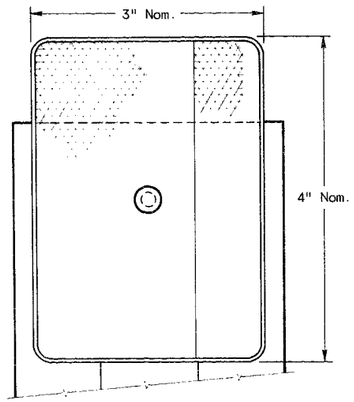

FRONT ELEVATION
3" X 4" RECTANGULAR TYPE

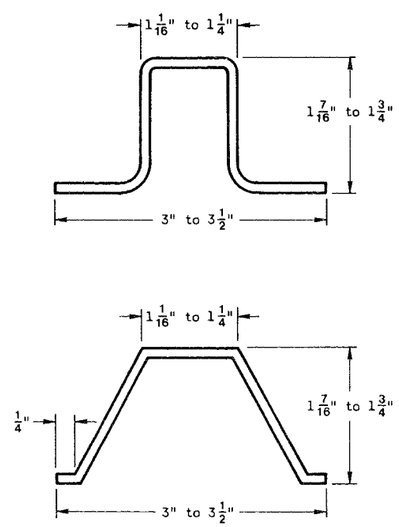

SECTION A-A
(Minimum weight 2.0 lbs. per ft.)

MOUNTING DETAILS FOR DELINEATORS

GENERAL NOTES

Details of construction not shown on this drawing shall conform to the pertinent requirements of the Standard Specifications and the applicable Special Provisions.

The rectangular delineator shall consist of an acrylic plastic wide angle reflex reflector housed in a material such as acrylontrile butadiene styrene and shall be permanently sealed against dust, water and vapor, and will not warp, crack or corrode under field conditions.

Detailed requirements for delineators,not shown on this drawing shall conform to Section 633 of the Standard Specifications and the current "MANUAL ON UNIFORM TRAFFIC CONTROL DEVICES". The reflectors in the delineators shall be clear.

When the cross sectional area of the Marker Post measured at the ground line exceeds 24 square inches (5 1/2 inch diameter) the post shall be weakened near the ground line by either drilling a 1 inch diameter hole transversely through the center of the post or by making a transverse saw cut to a depth of approximately 1 inch on the side of the post facing traffic.

DELINEATOR POSTS
MARKER POSTS AND DELINEATORS

State of Wisconsin
Department of Transportation
Division of Transportation Facilities

APPROVED 5-2-79
DATE
CHIEF DESIGN ENGINEER
FHWA

S.D.D. 15 A2-2

TABLE OF BARRICADE CHARACTERISTICS

BARRICADE TYPE	I	II	III
Height	3' Minimum		5' Minimum
*Rail Width	8" Minimum to 12" Maximum		
Rail Length	2' Minimum		4' Minimum
**Stripe Width	6" at 45° Angle		
Stripe Colors	Reflectorized Orange & White		

* Nominal dimensions when barricade is constructed of lumber.
** Shall be 4" for rail lengths less than 3'.

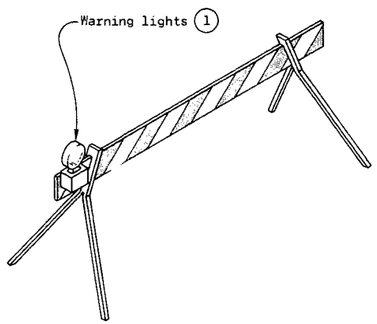

TYPICAL TYPE I BARRICADE

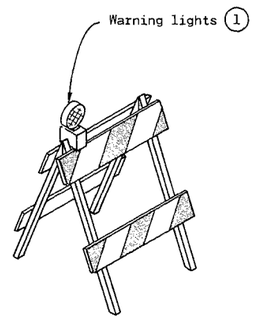

TYPICAL TYPE II BARRICADE

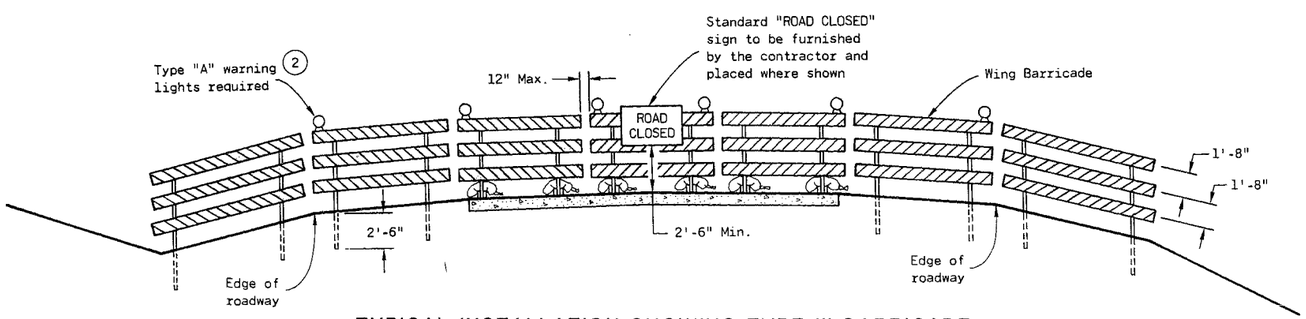

TYPICAL INSTALLATION SHOWING TYPE III BARRICADE

CONSTRUCTION BARRICADES

R11-2

48" x 30"

Black Lettering on Reflective White Background

Letter Series "D"
Letter height 8"

W20-3

48" x 48"

Black Lettering on Reflective Orange Background

Letter Series "D"
Letter height 7"

STANDARD SIGNS - TYPE II

GENERAL NOTES

The contractor shall furnish, erect and maintain barricades and signs. Details regarding location, spacing, dimensions, fabrication, material, sign lettering, lighting devices and color of barricades and signs shall conform to this drawing, the Manual On Uniform Traffic Control Devices, the Standard Specifications, Special Provisions and/or plans.

Type III Barricades and Signs shall be erected at the termini of projects and at other road or street locations where it is necessary to control or eliminate public access to the construction area.

Type I and II Barricades shall be used on projects when traffic is to be maintained through the construction area.

The actual field location of barricade installations and advance signs shall be as directed by the Engineer.

Each barricade shall have the name and telephone number of a person responsible for 24 hour emergency service printed in letters at least $\frac{3}{4}$ inch in height on the barricade rails. Prior to May 1, 1983, such information may be shown on either front or back faces of the barricade rails. After May 1, 1983, all printed information or identification markings shall be shown only on the back side of barricade rails.

Type I Barricades may include other unstriped horizontal panels necessary to provide stability.

On high speed expressways or in other situations where barricades may be susceptible to overturning in the wind, sandbags should be used for ballasting. Sandbags may be placed on lower parts of the frame or stays to provide the required ballast but shall not be placed on top of any striped rail.

(1) Unless otherwise provided elsewhere in the contract, warning lights are required on all barricades which will be located near traffic operations during periods of inclement weather or hours of darkness. Barricades used to shield isolated hazards shall be equipped with Type "A" (low intensity - flashing) lights unless Type "B" (high intensity)- flashing) lights are specified elsewhere in the contract documents. Barricades used for channelization or delineation of the travel path shall be equipped with Type "C" (steady burn) lights except for the initial barricade(s) in sequence, which shall be equipped with Type "A" or "B" lights as previously noted.

(2) Two warning lights shall be provided on the center barricade and at least one warning light shall be provided on each of the other barricades within the roadway limits. Spacing of the warning lights shall be uniform to the edge of roadway as shown.

CONSTRUCTION BARRICADES
& STANDARD SIGNS

State of Wisconsin
Department of Transportation

APPROVED
9-14-81
DATE

D. J. Ahrand
CHIEF DESIGN ENGINEER

FHWA

S.D.D. 15 C 1-7

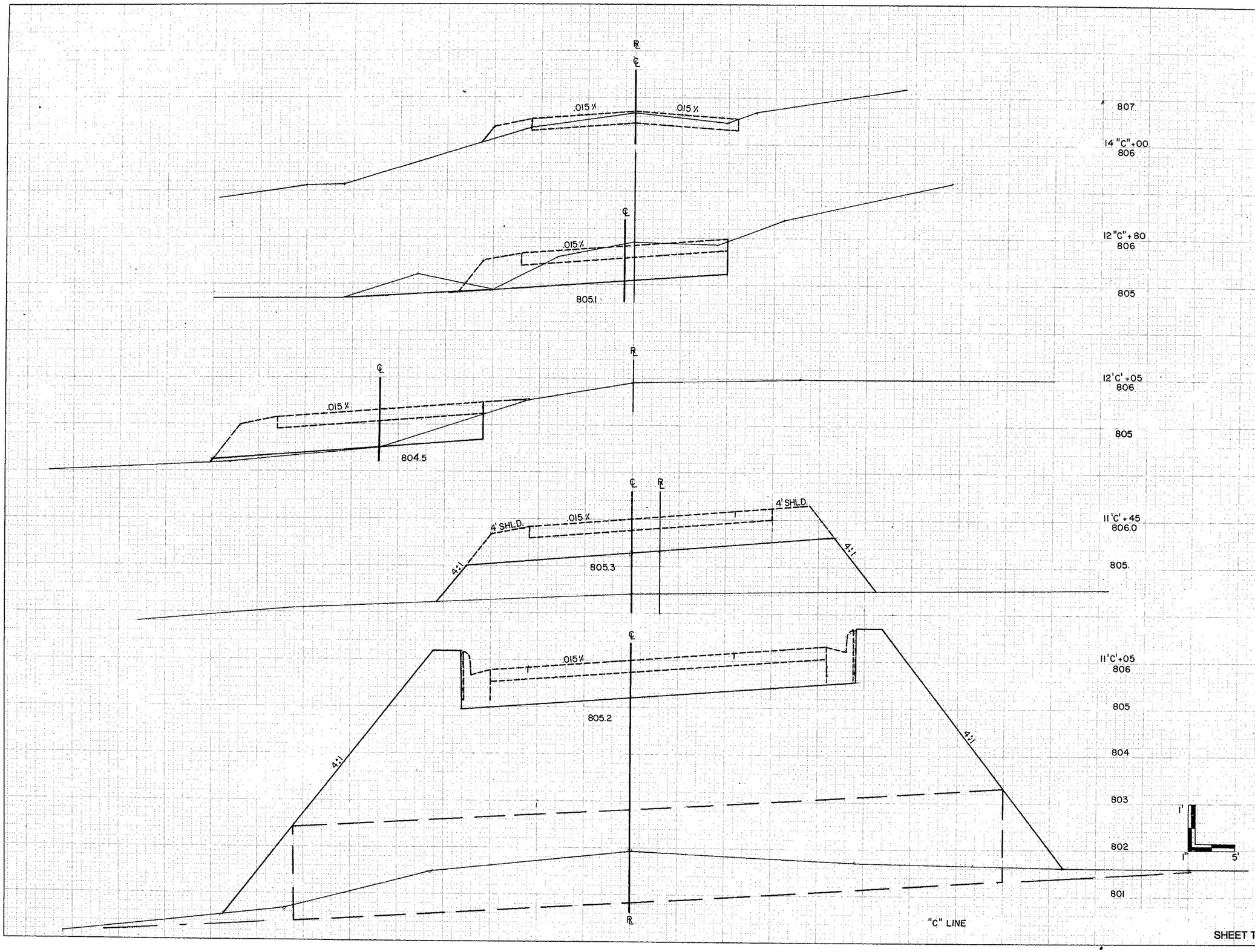

STATE PROJECT NUMBER	SHEET NUMBER
1633-06-71	9

STATION	DISTANCE	YARDAGE EXCAVATION UNCL				FILL
10'C' + 75						
	30					154
11'C' + 05						
	40					233
11'C' + 45						
	60	4				44
12'C' + 05						
	75	28				0
12'C' + 80						
	15	9				0
12'C' + 95						
SHEET TOTAL		41				431

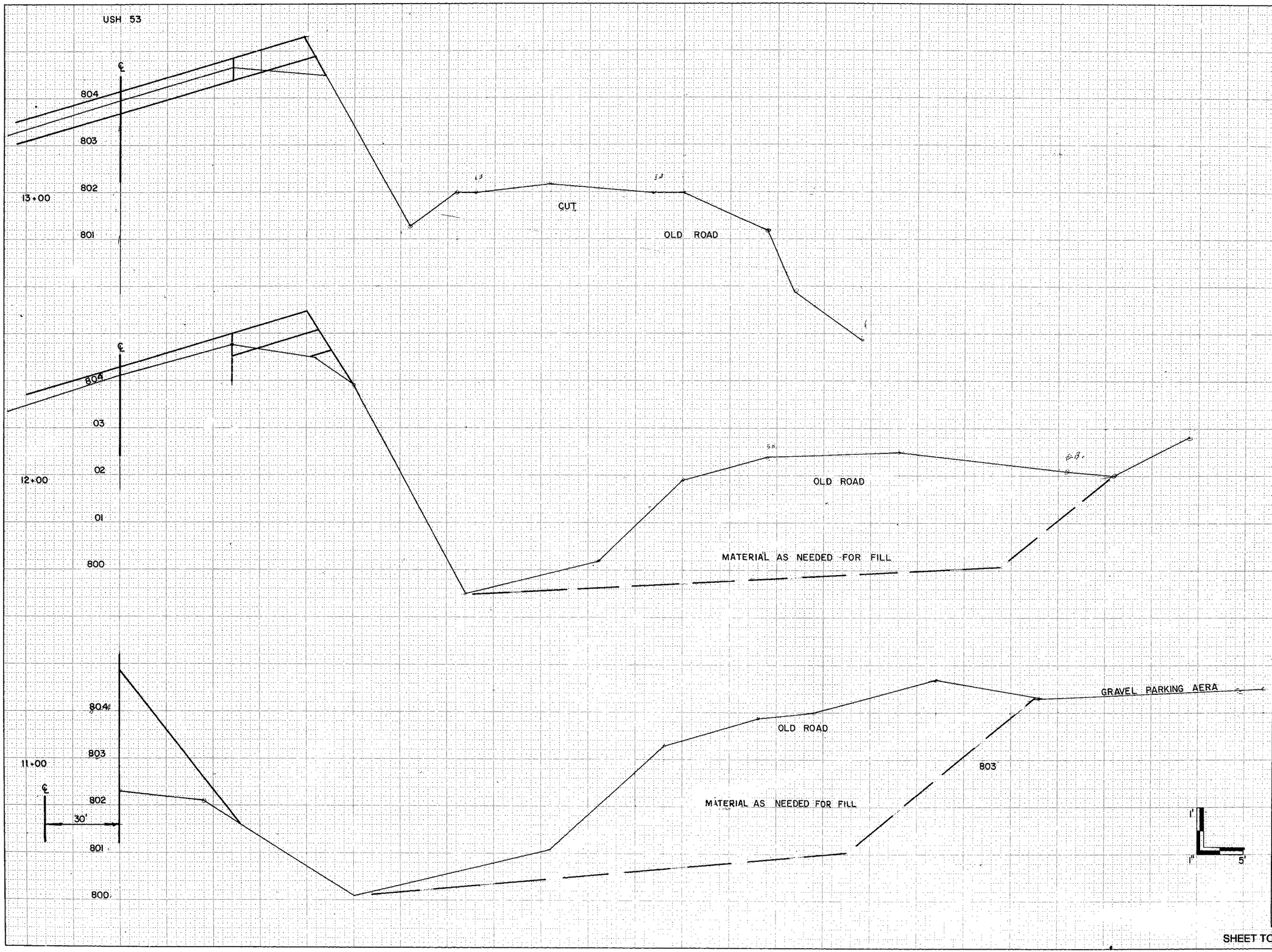

STATE PROJECT NUMBER	SHEET NUMBER
1633-06-71	9.1

STATION	DISTANCE	YARDAGE				
		EXCAVATION				FILL

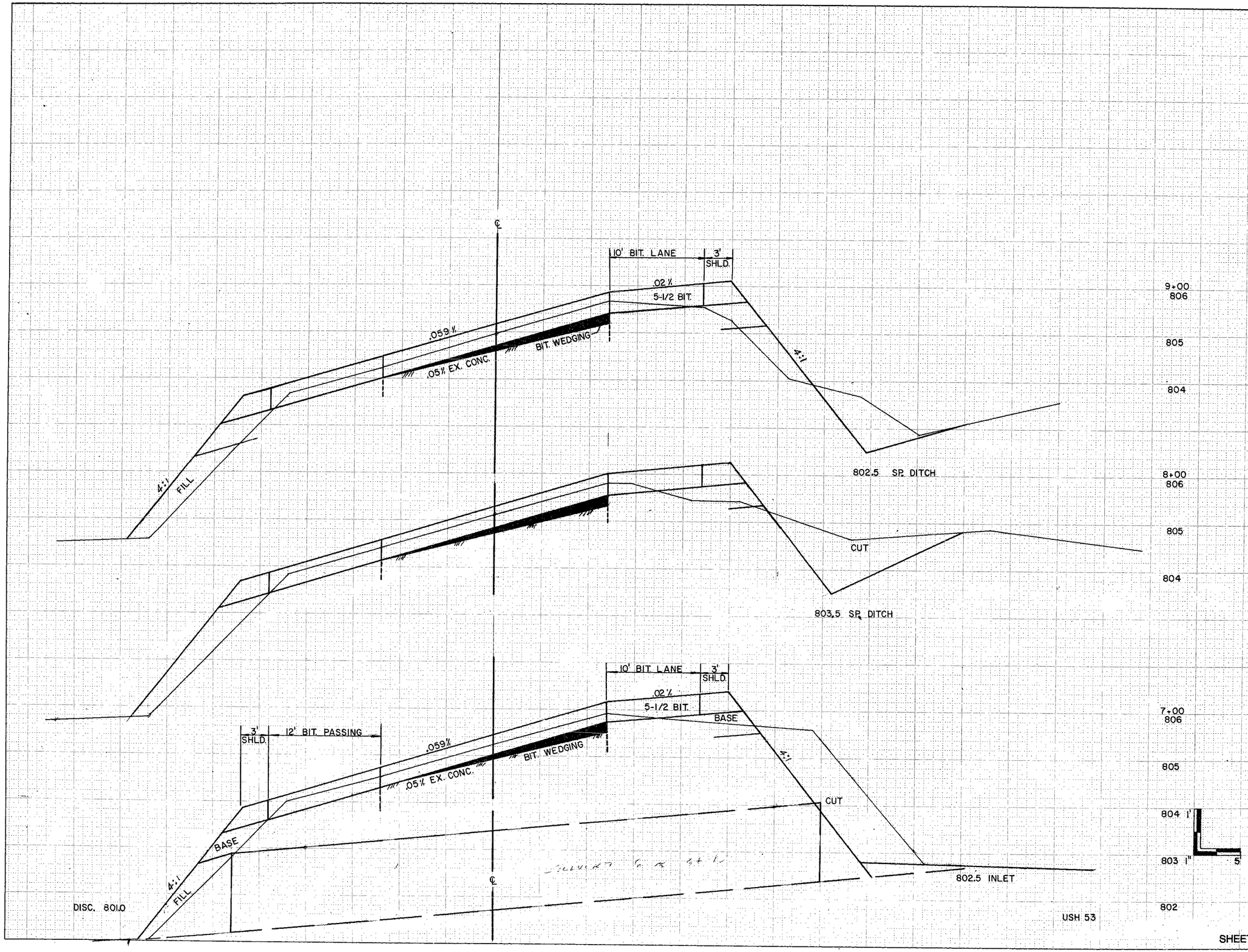

STATE PROJECT NUMBER	SHEET NUMBER
1633-06-71	9.2

STATION	DISTANCE	YARDAGE EXCAVATION UNCL					FILL
6 + 50							
	50	33					17
7 + 00							
	100	50					19
8 + 00							
	100	28					18
9 + 00							
	75	17					-
9 + 75 RT.							20
10 + 00 LT.							
SHEET TOTAL		128					74

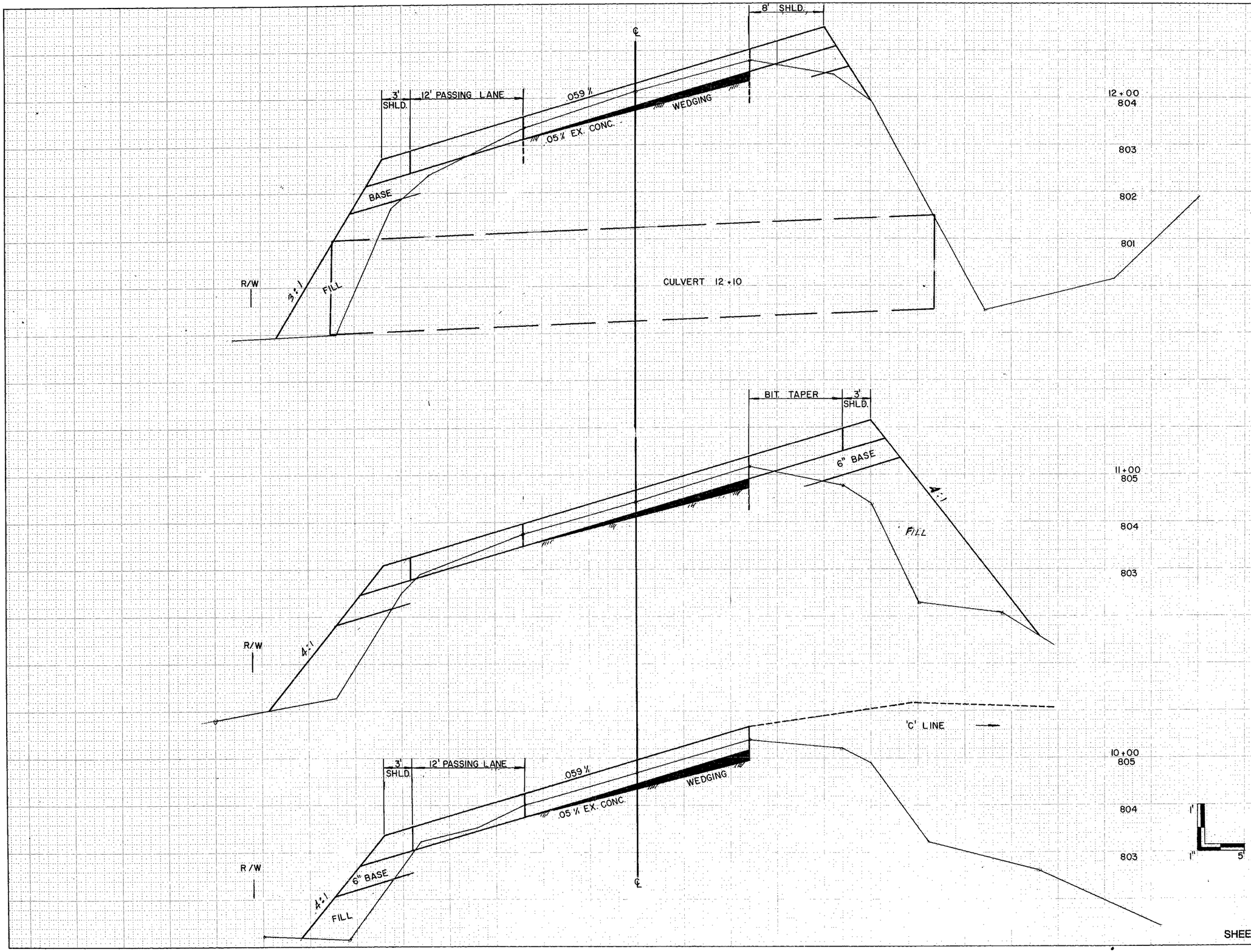

STATE PROJECT NUMBER	SHEET NUMBER
1633-06-71	9.3

STATION	DISTANCE	YARDAGE EXCAVATION				YARDAGE FILL
10+00						
	100					80
11+00						
	100					98
12+00						
	100					30
13+00						
SHEET TOTAL						208

Catalog No. 2150-C121