INDEX OF SHEETS

Sheet No.	1	Title
Sheet No.	2-2.13	Typical Sections and Details
Sheet No.	3-3.4	Estimate of Quantities
Sheet No.	3A-3C	Miscellaneous Quantities
Sheet No.	4 & 4.1	Right of Way Plat
Sheet No.	5-5.12	Plan and Profile
Sheet No.	6-6.23	Standard Detail Drawings
Sheet No.	7 & 7.1	Sign Plates
Sheet No.	8-8.2	Structure Plans
Sheet No.	——	Computer Earthwork Data
Sheet No.	9-9.26	Cross Sections

TOTAL SHEETS = 92

STATE OF WISCONSIN
DEPARTMENT OF TRANSPORTATION

PLAN OF PROPOSED IMPROVEMENT

ELLSWORTH - DURAND ROAD

C.T.H. "A" —EAST COUNTY LINE ROAD

U.S.H. 10

PIERCE & PEPIN COUNTY

STATE PROJECT	FEDERAL PROJECT	
	PROJECT	CONTRACT
1530-08-71	STP 019(92)	1

STATE PROJECT NUMBER

1530-08-71

AS BUILT PLAN

PROJECT ENGINEER Dan L. Winrich

GENERAL CONTRACTOR Mathy

BEGIN & END CONSTRUCTION 5-24-96 10-14-96

CONTRACT COST $ 1,982,438.54

C.C.O. #'S 1

BEGIN PROJECT
STA. 0+00
X. = 1,394,100 (±200')
Y. = 312,400 (±200)

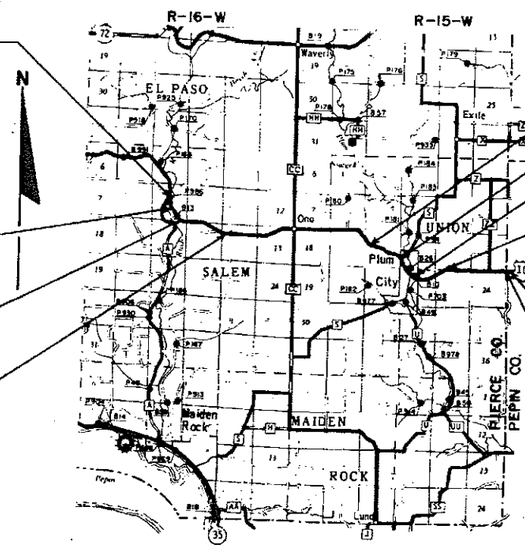

EQUATION
STA. 260+52.7 BK. =
STA. 14+53.92 AH.

EQUATION
STA. 64+00 BK. =
STA. 0-200 AH.

STA. 26+96.75 TO STA. 28+77.25
EXCEPTION TO NET LENGTH ℄
B-47-10

EQUATION
STA. 96+29.5 BK. =
STA. 0+00 AH.

EQUATION
STA. 22+43.00 BK. =
STA. 23+84.5 AH.

STA. 28+54.25 TO STA. 29+15.75
EXCEPTION TO NET ℄ LENGTH
B-47-13

EQUATION
STA. 117+50 BK. =
STA. 35+70 AH.

END PROJECT 1530-08-71
STA. 11+00

EQUATION
STA. 74+48.3 BK. =
STA. 0+00 AH.

DESIGN DESIGNATION

A.D.T.	1995	= 1720
A.D.T.	2015	= 2210
D.H.V.	2015	= 298
D.		= 60-40
T.		= 13.0%
V.		= 60 M.P.H.
ESALS		= 1,119,820

CONVENTIONAL SIGNS

COUNTY LINE		COMBUSTIBLE FLUIDS (UNDER PRESSURE)	CAUTION
CORPORATE LIMITS		UNDERGROUND UTILITIES	
PROPERTY LINE		GAS	G
LOT LINE		ELECTRIC	E
LIMITED EASEMENT		TELEPHONE	T
EXISTING RIGHT OF WAY		SERVICE PEDESTAL	
NEW RIGHT OF WAY		CABLE MARKER	
REFERENCE LINE		POWER POLE	
SLOPE INTERCEPT		TELEPHONE POLE	
ORIGINAL GROUND		RAILROADS	
MARSH OR ROCK PROFILE		MARSH	
CULVERT TO PLACE		WOODED AREA	
CULVERT REQUIRED			
CULVERT REQUIRED (Project)			

LAYOUT
SCALE 0 — 2 MI.

TOTAL NET LENGTH OF CENTERLINE = 10.823 MI.

COORDINATES SHOWN ON THIS PLAN ARE REFERENCED TO THE WISCONSIN COORDINATES SYSTEM, CENTRAL ZONE AND ARE SCALED FROM U.S.G.S. TOPOGRAPHIC MAPS, MAIDEN ROCK WISCONSIN QUADRANGLE FOR IDENTIFICATION ONLY

ORIGINAL PLAN PREPARED BY

Palzkill, Peterson & ASSOCIATES Consulting Engineers
1407 Lynn Avenue • Altoona, Wisconsin 54720 • 715/832-8400

WISCONSIN LYNN A. PETERSON E-8554 ALTOONA, WIS PROFESSIONAL ENGINEER

Lynn A. Peterson — ENGINEER — 1-28-93 DATE

STATE OF WISCONSIN
DEPARTMENT OF TRANSPORTATION

PREPARED BY

SURVEYOR	P&P
DESIGNER	P&P
DISTRICT EXAMINER	S.E. HELLER
DISTRICT SUPERVISOR	C. LINDALL
PROJ. DEV. ENGINEER	L.A. STANEK
C.O. EXAMINER	N.R. APPELDT

APPROVED FOR DISTRICT OFFICE
DATE: 3/14/95 Norm Lunt (SIGNATURE)

AUTHORIZED FOR CENTRAL OFFICE DESIGN
DATE: 5/30/95 Thomas L. Stanek (SIGNATURE)

WISDOT/VEHICLE NO. 10

Pierce

1530-08-71 / 1530-08-00

2-Full

STATE PROJECT NUMBER	SHEET NO
1530-08-71	2.0

GENERAL NOTES

STANDARD ABBREVIATIONS

ABUTMENT	ABUT	PAVEMENT	PAV'T
ACRES	AC	PERMANENT LIMITED EASEMENT	P.L.E.
AGGREGATE	AGG	POINT	PT
ASPHALT	ASPH	POINT OF CURVATURE	P.C.
ASPHALT CEMENT	A C	POINT OF INTERSECTION	P.I.
AUXILIARY	AUX.	POINT OF TANGENCY	PT
AVERAGE DAILY TRAFFIC	A.D.T	POINT ON CURVE	P.O.C.
BACK FACE	B F	POINT ON TANGENT	P.O.T.
BENCH MARK	B M	PORTLAND CEMENT CONCRETE	P.C.C.
BRIDGE	B OR BR	PRIVATE ENTRANCE	P.E
CATCH BASIN	C B	PROJECT	PROJ.
CENTER LINE	C.℄, OR C/L	RADIUS	R
CENTER TO CENTER	C C	RADIUS POINT	R P.
CONCRETE	CONC	REFERENCE LINE	℄
CORRUGATED	CORR	REFERENCE POINT	R P.
CREEK	CR	REINFORCED CONCRETE CULVERT PIPE	RCCP
CRUSHED	CR	REINFORCING OR REINFORCEMENT	REINF
CULVERT	CULV	REINFORCEMENT BAR	REBAR
CULVERT PIPE	C P	RELOCATE(D)	REL.
CURB & GUTTER	C & G	REMAINING	REM
DEGREE OF CURVE	D	REQUIRED	REQ'D
DESIGN HOUR VOLUME	D H V	RIGHT	RT
DIAMETER	DIA	RIGHT-HAND FOWARD	R H.F.
ELEVATION	EL OR ELEV	RIGHT-OF-WAY	R/W
EMBANKMENT	EMB	SALVAGED	SALV
ENDWALL	E W.	SECTION	SEC.
EXCAVATION	EXC	SHOULDER	SHLDR
EXISTING	EXIST	SHRINKAGE	SHR.
EXPAND(ED) OR EXPANSION	EXP	SOUTH	S
FERTILIZE	FERT	SOUTHBOUND	S B
FINISHED GRADE	F G	SPECIAL	S P
FLOW LINE	F L OR F/L	SPECIFICATIONS	SPEC'S.
GRID NORTH	G N	STANDARD	STD.
HUNDREDWEIGHT	CWT	STANDARD DETAIL DRAWINGS	S D.D.
HYDRANT	HYD.	STRUCTURE OR STRUCTURAL	STR.
INLET	INL	SUPERELEVATION	S.E.
INTERSECTION	INTERS.	SURVEY LINE	SL OR S/L
INVERT	INV	TANGENT	TAN. OR T.
IRON PIPE OR PIN	I P.	TELEPHONE	T OR TEL.
JOINT	JT.	TEMPORARY	TEMP.
JUNCTION	JCT	TEMPORARY LIMITED EASEMENT	T L E
LEFT HAND FOWARD	L H F	TOWN	T OR TN.
LENGTH (OF CURVE)	L	TRANSITION	TRANS
LINEAR FOOT	LIN FT	TRANSIT LINE	TL OR T/L
MAINTENANCE	MAINT	TYPICAL	TYP.
MATCH LINE	M L OR M/L	UNCLASSIFIED	UNCL.
NOMINAL	NOM	VERTICAL	VERT.
NORMAL CROWN	N C	VERTICAL	V C
NORTHBOUND	N B	WESTBOUND	W. B.
OBLITERATE	OBLIT.		
OUTSIDE DIAMETER	O.D.		
EQUIVALENT SINGLE AXLE LOADS	ESALS.		

SECTION AND STATION IDENTIFICATION

SEC. 1 = STA 0+00 to STA 117+50 BK = STA 35+70 AH

SEC. 2 = STA 35+70 AH to STA 260+52.7 BK = STA 14+53.92 AH

SEC. 3 = STA 14+53.92 AH to STA 64+00 BK = STA 0-200 AH

SEC. 4 = STA 0-200 AH to STA 96+29.5 BK = STA 0+00 AH

SEC. 5 = STA 0+00 AH to STA 74+48.3 BK = STA 0+00 AH

SEC. 6 = STA 0+00 AH to STA 11+00

GENERAL NOTES

THE LOCATION OF EXISTING AND PROPOSED UTILITY INSTALLATIONS AS SHOWN ON THE PLANS ARE APPROXIMATE. THERE MAY BE OTHER UTILITY INSTALLATIONS WITHIN THE AREA THAT ARE NOT SHOWN.

WHEN THE QUANTITY OF THE ITEM OF BASE COURSE, OR SURFACE COURSE IS MEASURED FOR PAYMENT BY THE TON, THE DEPTH OR THICKNESS OF THE COURSE SHOWN ON THE PLAN IS APPROXIMATE AND THE ACTUAL THICKNESS WILL DEPEND ON THE DISTRIBUTION OF THE MATERIAL AS DIRECTED BY THE ENGINEER.

CURVE DATA IS BASED ON ARC DEFINITION.

NO TREES OR SHRUBS SHALL BE REMOVED WITHOUT THE APPROVAL OF THE ENGINEER.

DISTURBED AREAS WITHIN THE RIGHT-OF-WAY ARE TO BE FERTILIZED, MULCHED, AND SEEDED AS DIRECTED BY THE ENGINEER.

INLET AND DISCHARGE ELEVATIONS FOR DRAINAGE STRUCTURES ARE APPROXIMATE AND SHALL BE DETERMINED BY THE ENGINEER IN THE FIELD.

EXCAVATION BELOW SUBGRADE (EBS) IS NOT USED TO BALANCE YARDAGE AND IS NOT SHOWN ON THE CROSS SECTIONS BUT IF REQUIRED SHALL BE MEASURED AND PAID FOR AS UNCLASSIFIED EXCAVATION. THE LOCATION OF EBS WILL BE DETERMINED BY THE ENGINEER.

ASPHALTIC MATERIAL FOR TACK COAT HAS BEEN ESTIMATED AT .030 GAL / S.Y.

BINDER COURSE SHALL BE 2½" AND SURFACE COURSE SHALL BE 2".

PAVEMENT CORING LOG

STATION	LOCATION	DEPTH OF ASPHALT (INCHES)
13+20	6' RT.	4.75
26+00	6' RT.	7.50
39+20	6' RT	7.50
52+30	6' RT.	7.25
66+00	6' RT	8.50
79+20	6' RT	10.00
92+40	6' RT	7.00
37+00	6' RT	9.75
50+20	6' RT	8.00
63+40	6' RT	4.00
76+60	6' RT.	4.40
89+80	6' RT	7.25
103+00	6' RT.	3.75
116+20	6' RT	3.75
129+40	6' RT	3.75
142+60	6' RT	3.75
155+80	6' RT	4.00
169+00	6' RT	4.00
182+20	6' RT	3.75
195+40	6' RT	4.75
208+60	6' RT.	4.00
221+80	6' RT.	4.00
235+00	6' RT	4.00
248+20	6' RT	4.75
15+40	6' RT	3.75
28+60	6' RT	8.50
41+80	6' RT	5.00
55+00	6' RT	8.50
2+20	6' RT	8.00
15+40	6' RT	6.75
28+60	6' RT	6.00
41+80	6' RT	6.50
55+00	6' RT	6.00
68+20	6' RT	6.75
81+40	6' RT	6.50
94+60	6' RT	8.75
11+50	6' RT	4.25
24+70	6' RT	5.75
37+90	6' RT	4.25
51+10	6' RT.	4.00

STANDARD DETAIL DRAWINGS

8D1-11	CONCRETE CURB, CONCRETE CURB AND GUTTER AND PAVEMENT TIES
8D4-3	CONCRETE SURFACE DRAIN & ASPHALTIC FLUME
8E9-4	SILT FENCE
8F1-11	APRON ENDWALLS FOR CULVERT PIPE
8F4-5	JOINT TIES
9A1-9a	AT-GRADE SIDE ROAD INTERSECTIONS, TYPE "B", "C", AND "D".
9A1-9b	AT-GRADE SIDE ROAD INTERSECTIONS, TYPE "A" AND PASSING LANES
9C2-1	CONCRETE BASES
12A3-4	NAME PLATES FOR STRUCTURES
14B15-1a	CLASS "A" STEEL PLATE BEAM GUARD, INSTALLATION & ELEMENTS
14B16-1a & b	CLASS "A" STEEL PLATE BEAM GUARD AND TREATMENT WITH ANCHORAGE TYPE 1 & 2
14B18-1a	CLASS "A" STEEL PLATE BEAM GUARD (AT BRIDGES, OBSTACLES AND SIDEROADS / DRIVEWAYS)
14B20-2a	STEEL THRIE BEAM STRUCTURE APPROACH
14B20-2c	STEEL THRIE BEAM STRUCTURE APPROACH CONNECTION TO SLOPED END PARAPETS
14B20-2d	STEEL THRIE BEAM STRUCTURE APPROACH CONNECTION TO BRIDGE RAILING TYPES "F" AND "M"
15C2-2	BARRICADES AND TRAFFIC CONTROL FOR ROAD CLOSURES
15C7-4a	PAVEMENT MARKING SYMBOLS
15C8-6a & 6b	PAVEMENT MARKING (MAINLINE & INTERSECTIONS)
15C12-2	TRAFFIC CONTROL FOR LANE CLOSURE (SUITABLE FOR MOVING OPERATIONS)
16A1-5	LANDMARK REFERENCE MONUMENTS AND COVERS

SUPERELEVATIONS

LOCATION		DEGREE OF CURVE	EXISTING S E	REQ'D. S E
0+50 - 7+20	SEC. 1	5°	08%	075%
23+84.5 — 41+22	SEC. 1	3°	06%	055%
43+76.3 — 51+73	SEC 1	0°-45'	.02%	.02%
55+45.1 — 60+56.8	SEC 1	0°-30'	02%	R.C
62+99.7 — 73+36.3	SEC. 1	2°	04%	.045%
73+71.6 — 82+03.3	SEC 1	1°	03%	027%
94+98 — 100+73	SEC 1	3°	06%	055%
80+50.4 — 90+088	SEC. 2	3°	065%	.055%
110+30 — 117+99	SEC. 2	3°-30'	065%	058%
211+15.3 — 223+61.8	SEC. 2	4°	08%	078%
242+11.2 — 252+78	SEC. 2	4°	085%	078%
15+19.48 — 22+36.15	SEC. 3	3°-30'	073%	074%
23+42.88 — 32+78.05	SEC. 3	5°	08%	075%
37+19.02 — 55+53.69	SEC. 3	5°	.08%	075%
57+41.99 — 64+00	SEC. 3	1°-30'	034%	037%
0+75 — 5+39	SEC. 4	3°	05%	055%
7+76 — 34+57	SEC. 4	3°-30'	06%	058%
60+37.4 — 65+70.7	SEC. 4	0°-30	015%	R.C.
82+31.9 - 88+13	SEC. 4	3°	065%	068%
90+23 — 94+80.2	SEC. 4	3°	07%	068%
0+43.3 — 4+05.8	SEC. 5	2°	044%	045%
8+89.2 — 12+50.3	SEC. 5	3°	06%	055%
12+50.3 — 20+08.6	SEC 5	2°	04%	.045%
23+04.1 — 33+44.1	SEC 5	2°	04%	.045%
38+28.7 — 45+52	SEC 5	0°-30'	.015%	R.C.

UTILITIES

* GTE NORTH
20 SOUTH WILSON
RICE LAKE, WI 54868
PHONE (715) 234-5528
ATTN: GARY SCHIEFFER

NELSON TELEPHONE COOPERATIVE
DURAND WI. 54736
PHONE (715) 672-4204
ATTN: DALE GOSS

* WISCONSIN GAS CO.
1251 WEST MAIN ST.
P.O. BOX 66
SUN PRARIE, WI. 53590
PHONE (715) 423-2800
ATTN: AL ZWICKER

* N.S.P.
100 N BARSTOW ST
PO BOX 8
EAU CLAIRE WI
PHONE (715) 839-2577
ATTN: ED TRAPP

* PIERCE-PEPIN ELECTRIC COOPERATIVE
ELLSWORTH, WI 54011
PHONE (715) 273-4355
ATTN GERALD DE WOLF

* FOR LOCATING PHONE 1-(800) 242-8511

STATE PROJECT NUMBER	SHEET NO.
1530-08-71	2.1

TYPICAL SECTIONS

NOTE: IN SOME LOCATIONS, WIDENING OF SHOULDERS HAS PRODUCED STEEP INSLOPES. THESE MUST BE TRIMMED AND WILL BE PAID FOR AS SHAPING SHOULDERS. (AS DIRECTED BY ENGINEER.)

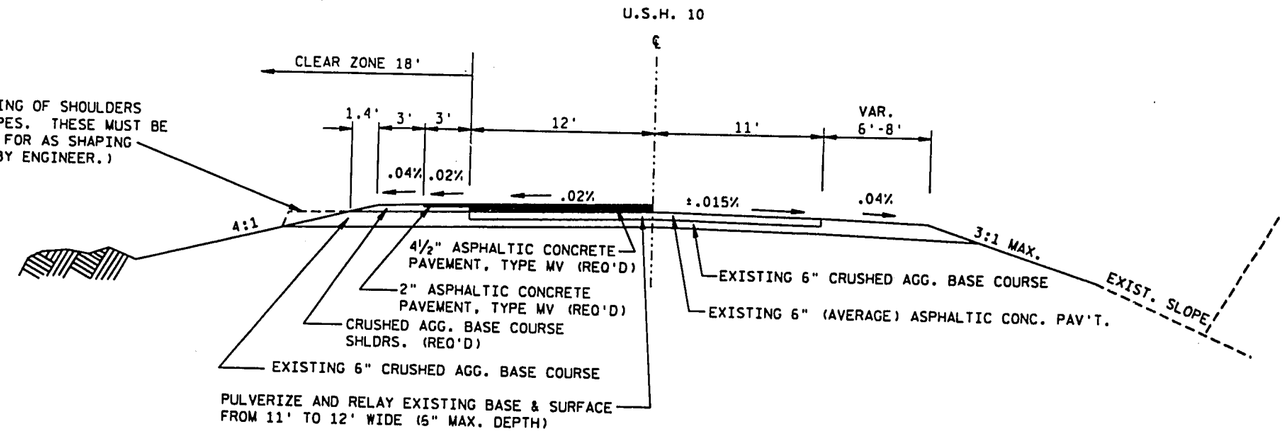

TYPICAL PROPOSED HALF SECTION

TYPICAL EXISTING HALF SECTION

(ALL SECTIONS)

1530-08-71 STP 019(92) DIST 6
ELLSWORTH - DURAND ROAD
CTH "A" EAST COUNTY LINE
USH 10 PIERCE/PEPIN COUNTIES
CONTR: MATHY CONSTRUCTION COMPANY
TYPE OF WORK: GEN CONST, ASPH SURF

PROJECT ENGINEER DAN L. WRIGHT
6/24/96 TO 10/4-96

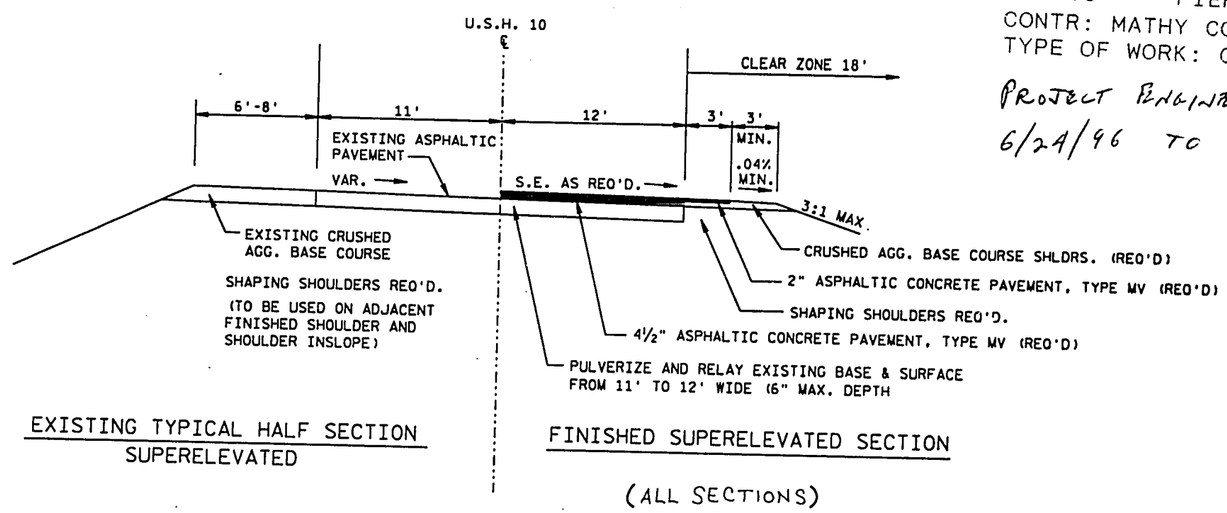

EXISTING TYPICAL HALF SECTION
SUPERELEVATED

FINISHED SUPERELEVATED SECTION

(ALL SECTIONS)

ORIGINATOR: DIST. 6, EAU CLAIRE, L. OLSON
REV. DATE: 4-24-95 LEO
PLOT NAME:
PLOT SCALE:
LEVELS ON - 1,2,3,4,5,6,7,8,9,10,11,12,13,14,15,16,17,18,19,20,21,22,23,24,25,26,27,28,29,30,31,32,33,34,35,36,37,38,39,40,41,42,43,44,45,46,47,48,49,50,51,52,53,54,55,56,57,58,59,60,61,62,63

sht2 FILE NAME: HDGN:D6 15300800:1530TYP.DGN

WISDOT/CADDS SHEET 42

STATE PROJECT NUMBER 1530-08-71

SHEET NO. 2.2

TYPICAL SECTIONS

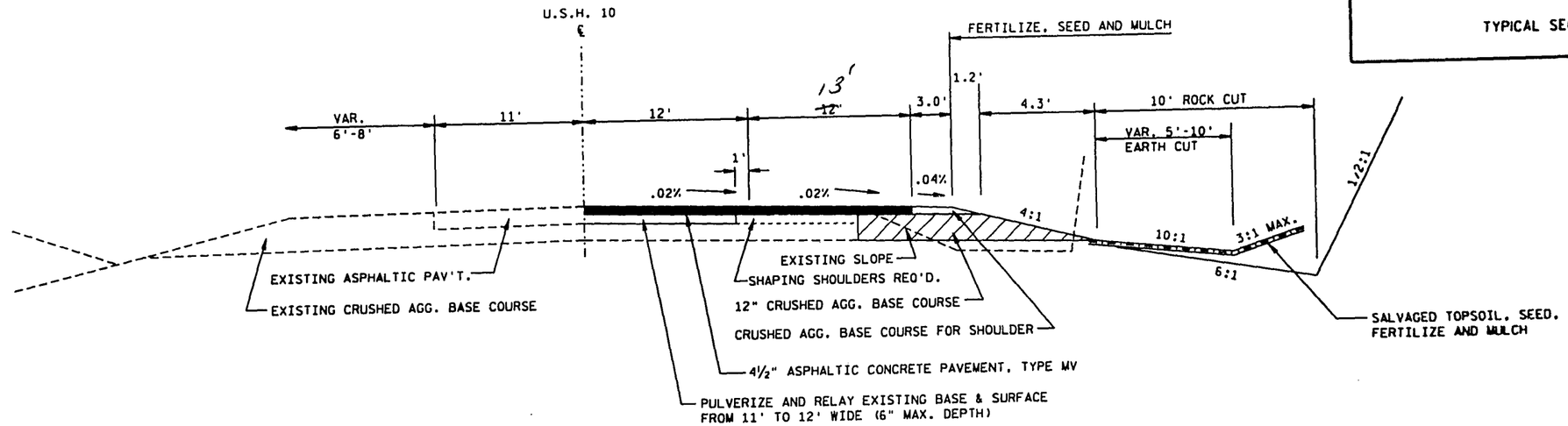

TYPICAL FINISHED HALF SECTION WITH AUXILIARY LANE

STA. 76+50 - STA. 96+29.5 BK. (SECTION 4)
STA. 0+00 AH. - STA. 45+52 BK. } (SECTION 5)
STA. 45+61.8 AH. - STA. 74+48.30 BK. }
STA. 0+00 AH. - STA. 11+00 (SECTION 6)

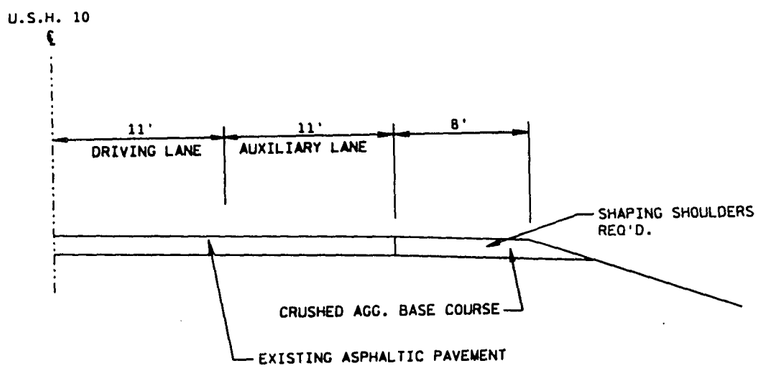

EXISTING HALF SECTION WITH EXISTING AUXILIARY LANE

SECTION NO. 1 - STA. 33+50 RT. - STA. 115+50 RT.
SECTION NO.2&3 STA. 207+50 LT. - STA. 56+50 LT.

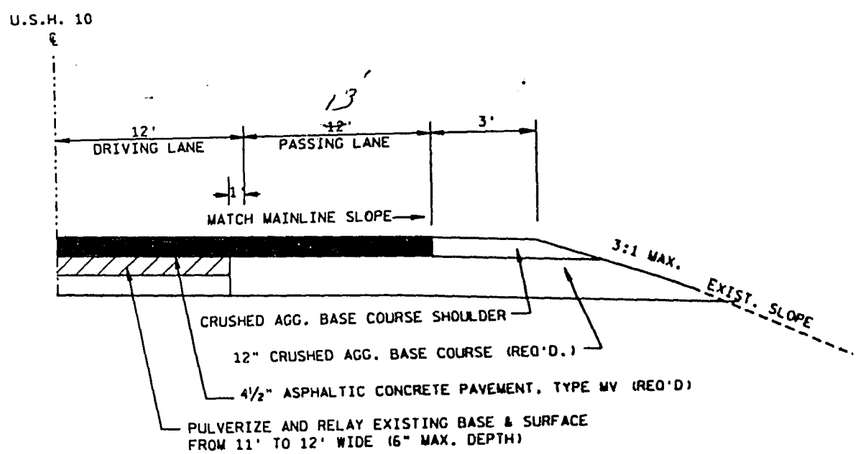

TYPICAL FINISHED HALF SECTION WITH PASSING LANE

SECTION NO. 1 - STA. 4+50 RT. - STA. 12+00 RT.

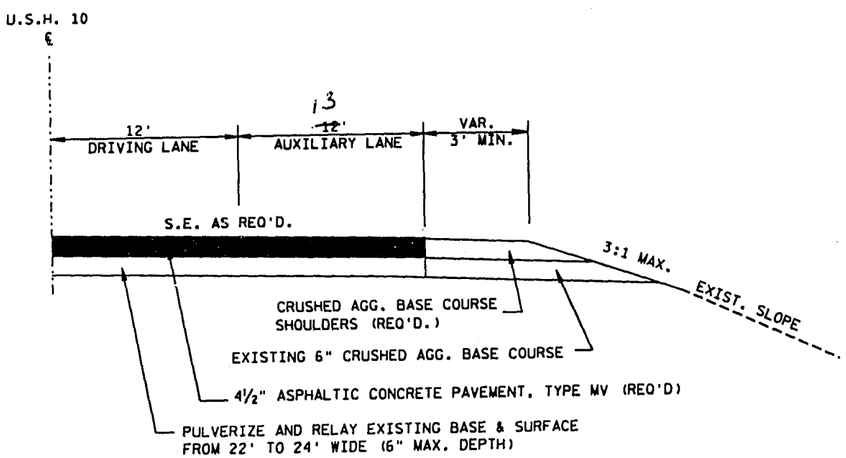

TYPICAL FINISHED HALF SECTION WITH EXISTING AUXILIARY LANE

SECTION NO. 1 - STA. 33+50 RT. - STA. 115+50 RT.
SECTION NO.2&3 STA. 207+50 LT. - STA. 56+50 LT.

NOTE FOR SIDE ROAD TYPICAL

1. EXISTING CRUSHED AGGREGATE SIDE ROADS SHALL BE PAVED TO THE RADIUS POINTS A DEPTH OF 3" WITH ASPHALTIC CONCRETE PAVEMENT, TYPE MV
2. EXISTING ASPHALTIC SURFACE SIDE ROADS, WHICH NEED RADIIS WIDENING SHALL BE CONSTRUCTED TO THE SAME PAVEMENT STRUCTURE AS SHOWN IN TYPICAL SECTION FOR SIDE ROADS. EXISTING ASPHALTIC SURFACE SHALL BE PULVERIZED AND RELAID AND RESURFACED WITH 3" OF ASPHALTIC CONCRETE PAVEMENT, TYPE MV

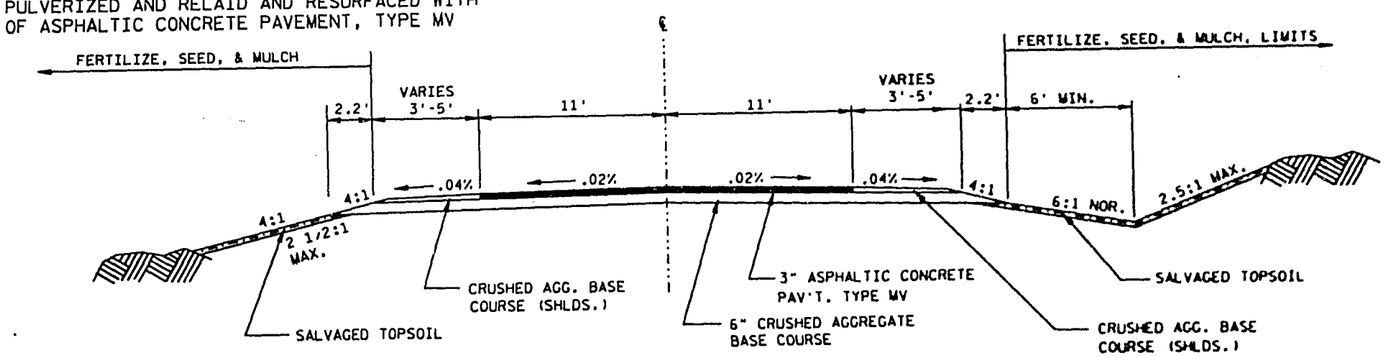

TYPICAL SECTION FOR SIDE ROADS

FILE NAME: HDGN:D6 15300800:1530TYP.DGN

STATE PROJECT NUMBER	SHEET NO
1530-08-71	2.3

SPECIAL DETAILS

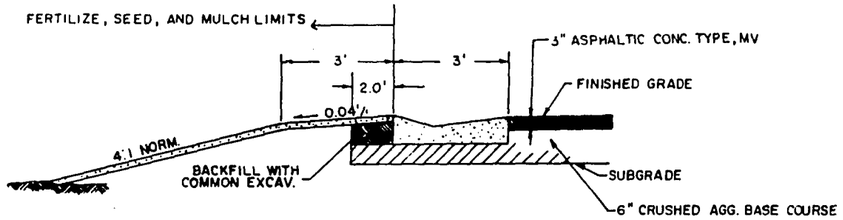

BERM DETAIL BEHIND CURB & GUTTER

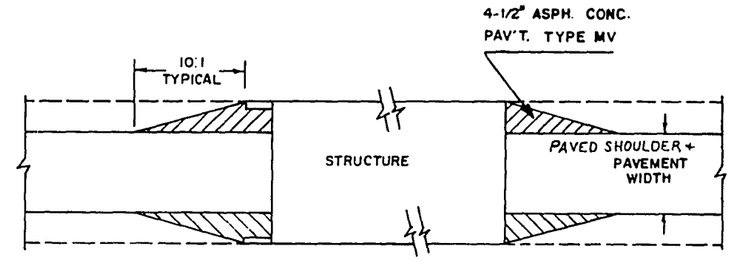

DETAIL FOR ASPHALTIC TAPERS AT STRUCTURES

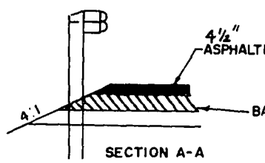

SECTION A-A

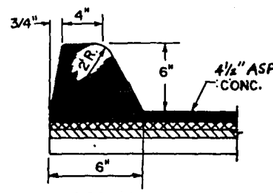

ASPHALTIC CURB

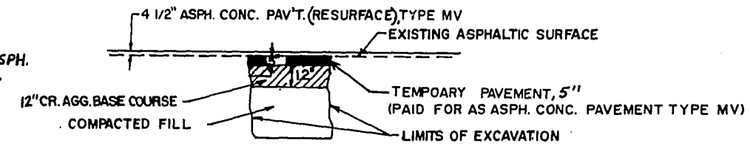

DETAIL OF TRENCH REPAIR
FOR
CULV. PIPE REMOVAL STA. 7+96 SEC. 1
CULV. PIPE INSTALLATION STA. 7+75 SEC. 1
CATTLE PASS REMOVAL STA. 47+00 SEC. 5

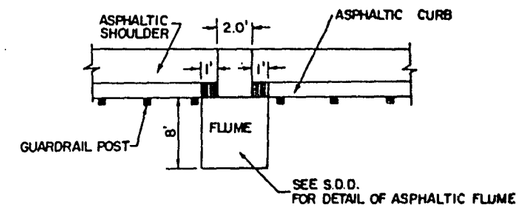

CURB OPENING FOR FLUME
ASPHALTIC CURB LOCATIONS

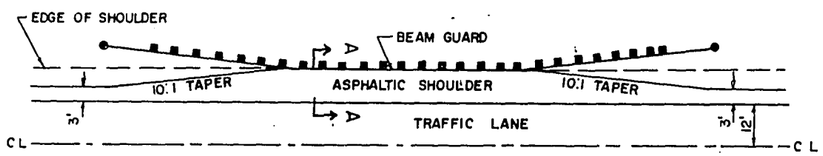

DETAIL FOR ASPHALTIC SHOULDER AT GUARDRAIL

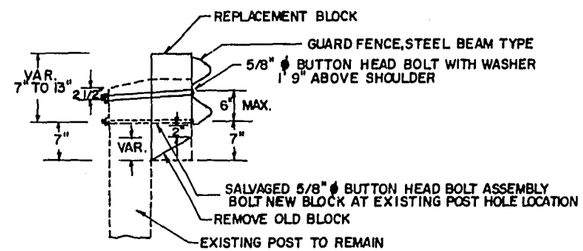

HEIGHT ADJUSTING REPLACEMENT BLOCK
FOR ADJUSTING STEEL PLATE BEAM GUARD

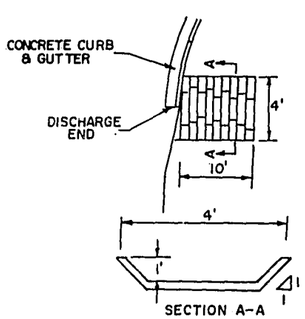

SECTION A-A

SOD FLUME DETAIL

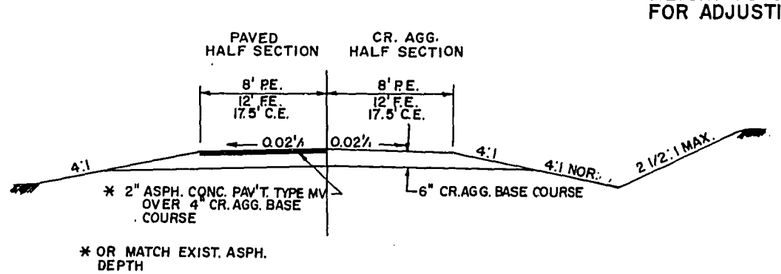

TYPICAL SECTION FOR
PRIVATE ENTRANCES

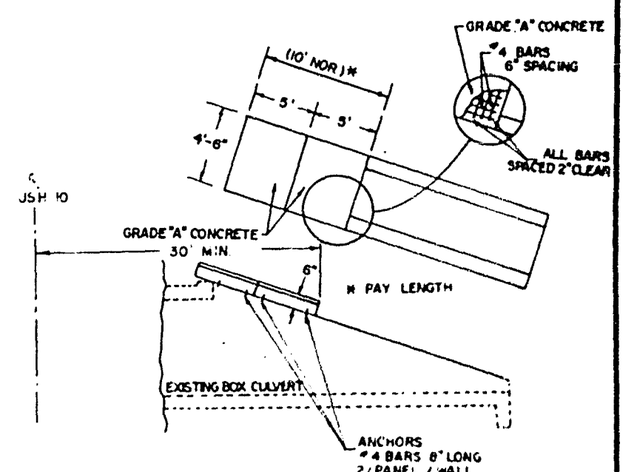

CONCRETE BOX CULVERT COVERS
SEC # 2 STA 83+00 LT STA 97+79 LT SEC # 1
SEC # 1 STA 98+66 LT STA 191+22 LT & RT SEC # 2
STA 259+39 LT & RT SEC # 2

STATE PROJECT NUMBER	SHEET NO.
1530-08-71	2.4

SPECIAL DETAILS

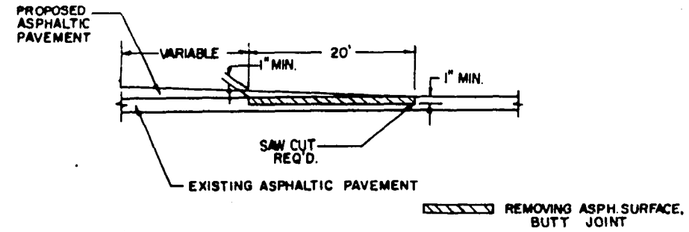

BUTT JOINT DETAIL

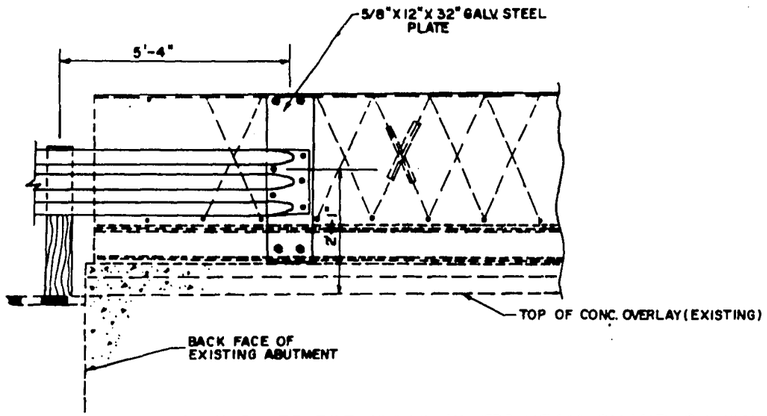

ANCHOR ASSEMBLIES FOR STEEL PLATE BEAM GUARD, SPECIAL
STRUCTURE B-47-986
(BEGINNING OF PROJECT)

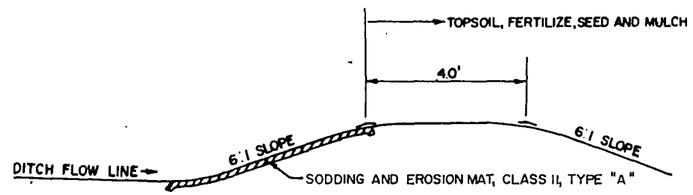

DETAIL FOR DITCH DAM

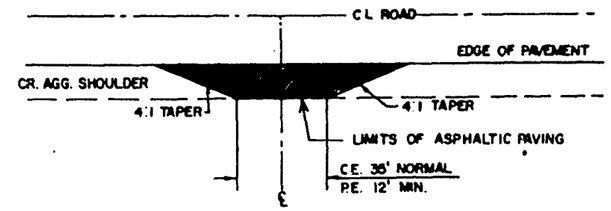

RURAL DRIVEWAY DETAIL

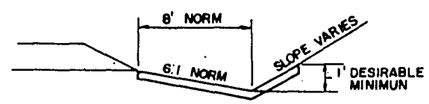

SOD OR EROSION MAT DETAIL
FOR DITCHES

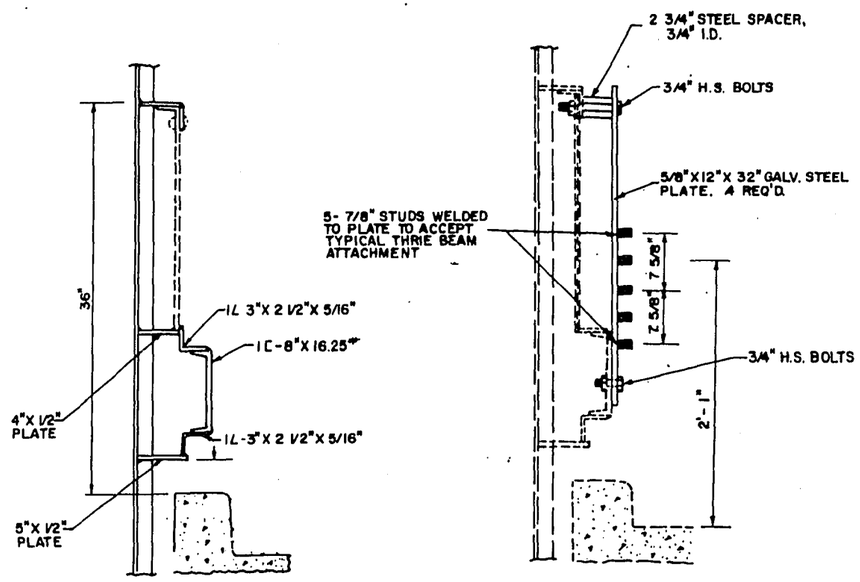

TYPICAL CROSS SECTION OF EXISTING RAILING AT THE END POST @ STRUCTURE B-47-986

SECTION THRU PROPOSED RAILING AT END POSTS @ STRUCTURE B-47-986

"ANCHOR ASSEMBLIES FOR STEEL PLATE BEAM GUARD, SPECIAL"
STRUCTURE B-47-986
(BEGINNING OF PROJECT)

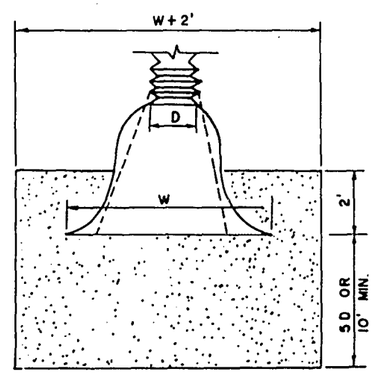

SOD AT PIPE DISCHARGE

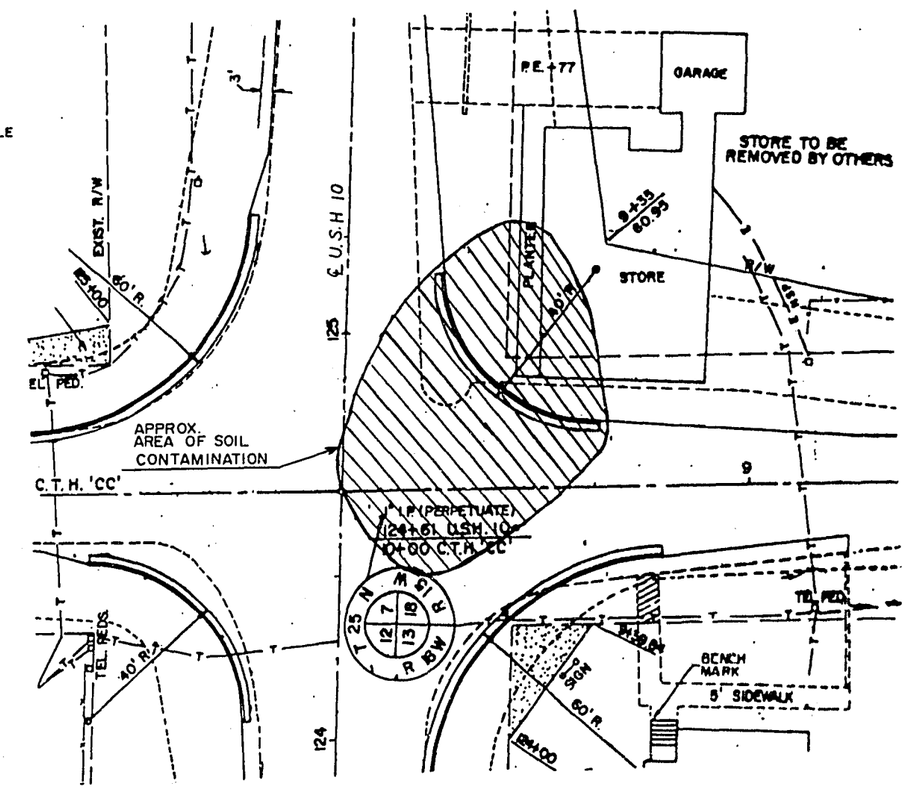

CONTAMINATED SOIL EXCAVATION
STA. 125+00 RT. SEC 2

STATE PROJECT NUMBER	SHEET NO.
1530-08-71	2.5

URBAN AREA

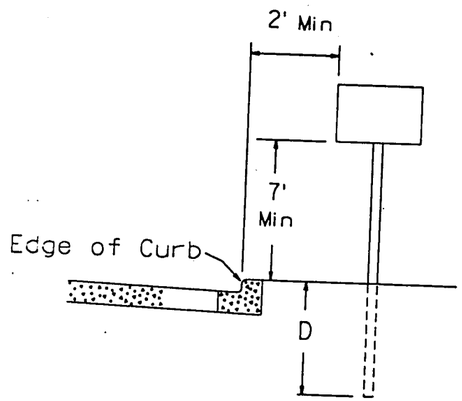

RURAL AREA

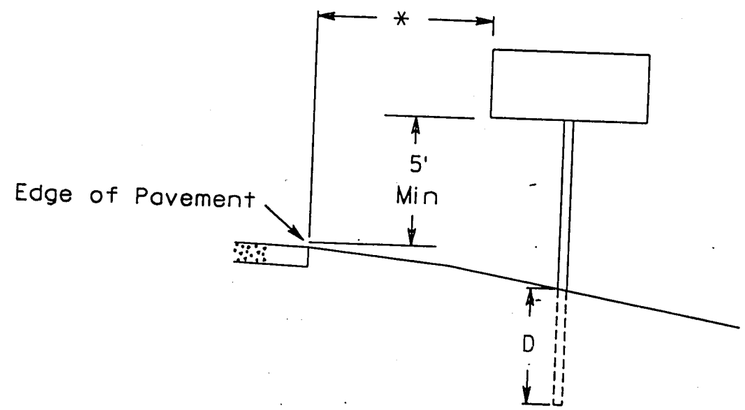

GENERAL NOTES

1. Sign assemblies wider than 4 feet or larger than 20 sq. ft. shall be mounted on multiple posts. See plate A4-4 for typical installations.

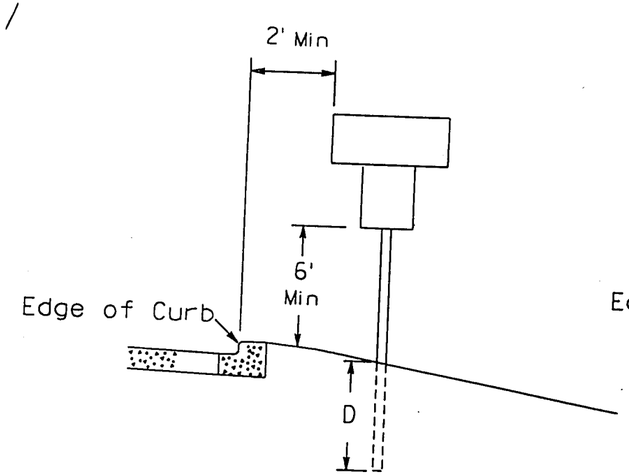

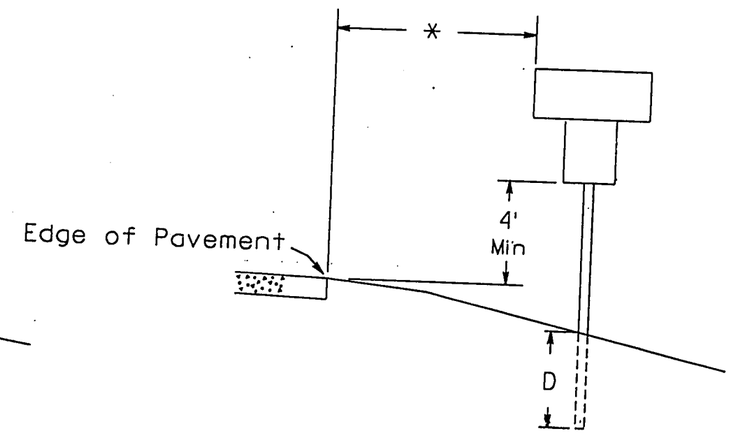

POST EMBEDMENT DEPTH

Area of Sign Installation (Sq. Ft.)	D (Min)
20 or Less	4'
Greater than 20	5'

* 12 feet minimum from edge of pavement. Where there is a paved shoulder, 6' minimum from edge of paved shoulder, but at least 12 feet from edge of pavement.

DATE DRAWN 9-12-91 DATE REDRAWN
DATE REVISED 1-14-92

TYPICAL INSTALLATION OF TYPE II SIGNS ON SINGLE POSTS

WISCONSIN DEPT OF TRANSPORTATION

APPROVED Robert F. Rusch
1/21/92

A4-3.0

TR_STDPLATE A43.DGN

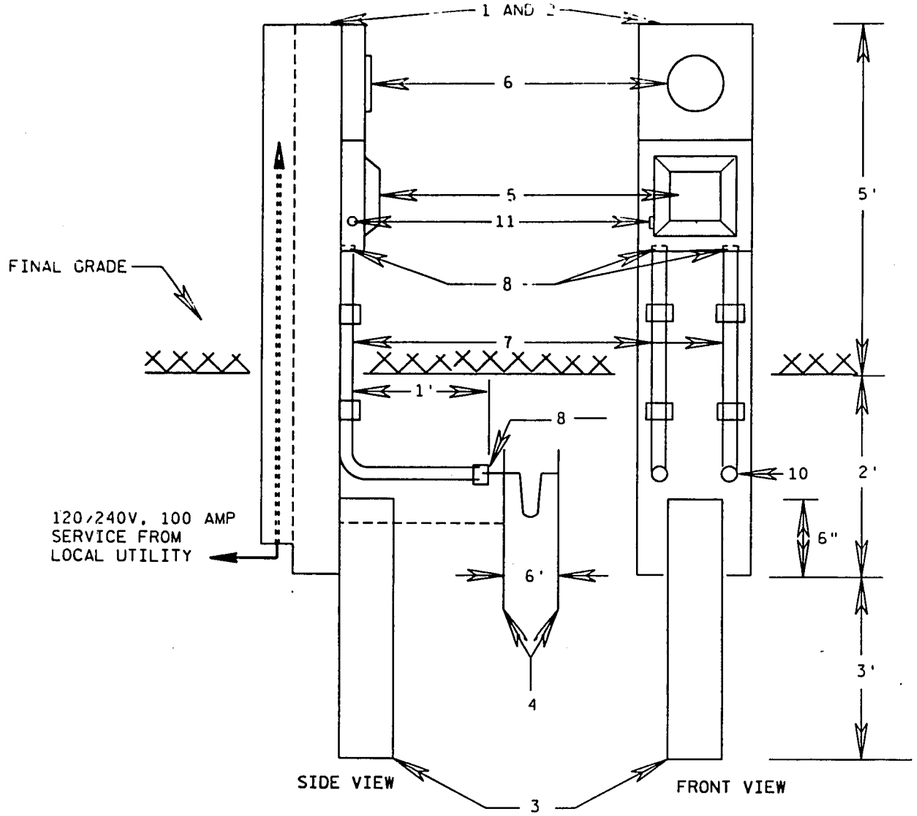

ELECTRICAL SERVICE, LIGHTING, METER BREAKER PEDESTAL
STA. 125+50 RT.

ELECTRICAL SERVICE PEDESTAL DETAIL

NOTES:

*1. THE INSTALLATION SHALL COMPLY WITH CODE, WI DOT, AND POWER COMPANY REQUIREMENTS.

2. POWER COMPANY AND WI DOT APPROVED PEDESTAL.

3. 6" x 4" OR 6" x 6" PRESSURE TREATED WOOD POST. BOLTED TO PEDESTAL.

4. GROUND RODS IF USED, AND GROUNDING CONDUCTOR SHALL NOT BE INSTALLED WITHIN TWO FEET OF THE UNDERGROUND CABLE ROUTE.
PREFERRED GROUNDING METHOD:
   A. ONE CONTINUOUS #6 COPPER STRANDED WIRE.
   B. TWO 5/8" x 8' COPPER CLAD STEEL RODS, LOCATED 6 FEET APART.

5. 100 AMP WEATHERPROOF DISCONNECT. THE SERVICE EQUIPMENT CONTAINING THE DISCONNECTING MEANS, OVERCURRENT PROTECTIVE DEVICES AND RECEPTACLES OR OTHER APPROVED MEANS FOR CONNECTING A SERVICE, SHALL BE LOCATED IN SIGHT OF AND NOT MORE THAN 30' FROM THE PARK-N-RIDE.

*6. SEALED METER SOCKET. (METER INSTALLATION NOT REQ'D. BY LOCAL UTILITY.)

7. CONDUIT (RIGID METAL OR SCHEDULE 80 PVC CONDUIT.)

8. BUSHING ON EACH END OF CONDUIT.

9. USE SUPPORTING CLAMPS AS REQUIRED.

10. CABLE-IN-DUCT TO LUMINAIRES. CABLE-IN-DUCT TO RUN INSIDE CONDUIT 1-FOOT, THEN ELECTRICAL WIRES EXTEND TO METER SOCKET.

11. PHOTOCELL

* CONTACT JERRY TOMESH
WI DOT
715-839-3787
AND
DENNIS CLOSE
NORTHERN STATES POWER
715-232-7405

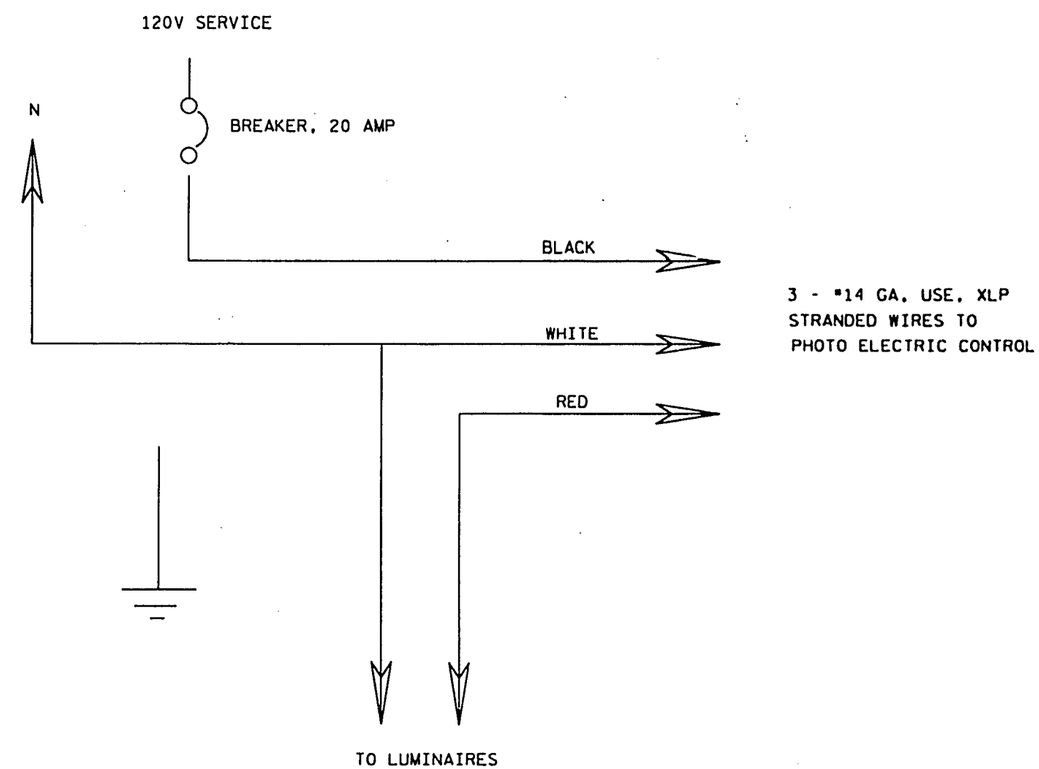

CONTROL WIRING SCHEMATIC
LIGHTING ELECTRICAL SERVICE

LEVELS ON - 1,2,3,4,5,6,7,8,9,10,11,12,13,14,15,16,17,18,19,20,21,22,23,24,25,26,27,28,29,30,31,32,33,34,35,36,37,38,39,40,41,42,43,44,45,46,47,48,49,50,51,52,53,54,55,56,57,58,59,60,61,62,63

STATE PROJECT NUMBER	SHEET NO
1530-08-71	2.7

INTERSECTION DETAILS

390TH AVE. @ STA. 8+00 & 330TH ST. @ STA. 217+16

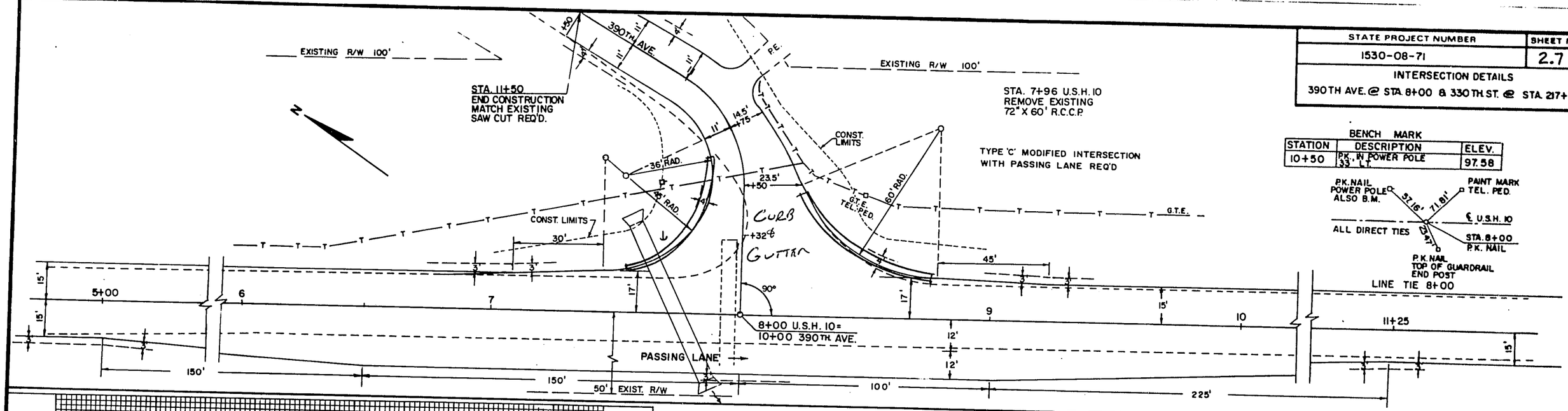

BENCH MARK

STATION	DESCRIPTION	ELEV.
10+50	P.K. IN POWER POLE 33' LT.	97.58

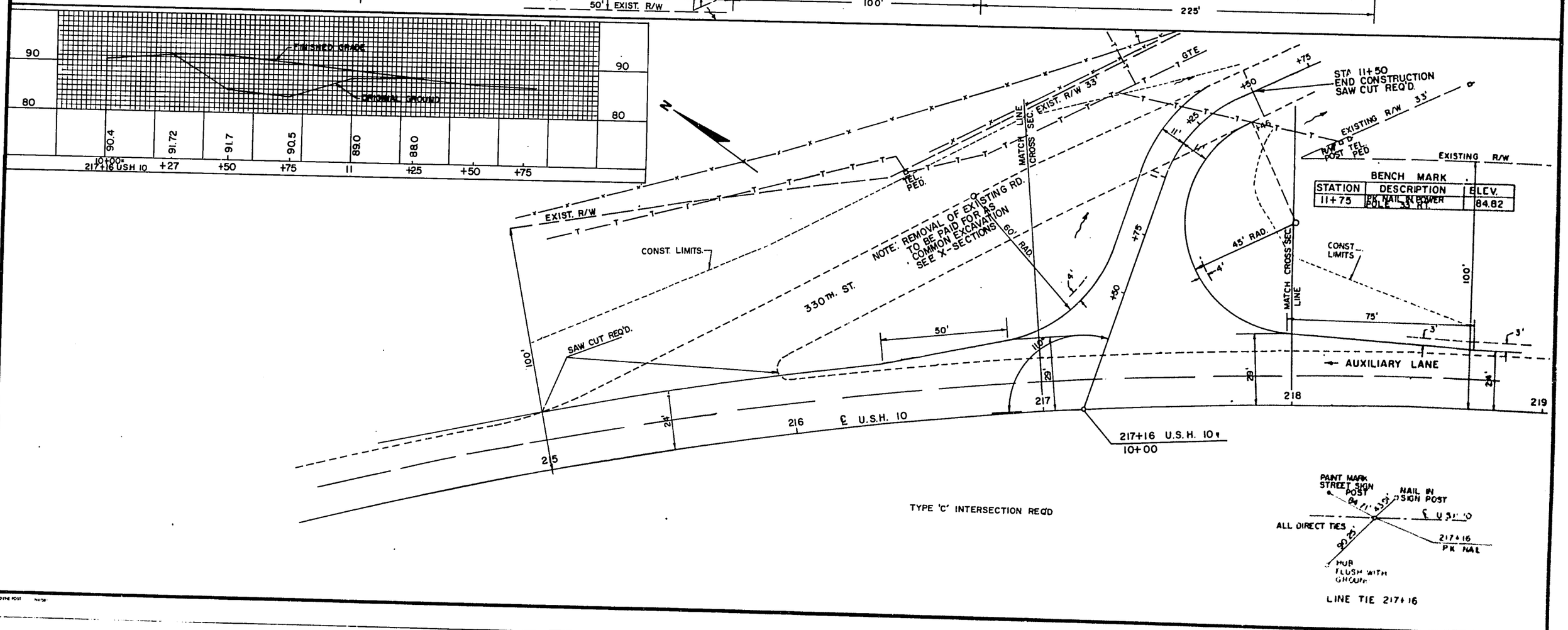

BENCH MARK

STATION	DESCRIPTION	ELEV.
11+75	P.K. NAIL IN POWER POLE 33' RT.	84.82

STATE PROJECT NUMBER	SHEET NO
1530-08-71	2.8

INTERSECTION DETAIL

322ND AVE.-STA. 94+50

BENCH MARK

STATION	DESCRIPTION	ELEV.
9+35 RT.	PK NAIL IN 4' TWIN COTTONWOOD TREE	104.64

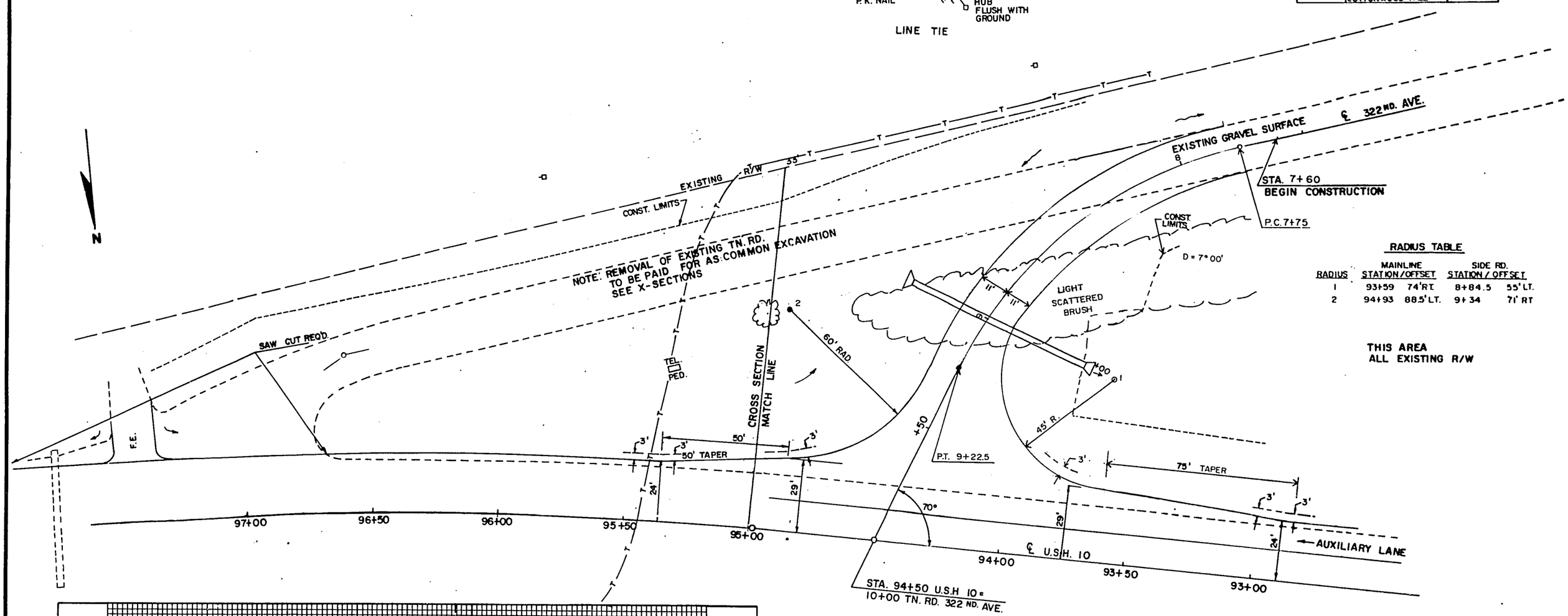

RADIUS TABLE

RADIUS	MAINLINE STATION/OFFSET		SIDE RD. STATION/OFFSET	
1	93+59	74' RT.	8+84.5	55' LT.
2	94+93	88.5' LT.	9+34	71' RT

THIS AREA
ALL EXISTING R/W

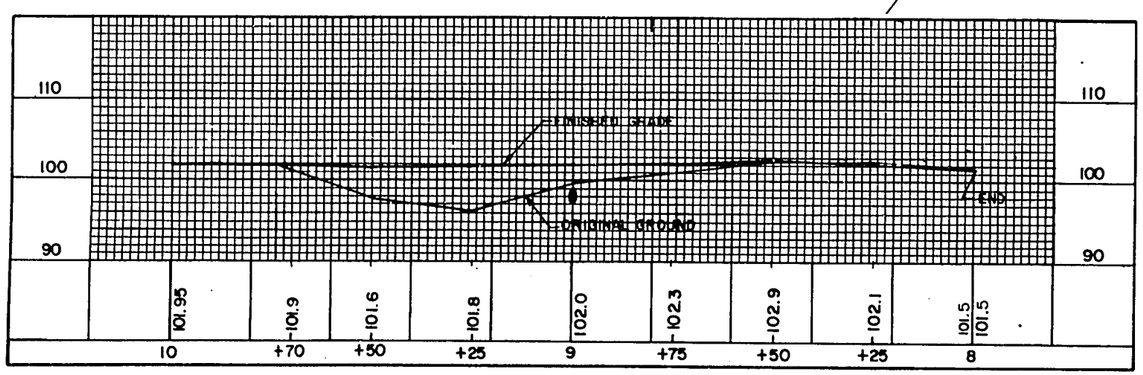

STA. 9+00 TN. RD.
1-24" X 56' C.P. CLASS III REQ'D.
2 APRON ENDWALLS REQ'D.

TYPE 'C' INTERSECTION REQUIRED

STATE PROJECT NUMBER	SHEET NO
1530-08-71	2.9

C.T.H. 'CC' INTERSECTION

STA 124+61, USH 10

BENCH MARK

STATION	DESCRIPTION	ELEV
9+25	N CORNER LOWER STEP CHURCH STEPS	100.00

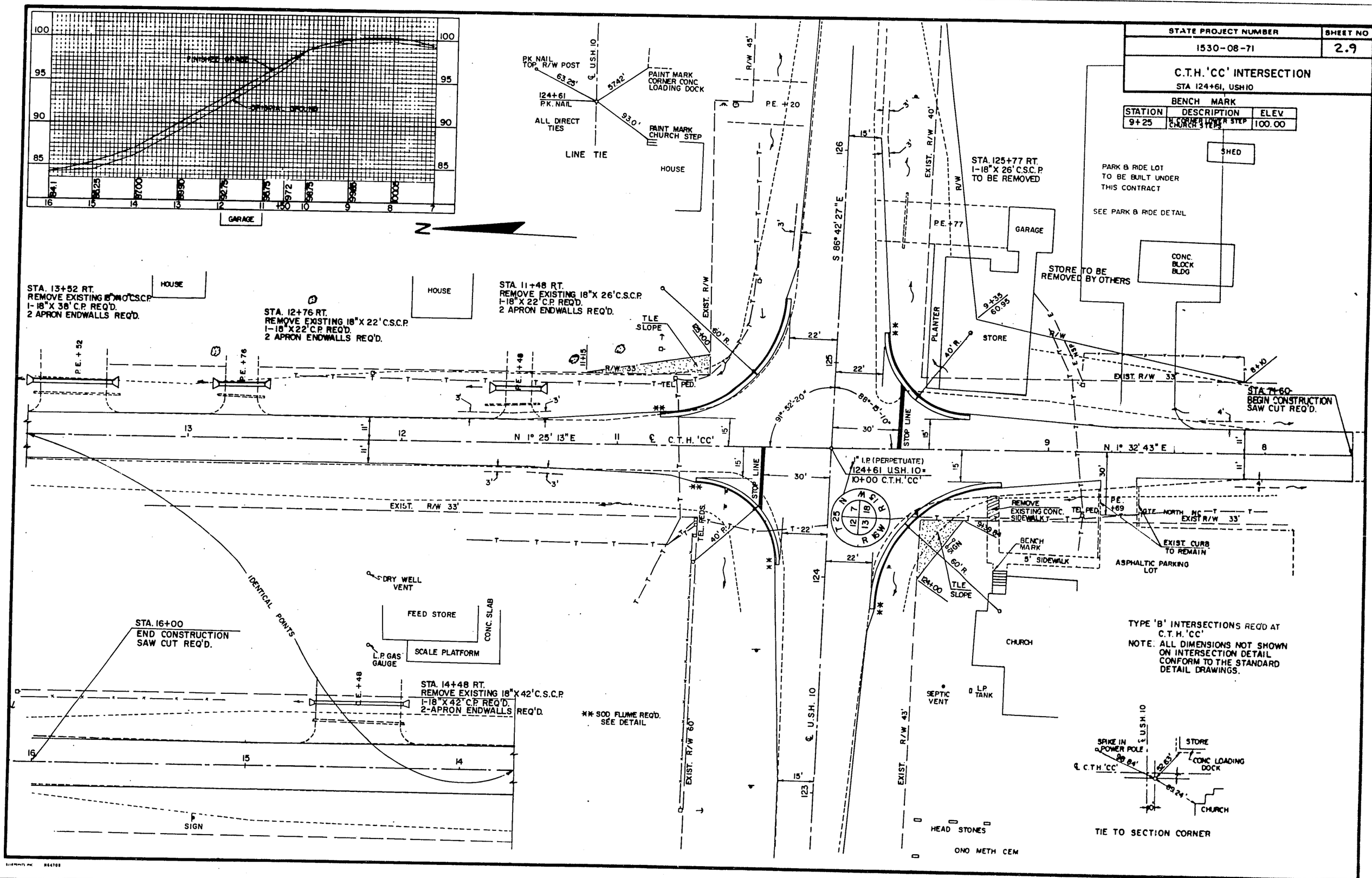

STATE PROJECT NUMBER	SHEET NO.
1530-08-71	2.10

PARK AND RIDE
CONSTRUCTION DETAILS

U.S.H. 10 — PIERCE CO.

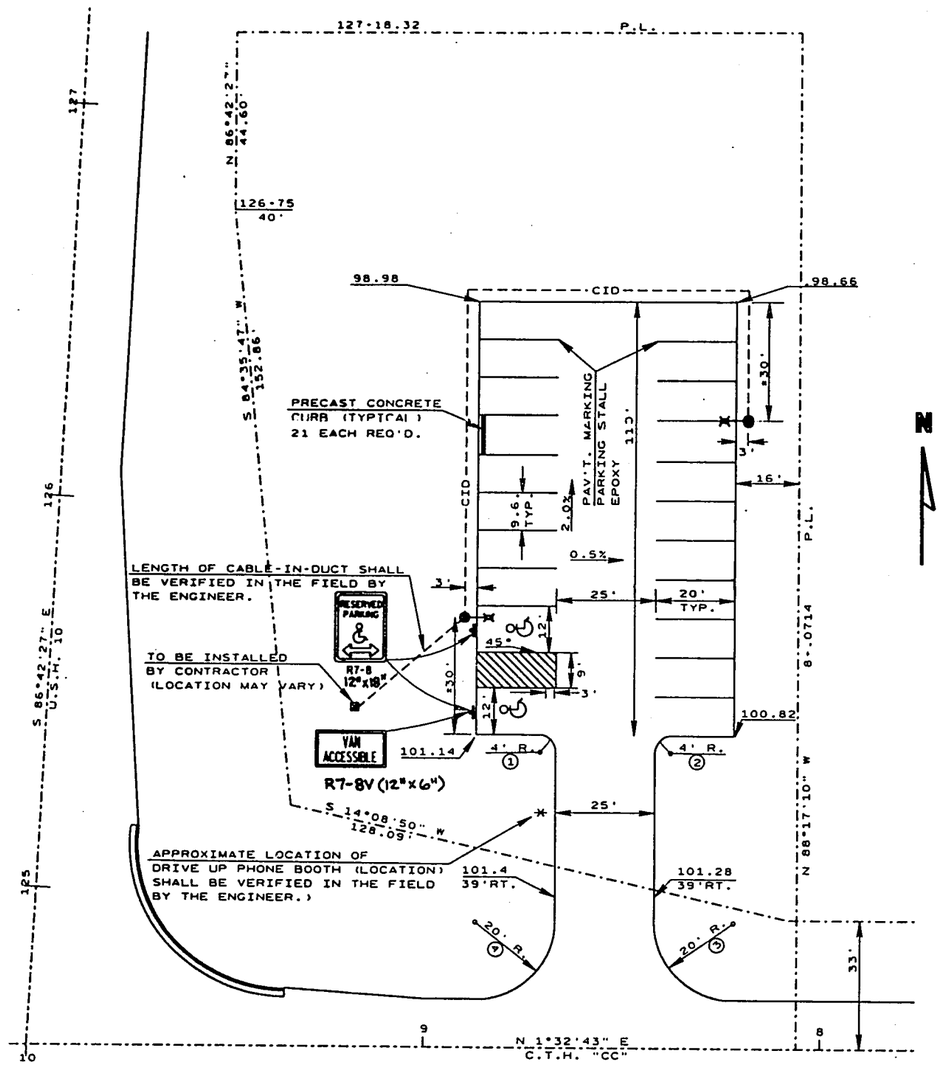

N

BENCH MARK

STATION	DESCRIPTION	ELEV.
9+25	N. CORNER LOWER CHURCH STEP	100.00

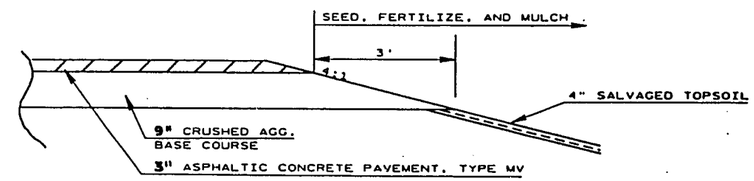

TYPICAL SECTION

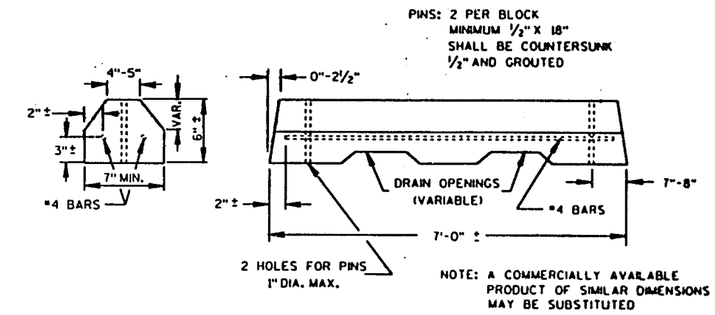

NOTE: A COMMERCIALLY AVAILABLE PRODUCT OF SIMILAR DIMENSIONS MAY BE SUBSTITUTED

PRECAST CONCRETE CURB
TYPICAL
21 EACH TOTAL REQ'D.

RADIUS TABLE

NO.	STATION	OFFSET	RADIUS
1	8+71	67' RT.	4'
2	8+38	67' RT.	4'
3	8+22	32' RT.	20'
4	8+87	32' RT.	20'

LEGEND

- LUMINAIRE-PROPOSED
- METER BREAKER PEDESTAL (METER NOT REQ'D.)
- —CID— CABLE-IN-DUCT, 3 CONDUCTOR, NO. 8
- TELEPHONE SERVICE

MISCELLANEOUS ITEMS

CABLE-IN-DUCT, 3 CONDUCTOR, NO. 8	225 L.F.
POLES, TYPE 5, 30-FEET	2 EACH
CONCRETE BASES, TYPE 5	2 EACH
LUMINAIRES, 150 WATTS, HIGH PRESSURE SODIUM	2 EACH
MAST ARMS, SINGLE MEMBER, 6-FOOT	2 EACH
ELECTRICAL SERVICE, LIGHTING, METER SOCKET, STA. 125+50 RT.	1 L.S.
WOOD POSTS 4"X4"X10'	2 EACH
SIGNS, TYPE II, REFLECTIVE	3.5 S.F.
TELEPHONE SERVICE, PARK AND RIDE LOT	1 L.S.

LEVELS ON • 1,2,3,4,5,6,7,8,9,10,11,12,13,14,15,16,17,18,19,20,21,22,23,24,25,26,27,28,29,30,31,32,33,34,35,36,37,38,39,40,41,42,43,44,45,46,47,48,49,50,51,52,53,54,55,56,57,58,59,60,61,62,63

FILE NAME: HDGN:o6 10280503:PARK.DGN

STATE PROJECT NUMBER	SHEET NO
1530-08-71	2.11

INTERSECTION
CTH 'S' CTH 'U'

BENCH MARKS

STATION	DESCRIPTION	ELEV.
9+25 CTH S	PK IN TOWER POLE 25' RT.	100.16
10+00 CTH U	PK IN STREET LIGHT POLE 18' RT.	105.92

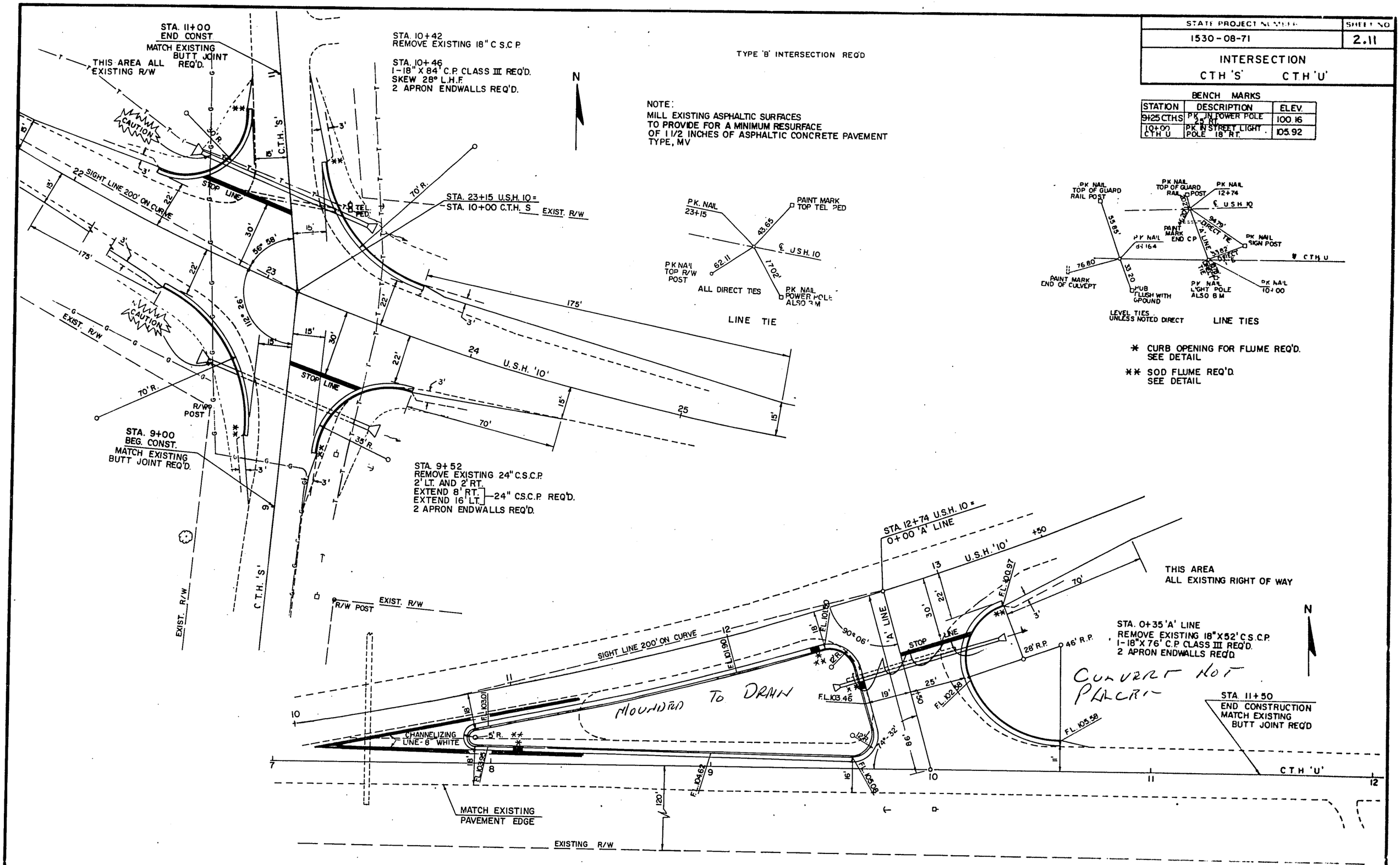

STATE PROJECT NUMBER	SHEET NO
1530-08-71	2.12

TRAFFIC CONTROL

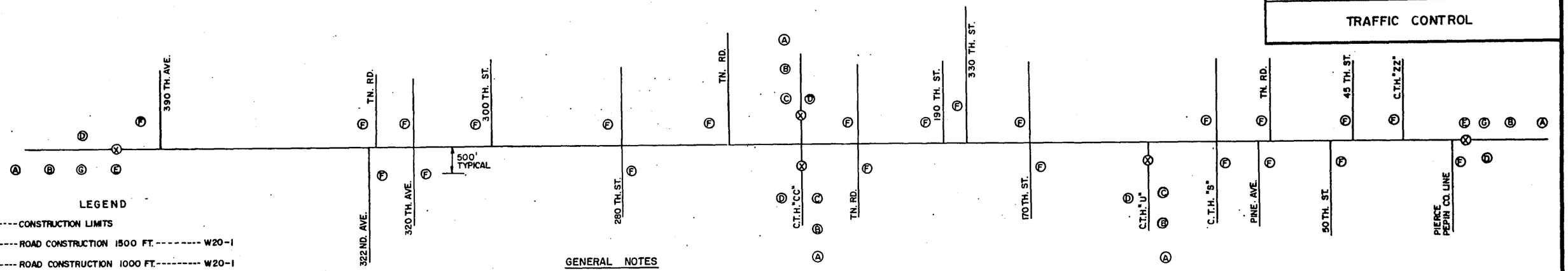

LEGEND

- Ⓧ-----CONSTRUCTION LIMITS
- Ⓐ-----ROAD CONSTRUCTION 1500 FT.--------W20-1
- Ⓑ-----ROAD CONSTRUCTION 1000 FT.--------W20-1
- Ⓒ-----ROAD CONSTRUCTION 500 FT.--------W20-1
- Ⓓ-----END CONSTRUCTION----------G20-2 60"X 24"
- Ⓔ-----ROAD CONSTRUCTION NEXT X MILES----G20-1 60"X 36"
- Ⓕ-----ROAD CONSTRUCTION AHEAD---------W20-1
- Ⓖ-----GROOVED PAVEMENT AHEAD---------W08-52 (SHALL BE PLACED 500' IN ADVANCE OF CONSTRUCTION LIMITS)

GENERAL NOTES

ALL SIGNS ARE 48"X 48" UNLESS OTHERWISE NOTED.

ALL SIGNS ON THIS PAGE TO BE MOUNTED ON PERMANENT SUPPORTS.

ROAD CONSTRUCTION WARNING SIGNS TO HAVE TYPE 'A' FLASHERS

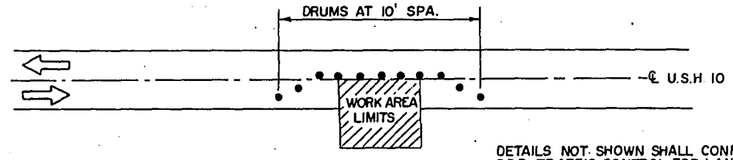

DETAILS NOT SHOWN SHALL CONFORM TO SDD TRAFFIC CONTROL FOR LANE CLOSURE

DETAIL FOR TRAFFIC CONTROL
FOR
OPEN TRENCHES ADJACENT TO ONE LANE TRAFFIC

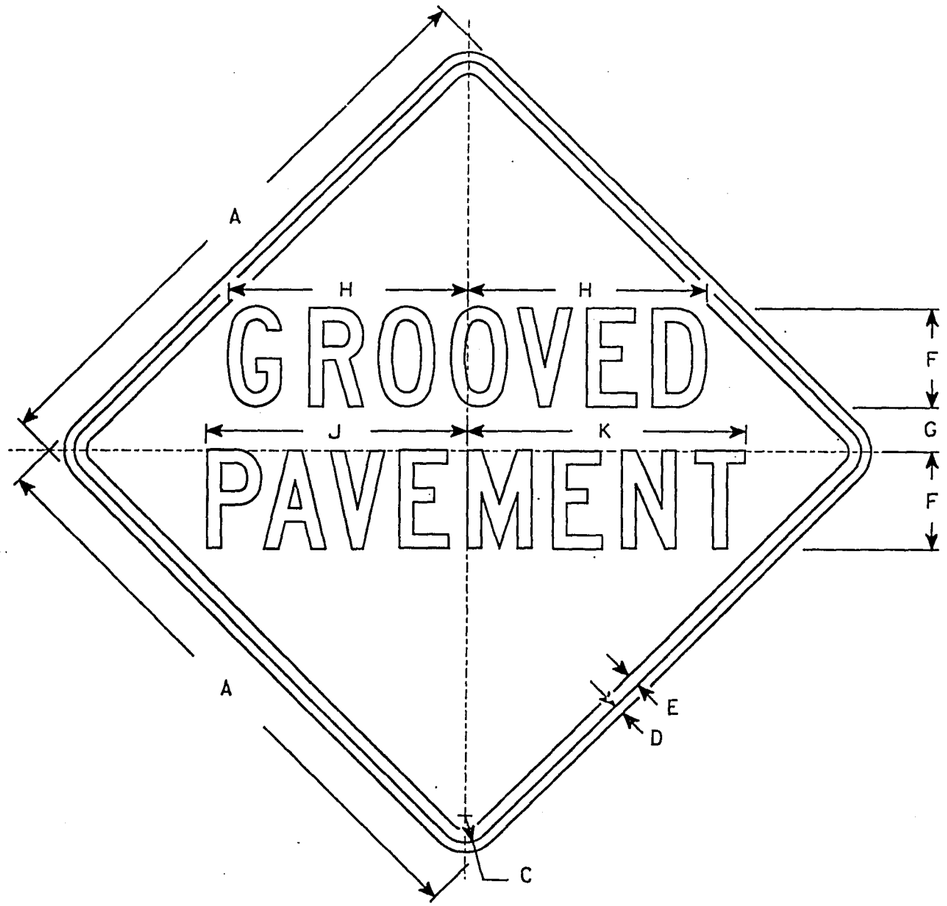

W8-52

NOTES

1. Sign is Type II - Reflective - reference WIS DOT Standard Specification for ROAD and BRIDGE CONSTRUCTION latest edition.
2. Color:
   Background - Yellow
   Message - Black
3. Message Series - C
4. Corners may be square or rounded when base material is plywood but borders shall be rounded as shown. When base material is metal, the corners and borders shall be rounded.

Metric equivalent for this sign is:

SIZE	
1	
2	750mm X 750mm
3	
4	900mm X 900mm
5	1200mm X 1200mm

SIZE	A	B	C	D	E	F	G	H	I	J	K	L	M	N	O	P	Q	R	S	T	U	V	W	X	Y	Z	Area sq. ft.
1																											
2	30		1 3/8	1/2	5/8	5	2 1/4	12 1/8		13 1/4	14 1/8																6.25
3																											
4	36		1 5/8	5/8	3/4	6	2 5/8	14 1/2		15 7/8	17																9.0
5	48		2 1/4	3/4	1	8	3 1/2	19 3/8		21 1/4	22 5/8																16.0

STANDARD SIGN
W8-52

WISCONSIN DEPT OF TRANSPORTATION

APPROVED Director, Office of Traffic

DATE 4/15/94 PLATE NO. W8-52.4

DATE 08/03/95

ESTIMATE OF QUANTITIES

ITEM	ITEM DESCRIPTION	UNIT	TOTAL	1530-08-71 QUANTITY
20101	CLEARING	STA.	23.00	23.00
20104	GRUBBING	STA.	28.00	28.00
20301	REMOVING OLD CULVERT, STATION 47+00	L.S.	1.00	1.00
20302	REMOVING OLD CULVERT, STATION 13+70	L.S.	1.00	1.00
20303	REMOVING OLD CULVERT, STATION 17+30	L.S.	1.00	1.00
20304	REMOVING OLD CULVERT, STATION 50+00	L.S.	1.00	1.00
20305	REMOVING OLD CULVERT, STATION 7+96	L.S.	1.00	1.00
20330	REMOVING OLD CULVERTS	EACH	17.00	17.00
20406	REMOVING CONCRETE SIDEWALK	S.Y.	6.00	6.00
20408	REMOVING MASONRY	C.Y.	8.40	8.40
20411	REMOVING GUARDRAIL	L.F.	10,390.00	10,390.00
20412	REMOVING FENCE	L.F.	27.00	27.00
20419	REMOVING ASPHALTIC SURFACE, BUTT JOINTS	S.Y.	520.00	520.00
20501	COMMON EXCAVATION	C.Y.	14,535.00	14,535.00
20502	ROCK EXCAVATION	C.Y.	8,890.00	8,890.00
20620	EXCAVATION FOR STRUCTURES, CULVERTS C-1894 (STA. 13+70)	L.S.	1.00	1.00
20621	EXCAVATION FOR STRUCTURES, CULVERTS C-1895 (STA. 17+30)	L.S.	1.00	1.00
20622	EXCAVATION FOR STRUCTURES, CULVERTS C-1898 (STA. 50+00)	L.S.	1.00	1.00
20801	BORROW EXCAVATION	C.Y.	5,537.00	5,537.00
20901	GRANULAR BACKFILL	C.Y.	942.00	942.00
21301	FINISHING ROADWAY	L.S.	1.00	1.00
30404	CRUSHED AGGREGATE BASE COURSE	TON	15,210.00	15,210.00
30409	SHAPING SHOULDERS	STA.	1,055.00	1,055.00
40204	ASPHALTIC MATERIAL FOR TACK COAT	GAL.	13,410.00	13,410.00
40501	ASPHALTIC MATERIAL FOR PLANT MIXES	TON	3,650.00	3,650.00
40713	ASPHALTIC CONCRETE PAVEMENT, TYPE MV	TON	60,685.00	60,685.00

SHEET 3

ITEM	ITEM DESCRIPTION	UNIT	TOTAL	1530-08-71 QUANTITY
50250	CONCRETE MASONRY ANCHORS, TYPE L, NO. 5 BARS	EACH	64.00	64.00
50401	CONCRETE MASONRY, CULVERTS	C.Y.	28.80	28.80
50505	HIGH-STRENGTH BAR STEEL REINFORCEMENT, CULVERTS	LB.	2,640.00	2,640.00
52003	CULVERT PIPE, CLASS III, 18-INCH	L.F.	422.00	422.00
52005	CULVERT PIPE, CLASS III, 24-INCH	L.F.	214.00	214.00
52015	CULVERT PIPE, CLASS III, 72-INCH	L.F.	80.00	80.00
52061	APRON ENDWALLS FOR CULVERT PIPE, 18-INCH	EACH	20.00	20.00
52063	APRON ENDWALLS FOR CULVERT PIPE, 24-INCH	EACH	8.00	8.00
52072	APRON ENDWALLS FOR CULVERT PIPE, 72-INCH	EACH	2.00	2.00
52107	CORRUGATED STEEL CULVERT PIPE, 24-INCH	L.F.	32.00	32.00
52109	CORRUGATED STEEL CULVERT PIPE, 30-INCH	L.F.	32.00	32.00
52111	CORRUGATED STEEL CULVERT PIPE, 36-INCH	L.F.	28.00	28.00
52112	CORRUGATED STEEL CULVERT PIPE, 42-INCH	L.F.	6.00	6.00
52115	CORRUGATED STEEL CULVERT PIPE, 60-INCH	L.F.	14.00	14.00
52149	STEEL APRON ENDWALLS FOR CULVERT PIPE, 24-INCH	EACH	4.00	4.00
52150	STEEL APRON ENDWALLS FOR CULVERT PIPE, 30-INCH	EACH	8.00	8.00
52151	STEEL APRON ENDWALLS FOR CULVERT PIPE, 36-INCH	EACH	4.00	4.00
52152	STEEL APRON ENDWALLS FOR CULVERT PIPE, 42-INCH	EACH	2.00	2.00
52155	STEEL APRON ENDWALLS FOR CULVERT PIPE, 60-INCH	EACH	1.00	1.00
60170	CONCRETE CURB AND GUTTER, 36-INCH, TYPE D	L.F.	2,184.00	2,184.00
60602	HEAVY RIPRAP	C.Y.	912.00	912.00

SHEET 3.1

ITEM	ITEM DESCRIPTION	UNIT	TOTAL	1530-08-71 QUANTITY
60604	MEDIUM RANDOM RIPRAP	C.Y.	406.00	406.00
61407	STEEL THRIE BEAM STRUCTURE APPROACH	L.F.	324.00	324.00
61408	STEEL PLATE BEAM GUARD, CLASS A	L.F.	16,254.00	16,254.00
61412	ANCHORAGES FOR STEEL PLATE BEAM GUARD, TYPE 1	EACH	71.00	71.00
61432	ADJUSTING STEEL PLATE BEAM GUARD	L.F.	10,490.00	10,490.00
61801	MAINTENANCE AND REPAIR OF HAUL ROADS	L.S.	1.00	1.00
61910	MOBILIZATION	L.S.	1.00	1.00
62101	LANDMARK REFERENCE MONUMENTS	EACH	3.00	3.00
62201	ASPHALTIC CONCRETE CURB	L.F.	2,624.00	2,624.00
62203	ASPHALTIC FLUMES	S.Y.	69.00	69.00
62502	TOPSOIL	C.Y.	950.00	950.00
62505	SALVAGED TOPSOIL	S.Y.	29,340.00	29,340.00
62702	MULCHING	S.Y.	51,830.00	51,830.00
62817	SILT FENCE MAINTENANCE	L.F.	3,150.00	3,150.00
62818	SILT SCREEN	L.F.	200.00	200.00
62819	MOBILIZATIONS, EROSION CONTROL	EACH	3.00	3.00
62821	MOBILIZATIONS, EMERGENCY EROSION CONTROL	EACH	3.00	3.00
62824	EROSION MAT, DELIVERED, CLASS I, TYPE B	S.Y.	8,666.00	8,666.00
62825	EROSION MAT, INSTALLED, CLASS I, TYPE B	S.Y.	8,666.00	8,666.00
62830	EROSION MAT, DELIVERED, CLASS II, TYPE A	S.Y.	1,027.00	1,027.00
62831	EROSION MAT, INSTALLED, CLASS II, TYPE A	S.Y.	1,027.00	1,027.00
62848	SILT FENCE, SILTY SOIL, DELIVERED	L.F.	3,150.00	3,150.00
62850	SILT FENCE, SILTY SOIL, INSTALLED	L.F.	3,150.00	3,150.00
62905	FERTILIZER, TYPE B	CWT.	23.30	23.30
63002	SEEDING	LB.	940.00	940.00
63101	SODDING	S.Y.	1,027.00	1,027.00
63401	WOOD POSTS, 4X4-INCH X 10-FT.	EACH	2.00	2.00

SHEET 3.2

ITEM	ITEM DESCRIPTION	UNIT	TOTAL	1530-08-71 QUANTITY
63702	SIGNS, TYPE II, REFLECTIVE	S.F.	3.50	3.50
64005	POLES, TYPE 5, 30-FEET	EACH	2.00	2.00
64014	CONCRETE BASES, TYPE 5	EACH	2.00	2.00
64032	LUMINAIRES, 150 WATTS, HIGH PRESSURE SODIUM	EACH	2.00	2.00
64051	MAST ARMS, SINGLE MEMBER, 6-FOOT	EACH	2.00	2.00
64066	CABLE-IN-DUCT, 3 CONDUCTOR, NO. 8	L.F.	225.00	225.00
64202	FIELD OFFICE, TYPE B	L.S.	1.00	1.00
64210	FIELD LABORATORY	L.S.	1.00	1.00
64301	TRAFFIC CONTROL	L.S.	1.00	1.00
64313	TRAFFIC CONTROL, DRUMS	DAYS	6,566.00	6,566.00
64318	TRAFFIC CONTROL, BARRICADES, TYPE III	DAYS	40.00	40.00
64321	TRAFFIC CONTROL, WARNING LIGHTS, TYPE A	DAYS	5,150.00	5,150.00
64326	TRAFFIC CONTROL, SIGNS	DAYS	5,890.00	5,890.00
64406	PAVEMENT MARKING, EPOXY, 4-INCH	L.F.	118,070.00	118,070.00
64414	PAVEMENT MARKING, CHANNELIZING, EPOXY, 8-INCH	L.F.	240.00	240.00
64431	PAVEMENT MARKING, SAME DAY, EPOXY, 4-INCH	L.F.	92,820.00	92,820.00
64437	PAVEMENT MARKING, STOP LINE, EPOXY, 18-INCH	L.F.	170.00	170.00
64484	TEMPORARY PAVEMENT MARKING	L.F.	84,500.00	84,500.00
64494	PAVEMENT MARKING, PARKING STALL, EPOXY	L.F.	580.00	580.00
64496	PAVEMENT MARKING, ISLAND NOSE, EPOXY	S.F.	580.00	580.00
64506	GEOTEXTILE FABRIC, TYPE HR	S.Y.	2,567.00	2,567.00
64601	SAWING EXISTING PAVEMENT	L.F.	316.00	316.00
90001	REMOVING CABLE GUARD	L.F.	3,787.00	3,787.00
90002	CONCRETE BOX CULVERT COVERS	L.F.	65.00	65.00
90003	CONTAMINATED SOIL EXCAVATION	C.Y.	815.00	815.00
90004	ELECTRICAL SERVICE, LIGHTING, METER BREAKER PEDESTAL,	L.S.	1.00	1.00

SHEET 33

ITEM	ITEM DESCRIPTION	UNIT	TOTAL	1530-08-71 QUANTITY
90005	TELEPHONE SERVICE, PARK AND RIDE LOT	L.S.	1.00	1.00
90006	ANCHOR ASSEMBLIES FOR STEEL PLATE BEAM GUARD, SPECIAL	EACH	4.00	4.00
90329	GRADING, SHAPING AND FINISHING FOR BEAM GUARD ANCHORAGES	EACH	66.00	66.00
90357	PULVERIZE AND RELAY EXISTING BASE AND SURFACE	STA.	574.00	574.00
90365	QUALITY MANAGEMENT PROGRAM, BASE COURSES	TON	15,210.00	15,210.00
90394	PROFILOGRAPH	L.S.	1.00	1.00
90402	QUALITY MANAGEMENT PROGRAM, ASPHALTIC MIXTURE	TON	60,685.00	60,685.00
90568	PRECAST CONCRETE CURB	EACH	21.00	21.00
90777	PAVEMENT MARKING, HANDICAP SYMBOLS, EPOXY	EACH	2.00	2.00
90999	ON-THE-JOB TRAINING	HRS.	300.00	300.00

SHEET 3.4

STATE PROJECT NUMBER	SHEET NO.
1530-08-71	3A

DETAIL SUMMARY OF MISCELLANEOUS QUANTITIES

CLEARING AND GRUBBING

STA. TO STA.	LOCATION	CLEARING STA.	GRUBBING STA.
5 + 00 - 6 + 00	SEC. 1 RT.	1	1
6 + 00 - 7 + 00	SEC. 1 RT.		1
8 + 00 - 10 + 00	SEC. 1 RT.		2
10 + 00 - 12 + 00	SEC. 1 RT.		2
9 + 00 - 10 + 00	322ND AVE. LT. & RT.	1	1
89 + 00 - 96 + 25	SEC. 4 RT.	7	7
0 + 00 - 7 + 00	SEC. 5 RT.	7	7
11 + 00 - 18 + 00	SEC. 5 RT.	7	7
	TOTAL	23	28

REMOVING OLD CULVERT, STATION 7+96

STATION	L.S.	REMARKS
7+96 SEC. NO. 1	1	72"X60' R.C.C.P

REMOVING OLD CULVERT, STATION 47+00

STATION	L.S.	REMARKS
47 + 00 SEC. NO. 5	1	3.5' x 6.0' x 56' CONC. CATTLE PASS

REMOVING OLD CULVERTS

STATION		EACH	DESCRIPTION
10 + 40	320TH ST.	1	24" x 52' C.S.C.P
10 + 36	280TH ST.	1	18" x 48' C.S.C.P
141 + 42	SEC. 2	1	36" x 16' C.S.C.P.
218 + 71	SEC. 2	1	36" x 12' C.S.C.P.
125 + 77	SEC. 2	1	18" x 26' C.S.C.P. (P.E. RT.)
11 + 48	C.T.H. 'CC'	1	18" x 22' C.S.C.P. (P.E. RT.)
12 + 76	C.T.H. 'CC'	1	18" x 22' C.S.C.P. (P.E. RT.)
13 + 52	C.T.H. 'CC'	1	18" x 40' C.S.C.P. (P.E. RT.)
14 + 48	C.T.H. 'CC'	1	18" x 42' C.S.C.P. (P.E. RT.)
0 + 35	'A' LINE	1	18" x 52' C.S.C.P.
10 + 42	C.T.H. 'S'	1	18" x 44' C.S.C.P.
9 + 52	C.T.H. 'S'	1	24" x 4' C.S.C.P. (2' EA. END)
32 + 15	SEC. 5	1	18" x 26' C.S.C.P. (F.E. RT.)
43 + 80	SEC. 5	1	18" x 26' C.S.C.P. (P.E. RT.)
52 + 40	SEC. 5	1	24" x 34' C.S.C.P. (P.E. RT.)
69 + 87	SEC. 5	1	18" x 26' C.S.C.P. (F.E. RT.)
6 + 75	SEC. 6	1	18" x 24' C.S.C.P. (P.E. RT.)
	TOTAL	17	

REMOVING CONCRETE SIDEWALK

STATION	S.Y.	REMARKS
9 + 25	6	C.T.H. 'CC' LT.

REMOVING MASONRY

STATION	LOCATION	C.Y.	DESCRIPTION
55 + 20 SEC. NO. 3	RT.	2.4	M.R.M. DITCH DAM
4 + 25 SEC. NO. 4	LT. & RT.	4.0	M.R.M. ENDWALLS
37 + 48 SEC. NO. 4	RT.	2.0	M.R.M. ENDWALL
	TOTAL	8.4	

REMOVING GUARDRAIL

STA. TO STA.		LOCATION	(STEEL BEAM) L.F.	(CABLE) L.F.
- 2 + 25	TO - 1 + 13 SEC. 1	LT.	112	
- 2 + 25	TO - 1 + 13 SEC. 1	RT.	112	
0 + 00	TO 1 + 12 SEC. 1	LT.	112	
0 + 00	TO 0 + 38 SEC. 1	RT.	38	
0 + 38	TO 8 + 13 SEC. 1	RT.		775
10 + 70	TO 14 + 90 SEC. 1	RT.		420
27 + 40	TO 28 + 54 SEC. 1	RT. & LT.	228	
29 + 16	TO 30 + 30 SEC. 1	RT. & LT.	228	
42 + 03	TO 64 + 92 SEC. 1	LT.		2289
50 + 64	TO 51 + 37 SEC. 1	RT.		73
71 + 90	TO 73 + 05 SEC. 1	LT.		115
72 + 75	TO 73 + 90 SEC. 1	RT.		115
97 + 45	TO 101 + 67 SEC. 2	LT.	422	
97 + 45	TO 101 + 25 SEC. 2	RT.	380	
200 + 12	TO 205 + 60 SEC. 2	RT.	548	
200 + 40	TO 11 + 00 190TH ST.	LT.	460	
259 + 90	TO 260 + 53 SEC. 2	RT.	63	
14 + 54	TO 25 + 50 SEC. 3	RT.	1096	
32 + 68	TO 46 + 10 SEC. 3	RT.	1362	
41 + 75	TO 64 + 00 SEC. 3	LT.	2225	
0 -200	TO 0 -140 SEC. 4	LT.	60	
8 + 85	TO 9 + 23 SEC. 4	LT.	38	
14 + 84	TO 15 + 22 SEC. 4	LT.	38	
25 + 95	TO 27 + 08 SEC. 4	RT.	113	
26 + 50	TO 27 + 10 SEC. 4	LT.	60	
28 + 77	TO 29 + 04 SEC. 4	LT.	27	
28 + 77	TO 29 + 04 SEC. 4	RT.	27	
47 + 66	TO 48 + 06 SEC. 4	LT.	40	
47 + 75	TO 48 + 13 SEC. 4	RT.	38	
56 + 62	TO 57 + 08 SEC. 4	RT.	46	
48 + 50	TO 48 + 88 SEC. 4	LT.	38	
63 + 63	TO 64 + 00 SEC. 4	LT.	37	
64 + 68	TO 65 + 06 SEC. 4	LT.	38	
81 + 93	TO 82 + 36 SEC. 4	LT.	43	
82 + 98	TO 83 + 36 SEC. 4	LT.	38	
9 + 44	TO 9 + 82 SEC. 5	LT.	38	
68 + 70	TO 70 + 62 SEC. 4	RT.	188	
11 + 80	TO 12 + 17 SEC. 5	LT.	38	
26 + 60 45TH ST.	TO 10 + 75 SEC. 5	LT.	70	
24 + 00	TO 28 + 00 SEC. 5	RT.	400	
10 + 75 45TH ST.	TO 28 + 90 SEC. 5	LT.	190	
46 + 00	TO 51 + 84 SEC. 5	RT.	584	
46 + 33 CTH 'ZZ'	TO 11 + 38 SEC. 5	LT.	240	
11 + 38 CTH 'ZZ'	TO 53 + 50 SEC. 5	LT.	575	
		TOTAL	10390	3787

REMOVING FENCE

STA. TO STA.	LOCATION	L.F.	TYPE
8 + 65 - 8 + 85	C.T.H. 'CC' RT.	27	WOOD RAIL WITH POST

REMOVING ASPHALTIC SURFACE, BUTT JOINTS

STA.	LOCATION	S.Y.
0 + 00	E. ABUT. B-47-986	49
28 + 54	W. ABUT. B-47-13	49
29 + 15	E. ABUT. B-47-13	49
	320TH ST. N & S	53
	300TH ST. NORTH	26
11 + 50	C.T.H. 'U'	49
9 + 00	C.T.H. 'S'	49
11 + 00	C.T.H. 'S'	49
26 + 97	W. ABUT. B-47-10	49
28 + 77	E. ABUT. B-47-10	49
11 + 00	END OF PROJECT	49
	TOTAL	520

YARDAGE SUMMARY

LOCATION	COMMON EXCAVATION C.Y.	FILL C.Y.	BORROW EXCAVATION C.Y.	ROCK EXCAVATION C.Y.	WASTE C.Y.
390TH AVE.	152	162 *	91		
PASSING LANE RT. STA.4+50 TO 12+00	576	941 *	836		
322ND AVE.	1719	576 *			855
C.T.H. 'CC'	524	1504 *	1852		
330TH ST.	1178	1167 *	573		
STA.23+50 - 32+28 LT. (FILL BEHIND C & G SEC. 3)		456 *	684		
C.T.H.'U' & C.T.H.'S'	59	513 *	711		
UNDISTRIBUTED TYPE 'C' INTERSECTIONS			300		
*ABOVE FILL EXPANDED BY 1.5					
AUX. LANE SEC.4-6 STA.75+00 - 11+00	10327	11877 **		8890***	7041
AUX. LANE:					
** FILL EXPANDED BY 1.10					
*** ROCK EX. EXPANDED BY 1.10					
PARK AND RIDE LOT		327 (*)	490		
(*) EXP. BY 1.5	14535	17603	5537	8890	7896

CRUSHED AGGREGATE BASE COURSE

STA. TO STA.	LOCATION	BASE TON	SHLDRS. TON
4 + 50 - 12 + 00 SEC. 1	PASSING LANE RT.	1019	48
33 + 50 - 115 + 50 SEC. 1	AUXILIARY LANE RT.		656
207 + 50 - 51 + 50 SEC.2&3	AUXILIARY LANE LT.		720
81 + 00 - 11 + 00 SEC.4-6	AUXILIARY LANE RT.	7712	795
10 + 17 - 11 + 50	390TH AVE.	223	28
8 + 00 - 10 + 29	322ND AVE.	292	23
7 + 60 - 16 + 00	C.T.H. 'CC'	1165	99
10 + 29 - 11 + 50	330TH AVE.	229	16
23 + 50 - 32 + 28 SEC. 3	CONC. C&G LT.	160	
6 + 00 - 11 + 50	C.T.H. 'U' INT.	70	5
9 + 00 - 11 + 00	C.T.H. 'S' INT.	145	12
MINOR SIDE ROADS (12) & DRIVEWAY & FIELD ENT.(63)	LT. & RT.	260	23
UNDISTRIBUTED USH 10	EXISTING LOW SHLDRS.		1000
PARK AND RIDE LOT		510	
	TOTAL	11785	3425

CROSS DRAINS

STA.	LOCATION	DIAM. INCHES	LENGTH L.F.	TYPE	CLASS	THICKNESS (IN.) STEEL	ALUMINUM	APRON ENDWALLS EACH
7 + 75 SEC. 1	℄	72"	60	C.P.*	III	0.138	0.164	2 *
105 + 53 SEC. 1	LT.	30"		C.S.C.P.				1
54 + 26 SEC. 2	RT.	30"	2'	C.S.C.P.	III	0.079		1
69 + 97 SEC. 2	LT.	30"	4'	C.S.C.P.	III	0.079		1
141 + 42 SEC. 2	RT.	36"	16'	C.S.C.P.	III	0.079		1
218 + 71 SEC. 2	LT.	36"	12'	C.S.C.P.	III	0.079		1
55 + 20 SEC. 3	RT.	24"		C.S.C.P.				1
4 + 25 SEC. 4	℄	36"		C.S.C.P.				2
37 + 48 SEC. 4	RT.	30"		C.S.C.P.				1
80 + 52 SEC. 4	RT.	30"	4'	C.S.C.P.	III	0.079		1
82 + 46 SEC. 4	RT.	42"	4'	C.S.C.P.	III	0.109		1
87 + 07 SEC. 4	RT.	30"	4'	C.S.C.P.	III	0.079		1
91 + 14 SEC. 4	RT.	30"	10'	C.S.C.P.	III	0.079		1
96 + 21 SEC. 4	RT.	30"	8'	C.S.C.P.	III	0.079		1
7 + 06 SEC. 5	RT.	42"	2'	C.S.C.P.	III	0.109		1
24 + 58 SEC. 5	RT.	60"	14'	C.S.C.P.	III	0.138		1
53 + 96 SEC. 5	RT.	24"	8'	C.S.C.P.	III	0.064		1

* CONCRETE OPTION REQUIRES PIPE TIES FOR APRON ENDWALLS AND FIRST TWO JOINTS

GRANULAR BACKFILL

STATION	LOCATION	C.Y.	REMARKS
50 + 00 SEC. NO. 3	RT.	2.0	C-1898
13 + 70 SEC. NO. 3	RT.	1.5	C-1894
17 + 30 SEC. NO. 3	RT.	1.5	C-1895
125+ 00 SEC. NO. 2	RT.	937	CONTAMINATION AREA
		942	

SHAPING SHOULDERS

STA. TO STA.	STA.
SEC. 1	
0 + 00 - 22 + 43	37.3
23 + 84 - 60 + 56.8	73.4
60 + 56 - 117 + 50	113.9
35 + 70 - 52 + 00	32.6
SEC. 2	
52 + 00 - 260 + 52.7	417.0
14 + 53.92 - 32 + 78.05	36.5
32 + 94.72 - 64 + 00	62.2
SEC. 3	
0 - 200 - 81 + 00	166.0
81 + 00 - 96 + 29.5	30.7
0 + 00 - 45 + 52	45.5
45 + 61.8 - 74 + 48.3	28.9
0 + 00 - 11 + 00	11.0
TOTAL	1055.0

DETAIL SUMMARY OF MISCELLANEOUS QUANTITIES

SAWING EXISTING PAVEMENT

LOCATION		L.F.
11+50	390TH AVE.	22
96+50 - 97+80	RT. SEC. 2	130
215+00 - 215+98	LT. SEC. 2	98
11+50	330TH ST.	20
7+60	C.T.H. CC	24
16+00	C.T.H. CC	22
	TOTAL:	316

CONCRETE BOX CULVERT COVERS

LOCATION		L.F.
97+79	SEC. 1 LT. SIDE ONLY	10
98+66	SEC. 1 LT. SIDE ONLY	10
83+00	SEC. 2 LT. SIDE ONLY	10
191+22	SEC. 2 LT.	10
191+22	SEC. 2 RT.	10
259+39	SEC. 2 LT.	5
259+39	SEC. 2 RT.	10
	TOTAL:	65

AVERAGE ESTIMATED QUANTITIES FOR EACH BEAM GUARD ANCHORAGE *

LOCATION EACH	FILL C.Y.	TOPSOIL S.Y.	MULCHING S.Y.	FERT. TYPE B CWT.	SEEDING LB.
	35	100	100	0.06	1.80

* FOR INFORMATIONAL PURPOSES ONLY

PULVERIZE AND RELAY EXISTING BASE AND SURFACE

LOCATION		STA.
0+00 AH. - 22+43 BK.	SEC. 1	22.4
23+84 AH. - 60+56 BK.	SEC. 1	36.7
60+55.9 AH. - 117+50 BK.	SEC. 1	57.0
35+70 AH. - 260+52.7 BK.	SEC. 2	224.8
14+53.92 AH. - 32+78.05 BK.	SEC. 3	18.2
32+94.72 AH. - 64+00 BK.	SEC. 3	31.1
0-200 AH. - 96+29 BK.	SEC. 4	98.3
0+00 AH. - 45+52 BK.	SEC. 5	45.5
45+62 AH. - 74+48 BK.	SEC. 5	29.0
0+00 AH. - 11+00	SEC. 6	11.0
	TOTAL:	574.0

GRADING, SHAPING & FINISHING FOR BEAM GUARD ANCHORAGES

LOCATION	EACH
0-252 SEC. 1 LT. & RT.	2
1+64 SEC. 1 LT.	1
13+88 SEC. 1 LT.	1
15+25 SEC. 1 LT.	1
16+14 SEC. 1 RT.	1
18+03 SEC. 1 LT.	1
19+41 SEC. 1 LT.	1
27+40 SEC. 1 LT. & RT.	2
30+30 SEC. 1 LT. & RT.	2
42+03 SEC. 1 LT.	1
66+91 SEC. 1 LT.	1
49+31 SEC. 1 RT.	1
51+69 SEC. 1 RT.	1
71+15 SEC. 1 LT.	1
71+75 SEC. 1 RT.	1
74+28 SEC. 1 LT.	1
74+38 SEC. 1 RT.	1
81+60 SEC. 1 LT.	1
82+50 SEC. 1 LT.	1
97+45 SEC. 2 LT. & RT.	2
101+23 SEC. 2 RT.	1
101+70 SEC. 2 RT.	1
200+12 SEC. 2 RT.	1
200+40 SEC. 2 LT.	1
11+00 SEC. 2 RT. 190TH ST.	1
205+62 SEC. 2 RT.	1
226+50 SEC. 2 RT.	1
227+00 SEC. 2 LT.	1
228+50 SEC. 2 RT.	1
229+00 SEC. 2 LT.	1
259+90 SEC. 2 RT.	1
25+49 SEC. 3 RT.	1
258+70 SEC. 2 LT.	1
260+08 SEC. 2 LT.	1
31+30 SEC. 3 RT.	1
46+10 SEC. 3 RT.	1
41+75 SEC. 3 LT.	1
0 - 138 SEC. 4 LT.	1
8+85 SEC. 4 LT.	1
15+22 SEC. 4 LT.	1
14+08 SEC. 4 RT.	1
15+45 SEC. 4 RT.	1
25+83 SEC. 4 RT.	1
26+33 SEC. 4 LT.	1
46+75 SEC. 4 RT.	1
48+04 SEC. 4 LT.	1
48+50 SEC. 4 LT.	1
58+12 SEC. 4 RT.	1
64+00 SEC. 4 LT.	1
64+68 SEC. 4 LT.	1
82+31 SEC. 4 LT.	1
82+98 SEC. 4 LT.	1
9+82 SEC. 5 LT.	1
11+80 SEC. 5 LT.	1
10+75 SEC. 5 LT. 45TH ST.	1
24+00 SEC. 5 RT.	1
10+75 SEC. 5 RT. 45 TH ST.	1
28+88 SEC. 5 LT.	1
46+33 SEC. 5 LT.	1
11+38 SEC. 5 LT. C.T.H. 'ZZ'	1
11+38 SEC. 5 RT. C.T.H. 'ZZ'	1
53+50 SEC. 5 LT.	1
TOTAL:	66

ASPHALTIC ITEMS

LOCATION		ASPH. MATL. FOR PLANT MIXES TON	ASPH. MATL. FOR TACK COAT GALS.	ASPH.CONC. PAVT TYPE MV TON
0+00 - 22+43 BK.	SEC. 1	113	455	1872
23+84.5 AH.-60+56 BK.	SEC. 1	226	877	3765
60+55.9 AH.-117+50 BK.	SEC. 1	375	1455	6245
35+70 AH. - 52+00	SEC. 2	85	326	1399
PASSING LANE 4+50-12+00 RT.		10	20	66
INTERSECTION (322ND AVE. LT.)		9	21	150
INTERSECTION (322ND AVE. RT.)		11	25	180
INTERSECTION (320TH ST. RT.)		6		100
INTERSECTION (320TH ST. LT.)		6		100
52+00 - 260+52.7 BK.	SEC. 2	1155	4480	19206
14+53.92 AH. - 32+78.05 BK.	SEC. 3	122	475	2035
32+94.72 AH. - 64+00 BK.	SEC. 3	192	750	3201
INTERSECTION (300TH ST. LT.)		6		100
INTERSECTION (280TH ST. LT.)		6		100
INTERSECTION (280TH ST. RT.)		6		100
INTERSECTION (330TH ST. WEST LT.)		6		100
INTERSECTION (C.T.H. 'CC' RT.)		14	33	240
INTERSECTION (C.T.H. 'CC' LT.)		28	64	460
PARK & RIDE		11	30	175
INTERSECTION @ 164+90 RT.		6		100
INTERSECTION @ 164+90 LT.		6		100
INTERSECTION (190TH ST. LT.)		6		100
INTERSECTION (330TH ST. EAST LT.)		8	19	135
INTERSECTION (170TH ST. LT)		6		100
INTERSECTION (170TH ST. RT.)		6		100
0-200 AH. - 96+29.5 BK.	SEC. 4	535	2070	8889
0+00 AH. - 45+52 BK.	SEC. 5	305	1184	5080
45+61.8 AH. - 74+48 BK.	SEC. 5	194	750	3221
0+00 AH. - 11+50	SEC. 6	68	265	1131
INTERSECTION (C.T.H. 'U' RT.)		18	31	300
INTERSECTION (C.T.H. 'S' LT.)		12	20	200
INTERSECTION (C.T.H. 'S' RT.)		11	19	180
INTERSECTION (PINE AVE. RT.)		6		100
INTERSECTION @ 37+10 LT.		6		100
INTERSECTION (50TH ST. RT.)		6		100
INTERSECTION (45TH ST. LT.)		6		100
INTERSECTION (C.T.H. 'ZZ' LT.)		14	31	225
INTERSECTION (10TH ST. RT.)		6		100
UNDISTRIBUTED		38	10	630
TOTALS:		3650	13410	60685

PAVEMENT MARKING, HANDICAP SYMBOLS, EPOXY
PAVEMENT MARKING, PARKING STALL, EPOXY

LOCATION	SYMBOLS EACH	PARKING STALL EPOXY L.F.
PARK & RIDE	2	580

PRECAST CONCRETE CURB

LOCATION	EACH
PARK & RIDE	21

LEVELS ON - 1,2,3,4,5,6,7,8,9,10,11,12,13,14,15,16,17,18,19,20,21,22,23,24,25,26,27,28,29,30,31,32,33,34,35,36,37,38,39,40,41,42,43,44,45,46,47,48,49,50,51,52,53,54,55,56,57,58,59,60,61,62,63

STATE PROJECT NUMBER	SHEET NO.
1530-06-71	3C

DETAIL SUMMARY OF MISCELLANEOUS QUANTITIES

SIDEROAD, PRIVATE AND FIELD ENTRANCE PIPES

STA.	LOCATION	DIAM. INCHES	LENGTH L.F.	TYPE	CLASS	THICKNESS (IN.) STEEL	THICKNESS (IN.) ALUMINUM	APRON ENDWALLS EACH
9 + 00	322nd AVE.	24	56	C.P.	III	0.064	0.075	2
10 + 40	320TH ST.	24	60	C.P.	III	0.064	0.075	2
10 + 36	260TH ST.	24	66	C.P.	III	0.064	0.075	2
11 + 48 RT.	C.T.H. 'CC'	18	22	C.P.	III	0.064	0.060	2
12 + 76 RT.	C.T.H. 'CC'	18	22	C.P.	III	0.064	0.060	2
13 + 52 RT.	C.T.H. 'CC'	18	38	C.P.	III	0.064	0.060	2
14 + 50 RT.	C.T.H. 'CC'	18	42	C.P.	III	0.064	0.060	2
0 + 35	'A'-LINE,	18	76	C.P.	III	0.064	0.075	2
9 + 52	C.T.H. 'S'	24	24	C.S.C.P.	III	0.064	0.060	2
10 + 46	C.T.H. 'S'	18"	84	C.P.	III	0.064	0.060	2
32 + 15 SEC. 5	F.E. RT.	18"	40	C.P.	III	0.064	0.060	2
43 + 80 SEC. 5	P.E. RT.	18"	32	C.P.	III	0.064	0.060	2
52 + 40 SEC. 5	P.E. RT.	24"	32	C.P.	III	0.064	0.060	2
69 + 87 SEC. 5	F.E. RT.	18	40	C.P.	III	0.064	0.060	2
6 + 75 SEC. 6	P.E. RT.	18	26	C.P.	III	0.064	0.060	2

CONCRETE CURB AND GUTTER, 36", TYPE 'D'

LOCATION	L.F.
23 + 50 TO 32 + 26 LT. (SEC. 3)	878
ISLAND C.T.H. 'U'	430
'A' LINE RT. AT C.T.H. 'U'	108
S.W. RADIUS C.T.H. 'S'	89
S.E. RADIUS C.T.H. 'S'	70
N.W. RADIUS C.T.H. 'S'	84
N.E. RADIUS C.T.H. 'S'	79
S.W. RADIUS C.T.H. 'CC'	64
S.E. RADIUS C.T.H. 'CC'	92
N.W. RADIUS C.T.H. 'CC'	92
N.E. RADIUS C.T.H. 'CC'	64
N.W. RADIUS C.T.H. 'ZZ'	92
N.E. RADIUS C.T.H. 'ZZ'	64
TOTAL	2184

RIPRAP & GEOTEXTILE FABRIC

STA. TO STA.	LOCATION	HEAVY RIPRAP C.Y.	MEDIUM RANDOM RIPRAP C.Y.	FABRIC TYPE HR S.Y.
5 + 50 - 12 + 50	SEC. 1 RT. SLOPE	912		1594
10 + 20 - 11 + 00	SEC. 5 RT. DITCH		67	160
17 + 00 - 18 + 00	SEC. 5 RT. DITCH		83	199
24 + 58 - 26 + 00	SEC. 5 RT. DITCH		118	283
45 + 00 - 47 + 65	SEC. 5 RT. DITCH		138	331
	TOTALS	912	406	2567

STEEL THRIE BEAM STRUCTURE APPROACH

STA. TO STA.	LOCATION	L.F.	ANCHOR ASSEMBLIES FOR STEEL PLATE BEAM GUARD, SPECIAL EACH	REMARKS
- 1 + 82 TO - 1 + 55 LT.	B-47-966	27	1	
- 1 + 82 TO - 1 + 55 RT.	B-47-966	27	1	
0 + 00 TO 0 + 27 LT.	B-47-966	27	1	
0 + 00 TO . 0 + 27 RT.	B-47-966	27	1	
26 + 27 TO 26 + 54 LT.	B-47-13	27		TYPE F RAIL
26 + 27 TO 26 + 54 RT.	B-47-13	27		TYPE F RAIL
29 + 16 TO 29 + 43 LT.	B-47-13	27		TYPE F RAIL
29 + 16 TO 29 + 43 RT.	B-47-13	27		TYPE F RAIL
26 + 70 TO 26 + 97 LT.	B-47-10	27		TYPE F RAIL
26 + 70 TO 26 + 97 RT.	B-47-10	27		TYPE F RAIL
28 + 77 TO 29 + 04 LT.	B-47-10	27		TYPE F RAIL
28 + 77 TO 29 + 04 RT.	B-47-10	27		TYPE F RAIL
	TOTALS	324	4	

ADJUSTING STEEL PLATE BEAM GUARD

STA. TO STA.	LOCATION	L.F.
9 + 23 TO 14 + 84	LT. SEC. 4	560
29 + 04 TO 37 + 00	LT. SEC. 4	796
29 + 04 TO 33 + 00	RT. SEC. 4	396
37 + 20 TO 47 + 66	LT. SEC. 4	1046
48 + 87 TO 63 + 63	LT. SEC. 4	1476
48 + 13 TO 56 + 62	RT. SEC. 4	849
65 + 06 TO 81 + 93	LT. SEC. 4	1687
83 + 36 TO 9 + 44	LT. SEC. 4 & 5	2237
12 + 17 TO 26 + 60	LT. SEC. 5	1443
	TOTAL	10,490

STEEL PLATE BEAM GUARD, CLASS A

STA. TO STA.	LOCATION	LENGTH L.F.	ANCHORAGES TYPE 1
0 - 252 TO 0 - 182	LT. SEC. 1	70	1
0 - 252 TO 0 - 182	RT. SEC. 1	70	1
0 + 27 TO 1 + 64	LT. SEC. 1	137	1
0 + 27 TO 16 + 14	RT. SEC. 1	1587	1
13 + 88 TO 15 + 25	LT. SEC. 1	137	2
18 + 03 TO 19 + 41	LT. SEC. 1	138	2
27 + 40 TO 28 + 27	LT. SEC. 1	87	1
27 + 40 TO 28 + 27	RT. SEC. 1	87	1
29 + 43 TO 30 + 30	LT. SEC. 1	87	1
29 + 43 TO 30 + 30	RT. SEC. 1	87	1
42 + 03 TO 66 + 91	LT. SEC. 1	2488	2
49 + 31 TO 51 + 69	RT. SEC. 1	238	2
71 + 15 TO 74 + 28	LT. SEC. 1	313	2
71 + 78 TO 74 + 38	RT. SEC. 1	263	2
81 + 60 TO 82 + 50	LT. SEC. 1	90	2
97 + 45 TO 101 + 70	LT. SEC. 2	425	2
97 + 45 TO 101 + 23	RT. SEC. 2	378	2
200 + 40 TO 11 + 00 190TH ST.	LT. SEC. 2	425	2
200 + 12 TO 205 + 62	RT. SEC. 2	550	2
227 + 00 TO 229 + 00	LT. SEC. 2	200	2
226 + 50 TO 228 + 50	RT. SEC. 2	200	2
258 + 70 TO 260 + 08	LT. SEC. 2	138	2
259 + 90 TO 25 + 49	RT. SEC. 2 & 3	1157	2
31 + 30 TO 46 + 10	RT. SEC. 3	1464	2
41 + 75 TO 0 - 136	LT. SEC. 3 & 4	2287	2
8 + 85 TO 9 + 23	LT. SEC. 4	38	1
14 + 08 TO 15 + 45	RT. SEC. 4	137	2
14 + 84 TO 15 + 22	LT. SEC. 4	38	1
26 + 33 TO 26 + 70	LT. SEC. 4	37	1
25 + 83 TO 26 + 70	RT. SEC. 4	87	1
47 + 66 TO 48 + 04	LT. SEC. 4	37	1
48 + 50 TO 48 + 87	LT. SEC. 4	37	1
46 + 75 TO 48 + 13	RT. SEC. 4	38	1
63 + 63 TO 64 + 00	LT. SEC. 4	37	1
56 + 62 TO 58 + 12	RT. SEC. 4	150	1
64 + 68 TO 65 + 06	LT. SEC. 4	38	1
66 + 70 TO 70 + 70	RT. SEC. 4	200	2
81 + 93 TO 82 + 31	LT. SEC. 4	38	1
82 + 96 TO 83 + 36	LT. SEC. 4	38	1
9 + 44 TO 9 + 82	LT. SEC. 5	38	1
11 + 80 TO 12 + 17	LT. SEC. 5	37	1
26 + 60 TO 10 + 75 45TH ST.	LT. SEC. 5	100	1
10 + 75 TO 28 + 88 45TH ST.	LT. SEC. 5	188	2
24 + 00 TO 28 + 00	RT. SEC. 5	410	2
46 + 33 TO 11 + 38 C.T.H. 'ZZ'	LT. SEC. 5	240	2
11 + 38 TO 53 + 50 C.T.H. 'ZZ'	LT. SEC. 5	590	2
45 + 50 TO 51 + 48	RT. SEC. 5	598	2
	TOTALS	16,254	71

LANDMARK REFERENCE MONUMENTS

LOCATION	EACH
124 + 54 10' RT. SEC. 2	3

ASPHALTIC CONCRETE CURB

STA. TO STA.	L.F.
258 + 25 TO 25 + 50 RT. SEC. 2 & 3	1324
33 + 00 TO 46 + 00 RT. SEC. 3	1300
TOTAL	2624

ASPHALTIC FLUMES

LOCATION	S.Y.
15 + 00 RT. SEC. 3	4.0
18 + 00 RT. SEC. 3	4.0
21 + 00 RT. SEC. 3	4.0
24 + 00 RT. SEC. 3	4.0
26 + 00 LT. SEC. 3	11.0
29 + 00 LT. SEC. 3	11.0
32 + 34 LT. SEC. 3	11.0
36 + 00 RT. SEC. 3	4.0
39 + 00 RT. SEC. 3	4.0
42 + 00 RT. SEC. 3	4.0
44 + 00 RT. SEC. 3	4.0
46 + 02 RT. SEC. 3	4.0
TOTAL	69.0

TOPSOIL, SALVAGED TOPSOIL, MULCHING, FERTILIZING & SEEDING

STATION - STATION	LOCATION	TOPSOIL C.Y.	SALVAGE TOPSOIL S.Y.	MULCH S.Y.	FERT. CWT.	SEED LBS.
10 + 20 - 11 + 50	390TH AVE. LT. & RT.		155	386	0.28	7
4 + 00 - 13 + 00	PASSING LANE RT.	54		1,144	0.77	21
8 + 00 - 9 + 70	322ND AVE. LT. & RT.		890	1,192	0.80	21
95 + 00 - 97 + 49	USH 10 RT. AT 322ND AVE.		1,502	1,752	1.15	32
7 + 60 - 16 + 00	C.T.H. 'CC' LT. & RT.		1,297	2,630	1.70	47
122 + 00 - 127 + 00	USH 10 LT. & RT. @ C.T.H. 'CC'		1,068	1,856	1.23	34
10 + 25 - 11 + 50	330TH ST. LT. & RT.		506	589	0.42	11
214 + 75 - 218 + 80	USH 10 LT. @ 330TH ST.		1,303	1,257	0.84	23
23 + 00 - 32 + 50	USH 10 LT. BERM BEHIND C&G		2,217	2,500	1.64	46
8 + 00 - 11 + 00	C.T.H. 'U' & 'A' LINE LT. & RT.		676	676	0.48	12
9 + 00 - 11 + 00	C.T.H. 'S' LT. & RT.		185	310	0.25	6
75 + 00 - 23 + 00 S 4 & 5	AUXILIARY LANE RT.	846		11,118	7.00	202
23 + 00 - 10 + 00 S 5 & 6	AUXILAIRY LANE RT.		18,641	24,940	5.76	450
UNDISTRIBUTED		50	500	1,000	0.68	18
PARK AND RIDE LOT			400	480	0.3	10
	TOTAL	950	29,340	51,830	23.3	940

EROSION MAT, CLASS I, TYPE B, DELIVERED AND INSTALLED

LOCATION	S.Y.	DESCRIPTION
(AUXILIARY LANE SEC. 4 & 5)		
STA. 82 + 46 TO 96 + 00 RT.	2,257	DITCH
STA. 96 + 21 TO 6 + 50 RT.	1,093	DITCH
STA. 7 + 00 TO 9 + 00 RT.	333	DITCH
STA. 11 + 00 TO 13 + 70 RT.	450	DITCH
STA. 13 + 80 TO 17 + 00 RT.	533	DITCH
STA. 18 + 00 TO 23 + 00 RT.	833	DITCH
STA. 30 + 00 TO 36 + 00 RT.	1,000	DITCH
STA. 44 + 00 TO 45 + 00 RT.	167	DITCH
STA. 50 + 00 TO 53 + 00 RT.	500	DITCH
STA. 54 + 00 TO 61 + 00 RT.	1,167	DITCH
STA. 65 + 00 TO 67 + 00 RT.	333	DITCH
TOTAL	8,666	

SILT FENCE DELIVERED/INSTALLED/MAINTENANCE (SILTY)

L.F.	REMARKS
450	VARIOUS DITCH CHECKS AND PROTECTION AT VARIOUS INLETS AND APRON ENDWALLS
2,700	UNDISTRIBUTED TOE OF SLOPE PROTECTION PLACED AS DIRECTED BY THE ENGINEER.
3,150 TOTAL	

TRAFFIC CONTROL, DRUMS, BARRICADES, WARNING LIGHTS, AND SIGNS

LOCATION	DRUM DAYS	BARRICADES TYPE III DAYS	WARNING LIGHTS TYPE 'A' (BARRICADES) DAYS	SIGN DAYS	WARNING LIGHTS TYPE 'A' (SIGNS) DAYS
MAINLINE (USH 10)				1300	1040
SIDE ROADS				4550	4030
ROAD CLOSURE (C.T.H. 'CC' NORTH)		20	40	20	
(330TH ST.)		20	40	20	
MAINLINE (USH10 OPEN TRENCHES)	66				
(USH10 ROADWAY EDGES)	6500				
TOTALS	6566	40	80	5890	5070

PAVEMENT MARKING, EPOXY, CHANNELIZING, SAME DAY, STOPLINE, ISLAND NOSE

LOCATION	4-INCH WHITE EDGELINE L.F.	SAME DAY 4-INCH YELLOW CENTERLINE L.F.	SAME DAY 4-INCH YELLOW NO-PASSING L.F.	4-INCH DASHED WHITE L.F.	18-INCH ** STOP LINE L.F.	8-INCH * CHANNELIZING L.F.	ISLAND NOSE L.F.
MAINLINE USH 10	111,660	12,150	75,770				
AUXILIARY LANES				6,340			
PASSING LANE (4+50-12+00)				70			
SIDEROADS					170	240	580
TOTALS	111,660 (1)	12,150 (2)	4,900 / 80,670 (2)	6,410 (1)	170	240	580

* CTH 'U' ISLAND (SEE INTERSECTION DETAIL)

** CTH 'CC', 'U' & 'S' (SEE INTERSECTION DETAILS)

(1) PAV'T. MARKING, EPOXY, 4-INCH TOTAL = 118,070 L.F.

(2) PAV'T. MARKING, SAME DAY, EPOXY, 4-INCH TOTAL = 92,820 L.F.

TEMPORARY PAVEMENT MARKING

LOCATION	DESCRIPTION	L.F.
USH 10 (BINDER COURSE)	NO PASSING (4" SOLID)	80,670
	℄ (4" x 4' DASHES)	3,830
	TOTAL =	84,500

SODDING & EROSION MAT, CLASS II, TYPE "A"

LOCATION	S.Y.	REMARKS
USH 10		
STA. 7 + 75 LT. & RT. SEC. 1	52	C.P. INLET & DISCH.
STA. 105 + 53 LT. SEC. 1	15	C.P. INLET
STA. 105 + 53 LT. SEC. 1	40	DITCH DAM
STA. 54 + 26 RT. SEC. 2	15	C.P. INLET
STA. 69 + 97 LT. SEC. 2	15	C.P. INLET
STA. 141 + 42 RT. SEC. 2	17	C.P. DISCH.
STA. 218 + 71 LT. SEC. 2	17	C.P. INLET
STA. 56 + 20 RT. SEC. 3	13	C.P. INLET
STA. 56 + 20 RT. SEC. 3	32	DITCH DAM
STA. 4 + 25 LT. & RT. SEC. 4	43	C.P. INLET & DISCH.
STA. 37 + 46 RT. SEC. 4	15	C.P. DISCH.
STA. 80 + 44 RT. SEC. 4	20	DITCH DAM
STA. 80 + 52 RT. SEC. 4	15	C.P. INLET
STA. 82 + 46 RT. SEC. 4	20	C.P. INLET
STA. 87 + 03 RT. SEC. 4	20	DITCH DAM
STA. 87 + 07 RT. SEC. 4	16	C.P. INLET
STA. 91 + 06 RT. SEC. 4	16	DITCH DAM
STA. 91 + 14 RT. SEC. 4	15	C.P. INLET
STA. 96 + 14 RT. SEC. 4	20	DITCH DAM
STA. 96 + 21 RT. SEC. 4	15	C.P. INLET
STA. 7 + 00 RT. SEC. 5	30	DITCH DAM
STA. 7 + 06 RT. SEC. 5	20	C.P. INLET
STA. 13 + 62 RT. SEC. 5	27	DITCH DAM
STA. 32 + 15 F.F. RT. SEC. 5	22	C.P. INLET & DISCH.
STA. 43 + 80 P.E. RT. SEC. 5	22	C.P. INLET & DISCH.
STA. 52 + 40 P.E. RT. SEC. 5	26	C.P. INLET & DISCH.
STA. 53 + 80 RT. SEC. 5	22	DITCH DAM
STA. 53 + 96 RT. SEC. 5	13	C.P. INLET
STA. 69 + 87 F.E. RT. SEC. 5	22	C.P. INLET & DISCH.
STA. 6 + 75 P.E. RT. SEC. 6	22	C.P. INLET & DISCH.
322ND AVE.		
STA. 9 + 00 LT. & RT.	26	C.P. INLET & DISCH.
C.T.H. 'CC'		
STA. 9 + 70 LT.	4	FLUME
STA. 9 + 75 RT.	4	FLUME
STA. 10 + 25 LT.	5	FLUME
STA. 10 + 60 LT.	5	FLUME
STA. 10 + 60 RT.	3	FLUME
STA. 11 + 48 P.E. RT.	22	C.P. INLET & DISCH.
STA. 12 + 76 P.E. RT.	22	C.P. INLET & DISCH.
STA. 13 + 52 P.E. RT.	22	C.P. INLET & DISCH.
STA. 14 + 50 P.E. RT.	22	C.P. INLET & DISCH.
C.T.H. 'U'		
STA. 8 + 10 LT.	4	FLUME
STA. 0 + 20 'A' LINE RT.	5	FLUME
STA. 0 + 35 'A' LINE	22	C.P. INLET & DISCH.
STA. 0 + 40 'A' LINE RT.	5	FLUME
STA. 0 + 25 'A' LINE LT.	4	FLUME
C.T.H. 'S'		
STA. 9 + 25	26	C.P. INLET & DISCH.
STA. 10 + 46	22	C.P. INLET & DISCH.
STA. 9 + 25 RT.	4	FLUME
STA. 9 + 30 LT.	4	FLUME
STA. 10 + 60 RT.	5	FLUME
STA. 10 + 65 LT.	5	FLUME
TN. RD.		
111 + 58 SEC. 1	26	C.P. INLET & DISCH.
82 + 40 SEC. 2	26	C.P. INLET & DISCH.
UNDISTRIBUTED	78	
TOTAL	1027	

R/W PROJECT NUMBER	SHEET NUMBER	TOTAL SHEETS
1530-08-21		
FEDERAL PROJECT NUMBER	4.0	

PLAT OF RIGHT OF WAY REQUIRED FOR
ELLSWORTH-DURAND ROAD
C.T.H. 'K'-EAST COUNTY LINE SECTION

U.S.H. 10 — PIERCE CO.

0' 25' 50'

1530-08-71 — 4.0

GRID FACTOR .9999000

SCHEDULE OF LANDS & INTERESTS REQUIRED

PARCEL NUMBER	SHEET NUMBER	OWNER	INTEREST REQUIRED	TOTAL ACRES	R/W ACRES REQUIRED NEW	EXIST	TOTAL	TOTAL ACRES REMAINING	T.L.E. ACRES
1	4	ONO METHODIST EPISCOPAL CHURCH OF GRANGE HALL	T.L.E.	—	—	—	—	—	239 SQ. FT.
2	4	RICHARD R. PROCH KEVIN M. HUPPERT	FEE	1.11	0.10	0.33	0.43	0.68	—
3	4	PHILLIP A. & MARY L. ROBERTS	T.L.E.	—	—	—	—	—	236 SQ. FT.
4	4.1	NORBERT G. KANNEL	FEE	201.00	0.10	1.34	1.44	199.56	—

CONVENTIONAL SIGNS AND ABBREVIATIONS

AC. ACRE
AH. AHEAD
A.P. ACCESS POINT
BK. BACK
C.S.M. CERTIFIED SURVEY MAP
D DEGREE OF CURVE
ET. AL. AND OTHERS
FRL. FRACTIONAL
FT. FEET
L LENGTH OF CURVE
L.C. LONG CHORD OF CURVE
LT. LEFT
L.P. PROPANE GAS
P.C. POINT OF CURVATURE
P.E. PRIVATE ENTRANCE
P.I. POINT OF INTERSECTION
P.T. POINT OF TANGENCY
P.L.E. PERMANENT LIMITED EASEMENT
R. RADIUS
REM. REMAINING
RT. RIGHT
R/W RIGHT OF WAY
S.F. SQUARE FEET
T TANK
TEMP TEMPORARY
T.L.E. TEMPORARY LIMITED EASEMENT
V. VILLAGE

	COMPUTERIZED	NON-COMPUTERIZED
POWER POLE	●	○
TELEPHONE POLE	●	○
SIGN	●	○
TELEPHONE PEDESTAL	■	□

NO ACCESS (BY ACQUISTION)
NO ACCESS (BY STATUTORY AUTHORITY)
NO ACCESS (BY PREVIOUS PROJECT)

CONVENTIONAL SIGNS

PROPERTY LINE
LOT LINE
LIMITED EASEMENT
EXISTING RIGHT OF WAY
NEW RIGHT OF WAY
REFERENCE LINE
SLOPE INTERCEPT

CULVERT IN PLACE
CULVERT REQUIRED
COMBUSTIBLE FLUIDS (UNDER PRESSURE) — CAUTION
UNDERGROUND UTILITIES
GAS — G
ELECTRIC — E
TELEPHONE — T
SERVICE PEDESTAL
CABLE MARKER
POWER POLE
TELEPHONE POLE

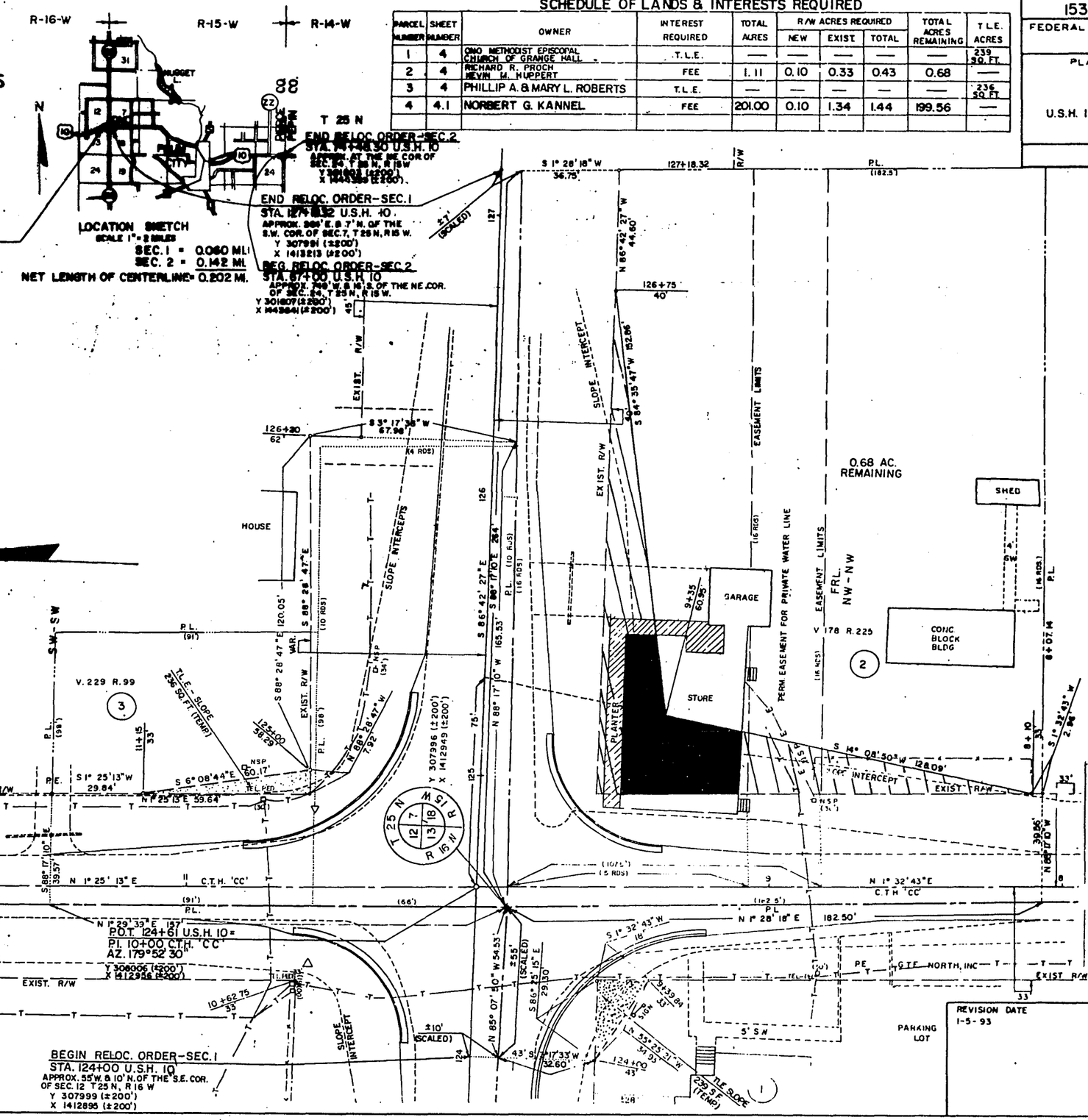

NOTES

COORDINATES AND BEARINGS ON THIS PLAT ARE ORIENTED TO THE WISCONSIN COORDINATE SYSTEM CENTRAL ZONE. ALL PLAT DISTANCES ARE GROUND LENGTH AND MAY BE CONVERTED TO GRID LENGTH BY MULTIPLYING THE DISTANCE BY THE GRID FACTOR PROVIDED ON THE DETAIL SHEETS.

RIGHT OF WAY MONUMENTS ARE AND ARE PLACED PRIOR TO OR AT THE TIME OF LAND TITLE TRANSFER.

RIGHT OF WAY BOUNDARIES ARE DEFINED WITH COURSES OF THE PERIMETER OF THE HIGHWAY LANDS REFERENCED TO THE U.S. PUBLIC LAND SURVEY OR OTHER SURVEYS OF PUBLIC RECORD.

ORIGINAL PLAN PREPARED BY
Palzkill, Peterson & ASSOCIATES
407 LINN AVENUE • AUDOBA, WISCONSIN 54720 • 715/837-6020

ENGINEER — DATE 7/6/92

REVISION DATE 1-5-93

STATE OF WISCONSIN
DEPARTMENT OF TRANSPORTATION

REVISION DATE	ROUTE	COUNTY	DATE	R/W PROJECT NUMBER	SHEET NUMBER
	U.S.H. 10	PIERCE (0 50' 100')	JAN.5,1993	1530-08-21	4.1
				FEDERAL PROJECT NUMBER	
				ELLSWORTH - DURAND ROAD	

GRID FACTOR .9999000

1530-08-71/4.1

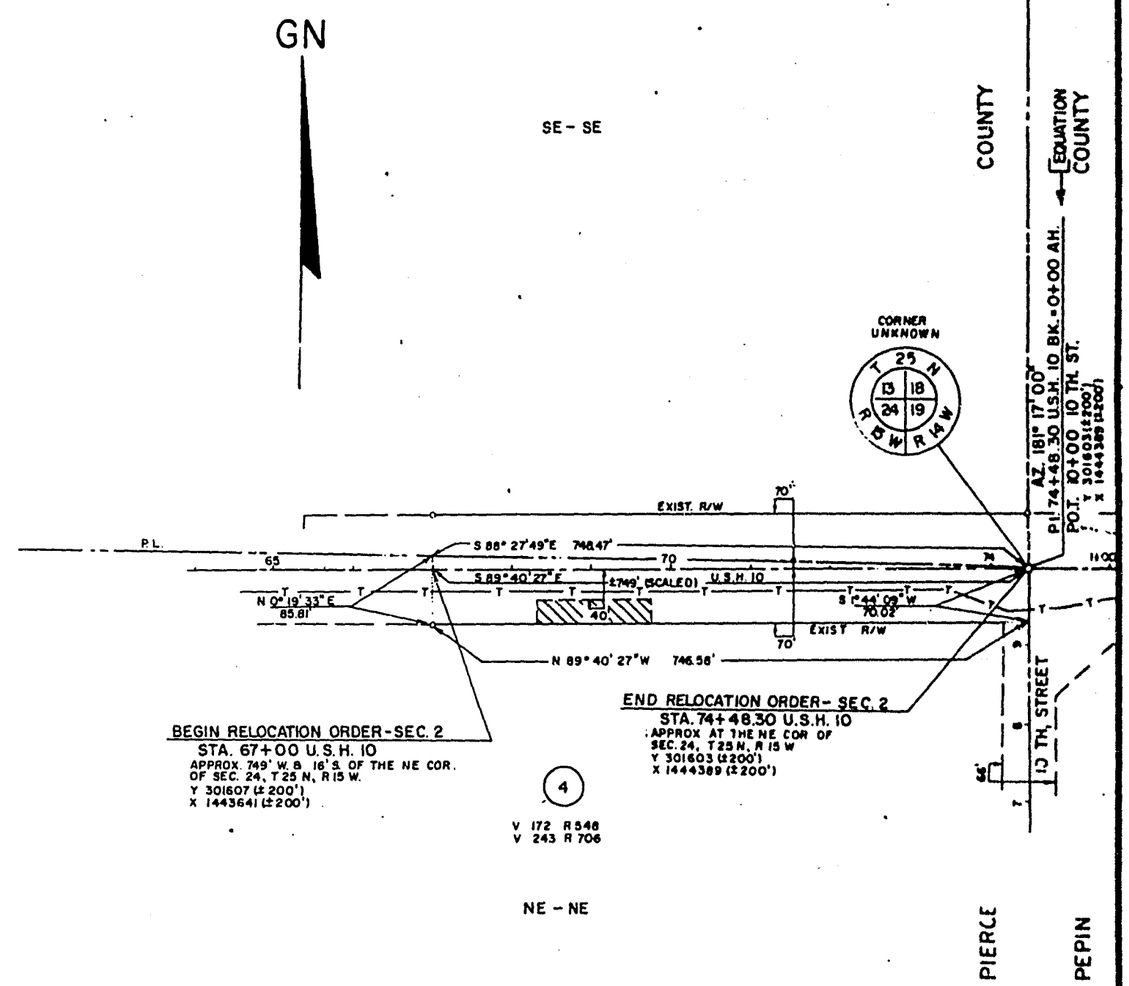

STATE PROJECT NUMBER	SHEET NO.
1530-08-71	5.0

SECTION 1

STA. 0-182 TO STA. 0-155 LT. & RT.
STEEL THRIE BEAM STRUCTURE APPROACH REQ'D.
SEE DETAIL FOR STRUCTURE ATTACHMENTS

STA. 0-252 TO STA. 0-182 LT. & RT.
STEEL PLATE BEAM GUARD CLASS "A" REQ'D.
(2) TYPE I ANCHORS REQ'D.

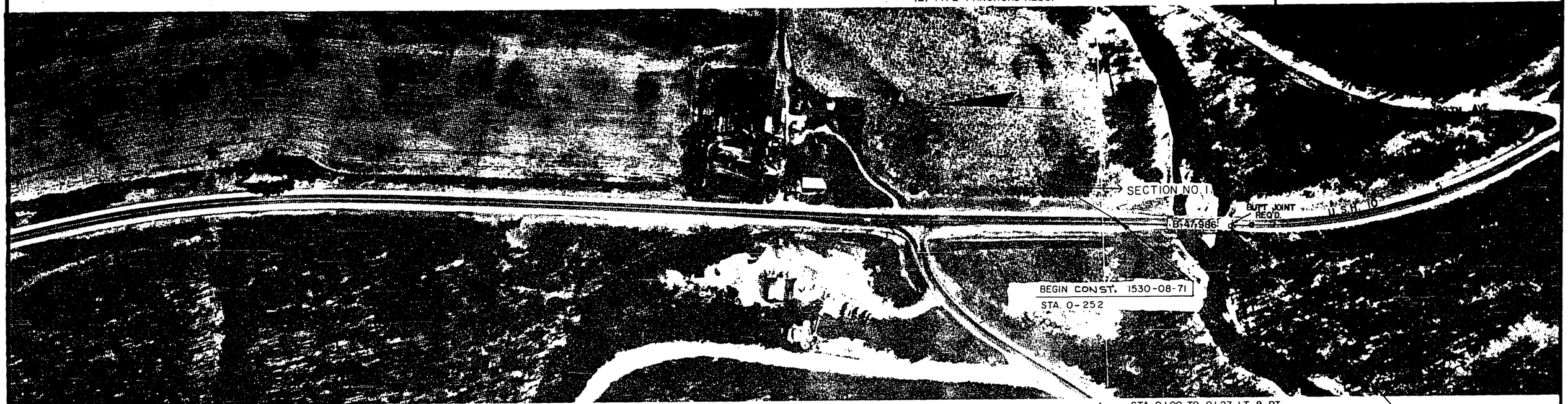

STA. 8+00 CONSTRUCT MODIFIED TYPE "C" INTERSECTION
PASSING LANE REQ'D.
(SEE INTERSECTION DETAIL)

STA. 13+88 TO 15+25 LT.
STEEL PLATE BEAM GUARD CLASS "A" REQ'D.
(2) TYPE I ANCHORS REQ'D.

STA. 0+00 TO 0+27 LT. & RT.
STEEL THRIE BEAM STRUCT. APPROACH REQ'D
SEE DETAIL FOR STRUCTURE ATTACHMENTS.

STA. 0±27 TO 1±64 LT.
STEEL PLATE BEAM GUARD CLASS "A" REQ'D.
(1) TYPE I ANCHOR REQ'D.

BEGIN PROJECT
STA. 0+00

STA. 7+75
1-72" X 80' C.P. CLASS III, REQ'D.
SKEW 25° R.H.F.
(2) APRON ENDWALLS REQ'D.

STA. 7+96
REMOVE 1-72" X 60' R.C.C.P.

STA. 18+03 TO 19+41 LT.
STEEL PLATE BEAM GUARD CLASS "A" REQ'D.
(2) TYPE I ANCHORS REQ'D.

NET LENGTH OF CENTERLINE STA. 0+00.00 TO 30+00.00 = 2,797 LIN. FT.

STA. 0±27 TO 16+14 RT.
STEEL PLATE BEAM GUARD CLASS "A" REQ'D
(1) TYPE I ANCHOR REQ'D.

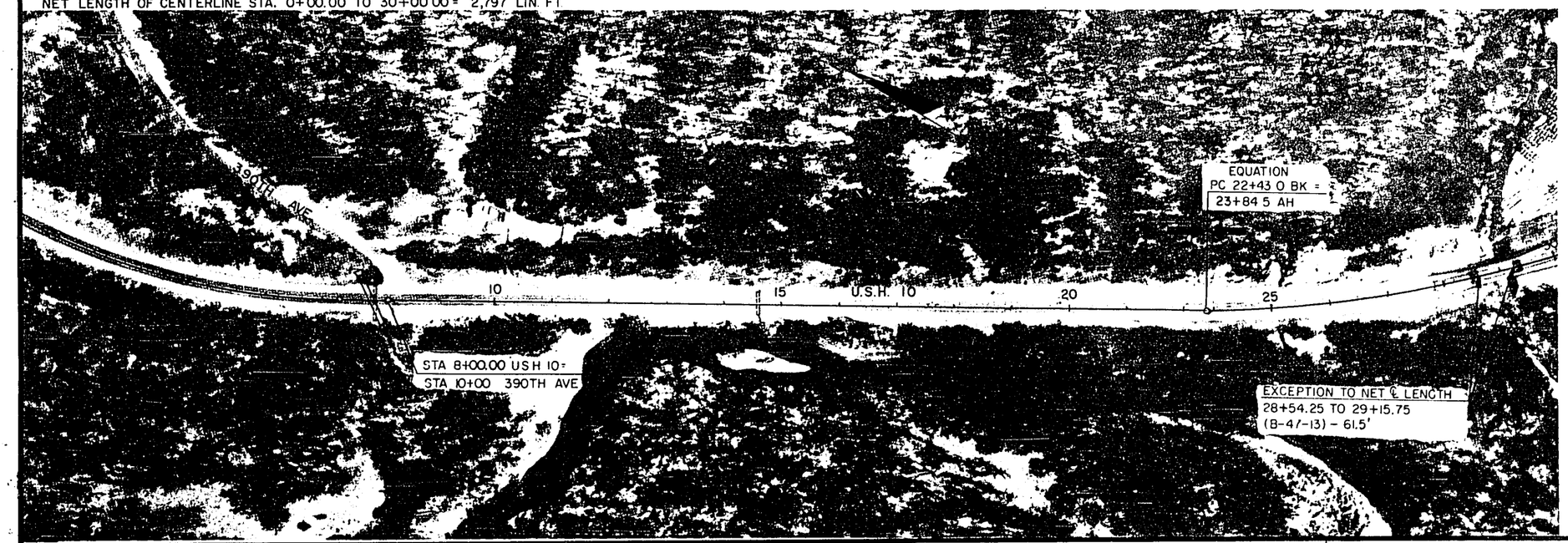

STA. 28+27 TO 28+54 LT. & RT.
STEEL THRIE BEAM STRUCT. APPROACH REQ'D.
SEE S.D.D. FOR STRUCTURE ATTACHMENT

STA. 27+40 TO 28+27 LT. & RT.
STEEL PLATE BEAM GUARD CLASS "A" REQ'D.
(2) TYPE I ANCHORS REQ'D.

STA. 29+16 TO 29+43 LT. & RT.
STEEL THRIE BEAM STRUCTURE APPROACH REQ'D.
SEE S.D.D. FOR STRUCTURE ATTACHMENT

STA. 29+43 TO 30+30 LT. & RT.
STEEL PLATE BEAM CLASS "A" REQ'D.
(2) TYPE I ANCHORS REQ'D.

STA. 33+50 15' RT.
BEGIN AUX. LANE TAPER

STA. 42+03 TO 66+91 LT.
STEEL PLATE BEAM GUARD CLASS "A" REQ'D.
(2) TYPE I ANCHORS REQ'D.

STA. 40+00 24' RT.
BEGIN 12' AUX. LANE

STA. 49+31 TO 51+69 RT.
STEEL PLATE BEAM GUARD CLASS "A" REQ'D.
(2) TYPE I ANCHORS REQ'D.

STATE PROJECT NUMBER	SHEET NO
1530-08-71	5.1

SECTION 1

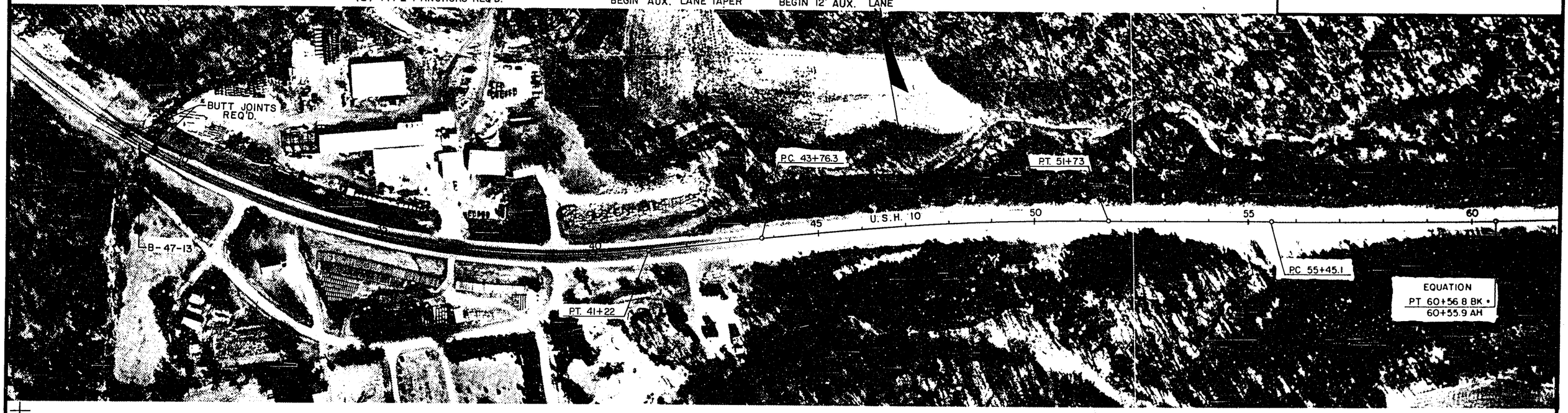

SECTION 1

NET LENGTH OF CENTERLINE STA. 30+00.00 TO 70+00.00 = 4,000.9 LIN. FT.

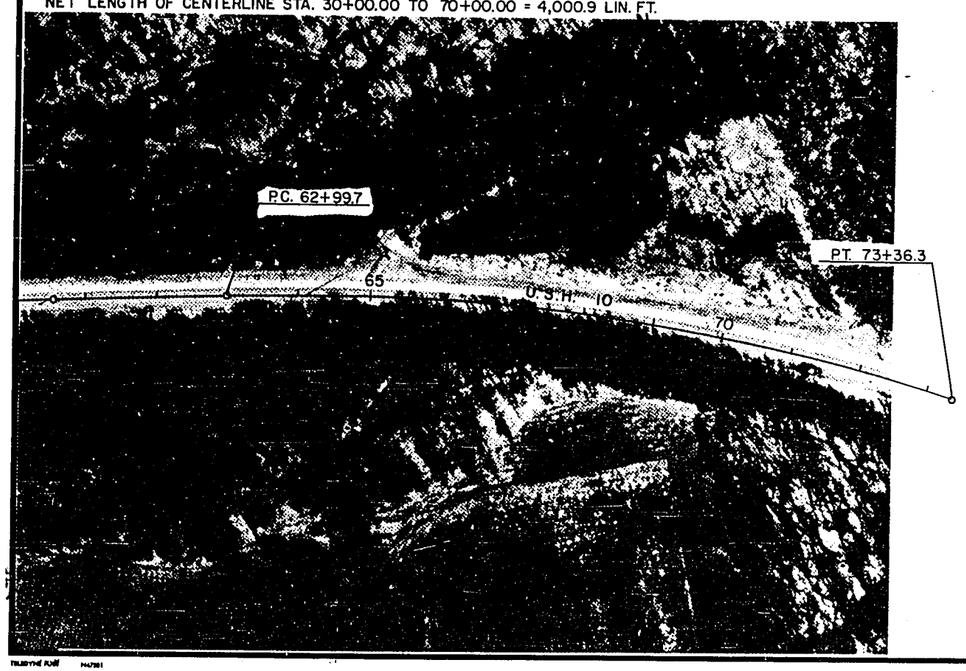

STATE PROJECT NUMBER	SHEET NO.
1530-08-71	5.2

SECTION 1 & 2

STA. 71+15 TO 74+28 LT.
STEEL PLATE BEAM GUARD CLASS "A" REQ'D.
(2) TYPE I ANCHORS REQ'D.

STA. 71+75 TO 74+38 RT.
STEEL PLATE BEAM GUARD CLASS "A" REQ'D.
(2) TYPE I ANCHORS REQ'D.

STA. 81+60 TO 82+50 LT.
STEEL PLATE BEAM GUARD CLASS "A" REQ'D.
(2) TYPE I ANCHORS REQ'D.

STA. 94+50 RT.
CONSTRUCT TYPE "C" INTERSECTION
(SEE INTERSECTION DETAILS)

STA. 97+79 LT.
2-CONC. BOX CULVERT COVERS REQ'D.
(SEE DETAIL)

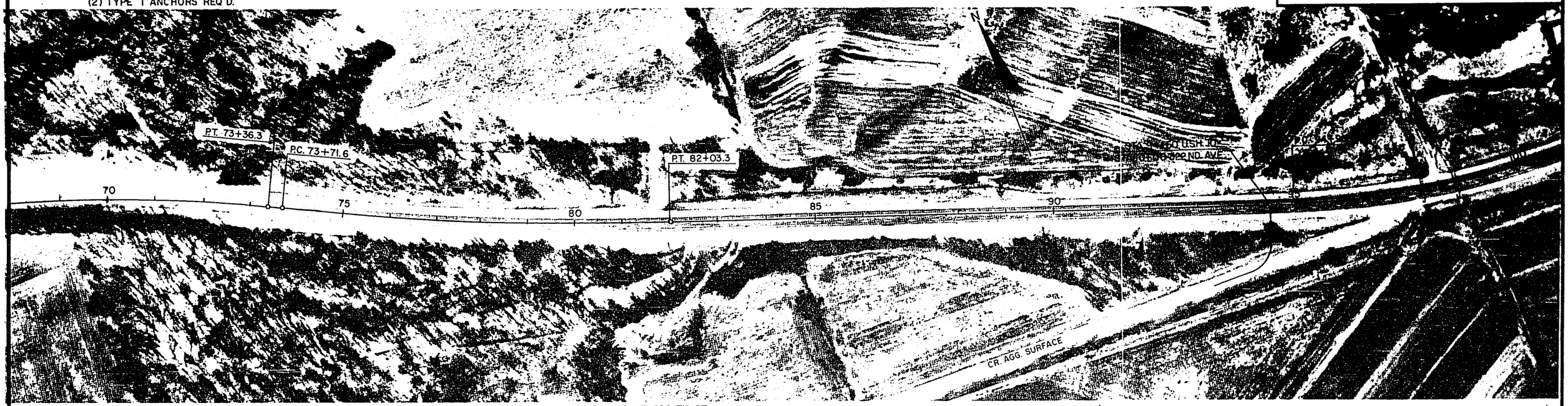

STA. 98+66 LT.
2 CONC. BOX CULVERT COVERS REQ'D.
(SEE DETAIL)

STA. 105+53 LT.
EXISTING 30" C.S.C.P.
(1) APRON ENDWALL REQ'D.
RECONSTRUCT DITCH DAM SLOPES
TO 6:1

STA. 111+58 LT. & RT. 320 TH. ST.
CONST. TYPE "C" INTERSECTION

STA. 10+40 320 TH. ST. REMOVE EXISTING 24" X 52' C.S.C.P.
STA. 10+40 320 TH. ST. 1-24" X 60' C.P. CLASS III REQ'D.
2-APRON ENDWALLS REQ'D.

STA. 111+00 24' RT.
END 12' AUX. LANE

STA. 115+50 RT.
END AUX. LANE TAPER

NET LENGTH OF CENTERLINE STA. 70+00.00 TO 48+00.00 = 5,980 LIN. FT.

STATE PROJECT NUMBER	SHEET NO
1530 - 08 - 71	5.3
SECTION 2	

STA. 56+00 LT.
CONSTRUCT TYPE "C" INTERSECTION

STA. 54+26 RT.
EXTEND EXISTING 30" C.S.C.P - 2' RT.
(1) APRON ENDWALL REQ'D.

STA. 69+97 LT.
EXTEND EXISTING 30" C.S.C.P 4' LT.
(1) APRON ENDWALL REQ'D.

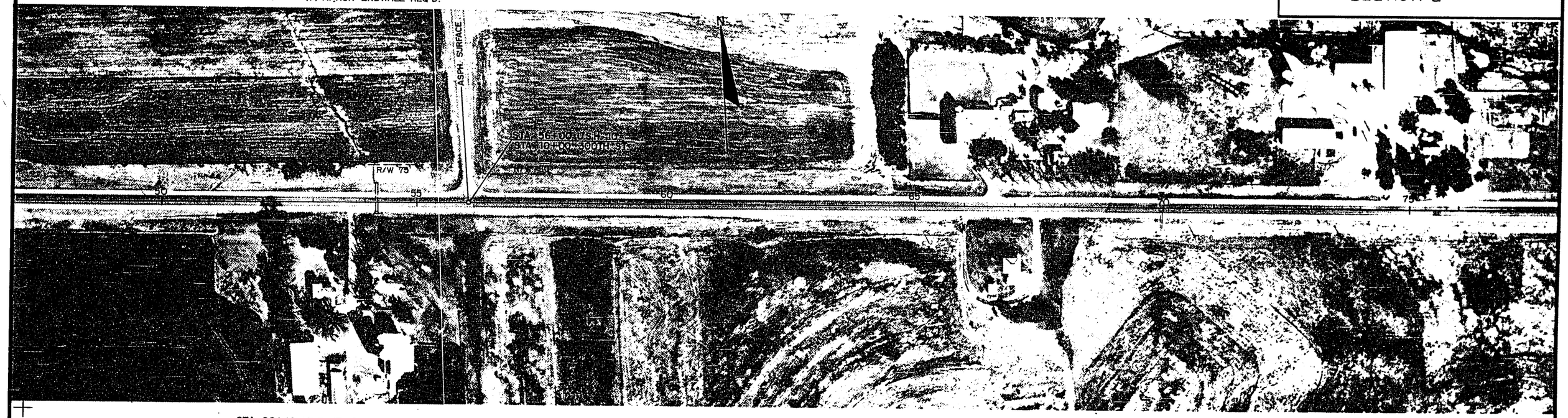

STA. 82+40 LT. & RT. 280 TH. ST.
CONSTRUCT TYPE "C" INTERSECTIONS

STA. 10+36 280 TH. ST.
REMOVE 1-18" X 48' C.S.C.P.
1-24" X 66' C.P. CLASS III REQ'D.
2-APRON ENDWALLS REQ'D.

SECTION 2

STA. 83+00 LT.
2-CONC. BOX CULVERT COVERS REQ'D.
(SEE DETAIL)

NET LENGTH OF CENTERLINE STA. 48+00.00 TO 85+00.00 = 3,700 LIN. FT.

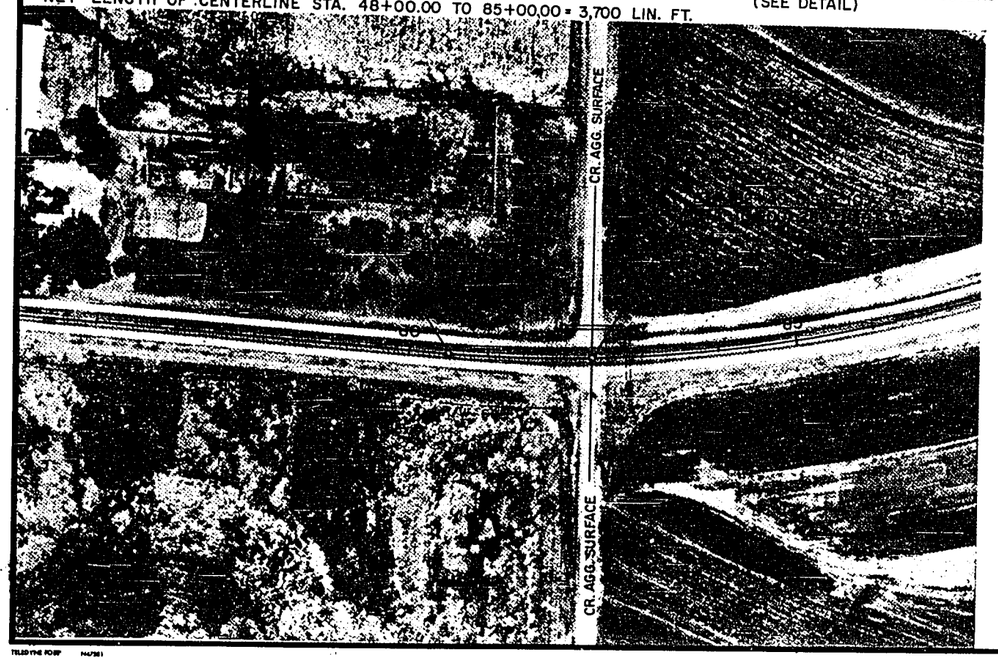

STATE PROJECT NUMBER	SHEET NO
1530-08-71	5.4

SECTION 2

STA. 97+45 TO 101+70 LT.
STEEL PLATE BEAM GUARD CLASS "A" REQ'D.
(2) TYPE I ANCHOR REQ'D.

STA. 97+45 TO 101+23 RT.
STEEL PLATE BEAM GUARD CLASS "A" REQ'D.
(2) TYPE I ANCHOR REQ'D.

STA. 113+65 LT.
MATCH EXISTING RADII

STA. 124+61 LT. & RT.
CONSTRUCT TYPE "B" INTERSECTIONS
(SEE INTERSECTION DETAILS)

STA 141+42 RT.
EXISTING 36" CS.C.P.
REMOVE 16' OF EXISTING PIPE & REPLACE
1-36" X 16' C.S.C.P. REQ'D. CLASS III
(1) APRON ENDWALL REQ'D. RT.

← SECTION 2 →

NET LENGTH OF CENTERLINE STA. 85+00.00 TO 145+00.00 = 6,000 LIN. FT.

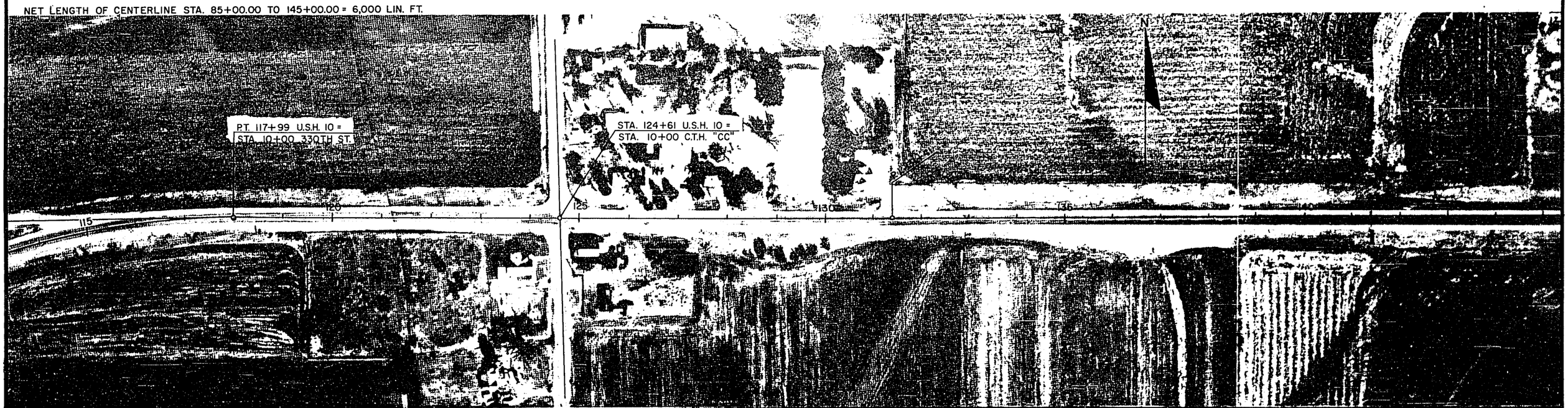

STATE PROJECT NUMBER	SHEET NO
1530 - 08 - 71	5.5

SECTION 2

STA. 164+90
CONSTRUCT TYPE "C" INTERSECTION
LT. & RT.

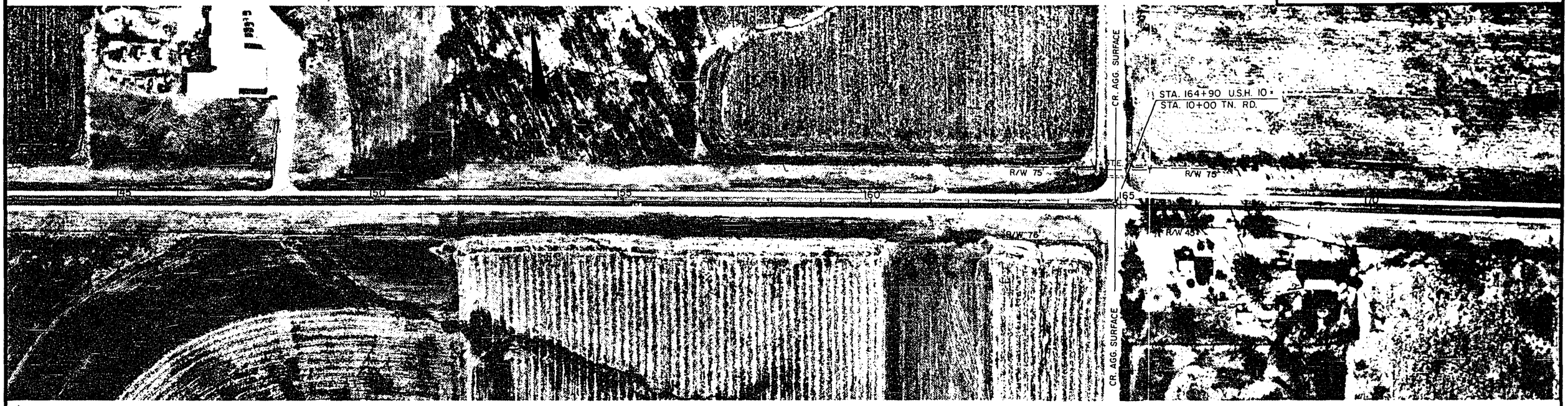

SECTION 2

STA. 200+40 TO 11+00 190 TH ST. LT.
STEEL PLATE BEAM GUARD CLASS "A" REQ'D
(2) TYPE I ANCHORS REQ'D.

STA. 191+22 LT. & RT.
4-CONC. BOX CULVERT COVERS REQ'D.
(SEE DETAIL)

NET LENGTH OF CENTERLINE STA. 145+00.00 TO 204+63.00 = 5,963 LIN. FT.

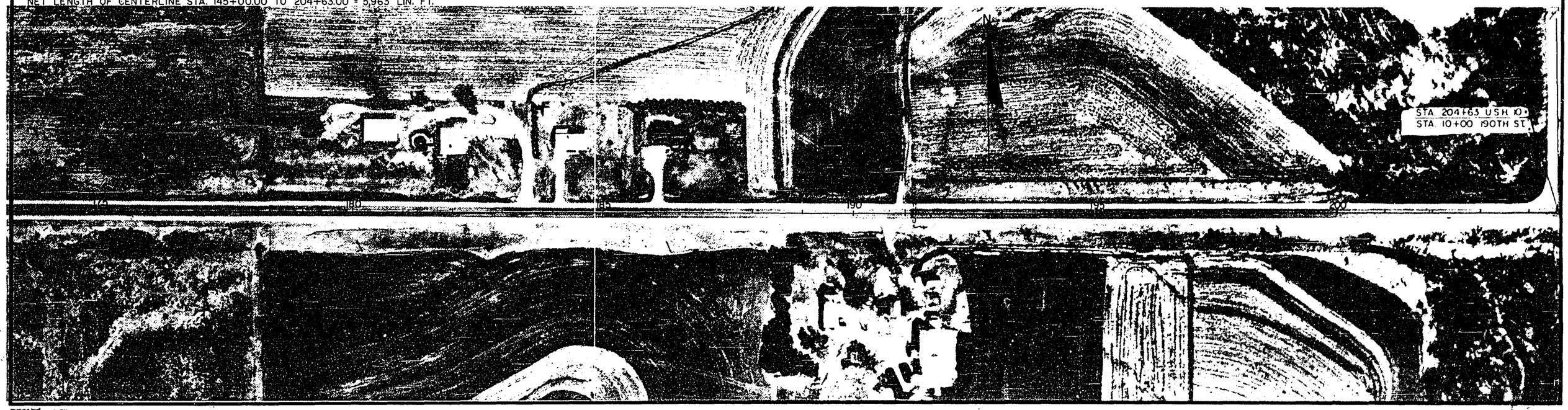

STATE PROJECT NUMBER	SHEET NO.
1530 - 08 - 71	5.6
SECTION 2	

STA. 204+63 LT.

MATCH EXISTING RADII
STA. 200+12 TO 205+62 RT.
STEEL PLATE BEAM GUARD CLASS "A" REQ'D.
(2) TYPE I ANCHORS REQ'D.

STA. 207+50 15' LT.
BEGIN AUX. LANE TAPER (EXISTING)

STA. 212+00 24' LT.
BEGIN 12' AUX. LANE (EXISTING)

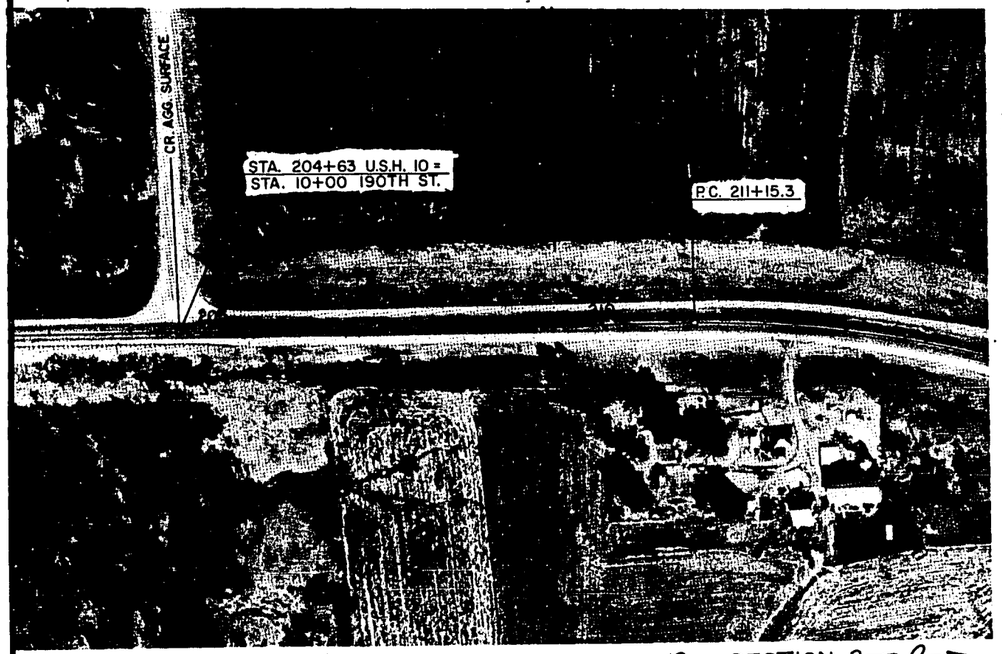

STA. 238+15 LT. & RT.
170 TH. ST.
MATCH EXISTING RADII

STA. 217+16 LT.
CONSTRUCT TYPE "C" INTERSECTION
(SEE INTERSECTION DETAILS)

SECTION 2

STA. 218+71 LT.
EXISTING 36" C.M.C.P.
REMOVE 12' OF EXISTING PIPE LT. & REPLACE
1-36" X 12' C.S.C.P. CLASS III REQ'D. LT.
(1) APRON ENDWALL REQ'D.

STA. 226+50 TO 228+50 RT.
STEEL PLATE BEAM GUARD CLASS "A" REQ'D.
(2) TYPE I ANCHORS REQ'D.

STA. 227+00 TO 229+00 LT.
STEEL PLATE BEAM GUARD CLASS "A" REQ'D.
(2) TYPE I ANCHORS REQ'D.

NET LENGTH OF CENTERLINE STA. 204+63.00 TO 242+11.2 = 3,748.2 LIN. FT.

STATE PROJECT NUMBER	SHEET NO
1530-08-71	5.7

SECTION 2 & 3

STA. 259+39 LT. & RT.
3 BOX CULVERT COVERS REQ'D.
(SEE DETAIL)

STA. 258+70 TO 260+08 LT.
STEEL PLATE BEAM GUARD CLASS "A" REQ'D.
(2) TYPE I ANCHORS REQ'D.

STA. 259+90 TO 260+52 BK. RT.
STA. 14+53.9 AH. TO 25+49 RT.
STEEL PLATE BEAM GUARD CLASS "A" REQ'D.
(2) TYPE I ANCHORS REQ'D.

STA. 258+25 RT.
BEGIN 10' PAVED SHOULDER
BEGIN ASPHALTIC CURB

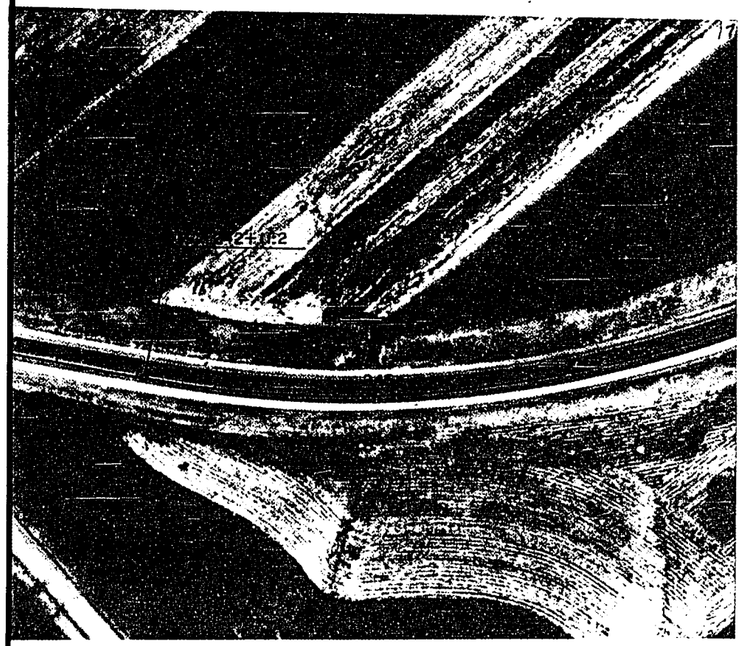

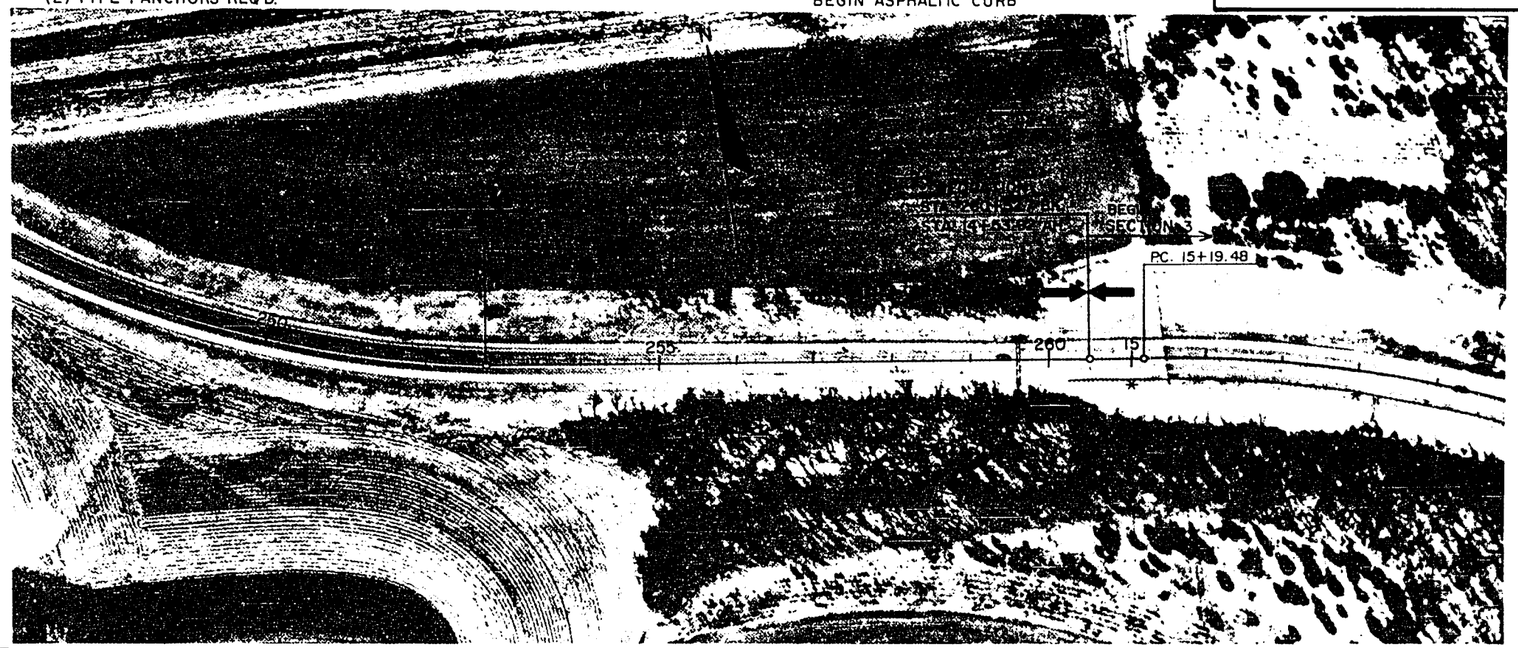

STA. 23+50 TO 32+28 LT.
CONCRETE CURB AND GUTTER, 36-INCH, TYPE D REQ'D.
SEE DETAIL FOR BERM BEHIND CURB AND GUTTER

STA. 25+50 RT.
END 10' PAVED SHOULDER
END ASPHALTIC CURB
ASPHALTIC FLUME REQ'D.
(SEE DETAIL)

STA. 31+30 TO 32+78.5 BK. RT.
STA. 32+94.72 AH. TO 46+10 RT.
STEEL PLATE BEAM GUARD CLASS "A" REQ'D.
(2) TYPE I ANCHORS REQ'D.

STA. 32+34 LT. ASPHALTIC FLUME REQ'D.
FROM END OF CURB AND GUTTER TO
EXISTING M S INLET

NET LENGTH OF CENTERLINE STA. 242+11.20 TO 40+00.00 = 4,370.91 LIN. FT.

STA. 33+00 RT.
BEGIN 10' PAVED SHOULDER
BEGIN ASPHALTIC CURB

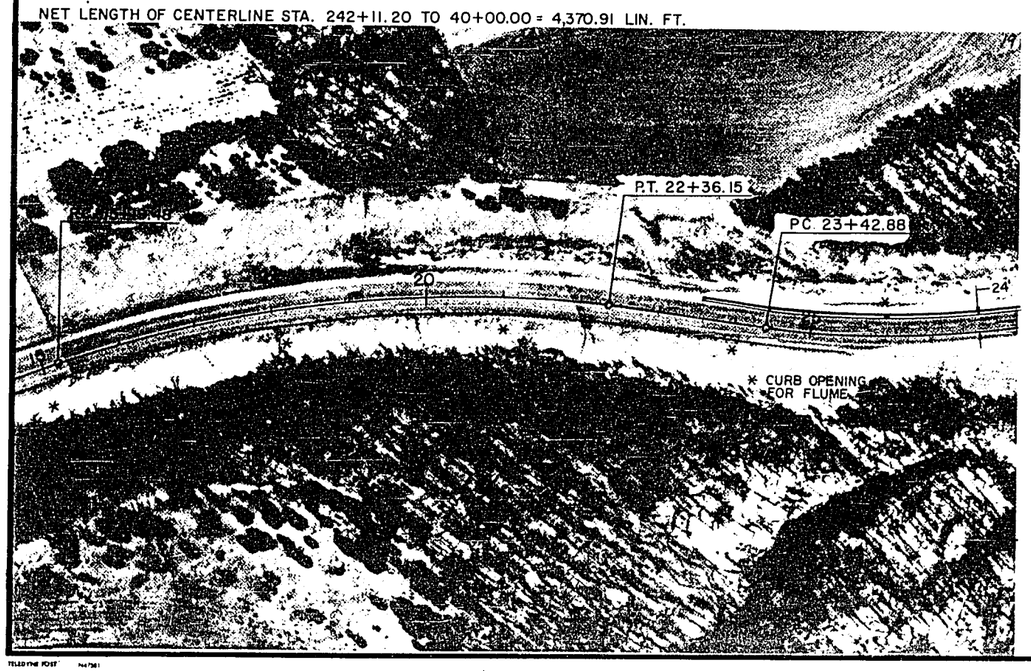

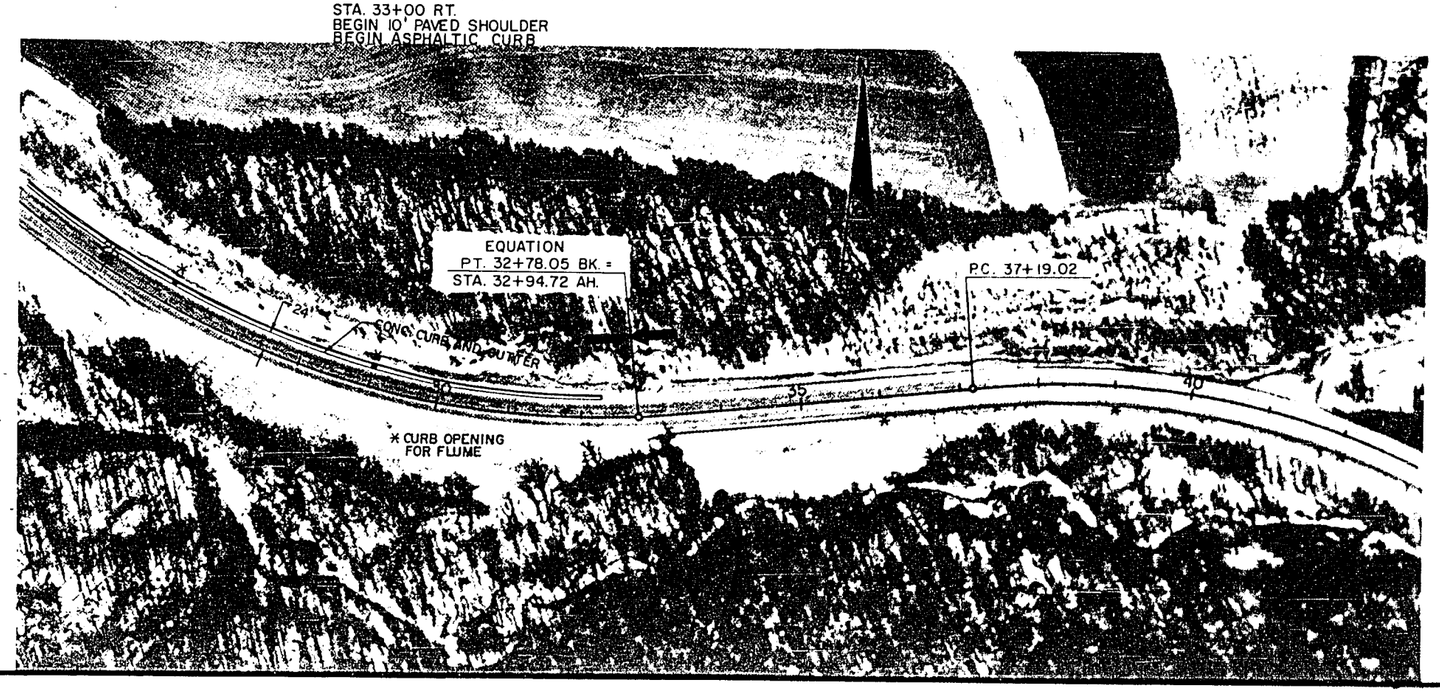

STATE PROJECT NUMBER	SHEET NO
1530-08-71	5.8

SECTION 3 & 4

STA. 46+00 RT.
END 10' PAVED SHOULDER
END ASPHALTIC CURB
ASPHALTIC FLUME REQ'D.
(SEE DETAIL)

STA. 41+75 TO 64+00 BK. LT.
STA. 0-200 TO 0-138 LT.
STEEL PLATE BEAM GUARD CLASS "A" REQ'D.
(2) TYPE I ANCHORS REQ'D.

STA. 51+50 24' LT.
END 12' AUX. LANE (EXISTING)

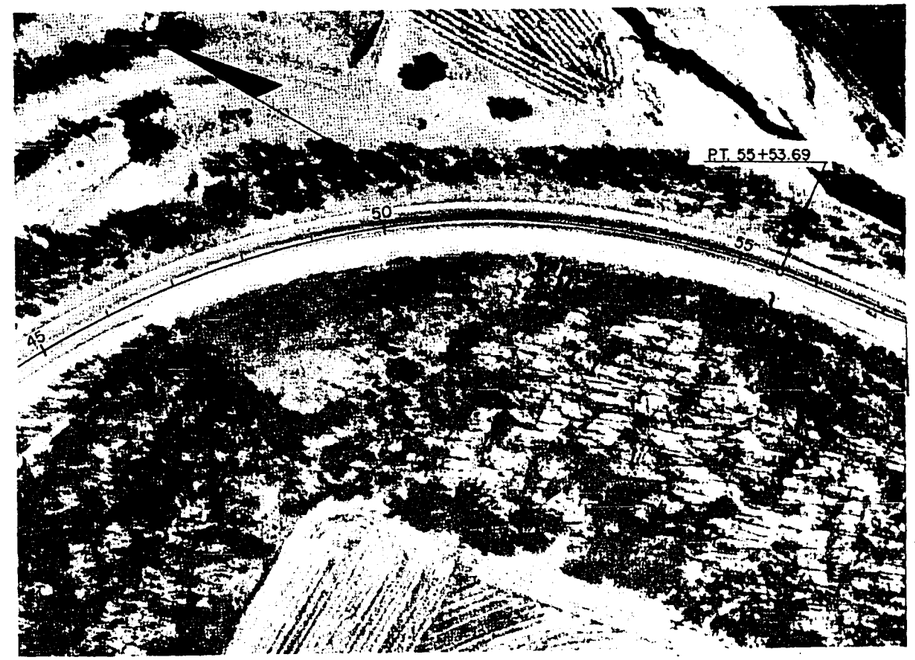

15+00 EXTENDED
BOX CULVERT RT. 6'

STA. 55+20 RT.
EXISTING 24" C.M.C.P.
(1) APRON ENDWALL REQ'D.
REMOVE EXISTING M.R.M. DITCH DAM &
RECONSTRUCT WITH 6:1 SLOPES

STA. 56+00 15' LT.
END AUX. LANE TAPER

STA. 4+25
EXISTING 36" C.S.C.P.
(2) APRON ENDWALLS REQ'D. LT. & RT.
REMOVE M.R.M. ENDWALLS LT. & RT.

STA. 8+85 TO 9+23 LT.
STEEL PLATE BEAM GUARD CLASS "A" REQ'D.
(1) TYPE I ANCHOR REQ'D.

STA. 9+23 TO 14+84 LT.
ADJUST STEEL PLATE BEAM GUARD
STA. 14+84 TO 15+22 LT.
STEEL PLATE BEAM GUARD CLASS "A" REQ'D.
(1) TYPE I ANCHOR REQ'D.

STA. 12+76 RT.
C.T.H. "U" INTERSECTION
(SEE INTERSECTION DETAILS)

STA. 14+08 TO 15+45 RT.
STEEL PLATE BEAM GUARD CLASS "A" REQ'D.
(2) TYPE I ANCHORS REQ'D.

NET LENGTH OF CENTERLINE STA. 40+00.00 TO 15+00.00 = 4,100 LIN. FT.

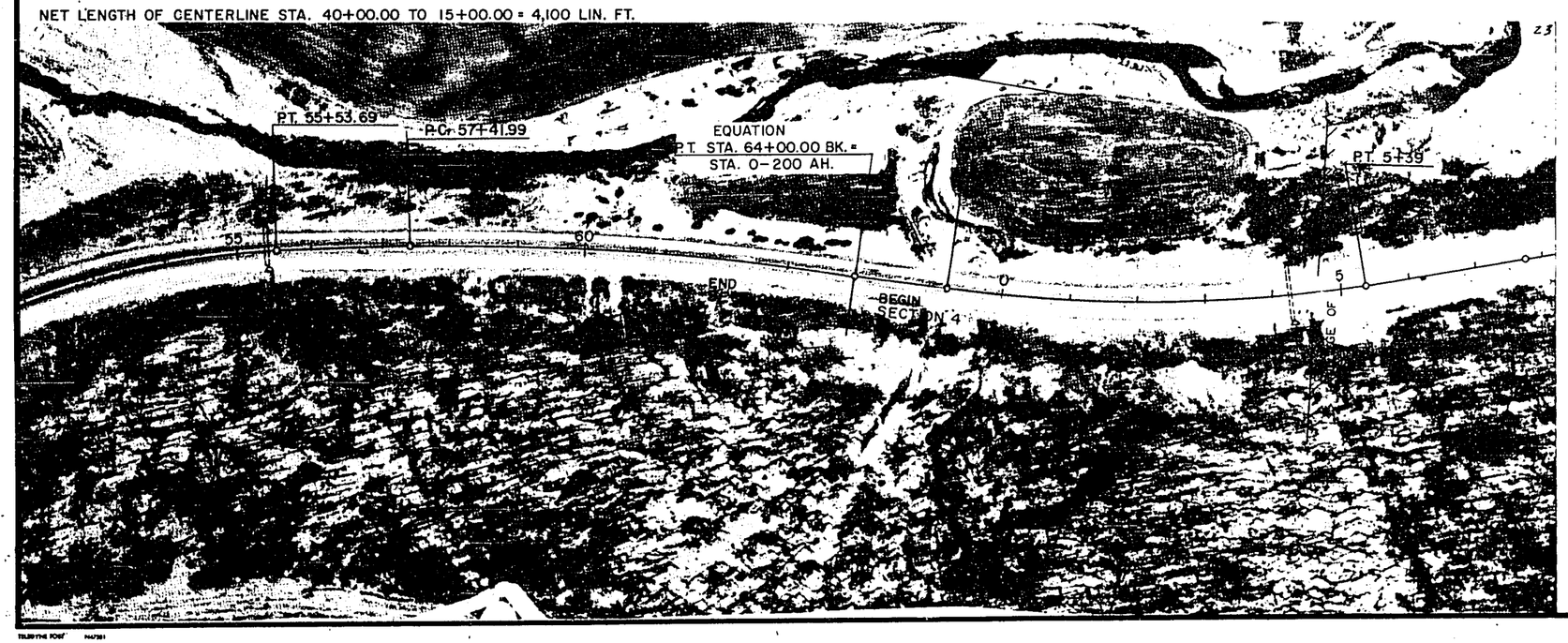

STATE PROJECT NUMBER	SHEET NO
1530-08-71	5.9

SECTION 4

STA. 23+15 C.T.H. 'S'
CONSTRUCT TYPE "B" INTERSECTION
(SEE INTERSECTION DETAILS)

STA. 26+33 TO 26+70 LT.
STEEL PLATE BEAM GUARD CLASS "A" REQ'D.
(1) TYPE I ANCHOR REQ'D.

STA. 25+83 TO 26+70 RT.
STEEL PLATE BEAM GUARD CLASS "A" REQ'D.
(1) TYPE I ANCHOR REQ'D.

STA. 26+70 TO 26+97 LT. & RT.
STEEL THRIE BEAM STRUCT. APPROACH REQ'D.
CONNECT TO B-47-13 AS PER S.D.D.
STA. 28+77 TO 29+04 LT. & RT.
STEEL THRIE BEAM STRUCT. APPROACH REQ'D.
CONNECT TO B-47-13 AS PER S.D.D.

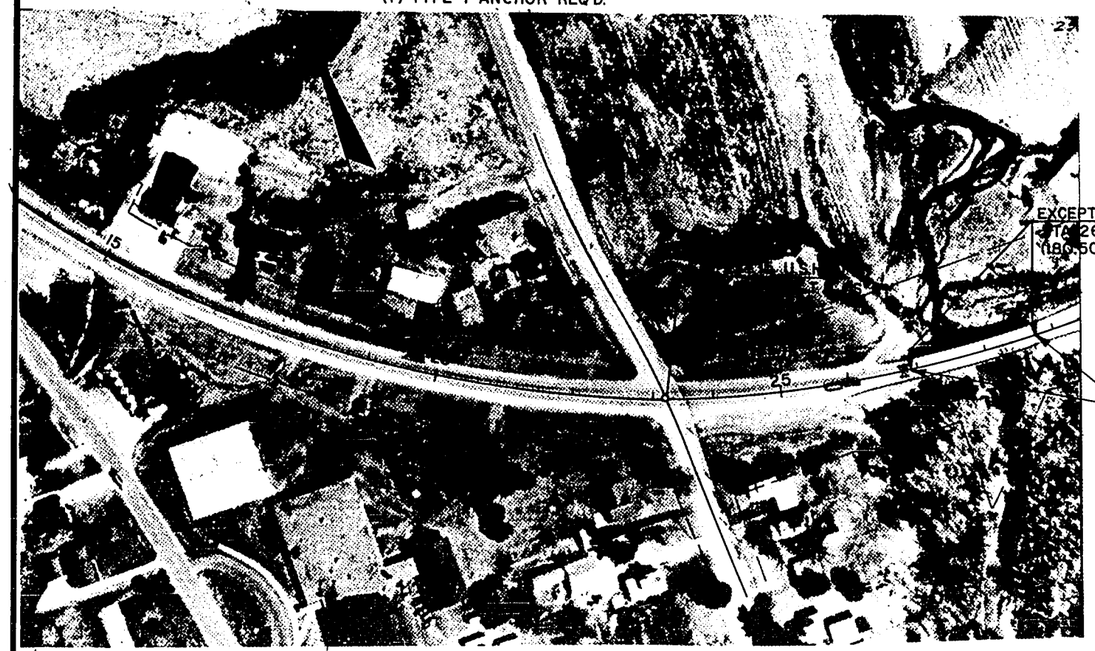

BENCH MARK

LOCATION	DESCRIPTION	ELEV.
B-47-10	CAP S.W. CORNER	827.49

STA. 29+04 TO 37+00 LT.
ADJUST STEEL PLATE BEAM GUARD

STA. 29+04 TO 33+00 RT.
ADJUST STEEL PLATE BEAM GUARD

STA. 33+50 RT. PINE AVE.
MILL AND RESURFACE EXISTING PAV'T.
MATCH EXISTING RADII

NET LENGTH OF CENTERLINE STA. 15+00.00 TO 60+00.00 = 4,319.5 LIN. FT.

STA. 37+20 TO 47+66 LT.
ADJUST STEEL PLATE BEAM GUARD

STA. 47+66 TO 48+04 LT.
STEEL PLATE BEAM GUARD CLASS "A" REQ'D.
(1) TYPE I ANCHOR REQ'D.

STA. 37+10 LT. TN. RD.
MILL AND RESURFACE EXISTING PAV'T.
MATCH EXISTING RADII

SECTION 4

STA. 37+48 RT.
REMOVE EXISTING M.R.M. ENDWALLS
EXISTING 30" C.M.C.P. TO REMAIN
(1) APRON ENDWALL REQ'D.
SEE X-SECTIONS

STA. 48+50 TO 48+87 LT.
STEEL PLATE BEAM GUARD CLASS "A" REQ'D.
(1) TYPE I ANCHOR REQ'D.

STA. 46+75 TO 48+13 RT.
STEEL PLATE BEAM GUARD CLASS "A" REQ'D.
(1) TYPE I ANCHOR REQ'D.

STA. 48+87 TO 63+63 LT.
ADJUST STEEL PLATE BEAM GUARD

STA. 48+13 TO 56+62 RT.
ADJUST STEEL PLATE BEAM GUARD

STA. 63+63 TO 64+00 LT.
STEEL PLATE BEAM GUARD CLASS "A" REQ'D.
(1) TYPE I ANCHOR REQ'D.

STA. 56+62 TO 58+12 RT.
STEEL PLATE BEAM GUARD CLASS "A" REQ'D.
(1) TYPE I ANCHOR REQ'D.

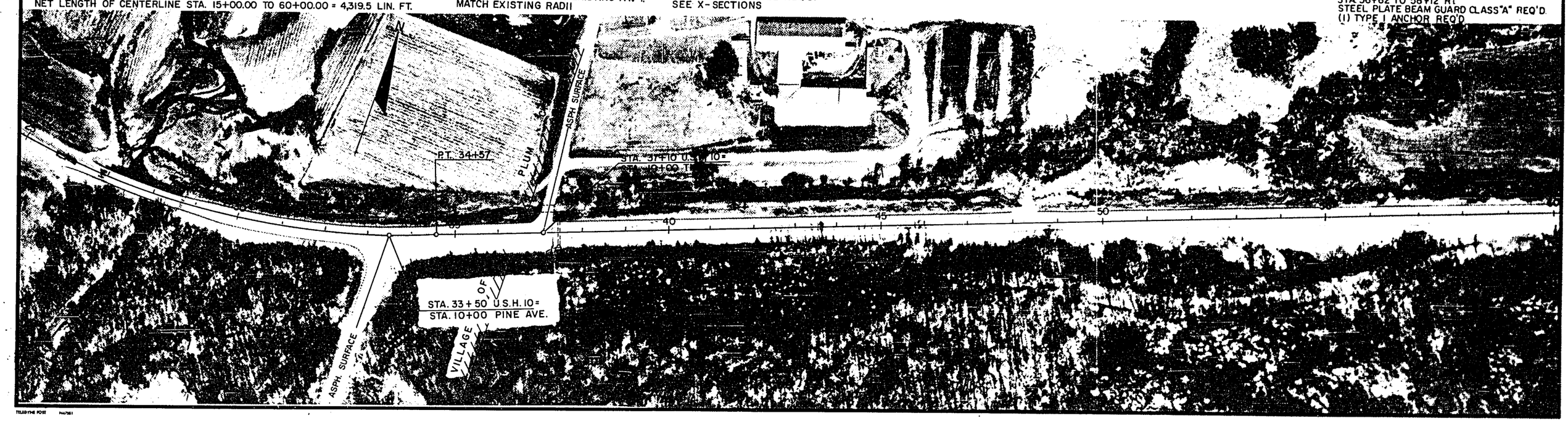

STATE PROJECT NUMBER	SHEET NO
1530-08-71	5.10

SECTION 4 & 5

STA. 64+68 TO 65+06 LT.
STEEL PLATE BEAM GUARD CLASS "A" REQ'D.
(1) TYPE I ANCHOR REQ'D.

STA. 65+06 TO 81+93 LT.
ADJUST STEEL PLATE BEAM GUARD

STA. 68+70 TO 70+70 RT.
STEEL PLATE BEAM GUARD CLASS "A" REQ'D
(2) TYPE I ANCHORS REQ'D.

STA. 80+52 RT.
EXISTING 30" C.S.C.P.
EXTEND 4' RT.
(1) APRON ENDWALL REQ'D.

STA. 76+50 15' RT.
BEGIN CONSTRUCTION
AUX. LANE TAPER

STA. 81+93 TO 82+31 LT.
STEEL PLATE BEAM GUARD CLASS "A" REQ'D.
(1) TYPE I ANCHOR REQ'D.

STA. 81+00 24' RT.
BEGIN CONSTRUCTION
12' AUX. LANE

STA. 82+46 RT.
EXISTING 42" C.S.C.P. EXTEND 4' RT.
(1) APRON ENDWALL REQ'D.

STA. 82+98 TO 83+36 LT.
STEEL PLATE BEAM GUARD REQ'D.
CLASS "A"
(1) TYPE I ANCHOR REQ'D.

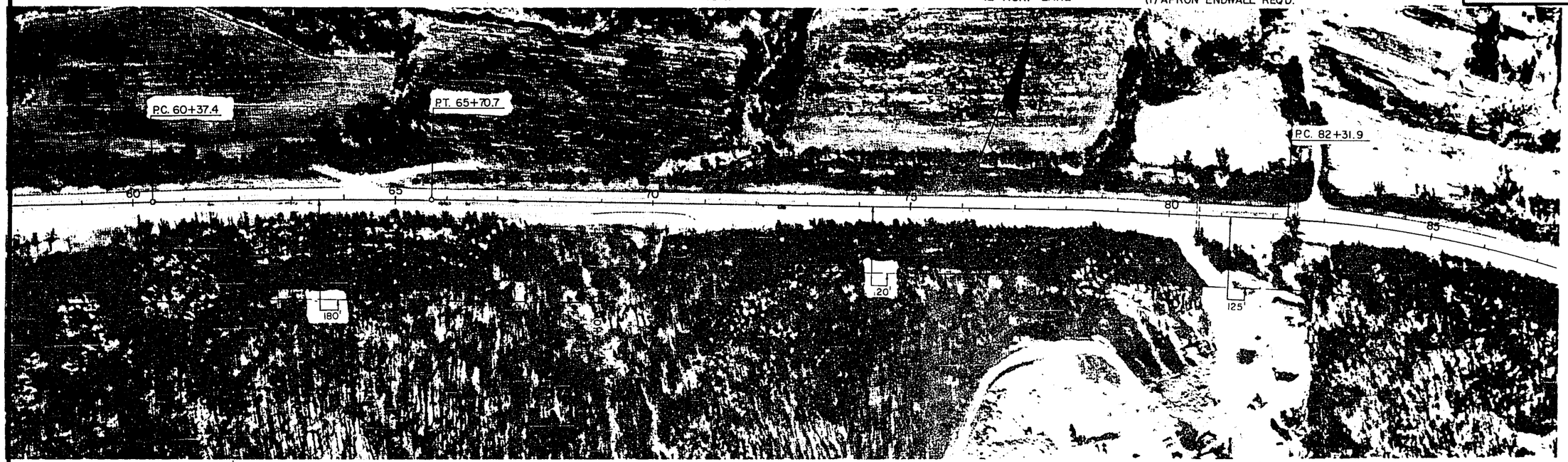

STA. 83+36 TO 96+29 BK. LT.
STA. 0+00 AH. TO 9+44 LT.
ADJUST STEEL PLATE BEAM GUARD

STA. 91+14 RT.
EXTEND EXISTING 30" C.S.C.P.
10' RT.
(1) APRON ENDWALL REQ'D.
(SEE X-SECTIONS)

STA. 96+21 RT.
EXTEND EXISTING 30" C.S.C.P.
8' RT.
(1) APRON ENDWALL REQ'D.
(SEE X-SECTIONS)

STA. 7+06 RT.
EXISTING 42" C.S.C.P.
(1) APRON ENDWALL REQ'D.
EXTEND 2' RT.

STA. 9+44 TO 9+82 LT.
STEEL PLATE BEAM GUARD CLASS "A" REQ'D
(1) TYPE I ANCHOR REQ'D.

STA. 87+07 RT.
EXTEND EXISTING 30" C.S.C.P. 4'
(1) APRON ENDWALL REQ'D.

NET LENGTH OF CENTERLINE STA. 60+00.00 TO STA. 8+00.00 = 4,429.5 LIN. FT.

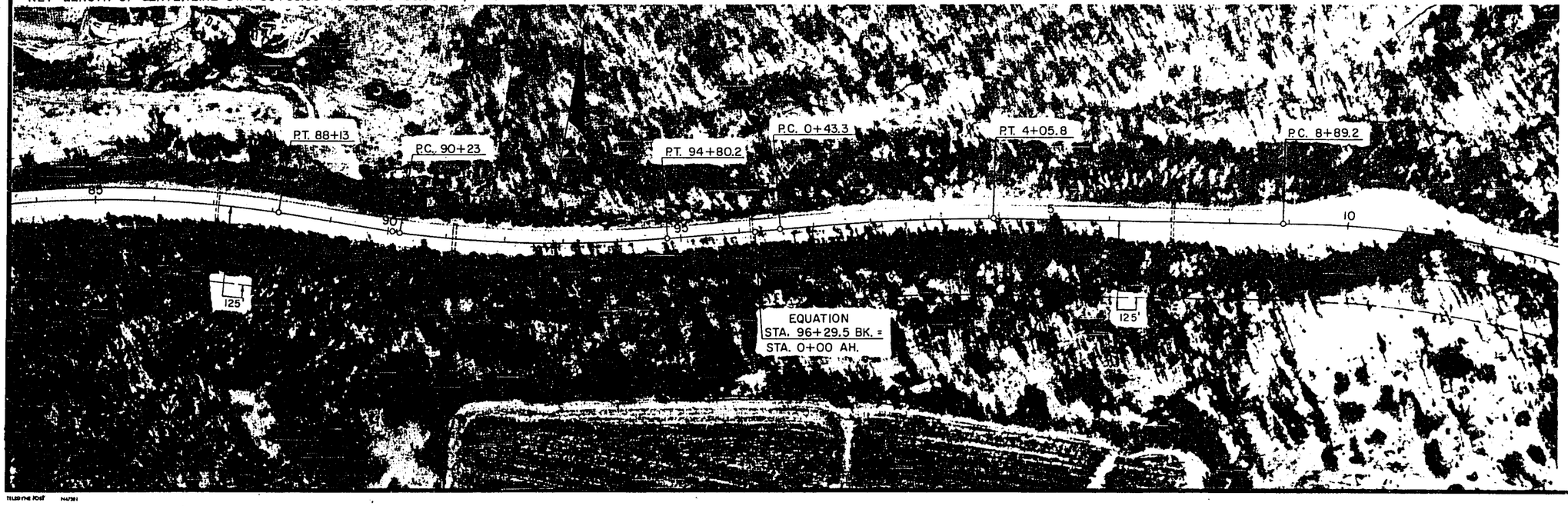

STATE PROJECT NUMBER	SHEET NO
1530-08-71	5.11

SECTION 5

STA. 11+80 TO 12+17 LT.
STEEL PLATE BEAM GUARD CLASS "A" REQ'D
(1) TYPE I ANCHOR REQ'D.

STA. 12+17 TO 26+60 LT.
ADJUST STEEL PLATE BEAM GUARD

STA. 24+00 RT. 50 TH. ST.
MILL AND RESURFACE EXISTING PAV'T.
MATCH EXISTING RADII

STA. 27+16 LT. 45 TH. ST.
CONST. TYPE C INTERSECTION

STA. 26+60 TO 10+75 45 TH. ST.
STEEL PLATE BEAM GUARD, CLASS "A" REQ'D.
(1) TYPE I ANCHOR REQ'D.

STA. 13+70 RT.
EXISTING 36" X 36" CONC. BOX CULVERT C-1894
EXTEND 7' RT. SEE DETAIL DRAWING

STA. 17+30
EXISTING 42" X 60" CONC. BOX CULVERT C 1895
EXTEND 13' RT. SEE DETAIL DRAWING

STA. 24+58 RT.
EXTEND EXISTING 60" C.S.C.P.
1-60" X 14' C.S.C.P., CLASS III REQ'D.
(1) APRON ENDWALL REQ'D.

STA. 24+00 TO 28+00 RT.
STEEL PLATE BEAM GUARD CLASS "A" REQ'D.
(2) TYPE I ANCHORS REQ'D.

STA. 10+75 45 TH. ST. TO STA 28+88 LT.
STEEL PLATE BEAM GUARD CLASS "A" REQ'D.
(2) TYPE I ANCHORS REQ'D.

STA. 11+38 C.T.H. "ZZ" RT. TO 53+50 LT.
STEEL PLATE BEAM GUARD CLASS "A" REQ'D
(2) TYPE I ANCHORS REQ'D

SECTION 5

STA. 46+33 TO 11+38 C.T.H. "ZZ" LT.
STEEL PLATE BEAM GUARD
CLASS "A" REQ'D.
(2) TYPE I ANCHORS REQ'D.

STA. 50+00 RT.
EXTEND EXISTING 72" X 72" CONC. BOX C 1898
12' RT. SEE DETAIL DRAWING

STA. 32+15 RT.
CONST. F.E.
REMOVE 1-18" X 26' C.S.C.P.
1-18" X 40' C.P. CLASS III REQ'D.
2 APRON ENDWALLS REQ'D.

STA. 43+80 RT.
CONST. P.E.
REMOVE 1-18" X 26' C.S.C.P.
1-18" X 32' C.P. CLASS III REQ'D.
2 APRON ENDWALLS REQ'D.

STA. 45+50 TO 51+48 RT.
STEEL PLATE BEAM GUARD
CLASS "A" REQ'D.
(2) TYPE I ANCHORS REQ'D.

STA. 48+25 LT.
CONSTRUCT TYPE "B" INTERSECTION

STA. 47+00
EXISTING CONC. CATTLE PASS 3.5' X 6' X 56'
TO BE REMOVED

STA. 53+96 RT.
EXISTING 24" C.S.C.P.
8' EXTENSION REQ'D. RT.
(1) APRON ENDWALL REQ'D

NET LENGTH OF CENTERLINE STA. 8+00.00 TO 58+00.00 = 4,990.2 LIN. FT.

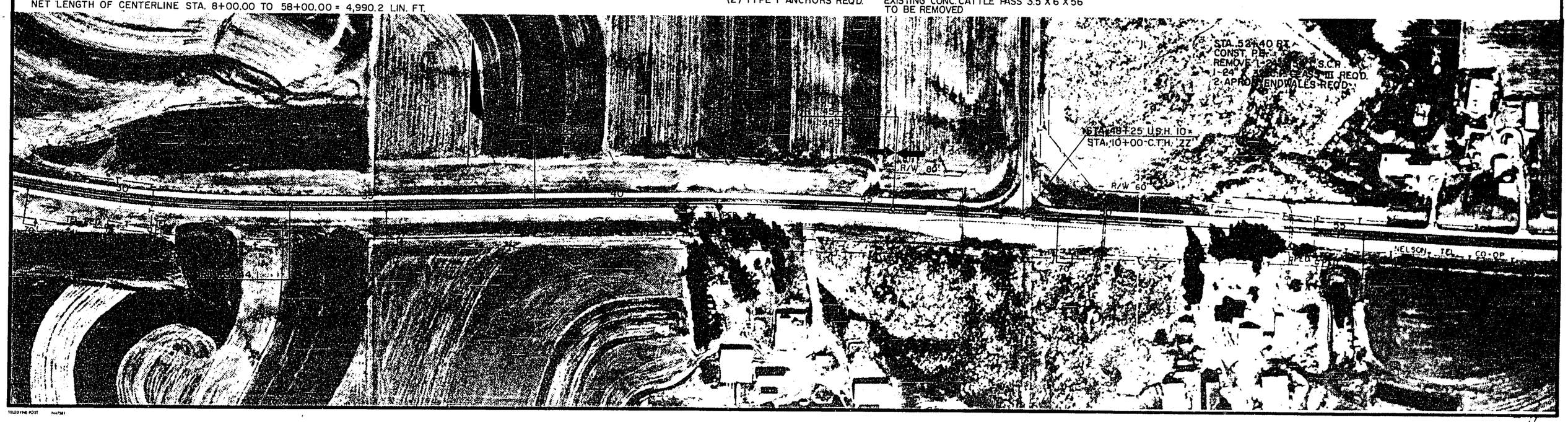

STATE PROJECT NUMBER	SHEET NO
1530-08-71	5.12

SECTION 5 & 6

STA. 69+87 RT.
CONST. F.E.
REMOVE 1-18"X 26' C.S.C.P.
1-18"X40' C.P. CLASS III REQ'D.
2-APRON ENDWALLS REQ'D.

STA. 0+00 RT.
CONSTRUCT TYPE "C"
INTERSECTION

STA. 5+00 RT. 24'
END 12' AUX. LANE
BEGIN TAPER

STA. 9+50 15' RT.
END AUX. LANE TAPER

STA. 6+75 RT.
CONSTRUCT P.E.
REMOVE 1-18"X 24' C.S.C.P.
1-18"X 26' C.P. CLASS III REQ'D.
2-APRON ENDWALLS REQ'D.

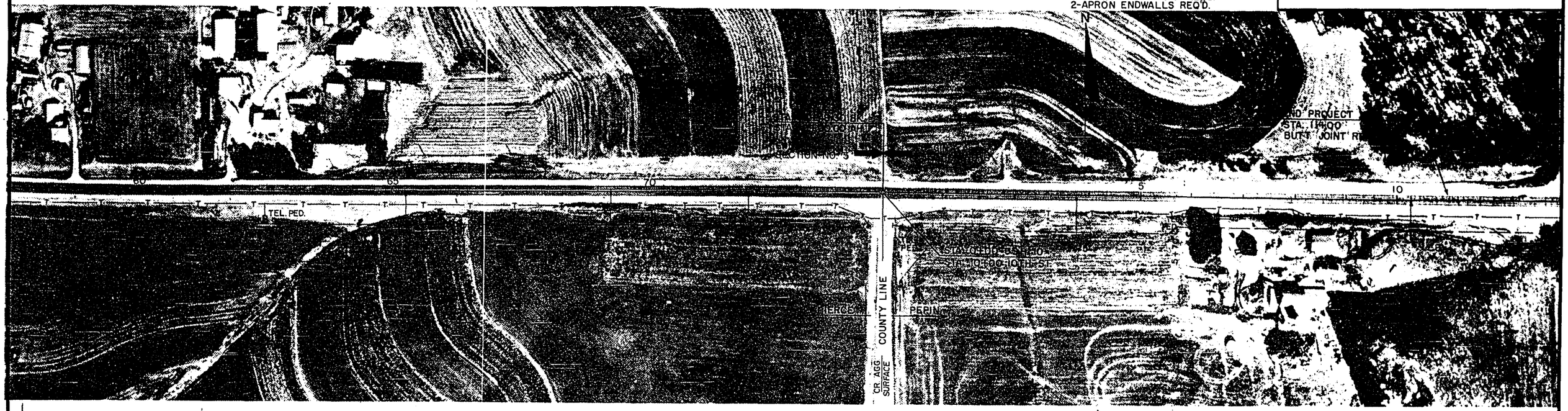

NET LENGTH OF CENTERLINE STA. 58+00.00 TO 11+00.00 = 2,748.30 LIN. FT.

TELEPHONE POST H4/381

Cat No 2130 - 1342

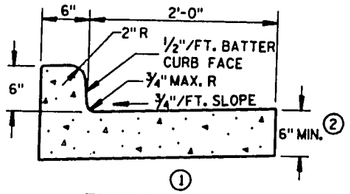

1 TYPES A & D

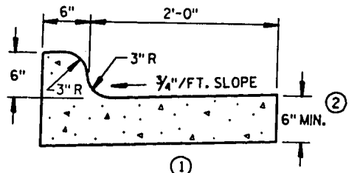

1 TYPES K & L

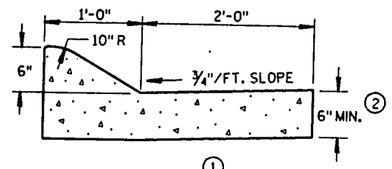

1 TYPES A & D

CONCRETE CURB & GUTTER 36"

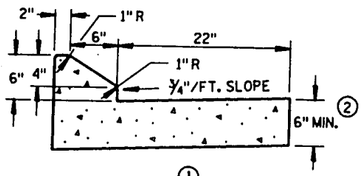

1 TYPES G & J

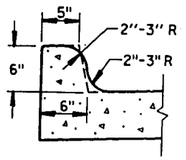

OPTIONAL CURB SHAPE FOR TYPES K 1 & L

CONCRETE CURB & GUTTER 30"

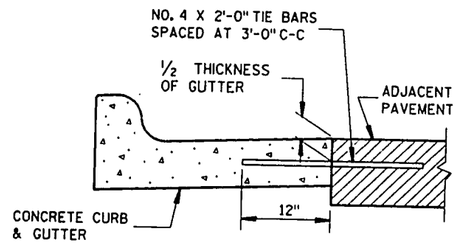

TYPICAL TIE BAR LOCATION 1

GENERAL NOTES

DETAILS OF CONSTRUCTION, MATERIALS AND WORKMANSHIP NOT SHOWN ON THIS DRAWING SHALL CONFORM TO THE PERTINENT REQUIREMENTS OF THE CONTRACT.

SEALANT IS NOT REQUIRED IN THE JOINTS OF CONCRETE CURB OR CONCRETE CURB & GUTTER EXCEPT AS REQUIRED FOR INTEGRAL GUTTER.

PAVEMENT TIES ARE REQUIRED, WHEN INCLUDED IN THE CONTRACT, WHERE CONCRETE CURB, CONCRETE CURB AND GUTTER OR CONCRETE PAVEMENT IS PLACED ADJACENT TO EXISTING CONCRETE.

PAVEMENT TIES AND TIE BARS SHALL BE EPOXY COATED IN CONFORMANCE WITH SUBSECTION 505.2.4 OF THE STANDARD SPECIFICATIONS.

INTEGRAL CURB & GUTTER SHALL CONFORM TO THE DETAILS SHOWN FOR CONCRETE CURB & GUTTER INCLUDING THE TRANSVERSE GUTTER SLOPE. TIE BARS AND A LONGITUDINAL CONSTRUCTION JOINT ARE NOT REQUIRED WITH THIS ALTERNATE.

PAVEMENT JOINTS SHALL BE EXTENDED THROUGH INTEGRAL CURB & GUTTER. JOINTS IN INTEGRAL GUTTER SHALL HAVE THE SAME DIMENSIONS AS THE JOINTS IN THE ADJACENT PAVEMENT. JOINTS IN INTEGRAL CURB SHALL BE 1/8" WIDE.

JOINTS IN INTEGRAL CURB & GUTTER SHALL BE SEALED TO THE FACE OF CURB WITH THE SAME SEALANT SPECIFIED FOR THE PAVEMENT JOINT. THE COST OF FURNISHING AND INSTALLING THIS SEALANT SHALL BE INCIDENTAL TO THE ITEM CONCRETE CURB & GUTTER.

UNLESS OTHERWISE SHOWN ON THE TYPICAL CROSS SECTIONS, THE BASE COURSE AND UNCLASSIFIED EXCAVATION LIMITS ARE TWO FEET BEHIND THE BACK OF CURBS.

1 TIE BARS ARE REQUIRED FOR CURB AND GUTTER TYPES A, G AND K.

2 THE BOTTOM OF CURB AND GUTTER MAY BE CONSTRUCTED EITHER LEVEL OR PARALLEL TO THE SLOPE OF THE SUBGRADE OR BASE COURSE PROVIDED A 6" MINIMUM GUTTER THICKNESS IS MAINTAINED.

3 WHEN REVERSE SLOPE GUTTER IS REQUIRED, THE LOCATIONS WILL BE SHOWN ELSEWHERE IN THE PLAN.

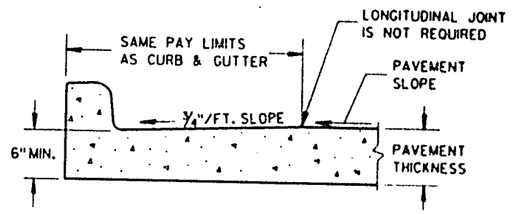

PARTIAL SECTION OF PAVEMENT WITH INTEGRAL CURB & GUTTER

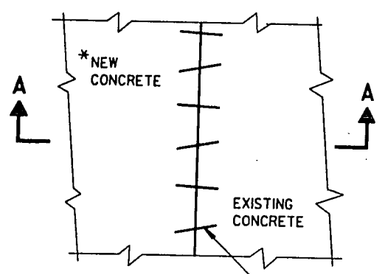

*NEW CURB & GUTTER, SURFACE DRAINS, CONCRETE PAVEMENT OR OTHER NEW CONCRETE.

PLAN VIEW

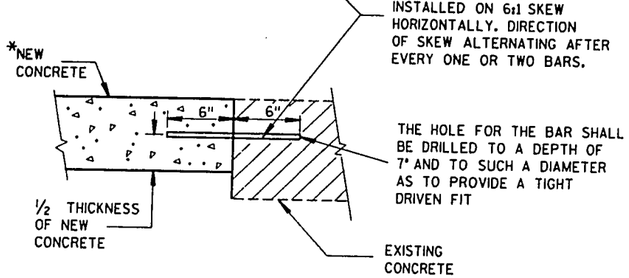

SECTION A-A
PAVEMENT TIES

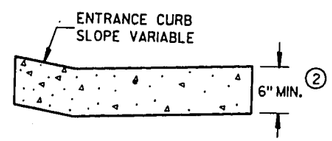

DRIVEWAY ENTRANCE CURB
(WHEN DIRECTED BY THE ENGINEER)

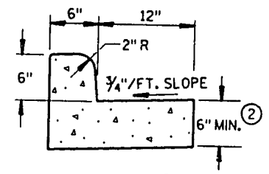

TYPES A 1 & D

CONCRETE CURB & GUTTER 18"

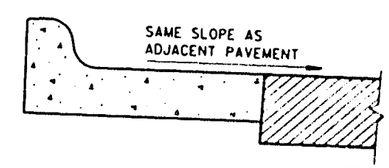

REVERSE SLOPE GUTTER 3
(TYPICAL FOR ALL CURB & GUTTER TYPES)

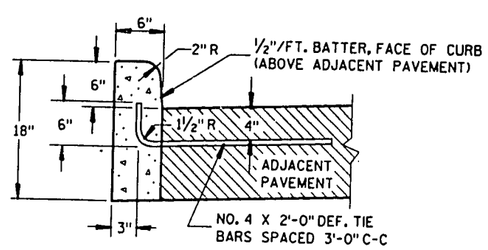

TYPES A 1 & D

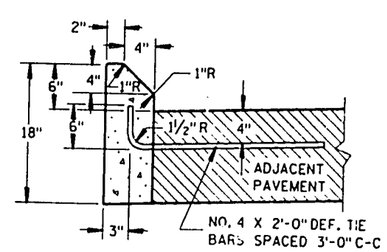

TYPES G 1 & J

CONCRETE CURB

CONCRETE CURB, CONCRETE CURB & GUTTER AND PAVEMENT TIES

STATE OF WISCONSIN
DEPARTMENT OF TRANSPORTATION

APPROVED
10-23-86
DATE
STATE DESIGN ENGINEER FOR HWYS
FHWA

S.D.D. 8 D 1-11

ASPHALTIC FLUME

NOTE: TAPER CURB ENDS TO GUTTER IN 1'-0"

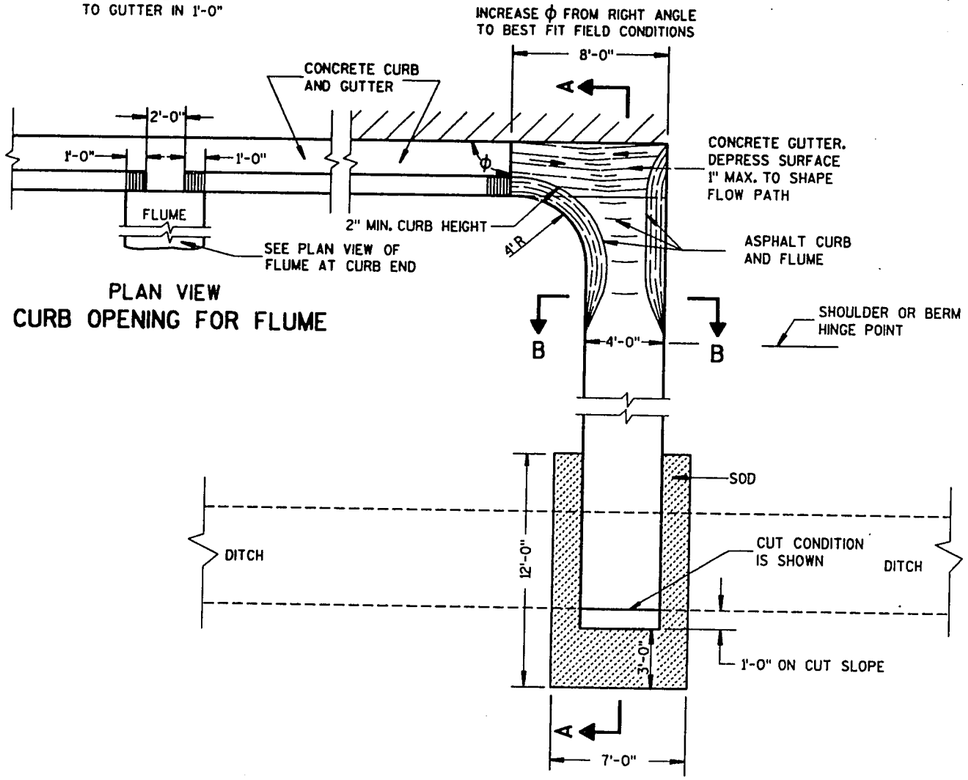

PLAN VIEW
CURB OPENING FOR FLUME

PLAN VIEW
FLUME AT CURB END

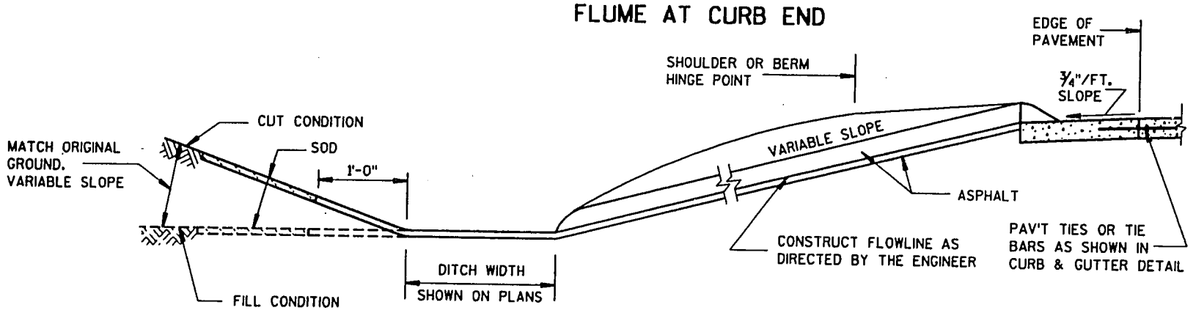

SECTION A-A

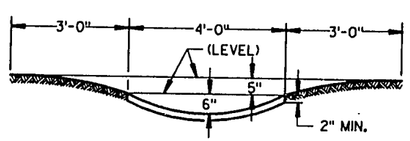

SECTION B-B

GENERAL NOTES

DETAILS OF CONSTRUCTION, MATERIALS AND WORKMANSHIP NOT SHOWN ON THIS DRAWING SHALL CONFORM TO PERTINENT REQUIREMENTS OF THE STANDARD SPECIFICATIONS AND APPLICABLE SPECIAL PROVISIONS.

WELDED STEEL WIRE FABRIC SHALL BE IN ACCORDANCE WITH AASHTO SPECIFICATION M55.

① JOINTS SHALL BE ⅛ TO ¼ INCH WIDE BY 1½ INCHES DEEP AND SPACED AT UNIFORM INTERVALS OF APPROXIMATELY 4 FEET.

② GEOTEXTILE FABRIC TYPE "R" SHALL UNDERLAY THE FULL LENGTH AND WIDTH OF THE CONCRETE SURFACE DRAIN AND RIPRAP.

③ CONCRETE SURFACE DRAIN WITHOUT CURB AND GUTTER MAY BE USED ON BACKSLOPES WHEN SPECIFIED

③ CONCRETE SURFACE DRAIN

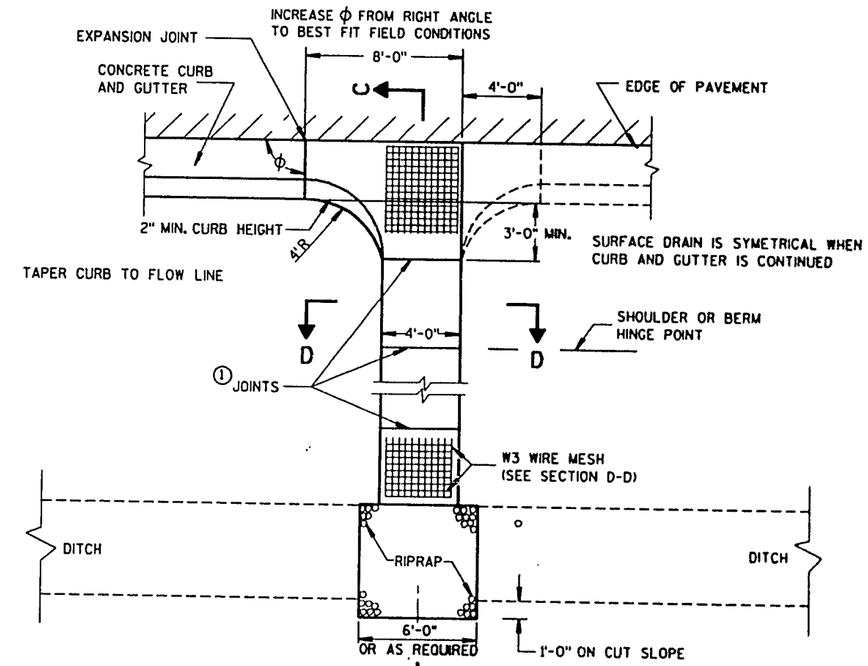

PLAN VIEW

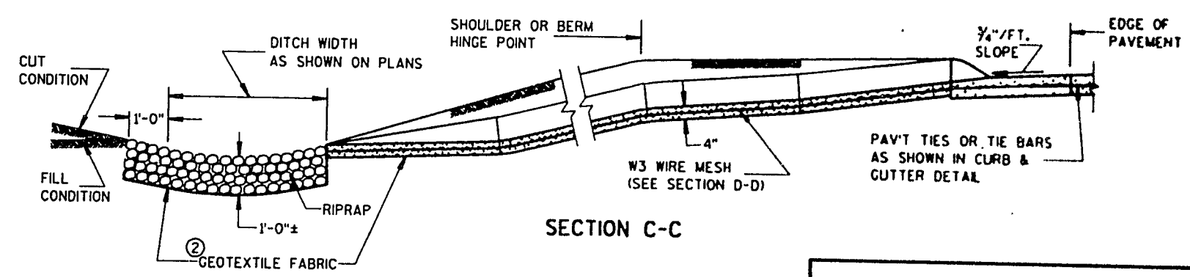

SECTION C-C

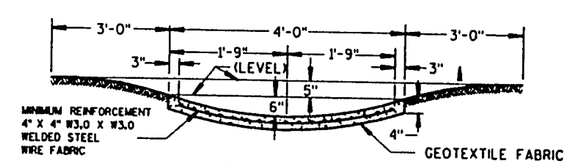

SECTION D-D

CONCRETE SURFACE DRAIN & ASPHALTIC FLUME

STATE OF WISCONSIN
DEPARTMENT OF TRANSPORTATION

APPROVED 10/23/09 DATE

STATE DESIGN ENGINEER FOR HWYS

FHWA

S.D.D. 8 D 4-3

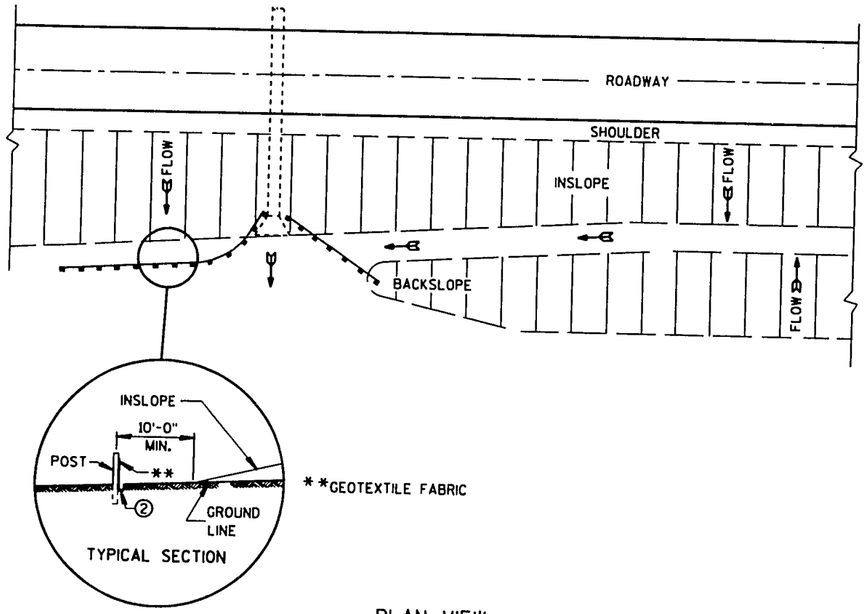

PLAN VIEW

TYPICAL APPLICATIONS OF SILT FENCE

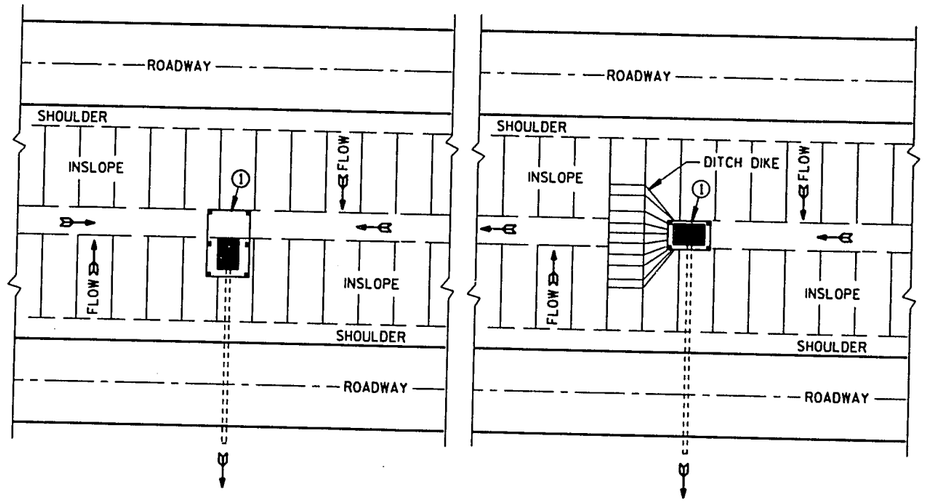

PLAN VIEW

SILT FENCE AT MEDIAN SURFACE DRAINS

GENERAL NOTES

DETAILS OF CONSTRUCTION NOT SHOWN ON THIS DRAWING SHALL CONFORM TO THE PERTINENT REQUIREMENTS OF THE STANDARD SPECIFICATIONS AND APPLICABLE SPECIAL PROVISIONS.

① HORIZONTAL BRACE WITH 2" X 4" WOODEN FRAME OR EQUIVALENT AT TOP OF POSTS AS DIRECTED BY THE ENGINEER.

② TRENCH SHALL BE A MINIMUM OF 4" WIDE & 6" DEEP TO BURY AND ANCHOR THE GEOTEXTILE FABRIC. FOLD MATERIAL TO FIT TRENCH AND BACKFILL & COMPACT TRENCH WITH EXCAVATED SOIL.

③ WOOD POSTS SHALL BE A MINIMUM SIZE OF 1⅛" X 1⅛" OF OAK OR HICKORY.

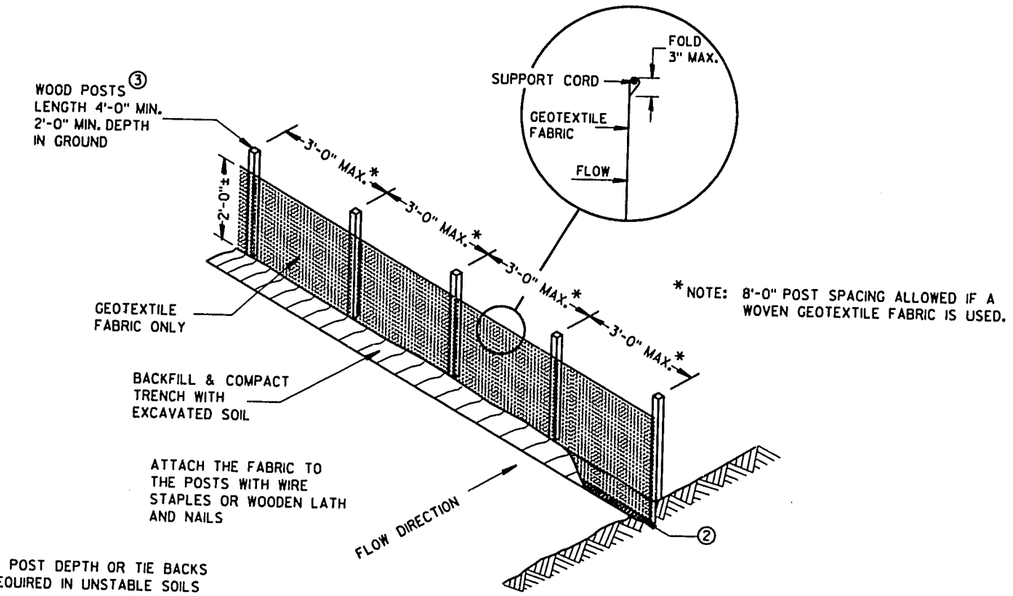

NOTE: ADDITIONAL POST DEPTH OR TIE BACKS MAY BE REQUIRED IN UNSTABLE SOILS

SILT FENCE
(NON-REINFORCED)

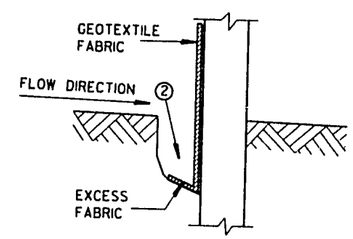

TRENCH DETAIL

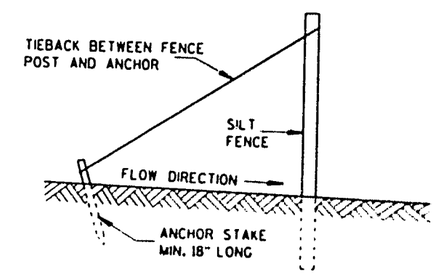

SILT FENCE TIE BACK
(WHEN REQUIRED BY THE ENGINEER)

SILT FENCE

STATE OF WISCONSIN
DEPARTMENT OF TRANSPORTATION

APPROVED
6/29/94 Doug D. Dimmer
DATE CHIEF ROADWAY DEVELOPMENT ENGINEER
FHWA

S.D.D. 8 E 9-4

METAL APRON ENDWALLS

PIPE DIA. (IN.)	MIN. THICK. (Inches) STEEL	MIN. THICK. (Inches) ALUM.	A (±1")	B (MAX.)	H (±1")	L (±1 1/2")	L1 ①	L2 ①	W (±2")	APPROX. SLOPE	BODY
12	.064	.060	6	6	6	21	12	17 1/2	24	2 1/2 to 1	1 Pc.
15	.064	.060	7	8	6	26	14	21 3/4	30	2 1/2 to 1	1 Pc.
18	.064	.060	8	10	6	31	15	28 1/4	36	2 1/2 to 1	1 Pc.
21	.064	.060	9	12	6	36	18	29 5/8	42	2 1/2 to 1	1 Pc.
24	.064	.075	10	13	6	41	18	37 1/4	48	2 1/2 to 1	1 Pc.
30	.079	.075	12	16	8	51	18	52 1/4	60	2 1/2 to 1	1 Pc.
36	.079	.105	14	19	9	60	24	59 3/4	72	2 1/2 to 1	2 Pc.
42	.109	.105	16	22	11	69	24	75 5/8	84	2 1/2 to 1	2 Pc.
48	.109	.105	18	27	12	78	24	81	90	2 1/4 to 1	3 Pc.
54	.109	.105	18	30	12	84	30	85 1/2	102	2 1/4 to 1	3 Pc.
60	.109×	.105×	18	33	12	87	—	—	114	2 to 1	3 Pc.
66	.109×	.105×	18	36	12	87	—	—	120	2 to 1	3 Pc.
72	.109×	.105×	18	39	12	87	—	—	126	2 to 1	3 Pc.
78	.109×	.105×	18	42	12	87	—	—	132	1 1/2 to 1	3 Pc.
84	.109×	.105×	18	45	12	87	—	—	138	1 1/2 to 1	3 Pc.
90	.109×	.105×	18	37	12	87	—	—	144	1 1/2 to 1	3 Pc.
96	.109×	.105×	18	35	12	87	—	—	150	1 1/2 to 1	3 Pc.

× EXCEPT CENTER PANEL
SEE GENERAL NOTES

REINFORCED CONCRETE APRON ENDWALLS

PIPE DIA. (IN.)	T	A	B	C	D	E	G	APPROX. SLOPE
12	2	4	24	48 7/8	72 7/8	24	2	3 to 1
15	2 1/4	6	27	46	73	30	2 1/4	3 to 1
18	2 1/2	9	27	46	73	36	2 1/2	3 to 1
21	2 3/4	9	36	37 1/2	73 1/2	42	2 3/4	3 to 1
24	3	9 1/2	43 1/2	30	73 1/2	48	3	3 to 1
27	3 1/4	10 1/2	49 1/2	24	73 1/2	54	3 1/4	3 to 1
30	3 1/2	12	54	19 3/4	73 1/2	60	3 1/2	3 to 1
36	4	15	63	34 3/4	97 3/4	72	4	3 to 1
42	4 1/2	21	63	35	98	78	4 1/2	3 to 1
48	5	24	72	26	98	84	5	3 to 1
54	5 1/2	27	65	*33 1/4-35 **	*98 1/4- ** 100	90	5 1/2	2 2/3 to 1
60	6	*30-35 **	60	39	99	96	5	2 to 1
66	6 1/2	*24-30 **	*72-78 **	*21-27 **	99	102	5 1/2	2 to 1
72	7	*24-36 **	78	21	99	108	6	2 to 1
78	7 1/2	*24-36 **	78	21	99	114	6 1/2	2 to 1
84	8	36	90 1/2	21	111 1/2	120	6 1/2	1 1/2 to 1
90	8 1/2	41	87 1/2	24	111 1/2	132	6 1/2	1 1/2 to 1

*MINIMUM
**MAXIMUM

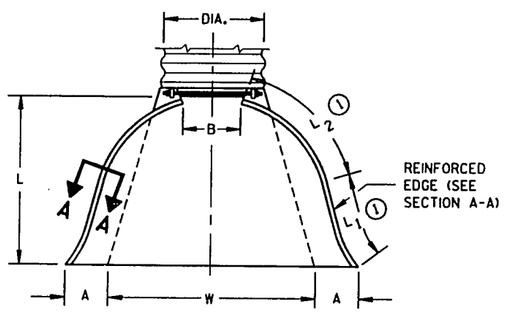

PLAN VIEW

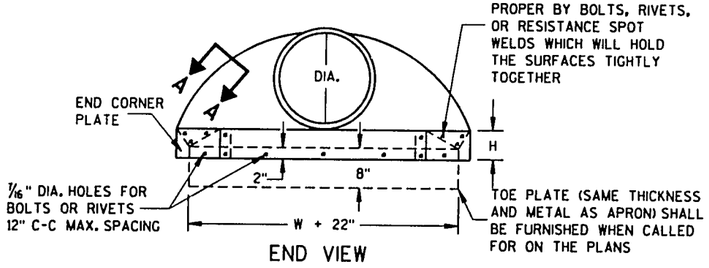

END VIEW

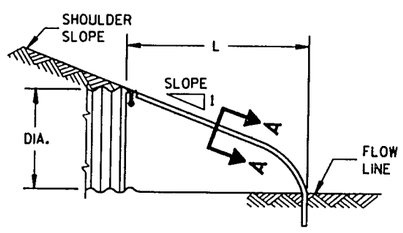

SIDE ELEVATION

METAL ENDWALLS

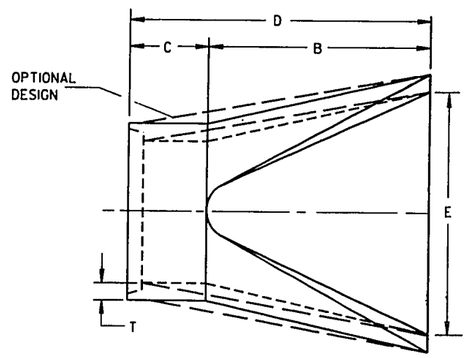

PLAN

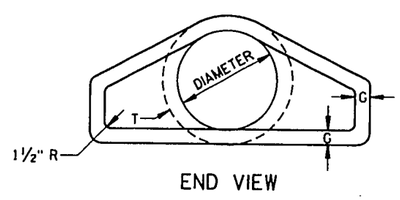

END VIEW

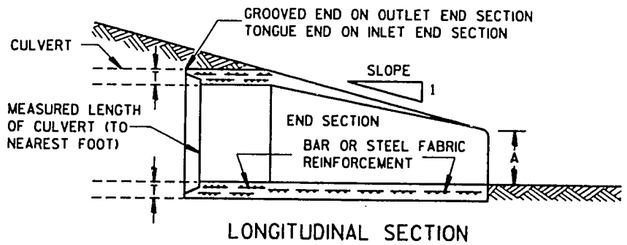

LONGITUDINAL SECTION

CONCRETE ENDWALLS

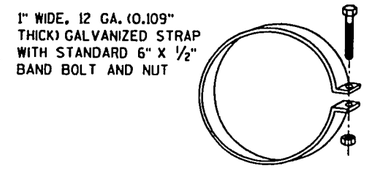

ALTERNATE FOR TYPE 1 CONNECTION

END SECTION CONNECTOR STRAP

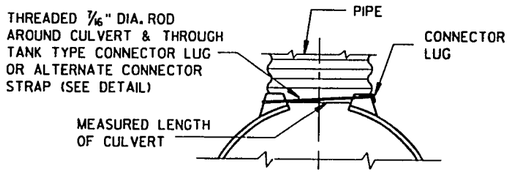

TYPE 1
FOR 12" THRU 24" CORR. PIPE

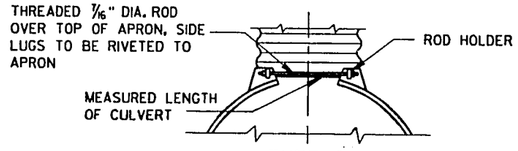

TYPE 2
FOR 30" THRU 96" CORR. PIPE

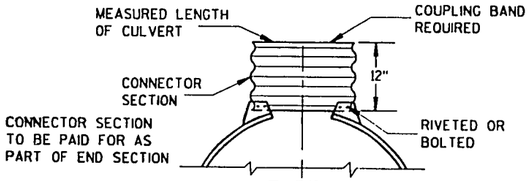

TYPE 3
FOR 42" THRU 96" CORR. PIPE

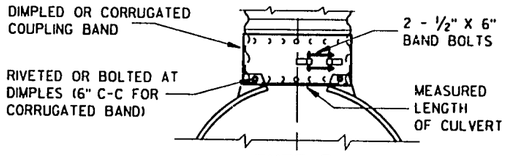

TYPE 5

ALTERNATE FOR:
ALL SIZES CORRUGATED CIRCULAR PIPE

NOTE: DIMPLED BAND FITS OVER OUTSIDE OF ENDWALL, AND CORRUGATED BAND FITS INSIDE ENDWALL. DIMPLED BAND MAY BE USED WITH HELICALLY CORRUGATED PIPE.

FOR CIRCUMFERENTIALLY CORRUGATED PIPE USE ENDWALL CONNECTION DETAILS 1, 2, 3 OR 5 AS APPLICABLE.

FOR HELICALLY CORRUGATED PIPE USE ENDWALL CONNECTION DETAILS 1, 2 OR 5.

FOR HELICALLY CORRUGATED PIPES WITH TWO CIRCUMFERENTIAL CORRUGATIONS AT EACH END USE ENDWALL CONNECTION DETAILS 1, 2 OR 3.

CONNECTION DETAILS

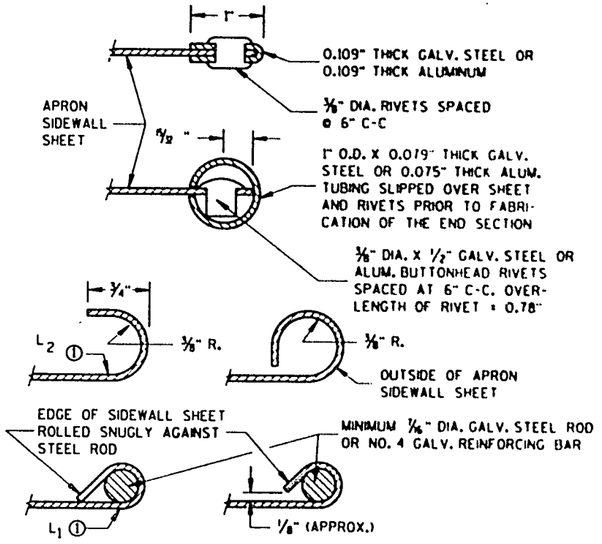

SECTION A-A

GENERAL NOTES

DETAILS OF CONSTRUCTION, MATERIALS AND WORKMANSHIP NOT SHOWN ON THIS DRAWING SHALL CONFORM TO THE PERTINENT REQUIREMENTS OF THE STANDARD SPECIFICATIONS AND THE APPLICABLE SPECIAL PROVISIONS.

CONCRETE CULVERT ENDWALLS MAY NOT BE USED WITH GALVANIZED STEEL OR ALUMINUM CULVERT PIPE OR VISE VERSA. GALVANIZED STEEL OR ALUMINUM ENDWALLS SHALL NORMALLY BE INSTALLED ON CULVERT PIPE OF THE SAME METAL.

ALL THREE PIECE STEEL APRON ENDWALLS FOR 60" DIAMETER PIPE AND LARGER SHALL HAVE 0.109" SIDES AND 0.138" CENTER PANELS. ALL THREE PIECE ALUMINUM APRON ENDWALLS FOR 60" DIAMETER PIPE AND LARGER SHALL HAVE 0.105" SIDES AND 0.134" CENTER PANELS. THE WIDTH OF CENTER PANELS SHALL BE GREATER THAN 20 PERCENT OF THE PIPE PERIMETER.

LAP SEAMS SHALL BE TIGHTLY JOINED BY GALVANIZED RIVETS OR BOLTS FOR STEEL UNITS AND ALUMINUM RIVETS AND BOLTS FOR ALUMINUM UNITS. FOR THE 60" THROUGH 96" DIAMETER APRON ENDWALL SIZES, THE REINFORCED EDGES AND CENTER PANEL SEAMS SHALL BE FURTHER REINFORCED WITH GALVANIZED STEEL OR ALUMINUM STIFFENER ANGLES. THE ANGLES SHALL BE ATTACHED BY GALVANIZED NUTS AND BOLTS FOR STEEL UNITS AND ALUMINUM NUTS AND BOLTS FOR ALUMINUM UNITS.

WHERE TWO OR MORE PIPES WITH APRON ENDWALLS ARE LAID ADJACENT TO EACH OTHER, THEY SHALL BE SEPARATED BY A DISTANCE SUFFICIENT TO PROVIDE A MINIMUM CLEARANCE OF 6 INCHES BETWEEN APRON ENDWALLS.

① FOR PIPE SIZES UP TO 60" DIAMETER, A 180° ROLLED EDGE MAY BE USED INSTEAD OF STEEL ROD REINFORCEMENT. SEE SECTION A-A.

APRON ENDWALLS FOR CULVERT PIPE

STATE OF WISCONSIN
DEPARTMENT OF TRANSPORTATION

APPROVED
11/30/94 Roger R. Simonson
DATE CHIEF BROADWAY DEVELOPMENT ENGINEER
FHWA

S.D.D. 8 F 1-11

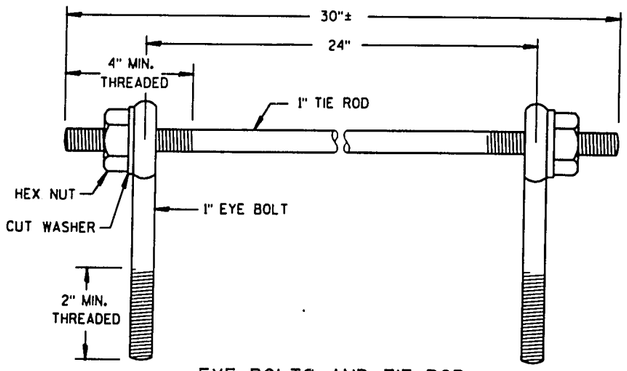

EYE BOLTS AND TIE ROD

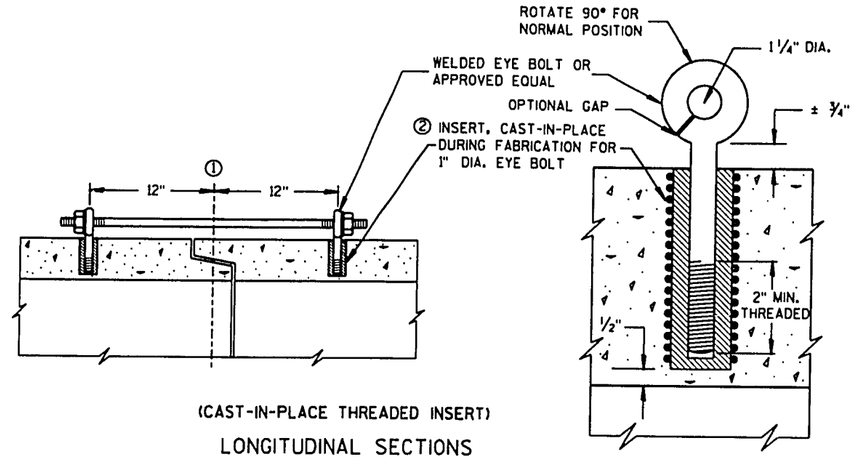

(CAST-IN-PLACE THREADED INSERT)

LONGITUDINAL SECTIONS

GENERAL NOTES

CONCRETE CULVERT PIPE SHALL BE TIED TOGETHER IN THE MANNER ILLUSTRATED BY THIS DETAIL AT LOCATIONS DESIGNATED ON THE PLAN. THE CONTRACTOR MAY USE EITHER ALTERNATE 1, 2 OR 3 FOR DRAINAGE STRUCTURES. ONLY ALTERNATE 1 AND 3 MAY BE USED FOR CATTLE PASSES. UNLESS OTHERWISE STATED IN THE CONTRACT THE MATERIALS, FABRICATION AND WORK NECESSARY TO TIE CULVERT PIPE AS INDICTED ON THE PLANS AND BY THIS DETAIL WILL BE CONSIDERED INCIDENTAL TO CULVERT PIPE, REINFORCED CONCRETE CULVERT PIPE, OR REINFORCED CONCRETE PIPE CATTLE PASS.

DETAILED DRAWINGS FOR PROPOSED ALTERNATE DESIGNS FOR JOINT TIES SHALL BE SUBMITTED TO THE ENGINEER FOR APPROVAL.

① ℄ OF TONGUE AND GROOVE OR BELL AND SPIGOT JOINTS.

② THE INSIDE OF THE THREADED INSERTS SHALL BE CLEAN TO ALLOW THE INSERTION OF THREADED EYE BOLTS.

③ HOLES SHALL BE CAST-IN-PLACE OR DRILLED 12" FROM ℄ OF TONGUE AND GROOVE.

④ BOLT PROJECTION INSIDE OF PIPE SHALL NOT EXCEED 2".

⑤ ROD DIAMETER + 1 INCH.

⑥ LENGTH ADEQUATE TO EXTEND TO WITHIN 1/2 INCH OF THE INNER SURFACE OF THE PIPE.

EYE BOLT AND TIE ROD ASSEMBLY (ALTERNATE NO. 1)

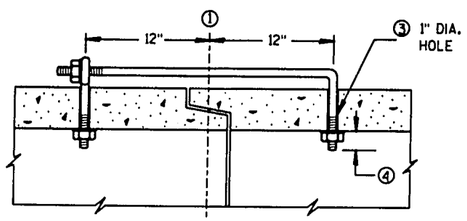

(TONGUE & GROOVE PIPE)

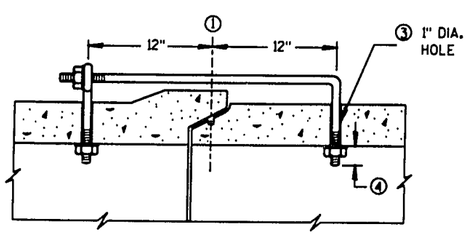

(MODIFIED BELL PIPE)

LONGITUDINAL SECTION

EYE BOLT DIMENSION TABLE

PIPE SIZE	L = LENGTH	
	TONGUE & GROOVE PIPE	MODIFIED BELL PIPE
18" TO 24"	4 1/2"	6 1/4"
30"	5"	7"
36"	5 1/2"	7"
42"	6"	
48"	6 1/2"	
60"	7 1/2"	
66"	8"	

ADJUSTABLE TIE ROD TABLE

PIPE DIAMETER	TIE ROD DIAMETER	D	L_1	N
12-60	5/8	5/8	5	1/2
66-84	3/4	3/4	5	1/2
90-108	1	1	7	1 7/16

DIMENSIONS SHOWN ARE IN INCHES

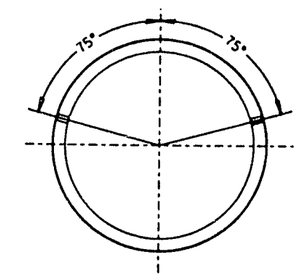

PLACEMENT OF (2) CAST-IN-PLACE INSERTS OR HOLES DURING FABRICATION FOR PIPE SECTIONS REQUIRING TIE RODS

TRANSVERSE SECTION

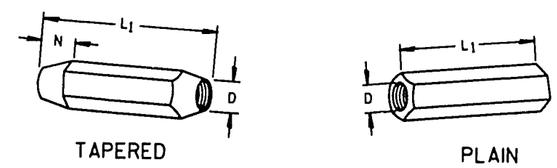

TAPERED

PLAIN

RIGHT AND LEFT THREADS

SLEEVE NUTS

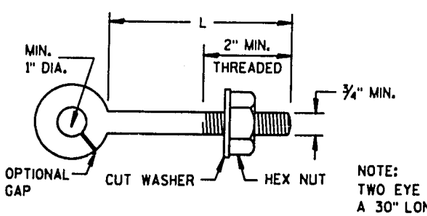

EYE BOLT

NOTE:
TWO EYE BOLTS MAY BE USED WITH A 30" LONG THREADED ROD IN LIEU OF THE 90° BENT TIE ROD.

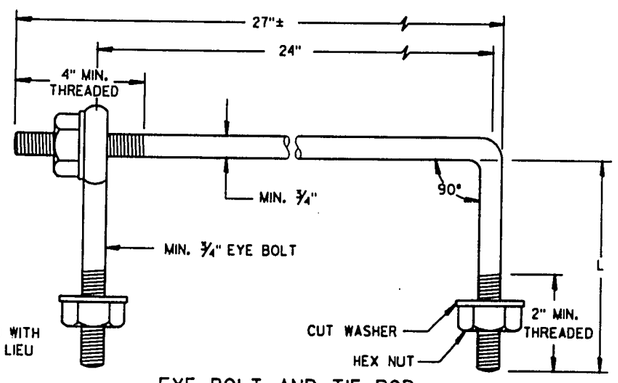

EYE BOLT AND TIE ROD

(JOINT TIES FOR 18" TO 66" DIA. CONCRETE PIPE)

EYE BOLT AND TIE ROD ASSEMBLY (ALTERNATE NO. 2)

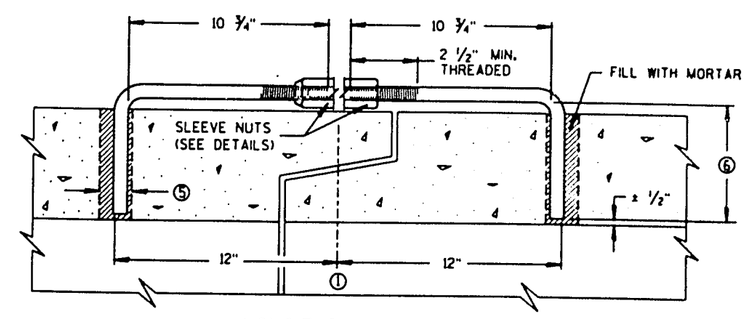

LONGITUDINAL SECTION

(JOINT TIES FOR 12" TO 108" DIA. CONCRETE PIPE)

ADJUSTABLE TIE ROD (ALTERNATE NO. 3)

JOINT TIES FOR CONCRETE PIPE

STATE OF WISCONSIN
DEPARTMENT OF TRANSPORTATION

APPROVED
9/10/92
DATE

STATE DESIGN ENGINEER FOR HBTS

FHWA

S.D.D. 8 F 4-5

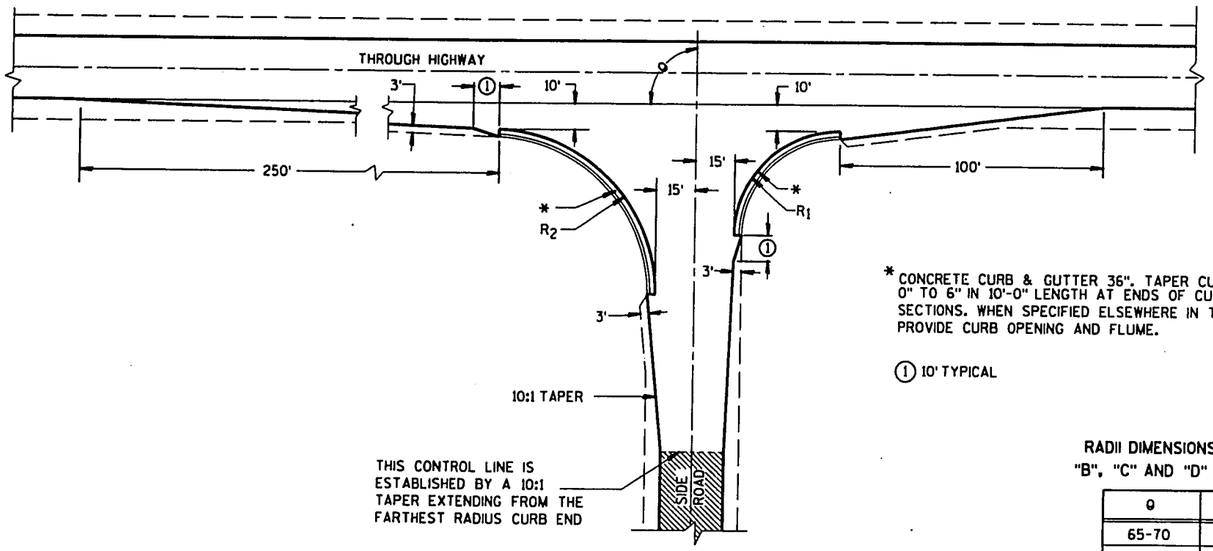

TYPE "B"

* CONCRETE CURB & GUTTER 36". TAPER CURB HEIGHT 0" TO 6" IN 10'-0" LENGTH AT ENDS OF CURB & GUTTER SECTIONS. WHEN SPECIFIED ELSEWHERE IN THE CONTRACT, PROVIDE CURB OPENING AND FLUME.

(1) 10' TYPICAL

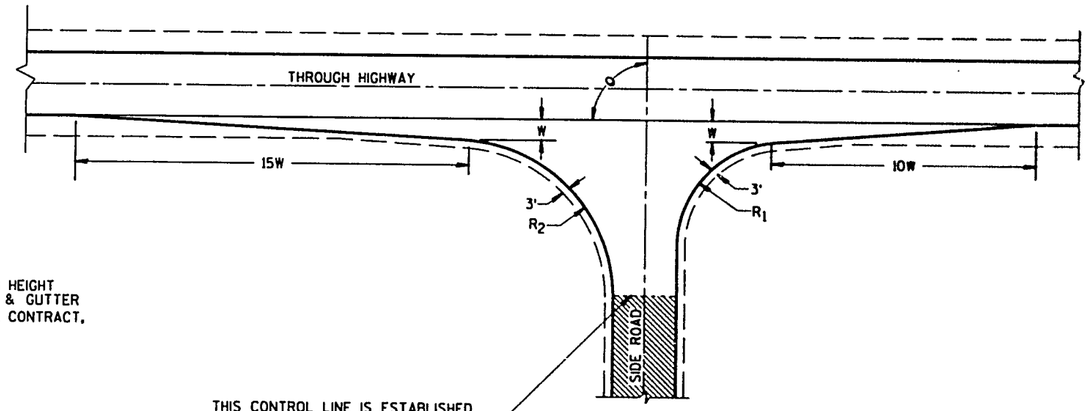

TYPE "C"

RADII DIMENSIONS FOR TYPES "B", "C" AND "D" INTERSECTIONS

θ	R_1	R_2
65-70	35	70
75-80	40	70
85-90	40	60
100	50	55
105-110	60	45

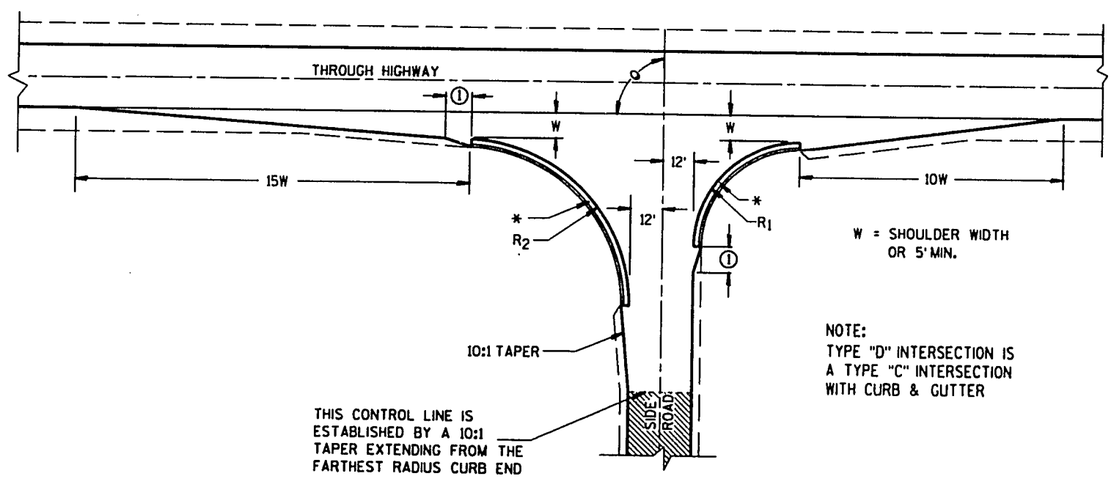

TYPE "D"

W = SHOULDER WIDTH OR 5' MIN.

NOTE:
TYPE "D" INTERSECTION IS A TYPE "C" INTERSECTION WITH CURB & GUTTER

GENERAL NOTES

DESIGNS MAY BE USED INTERCHANGEABLY IN COMBINATION OR SEPARATELY FOR ANY ONE COMPLETE INTERSECTION DEPENDING UPON INTERSECTION ANGLE AND SURFACING OF EACH APPROACH ROADWAY.

SIDE ROAD SURFACING NOTE

WHEN THE SIDE ROAD IS NOT PRESENTLY PAVED, PAVEMENT SHALL BE PLACED TO THE LIMITS SHOWN UNLESS OTHERWISE PROVIDED IN THE CONTRACT. WHERE THE CONSTRUCTION LIMITS ARE BEYOND THE PAVING LIMITS, CRUSHED AGGREGATE SURFACING SHALL BE PLACED BETWEEN THE PAVING LIMITS AND CONSTRUCTION LIMITS.

WHEN THE SIDE ROAD IS PRESENTLY PAVED, NEW PAVEMENT SHALL BE PLACED TO THE LIMITS OF DESIGN AS SHOWN AND BEYOND, IF NECESSARY, TO MEET EXISTING PAVEMENT.

WHEN THE SIDE ROAD IS THE CONSTRUCTION PROJECT, THE INTERSECTION SURFACING SHALL BE THE SAME AS FOR THE PROJECT.

EXISTING SURFACE

AT-GRADE SIDE ROAD INTERSECTION, TYPES "B", "C" AND "D"

STATE OF WISCONSIN
DEPARTMENT OF TRANSPORTATION

APPROVED 8/15/94 DATE
Chief Roadway Development Engineer
FHWA

S.D.D. 9 A 1-9a

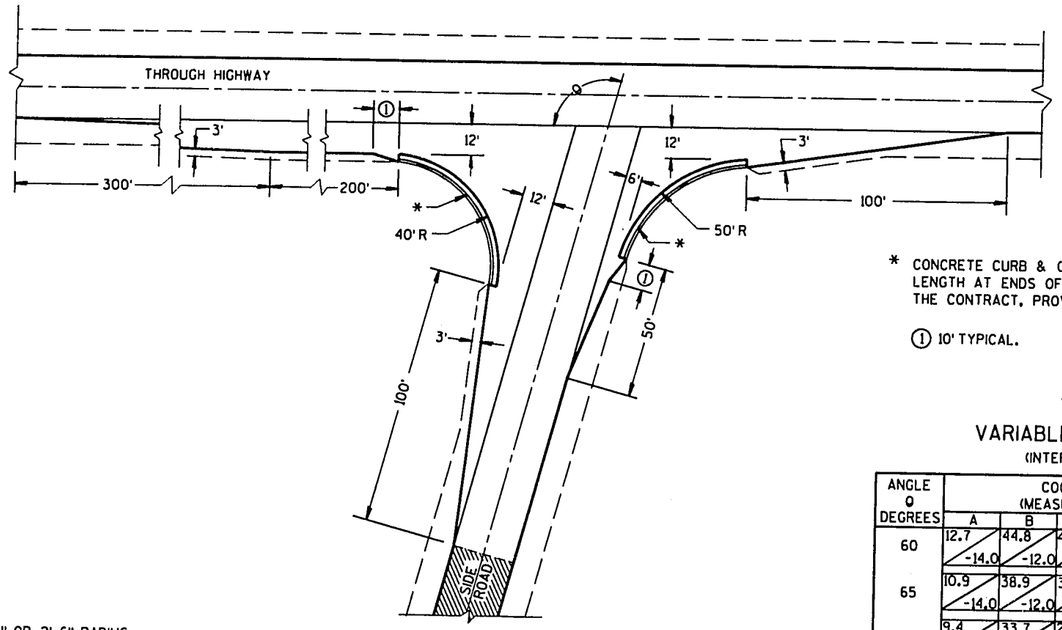

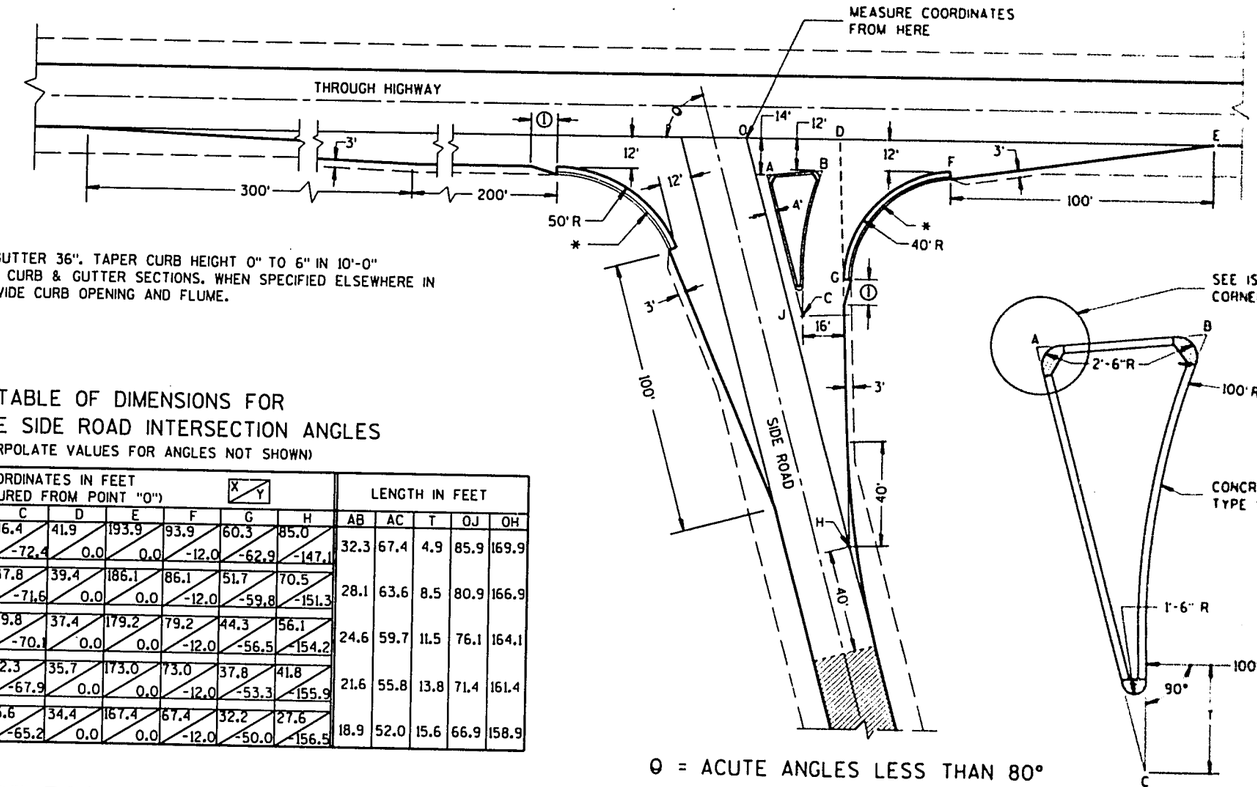

* CONCRETE CURB & GUTTER 36". TAPER CURB HEIGHT 0" TO 6" IN 10'-0" LENGTH AT ENDS OF CURB & GUTTER SECTIONS. WHEN SPECIFIED ELSEWHERE IN THE CONTRACT, PROVIDE CURB OPENING AND FLUME.

① 10' TYPICAL.

TABLE OF DIMENSIONS FOR VARIABLE SIDE ROAD INTERSECTION ANGLES

(INTERPOLATE VALUES FOR ANGLES NOT SHOWN)

ANGLE θ DEGREES	COORDINATES IN FEET (MEASURED FROM POINT "O") X/Y								LENGTH IN FEET				
	A	B	C	D	E	F	G	H	AB	AC	T	OJ	OH
60	12.7 / -14.0	44.8 / -12.0	46.4 / -72.4	41.9 / 0.0	193.9 / 0.0	93.9 / -12.0	60.3 / -62.9	85.0 / -147.1	32.3	67.4	4.9	85.9	169.9
65	10.9 / -14.0	38.9 / -12.0	37.8 / -71.6	39.4 / 0.0	186.1 / 0.0	86.1 / -12.0	51.7 / -59.8	70.5 / -151.3	28.1	63.6	8.5	80.9	166.9
70	9.4 / -14.0	33.7 / -12.0	29.8 / -70.1	37.4 / 0.0	179.2 / 0.0	79.2 / -12.0	44.3 / -56.5	56.1 / -154.2	24.6	59.7	11.5	76.1	164.1
75	7.9 / -14.0	29.2 / -12.0	22.3 / -67.9	35.7 / 0.0	173.0 / 0.0	73.0 / -12.0	37.8 / -53.3	41.8 / -155.9	21.6	55.8	13.8	71.4	161.4
80	6.5 / -14.0	25.2 / -12.0	15.6 / -65.2	34.4 / 0.0	167.4 / 0.0	67.4 / -12.0	32.2 / -50.0	27.6 / -156.5	18.9	52.0	15.6	66.9	158.9

TYPE "A" SIDE ROAD INTERSECTION DETAILS

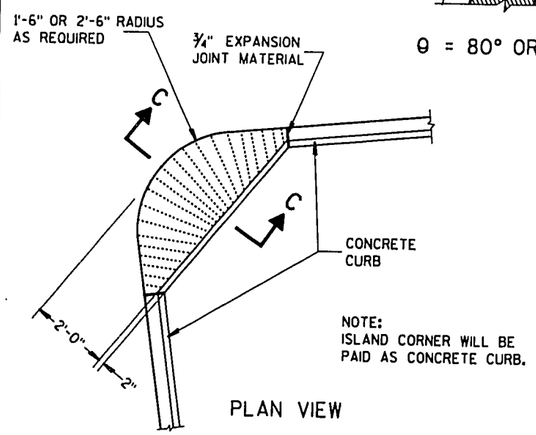

PLAN VIEW

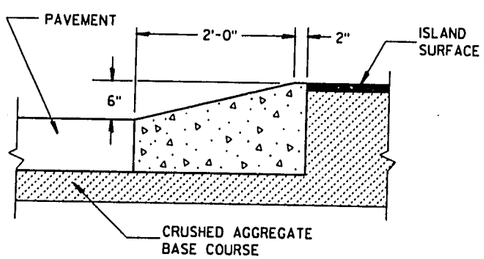

SECTION C-C

ISLAND CORNER DETAIL

(TO BE CONSTRUCTED AT ALL ISLAND CORNERS)

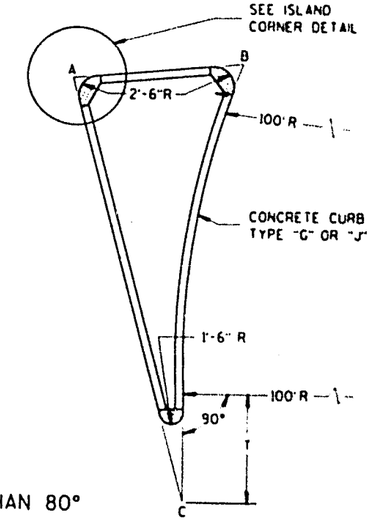

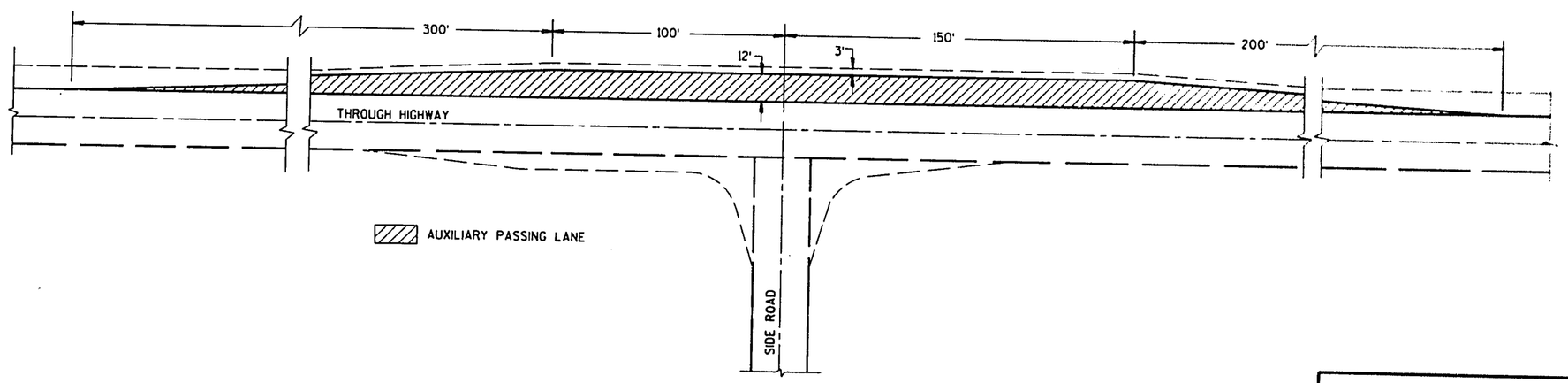

PASSING LANE DETAIL

AT-GRADE SIDE ROAD INTERSECTION, TYPE "A" AND PASSING LANE

STATE OF WISCONSIN
DEPARTMENT OF TRANSPORTATION

S.D.D. 9 A 1-9b

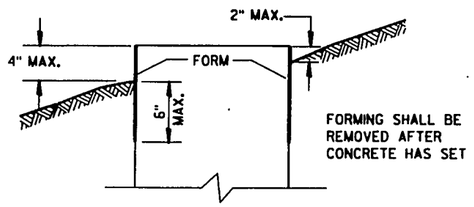

FORMING DETAIL

QUANTITY REQUIREMENTS	CONCRETE BASE TYPE		
	1	2	5
APPROX. CUBIC YARDS OF CONCRETE	.32	.57	.40
LBS. OF HOOP BAR STEEL	NONE	23	16
LBS. OF VERTICAL BAR STEEL	NONE	60	18

WELDING ANCHOR BOLTS TO THE CAGE IS UNACCEPTABLE. TIE WIRES SHALL BE USED.

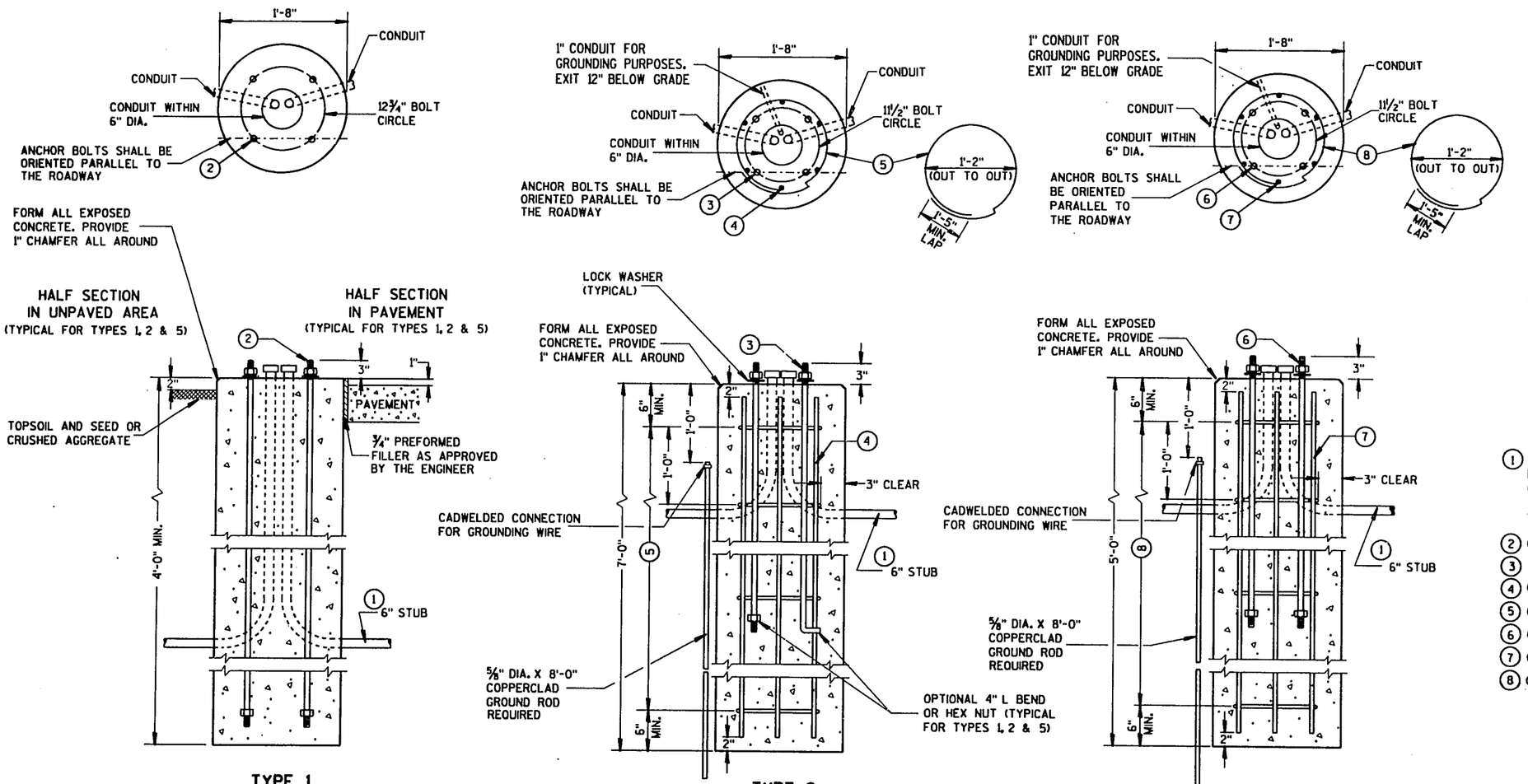

CONCRETE BASES

GENERAL NOTES

DETAILS OF CONSTRUCTION, MATERIALS AND WORKMANSHIP NOT SHOWN ON THIS DRAWING SHALL CONFORM TO THE PERTINENT REQUIREMENTS OF THE CONTRACT.

BASES SHALL BE EXCAVATED BY USE OF A CIRCULAR AUGER.

TOP SURFACES OF CONCRETE BASES SHALL BE TROWEL FINISHED AND LEVEL.

CONDUIT SIZES AND LOCATIONS SHALL BE AS SHOWN ON THE PLANS.

MINIMUM BENDING RADIUS OF CONDUIT = 6 X THE DIAMETER.

CONDUIT HEIGHT ABOVE CONCRETE BASES SHALL BE 1 INCH. ALL METALLIC CONDUIT ENDS SHALL BE REAMED AND THREADED.

ALL METALLIC CONDUITS IN WHICH WIRE OR CABLE IS NOT TO BE INSTALLED SHALL BE CAPPED WITH THREADED PROTECTIVE CAPS, AS APPROVED BY THE ENGINEER.

ALL NONMETALLIC CONDUITS IN WHICH WIRE OR CABLE IS NOT INSTALLED SHALL BE PLUGGED.

ALL CONDUIT ENDS AT THE TOP OF CONCRETE BASES SHALL BE CAPPED IF METALLIC OR PLUGGED IF NONMETALLIC IMMEDIATELY AFTER PLACEMENT AND BEFORE CONCRETE IS POURED. CONDUITS IN WHICH WIRE OR CABLE IS NOT INSTALLED SHALL REMAIN CAPPED OR PLUGGED.

BELL ENDS SHALL BE INSTALLED ON ALL PVC CONDUIT EXPOSED AT THE TOP OF CONCRETE BASES BEFORE INSTALLATION OF CABLE OR WIRE.

ENDS OF CONDUIT INSTALLED BELOW GRADE FOR FUTURE USE SHALL BE CAPPED IF METALLIC OR PLUGGED IF NONMETALLIC.

WHEN REQUIRED TO CONNECT NONMETALLIC CONDUIT TO METALLIC CONDUIT, ONLY ADAPTER FITTINGS, U.L. LISTED FOR ELECTRICAL USE, SHALL BE USED.

IF A BASE REQUIRES A DEEP FORM BECAUSE OF LOOSE DIRT OR FILL, THE FORM SHALL BE REMOVED BEFORE BACKFILLING AROUND THE BASE. BACKFILL SHALL BE TAMPED TIGHT AGAINST THE BARE CONCRETE BASE

IN LAYERS OF 1 FOOT OR LESS.

A NO. 6 AWG, STRANDED COPPER GROUNDING WIRE SHALL BE CADWELDED TO THE GROUND ROD FOR TYPE 2 AND TYPE 5 BASES.

THE GROUNDING WIRE SHALL BE FURNISHED AND INSTALLED TO ENTER THE BASE OF THE TYPE 2 AND TYPE 5 BASES THROUGH A 1 INCH CONDUIT INSTALLED FOR GROUNDING PURPOSES, LEAVING A 4 FOOT COIL OF WIRE ABOVE THE CONCRETE BASE. THE GROUNDING WIRE SHALL BE NEATLY COILED AND THE COILS TIED TOGETHER.

ANCHOR BOLTS SHALL BE THREADED 8" IN LENGTH ON EACH END OF THE BOLT, AND BE MANUFACTURED IN ACCORDANCE WITH SECTION 640.2.9 OF THE STANDARD SPECIFICATIONS, ASTM A-449, OR ASTM A-687 (GRADE 105).

WHEN ANCHOR BOLTS USING THE ALTERNATE "L" BEND ARE FURNISHED, THE 4" "L" BEND SHALL BE IN ADDITION TO THE SPECIFIED ANCHOR BOLT BAR LENGTH. THE "L" BEND END SHALL NOT BE THREADED.

(1) THE MINIMUM DEPTH OF CONDUIT EXITING THE CONCRETE BASE AND INSTALLED BELOW THE TRAVELED WAY SHALL BE 24 INCHES. THE MINIMUM DEPTH OF CONDUIT EXITING THE CONCRETE BASE THAT IS NOT INSTALLED BELOW THE TRAVELED WAY SHALL BE 18 INCHES. THE MAXIMUM DEPTH OF ALL CONDUIT SHALL BE 36 INCHES EXCEPT WITH WRITTEN APPROVAL BY THE ENGINEER.

(2) (4) 1" DIA. X 3'-6" ANCHOR BOLTS.

(3) (4) 1" DIA. X 5'-0" ANCHOR BOLTS.

(4) (6) NO. 6 X 6'-8" BAR STEEL REINFORCEMENT.

(5) (7) NO. 4 X 5'-1" BAR STEEL REINFORCEMENT @ 1'-0" C-C.

(6) (4) 1" DIA. X 3'-6" ANCHOR BOLTS.

(7) (6) NO. 4 X 4'-8" BAR STEEL REINFORCEMENT

(8) (5) NO. 4 X 5'-1" BAR STEEL REINFORCEMENT @ 1'-0" C-C.

CONCRETE BASES

STATE OF WISCONSIN
DEPARTMENT OF TRANSPORTATION

APPROVED 4/21/93 DATE — STATE ELECTRICAL ENGR FOR HWYS

4/21/93 DATE — STATE TRAFFIC ENGINEER FOR HWYS

FHWA

S.D.D. 9 C 2-1

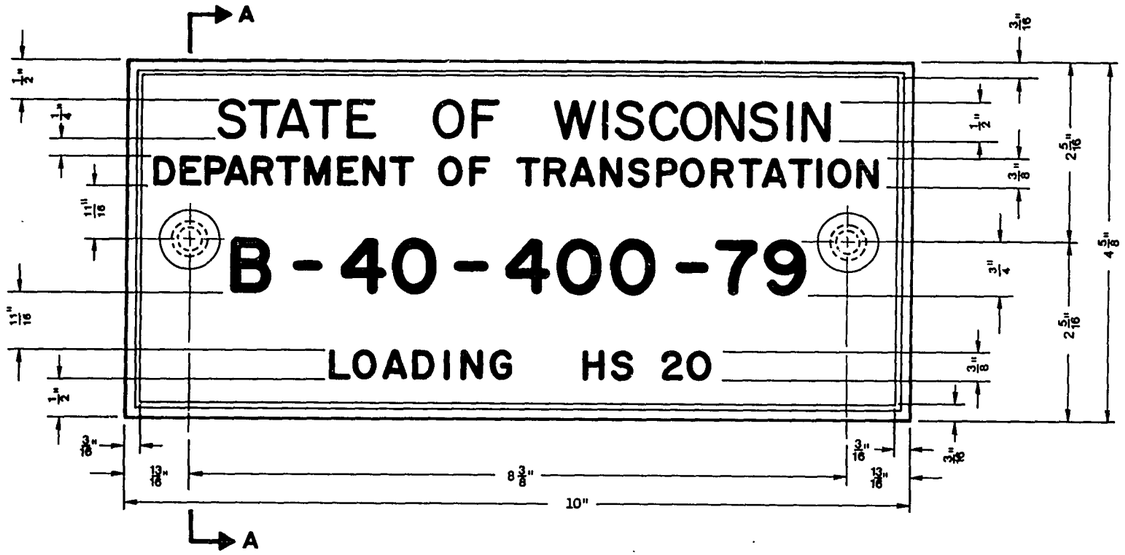

TYPICAL NAME PLATE
(BRIDGES, CULVERTS, AND RETAINING WALLS)

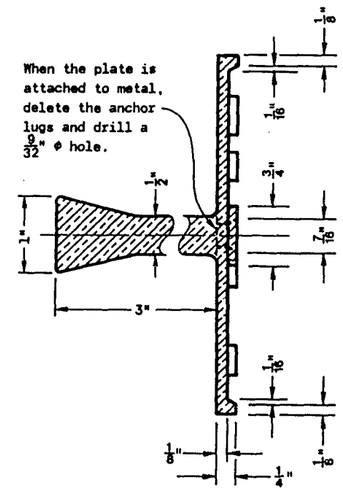

SECTION A-A

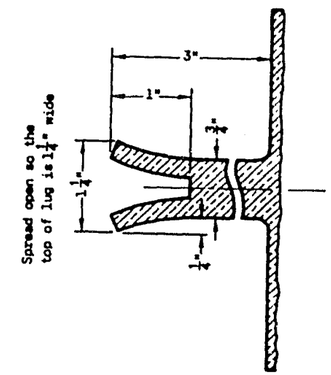

ALTERNATE LUG

FOR MULTI-UNIT STRUCTURES LINES 4 AND 5 ABOVE SHALL READ:

B = Bridge
C = Culvert
RW = Retaining Wall

County No.

Bridge No.

Year of Substantial Completion

B-40-400-79

UNIT IA HS 20M

Unit No. for Multiple Unit

Design Loading of Structure Indicated on the Plan

NUMBERING AND LOADING DESIGNATION
MULTI-UNIT STRUCTURES

GENERAL NOTES

Name Plates to be installed on Bridges, Culverts, and Retaining Walls shall conform to the requirements of Section 506.2.4 of the Standard Specifications.

The Bridge Number and Design Loading shown on this drawing are examples only. See Construction Plans for individual numbering and design loading.

NAME PLATE
(STRUCTURES)

State of Wisconsin
Department of Transportation
Division of Transportation Facilities

APPROVED 9-27-79
DATE

CHIEF DESIGN ENGINEER

FHWA

S.D.D. 12 A 3-4

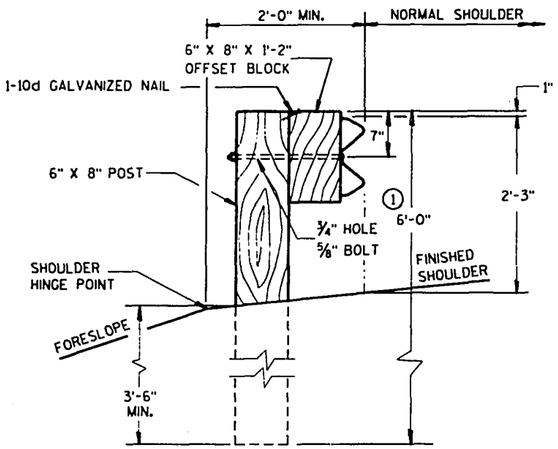

END VIEW

LOCATED ALONG A ROADWAY SHOULDER

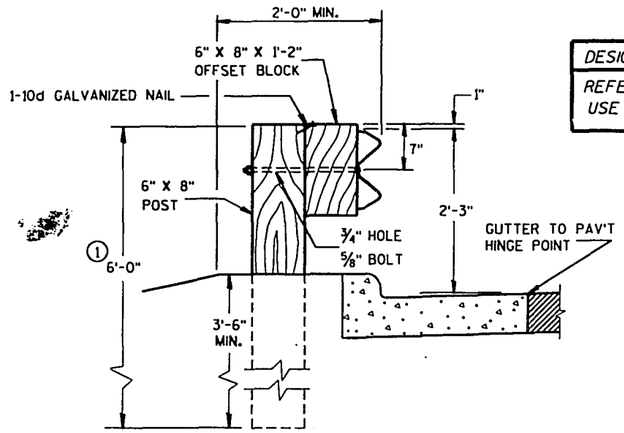

END VIEW

LOCATED ALONG A CURBED ROADWAY

DESIGN NOTE: (WILL NOT APPEAR ON CONTRACT PLANS)

REFER TO PROCEDURE 11-45-1 FOR GUIDANCE ON THE USE OF BEAM GUARD ON CURBED ROADWAYS.

GENERAL NOTES

DETAILS OF CONSTRUCTION, MATERIALS AND WORKMANSHIP NOT SHOWN ON THIS DRAWING SHALL CONFORM TO THE PERTINENT REQUIREMENTS OF THE STANDARD SPECIFICATIONS, AND THE APPLICABLE SPECIAL PROVISIONS.

① POST LENGTH SHALL BE INCREASED TO PROVIDE A MINIMUM EMBEDMENT OF 3'-6" WHERE THE SHOULDER HINGE POINT IS LOCATED IN FRONT OF THE POST.

② PROVIDE TYPE "H" SILVER REFLECTIVE SHEETING ON ALL REFLECTORS EXCEPT THOSE LOCATED ALONG THE LEFT EDGE OF ONE-WAY ROADWAYS, WHICH SHALL BE PROVIDED WITH TYPE "H" YELLOW REFLECTIVE SHEETING.

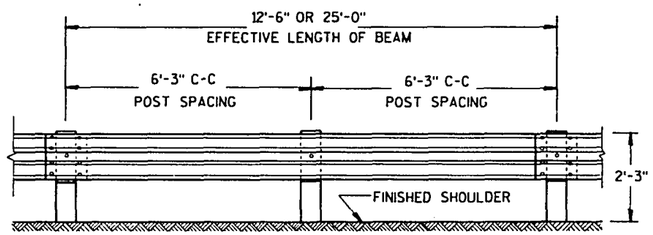

FRONT VIEW

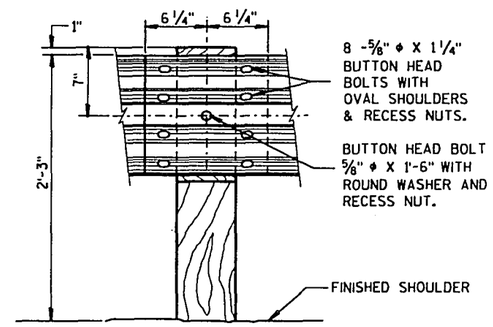

FRONT VIEW

BEAM SPLICING AND POST MOUNTING DETAIL

TYPICAL INSTALLATION OF STEEL PLATE BEAM GUARD

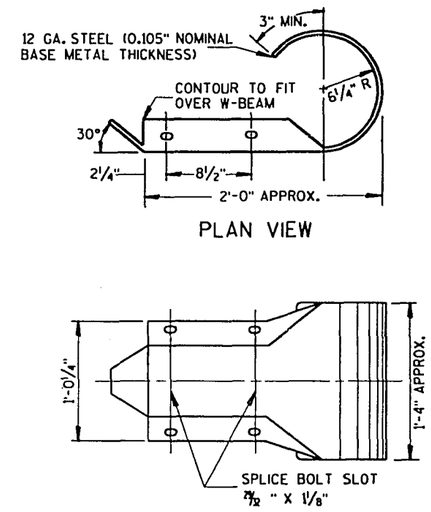

PLAN VIEW

FRONT VIEW

W BEAM END SECTION (ROUNDED)

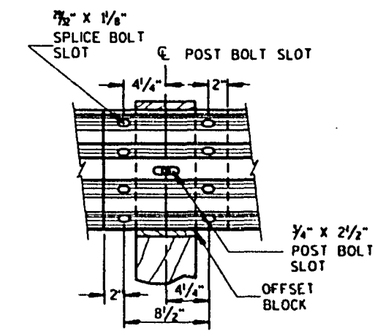

W BEAM SPLICE

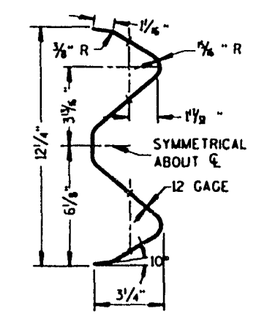

SECTION THRU W BEAM

REFLECTOR SPACING

	BEAM GUARD LENGTH	REFLECTOR SPACING	NO. SURFACES REFLECTORIZED	MIN. NO. REFLECTORS
ONE WAY TRAFFIC	< 200'	50' C-C	1	3
	> 200'	100' C-C	1	
TWO WAY TRAFFIC	< 200' *	25' C-C	1 *	6
	> 200' *	50' C-C	1 *	
TWO WAY TRAFFIC	< 200'	50' C-C	2 **	3
	> 200'	100' C-C	2 **	

* EVERY OTHER REFLECTOR REVERSED FOR 2-WAY VISIBILITY. CONTRACTOR MAY FURNISH TWO-SIDED REFLECTORS IN LIEU OF ONE-SIDED RELECTORS.

** ANGLE OF BEND TO BE 90° ± 1° FOR TWO-SIDED REFLECTORS.

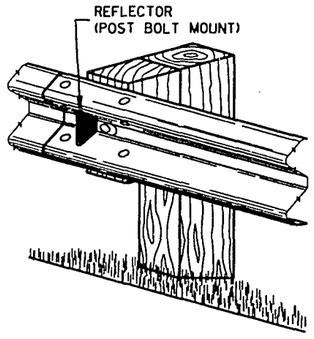

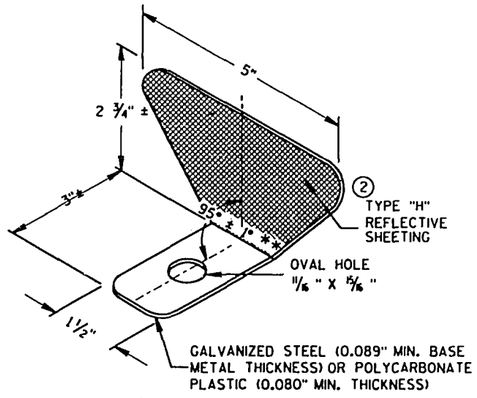

② REFLECTOR DETAIL AND TYPICAL INSTALLATION

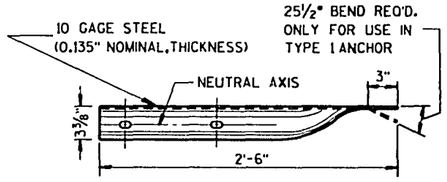

PLAN VIEW

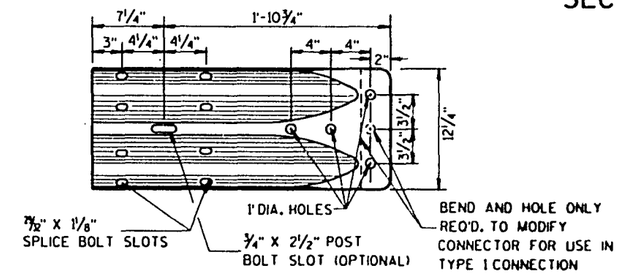

FRONT VIEW

W BEAM TERMINAL CONNECTOR

NOTE:
SHEETS 1b 1s OPTIONAL FOR INCLUSION IN PLANS WHEN APPLICABLE.

CLASS "A"
STEEL PLATE BEAM GUARD, INSTALLATION & ELEMENTS

STATE OF WISCONSIN
DEPARTMENT OF TRANSPORTATION

APPROVED
5/15/91
DATE

STATE DESIGN ENGINEER FOR HWYS.

FHWA

S.D.D. 14 B 15-1a

S.D.D. 14 B 15-1a

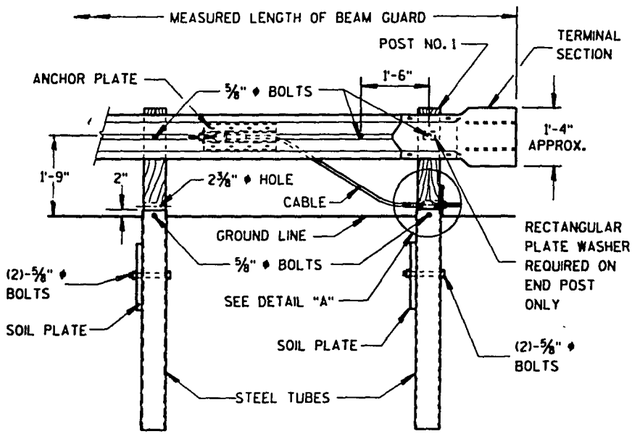

FRONT VIEW

① TYPE 1 ANCHORAGE

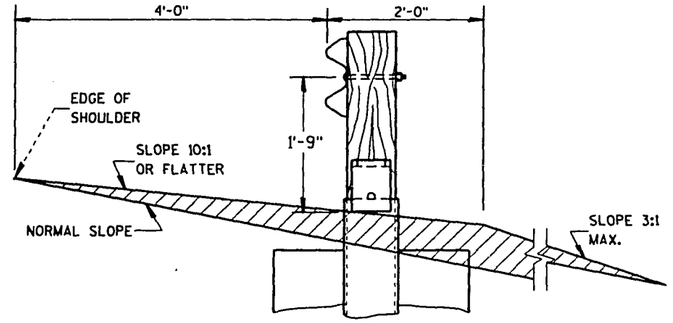

SECTION A-A

GENERAL NOTES

DETAILS OF CONSTRUCTION, MATERIALS AND WORKMANSHIP NOT SHOWN ON THIS DRAWING SHALL CONFORM TO THE PERTINENT REQUIREMENTS OF THE STANDARD SPECIFICATIONS AND THE APPLICABLE SPECIAL PROVISIONS.

POSTS AT LOCATIONS 1 & 2 SHALL BE WOOD BREAKAWAY POSTS INSERTED AND BOLTED INTO STEEL TUBES.

① TYPE 1 AND TYPE 2 ANCHORAGES SHALL CONSIST OF STEEL TUBE(S), SOIL PLATE(S), WOOD BREAKAWAY POST(S), BEARING PLATE, ANCHOR PLATE, CABLE ASSEMBLY AND ALL ASSOCIATED HARDWARE. ALL STEEL PARTS SHALL BE GALVANIZED.

TANGENT OFFSET TABLE	
POST NO.	OFFSET (FEET)
1	4.00
2	2.78
3	1.78
4	1.00
5	0.44
6	0.11
7	0.00

**37'-6" INSTALLATION, 6 SPACES AT 6'-3"

TANGENT OFFSET TABLE

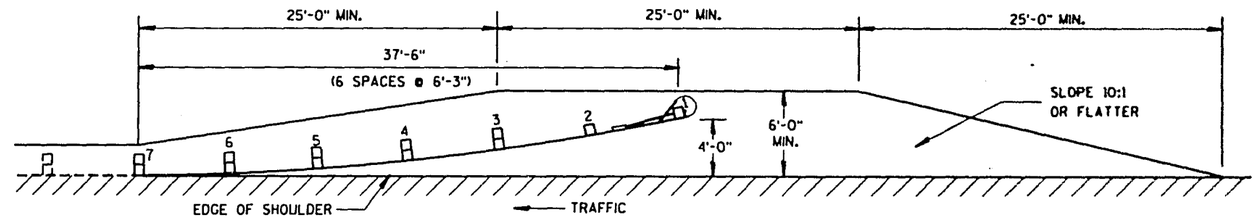

PLAN VIEW

ROADWAY WIDENING FOR TYPE 1 ANCHORAGE

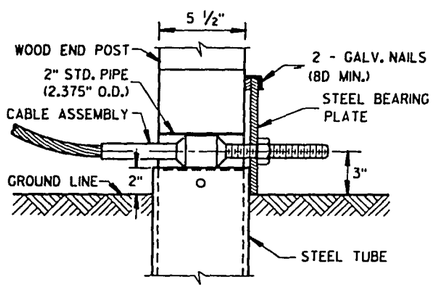

DETAIL "A"

(POST NO. 1)

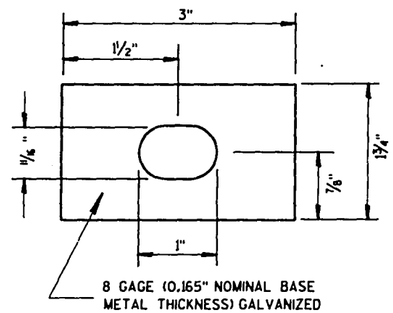

RECTANGULAR PLATE WASHER

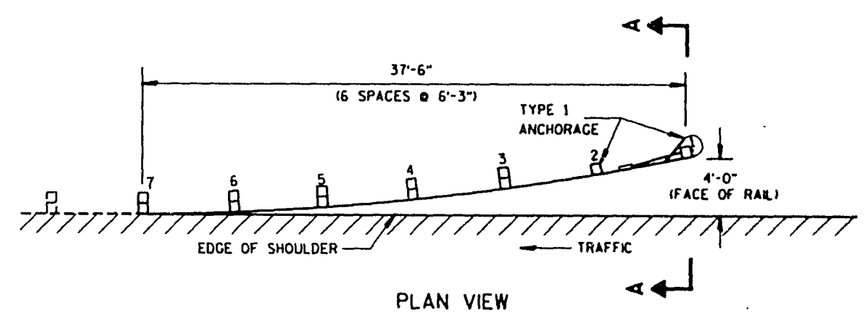

PLAN VIEW

END TREATMENT WITH ANCHORAGE TYPE 1

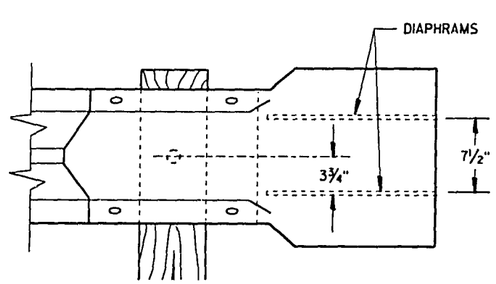

FRONT VIEW

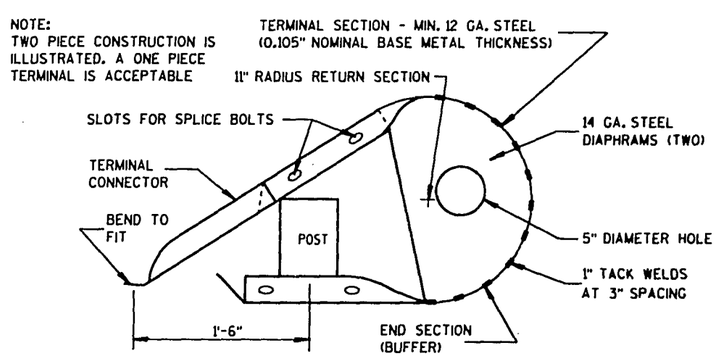

PLAN VIEW

TERMINAL SECTION DETAIL

NOTE:
THIS DRAWING CONSISTS OF TWO SHEETS. BOTH SHEETS ARE REQUIRED WHEN THIS DRAWING IS CALLED FOR IN THE PLANS.

CLASS "A" STEEL PLATE BEAM GUARD END TREATMENT WITH ANCHORAGE, TYPE 1 & 2

STATE OF WISCONSIN
DEPARTMENT OF TRANSPORTATION

S.D.D. 14 B 16-1a

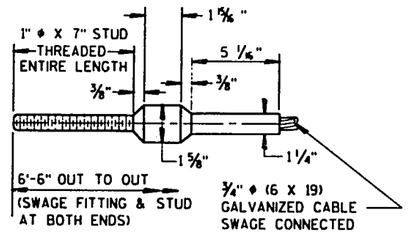

CABLE ASSEMBLY

CABLE, SWAGE FITTING, STUD AND NUT SHALL DEVELOP A MINIMUM BREAKING STRENGTH OF 40,000 LB

(TIGHTEN UNTIL TAUT)

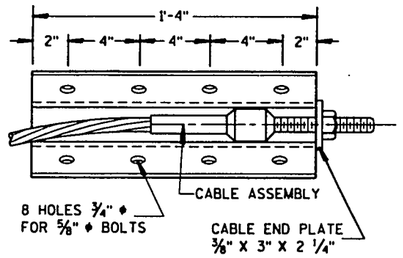

FRONT VIEW

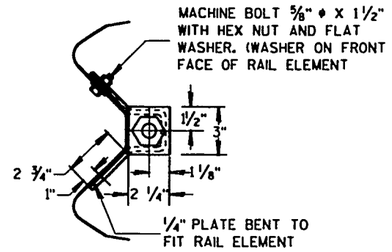

END VIEW

ANCHOR PLATE DETAIL

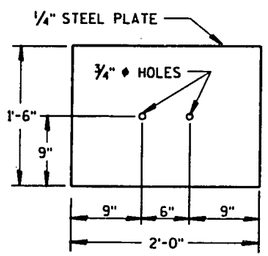

SOIL PLATE

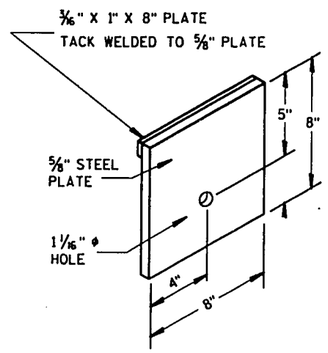

STEEL BEARING PLATE

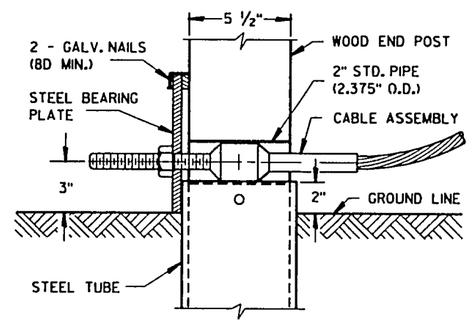

DETAIL "A"

(POST NO. 1)

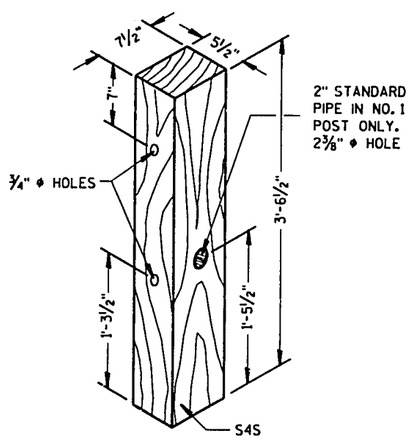

WOOD BREAKAWAY POST

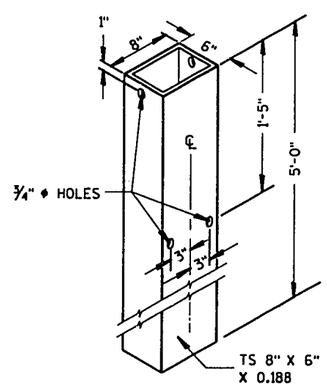

STEEL TUBE

THE STEEL TUBE SHALL CONFORM TO REQUIREMENTS OF ASTM A501

ANCHORAGE COMPONENTS

(COMMON TO BOTH TYPE 1 & 2 ANCHORAGES)

NOTE:

STRUCTURAL TUBING SHALL CONFORM TO THE REQUIREMENTS OF ASTM A-500 GRADE B OR ASTM A-501

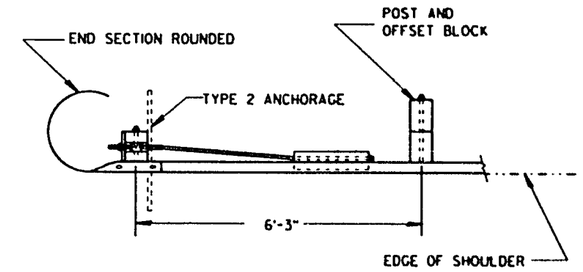

PLAN VIEW

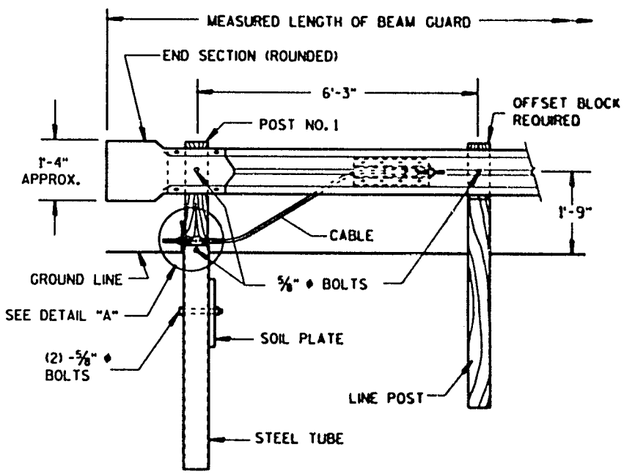

FRONT VIEW

TYPE 2 ANCHORAGE

END TREATMENT WITH ANCHORAGE TYPE 2

(USE ON ONE-WAY ROADWAYS ONLY - DEPARTING END)

NOTE:
THIS DRAWING CONSISTS OF TWO SHEETS. BOTH SHEETS ARE REQUIRED WHEN THIS DRAWING IS CALLED FOR IN THE PLANS.

CLASS "A" STEEL PLATE BEAM GUARD END TREATMENT WITH ANCHORAGE. TYPE 1 & 2

STATE OF WISCONSIN
DEPARTMENT OF TRANSPORTATION

APPROVED
5/3/91
DATE
STATE DESIGN ENGINEER FOR WDOT
FHWA

S.D.D. 14 B 16-1b

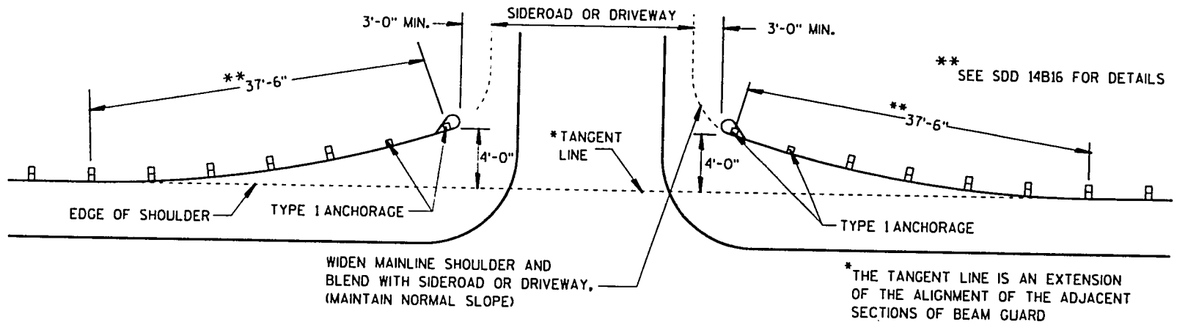

BEAM GUARD AT MINOR SIDEROADS OR DRIVEWAYS

GENERAL NOTES

DETAILS OF CONSTRUCTION, MATERIALS AND WORKMANSHIP NOT SHOWN ON THIS DRAWING SHALL CONFORM TO THE PERTINENT REQUIREMENTS OF THE STANDARD SPECIFICATIONS AND THE APPLICABLE SPECIAL PROVISIONS.

BEAM GUARD LOCATIONS AND LENGTHS ARE SHOWN ELSEWHERE IN THE PLAN.

(1) STEEL THRIE BEAM STRUCTURE APPROACH.

(2) UNLESS OTHERWISE INDICATED, THE FLARED END TREATMENT WITH A TYPE 1 ANCHORAGE SHALL BE USED TO TERMINATE BEAM GUARD ON THE TRAFFIC APPROACH SIDE OF BRIDGES/OBSTACLES. TYPE 2 ANCHORAGE SHALL BE USED ONLY AT THE DOWNSTREAM ENDS OF BEAM GUARD LOCATED ALONG ROADWAYS WITH ONE WAY TRAFFIC.

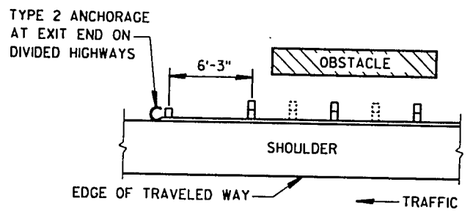

BEAM GUARD AT OBSTACLES EXIT END - ONE WAY TRAFFIC

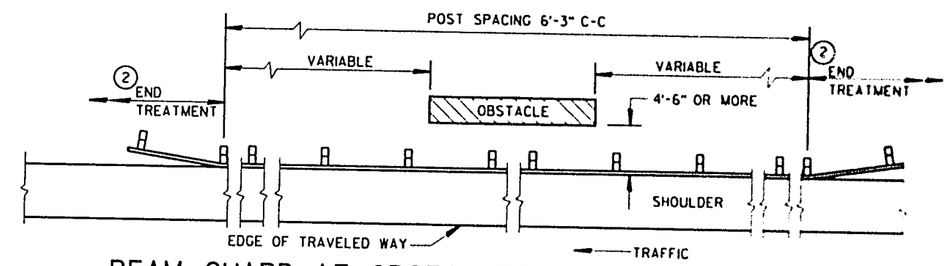

BEAM GUARD AT OBSTACLES - TWO WAY TRAFFIC

(RAIL TO OBSTACLE CLEARANCE 4'-6" OR MORE)

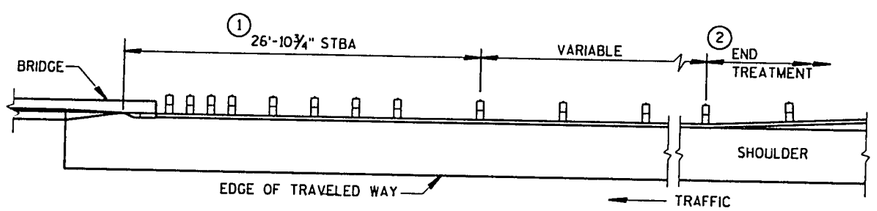

BEAM GUARD AT FULL WIDTH BRIDGES

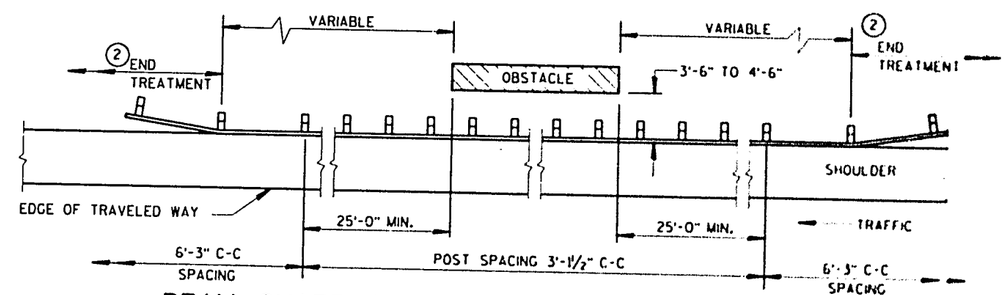

BEAM GUARD AT OBSTACLES - TWO WAY TRAFFIC

(RAIL TO OBSTACLE CLEARANCE 3'-6" TO 4'-6")

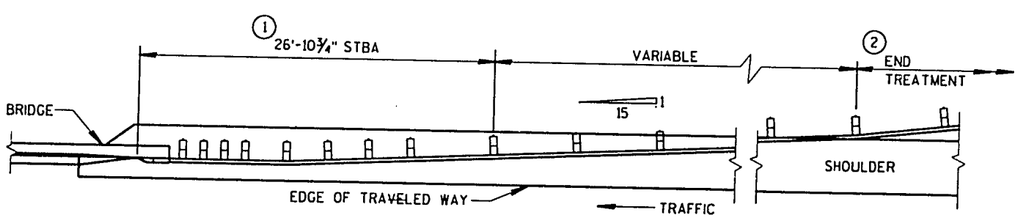

BEAM GUARD AT NARROW BRIDGES

CLASS "A" STEEL PLATE BEAM GUARD (AT BRIDGES, OBSTACLES AND SIDEROADS/DRIVEWAYS)

STATE OF WISCONSIN
DEPARTMENT OF TRANSPORTATION

APPROVED
5/15/91
DATE
STATE DESIGN ENGINEER FOR HWYS.
FHWA

S.D.D. 14 B 18-1a

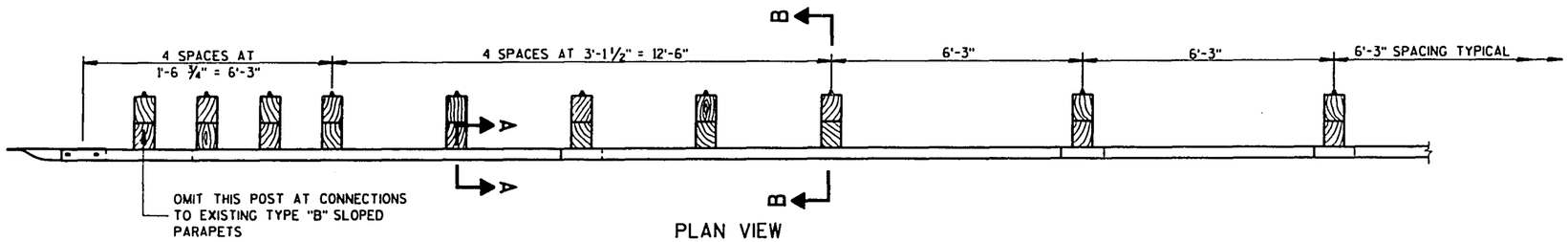

PLAN VIEW

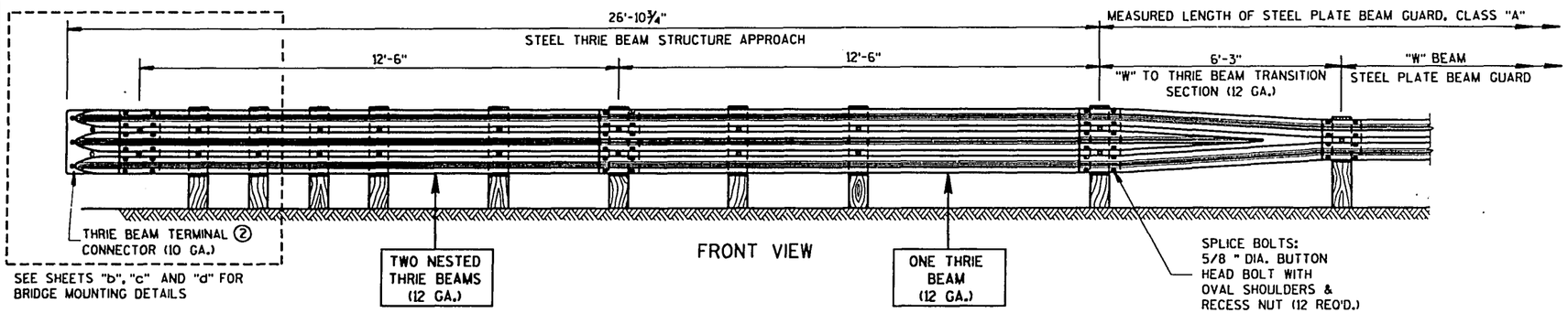

FRONT VIEW

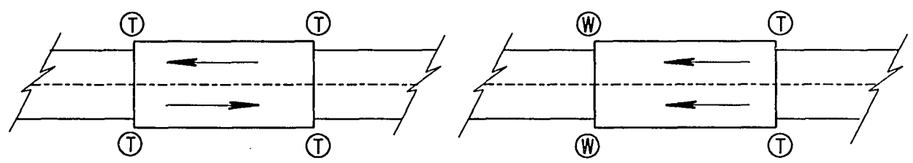

TWO WAY TRAFFIC

ONE WAY TRAFFIC

Ⓣ THRIE BEAM CONNECTION

Ⓦ W-BEAM CONNECTION WHEN REQUIRED

TYPICAL LOCATIONS OF THRIE BEAM
AND W-BEAM CONNECTIONS TO BRIDGE

GENERAL NOTES

DETAILS OF CONSTRUCTION, MATERIALS AND WORKMANSHIP NOT SHOWN ON THIS DRAWING SHALL CONFORM TO THE PERTINENT REQUIREMENTS OF THE STANDARD SPECIFICATIONS AND THE APPLICABLE SPECIAL PROVISIONS.

THRIE BEAM STRUCTURE APPROACH SHALL BE FURNISHED AND CONSTRUCTED IN ACCORDANCE WITH THE REQUIREMENTS OF SECTION 614 OF THE STANDARD SPECIFICATIONS. THRIE BEAM SECTIONS SHALL CONFORM TO THE REQUIREMENTS FOR CLASS "A", TYPE 2, BEAM AS SPECIFIED IN AASHTO DESIGNATION M180.

THRIE BEAM SHALL BE BOLTED TO ALL POSTS AND OFFSET BLOCKS. FIELD DRILLING/PUNCHING OF BOLT HOLES IN THE BEAM IS PERMITTED WHERE POST SPACING IS LESS THAN 6'-3".

① POST LENGTH SHALL BE INCREASED TO PROVIDE A MINIMUM EMBEDMENT OF 4'-0" WHERE THE SHOULDER HINGE POINT IS LOCATED IN FRONT OF THE POST.

② A TERMINAL CONNECTOR IS NOT REQUIRED AT CONNECTIONS TO BRIDGE RAILING TYPE "W".

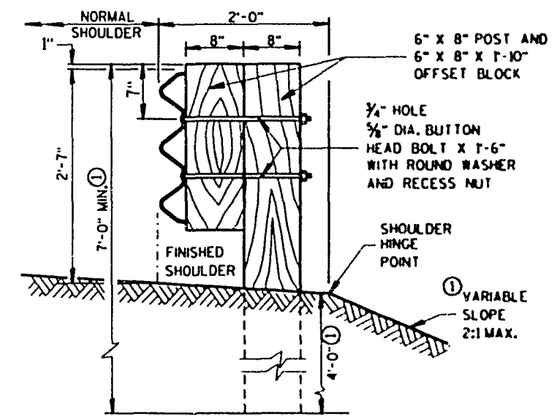

SECTION B-B

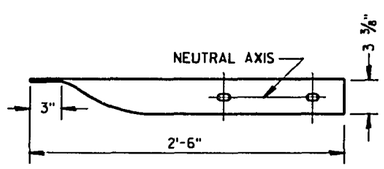

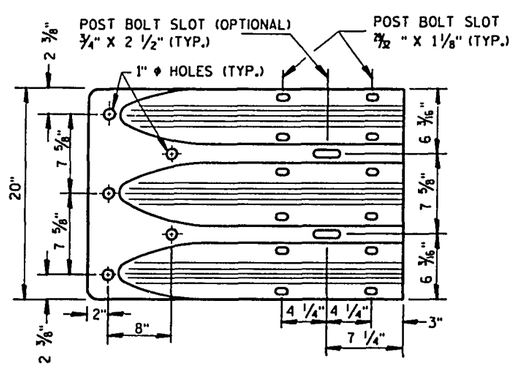

THRIE BEAM TERMINAL CONNECTOR

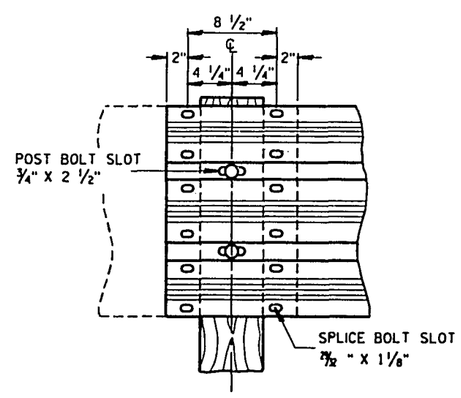

THRIE BEAM SPLICE

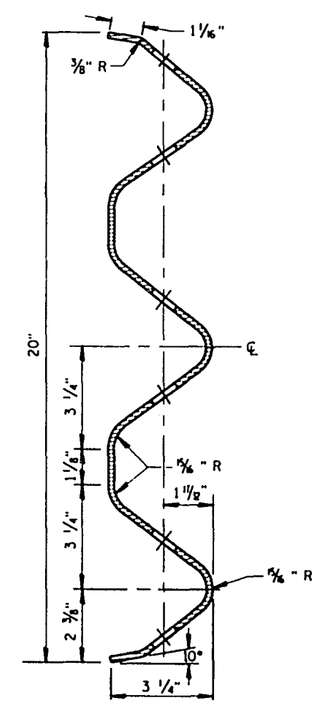

SECTION THRU THRIE
BEAM RAIL ELEMENT

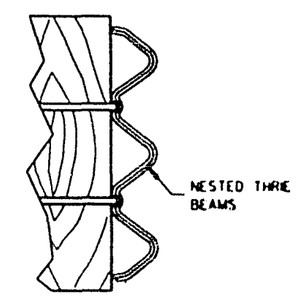

PARTIAL SECTION A-A

NOTE:
THIS DRAWING CONSISTS OF FOUR SHEETS. SHEET 2a MUST BE SUPPLEMENTED WITH AT LEAST ONE ADDITIONAL SHEET, 2b, 2c OR 2d WHEN THIS DRAWING IS CALLED FOR IN PLANS.

STEEL THRIE BEAM
STRUCTURE APPROACH

STATE OF WISCONSIN
DEPARTMENT OF TRANSPORTATION

S.D.D. 14 B 20-2a

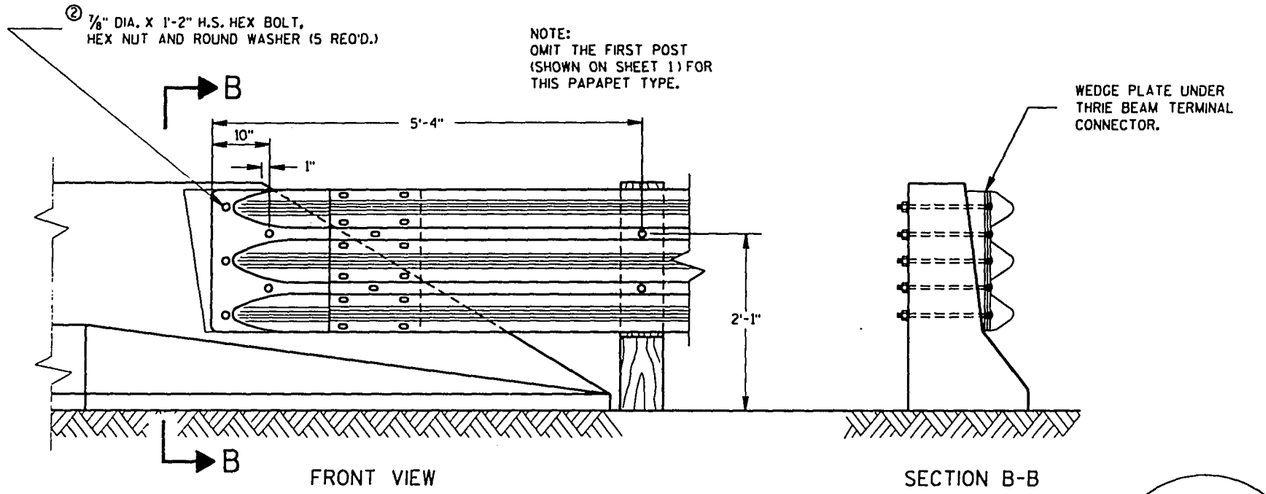

THRIE BEAM CONNECTION TO BRIDGE PARAPETS WITH SLOPED ENDS

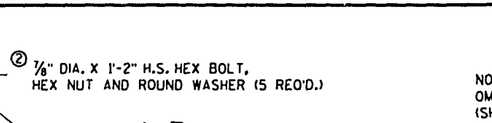

WEDGE DETAIL

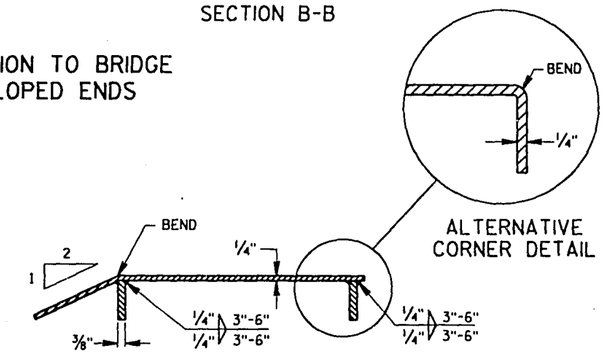

SECTION A-A

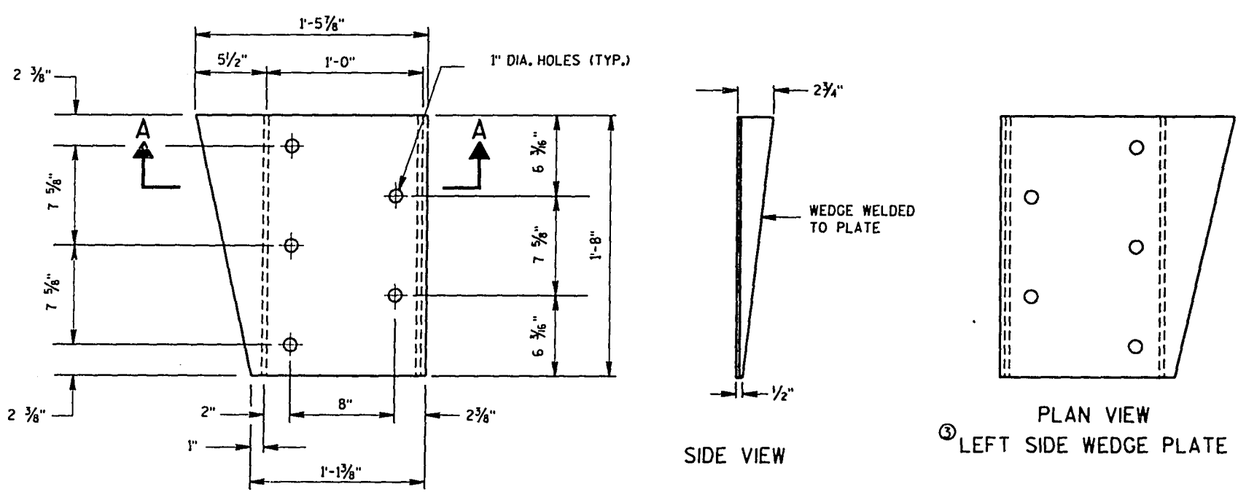

③ PLAN VIEW
RIGHT SIDE WEDGE PLATE

SIDE VIEW

PLAN VIEW
③ LEFT SIDE WEDGE PLATE

① WEDGE PLATE DETAILS

GENERAL NOTES

THE CONNECTION DETAILS SHOWN ARE TYPICAL. THE POSITION OF THE CONNECTIONS TO EXISTING BRIDGES SHALL BE ADJUSTED WHERE NECESSARY TO FIT ACTUAL BRIDGE AND SITE DIMENSIONS.

BOLTS, PLATES, NUTS AND WASHERS SHALL CONFORM TO THE REQUIREMENTS OF ASTM SPECIFICATION A 325, AND BE GALVANIZED IN ACCORDANCE WITH ASTM A 153.

① PAYMENT FOR DRILLING BOLT HOLES THRU THE PARAPET, WEDGE PLATE AND ALL BOLTS, NUTS AND WASHERS REQUIRED SHALL BE INCLUDED IN THE ITEM STEEL THRIE BEAM STRUCTURE APPROACH.

② 2 1/4" O.D. X 5/32" THICK ROUND WASHER REQUIRED WITH EACH BOLT AT THE BACKFACE OF PARAPET.

③ WEDGE PLATES ARE DESIGNATED AS "RIGHT" OR "LEFT" IN ACCORDANCE WITH THE PARAPET LOCATION WHEN APPROACHING THE BRIDGE.

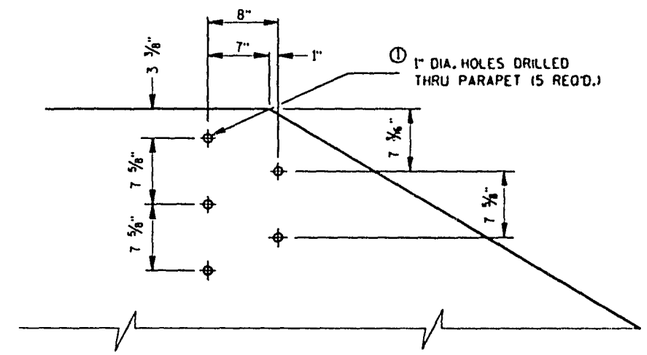

DRILL HOLE LOCATION AND PATTERN

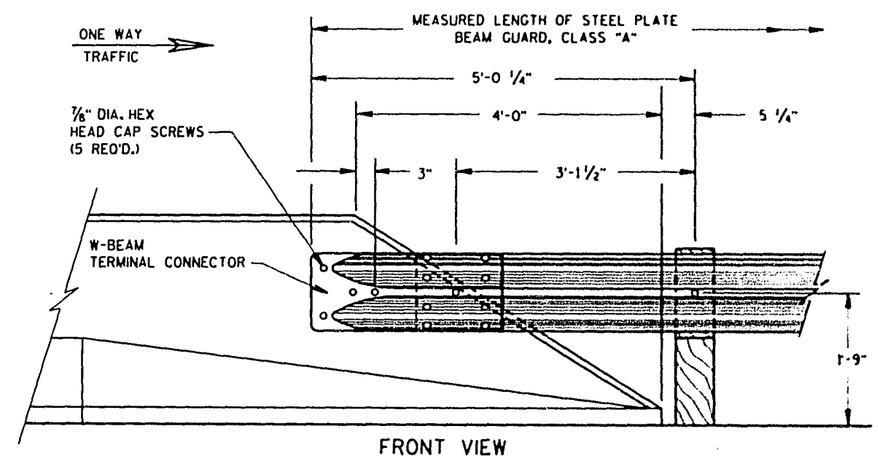

FRONT VIEW
W BEAM CONNECTION TO PARAPETS WITH SLOPED ENDS
(USE ONLY AT TRAFFIC EXIT END OF ONE WAY BRIDGE)

NOTE:
SDD 14 B 20-2a IS REQUIRED WHEN THIS DRAWING IS CALLED FOR IN PLANS.

STEEL THRIE BEAM STRUCTURE APPROACH, CONNECTION TO SLOPED END PARAPETS

STATE OF WISCONSIN
DEPARTMENT OF TRANSPORTATION

APPROVED
5/19/91
DATE
STATE DESIGN ENGINEER FOR HWYS
FHWA

S.D.D. 14 B 20-2c

S.D.D. 14 B 20-2c

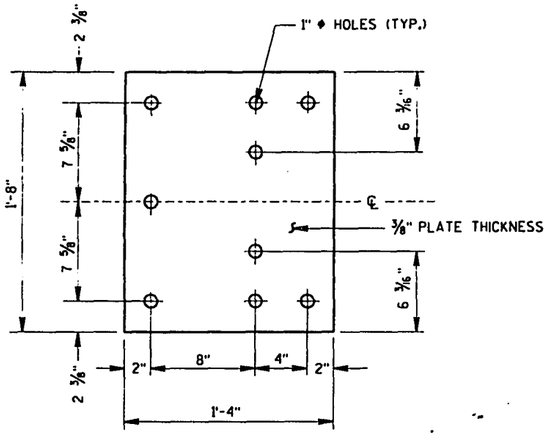

BACK-UP PLATE DETAIL

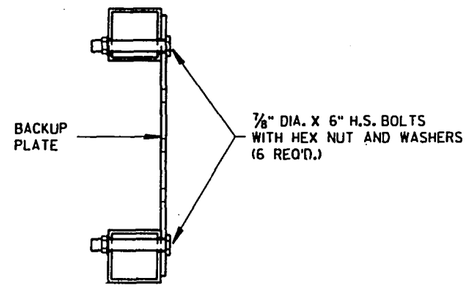

SECTION A-A

GENERAL NOTES

BOLTS, PLATES, NUTS AND WASHERS SHALL CONFORM TO THE REQUIREMENTS OF ASTM SPECIFICATION A 325 AND BE GALVANIZED IN ACCORDANCE WITH ASTM A 153.

① PAYMENT FOR DRILLING HOLES IN RAILING SHALL BE INCLUDED IN THE ITEM STEEL THRIE BEAM STRUCTURE APPROACH.

② THIS DIMENSION WILL VARY DEPENDING ON ABUTMENT TYPE, WINGWALL DETAILS, AND SKEW ANGLE. THE FIRST WOOD POST OFF THE BRIDGE SHALL BE PLACED AS CLOSE AS FEASIBLE TO THE STEEL END POST.

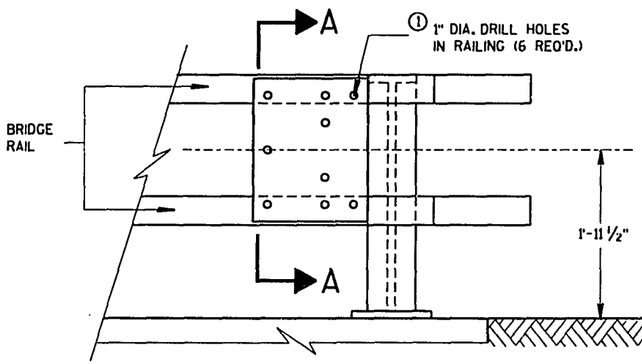

BACK-UP PLATE MOUNTING ONTO BRIDGE RAILING

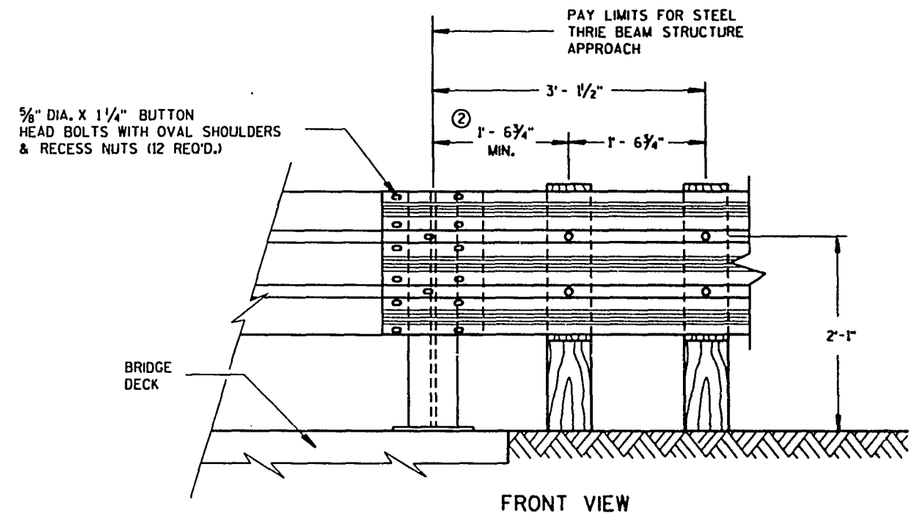

FRONT VIEW

THRIE BEAM CONNECTION TO STEEL RAILING TYPE "W"

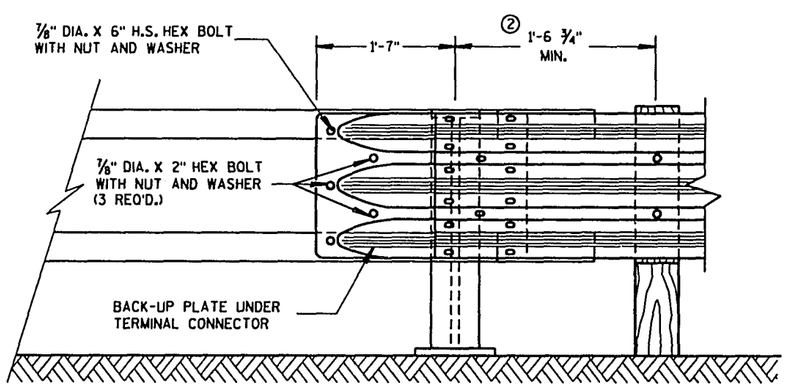

FRONT VIEW

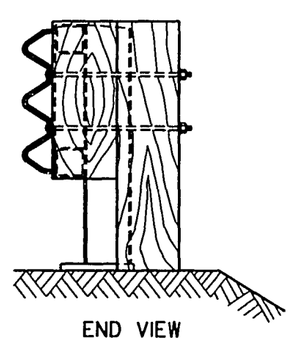

END VIEW

THRIE BEAM CONNECTION TO TUBULAR RAILING TYPE "F"

NOTE:
SDD 14 B 20-2a IS REQUIRED WHEN THIS DRAWING IS CALLED FOR IN PLANS.

STEEL THRIE BEAM STRUCTURE APPROACH, CONNECTION TO BRIDGE RAILING TYPES "F" AND "W"

STATE OF WISCONSIN
DEPARTMENT OF TRANSPORTATION

APPROVED
DATE
STATE DESIGN ENGINEER FOR HBYS
FHWA

S.D.D. 14 B 20-2d

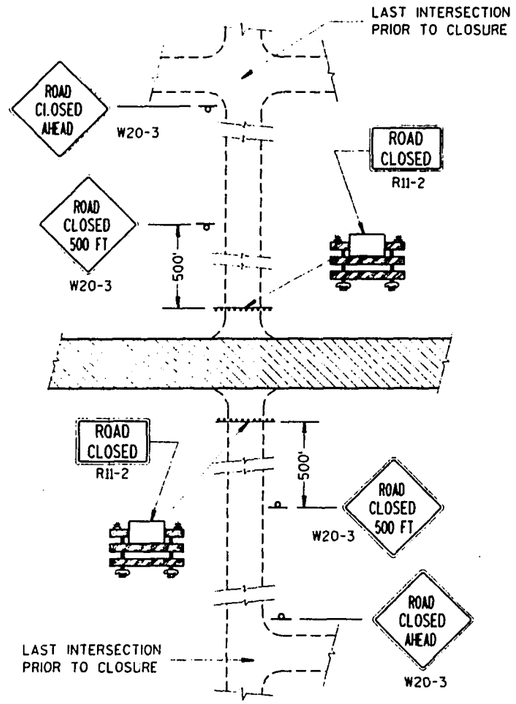

DETAIL 1

(NO ACCESS TO PROJECT)

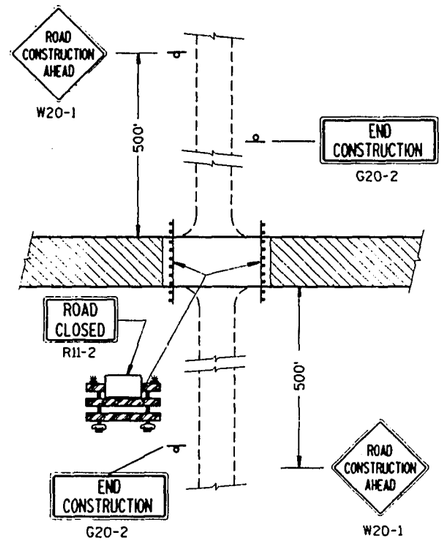

DETAIL 2

(PUBLIC CROSS-TRAFFIC MAINTAINED. NO ACCESS TO PROJECT).

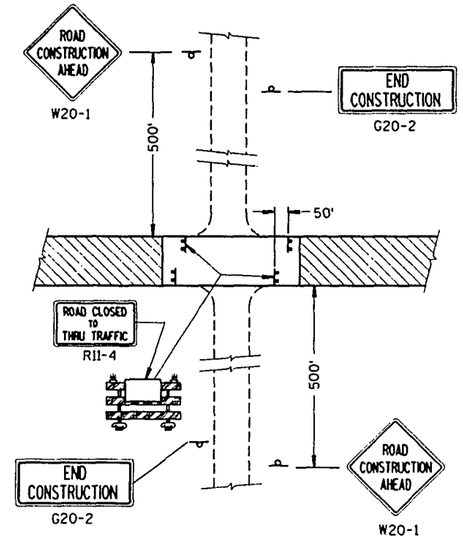

DETAIL 3

(PUBLIC CROSS-TRAFFIC MAINTAINED. CONTRACTOR, LOCAL BUSINESS AND RESIDENT ACCESS).

SIDEROAD CLOSURES

GENERAL NOTES

DETAILS OF TRAFFIC CONTROL DEVICES AND THEIR LOCATION NOT SHOWN ON THIS DRAWING SHALL CONFORM TO THE PERTINENT REQUIREMENTS OF THE WISCONSIN MANUAL OF TRAFFIC CONTROL DEVICES, THE PLANS, SPECIFICATIONS AND CONTRACT.

SIGN AND BARRICADE LOCATIONS MAY BE ADJUSTED IN THE FIELD AS DIRECTED BY THE ENGINEER. ANY EXISTING TRAFFIC SIGNS THAT CONFLICT WITH THIS WORK SHALL BE COVERED AS DIRECTED BY THE ENGINEER. ALL "STOP" OR OTHER REGULATORY SIGNS ON THE SIDE ROADS SHALL NOT BE DISTURBED, EXCEPT WHEN NECESSARY TO COMPLETE THE WORK. THE SIGNS MUST THEN BE IMMEDIATELY REESTABLISHED.

ALL TYPE III BARRICADES SHALL HAVE RAILS REFLECTORIZED ON BOTH FACES. STRIPES SHALL BE PROPERLY SLOPED DOWN TOWARD THE TRAFFIC SIDE OR AS SHOWN IN THE ROAD CLOSURE BARRICADE DETAIL FOR FULL ROAD CLOSURES. TYPE "A" LOW INTENSITY FLASHING WARNING LIGHTS SHALL BE VISIBLE ON BOTH SIDES OF THE BARRICADE.

THE ROAD CLOSED SIGN (R11-2), ROAD CLOSED ____ MILES AHEAD SIGN (R11-3) AND THE ROAD CLOSED TO THRU TRAFFIC SIGN (R11-4) SHALL BE ATTACHED ONLY TO THE TOP RAIL OF THE TYPE III BARRICADE. THE SIGNS SHALL NOT COVER MIDDLE RAIL.

TYPE "H" REFLECTIVE SHEETING SHALL BE USED ON ALL BARRICADES, TYPE I, II AND III, AND ON ALL R11-2, R11-3 AND R11-4 SIGNS.

ALL SIGNS SHALL BE 48" X 48" UNLESS OTHERWISE NOTED BELOW:
R11-2, "ROAD CLOSED" SIGNS SHALL BE 48" X 30".
R11-3, AND R11-4 SIGNS SHALL BE 60" X 30".
G20-2 SIGNS SHALL BE 60" X 24".

(1) TWO WARNING LIGHTS SHALL BE PROVIDED ON THE CENTER BARRICADE AND AT LEAST ONE WARNING LIGHT SHALL BE PROVIDED ON EACH OF THE OTHER BARRICADES WITHIN THE ROADWAY LIMITS. SPACING OF THE WARNING LIGHTS SHALL BE UNIFORM TO THE EDGE OF ROADWAY AS SHOWN.

(2) THESE SIGNS AND BARRICADES ARE NOT REQUIRED IF ROAD CLOSURE BEGINS AT INTERSECTION.

(3) FOR ROAD CLOSURE WITH LOCAL ACCESS TO PROJECT. SEE LANE CLOSURE BARRICADE DETAIL.

(4) FOR ROAD CLOSURE WITHOUT LOCAL ACCESS TO PROJECT. SEE ROAD CLOSURE BARRICADE DETAIL.

(5) ONE-WAY LIGHTS SHALL BE PROVIDED ON ALL ADVANCE WARNING SIGNS. THE UNIT SHALL BE POSITIONED SUCH THAT THE LIGHT SOURCE IS OUTSIDE THE SIGN FACE AND AT THE TOP OF THE SIGN.

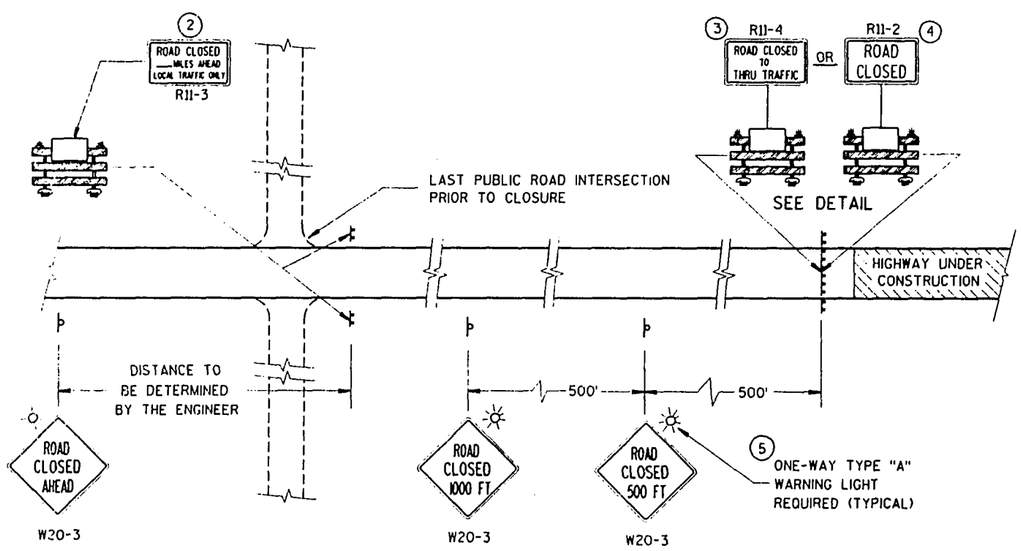

MAINLINE CLOSURE

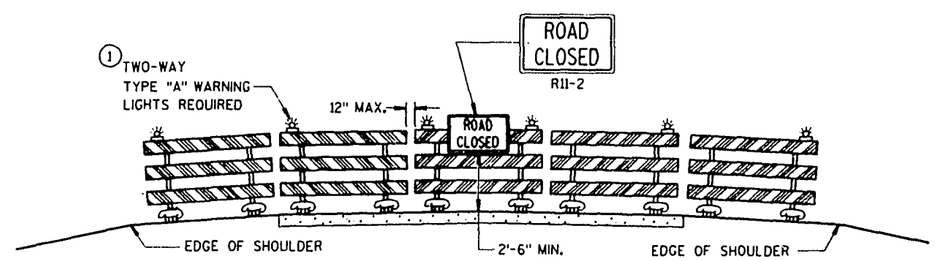

APPROACH VIEW

ROAD CLOSURE BARRICADE DETAIL

LEGEND

- POST MOUNTED WARNING SIGN
- TYPE III BARRICADES WITH TYPE "H" REFLECTIVE SHEETING
- TYPE "A" LOW INTENSITY FLASHING WARNING LIGHT (FOR NIGHT USE)
- WORK AREA

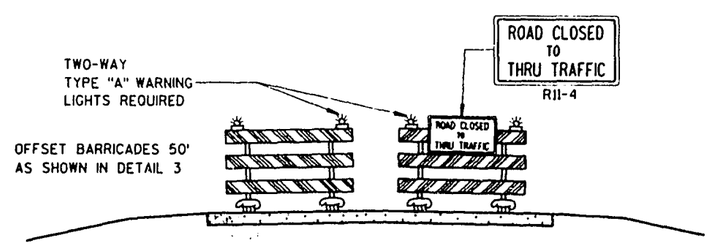

APPROACH VIEW

LANE CLOSURE BARRICADE DETAIL

BARRICADES AND TRAFFIC CONTROL FOR ROAD CLOSURES

STATE OF WISCONSIN
DEPARTMENT OF TRANSPORTATION

APPROVED
10-31-89
DATE
STATE TRAFFIC ENGINEER FOR HWYS
FHWA

S.D.D. 15 C 2-2

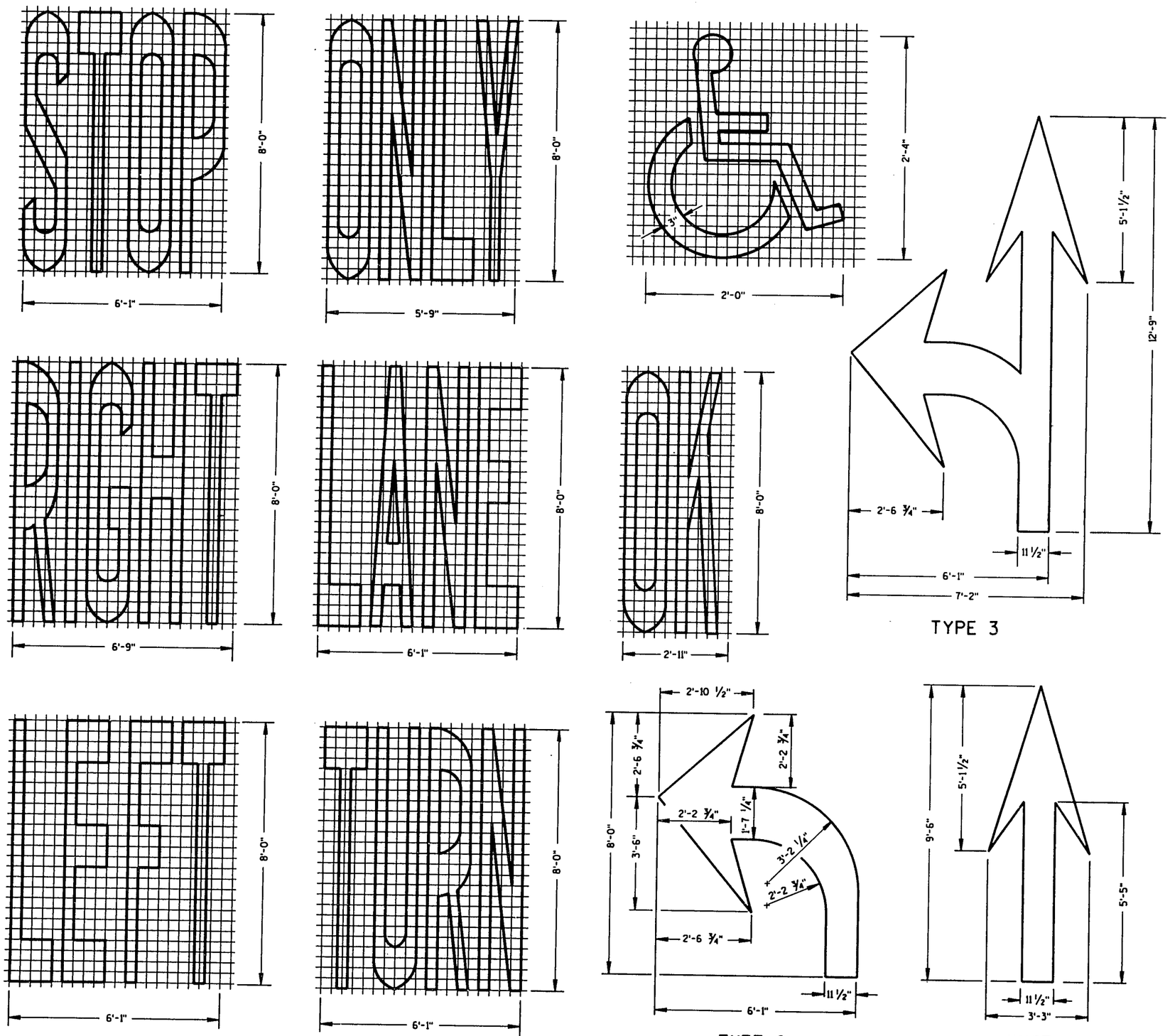

GENERAL NOTES

DETAILS OF INSTALLATION, MATERIALS AND WORKMANSHIP NOT SHOWN ON THIS DRAWING SHALL CONFORM TO THE PERTINENT REQUIREMENTS OF THE STANDARD SPECIFICATIONS AND APPLICABLE SPECIAL PROVISIONS.

ALL LETTERS AND SYMBOLS SHALL BE IN CONFORMANCE WITH REQUIREMENTS INCLUDED IN "STANDARD ALPHABETS FOR HIGHWAY SIGNS AND PAVEMENT MARKING" BY THE FEDERAL HIGHWAY ADMINISTRATION. ALL LETTERS, ARROWS AND SYMBOLS SHALL BE WHITE AND REFLECTORIZED.

A DETAILED DRAWING OF THE HANDICAPPED PARKING SYMBOL IS ILLUSTRATED IN THE "STANDARD HIGHWAY SIGNS MANUAL" BY THE FEDERAL HIGHWAY ADMINISTRATION.

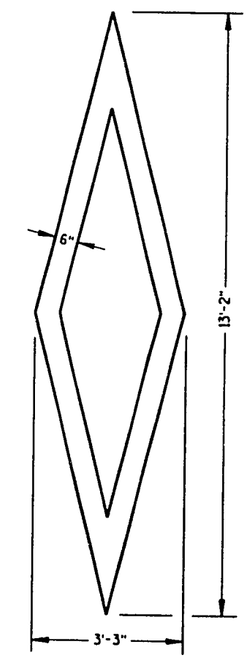

PREFERENTIAL LANE SYMBOL

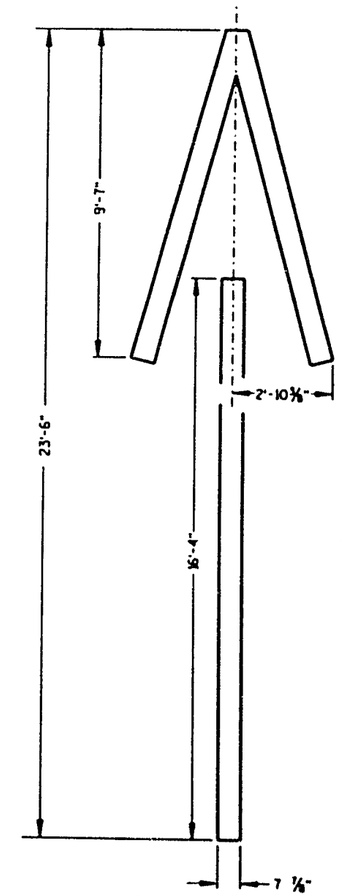

TYPE 4

PAVEMENT MARKING SYMBOLS

STATE OF WISCONSIN
DEPARTMENT OF TRANSPORTATION

APPROVED
4-29-94
DATE

Charles J. Spangler
STATE TRAFFIC ENGINEER FOR HWYS

FHWA

S.D.D. 15 C 7-4a

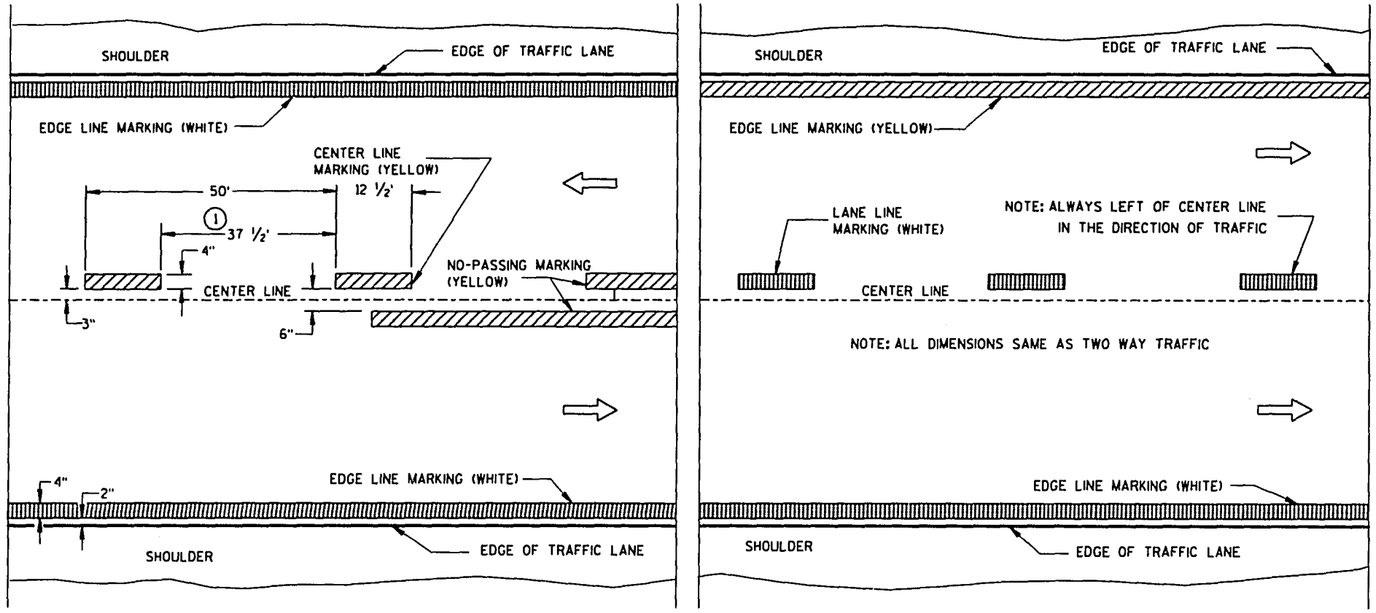

TWO WAY TRAFFIC

ONE WAY TRAFFIC

PERMANENT PAVEMENT MARKING

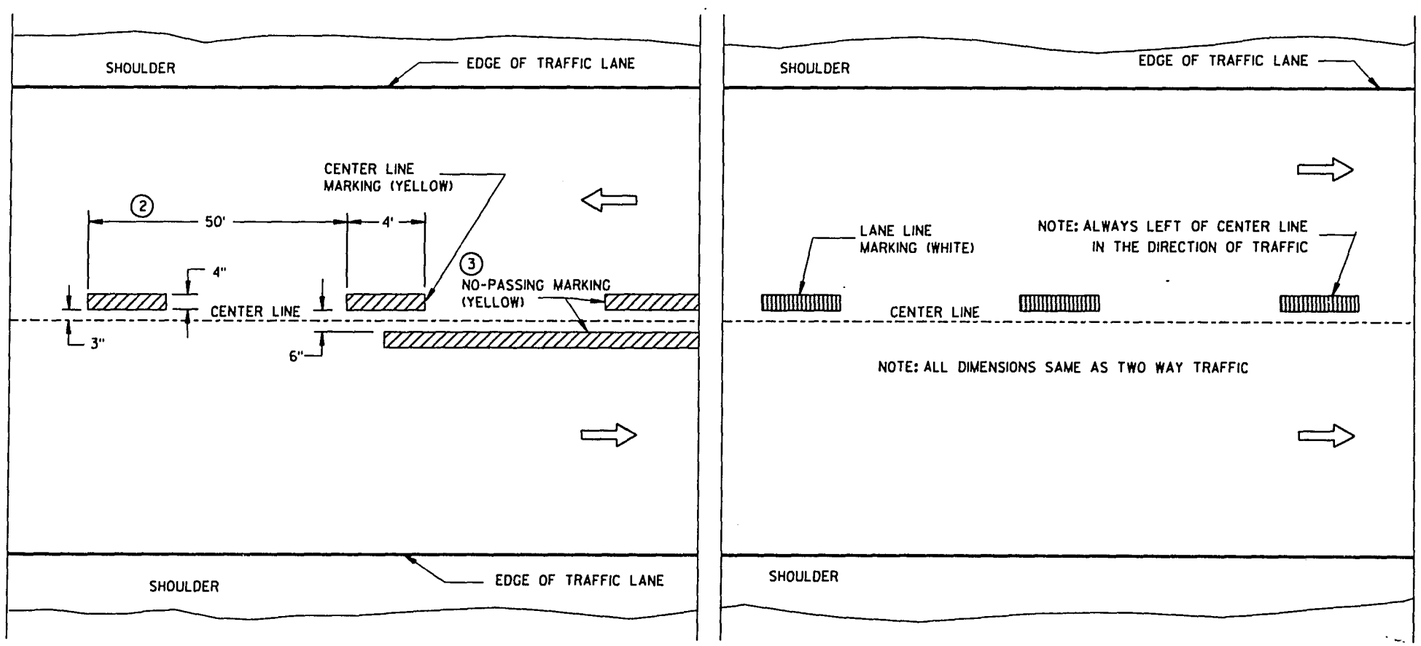

TWO WAY TRAFFIC

ONE WAY TRAFFIC

TEMPORARY (INTERMEDIATE) PAVEMENT MARKING

(SHOWS CYCLE FOR TEMPORARY CENTER LINE OR TEMPORARY LANE LINE MARKING)

GENERAL NOTES

DETAILS OF CONSTRUCTION NOT SHOWN ON THIS DRAWING SHALL CONFORM TO STANDARD SPECIFICATIONS AND SPECIAL PROVISIONS.

1. CENTER LINE/LANE LINE MARKINGS SHALL BE 37 ½ FEET BETWEEN DASHES THROUGHOUT THE PROJECT, INCLUDING THE STARTING OR ENDING GAP FROM THE EXISTING CENTER LINE/LANE LINE MARKING.
2. HALF CYCLE LENGTHS (25'±) WITH 2' MINIMUM STRIPE LENGTHS SHALL BE PROVIDED ON ROADWAYS (INCLUDING TEMPORARY TRAVELED WAYS) WITH REVERSE CURVATURE, CURVATURE OF OVER 5 DEGREES OR WHEN DIRECTED BY THE ENGINEER TO MARK UNUSUAL ALIGNMENT OF THE TRAVELED WAY.
3. NO PASSING ZONE TEMPORARY PAVEMENT MARKING IS REQUIRED TO BE PLACED, WHERE APPROPRIATE, ALONG WITH CENTERLINE TEMPORARY PAVEMENT MARKING WHEN A SAME DAY PERMANENT PAVEMENT MARKING ITEM IS INCLUDED IN THE CONTRACT.

NOTE

ARROW SYMBOL (⇨) SHOWS DIRECTION OF TRAVEL

PAVEMENT MARKING
(MAINLINE)

STATE OF WISCONSIN
DEPARTMENT OF TRANSPORTATION

APPROVED 8/18/94 DATE

DIRECTOR, OFFICE OF TRAFFIC

FHWA

S.D.D. 15 C 8-6a

NOTES

EDGE LINES SHALL BE OMITTED THROUGH INTERSECTIONS. EDGE LINES SHALL BE CONTINUED THROUGH DRIVEWAYS.

1. WHEN DISTANCE "A" IS LESS THAN 250 FEET, OMIT LANE LINE.
2. WHEN DISTANCE "B" IS LESS THAN 100 FEET, OMIT CHANNELIZING LANE LINE.
3. NO-PASSING MARKING SHALL BE PROVIDED WHERE SIGHT DISTANCE IS DEFICIENT. THE LENGTH OF NO-PASSING MARKING SHALL BE 500 FEET MINIMUM.
4. ALTERNATIVE MARKING SHALL BE PROVIDED WHEN SPECIFIED IN THE CONTRACT. TYPICAL SITUATIONS WHERE THIS MARKING MAY BE REQUIRED ARE WHERE THE INTERSECTION IS ON A SHARP HORIZONTAL CURVE OR CREST VERTICAL CURVE IN AN UNLIGHTED AREA SUCH THAT THE EDGE LINE MAY BE MISLEADING TO THE MOTORIST OR DISAPPEAR FROM SIGHT.
5. LOCATE THE EDGE LINE ALONG THE TAPER WHERE "W" IS 10' OR MORE.

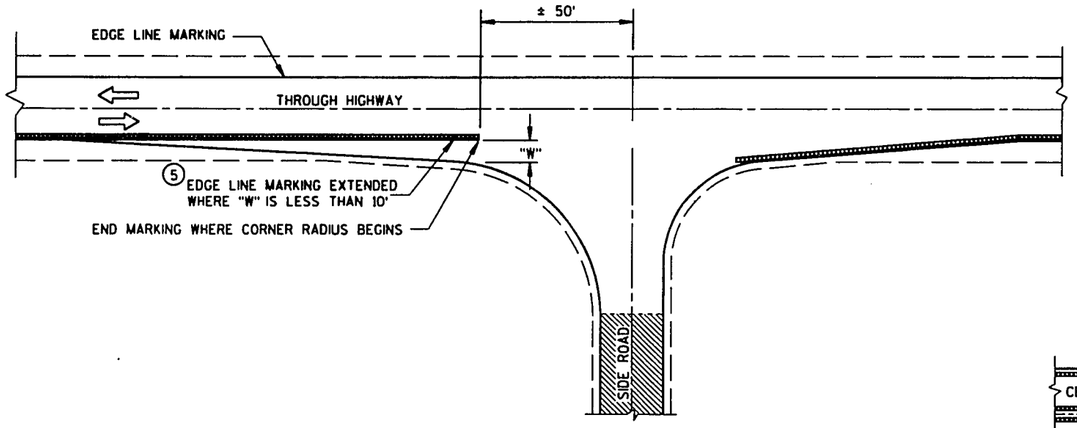

MINOR INTERSECTION WITHOUT CURBS

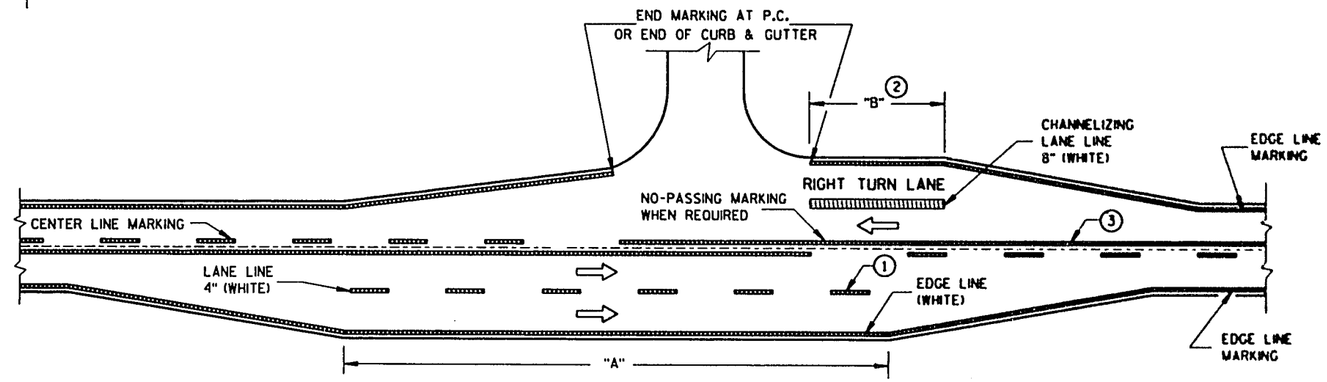

MAJOR INTERSECTIONS

(INTERSECTION WITH FULL RIGHT TURN LANE OR BYPASS LANES)

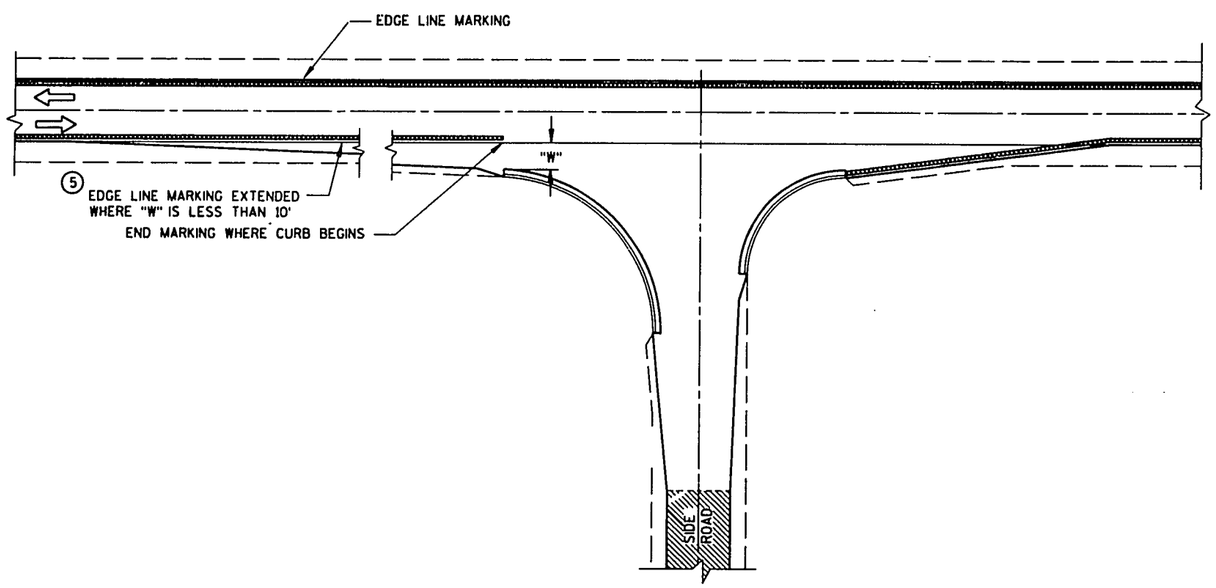

MINOR INTERSECTION WITH CURBS

(TYPICAL MARKING)

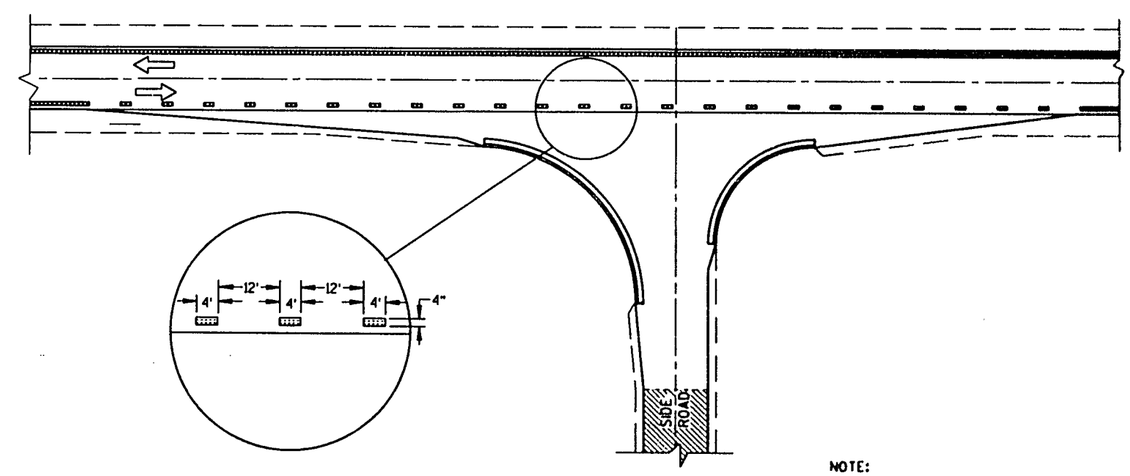

MINOR INTERSECTION WITH CURBS

4 (FOR SPECIAL CONDITIONS AS SPECIFIED)

NOTE:
SDD 15 C 8-6a IS REQUIRED WHEN THIS DRAWING IS CALLED FOR IN THE PLANS.

PAVEMENT MARKING
(INTERSECTIONS)

STATE OF WISCONSIN
DEPARTMENT OF TRANSPORTATION

S.D.D. 15 C 8-6b

TWO-LANE ROADWAY

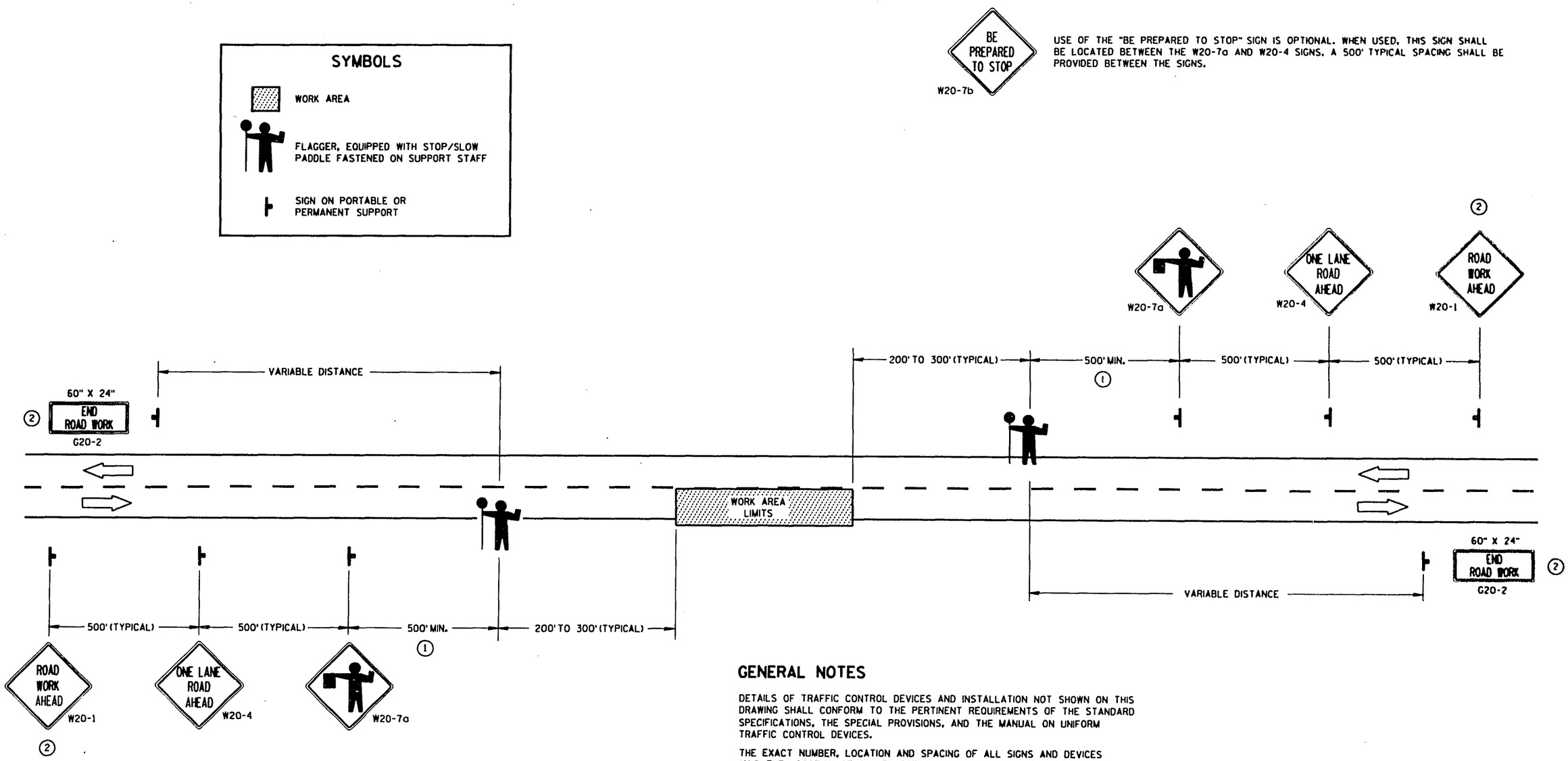

GENERAL NOTES

DETAILS OF TRAFFIC CONTROL DEVICES AND INSTALLATION NOT SHOWN ON THIS DRAWING SHALL CONFORM TO THE PERTINENT REQUIREMENTS OF THE STANDARD SPECIFICATIONS, THE SPECIAL PROVISIONS, AND THE MANUAL ON UNIFORM TRAFFIC CONTROL DEVICES.

THE EXACT NUMBER, LOCATION AND SPACING OF ALL SIGNS AND DEVICES (AND THE LOCATION OF ALL FLAGGERS) SHALL BE ADJUSTED TO FIT FIELD CONDITIONS AS DIRECTED BY THE ENGINEER.

THE FIRST ADVANCE WARNING SIGN SHOULD TYPICALLY BE LOCATED IN ADVANCE OF THE ANTICIPATED TRAFFIC BACKUP OR QUEUE.

WHEN A SIDE ROAD OR RAMP INTERSECTS THE FACILITY ON WHICH THE WORK IS BEING PERFORMED, ADDITIONAL TRAFFIC CONTROLS SHALL BE PROVIDED AS SPECIFIED IN THE PLANS AND/OR THE SPECIAL PROVISIONS OR AS DIRECTED BY THE ENGINEER.

FLAGGERS SHALL BE IN SIGHT OF EACH OTHER OR IN DIRECT COMMUNICATION AT ALL TIMES. THEY SHALL BE EQUIPPED WITH STOP/SLOW PADDLES FASTENED ON SUPPORT STAFFS. WHEN THE FLAGGING OPERATION IS NOT IN EFFECT, THE "FLAGGER AHEAD", THE "ROAD WORK AHEAD" AND THE ONE LANE ROAD AHEAD" SIGNS SHALL BE COVERED OR REMOVED AND THE HIGHWAY RESTORED TO NORMAL OPERATION.

ALL SIGNS ARE 48" X 48" UNLESS OTHERWISE NOTED.

(1) FOR A MOVING WORK OPERATION, SIGNING FOR BOTH DIRECTIONS SHALL BE REESTABLISHED (AS SIMULTANEOUSLY AS PRACTICAL) AT APPROXIMATELY 3500 FOOT INTERVALS IN THE MOVING WORK OPERATION OR AS DIRECTED BY THE ENGINEER.

(2) SIGN NOT REQUIRED IF FLAGGING OPERATION OCCURS WITHIN A SIGNED ROAD WORK ZONE AREA.

TRAFFIC CONTROL FOR LANE CLOSURE (SUITABLE FOR MOVING OPERATIONS)

STATE OF WISCONSIN
DEPARTMENT OF TRANSPORTATION

APPROVED
2/17/94
DATE
STATE TRAFFIC ENGINEER FOR HWYS

FHWA

S.D.D. 15 C 12-2

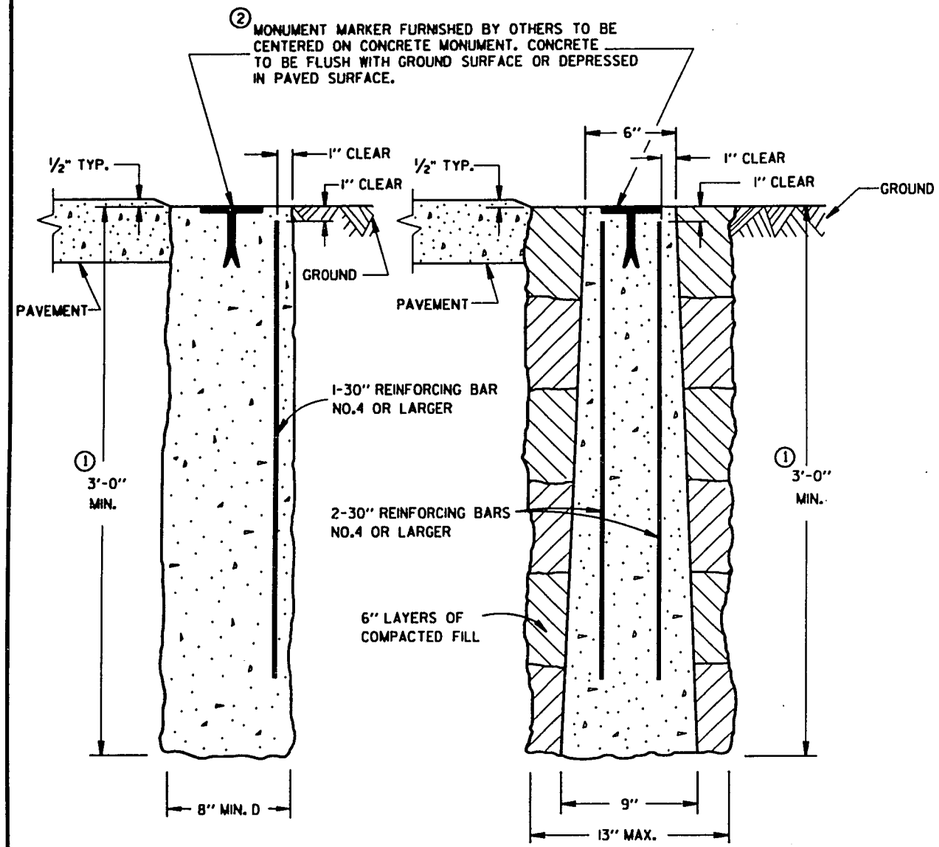

CAST-IN-PLACE PRECAST

CONCRETE MONUMENTS

TYPE A

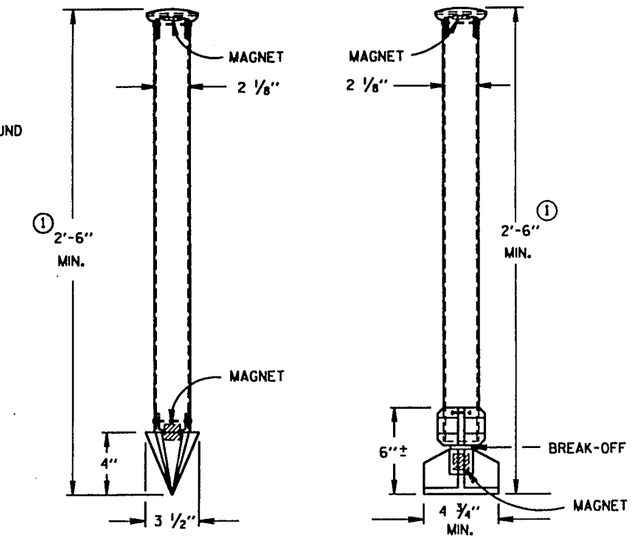

TYPE C DRIVE-IN MONUMENT

TYPE D BREAK-OFF MONUMENT

ALUMINUM MONUMENTS

(INCLUDES MARKER)

GENERAL NOTES

DETAILS OF CONSTRUCTION, MATERIALS AND WORKMANSHIP NOT SHOWN ON THIS DRAWING SHALL CONFORM TO THE PERTINENT REQUIREMENTS OF THE STANDARD SPECIFICATIONS AND THE APPLICABLE SPECIAL PROVISIONS.

DETAILED DRAWINGS OF PROPOSED ALTERNATE DESIGNS FOR METAL MONUMENTS OR MONUMENT COVERS SHALL BE SUBMITTED TO THE ENGINEER FOR APPROVAL.

INSTALLED METAL MONUMENTS MUST BE EASILY DETECTED WITH A DIP NEEDLE. INSERT PERMANENT MAGNETS SHALL BE ATTACHED NEAR THE TOP AND BOTTOM OF THOSE MONUMENTS CONSTRUCTED OF A METAL ALLOY WHICH IS NOT ATTRACTIVE TO A DIP NEEDLE.

THE CAST IRON MONUMENT COVER SHALL BE A "NON-ROCKING" TYPE. ADJUSTMENT OF THE COVER TO GRADE MAY BE ACCOMPLISHED BY THE USE OF MORTAR AND BRICK, OR BY EITHER PRECAST OR CAST-IN-PLACE REINFORCED CONCRETE GRADE RINGS.

MONUMENTS SHALL BE LOCATED AND PLACED AT THE DIRECTION OF THE ENGINEER.

ALUMINUM MONUMENTS AND MONUMENT COVERS SHALL BE MADE FROM AN ALUMINUM AND MAGNESIUM ALLOY AS DETERMINED BY THE MANUFACTURER.

THE MONUMENT COVERS DETAILED ON THIS DRAWING ARE NOT EQUAL ALTERNATES. MONUMENT COVERS SHALL BE CAST IRON UNLESS ALUMINUM IS SPECIFIED ELSEWHERE IN THE CONTRACT.

MONUMENT SHALL BE CAST-IN-PLACE CONCRETE UNLESS PRECAST CONCRETE OR ALUMINUM MONUMENTS ARE SPECIFIED IN THE CONTRACT OR PERMITTED BY THE ENGINEER.

① MINIMUM LENGTH SHALL BE 4'-0" FOR MONUMENTS INSTALLED IN PAVED AREAS.

② AN OFFICIAL COUNTY MONUMENT MARKER SUPPLIED BY A COUNTY MAY BE REQUIRED FOR SOME SECTION CORNERS AND WITNESS MONUMENTS INSTEAD OF THIS WIS DOT MARKER.

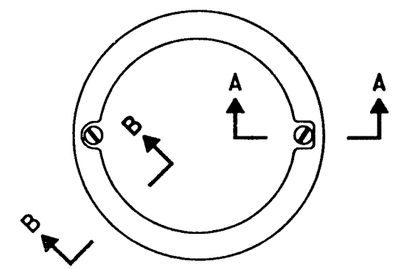

TOP VIEW

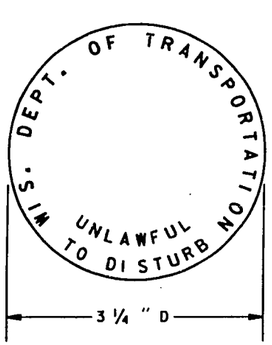

② WIS DOT MONUMENT MARKER LOGO

FOR TYPES "A", "C" & "D"

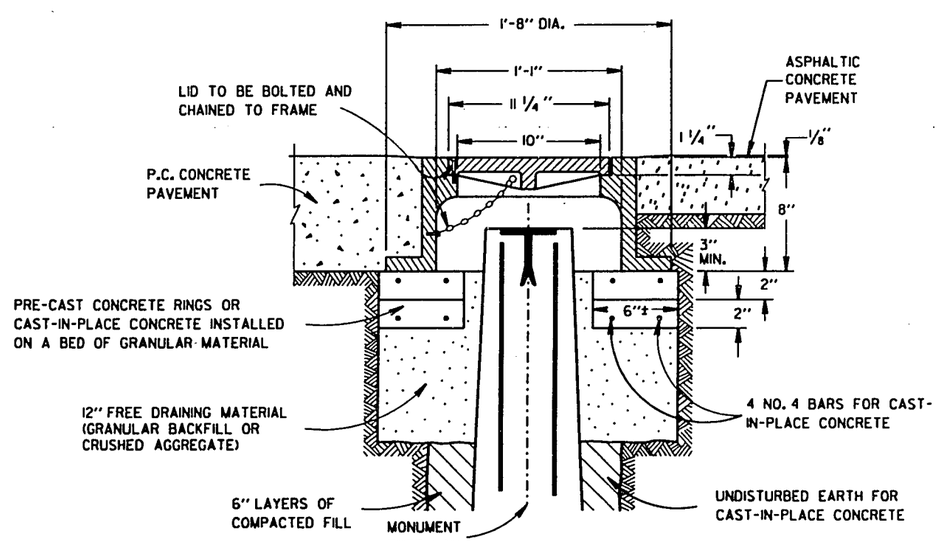

CAST IRON MONUMENT COVER

(APPROXIMATE WEIGHT - 95 LBS.)

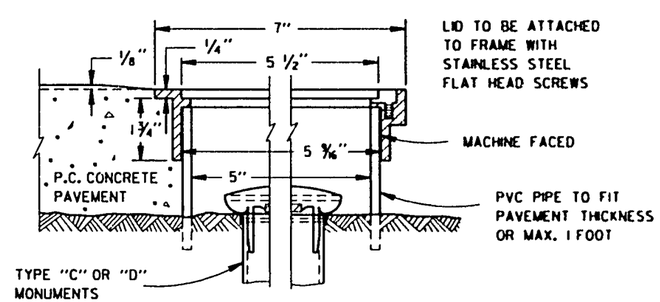

SECTION B-B SECTION A-A

ALUMINUM MONUMENT COVER

(APPROXIMATE WEIGHT 2 LBS)

(FOR CONCRETE PAVEMENT ONLY)

LANDMARK REFERENCE MONUMENTS AND COVERS

STATE OF WISCONSIN
DEPARTMENT OF TRANSPORTATION

APPROVED 3/31/92 DATE — STATE DESIGN ENGINEER FOR HWYS

FHWA

S.D.D. 16 A 1-5

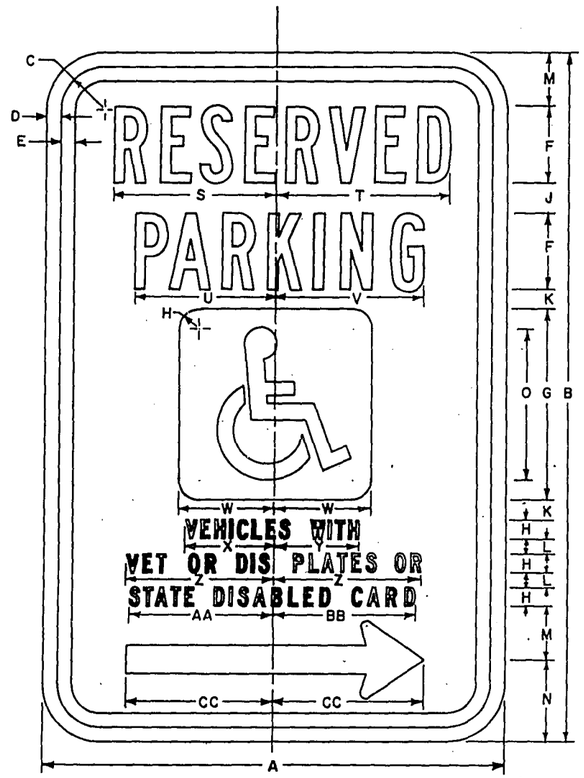

R7-8R

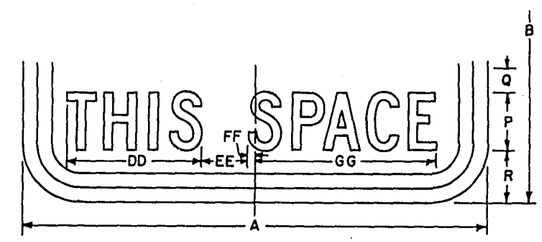

R7-8A

NOTES

1. Sign is Type II - Reflective- reference WIS D.O.T. Standard Specification for ROAD and BRIDGE CONSTRUCTION latest edition.
2. Color:
   Background – Sign is white; paraplegic symbol is blue.
   Message – Legend and border are green; paraplegic symbol is white.
3. Message Series – Lines 1 & 2 –"B"
   Lines 3,4,5 & 6 –"C"
4. Corners may be square or rounded when base material is plywood but borders shall be rounded as shown. When base material is metal, the corners and borders shall be rounded.
5. R7-8R (Right Arrow), R7-8L (Left Arrow), R7-8A (THIS SPACE).
6. This drawing may be scaled for standard size only.

SIZE	CODE SIZE	A	B	C	D	E	F	G	H	I	J	K	L	M	N	O	P	Q	R	S	T	U	V	W	X	Y	Z	Bid Area Sq. Ft.
Minimum	1																											
Standard	2	12	18	$1\frac{1}{8}$	$\frac{3}{8}$	$\frac{3}{8}$	2	5	$\frac{1}{2}$		$\frac{3}{4}$	$\frac{9}{16}$	$\frac{3}{8}$	$1\frac{3}{8}$	$2\frac{1}{8}$	4	$1\frac{1}{2}$	$\frac{5}{8}$	$1\frac{3}{8}$	$4\frac{1}{4}$	$4\frac{5}{8}$	$3\frac{5}{8}$	$3\frac{7}{8}$	$2\frac{1}{2}$	$2\frac{3}{8}$	$2\frac{1}{4}$	$3\frac{7}{8}$	
Oversize	3	18	24	$1\frac{1}{8}$	$\frac{3}{8}$	$\frac{1}{2}$	3	6	$\frac{3}{4}$		$\frac{7}{8}$	$\frac{5}{8}$	$\frac{7}{16}$	$1\frac{7}{8}$	3	5	2	$\frac{7}{8}$	2	6	$6\frac{1}{4}$	$5\frac{3}{8}$	$5\frac{1}{2}$	3	$3\frac{1}{4}$	$3\frac{1}{8}$	5	
Exp-way	4																											
Freeway	5																											
Bicycle	6																											
Snowmobile	7																											
		AA	BB	CC	DD	EE	FF	GG	HH	II	JJ	KK	LL	MM	NN	OO	PP	QQ	RR	SS	TT	UU	VV	WW	XX	YY	ZZ	
Minimum	1																											
Standard	2	$3\frac{3}{4}$	$3\frac{5}{8}$	$3\frac{7}{8}$	$3\frac{1}{2}$	$1\frac{3}{16}$	$\frac{3}{16}$	$4\frac{11}{16}$	$\frac{3}{8}$	$\frac{3}{4}$	$\frac{1}{8}$	$\frac{7}{8}$	$1\frac{1}{2}$															1.50
Oversize	3	$4\frac{7}{8}$	$4\frac{5}{8}$	$5\frac{13}{16}$	$4\frac{9}{16}$	$1\frac{3}{8}$	$\frac{3}{16}$	$6\frac{3}{8}$	$\frac{9}{16}$	$1\frac{1}{8}$	$\frac{3}{16}$	$1\frac{5}{16}$	$2\frac{1}{4}$															3.00
Exp-way	4																											
Freeway	5																											
Bicycle	6																											
Snowmobile	7																											

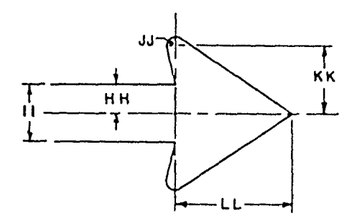

ARROW DETAIL

RA	RA

Date Drawn: 1-25-79 Date Revised: 4-15-83

Date Revised: 4-15-83

STANDARD SIGN
R7-8

WISCONSIN DEPT OF TRANSPORTATION

NOTES

1. Sign is Type II - Reflective - reference WIS DOT Standard Specification for ROAD and BRIDGE CONSTRUCTION latest edition.
2. Color:
   Background -White
   Message -Green
3. Message Series -D
4. Corners may be square or rounded when base material is plywood but borders shall be rounded as shown. When base material is metal, the corners and borders shall be rounded.

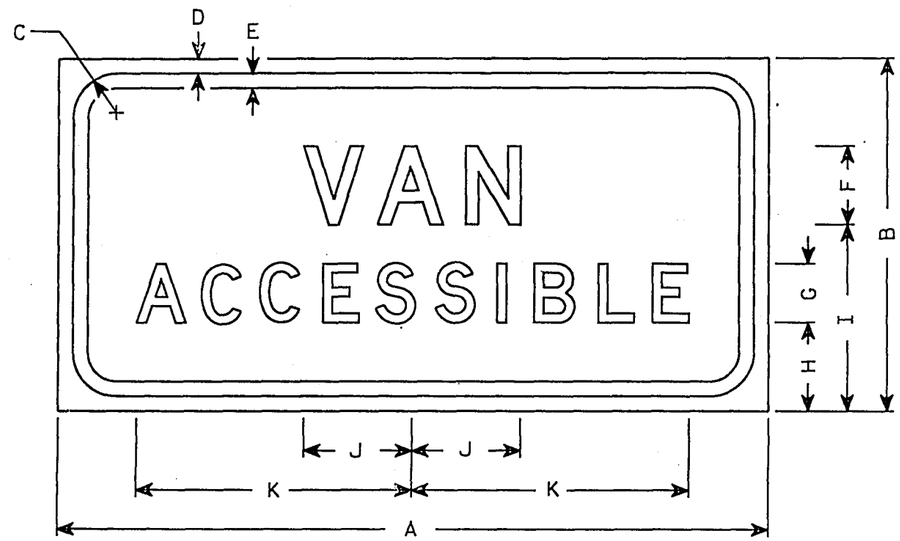

R7-8V

Metric equivalent for this sign is:

SIZE	
1	
2	300 mm x 150 mm
3	450 mm x 225 mm
4	
5	

SIZE	A	B	C	D	E	F	G	H	I	J	K	L	M	N	O	P	Q	R	S	T	U	V	W	X	Y	Z	Area Sq. Ft.
2	12	6	1 1/8	3/8	3/8	1 1/2	1	1 5/8	3 1/2	2	5 1/4																0.50
3	18	9	1 1/8	3/3	3/8	2	1 1/2	2 1/4	4 3/4	2 3/4	7																1.12
4																											
5																											

STANDARD SIGN
R7-8V

WISCONSIN DEPT. OF TRANSPORTATION

APPROVED

STATE PROJECT NUMBER	SHEET NO
1530-08-71	8.0

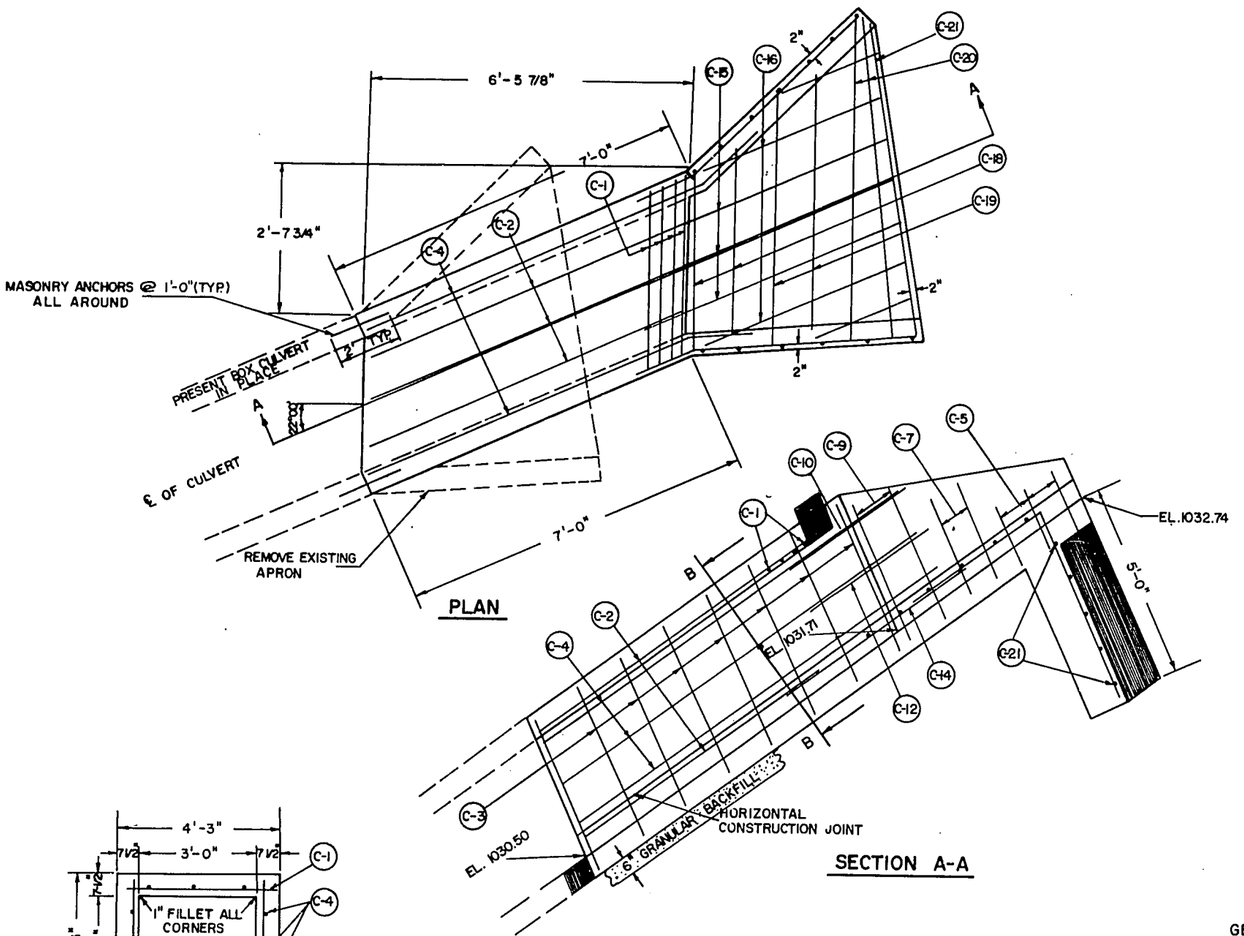

PLAN

SECTION A-A

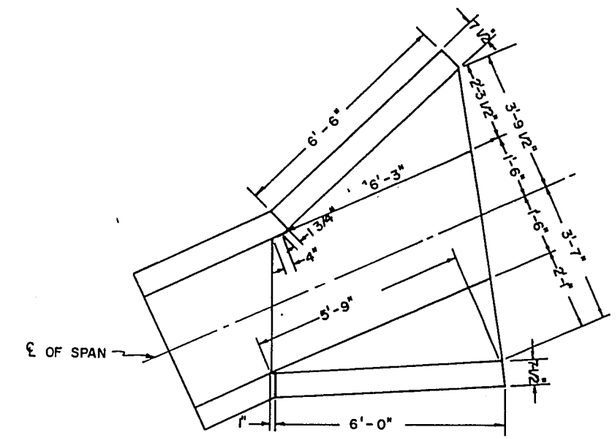

PLAN OF APRON

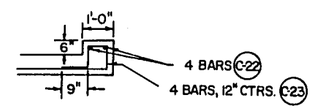

HEADWALL DETAIL

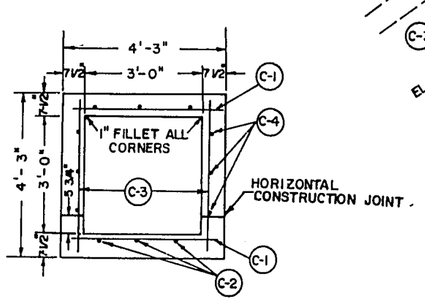

SECTION B-B

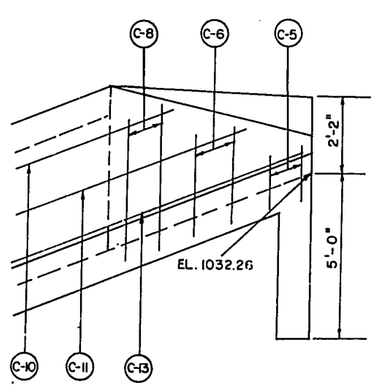

ELEVATION OF SHORT WING

NO.	MARK	SIZE	LENGTH	SPACING	LOCATION
44	C-1	1/2"Ø	4'-3"	4" CTRS.	LONGITUDINAL-FLOOR & PAVEMENT
6	C-2	"	6'-10"	1'-0" CTRS.	TRANSVERSE-FLOOR & PAVEMENT
16	C-3	"	4'-0"	1'-0" "	VERTICAL-SIDES OF BARREL
6"	C-4	"	9'-4"	1'-0" "	HORIZONTAL-SIDES OF BARREL
5	C-5	"	3'-6"	1'-0" "	VERTICAL-BOTH WINGS
2	C-6	"	4'-6"	1'-0" "	" - SHORT "
2	C-7	"	4'-9"	1'-0" "	" - LONG "
2	C-8	"	5'-5"	1'-0" "	" - SHORT "
2	C-9	"	5'-6"	1'-0" "	" - LONG "
2	C-10	"	4'-3"	1'-0" "	HORIZONTAL-BOTH WINGS
1	C-11	"	6'-0"	1'-0" "	" - SHORT WING
1	C-12	"	6'-9"	1'-0" "	" - LONG "
1	C-13	"	8'-0"	1'-0" "	" - SHORT "
1	C-14	"	8'-6"	1'-0" "	" - LONG "
3	C-15	"	11'-9"	1'-0" "	LONGITUDINAL-APRON
2	C-16	"	9'-6"	1'-0" "	" "
2	C-17	"	7'-0"	1'-0" "	" "
2	C-18	"	4'-6"	1'-0" "	TRANSVERSE - APRON
2	C-19	"	6'-0"	1'-0" "	" "
2	C-20	"	7'-9"	1'-0" "	" "
5	C-21	"	8'-3"	1'-0" "	HORIZONTAL-CUTOFF WALL
2	C-22	"	4'-3"	AS SHOWN	HEADWALL
5	C-23	"	3'-5"	1'-0" "	HEADWALL

GENERAL NOTES

DRAWINGS SHALL NOT BE SCALED
ALL CONCRETE MASONRY SHALL BE GRADE A
BEVEL EXPOSED EDGES OF CONCRETE 1"
ALL VERTICAL STEEL IN WINGS SHALL BE BENT 2'-0" INTO APRON
THE SIDES OF THE BARREL AND THE TOP OF THE BOX CULVERT AT THE JOINT BETWEEN EXISTING AND NEW CONCRETE SHALL BE WATERPROOFED WITH MEMBRANE WATERPROOFING

TOTAL ESTIMATED QUANTITIES

EXCAVATION FOR STRUCTURES	1 L.S.
CONCRETE MASONRY CULVERTS	5.5 C.Y.
H.S. BAR STEEL REINFORCEMENT	450 LB.
GRANULAR BACKFILL *	1.5 C.Y.
REMOVING OLD CULVERT	1 L.S.
CONCRETE MASONRY ANCHORS, TYPE L, NO. 5 BARS	14 EACH

NON BID ITEMS

MEMBRANE JOINT WATERPROOFING

* THIS QUANTITY INCLUDED IN THE MISC QUANTITIES SHEET LISTING FOR GRANULAR BACKFILL

DETAILS
FOR
EXTENSION OF
CULVERT C-[illegible]94
STA. 13+[illegible] [illegible] 10
[illegible]

STATE PROJECT NUMBER	SHEET NO
1530-08-71	8.1

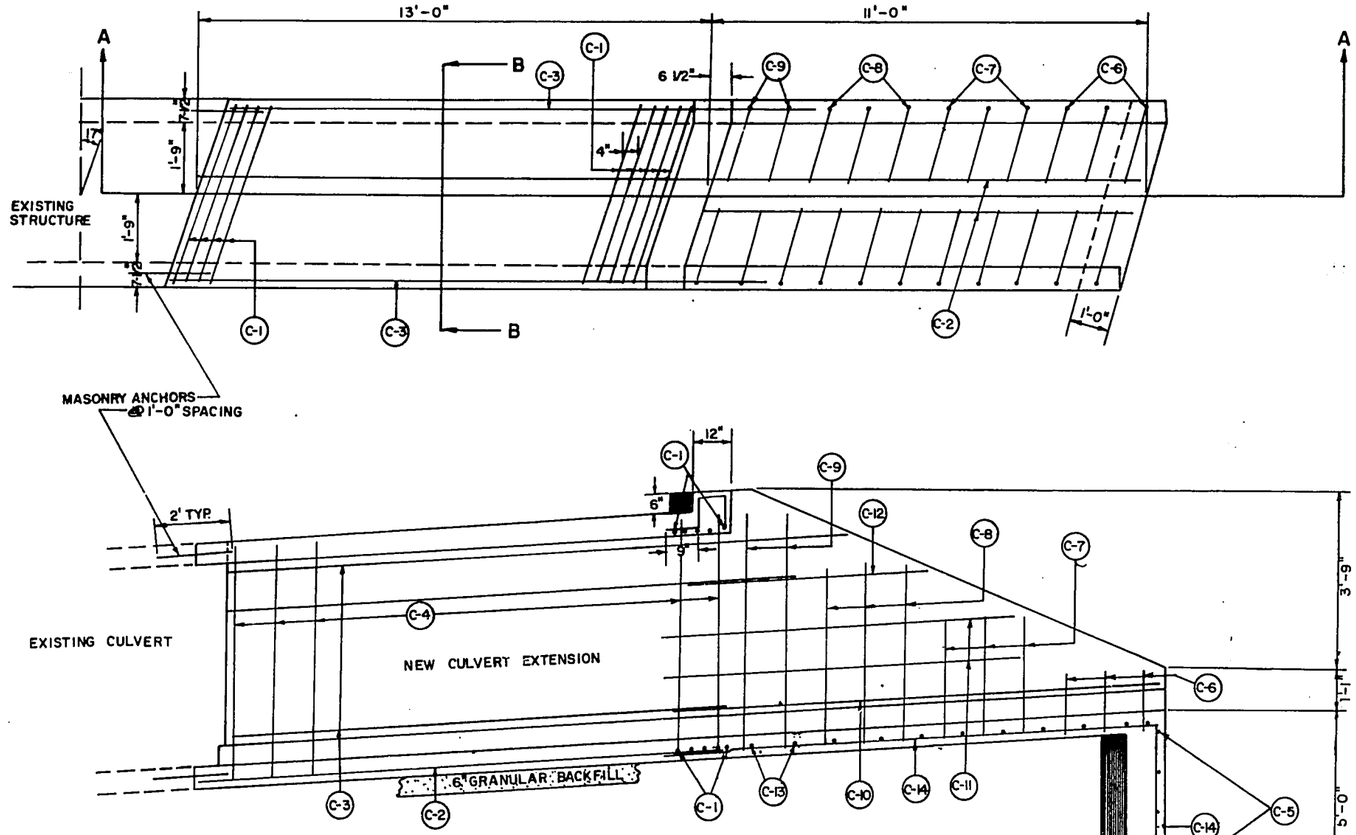

SECTION A-A

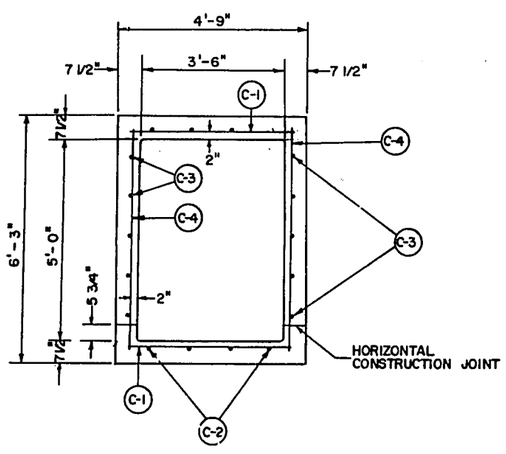

SECTION B-B

NO.	MARK	SIZE	LENGTH	SPACING	LOCATION
80	C-1	4	4'-6"	0'-4"	LONGIT.-FLOOR & PAVEMENT
8	C-2	4	12'-8"	1'-0"	TRANSV.-FLOOR & PAVEMENT
10	C-3	4	12'-10"	1'-0"	HORIZ. —SIDES OF BARREL
26	C-4	4	6'-0"	1'-0"	VERTICAL-SIDES OF BARREL
5	C-5	4	4'-6"	1'-0"	LONGIT.-CUTOFF WALL
6	C-6	4	3'-6"	1'-0"	VERTICAL-WING
6	C-7	4	5'-0"	1'-0"	" "
6	C-8	4	6'-0"	1'-0"	" "
4	C-9	4	7'-0"	1'-0"	" "
2	C-10	4	13'-0"	1'-0"	HORIZ.- WING
4	C-11	4	9'-0"	1'-0"	" "
2	C-12	4	6'-0"	1'-0"	" "
10	C-13	4	4'-6"	1'-0"	LONGIT.- APRON
4	C-14	4	16'-6"	1'-0"	TRANSV.- APRON

GENERAL NOTES

DRAWINGS SHALL NOT BE SCALED
ALL CONCRETE MASONRY SHALL BE GRADE A
BEVEL. EXPOSED EDGES OF CONCRETE 1"
ALL VERTICAL STEEL IN WINGS SHALL BE BENT 2'-0" INTO APRON
THE SIDES OF THE BARREL AND THE TOP OF THE BOX CULVERT AT THE JOINT BETWEEN EXISTING AND NEW CONCRETE SHALL BE WATERPROOFED WITH MEMBRANE WATERPROOFING

ESTIMATED QUANTITIES

BID ITEMS

EXCAVATION FOR STRUCTURES	1.0 L.S.
CONCRETE MASONRY CULVERTS	10.0 C.Y.
H.S. BAR STEEL REINFORCEMENT	765 LBS.
REMOVING OLD CULVERT	1.0 L.S.
GRANULAR BACKFILL *	1.5 C.Y.
CONCRETE MASONRY ANCHORS, TYPE L, NO. 5 BARS	22 EACH

NON-BID ITEM

MEMBRANE JOINT WATERPROOFING

* THIS QUANTITY INCLUDED IN THE MISC. QUANTITY SHEET LISTING FOR GRANULAR BACKFILL

DETAILS
FOR
EXTENSION OF
CULVERT C-1895

STA. 17+30.00 U.S. H. 10
PIERCE CO.

TELEBYNE POST 144781

Cat No 7130 7114

STATE PROJECT NUMBER	SHEET NO.
1530-08-71	8.2

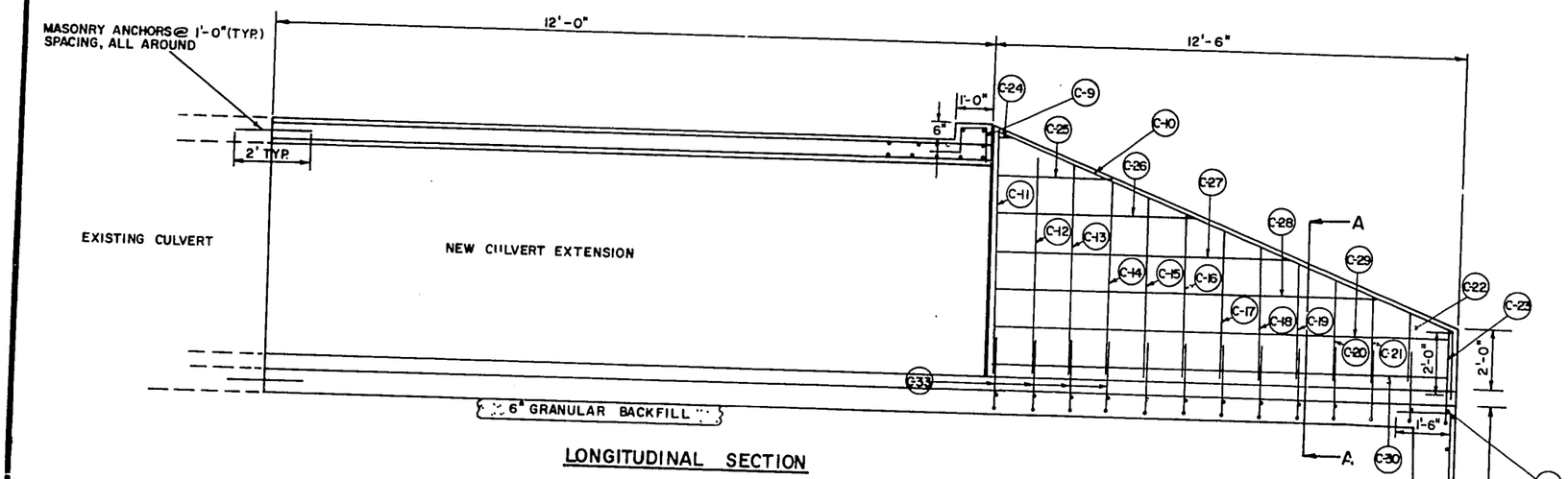

LONGITUDINAL SECTION

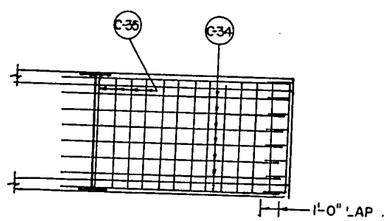

APRON DETAIL

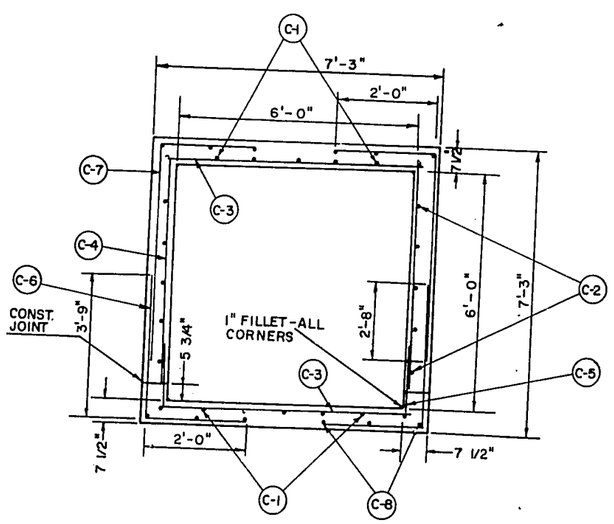

TYPICAL CULVERT CROSS SECTION

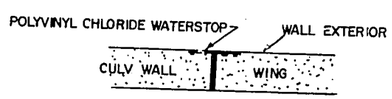

WALL JOINT DETAIL

EXTEND FILLER FROM HORIZONTAL CONSTRUCTION JOINT TO TOP OF WING. DO NOT RUN ANY STEEL THRU JOINT FILLER.

FILLER SHALL CONFORM TO AASHTO DESIGNATION M 153 OR M 213.

POLYVINYL CHLORIDE WATERSTOP – EXTEND FROM HORIZONTAL CONST. JOINT TO TOP OF WALL (FLUSH WITH FACE OF CONCRETE) SEE WATERSTOP DETAIL.

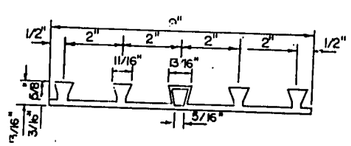

POLYVINYL CHLORIDE WATERSTOP DETAIL

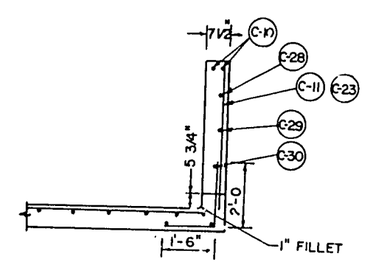

SECTION A-A
SECTION THRU WINGWALL

NO.	MARK	SIZE	LENGTH	SPACING	LOCATION
10	C-1	4	11'-9"	1'-0"	LONGIT.- TOP OF BARREL
10	C-2	4	11'-9"	1'-0"	HORIZ.- SIDES OF BARREL
34	C-3	6	6'-6"	0'-9"	TRANSV.-TOP & BOTTOM OF BARREL
26	C-4	4	5'-9"	1'-0"	VERTICAL- SIDES OF BARREL
26	C-5	4	2'-3"	1'-0"	" " " "
26	C-6	4	5'-9"	1'-0"	BOTTOM CORNER OF BARREL
26	C-7	4	6'-8"	1'-0"	TOP CORNER OF BARREL
12	C-8	4	11'-9"	1'-0"	HORIZ.-TOP & BOTTOM OF BARREL
9	C-9	3	2'-8"	0'-8"	HEADWALL
4	C-10	5	15'-0"	AS SHOWN	WINGWALLS
2	C-11	4	6'-4"	1'-0"	"
2	C-12	4	5'-11"	AS SHOWN (1'-0" TYP.)	"
2	C-13	4	5'-6"	"	"
2	C-14	4	5'-1"	"	"
2	C-15	4	4'-8"	"	"
2	C-16	4	4'-3"	"	"
2	C-17	4	3'-10"	"	"
2	C-18	4	3'-5"	"	"
2	C-19	4	3'-1"	"	"
2	C-20	4	2'-8"	"	"
2	C-21	4	2'-3"	"	"
2	C-22	4	1'-10"	"	"
2	C-23	4	4'-0"	"	"
2	C-24	4	0'-10"	"	"
2	C-25	4	3'-0"	"	"
2	C-26	4	5'-3"	"	"
2	C-27	4	7'-9"	"	"
2	C-28	4	10'-3"	"	"
2	C-29	4	12'-0"	"	"
2	C-30	4	12'-0"	"	"
5	C-31	4	6'-10"	1'-0"	CUTOFF WALL
7	C-32	4	6'-0"	1'-0"	" "
24	C-33	4	3'-6"	1'-0"	APRON - HORIZ
8	C-34	4	14'-0"	1'-0"	APRON - HORIZ, LONGIT
12	C-35	4	6'-10	1'-0"	" - HORIZ, TRANSV

GENERAL NOTES

1. DRAWINGS SHALL NOT BE SCALED
2. ALL CONCRETE MASONRY SHALL BE GRADE A
3. BEVEL ALL EXPOSED EDGES OF CONCRETE 1'
4. ALL VERTICAL STEEL IN WINGS SHALL BE BENT 1'-6" INTO APRON.
5. BAR STEEL REINFORCEMENT SHALL BE IMBEDDED 2" CLEAR UNLESS OTHERWISE SHOWN OR NOTED.

BID ITEMS

EXCAVATION FOR STRUCTURES	1 L.S.
CONCRETE MASONRY, CULVERTS	133 CU YDS
H.S. BAR STEEL REINFORCEMENT	1425 LBS.
GRANULAR BACKFILL*	2 CU YDS.
REMOVING OLD CULVERT	1 L.S.
CONCRETE MASONRY ANCHORS, TYPE L NO 5 BARS	28 EACH

NON-BID ITEMS

POLYVINYL CHLORIDE WATERSTOP FILLER

* THIS QUANTITY INCLUDED IN THE MISC QUANTITIES SHEET LISTING FOR GRANULAR BACKFILL

DETAILS
FOR
EXTENSION OF
CULVERT C-1898
STA 50+00 U S 410
PIERCE CO

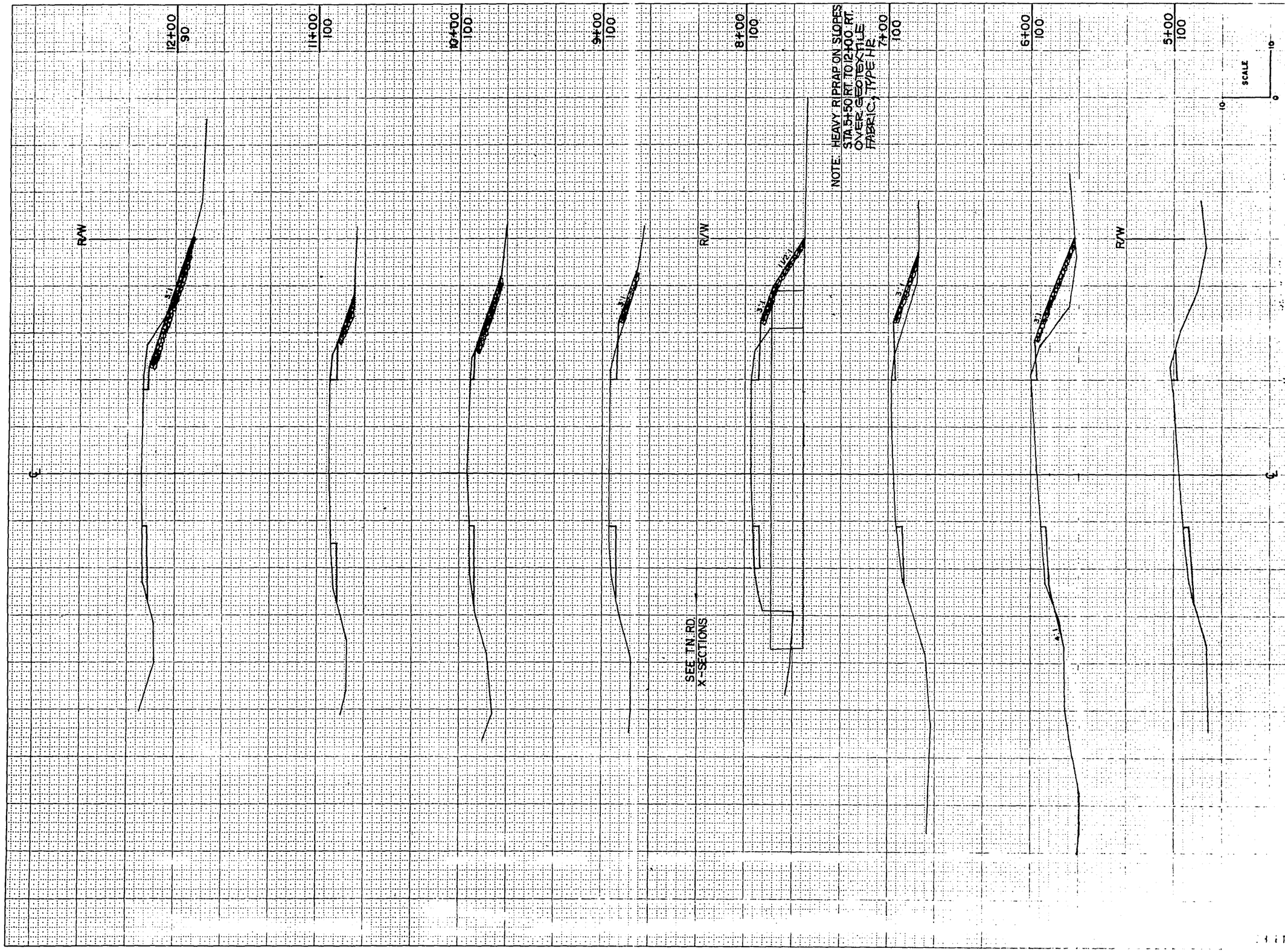

STATE PROJECT NUMBER	SHEET NUMBER
1530-08-71	9.0

SIDEROAD 390TH AVE. PASSING LANE STA. 4+50 TO 12+00 RT. U.S.H. 10

STATION	DISTANCE	YARDAGE EXCAVATION COMMON				FILL
4		0				
		37				0
5		70				128
6		57				187
7		61				265
8		81				226
9		72				41
10		61				37
11		85				37
12		52				22
13						
		576				941

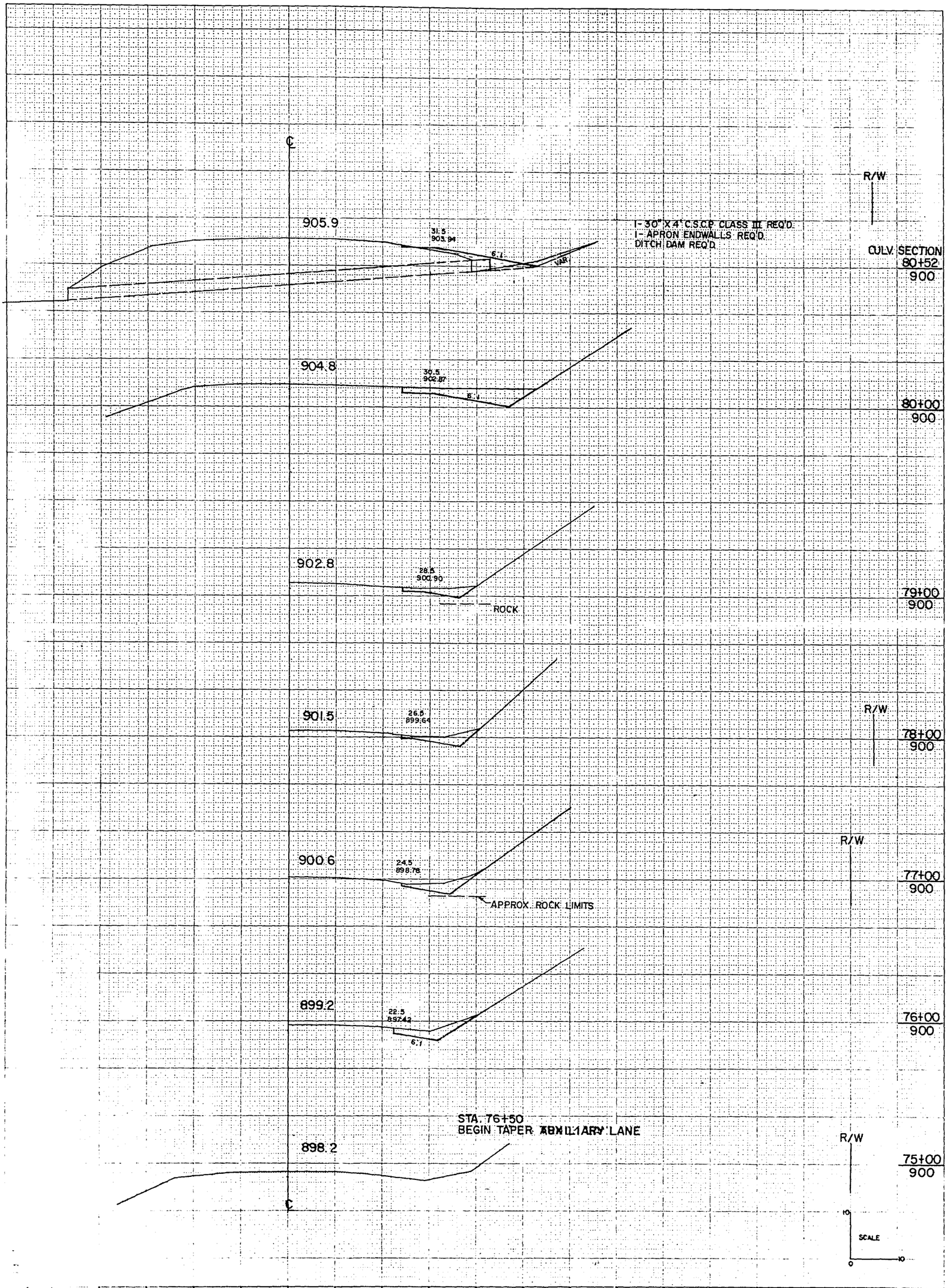

STATION	DISTANCE	COMMON	EXCAVATION	FILL
+52				
80	69			20
79	144			0
78	74			0
77	85			0
76	96			0
75	52			0

YARDAGE

STATE PROJECT NUMBER 1530-08-71

SHEET NUMBER 9.1

520

20

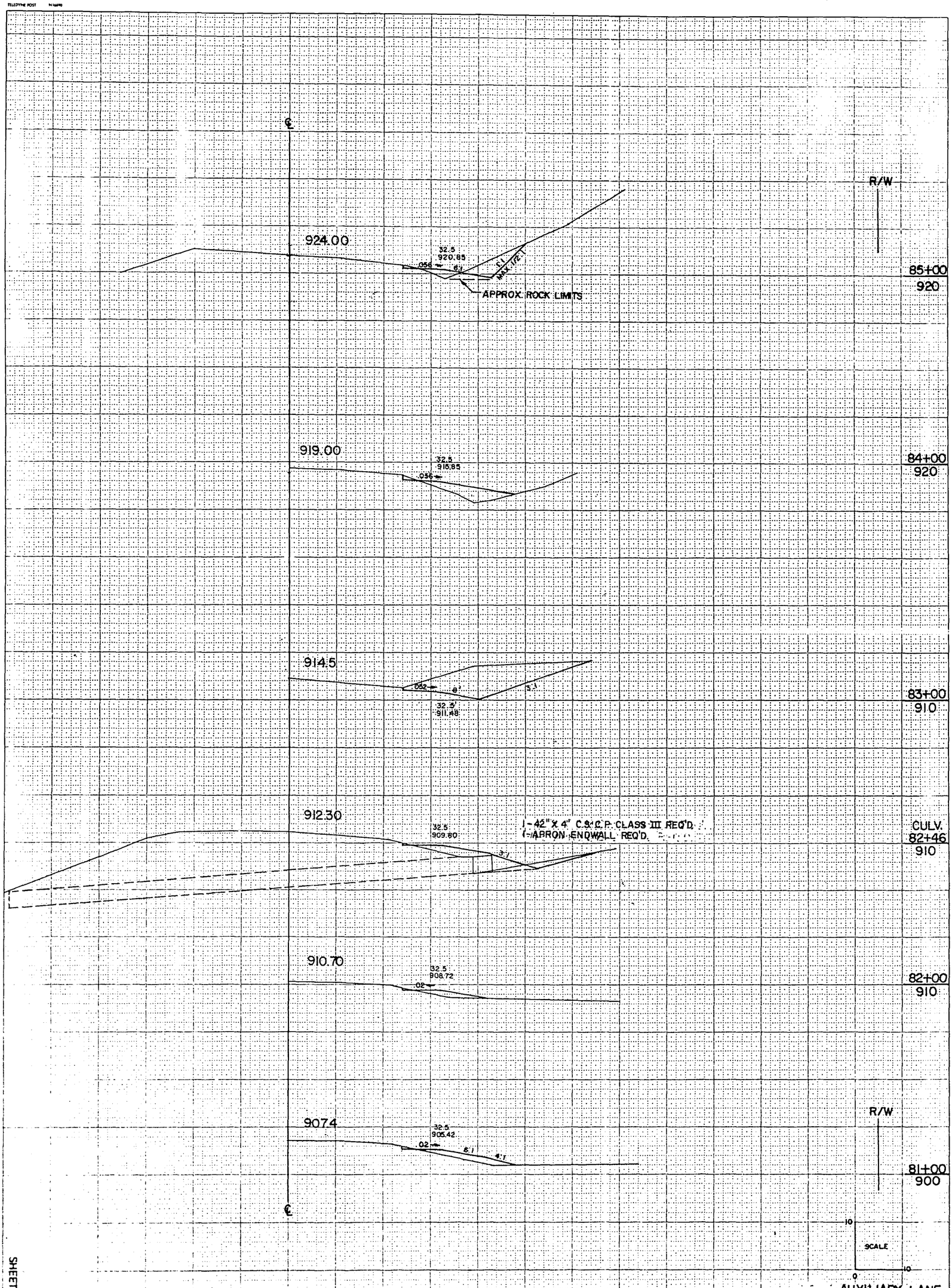

STATION	DISTANCE	COMMON	EXCAVATION	YARDAGE	FILL
85	56				85
84	259				67
83	141				44
+46	4				48
82	7				59
81	13				37
+52 80					
SHEET TOTAL	480				340

STATE PROJECT NUMBER 1530-08-71

SHEET NUMBER 9.2

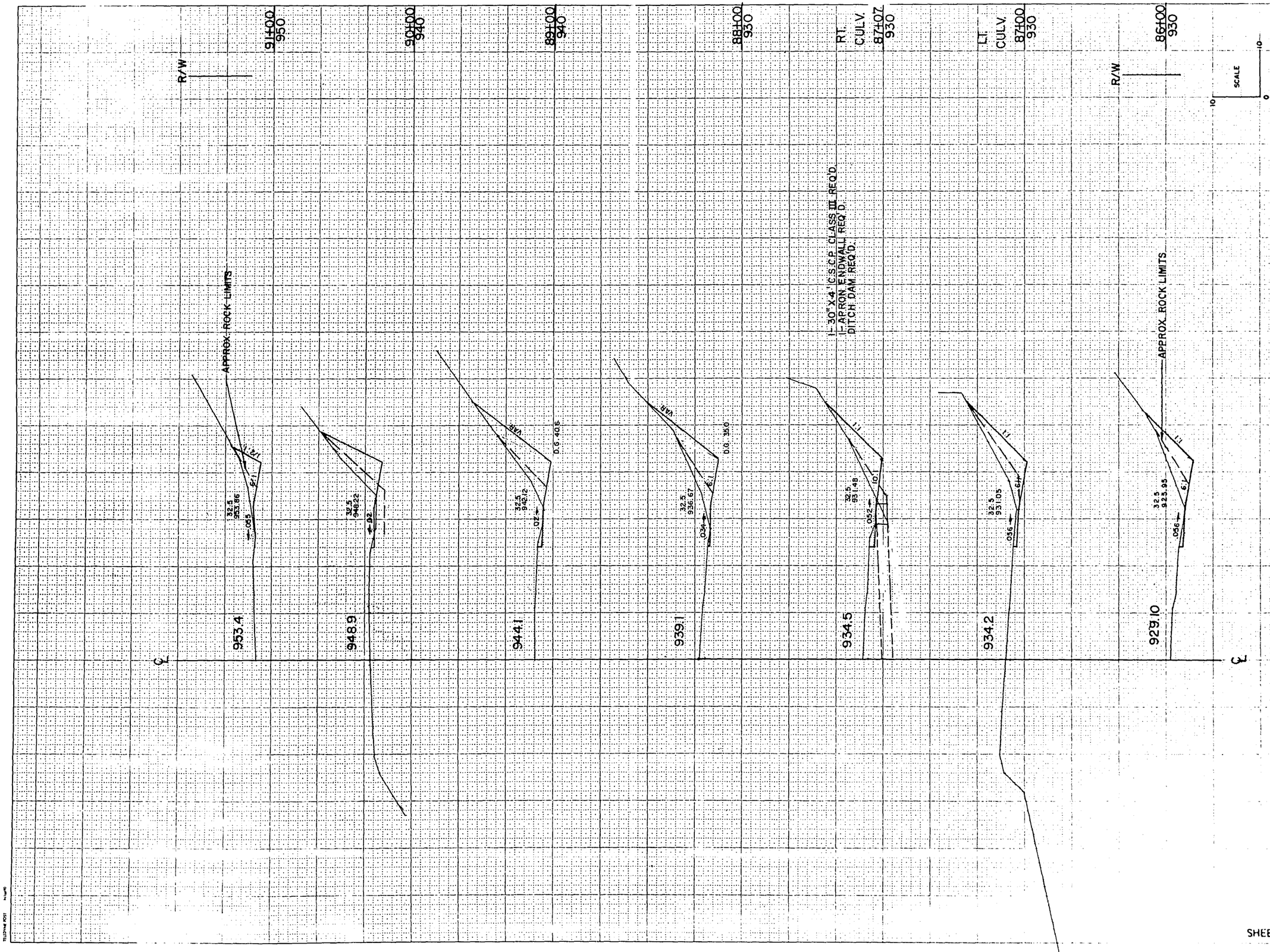

STATE PROJECT NUMBER	SHEET NUMBER
1530-08-71	93

STATION	DISTANCE	YARDAGE EXCAVATION COMMON		ROCK		FILL
85						
		102		52		19
86						
		120		115		0
87						
		7		9		0
107						
		80		165		0
88						
		78		207		0
89						
		78		178		7
90						
		65		96		7
91						
SHEET TOTAL		530		822		33

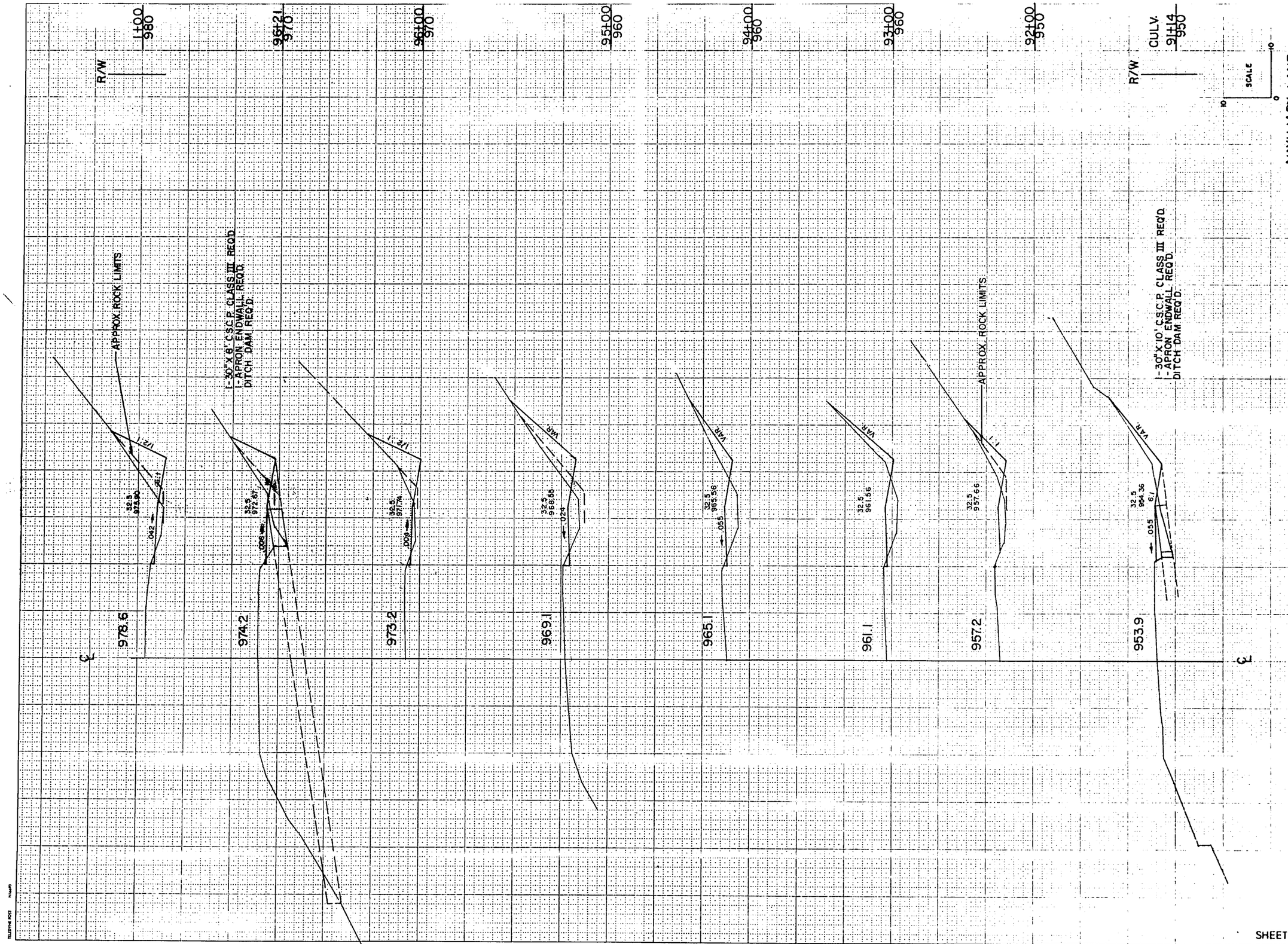

STATE PROJECT NUMBER: 1530-08-71

SHEET NUMBER: 9A

AUXILIARY LANE

STATION	DISTANCE	YARDAGE EXCAVATION COMMON		YARDAGE EXCAVATION ROCK		YARDAGE FILL
91 +14		7		6		7
92		48		26		63
93		59		30		78
94		81		0		111
95		76		30		100
96		46		93		52
+29 =0100 EQ. 100		11		33		16
		61		122		59
SHEET TOTAL		389		340		485

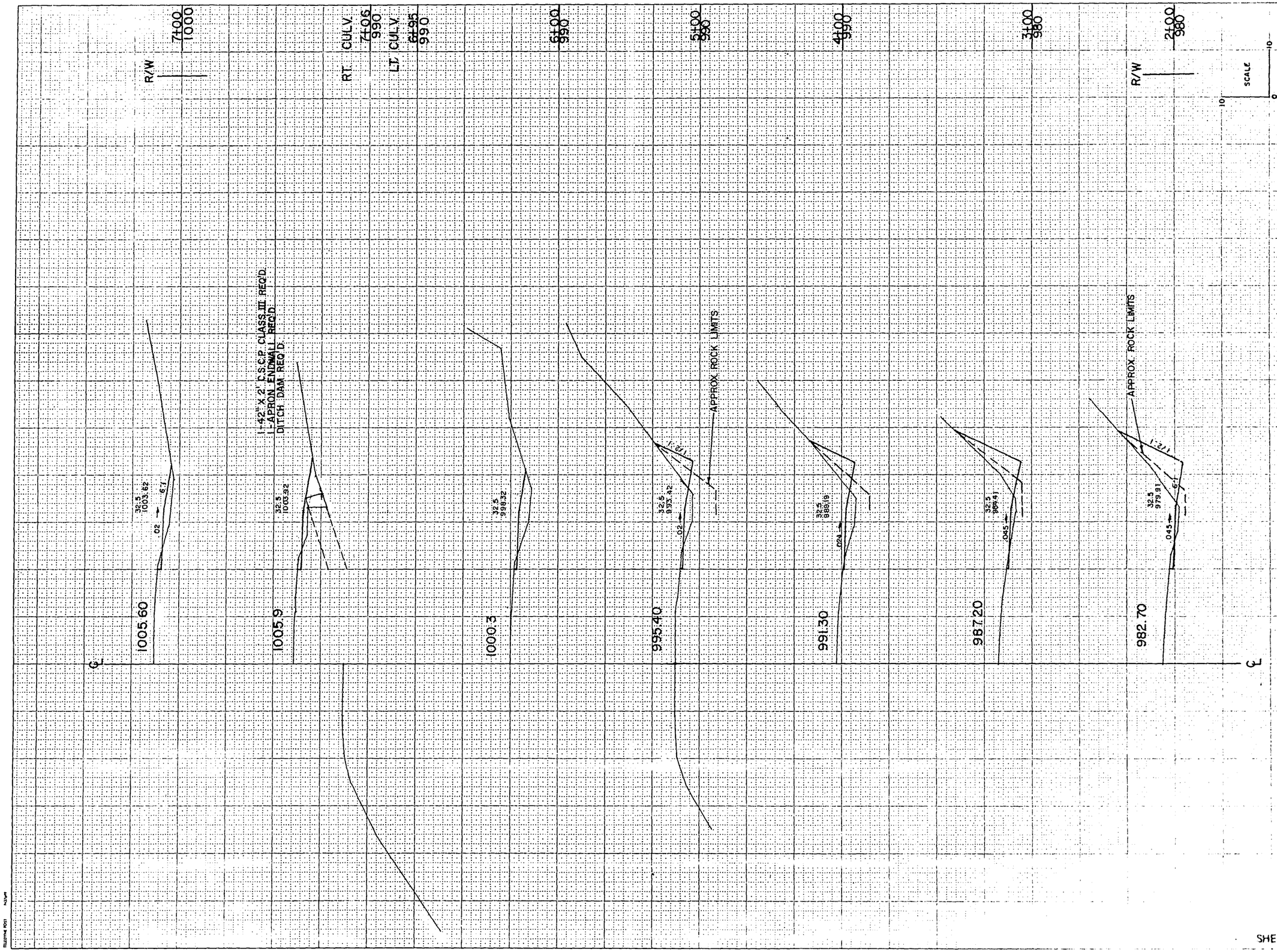

STATE PROJECT NUMBER	SHEET NUMBER
1530-08-71	9.5

STATION	DISTANCE	YARDAGE EXCAVATION COMMON		ROCK		FILL
1		80		144		33
2		81		122		26
3		67		78		52
4		63		48		65
5		37		19		74
6		7				81
7						
SHEET TOTAL		335		411		329

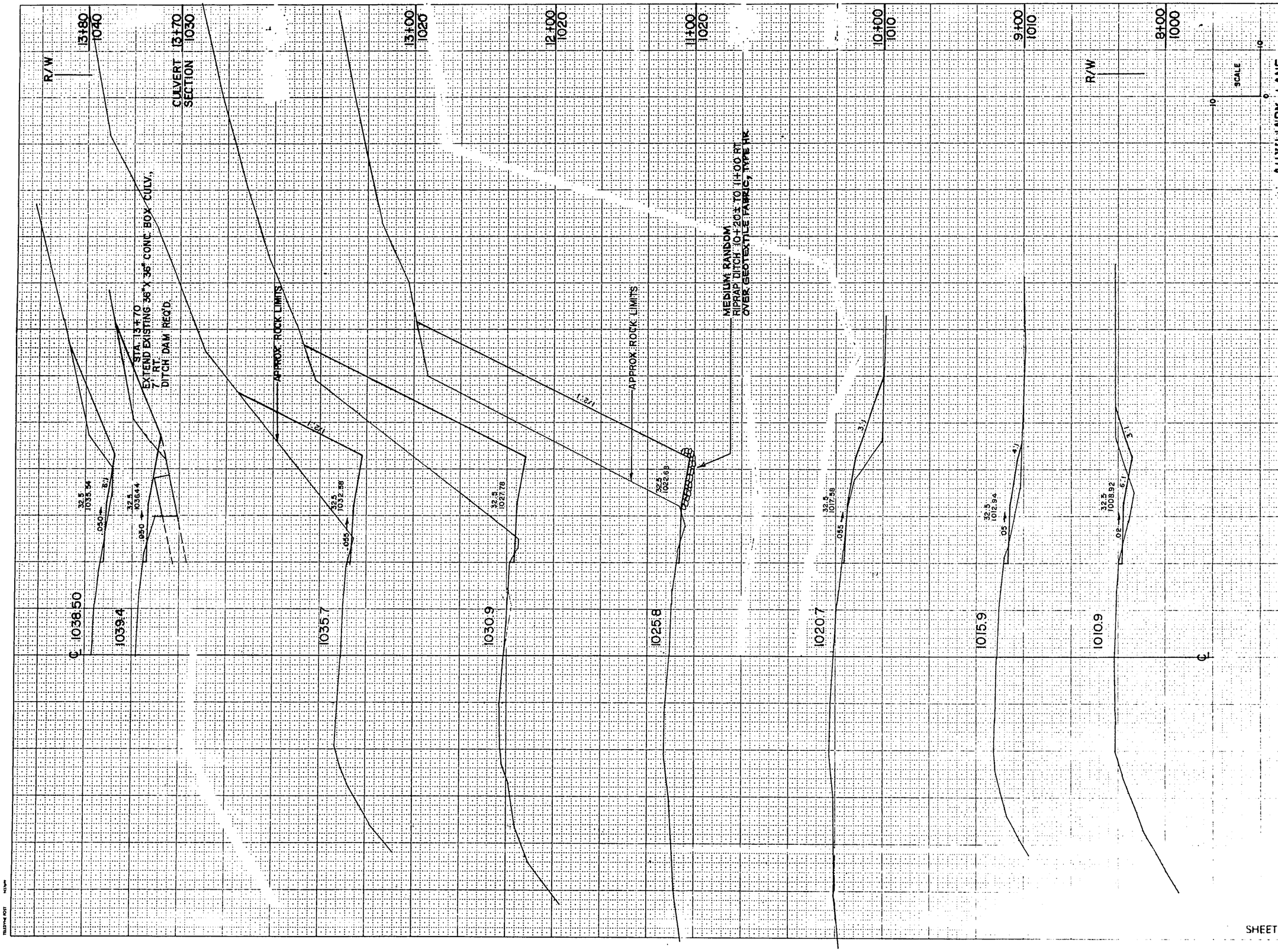

STATE PROJECT NUMBER	SHEET NUMBER
1530-08-71	9/6

STATION	DISTANCE	YARDAGE EXCAVATION COMMON	YARDAGE EXCAVATION ROCK	YARDAGE FILL
7				
		44		63
8				
		44		70
9				
		7		148
10				
		[illegible]		[illegible]
		7	1130	115
11				
		7	2130	15
12				
		7	1445	11
13				
		85	311	78
+70				
		22		13
+80				
SHEET TOTAL		223	5016	513

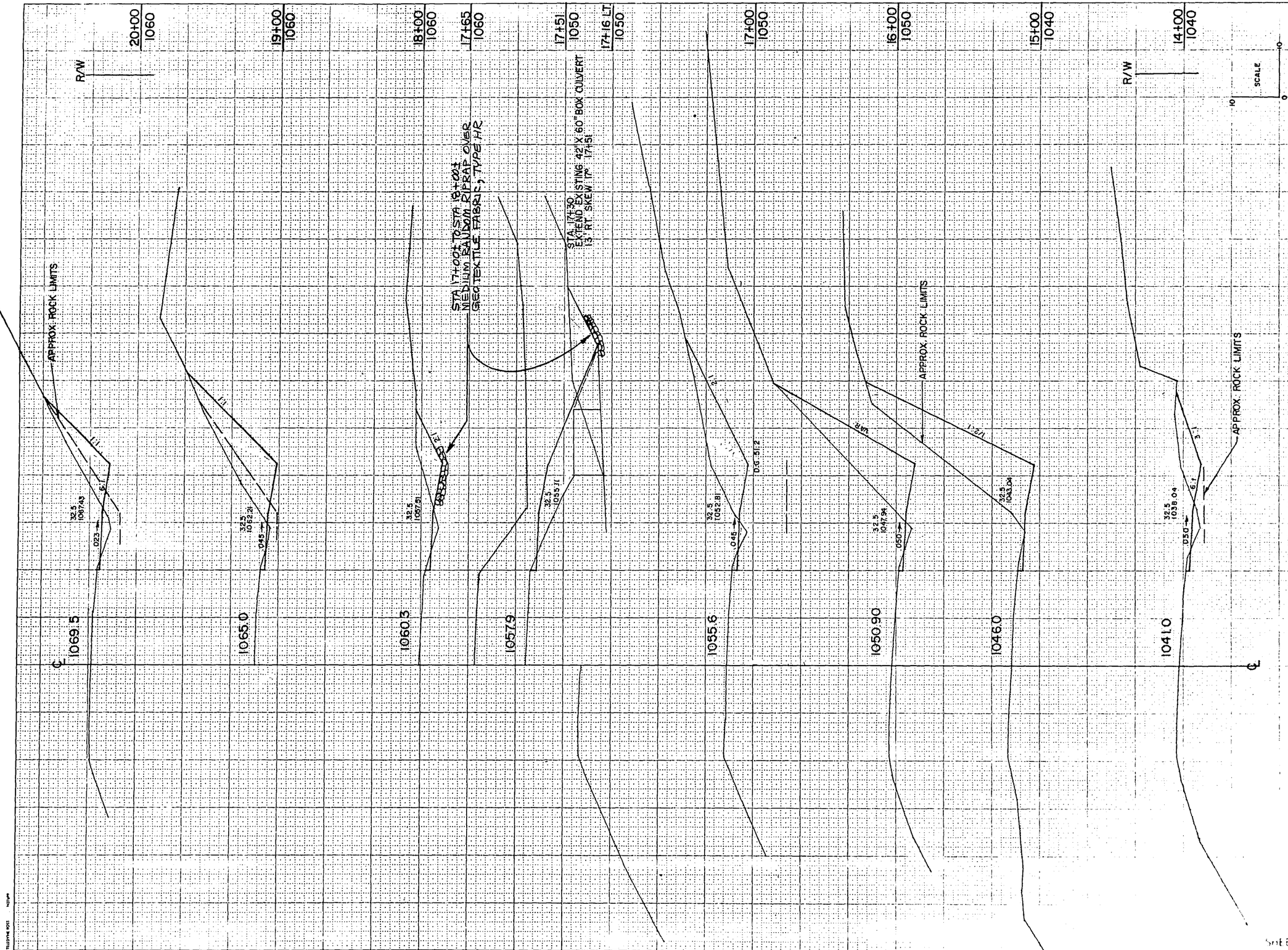

STATE PROJECT NUMBER: 1530-08-71

SHEET NUMBER: 9.7

AUXILIARY LANE

STATION	DISTANCE	YARDAGE EXCAVATION COMMON	YARDAGE EXCAVATION ROCK	YARDAGE EXCAVATION	YARDAGE FILL
13 +80		41			7
14		111	537		19
15		15	893		11
16		294	356		22
17 +51		213	0		148
18		109	0		141
19		204	209		15
20		170	293		26
SHEET TOTAL		1157	2288		389

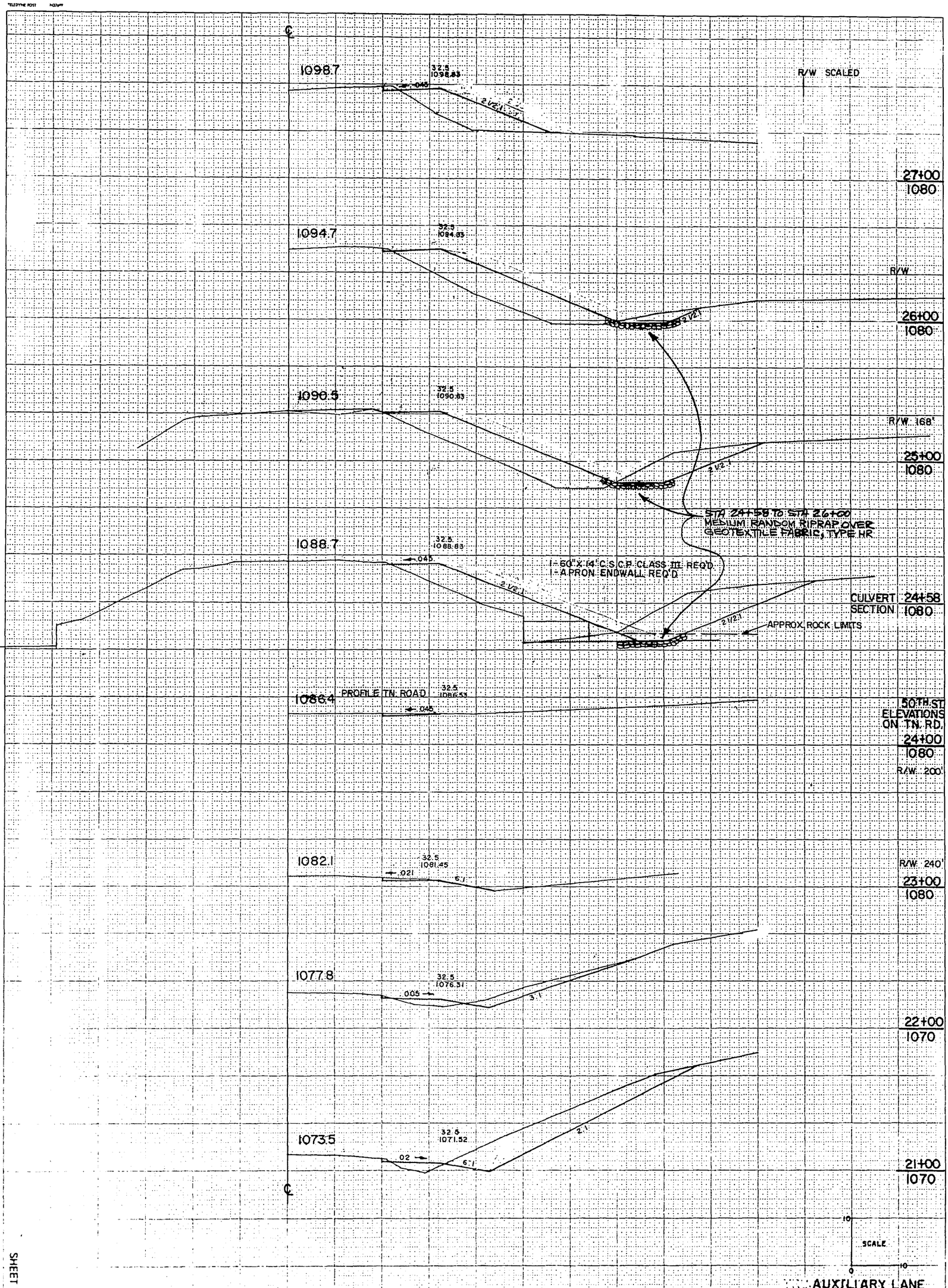

STATION	DISTANCE	COMMON	EXCAVATION ROCK	FILL
27	1730'	64		661
26		222		833
25		230	6	341
24+58	13	220	7	237
24				
23		22		0
22		89		28
21		456		52
20	2198	437		48

SHEET TOTAL

STATE PROJECT NUMBER 1530-08-71

SHEET NUMBER 9.8

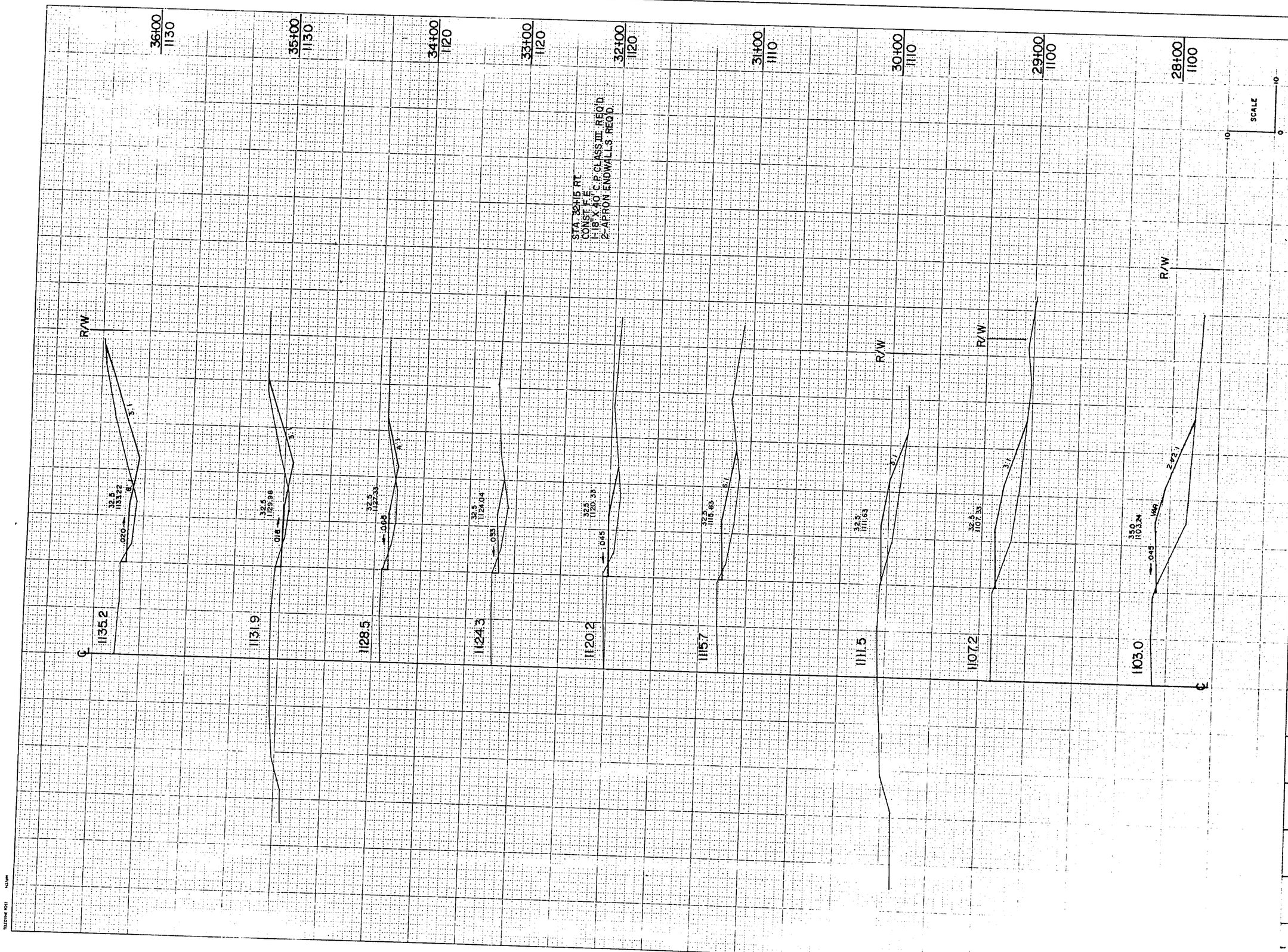

AUXILIARY LANE

STATE PROJECT NUMBER	SHEET NUMBER
1530-08-71	99

STATION	DISTANCE	YARDAGE EXCAVATION COMMON				FILL
27						
		11				654
28						
		4				374
29						
		0				259
30						
		3				193
31						
		7				137
32						
		11				89
33						
		26				70
34						
		89				48
35						
		174				41
36						
SHEET TOTAL		325				1665

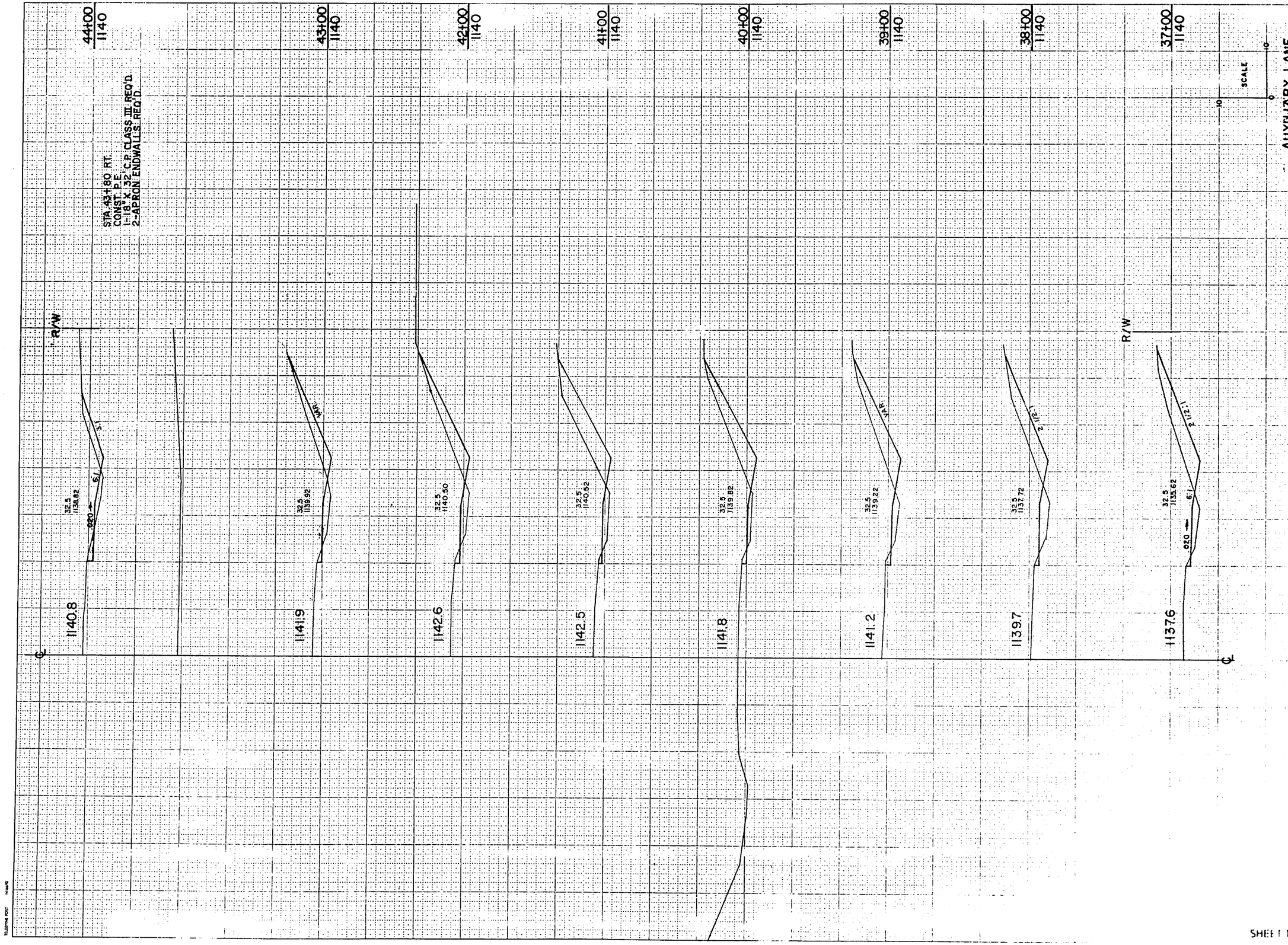

STATE PROJECT NUMBER	SHEET NUMBER
1530-08-71	9.10

AUXILIARY LANE

STATION	DISTANCE	YARDAGE EXCAVATION COMMON	YARDAGE FILL
36		226	52
37		222	68
38		211	59
39		222	41
40		252	44
41		226	56
42		148	56
43		104	44
44			
SHEET TOTAL		1611	415

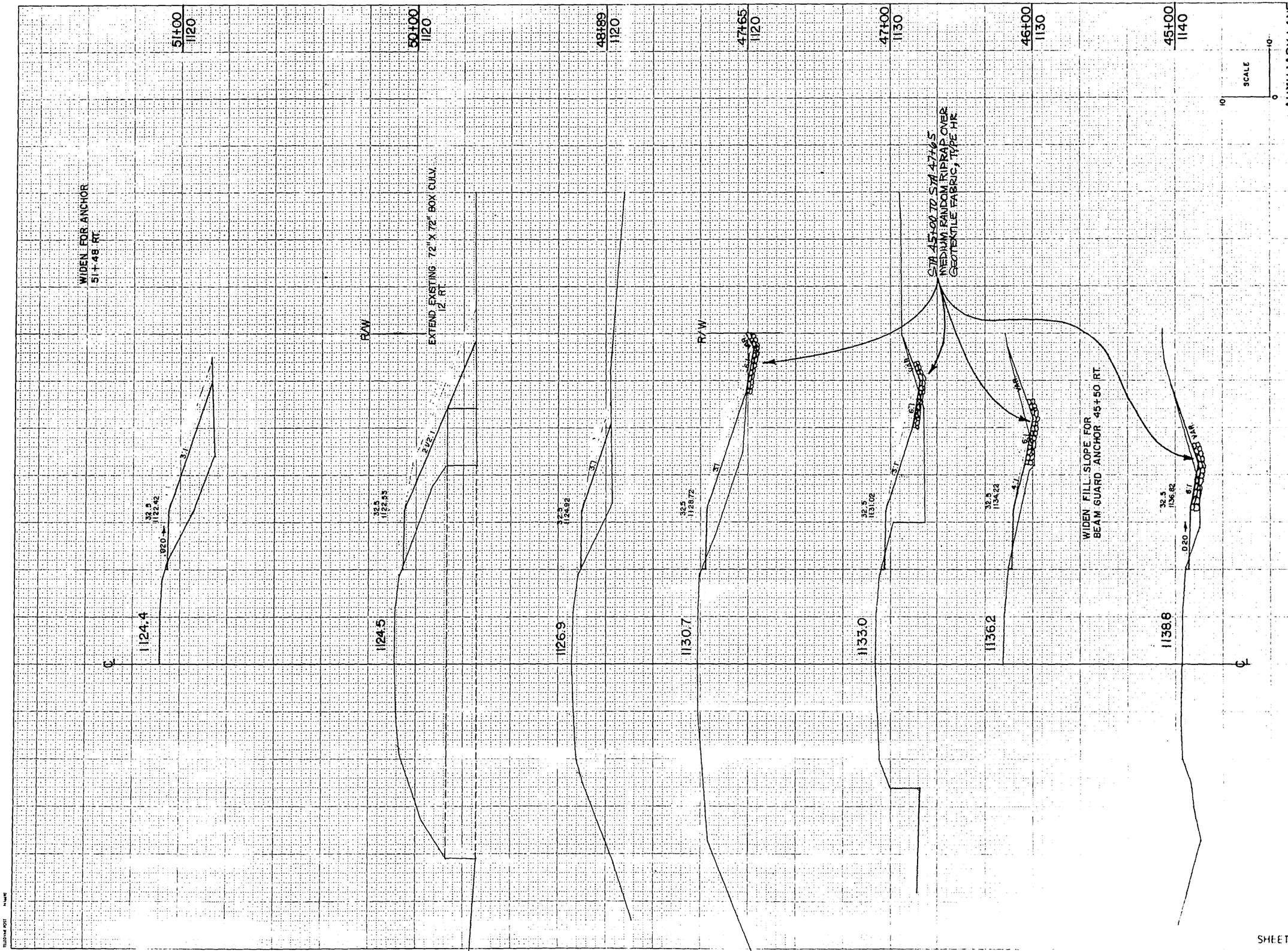

AUXILIARY LANE

STATE PROJECT NUMBER	SHEET NUMBER
1530-08-71	9.11

STATION	DISTANCE	YARDAGE EXCAVATION COMMON				FILL
44						
		59				63
45						
		56				93
46						
		52				289
47						
		13				257
+65						
		3				422
48 +89						
		0				67.8
50						
		3				693
51						
SHEET TOTAL		186				2495

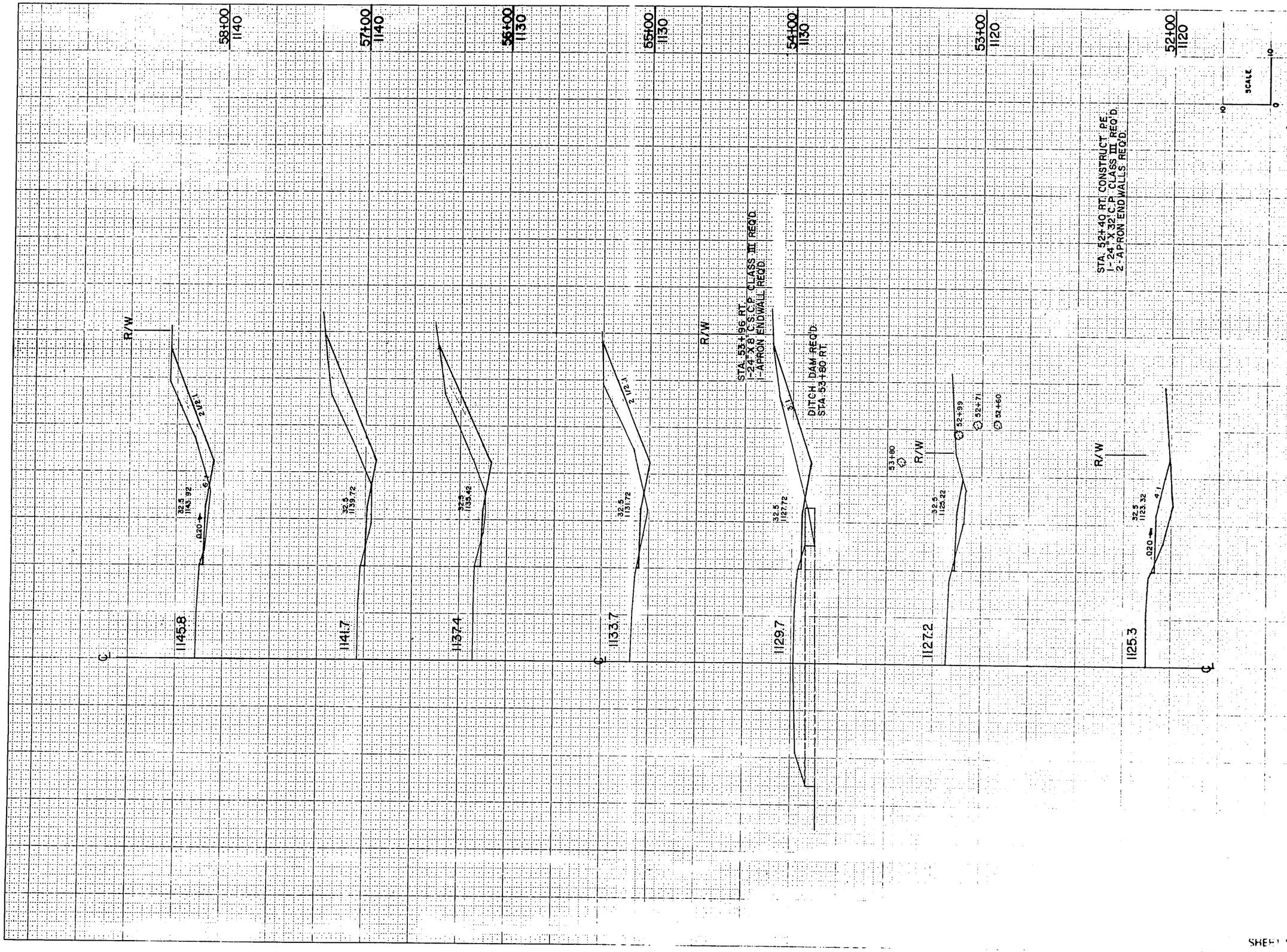

STATE PROJECT NUMBER	SHEET NUMBER
1530-08-71	9.12

AUXILIARY LANE

STATION	DISTANCE	YARDAGE EXCAVATION COMMON				FILL
51						
		7				341
52						
		7				107
53						
		124				67
54						
		254				52
55						
		290				26
56						
		307				22
57						
		256				30
58						
SHEET TOTAL		1245				645

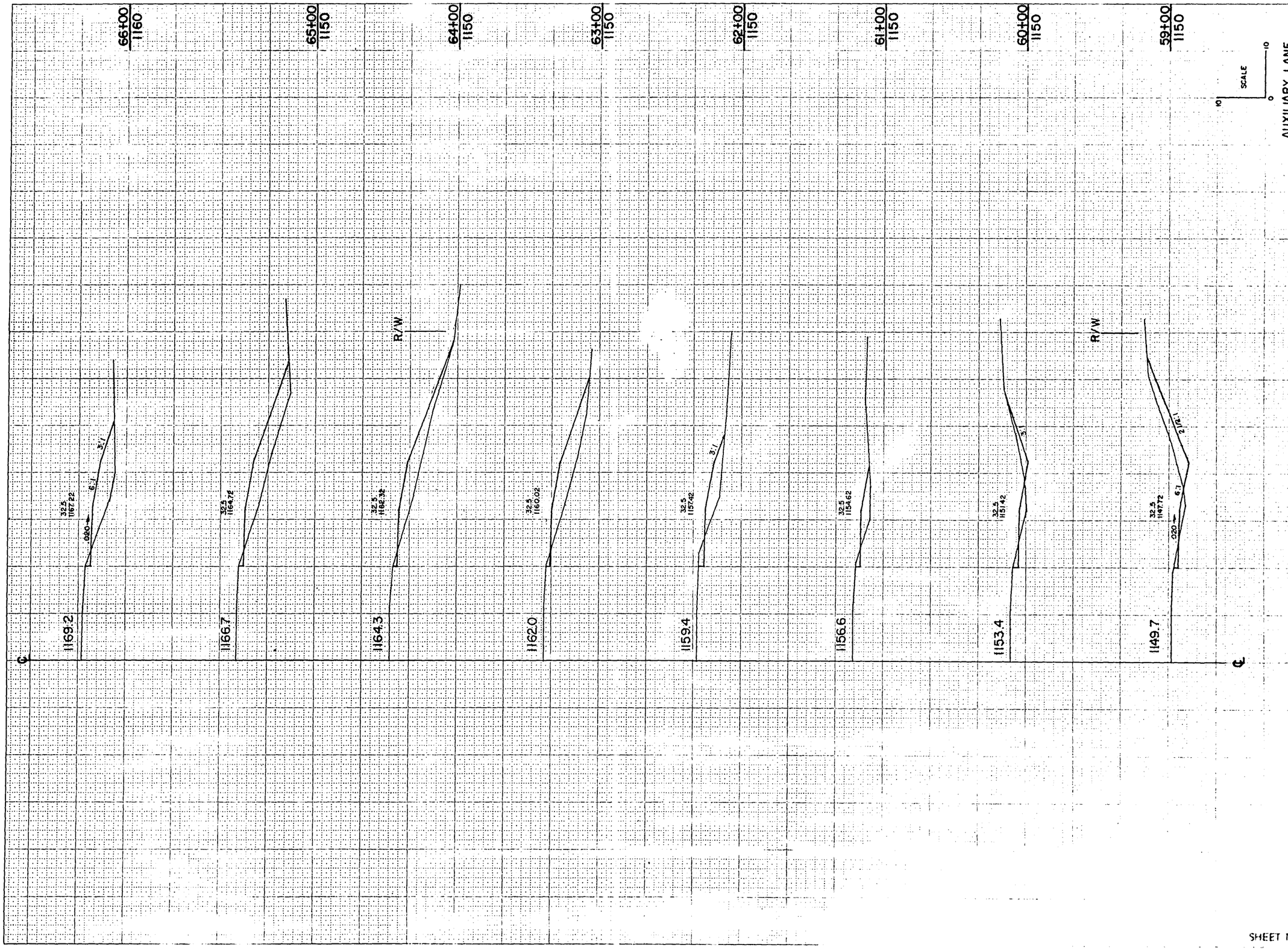

STATE PROJECT NUMBER	SHEET NUMBER
1530-08-71	9.13

STATION	DISTANCE	YARDAGE EXCAVATION COMMON				FILL
58		185				30
59		107				33
60		33				56
61		19				100
62		15				207
63		7				300
64		7				333
65		7				289
66						
SHEET TOTAL		380				1348

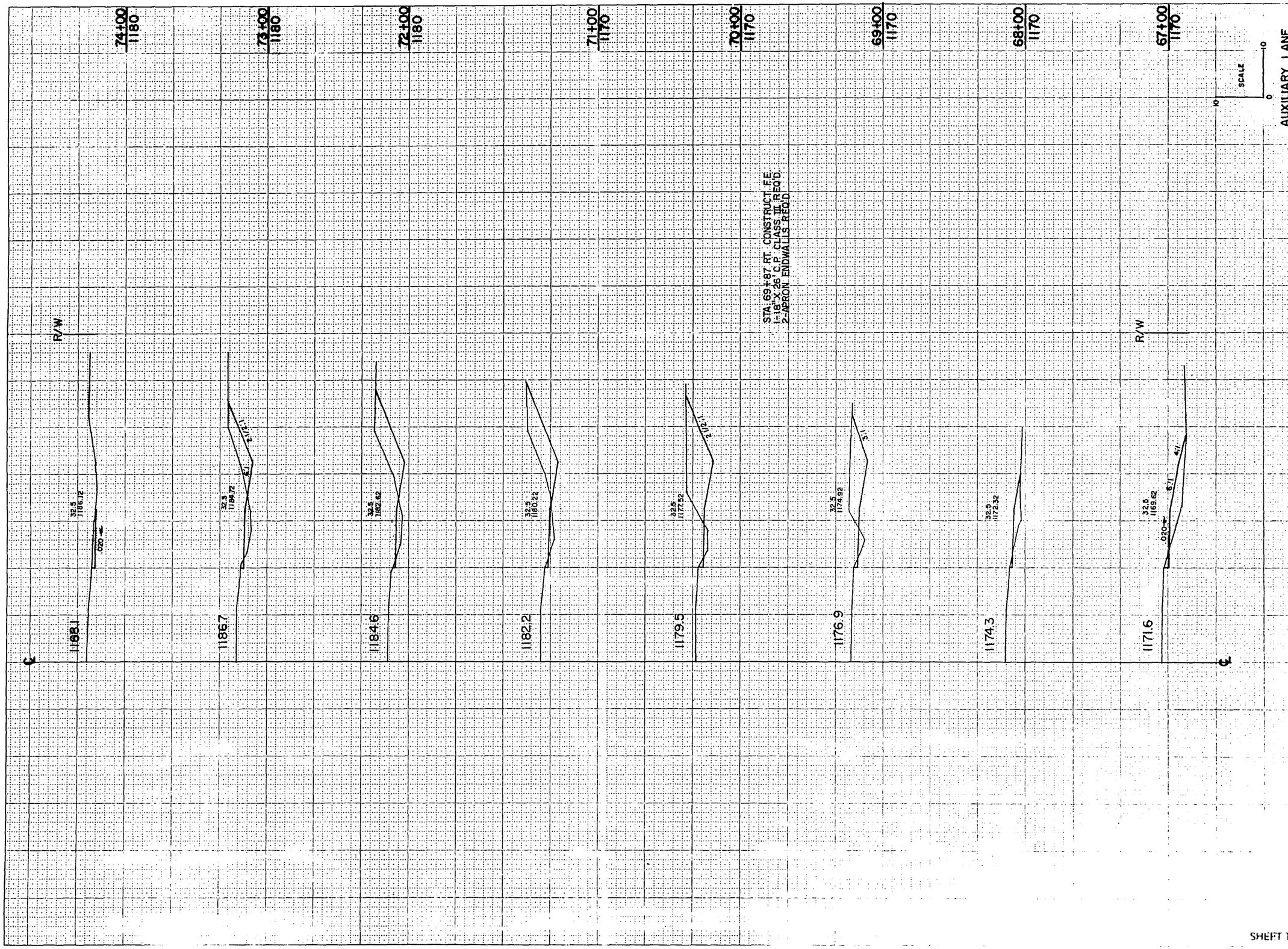

STATE PROJECT NUMBER	SHEET NUMBER
1530-08-71	9.14

STATION	DISTANCE	YARDAGE EXCAVATION COMMON				FILL
66						
		7				170
67						
		7				81
68						
		104				30
69						
		263				15
70						
		274				22
71						
		211				37
72						
		163				44
73						
		74				22
74						
SHEET TOTAL		1103				421

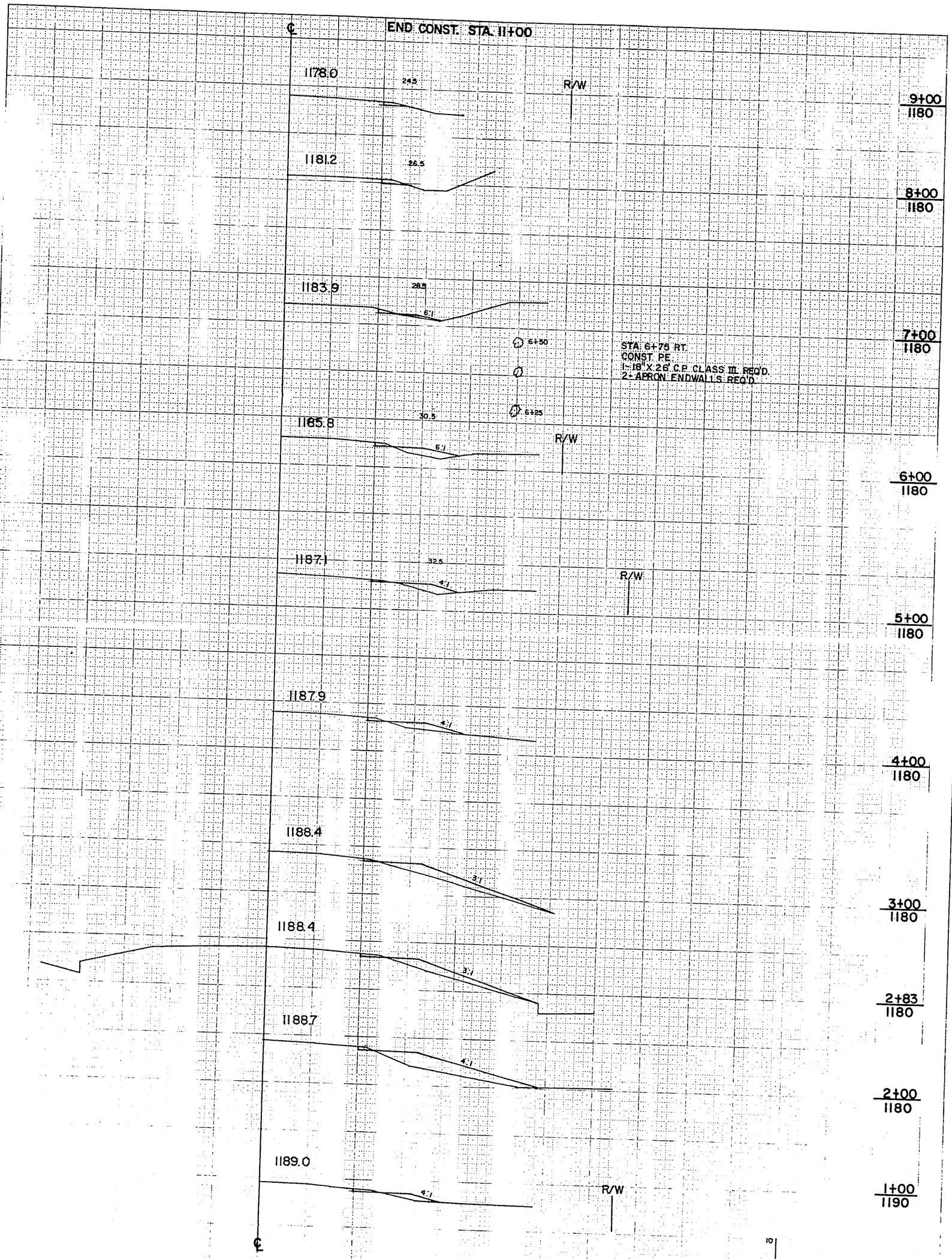

AUXILIARY LANE

STATION	DISTANCE	COMMON	EXCAVATION	YARDAGE	FILL
0		22			22
1		7			137
2		9			154
+83		2			24
3		7			100
4		7			52
5		7			52
6		11			52
7		15			33
8		15			7
9		11			0
11		7			9

STATE PROJECT NUMBER 1530-08-71

SHEET NUMBER 9.15

113

581

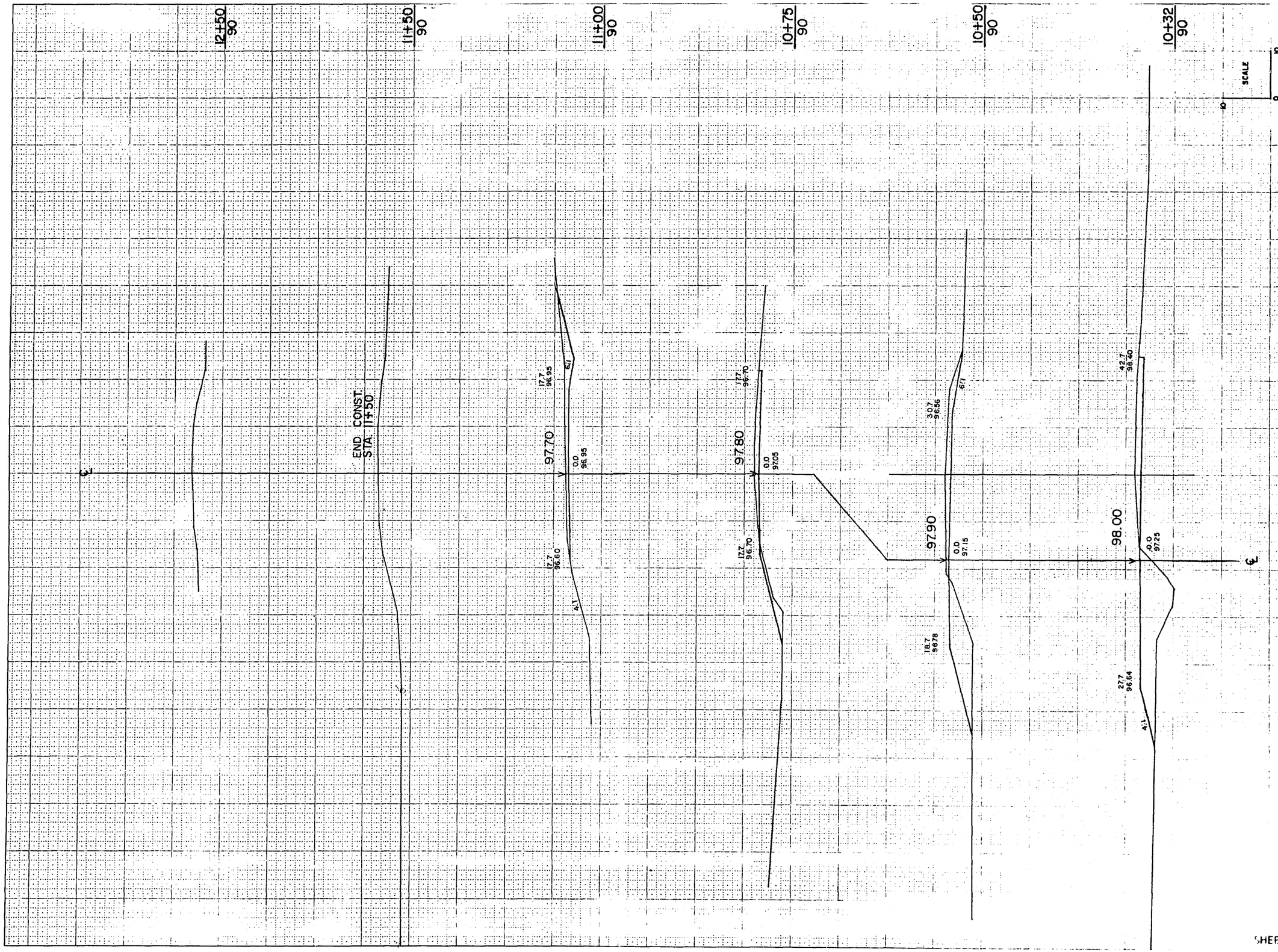

390TH AVE. TN. RD. @ 8+00 U.S.H. 10

STATE PROJECT NUMBER	SHEET NUMBER
1530-08-71	9.16

STATION	DISTANCE	YARDAGE EXCAVATION COMMON				FILL
10 + 20						
+32	12	9				33
+50	18	31				78
+75	25	37				44
11	25	34				7
+50	50	41				
SHEET TOTAL		152				162

Catalog No. 2130 C121

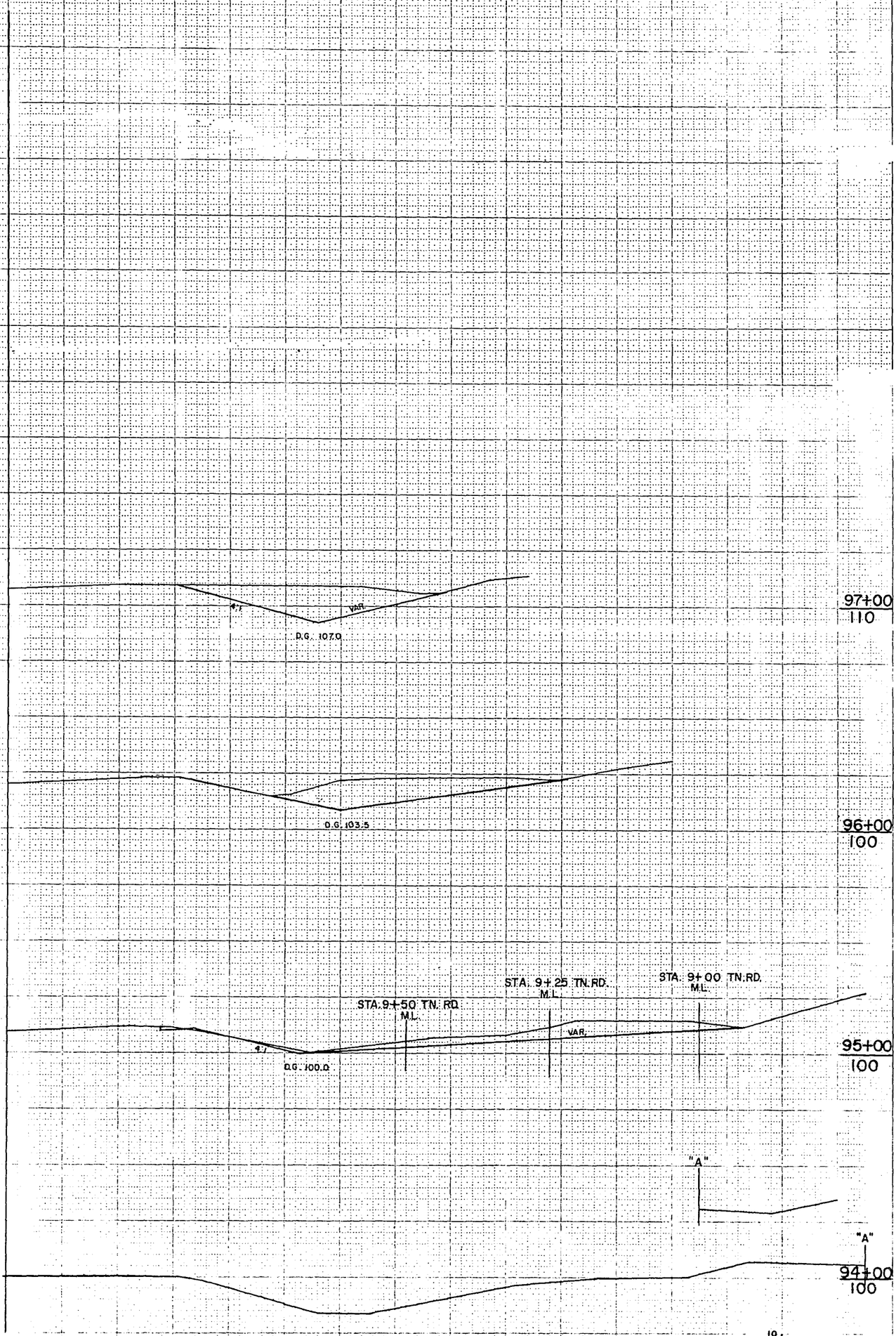

(322ND AVE.)
U.S.H. 10 @ TN. RD. INTERSECTION 94+50

STATION	DISTANCE	COMMON	EXCAVATION	YARDAGE	FILL
95		463			0
96		559			0
97		146			0
+49					

STATE PROJECT NUMBER 1530-08-71

SHEET NUMBER 9.17

SHEET TOTAL 1168

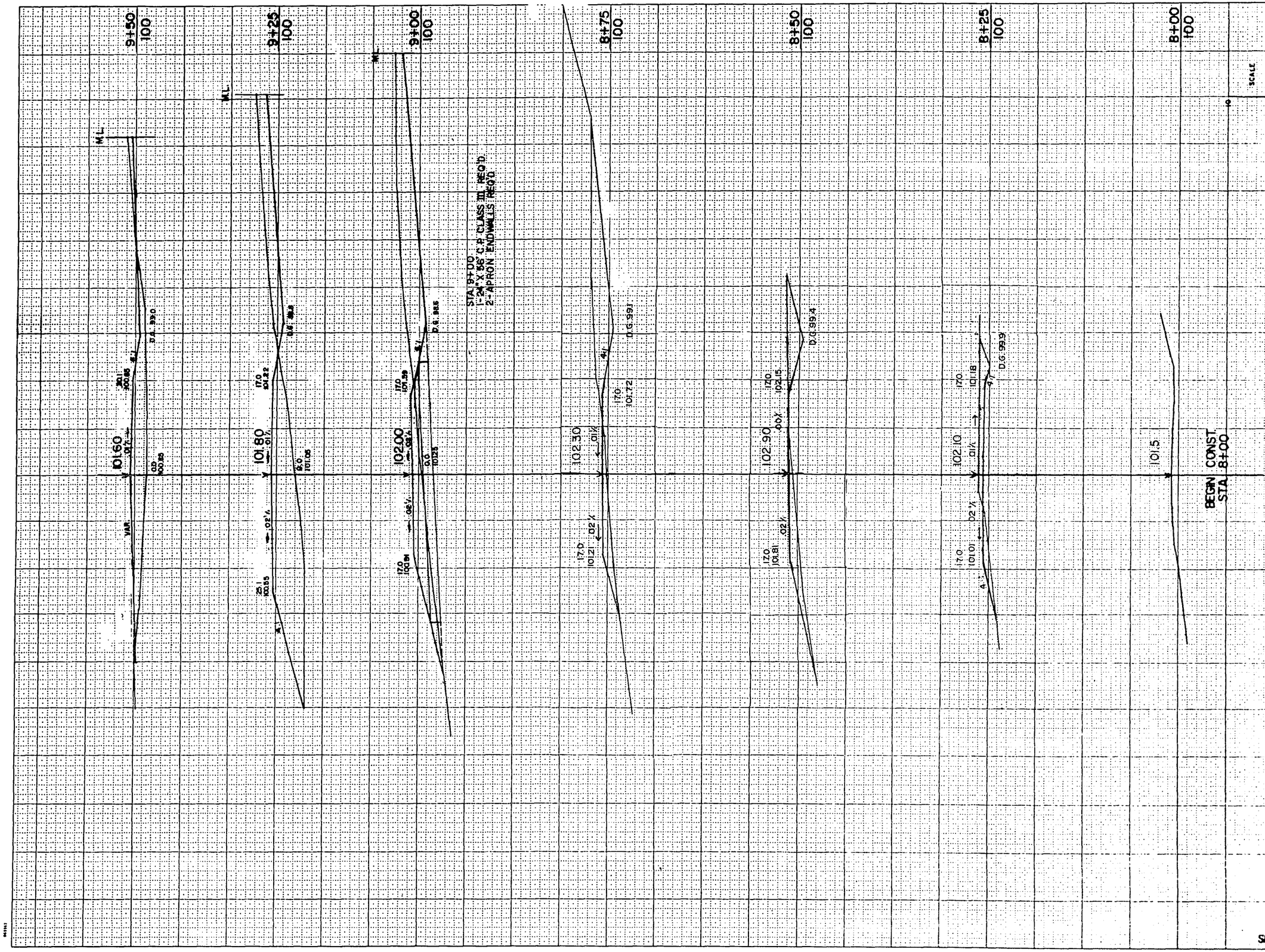

STATE PROJECT NUMBER	SHEET NUMBER
1530-08-71	9.18

322ND AVE., TN. RD. @ STA. 94+50 U.S.H. 10

STATION	DISTANCE	YARDAGE EXCAVATION COMMON	FILL
8			
	20		2
+25			
	46		11
+50			
	96		20
+75			
	172		61
9			
	154		191
+25			
	57		224
+50			
	6		67
+70			
SHEET TOTAL		551	576

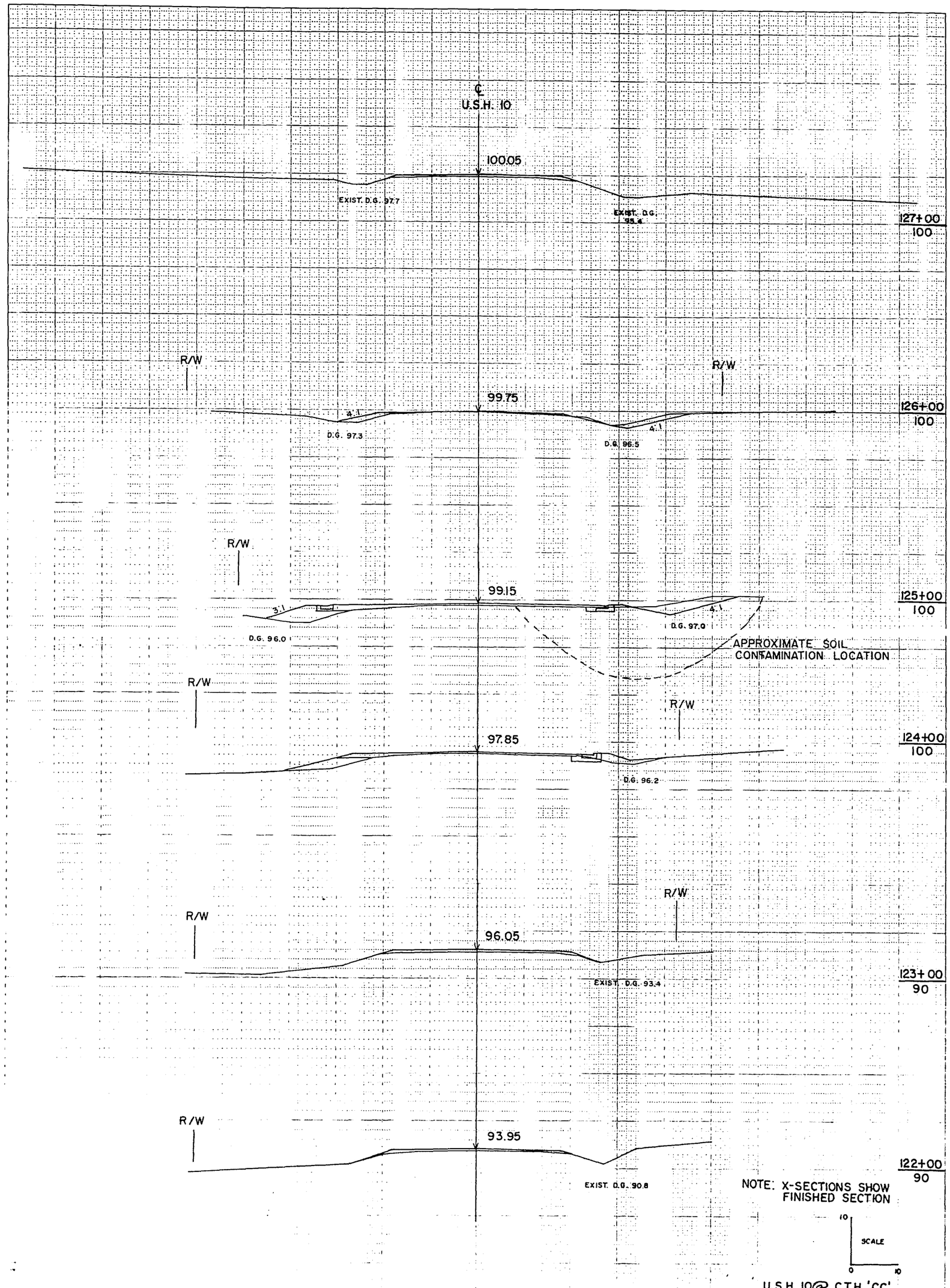

U.S.H. 10 @ C.T.H. 'CC'

STATION	127	126	125	124	123
DISTANCE					
COMMON	28	87	85	26	
EXCAVATION					
YARDAGE					
FILL	11	76	100	35	

STATE PROJECT NUMBER 1530-08-71

SHEET NUMBER 9.19

226

222

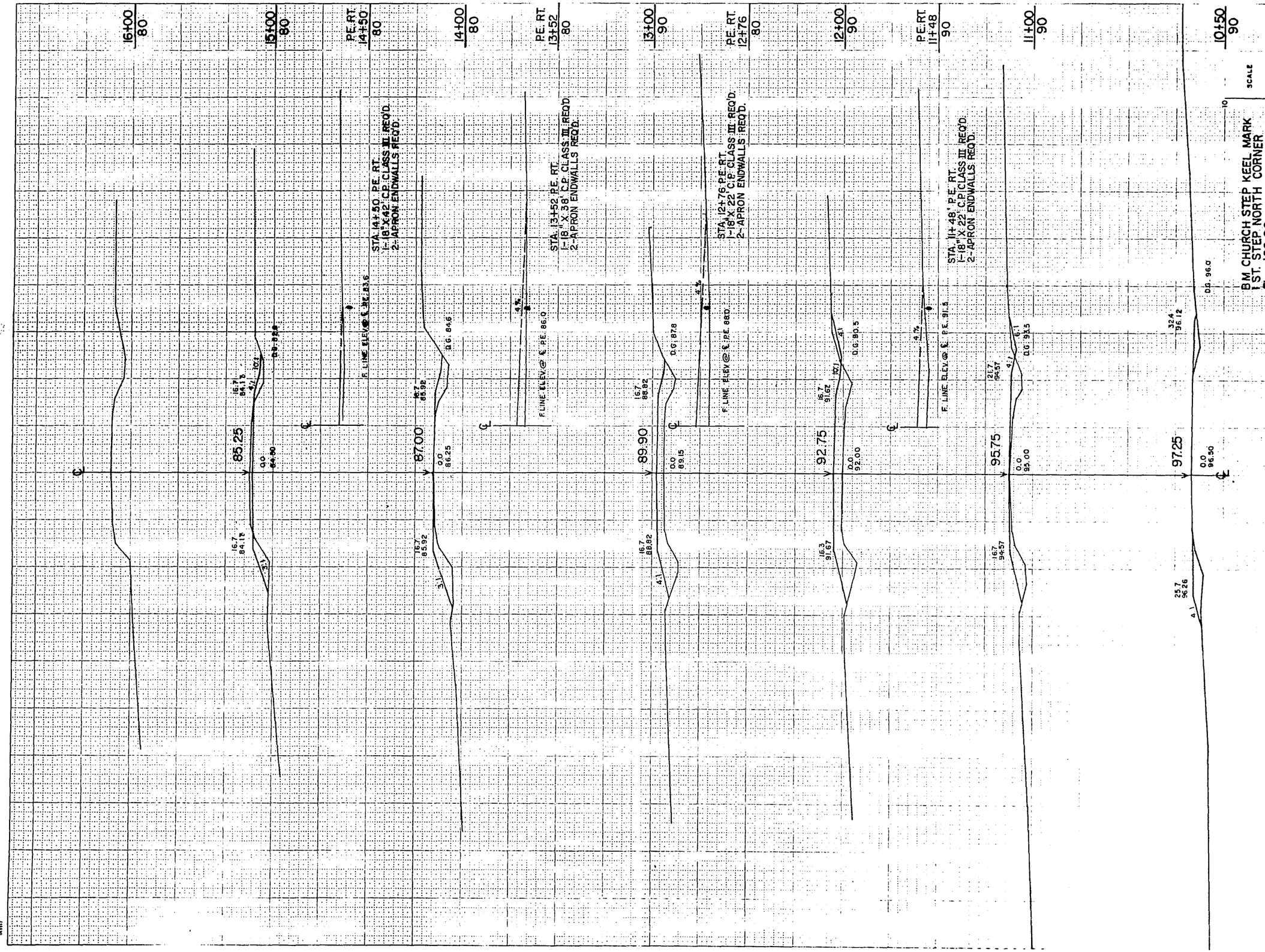

STATE PROJECT NUMBER	SHEET NUMBER
1530-08-71	9.20

STATION	DISTANCE	YARDAGE EXCAVATION COMMON				FILL
10+50						
40		0				6
50		4				72
11		19				307
12		11				415
13		0				318
14		19				181
15		19				63
16						
		72				1362

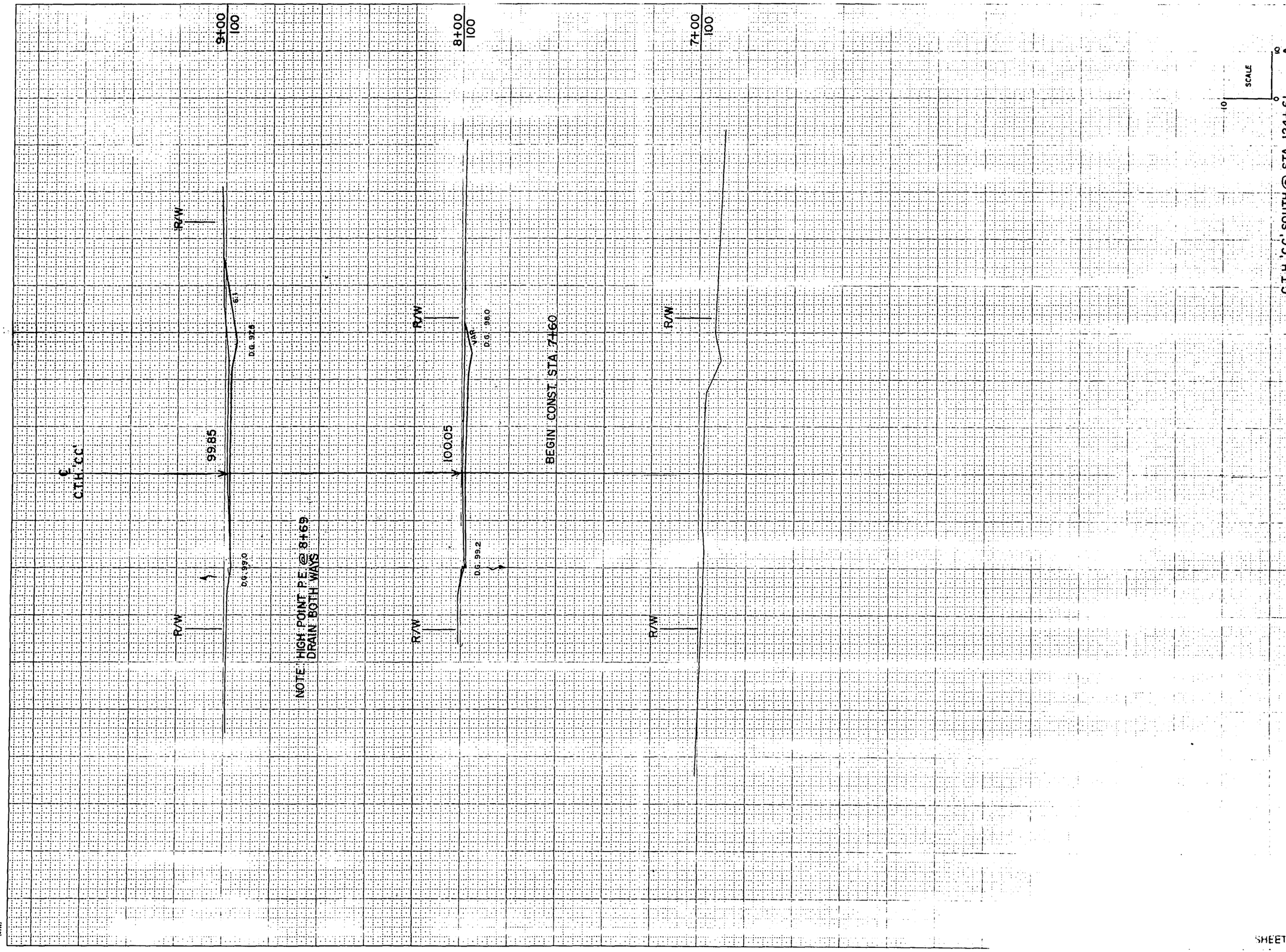

STATE PROJECT NUMBER	SHEET NUMBER
1530-08-71	9.21

STATION	DISTANCE	YARDAGE EXCAVATION COMMON				FILL
7 + 60						
		30				
8						
		155				
9						
		41				
+50						
C.T.H. 'CC' SOUTH @ STA. 124+61						
SHEET TOTAL		226				0

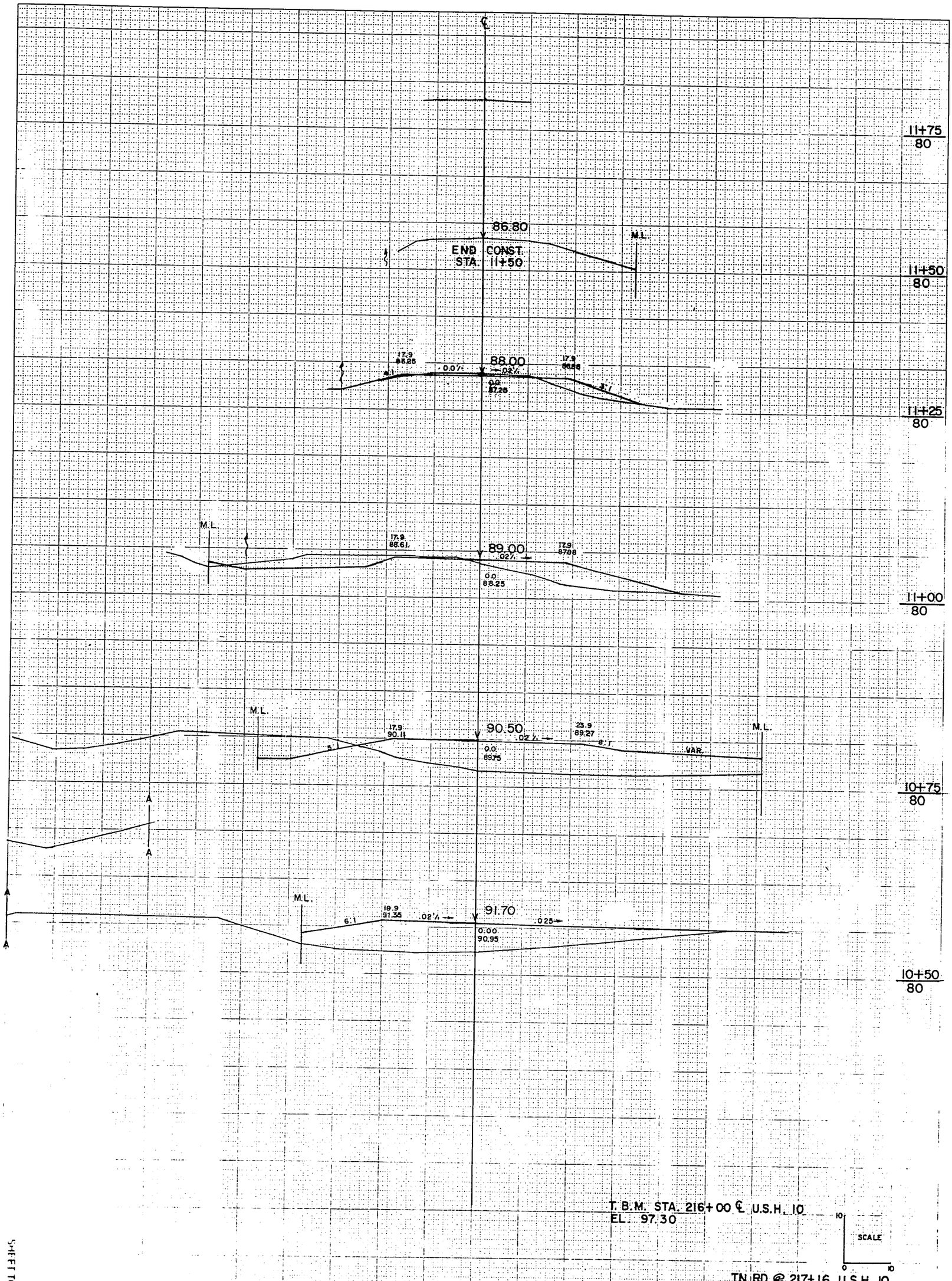

T. B. M. STA. 216+00 ℄ U.S.H. 10
EL. 97.30

SCALE
10 0 10

TN. RD. @ 217+16 U.S.H. 10

STATION	DISTANCE	COMMON EXCAVATION	COMMON YARDAGE	FILL
10+50				15
25	0			85
11+25	53			244
11+50	81			363
11+75	33			169
12+00	0			

SHEET TOTAL 167 856

STATE PROJECT NUMBER 1530-08-71

SHEET NUMBER 9.22

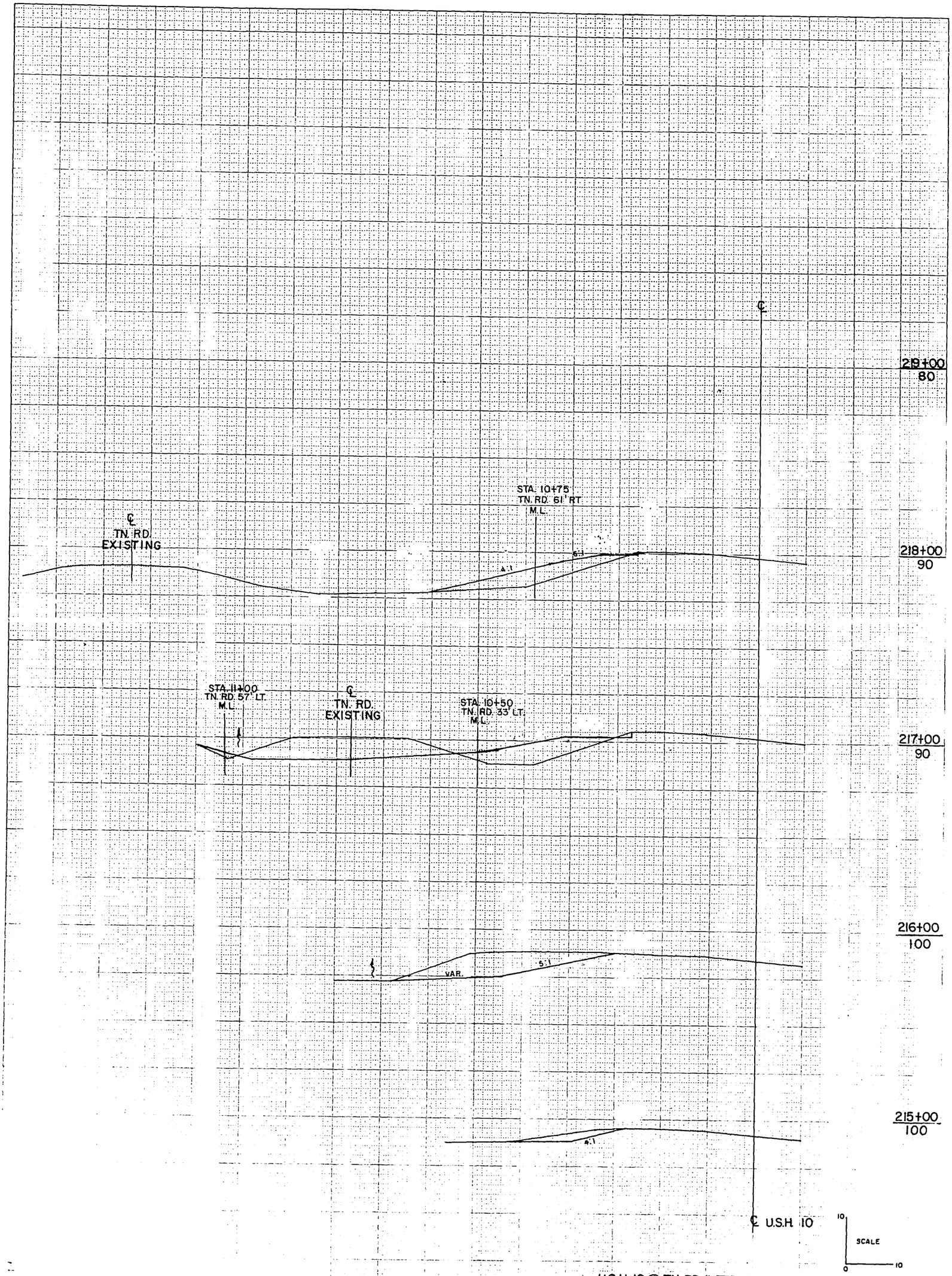

U.S.H. 10 @ TN. RD. INTERSECTION STA. 217+16 U.S.H. 10

STATION	214 75 +	215	216	217		218	80 +
DISTANCE							
COMMON		13	363	635			0
EXCAVATION							
YARDAGE							
FILL				178			133

TAIL PROJECT NUMBER 1530-08-71

SHEET NUMBER 9.23

1011

311

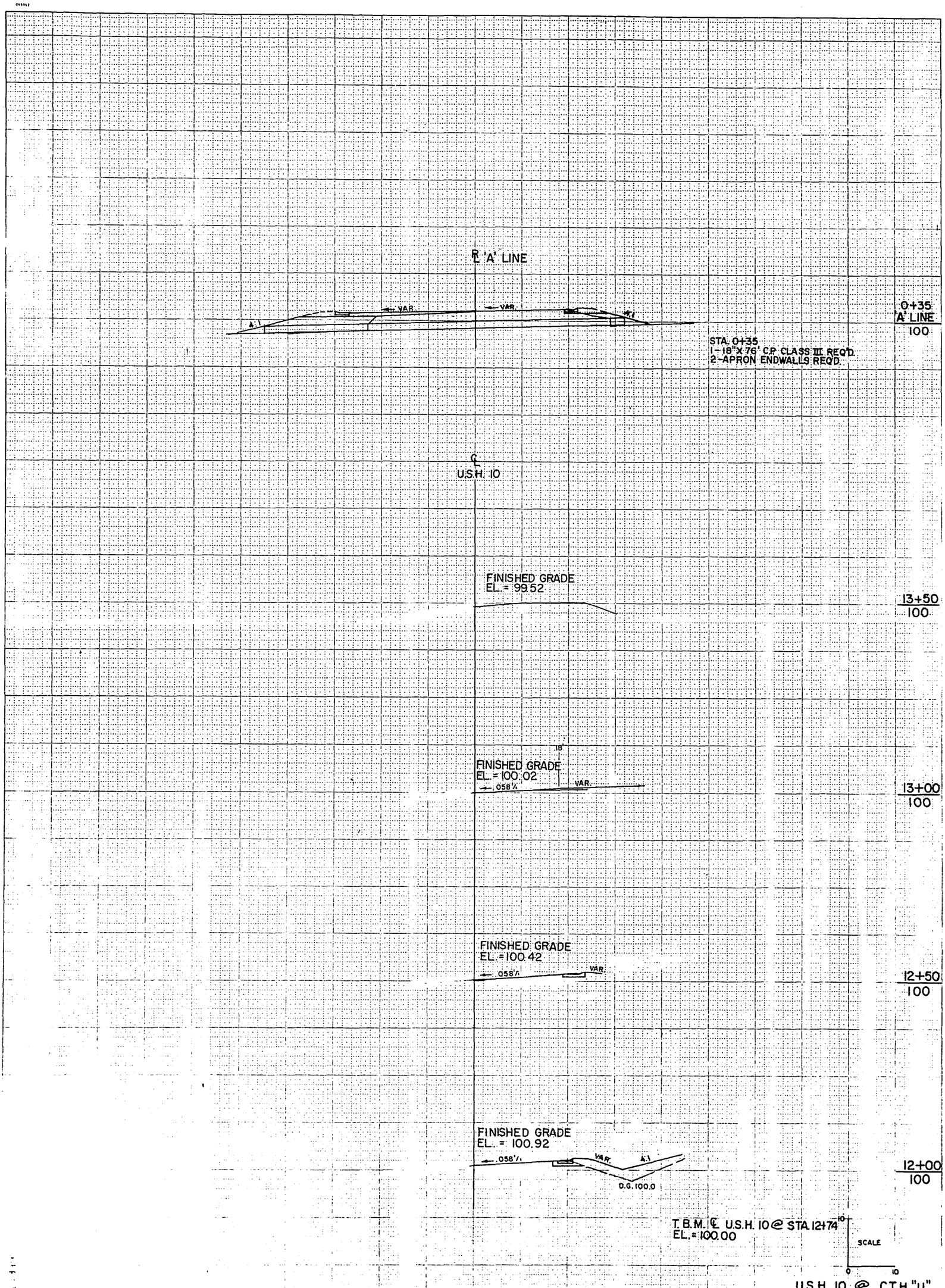

U.S.H. 10 @ C.T.H. "U"

STATION	DISTANCE	EXCAVATION	FILL
11			85
12			33
+40			118
20 + 0			24
35 + 0			69
65 + 0			93

"A" LINE

YARDAGE

STATE PROJECT NUMBER 1530-08-71

SHEET NUMBER 9.24

211

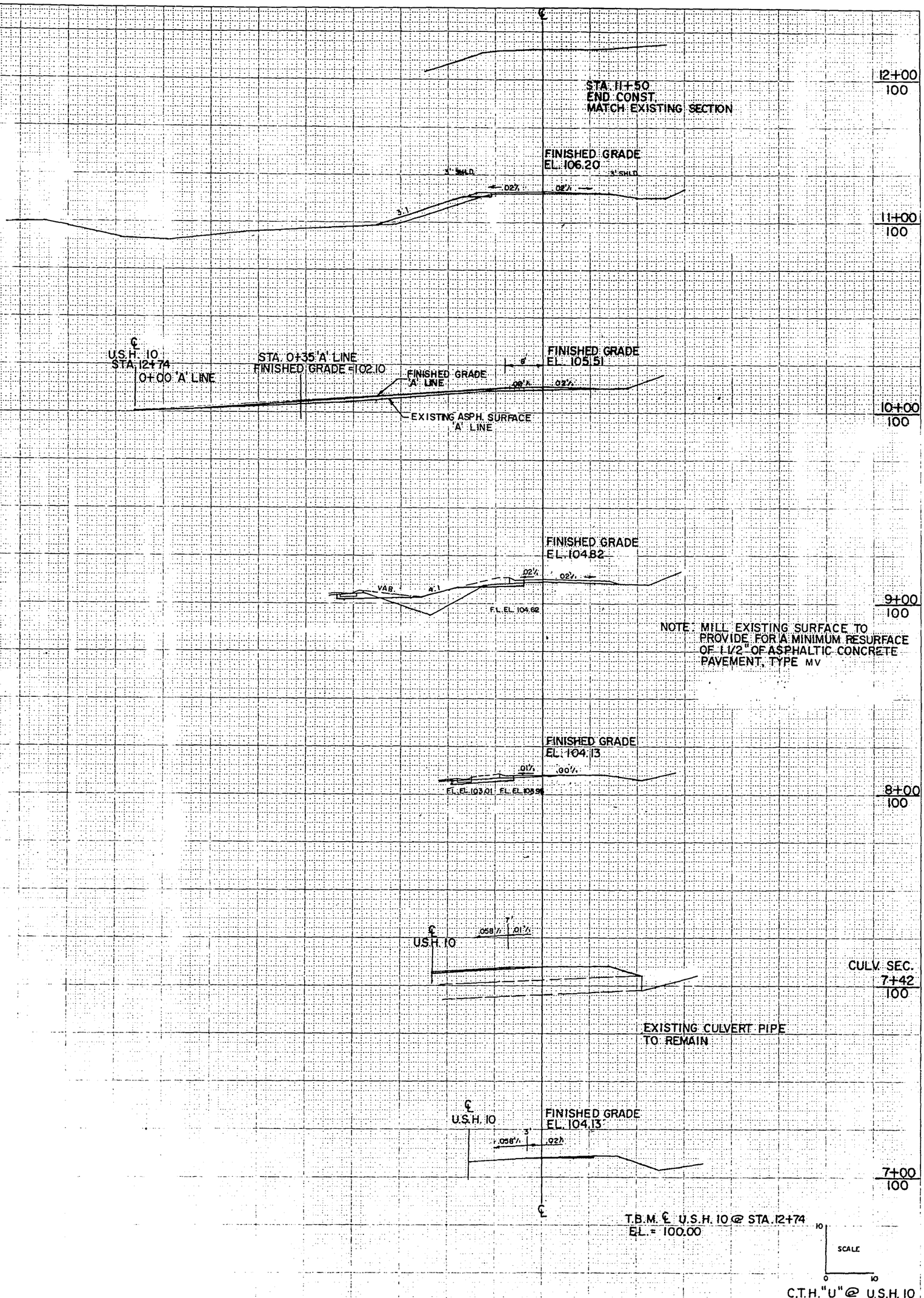

C.T.H. "U" @ U.S.H. 10

STATION	8	9	+70		10 +30	11	+50																	
DISTANCE																								
COMMON		15	11																					
EXCAVATION																								
YARDAGE																								
FILL		89	63			35	26																	

STATE PROJECT NUMBER 1530-08-71

SHEET NUMBER 9.25

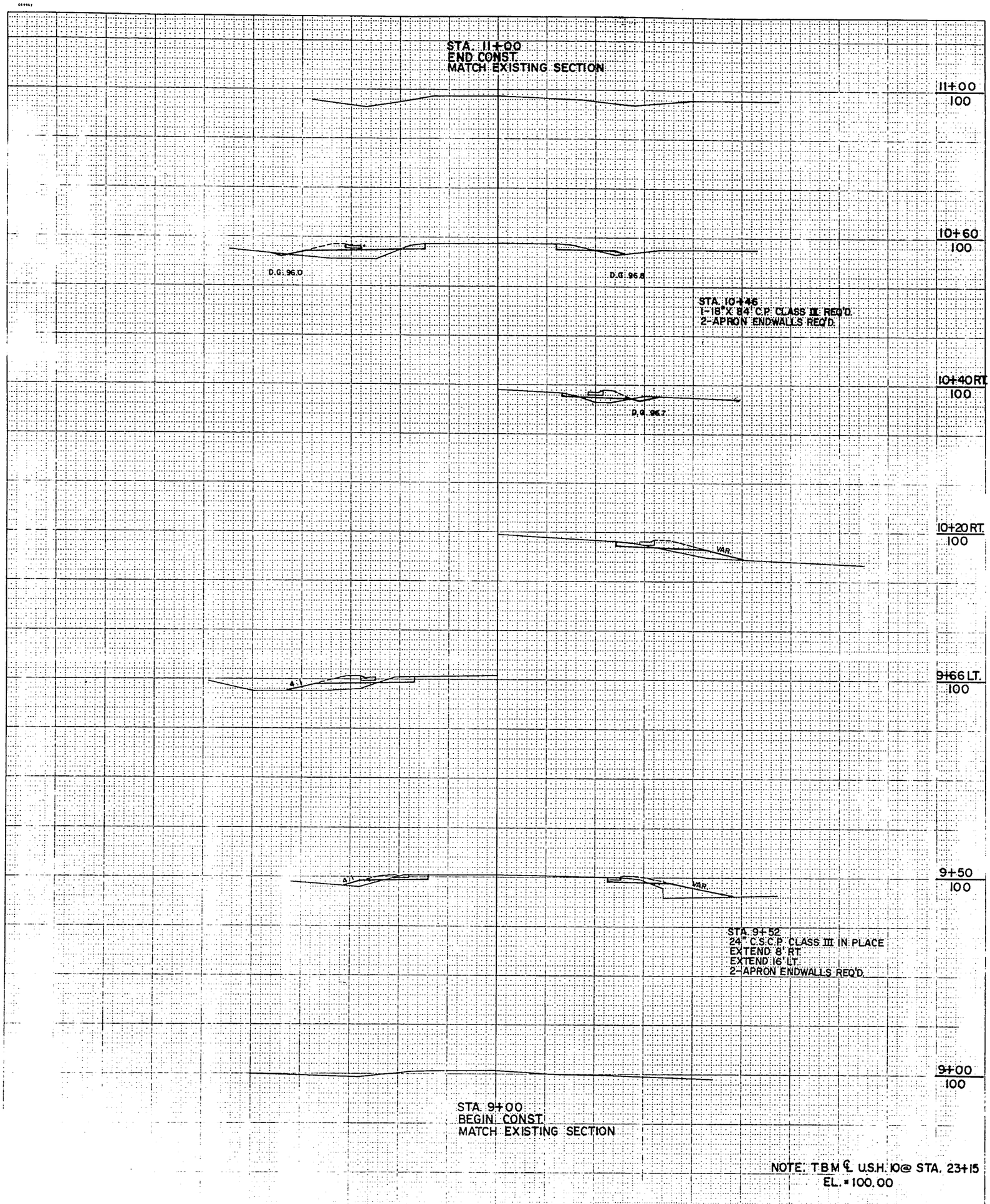

C.T.H. S

STATION	11	+60	+40	10+20		+75	+66	+50	9
DISTANCE									
COMMON (EXCAVATION)		6	4	4		2	6	11	
FILL (YARDAGE)		22	13	17		4	15	28	

STATE PROJECT NUMBER

SHEET NUMBER 9.26

33

89