AS BUILT PLAN

RHI

APR 2015

PROJECT ID: 1595-09-60

WITH: N/A

COUNTY: ONEIDA

ORDER OF SHEETS

Section No.	1	Title
Section No.	2	Typical Sections and Details (Inc Erosion Control)
Section No.	3	Estimate of Quantities
Section No.	3	Miscellaneous Quantities
Section No.	4	Right of Way Plat
Section No.	5	Plan and Profile
Section No.	6	Standard Detail Drawings
Section No.	7	Sign Plates
~~Section No.~~	~~8~~	~~Structure Plans~~
Section No.	9	Computer Earthwork Data
Section No.	9	Cross Sections

TOTAL SHEETS = 284

STATE OF WISCONSIN
DEPARTMENT OF TRANSPORTATION

PLAN OF PROPOSED IMPROVEMENT

BRADLEY-RHINELANDER

GATEWOOD HEIGHTS RD TO N RIFLE ROAD

USH 8

ONEIDA COUNTY

STATE PROJECT	FEDERAL PROJECT	
	PROJECT	CONTRACT
1595-09-60	WISC 2015189	1

CONTRACTOR: NORTHEAST ASPHALT
SUPERVISOR: MIKE WENDT
PROJECT MANAGER: DAN ERVA
PROJECT LEADER: MITCH LAVIN
PROJECT STAFF:
JEN HOFFMAN - INSPECTOR
ADAM HOLQUIST - INSPECTOR
CHAD BLUMENSCHEIN - INSPECTOR
EVAN MAVES - INSPECTOR
WORK STARTED: AUGUST 3, 2015
WORK COMPLETED: NOVEMBER 9,2015

STATE PROJECT NUMBER
1595-09-60

26

N

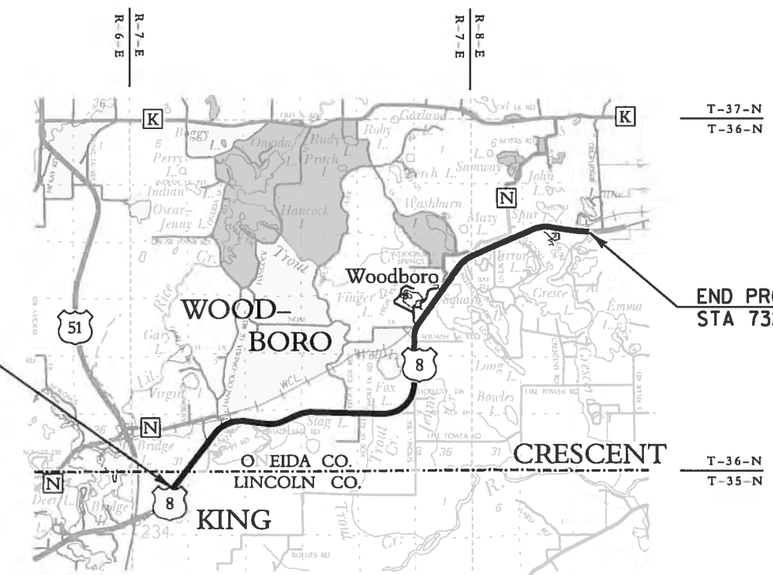

DESIGN DESIGNATION

A.A.D.T. 2014	=	6,000-6,900
A.A.D.T. 2034	=	7,400-8,500
D.H.V. 2034	=	1,030-1,190
D.D.	=	63/37
T.	=	12.2%
DESIGN SPEED	=	55 MPH-60 MPH
ESALS	=	1,752,000

CONVENTIONAL SYMBOLS

PLAN
- CORPORATE LIMITS
- PROPERTY LINE
- LOT LINE
- LIMITED HIGHWAY EASEMENT
- EXISTING RIGHT OF WAY
- PROPOSED OR NEW R/W LINE
- SLOPE INTERCEPT
- REFERENCE LINE
- EXISTING CULVERT
- PROPOSED CULVERT (Box or Pipe)
- COMBUSTIBLE FLUIDS (CAUTION)
- MARSH AREA
- WOODED OR SHRUB AREA

PROFILE
- GRADE LINE
- ORIGINAL GROUND
- MARSH OR ROCK PROFILE (To be noted as such) (ROCK)
- SPECIAL DITCH (LABEL)
- GRADE ELEVATION (95.36)
- CULVERT (Profile View)

UTILITIES
- ELECTRIC (E)
- FIBER OPTIC (FO)
- GAS (G)
- SANITARY SEWER (SAN)
- STORM SEWER (SS)
- TELEPHONE (T)
- WATER (W)
- UTILITY PEDESTAL
- POWER POLE
- TELEPHONE POLE

LAYOUT
SCALE 0 1.5 MI.

TOTAL NET LENGTH OF CENTERLINE = 11.045 MI.

COORDINATES ON THIS PLAN ARE REFERENCED TO THE WISCONSIN COUNTY COORDINATE SYSTEM (WCCS), 'ONEIDA' COUNTY." HORIZONTAL DATUM NAD 83, (91). ALL DISTANCES ARE GROUND. ELEVATIONS SHOWN ON THIS PLAN ARE REFERENCED TO NAVD 1988.

PLANS PREPARED BY

emcs inc
630 South 36th Avenue
Wausau, WI 54401
715.845.1081 Fax 715.845.1099

WISCONSIN
STEPHANIE G. CHRISTENSEN
E35808
WAUSAU, WI
PROFESSIONAL ENGINEER

Stephanie G. Christensen
6-2-2014

STATE OF WISCONSIN
DEPARTMENT OF TRANSPORTATION

PREPARED BY

Surveyor	EMCS, INC
Designer	EMCS, INC
Project Manager	DANIEL ERVA
Regional Examiner	CHERYL SIMON
Regional Supervisor	ANNA WISNER

APPROVED FOR THE DEPARTMENT

DATE: 6/2/14 Anna Wisner (Signature)

E

FILE NAME : P:\47xx\4727_DP.12.USH8.ONE\CADDS\Plan\010101_ti.dgn

PLOT DATE : 5/30/2014

PLOT BY : emo

PLOT NAME :

PLOT SCALE : 1:200

WISDOT/CADDS SHEET 10

2

GENERAL NOTES

NO TREES OR SHRUBS SHALL BE REMOVED WITHOUT APPROVAL OF THE ENGINEER.

THE LOCATIONS OF EXISTING AND PROPOSED UTILITY INSTALLATIONS AS SHOWN ON THE PLANS ARE APPROXIMATE. THERE MAY BE OTHER UTILITY INSTALLATIONS WITHIN THE PROJECT AREA THAT ARE NOT SHOWN. EXISTING UTILITIES WERE ONLY SURVEYED IN AREAS OF POTENTIAL EXCAVATION.

THE CONTRACTOR SHALL NOTIFY DIGGERS HOTLINE AND AFFECTED UTILITIES PRIOR TO THE START OF WORK. ANY UTILITY WHICH IS NOT A MEMBER OF THE DIGGERS HOTLINE MUST BE CONTACTED SEPARATELY.

THE SIGNS AND PAVEMENT MARKING ARE TO BE ADJUSTED BASED ON THE RESULTS OF "LOCATING NO-PASSING ZONES".

GROUND SURVEY WAS COMBINED WITH FLIGHT SURVEY DATA IN IMPROVEMENT AREAS TO DETERMINE GRADING LIMITS AND IS SHOWN ON CROSS SECTIONS.

PLACE HMA PAVEMENT LAYERS WITH THE FOLLOWING THICKNESS AND NOMINAL SIZES:

HMA, THIN LAYER OVERLAY, E-3 1.25-INCH (MAINLINE)
LAYER THICKNESS = 1.25-INCH (9.5 MM) PG58-34

HMA PAVEMENT TYPE E-3 5.25-INCH (INTERSECTION WIDENING, BYPASS LANES AND CULVERT REPLACEMENT AREAS)
UPPER LAYER THICKNESS = 1.25-INCH (9.5 MM) (HMA, THIN LAYER OVERLAY, E-3) PG58-34
MIDDLE LAYER THICKNESS = 2.0-INCH (12.5 MM) PG58-34
LOWER LAYER THICKNESS = 2.0-INCH (12.5 MM) PG58-34

HMA PAVEMENT TYPE E-3 3.5-INCH (SHOULDER WIDENING)
UPPER LAYER THICKNESS = 1.25-INCH (9.5 MM) (HMA, THIN LAYER OVERLAY, E-3) PG58-34
LOWER LAYER THICKNESS = 2.25-INCH (12.5 MM) PG58-34

AS-BUILTS USED FOR PLAN DEVELOPMENT

PROJECT NO: FAP500(1) & FAP500(2), CONSTRUCTION YEAR: 1946
PROJECT NO: F021-2(29) & F021-02(23), CONSTRUCTION YEAR: 1948
PROJECT NO: 1595-00-72, CONSTRUCTION YEAR: 1981
PROJECT NO: 1593-04-70, CONSTRUCTION YEAR: 1991
PROJECT NO: 0043-13-30, CONSTRUCTION YEAR: 1991
PROJECT NO: 1589-02-61, CONSTRUCTION YEAR: 2001
PROJECT NO: 1593-05-70, CONSTRUCTION YEAR: 2003
PROJECT NO: 1595-11-60, CONSTRUCTION YEAR: 2003

ORDER OF SECTION 2 SHEETS

PROJECT OVERVIEW
TYPICAL SECTIONS
CONSTRUCTION DETAILS
INTERSECTION DETAILS
EROSION CONTROL
PERMANENT SIGNING & PAVEMENT MARKING
TRAFFIC CONTROL

UTILITIES

FRONTIER COMMUNICATIONS OF WILLC
(COMMUNICATIONS)
GLENN LEFEBVRE
53 NORTH STEVENS STREET
RHINELANDER, WI 54501
715-493-0017
glen.lefebvre@ftr.com

WISCONSIN PUBLIC SERVICE CORPORATION
(ELECTRICITY)
ZANE HAGSTROM
2027 NAVAJO STREET
P.O. BOX 160
RHINELANDER, WI 54501
715-209-0085

CHARTER COMMUNICATIONS
(COMMUNICATIONS)
MARK OLEJNICZAK
821 LINCOLN ST
RHINELANDER, WI 54501
(715) 370-4106
mark.olejniczak@charter.com

WISCONSIN PUBLIC SERVICE CORPORATION
(GAS)
EVELYN WEYKER
2027 NAVAJO STREET
P.O. BOX 160
RHINELANDER, WI 54501
715-703-4059

DIGGERS HOTLINE
Dial 811 or (800) 242-8511
www.DiggersHotline.com

TO OBTAIN LOCATION OF
PARTICIPANTS UNDERGROUND
FACILITIES BEFORE YOU
DIG IN WISCONSIN

OTHER CONTACT

DNR LIAISON
JON SIMONSEN
DNR NORTHERN REGION HEADQUARTERS
107 SUTLIFF
RHINELANDER, WI 54501
715-365-8916

REMOVING ASPHALTIC SURFACE MILLING AND HMA PAVEMENT OVERLAY FROM STA 149+40 TO STA 732+58

ONEIDA COUNTY
LINCOLN COUNTY

MGS GUARDRAIL & BARRIER SYSTEM GRADING SHAPING FINISHING STA 192+03 - STA 194+23

SALVAGE CABLE GUARD & REPLACE WITH MGS GUARDRAIL, BARRIER SYSTEM GRADING SHAPING FINISHING STA 175+47 - STA 192+03

US 51 SB
US 51 NB
USH 8
150+00
200+00
250+00
300+00
350+00
400+00
GATEWOOD HEIGHTS RD

BEGIN PROJECT
STA 149+40.00
MATCH EXISTING

BIRCH BAY RD
OUTLET DR
PAULSON DR
CTH N
REMOVE & REPLACE CURB AND GUTTER
SHADY REST RD
MEMORIAL FOREST RD
WOLF LAKE RD
HEIDE DR
ROE LAKE RD
OLD SCHOOL RD

N

WISCONSIN CENTRAL LTD
LINE EXISTING CULVERT STA 545+25
LAKE REST RD
500+00
550+00
600+00
650+00
700+00
REMOVE & REPLACE CURB AND GUTTER
WIDEN ASPHALT SHOULDER FULL WIDTH STA 552+38 TO STA 565+00
REMOVE & REPLACE CULVERT STA 572+43
CRESTWOOD DR
CRESCENT RD
CONSTRUCT TURN LANES STA 599+19 - STA 620+71
WAUSAU RD
DETIENNE RD
PLEASURE POINT RD
WIDEN ASPHALTIC SHOULDER STA 620+71 - STA 732-58
WIDEN ASPHALT SHOULDER FULL WIDTH STA 700+83 TO STA 704+66
LINE EXISTING CULVERT STA 704+58
S RIFLE RD
N RIFLE RD
REMOVE & REPLACE CURB AND GUTTER
750+00

END PROJECT
STA 732+58.00
MATCH EXISTING

RED FOX RUN
SQUASH LAKE RD
REMOVE & REPLACE CURB AND GUTTER
400+00
HEIDE DR
450+00
SPRING CREEK RD
TIE EXISTING CULVERT ENDS STA 450+39

PROJECT NO: 1595-09-60	HWY: USH 8	COUNTY: ONEIDA	PROJECT OVERVIEW	SHEET 3	E

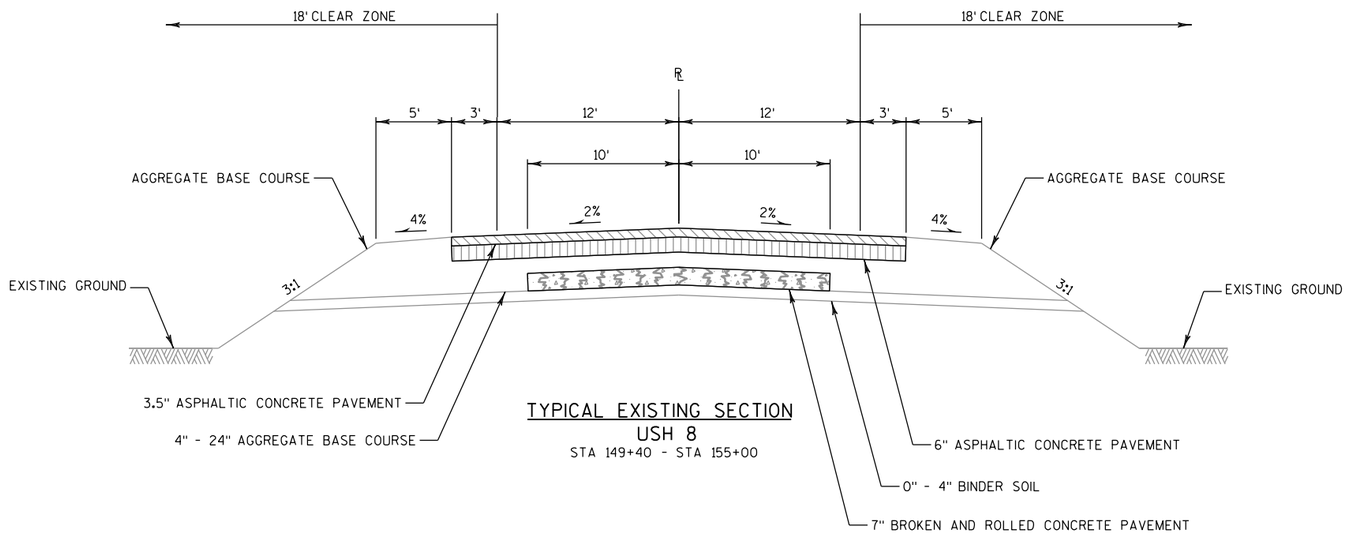

TYPICAL EXISTING SECTION
USH 8
STA 149+40 - STA 155+00

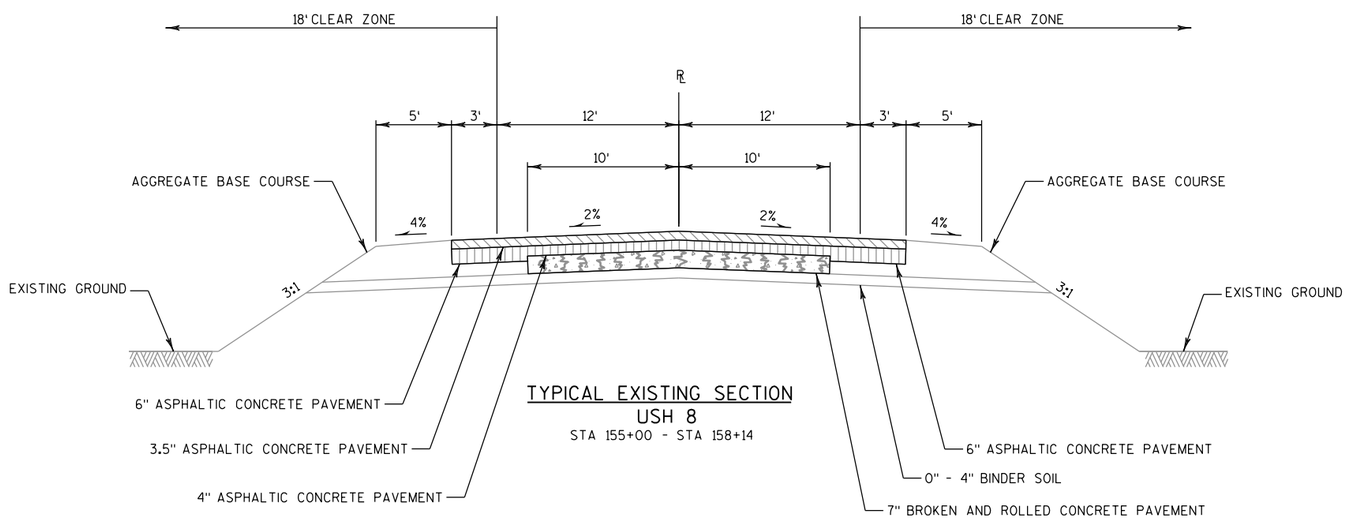

TYPICAL EXISTING SECTION
USH 8
STA 155+00 - STA 158+14

NOTE

PAVEMENT CROSS SLOPE VARIES DUE TO SUPER ELEVATION
SEE SECTION 5 PLAN SHEETS FOR SUPER ELEVATION DATA

PROJECT NO: 1595-09-60	HWY: USH 8	COUNTY: ONEIDA	TYPICAL SECTION	SHEET 4	E

2

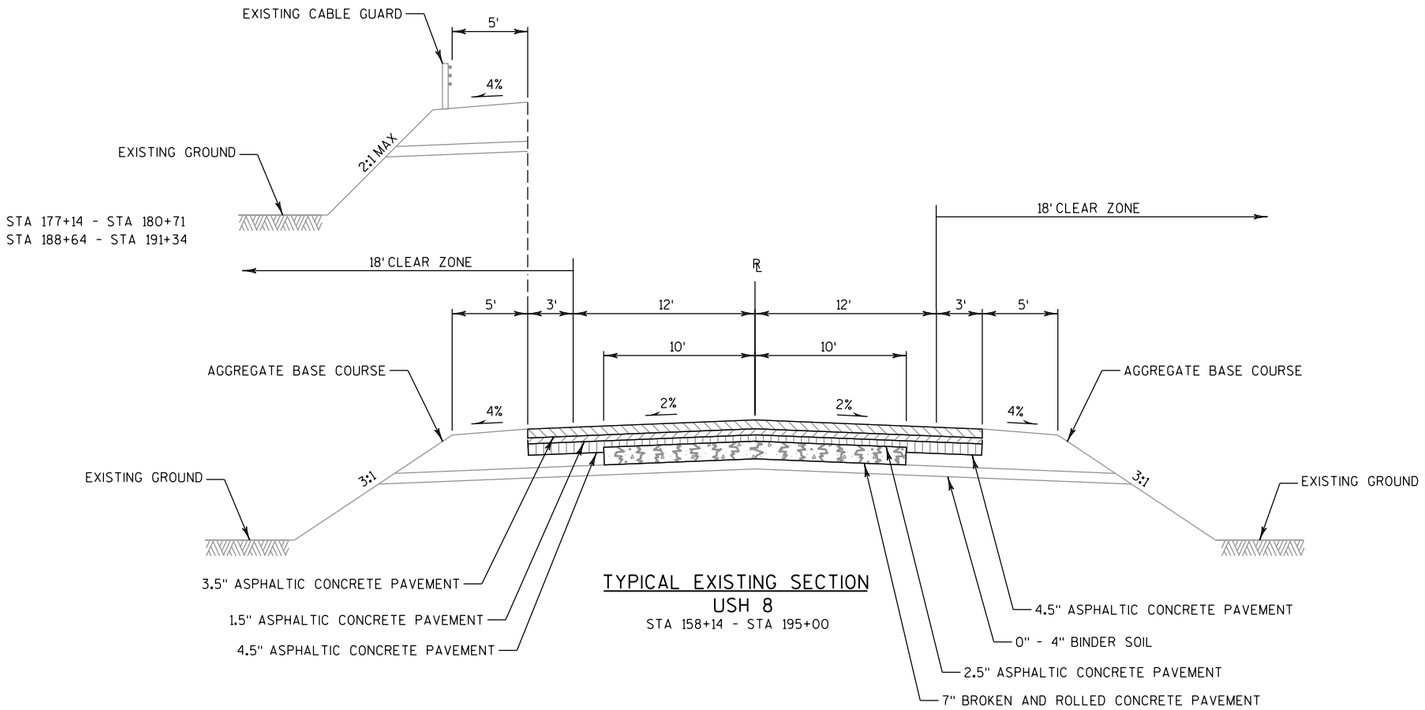

TYPICAL EXISTING SECTION
USH 8
STA 158+14 - STA 195+00

NOTE

PAVEMENT CROSS SLOPE VARIES DUE TO SUPER ELEVATION
SEE SECTION 5 PLAN SHEETS FOR SUPER ELEVATION DATA

PROJECT NO: 1595-09-60	HWY: USH 8	COUNTY: ONEIDA	TYPICAL SECTION	SHEET 5	E

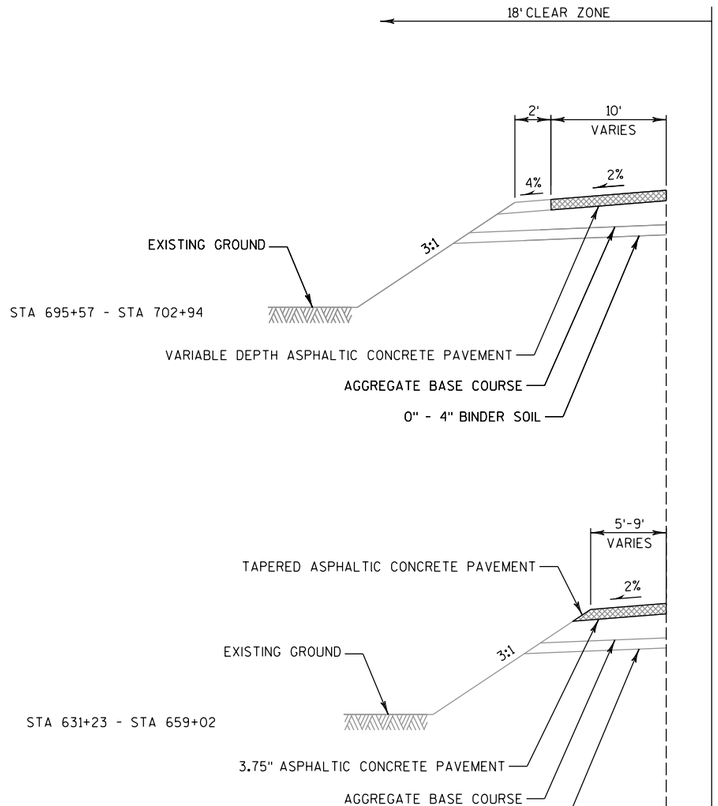

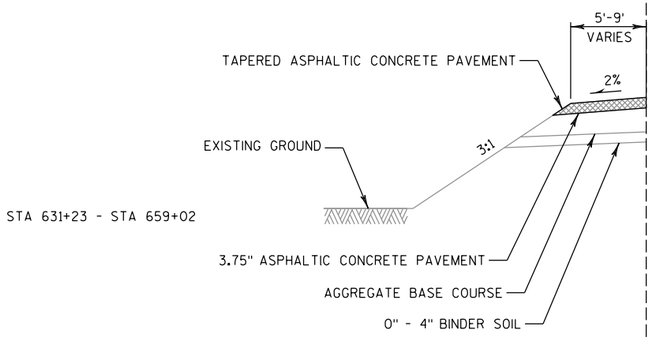

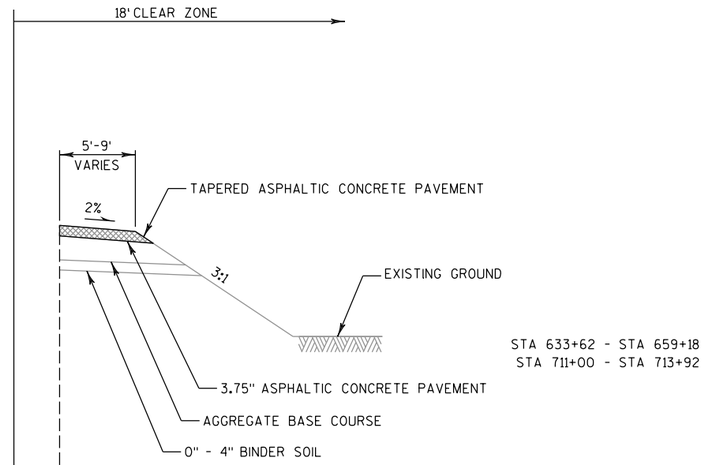

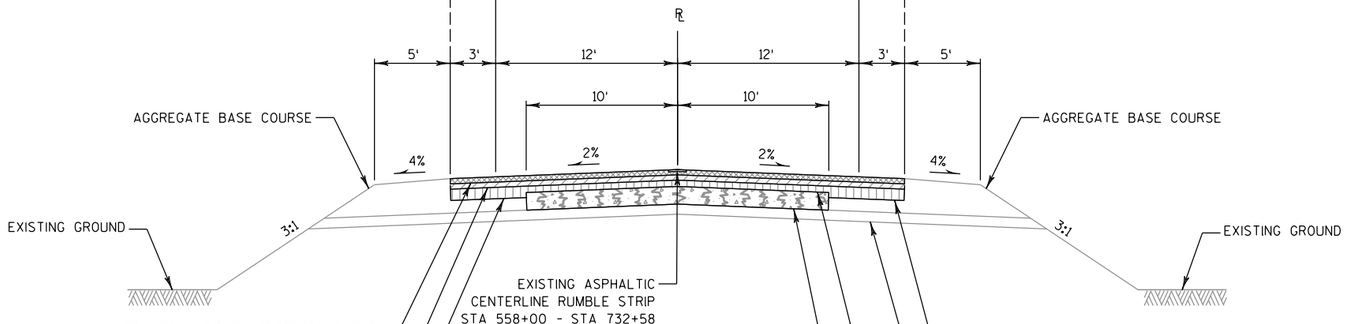

TYPICAL EXISTING SECTION
USH 8

STA 195+00 - STA 278+00
STA 291+00 - STA 342+02
STA 401+26 - STA 484+29
STA 548+98 - STA 732+58

NOTES

PAVEMENT CROSS SLOPE VARIES DUE TO SUPER ELEVATION
SEE SECTION 5 PLAN SHEETS FOR SUPER ELEVATION DATA

* THICKNESS OF ASPHALTIC CONCRETE PAVEMENT VARIES 1.75" TO 3.5" FROM STA 729+50 TO STA 732+58

PROJECT NO: 1595-09-60	HWY: USH 8	COUNTY: ONEIDA	TYPICAL SECTION	SHEET 6	E

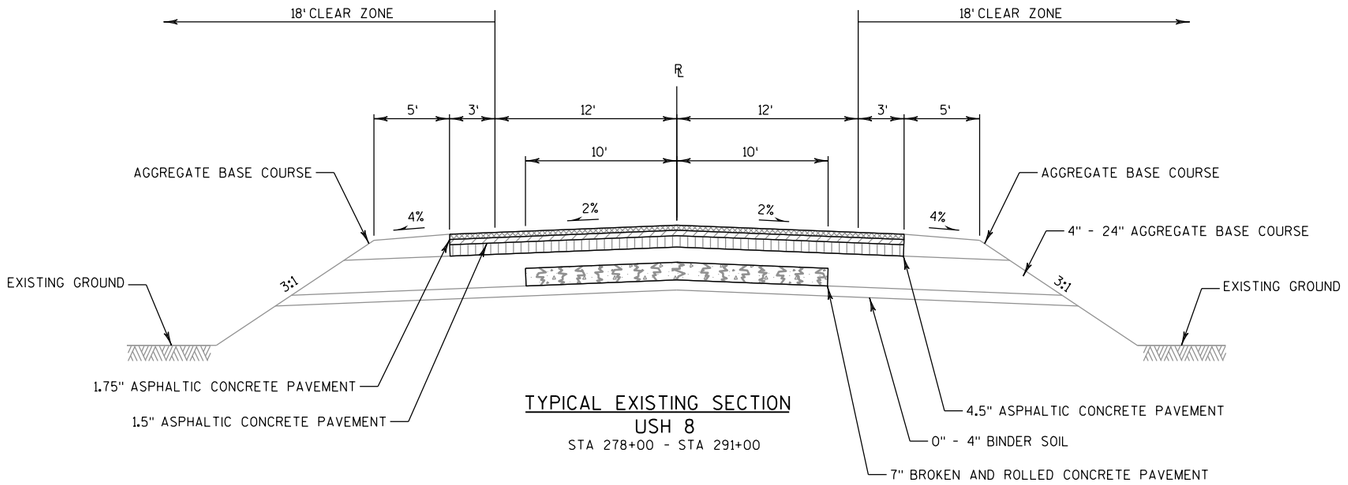

TYPICAL EXISTING SECTION
USH 8
STA 278+00 - STA 291+00

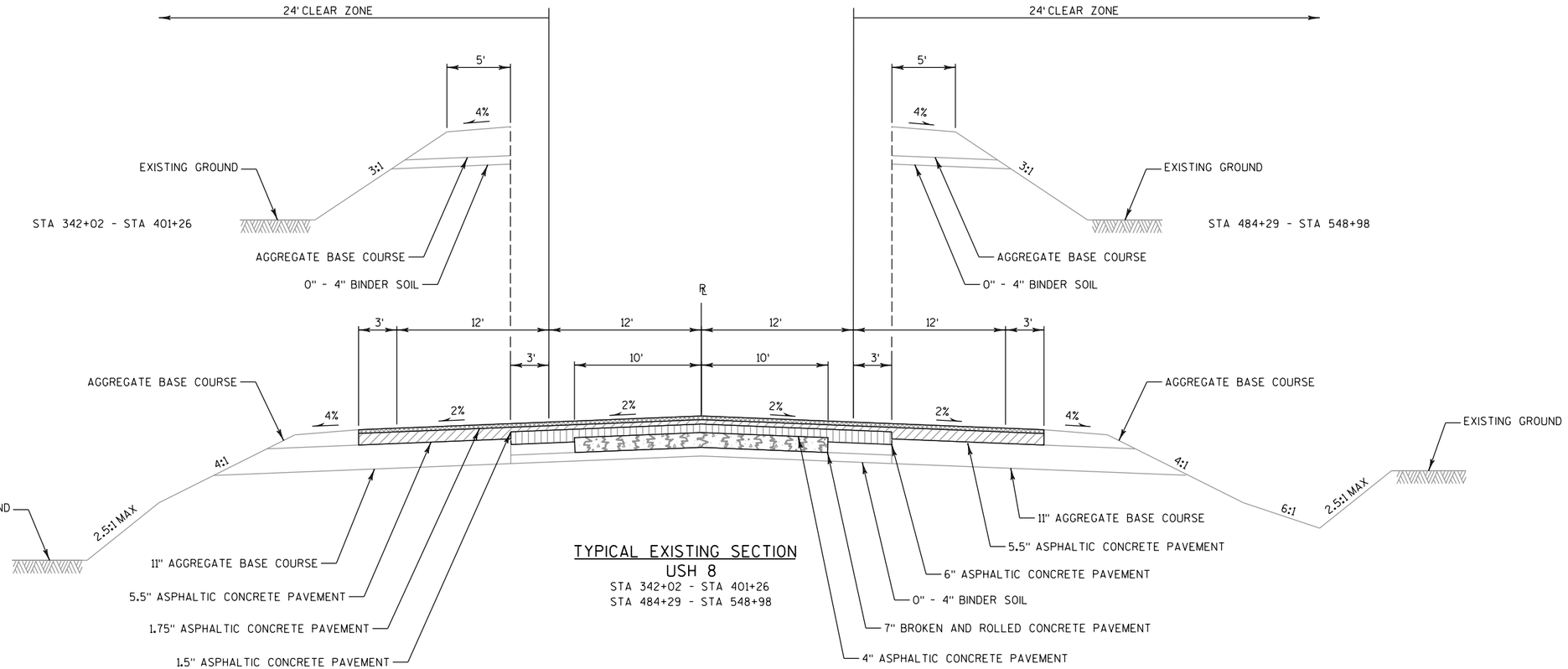

TYPICAL EXISTING SECTION
USH 8
STA 342+02 - STA 401+26
STA 484+29 - STA 548+98

NOTE

PAVEMENT CROSS SLOPE VARIES DUE TO SUPER ELEVATION
SEE SECTION 5 PLAN SHEETS FOR SUPER ELEVATION DATA

PROJECT NO: 1595-09-60	HWY: USH 8	COUNTY: ONEIDA	TYPICAL SECTION	SHEET 7	E

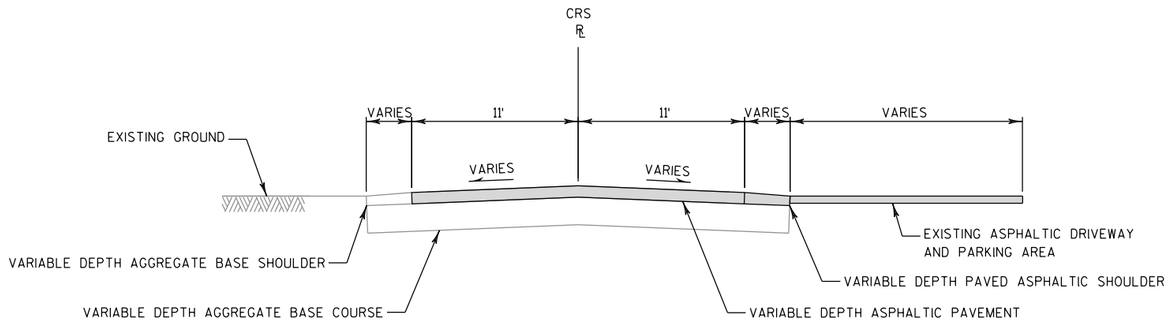

TYPICAL EXISTING SECTION
CRESCENT RD
STA 12'CRS'+87 - STA 13'CRS'+65

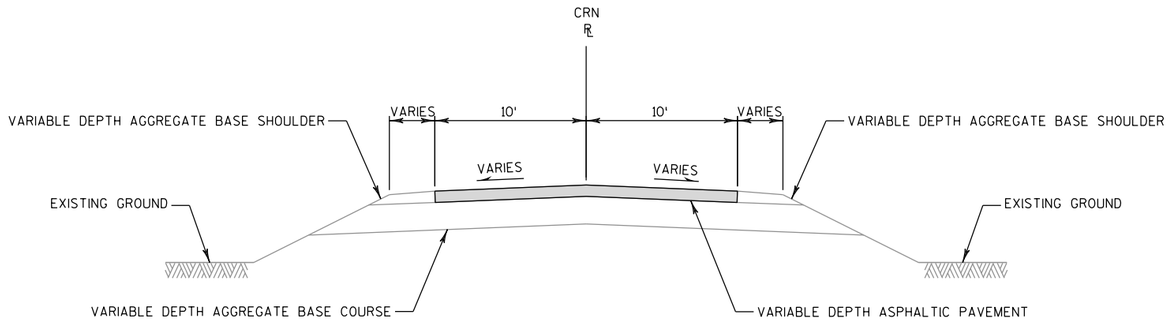

TYPICAL EXISTING SECTION
CRESCENT RD
STA 20'CRN'+30 - STA 21'CRN'+22

PROJECT NO: 1595-09-60	HWY: USH 8	COUNTY: ONEIDA	TYPICAL SECTION	SHEET 8	E

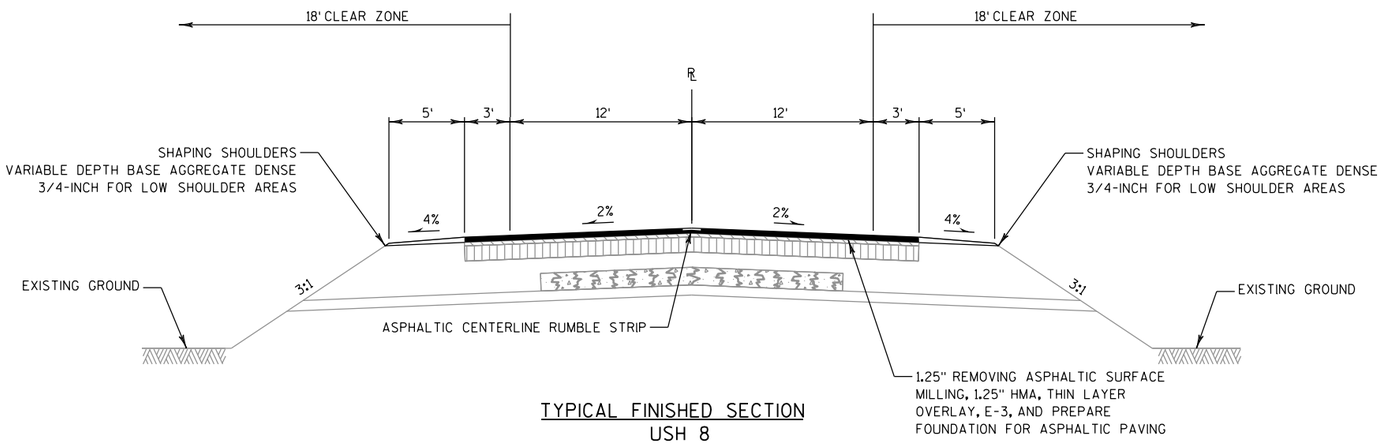

TYPICAL FINISHED SECTION
USH 8
STA 149+40 - STA 155+00

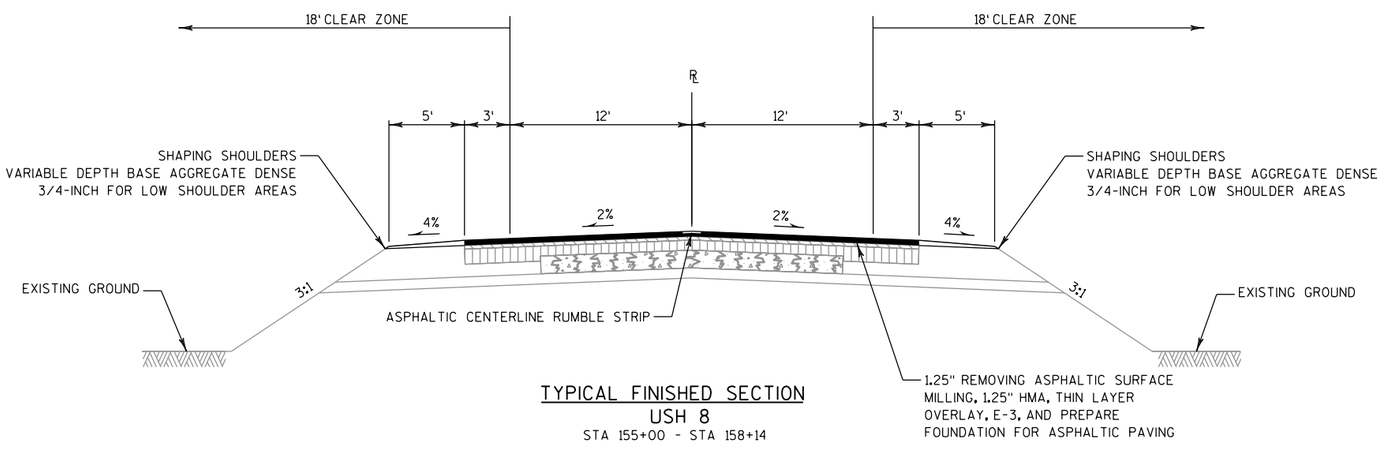

TYPICAL FINISHED SECTION
USH 8
STA 155+00 - STA 158+14

NOTES

PAVEMENT CROSS SLOPE VARIES DUE TO SUPER ELEVATION
SEE SECTION 5 PLAN SHEETS FOR SUPER ELEVATION DATA.

PAVEMENT SAFETY EDGE REQUIRED, SEE SDD "SAFETY EDGE".

PROJECT NO: 1595-09-60	HWY: USH 8	COUNTY: ONEIDA	TYPICAL SECTION	SHEET 9	E

2

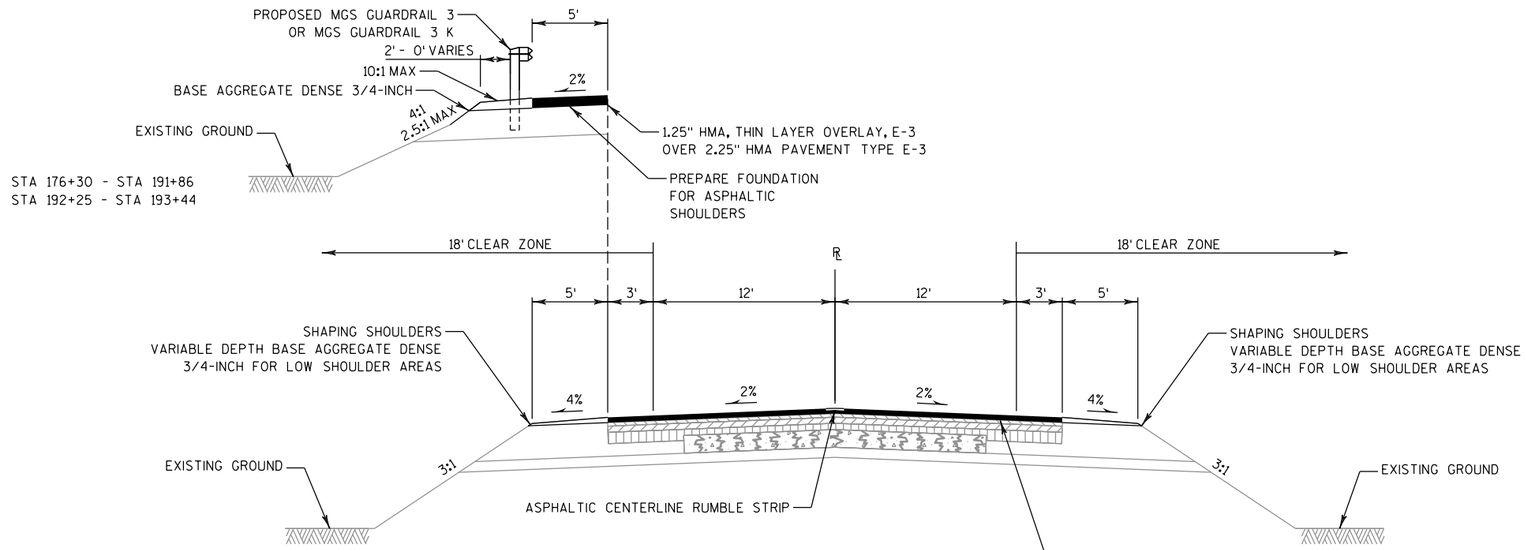

TYPICAL FINISHED SECTION
USH 8
STA 158+14 - STA 195+00

NOTES

PAVEMENT CROSS SLOPE VARIES DUE TO SUPER ELEVATION
SEE SECTION 5 PLAN SHEETS FOR SUPER ELEVATION DATA.

PAVEMENT SAFETY EDGE REQUIRED, SEE SDD "SAFETY EDGE".

PROJECT NO: 1595-09-60	HWY: USH 8	COUNTY: ONEIDA	TYPICAL SECTION	SHEET 10	E

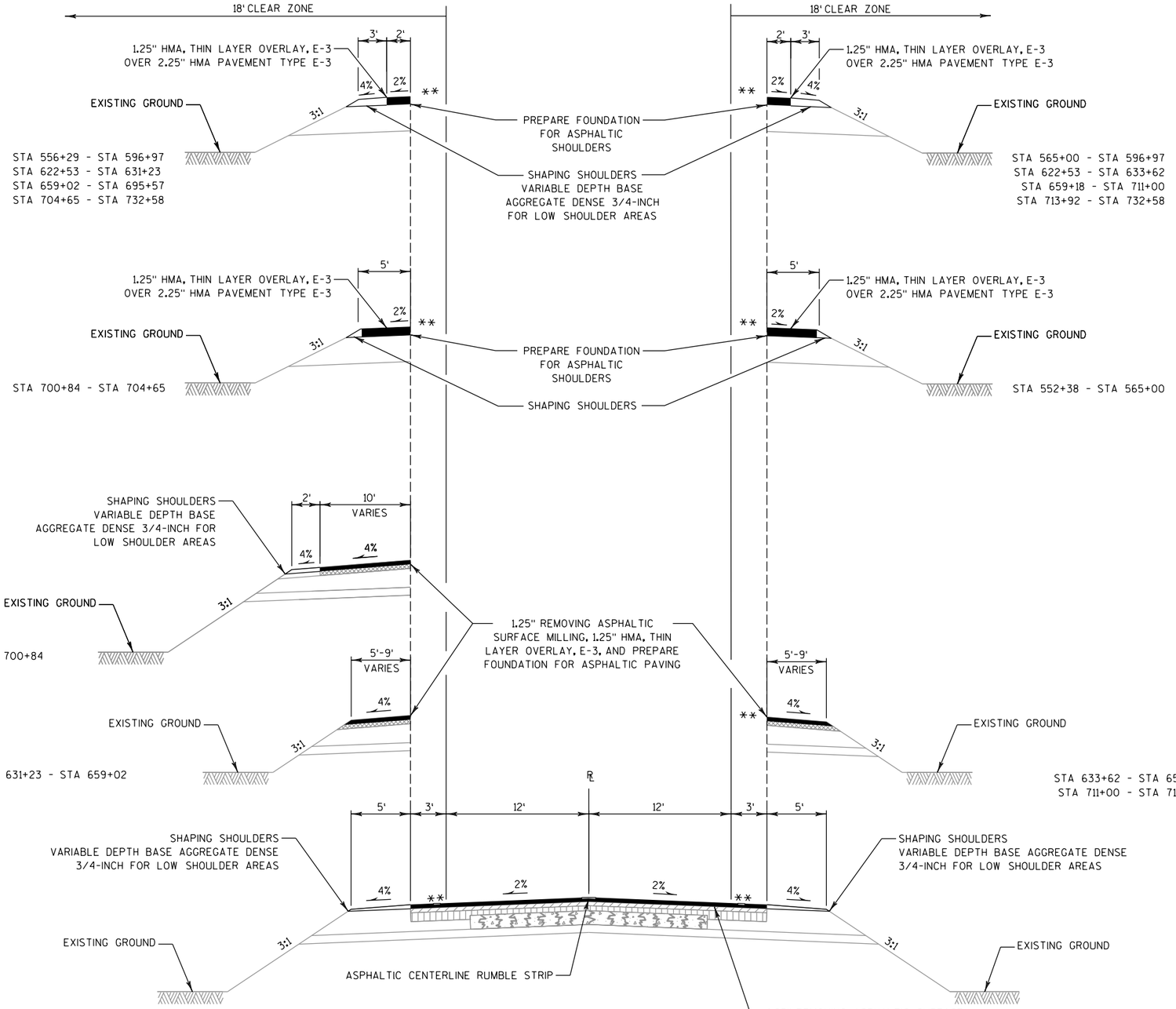

NOTES

PAVEMENT CROSS SLOPE VARIES DUE TO SUPER ELEVATION
SEE SECTION 5 PLAN SHEETS FOR SUPER ELEVATION DATA.

PAVEMENT SAFETY EDGE REQUIRED, SEE SDD "SAFETY EDGE".

** ASPHALTIC SHOULDER RUMBLE STRIP, SEE PERMANENT SIGNING
AND PAVEMENT MARKING PLAN FOR LOCATIONS.

TYPICAL FINISHED SECTION
USH 8

STA 195+00 - STA 278+00
STA 291+00 - STA 342+02
STA 401+26 - STA 484+29
STA 548+98 - STA 596+97
STA 622+53 - STA 732+58

PROJECT NO: 1595-09-60	HWY: USH 8	COUNTY: ONEIDA	TYPICAL SECTION	SHEET 11	E

2

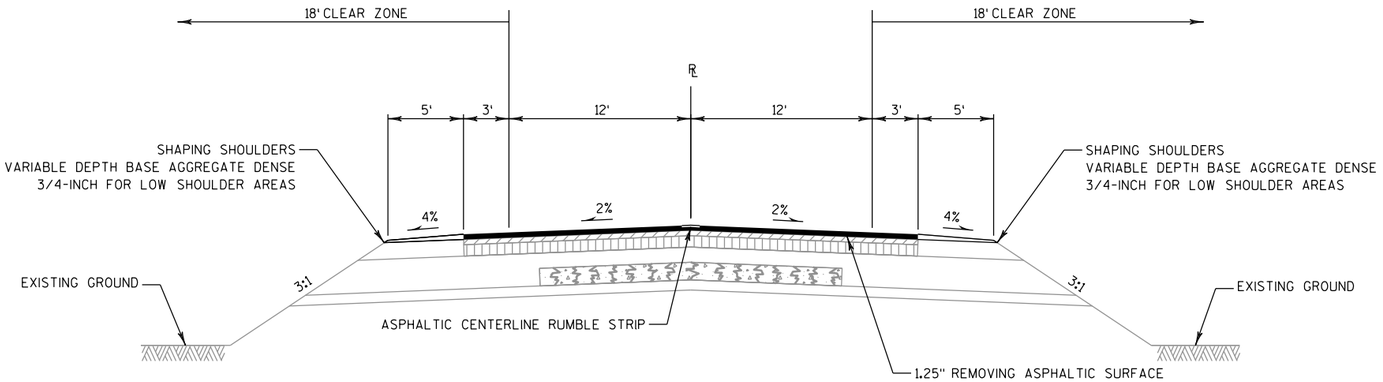

TYPICAL FINISHED SECTION
USH 8
STA 278+00 - STA 291+00

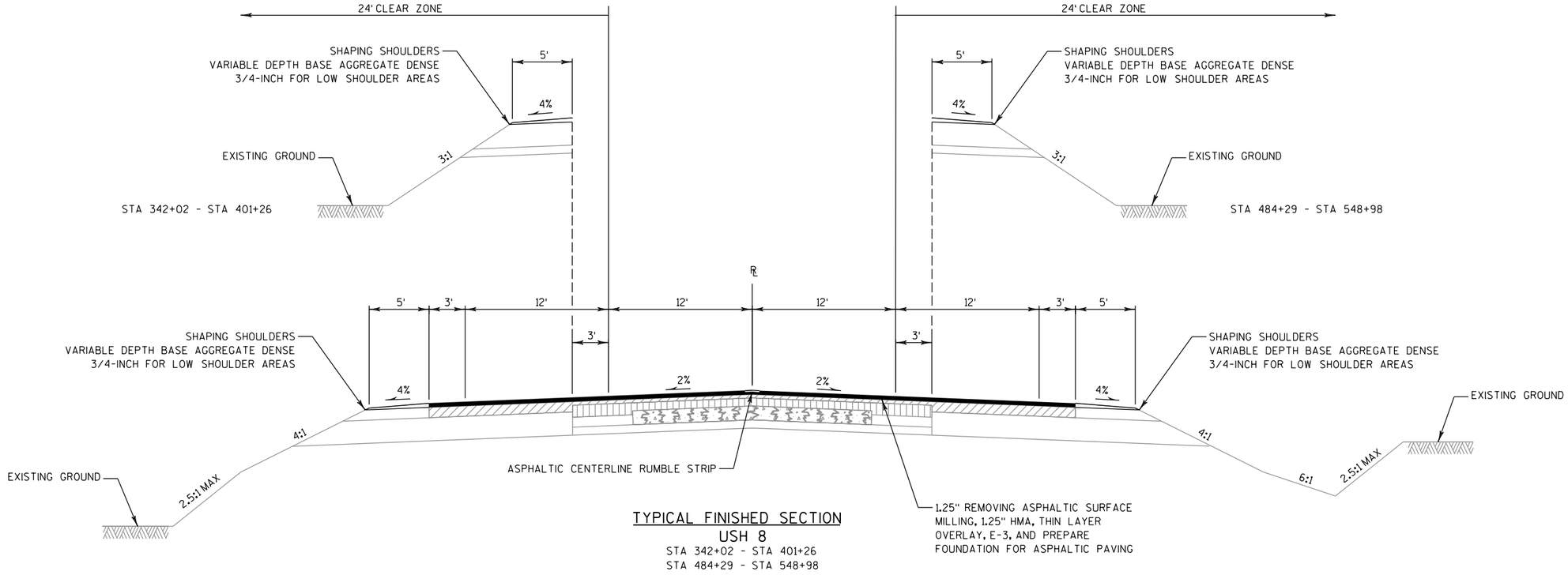

TYPICAL FINISHED SECTION
USH 8
STA 342+02 - STA 401+26
STA 484+29 - STA 548+98

NOTES

PAVEMENT CROSS SLOPE VARIES DUE TO SUPER ELEVATION
SEE SECTION 5 PLAN SHEETS FOR SUPER ELEVATION DATA.

PAVEMENT SAFETY EDGE REQUIRED, SEE SDD "SAFETY EDGE".

PROJECT NO: 1595-09-60	HWY: USH 8	COUNTY: ONEIDA	TYPICAL SECTION	SHEET 12	E

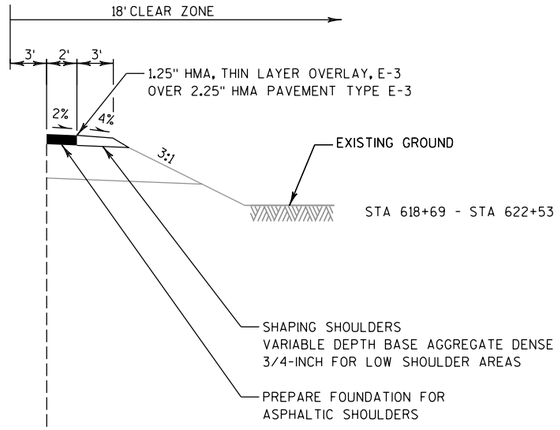

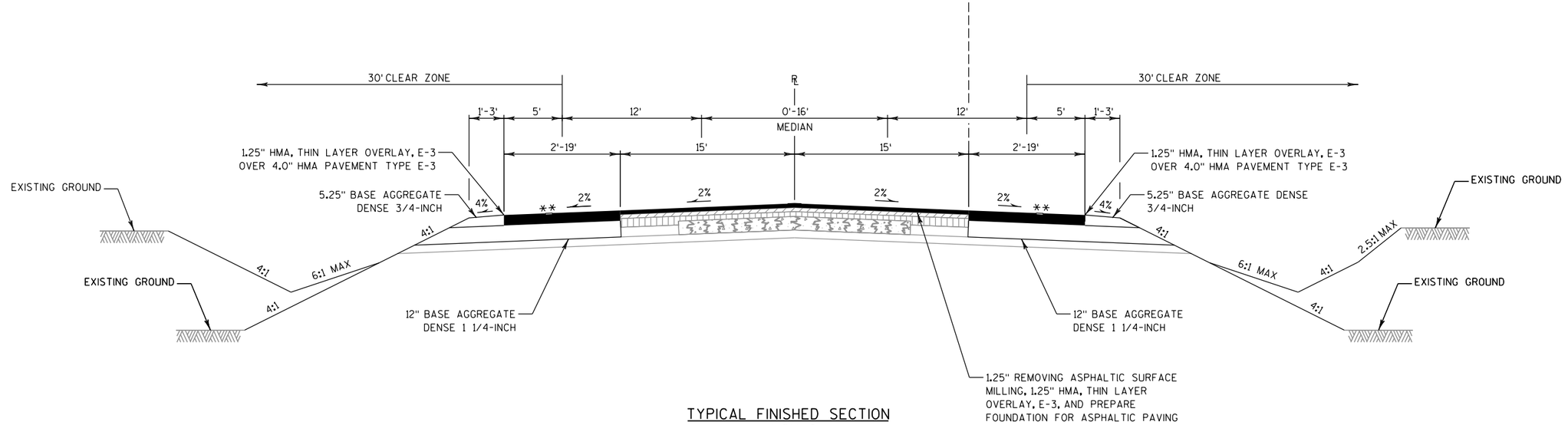

TYPICAL FINISHED SECTION
USH 8
PROPOSED CRESCENT RD INTERSECTION WIDENING
STA 596+97 - STA 622+53

NOTES

PAVEMENT CROSS SLOPE VARIES DUE TO SUPER ELEVATION
SEE SECTION 5 PLAN SHEETS FOR SUPER ELEVATION DATA.

PAVEMENT SAFETY EDGE REQUIRED, SEE SDD "SAFETY EDGE".

** ASPHALTIC SHOULDER RUMBLE STRIP, SEE PERMANENT SIGNING
AND PAVEMENT MARKING PLAN FOR LOCATIONS

PROJECT NO: 1595-09-60	HWY: USH 8	COUNTY: ONEIDA	TYPICAL SECTION	SHEET 13	E

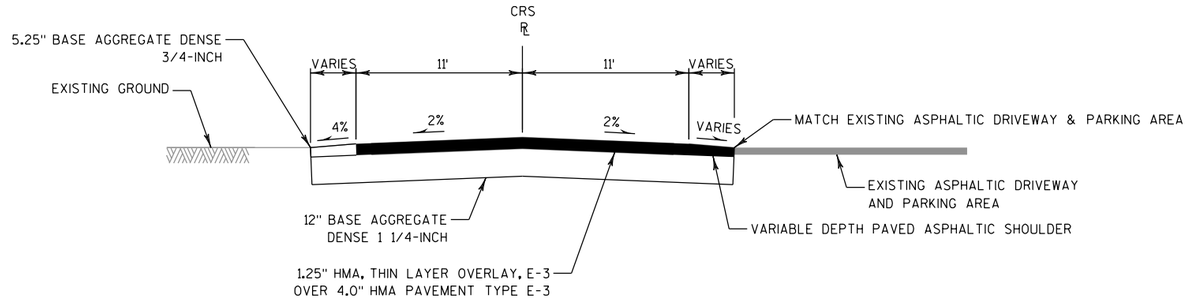

TYPICAL FINISHED SECTION
CRESCENT RD
STA 12'CRS'+75 - STA 13'CRS'+65

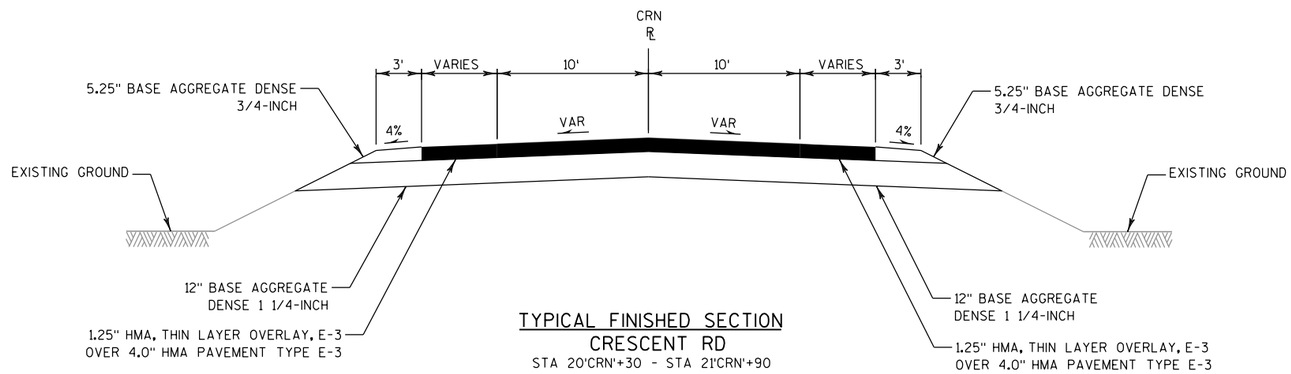

TYPICAL FINISHED SECTION
CRESCENT RD
STA 20'CRN'+30 - STA 21'CRN'+90

PROJECT NO: 1595-09-60	HWY: USH 8	COUNTY: ONEIDA	TYPICAL SECTION	SHEET 14	E

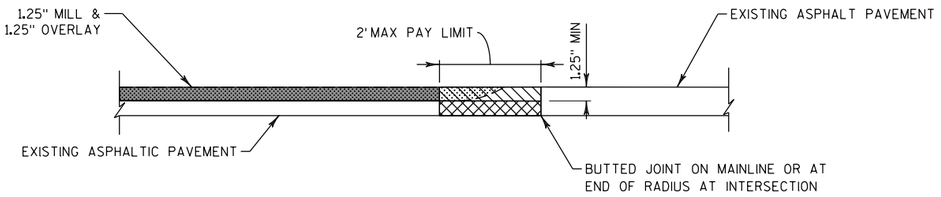

ASPHALTIC WEDGING
(FULL DEPTH REMOVAL OPTIONAL)

REMOVING ASPHALTIC SURFACE BUTT JOINTS
DO NOT REMOVE MATERIAL UNDER THIS ITEM UNTIL 24 HOURS BEFORE PAVING

REMOVING ASPHALTIC SURFACE MILLING

NOTES

FOR MAINLINE AND SIDE ROADS USE 1.25" HMA, THIN LAYER OVERLAY, E-3

ASPHALTIC SURFACE BUTT JOINT TYPICAL SECTION DETAIL

STA 149+40 (BEGIN PROJECT)
STA 732+58 (END PROJECT)
BIRCH BAY RD
PAULSON DR
CTH N (WEST)
SHADY REST RD (WEST)
SHADY REST RD (EAST)
MEMORIAL FOREST RD
WOLF LAKE RD
OLD SCHOOL RD
SPRING CREEK RD
SQUASH LAKE RD
CTH N (EAST)
CRESTWOOD DR
WAUSAU RD
DETIENNE RD
PLEASURE POINT RD
S RIFLE RD
N RIFLE RD

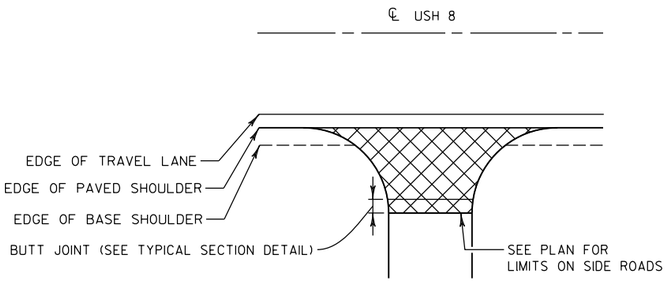

1.25" MILL & 1.25" HMA, THIN LAYER OVERLAY, E-3 OR
1.25" ASPHALTIC SURFACE DRIVEWAYS AND FIELD ENTRANCES

PLAN VIEW OF MILL & OVERLAY AT ASPHALT INTERSECTIONS & PAVED DRIVEWAYS DETAIL

PLAN VIEW

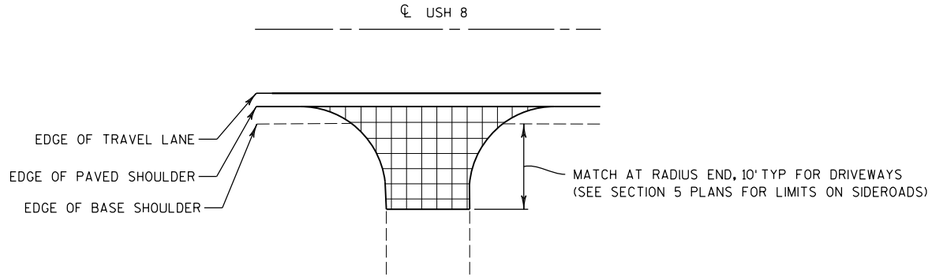

VARIABLE DEPTH BASE AGGREGATE DENSE 3/4-INCH

MATCH LIMITS AT UNPAVED INTERSECTIONS & DRIVEWAYS DETAIL

HEIDE DR
RED FOX RUN

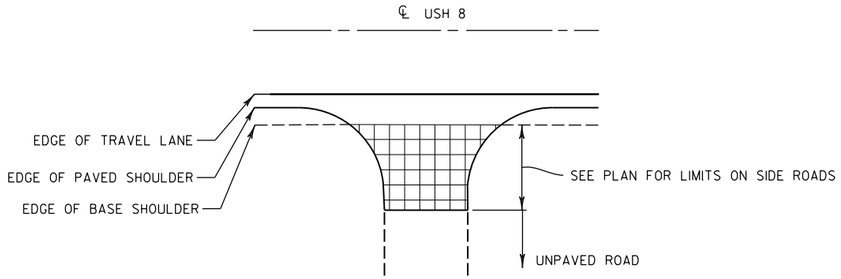

1.25" MILL & 1.25" HMA, THIN LAYER OVERLAY, E-3

MATCH LIMITS AT UNPAVED SIDE ROADS WITH PAVED APRON DETAIL

ROE LAKE RD

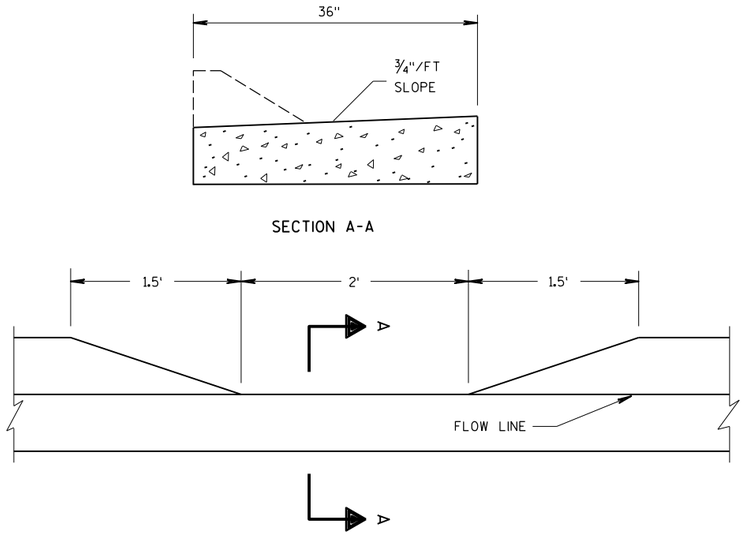

DETAIL OF CURB HEAD DEPRESSION FOR DRAINAGE AT CURB & GUTTER SECTION

CRESCENT RD
N RIFLE RD

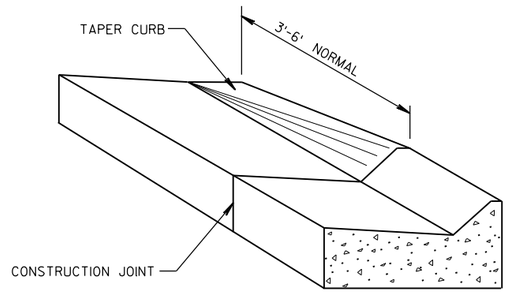

DETAIL OF CURB & GUTTER TERMINI

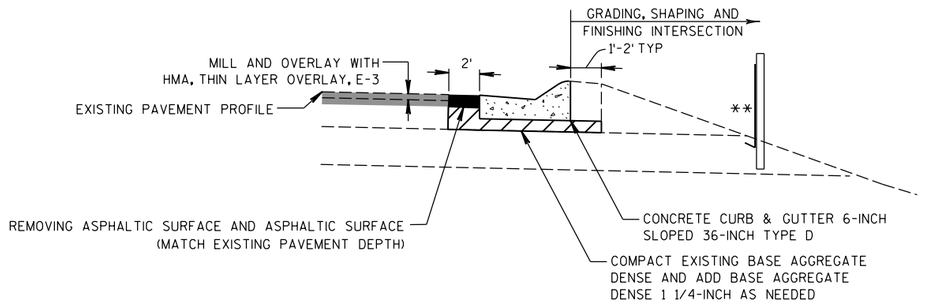

DETAIL OF ASPHALTIC SURFACE PATCH AT CURB & GUTTER INSTALLATION AREAS

AT INTERSECTION RADII
BIRCH BAY RD
CTH N (WEST)
SPRING CREEK RD
CTH N (EAST)
WAUSAU RD
S RIFLE RD
N RIFLE RD

NOTES

NEW CURB & GUTTER AND ASPHALTIC SURFACE IS TO BE PLACED PRIOR TO MILL & OVERLAY

** INSTALL SILT FENCE (AROUND CURB & GUTTER RADIUS) AND SILT FENCE RELIEF (ROCK BAGS)

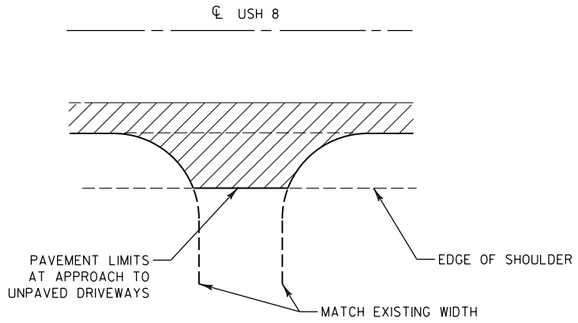

RURAL DRIVEWAY INTERSECTION DETAIL
PLAN VIEW

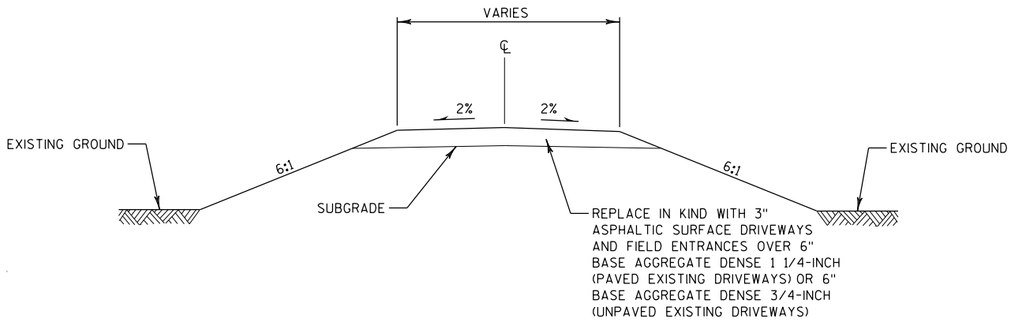

TYPICAL CROSS SECTION FOR PRIVATE DRIVEWAYS & FIELD ENTRANCES

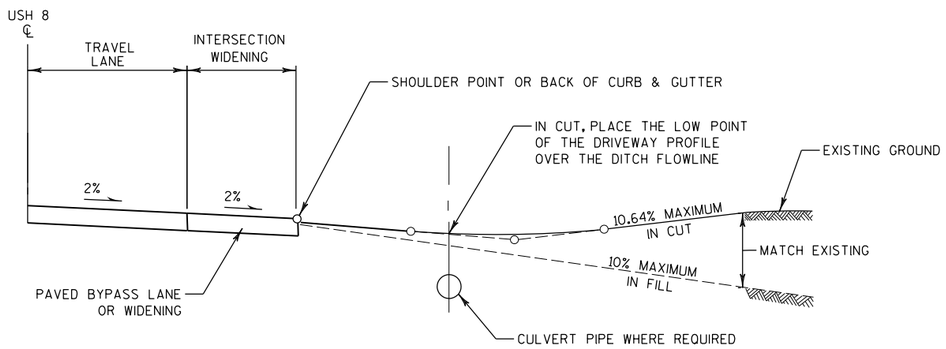

TYPICAL DRIVEWAY DETAIL IN DITCH GRADING

CRESCENT RD INTERSECTION WIDENING

NOTE

FOR DRIVEWAY SLOPES (SEE CROSS SECTIONS)

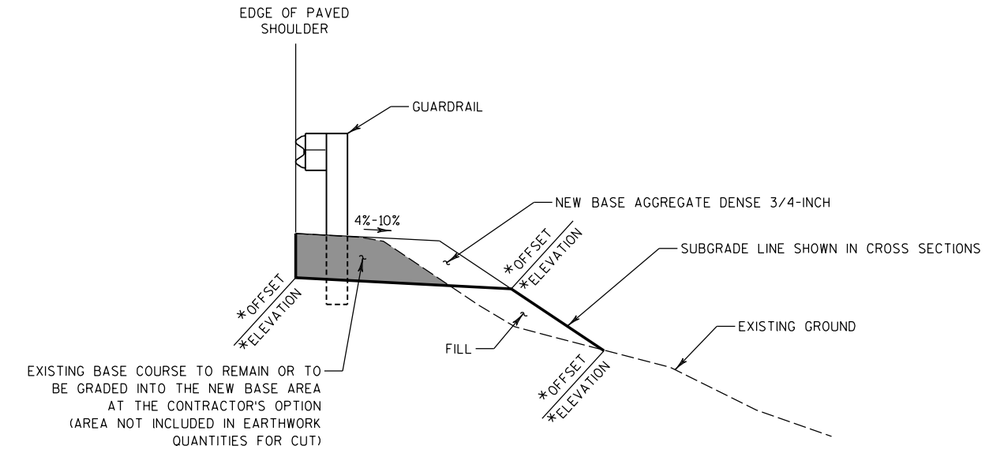

SHOULDER WIDENING EARTHWORK & BASE AGGREGATE FOR GUARDRAIL DETAIL

SEE CROSS SECTIONS

NOTES

ANY CUT AND FILL REQUIRED IS INCIDENTAL TO THE BARRIER SYSTEM GRADING SHAPING FINISHING ITEM

*OFFSET AND ELEVATION PROVIDED TO THESE POINTS ON THE CROSS SECTIONS

FOR FINISHING ITEMS SEE FINISHING ITEMS AT GUARDRAIL DETAIL

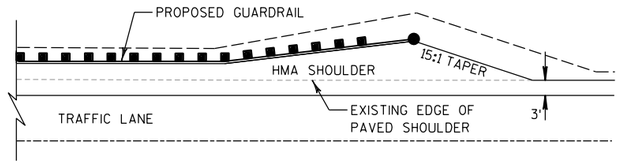

DETAIL FOR ASPHALTIC SHOULDER AT GUARDRAIL

NOTE

SEE TYPICAL SECTIONS FOR PAVEMENT STRUCTURE IN GUARDRAIL AREAS

RUNOFF COEFFICIENT TABLE

	HYDROLOGIC SOIL GROUP											
	A			B			C			D		
	SLOPE RANGE (PERCENT)			SLOPE RANGE (PERCENT)			SLOPE RANGE (PERCENT)			SLOPE RANGE (PERCENT)		
LAND USE:	0-2	2-6	6 & OVER	0-2	2-6	6 & OVER	0-2	2-6	6 & OVER	0-2	2-6	6 & OVER
ROW CROPS	.08 .22	.16 .30	.22 .38	.12 .26	.20 .34	.27 .44	.15 .30	.24 .37	.33 .50	.19 .34	.28 .41	.38 .56
MEDIAN STRIP- TURF	.19 .24	.20 .26	.24 .30	.19 .25	.22 .28	.26 .33	.20 .26	.23 .30	.30 .37	.20 .27	.25 .32	.30 .40
SIDE SLOPE- TURF			.25 .32			.27 .34			.28 .36			.30 .38
PAVEMENT:												
ASPHALT	.70 - .95											
CONCRETE	.80 - .95											
BRICK	.70 - .80											
DRIVES, WALKS	.75 - .85											
ROOFS	.75 - .95											
GRAVEL ROADS, SHOULDERS	.40 - .60											

TOTAL PROJECT AREA = 270 ACRES
TOTAL AREA EXPECTED TO BE DISTURBED BY CONSTRUCTION ACTIVITIES = 65 ACRES

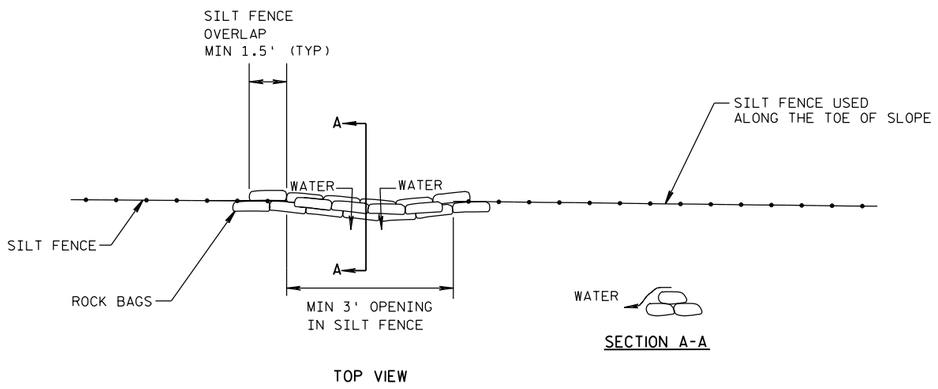

ROCK BAGS SILT FENCE RELIEF DETAIL

PAID AS ROCK BAGS

NOTE

SEE EROSION CONTROL PLANS FOR
ADDITIONAL INFORMATION

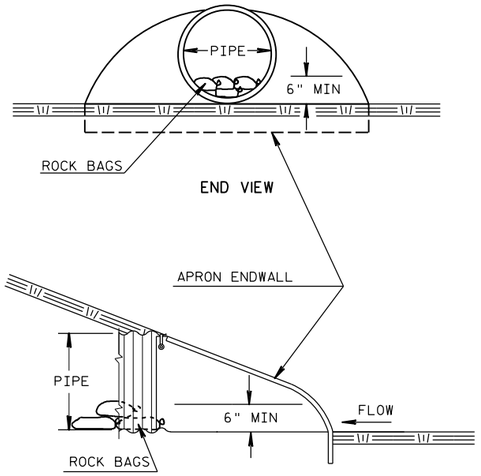

CULVERT PIPE CHECKS

INSTALL ON INLET END
PAID AS CULVERT PIPE CHECKS

NOTE

SEE EROSION CONTROL PLANS FOR
ADDITIONAL INFORMATION

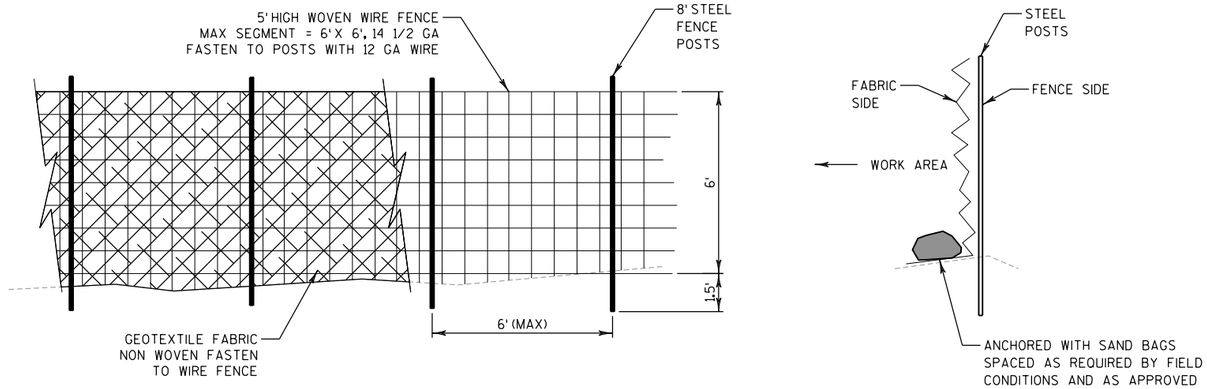

HEAVY DUTY SILT FENCE

STA 572+43

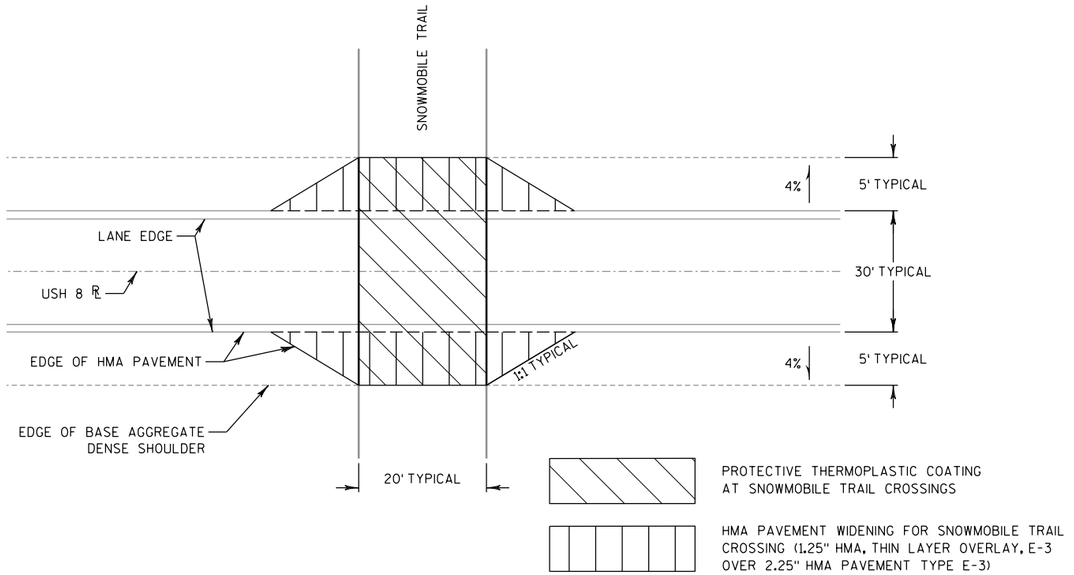

SNOWMOBILE TRAIL CROSSING DETAIL

STA 228+25, STA 364+60

NOTES

PREPARATION FOR PAVEMENT WIDENING WILL BE PAID AS
PREPARE FOUNDATION FOR ASPHALTIC SHOULDERS.

EXACT LOCATIONS TO BE MARKED IN THE FIELD BY THE
PROJECT ENGINEER.

2

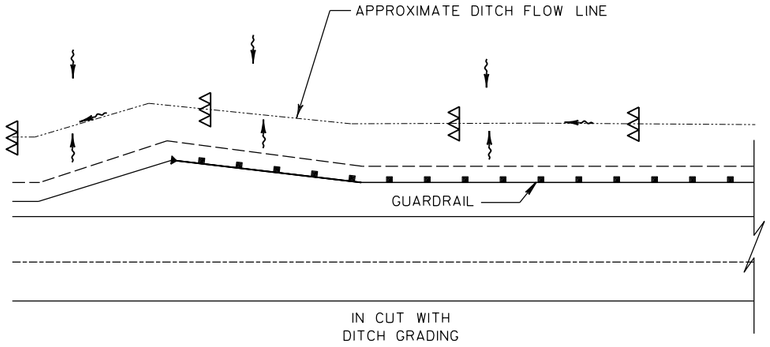

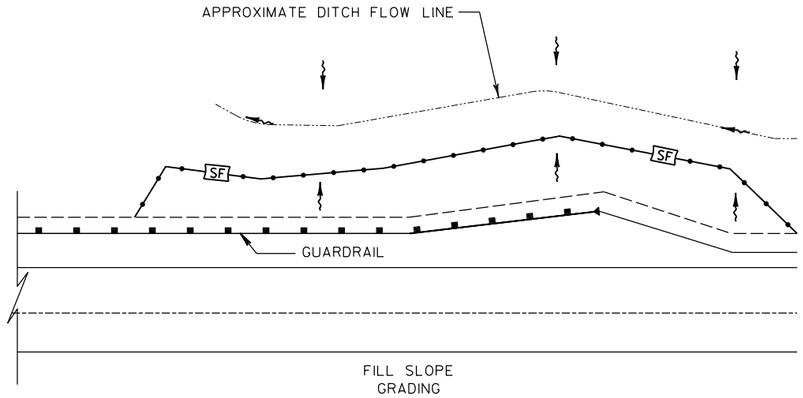

LEGEND

- SILT FENCE
- TEMPORARY DITCH CHECK
- SF — SILT FENCE RELIEF (ROCK BAGS)

DETAIL FOR EROSION CONTROL FOR GUARDRAIL REPLACEMENT

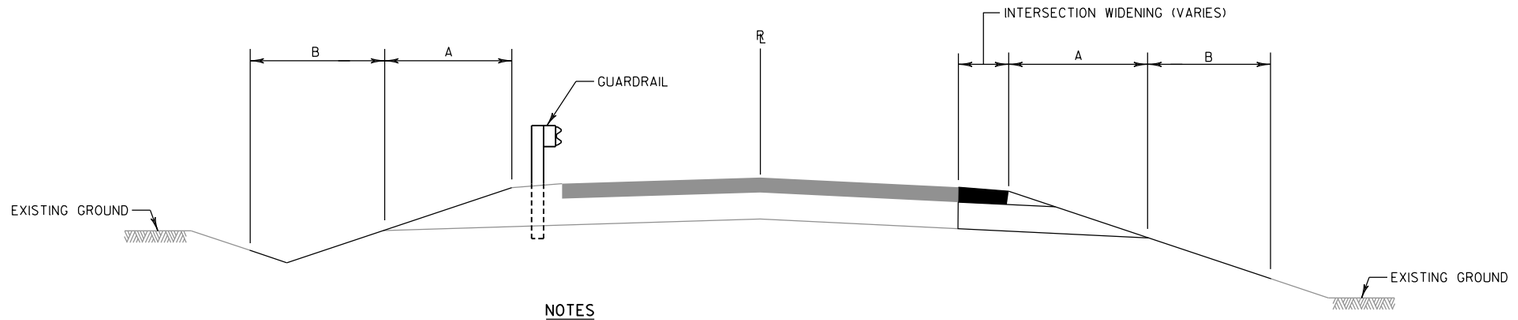

NOTES

A= FERTILIZER TYPE B & SEEDING MIXTURE NO. 30

B= TOPSOIL, FERTILIZER TYPE B, SEEDING MIXTURE NO. 30 & EROSION MAT

TOPSOIL, FERTILIZER TYPE B, AND SEEDING MIXTURE NO. 30 ARE INCIDENTAL TO BARRIER SYSTEM GRADING SHAPING FINISHING ITEM OR GRADING, SHAPING AND FINISHING CULVERTS

TOPSOIL, FERTILIZER TYPE B, AND SEEDING MIXTURE NO. 30 ARE PAID UNDER THE APPLICABLE BID ITEMS IN THE CONTRACT AT INTERSECTION WIDENING FOR CRESCENT ROAD FROM STA 596+97 TO STA 622+53

FINISHING ITEMS AT GRADING AREAS

USH 8

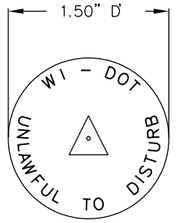

② WIS DOT MONUMENT CAP MARKER LOGO (SSDR130)

CONTRACTOR TO ORDER LANDMARK REFERENCE MONUMENTS WITH THE ABOVE STAMPING

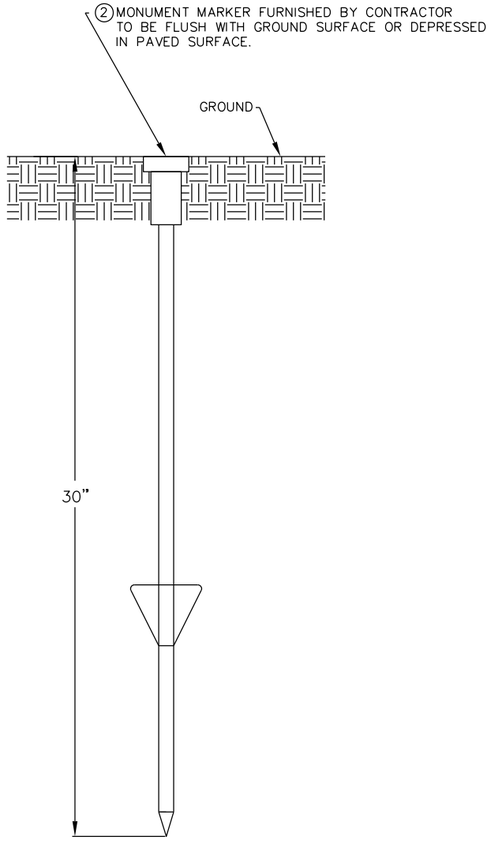

(FRONT VIEW)

BERNSTEN DRIVABLE MONUMENT SSDR130

LANDMARK REFERENCE MONUMENT (TIES ONLY)

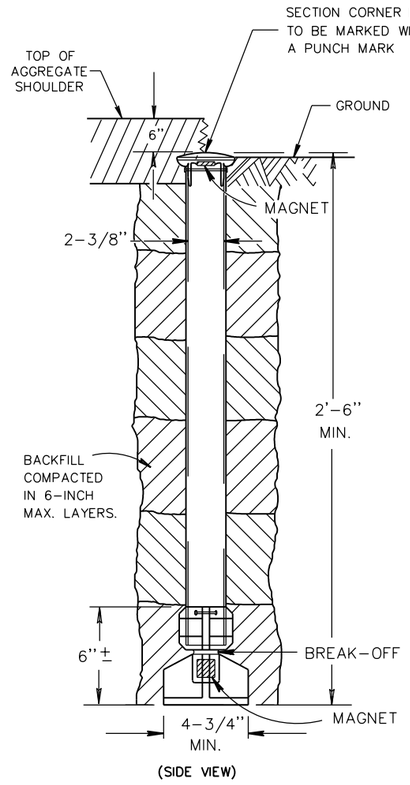

(SIDE VIEW)

OUTSIDE OF PAVEMENT

① BERNTSEN A1BR30 ALUMINUM BREAK-OFF MONUMENT

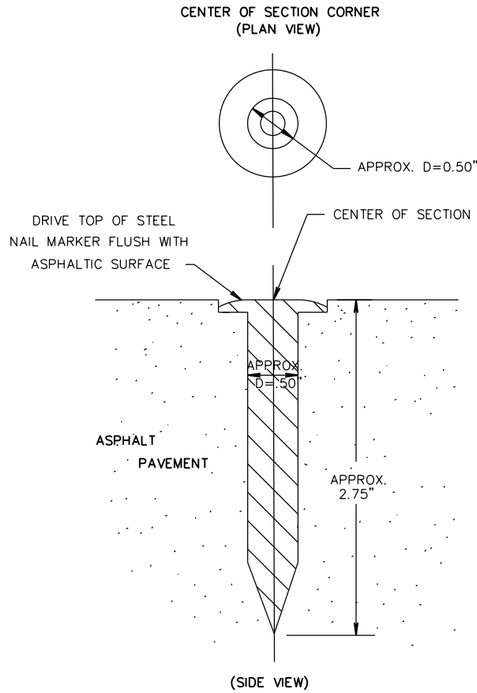

(SIDE VIEW)

IN ASPHALTIC PAVEMENT

① BERNTSEN SNM1 STEEL NAIL MARKER

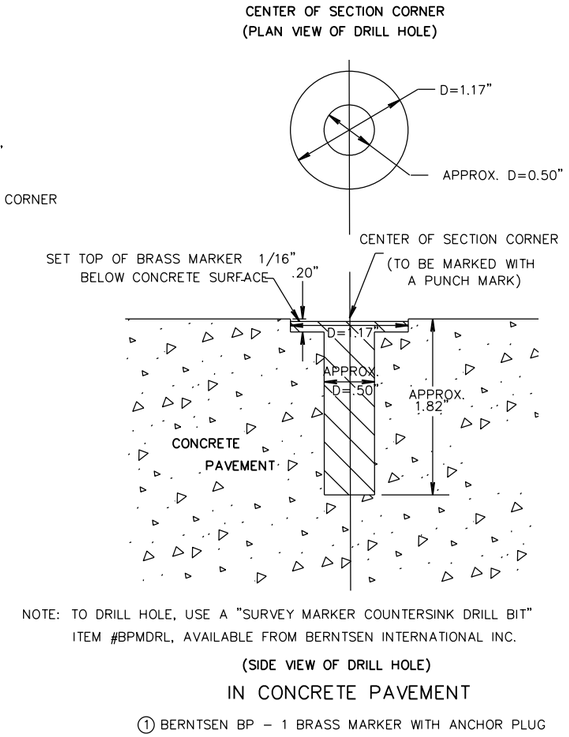

NOTE: TO DRILL HOLE, USE A "SURVEY MARKER COUNTERSINK DRILL BIT" ITEM #BPMDRL, AVAILABLE FROM BERNTSEN INTERNATIONAL INC.

(SIDE VIEW OF DRILL HOLE)

IN CONCRETE PAVEMENT

① BERNTSEN BP – 1 BRASS MARKER WITH ANCHOR PLUG

SECTION CORNER MONUMENTS

GENERAL NOTES

DETAILS OF CONSTRUCTION, MATERIALS AND WORKMANSHIP NOT SHOWN ON THIS DRAWING SHALL CONFORM TO THE PERTINENT REQUIREMENTS OF THE STANDARD SPECIFICATIONS AND THE APPLICABLE SPECIAL PROVISIONS.

LOCATE LANDMARK REFERENCE MONUMENTS OUTSIDE THE CONSTRUCTION LIMITS AND WITHIN WISDOT RIGHT OF WAY. LOCATION TO BE APPROVED BY THE ENGINEER.

① THE REGIONAL SURVEY COORDINATOR WILL SUPPLY.

② CONTRACTOR WILL SUPPLY.

SECTION CORNER MONUMENT AND LANDMARK REFERENCE MONUMENT DETAIL

2

DATA TABLE

POINT NO.	STATION	OFFSET	RADIUS
1	225+19.27	60.00' RT	39' R
2	226+46.78	74.70' RT	54' R

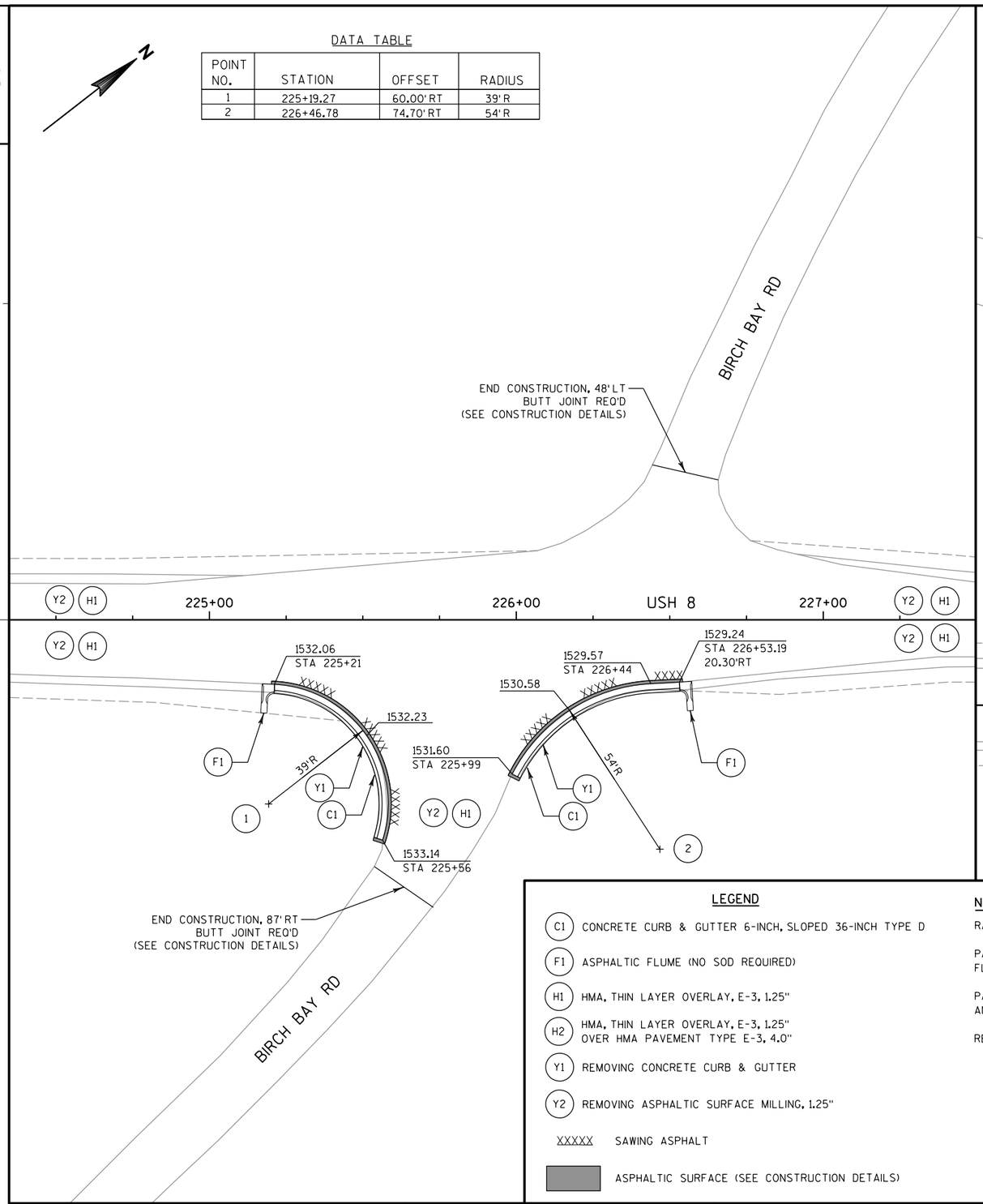

DATA TABLE

POINT NO.	STATION	OFFSET	RADIUS
3	260+83.73	48.12' LT	26' R
4	261+98.53	93.52' LT	71' R

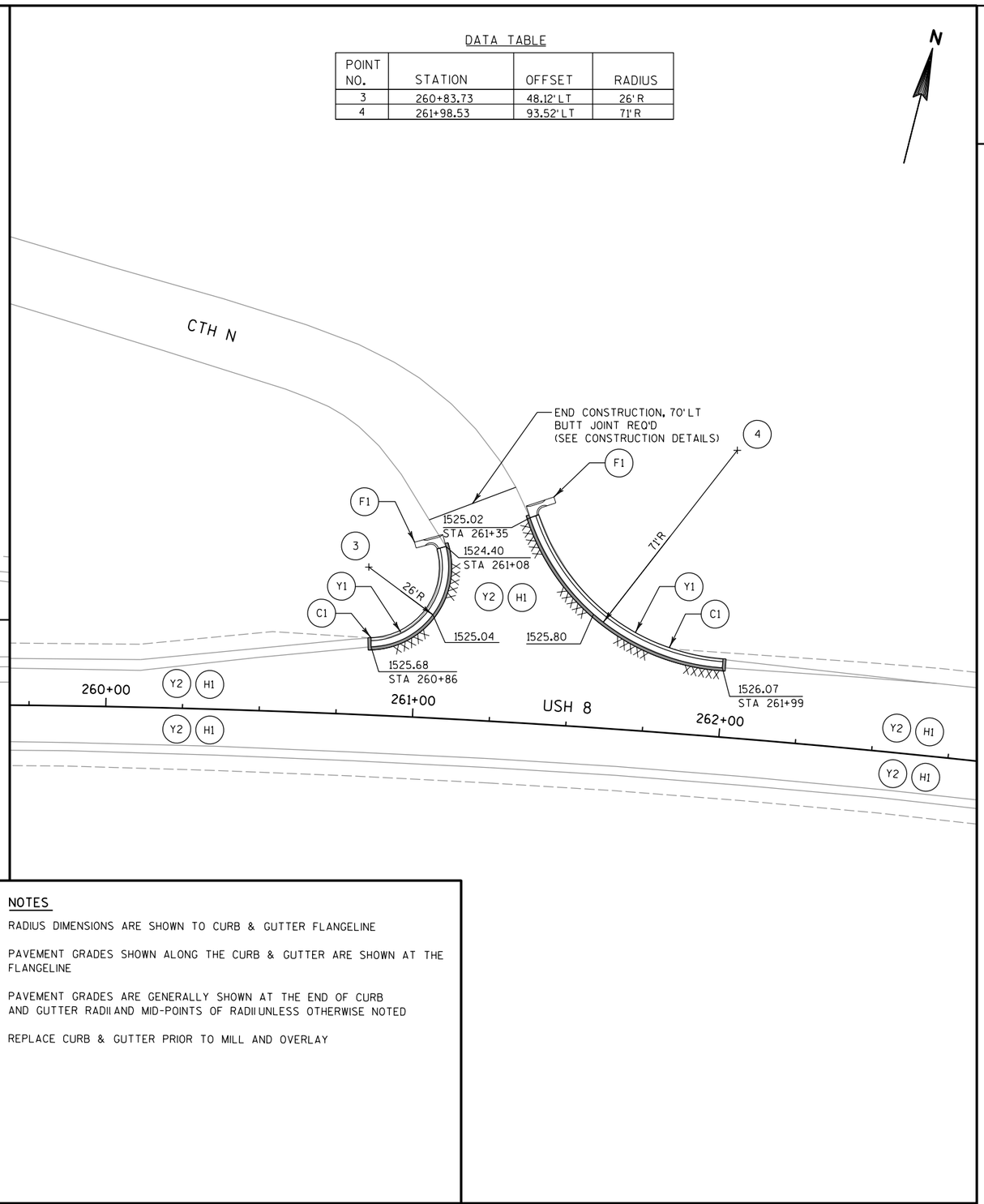

LEGEND

- (C1) CONCRETE CURB & GUTTER 6-INCH, SLOPED 36-INCH TYPE D
- (F1) ASPHALTIC FLUME (NO SOD REQUIRED)
- (H1) HMA, THIN LAYER OVERLAY, E-3, 1.25"
- (H2) HMA, THIN LAYER OVERLAY, E-3, 1.25" OVER HMA PAVEMENT TYPE E-3, 4.0"
- (Y1) REMOVING CONCRETE CURB & GUTTER
- (Y2) REMOVING ASPHALTIC SURFACE MILLING, 1.25"
- XXXXX SAWING ASPHALT
- ASPHALTIC SURFACE (SEE CONSTRUCTION DETAILS)

NOTES

RADIUS DIMENSIONS ARE SHOWN TO CURB & GUTTER FLANGELINE

PAVEMENT GRADES SHOWN ALONG THE CURB & GUTTER ARE SHOWN AT THE FLANGELINE

PAVEMENT GRADES ARE GENERALLY SHOWN AT THE END OF CURB AND GUTTER RADII AND MID-POINTS OF RADII UNLESS OTHERWISE NOTED

REPLACE CURB & GUTTER PRIOR TO MILL AND OVERLAY

PROJECT NO: 1595-09-60	HWY: USH 8	COUNTY: ONEIDA	INTERSECTION DETAIL - BIRCH BAY RD & CTH N	SHEET 22	E

DATA TABLE

POINT NO.	STATION	OFFSET	RADIUS
5	439+82.27	50.42' RT	30' R
6	440+98.51	95.71' RT	76' R

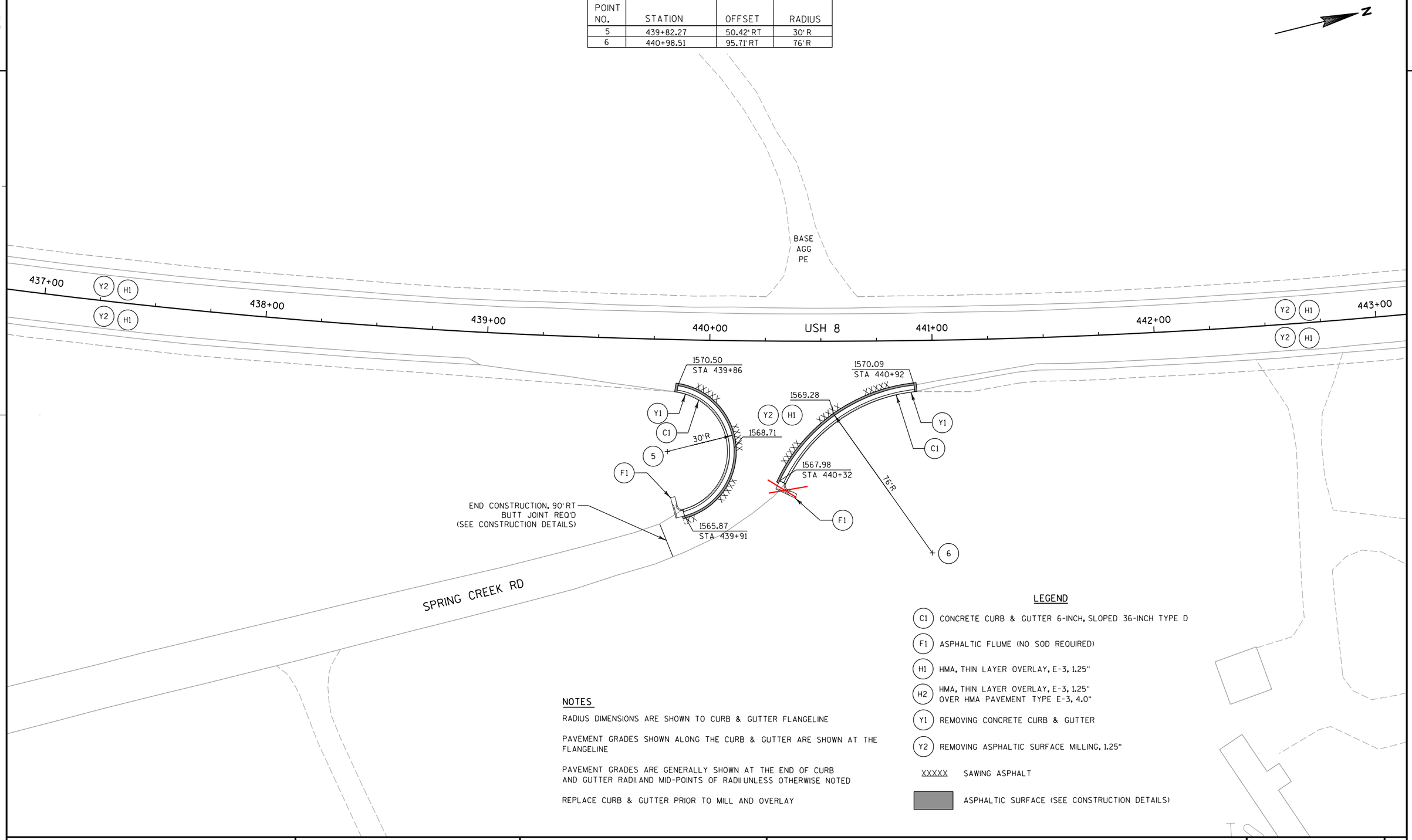

NOTES

RADIUS DIMENSIONS ARE SHOWN TO CURB & GUTTER FLANGELINE

PAVEMENT GRADES SHOWN ALONG THE CURB & GUTTER ARE SHOWN AT THE FLANGELINE

PAVEMENT GRADES ARE GENERALLY SHOWN AT THE END OF CURB AND GUTTER RADII AND MID-POINTS OF RADII UNLESS OTHERWISE NOTED

REPLACE CURB & GUTTER PRIOR TO MILL AND OVERLAY

LEGEND

- C1 — CONCRETE CURB & GUTTER 6-INCH, SLOPED 36-INCH TYPE D
- F1 — ASPHALTIC FLUME (NO SOD REQUIRED)
- H1 — HMA, THIN LAYER OVERLAY, E-3, 1.25"
- H2 — HMA, THIN LAYER OVERLAY, E-3, 1.25" OVER HMA PAVEMENT TYPE E-3, 4.0"
- Y1 — REMOVING CONCRETE CURB & GUTTER
- Y2 — REMOVING ASPHALTIC SURFACE MILLING, 1.25"
- XXXXX — SAWING ASPHALT
- ASPHALTIC SURFACE (SEE CONSTRUCTION DETAILS)

PROJECT NO: 1595-09-60	HWY: USH 8	COUNTY: ONEIDA	INTERSECTION DETAIL - SPRING CREEK RD	SHEET 23	E

WISCONSIN CENTRAL LTD

CTH N

USH 8

DATA TABLE

POINT NO.	STATION	OFFSET	RADIUS
7	554+99.59	62.50' LT	40' R
8	556+29.14	82.00' LT	59' R

NOTES

RADIUS DIMENSIONS ARE SHOWN TO CURB & GUTTER FLANGELINE

PAVEMENT GRADES SHOWN ALONG THE CURB & GUTTER ARE SHOWN AT THE FLANGELINE

PAVEMENT GRADES ARE GENERALLY SHOWN AT THE END OF CURB AND GUTTER RADII AND MID-POINTS OF RADII UNLESS OTHERWISE NOTED

REPLACE CURB & GUTTER PRIOR TO MILL AND OVERLAY

LEGEND

- C1 — CONCRETE CURB & GUTTER 6-INCH, SLOPED 36-INCH TYPE D
- F1 — ASPHALTIC FLUME (NO SOD REQUIRED)
- H1 — HMA, THIN LAYER OVERLAY, E-3, 1.25"
- H2 — HMA, THIN LAYER OVERLAY, E-3, 1.25" OVER HMA PAVEMENT TYPE E-3, 4.0"
- Y1 — REMOVING CONCRETE CURB & GUTTER
- Y2 — REMOVING ASPHALTIC SURFACE MILLING, 1.25"
- XXXXX — SAWING ASPHALT
- ASPHALTIC SURFACE (SEE CONSTRUCTION DETAILS)

END CONSTRUCTION, 97' LT
BUTT JOINT REQ'D
(SEE CONSTRUCTION DETAILS)

1609.35
STA 555+70

1609.44
STA 555+40

1609.17

1608.52
STA 555+01

1609.69

1610.54
STA 556+29

40' R

59' R

554+00 555+00 556+00 557+00 558+00 559+00 560+00

BASE AGG PE

ASPH PE

ASPH PE

ASPH PE

PROJECT NO: 1595-09-60	HWY: USH 8	COUNTY: ONEIDA	INTERSECTION DETAIL - CTH N	SHEET 24	E

2

LEGEND

- (A1) ASPHALTIC SURFACE DRIVEWAYS AND FIELD ENTRANCES, 3"
- (B1) BASE AGGREGATE DENSE 3/4-INCH, 6"
- (C1) CONCRETE CURB & GUTTER 6-INCH, SLOPED 36-INCH TYPE D
- (F1) ASPHALTIC FLUME (NO SOD REQUIRED)
- (H1) HMA, THIN LAYER OVERLAY, E-3, 1.25"
- (H2) HMA, THIN LAYER OVERLAY, E-3, 1.25" OVER HMA PAVEMENT TYPE E-3, 4.0"
- (Y1) REMOVING CONCRETE CURB & GUTTER
- (Y2) REMOVING ASPHALTIC SURFACE MILLING, 1.25"
- XXXXX SAWING ASPHALT
- INTERSECTION WIDENING

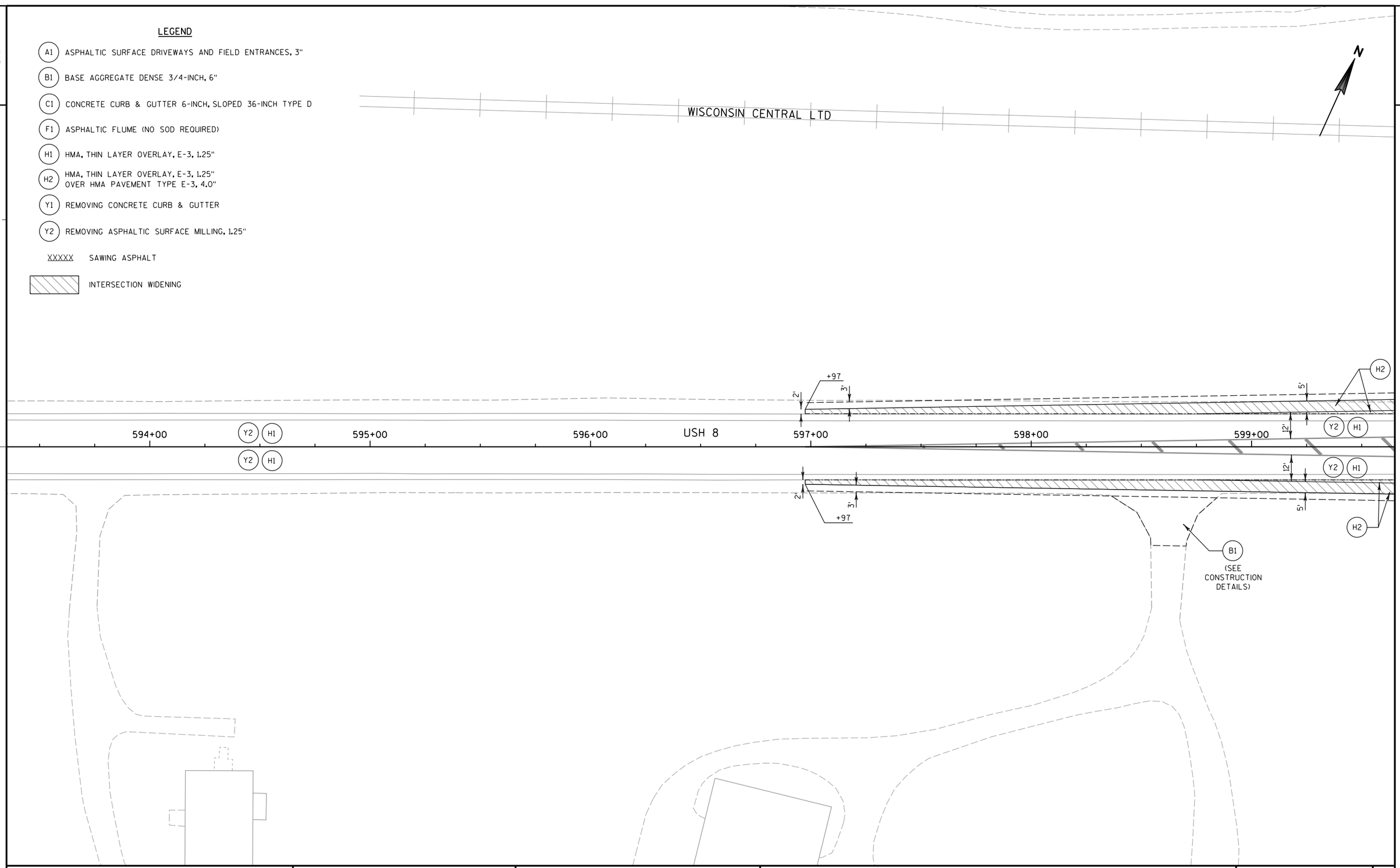

PROJECT NO: 1595-09-60	HWY: USH 8	COUNTY: ONEIDA	INTERSECTION DETAIL - CRESCENT RD	SHEET 25	E

FILE NAME : P:\47xx\4727_DP.12.USH8.ONE\CADDS\Plan\021104_id.dgn PLOT DATE : 2/16/2015 PLOT BY : emo PLOT NAME : PLOT SCALE : 1:40

2

WISCONSIN CENTRAL LTD

N

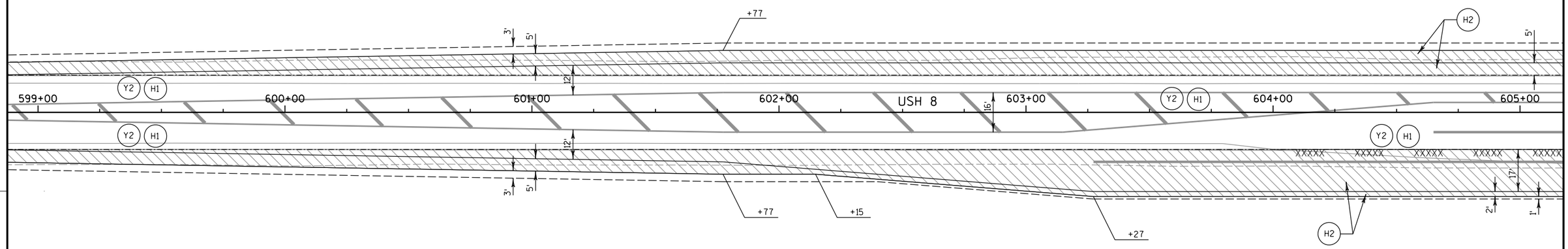

LEGEND

- (A1) ASPHALTIC SURFACE DRIVEWAYS AND FIELD ENTRANCES, 3"
- (B1) BASE AGGREGATE DENSE 3/4-INCH, 6"
- (C1) CONCRETE CURB & GUTTER 6-INCH, SLOPED 36-INCH TYPE D
- (F1) ASPHALTIC FLUME (NO SOD REQUIRED)
- (H1) HMA, THIN LAYER OVERLAY, E-3, 1.25"
- (H2) HMA, THIN LAYER OVERLAY, E-3, 1.25" OVER HMA PAVEMENT TYPE E-3, 4.0"
- (Y1) REMOVING CONCRETE CURB & GUTTER
- (Y2) REMOVING ASPHALTIC SURFACE MILLING, 1.25"
- XXXXX SAWING ASPHALT
- INTERSECTION WIDENING

PROJECT NO: 1595-09-60	HWY: USH 8	COUNTY: ONEIDA	INTERSECTION DETAIL - CRESCENT RD	SHEET 26	E

NOTES

RADIUS DIMENSIONS ARE SHOWN TO CURB & GUTTER FLANGELINE

PAVEMENT GRADES SHOWN ALONG THE CURB & GUTTER ARE SHOWN AT THE FLANGELINE

PAVEMENT GRADES ARE GENERALLY SHOWN AT THE END OF CURB AND GUTTER RADII AND MID-POINTS OF RADII UNLESS OTHERWISE NOTED

DATA TABLE

POINT NO.	STATION	OFFSET	RADIUS
9	606+27.35	77.00' RT	45' R
10	606+92.15	92.00' LT	60' R
11	607+68.67	92.00' RT	60' R
12	608+30.29	77.00' LT	45' R

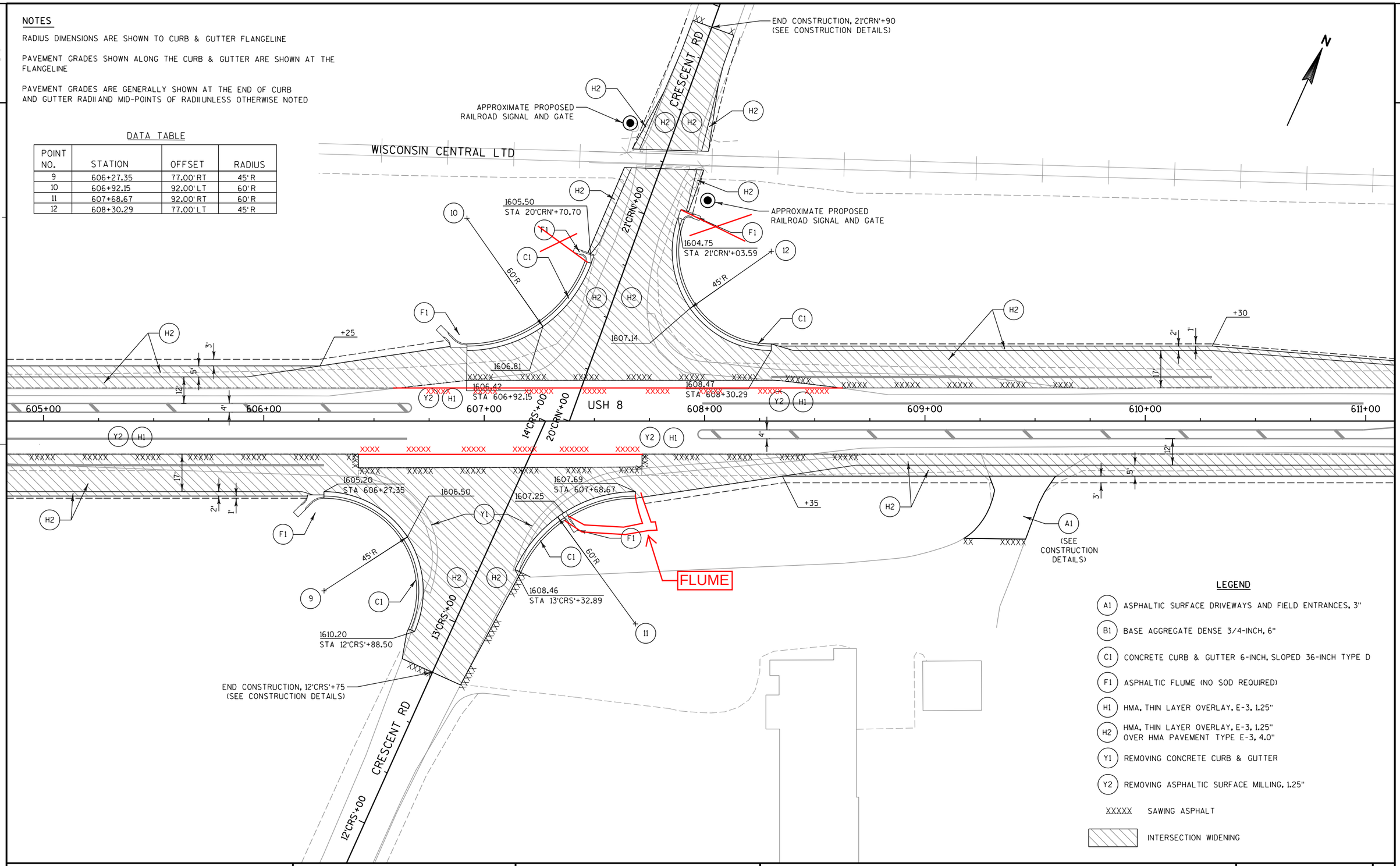

LEGEND

- A1 ASPHALTIC SURFACE DRIVEWAYS AND FIELD ENTRANCES, 3"
- B1 BASE AGGREGATE DENSE 3/4-INCH, 6"
- C1 CONCRETE CURB & GUTTER 6-INCH, SLOPED 36-INCH TYPE D
- F1 ASPHALTIC FLUME (NO SOD REQUIRED)
- H1 HMA, THIN LAYER OVERLAY, E-3, 1.25"
- H2 HMA, THIN LAYER OVERLAY, E-3, 1.25" OVER HMA PAVEMENT TYPE E-3, 4.0"
- Y1 REMOVING CONCRETE CURB & GUTTER
- Y2 REMOVING ASPHALTIC SURFACE MILLING, 1.25"
- XXXXX SAWING ASPHALT
- INTERSECTION WIDENING

PROJECT NO: 1595-09-60	HWY: USH 8	COUNTY: ONEIDA	INTERSECTION DETAIL - CRESCENT RD	SHEET 27	E

NOTES

RADIUS DIMENSIONS ARE SHOWN TO THE EDGE OF PAVED SHOULDER

STATION AND OFFSET INFORMATION PROVIDED FOR BEGINNING AND ENDING POINTS ALONG EDGE OF PAVEMENT RADII

DATA TABLE

POINT NO.	STATION	OFFSET	RADIUS
13	616+23.49	11,091.69' RT	11,117' R
14	618+69.18	11,112.00' RT	11,095' R

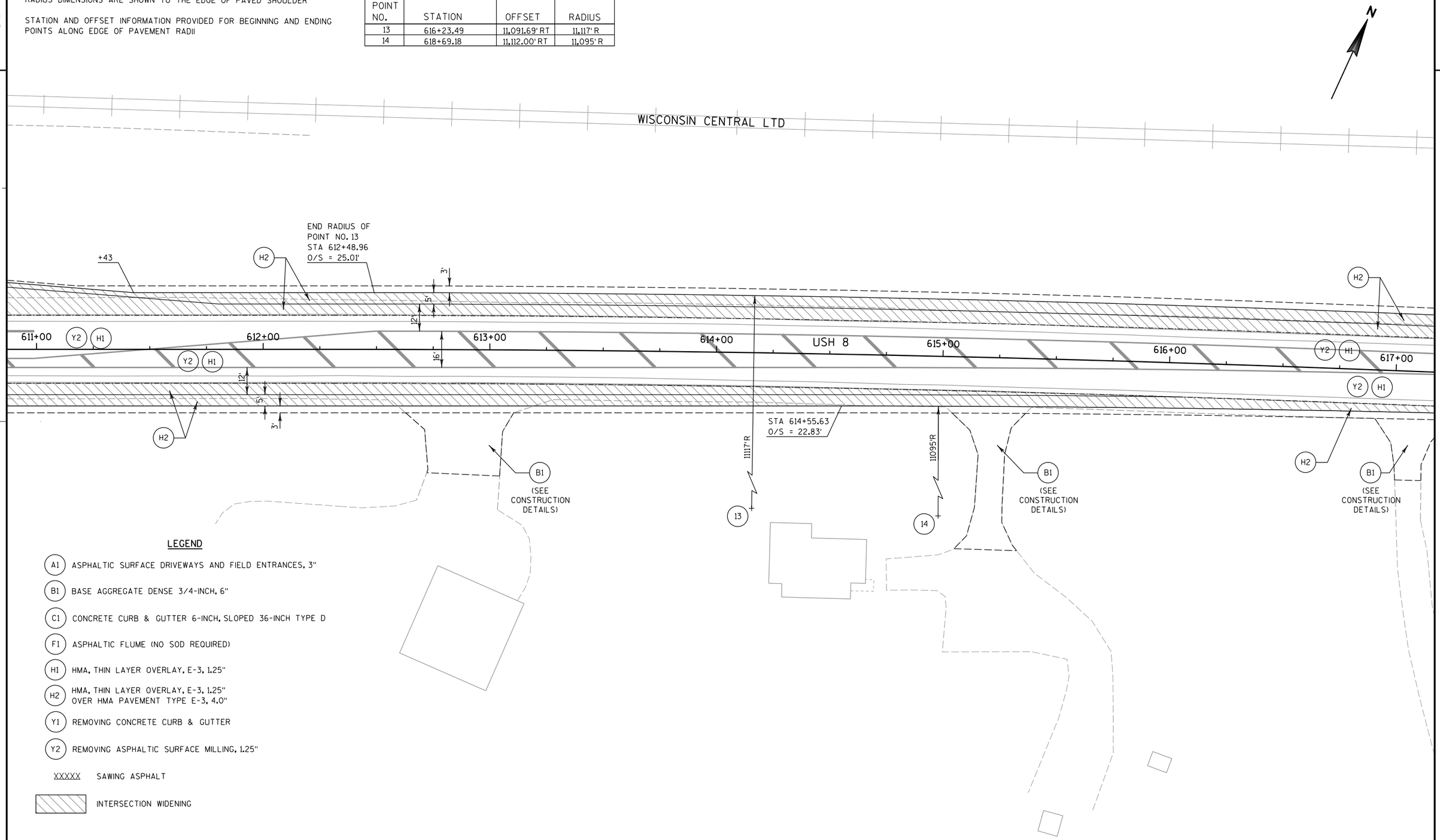

LEGEND

- (A1) ASPHALTIC SURFACE DRIVEWAYS AND FIELD ENTRANCES, 3"
- (B1) BASE AGGREGATE DENSE 3/4-INCH, 6"
- (C1) CONCRETE CURB & GUTTER 6-INCH, SLOPED 36-INCH TYPE D
- (F1) ASPHALTIC FLUME (NO SOD REQUIRED)
- (H1) HMA, THIN LAYER OVERLAY, E-3, 1.25"
- (H2) HMA, THIN LAYER OVERLAY, E-3, 1.25" OVER HMA PAVEMENT TYPE E-3, 4.0"
- (Y1) REMOVING CONCRETE CURB & GUTTER
- (Y2) REMOVING ASPHALTIC SURFACE MILLING, 1.25"
- XXXXX SAWING ASPHALT
- INTERSECTION WIDENING

PROJECT NO: 1595-09-60	HWY: USH 8	COUNTY: ONEIDA	INTERSECTION DETAIL - CRESCENT RD	SHEET 28	E

FILE NAME : P:\47xx\4727_DP.12.USH8.ONE\CADDS\Plan\021107_id.dgn PLOT DATE : 2/16/2015 PLOT BY : emo PLOT NAME : PLOT SCALE : 1:40

NOTE

STATION AND OFFSET INFORMATION PROVIDED FOR BEGINNING AND ENDING POINTS ALONG EDGE OF PAVEMENT RADII

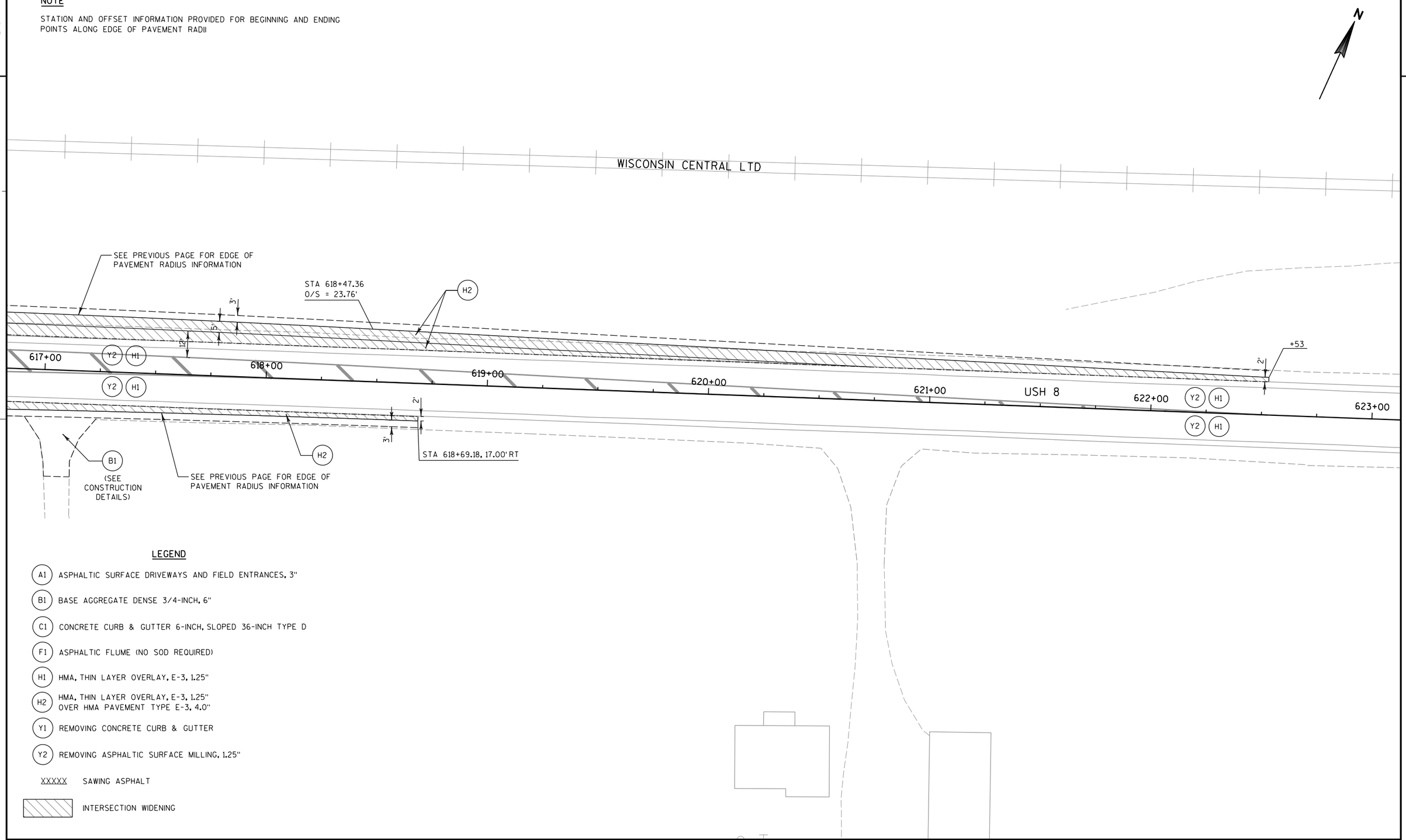

LEGEND

- (A1) ASPHALTIC SURFACE DRIVEWAYS AND FIELD ENTRANCES, 3"
- (B1) BASE AGGREGATE DENSE 3/4-INCH, 6"
- (C1) CONCRETE CURB & GUTTER 6-INCH, SLOPED 36-INCH TYPE D
- (F1) ASPHALTIC FLUME (NO SOD REQUIRED)
- (H1) HMA, THIN LAYER OVERLAY, E-3, 1.25"
- (H2) HMA, THIN LAYER OVERLAY, E-3, 1.25" OVER HMA PAVEMENT TYPE E-3, 4.0"
- (Y1) REMOVING CONCRETE CURB & GUTTER
- (Y2) REMOVING ASPHALTIC SURFACE MILLING, 1.25"
- XXXXX SAWING ASPHALT
- INTERSECTION WIDENING

PROJECT NO: 1595-09-60	HWY: USH 8	COUNTY: ONEIDA	INTERSECTION DETAIL - CRESCENT RD	SHEET 29	E

DATA TABLE

POINT NO.	STATION	OFFSET	RADIUS
15	632+35.11	62.50' RT	40' R
16	633+64.93	83.00' RT	60' R

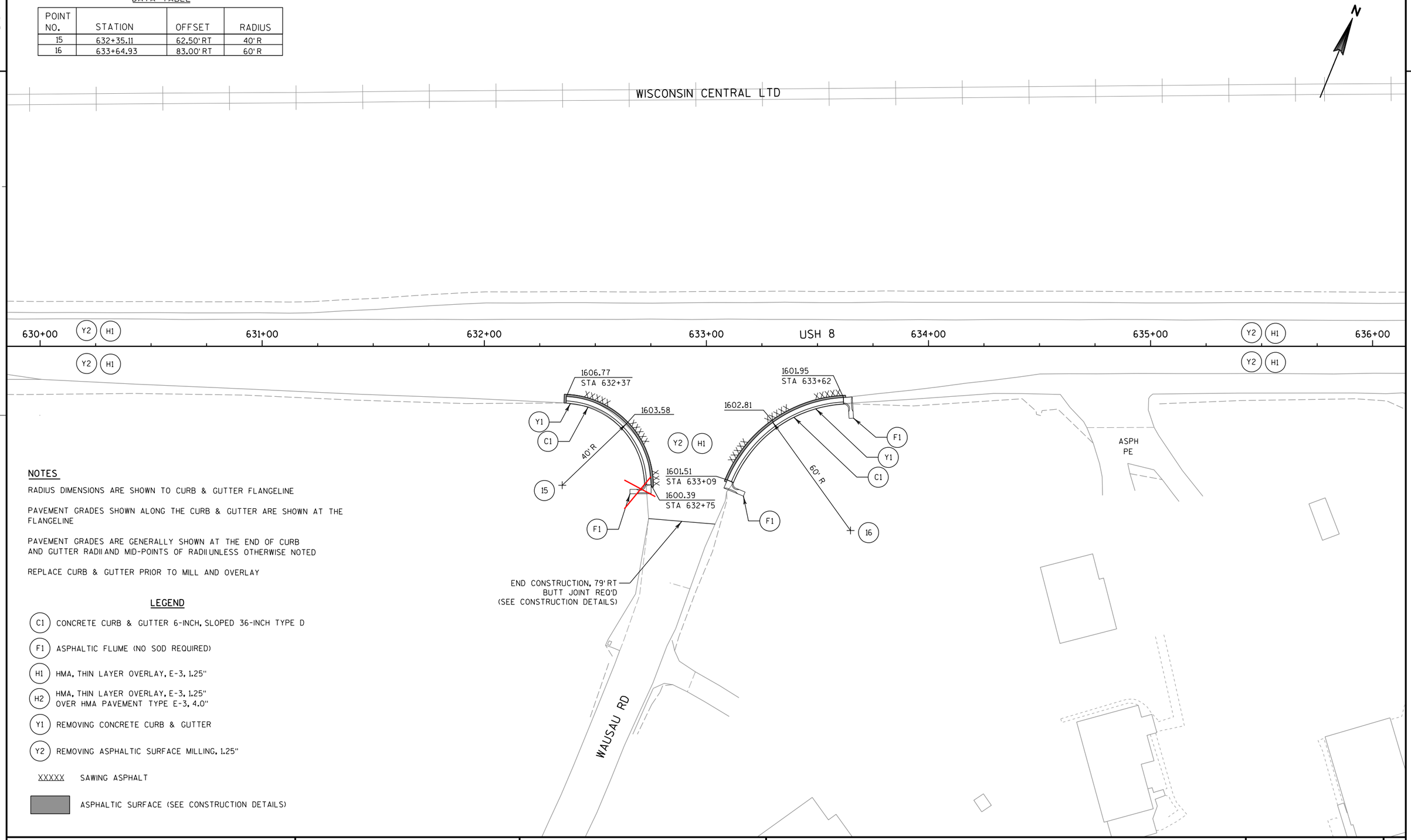

NOTES

RADIUS DIMENSIONS ARE SHOWN TO CURB & GUTTER FLANGELINE

PAVEMENT GRADES SHOWN ALONG THE CURB & GUTTER ARE SHOWN AT THE FLANGELINE

PAVEMENT GRADES ARE GENERALLY SHOWN AT THE END OF CURB AND GUTTER RADII AND MID-POINTS OF RADII UNLESS OTHERWISE NOTED

REPLACE CURB & GUTTER PRIOR TO MILL AND OVERLAY

LEGEND

- (C1) CONCRETE CURB & GUTTER 6-INCH, SLOPED 36-INCH TYPE D
- (F1) ASPHALTIC FLUME (NO SOD REQUIRED)
- (H1) HMA, THIN LAYER OVERLAY, E-3, 1.25"
- (H2) HMA, THIN LAYER OVERLAY, E-3, 1.25" OVER HMA PAVEMENT TYPE E-3, 4.0"
- (Y1) REMOVING CONCRETE CURB & GUTTER
- (Y2) REMOVING ASPHALTIC SURFACE MILLING, 1.25"
- XXXXX SAWING ASPHALT
- ASPHALTIC SURFACE (SEE CONSTRUCTION DETAILS)

PROJECT NO: 1595-09-60	HWY: USH 8	COUNTY: ONEIDA	INTERSECTION DETAIL - WAUSAU RD	SHEET 30	E

2

N

LEGEND

- (C1) CONCRETE CURB & GUTTER 6-INCH, SLOPED 36-INCH TYPE D
- (F1) ASPHALTIC FLUME (NO SOD REQUIRED)
- (H1) HMA, THIN LAYER OVERLAY, E-3, 1.25"
- (H2) HMA, THIN LAYER OVERLAY, E-3, 1.25" OVER HMA PAVEMENT TYPE E-3, 4.0"
- (Y1) REMOVING CONCRETE CURB & GUTTER
- (Y2) REMOVING ASPHALTIC SURFACE MILLING, 1.25"
- XXXXX SAWING ASPHALT
- ASPHALTIC SURFACE (SEE CONSTRUCTION DETAILS)

NOTES

RADIUS DIMENSIONS ARE SHOWN TO CURB & GUTTER FLANGELINE

PAVEMENT GRADES SHOWN ALONG THE CURB & GUTTER ARE SHOWN AT THE FLANGELINE

PAVEMENT GRADES ARE GENERALLY SHOWN AT THE END OF CURB AND GUTTER RADII AND MID-POINTS OF RADII UNLESS OTHERWISE NOTED

REPLACE CURB & GUTTER PRIOR TO MILL AND OVERLAY

BASE AGG CE

698+00 699+00 USH 8 700+00

1599.96
STA 698+58

1599.35

1599.85

1600.41
STA 699+79

1599.29
STA 699+39

1598.74
STA 699+08

59'R

40'R

17

18

F1

Y1 C1 Y2 H1

END CONSTRUCTION, 91' RT
BUTT JOINT REQ'D
(SEE CONSTRUCTION DETAILS)

S RIFLE RD

DATA TABLE

POINT NO.	STATION	OFFSET	RADIUS
17	698+49.40	82.50' RT	59' R
18	699+78.13	63.00' RT	40' R

N RIFLE RD

END CONSTRUCTION, 84' LT
BUTT JOINT REQ'D
(SEE CONSTRUCTION DETAILS)

1605.91
STA 712+63

1605.61
STA 712+32

1605.05

1604.82
STA 711+89

1605.49

1606.05
STA 713+18

39'R

59'R

19

20

F1

Y1 C1 Y2 H1

711+00 712+00 USH 8 713+00

BASE AGG PE

DATA TABLE

POINT NO.	STATION	OFFSET	RADIUS
19	711+93.02	60.50' LT	39' R
20	713+22.45	81.25' LT	59' R

PROJECT NO: 1595-09-60	HWY: USH 8	COUNTY: ONEIDA	INTERSECTION DETAIL - N RIFLE RD & S RIFLE RD	SHEET 31	E

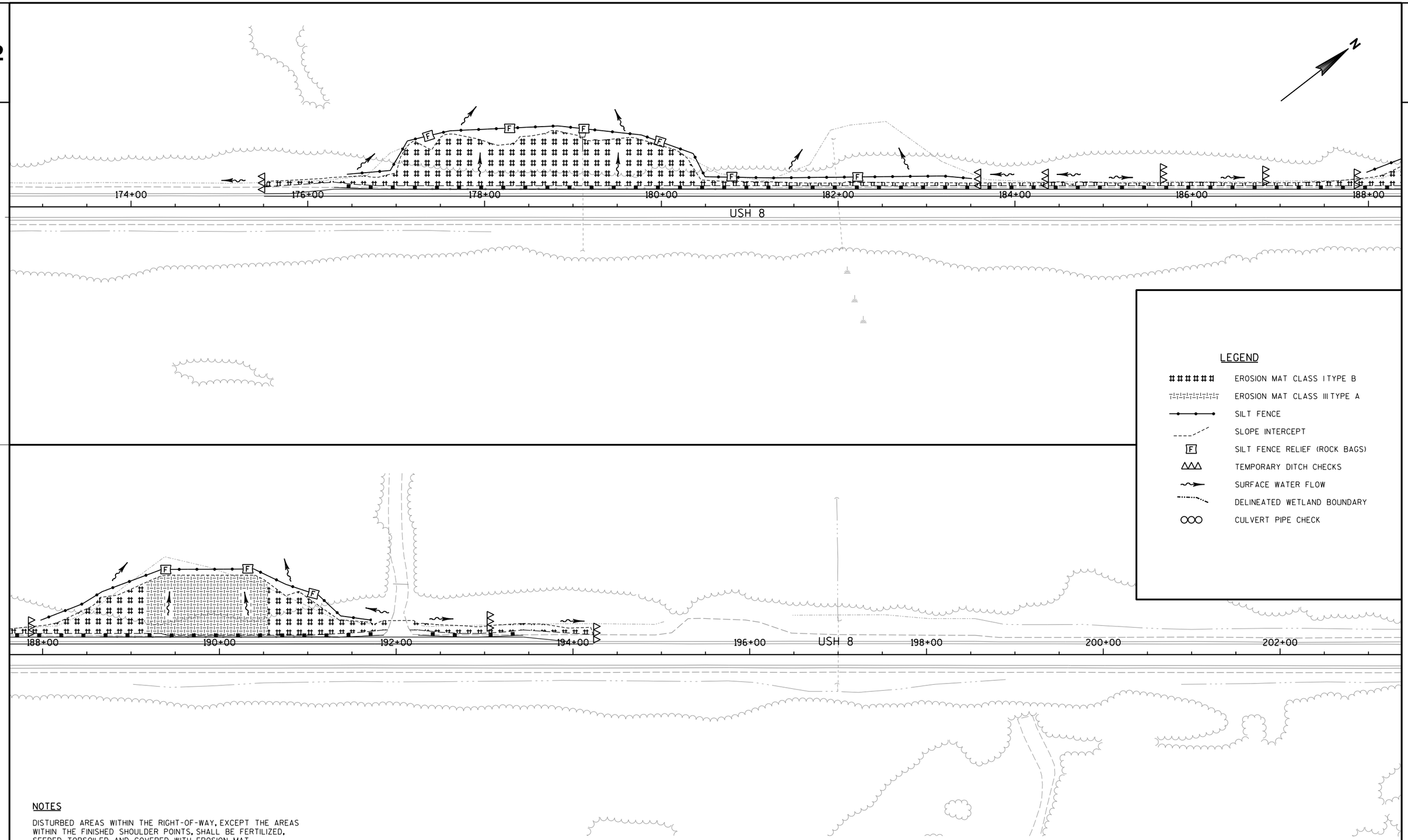

NOTES

DISTURBED AREAS WITHIN THE RIGHT-OF-WAY, EXCEPT THE AREAS WITHIN THE FINISHED SHOULDER POINTS, SHALL BE FERTILIZED, SEEDED, TOPSOILED AND COVERED WITH EROSION MAT.

PROJECT NO:1595-09-60	HWY:USH 8	COUNTY:ONEIDA	EROSION CONTROL	SHEET 32	E

FILE NAME : P:\47xx\4727_DP.12.USH8.ONE\CADDS\Plan\022001_ec.dgn PLOT DATE : 2/16/2015 PLOT BY : emo PLOT NAME : PLOT SCALE : 1:100

WISDOT/CADDS SHEET 42

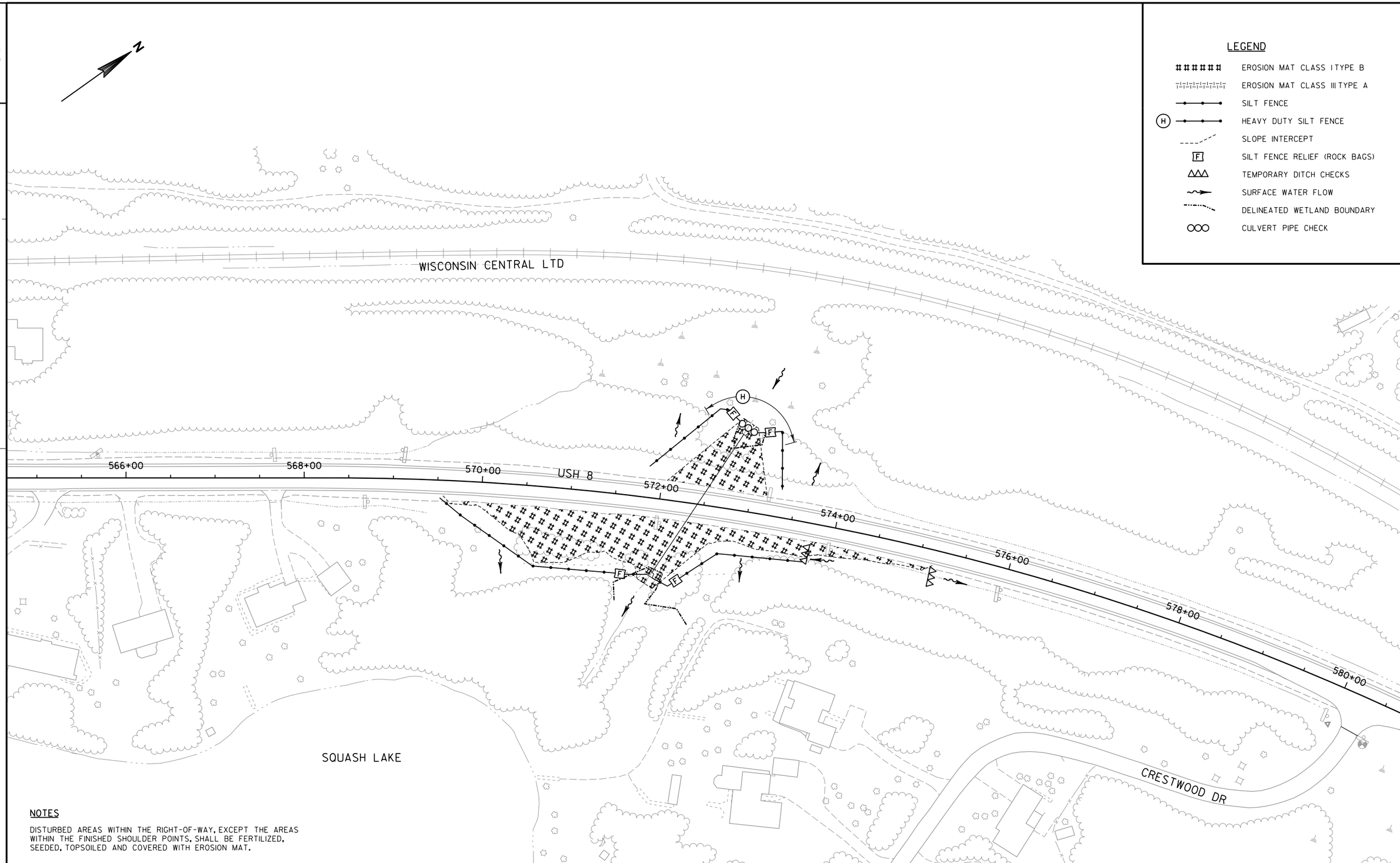

NOTES

DISTURBED AREAS WITHIN THE RIGHT-OF-WAY, EXCEPT THE AREAS WITHIN THE FINISHED SHOULDER POINTS, SHALL BE FERTILIZED, SEEDED, TOPSOILED AND COVERED WITH EROSION MAT.

PROJECT NO:1595-09-60	HWY:USH 8	COUNTY:ONEIDA	EROSION CONTROL	SHEET 33	E

2

LEGEND

- EROSION MAT CLASS I TYPE B
- EROSION MAT CLASS III TYPE A
- SILT FENCE
- SLOPE INTERCEPT
- F — SILT FENCE RELIEF (ROCK BAGS)
- TEMPORARY DITCH CHECKS
- SURFACE WATER FLOW
- DELINEATED WETLAND BOUNDARY
- CULVERT PIPE CHECK

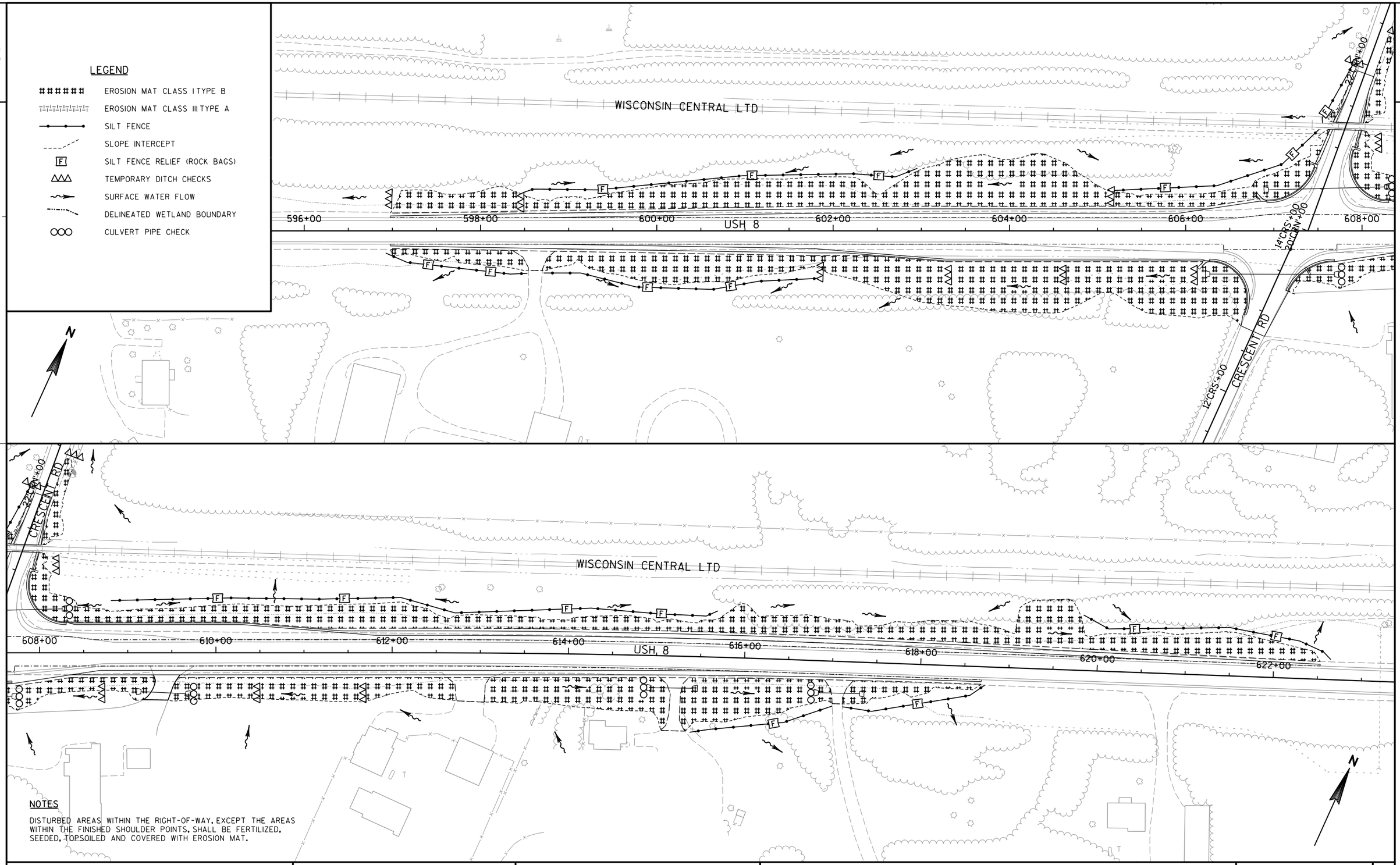

NOTES

DISTURBED AREAS WITHIN THE RIGHT-OF-WAY, EXCEPT THE AREAS WITHIN THE FINISHED SHOULDER POINTS, SHALL BE FERTILIZED, SEEDED, TOPSOILED AND COVERED WITH EROSION MAT.

PROJECT NO: 1595-09-60	HWY: USH 8	COUNTY: ONEIDA	EROSION CONTROL	SHEET 34	E

2

NOTES

PERMANENT SIGN LOCATIONS ARE APPROXIMATE. FINAL LOCATIONS SHALL BE PLACED IN ACCORDANCE TO DETAILS AND THE MUTCD.

NO PASSING ZONE PENNANTS SHALL BE PLACED IN ACCORDANCE WITH THE RESULTS OF THE LOCATING NO PASSING ZONE ITEM.

CENTERLINE RUMBLE STRIP LOCATIONS ARE APPROXIMATE. INSTALL CENTERLINE RUMBLE STRIPS IN ACCORDANCE TO DETAILS AS APPROVED BY THE ENGINEER.

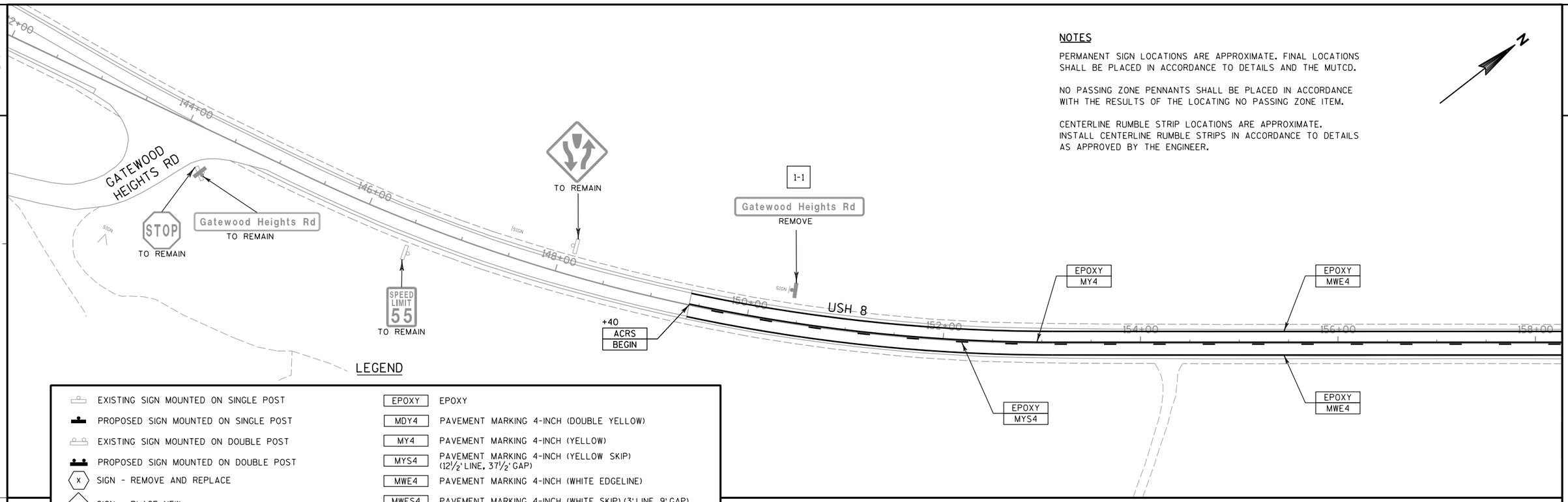

LEGEND

	EPOXY	EPOXY
	MDY4	PAVEMENT MARKING 4-INCH (DOUBLE YELLOW)
	MY4	PAVEMENT MARKING 4-INCH (YELLOW)
	MYS4	PAVEMENT MARKING 4-INCH (YELLOW SKIP) (12½' LINE, 37½' GAP)
X	MWE4	PAVEMENT MARKING 4-INCH (WHITE EDGELINE)
X	MWES4	PAVEMENT MARKING 4-INCH (WHITE SKIP) (3' LINE, 9' GAP)
X	MWS4	PAVEMENT MARKING 4-INCH (WHITE SKIP) (12½' LINE, 37½' GAP)
ASRS	MW8	PAVEMENT MARKING 8-INCH (WHITE)
ACRS	MWA2	PAVEMENT MARKING ARROWS TYPE 2 (WHITE)
BEGIN	MWWO	PAVEMENT MARKING WORDS (ONLY) (WHITE)
END	MYD12	PAVEMENT MARKING DIAGONAL 12-INCH (YELLOW) (25' CEN. TO CEN.)

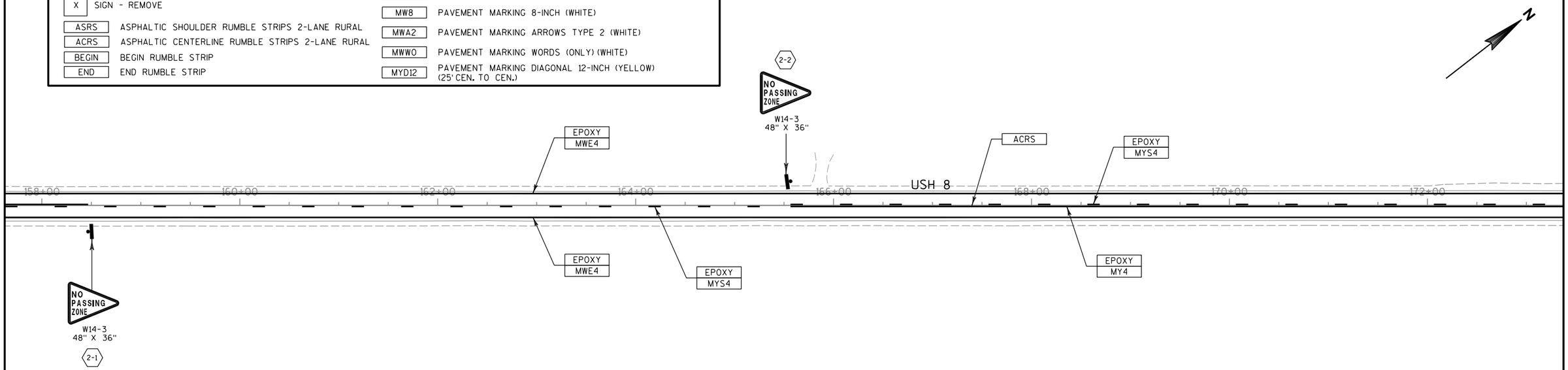

PROJECT NO: 1595-09-60	HWY: USH 8	COUNTY: ONEIDA	PERMANENT SIGNING & PAVEMENT MARKING	SHEET 35	E

2

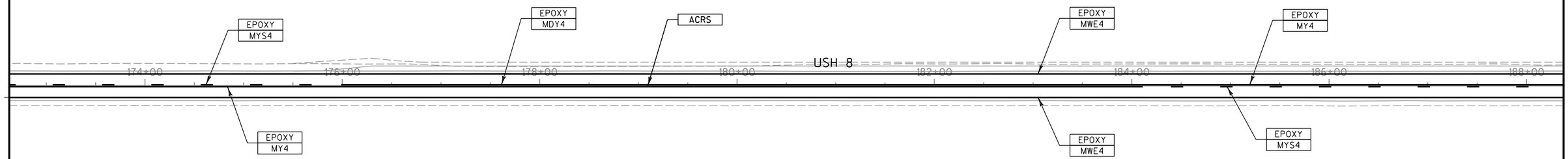

LEGEND

EXISTING SIGN MOUNTED ON SINGLE POST	EPOXY	EPOXY
PROPOSED SIGN MOUNTED ON SINGLE POST	MDY4	PAVEMENT MARKING 4-INCH (DOUBLE YELLOW)
EXISTING SIGN MOUNTED ON DOUBLE POST	MY4	PAVEMENT MARKING 4-INCH (YELLOW)
PROPOSED SIGN MOUNTED ON DOUBLE POST	MYS4	PAVEMENT MARKING 4-INCH (YELLOW SKIP) (12½' LINE, 37½' GAP)
(X) SIGN - REMOVE AND REPLACE	MWE4	PAVEMENT MARKING 4-INCH (WHITE EDGELINE)
(X) SIGN - PLACE NEW	MWES4	PAVEMENT MARKING 4-INCH (WHITE SKIP) (3' LINE, 9' GAP)
X SIGN - REMOVE	MWS4	PAVEMENT MARKING 4-INCH (WHITE SKIP) (12½' LINE, 37½' GAP)
ASRS ASPHALTIC SHOULDER RUMBLE STRIPS 2-LANE RURAL	MW8	PAVEMENT MARKING 8-INCH (WHITE)
ACRS ASPHALTIC CENTERLINE RUMBLE STRIPS 2-LANE RURAL	MWA2	PAVEMENT MARKING ARROWS TYPE 2 (WHITE)
BEGIN BEGIN RUMBLE STRIP	MWWO	PAVEMENT MARKING WORDS (ONLY) (WHITE)
END END RUMBLE STRIP	MYD12	PAVEMENT MARKING DIAGONAL 12-INCH (YELLOW) (25' CEN. TO CEN.)

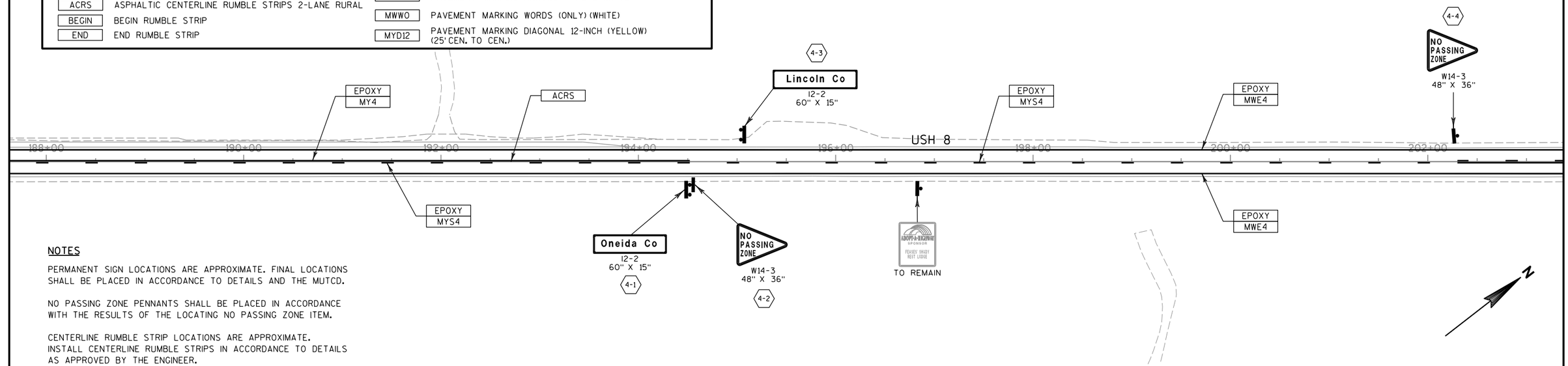

NOTES

PERMANENT SIGN LOCATIONS ARE APPROXIMATE. FINAL LOCATIONS SHALL BE PLACED IN ACCORDANCE TO DETAILS AND THE MUTCD.

NO PASSING ZONE PENNANTS SHALL BE PLACED IN ACCORDANCE WITH THE RESULTS OF THE LOCATING NO PASSING ZONE ITEM.

CENTERLINE RUMBLE STRIP LOCATIONS ARE APPROXIMATE. INSTALL CENTERLINE RUMBLE STRIPS IN ACCORDANCE TO DETAILS AS APPROVED BY THE ENGINEER.

PROJECT NO: 1595-09-60	HWY: USH 8	COUNTY: ONEIDA	PERMANENT SIGNING & PAVEMENT MARKING	SHEET 36	E

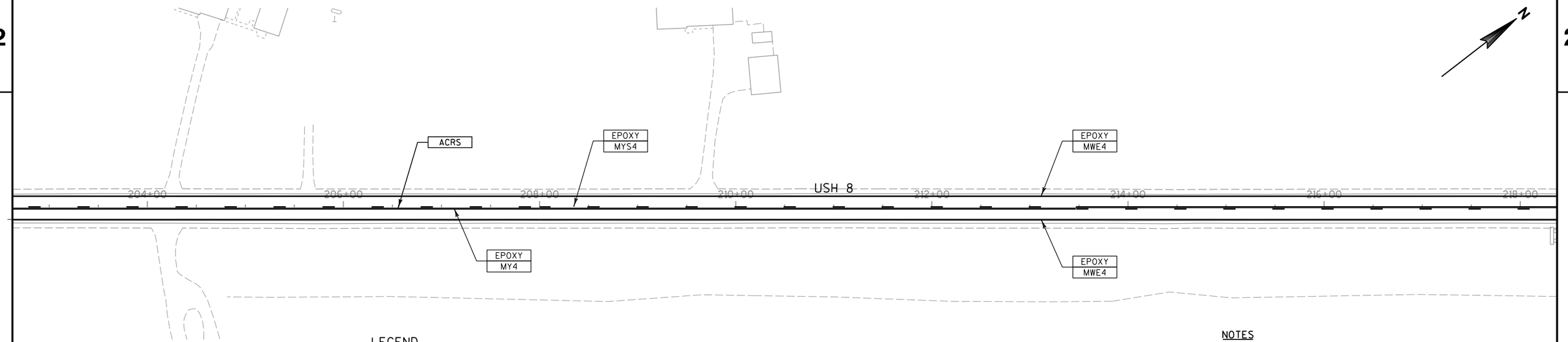

LEGEND

	EXISTING SIGN MOUNTED ON SINGLE POST	EPOXY — EPOXY
	PROPOSED SIGN MOUNTED ON SINGLE POST	MDY4 — PAVEMENT MARKING 4-INCH (DOUBLE YELLOW)
	EXISTING SIGN MOUNTED ON DOUBLE POST	MY4 — PAVEMENT MARKING 4-INCH (YELLOW)
	PROPOSED SIGN MOUNTED ON DOUBLE POST	MYS4 — PAVEMENT MARKING 4-INCH (YELLOW SKIP) (12½' LINE, 37½' GAP)
X	SIGN - REMOVE AND REPLACE	MWE4 — PAVEMENT MARKING 4-INCH (WHITE EDGELINE)
X	SIGN - PLACE NEW	MWES4 — PAVEMENT MARKING 4-INCH (WHITE SKIP) (3' LINE, 9' GAP)
X	SIGN - REMOVE	MWS4 — PAVEMENT MARKING 4-INCH (WHITE SKIP) (12½' LINE, 37½' GAP)
ASRS	ASPHALTIC SHOULDER RUMBLE STRIPS 2-LANE RURAL	MW8 — PAVEMENT MARKING 8-INCH (WHITE)
ACRS	ASPHALTIC CENTERLINE RUMBLE STRIPS 2-LANE RURAL	MWA2 — PAVEMENT MARKING ARROWS TYPE 2 (WHITE)
BEGIN	BEGIN RUMBLE STRIP	MWWO — PAVEMENT MARKING WORDS (ONLY) (WHITE)
END	END RUMBLE STRIP	MYD12 — PAVEMENT MARKING DIAGONAL 12-INCH (YELLOW) (25' CEN. TO CEN.)

NOTES

PERMANENT SIGN LOCATIONS ARE APPROXIMATE. FINAL LOCATIONS SHALL BE PLACED IN ACCORDANCE TO DETAILS AND THE MUTCD.

NO PASSING ZONE PENNANTS SHALL BE PLACED IN ACCORDANCE WITH THE RESULTS OF THE LOCATING NO PASSING ZONE ITEM.

CENTERLINE RUMBLE STRIP LOCATIONS ARE APPROXIMATE. INSTALL CENTERLINE RUMBLE STRIPS IN ACCORDANCE TO DETAILS AS APPROVED BY THE ENGINEER.

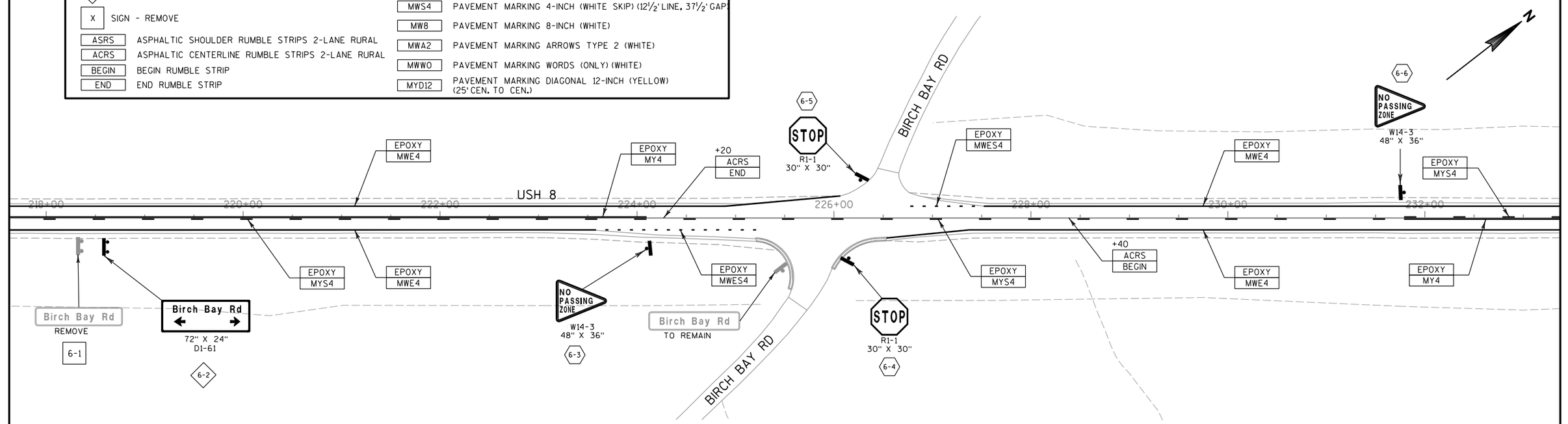

PROJECT NO: 1595-09-60	HWY: USH 8	COUNTY: ONEIDA	PERMANENT SIGNING & PAVEMENT MARKING	SHEET 37	E

NOTES

PERMANENT SIGN LOCATIONS ARE APPROXIMATE. FINAL LOCATIONS SHALL BE PLACED IN ACCORDANCE TO DETAILS AND THE MUTCD.

NO PASSING ZONE PENNANTS SHALL BE PLACED IN ACCORDANCE WITH THE RESULTS OF THE LOCATING NO PASSING ZONE ITEM.

CENTERLINE RUMBLE STRIP LOCATIONS ARE APPROXIMATE. INSTALL CENTERLINE RUMBLE STRIPS IN ACCORDANCE TO DETAILS AS APPROVED BY THE ENGINEER.

LEGEND

	EXISTING SIGN MOUNTED ON SINGLE POST	EPOXY	EPOXY
	PROPOSED SIGN MOUNTED ON SINGLE POST	MDY4	PAVEMENT MARKING 4-INCH (DOUBLE YELLOW)
	EXISTING SIGN MOUNTED ON DOUBLE POST	MY4	PAVEMENT MARKING 4-INCH (YELLOW)
	PROPOSED SIGN MOUNTED ON DOUBLE POST	MYS4	PAVEMENT MARKING 4-INCH (YELLOW SKIP) (12½' LINE, 37½' GAP)
X	SIGN - REMOVE AND REPLACE	MWE4	PAVEMENT MARKING 4-INCH (WHITE EDGELINE)
X	SIGN - PLACE NEW	MWES4	PAVEMENT MARKING 4-INCH (WHITE SKIP) (3' LINE, 9' GAP)
X	SIGN - REMOVE	MWS4	PAVEMENT MARKING 4-INCH (WHITE SKIP) (12½' LINE, 37½' GAP)
ASRS	ASPHALTIC SHOULDER RUMBLE STRIPS 2-LANE RURAL	MW8	PAVEMENT MARKING 8-INCH (WHITE)
ACRS	ASPHALTIC CENTERLINE RUMBLE STRIPS 2-LANE RURAL	MWA2	PAVEMENT MARKING ARROWS TYPE 2 (WHITE)
BEGIN	BEGIN RUMBLE STRIP	MWWO	PAVEMENT MARKING WORDS (ONLY) (WHITE)
END	END RUMBLE STRIP	MYD12	PAVEMENT MARKING DIAGONAL 12-INCH (YELLOW) (25' CEN. TO CEN.)

7-1 Birch Bay Rd REMOVE

7-2 Birch Bay Rd 72" X 24" D1-61

EPOXY MWE4

EPOXY MYS4

EPOXY MY4

EPOXY MWE4

234+00 236+00 238+00 240+00 242+00 244+00 246+00 248+00

USH 8

+50 ACRS END

EPOXY MDY4

7-3 Paulson Dr REMOVE

7-4 Paulson Dr 66" X 24" D1-61

7-5 W2-1 30" X 30"

DEAD END TO REMAIN

OUTLET DR

7-6 STOP R1-1 30" X 30"

Outlet Dr TO REMAIN

8-1 STOP R1-1 30" X 30"

PAULSON DR

EPOXY MWES4

EPOXY MDY4

+95 ACRS BEGIN

8-4 Paulson Dr REMOVE

EPOXY MWE4

8-5 Paulson Dr 66" X 24" D1-61

250+00 252+00 254+00 256+00 258+00 260+00 262+00

USH 8

+30 ACRS END

8-6 REMOVE EMPTY POST

EPOXY MWE4

JCT COUNTY N J1-1 24" X 39"

8-3

WOODBORO TOWN HALL TO REMAIN

8-7 Heafford Jct D1-1 84" X 15"

8-8 WEST 8 J4-1 24" X 36"

STOP R1-1 36" X 36" 8-11

8-10 8 J13-1 24" X 45"

CTH N

TO REMAIN

8-12 STOP R1-1 36" X 36"

8-13 COUNTY N J13-1 24" X 45"

EPOXY MW8

EPOXY MDY4

8-9 COUNTY N J13-1 24" X 45"

Paulson Dr TO REMAIN

EPOXY MWES4

8-2 STOP R1-1 30" X 30"

PAULSON DR

DEAD END TO REMAIN

SPEED LIMIT 25 TO REMAIN

N

PROJECT NO: 1595-09-60	HWY: USH 8	COUNTY: ONEIDA	PERMANENT SIGNING & PAVEMENT MARKING	SHEET 38	E

FILE NAME : P:\47xx\4727_DP.12.USH8.ONE\CADDS\Plan\023204_ps.dgn PLOT DATE : 2/16/2015 PLOT BY : emo PLOT NAME : PLOT SCALE : 1:100

WISDOT/CADDS SHEET 42

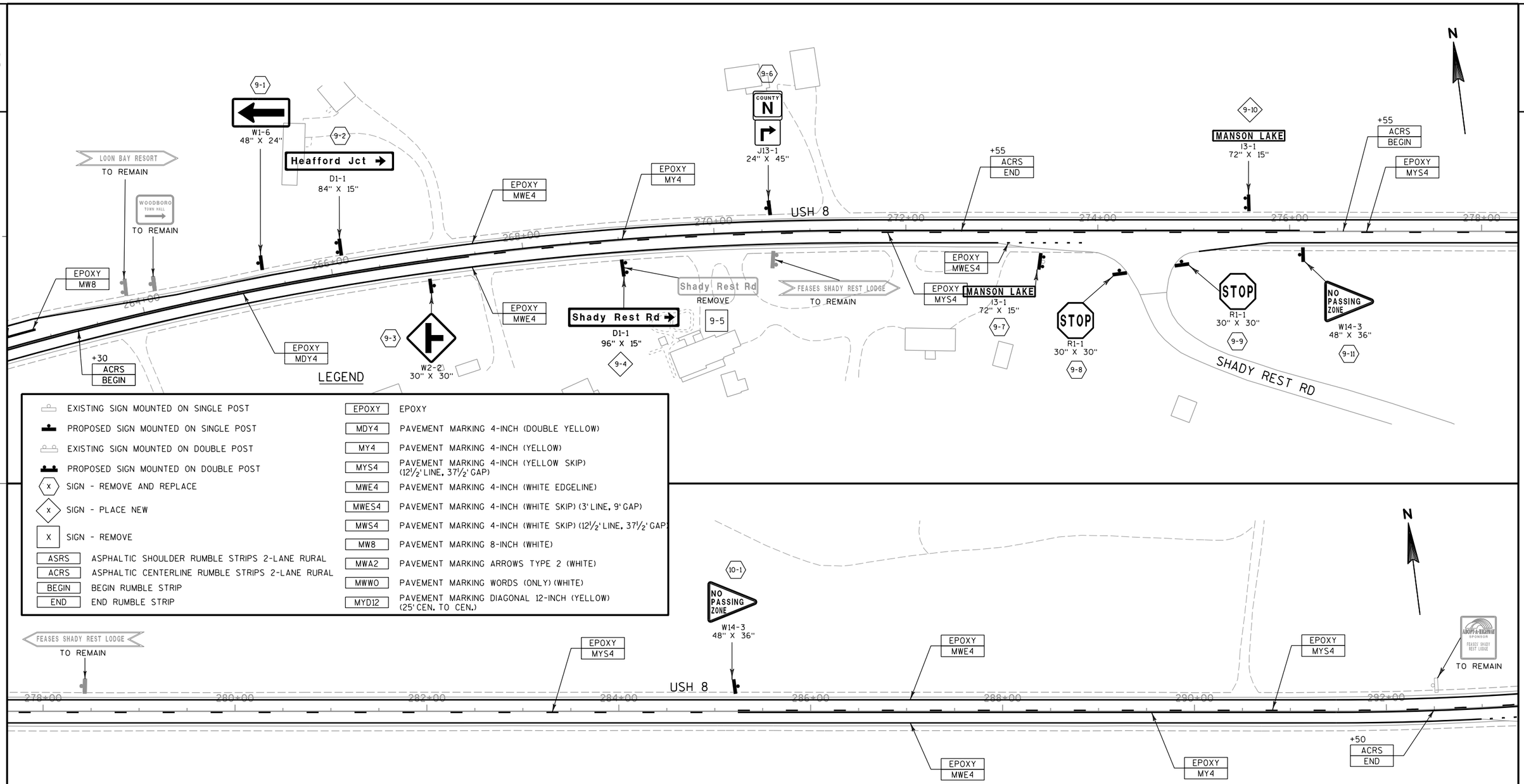

NOTES

PERMANENT SIGN LOCATIONS ARE APPROXIMATE. FINAL LOCATIONS SHALL BE PLACED IN ACCORDANCE TO DETAILS AND THE MUTCD.

NO PASSING ZONE PENNANTS SHALL BE PLACED IN ACCORDANCE WITH THE RESULTS OF THE LOCATING NO PASSING ZONE ITEM.

CENTERLINE RUMBLE STRIP LOCATIONS ARE APPROXIMATE. INSTALL CENTERLINE RUMBLE STRIPS IN ACCORDANCE TO DETAILS AS APPROVED BY THE ENGINEER.

PROJECT NO: 1595-09-60	HWY: USH 8	COUNTY: ONEIDA	PERMANENT SIGNING & PAVEMENT MARKING	SHEET 39	E

2

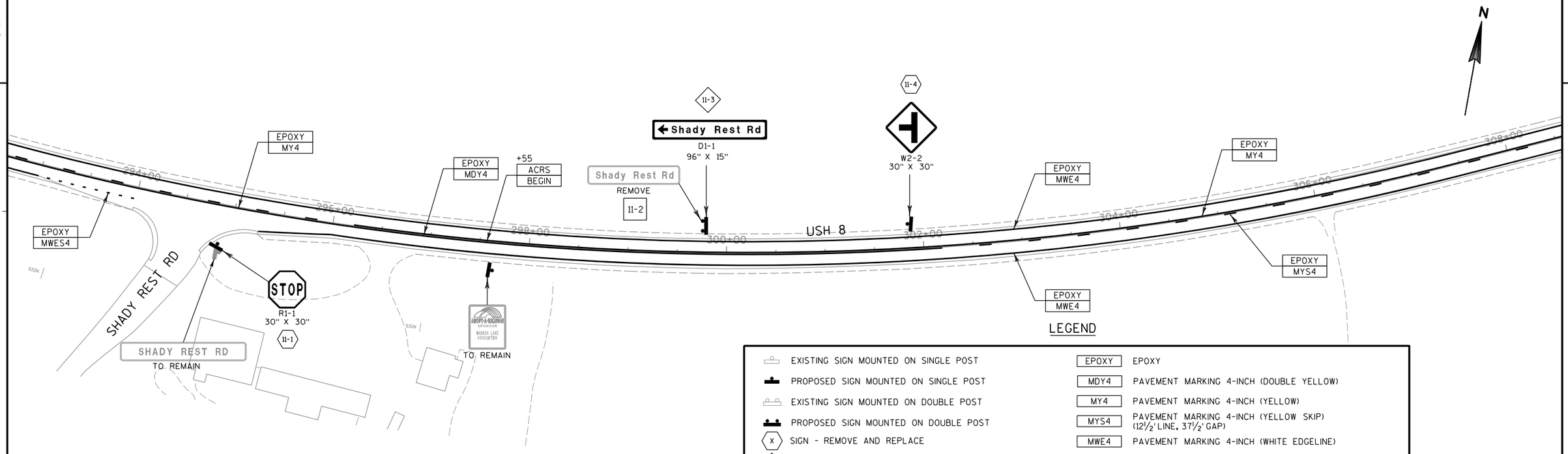

LEGEND

	EXISTING SIGN MOUNTED ON SINGLE POST	EPOXY	EPOXY
	PROPOSED SIGN MOUNTED ON SINGLE POST	MDY4	PAVEMENT MARKING 4-INCH (DOUBLE YELLOW)
	EXISTING SIGN MOUNTED ON DOUBLE POST	MY4	PAVEMENT MARKING 4-INCH (YELLOW)
	PROPOSED SIGN MOUNTED ON DOUBLE POST	MYS4	PAVEMENT MARKING 4-INCH (YELLOW SKIP) (12½' LINE, 37½' GAP)
X	SIGN - REMOVE AND REPLACE	MWE4	PAVEMENT MARKING 4-INCH (WHITE EDGELINE)
X	SIGN - PLACE NEW	MWES4	PAVEMENT MARKING 4-INCH (WHITE SKIP) (3' LINE, 9' GAP)
X	SIGN - REMOVE	MWS4	PAVEMENT MARKING 4-INCH (WHITE SKIP) (12½' LINE, 37½' GAP)
		MW8	PAVEMENT MARKING 8-INCH (WHITE)
		MWA2	PAVEMENT MARKING ARROWS TYPE 2 (WHITE)
		MWWO	PAVEMENT MARKING WORDS (ONLY) (WHITE)
		MYD12	PAVEMENT MARKING DIAGONAL 12-INCH (YELLOW) (25' CEN. TO CEN.)
ASRS	ASPHALTIC SHOULDER RUMBLE STRIPS 2-LANE RURAL		
ACRS	ASPHALTIC CENTERLINE RUMBLE STRIPS 2-LANE RURAL		
BEGIN	BEGIN RUMBLE STRIP		
END	END RUMBLE STRIP		

NOTES

PERMANENT SIGN LOCATIONS ARE APPROXIMATE. FINAL LOCATIONS SHALL BE PLACED IN ACCORDANCE TO DETAILS AND THE MUTCD.

NO PASSING ZONE PENNANTS SHALL BE PLACED IN ACCORDANCE WITH THE RESULTS OF THE LOCATING NO PASSING ZONE ITEM.

CENTERLINE RUMBLE STRIP LOCATIONS ARE APPROXIMATE. INSTALL CENTERLINE RUMBLE STRIPS IN ACCORDANCE TO DETAILS AS APPROVED BY THE ENGINEER.

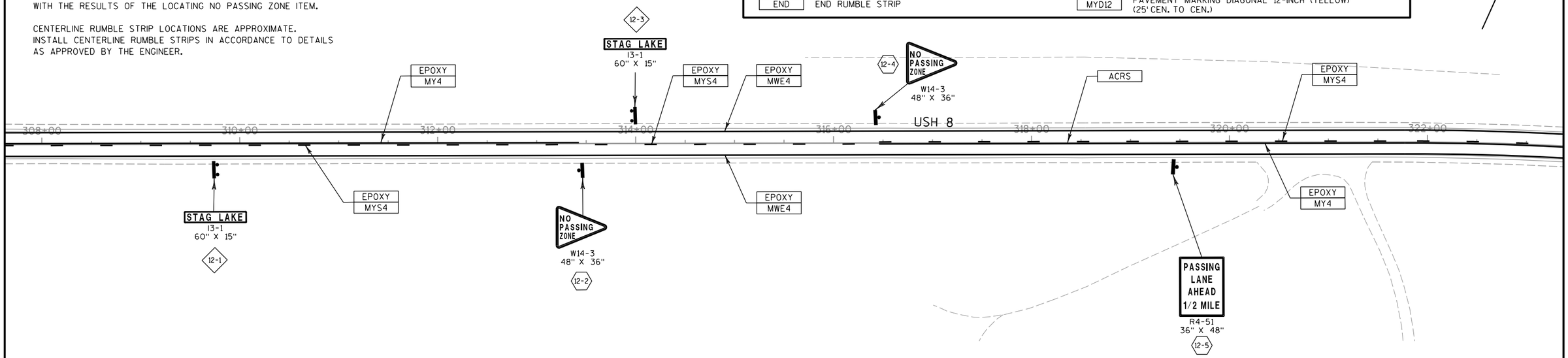

PROJECT NO: 1595-09-60	HWY: USH 8	COUNTY: ONEIDA	PERMANENT SIGNING & PAVEMENT MARKING	SHEET 40	E

2

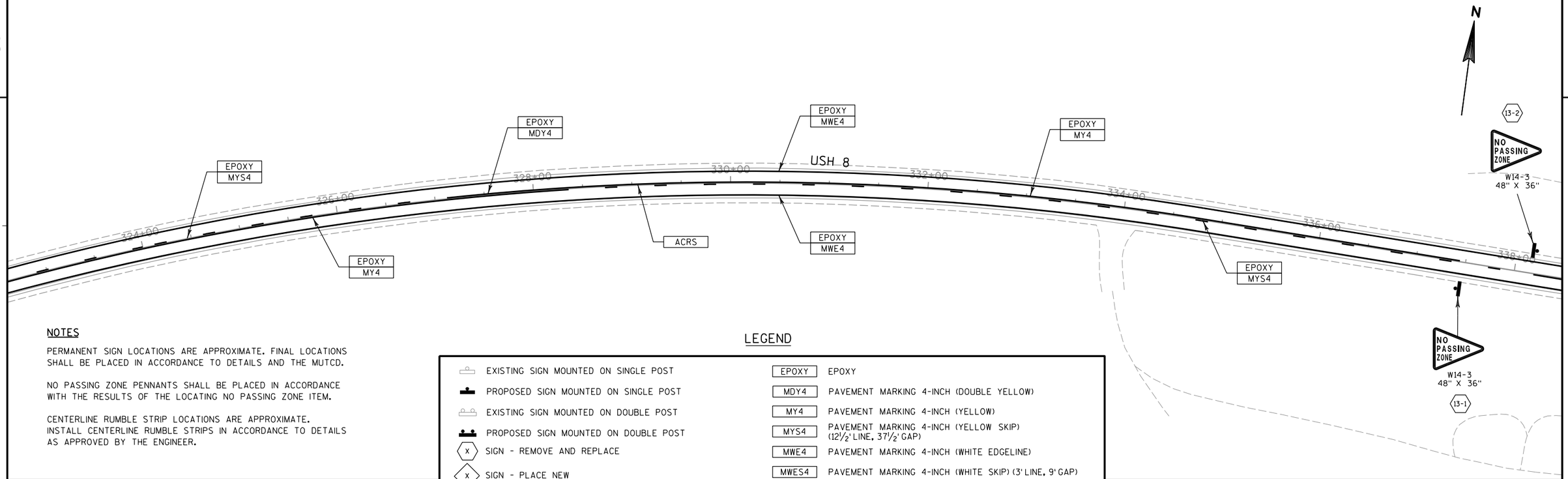

NOTES

PERMANENT SIGN LOCATIONS ARE APPROXIMATE. FINAL LOCATIONS SHALL BE PLACED IN ACCORDANCE TO DETAILS AND THE MUTCD.

NO PASSING ZONE PENNANTS SHALL BE PLACED IN ACCORDANCE WITH THE RESULTS OF THE LOCATING NO PASSING ZONE ITEM.

CENTERLINE RUMBLE STRIP LOCATIONS ARE APPROXIMATE. INSTALL CENTERLINE RUMBLE STRIPS IN ACCORDANCE TO DETAILS AS APPROVED BY THE ENGINEER.

LEGEND

EXISTING SIGN MOUNTED ON SINGLE POST	
PROPOSED SIGN MOUNTED ON SINGLE POST	
EXISTING SIGN MOUNTED ON DOUBLE POST	
PROPOSED SIGN MOUNTED ON DOUBLE POST	
(X)	SIGN - REMOVE AND REPLACE
◇X◇	SIGN - PLACE NEW
X	SIGN - REMOVE
ASRS	ASPHALTIC SHOULDER RUMBLE STRIPS 2-LANE RURAL
ACRS	ASPHALTIC CENTERLINE RUMBLE STRIPS 2-LANE RURAL
BEGIN	BEGIN RUMBLE STRIP
END	END RUMBLE STRIP

EPOXY	EPOXY
MDY4	PAVEMENT MARKING 4-INCH (DOUBLE YELLOW)
MY4	PAVEMENT MARKING 4-INCH (YELLOW)
MYS4	PAVEMENT MARKING 4-INCH (YELLOW SKIP) (12½' LINE, 37½' GAP)
MWE4	PAVEMENT MARKING 4-INCH (WHITE EDGELINE)
MWES4	PAVEMENT MARKING 4-INCH (WHITE SKIP) (3' LINE, 9' GAP)
MWS4	PAVEMENT MARKING 4-INCH (WHITE SKIP) (12½' LINE, 37½' GAP)
MW8	PAVEMENT MARKING 8-INCH (WHITE)
MWA2	PAVEMENT MARKING ARROWS TYPE 2 (WHITE)
MWWO	PAVEMENT MARKING WORDS (ONLY) (WHITE)
MYD12	PAVEMENT MARKING DIAGONAL 12-INCH (YELLOW) (25' CEN. TO CEN.)

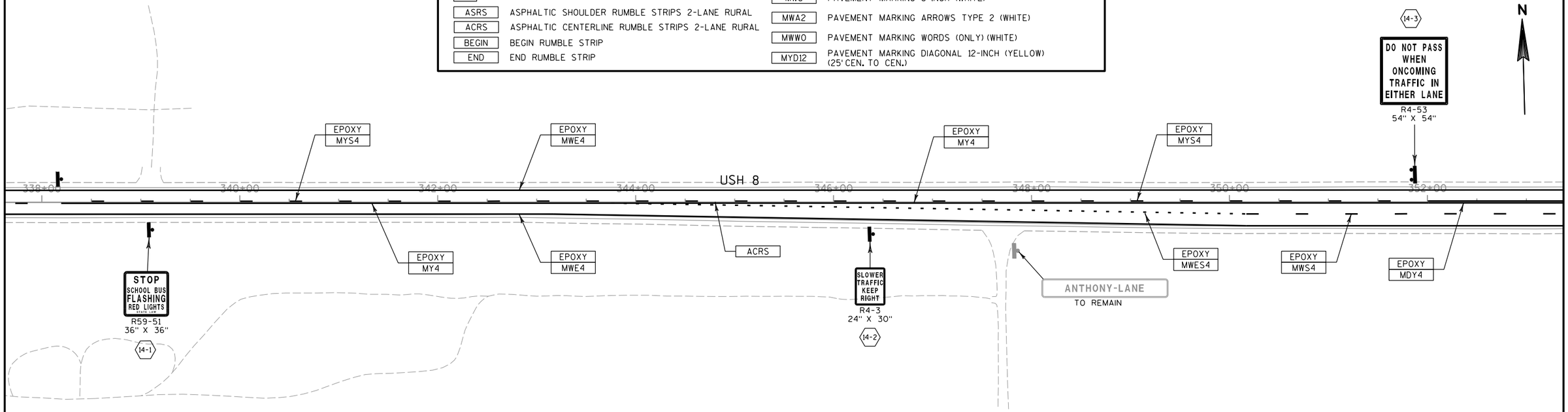

PROJECT NO: 1595-09-60	HWY: USH 8	COUNTY: ONEIDA	PERMANENT SIGNING & PAVEMENT MARKING	SHEET 41	E

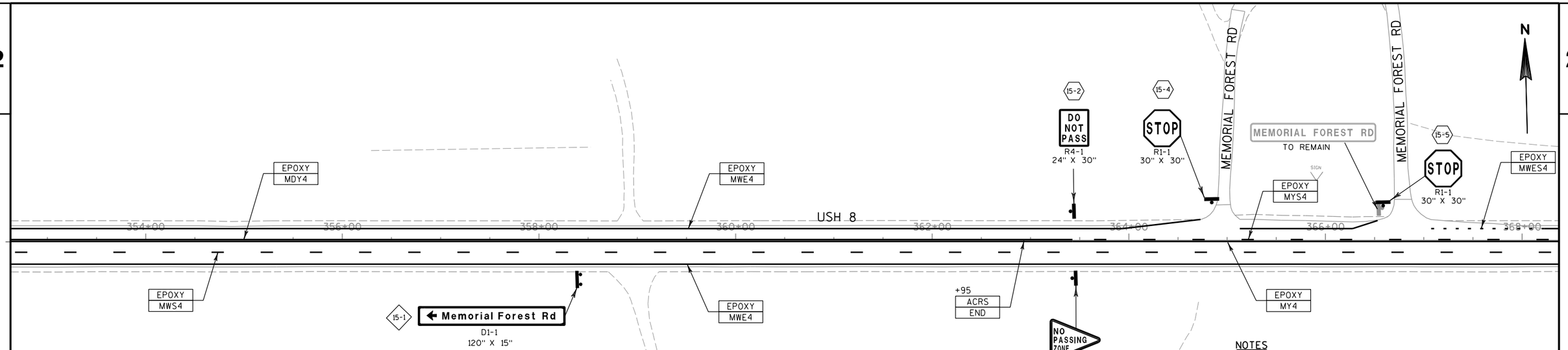

LEGEND

	EXISTING SIGN MOUNTED ON SINGLE POST	EPOXY — EPOXY
	PROPOSED SIGN MOUNTED ON SINGLE POST	MDY4 — PAVEMENT MARKING 4-INCH (DOUBLE YELLOW)
	EXISTING SIGN MOUNTED ON DOUBLE POST	MY4 — PAVEMENT MARKING 4-INCH (YELLOW)
	PROPOSED SIGN MOUNTED ON DOUBLE POST	MYS4 — PAVEMENT MARKING 4-INCH (YELLOW SKIP) (12½' LINE, 37½' GAP)
X	SIGN - REMOVE AND REPLACE	MWE4 — PAVEMENT MARKING 4-INCH (WHITE EDGELINE)
X	SIGN - PLACE NEW	MWES4 — PAVEMENT MARKING 4-INCH (WHITE SKIP) (3' LINE, 9' GAP)
X	SIGN - REMOVE	MWS4 — PAVEMENT MARKING 4-INCH (WHITE SKIP) (12½' LINE, 37½' GAP)
		MW8 — PAVEMENT MARKING 8-INCH (WHITE)
ASRS	ASPHALTIC SHOULDER RUMBLE STRIPS 2-LANE RURAL	MWA2 — PAVEMENT MARKING ARROWS TYPE 2 (WHITE)
ACRS	ASPHALTIC CENTERLINE RUMBLE STRIPS 2-LANE RURAL	MWWO — PAVEMENT MARKING WORDS (ONLY) (WHITE)
BEGIN	BEGIN RUMBLE STRIP	MYD12 — PAVEMENT MARKING DIAGONAL 12-INCH (YELLOW) (25' CEN. TO CEN.)
END	END RUMBLE STRIP	

NOTES

PERMANENT SIGN LOCATIONS ARE APPROXIMATE. FINAL LOCATIONS SHALL BE PLACED IN ACCORDANCE TO DETAILS AND THE MUTCD.

NO PASSING ZONE PENNANTS SHALL BE PLACED IN ACCORDANCE WITH THE RESULTS OF THE LOCATING NO PASSING ZONE ITEM.

CENTERLINE RUMBLE STRIP LOCATIONS ARE APPROXIMATE. INSTALL CENTERLINE RUMBLE STRIPS IN ACCORDANCE TO DETAILS AS APPROVED BY THE ENGINEER.

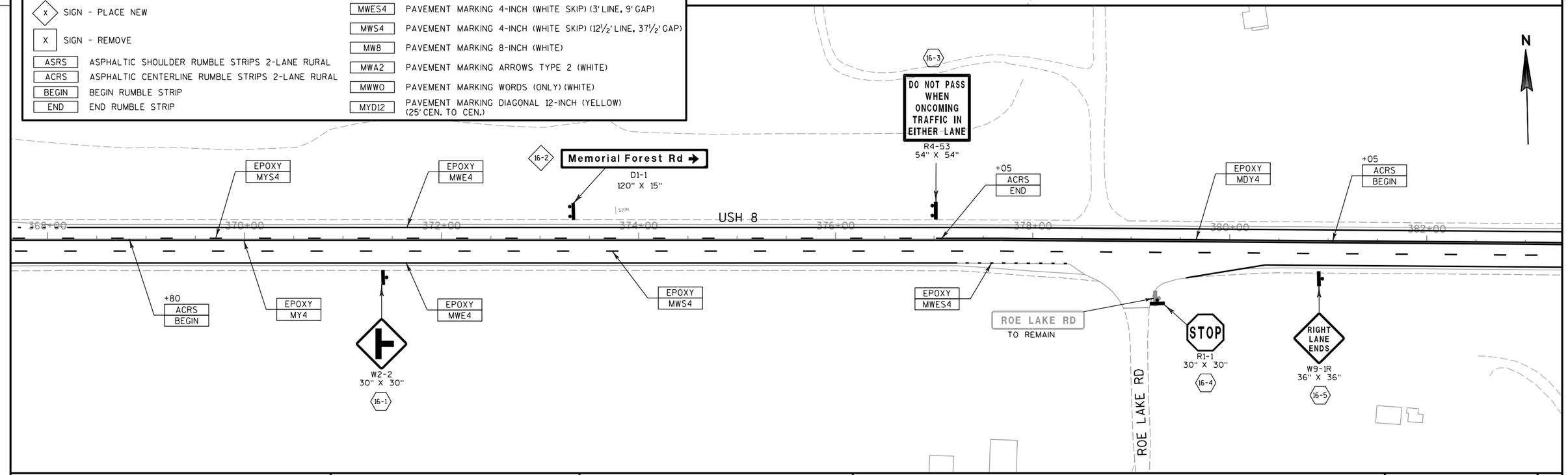

PROJECT NO: 1595-09-60	HWY: USH 8	COUNTY: ONEIDA	PERMANENT SIGNING & PAVEMENT MARKING	SHEET 42	E

2

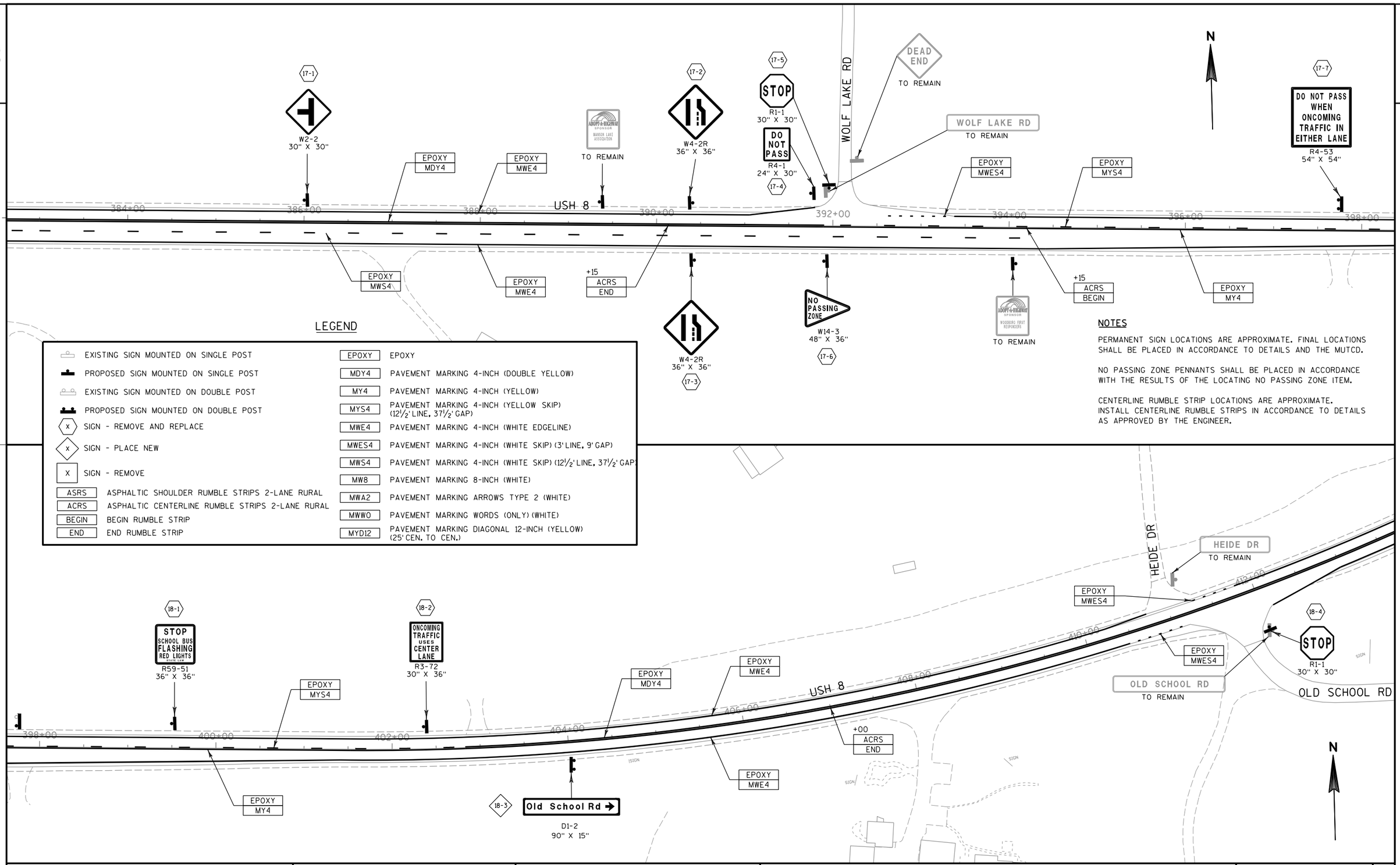

LEGEND

	EXISTING SIGN MOUNTED ON SINGLE POST	EPOXY — EPOXY
	PROPOSED SIGN MOUNTED ON SINGLE POST	MDY4 — PAVEMENT MARKING 4-INCH (DOUBLE YELLOW)
	EXISTING SIGN MOUNTED ON DOUBLE POST	MY4 — PAVEMENT MARKING 4-INCH (YELLOW)
	PROPOSED SIGN MOUNTED ON DOUBLE POST	MYS4 — PAVEMENT MARKING 4-INCH (YELLOW SKIP) (12½' LINE, 37½' GAP)
X	SIGN - REMOVE AND REPLACE	MWE4 — PAVEMENT MARKING 4-INCH (WHITE EDGELINE)
X	SIGN - PLACE NEW	MWES4 — PAVEMENT MARKING 4-INCH (WHITE SKIP) (3' LINE, 9' GAP)
X	SIGN - REMOVE	MWS4 — PAVEMENT MARKING 4-INCH (WHITE SKIP) (12½' LINE, 37½' GAP)
		MW8 — PAVEMENT MARKING 8-INCH (WHITE)
ASRS	ASPHALTIC SHOULDER RUMBLE STRIPS 2-LANE RURAL	MWA2 — PAVEMENT MARKING ARROWS TYPE 2 (WHITE)
ACRS	ASPHALTIC CENTERLINE RUMBLE STRIPS 2-LANE RURAL	MWWO — PAVEMENT MARKING WORDS (ONLY) (WHITE)
BEGIN	BEGIN RUMBLE STRIP	MYD12 — PAVEMENT MARKING DIAGONAL 12-INCH (YELLOW) (25' CEN. TO CEN.)
END	END RUMBLE STRIP	

NOTES

PERMANENT SIGN LOCATIONS ARE APPROXIMATE. FINAL LOCATIONS SHALL BE PLACED IN ACCORDANCE TO DETAILS AND THE MUTCD.

NO PASSING ZONE PENNANTS SHALL BE PLACED IN ACCORDANCE WITH THE RESULTS OF THE LOCATING NO PASSING ZONE ITEM.

CENTERLINE RUMBLE STRIP LOCATIONS ARE APPROXIMATE. INSTALL CENTERLINE RUMBLE STRIPS IN ACCORDANCE TO DETAILS AS APPROVED BY THE ENGINEER.

PROJECT NO: 1595-09-60	HWY: USH 8	COUNTY: ONEIDA	PERMANENT SIGNING & PAVEMENT MARKING	SHEET 43	E

2

NOTES

PERMANENT SIGN LOCATIONS ARE APPROXIMATE. FINAL LOCATIONS SHALL BE PLACED IN ACCORDANCE TO DETAILS AND THE MUTCD.

NO PASSING ZONE PENNANTS SHALL BE PLACED IN ACCORDANCE WITH THE RESULTS OF THE LOCATING NO PASSING ZONE ITEM.

CENTERLINE RUMBLE STRIP LOCATIONS ARE APPROXIMATE. INSTALL CENTERLINE RUMBLE STRIPS IN ACCORDANCE TO DETAILS AS APPROVED BY THE ENGINEER.

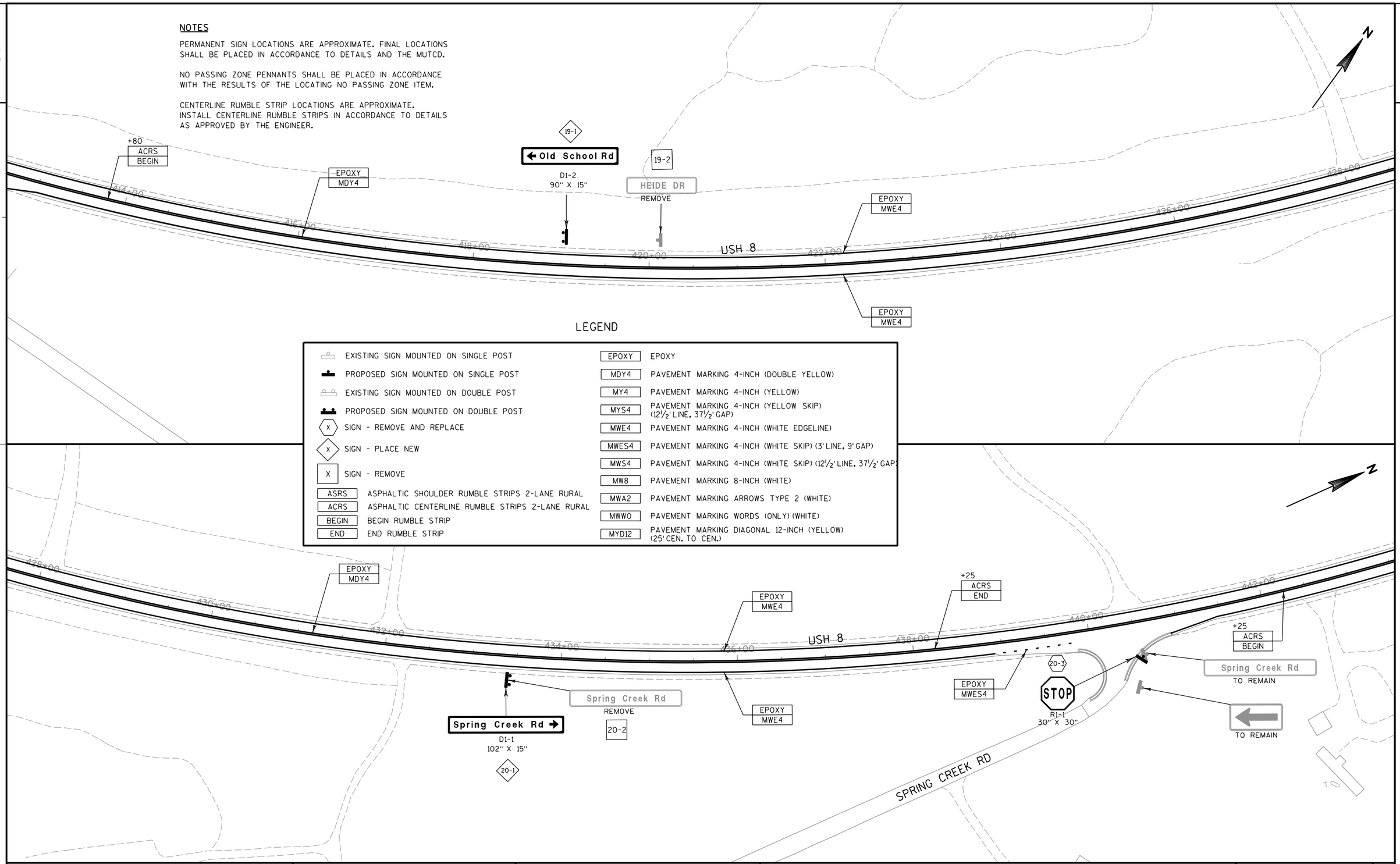

PROJECT NO: 1595-09-60	HWY: USH 8	COUNTY: ONEIDA	PERMANENT SIGNING & PAVEMENT MARKING	SHEET 44	E

2

N

21-2

Spring Creek Rd

D1-1
102" X 15"

21-1

Spring Creek Rd
REMOVE

EPOXY
MWE4

EPOXY
MDY4

EPOXY
MY4

USH 8

444+00 446+00 448+00 450+00 452+00 454+00 456+00 458+00

EPOXY
MWE4

ACRS

EPOXY
MYS4

SIGN

LEGEND

EXISTING SIGN MOUNTED ON SINGLE POST	EPOXY	EPOXY
PROPOSED SIGN MOUNTED ON SINGLE POST	MDY4	PAVEMENT MARKING 4-INCH (DOUBLE YELLOW)
EXISTING SIGN MOUNTED ON DOUBLE POST	MY4	PAVEMENT MARKING 4-INCH (YELLOW)
PROPOSED SIGN MOUNTED ON DOUBLE POST	MYS4	PAVEMENT MARKING 4-INCH (YELLOW SKIP) (12½' LINE, 37½' GAP)
X SIGN - REMOVE AND REPLACE	MWE4	PAVEMENT MARKING 4-INCH (WHITE EDGELINE)
X SIGN - PLACE NEW	MWES4	PAVEMENT MARKING 4-INCH (WHITE SKIP) (3' LINE, 9' GAP)
X SIGN - REMOVE	MWS4	PAVEMENT MARKING 4-INCH (WHITE SKIP) (12½' LINE, 37½' GAP)
ASRS ASPHALTIC SHOULDER RUMBLE STRIPS 2-LANE RURAL	MW8	PAVEMENT MARKING 8-INCH (WHITE)
ACRS ASPHALTIC CENTERLINE RUMBLE STRIPS 2-LANE RURAL	MWA2	PAVEMENT MARKING ARROWS TYPE 2 (WHITE)
BEGIN BEGIN RUMBLE STRIP	MWWO	PAVEMENT MARKING WORDS (ONLY) (WHITE)
END END RUMBLE STRIP	MYD12	PAVEMENT MARKING DIAGONAL 12-INCH (YELLOW) (25' CEN. TO CEN.)

N

RED FOX RUN

RED FOX RUN
TO REMAIN

EPOXY
MY4

EPOXY
MWE4

EPOXY
MYS4

458+00 460+00 462+00 464+00 USH 8 466+00 468+00 470+00 472+00

EPOXY
MYS4

EPOXY
MWE4

NO PASSING ZONE
W14-3
48" X 36"
22-1

+55
ACRS
END

NOTES

PERMANENT SIGN LOCATIONS ARE APPROXIMATE. FINAL LOCATIONS SHALL BE PLACED IN ACCORDANCE TO DETAILS AND THE MUTCD.

NO PASSING ZONE PENNANTS SHALL BE PLACED IN ACCORDANCE WITH THE RESULTS OF THE LOCATING NO PASSING ZONE ITEM.

CENTERLINE RUMBLE STRIP LOCATIONS ARE APPROXIMATE. INSTALL CENTERLINE RUMBLE STRIPS IN ACCORDANCE TO DETAILS AS APPROVED BY THE ENGINEER.

PROJECT NO: 1595-09-60	HWY: USH 8	COUNTY: ONEIDA	PERMANENT SIGNING & PAVEMENT MARKING	SHEET 45	E

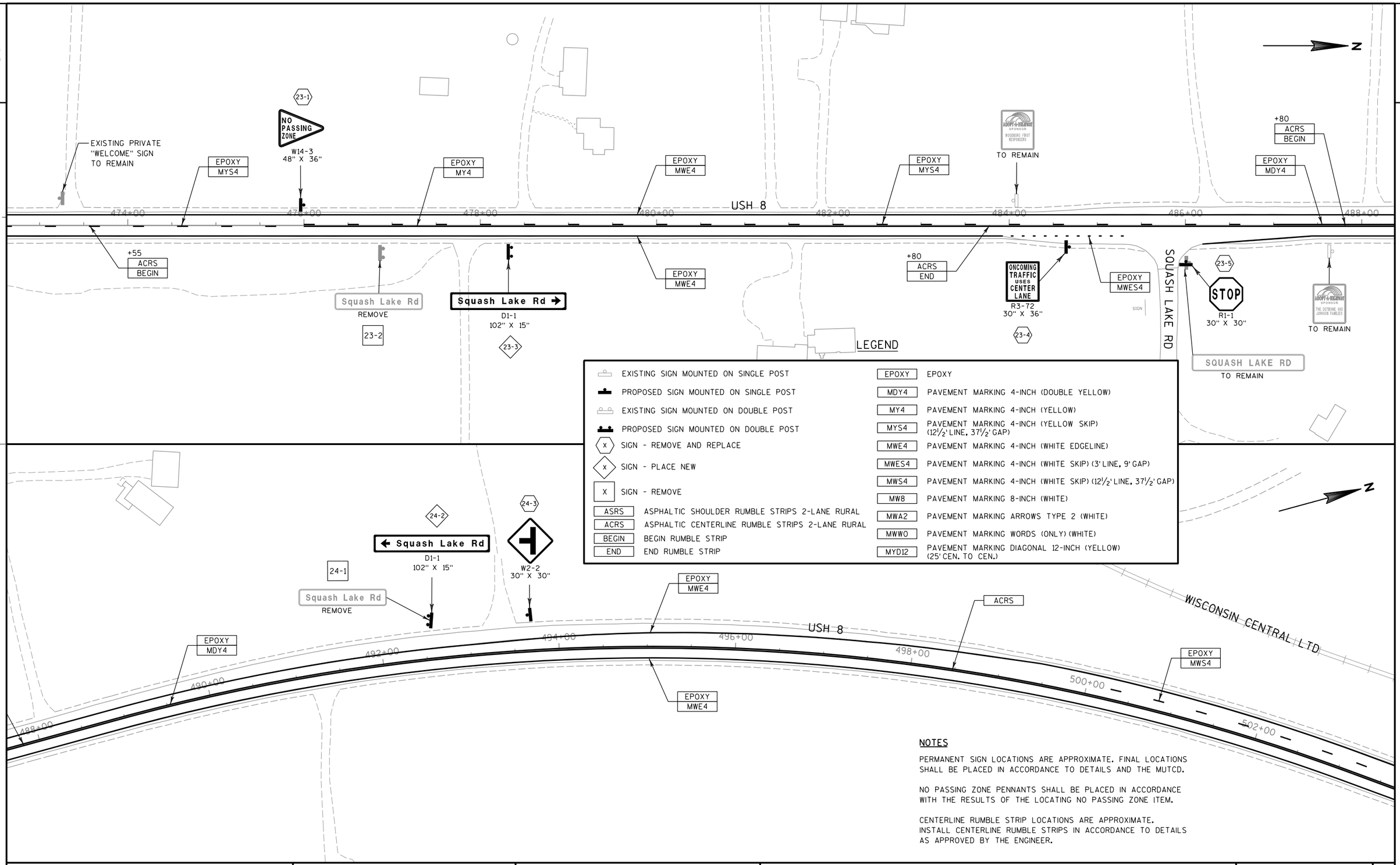

NOTES

PERMANENT SIGN LOCATIONS ARE APPROXIMATE. FINAL LOCATIONS SHALL BE PLACED IN ACCORDANCE TO DETAILS AND THE MUTCD.

NO PASSING ZONE PENNANTS SHALL BE PLACED IN ACCORDANCE WITH THE RESULTS OF THE LOCATING NO PASSING ZONE ITEM.

CENTERLINE RUMBLE STRIP LOCATIONS ARE APPROXIMATE. INSTALL CENTERLINE RUMBLE STRIPS IN ACCORDANCE TO DETAILS AS APPROVED BY THE ENGINEER.

PROJECT NO: 1595-09-60	HWY: USH 8	COUNTY: ONEIDA	PERMANENT SIGNING & PAVEMENT MARKING	SHEET 46	E

2

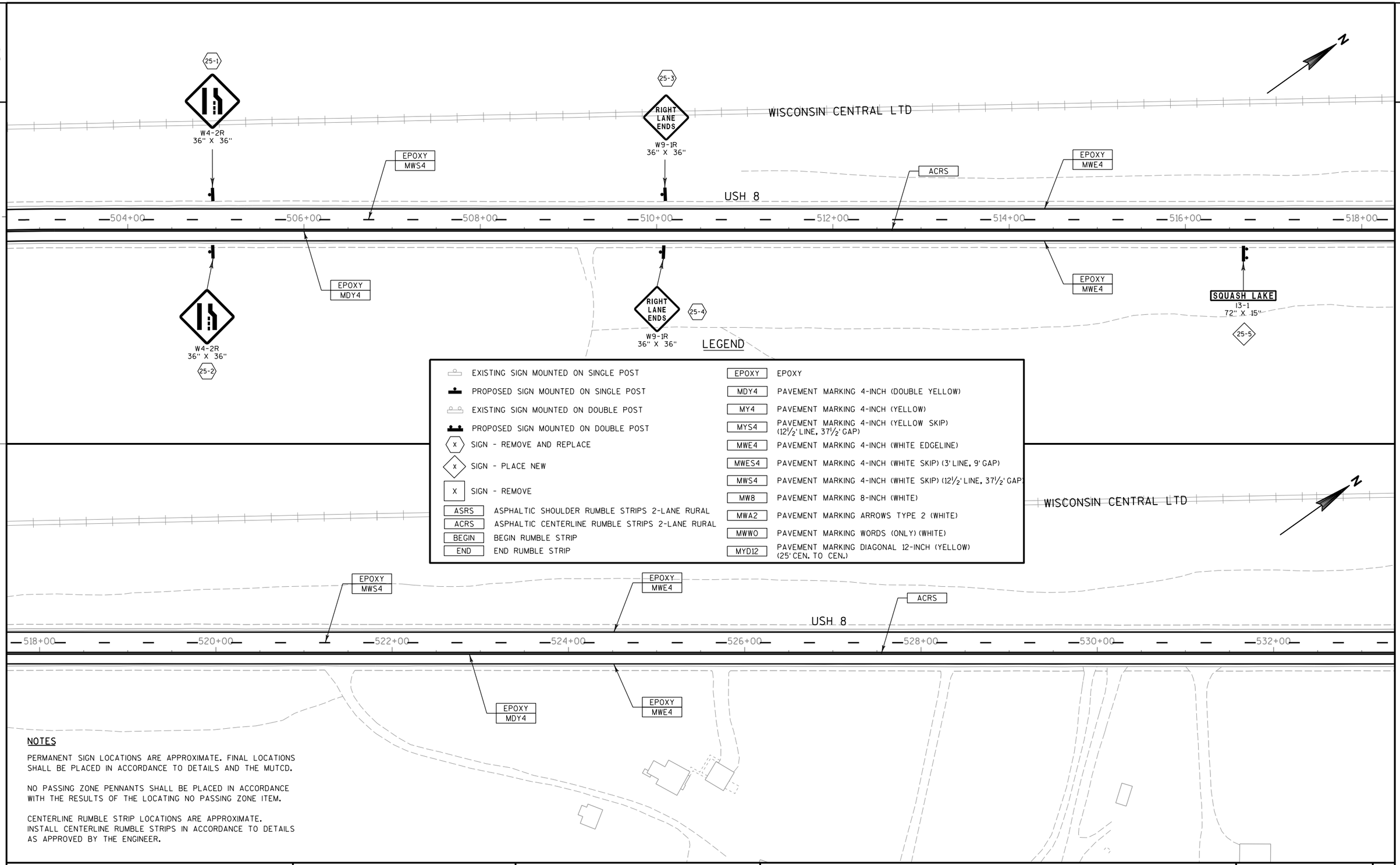

NOTES

PERMANENT SIGN LOCATIONS ARE APPROXIMATE. FINAL LOCATIONS SHALL BE PLACED IN ACCORDANCE TO DETAILS AND THE MUTCD.

NO PASSING ZONE PENNANTS SHALL BE PLACED IN ACCORDANCE WITH THE RESULTS OF THE LOCATING NO PASSING ZONE ITEM.

CENTERLINE RUMBLE STRIP LOCATIONS ARE APPROXIMATE. INSTALL CENTERLINE RUMBLE STRIPS IN ACCORDANCE TO DETAILS AS APPROVED BY THE ENGINEER.

PROJECT NO: 1595-09-60	HWY: USH 8	COUNTY: ONEIDA	PERMANENT SIGNING & PAVEMENT MARKING	SHEET 47	E

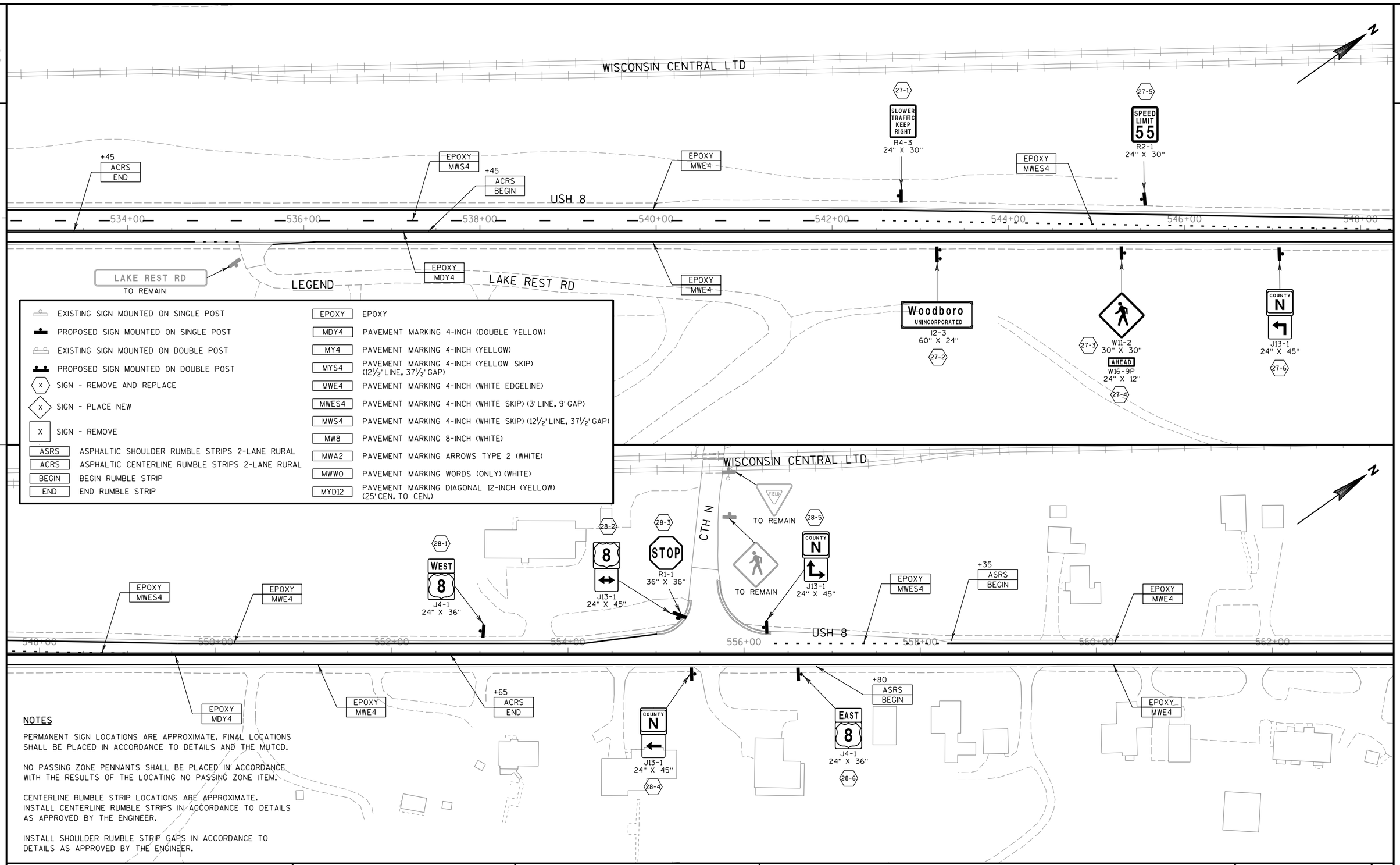

NOTES

PERMANENT SIGN LOCATIONS ARE APPROXIMATE. FINAL LOCATIONS SHALL BE PLACED IN ACCORDANCE TO DETAILS AND THE MUTCD.

NO PASSING ZONE PENNANTS SHALL BE PLACED IN ACCORDANCE WITH THE RESULTS OF THE LOCATING NO PASSING ZONE ITEM.

CENTERLINE RUMBLE STRIP LOCATIONS ARE APPROXIMATE. INSTALL CENTERLINE RUMBLE STRIPS IN ACCORDANCE TO DETAILS AS APPROVED BY THE ENGINEER.

INSTALL SHOULDER RUMBLE STRIP GAPS IN ACCORDANCE TO DETAILS AS APPROVED BY THE ENGINEER.

PROJECT NO:1595-09-60	HWY:USH 8	COUNTY:ONEIDA	PERMANENT SIGNING & PAVEMENT MARKING	SHEET 48	E

WISCONSIN CENTRAL LTD

29-1 JCT COUNTY N J1-1 24" X 39"

29-2 W11-2 30" X 30" AHEAD W16-9P 24" X 12" 29-3

29-5 Woodboro UNINCORPORATED I2-3 60" X 24"

29-6 SQUASH LAKE I3-1 72" X 15"

29-9 PASSING LANE AHEAD ½ MILES R4-51A 36" x 48"

REMOVE CENTER LINE RUMBLE STRIPS NEXT x MILES

ASRS

564+00 566+00 568+00 570+00 572+00 574+00 576+00 578+00

USH 8

EPOXY MWE4

EPOXY MDY4

+15 ACRS BEGIN

EPOXY MWE4

SPEED LIMIT 55 R2-1 24" X 30" 29-4

S3-1 36" X 36" 29-7

SCHOOL BUS STOP AHEAD REMOVE 29-8

W2-2 30" X 30" 29-10

29-11 Crestwood Dr REMOVE

Crestwood Dr D1-1 90" X 15" 29-12

+25 ACRS END

NOTES

PERMANENT SIGN LOCATIONS ARE APPROXIMATE. FINAL LOCATIONS SHALL BE PLACED IN ACCORDANCE TO DETAILS AND THE MUTCD.

NO PASSING ZONE PENNANTS SHALL BE PLACED IN ACCORDANCE WITH THE RESULTS OF THE LOCATING NO PASSING ZONE ITEM.

CENTERLINE RUMBLE STRIP LOCATIONS ARE APPROXIMATE. INSTALL CENTERLINE RUMBLE STRIPS IN ACCORDANCE TO DETAILS AS APPROVED BY THE ENGINEER.

INSTALL SHOULDER RUMBLE STRIP GAPS IN ACCORDANCE TO DETAILS AS APPROVED BY THE ENGINEER.

LEGEND

EXISTING SIGN MOUNTED ON SINGLE POST	EPOXY	EPOXY
PROPOSED SIGN MOUNTED ON SINGLE POST	MDY4	PAVEMENT MARKING 4-INCH (DOUBLE YELLOW)
EXISTING SIGN MOUNTED ON DOUBLE POST	MY4	PAVEMENT MARKING 4-INCH (YELLOW)
PROPOSED SIGN MOUNTED ON DOUBLE POST	MYS4	PAVEMENT MARKING 4-INCH (YELLOW SKIP) (12½' LINE, 37½' GAP)
X SIGN - REMOVE AND REPLACE	MWE4	PAVEMENT MARKING 4-INCH (WHITE EDGELINE)
X SIGN - PLACE NEW	MWES4	PAVEMENT MARKING 4-INCH (WHITE SKIP) (3' LINE, 9' GAP)
X SIGN - REMOVE	MWS4	PAVEMENT MARKING 4-INCH (WHITE SKIP) (12½' LINE, 37½' GAP)
ASRS ASPHALTIC SHOULDER RUMBLE STRIPS 2-LANE RURAL	MW8	PAVEMENT MARKING 8-INCH (WHITE)
ACRS ASPHALTIC CENTERLINE RUMBLE STRIPS 2-LANE RURAL	MWA2	PAVEMENT MARKING ARROWS TYPE 2 (WHITE)
BEGIN BEGIN RUMBLE STRIP	MWWO	PAVEMENT MARKING WORDS (ONLY) (WHITE)
END END RUMBLE STRIP	MYD12	PAVEMENT MARKING DIAGONAL 12-INCH (YELLOW) (25' CEN. TO CEN.)

WISCONSIN CENTRAL LTD

30-4 Crestwood Dr D1-1 90" X 15"

30-6 NO PASSING ZONE W14-3 48" X 36"

30-3 Crestwood Dr REMOVE

EPOXY MY4

ASRS

EPOXY MYS4

EPOXY MDY4

+25 ACRS BEGIN

EPOXY MWE4

+25 ACRS END

578+00 580+00 582+00 584+00 586+00 588+00 590+00 592+00

USH 8

+96 ASRS END

EPOXY MWES4

CRESTWOOD DR TO REMAIN

+50 ASRS BEGIN

EPOXY MWE4

EPOXY MYS4

STOP R1-1 30" X 30" 30-1

W6-1 36" X 36" 30-2

NO PASSING ZONE 30-5

CRESTWOOD DR

PROJECT NO: 1595-09-60	HWY: USH 8	COUNTY: ONEIDA	PERMANENT SIGNING & PAVEMENT MARKING	SHEET 49	E

NOTES

PERMANENT SIGN LOCATIONS ARE APPROXIMATE. FINAL LOCATIONS SHALL BE PLACED IN ACCORDANCE TO DETAILS AND THE MUTCD.

NO PASSING ZONE PENNANTS SHALL BE PLACED IN ACCORDANCE WITH THE RESULTS OF THE LOCATING NO PASSING ZONE ITEM.

CENTERLINE RUMBLE STRIP LOCATIONS ARE APPROXIMATE. INSTALL CENTERLINE RUMBLE STRIPS IN ACCORDANCE TO DETAILS AS APPROVED BY THE ENGINEER.

INSTALL SHOULDER RUMBLE STRIP GAPS IN ACCORDANCE TO DETAILS AS APPROVED BY THE ENGINEER.

LEGEND

	EXISTING SIGN MOUNTED ON SINGLE POST	EPOXY — EPOXY
	PROPOSED SIGN MOUNTED ON SINGLE POST	MDY4 — PAVEMENT MARKING 4-INCH (DOUBLE YELLOW)
	EXISTING SIGN MOUNTED ON DOUBLE POST	MY4 — PAVEMENT MARKING 4-INCH (YELLOW)
	PROPOSED SIGN MOUNTED ON DOUBLE POST	MYS4 — PAVEMENT MARKING 4-INCH (YELLOW SKIP) (12½'LINE, 37½'GAP)
X	SIGN - REMOVE AND REPLACE	MWE4 — PAVEMENT MARKING 4-INCH (WHITE EDGELINE)
X	SIGN - PLACE NEW	MWES4 — PAVEMENT MARKING 4-INCH (WHITE SKIP) (3'LINE, 9'GAP)
X	SIGN - REMOVE	MWS4 — PAVEMENT MARKING 4-INCH (WHITE SKIP) (12½'LINE, 37½'GAP)
		MW8 — PAVEMENT MARKING 8-INCH (WHITE)
ASRS	ASPHALTIC SHOULDER RUMBLE STRIPS 2-LANE RURAL	MWA2 — PAVEMENT MARKING ARROWS TYPE 2 (WHITE)
ACRS	ASPHALTIC CENTERLINE RUMBLE STRIPS 2-LANE RURAL	MWWO — PAVEMENT MARKING WORDS (ONLY) (WHITE)
BEGIN	BEGIN RUMBLE STRIP	MYD12 — PAVEMENT MARKING DIAGONAL 12-INCH (YELLOW) (25'CEN. TO CEN.)
END	END RUMBLE STRIP	

WISCONSIN CENTRAL LTD

USH 8

CRESCENT RD

Crescent Rd

31-1 NO PASSING ZONE

+72 ACRS END

W6-3 36" X 36" 31-2

D1-61 66" X 24" 31-3

ASRS

EPOXY MDY4

EPOXY MWE4

EPOXY MWA2

EPOXY MDY4

+42 ASRS END

EPOXY MWE4

EPOXY MYD12

+77 ASRS END

EPOXY MDY4

EPOXY MWE4

EPOXY MWWO

EPOXY MWWO

EPOXY MW8

EPOXY MWA2

31-5 Crescent Rd REMOVE

W10-2 36" X 36" 31-4

YIELD REMOVED BY OTHERS

31-7 STOP R1-1 30" X 30"

CRESCENT RD MOVE 31-6

STOP R1-1 30" X 30" 31-8

W3-1 36" X 36" 31-9

250' FROM R1-1 (STOP SIGN)

594+00 596+00 598+00 600+00 602+00 604+00 606+00 608+00

CRESCENT RD

YIELD REMOVED BY OTHERS

CRESCENT RD MOVE 32-1

EPOXY MWA2

EPOXY MW8

W6-2 36" X 36" 32-2

32-4 W10-2 36" X 36"

32-6 Crescent Rd D1-61 66" X 24"

32-5 Crescent Rd REMOVE

+80 ASRS BEGIN

EPOXY MWA2

EPOXY MWE4

EPOXY MDY4

ASRS

EPOXY MWWO

EPOXY MW8

+10 ASRS BEGIN

EPOXY MWE4

EPOXY MYD12

EPOXY MDY4

W6-2 36" X 36" 32-3

EXISTING FIRE WARDEN SIGN TO REMAIN

EXISTING COMMERCIAL "HENKEL'S TOWN PUMP" SIGN TO REMAIN

BOAT LANDING 1/2 MILE D7-54 48" X 36" 32-7

W6-3 36" X 36" 32-8

608+00 610+00 612+00 614+00 616+00 618+00 620+00 622+00

PROJECT NO: 1595-09-60	HWY: USH 8	COUNTY: ONEIDA	PERMANENT SIGNING & PAVEMENT MARKING	SHEET 50	E

FILE NAME : P:\47xx\4727_DP.12.USH8.ONE\CADDS\Plan\023216_ps.dgn PLOT DATE : 2/16/2015 PLOT BY : emo PLOT NAME : PLOT SCALE : 1:100

2

NOTES

PERMANENT SIGN LOCATIONS ARE APPROXIMATE. FINAL LOCATIONS SHALL BE PLACED IN ACCORDANCE TO DETAILS AND THE MUTCD.

NO PASSING ZONE PENNANTS SHALL BE PLACED IN ACCORDANCE WITH THE RESULTS OF THE LOCATING NO PASSING ZONE ITEM.

CENTERLINE RUMBLE STRIP LOCATIONS ARE APPROXIMATE. INSTALL CENTERLINE RUMBLE STRIPS IN ACCORDANCE TO DETAILS AS APPROVED BY THE ENGINEER.

INSTALL SHOULDER RUMBLE STRIP GAPS IN ACCORDANCE TO DETAILS AS APPROVED BY THE ENGINEER.

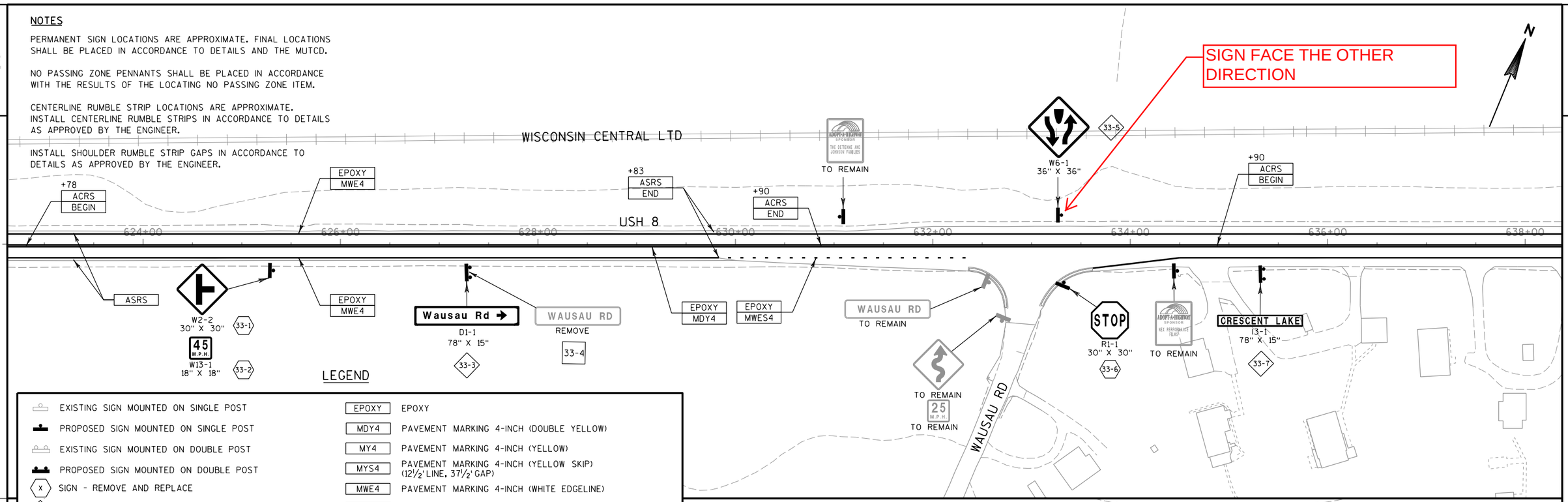

LEGEND

EXISTING SIGN MOUNTED ON SINGLE POST	EPOXY — EPOXY
PROPOSED SIGN MOUNTED ON SINGLE POST	MDY4 — PAVEMENT MARKING 4-INCH (DOUBLE YELLOW)
EXISTING SIGN MOUNTED ON DOUBLE POST	MY4 — PAVEMENT MARKING 4-INCH (YELLOW)
PROPOSED SIGN MOUNTED ON DOUBLE POST	MYS4 — PAVEMENT MARKING 4-INCH (YELLOW SKIP) (12½' LINE, 37½' GAP)
X — SIGN - REMOVE AND REPLACE	MWE4 — PAVEMENT MARKING 4-INCH (WHITE EDGELINE)
X — SIGN - PLACE NEW	MWES4 — PAVEMENT MARKING 4-INCH (WHITE SKIP) (3' LINE, 9' GAP)
X — SIGN - REMOVE	MWS4 — PAVEMENT MARKING 4-INCH (WHITE SKIP) (12½' LINE, 37½' GAP)
ASRS — ASPHALTIC SHOULDER RUMBLE STRIPS 2-LANE RURAL	MW8 — PAVEMENT MARKING 8-INCH (WHITE)
ACRS — ASPHALTIC CENTERLINE RUMBLE STRIPS 2-LANE RURAL	MWA2 — PAVEMENT MARKING ARROWS TYPE 2 (WHITE)
BEGIN — BEGIN RUMBLE STRIP	MWWO — PAVEMENT MARKING WORDS (ONLY) (WHITE)
END — END RUMBLE STRIP	MYD12 — PAVEMENT MARKING DIAGONAL 12-INCH (YELLOW) (25' CEN. TO CEN.)

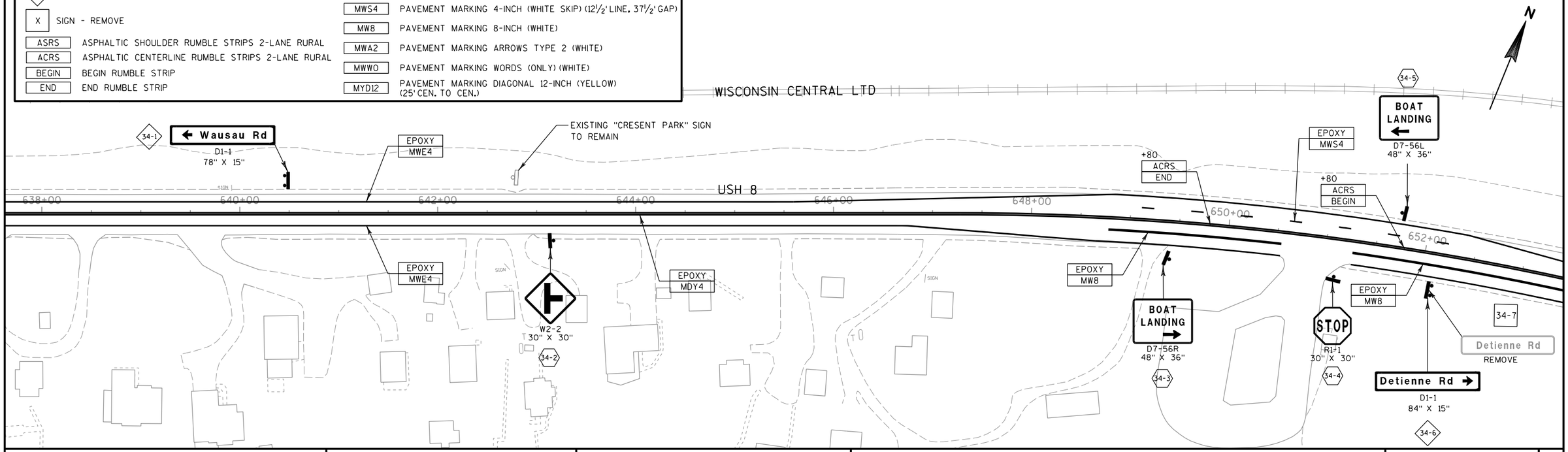

PROJECT NO: 1595-09-60	HWY: USH 8	COUNTY: ONEIDA	PERMANENT SIGNING & PAVEMENT MARKING	SHEET 51	E

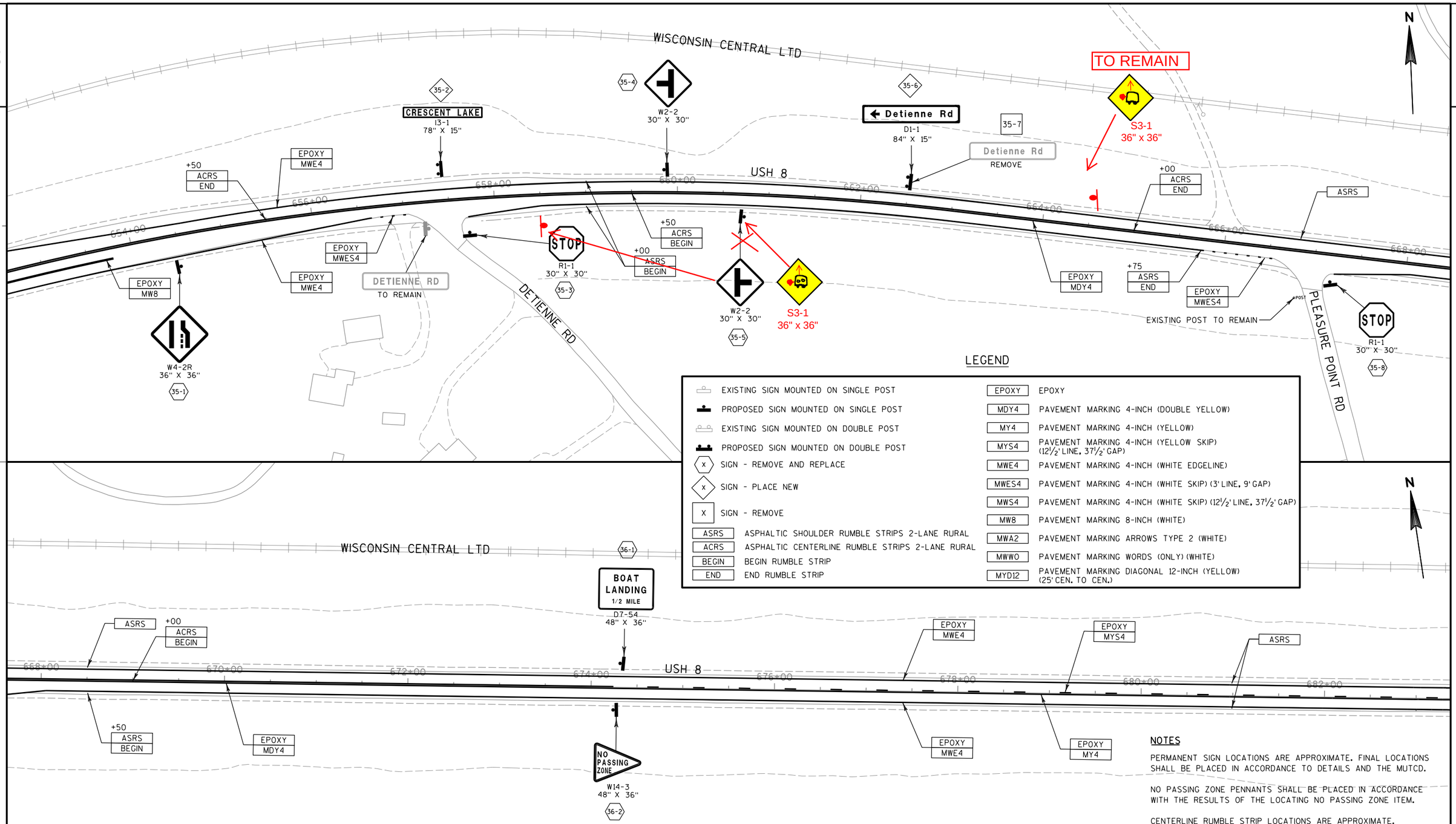

LEGEND

EXISTING SIGN MOUNTED ON SINGLE POST	EPOXY — EPOXY
PROPOSED SIGN MOUNTED ON SINGLE POST	MDY4 — PAVEMENT MARKING 4-INCH (DOUBLE YELLOW)
EXISTING SIGN MOUNTED ON DOUBLE POST	MY4 — PAVEMENT MARKING 4-INCH (YELLOW)
PROPOSED SIGN MOUNTED ON DOUBLE POST	MYS4 — PAVEMENT MARKING 4-INCH (YELLOW SKIP) (12½' LINE, 37½' GAP)
(X) SIGN - REMOVE AND REPLACE	MWE4 — PAVEMENT MARKING 4-INCH (WHITE EDGELINE)
(X) SIGN - PLACE NEW	MWES4 — PAVEMENT MARKING 4-INCH (WHITE SKIP) (3' LINE, 9' GAP)
[X] SIGN - REMOVE	MWS4 — PAVEMENT MARKING 4-INCH (WHITE SKIP) (12½' LINE, 37½' GAP)
ASRS — ASPHALTIC SHOULDER RUMBLE STRIPS 2-LANE RURAL	MW8 — PAVEMENT MARKING 8-INCH (WHITE)
ACRS — ASPHALTIC CENTERLINE RUMBLE STRIPS 2-LANE RURAL	MWA2 — PAVEMENT MARKING ARROWS TYPE 2 (WHITE)
BEGIN — BEGIN RUMBLE STRIP	MWWO — PAVEMENT MARKING WORDS (ONLY) (WHITE)
END — END RUMBLE STRIP	MYD12 — PAVEMENT MARKING DIAGONAL 12-INCH (YELLOW) (25' CEN. TO CEN.)

NOTES

PERMANENT SIGN LOCATIONS ARE APPROXIMATE. FINAL LOCATIONS SHALL BE PLACED IN ACCORDANCE TO DETAILS AND THE MUTCD.

NO PASSING ZONE PENNANTS SHALL BE PLACED IN ACCORDANCE WITH THE RESULTS OF THE LOCATING NO PASSING ZONE ITEM.

CENTERLINE RUMBLE STRIP LOCATIONS ARE APPROXIMATE. INSTALL CENTERLINE RUMBLE STRIPS IN ACCORDANCE TO DETAILS AS APPROVED BY THE ENGINEER.

INSTALL SHOULDER RUMBLE STRIP GAPS IN ACCORDANCE TO DETAILS AS APPROVED BY THE ENGINEER.

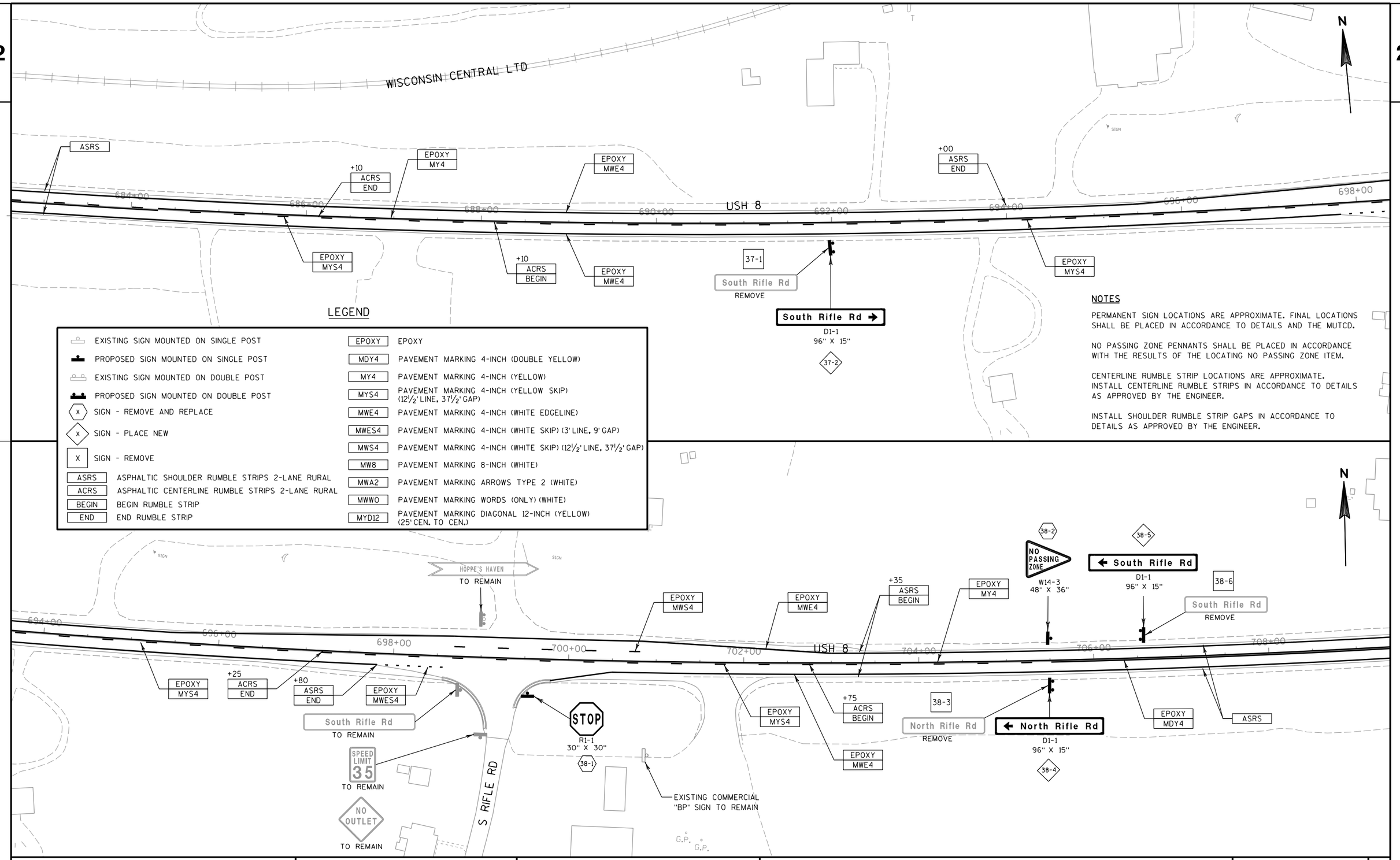

LEGEND

EXISTING SIGN MOUNTED ON SINGLE POST	EPOXY	EPOXY
PROPOSED SIGN MOUNTED ON SINGLE POST	MDY4	PAVEMENT MARKING 4-INCH (DOUBLE YELLOW)
EXISTING SIGN MOUNTED ON DOUBLE POST	MY4	PAVEMENT MARKING 4-INCH (YELLOW)
PROPOSED SIGN MOUNTED ON DOUBLE POST	MYS4	PAVEMENT MARKING 4-INCH (YELLOW SKIP) (12½' LINE, 37½' GAP)
(X) SIGN - REMOVE AND REPLACE	MWE4	PAVEMENT MARKING 4-INCH (WHITE EDGELINE)
◇X SIGN - PLACE NEW	MWES4	PAVEMENT MARKING 4-INCH (WHITE SKIP) (3' LINE, 9' GAP)
X SIGN - REMOVE	MWS4	PAVEMENT MARKING 4-INCH (WHITE SKIP) (12½' LINE, 37½' GAP)
ASRS ASPHALTIC SHOULDER RUMBLE STRIPS 2-LANE RURAL	MW8	PAVEMENT MARKING 8-INCH (WHITE)
ACRS ASPHALTIC CENTERLINE RUMBLE STRIPS 2-LANE RURAL	MWA2	PAVEMENT MARKING ARROWS TYPE 2 (WHITE)
BEGIN BEGIN RUMBLE STRIP	MWWO	PAVEMENT MARKING WORDS (ONLY) (WHITE)
END END RUMBLE STRIP	MYD12	PAVEMENT MARKING DIAGONAL 12-INCH (YELLOW) (25' CEN. TO CEN.)

NOTES

PERMANENT SIGN LOCATIONS ARE APPROXIMATE. FINAL LOCATIONS SHALL BE PLACED IN ACCORDANCE TO DETAILS AND THE MUTCD.

NO PASSING ZONE PENNANTS SHALL BE PLACED IN ACCORDANCE WITH THE RESULTS OF THE LOCATING NO PASSING ZONE ITEM.

CENTERLINE RUMBLE STRIP LOCATIONS ARE APPROXIMATE. INSTALL CENTERLINE RUMBLE STRIPS IN ACCORDANCE TO DETAILS AS APPROVED BY THE ENGINEER.

INSTALL SHOULDER RUMBLE STRIP GAPS IN ACCORDANCE TO DETAILS AS APPROVED BY THE ENGINEER.

PROJECT NO: 1595-09-60	HWY: USH 8	COUNTY: ONEIDA	PERMANENT SIGNING & PAVEMENT MARKING	SHEET 53	E

NOTES

PERMANENT SIGN LOCATIONS ARE APPROXIMATE. FINAL LOCATIONS SHALL BE PLACED IN ACCORDANCE TO DETAILS AND THE MUTCD.

NO PASSING ZONE PENNANTS SHALL BE PLACED IN ACCORDANCE WITH THE RESULTS OF THE LOCATING NO PASSING ZONE ITEM.

CENTERLINE RUMBLE STRIP LOCATIONS ARE APPROXIMATE. INSTALL CENTERLINE RUMBLE STRIPS IN ACCORDANCE TO DETAILS AS APPROVED BY THE ENGINEER.

INSTALL SHOULDER RUMBLE STRIP GAPS IN ACCORDANCE TO DETAILS AS APPROVED BY THE ENGINEER.

N

N RIFLE RD

39-1 STOP R1-1 30" X 30"

North Rifle Rd TO REMAIN

+75 ASRS END

+90 ASRS BEGIN

EPOXY MWES4

EPOXY MWE4

39-2 North Rifle Rd → D1-1 96" X 15"

39-3 North Rifle Rd REMOVE

39-4 W2-2 30" X 30"

EPOXY MY4

ASRS

710+00 712+00 714+00 716+00 718+00 720+00 722+00 724+00

USH 8

ASRS

+50 ACRS END

EPOXY MDY4

+50 ACRS BEGIN

EPOXY MWE4

EPOXY MYS4

POOL

LEGEND

EXISTING SIGN MOUNTED ON SINGLE POST	EPOXY — EPOXY
PROPOSED SIGN MOUNTED ON SINGLE POST	MDY4 — PAVEMENT MARKING 4-INCH (DOUBLE YELLOW)
EXISTING SIGN MOUNTED ON DOUBLE POST	MY4 — PAVEMENT MARKING 4-INCH (YELLOW)
PROPOSED SIGN MOUNTED ON DOUBLE POST	MYS4 — PAVEMENT MARKING 4-INCH (YELLOW SKIP) (12½' LINE, 37½' GAP)
(X) SIGN - REMOVE AND REPLACE	MWE4 — PAVEMENT MARKING 4-INCH (WHITE EDGELINE)
◇X SIGN - PLACE NEW	MWES4 — PAVEMENT MARKING 4-INCH (WHITE SKIP) (3' LINE, 9' GAP)
X SIGN - REMOVE	MWS4 — PAVEMENT MARKING 4-INCH (WHITE SKIP) (12½' LINE, 37½' GAP)
ASRS — ASPHALTIC SHOULDER RUMBLE STRIPS 2-LANE RURAL	MW8 — PAVEMENT MARKING 8-INCH (WHITE)
ACRS — ASPHALTIC CENTERLINE RUMBLE STRIPS 2-LANE RURAL	MWA2 — PAVEMENT MARKING ARROWS TYPE 2 (WHITE)
BEGIN — BEGIN RUMBLE STRIP	MWWO — PAVEMENT MARKING WORDS (ONLY) (WHITE)
END — END RUMBLE STRIP	MYD12 — PAVEMENT MARKING DIAGONAL 12-INCH (YELLOW) (25' CEN. TO CEN.)

N

REMOVE

CENTER LINE RUMBLE STRIPS NEXT x MILES

40-1 NO PASSING ZONE W14-3 48" X 36"

40-2 W6-1 36" X 36"

40-3 W6-3 36" X 36"

EPOXY MY4

EPOXY MWE4

ASRS

EPOXY MYS4

EPOXY MWE4

EPOXY MDY4

+33 ACRS END

+58 ASRS END

724+00 726+00 728+00 730+00 732+00 734+00 736+00 738+00

USH 8

CHAS DENTON LN

PROJECT NO: 1595-09-60	HWY: USH 8	COUNTY: ONEIDA	PERMANENT SIGNING & PAVEMENT MARKING	SHEET 54	E

FILE NAME : P:\47xx\4727_DP.12.USH8.ONE\CADDS\Plan\023220_ps.dgn PLOT DATE : 2/16/2015 PLOT BY : emo PLOT NAME : PLOT SCALE : 1:100

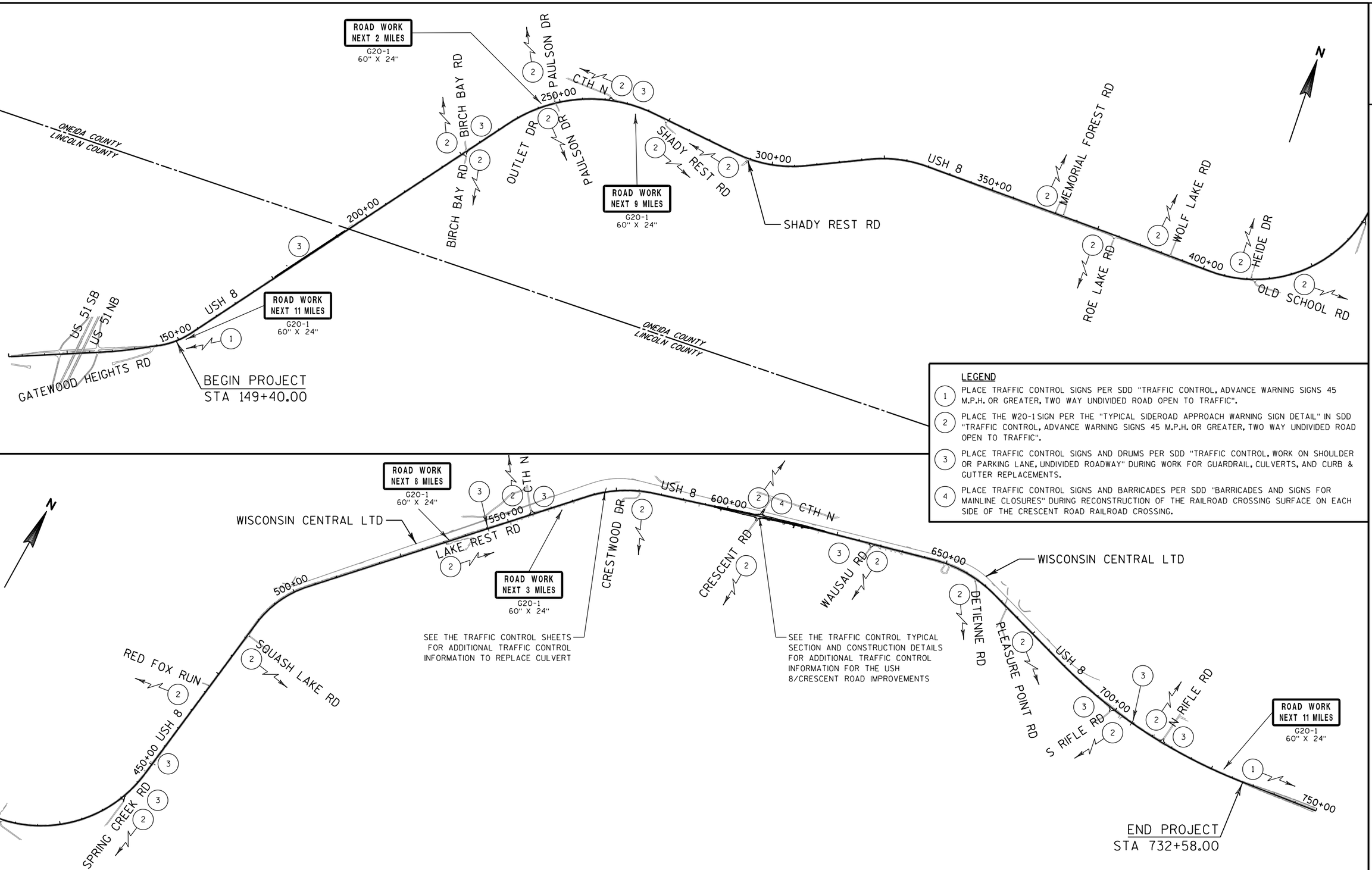

LEGEND

1. PLACE TRAFFIC CONTROL SIGNS PER SDD "TRAFFIC CONTROL, ADVANCE WARNING SIGNS 45 M.P.H. OR GREATER, TWO WAY UNDIVIDED ROAD OPEN TO TRAFFIC".
2. PLACE THE W20-1 SIGN PER THE "TYPICAL SIDEROAD APPROACH WARNING SIGN DETAIL" IN SDD "TRAFFIC CONTROL, ADVANCE WARNING SIGNS 45 M.P.H. OR GREATER, TWO WAY UNDIVIDED ROAD OPEN TO TRAFFIC".
3. PLACE TRAFFIC CONTROL SIGNS AND DRUMS PER SDD "TRAFFIC CONTROL, WORK ON SHOULDER OR PARKING LANE, UNDIVIDED ROADWAY" DURING WORK FOR GUARDRAIL, CULVERTS, AND CURB & GUTTER REPLACEMENTS.
4. PLACE TRAFFIC CONTROL SIGNS AND BARRICADES PER SDD "BARRICADES AND SIGNS FOR MAINLINE CLOSURES" DURING RECONSTRUCTION OF THE RAILROAD CROSSING SURFACE ON EACH SIDE OF THE CRESCENT ROAD RAILROAD CROSSING.

PROJECT NO: 1595-09-60	HWY: USH 8	COUNTY: ONEIDA	TRAFFIC CONTROL - OVERVIEW	SHEET 55	E

NOTES FOR TRAFFIC CONTROL

ALL SIGNS ARE 48" X 48" UNLESS OTHERWISE NOTED

"WO" SIGNS ARE THE SAME AS "W" SIGNS EXCEPT THE BACKGROUND IS ORANGE

TRAFFIC CONTROL FOR MAINLINE PAVING WORK NOT IN GRADING AREAS SEE SDD TRAFFIC CONTROL LANE CLOSURE (SUITABLE FOR MOVING OPERATIONS)

ON USH 8 MAINLINE PAVING, PASSING LANE MAY BE CLOSED WITH A TRAFFIC CONTROL DRUMS

① DRUM PLACEMENT SHOWN DURING NON-WORKING HOURS
SHIFT TRAFFIC CONTROL DRUMS ONTO PAVED SHOULDER
DURING ADJACENT CONSTRUCTION OPERATIONS

② PLACE TEMPORARY DOUBLE YELLOW CENTERLINE MARKING ON USH 8 WEST OF CRESCENT ROAD PRIOR TO BEGINING WIDENING WORK. PLACE TEMPORARY DOUBLE YELLOW CENTERLINE MARKING ON THE MILLED SURFACE THROUGHOUT THE WIDENING LIMITS. PLACE TEMPORARY DOUBLE YELLOW CENTERLINE REMOVABLE TAPE ON THE FINISHED SURFACE.

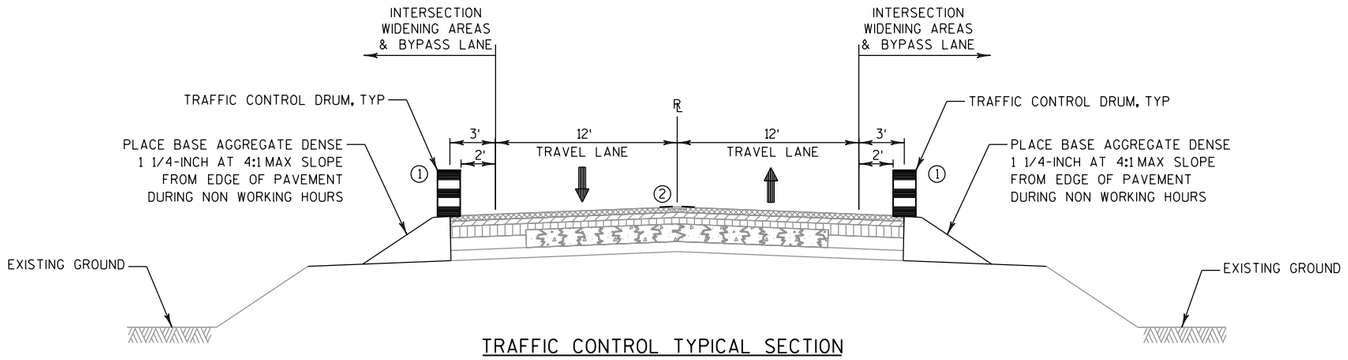

TRAFFIC CONTROL TYPICAL SECTION
USH 8
CONSTRUCTION OF INTERSECTION WIDENING AT CRESCENT RD

NOTES

\# ADJUST TRAFFIC CONTROL PCMS MESSAGE AS NEEDED BASED ON WORK ZONE AREAS AND CONSTRUCTION SCHEDULE.

** TRAFFIC CONTROL SIGNS PCMS FOR USE DURING CULVERT REPLACEMENT

CONSIDER GEOMETRICS WHEN LOCATING MESSAGE BOARDS SO THE DRIVER HAS A CLEAR VIEW OF THE BOARD FOR A MINIMUM OF 1000 FEET IN FRONT OF THE MESSAGE BOARD.

PLACE MESSAGE BOARDS AS FAR AWAY FROM LIVE TRAFFIC LANES AS POSSIBLE WITHOUT HAMPERING VISIBILITY. IN ADVANCE OF INTERSTATE CONSTRUCTION PROJECTS THE SIGNS SHOULD BE PLACED ON THE BACKSLOPE BEYOND THE DITCH. THE LOCATION SELECTED SHOULD BE AT OR SLIGHTLY ABOVE THE ELEVATION OF THE ROADWAY. FOR INTERMITTENT WORK SUCH AS FREEWAY LANE CLOSURE, OR WHERE SITE CONDITIONS DO NOT ALLOW OTHERWISE, THE SIGNS MAY BE PLACED ON THE SHOULDER. THE SITE SHOULD BE VISITED TO ASSURE VISIBILITY, SAFETY AND MAINTENANCE CONSIDERATIONS. A TAPER OF REFLECTORIZED DRUMS OR BARRICADES SHOULD BE PLACED AHEAD OF PCMS PLACED ON THE SHOULDER IF IT IS NOT SHIELDED BY A BARRIER.

PLACE TRAFFIC CONTROL SIGNS PCMS AND DISPLAY THE "PRIOR TO CONSTRUCTION" MESSAGE 7 DAYS PRIOR TO THE EXPECTED START OF THE PROPOSED WORK THAT WILL REQUIRE LANE CLOSURES. ADJUST THE MESSAGE DATE ACCORDINGLY.

TRAFFIC CONTROL SIGNS PCMS ARE ALSO FOR WORK ZONE INCIDENT MANAGEMENT.

LEGEND

MB — TRAFFIC CONTROL SIGNS PCMS

WORK ZONE

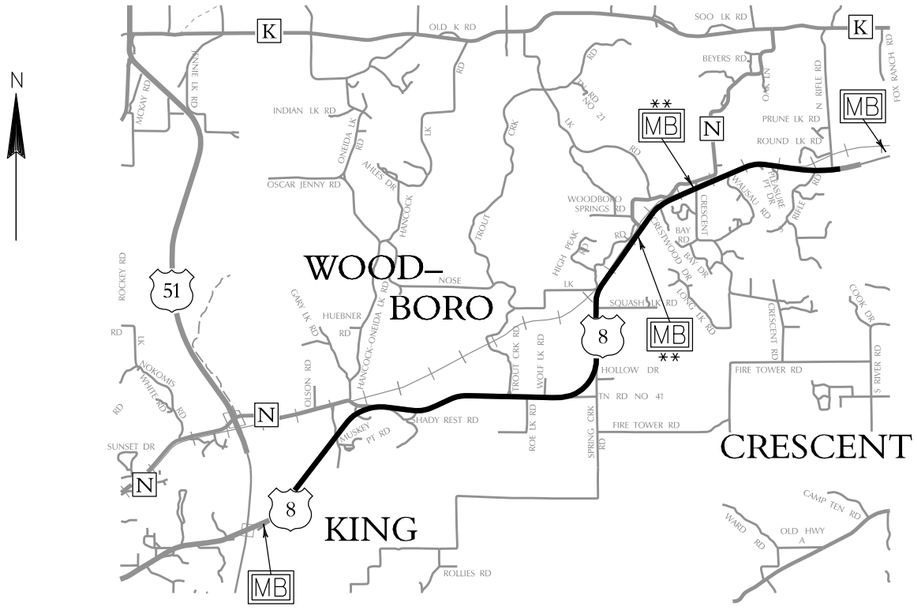

TRAFFIC CONTROL SIGNS PCMS MESSAGES

	PCMS SIGN LOCATION	PRIOR TO CONSTRUCTION PHASE 1 (2 SEC)	PRIOR TO CONSTRUCTION PHASE 2 (2 SEC)	DURING CONSTRUCTION PHASE 1 (2 SEC)	DURING CONSTRUCTION PHASE 2 (2 SEC)	STAGE C1 PHASE 1 (2 SEC)	STAGE C1 PHASE 2 (2 SEC)	STAGE C2 PHASE 1 (2 SEC)	STAGE C2 PHASE 2 (2 SEC)	STAGE C3 PHASE 1 (2 SEC)	STAGE C3 PHASE 2 (2 SEC)	STAGE C4 PHASE 1 (2 SEC)	STAGE C4 PHASE 2 (2 SEC)
#	EB USH 8 0.1 MILES WEST OF GATEWOOD HTS RD	ROAD WORK STARTS	DATE	ONE-WAY TRAFFIC AHEAD	WATCH FOR FLAGGER	--	--	--	--	--	--	--	--
#	WB USH 8 0.1 MILES EAST OF GOLF COURSE RD	ROAD WORK STARTS	DATE	ONE-WAY TRAFFIC AHEAD	WATCH FOR FLAGGER	--	--	--	--	--	--	--	--
**	EB USH 8 0.1 MILES WEST OF CTH N	--	--	--	--	ONE-WAY TRAFFIC AHEAD	WATCH FOR FLAGGER	TRAFFIC SIGNAL AHEAD	BE PREPARED TO STOP	TRAFFIC SIGNAL AHEAD	BE PREPARED TO STOP	ONE-WAY TRAFFIC AHEAD	WATCH FOR FLAGGER
**	WB USH 8 0.1 MILES WEST OF CRESCENT RD	--	--	--	--	ONE-WAY TRAFFIC AHEAD	WATCH FOR FLAGGER	TRAFFIC SIGNAL AHEAD	BE PREPARED TO STOP	TRAFFIC SIGNAL AHEAD	BE PREPARED TO STOP	ONE-WAY TRAFFIC AHEAD	WATCH FOR FLAGGER

CRI REMOVED

TRAFFIC CONTROL SIGNS PCMS LOCATIONS

PROJECT NO: 1595-09-60	HWY: USH 8	COUNTY: ONEIDA	TRAFFIC CONTROL	SHEET 56	E

FILE NAME : P:\47xx\4727_DP.12.USH8.ONE\CADDS\Plan\025002_tc.dgn PLOT DATE : 2/16/2015 PLOT BY : emo PLOT NAME : PLOT SCALE : 1:20

WISDOT/CADDS SHEET 42

2

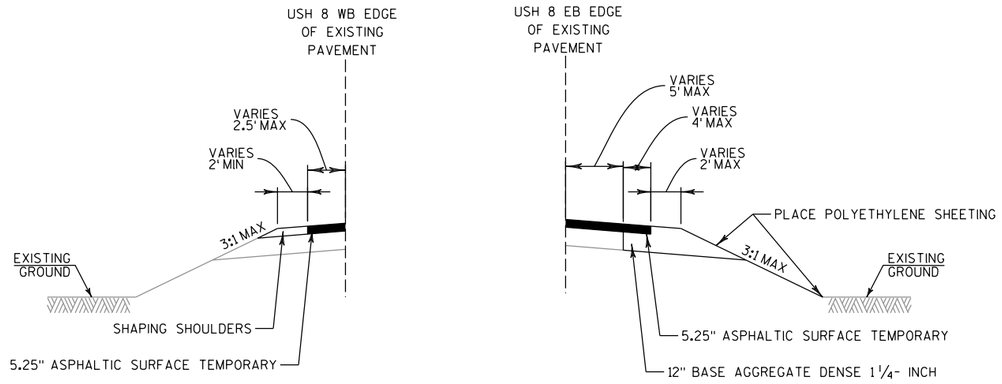

TYPICAL SECTIONS FOR TEMPORARY WIDENING AT CULVERT REPLACEMENT DETAIL

STA 572+43

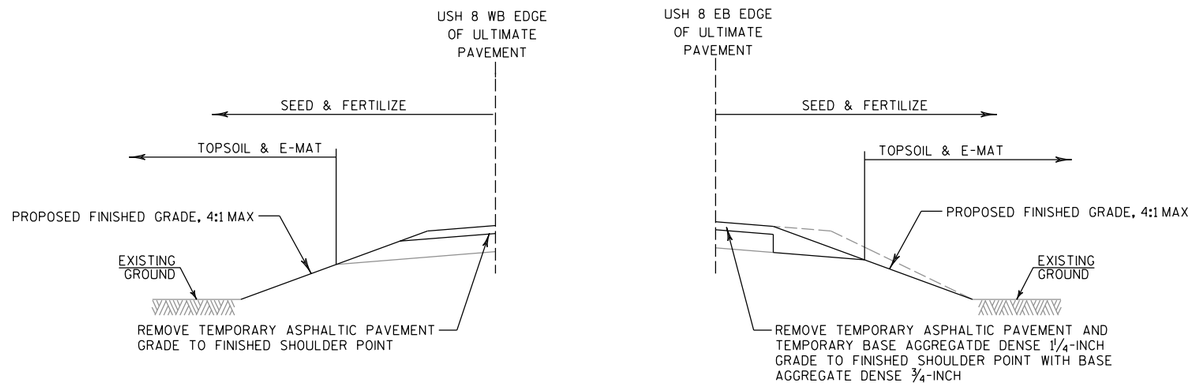

ULTIMATE FINISHED TYPICAL SECTION AT CULVERT REPLACEMENT DETAIL

STA 572+43

NOTES

SEE TRAFFIC CONTROL PLAN DETAILS FOR ADDITIONAL INFORMATION

FILL, EXCAVATION, BASE AGGREGATE DENSE, AND TEMPORARY ASPHALTIC SURFACE ARE INCIDENTAL TO THE LANE SHIFT ITEM

2

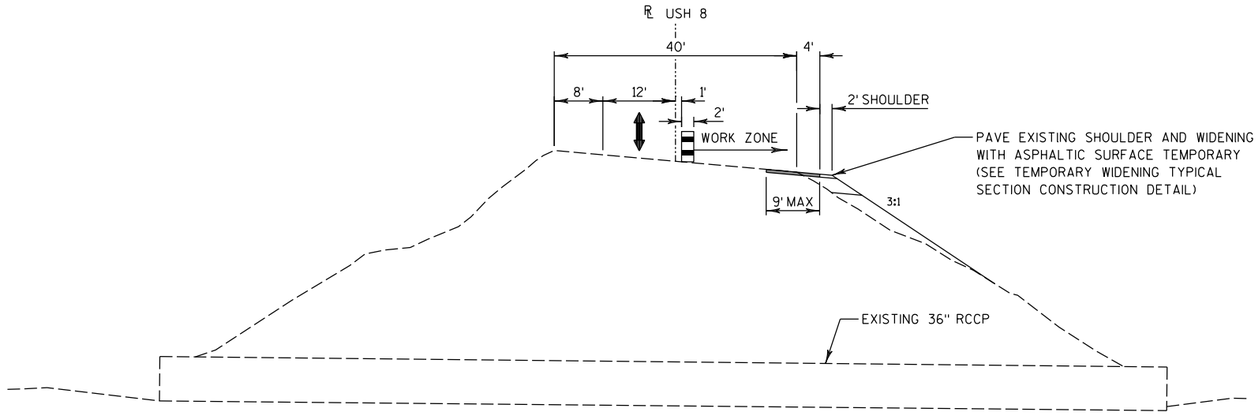

STAGE C1

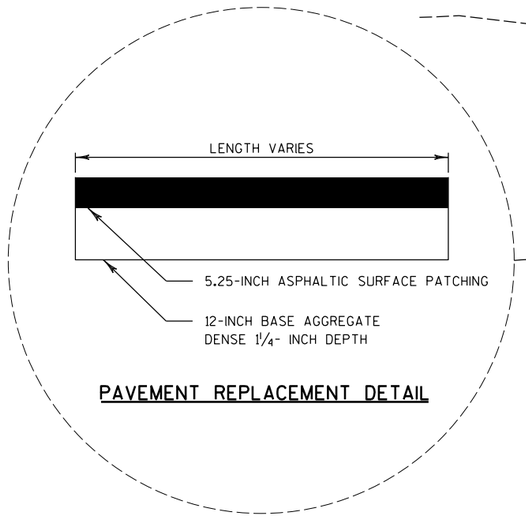

PAVEMENT REPLACEMENT DETAIL

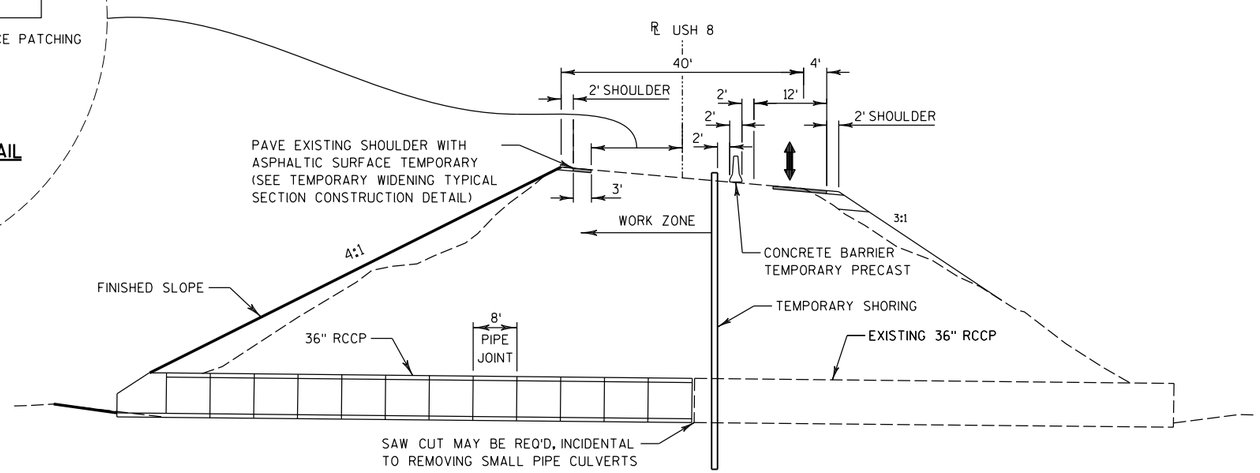

STAGE C2

NOTES

THE PIPE AND SEGMENT LENGTHS REFLECT THE OVERALL LENGTH ALONG THE SKEWED CULVERT

SEE TRAFFIC CONTROL PLAN DETAILS FOR ADDITIONAL INFORMATION

TRAFFIC CONTROL TYPICAL SECTIONS FOR CULVERT REPLACEMENT DETAIL

STA 572+43

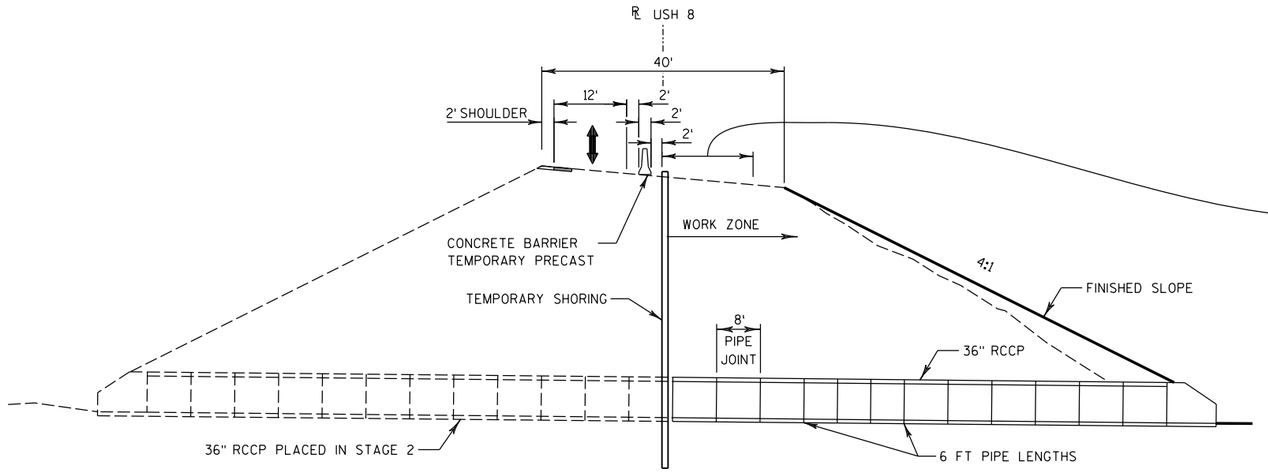

STAGE C3

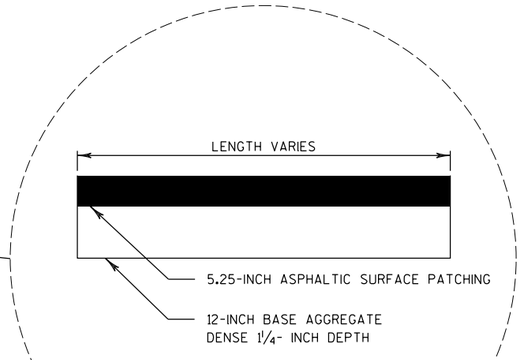

PAVEMENT REPLACEMENT DETAIL

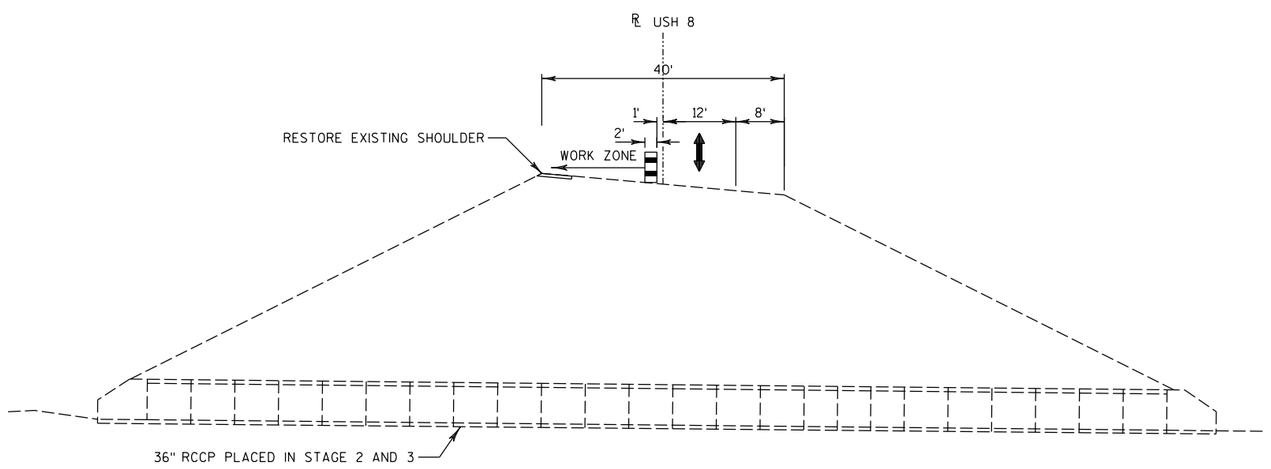

STAGE C4

TRAFFIC CONTROL TYPICAL SECTIONS
FOR CULVERT REPLACEMENT DETAIL

STA 572+43

NOTES

THE PIPE AND SEGMENT LENGTHS REFLECT THE OVERALL LENGTH ALONG THE SKEWED CULVERT

SEE TRAFFIC CONTROL PLAN DETAILS FOR ADDITIONAL INFORMATION

LEGEND

- CONCRETE BARRIER TEMPORARY PRECAST
- WORK ZONE
- 5.25-INCH ASPHALTIC SURFACE TEMPORARY OR ASPHALTIC SURFACE PATCHING (SEE CONSTRUCTION DETAILS)
- DIRECTION OF TRAFFIC
- TYPE III BARRICADE WTH ATTACHED SIGN
- TEMPORARY SIGNAL ON 4" X 6" WOOD POST
- TRAFFIC CONTROL DRUM WITH/WITHOUT TYPE C LIGHT
- EXISTING PAVEMENT MARKING
- XXXXX (REM) REMOVING PAVEMENT MARKINGS
- (TW) TEMPORARY PAVEMENT MARKING REMOVABLE TAPE 4-INCH, WHITE
- (STP) TEMPORARY PAVEMENT MARKING STOP LINE REMOVABLE TAPE 24-INCH

WORK IN STAGE C2

INSTALL NORTH PORTION OF 36" RCCP, GRADE FILL SLOPES, FINISHING AND EROSION CONTROL ON USH 8 (LT).

TRAFFIC

USH 8 TRAFFIC ON TEMPORARY WIDENING CONTROLLED BY TEMPORARY SIGNALS AT CULVERT. SEE CROSS SECTIONS AND CONSTRUCTION DETAILS FOR ADDITIONAL TEMPORARY WIDENING INFORMATION.

SIGNAL TIMING

SIGNAL TIMING PROVIDED BY NC REGION-RHINELANDER, TRAFFIC SECTION AND IS BASED ON 800' SPACING BETWEEN STOP BARS

6:00 AM - 8:00 PM
EB: GREEN = 32, Y = 4, AR = 24
WB: GREEN = 32, Y = 4, AR = 24

8:00 PM - 6:00 AM
EB: GREEN = 25, Y = 4, AR = 24
WB: GREEN = 25, Y = 4, AR = 24

NOTES

* SEE SDD "TRAFFIC CONTROL, ONE LANE ROAD WITH TEMPORARY SIGNALS" FOR SIGNING AND ADDITIONAL INFORMATION. SIGNS SHOWN ON THIS SHEET ARE TO BE PLACED IN ADDITION TO SIGNS SHOWN ON THE SDD.

SEE SDD "BRIDGE TEMPORARY TRAFFIC SIGNAL INSTALLATION" FOR ADDITIONAL INFORMATION.

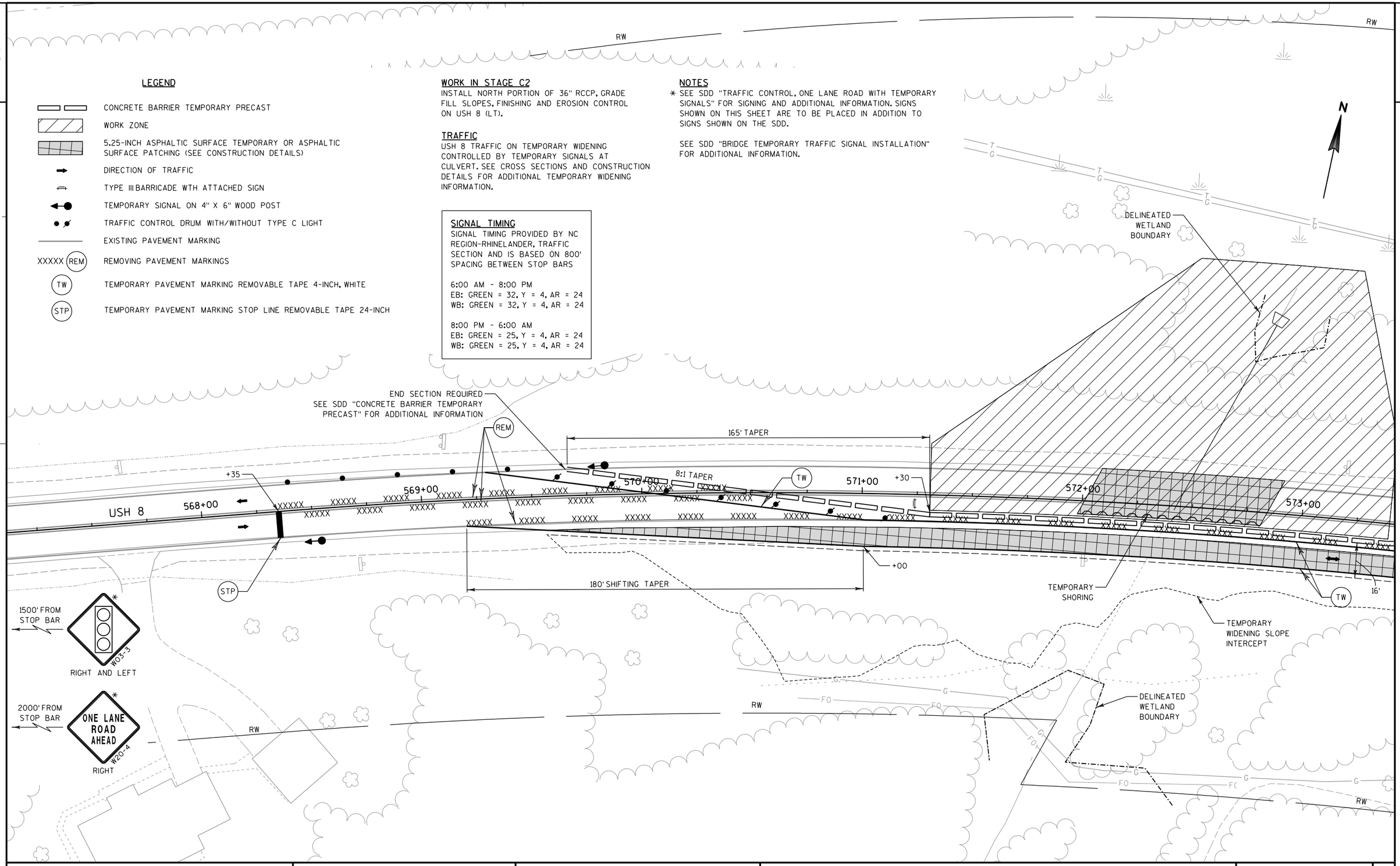

PROJECT NO: 1595-09-60	HWY: USH 8	COUNTY: ONEIDA	TRAFFIC CONTROL - CULVERT STAGE C2	SHEET 60	E

2

2

N

LEGEND

- CONCRETE BARRIER TEMPORARY PRECAST
- WORK ZONE
- 5.25-INCH ASPHALTIC SURFACE TEMPORARY OR ASPHALTIC SURFACE PATCHING (SEE CONSTRUCTION DETAILS)
- DIRECTION OF TRAFFIC
- TYPE III BARRICADE WTH ATTACHED SIGN
- TEMPORARY SIGNAL ON 4" X 6" WOOD POST
- TRAFFIC CONTROL DRUM WITH/WITHOUT TYPE C LIGHT
- EXISTING PAVEMENT MARKING
- XXXXX (REM) REMOVING PAVEMENT MARKINGS
- (TW) TEMPORARY PAVEMENT MARKING REMOVABLE TAPE 4-INCH, WHITE
- (STP) TEMPORARY PAVEMENT MARKING STOP LINE REMOVABLE TAPE 24-INCH

WORK IN STAGE C2
INSTALL NORTH PORTION OF 36" RCCP, GRADE FILL SLOPES, FINISHING AND EROSION CONTROL ON USH 8 (LT).

TRAFFIC
USH 8 TRAFFIC ON TEMPORARY WIDENING CONTROLLED BY TEMPORARY SIGNALS AT CULVERT. SEE CROSS SECTIONS AND CONSTRUCTION DETAILS FOR ADDITIONAL TEMPORARY WIDENING INFORMATION.

SIGNAL TIMING
SIGNAL TIMING PROVIDED BY NC REGION-RHINELANDER, TRAFFIC SECTION AND IS BASED ON 800' SPACING BETWEEN STOP BARS

6:00 AM - 8:00 PM
EB: GREEN = 32, Y = 4, AR = 24
WB: GREEN = 32, Y = 4, AR = 24

8:00 PM - 6:00 AM
EB: GREEN = 25, Y = 4, AR = 24
WB: GREEN = 25, Y = 4, AR = 24

NOTES
* SEE SDD "TRAFFIC CONTROL, ONE LANE ROAD WITH TEMPORARY SIGNALS" FOR SIGNING AND ADDITIONAL INFORMATION. SIGNS SHOWN ON THIS SHEET ARE TO BE PLACED IN ADDITION TO SIGNS SHOWN ON THE SDD.

SEE SDD "BRIDGE TEMPORARY TRAFFIC SIGNAL INSTALLATION" FOR ADDITIONAL INFORMATION.

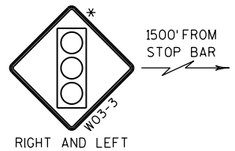

RIGHT AND LEFT

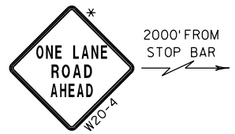

RIGHT

END SECTION REQUIRED
SEE SDD "CONCRETE BARRIER TEMPORARY PRECAST" FOR ADDITIONAL INFORMATION

165' TAPER
8:1 TAPER
180' SHIFTING TAPER
573+00
574+00
575+00
576+00
577+00
578+00
579+00
USH 8
+40
+35
+70
16'
TW
REM
STP
RW
G

PROJECT NO: 1595-09-60	HWY: USH 8	COUNTY: ONEIDA	TRAFFIC CONTROL - CULVERT STAGE C2	SHEET 61	E

LEGEND

- CONCRETE BARRIER TEMPORARY PRECAST
- WORK ZONE
- 5.25-INCH ASPHALTIC SURFACE TEMPORARY OR ASPHALTIC SURFACE PATCHING (SEE CONSTRUCTION DETAILS)
- DIRECTION OF TRAFFIC
- TYPE III BARRICADE WTH ATTACHED SIGN
- TEMPORARY SIGNAL ON 4" X 6" WOOD POST
- TRAFFIC CONTROL DRUM WITH/WITHOUT TYPE C LIGHT
- EXISTING PAVEMENT MARKING
- XXXXX (REM) REMOVING PAVEMENT MARKINGS
- (TW) TEMPORARY PAVEMENT MARKING REMOVABLE TAPE 4-INCH, WHITE
- (STP) TEMPORARY PAVEMENT MARKING STOP LINE REMOVABLE TAPE 24-INCH

WORK IN STAGE C3

INSTALL SOUTH PORTION OF 36" RCCP, GRADE FILL SLOPES, FINISHING AND EROSION CONTROL ON USH 8 (RT).

TRAFFIC

USH 8 TRAFFIC ON PAVED SHOULDER CONTROLLED BY TEMPORARY SIGNALS AT CULVERT. SEE CROSS SECTIONS AND CONSTRUCTION DETAILS FOR ADDITIONAL TEMPORARY WIDENING INFORMATION.

SIGNAL TIMING

SIGNAL TIMING PROVIDED BY NC REGION-RHINELANDER, TRAFFIC SECTION AND IS BASED ON 800' SPACING BETWEEN STOP BARS

6:00 AM - 8:00 PM
EB: GREEN = 32, Y = 4, AR = 24
WB: GREEN = 32, Y = 4, AR = 24

8:00 PM - 6:00 AM
EB: GREEN = 25, Y = 4, AR = 24
WB: GREEN = 25, Y = 4, AR = 24

NOTES

* SEE SDD "TRAFFIC CONTROL, ONE LANE ROAD WITH TEMPORARY SIGNALS" FOR SIGNING AND ADDITIONAL INFORMATION. SIGNS SHOWN ON THIS SHEET ARE TO BE PLACED IN ADDITION TO SIGNS SHOWN ON THIS SHEET.

SEE SDD "BRIDGE TEMPORARY TRAFFIC SIGNAL INSTALLATION" FOR ADDITIONAL INFORMATION.

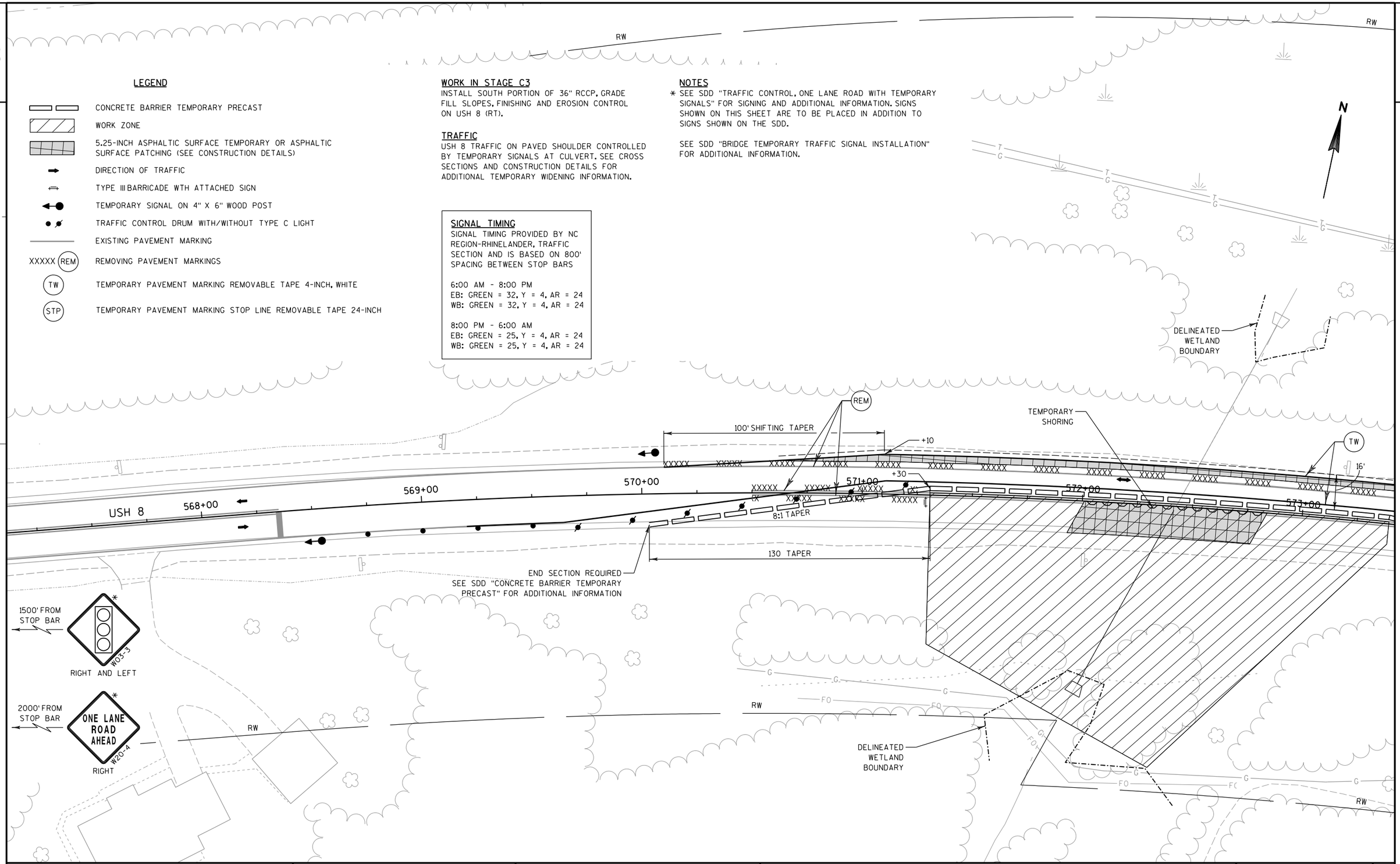

PROJECT NO: 1595-09-60	HWY: USH 8	COUNTY: ONEIDA	TRAFFIC CONTROL - CULVERT STAGE C3	SHEET 62	E

2

N

LEGEND

- CONCRETE BARRIER TEMPORARY PRECAST
- WORK ZONE
- 5.25-INCH ASPHALTIC SURFACE TEMPORARY OR ASPHALTIC SURFACE PATCHING (SEE CONSTRUCTION DETAILS)
- DIRECTION OF TRAFFIC
- TYPE III BARRICADE WTH ATTACHED SIGN
- TEMPORARY SIGNAL ON 4" X 6" WOOD POST
- TRAFFIC CONTROL DRUM WITH/WITHOUT TYPE C LIGHT
- EXISTING PAVEMENT MARKING
- XXXXX (REM) REMOVING PAVEMENT MARKINGS
- (TW) TEMPORARY PAVEMENT MARKING REMOVABLE TAPE 4-INCH, WHITE
- (STP) TEMPORARY PAVEMENT MARKING STOP LINE REMOVABLE TAPE 24-INCH

WORK IN STAGE C3
INSTALL SOUTH PORTION OF 36" RCCP, GRADE FILL SLOPES, FINISHING AND EROSION CONTROL ON USH 8 (RT).

TRAFFIC
USH 8 TRAFFIC ON PAVED SHOULDER CONTROLLED BY TEMPORARY SIGNALS AT CULVERT. SEE CROSS SECTIONS AND CONSTRUCTION DETAILS FOR ADDITIONAL TEMPORARY WIDENING INFORMATION.

SIGNAL TIMING
SIGNAL TIMING PROVIDED BY NC REGION-RHINELANDER, TRAFFIC SECTION AND IS BASED ON 800' SPACING BETWEEN STOP BARS

6:00 AM - 8:00 PM
EB: GREEN = 32, Y = 4, AR = 24
WB: GREEN = 32, Y = 4, AR = 24

8:00 PM - 6:00 AM
EB: GREEN = 25, Y = 4, AR = 24
WB: GREEN = 25, Y = 4, AR = 24

NOTES
* SEE SDD "TRAFFIC CONTROL, ONE LANE ROAD WITH TEMPORARY SIGNALS" FOR SIGNING AND ADDITIONAL INFORMATION. SIGNS SHOWN ON THIS SHEET ARE TO BE PLACED IN ADDITION TO SIGNS SHOWN ON THE SDD.

SEE SDD "BRIDGE TEMPORARY TRAFFIC SIGNAL INSTALLATION" FOR ADDITIONAL INFORMATION.

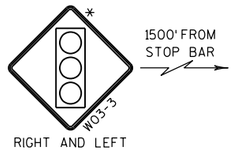

DELINEATED WETLAND BOUNDARY

TW
REM
+60
100' SHIFTING TAPER
16'
+40
573+00
574+00
575+00
576+00
577+00
USH 8
578+00
579+00
8:1 TAPER
130' TAPER

END SECTION REQUIRED
SEE SDD "CONCRETE BARRIER TEMPORARY PRECAST" FOR ADDITIONAL INFORMATION

RW

PROJECT NO: 1595-09-60	HWY: USH 8	COUNTY: ONEIDA	TRAFFIC CONTROL - CULVERT STAGE C3	SHEET 63	E

FILE NAME : P:\47xx\4727_DP.12.USH8.ONE\CADDS\Plan\025007_tc.dgn
PLOT DATE : 2/16/2015
PLOT BY : emo
PLOT NAME :
PLOT SCALE : 1:40

DATE 18FEB15 E S T I M A T E O F Q U A N T I T I E S

LINE NUMBER	ITEM	ITEM DESCRIPTION	UNIT	TOTAL	1595-09-60 QUANTITY
0010	201.0105	Clearing	STA	24.000	24.000
0020	201.0205	Grubbing	STA	24.000	24.000
0030	203.0100	Removing Small Pipe Culverts	EACH	6.000	6.000
0040	204.0110	Removing Asphaltic Surface	SY	125.000	125.000
0050	204.0115	Removing Asphaltic Surface Butt Joints	SY	290.000	290.000
0060	204.0120	Removing Asphaltic Surface Milling	SY	221,000.000	221,000.000
0070	204.0150	Removing Curb & Gutter	LF	1,100.000	1,100.000
0080	205.0100	Excavation Common	CY	9,644.000	9,644.000
0090	205.9015.S	Grading Shaping and Finishing Intersection (location) 01. Birch Bay Rd	LS	1.000	1.000
0100	205.9015.S	Grading Shaping and Finishing Intersection (location) 02. Cth N - East	LS	1.000	1.000
0110	205.9015.S	Grading Shaping and Finishing Intersection (location) 03. Spring Creek	LS	1.000	1.000
0120	205.9015.S	Grading Shaping and Finishing Intersection (location) 04. Cth N - West	LS	1.000	1.000
0130	205.9015.S	Grading Shaping and Finishing Intersection (location) 05. Wausau Rd	LS	1.000	1.000
0140	205.9015.S	Grading Shaping and Finishing Intersection (location) 06. South Rifle Rd	LS	1.000	1.000
0150	205.9015.S	Grading Shaping and Finishing Intersection (location) 07. North Rifle Rd	LS	1.000	1.000
0160	211.0100	Prepare Foundation for Asphaltic Paving (project) 01. 1595-09-60	LS	1.000	1.000
0170	211.0400	Prepare Foundation for Asphaltic Shoulders	STA	286.000	286.000
0180	213.0100	Finishing Roadway (project) 01. 1595-09-60	EACH	1.000	1.000
0190	305.0110	Base Aggregate Dense 3/4-Inch	TON	3,600.000	3,600.000
0200	305.0120	Base Aggregate Dense 1 1/4-Inch	TON	7,950.000	7,950.000
0210	305.0500	Shaping Shoulders	STA	1,102.000	1,102.000
0220	440.4410.S	Incentive IRI Ride	DOL	48,900.000	48,900.000
0230	455.0110	Asphaltic Material PG58-34	TON	130.000	130.000
0240	455.0605	Tack Coat	GAL	19,450.000	19,450.000
0250	460.1103	HMA Pavement Type E-3	TON	2,300.000	2,300.000
0260	460.2000	Incentive Density HMA Pavement	DOL	12,960.000	12,960.000
0270	465.0105	Asphaltic Surface	TON	1,100.000	1,100.000
0280	465.0110	Asphaltic Surface Patching	TON	300.000	300.000
0290	465.0120	Asphaltic Surface Driveways and Field Entrances	TON	135.000	135.000
0300	465.0315	Asphaltic Flumes	SY	100.000	100.000
0310	465.0425	Asphaltic Shoulder Rumble Strips 2-Lane Rural	LF	22,610.000	22,610.000
0320	465.0475	Asphalt Center Line Rumble Strips 2-Lane Rural	LF	45,390.000	45,390.000
0330	511.1100	Temporary Shoring	SF	2,000.000	2,000.000
0340	520.9700.S	Culvert Pipe Liners (size) 01. 24-Inch	LF	106.000	106.000
0350	520.9700.S	Culvert Pipe Liners (size) 02. 36-Inch	LF	120.000	120.000
0360	520.9750.S	Cleaning Culvert Pipes for Liner Verification	EACH	2.000	2.000
0370	522.0112	Culvert Pipe Reinforced Concrete Class III 12-Inch	LF	36.000	36.000
0380	522.0118	Culvert Pipe Reinforced Concrete Class III 18-Inch	LF	196.000	196.000

3

DATE 18FEB15 E S T I M A T E O F Q U A N T I T I E S

LINE NUMBER	ITEM	ITEM DESCRIPTION	UNIT	TOTAL	1595-09-60 QUANTITY
0390	522.0124	Culvert Pipe Reinforced Concrete Class III 24-Inch	LF	146.000	146.000
0400	522.0136	Culvert Pipe Reinforced Concrete Class III 36-Inch	LF	186.000	186.000
0410	522.1012	Apron Endwalls for Culvert Pipe Reinforced Concrete 12-Inch	EACH	2.000	2.000
0420	522.1018	Apron Endwalls for Culvert Pipe Reinforced Concrete 18-Inch	EACH	6.000	6.000
0430	522.1024	Apron Endwalls for Culvert Pipe Reinforced Concrete 24-Inch	EACH	5.000	5.000
0440	522.1036	Apron Endwalls for Culvert Pipe Reinforced Concrete 36-Inch	EACH	4.000	4.000
0450	601.0557	Concrete Curb & Gutter 6-Inch Sloped 36-Inch Type D	LF	1,225.000	1,225.000
0460	603.8000	Concrete Barrier Temporary Precast Delivered	LF	540.000	540.000
0470	603.8125	Concrete Barrier Temporary Precast Installed	LF	1,010.000	1,010.000
0480	614.0010	Barrier System Grading Shaping Finishing	EACH	2.000	2.000
0490	614.2300	MGS Guardrail 3	LF	1,322.500	1,322.500
0500	614.2330	MGS Guardrail 3 K	LF	140.000	140.000
0510	614.2610	MGS Guardrail Terminal EAT	EACH	4.000	4.000
0520	618.0100	Maintenance And Repair of Haul Roads (project) 01. 1595-09-60	EACH	1.000	1.000
0530	619.1000	Mobilization	EACH	1.000	1.000
0540	621.0100	Landmark Reference Monuments	EACH	16.000	16.000
0550	624.0100	Water	MGAL	20.000	20.000
0560	625.0500	Salvaged Topsoil	SY	17,730.000	17,730.000
0570	628.1504	Silt Fence	LF	6,730.000	6,730.000
0580	628.1520	Silt Fence Maintenance	LF	6,730.000	6,730.000
0590	628.1905	Mobilizations Erosion Control	EACH	8.000	8.000
0600	628.1910	Mobilizations Emergency Erosion Control	EACH	4.000	4.000
0610	628.2004	Erosion Mat Class I Type B	SY	27,870.000	27,870.000
0620	628.2031	Erosion Mat Class III Type A	SY	1,340.000	1,340.000
0630	628.5505	Polyethylene Sheeting	SY	2,500.000	2,500.000
0640	628.7504	Temporary Ditch Checks	LF	230.000	230.000
0650	628.7555	Culvert Pipe Checks	EACH	55.000	55.000
0660	628.7570	Rock Bags	EACH	765.000	765.000
0670	629.0210	Fertilizer Type B	CWT	12.000	12.000
0680	630.0120	Seeding Mixture No. 20	LB	205.000	205.000
0690	630.0130	Seeding Mixture No. 30	LB	185.000	185.000
0700	633.5200	Markers Culvert End	EACH	96.000	96.000
0710	634.0614	Posts Wood 4x6-Inch X 14-FT	EACH	32.000	32.000
0720	634.0616	Posts Wood 4x6-Inch X 16-FT	EACH	156.000	156.000
0730	634.0618	Posts Wood 4x6-Inch X 18-FT	EACH	5.000	5.000
0740	634.0620	Posts Wood 4x6-Inch X 20-FT	EACH	3.000	3.000
0750	637.2210	Signs Type II Reflective H	SF	810.020	810.020
0760	637.2230	Signs Type II Reflective F	SF	401.750	401.750
0770	638.2102	Moving Signs Type II	EACH	2.000	2.000
0780	638.2602	Removing Signs Type II	EACH	139.000	139.000
0790	638.3000	Removing Small Sign Supports	EACH	165.000	165.000
0800	638.4000	Moving Small Sign Supports	EACH	2.000	2.000
0810	642.5001	Field Office Type B	EACH	1.000	1.000
0820	643.0100	Traffic Control (project) 01. 1595-09-60	EACH	1.000	1.000
0830	643.0300	Traffic Control Drums	DAY	3,574.000	3,574.000

3

DATE 18FEB15 E S T I M A T E O F Q U A N T I T I E S

LINE NUMBER	ITEM	ITEM DESCRIPTION	UNIT	TOTAL	1595-09-60 QUANTITY
0840	643.0420	Traffic Control Barricades Type III	DAY	60.000	60.000
0850	643.0705	Traffic Control Warning Lights Type A	DAY	80.000	80.000
0860	643.0715	Traffic Control Warning Lights Type C	DAY	140.000	140.000
0870	643.0900	Traffic Control Signs	DAY	5,256.000	5,256.000
0880	643.1050	Traffic Control Signs PCMS	DAY	274.000	274.000
0890	646.0106	Pavement Marking Epoxy 4-Inch	LF	211,590.000	211,590.000
0900	646.0126	Pavement Marking Epoxy 8-Inch	LF	1,515.000	1,515.000
0910	646.0600	Removing Pavement Markings	LF	2,230.000	2,230.000
0920	647.0166	Pavement Marking Arrows Epoxy Type 2	EACH	10.000	10.000
0930	647.0356	Pavement Marking Words Epoxy	EACH	6.000	6.000
0940	647.0726	Pavement Marking Diagonal Epoxy 12-Inch	LF	790.000	790.000
0950	648.0100	Locating No-Passing Zones	MI	11.060	11.060
0960	649.0100	Temporary Pavement Marking 4-Inch	LF	192,690.000	192,690.000
0970	649.0400	Temporary Pavement Marking Removable Tape 4-Inch	LF	7,450.000	7,450.000
0980	649.1400	Temporary Pavement Marking Stop Line Removable Tape 24-Inch	LF	24.000	24.000
0990	650.4500	Construction Staking Subgrade	LF	3,432.000	3,432.000
1000	650.5000	Construction Staking Base	LF	3,432.000	3,432.000
1010	650.5500	Construction Staking Curb Gutter and Curb & Gutter	LF	1,225.000	1,225.000
1020	650.6000	Construction Staking Pipe Culverts	EACH	4.000	4.000
1030	650.8000	Construction Staking Resurfacing Reference	LF	58,318.000	58,318.000
1040	650.9910	Construction Staking Supplemental Control (project) 01. 1595-09-60	LS	1.000	1.000
1050	650.9920	Construction Staking Slope Stakes	LF	3,432.000	3,432.000
1060	661.0100	Temporary Traffic Signals for Bridges (structure) 01. Culvert Sta 572+43	LS	1.000	1.000
1070	690.0150	Sawing Asphalt	LF	2,090.000	2,090.000
1080	690.0250	Sawing Concrete	LF	220.000	220.000
1090	ASP.1T0A	On-the-Job Training Apprentice at $5.00/HR	HRS	2,000.000	2,000.000
1100	ASP.1T0G	On-the-Job Training Graduate at $5.00/HR	HRS	1,260.000	1,260.000
1110	SPV.0060	Special 01. Reestablish Section Corner Monuments	EACH	4.000	4.000
1120	SPV.0060	Special 02. Grading, Shaping, And Finishing Culverts	EACH	4.000	4.000
1130	SPV.0060	Special 03. Lane Shift	EACH	1.000	1.000
1140	SPV.0060	Special 04. Joint Ties For Concrete Pipes	EACH	2.000	2.000
1150	SPV.0060	Special 05. Temporary Pavement Marking Reflective Tabs	EACH	1,185.000	1,185.000
1160	SPV.0090	Special 01. Fog Seal Rumble Strips	LF	45,390.000	45,390.000
1170	SPV.0090	Special 02. Heavy Duty Silt Fence	LF	140.000	140.000
1180	SPV.0090	Special 03. Salvaged Cable Guard	LF	627.000	627.000
1190	SPV.0105	Special 01. Research And Locate Existing Property Monuments	LS	1.000	1.000
1200	SPV.0105	Special 02. Verify And Replace Existing Property Monuments	LS	1.000	1.000
1210	SPV.0120	Special 01. Water For Seeded Areas	MGAL	500.000	500.000
1220	SPV.0180	Special 01. Protective Thermoplastic Coating At Snowmobile Crossing	SY	180.000	180.000
1230	SPV.0195	Special 01. HMA, THIN LAYER OVERLAY, E-3	TON	17,950.000	17,950.000

3

3

CLEARING AND GRUBBING

STATION - STATION	LOCATION	201.0105 CLEARING STA	201.0205 GRUBBING STA
CAT 0010			
177+00 - 181+00	LT	4	4
188+00 - 191+00	LT	3	3
450+00 - 451+00	LT & RT	1	1
570+00 - 574+00	LT & RT	4	4
603+00 - 607+00	LT & RT	4	4
613+00 - 620+00	LT & RT	7	7
704+00 - 705+00	LT	1	1
TOTALS		24	24

REMOVING SMALL PIPE CULVERTS

STATION	LOCATION	203.0100 EACH	FOR INFORMATIONAL USE ONLY SIZE (INCH)	MATERIAL	LENGTH (FT)	COMMENTS
CAT 0010						
572+43	LT & RT	1	36	RCCP	160	USH 8
606+98	RT	1	18	CMCP	86	CRESCENT RD
607+60	LT	1	24	CMCP	64	CRESCENT RD
609+40	LT	1	18	CMCP	32	DRIVEWAY
612+88	RT	1	18	CMCP	70	DRIVEWAY
617+08	RT	1	24	CMCP	32	DRIVEWAY
TOTAL		6				

3

REMOVING ASPHALTIC SURFACE ITEMS

STATION - STATION	LOCATION	204.0115 BUTT JOINTS SY	204.0120 MILLING SY	COMMENTS
CAT 0010				
149+40 - 208+00	LT & RT	6	19,515	
208+00 - 266+00	LT & RT	6	19,515	
226+00	LT & RT	11	770	BIRCH BAY RD
248+90	LT & RT	9	296	PAULSON DR
261+25	LT	7	353	CTH N
266+00 - 324+00	LT & RT	6	19,285	
274+50	RT	7	359	SHADY REST RD
294+50	RT	9	605	SHADY REST RD
324+00 - 383+00	LT & RT	--	24,547	
365+80	LT	8	294	MEMORIAL FOREST RD
379+00	RT	--	358	ROE LAKE RD
383+00 - 441+00	LT & RT	6	21,167	
392+10	LT	4	185	WOLF LAKE RD
411+75	RT	6	346	OLD SCHOOL RD
440+25	RT	4	480	SPRING CREEK RD
441+00 - 499+00	LT & RT	27	20,893	
485+75	RT	6	311	SQUASH LAKE RD
499+00 - 558+00	LT & RT	22	26,051	
555+60	LT	7	656	CTH N
558+00 - 616+00	LT & RT	38	19,493	
580+25	RT	5	137	CRESTWOOD DR
616+00 - 674+00	LT & RT	43	23,022	
633+00	RT	7	467	WAUSAU RD
657+50	RT	4	144	DETIENNE RD
667+00	RT	6	157	PLEASURE POINT RD
674+00 - 732+58	LT & RT	22	20,566	
699+25	RT	7	534	SOUTH RIFLE RD
712+50	LT	7	494	NORTH RIFLE RD
TOTALS		290	221,000	

3

REMOVING ASPHALTIC SURFACE

STATION - STATION	LOCATION	204.0110 SY	COMMENTS
CAT 0010			
225+21 - 226+53	RT	17	BIRCH BAY RD
260+86 - 261+99	LT	16	CTH N
439+86 - 440+92	RT	20	SPRING CREEK RD
555+01 - 556+29	LT	19	CTH N
632+37 - 633+62	RT	16	WAUSAU RD
698+58 - 699+79	RT	17	S RIFLE RD
711+89 - 713+18	LT	20	N RIFLE RD
TOTAL		125	

REMOVING CURB & GUTTER

STATION - STATION	LOCATION	204.0150 LF	COMMENTS
CAT 0010			
225+21 - 226+53	RT	123	BIRCH BAY RD
260+86 - 261+99	LT	126	CTH N
439+86 - 440+92	RT	152	SPRING CREEK RD
555+01 - 556+29	LT	148	CTH N
606+40 - 607+75	RT	147	CRESCENT RD
632+37 - 633+62	RT	124	WAUSAU RD
698+58 - 699+79	RT	133	S RIFLE RD
711+89 - 713+18	LT	147	N RIFLE RD
TOTAL		1,100	

3

EARTHWORK SUMMARY

DIVISION	LOCATION	EXCAVATION COMMON (NOTE 1) (ITEM *205.0100)	SALVAGED / UNUSEABLE PAVEMENT MATERIAL (NOTE 2)	AVAILABLE MATERIAL (NOTE 3)	UNEXPANDED FILL	EXPANDED FILL (NOTE 4)	MASS ORDINATE +/- (NOTE 5)
						FACTOR 1.25	
ID 1595-09-60							
1	USH 8 WIDENING AT CRESCENT ROAD	9,347	47	9,300	2,247	2,809	6,491
1	CRESCENT ROAD (NORTH)	297	17	280	94	118	162
TOTALS		9,644	64	9,580	2,341	2,926	6,653

1) SALVAGED/UNSUABLE PAVEMENT MATERIAL IS INCLUDED IN CUT
2) SALVAGED/UNUSABLE PAVEMENT MATERIAL = (AREA OF PROJECT PAVEMENT REMOVAL) * (TYPICAL EXISTING PAVEMENT DEPTH)
3) AVAILABLE MATERIAL = CUT - SALVAGED/UNUSUABLE PAVEMENT MATERIAL
4) EXPANDED FILL FACTOR = (UNEXPANDED FILL) * (FILL FACTOR)
5) MASS ORDINATE = CUT - (EXPANDED FILL); PLUS INDICATES AN EXCESS OF MATERIAL

GRADING, SHAPING AND FINISHING INTERSECTION

LOCATION	BID ITEM NO.	EACH	**COMMON EXC. CY	**FILL CY	**BORROW EXC. CY	**TOPSOIL SY	**FERTILIZER TYPE B CWT	**SEEDING #30 LB
CAT 0010								
BIRCH BAY RD	205.9015.S.01	1	25	13	--	55	0.1	1
CTH N-EAST	205.9015.S.02	1	25	13	--	57	0.1	2
SPRING CREEK	205.9015.S.03	1	31	16	--	68	0.1	2
CTH N-WEST	205.9015.S.04	1	30	15	--	66	0.1	2
WAUSAU RD	205.9015.S.05	1	25	13	--	56	0.1	1
SOUTH RIFLE RD	205.9015.S.06	1	27	14	--	60	0.1	2
NORTH RIFLE RD	205.9015.S.07	1	30	15	--	66	0.1	2
TOTALS		7	193	99	0	428	0.7	12

**NON-BID ITEM, ITEMS AND QUANTITIES LISTED FOR BID INFORMATION ONLY. ITEMS INCIDENTAL TO GRADING, SHAPING AND FINISHING INTERSECTION

PREPARE FOUNDATION FOR ASPHALTIC PAVING

STATION - STATION	211.0100 (1595-09-60) LS
CAT 0010	
PROJECT	1
TOTAL	1

PREPARE FOUNDATION FOR ASPHALTIC SHOULDERS

STATION - STATION	LOCATION	211.0400 STA
CAT 0010		
175+80 - 193+93	LT	19
228+12 - 228+37	LT & RT	1
364+47 - 364+72	LT & RT	1
552+38 - 596+97	RT	60
556+29 - 596+97	LT	41
618+69 - 633+62	RT	15
622+53 - 631+23	LT	9
659+02 - 695+57	LT	37
659+18 - 711+00	RT	52
700+84 - 732+58	LT	32
713+92 - 732+58	RT	19
TOTAL		286

3

BASE AGGREGATE DENSE ITEMS

STATION - STATION	LOCATION	305.0110 3/4-INCH TON	305.0120 1 1/4-INCH TON	COMMENTS
CAT 0010				
149+40 - 208+00	LT & RT	800	--	LOW SHOULDERS, DRIVEWAYS, AND GUARDRAIL
208+00 - 266+00	LT & RT	180	30	LOW SHOULDERS, DRIVEWAYS, AND CURB & GUTTER
266+00 - 324+00	LT & RT	180	--	LOW SHOULDERS AND DRIVEWAYS
324+00 - 383+00	LT & RT	190	--	LOW SHOULDERS AND DRIVEWAYS
383+00 - 441+00	LT & RT	180	20	LOW SHOULDERS, DRIVEWAYS, AND CURB & GUTTER
441+00 - 499+00	LT & RT	180	--	LOW SHOULDERS AND DRIVEWAYS
499+00 - 558+00	LT & RT	190	20	LOW SHOULDERS, DRIVEWAYS, AND CURB & GUTTER
558+00 - 616+00	LT & RT	180	--	LOW SHOULDERS AND DRIVEWAYS
596+97 - 622+53	LT & RT	640	6,830	CRESCENT RD WIDENING
616+00 - 674+00	LT & RT	180	20	LOW SHOULDERS, DRIVEWAYS, AND CURB & GUTTER
674+00 - 732+58	LT & RT	190	30	LOW SHOULDERS, DRIVEWAYS, AND CURB & GUTTER
UNDISTRIBUTED	--	510	1,000	
TOTALS		3,600	7,950	

SHAPING SHOULDERS

STATION - STATION	LOCATION	305.0500 SHAPING SHOULDERS STA
CAT 0010		
149+40 - 175+50	LT	27
194+23 - 596+97	LT	403
622+58 - 732+58	LT	110
149+40 - 596+97	RT	448
618+69 - 732+58	RT	114
TOTAL		1,102

3

Addendum No. 1
ID 1595-09-60
Revised Sheet 70
April 7, 2015

REHEATING HMA PAVEMENT LONGITUNDINAL JOINTS

STATION - STATION	LOCATION	460.4110.S LF	COMMENTS
CAT 0010			
149+40 - 732+58	LT & RT	58,318	USH 8 CENTERLINE UPPER LAYER
TOTAL		58,318	

ASPHALTIC RUMBLE STRIP ITEMS

STATION - STATION	LOCATION	465.0425 ASPHALTIC SHOULDER RUMBLE STRIPS 2-LANE RURAL (TYPE I) LF	465.0475 ASPHALTIC CENTER LINE RUMBLE STRIPS 2-LANE RURAL LF	SPV.0090.04 SEAL RUMBLE STRIPS LF
CAT 0010				
149+40 - 208+00	LT & RT	--	5,860	--
208+00 - 266+00	LT & RT	--	4,140	--
266+00 - 324+00	LT & RT	--	4,900	--
324+00 - 383+00	LT & RT	--	4,920	--
383+00 - 441+00	LT & RT	--	4,320	--
441+00 - 499+00	LT & RT	--	5,000	--
499+00 - 558+00	LT & RT	--	5,100	--
558+00 - 616+00	LT & RT	--	2,530	--
616+00 - 674+00	LT & RT	--	3,730	--
674+00 - 732+58	LT & RT	--	4,890	--
556+80 - 605+42	LT & RT	7,880	--	--
610+10 - 629+83	LT & RT	3,440	--	--
659+00 - 732+58	LT & RT	11,290	--	--
149+40 - 279+50	LT & RT	--	--	11,350
424+50 - 558+00	LT & RT	--	--	11,350
TOTALS		22,610	45,390	22,700

TEMPORARY SHORING

STATION - STATION	LOCATION	511.1100 SF	COMMENTS
CAT 0010			
571+98 - 572+81	RT	1,000	STAGE C2
572+01 - 572+84	RT	1,000	STAGE C3
TOTAL		2,000	

HMA AND ASPHALTIC ITEMS

STATION - STATION	LOCATION	455.0110 ASPHALTIC MATERIAL PG58-34 TON	455.0605 TACK COAT GAL	460.1103 HMA PAVEMENT TYPE E-3 TON	465.0105 ASPHALTIC SURFACE TON	465.0110 ASPHALTIC SURFACE PATCHING TON	465.0120 ASPHALTIC SURFACE DRIVEWAYS AND FIELD ENTRANCES TON	465.0315 ASPHALTIC FLUME SY	SPV.0195.01 HMA, THIN LAYER OVERLAY, E-3 TON	COMMENTS
CAT 0010										
149+40 - 208+00	LT & RT	8	1,650	130	--	--	3	--	1,580	
208+00 - 266+00	LT & RT	--	1,570	--	16	--	4	20	1,510	
226+00	LT & RT	--	70	--	--	--	--	--	60	BIRCH BAY RD
248+90	LT & RT	--	30	--	--	--	--	--	30	PAULSON DR
261+25	LT	--	30	--	--	--	--	--	30	CTH N
266+00 - 324+00	LT & RT	--	1,550	--	--	--	4	--	1,490	
274+50	RT	--	30	--	--	--	--	--	30	SHADY REST RD
294+50	RT	--	50	--	--	--	--	--	50	SHADY REST RD
324+00 - 383+00	LT & RT	--	1,980	--	--	--	--	--	1,860	
365+80	LT	--	30	--	--	--	--	--	30	MEMORIAL FOREST RD
379+00	RT	--	30	--	--	--	--	--	30	ROE LAKE RD
383+00 - 441+00	LT & RT	--	1,700	--	8	--	14	10	1,620	
392+10	LT	--	20	--	--	--	--	--	20	WOLF LAKE RD
411+75	RT	--	30	--	--	--	--	--	30	OLD SCHOOL RD
440+25	RT	--	40	--	--	--	--	--	40	SPRING CREEK RD
441+00 - 499+00	LT & RT	--	1,680	--	--	--	19	--	1,600	
485+75	RT	--	30	--	--	--	--	--	30	SQUASH LAKE RD
499+00 - 558+00	LT & RT	6	2,150	100	8	--	12	10	2,030	
555+60	LT	--	60	--	--	--	--	--	50	CTH N
558+00 - 616+00	LT & RT	11	1,730	190	--	100	29	--	1,610	
580+25	RT	--	20	--	--	--	--	--	10	CRESTWOOD DR
596+97 - 622+53	LT & RT	76	990	1,380	--	--	--	25	440	CRECENT RD WIDENING
616+00 - 674+00	LT & RT	10	1,960	170	7	--	24	15	1,850	
633+00	RT	--	40	--	--	--	--	--	40	WAUSAU RD
657+50	RT	--	20	--	--	--	--	--	20	DETIENNE RD
667+00	RT	--	20	--	--	--	--	--	20	PLEASURE POINT RD
674+00 - 732+58	LT & RT	19	1,850	330	16	--	26	20	1,760	
699+25	RT	--	50	--	--	--	--	--	40	SOUTH RIFLE RD
712+50	LT	--	40	--	--	--	--	--	40	NORTH RIFLE RD
UNDISTRIBUTED	--	--	--	--	1,045	200	--	--	--	
TOTALS		130	19,450	2,300	1,100	300	135	100	17,950	

NOTES: THE ADDITIONAL HMA, THIN LAYER OVERLAY, E-3 FOR THE PAVEMENT SAFETY EDGE WAS CALCULATED WITH H=5-INCHES TYP
THE UNDISTRIBUTED AMOUNT OF ASPHALTIC SURFACE IS FOR WEDGING BEFORE HMA, THIN LAYER OVERLAY, E-3

CULVERT PIPE ITEMS

STATION	LOCATION	520.9700.S.01 LINERS 24-INCH LF	520.9700.S.02 LINERS 36-INCH LF	520.9750.S CLEANING CULVERT PIPES FOR LINER VERIFICATION EACH	522.0112 REINFORCED CONCRETE CLASS III 12-INCH LF	522.0118 REINFORCED CONCRETE CLASS III 18-INCH LF	522.0124 REINFORCED CONCRETE CLASS III 24-INCH LF	522.0136 REINFORCED CONCRETE CLASS III 36-INCH LF	522.1012 APRON ENDWALLS FOR CULVERT PIPE REINFORCED CONCRETE 12-INCH EACH	522.1018 18-INCH EACH	522.1024 24-INCH EACH	522.1036 36-INCH EACH	633.5200 MARKERS CULVERT END EACH	SPV.0060.04 JOINT TIES FOR CONCRETE PIPES EACH	**PIPE JOINT TIES EACH	COMMENTS
CAT 0010																
179+12	LT & RT	--	--	--	--	--	16	--	--	--	1	--	2	--	6	
450+39	LT & RT	--	--	--	--	--	--	--	--	--	--	2	2	2	--	
545+25	LT & RT	106	--	1	--	--	--	--	--	--	2	--	2	--	12	
572+43	LT & RT	--	--	--	--	--	--	186	--	--	--	2	2	--	--	
606+98	RT	--	--	--	--	--	130	--	--	--	2	--	--	--	12	CRESCENT RD
607+60	LT	--	--	--	--	120	--	--	--	2	--	--	--	--	12	CRESCENT RD
609+40	LT	--	--	--	--	40	--	--	--	2	--	--	--	--	12	DRIVEWAY
615+18	RT	--	--	--	36	--	--	--	2	--	--	--	--	--	12	DRIVEWAY
617+08	RT	--	--	--	--	36	--	--	--	2	--	--	--	--	12	DRIVEWAY
704+58	LT & RT	--	120	1	--	--	--	--	--	--	--	--	2	--	--	
PROJECT	LT & RT	--	--	--	--	--	--	--	--	--	--	--	86	--	--	
TOTALS		106	120	2	36	196	146	186	2	6	5	4	96	2		

**NON BID ITEM, FOR INFORMATION ONLY. TIE LAST THREE JOINTS.

CURB & GUTTER 6-INCH SLOPED 36-INCH TYPE D

STATION - STATION	LOCATION	601.0557 LF	COMMENTS
CAT 0010			
225+21 - 226+53	RT	123	BIRCH BAY RD
260+86 - 261+99	LT	126	CTH N
439+86 - 440+92	RT	152	SPRING CREEK RD
555+01 - 556+29	LT	148	CTH N
606+27 - 608+31	LT & RT	272	CRESCENT RD
632+37 - 633+62	RT	124	WAUSAU RD
698+58 - 699+79	RT	133	S RIFLE RD
711+89 - 713+18	LT	147	N RIFLE RD
TOTAL		1,225	

CONCRETE BARRIER TEMPORARY PRECAST ITEMS

STATION - STATION	LOCATION	603.8000 DELIVERED LF	603.8125 INSTALLED LF	COMMENTS
CAT 0010				
569+66 - 575+05	LT & RT	540	540	STAGE C2
570+03 - 574+67	LT & RT	--	470	STAGE C3
TOTALS		540	1,010	

3

BARRIER SYSTEM GRADING SHAPING FINISHING

STATION - STATION	LOCATION	614.0010 EACH	**COMMON EXC. CY	**FILL CY	**BORROW EXC. CY	**TOPSOIL SY	**FERTILIZER TYPE B CWT	**SEEDING #20 LB	**SEEDING #30 LB
CAT 0010									
174+51 - 192+05	LT	1	--	2,210	2,210	4,600	3	83	28
192+05 - 194+23	LT	1	--	10	10	200	0	--	4
TOTALS		2	0	2,220	2,220	4,800	3	83	32

**NON-BID ITEM, ITEMS AND QUANTITIES LISTED FOR BID INFORMATION ONLY. ITEMS INCIDENTAL TO BARRIER SYSTEM GRADING SHAPING FINISHING.
ANY STAKING REQUIRED IS INCIDENTAL TO BARRIER SYSTEM GRADING SHAPING FINISHING.

GUARDRAIL ITEMS

STATION - STATION	LOCATION	614.2300 MGS GUARDRAIL 3 LF	614.2330 MGS GUARDRAIL 3 K LF	614.2610 MGS GUARDRAIL TERMINAL EAT EACH
CAT 0010				
176+30 - 191+86	LT	1,310.0	140.0	2
192+25 - 193+44	LT	12.5	--	2
TOTALS		1,322.5	140.0	4

MONUMENT ITEMS

LOCATION	621.0100 LANDMARK REFERENCE MONUMENTS EACH	SPV.0060.01 REESTABLISH SECTION CORNER MONUMENTS EACH
CAT 0010		
NORTHEAST OF SEC 34, T36N, R7E	4	1
NORTH 1/4 OF SEC 35, T36N, R7E	4	1
EAST 1/4 OF SEC 26, T36N, R7E	4	1
NORTHEAST OF SEC 26, T36N, R7E	4	1
TOTALS	16	4

WATER

LOCATION	624.0100 MGAL
CAT 0010	
PROJECT	20
TOTAL	20

NOTE: WATER PROVIDED FOR COMPACTION OF SUBGRADE AND BASE AGGREGATE

3

FINISHING ITEMS

LOCATION	625.0500 SALVAGED TOPSOIL SY	629.0210 FERTILIZER TYPE B CWT	630.0120 SEEDING MIXTURE NO. 20 LB	630.0130 SEEDING MIXTURE NO. 30 LB
CAT 0010				
CRESCENT ROAD	14,180	9.0	163	147
UNDISTRIBUTED	3,550	3.0	42	38
TOTALS	17,730	12.0	205	185

MOBILIZATIONS EROSION CONTROL

LOCATION	628.1905 MOBILIZATION EROSION CONTROL EACH	628.1910 MOBILIZATION EMERGENCY EROSION CONTROL EACH
CAT 0010		
PROJECT	8	4
TOTALS	8	4

3

EROSION CONTROL ITEMS

STATION - STATION	LOCATION	628.1504 SILT FENCE LF	628.1520 SILT FENCE MAINTENANCE LF	628.2004 CLASS I TYPE B SY	628.2031 CLASS III TYPE A SY	628.5505 POLYETHYLENE SHEETING SY	628.7504 TEMPORARY DITCH CHECKS LF	628.7555 CULVERT PIPE CHECKS EACH	628.7570 ROCK BAGS EACH	SPV.0090.02 HEAVY DUTY SILT FENCE LF	COMMENTS
CAT 0010											
174+51 - 194+23	LT	1,073	1,073	3,630	1,070	--	80	--	135	--	GUARDRAIL
225+21 - 226+53	RT	138	138	60	--	--	--	--	15	--	CURB & GUTTER REPLACEMENT
260+86 - 261+99	LT	141	141	60	--	--	--	--	15	--	CURB & GUTTER REPLACEMENT
439+86 - 440+92	RT	167	167	70	--	--	--	--	15	--	CURB & GUTTER REPLACEMENT
450+39	LT & RT	65	65	390	--	--	--	6	15	--	CULVERT
545+25	LT & RT	65	65	300	--	--	--	4	15	--	CULVERT
555+01 - 556+29	LT	163	163	70	--	--	--	--	15	--	CURB & GUTTER REPLACEMENT
569+55 - 575+16	LT & RT	652	652	2,590	--	2,000	--	6	60	110	CULVERT AND WIDENING
596+97 - 622+53	LT & RT	2,401	2,401	14,820	--	--	140	20	270	--	USH 8/CRESCENT RD WIDENING
632+37 - 633+62	RT	139	139	60	--	--	--	--	15	--	CURB & GUTTER REPLACEMENT
698+58 - 699+79	RT	148	148	60	--	--	--	--	15	--	CURB & GUTTER REPLACEMENT
704+58	LT & RT	65	65	110	--	--	--	6	15	--	CULVERT
711+89 - 713+18	LT	162	162	70	--	--	--	--	15	--	CURB & GUTTER REPLACEMENT
UNDISTRIBUTED	--	1,351	1,351	5,580	270	500	10	13	150	30	
TOTALS		6,730	6,730	27,870	1,340	2,500	230	55	765	140	

NOTE: ROCK BAGS ARE FOR SILT FENCE RELIEF

TYPE II SIGNS AND SUPPORTS

SIGN NO.	SIGN CODE	W	X	H	637.2210 SIGNS TYPE II REFLECTIVE H SF	637.2230 SIGNS TYPE II REFLECTIVE F SF	634.0614 POSTS WOOD 4x6x14 EACH	634.0616 POSTS WOOD 4x6x16 EACH	634.0618 POSTS WOOD 4x6x18 EACH	634.0620 POSTS WOOD 4x6x20 EACH	638.2102 MOVING SIGNS TYPE II EACH	638.4000 MOVING SMALL SIGN SUPPORTS EACH	638.2602 REMOVING SIGNS TYPE II EACH	638.3000 REMOVING SMALL SIGN SUPPORTS EACH	COMMENTS
CAT 0010															
1-1	--	--	X	--	--	--	--	--	--	--	--	--	1	1	GATEWOOD HEIGHTS RD
2-1	W14-3	48	X	36	--	6.00	--	1	--	--	--	--	1	1	
2-2	W14-3	48	X	36	--	6.00	--	1	--	--	--	--	1	1	
4-1	I2-2	60	X	15	6.25	--	1	1	--	--	--	--	1	1	ONEIDA CO
4-2	W14-3	48	X	36	--	6.00	--	--	--	--	--	--	1	--	
4-3	I2-2	60	X	15	6.25	--	1	1	--	--	--	--	1	1	LINCOLN CO
4-4	W14-3	48	X	36	--	6.00	--	1	--	--	--	--	1	1	
6-1	--	--	X	--	--	--	--	--	--	--	--	--	1	2	BIRCH BAY RD
6-2	D1-61	72	X	24	12.00	--	--	2	--	--	--	--	--	--	BIRCH BAY RD
6-3	W14-3	48	X	36	--	6.00	--	1	--	--	--	--	1	1	
6-4	R1-1	30	X	30	5.18	--	--	1	--	--	--	--	1	1	
6-5	R1-1	30	X	30	5.18	--	--	1	--	--	--	--	1	1	
6-6	W14-3	48	X	36	--	6.00	--	1	--	--	--	--	1	1	
7-1	--	--	X	--	--	--	--	--	--	--	--	--	1	2	BIRCH BAY RD
7-2	D1-61	72	X	24	12.00	--	--	2	--	--	--	--	--	--	BIRCH BAY RD
7-3	--	--	X	--	--	--	--	--	--	--	--	--	1	2	PAULSON DR
7-4	D1-61	66	X	24	11.00	--	--	2	--	--	--	--	--	--	PAULSON DR
7-5	W2-1	30	X	30	--	6.25	--	1	--	--	--	--	1	1	
7-6	R1-1	30	X	30	5.18	--	--	1	--	--	--	--	1	1	
8-1	R1-1	30	X	30	5.18	--	--	1	--	--	--	--	1	1	
8-2	R1-1	30	X	30	5.18	--	--	1	--	--	--	--	1	1	
8-3	J1-1	24	X	39	6.50	--	--	1	--	--	--	--	1	1	
8-4	--	--	X	--	--	--	--	--	--	--	--	--	1	2	PAULSON DR
8-5	D1-61	66	X	24	11.00	--	--	2	--	--	--	--	--	--	PAULSON DR
8-6	--	--	X	--	--	--	--	--	--	--	--	--	--	1	EMPTY POST
8-7	D1-1	84	X	15	8.75	--	1	1	--	--	--	--	1	2	HEAFFORD JCT
8-8	J4-1	24	X	36	6.00	--	--	1	--	--	--	--	1	1	
8-9	J13-1	24	X	45	7.50	--	--	1	--	--	--	--	--	--	
8-10	J13-1	24	X	45	7.50	--	--	1	--	--	--	--	1	1	
8-11	R1-1	36	X	36	7.46	--	--	1	--	--	--	--	1	1	
8-12	R1-1	36	X	36	7.46	--	--	1	--	--	--	--	1	1	
8-13	J13-1	24	X	45	7.50	--	--	1	--	--	--	--	1	1	
9-1	W1-6	48	X	24	--	8.00	--	1	--	--	--	--	1	1	
9-2	D1-1	84	X	15	8.75	--	1	1	--	--	--	--	1	2	HEAFFORD JCT
9-3	W2-2	30	X	30	--	6.25	--	1	--	--	--	--	1	1	
9-4	D1-1	96	X	15	10.00	--	1	1	--	--	--	--	--	--	SHADY REST RD
9-5	--	--	X	--	--	--	--	--	--	--	--	--	1	2	SHADY REST RD
9-6	J13-1	24	X	45	7.50	--	--	1	--	--	--	--	1	1	
9-7	I3-1	72	X	15	7.50	--	1	1	--	--	--	--	1	2	MANSON LAKE
9-8	R1-1	30	X	30	5.18	--	--	1	--	--	--	--	1	1	
9-9	R1-1	30	X	30	5.18	--	--	1	--	--	--	--	1	1	
9-10	I3-1	72	X	15	7.50	--	1	1	--	--	--	--	--	--	MANSON LAKE
9-11	W14-3	48	X	36	--	6.00	--	1	--	--	--	--	1	1	
10-1	W14-3	48	X	36	--	6.00	--	1	--	--	--	--	1	1	
11-1	R1-1	30	X	30	5.18	--	--	1	--	--	--	--	1	1	
11-2	--	--	X	--	--	--	--	--	--	--	--	--	1	2	SHADY REST RD
11-3	D1-1	96	X	15	10.00	--	1	1	--	--	--	--	--	--	SHADY REST RD
11-4	W2-2	30	X	30	--	6.25	--	1	--	--	--	--	1	1	
12-1	I3-1	60	X	15	6.25	--	1	1	--	--	--	--	--	--	STAG LAKE
12-2	W14-3	48	X	36	--	6.00	--	1	--	--	--	--	1	1	
SUBTOTALS					216.11	80.75	9	45	0	0	0	0	40	49	

TYPE II SIGNS AND SUPPORTS (CONTINUED)

SIGN NO.	SIGN CODE	W	X	H	637.2210 SIGNS TYPE II REFLECTIVE H SF	637.2230 SIGNS TYPE II REFLECTIVE F SF	634.0614 POSTS WOOD 4x6x14 EACH	634.0616 POSTS WOOD 4x6x16 EACH	634.0618 POSTS WOOD 4x6x18 EACH	634.0620 POSTS WOOD 4x6x20 EACH	638.2102 MOVING SIGNS TYPE II EACH	638.4000 MOVING SMALL SIGN SUPPORTS EACH	638.2602 REMOVING SIGNS TYPE II EACH	638.3000 REMOVING SMALL SIGN SUPPORTS EACH	COMMENTS
CAT 0010															
12-3	I3-1	60	X	15	6.25	--	1	1	--	--	--	--	--	--	STAG LAKE
12-4	W14-3	48	X	36	--	6.00	--	1	--	--	--	--	1	1	
12-5	R4-51	36	X	48	12.00	--	--	--	1	--	--	--	1	1	
13-1	W14-3	48	X	36	--	6.00	--	1	--	--	--	--	1	1	
13-2	W14-3	48	X	36	--	6.00	--	1	--	--	--	--	1	1	
14-1	R59-51	36	X	36	9.00	--	--	1	--	--	--	--	1	1	
14-2	R4-3	24	X	30	5.00	--	--	1	--	--	--	--	1	1	
14-3	R4-53	54	X	54	20.25	--	--	--	1	1	--	--	1	2	
15-1	D1-1	120	X	15	12.50	--	1	1	--	--	--	--	--	--	MEMORIAL FOREST RD
15-2	R4-1	24	X	30	5.00	--	--	1	--	--	--	--	1	1	
15-3	W14-3	48	X	36	--	6.00	--	1	--	--	--	--	1	1	
15-4	R1-1	30	X	30	5.18	--	--	1	--	--	--	--	1	1	
15-5	R1-1	30	X	30	5.18	--	--	1	--	--	--	--	1	1	
16-1	W2-2	30	X	30	--	6.25	--	1	--	--	--	--	1	1	
16-2	D1-1	120	X	15	12.50	--	1	1	--	--	--	--	--	--	MEMORIAL FOREST RD
16-3	R4-53	54	X	54	20.25	--	--	--	1	1	--	--	1	2	
16-4	R1-1	30	X	30	5.18	--	--	1	--	--	--	--	1	1	
16-5	W9-1R	36	X	36	--	9.00	--	1	--	--	--	--	1	1	
17-1	W2-2	30	X	30	--	6.25	--	1	--	--	--	--	1	1	
17-2	W4-2R	36	X	36	--	9.00	--	1	--	--	--	--	1	1	
17-3	W4-2R	36	X	36	--	9.00	--	1	--	--	--	--	1	1	
17-4	R4-1	24	X	30	5.00	--	--	1	--	--	--	--	1	1	
17-5	R1-1	30	X	30	5.18	--	--	1	--	--	--	--	1	1	
17-6	W14-3	48	X	36	--	6.00	--	1	--	--	--	--	1	1	
17-7	R4-53	54	X	54	20.25	--	--	--	1	1	--	--	1	2	
18-1	R59-51	36	X	36	9.00	--	--	1	--	--	--	--	1	1	
18-2	R3-72	30	X	36	7.50	--	--	1	--	--	--	--	1	1	
18-3	D1-2	90	X	15	9.38	--	1	1	--	--	--	--	--	--	OLD SCHOOL RD
18-4	R1-1	30	X	30	5.18	--	--	1	--	--	--	--	1	1	
19-1	D1-2	90	X	15	9.38	--	1	1	--	--	--	--	--	--	OLD SCHOOL RD
19-2	--	--	X	--	--	--	--	--	--	--	--	--	1	2	HEIDE DR
20-1	D1-1	102	X	15	10.63	--	1	1	--	--	--	--	--	--	SPRING CREEK RD
20-2	--	--	X	--	--	--	--	--	--	--	--	--	1	2	SPRING CREEK RD
20-3	R1-1	30	X	30	5.18	--	--	1	--	--	--	--	1	1	
21-1	--	--	X	--	--	--	--	--	--	--	--	--	1	2	SPRING CREEK RD
21-2	D1-1	102	X	15	10.63	--	1	1	--	--	--	--	--	--	SPRING CREEK RD
22-1	W14-3	48	X	36	--	6.00	--	1	--	--	--	--	1	1	
23-1	W14-3	48	X	36	--	6.00	--	1	--	--	--	--	1	1	
23-2	--	--	X	--	--	--	--	--	--	--	--	--	1	2	SQUASH LAKE RD
23-3	D1-1	102	X	15	10.63	--	1	1	--	--	--	--	--	--	SQUASH LAKE RD
23-4	R3-72	30	X	36	7.50	--	--	1	--	--	--	--	1	1	
23-5	R1-1	30	X	30	5.18	--	--	1	--	--	--	--	1	1	
24-1	--	--	X	--	--	--	--	--	--	--	--	--	1	2	SQUASH LAKE RD
24-2	D1-1	102	X	15	10.63	--	1	1	--	--	--	--	--	--	SQUASH LAKE RD
24-3	W2-2	30	X	30	--	6.25	--	1	--	--	--	--	1	1	
25-1	W4-2R	36	X	36	--	9.00	--	1	--	--	--	--	1	1	
25-2	W4-2R	36	X	36	--	9.00	--	1	--	--	--	--	1	1	
25-3	W9-1R	36	X	36	--	9.00	--	1	--	--	--	--	1	1	
25-4	W9-1R	36	X	36	--	9.00	--	1	--	--	--	--	1	1	
25-5	I3-1	72	X	15	7.50	--	1	1	--	--	--	--	--	--	SQUASH LAKE
SUBTOTALS					257.01	123.75	10	41	4	3	0	0	40	48	

TYPE II SIGNS AND SUPPORTS (CONTINUED)

SIGN NO.	SIGN CODE	W	X	H	637.2210 SIGNS TYPE II REFLECTIVE H SF	637.2230 SIGNS TYPE II REFLECTIVE F SF	634.0614 POSTS WOOD 4x6x14 EACH	634.0616 POSTS WOOD 4x6x16 EACH	634.0618 POSTS WOOD 4x6x18 EACH	634.0620 POSTS WOOD 4x6x20 EACH	638.2102 MOVING SIGNS TYPE II EACH	638.4000 MOVING SMALL SIGN SUPPORTS EACH	638.2602 REMOVING SIGNS TYPE II EACH	638.3000 REMOVING SMALL SIGN SUPPORTS EACH	COMMENTS
CAT 0010															
27-1	R4-3	24	X	30	5.00	--	--	1	--	--	--	--	1	1	
27-2	I2-3	60	X	24	10.00	--	--	2	--	--	--	--	1	2	WOODBORO
27-3	W11-2	30	X	30	--	6.25	--	1	--	--	--	--	1	1	MOUNT ON SAME POST AS 27-4
27-4	W16-9P	24	X	12	--	2.00	--	--	--	--	--	--	1	--	MOUNT ON SAME POST AS 27-3
27-5	R2-1	24	X	30	5.00	--	--	1	--	--	--	--	1	1	
27-6	J13-1	24	X	45	7.50	--	--	1	--	--	--	--	1	1	
28-1	J4-1	24	X	36	6.00	--	--	1	--	--	--	--	1	1	
28-2	J13-1	24	X	45	7.50	--	--	1	--	--	--	--	1	1	
28-3	R1-1	36	X	36	7.46	--	--	1	--	--	--	--	1	1	
28-4	J13-1	24	X	45	7.50	--	--	1	--	--	--	--	1	1	
28-5	J13-1	24	X	45	7.50	--	--	1	--	--	--	--	1	1	
28-6	J4-1	24	X	36	6.00	--	--	1	--	--	--	--	1	1	
29-1	J1-1	24	X	39	6.50	--	--	1	--	--	--	--	1	1	
29-2	W11-2	30	X	30	--	6.25	--	1	--	--	--	--	1	1	MOUNT ON SAME POST AS 29-3
29-3	W16-9P	24	X	12	--	2.00	--	--	--	--	--	--	1	--	MOUNT ON SAME POST AS 29-2
29-4	R2-1	24	X	30	5.00	--	--	1	--	--	--	--	1	1	
29-5	I2-3	60	X	24	10.00	--	--	2	--	--	--	--	1	2	WOODBORO
29-6	I3-1	72	X	15	7.50	--	1	1	--	--	--	--	--	--	SQUASH LAKE
29-7	S3-1	36	X	36	--	9.00	--	1	--	--	--	--	--	--	
29-8	--	--	X	--	--	--	--	--	--	--	--	--	1	1	
29-9	R4-51A	36	X	48	12.00	--	--	--	1	--	--	--	1	1	
29-10	W2-2	30	X	30	--	6.25	--	1	--	--	--	--	1	1	
29-11	--	--	X	--	--	--	--	--	--	--	--	--	1	2	CRESTWOOD DR
29-12	D1-1	90	X	15	9.38	--	1	1	--	--	--	--	--	--	CRESTWOOD DR
30-1	R1-1	30	X	30	5.18	--	--	1	--	--	--	--	1	1	
30-2	W6-1	36	X	36	--	9.00	--	1	--	--	--	--	--	--	
30-3	--	--	X	--	--	--	--	--	--	--	--	--	1	2	CRESTWOOD DR
30-4	D1-1	90	X	15	9.38	--	1	1	--	--	--	--	--	--	CRESTWOOD DR
30-5	--	--	X	--	--	--	--	--	--	--	--	--	1	1	
30-6	W14-3	48	X	36	--	6.00	--	1	--	--	--	--	--	--	
31-1	--	--	X	--	--	--	--	--	--	--	--	--	1	1	
31-2	W6-3	36	X	36	--	9.00	--	1	--	--	--	--	--	--	
31-3	D1-61	66	X	24	11.00	--	--	2	--	--	--	--	--	--	CRESCENT RD
31-4	W10-2	36		36	--	9.00	--	1	--	--	--	--	--	--	
31-5	--	--	X	--	--	--	--	--	--	--	--	--	1	2	CRESCENT RD
31-6	--	--	X	--	--	--	--	--	--	--	1	1	--	--	CRESCENT RD
31-7	R1-1	30	X	30	5.18	--	--	1	--	--	--	--	1	1	
31-8	R1-1	30	X	30	5.18	--	--	1	--	--	--	--	1	1	
31-9	W3-1	36	X	36	--	9.00	--	1	--	--	--	--	--	--	
32-1	--	--	X	--	--	--	--	--	--	--	1	1	--	--	CRESCENT RD
32-2	W6-2	36	X	36	--	9.00	--	1	--	--	--	--	--	--	
32-3	W6-2	36	X	36	--	9.00	--	1	--	--	--	--	--	--	
32-4	W10-2	36	X	36	--	9.00	--	1	--	--	--	--	1	1	
32-5	--	--	X	--	--	--	--	--	--	--	--	--	1	2	CRESCENT RD
32-6	D1-61	66	X	24	11.00	--	--	2	--	--	--	--	--	--	CRESCENT RD
32-7	D7-54	48	X	36	12.00	--	--	1	--	--	--	--	1	1	
32-8	W6-3	36	X	36	--	9.00	--	1	--	--	--	--	--	--	
33-1	W2-2	30	X	30	--	6.25	--	1	--	--	--	--	1	1	MOUNT ON SAME POST AS 33-2
33-2	W13-1	18	X	18	--	2.25	--	--	--	--	--	--	1	--	MOUNT ON SAME POST AS 33-1
33-3	D1-1	78	X	15	8.13	--	1	1	--	--	--	--	--	--	WAUSAU RD
33-4	--	--	X	--	--	--	--	--	--	--	--	--	1	1	WAUSAU RD
SUBTOTALS					186.88	118.25	4	41	1	0	2	2	34	37	

TYPE II SIGNS AND SUPPORTS (CONTINUED)

SIGN NO.	SIGN CODE	W		H	637.2210 SIGNS TYPE II REFLECTIVE H SF	637.2230 SIGNS TYPE II REFLECTIVE F SF	634.0614 POSTS WOOD 4x6x14 EACH	634.0616 POSTS WOOD 4x6x16 EACH	634.0618 POSTS WOOD 4x6x18 EACH	634.0620 POSTS WOOD 4x6x20 EACH	638.2102 MOVING SIGNS TYPE II EACH	638.4000 MOVING SMALL SIGN SUPPORTS EACH	638.2602 REMOVING SIGNS TYPE II EACH	638.3000 REMOVING SMALL SIGN SUPPORTS EACH	COMMENTS
CAT 0010															
33-5	W6-1	36	X	36	--	9.00	--	1	--	--	--	--	--	--	
33-6	R1-1	30	X	30	6.25	--	--	1	--	--	--	--	1	1	
33-7	I3-1	78	X	15	8.13	--	1	1	--	--	--	--	--	--	CRESCENT LAKE
34-1	D1-1	78	X	15	8.13	--	1	1	--	--	--	--	--	--	WAUSAU RD
34-2	W2-2	30	X	30	--	6.25	--	1	--	--	--	--	1	1	
34-3	D7-56R	48	X	36	12.00	--	--	1	--	--	--	--	1	1	
34-4	R1-1	30	X	30	5.18	--	--	1	--	--	--	--	1	1	
34-5	D7-56L	48	X	36	12.00	--	--	1	--	--	--	--	1	1	
34-6	D1-1	84	X	15	8.75	--	1	1	--	--	--	--	--	--	DETIENNE RD
34-7	--	--	X	--	--	--	--	--	--	--	--	--	1	2	DETIENNE RD
35-1	W4-2R	36	X	36	--	9.00	--	1	--	--	--	--	1	1	
35-2	I3-1	78	X	15	8.13	--	1	1	--	--	--	--	--	--	CRESCENT LAKE
35-3	R1-1	30	X	30	5.18	--	--	1	--	--	--	--	1	1	
35-4	W2-2	30	X	30	--	6.25	--	1	--	--	--	--	1	1	
35-5	W2-2	30	X	30	--	6.25	--	1	--	--	--	--	1	1	
35-6	D1-1	84	X	15	8.75	--	1	1	--	--	--	--	--	--	DETIENNE RD
35-7	--	--	X	--	--	--	--	--	--	--	--	--	1	2	DETIENNE RD
35-8	R1-1	30	X	30	5.18	--	--	1	--	--	--	--	1	1	
36-1	D7-54	48	X	36	12.00	--	--	1	--	--	--	--	1	1	
36-2	W14-3	48	X	36	--	6.00	--	1	--	--	--	--	1	1	
37-1	--	--	X	--	--	--	--	--	--	--	--	--	1	2	SOUTH RIFLE RD
37-2	D1-1	96	X	15	10.00	--	1	1	--	--	--	--	--	--	SOUTH RIFLE RD
38-1	R1-1	30	X	30	5.18	--	--	1	--	--	--	--	1	1	
38-2	W14-3	48	X	36	--	6.00	--	1	--	--	--	--	1	1	
38-3	--	--	X	--	--	--	--	--	--	--	--	--	1	2	NORTH RIFLE RD
38-4	D1-1	96	X	15	10.00	--	1	1	--	--	--	--	--	--	NORTH RIFLE RD
38-5	D1-1	96	X	15	10.00	--	1	1	--	--	--	--	--	--	SOUTH RIFLE RD
38-6	--	--	X	--	--	--	--	--	--	--	--	--	1	2	SOUTH RIFLE RD
39-1	R1-1	30	X	30	5.18	--	--	1	--	--	--	--	1	1	
39-2	D1-1	96	X	15	10.00	--	1	1	--	--	--	--	--	--	NORTH RIFLE RD
39-3	--	--	X	--	--	--	--	--	--	--	--	--	1	2	NORTH RIFLE RD
39-4	W2-2	30	X	30	--	6.25	--	1	--	--	--	--	1	1	
40-1	W14-3	48	X	36	--	6.00	--	1	--	--	--	--	1	1	
40-2	W6-1	36	X	36	--	9.00	--	1	--	--	--	--	1	1	
40-3	W6-3	36	X	36	--	9.00	--	1	--	--	--	--	1	1	
SUBTOTALS					150.03	79.00	9	29	0	0	0	0	25	31	
TOTALS					810.02	401.75	32	156	5	3	2	2	139	165	

35-5a	S3-1	36	x	26		9		1							STA 660+60
Rumble STrips												4		2	Sta 732+00 LT
															STA 572+43

TRAFFIC CONTROL ITEMS

LOCATION	DAYS	643.0300 DRUMS NO.	643.0300 DRUMS DAYS	643.0420 BARRICADES TYPE III NO.	643.0420 BARRICADES TYPE III DAYS	643.0705 WARNING LIGHTS TYPE A NO.	643.0705 WARNING LIGHTS TYPE A DAYS	643.0715 WARNING LIGHTS TYPE C NO.	643.0715 WARNING LIGHTS TYPE C DAYS	643.0900 SIGNS NO.	643.0900 SIGNS DAYS	643.1050 SIGNS PCMS NO.	643.1050 SIGNS PCMS DAYS	COMMENTS
CAT 0010														
PROJECT (PRIOR TO CONSTRUCTION)	7	--	--	--	--	--	--	--	--	--	--	2	14	
PROJECT (ADVANCE WARNING USH 8 AND SIDE ROADS)	110	--	--	--	--	--	--	--	--	37	4,070	2	220	
PROJECT (SHOULDER CLOSURES FOR GUARDAIL)	10	29	290	--	--	--	--	--	--	1	10	--	--	
PROJECT (SHOULDER CLOSURES FOR CURB & GUTTER)	20	14	280	--	--	--	--	--	--	1	20	--	--	
PROJECT (SHOULDER CLOSURES FOR CULVERT REPAIRS)	6	14	84	--	--	--	--	--	--	1	6	--	--	
STA 572+43 (SHOULDER CLOSURE/FLAGGING FOR CULVERT STAGING)	5	14	70	--	--	--	--	--	--	1	5	2	10	STAGE C1
STA 572+43 (ONE LANE ROAD WITH SIGNALS FOR CULVERT STAGING)	5	24	120	1	5	2	10	14	70	22	110	2	10	STAGE C2
STA 572+43 (ONE LANE ROAD WITH SIGNALS FOR CULVERT STAGING)	5	22	110	1	5	2	10	14	70	22	110	2	10	STAGE C3
STA 572+43 (SHOULDER CLOSURE/FLAGGING FOR CULVERT STAGING)	5	14	70	--	--	--	--	--	--	1	5	2	10	STAGE C4
USH 8/CRESCENT RD WIDENING (SHOULDER CLOSURES)	25	98	2,450	--	--	--	--	--	--	2	50	--	--	
CRESCENT RD (CLOSURE FOR RAILROAD CROSSING)	5	20	100	10	50	12	60	--	--	6	30	--	--	
TOTALS			3,574		60		80		140		4,416		274	

PAVEMENT MARKING ITEMS

STATION - STATION	LOCATION	646.0106 EPOXY 4-INCH (SOLID WHITE) LF	646.0106 EPOXY 4-INCH (WHITE SKIPS) LF	646.0106 EPOXY 4-INCH (SOLID YELLOW) LF	646.0106 EPOXY 4-INCH (YELLOW SKIPS) LF	646.0406 SAME DAY EPOXY 4-INCH (SOLID YELLOW) LF	646.0406 SAME DAY EPOXY 4-INCH (YELLOW SKIPS) LF	646.0126 EPOXY 8-INCH (WHITE) LF	647.0166 ARROWS EPOXY TYPE 2 (WHITE) LF	647.0356 WORDS EPOXY (ONLY) (WHITE) LF	647.0726 DIAGONAL EPOXY 12-INCH (YELLOW) LF	648.0100 LOCATING NO-PASSING ZONES MI
CAT 0010												
149+40 - 208+00	LT & RT	11,720	--	5,185	1,275	5,185	1,275	--	--	--	--	1.11
208+00 - 266+00	LT & RT	10,810	100	7,371	875	7,371	875	88	--	--	--	1.10
266+00 - 324+00	LT & RT	11,164	50	5,319	1,275	5,319	1,275	--	--	--	--	1.10
324+00 - 383+00	LT & RT	11,362	1,050	7,687	1,013	7,687	1,013	--	--	--	--	1.12
383+00 - 441+00	LT & RT	10,969	363	10,508	275	10,508	275	--	--	--	--	1.10
441+00 - 499+00	LT & RT	11,376	38	7,455	800	7,455	800	--	--	--	--	1.10
499+00 - 558+00	LT & RT	11,416	1,275	11,800	--	11,800	--	--	--	--	--	1.12
558+00 - 616+00	LT & RT	11,247	38	13,525	350	6,417	350	1,000	10	6	644	1.10
616+00 - 674+00	LT & RT	10,896	188	12,937	--	10,362	--	427	--	--	146	1.10
674+00 - 732+58	LT & RT	11,223	125	7,467	1,063	7,467	1,063	--	--	--	--	1.11
TOTALS		112,183	3,227	89,254	6,926	79,571	6,926	1,515	10	6	790	11.06
		211,590				86,497						

Addendum No. 1
ID 1595-09-60
Revised Sheet 79
April 7, 2015

FILE NAME : P:\47xx\4727_DP.12.USH8.ONE\CADDS\Plan\030201_mq.dgn PLOT DATE : 3/31/2015 PLOT BY : sgc PLOT NAME : PLOT SCALE : 1:30.9091
WISDOT/CADDS SHEET 43

TEMPORARY PAVEMENT MARKING ITEMS

STATION - STATION	LOCATION	646.0600 REMOVING PAVEMENT MARKING LF	649.0100 4-INCH (YELLOW) LF	649.0400 REMOVABLE TAPE 4-INCH (WHITE) LF	649.1400 STOP LINE REMOVABLE TAPE 24-INCH (WHITE) LF	COMMENTS
CAT 0010						
149+40 - 208+00	LT & RT	--	6,460	--	--	MILL AND OVERLAY
208+00 - 266+00	LT & RT	--	8,246	--	--	MILL AND OVERLAY
266+00 - 324+00	LT & RT	--	6,594	--	--	MILL AND OVERLAY
324+00 - 383+00	LT & RT	--	8,700	--	--	MILL AND OVERLAY
383+00 - 441+00	LT & RT	--	10,783	--	--	MILL AND OVERLAY
441+00 - 499+00	LT & RT	--	8,255	--	--	MILL AND OVERLAY
499+00 - 558+00	LT & RT	--	11,800	--	--	MILL AND OVERLAY
558+00 - 616+00	LT & RT	--	11,972	--	--	MILL AND OVERLAY
569+35 - 576+35	LT & RT	2,230	2,215	2,330	24	CULVERT STAGING
596+97 - 607+17	LT & RT	--	1,020	--	--	INTERSECTION WIDENING
596+97 - 622+53	LT & RT	--	--	5,120	--	INTERSECTION WIDENING
616+00 - 674+00	LT & RT	--	12,280	--	--	MILL AND OVERLAY
674+00 - 732+58	LT & RT	--	8,530	--	--	MILL AND OVERLAY
TOTALS		2,230	96,855	7,450	24	

NOTES: THE TEMPORARY PAVEMENT MARKING 4-INCH FOR THE MILL & OVERLAY IS FOR THE MILLED SURFACE

CONSTRUCTION STAKING ITEMS

STATION - STATION	LOCATION	650.4500 SUBGRADE LF	650.5000 BASE LF	650.5500 CURB GUTTER AND CURB & GUTTER LF	650.6000 PIPE CULVERTS EACH	650.8000 RESURFACING REFERENCE LF	650.9910.01 SUPPLEMENTAL CONTROL 1595-09-60 LS	650.9920 SLOPE STAKES LF
CAT 0010								
225+21 - 226+53	RT	--	--	123	--	--	--	--
260+86 - 261+99	LT	--	--	126	--	--	--	--
439+86 - 440+92	RT	--	--	152	--	--	--	--
450+39	LT & RT	--	--	--	1	--	--	--
545+25	LT & RT	--	--	--	1	--	--	--
555+01 - 556+29	LT	--	--	148	--	--	--	--
569+55 - 575+16	LT & RT	561	561	--	1	--	--	561
596+97 - 622+53	LT & RT	2,556	2,556	272	--	--	--	2,556
632+37 - 633+62	RT	--	--	124	--	--	--	--
698+58 - 699+79	RT	--	--	133	--	--	--	--
704+58	LT & RT	--	--	--	1	--	--	--
711+89 - 713+18	LT	--	--	147	--	--	--	--
12'CRS'+75 - 14'CRS'+00	LT & RT	125	125	--	--	--	--	125
20'CRN'+00 - 21'CRN'+90	LT & RT	190	190	--	--	--	--	190
PROJECT		--	--	--	--	58,318	1	--
TOTALS		3,432	3,432	1,225	4	58,318	1	3,432

Addendum No. 1
ID 1595-09-60
Revised Sheet 80
April 7, 2015

3

TEMPORARY TRAFFIC SIGNALS FOR BRIDGES

STATION	LOCATION	661.0100 (CULVERT) LS
CAT 0010		
572+43	LT & RT	1
TOTAL		1

SAWING ITEMS

STATION - STATION	LOCATION	690.0150 ASPHALT LF	690.0250 CONCRETE LF	COMMENTS
CAT 0010				
572+43	LT & RT	16	220	CULVERT REPLACEMENT
225+21 - 226+53	RT	151	--	CURB AND GUTTER REPLACEMENT
260+86 - 261+99	LT	154	--	CURB AND GUTTER REPLACEMENT
439+86 - 440+92	RT	180	--	CURB AND GUTTER REPLACEMENT
555+01 - 556+29	LT	176	--	CURB AND GUTTER REPLACEMENT
604+00 - 609+68	LT & RT	925	--	USH 8 AND CRESCENT RD
632+37 - 633+62	RT	152	--	CURB AND GUTTER REPLACEMENT
698+58 - 699+79	RT	161	--	CURB AND GUTTER REPLACEMENT
711+89 - 713+18	LT	175	--	CURB AND GUTTER REPLACEMENT
TOTALS		2,090	220	

3

GRADING, SHAPING, AND FINISHING CULVERTS

STATION - STATION	LOCATION	SPV.0060.02 CULVERTS EACH	**COMMON EXC. CY	**FILL CY	**BORROW EXC. CY	**TOPSOIL SY	**FERTILIZER TYPE B CWT	**SEEDING #20 LB	**SEEDING #30 LB
CAT 0010									
450+39	LT & RT	1	--	52	52	365	0.3	7	3
545+25	LT & RT	1	--	88	88	283	0.2	5	3
572+43	LT & RT	1	--	882	882	2,500	1.6	41	18
704+58	LT & RT	1	--	3	3	103	0.1	3	--
TOTALS		4	0	1,025	1,025	3,251	2.2	56	24

NOTES: GRADING AND SHAPING DOES NOT INCLUDE WORK INCIDENTAL TO CULVERT PIPE AND APRON ENDWALL ITEMS
SHAPING AND FINISHING FOR THE CULVERT AT STA 572+43 INCLUDES THE DISTURBED AREA FROM THE TEMPORARY WIDENING
**NON-BID ITEM, ITEMS AND QUANTITIES LISTED FOR BID INFORMATION ONLY. ITEMS INCIDENTAL TO GRADING, SHAPING AND FINISHING CULVERTS

LANE SHIFT

STATION	LOCATION	SPV.0060.03 EACH
CAT 0010		
572+43	LT & RT	1
TOTAL		1

3

EXISTING PROPERTY MONUMENT ITEMS

LOCATION	SPV.0105.01 RESEARCH AND LOCATE EXISTING PROPERTY MONUMENTS LS	SPV.0105.02 VERIFY AND REPLACE EXISTING PROPERTY MONUMENTS LS
CAT 0010		
PROJECT	1	1
TOTALS	1	1

WATER FOR SEEDED AREAS

STATION	LOCATION	SPV.0120.01 MGAL
CAT 0010		
PROJECT	LT & RT	500
TOTAL		500

3

SALVAGED CABLE GUARD

STATION - STATION	LOCATION	SPV.0090.03 LF
CAT 0010		
177+14 - 180+71	LT	357
188+64 - 191+34	LT	270
TOTAL		627

PROTECTIVE THERMOPLASTIC COATING AT SNOWMOBILE TRAIL CROSSING

STATION	LOCATION	SPV.0180.01 SY
CAT 0010		
228+25	LT & RT	75
364+60	LT & RT	105
TOTAL		180

732606

TRANSPORTATION PROJECT PLAT NO: 1595-09-20-4.01

THAT PART OF THE SW¼ OF THE SE¼ OF SECTION 7 AND THAT PART OF THE NW¼ OF THE NE¼ AND THE N1/2 OF THE FRACTIONAL NW1/4 OF SECTION 18, ALL IN TOWNSHIP 36 NORTH, RANGE 8 EAST, TOWN OF CRESCENT, ONEIDA COUNTY, WISCONSIN

RELOCATION ORDER USH 8 ONEIDA COUNTY

TO PROPERLY ESTABLISH, LAY OUT, WIDEN, ENLARGE, EXTEND, CONSTRUCT, RECONSTRUCT, IMPROVE, OR MAINTAIN A PORTION OF THE HIGHWAY DESIGNATED ABOVE, THE STATE OF WISCONSIN DEPARTMENT OF TRANSPORTATION DEEMS IT NECESSARY TO RELOCATE OR CHANGE SAID HIGHWAY AND ACQUIRE CERTAIN LANDS AND INTERESTS OR RIGHTS IN LANDS FOR THE ABOVE PROJECT.

TO EFFECT THIS CHANGE, PURSUANT TO AUTHORITY GRANTED UNDER SECTION 84.02 (3), 84.09 AND 84.30 WISCONSIN STATUTES, THE DEPARTMENT OF TRANSPORTATION HEREBY ORDERS THAT:
1. THAT PORTION OF SAID HIGHWAY AS SHOWN ON THIS PLAT IS LAID OUT AND ESTABLISHED TO THE LINES AND WIDTHS AS SO SHOWN FOR THE ABOVE PROJECT.
2. THE LANDS OR INTERESTS OR RIGHTS IN LANDS AS SHOWN ON THIS PLAT ARE REQUIRED BY THE DEPARTMENT FOR THE ABOVE PROJECT AND SHALL BE ACQUIRED IN THE NAME OF THE STATE OF WISCONSIN, PURSUANT TO THE PROVISIONS OF SECTION 84.09 (1) OR (2), WISCONSIN STATUTES.

REGISTER'S OFFICE }
Oneida County, Wis. }
Received for Record the 27 day of September A.D. 2013 at 1:30 o'clock P. M. and recorded in Vol. 1 TPP on page 45
Laurie A. Meyer Register
Deputy

RESERVED FOR REGISTER OF DEEDS
PROJECT NUMBER 1595-09-20-4.01
AMENDMENT NO:

NOTES:
POSITIONS SHOWN ON THIS PLAT ARE WISCONSIN COUNTY COORDINATES, ONEIDA COUNTY, NAD83(91) IN U.S. SURVEY FEET. VALUES SHOWN ARE GRID COORDINATES, GRID BEARINGS, AND GRID DISTANCES. GRID DISTANCES MAY BE USED AS GROUND DISTANCES.

RIGHT-OF-WAY MONUMENTS ARE TYPE 2 AND WILL BE PLACED PRIOR TO THE COMPLETION OF THE PROJECT.

RIGHT-OF-WAY BOUNDARIES ARE DEFINED WITH COURSES OF THE PERIMETER OF THE HIGHWAY LANDS REFERENCED TO THE U.S. PUBLIC LAND SURVEY SYSTEM OR OTHER "SURVEYS OF PUBLIC RECORD".

PROPERTY LINES SHOWN ON THIS PLAT ARE DRAWN FROM DATA DERIVED FROM MAPS AND DOCUMENTS OF PUBLIC RECORD AND/OR EXISTING OCCUPATIONAL LINES. THIS PLAT MAY NOT BE A TRUE REPRESENTATION OF EXISTING PROPERTY LINES, EXCLUDING RIGHT-OF-WAY LINES, AND SHOULD NOT BE USED AS A SUBSTITUTE FOR AN ACCURATE FIELD SURVEY.

EXISTING HIGHWAY RIGHT-OF-WAY SHOWN HEREIN IS BASED ON THE FOLLOWING POINTS OF REFERENCE: EXISTING HIGHWAY RIGHT-OF-WAY FOR USH 8 ESTABLISHED FROM PREVIOUS PROJECT DIVISION JOB 7192 AND EXISTING HIGHWAY RIGHT-OF-WAY FOR SIDE ROADS ESTABLISHED FROM CENTERLINE OF EXISTING PAVEMENTS.

A **TEMPORARY LIMITED EASEMENT** (TLE) IS A RIGHT FOR CONSTRUCTION PURPOSES, AS DEFINED HEREIN, INCLUDING THE RIGHT TO OPERATE NECESSARY EQUIPMENT THEREON AND THE RIGHT OF INGRESS AND EGRESS, AS LONG AS REQUIRED FOR SUCH PUBLIC PURPOSE, INCLUDING THE RIGHT TO PRESERVE, PROTECT, REMOVE, OR PLANT THEREON ANY VEGETATION THAT THE HIGHWAY AUTHORITIES MAY DEEM NECESSARY OR DESIRABLE. ALL TLES EXPIRE AT THE COMPLETION OF THE CONSTRUCTION PROJECT FOR WHICH THIS INSTRUMENT IS GIVEN.

DIMENSIONING FOR THE NEW RIGHT-OF-WAY IS MEASURED ALONG AND PERPENDICULAR TO NEW REFERENCE LINES.

FOR THE LATEST ACCESS CONTROL INFORMATION, CONTACT THE PLANNING UNIT OF THE WISCONSIN DEPARTMENT OF TRANSPORTATION OFFICE IN RHINELANDER

ACCESS CONTROL ESTABLISHED FROM ACCESS CONTROL PROJECT 1593-06-29

COURSE TABLE		
COURSE	BEARING	DISTANCE
N1/4 SEC. 18 -100	S 0°03'46"E	63.05'
100-101	N 67°19'47" E	35.75'
101-102	S 0°03'46" E	108.32'
102-103	N 67°19'47" E	1458.49'
103-104	S 22°13'47" E	55.11'
104-105	S 22°13'47" E	100.00'
105-106	S 67°46'13" W	126.63'
106-107	N 22°13'47" W	40.00'
107-108	S 67°46'13" W	459.39'
108-109	CHORD BEARING S 66°42'12" W RADIUS 11570.00' ARC DISTANCE 430.91'	CHORD DISTANCE 430.89'
109-110	S 65°38'11" W	495.06'
110-146	S 0°03'46" E	10.97'
146-111	S 46°23'52" W	45.52'
111-112	S 46°23'52" W	45.52'
112-113	S 65°38'11" W	332.99'
113-114	N 24°27'29" W	100.00'
114-115	N 24°27'29" W	82.53'
115-116	N 67°19'47" E	410.41'
116-117	N 0°03'46" W	129.76'
117-100	S 76°56'20" E	33.89'

STATION-OFFSET TABLE		
POINT NO.	STATION	OFFSET
100	608+02.54	168.07' LT
101	608+38.27	167.02' LT
102	607+93.69	68.29' LT
103	622+50.00	55.11' LT
104	622+50.00	0.00'
105	622+50.00	100.00' RT
106	621+23.37	100.00' RT
107	621+23.37	60.00' RT
108	616+63.98	60.00' RT
109	612+30.83	60.00' RT
110	607+35.77	60.00' RT
111	606+88.27	85.00' RT
112	606+45.29	100.00' RT
113	603+12.30	100.00' RT
114	603+12.14	0.00'
115	603+12.00	82.53' LT
116	607+22.23	70.40' LT
117	607+75.63	188.66' LT
118	608+49.10	166.69' LT
119	608+18.00	76.50' LT
120	608+80.00	76.50' LT
121	608+80.00	65.74' LT
122	610+70.00	60.12' LT
123	610+70.00	71.00' LT
124	612+52.00	66.00' LT
125	612+52.00	54.76' LT
126	614+38.00	51.07' LT
127	614+38.00	55.00' LT

STATION-OFFSET TABLE		
POINT NO.	STATION	OFFSET
128	615+68.00	54.50' LT
129	615+68.00	68.00' LT
130	616+15.00	68.00' LT
131	616+15.00	57.50' LT
132	618+97.00	60.00' LT
133	618+97.00	87.00' LT
134	619+93.00	87.00' LT
135	619+93.00	60.00' LT
136	622+50.00	60.00' LT
137	616+71.81	60.00' RT
138	616+61.60	85.00' RT
139	615+50.00	85.00' RT
140	615+50.00	90.00' RT
141	615+00.00	90.00' RT
142	615+00.00	77.00' RT
143	613+70.00	77.00' RT
144	613+70.00	70.00' RT
145	611+64.58	70.00' RT
146	607+31.25	70.00' RT
147	603+12.00	102.54' LT
148	604+81.00	97.54' LT
149	604+81.00	77.53' LT
150	606+86.00	71.47' LT
151	607+18.00	85.00' RT
152	607+66.20	192.08' LT
153	607+26.65	0.00'
154	613+08.60	0.00'

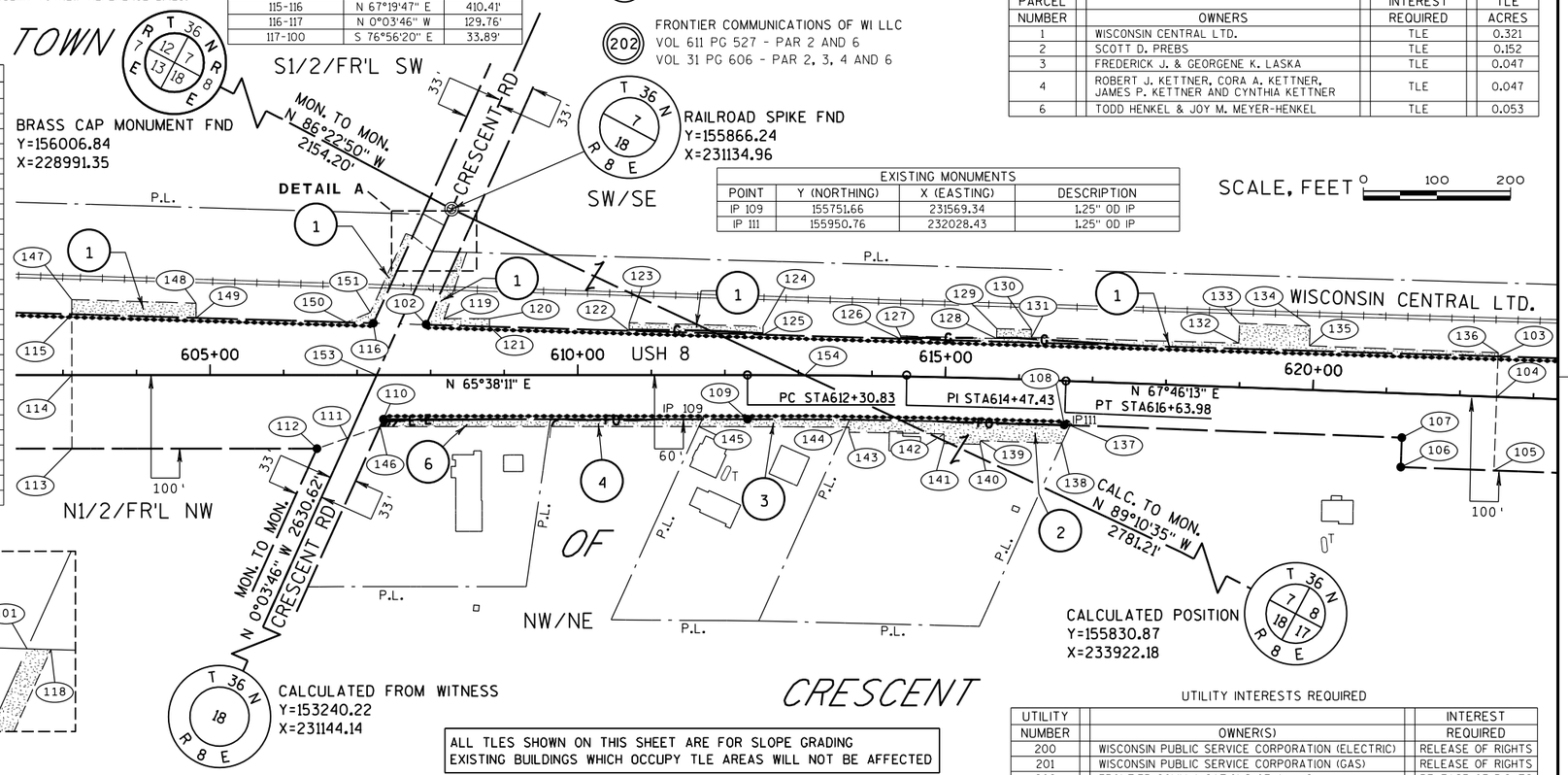

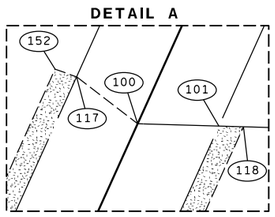

CONVENTIONAL UTILITY SYMBOLS

	NON COMPENSABLE	COMPENSABLE
WATER	W	
GAS	G	
TELEPHONE	T	
OVERHEAD	OH	
TRANSMISSION LINES ELECTRIC	E	
CABLE TELEVISION	TV	
FIBER OPTIC	FO	
SANITARY SEWER	SAN	
STORM SEWER	SS	
POWER POLE		
TELEPHONE POLE		
TELEPHONE PEDESTAL		
ELECTRIC TOWER		

CONVENTIONAL SYMBOLS

FOUND IRON PIPE/PIN	LP (1" UNLESS NOTED)	PROPOSED R/W LINE	
R/W MONUMENT	•(SET)	EXISTING H.E. LINE	
R/W STANDARD	▲(SET)	PROPERTY LINE	
SIGN	SIGN	LOT & TIE LINES	
SECTION CORNER MONUMENT		SLOPE INTERCEPTS	
SECTION CORNER SYMBOL		CORPORATE LIMITS	
FEE (HATCH VARIES)		RESTRICTED ACCESS (BY PREVIOUS ACQUISITION/CONTROL)	
TEMPORARY LIMITED EASEMENT		RESTRICTED ACCESS (BY ACQUISITION)	
PERMANENT LIMITED EASEMENT		NO ACCESS (BY STATUTORY AUTHORITY)	
R/W BOUNDARY POINT	RWB20	SECTION LINE	
PARCEL NUMBER	102	QUARTER LINE	
UTILITY INTEREST	40	SIXTEENTH LINE	
SIGN NUMBER (OFF PREMISE)	21-1	EXISTING CENTERLINE	
BUILDING		PROPOSED REFERENCE LINE	
REFERENCE LINE		PARALLEL OFFSET	

CONVENTIONAL ABBREVIATIONS

ACCESS POINT/ DRIVEWAY CONNECTION	AP	REFERENCE LINE	R/L
ACCESS RIGHTS	AR	RELEASE OF RIGHTS	ROR
ACRES	AC.	REMAINING	REM.
AND OTHERS	ET.AL.	RIGHT-OF-WAY	R/W
CENTERLINE	C/L	SECTION	SEC.
CERTIFIED SURVEY MAP	CSM	STATION	STA.
CORNER	COR.	TEMPORARY LIMITED EASEMENT	TLE
DOCUMENT	DOC.	VOLUME	V.
EASEMENT	EASE.	**CURVE DATA**	
HIGHWAY EASEMENT	H.E.	LONG CHORD	LCH
LAND CONTRACT	LC	LONG CHORD BEARING	LCB
MONUMENT	MON.	RADIUS	R
PAGE	P.	DEGREE OF CURVE	D
PERMANENT LIMITED EASEMENT	PLE	CENTRAL ANGLE OR DELTA	DELTA
PROPERTY LINE	PL	LENGTH OF CURVE	L
RECORDED AS	(100')	TANGENT	TAN

ALL TLES SHOWN ON THIS SHEET ARE FOR SLOPE GRADING
EXISTING BUILDINGS WHICH OCCUPY TLE AREAS WILL NOT BE AFFECTED

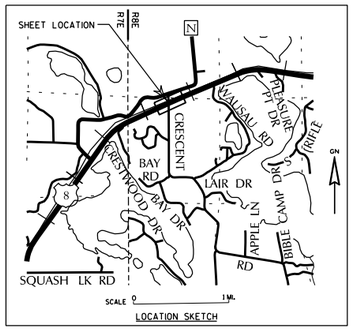

USH 8 CURVE 1 DATA

PI = 614+47.43
Y = 155920.73
X = 231798.12
PC = 612+30.83
Y = 155831.37
X = 231600.81
PT = 616+63.98
Y = 156002.67
X = 231998.62
T = 216.60
L = 433.15
R = 11630.00
DELTA = 02°08'02" RT
D = 00°29'34"

GN

EXISTING MONUMENTS

POINT	Y (NORTHING)	X (EASTING)	DESCRIPTION
IP 109	155751.66	231569.34	1.25" OD IP
IP 111	155950.76	232028.43	1.25" OD IP

SCALE, FEET 0 100 200

SCHEDULE OF LANDS & INTERESTS REQUIRED

OWNER'S NAMES ARE SHOWN FOR REFERENCE PURPOSES ONLY AND ARE SUBJECT TO CHANGE PRIOR TO THE TRANSFER OF LAND INTERESTS TO THE DEPARTMENT.

PARCEL NUMBER	OWNERS	INTEREST REQUIRED	TLE ACRES
1	WISCONSIN CENTRAL LTD.	TLE	0.321
2	SCOTT D. PREBS	TLE	0.152
3	FREDERICK J. & GEORGENE K. LASKA	TLE	0.047
4	ROBERT J. KETTNER, CORA A. KETTNER, JAMES P. KETTNER AND CYNTHIA KETTNER	TLE	0.047
6	TODD HENKEL & JOY M. MEYER-HENKEL	TLE	0.053

(200) WISCONSIN PUBLIC SERVICE CORPORATION (ELECTRIC)
NO EASEMENT OF RECORD - PAR 6

(201) WISCONSIN PUBLIC SERVICE CORPORATION (GAS)
NO EASEMENT OF RECORD - PAR 1

(202) FRONTIER COMMUNICATIONS OF WI LLC
VOL 611 PG 527 - PAR 2 AND 6
VOL 31 PG 606 - PAR 2, 3, 4 AND 6

UTILITY INTERESTS REQUIRED

UTILITY NUMBER	OWNER(S)	INTEREST REQUIRED
200	WISCONSIN PUBLIC SERVICE CORPORATION (ELECTRIC)	RELEASE OF RIGHTS
201	WISCONSIN PUBLIC SERVICE CORPORATION (GAS)	RELEASE OF RIGHTS
202	FRONTIER COMMUNICATIONS OF WI LLC	RELEASE OF RIGHTS

emcs.inc

I, KEVIN C. BOYER, REGISTERED LAND SURVEYOR, HEREBY CERTIFY THAT IN FULL COMPLIANCE WITH THE PROVISIONS OF SECTION 84.095 OF THE WISCONSIN STATUTES AND UNDER THE DIRECTION OF THE DEPARTMENT, I HAVE SURVEYED TRANSPORTATION PROJECT PLAT 1595-09-20-4.01 AND THAT SUCH PLAT CORRECTLY REPRESENTS ALL EXTERIOR BOUNDARIES OF THE SURVEYED LAND.

WISCONSIN KEVIN C BOYER S-2675 HEWITT WI LAND SURVEYOR

Kevin C. Boyer DATE: 09/25/2013
KEVIN C. BOYER
REGISTERED LAND SURVEYOR NUMBER 2675
THIS PLAT AND RELOCATION ORDER ARE APPROVED FOR THE WISCONSIN DEPARTMENT OF TRANSPORTATION.

Brent L Stella DATE: 9-25-13
(SIGNATURE)
(PRINTED NAME) Brent L Stella

FILE NAME : P:\47xx\4727_DP.12.USH8.ONE\CADDS\Plan\TPP\040101_rp.dgn
PLOT DATE : 10/8/2013
PLOT BY : kcb
PLOT NAME :
PLOT SCALE : 1:200
APPRAISAL PLAT DATE :

1595-09-20-4.01

PROPOSED WORK
STA 149+40 - STA 173+00
MILL AND OVERLAY

CURVE 1 DATA
PI = 149+25.78
Y = 131187.10
X = 199445.69
PC = 145+27.51
Y = 131007.70
X = 199090.10
PT = 153+11.03
Y = 131501.46
X = 199690.23
T = 398.28
L = 783.52
R = 1771.06
DELTA = 25°20'52" LT
D = 3°14'06"
SE = 5.7%
SE TRANSITION (T) = 205
RO (RUNOFF) = 152

N 63°13'40" E

144+00

PC STA145+27.51

146+00

BEGIN PROJECT
STA 149+40.00
BUTT JOINT REQ'D
(SEE CONSTRUCTION DETAILS)

GATEWOOD
HEIGHTS RD

148+00

150+00

USH 8

CURVE 1

MARKER FOR CULVERT
END REQ'D

152+00

PT STA153+11.03

154+00

156+00

MARKER FOR CULVERT
END REQ'D

158+00

N 37°52'48" E

MARKER FOR CULVERT
END REQ'D

BASE
AGG FE

MARKER FOR CULVERT
END REQ'D

158+00

160+00

MARKER FOR CULVERT
END REQ'D

162+00

164+00

USH 8

BASE
AGG FE

166+00

168+00

170+00

172+00

N 37°52'48" E

MARKER FOR CULVERT
END REQ'D

PROJECT NO: 1595-09-60	HWY: USH 8	COUNTY: ONEIDA	PLAN	SHEET 84	E

PROPOSED WORK
STA 173+00 - STA 203+00
MILL AND OVERLAY
REMOVE CABLE GUARD
INSTALL GUARDRAIL

X = CLEARING & GRUBBING

BENCH MARK

NO.	STATION	DESCRIPTION	ELEV.
9	179+92, 58' RT	RR SPK IN MAPLE	1542.05

SALVAGED CABLE GUARD
STA 177+14 - STA 180+71, LT

MGS GUARDRAIL 3 & TERMINAL EAT
STA 176+30 - STA 189+33, LT

N

RW

+51
BEGIN BARRIER SYSTEM
GRADING SHAPING FINISHING

SLOPE INTERCEPT

EXTEND EXISTING CULVERT PIPE 16-FEET
(CULVERT PIPE REINFORCED CONCRETE 24-INCH)

MARKER FOR CULVERT
END REQ'D

MARKER FOR CULVERT
END REQ'D

+83

USH 8

174+00 176+00 178+00 180+00 182+00 184+00 186+00 188+00

N 37°52'48" E

MARKER FOR CULVERT
END REQ'D

MARKER FOR CULVERT
END REQ'D

BM 9

RW

RW

5

5

SALVAGED CABLE GUARD
STA 188+64 - STA 191+34, LT

MGS GUARDRAIL 3 & TERMINAL EAT
STA 190+46 - STA 191+86, LT

MGS GUARDRAIL 3 K
STA 189+33 - STA 190+46, LT

SLOPES BEHIND MGS GUARDRAIL 3 K
ARE BETWEEN 2:1 AND 2.5:1

MGS GUARDRAIL 3 & TERMINAL EATS
STA 192+25 - STA 193+44, LT

ONEIDA COUNTY
LINCOLN COUNTY

CONTROL POINT 6
Y=134934.74
X=202302.557
0.75" IRON ROD SET
W/ BLUE EMCS CAP

BM 8

BENCH MARK

NO.	STATION	DESCRIPTION	ELEV.
8	195+28, 67' LT	RR SPK IN OAK	1537.89

N

RW

SLOPE INTERCEPT

BASE
AGG FE

+33

+78 +91

+23
END BARRIER SYSTEM
GRADING SHAPING FINISHING

MARKER FOR CULVERT
END REQ'D

188+00 190+00 192+00 194+00 196+00 USH 8 198+00 200+00 202+00

N 37°52'48" E

BASE
AGG FE

MARKER FOR CULVERT
END REQ'D

RW

RW

ONEIDA COUNTY
LINCOLN COUNTY

PROJECT NO: 1595-09-60	HWY: USH 8	COUNTY: ONEIDA	PLAN	SHEET 85	E

FILE NAME : P:\47xx\4727_DP.12.USH8.ONE\CADDS\Plan\050202_pn.dgn PLOT DATE : 2/16/2015 PLOT BY : emo PLOT NAME : PLOT SCALE : 1:100

PROPOSED WORK
STA 203+00 - STA 233+00
MILL AND OVERLAY
REMOVE AND REPLACE INTERSECTION CURB AND GUTTER

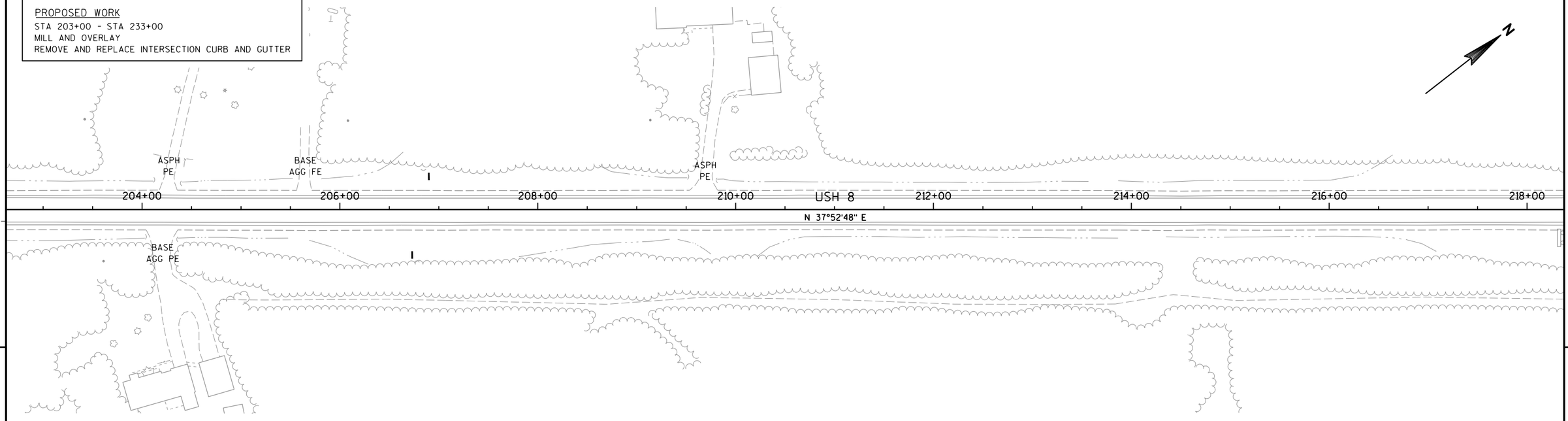

5

5

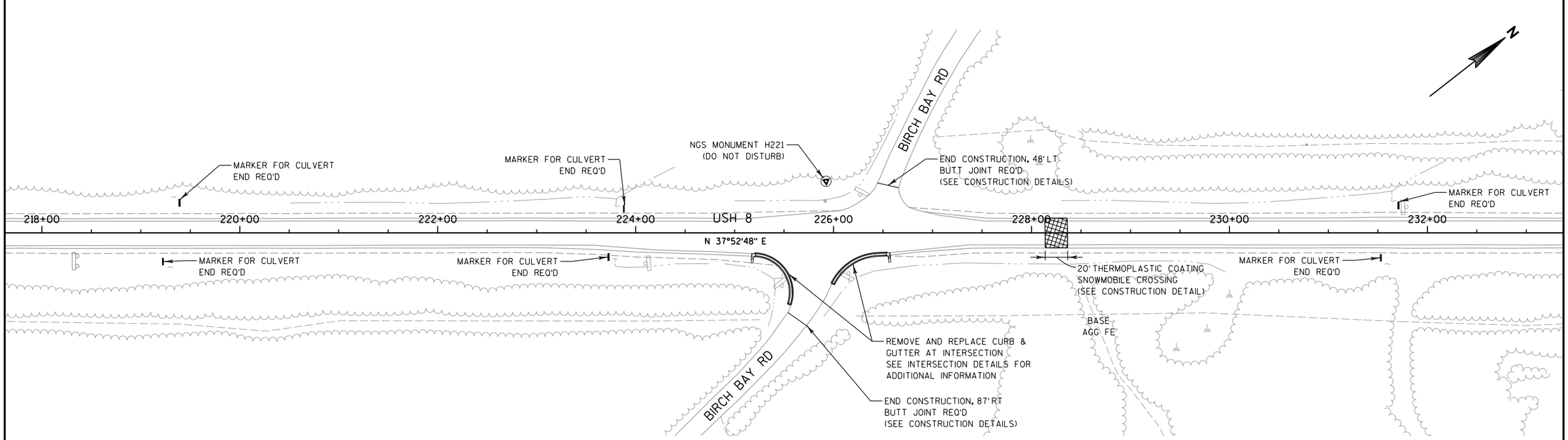

PROJECT NO: 1595-09-60	HWY: USH 8	COUNTY: ONEIDA	PLAN	SHEET 86	E

PROPOSED WORK
STA 233+00 - STA 263+00
MILL AND OVERLAY
REMOVE AND REPLACE INTERSECTION CURB AND GUTTER

CURVE 2 DATA
PI = 256+26.01
Y = 139643.06
X = 206023.74
PC = 237+60.20
Y = 138170.37
X = 204878.11
PT = 271+51.43
Y = 139406.55
X = 207874.51
T = 1865.82
L = 3391.23
R = 3270.98
DELTA = 59°24'08" RT
D = 1°45'06"
EXISTING SE = 4.0
PROPOSED SE = 4.1
SE TRANSITION (T) = 162
RO (RUNOFF) = 109

N

PC STA237+60.20

MARKER FOR CULVERT END REQ'D

234+00 236+00 238+00 240+00 242+00 244+00 246+00 248+00

USH 8

CURVE 2

N 37°52'48" E

MARKER FOR CULVERT END REQ'D

MARKER FOR CULVERT END REQ'D

OUTLET DR

END CONSTRUCTION, 38' RT (SEE CONSTRUCTION DETAILS)

MARKER FOR CULVERT END REQ'D

PAULSON DR

END CONSTRUCTION, 43' LT BUTT JOINT REQ'D (SEE CONSTRUCTION DETAILS)

248+00 250+00 252+00 254+00 256+00 258+00 260+00 262+00

USH 8

CURVE 2

MARKER FOR CULVERT END REQ'D

MARKER FOR CULVERT END REQ'D

CTH N

REMOVE AND REPLACE CURB & GUTTER AT INTERSECTION SEE INTERSECTION DETAILS FOR ADDITIONAL INFORMATION

END CONSTRUCTION, 70' LT BUTT JOINT REQ'D (SEE CONSTRUCTION DETAILS)

PAULSON DR

END CONSTRUCTION, 46' RT BUTT JOINT REQ'D (SEE CONSTRUCTION DETAILS)

PROJECT NO: 1595-09-60	HWY: USH 8	COUNTY: ONEIDA	PLAN	SHEET 87	E

PROPOSED WORK
STA 263+00 - STA 293+00
MILL AND OVERLAY

CURVE 2 DATA
PI = 256+26.01
Y = 139643.06
X = 206023.74
PC = 237+60.20
Y = 138170.37
X = 204878.11
PT = 271+51.43
Y = 139406.55
X = 207874.51
T = 1865.82
L = 3391.23
R = 3270.98
DELTA = 59°24'08" RT
D = 1°45'06"
EXISTING SE = 4.0
PROPOSED SE = 4.1
SE TRANSITION (T) = 162
RO (RUNOFF) = 109

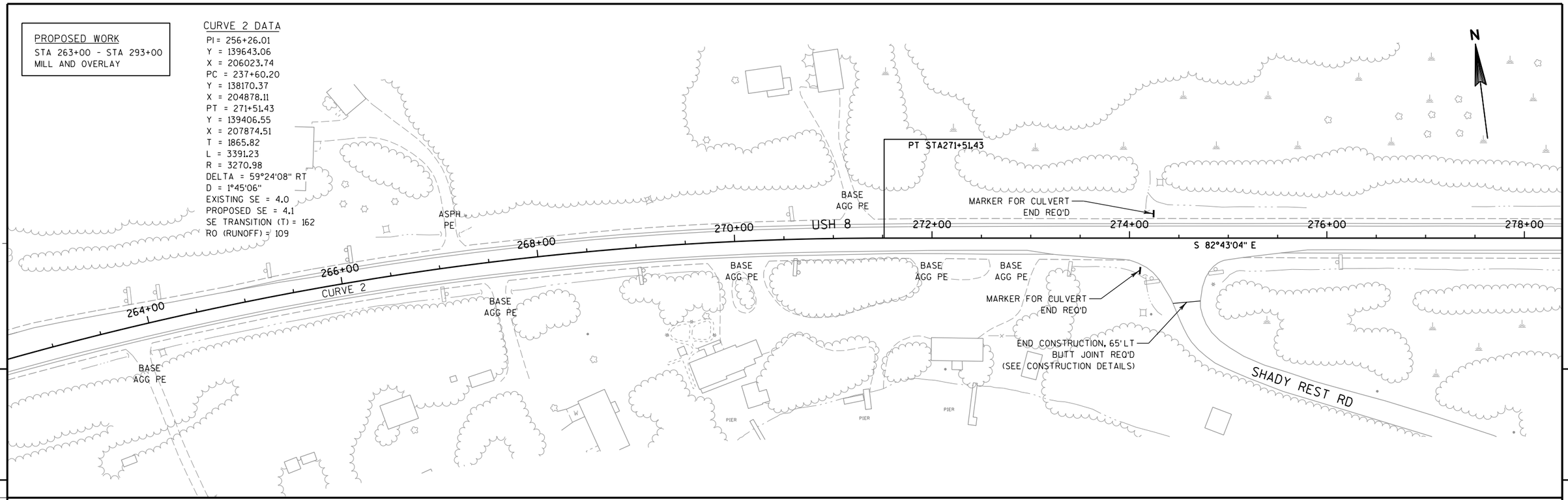

5

5

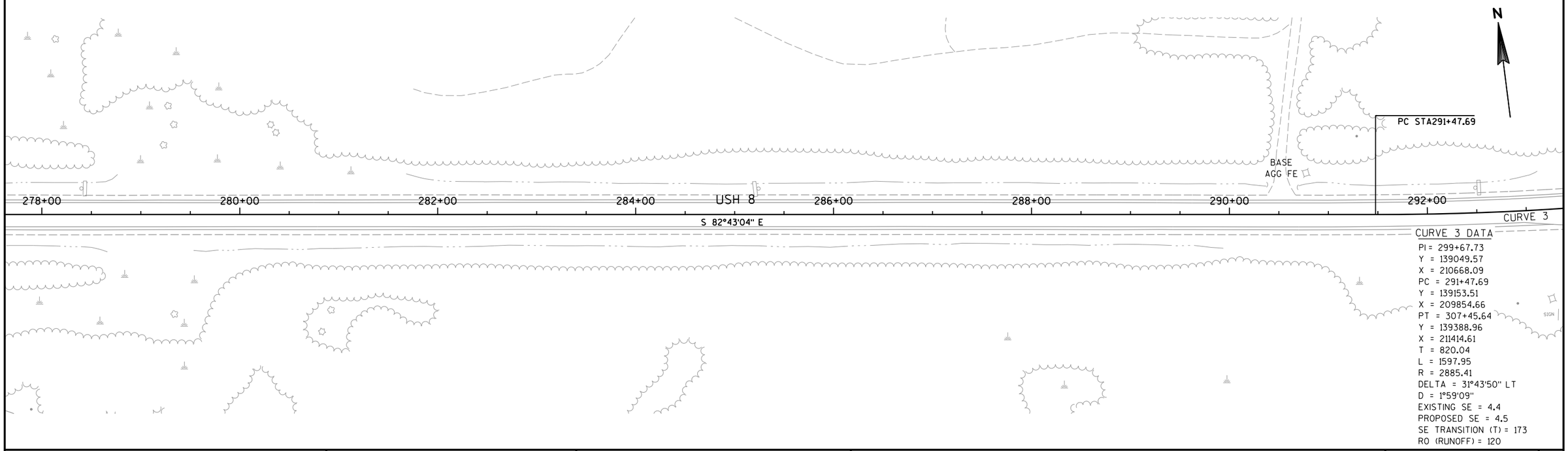

CURVE 3 DATA
PI = 299+67.73
Y = 139049.57
X = 210668.09
PC = 291+47.69
Y = 139153.51
X = 209854.66
PT = 307+45.64
Y = 139388.96
X = 211414.61
T = 820.04
L = 1597.95
R = 2885.41
DELTA = 31°43'50" LT
D = 1°59'09"
EXISTING SE = 4.4
PROPOSED SE = 4.5
SE TRANSITION (T) = 173
RO (RUNOFF) = 120

PROJECT NO: 1595-09-60	HWY: USH 8	COUNTY: ONEIDA	PLAN	SHEET 88	E

PROPOSED WORK
STA 293+00 - STA 323+00
MILL AND OVERLAY

CURVE 3 DATA
PI = 299+67.73
Y = 139049.57
X = 210668.09
PC = 291+47.69
Y = 139153.51
X = 209854.66
PT = 307+45.64
Y = 139388.96
X = 211414.61
T = 820.04
L = 1597.95
R = 2885.41
DELTA = 31°43'50" LT
D = 1°59'09"
EXISTING SE = 4.4
PROPOSED SE = 4.5
SE TRANSITION (T) = 173
RO (RUNOFF) = 120

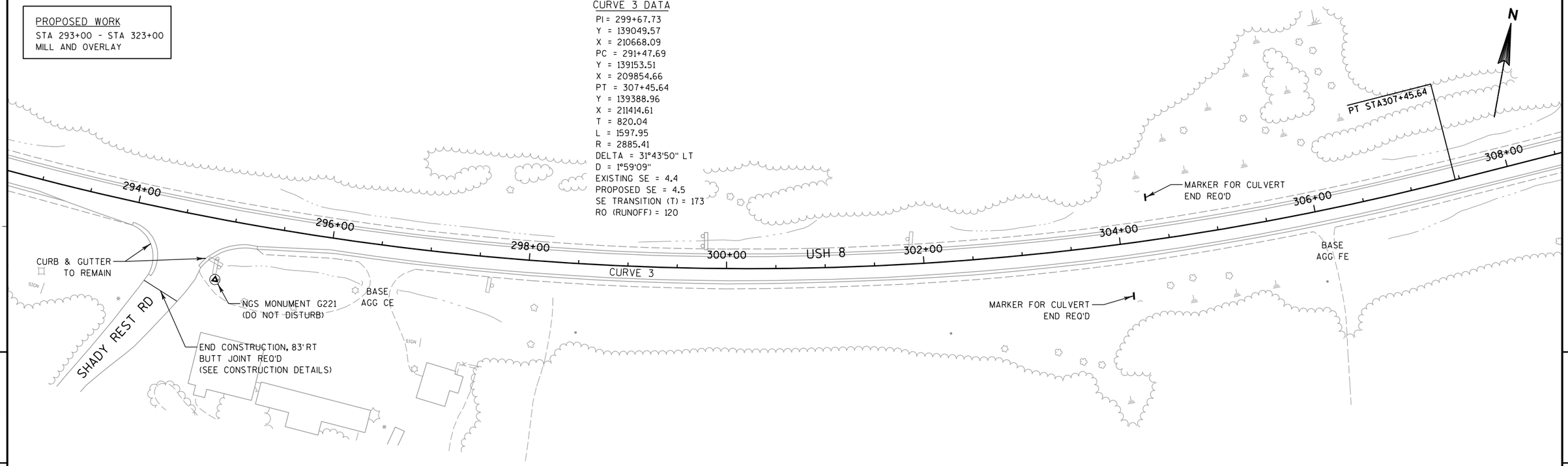

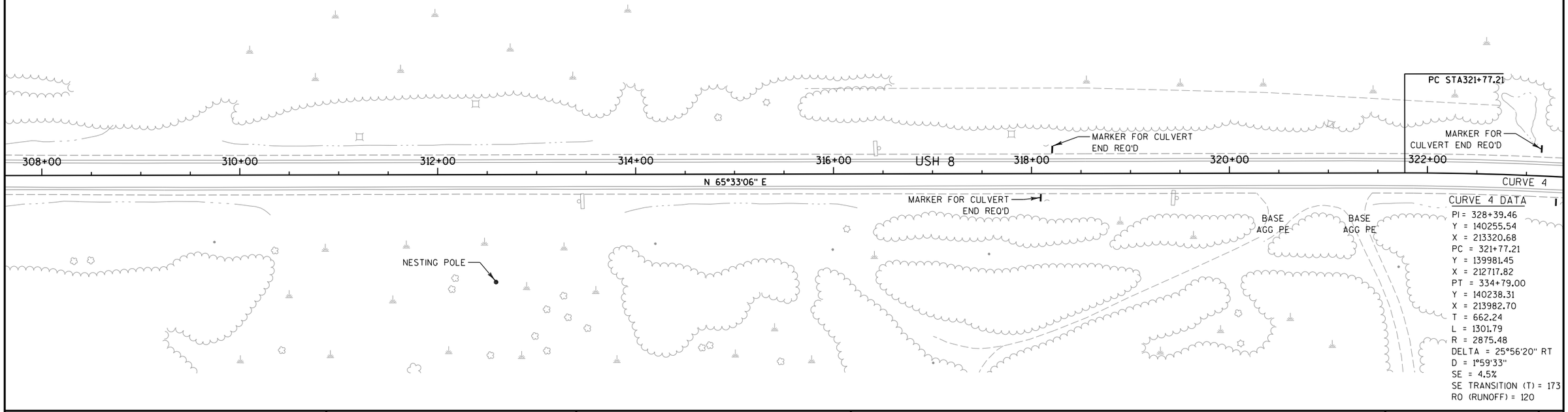

CURVE 4 DATA
PI = 328+39.46
Y = 140255.54
X = 213320.68
PC = 321+77.21
Y = 139981.45
X = 212717.82
PT = 334+79.00
Y = 140238.31
X = 213982.70
T = 662.24
L = 1301.79
R = 2875.48
DELTA = 25°56'20" RT
D = 1°59'33"
SE = 4.5%
SE TRANSITION (T) = 173
RO (RUNOFF) = 120

PROJECT NO: 1595-09-60	HWY: USH 8	COUNTY: ONEIDA	PLAN	SHEET 89	E

CURVE 4 DATA

PI = 328+39.46
Y = 140255.54
X = 213320.68
PC = 321+77.21
Y = 139981.45
X = 212717.82
PT = 334+79.00
Y = 140238.31
X = 213982.70
T = 662.24
L = 1301.79
R = 2875.48
DELTA = 25°56'20" RT
D = 1°59'33"
SE = 4.5%
SE TRANSITION (T) = 173
RO (RUNOFF) = 120

PROPOSED WORK
STA 323+00 - STA 353+00
MILL AND OVERLAY

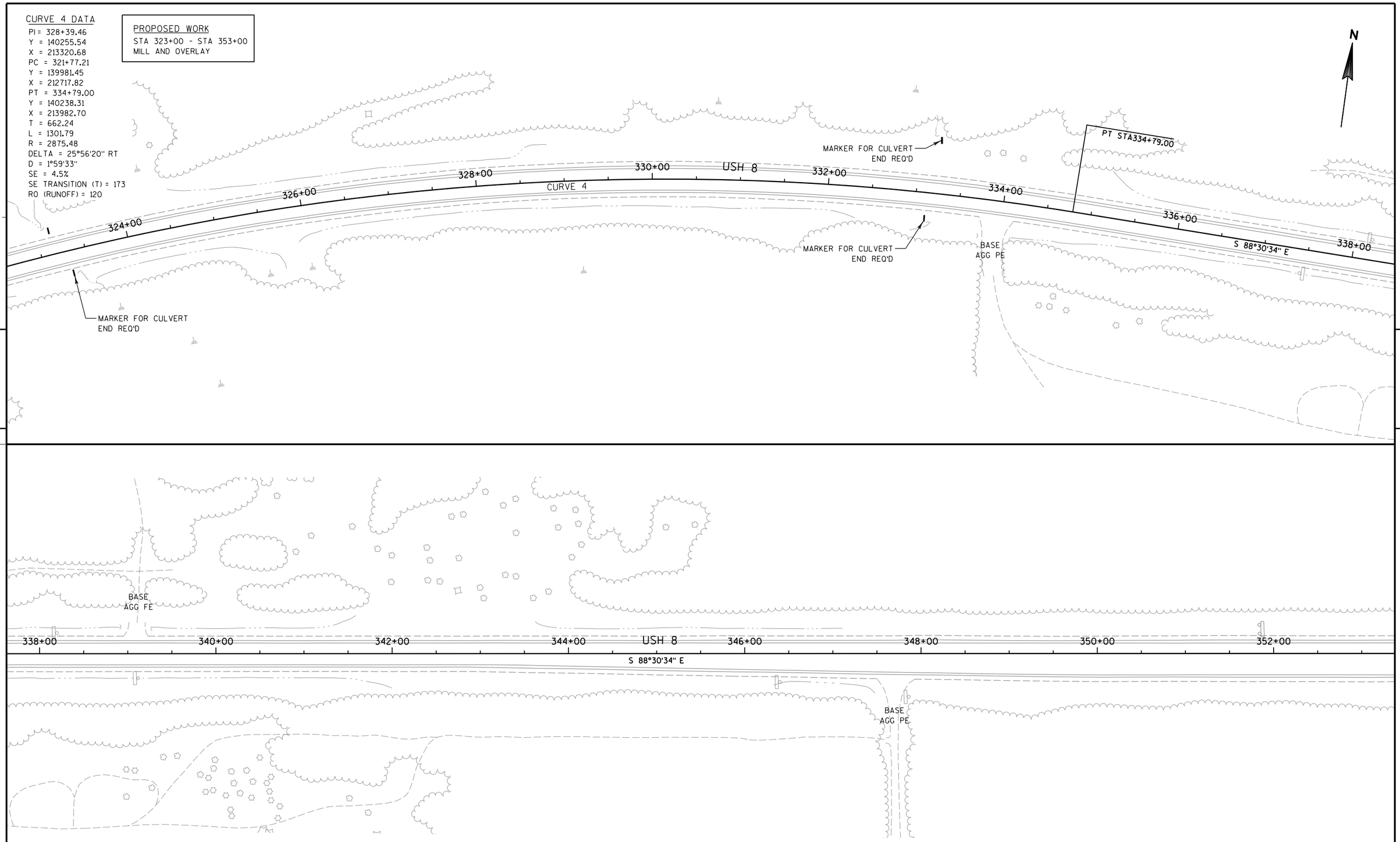

PROJECT NO: 1595-09-60	HWY: USH 8	COUNTY: ONEIDA	PLAN	SHEET 90	E

FILE NAME : P:\47xx\4727_DP.12.USH8.ONE\CADDS\Plan\050207_pn.dgn PLOT DATE : 2/16/2015 PLOT BY : emo PLOT NAME : PLOT SCALE : 1:100

WISDOT/CADDS SHEET 44

PROPOSED WORK
STA 353+00 - STA 383+00
MILL AND OVERLAY

NGS MONUMENT F221
(DO NOT DISTURB)

BASE
AGG PE

MEMORIAL FOREST RD

END CONSTRUCTION, 36' LT
BUTT JOINT REQ'D
(SEE CONSTRUCTION DETAILS)

SIGN
END CONSTRUCTION, 42' LT
BUTT JOINT REQ'D
(SEE CONSTRUCTION DETAILS)

MEMORIAL FOREST RD

N

354+00 356+00 358+00 360+00 USH 8 362+00 364+00 366+00 368+00

S 88°30'34" E

BASE
AGG FE

BASE
AGG FE

20' THERMOPLASTIC COATING
SNOWMOBILE CROSSING
(SEE CONSTRUCTION DETAILS)

5

5

N

REESTABLISH SECTION
CORNER AND LANDMARK
REFERENCE MONUMENTS

T 36 N
27 26
34 35
R 7 E

PI STA377+68.37
Y =140126.75
X =218270.62

ASPH
PE

MARKER FOR CULVERT
END REQ'D

SIGN

368+00 370+00 372+00 374+00 376+00 USH 8 378+00 380+00 382+00

S 88°30'34" E

S 88°04'42" E

MARKER FOR CULVERT
END REQ'D

END CONSTRUCTION, 69' RT
(SEE CONSTRUCTION DETAILS)

ROE LAKE RD

PROJECT NO: 1595-09-60	HWY: USH 8	COUNTY: ONEIDA	PLAN	SHEET	E

FILE NAME : P:\47xx\4727_DP.12.USH8.ONE\CADDS\Plan\050208_pn.dgn PLOT DATE : 2/16/2015 PLOT BY : emo PLOT NAME : PLOT SCALE : 1:100

PROPOSED WORK
STA 383+00 - STA 413+00
MILL AND OVERLAY

N

WOLF LAKE RD

MARKER FOR CULVERT END REQ'D

END CONSTRUCTION, 51' LT
BUTT JOINT REQ'D
(SEE CONSTRUCTION DETAILS)

384+00 386+00 388+00 USH 8 390+00 392+00 394+00 396+00 398+00

S 88°04'42" E

MARKER FOR CULVERT END REQ'D

BASE AGG PE

BASE AGG FE

5

5

CURVE 5 DATA
PI = 431+21.81
Y = 139947.22
X = 223621.04
PC = 401+52.81
Y = 140046.79
X = 220653.72
PT = 447+55.57
Y = 142916.22
X = 223615.28
T = 2969.00
L = 4602.75
R = 2865.48
DELTA = 92°01'58" LT
D = 1°59'58"
SE = 4.5%
SE TRANSITION (T) = 173
RO (RUNOFF) = 120

N

REESTABLISH SECTION CORNER AND LANDMARK REFERENCE MONUMENTS

T 36 N
26
35
R 7 E

PC STA401+52.81

BASE AGG FE

398+00 400+00 402+00 404+00 406+00 USH 8 CURVE 5 408+00 410+00 412+00

S 88°04'42" E

MARKER FOR CULVERT END REQ'D

MARKER FOR CULVERT END REQ'D

HEIDE DR

END CONSTRUCTION, 47' LT
(SEE CONSTRUCTION DETAILS)

MARKER FOR CULVERT END REQ'D

BASE AGG PE

END CONSTRUCTION, 57' RT
BUTT JOINT REQ'D
(SEE CONSTRUCTION DETAILS)

OLD SCHOOL RD

ASPH PE

MARKER FOR CULVERT END REQ'D

NURSERY

NURSERY

PROJECT NO: 1595-09-60	HWY: USH 8	COUNTY: ONEIDA	PLAN	SHEET 92	E

FILE NAME : P:\47xx\4727_DP.12.USH8.ONE\CADDS\Plan\050209_pn.dgn PLOT DATE : 2/16/2015 PLOT BY : emo PLOT NAME : PLOT SCALE : 1:100

PROPOSED WORK
STA 413+00 - STA 443+00
MILL AND OVERLAY
REMOVE AND REPLACE INTERSECTION CURB AND GUTTER

CURVE 5 DATA
PI = 431+21.81
Y = 139947.22
X = 223621.04
PC = 401+52.81
Y = 140046.79
X = 220653.72
PT = 447+55.57
Y = 142916.22
X = 223615.28
T = 2969.00
L = 4602.75
R = 2865.48
DELTA = 92°01'58" LT
D = 1°59'58"
SE = 4.5%
SE TRANSITION (T) = 173
RO (RUNOFF) = 120

N

414+00
416+00
418+00
420+00
USH 8
CURVE 5
422+00
424+00
426+00
428+00
BASE AGG PE
MARKER FOR CULVERT END REQ'D
MARKER FOR CULVERT END REQ'D

OLD SCHOOL RD
NURSERY

BENCH MARK

NO.	STATION	DESCRIPTION	ELEV.
6	440+56, 58'RT	6" MAG NAIL SET IN PP	1569.74

N

BASE AGG PE
428+00
430+00
ASPH PE
MARKER FOR CULVERT END REQ'D
432+00
434+00
436+00
USH 8
CURVE 5
438+00
440+00
442+00
BASE AGG PE
BASE AGG PE
BASE AGG PE
MARKER FOR CULVERT END REQ'D
REMOVE AND REPLACE CURB & GUTTER AT INTERSECTION SEE INTERSECTION DETAILS FOR ADDITIONAL INFORMATION
BM 6
CONTROL POINT 5
Y=134934.74
X=202302.56
0.75" IRON ROD SET W/ BLUE EMCS CAP
END CONSTRUCTION, 90° RT BUTT JOINT REQ'D (SEE CONSTRUCTION DETAILS)
SPRING CREEK RD

PROJECT NO: 1595-09-60	HWY: USH 8	COUNTY: ONEIDA	PLAN	SHEET 93	E

FILE NAME : P:\47xx\4727_DP.12.USH8.ONE\CADDS\Plan\050210_pn.dgn PLOT DATE : 2/16/2015 PLOT BY : emo PLOT NAME : PLOT SCALE : 1:100

PROPOSED WORK
STA 443+00 - STA 473+00
MILL AND OVERLAY

REESTABLISH SECTION CORNER AND LANDMARK REFERENCE MONUMENTS

T 36 N
R 7 E
26 25

= CLEARING & GRUBBING

BENCH MARK

NO.	STATION	DESCRIPTION	ELEV.
7	453+12, 42'LT	RR SPK IN 12" POPLAR	1565.89

N

CHARTER COMMUNICATIONS (COMMUNICATIONS)

FRONTIER COMMUNICATIONS OF WILLC (COMMUNICATIONS)

SLOPE INTERCEPT

BM 7

PT STA447+55.57

BASE AGG PE

444+00 446+00 448+00 450+00 452+00 USH 8 454+00 456+00 458+00

CURVE 5

N 0°06'40" W

CURVE 5 DATA
PI = 431+21.81
Y = 139947.22
X = 223621.04
PC = 401+52.81
Y = 140046.79
X = 220653.72
PT = 447+55.57
Y = 142916.22
X = 223615.28
T = 2969.00
L = 4602.75
R = 2865.48
DELTA = 92°01'58" LT
D = 1°59'58"
SE = 4.5%
SE TRANSITION (T) = 173
RO (RUNOFF) = 120

SLOPE INTERCEPT

CAUTION

WISCONSIN PUBLIC SERVICE CORPORATION (GAS)

WISCONSIN PUBLIC SERVICE CORPORATION (ELECTRIC)

FRONTIER COMMUNICATIONS OF WILLC (COMMUNICATIONS)

STA 450+39
TIE CULVERT PIPE ENDS
EXISTING 36" RCCP
2-AEW REQ'D
2-MARKERS FOR CULVERT END REQ'D

BASE AGG PE

BASE AGG PE

5

5

N

REESTABLISH SECTION CORNER AND LANDMARK REFERENCE MONUMENTS

T 36 N
R 7 E
26 25 23 24

RED FOX RUN

MARKER FOR CULVERT END REQ'D

END CONSTRUCTION, 36'LT (SEE CONSTRUCTION DETAILS)

458+00 460+00 462+00 464+00 USH 8 466+00 468+00 470+00 472+00

N 0°06'40" W

MARKER FOR CULVERT END REQ'D

BASE AGG PE

BASE AGG PE

BASE AGG PE

PROJECT NO: 1595-09-60	HWY: USH 8	COUNTY: ONEIDA	PLAN	SHEET 94	E

FILE NAME : P:\47xx\4727_DP.12.USH8.ONE\CADDS\Plan\050211_pn.dgn PLOT DATE : 2/16/2015 PLOT BY : emo PLOT NAME : PLOT SCALE : 1:100

PROPOSED WORK
STA 473+00 - STA 503+00
MILL AND OVERLAY

N

BASE AGG PE

MARKER FOR CULVERT END REQ'D

ASPH PE

474+00 476+00 478+00 480+00 USH 8 482+00 484+00 486+00 488+00

N 0°06'40" W

MARKER FOR CULVERT END REQ'D

ASPH PE

ASPH PE

SQUASH LAKE RD

END CONSTRUCTION, 49' RT
BUTT JOINT REQ'D
(SEE CONSTRUCTION DETAILS)

5

5

NOSE LAKE RD

WISCONSIN CENTRAL LTD

N

BASE AGG PE

PC STA488+92.49

488+00 490+00 492+00 494+00 496+00 USH 8 CURVE 6 498+00 500+00 502+00

PT STA503+17.19

MARKER FOR CULVERT END REQ'D

MARKER FOR CULVERT END REQ'D

CURVE 6 DATA
PI = 496+28.68
Y = 147789.32
X = 223605.83
PC = 488+92.49
Y = 147053.13
X = 223607.26
PT = 503+17.19
Y = 148388.75
X = 224033.20
T = 736.19
L = 1424.70
R = 2293.06
DELTA = 35°35'54" RT
D = 02°29'55"
SE = 5.1%
SE TRANSITION (T) = 189
RO (RUNOFF) = 136

PROJECT NO: 1595-09-60	HWY: USH 8	COUNTY: ONEIDA	PLAN	SHEET 95	E

PROPOSED WORK
STA 503+00 - STA 533+00
MILL AND OVERLAY

N

WISCONSIN CENTRAL LTD

PT STA503+17.19

MARKER FOR CULVERT END REQ'D

504+00 506+00 508+00 510+00 USH 8 512+00 514+00 516+00 518+00

N 35°29'14" E

MARKER FOR CULVERT END REQ'D

BASE AGG PE

MARKER FOR CULVERT END REQ'D

5

5

N

WISCONSIN CENTRAL LTD

MARKER FOR CULVERT END REQ'D

MARKER FOR CULVERT END REQ'D

518+00 520+00 522+00 524+00 USH 8 526+00 528+00 530+00 532+00

N 35°29'14" E

MARKER FOR CULVERT END REQ'D

BASE AGG PE

MARKER FOR CULVERT END REQ'D

ASPH PE

BASE AGG PE

BASE AGG PE

BASE AGG PE

ASPH PE

PROJECT NO: 1595-09-60	HWY: USH 8	COUNTY: ONEIDA	PLAN	SHEET 96	E

PROPOSED WORK
STA 533+00 - STA 563+00
MILL AND OVERLAY
REMOVE AND REPLACE INTERSECTION CURB AND GUTTER

ENDWALL ALREADY INSTALLED. DID NOT REQUIRE A NEW ENDWALL

WISCONSIN CENTRAL LTD

RW

DELINEATED WETLAND BOUNDARY

FRONTIER COMMUNICATIONS OF WILLC (COMMUNICATIONS)

STA 545+25
CULVERT PIPE LINERS 24"
EXISTING 24" RCCP @ 2.24%
2-AEW REQ'D
2-MARKERS FOR CULVERT END REQ'D

CHARTER COMMUNICATIONS (COMMUNICATIONS)

PERMITTED WETLAND IMPACTS

SLOPE INTERCEPT

534+00 536+00 538+00 540+00 USH 8 542+00 544+00 546+00 548+00

N 35°29'14" E

LAKE REST RD

END CONSTRUCTION, 40' RT
(SEE CONSTRUCTION DETAILS)

CONTROL POINT 4
Y=151469.867
X=226320.822
0.75" IRON ROD SET
W/ BLUE EMCS CAP

BM 5

BENCH MARK

NO.	STATION	DESCRIPTION	ELEV.
5	542+60, 96' RT	6" MAG NAIL SET IN PP	1606.00

WISCONSIN PUBLIC SERVICE CORPORATION (GAS)

WISCONSIN PUBLIC SERVICE CORPORATION (ELECTRIC)

FRONTIER COMMUNICATIONS OF WILLC (COMMUNICATIONS)

WISCONSIN CENTRAL LTD

WISCONSIN PUBLIC SERVICE CORPORATION (GAS)

FRONTIER COMMUNICATIONS OF WILLC (COMMUNICATIONS)

CHARTER COMMUNICATIONS (COMMUNICATIONS)

END CONSTRUCTION, 97' LT
BUTT JOINT REQ'D
(SEE CONSTRUCTION DETAILS)

CTH N

REMOVE AND REPLACE CURB & GUTTER AT INTERSECTION
SEE INTERSECTION DETAILS FOR ADDITIONAL INFORMATION

WISCONSIN PUBLIC SERVICE CORPORATION (GAS)

CHARTER COMMUNICATIONS (COMMUNICATIONS)

BASE AGG CE

BASE AGG PE

548+00 550+00 552+00 554+00 556+00 USH 8 558+00 560+00 562+00

N 35°29'14" E

DELINEATED WETLAND BOUNDARY

BASE AGG PE

ASPH PE

ASPH CE

FRONTIER COMMUNICATIONS OF WILLC (COMMUNICATIONS)

WISCONSIN PUBLIC SERVICE CORPORATION (ELECTRIC)

WISCONSIN PUBLIC SERVICE CORPORATION (GAS)

PROJECT NO: 1595-09-60	HWY: USH 8	COUNTY: ONEIDA	PLAN	SHEET 97	E

FILE NAME : P:\47xx\4727_DP.12.USH8.ONE\CADDS\Plan\050214_pn.dgn PLOT DATE : 2/16/2015 PLOT BY : emo PLOT NAME : PLOT SCALE : 1:100

WISDOT/CADDS SHEET 44

PROPOSED WORK
STA 563+00 - STA 593+00
MILL AND OVERLAY

X = CLEARING & GRUBBING

WISCONSIN CENTRAL LTD

RW

CHARTER COMMUNICATIONS (COMMUNICATIONS)

WISCONSIN PUBLIC SERVICE CORPORATION (GAS)

ASPH PE

PC STA568+32.84

FRONTIER COMMUNICATIONS OF WILLC (COMMUNICATIONS)

WISCONSIN PUBLIC SERVICE CORPORATION (GAS)

PERMITTED WETLAND IMPACTS

SLOPE INTERCEPT

DELINEATED WETLAND BOUNDARY

564+00 566+00 568+00 570+00 572+00 574+00 576+00 578+00

USH 8

CURVE 7

N 35°29'14" E

ASPH CE

ASPH CE

BASE AGG PE

ASPH PE

WISCONSIN PUBLIC SERVICE CORPORATION (ELECTRIC)

TEMPORARY WIDENING SLOPE INTERCEPT

SLOPE INTERCEPT

DELINEATED WETLAND BOUNDARY

PERMITTED WETLAND IMPACTS

WISCONSIN PUBLIC SERVICE CORPORATION (GAS)

STA 572+43
REMOVE 1-36" RCCP
1-36"X186' RCCP REQ'D
2-AEW REQ'D
25.4° RHF
2-MARKERS FOR CULVERT END REQ'D

FRONTIER COMMUNICATIONS OF WILLC (COMMUNICATIONS)

CURVE 7 DATA
PI = 576+00.34
Y = 154319.02
X = 228261.22
PC = 568+32.84
Y = 153694.09
X = 227815.67
PT = 583+32.26
Y = 154635.64
X = 228960.37
T = 767.50
L = 1499.42
R = 2849.52
DELTA = 30°08'57" RT
D = 2°00'39"
EXISTING SE = 4.4
PROPOSED SE = 4.5
SE TRANSITION (T) = 173
RO (RUNOFF) = 120

BENCH MARK

NO.	STATION	DESCRIPTION	ELEV.
4	580+44, 50' RT	6" MAG NAIL SET IN PP	1582.62

WISCONSIN CENTRAL LTD

WISCONSIN PUBLIC SERVICE CORPORATION (GAS)

PT STA583+32.26

MARKER FOR CULVERT END REQ'D

578+00 580+00 582+00 584+00 586+00 588+00 590+00 592+00

USH 8

CURVE 7

N 65°38'11" E

MARKER FOR CULVERT END REQ'D

BASE AGG PE

MARKER FOR CULVERT END REQ'D

BM 4

END CONSTRUCTION, 42' RT
BUTT JOINT REQ'D
(SEE CONSTRUCTION DETAILS)

CONTROL POINT 3
Y=154442.325
X=228687.963
0.75" IRON ROD SET
W/ BLUE EMCS CAP

CRESTWOOD DR

FRONTIER COMMUNICATIONS OF WILLC (COMMUNICATIONS)

CHARTER COMMUNICATIONS (COMMUNICATIONS)

WISCONSIN PUBLIC SERVICE CORPORATION (ELECTRIC)

PROJECT NO: 1595-09-60	HWY: USH 8	COUNTY: ONEIDA	PLAN	SHEET 98	E

FILE NAME : P:\47xx\4727_DP.12.USH8.ONE\CADDS\Plan\050215_pn.dgn PLOT DATE : 2/16/2015 PLOT BY : emo PLOT NAME : PLOT SCALE : 1:100

PROPOSED WORK
STA 593+00 - STA 623+00
MILL AND OVERLAY
ADD TURN LANES AND ITERSECTION WIDENING

N

= CLEARING & GRUBBING

WISCONSIN CENTRAL LTD

RW

WISCONSIN PUBLIC SERVICE CORPORATION (GAS)

SLOPE INTERCEPT

TLE

18" RCCP CULVERT PIPE & REMOVING SMALL PIPE CULVERTS

CAUTION

PROPOSED INTERSECTION IMPROVEMENTS SEE INTERSECTION DETAILS FOR ADDITIONAL INFORMATION

USH 8

594+00 596+00 598+00 600+00 602+00 604+00 606+00 608+00

N 65°38'11" E

+97
BEGIN INTERSECTION CONSTRUCTION

BASE AGG PE

BASE AGG CE

WISCONSIN PUBLIC SERVICE CORPORATION (ELECTRIC)

WISCONSIN PUBLIC SERVICE CORPORATION (ELECTRIC)
CHARTER COMMUNICATIONS (COMMUNICATIONS)

FRONTIER COMMUNICATIONS OF WILLC (COMMUNICATIONS)

CHARTER COMMUNICATIONS (COMMUNICATIONS)

CHARTER COMMUNICATIONS (COMMUNICATIONS)
FRONTIER COMMUNICATIONS OF WILLC (COMMUNICATIONS)

END CONSTRUCTION, 21'CRN'+75

RAILROAD CROSSING IMPROVEMENTS (SEE PAVING DETIALS FOR SIGNAL LOCATIONS)

22'CRN'+00

CRESCENT RD

14'CRS'+00
20'CRN'+00

24" RCCP CULVERT PIPE & REMOVING SMALL PIPE CULVERTS

REMOVE CURB & GUTTER

SLOPE INTERCEPT

BEGIN CONSTRUCTION, STA 12'CRS'+75

STA 607+38.62
STA 22'CRN'+00.00
Y=155628.33
X=231152.43

STA 607+27.87
STA 14'CRS'+00.00
Y=155623.89
X=231142.64

STA 12'CRS'+00.00
Y=155423.89
X=231142.99

12'CRS'+00

5

5

BENCH MARK

NO.	STATION	DESCRIPTION	ELEV.
3	608+37, 204'LT	RR SPK IN PP#360818E9	1605.07

= CLEARING & GRUBBING

N

FRONTIER COMMUNICATIONS OF WILLC (COMMUNICATIONS)

BM 3

STA 22'CRN'+00.00
Y=155827.72
X=231136.84

END CONSTRUCTION, 21'CRN'+90

22'CRN'+00

CRESCENT RD

FRONTIER COMMUNICATIONS OF WILLC (COMMUNICATIONS)

PROPOSED INTERSECTION IMPROVEMENTS SEE INTERSECTION DETAILS FOR ADDITIONAL INFORMATION

WISCONSIN CENTRAL LTD

PC STA612+30.83

SLOPE INTERCEPT

CAUTION

PT STA616+63.98

WISCONSIN PUBLIC SERVICE CORPORATION (GAS)

+53
END INTERSECTION CONSTRUCTION

608+00 610+00 612+00 614+00 616+00 618+00 620+00 622+00

N 65°38'11" E

CURVE 8

N 67°46'13" E

18" RCCP CULVERT PIPE & REMOVING SMALL PIPE CULVERTS

ASPH AGG CE

CHARTER COMMUNICATIONS (COMMUNICATIONS)

FRONTIER COMMUNICATIONS OF WILLC (COMMUNICATIONS)

WISCONSIN PUBLIC SERVICE CORPORATION (ELECTRIC)

REMOVING SMALL PIPE CULVERTS

BASE AGG PE

12" RCCP CULVERT PIPE

SLOPE INTERCEPT

BASE AGG PE

18" RCCP CULVERT PIPE & REMOVING SMALL PIPE CULVERTS

MARKER FOR CULVERT END REQ'D

CURVE 8 DATA

PI = 614+47.43
Y = 155920.73
X = 231798.12
PC = 612+30.83
Y = 155831.37
X = 231600.81
PT = 616+63.98
Y = 156002.67
X = 231998.62

T = 216.60
L = 433.15
R = 11630.00
DELTA = 2°08'02" RT
D = 00°29'34"
SE = 1.0% (WB USH 8 ONLY)
SE TRANSITION (T) = 106
RO (RUNOFF) = 53

PROJECT NO: 1595-09-60	HWY: USH 8	COUNTY: ONEIDA	PLAN	SHEET 99	E

PROPOSED WORK

STA 623+00 - STA 653+00
MILL AND OVERLAY
REMOVE AND REPLACE INTERSECTION CURB AND GUTTER

BENCH MARK

NO.	STATION	DESCRIPTION	ELEV.
2	626+40, 72' LT	RR SPK SET IN TRIPLE BASSWOOD	1620.86

Asphaltic Surface Flume

Asphaltic Surface Flume

Asphaltic Surface Flume

Asphaltic Surface Flume

WISCONSIN CENTRAL LTD

CONTROL POINT 2
Y=156455.846
X=232972.136
0.75" IRON ROD SET
W/ BLUE EMCS CAP

BM 2

MARKER FOR CULVERT END REQ'D

624+00 626+00 628+00 630+00 USH 8 632+00 634+00 636+00 638+00

N 67°46'13" E

WISCONSIN PUBLIC SERVICE CORPORATION (GAS)

FRONTIER COMMUNICATIONS OF WILLC (COMMUNICATIONS)

BASE AGG FE

MARKER FOR CULVERT END REQ'D

MARKER FOR CULVERT END REQ'D

MARKER FOR CULVERT END REQ'D

FRONTIER COMMUNICATIONS OF WILLC (COMMUNICATIONS)

MARKER FOR CULVERT END REQ'D

WISCONSIN PUBLIC SERVICE CORPORATION (ELECTRIC)

CHARTER COMMUNICATIONS (COMMUNICATIONS)

NGS MONUMENT D221 (DO NOT DISTURB)

WISCONSIN PUBLIC SERVICE CORPORATION (GAS)

WAUSAU RD

REMOVE AND REPLACE CURB & GUTTER AT INTERSECTION SEE INTERSECTION DETAILS FOR ADDITIONAL INFORMATION

END CONSTRUCTION, 79' RT BUTT JOINT REQ'D (SEE CONSTRUCTION DETAILS)

ASPH PE

ASPH PE

BASE AGG PE

WISCONSIN PUBLIC SERVICE CORPORATION (GAS)

WISCONSIN PUBLIC SERVICE CORPORATION (ELECTRIC)

FRONTIER COMMUNICATIONS OF WILLC (COMMUNICATIONS)

MARKER FOR CULVERT END REQ'D

MARKER FOR CULVERT END REQ'D

MARKER FOR CULVERT END REQ'D

638+00 640+00 642+00 644+00 USH 8 646+00

N 67°46'13" E

WISCONSIN CENTRAL LTD

PC STA647+27.90

MARKER FOR CULVERT END REQ'D

MARKER FOR CULVERT END REQ'D

648+00 650+00 652+00 CURVE 9

BASE AGG PE

ASPH PE

MARKER FOR CULVERT END REQ'D

MARKER FOR CULVERT END REQ'D

BASE AGG PE

ASPH PE

MARKER FOR CULVERT END REQ'D

BASE AGG PE

ASPH PE

MARKER FOR CULVERT END REQ'D

CURVE 9 DATA
PI = 655+35.64
Y = 157467.40
X = 235582.52
PC = 647+27.90
Y = 157161.82
X = 234834.81
PT = 663+02.95
Y = 157339.74
X = 236380.11
T = 807.74
L = 1575.05
R = 2881.04
DELTA = 31°19'24" RT
D = 1°59'19"
SE = 4.5%
SE TRANSITION (T) = 173
RO (RUNOFF) = 120

BASE AGG PE

ASPH CE

MARKER FOR CULVERT END REQ'D

PROJECT NO: 1595-09-60	HWY: USH 8	COUNTY: ONEIDA	PLAN	SHEET 100	E

FILE NAME : P:\47xx\4727_DP.12.USH8.ONE\CADDS\Plan\050217_pn.dgn PLOT DATE : 2/16/2015 PLOT BY : emo PLOT NAME : PLOT SCALE : 1:100

WISDOT/CADDS SHEET 44

PROPOSED WORK

STA 653+00 - STA 683+00
MILL AND OVERLAY

WISCONSIN CENTRAL LTD

N

654+00 656+00 658+00 660+00 662+00 664+00 666+00 668+00

USH 8

CURVE 9

S 80°54'23" E

PT STA663+02.95

MARKER FOR CULVERT
END REQ'D

BASE
AGG PE

END CONSTRUCTION, 50' RT
BUTT JOINT REQ'D
(SEE CONSTRUCTION DETAILS)

DETIENNE RD

MARKER FOR CULVERT
END REQ'D

CURVE 9 DATA
PI= 655+35.64
Y = 157467.40
X = 235582.52
PC = 647+27.90
Y = 157161.82
X = 234834.81
PT = 663+02.95
Y = 157339.74
X = 236380.11
T = 807.74
L = 1575.05
R = 2881.04
DELTA = 31°19'24" RT
D = 1°59'19"
SE = 4.5%
SE TRANSITION (T) = 173
RO (RUNOFF) = 120

BASE
AGG PE

END CONSTRUCTION, 40' RT
BUTT JOINT REQ'D
(SEE CONSTRUCTION DETAILS)

PLEASURE POINT RD

5

5

WISCONSIN CENTRAL LTD

PC STA683+29.27

MARKER FOR CULVERT
END REQ'D

668+00 670+00 672+00 674+00 676+00 678+00 680+00 682+00

USH 8

S 80°54'23" E

MARKER FOR CULVERT
END REQ'D

PROJECT NO: 1595-09-60	HWY: USH 8	COUNTY: ONEIDA	PLAN	SHEET 101	E

FILE NAME : P:\47xx\4727_DP.12.USH8.ONE\CADDS\Plan\050218_pn.dgn PLOT DATE : 2/16/2015 PLOT BY : emo PLOT NAME : PLOT SCALE : 1:100

PROPOSED WORK
STA 683+00 - STA 709+00
MILL AND OVERLAY
REMOVE AND REPLACE INTERSECTION CURB AND GUTTER

WISCONSIN CENTRAL LTD

PC STA683+29.27

684+00 686+00 688+00 690+00 USH 8 692+00 694+00 696+00 698+00

CURVE 10

CURVE 10 DATA
PI= 707+96.46
Y = 156629.56
X = 240817.14
PC = 683+29.27
Y = 157019.49
X = 238380.97
PT = 731+90.07
Y = 157272.54
X = 243199.07
T = 2467.18
L = 4860.79
R = 11508.38
DELTA = 24°12'00" LT
D = 00°29'52"
SE = RC
SE TRANSITION (T) = 112
RO (RUNOFF) = 56

CHARTER COMMUNICATIONS (COMMUNICATIONS)
WISCONSIN PUBLIC SERVICE CORPORATION (GAS)
MARKER FOR CULVERT END REQ'D
WISCONSIN PUBLIC SERVICE CORPORATION (ELECTRIC)
WISCONSIN PUBLIC SERVICE CORPORATION (GAS)
CHARTER COMMUNICATIONS (COMMUNICATIONS)
BASE AGG PE
BASE AGG CE

BENCH MARK

NO.	STATION	DESCRIPTION	ELEV.
1	700+92, 102' RT	CHISLED X NE BOLT ON BP SIGN	1599.44

X = CLEARING & GRUBBING

PERMITTED WETLAND IMPACTS
STA 704+58
CULVERT PIPE LINERS 36"
EXISTING 36" RCCP @ 0.35%
2-AEW REQ'D
2-MARKERS FOR CULVERT END REQ'D
SLOPE INTERCEPT
DELINEATED WETLAND BOUNDARY
FRONTIER COMMUNICATIONS OF WILLC (COMMUNICATIONS)
WISCONSIN PUBLIC SERVICE CORPORATION (ELECTRIC)
CHARTER COMMUNICATIONS (COMMUNICATIONS)
MARKER FOR CULVERT END REQ'D
REMOVE AND REPLACE CURB & GUTTER AT INTERSECTION SEE INTERSECTION DETAILS FOR ADDITIONAL INFORMATION
BM 1
CONTROL POINT 1
Y=156803.993
X=240135.534
0.75" IRON ROD SET
W/ BLUE EMCS CAP
NGS MONUMENT C221
(DO NOT DISTURB)
END CONSTRUCTION, 91'RT
BUTT JOINT REQ'D
(SEE CONSTRUCTION DETAILS)
S RIFLE RD
ASPH CE
CAUTION
694+00 696+00 698+00 700+00 702+00 704+00 706+00 USH 8 708+00

N

PROJECT NO: 1595-09-60	HWY: USH 8	COUNTY: ONEIDA	PLAN	SHEET 102	E

FILE NAME : P:\47xx\4727_DP.12.USH8.ONE\CADDS\Plan\050219_pn.dgn
PLOT DATE : 2/16/2015
PLOT BY : emo
PLOT NAME :
PLOT SCALE : 1:100

PROPOSED WORK
STA 709+00 - STA 732+58
MILL AND OVERLAY
REMOVE AND REPLACE INTERSECTION CURB AND GUTTER

N RIFLE RD

END CONSTRUCTION, 84' LT
BUTT JOINT REQ'D
(SEE CONSTRUCTION DETAILS)

REMOVE AND REPLACE CURB & GUTTER AT INTERSECTION
SEE INTERSECTION DETAILS FOR ADDITIONAL INFORMATION

MARKER FOR CULVERT END REQ'D

710+00 712+00 714+00 716+00 718+00 720+00 722+00 724+00

USH 8

CURVE 10

ASPH PE
BASE AGG PE
BASE AGG CE
OH
W
POOL

CURVE 10 DATA
PI = 707+96.46
Y = 156629.56
X = 240817.14
PC = 683+29.27
Y = 157019.49
X = 238380.97
PT = 731+90.07
Y = 157272.54
X = 243199.07
T = 2467.18
L = 4860.79
R = 1508.38
DELTA = 24°12'00" LT
D = 00°29'52"
SE = RC
SE TRANSITION (T) = 112
RO (RUNOFF) = 56

MARKER FOR CULVERT END REQ'D

END PROJECT
STA 732+58.00
BUTT JOINT REQ'D
(SEE CONSTRUCTION DETAILS)

MARKER FOR CULVERT END REQ'D
PT STA731+90.07

724+00 726+00 728+00 730+00 732+00 734+00 736+00 738+00

N 74°53'37" E

CHAS DENTON LN

PROJECT NO: 1595-09-60	HWY: USH 8	COUNTY: ONEIDA	PLAN	SHEET 103	E

FILE NAME : P:\47xx\4727_DP.12.USH8.ONE\CADDS\Plan\050220_pn.dgn
PLOT DATE : 2/16/2015
PLOT BY : emo
PLOT NAME :
PLOT SCALE : 1:100

Standard Detail Drawing List

08D01-17	CONCRETE CURB, CONCRETE CURB AND GUTTER AND TIES
08D04-05	CONCRETE SURFACE DRAINS & ASPHALTIC FLUMES
08E08-03	TYPICAL INSTALLATIONS OF EROSION BALES / TEMPORARY DITCH CHECKS
08E09-06	SILT FENCE
08F01-11	APRON ENDWALLS FOR CULVERT PIPE
08F04-07	JOINT TIES FOR CONCRETE PIPE AND CONCRETE COLLAR DETAIL
09A01-13A	AT-GRADE SIDE ROAD INTERSECTION, TYPES "B1", "B2", "C" AND D AND TEE INTERSECTION BYPASS LANE
09A01-13B	AT-GRADE SIDE ROAD INTERSECTION, TYPE "A1" & "A2"
09G02-03A	BRIDGE TEMPORARY TRAFFIC SIGNAL INSTALLATION
09G02-03B	BRIDGE TEMPORARY TRAFFIC SIGNAL INSTALLATION
09G02-03C	BRIDGE TEMPORARY TRAFFIC SIGNAL INSTALLATION
13A10-01A	2-LANE RURAL SHOULDER RUMBLE STRIP, MILLING
13A10-01B	2-LANE RURAL SHOULDER RUMBLE STRIP, MILLING
13A10-01C	2-LANE RURAL SHOULDER RUMBLE STRIP, MILLING
13A10-01D	2-LANE RURAL SHOULDER RUMBLE STRIP, MILLING
13A11-02A	2-LANE RURAL CENTER LINE RUMBLE STRIP, MILLING
13A11-02B	2-LANE RURAL CENTER LINE RUMBLE STRIP, MILLING
13B01-10	PAVEMENT DETAILS FOR RAILROAD APPROACH
14B07-14A	CONCRETE BARRIER TEMPORARY PRECAST, 12'-6"
14B07-14B	CONCRETE BARRIER TEMPORARY PRECAST, 12'-6"
14B07-14C	CONCRETE BARRIER TEMPORARY PRECAST, 12'-6"
14B07-14D	CONCRETE BARRIER TEMPORARY PRECAST, 12'-6"
14B07-14E	CONCRETE BARRIER TEMPORARY PRECAST, 12'-6"
14B07-14F	CONCRETE BARRIER TEMPORARY PRECAST, 12'-6"
14B07-14G	CONCRETE BARRIER TEMPORARY PRECAST, 12'-6"
14B07-14H	CONCRETE BARRIER TEMPORARY PRECAST, 12'-6"
14B29-01	SAFETY EDGE
14B42-03A	MIDWEST GUARDRAIL SYSTEM (MGS) GUARDRAIL
14B42-03B	MIDWEST GUARDRAIL SYSTEM (MGS) GUARDRAIL
14B42-03C	MIDWEST GUARDRAIL SYSTEM (MGS) GUARDRAIL
14B44-02A	MIDWEST GUARDRAIL SYSTEM ENERGY ABSORBING TERMINAL (MGS)
14B44-02B	MIDWEST GUARDRAIL SYSTEM ENERGY ABSORBING TERMINAL (MGS)
14B44-02C	MIDWEST GUARDRAIL SYSTEM ENERGY ABSORBING TERMINAL (MGS)
15A03-02A	FLEXIBLE MARKER POST FOR CULVERT END
15A03-02B	FLEXIBLE MARKER POST FOR CULVERT END
15C02-05A	BARRICADES AND SIGNS FOR MAINLINE CLOSURES
15C02-05B	BARRICADES AND SIGNS FOR MAINLINE CLOSURES
15C04-02	TRAFFIC CONTROL, ADVANCE WARNING SIGNS 45 M.P.H. OR GREATER TWO-WAY UNDIVIDED ROAD OPEN TO TRAFFIC
15C07-12B	PAVEMENT MARKING WORDS
15C07-12C	PAVEMENT MARKING ARROWS
15C08-16A	PAVEMENT MARKING (MAINLINE)
15C08-16B	PAVEMENT MARKING (INTERSECTIONS)
15C08-16C	PAVEMENT MARKING (CLIMBING LANE & PASSING LANE)
15C08-16D	PAVEMENT MARKING (CLIMBING LANE & PASSING LANE)
15C08-16E	PAVEMENT MARKING (LEFT TURN LANE)
15C12-04	TRAFFIC CONTROL FOR LANE CLOSURE (SUITABLE FOR MOVING OPERATIONS)
15C18-03	MEDIAN ISLAND MARKING
15C19-02A	MOVING PAVEMENT MARKING OPERATION TWO-LANE TWO-WAY ROADWAY
15D28-02	TRAFFIC CONTROL, WORK ON SHOULDER OR PARKING LANE, UNDIVIDED ROADWAY
15D33-03	TRAFFIC CONTROL, ONE LANE ROAD WITH TEMPORARY SIGNALS

6

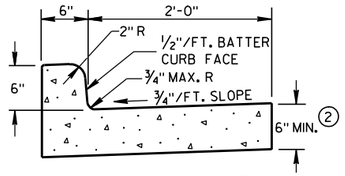

TYPES A & D (1)

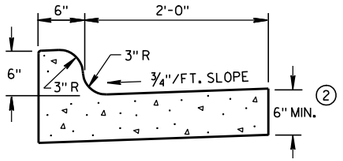

TYPES K & L (1)

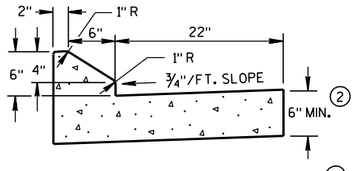

6" SLOPED CURB TYPES G & J (1)

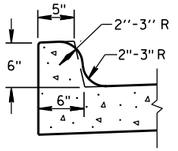

OPTIONAL CURB SHAPE FOR TYPES K & L (1)

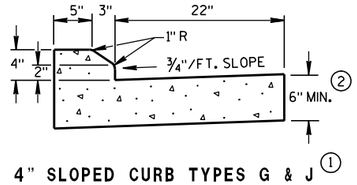

4" SLOPED CURB TYPES G & J (1)

CONCRETE CURB & GUTTER 30"

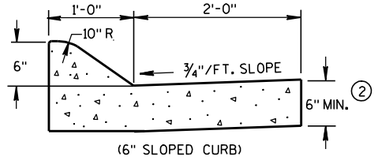

(6" SLOPED CURB)

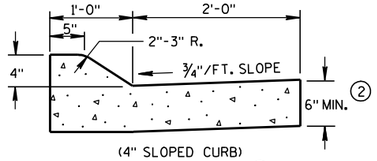

(4" SLOPED CURB)

TYPES A & D (1)

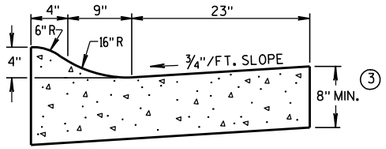

4" SLOPED CURB TYPES R & T (1) (4)

CONCRETE CURB & GUTTER 36"

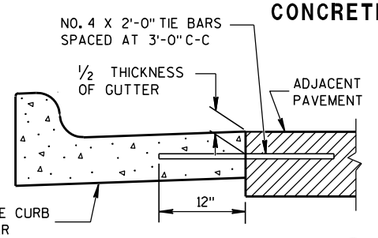

TYPICAL TIE BAR LOCATION (1)

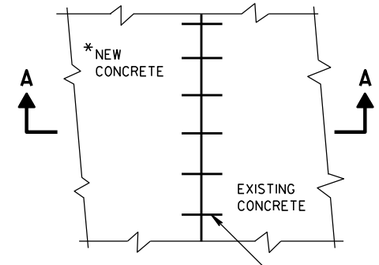

*NEW CURB & GUTTER, SURFACE DRAINS, CONCRETE PAVEMENT OR OTHER NEW CONCRETE.

PLAN VIEW

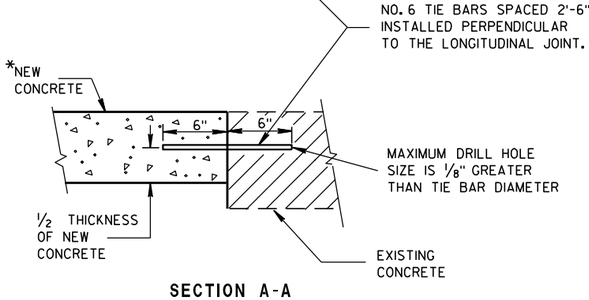

SECTION A-A

TIE BARS DRILLED INTO EXISTING PAVEMENT

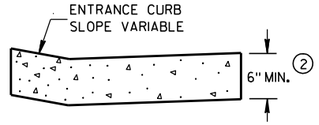

DRIVEWAY ENTRANCE CURB

(WHEN DIRECTED BY THE ENGINEER)

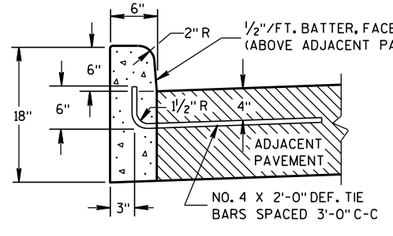

(1)

TYPES A & D

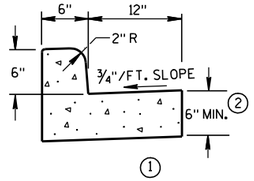

(1)

TYPES A & D

CONCRETE CURB & GUTTER 18"

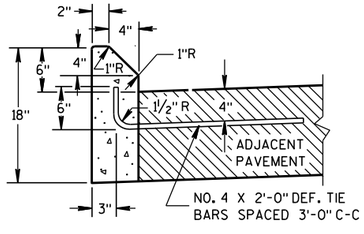

(1)

TYPES G & J

CONCRETE CURB

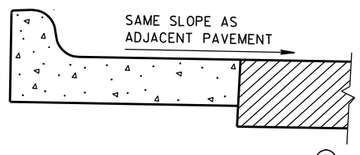

(5)

REVERSE SLOPE GUTTER

(TYPICAL FOR ALL CURB & GUTTER TYPES)

GENERAL NOTES

DETAILS OF CONSTRUCTION, MATERIALS AND WORKMANSHIP NOT SHOWN ON THIS DRAWING SHALL CONFORM TO THE PERTINENT REQUIREMENTS OF THE CONTRACT.

PAVEMENT TIES AND TIE BARS SHALL BE EPOXY COATED IN CONFORMANCE WITH SUBSECTION 505.2.6.2 OF THE STANDARD SPECIFICATIONS.

INTEGRAL CURB & GUTTER SHALL CONFORM TO THE DETAILS SHOWN FOR CONCRETE CURB & GUTTER INCLUDING THE TRANSVERSE GUTTER SLOPE. A LONGITUDINAL CONSTRUCTION JOINT IS NOT REQUIRED WITH INTEGRAL CURB AND GUTTER.

WHERE THE TRANSVERSE JOINTS IN THE PAVEMENT ARE REQUIRED TO BE SEALED, THE JOINTS IN THE INTEGRAL CURB AND GUTTER SHALL BE SEALED TO THE FACE OF CURB WITH THE SAME TYPE OF SEALANT. THE COST OF FURNISHING AND INSTALLING THIS SEALANT SHALL BE INCIDENTAL TO THE ITEM CONCRETE CURB AND GUTTER.

UNLESS OTHERWISE SHOWN ON THE TYPICAL CROSS SECTIONS, THE BASE AGGREGATE AND COMMON EXCAVATION LIMITS ARE 2'-0" BEHIND THE BACK OF CURBS.

(1) TIE BARS ARE REQUIRED FOR CURB AND GUTTER TYPES A, G, K AND R.

(2) THE BOTTOM OF CURB AND GUTTER MAY BE CONSTRUCTED EITHER LEVEL OR PARALLEL TO THE SLOPE OF THE SUBGRADE OR BASE AGGREGATE PROVIDED A 6" MINIMUM GUTTER THICKNESS IS MAINTAINED.

(3) THE BOTTOM OF CURB AND GUTTER MAY BE CONSTRUCTED EITHER LEVEL OR PARALLEL TO THE SLOPE OF THE SUBGRADE OR BASE AGGREGATE PROVIDED A 8" MINIMUM GUTTER THICKNESS IS MAINTAINED.

(4) THE FACE OF CURB IS 6" FROM THE BACK OF CURB.

(5) WHEN REVERSE SLOPE GUTTER IS REQUIRED, THE LOCATION(S) WILL BE SHOWN ELSEWHERE IN THE PLAN.

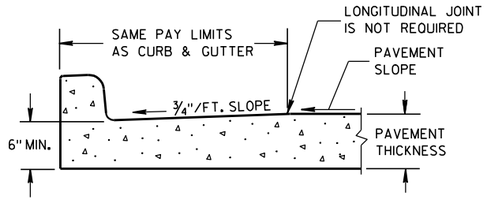

PARTIAL SECTION OF PAVEMENT WITH INTEGRAL CURB & GUTTER

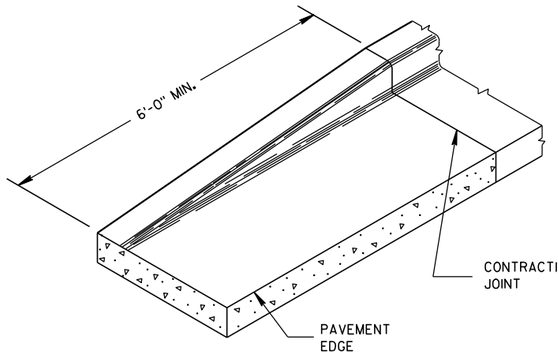

END SECTION CURB & GUTTER

CONCRETE CURB, CONCRETE CURB & GUTTER AND TIES

STATE OF WISCONSIN
DEPARTMENT OF TRANSPORTATION

APPROVED
9/4/08 DATE
/S/ Jerry H. [illegible]
ROADWAY STANDARDS ENGINEER

FHWA

ENT

6

S.D.D. 8 D 1-17

6

S.D.D. 8 D 1-17

ASPHALTIC FLUME

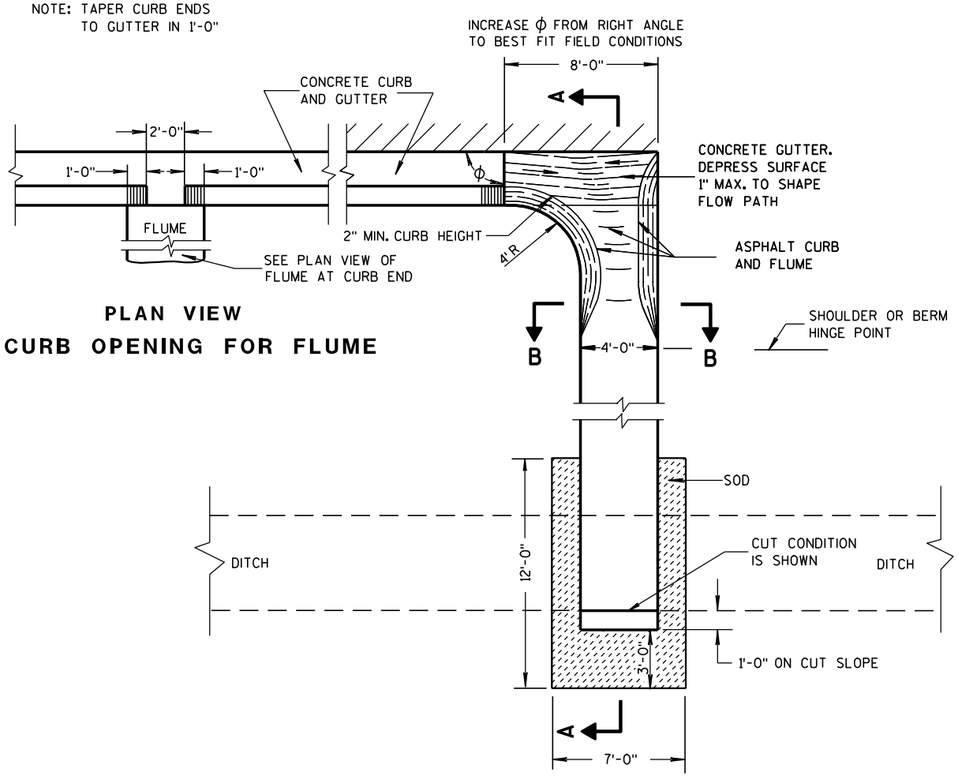

PLAN VIEW
CURB OPENING FOR FLUME

PLAN VIEW
FLUME AT CURB END

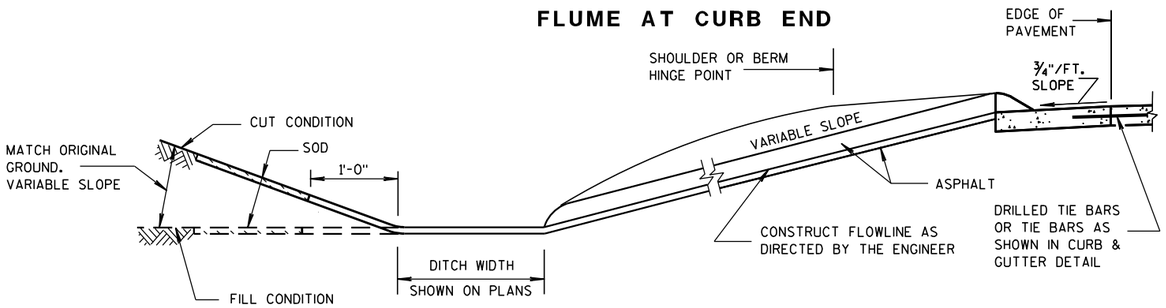

SECTION A-A

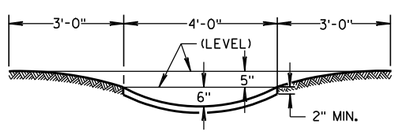

SECTION B-B

GENERAL NOTES

DETAILS OF CONSTRUCTION, MATERIALS AND WORKMANSHIP NOT SHOWN ON THIS DRAWING SHALL CONFORM TO PERTINENT REQUIREMENTS OF THE STANDARD SPECIFICATIONS AND APPLICABLE SPECIAL PROVISIONS.

WELDED STEEL WIRE FABRIC SHALL BE IN ACCORDANCE WITH AASHTO SPECIFICATION M55.

① JOINTS SHALL BE ⅛ TO ¼ INCH WIDE BY 1½ INCHES DEEP AND SPACED AT UNIFORM INTERVALS OF APPROXIMATELY 4 FEET.

② GEOTEXTILE FABRIC TYPE "R" SHALL UNDERLAY THE FULL LENGTH AND WIDTH OF THE CONCRETE SURFACE DRAIN AND RIPRAP.

③ CONCRETE SURFACE DRAIN WITHOUT CURB AND GUTTER MAY BE USED ON BACKSLOPES WHEN SPECIFIED

③ CONCRETE SURFACE DRAIN

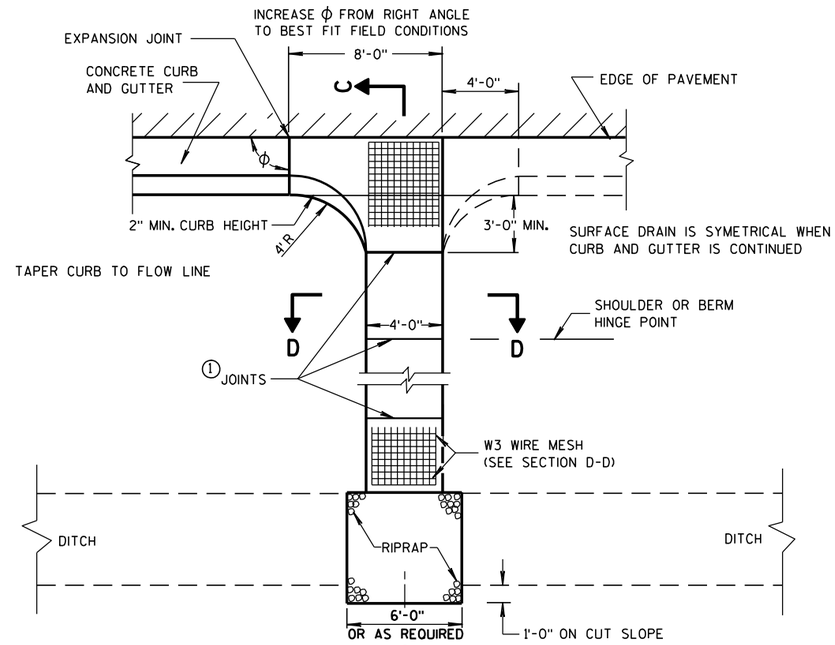

PLAN VIEW

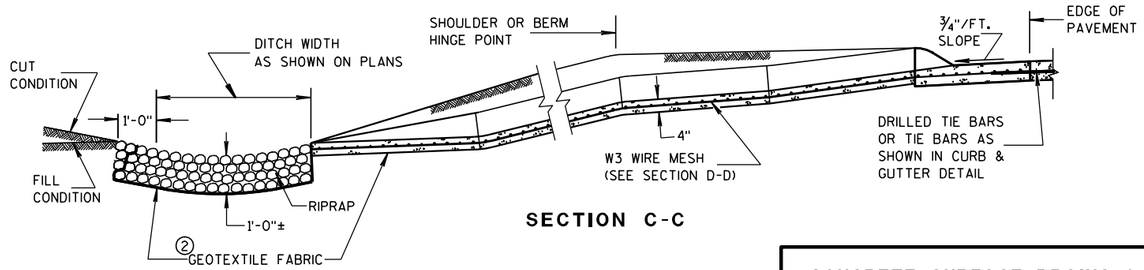

SECTION C-C

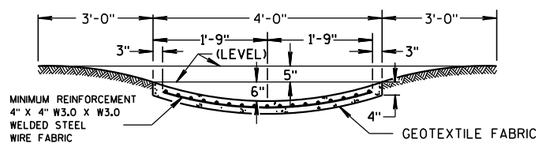

SECTION D-D

CONCRETE SURFACE DRAINS & ASPHALTIC FLUMES

STATE OF WISCONSIN
DEPARTMENT OF TRANSPORTATION

APPROVED
9-4-08 DATE
/S/ Jerry H. Zogg
ROADWAY STANDARDS ENGINEER
MENT
FHWA

6

S.D.D. 8 D 4-5

6

S.D.D. 8 D 4-5

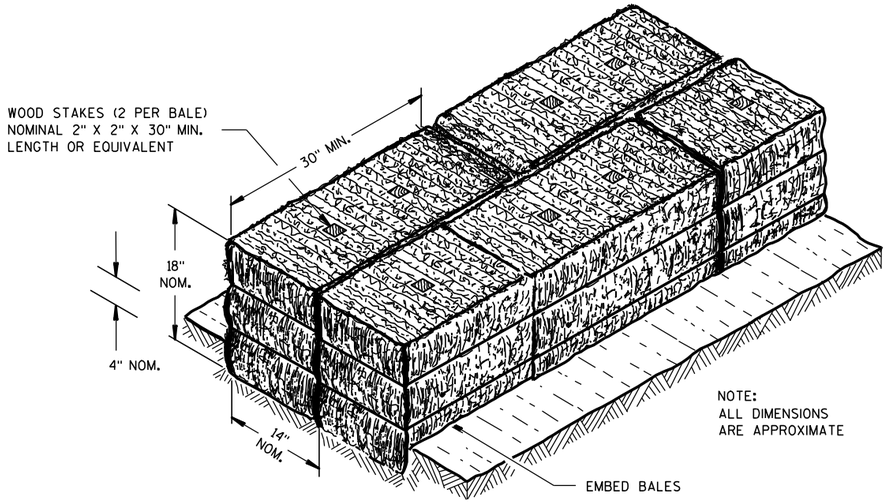

SECTION A-A

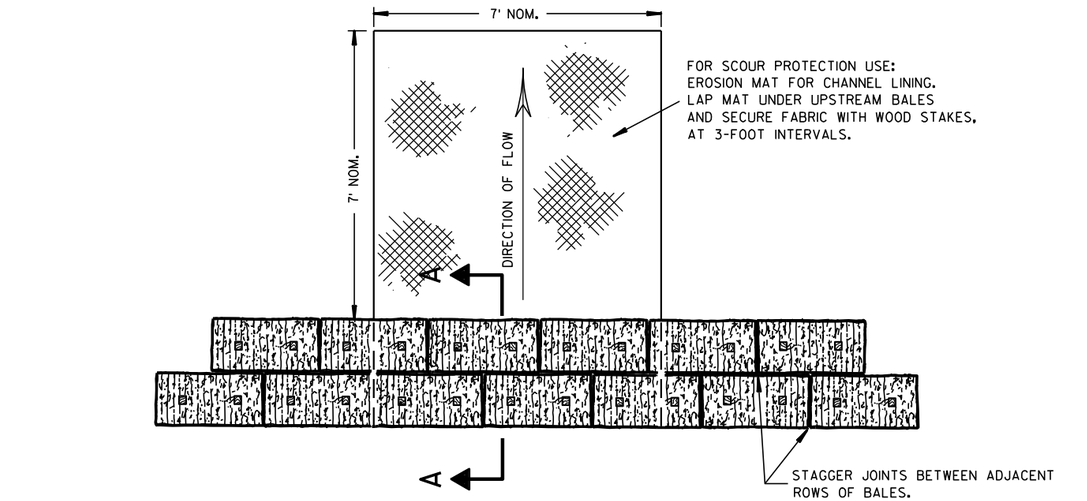

PLAN VIEW

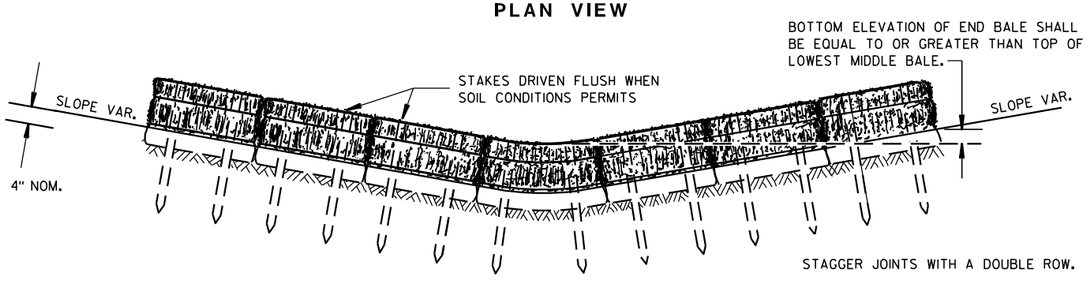

FRONT ELEVATION

TEMPORARY DITCH CHECK USING EROSION BALES (1)

GENERAL NOTES

DETAILS OF CONSTRUCTION, MATERIALS AND WORKMANSHIP NOT SHOWN ON THIS DRAWING SHALL CONFORM TO THE PERTINENT REQUIREMENTS OF THE STANDARD SPECIFICATIONS AND THE APPLICABLE SPECIAL PROVISIONS.

(1) TEMPORARY DITCH CHECKS EITHER EROSION BALES OR MANUFACTURED SHALL BE PAID FOR UNDER THE BID ITEM OF TEMPORARY DITCH CHECK. THE DEPARTMENT WILL NOT PAY FOR TEMPORARY DITCH CHECKS CONSTRUCTED OF A SINGLE ROW OF EROSION BALES.

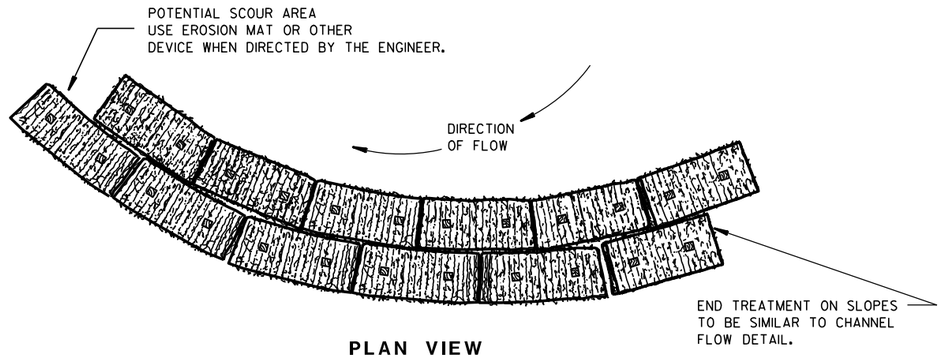

PLAN VIEW

WHEN ALTERING THE DIRECTION OF FLOW

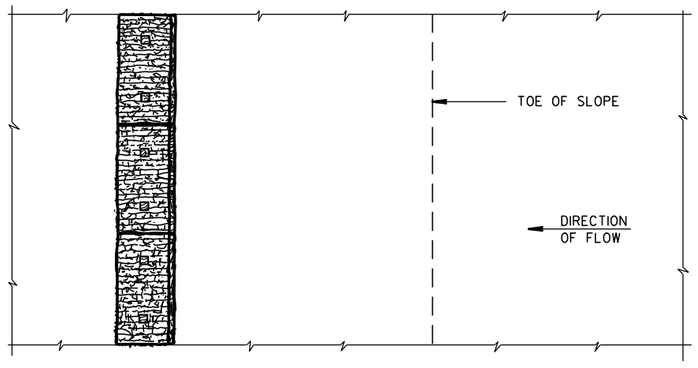

PLAN VIEW

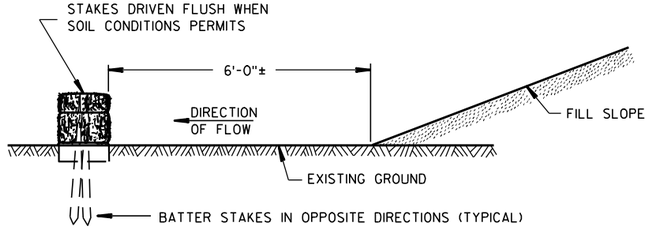

FRONT ELEVATION

WHEN EXISTING GROUND SLOPES AWAY FROM FILL SLOPE

EROSION BALES FOR SHEET FLOW

TYPICAL INSTALLATIONS OF EROSION BALES / TEMPORARY DITCH CHECKS

STATE OF WISCONSIN
DEPARTMENT OF TRANSPORTATION

APPROVED

6/04/02 — DATE

/S/ Beth Cannestra — CHIEF ROADWAY DEVELOPMENT ENGINEER

FHWA

6

S.D.D. 8 E 8-3

6

S.D.D. 8 E 8-3

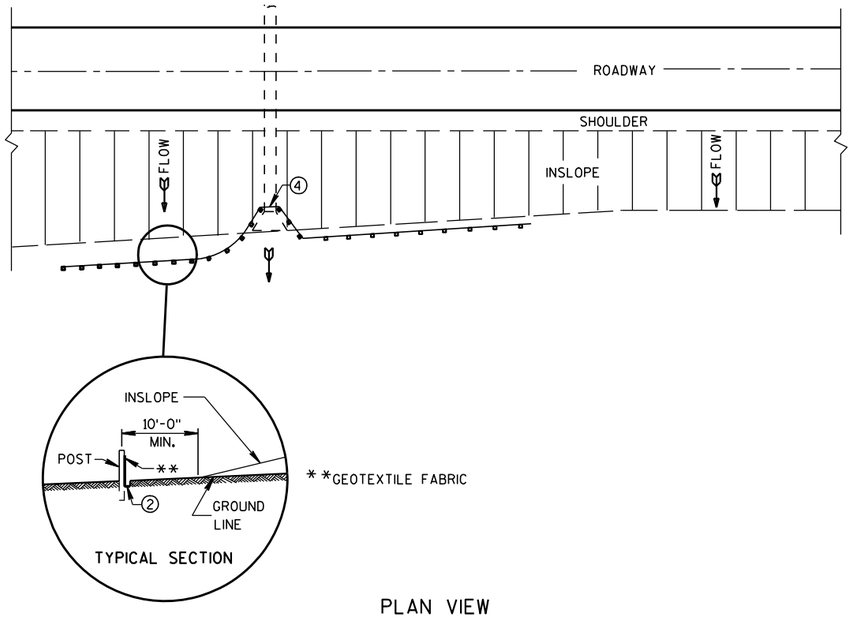

PLAN VIEW

TYPICAL APPLICATION OF SILT FENCE

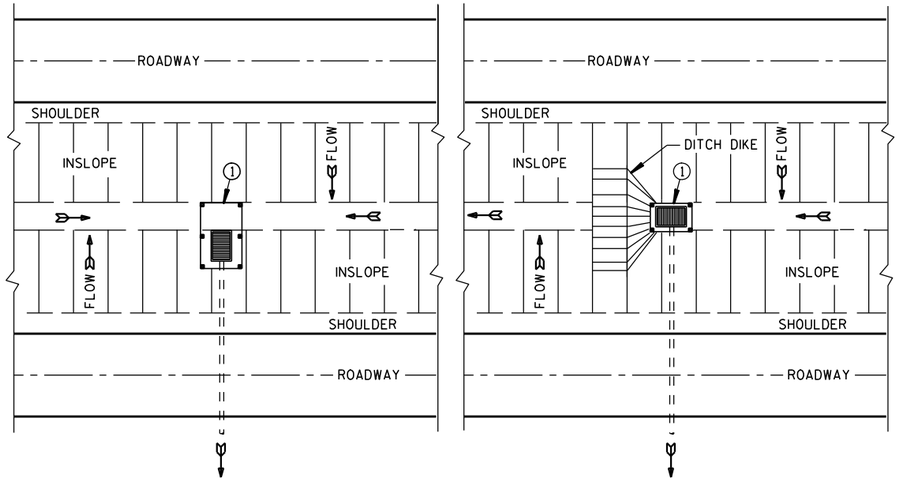

PLAN VIEW

SILT FENCE AT MEDIAN SURFACE DRAINS

GENERAL NOTES

DETAILS OF CONSTRUCTION NOT SHOWN ON THIS DRAWING SHALL CONFORM TO THE PERTINENT REQUIREMENTS OF THE STANDARD SPECIFICATIONS AND APPLICABLE SPECIAL PROVISIONS.

① HORIZONTAL BRACE REQUIRED WITH 2" X 4" WOODEN FRAME OR EQUIVALENT AT TOP OF POSTS.

② FOR MANUAL INSTALLATIONS THE TRENCH SHALL BE A MINIMUM OF 4" WIDE & 6" DEEP TO BURY AND ANCHOR THE GEOTEXTILE FABRIC. FOLD MATERIAL TO FIT TRENCH AND BACKFILL & COMPACT TRENCH WITH EXCAVATED SOIL.

③ WOOD POSTS SHALL BE A MINIMUM SIZE OF 1⅛" X 1⅛" OF OAK OR HICKORY.

④ SILT FENCE TO EXTEND ACROSS THE TOP OF THE PIPE.

⑤ CONSTRUCT SILT FENCE FROM A CONTINUOUS ROLL IF POSSIBLE BY CUTTING LENGTHS TO AVOID JOINTS. IF A JOINT IS NECESSARY USE ONE OF THE FOLLOWING TWO METHODS; A) OVERLAP THE END POSTS AND TWIST, OR ROTATE, AT LEAST 180 DEGREES, B) HOOK THE END OF EACH SILT FENCE LENGTH.

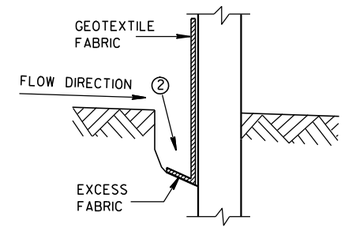

TRENCH DETAIL

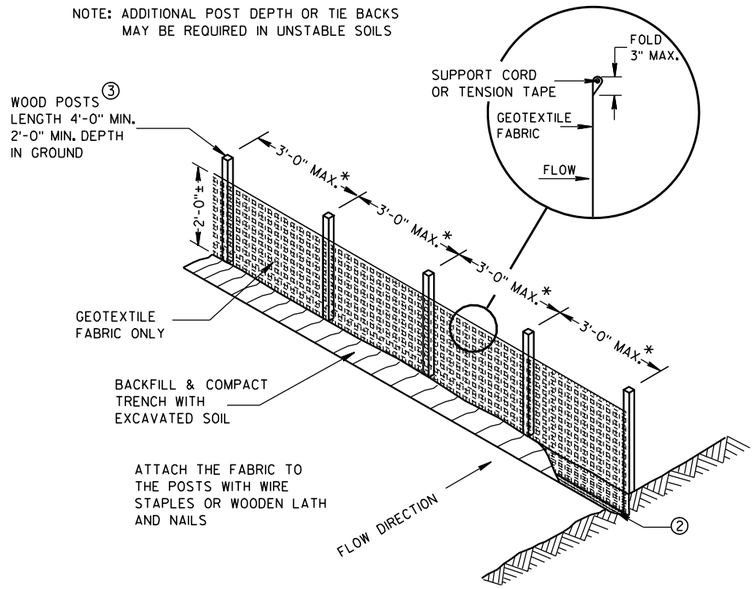

*NOTE: 8'-0" POST SPACING ALLOWED IF A WOVEN GEOTEXTILE FABRIC IS USED.

SILT FENCE

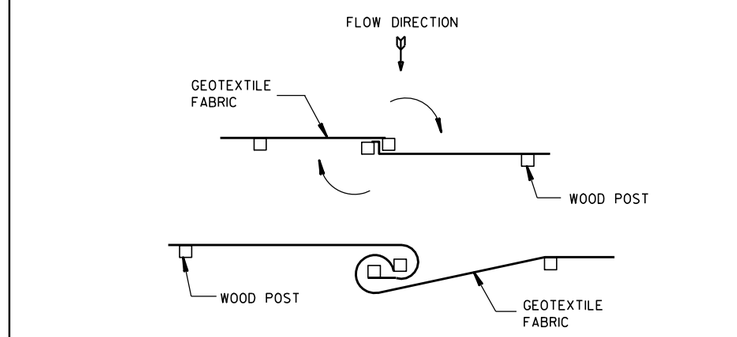

TWIST METHOD

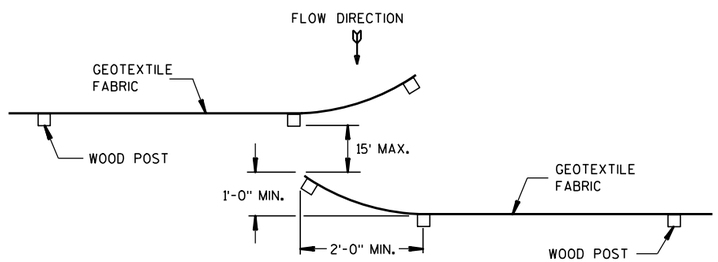

HOOK METHOD

JOINING TWO LENGTHS OF SILT FENCE ⑤

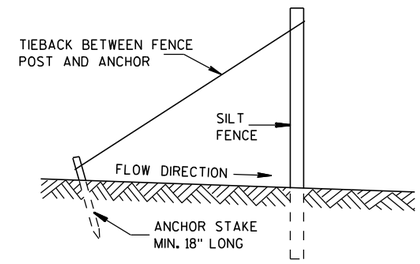

SILT FENCE TIE BACK

(WHEN REQUIRED BY THE ENGINEER)

SILT FENCE

STATE OF WISCONSIN
DEPARTMENT OF TRANSPORTATION

APPROVED
4-29-05 DATE
/S/ Beth Cannestra
CHIEF ROADWAY DEVELOPMENT ENGINEER
FHWA

6

S.D.D. 8 E 9-6

6

S.D.D. 8 E 9-6

METAL APRON ENDWALLS

PIPE DIA. (IN.)	MIN. THICK. (Inches) STEEL	MIN. THICK. (Inches) ALUM.	DIMENSIONS (Inches) A (±1")	B (MAX.)	H (±1")	L (±1 1/2")	L1 ①	L2 ①	W (±2")	APPROX. SLOPE	BODY
12	.064	.060	6	6	6	21	12	17 1/2	24	2 1/2 to 1	1 Pc.
15	.064	.060	7	8	6	26	14	21 3/4	30	2 1/2 to 1	1 Pc.
18	.064	.060	8	10	6	31	15	28 1/4	36	2 1/2 to 1	1 Pc.
21	.064	.060	9	12	6	36	18	29 5/8	42	2 1/2 to 1	1 Pc.
24	.064	.075	10	13	6	41	18	37 1/4	48	2 1/2 to 1	1 Pc.
30	.079	.075	12	16	8	51	18	52 1/4	60	2 1/2 to 1	1 Pc.
36	.079	.105	14	19	9	60	24	59 3/4	72	2 1/2 to 1	2 Pc.
42	.109	.105	16	22	11	69	24	75 5/8	84	2 1/2 to 1	2 Pc.
48	.109	.105	18	27	12	78	24	81	90	2 1/4 to 1	3 Pc.
54	.109	.105	18	30	12	84	30	85 1/2	102	2 1/4 to 1	3 Pc.
60	.109×	.105×	18	33	12	87	—	—	114	2 to 1	3 Pc.
66	.109×	.105×	18	36	12	87	—	—	120	2 to 1	3 Pc.
72	.109×	.105×	18	39	12	87	—	—	126	2 to 1	3 Pc.
78	.109×	.105×	18	42	12	87	—	—	132	1 1/2 to 1	3 Pc.
84	.109×	.105×	18	45	12	87	—	—	138	1 1/2 to 1	3 Pc.
90	.109×	.105×	18	37	12	87	—	—	144	1 1/2 to 1	3 Pc.
96	.109×	.105×	18	35	12	87	—	—	150	1 1/2 to 1	3 Pc.

× EXCEPT CENTER PANEL SEE GENERAL NOTES

REINFORCED CONCRETE APRON ENDWALLS

PIPE DIA. (IN.)	DIMENSIONS (Inches) T	A	B	C	D	E	G	APPROX. SLOPE
12	2	4	24	48 7/8	72 1/8	24	2	3 to 1
15	2 1/4	6	27	46	73	30	2 1/4	3 to 1
18	2 1/2	9	27	46	73	36	2 1/2	3 to 1
21	2 3/4	9	36	37 1/2	73 1/2	42	2 3/4	3 to 1
24	3	9 1/2	43 1/2	30	73 1/2	48	3	3 to 1
27	3 1/4	10 1/2	49 1/2	24	73 1/2	54	3 1/4	3 to 1
30	3 1/2	12	54	19 3/4	73 1/2	60	3 1/2	3 to 1
36	4	15	63	34 3/4	97 3/4	72	4	3 to 1
42	4 1/2	21	63	35	98	78	4 1/2	3 to 1
48	5	24	72	26	98	84	5	3 to 1
54	5 1/2	27	65	* 33 1/4 - ** 35	* 98 1/4 - ** 100	90	5 1/2	2 2/5 to 1
60	6	* 30 - ** 35	60	39	99	96	5	2 to 1
66	6 1/2	* 24 - ** 30	* 72 - ** 78	* 21 - ** 27	99	102	5 1/2	2 to 1
72	7	* 24 - ** 36	78	21	99	108	6	2 to 1
78	7 1/2	* 24 - ** 36	78	21	99	114	6 1/2	2 to 1
84	8	36	90 1/2	21	111 1/2	120	6 1/2	1 1/2 to 1
90	8 1/2	41	87 1/2	24	111 1/2	132	6 1/2	1 1/2 to 1

*MINIMUM
**MAXIMUM

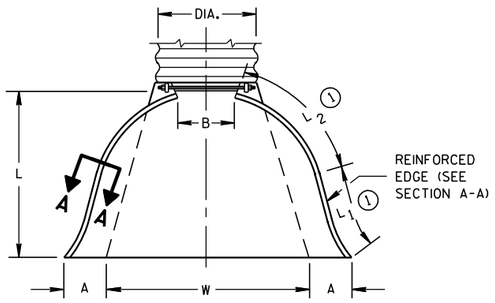

PLAN VIEW

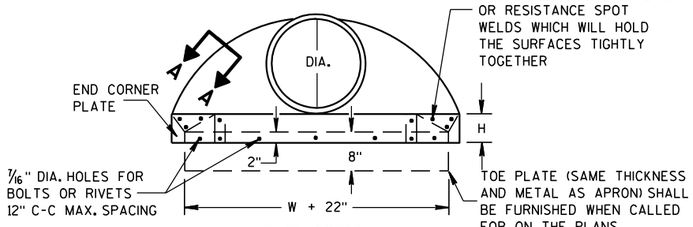

END VIEW

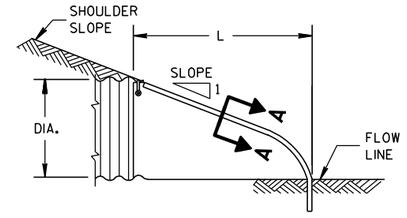

SIDE ELEVATION

METAL ENDWALLS

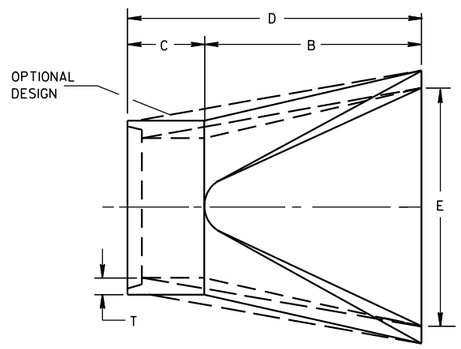

PLAN

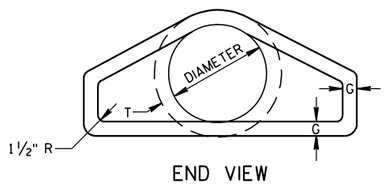

END VIEW

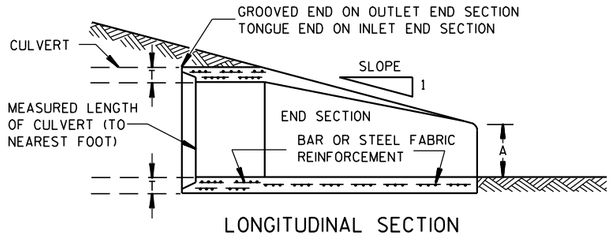

LONGITUDINAL SECTION

CONCRETE ENDWALLS

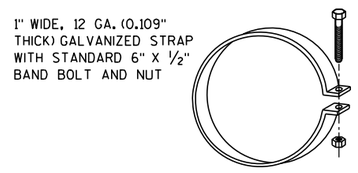

ALTERNATE FOR TYPE 1 CONNECTION

END SECTION CONNECTOR STRAP

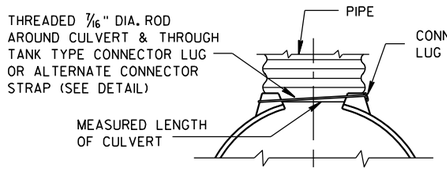

TYPE 1
FOR 12" THRU 24" CORR. PIPE

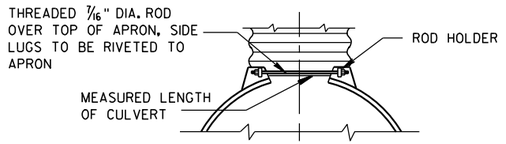

TYPE 2
FOR 30" THRU 96" CORR. PIPE

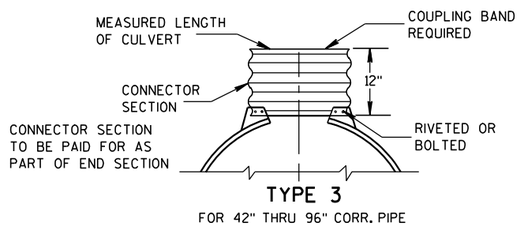

TYPE 3
FOR 42" THRU 96" CORR. PIPE

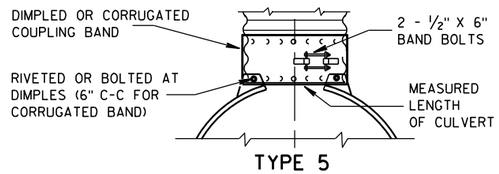

TYPE 5
ALTERNATE FOR:
ALL SIZES CORRUGATED CIRCULAR PIPE

NOTE: DIMPLED BAND FITS OVER OUTSIDE OF ENDWALL. AND CORRUGATED BAND FITS INSIDE ENDWALL. DIMPLED BAND MAY BE USED WITH HELICALLY CORRUGATED PIPE.

FOR CIRCUMFERENTIALLY CORRUGATED PIPE USE ENDWALL CONNECTION DETAILS 1, 2, 3 OR 5 AS APPLICABLE.

FOR HELICALLY CORRUGATED PIPE USE ENDWALL CONNECTION DETAILS 1, 2 OR 5.

FOR HELICALLY CORRUGATED PIPES WITH TWO CIRCUMFERENTIAL CORRUGATIONS AT EACH END USE ENDWALL CONNECTION DETAILS 1, 2 OR 3.

CONNECTION DETAILS

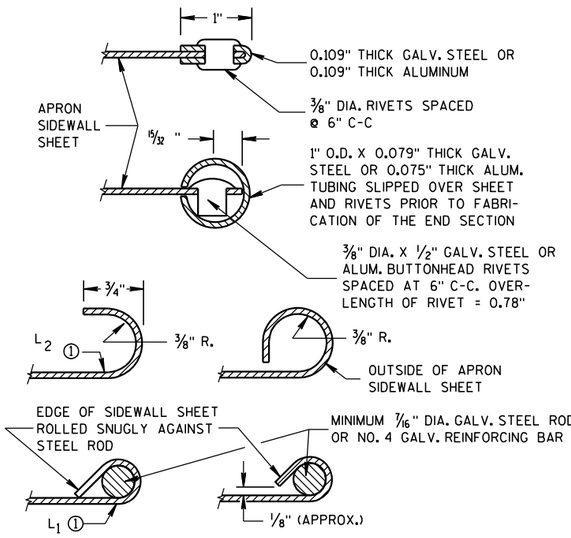

SECTION A-A

GENERAL NOTES

DETAILS OF CONSTRUCTION, MATERIALS AND WORKMANSHIP NOT SHOWN ON THIS DRAWING SHALL CONFORM TO THE PERTINENT REQUIREMENTS OF THE STANDARD SPECIFICATIONS AND THE APPLICABLE SPECIAL PROVISIONS.

CONCRETE CULVERT ENDWALLS MAY NOT BE USED WITH GALVANIZED STEEL OR ALUMINUM CULVERT PIPE OR VISE VERSA. GALVANIZED STEEL OR ALUMINUM ENDWALLS SHALL NORMALLY BE INSTALLED ON CULVERT PIPE OF THE SAME METAL.

ALL THREE PIECE STEEL APRON ENDWALLS FOR 60" DIAMETER PIPE AND LARGER SHALL HAVE 0.109" SIDES AND 0.138" CENTER PANELS. ALL THREE PIECE ALUMINUM APRON ENDWALLS FOR 60" DIAMETER PIPE AND LARGER SHALL HAVE 0.105" SIDES AND 0.134" CENTER PANELS. THE WIDTH OF CENTER PANELS SHALL BE GREATER THAN 20 PERCENT OF THE PIPE PERIMETER.

LAP SEAMS SHALL BE TIGHTLY JOINED BY GALVANIZED RIVETS OR BOLTS FOR STEEL UNITS AND ALUMINUM RIVETS AND BOLTS FOR ALUMINUM UNITS. FOR THE 60" THROUGH 96" DIAMETER APRON ENDWALL SIZES, THE REINFORCED EDGES AND CENTER PANEL SEAMS SHALL BE FURTHER REINFORCED WITH GALVANIZED STEEL OR ALUMINUM STIFFENER ANGLES. THE ANGLES SHALL BE ATTACHED BY GALVANIZED NUTS AND BOLTS FOR STEEL UNITS AND ALUMINUM NUTS AND BOLTS FOR ALUMINUM UNITS.

WHERE TWO OR MORE PIPES WITH APRON ENDWALLS ARE LAID ADJACENT TO EACH OTHER, THEY SHALL BE SEPARATED BY A DISTANCE SUFFICIENT TO PROVIDE A MINIMUM CLEARANCE OF 6 INCHES BETWEEN APRON ENDWALLS.

① FOR PIPE SIZES UP TO 60" DIAMETER, A 180° ROLLED EDGE MAY BE USED INSTEAD OF STEEL ROD REINFORCEMENT. SEE SECTION A-A.

APRON ENDWALLS FOR CULVERT PIPE

STATE OF WISCONSIN
DEPARTMENT OF TRANSPORTATION

APPROVED
11/30/94 DATE
/S/ Rory L. Rhinesmith
CHIEF ROADWAY DEVELOPMENT ENGINEER
FHWA

6
S.D.D. 8 F 1-11

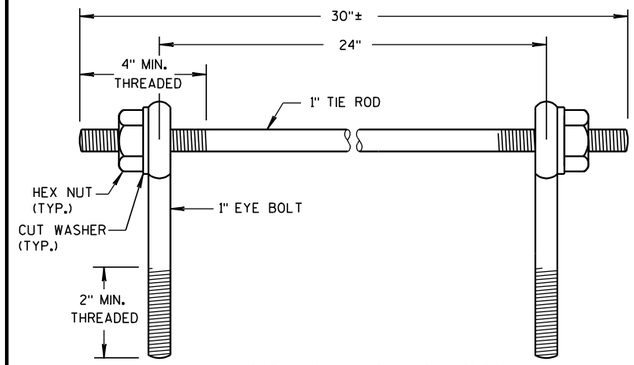

EYE BOLTS AND TIE ROD

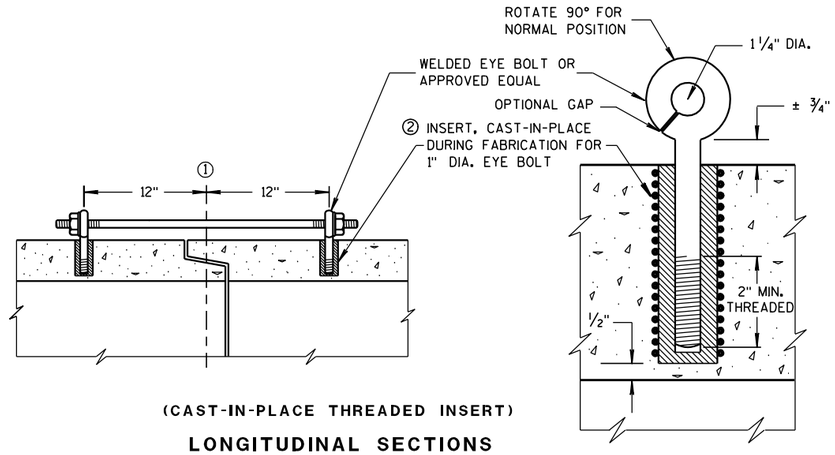

(CAST-IN-PLACE THREADED INSERT)

LONGITUDINAL SECTIONS

EYE BOLT AND TIE ROD ASSEMBLY (ALTERNATE NO. 1)

GENERAL NOTES

DETAILS OF CONSTRUCTION, MATERIALS, AND WORKMANSHIP NOT SHOWN ON THIS DRAWING SHALL CONFORM TO THE PERTINENT REQUIREMENTS OF THE STANDARD SPECIFICATIONS AND APPLICABLE SPECIAL PROVISIONS.

CONCRETE CULVERT AND STORM SEWER PIPE SHALL BE TIED TOGETHER IN THE MANNER ILLUSTRATED BY THIS DETAIL AT LOCATIONS DESIGNATED IN THE STANDARD SPECIFICATIONS AND THE PLAN. THE CONTRACTOR MAY USE EITHER ALTERNATE 1, 2 OR 3 FOR DRAINAGE STRUCTURES. ONLY ALTERNATE 1 AND 3 MAY BE USED FOR CATTLE PASSES, UNLESS OTHERWISE STATED IN THE CONTRACT. THE MATERIALS, FABRICATION AND WORK NECESSARY TO TIE THE PIPE BY THIS DETAIL WILL BE CONSIDERED INCIDENTAL TO THE PIPE AND APRON ENDWALLS IF REQUIRED.

DETAILED DRAWINGS FOR PROPOSED ALTERNATE DESIGNS FOR JOINT TIES SHALL BE SUBMITTED TO THE ENGINEER FOR APPROVAL.

JOINT TIES TO BE HOT-DIP GALVANIZED PER ASTM A 153.

① ℄ OF TONGUE AND GROOVE OR BELL AND SPIGOT JOINTS.

② THE INSIDE OF THE THREADED INSERTS SHALL BE CLEAN TO ALLOW THE INSERTION OF THREADED EYE BOLTS.

③ HOLES SHALL BE CAST-IN-PLACE OR DRILLED 12 INCHES FROM ℄ OF TONGUE AND GROOVE.

④ BOLT PROJECTION INSIDE OF PIPE SHALL NOT EXCEED 2 INCHES.

⑤ OPENING TO BE ROD DIAMETER PLUS 1 INCH.

⑥ LENGTH ADEQUATE TO EXTEND TO WITHIN 1/2 INCH OF THE INNER SURFACE OF THE PIPE.

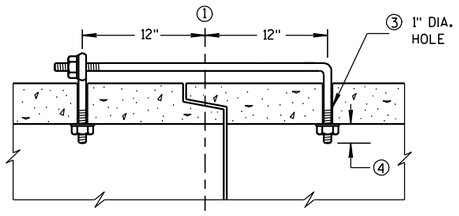

(TONGUE & GROOVE PIPE)

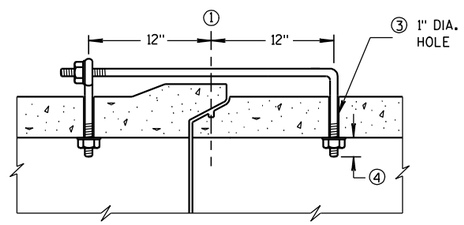

(MODIFIED BELL PIPE)

LONGITUDINAL SECTION

EYE BOLT DIMENSION TABLE

PIPE SIZE	L = LENGTH	
	TONGUE & GROOVE PIPE	MODIFIED BELL PIPE
18" TO 24"	4 1/2"	6 1/4"
30"	5"	7"
36"	5 1/2"	7"
42"	6"	
48"	6 1/2"	
60"	7 1/2"	
66"	8"	

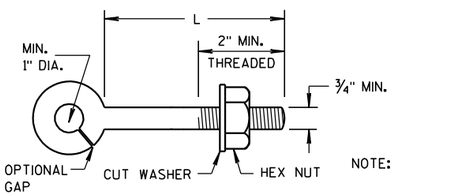

NOTE:

EYE BOLT

NOTE: TWO EYE BOLTS MAY BE USED WITH A 30" LONG THREADED ROD IN LIEU OF THE 90° BENT TIE ROD.

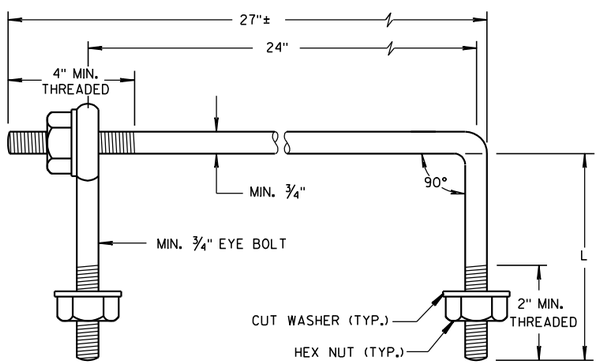

EYE BOLT AND TIE ROD

(JOINT TIES FOR 18" TO 66" DIA. CONCRETE PIPE)

EYE BOLT AND TIE ROD ASSEMBLY (ALTERNATE NO. 2)

ADJUSTABLE TIE ROD TABLE

PIPE DIAMETER	TIE ROD DIAMETER	D	L_1	N
12-60	5/8	5/8	5	1/2
66-84	3/4	3/4	5	1/2
90-108	1	1	7	1 1/16

DIMENSIONS SHOWN ARE IN INCHES

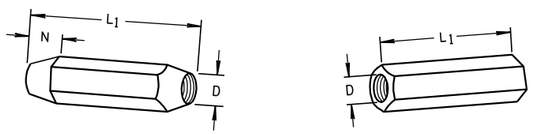

TAPERED PLAIN

RIGHT AND LEFT THREADS

SLEEVE NUTS

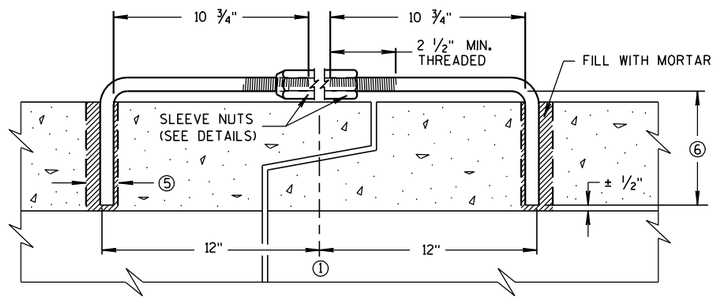

LONGITUDINAL SECTION

(JOINT TIES FOR 12" TO 108" DIA. CONCRETE PIPE)

ADJUSTABLE TIE ROD (ALTERNATE NO. 3)

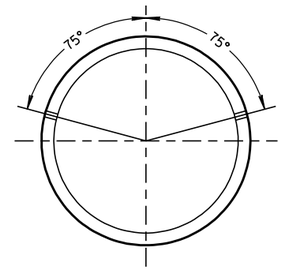

PLACEMENT OF (2) CAST-IN-PLACE INSERTS OR HOLES DURING FABRICATION FOR PIPE SECTIONS REQUIRING TIE RODS

TRANSVERSE SECTION

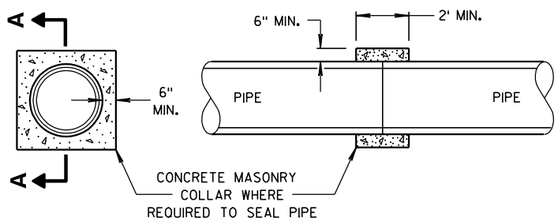

SECTION A-A

CONCRETE COLLAR DETAIL

JOINT TIES FOR CONCRETE PIPE AND CONCRETE COLLAR DETAIL

STATE OF WISCONSIN
DEPARTMENT OF TRANSPORTATION

APPROVED
6/5/2012 DATE
/S/ Jerry H. Zogg
ROADWAY STANDARDS ENGINEER
110
FHWA

6

S.D.D. 8 F 4-7

6

S.D.D. 8 F 4-7

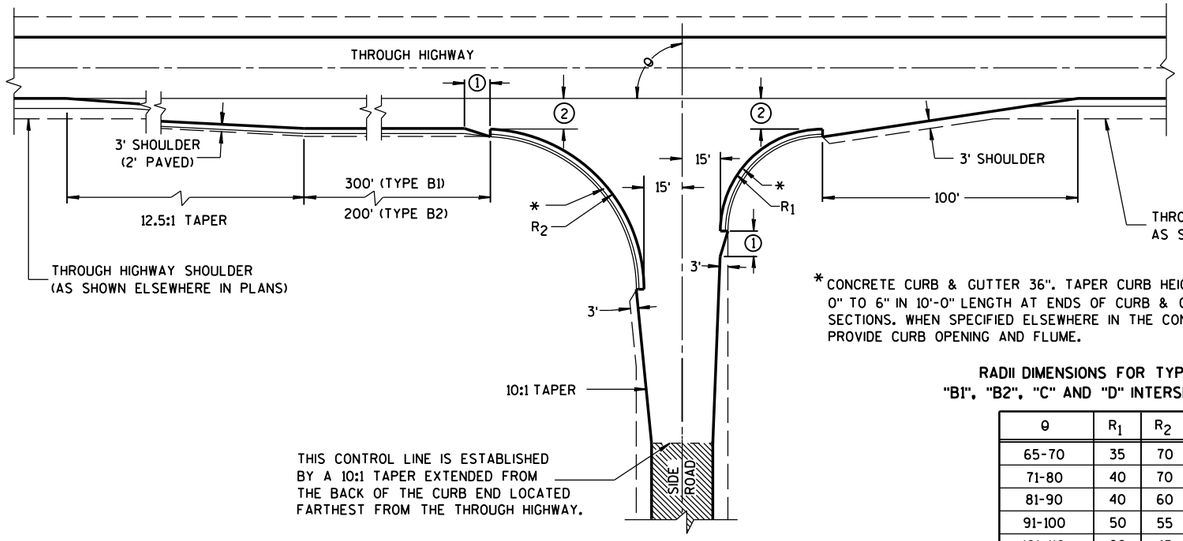

TYPE "B1" AND "B2"

*CONCRETE CURB & GUTTER 36". TAPER CURB HEIGHT 0" TO 6" IN 10'-0" LENGTH AT ENDS OF CURB & GUTTER SECTIONS. WHEN SPECIFIED ELSEWHERE IN THE CONTRACT, PROVIDE CURB OPENING AND FLUME.

RADII DIMENSIONS FOR TYPES "B1", "B2", "C" AND "D" INTERSECTIONS

θ	R_1	R_2
65-70	35	70
71-80	40	70
81-90	40	60
91-100	50	55
101-110	60	45

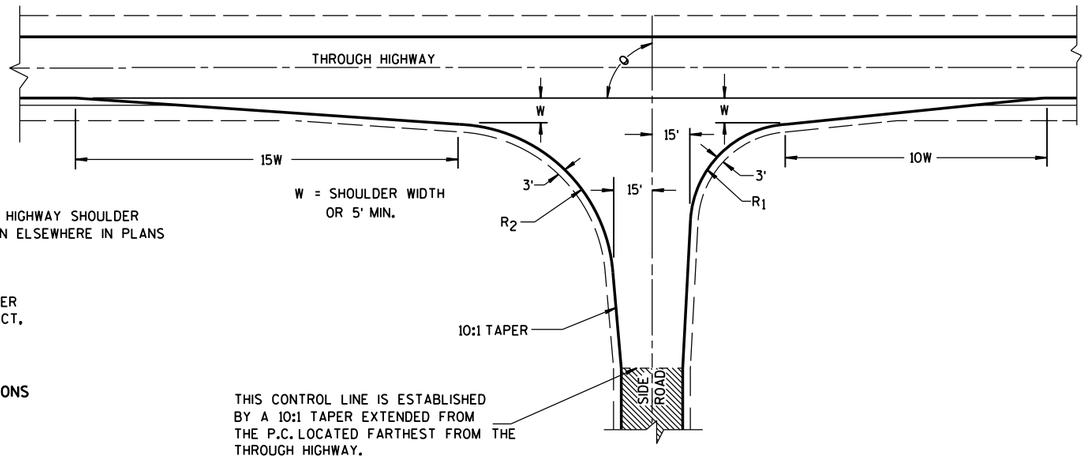

TYPE "C"

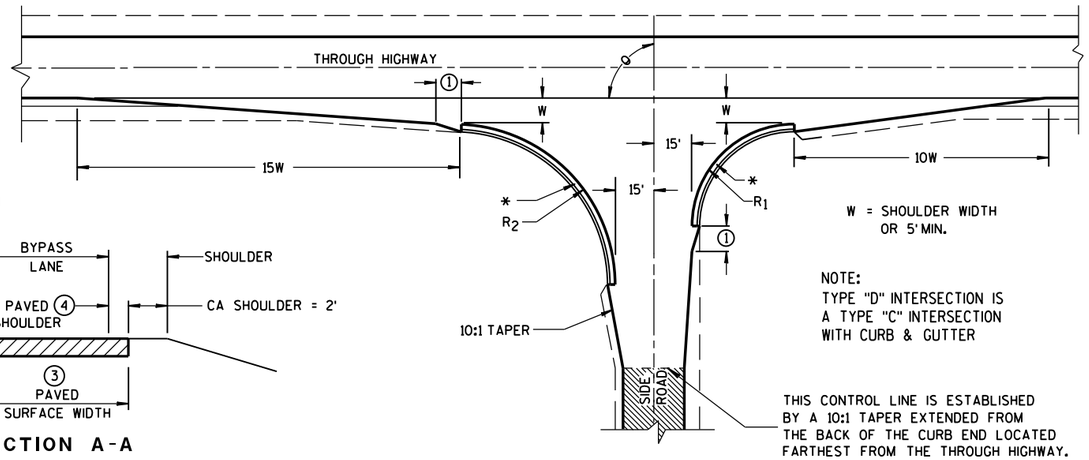

TYPE "D"

GENERAL NOTES

DESIGNS MAY BE USED INTERCHANGEABLY IN COMBINATION OR SEPARATELY FOR ANY ONE COMPLETE INTERSECTION DEPENDING UPON INTERSECTION ANGLE AND SURFACING OF EACH APPROACH ROADWAY.

SIDE ROAD SURFACING NOTE

WHEN THE SIDE ROAD IS NOT PRESENTLY PAVED, PAVEMENT SHALL BE PLACED TO THE LIMITS SHOWN UNLESS OTHERWISE PROVIDED IN THE CONTRACT. WHERE THE CONSTRUCTION LIMITS ARE BEYOND THE PAVING LIMITS, CRUSHED AGGREGATE SURFACING SHALL BE PLACED BETWEEN THE PAVING LIMITS AND CONSTRUCTION LIMITS.

WHEN THE SIDE ROAD IS PRESENTLY PAVED, NEW PAVEMENT SHALL BE PLACED TO THE LIMITS OF DESIGN AS SHOWN AND BEYOND, IF NECESSARY, TO MEET EXISTING PAVEMENT.

WHEN THE SIDE ROAD IS THE CONSTRUCTION PROJECT, THE INTERSECTION SURFACING SHALL BE THE SAME AS FOR THE PROJECT.

EXISTING PAVED SURFACE

BYPASS LANE

(1) 10-FT TYPICAL.

(2) 12-FT** PLUS ADDITIONAL WIDTH FOR BIKE LANE IF SHOWN ELSEWHERE IN THE PLAN.

**10-FT MAY BE USED ON TYPE B2 ON RESURFACING PROJECTS IF SPECIFIED IN THE CONTRACT.

(3) BYPASS LANE PAVED SURFACE WIDTH OUTSIDE OF TRAVEL LANE
-ASPHALT = 12-FT PLUS PAVED SHOULDER WIDTH.
-PC CPNCRETE = 13-FT PLUS PAVED SHOULDER WIDTH.

(4) BYPASS LANE PAVED SHOULDER WIDTH = THE GREATER OF 1-FT OR THE PAVED SHOULDER WIDTH OF THE THROUGH HIGHWAY.

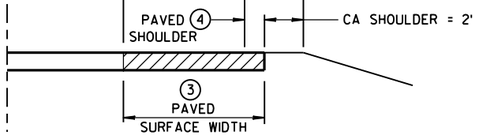

SECTION A-A
(SHOWING BYPASS LANE AND SHOULDER)

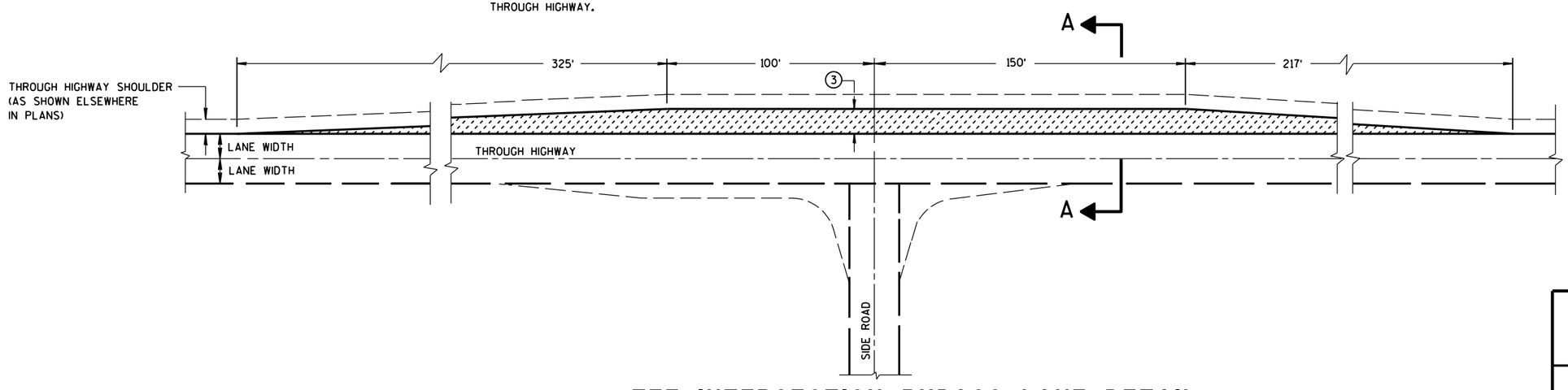

TEE INTERSECTION BYPASS LANE DETAIL

AT-GRADE SIDE ROAD INTERSECTION, TYPES "B1", "B2", "C" AND "D" AND TEE INTERSECTION BYPASS LANE

STATE OF WISCONSIN
DEPARTMENT OF TRANSPOR

6

S.D.D. 9 A 1-13a

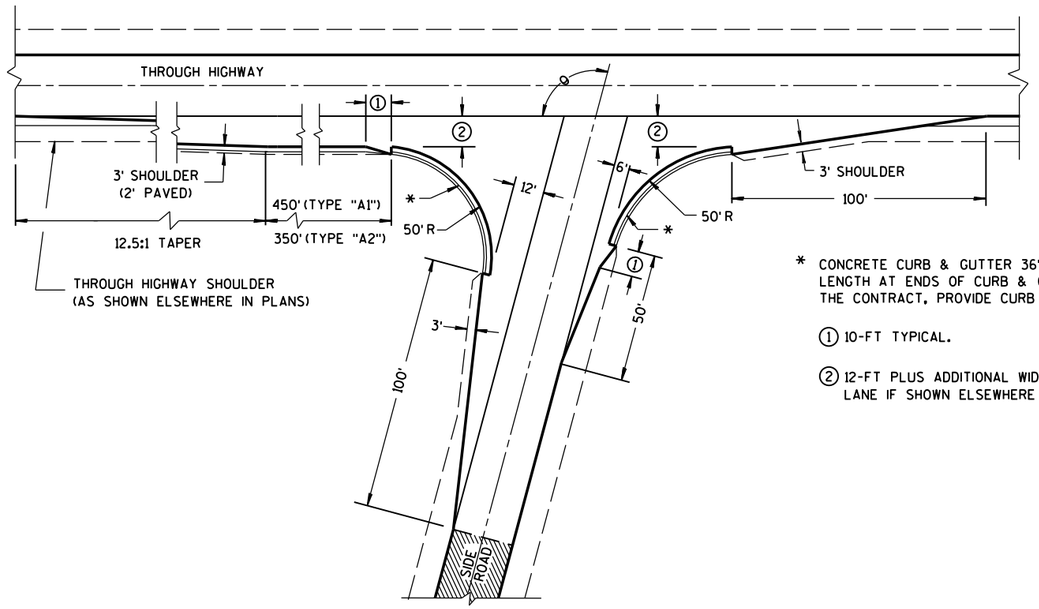

θ = MORE THAN 80°

* CONCRETE CURB & GUTTER 36". TAPER CURB HEIGHT 0" TO 6" IN 10'-0" LENGTH AT ENDS OF CURB & GUTTER SECTIONS. WHEN SPECIFIED ELSEWHERE IN THE CONTRACT, PROVIDE CURB OPENING AND FLUME.

① 10-FT TYPICAL.

② 12-FT PLUS ADDITIONAL WIDTH FOR BIKE LANE IF SHOWN ELSEWHERE IN THE PLANS.

EXISTING PAVED SURFACE

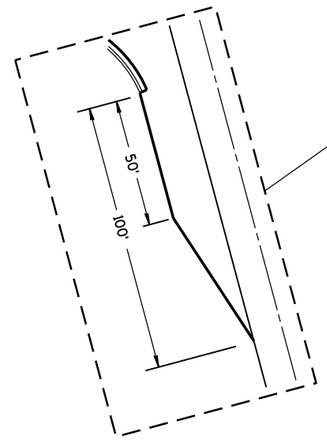

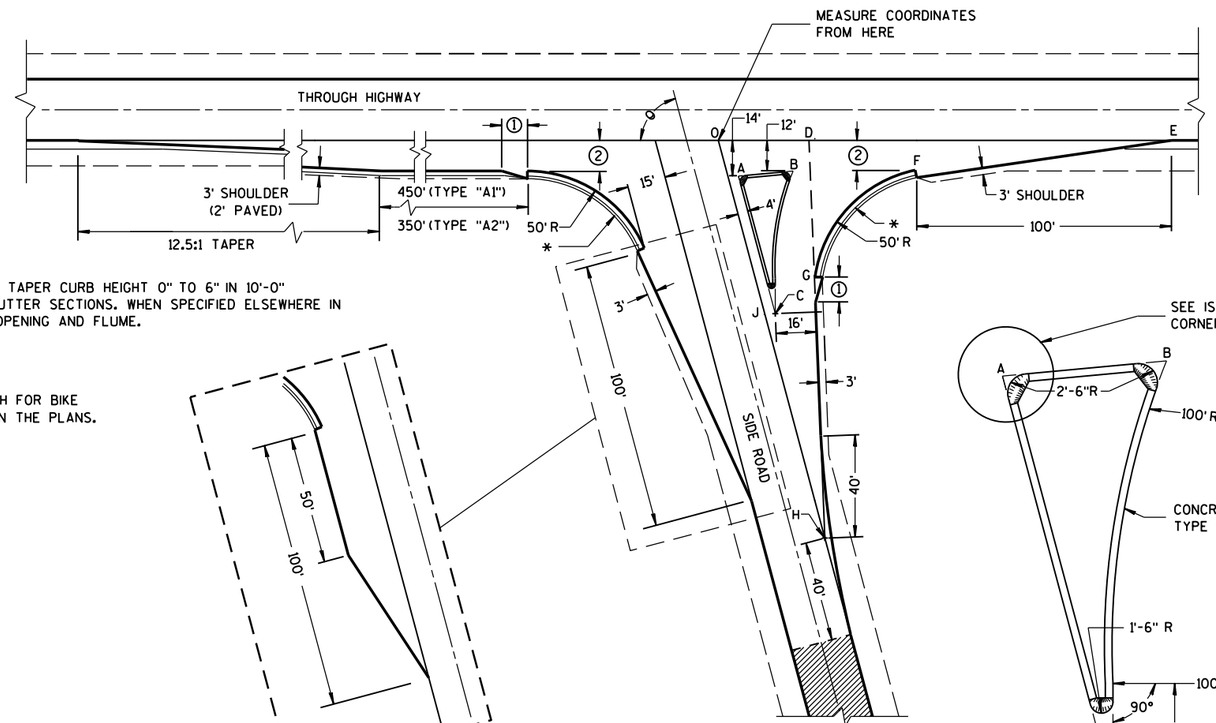

θ = ACUTE ANGLES 80° OR LESS

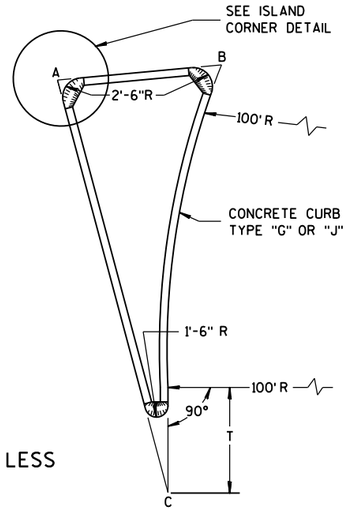

SIDE ROAD WIDENING AND TAPER REQUIRED WHERE
THE THROUGH HIGHWAY CARRIES TWO-WAY TRAFFIC
θ = ACUTE ANGLES 70° OR LESS

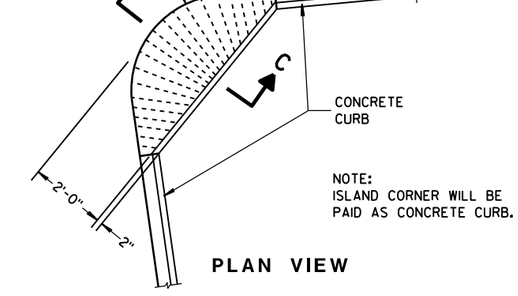

NOTE:
ISLAND CORNER WILL BE
PAID AS CONCRETE CURB.

PLAN VIEW

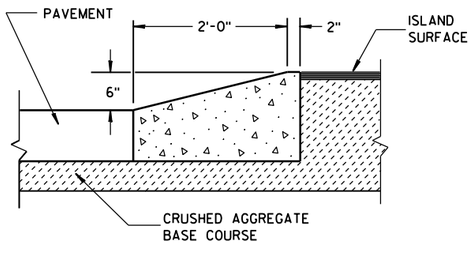

SECTION C-C

ISLAND CORNER DETAIL

(TO BE CONSTRUCTED AT ALL ISLAND CORNERS)

TABLE OF DIMENSIONS FOR
VARIABLE SIDE ROAD INTERSECTION ANGLES
(INTERPOLATE VALUES FOR ANGLES NOT SHOWN)

ANGLE θ DEGREES	COORDINATES IN FEET (MEASURED FROM POINT "O") X / Y								LENGTH IN FEET				
	A	B	C	D	E	F	G	H	AB	AC	T	OJ	OH
60	12.7 / -14.0	44.9 / -12.0	46.4 / -72.4	41.9 / 0.0	205.0 / 0.0	104.6 / -12.0	64.0 / -75.5	85.0 / -147.1	32.3	67.4	4.9	85.9	169.9
65	10.9 / -14.0	39.0 / -12.0	37.8 / -71.6	39.4 / 0.0	196.1 / 0.0	95.7 / -12.0	54.1 / -71.5	70.5 / -151.3	28.2	63.6	8.5	80.9	166.9
70	9.4 / -14.0	33.9 / -12.0	29.8 / -70.1	37.4 / 0.0	188.3 / 0.0	87.8 / -12.0	45.6 / -67.5	56.1 / -154.2	24.6	59.7	11.5	76.1	164.1
75	7.9 / -14.0	29.3 / -12.0	22.3 / -67.9	35.7 / 0.0	181.2 / 0.0	80.7 / -12.0	38.2 / -63.4	41.8 / -155.9	21.5	55.8	13.8	71.4	161.4
80	6.5 / -14.0	25.4 / -12.0	15.6 / -65.2	34.4 / 0.0	174.8 / 0.0	74.4 / -12.0	31.8 / -59.3	27.6 / -156.5	18.9	52.0	15.6	66.9	158.9

TYPE "A1" & "A2" SIDE ROAD INTERSECTION DETAILS

AT-GRADE SIDE ROAD
INTERSECTION, TYPE "A1" & "A2"

STATE OF WISCONSIN
DEPARTMENT OF TRANSPORTATION

APPROVED
12/18/12 — DATE
/S/ Jerry H. Zogg — ROADWAY STANDARDS DEVELOPMENT ENGINEER
FHWA

6
S.D.D. 9 A 1-13b

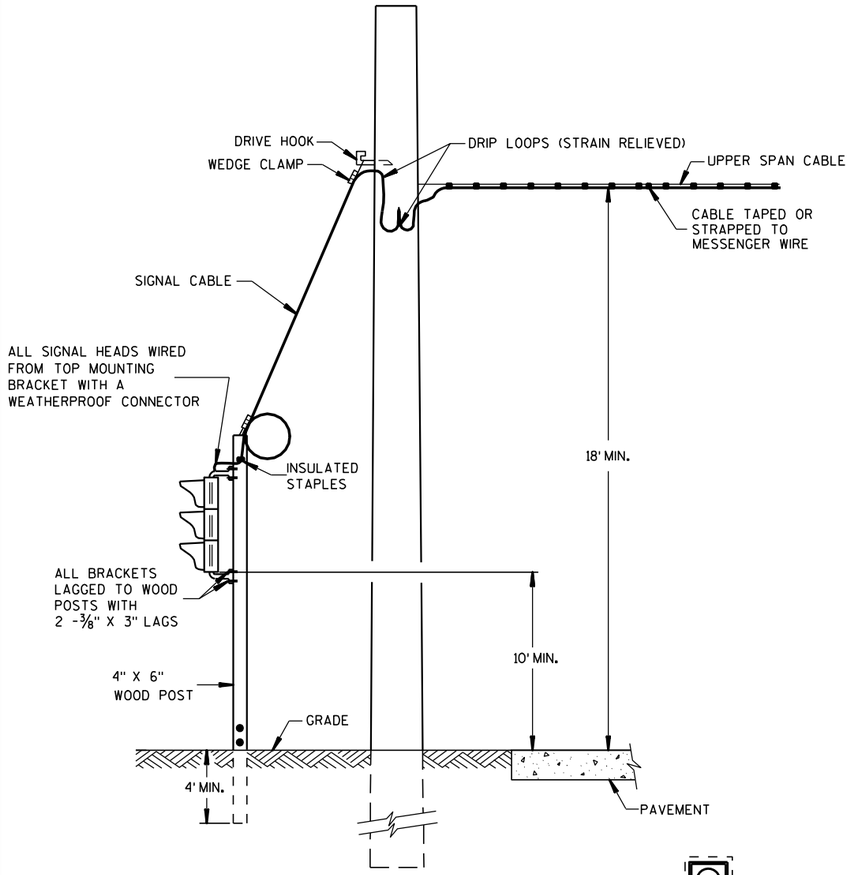

TYPICAL DROP TO TRAFFIC SIGNAL FACE

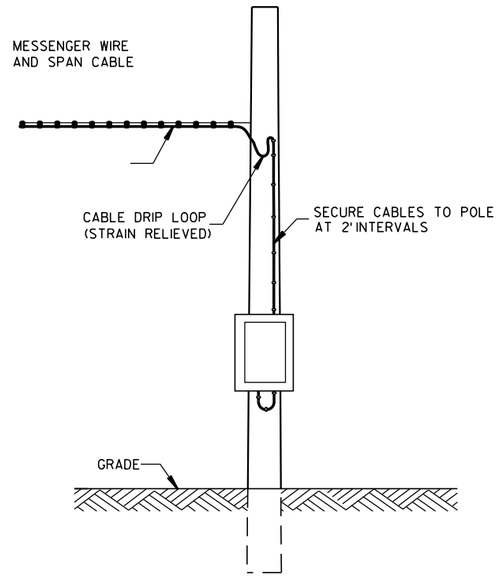

POLE MOUNT CABINET INSTALLATION

GENERAL NOTES

DETAILS OF CONSTRUCTION, MATERIALS AND WORKMANSHIP NOT SHOWN ON THIS DRAWING SHALL CONFORM TO THE PERTINENT REQUIREMENTS OF THE CONTRACT.

POLE MOUNTED TRAFFIC SIGNAL CONTROL CABINET MAYBE MOUNTED ON THE SERVICE POLE IF THE ELECTRICAL UTILITY ALLOWS THE INSTALLATION.

WHEN UTILITY PLOLES ARE USED TO SPAN THE TEMPORARY OVERHEAD CABLE, WRITTEN PERMISSION MUST BE OBTAINED FROM THE OWNER OF THE POLES AND GIVEN TO THE PROJECT MANAGER. ALL PERTINENT UTILITY AND CODE CLEARANCES SHALL BE MAINTAINED.

WOOD POLES (NONBREAKAWAY) SHALL BE NO CLOSER TO EDGE OF PAVEMENT THAN OFFSET DISTANCE CHART ALLOWS OR 4 FEET BEHIND PROTECTIVE BARRIER (BEAMGUARD, ETC.).

WOOD POSTS (BREAKAWAY) SHALL BE NO CLOSER THAN 2 FEET OUTSIDE OF SHOULDER.

VERTICAL CLEARANCE ETC. PER NEC.

TRAFFIC SIGNAL FACES SHALL BE TYPICALLY PLACED 12 FEET FROM EDGE OF PAVEMENT.

EACH TRAFFIC SIGNAL FACE SHALL HAVE A BACKPLATE.

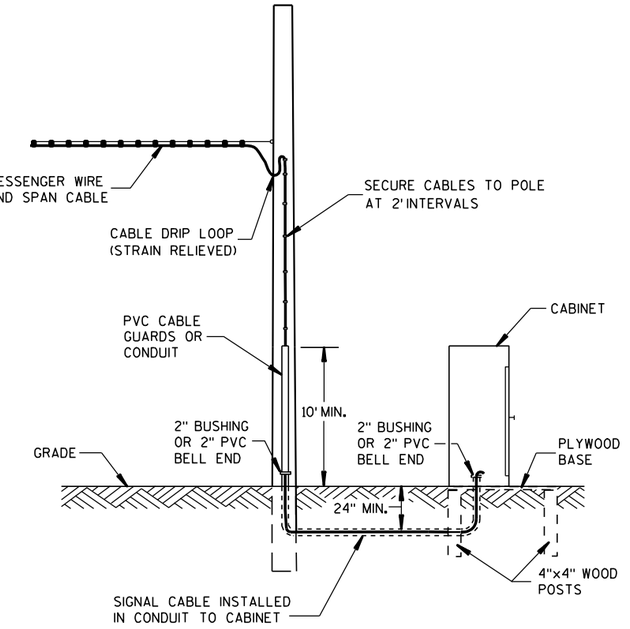

GROUND MOUNT CABINET INSTALLATION

OFFSET DISTANCES FOR TEMPORARY NON-BREAKAWAY POLES	
SPEED LIMIT	OFFSET DISTANCE**
GREATER THAN 45 MPH	18 FT
45 MPH OR LESS	12 FT
45 MPH OR LESS W/ CURBS	2 FT

**NOTE: OFFSET MEASURED FROM OUTER EDGE OF OUTSIDE THRU LANE.

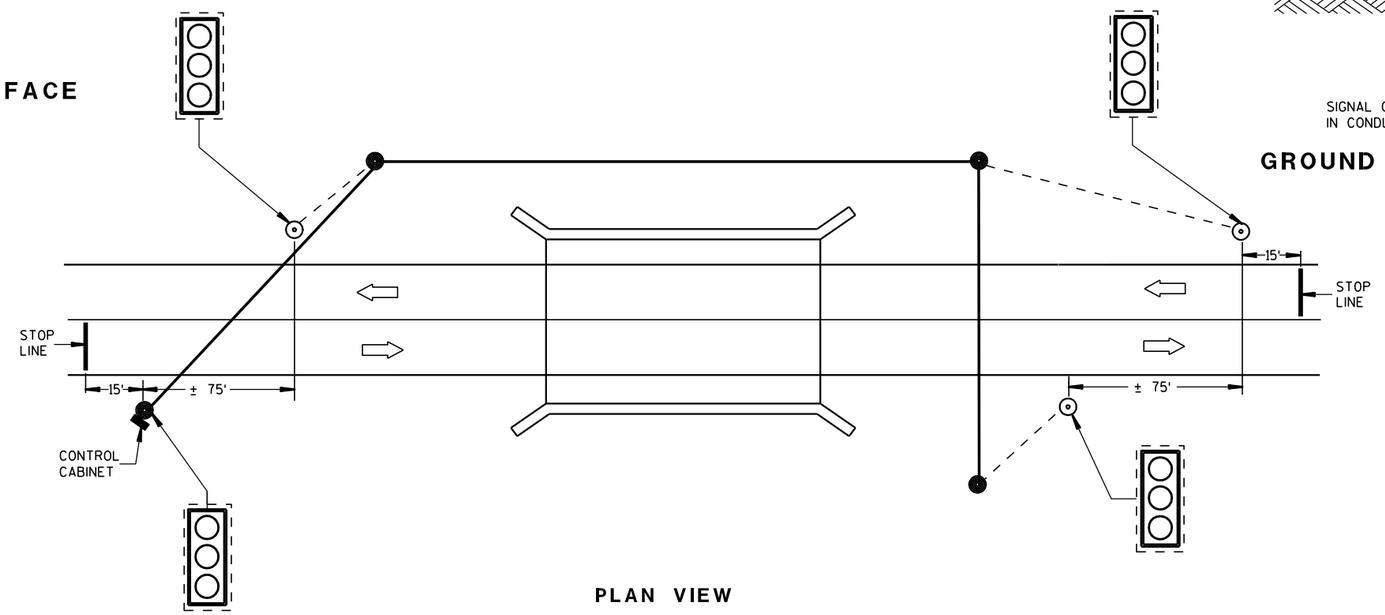

PLAN VIEW

TYPICAL BRIDGE TEMPORARY TRAFFIC SIGNAL LOCATION

LEGEND

- WOOD POLE (NONBREAKAWAY)
- WOOD POST (BREAKAWAY)
- SIGNAL CABLE
- SIGNAL CABLE W/MESSENGER
- LED TRAFFIC SIGNAL FACE WITH BACKPLATE (3-12")
- DIRECTION OF TRAFFIC

MINIMUM POLE LENGHTS	CLASS	MINIMUM BURIAL DEPTHS
25 FEET	V	5 FEET
30 FEET	V	6 FEET
35 FEET	IV	7 FEET
40 FEET	IV	8 FEET
45 FEET	IV	9 FEET

BRIDGE TEMPORARY TRAFFIC SIGNAL INSTALLATION

STATE OF WISCONSIN
DEPARTMENT OF TRANSPORTATION

APPROVED
3/2/2011 DATE
/S/ Thomas J. Gosling STATE ELECTRICAL ENGI
FHWA HWYS

6

S.D.D. 9 G 2-3a

6

S.D.D. 9 G 2-3a

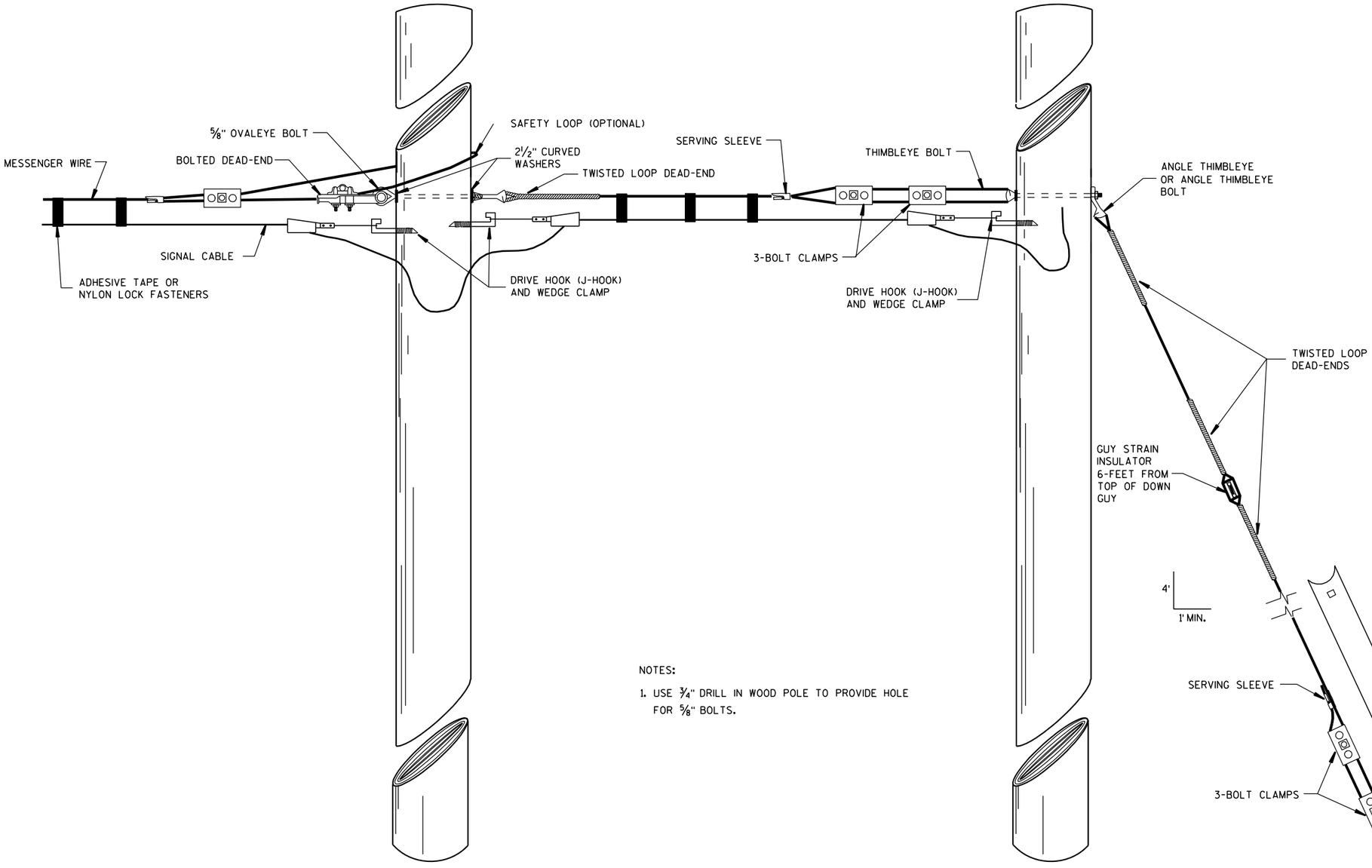

SPAN WIRE POLE

GUY POLE

NOTES:

1. USE 3/4" DRILL IN WOOD POLE TO PROVIDE HOLE FOR 5/8" BOLTS.

TYPICAL DEAD-ENDINGS OR GUYING

BRIDGE TEMPORARY TRAFFIC SIGNAL INSTALLATION

STATE OF WISCONSIN
DEPARTMENT OF TRANSPORTATION

APPROVED

3/2/2011 DATE

/S/ Thomas J. G... STATE ELECTRICAL ENGI

HWYS

FHWA

6

S.D.D. 9 G 2-3b

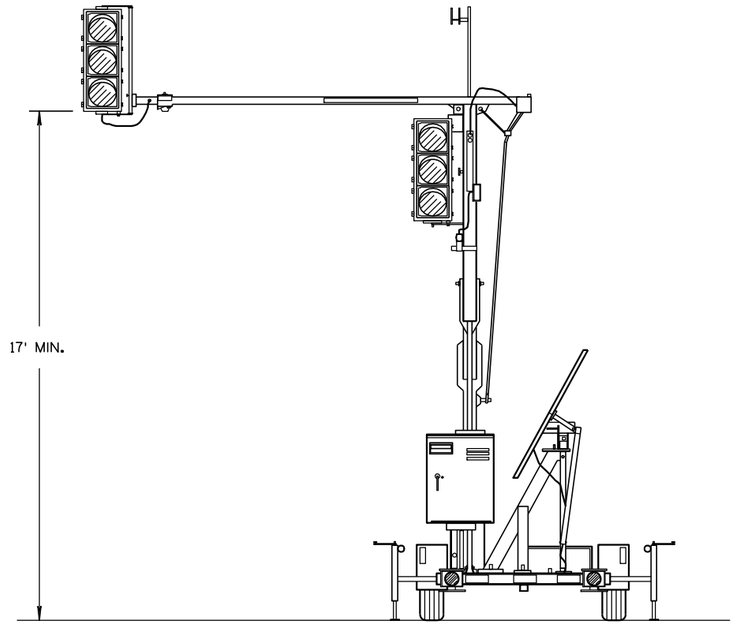

TRAILER MOUNTED TRAFFIC SIGNAL

GENERAL NOTES

DETAILS OF CONSTRUCTION, MATERIALS AND WORKMANSHIP NOT SHOWN ON THIS DRAWING SHALL CONFORM TO THE PERTINENT REQUIREMENTS OF THE CONTRACT.

SIGNING, PAVEMENT MARKING AND LANE CONTROL REQUIREMENTS SHALL CONFORM TO STANDARD DETAIL DRAWING 15 D 33.

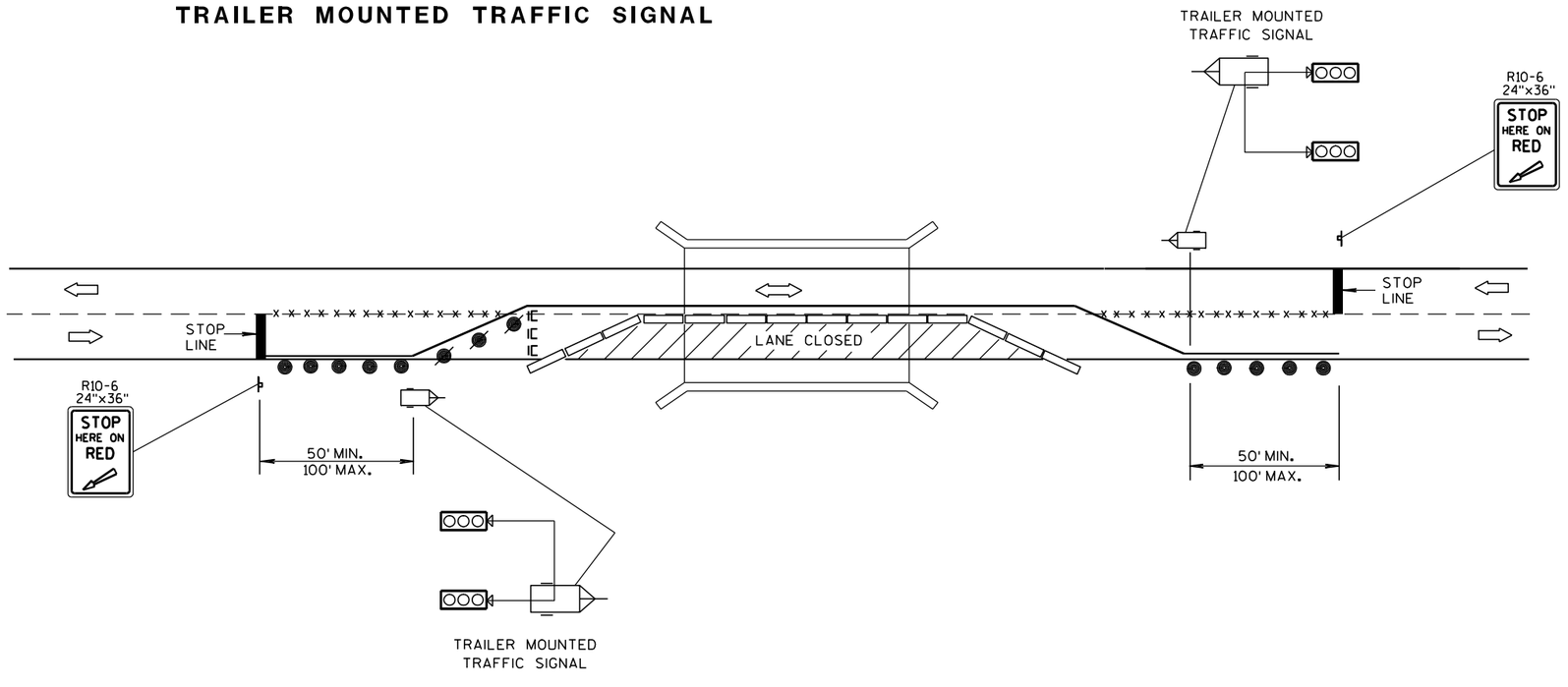

TYPICAL TRAILER MOUNTED TRAFFIC SIGNAL LOCATION

LEGEND

- POST MOUNTED SIGN
- REMOVING PAVEMENT MARKING
- TYPE III BARRICADE WITH SIGN
- DRUM WITH/WITHOUT WARNING LIGHT, TYPE C (STEADY-BURN)
- TEMPORARY PRECAST CONCRETE BARRIER
- TRAILER MOUNTED TRAFFIC SIGNAL
- DIRECTION OF TRAFFIC FLOW

BRIDGE TEMPORARY TRAFFIC SIGNAL INSTALLATION

STATE OF WISCONSIN
DEPARTMENT OF TRANSPORTATION

APPROVED

3/2/2011 — DATE

/S/ Thomas J. Gosling — STATE ELECTRICAL ENGI

FHWA

HWYS

6

S.D.D. 9 G 2-3c

6

S.D.D. 9 G 2-3c

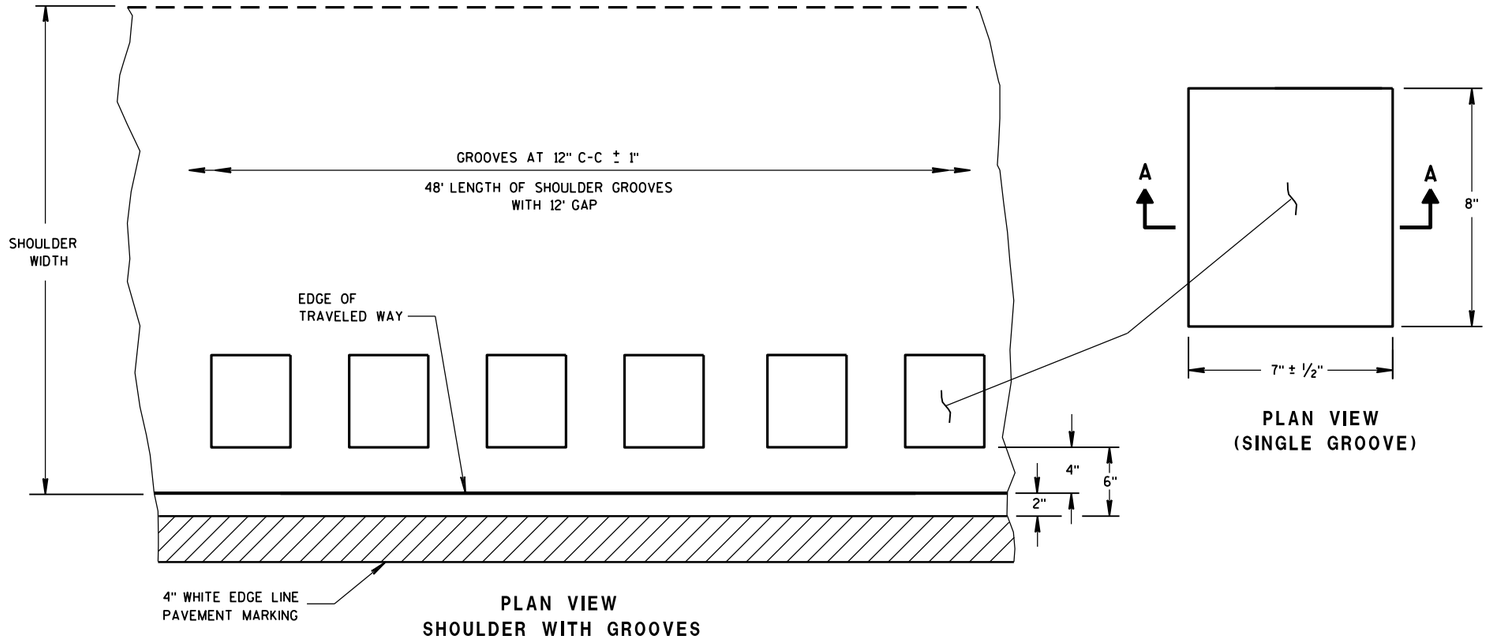

PLAN VIEW
SHOULDER WITH GROOVES

PLAN VIEW
(SINGLE GROOVE)

GENERAL NOTES

DETAILS OF CONSTRUCTION SHOWN ON THIS DRAWING SHALL CONFORM TO THE PERTINENT REQUIREMENTS OF THE STANDARD SPECIFICATIONS AND APPLICABLE SPECIAL PROVISIONS.

DO NOT MILL SHOULDER GROOVES THROUGH ANY INTERSECTION, MARKED CROSSWALK, NON-MOTORIZED PATH CROSSING, OR SNOWMOBILE CROSSING.

(1) SHOULDER GROOVES MAY BE OMITTED IN AREAS WITH HIGH CONCENTRATIONS OF DRIVEWAYS, WHEN DIRECTED BY THE ENGINEER.

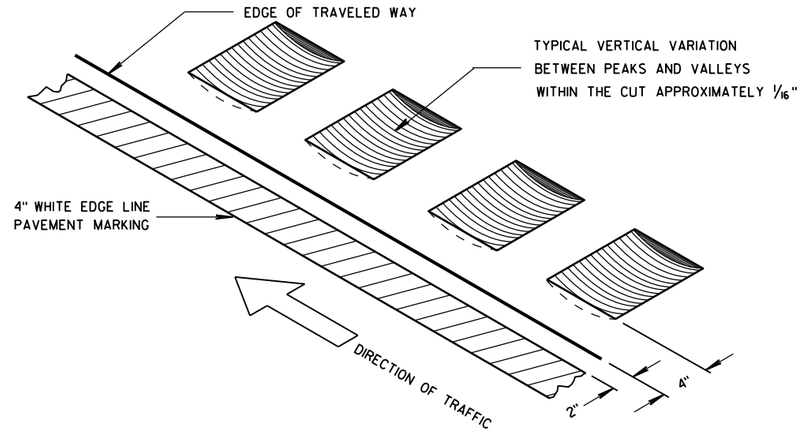

ISOMETRIC

PLACEMENT DETAIL FOR TYPE 1 MILLED RUMBLE STRIP

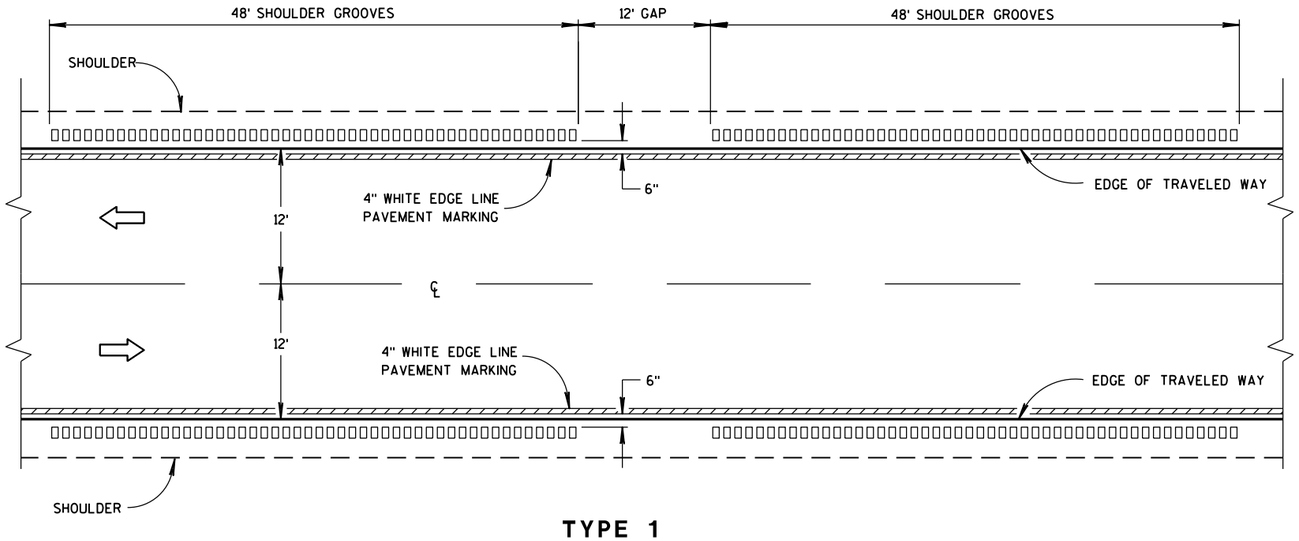

TYPE 1
2-LANE SHOULDER RUMBLE STRIP

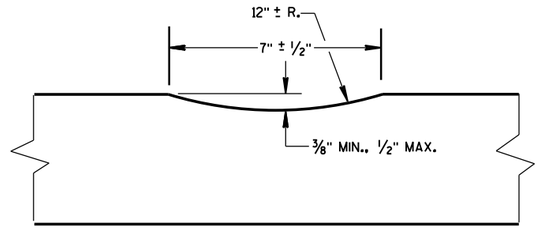

SECTION A-A

2-LANE RURAL
SHOULDER RUMBLE STRIP, MILLING

STATE OF WISCONSIN
DEPARTMENT OF TRANSPO

6

S.D.D. 13 A 10-1a

6

S.D.D. 13 A 10-1a

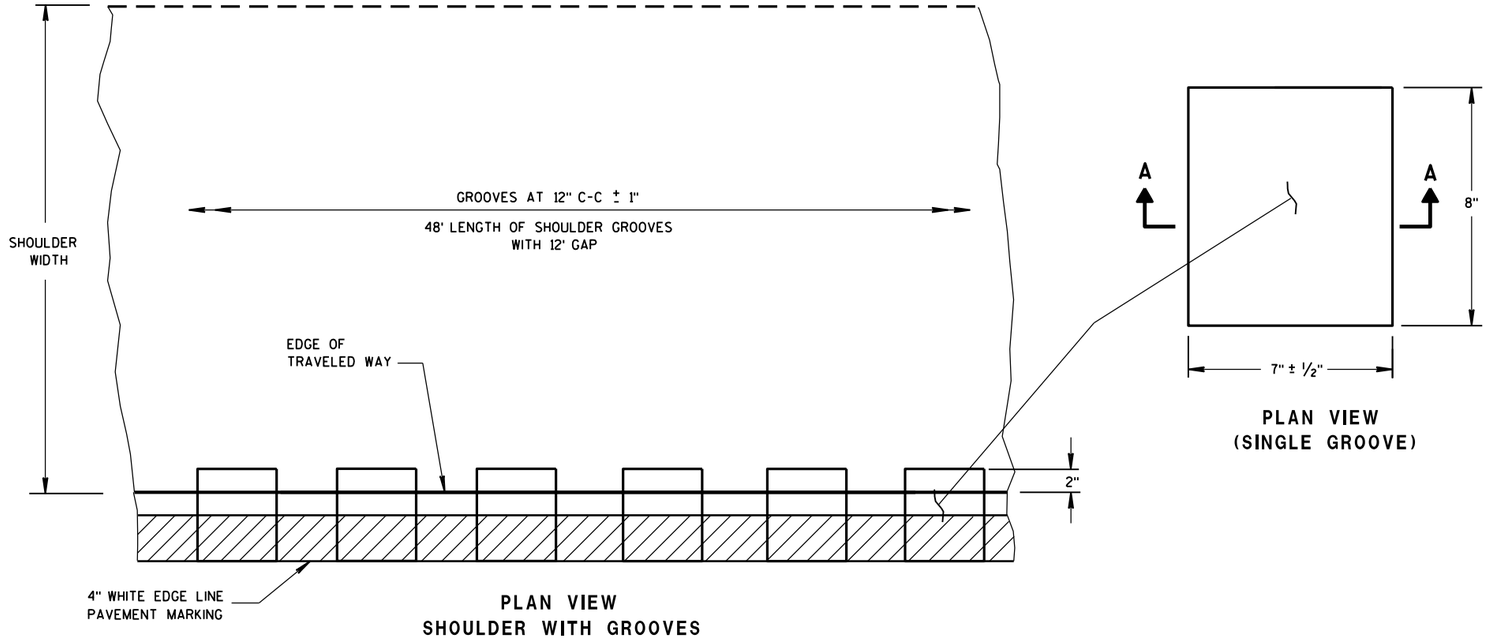

PLAN VIEW
SHOULDER WITH GROOVES

PLAN VIEW
(SINGLE GROOVE)

PLACEMENT DETAIL FOR TYPE 2 MILLED RUMBLE STRIP

GENERAL NOTES

DETAILS OF CONSTRUCTION SHOWN ON THIS DRAWING SHALL CONFORM TO THE PERTINENT REQUIREMENTS OF THE STANDARD SPECIFICATIONS AND APPLICABLE SPECIAL PROVISIONS.

DO NOT MILL SHOULDER GROOVES THROUGH ANY INTERSECTION, MARKED CROSSWALK, NON-MOTORIZED PATH CROSSING, OR SNOWMOBILE CROSSING.

(1) SHOULDER GROOVES MAY BE OMITTED IN AREAS WITH HIGH CONCENTRATIONS OF DRIVEWAYS, WHEN DIRECTED BY THE ENGINEER.

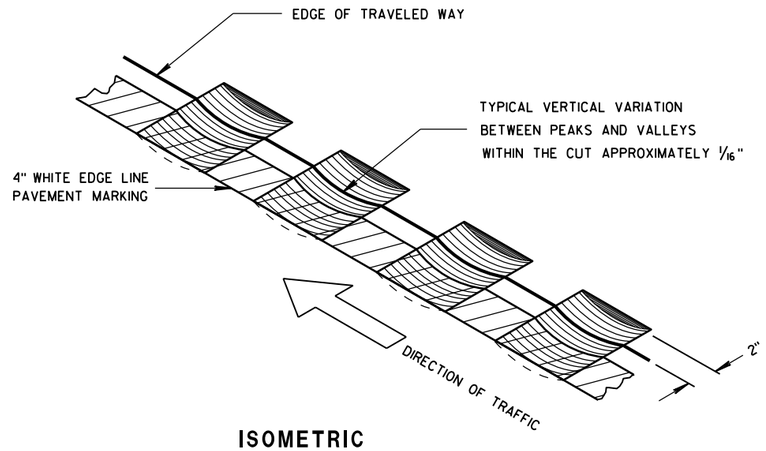

ISOMETRIC

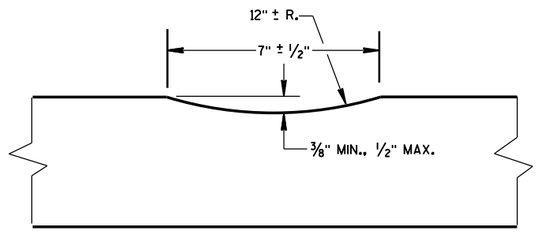

SECTION A-A

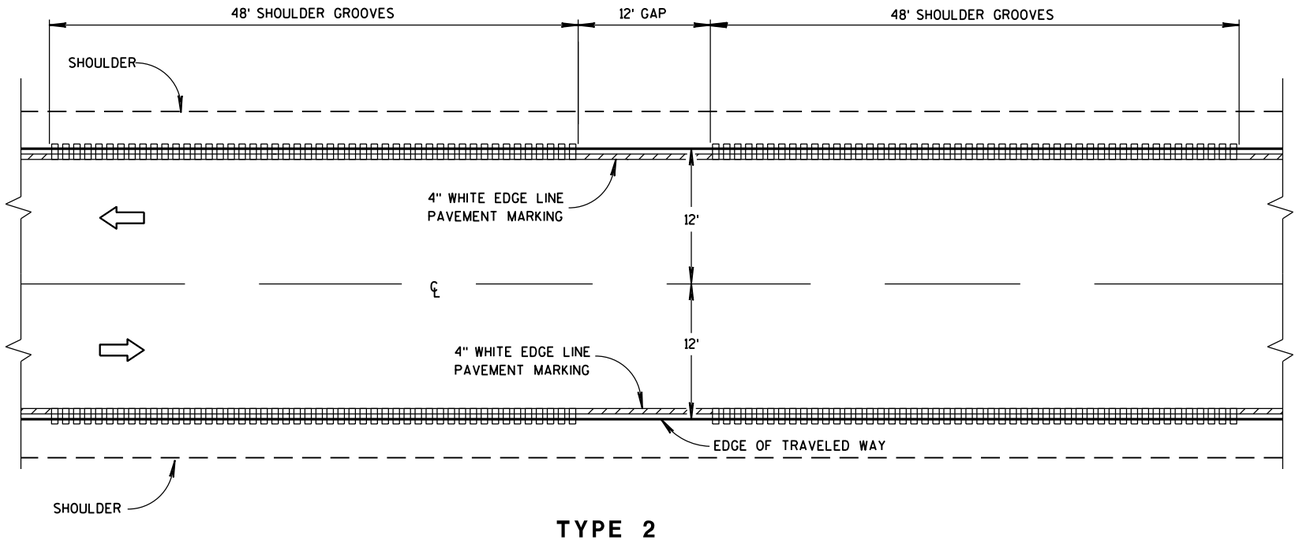

TYPE 2
2-LANE SHOULDER RUMBLE STRIP

2-LANE RURAL
SHOULDER RUMBLE STRIP, MILLING

STATE OF WISCONSIN
DEPARTMENT OF TRANSPOR

6

S.D.D. 13 A 10-1b

6

S.D.D. 13 A 10-1b

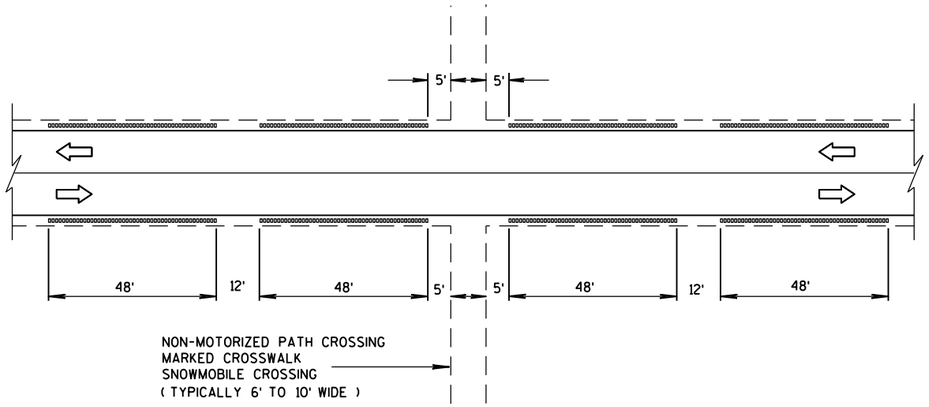

SHOULDER GROOVES AT MISCELLANEOUS CROSSINGS

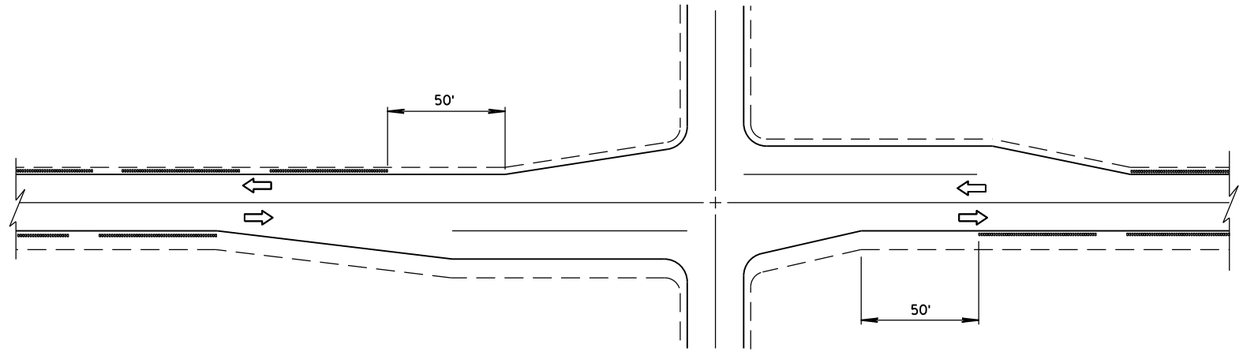

SHOULDER GROOVES AT INTERSECTIONS

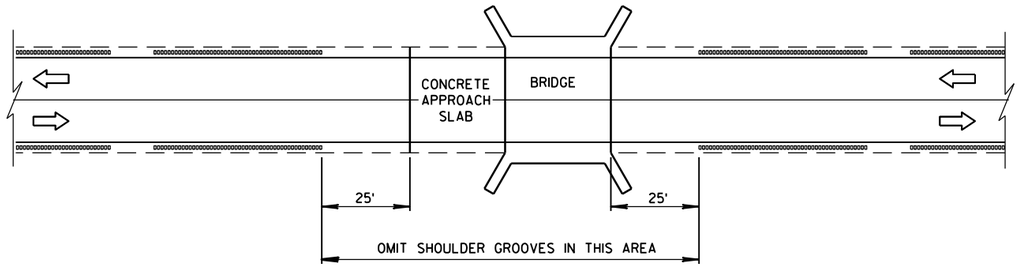

SHOULDER GROOVES AT BRIDGES

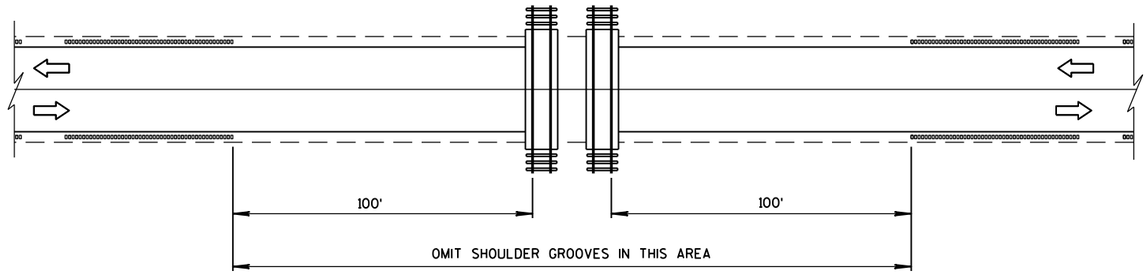

SHOULDER GROOVES AT RAILROADS

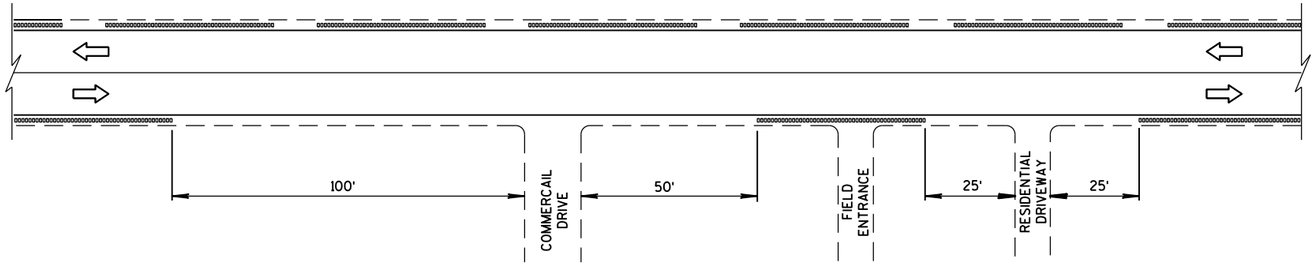

SHOULDER GROOVES AT DRIVEWAYS (1)

2-LANE RURAL
SHOULDER RUMBLE STRIP, MILLING

STATE OF WISCONSIN
DEPARTMENT OF TRANSPOI

6

S.D.D. 13 A 10-1c

6

S.D.D. 13 A 10-1c

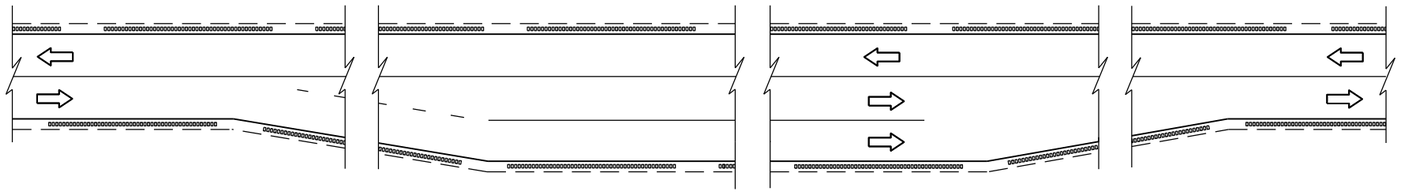

SHOULDER GROOVES AT PASSING AND CLIMBING LANES

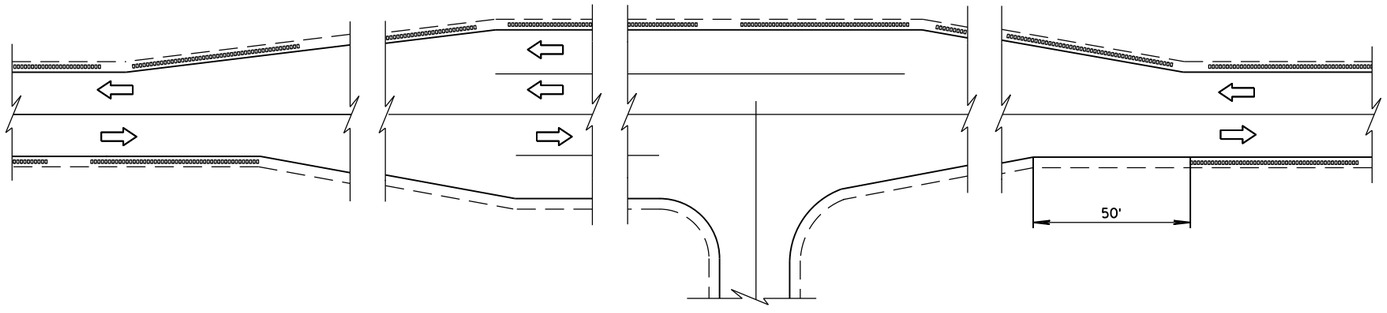

SHOULDER GROOVES AT BYPASS LANES

6

6

S.D.D. 13 A 10-1d

S.D.D. 13 A 10-1d

2-LANE RURAL
SHOULDER RUMBLE STRIP, MILLING

STATE OF WISCONSIN
DEPARTMENT OF TRANSPORTATION

APPROVED

12/17/2012
DATE

/S/ Jerry H. Zogg
ROADWAY STANDARDS DEVELOPMENT ENGINEER

FHWA

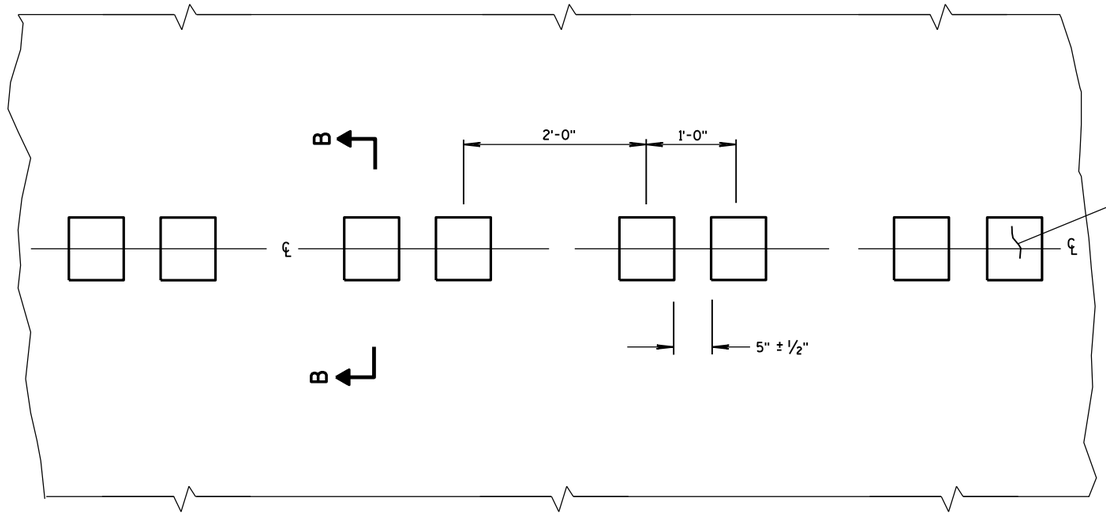

PLAN VIEW
CENTER LINE WITH GROOVES

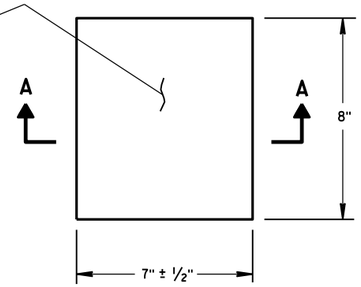

PLAN VIEW
(SINGLE GROOVE)

PLACEMENT DETAIL FOR MILLED RUMBLE STRIP

GENERAL NOTES

DETAILS OF CONSTRUCTION SHOWN ON THIS DRAWING SHALL CONFORM TO THE PERTINENT REQUIREMENTS OF THE STANDARD SPECIFICATIONS AND APPLICABLE SPECIAL PROVISIONS.

DO NOT MILL CENTER LINE GROOVES THROUGH ANY INTERSECTION, MARKED CROSSWALK, NON-MOTORIZED PATH CROSSING, OR SNOWMOBILE CROSSING.

INSTALL PAVEMENT MARKING AFTER THE GROOVES ARE INSTALLED.

SEE SIGNING PLAN FOR SIGN REQUIREMENTS THAT MAY BE NEEDED.

(1) CENTERLINE GROOVES MAY BE OMITTED IN AREAS WITH HIGH CONCENTRATIONS OF DRIVEWAYS, WHEN DIRECTED BY THE ENGINEER.

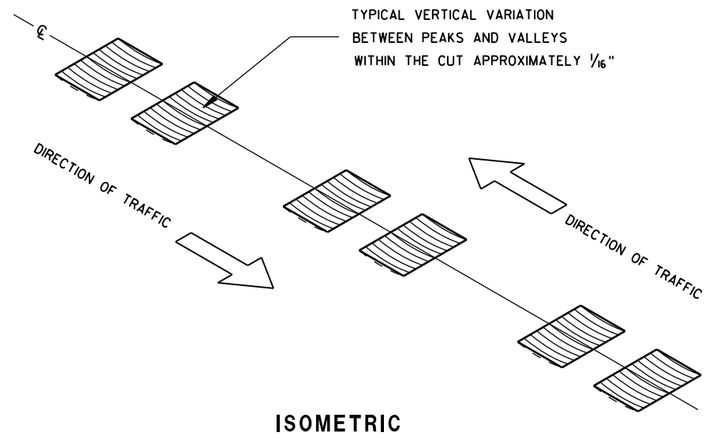

ISOMETRIC

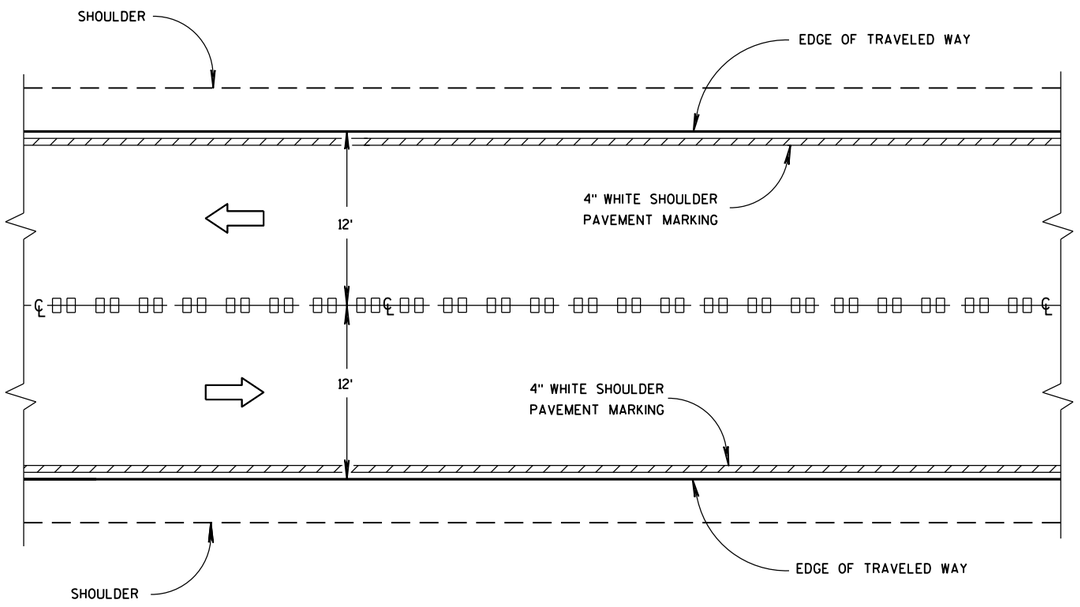

CENTER LINE GROOVES ON TWO-WAY ROADWAYS

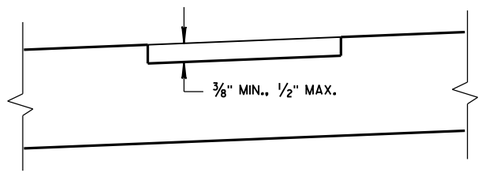

SECTION B-B
SUPERELEVATED ROADWAY

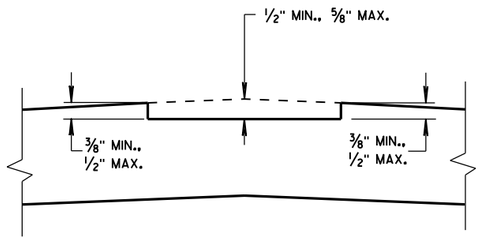

SECTION B-B
CROWNED ROADWAY

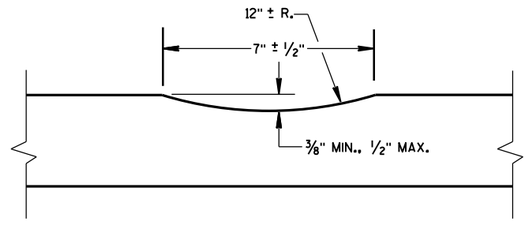

SECTION A-A

2-LANE RURAL
CENTER LINE RUMBLE STRIP, MILLING

STATE OF WISCONSIN
DEPARTMENT OF TRANSPOI

6

S.D.D. 13 A 11-2a

6

S.D.D. 13 A 11-2a

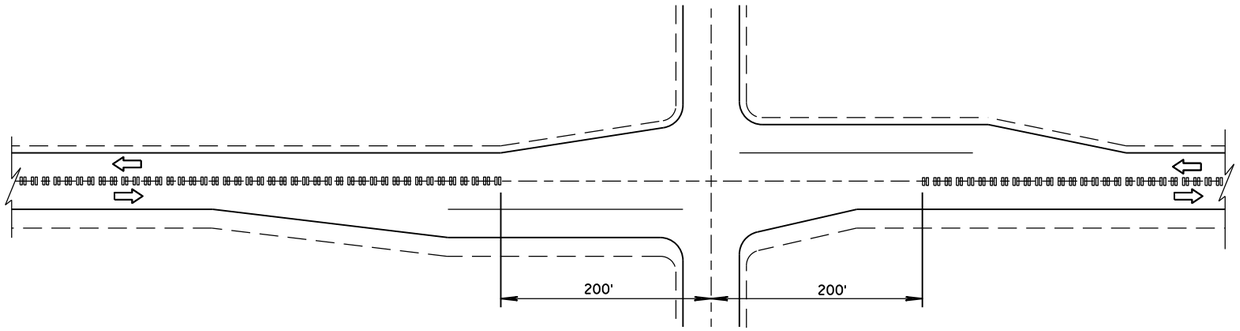

CENTER LINE GROOVES AT INTERSECTIONS

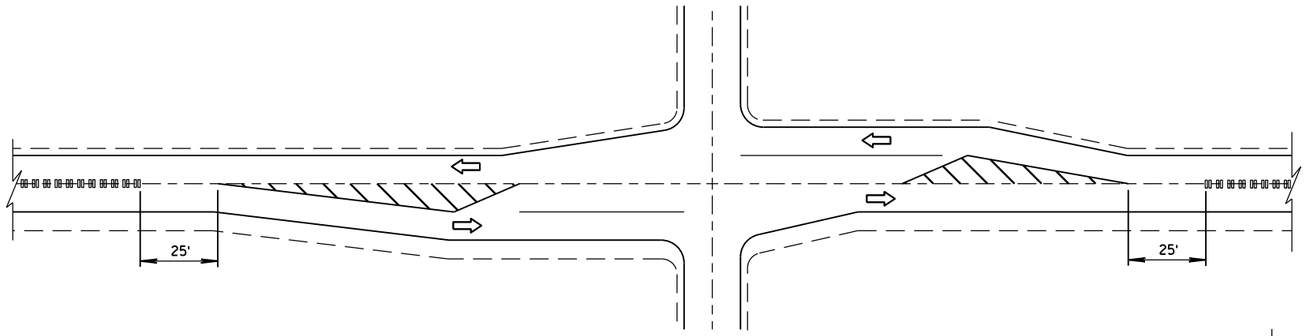

CENTER LINE GROOVES AT INTERSECTIONS
(WITH LEFT TURN LANES)

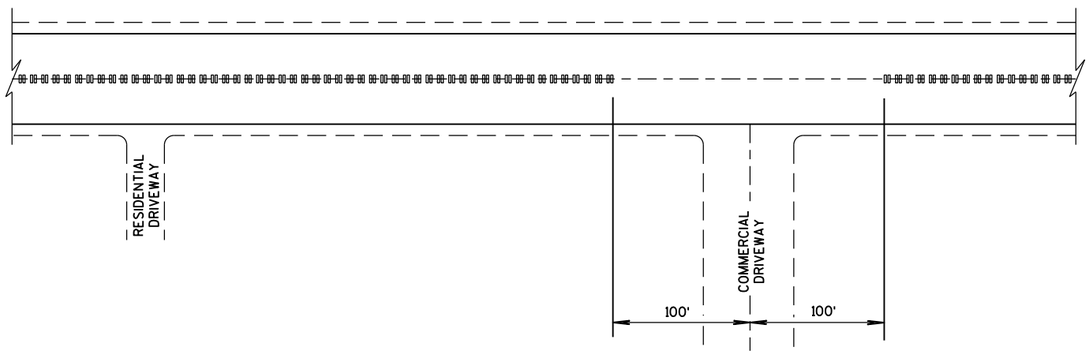

CENTER LINE GROOVES AT DRIVEWAYS (1)

(1) CENTERLINE GROOVES MAY BE OMITTED IN AREAS WITH HIGH CONCENTRATIONS OF DRIVEWAYS, WHEN DIRECTED BY THE ENGINEER.

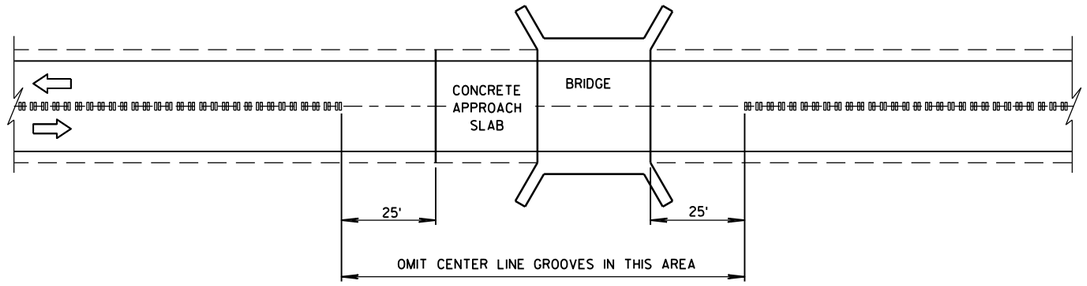

CENTER LINE GROOVES AT BRIDGES

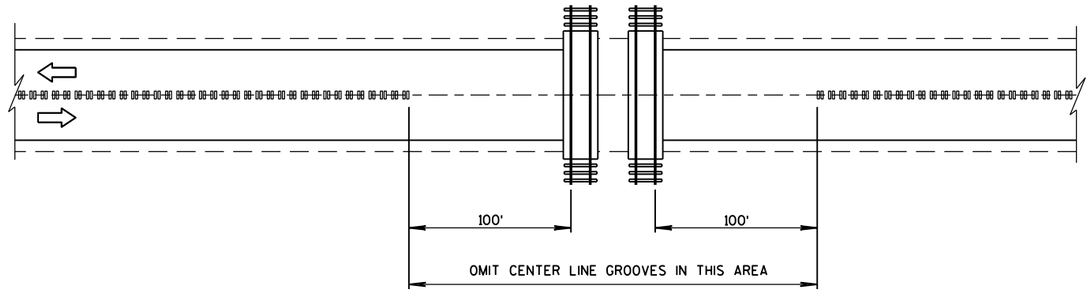

CENTER LINE GROOVES AT RAILROADS

6

S.D.D. 13 A 11-2b

6

S.D.D. 13 A 11-2b

2-LANE RURAL
CENTER LINE RUMBLE STRIP, MILLING

STATE OF WISCONSIN
DEPARTMENT OF TRANSPORTATION

APPROVED

5/15/2013 — DATE

/S/ Jerry H. Zoda — ROADWAY STANDARDS DEVELOPMENT ENGINEER

NT

FHWA

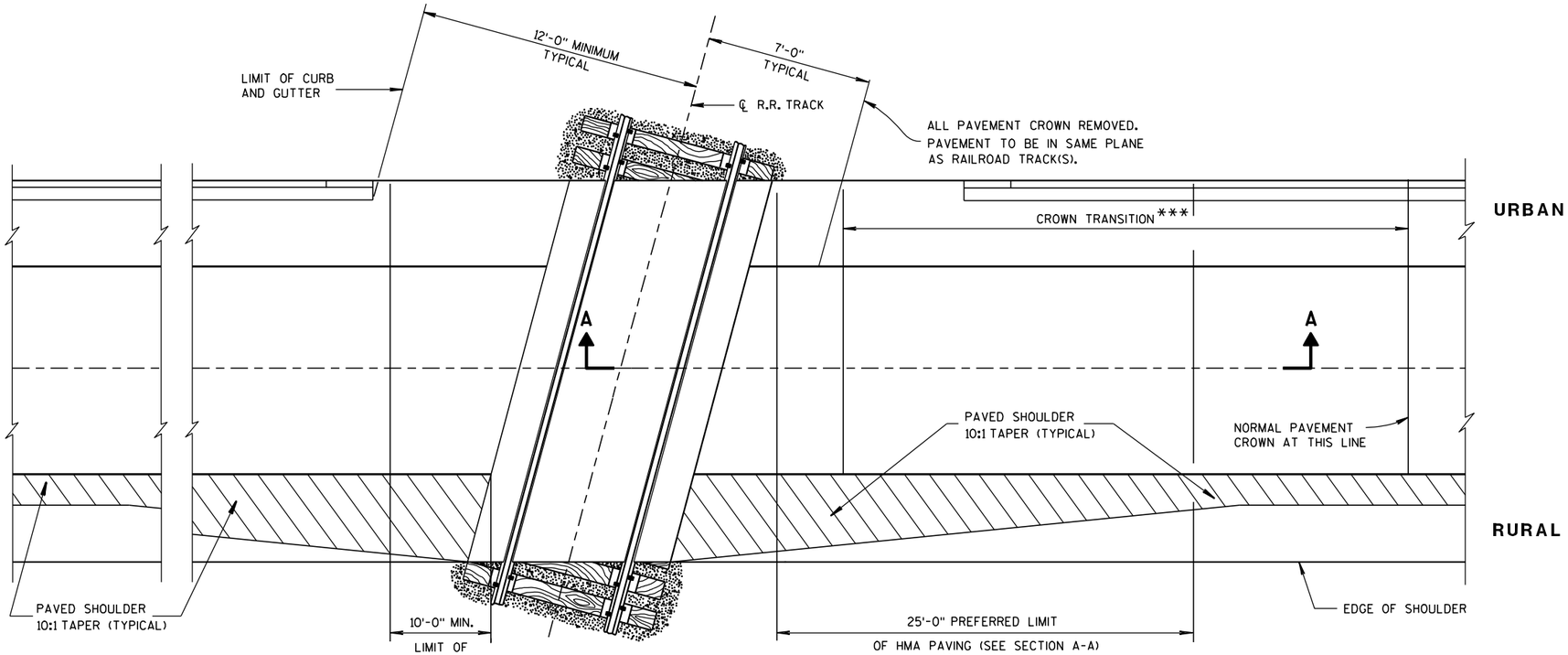

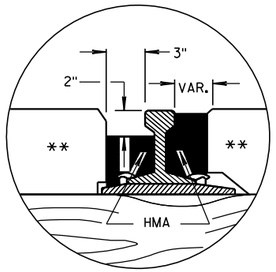

DETAIL B

HMA FLANGEWAY AND FIELD FILLERS

GENERAL NOTES

DETAILS OF CONSTRUCTION, MATERIALS AND WORKMANSHIP NOT SHOWN ON THIS DRAWING SHALL CONFORM TO THE PERTINENT REQUIREMENTS OF THE STANDARD SPECIFICATIONS AND THE APPLICABLE SPECIAL PROVISIONS.

TIMBER, CONCRETE OR RUBBER CROSSING SURFACE MATERIAL, RAILS, TIES, BALLAST, GEOTEXTILE FABRIC AND CROSSING DRAINAGE SYSTEM BY OTHERS UNLESS OTHERWISE PROVIDED.

HMA PAVEMENT APPROACHES AND HMA PAVEMET CROSSING SURFACES TO BE PLACED BY CONTRACTOR UNLESS OTHERWISE PROVIDED.

HMA FLANGEWAY AND FIELD FILLERS TO BE PLACED AND THOROUGHLY HAND COMPACTED BY THE CONTRACTOR WHEN NOT PROVIDED BY OTHERS. SEE DETAIL B. HMA FILLERS NOT REQUIRED WHEN RUBBER FILLERS ARE PROVIDED.

HMA PAVEMENT SHALL BE ROLLED PARALLEL TO THE TRACK.

** CROSSING SURFACE MAY BE TIMBER, RUBBER, CONCRETE, HMA PAVEMENT OR A COMBINATION OF SUCH MATERIALS.

*** CROWN TRANSITION LENGTH SHOWN ELSEWHERE IN THE PLAN.

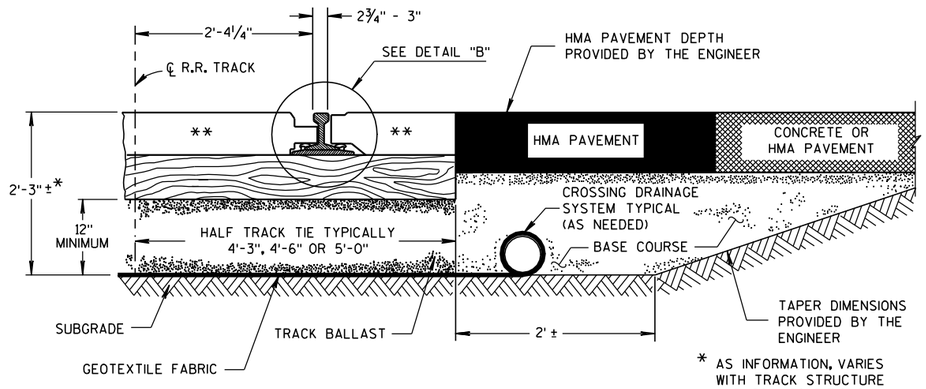

TYPICAL HALF SECTION

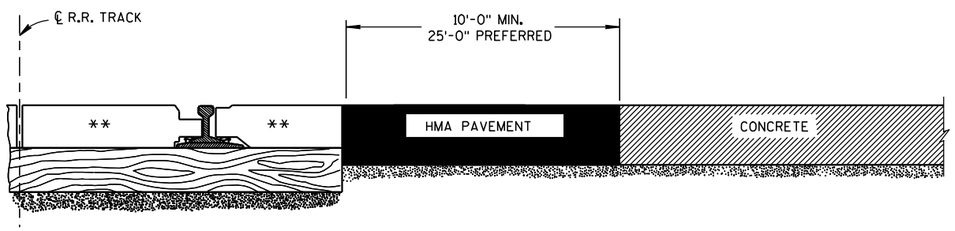

SECTION A-A

CONCRETE PAVEMENT APPROACH

SECTION A-A

HMA PAVEMENT APPROACH

EXAMPLES OF PAVEMENT APPROACHES

PAVEMENT DETAILS FOR RAILROAD APPROACH

STATE OF WISCONSIN
DEPARTMENT OF TRANSPORTATION

APPROVED
8-28-09 DATE
/S/ Ronald E. Adams
CHIEF, RAILROADS & HAI CTION
FHWA

6

S.D.D. 13 B 1-10

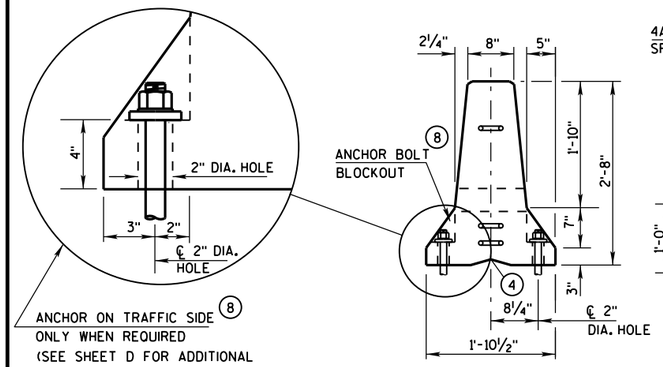

END VIEW

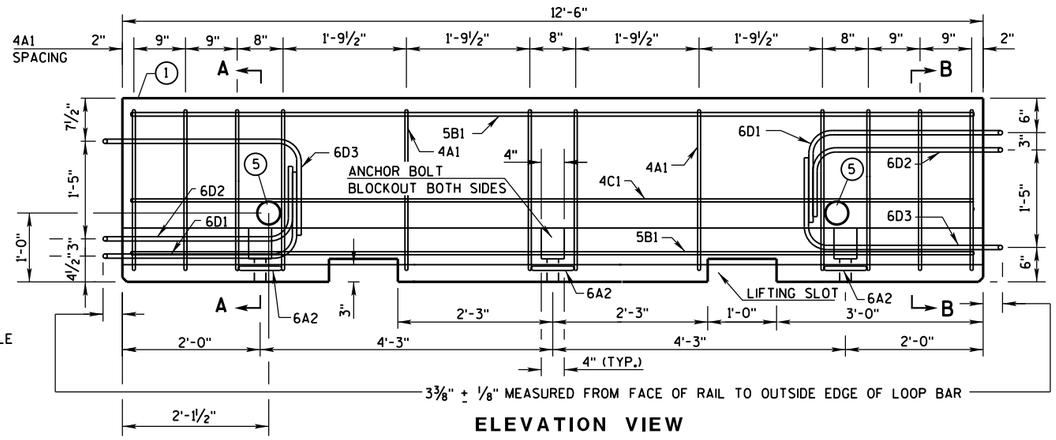

ELEVATION VIEW

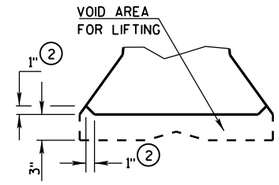

DETAIL "B"
LIFTING SLOT DETAIL

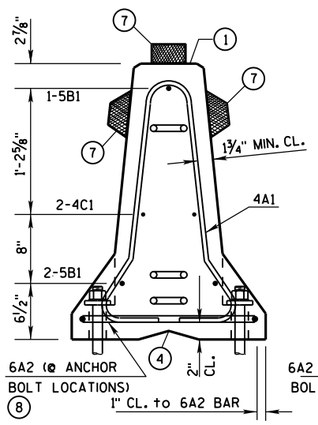

SECTION A-A
(STIRRUP PLACEMENT)

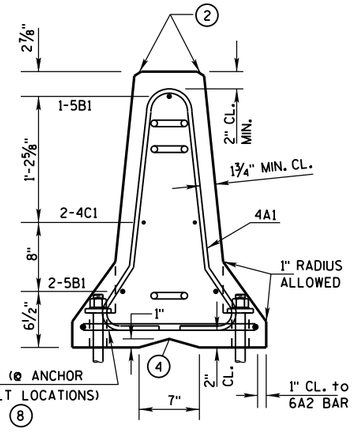

SECTION B-B
(STIRRUP PLACEMENT)

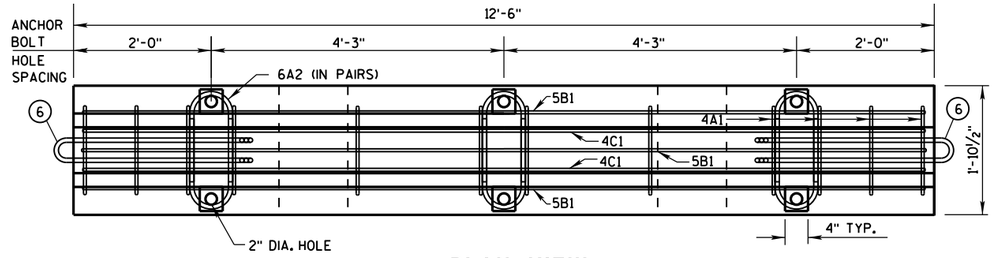

PLAN VIEW

DETAILS OF BARRIER SECTION

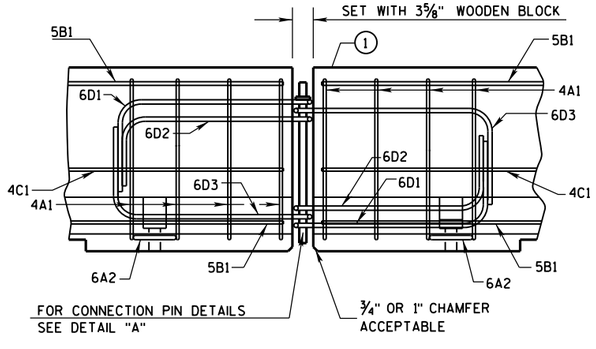

DETAILS OF BARRIER CONNECTION

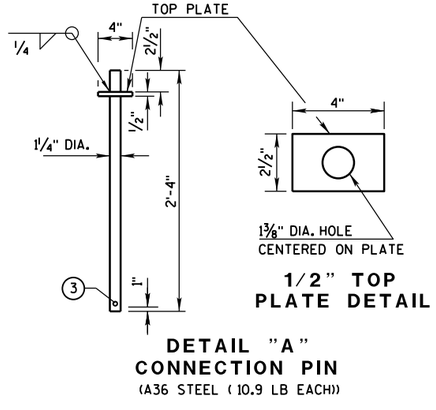

1/2" TOP
PLATE DETAIL

DETAIL "A"
CONNECTION PIN
(A36 STEEL (10.9 LB EACH))

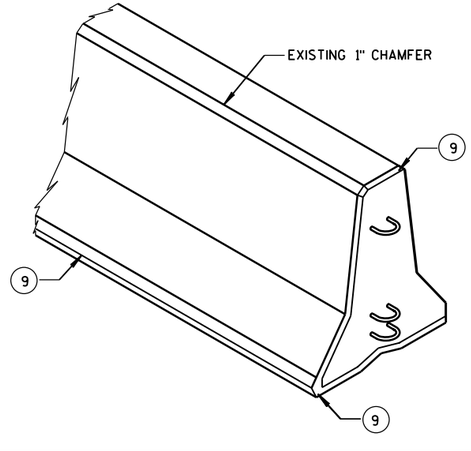

GENERAL NOTES

THESE GENERAL NOTES APPLY TO SHEETS 14B7-14(a) THRU 14B7-14(h).

DO NOT INTERMIX CONCRETE BARRIER TEMPORARY PRCAST, 12'-6" (CBTP12.5) WITH OTHER TEMPORARY CONCRETE BARRIERS.

USE ASTM A-615, GRADE 60, DEFORMED STEEL BARS FOR BARS 4A1, 6A2, 5B1 AND 4C1 IN THE BARRIER SECTION AND FOR 4V1, 4V2, 4V3, 4V4, 4V5, 4V6, 4F1, 4F2 AND 5F3 IN THE BARRIER TAPER SECTION.

LOOP BARS 6D1, 6D2 AND 6D3 SHALL BE ¾" SMOOTH STEEL BARS WITH A MINIMUM YIELD STRENGTH OF 60 KSI, A TENSILE STRENGTH OF NOT LESS THAN 1.25 TIMES THE YIELD STRENGTH BUT A MINIMUM OF 80 KSI, A MINIMUM 14% ELONGATION IN 8 INCHES AND PASSING A 180 DEGREE BEND TEST USING A 3-½" PIN BEND DIAMETER FOR BEND TESTS. THE LOOPS SHALL BE INSTALLED WITHIN ⅛" OF THE PLAN DIMENSION.

CONSTRUCT LIFTING SLOTS AS SPECIFIED ON THE PLANS TO FACILITATE THE DRAINAGE OF WATER AFTER INSTALLATION.

PLACE BARRIER ON A PAVED SURFACE. REMOVE ALL LOOSE DIRT AND SAND FROM THE ROADWAY SURFACE PRIOR TO PLACEMENT OF THE BARRIER.

INSTALL MECHANICAL OR EPOXY ANCHORS PER MANUFACTURER'S RECOMMENDATIONS. PROVIDE MANUFACTURER'S INFORMATION TO PROJECT ENGINEER.

(1) MARK ONE END OF EACH BARRIER PERMANENTLY BY FORMING INTO THE BARRIER THE FOLLOWING INFORMATION:
- a. TYPE: WI CBTP
- b. MANUFACTURER
- c. DATE MANUFACTURED (MONTH AND YEAR)

(2) 1" CHAMFER TO PREVENT SPALLING.

(3) A ⅜" HOLE IN THE CONNECTION PIN, AT THE LOCATION SHOWN, IS ACCEPTABLE, BUT NOT REQUIRED..

(4) "V" NOTCH IS OPTIONAL.

(5) THE 4" DIAMETER, 11 GAUGE STEEL, ROUND MECHANICAL TUBING SLEEVE FOR LIFTING (OPTIONAL).

(6) NEVER USE LOOP BARS (6D1, 6D2 OR 6D3) TO LIFT, MOVE OR REPOSITION THE BARRIER.

(7) USE DELINEATORS CONFORMING TO SECTION 633 OF THE STANDARD SPECIFICATIONS. CONTRACTOR MAY USE ALTERNATE SHAPES AND HOUSING. INSTALL DELINEATORS ACCORDING TO MANUFACTURES INSTRUCTION. INSTALL YELLOW REFLECTORS WHEN BARRIER IS LOCATED TO THE LEFT OF TRAFFIC AND WHITE REFLECTORS WHEN BARRIER IS LOCATED TO THE RIGHT OF TRAFFIC. SPACE DELINEATORS A MAXIMUM OF 25 FEET APART. PROVIDE TOP MOUNTED DELINEATORS IN ADDITION TO THE SIDE MOUNTED DELINEATORS ON ALL BARRIER INSTALLATIONS LOCATED ON A CURVED ALIGNMENT LONGER THAN 200 FEET AND ON BARRIERS USED TO SEPARATE OPPOSING TRAFFIC.

(8) SEE SHEET D FOR ANCHORING CRITERIA.

(9) 1" CHAMFER OPTIONAL.

CONCRETE BARRIER TEMPORARY PRECAST, 12'-6"

STATE OF WISCONSIN
DEPARTMENT OF TRANSPOI

6

S.D.D. 14 B 7-14a

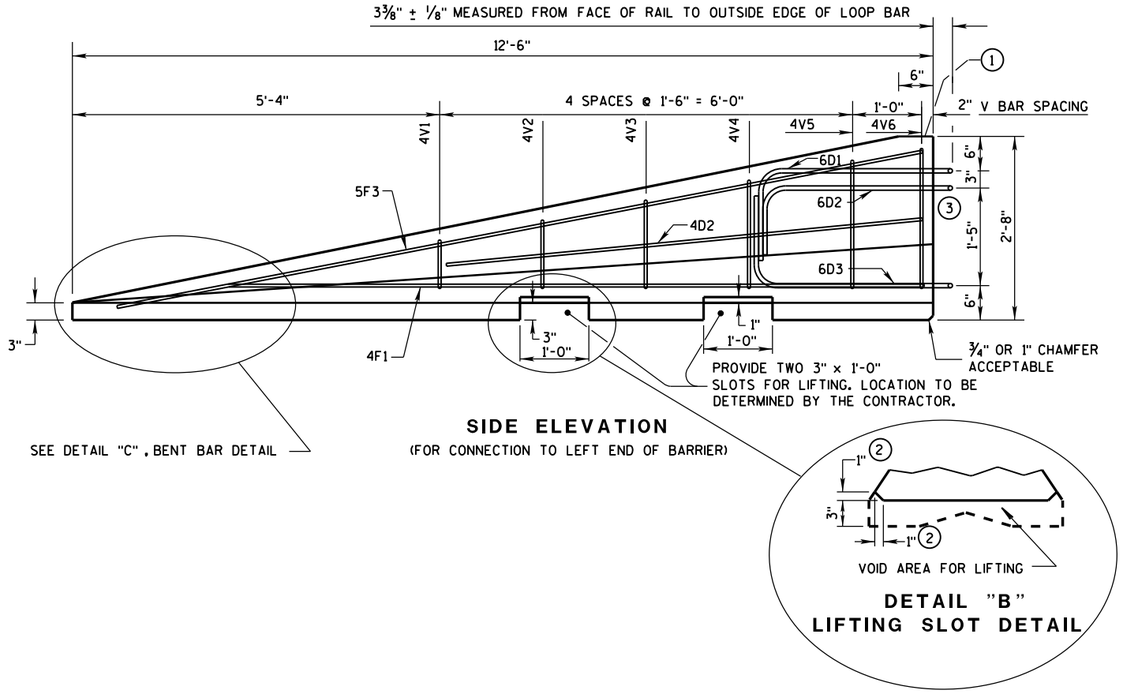

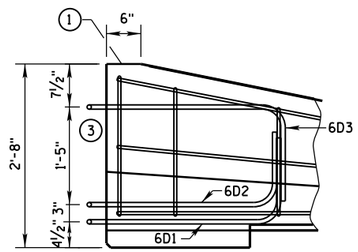

GENERAL NOTES

1. MARK ONE END OF EACH BARRIER PERMANENTLY BY FORMING INTO THE BARRIER THE FOLLOWING INFORMATION:
   a. TYPE WICBTP
   b. MANUFACTURER
   c. DATE MANUFACTURED (MONTH AND YEAR)
2. 1" CHAMFER TO PREVENT SPALLING.
3. NEVER USE LOOP BARS (6D1, 6D2 OR 6D3) TO LIFT, MOVE OR REPOSITION THE BARRIER.

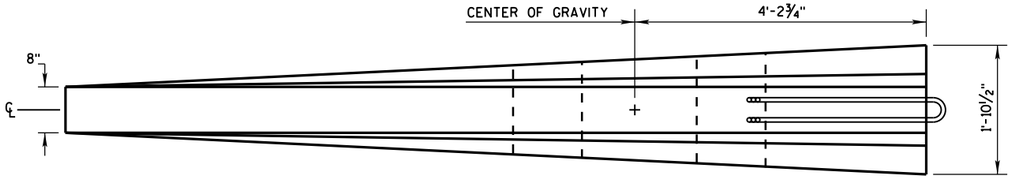

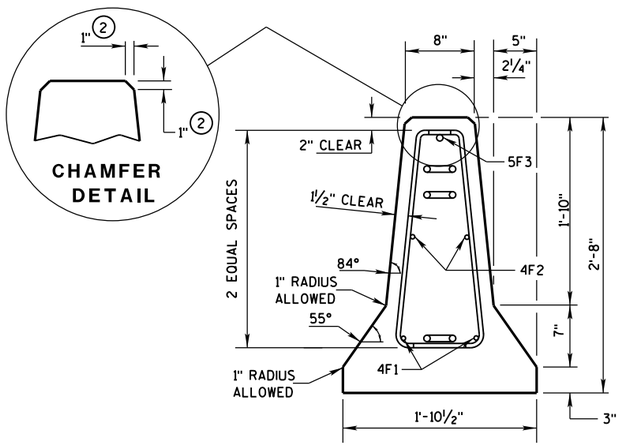

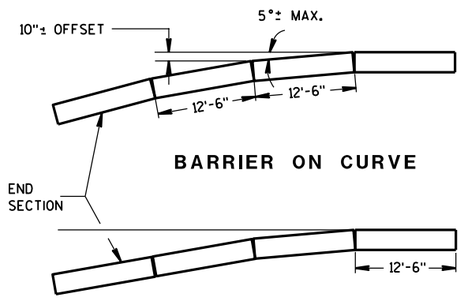

POSTED SPEED, (MPH)	FLARE RATE
40 OR LESS	6:1
45 OR GREATER	8:1

DETAILS OF BARRIER TAPER SECTION

CONCRETE BARRIER
TEMPORARY PRECAST, 12'-6"

STATE OF WISCONSIN
DEPARTMENT OF TRANSPOI

6

S.D.D. 14 B 7-14b

BARRIER TAPER SECTION BILL OF MATERIALS

(PER 12'-6" BARRIER TAPER SECTION)

BAR	BAR SIZE	NO. OF BARS	LENGTH FT.
4V1	4	2	1'-11"
4V2	4	2	2'-2"
4V3	4	2	2'-6"
4V4	4	2	2'-9"
4V5	4	2	3'-2"
4V6	4	2	3'-4"
4F1	4	2	12'-0"
4F2	4	2	7'-6"
5F3	5	1	11'-9"
LOOP ASSEMBLY			
6D1	6	1	8'-5"
6D2	6	1	7'-7"
6D3	6	1	8'-6"

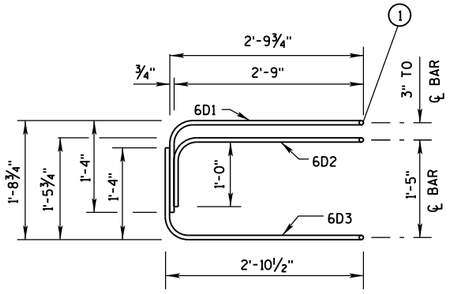

ELEVATION
LOOP BAR ASSEMBLY

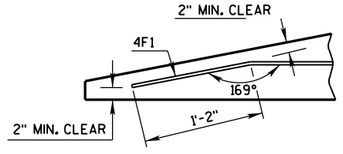

DETAIL "C"
BENT BAR DETAIL

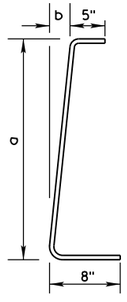

BAR	a	b
V1	10"	1"
V2	1'-1"	1¼"
V3	1'-5"	1⅝"
V4	1'-8"	1⅞"
V5	2'-0½"	2⅜"
V6	2'-3"	2¾"

4V BARS
2 AT EACH SIZE REQUIRED
FOR STIRRUP ASSEMBLY

TAPER BARRIER SECTION

GENERAL NOTES

(1) NEVER USE LOOP BARS (6D1, 6D2 OR 6D3) TO LIFT, MOVE OR REPOSITION THE BARRIER.

BARRIER SECTION BILL OF MATERIALS

(PER 12'-6" BARRIER SECTION)

BAR	BAR SIZE	NO. OF BARS	LENGTH FT.
4A1	4	12	6'-0"
6A2	6	6	2'-11"
5B1	5	3	12'-2"
4C1	4	2	12'-2"
LOOP ASSEMBLY			
6D1	6	2	8'-5"
6D2	6	2	7'-7"
6D3	6	2	8'-6"

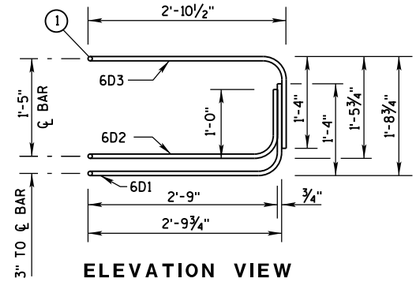

ELEVATION VIEW

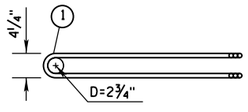

PLAN VIEW
LOOP BAR ASSEMBLY
(MARKED END SHOWN, INVERT FOR OTHER END)

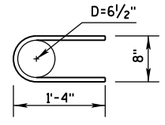

6A2

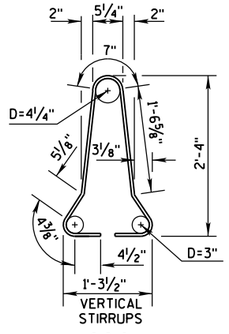

4A1

BARRIER SECTION

CONCRETE BARRIER
TEMPORARY PRECAST, 12'-6"

STATE OF WISCONSIN
DEPARTMENT OF TRANSPOI

6

S.D.D. 14 B 7-14c

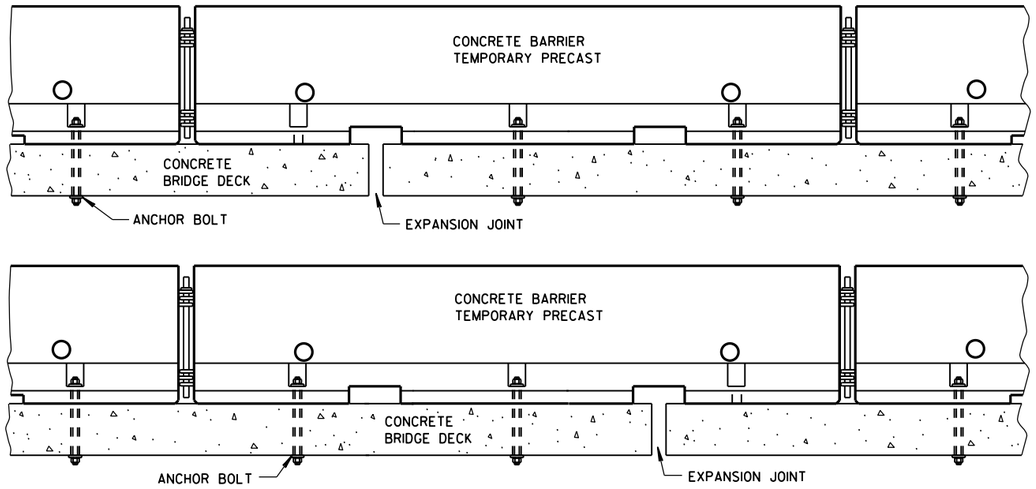

TREATMENT AT BRIDGE DECK EXPANSION JOINTS

(NO SINGLE CONCRETE BARRIER SECTION SHALL BE ANCHORED TO BOTH THE BRIDGE DECK AND THE APPROACH SLAB. ALL ANCHOR BOLT LOCATIONS SHALL BE ANCHORED TO THE DECK IN ACCORDANCE WITH THE DETAIL. NO MORE THAN ONE ANCHOR BOLT SHALL BE ELIMINATED FROM A BARRIER SECTION WHEN SPANNING AN EXPANSION JOINT.)

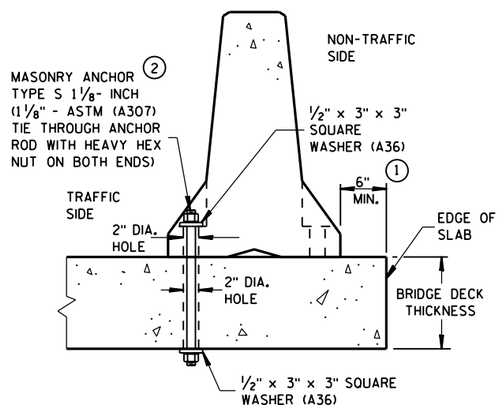

THROUGH BOLTED ANCHOR INSTALLATION ON BRIDGE DECK

(DO NOTUSE ON CONCRETE BRIDGE DECK WITH ASPHALT OVERLAY)

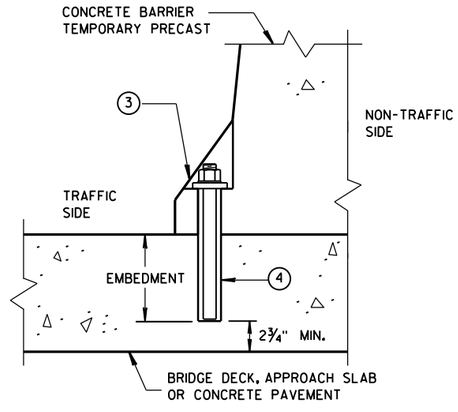

REMOVABLE ADHESIVE BONDED ANCHOR ② INSTALLATION ON CONCRETE BRIDGE DECK, CONCRETE APPROACH SLAB, OR CONCRETE PAVEMENT

(DO NOT USE ON CONCRETE WITH AN ASPHALTIC OVERLAY)

GENERAL NOTES

① CONCRETE BARRIER TEMPORARY PRECAST, 12'-6" SHALL BE ANCHORED IF:
THE DISTANCE TO A 2 FOOT OR GREATER DROPOFF THAT IS STEEPER THAN 3H : 1V, FOR EXAMPLE THE EDGE OF A BRIDGE DECK OR A DROPOFF AT THE EDGE OF PAVEMENT, IS LESS THAN 4 FEET FROM THE SIDE OF THE BARRIER CLOSEST TO THE DROPOFF AND THE POSTED SPEED IS 45 MPH OR GREATER, OR

THE DISTANCE TO A 2 FOOT OR GREATER DROPOFF THAT IS STEEPER THAN 3H : 1V, FOR EXAMPLE THE EDGE OF A BRIDGE DECK OR A DROPOFF AT THE EDGE OF PAVEMENT. IS LESS THAN 2 FEET FROM THE SIDE OF THE BARRIER CLOSEST TO THE DROPOFF AND THE POSTED SPEED IS 40 MPH OR LESS.

② ANCHORING IS INCIDENTAL TO CONCRETE BARRIER TEMPORARY PRECAST.

WITH THE APPROVAL OF THE ENGINEER, REMOVABLE ADHESIVE BONDED (EPOXY) ANCHOR BOLT INSTALLATION MAY BE USED IN LIEU OF THROUGH BOLTED ANCHOR INSTALLATION. THE ADHESIVE BONDED ANCHOR BOLT MUST BE REMOVABLE. USE ASTM (A307) MASONRY ANCHORS TYPE S 1⅛-INCH, EMBEDDED TO A DEPTH SUFFICIENT TO DEVELOP THE ULTIMATE CAPACITY OF THE ANCHOR BOLT AND PROVIDE DOCUMENTATION TO CONFIRM THIS.

UPON REMOVAL OR RELOCATION OF THE BARRIER UNITS, REMOVE ALLANCHOR BOLTS AND COMPLETELY FILL IN THE REMAINING HOLES IN CONCRETE BRIDGE DECKS, CONCRETE APPROACH SLABS AND CONCRETE PAVEMENTS THAT ARE TO REMAIN, WITH A NON-SHRINK COMMERICAL GROUT OR EPOXY MATERIAL IDENTIFIED ON THE CURRENT WISDOT APPROVED PRODUCTS LIST.

③ 1⅛" DIAMENTER A307 THREADED ROD, ½" X 3" X 3" SQUARE PLATE WASHER WITH ASTM A36 STEEL, ASTM A563A HEAVY HEX NUT.

④ ADHESIVE ANCHORS WITH A MINIMUM BOND STRENGTH OF 1,800 PSI AND 5¼" EMBEDMENT. SEE 603.2 AND 603.3.1.2 OF THE WISCONSIN STANDARD SPECIFICATIONS FOR MORE INFORMATION ON ADHESIVE ANCHORS.

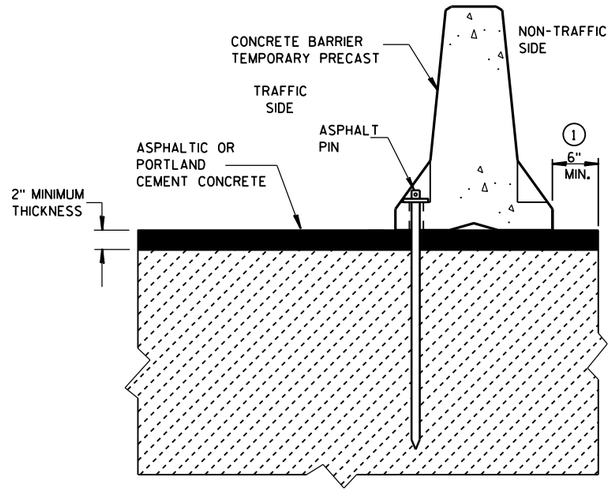

STAKE DOWN INSTALLATION FOR ASPHALTIC OR PORTLAND CEMENT CONCRETE SURFACE

(STAKING IS INCIDENTAL TO CONCRETE BARRIER TEMPORARY PRECAST)

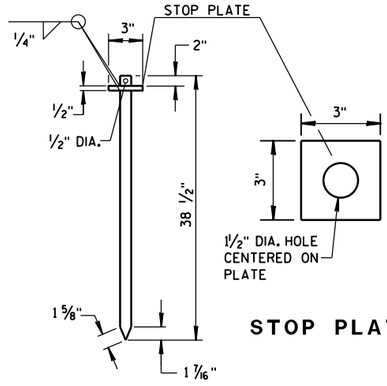

STOP PLATE

ASPHALT PIN

(ASTM A36 STEEL)

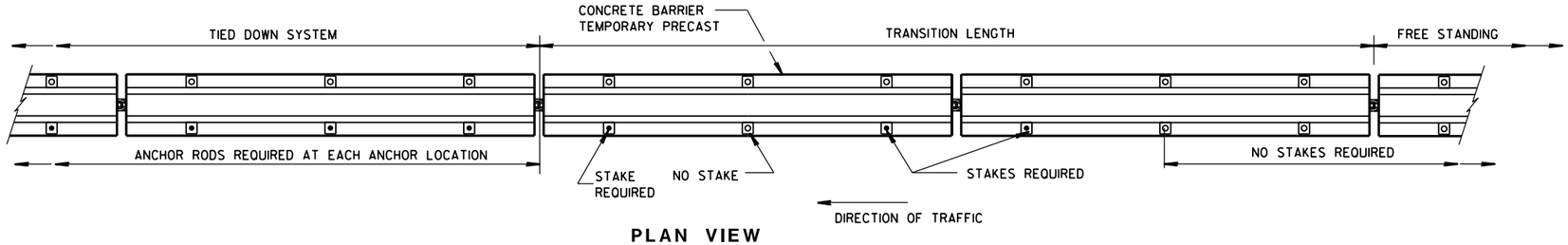

PLAN VIEW

FREE STANDING TRANSITION TO TIED-DOWN SYSTEM

(PLACE TRANSITION IN A TANGENT SECTION OF BARRIER PARALLEL TO THE ROADWAY. IF TRANSITION OCCURS ON STRUCTURAL SLAB, ANCHOR AS SHOWN.)

CONCRETE BARRIER
TEMPORARY PRECAST, 12'-6"

STATE OF WISCONSIN
DEPARTMENT OF TRANSPOI

6

S.D.D. 14 B 7-14d

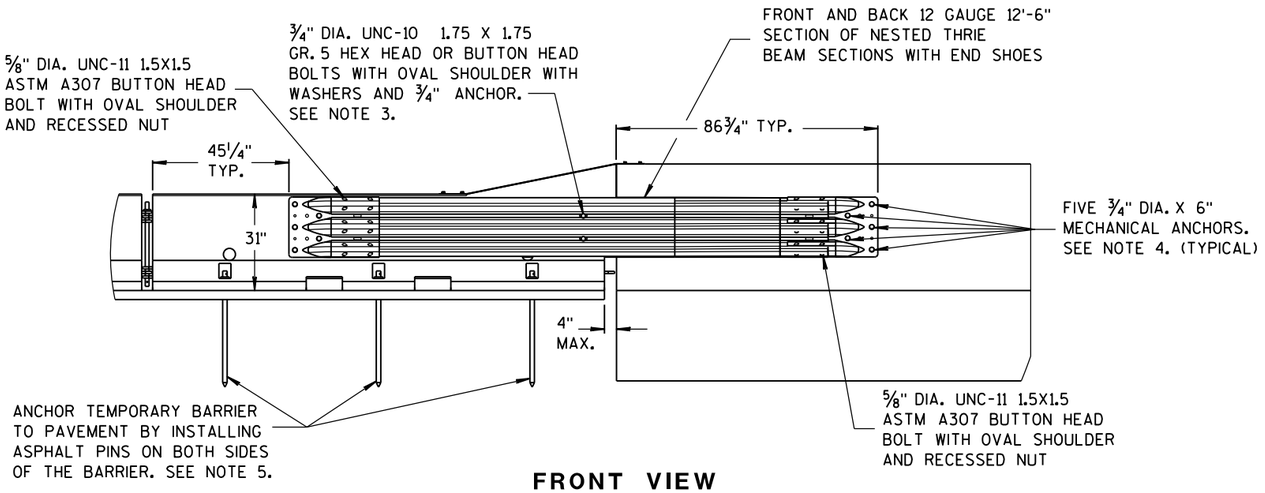

FRONT VIEW

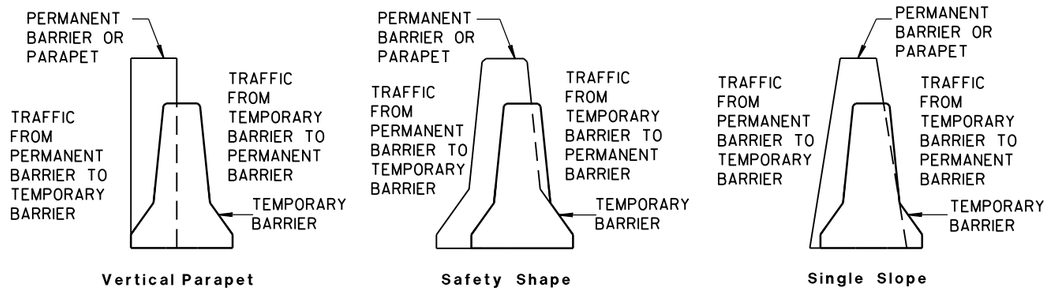

TEMPORARY BARRIER PLACEMENT FOR BI-DIRECTIONAL TRANSITION TO TIED-DOWN SYSTEM

NOTES

NESTED THRIE BEAM IS REQUIRED ON BOTH SIDES OF THE TEMPORARY BARRIER FOR ALL INSTALLATIONS.

1. CAP END PLATE PLACED FLUSH WITH UPSTREAM END OF PERMANENT BARRIER OR PARAPET.
2. THRIE BEAM PIECES ARE OFFSET 15 1/4" TO PREVENT INTERFERENCE FROM THE ANCHORS ON OPPOSING SIDES.
3. MINIMUM MECHANICAL OR EPOXY ANCHOR STRENGTH REQUIREMENTS: ULTIMATE TENSILE LOAD 9.48 KIPS AND ULTIMATE SHEAR LOAD 10.48 KIPS.
4. MINIMUM MECHANICAL OR EPOXY ANCHOR STRENGTH REQUIREMENTS: ULTIMATE TENSILE LOAD 17.9 KIPS AND ULTIMATE SHEAR LOAD 21.96 KIPS.
5. MAY BE USED ON CONCRETE OR ASPHALT PAVEMENTS. ASPHALT OPTION SHOWN. FOR CONCRETE OPTION SEE OTHER DETAILS.
6. MINIMUM MECHANICAL OR EPOXY ANCHOR STRENGTH REQUIREMENTS: ULTIMATE TENSILE LOAD 12.14 KIPS AND ULTIMATE SHEAR LOAD 17.5 KIPS.

BACK VIEW

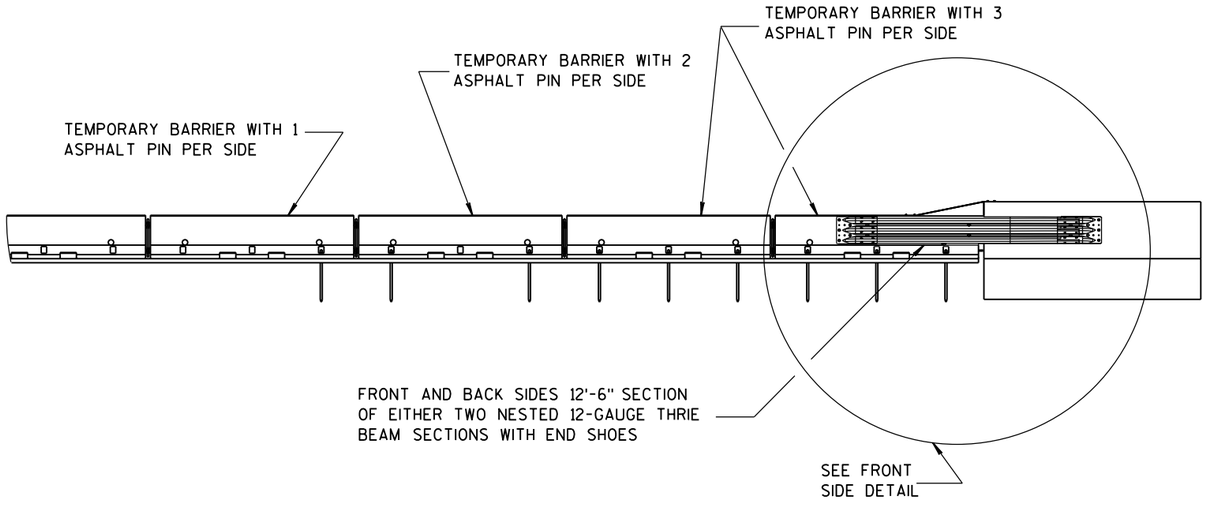

FRONT VIEW

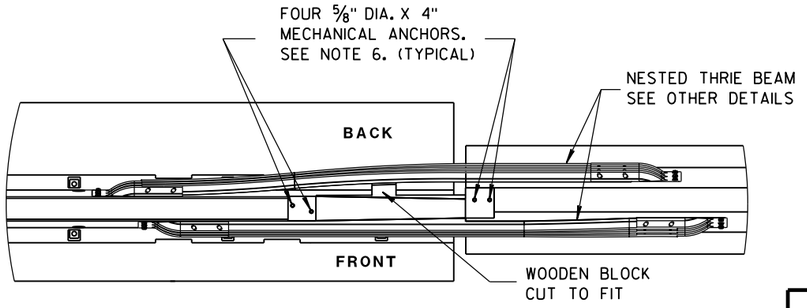

PLAN VIEW

BI-DIRECTIONAL TRANSITION TO TIED-DOWN SYSTEM

CONCRETE BARRIER
TEMPORARY PRECAST, 12'-6"

STATE OF WISCONSIN
DEPARTMENT OF TRANSPO

6
S.D.D. 14 B 7-14e

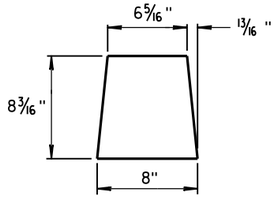

GUSSET 1

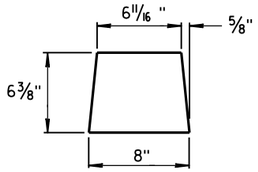

GUSSET 2

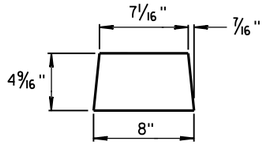

GUSSET 3

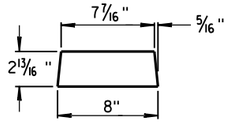

GUSSET 4

GUSSETS

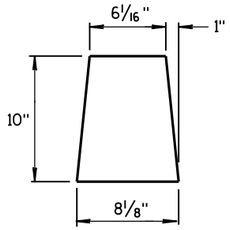

END PLATE

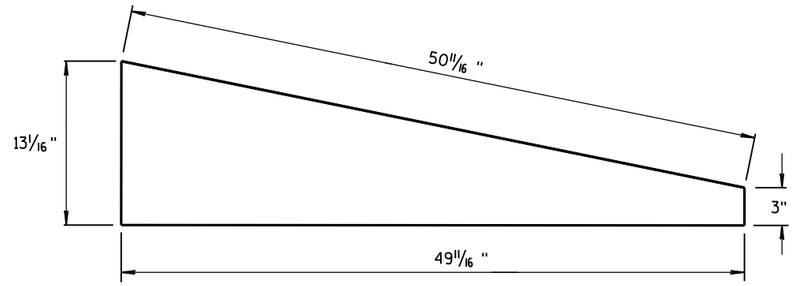

SIDE PLATE

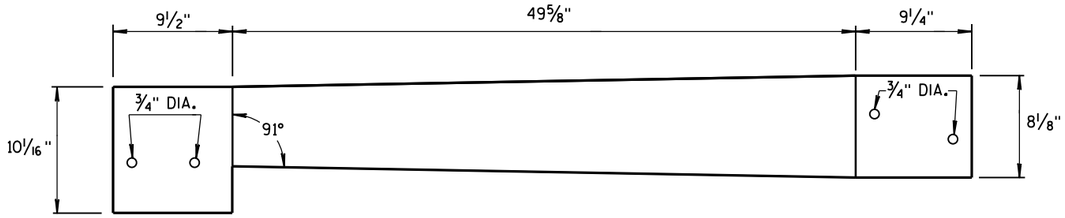

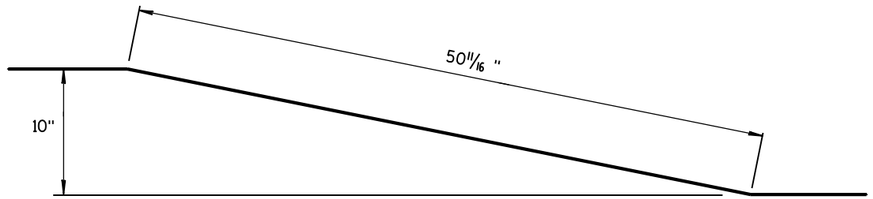

TOP PLATE

SIDE, TOP AND END PLATES FOR CAP FROM TEMPORARY CONCRETE BARRIER TO 42" PERMANENT CONCRETE BARRIER

SIDE PLATES, TOP PLATE, END PLATE AND GUSSETS ARE 12 GAUGE ASTM A36 GALVANIZED STEEL.

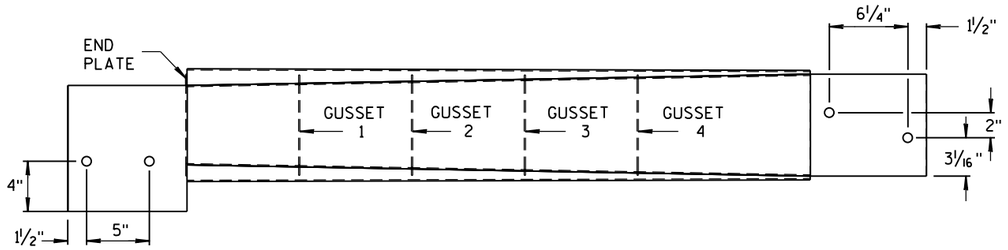

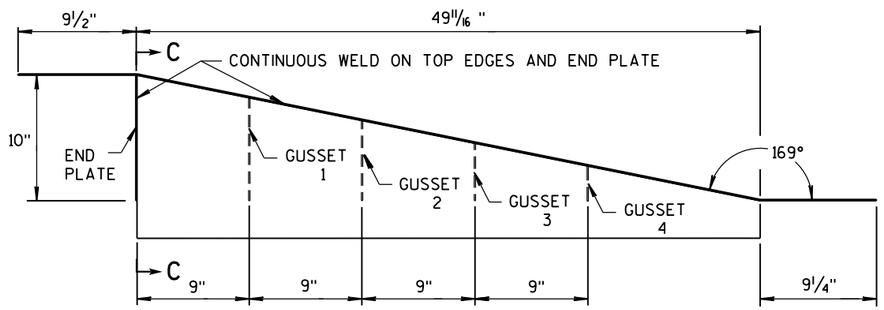

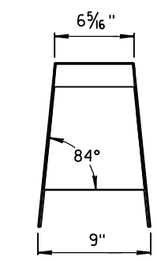

SECTION C-C

NOTES

1. FOUR GUSSETS AND END PLATE ARE STITCH WELDED ON THREE SIDES.
2. TWO TRIANGULAR SIDE PLATES ARE STITCH WELDED TO TOP PLATE, END PLATE, AND GUSSETS.

CAP DETAILS FOR TEMPORARY CONCRETE BARRIER TO 42" PERMANENT CONCRETE BARRIER

CONCRETE BARRIER
TEMPORARY PRECAST, 12'-6"

STATE OF WISCONSIN
DEPARTMENT OF TRANSPOI

6

S.D.D. 14 B 7-14f

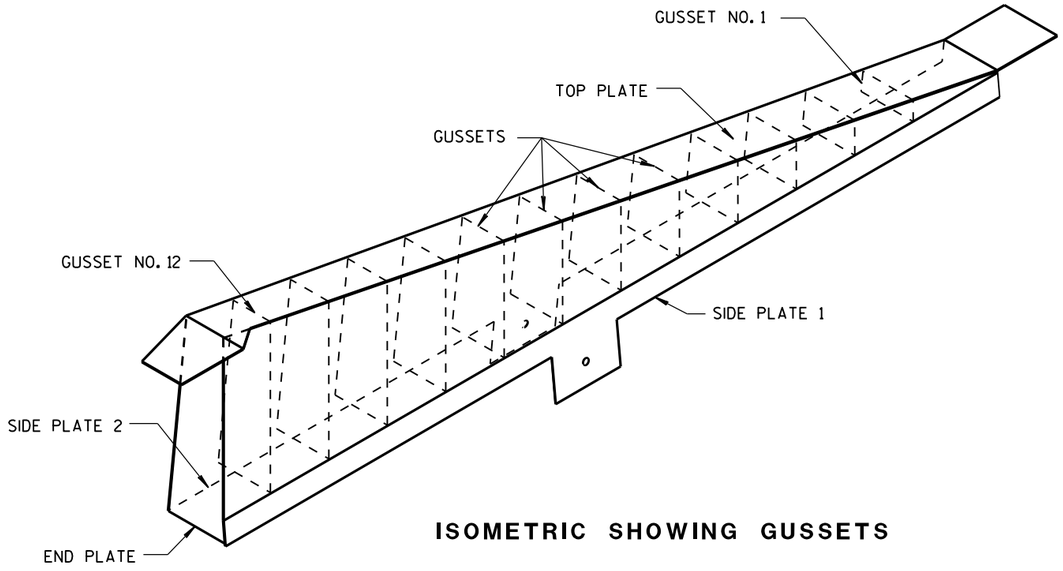

ISOMETRIC SHOWING GUSSETS

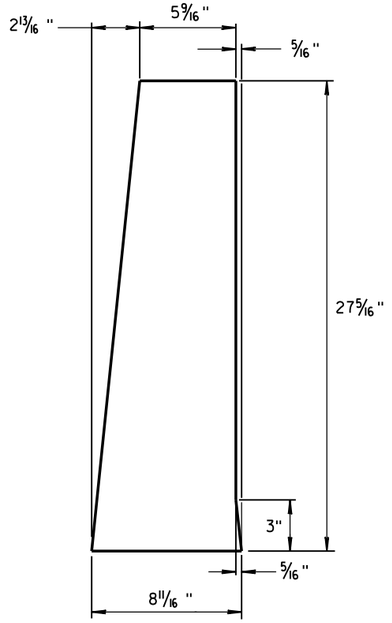

END PLATE

1/8" STEEL PLATE

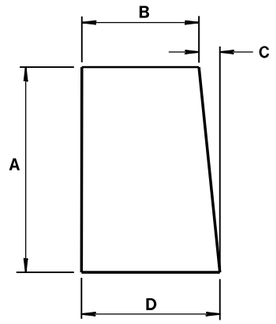

GUSSETS 1 - 12

ALL GUSSETS 1/8" STEEL PLATE

GUSSET DIMENSIONS				
GUSSET NO.	A	B	C	D
1	2 7/8"	7 3/4"	1/4"	8
2	4 11/16 "	7 9/16 "	1/2"	8
3	6 1/2"	7 3/8"	11/16 "	8 1/16 "
4	8 5/16 "	7 3/16 "	7/8"	8 1/16 "
5	10 1/8"	7"	1 1/16 "	8 1/16 "
6	11 15/16 "	6 13/16 "	1 1/4"	8 1/16 "
7	13 3/4"	6 5/8"	1 7/16 "	8 1/16 "
8	15 9/16 "	6 7/16 "	1 9/16 "	8 1/16 "
9	17 3/8"	6 1/4"	1 13/16 "	8 1/16 "
10	19 3/16 "	6 1/16 "	1 15/16 "	8 1/16 "
11	21"	5 7/8"	2 3/16 "	8 1/16 "
12	22 13/16 "	5 11/16 "	2 5/16 "	8 1/16 "

SIDE PLATES, TOP PLATE, END PLATE AND GUSSETS ARE 12 GAUGE ASTM A36 STEEL AND GALVANIZED.

GUSSETS AND END PLATE ARE STITCH WELDED ON 3 SIDES. TWO TRIANGULAR SIDE PLATES ARE STITCH WELDED TO TOP PLATE, END PLATE AND GUSSETS.

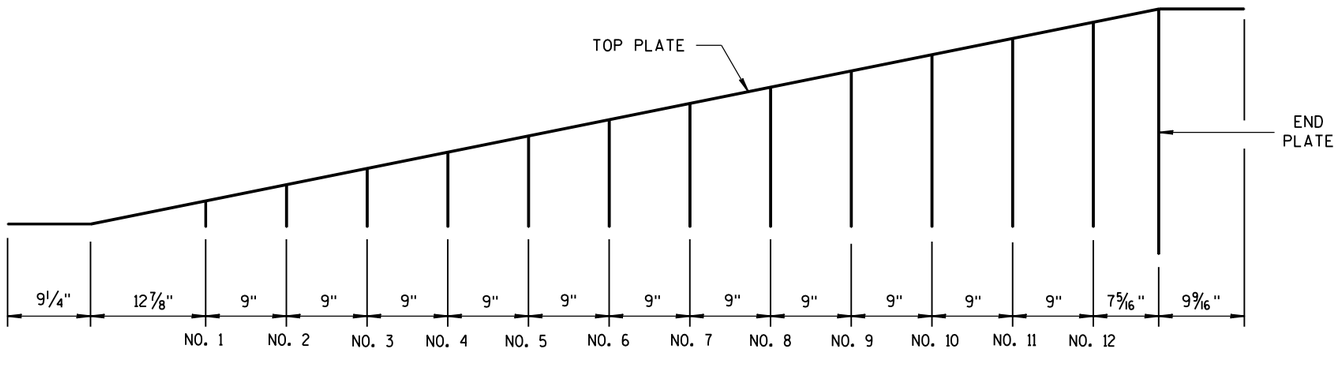

GUSSET LOCATION

CAP DETAILS FOR TEMPORARY CONCRETE BARRIER TO 56" PERMANENT CONCRETE BARRIER

CONCRETE BARRIER
TEMPORARY PRECAST, 12'-6"

STATE OF WISCONSIN
DEPARTMENT OF TRANSPOI

6

S.D.D. 14 B 7-14g

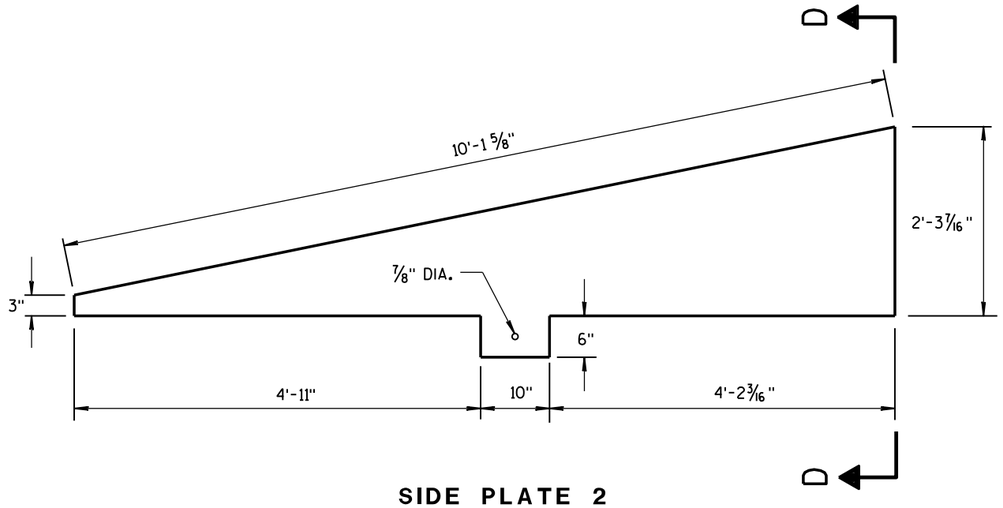

SIDE PLATE 2

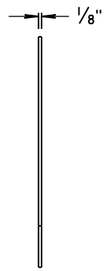

END VIEW

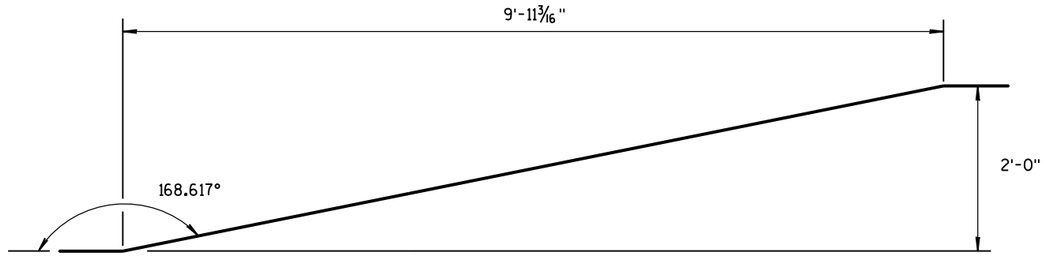

SIDE VIEW

TOP PLATE

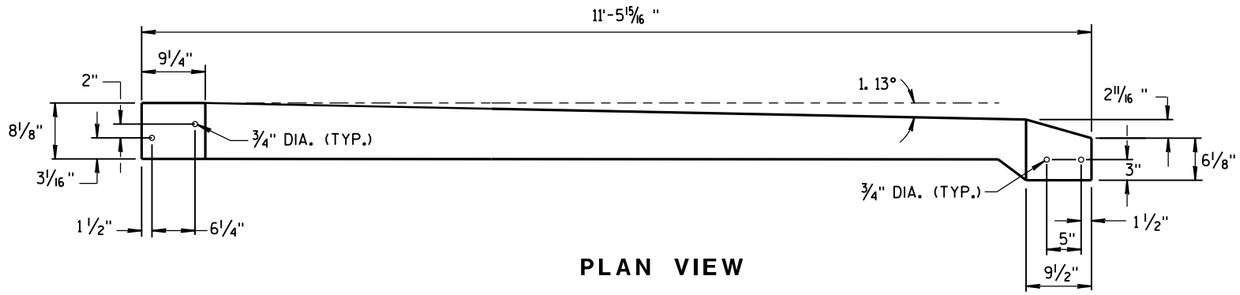

PLAN VIEW

TOP PLATE

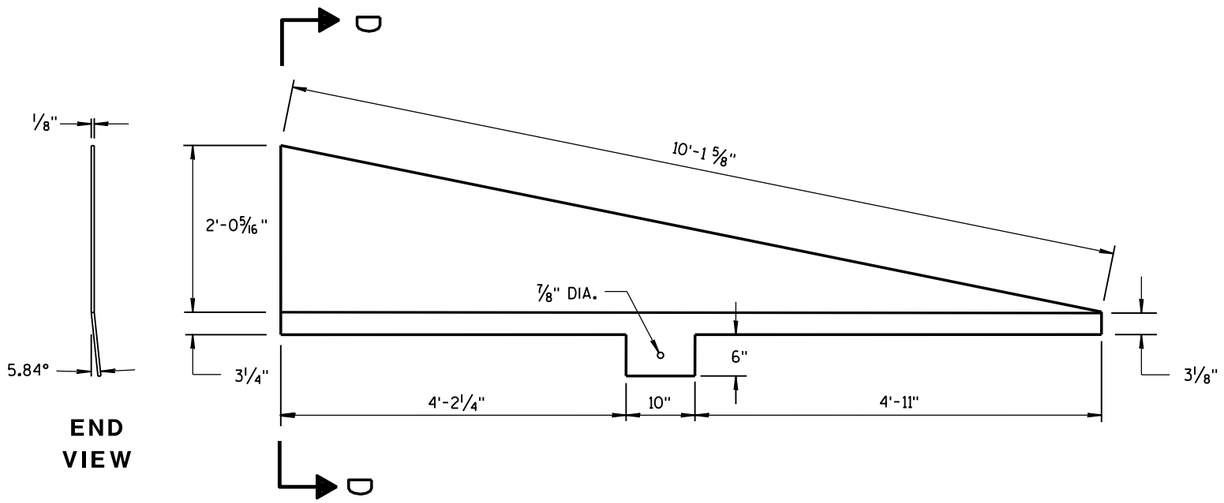

END VIEW

SIDE PLATE 1

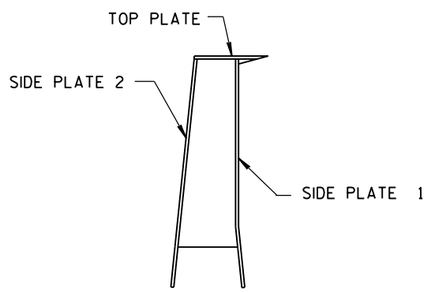

SECTION D-D

CAP DETAILS FOR TEMPORARY CONCRETE BARRIER TO 56" PERMANENT CONCRETE BARRIER

CONCRETE BARRIER
TEMPORARY PRECAST, 12'-6"

STATE OF WISCONSIN
DEPARTMENT OF TRANSPORTATION

APPROVED
June 2014 — DATE
/S/ Jerry H. Zoda — ROADWAY STANDARD DEVELOPMENT ENGINEER
FHWA

6

S.D.D. 14 B 7-14h

6

S.D.D. 14 B 7-14h

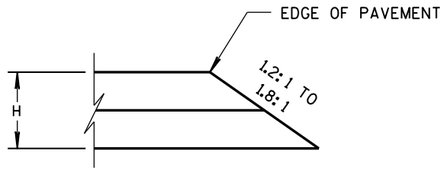

CONSTRUCTED WITH FINAL TWO LAYERS

FOR H 5" OR LESS

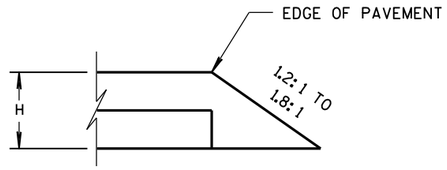

CONSTRUCTED WITH FINAL LAYER

FOR H 5" OR LESS

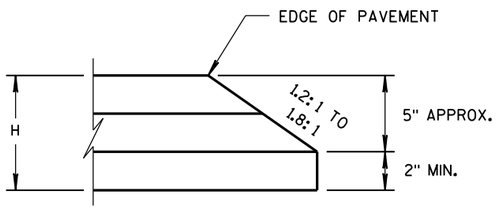

CONSTRUCTED WITH FINAL TWO LAYERS

FOR H GREATER THAN 5"

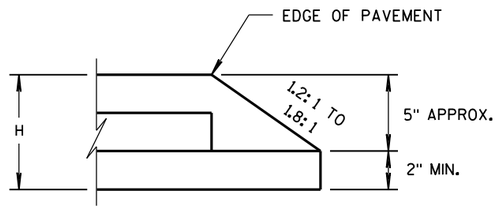

CONSTRUCTED WITH FINAL LAYER

FOR H GREATER THAN 5"

HMA PAVEMENT AND HMA OVERLAYS

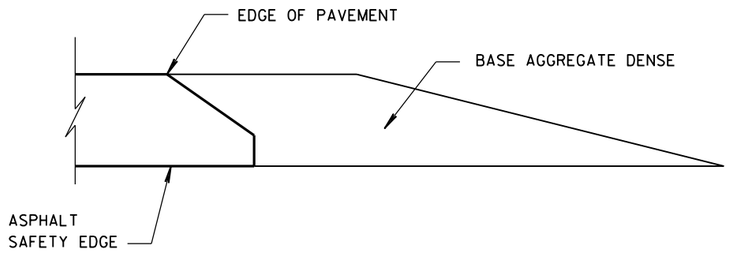

FINISHED SHOULDER AGGREGATE PLACEMENT

6

6

S.D.D. 14 B 29-1

S.D.D. 14 B 29-1

SAFETY EDGE SM

STATE OF WISCONSIN
DEPARTMENT OF TRANSPORTATION

APPROVED

11/30/2012
DATE

/S/ Jerry H. Zoda
ROADWAY STANDARDS DEVELOPMENT ENGINEER

FHWA

GENERAL NOTES

1. WOOD OR STEEL POSTS (w6X9 OR w6X8.5) MAY BE USED. DO NOT INTERMIX WOOD AND STEEL POSTS. INSTALL STEEL POSTS WITH HOLES ON APPROACHING TRAFFIC SIDE.

2. USE WOOD OR APPROVED PLASTIC BLOCKOUTS. WOOD BLOCKOUTS MAY BE CONSTRUCTED OUT OF TWO OR MORE WOOD BLOCKOUTS. SEE ALTERNATE WOOD BLOCKOUT DETAIL. DIMENSIONS OF APPROVED PLASTIC BLOCKOUTS MAY VARY.

3. IF ROCK IS ENCOUNTERED DURING EXCAVATION, PROVIDE A HOLE 12 INCHES IN DIAMETER EXTENDING 20 INCHES DEEP INTO THE ROCK. PLACE APPROXIMATELY 2½ INCHES OF GRANULAR MATERIAL IN THE BOTTOM OF THE HOLE. CUT THE POSTS THE TO LENGTH AMD INSTALL. BACKFILL WITH EXCAVATED MATERIAL AND COMPACT. BACKFILL IS TO BE FREE OF LARGE ROCKS.

4. WHEN THE DISTANCE FROM BACK OF POST TO SHOULDER HINGE POINT IS LESS THAN 2 FEET INSTALL LONGER POST AT HALF POST SPACING (K).

5. FOR NEW MGS INSTALLATION TOP OF W-BEAM RAIL TOLERANCE IS ± 1". FOR EXISTING MGS INSTALLATION TOP OF W-BEAM IS BETWEEN 27¾" TO 32".

6. WHEN USING STEEL POST AND WOOD BLOCKOUTS INSTALL FOUR 16D GALVANIZED NAILS. INSTALL NAILS AT THE BACK CORNERS OF THE BLOCK AND BEND THE NAILS OVER THE FLANGE OF THE STEEL POST.

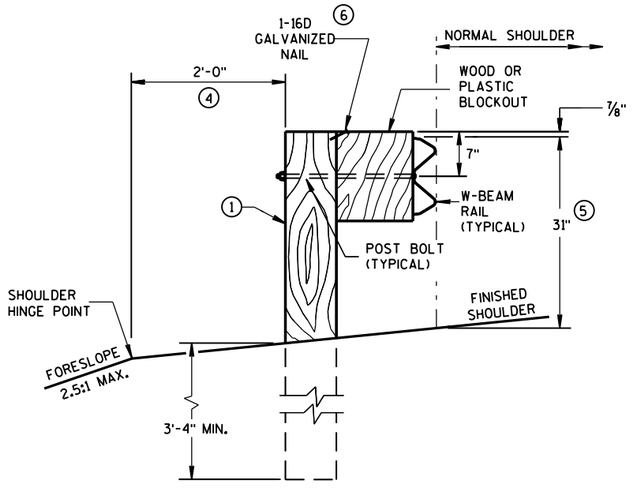

END VIEW

LOCATED ALONG A ROADWAY SHOULDER
STANDARD INSTALLATION

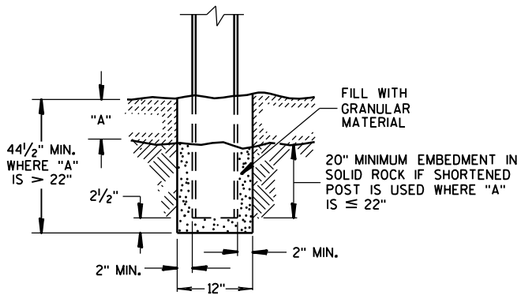

END VIEW

SETTING STEEL OR WOOD POST IN ROCK 3

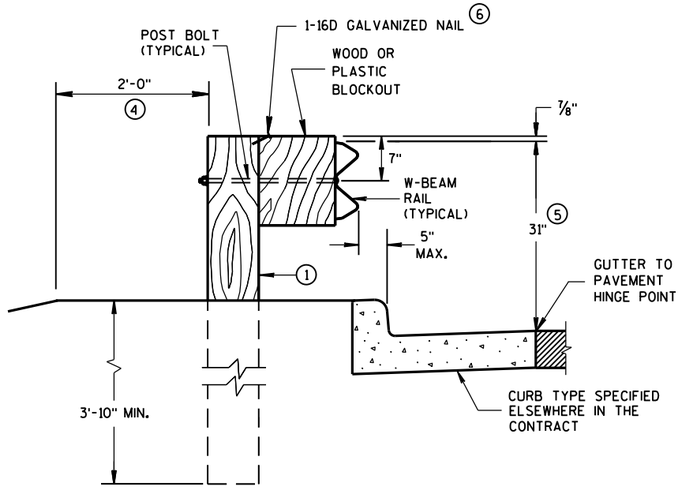

END VIEW

LOCATED ALONG A CURBED ROADWAY

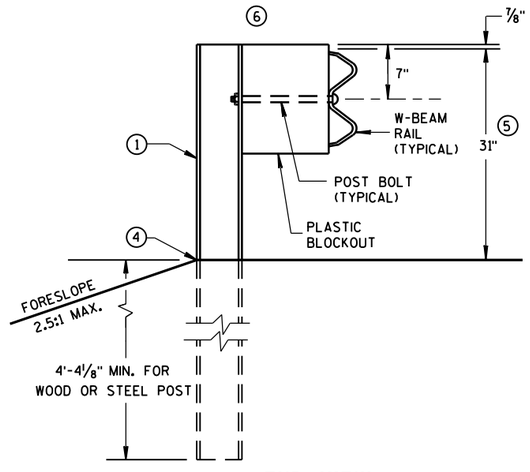

END VIEW

MGS LONGER POST AT HALFPOST SPACING W BEAM (K)

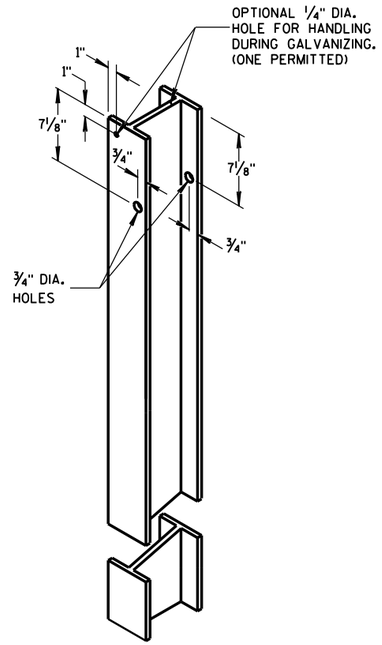

STEEL POST &
HOLE PUNCHING DETAIL
(w6X9) 1

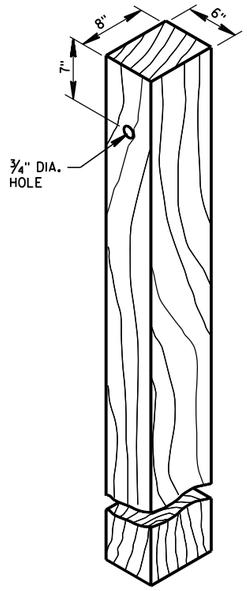

WOOD POST
(6" X 8") NOMINAL 1

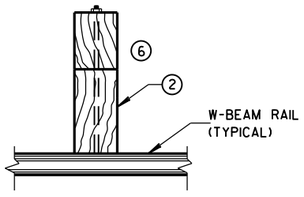

PLAN VIEW
WOOD POST,
BLOCKOUT & BEAM

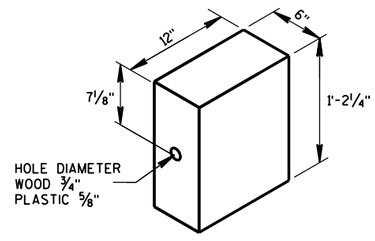

WOOD OR
PLASTIC BLOCKOUT 2

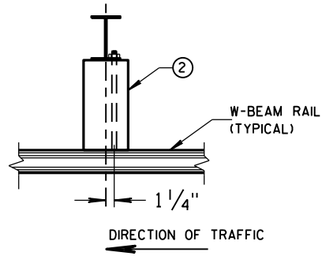

PLAN VIEW
STEEL POST,
PLASTIC BLOCKOUT & BEAM

MIDWEST GUARDRAIL SYSTEM
(MGS) GUARDRAIL

STATE OF WISCONSIN
DEPARTMENT OF TRANSPOI

6
S.D.D. 14 B 42-3a

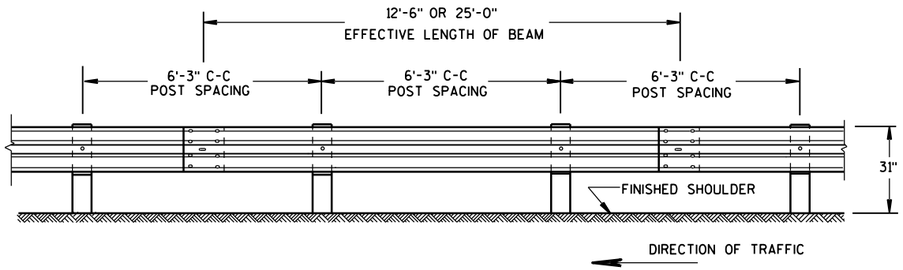

FRONT VIEW

POST SPACING STANDARD INSTALLATION

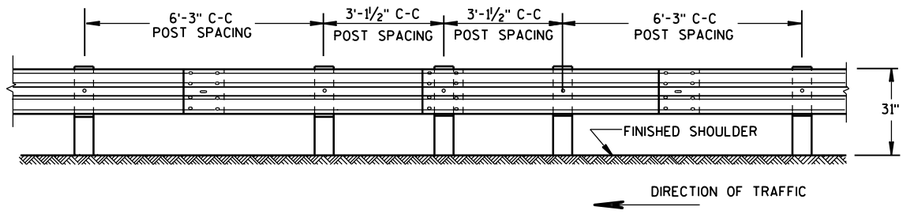

FRONT VIEW

HALF POST SPACING (HS) AND HALF POST SPACING WITH LONGER POSTS (K)

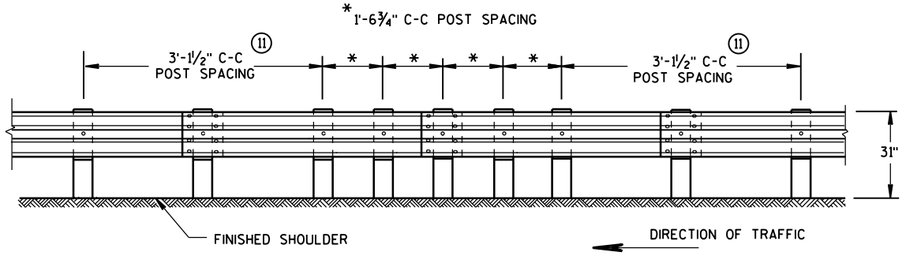

FRONT VIEW

QUARTER POST SPACING (QS)

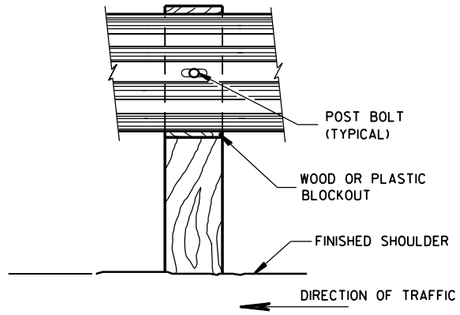

FRONT VIEW AT WOOD POST

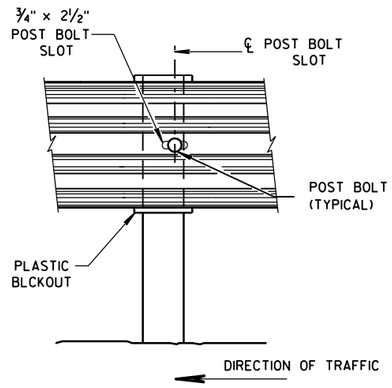

FRONT VIEW AT STEEL POST

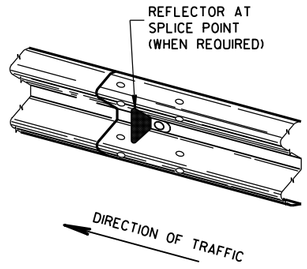

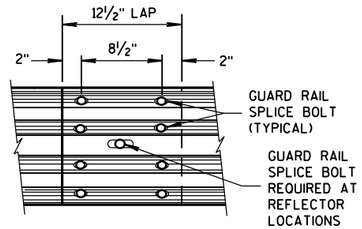

FRONT VIEW

MID-SPAN BEAM SPLICE

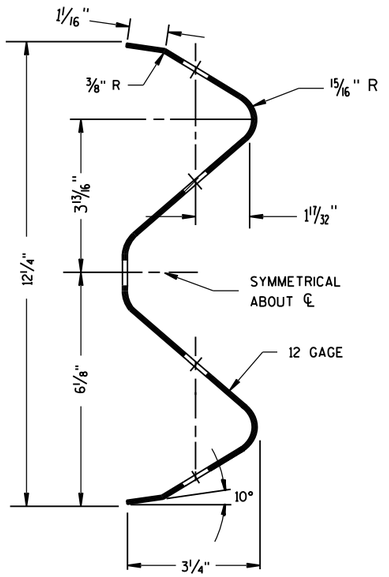

SECTION THRU W-BEAM RAIL

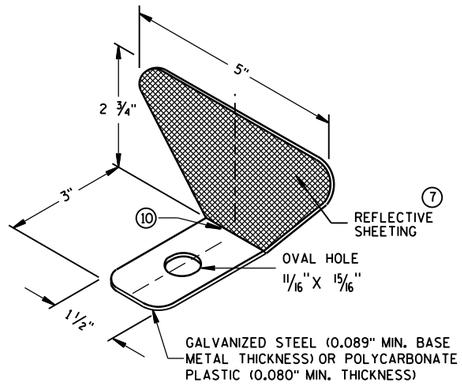

GENERAL NOTES

⑦ PROVIDE SILVER REFLECTIVE SHEETING ON ALL REFLECTORS EXCEPT THOSE LOCATED ALONG THE LEFT EDGE OF ONE-WAY ROADWAYS, WHICH SHALL BE PROVIDED WITH YELLOW REFLECTIVE SHEETING. SHEETING IS TYPE H. SEE STANDARD SPECIFICATION 637.

⑧ DO NOT INSTALL REFLECTORS ON THE FIRST 50 FEET OF THE APPROACH END OF THE ENERGY ABSORBING TERMINAL. RAIL SPLICE LOCATIONS ARE THE ONLY ACCEPTABLE LOCATIONS FOR REFLECTORS.

⑨ REVERSE EVERY OTHER REFLECTOR FOR 2-WAY VISIBILITY. THE CONTRACTOR MAY FURNISH TWO-SIDED REFLECTORS IN LIEU OF ONE-SIDED REFLECTORS.

⑩ PROVIDE AN ANGLE OF BEND OF 90° ± 1° FOR TWO-SIDED REFLECTORS.

⑪ 25 FEET OF HALF POST SPACING IS REQUIRED ON APPROACH AND DEPARTURE ENDS OF QUARTER POST SPACING.

POST BOLTS ARE A ⅝" DIAMETER ASTM A307 GUARDRAIL BOLT. A POST BOLT REQUIRES ⅝" DIAMETER A563A DOUBLE RECESSED (DR) HEAVY HEX NUT AND ⅝" DIAMETER F844 FLAT WASHER. POST BOLTS MAY BE LONGER IF MULTIPLE BLOCKOUTS ARE BEING USED.

GUARD RAIL SPLICE BOLTS ARE A ⅝" DIAMETER ASTM A307 GUARDRAIL HEAD BOLT. A GUARDRAIL SPLICE BOLT REQUIRES ⅝" DIAMETER A563A DOUBLE RECESSED (DR) HEAVY HEX NUT.

REFLECTOR SPACING ⑧

	BEAM GUARD LENGTH	REFLECTOR SPACING	NO. SURFACES REFLECTORIZED	MIN. NO. REFLECTORS
ONE WAY TRAFFIC	< 200'	50' C-C	1	3
	> 200'	100' C-C	1	
TWO WAY TRAFFIC	< 200'	25' C-C	1 ⑨	6
	> 200'	50' C-C	1	
TWO WAY TRAFFIC	< 200'	50' C-C	2	3
	> 200'	100' C-C	2 ⑩	

ONE SIDED REFLECTOR DETAIL AND TYPICAL INSTALLATION ⑦

MIDWEST GUARDRAIL SYSTEM
(MGS) GUARDRAIL

STATE OF WISCONSIN
DEPARTMENT OF TRANSPO

6

S.D.D. 14 B 42-3b

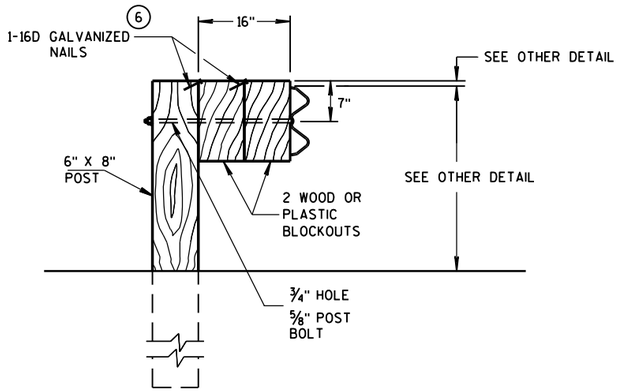

DETAIL FOR 16" BLOCKOUT DEPTH

IT IS ACCEPTABLE TO USE BLOCKOUTS UP TO 16" DEEP TO INCREASE THE POST OFFSET TO AVOID UNDERGROUND OBSTACLES. THERE IS NO LIMIT TO THE NUMBER OF POSTS THAT CAN HAVE ADDITIONAL BLOCKOUTS UP TO 16" DEEP.

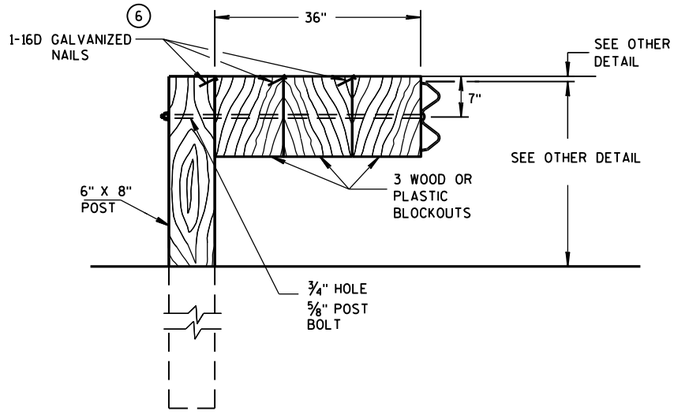

DETAIL FOR 36" BLOCKOUT DEPTH

NOTES: UNDER SPECIAL CIRCUMSTANCES, SUCH AS AVOIDING OBSTACLES THAT ARE NOT RELOCATED, IT IS ACCEPTABLE TO INSTALL ADDITIONAL BLOCKOUTS TO OBTAIN UP TO 36" DEPTH FOR ONE OR TWO POSTS IN A SECTION OF GUARDRAIL.

DO NOT USE 16" OR 36" BLOCKOUTS IF IT CAUSES THE POST TO BE DRIVEN BEYOND SHOULDER HINGE POINT OR CAUSES A FIXED OBJECT TO BE WITHIN THE DEFLECTION DISTANCE OF THE BARRIER.

NOTE: 1. ALL FILLETS SHALL HAVE A MINIMUM RADIUS OF 1/16".
2. IF THE BOLT EXTENDS MORE THAN 1/4" FROM THE NUT THE BOLT SHOULD BE TRIMMED BACK.

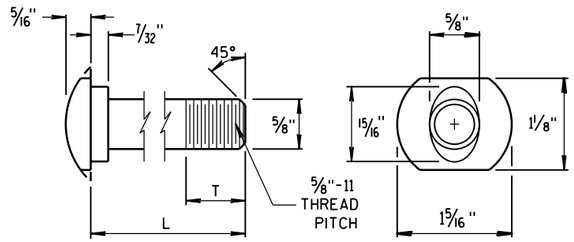

POST BOLT TABLE

L	T (MIN.)
1 1/4"	1 1/8"
2"	1 3/4"
10"	4"
14"	4 1/16"
18"	4"
21"	4 1/16"
25"	4"

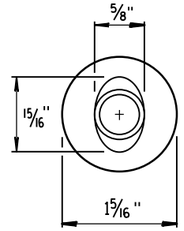

ALTERNATE BOLT HEAD

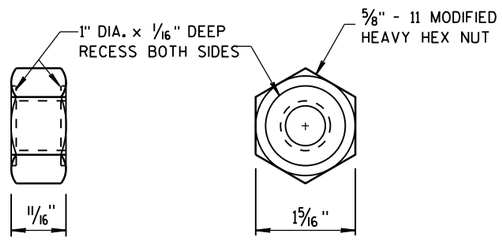

POST BOLT AND RECESS NUT

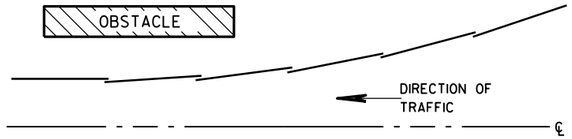

PLAN VIEW

BEAM LAPPING DETAIL

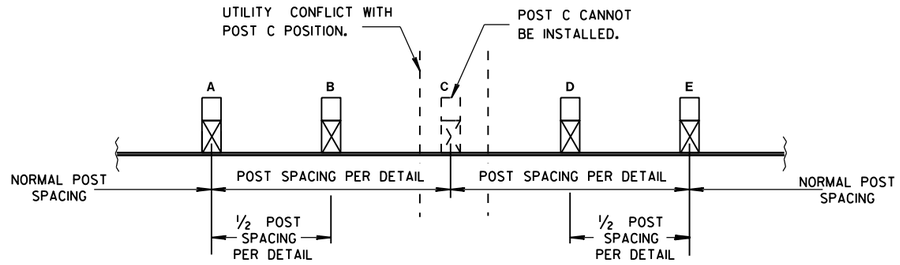

POST DRIVING FOR CONTINUOUS UNDERGROUND OBSTRUCTION

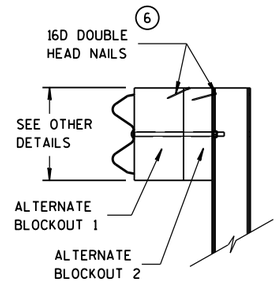

SIDE VIEW

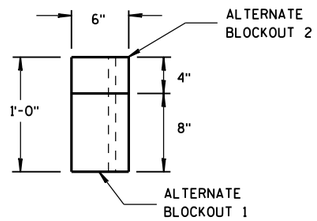

TOP VIEW

ALTERNATE WOOD BLOCKOUT DETAIL

MIDWEST GUARDRAIL SYSTEM (MGS) GUARDRAIL

STATE OF WISCONSIN
DEPARTMENT OF TRANSPORTATION

APPROVED
June 2014
DATE
/S/ Jerry H. Zogg
ROADWAY STANDARDS ENGINEER
FHWA

6
S.D.D. 14 B 42-3c

GENERAL NOTES

(A) THE SLOPE IN THE AREA BOUNDED BY THE GRADELINE, THE HINGE POINT LINE (HPL), AND THE CLEAR ZONE LIMITS (CZL) SHALL BE 4:1 OR FLATTER.

(B) AFTER FINAL ASSEMBLY, RECHECK CABLE TO BE SURE IT IS TAUT AND HAS NOT RELAXED.

(C) DIFFERENT MANUFACTURES REQUIRE DIFFERENT PERFORATED W-BEAM RAIL END PANELS. SEE MANUFACTURES INFORMATION.

(D) THE TOP OF THE STEEL TUBE ON POST 1 AND POST 2 SHALL NOT BE MORE THAN 3" ABOVE THE FINISH GROUND ELEVATION.

(F) ATTACH ALUMINUM SHEET TO E.A.T. HEAD USING 4 STAINLESS STEEL SELF-TAPPING SCREWS. ONE SCREW PER CORNER.

(G) ½" DIAMETER X 3" LONG LAG BOLT AND WASHER.

(H) HARDWARE VARIES BETWEEN DIFFERENT MANUFACTURES. SEE MANUFACTURE'S DRAWING FOR INFORMATION.

(I) DIMENSIONS MAY VARY. SEE MANUFACTURE'S INFORMATION.

SEE SDD 14B42 FOR MORE INFORMATION.

* DO NOT ATTACH BLOCKOUTS TO POSTS 1 AND 2.

DO NOT INSTALL REFLECTORS ON THE FIRST 50 FEET OF THE APPROACH END OF THE ENERGY ABSORBING TERMINAL.

W-BEAM RAIL SPLICES ARE LOCATED AT POST NUMBER 3, AND BETWEEN POST 5 AND 6, BETWEEN POSTS 7 AND 8, AND MIDDLE OF THE SPAN AFTER POST 9.

THE CENTER OF THE UPPER 3½" DIAMETER HOLE ON POST NUMBER 3 THROUGH POST 9 IS TO BE FLUSH WITH THE GROUND LINE UP TO A MAXIMUM OF 2" ABOVE GROUND LINE.

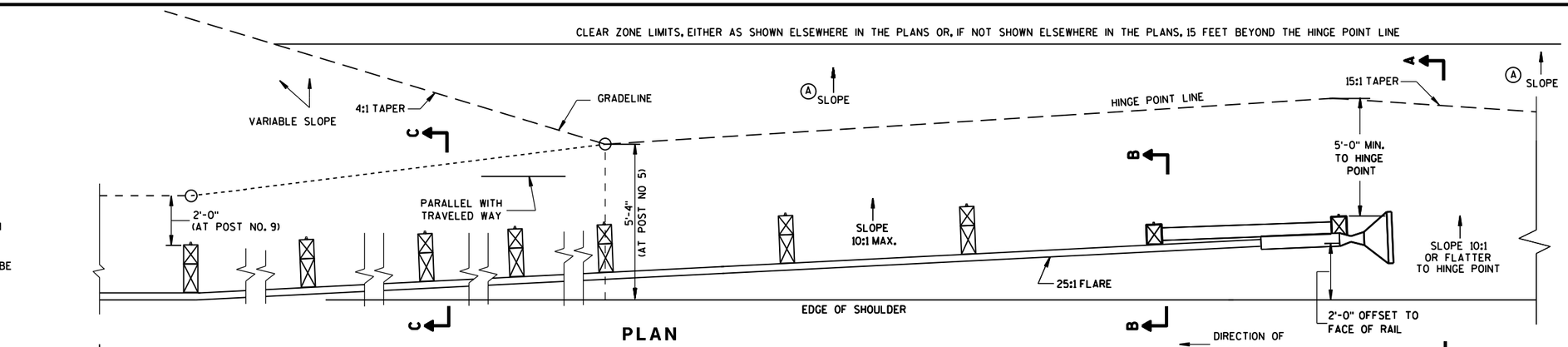

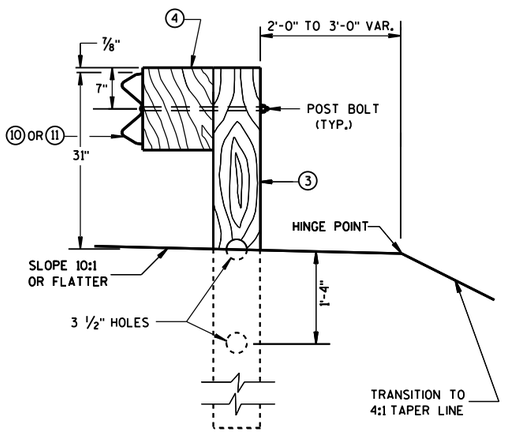

SECTION C-C
TYPICAL AT POST NOS. 3-9

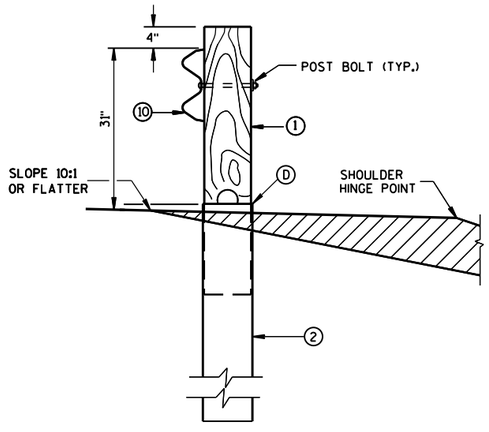

SECTION B-B
TYPICAL AT POST NO. 2*

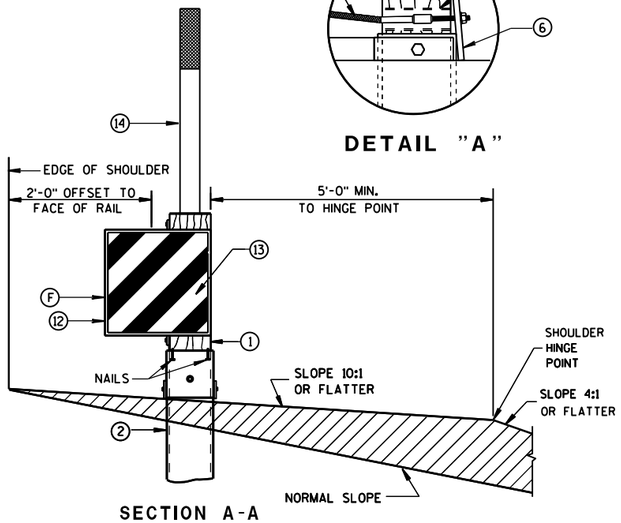

SECTION A-A
TYPICAL AT POST NO. 1*

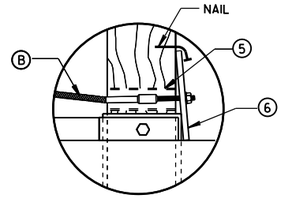

DETAIL "A"

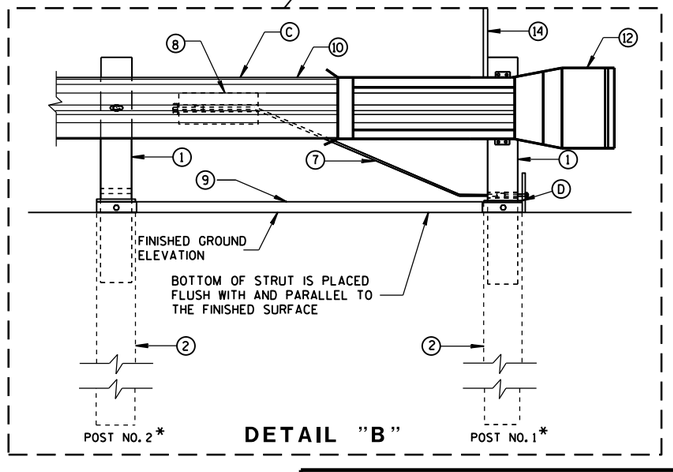

DETAIL "B"

MIDWEST GUARDRAIL SYSTEM ENERGY ABSORBING TERMINAL (MGS)

STATE OF WISCONSIN
DEPARTMENT OF TRANSPO

S.D.D. 14 B 44-2a

S.D.D. 14 B 44-2a

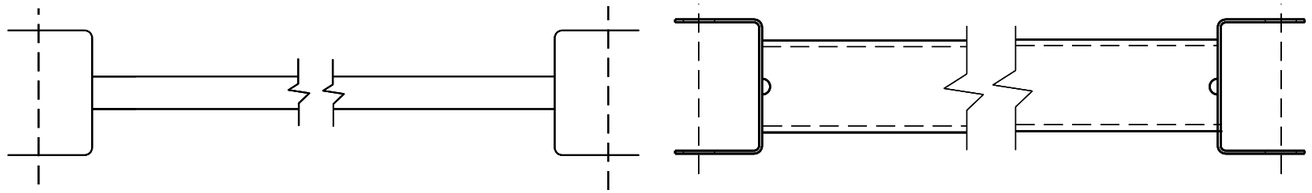

GENERIC GROUND STRUT (9) (H)

BILL OF MATERIALS

PART NO.	DESCRIPTION MATERIALS PROVIDED BY MGS EAT MANUFACTURER. SEE MANUFACTURER'S DETAILS FOR MORE INFORMATION.
(1)	WOOD BREAKAWAY POST
(2)	6" X 8" X 0.188", 6'-0" LONG FOUNDATION TUBE AT POSTS 1 AND 2
(3)	WOOD CRT
(4)	WOOD BLOCKOUT
(5)	PIPE SLEEVE
(6)	BEARING PLATE
(7)	BCT CABLE ASSEMBLY
(8)	ANCHOR CABLE BOX
(9)	GROUND STRUT
(10)	PERFORATED W-BEAM RAIL END PANEL, 12'-6" LONG.
(11)	STANDARD W-BEAM RAIL. MULTIPLE SECTIONS REQUIRED. SECTIONS VARY IN LENGTH.
(12)	END SECTION EAT
(13)	0.040" ALUMINUM SHEET WITH REFLECTIVE SHEETING TYPE F PER SECTION 637 OF THE STANDARD SPECIFICATIONS
(14)	EAT MARKER POST - YELLOW (SEE APPROVED PRODUCTS LIST)

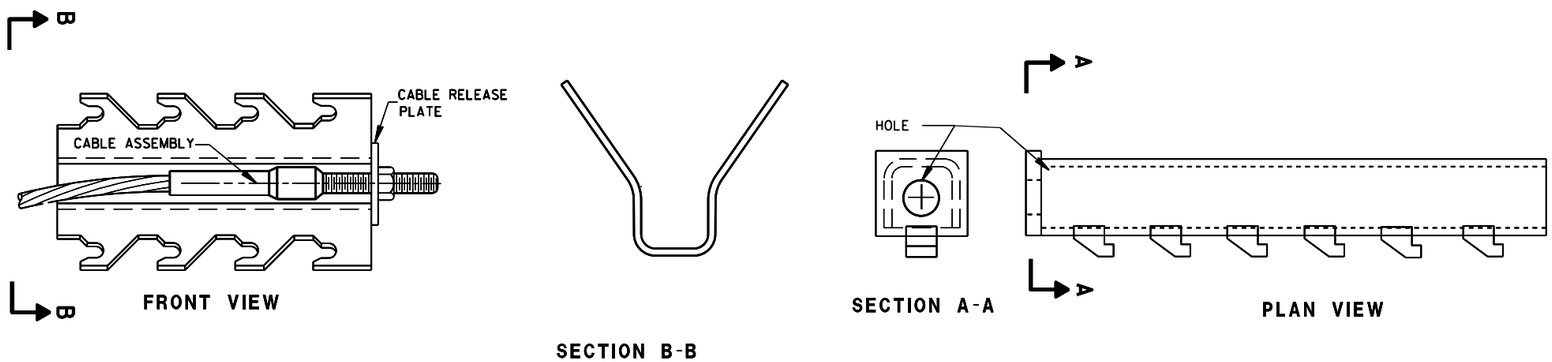

GENERIC ANCHOR CABLE BOX (8) (H)

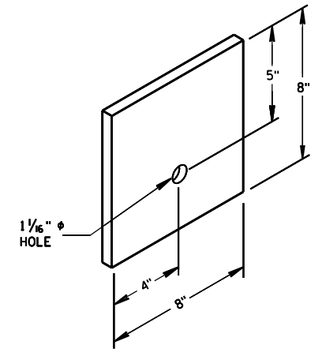

BEARING PLATE (6)

MIDWEST GUARDRAIL SYSTEM
ENERGY ABSORBING TERMINAL
(MGS)

STATE OF WISCONSIN
DEPARTMENT OF TRANSPOI

6
S.D.D. 14 B 44-2b

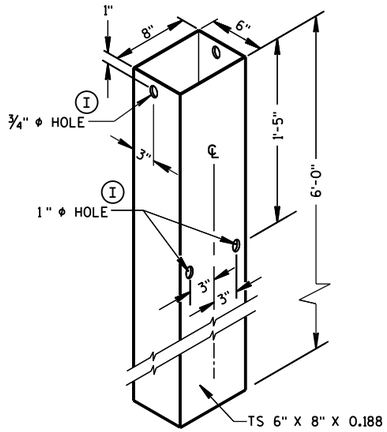

FOUNDATION TUBE (2)

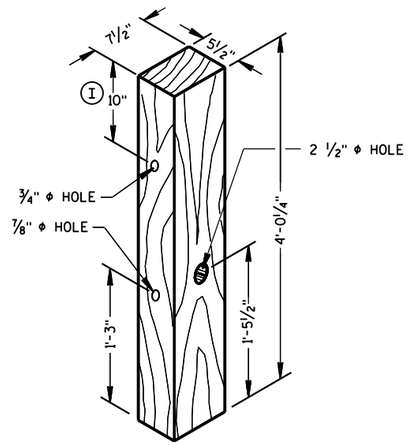

POSTS NUMBER 1 AND 2

WOOD BREAKAWAY POST (1)

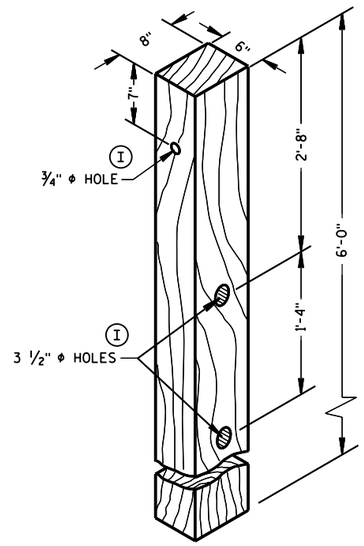

POSTS NUMBER 3-9

WOOD CRT POST (3)

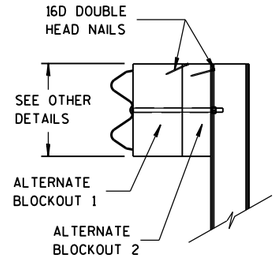

SIDE VIEW

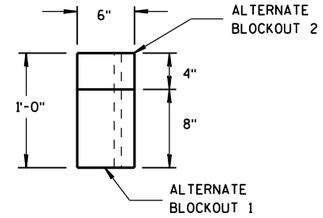

TOP VIEW

ALTERNATE WOOD BLOCKOUT DETAIL

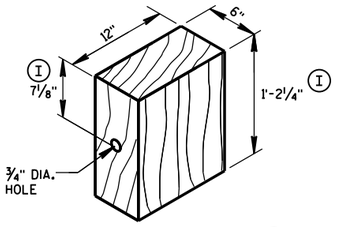

WOOD BLOCKOUT (4)

REQ'D. AT ALL POSTS EXCEPT POST NO'S 1 & 2

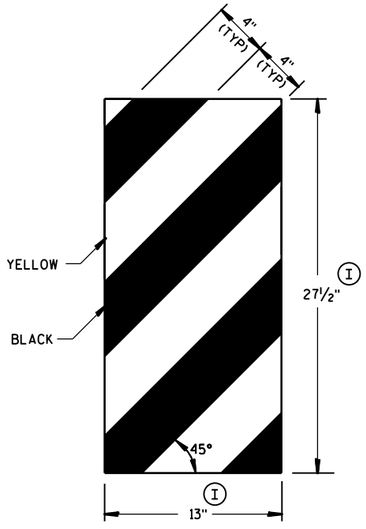

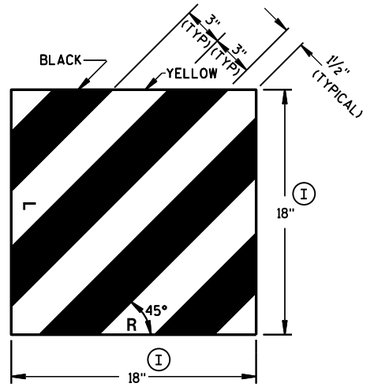

GENERIC REFLECTIVE SHEETING (13) (H)

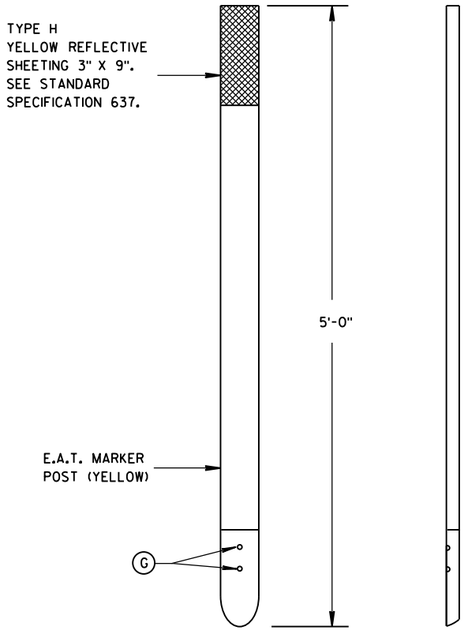

FRONT VIEW

SIDE VIEW

E.A.T. MARKER POST (14)

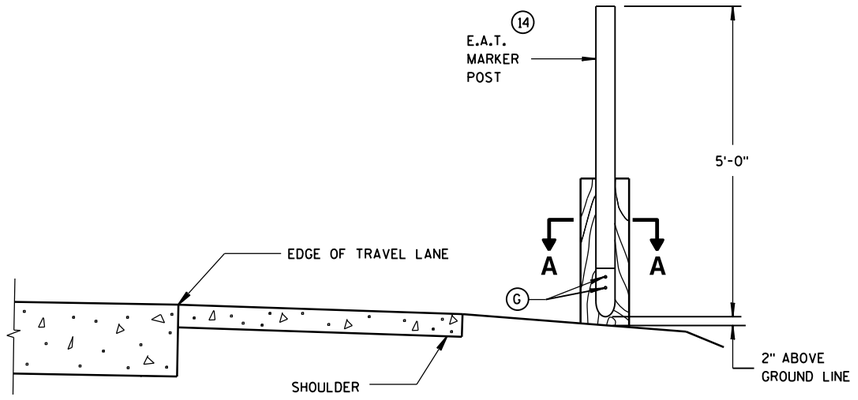

TYPICAL INSTALLATION OF E.A.T. MARKER POST BACKSIDE OF POST NO. 1

(E.A.T. AND RAIL REMOVED FOR CLARITY)

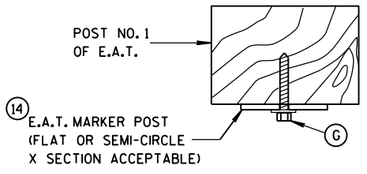

SECTION A-A

MIDWEST GUARDRAIL SYSTEM ENERGY ABSORBING TERMINAL (MGS)

STATE OF WISCONSIN
DEPARTMENT OF TRANSPORTATION

APPROVED
June 2014 — DATE
/S/ Jerry H. Zogg — ROADWAY STANDARDS ENGINEER
FHWA

6

S.D.D. 14 B 44-2c

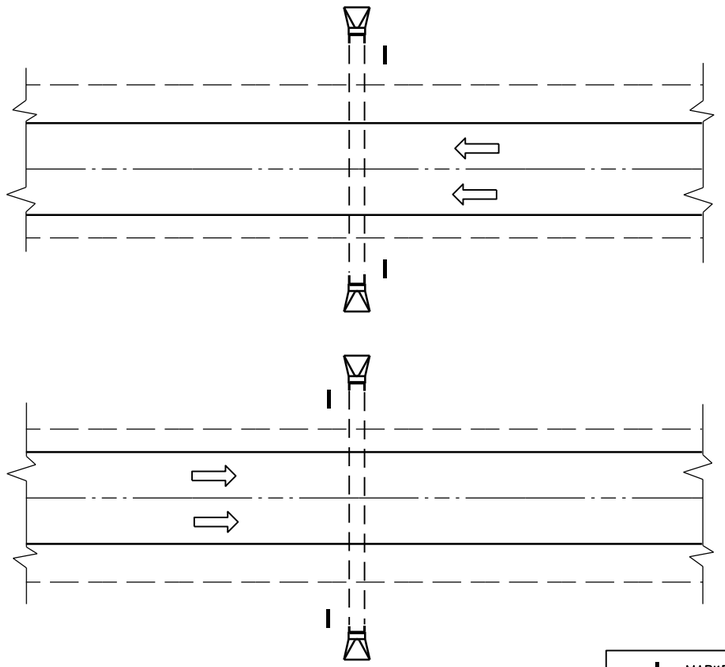

PLAN VIEW

DIVIDED HIGHWAY

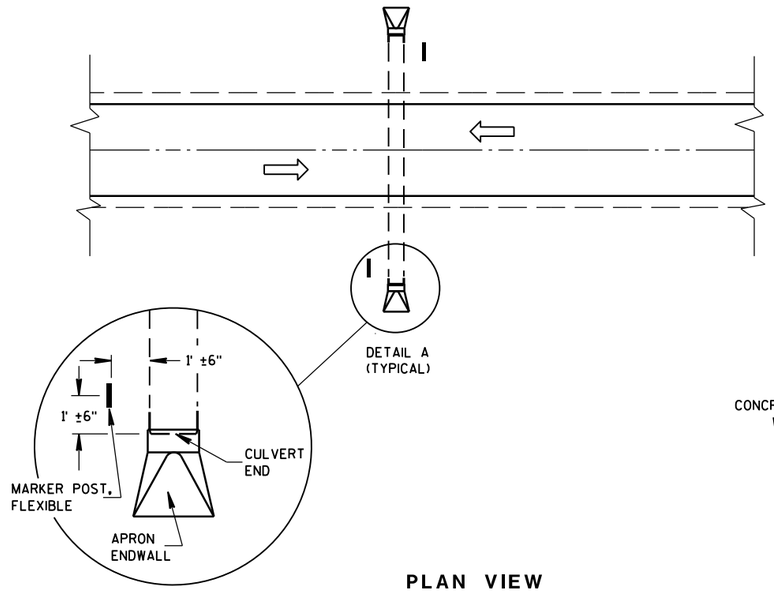

DETAIL A
(TYPICAL)

PLAN VIEW

UNDIVIDED HIGHWAY

MARKER POST, FLEXIBLE

DIRECTION OF TRAFFIC FLOW

GENERAL NOTES

DETAILS OF CONSTRUCTION, MATERIALS AND WORKMANSHIP NOT SHOWN ON THIS DRAWING SHALL CONFORM TO THE PERTINENT REQUIREMENTS OF THE STANDARD SPECIFICATIONS AND THE APPLICABLE SPECIAL PROVISIONS.

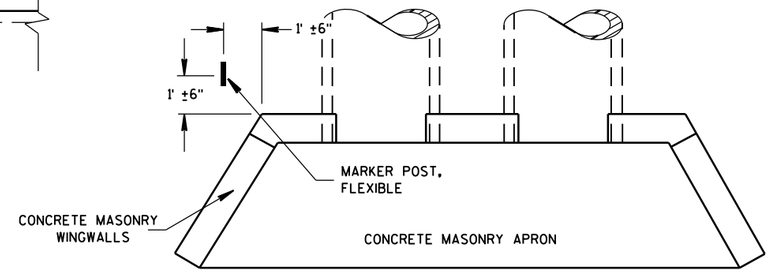

PLAN VIEW

CONCRETE MASONRY ENDWALLS FOR CULVERT PIPE AND PIPE ARCH

FLEXIBLE MARKER POST LOCATION

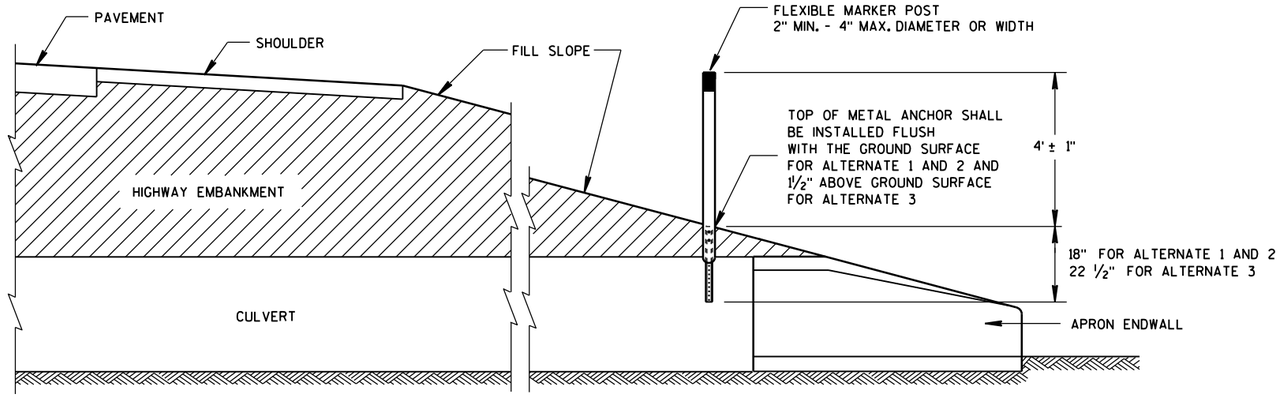

CROSS SECTION

FLEXIBLE MARKER POST

FLEXIBLE MARKER POST FOR CULVERT END

STATE OF WISCONSIN
DEPARTMENT OF TRANSPOI

6

S.D.D. 15 A 3-2a

6

S.D.D. 15 A 3-2a

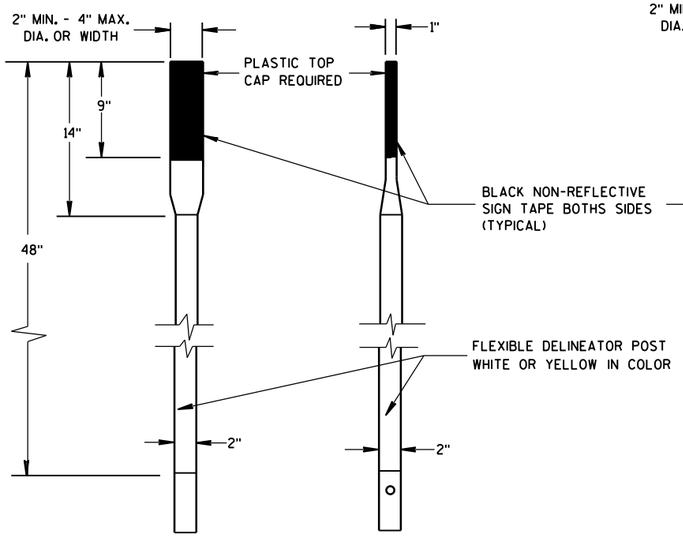

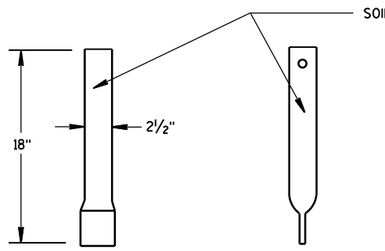

FRONT VIEW SIDE VIEW

ALTERNATE 1

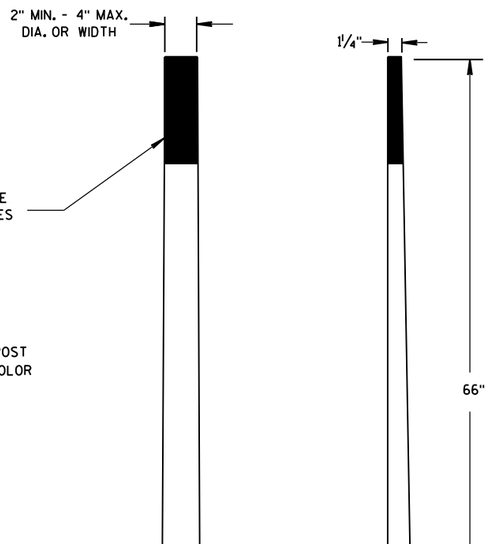

FRONT VIEW SIDE VIEW

ALTERNATE 2

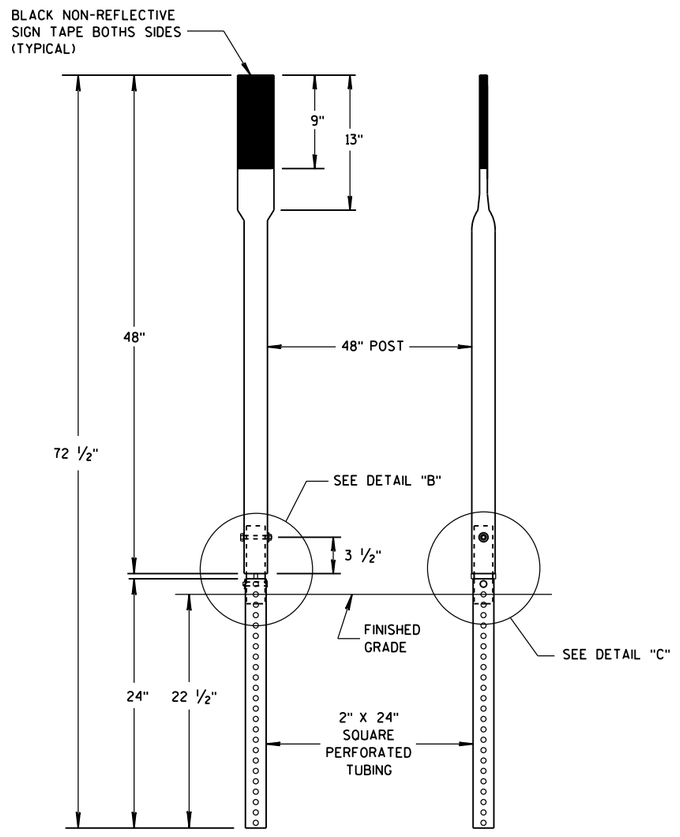

FRONT VIEW SIDE VIEW

ALTERNATE 3

FLEXIBLE MARKER POSTS

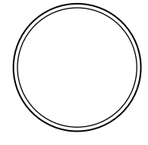

SECTION A-A

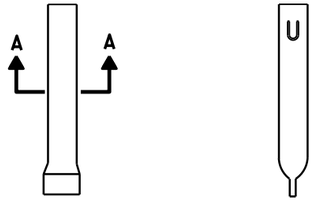

FRONT VIEW SIDE VIEW

ALTERNATE 1

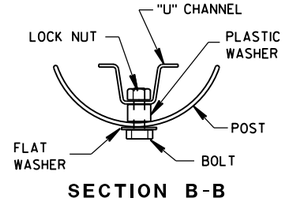

SECTION B-B

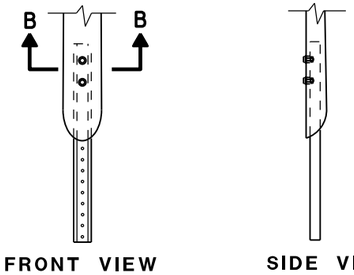

FRONT VIEW SIDE VIEW

ALTERNATE 2

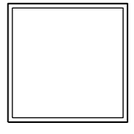

SECTION C-C

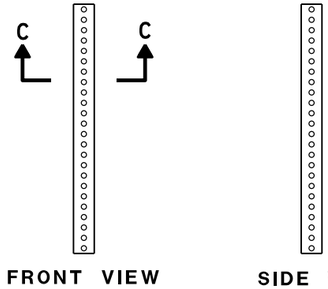

FRONT VIEW SIDE VIEW

ALTERNATE 3

FLEXIBLE MARKER POST ANCHORS

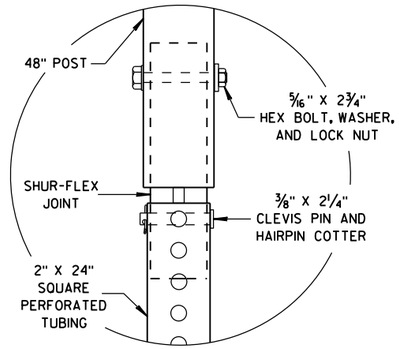

DETAIL B

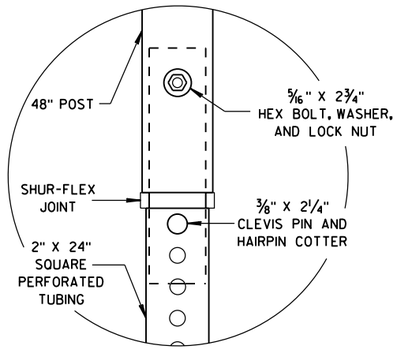

DETAIL C

FLEXIBLE MARKER POST
FOR CULVERT END

STATE OF WISCONSIN
DEPARTMENT OF TRANSPORTATION

APPROVED
10/1/2012 — DATE
/S/ Travis Feltes — STATE TRAFFIC ENGINEER
FHWA

6

S.D.D. 15 A 3-2b

6

S.D.D. 15 A 3-2b

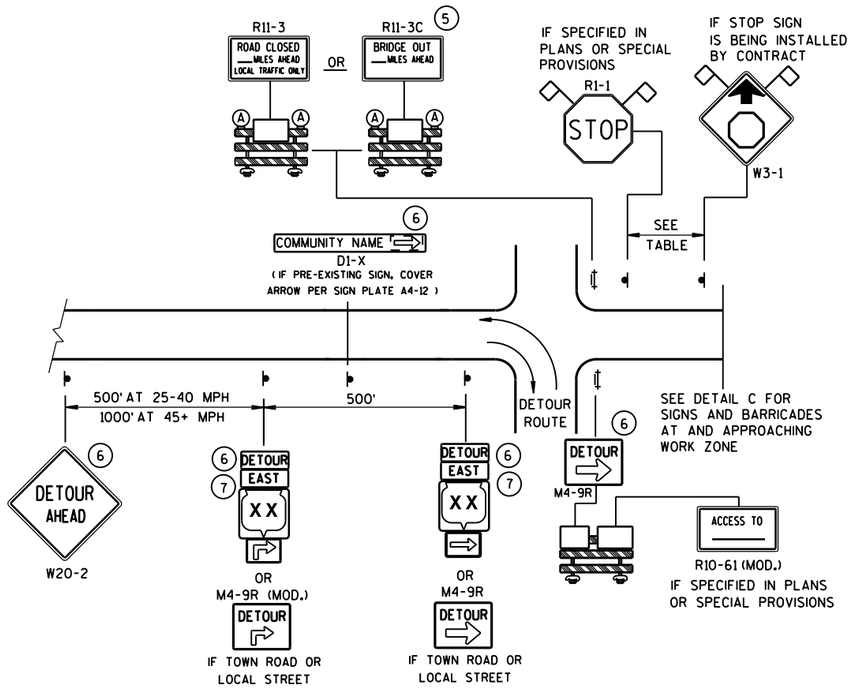

DETAIL A
MAINLINE CLOSURE WITH POSTED DETOUR

WORK ZONE GREATER THAN ½ MILE FROM DETOUR ROUTE (1000 FEET IF URBAN)

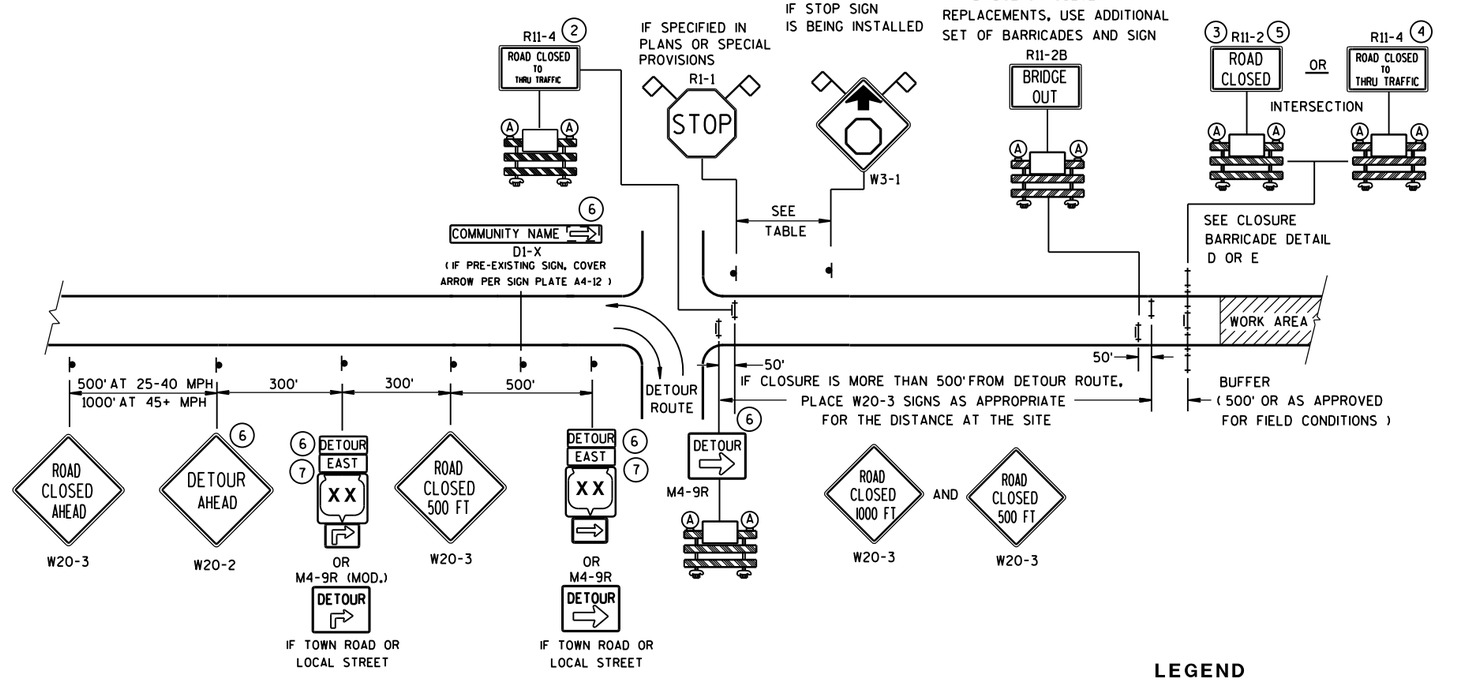

DETAIL B
MAINLINE CLOSURE WITH POSTED DETOUR

WORK ZONE LESS THAN ½ MILE FROM DETOUR ROUTE (1000 FEET IF URBAN)

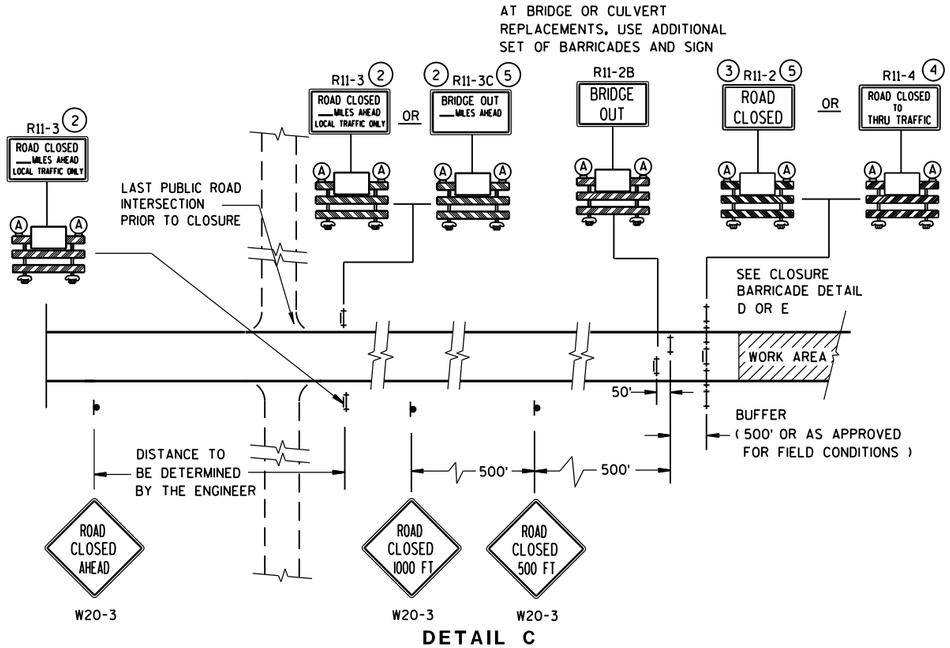

DETAIL C
MAINLINE CLOSURE, NO POSTED DETOUR

SPEED LIMIT (MPH)	"STOP AHEAD" ADVANCE WARNING DISTANCE (FT)
25	200
30	200
35	350
40	350
45	500
50	550
55	750

SEE SDD 15C2-SHEET "**b**" FOR GENERAL NOTES AND FOOTNOTES ① THROUGH ⑦

LEGEND

- SIGN ON PERMANENT SUPPORT
- TYPE III BARRICADE
- TYPE III BARRICADE WITH ATTACHED SIGN
- (A) TYPE "A" WARNING LIGHT (FLASHING)
- WORK AREA
- DETOUR / EAST — M4-8 / M3-X
- XX — M1-4; COUNTY XX — M1-5A; XX — M1-6
- M05-1 OR M06-1
- FLAGS, 16" X 16" MIN., (ORANGE)

BARRICADES AND SIGNS FOR MAINLINE CLOSURES

STATE OF WISCONSIN
DEPARTMENT OF TRANSPORTATION

8/2013 DATE

/S/ Travis Feltes
STATE TRAFFIC ENGINEER

FHWA

6

S.D.D. 15 C 2-5a

6

S.D.D. 15 C 2-5a

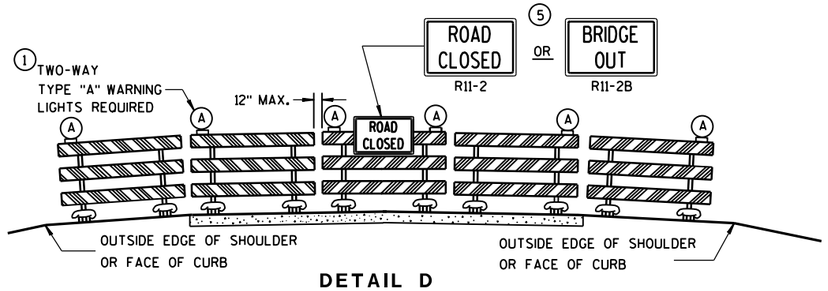

DETAIL D

ROAD CLOSURE BARRICADE DETAIL

APPROACH VIEW

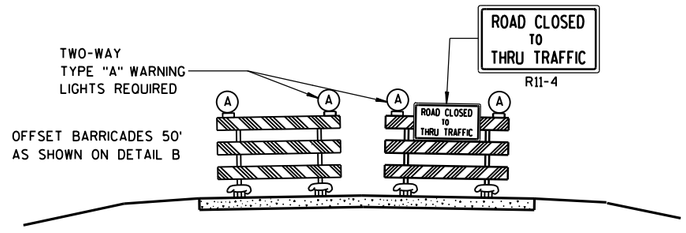

DETAIL E

LANE CLOSURE BARRICADE DETAIL

APPROACH VIEW

SEE SDD 15C2-SHEET "**a**" FOR LEGEND

GENERAL NOTES

THE EXACT NUMBER, LOCATION, AND SPACING OF ALL SIGNS AND BARRICADES SHALL BE ADJUSTED TO FIT FIELD CONDITIONS AS APPROVED BY THE ENGINEER.

ANY SIGNS TEMPORARY OR EXISTING, WHICH CONFLICT WITH TRAFFIC CONTROL "IN USE" SHALL BE REMOVED OR COVERED AS NEEDED AND AS APPROVED BY THE ENGINEER.

THE SPACING BETWEEN TRAFFIC CONTROL SIGNS SHOULD BE ADJUSTED TO NOT CONFLICT WITH AND SHOULD PROVIDE A DESIRABLE MINIMUM OF 200 FEET CLEARANCE TO EXISTING SIGNS THAT WILL REMAIN IN PLACE.

BARRICADES THAT MUST BE MOVED FOR A WORK OPERATION SHALL BE IMMEDIATELY RE-ESTABLISHED UPON COMPLETION OF THE OPERATION OR, FOR CONTINUING OPERATIONS, AT THE END OF EACH WORKING DAY.

SIGNS THAT WILL BE IN PLACE LESS THAN 7 CONTINUOUS DAYS AND NIGHTS MAY BE MOUNTED ON PORTABLE SUPPORTS.

ALL TYPE III BARRICADES SHALL HAVE RAILS REFLECTORIZED ON BOTH FACES. STRIPES SHALL BE PROPERLY SLOPED DOWN TOWARD THE TRAFFIC SIDE OR AS SHOWN IN THE ROAD CLOSURE BARRICADE DETAIL D FOR FULL ROAD CLOSURES.

TYPE "A" LOW-INTENSITY FLASHING WARNING LIGHTS SHALL BE VISIBLE ON BOTH SIDES OF THE BARRICADE.

THE R11-2, R11-3, M4-9, R11-4 AND R10-61 SIGNS PLACED ON BARRICADES SHALL COVER NO MORE THAN THE TOP RAIL. THE SIGNS SHALL NOT COVER ANY PORTION OF THE MIDDLE OR BOTTOM RAILS.

"WO AND "MO" SIGNS ARE THE SAME AS "W" AND "M" SIGNS EXCEPT THE BACKGROUND IS ORANGE.

ALL SIGNS SHALL BE 48" X 48" UNLESS OTHERWISE NOTED BELOW:
- R11-2 SHALL BE 48" X 30".
- R11-3, R11-4 AND R10-61 SHALL BE 60" X 30".
- M4-9 SHALL BE 30" X 24".
- M3-X SHALL BE 24" X 12". (36" X 18" IF NEEDED TO MATCH EXISTING SIGNS.)
- M4-8 SHALL BE 24" X 12". (30" X 15" IF NEEDED TO MATCH EXISTING SIGNS.)
- M1-4, M1-5A, AND M1-6 SHALL BE 24" X 24". (36" X 36" IF NEEDED TO MATCH EXISTING SIGNS.)
- M05-1 AND M06-1 SHALL BE 21" X 21". (30" X 30" IF NEEDED TO MATCH EXISTING SIGNS.)
- D1-X SHALL BE AS SHOWN ON SPECIFIC PROJECT SIGNING DETAIL SHEETS.
- R1-1 SHALL BE 36" X 36".

(1) TWO WARNING LIGHTS SHALL BE PROVIDED ON THE CENTER BARRICADE AND A MINIMUM OF ONE WARNING LIGHT SHALL BE PROVIDED ON EACH OF THE OTHER BARRICADES WITHIN THE ROADWAY LIMITS. SPACING OF THE WARNING LIGHTS SHALL BE UNIFORM TO THE EDGE OF ROADWAY AS SHOWN (APPROX. 8-FOOT LIGHT SPACING).

(2) THESE SIGNS AND BARRICADES ARE NOT REQUIRED IF ROAD CLOSURE BEGINS AT INTERSECTION.

(3) FOR ROAD CLOSURE WITHOUT LOCAL ACCESS TO PROJECT, SEE ROAD CLOSURE BARRICADE DETAIL D.

(4) FOR ROAD CLOSURE WITH LOCAL ACCESS TO PROJECT, SEE LANE CLOSURE BARRICADE DETAIL E.

(5) FOR BRIDGE OR CULVERT REPLACEMENTS, SUBSTITUTE "BRIDGE OUT" INSTEAD OF "ROAD CLOSED" ON R11-2 AND R11-3 SIGNS.

(6) INSTALL DETOUR AND COMMUNITY GUIDE SIGNS AND ARROWS ONLY IF SPECIFIED IN THE CONTRACT. IF THERE ARE EXISTING ROUTE MARKER ASSEMBLIES THAT WILL REMAIN IN PLACE, ADJUST THE LOCATION OF THE DETOUR ROUTE SIGNS TO CORRESPOND WITH THE EXISTING ASSEMBLIES. MODIFY EXISTING SIGNS WHERE POSSIBLE. SEE SPECIFIC PROJECT DETOUR SIGNING DETAIL SHEETS. IF DETOUR SIGNS ARE BEING INSTALLED BY OTHERS, PLACE THE CONTRACTED TRAFFIC CONTROL SIGNS TO ALLOW FOR PLACEMENT OF ALL WARNING, DETOUR AND GUIDE SIGNS AS SHOWN.

(7) "EAST" CARDINAL DIRECTION MARKERS AND RIGHT TURN ARROWS ARE SHOWN. USE OTHER CARDINAL DIRECTIONS AND ARROWS AS APPROPRIATE.

BARRICADES AND SIGNS FOR MAINLINE CLOSURES

STATE OF WISCONSIN
DEPARTMENT OF TRANSPORTATION

8/2013 — DATE

/S/ Travis Feltes — STATE TRAFFIC ENGINEER

FHWA

6

S.D.D. 15 C 2-5b

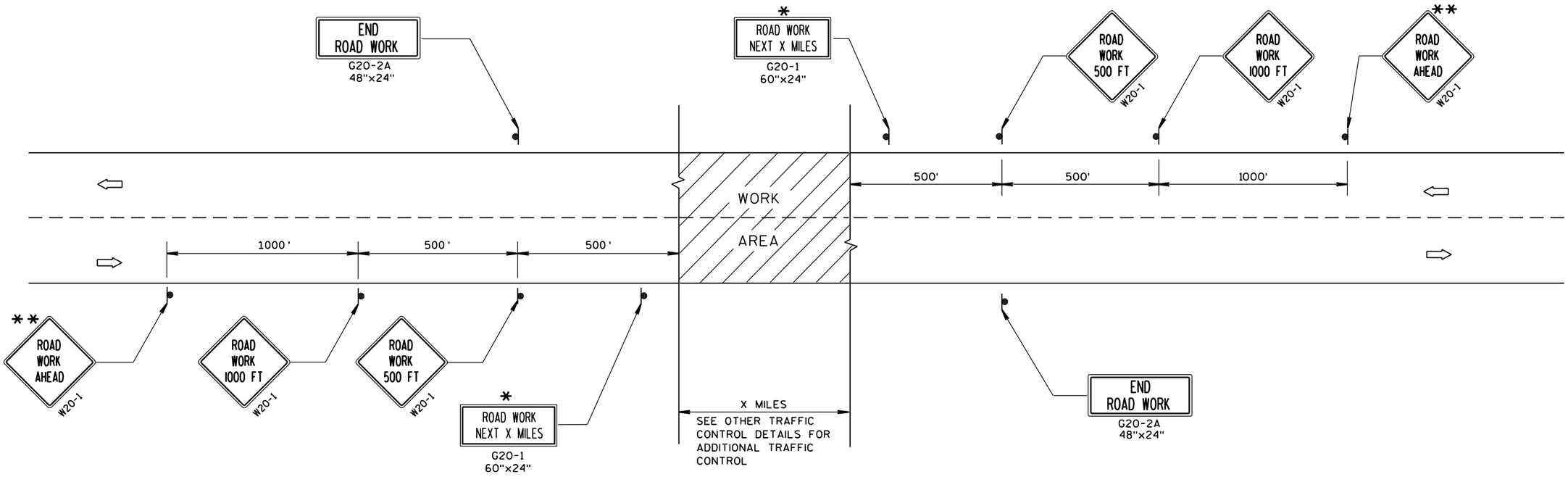

TYPICAL SIDEROAD APPROACH WARNING SIGN DETAIL

GENERAL NOTES

THE EXACT NUMBER, LOCATION, AND SPACING OF ALL SIGNS AND DEVICES SHALL BE ADJUSTED TO FIT FIELD CONDITIONS.

THE SPACING BETWEEN TRAFFIC CONTROL SIGNS SHOULD BE ADJUSTED TO NOT CONFLICT WITH AND SHOULD PROVIDE A MINIMUM OF 200 FEET (500 FEET DESIRABLE) CLEARANCE TO EXISTING SIGNS THAT WILL REMAIN IN PLACE.

ALL SIGNS ARE 48"x48" UNLESS OTHERWISE NOTED.

SIGNS THAT WILL BE IN PLACE LESS THAN 7 CONTINUOUS DAYS AND NIGHTS MAY BE MOUNTED ON PORTABLE SUPPORTS.

IF A "STOP" SIGN MUST BE REMOVED FOR A WORK OPERATION, A TEMPORARY "STOP" SIGN SHALL BE PLACED PRIOR TO THE SIGN REMOVAL, OR A FLAGGER SHALL BE PROVIDED UNTIL THE SIGN IS RE-ESTABLISHED.

* OMIT G20-1 SIGNS IF LENGTH OF WORK AREA IS 2 MILES OR LESS.

** PLACE ADDITIONAL W20-1 "ROAD WORK AHEAD" SIGN IF WORK AREA WITHIN THE PROJECT IS SEPARATED BY MORE THAN 2 MILES FROM PREVIOUS WORK AREA.

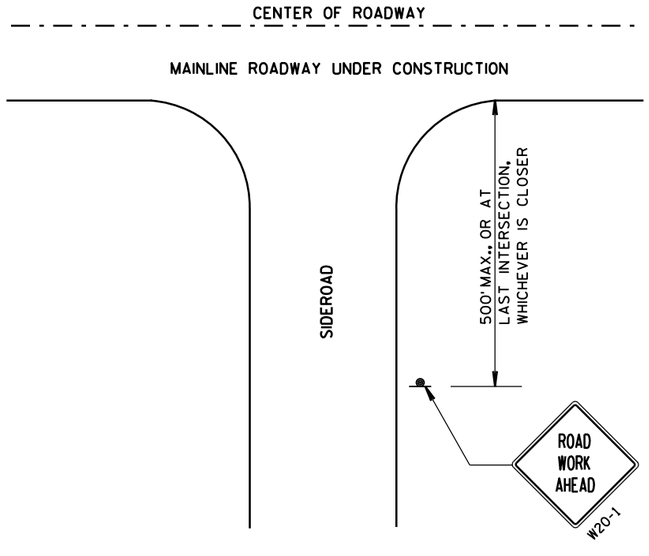

LEGEND

- SIGN ON PERMANENT SUPPORT
- DIRECTION OF TRAFFIC
- WORK AREA

TRAFFIC CONTROL, ADVANCE WARNING SIGNS 45 M.P.H. OR GREATER TWO-WAY UNDIVIDED ROAD OPEN TO TRAFFIC

STATE OF WISCONSIN
DEPARTMENT OF TRANSPORTATION

APPROVED

8/2013 — DATE

/S/ Travis Feltes — STATE TRAFFIC ENGINEER

SIGN

FHWA

6

S.D.D. 15 C 4-2

6

S.D.D. 15 C 4-2

GENERAL NOTES

DETAILS OF INSTALLATION, MATERIALS AND WORKMANSHIP NOT SHOWN ON THIS DRAWING SHALL CONFORM TO THE PERTINENT REQUIREMENTS OF THE STANDARD SPECIFICATIONS AND APPLICABLE SPECIAL PROVISIONS.

ALL LETTERS, ARROWS AND SYMBOLS SHALL BE IN CONFORMANCE WITH REQUIREMENTS INCLUDED IN "STANDARD ALPHABETS FOR HIGHWAY SIGNS AND PAVEMENT MARKING" BOOK BY THE FEDERAL HIGHWAY ADMINISTRATION. ALL LETTERS, ARROWS AND SYMBOLS SHALL BE WHITE AND REFLECTORIZED. SMALL DIFFERENCES IN DIMENSIONS WITHIN THE TOLERANCES OF THAT BOOK ARE ACCEPTABLE.

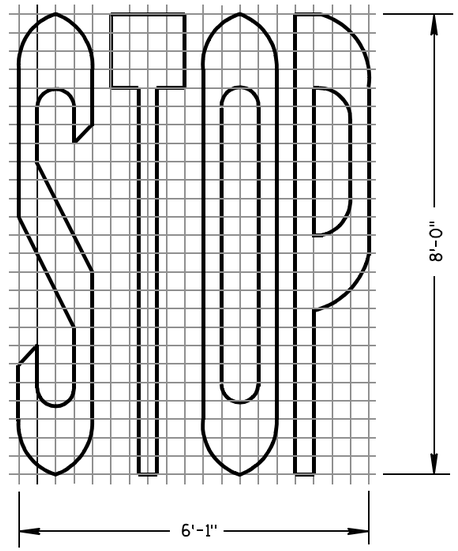

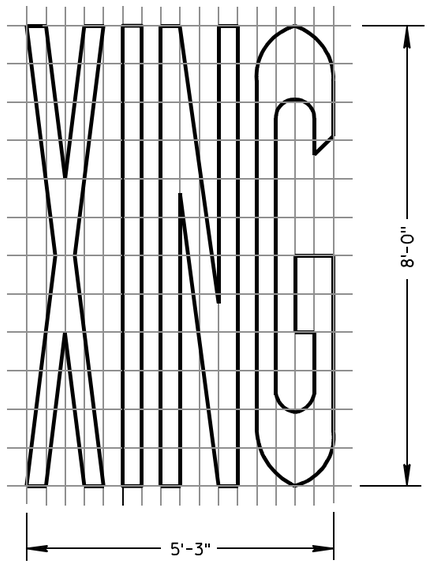

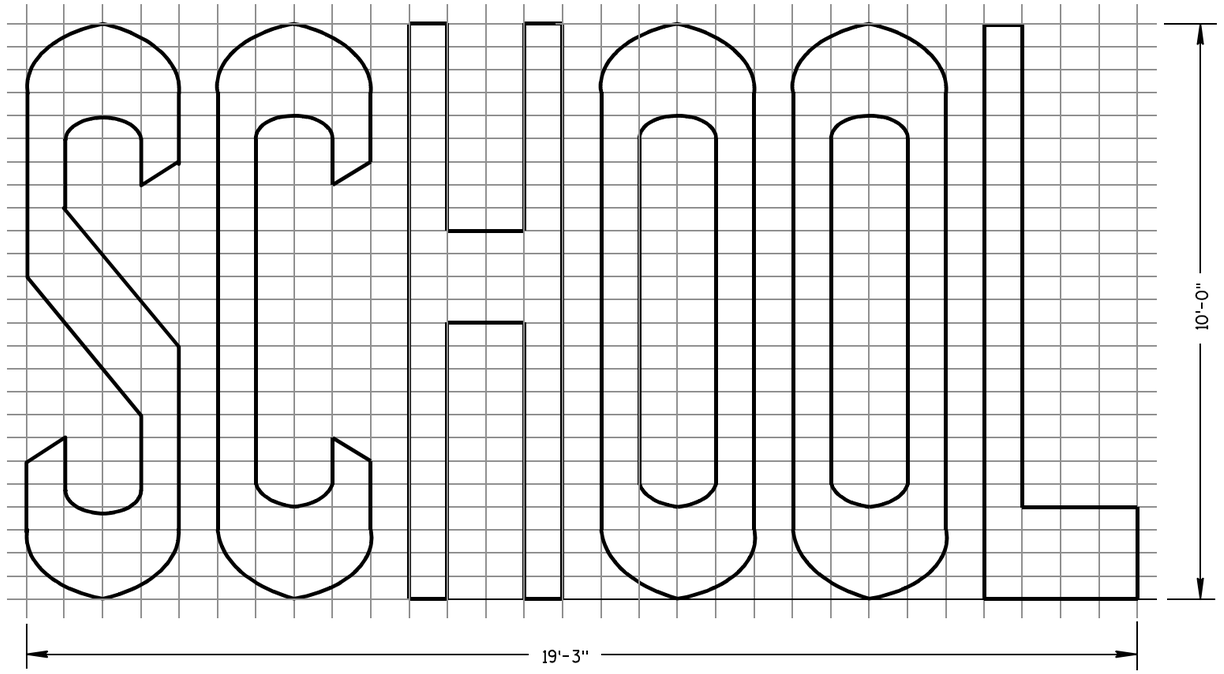

TWO-LANE

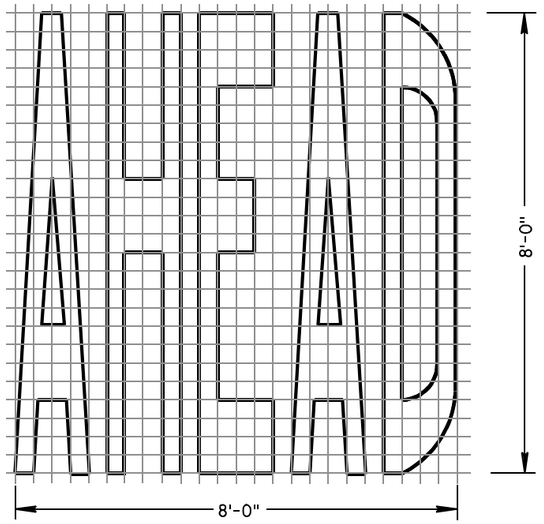

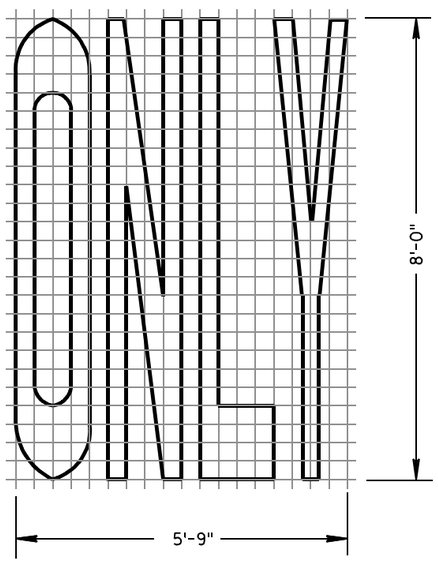

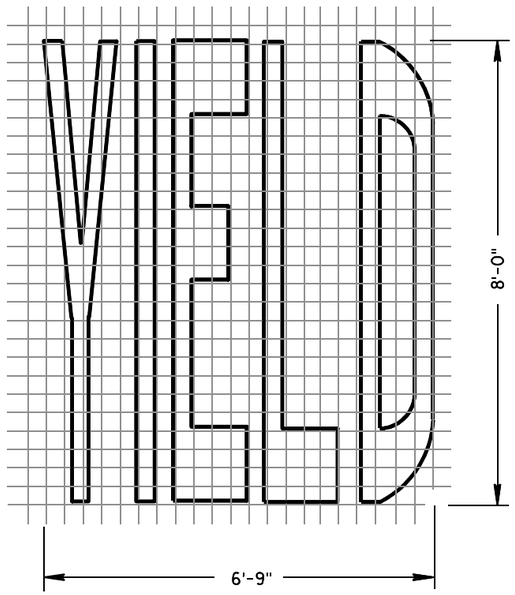

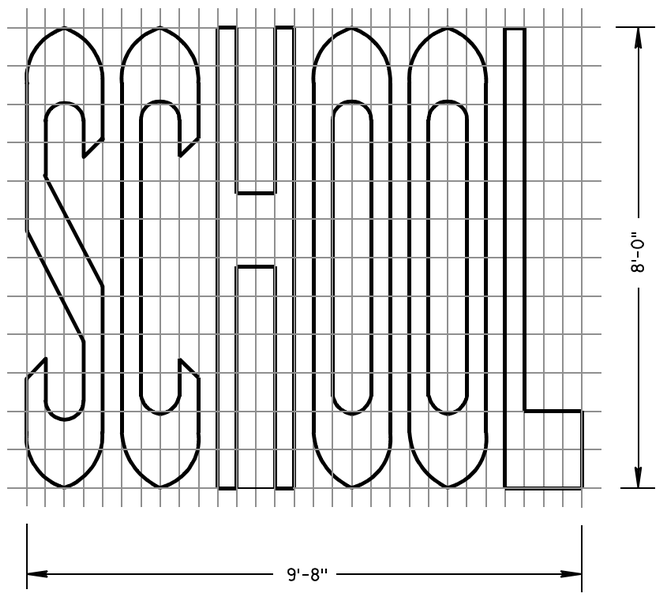

SINGLE-LANE

PAVEMENT MARKING WORDS

STATE OF WISCONSIN
DEPARTMENT OF TRANSPORTATION

APPROVED

7-1-11 DATE — /S/ Thomas N. Nothohm STATE TRAFFIC ENGINEER — IGN

FHWA

6

S.D.D. 15 C 7-12b

6

S.D.D. 15 C 7-12b

GENERAL NOTES

DETAILS OF INSTALLATION, MATERIALS AND WORKMANSHIP NOT SHOWN ON THIS DRAWING SHALL CONFORM TO THE PERTINENT REQUIREMENTS OF THE STANDARD SPECIFICATIONS AND APPLICABLE SPECIAL PROVISIONS.

ALL LETTERS, ARROWS AND SYMBOLS SHALL BE IN CONFORMANCE WITH REQUIREMENTS INCLUDED IN "STANDARD ALPHABETS FOR HIGHWAY SIGNS AND PAVEMENT MARKING" BOOK BY THE FEDERAL HIGHWAY ADMINISTRATION. ALL LETTERS, ARROWS AND SYMBOLS SHALL BE WHITE AND REFLECTORIZED. SMALL DIFFERENCES IN DIMENSIONS WITHIN THE TOLERANCES OF THAT BOOK ARE ACCEPTABLE.

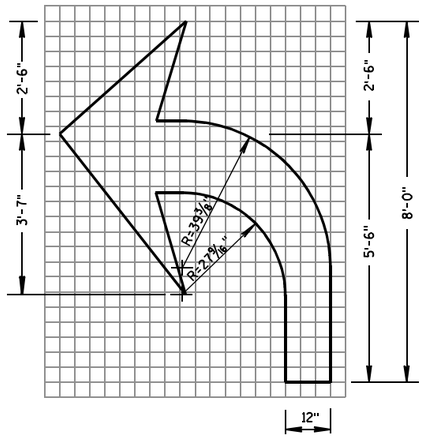

TYPE 2

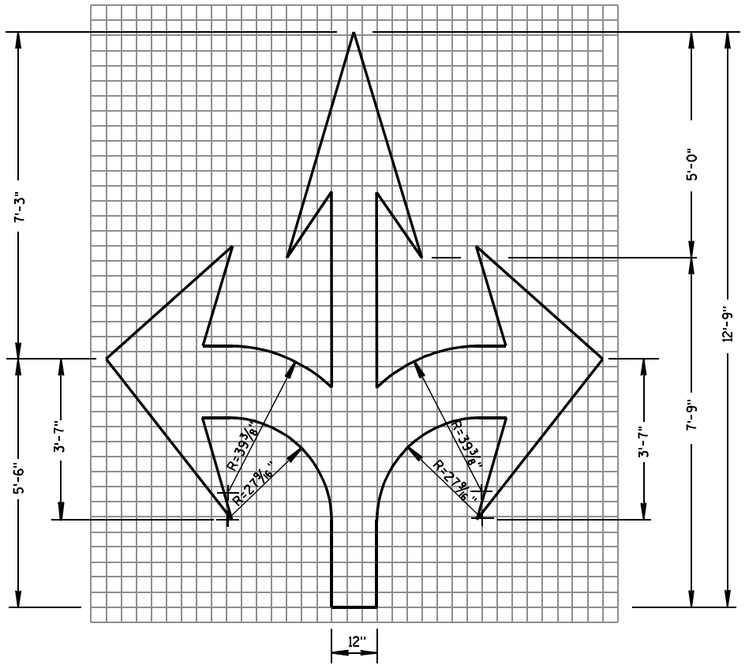

TYPE 6

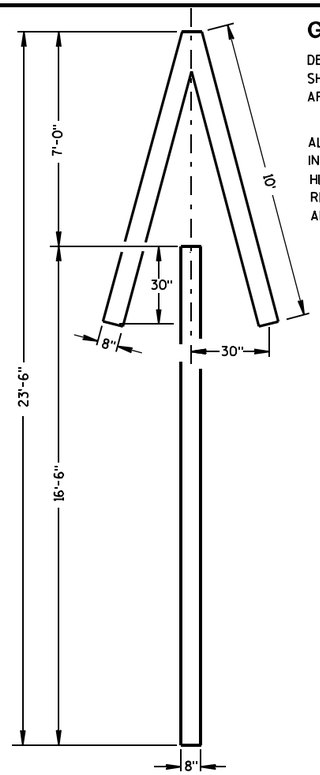

TYPE 4

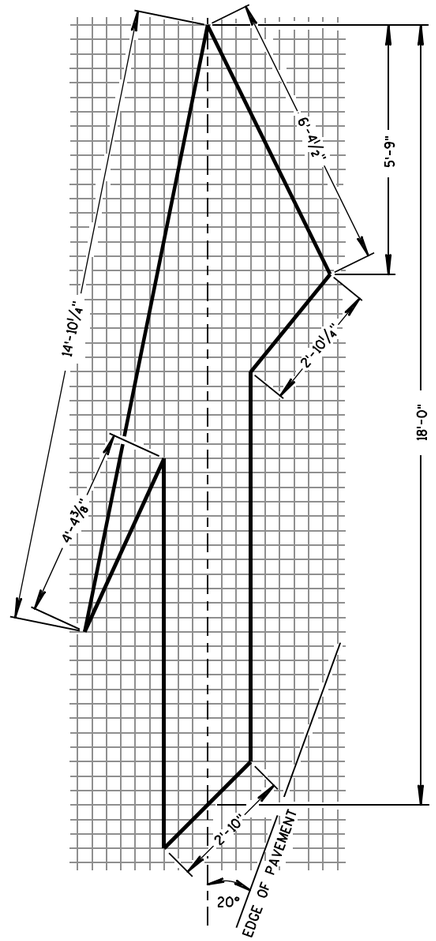

TYPE 5 LANE DROP ARROW

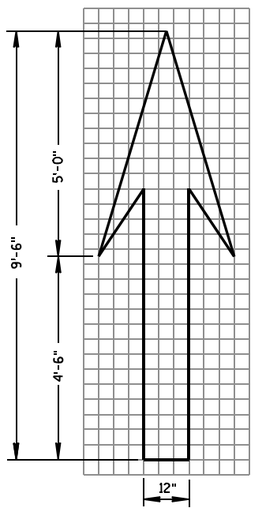

TYPE 1

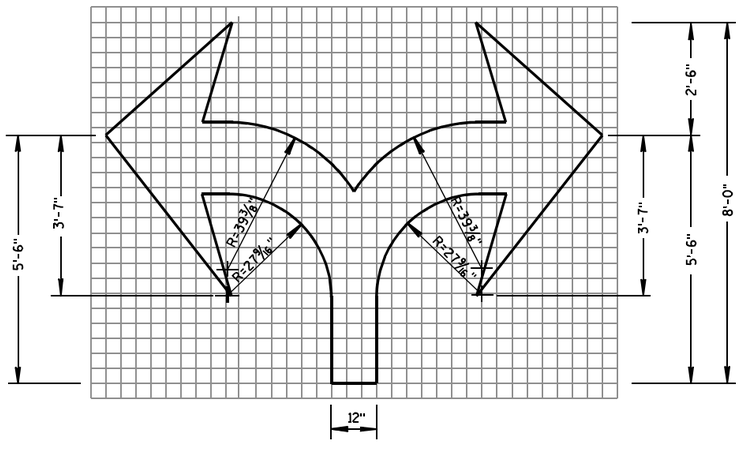

TYPE 7

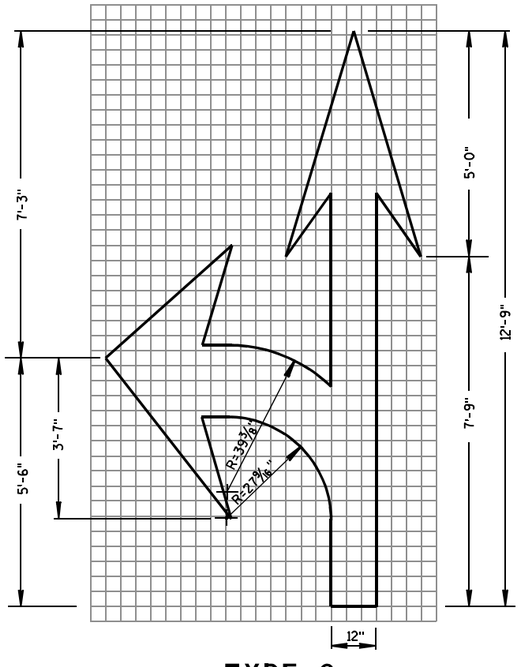

TYPE 3

PAVEMENT MARKING ARROWS

STATE OF WISCONSIN
DEPARTMENT OF TRANSPORTATION

APPROVED

7/1/11 — DATE

/S/ Thomas N. Nothohm — STATE TRAFFIC ENGINE[illegible] SIGN

FHWA

6

S.D.D. 15 C 7-12c

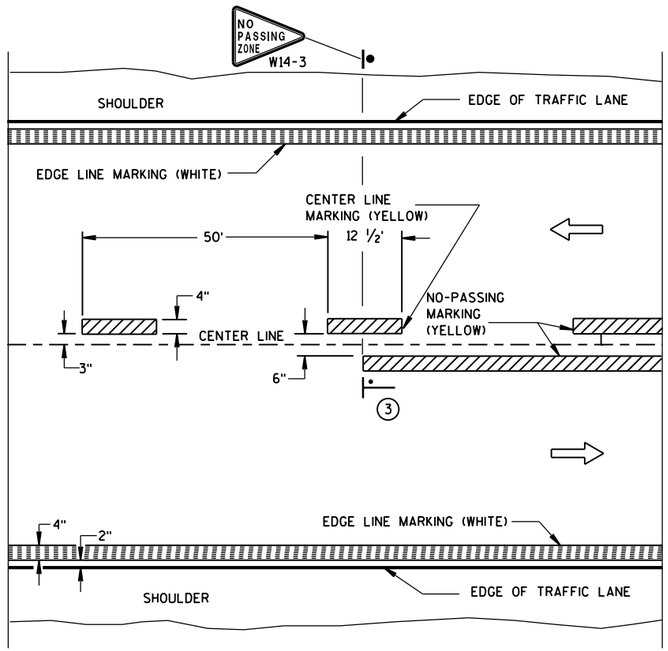

TWO WAY TRAFFIC

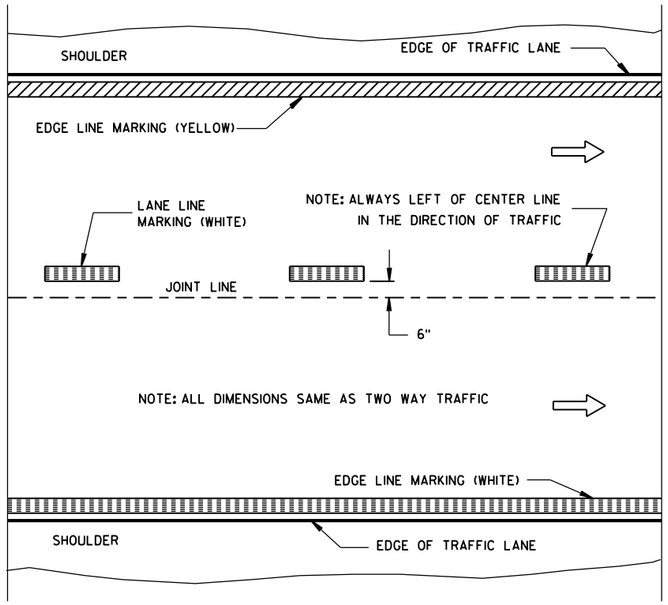

ONE WAY TRAFFIC

PERMANENT PAVEMENT MARKING

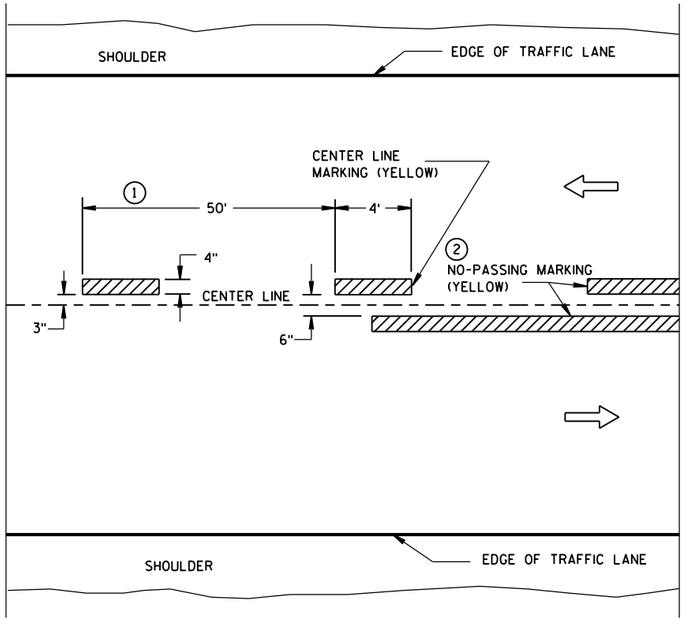

TWO WAY TRAFFIC

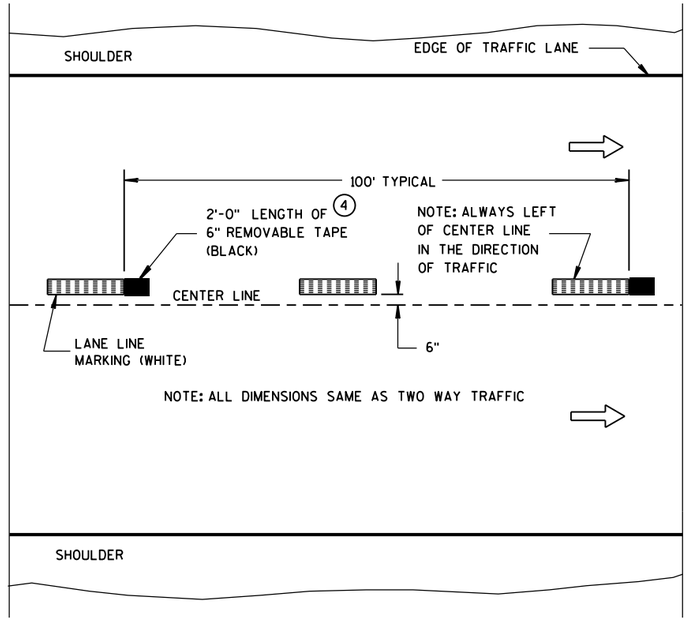

ONE WAY TRAFFIC

TEMPORARY (INTERMEDIATE) PAVEMENT MARKING

(SHOWS CYCLE FOR TEMPORARY CENTER LINE OR TEMPORARY LANE LINE MARKING)

GENERAL NOTES

DETAILS OF CONSTRUCTION NOT SHOWN ON THIS DRAWING SHALL CONFORM TO STANDARD SPECIFICATIONS AND SPECIAL PROVISIONS.

1. HALF CYCLE LENGTHS (25'±) WITH 2' MINIMUM STRIPE LENGTHS SHALL BE PROVIDED ON ROADWAYS (INCLUDING TEMPORARY TRAVELED WAYS) WITH REVERSE CURVATURE, CURVATURE OF OVER 5 DEGREES OR WHEN DIRECTED BY THE ENGINEER TO MARK UNUSUAL ALIGNMENT OF THE TRAVELED WAY.
2. NO PASSING ZONE TEMPORARY PAVEMENT MARKING IS REQUIRED TO BE PLACED, WHERE APPROPRIATE, ALONG WITH CENTERLINE TEMPORARY PAVEMENT MARKING WHEN A SAME DAY PERMANENT PAVEMENT MARKING ITEM IS INCLUDED IN THE CONTRACT.
3. NO PASSING ZONE MARKINGS ARE PLACED ACCORDING TO "T" MARKINGS. IF EXISTING NO PASSING ZONE W14-3 SIGNS ARE BEYOND 50 FEET IN EITHER DIRECTION, THE SIGNS SHALL BE MOVED TO THE "T" MARKINGS.
4. CONCRETE ONLY.

NOTE

ARROW SYMBOL (⇨) SHOWS DIRECTION OF TRAVEL

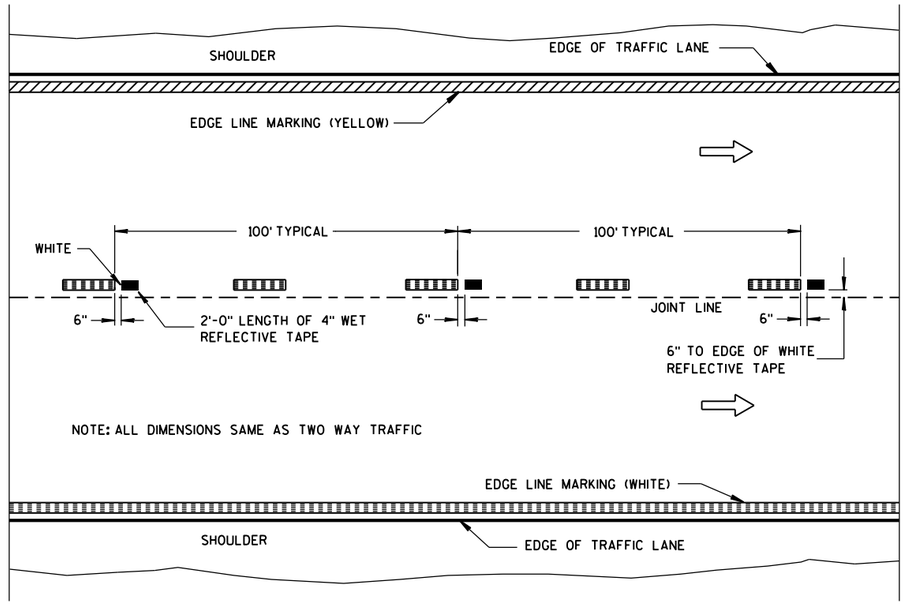

WET REFLECTIVE TAPE SUPPLEMENT TO
SPRAYED OR NON WET REFLECTIVE TAPE LANE LINE

LEGEND

"T" MARKING

POST MOUNTED SIGN

PAVEMENT MARKING (MAINLINE)

STATE OF WISCONSIN
DEPARTMENT OF TRANSPORTATION

APPROVED

5-13-2013 — DATE

/S/ Travis Feltes — STATE TRAFFIC E

FHWA

6

S.D.D. 15 C 8-16a

6

S.D.D. 15 C 8-16a

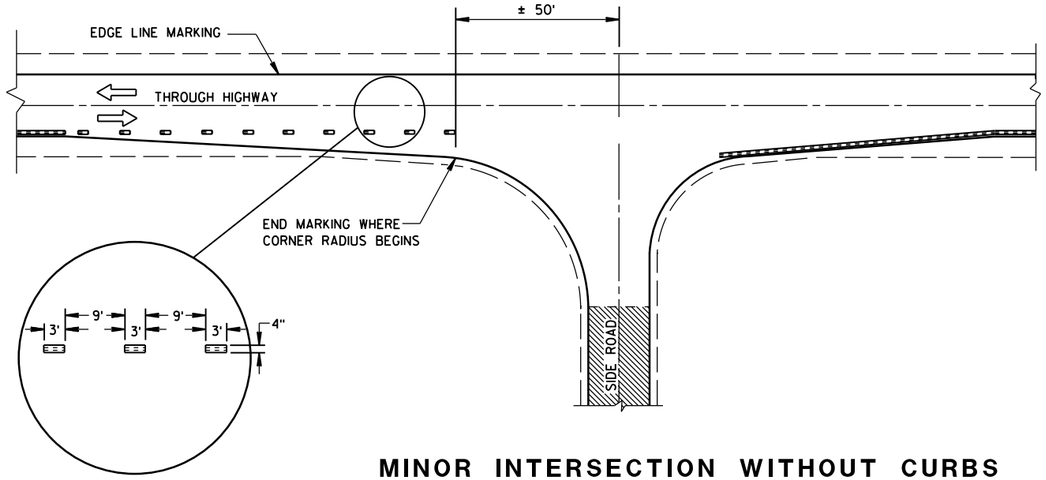

MINOR INTERSECTION WITHOUT CURBS

GENERAL NOTES

EDGE LINES SHALL BE OMITTED THROUGH INTERSECTIONS. EDGE LINES SHALL BE CONTINUED THROUGH DRIVEWAYS.

(1) WHEN DISTANCE "A" IS LESS THAN 250 FEET, OMIT LANE LINE.

(2) WHEN DISTANCE "B" IS LESS THAN 100 FEET, OMIT CHANNELIZING LANE LINE.

(3) ALTERNATIVE MARKING SHALL BE PROVIDED WHEN SPECIFIED IN THE CONTRACT. TYPICAL SITUATIONS WHERE THIS MARKING MAY BE REQUIRED ARE WHERE THE INTERSECTION IS ON A SHARP HORIZONTAL CURVE OR CREST VERTICAL CURVE IN AN UNLIGHTED AREA SUCH THAT THE EDGE LINE MAY BE MISLEADING TO THE MOTORIST OR DISAPPEAR FROM SIGHT.

(4) THE EDGE LINE IN THE TAPER AREAS OF THE BYPASS LANE AND THE BYPASS LANE SHALL BE LOCATED 1-FOOT FROM EDGE OF PAVEMENT TO THE OUTSIDE EDGE OF EDGE LINE.

(5) BARRIER LINE ENDS AT SIDE ROAD PAVEMENT/SURFACE EDGE EXTENSION.

(6) BARRIER LINE STARTS 500 FEET PRIOR TO THE BYPASS TAPER.

(7) IF THE DISTANCE BETWEEN 2 SUCCESSIVE NO-PASSING ZONES IS LESS THAN THE MINIMUM DISTANCE BETWEEN ZONES, CONNECT THE 2 ZONES.

(8) 3' LINE 9' GAP, EXCEPT RETRACE THE EXISTING LINE - GAP PATTERN WHERE EXISTING MARKINGS ARE IN PLACE.

ARROW SYMBOL (⇨) SHOWS DIRECTION OF TRAVEL

(7)

POSTED SPEED (MPH)	MINIMUM DISTANCE BETWEEN ZONES (FEET)
25 - 30	528
35 - 40	528
45 - 50	686
55	792

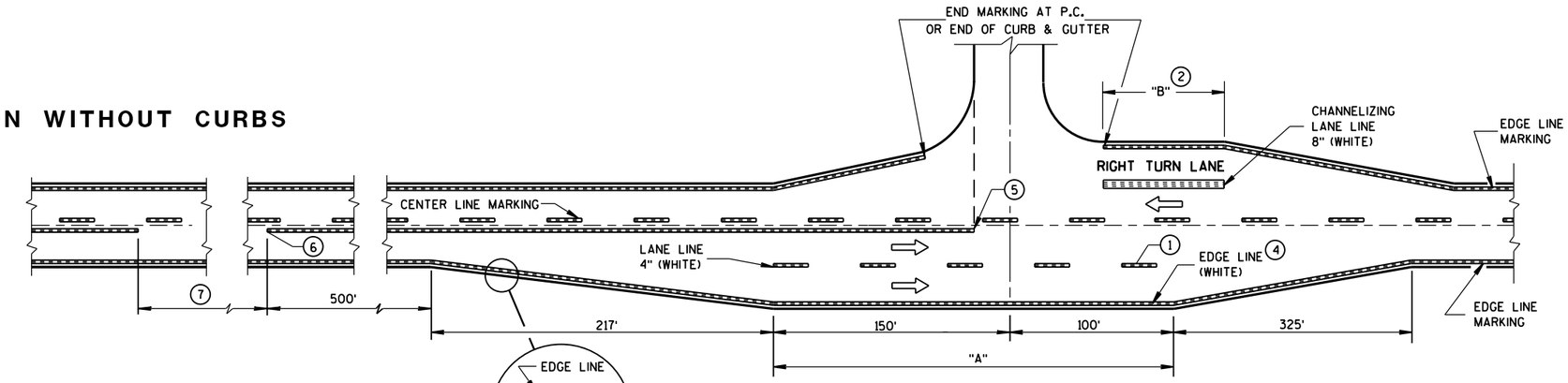

MAJOR INTERSECTIONS

(INTERSECTION WITH FULL RIGHT TURN LANE OR BYPASS LANES)

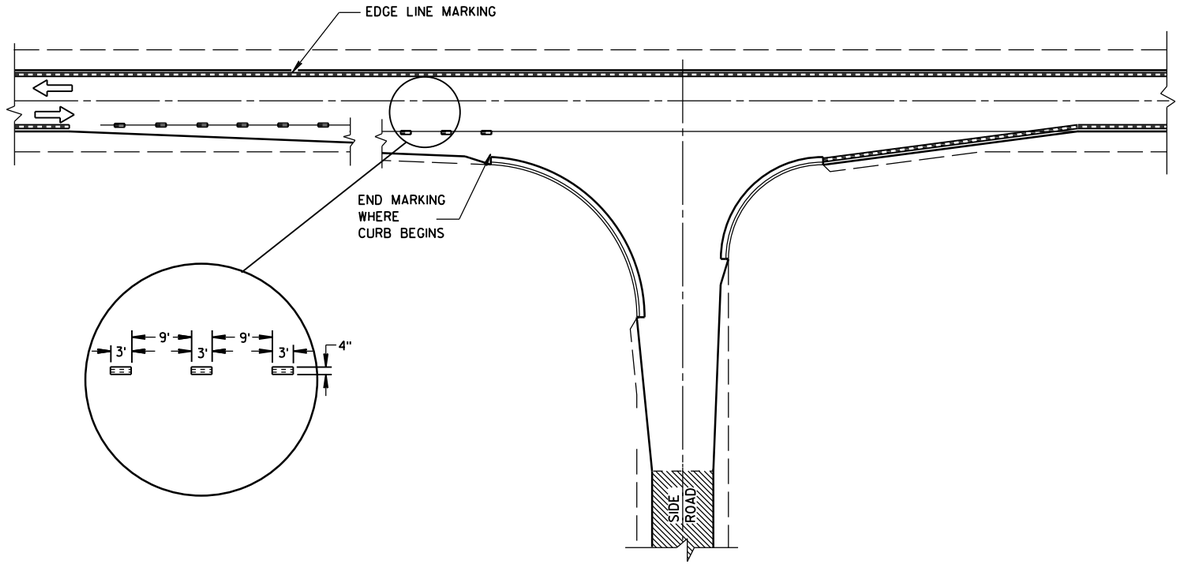

MINOR INTERSECTION WITH CURBS

(TYPICAL MARKING)

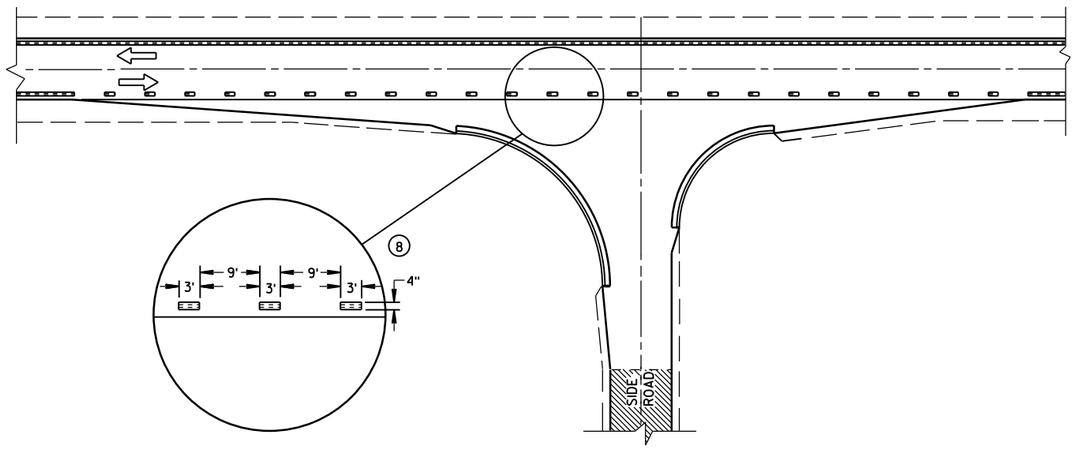

MINOR INTERSECTION WITH CURBS

(3) (FOR SPECIAL CONDITIONS AS SPECIFIED)

PAVEMENT MARKING
(INTERSECTIONS)

STATE OF WISCONSIN
DEPARTMENT OF TRANSPOR

6

S.D.D. 15 C 8-16b

6

S.D.D. 15 C 8-16b

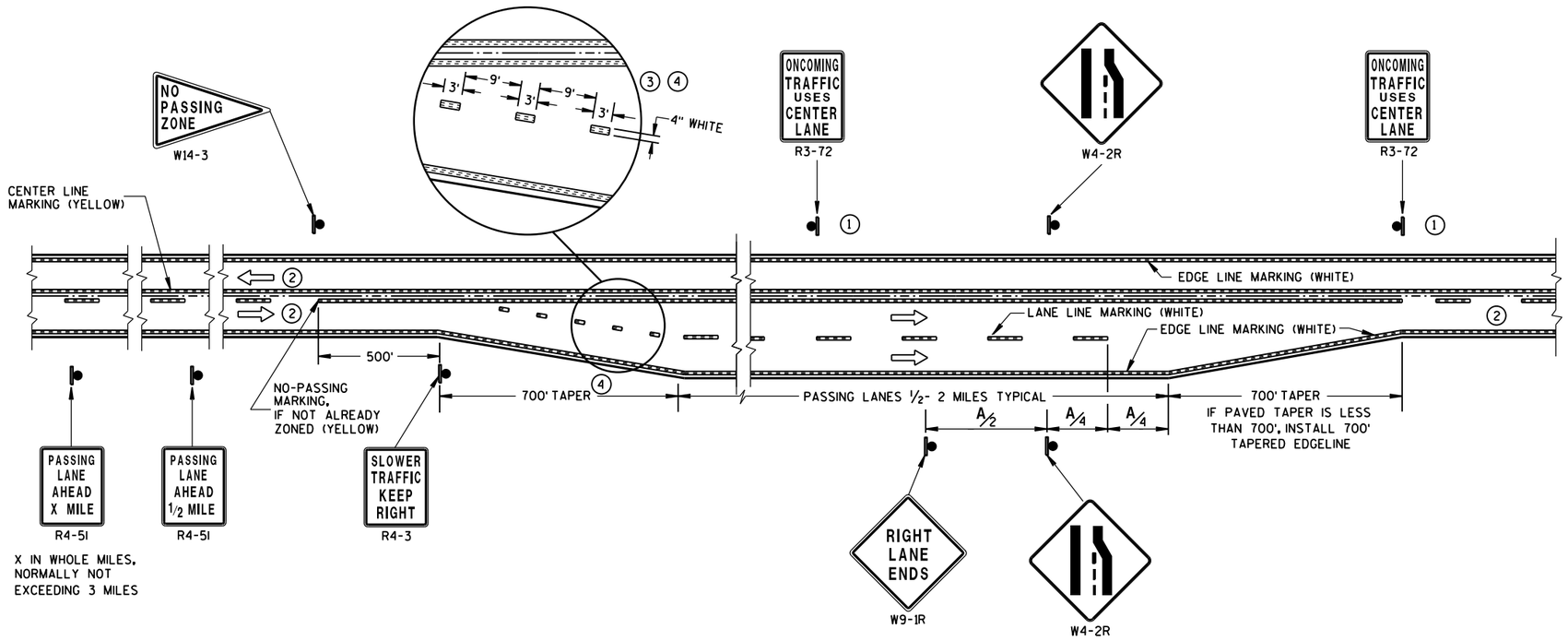

SOLID DOUBLE-YELLOW LINE
(THROUGHOUT ENTIRE PASSING/CLIMBING LANE)

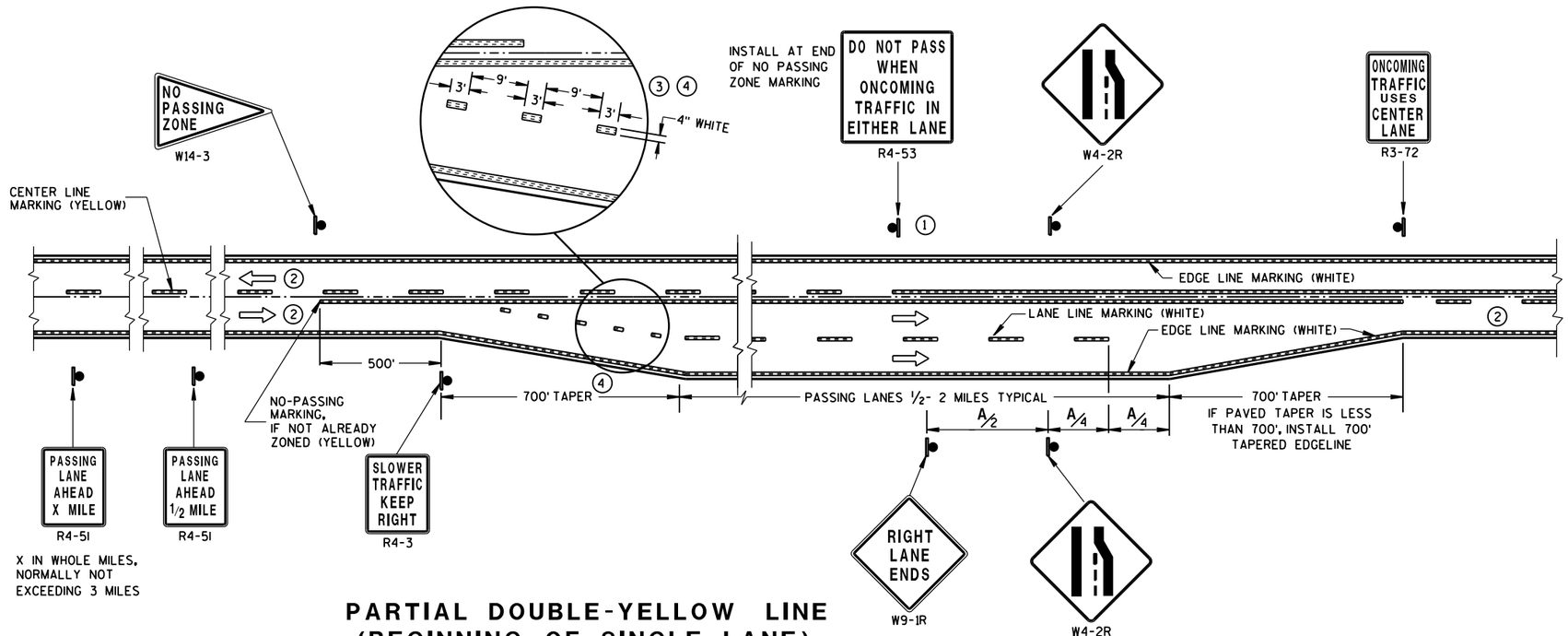

PARTIAL DOUBLE-YELLOW LINE
(BEGINNING OF SINGLE LANE)

GENERAL NOTES

1. SIGN SHALL BE REPEATED AT 1 MILE INCREMENTS OR AT THE DISCRETION OF THE REGIONAL TRAFFIC ENGINEER.
2. THERE MAY BE SOLID YELLOW ON THE CENTERLINE DUE TO SIGHT CONDITIONS.
3. THE TAPER LENGTH OF THE DOTTED LINE PAVEMENT MARKING SHALL BE 700 FEET, 3'LINE 9'GAP, EXCEPT RETRACE THE EXISTING LINE-GAP PATTERN WHERE EXISTING MARKINGS ARE IN PLACE.
4. WHEN THE ENTRANCE TAPER IS LESS THAN 700 FEET OR THE SHOULDER WIDTH IN THE PASSING/CLIMBING LANE IS LESS THAN THE ADJACENT HIGHWAY, DO NOT INSTALL DOTTED LINE PAVEMENT MARKING.

ARROW SYMBOL (⇨) SHOWS DIRECTION OF TRAVEL

DISTANCE TABLE

POSTED OR 85th PERCENTILE SPEED	DISTANCE "A"
45	750
50	850
55	950

PAVEMENT MARKING & SIGNING (CLIMBING LANE & PASSING LANE)

STATE OF WISCONSIN
DEPARTMENT OF TRANSPOR

6

S.D.D. 15 C 8-16c

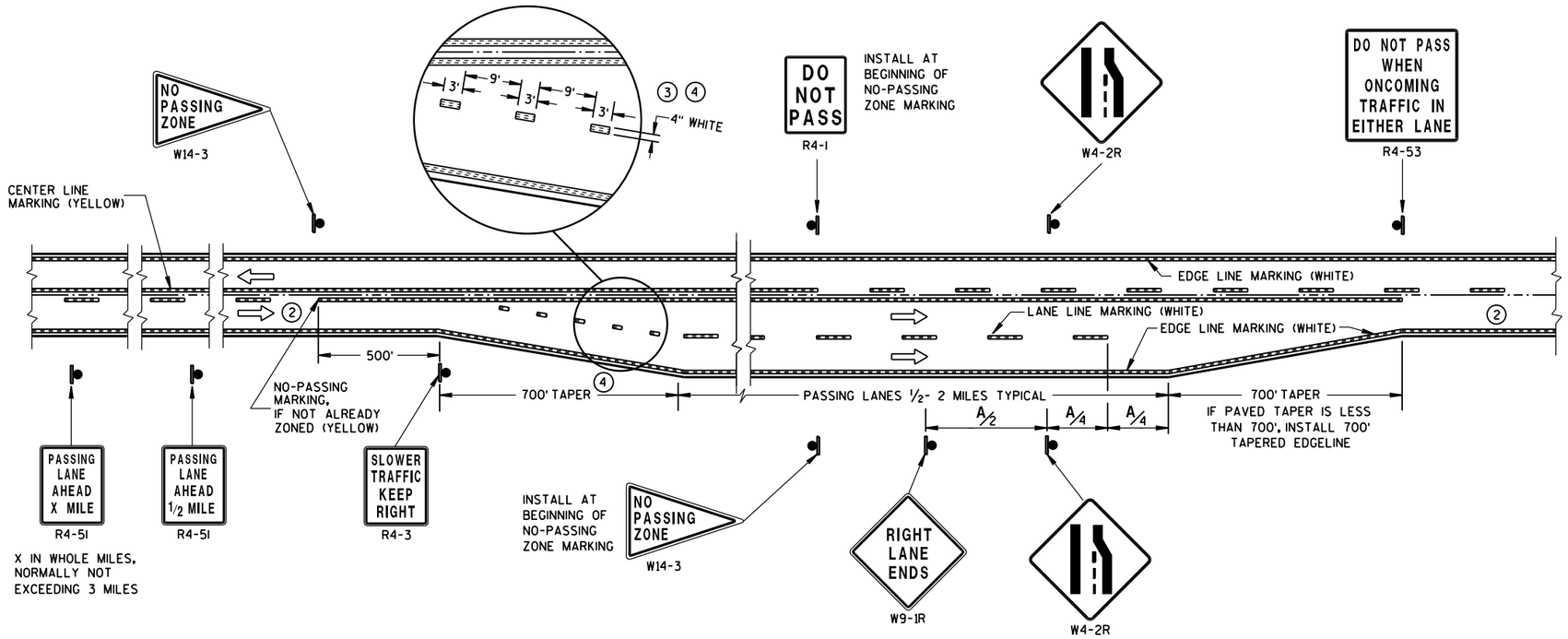

SOLID DOUBLE-YELLOW LINE (END OF SINGLE LANE)

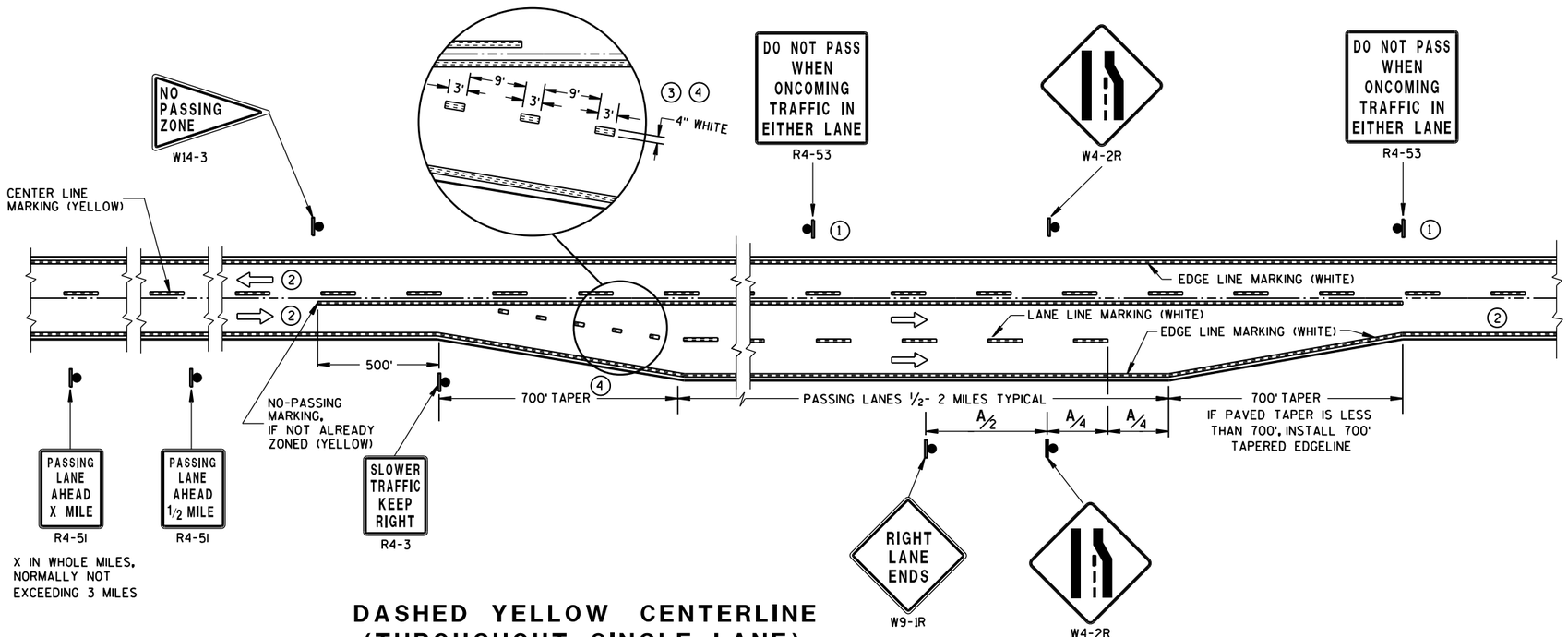

DASHED YELLOW CENTERLINE (THROUGHOUT SINGLE LANE)

GENERAL NOTES

1. SIGN SHALL BE REPEATED AT 1/2 MILE INCREMENTS OR AT THE DISCRETION OF THE REGIONAL TRAFFIC ENGINEER.
2. THERE MAY BE SOLID YELLOW ON THE CENTERLINE DUE TO SIGHT CONDITIONS.
3. THE TAPER LENGTH OF THE DOTTED LINE PAVEMENT MARKING SHALL BE 700 FEET, 3' LINE 9' GAP, EXCEPT RETRACE THE EXISTING LINE-GAP PATTERN WHERE EXISTING MARKINGS ARE IN PLACE.
4. WHEN THE ENTRANCE TAPER IS LESS THAN 700 FEET OR THE SHOULDER WIDTH IN THE PASSING/CLIMBING LANE IS LESS THAN THE ADJACENT HIGHWAY, DO NOT INSTALL DOTTED LINE PAVEMENT MARKING.

ARROW SYMBOL (⇨) SHOWS DIRECTION OF TRAVEL

DISTANCE TABLE

POSTED OR 85th PERCENTILE SPEED	DISTANCE "A"
45	750
50	850
55	950

PAVEMENT MARKING & SIGNING (CLIMBING LANE & PASSING LANE)

STATE OF WISCONSIN
DEPARTMENT OF TRANSPOI

6

S.D.D. 15 C 8-16d

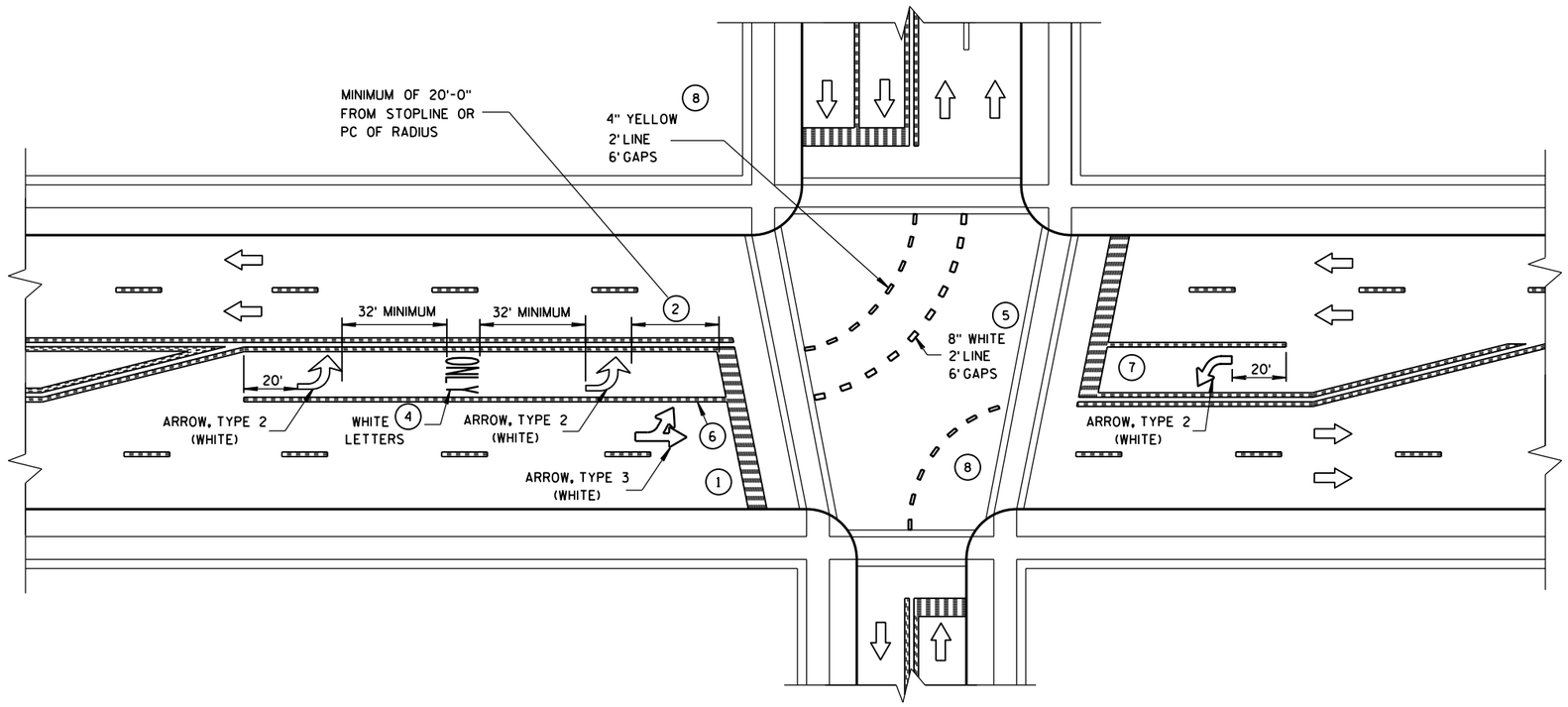

GENERAL NOTES

1. STOP BAR IS REQUIRED ONLY WHEN SPECIFIED IN THE CONTRACT.
2. DISTANCE MAY BE ADJUSTED TO ACCOMODATE SHORT LEFT TURN LANES. AS APPROVED BY THE ENGINEER.
3. A SET OF ARROWS IS REQUIRED EVERY 400 FEET OR NEAR INTERSECTIONS OR DRIVEWAYS WITH TURNING TRAFFIC.
4. ADD EXTRA SETS OF ONE ARROW AND ONE ONLY PER 160 FEET OR WHEN ON A CURVE.
5. 8" WHITE WITH 2' LINE 6' GAPS FOR DUAL TURN LANE.
6. 8" WHITE
7. ADD SECOND ARROW WHEN TURN BAY IS GREATER THAN OR EQUAL TO 108 FEET.
8. REQUIRED ONLY WHEN SPECIFIED IN THE CONTRACT.

NOTE:
ARROW SYMBOL (⇨)
SHOWS DIRECTION OF TRAVEL

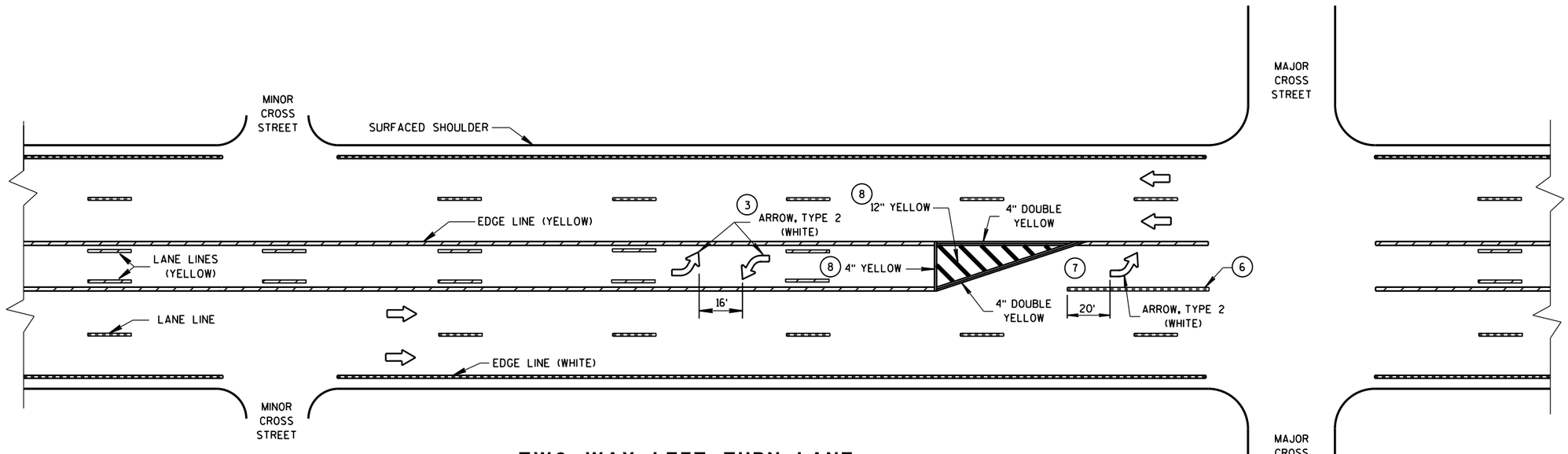

TWO WAY LEFT TURN LANE

PAVEMENT MARKING (LEFT TURN LANE)

STATE OF WISCONSIN
DEPARTMENT OF TRANSPORTATION

6

S.D.D. 15 C 8-16e

6

S.D.D. 15 C 8-16e

LEGEND

SIGN ON PORTABLE OR PERMANENT SUPPORT

DIRECTION OF TRAFFIC

WORK AREA

FLAGGER, EQUIPPED WITH STOP/SLOW PADDLE FASTENED ON SUPPORT STAFF

SIGN SPACING TABLE

SPEED LIMIT	SIGN SPACING A,B,C
25-35 MPH	200'
35-40 MPH	350'
45-55 MPH	500'

W3-4

USE OF THE "BE PREPARED TO STOP" SIGN IS OPTIONAL. WHEN USED, THIS SIGN SHALL BE LOCATED BETWEEN THE W20-7a AND W20-4 SIGNS. A 500' TYPICAL SPACING SHALL BE PROVIDED BETWEEN THE SIGNS.

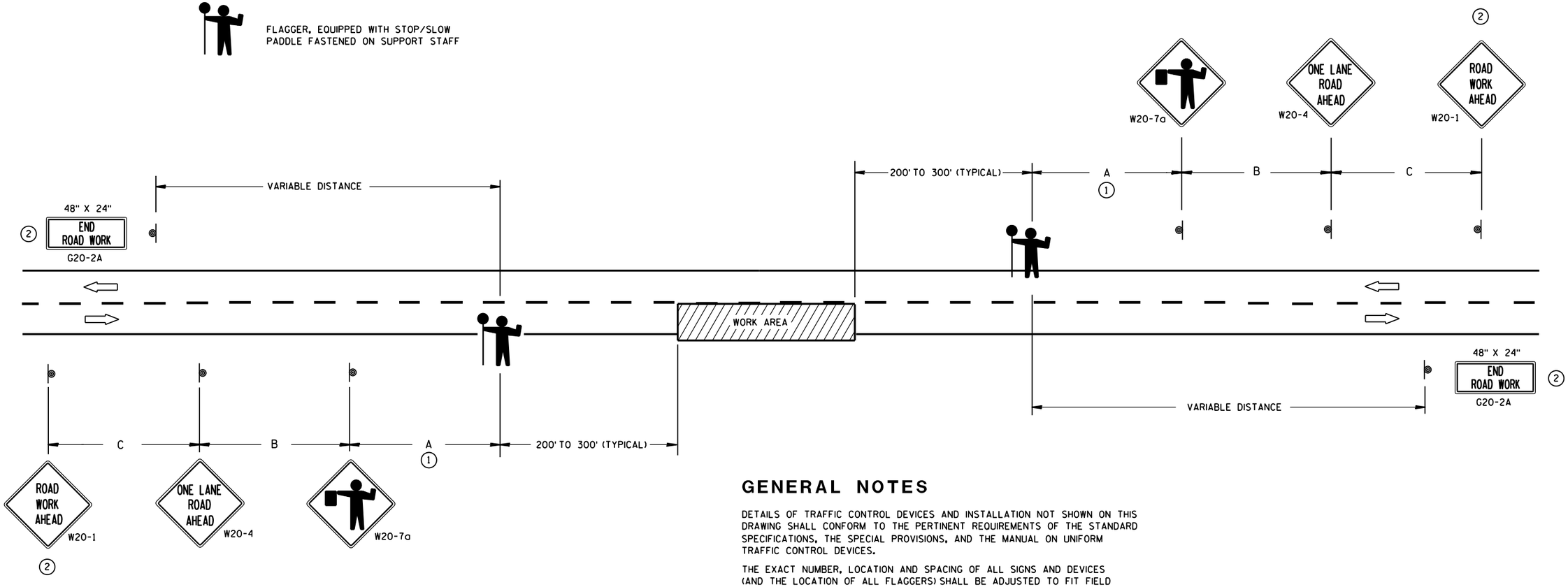

(1) FOR A MOVING WORK OPERATION,
SIGNING FOR BOTH DIRECTIONS SHALL BE REESTABLISHED (AS SIMULTANEOUSLY AS PRACTICAL) AT APPROXIMATELY 3500 FOOT INTERVALS IN THE MOVING WORK OPERATION OR AS APPROVED BY THE ENGINEER.

(2) SIGN NOT REQUIRED IF FLAGGING OPERATION OCCURS WITHIN A SIGNED ROAD WORK ZONE AREA.

GENERAL NOTES

DETAILS OF TRAFFIC CONTROL DEVICES AND INSTALLATION NOT SHOWN ON THIS DRAWING SHALL CONFORM TO THE PERTINENT REQUIREMENTS OF THE STANDARD SPECIFICATIONS, THE SPECIAL PROVISIONS, AND THE MANUAL ON UNIFORM TRAFFIC CONTROL DEVICES.

THE EXACT NUMBER, LOCATION AND SPACING OF ALL SIGNS AND DEVICES (AND THE LOCATION OF ALL FLAGGERS) SHALL BE ADJUSTED TO FIT FIELD CONDITIONS AS APPROVED BY THE ENGINEER.

THE FIRST ADVANCE WARNING SIGN SHOULD TYPICALLY BE LOCATED IN ADVANCE OF THE ANTICIPATED TRAFFIC BACKUP OR QUEUE.

WHEN A SIDE ROAD OR RAMP INTERSECTS THE FACILITY ON WHICH THE WORK IS BEING PERFORMED, ADDITIONAL TRAFFIC CONTROLS SHALL BE PROVIDED AS SPECIFIED IN THE PLANS AND/OR THE SPECIAL PROVISIONS OR AS APPROVED BY THE ENGINEER.

FLAGGERS SHALL BE IN SIGHT OF EACH OTHER OR IN DIRECT COMMUNICATION AT ALL TIMES. THEY SHALL BE EQUIPPED WITH STOP/SLOW PADDLES FASTENED ON SUPPORT STAFFS. WHEN THE FLAGGING OPERATION IS NOT IN EFFECT, COVER OR REMOVE ALL TEMPORARY TRAFFIC CONTROL SIGNS.

ALL SIGNS ARE 48" X 48" UNLESS OTHERWISE NOTED.

TRAFFIC CONTROL FOR LANE CLOSURE (SUITABLE FOR MOVING OPERATIONS)

STATE OF WISCONSIN
DEPARTMENT OF TRANSPORTATION

APPROVED
8/2013 — DATE
/S/ Travis Feltes — STATE TRAFFIC ENGINEER
FHWA

6

S.D.D. 15 C 12-4

6

S.D.D. 15 C 12-4

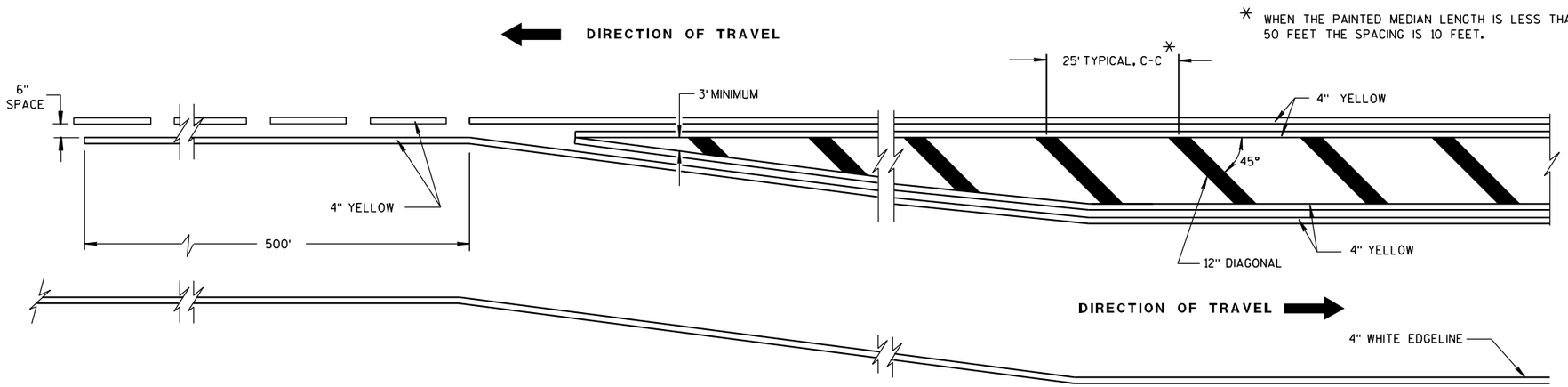

MEDIAN ISLAND DETAIL

GENERAL NOTE

DIAGONALS ARE OPTIONAL WHEN PAINTED ISLAND IS LESS THAN 6 FEET AT WIDEST POINT.

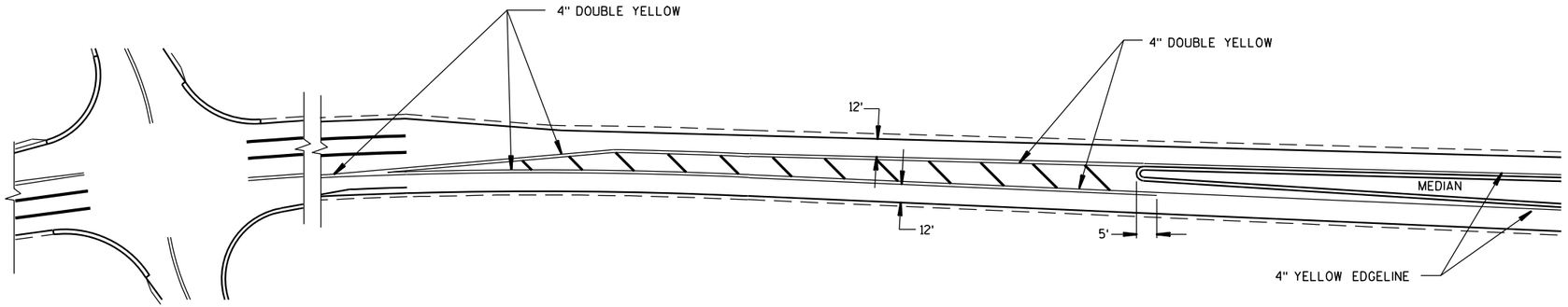

APPROACH MARKINGS FOR OTHER MEDIAN TYPES

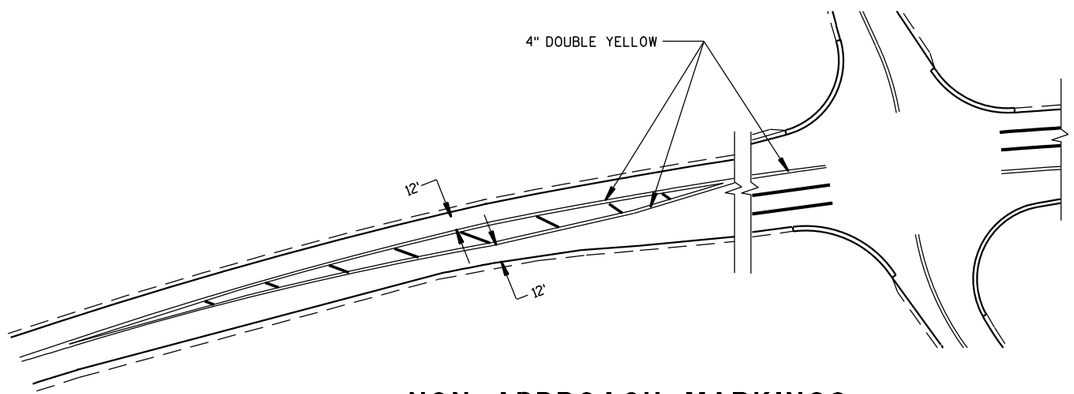

NON APPROACH MARKINGS

MEDIAN ISLAND MARKING	
STATE OF WISCONSIN DEPARTMENT OF TRANSPORTATION	
APPROVED 2-5-09 DATE	/S/ Thomas N. Nothohm STATE TRAFFIC ENGINEER
FHWA	151 IGN

6

S.D.D. 15 C 18-3

6

S.D.D. 15 C 18-3

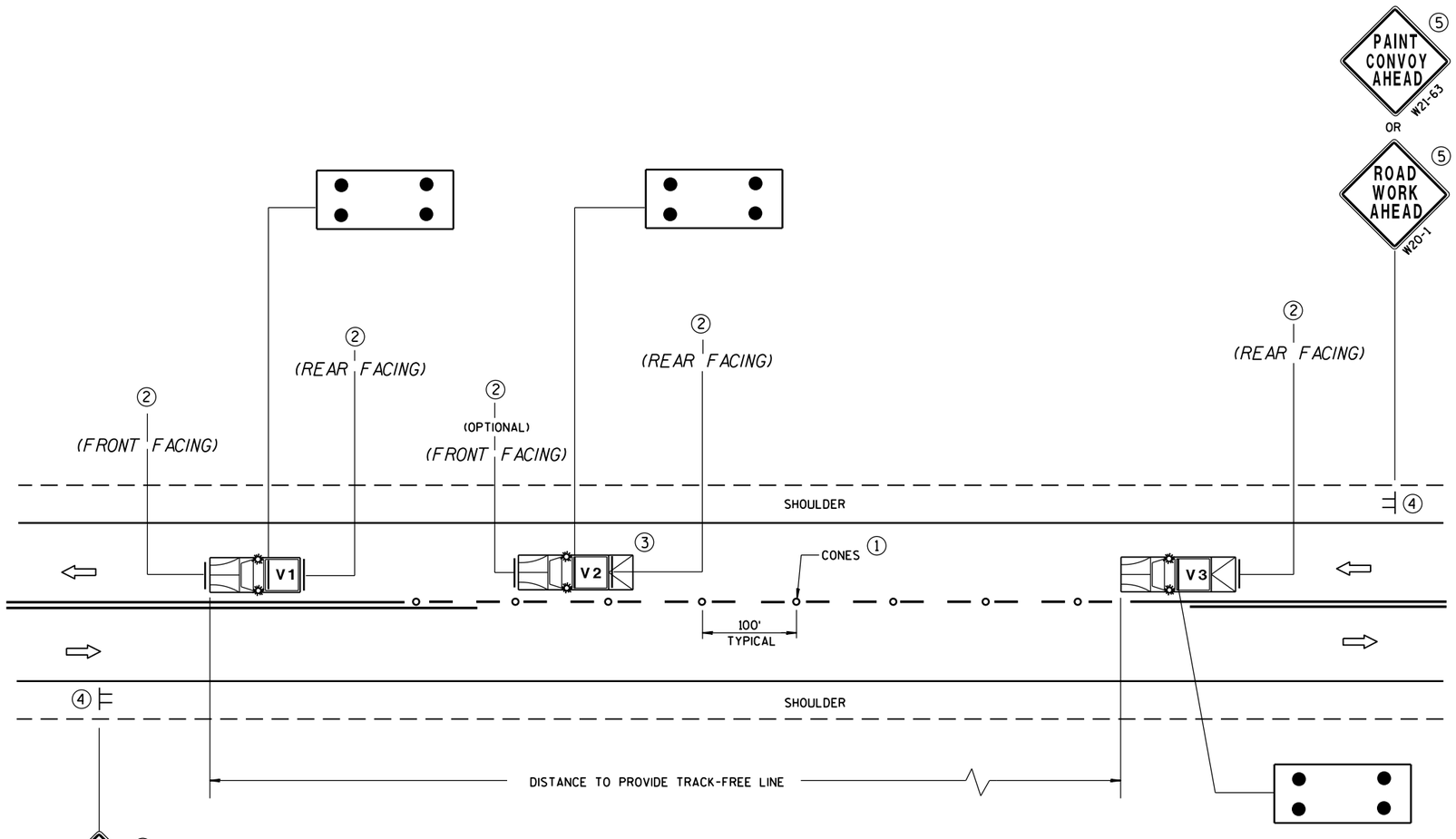

MOVING PAVEMENT MARKING OPERATIONS
TWO-LANE TWO-WAY ROADWAY

GENERAL NOTES

ALL VEHICLES SHALL BE EQUIPPED WITH TWO 360 DEGREE HIGH INTENSITY YELLOW FLASHING LIGHTS OR STROBE LIGHTS AND OPERATED WITH HEADLIGHTS TURNED ON.

VEHICLES SHALL BE EQUIPPED WITH REAR FACING TYPE B OR C FLASHING ARROW PANEL OPERATING IN CAUTION MODE. SIGNS PLACED ON VEHICLES MUST NOT OBSCURE THE ARROW PANEL.

ALL SIGNS ARE 48" X 48" UNLESS OTHERWISE SPECIFIED.

IF SPEED LIMIT IS 40 MPH OR LESS STATIONARY SIGNS MAY BE OMITTED IF CONES ARE USED.

ALTERNATE SIGN MESSAGES, SUCH AS "PAINT CREW AHEAD" OR "ROAD PAINTING AHEAD" MAY BE USED.

DISTANCE BETWEEN VEHICLES MAY VARY ACCORDING TO TERRAIN, SIGHT DISTANCE, PAINT DRYING TIME, AND OTHER FACTORS. WHENEVER ADEQUATE STOPPING SIGHT DISTANCE EXISTS TO THE REAR, SHADOW VEHICLES SHOULD MAINTAIN THE MINIMUM DISTANCE FROM THE WORK VEHICLE AND PROCEED AT THE SAME SPEED AS THE WORK VEHICLE. SHADOW VEHICLES SHOULD SLOW DOWN IN ADVANCE OF VERTICAL OR HORIZONTAL CURVES THAT RESTRICT SIGHT DISTANCE.

THE WORK AND SHADOW VEHICLES SHOULD PULL OVER PERIODICALLY TO ALLOW TRAFFIC TO PASS.

THIS DRAWING SHALL BE USED FOR CENTERLINE OR EDGELINE MARKING.

WHEN NO WORK ACTIVITY IS TAKING PLACE, REMOVE OR TURN THE STATIONARY WARNING SIGNS AWAY FROM TRAFFIC.

(1) CONES MAY BE OMITTED ON PAINTED LINE IF APPROVED BY THE ENGINEER. CONSIDER PAVEMENT MARKING DRY OR CURE TIMES AND TRAFFIC VOLUME.

(2) USE STANDARD SIGN W21-64 WITH APPROPRIATE ARROW.

WET PAINT W21-64 OR WET PAINT W21-64

(3) OPTIONAL TRUCK-MOUNTED ATTENUATOR.

(4) SIGNS SHALL BE REPEATED APPROXIMATELY EVERY THREE MILES.

(5) IF CONSTRUCTION WORK ZONE SIGNS ARE IN PLACE, W20-1 OR W21-63 ARE NOT REQUIRED.

LEGEND

- **V1** LEAD VEHICLE
- **V2** SHADOW VEHICLE
- **V3** TRAIL VEHICLE WITH TMA
- **TMA** TRUCK-MOUNTED ATTENUATOR
- SIGN ON TEMPORARY SUPPORT
- DIRECTION OF TRAFFIC
- CONES
- FLASHING ARROW PANEL (CAUTION)

MOVING PAVEMENT MARKING OPERATION TWO-LANE TWO-WAY ROADWAY	
STATE OF WISCONSIN DEPARTMENT OF TRANSPORTATION	
APPROVED 5/3/2013 DATE	/S/ Travis Feltes STATE TRAFFIC E
FHWA	

6
S.D.D. 15 C 19-2a

GENERAL NOTES

THE EXACT NUMBER, LOCATION AND SPACING OF ALL SIGNS AND DEVICES SHALL BE ADJUSTED TO FIT FIELD CONDITIONS AS APPROVED BY THE ENGINEER.

ALL SIGNS ARE 48" X 48" UNLESS OTHERWISE NOTED. IF NECESSARY DUE TO SPACE CONSTRAINTS IN URBAN AREAS, 36" X 36" SIGNS MAY BE USED IF APPROVED BY DISTRICT TRAFFIC UNIT.

"WO" SIGNS ARE THE SAME AS "W" SIGNS EXCEPT THE BACKGROUND IS ORANGE.

SIGNS THAT WILL BE IN PLACE LESS THAN 7 CONTINUOUS DAYS AND NIGHTS MAY BE MOUNTED ON PORTABLE SUPPORTS.

ANY SIGNS TEMPORARY OR EXISTING, WHICH CONFLICT WITH TRAFFIC CONTROL "IN USE" SHALL BE REMOVED OR COVERED AS NEEDED AND AS APPROVED BY THE ENGINEER.

W20-1 AND G20-2A SIGNS ARE NOT REQUIRED IF THE WORK AREA IS WITHIN A LARGER WORK ZONE WHERE THESE SIGNS ARE ALREADY PRESENT. G20-2A SIGNS MAY ALSO BE OMITTED IF DURATION OF WORK IS LESS THAN 7 CONTINUOUS DAYS AND NIGHTS.

CHANNELIZING DEVICES PLACED ADJACENT TO THE WORK AREA SHALL BE PULLED BACK FROM THE TRAVEL LANE WHEN WORK IS NOT IN PROGRESS.

TABLE A

S \ W	SHOULDER TAPER LENGTH (FEET) 4	6	8	10	BUFFER SPACE (FEET)
30	20	30	40	50	85
35	30	45	55	70	120
40	40	55	75	90	170
45	60	90	120	150	220
50	70	100	135	170	280
55	75	110	150	185	335

W = SHOULDER WIDTH (FEET)
S = NON-CONSTRUCTION SPEED LIMIT (MPH)

SHOULDER TAPER LENGTH
= WS AT 45 MPH OR GREATER

$= \frac{WS^2}{60}$ AT 40 MPH OR LESS

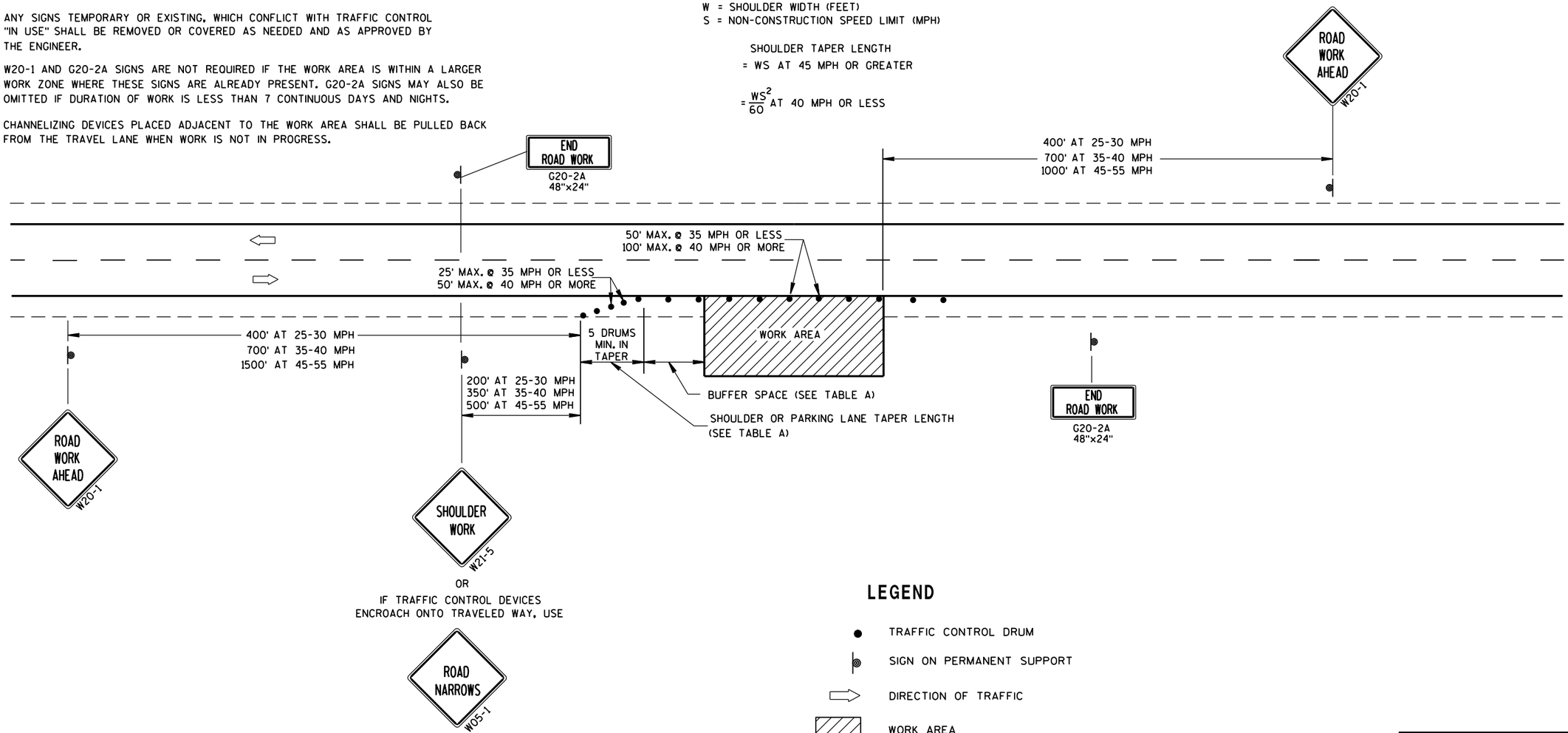

LEGEND

- TRAFFIC CONTROL DRUM
- SIGN ON PERMANENT SUPPORT
- DIRECTION OF TRAFFIC
- WORK AREA

TRAFFIC CONTROL, WORK ON SHOULDER OR PARKING LANE, UNDIVIDED ROADWAY

STATE OF WISCONSIN
DEPARTMENT OF TRANSPORTATION

APPROVED

8/2013 DATE

/S/ Travis Feltes
STATE TRAFFIC ENGINEER

FHWA

6

S.D.D. 15 D 28-2

LEGEND

- SIGN ON PERMANENT SUPPORT
- REMOVING PAVEMENT MARKING
- TYPE III BARRICADE WITH ATTACHED SIGN
- CONCRETE BARRIER TEMPORARY PRECAST
- FLAGS, 16" x 16" MIN., (ORANGE)
- TRAFFIC CONTROL DRUM
- TRAFFIC CONTROL DRUM WITH TYPE "C" STEADY BURN LIGHT
- ASPHALTIC PAVEMENT WIDENING
- DIRECTION OF TRAFFIC
- 4" X 6" WOOD POST
- TEMPORARY SIGNAL WITH BACKPLATE AND 12-INCH LENSES ON BREAKAWAY POLE

W057-52
36"x24"

INSTALL ON EACH APPROACH AT THE CLOSEST INTERSECTION WITH A STATE OR COUNTY TRUNK HIGHWAY, OR AS DIRECTED BY THE ENGINEER. WIDTH ON SIGN TO BE APPROX. 1-FOOT LESS THAN AVAILABLE WIDTH. (OMIT IF AVAILABLE WIDTH IS MORE THAN 16 FEET.)

GENERAL NOTES

THE EXACT NUMBER, LOCATION AND SPACING OF ALL SIGNS AND DEVICES SHALL BE ADJUSTED TO FIT FIELD CONDITIONS.

THE SPACING BETWEEN TRAFFIC CONTROL SIGNS SHOULD BE ADJUSTED TO NOT CONFLICT WITH AND SHOULD PROVIDE A MINIMUM OF 200 FEET (500 FEET DESIRABLE) CLEARANCE TO EXISTING SIGNS THAT WILL REMAIN IN PLACE.

ALL SIGNS ARE 48"x48" UNLESS OTHERWISE NOTED.

"WO" IS THE SAME AS "W" EXCEPT THE BACKGROUND IS ORANGE.

SIGN LAYOUTS SHALL BE IN ACCORDANCE WITH THE FHWA'S MANUAL OF STANDARD HIGHWAY SIGNS OR THE WISCONSIN STANDARD SIGN PLATES.

ANY SIGNS TEMPORARY OR EXISTING, WHICH CONFLICT WITH TRAFFIC CONTROL "IN USE" SHALL BE REMOVED OR COVERED AS NEEDED AND AS APPROVED BY THE ENGINEER.

PLACE TEMPORARY PAVEMENT MARKING EDGELINE AND CENTERLINE, AND REMOVE EXISTING PAVEMENT MARKINGS IF LANE CLOSURE IS TO BE IN PLACE FOR 4 OR MORE CONTINUOUS DAYS AND NIGHTS OR AS NOTED ON DETAIL.

* 500-FOOT SPACING SHOWN IS FOR ROADWAYS WITH A PRE-CONSTRUCTION REGULATORY SPEED LIMIT OF 45 MPH OR MORE. FOR 35-40 MPH, USE 350-FOOT TYPICAL SPACING. FOR 25-30 MPH, USE 200-FOOT TYPICAL SPACING.

** USE 300' SPACING IF PRE-CONSTRUCTION REGULATORY SPEED LIMIT IS 35 MPH OR LESS.

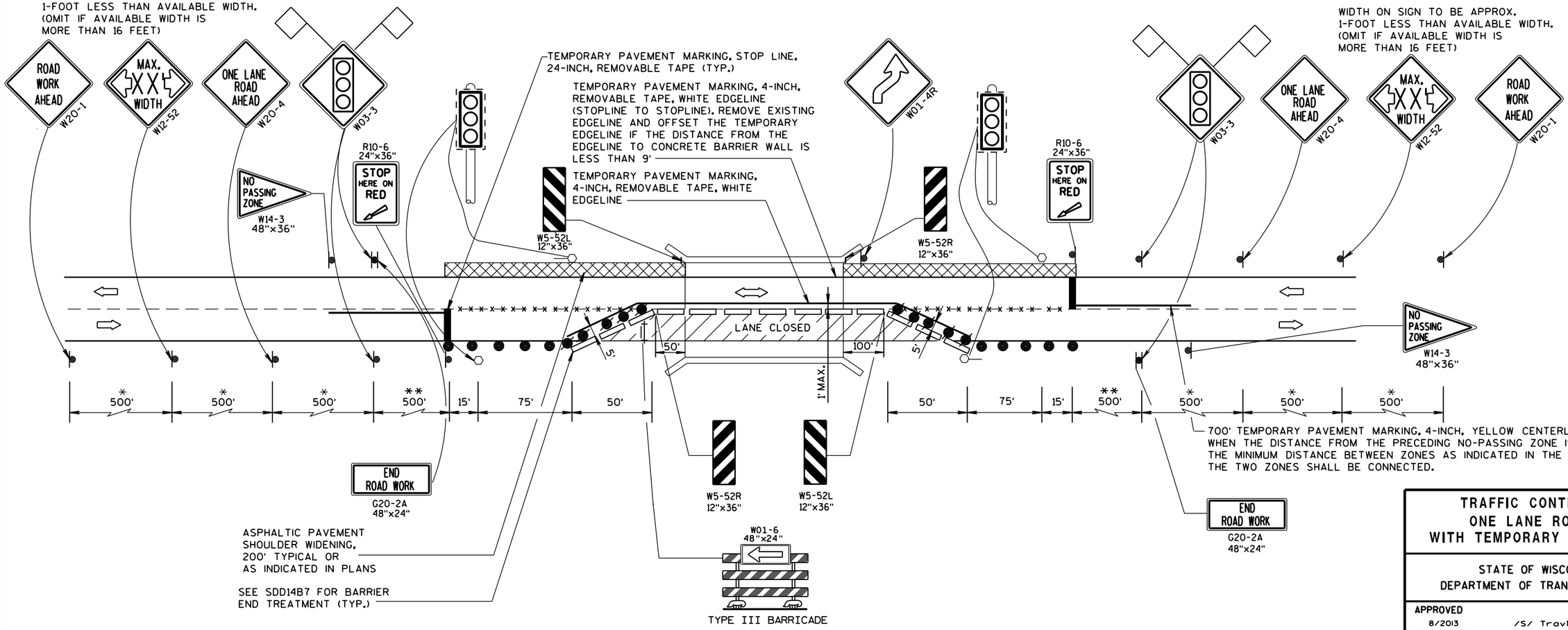

TRAFFIC CONTROL, ONE LANE ROAD WITH TEMPORARY SIGNALS

STATE OF WISCONSIN
DEPARTMENT OF TRANSPORTATION

APPROVED

8/2013 — DATE

/S/ Travis Feltes — STATE TRAFFIC ENGINEER

FHWA

6

S.D.D. 15 D 33-3

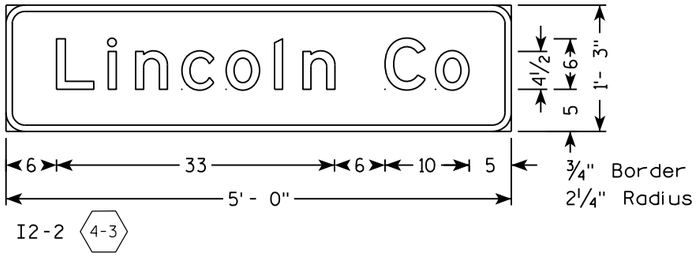

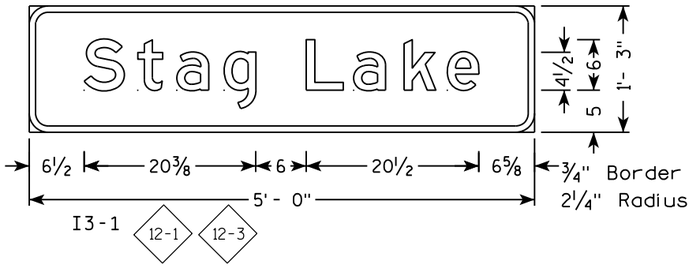

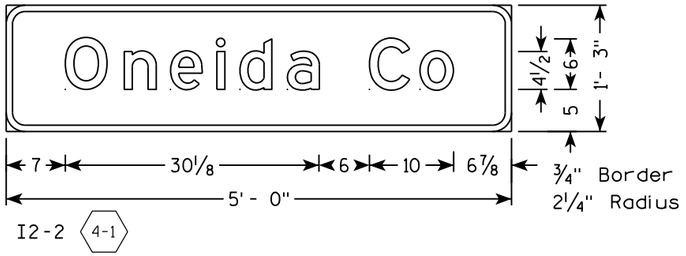

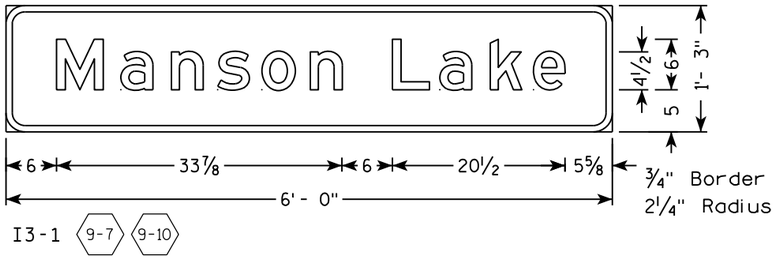

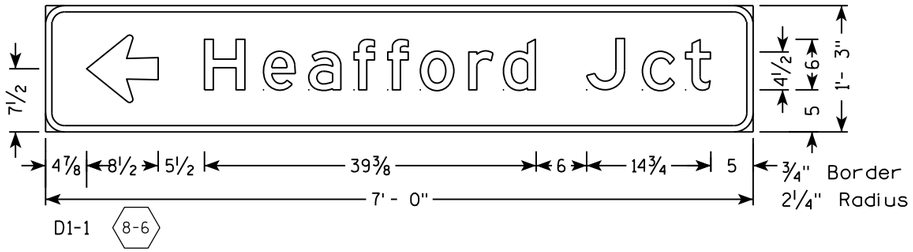

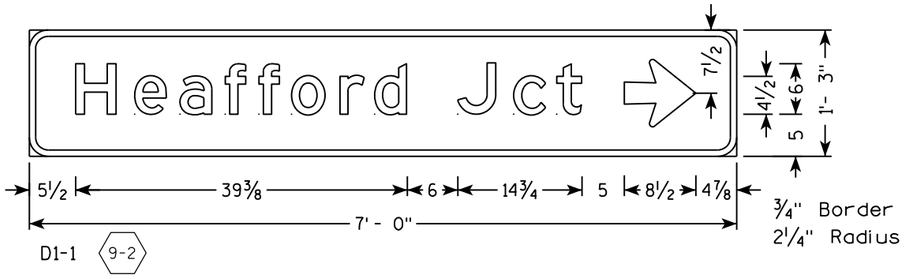

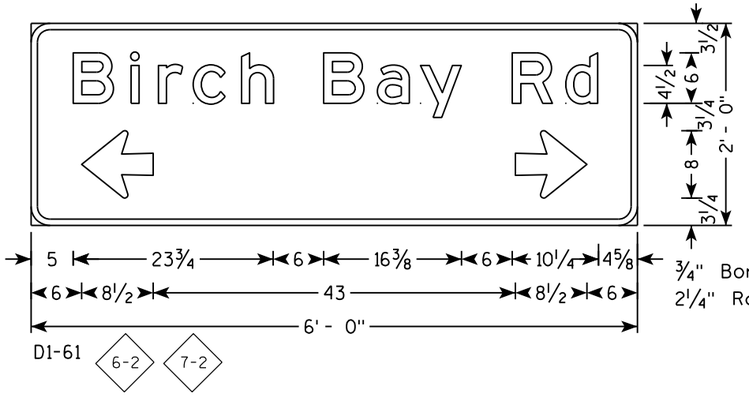

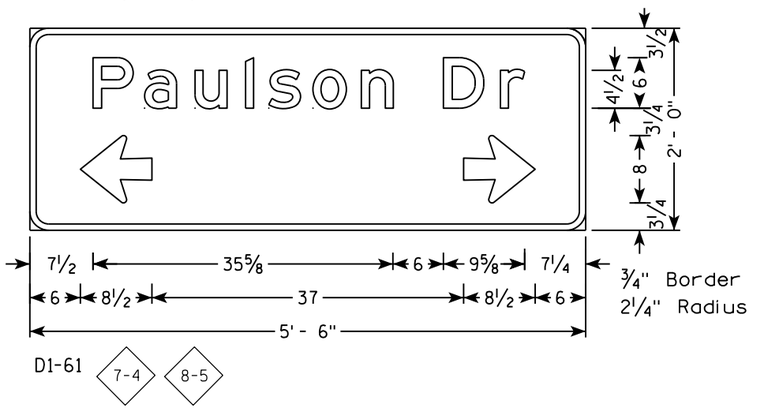

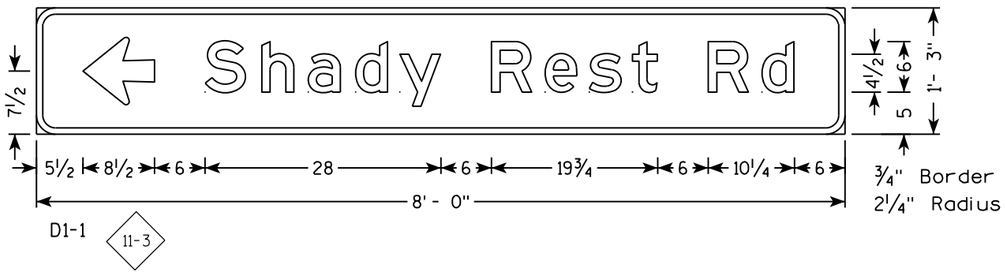

NOTES

1. All Signs Type II - Type H Reflective - reference WIS DOT Standard Specification for HIGHWAY and STRUCTURE CONSTRUCTION latest edition.
2. Color:
   Background - GREEN
   Message - WHITE
3. Message Series - E

7

7

PROJECT NO: 1595-09-60	HWY: USH 8	COUNTY: ONEIDA	SIGN DETAIL		SHEET 155	E

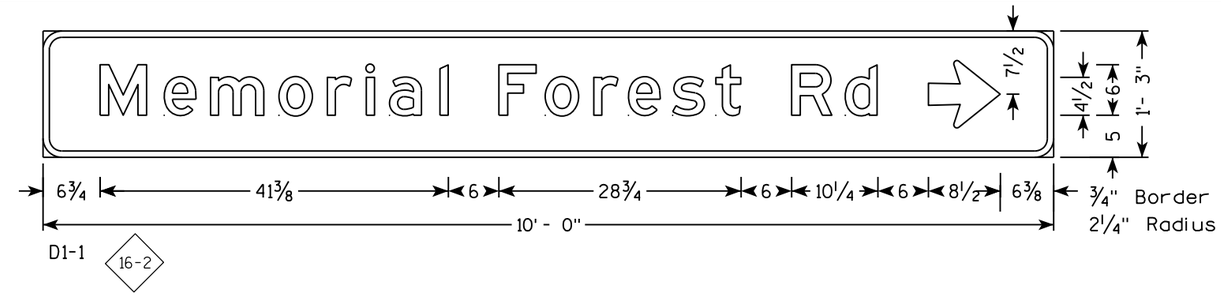

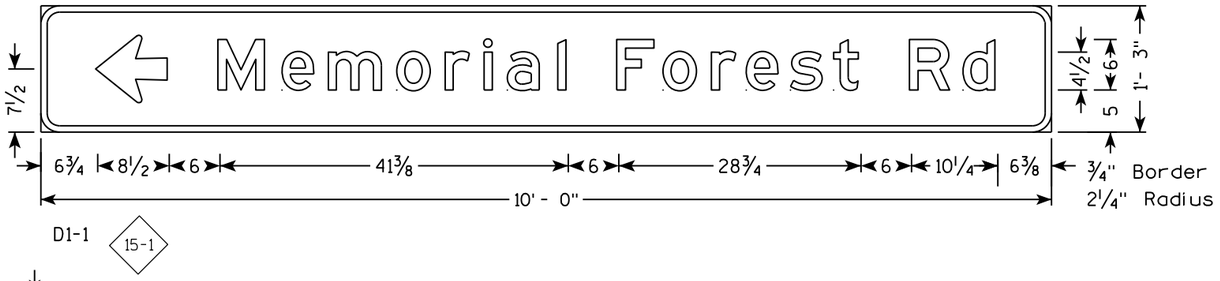

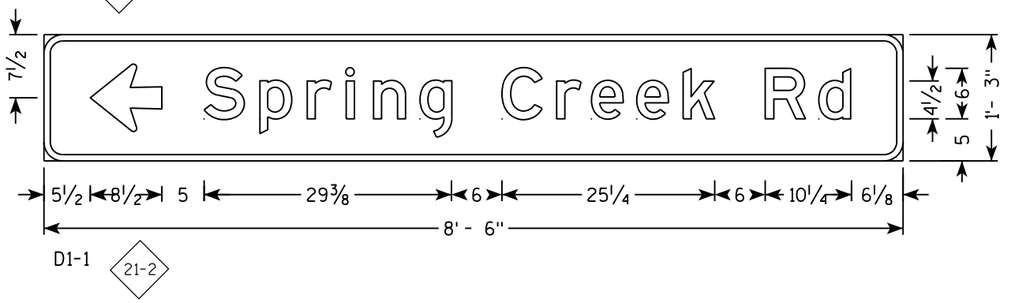

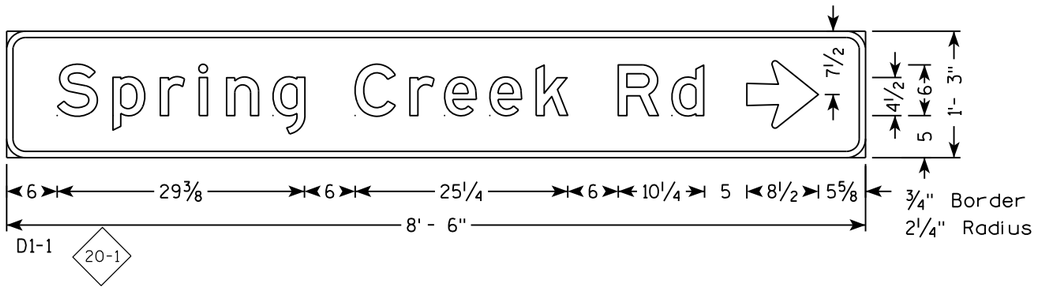

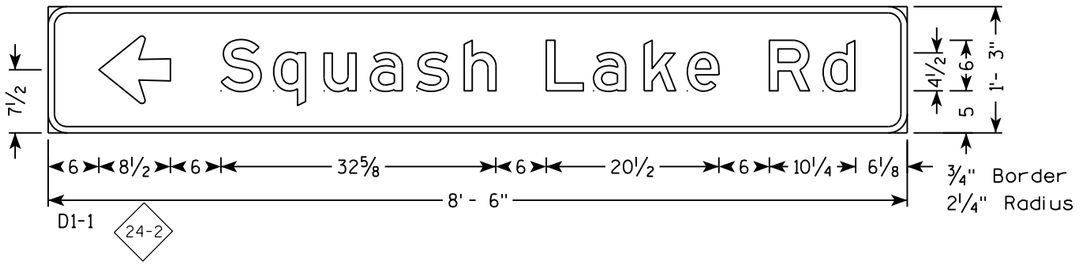

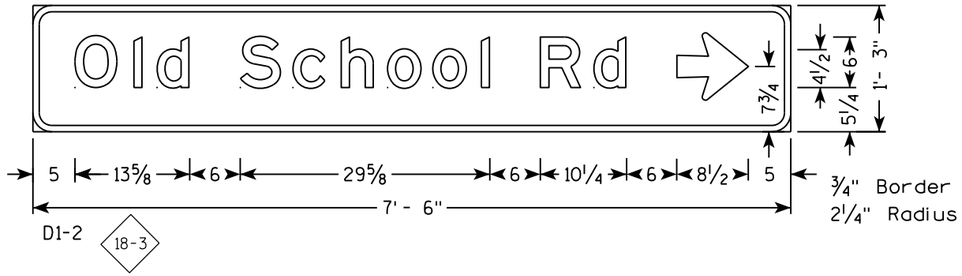

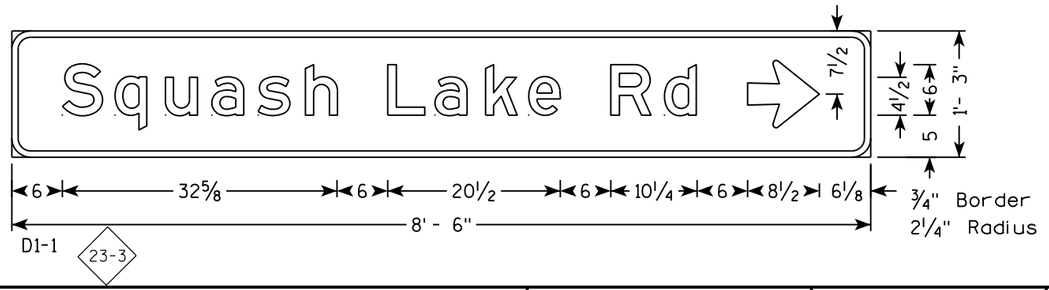

NOTES

1. All Signs Type II - Type H Reflective - reference WIS DOT Standard Specification for HIGHWAY and STRUCTURE CONSTRUCTION latest edition.
2. Color:
   Background - GREEN
   Message - WHITE
3. Message Series - E

7

7

PROJECT NO: 1595-09-60	HWY: USH 8	COUNTY: ONEIDA	SIGN DETAIL		SHEET 156	E

NOTES

1. All Signs Type II - Type H Reflective - reference WIS DOT Standard Specification for HIGHWAY and STRUCTURE CONSTRUCTION latest edition.
2. Color:
   Background - GREEN
   Message - WHITE
3. Message Series - E except as Shown

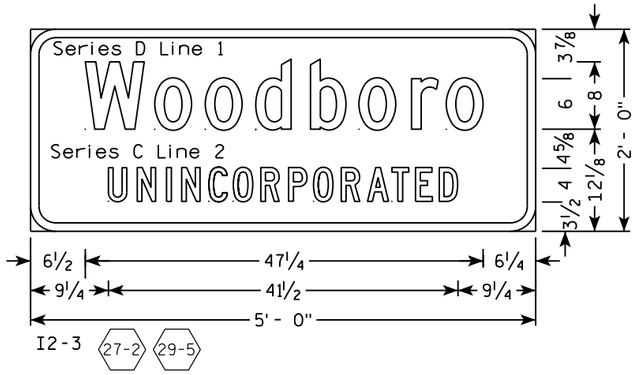

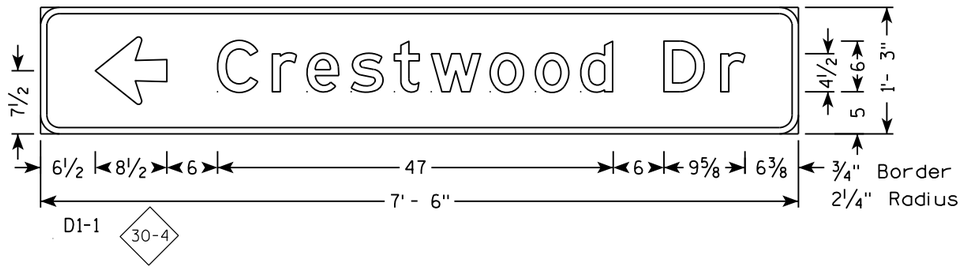

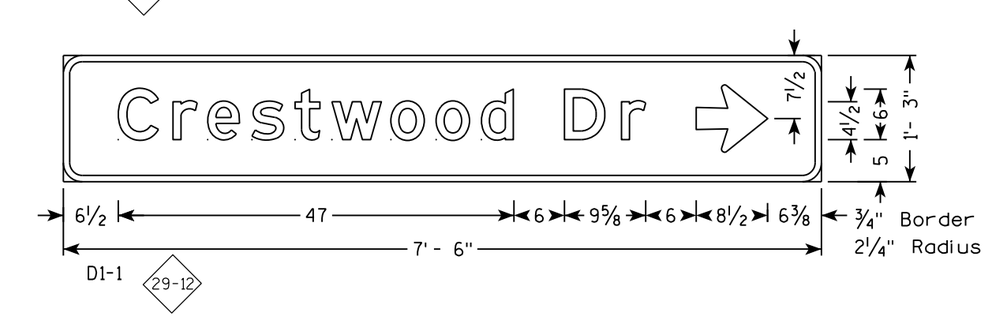

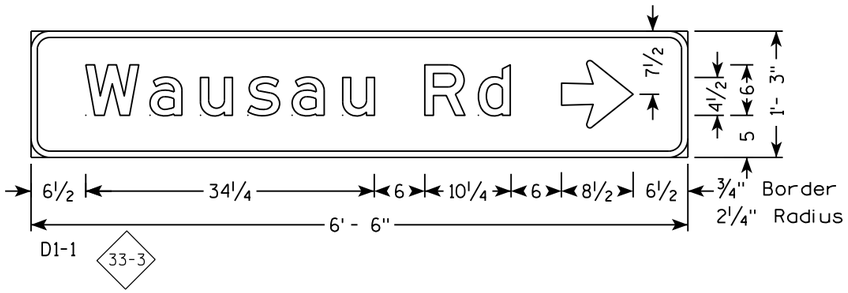

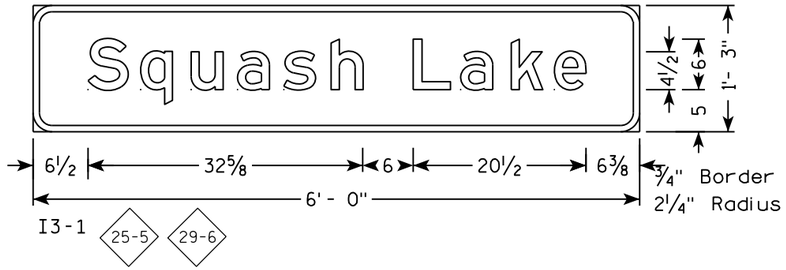

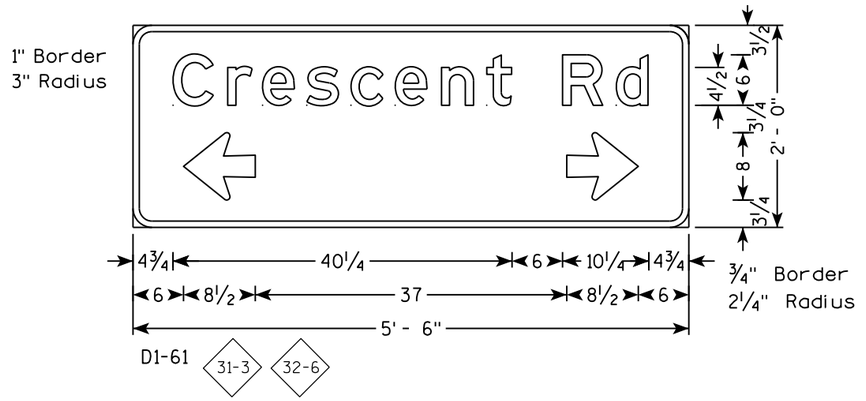

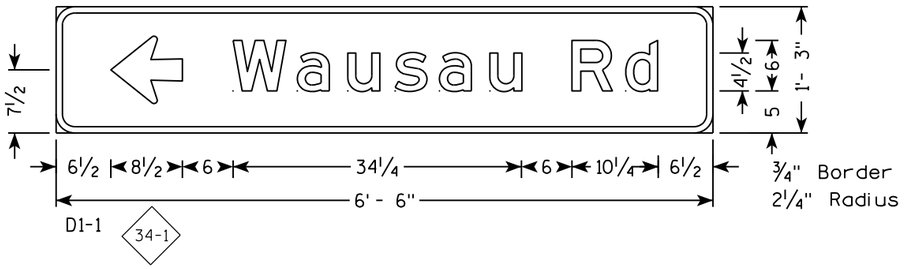

7

7

PROJECT NO: 1595-09-60	HWY: USH 8	COUNTY: ONEIDA	SIGN DETAIL		SHEET 157	E

NOTES

1. All Signs Type II - Type H Reflective - reference WIS DOT Standard Specification for HIGHWAY and STRUCTURE CONSTRUCTION latest edition.
2. Color:
   Background - GREEN
   Message - WHITE
3. Message Series - E

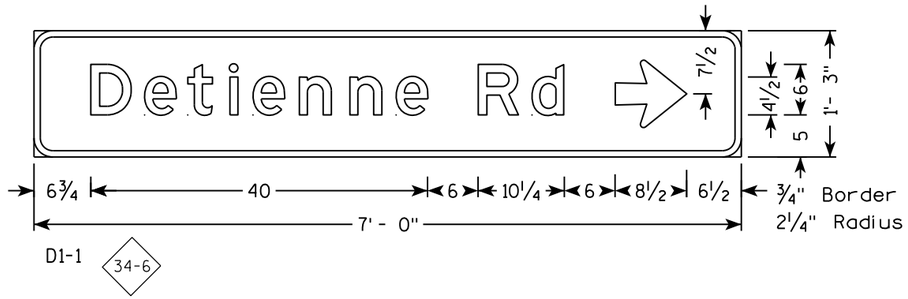

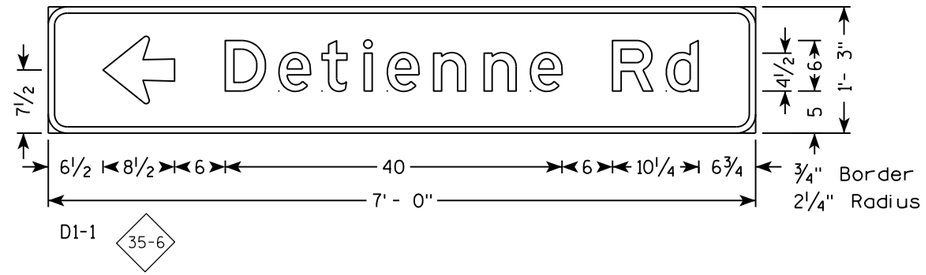

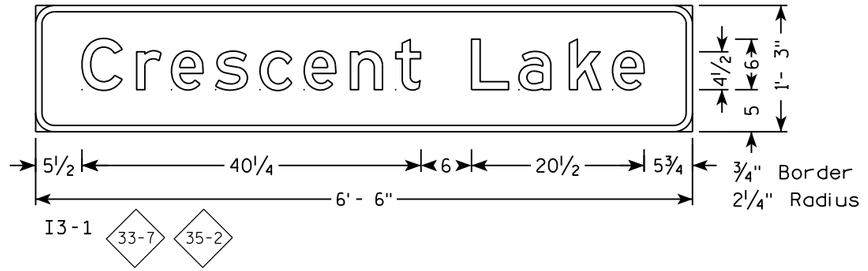

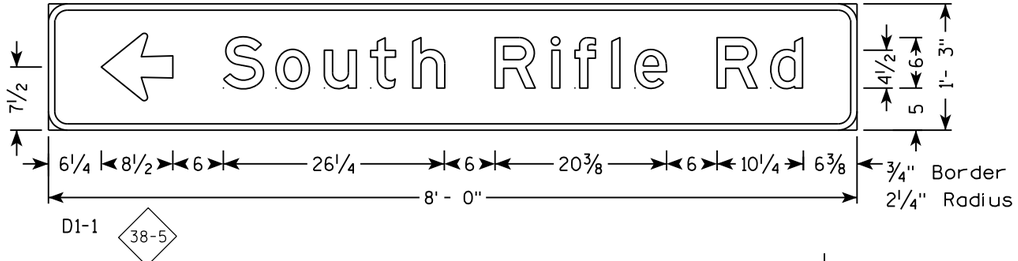

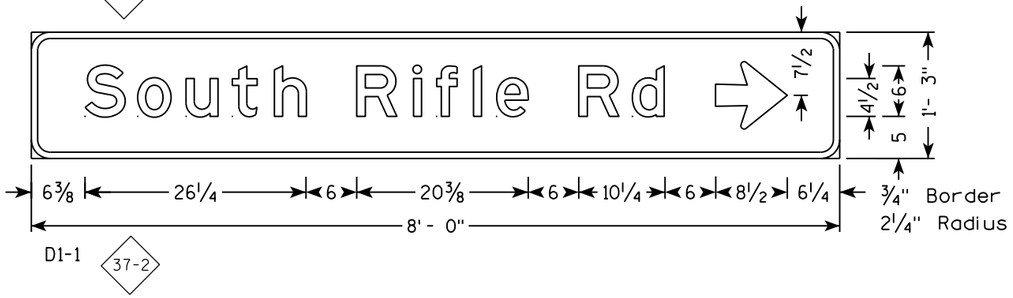

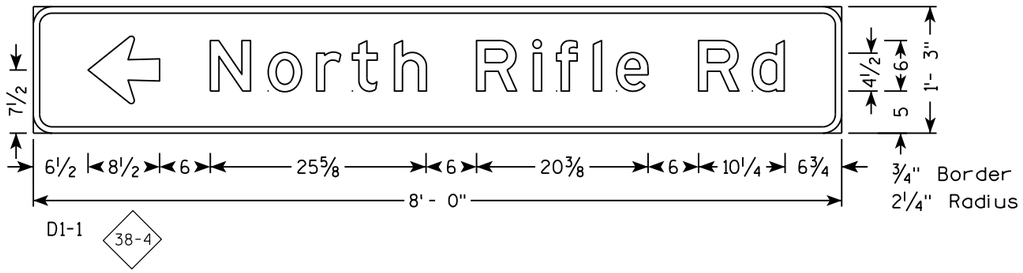

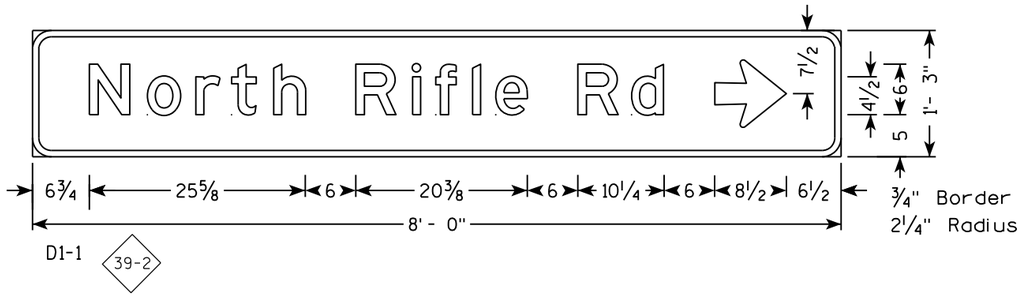

7

7

PROJECT NO: 1595-09-60	HWY: USH 8	COUNTY: ONEIDA	SIGN DETAIL		SHEET 158	E

TYPICAL ASSEMBLIES

J1-1

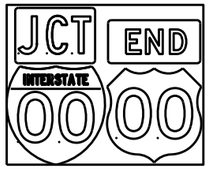

J1-2

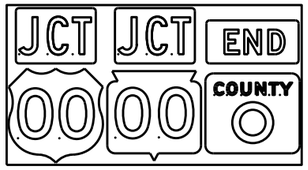

J1-3

J2-1

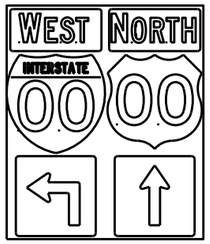

J2-2

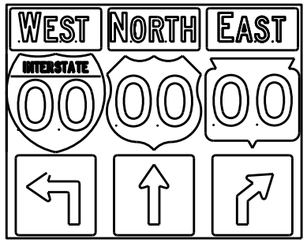

J2-3

JV

(Typical Vertical J-Assembly
See Note 10 and 11)

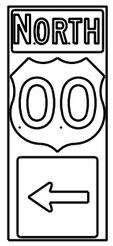

J3-1

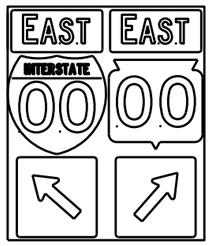

J3-2

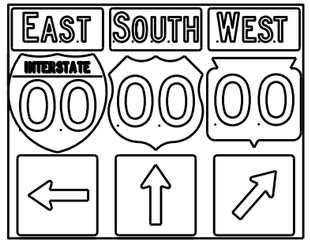

J3-3

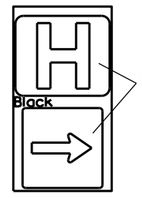

JH-1

J4-1

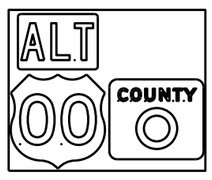

J4-2

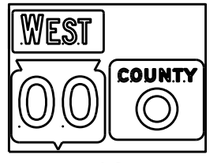

J4-2

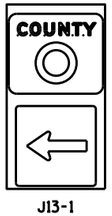

J13-1

J12-1

J32-1

J33-1

J23-1

J22-1

[blue background with interstate]

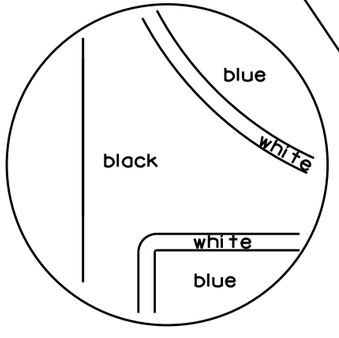

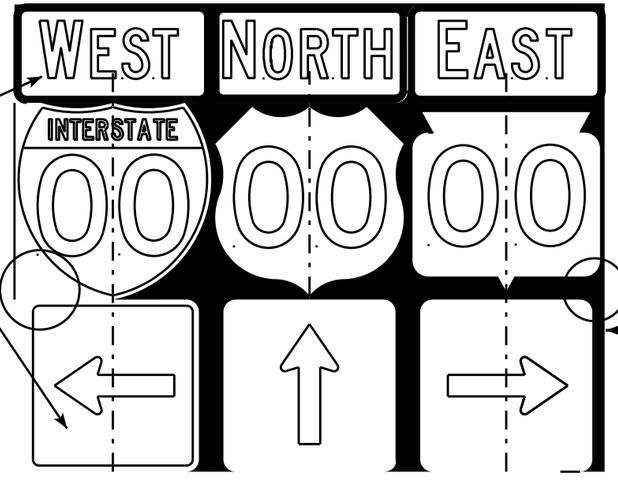

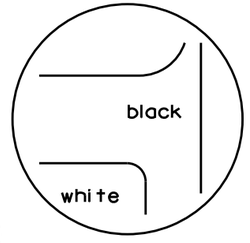

[black background]

NOTES

1. Signs are Type II - Type H Reflective - reference WIS DOT Standard Specification for HIGHWAY and STRUCTURE CONSTRUCTION latest edition.
2. Color:
   Background - Black Non-reflective
   Message - see Note 5
3. Message Series - See Note 5
4. Corners shall be square or rounded if base material is plywood. If base material is metal the corners shall be rounded.
5. The colors and message spacing on each marker shall be according to the applicable route marker panel specifications.
6. Certain marker heads require the component pieces to be the same color. As an example, all the components used with an M1-1 Interstate marker shall be blue.
7. Single panel j-assemblies shall only be used with route marker shields that are same size. If the route marker shields are different size use multiple piece component.
8. Route assemblies that have 24 inch route shields and have dimensions greater than 48 inches (both vertical and horizontal) shall have one horizontal splice between the arrows and route shields. Vertical splices shall not be used on route assemblies with a horizontal dimension of 144 inches or less. The contractor shall not use more than one vertical joint per sign and the joint shall be between route shields.
9. Route assemblies that have 36 inch shields and have dimensions greater than 48 inchs (both vertical and horizontal) shall have two horizontal splices. One horizontal splice shall be between the cardinal direction and route shields and the other horizontal splice shall be between the arrows and route shields. Vertical splices shall not be used on route assemblies with a horizontal dimension of 144 or less. The contractor shall not use more than one vertical joint per sign and the joint shall be between route shields.
10. All Vertical J Assemblies are given a Sign Code of JV
11. For JV Assemblies that have a mixture of Interstate and non Interstate shields, arrows and cardinals shall be white on blue.

ROUTE MARKERS & COMPONENTS
IN TYPICAL ASSEMBLIES

WISCONSIN DEPT OF TRANSPORTATION

APPROVED Matthew R Rauch
for State Traffic Engineer

DATE 2/06/14 PL... A2-1S.8

PROJECT NO: SHEET NO: E

FILE NAME : C:\CAEFiles\Projects\tr_stdplate\A21S.DGN PLOT DATE : 06-FEB-2014 14:10 PLOT BY : mscsja PLOT NAME :
WISDOT/CADDS SHEET 42

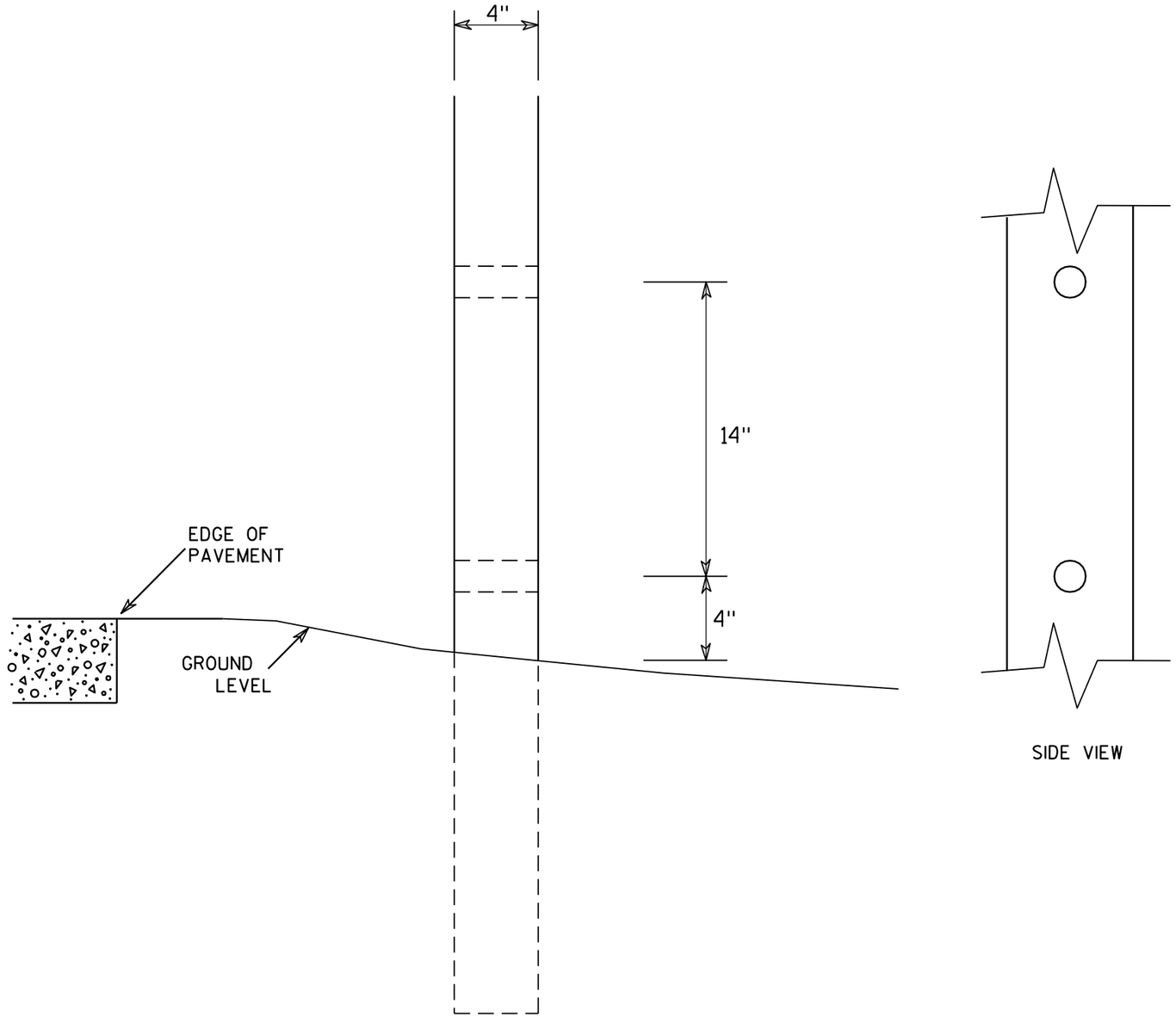

SIDE VIEW

GENERAL NOTES

1. All 4 x 6 Wood Posts shall be modified by having two 1½" diameter holes drilled perpendicular to the roadway centerline.

4 X 6 WOOD POST MODIFICATIONS

WISCONSIN DEPT OF TRANSPORTATION

APPROVED Chester J Spang for State Traffic Engineer

DATE 3/27/97 PLATE NO. A4-11.2

PROJECT NO:	HWY:	COUNTY:		SHEET NO: 160	E

URBAN AREA

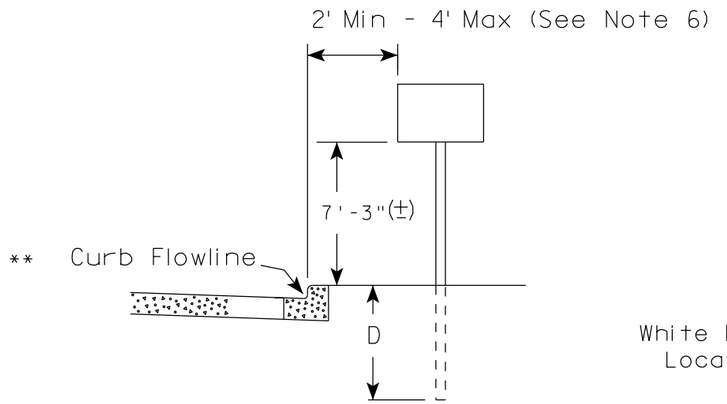

RURAL AREA (See Note 2)

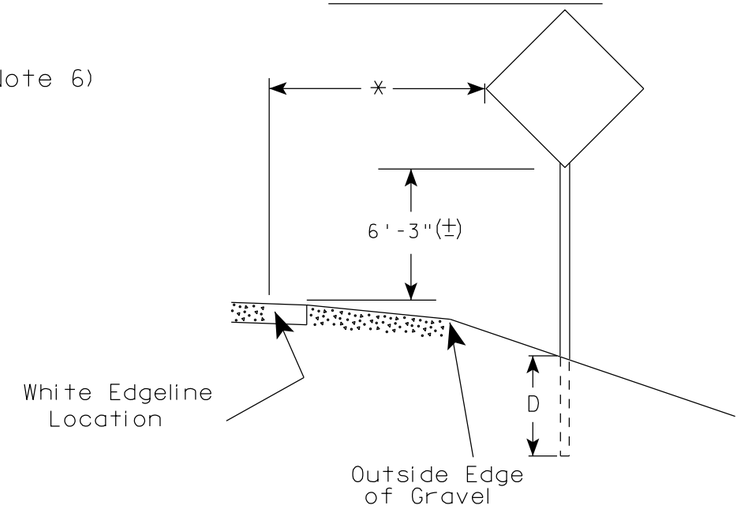

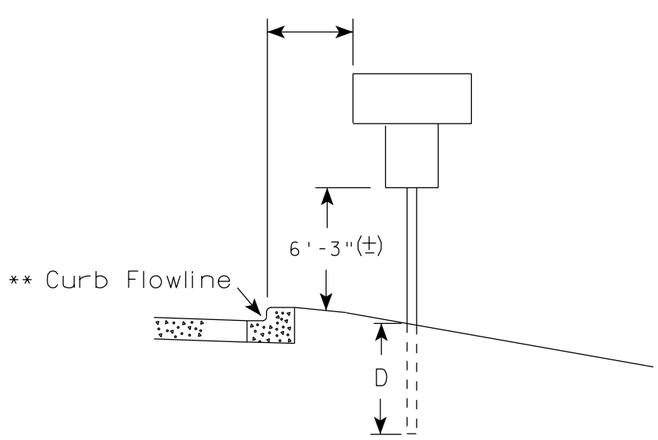

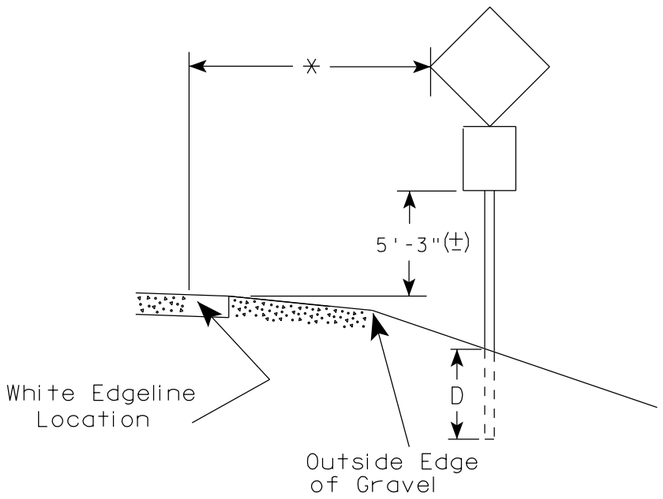

** The existence of curb and gutter does not in itself mandate the vertical clearance illustrated. That height is typically measured where there is sidewalk adjacent to the roadway or parking is permitted. In the absence of sidewalk vertical clearance is measured from the top of the curb. Offset of signs is measured from the flow line.

* 6 feet from edge of a paved shoulder or 12 feet from the edge of pavement (edge line location) or 2 feet from outside edge of gravel, whichever is greater unless directed by project engineer.

POST EMBEDMENT DEPTH

Area of Sign Installation (Sq. Ft.)	D (Min)
20 or Less	4'
Greater than 20	5'

GENERAL NOTES

1. Signs wider than 4 feet, 20 sq.ft or larger, shall be mounted on multiple posts. Refer to plate A4-4.
2. If signs are mounted on barrier wall, see A4-10 sign plate.
3. For expressways and freeways, mounting height is 7'- 3" (±) or 6'-3" (±) depending upon existence of a sub-sign.
4. Minimum mounting height for J assemblies (A2-1S) is 7'-3" (±) or 6'-3" (±) per urban or rural detail respectively.
5. Minimum mounting height for signs mounted on traffic signal poles is 5'- 3" (±).
6. Offset distance shall be consistent with existing signs or consistent throughout length of project.
7. The (±) tolerance for mounting height is 3 inches.
8. Folding signs shall be mounted at a height of 5'-3" (±) or as directd by the Engineer.
9. The Double Arrow sign (W12-1) shall be mounted at a height of 2'-3" (±). The Chevron sign (W1-8), Roundabout Chevron panel (R6-4B), Enhanced Reference Markers, Clearance Markers (W5-52), Mile Markers (D10 series), In Road Object Markers (W5-54) & End of Road Markers (W5-56) shall be mounted at a height of 4'-3" (±).

TYPICAL INSTALLATION OF PERMANENT TYPE II SIGNS ON SINGLE POSTS

WISCONSIN DEPT OF TRANSPORTATION

APPROVED Matthew R Rauch
for State Traffic Engineer

DATE 11/12/14 PLATE NO. A4-3.19

PROJECT NO:	HWY:	COUNTY:		SHEET NO:	E

FILE NAME : C:\CAEFiles\Projects\tr_stdplate\A43.DGN PLOT DATE : 12-NOV-2014 14:03 PLOT BY : mscsja PLOT NAME : PLOT SCALE : 99.237937:1.000000
WISDOT/CADDS SHEET 42

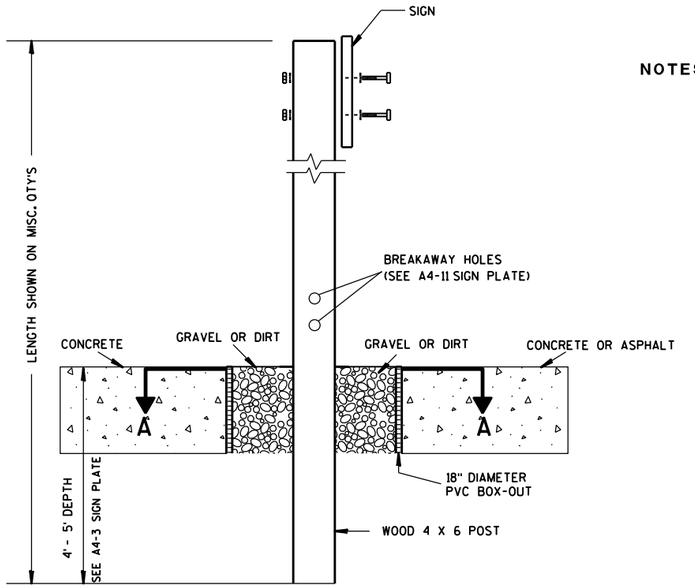

ELEVATION VIEW

DETAIL OF WOOD 4 X 6 SIGN POST IN BOX-OUT

NOTES:
1. ALL MATERIAL TO BE APPROVED BY ENGINEER PRIOR TO INSTALLATION
2. SEE SIGN PLATE A4-8 FOR SIGN HARDWARE REQUIREMENTS
3. 18 INCH X 18 INCH SQUARE BOX-OUTS MAY BE USED FOR INSTALLATIONS IN EXISTING CONCRETE OR ASPHALT LOCATIONS.

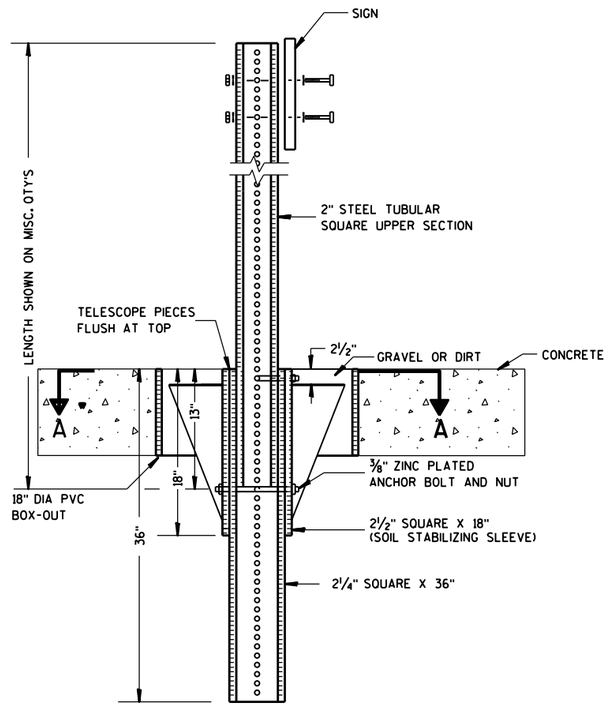

ELEVATION VIEW

DETAIL OF STEEL 2 X 2 SIGN POST IN BOX-OUT

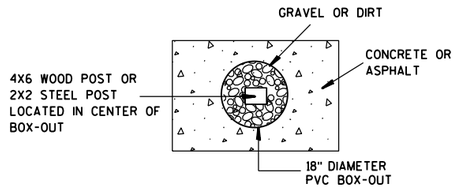

PLAN VIEW

FOR NEW CONCRETE/ASPHALT INSTALLATIONS

SIGN POST BOX-OUTS A4-3B

WISCONSIN DEPT OF TRANSPORTATION

APPROVED Matthew R Rauch
for State Traffic Engineer

DATE 1/27/14 PLATE NO. A4-3B.1

PROJECT NO:	HWY:	COUNTY:		SHEET NO:	E

FILE NAME : C:\CAEFiles\Projects\tr_stdplate\A43B.DGN PLOT DATE : 27-JAN-2014 09:48 PLOT BY : mscsja PLOT NAME : PLOT SCALE : 13.659812:1.000000 WISDOT/CADDS SHEET 42

URBAN AREA

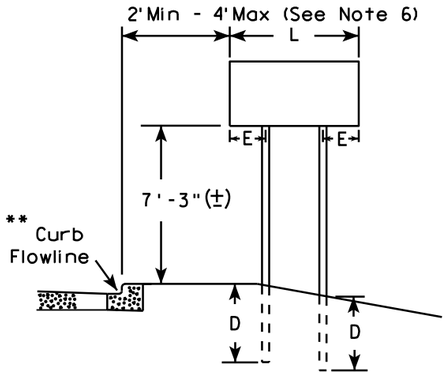

RURAL AREA (See Note 3)

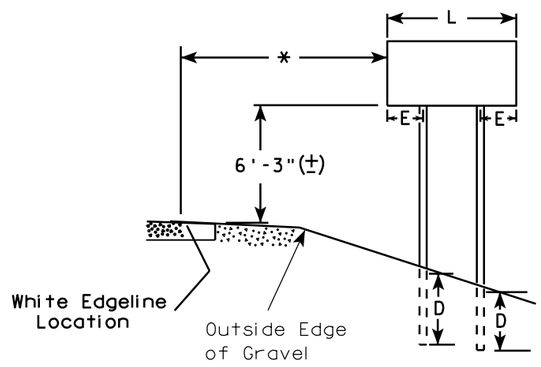

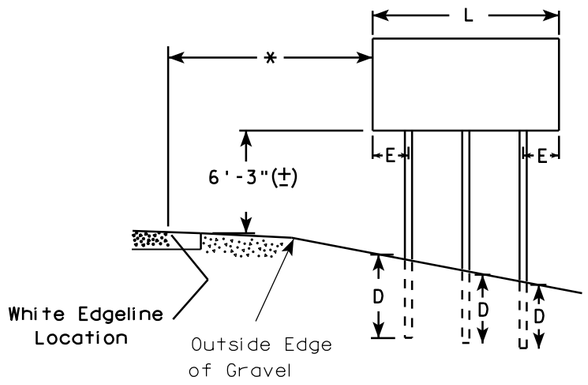

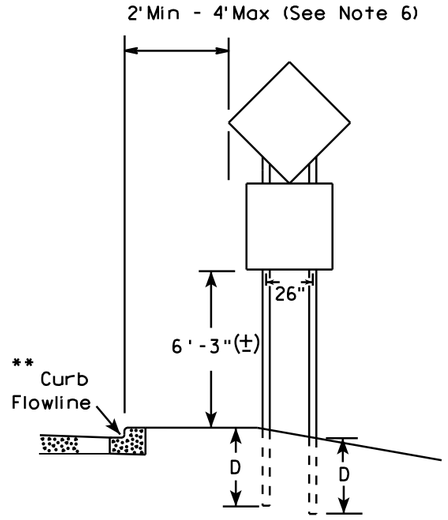

48" DIAMOND WARNING SIGN

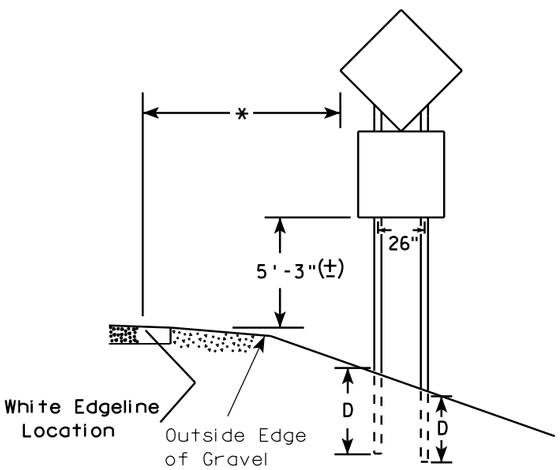

48" DIAMOND WARNING SIGN

GENERAL NOTES

1. For 3 or 4 post installations, individual post spacing shall be greater than 3'-6".
2. See tables below for required number of posts.
3. For expressways and freeways, mounting height is 7'-3" (±) or 6'-3" (±) depending upon existence of sub-sign.
4. The (±) tolerance for mounting height is 3 inches.
5. Minimum mounting height for J assemblies (A2-1S) is 7'-3" (±) or 6'-3" (±) per urban or rural detail respectively.
6. Offset distance shall be consistent with existing signs or consistent throughout length of project.
7. Folding signs shall be mounted at a height of 5'-3" (±) or as directed by the engineer.
8. The Double Arrow sign (W12-1) shall be mounted at a height of 2'-3" (±). The Chevron sign (W1-8), Roundabout Chevron panel (R6-4B), Clearance Markers (W5-52), Mile Markers (D10 series), In Road Object Markers (W5-54) & End of Road Markers (W5-56) shall be mounted at a height of 4"-3" (±).

* 6 feet from edge of a paved shoulder or 12 feet from the edge of pavement (edge line location) or 2 feet from outside edge of gravel, whichever is greater unless directed by project engineer.

** The existence of curb and gutter does not in itself mandate the vertical clearance illustrated. That height is typically measured where there is sidewalk adjacent to the roadway or parking is permitted. In the absence of sidewalk vertical clearance is measured from the top of the curb. Offset of signs is measured from the flow line.

*** See A4-3 sign plate for signs 4' or less in width or less than 20 S.F. in area.

SIGN SHAPE OTHER THAN DIAMOND (TWO POSTS REQUIRED)	
L	E
Greater than 48" Less than 60"	12"
60" to 120"	L/5

***

SIGN SHAPE OTHER THAN DIAMOND (THREE POSTS REQUIRED)	
L	E
Greater than 120" less than 168"	12"

SIGN SHAPE OTHER THAN DIAMOND (FOUR POSTS REQUIRED)	
L	E
168" and greater	12"

POST EMBEDMENT DEPTH

Area of Sign Installation (Sq. Ft.)	D (Min)
20 or Less	4'
Greater than 20	5'

TYPICAL INSTALLATION OF TYPE II SIGNS ON MULTIPLE POSTS

WISCONSIN DEPT OF TRANSPORTATION

APPROVED Matthew R Rauch
for State Traffic Engineer

DATE 11/12/14 PLATE NO. A4-4 13

163

PROJECT NO:	HWY:	COUNTY:		SHEET NO:	E

FILE NAME : C:\CAEFiles\Projects\tr_stdplate\A44.DGN PLOT DATE : 12-NOV-2014 14:01 PLOT BY : mscsja PLOT NAME : PLOT SCALE : 107.021305:1.000000

WISDOT/CADDS SHEET 42

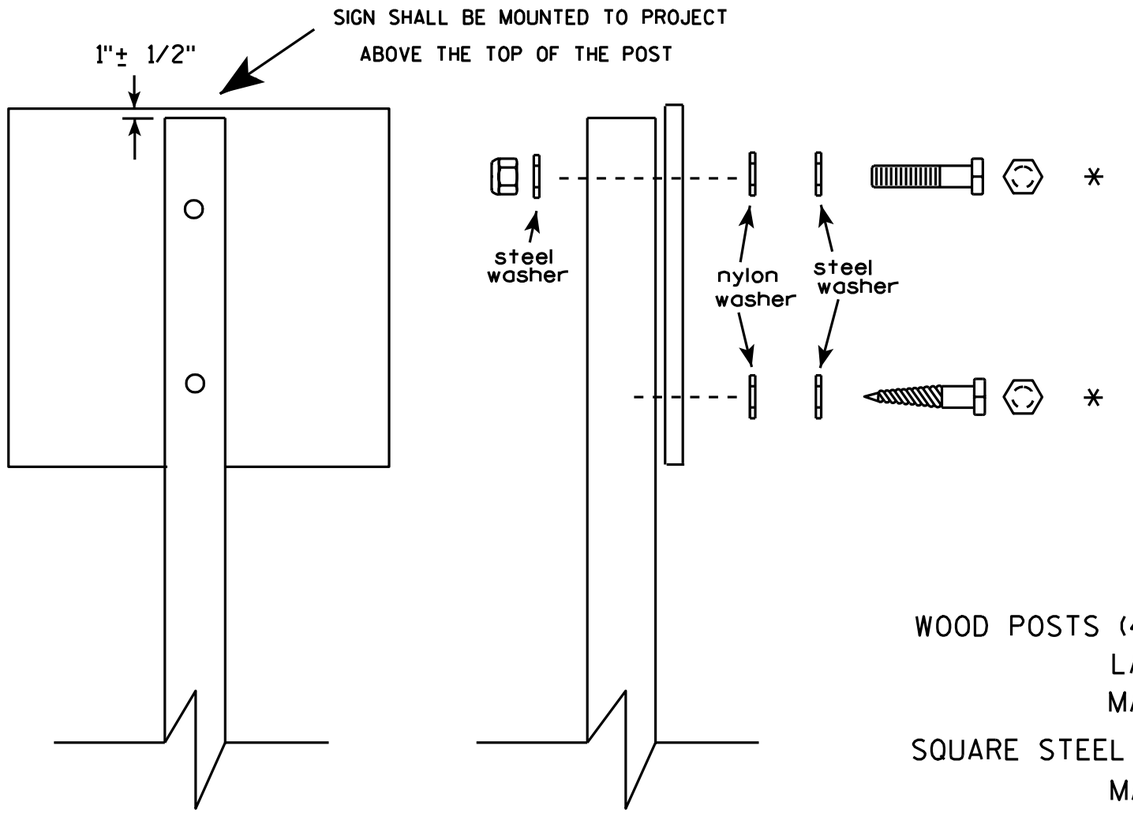

Nuts, bolts and lags used for mounting signs shall have hexagonal heads and shall be either :

a. Hot dip galvanized in accordance with ASTM Designation: A 153, Class D, or SC 3

b. Electro-galvanized in accordance with ASTM Designation : B 633, TYPE III, SC 3.

Threads on bolts and nuts shall be manufactured with sufficient allowance for the cadmium plate or galvanized coating to permit the nuts to run freely on the bolts.

WOOD POSTS (4" x 4" or 4" x 6")
LAG SCREWS - 3/8" X 3"
MACHINE BOLTS - 5/16" X 6-1/2" or 7" Length w/ nuts

SQUARE STEEL POSTS (2" x 2")
MACHINE BOLTS - 3/8" X 3-1/4" Length w/ nuts
RIVETS - 9/32 " (6605-9-6) BULB-TITE, TRI-FOLD, ALUMINUM BODY/MANDREL
O.D. FLANGE .720-.765 INCH, GRIP RANGE .042-.375 INCH

WASHERS (ALL POSTS) -
1-1/4" O.D. X 3/8" I.D. X 1/16" STEEL
1-1/4" O.D. X 3/8" I.D. X .080 NYLON for all Type H signs.

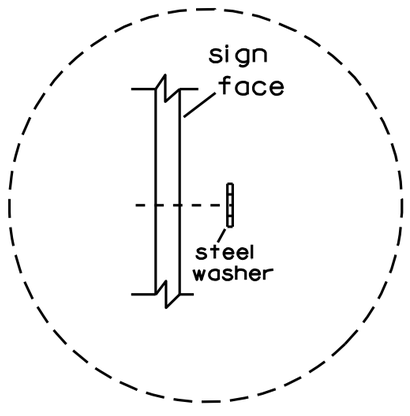

Washer Placement when Sign Has Other Than Type H or Type F Face

* Two different fastening systems are shown for illustration purposes. On any individual sign, either one or the other system shall be used. Actual number of fasteners per sign varies with the sign area, but normally there are two. For a single post installation, all signs greater than 9 sq. ft. require the use of 3 fasteners.

ATTACHMENT OF SIGNS TO POSTS

WISCONSIN DEPT OF TRANSPORTATION

APPROVED Matthew R Rauch
for State Traffic Engineer

DATE 3/23/10 PLATE NO. A4-8.7

7

7

PROJECT NO:

SHEET NO: 164 E

TELESCOPIC TUBING ANCHORS
TWO PIECE SYSTEM

2 1/4 " SQUARE
12 GAUGE
PERFORATED
GALVANIZED FINISH

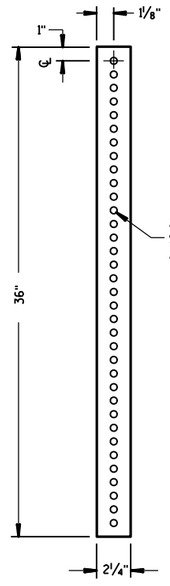

2 1/2 " SQUARE
12 GAUGE
OMNI-DIRECTIONAL
PERFORATED
SOIL STABILIZING SLEEVE
GALVANIZED FINISH

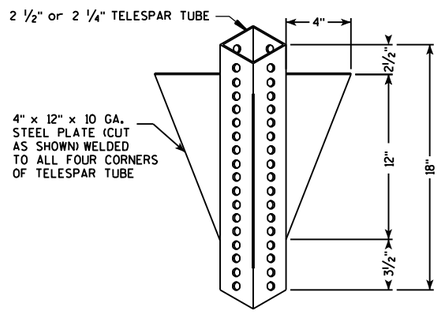

DETAIL OF TUBULAR STEEL SIGN POST
(IN POURED CONCRETE OR ASPHALT)

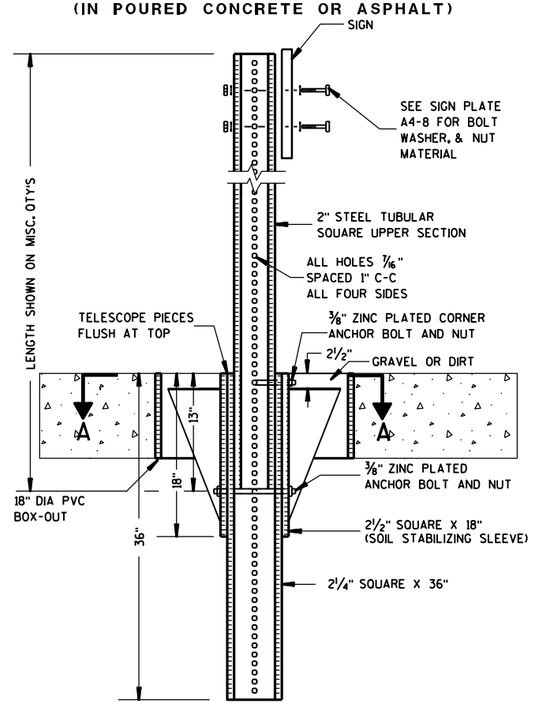

DETAIL OF TUBULAR STEEL SIGN POST
(IN LOCATIONS OTHER THAN POURED CONCRETE OR ASHALT)

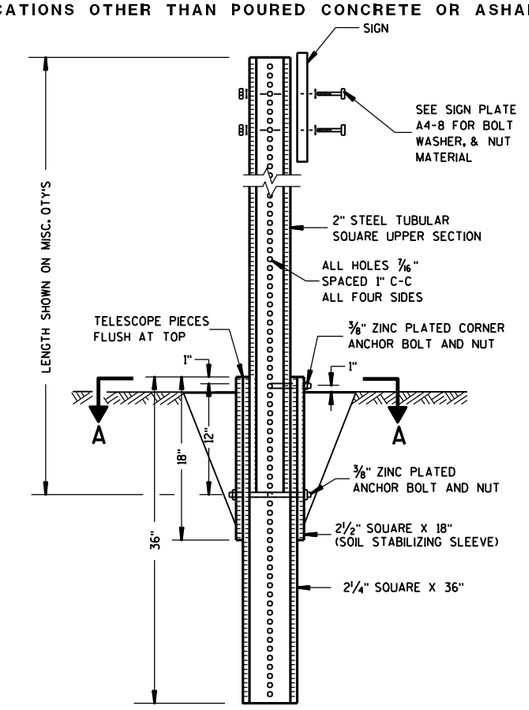

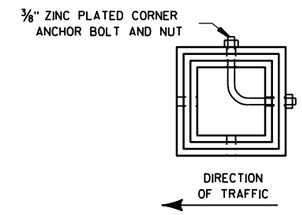

SECTION A-A

Area of Sign Installation (Sq. Ft.)	Number of Required Posts
9 or less	1
Greater than 9 less than or equal to 18	2
Greater than 18 less than or equal to 27	3

Signs wider than 3 feet or larger than 9 sq. ft shall be mounted on multiple posts (see above table).

TUBULAR STEEL SIGN POST A4-9

WISCONSIN DEPT OF TRANSPORTATION

APPROVED Matthew R Rauch
for State Traffic Engineer

DATE 5/30/12 PLATE NO. A4-9.7

PROJECT NO:	HWY:	COUNTY:		SHEET NO: 165	E

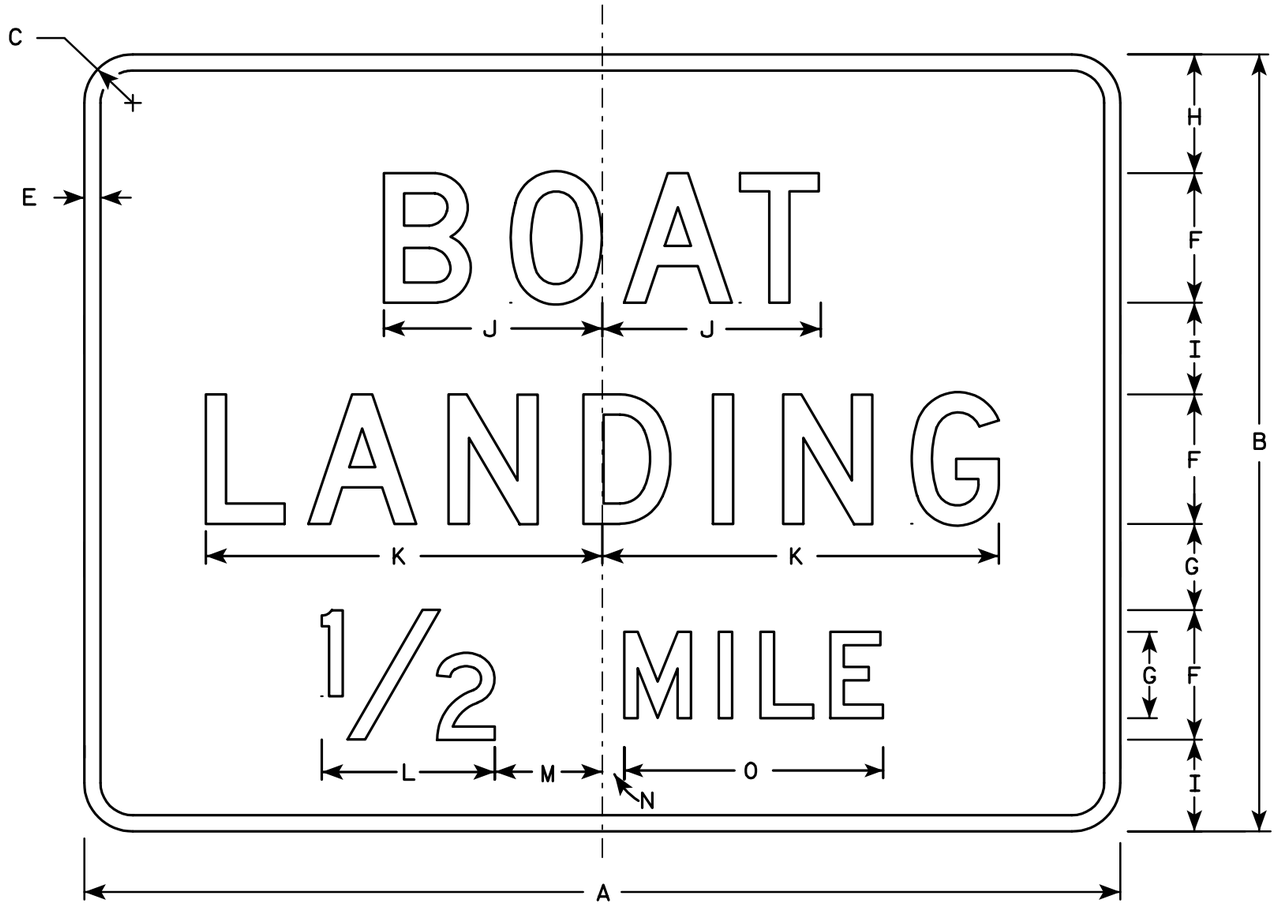

D7-54

NOTES

1. Sign is Type II - Type H Reflective - reference WIS DOT Standard Specification for HIGHWAY and STRUCTURE CONSTRUCTION latest edition.
2. Color:
   Background - Brown
   Message - White - Type H Reflective
3. Message Series - D
4. Corners may be square or rounded when base material is plywood but borders shall be rounded as shown. When base material is metal, the corners and borders shall be rounded.

Metric equivalent for this sign is:

SIZE	
1	
2	1200 mm X 900 mm
3	
4	
5	

SIZE	A	B	C	D	E	F	G	H	I	J	K	L	M	N	O	P	Q	R	S	T	U	V	W	X	Y	Z	Area sq. ft.	Area m²
1																												
2	48	36	2 1/4		3/4	6	4	5 1/2	4 1/4	10 1/8	18 3/8	8	5	1	12												12.0	1.08
3																												
4																												
5																												

STANDARD SIGN
D7-54

WISCONSIN DEPT OF TRANSPORTATION

APPROVED Chester J Spray for State Traffic Engineer

DATE 1/10/02 PLATE NO. D7-54.6

STATE PROJECT NUMBER: | SHEET NO: 166 | E

LEVELS ON • 2.3. 5.6. 10.

58.59.60.61.62.63

FILE NAME : C:\Users\Projects\tr_stdplate\D754.DGN PLOT DATE : 22-JAN-2002 08:05 ORG DATE : 6/13/97 Originator : Don Kluever

WISDOT/CADDS SHEET 42

7

7

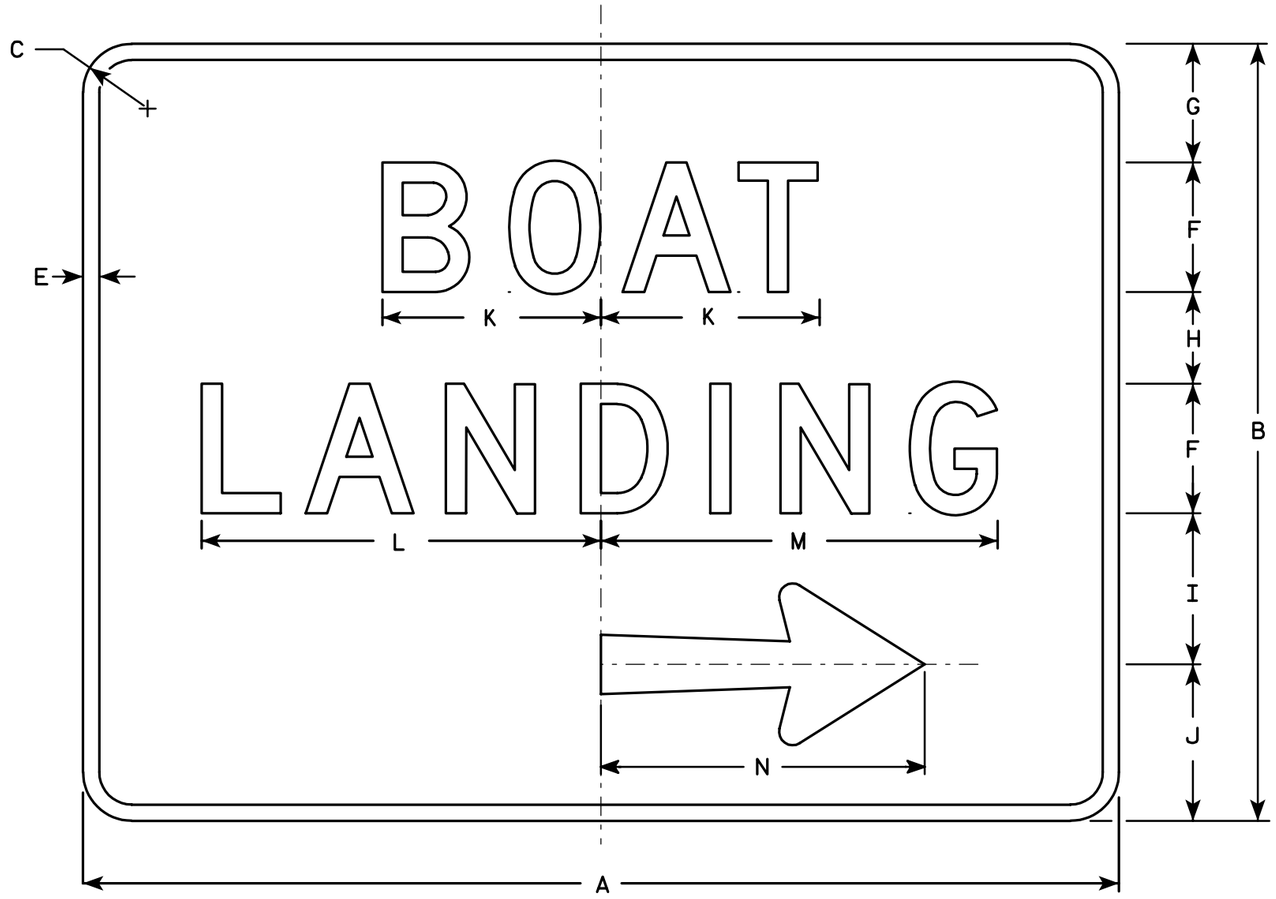

D7-56R

NOTES

1. Sign is Type II - Type H Reflective - reference WIS DOT Standard Specification for HIGHWAY and STRUCTURE CONSTRUCTION latest edition.
2. Color:
   Background - Brown
   Message - White - Type H Reflective
3. Message Series - D
4. Corners may be square or rounded when base material is plywood but borders shall be rounded as shown. When base material is metal, the corners and borders shall be rounded.
5. D7-56L is the same as D7-56R except the arrow is reversed.

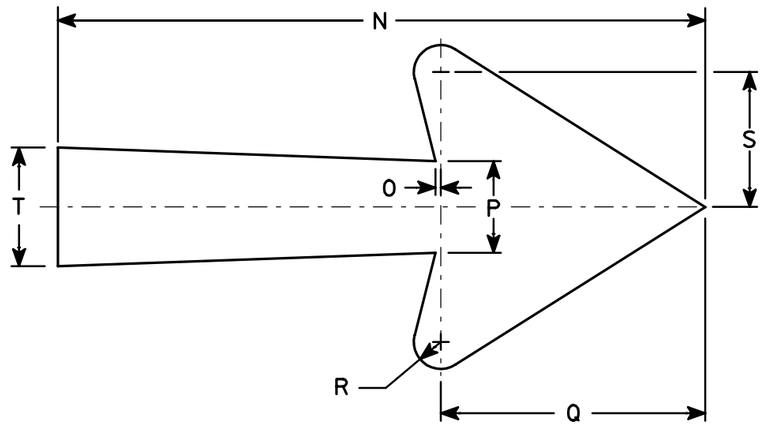

Arrow Detail

Metric equivalent for this sign is:

SIZE	
1	
2	1200 mm X 900 mm
3	
4	
5	

SIZE	A	B	C	D	E	F	G	H	I	J	K	L	M	N	O	P	Q	R	S	T	U	V	W	X	Y	Z	Area sq. ft.	Area m2
1																												
2	48	36	2 1/4		3/4	6	5 1/2	4 1/4	7	7 1/4	10 1/8	18 1/2	18 3/8	15	1/8	2 1/8	6 1/8	5/8	3 1/8	2 3/4							12.0	1.08
3																												
4																												
5																												

STANDARD SIGN
D7-56

WISCONSIN DEPT OF TRANSPORTATION

APPROVED Chester J Spong for State Traffic Engineer

DATE 1/10/02 PLATE NO. D7-56.8

STATE PROJECT NUMBER:

SHEET NO: 167 E

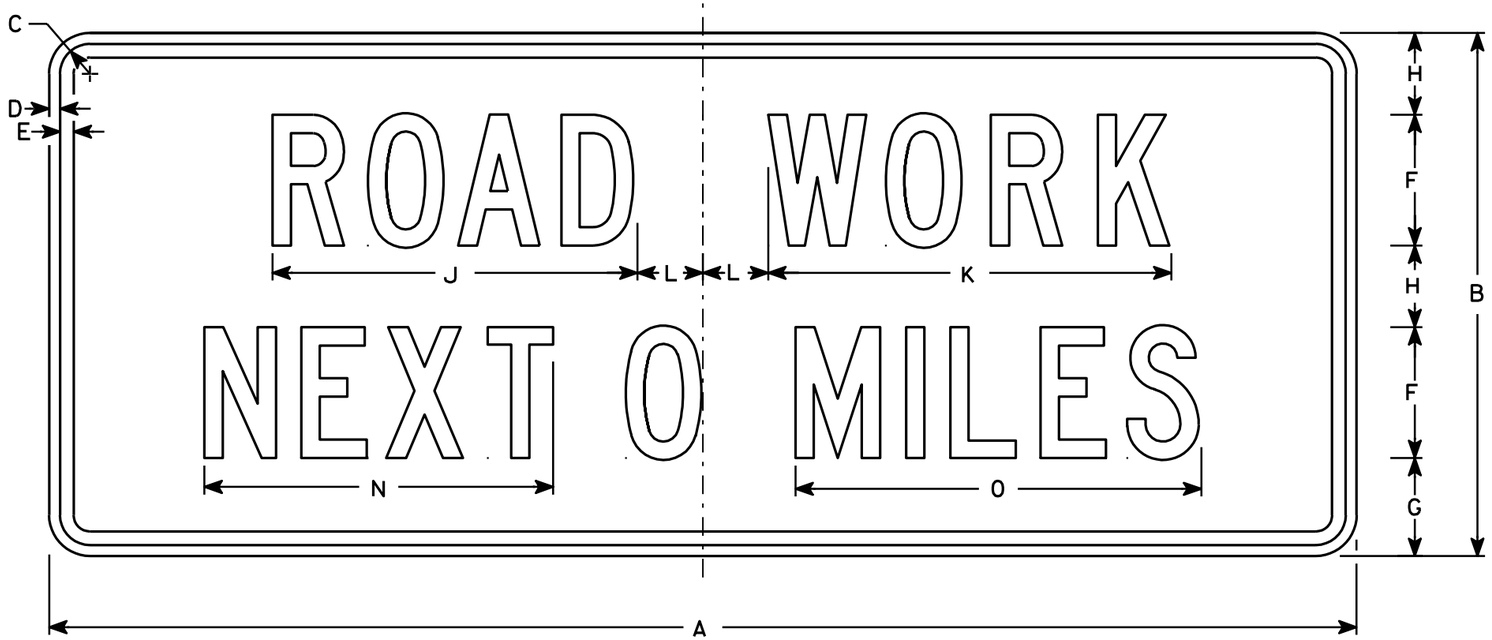

G20-1

NOTES

1. Sign is Type II - Type F Reflective - reference WIS DOT Standard Specification for HIGHWAY and STRUCTURE CONSTRUCTION latest edition.
2. Color:
   Background - Orange
   Message - Black
3. Message Series - C
4. Corners may be square or rounded when base material is plywood but borders shall be rounded as shown. When base material is metal, the corners and borders shall be rounded.
5. Substitute appropriate numerals and optically adjust spacing to achieve proper balance

Metric equivalent for this sign is:

SIZE	
1	
2	1500 mm X 600 mm
3	
4	1500 mm X 600 mm
5	

SIZE	A	B	C	D	E	F	G	H	I	J	K	L	M	N	O	P	Q	R	S	T	U	V	W	X	Y	Z	Area sq. ft.	Area m2
1																												
2	60	24	1 3/8	1/2	5/8	6	4 1/2	3 3/4		16 3/4	18 1/2	3		16	18 5/8												10	.90
3																												
4	60	24	1 3/8	1/2	5/8	6	4 1/2	3 3/4		16 3/4	18 1/2	3		16	18 5/8												10	.90
5																												

STANDARD SIGN
G20-1

WISCONSIN DEPT OF TRANSPORTATION

APPROVED Chester J Spray for State Traffic Engineer

DATE 4/8/97 PLATE NO. G20-1.7

PROJECT NO:	HWY:	COUNTY:		SHEET NO: 168	E

NOTES

1. Sign is Type II - See Note 6 - reference WIS DOT Standard Specification for HIGHWAY and STRUCTURE CONSTRUCTION latest edition.
2. Color:
   Background - White & Black - See Note 6
   Message - Black
3. Message Series - See note 5
4. Corners may be square or rounded when base material is plywood but borders shall be rounded as shown. When base material is metal, the corners and borders shall be rounded.
5. Substitute appropriate numerals and adjust spacing as per Plate A10-1.
6. Permanent Signs
   Background - Type H Reflective
   Detour or other temporary signs
   Background - Reflective

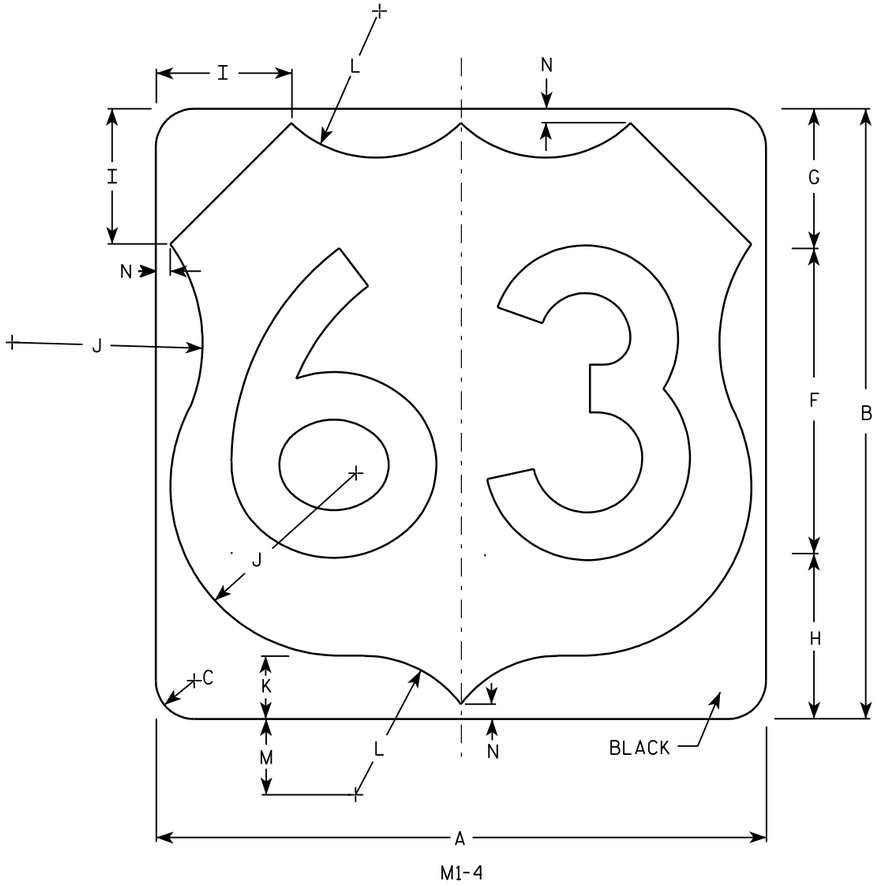

M1-4

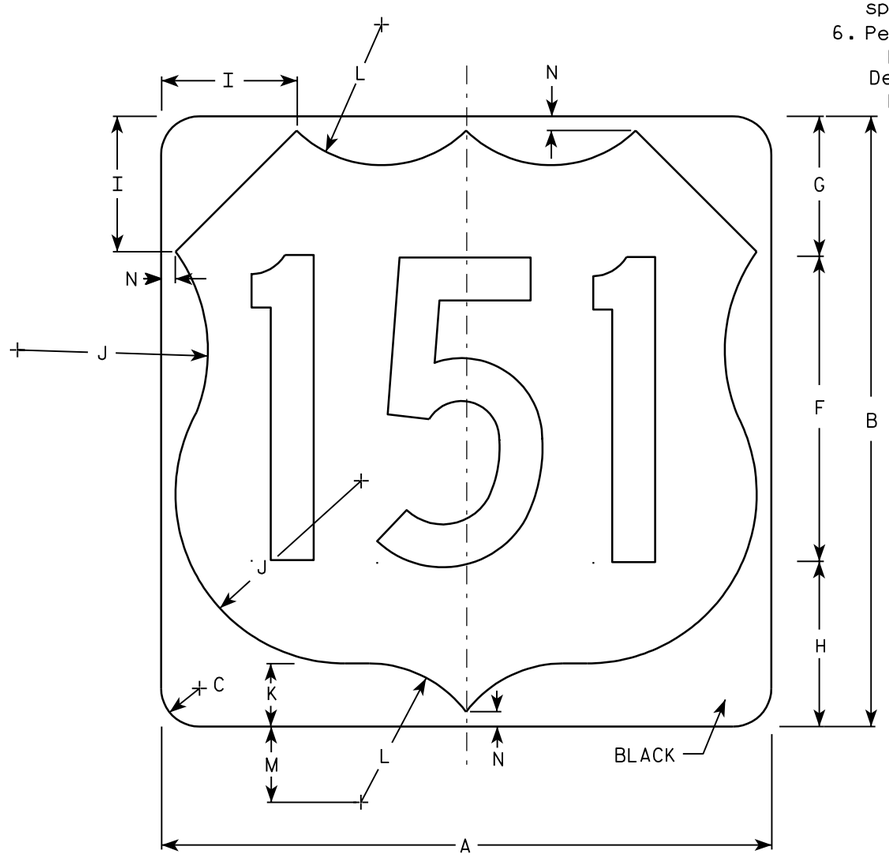

M1-4

Metric equivalent for this sign is:

SIZE	
1	
2	600 mm X 600 mm
3	900 mm X 900 mm
4	900 mm X 900 mm
5	900 mm X 900 mm

SIZE	A	B	C	D	E	F	G	H	I	J	K	L	M	N	O	P	Q	R	S	T	U	V	W	X	Y	Z	Area sq. ft.	Area m2
1																												
2	24	24	1 1/2			12	5 1/2	6 1/2	5	7 1/2	2 1/2	5 1/2	3	1/2													4.0	.36
3	36	36	2 1/4			18	8 1/4	9 1/4	7 1/4	11 1/4	3 3/4	8 1/4	4 1/2	3/4													9.0	.81
4	36	36	2 1/4			18	8 1/4	9 1/4	7 1/4	11 1/4	3 3/4	8 1/4	4 1/2	3/4													9.0	.81
5	36	36	2 1/4			18	8 1/4	9 1/4	7 1/4	11 1/4	3 3/4	8 1/4	4 1/2	3/4													9.0	.81

USH MARKER
M1-4 FOR ASSEMBLIES

WISCONSIN DEPT OF TRANSPORTATION

APPROVED Matthew R Rauch
for State Traffic Engineer

DATE 08/25/05 PLATE NO. M1-4.9

PROJECT NO: | HWY: | COUNTY: | SHEET NO: 169 | E

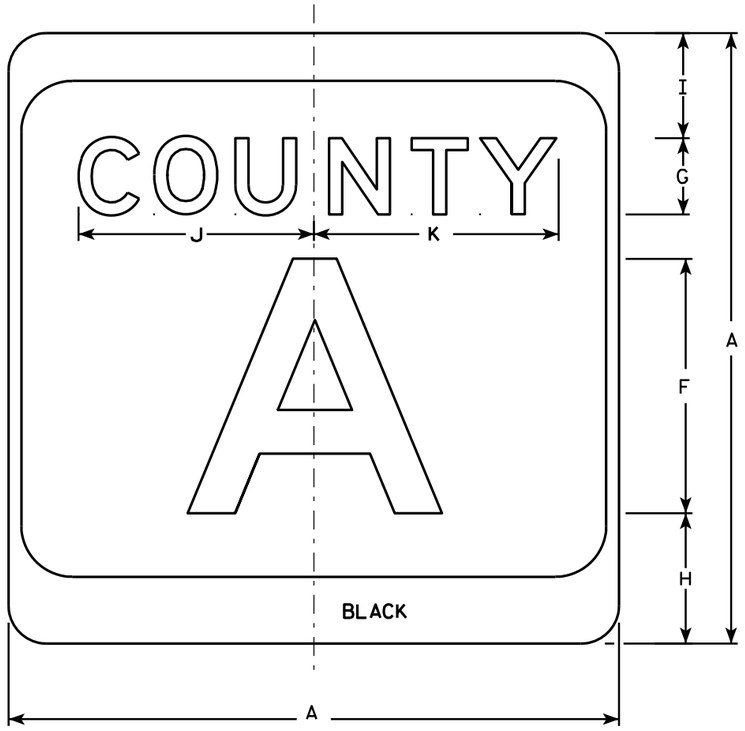

M1-5A

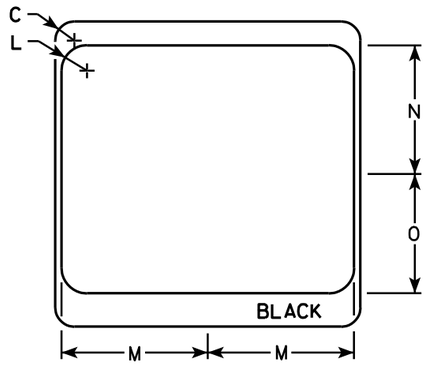

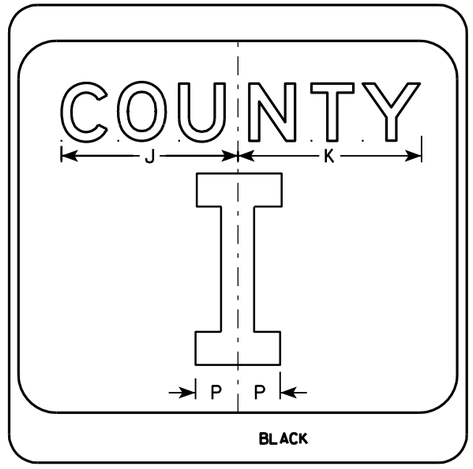

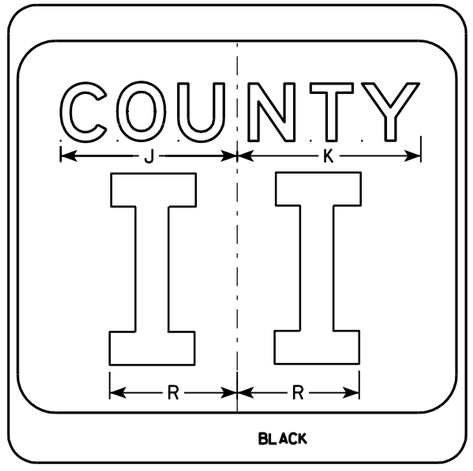

NOTES

1. Sign is Type II - see Note 7 - reference WIS DOT Standard Specification for HIGHWAY and STRUCTURE CONSTRUCTION latest edition.
2. Color:
   Background - White & Black - See Note 7
   Message - Black
3. Message Series - see Note 5
4. Corners may be square or rounded when base material is plywood but borders shall be rounded as shown. When base material is metal, the corners and borders shall be rounded.
5. Message Series E for 1 letter.
   Message Series D for 2 letters unless message is too big then Series C.
   Message Series C for 3 letters unless message is too big then Series B.
6. Substitute appropriate letters & optically center to achieve proper balance.
7. Permanent Signs
   Background - Type H Reflective
   Detour or temporary Signs
   Background - Reflective

SIZE	A	B	C	D	E	F	G	H	I	J	K	L	M	N	O	P	Q	R	S	T	U	V	W	X	Y	Z	Area sq. ft.
1																											
2	24		1 1/2			10	3	5 1/8	4 1/8	9 1/4	9 5/8	2	11 1/2	10 1/8	9 3/8	2 1/4		6 5/8									4.0
3	36		2 1/4			16	4	7 5/8	5 5/8	12 1/4	12 7/8	3	17 1/8	15 1/4	14	3 3/8		10									9.0
4	36		2 1/4			16	4	7 5/8	5 5/8	12 1/4	12 7/8	3	17 1/8	15 1/4	14	3 3/8		10									9.0
5	36		2 1/4			16	4	7 5/8	5 5/8	12 1/4	12 7/8	3	17 1/8	15 1/4	14	3 3/8		10									9.0

CTH MARKER
M1-5A FOR ASSEMBLIES

WISCONSIN DEPT OF TRANSPORTATION

APPROVED Matthew R Rauch
for State Traffic Engineer

DATE 9/27/11 PLATE NO. M1-5A.8

PROJECT NO:	HWY:	COUNTY:		SHEET NO: 170	E

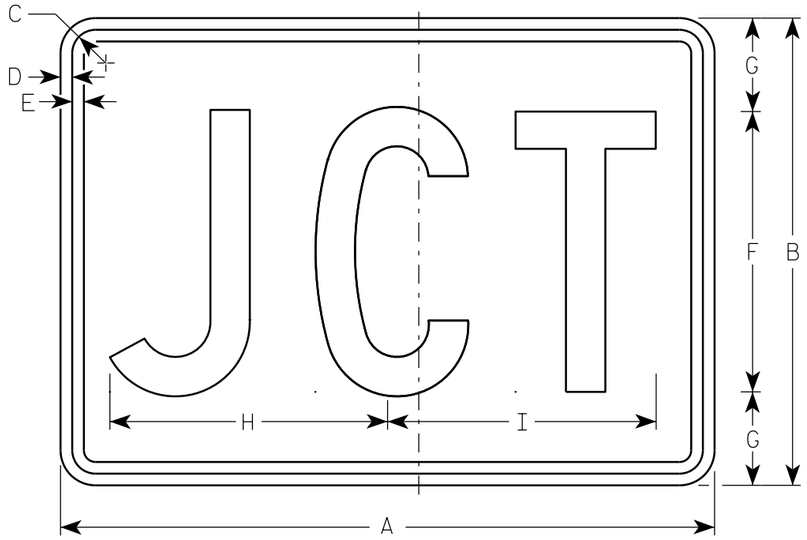

M2-1
MK2-1
MM2-1
MN2-1
MR2-1

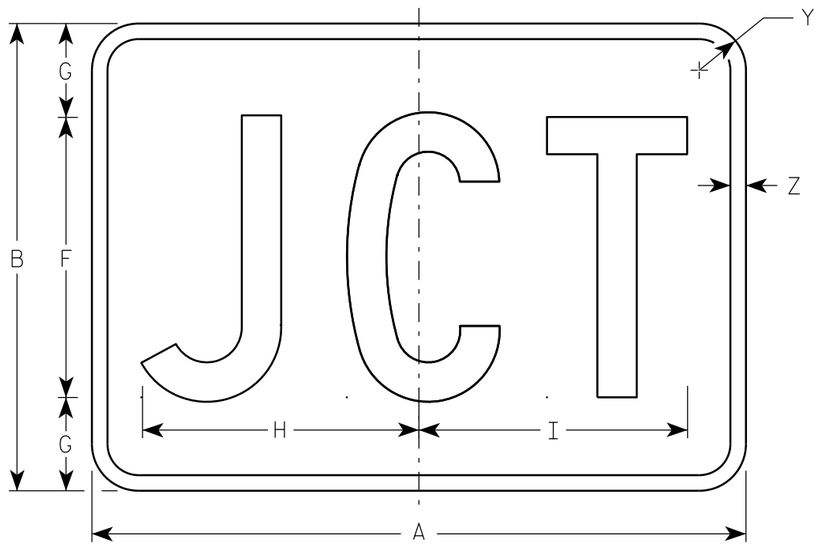

MB2-1

NOTES

1. Sign is Type II - Type H
2. Color:
   Background - See note 5
   Message - See note 5
3. Message Series - C
4. Corners may be square or rounded when base material is plywood but borders shall be rounded as shown. When base material is metal, the corners and borders shall be rounded.
5. M2-1 Background - White
   Message - Black
   MB2-1 Background - Blue
   Message - White
   MK2-1 Background - Green
   Message - White
   MM2-1 Background - White
   Message - Green
   MN2-1 Background - Brown
   Message - White
   MR2-1 Background - Brown
   Message - Yellow

SIZE	A	B	C	D	E	F	G	H	I	J	K	L	M	N	O	P	Q	R	S	T	U	V	W	X	Y	Z	Area sq. ft.
1																											
2	21	15	1 1/8	3/8	3/8	9	3	8 7/8	8 5/8																1 1/2	1/2	2.20
3	30	21	1 1/8	3/8	3/8	13	4	12 7/8	12 3/8																1 1/2	1/2	4.40
4	30	21	1 1/8	3/8	3/8	13	4	12 7/8	12 3/8																1 1/2	1/2	4.40
5	30	21	1 1/8	3/8	3/8	13	4	12 7/8	12 3/8																1 1/2	1/2	4.40

STANDARD SIGN
M2-1

WISCONSIN DEPT OF TRANSPORTATION

APPROVED Matthew R Rauch
For State Traffic Engineer

DATE 6/30/14 PLATE 171 12-1.11

PROJECT NO:	HWY:	COUNTY:		SHEET NO:	E

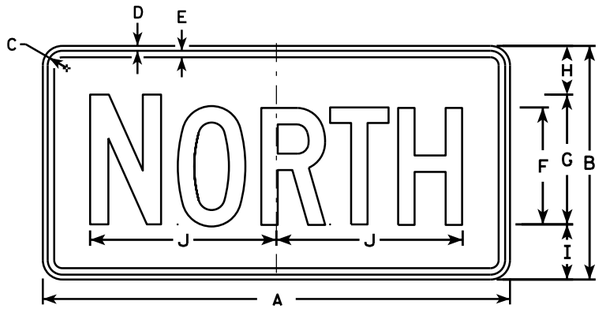

M3-1
MK3-1
MM3-1
MN3-1

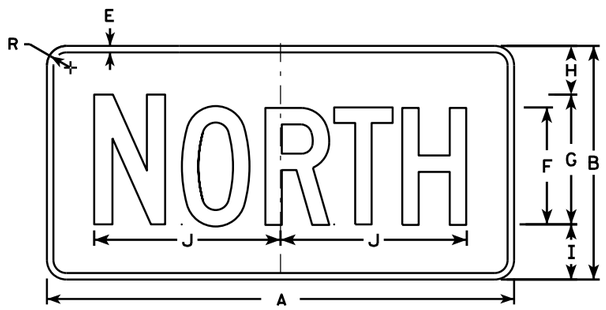

MB3-1

M3-2
MK3-2
MM3-2
MN3-2

MB3-2

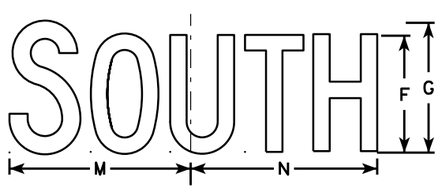

M3-3
MK3-3
MM3-3
MN3-3

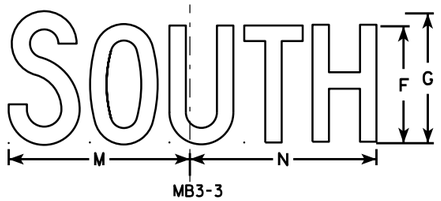

MB3-3

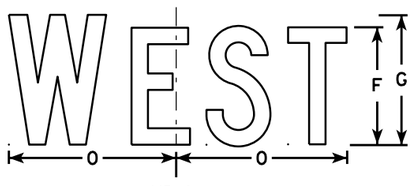

M3-4
MK3-4
MM3-4
MN3-4

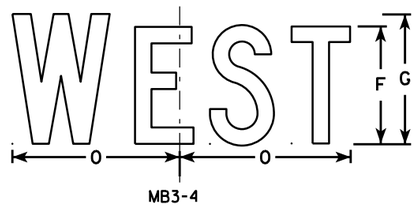

MB3-4

NOTES

1. All Signs Type II - Type H
2. Color:
   Background - See note 5
   Message - See note 5
3. Message Series - C
4. Corners may be square or rounded when base material is plywood but borders shall be rounded as shown. When base material is metal, the corners and borders shall be rounded.
5. M3-1 thru M3-4 Background - White
   Message - Black
   MB3-1 thru MB3-4 Background - Blue
   Message - White
   MK3-1 thru MK3-4 Background - Green
   Message - White
   MM3-1 thru MM3-4 Background - White
   Message - Green
   MN3-1 thru MN3-4 Background - Brown
   Message - White
6. Note the first letter of each direction is larger than the remainder of the message.

SIZE	A	B	C	D	E	F	G	H	I	J	K	L	M	N	O	P	Q	R	S	T	U	V	W	X	Y	Z	Area sq. ft.
1																											
2	24	12	1 1/8	3/8	3/8	6	7	2 1/4	2 3/4	10 1/4	7 7/8	8 3/8	10 1/4	9 3/4	8 3/4			1 1/2									2.00
3	36	18	1 1/8	3/8	1/2	9	10	3 3/4	4 1/4	14 3/8	12	12 1/8	14	14 1/8	13			1 1/2									4.5
4	36	18	1 1/8	3/8	1/2	9	10	3 3/4	4 1/4	14 3/8	12	12 1/8	14	14 1/8	13			1 1/2									4.5
5	36	18	1 1/8	3/8	1/2	9	10	3 3/4	4 1/4	14 3/8	12	12 1/8	14	14 1/8	13			1 1/2									4.5

STANDARD SIGNS
M3-1 thur M3-4
SERIES

WISCONSIN DEPT OF TRANSPORTATION

APPROVED Matthew R Rauch for State Traffic Engineer

DATE 6/30/14 PLATE NO M3-1.13

PROJECT NO: | HWY: | COUNTY: | | SHEET NO: E

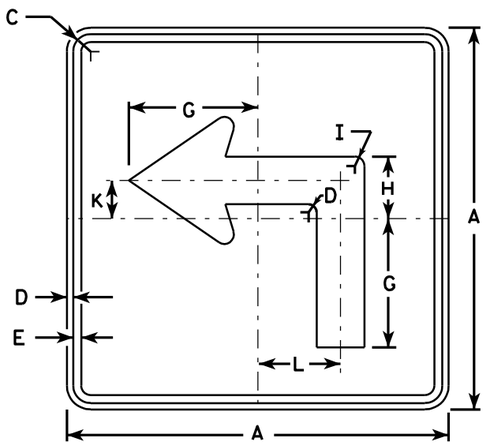

M5-1L
MK5-1L
MM5-1L
MO5-1L
MP5-1L
MR5-1L

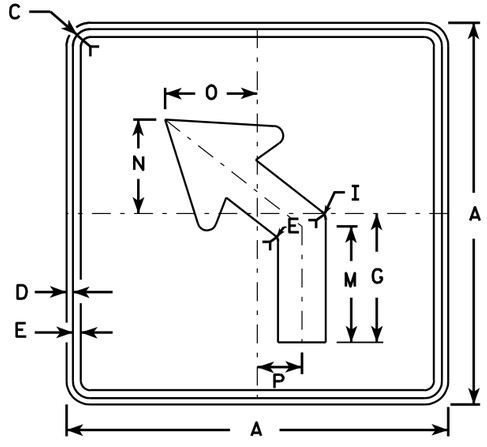

M5-2L
MK5-2L
MM5-2L
MO5-2L
MP5-2L
MR5-2L

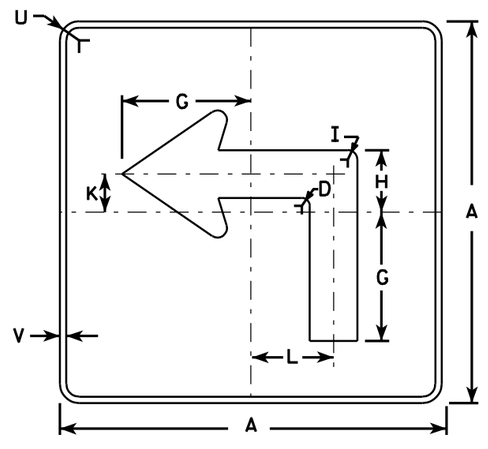

MB5-1L
MG5-1L
MN5-1L

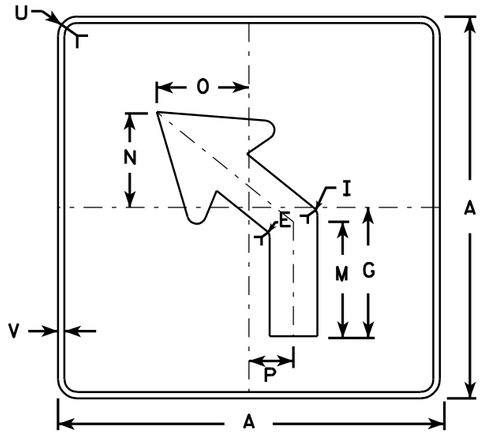

MB5-2L
MG5-2L
MN5-2L

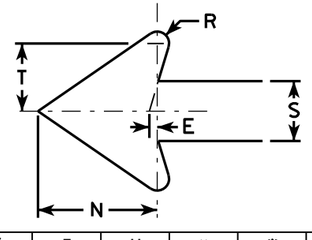

NOTES

1. Signs are Type II - See Note 4 - reference WIS DOT Standard Specification for HIGHWAY and STRUCTURE CONSTRUCTION latest edition.
2. Color:
   Background - See note 4
   Message - See note 4
3. Corners may be square or rounded when base material is plywood but borders shall be rounded as shown. When base material is metal, the corners and borders shall be rounded.
4. M5-1 and M5-2 Background - White - Type H Reflective
   Message - Black
   MB5-1 and MB5-2 Background - Blue
   Message - White - Type H Reflective
   MG5-1 and MG5-2 Background - Green
   Message - White - Type H Reflective
   MK5-1 and MK5-2 Background - Green
   Message - White Type H Reflective
   MM5-1 and MM5-2 Background - White - Type H Reflective
   Message - Green
   MN5-1 and MN5-2 Background - Brown
   Message - White - Type H Reflective
   MO5-1 and MO5-2 Background - Orange - Type F Reflective
   Message - Black
   MP5-1 and MP5-2 Background - White - Type H Reflective
   Message - Blue
   MR5-1 and MR5-2 Background - Brown
   Message - Yellow - Type H Reflective
5. M5-1R same as M5-1L except arrow points right.
6. M5-2R same as M5-2L except arrow tilts right.

SIZE	A	B	C	D	E	F	G	H	I	J	K	L	M	N	O	P	Q	R	S	T	U	V	W	X	Y	Z	Area sq. ft.
1																											
2	21		1 1/8	3/8	3/8		7	3 3/8	5/8		2 1/8	4 1/2	6 3/8	5 1/4	5	2 1/2		1/2	2 5/8	3	1 1/2	1/2					3.06
3	30		1 3/8	1/2	5/8		10 1/8	4 1/8	7/8		3	6 1/2	9 1/8	7 1/2	7 1/4	3 1/2		3/4	3 3/4	4 1/4	1 7/8	1/2					6.25
4	30		1 3/8	1/2	5/8		10 1/8	4 1/8	7/8		3	6 1/2	9 1/8	7 1/2	7 1/4	3 1/2		3/4	3 3/4	4 1/4	1 7/8	1/2					6.25
5	30		1 3/8	1/2	5/8		10 1/8	4 1/8	7/8		3	6 1/2	9 1/8	7 1/2	7 1/4	3 1/2		3/4	3 3/4	4 1/4	1 7/8	1/2					6.25

STANDARD SIGN
M5-1 & M5-2

WISCONSIN DEPT OF TRANSPORTATION

APPROVED Matthew R Rauch
for State Traffic Engineer

DATE 7/29/13 PLATE NO. M5-1.12

PROJECT NO: | HWY: | COUNTY: | SHEET NO: 173 | E

7

FILE NAME : C:\CAEFiles\Projects\tr_stdplate\M51.DGN PLOT DATE : 29-JUL-2013 13:34 PLOT BY : mscj9h PLOT NAME : PLOT SCALE : 11.908552:1.000000
WISDOT/CADDS SHEET 42

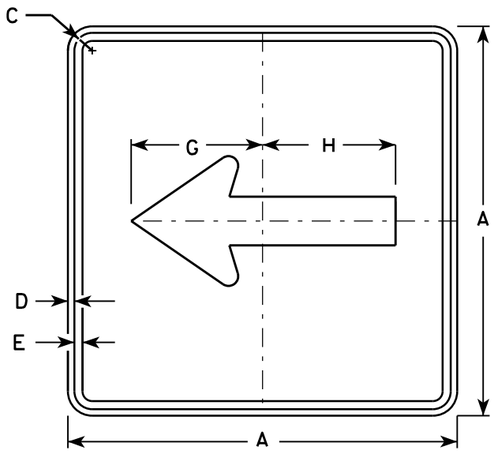

M6-1
MK6-1
MM6-1
MN6-1
MO6-1
MP6-1
MR6-1

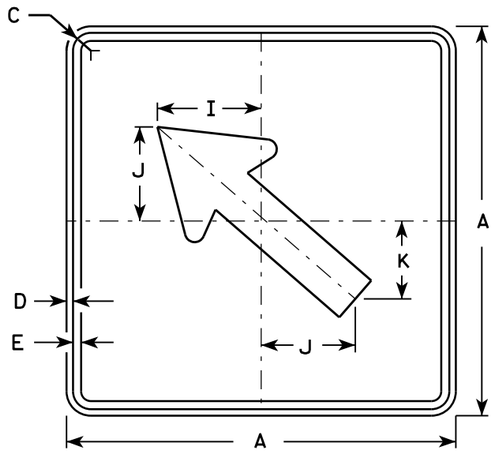

M6-2
MK6-2
MM6-2
MN6-2
MO6-2
MP6-2
MR6-2

NOTES

1. Signs are Type II - Type H except as Shown
2. Color:
   Background - See note 4
   Message - See note 4
3. Corners may be square or rounded when base material is plywood but borders shall be rounded as shown. When base material is metal, the corners and borders shall be rounded.
4. M6-1 and M6-2 Background - White
   Message - Black
   MB6-1 and MB6-2 Background - Blue
   Message - White
   MG6-1 and MG6-2 Background - Green
   Message - White
   MK6-1 and MK6-2 Background - Green
   Message - White
   MM6-1 and MM6-2 Background - White
   Message - Green
   MN6-1 and MN6-2 Background - Brown
   Message - White
   MO6-1 and MO6-2 Background - Orange - Type F Reflective
   Message - Black
   MP6-1 and MP6-2 Background - White
   Message - Blue
   MR6-1 and MR6-2 Background - Brown
   Message - Yellow

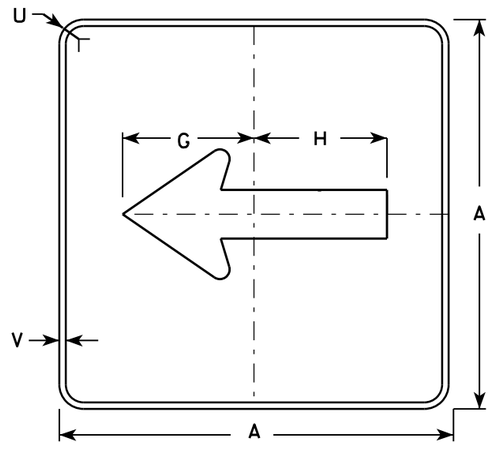

MB6-1

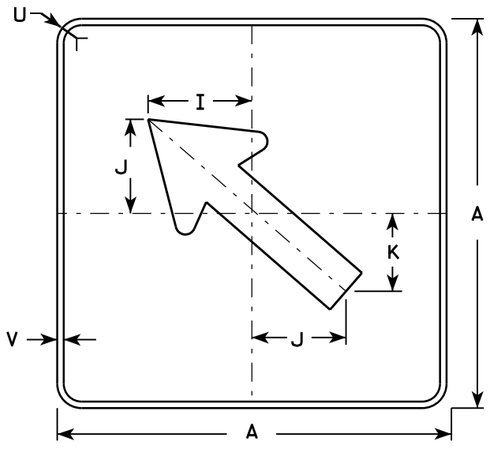

MB6-2

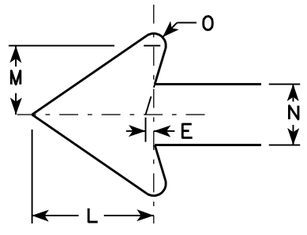

SIZE	A	B	C	D	E	F	G	H	I	J	K	L	M	N	O	P	Q	R	S	T	U	V	W	X	Y	Z	Area sq. ft.
1																											
2	21		1 1/8	3/8	3/8		7 1/2	7 1/8	5 5/8	5	4 1/4	5 1/4	3	2 5/8	1/2						1 1/2	1/2						3.06
3	30		1 3/8	1/2	5/8		10 3/4	10 1/4	8	7 1/4	6	7 1/2	4 1/4	3 3/4	3/4						1 7/8	1/2						6.25
4	30		1 3/8	1/2	5/8		10 3/4	10 1/4	8	7 1/4	6	7 1/2	4 1/4	3 3/4	3/4						1 7/8	1/2						6.25
5	30		1 3/8	1/2	5/8		10 3/4	10 1/4	8	7 1/4	6	7 1/2	4 1/4	3 3/4	3/4						1 7/8	1/2						6.25

STANDARD SIGN M6-1 & M6-2 SERIES

WISCONSIN DEPT OF TRANSPORTATION

APPROVED Matthew R Rauch
for State Traffic Engineer

DATE 7/03/14 PLATE 174 M6-1.14

PROJECT NO: | HWY: | COUNTY: | SHEET NO: E

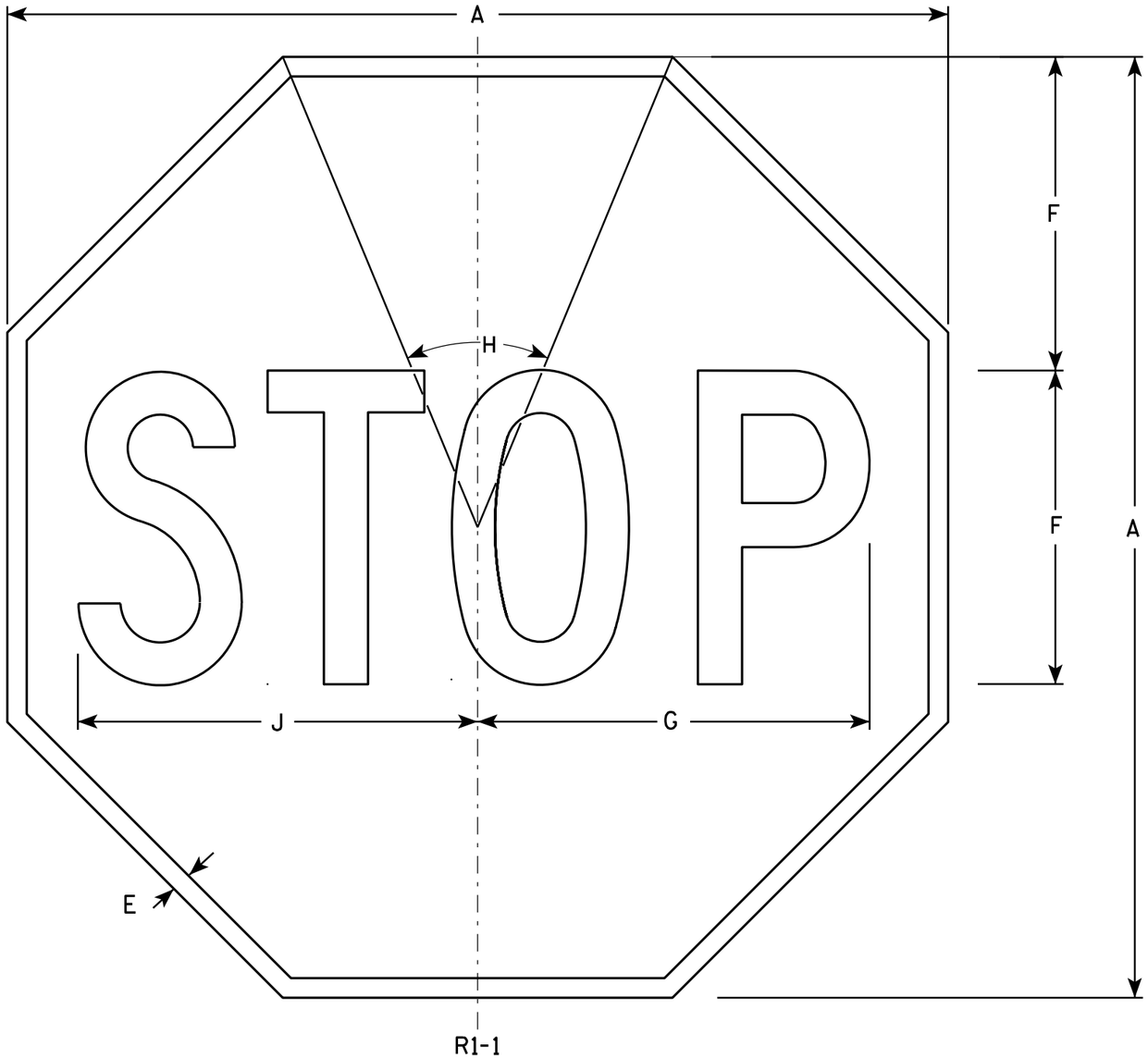

NOTES

1. Sign is Type II - Type H Reflective - reference WIS DOT Standard Specification for HIGHWAY and STRUCTURE CONSTRUCTION latest edition.
2. Color:
   Background - Red
   Message - White
3. Message Series - C

SIZE	A	B	C	D	E	F	G	H	I	J	K	L	M	N	O	P	Q	R	S	T	U	V	W	X	Y	Z	Area sq. ft.
1	24				3/8	8	10	45°		10 1/4																	3.31
2S	30				5/8	10	12 1/2	45°		12 3/4																	5.18
2M	36				3/4	12	15	45°		15 3/8																	7.46
3	36				3/4	12	15	45°		15 3/8																	7.46
4	48				1	16	20	45°		20 1/2																	13.25
5	48				1	16	20	45°		20 1/2																	13.25
6	18				3/8	6	7 3/4	45°		7 3/4																	1.86
7	12				1/4	4	5	45°		5 1/8																	0.78

STANDARD SIGN
R1-1

WISCONSIN DEPT OF TRANSPORTATION

APPROVED Matthew R Rauch
for State Traffic Engineer

DATE 12/03/10 PLATE NO. R1-1.12

PROJECT NO:	HWY:	COUNTY:		SHEET NO: 175	E

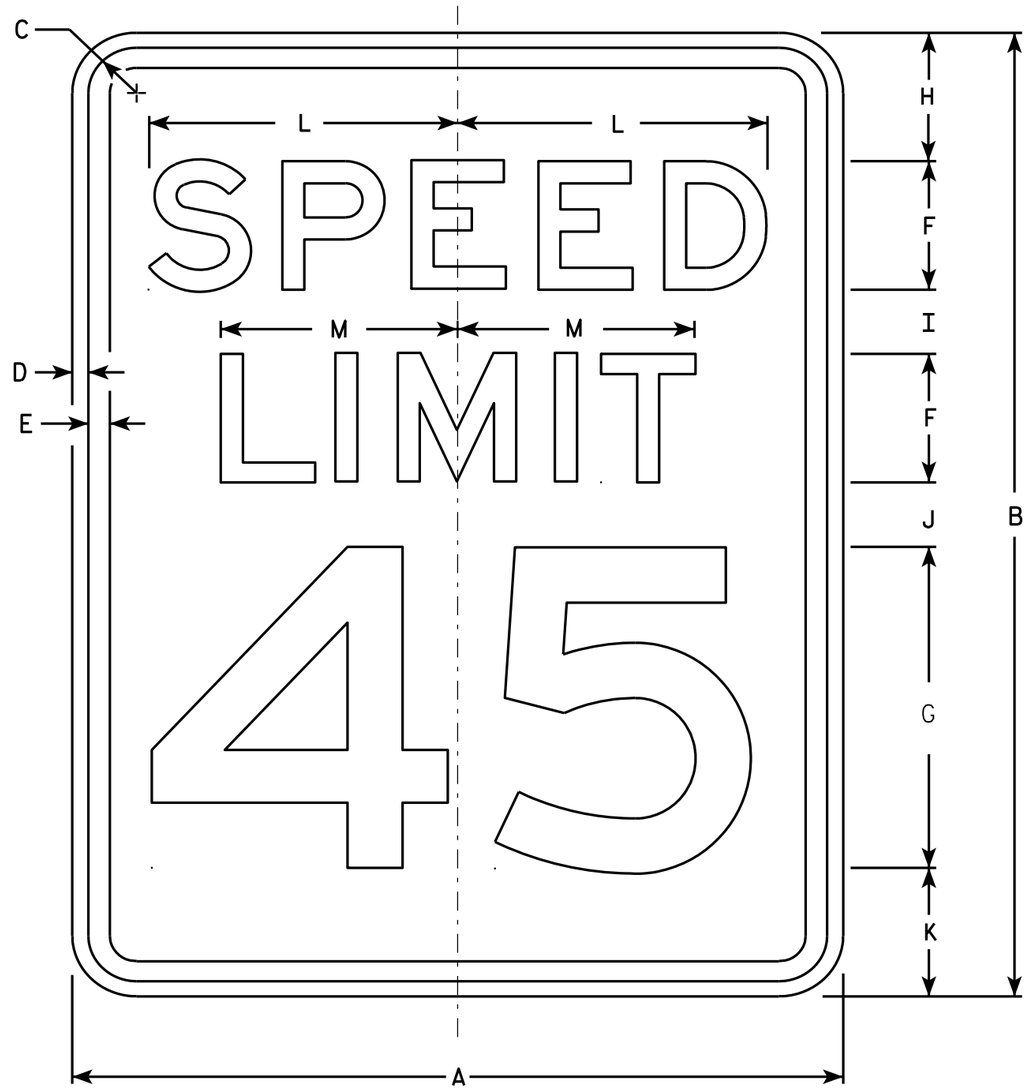

R2-1

NOTES

1. Sign is Type II - Type H Reflective - reference WIS DOT Standard Specification for HIGHWAY and STRUCTURE CONSTRUCTION latest edition.
2. Color:
   Background - White
   Message - Black
3. Message Series - E
4. Corners may be square or rounded when base material is plywood but borders shall be rounded as shown. When base material is metal, the corners and borders shall be rounded.
5. Substitute appropriate numerals and optically adjust spacing to achieve proper balance.

SIZE	A	B	C	D	E	F	G	H	I	J	K	L	M	N	O	P	Q	R	S	T	U	V	W	X	Y	Z	Area sq. ft.
1	18	24	1 1/8	3/8	1/2	3	8	3	2	2	3	7 1/4	5 1/2														3.0
2S	24	30	1 1/8	3/8	1/2	4	10	3	2 1/4	3 3/8	3 3/8	9 5/8	7 3/8														5.0
2M	30	36	1 3/8	1/2	5/8	5	12	5	2 1/2	2 1/2	4	12	9 1/4														7.5
3	36	48	1 3/8	1/2	5/8	6	14	6	5	5	6	14 3/8	11														12.0
4	36	48	1 3/8	1/2	5/8	6	14	6	5	5	6	14 3/8	11														12.0
5	48	60	2 1/4	3/4	1	8	20	6	4 1/2	6 3/4	6 3/4	19 1/4	14 5/8														20.0

STANDARD SIGN
R2-1

WISCONSIN DEPT OF TRANSPORTATION

APPROVED Matthew R Rauch
for State Traffic Engineer

DATE 5/26/10 PLATE NO. R2-1.13

PROJECT NO: | HWY: | COUNTY: | SHEET NO: 176 | E

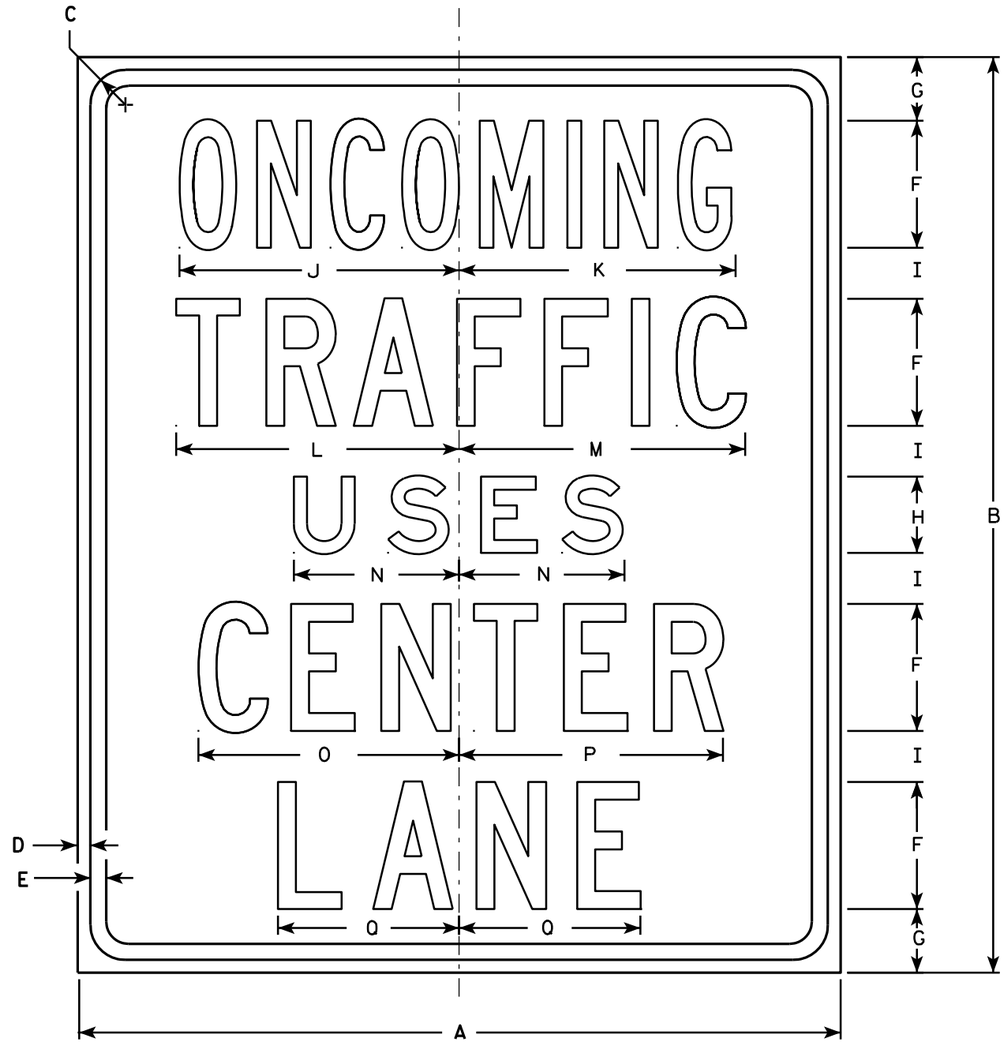

R3-72

NOTES

1. Sign is Type II - Type H Reflective - reference WIS DOT Standard Specification for HIGHWAY and STRUCTURE CONSTRUCTION latest edition.
2. Color:
   Background - White
   Message - Black
3. Message Series - Line 1 is Series B, Lines 2, 4 and 5 are Series C, and Line 3 is Series E.
4. Corners may be square or rounded when base material is plywood but borders shall be rounded as shown. When base material is metal, the corners and borders shall be rounded.

SIZE	A	B	C	D	E	F	G	H	I	J	K	L	M	N	O	P	Q	R	S	T	U	V	W	X	Y	Z	Area sq. ft.
1	30	36	1 3/8	1/2	5/8	5	2 1/2	3	2	11	10 7/8	11 1/8	11 1/4	6 1/2	10 1/4	10 3/8	7 1/8										7.50
2S	30	36	1 3/8	1/2	5/8	5	2 1/2	3	2	11	10 7/8	11 1/8	11 1/4	6 1/2	10 1/4	10 3/8	7 1/8										7.50
2M	30	36	1 3/8	1/2	5/8	5	2 1/2	3	2	11	10 7/8	11 1/8	11 1/4	6 1/2	10 1/4	10 3/8	7 1/8										7.50
3																											
4																											
5																											

STANDARD SIGN
R3-72

WISCONSIN DEPT OF TRANSPORTATION

APPROVED Matthew R Rauch
for State Traffic Engineer

DATE 3/25/2011 PLATE NO. R3-72.5

PROJECT NO:	HWY:	COUNTY:		SHEET NO: 177	E

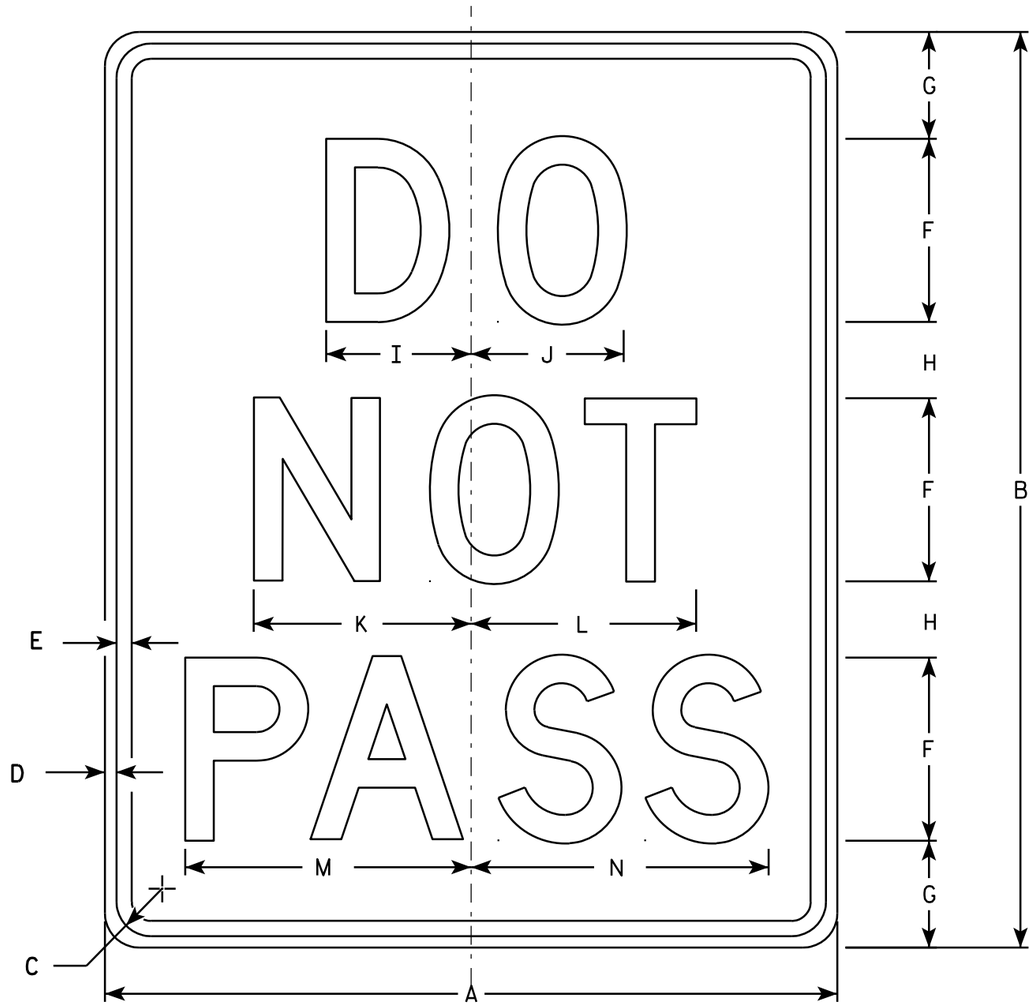

R4-1

NOTES

1. Sign is Type II - Type H Reflective - reference WIS DOT Standard Specification for HIGHWAY and STRUCTURE CONSTRUCTION latest edition.
2. Color:
   Background - White
   Message - Black
3. Message Series - D
4. Corners may be square or rounded when base material is plywood but borders shall be rounded as shown. When base material is metal, the corners and borders shall be rounded.

SIZE	A	B	C	D	E	F	G	H	I	J	K	L	M	N	O	P	Q	R	S	T	U	V	W	X	Y	Z	Area sq. ft.
1	18	24	1 1/8	3/8	1/2	4	3 1/2	2 1/2	3 1/8	3 1/4	4 3/4	4 7/8	6 1/4	6 1/2													3.0
2S	24	30	1 1/8	3/8	1/2	6	3 1/2	2 1/2	4 3/4	5	7 1/8	7 3/8	9 3/8	9 3/4													5.0
2M	24	30	1 1/8	3/8	1/2	6	3 1/2	2 1/2	4 3/4	5	7 1/8	7 3/8	9 3/8	9 3/4													5.0
3																											
4	36	48	1 5/8	5/8	3/4	8	7	5	6 1/4	6 5/8	9 1/2	9 3/4	12 1/2	13													12.0
5	48	60	2 1/4	3/4	1	10	8	7	7 3/4	8 3/8	11 7/8	12 1/4	15 5/8	16 1/4													20.0

STANDARD SIGN
R4-1

WISCONSIN DEPT OF TRANSPORTATION

APPROVED Matthew R Rauch
for State Traffic Engineer

DATE 3/25/2011 PLATE NO. R4-1.7

PROJECT NO: | HWY: | COUNTY: | SHEET NO: 178 | E

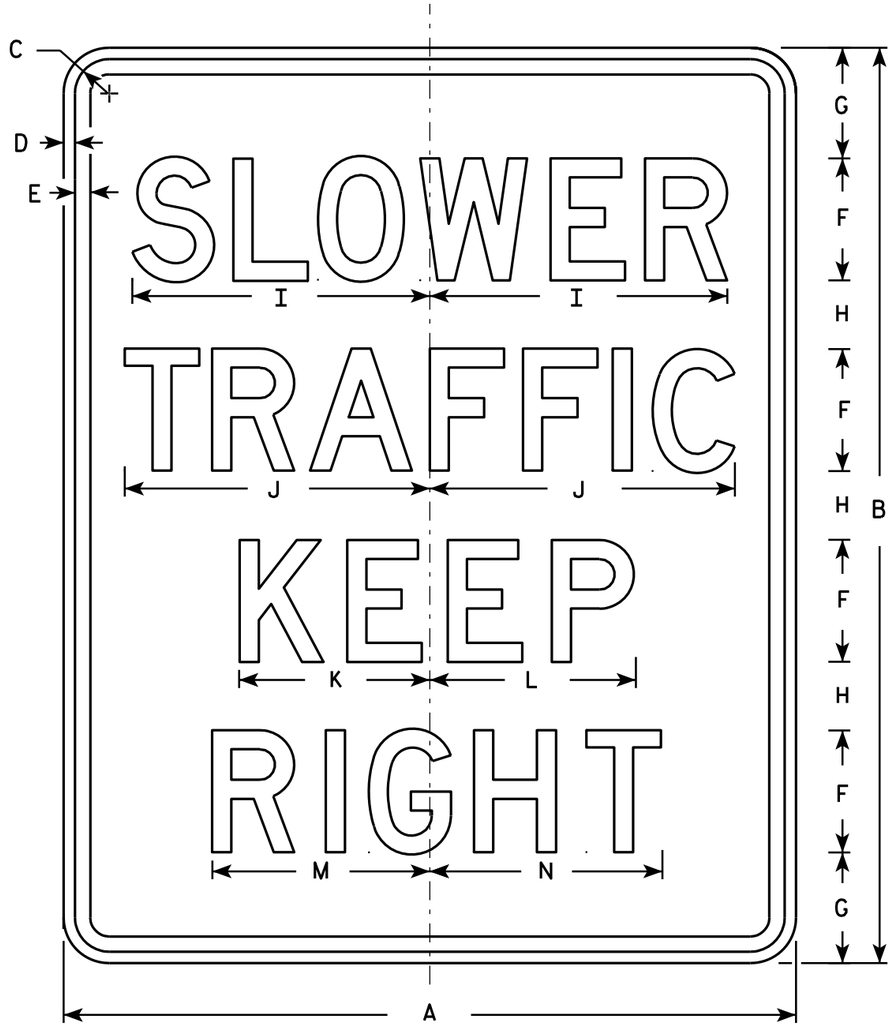

R4-3

NOTES

1. Sign is Type II - Type H Reflective - reference WIS DOT Standard Specification for HIGHWAY and STRUCTURE CONSTRUCTION latest edition.
2. Color:
   Background - White
   Message - Black
3. Message Series - D
4. Corners may be square or rounded when base material is plywood but borders shall be rounded as shown. When base material is metal, the corners and borders shall be rounded.

SIZE	A	B	C	D	E	F	G	H	I	J	K	L	M	N	O	P	Q	R	S	T	U	V	W	X	Y	Z	Area sq. ft.
1																											
2S	24	30	1 1/8	3/8	1/2	4	3 5/8	2 1/4	9 3/4	10	6 1/4	6 3/4	7 1/8	7 5/8													5.0
2M	24	30	1 1/8	3/8	1/2	4	3 5/8	2 1/4	9 3/4	10	6 1/4	6 3/4	7 1/8	7 5/8													5.0
3	36	48	1 5/8	5/8	3/4	6	6	4	14 5/8	15	9 3/8	10	10 3/4	11 3/8													12.0
4	36	48	1 5/8	5/8	3/4	6	6	4	14 5/8	15	9 3/8	10	10 3/4	11 3/8													12.0
5	48	60	2 1/4	3/4	1	8	7 1/4	4 1/2	19 1/2	20	12 1/2	13 1/2	14 1/4	15 1/4													20.0

STANDARD SIGN
R4-3

WISCONSIN DEPT OF TRANSPORTATION

APPROVED Matthew R Rauch
for State Traffic Engineer

DATE 3/25/2011 PLATE NO. R4-3.8

PROJECT NO:

SHEET NO: 179 E

FILE NAME : C:\Users\PROJECTS\tr_stdplate\R43.DGN PLOT DATE : 25-MAR-2011 13:40 PLOT BY : mscsja

WISDOT/CADDS SHEET 42

7

7

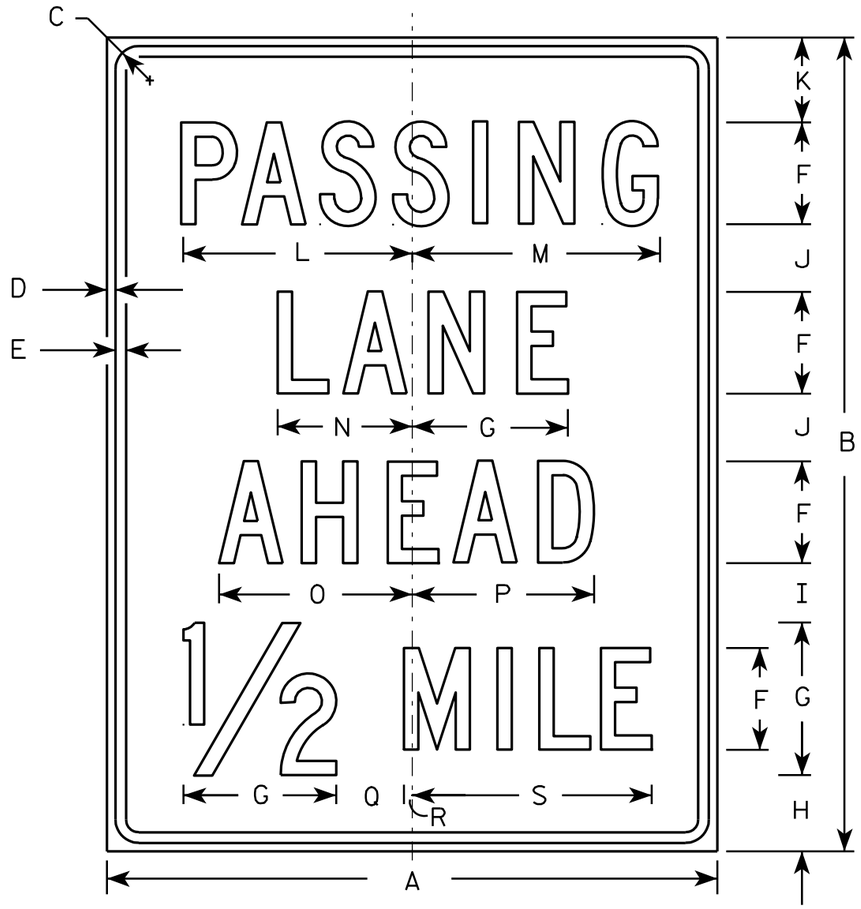

R4-51

NOTES

1. Sign is Type II - Type H Reflective - reference WIS DOT Standard Specification for HIGHWAY and STRUCTURE CONSTRUCTION latest edition.
2. Color:
   Background - White
   Message - Black
3. Message Series - C
4. Corners may be square or rounded when base material is plywood but borders shall be rounded as shown. When base material is metal, the corners and borders shall be rounded.

SIZE	A	B	C	D	E	F	G	H	I	J	K	L	M	N	O	P	Q	R	S	T	U	V	W	X	Y	Z	Area sq. ft.
1																											
2S	36	48	1 3/8	1/2	5/8	6	9	4 1/2	3 1/2	4	5	13 5/8	14 1/2	8	11 3/8	10 3/4	4	1/2	14 1/8								12.0
2M	36	48	1 3/8	1/2	5/8	6	9	4 1/2	3 1/2	4	5	13 5/8	14 1/2	8	11 3/8	10 3/4	4	1/2	14 1/8								12.0
3																											
4																											
5																											

STANDARD SIGN
R4-51

WISCONSIN DEPT OF TRANSPORTATION

APPROVED Matthew R Rauch
for State Traffic Engineer

DATE 3/29/2011 PLATE NO. R4-51.4

PROJECT NO: | HWY: | COUNTY: | SHEET NO: 180 | E

FILE NAME : C:\Users\PROJECTS\tr_stdplate\R451.DGN PLOT DATE : 29-MAR-2011 10:36 PLOT BY : mscsja PLOT NAME : PLOT SCALE : 8.938567:1.000000

WISDOT/CADDS SHEET 42

7

7

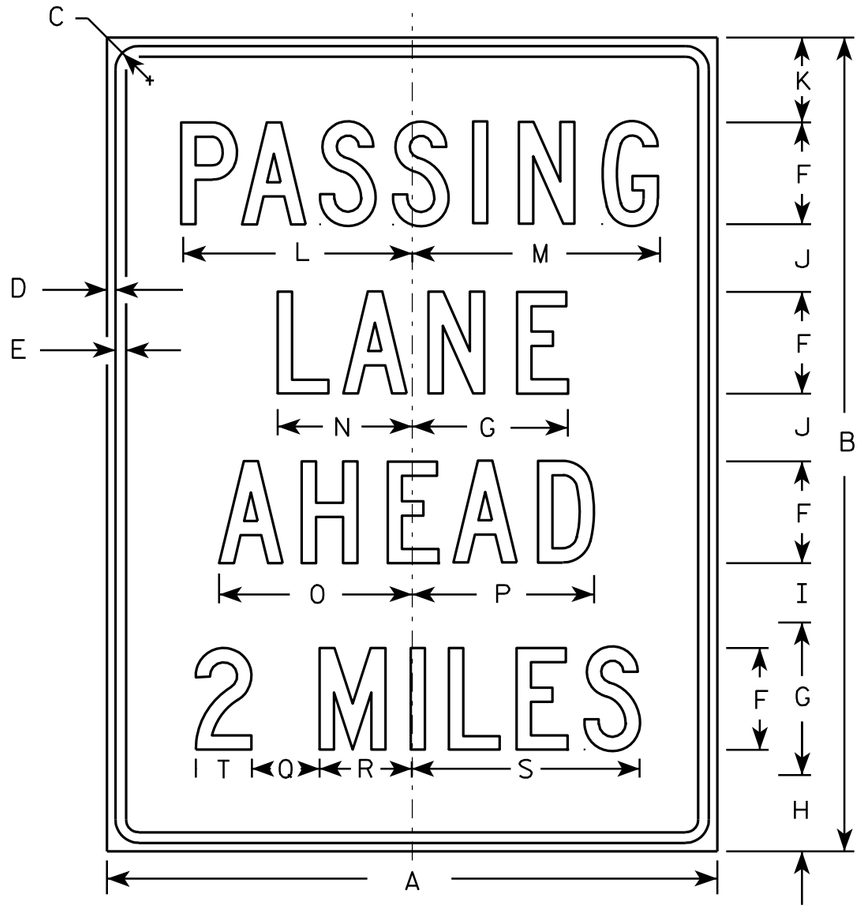

R4-51A

NOTES

1. Sign is Type II - Type H Reflective - reference WIS DOT Standard Specification for HIGHWAY and STRUCTURE CONSTRUCTION latest edition.
2. Color:
   Background - White
   Message - Black
3. Message Series - C
4. Corners may be square or rounded when base material is plywood but borders shall be rounded as shown. When base material is metal, the corners and borders shall be rounded.

SIZE	A	B	C	D	E	F	G	H	I	J	K	L	M	N	O	P	Q	R	S	T	U	V	W	X	Y	Z	Area sq. ft.
1																											
2S	36	48	1 3/8	1/2	5/8	6	9 1/4	4 1/2	3 1/2	4	5	13 5/8	14 1/2	8	11 3/8	10 3/4	4	5 1/2	13 3/8	3 1/4							12.0
2M	36	48	1 3/8	1/2	5/8	6	9 1/4	4 1/2	3 1/2	4	5	13 5/8	14 1/2	8	11 3/8	10 3/4	4	5 1/2	13 3/8	3 1/4							12.0
3																											
4																											
5																											

STANDARD SIGN
R4-51A

WISCONSIN DEPT OF TRANSPORTATION

APPROVED Matthew R Rauch
for State Traffic Engineer

DATE 3/29/2011 PLATE NO. R4-51A.2

PROJECT NO: | HWY: | COUNTY: | SHEET NO: 181 | E

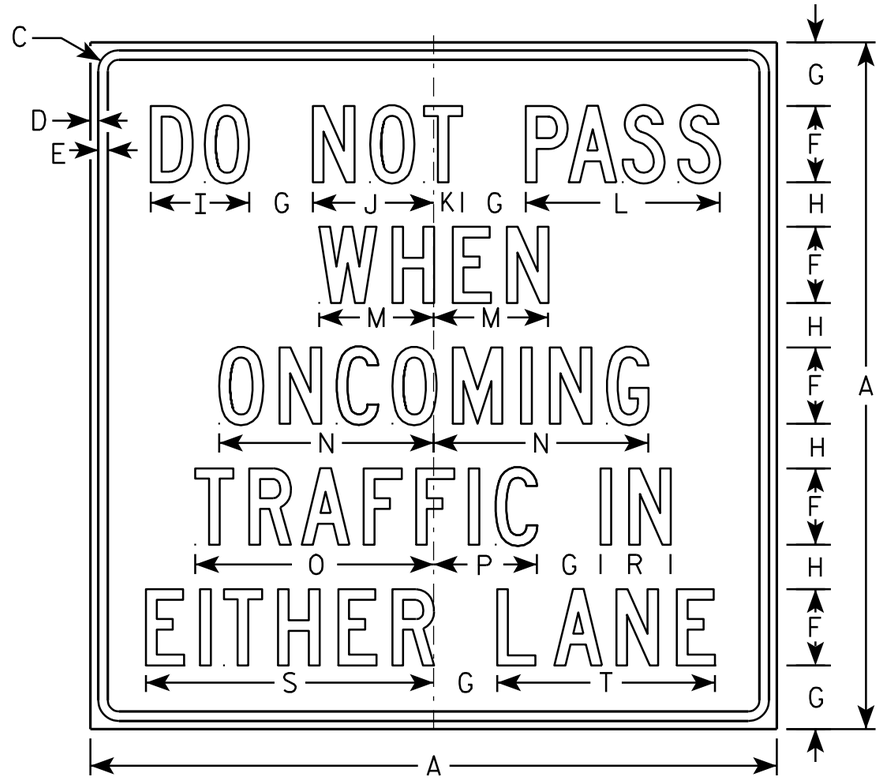

R4-53

NOTES

1. Sign is Type II - Type H Reflective - reference WIS DOT Standard Specification for HIGHWAY and STRUCTURE CONSTRUCTION latest edition.
2. Color:
   Background - WHITE
   Message - BLACK
3. Message Series - C
4. Corners may be square or rounded when base material is plywood but borders shall be rounded as shown. When base material is metal, the corners and borders shall be rounded.

SIZE	A	B	C	D	E	F	G	H	I	J	K	L	M	N	O	P	Q	R	S	T	U	V	W	X	Y	Z	Area sq. ft.
1																											
2S	54		1 5/8	5/8	3/4	6	5	3 1/2	7 3/4	9 1/2	2 1/4	15 1/4	9	16 7/8	18 3/4	8 1/8		5 1/2	22 5/8	17 1/8							20.25
2M	54		1 5/8	5/8	3/4	6	5	3 1/2	7 3/4	9 1/2	2 1/4	15 1/4	9	16 7/8	18 3/4	8 1/8		5 1/2	22 5/8	17 1/8							20.25
3																											
4																											
5																											

STANDARD SIGN
R4-53

WISCONSIN DEPT OF TRANSPORTATION

APPROVED Matthew R Rauch
for State Traffic Engineer

DATE 6/2/10 PLATE NO. R4-53.1

PROJECT NO: | HWY: | COUNTY: | SHEET NO: 182 | E

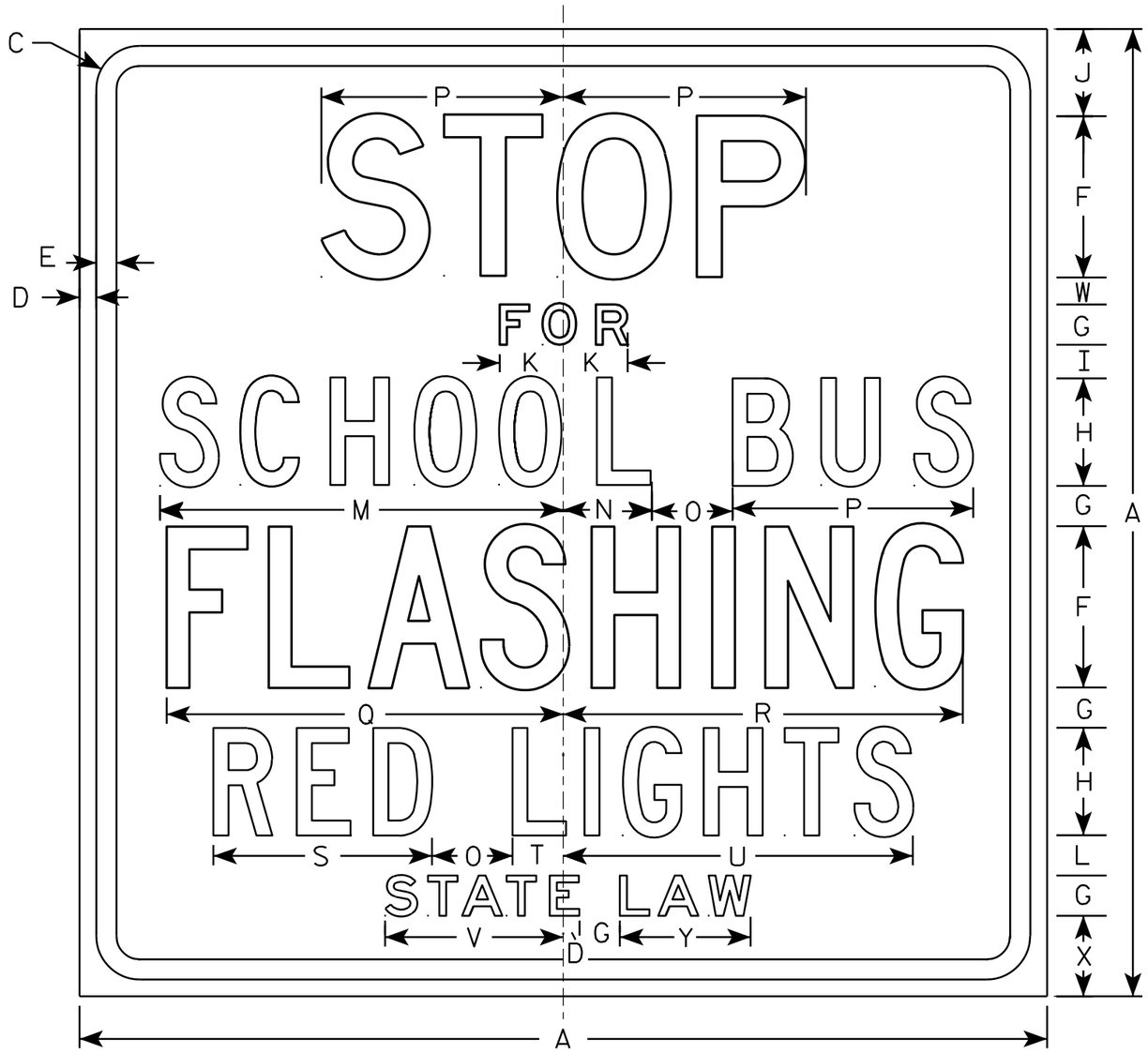

R59-51

NOTES

1. Sign is Type II - Type H Reflective - reference WIS DOT Standard Specification for HIGHWAY and STRUCTURE CONSTRUCTION latest edition.
2. Color:
   Background - White
   Message - Black
3. Message Series - See note 5
4. Corners may be square or rounded when base material is plywood but borders shall be rounded as shown. When base material is metal, the corners and borders shall be rounded.
5. Line 1 is Series D
   Lines 2 & 6 are Series E
   Line 3, 4 & 5 are Series C

SIZE	A	B	C	D	E	F	G	H	I	J	K	L	M	N	O	P	O	R	S	T	U	V	W	X	Y	Z	Area sq. ft.
1																											
2S	36		1 5/8	5/8	3/4	6	1 1/2	4	1 1/4	3 1/4	2 3/8	1 1/2	15	3 1/4	3	9	14 3/4	14 7/8	8 1/8	1 7/8	13	6 5/8	1	3	4 7/8		9.0
2M	36		1 5/8	5/8	3/4	6	1 1/2	4	1 1/4	3 1/4	2 3/8	1 1/2	15	3 1/4	3	9	14 3/4	14 7/8	8 1/8	1 7/8	13	6 5/8	1	3	4 7/8		9.0
3	48		2 1/4	3/4	1	8	2	6	1 1/4	4 3/4	3 1/4	1 1/2	20 1/4	5	3 5/8	12	19 1/2	20	11 5/8	3 3/4	19	9 1/2	1	3 1/2	6 3/4		16.0
4	48		2 1/4	3/4	1	8	2	6	1 1/4	4 3/4	3 1/4	1 1/2	20 1/4	5	3 5/8	12	19 1/2	20	11 5/8	3 3/4	19	9 1/2	1	3 1/2	6 3/4		16.0
5																											

STANDARD SIGN
R59-51

WISCONSIN DEPT OF TRANSPORTATION

APPROVED Matthew R Rauch
for State Traffic Engineer

DATE 3/30/11 PLATE NO. R59-51.10

PROJECT NO: | HWY: | COUNTY: | SHEET NO: 183 | E

FILE NAME : C:\Users\PROJECTS\tr_stdplate\R5951.DGN 30-MAR-2011 09:59 PLOT DATE : 30-MAR-2011 09:59 PLOT BY : mscj9h PLOT NAME : PLOT SCALE : 5.287650:1.000000

WISDOT/CADDS SHEET 42

7

7

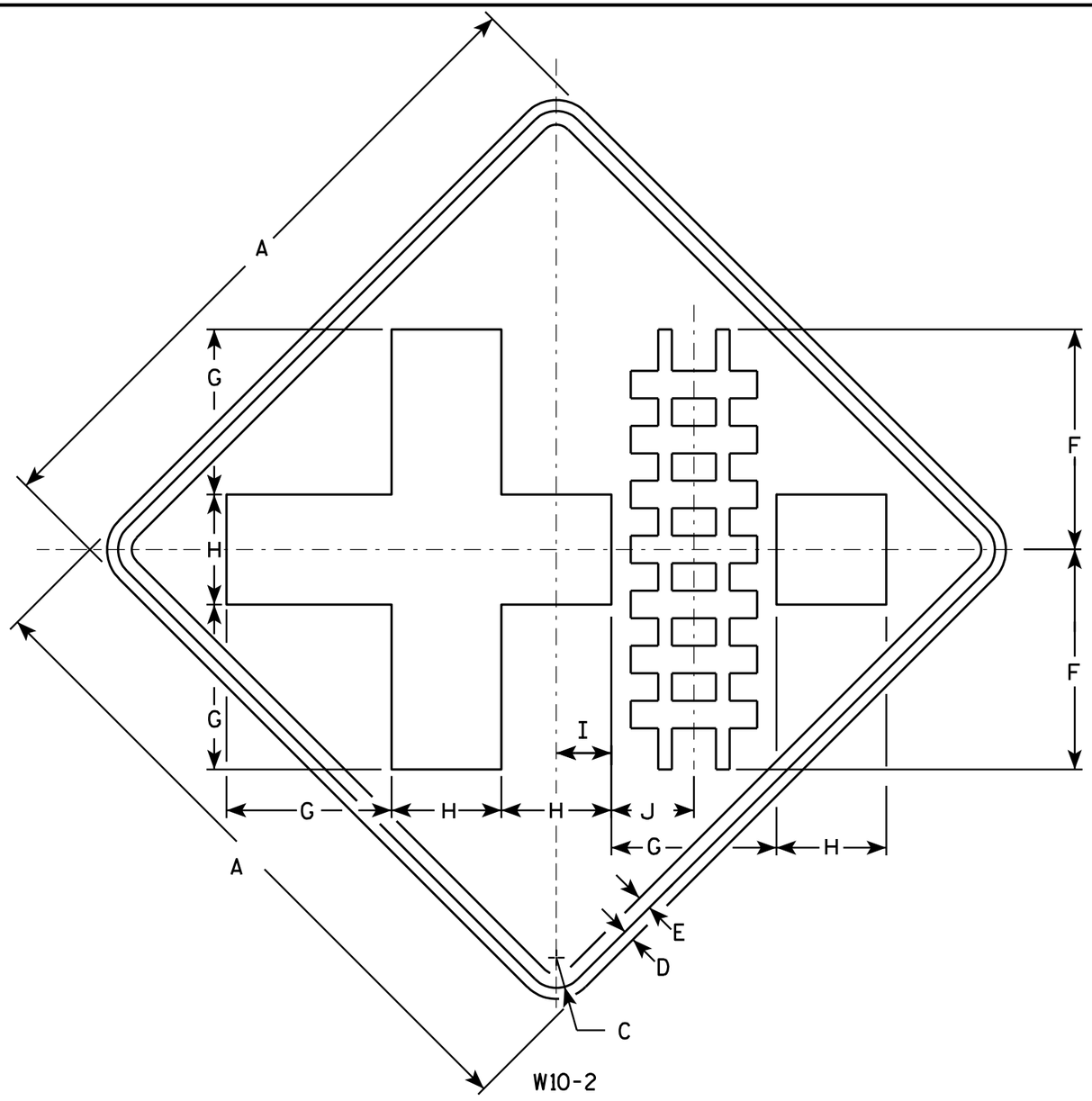

NOTES

1. Sign is Type II - Type F Reflective - reference WIS DOT Standard Specification for HIGHWAY and STRUCTURE CONSTRUCTION latest edition.
2. Color:
   Background - Yellow
   Message - Black
3. Corners may be square or rounded when base material is plywood but borders shall be rounded as shown. When base material is metal, the corners and borders shall be rounded.

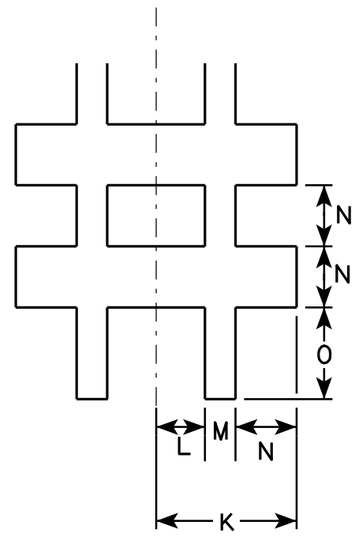

SIZE	A	B	C	D	E	F	G	H	I	J	K	L	M	N	O	P	Q	R	S	T	U	V	W	X	Y	Z	Area sq. ft.
1	30		1 3/8	1/2	5/8	10	7 1/2	5	2 1/2	3 3/4	2 7/8	1	5/8	1 1/4	1 7/8												6.25
2S	36		1 5/8	5/8	3/4	12	9	6	3	4 1/2	3 3/8	1 1/8	3/4	1 1/2	2 1/4												9.0
2M	36		1 5/8	5/8	3/4	12	9	6	3	4 1/2	3 3/8	1 1/8	3/4	1 1/2	2 1/4												9.0
3	36		1 5/8	5/8	3/4	12	9	6	3	4 1/2	3 3/8	1 1/8	3/4	1 1/2	2 1/4												9.0
4	48		2 1/4	3/4	1	16	12	8	4	6	4 1/2	1 1/2	1	2	3												16.0
5																											

STANDARD SIGN
W10-2

WISCONSIN DEPT OF TRANSPORTATION

APPROVED Matthew R Rauch
for State Traffic Engineer

DATE 3/13/13 PLATE NO. W10-2.8

PROJECT NO: | HWY: | COUNTY: | SHEET NO: 184 | E

FILE NAME : C:\CAEFiles\Projects\tr_stdplate\W102.DGN PLOT DATE : 13-MAR-2013 11:13 PLOT BY : mscj9h PLOT NAME : PLOT SCALE : 6.202372:1.000000
WISDOT/CADDS SHEET 42

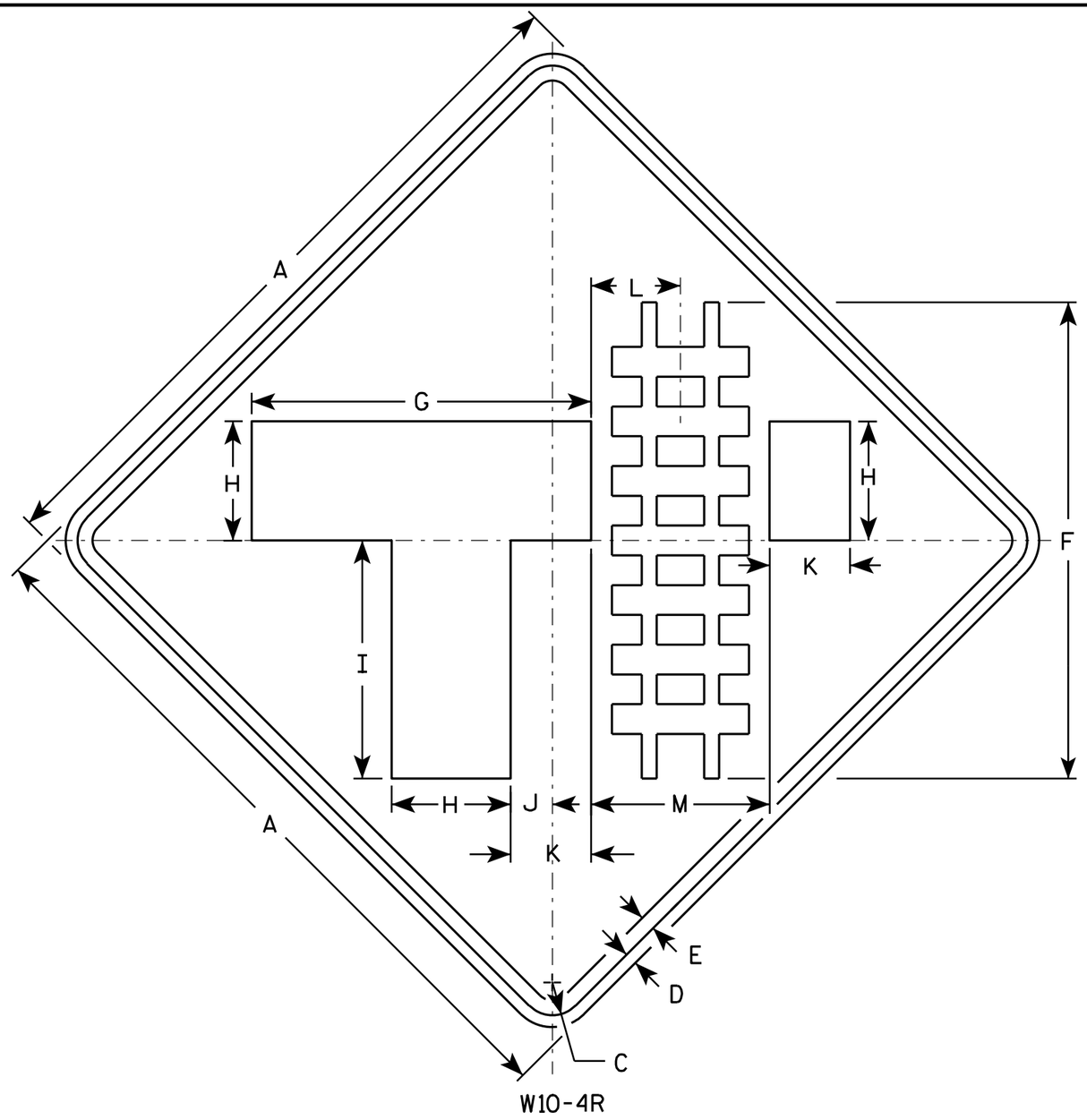

W10-4R

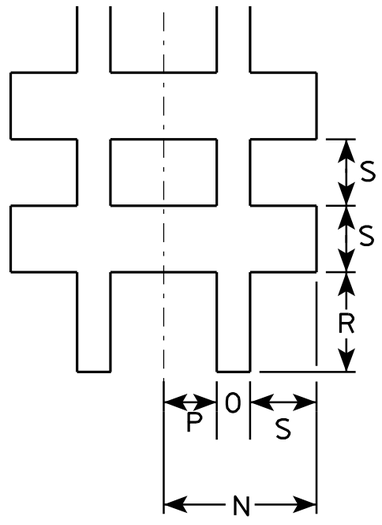

NOTES

1. Sign is Type II - Type F Reflective - reference WIS DOT Standard Specification for HIGHWAY and STRUCTURE CONSTRUCTION latest edition.
2. Color:
   Background - Yellow
   Message - Black
3. Corners may be square or rounded when base material is plywood but borders shall be rounded as shown. When base material is metal, the corners and borders shall be rounded.
4. W10-4L same as W10-4R except symbol is reversed.

SIZE	A	B	C	D	E	F	G	H	I	J	K	L	M	N	O	P	Q	R	S	T	U	V	W	X	Y	Z	Area sq. ft.
1	30		1 3/8	1/2	5/8	20	14 1/4	5	10	1 3/4	3 3/8	3 3/4	7 1/2	2 7/8	5/8	1		1 7/8	1 1/4								6.25
2	36		1 5/8	5/8	3/4	24	17	6	12	2	4	4 1/2	9	3 3/8	3/4	1 1/8		2 1/4	1 1/2								9.0
2	36		1 5/8	5/8	3/4	24	17	6	12	2	4	4 1/2	9	3 3/8	3/4	1 1/8		2 1/4	1 1/2								9.0
3	36		1 5/8	5/8	3/4	24	17	6	12	2	4	4 1/2	9	3 3/8	3/4	1 1/8		2 1/4	1 1/2								9.0
4	48		2 1/4	3/4	1	32	22 5/8	8	16	2 5/8	5 3/8	6	12	4 1/2	1	1 1/2		3	2								16.0
5																											

STANDARD SIGN
W10-4

WISCONSIN DEPT OF TRANSPORTATION

APPROVED Matthew R Rauch
for State Traffic Engineer

DATE 3/13/13 PLATE NO. W10-4.9

PROJECT NO:

SHEET NO: 185 E

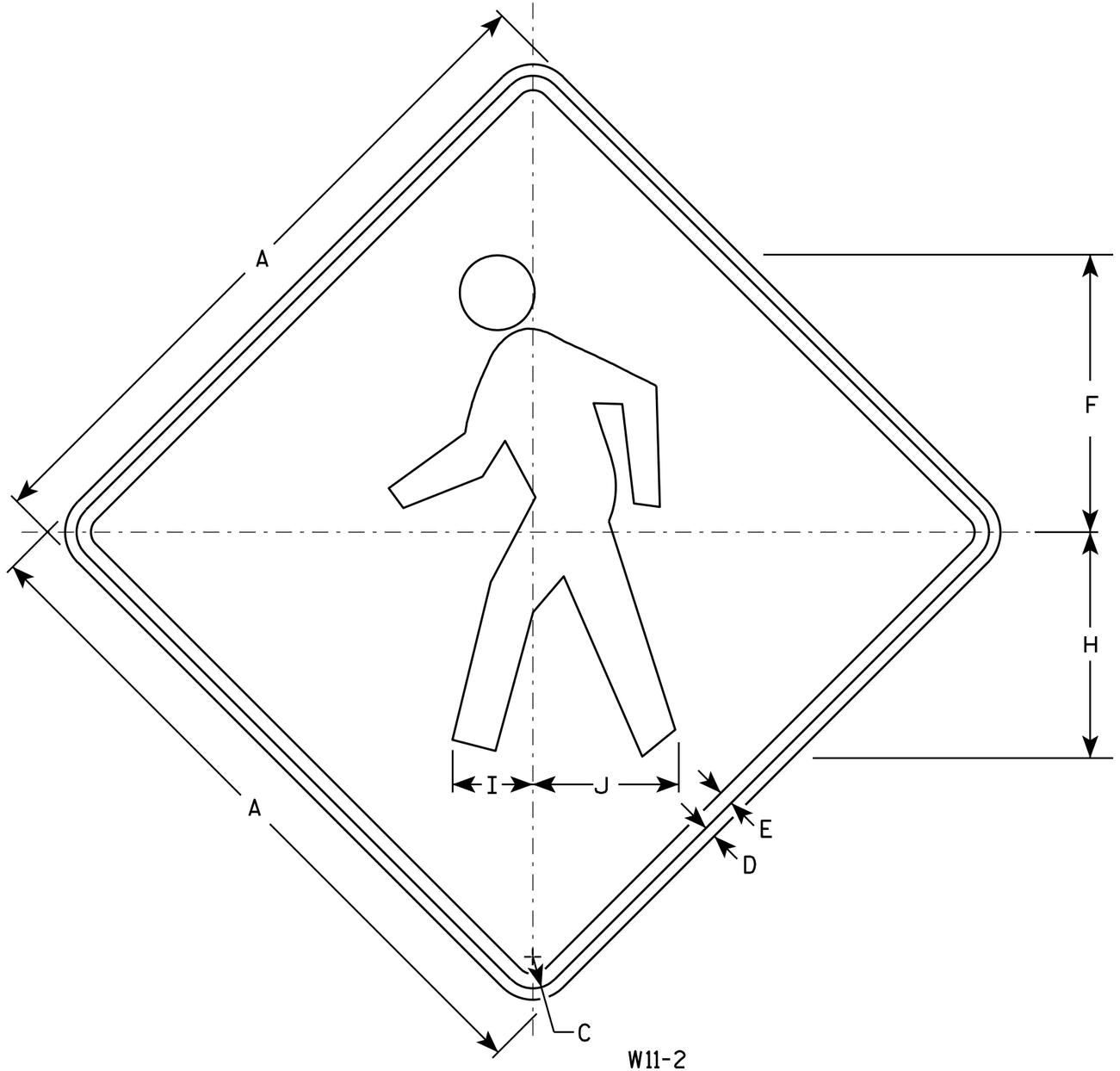

W11-2

NOTES

1. Sign is Type II - Type F Reflective - reference WIS DOT Standard Specification for HIGHWAY and STRUCTURE CONSTRUCTION latest edition.
2. Color:
   Background - Yellow
   Message - Black
3. Corners may be square or rounded when base material is plywood but borders shall be rounded as shown. When base material is metal, the corners and borders shall be rounded.

SIZE	A	B	C	D	E	F	G	H	I	J	K	L	M	N	O	P	Q	R	S	T	U	V	W	X	Y	Z	Area sq. ft.
1	24		1 1/8	3/8	1/2	9 3/4		7 7/8	2 7/8	5 1/8																	4.0
2S	30		1 3/8	1/2	5/8	12 1/8		9 7/8	3 1/2	6 3/8																	6.25
2M	36		1 5/8	5/8	3/4	14 1/2		11 7/8	4 1/4	7 5/8																	9.0
3	36		1 5/8	5/8	3/4	14 1/2		11 7/8	4 1/4	7 5/8																	9.0
4	48		2 1/4	3/4	1	19 3/8		15 3/4	5 5/8	10 1/4																	16.0
5																											

STANDARD SIGN
W11-2

WISCONSIN DEPT OF TRANSPORTATION

APPROVED Matthew R Rauch
for State Traffic Engineer

DATE 6/7/10 PLATE NO. W11-2.7

PROJECT NO:	HWY:	COUNTY:		SHEET NO: 186	E

NOTES

1. Sign is Type II - Type F Reflective - reference WIS DOT Standard Specification for HIGHWAY and STRUCTURE CONSTRUCTION latest edition.
2. Color:
   Background - Yellow
   Message - Black
3. Message Series - See note 5
4. Corners and borders shall be rounded on all base materials for this sign.
5. Lines 1 and 2 are Series D.
   Line 3 is series C.

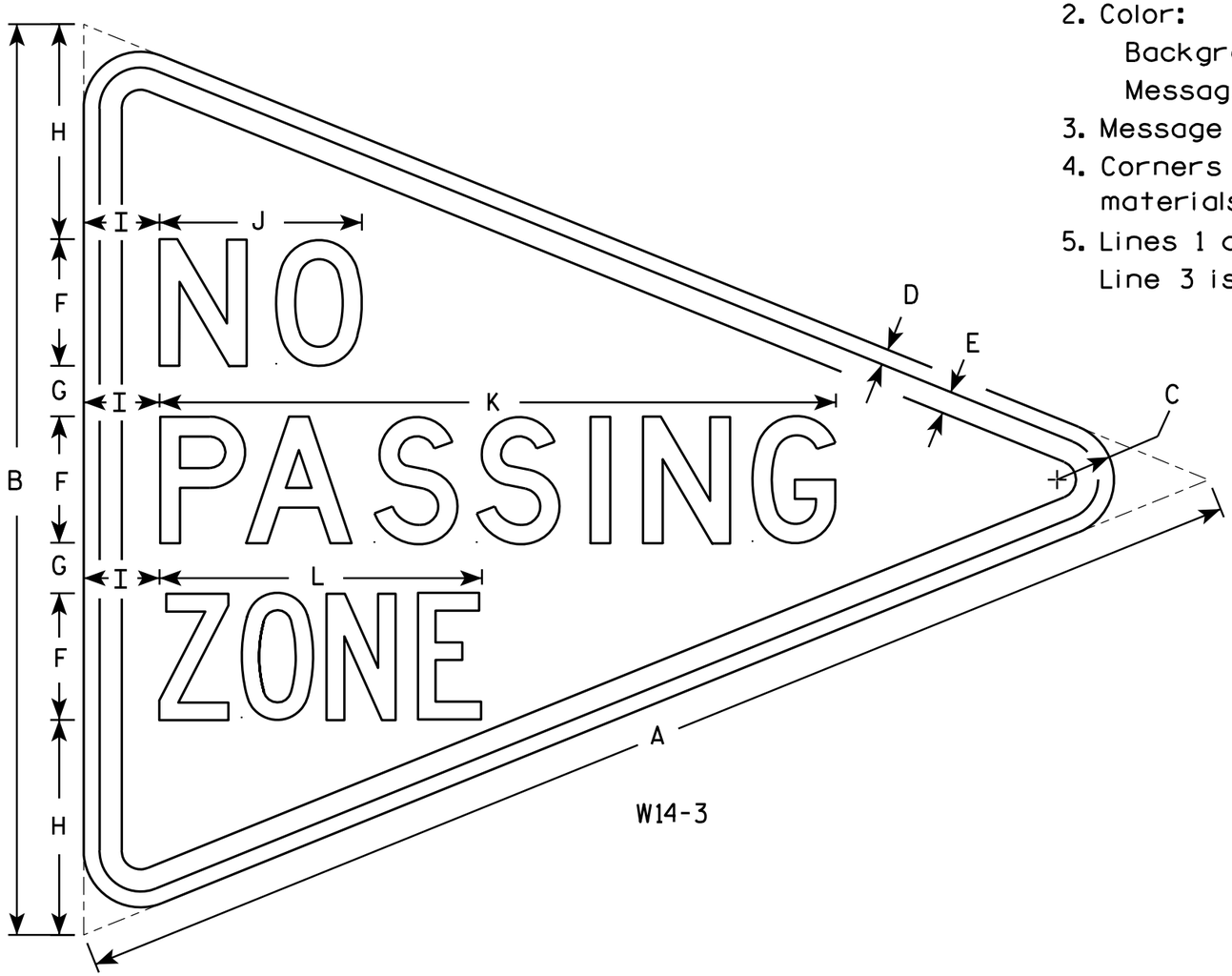

W14-3

SIZE	A	B	C	D	E	F	G	H	I	J	K	L	M	N	O	P	Q	R	S	T	U	V	W	X	Y	Z	Area sq. ft.
1																											
2S	48	36	2 1/4	5/8	7/8	5	2	8 1/2	3	8	26 3/4	12 3/4															6.0
2M	48	36	2 1/4	5/8	7/8	5	2	8 1/2	3	8	26 3/4	12 3/4															6.0
3	64	48	3	3/4	1 1/4	6	3	12	4	10 3/4	33 5/8	16 1/2															10.7
4																											
5																											

STANDARD SIGN
W14-3

WISCONSIN DEPT OF TRANSPORTATION

APPROVED Matthew R Rauch
for State Traffic Engineer

DATE 6/7/10 PLATE NO. W14-3.9

PROJECT NO:	HWY:	COUNTY:		SHEET NO: 187	E

NOTES

1. Sign is Type II - Type F Reflective - reference WIS DOT Standard Specification for HIGHWAY and STRUCTURE CONSTRUCTION latest edition.
2. Color:
   Background - Yellow
   Message - Black
3. Corners may be square or rounded when base material is plywood but borders shall be rounded as shown. When base material is metal, the corners and borders shall be rounded.

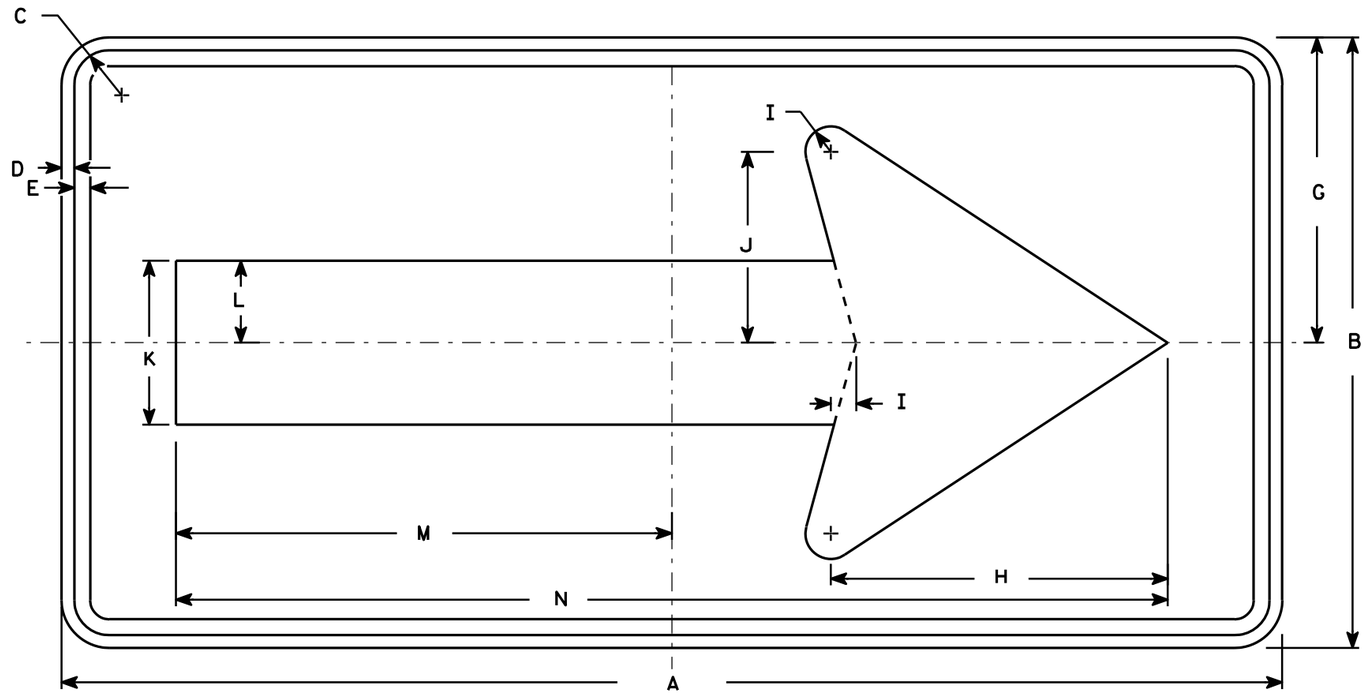

W1-6

SIZE	A	B	C	D	E	F	G	H	I	J	K	L	M	N	O	P	Q	R	S	T	U	V	W	X	Y	Z	Area sq. ft.
1	36	18	1 1/8	3/8	3/8		9	10	3/4	5 5/8	4 3/4	2 3/8	14 5/8	29 1/4													4.5
2S	48	24	1 3/8	1/2	5/8		12	13 1/4	1	7 1/2	6 1/2	3 1/4	19 1/2	39													8.0
2M	48	24	1 3/8	1/2	5/8		12	13 1/4	1	7 1/2	6 1/2	3 1/4	19 1/2	39													8.0
3	60	30	1 3/8	1/2	5/8		15	16 1/4	1 1/4	9 1/4	8	4	24 3/8	48 3/4													12.5
4	60	30	1 3/8	1/2	5/8		15	16 1/4	1 1/4	9 1/4	8	4	24 3/8	48 3/4													12.5
5	96	48	2 1/4	3/4	1		24	26 1/2	2	15	13	6 1/2	39	78													32.0

STANDARD SIGN
W1-6

WISCONSIN DEPT OF TRANSPORTATION

APPROVED Matthew R Rauch
for State Traffic Engineer

DATE 6/7/10 PLATE NO. W1-6.8

PROJECT NO:	HWY:	COUNTY:		SHEET NO: 188

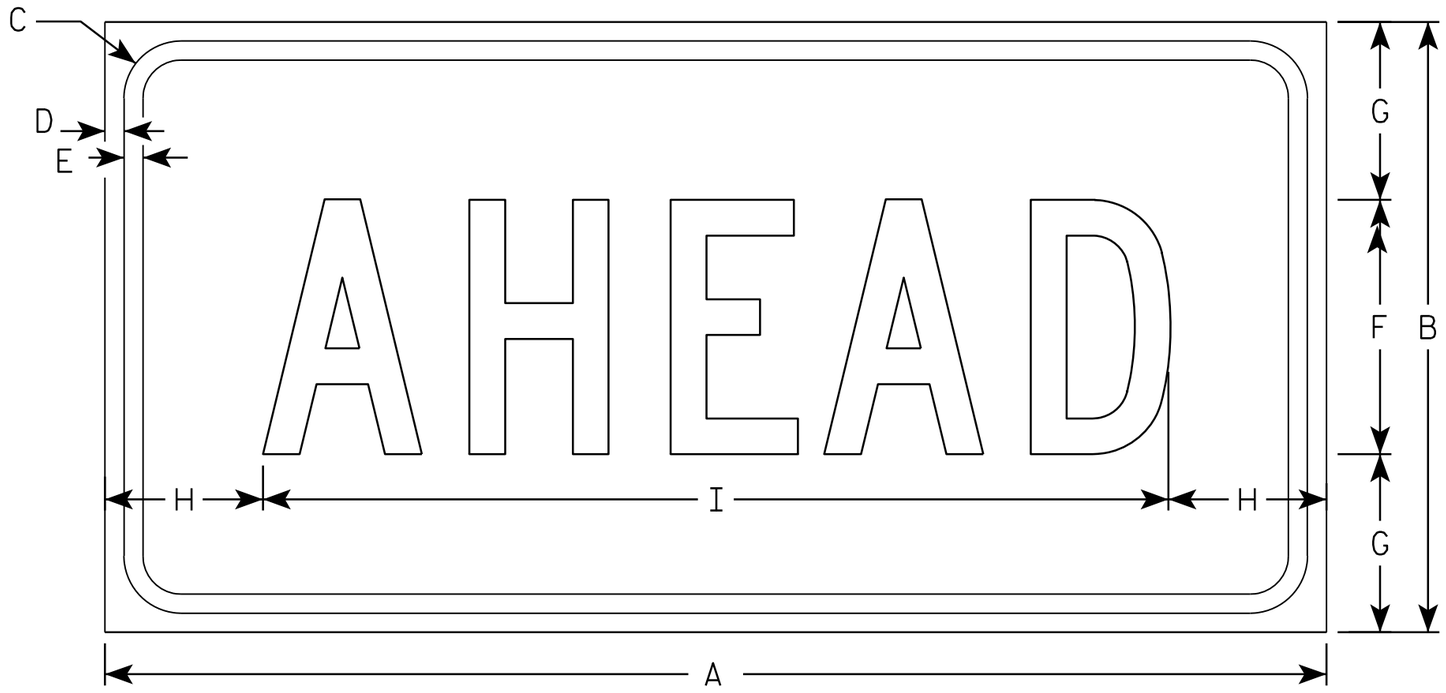

W16-9P

NOTES

1. Sign is Type II - Type F Reflective - reference WIS DOT Standard Specification for HIGHWAY and STRUCTURE CONSTRUCTION latest edition.
2. Color:
   Background - Yellow
   Message - Black
3. Message Series - C
4. Corners may be square or rounded when base material is plywood but borders shall be rounded as shown. When base material is metal, the corners and borders shall be rounded.

SIZE	A	B	C	D	E	F	G	H	I	J	K	L	M	N	O	P	Q	R	S	T	U	V	W	X	Y	Z	Area sq. ft.
1																											
2S	24	12	1 1/8	3/8	3/8	5	3 1/2	3 1/8	17 3/4																		2.0
2M	30	18	1 1/8	3/8	1/2	7	5 1/2	2 3/4	24 1/2																		3.75
3	30	18	1 1/8	3/8	1/2	7	3 1/2	2 3/4	24 1/2																		3.75
4	48	24	1 3/8	1/2	5/8	10	7	6 1/8	35 3/4																		8.0
5																											

STANDARD SIGN
W16-9P

WISCONSIN DEPT OF TRANSPORTATION

APPROVED Matthew R Rauch
for State Traffic Engineer

DATE 12/28/10 PLATE NO. W16-9P.6

PROJECT NO: | HWY: | COUNTY: | SHEET NO: 189 | E

FILE NAME : C:\Users\PROJECTS\tr_stdplate\W169P.DGN PLOT DATE : 28-DEC-2010 13:39 PLOT BY : dotsja PLOT NAME : PLOT SCALE : 2.979524:1.000000
WISDOT/CADDS SHEET 42

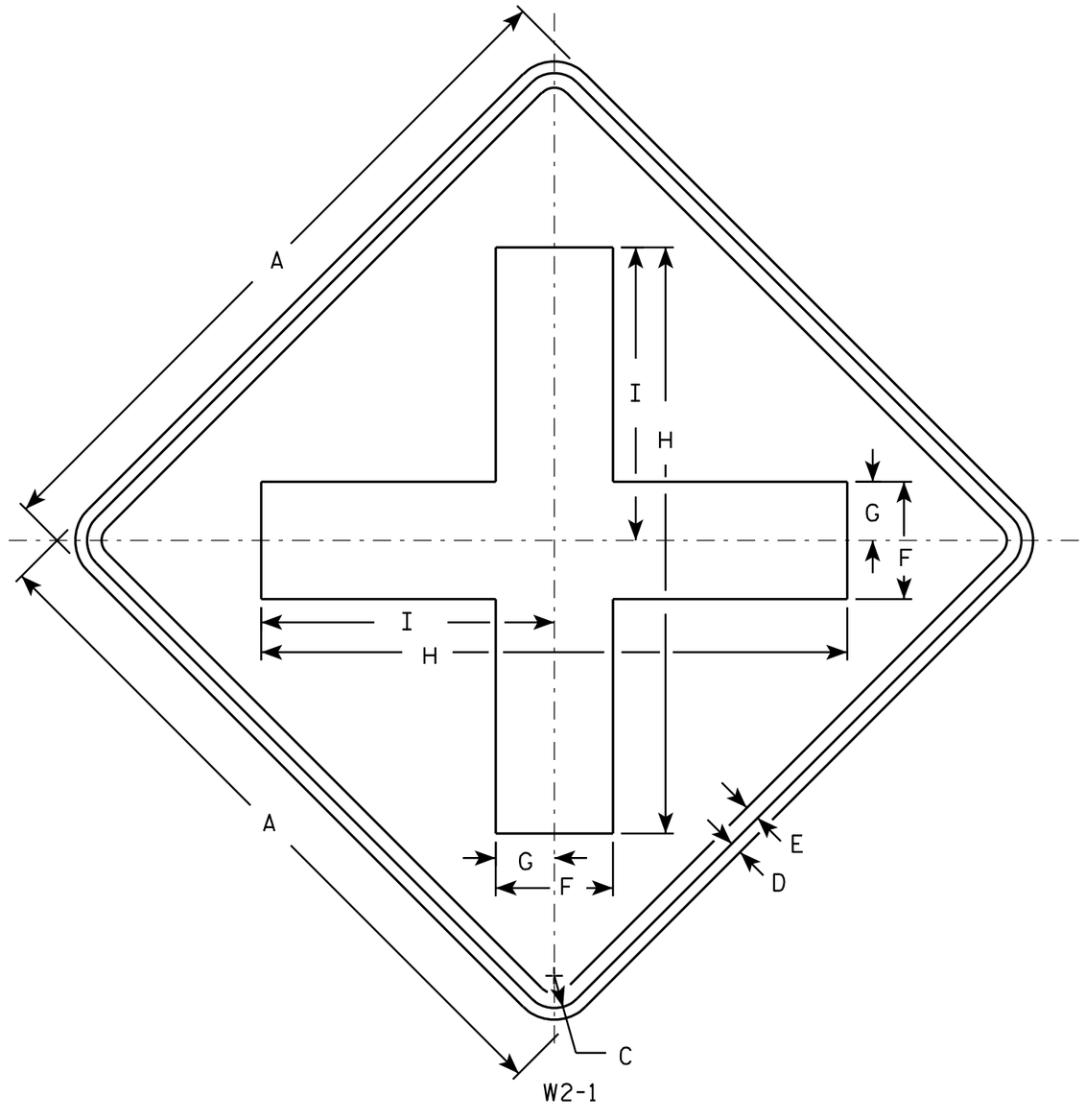

NOTES

1. Sign is Type II - Type F Reflective - reference WIS DOT Standard Specification for HIGHWAY and STRUCTURE CONSTRUCTION latest edition.
2. Color:
   Background - Yellow
   Message - Black
3. Corners may be square or rounded when base material is plywood but borders shall be rounded as shown. When base material is metal, the corners and borders shall be rounded.

SIZE	A	B	C	D	E	F	G	H	I	J	K	L	M	N	O	P	Q	R	S	T	U	V	W	X	Y	Z	Area sq. ft.
1	24		1 1/8	3/8	1/2	4	2	20	10																		4.0
2S	30		1 3/8	1/2	5/8	5	2 1/2	25	12 1/2																		6.25
2M	30		1 3/8	1/2	5/8	5	2 1/2	25	12 1/2																		6.25
3	36		1 5/8	5/8	3/4	6	3	30	15																		9.0
4	48		2 1/4	3/4	1	8	4	40	20																		16.0
5																											

STANDARD SIGN
W2-1

WISCONSIN DEPT OF TRANSPORTATION

APPROVED Matthew R Rauch
for State Traffic Engineer

DATE 5/29/12 PLATE NO. W2-1.9

PROJECT NO: | HWY: | COUNTY: | SHEET NO: 190 | E

FILE NAME : C:\CAEFiles\Projects\tr_stdplate\W21.DGN PLOT DATE : 29-MAY-2012 10:10 PLOT BY : mscsja PLOT NAME : PLOT SCALE : 6.202372:1.000000
WISDOT/CADDS SHEET 42

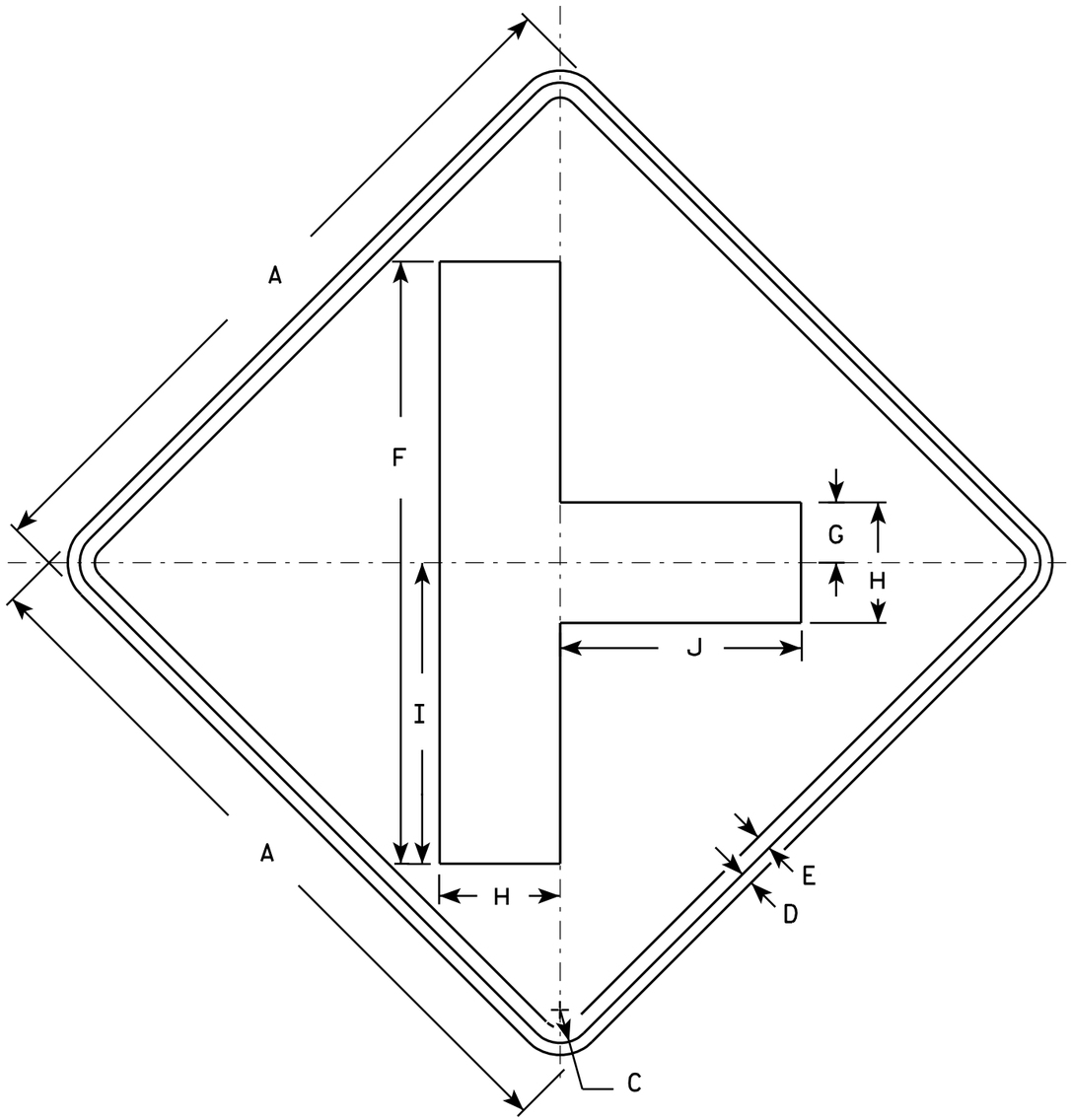

W2-2

NOTES

1. Sign is Type II - Type F Reflective - reference WIS DOT Standard Specification for HIGHWAY and STRUCTURE CONSTRUCTION latest edition.
2. Color:
   Background - Yellow
   Message - Black
3. Corners may be square or rounded when base material is plywood but borders shall be rounded as shown. When base material is metal, the corners and borders shall be rounded.

SIZE	A	B	C	D	E	F	G	H	I	J	K	L	M	N	O	P	Q	R	S	T	U	V	W	X	Y	Z	Area sq. ft.
1	24		1 1/8	3/8	1/2	20	2	4	10	8																	4.0
2S	30		1 3/8	1/2	5/8	25	2 1/2	5	12 1/2	10																	6.25
2M	30		1 3/8	1/2	5/8	25	2 1/2	5	12 1/2	10																	6.25
3	36		1 5/8	5/8	3/4	30	3	6	15	12																	9.0
4	48		2 1/4	3/4	1	40	4	8	20	16																	16.0
5																											

STANDARD SIGN
W2-2

WISCONSIN DEPT OF TRANSPORTATION

APPROVED Matthew R Rauch
for State Traffic Engineer

DATE 5/29/12 PLATE NO. W2-2.6

PROJECT NO:	HWY:	COUNTY:		SHEET NO: 191	E

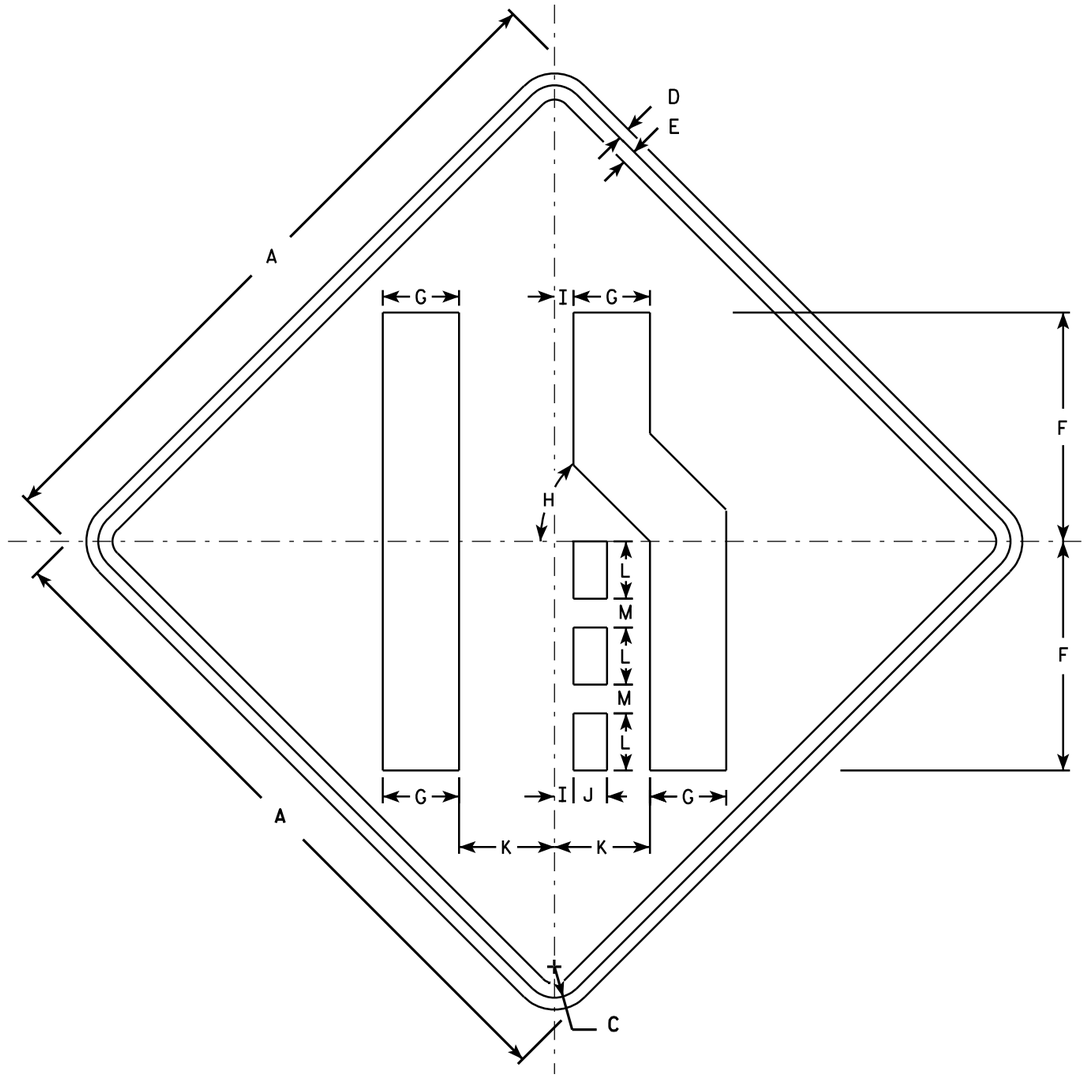

W4-2R

NOTES

1. Sign is Type II - Type F Reflective - reference WIS DOT Standard Specification for HIGHWAY and STRUCTURE CONSTRUCTION latest edition.
2. Color:
   Background - Yellow
   Message - Black
3. Corners may be square or rounded when base material is plywood but borders shall be rounded as shown. When base material is metal, the corners and borders shall be rounded.
4. W4-2L is the same as W4-2R except the symbol is reversed along the vertical centerline.

SIZE	A	B	C	D	E	F	G	H	I	J	K	L	M	N	O	P	Q	R	S	T	U	V	W	X	Y	Z	Area sq. ft.
1	30		1 3/8	1/2	5/8	10	3 3/8	45°	7/8	1 1/2	4 1/4	2 1/2	1 1/4														6.25
2S	36		1 5/8	5/8	3/4	12	4	45°	1	1 3/4	5	3	1 1/2														9.0
2M	36		1 5/8	5/8	3/4	12	4	45°	1	1 3/4	5	3	1 1/2														9.0
3	36		1 5/8	5/8	3/4	12	4	45°	1	1 3/4	5	3	1 1/2														9.0
4	48		2 1/4	3/4	1	16	5 3/8	45°	1 1/4	2 3/8	6 3/4	4	2														16.0
5	48		2 1/4	3/4	1	16	5 3/8	45°	1 1/4	2 3/8	6 3/4	4	2														16.0

STANDARD SIGN
W4-2

WISCONSIN DEPT OF TRANSPORTATION

APPROVED Matthew R Rauch
for State Traffic Engineer

DATE 3/12/13 PLATE NO. W4-2.14

PROJECT NO:

SHEET NO: 192 E

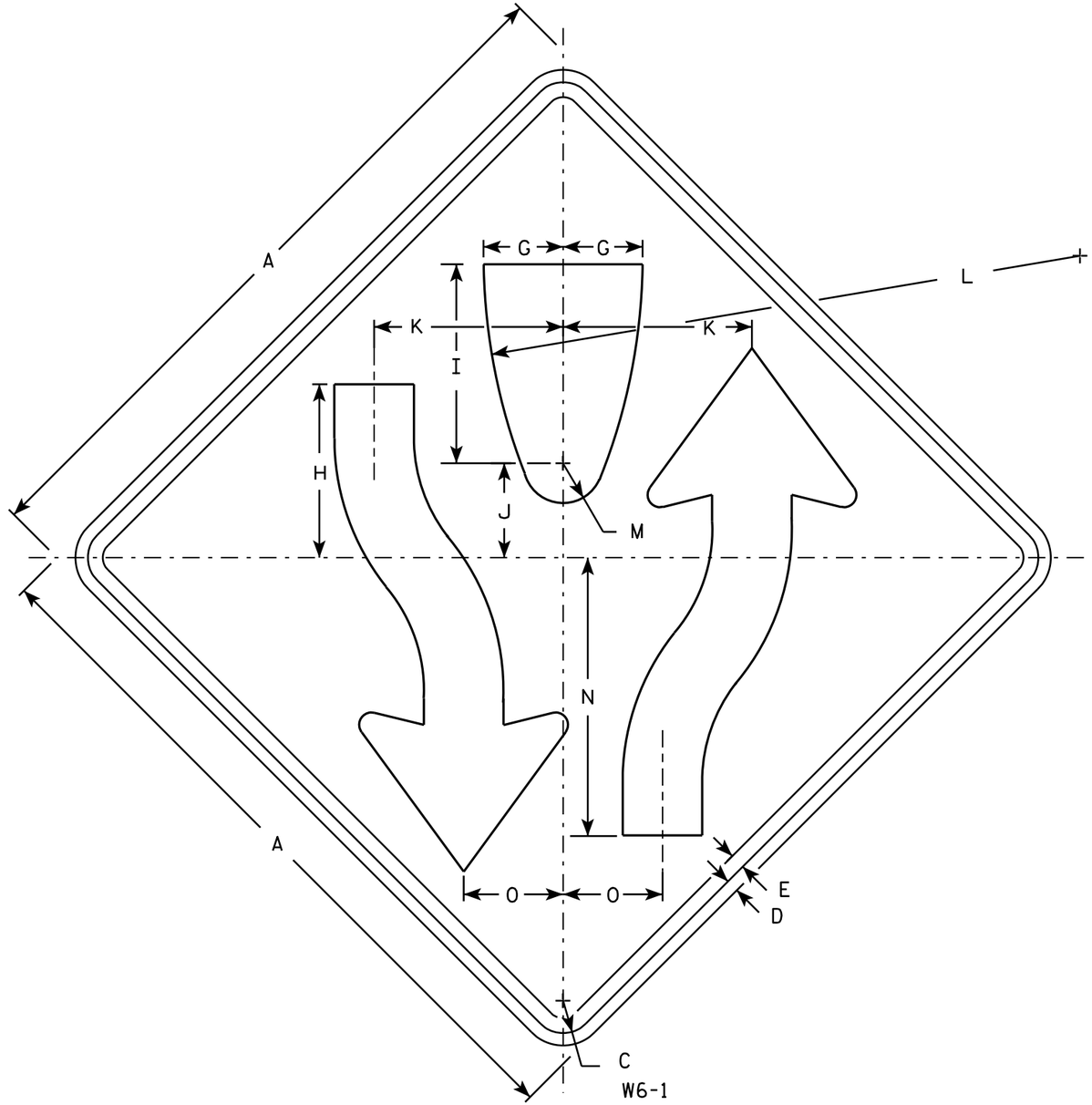

NOTES

1. Sign is Type II - Type F Reflective - reference WIS DOT Standard Specification for HIGHWAY and STRUCTURE CONSTRUCTION latest edition.
2. Color:
   Background - Yellow
   Message - Black
3. Corners may be square or rounded when base material is plywood but borders shall be rounded as shown. When base material is metal, the corners and borders shall be rounded.
4. W6-2 same as W6-1 but is rotated 180° when mounted.

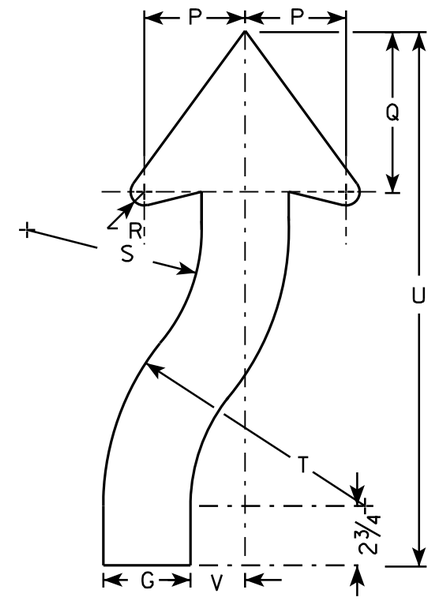

ARROW DETAIL

SIZE	A	B	C	D	E	F	G	H	I	J	K	L	M	N	O	P	Q	R	S	T	U	V	W	X	Y	Z	Area sq. ft.
1	30		1 3/8	1/2	5/8		3 1/4	8	8 1/4	4 1/8	7 7/8	25	1 3/4	11 5/8	4 1/8	3 7/8	6 3/4	5/8	6 5/8	9 7/8	21 5/8	2					6.25
2S	36		1 5/8	5/8	3/4		4	8 3/4	10	4 3/4	9 1/2	30	2	14	5	4 5/8	7 3/8	7/8	8	12	24 1/2	2 1/2					9.0
2M	36		1 5/8	5/8	3/4		4	8 3/4	10	4 3/4	9 1/2	30	2	14	5	4 5/8	7 3/8	7/8	8	12	24 1/2	2 1/2					9.0
3																											
4	48		2 1/4	3/4	1		5 3/8	11 5/8	13 3/8	6 3/8	12 5/8	40	2 5/8	18 5/8	6 5/8	6 1/4	9 7/8	1 1/4	10 5/8	16	32 5/8	3 3/8					16.0
5	48		2 1/4	3/4	1		5 3/8	11 5/8	13 3/8	6 3/8	12 5/8	40	2 5/8	18 5/8	6 5/8	6 1/4	9 7/8	1 1/4	10 5/8	16	32 5/8	3 3/8					16.0

STANDARD SIGN
W6-1 & W6-2

WISCONSIN DEPT OF TRANSPORTATION

APPROVED Matthew R Rauch
for State Traffic Engineer

DATE 03/12/13 PLATE NO. W6-1.14

PROJECT NO:	HWY:	COUNTY:		SHEET NO: 193	E

7

FILE NAME : C:\CAEFiles\Projects\tr_stdplate\W61.DGN PLOT DATE : 12-MAR-2013 14:02 PLOT BY : mscsja PLOT NAME : PLOT SCALE : 6.946657:1.000000
WISDOT/CADDS SHEET 42

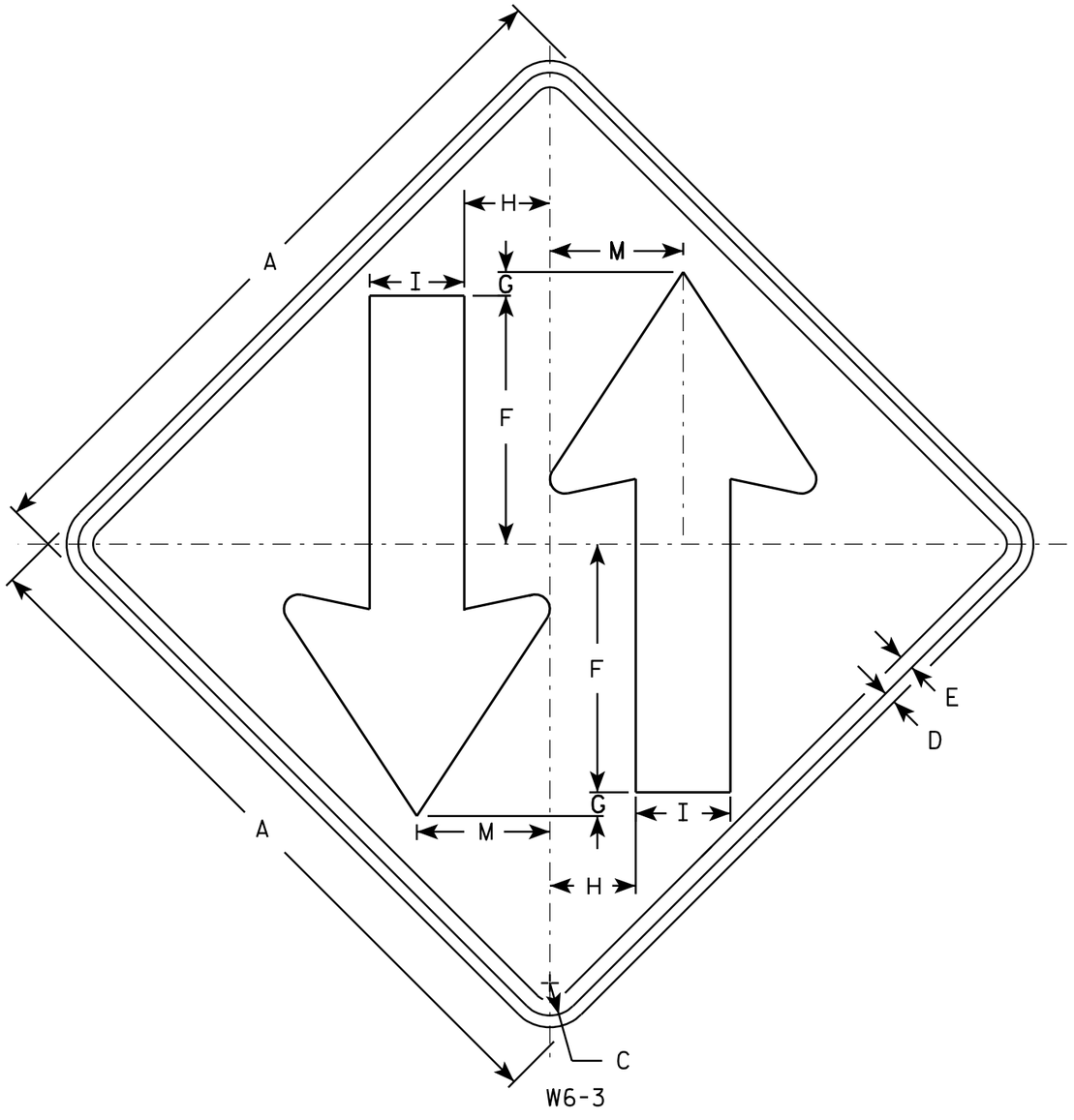

NOTES

1. Sign is Type II - Type F Reflective - reference WIS DOT Standard Specification for HIGHWAY and STRUCTURE CONSTRUCTION latest edition.
2. Color:
   Background - Yellow
   Message - Black
3. Corners may be square or rounded when base material is plywood but borders shall be rounded as shown. When base material is metal, the corners and borders shall be rounded.

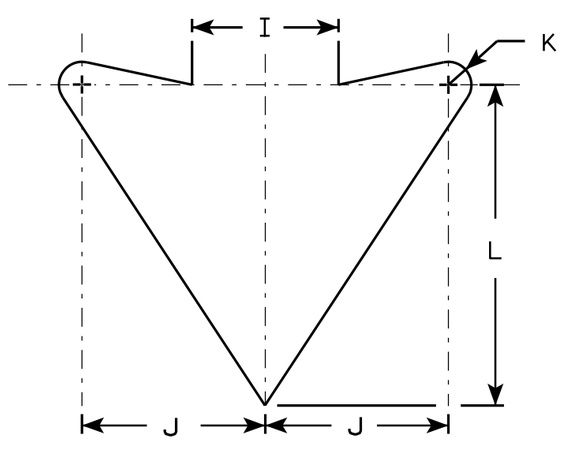

ARROW DETAIL

SIZE	A	B	C	D	E	F	G	H	I	J	K	L	M	N	O	P	Q	R	S	T	U	V	W	X	Y	Z	Area sq. ft.
1	30		1 3/8	1/2	5/8	10 1/2	1	3 5/8	4	5	5/8	8 3/4	5 5/8														6.25
2S	36		1 5/8	5/8	3/4	12	1	4 1/4	5	6	3/4	10 1/2	6 3/4														9.0
2M	36		1 5/8	5/8	3/4	12	1	4 1/4	5	6	3/4	10 1/2	6 3/4														9.0
3																											
4	48		2 1/4	3/4	1	15 1/2	1	6	6	8	1	14	9														16.0
5	48		2 1/4	3/4	1	15 1/2	1	6	6	8	1	14	9														16.0

STANDARD SIGN
W6-3

WISCONSIN DEPT OF TRANSPORTATION

APPROVED Matthew R Rauch
for State Traffic Engineer

DATE 03/12/13 PLATE NO. W6-3.10

PROJECT NO:	HWY:	COUNTY:		SHEET NO: 194	E

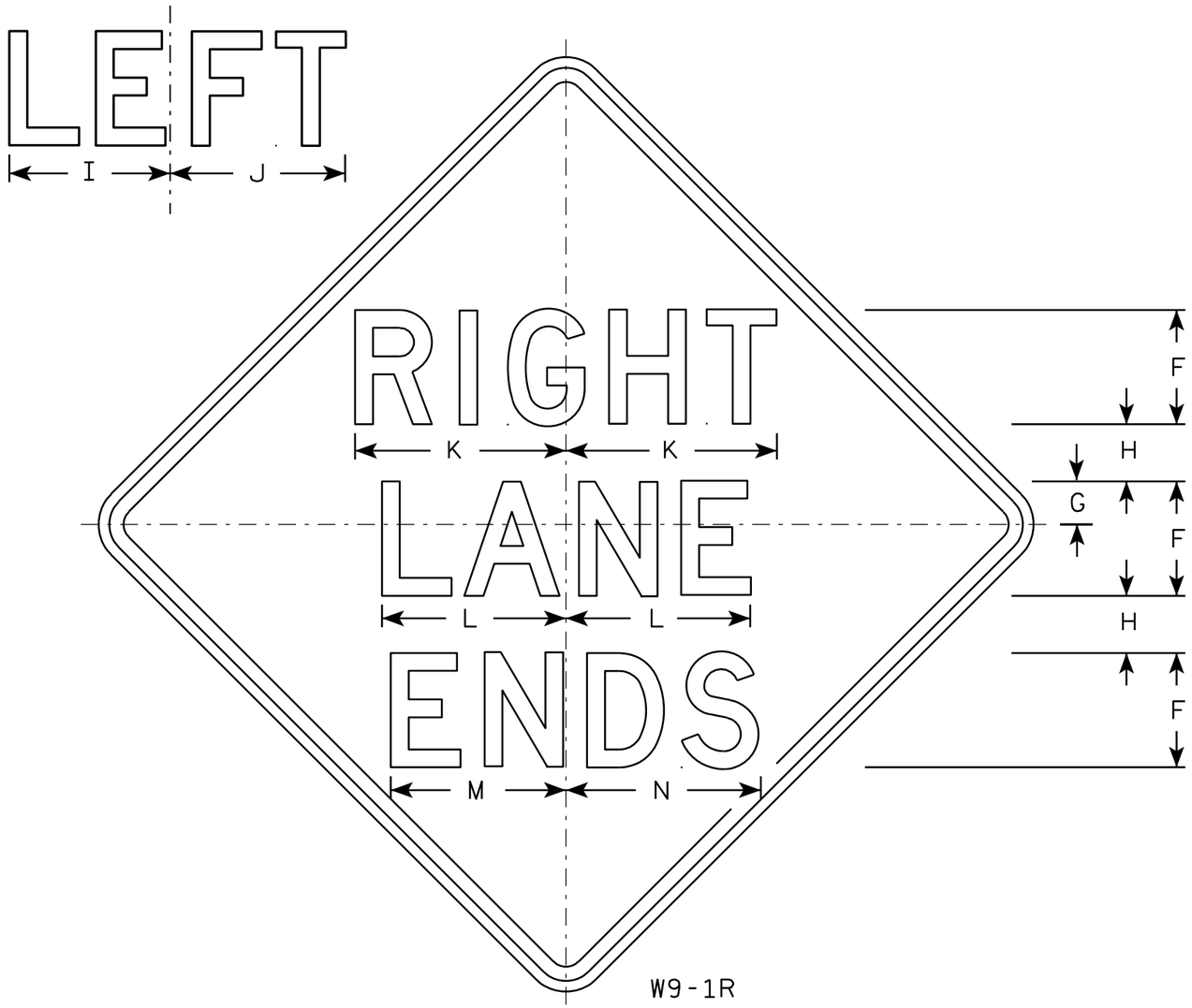

W9-1R

NOTES

1. Sign is Type II - Type F Reflective - reference WIS DOT Standard Specification for HIGHWAY and STRUCTURE CONSTRUCTION latest edition.
2. Color:
   Background - Yellow
   Message - Black
3. Message Series - D
4. Corners may be square or rounded when base material is plywood but borders shall be rounded as shown. When base material is metal, the corners and borders shall be rounded.
5. W9-1L same as W9-1R except the word Left replaces Right.

SIZE	A	B	C	D	E	F	G	H	I	J	K	L	M	N	O	P	Q	R	S	T	U	V	W	X	Y	Z	Area sq. ft.
1	30		1 3/8	1/2	5/8	5	1 1/2	2 1/2	7 1/8	7 5/8	9 1/4	8 1/8	7 5/8	8 5/8													6.25
2S	36		1 5/8	5/8	3/4	6	2	3	8 1/2	9 1/8	11	9 3/4	9	10 3/8													9.0
2M	36		1 5/8	5/8	3/4	6	2	3	8 1/2	9 1/8	11	9 3/4	9	10 3/8													9.0
3	36		1 5/8	5/8	3/4	6	2	3	8 1/2	9 1/8	11	9 3/4	9	10 3/8													9.0
4	36		1 5/8	5/8	3/4	6	2	3	8 1/2	9 1/8	11	9 3/4	9	10 3/8													9.0
5	48		2 1/4	3/4	1	8	3	4	11 1/4	12 1/4	14 3/4	12 7/8	12 1/4	13 5/8													16.0

STANDARD SIGN
W9-1

WISCONSIN DEPT OF TRANSPORTATION

APPROVED Matthew R Rauch for State Traffic Engineer

DATE 03/18/13 PLATE NO. W9-1.8

PROJECT NO:

SHEET NO: 195 E

FILE NAME : C:\CAEFiles\Projects\tr_stdplate\W91.DGN PLOT DATE : 18-MAR-2013 11:42 PLOT BY : mscsja

WISDOT/CADDS SHEET 42

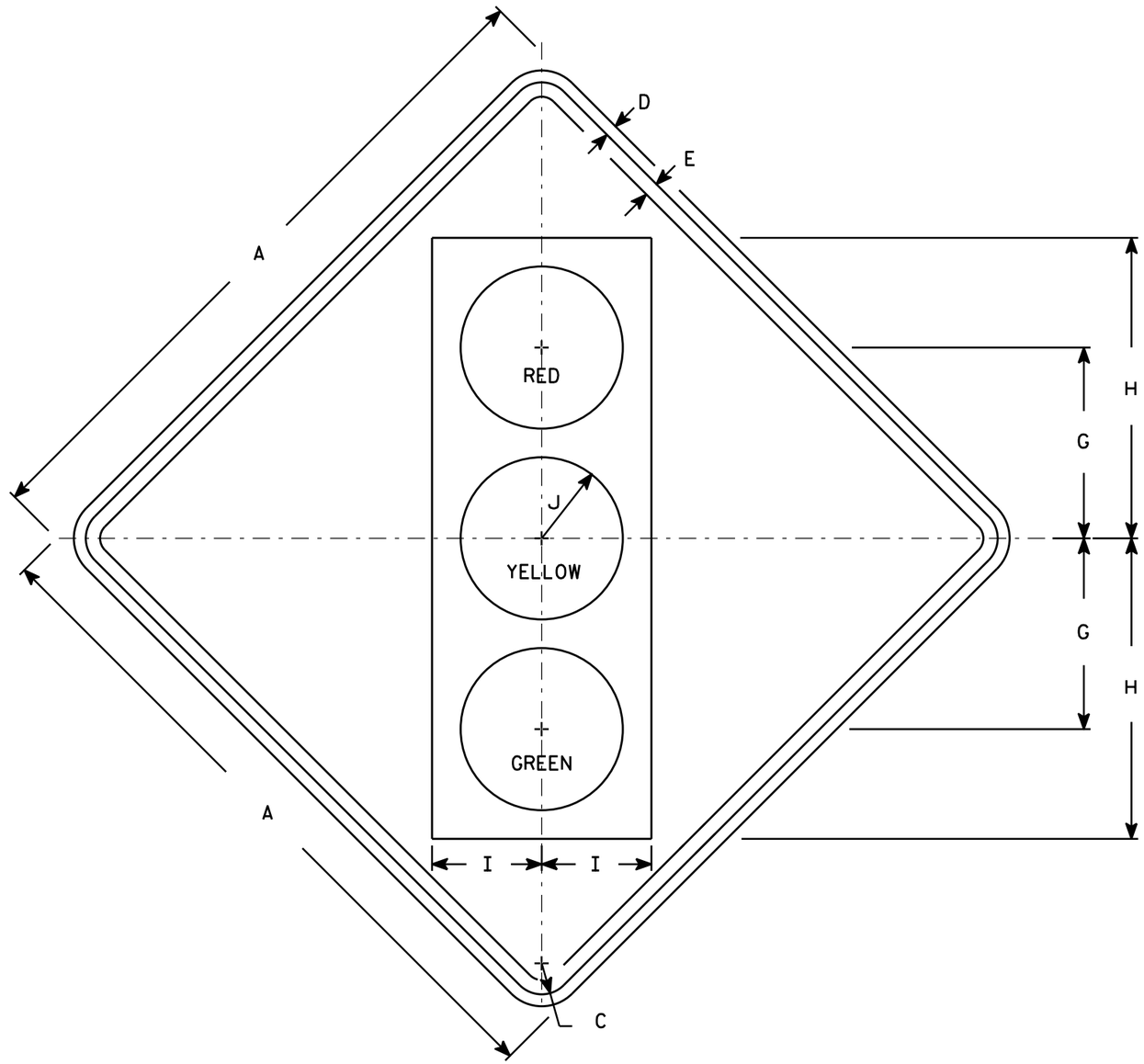

W03-3

NOTES

1. Sign is Type II - Type F Reflective - reference WIS DOT Standard Specification for HIGHWAY and STRUCTURE CONSTRUCTION latest edition.
2. Color:
   Background - Orange
   Message - See Note 4
3. Corners may be square or rounded when base material is plywood but borders shall be rounded as shown. When base material is metal, the corners and borders shall be rounded.
4. Symbol and border are non-reflective black.
   Top circle - Type H Reflectorized Red
   Center circle - Same as background
   Bottom circle - Type H Reflectorized Green

SIZE	A	B	C	D	E	F	G	H	I	J	K	L	M	N	O	P	Q	R	S	T	U	V	W	X	Y	Z	Area sq. ft.
1	36		1 5/8	5/8	3/4		10	15 3/4	5 3/4	4 1/4																	9.0
2S	48		2 1/4	3/4	1		12 1/2	20	7 1/2	5																	16.0
2M	48		2 1/4	3/4	1		12 1/2	20	7 1/2	5																	16.0
3	48		2 1/4	3/4	1		12 1/2	20	7 1/2	5																	16.0
4	48		2 1/4	3/4	1		12 1/2	20	7 1/2	5																	16.0
5	48		2 1/4	3/4	1		12 1/2	20	7 1/2	5																	16.0

STANDARD SIGN
W03-3

WISCONSIN DEPT OF TRANSPORTATION

APPROVED Matthew R Rauch
for State Traffic Engineer

DATE 11/20/13 PLATE 196 W03-3.1

PROJECT NO:	HWY:	COUNTY:		SHEET NO:	E

ID 1595-09-60

USH 8 WIDENING AT CRESCENT ROAD

STATION	DISTANCE	AREA (SF)		INCREMENTAL VOL (CY) (UNADJUSTED)		CUMULATIVE VOL (CY)		MASS ORDINATE
		CUT	FILL	CUT NOTE 1	FILL NOTE 2	CUT 1.00 NOTE 1	EXPANDED FILL 1.25 NOTE 3	NOTE 4
596+97		0	0	0	0	0	0	0
597+00	3	23	0	1	0	1	0	1
597+50	50	27	2	47	2	48	2	45
598+00	50	36	1	58	2	106	5	101
598+50	50	50	2	80	3	185	9	177
598+62	12	43	4	21	1	207	11	196
599+00	38	35	2	55	4	261	16	245
599+50	50	21	27	52	28	313	51	263
600+00	50	22	49	40	71	353	139	214
600+50	50	22	57	41	99	394	263	132
601+00	50	18	95	37	141	431	440	-9
601+50	50	22	74	37	157	468	635	-168
601+77	27	24	66	24	71	492	724	-233
602+00	23	31	60	23	53	515	791	-276
602+15	15	42	56	20	32	535	830	-295
602+50	35	93	18	88	48	623	890	-267
603+00	50	310	1	373	18	996	912	84
603+27	27	416	1	367	1	1363	914	450
603+50	23	483	2	379	1	1742	915	827
604+00	50	531	2	939	3	2681	919	1763
604+50	50	492	5	947	6	3629	926	2702
605+00	50	169	9	612	13	4241	943	3298
605+50	50	265	13	402	21	4643	969	3674
606+00	50	334	17	555	27	5198	1003	4195
606+25	25	290	16	294	15	5493	1022	4471
606+27	2	212	18	17	1	5510	1024	4486
606+43	16	177	23	112	12	5622	1038	4584
606+50	7	162	27	45	7	5667	1047	4620
606+65	15	142	32	85	17	5752	1068	4684
606+76	11	239	33	76	13	5828	1084	4744
606+92	16	187	44	127	23	5956	1113	4843
607+00	8	142	2	48	7	6004	1122	4882
607+14	14	123	1	69	1	6072	1123	4950
607+36	22	71	1	80	1	6152	1124	5028
607+50	14	39	14	28	4	6180	1128	5052
607+69	19	24	26	22	14	6202	1146	5056
607+72	3	44	9	4	2	6206	1148	5058
608+00	28	27	13	37	11	6243	1162	5081
608+30	30	33	37	33	28	6276	1198	5079
608+35	5	31	26	6	6	6282	1205	5078

NOTES:	
1 - CUT	CUT INCLUDES SALVAGED/UNUSABLE PAVEMENT MATERIAL. SALVAGED/UNUSABLE PAVEMENT MATERIAL IS CALCULATED ON THE SUMMARY SHEET.
2 - FILL	DOES NOT INCLUDE UNUSABLE PAVEMENT EXC VOLUME. SALVAGED/UNUSABLE PAVEMENT MATERIAL IS CALCULATED ON THE SUMMARY SHEET.
3 - EXPANDED FILL	(UNEXPANDED FILL)*(FILL FACTOR)
4 - MASS ORDINATE	CUT - (EXPANDED FILL); PLUS INDICATES AN EXCESS OF MATERIAL

ID 1595-09-60

USH 8 WIDENING AT CRESCENT ROAD

STATION	DISTANCE	AREA (SF)		INCREMENTAL VOL (CY) (UNADJUSTED)		CUMULATIVE VOL (CY)		MASS ORDINATE
		CUT	FILL	CUT NOTE 1	FILL NOTE 2	CUT 1.00 NOTE 1	EXPANDED FILL 1.25 NOTE 3	NOTE 4
608+50	15	30	28	17	15	6299	1223	5076
609+00	50	29	29	55	53	6354	1289	5064
609+38	38	49	21	54	35	6408	1333	5075
609+50	12	81	23	30	10	6438	1346	5092
610+00	50	30	50	103	67	6540	1430	5111
610+30	30	30	61	34	63	6574	1508	5066
610+50	20	30	63	22	45	6596	1565	5031
611+00	50	26	66	52	119	6648	1714	4934
611+43	43	25	70	41	108	6688	1849	4840
611+50	7	24	72	7	19	6695	1872	4823
612+00	50	24	70	45	132	6740	2037	4703
612+49	49	41	36	59	96	6799	2157	4642
612+50	1	42	32	2	1	6801	2158	4642
612+89	39	50	10	66	31	6867	2197	4670
613+00	11	85	10	28	4	6895	2202	4693
613+50	50	56	18	131	26	7026	2235	4791
614+00	50	101	13	146	29	7172	2271	4901
614+50	50	167	9	249	20	7420	2297	5124
614+56	6	173	9	35	2	7456	2299	5157
615+00	44	158	11	272	16	7728	2319	5409
615+21	21	83	14	93	10	7821	2332	5489
615+50	29	158	11	131	14	7951	2349	5602
616+00	50	225	2	355	12	8306	2364	5942
616+50	50	118	2	317	4	8623	2369	6254
617+00	50	61	7	165	9	8788	2380	6408
617+07	7	29	8	12	2	8799	2382	6417
617+50	43	32	22	49	24	8848	2412	6436
618+00	50	22	26	50	45	8899	2468	6431
618+47	47	23	30	40	49	8939	2529	6410
618+50	3	24	29	2	3	8941	2533	6408
618+69	19	26	23	18	18	8959	2556	6403
619+00	31	12	18	21	23	8980	2584	6395
619+50	50	139	12	139	28	9119	2620	6500
620+00	50	10	15	138	26	9257	2652	6605
620+50	50	12	18	19	31	9276	2690	6586
621+00	50	9	19	19	35	9295	2733	6562
621+50	50	8	20	16	36	9311	2779	6532
622+00	50	11	3	17	21	9328	2805	6523
622+50	50	9	1	19	3	9346	2809	6538
622+53	3	0	0	0	0	9347	2809	6538
			COLUMN TOTALS	9347	2247			

NOTES:	
1 - CUT	CUT INCLUDES SALVAGED/UNUSABLE PAVEMENT MATERIAL. SALVAGED/UNUSABLE PAVEMENT MATERIAL IS CALCULATED ON THE SUMMARY SHEET.
2 - FILL	DOES NOT INCLUDE UNUSABLE PAVEMENT EXC VOLUME. SALVAGED/UNUSABLE PAVEMENT MATERIAL IS CALCULATED ON THE SUMMARY SHEET.
3 - EXPANDED FILL	(UNEXPANDED FILL)*(FILL FACTOR)
4 - MASS ORDINATE	CUT - (EXPANDED FILL); PLUS INDICATES AN EXCESS OF MATERIAL

ID 1595-09-60

CRESCENT ROAD (NORTH)

STATION	DISTANCE	AREA (SF)		INCREMENTAL VOL (CY) (UNADJUSTED)		CUMULATIVE VOL (CY)		MASS ORDINATE
		CUT	FILL	CUT NOTE 1	FILL NOTE 2	CUT 1.00 NOTE 1	EXPANDED FILL 1.25 NOTE 3	NOTE 4
1079+51		0	0	0	0	0	0	0
1079+75	16	70	57	21	17	21	21	0
1080+00	21	75	60	56	44	76	76	0
1080+05	29	54	0	70	32	146	117	29
1080+25	4	53	0	7	0	153	117	36
1080+30	13	47	1	23	0	176	117	59
1080+50	21	33	0	31	0	208	117	90
1080+55	13	40	1	17	0	225	117	107
1080+75	25	49	0	41	0	266	118	148
1081+00	25	7	0	26	0	292	118	174
1081+25	40	0	0	5	0	297	118	179
			COLUMN TOTALS	297	94			

NOTES:	
1 - CUT	CUT INCLUDES SALVAGED/UNUSABLE PAVEMENT MATERIAL. SALVAGED/UNUSABLE PAVEMENT MATERIAL IS CALCULATED ON THE SUMMARY SHEET.
2 - FILL	DOES NOT INCLUDE UNUSABLE PAVEMENT EXC VOLUME. SALVAGED/UNUSABLE PAVEMENT MATERIAL IS CALCULATED ON THE SUMMARY SHEET.
3 - EXPANDED FILL	(UNEXPANDED FILL)*(FILL FACTOR)
4 - MASS ORDINATE	CUT - (EXPANDED FILL); PLUS INDICATES AN EXCESS OF MATERIAL

9

9

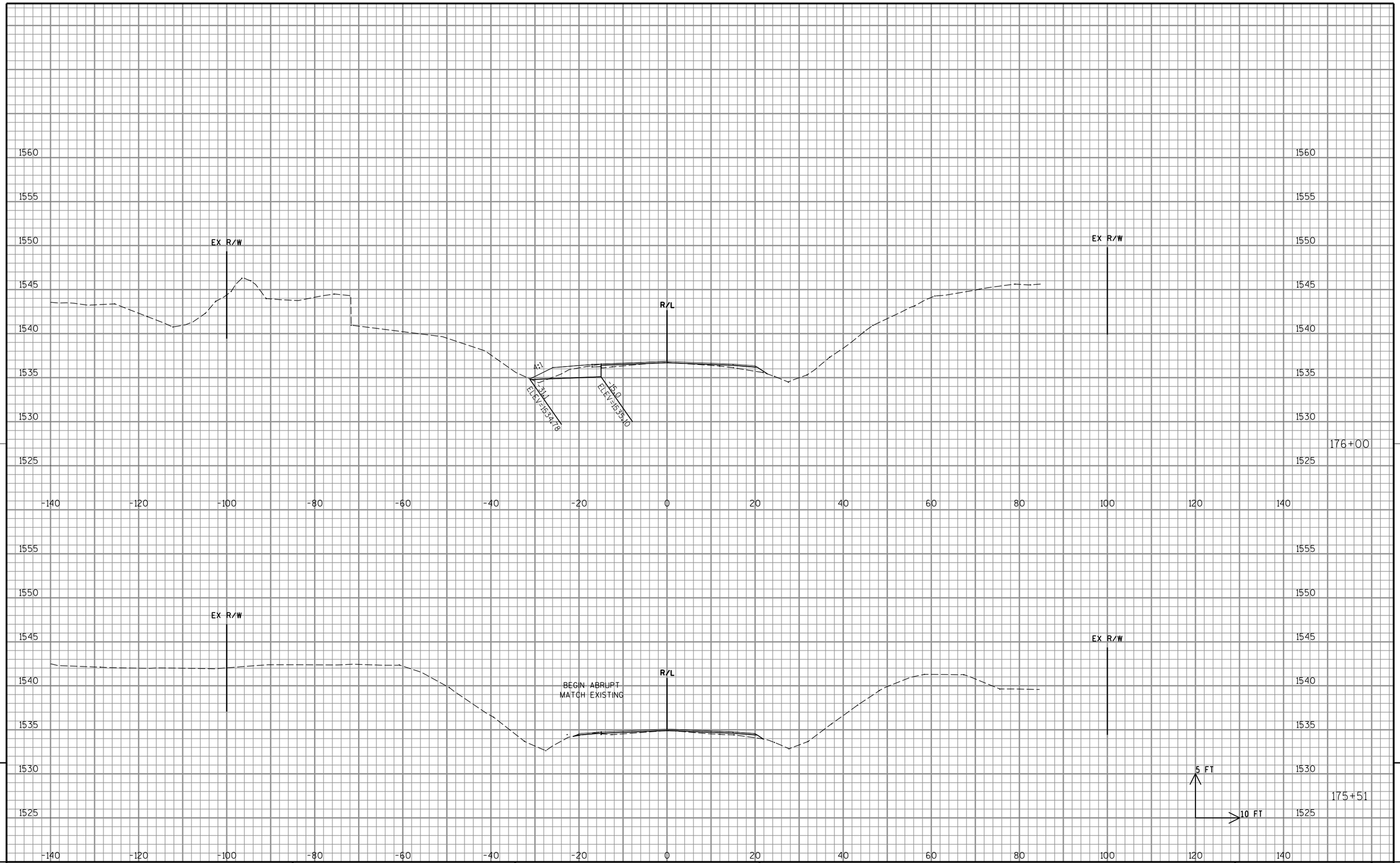

9

9

PROJECT NO: 1595-09-60	HWY: USH 8	COUNTY: ONEIDA	CROSS SECTIONS: USH 8 - GUARDRAIL	SHEET 200	E

FILE NAME : P:\47xx\4727_DP.12.USH8.ONE\CADDS\Plan\090201_xs.dgn PLOT DATE : 2/16/2015 PLOT BY : emo PLOT NAME : PLOT SCALE : 1:20
WISDOT/CADDS SHEET 21

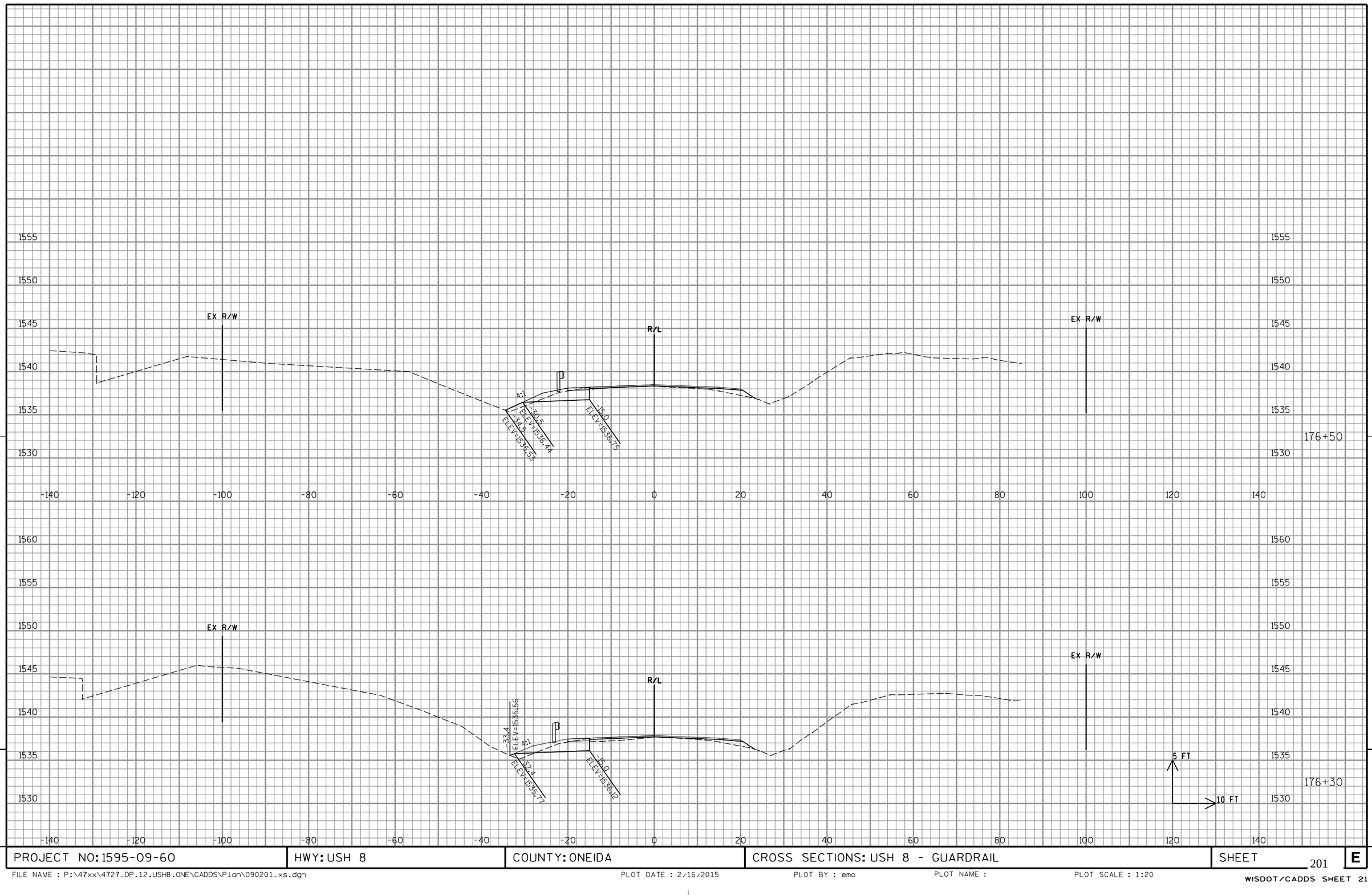

9

9

PROJECT NO: 1595-09-60	HWY: USH 8	COUNTY: ONEIDA	CROSS SECTIONS: USH 8 - GUARDRAIL	SHEET 201	E

FILE NAME : P:\47xx\4727_DP.12.USH8.ONE\CADDS\Plan\090201_xs.dgn PLOT DATE : 2/16/2015 PLOT BY : emo PLOT NAME : PLOT SCALE : 1:20

WISDOT/CADDS SHEET 21

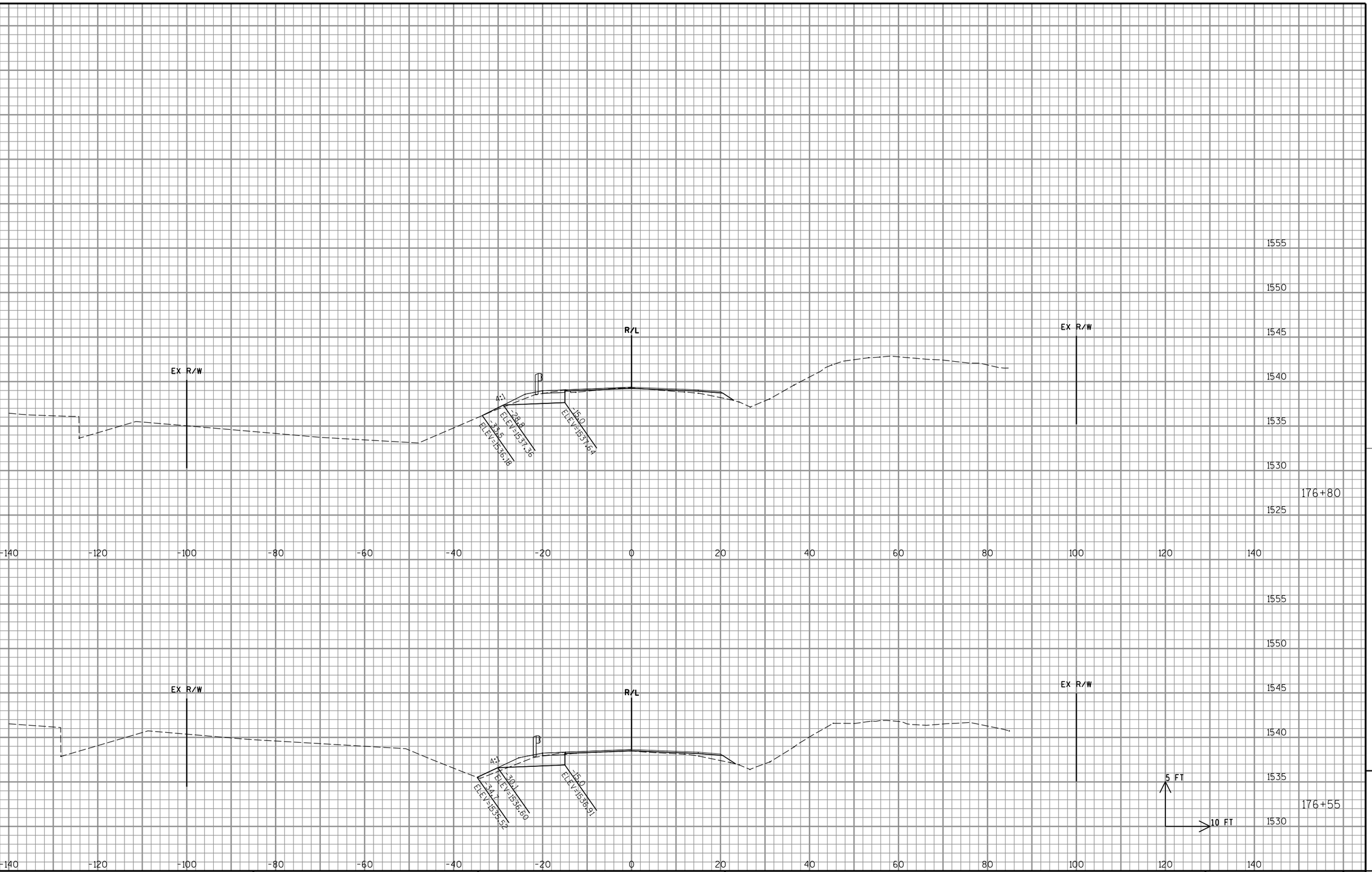

9

PROJECT NO: 1595-09-60	HWY: USH 8	COUNTY: ONEIDA	CROSS SECTIONS: USH 8 - GUARDRAIL	SHEET 202	E

9

FILE NAME : P:\47xx\4727_DP.12.USH8.ONE\CADDS\Plan\090201_xs.dgn PLOT DATE : 2/16/2015 PLOT BY : emo PLOT NAME : PLOT SCALE : 1:20
WISDOT/CADDS SHEET 21

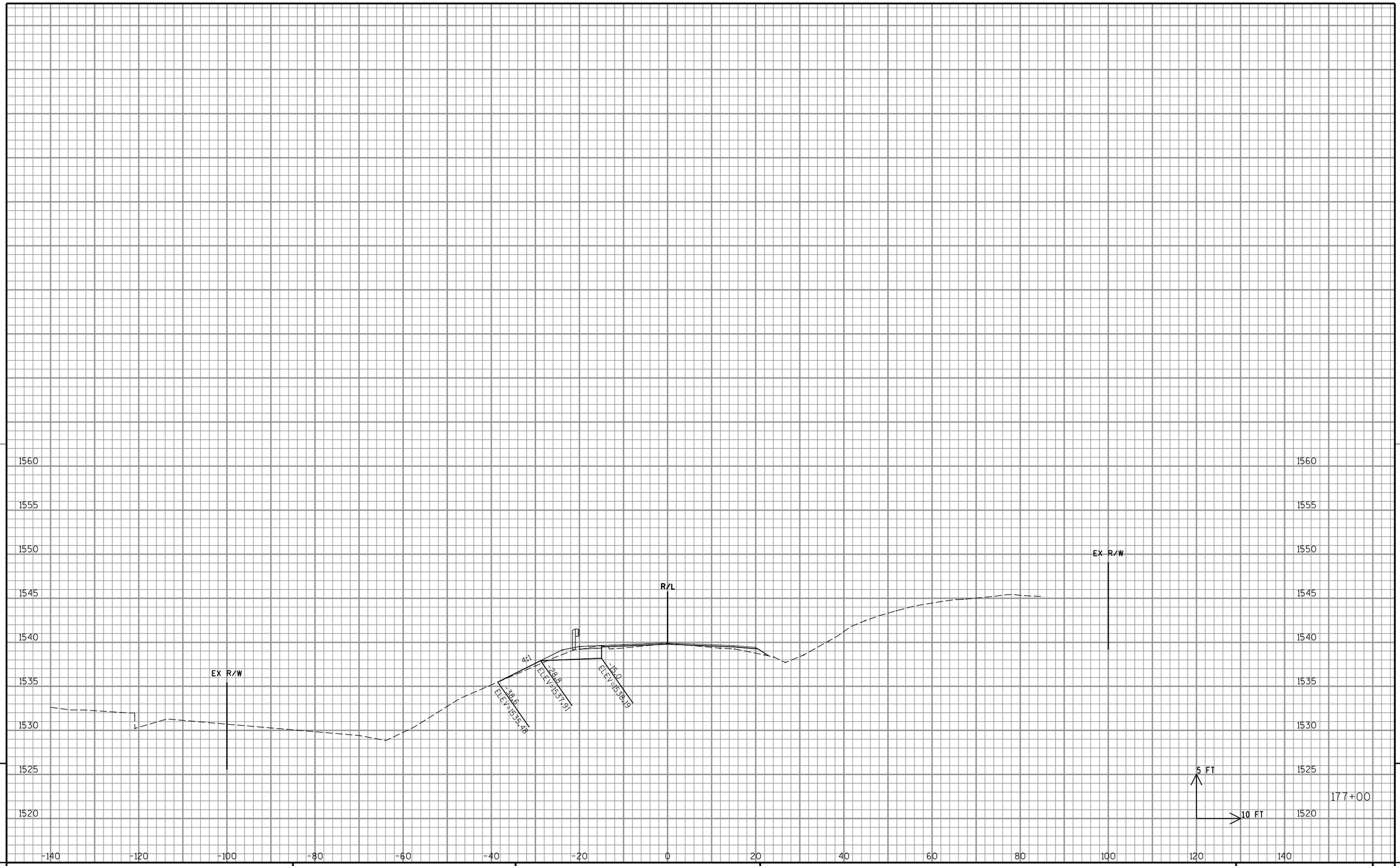

9

9

PROJECT NO: 1595-09-60	HWY: USH 8	COUNTY: ONEIDA	CROSS SECTIONS: USH 8 - GUARDRAIL	SHEET 203	E

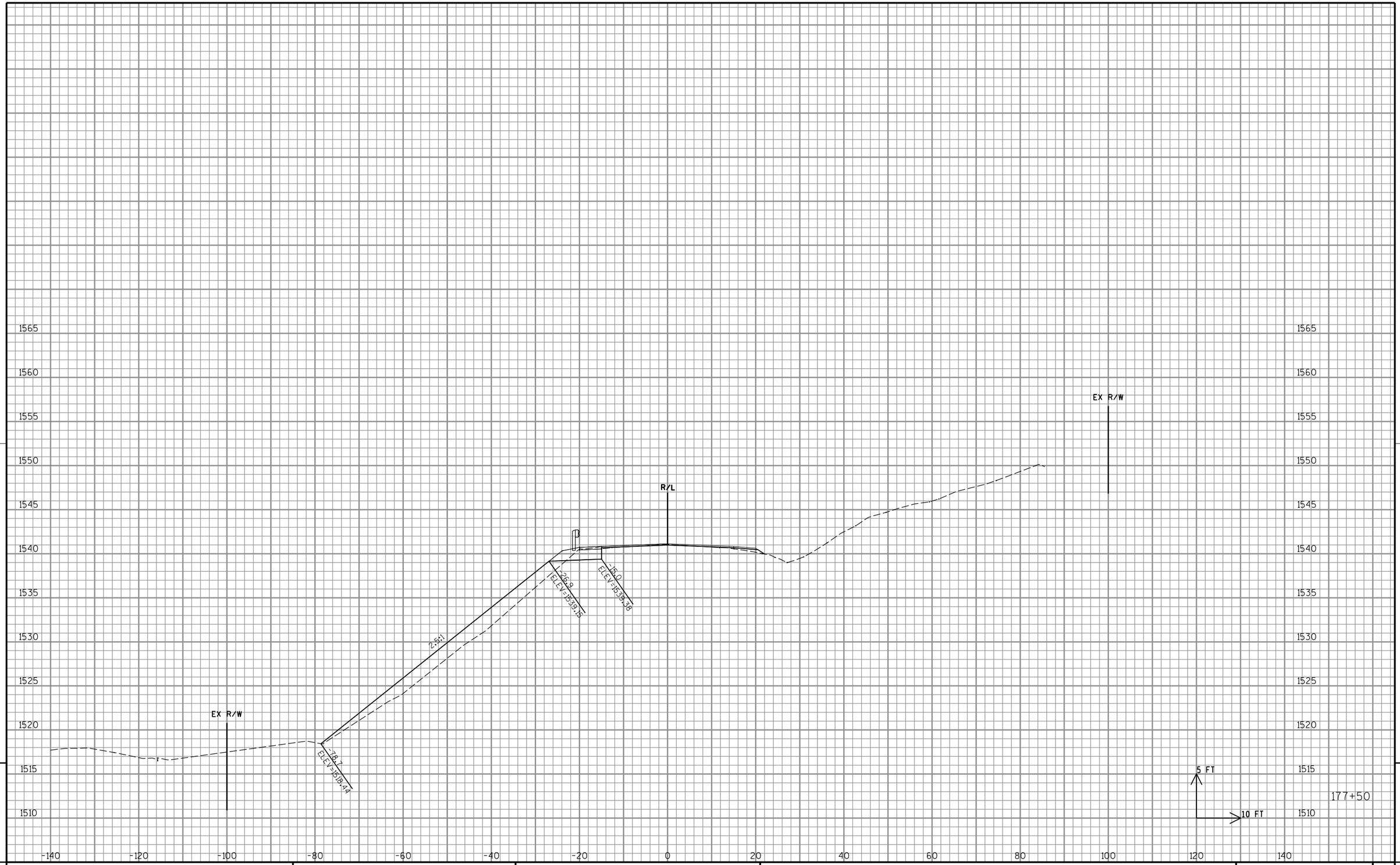

9

9

PROJECT NO: 1595-09-60	HWY: USH 8	COUNTY: ONEIDA	CROSS SECTIONS: USH 8 - GUARDRAIL	SHEET 204	E

FILE NAME : P:\47xx\4727_DP.12.USH8.ONE\CADDS\Plan\090201_xs.dgn PLOT DATE : 2/16/2015 PLOT BY : emo PLOT NAME : PLOT SCALE : 1:20

WISDOT/CADDS SHEET 21

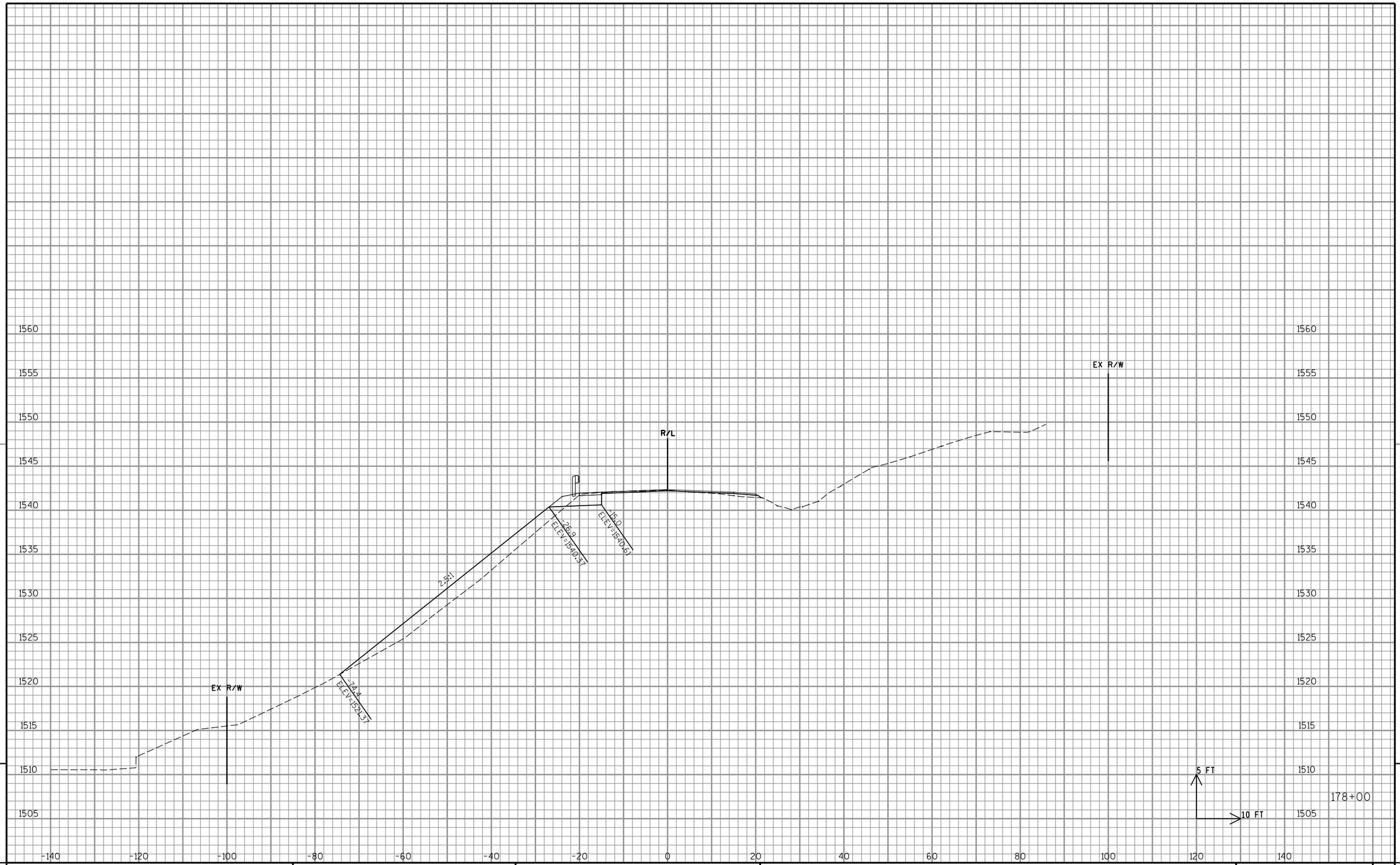

9

9

PROJECT NO: 1595-09-60	HWY: USH 8	COUNTY: ONEIDA	CROSS SECTIONS: USH 8 - GUARDRAIL	SHEET 205	E

FILE NAME : P:\47xx\4727_DP.12.USH8.ONE\CADDS\Plan\090201_xs.dgn PLOT DATE : 2/16/2015 PLOT BY : emo PLOT NAME : PLOT SCALE : 1:20

WISDOT/CADDS SHEET 21

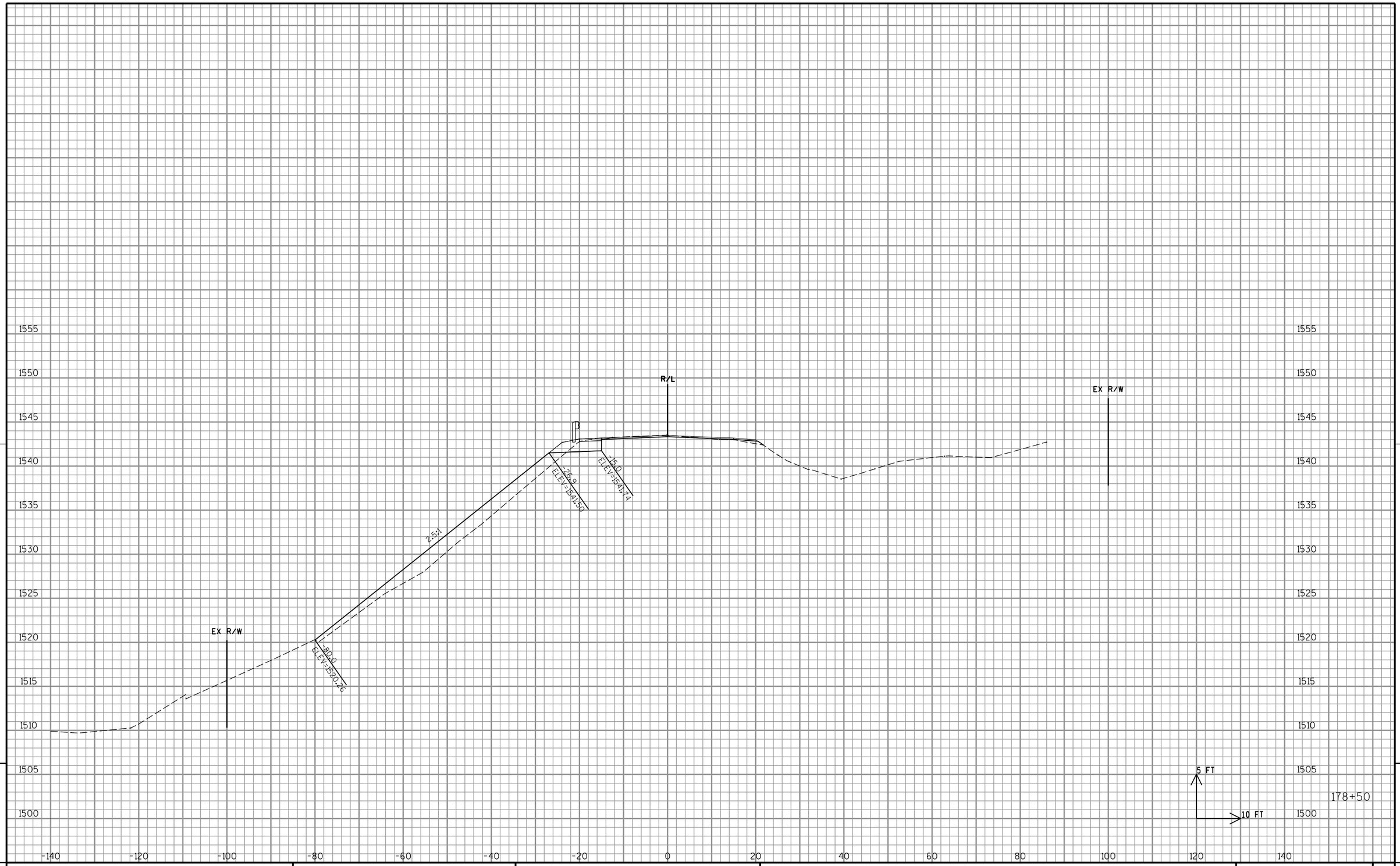

9

9

PROJECT NO: 1595-09-60	HWY: USH 8	COUNTY: ONEIDA	CROSS SECTIONS: USH 8 - GUARDRAIL	SHEET 206	E

FILE NAME : P:\47xx\4727_DP.12.USH8.ONE\CADDS\Plan\090201_xs.dgn PLOT DATE : 2/16/2015 PLOT BY : emo PLOT NAME : PLOT SCALE : 1:20

WISDOT/CADDS SHEET 21

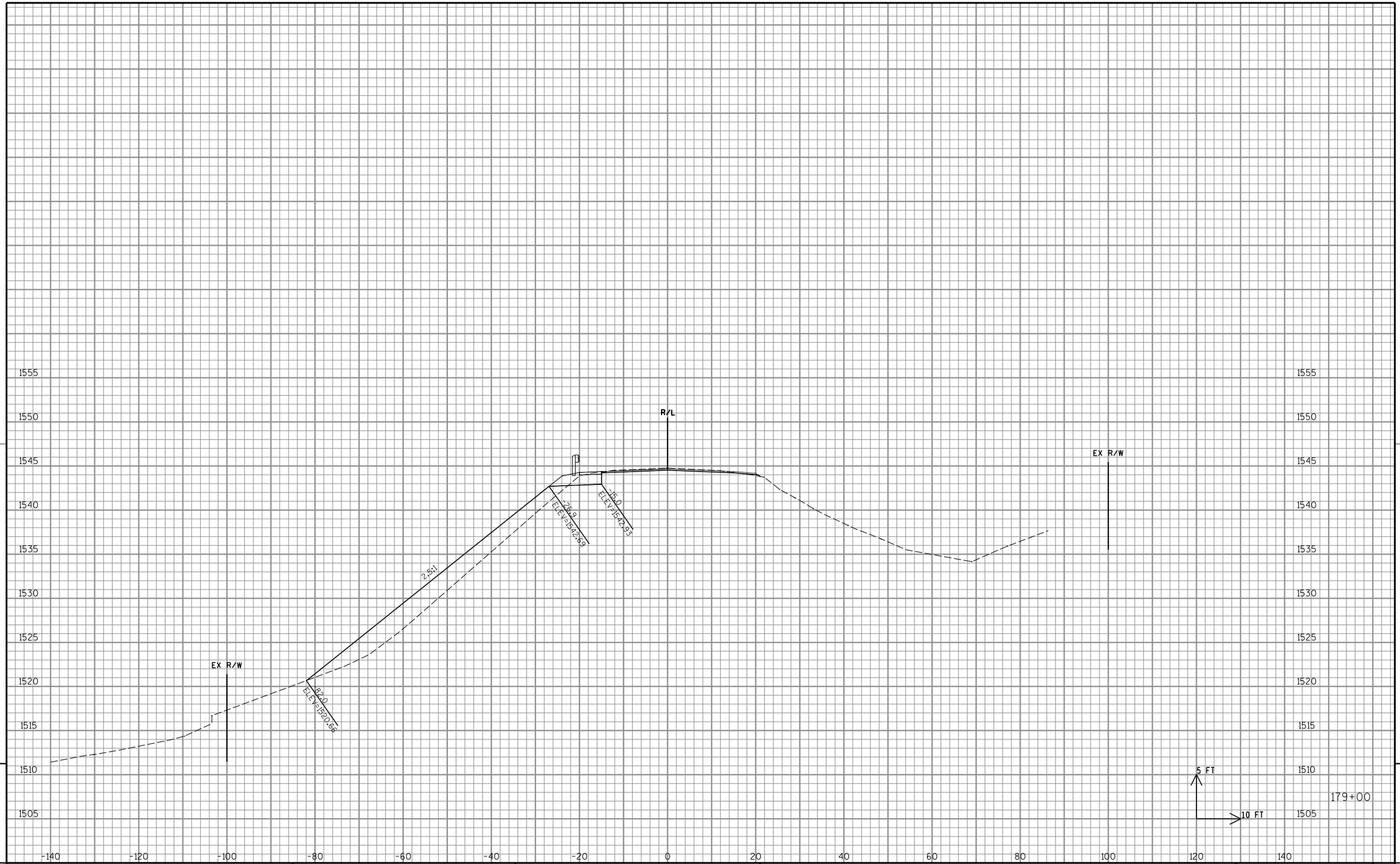

9

9

PROJECT NO: 1595-09-60	HWY: USH 8	COUNTY: ONEIDA	CROSS SECTIONS: USH 8 - GUARDRAIL	SHEET 207	E

FILE NAME : P:\47xx\4727_DP.12.USH8.ONE\CADDS\Plan\090201_xs.dgn PLOT DATE : 2/16/2015 PLOT BY : emo PLOT NAME : PLOT SCALE : 1:20

WISDOT/CADDS SHEET 21

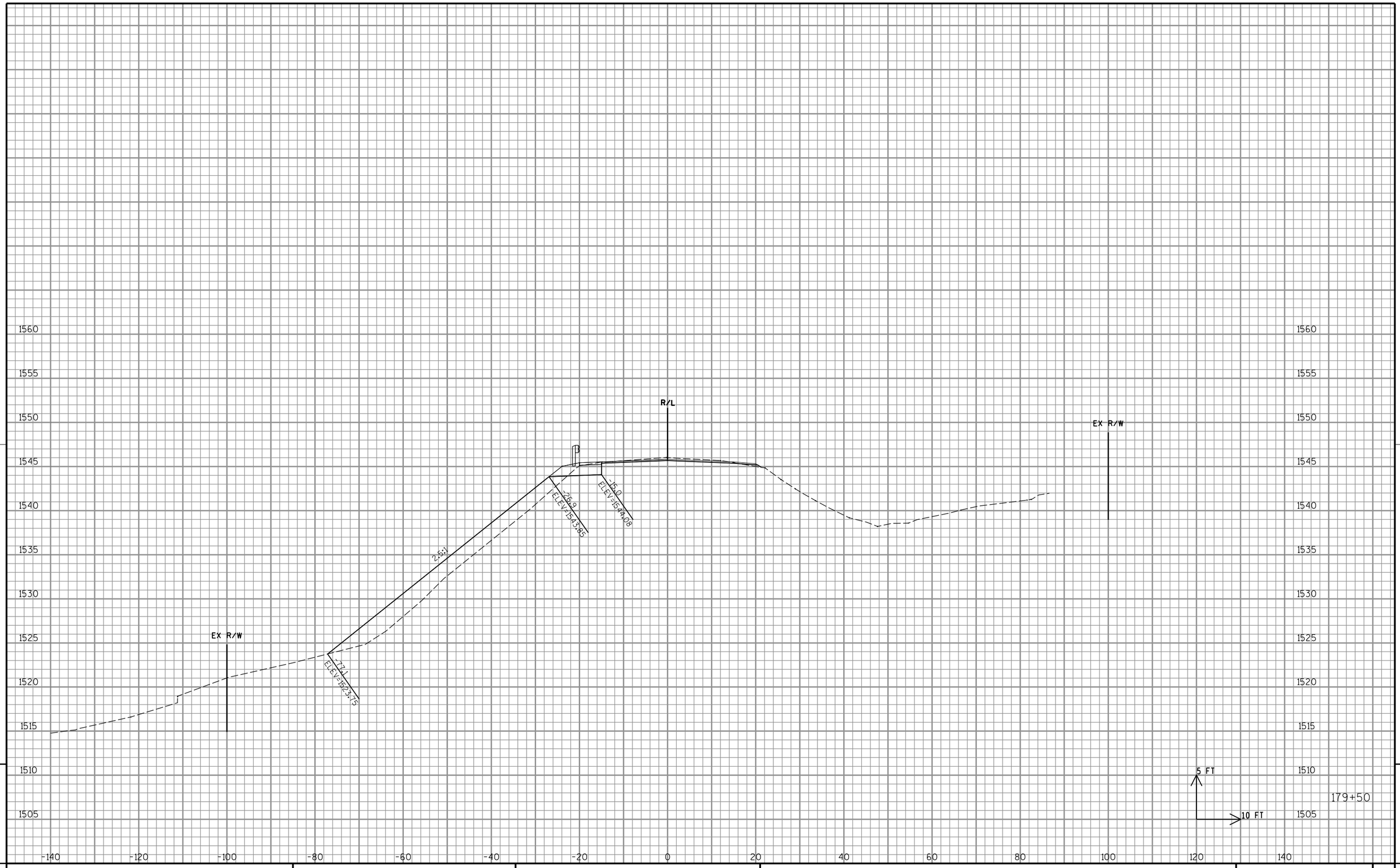

9

9

PROJECT NO: 1595-09-60	HWY: USH 8	COUNTY: ONEIDA	CROSS SECTIONS: USH 8 - GUARDRAIL	SHEET 208	E

FILE NAME : P:\47xx\4727_DP.12.USH8.ONE\CADDS\Plan\090201_xs.dgn PLOT DATE : 2/16/2015 PLOT BY : emo PLOT NAME : PLOT SCALE : 1:20

WISDOT/CADDS SHEET 21

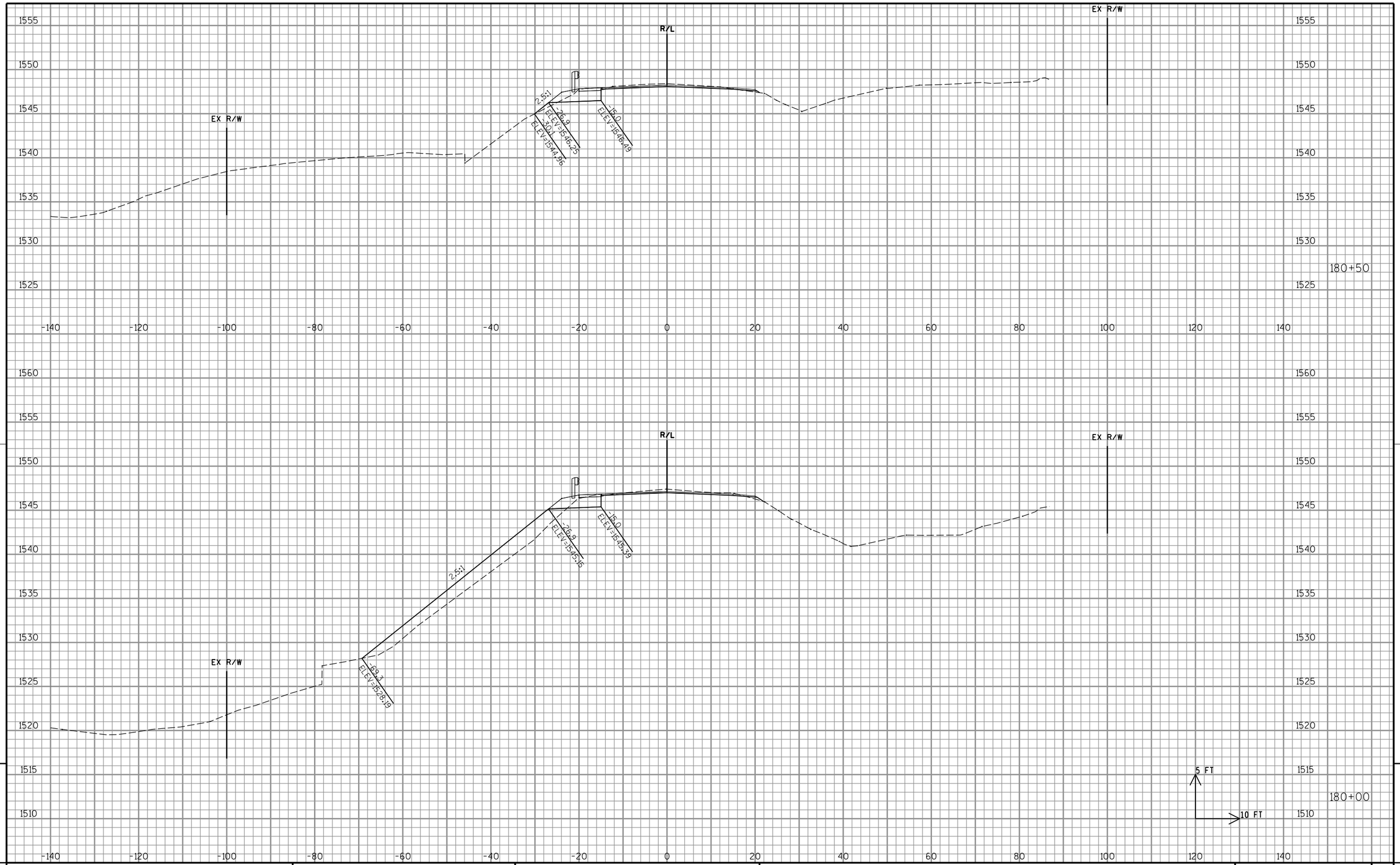

9

9

PROJECT NO: 1595-09-60	HWY: USH 8	COUNTY: ONEIDA	CROSS SECTIONS: USH 8 - GUARDRAIL	SHEET 209	E

FILE NAME : P:\47xx\4727_DP.12.USH8.ONE\CADDS\Plan\090201_xs.dgn PLOT DATE : 2/16/2015 PLOT BY : emo PLOT NAME : PLOT SCALE : 1:20

WISDOT/CADDS SHEET 21

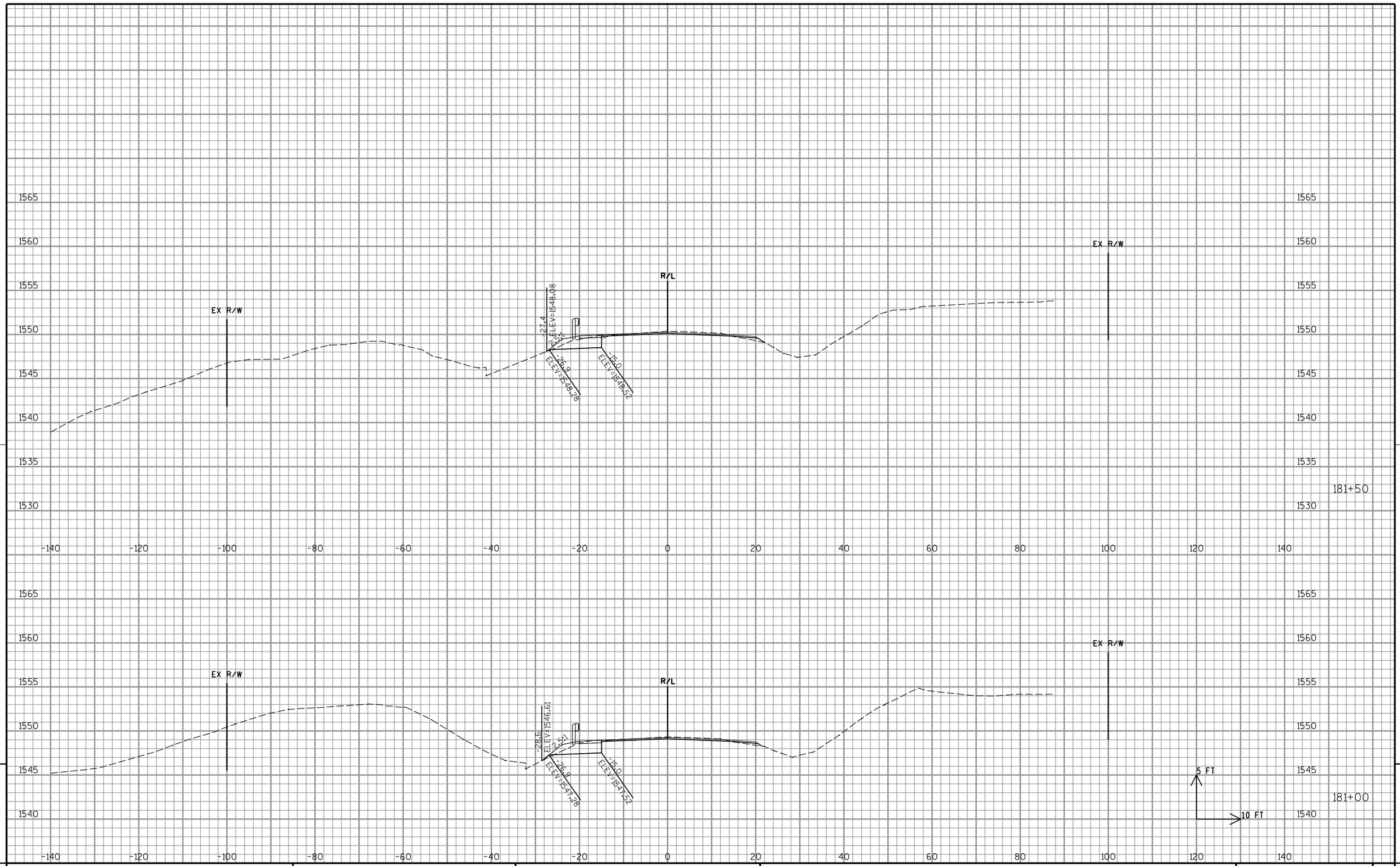

9

PROJECT NO: 1595-09-60	HWY: USH 8	COUNTY: ONEIDA	CROSS SECTIONS: USH 8 - GUARDRAIL	SHEET 210	E

FILE NAME : P:\47xx\4727_DP.12.USH8.ONE\CADDS\Plan\090201_xs.dgn PLOT DATE : 2/16/2015 PLOT BY : emo PLOT NAME : PLOT SCALE : 1:20

WISDOT/CADDS SHEET 21

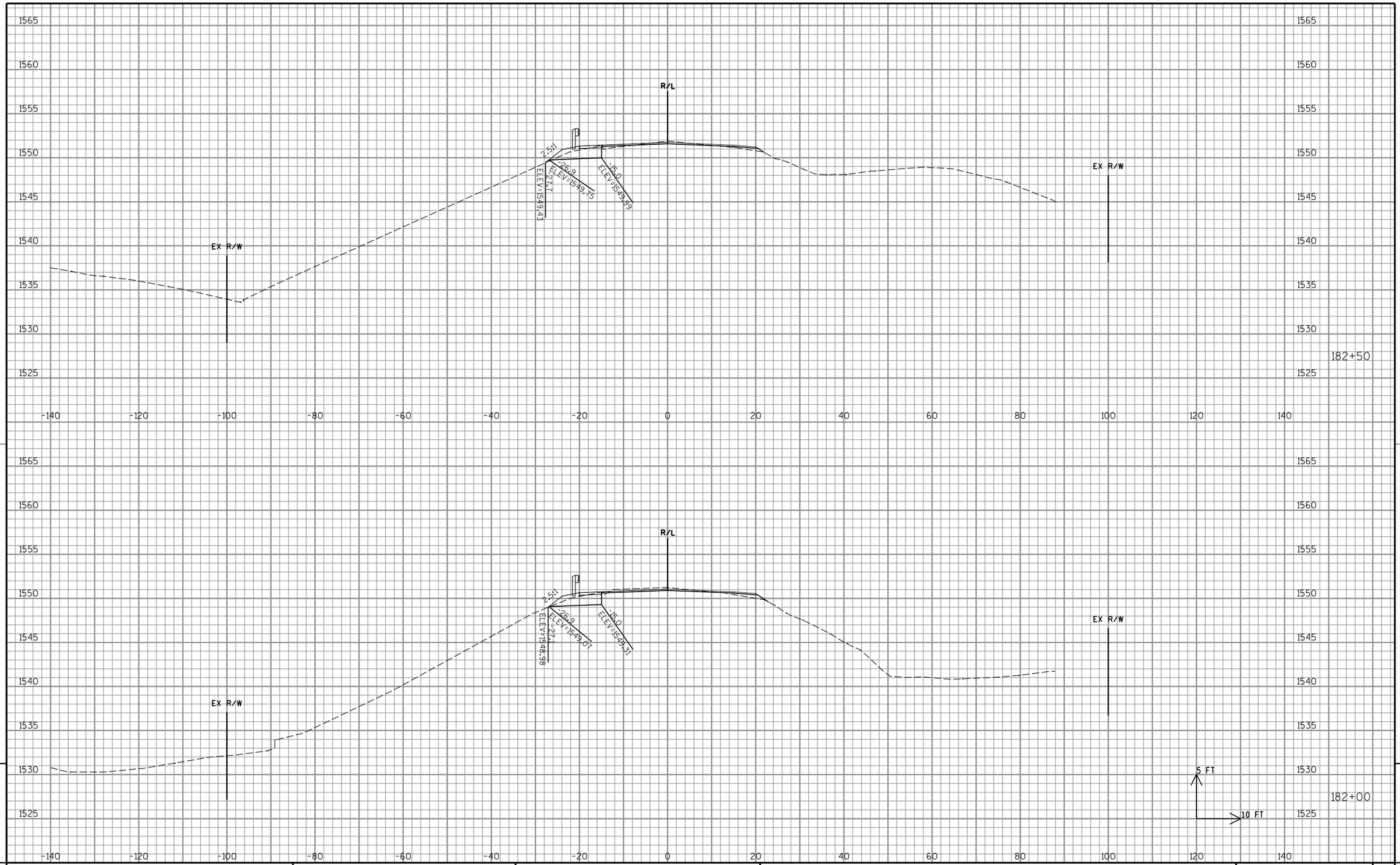

9

PROJECT NO: 1595-09-60	HWY: USH 8	COUNTY: ONEIDA	CROSS SECTIONS: USH 8 - GUARDRAIL	SHEET 211	E

FILE NAME : P:\47xx\4727_DP.12.USH8.ONE\CADDS\Plan\090201_xs.dgn PLOT DATE : 2/16/2015 PLOT BY : emo PLOT NAME : PLOT SCALE : 1:20

WISDOT/CADDS SHEET 21

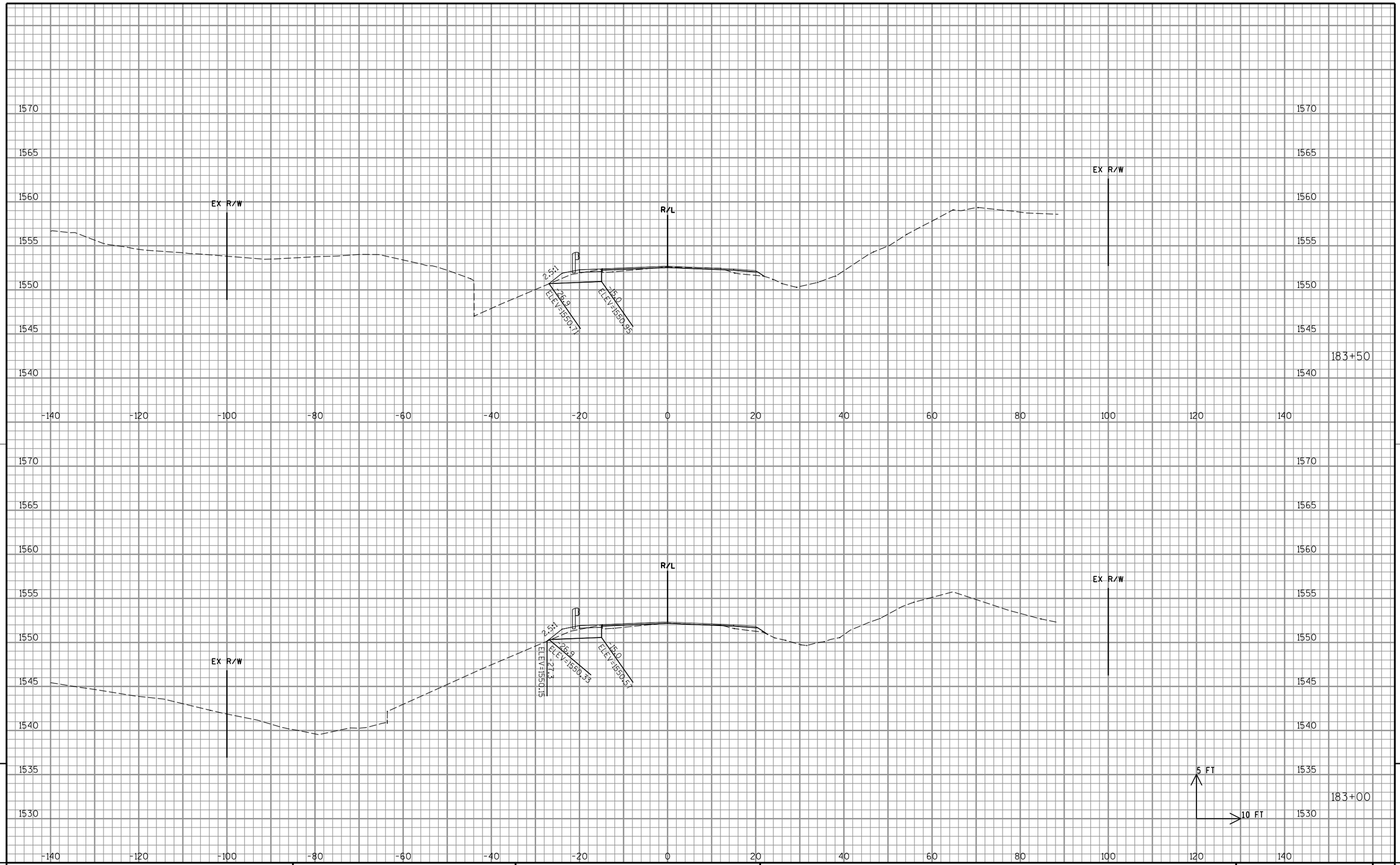

9

PROJECT NO: 1595-09-60	HWY: USH 8	COUNTY: ONEIDA	CROSS SECTIONS: USH 8 - GUARDRAIL	SHEET 212	E

FILE NAME : P:\47xx\4727_DP.12.USH8.ONE\CADDS\Plan\090201_xs.dgn PLOT DATE : 2/16/2015 PLOT BY : emo PLOT NAME : PLOT SCALE : 1:20

WISDOT/CADDS SHEET 21

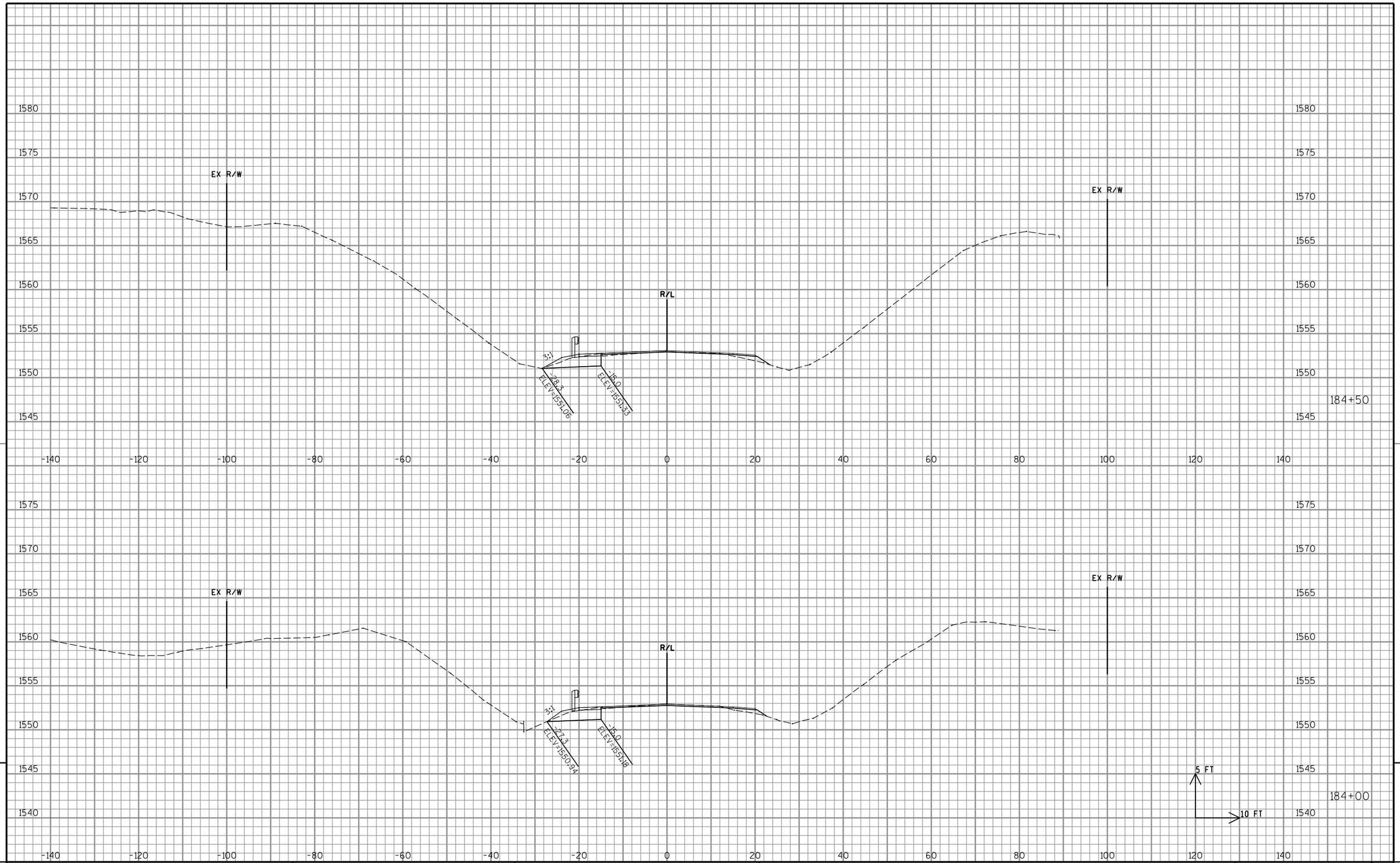

9

9

PROJECT NO: 1595-09-60	HWY: USH 8	COUNTY: ONEIDA	CROSS SECTIONS: USH 8 - GUARDRAIL	SHEET 213	E

FILE NAME : P:\47xx\4727_DP.12.USH8.ONE\CADDS\Plan\090201_xs.dgn PLOT DATE : 2/16/2015 PLOT BY : emo PLOT NAME : PLOT SCALE : 1:20

WISDOT/CADDS SHEET 21

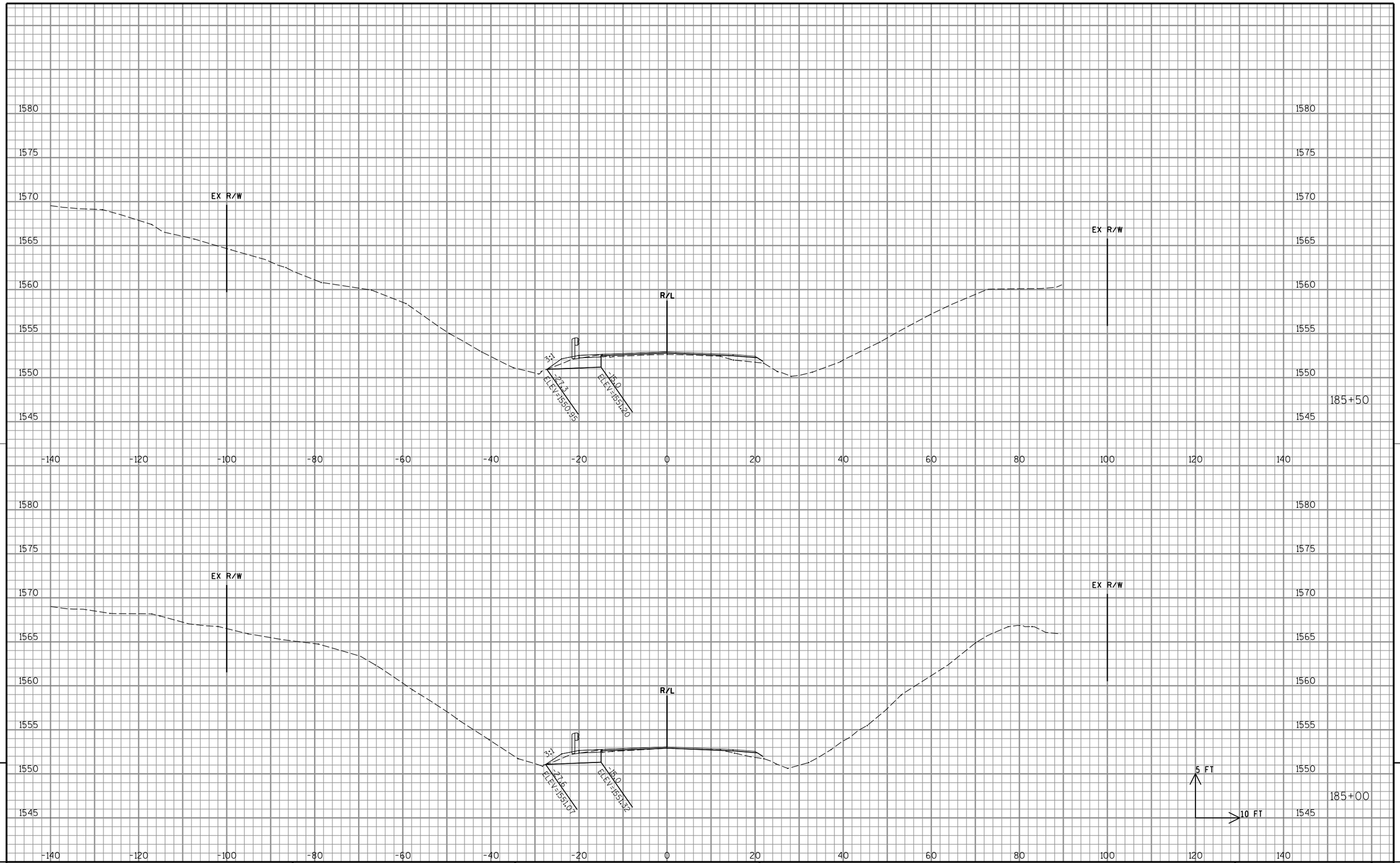

9

9

PROJECT NO: 1595-09-60	HWY: USH 8	COUNTY: ONEIDA	CROSS SECTIONS: USH 8 - GUARDRAIL	SHEET 214	E

FILE NAME : P:\47xx\4727_DP.12.USH8.ONE\CADDS\Plan\090201_xs.dgn PLOT DATE : 2/16/2015 PLOT BY : emo PLOT NAME : PLOT SCALE : 1:20

WISDOT/CADDS SHEET 21

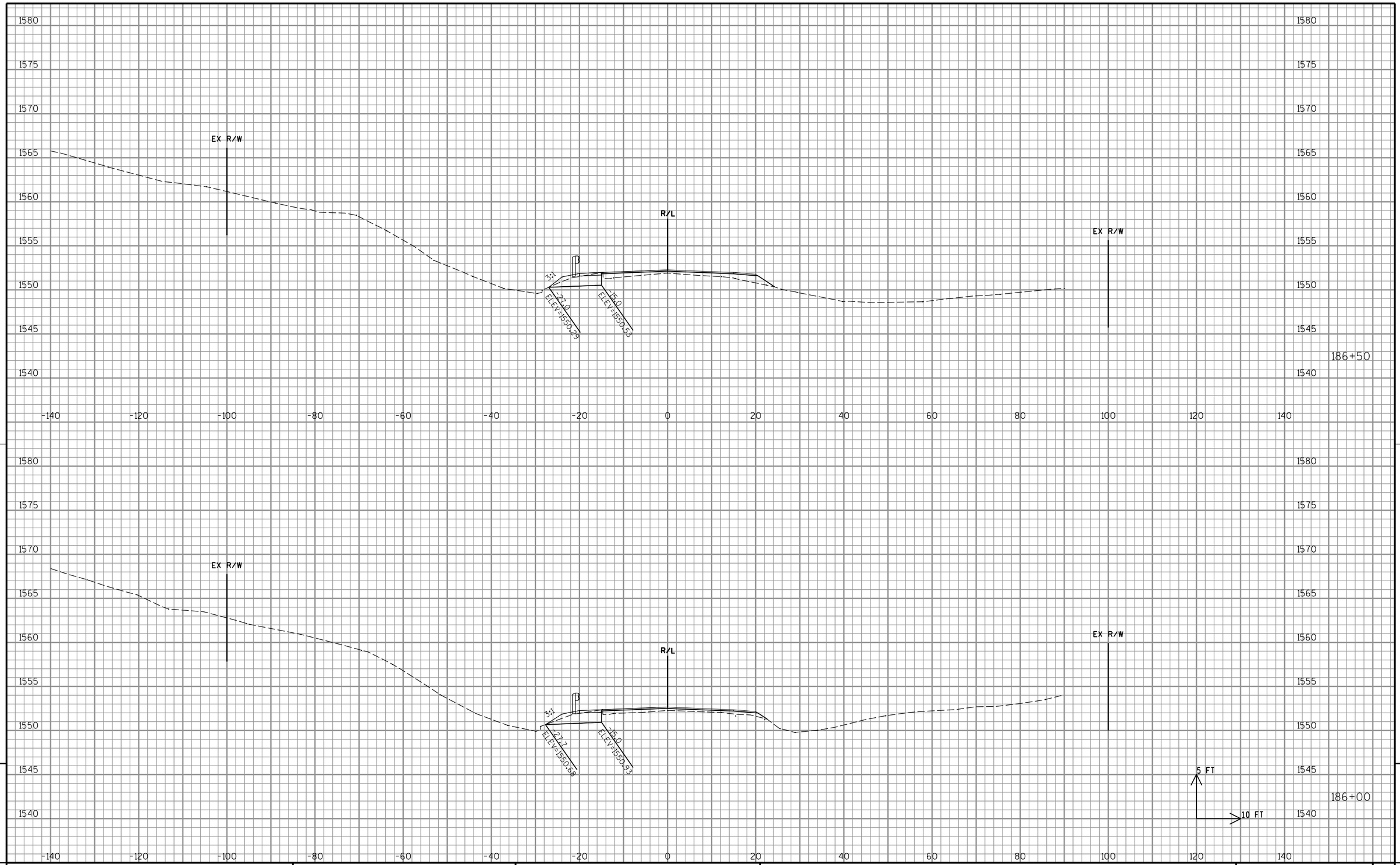

9

9

PROJECT NO: 1595-09-60	HWY: USH 8	COUNTY: ONEIDA	CROSS SECTIONS: USH 8 - GUARDRAIL	SHEET 215	E

FILE NAME : P:\47xx\4727_DP.12.USH8.ONE\CADDS\Plan\090201_xs.dgn PLOT DATE : 2/16/2015 PLOT BY : emo PLOT NAME : PLOT SCALE : 1:20

WISDOT/CADDS SHEET 21

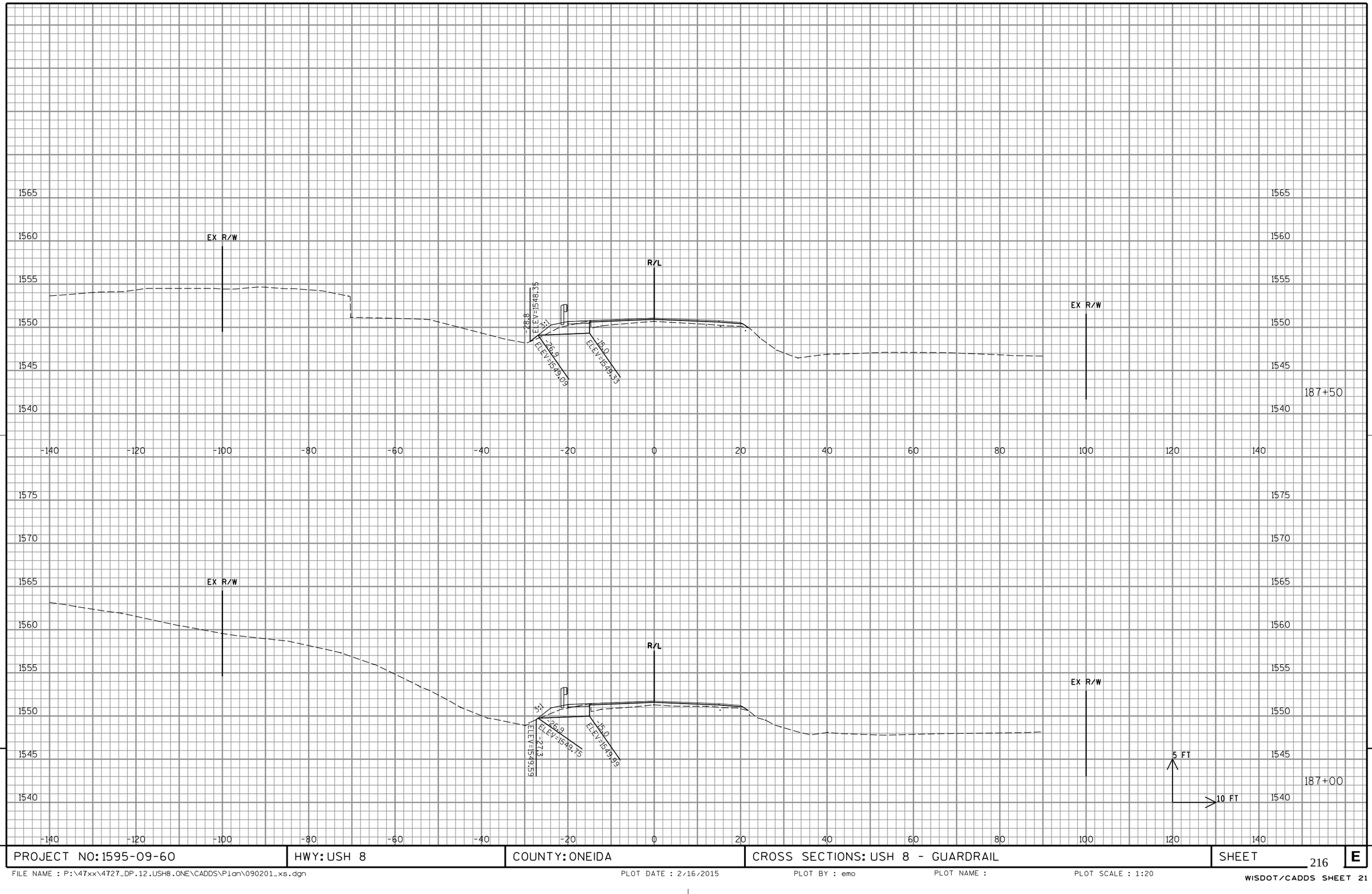

9

9

PROJECT NO: 1595-09-60	HWY: USH 8	COUNTY: ONEIDA	CROSS SECTIONS: USH 8 - GUARDRAIL	SHEET 216	E

FILE NAME : P:\47xx\4727_DP.12.USH8.ONE\CADDS\Plan\090201_xs.dgn PLOT DATE : 2/16/2015 PLOT BY : emo PLOT NAME : PLOT SCALE : 1:20

WISDOT/CADDS SHEET 21

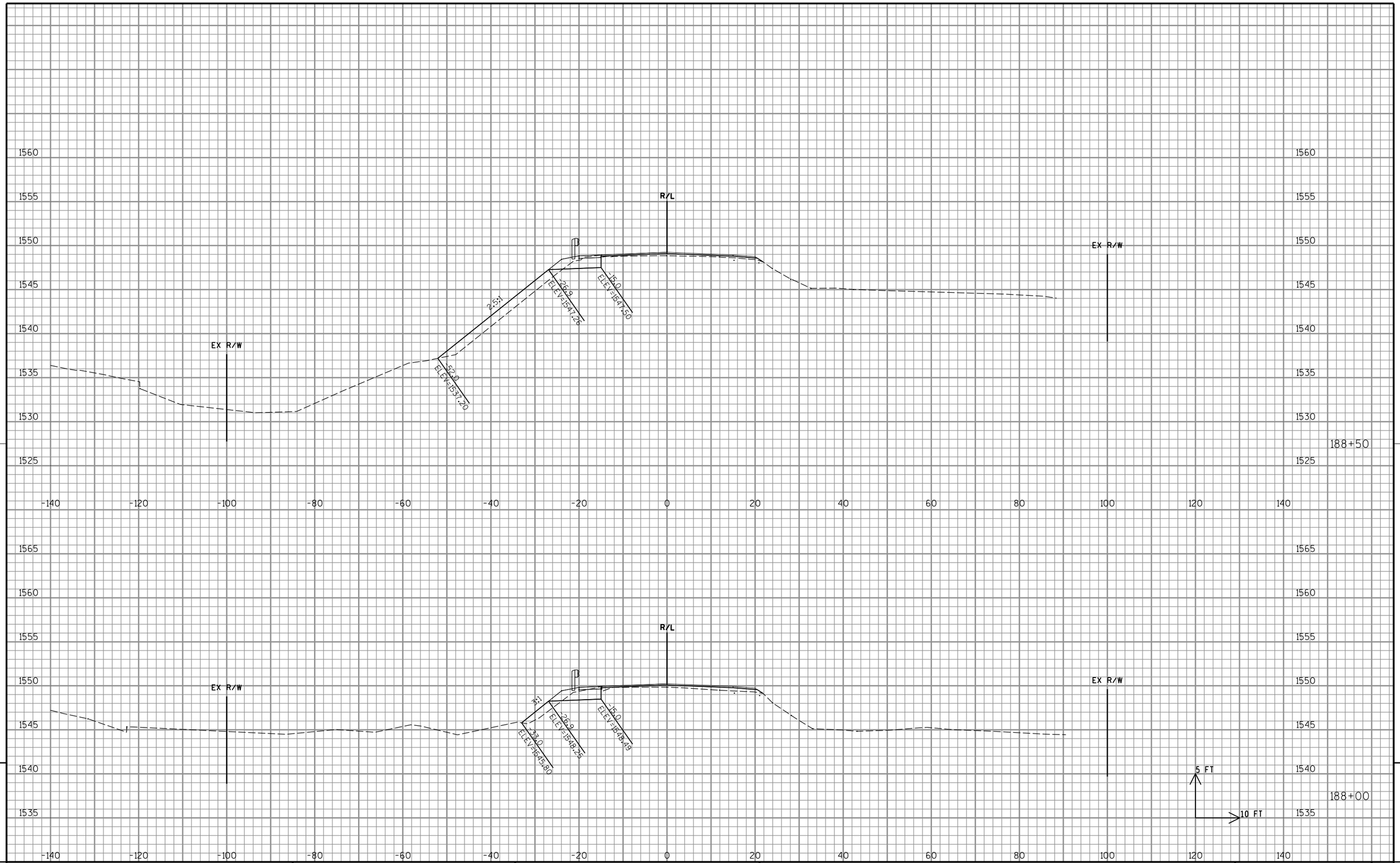

9

PROJECT NO: 1595-09-60	HWY: USH 8	COUNTY: ONEIDA	CROSS SECTIONS: USH 8 - GUARDRAIL	SHEET 217	E

9

FILE NAME : P:\47xx\4727_DP.12.USH8.ONE\CADDS\Plan\090201_xs.dgn PLOT DATE : 2/16/2015 PLOT BY : emo PLOT NAME : PLOT SCALE : 1:20

WISDOT/CADDS SHEET 21

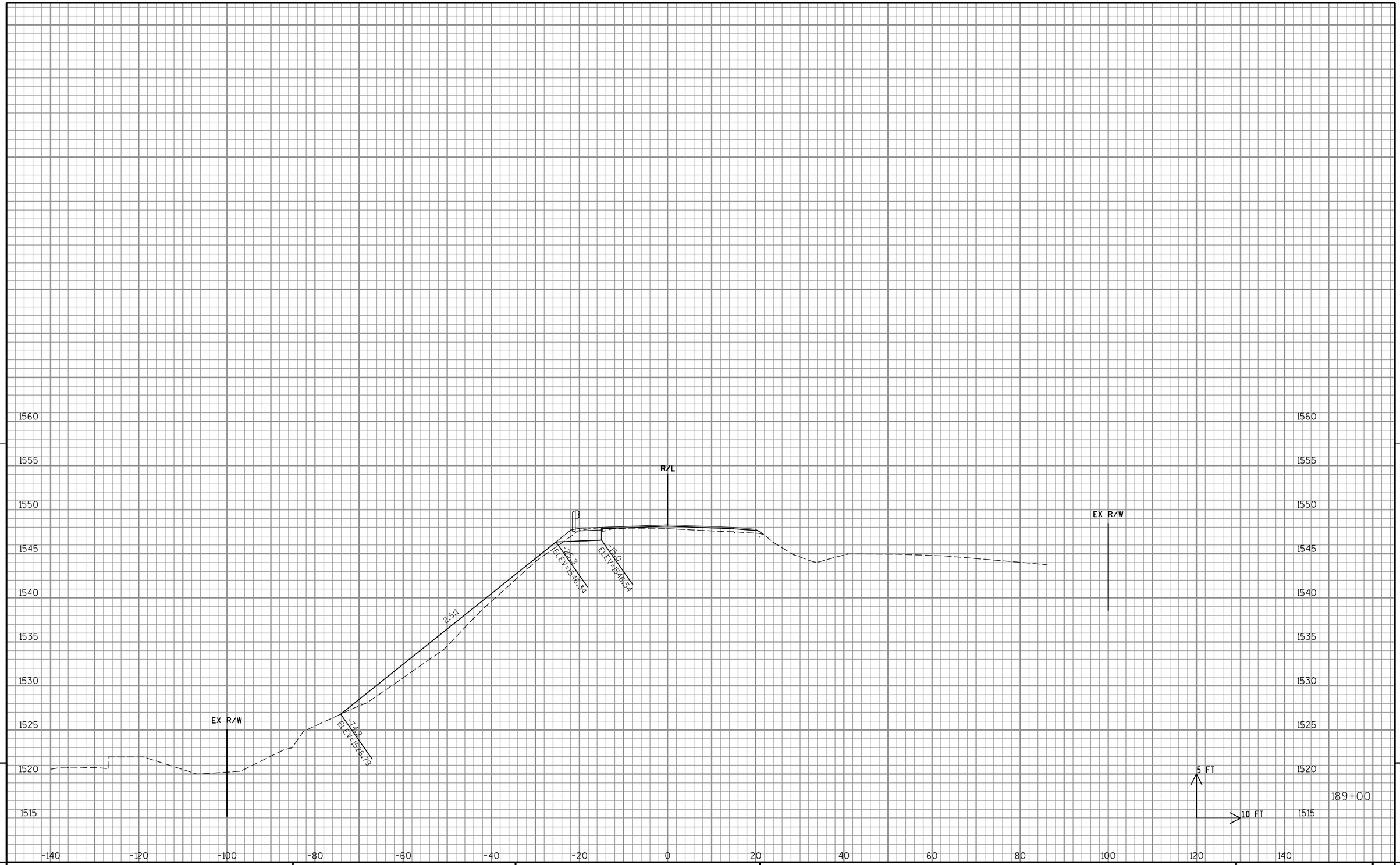

9

9

PROJECT NO: 1595-09-60	HWY: USH 8	COUNTY: ONEIDA	CROSS SECTIONS: USH 8 - GUARDRAIL	SHEET 218	E

FILE NAME : P:\47xx\4727_DP.12.USH8.ONE\CADDS\Plan\090201_xs.dgn PLOT DATE : 2/16/2015 PLOT BY : emo PLOT NAME : PLOT SCALE : 1:20

WISDOT/CADDS SHEET 21

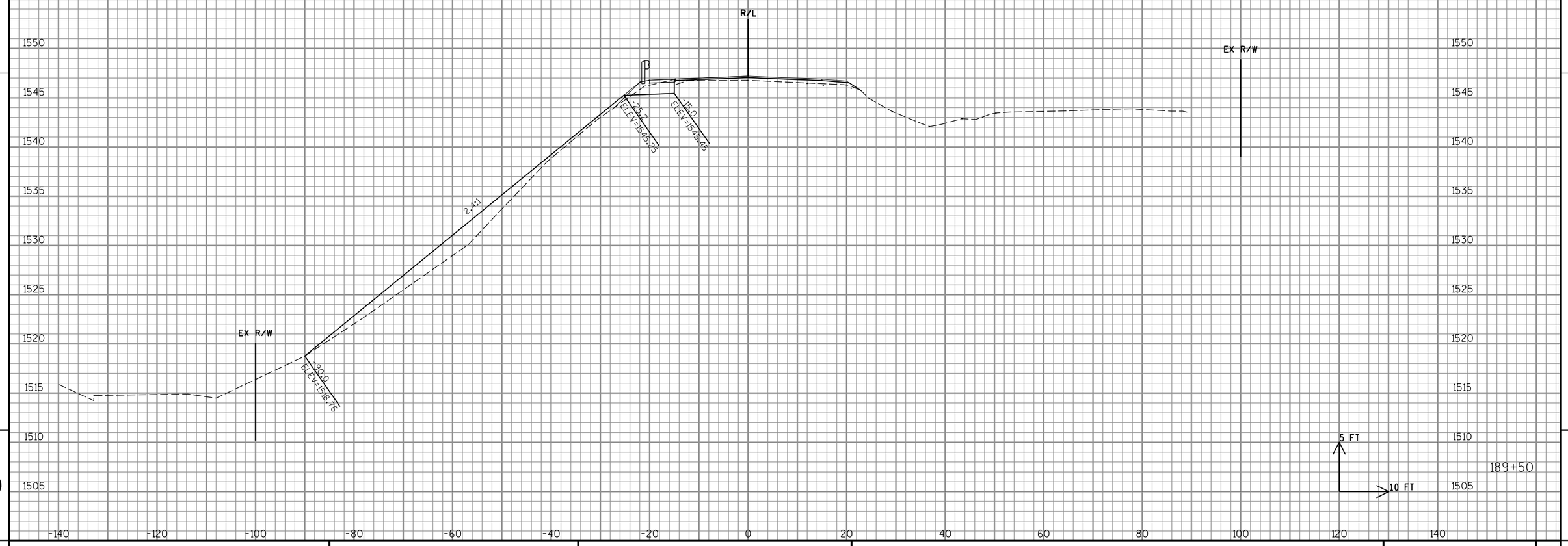

9

9

PROJECT NO: 1595-09-60	HWY: USH 8	COUNTY: ONEIDA	CROSS SECTIONS: USH 8 - GUARDRAIL	SHEET 219	E

FILE NAME : P:\47xx\4727_DP.12.USH8.ONE\CADDS\Plan\090201_xs.dgn PLOT DATE : 2/16/2015 PLOT BY : emo PLOT NAME : PLOT SCALE : 1:20

WISDOT/CADDS SHEET 21

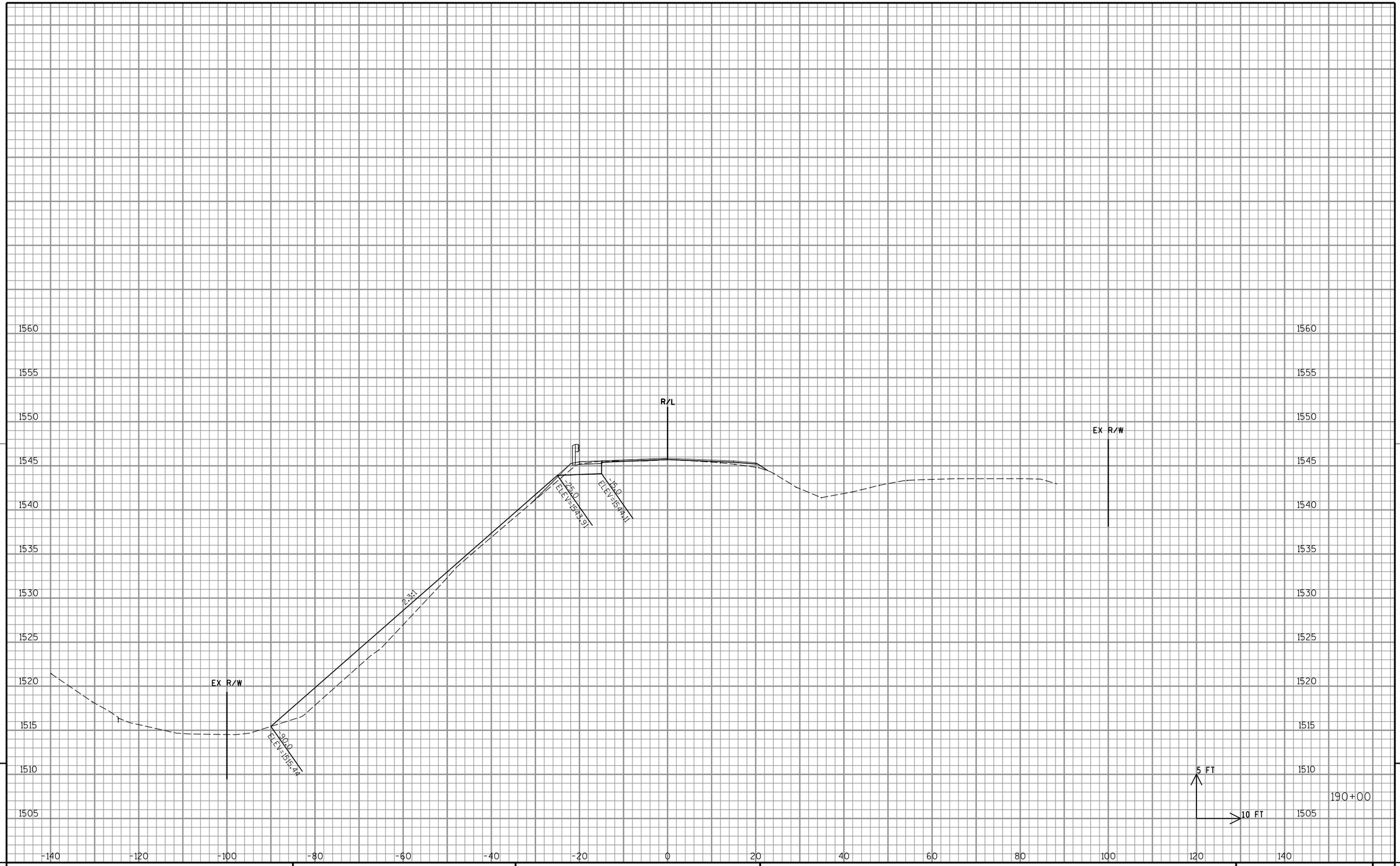

9

9

PROJECT NO: 1595-09-60	HWY: USH 8	COUNTY: ONEIDA	CROSS SECTIONS: USH 8 - GUARDRAIL	SHEET 220	E

FILE NAME : P:\47xx\4727_DP.12.USH8.ONE\CADDS\Plan\090201_xs.dgn PLOT DATE : 2/16/2015 PLOT BY : emo PLOT NAME : PLOT SCALE : 1:20

WISDOT/CADDS SHEET 21

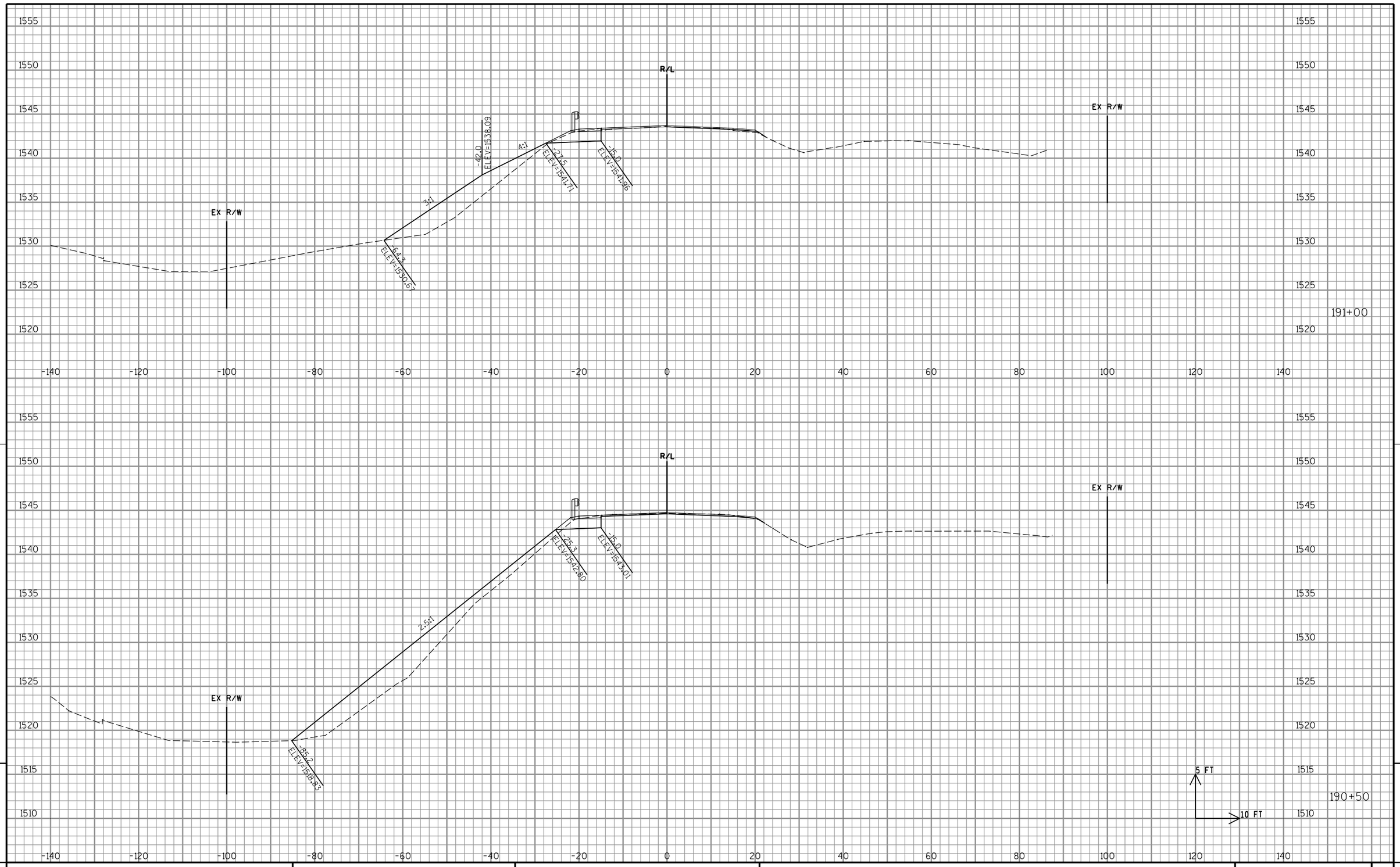

9

9

PROJECT NO: 1595-09-60	HWY: USH 8	COUNTY: ONEIDA	CROSS SECTIONS: USH 8 - GUARDRAIL	SHEET 221	E

FILE NAME : P:\47xx\4727_DP.12.USH8.ONE\CADDS\Plan\090201_xs.dgn PLOT DATE : 2/16/2015 PLOT BY : emo PLOT NAME : PLOT SCALE : 1:20

WISDOT/CADDS SHEET 21

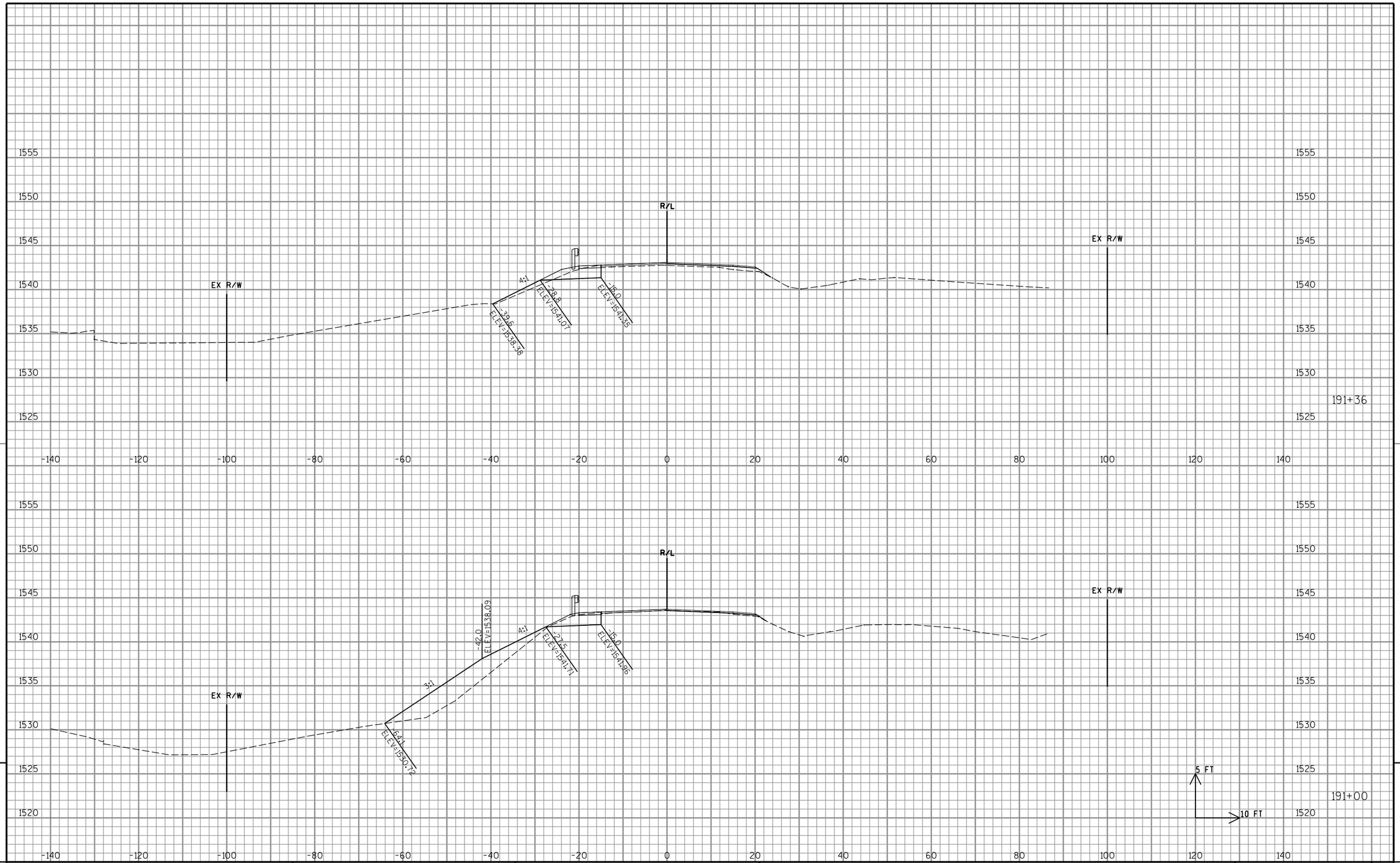

9

PROJECT NO: 1595-09-60	HWY: USH 8	COUNTY: ONEIDA	CROSS SECTIONS: USH 8 - GUARDRAIL	SHEET 222	E

9

FILE NAME : P:\47xx\4727_DP.12.USH8.ONE\CADDS\Plan\090201_xs.dgn | PLOT DATE : 2/16/2015 | PLOT BY : emo | PLOT NAME : | PLOT SCALE : 1:20

WISDOT/CADDS SHEET 21

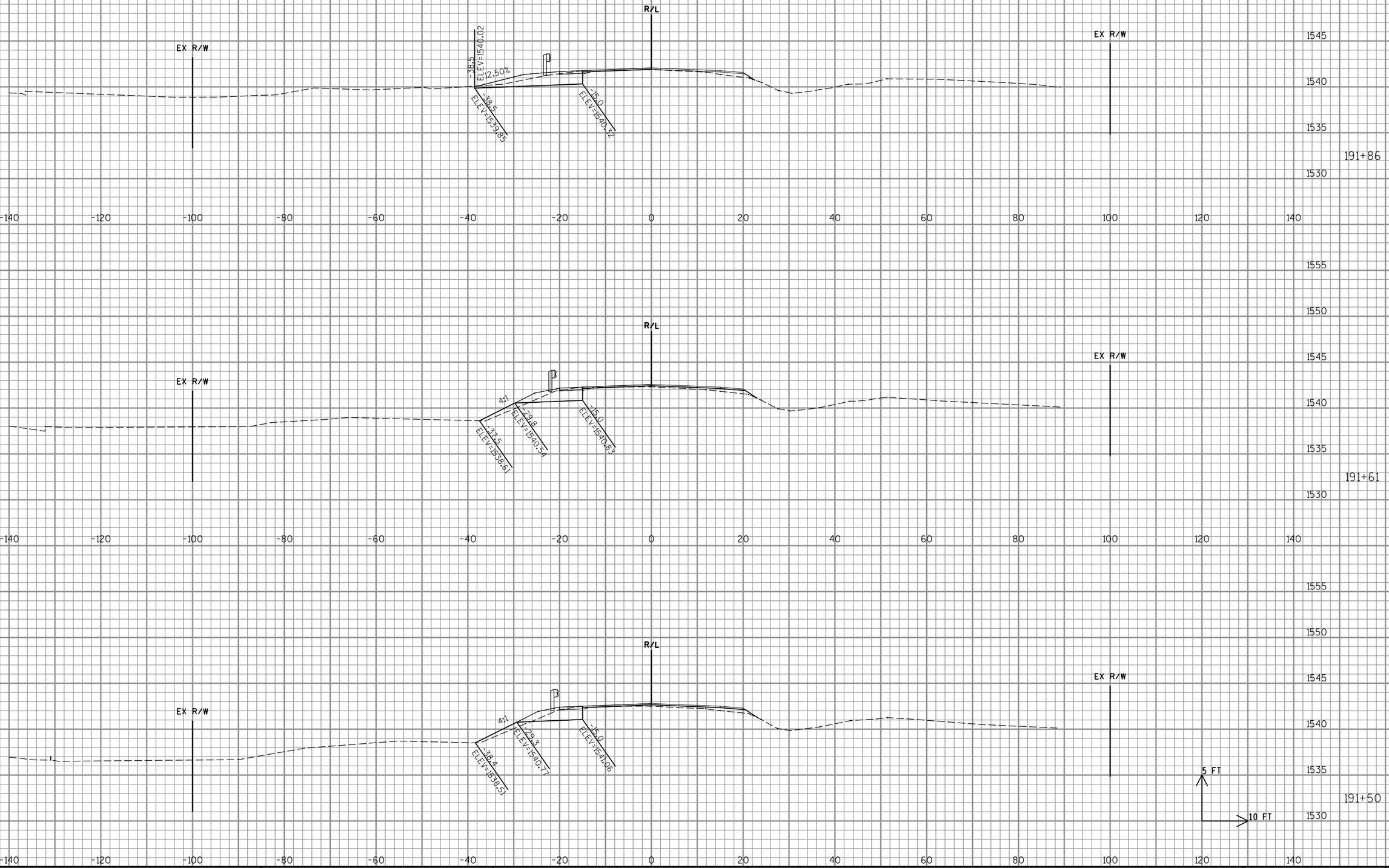

9

PROJECT NO: 1595-09-60	HWY: USH 8	COUNTY: ONEIDA	CROSS SECTIONS: USH 8 - GUARDRAIL	SHEET 223	E

9

FILE NAME : P:\47xx\4727_DP.12.USH8.ONE\CADDS\Plan\090201_xs.dgn PLOT DATE : 2/16/2015 PLOT BY : emo PLOT NAME : PLOT SCALE : 1:20

WISDOT/CADDS SHEET 21

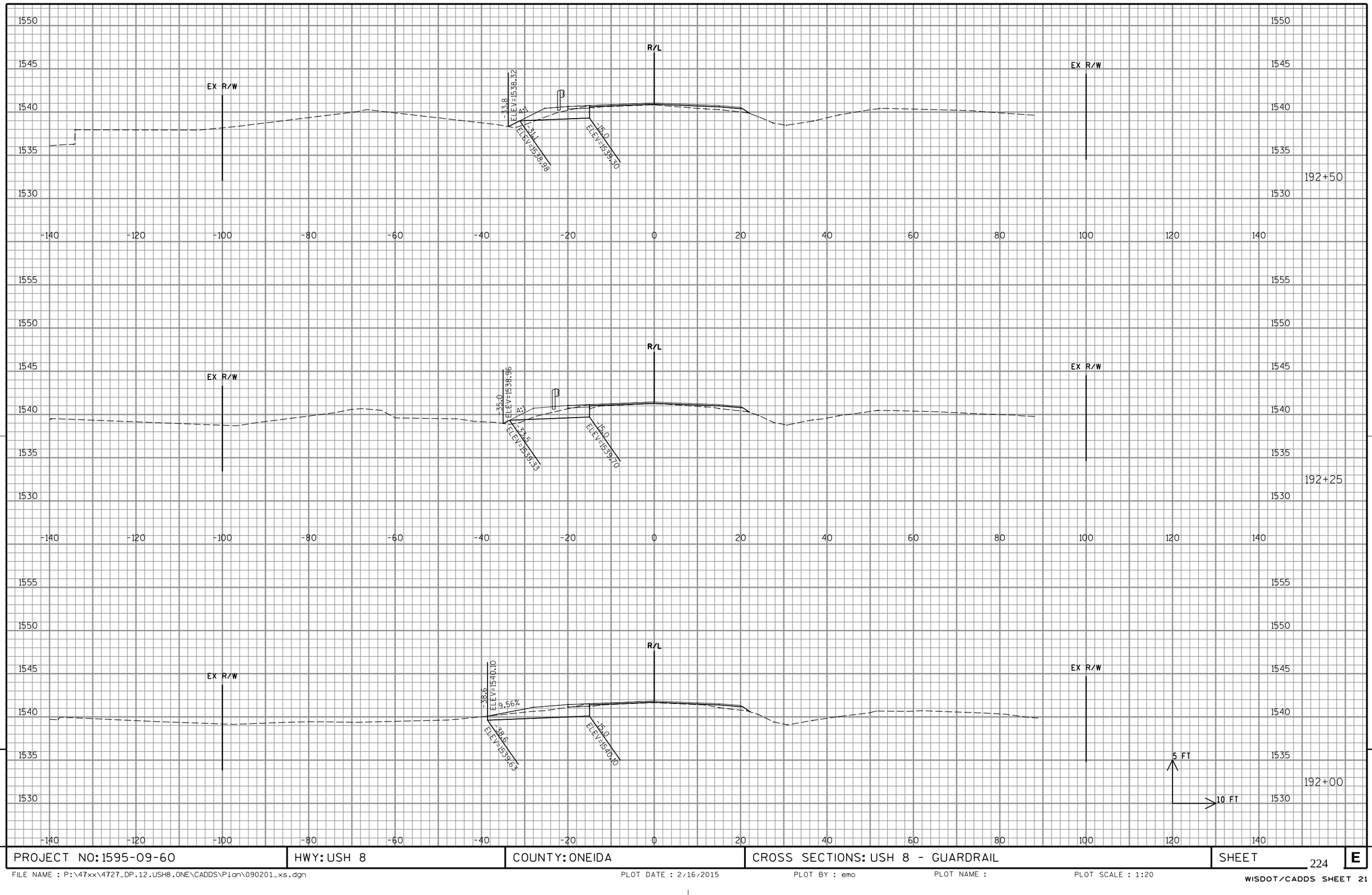

PROJECT NO: 1595-09-60	HWY: USH 8	COUNTY: ONEIDA	CROSS SECTIONS: USH 8 - GUARDRAIL	SHEET 224	E

FILE NAME : P:\47xx\4727_DP.12.USH8.ONE\CADDS\Plan\090201_xs.dgn PLOT DATE : 2/16/2015 PLOT BY : emo PLOT NAME : PLOT SCALE : 1:20

WISDOT/CADDS SHEET 21

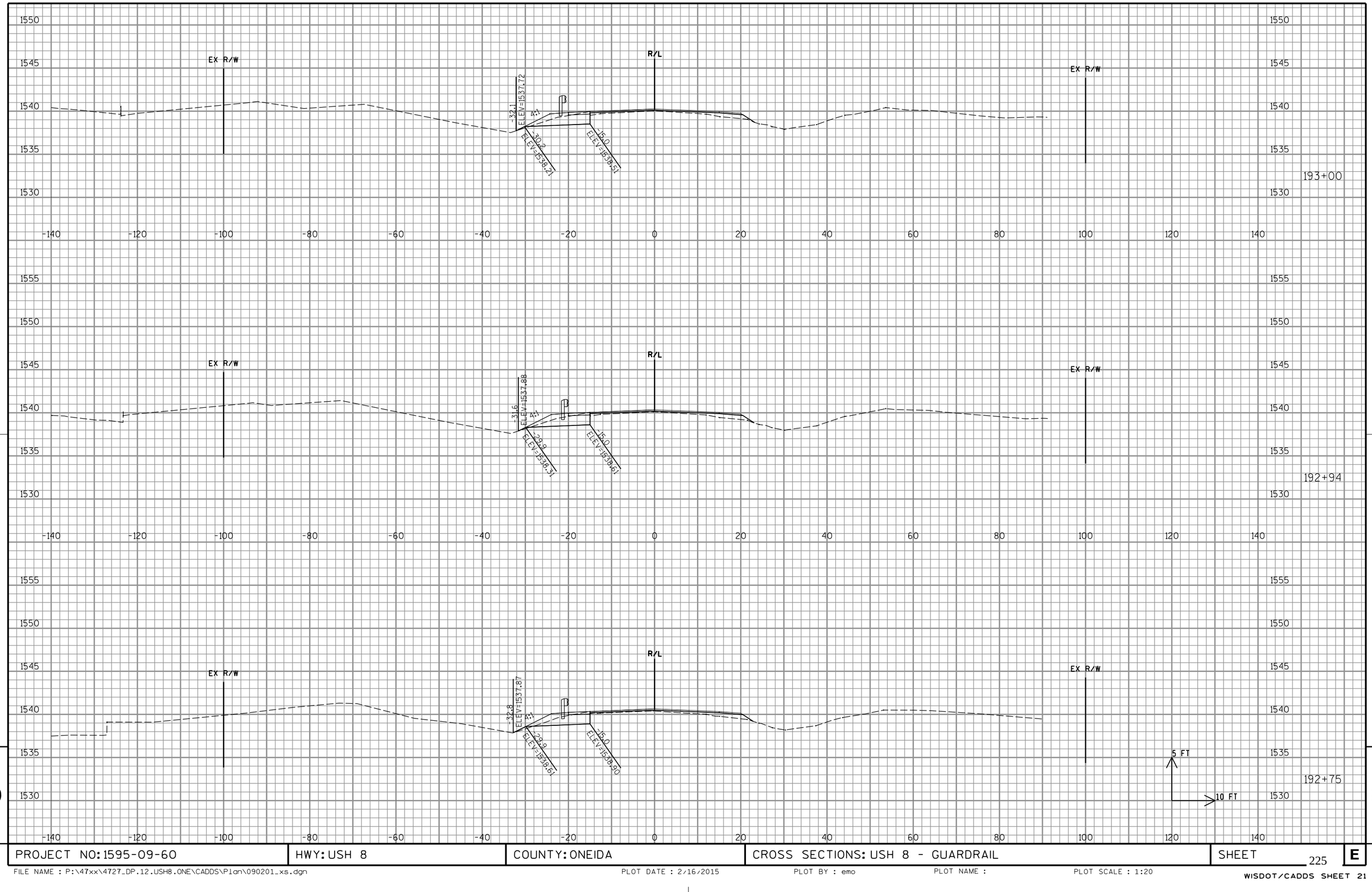

9

9

PROJECT NO: 1595-09-60	HWY: USH 8	COUNTY: ONEIDA	CROSS SECTIONS: USH 8 - GUARDRAIL	SHEET 225	E

FILE NAME : P:\47xx\4727_DP.12.USH8.ONE\CADDS\Plan\090201_xs.dgn PLOT DATE : 2/16/2015 PLOT BY : emo PLOT NAME : PLOT SCALE : 1:20

WISDOT/CADDS SHEET 21

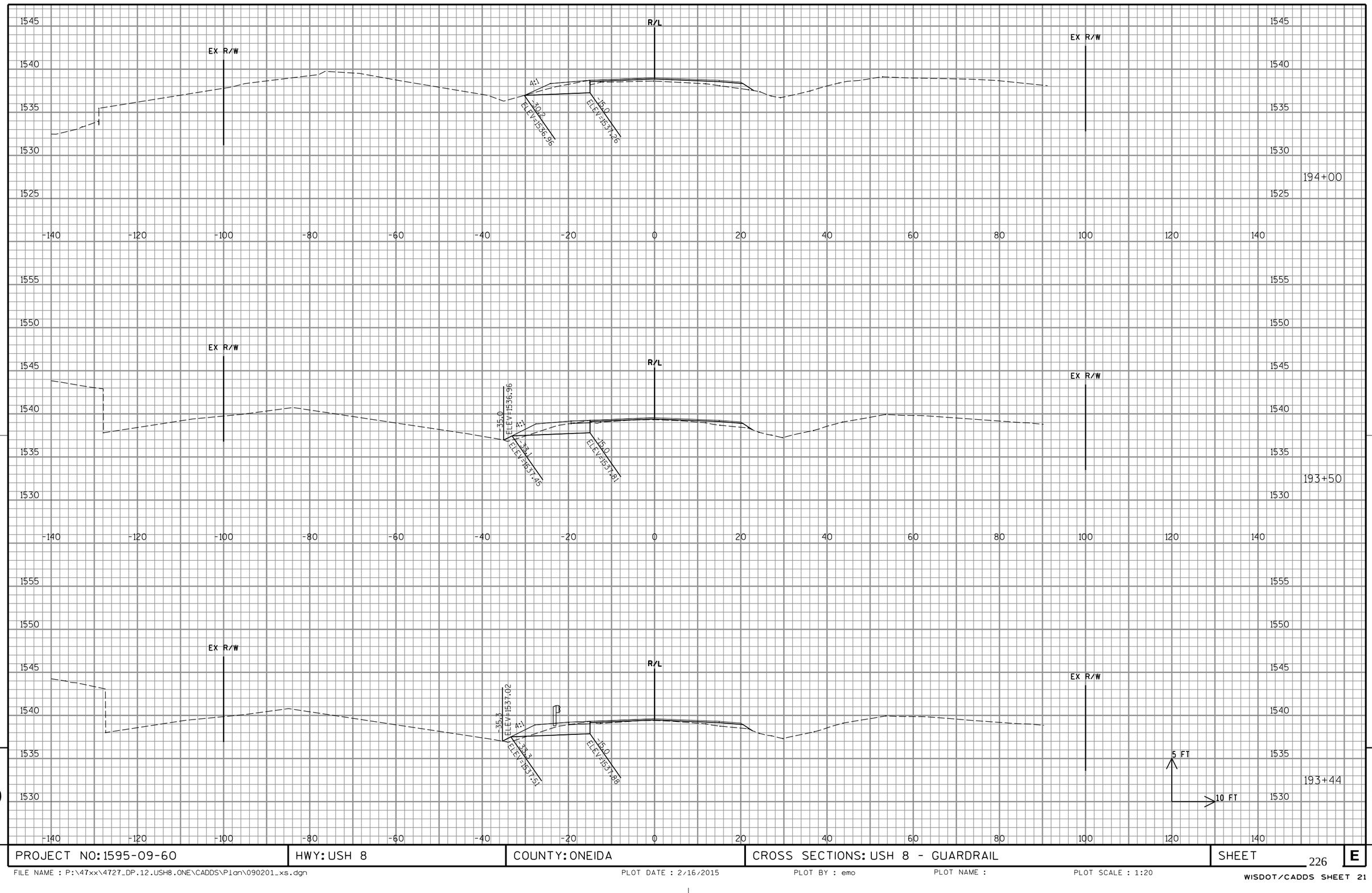

9

PROJECT NO: 1595-09-60	HWY: USH 8	COUNTY: ONEIDA	CROSS SECTIONS: USH 8 - GUARDRAIL	SHEET 226	E

9

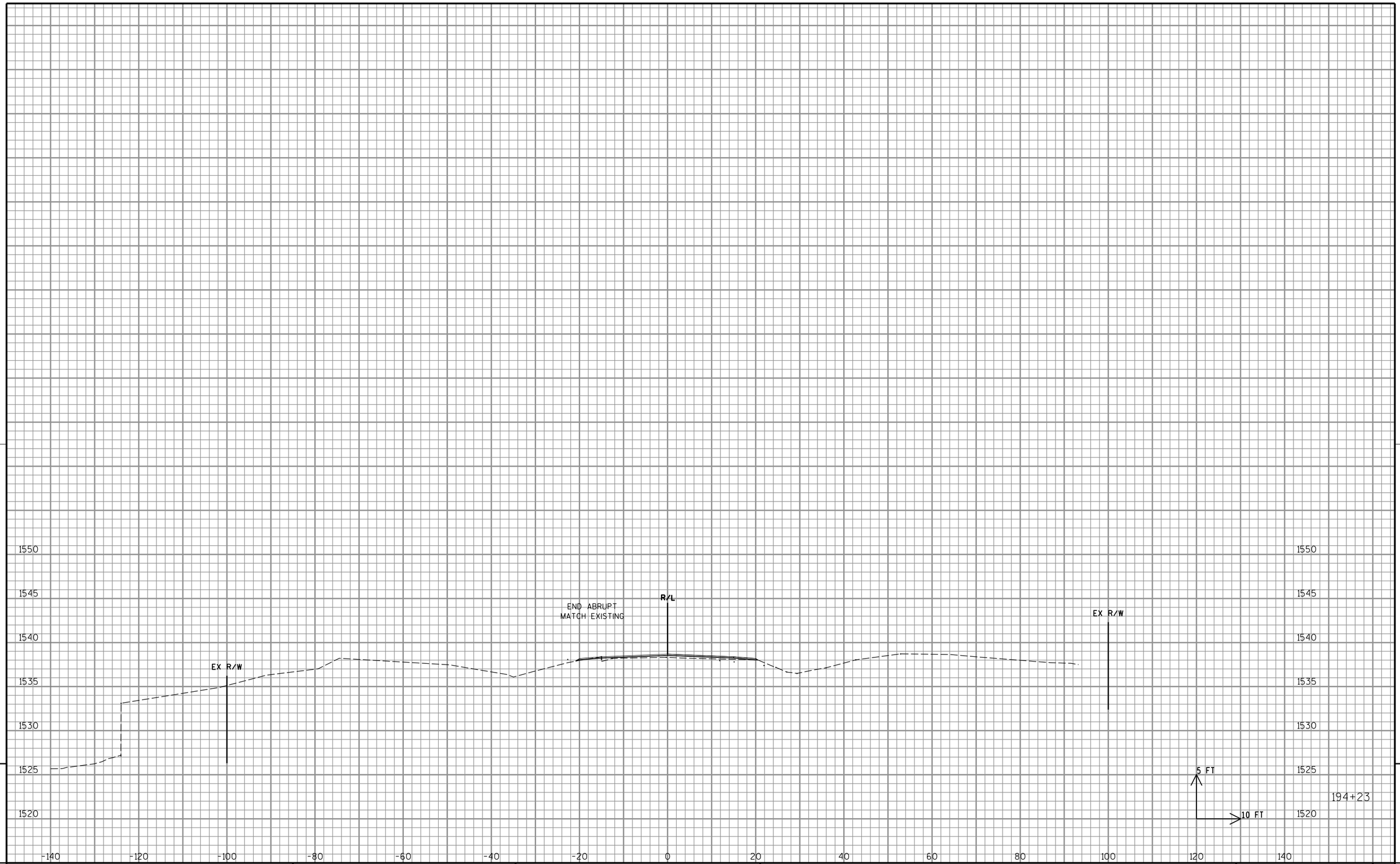

9

9

PROJECT NO: 1595-09-60	HWY: USH 8	COUNTY: ONEIDA	CROSS SECTIONS: USH 8 - GUARDRAIL	SHEET 227	E

FILE NAME : P:\47xx\4727_DP.12.USH8.ONE\CADDS\Plan\090201_xs.dgn PLOT DATE : 2/16/2015 PLOT BY : emo PLOT NAME : PLOT SCALE : 1:20

WISDOT/CADDS SHEET 21

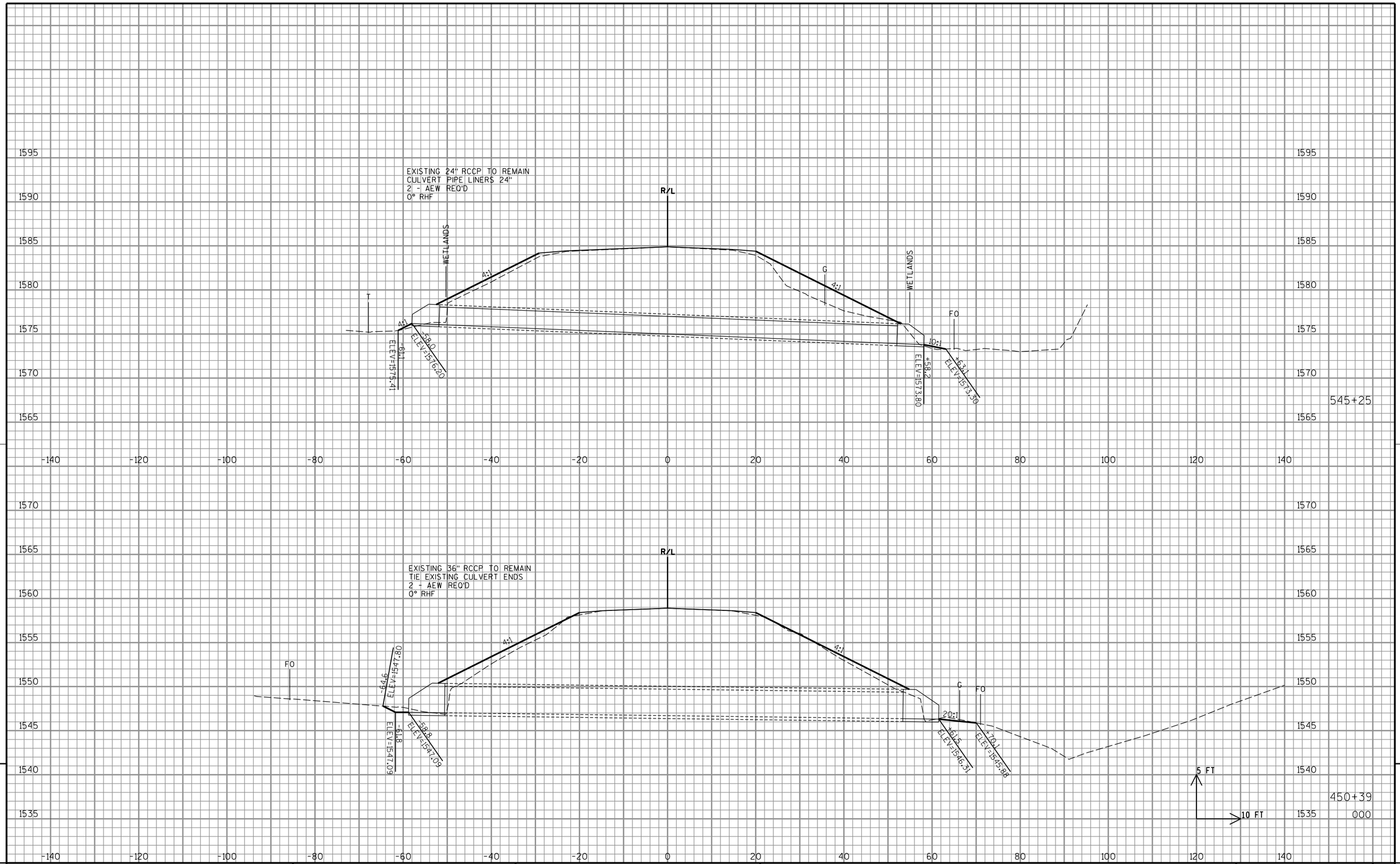

9

PROJECT NO: 1595-09-60	HWY: USH 8	COUNTY: ONEIDA	CROSS SECTIONS: CROSS CULVERT REPLACEMENTS	SHEET 228	E

9

FILE NAME : P:\47xx\4727_DP.12.USH8.ONE\CADDS\Plan\090202_xs.dgn PLOT DATE : 2/16/2015 PLOT BY : emo PLOT NAME : PLOT SCALE : 1:20

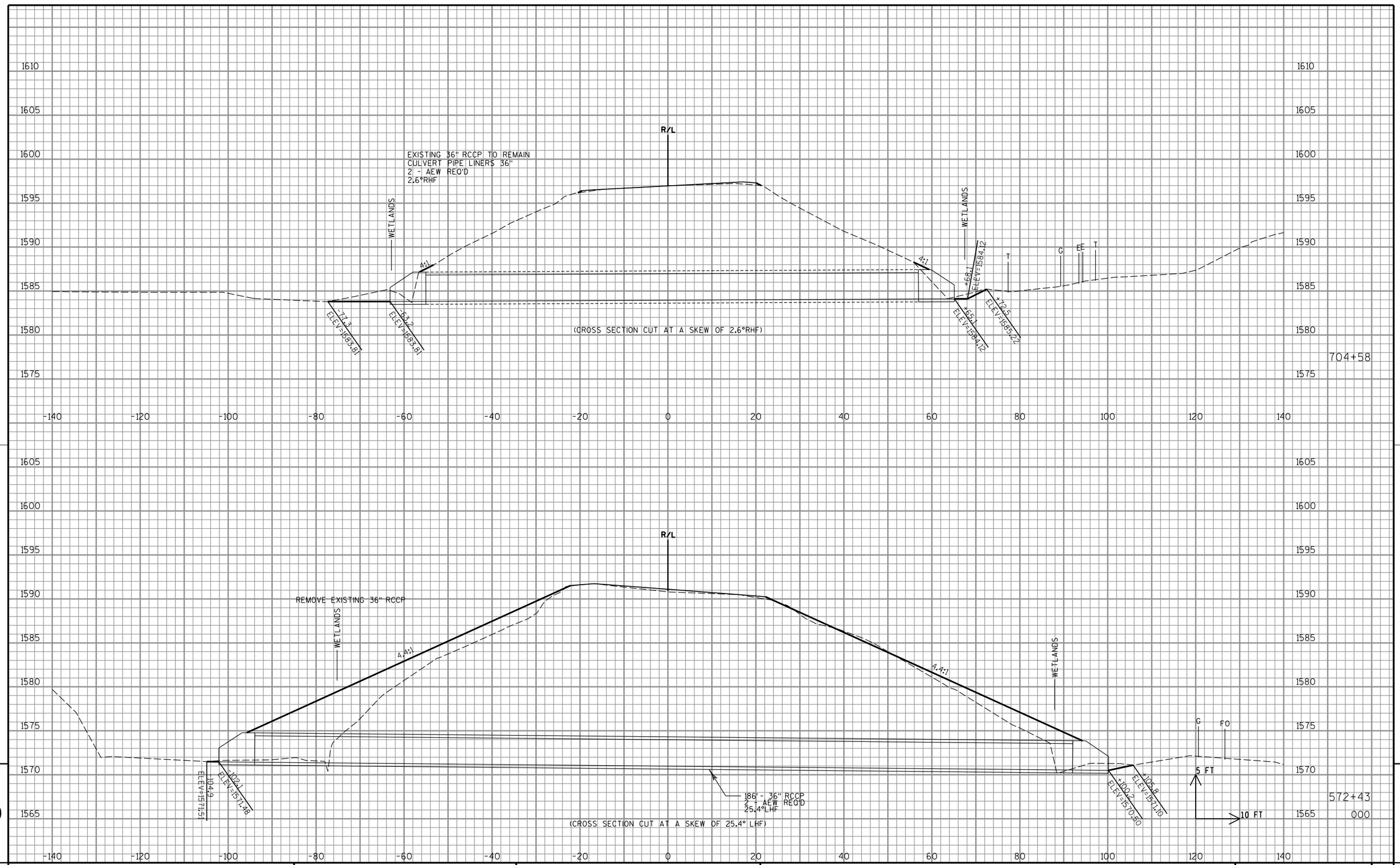

9

PROJECT NO: 1595-09-60	HWY: USH 8	COUNTY: ONEIDA	CROSS SECTIONS: CROSS CULVERT REPLACEMENTS	SHEET 229	E

9

FILE NAME : P:\47xx\4727_DP.12.USH8.ONE\CADDS\Plan\090202_xs.dgn PLOT DATE : 2/16/2015 PLOT BY : emo PLOT NAME : PLOT SCALE : 1:20

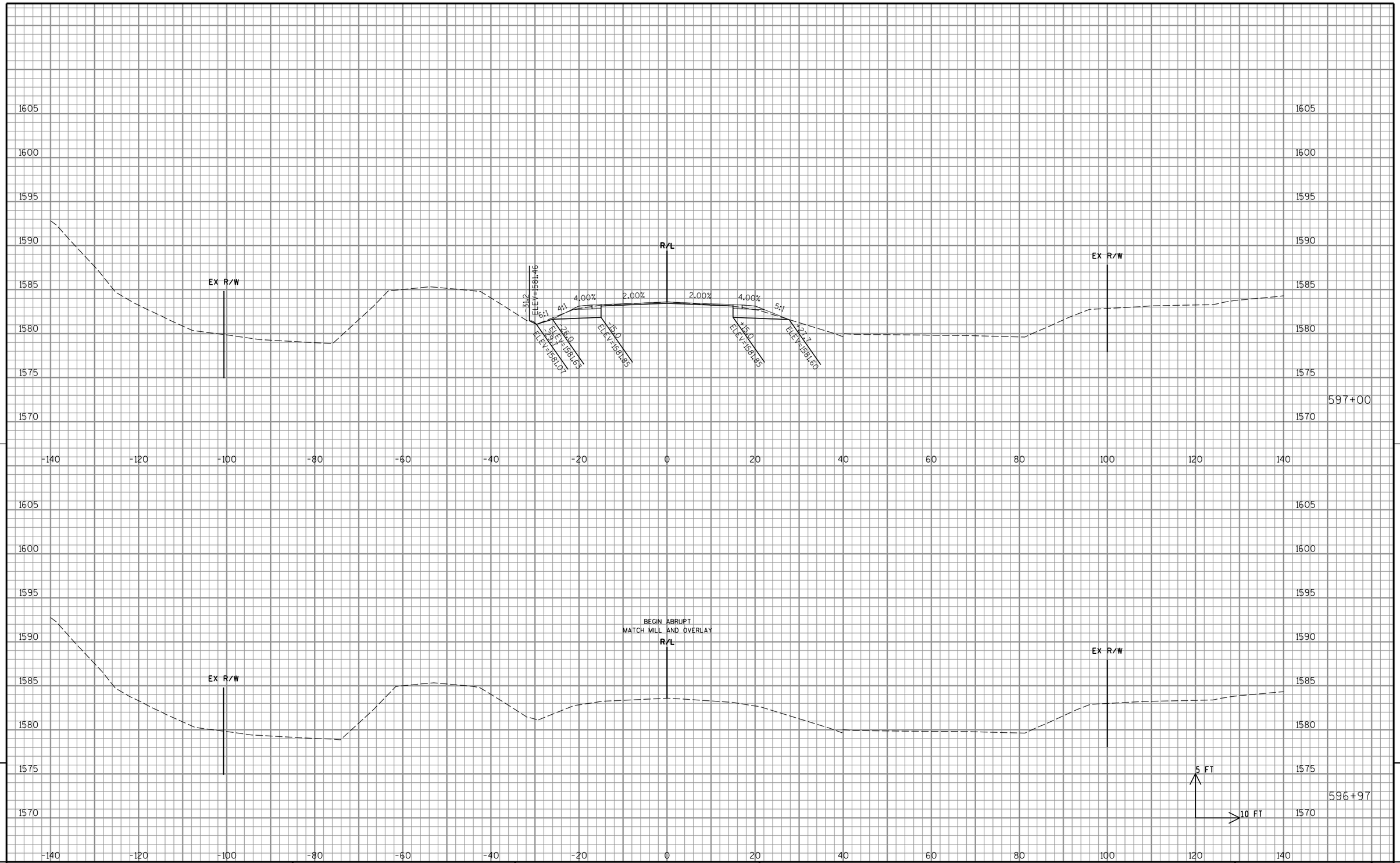

9

9

PROJECT NO: 1595-09-60	HWY: USH 8	COUNTY: ONEIDA	CROSS SECTIONS: USH 8 - CRESCENT ROAD INTERSECTION	SHEET 230	E

FILE NAME : P:\47xx\4727_DP.12.USH8.ONE\CADDS\Plan\090203_xs.dgn
PLOT DATE : 2/16/2015
PLOT BY : emo
PLOT NAME :
PLOT SCALE : 1:20
WISDOT/CADDS SHEET 21

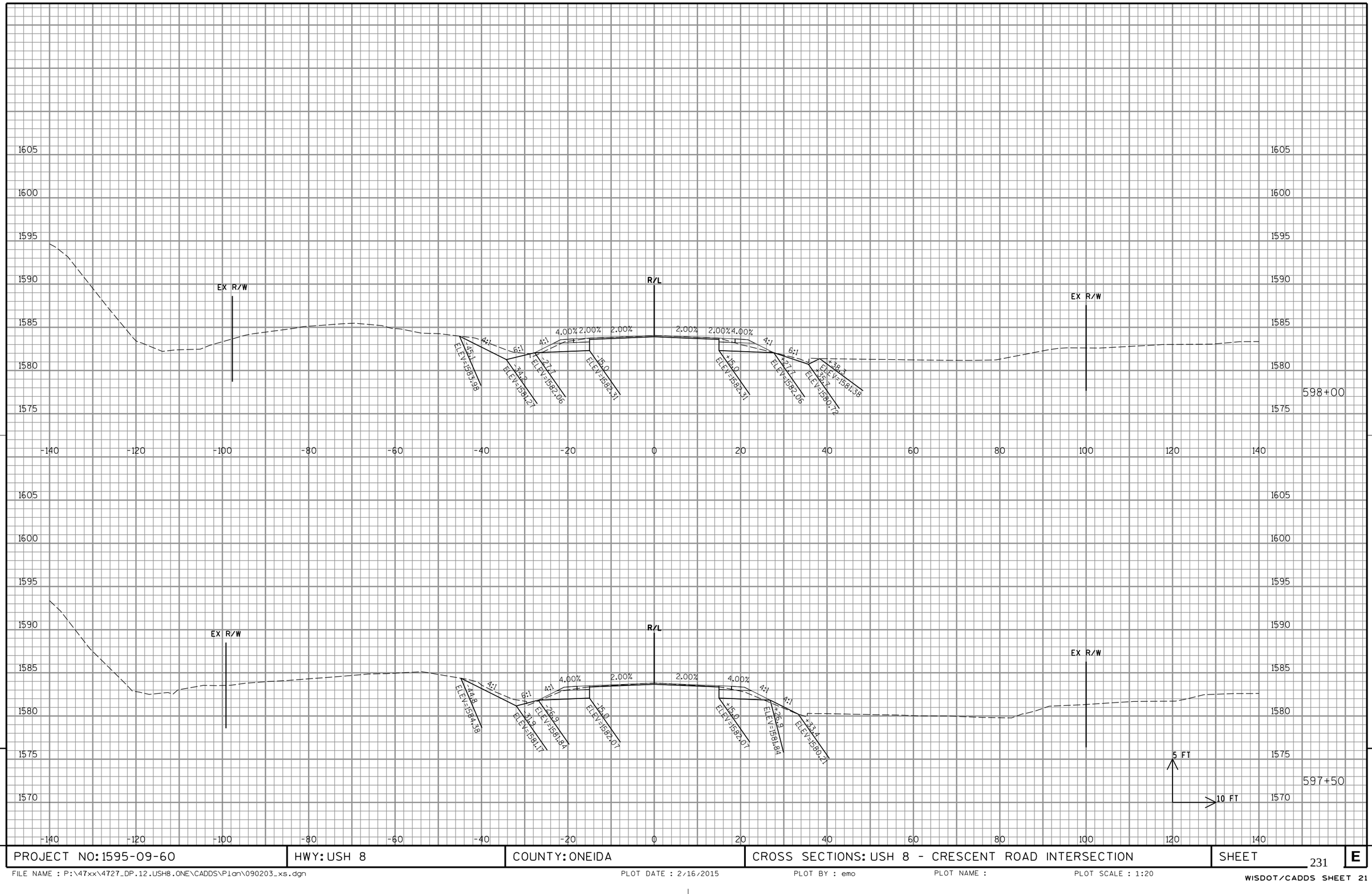

PROJECT NO: 1595-09-60	HWY: USH 8	COUNTY: ONEIDA	CROSS SECTIONS: USH 8 - CRESCENT ROAD INTERSECTION	SHEET 231	E

FILE NAME : P:\47xx\4727_DP.12.USH8.ONE\CADDS\Plan\090203_xs.dgn PLOT DATE : 2/16/2015 PLOT BY : emo PLOT NAME : PLOT SCALE : 1:20

WISDOT/CADDS SHEET 21

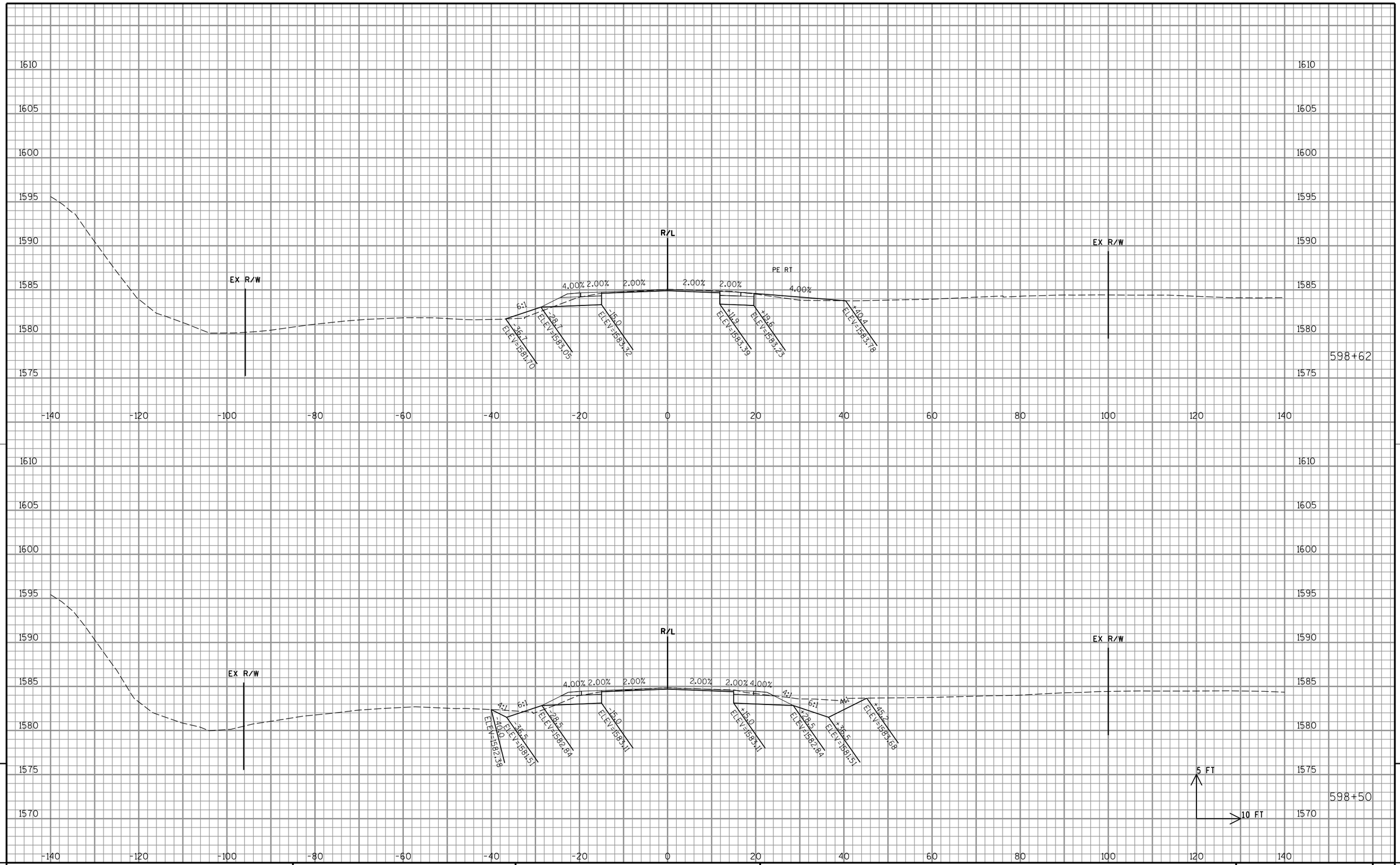

PROJECT NO: 1595-09-60	HWY: USH 8	COUNTY: ONEIDA	CROSS SECTIONS: USH 8 - CRESCENT ROAD INTERSECTION	SHEET 232	E

FILE NAME : P:\47xx\4727_DP.12.USH8.ONE\CADDS\Plan\090203_xs.dgn PLOT DATE : 2/16/2015 PLOT BY : emo PLOT NAME : PLOT SCALE : 1:20

WISDOT/CADDS SHEET 21

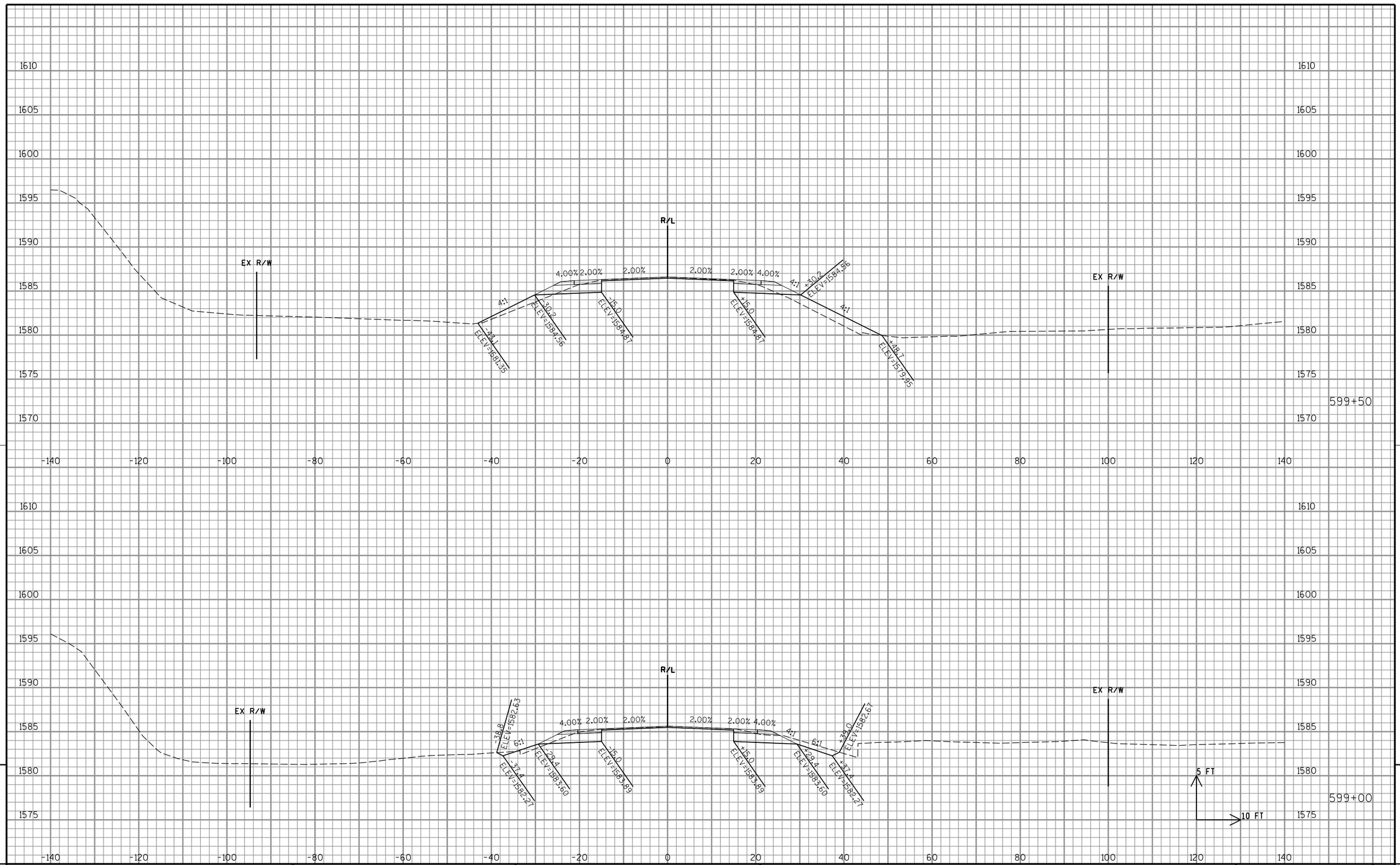

9

PROJECT NO: 1595-09-60	HWY: USH 8	COUNTY: ONEIDA	CROSS SECTIONS: USH 8 - CRESCENT ROAD INTERSECTION	SHEET 233	E

9

FILE NAME : P:\47xx\4727_DP.12.USH8.ONE\CADDS\Plan\090203_xs.dgn | PLOT DATE : 2/16/2015 | PLOT BY : emo | PLOT NAME : | PLOT SCALE : 1:20

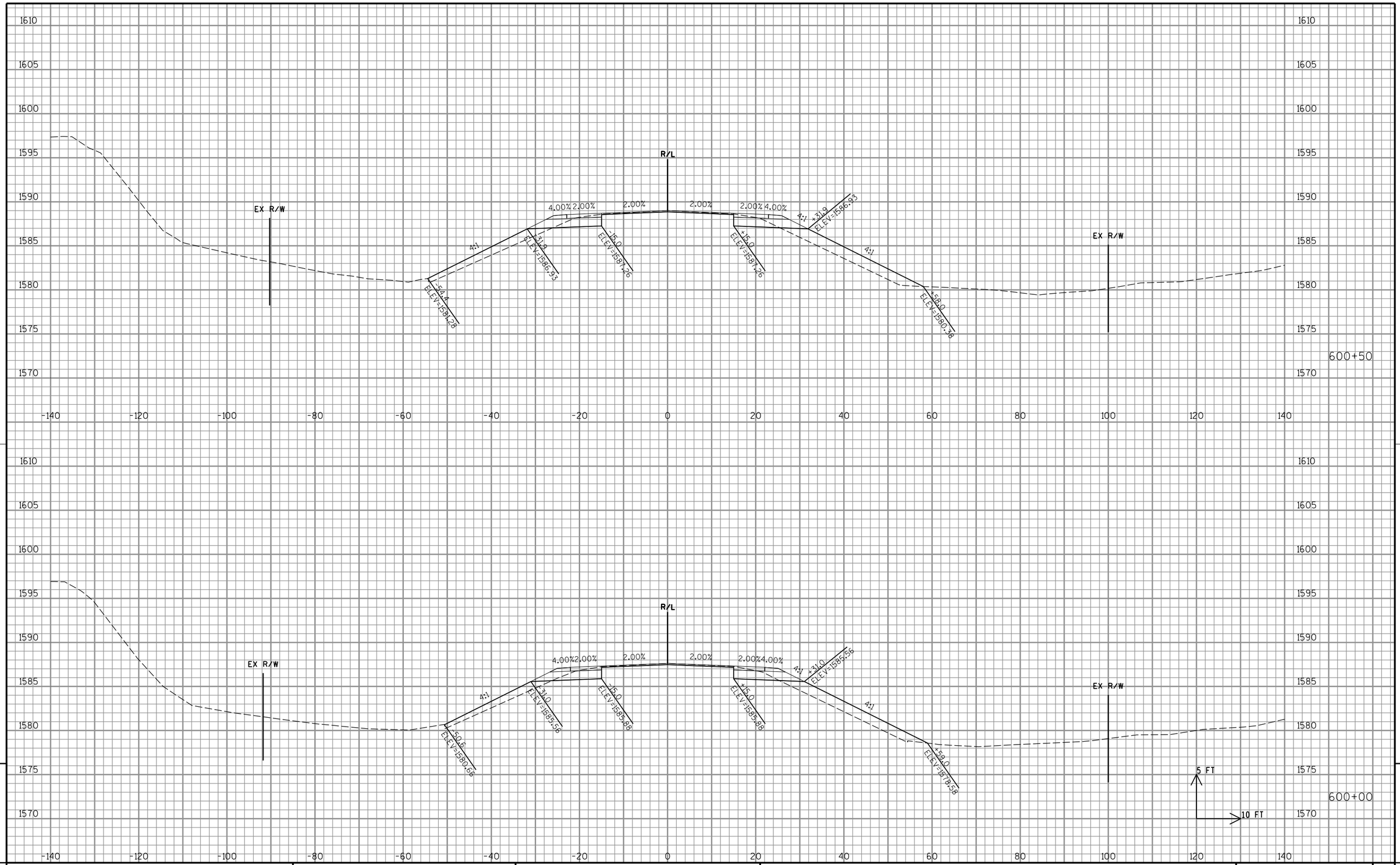

9

PROJECT NO: 1595-09-60	HWY: USH 8	COUNTY: ONEIDA	CROSS SECTIONS: USH 8 - CRESCENT ROAD INTERSECTION	SHEET 234	E

9

FILE NAME : P:\47xx\4727_DP.12.USH8.ONE\CADDS\Plan\090203_xs.dgn PLOT DATE : 2/16/2015 PLOT BY : emo PLOT NAME : PLOT SCALE : 1:20

WISDOT/CADDS SHEET 21

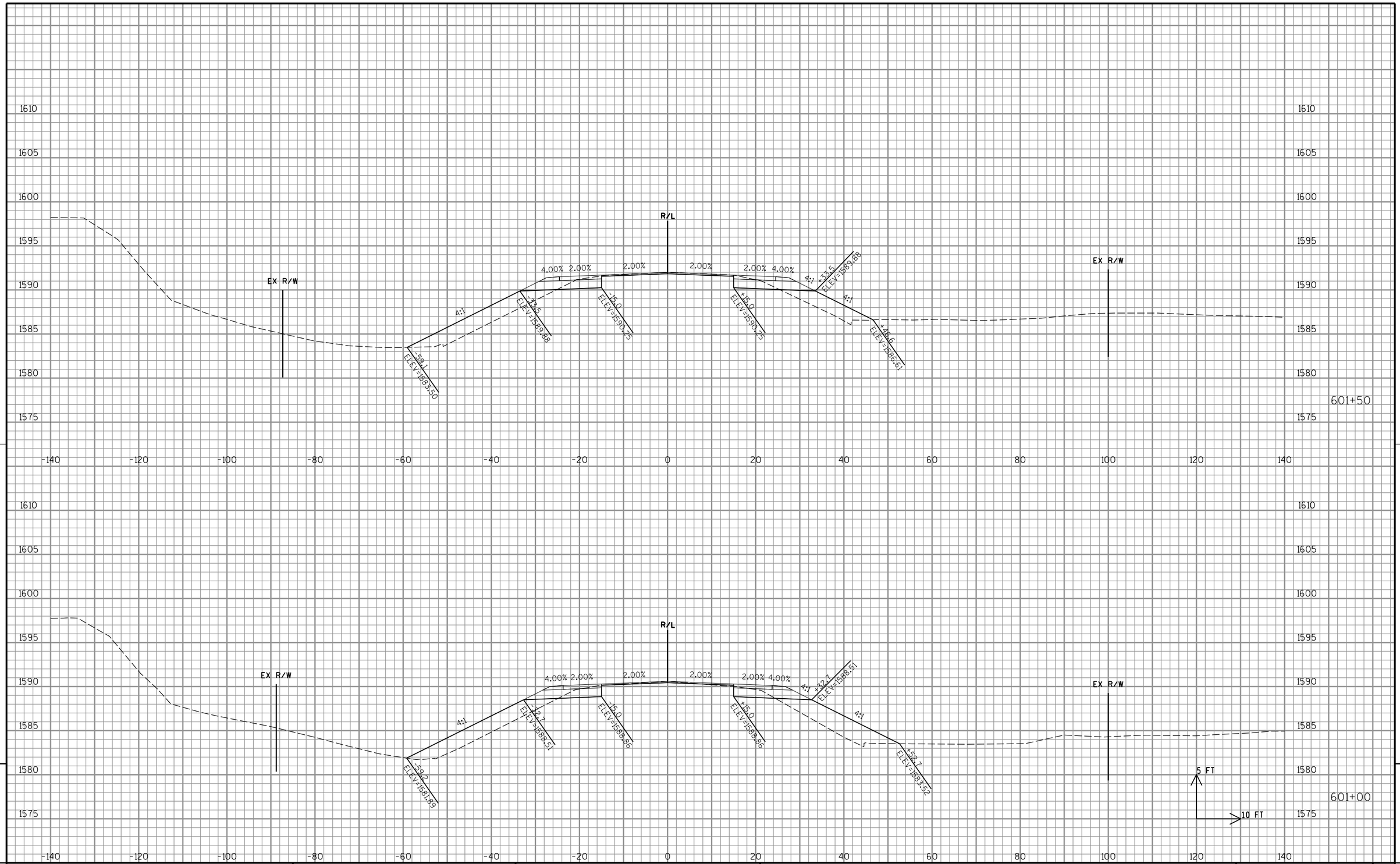

9

PROJECT NO: 1595-09-60	HWY: USH 8	COUNTY: ONEIDA	CROSS SECTIONS: USH 8 - CRESCENT ROAD INTERSECTION	SHEET 235	E

9

FILE NAME : P:\47xx\4727_DP.12.USH8.ONE\CADDS\Plan\090203_xs.dgn PLOT DATE : 2/16/2015 PLOT BY : emo PLOT NAME : PLOT SCALE : 1:20

WISDOT/CADDS SHEET 21

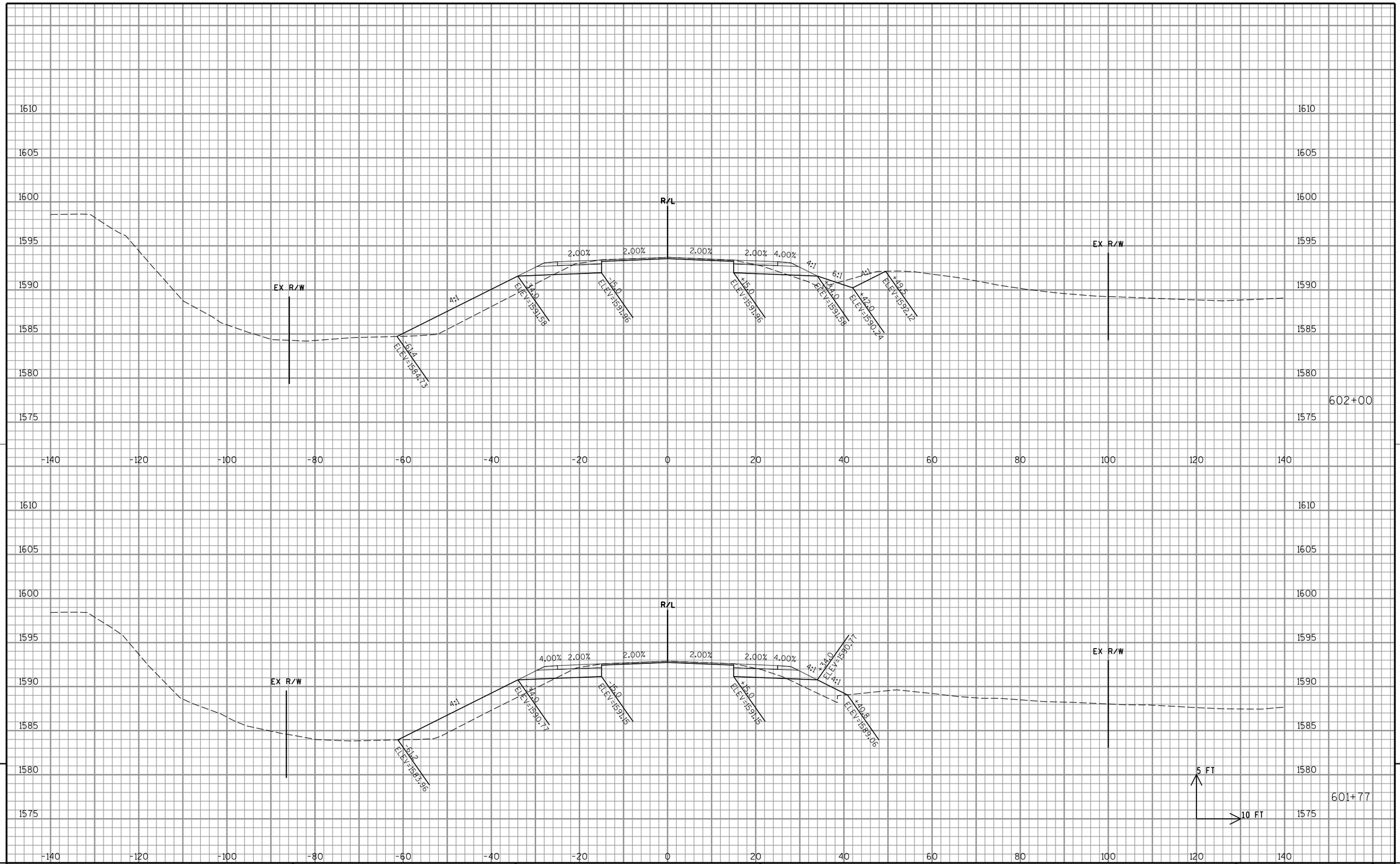

9

PROJECT NO: 1595-09-60	HWY: USH 8	COUNTY: ONEIDA	CROSS SECTIONS: USH 8 - CRESCENT ROAD INTERSECTION	SHEET 236	E

9

FILE NAME : P:\47xx\4727_DP.12.USH8.ONE\CADDS\Plan\090203_xs.dgn | PLOT DATE : 2/16/2015 | PLOT BY : emo | PLOT NAME : | PLOT SCALE : 1:20

WISDOT/CADDS SHEET 21

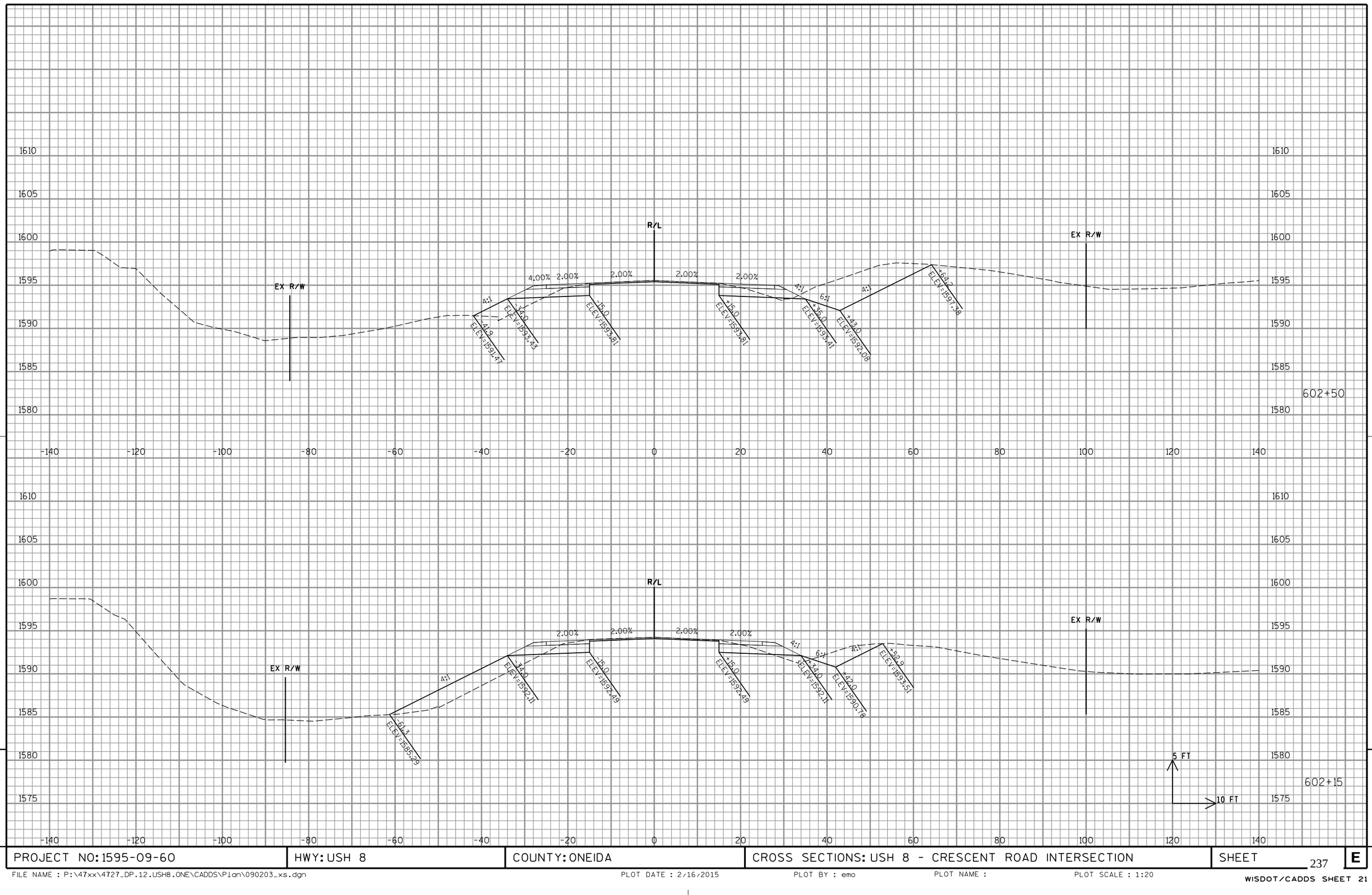

9

PROJECT NO: 1595-09-60	HWY: USH 8	COUNTY: ONEIDA	CROSS SECTIONS: USH 8 - CRESCENT ROAD INTERSECTION	SHEET 237	E

9

FILE NAME : P:\47xx\4727_DP.12.USH8.ONE\CADDS\Plan\090203_xs.dgn PLOT DATE : 2/16/2015 PLOT BY : emo PLOT NAME : PLOT SCALE : 1:20

WISDOT/CADDS SHEET 21

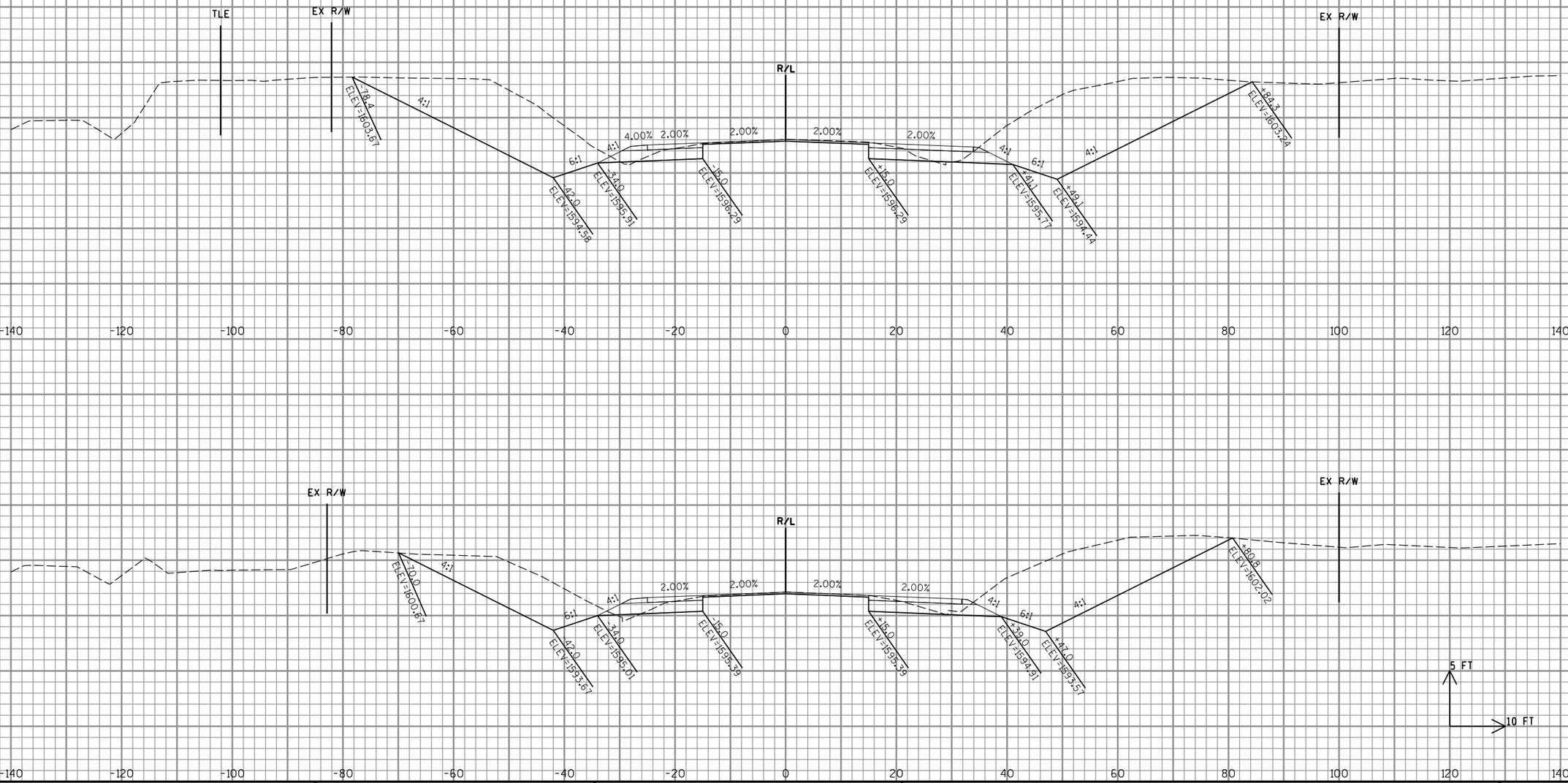

PROJECT NO: 1595-09-60	HWY: USH 8	COUNTY: ONEIDA	CROSS SECTIONS: USH 8 - CRESCENT ROAD INTERSECTION	SHEET 238	E

FILE NAME : P:\47xx\4727_DP.12.USH8.ONE\CADDS\Plan\090203_xs.dgn PLOT DATE : 2/16/2015 PLOT BY : emo PLOT NAME : PLOT SCALE : 1:20

WISDOT/CADDS SHEET 21

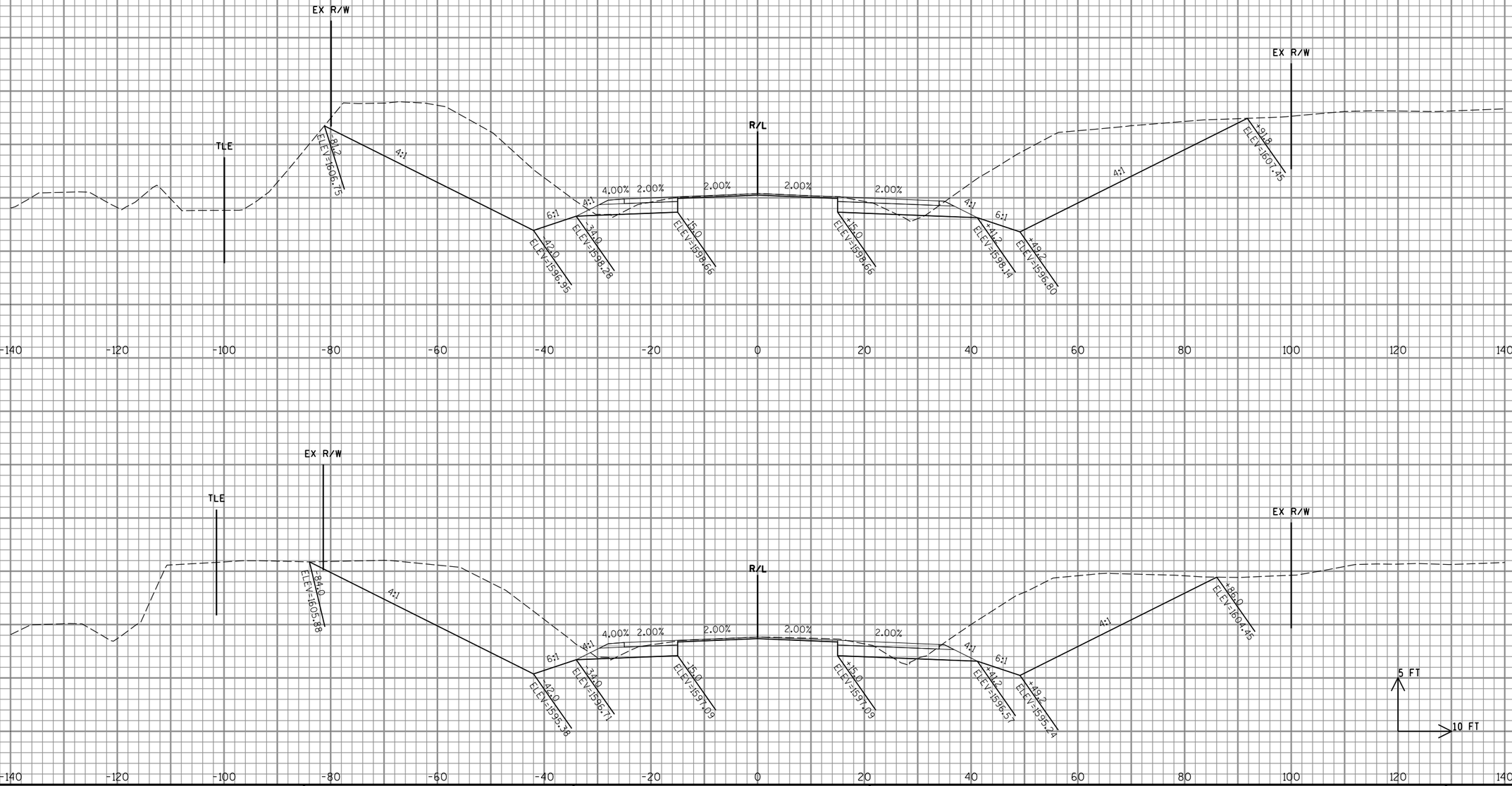

9

9

PROJECT NO: 1595-09-60	HWY: USH 8	COUNTY: ONEIDA	CROSS SECTIONS: USH 8 - CRESCENT ROAD INTERSECTION	SHEET 239	E

FILE NAME : P:\47xx\4727_DP.12.USH8.ONE\CADDS\Plan\090203_xs.dgn PLOT DATE : 2/16/2015 PLOT BY : emo PLOT NAME : PLOT SCALE : 1:20

WISDOT/CADDS SHEET 21

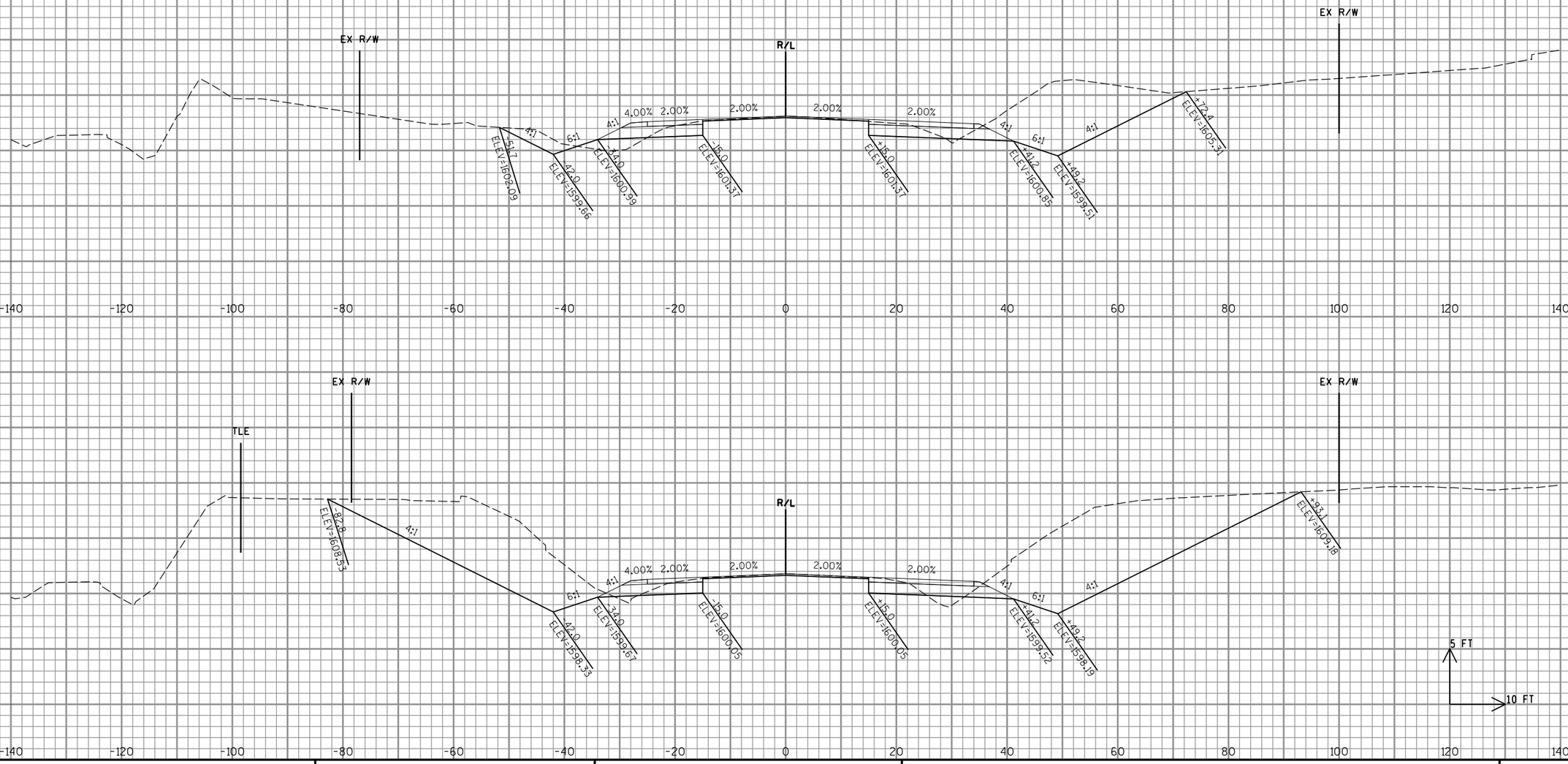

9

PROJECT NO: 1595-09-60	HWY: USH 8	COUNTY: ONEIDA	CROSS SECTIONS: USH 8 - CRESCENT ROAD INTERSECTION	SHEET 240	E

9

FILE NAME : P:\47xx\4727_DP.12.USH8.ONE\CADDS\Plan\090203_xs.dgn PLOT DATE : 2/16/2015 PLOT BY : emo PLOT NAME : PLOT SCALE : 1:20

WISDOT/CADDS SHEET 21

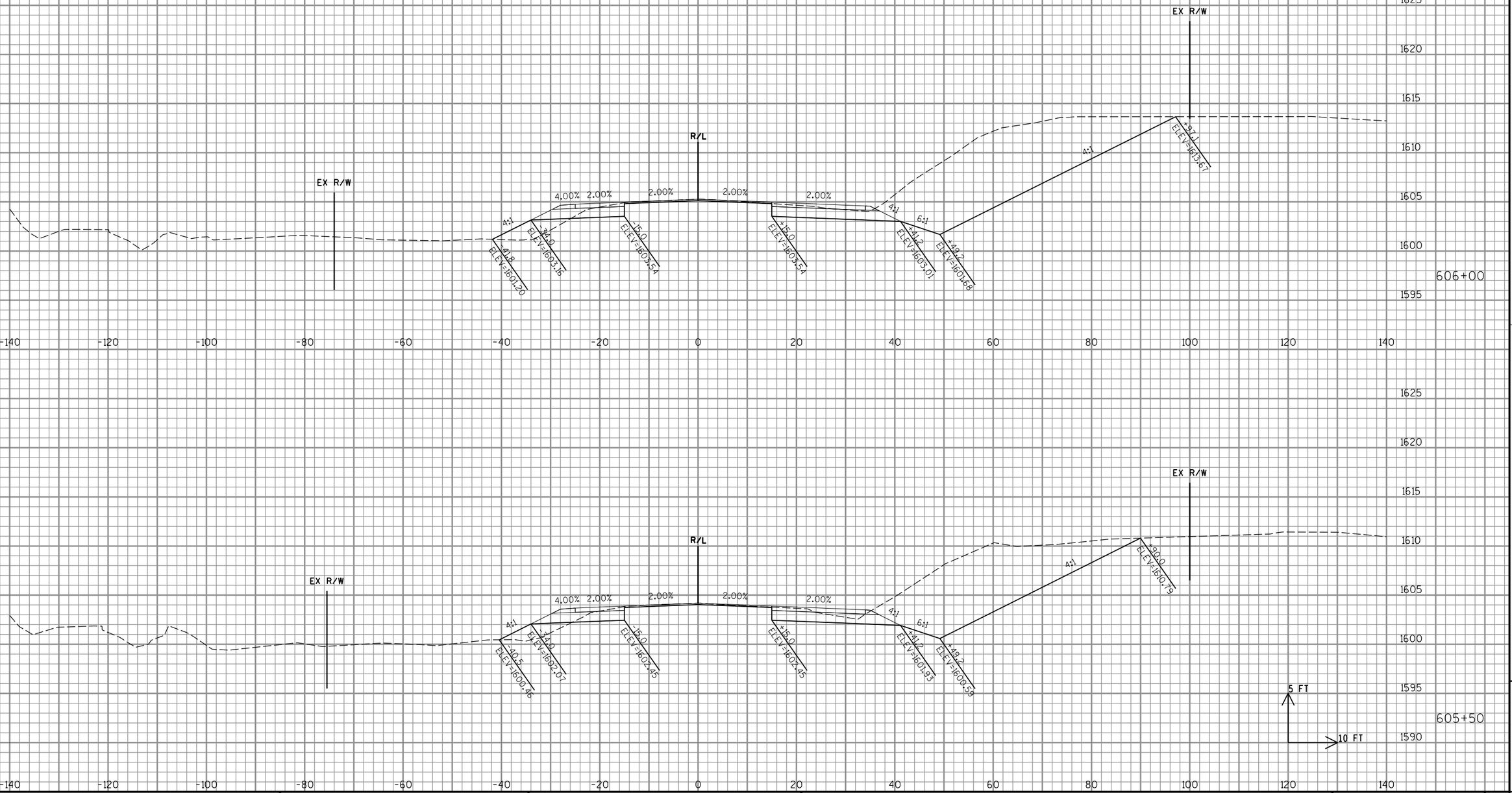

PROJECT NO: 1595-09-60	HWY: USH 8	COUNTY: ONEIDA	CROSS SECTIONS: USH 8 - CRESCENT ROAD INTERSECTION	SHEET 241	E

FILE NAME : P:\47xx\4727_DP.12.USH8.ONE\CADDS\Plan\090203_xs.dgn PLOT DATE : 2/16/2015 PLOT BY : emo PLOT NAME : PLOT SCALE : 1:20

WISDOT/CADDS SHEET 21

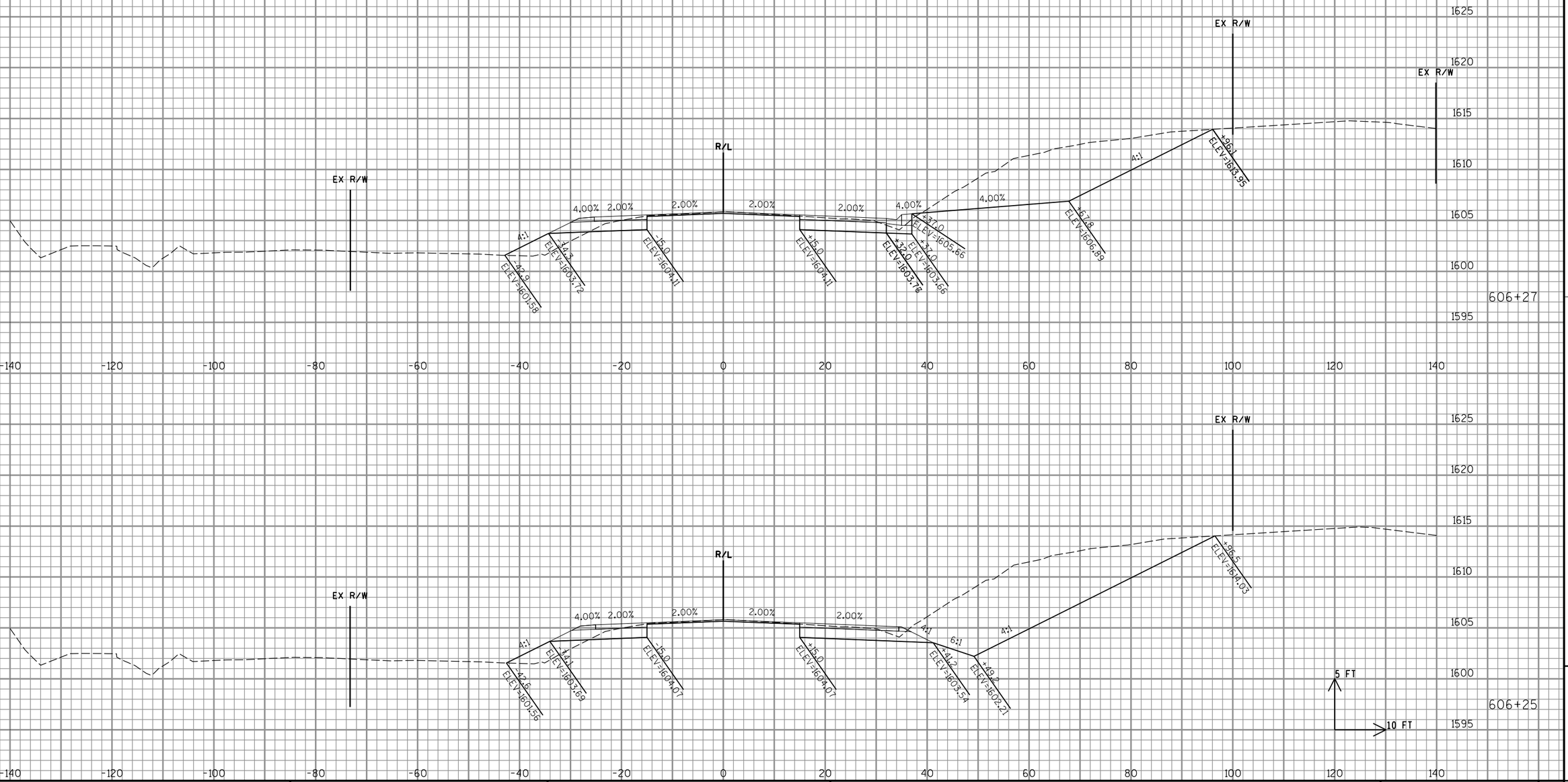

9

9

PROJECT NO: 1595-09-60	HWY: USH 8	COUNTY: ONEIDA	CROSS SECTIONS: USH 8 - CRESCENT ROAD INTERSECTION	SHEET 242	E

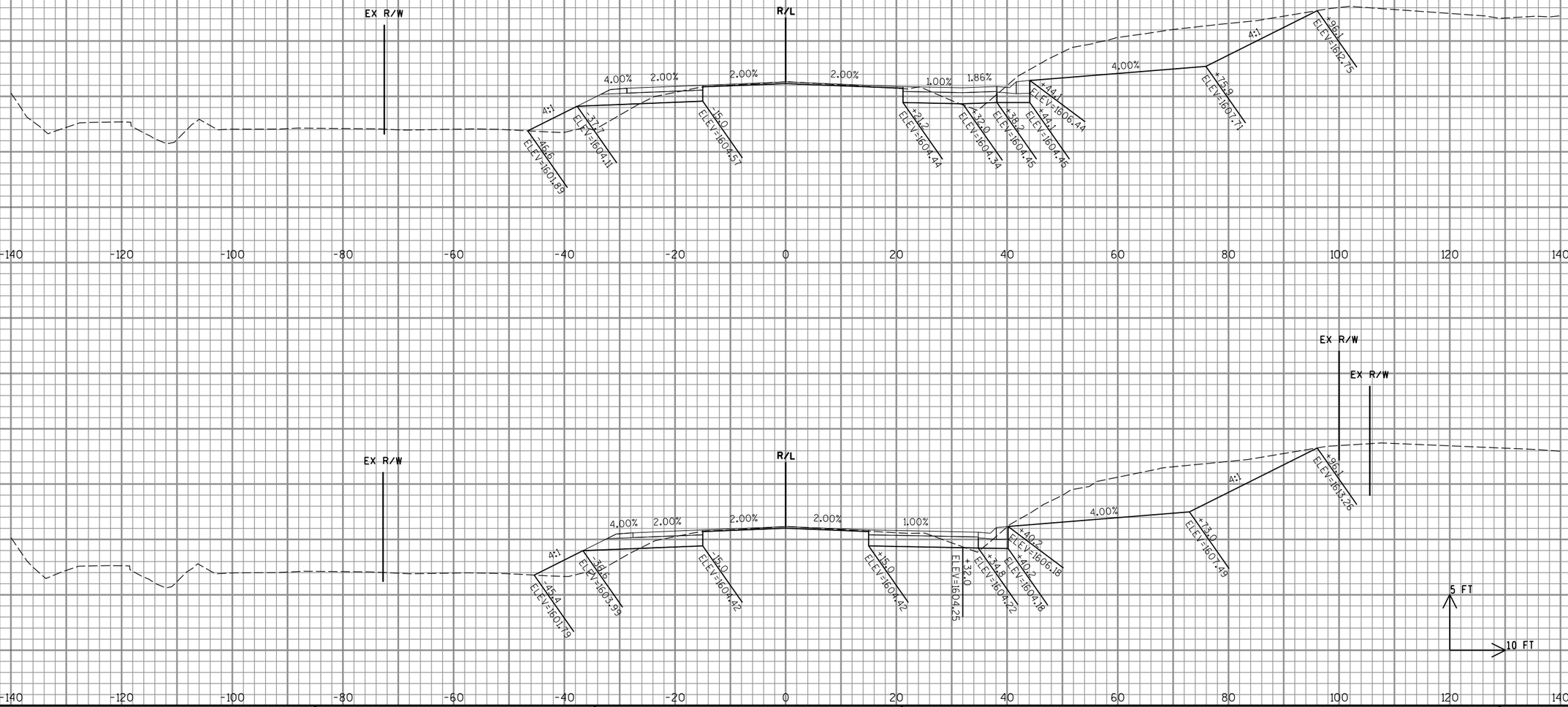

9

9

PROJECT NO: 1595-09-60	HWY: USH 8	COUNTY: ONEIDA	CROSS SECTIONS: USH 8 - CRESCENT ROAD INTERSECTION	SHEET 243	E

FILE NAME : P:\47xx\4727_DP.12.USH8.ONE\CADDS\Plan\090203_xs.dgn PLOT DATE : 2/16/2015 PLOT BY : emo PLOT NAME : PLOT SCALE : 1:20

WISDOT/CADDS SHEET 21

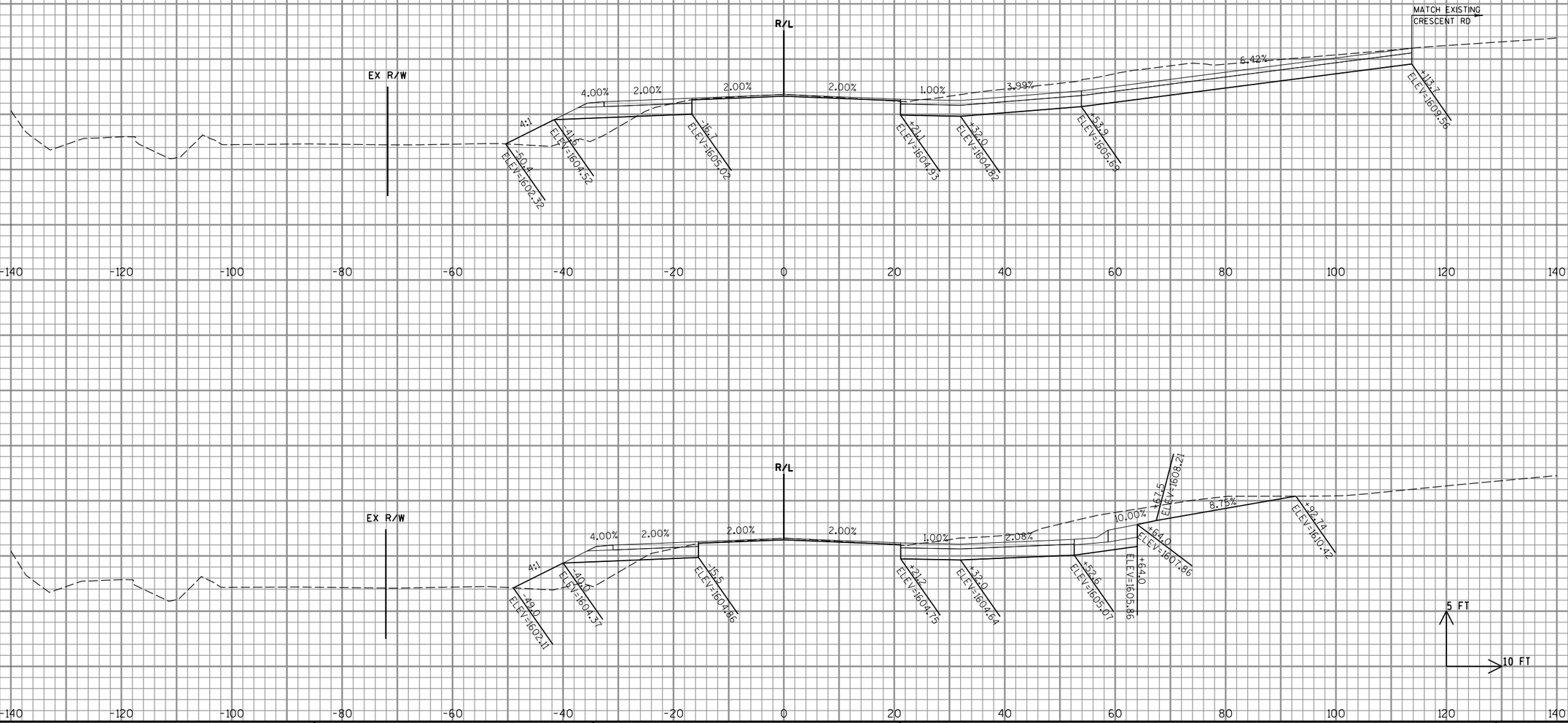

PROJECT NO: 1595-09-60	HWY: USH 8	COUNTY: ONEIDA	CROSS SECTIONS: USH 8 - CRESCENT ROAD INTERSECTION	SHEET 244	E

FILE NAME : P:\47xx\4727_DP.12.USH8.ONE\CADDS\Plan\090203_xs.dgn PLOT DATE : 2/16/2015 PLOT BY : emo PLOT NAME : PLOT SCALE : 1:20

WISDOT/CADDS SHEET 21

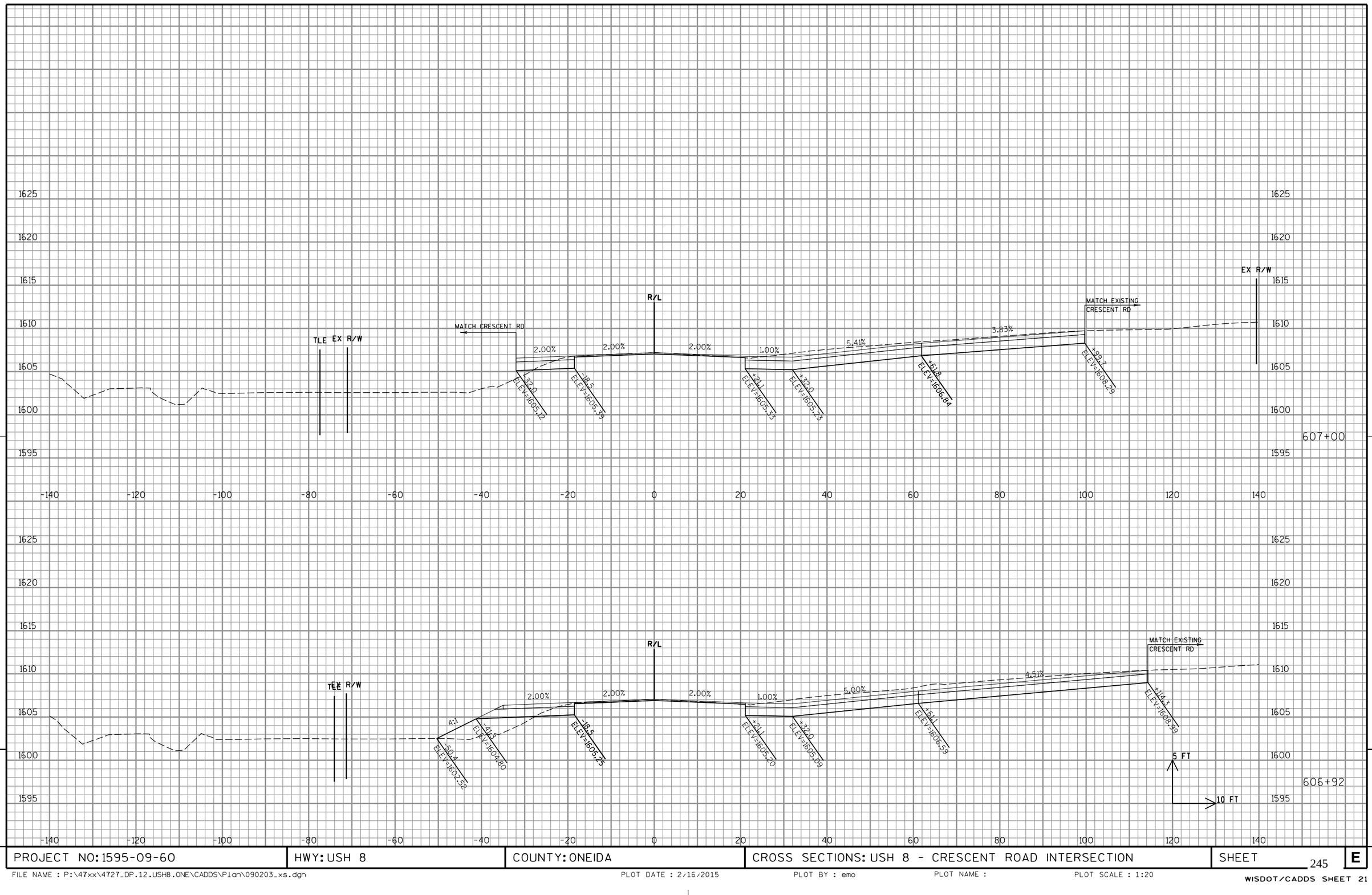

PROJECT NO: 1595-09-60	HWY: USH 8	COUNTY: ONEIDA	CROSS SECTIONS: USH 8 - CRESCENT ROAD INTERSECTION	SHEET 245	E

FILE NAME : P:\47xx\4727_DP.12.USH8.ONE\CADDS\Plan\090203_xs.dgn PLOT DATE : 2/16/2015 PLOT BY : emo PLOT NAME : PLOT SCALE : 1:20

WISDOT/CADDS SHEET 21

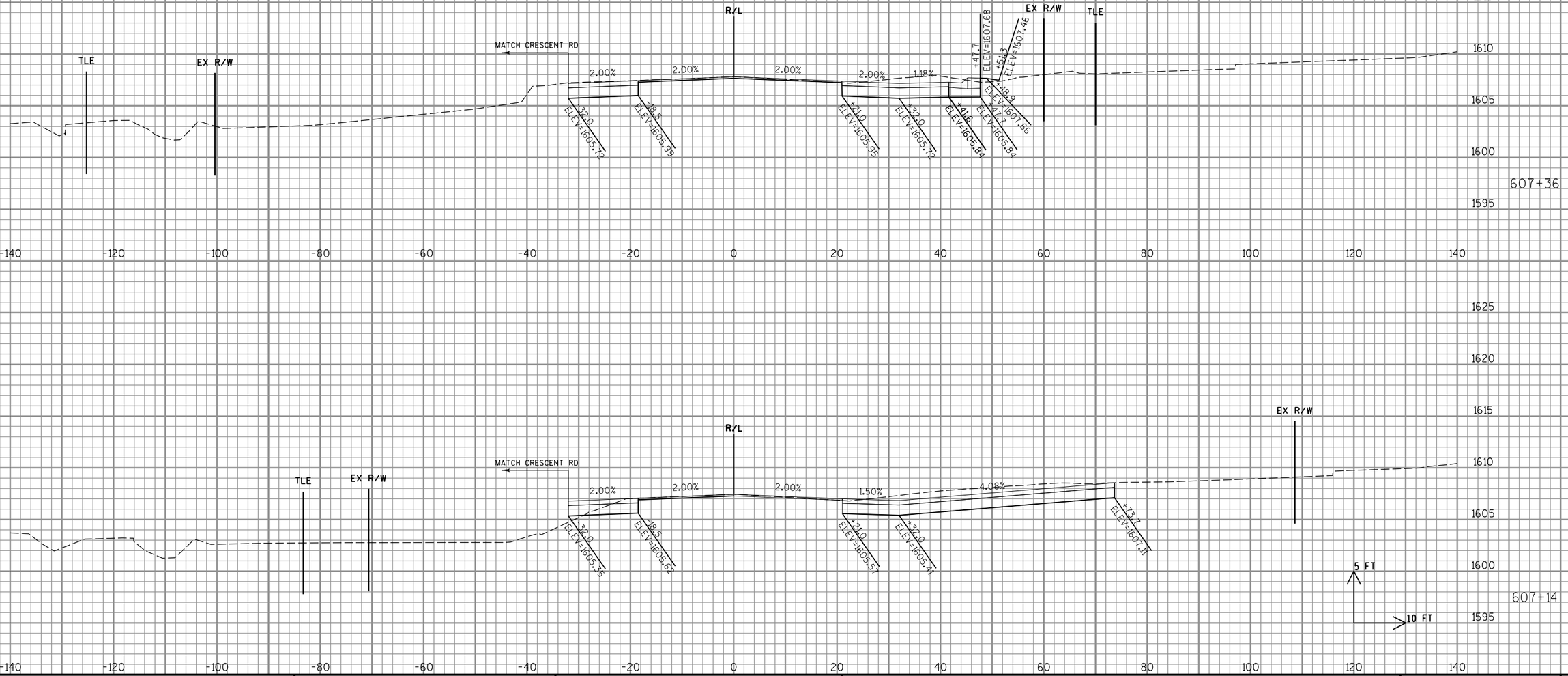

9

9

PROJECT NO: 1595-09-60	HWY: USH 8	COUNTY: ONEIDA	CROSS SECTIONS: USH 8 - CRESCENT ROAD INTERSECTION	SHEET 246	E

FILE NAME : P:\47xx\4727_DP.12.USH8.ONE\CADDS\Plan\090203_xs.dgn PLOT DATE : 2/16/2015 PLOT BY : emo PLOT NAME : PLOT SCALE : 1:20

WISDOT/CADDS SHEET 21

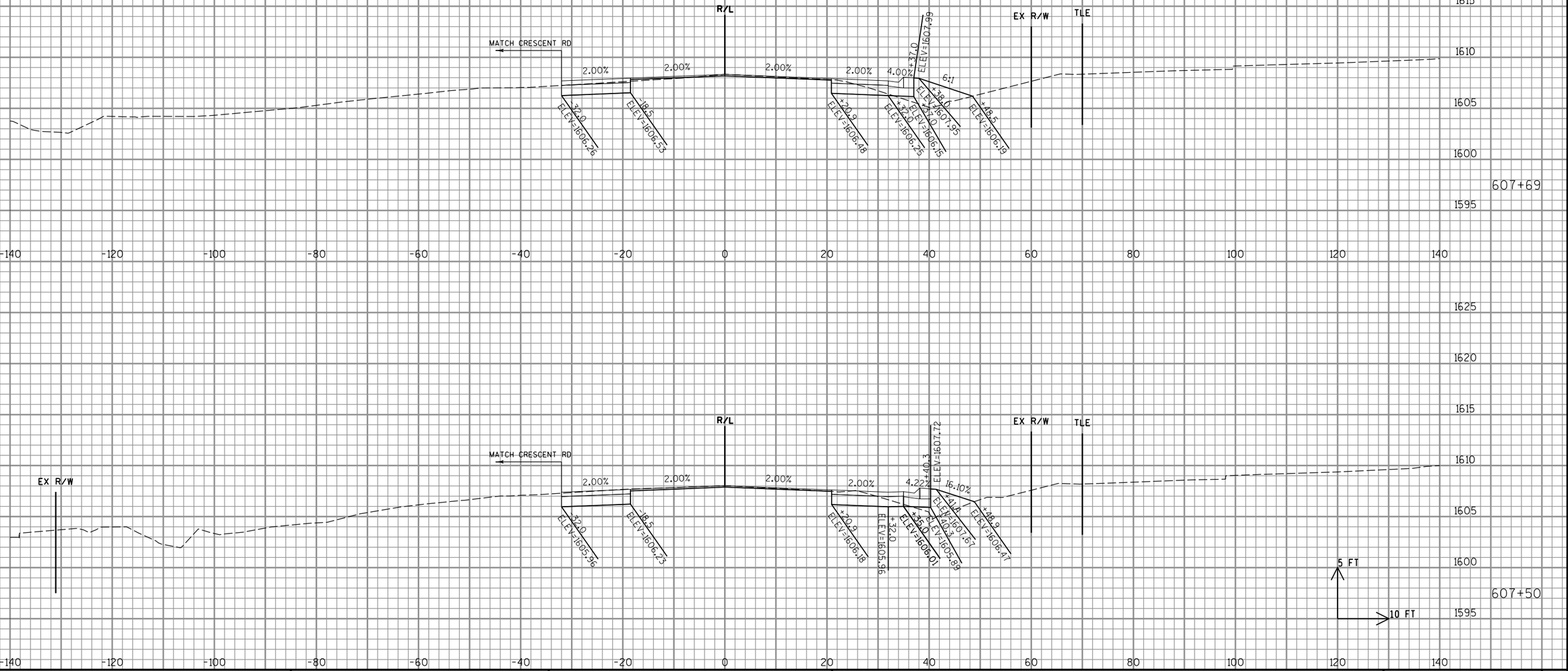

PROJECT NO: 1595-09-60	HWY: USH 8	COUNTY: ONEIDA	CROSS SECTIONS: USH 8 - CRESCENT ROAD INTERSECTION	SHEET 247	E

FILE NAME : P:\47xx\4727_DP.12.USH8.ONE\CADDS\Plan\090203_xs.dgn PLOT DATE : 2/16/2015 PLOT BY : emo PLOT NAME : PLOT SCALE : 1:20

WISDOT/CADDS SHEET 21

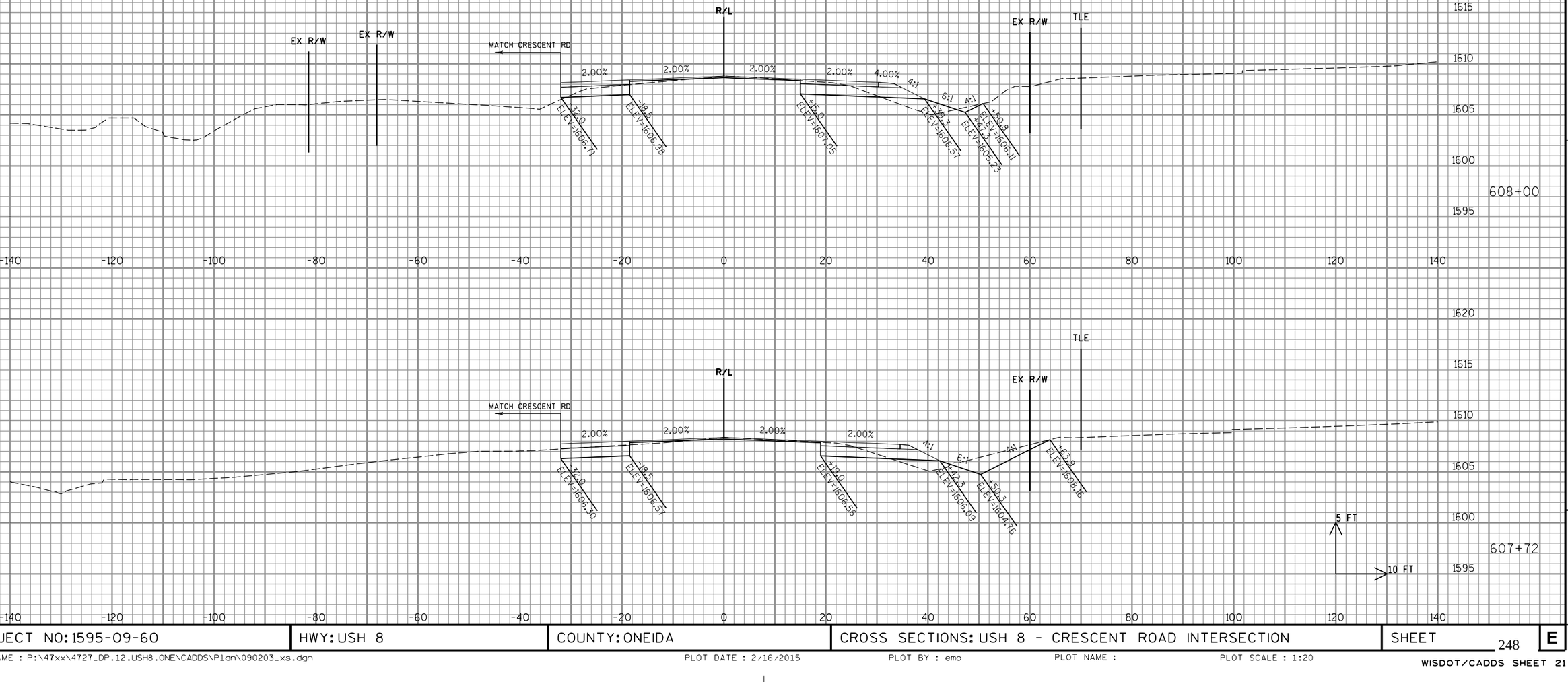

PROJECT NO: 1595-09-60	HWY: USH 8	COUNTY: ONEIDA	CROSS SECTIONS: USH 8 - CRESCENT ROAD INTERSECTION	SHEET 248	E

FILE NAME : P:\47xx\4727_DP.12.USH8.ONE\CADDS\Plan\090203_xs.dgn PLOT DATE : 2/16/2015 PLOT BY : emo PLOT NAME : PLOT SCALE : 1:20

WISDOT/CADDS SHEET 21

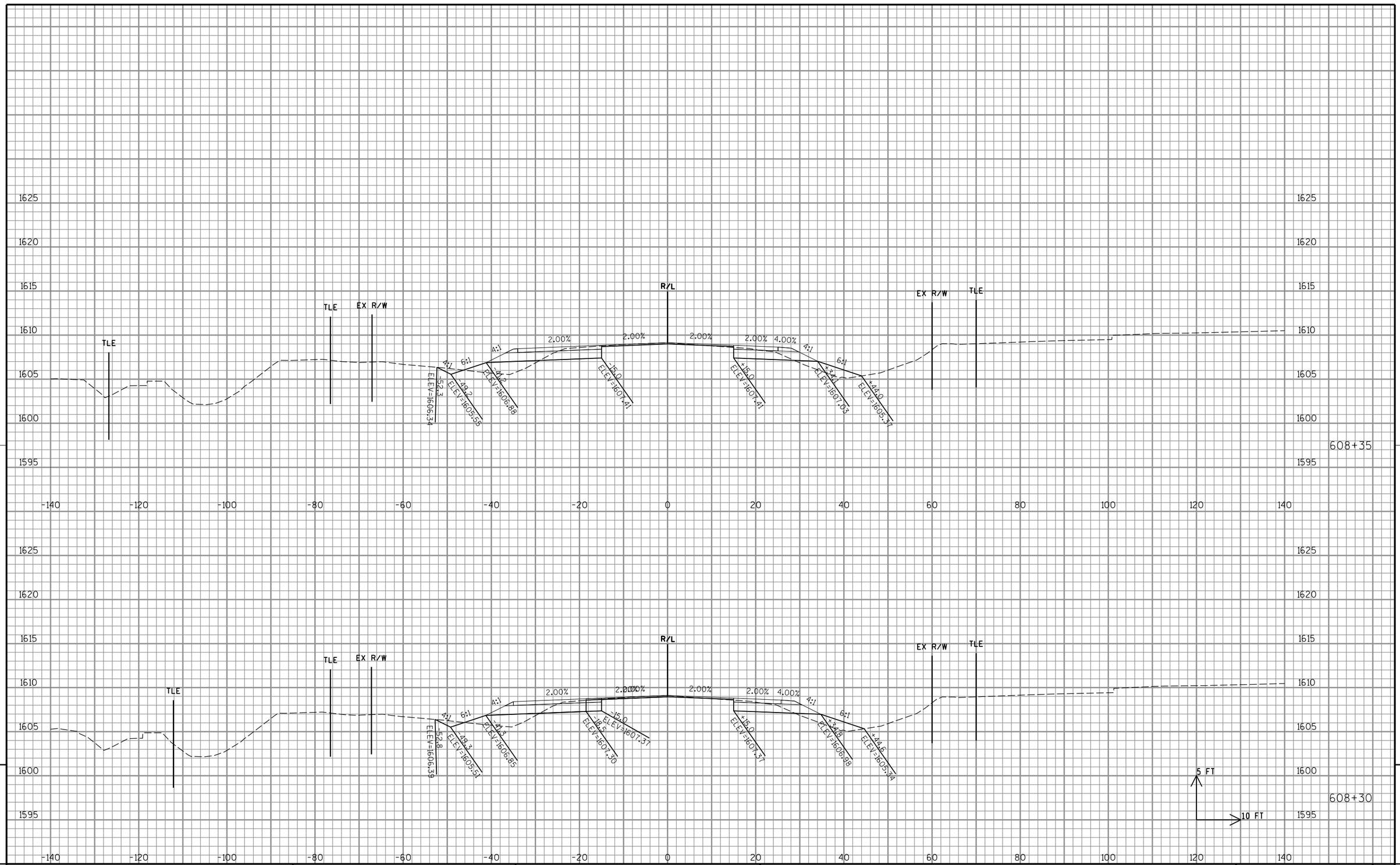

9

9

PROJECT NO: 1595-09-60	HWY: USH 8	COUNTY: ONEIDA	CROSS SECTIONS: USH 8 - CRESCENT ROAD INTERSECTION	SHEET 249	E

FILE NAME : P:\47xx\4727_DP.12.USH8.ONE\CADDS\Plan\090203_xs.dgn PLOT DATE : 2/16/2015 PLOT BY : emo PLOT NAME : PLOT SCALE : 1:20

WISDOT/CADDS SHEET 21

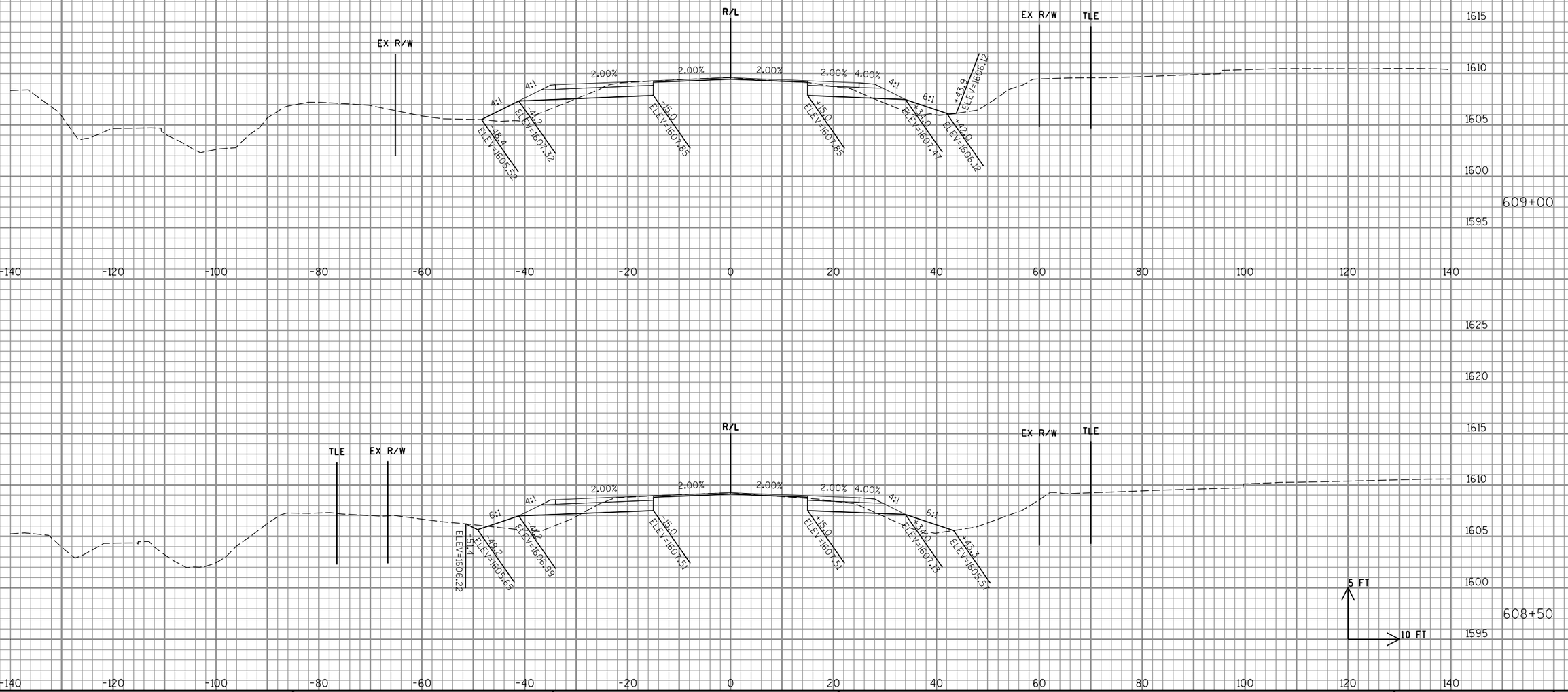

9

PROJECT NO: 1595-09-60	HWY: USH 8	COUNTY: ONEIDA	CROSS SECTIONS: USH 8 - CRESCENT ROAD INTERSECTION	SHEET 250	E

9

FILE NAME : P:\47xx\4727_DP.12.USH8.ONE\CADDS\Plan\090203_xs.dgn PLOT DATE : 2/16/2015 PLOT BY : emo PLOT NAME : PLOT SCALE : 1:20

WISDOT/CADDS SHEET 21

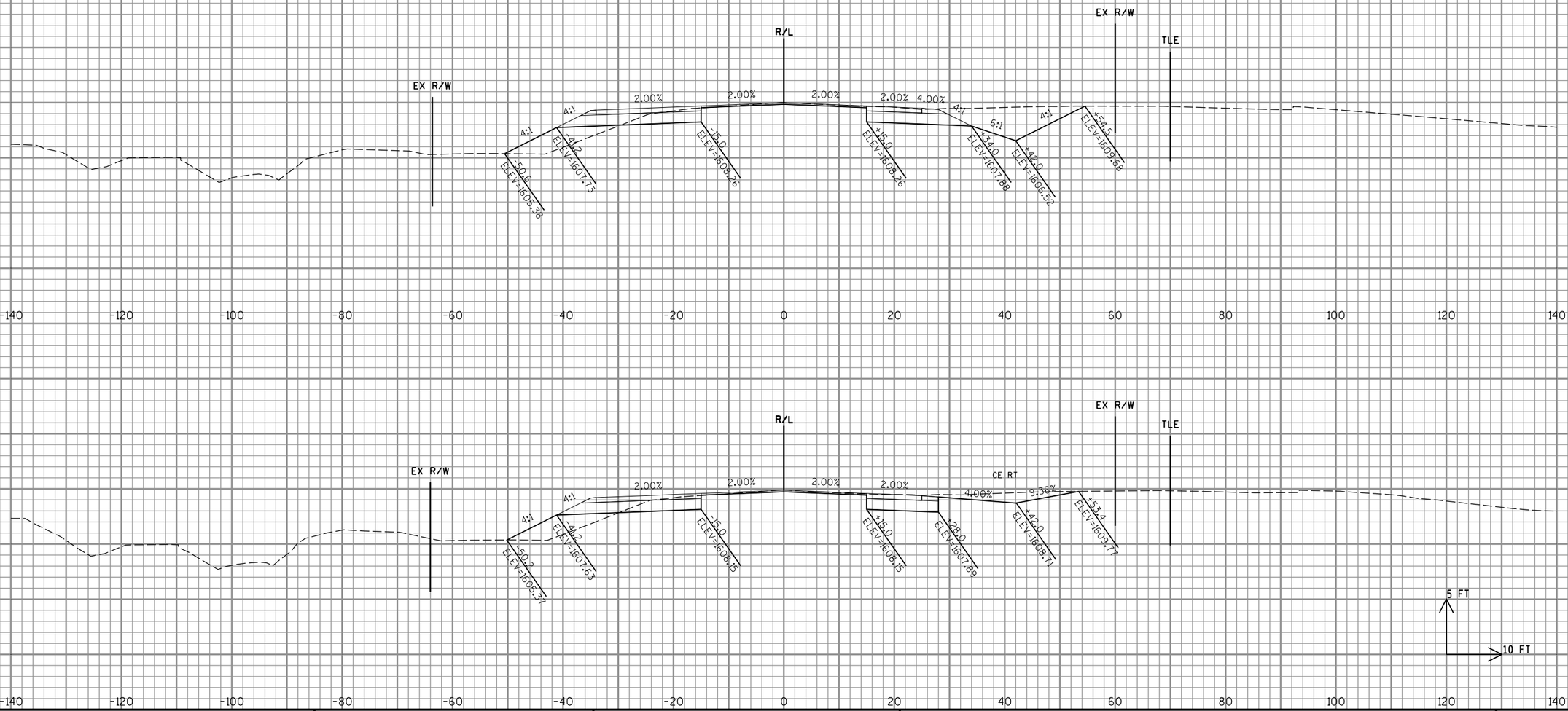

PROJECT NO: 1595-09-60	HWY: USH 8	COUNTY: ONEIDA	CROSS SECTIONS: USH 8 - CRESCENT ROAD INTERSECTION	SHEET 251	E

FILE NAME : P:\47xx\4727_DP.12.USH8.ONE\CADDS\Plan\090203_xs.dgn PLOT DATE : 2/16/2015 PLOT BY : emo PLOT NAME : PLOT SCALE : 1:20

WISDOT/CADDS SHEET 21

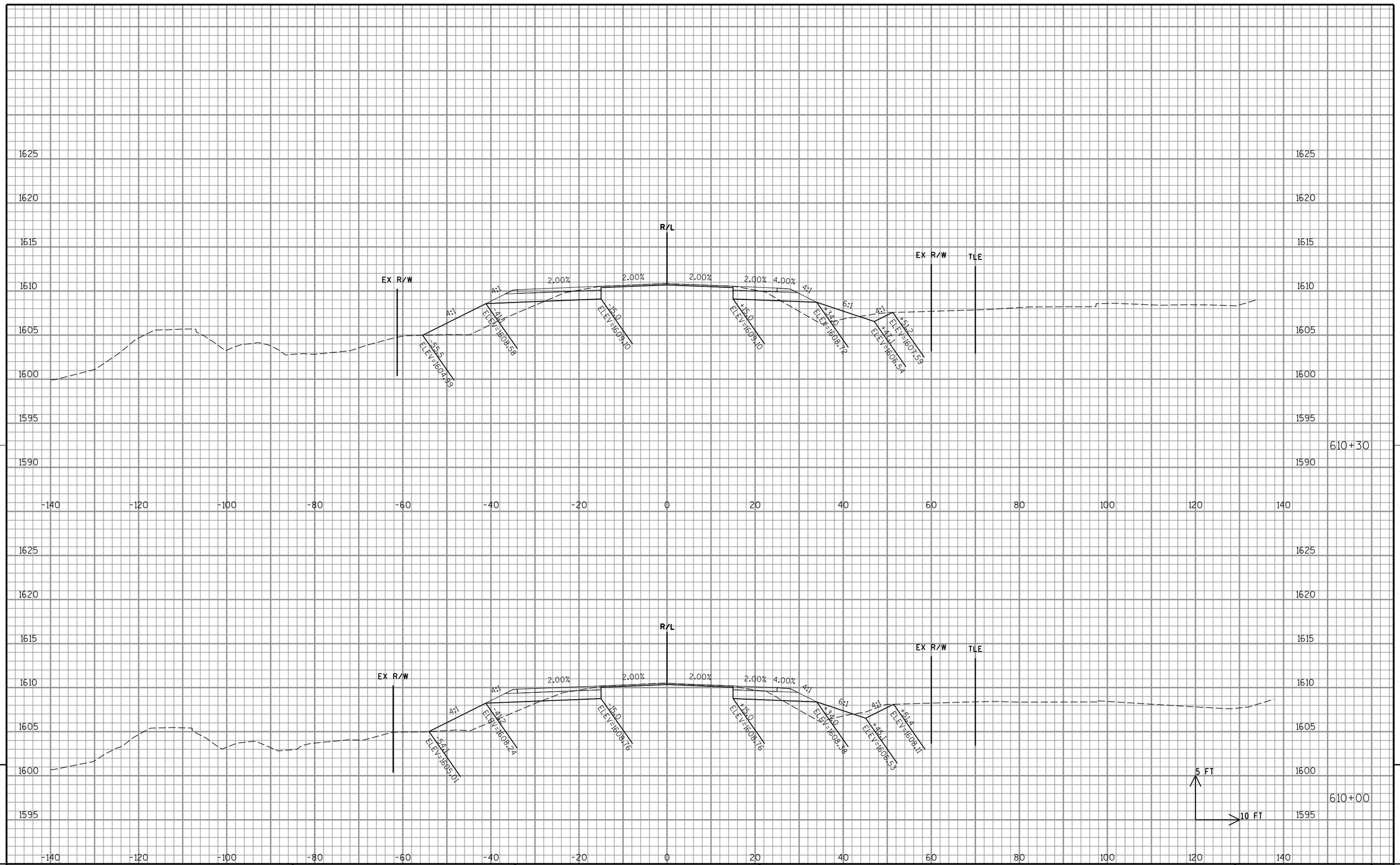

9

PROJECT NO: 1595-09-60	HWY: USH 8	COUNTY: ONEIDA	CROSS SECTIONS: USH 8 - CRESCENT ROAD INTERSECTION	SHEET 252	E

9

FILE NAME : P:\47xx\4727_DP.12.USH8.ONE\CADDS\Plan\090203_xs.dgn PLOT DATE : 2/16/2015 PLOT BY : emo PLOT NAME : PLOT SCALE : 1:20

WISDOT/CADDS SHEET 21

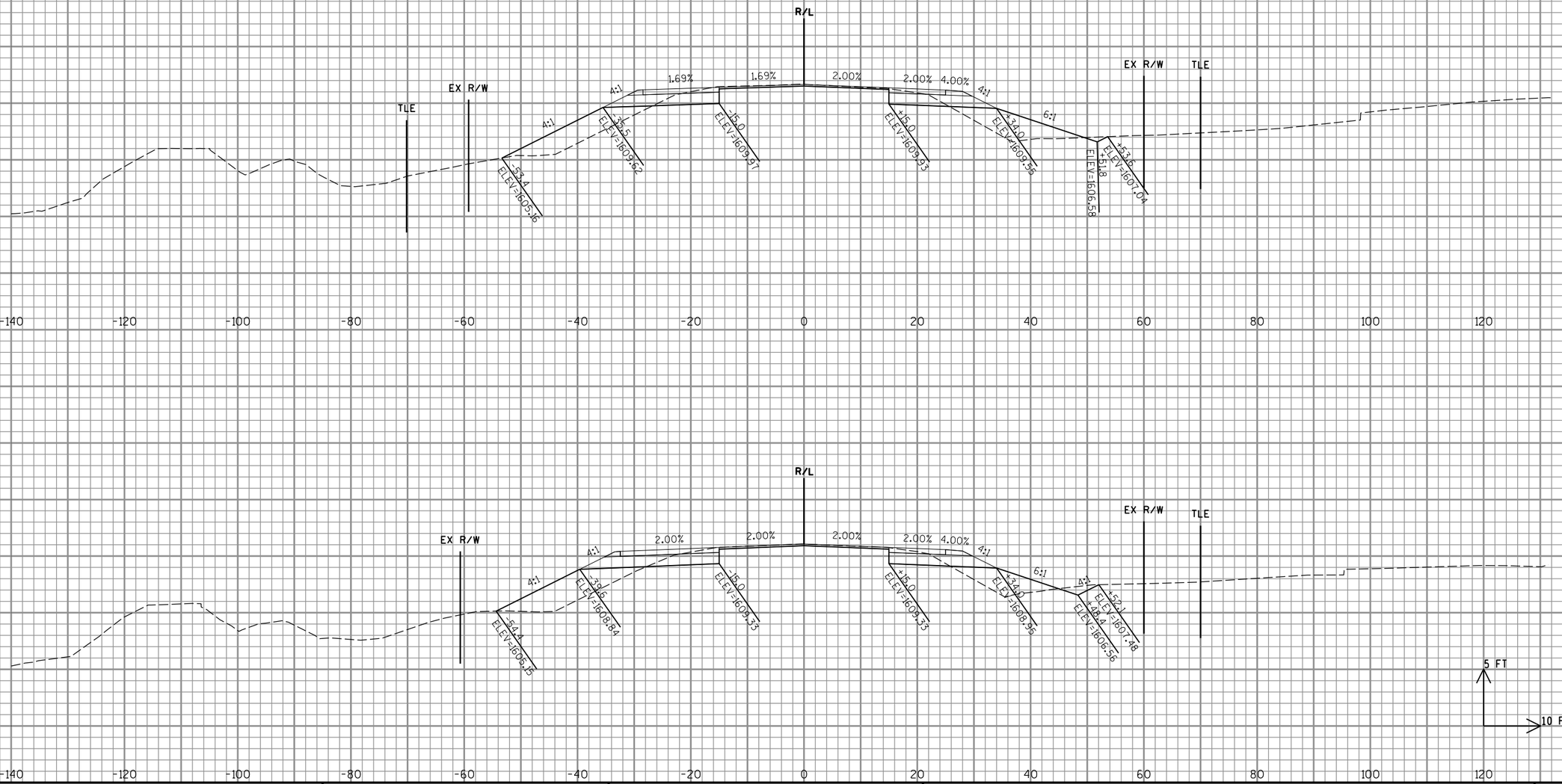

PROJECT NO: 1595-09-60	HWY: USH 8	COUNTY: ONEIDA	CROSS SECTIONS: USH 8 - CRESCENT ROAD INTERSECTION	SHEET 253	E

FILE NAME : P:\47xx\4727_DP.12.USH8.ONE\CADDS\Plan\090203_xs.dgn PLOT DATE : 2/16/2015 PLOT BY : emo PLOT NAME : PLOT SCALE : 1:20

WISDOT/CADDS SHEET 21

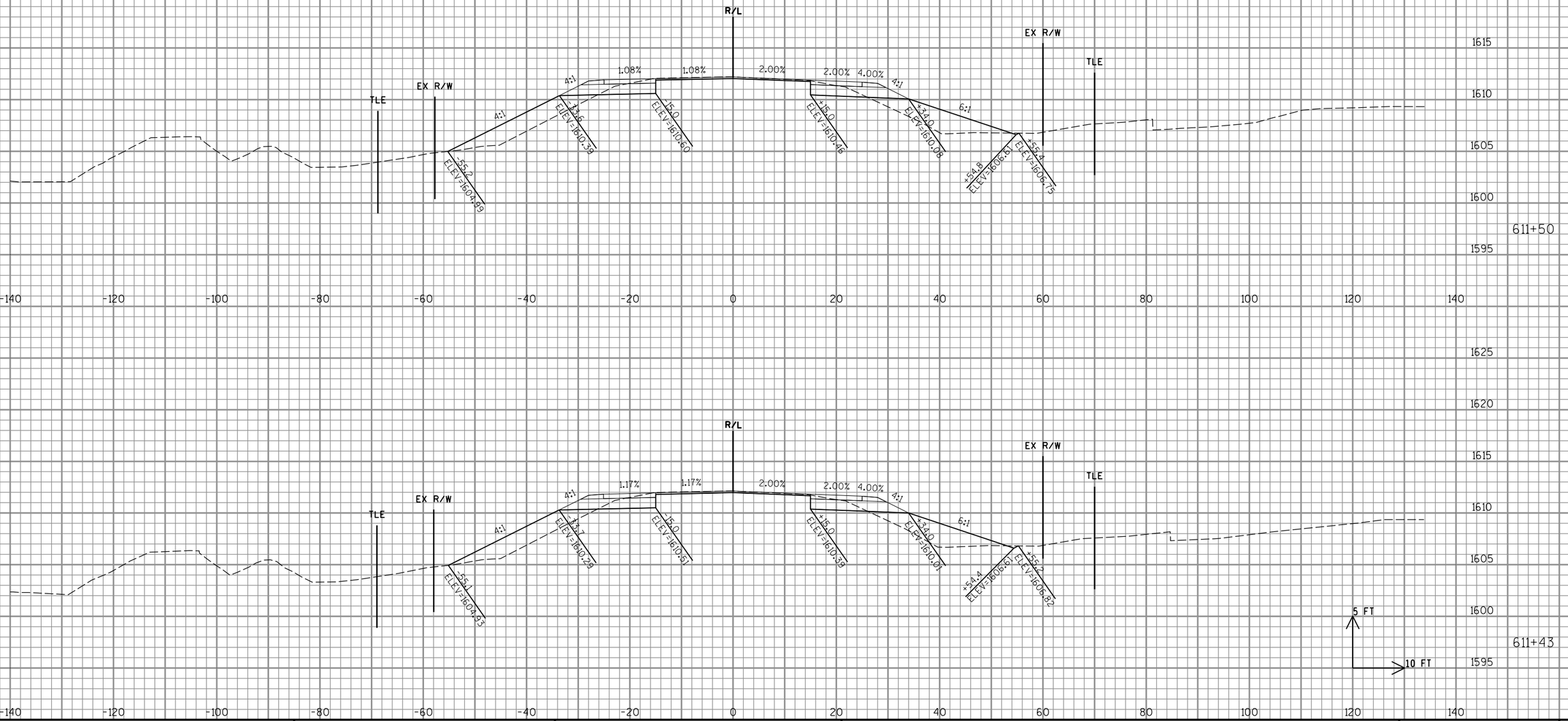

9

9

PROJECT NO: 1595-09-60	HWY: USH 8	COUNTY: ONEIDA	CROSS SECTIONS: USH 8 - CRESCENT ROAD INTERSECTION	SHEET 254	E

FILE NAME : P:\47xx\4727_DP.12.USH8.ONE\CADDS\Plan\090203_xs.dgn PLOT DATE : 2/16/2015 PLOT BY : emo PLOT NAME : PLOT SCALE : 1:20

WISDOT/CADDS SHEET 21

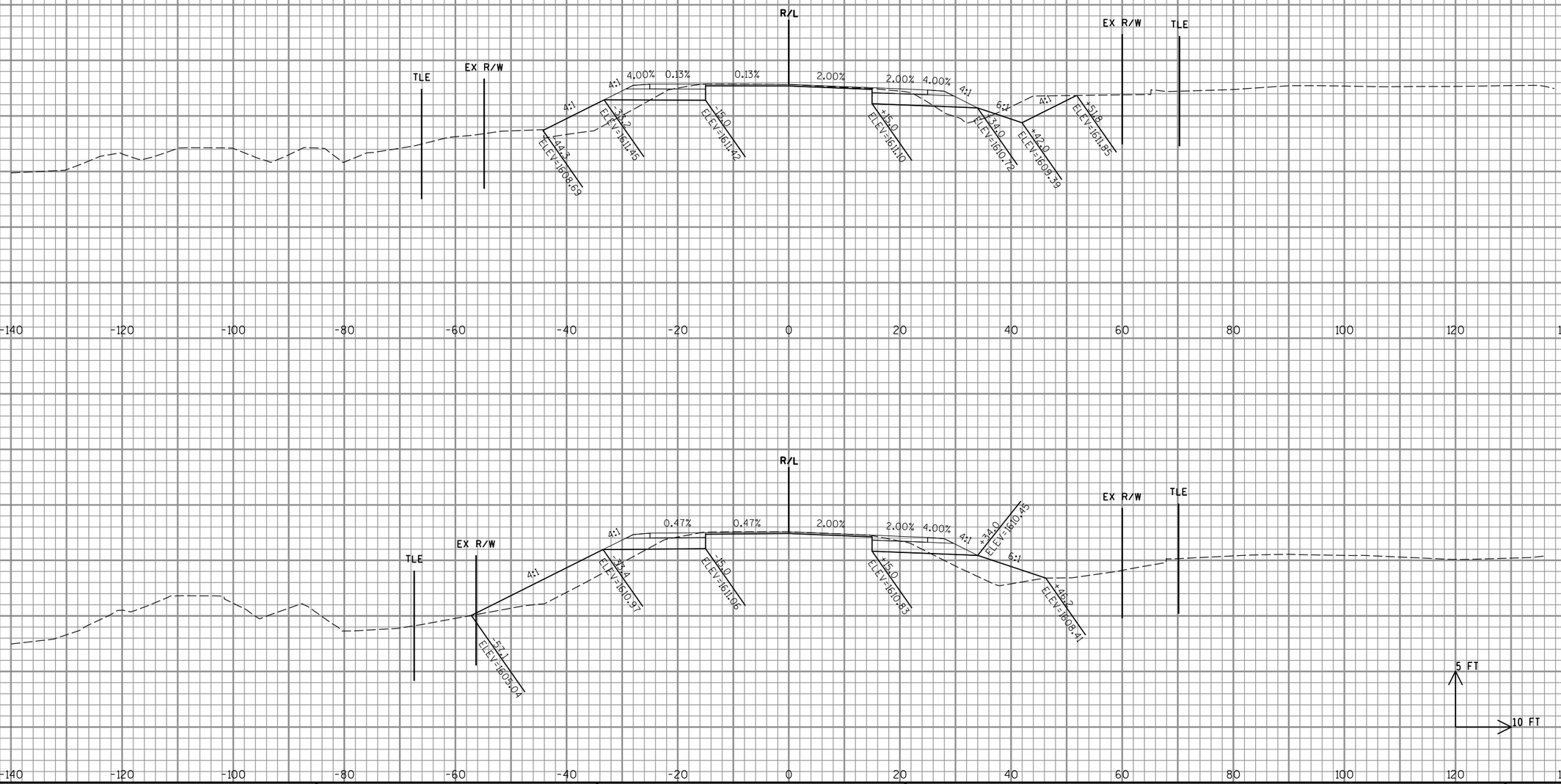

PROJECT NO: 1595-09-60	HWY: USH 8	COUNTY: ONEIDA	CROSS SECTIONS: USH 8 - CRESCENT ROAD INTERSECTION	SHEET 255	E

FILE NAME : P:\47xx\4727_DP.12.USH8.ONE\CADDS\Plan\090203_xs.dgn PLOT DATE : 2/16/2015 PLOT BY : emo PLOT NAME : PLOT SCALE : 1:20

WISDOT/CADDS SHEET 21

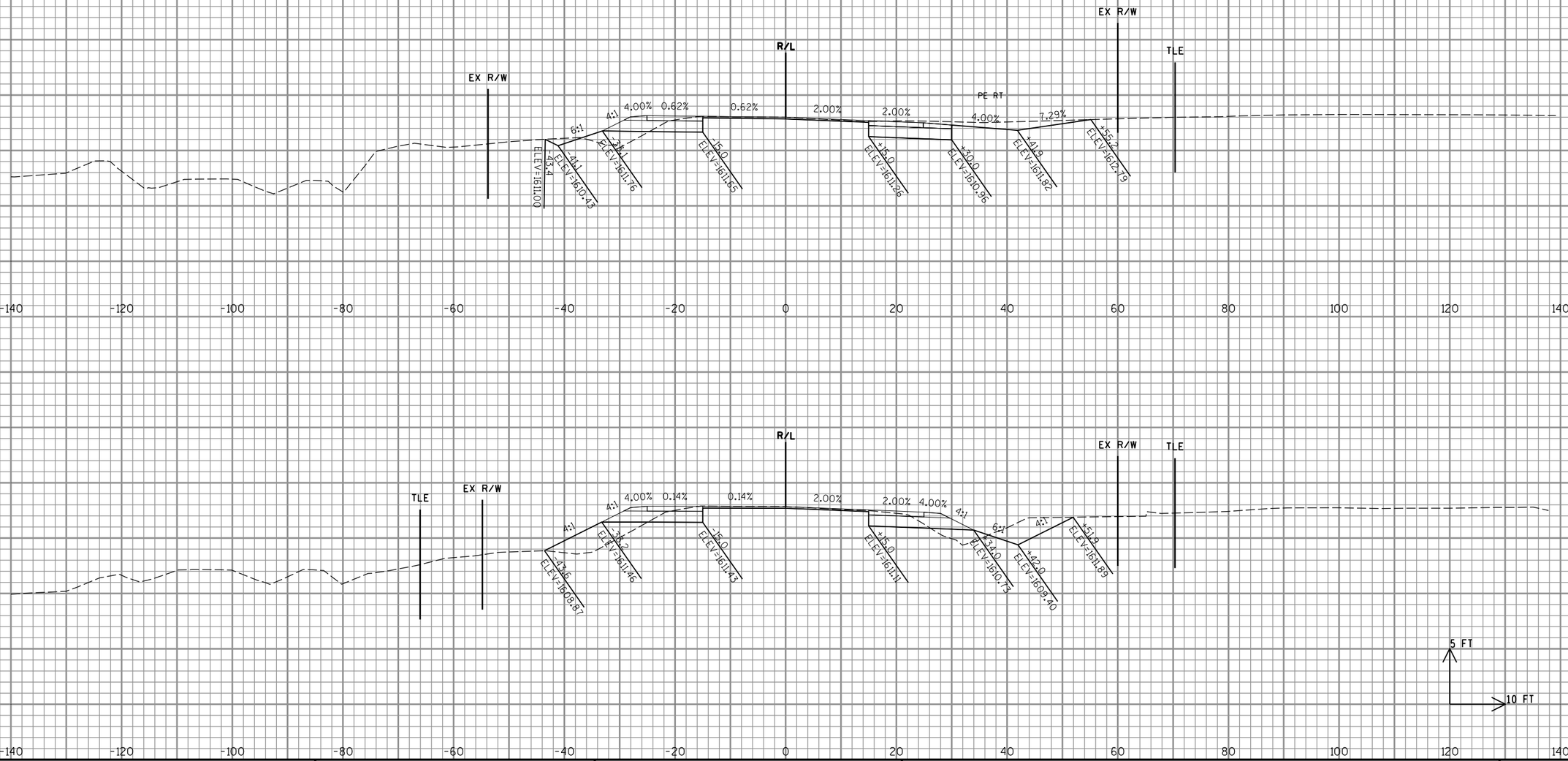

PROJECT NO: 1595-09-60	HWY: USH 8	COUNTY: ONEIDA	CROSS SECTIONS: USH 8 - CRESCENT ROAD INTERSECTION	SHEET 256	E

FILE NAME : P:\47xx\4727_DP.12.USH8.ONE\CADDS\Plan\090203_xs.dgn PLOT DATE : 2/16/2015 PLOT BY : emo PLOT NAME : PLOT SCALE : 1:20

WISDOT/CADDS SHEET 21

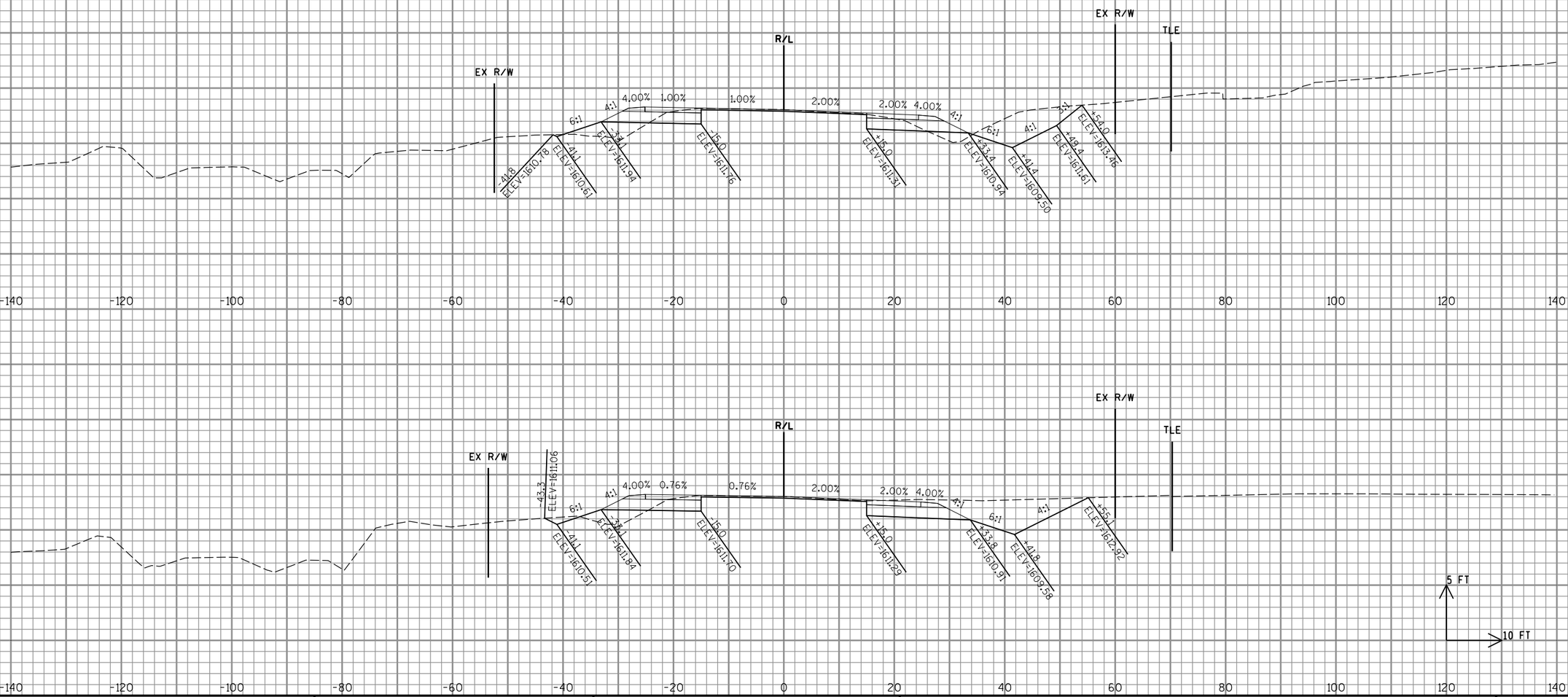

PROJECT NO: 1595-09-60	HWY: USH 8	COUNTY: ONEIDA	CROSS SECTIONS: USH 8 - CRESCENT ROAD INTERSECTION	SHEET 257	E

FILE NAME : P:\47xx\4727_DP.12.USH8.ONE\CADDS\Plan\090203_xs.dgn PLOT DATE : 2/16/2015 PLOT BY : emo PLOT NAME : PLOT SCALE : 1:20

WISDOT/CADDS SHEET 21

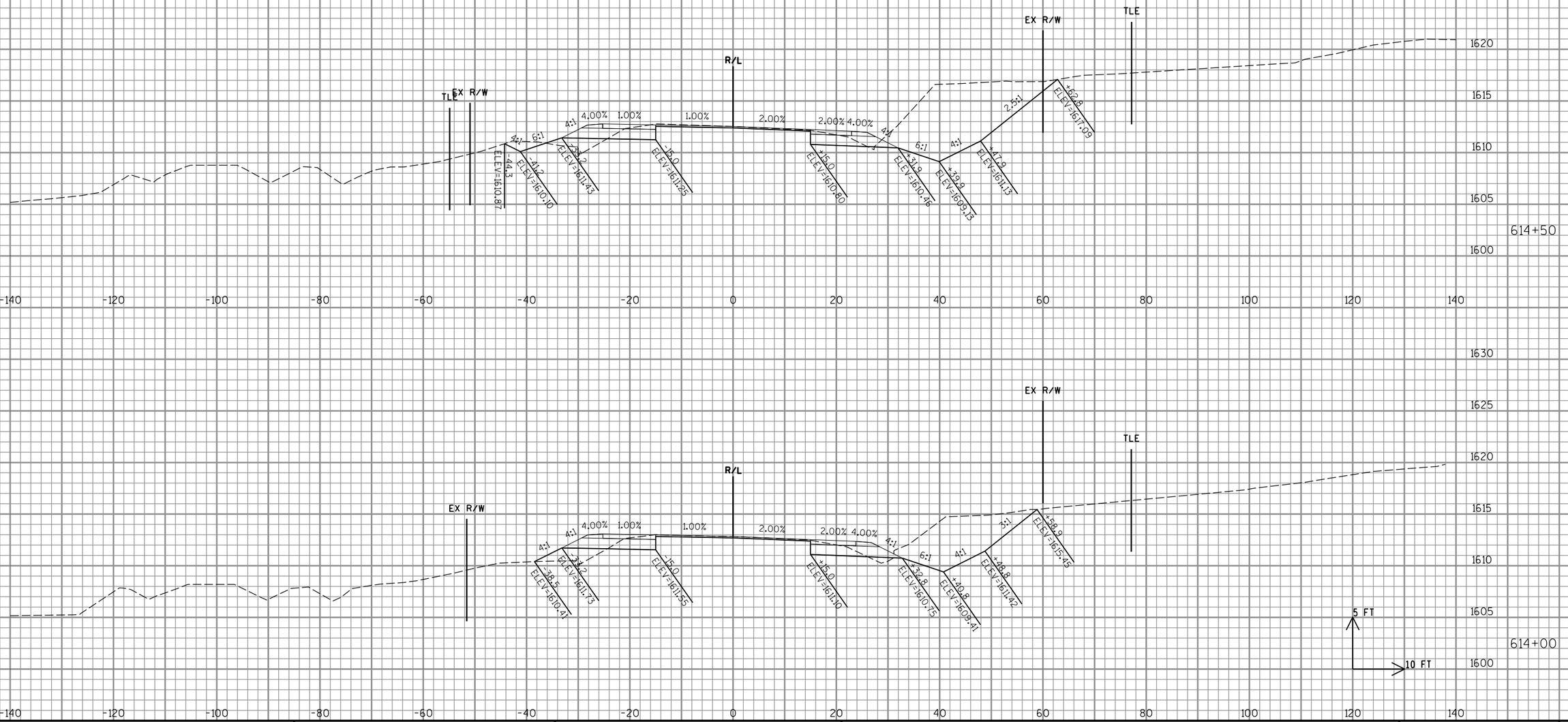

9

PROJECT NO: 1595-09-60	HWY: USH 8	COUNTY: ONEIDA	CROSS SECTIONS: USH 8 - CRESCENT ROAD INTERSECTION	SHEET 258	E

9

FILE NAME : P:\47xx\4727_DP.12.USH8.ONE\CADDS\Plan\090203_xs.dgn PLOT DATE : 2/16/2015 PLOT BY : emo PLOT NAME : PLOT SCALE : 1:20

WISDOT/CADDS SHEET 21

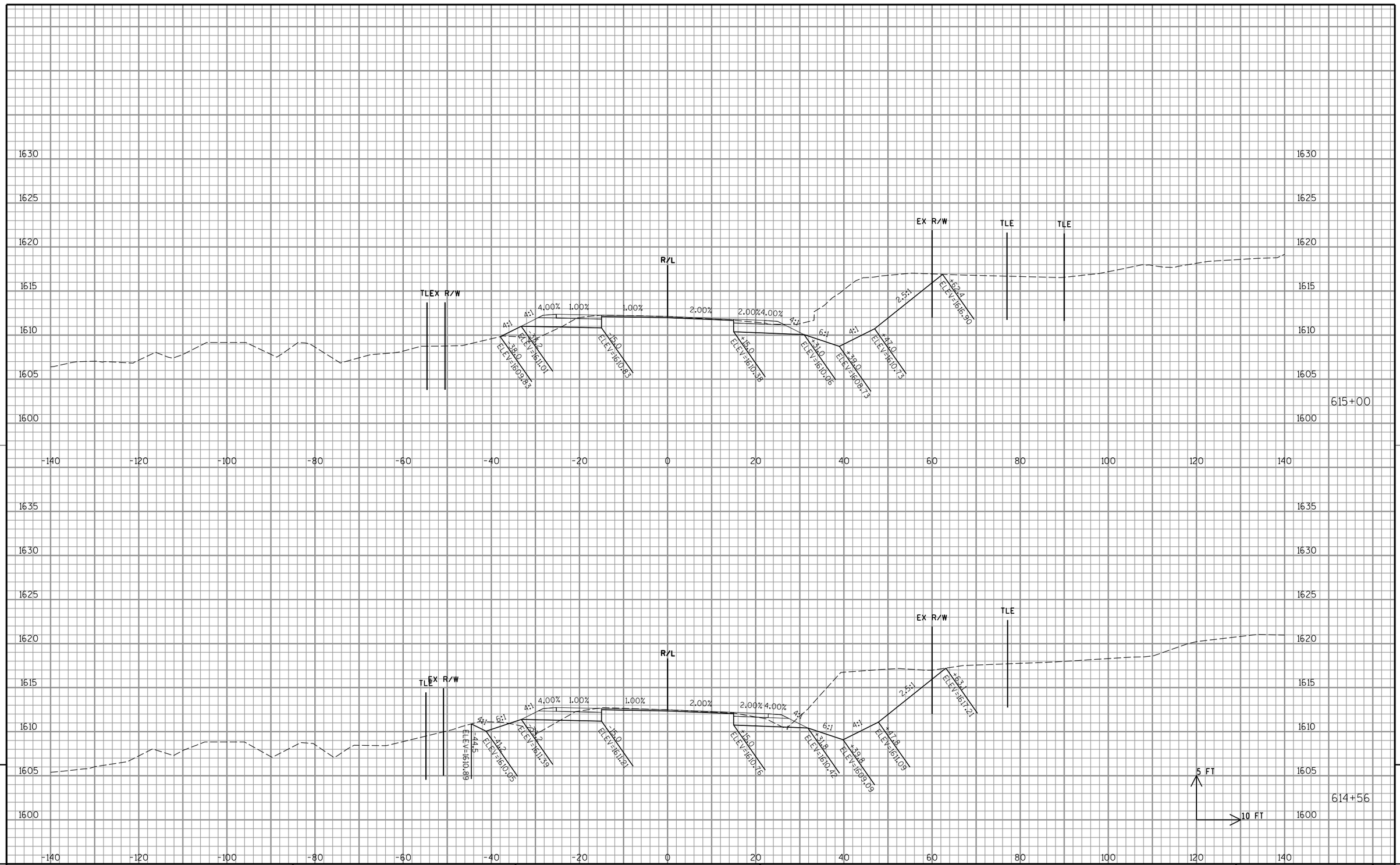

9

9

PROJECT NO: 1595-09-60	HWY: USH 8	COUNTY: ONEIDA	CROSS SECTIONS: USH 8 - CRESCENT ROAD INTERSECTION	SHEET 259	E

FILE NAME : P:\47xx\4727_DP.12.USH8.ONE\CADDS\Plan\090203_xs.dgn PLOT DATE : 2/16/2015 PLOT BY : emo PLOT NAME : PLOT SCALE : 1:20

WISDOT/CADDS SHEET 21

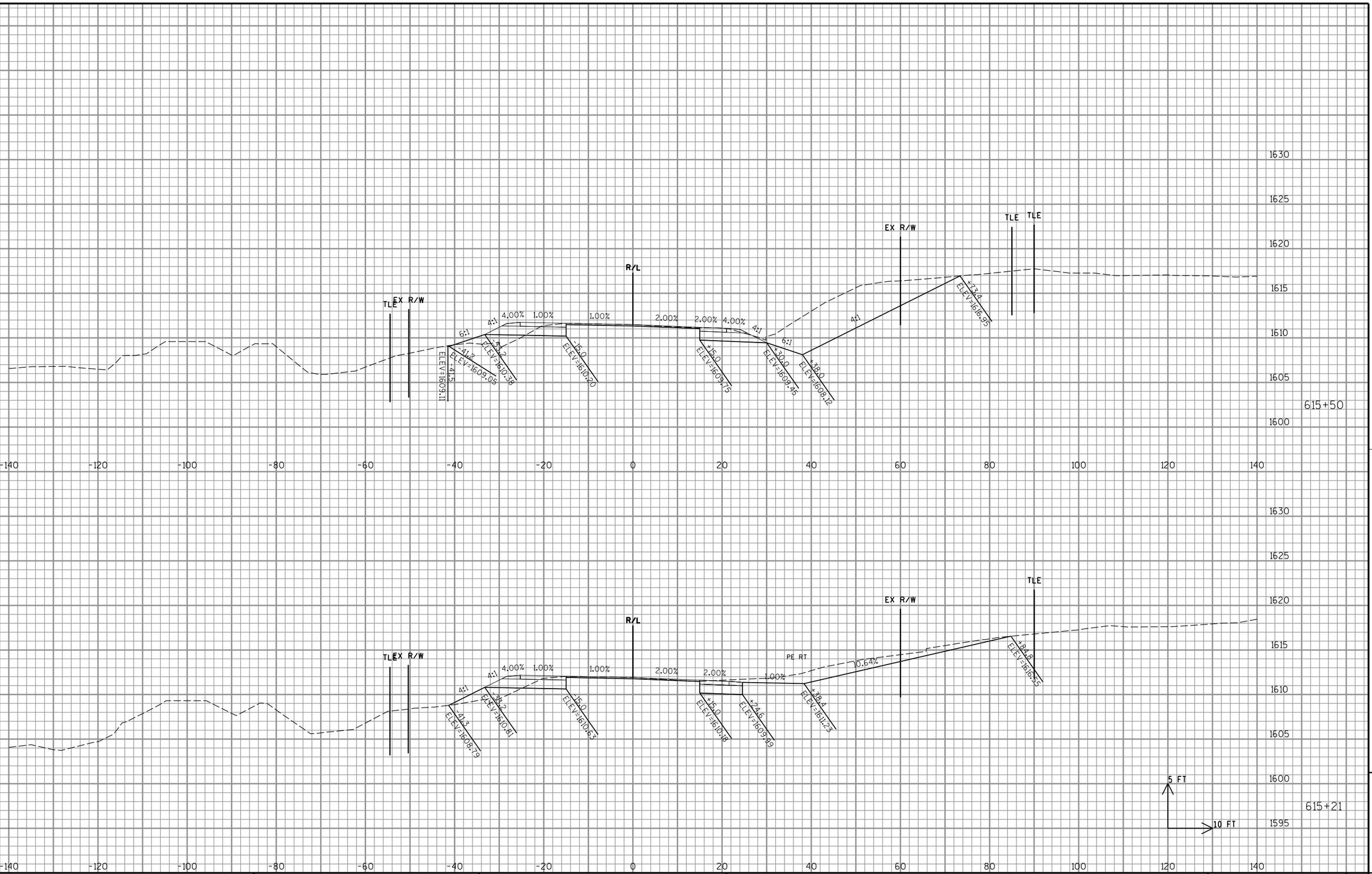

PROJECT NO: 1595-09-60	HWY: USH 8	COUNTY: ONEIDA	CROSS SECTIONS: USH 8 - CRESCENT ROAD INTERSECTION	SHEET 260	E

FILE NAME : P:\47xx\4727_DP.12.USH8.ONE\CADDS\Plan\090203_xs.dgn PLOT DATE : 2/16/2015 PLOT BY : emo PLOT NAME : PLOT SCALE : 1:20

WISDOT/CADDS SHEET 21

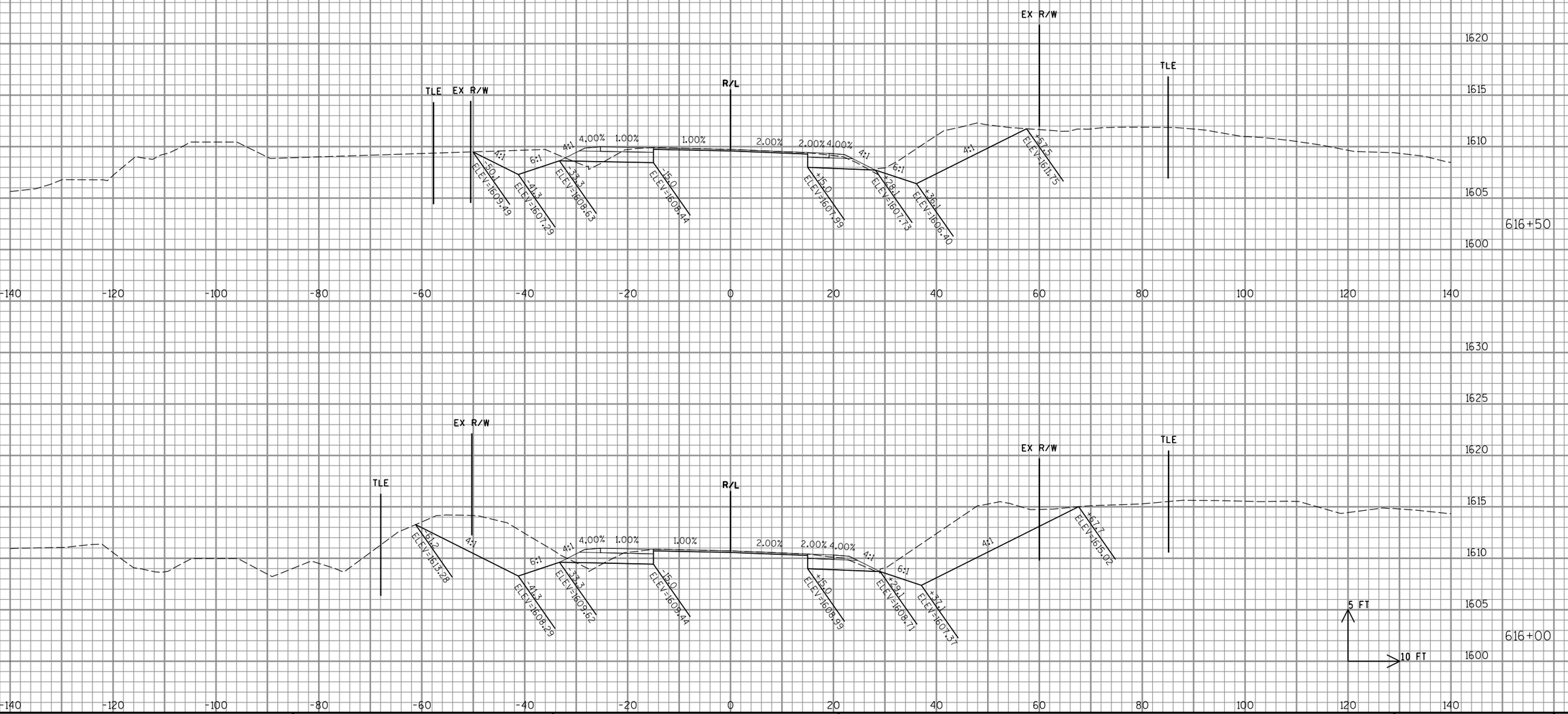

9

9

PROJECT NO: 1595-09-60	HWY: USH 8	COUNTY: ONEIDA	CROSS SECTIONS: USH 8 - CRESCENT ROAD INTERSECTION	SHEET 261	E

FILE NAME : P:\47xx\4727_DP.12.USH8.ONE\CADDS\Plan\090203_xs.dgn PLOT DATE : 2/16/2015 PLOT BY : emo PLOT NAME : PLOT SCALE : 1:20

WISDOT/CADDS SHEET 21

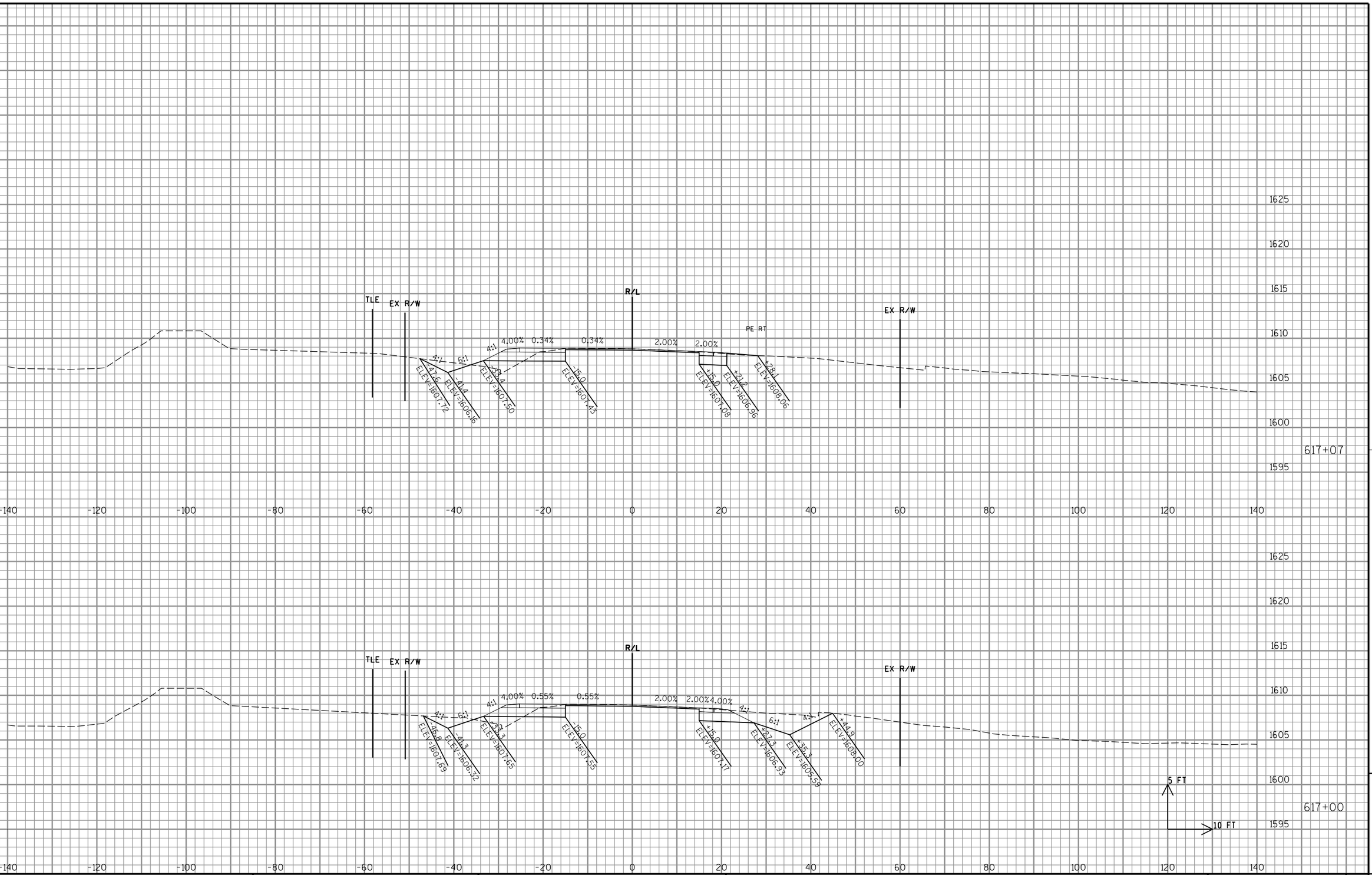

9

9

PROJECT NO: 1595-09-60	HWY: USH 8	COUNTY: ONEIDA	CROSS SECTIONS: USH 8 - CRESCENT ROAD INTERSECTION	SHEET 262	E

FILE NAME : P:\47xx\4727_DP.12.USH8.ONE\CADDS\Plan\090203_xs.dgn PLOT DATE : 2/16/2015 PLOT BY : emo PLOT NAME : PLOT SCALE : 1:20

WISDOT/CADDS SHEET 21

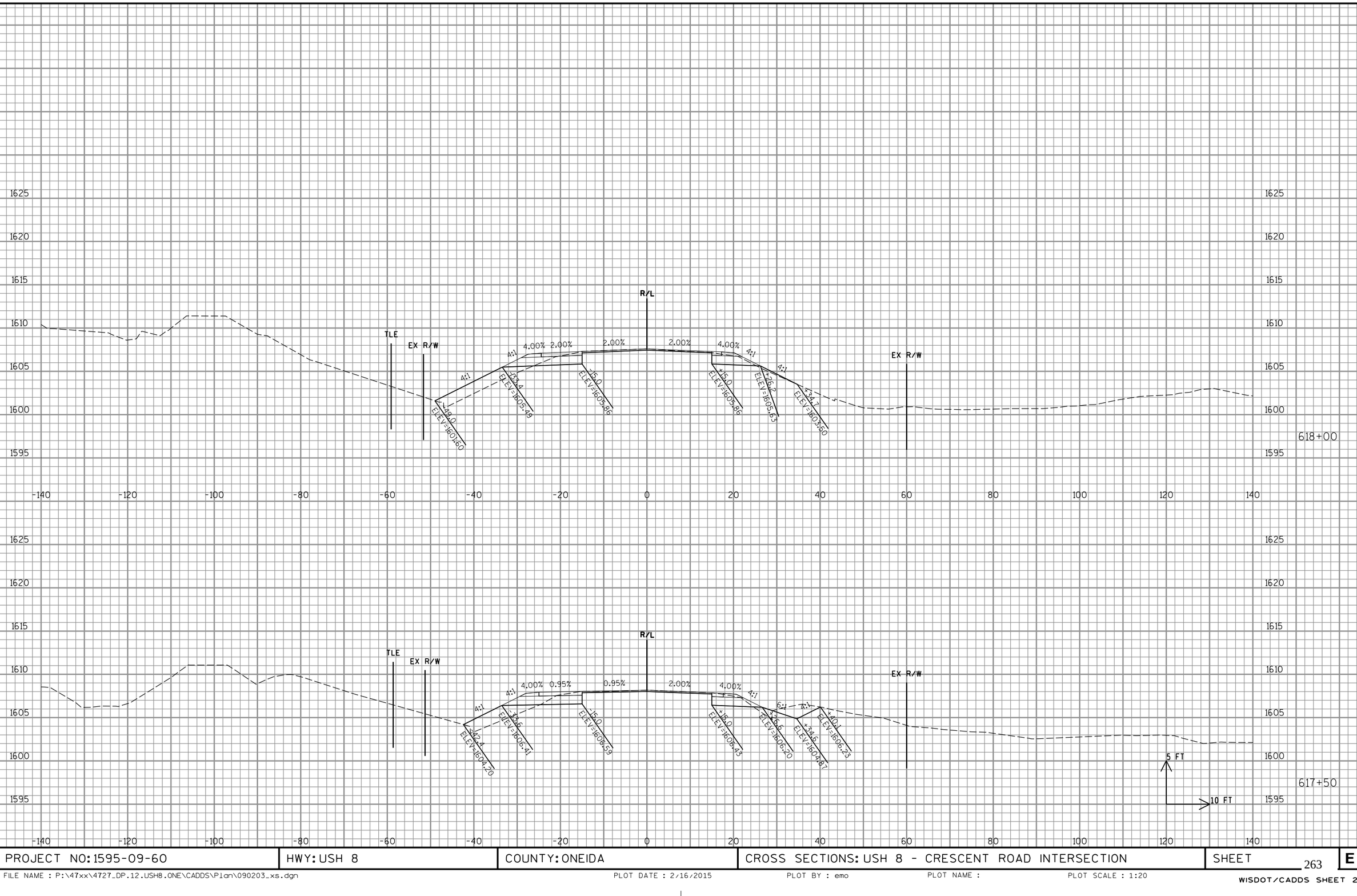

PROJECT NO: 1595-09-60	HWY: USH 8	COUNTY: ONEIDA	CROSS SECTIONS: USH 8 - CRESCENT ROAD INTERSECTION	SHEET 263	E

FILE NAME : P:\47xx\4727_DP.12.USH8.ONE\CADDS\Plan\090203_xs.dgn PLOT DATE : 2/16/2015 PLOT BY : emo PLOT NAME : PLOT SCALE : 1:20

WISDOT/CADDS SHEET 21

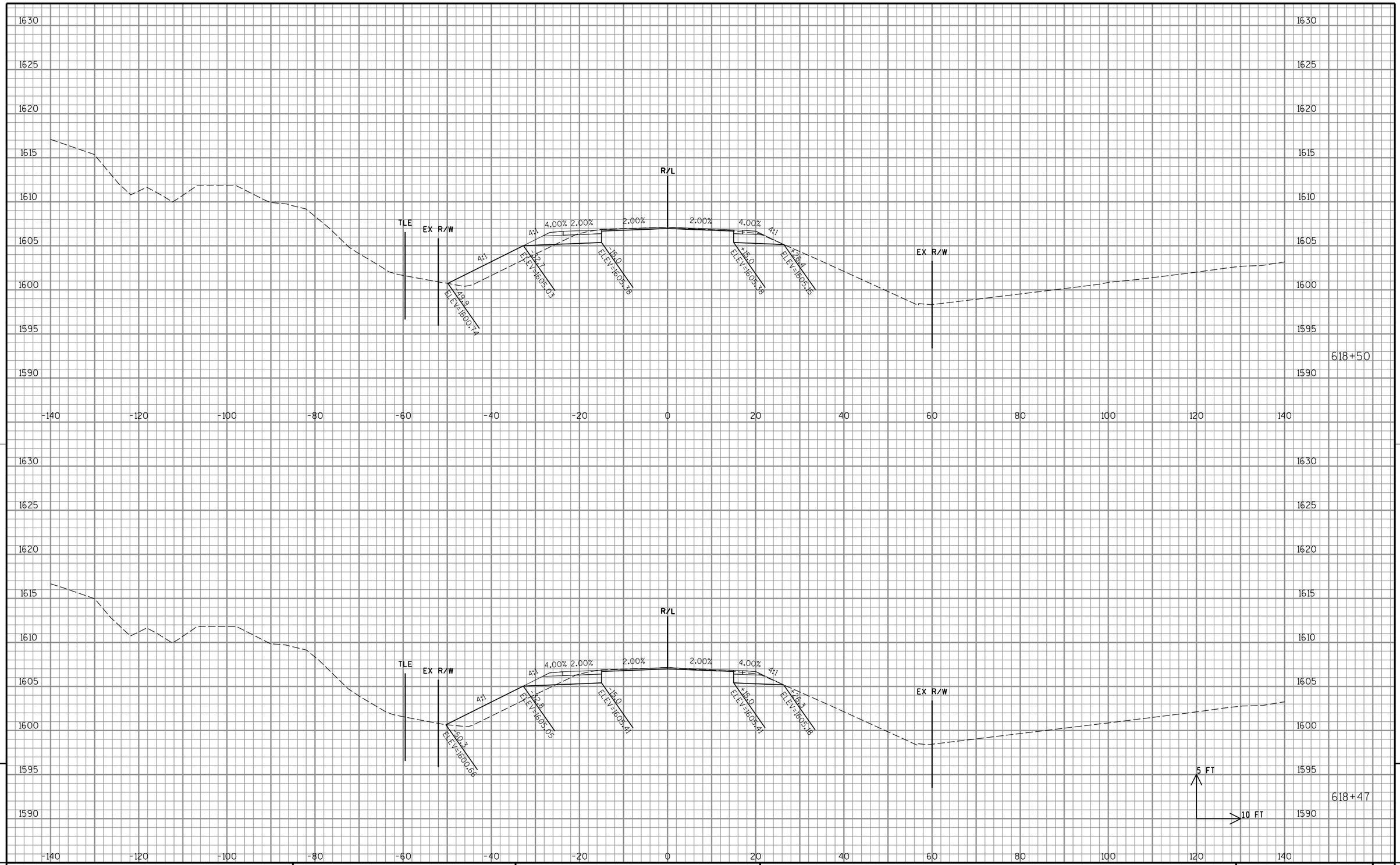

PROJECT NO: 1595-09-60	HWY: USH 8	COUNTY: ONEIDA	CROSS SECTIONS: USH 8 - CRESCENT ROAD INTERSECTION	SHEET 264	E

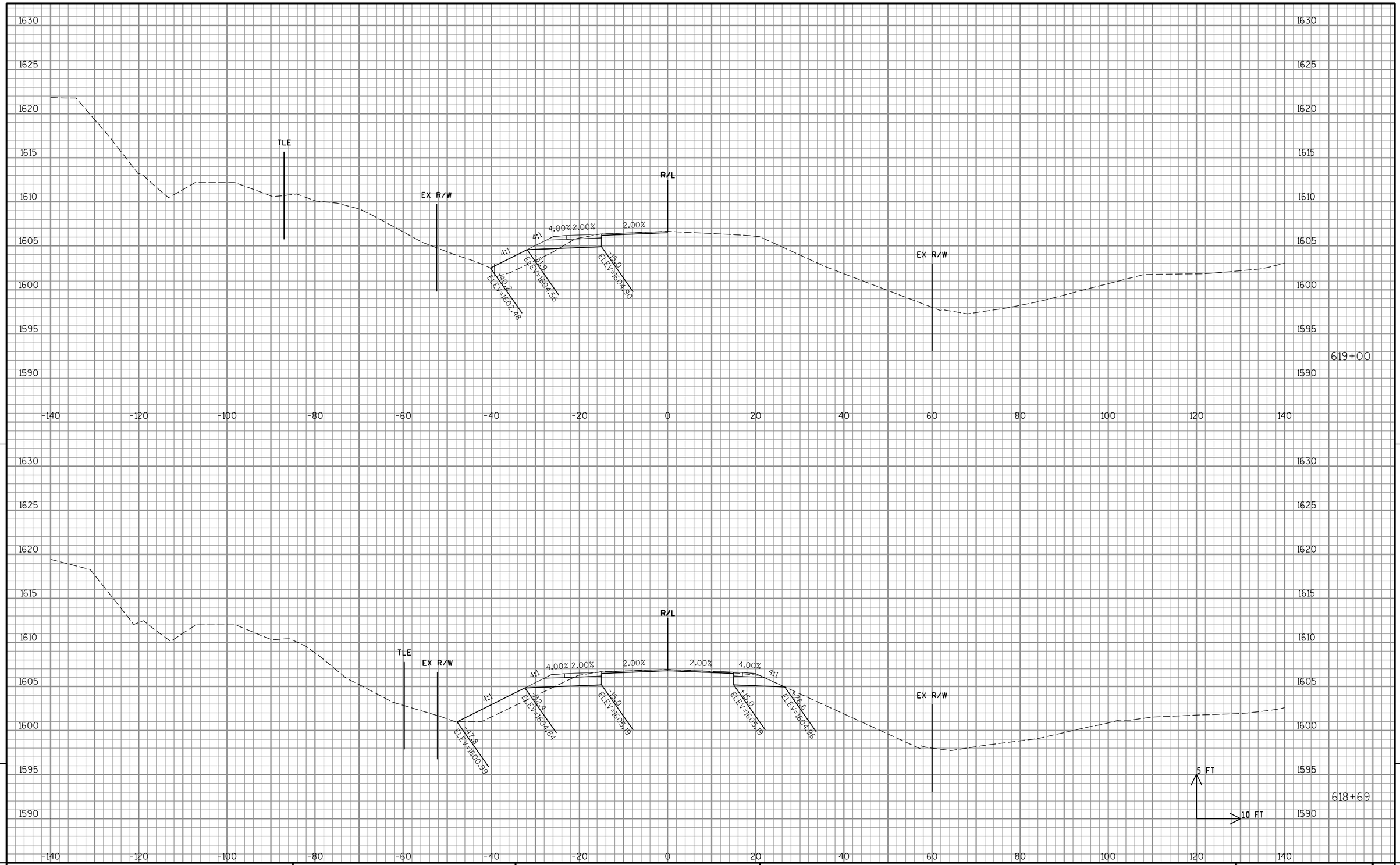

9

9

PROJECT NO: 1595-09-60	HWY: USH 8	COUNTY: ONEIDA	CROSS SECTIONS: USH 8 - CRESCENT ROAD INTERSECTION	SHEET 265	E

FILE NAME : P:\47xx\4727_DP.12.USH8.ONE\CADDS\Plan\090203_xs.dgn PLOT DATE : 2/16/2015 PLOT BY : emo PLOT NAME : PLOT SCALE : 1:20

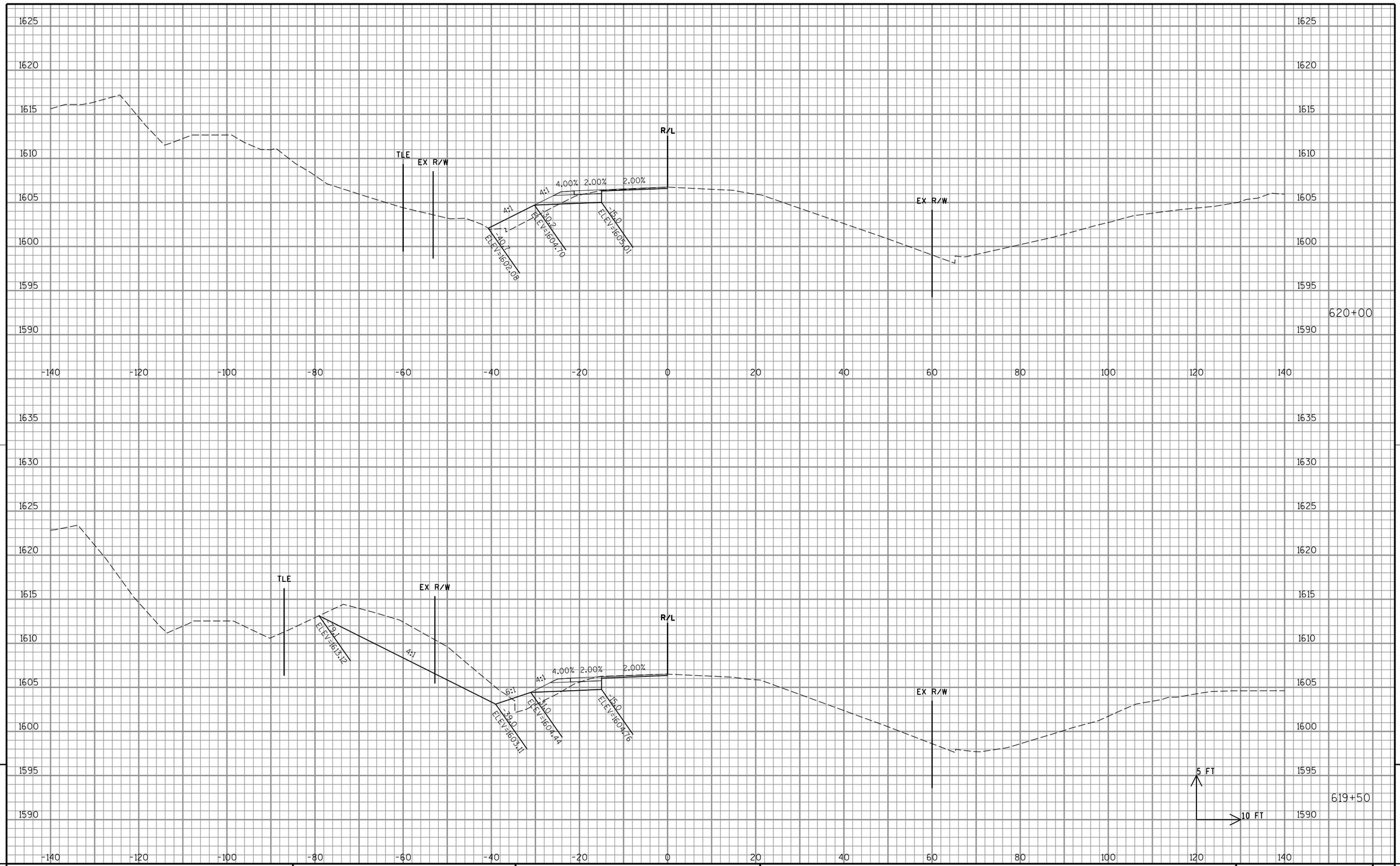

9

9

PROJECT NO: 1595-09-60	HWY: USH 8	COUNTY: ONEIDA	CROSS SECTIONS: USH 8 - CRESCENT ROAD INTERSECTION	SHEET 266	E

FILE NAME : P:\47xx\4727_DP.12.USH8.ONE\CADDS\Plan\090203_xs.dgn PLOT DATE : 2/16/2015 PLOT BY : emo PLOT NAME : PLOT SCALE : 1:20

WISDOT/CADDS SHEET 21

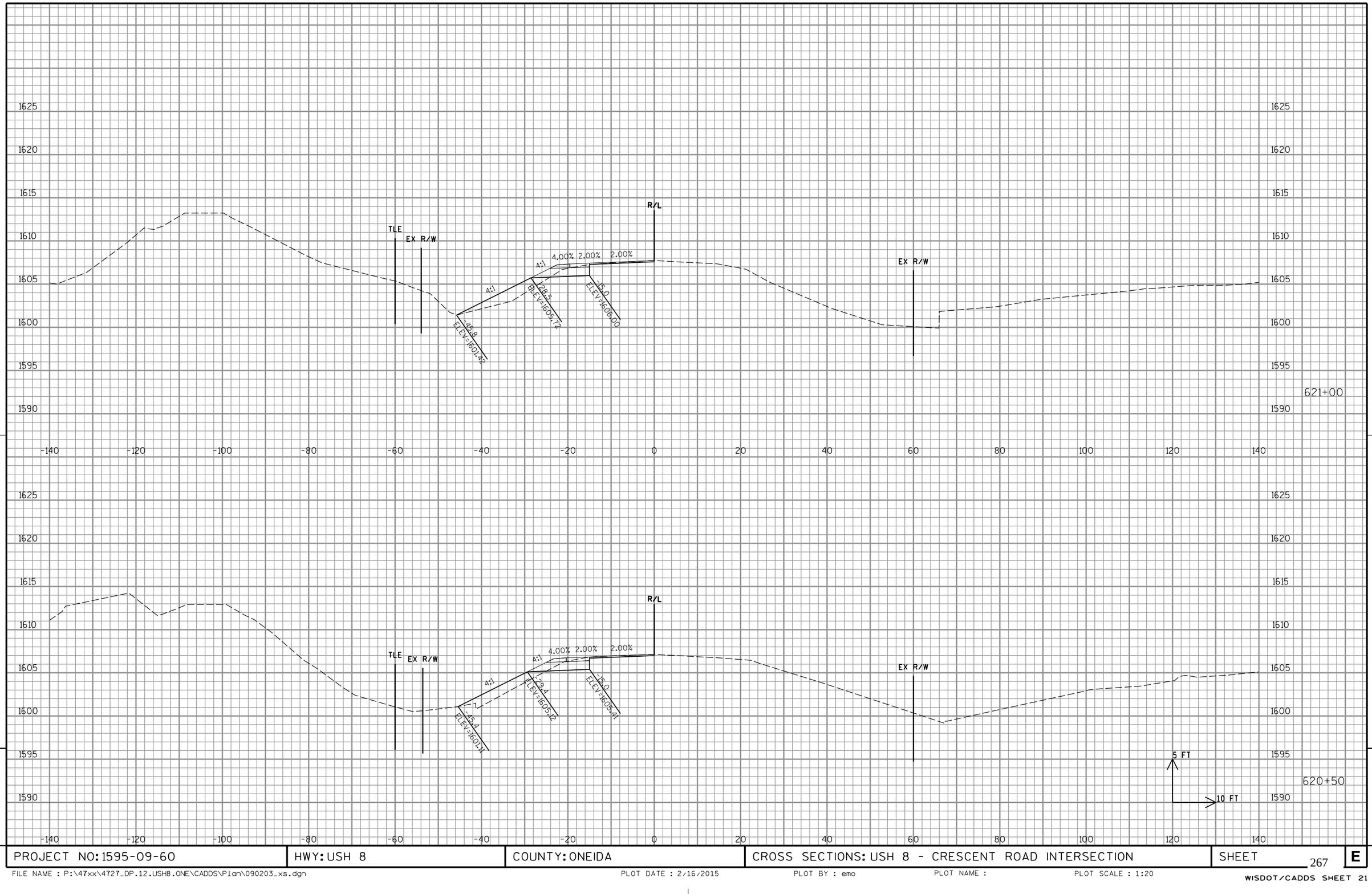

9

9

PROJECT NO: 1595-09-60	HWY: USH 8	COUNTY: ONEIDA	CROSS SECTIONS: USH 8 - CRESCENT ROAD INTERSECTION	SHEET 267	E

FILE NAME : P:\47xx\4727_DP.12.USH8.ONE\CADDS\Plan\090203_xs.dgn PLOT DATE : 2/16/2015 PLOT BY : emo PLOT NAME : PLOT SCALE : 1:20

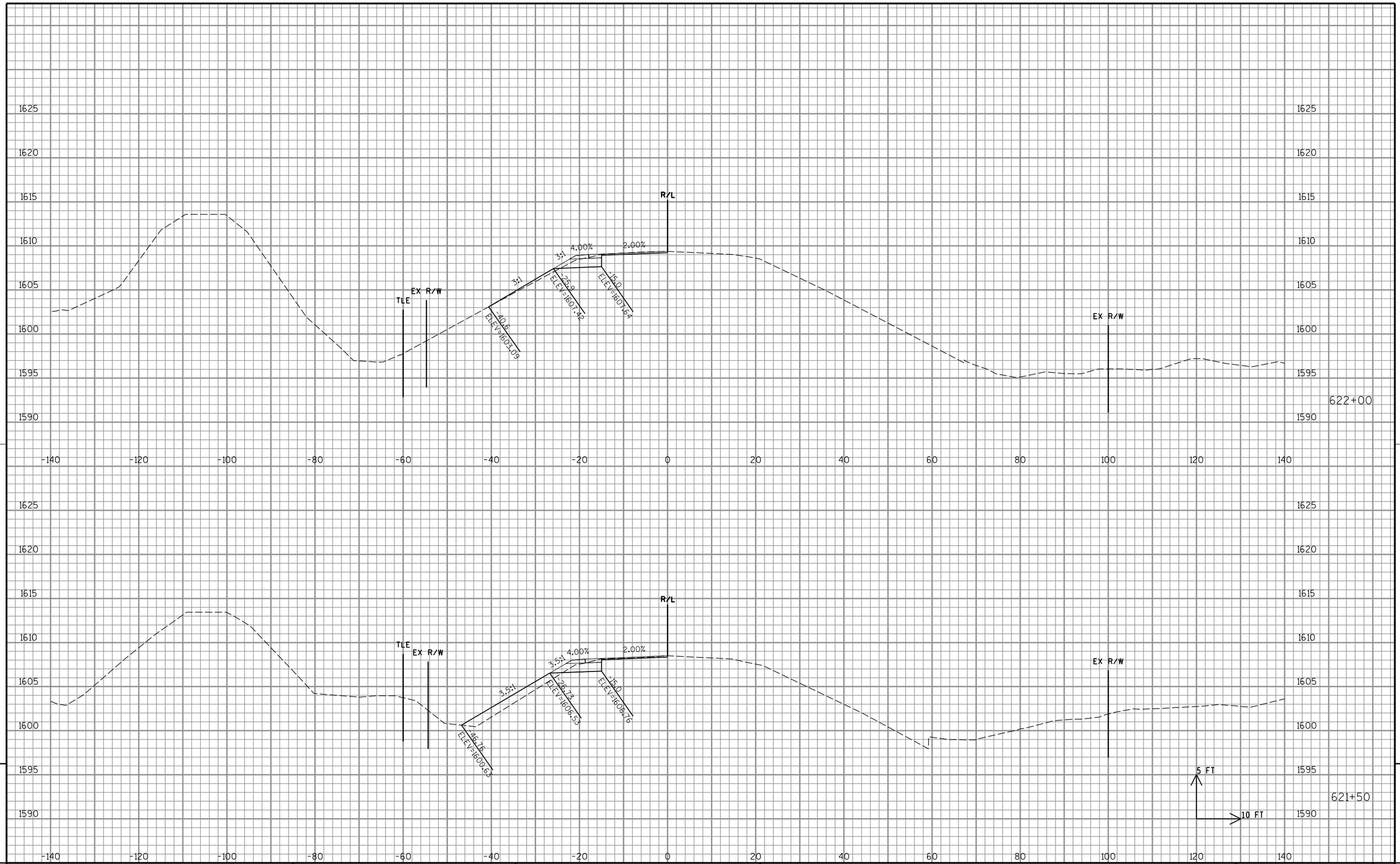

PROJECT NO: 1595-09-60	HWY: USH 8	COUNTY: ONEIDA	CROSS SECTIONS: USH 8 - CRESCENT ROAD INTERSECTION	SHEET 268	E

FILE NAME : P:\47xx\4727_DP.12.USH8.ONE\CADDS\Plan\090203_xs.dgn PLOT DATE : 2/16/2015 PLOT BY : emo PLOT NAME : PLOT SCALE : 1:20

WISDOT/CADDS SHEET 21

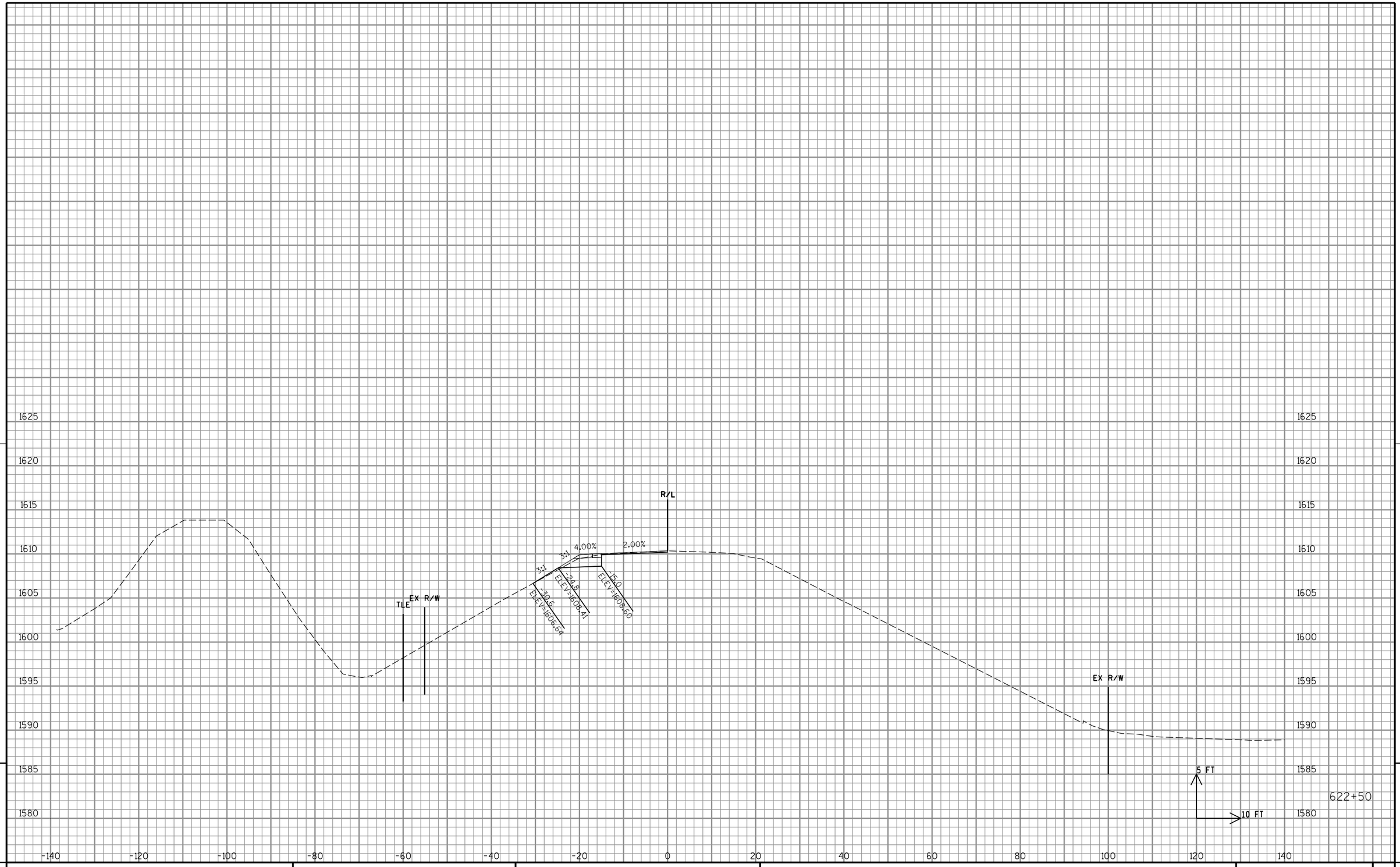

9

9

PROJECT NO: 1595-09-60	HWY: USH 8	COUNTY: ONEIDA	CROSS SECTIONS: USH 8 - CRESCENT ROAD INTERSECTION	SHEET 269	E

FILE NAME : P:\47xx\4727_DP.12.USH8.ONE\CADDS\Plan\090203_xs.dgn PLOT DATE : 2/16/2015 PLOT BY : emo PLOT NAME : PLOT SCALE : 1:20

WISDOT/CADDS SHEET 21

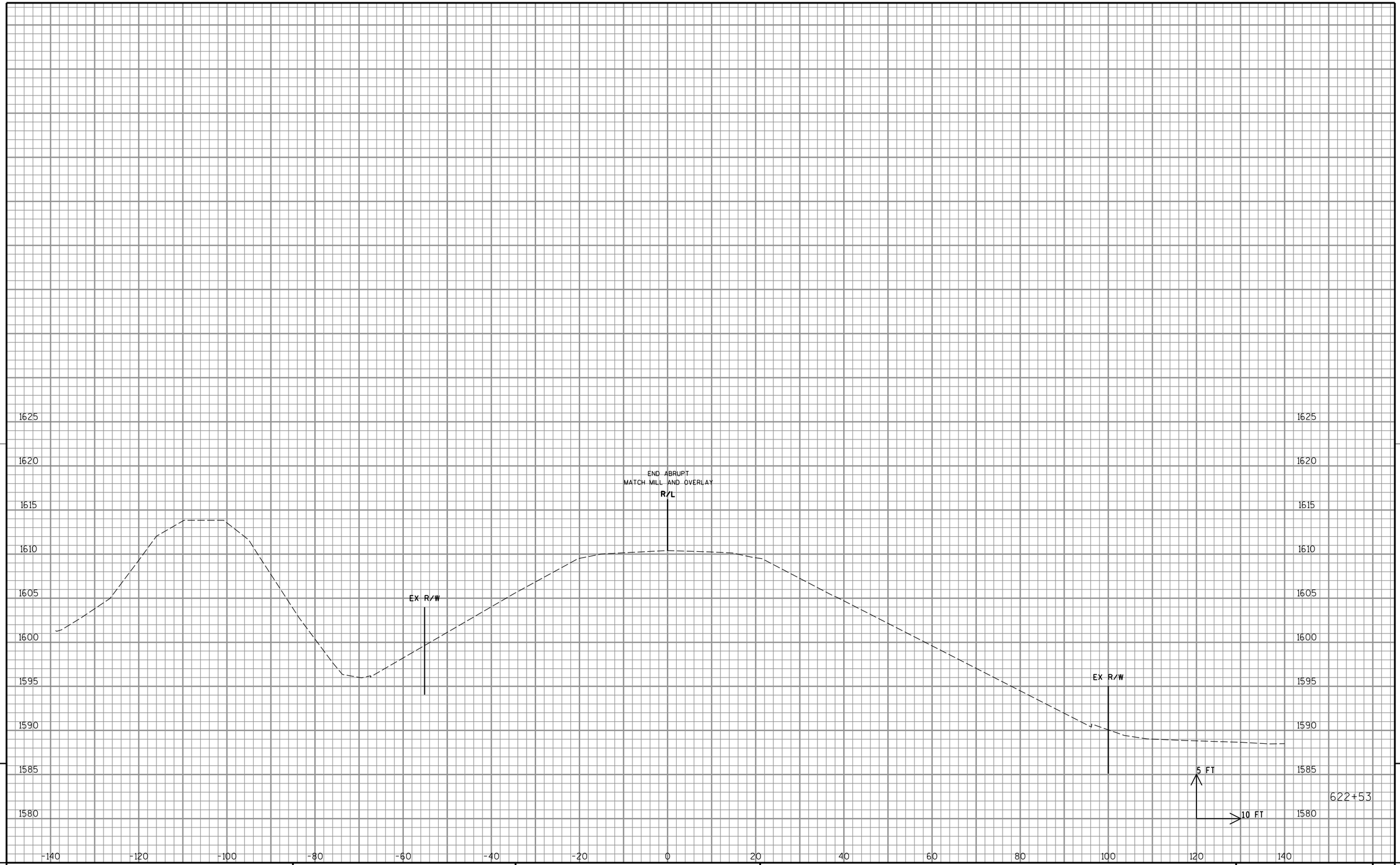

9

PROJECT NO: 1595-09-60	HWY: USH 8	COUNTY: ONEIDA	CROSS SECTIONS: USH 8 - CRESCENT ROAD INTERSECTION	SHEET 270	E

9

FILE NAME : P:\47xx\4727_DP.12.USH8.ONE\CADDS\Plan\090203_xs.dgn PLOT DATE : 2/16/2015 PLOT BY : emo PLOT NAME : PLOT SCALE : 1:20

WISDOT/CADDS SHEET 21

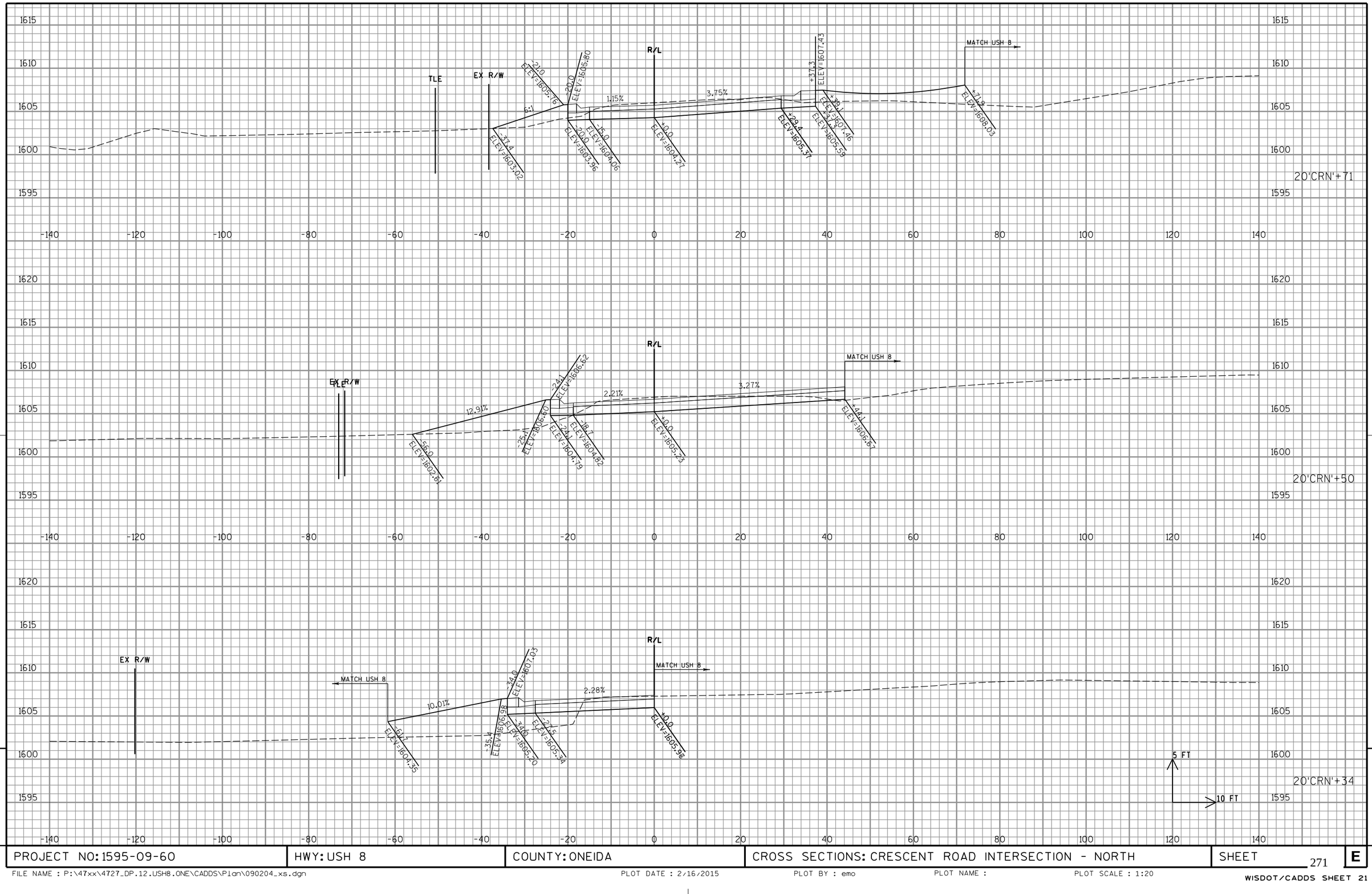

9

9

PROJECT NO: 1595-09-60	HWY: USH 8	COUNTY: ONEIDA	CROSS SECTIONS: CRESCENT ROAD INTERSECTION - NORTH	SHEET 271	E

FILE NAME : P:\47xx\4727_DP.12.USH8.ONE\CADDS\Plan\090204_xs.dgn PLOT DATE : 2/16/2015 PLOT BY : emo PLOT NAME : PLOT SCALE : 1:20

WISDOT/CADDS SHEET 21

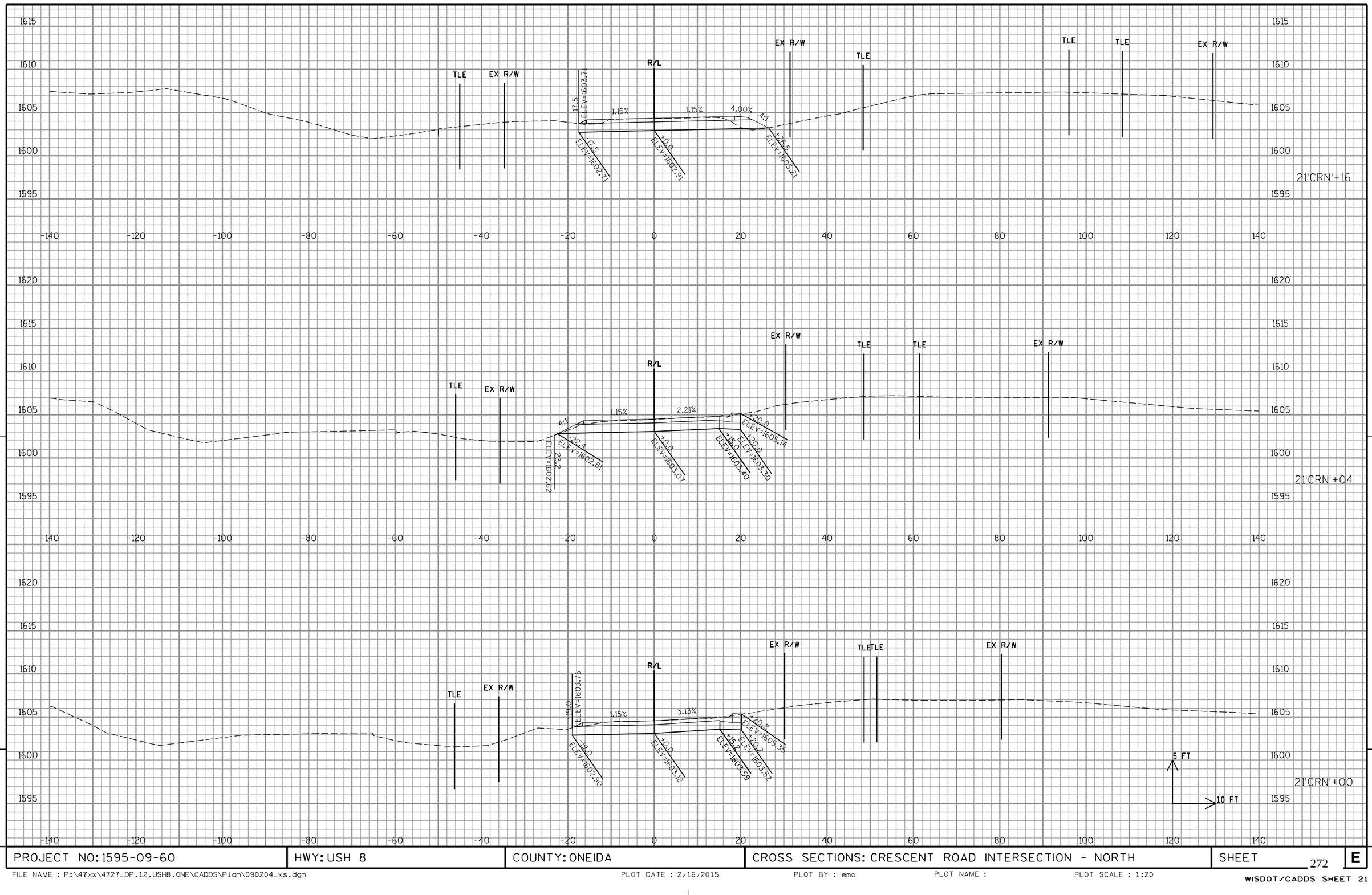

PROJECT NO: 1595-09-60	HWY: USH 8	COUNTY: ONEIDA	CROSS SECTIONS: CRESCENT ROAD INTERSECTION - NORTH	SHEET 272	E

FILE NAME : P:\47xx\4727_DP.12.USH8.ONE\CADDS\Plan\090204_xs.dgn PLOT DATE : 2/16/2015 PLOT BY : emo PLOT NAME : PLOT SCALE : 1:20

WISDOT/CADDS SHEET 21

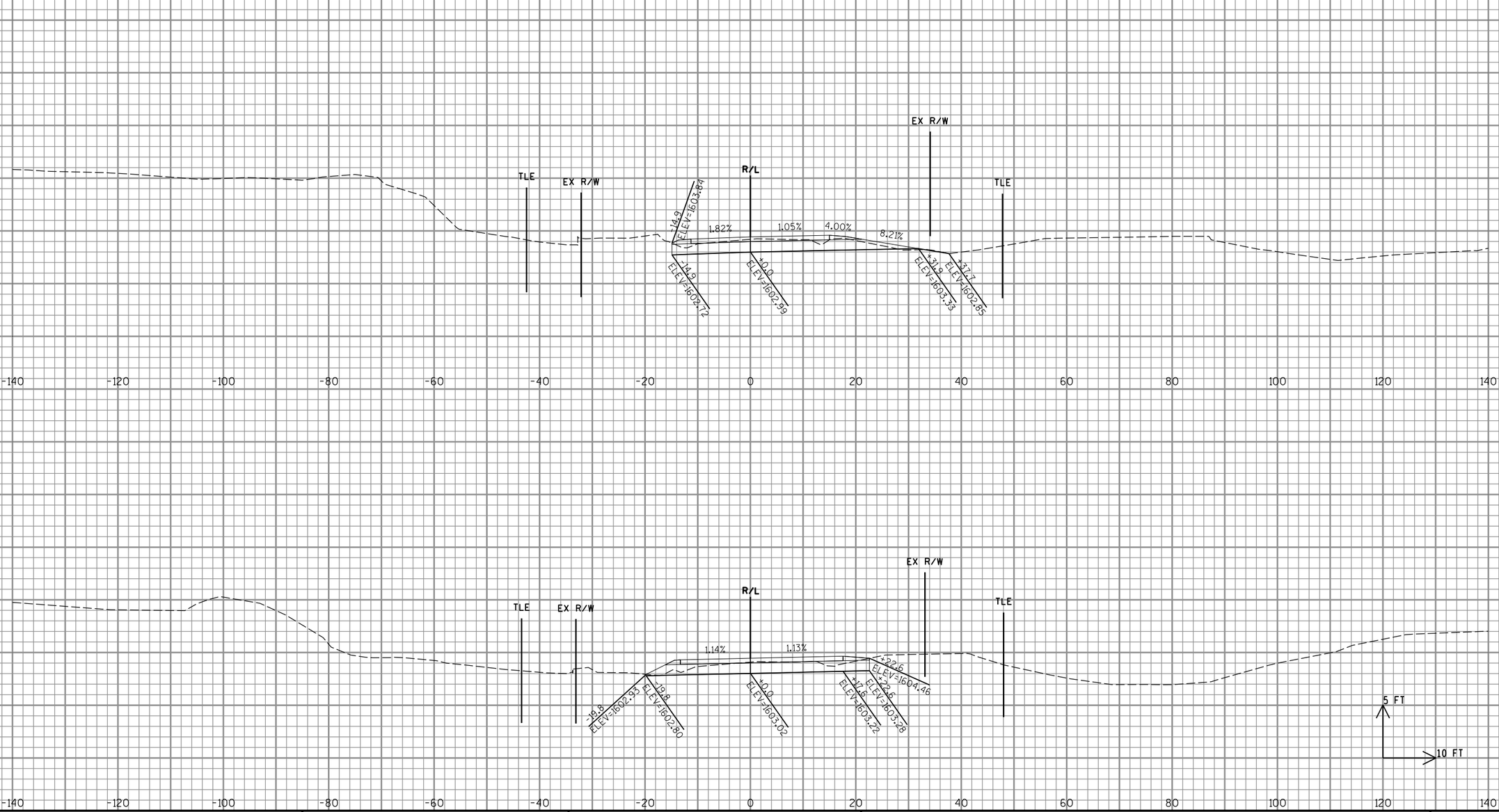

9

9

PROJECT NO: 1595-09-60	HWY: USH 8	COUNTY: ONEIDA	CROSS SECTIONS: CRESCENT ROAD INTERSECTION - NORTH	SHEET 273	E

FILE NAME : P:\47xx\4727_DP.12.USH8.ONE\CADDS\Plan\090204_xs.dgn PLOT DATE : 2/16/2015 PLOT BY : emo PLOT NAME : PLOT SCALE : 1:20

WISDOT/CADDS SHEET 21

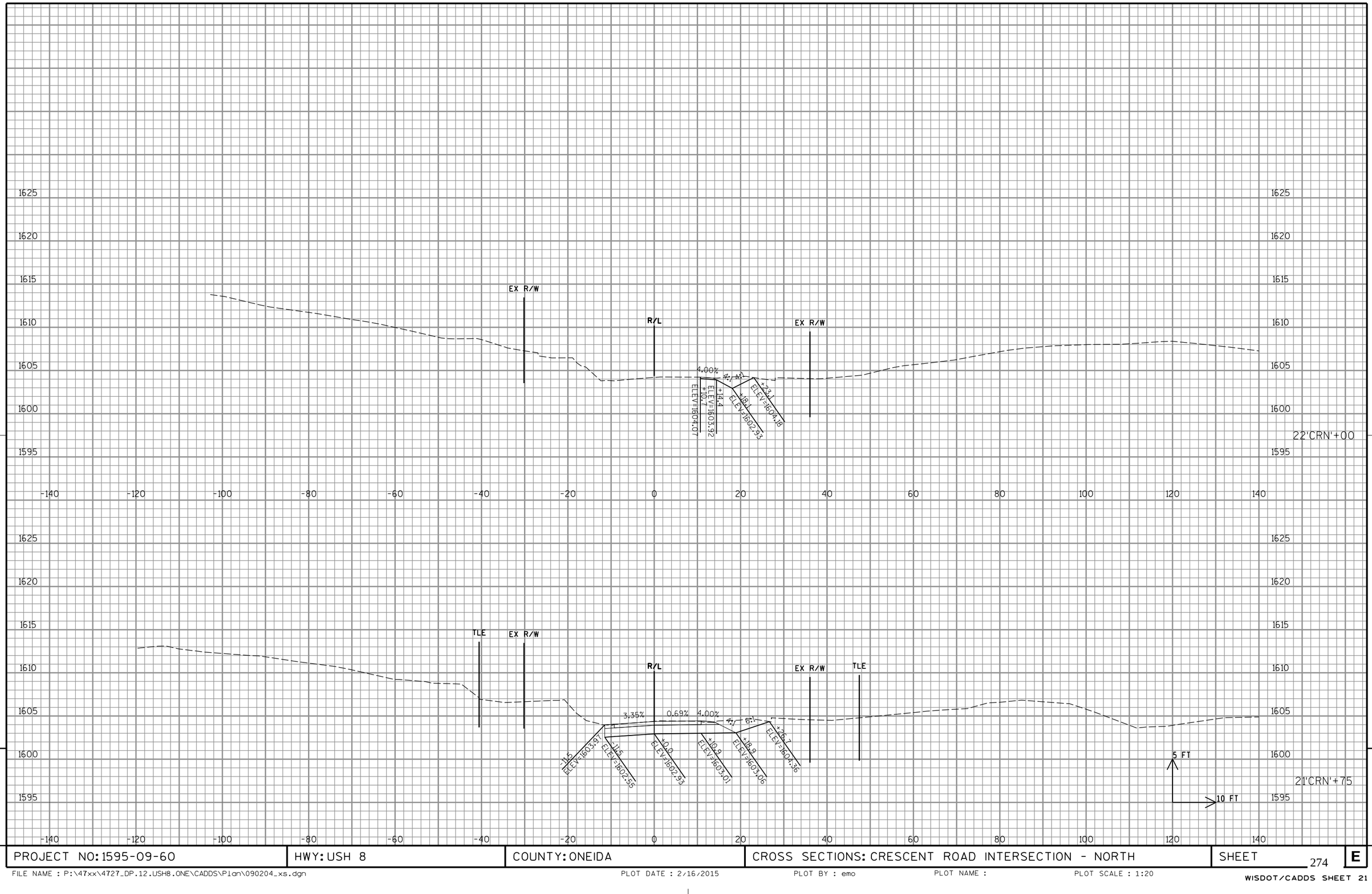

9

9

PROJECT NO: 1595-09-60	HWY: USH 8	COUNTY: ONEIDA	CROSS SECTIONS: CRESCENT ROAD INTERSECTION - NORTH	SHEET 274	E

FILE NAME : P:\47xx\4727_DP.12.USH8.ONE\CADDS\Plan\090204_xs.dgn PLOT DATE : 2/16/2015 PLOT BY : emo PLOT NAME : PLOT SCALE : 1:20

WISDOT/CADDS SHEET 21

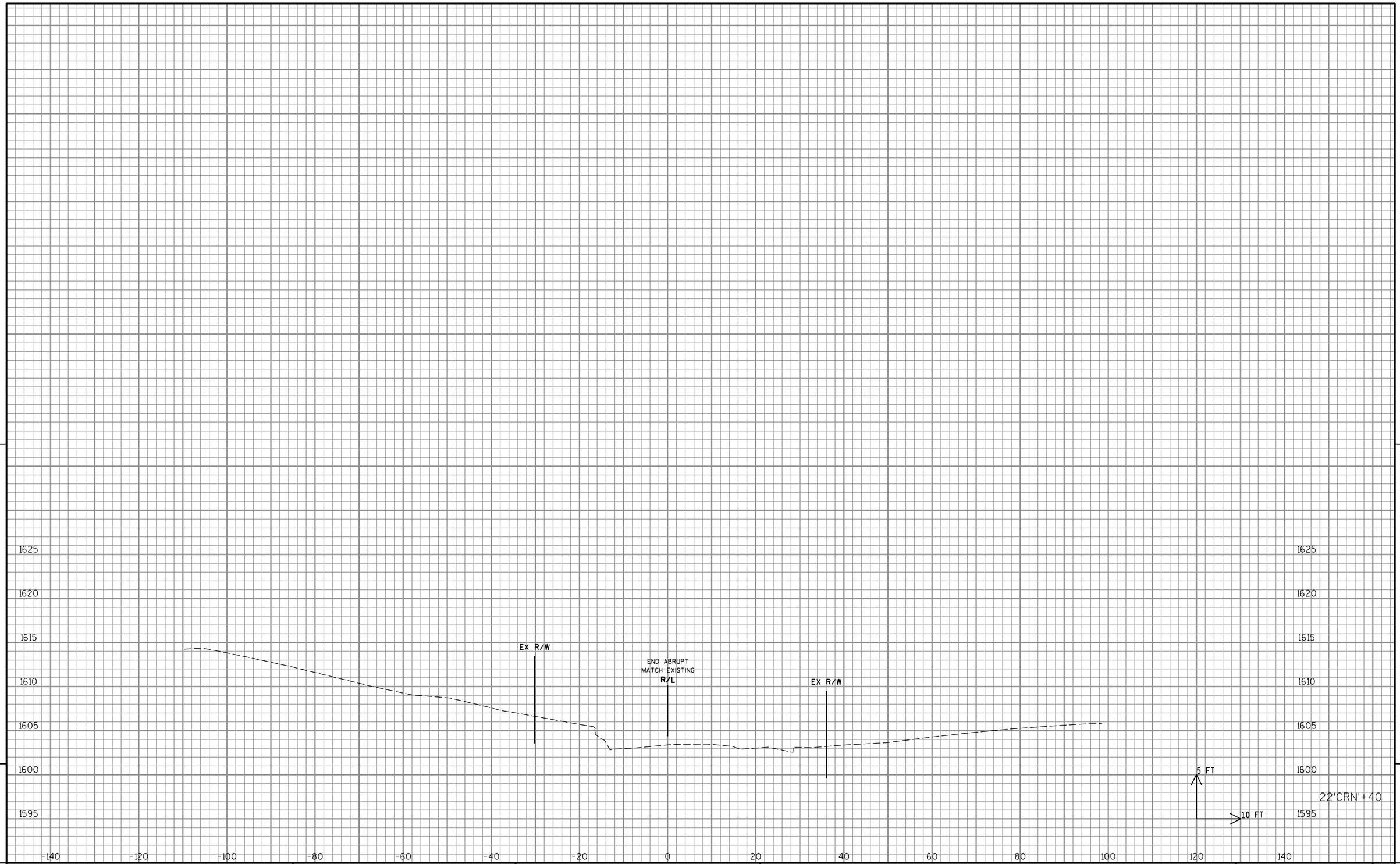

9

9

PROJECT NO: 1595-09-60	HWY: USH 8	COUNTY: ONEIDA	CROSS SECTIONS: CRESCENT ROAD INTERSECTION - NORTH	SHEET 275	E

FILE NAME : P:\47xx\4727_DP.12.USH8.ONE\CADDS\Plan\090204_xs.dgn PLOT DATE : 2/16/2015 PLOT BY : emo PLOT NAME : PLOT SCALE : 1:20

WISDOT/CADDS SHEET 21

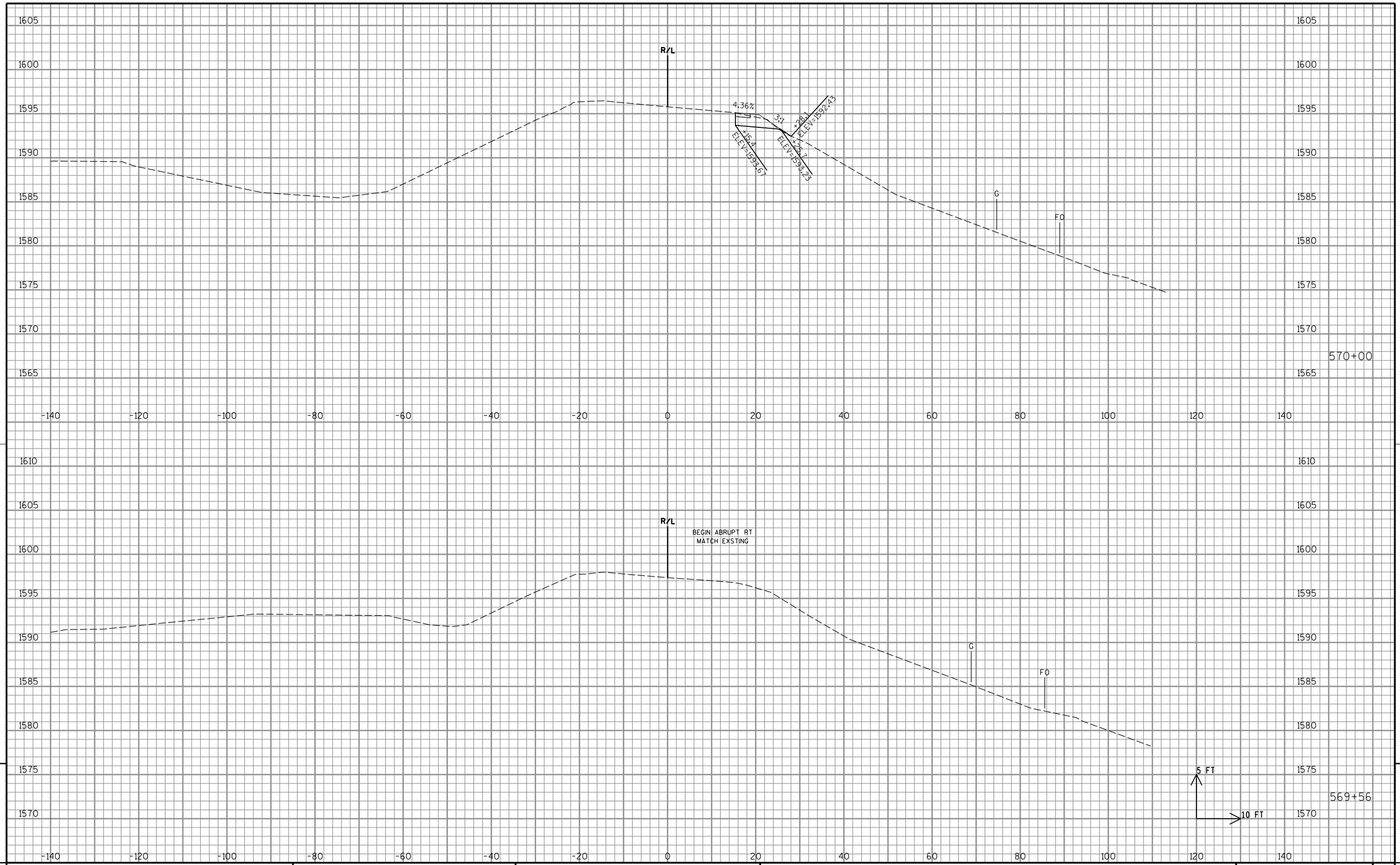

9

PROJECT NO: 1595-09-60	HWY: USH 8	COUNTY: ONEIDA	CROSS SECTIONS: USH 8 - TEMPORARY WIDENING	SHEET 276	E

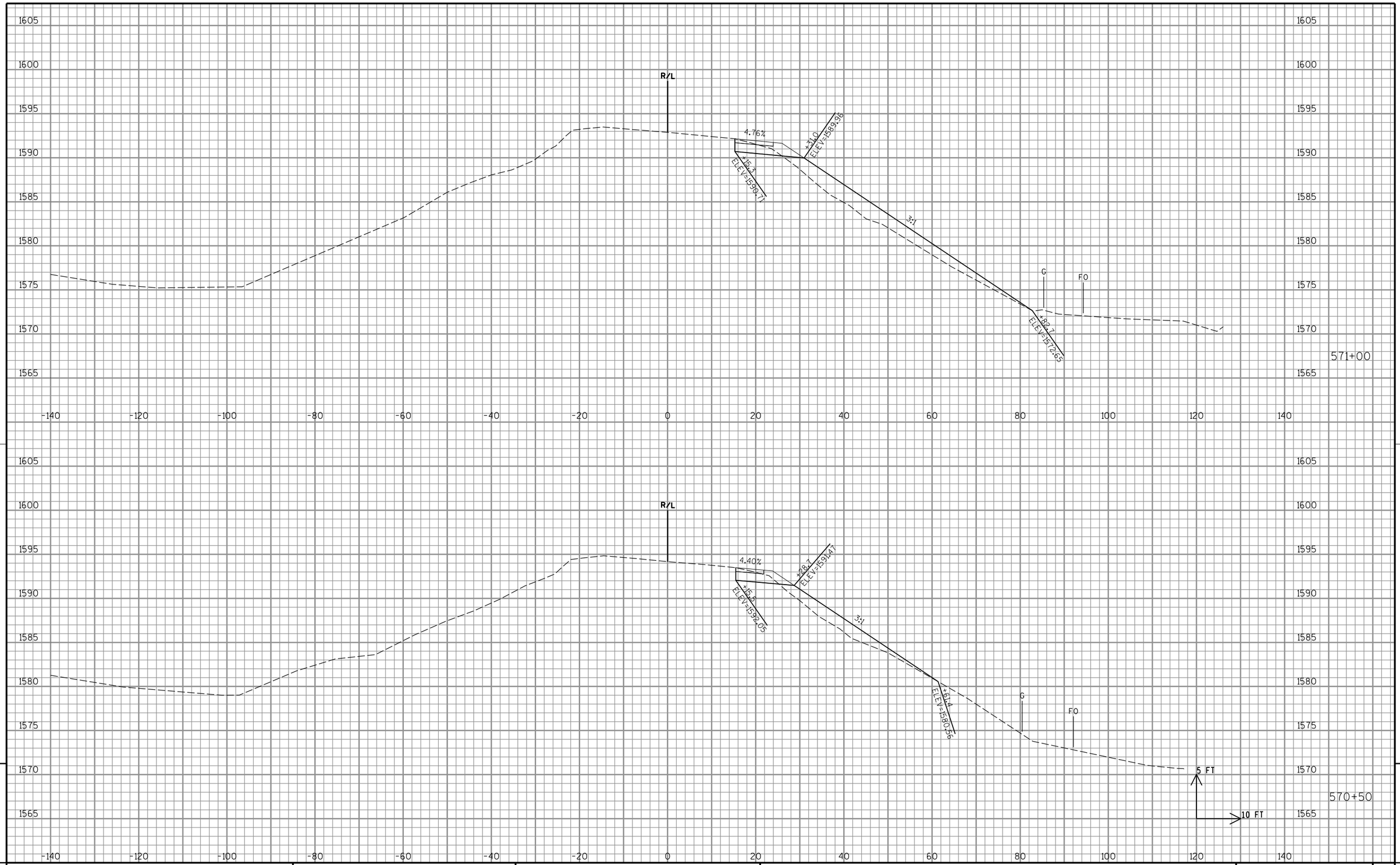

9

PROJECT NO: 1595-09-60	HWY: USH 8	COUNTY: ONEIDA	CROSS SECTIONS: USH 8 - TEMPORARY WIDENING	SHEET 277	E

9

FILE NAME : P:\47xx\4727_DP.12.USH8.ONE\CADDS\Plan\090205_xs.dgn PLOT DATE : 2/16/2015 PLOT BY : emo PLOT NAME : PLOT SCALE : 1:20

WISDOT/CADDS SHEET 21

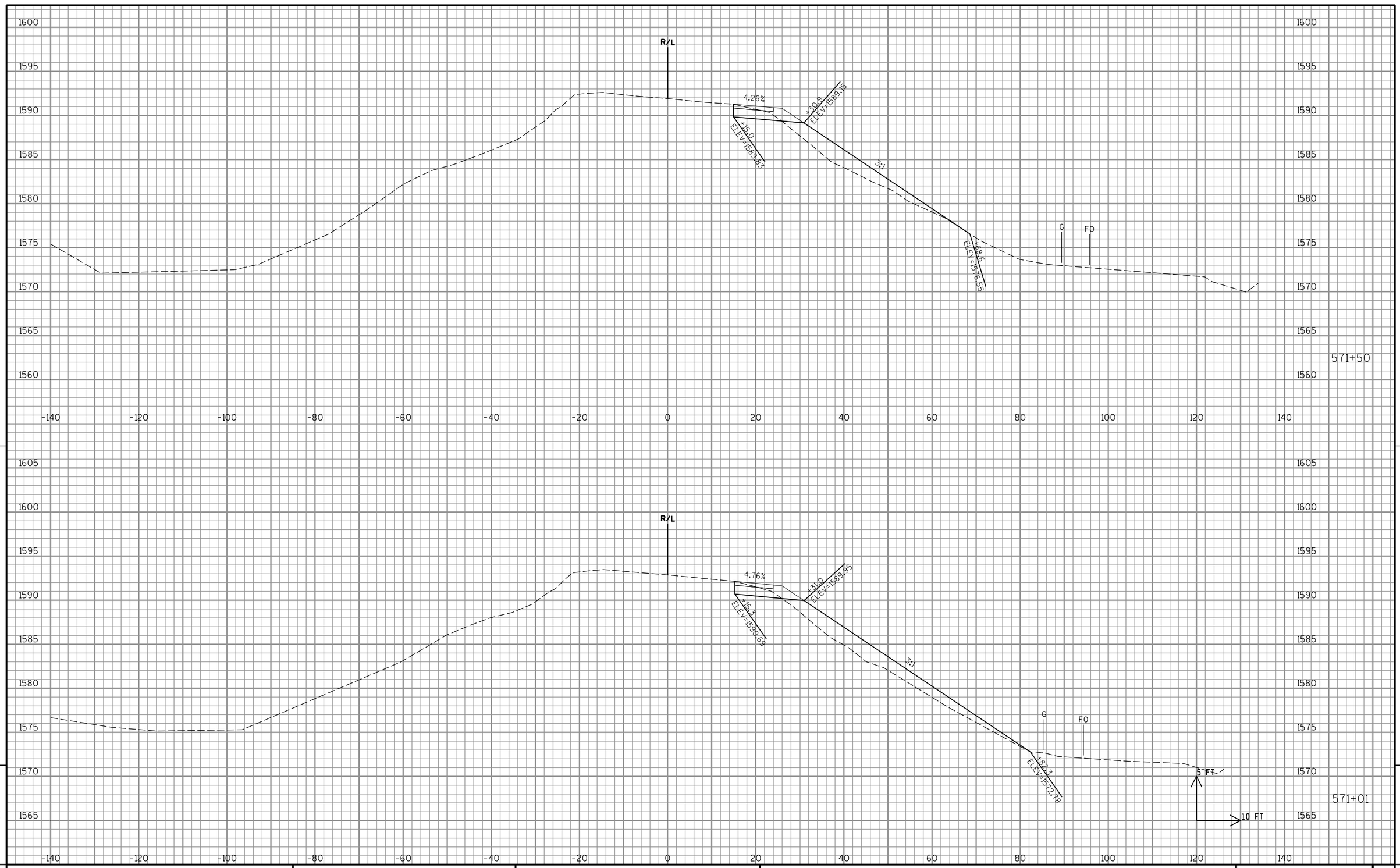

9

PROJECT NO: 1595-09-60	HWY: USH 8	COUNTY: ONEIDA	CROSS SECTIONS: USH 8 - TEMPORARY WIDENING	SHEET 278	E

9

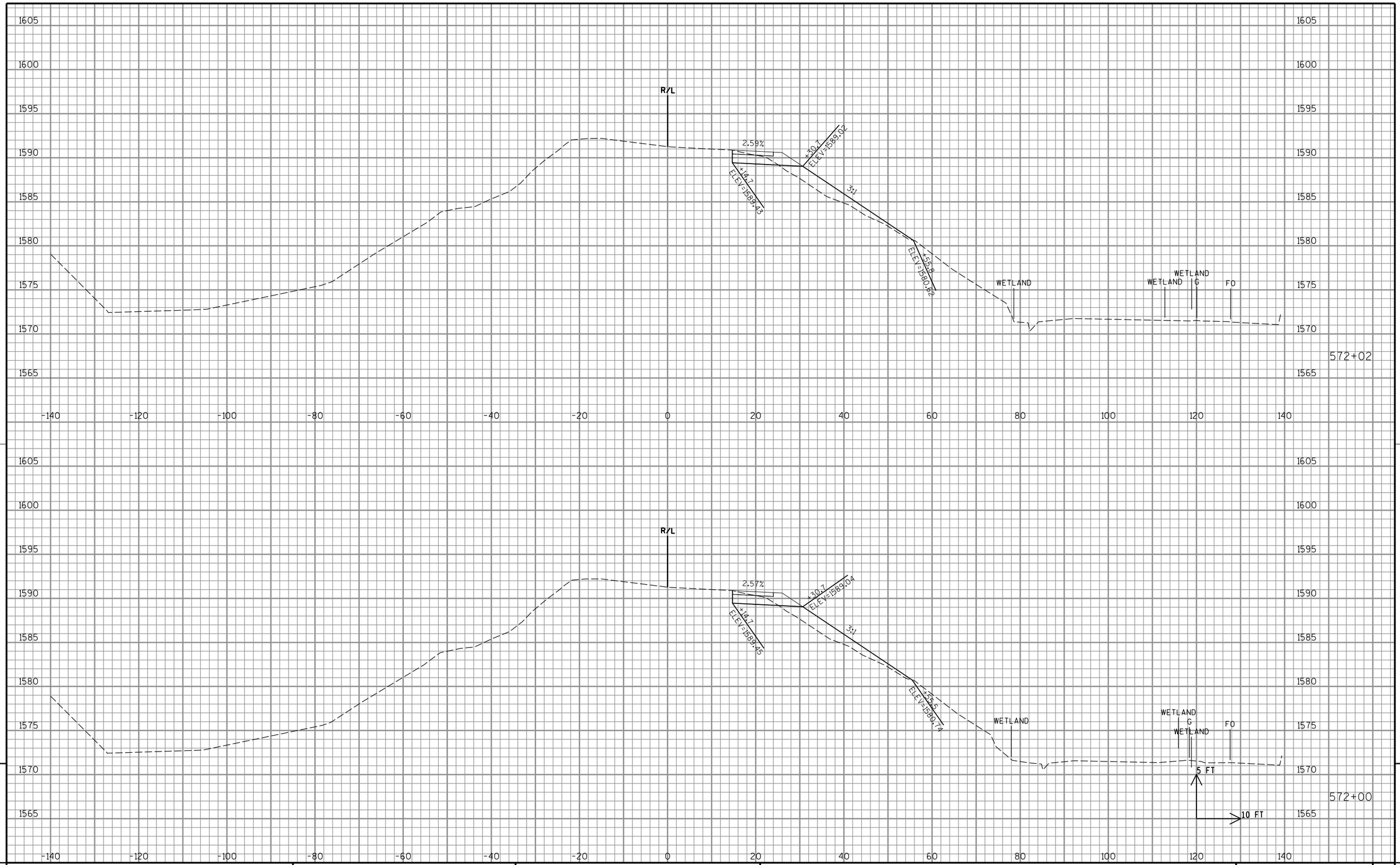

9

PROJECT NO: 1595-09-60	HWY: USH 8	COUNTY: ONEIDA	CROSS SECTIONS: USH 8 - TEMPORARY WIDENING	SHEET 279	E

9

FILE NAME : P:\47xx\4727_DP.12.USH8.ONE\CADDS\Plan\090205_xs.dgn PLOT DATE : 2/16/2015 PLOT BY : emo PLOT NAME : PLOT SCALE : 1:20

WISDOT/CADDS SHEET 21

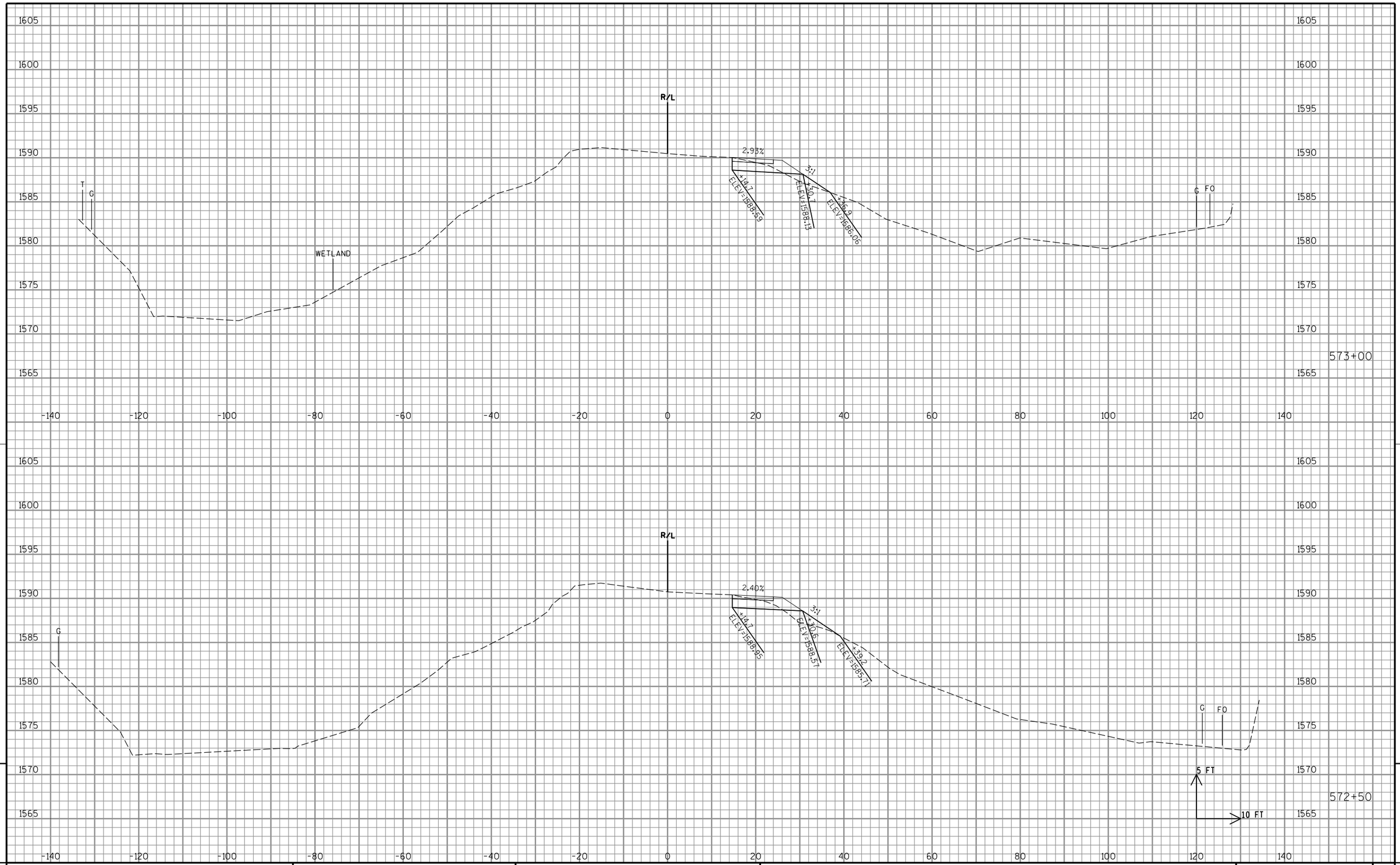

9

PROJECT NO: 1595-09-60	HWY: USH 8	COUNTY: ONEIDA	CROSS SECTIONS: USH 8 - TEMPORARY WIDENING	SHEET 280	E

9

FILE NAME : P:\47xx\4727_DP.12.USH8.ONE\CADDS\Plan\090205_xs.dgn PLOT DATE : 2/16/2015 PLOT BY : emo PLOT NAME : PLOT SCALE : 1:20

WISDOT/CADDS SHEET 21

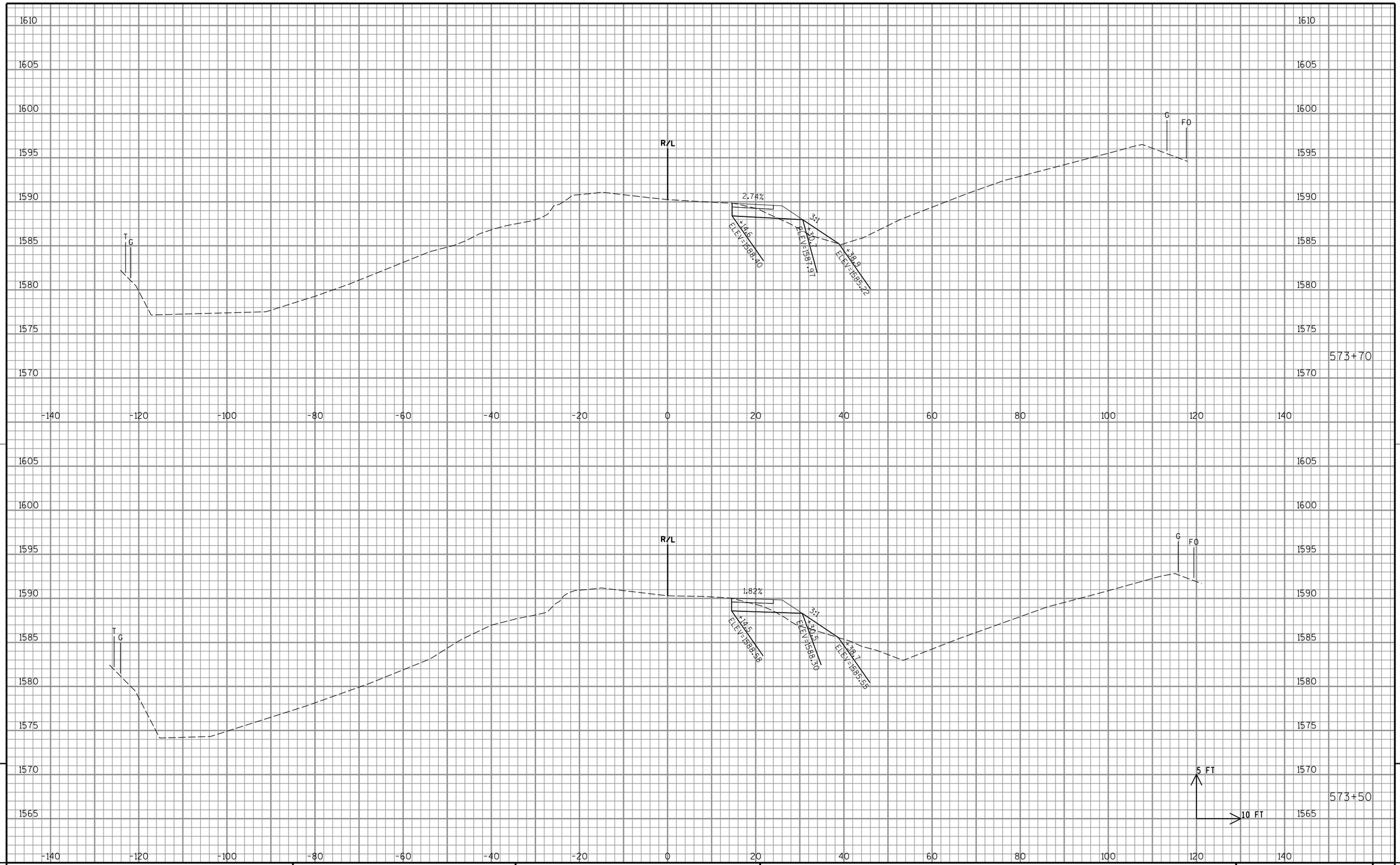

9

PROJECT NO: 1595-09-60	HWY: USH 8	COUNTY: ONEIDA	CROSS SECTIONS: USH 8 - TEMPORARY WIDENING	SHEET 281	E

9

FILE NAME : P:\47xx\4727_DP.12.USH8.ONE\CADDS\Plan\090205_xs.dgn PLOT DATE : 2/16/2015 PLOT BY : emo PLOT NAME : PLOT SCALE : 1:20

WISDOT/CADDS SHEET 21

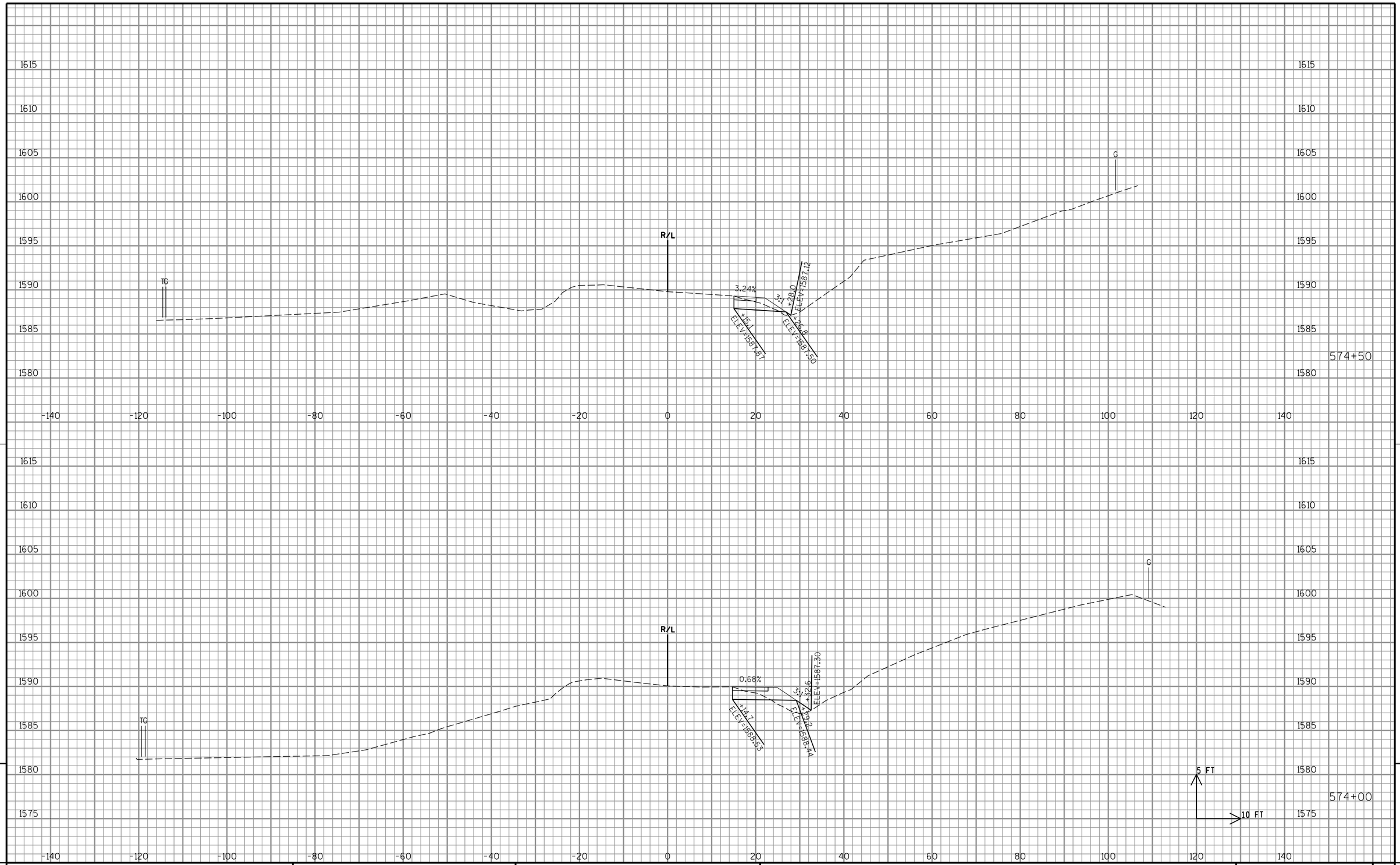

9

9

PROJECT NO: 1595-09-60	HWY: USH 8	COUNTY: ONEIDA	CROSS SECTIONS: USH 8 - TEMPORARY WIDENING	SHEET 282	E

FILE NAME : P:\47xx\4727_DP.12.USH8.ONE\CADDS\Plan\090205_xs.dgn PLOT DATE : 2/16/2015 PLOT BY : emo PLOT NAME : PLOT SCALE : 1:20

WISDOT/CADDS SHEET 21

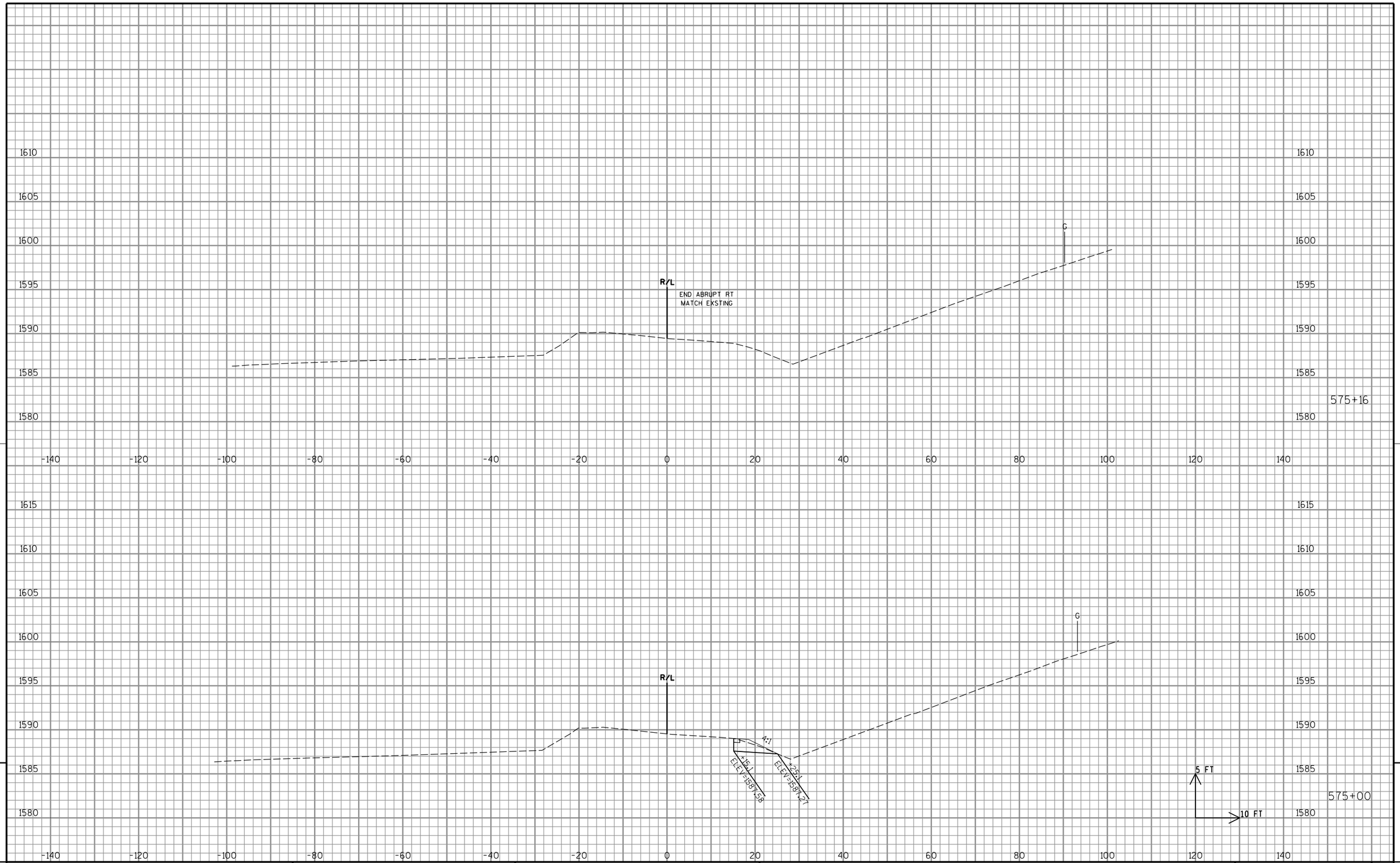

9

9

PROJECT NO: 1595-09-60	HWY: USH 8	COUNTY: ONEIDA	CROSS SECTIONS: USH 8 - TEMPORARY WIDENING	SHEET 283	E

FILE NAME : P:\47xx\4727_DP.12.USH8.ONE\CADDS\Plan\090205_xs.dgn PLOT DATE : 2/16/2015 PLOT BY : emo PLOT NAME : PLOT SCALE : 1:20

WISDOT/CADDS SHEET 21

Wisconsin Department of Transportation

Dedicated people creating transportation solutions
through innovation and exceptional service.

http://www.dot.wisconsin.gov