WIS

PROJECT ID: 1166-09-74, 1166-09-76
WITH: 1166-09-78, 1166-10-72, 1166-11-77

COUNTY: MARATHON

FEB 07

ORDER OF SHEETS

TOTAL SHEETS = 494

STATE PROJECT	FEDERAL PROJECT	
	PROJECT	CONTRACT
1166-09-74	—	—
1166-09-76	—	—

STATE OF WISCONSIN
DEPARTMENT OF TRANSPORTATION

PLAN OF PROPOSED IMPROVEMENT

USH 51/STH 29 CORRIDOR - WAUSAU

STH 29 WESTBOUND,
SHERMAN STREET FLYOVER BRIDGE

STH 29

MARATHON COUNTY

USH 51/STH 29 NORTHBOUND,
MALLARD LANE TO SHERMAN STREET

USH 51

MARATHON COUNTY

STATE PROJECT NUMBER
1166-09-74

STATE PROJECT NUMBER
1166-09-76

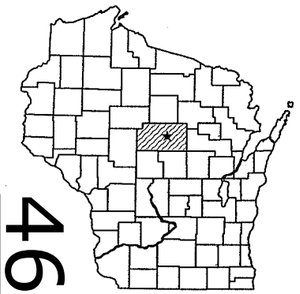

46

BEGIN PROJECT 1166-09-74
STA. 4111+66.76 WW
Y=199743.40
X=271195.83

STRUCTURE B-37-360
(WB 29 OVER USH 51)

STRUCTURE B-37-344
(USH 51 NB OVER RIB RIVER)

END PROJECT 1166-09-76
STA. 615+71.93

END PROJECT 1166-09-74
STA. 4131+63.47 WW

STRUCTURE R-37-21
EB STH 29

BEGIN PROJECT 1166-09-76
STA. 565+00.00
Y=194047.41
X=271964.93

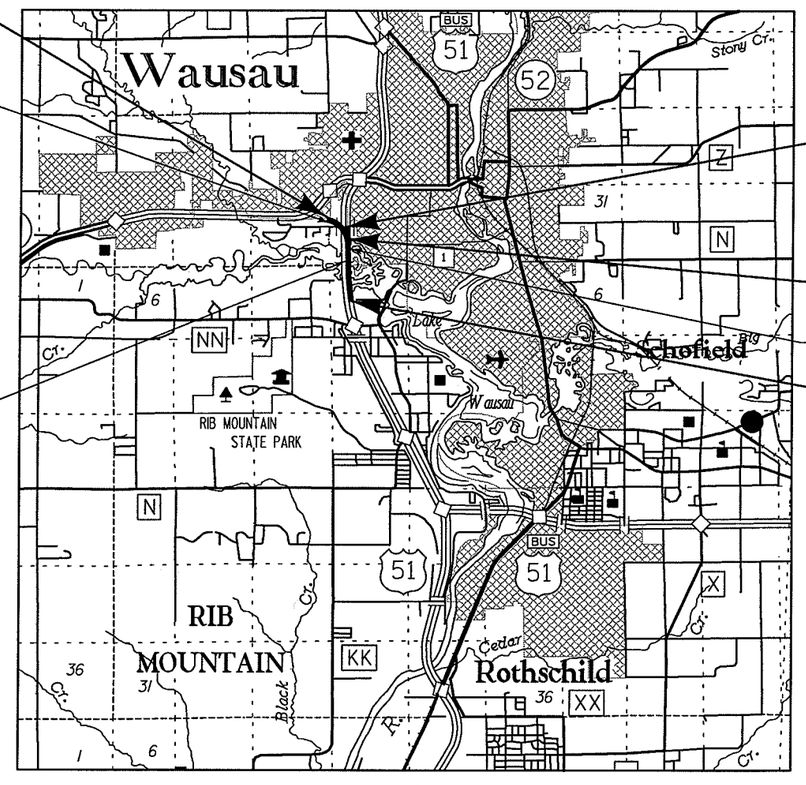

N

DESIGN DESIGNATION

	USH 51/ STH 29 (NORTH OF CTH NN & SOUTH OF SHERMAN ST.)	WB STH 29	A RAMP (SHERMAN STREET)
A.D.T. (2010)	= 64,900	= 7,200	= 5,300
A.D.T. (2030)	= 96,100	= 10,800	= 7,700
D.H.V. (2030)	= 8,900	= 1,200	= 690
D.D.	= 58/42	= 100/0	= 100/0
T.	= 8.1%	= 8.1%	= 8.1%
DESIGN SPEED	= 70 M.P.H.	= 60 M.P.H.	= 50 M.P.H. EXIT = 30 M.P.H. TERMINAL
ESALS	= 10,263,800	= 5,256,000	= N/A

CONVENTIONAL SYMBOLS

PLAN
- CORPORATE LIMITS
- PROPERTY LINE
- LOT LINE
- LIMITED HIGHWAY EASEMENT
- EXISTING RIGHT OF WAY
- PROPOSED OR NEW R/W LINE
- SLOPE INTERCEPT
- REFERENCE LINE
- EXISTING CULVERT
- PROPOSED CULVERT (Box or Pipe)
- COMBUSTIBLE FLUIDS — CAUTION
- MARSH AREA
- WOODED OR SHRUB AREA

PROFILE
- GRADE LINE
- ORIGINAL GROUND
- MARSH OR ROCK PROFILE (To be noted as such) — ROCK
- SPECIAL DITCH — LABEL
- GRADE ELEVATION — 95.36
- CULVERT (Profile View)

UTILITIES
- ELECTRIC — E
- FIBER OPTIC — FO
- GAS — G (size)
- SANITARY SEWER — SAN
- STORM SEWER
- TELEPHONE — T
- WATER — W
- UTILITY PEDESTAL
- POWER POLE
- TELEPHONE POLE

LAYOUT
SCALE 0 — 1 MI.

PROJECT 1166-09-74 TOTAL NET LENGTH OF CENTERLINE = 0.000 MI.
PROJECT 1166-09-76 TOTAL NET LENGTH OF CENTERLINE = 0.961 MI.
TOTAL NET LENGTH OF CENTERLINE = 0.961 MI.

COORDINATES ON THIS PLAN ARE REFERENCED TO THE WISCONSIN COUNTY COORDINATE SYSTEM (WCCS), MARATHON COUNTY.

ORIGINAL PLANS PREPARED BY:

STRAND ASSOCIATES, INC.
ENGINEERS®
910 WEST WINGRA DRIVE
MADISON, WISCONSIN 53715
(608) 251-4843

WISCONSIN
NED R. GRADY
E-36610
MADISON
WI
PROFESSIONAL ENGINEER

STATE OF WISCONSIN
DEPARTMENT OF TRANSPORTATION

PREPARED BY

Surveyor	STRAND ASSOCIATES
Designer	STRAND ASSOCIATES
Project Manager	DAN HOLLOWAY
District Examiner	ADAM OSYPOWSKI
District Supervisor	RON HETT
C.O. Examiner	James E. Engelhart

APPROVED FOR DISTRICT OFFICE
DATE: 7/17/06 (Signature)

E

STATE PROJECT NUMBER
1166-09-76

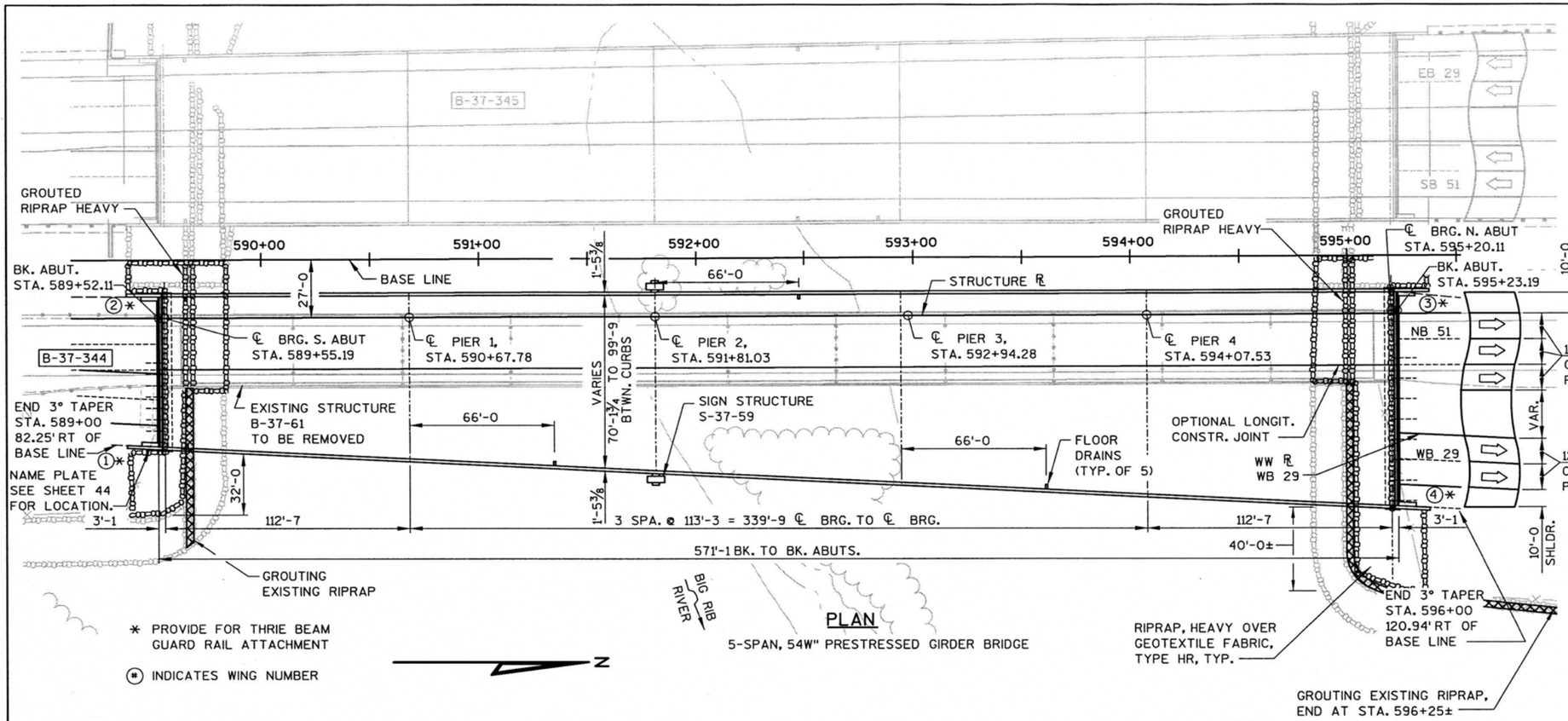

PLAN

5-SPAN, 54W" PRESTRESSED GIRDER BRIDGE

* PROVIDE FOR THRIE BEAM GUARD RAIL ATTACHMENT

(#) INDICATES WING NUMBER

DESIGN DATA

STRUCTURE DESIGNED FOR A FUTURE WEARING SURFACE OF 20 #/S.F.

LIVE LOAD:
DESIGN RATING ____ HS22.5
INVENTORY RATING ____ HS24
OPERATING RATING ____ HS35
MAX. STD. PERMIT VEHICLE LOAD ____ 220 KIPS
ULTIMATE DESIGN STRESSES:
CONCRETE MASONRY SLAB ____ f'c = 4,000 psi
ALL OTHER ____ f'c = 3,500 psi
HIGH STRENGTH BAR STEEL REINFORCEMENT ____ fy = 60,000 psi
54W-INCH PRESTRESSED GIRDERS:
CONCRETE MASONRY ____ f'c = 8,000 psi
STRANDS:
0.6" DIA. WITH ULTIMATE STRENGTH OF ____ 270,000 psi

TRAFFIC DATA:
NB STH 51/WB STH 29
A.D.T. (2010) : 32,700
A.D.T. (2030) : 48,400
DESIGN SPEED: 70 MPH

FOUNDATION DATA:
ABUTMENTS TO BE SUPPORTED ON STEEL PILING, HP12 x 53, WITH PILE POINTS, DRIVEN TO A MIN. BEARING VALUE OF 93 TONS PER PILE. EST. 75 FEET LONG AT S. ABUT AND 55 FEET LONG AT N. ABUT.

PIERS TO BE SUPPORTED ON STEEL PILING, HP12 x 53, WITH PILE POINTS, DRIVEN TO A MIN. BEARING VALUE OF 93 TONS PER PILE. EST. 35 FEET LONG AT PIER 1, 35 FEET LONG AT PIER 2, 40 FEET LONG AT PIER 3, AND 35 FEET LONG AT PIER 4.

HYDRAULIC DATA

Q_{100}(TOTAL)	35,000 C.F.S.
Q_{100}(THRU BRIDGE)	35,000 C.F.S.
Q_{100}(OVER ROAD)	0 C.F.S.
VELOCITY (THRU BRIDGE)	6.11 F.P.S.
HW_{100} ELEV.	1169.18 FT.
WATERWAY AREA	5863 S.F.
DRAINAGE AREA	489 SQ. MI.
SCOUR CRITICAL CODE	5
ROADWAY OVERTOPPING	N/A
Q_2	8,800 C.F.S.
HW_2	1162.24 FT.
REGULATORY Q_{100}	41,600 C.F.S.
REGULATORY HW_{100}	1169.74 FT.

LIST OF DRAWINGS

WISCONSIN PROFESSIONAL ENGINEER CHAD D. HALVERSON E-34364 MADISON WIS.

6/12/06

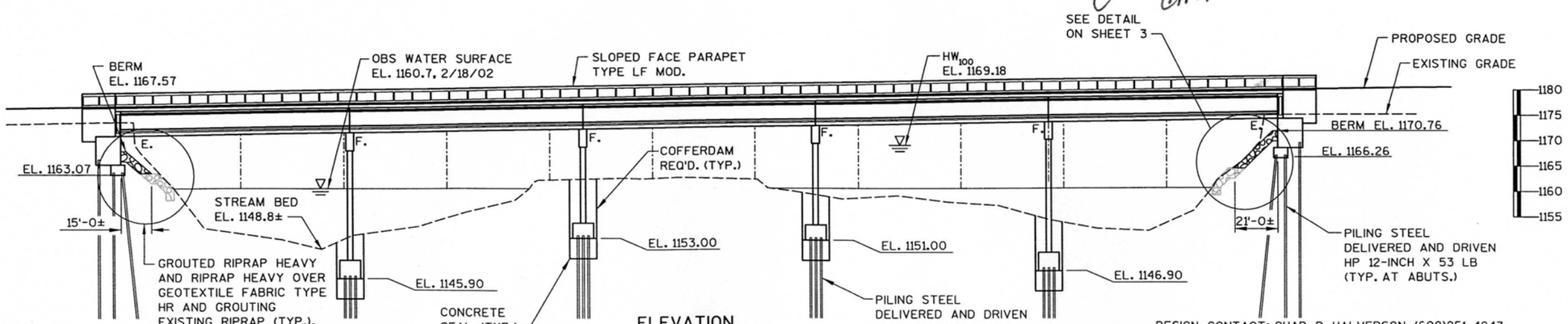

ELEVATION

(LOOKING WEST)

DESIGN CONTACT: CHAD D. HALVERSON (608)251-4843
BRIDGE OFFICE CONTACT: FINN HUBBARD (608)266-8489

NO.	DATE	REVISION	BY

STRAND ASSOCIATES, INC. ENGINEERS
910 WEST WINGRA DRIVE
MADISON, WISCONSIN 53715
(608)-251-4843
(608) 251-8655 FAX
WWW.STRAND.COM

WISDOT
BUREAU OF STRUCTURES

STRUCTURE B-37-344

NB 51/WB 29 OVER BIG RIB RIVER

COUNTY MARATHON		~~TOWN~~/CITY/~~VILLAGE~~ WAUSAU	
DESIGN SPEC. AASHTO STD. SPEC. 2002		LOAD HS-20	CONST. SPEC. 2003
DESIGNED BY KAS	DESIGN CK'D. DJW	DRAWN BY HSB	PLANS CK'D. DJW

APPROVED William C. Dreher SDR 9-26-06
CHIEF STRUCTURAL DESIGN ENGINEER DATE

GENERAL PLAN

SHEET 1 OF 49
DAT 281

8

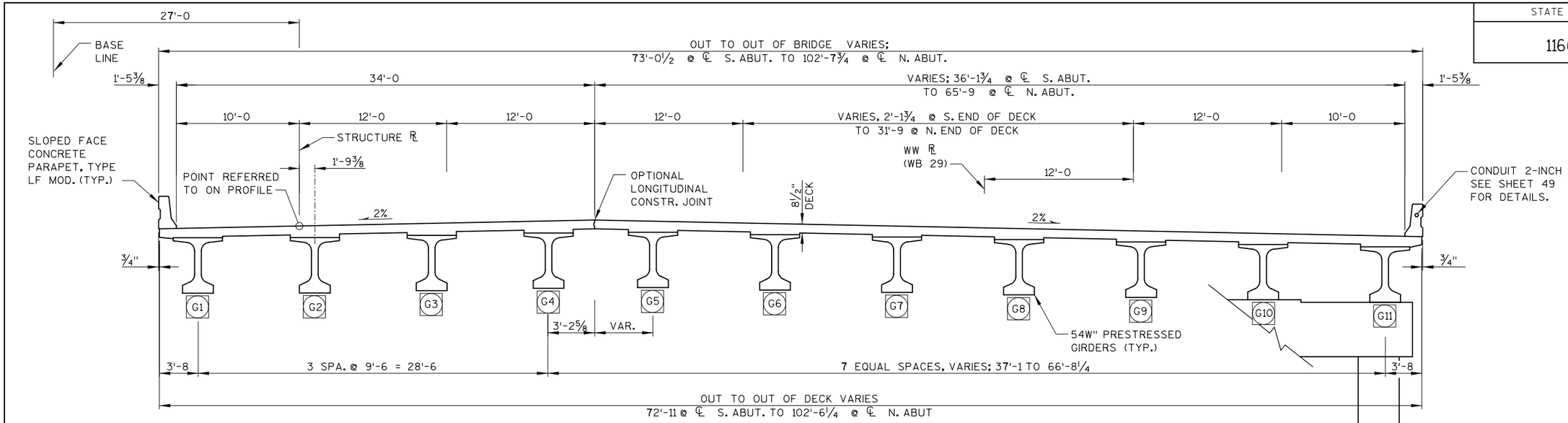

CROSS SECTION THRU DECK

(LOOKING NORTH)

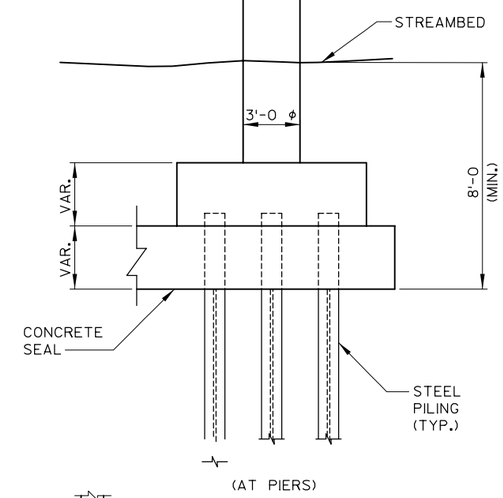

BENCH MARK

B.M. NO.	STATION	OFFSET	DESCRIPTION	ELEV.
232	547+06	LT	CAP IN SW PARAPET, B-37-55, CTH NN STRUCTURE	1198.67
126	595+12	RT	CHISELED SQUARE IN NE END OF 'NB' RIB RIVER STRUCTURE	1175.52
127	617+28	RT	BLUE SQ. NE END OF 'NB' STRUCTURE OVER SHERMAN ST.	1197.11

GENERAL NOTES

DRAWINGS SHALL NOT BE SCALED

ALL STATIONS AND ALL ELEVATIONS ARE IN FEET.

BAR STEEL REINFORCEMENT SHALL BE IMBEDDED 2" CLEAR UNLESS OTHERWISES SHOWN OR NOTED.

ALL REINFORCING BARS ARE ENGLISH AND THE FIRST ONE OR TWO DIGITS OF THE BAR MARK SIGNIFY THE BAR SIZE.

THE EXISTING STRUCTURE, B-37-61, AN 11-SPAN, 36" PRESTRESSED GIRDER STRUCTURE, IS TO BE REMOVED.

THE FINISHED GRADED SECTION SHALL BE THE UPPER LIMITS OF EXCAVATION FOR STRUCTURES.

SEE SPECIAL PROVISIONS ARTICLE "NOTICE TO CONTRACTOR - REUSE OF RIVER BOTTOM MATERIAL" FOR REQUIRMENTS FOR MATERIAL EXCAVATED AS PART OF "EXCAVATION FOR STRUCTURES B-37-344."

THE EMBANKMENTS ADJACENT TO THE BRIDGE WILL BE COVERED WITH RIPRAP HEAVY, GROUTED RIPRAP HEAVY AND GROUTING EXISTING RIPRAP TO THE EXTENT SHOWN ON THE GENERAL PLAN, ON SHEET 3 AND IN THE ABUTMENT DETAILS OR AS DIRECTED BY THE ENGINEER.

AT THE BACKFACE OF ABUTMENTS ALL SPACES EXCAVATED AND NOT OCCUPIED BY THE NEW STRUCTURE SHALL BE BACKFILLED WITH STRUCTURE BACKFILL.

AT PIERS, CONCRETE FOR THE SEALS POURED UNDER WATER WILL BE ALLOWED AND SHALL BE DONE IN ACCORDANCE WITH SECTION 502.3.6 OF THE STANDARD SPECIFICATIONS.

BRIDGE DECK SURFACE SHALL BE TREATED WITH ANTI-SKID SURFACE TREATMENT.

PROTECTIVE SURFACE TREATMENT SHALL BE APPLIED TO THE INSIDE FACE, TOP AND END SURFACES OF THE PARAPETS.

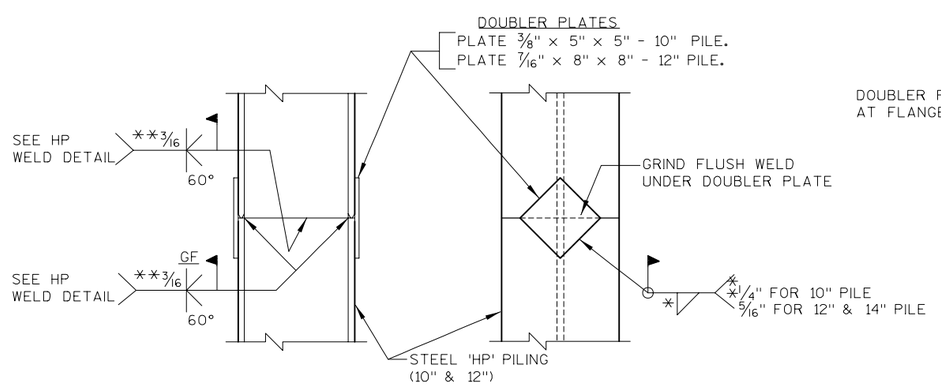

PILE SPLICE DETAILS

**10X42 & 12X53, FOR OTHERS USE 1/16" LAND.

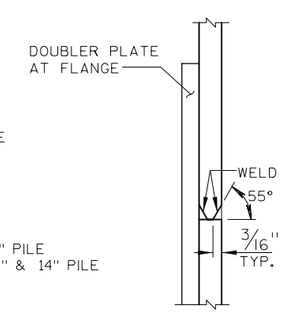

WELD DETAIL

FLANGE SHOWN, WEB SIMILAR

PILE SPLICE NOTES

STEEL 'HP' PILE MATERIAL SHALL BE A.S.T.M. DESIGNATION A36.

GRINDING MAY BE USED IN LIEU OF BACKGOUGING.

NO.	DATE	REVISION	BY

STATE OF WISCONSIN
DEPARTMENT OF TRANSPORTATION
STRUCTURES DESIGN SECTION

STRUCTURE B-37-344

CONST. SPEC.	2003	DRAWN BY	CDH	PLANS CK'D.	DJW

CROSS SECTION AND NOTES

SHEET 282

STATE PROJECT NUMBER
1166-09-76

TOTAL ESTIMATED QUANTITIES

BID ITEMS	UNIT	SOUTH ABUT.	PIER 1	PIER 2	PIER 3	PIER 4	NORTH ABUT.	SUPERS.	TOTALS
REMOVING OLD STRUCTURE OVER WATERWAYS WITH MINIMAL DEBRIS STA 592+38	LS	--	--	--	--	--	--	--	1
EXCAVATION FOR STRUCTURES BRIDGE B-37-344	LS	--	--	--	--	--	--	--	1
COFFERDAMS STRUCTURE B-37-344	LS	--	--	--	--	--	--	--	1
BACKFILL STRUCTURE	CY	585	--	--	--	--	835	--	1,420
CONCRETE MASONRY BRIDGES	CY	154.8	128.1	134.7	129.1	140.6	204.7	1,808.0	2,700
CONCRETE MASONRY SEAL	CY	--	185.8	135.8	127.2	181.2	--	--	630
EXPANSION DEVICE STRUCTURE B-37-344	LS	--	--	--	--	--	--	--	1
PROTECTIVE SURFACE TREATMENT	SY	--	--	--	--	--	--	5,845	5,845
PRESTRESSED GIRDER TYPE I 54 W-INCH	LF	--	--	--	--	--	--	6,224.75	6,224.75
BAR STEEL REINFORCEMENT HS BRIDGES	LB	3,740	29,230	32,870	31,520	35,910	5,290	--	138,560
BAR STEEL REINFORCEMENT HS COATED BRIDGES	LB	4,360	--	--	--	--	5,190	470,820	480,370
STRUCTURAL STEEL CARBON	LB	450	--	--	--	--	450	--	900
BEARING PADS ELASTOMERIC NON-LAMINATED	EACH	--	11	11	11	11	--	--	44
BEARING PADS ELASTOMERIC LAMINATED	EACH	11	--	--	--	--	11	--	22
STEEL DIAPHRAGMS STRUCTURE B-37-344	EACH	--	--	--	--	--	--	100	100
PILING STEEL DELIVERED & DRIVEN HP 12-INCH × 53 LB	LF	1,650	1,260	1,225	1,400	1,225	1,650	--	8,410
PILE POINTS	EACH	22	36	35	35	35	30	--	193
FLOOR DRAINS TYPE H	EACH	--	--	--	--	--	--	5	5
RUBBERIZED MEMBRANE WATERPROOFING	SY	17.7	--	--	--	--	24.3	--	42
RIPRAP HEAVY	CY	310	--	--	--	--	440	--	750
GROUTED RIPRAP HEAVY	CY	15	--	--	--	--	15	--	30
PIPE UNDERDRAIN 6-INCH	LF	86	--	--	--	--	114	--	200
PIPE UNDERDRAIN UNPERFORATED 6-INCH	LF	60	--	--	--	--	72	--	132
APRON ENDWALLS FOR UNDERDRAIN REINFORCED CONCRETE 6-INCH	EACH	2	--	--	--	--	2	--	4
ANCHOR ASSEMBLIES FOR STEEL PLATE BEAM GUARD	EACH	2	--	--	--	--	2	--	4
GEOTEXTILE FABRIC TYPE DF SCHEDULE A	SY	602	--	--	--	--	798	--	1,400
GEOTEXTILE FABRIC TYPE HR	SY	550	--	--	--	--	750	--	1,300
CONSTRUCTION STAKING STRUCTURE LAYOUT B-37-344	LS	--	--	--	--	--	--	--	1
CONDUIT RIGID METALLIC 2-INCH	LF	20	--	--	--	--	20	10	50
CONDUIT RIGID NON METALLIC SCHEDULE 40 2-INCH	LF	--	--	--	--	--	--	560	560
JUNCTION BOXES 18X6X6-INCH	EACH	--	--	--	--	--	--	3	3
GROUTING EXISTING RIPRAP	CY	13	--	--	--	--	37	--	50
CONCRETE STAINING B-37-344	SF	305	--	--	--	--	305	12,990	13,600
ANTI-SKID TREATMENT	SY	--	--	--	--	--	--	5,380	5,380
NON-BID ITEMS									
FILLER	SIZE	1/2" & 3/4"	3/4"	3/4"	3/4"	3/4"	1/2" & 3/4"	———	1/2" & 3/4"
BRIDGE SEAT PROTECTION	L.S.	———	———	———	———	———	———	———	1

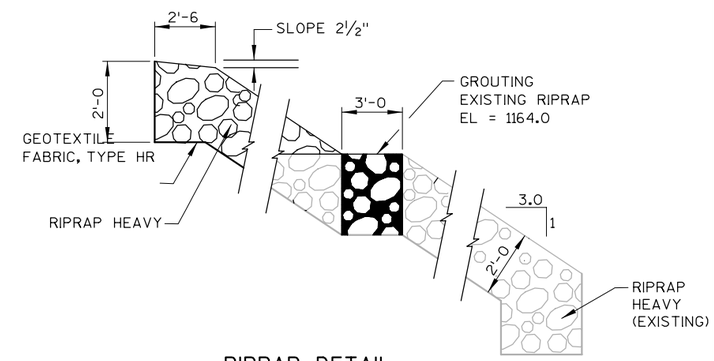

RIPRAP DETAIL
UNDER NEW BRIDGE

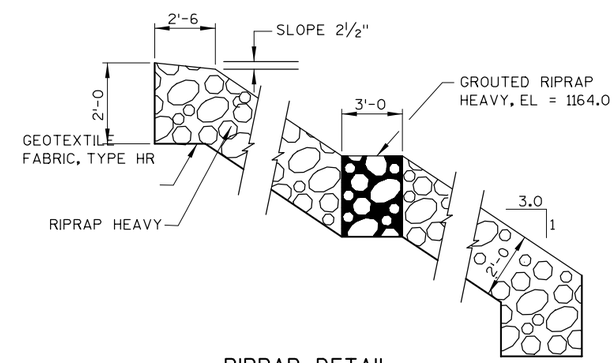

RIPRAP DETAIL
UNDER EXISTING BRIDGE (B-37-61)

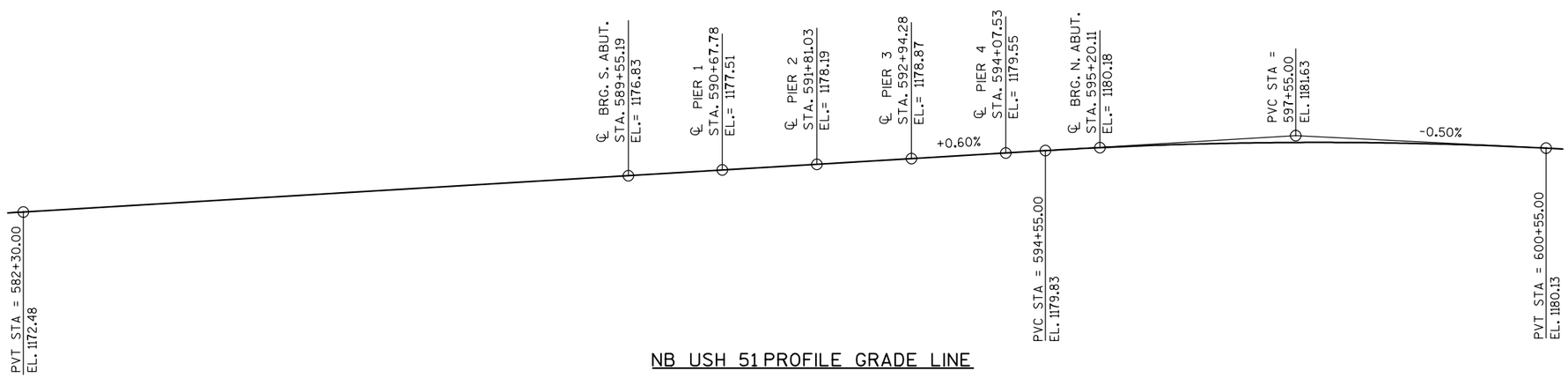

NB USH 51 PROFILE GRADE LINE

NO.	DATE	REVISION	BY

STATE OF WISCONSIN
DEPARTMENT OF TRANSPORTATION
STRUCTURES DESIGN SECTION

STRUCTURE B-37-344

CONST. SPEC.	2003	DRAWN BY	CDH	PLANS CK'D.	DJW

PROFILE AND QUANTITIES

SHEET 283

8

8

STATE PROJECT NUMBER
1166-09-76

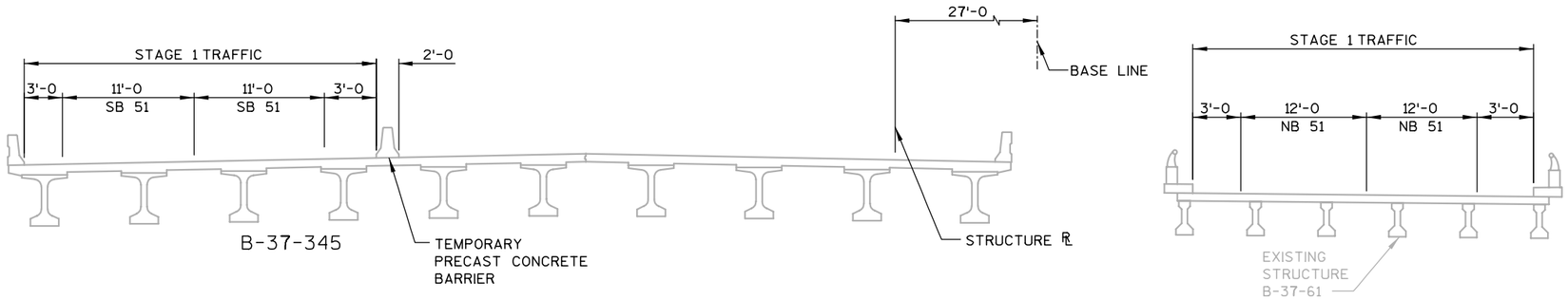

STAGE 1

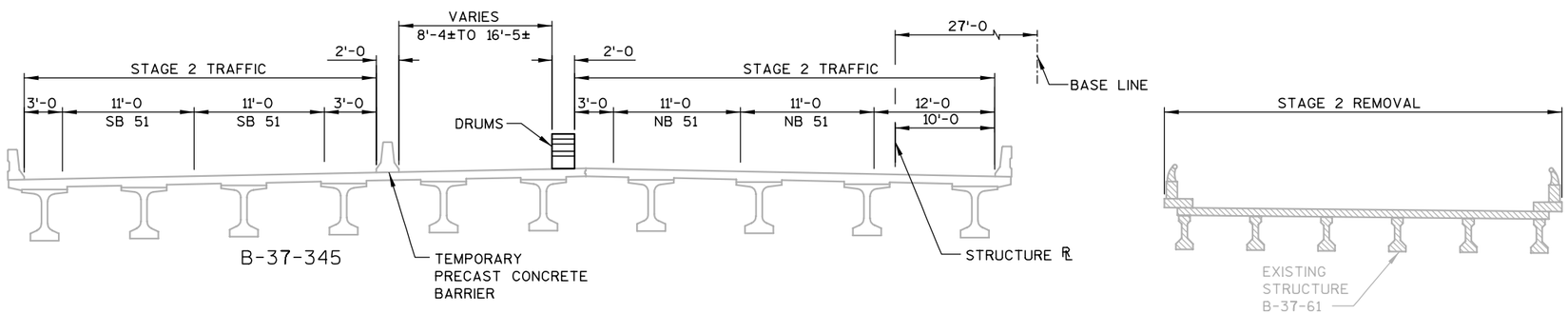

STAGE 2 (REMOVAL)

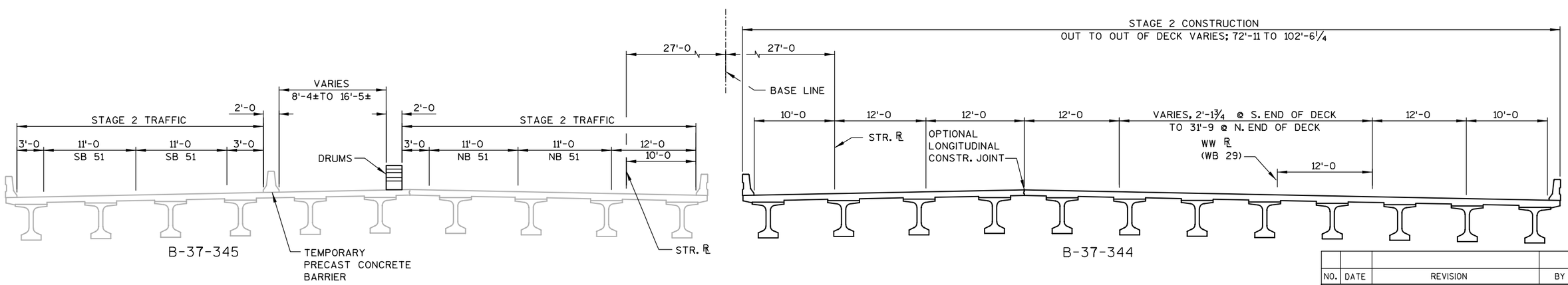

STAGE 2 (CONSTRUCTION)

8

8

NO.	DATE	REVISION	BY

STATE OF WISCONSIN
DEPARTMENT OF TRANSPORTATION
STRUCTURES DESIGN SECTION

STRUCTURE B-37-344

CONST. SPEC.	2003	DRAWN BY	KAS	PLANS CK'D.	DJW

STAGING DETAILS

SHEET 4
284

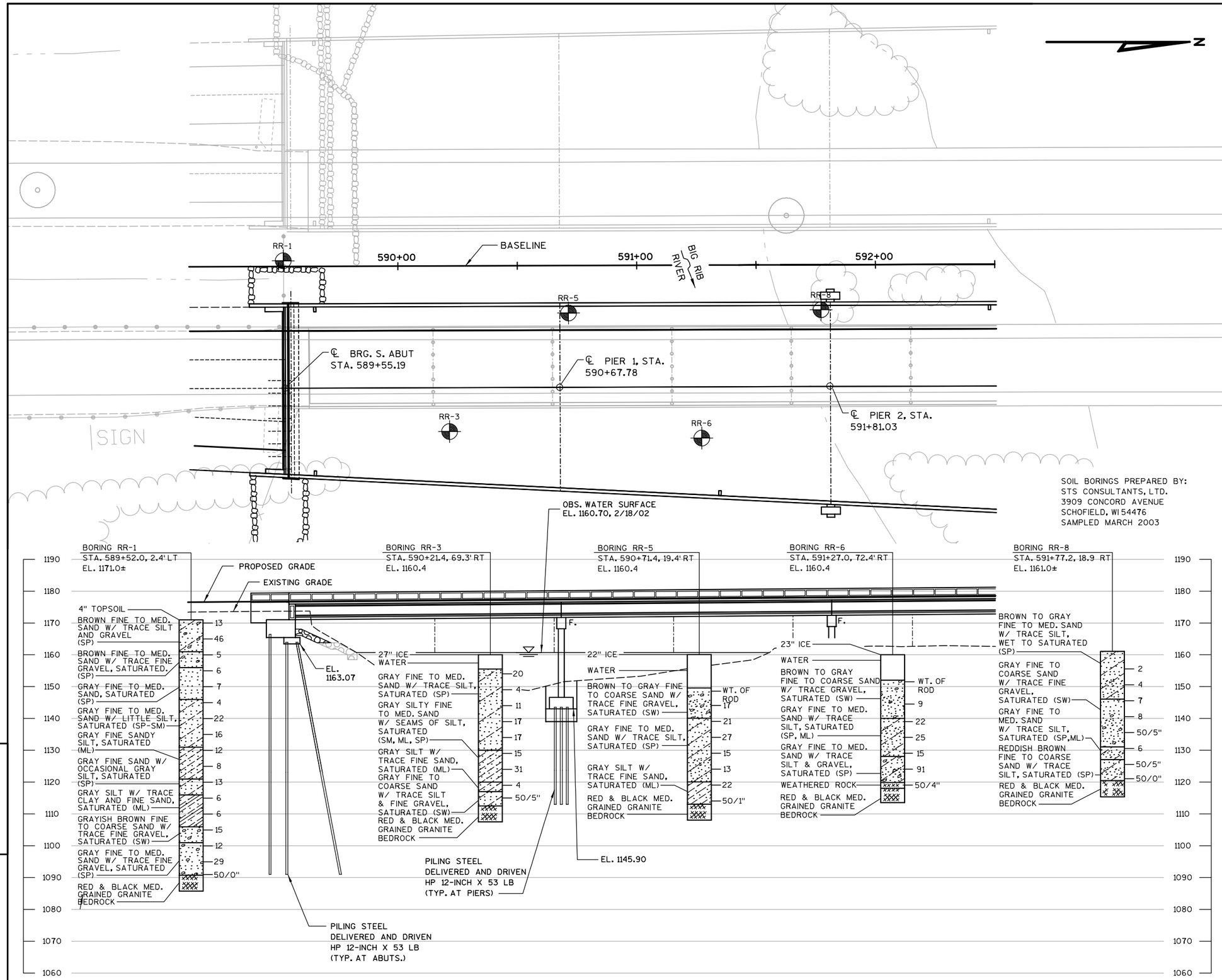

STATE PROJECT NUMBER

1166-09-76

ABBREVIATIONS

F — FINE M — MEDIUM C — COARSE
WS — WEATHERED SO — SOUND

MATERIAL SYMBOLS

TOPSOIL, SILT, SANDSTONE, SAND, PEAT, LIMESTONE, GRAVEL, CLAY, IGNEOUS ROCK

LEGEND OF PROBING

PROBING NO.
STA.
ELEVATION
7 AVERAGE BLOWS PER FOOT
REFUSAL 95/6

95/6=95 BLOWS FOR 6" PENETRATION PROBING TAKEN WITH A 350# WT. FALLING 18" ON A 2" O.D. POINT.

LEGEND OF BORING

BORING NO.
ELEV. STA.
UNCONFINED STRENGTH → 7.7 7
BLOWS PER FT. USING 140# WT. FALLING 30"
SANDY GRAVEL
WASH SAMPLE
F. BOULDERS OR COBBLES
SHELBY TUBE — S.T.
SAND
GROUND WATER ELEVATION
SILTY CLAY
NO GROUND WATER OBSERVED ABOVE THIS ELEVATION
SO LIMESTONE

UNLESS OTHERWISE SPECIFIED, THE BLOWS PER FOOT AT THE LOCATIONS INDICATED ARE BASED ON DRIVING A 2" O.D. X 1.4" I.D. SPLIT SPOON SAMPLER WITH A 140# HAMMER HAVING A FREE FALL OF 30". THE BLOW COUNT IS TAKEN IN UNDISTURBED SOIL IMMEDIATELY BELOW A CASED OR OPEN HOLE ELIMINATING SIDE FRICTION ON THE DRIVE PIPE.

SUBSURFACE EXPLORATION FOR FOUNDATION DESIGN AND BIDDERS INFORMATION

TO OBTAIN RELATIVE DATA CONCERNING THE CHARACTER OF MATERIAL IN AND UPON WHICH THE FOUNDATION MIGHT BE BUILT, BORINGS AND/OR SOUNDINGS WERE MADE AT POINTS APPROXIMATELY AS INDICATED ON THIS DRAWING. THE DATA PRESENTED HEREIN REPRESENTS THE FINDINGS OF THE SUBSURFACE EXPLORATIONS MADE. HOWEVER, BECAUSE THE DEPTHS INVESTIGATED ARE LIMITED AND THE AREA OF THE BORINGS AND/OR SOUNDINGS IS VERY SMALL IN RELATION TO THE ENTIRE AREA, THE WISCONSIN DEPARTMENT OF TRANSPORTATION DOES NOT WARRANT CONDITIONS BELOW THE DEPTHS INVESTIGATED OR THAT THE CLASSIFICATION OF MATERIAL ENCOUNTERED IN THESE INVESTIGATIONS IS NECESSARILY TYPICAL OF THE ENTIRE SITE.

8

NO.	DATE	REVISION	BY

STATE OF WISCONSIN
DEPARTMENT OF TRANSPORTATION
STRUCTURES DESIGN SECTION

STRUCTURE B-37-344

CONST. SPEC.	2003	DRAWN BY	HSB	PLANS CK'D.	DJW

SUBSURFACE EXPLORATION 1

SHEET 5 — 285

STATE PROJECT NUMBER

1166-09-76

ABBREVIATIONS

F — FINE M — MEDIUM C — COARSE
WS — WEATHERED SO — SOUND

MATERIAL SYMBOLS

TOPSOIL, SILT, SANDSTONE, SAND, PEAT, LIMESTONE, GRAVEL, CLAY, IGNEOUS ROCK

LEGEND OF PROBING

PROBING NO.
STA.
ELEVATION
7 AVERAGE BLOWS PER FOOT
REFUSAL 95/6

95/6=95 BLOWS FOR 6" PENETRATION PROBING TAKEN WITH A 350# WT. FALLING 18" ON A 2" O.D. POINT.

LEGEND OF BORING

BORING NO.
ELEV. STA.
UNCONFINED STRENGTH → 7.7 7
BLOWS PER FT. USING 140# WT. FALLING 30"
SANDY GRAVEL
F. BOULDERS OR COBBLES
WASH SAMPLE
SAND
SHELBY TUBE — S.T.
GROUND WATER ELEVATION
SILTY CLAY
NO GROUND WATER OBSERVED ABOVE THIS ELEVATION
SO LIMESTONE

UNLESS OTHERWISE SPECIFIED, THE BLOWS PER FOOT AT THE LOCATIONS INDICATED ARE BASED ON DRIVING A 2" O.D. X 1.4" I.D. SPLIT SPOON SAMPLER WITH A 140# HAMMER HAVING A FREE FALL OF 30". THE BLOW COUNT IS TAKEN IN UNDISTURBED SOIL IMMEDIATELY BELOW A CASED OR OPEN HOLE ELIMINATING SIDE FRICTION ON THE DRIVE PIPE.

SUBSURFACE EXPLORATION FOR FOUNDATION DESIGN AND BIDDERS INFORMATION

TO OBTAIN RELATIVE DATA CONCERNING THE CHARACTER OF MATERIAL IN AND UPON WHICH THE FOUNDATION MIGHT BE BUILT, BORINGS AND/OR SOUNDINGS WERE MADE AT POINTS APPROXIMATELY AS INDICATED ON THIS DRAWING. THE DATA PRESENTED HEREIN REPRESENTS THE FINDINGS OF THE SUBSURFACE EXPLORATIONS MADE. HOWEVER, BECAUSE THE DEPTHS INVESTIGATED ARE LIMITED AND THE AREA OF THE BORINGS AND/OR SOUNDINGS IS VERY SMALL IN RELATION TO THE ENTIRE AREA, THE WISCONSIN DEPARTMENT OF TRANSPORTATION DOES NOT WARRANT CONDITIONS BELOW THE DEPTHS INVESTIGATED OR THAT THE CLASSIFICATION OF MATERIAL ENCOUNTERED IN THESE INVESTIGATIONS IS NECESSARILY TYPICAL OF THE ENTIRE SITE.

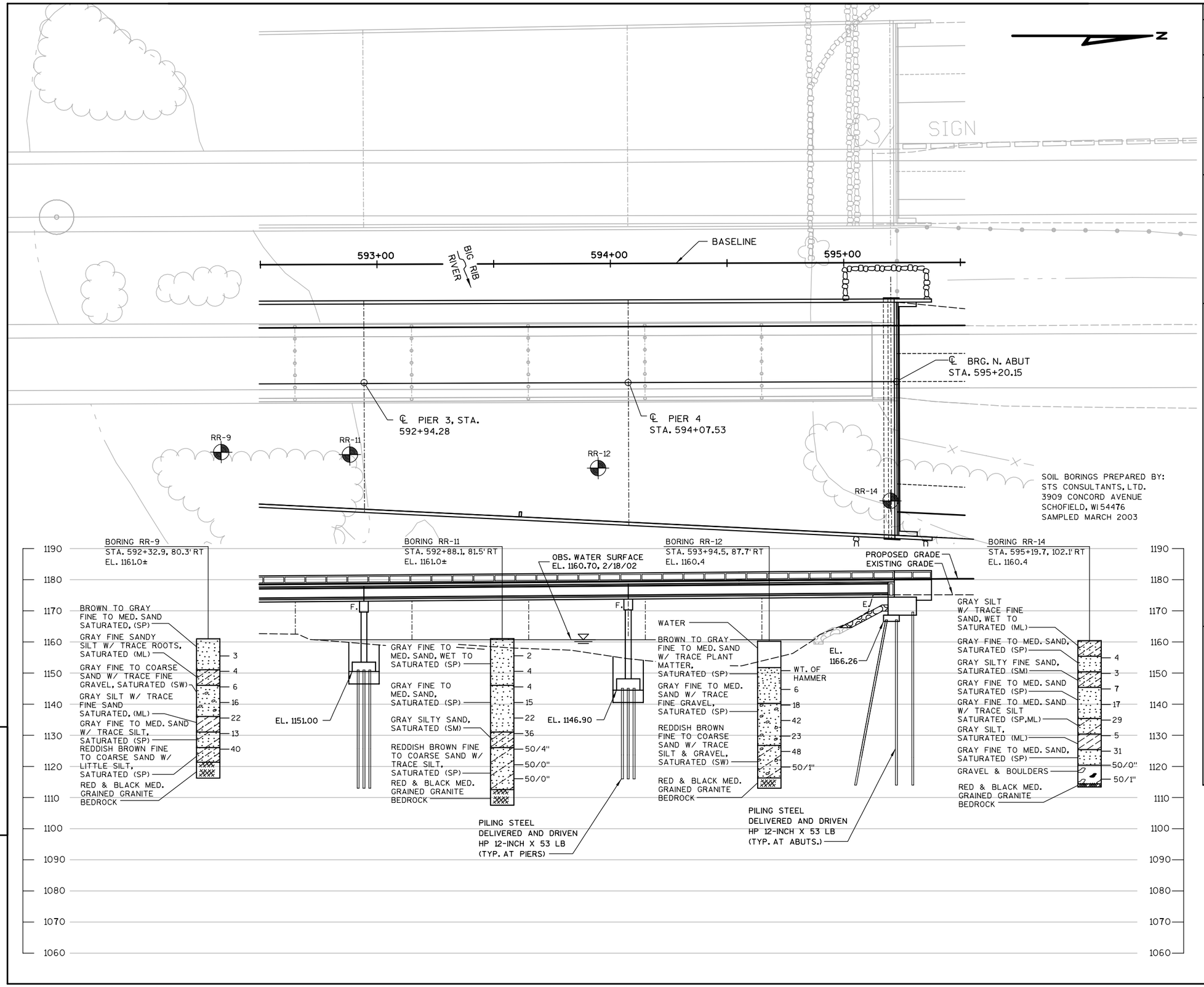

NO.	DATE	REVISION	BY

STATE OF WISCONSIN
DEPARTMENT OF TRANSPORTATION
STRUCTURES DESIGN SECTION

STRUCTURE B-37-344

CONST. SPEC.	2003	DRAWN BY	HSB	PLANS CK'D.	DJW

SUBSURFACE EXPLORATION 2

SHEET 6
286

8

STATE PROJECT NUMBER

1166-09-76

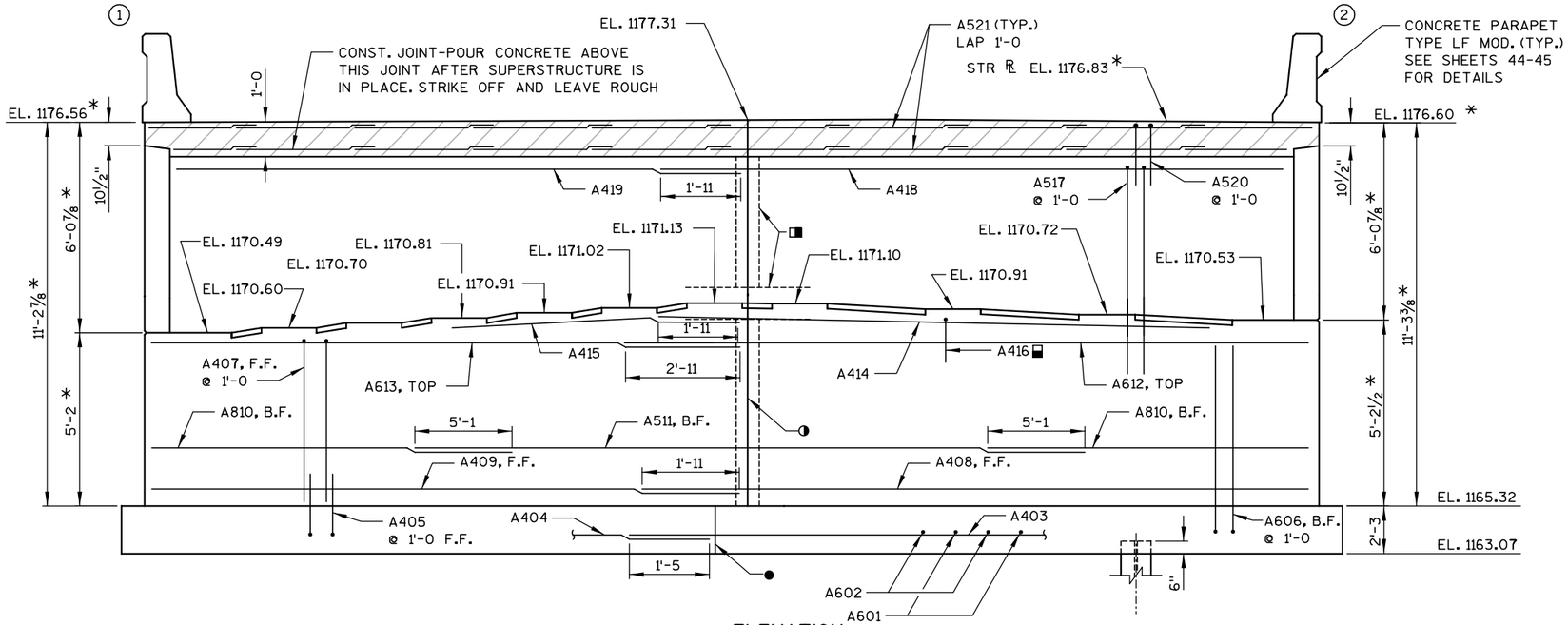

ELEVATION
(LOOKING SOUTH)

NOTES

- VERTICAL CONSTRUCTION JOINT, FORMED BY BEVELED 2" X 8". RUN BAR STEEL THRU JOINT, SEAL JOINT WITH 18" RUBBERIZED MEMBRANE WATERPROOFING AT B.F., ¾" V-GROOVE AT F.F. SEE SHEET 14 FOR ALTERNATE CONSTRUCTION JOINT DETAILS.
- ● VERTICAL CONSTRUCTION JOINT IN FOOTING IS OPTIONAL.
- ■ 18" RUBBERIZED MEMBRANE WATERPROOFING. SEAL ALL HORIZ. AND VERT. JOINTS ON BACKFACE ABOVE FOOTING.
- ◭ KEYED CONST. JOINT FORMED BY BEVELED 2" X 6". USE ¾" V-GROVE ON F.F. OF WINGWALLS.
- * DIMENSIONS AT FRONT FACE OF ABUTMENT BACKWALL.
- ⬓ A416 AT 9" IN BEAM SEAT. SPACE AT 1'-6 BETWEEN SEATS.
- ▽ ABUTMENTS ARE SUPPORTED ON HP 12 X 53 STEEL PILES WITH PILE POINTS, DRIVEN TO A MIN. BEARING VALUE OF 93 TONS PER PILE. EST. 75 FT. LONG.
- ■ DIMENSIONS AT ℄ OF ABUTMENT BEARING.
- ‡ STRIP SEAL EXPANSION DEVICE SEE SHEETS 47-48.

LEGEND

- ⊠ INDICATES GIRDER No.
- (#) INDICATES WING No.

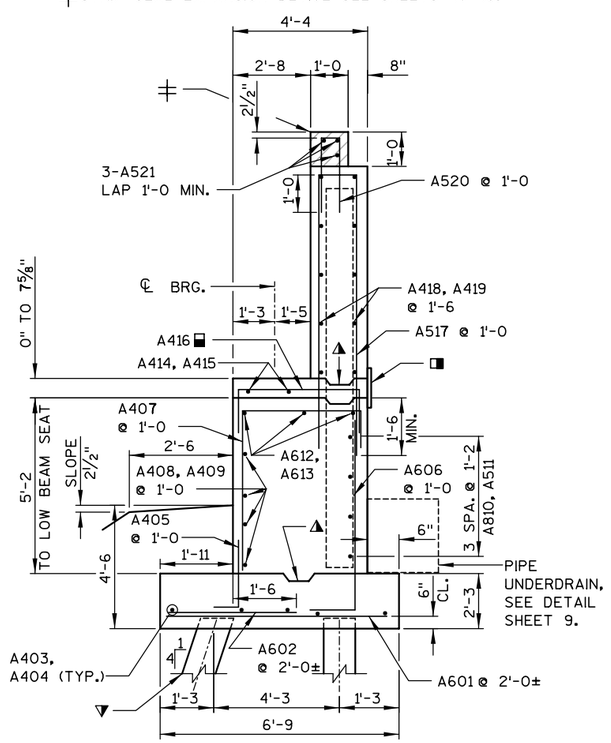

SECTION THRU BODY A-A

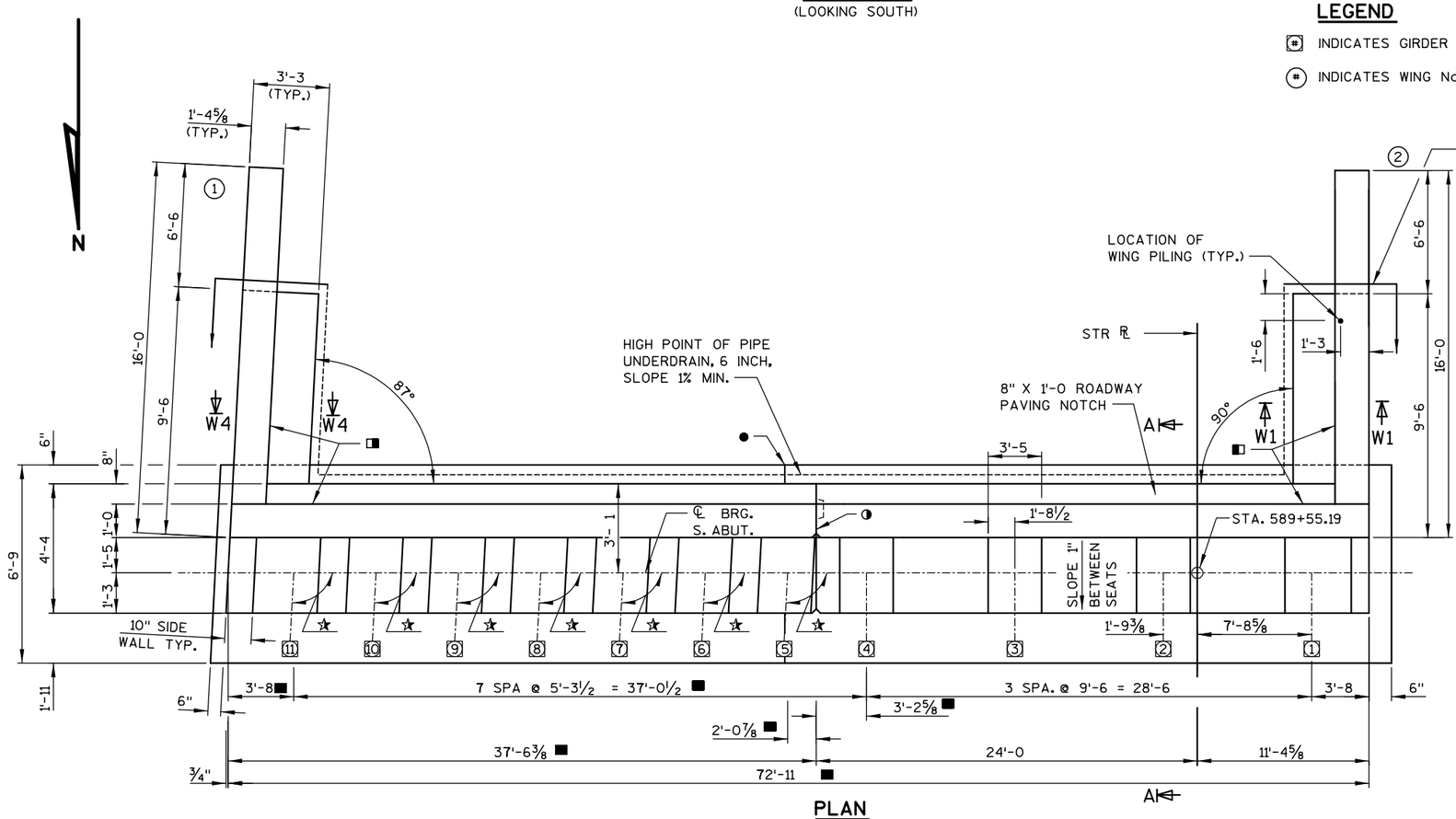

PLAN

★ GIRDER ANGLE TABLE

GIRDER #	ANGLE
11.	93°00'00"
10.	92°34'19"
9.	92°08'37"
8.	91°42'55"
7.	91°17'12"
6.	90°51'28"
5.	90°25'35"

NO.	DATE	REVISION	BY

STATE OF WISCONSIN
DEPARTMENT OF TRANSPORTATION
STRUCTURES DESIGN SECTION

STRUCTURE B-37-344

CONST. SPEC. 2003 | DRAWN BY JLB | PLANS CK'D. JAR

SOUTH ABUTMENT

SHEET 7
287

8

8

STATE PROJECT NUMBER

1166-09-76

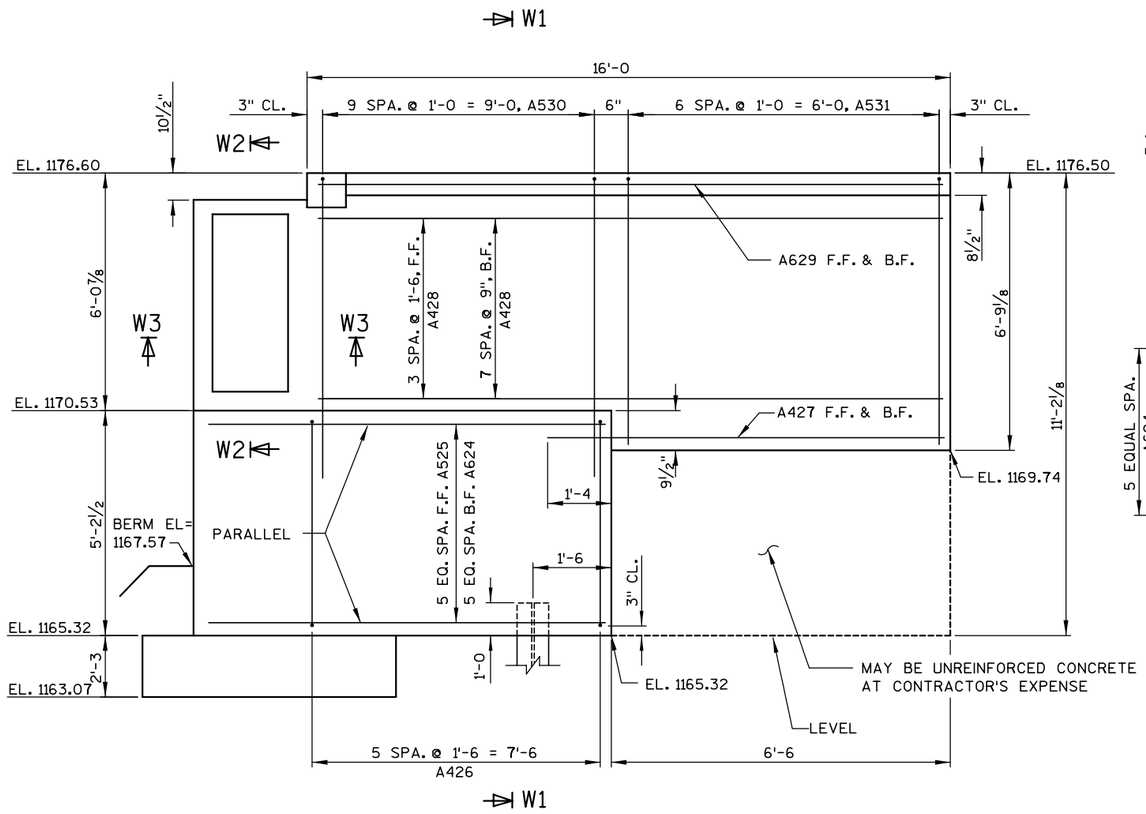

WING 2 ELEVATION

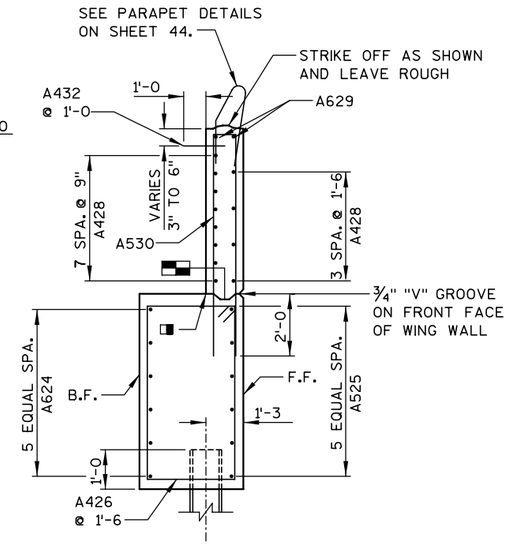

SECTION W1

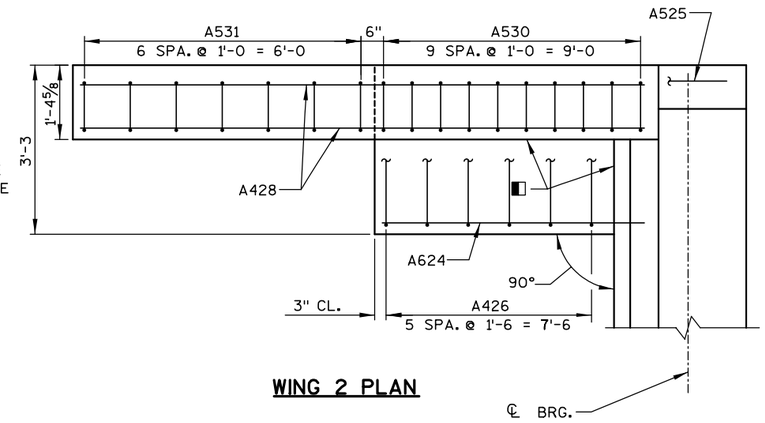

WING 2 PLAN

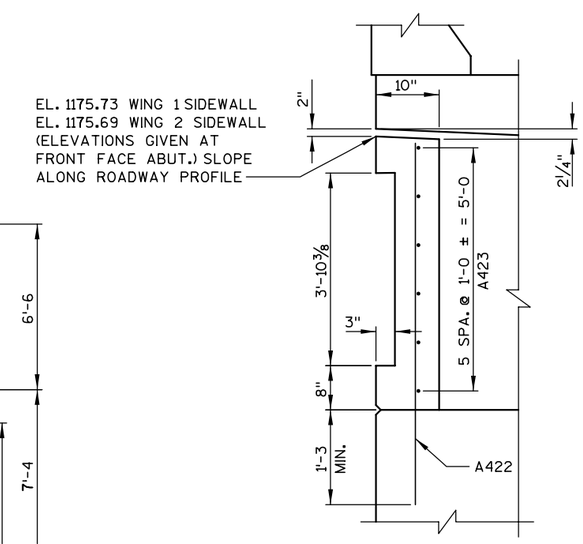

SECTION W2

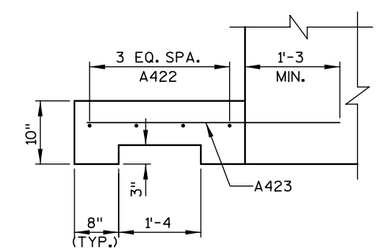

SECTION W3

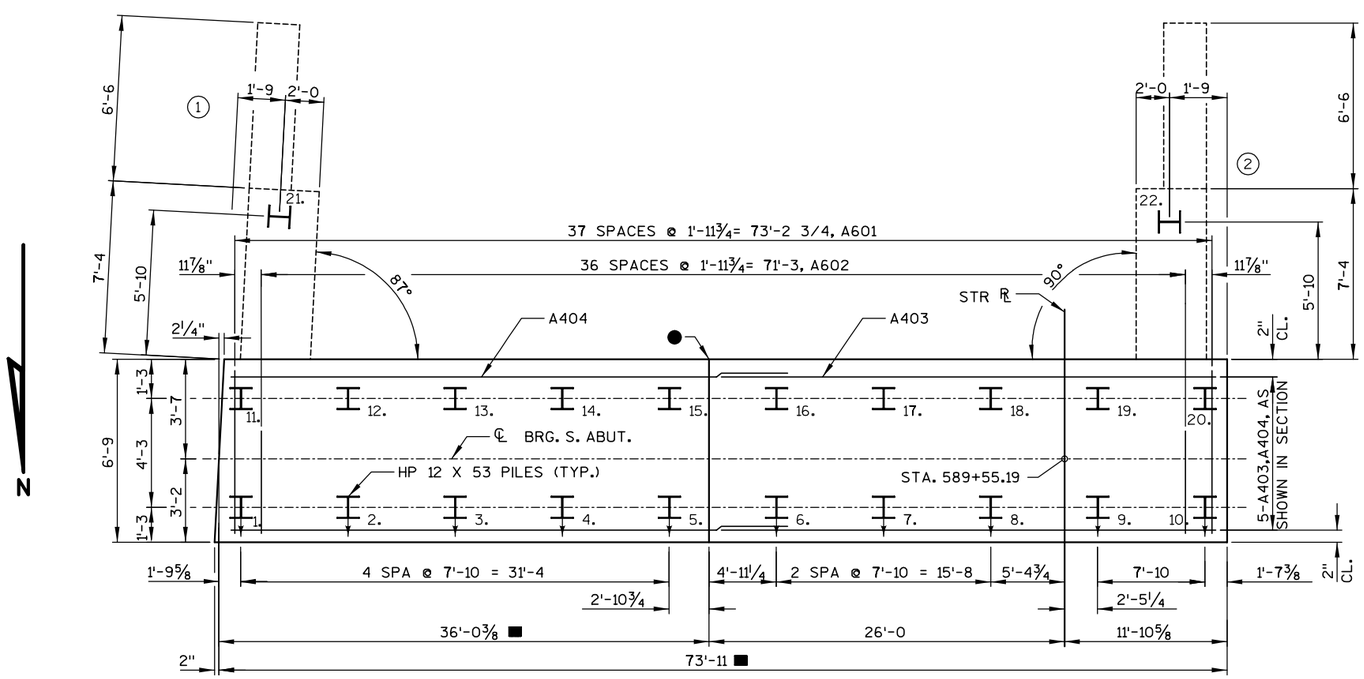

FOUNDATION PLAN

LEGEND

(#) INDICATES GIRDER No.

(#) INDICATES WING No.

SEE NOTES ON SHEET 9.

NO.	DATE	REVISION	BY

STATE OF WISCONSIN
DEPARTMENT OF TRANSPORTATION
STRUCTURES DESIGN SECTION

STRUCTURE B-37-344

CONST. SPEC.	2003	DRAWN BY	JLB	PLANS CK'D.	JAR

SOUTH ABUT. DETAILS 1

SHEET 288

8

8

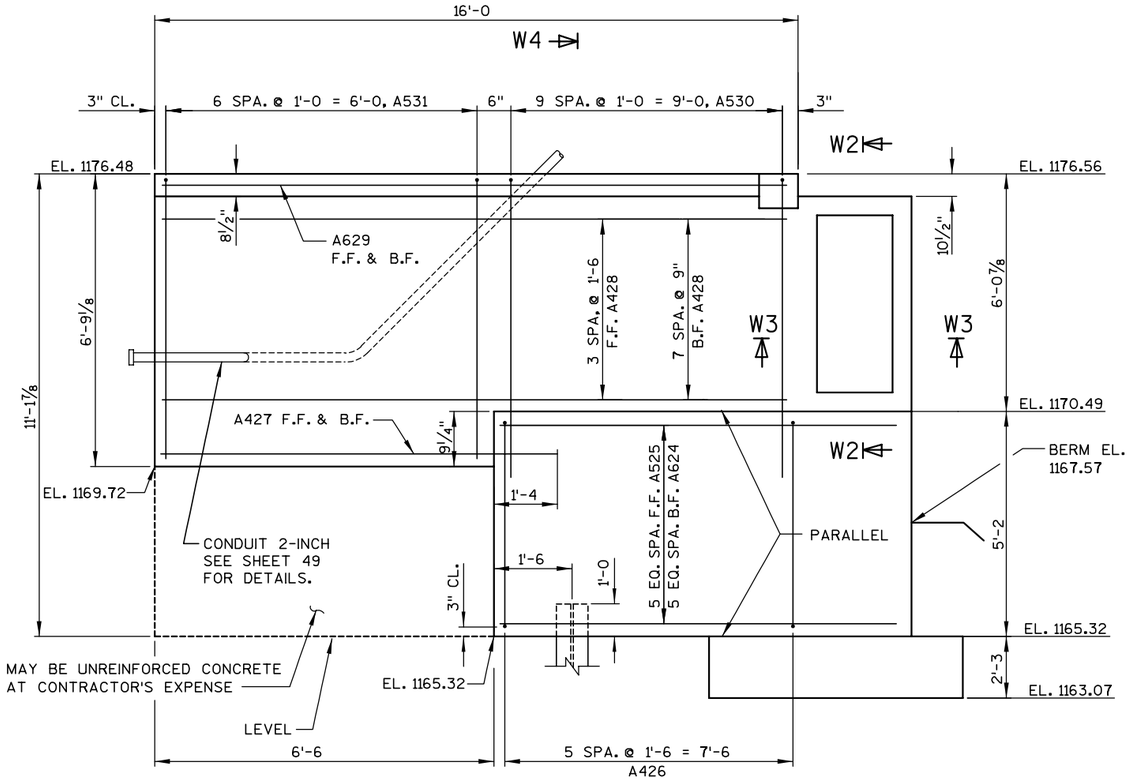

WING 1 ELEVATION

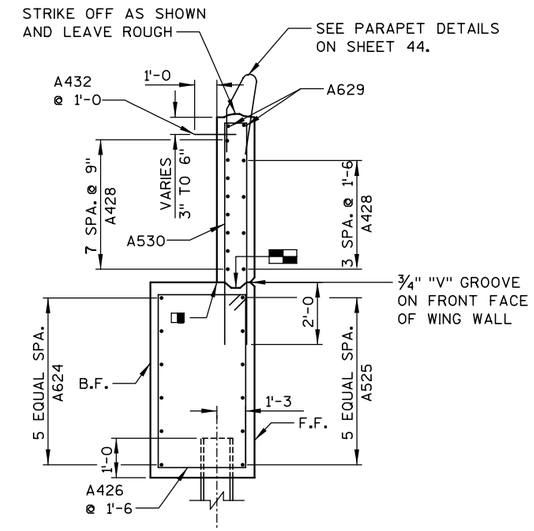

SECTION W4

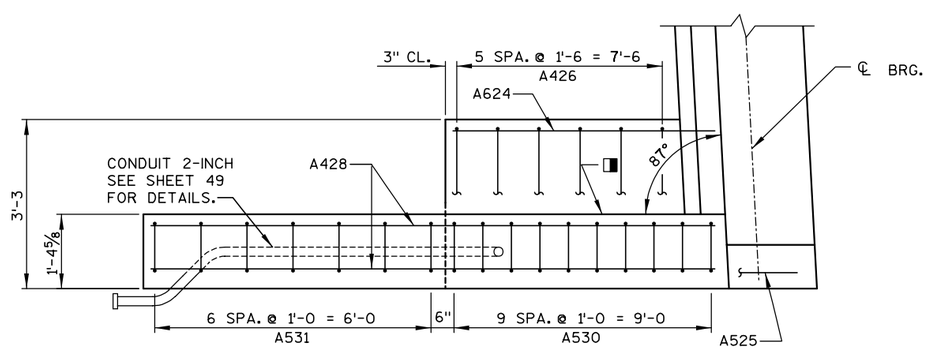

WING 1 PLAN

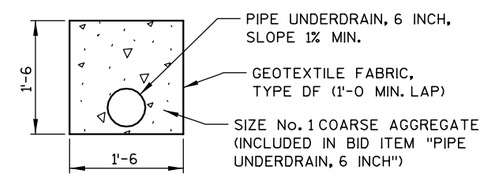

PIPE UNDERDRAIN DETAIL

NOTES

- INDICATES PILE BATTERED 4 TO 1 IN DIRECTION OF ARROW.
- OPTIONAL CONST. JOINT FORMED BY BEVEL 2" X 6" KEYWAY WITH 18" RUBBERIZED MEMBRANE WATERPROOFING ON BACKFACE.
- CONSTRUCTION JOINT, LEAVE ROUGH. POUR CONCRETE ABOVE THIS JOINT AFTER DECK IS IN PLACE. ¾" "V" GROOVE OPTIONAL.
- 18" RUBBERIZED MEMBRANE WATERPROOFING. SEAL ALL HORIZ. AND VERT. JOINTS ON BACKFACE ABOVE FOOTING.
- DIMENSIONS AT ℄ BEARING OF ABUTMENT.
- VERTICAL CONSTRUCTION JOINT IN FOOTING IS OPTIONAL.

SEE SHEET 8 FOR SECTION W2.
SEE SHEET 8 FOR SECTION W3.

NO.	DATE	REVISION	BY

STATE OF WISCONSIN
DEPARTMENT OF TRANSPORTATION
STRUCTURES DESIGN SECTION

STRUCTURE B-37-344

CONST. SPEC.	2003	DRAWN BY	JLB	PLANS CK'D.	JAR

SOUTH ABUT.
DETAILS 2

SHEET 9
289

STATE PROJECT NUMBER

1166-09-76

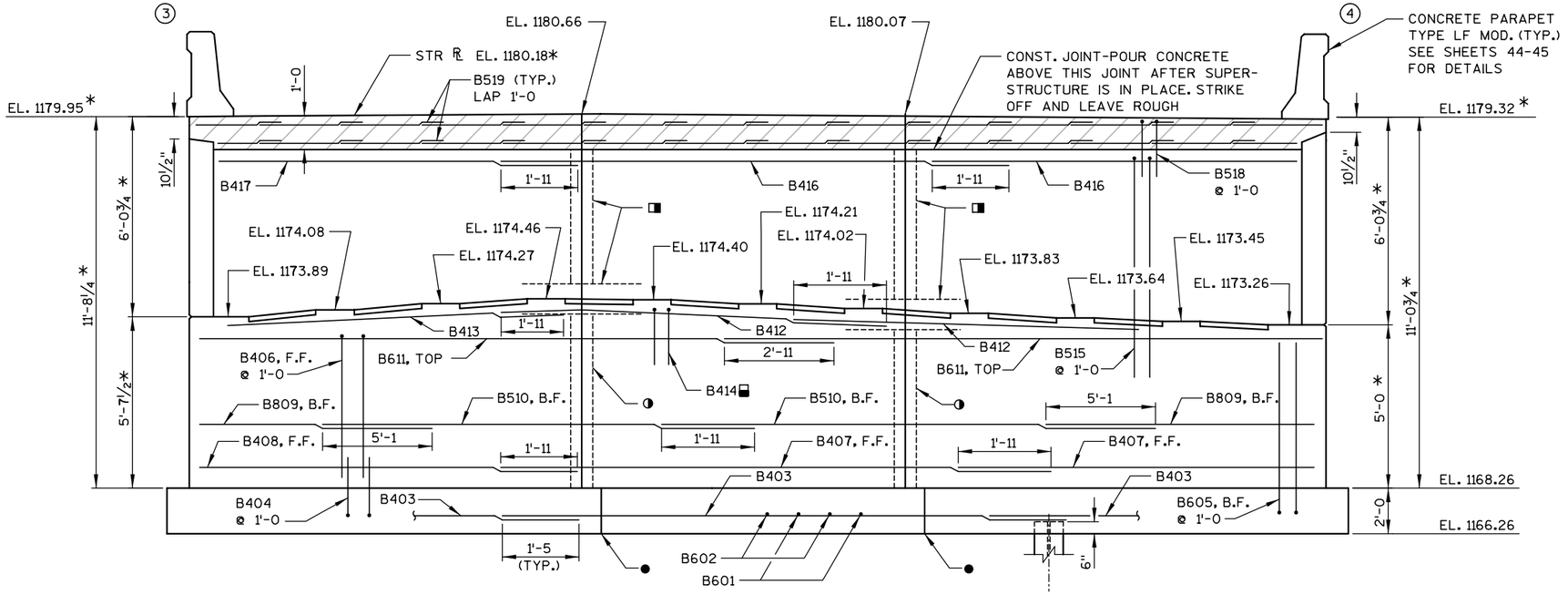

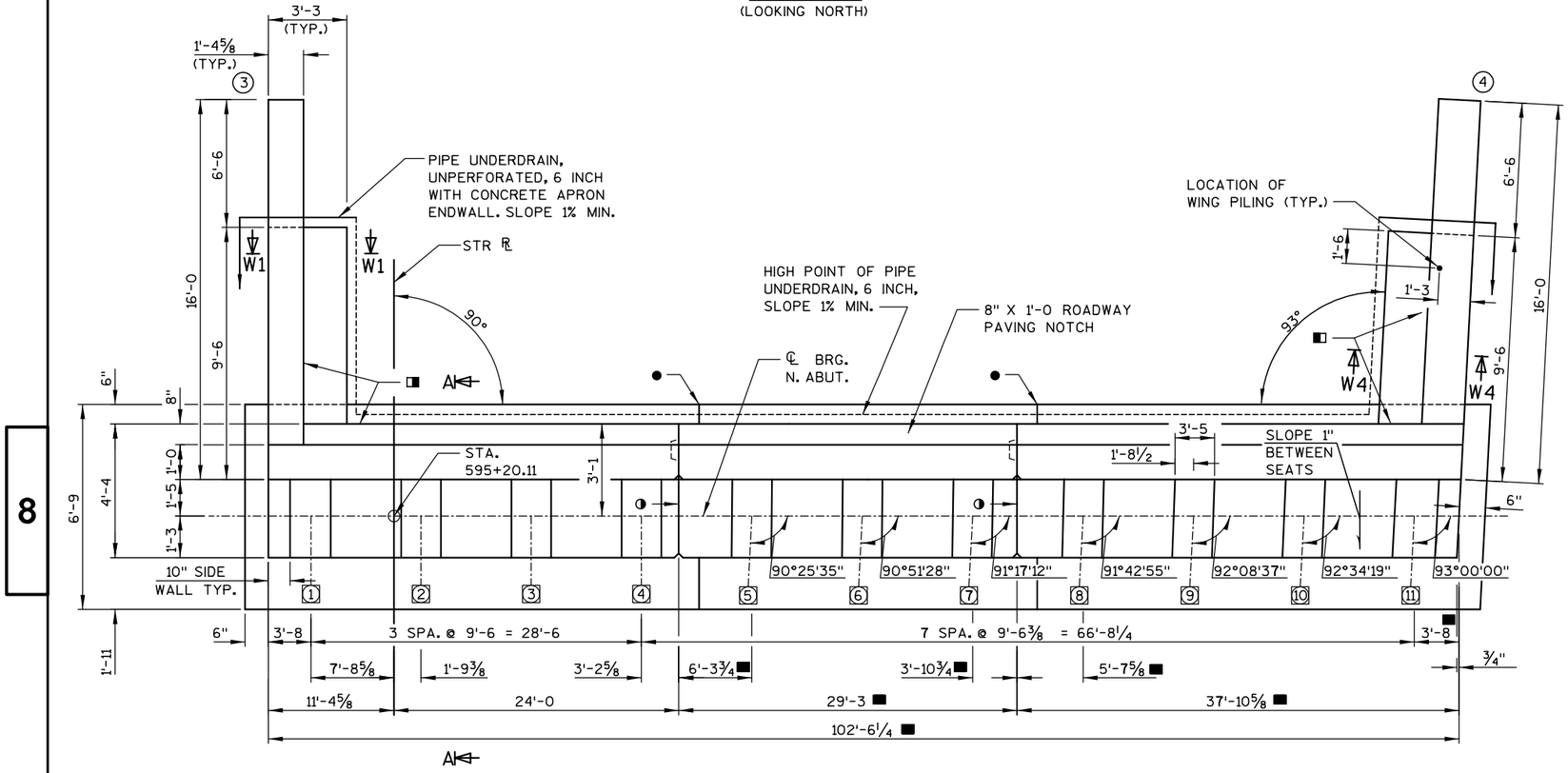

NOTES

- VERTICAL CONSTRUCTION JOINT, FORMED BY BEVELED 2" X 8". RUN BAR STEEL THRU JOINT, SEAL JOINT WITH 18" RUBBERIZED MEMBRANE WATERPROOFING AT B.F., ¾" V-GROOVE AT F.F. SEE SHEET 14 FOR ALTERNATE CONST. JOINT DETAILS.
- VERTICAL CONSTRUCTION JOINT IN FOOTING IS OPTIONAL.
- 18" RUBBERIZED MEMBRANE WATERPROOFING. SEAL ALL HORIZ. AND VERT. JOINTS ON BACKFACE ABOVE FOOTING.
- KEYED CONST. JOINT FORMED BY BEVELED 2" X 6". USE ¾" V-GROVE ON F.F. OF WINGWALLS.
- * DIMENSIONS AT FRONT FACE OF ABUTMENT BACKWALL.
- B414 AT 9" IN BEAM SEAT. SPACE AT 1'-6 BETWEEN SEATS.
- ABUTMENTS ARE SUPPORTED ON HP 12 X 53 STEEL PILES WITH PILE POINTS, DRIVEN TO A MIN. BEARING VALUE OF 93 TONS PER PILE. EST. 55 FT. LONG.
- STRIP SEAL EXPANSION DEVICE SEE SHEETS 47-48.
- DIMENSIONS AT ℄ OF ABUTMENT BEARING.

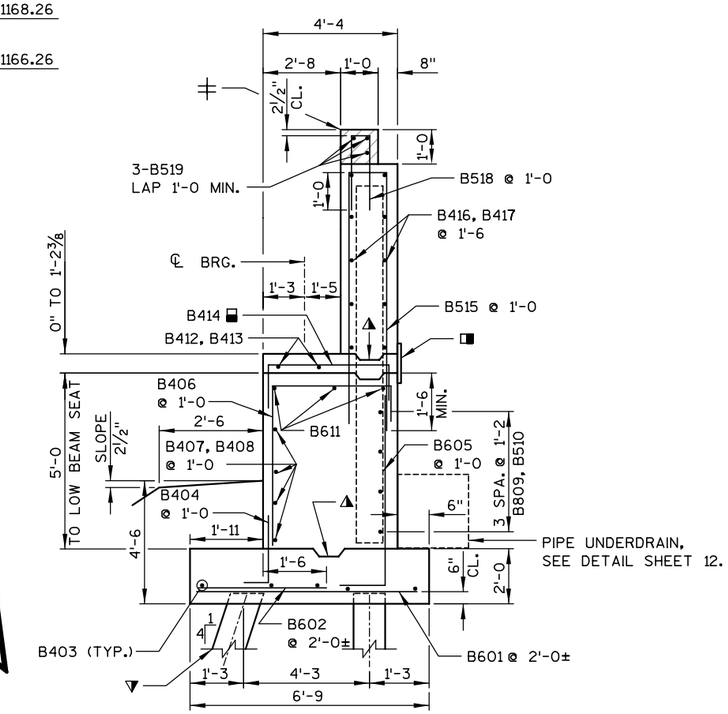

SECTION THRU BODY A-A

LEGEND

- (#) INDICATES GIRDER No.
- (#) INDICATES WING No.

NO.	DATE	REVISION	BY

STATE OF WISCONSIN
DEPARTMENT OF TRANSPORTATION
STRUCTURES DESIGN SECTION

STRUCTURE B-37-344

CONST. SPEC.	2003	DRAWN BY	JLB	PLANS CK'D.	JAR

NORTH ABUTMENT

SHEET 10
290

8

8

STATE PROJECT NUMBER

1166-09-76

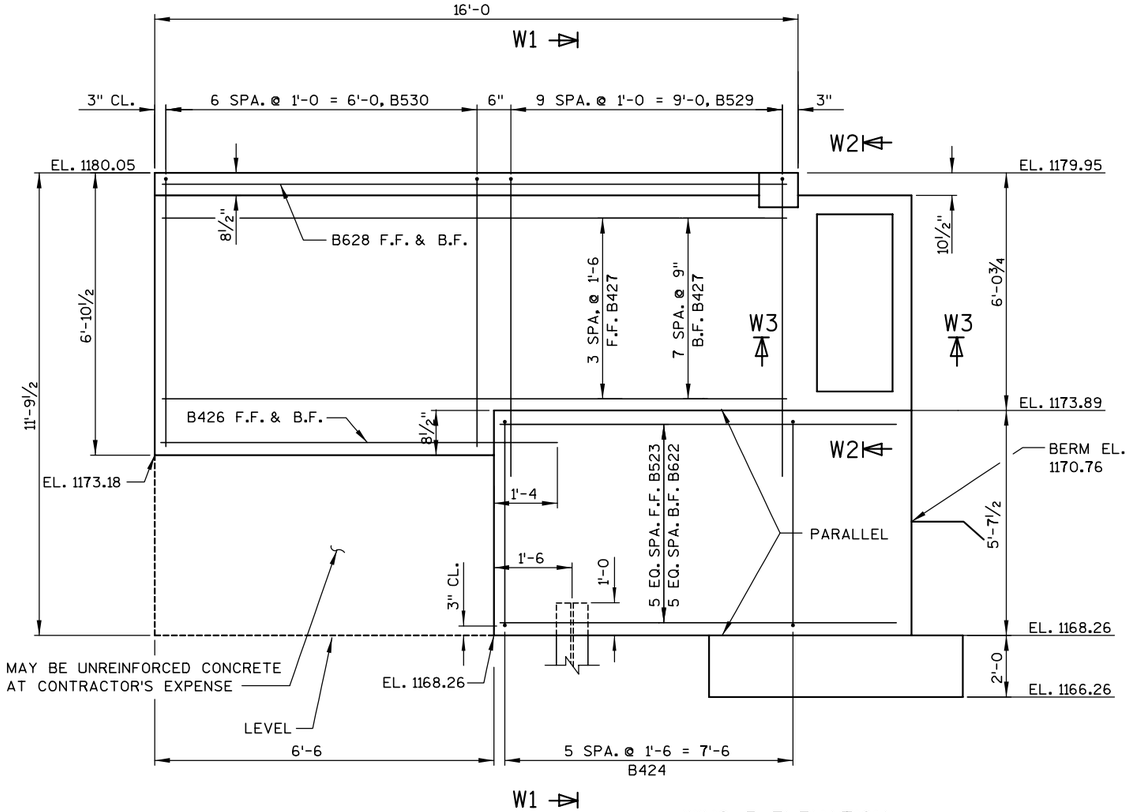

WING 3 ELEVATION

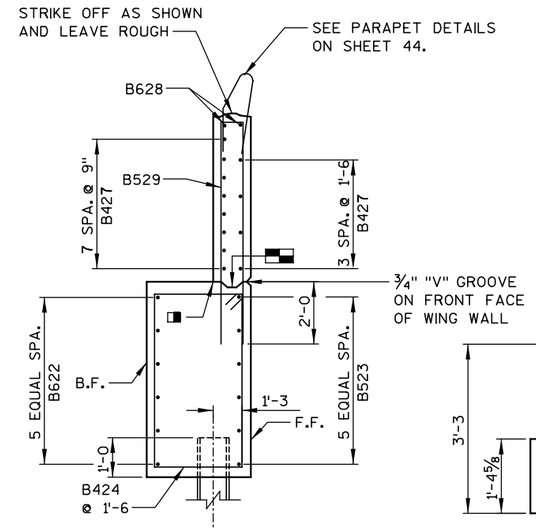

SECTION W1

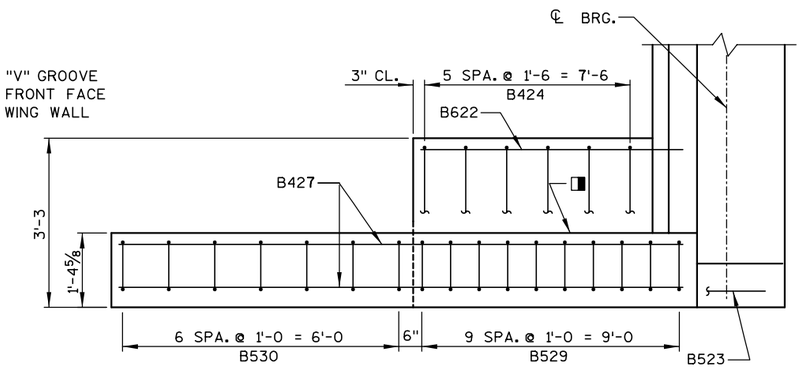

WING 3 PLAN

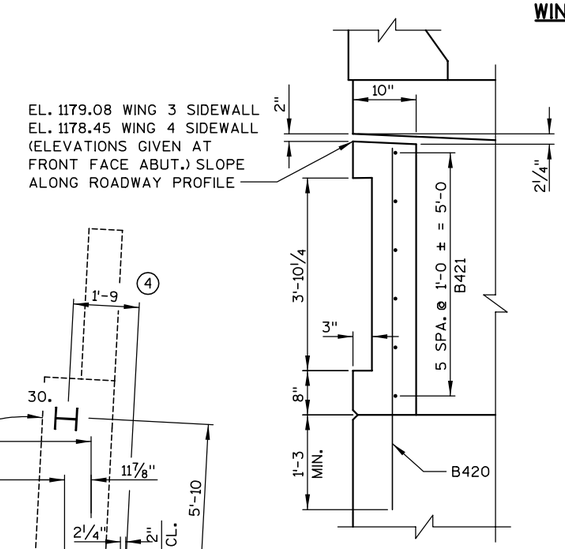

SECTION W2

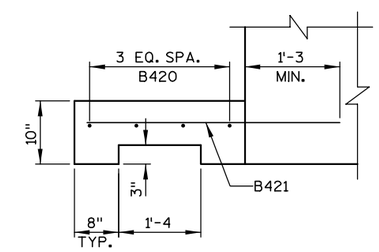

SECTION W3

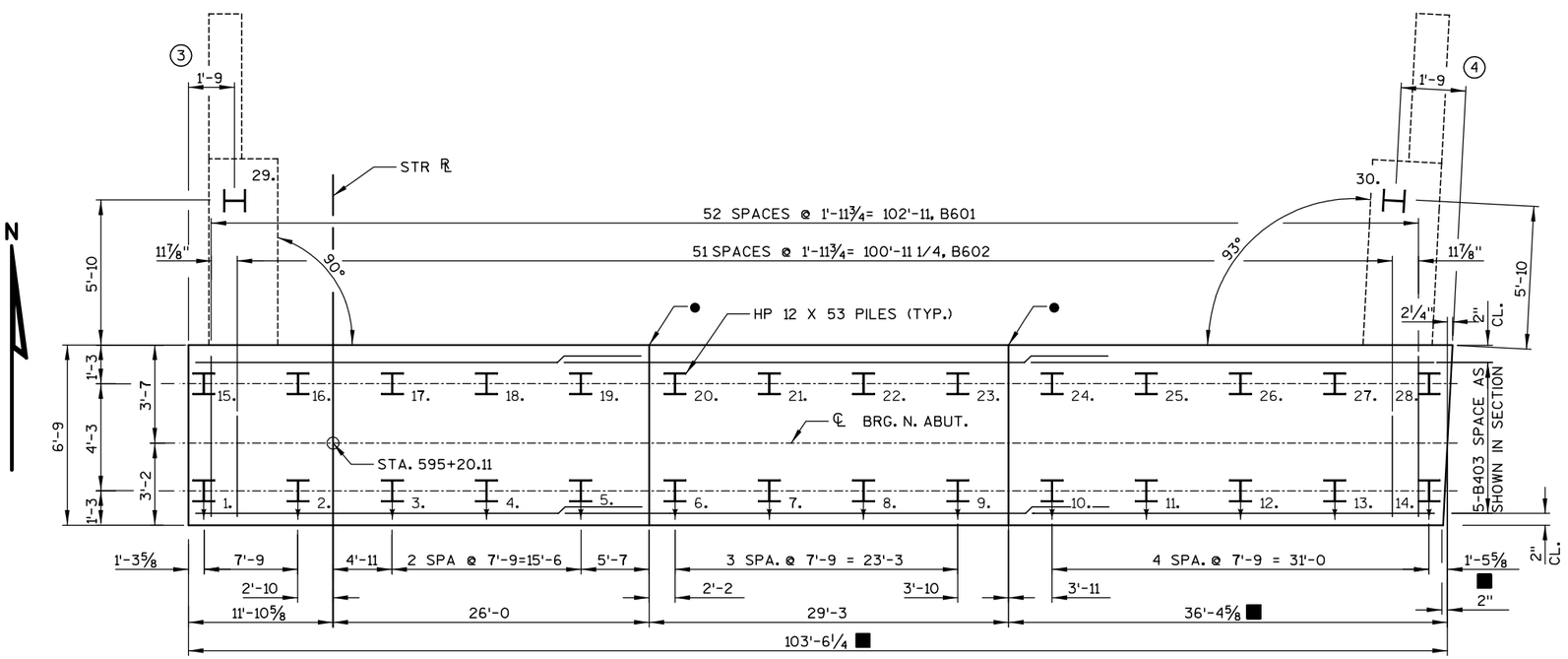

FOUNDATION PLAN

LEGEND

[#] INDICATES GIRDER No.

(#) INDICATES WING No.

SEE NOTES ON SHEET 12.

NO.	DATE	REVISION	BY

STATE OF WISCONSIN
DEPARTMENT OF TRANSPORTATION
STRUCTURES DESIGN SECTION

STRUCTURE B-37-344

CONST. SPEC.	2003	DRAWN BY	HSB	PLANS CK'D.	DJW

NORTH ABUT. DETAILS 1

SHEET 11
291

8

8

STATE PROJECT NUMBER

1166-09-76

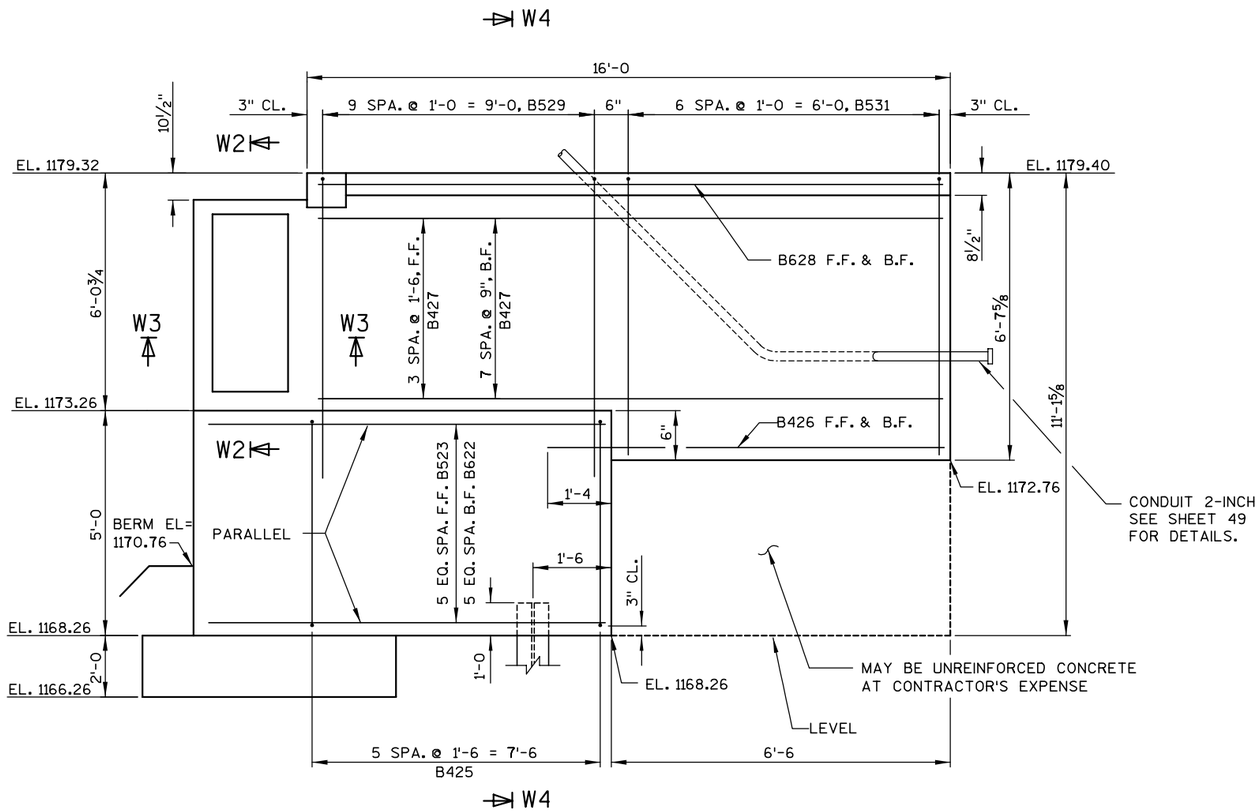

WING 4 ELEVATION

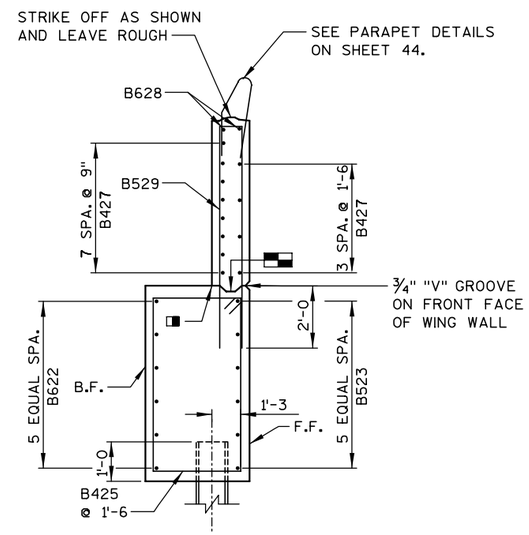

SECTION W4

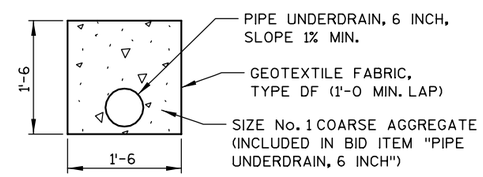

PIPE UNDERDRAIN DETAIL

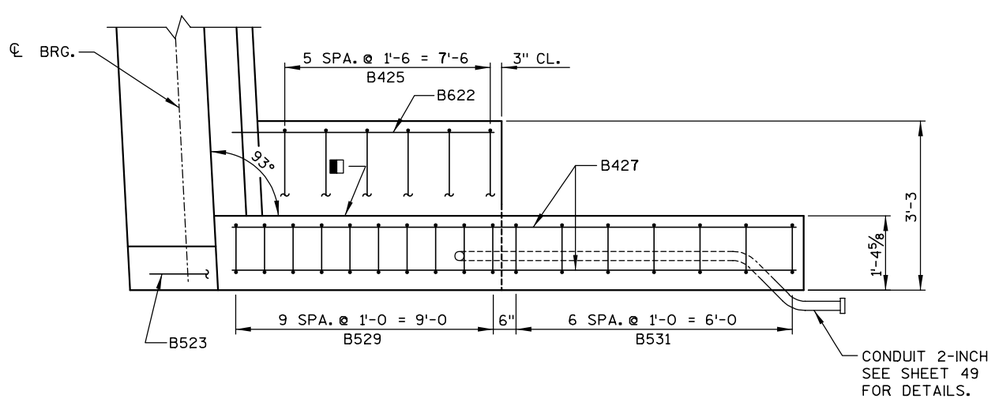

WING 4 PLAN

NOTES

- INDICATES PILE BATTERED 4 TO 1 IN DIRECTION OF ARROW.
- OPTIONAL CONST. JOINT FORMED BY BEVEL 2" X 6" KEYWAY WITH 18" RUBBERIZED MEMBRANE WATERPROOFING ON BACKFACE.
- CONSTRUCTION JOINT, LEAVE ROUGH. POUR CONCRETE ABOVE THIS JOINT AFTER DECK IS IN PLACE. ¾" "V" GROOVE OPTIONAL.
- 18" RUBBERIZED MEMBRANE WATERPROOFING. SEAL ALL HORIZ. AND VERT. JOINTS ON BACKFACE ABOVE FOOTING.
- DIMENSIONS AT ℄ BEARING OF ABUTMENT.
- VERTICAL CONSTRUCTION JOINT OPTIONAL IN FOOTING.

SEE SHEET 11 FOR SECTION W2.
SEE SHEET 11 FOR SECTION W3.

NO.	DATE	REVISION	BY

STATE OF WISCONSIN
DEPARTMENT OF TRANSPORTATION
STRUCTURES DESIGN SECTION

STRUCTURE B-37-344

CONST. SPEC.	2003	DRAWN BY	JLB	PLANS CK'D.	JAR

NORTH ABUT.
DETAILS 2

8

8

STATE PROJECT NUMBER

1166-09-76

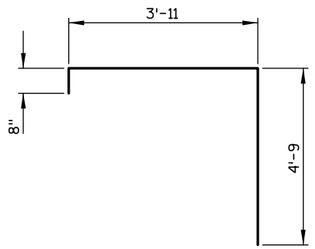

A407

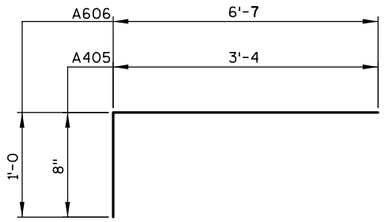

A405, A606

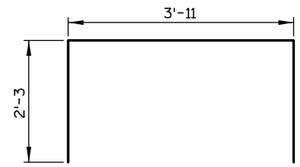

A416

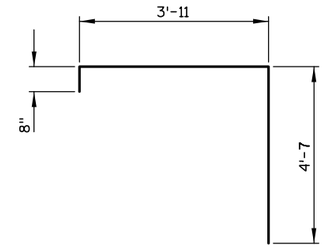

B406

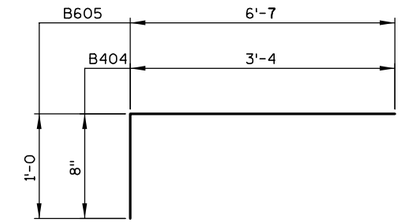

B404, B605

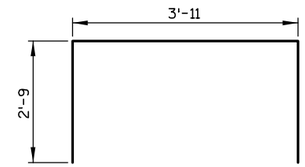

B414

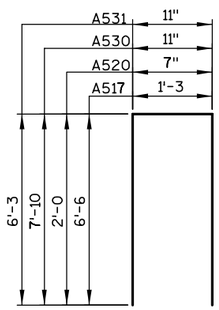

A517, A520, A530, A531

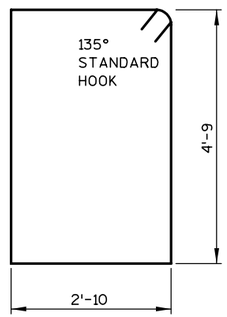

A426

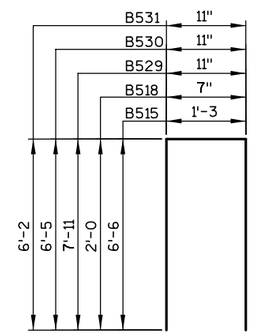

B515, B518, B529, B530, B531

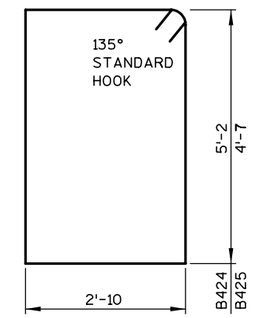

B424, B425

SOUTH ABUTMENT BILL OF BARS

COATED 3,610 LBS
UNCOATED 3,740 LBS

MARK	NO. REQ'D	LENGTH	BENT	COAT	LOCATION
A601	38	6'-3			ABUT. - FOOTING - TRANS.
A602	37	3'-2			ABUT. - FOOTING - TRANS.
A403	5	37'-5			ABUT. - FOOTING - LONGIT.
A404	5	37'-7			ABUT. - FOOTING - LONGIT.
A405	74	3'-11	X		ABUT. - FOOTING - VERT. - F.F.
A606	74	7'-5	X		ABUT. - FOOTING & BODY - VERT. - B.F.
A407	74	9'-2	X		ABUT. - BODY - VERT. - F.F.
A408	4	37'-4			ABUT. - BODY - HORIZ. - F.F.
A409	4	37'-1			ABUT. - BODY - HORIZ. - F.F
A810	8	21'-1			ABUT. - BODY - HORIZ. - B.F.
A511	4	40'-5			ABUT. - BODY - HORIZ. - B.F.
A612	3	38'-4			ABUT. - BODY - TOP - HORIZ.
A613	3	37'-1			ABUT. - BODY - TOP - HORIZ.
A414	2	19'-5			ABUT. - BODY - TOP SEAT - HORIZ.
A415	2	17'-8			ABUT. - BODY - TOP SEAT - HORIZ.
A416	50	8'-3	X		ABUT. - BODY - TOP SEAT - VERT.
A517	74	14'-0	X	X	ABUT. - BACKWALL - VERT.
A418	10	37'-4		X	ABUT. - BACKWALL - HORIZ. - F.F. & B.F.
A419	10	37'-1		X	ABUT. - BACKWALL - HORIZ. - F.F. & B.F.
A520	74	4'-4	X	X	PAVING BLOCK - VERT.
A521	30	8'-2		X	PAVING BLOCK - HORIZ.
A422	8	6'-3		X	SIDEWALL - VERT.
A423	12	3'-9		X	SIDEWALL - HORIZ.
A624	12	9'-5		X	WING 1&2 - LOWER WING - HORIZ. - B.F.
A525	12	11'-8		X	WING 1&2 - LOWER WING - HORIZ. - F.F.
A426	12	15'-8	X	X	WING 1&2 - LOWER WING - VERT. - STIRRUPS
A427	4	7'-7		X	WING 1&2 - UPPER WING - HORIZ.
A428	24	15'-6		X	WING 1&2 - UPPER WING - HORIZ.
A629	4	15'-6		X	WING 1&2 - UPPER WING - TOP HORIZ.
A530	20	16'-4	X	X	WING 1&2 - UPPER WING - VERT. U-BAR
A531	14	13'-2	X	X	WING 1&2 - UPPER WING - VERT. U-BAR
A432	30	2'-0			WING 1&2 - SURFACE DRAIN ANCHORS

NOTE: THE FIRST DIGIT OF A BAR MARK SIGNIFIES THE BAR SIZE.
DIMENSIONS FOR BENDING ARE OUT TO OUT OF BAR.

NORTH ABUTMENT BILL OF BARS

COATED 4,440 LBS
UNCOATED 5,290 LBS

MARK	NO. REQ'D	LENGTH	BENT	COAT	LOCATION
B601	53	6'-3			ABUT. - FOOTING - TRANS.
B602	52	3'-2			ABUT. - FOOTING - TRANS.
B403	15	35'-3			ABUT. - FOOTING - LONGIT.
B404	103	3'-11	X		ABUT. - FOOTING - VERT. - F.F.
B605	103	7'-5	X		ABUT. - FOOTING & BODY - VERT. - B.F.
B406	103	9'-0	X		ABUT. - BODY - VERT. - F.F.
B407	8	35'-6			ABUT. - BODY - HORIZ. - F.F.
B408	4	34'-11			ABUT. - BODY - HORIZ. - F.F.
B809	8	21'-1			ABUT. - BODY - HORIZ. - B.F.
B510	8	36'-0			ABUT. - BODY - HORIZ. - B.F.
B611	6	52'-6			ABUT. - BODY - TOP - HORIZ.
B412	4	27'-6			ABUT. - BODY - TOP SEAT - HORIZ.
B413	2	35'-0			ABUT. - BODY - TOP SEAT - HORIZ.
B414	86	9'-3	X		ABUT. - BODY - TOP SEAT - VERT.
B515	103	14'-0	X	X	ABUT. - BACKWALL - VERT.
B416	20	35'-6		X	ABUT. - BACKWALL - HORIZ. - F.F. & B.F.
B417	10	34'-11		X	ABUT. - BACKWALL - HORIZ. - F.F. & B.F.
B518	103	4'-4	X	X	PAVING BLOCK - VERT.
B519	42	8'-3		X	PAVING BLOCK - HORIZ.
B420	8	6'-3		X	SIDEWALL - VERT.
B421	12	3'-9		X	SIDEWALL - HORIZ.
B622	12	9'-5		X	WING 3 &4 - LOWER WING - HORIZ. - B.F.
B523	12	11'-8		X	WING 3 &4 - LOWER WING - HORIZ. - F.F.
B424	6	16'-5	X	X	WING 3 - LOWER WING - VERT. - STIRRUPS
B425	6	15'-3	X	X	WING 4 - LOWER WING - VERT. - STIRRUPS
B426	4	7'-7		X	WING 3 &4 - UPPER WING - HORIZ.
B427	24	15'-6		X	WING 3 &4 - UPPER WING - HORIZ.
B628	4	15'-6		X	WING 3 &4 - UPPER WING - TOP HORIZ.
B529	20	16'-6	X	X	WING 3 &4 - UPPER WING - VERT. U-BAR
B530	7	13'-6	X	X	WING 3 - UPPER WING - VERT. U-BAR
B531	7	13'-0	X	X	WING 4 - UPPER WING - VERT. U-BAR

NOTE: THE FIRST DIGIT OF A BAR MARK SIGNIFIES THE BAR SIZE.
DIMENSIONS FOR BENDING ARE OUT TO OUT OF BAR.

8

8

NO.	DATE	REVISION	BY

STATE OF WISCONSIN
DEPARTMENT OF TRANSPORTATION
STRUCTURES DESIGN SECTION

STRUCTURE B-37-344

CONST. SPEC.	2003	DRAWN BY	HSB	PLANS CK'D.	DJW

ABUTMENT REINFORCING

SHEET 13
293

STATE PROJECT NUMBER

1166-09-76

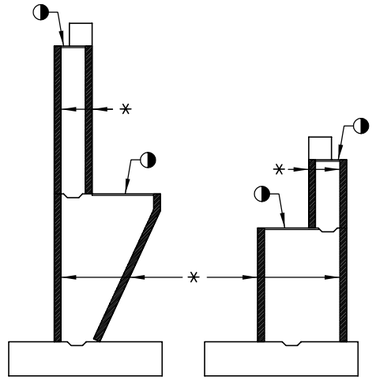

A3 ABUTMENT A4 ABUTMENT

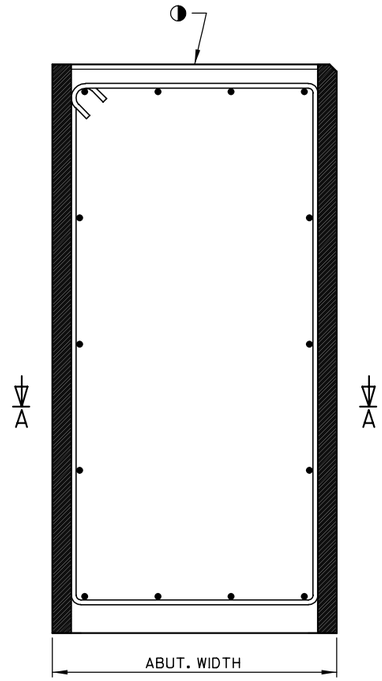

SECTION THRU ABUTMENT BODY

A1 ABUTMENT SHOWN, A5 SIMILAR

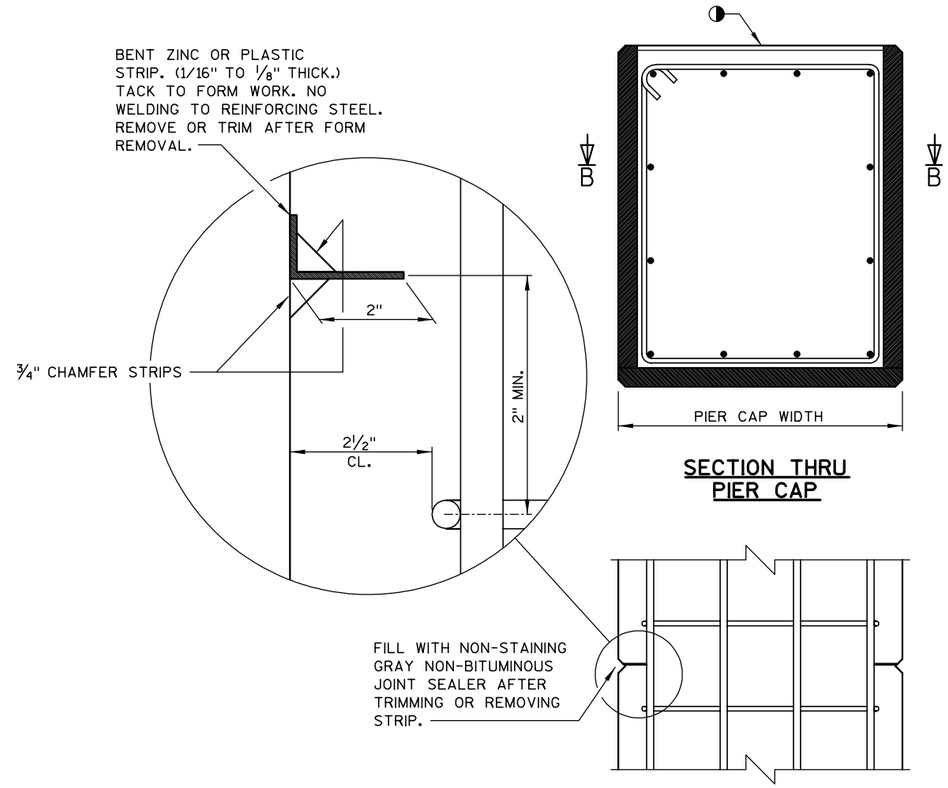

SECTION THRU PIER CAP

SECTION B-B

ALTERNATE CONSTRUCTION JOINT AT PIER CAP

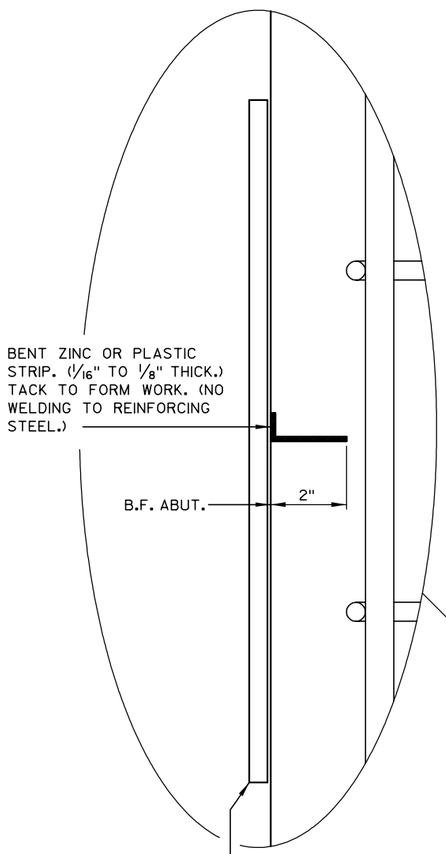

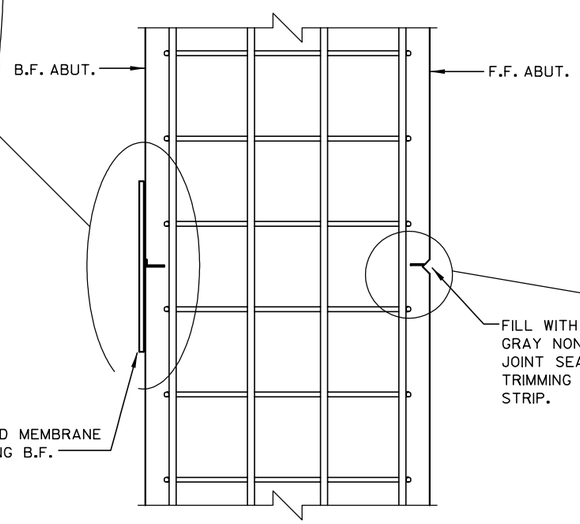

SECTION A-A

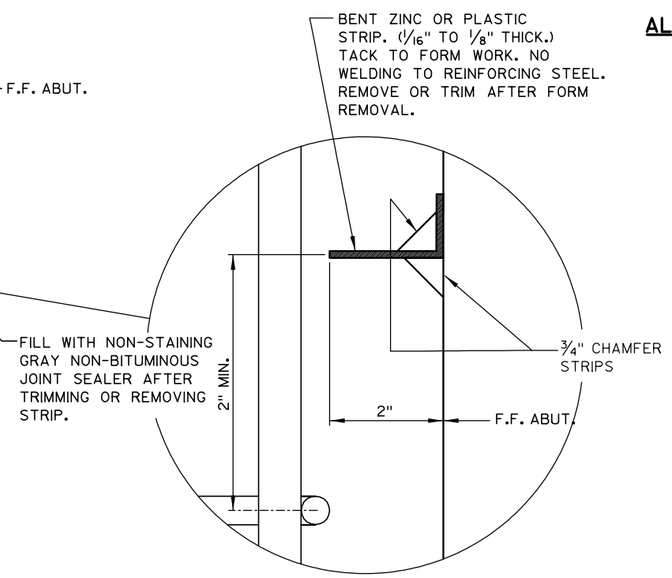

ALTERNATE CONSTRUCTION JOINT AT ABUTMENT

NOTES

PARTIAL ZINC OR PLASTIC BULKHEAD MAY BE USED AS ALTERNATE CONSTRUCTION JOINT, WITH THE PERMISSION OF THE ENGINEER, AT THE CONTRACTOR'S EXPENSE.

VERTICAL CONSTRUCTION JOINT KEYWAY IS NOT REQUIRED WHEN USING ALTERNATE CONSTRUCTION JOINT.

CARE IS TO BE USED IN CASTING CONCRETE AROUND BULKHEAD TO PREVENT DISLOCATION OR MISALIGNMENT OF THE BULKHEAD.

◑ USE A JOINT TOOL TO CONSTRUCT A CONTRACTION JOINT APPROXIMATELY 1/2" DEEP.

* BENT ZINC OR PLASTIC STRIP.

NO.	DATE	REVISION	BY

STATE OF WISCONSIN
DEPARTMENT OF TRANSPORTATION
STRUCTURES DESIGN SECTION

STRUCTURE B-37-344

CONST. SPEC.	2003	DRAWN BY	CDH	PLANS CK'D.	DJW

ALTERNATE CONSTR. JOINT

SHEET 14
294

8

8

STATE PROJECT NUMBER

1166-09-76

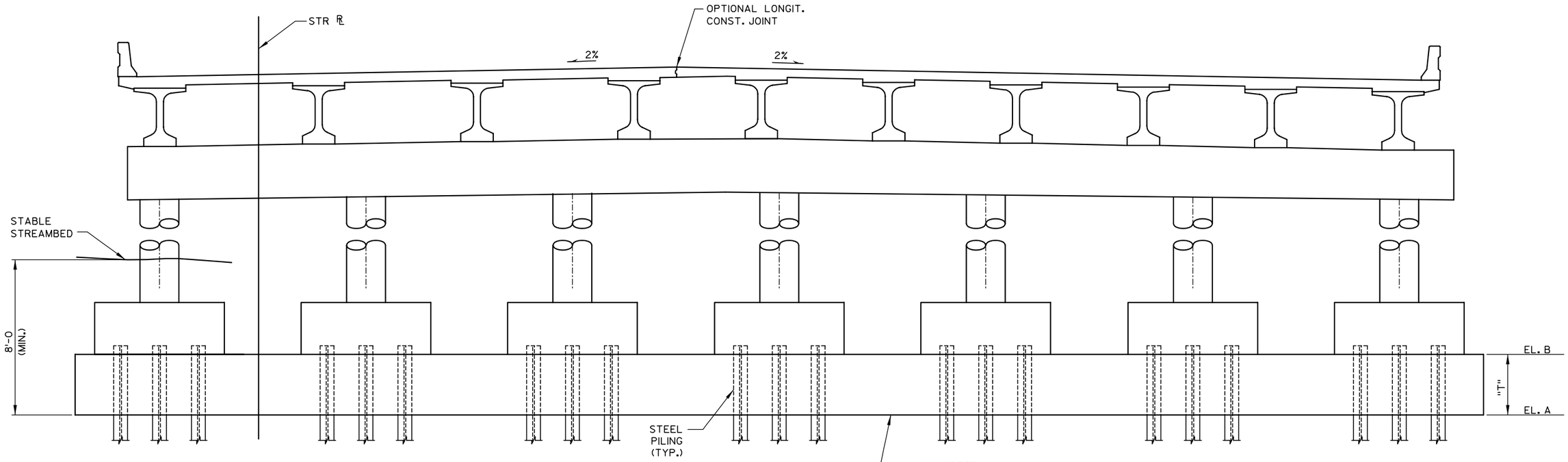

CROSS SECTION
(LOOKING NORTH)
(PIERS 2, 3, AND 4 SHOWN)

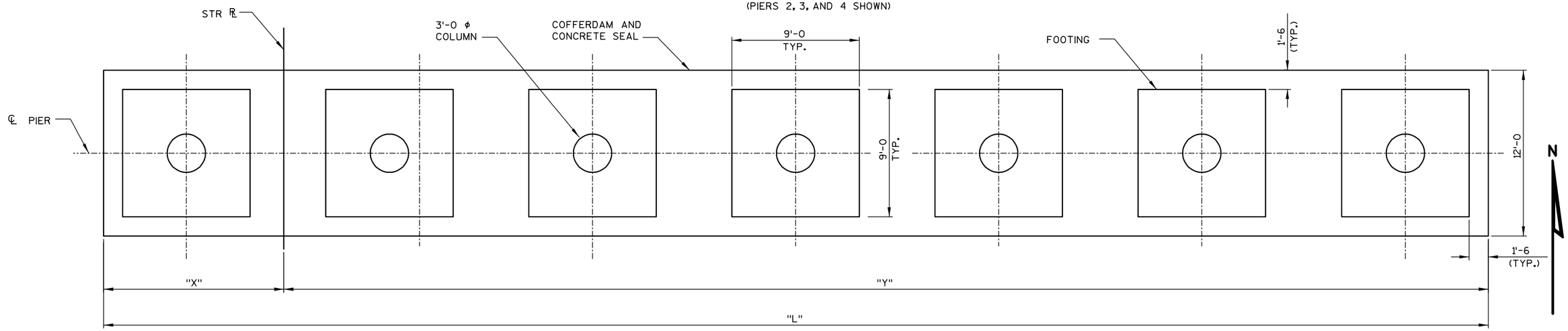

PLAN
(PIERS 2, 3, AND 4 SHOWN, PIER 1 SIMILAR)

SEAL DATA

PIER	EL. A	EL. B	"T"	"L"	"X"	"Y"
1	1140.90	1145.90	5.0'	83'-8	13'-9½±	69'-10½±
2	1150.00	1153.00	3.0'	102'-0	20'-0 ±	82'-0 ±
3	1148.00	1151.00	3.0'	95'-6	13'-9 ±	81'-9 ±
4	1142.90	1146.90	4.0'	102'-0	14'-1 ±	87'-11 ±

NO.	DATE	REVISION	BY

STATE OF WISCONSIN
DEPARTMENT OF TRANSPORTATION
STRUCTURES DESIGN SECTION

STRUCTURE B-37-344

CONST. SPEC.	2003	DRAWN BY	STE	PLANS CK'D.	DJW

SEAL DETAILS

SHEET 15
295

8

8

STATE PROJECT NUMBER

1166-09-76

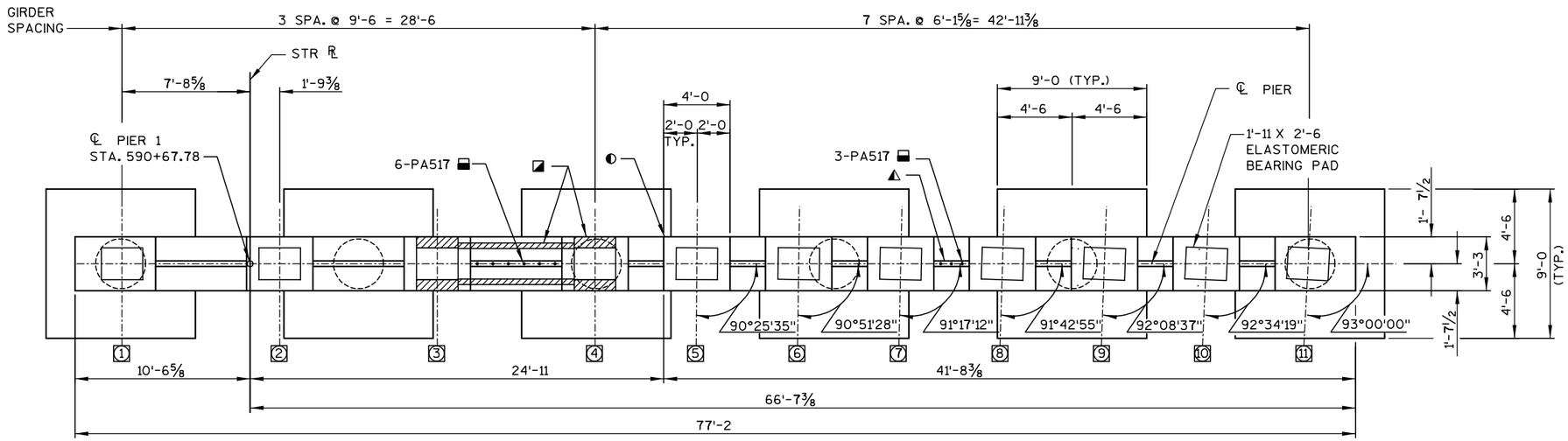

PLAN

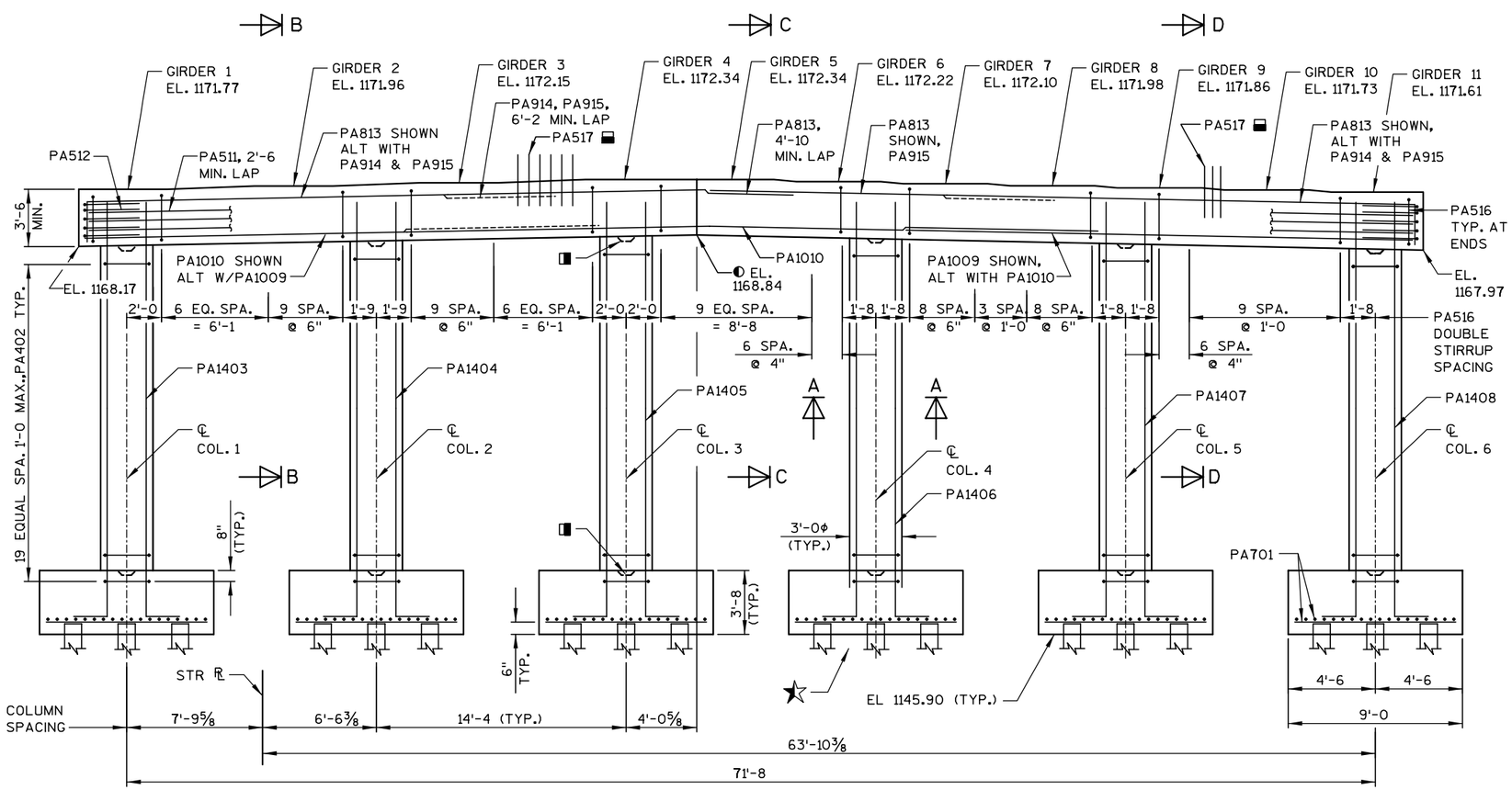

ELEVATION
(LOOKING NORTH)

NOTES

- 1'-3 X 1'-3 X 2" CONST. JOINT FORMED BY BEVELED KEYWAY, TYP. ALL COLUMNS AND FOOTINGS.
- 2" X 6" BEVELED KEYWAY BETWEEN BEAM SEATS.
- PA517 BARS @ 1'-0± CENTERS BETWEEN BEAM SEATS. MAY BE PLACED AFTER CONCRETE IS POURED BUT BEFORE INITIAL SET HAS TAKEN PLACE. (EMBED 1'-0 INTO CONCRETE)
- ¾" X 4" PREFORMED FILLER.
- PILING STEEL, DELIVERED AND DRIVEN HP 12-INCH x 53 LB DRIVEN TO A MIN. BEARING VALUE OF 93 TONS, EST. 35 FT.
- VERTICAL CONSTRUCTION JOINT FORMED BY BEVELED 2"x8". SPLICE BAR STEEL THRU JOINT, ¾" V-GROOVE ALL AROUND.
- INDICATES GIRDER No.

SEE SHEET 14 FOR ALTERNATE CONSTRUCTION JOINT DETAIL.

COLUMN HEIGHTS
(@ ℄ COL.)

COL. #	HEIGHT	TOP ELEV.
1	18'-7⅞	1168.23
2	18'-11⅛	1168.50
3	19'-2⅜	1168.76
4	19'-0¾	1168.62
5	18'-9⅛	1168.32
6	18'-5½	1168.02

NO.	DATE	REVISION	BY

STATE OF WISCONSIN
DEPARTMENT OF TRANSPORTATION
STRUCTURES DESIGN SECTION

STRUCTURE B-37-344

CONST. SPEC.	2003	DRAWN BY	HSB	PLANS CK'D.	DJW

PIER 1

SHEET 16
296

8

8

STATE PROJECT NUMBER
1166-09-76

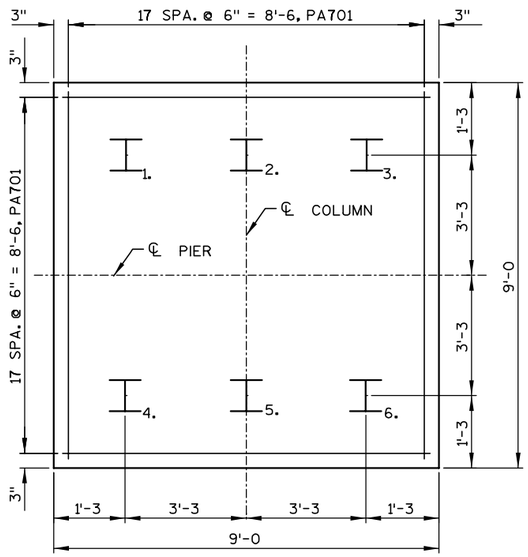

FOOTING AND PILE PLAN

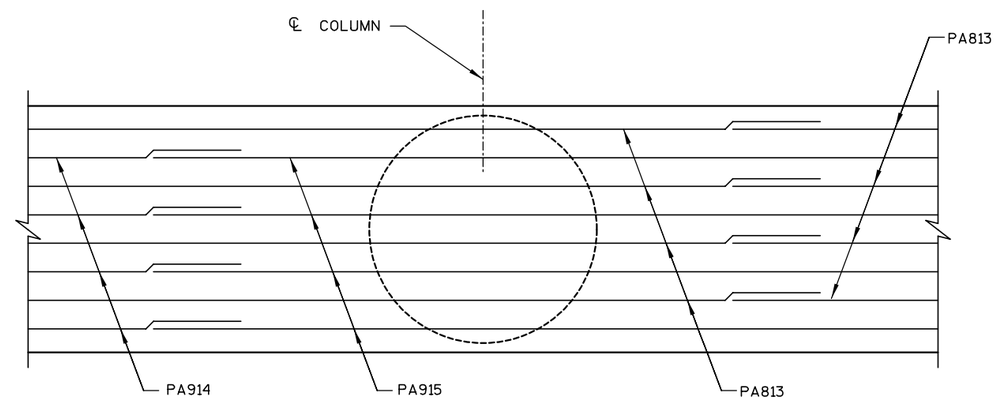

TOP MAT CAP REINF. DETAIL @ COL #3 & #4

(COL #3 SHOWN, COL #4 SIMILAR)

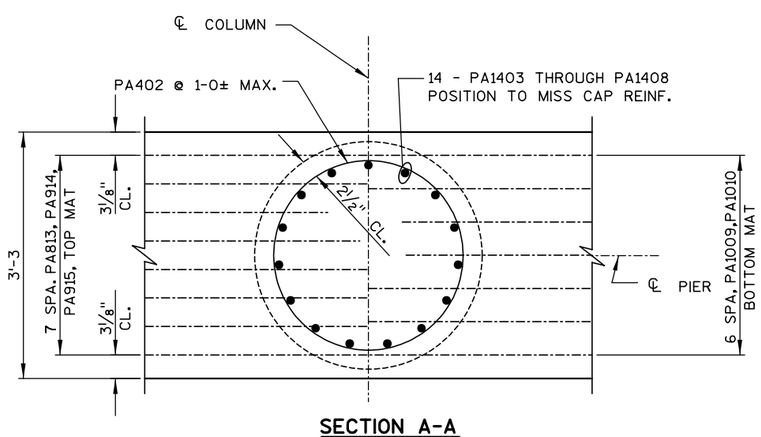

SECTION A-A

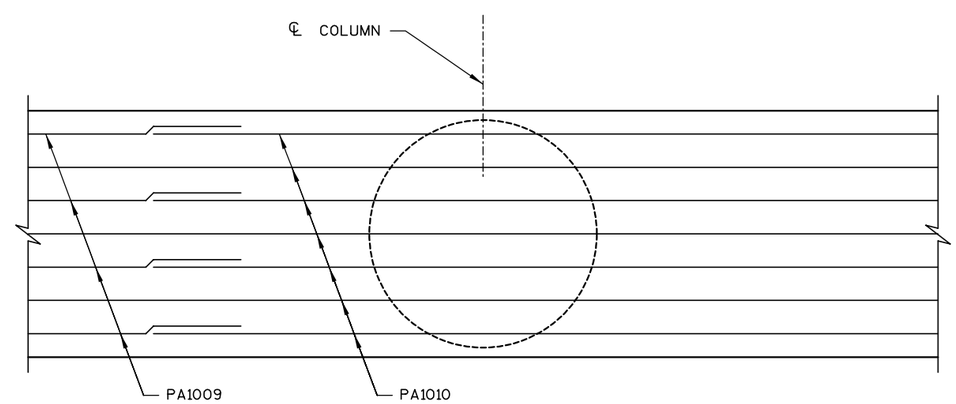

BOTTOM MAT CAP REINF. DETAIL @ COL #3 AND #4

(COL #3 SHOWN, COL #4 SIMILAR)

8

8

NO.	DATE	REVISION	BY

STATE OF WISCONSIN
DEPARTMENT OF TRANSPORTATION
STRUCTURES DESIGN SECTION

STRUCTURE B-37-344

CONST. SPEC.	2003	DRAWN BY	HSB	PLANS CK'D.	DJW

PIER 1
DETAILS 1

SHEET 17
297

STATE PROJECT NUMBER

1166-09-76

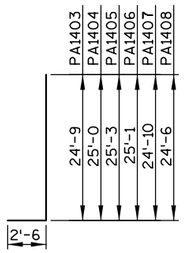

PA1403, PA1404, PA1405, PA1406, PA1407, PA1408

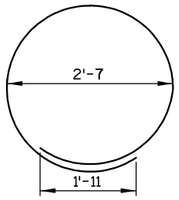

PA402

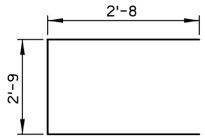

PA512

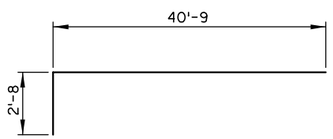

PA813

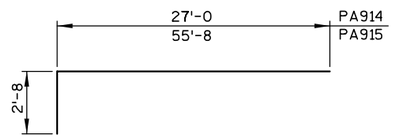

PA914, PA915

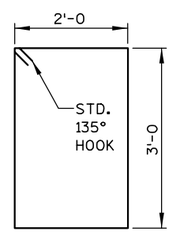

PA516

PIER 1
BILL OF BARS

UNCOATED 29,230 LBS

MARK	NO. REQ'D	LENGTH	BENT	COAT	LOCATION
PA701	216	8'-6			FOOTING - HORIZ.
PA402	120	10'-0	X		COLUMN - STIRRUPS
PA1403	14	26'-10	X		FOOTING - COLUMN 1- VERT.
PA1404	14	27'-1	X		FOOTING - COLUMN 2 - VERT.
PA1405	14	27'-4	X		FOOTING - COLUMN 3 - VERT.
PA1406	14	27'-2	X		FOOTING - COLUMN 4 - VERT.
PA1407	14	26'-11	X		FOOTING - COLUMN 5 - VERT.
PA1408	14	26'-7	X		FOOTING - COLUMN 6 - VERT.
PA1009	7	29'-8			CAP - BOTTOM - HORIZ.
PA1010	7	58'-0			CAP - BOTTOM - HORIZ.
PA511	12	39'-10			CAP - SIDES - HORIZ.
PA512	10	7'-10	X		CAP - ENDS - HORIZ.
PA813	8	43'-3	X		CAP - TOP -HORIZ.
PA914	4	29'-6	X		CAP - TOP -HORIZ.
PA915	4	58'-2	X		CAP - TOP -HORIZ.
PA516	172	10'-8	X		CAP - STIRRUPS
PA517	39	2'-0			CAP - VERTICAL - DOWELS

NOTE: THE FIRST ONE OR TWO DIGITS OF THE BAR MARK SIGNIFIES THE BAR SIZE. BENDING DIMENSIONS ARE OUT TO OUT OF BARS.

NOTES

▲ 2" X 6" BEVELED KEYWAY BETWEEN BEAM SEATS.

▬ PA517 BARS @ 1'-0± CENTERS BETWEEN BEAM SEATS AT FIXED BEARING PIERS. MAY BE PLACED AFTER CONCRETE IS POURED BUT BEFORE INITIAL SET HAS TAKEN PLACE. (EMBED 1'-0 INTO CONCRETE).

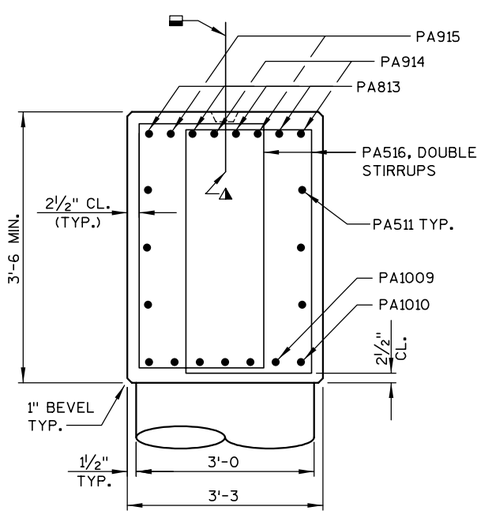

SECTION B-B

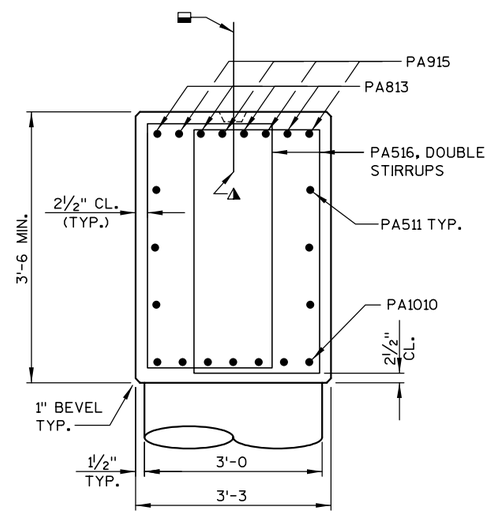

SECTION C-C

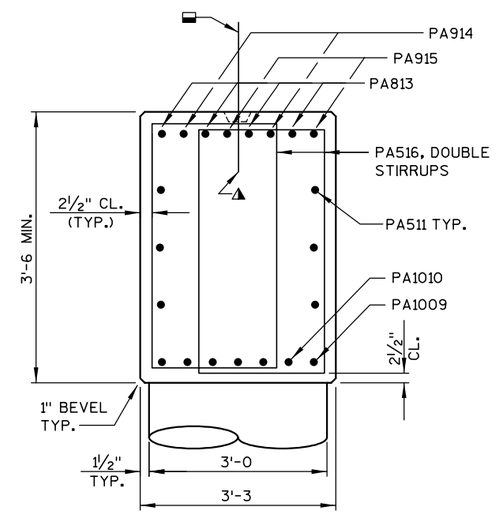

SECTION D-D

8

8

NO.	DATE	REVISION	BY

STATE OF WISCONSIN
DEPARTMENT OF TRANSPORTATION
STRUCTURES DESIGN SECTION

STRUCTURE B-37-344

CONST. SPEC.	2003	DRAWN BY	HSB	PLANS CK'D.	DJW

PIER 1
DETAILS 2

SHEET 18
298

STATE PROJECT NUMBER

1166-09-76

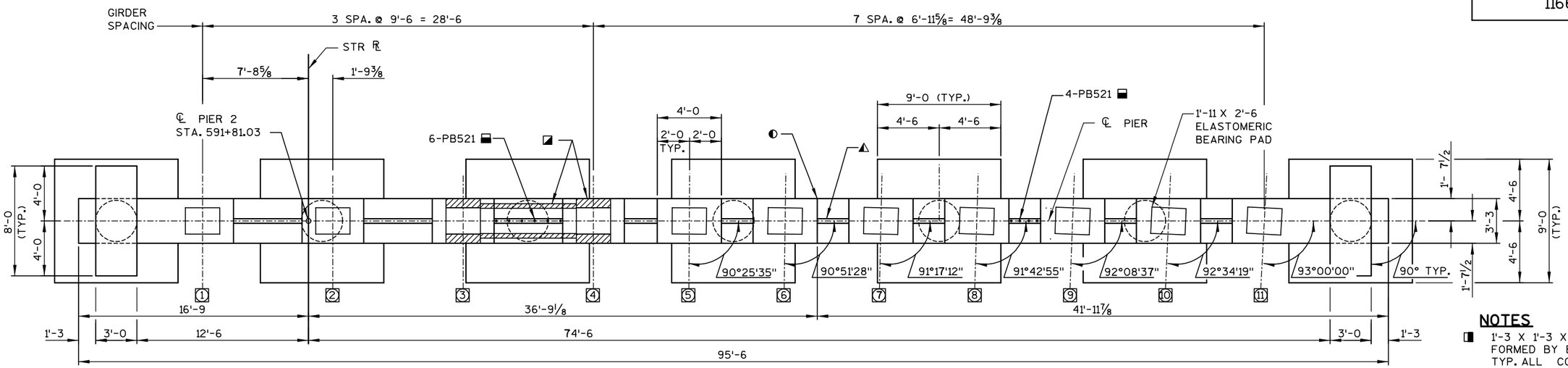

PLAN

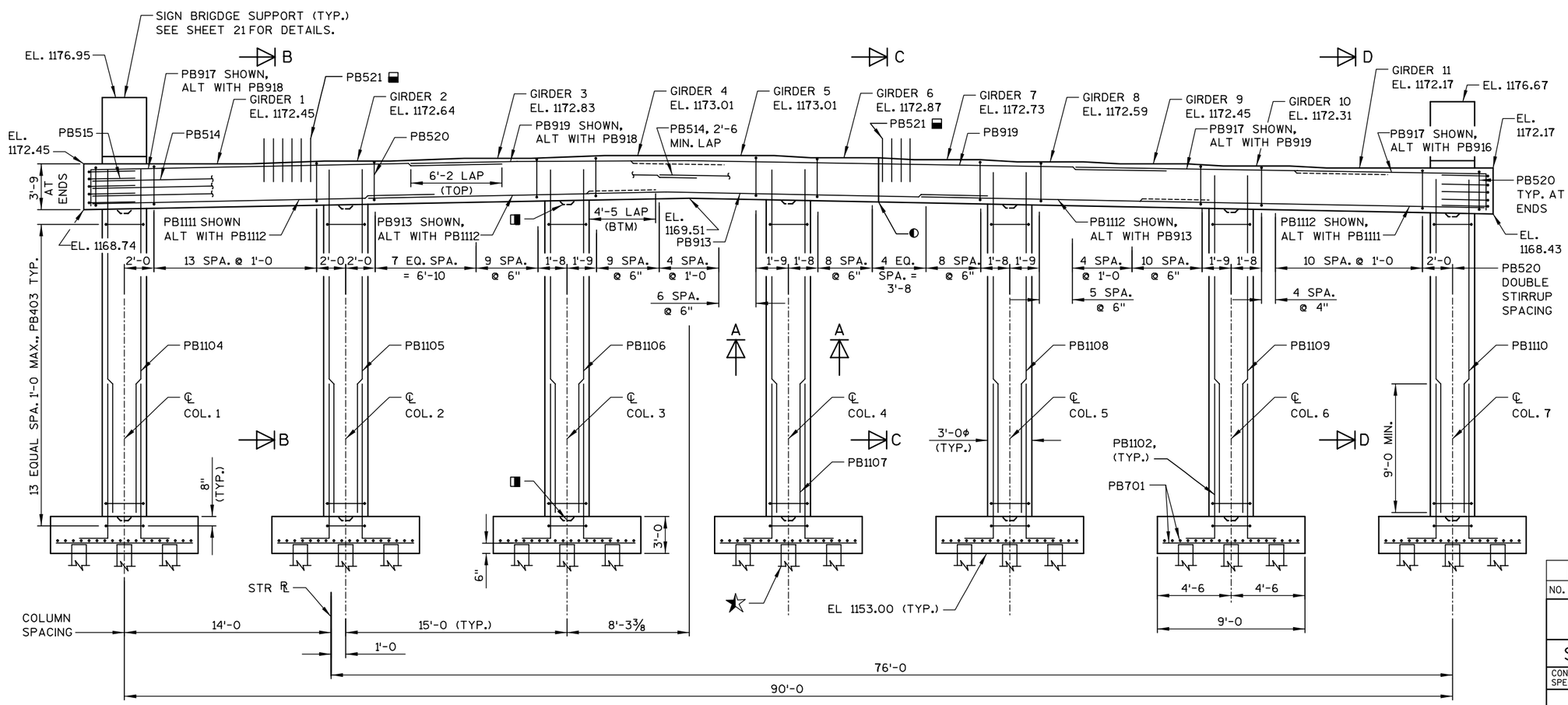

ELEVATION
(LOOKING NORTH)

NOTES

- 1'-3 X 1'-3 X 2" CONST. JOINT FORMED BY BEVELED KEYWAY, TYP. ALL COLUMNS AND FOOTINGS.
- 2" X 6" BEVELED KEYWAY BETWEEN BEAM SEATS.
- PB521 BARS @ 1'-0 CENTERS BETWEEN BEAM SEATS. MAY BE PLACED AFTER CONCRETE IS POURED BUT BEFORE INITIAL SET HAS TAKEN PLACE. (EMBED 1'-0 INTO CONCRETE)
- ¾" X 4" PREFORMED FILLER.
- PILING STEEL, DELIVERED AND DRIVEN HP 12-INCH x 53 LB DRIVEN TO A MIN. BEARING VALUE OF 93 TONS, EST. 35 FT.
- VERTICAL CONSTRUCTION JOINT FORMED BY BEVELED 2"x8". SPLICE BAR STEEL THRU JOINT, ¾" V-GROOVE ALL AROUND.
- INDICATES GIRDER No.

SEE SHEET 14 FOR ALTERNATE CONSTRUCTION JOINT DETAIL.

COLUMN HEIGHTS
(@ ℄ COL.)

COL. #	HEIGHT	TOP ELEV.
1	12'-9½	1168.79
2	13'-0⅛	1169.07
3	13'-4⅜	1169.36
4	13'-4½	1169.38
5	13'-1⅛	1169.09
6	12'-9⅝	1168.80
7	12'-6	1168.50

NO.	DATE	REVISION	BY

STATE OF WISCONSIN
DEPARTMENT OF TRANSPORTATION
STRUCTURES DESIGN SECTION

STRUCTURE B-37-344

CONST. SPEC.	2003	DRAWN BY	HSB	PLANS CK'D.	DJW

PIER 2

SHEET 19
299

8

STATE PROJECT NUMBER
1166-09-76

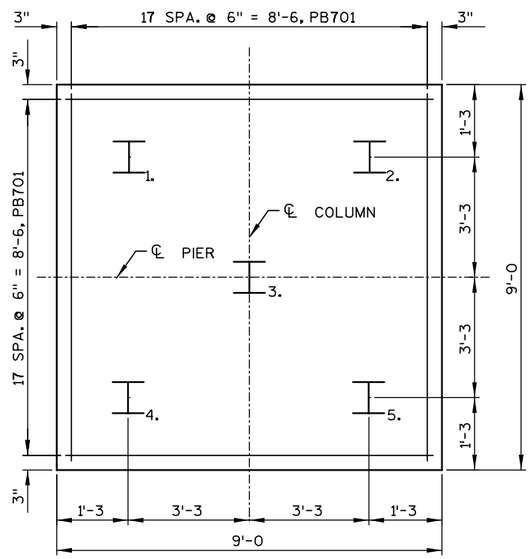

FOOTING AND PILE PLAN

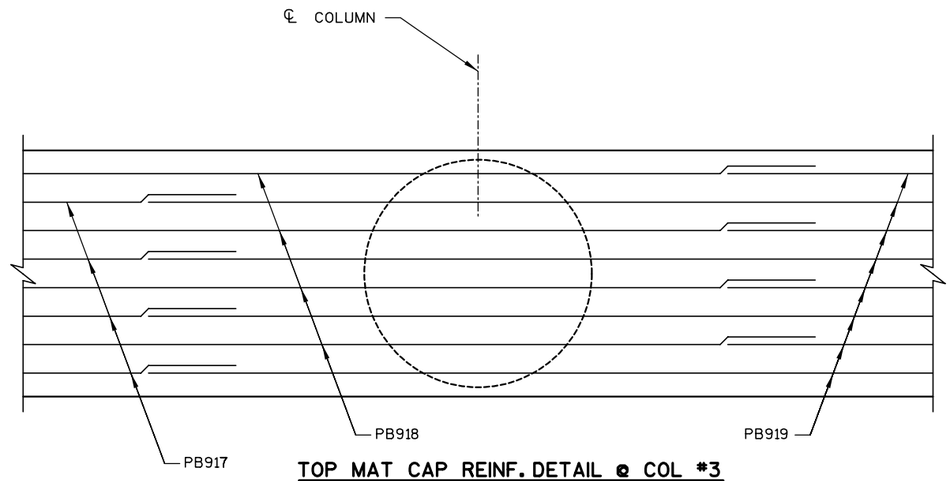

TOP MAT CAP REINF. DETAIL @ COL #3

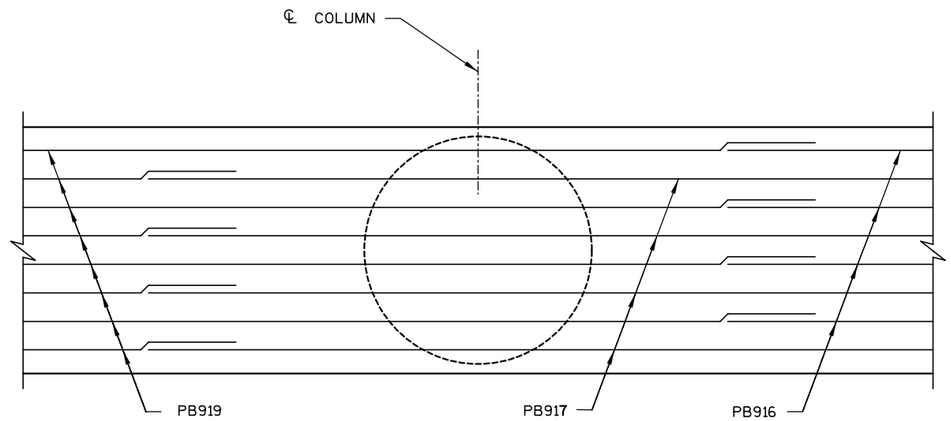

TOP MAT CAP REINF. DETAIL @ COL #6

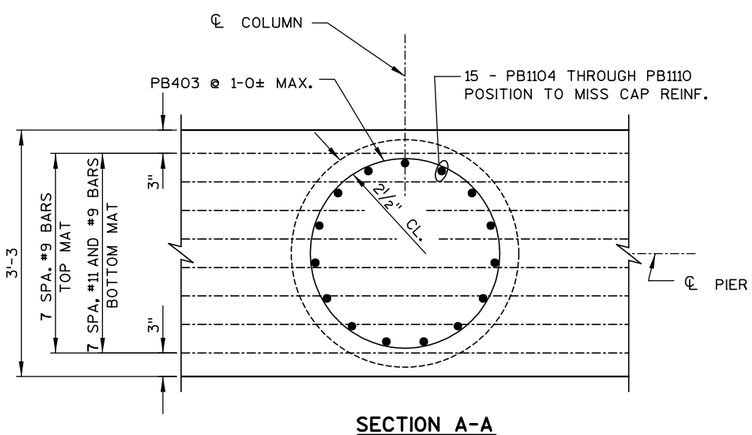

SECTION A-A

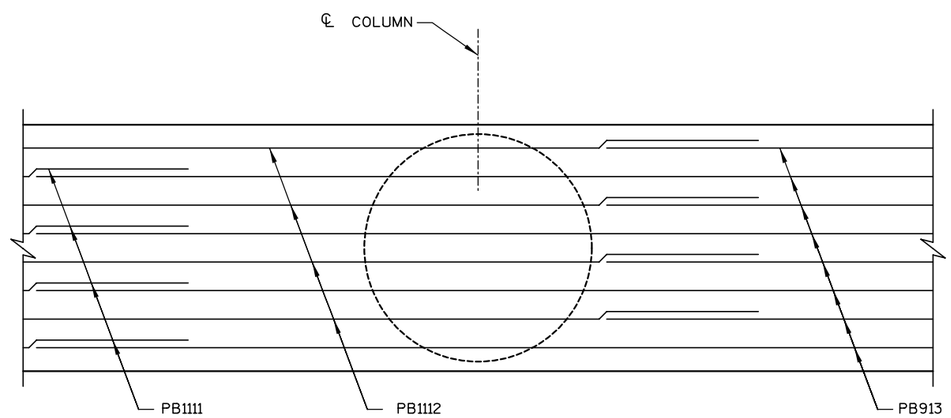

BOTTOM MAT CAP REINF. DETAIL @ COL'S #3 & #5

(COL. #3 SHOWN, COL. # 5 SIMILAR)

8

8

NO.	DATE	REVISION	BY

STATE OF WISCONSIN
DEPARTMENT OF TRANSPORTATION
STRUCTURES DESIGN SECTION

STRUCTURE B-37-344

CONST. SPEC.	2003	DRAWN BY	HSB	PLANS CK'D.	DJW

PIER 2
DETAILS 1

SHEET 20
300

STATE PROJECT NUMBER

1166-09-76

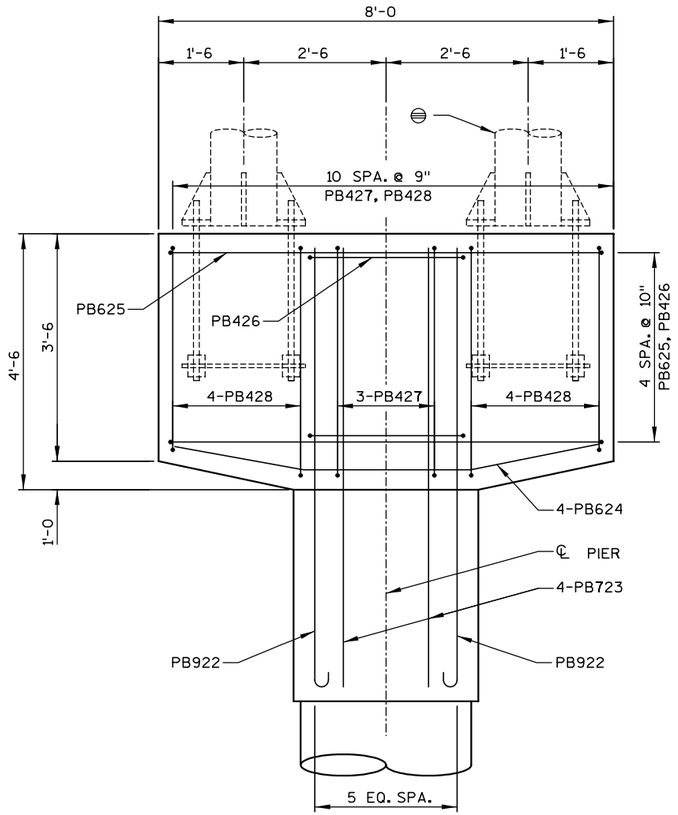

ELEVATION

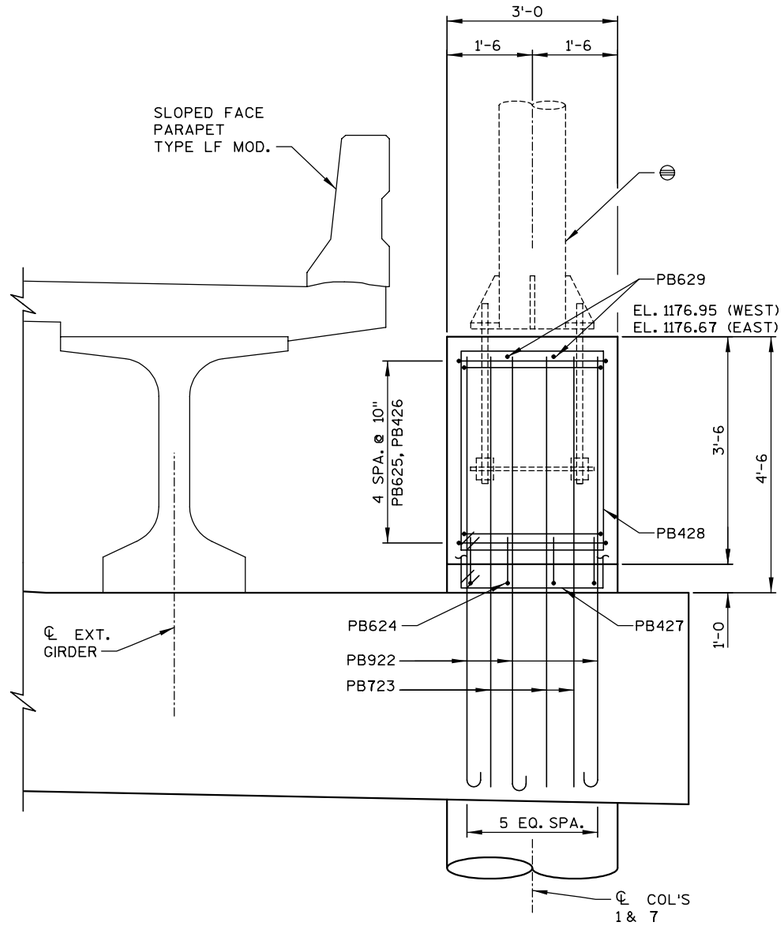

SECTION E-E

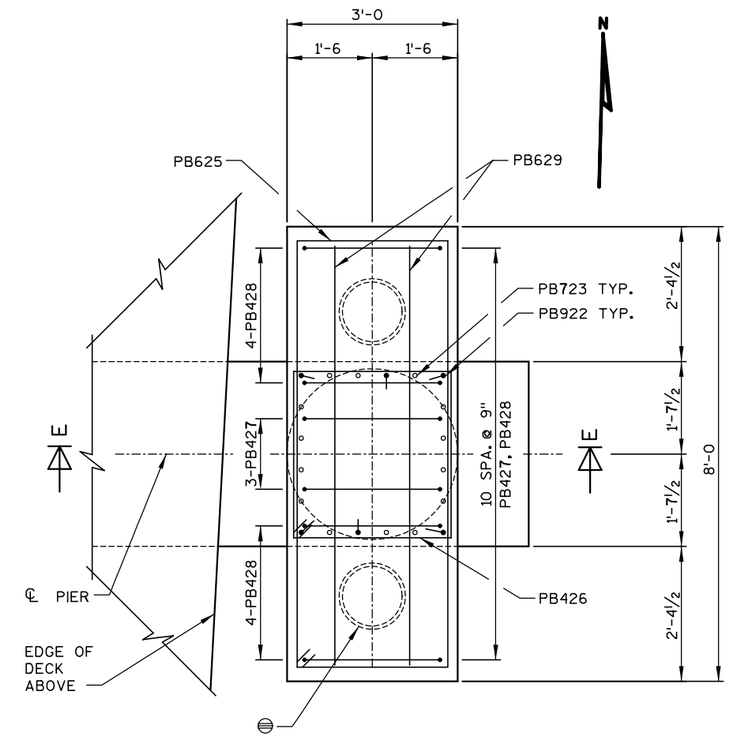

PLAN

NOTES

▲ 2" X 6" BEVELED KEYWAY BETWEEN BEAM SEATS.

▬ PB521 BARS @ 1'-0 CENTERS BETWEEN BEAM SEATS AT FIXED BEARING PIERS. MAY BE PLACED AFTER CONCRETE IS POURED BUT BEFORE INITIAL SET HAS TAKEN PLACE. (EMBED 1'-0 INTO CONCRETE).

⊖ SIGN STRUCTURE S-37-59. ANCHOR BOLTS ARE INCLUDED UNDER BID ITEM "SIGN STRUCTURE S-37-59." SEE SIGN STRUCTURE PLANS FOR ANCHOR BOLT SIZE AND SPACING.

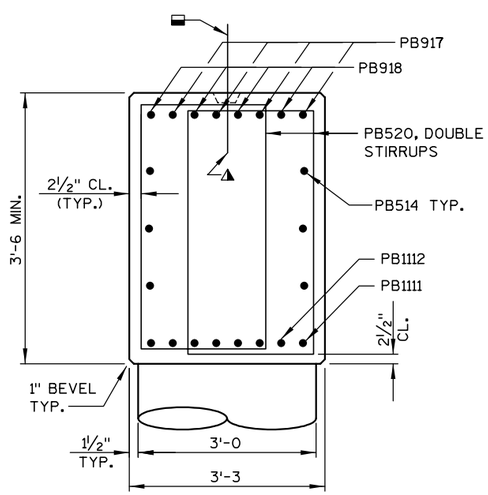

SECTION B-B

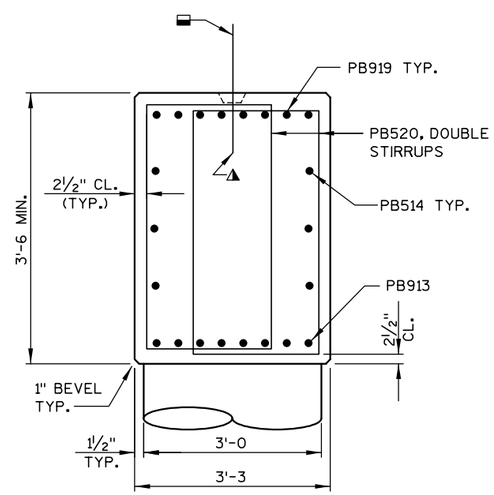

SECTION C-C

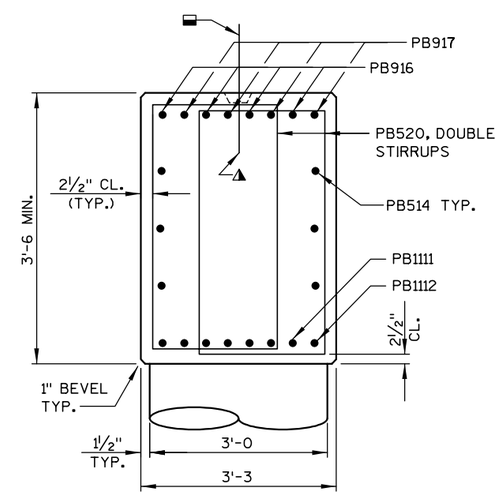

SECTION D-D

NO.	DATE	REVISION	BY

STATE OF WISCONSIN
DEPARTMENT OF TRANSPORTATION
STRUCTURES DESIGN SECTION

STRUCTURE B-37-344

CONST. SPEC.	2003	DRAWN BY	HSB	PLANS CK'D.	DJW

PIER 2
DETAILS 2

SHEET 21
301

8

8

STATE PROJECT NUMBER

1166-09-76

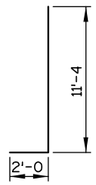

PB1102

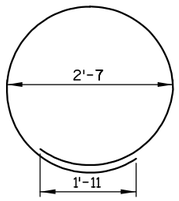

PB403

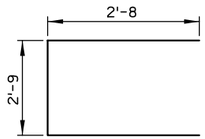

PB515

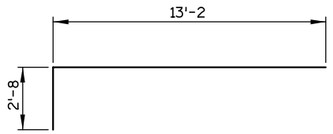

PB916

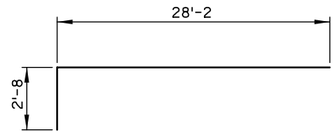

PB917

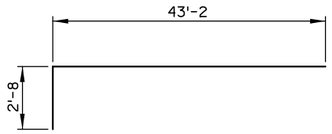

PB918

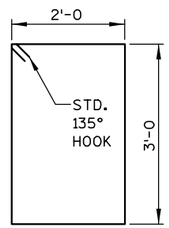

PB520

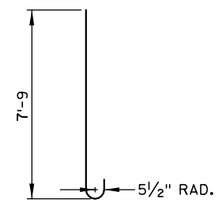

PB922

PIER 2
BILL OF BARS

UNCOATED 32,870 LBS

MARK	NO. REQ'D	LENGTH	BENT	COAT	LOCATION
PB701	252	8'-6			FOOTING - HORIZ.
PB1102	105	13'-1	X		FOOTING - COLUMN - DOWELS
PB403	98	10'-0	X		COLUMN - STIRRUPS
PB1104	15	15'-10			COLUMN 1 - VERT.
PB1105	15	16'-1			COLUMN 2 - VERT.
PB1106	15	16'-5			COLUMN 3 - VERT.
PB1107	15	16'-5			COLUMN 4 - VERT.
PB1108	15	16'-2			COLUMN 5 - VERT.
PB1109	15	15'-10			COLUMN 6 - VERT.
PB1110	15	15'-6			COLUMN 7 - VERT.
PB1111	8	23'-8			CAP - BOTTOM - HORIZ.
PB1112	8	38'-8			CAP - BOTTOM - HORIZ.
PB913	8	41'-6			CAP - BOTTOM - HORIZ.
PB514	12	48'-9			CAP - SIDES - HORIZ.
PB515	10	7'-10	X		CAP - ENDS - HORIZ.
PB916	4	15'-7	X		CAP - TOP - HORIZ.
PB917	8	30'-7	X		CAP - TOP - HORIZ.
PB918	4	45'-7	X		CAP - TOP - HORIZ.
PB919	8	51'-0			CAP - TOP - HORIZ.
PB520	218	10'-10	X		CAP - STIRRUPS
PB521	46	2'-0			CAP - DOWELS -VERT
PB922	12	9'-0	X		SIGN BRIDGE SUPPORT - DOWELS - VERT.
PB723	28	7'-9			SIGN BRIDGE SUPPORT - DOWELS - VERT.
PB624	8	7'-6	X		SIGN BRIDGE SUPPORT - BTM. - HORIZ.
PB625	10	21'-0	X		SIGN BRIDGE SUPPORT - STIRRUPS - HORIZ.
PB426	10	11'-4	X		SIGN BRIDGE SUPPORT - STIRRUPS - HORIZ.
PB427	6	13'-4	X		SIGN BRIDGE SUPPORT - STIRRUPS - VERT.
▲ PB428	16	12'-4	X		SIGN BRIDGE SUPPORT - STIRRUPS - VERT.
PB629	4	7'-6			SIGN BRIDGE SUPPORT - HORIZ. - TOP

NOTE: THE FIRST ONE OR TWO DIGITS OF A BAR MARK SIGNIFIES THE BAR SIZE. DIMENSIONS FOR BENDING ARE OUT TO OUT OF BAR.

▲ LENGTH SHOWN FOR BAR IS AN AVERAGE LENGTH AND SHOULD ONLY BE USED FOR BAR WIEGHT CALCULATIONS. SEE BAR SERIES TABLE FOR ACTUAL LENGTHS.

▲ BAR SERIES TABLE

MARK	No. REQUIRED	LENGTH
PB428	4 SERIES OF 4	11'-4 TO 13'-4

BUNDLE AND TAG EACH SERIES SEPARATELY.

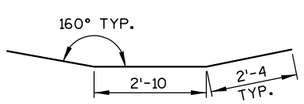

PB624

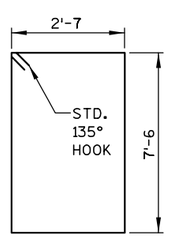

PB625

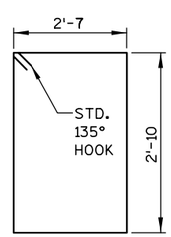

PB426

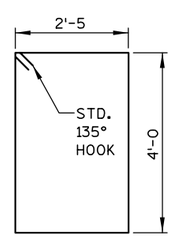

PB427

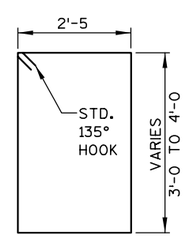

PB428

8

8

NO.	DATE	REVISION	BY

STATE OF WISCONSIN
DEPARTMENT OF TRANSPORTATION
STRUCTURES DESIGN SECTION

STRUCTURE B-37-344

CONST. SPEC. 2003 | DRAWN BY HSB | PLANS CK'D. DJW

PIER 2
DETAILS 3

SHEET 22
302

STATE PROJECT NUMBER

1166-09-76

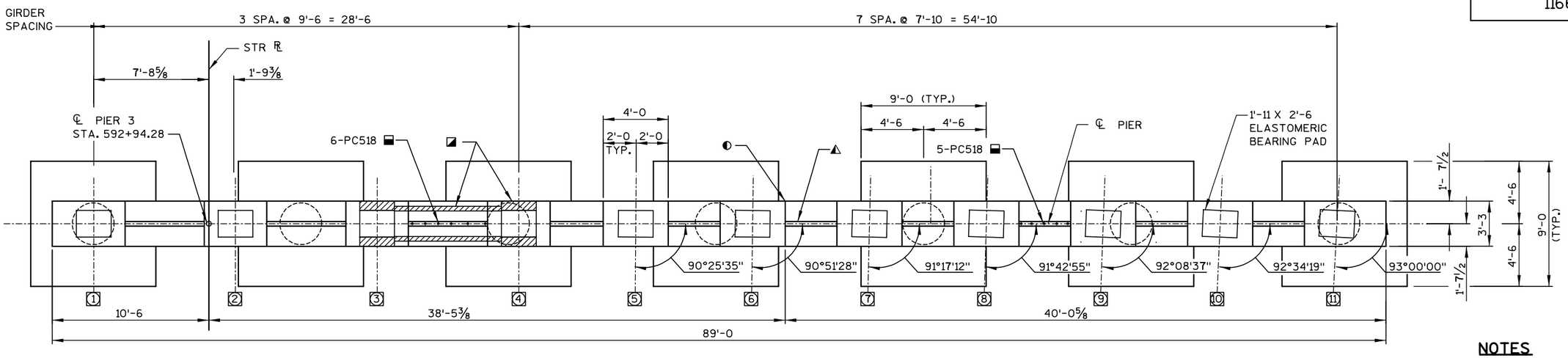

PLAN

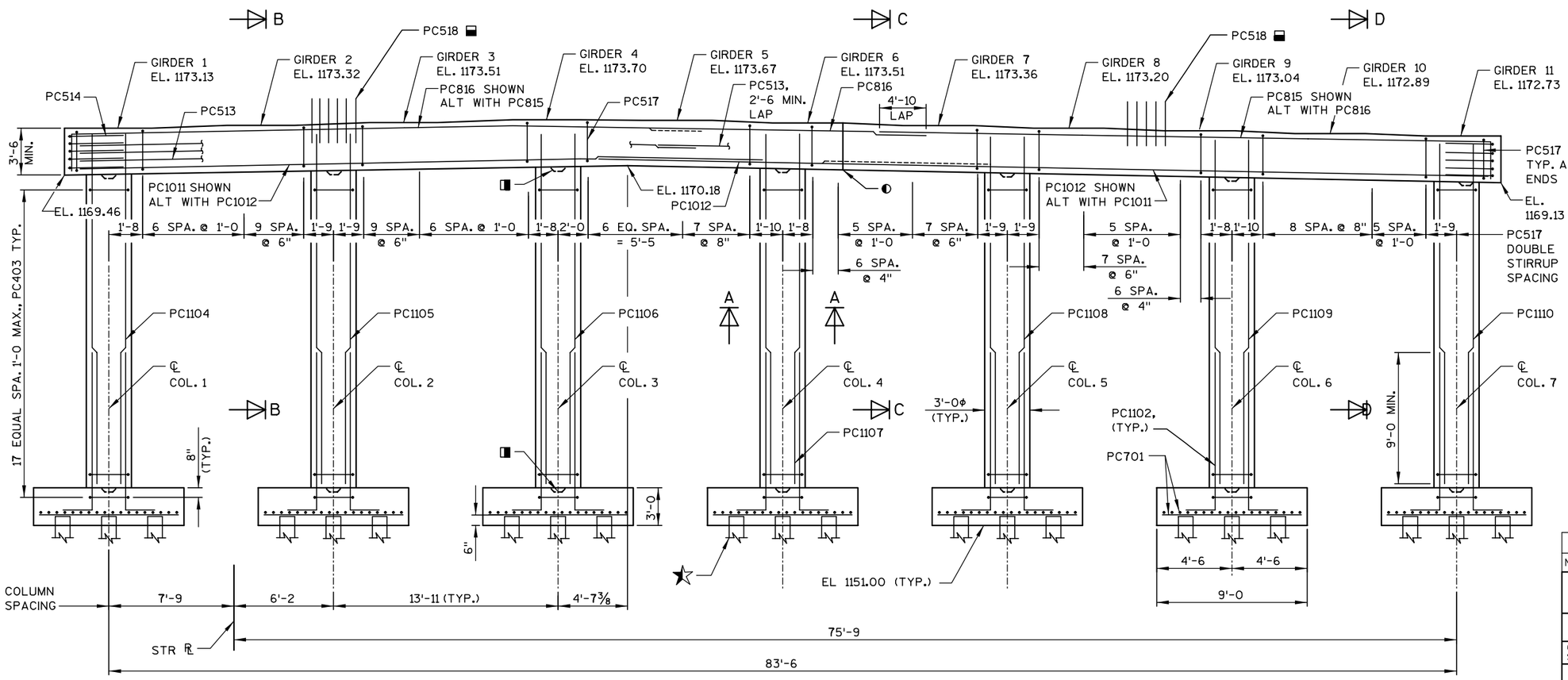

ELEVATION

(LOOKING NORTH)

NOTES

- 1'-3 X 1'-3 X 2" CONST. JOINT FORMED BY BEVELED KEYWAY, TYP. ALL COLUMNS AND FOOTINGS.
- 2" X 6" BEVELED KEYWAY BETWEEN BEAM SEATS.
- PC518 BARS @ 1'-0± CENTERS BETWEEN BEAM SEATS. MAY BE PLACED AFTER CONCRETE IS POURED BUT BEFORE INITIAL SET HAS TAKEN PLACE. (EMBED 1'-0 INTO CONCRETE)
- ¾" X 4" PREFORMED FILLER.
- PILING STEEL, DELIVERED AND DRIVEN HP 12-INCH x 53 LB DRIVEN TO A MIN. BEARING VALUE OF 93 TONS, EST. 40 FT.
- VERTICAL CONSTRUCTION JOINT FORMED BY BEVELED 2"x8". SPLICE BAR STEEL THRU JOINT, ¾" V-GROOVE ALL AROUND.
- INDICATES GIRDER NUMBER.

SEE SHEET 14 FOR ALTERNATE CONSTRUCTION JOINT DETAIL.

COLUMN HEIGHTS

(@ ℄ COL.)

COL. #	HEIGHT	TOP ELEV.
1	15'-6¼	1169.52
2	15'-9⅝	1169.80
3	16'-1⅛	1170.09
4	16'-0	1170.00
5	15'-8¾	1169.73
6	15'-5½	1169.46
7	15'-2¼	1169.19

NO.	DATE	REVISION	BY

STATE OF WISCONSIN
DEPARTMENT OF TRANSPORTATION
STRUCTURES DESIGN SECTION

STRUCTURE B-37-344

CONST. SPEC.	2003	DRAWN BY	HSB	PLANS CK'D.	DJW

PIER 3

SHEET 23
303

8

8

STATE PROJECT NUMBER
1166-09-76

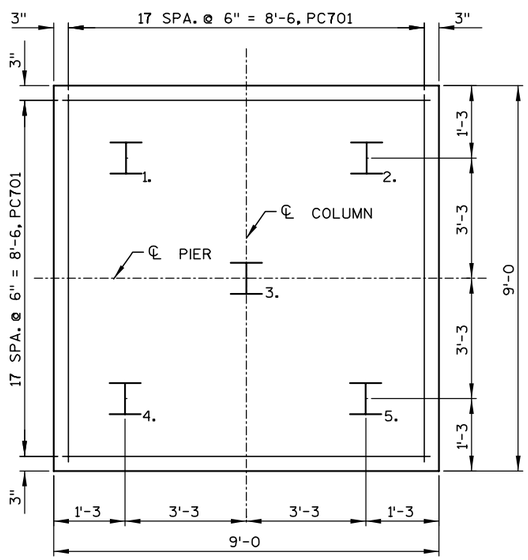

FOOTING AND PILE PLAN

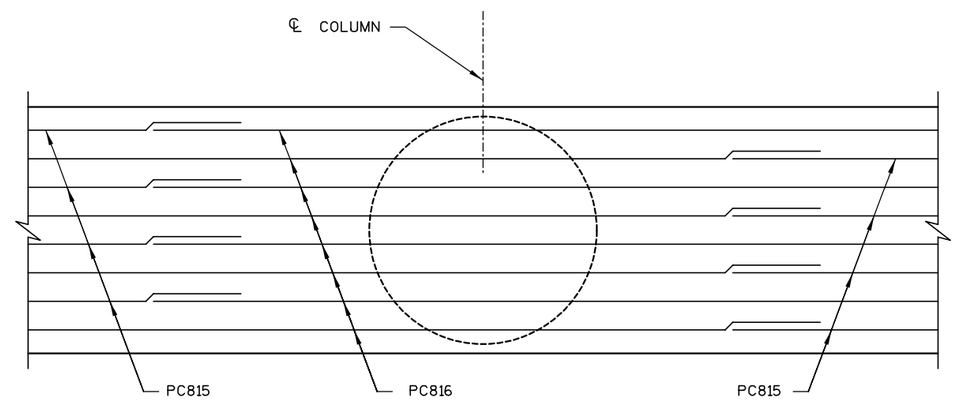

TOP MAT CAP REINF. DETAIL @ COL #4

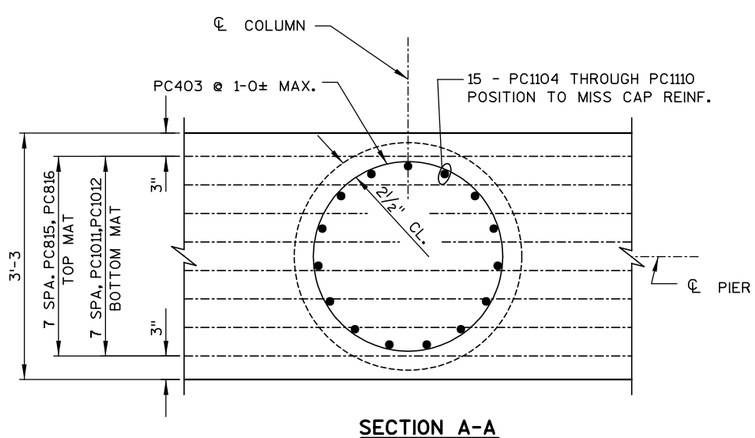

SECTION A-A

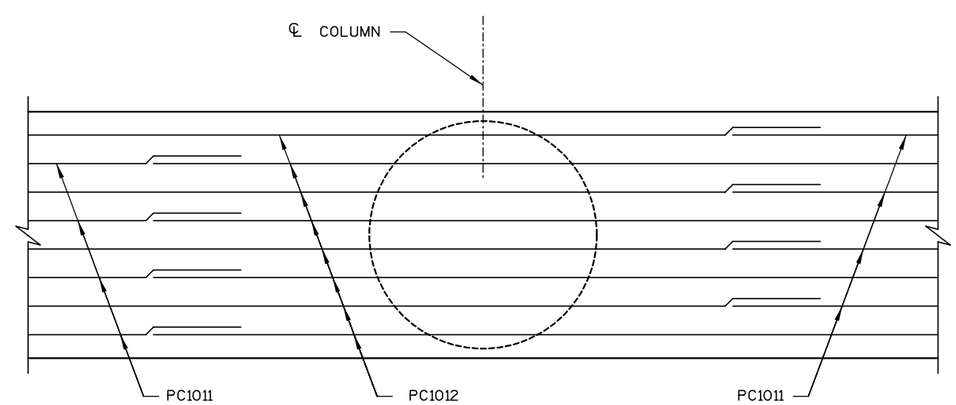

BOTTOM MAT CAP REINF. DETAIL @ COL #4

8

8

NO.	DATE	REVISION	BY

STATE OF WISCONSIN
DEPARTMENT OF TRANSPORTATION
STRUCTURES DESIGN SECTION

STRUCTURE B-37-344

CONST. SPEC.	2003	DRAWN BY	HSB	PLANS CK'D.	DJW

PIER 3
DETAILS 1

SHEET 24
304

STATE PROJECT NUMBER

1166-09-76

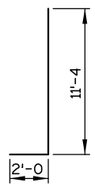

PC1102

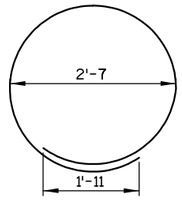

PC403

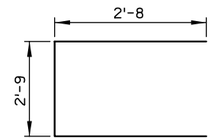

PC514

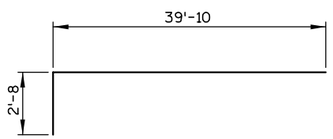

PC815

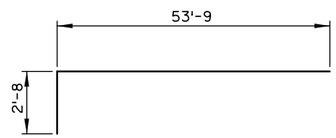

PC816

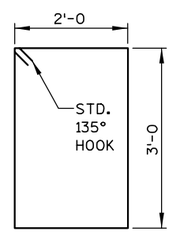

PC517

PIER 3
BILL OF BARS

UNCOATED 31,520 LBS

MARK	NO. REQ'D	LENGTH	BENT	COAT	LOCATION
PC701	252	8'-6			FOOTING - HORIZ.
PC1102	105	13'-1	X		FOOTING - COLUMN - DOWELS
PC403	126	10'-0	X		COLUMN - STIRRUPS
PC1104	15	18'-7			COLUMN 1 - VERT.
PC1105	15	18'-10			COLUMN 2 - VERT.
PC1106	15	19'-2			COLUMN 3 - VERT.
PC1107	15	19'-1			COLUMN 4 - VERT.
PC1108	15	18'-9			COLUMN 5 - VERT.
PC1109	15	18'-6			COLUMN 6 - VERT.
PC1110	15	18'-3			COLUMN 7 - VERT.
PC1011	8	43'-0			CAP - BOTTOM - HORIZ.
PC1012	8	56'-8			CAP - BOTTOM - HORIZ.
PC513	12	45'-6			CAP - SIDES - HORIZ.
PC514	10	7'-10	X		CAP - ENDS - HORIZ.
PC815	8	42'-3	X		CAP - TOP - HORIZ.
PC816	8	56'-3	X		CAP - TOP - HORIZ.
PC517	200	10'-10	X		CAP - STIRRUPS
PC518	53	2'-0			CAP - DOWELS -VERT

NOTE: THE FIRST ONE OR TWO DIGITS OF THE BAR MARK SIGNIFIES THE BAR SIZE. BENDING DIMENSIONS ARE OUT TO OUT OF BARS.

NOTES

▲ 2" X 6" BEVELED KEYWAY BETWEEN BEAM SEATS.

▬ PC518 BARS @ 1'-0± CENTERS BETWEEN BEAM SEATS AT FIXED BEARING PIERS. MAY BE PLACED AFTER CONCRETE IS POURED BUT BEFORE INITIAL SET HAS TAKEN PLACE. (EMBED 1'-0 INTO CONCRETE).

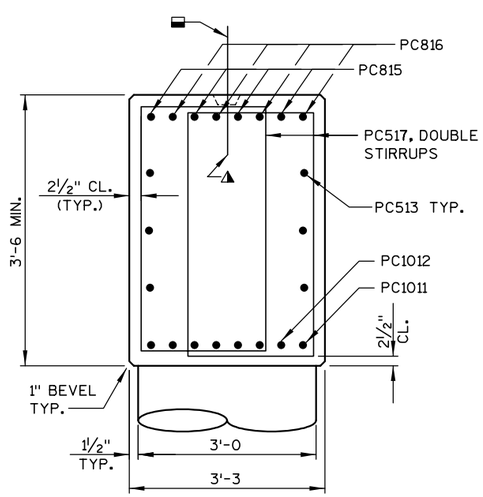

SECTION B-B

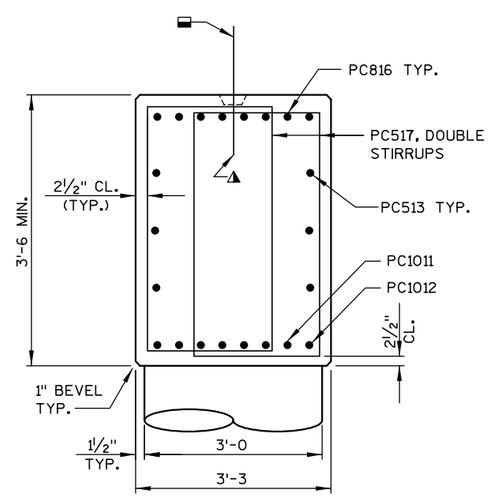

SECTION C-C

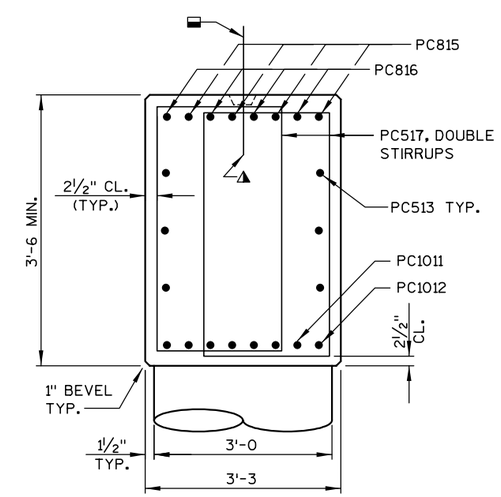

SECTION D-D

8

8

NO.	DATE	REVISION	BY

STATE OF WISCONSIN
DEPARTMENT OF TRANSPORTATION
STRUCTURES DESIGN SECTION

STRUCTURE B-37-344

CONST. SPEC. 2003 | DRAWN BY HSB | PLANS CK'D. DJW

PIER 3
DETAILS 2

SHEET 25
305

STATE PROJECT NUMBER

1166-09-76

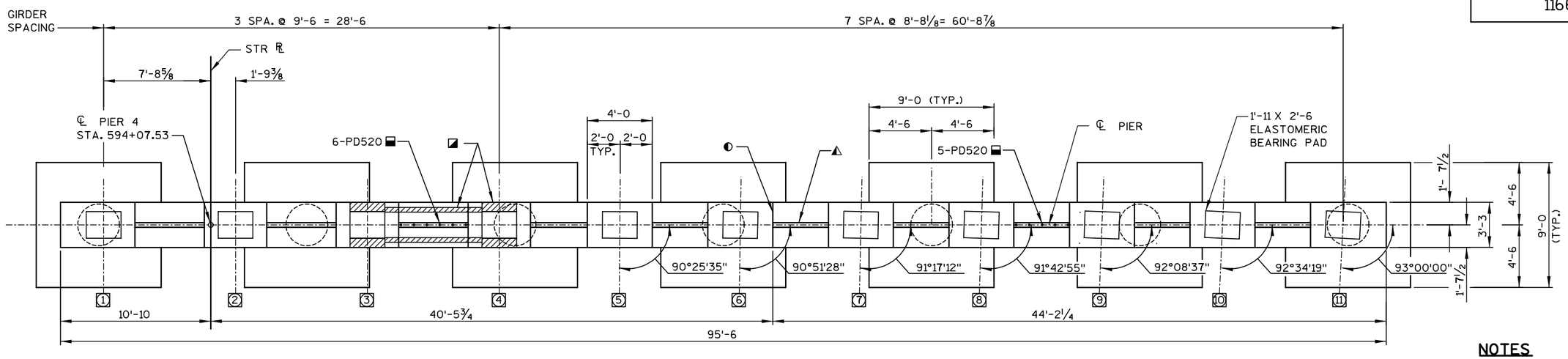

PLAN

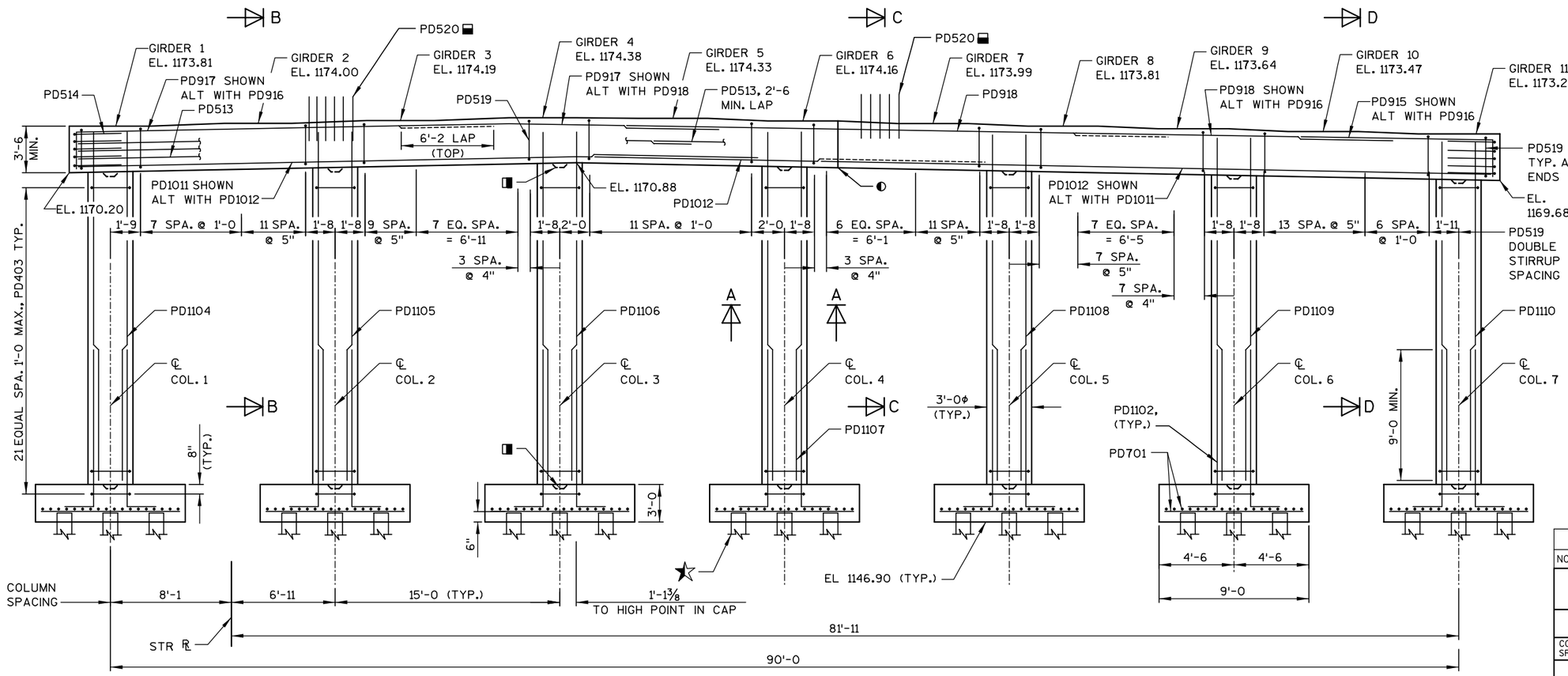

ELEVATION

(LOOKING NORTH)

NOTES

- 1'-3 X 1'-3 X 2" CONST. JOINT FORMED BY BEVELED KEYWAY, TYP. ALL COLUMNS AND FOOTINGS.
- 2" X 6" BEVELED KEYWAY BETWEEN BEAM SEATS.
- PD520 BARS @ 1'-0 CENTERS BETWEEN BEAM SEATS. MAY BE PLACED AFTER CONCRETE IS POURED BUT BEFORE INITIAL SET HAS TAKEN PLACE. (EMBED 1'-0 INTO CONCRETE)
- 3/4" X 4" PREFORMED FILLER.
- PILING STEEL, DELIVERED AND DRIVEN HP 12-INCH x 53 LB DRIVEN TO A MIN. BEARING VALUE OF 93 TONS, EST. 35 FT.
- VERTICAL CONSTRUCTION JOINT FORMED BY BEVELED 2"x8". SPLICE BAR STEEL THRU JOINT, 3/4" V-GROOVE ALL AROUND.
- INDICATES GIRDER NUMBER.

SEE SHEET 14 FOR ALTERNATE CONSTRUCTION JOINT DETAIL.

COLUMN HEIGHTS

(@ ℄ COL.)

COL. #	HEIGHT	TOP ELEV.
1	20'-4 1/4	1170.26
2	20'- 7 7/8	1170.56
3	20'-11 1/2	1170.86
4	20'-8 1/2	1170.61
5	20'-5	1170.32
6	20'-1 1/2	1170.03
7	19'-10	1169.74

NO.	DATE	REVISION	BY

STATE OF WISCONSIN
DEPARTMENT OF TRANSPORTATION
STRUCTURES DESIGN SECTION

STRUCTURE B-37-344

CONST. SPEC.	2003	DRAWN BY	HSB	PLANS CK'D.	DJW

PIER 4

SHEET 26
306

8

8

STATE PROJECT NUMBER

1166-09-76

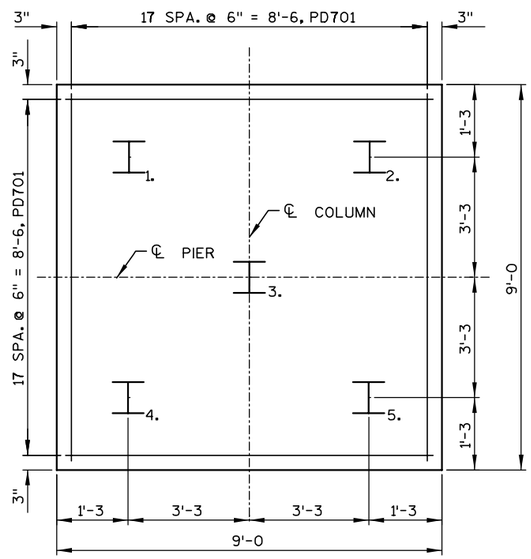

FOOTING AND PILE PLAN

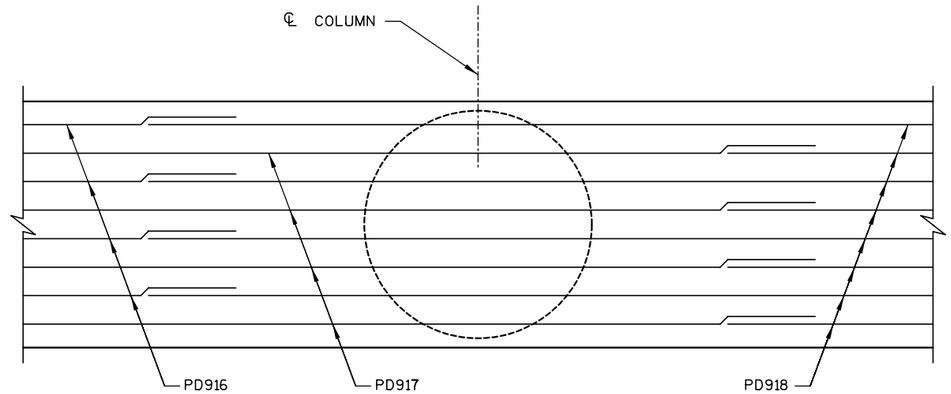

TOP MAT CAP REINF. DETAIL @ COL #3

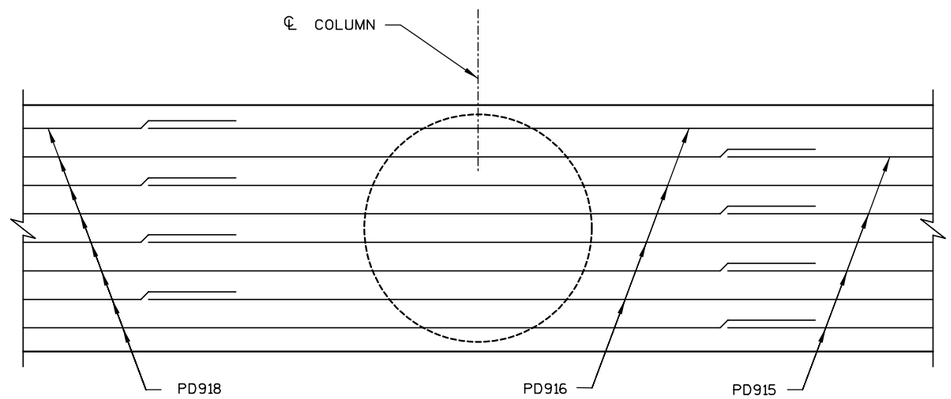

TOP MAT CAP REINF. DETAIL @ COL #6

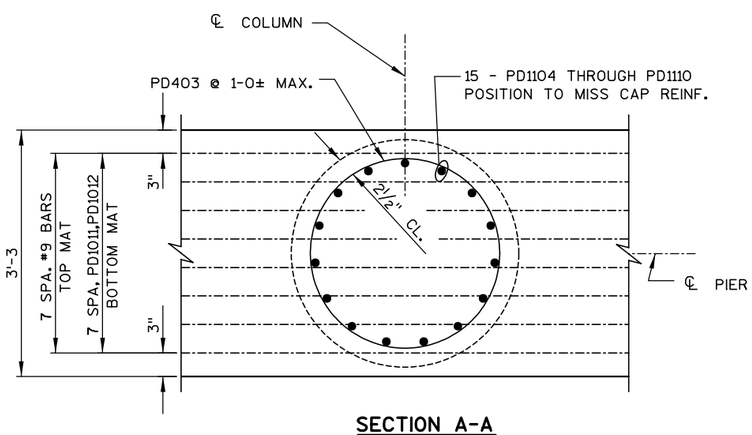

SECTION A-A

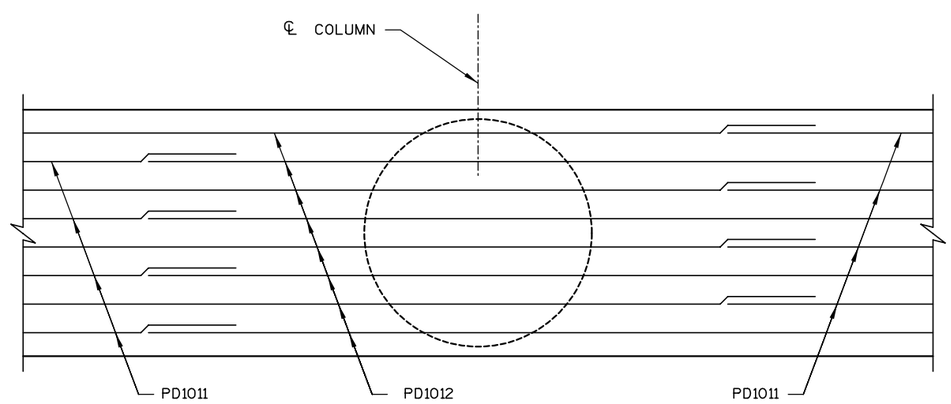

BOTTOM MAT CAP REINF. DETAIL @ COL #4

8

8

NO.	DATE	REVISION	BY

STATE OF WISCONSIN
DEPARTMENT OF TRANSPORTATION
STRUCTURES DESIGN SECTION

STRUCTURE B-37-344

CONST. SPEC.	2003	DRAWN BY	HSB	PLANS CK'D.	DJW

PIER 4
DETAILS 1

SHEET 27
307

STATE PROJECT NUMBER

1166-09-76

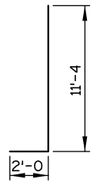

PD1102

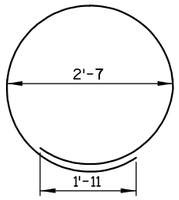

PD403

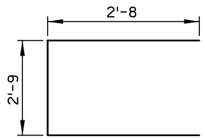

PD514

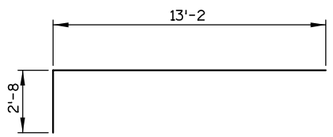

PD915

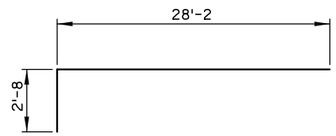

PD916

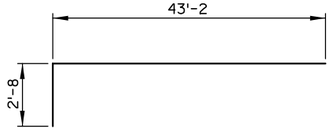

PD917

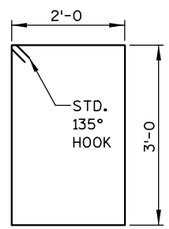

PD519

PIER 4
BILL OF BARS

UNCOATED 35,910 LBS

MARK	NO. REQ'D	LENGTH	BENT	COAT	LOCATION
PD701	252	8'-6			FOOTING - HORIZ.
PD1102	105	13'-1	X		FOOTING - COLUMN - DOWELS
PD403	154	10'-0	X		COLUMN - STIRRUPS
PD1104	15	23'-5			COLUMN 1 - VERT.
PD1105	15	23'-8			COLUMN 2 - VERT.
PD1106	15	24'-0			COLUMN 3 - VERT.
PD1107	15	23'-10			COLUMN 4 - VERT.
PD1108	15	23'-5			COLUMN 5 - VERT.
PD1109	15	23'-1			COLUMN 6 - VERT.
PD1110	15	22'-11			COLUMN 7 - VERT.
PD1011	8	45'-9			CAP - BOTTOM - HORIZ.
PD1012	8	60'-0			CAP - BOTTOM - HORIZ.
PD513	12	48'-9			CAP - SIDES - HORIZ.
PD514	10	7'-10	X		CAP - ENDS - HORIZ.
PD915	4	15'-7	X		CAP - TOP - HORIZ.
PD916	8	30'-7	X		CAP - TOP - HORIZ.
PD917	4	45'-7	X		CAP - TOP - HORIZ.
PD918	8	51'-0			CAP - TOP - HORIZ.
PD519	232	10'-10	X		CAP - STIRRUPS
PD520	53	2'-0			CAP - DOWELS -VERT

NOTE: THE FIRST ONE OR TWO DIGITS OF THE BAR MARK SIGNIFIES THE BAR SIZE. BENDING DIMENSIONS ARE OUT TO OUT OF BARS.

NOTES

▲ 2" X 6" BEVELED KEYWAY BETWEEN BEAM SEATS.

▬ PD520 BARS @ 1'-0 CENTERS BETWEEN BEAM SEATS AT FIXED BEARING PIERS. MAY BE PLACED AFTER CONCRETE IS POURED BUT BEFORE INITIAL SET HAS TAKEN PLACE. (EMBED 1'-0 INTO CONCRETE).

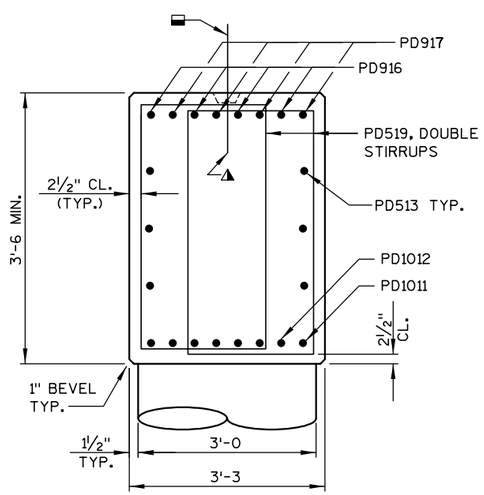

SECTION B-B

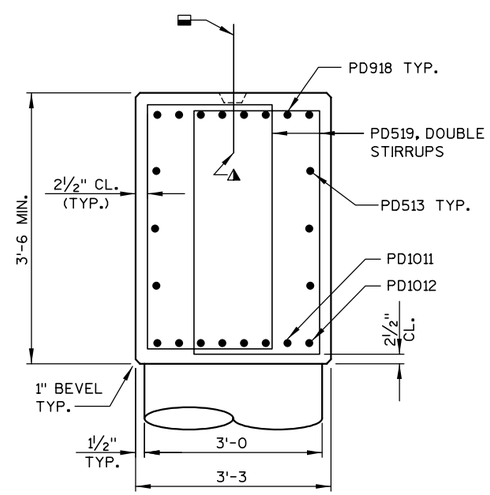

SECTION C-C

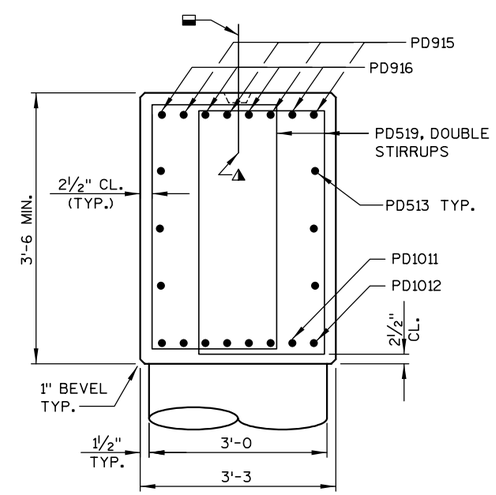

SECTION D-D

8

8

NO.	DATE	REVISION	BY

STATE OF WISCONSIN
DEPARTMENT OF TRANSPORTATION
STRUCTURES DESIGN SECTION

STRUCTURE B-37-344

CONST. SPEC. 2003 | DRAWN BY HSB | PLANS CK'D. DJW

PIER 4
DETAILS 2

SHEET 28
308

STATE PROJECT NUMBER
1166-09-76

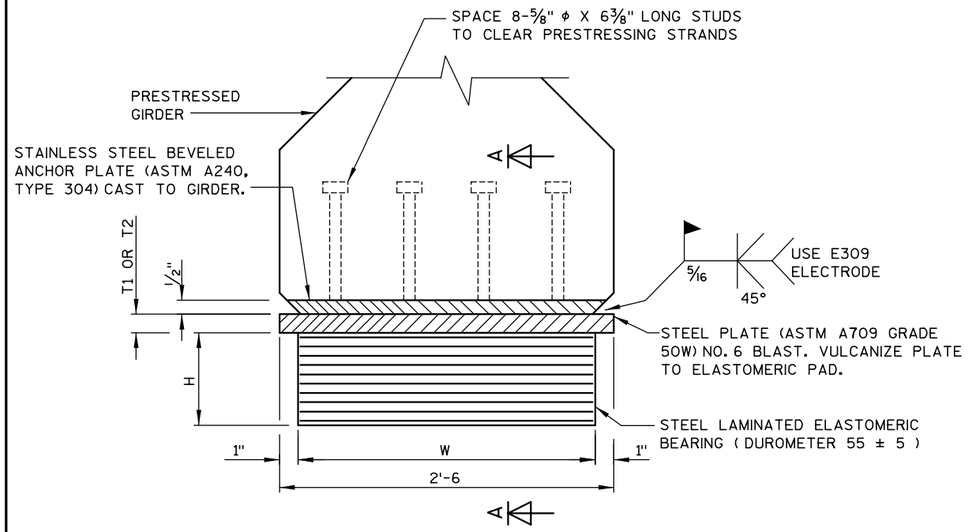

END VIEW

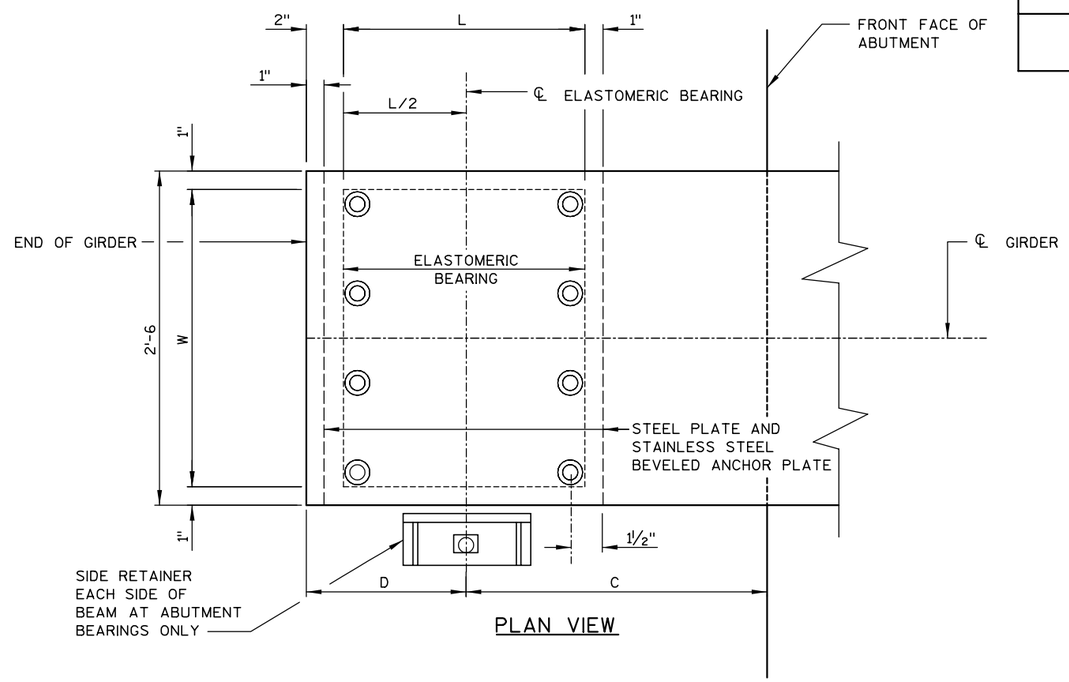

PLAN VIEW

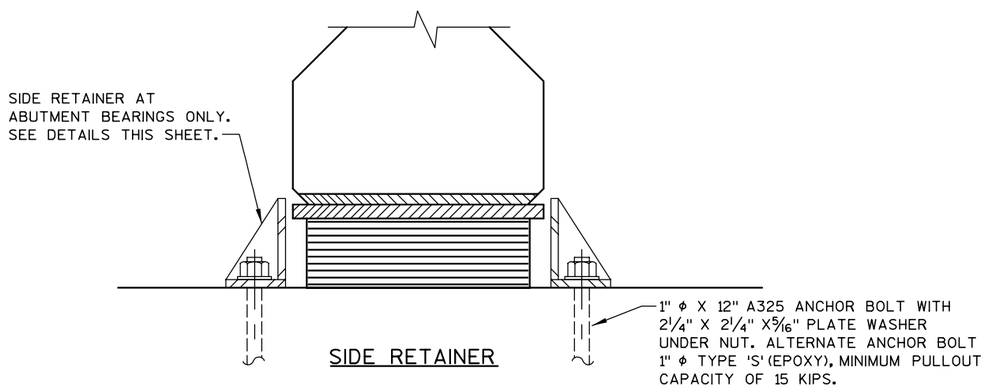

SIDE RETAINER

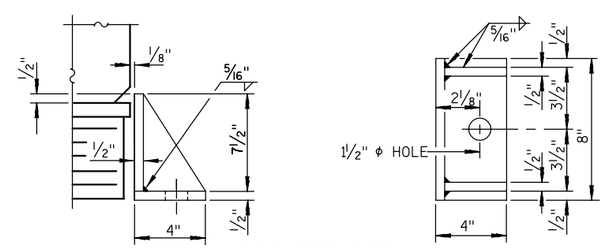

SIDE RETAINER

EQUIVALENT ROLLED ANGLE WITH STIFFENERS WILL BE ALLOWED IN LIEU OF WELDED PLATES.

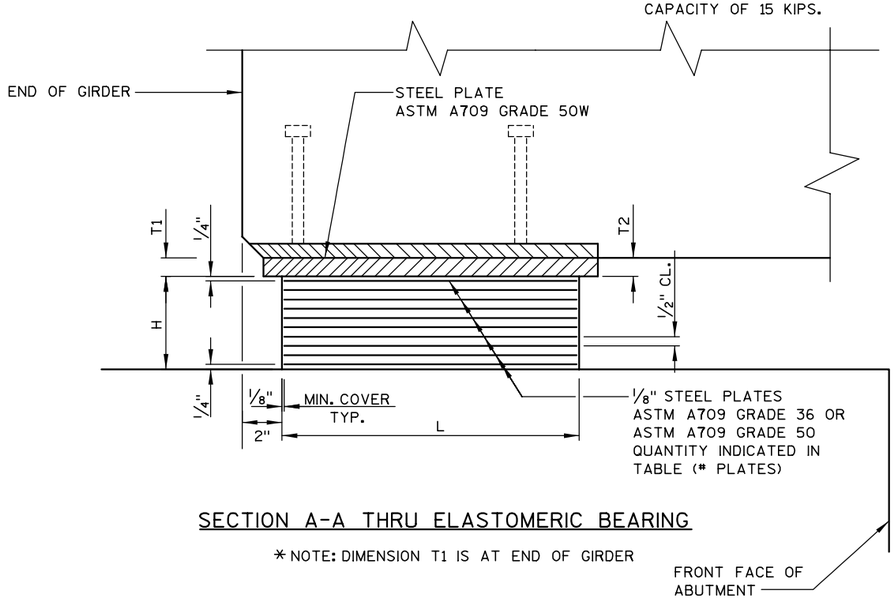

SECTION A-A THRU ELASTOMERIC BEARING

* NOTE: DIMENSION T1 IS AT END OF GIRDER

NOTES:

ALL RETAINER STRUCTURAL STEEL SHALL BE A.S.T.M. A709. GRADE 36. ALL BOLTS, NUTS AND WASHERS SHALL BE A.S.T.M. A325 TYPE 1.

ALL RETAINER STRUCTURAL STEEL SHOWN SHALL BE HOT-DIPPED GALVANIZED. ALL BOLTS, NUTS AND WASHERS SHALL BE HOT-DIPPED GALVANIZED IN ACCORDANCE WITH A.S.T.M. A153 CLASS C. GALVANIZED NUTS SHALL BE TAPPED OVERSIZE IN ACCORDANCE WITH THE REQUIREMENTS OF A.S.T.M. A563 AND SHALL MEET THE REQUIREMENTS OF SUPPLEMENTARY REQUIREMENT S1 OF A.S.T.M. A563, LUBRICANT AND TEST FOR COATED NUTS.

ALL MATERIALS, INCLUDING ANCHOR BOLTS, USED FOR SIDE RETAINERS SHALL BE PAID FOR AT THE UNIT PRICE BID FOR "STRUCTURAL STEEL, CARBON".

ALL MATERIAL USED FOR BEARINGS SHALL BE PAID FOR AT THE UNIT PRICE BID FOR "BEARING PADS ELASTOMERIC LAMINATED".

ALL STRUCTURAL STEEL PLATES SHALL BE FLAT ROLLED WITH ALL SURFACES SMOOTH AND FREE FROM WARP AND ALL EDGES SMOOTH, STRAIGHT, AND VERTICAL.

ALL PLATE CUTS SHALL BE MACHINE OR MACHINE FLAME CUTS.

STAINLESS STEEL BEVELED ANCHOR PLATE CAST TO GIRDERS AT ABUTMENT ENDS.

BAERING PADS SHALL BE MARKED INDICATING THE SIDE FACING THE FRONT FACE OF ABUTMENT.

DIM.	S. ABUT.	N. ABUT.
H	5 5/8"	5 5/8"
L	1'-5	1'-5
W	2'-4	2'-4
T1	1 1/2"	1 9/16"
T2	1 11/16"	1 1/2"
C	1'-3	1'-3
D	10 1/2"	10 1/2"
# PLATES	9	9

TABLE OF DIMENSIONS

NO.	DATE	REVISION	BY

STATE OF WISCONSIN
DEPARTMENT OF TRANSPORTATION
STRUCTURES DESIGN SECTION

STRUCTURE B-37-344

CONST. SPEC.	2003	DRAWN BY	KAS	PLANS CK'D.	DJW

ELASTOMERIC BEARINGS 1 (GIRDERS 1-4)

SHEET 29
309

8

8

STATE PROJECT NUMBER
1166-09-76

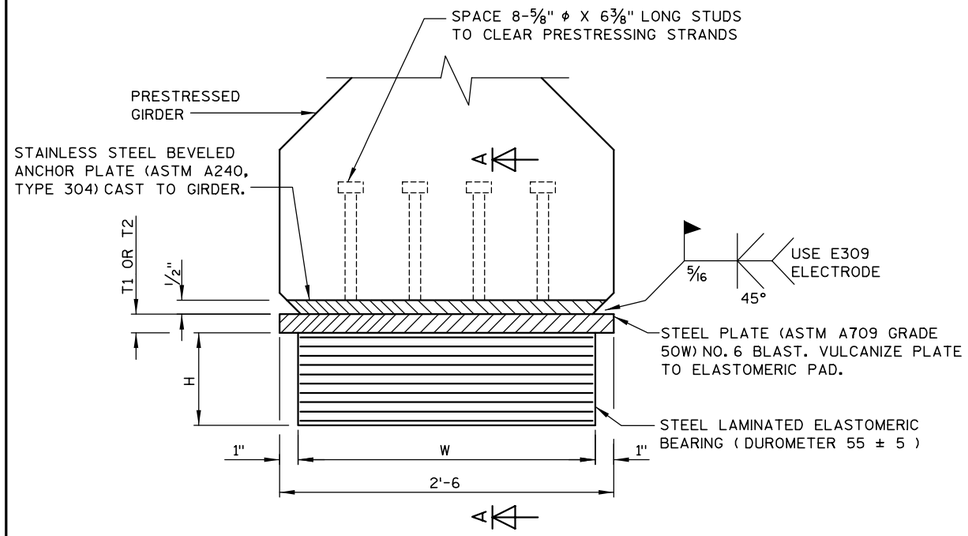

END VIEW

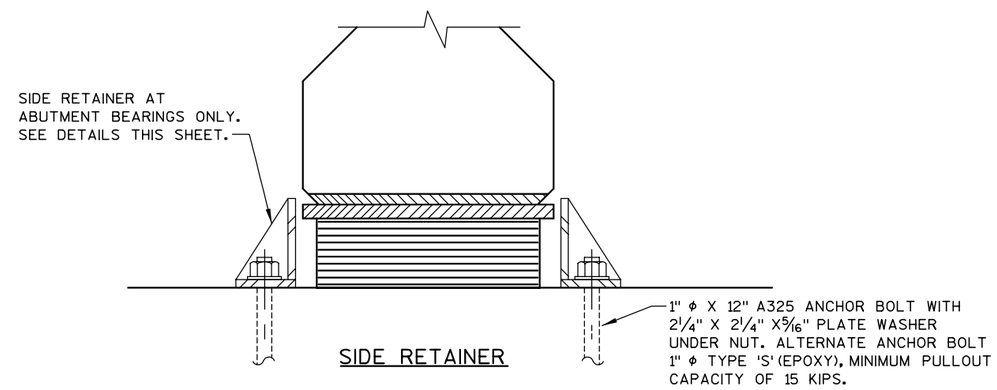

SIDE RETAINER

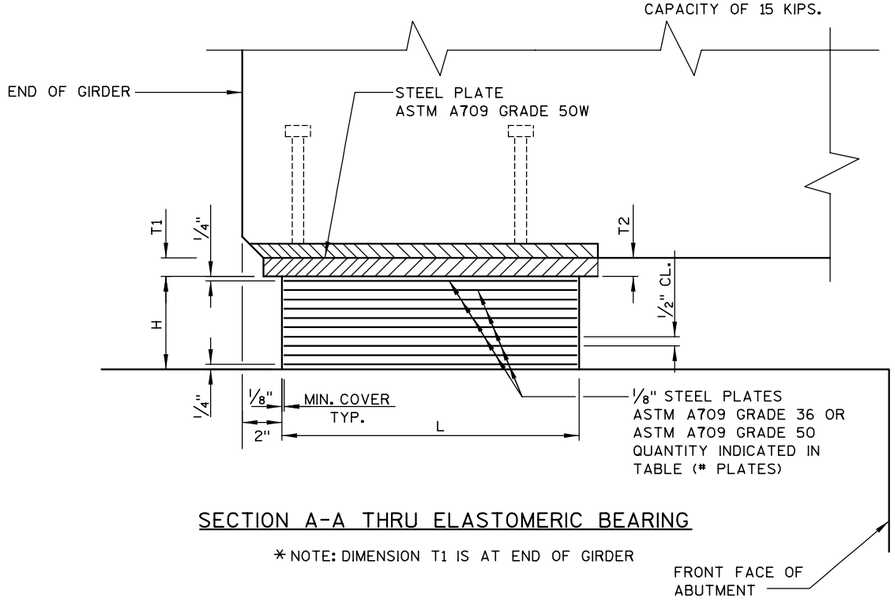

SECTION A-A THRU ELASTOMERIC BEARING

* NOTE: DIMENSION T1 IS AT END OF GIRDER

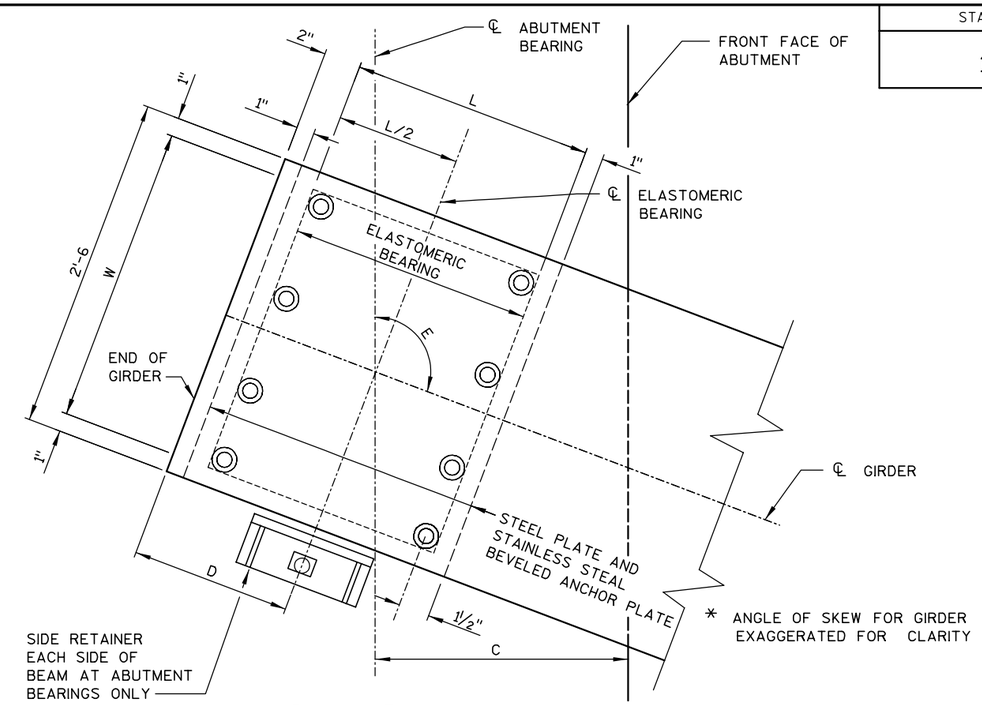

PLAN VIEW

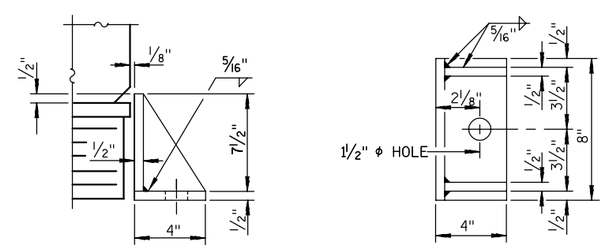

SIDE RETAINER

EQUIVALENT ROLLED ANGLE WITH STIFFENERS WILL BE ALLOWED IN LIEU OF WELDED PLATES.

GIRDER #	ANGLE E N. & S. ABUT.
5	90°25'35"
6	90°51'28"
7	91°17'12"
8	91°42'55"
9	92°08'37"
10	92°34'19"
11	93°00'00"

TABLE OF GIRDER ANGLES

DIM.	S. ABUT.	N. ABUT.
H	5 5/8"	5 5/8"
L	1'-5	1'-5
W	2'-4	2'-4
T1	1 1/2"	1 9/16"
T2	1 11/16"	1 1/2"
C	1'-3	1'-3
D	10 1/2"	10 1/2"
* PLATES	9	9

TABLE OF DIMENSIONS

NOTES:

ALL RETAINER STRUCTURAL STEEL SHALL BE A.S.T.M. A709. GRADE 36. ALL BOLTS, NUTS AND WASHERS SHALL BE A.S.T.M. A325 TYPE 1.

ALL RETAINER STRUCTURAL STEEL SHOWN SHALL BE HOT-DIPPED GALVANIZED. ALL BOLTS, NUTS AND WASHERS SHALL BE HOT-DIPPED GALVANIZED IN ACCORDANCE WITH A.S.T.M. A153 CLASS C. GALVANIZED NUTS SHALL BE TAPPED OVERSIZE IN ACCORDANCE WITH THE REQUIREMENTS OF A.S.T.M. A563 AND SHALL MEET THE REQUIREMENTS OF SUPPLEMENTARY REQUIREMENT S1 OF A.S.T.M. A563, LUBRICANT AND TEST FOR COATED NUTS.

ALL MATERIALS, INCLUDING ANCHOR BOLTS, USED FOR SIDE RETAINERS SHALL BE PAID FOR AT THE UNIT PRICE BID FOR "STRUCTURAL STEEL, CARBON".

ALL MATERIAL USED FOR BEARINGS SHALL BE PAID FOR AT THE UNIT PRICE BID FOR "BEARING PADS ELASTOMERIC LAMINATED."

ALL STRUCTURAL STEEL PLATES SHALL BE FLAT ROLLED WITH ALL SURFACES SMOOTH AND FREE FROM WARP AND ALL EDGES SMOOTH, STRAIGHT, AND VERTICAL.

ALL PLATE CUTS SHALL BE MACHINE OR MACHINE FLAME CUTS.

STAINLESS STEEL BEVELED ANCHOR PLATE CAST TO GIRDERS AT ABUTMENT ENDS.

BEARING PAD SHALL BE MARKED INDICATING THE SIDE FACING THE FRONT FACE OF THE ABUTMENT.

NO.	DATE	REVISION	BY

STATE OF WISCONSIN
DEPARTMENT OF TRANSPORTATION
STRUCTURES DESIGN SECTION

STRUCTURE B-37-344

CONST. SPEC.	2003	DRAWN BY	KAS	PLANS CK'D.	DJW

ELASTOMERIC BEARINGS 2 (GIRDERS 5-11)

SHEET 310

8

8

STATE PROJECT NUMBER

1166-09-76

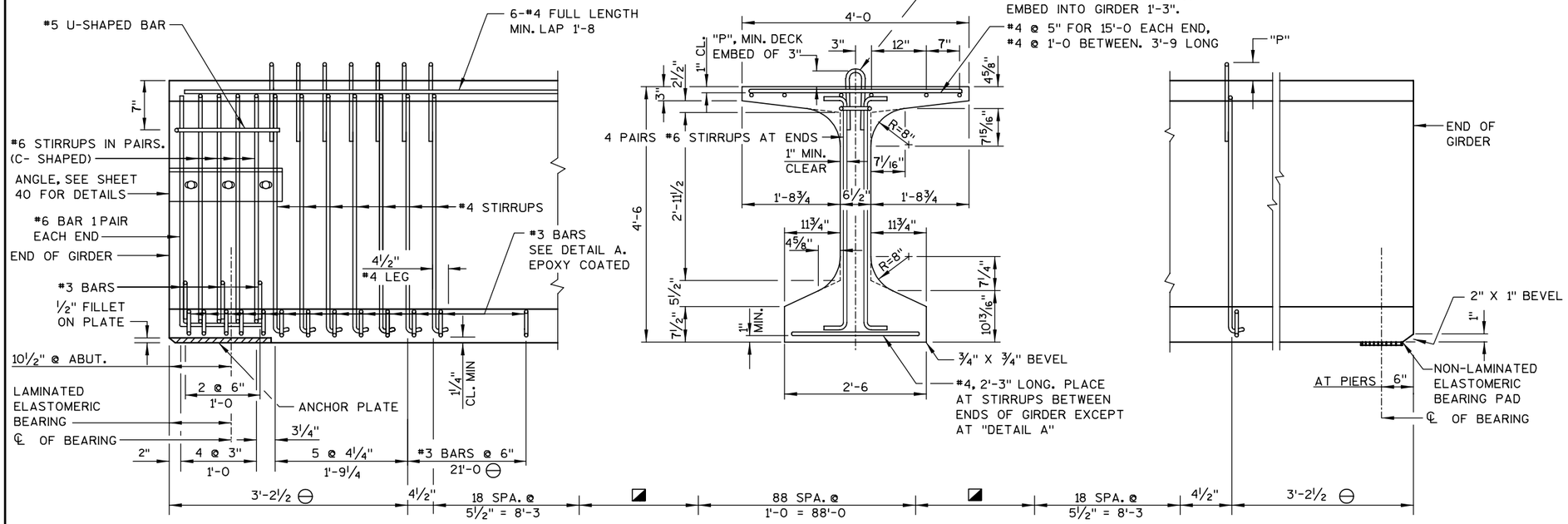

SUPPORT WITH LAMINATED ELASTOMERIC BEARINGS

(AT ABUTMENTS)

⊖ DETAIL TYPICAL AT EACH END.

◪ STIRRUP SPACING, DIMENSIONS.

GIRDER NO.	SPANS 1 & 5	SPANS 2-4
1-6	10"	8"
7,8	10¼"	8¼"
9	10½"	8½"
10	10¾"	8¾"
11	11"	9"

SUPPORT WITH ½" NON-LAMINATED ELASTOMERIC BEARING PAD

(AT PIERS)

GENERAL NOTES

PRESTRESSING STRANDS SHALL BE 0.6" ϕ 7 WIRE LOW-RELAXATION STRANDS WITH AN ULTIMATE STRENGTH OF 270 ksi AND SHALL BE FLUSH WITH THE ENDS OF THE GIRDER. ENDS OF STRANDS SHALL BE PAINTED WITH NON-STAINING GRAY NON-BITUMINOUS JOINT SEALER. THIS APPLIES ONLY TO THOSE ENDS OF GIRDERS THAT ARE FINALLY EXPOSED. (ABUTMENT ENDS)

FOR DIAPHRAGM INSERT & CONNECTION DETAILS SEE "INTERMEDIATE STEEL DIAPHRAGM" SHEET 33.

BEND EACH END OF #4 STIRRUPS 4½".

DATA SHOWN IN DEFLECTION DATA" IS THEORETICAL AND MAY VARY WITH CONCRETE STRENGTH, VARIABLE PRESTRESS CONDITIONS AND PRESTRESS LOSSES.

ALL GIRDERS SHALL BE CAST FULL LENGTH AS SHOWN.

THE GIRDERS SHALL BE PROVIDED WITH A SUITABLE LIFTING DEVICE FOR HANDLING AND ERECTING THE GIRDERS. ALL GIRDERS SHALL BE CAST FULL LENGTH AS SHOWN.

TOP OF GIRDER TO BE ROUGH FLOATED AND BROOMED TRANSVERSELY FOR BONDING TO THE SLAB, EXCEPT THE OUTSIDE 15" OF GIRDER, WHICH SHALL RECEIVE A SMOOTH FINISH. AN APPROVED LIQUID BOND BREAKER SHALL BE APPLIED TO THE TOP SURFACE OF THE GIRDER EXCEPT FOR THE CENTER 18". APPLY NO MORE THAN 7 DAYS PRIOR TO POURING THE DECK.

NOX-CRETE:
SILCOSEAL 2000 F (2 COATS)
MASTER BUILDERS:
FIRST COAT - PRECO FORM-COTE
SECOND COAT - RHEOFINISH 220

SPACING SHOWN FOR #4 STIRRUPS IS FOR GRADE 60 REINFORCEMENT. IF THE FABRICATOR WANTS TO BUILD A BAR STEEL CAGE BY WELDING LONGITUDINAL REINFORCEMENT TO THE #4 STIRRUPS, TWO OPTIONS ARE AVAILABLE:

1. USE ASTM A706 GRADE 60 REINFORCEMENT AND THE STIRRUP SPACING AS SHOWN ON THE PLANS.

2. USE ASTM A615, GRADE 40 REINFORCEMENT AND A MODIFIED STIRRUP SPACING SUBMITTED TO AND APPROVED BY THE STRUCTURES DEVELOPMENT SECTION. (608) 266-8494

AN ALTERNATE EQUIVALENT OF WELDED WIRE FABRIC (WWF) ASTM A497 MAY BE SUBSTITUTED FOR THE STIRRUP REINFORCEMENT SHOWN, UPON APPROVAL OF THE STRUCTURES DEVELOPMENT SECTION.

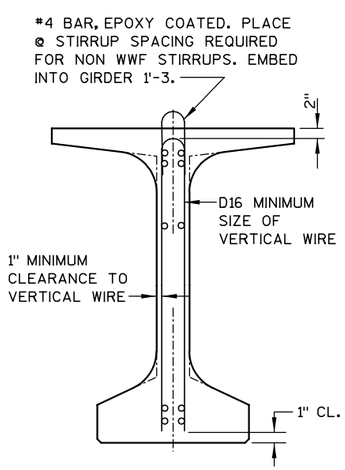

SECTION THRU GIRDER

SHOWING WELDED WIRE FABRIC (WWF) STIRRUPS

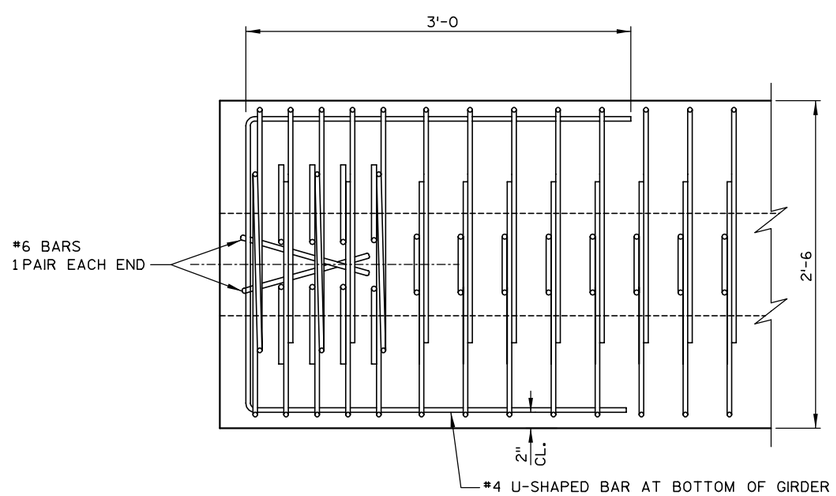

BOTTOM FLANGE

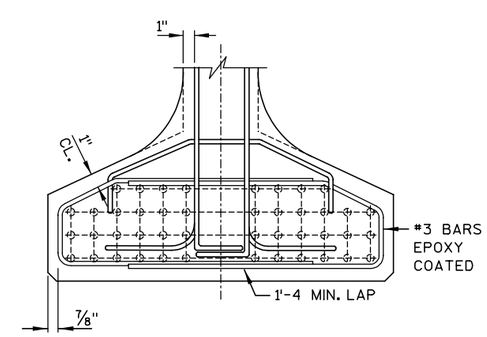

DETAIL A

NO.	DATE	REVISION	BY

STATE OF WISCONSIN
DEPARTMENT OF TRANSPORTATION
STRUCTURES DESIGN SECTION

STRUCTURE B-37-344

CONST. SPEC.	2003	DRAWN BY	HSB	PLANS CK'D.	DJW

54W PRESTRESSED GIRDERS 1

SHEET 31 / 311

8

8

STATE PROJECT NUMBER

1166-09-76

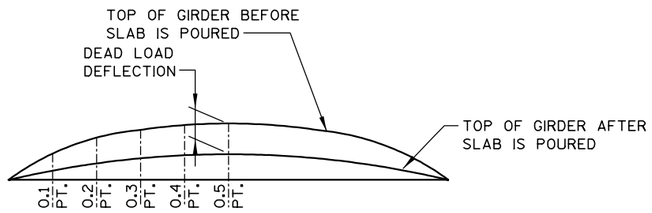

DEAD LOAD DEFLECTION DIAGRAM

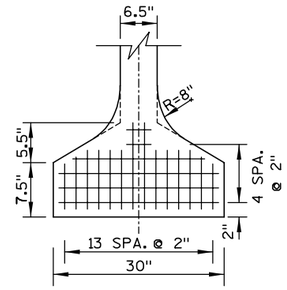

TYP. STRAND PATTERN

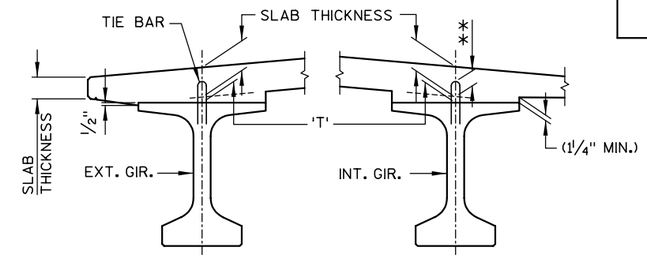

SLAB HAUNCH DETAIL

IF 1 1/4" MINIMUM HAUNCH HEIGHT AT EDGE OF GIRDER CANNOT BE MAINTAINED, THE GRADE LINE MAY BE REVISED BY THE ENGINEER AT THE OPTION OF THE CONTRACTOR. THE PLAN SLAB THICKNESS SHALL BE HELD. NOTIFY THE STRUCTURES SECTION IF THE GRADE LINE IS RAISED FROM THE PLAN PROFILE BY MORE THAN 1/2" OR,

** IF 3" MINIMUM DECK EMBEDMENT OF TIE BAR CANNOT BE OBTAINED.

TO DETERMINE 'T', ELEV. OF TOP OF GIR'S. AT ℄ OF SUBSTRUCTURE UNITS & AT TENTH POINTS OF EACH SPAN SHALL BE TAKEN. THEN FOLLOW THIS PROCESS:

TOP OF DECK ELEV. AT FINAL GRADE
- TOP OF GIRDER ELEVATION
+ DEAD LOAD DEFLECTION
- SLAB THICKNESS
= HAUNCH HEIGHT 'T'

NOTE: AN AVERAGE HAUNCH ('T') OF 3" WAS USED IN THE QUANTITY "CONCRETE MASONRY BRIDGES".

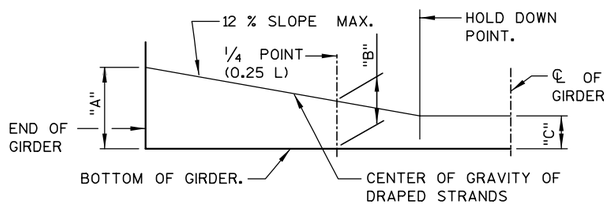

LOCATION OF DRAPED STRANDS

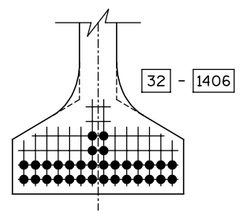

DRAPED PATTERN

32 STRANDS

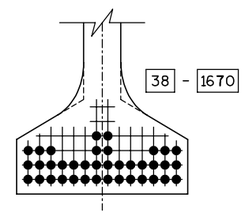

DRAPED PATTERN

38 STRANDS

GIRDER DATA

SPAN	GIRDER NO.	GIRDER LENGTH "L" (FEET)	DEAD LOAD DEFLECTION (INCHES) 0.1 L	0.2 L	0.3 L	0.4 L	0.5 L	"P" 0-0.2L	0.2L-0.8L	0.8L-L	CONC. STRGTH. f'c (psi)	"Pi" (kips)	DIA. OF STRANDS (INCHES)	DRAPED PATTERN TOTAL NO. OF STRANDS	f'ci (psi) *	(INCHES) "A"	"B" MIN.	"B" MAX.	"C"
1	1-4	113'-4	3/4"	1 1/2"	2"	2 3/8"	2 1/2"	7"	6"	7"	8000	1670	0.6	38	6400	49	16	19	5
	5,6	113'-4	1/2"	1"	1 3/8"	1 5/8"	1 3/4"	7"	6"	7"	8000	1406	0.6	32	6400	49	16	19	5
	7,8	113'-4 1/2	1/2"	1"	1 3/8"	1 5/8"	1 3/4"	7"	6"	7"	8000	1406	0.6	32	6400	49	16	19	5
	9	113'-5	1/2"	1"	1 3/8"	1 5/8"	1 3/4"	7"	6"	7"	8000	4106	0.6	32	6400	49	16	19	5
	10	113'-5 1/2	1/2"	1"	1 3/8"	1 5/8"	1 3/4"	7"	6"	7"	8000	1406	0.6	32	6400	49	16	19	5
	11	113'-6	1/2"	1"	1 3/8"	1 5/8"	1 3/4"	7"	6"	7"	8000	1406	0.6	32	6400	49	16	19	5
2-4	1-4	113'-0	3/4"	1 1/2"	2"	2 3/8"	2 1/2"	7"	6"	7"	8000	1670	0.6	38	6400	49	16	19	5
	5,6	113'-0	5/8"	1 1/4"	1 5/8"	2"	2 1/8"	7"	6"	7"	8000	1406	0.6	32	6400	49	16	19	5
	7,8	113'-0 1/2	5/8"	1 1/4"	1 5/8"	2"	2 1/8"	7"	6"	7"	8000	1406	0.6	32	6400	49	16	19	5
	9	113'-1	5/8"	1 1/4"	1 5/8"	2"	2 1/8"	7"	6"	7"	8000	1406	0.6	32	6400	49	16	19	5
	10	113'-1 1/2	5/8"	1 1/4"	1 5/8"	2"	2 1/8"	7"	6"	7"	8000	1406	0.6	32	6400	49	16	19	5
	11	113'-2	5/8"	1 1/4"	1 5/8"	2"	2 1/8"	7"	6"	7"	8000	1406	0.6	32	6400	49	16	19	5
5	1-6	113'-4	3/4"	1 1/2"	2"	2 3/8"	2 1/2"	7"	6"	7"	8000	1670	0.6	38	6400	49	16	19	5
	7,8	113'-4 1/2	3/4"	1 1/2"	2"	2 3/8"	2 1/2"	7"	6"	7"	8000	1670	0.6	38	6400	49	16	19	5
	9	113'-5	3/4"	1 1/2"	2"	2 3/8"	2 1/2"	7"	6"	7"	8000	1670	0.6	38	6400	49	16	19	5
	10	113'-5 1/2	3/4"	1 1/2"	2"	2 3/8"	2 1/2"	7"	6"	7"	8000	1670	0.6	38	6400	49	16	19	5
	11	113'-6	3/4"	1 1/2"	2"	2 3/8"	2 1/2"	7"	6"	7"	8000	1670	0.6	38	6400	49	16	19	5

* MINIMUM CYLINDER STRENGTH OF CONCRETE @ TIME OF TRANSFER OF PRESTRESS FORCE.

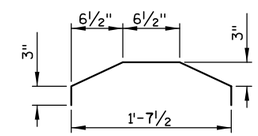

#3 BAR
3 @ EACH END
(EPOXY COAT)

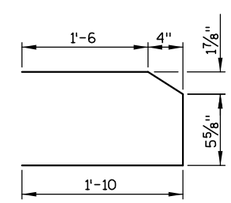

#3 BAR
53 PAIRS EACH END
(EPOXY COATED)

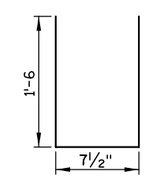

#5 BAR
1 @ EACH END

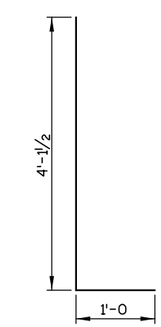

#6 BAR
2 @ EACH END

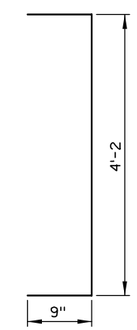

#6 BAR
8 @ EACH END

NO.	DATE	REVISION	BY

STATE OF WISCONSIN
DEPARTMENT OF TRANSPORTATION
STRUCTURES DESIGN SECTION

STRUCTURE B-37-344

CONST. SPEC. 2003 | DRAWN BY HSB | PLANS CK'D. DJW

54W PRESTRESSED GIRDERS 2

SHEET 32 / 312

8

8

STATE PROJECT NUMBER
1166-09-76

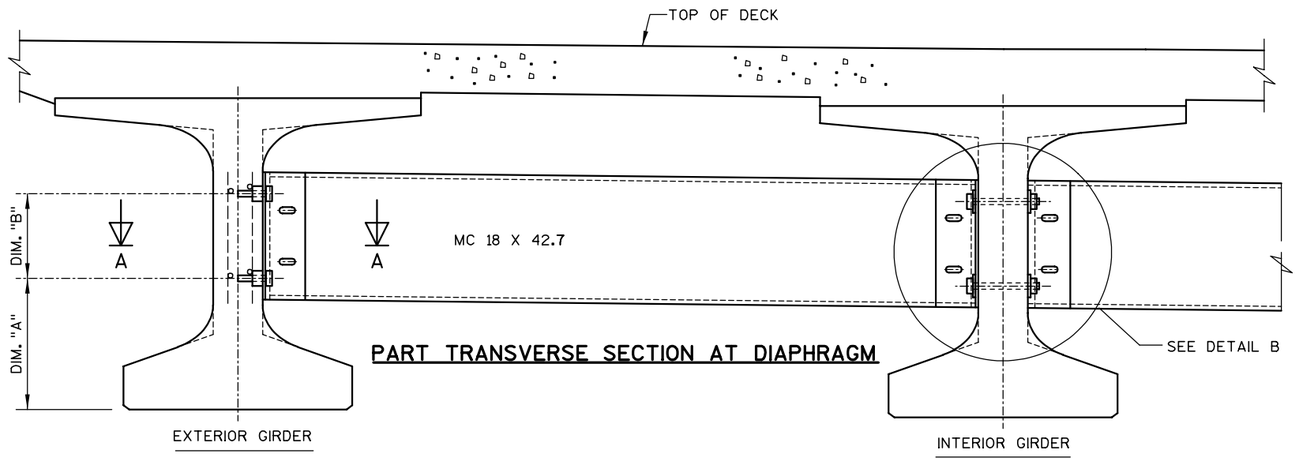

PART TRANSVERSE SECTION AT DIAPHRAGM

NOTES

ALL DIAPHRAGM MATERIAL NOT EMBEDDED IN THE CONCRETE GIRDER SHALL BE PAID FOR AT THE UNIT PRICE BID FOR "STEEL DIAPHRAGMS, STRUCTURE B-37-344", EACH.

EACH DIAPHRAGM BETWEEN GIRDERS SHALL CONSTITUTE ONE UNIT.

ALL DIAPHRAGM STRUCTURAL STEEL SHALL BE A.S.T.M. A709 GRADE 36. ALL BOLTS, NUTS AND WASHERS SHALL BE A.S.T.M. A325 TYPE 1.

ALL DIAPHRAGM STRUCTURAL STEEL SHOWN SHALL BE HOT-DIPPED GALVANIZED. ALL BOLTS, NUTS AND WASHERS SHALL BE HOT-DIPPED GALVANIZED IN ACCORDANCE WITH A.S.T.M. A153 CLASS C. GALVANIZED NUTS SHALL BE TAPPED OVERSIZED IN ACCORDANCE WITH THE REQUIREMENTS OF A.S.T.M. A563 AND SHALL MEET THE REQUIREMENTS OF SUPPLEMENTARY REQUIREMENT S1 OF A.S.T.M. A563, LUBRICANT AND TEST FOR COATED NUTS.

PLACE DIAPHRAGMS AS DETAILED ON SHEETS 37, 38 AND 39.

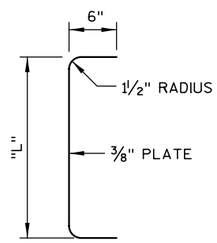

SECTION THRU ALTERNATE DIAPHRAGM

*DIM "X" = 2½" FOR ALTERNATE PLATE DIAPHRAGM

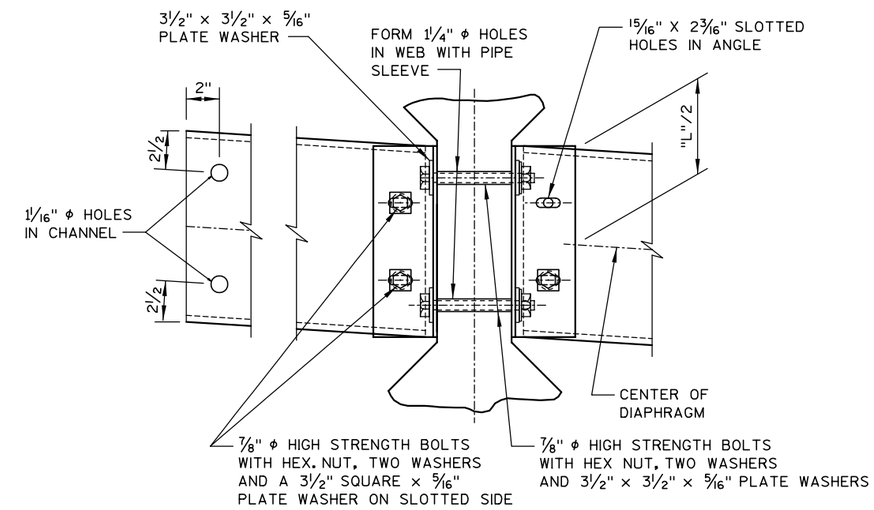

DETAIL B

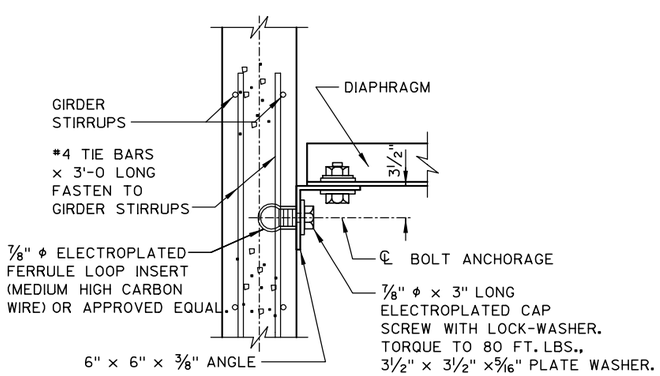

SECTION A-A

(FOR EXTERIOR ATTACHMENT)

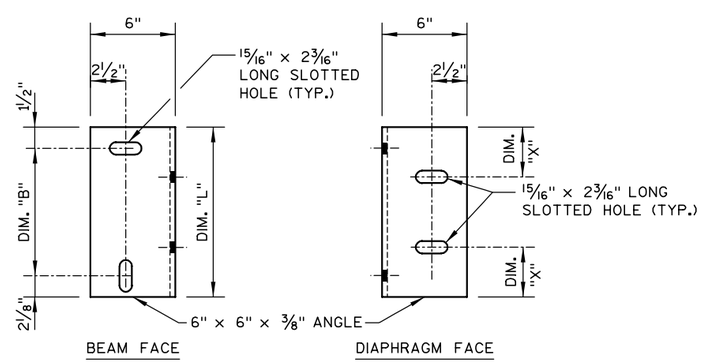

DIAPHRAGM SUPPORT

TABLE

GIRDER HEIGHT	DIM. "A"	DIM. "B"	DIM. "L"	*DIM. "X"
28"	1'-0⅞"	5⅞"	9½"	2¼"
36"	1'-2⅞"	9⅞"	1'-1½"	3¼"
45"	1'-5⅜"	1'-1⅞"	1'-5½"	2¼"
54"	1'-7⅞"	1'-5⅞"	1'-9½"	4¼"
54W"	1'-9⅛"	1'-5⅞"	1'-9½"	4¼"

NO.	DATE	REVISION	BY

STATE OF WISCONSIN
DEPARTMENT OF TRANSPORTATION
STRUCTURES DESIGN SECTION

STRUCTURE B-37-344

CONST. SPEC.	2003	DRAWN BY	KAS	PLANS CK'D.	DJW

INTERMEDIATE STEEL DIAPHRAGM

SHEET 37
313

8

8

STATE PROJECT NUMBER

1166-09-76

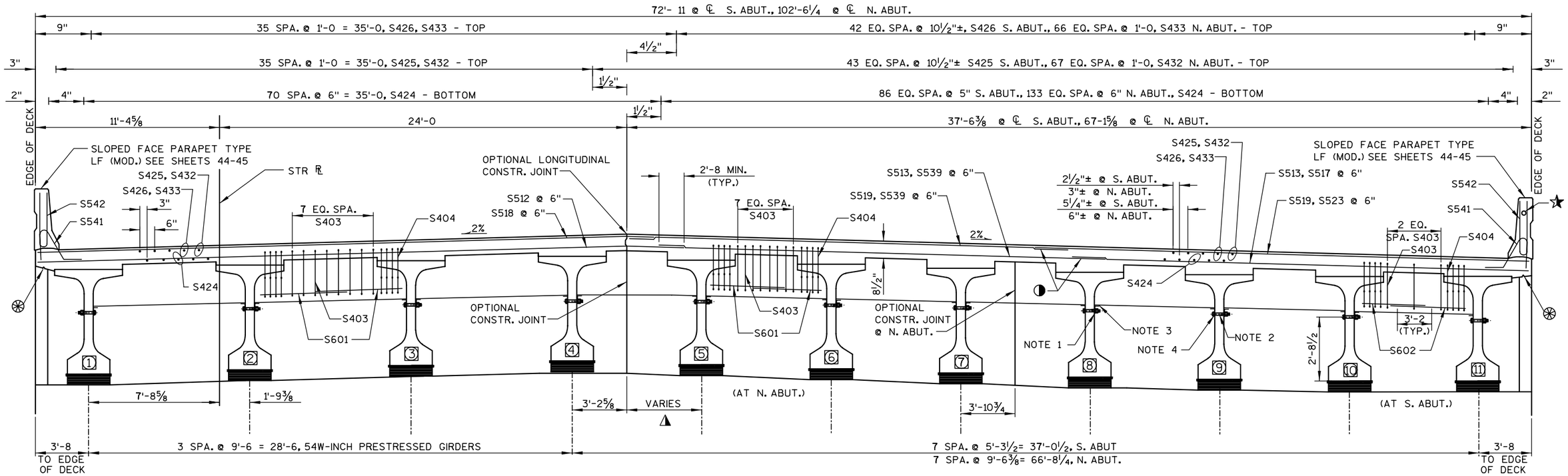

CROSS SECTION AT ABUTMENTS

(LOOKING NORTH)

8

LEGEND

- ⊛ ¾" CONTINUOUS DRIP GROOVE. END 2'-0 FROM FACE OF SUBSTRUCTURE UNITS.
- ⬚ INDICATES GIRDER NUMBER.
- ◪ THESE DIMENSIONS PARALLEL TO GIRDER.
- ◮ 2'-0⅞ @ S. ABUT., 6'-3¾ @ N. ABUT.
- ◑ LAP REQ'D IN SPAN 5.
- ★ CONDUIT RIGID METALLIC 2-INCH

NOTES

1. 3½" X 3½" X½" PLATE WASHER
2. ⅞" DIA. HIGH STRENGTH BOLTS WITH HEX NUT AND TWO WASHERS.
3. ANGLE 6" X 4" X¾" X 1'-7
4. 3½" X 3½" X5/16" PLATE WASHER.

NO.	DATE	REVISION	BY

STATE OF WISCONSIN
DEPARTMENT OF TRANSPORTATION
STRUCTURES DESIGN SECTION

STRUCTURE B-37-344

CONST. SPEC.	2003	DRAWN BY	KAS	PLANS CK'D.	DJW

SUPERSTRUCTURE
1

SHEET 34
314

STATE PROJECT NUMBER

1166-09-76

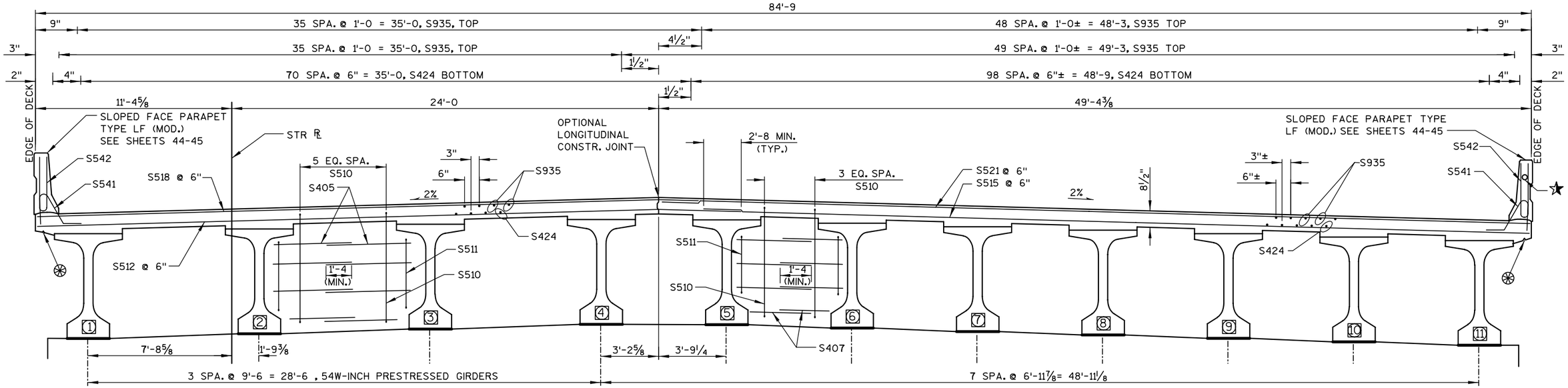

CROSS SECTION AT PIER 2

(LOOKING NORTH)

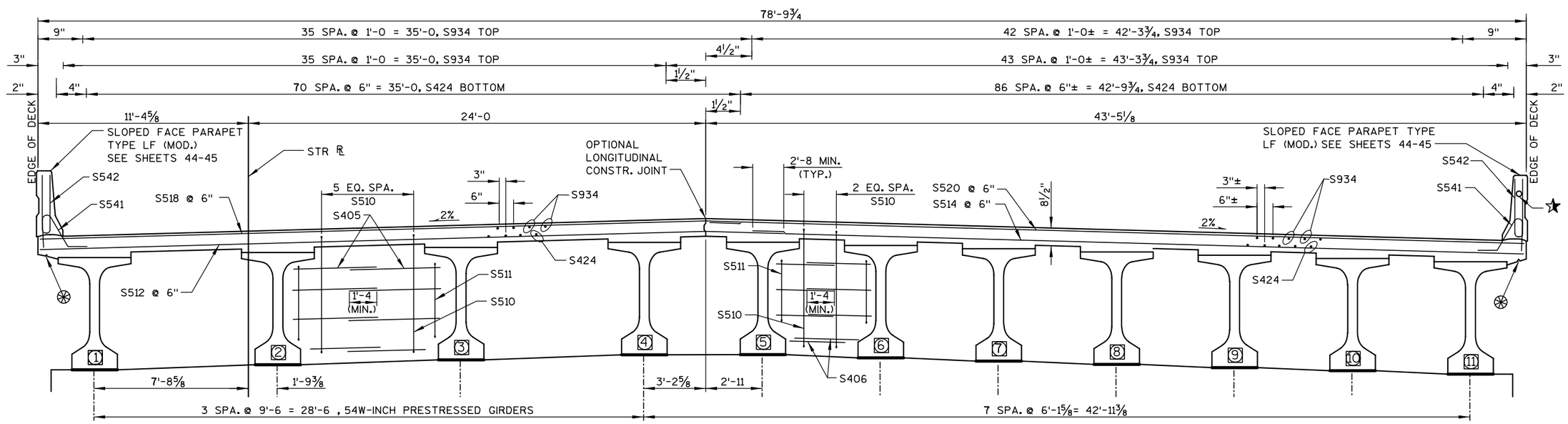

CROSS SECTION AT PIER 1

(LOOKING NORTH)

8

8

LEGEND

- ¾" CONTINUOUS DRIP GROOVE. END 2'-0 FROM FACE OF SUBSTRUCTURE UNITS.
- INDICATES GIRDER NUMBER.
- THESE DIMENSIONS PARALLEL TO GIRDER.
- CONDUIT RIGID NON-METALLIC, SCHEDULE 40 2-INCH

NO.	DATE	REVISION	BY

STATE OF WISCONSIN
DEPARTMENT OF TRANSPORTATION
STRUCTURES DESIGN SECTION

STRUCTURE B-37-344

CONST. SPEC.	2003	DRAWN BY	KAS	PLANS CK'D.	DJW

SUPERSTRUCTURE 2

SHEET 35
315

STATE PROJECT NUMBER

1166-09-76

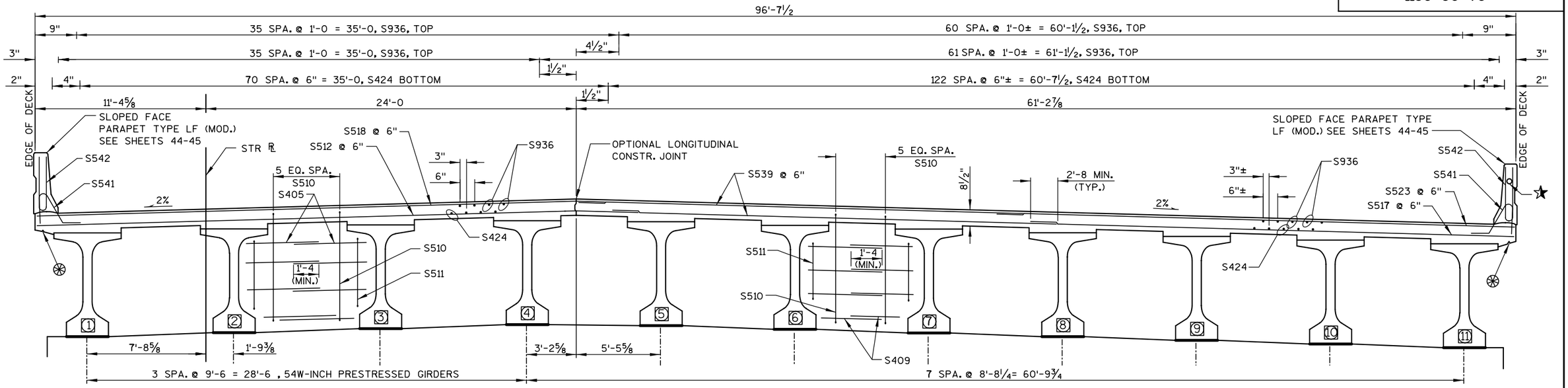

CROSS SECTION AT PIER 4

(LOOKING NORTH)

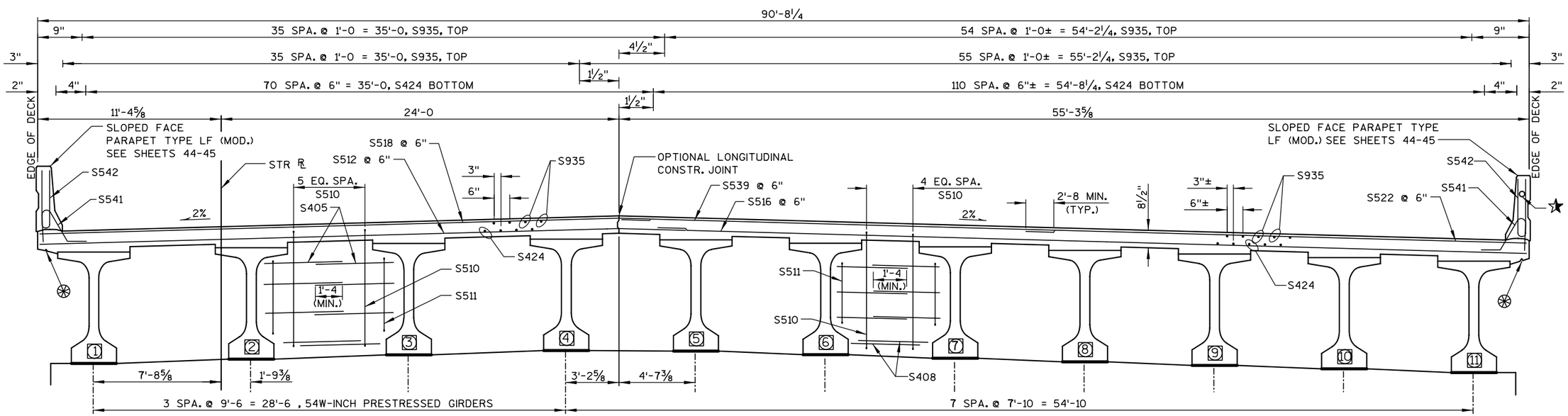

CROSS SECTION AT PIER 3

(LOOKING NORTH)

8

8

LEGEND

- ⊛ ¾" CONTINUOUS DRIP GROOVE. END 2'-0 FROM FACE OF SUBSTRUCTURE UNITS.
- ○ INDICATES GIRDER NUMBER.
- ◪ THESE DIMENSIONS PARALLEL TO GIRDER.
- ★ CONDUIT RIGID NON-METALLIC, SCHEDULE 40 2-INCH

NO.	DATE	REVISION	BY

STATE OF WISCONSIN
DEPARTMENT OF TRANSPORTATION
STRUCTURES DESIGN SECTION

STRUCTURE B-37-344

CONST. SPEC.	2003	DRAWN BY	KAS	PLANS CK'D.	DJW

SUPERSTRUCTURE 3

SHEET 36
316

STATE PROJECT NUMBER

1166-09-76

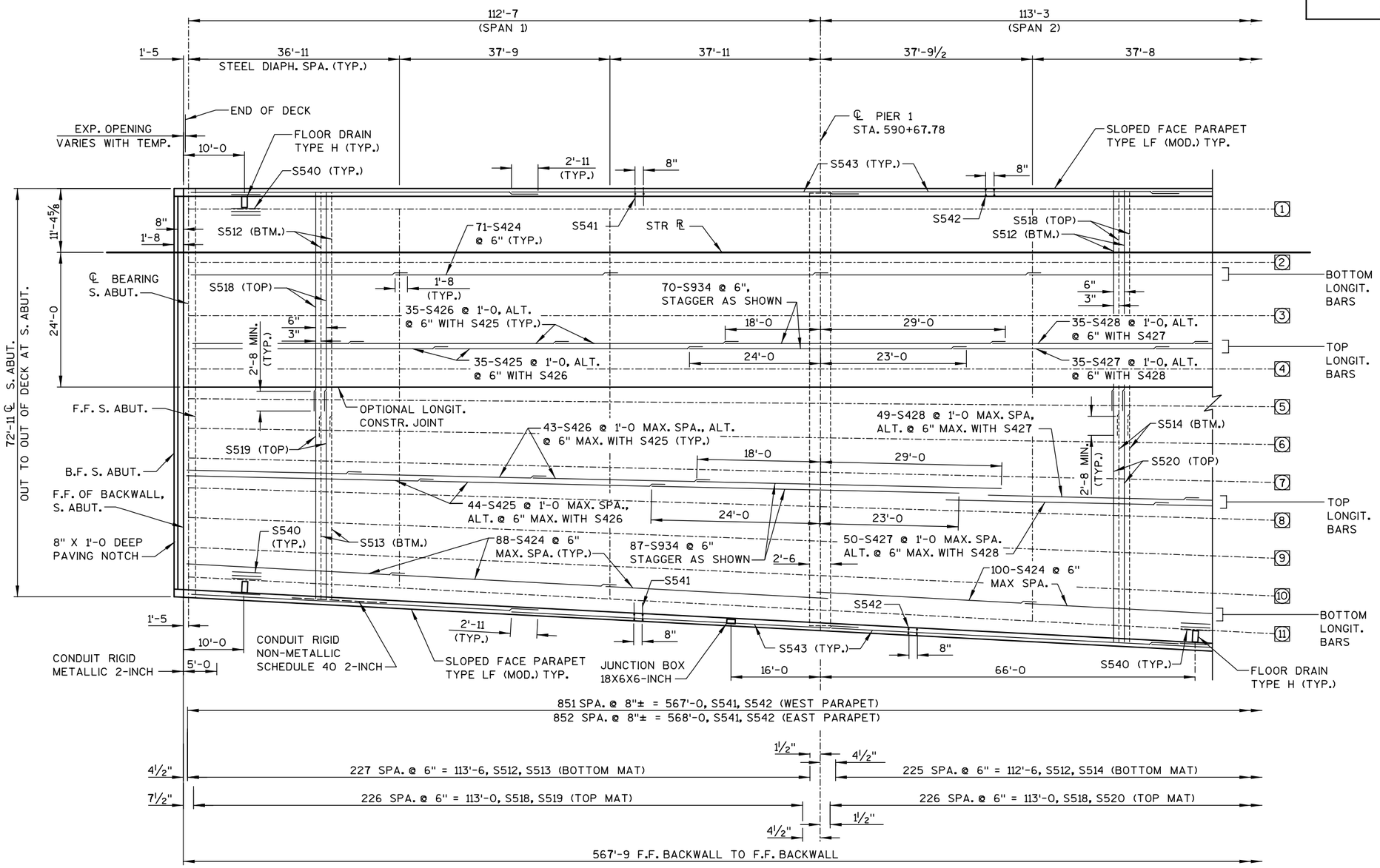

8

8

PART PLAN

N

LEGEND

◯ INDICATES GIRDER NUMBER.

NOTES

LONGITUDINAL BARS SHALL BE PLACED PARALLEL TO GIRDERS.

NO.	DATE	REVISION	BY

STATE OF WISCONSIN
DEPARTMENT OF TRANSPORTATION
STRUCTURES DESIGN SECTION

STRUCTURE B-37-344

CONST. SPEC.	2003	DRAWN BY	HSB	PLANS CK'D.	DJW

SUPERSTRUCTURE PLAN 1

SHEET 317

STATE PROJECT NUMBER

1166-09-76

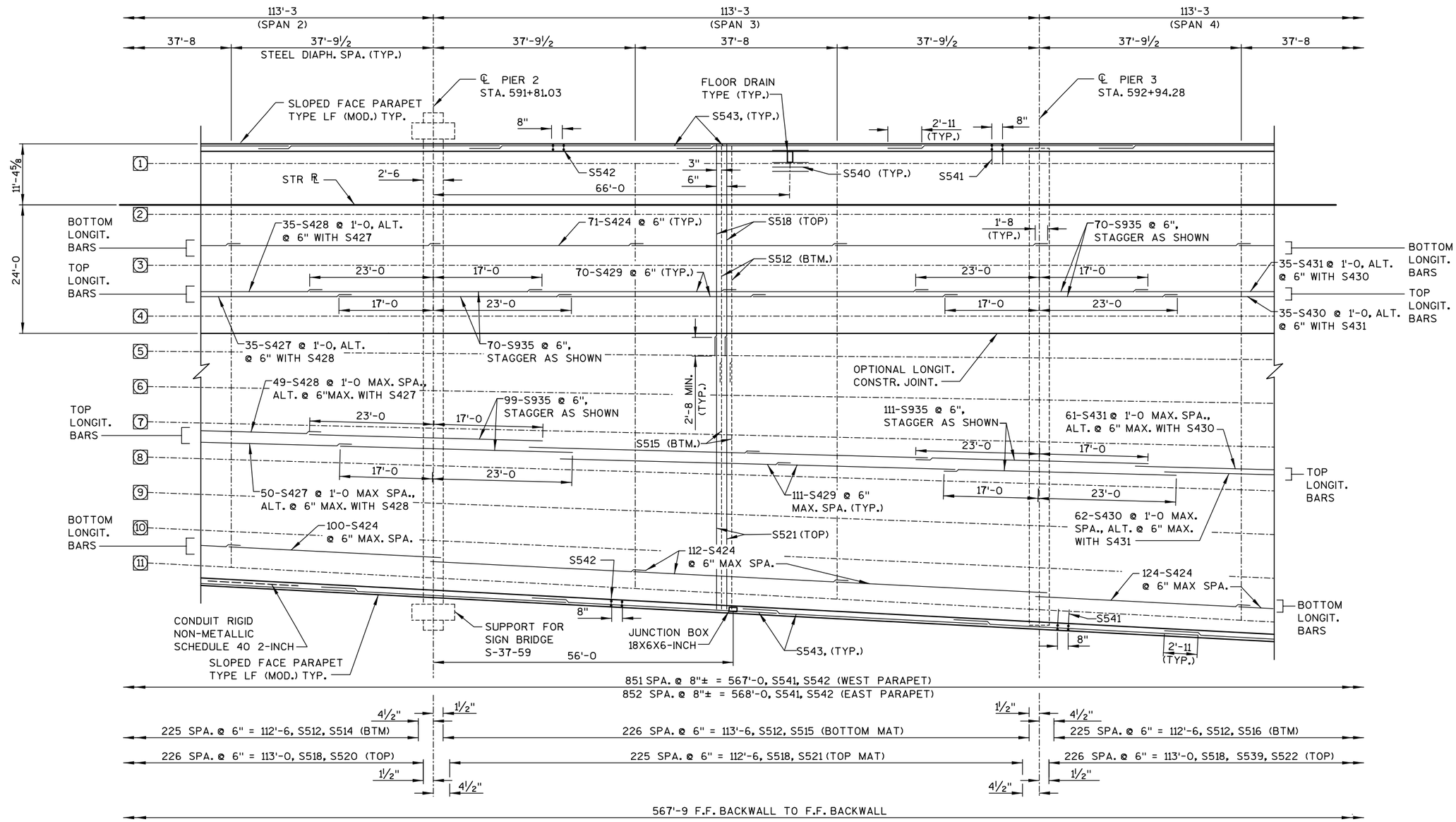

PART PLAN

N

LEGEND

◯ INDICATES GIRDER NUMBER.

NOTES

LONGITUDINAL BARS SHALL BE PLACED PARALLEL TO GIRDERS.

NO.	DATE	REVISION	BY

STATE OF WISCONSIN
DEPARTMENT OF TRANSPORTATION
STRUCTURES DESIGN SECTION

STRUCTURE B-37-344

CONST. SPEC.	2003	DRAWN BY	HSB	PLANS CK'D.	DJW

SUPERSTRUCTURE PLAN 2

SHEET 38
318

8

8

STATE PROJECT NUMBER

1166-09-76

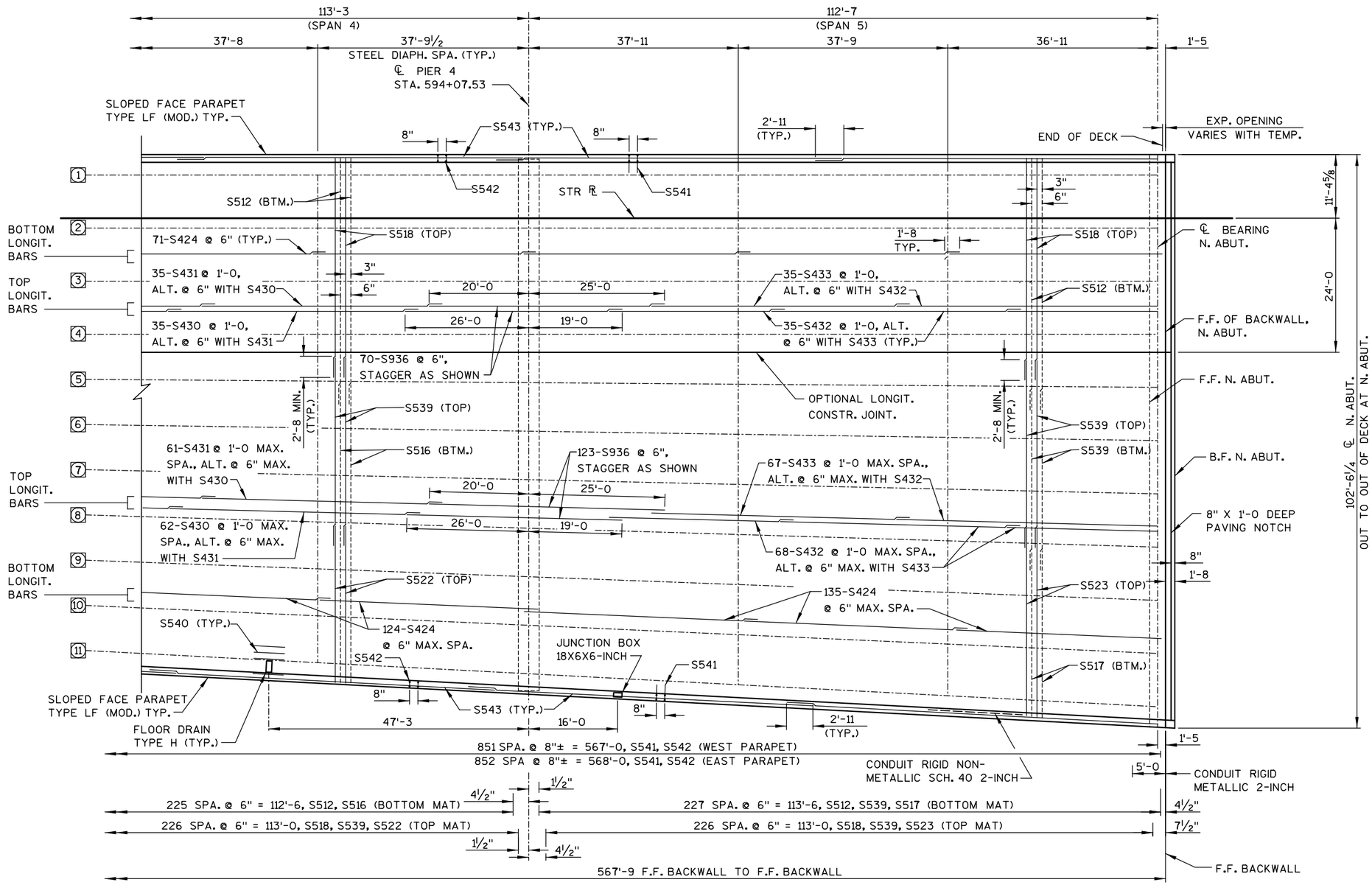

PART PLAN

N

LEGEND

◯ INDICATES GIRDER NUMBER.

NOTES

LONGITUDINAL BARS SHALL BE PLACED PARALLEL TO GIRDERS.

NO.	DATE	REVISION	BY

STATE OF WISCONSIN
DEPARTMENT OF TRANSPORTATION
STRUCTURES DESIGN SECTION

STRUCTURE B-37-344

CONST. SPEC.	2003	DRAWN BY	HSB	PLANS CK'D.	DJW

SUPERSTRUCTURE PLAN 3

SHEET 39
319

8

8

STATE PROJECT NUMBER

1166-09-76

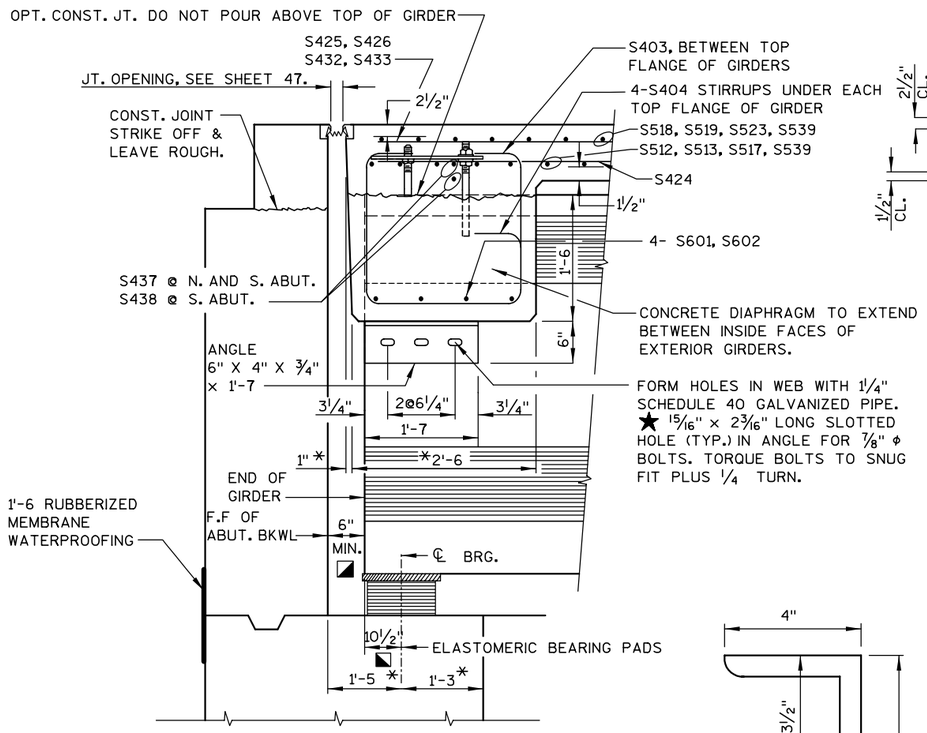

ABUTMENT DIAPHRAGM

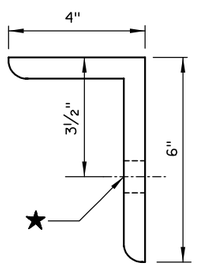

ANGLE

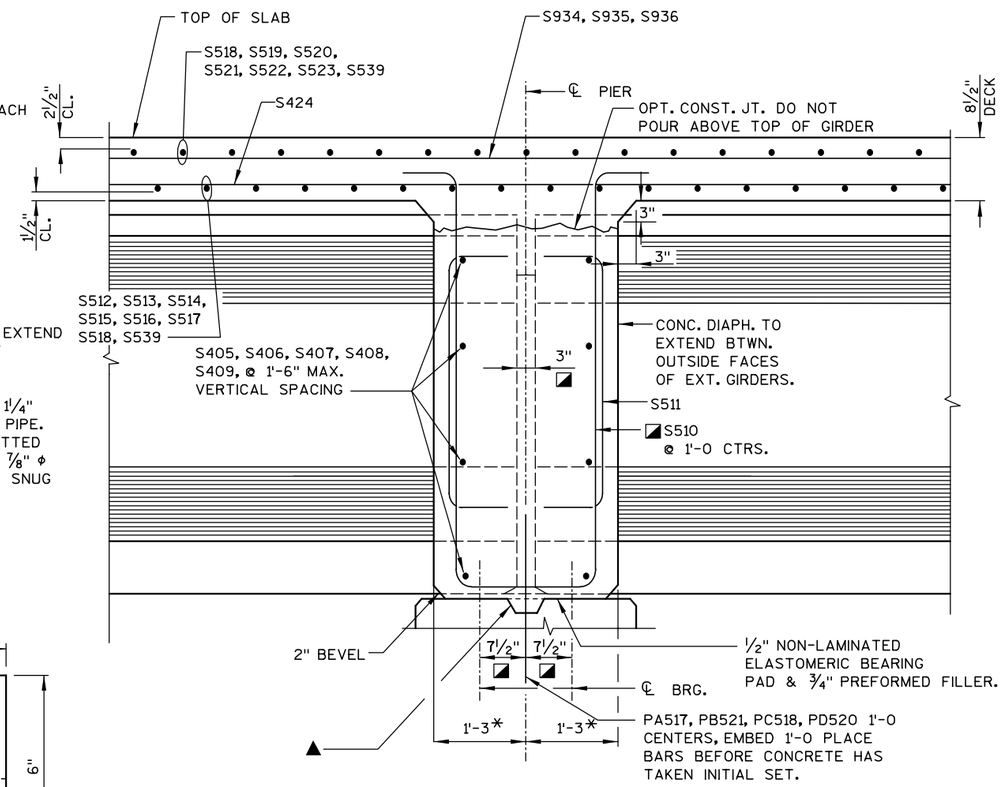

DIAPHRAGM AT PIERS

NOTES

▲ KEYED CONSTRUCTION JOINT FORMED BY BEVELED 2"X6".

◪ THESE DIMENSIONS PARALLEL TO GIRDER.

✳ DIMENSION IS TAKEN NORMAL TO SUBSTRUCTURE UNITS.

TRANSVERSE CONSTRUCTION JOINT AS DETAILED IF REQUIRED.

DIAPHRAGM SUPPORT ANGLES SHALL BE ASTM A709 GRADE 36. ALL BOLTS, NUTS AND WASHERS SHALL BE ASTM A325 TYPE 1.

ALL SUPPORT ANGLES SHALL BE HOT-DIPPED GALVANIZED. ALL BOLTS, NUTS AND WASHERS SHALL BE HOT-DIPPED GALVANIZED IN ACCORDANCE WITH ASTM A153 CLASS C. GALVANIZED NUTS SHALL BE TAPPED OVERSIZED IN ACCORDANCE WITH THE REUQIREMENTS OF ASTM A53 AND SHALL MEET THE REQUIREMENTS OF SUPPLEMENTARY REQUIREMENT S1 OF ASTM A563, LUBRICANT AND TEST FOR COATED NUTS.

ALL DIAPHRAGM SUPPORT HARDWARE SHALL BE INCIDENTAL TO CONCRETE MASONRY BRIDGES.

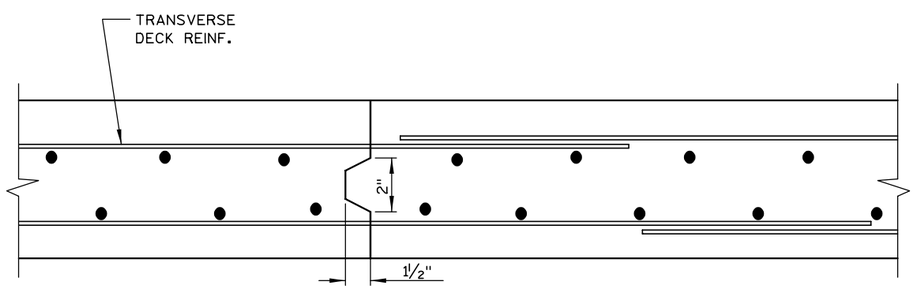

LONGIT. CONSTR. JOINT DETAIL

(LOOKING NORTH)

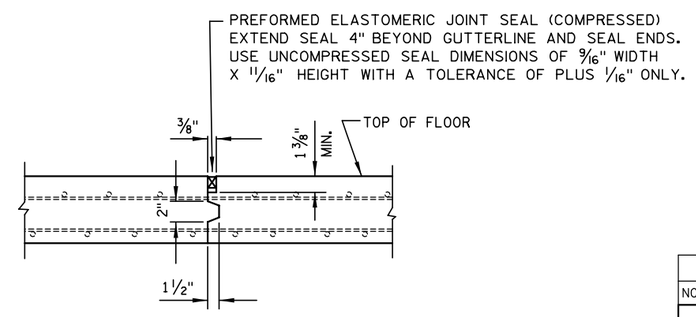

TRANSVERSE CONSTRUCTION JOINT SECTION

NOTE: CONSTRUCTION JOINT SHALL NOT BE PERMITTED EXCEPT BY THE STRUCTURES DEVELOPMENT SECTION. IF APPROVED, LOCATE THE TRANSVERSE JOINT AT THE 0.75 SPAN POINT.

8

NO.	DATE	REVISION	BY

STATE OF WISCONSIN
DEPARTMENT OF TRANSPORTATION
STRUCTURES DESIGN SECTION

STRUCTURE B-37-345

CONST. SPEC.	2003	DRAWN BY	KAS	PLANS CK'D.	DJW

SUPERSTRUCTURE DETAILS 1

SHEET 40
320

STATE PROJECT NUMBER
1166-09-76

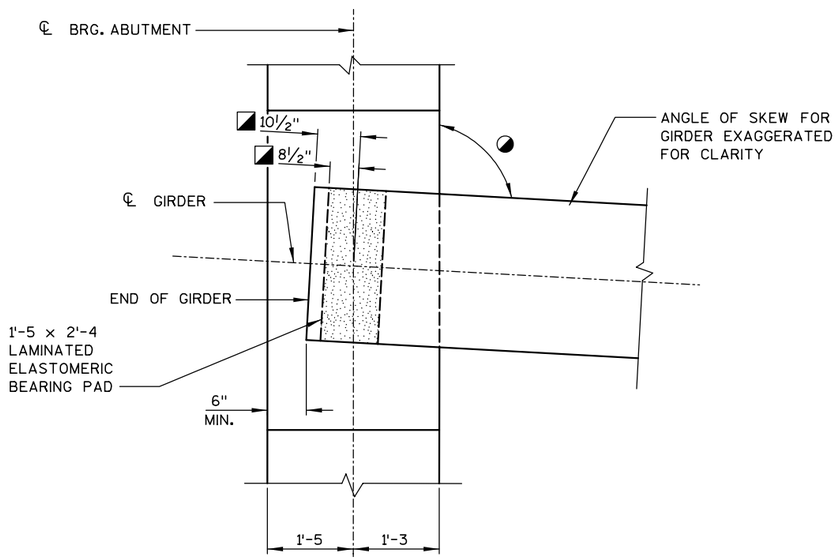

BEARING PAD AT ABUTMENTS, GIRDERS 5-11

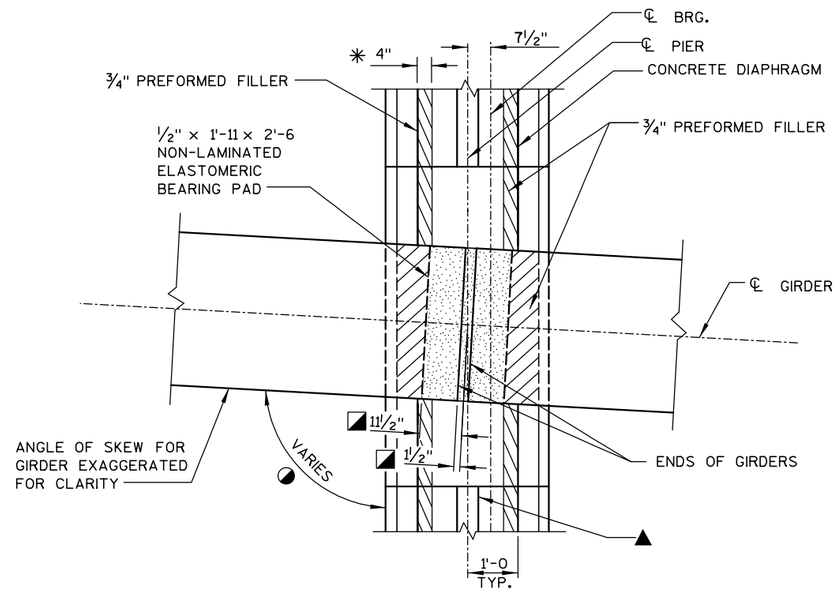

BEARING PAD AT PIERS, GIRDERS 5-11

NOTES

▲ KEYED CONSTRUCTION JOINT FORMED BY BEVELED 2"X6".

◪ THESE DIMENSIONS PARALLEL TO ℄ GIRDER

✳ DIMENSION IS TAKEN NORMAL TO SUBSTRUCTURE UNITS.

◕ ANGLE VARIES, SEE TABLE

GIRDER LINE	ANGLE
1-4	90°
5	90°25'44"
6	90°51'28"
7	91°17'12"
8	91°42'55"
9	92°08'38"
10	92°34'19"
11	93°00'00"

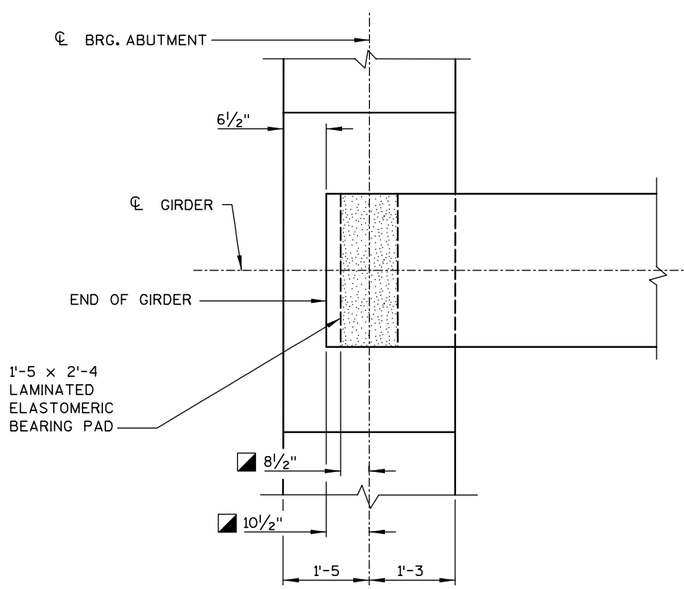

BEARING PAD AT ABUTMENTS, GIRDERS 1-4

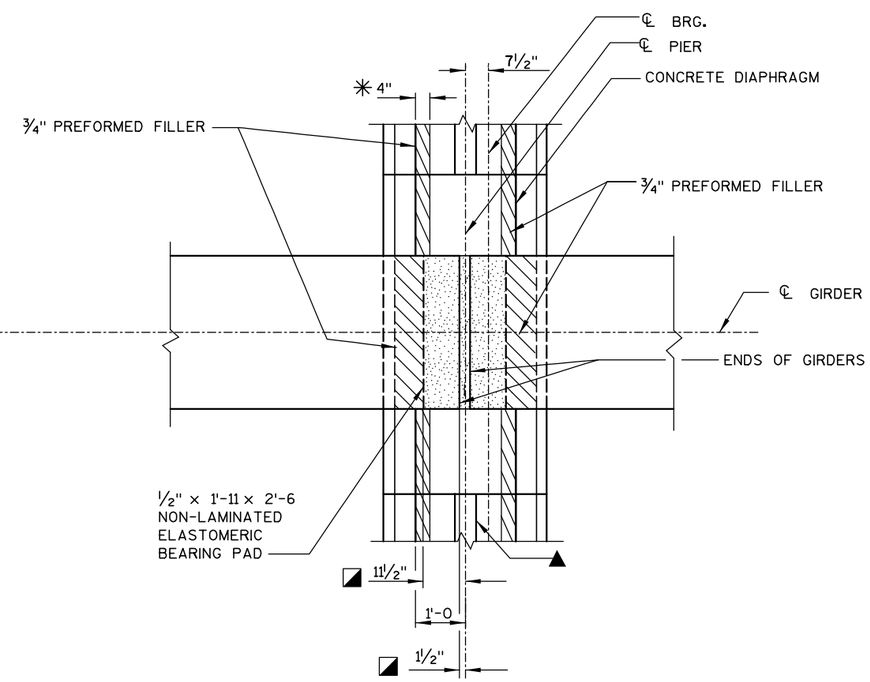

BEARING PAD AT PIERS, GIRDERS 1-4

8

8

NO.	DATE	REVISION	BY

STATE OF WISCONSIN
DEPARTMENT OF TRANSPORTATION
STRUCTURES DESIGN SECTION

STRUCTURE B-37-344

CONST. SPEC.	2003	DRAWN BY	KAS	PLANS CK'D.	DJW

SUPERSTRUCTURE DETAILS 2

SHEET 41
321

SUPERSTRUCTURE BILL OF BARS

COATED 470,820 LBS

MARK	NO. REQ'D.	LENGTH	BENT	COAT	SERIES	LOCATION
S601	104	5'-11		X		N. AND S. ABUT. DIAPH. - BOTTOM - HORIZ.
S602	56	3'-10		X		S. ABUT. DIAPH. - BOTTOM - HORIZ.
S403	125	7'-0	X	X		ABUT. DIAPH. - VERT. - BETWEEN BEAM FLANGES
S404	160	5'-7	X	X		ABUT. DIAPH. - VERT. - UNDER BEAM FLANGES
S405	192	5'-0		X		PIERS - DIAPH. - HORIZ.
S406	112	3'-4		X		PIER 1 - DIAPH. - HORIZ.
S407	112	3'-9		X		PIER 2 - DIAPH. - HORIZ.
S408	112	4'-2		X		PIER 3 - DIAPH. - HORIZ.
S409	112	4'-7		X		PIER 4 - DIAPH. - HORIZ.
S510	198	13'-0	X	X		PIERS - DIAPH. - VERT. - BETWEEN FLANGES
S511	160	4'-5	X	X		PIERS - DIAPH. - VERT. - UNDER BEAM FLANGES
S512	1135	40'-10		X		DECK - TRANSVERSE - BOTTOM
S513	228	38'-0		X	◭	DECK - TRANSVERSE - BOTTOM & SPAN 1
S514	226	44'-0		X	◭	DECK - TRANSVERSE - BOTTOM SPAN 2
S515	227	50'-0		X	◭	DECK - TRANSVERSE - BOTTOM SPAN 3
S516	226	55'-9		X	◭	DECK - TRANSVERSE - BOTTOM SPAN 4
S517	228	28'-9		X	◭	DECK - TRANSVERSE - BOTTOM SPAN 5
S518	1134	38'-0		X		DECK - TRANSVERSE - TOP
S519	227	40'-1		X	◭	DECK - TRANSVERSE - TOP SPAN 1
S520	227	46'-0		X	◭	DECK - TRANSVERSE - TOP SPAN 2
S521	226	52'-0		X	◭	DECK - TRANSVERSE - TOP SPAN 3
S522	227	25'-8		X	◭	DECK - TRANSVERSE - TOP SPAN 4
S523	227	31'-8		X	◭	DECK - TRANSVERSE - TOP SPAN 5
S424	2742	39'-5		X		DECK - LONGIT. - BOTTOM
S425	158	46'-6		X		DECK - LONGIT. - TOP SPAN 1
S426	234	33'-7		X		DECK - LONGIT. - TOP SPAN 1
S427	170	39'-2		X		DECK - LONGIT. - TOP SPAN 2
S428	168	33'-2		X		DECK - LONGIT. - TOP SPAN 2
S429	362	39'-2		X		DECK - LONGIT. - TOP SPAN 3
S430	194	34'-8		X		DECK - LONGIT. - TOP SPAN 4
S431	192	40'-8		X		DECK - LONGIT. - TOP SPAN 4
S432	309	33'-3		X		DECK - LONGIT. - TOP SPAN 5
S433	204	46'-0		X		DECK - LONGIT. - TOP SPAN 5
S934	157	47'-0		X		DECK - LONGIT. - TOP PIER 1
S935	350	40'-0		X		DECK - LONGIT. - TOP PIERS 2, 3
S936	193	45'-0		X		DECK - LONGIT. - TOP PIER 4
S437	26	7'-0		X		N. & S. ABUT. - STRIP SEAL - HORIZ.
S438	14	3'-6		X		S. ABUT. - STRIP SEAL - HORIZ.
S539	682	35'-0		X		DECK - TRANS. - TOP SPANS 4 & 5 - BOT. SPAN 5
S540	20	5'-0		X		DECK - FLOOR DRAIN BARS
S541	1705	4'-2	X	X		PARAPET - VERT. - DOWELS
S542	1705	4'-10	X	X		PARAPET - VERT.
S543	100	59'-6		X		PARAPET - LONGIT.

NOTE: THE FIRST ONE OR TWO DIGITS OF A BAR MARK SIGNIFIES THE BAR SIZE. DIMENSIONS FOR BENDING ARE OUT TO OUT OF BAR.

◭ LENGTH SHOWN FOR BAR IS AN AVERAGE LENGTH AND SHOULD ONLY BE USED FOR BAR WIEGHT CALCULATIONS. SEE BAR SERIES TABLE FOR ACTUAL LENGTHS.

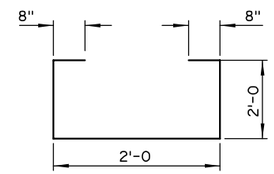

S403

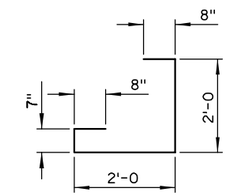

S404

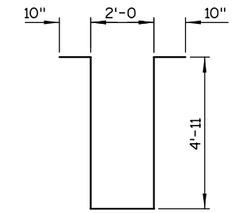

S510

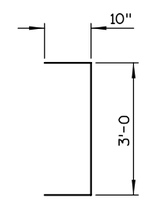

S511

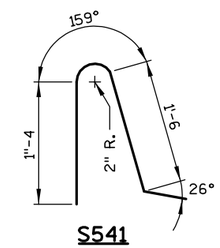

S541

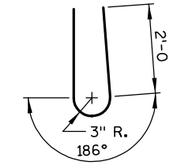

S542

◭ BAR SERIES TABLE

MARK	No. REQUIRED	LENGTH
S513	1 SERIES OF 228	35'-0 TO 41'-0
S514	1 SERIES OF 226	41'-0 TO 47'-0
S515	1 SERIES OF 227	47'-0 TO 53'-0
S516	1 SERIES OF 226	53'-0 TO 58'-6
S517	1 SERIES OF 228	25'-10 TO 31'-8
S519	1 SERIES OF 227	37'-2 TO 43'-0
S520	1 SERIES OF 227	43'-0 TO 49'-0
S521	1 SERIES OF 226	49'-0 TO 54-'11
S522	1 SERIES OF 227	22'-8 TO 28'-8
S523	1 SERIES OF 227	28'-8 TO 34'-8

BUNDLE AND TAG EACH SERIES SEPARATELY.

NOTE

CONTRACTOR MAY PROVIDE BARS OF A UNIFORM LENGTH AS AN ALTERNATE TO THE BAR SERIES AS DETAILED. CHANGES MUST BE SUBMITTED TO THE ENGINEER FOR APPROVAL PRIOR TO FABRICATION. PAYMENT WILL BE BASED ON BAR WEIGHTS AS DETAILED IN THE PLANS.

8

8

NO.	DATE	REVISION	BY

STATE OF WISCONSIN
DEPARTMENT OF TRANSPORTATION
STRUCTURES DESIGN SECTION

STRUCTURE B-37-344

CONST. SPEC.	2003	DRAWN BY	KAS	PLANS CK'D.	DJW

SUPERSTRUCTURE REINFORCEMENT

SHEET 42
322

STATE PROJECT NUMBER

1166-09-76

TOP OF DECK ELEVATIONS AT ℄ GIRDER

LOCATION	STATION	WEST EDGE OF DECK ELEV.	GIRDER NUMBER 1 ELEV.	℞ ELEV.	2 ELEV.	3 ELEV.	4 ELEV.	OPTIONAL CONSTR. JOINT ELEV.	5 ELEV.	6 ELEV.	7 ELEV.	8 ELEV.	9 ELEV.	10 ELEV.	11 ELEV.	EAST EDGE OF DECK ELEV.
℄ S. ABUT	589+55.19	1176.60	1176.68	1176.83	1176.87	1177.06	1177.25	1177.31	1177.27	1177.16	1177.06	1176.95	1176.85	1176.74	1176.63	1176.56
0.1 L POINT	589+66.45	1176.67	1176.74	1176.90	1176.93	1177.12	1177.31	1177.38	1177.34	1177.23	1177.12	1177.01	1176.90	1176.80	1176.69	1176.62
0.2 L POINT	589+77.71	1176.74	1176.81	1176.97	1177.00	1177.19	1177.38	1177.45	1177.40	1177.29	1177.18	1177.07	1176.96	1176.85	1176.75	1176.67
0.3 L POINT	589+88.97	1176.81	1176.88	1177.03	1177.07	1177.26	1177.45	1177.51	1177.47	1177.36	1177.25	1177.13	1177.02	1176.91	1176.80	1176.73
0.4 L POINT	590+00.23	1176.87	1176.95	1177.10	1177.14	1177.33	1177.52	1177.58	1177.53	1177.42	1177.31	1177.20	1177.08	1176.97	1176.86	1176.78
0.5 L POINT	590+11.49	1176.94	1177.01	1177.17	1177.20	1177.39	1177.58	1177.65	1177.60	1177.48	1177.37	1177.26	1177.14	1177.03	1176.91	1176.84
0.6 L POINT	590+22.74	1177.01	1177.08	1177.24	1177.27	1177.46	1177.65	1177.72	1177.66	1177.55	1177.43	1177.32	1177.20	1177.08	1176.97	1176.90
0.7 L POINT	590+34.00	1177.08	1177.15	1177.30	1177.34	1177.53	1177.72	1177.78	1177.73	1177.61	1177.50	1177.38	1177.26	1177.14	1177.02	1176.95
0.8 L POINT	590+45.26	1177.14	1177.22	1177.37	1177.41	1177.60	1177.79	1177.85	1177.80	1177.68	1177.56	1177.44	1177.32	1177.20	1177.08	1177.01
0.9 L POINT	590+56.52	1177.21	1177.28	1177.44	1177.47	1177.66	1177.85	1177.92	1177.86	1177.74	1177.62	1177.50	1177.38	1177.26	1177.14	1177.06
℄ PIER 1	590+67.78	1177.28	1177.35	1177.51	1177.54	1177.73	1177.92	1177.99	1177.93	1177.81	1177.68	1177.56	1177.44	1177.31	1177.19	1177.12
0.1 L POINT	590+79.11	1177.35	1177.42	1177.57	1177.61	1177.80	1177.99	1178.05	1177.99	1177.87	1177.75	1177.62	1177.50	1177.37	1177.25	1177.17
0.2 L POINT	590+90.43	1177.41	1177.49	1177.64	1177.68	1177.87	1178.06	1178.12	1178.06	1177.93	1177.81	1177.68	1177.56	1177.43	1177.30	1177.23
0.3 L POINT	591+01.76	1177.48	1177.56	1177.71	1177.75	1177.94	1178.13	1178.19	1178.13	1178.00	1177.87	1177.74	1177.62	1177.49	1177.36	1177.29
0.4 L POINT	591+13.08	1177.55	1177.62	1177.78	1177.81	1178.00	1178.19	1178.26	1178.19	1178.06	1177.93	1177.80	1177.67	1177.55	1177.42	1177.34
0.5 L POINT	591+24.41	1177.62	1177.69	1177.85	1177.88	1178.07	1178.26	1178.33	1178.26	1178.13	1178.00	1177.87	1177.73	1177.60	1177.47	1177.40
0.6 L POINT	591+35.73	1177.69	1177.76	1177.91	1177.95	1178.14	1178.33	1178.39	1178.33	1178.19	1178.06	1177.93	1177.79	1177.66	1177.53	1177.45
0.7 L POINT	591+47.06	1177.75	1177.83	1177.98	1178.02	1178.21	1178.40	1178.46	1178.39	1178.26	1178.12	1177.99	1177.85	1177.72	1177.58	1177.51
0.8 L POINT	591+58.38	1177.82	1177.90	1178.05	1178.09	1178.28	1178.47	1178.53	1178.46	1178.32	1178.19	1178.05	1177.91	1177.78	1177.64	1177.57
0.9 L POINT	591+69.71	1177.89	1177.96	1178.12	1178.15	1178.34	1178.53	1178.60	1178.52	1178.39	1178.25	1178.11	1177.97	1177.83	1177.70	1177.62
℄ PIER 2	591+81.03	1177.96	1178.03	1178.19	1178.22	1178.41	1178.60	1178.67	1178.59	1178.45	1178.31	1178.17	1178.03	1177.89	1177.75	1177.68
0.1 L POINT	591+92.36	1178.03	1178.10	1178.25	1178.29	1178.48	1178.67	1178.73	1178.66	1178.52	1178.37	1178.23	1178.09	1177.95	1177.81	1177.74
0.2 L POINT	592+03.68	1178.09	1178.17	1178.32	1178.36	1178.55	1178.74	1178.80	1178.72	1178.58	1178.44	1178.29	1178.15	1178.01	1177.86	1177.79
0.3 L POINT	592+15.01	1178.16	1178.24	1178.39	1178.43	1178.62	1178.81	1178.87	1178.79	1178.64	1178.50	1178.36	1178.21	1178.07	1177.92	1177.85
0.4 L POINT	592+26.33	1178.23	1178.30	1178.46	1178.49	1178.68	1178.87	1178.94	1178.86	1178.71	1178.56	1178.42	1178.27	1178.12	1177.98	1177.90
0.5 L POINT	592+37.66	1178.30	1178.37	1178.53	1178.56	1178.75	1178.94	1179.01	1178.92	1178.77	1178.63	1178.48	1178.33	1178.18	1178.03	1177.96
0.6 L POINT	592+48.98	1178.37	1178.44	1178.59	1178.63	1178.82	1179.01	1179.07	1178.99	1178.84	1178.69	1178.54	1178.39	1178.24	1178.09	1178.02
0.7 L POINT	592+60.31	1178.43	1178.51	1178.66	1178.70	1178.89	1179.08	1179.14	1179.05	1178.90	1178.75	1178.60	1178.45	1178.30	1178.14	1178.07
0.8 L POINT	592+71.63	1178.50	1178.58	1178.73	1178.77	1178.96	1179.15	1179.21	1179.12	1178.97	1178.81	1178.66	1178.51	1178.35	1178.20	1178.13
0.9 L POINT	592+82.96	1178.57	1178.64	1178.80	1178.83	1179.02	1179.21	1179.28	1179.19	1179.03	1178.88	1178.72	1178.57	1178.41	1178.26	1178.18
℄ PIER 3	592+94.28	1178.64	1178.71	1178.87	1178.90	1179.09	1179.28	1179.35	1179.25	1179.10	1178.94	1178.78	1178.63	1178.47	1178.31	1178.24
0.1 L POINT	593+05.61	1178.71	1178.78	1178.93	1178.97	1179.16	1179.35	1179.41	1179.32	1179.16	1179.00	1178.84	1178.69	1178.53	1178.37	1178.30
0.2 L POINT	593+16.93	1178.77	1178.85	1179.00	1179.04	1179.23	1179.42	1179.48	1179.39	1179.23	1179.07	1178.91	1178.75	1178.59	1178.43	1178.35
0.3 L POINT	593+28.26	1178.84	1178.92	1179.07	1179.11	1179.30	1179.49	1179.55	1179.45	1179.29	1179.13	1178.97	1178.80	1178.64	1178.48	1178.41
0.4 L POINT	593+39.58	1178.91	1178.98	1179.14	1179.17	1179.36	1179.55	1179.62	1179.52	1179.35	1179.19	1179.03	1178.86	1178.70	1178.54	1178.46
0.5 L POINT	593+50.91	1178.98	1179.05	1179.21	1179.24	1179.43	1179.62	1179.69	1179.58	1179.42	1179.25	1179.09	1178.92	1178.76	1178.59	1178.52
0.6 L POINT	593+62.23	1179.05	1179.12	1179.27	1179.31	1179.50	1179.69	1179.75	1179.65	1179.48	1179.32	1179.15	1178.98	1178.82	1178.65	1178.58
0.7 L POINT	593+73.56	1179.11	1179.19	1179.34	1179.38	1179.57	1179.76	1179.82	1179.72	1179.55	1179.38	1179.21	1179.04	1178.87	1178.71	1178.63
0.8 L POINT	593+84.88	1179.18	1179.25	1179.41	1179.44	1179.63	1179.82	1179.89	1179.78	1179.61	1179.44	1179.27	1179.10	1178.93	1178.76	1178.69
0.9 L POINT	593+96.21	1179.25	1179.32	1179.48	1179.51	1179.70	1179.89	1179.96	1179.85	1179.68	1179.51	1179.33	1179.16	1178.99	1178.82	1178.74
℄ PIER 4	594+07.53	1179.32	1179.39	1179.55	1179.58	1179.77	1179.96	1180.03	1179.92	1179.74	1179.57	1179.39	1179.22	1179.05	1178.87	1178.80
0.1 L POINT	594+18.79	1179.39	1179.46	1179.61	1179.65	1179.84	1180.03	1180.09	1179.98	1179.81	1179.63	1179.46	1179.28	1179.11	1178.93	1178.86
0.2 L POINT	594+30.05	1179.45	1179.53	1179.68	1179.72	1179.91	1180.10	1180.16	1180.05	1179.87	1179.69	1179.52	1179.34	1179.16	1178.99	1178.91
0.3 L POINT	594+41.30	1179.52	1179.59	1179.75	1179.78	1179.97	1180.16	1180.23	1180.11	1179.93	1179.76	1179.58	1179.40	1179.22	1179.04	1178.97
0.4 L POINT	594+52.56	1179.59	1179.66	1179.82	1179.85	1180.04	1180.23	1180.30	1180.18	1180.00	1179.82	1179.64	1179.46	1179.28	1179.10	1179.02
0.5 L POINT	594+63.82	1179.65	1179.73	1179.88	1179.92	1180.11	1180.30	1180.36	1180.24	1180.06	1179.88	1179.70	1179.52	1179.33	1179.15	1179.08
0.6 L POINT	594+75.08	1179.72	1179.79	1179.95	1179.98	1180.17	1180.36	1180.43	1180.31	1180.12	1179.94	1179.76	1179.57	1179.39	1179.20	1179.13
0.7 L POINT	594+86.34	1179.78	1179.85	1180.01	1180.04	1180.23	1180.42	1180.49	1180.37	1180.18	1180.00	1179.81	1179.63	1179.44	1179.26	1179.18
0.8 L POINT	594+97.59	1179.84	1179.91	1180.07	1180.10	1180.29	1180.48	1180.55	1180.43	1180.24	1180.05	1179.86	1179.68	1179.49	1179.30	1179.23
0.9 L POINT	595+08.85	1179.90	1179.97	1180.13	1180.16	1180.35	1180.54	1180.61	1180.48	1180.29	1180.10	1179.92	1179.73	1179.54	1179.35	1179.28
℄ N. ABUT	595+20.11	1179.95	1180.03	1180.18	1180.22	1180.41	1180.60	1180.66	1180.54	1180.35	1180.15	1179.96	1179.77	1179.58	1179.39	1179.32

ELEVATIONS SHOWN ARE FINISHED GRADE ELEVATIONS.

8

8

NO.	DATE	REVISION	BY

STATE OF WISCONSIN
DEPARTMENT OF TRANSPORTATION
STRUCTURES DESIGN SECTION

STRUCTURE B-37-344

CONST. SPEC. 2003 | DRAWN BY HSB | PLANS CK'D. DJW

SUPERSTRCTURE ELEVATIONS

SHEET 43
323

STATE PROJECT NUMBER

1166-09-76

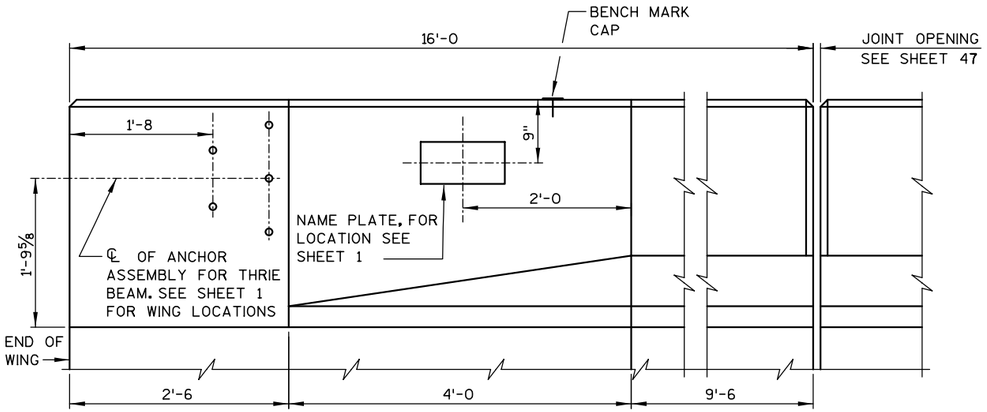

INSIDE ELEVATION

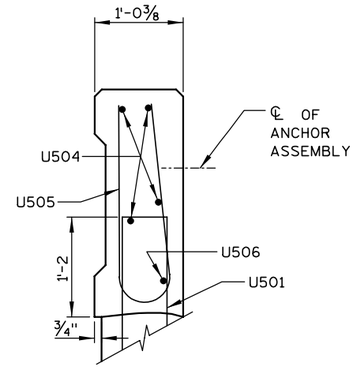

SECTION A-A

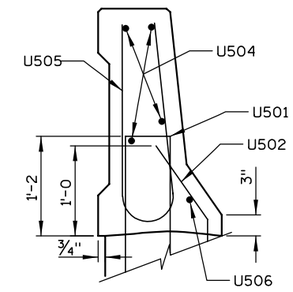

SECTION B-B

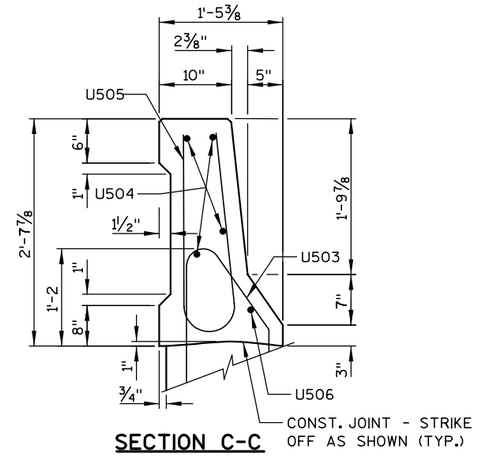

SECTION C-C

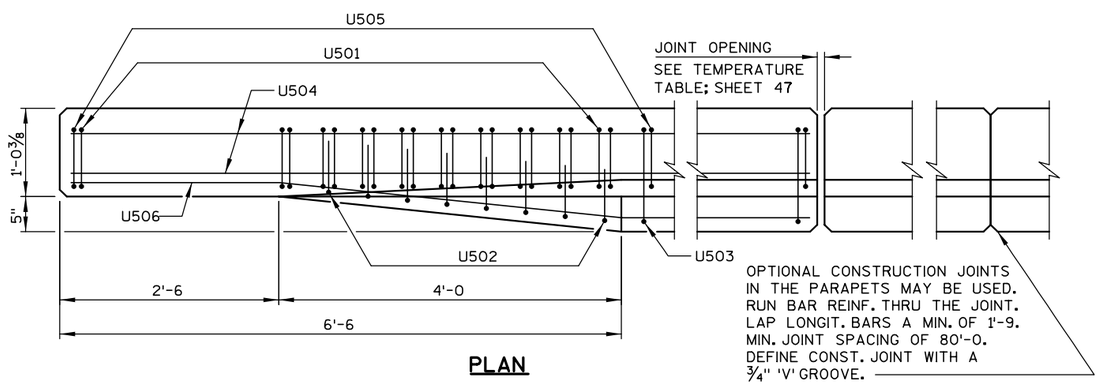

PLAN

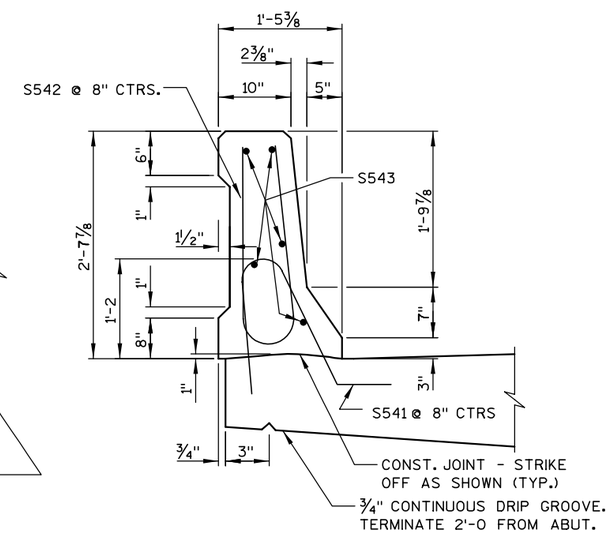

SECTION D-D THRU PARAPET ON BRIDGE

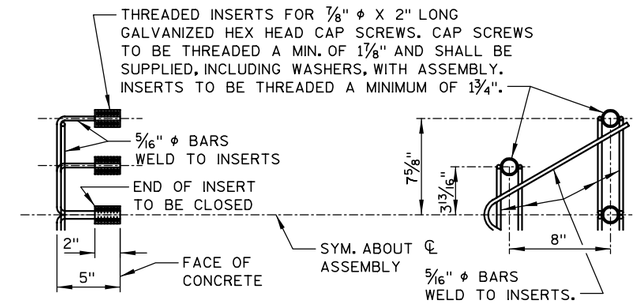

DETAIL OF ANCHOR ASEMBLY

NOTE: HEX HEAD CAP SCREWS & WASHERS TO BE GALVANIZED IN ACCORDANCE WITH AASHTO M232 CLASS C.

SEE SHEET 1 FOR LOCATION

ASSEMBLY SHALL BE BID ITEM "ANCHOR ASSEMBLIES FOR STEEL PLATE BEAM GUARD", EACH.

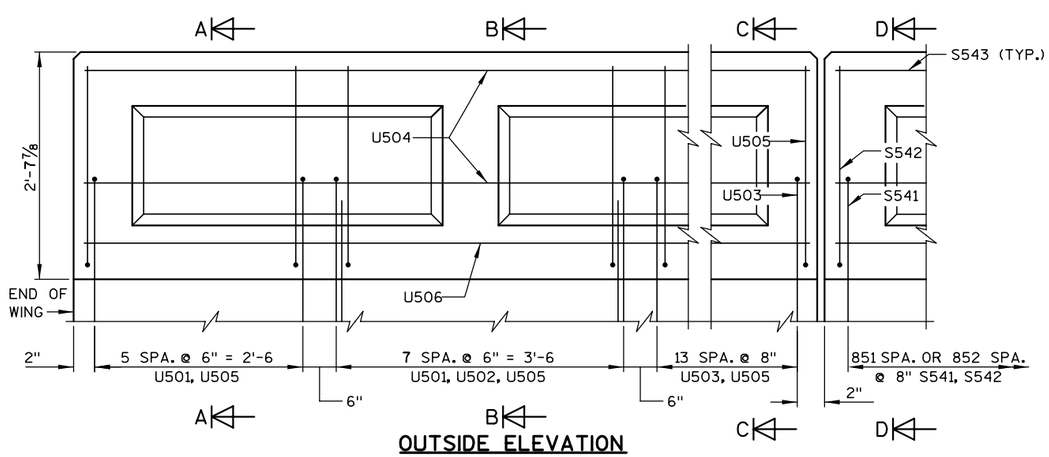

OUTSIDE ELEVATION

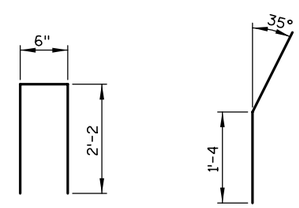

U501 U502

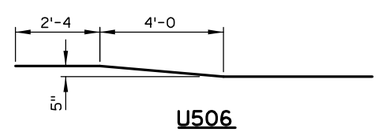

U506

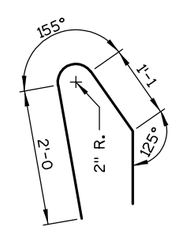

U503

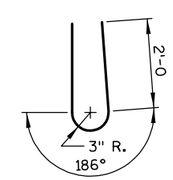

U505

WING 1, 2, 3, 4
PARAPET BILL OF BARS COATED 1500 LBS

MARK	NO. REQ'D	LENGTH	BENT	COAT	LOCATION
U501	56	4'-7	X	X	PARAPET - VERT.
U502	32	2'-4	X	X	PARAPET - VERT.
U503	56	4'-7	X	X	PARAPET - VERT.
U504	16	15'-6		X	PARAPET - HORIZ.
U505	112	4'-10	X	X	PARAPET - VERT.
U506	4	15'-6	X	X	PARAPET - HORIZ. - BOT.

NOTE: THE FIRST DIGIT OF THE BAR MARK SIGNIFIES THE BAR SIZE. BENDING DIMENSIONS ARE OUT TO OUT OF BARS.

NO.	DATE	REVISION	BY

STATE OF WISCONSIN
DEPARTMENT OF TRANSPORTATION
STRUCTURES DESIGN SECTION

STRUCTURE B-37-344

CONST. SPEC. 2003 | DRAWN BY ADW | PLANS CK'D. DJW

SLOPED FACE PARAPET, TYPE LF MOD.

SHEET 44
324

8

8

STATE PROJECT NUMBER

1166-09-76

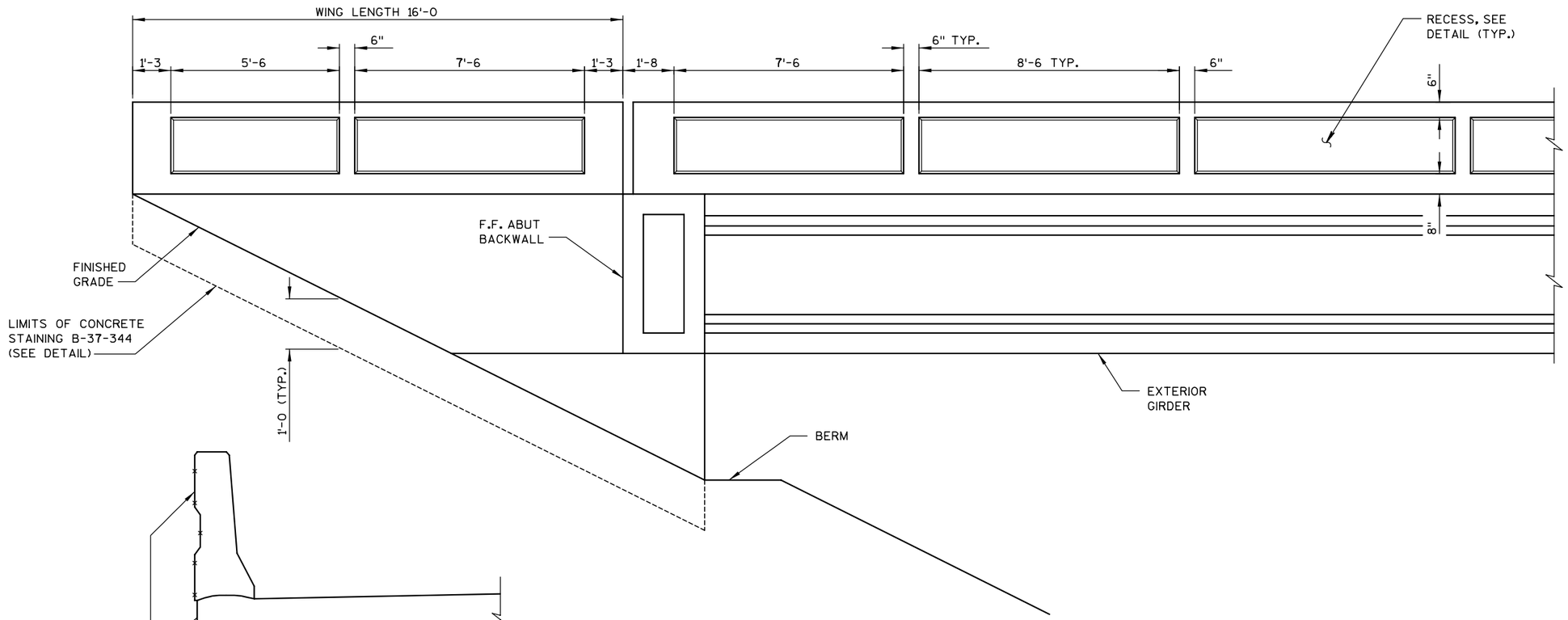

PARAPET ELEVATION - OUTSIDE FACE

(SOUTH ABUTMENT SHOWN, NORTH ABUTMENT SIMILAR)

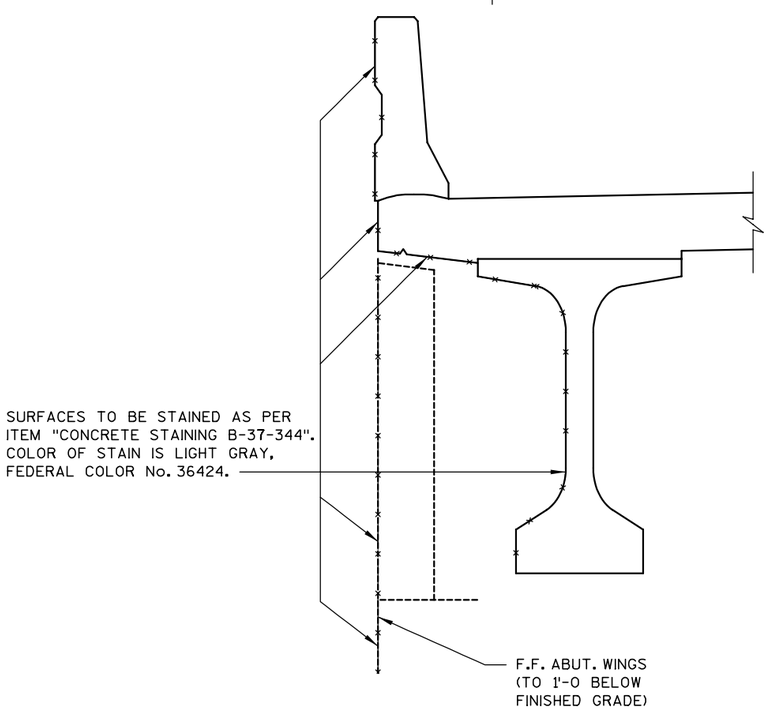

STAINING DETAIL

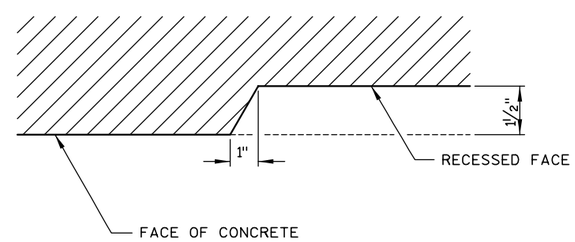

RECESS DETAIL

8

8

NO.	DATE	REVISION	BY

STATE OF WISCONSIN
DEPARTMENT OF TRANSPORTATION
STRUCTURES DESIGN SECTION

STRUCTURE B-37-344

CONST. SPEC.	2003	DRAWN BY	CDH	PLANS CK'D.	DJW

PARAPET DETAILS

SHEET 45
325

STATE PROJECT NUMBER
1166-09-76

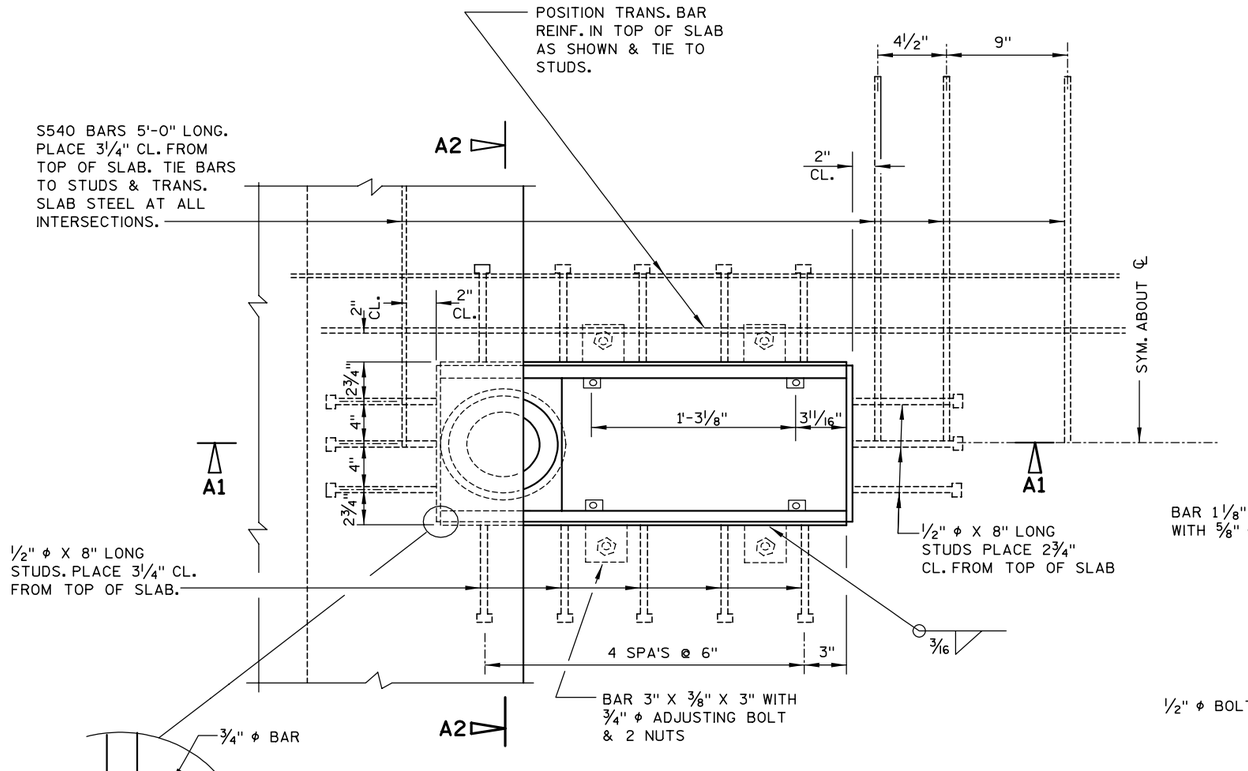

PLAN

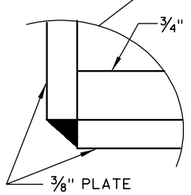

TRANS. & LONGIT. SLAB BAR REINFORCEMENT TO BE CUT A MAX. OF 1" CL. FROM DRAIN FRAME. DISPLACE BARS WHERE POSSIBLE.

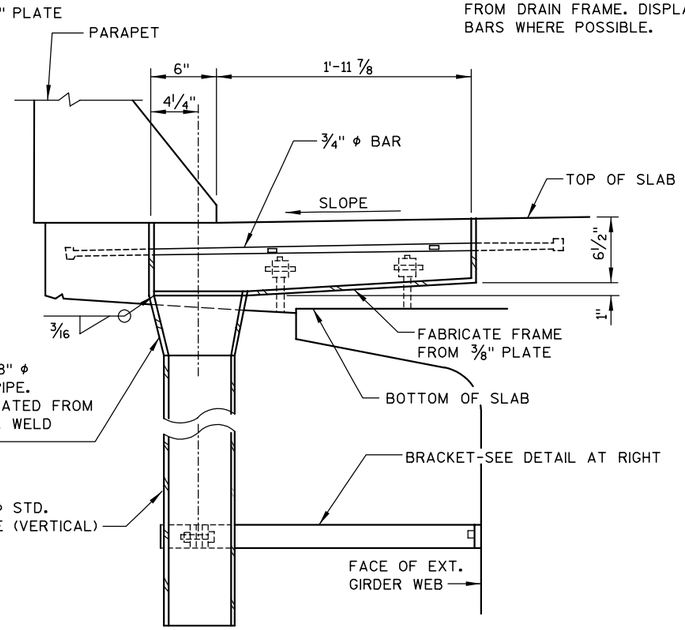

SECTION A1

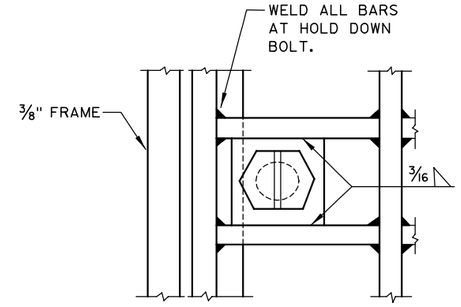

PART PLAN

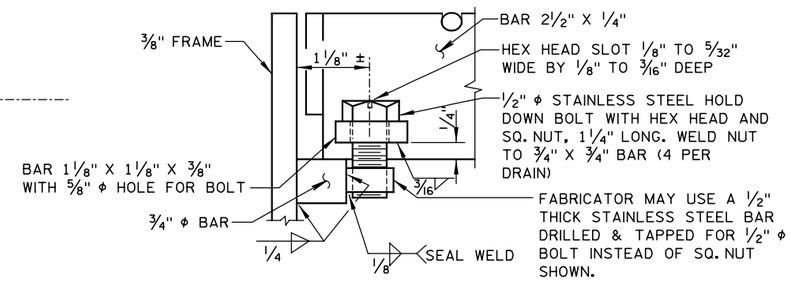

SECTION AT HOLD DOWN BOLT

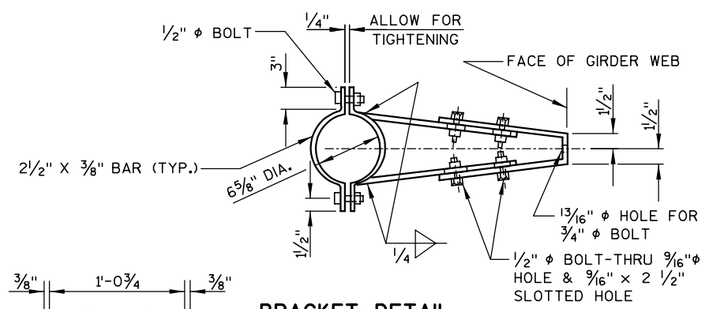

BRACKET DETAIL

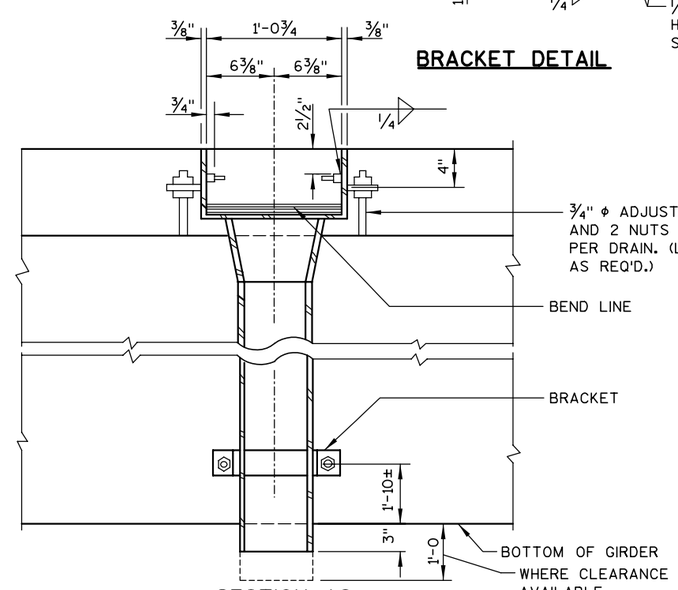

SECTION A2

GENERAL NOTES

ALL DRAIN MATERIAL INCLUDING GRATE, EXCLUDING PIPE & GRATE HOLD DOWN BOLTS, SHALL BE ASTM A36 STEEL.

ALL STEEL SHALL BE GALVANIZED. WELDS SHALL BE MADE WITH LOW HYDROGEN ELECTRODES.

SEAL WELD INSIDE OF DRAIN.

THE CONTRACTOR MAY PROPOSE AN ALTERNATE TYPE OF BRACKET. THE PROPOSED ALTERNATE DETAILS SHALL BE SUBMITTED AND SUBJECT TO THE APPROVAL OF THE ENGINEER.

FLANGED 6" ϕ FIBERGLASS PIPE CONFORMING TO ASTM D2996, GRADE 1, CLASS A, MAY BE USED AS AN ALTERNATE TO GALVANIZED ST'D. PIPE CONFORMING TO ASTM A53.

PRIOR TO GALVANIZING A NO. 6 BLAST CLEANING IS REQ'D.

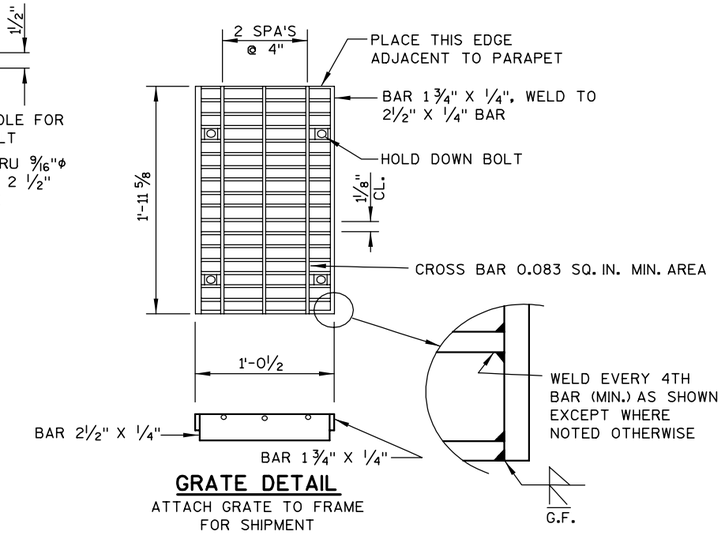

GRATE DETAIL

ATTACH GRATE TO FRAME FOR SHIPMENT

8

8

NO.	DATE	REVISION	BY

STATE OF WISCONSIN
DEPARTMENT OF TRANSPORTATION
STRUCTURES DESIGN SECTION

STRUCTURE B-37-344

CONST. SPEC.	2003	DRAWN BY	HSB	PLANS CK'D.	DJW

FLOOR DRAIN TYPE H

SHEET 46
326

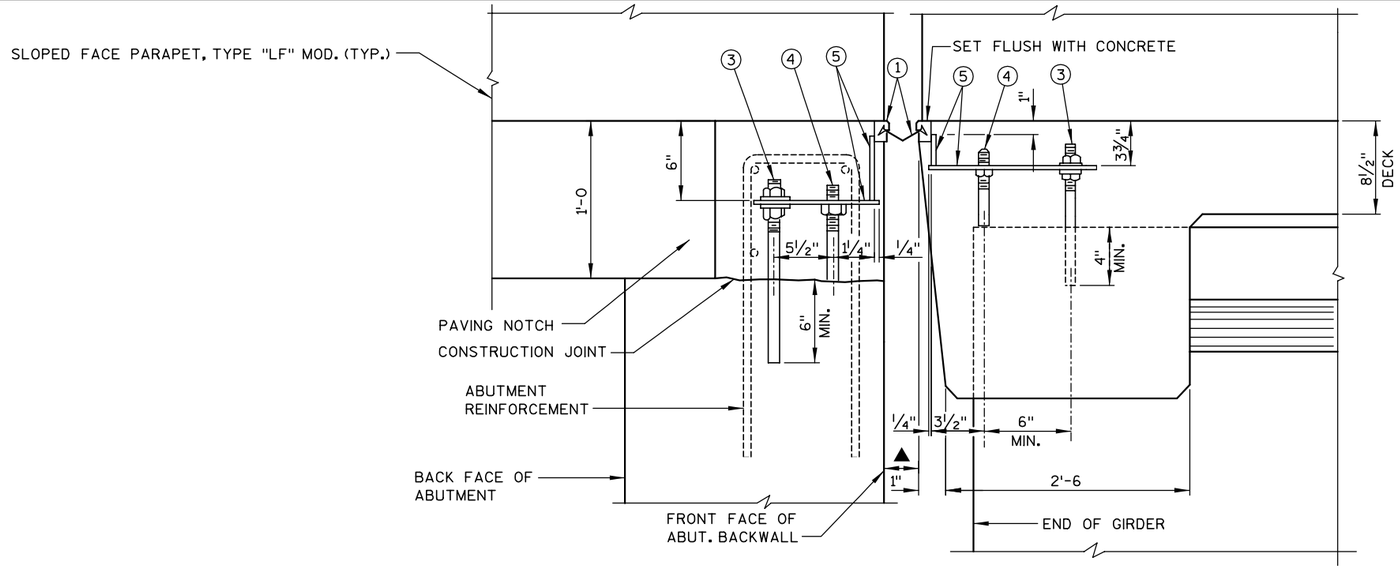

SECTION THRU JOINT AT ABUTMENT

NORMAL TO ℄ SUBSTRUCTURE

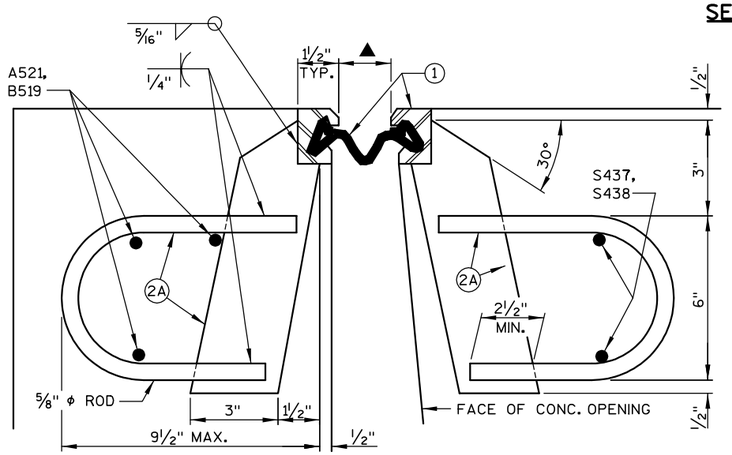

SECTION THRU JOINT

ROADWAY TRAFFIC AREA BETWEEN EXTERIOR GIRDERS

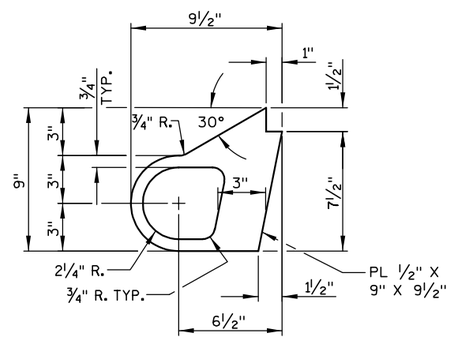

ALTERNATE STRIP SEAL ANCHOR

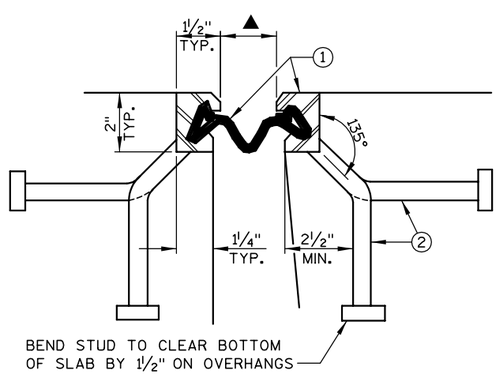

SECTION THRU JOINT

EXTERIOR GIRDER TO EDGE OF SLAB & AT PARAPETS

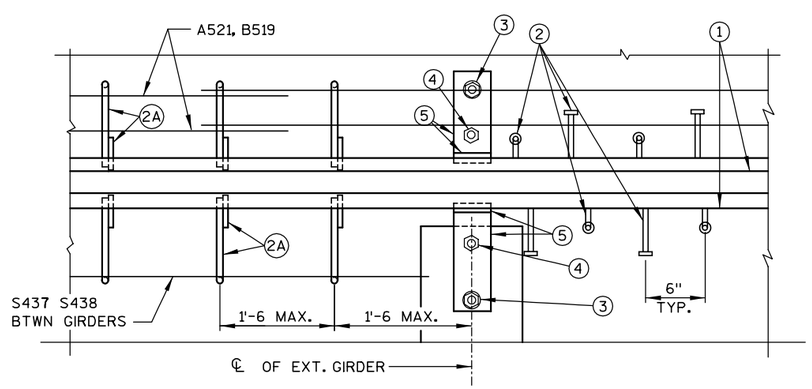

PART PLAN

GENERAL NOTES

ONE FIELD SPLICE PERMITTED IN STEEL EXTRUSIONS. IF USED, DETAILS SHALL BE SUBMITTED FOR APROVAL.

NO SPLICING PERMITTED IN NEOPRENE STRIP SEAL.

AFTER FABRICATION, BUT BEFORE SHIPMENT, STRAIGHTEN STEEL EXTRUSIONS SUCH THAT THEY SHALL BE FREE FROM WARP, TWIST & SWEEP.

FABRICATOR SHALL PROVIDE MEANS OF KEEPING GALVANIZED EXTRUSIONS CLEAN & SMOOTH DURING SHIPMENT AND PRIOR TO APPLYING LUBRICANT ADHESIVE FOR NEOPRENE GLAND INSTALLATION.

SANDBLAST PLATES & EXTRUSIONS AFTER FABRICATION IN ACCORDANCE WITH SSPC SP. #6 "COMMERCIAL BLAST CLEANING". AFTER BLAST CLEANING, THE PLATES & EXTRUSIONS SHALL BE HOT DIPPED GALVANIZED.

ANCHOR SYSTEM NO. 8 & NO. 9 SHALL CONFORM TO ASTM A307 & SHALL BE GALVANIZED IN ACCORDANCE WITH ASTM A153 CLASS C & D.

STRIP SEAL EXPANSION JOINT ASSEMBLY, INCLUDING ANCHOR STUDS & HARDWARE WILL BE PAID FOR AT THE LUMP SUM PRICE BID FOR "EXPANSION DEVICE".

⊗ BLOCK OUT CONCRETE 2" EACH SIDE FOR JOINT OPENING.

STRIP SEAL MANUFACTURER SHALL MARK "TOP SIDE" ON THE TOP SIDE OF THE NEOPRENE GLAND PRIOR TO SHIPPING.

SEE SHEET 48 FOR ADDITIONAL DETAILS.

LEGEND

1. NEOPRENE STRIP SEAL (4-INCH) & STEEL EXTRUSIONS.
2. STUDS ⅝" ϕ X 6⅜" LONG AT 6" ALTERNATE CENTERS. WELD TO EXTRUSIONS & BEND AS SHOWN AFTER WELDING.

2A. ½" THICK ANCHOR PLATE WITH ⅝" ϕ ROD (OR ALTERNATE STRIP SEAL ANCHOR). WELD ROD TO ANCHOR PLATE, WELD ANCHOR PL. TO NO. 1 AT 1'-6" CTRS. BETWEEN GIRDERS.

3. ¾" ϕ THREADED ROD WITH 2 NUTS AND WASHERS. FIELD SET ON ℄ OF GIRDER. ON ABUTMENT SIDE GROUT THREADED ROD INTO FIELD DRILLED HOLES IN ABUTMENT BACKWALL AS SHOWN.
4. ¾" ϕ THREADED ROD WITH NUT. TACK WELD NUT TO NO. 5.
5. FABRICATE SUPPORT FROM 3" X ½" BAR AS SHOWN OR EQUIVALENT. ONE PER GIRDER PER SIDE. SHOP OR FIELD WELD TO NO. 1. IF FIELD WELDED, COVER WELDED AREAS WITH EPOXY-COATING MATERIAL. PROVIDE 1½" ϕ HOLE FOR NO. 3 & 1" ϕ HOLE FOR NO. 4.

TEMPERATURE TABLE

TEMPERATURE	JOINT OPENING ▲
85° F	1½"
45° F	2½"
-5° F	3⅞"

NO.	DATE	REVISION	BY

STATE OF WISCONSIN
DEPARTMENT OF TRANSPORTATION
STRUCTURES DESIGN SECTION

STRUCTURE B-37-344

CONST. SPEC.	2003	DRAWN BY	HSB	PLANS CK'D.	DJW

EXPANSION DEVICE 1

STATE PROJECT NUMBER

1166-09-76

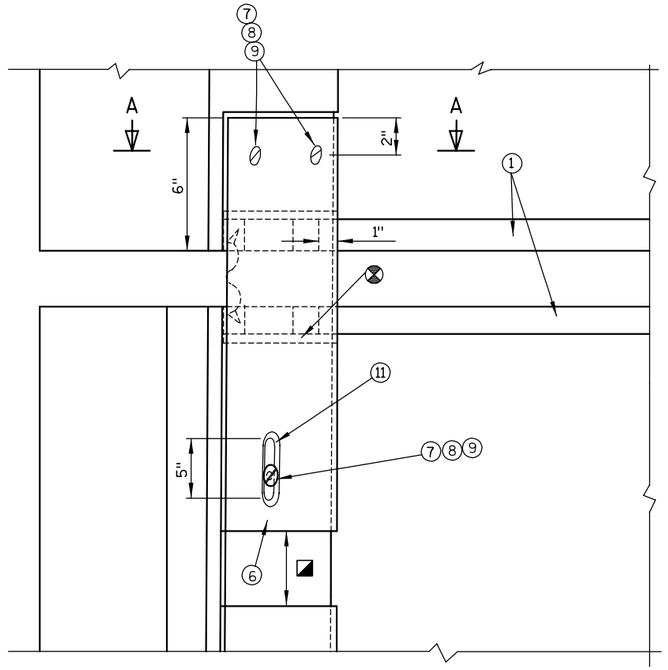

PLAN

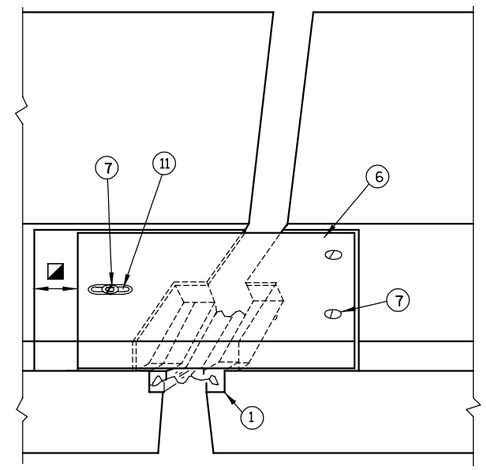

VIEW OF PARAPET PLATES FROM ROADWAY

LEGEND

6. GALVANIZED PLATE 3/8" X 10 1/2" X 2'-0 LONG WITH HOLES FOR NO. 7. BEND AS SHOWN.
7. 3/4" ϕ X 1 1/2" STAINLESS STEEL SOCKET FLAT HEAD SCREWS WITH ANTI-SEIZE LUBRICANT. RECESS 1/16" BELOW PLATE SURFACE.
8. 3/4" ϕ X 4" GALVANIZED HEX HEAD BOLT. BEND 45°.
9. 3/4" ϕ X 2 1/4" GALVANIZED THREADED COUPLING.
11. 1" X 5" SLOTTED CSK. HOLE FOR NO. 7. SLOT PARALLEL TO DIRECTION OF MOVEMENT.

⊗ BLOCK OUT CONCRETE 2" EACH SIDE FOR JOINT OPENING.

◪ JOINT OPENING DIMENSION PLUS 1/2".

SEE SHEET 47 FOR ADDITIONAL NOTES.

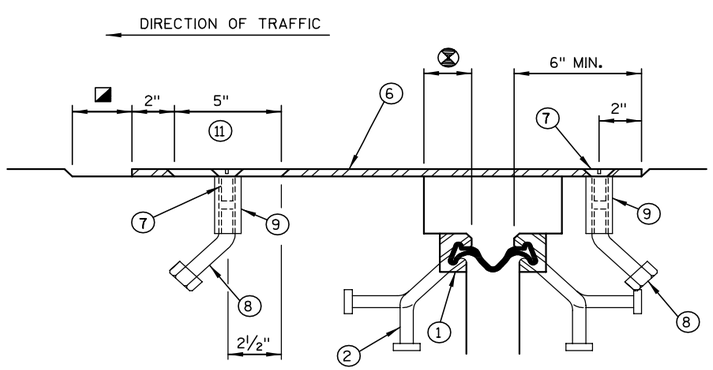

SECTION B-B

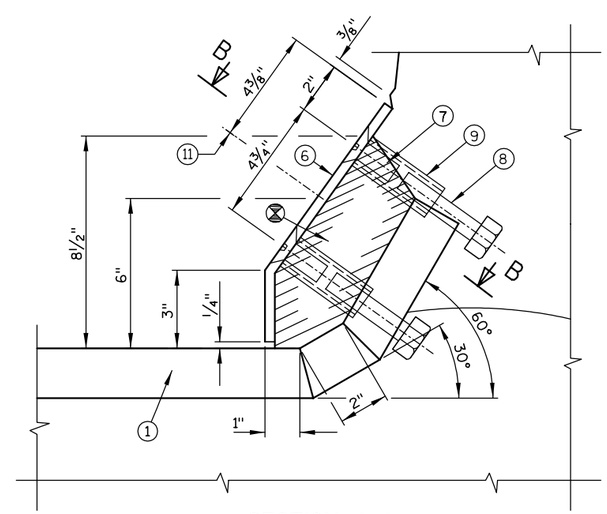

SECTION A-A

NO.	DATE	REVISION	BY

STATE OF WISCONSIN
DEPARTMENT OF TRANSPORTATION
STRUCTURES DESIGN SECTION

STRUCTURE B-37-344

CONST. SPEC.	2003	DRAWN BY	HSB	PLANS CK'D.	DJW

EXPANSION DEVICE 2

SHEET 4R
328

8

8

STATE PROJECT NUMBER

1166-09-76

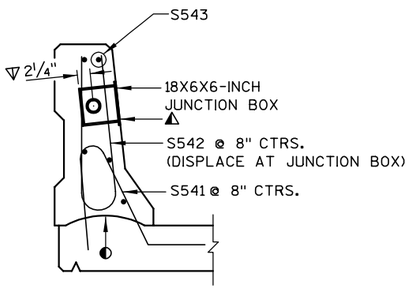

SECTION THRU PARAPET

SHOWING 18X6X6-INCH JUNCTION BOX

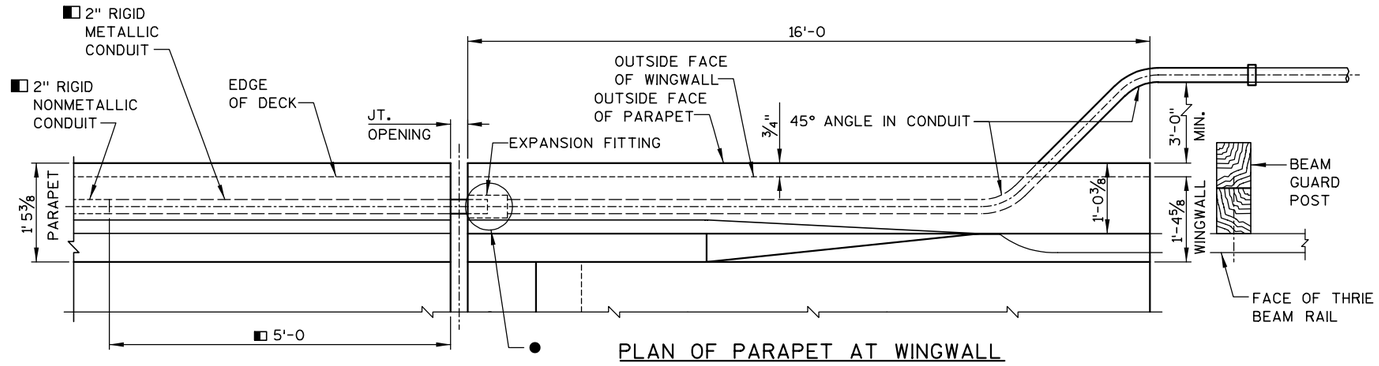

PLAN OF PARAPET AT WINGWALL

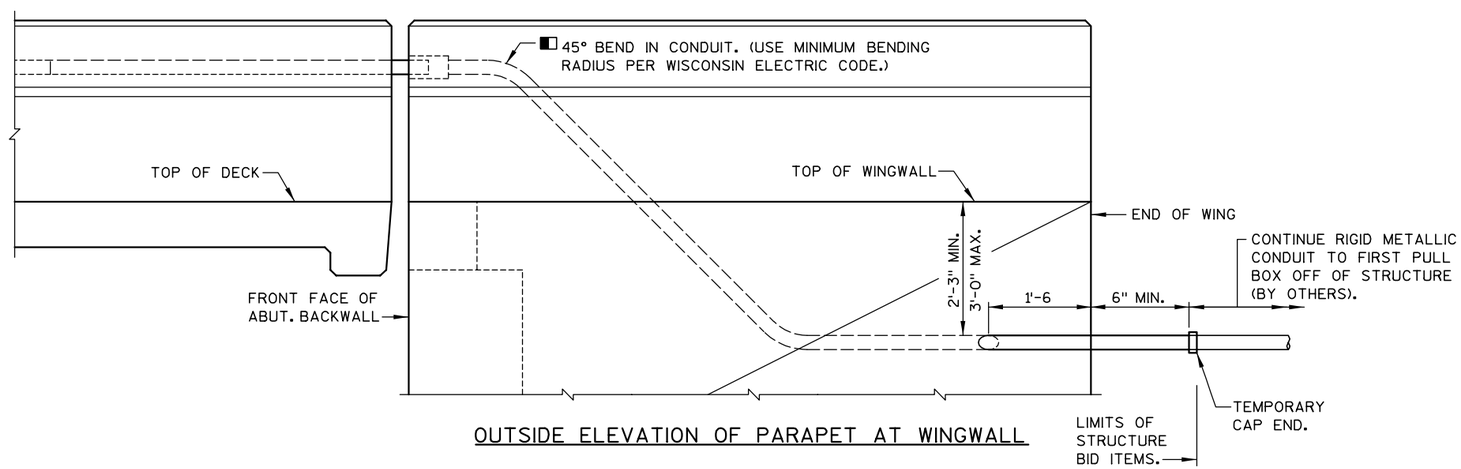

OUTSIDE ELEVATION OF PARAPET AT WINGWALL

NOTES

BID ITEMS SHALL BE:
"JUNCTION BOXES 18X6X6-INCH", EACH.
"CONDUIT RIGID NONMETALLIC SCHEDULE 40 2-INCH"
"CONDUIT RIGID METALLIC 2-INCH".

EXPANSION FITTINGS, ANGLES AND ADAPTER FITTINGS TO BE INCIDENTAL TO "CONDUIT RIGID METALLIC 2-INCH".

WHEN CONNECTING NONMETALLIC CONDUIT TO METALLIC CONDUIT, ONLY ADAPTER FITTINGS U.L. LISTED FOR ELECTRICAL USE SHALL BE USED.

APPROVED MANUFACTURERS - JUNCTION BOXES:
SEE APPROVED MATERIAL LIST.

APPROVED MANUFACTURER OR EQUIVALENT - EXPANSION FITTING:
O-Z/GEDNEY TYPE AX-200 AND BONDING JUMPER

LEGEND

◐ CONSTR. JT. STRIKE OFF AS SHOWN

◧ USE 2"φ RIGID NONMETALLIC CONDUIT EXCEPT AT EXPANSION FITTING. AT EXPANSION FITTING USE RIGID METALLIC CONDUIT 5'-0" INTO PARAPET ON DECK SIDE AND THRU PARAPET AND WINGWALL TO A MINIMUM OF 6" BEYOND END OF WINGWALL. (FOR GROUNDING PURPOSES.)

◭ CUT OUT ± 1" OF GASKET AT BOTTOM OF JUNCTION BOX COVER TO ALLOW FOR DRAINAGE.

▽ LOCATION OF CONDUIT IS MEASURED FROM OUTSIDE EDGE OF JUNCTION BOX.

● POSITION MOVABLE END OF CONDUIT INSIDE EXPANSION FITTING, SUCH THAT IT WILL HAVE THE SAME ALLOWANCE FOR MOVEMENT (EXPANSION/CONTRACTION) AS THE EXPANSION DEVICE SET IN PLACE IN THE DECK BELOW IT. TAKE CARE TO INSTALL EXPANSION FITTING AND CONDUIT EXACTLY PARALLEL TO BRIDGE MOVEMENT.

8

8

NO.	DATE	REVISION	BY

STATE OF WISCONSIN
DEPARTMENT OF TRANSPORTATION
STRUCTURES DESIGN SECTION

STRUCTURE B-37-344

CONST. SPEC.	2003	DRAWN BY	HSB	PLANS CK'D.	DJW

CONDUIT DETAILS

SHEET 49
329

STATE PROJECT NUMBER

1166-09-74

* PROVIDE FOR GUARD RAIL ATTACHMENT

INDICATES WING NUMBER

NOTE: SURFACE DRAIN ANCHORS REQUIRED ON WINGS.

FLOOR DRAINS SEE SHEET 25

"DELINEATOR" AND "DELINEATOR BRACKETS" MOUNTED ON TOP OF THE PARAPET, SEE "SUPERSTRUCTURE PLAN"

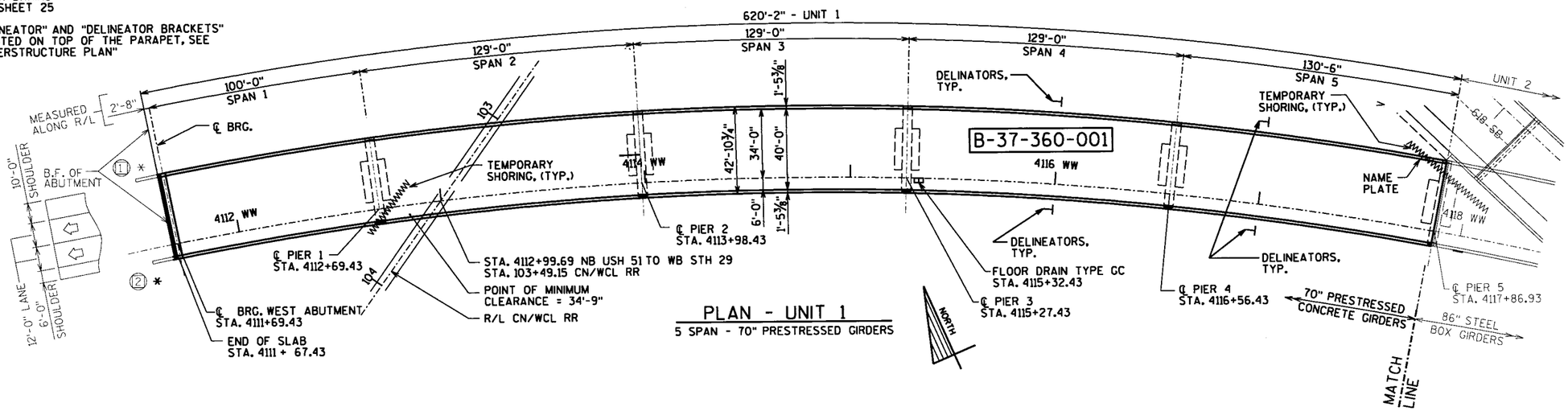

PLAN - UNIT 1

5 SPAN - 70" PRESTRESSED GIRDERS

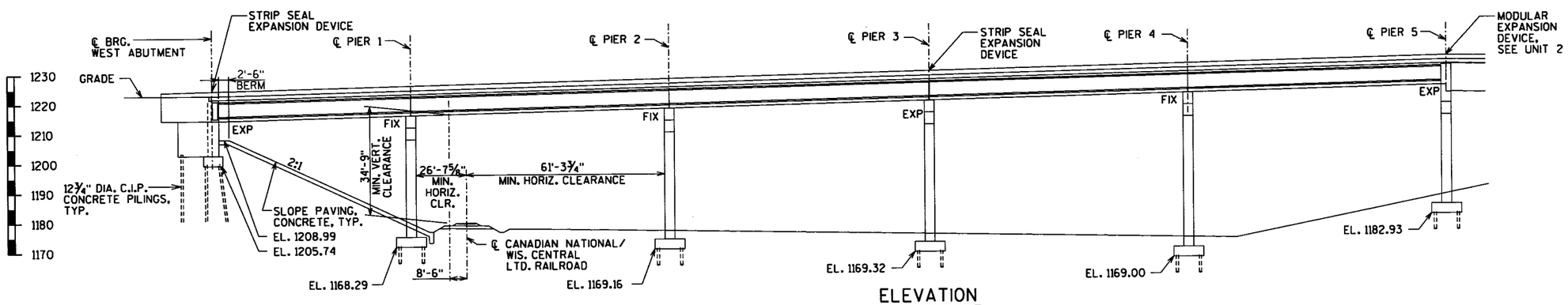

ELEVATION

LIST OF DRAWINGS

WISCONSIN ALBERT M. LINDNER E-18992 BROOKFIELD, WIS. PROFESSIONAL ENGINEER

July 27, 2006

DESIGN DATA

LIVE LOAD:

DESIGN RATING: HS-25
INVENTORY RATING: HS-27
OPERATIONAL RATING: HS-44
MAXIMUM STANDARD PERMIT VEHICLE LOAD = 250 KIPS.

STRUCTURE IS DESIGNED FOR A FUTURE WEARING SURFACE OF 20 POUNDS PER SQUARE FOOT.

ULTIMATE DESIGN STRESSES:

CONCRETE MASONRY
SLAB — f'c = 4,000 P.S.I.
ALL OTHER — f'c = 3,500 P.S.I.
HIGH STRENGTH
BAR STEEL REINFORCEMENT, GRADE 60 — fy = 60,000 P.S.I.
70" PRESTRESSED GIRDERS, CONCRETE MASONRY — f'c = 7,000 P.S.I.
STRANDS - 0.6" ϕ WITH ULTIMATE TENSILE STRENGTH OF 270,000 P.S.I.

FOUNDATION DATA

ABUTMENTS TO BE SUPPORTED ON 12¾" DIA. CAST IN PLACE CONCRETE PILING DRIVEN TO A MINIMUM BEARING VALUE OF 70 TONS PER PILE.
ESTIMATED 95 FEET LONG FOR THE WEST ABUTMENT.

PIERS TO BE SUPPORTED ON 12¾" DIA. CAST IN PLACE CONCRETE PILLING DRIVEN TO A MINIMUM BEARING VALUE OF 70 TONS PER PILE.
ESTIMATED 65 FEET LONG.

TRAFFIC VOLUME

WB STH 29	USH 51
A.D.T. (2010) = 7200	A.D.T. (2010) = 56,100
A.D.T. (2030) = 10,800	A.D.T. (2030) = 62,200
R.D.S.= 60 M.P.H.	R.D.S.= 70 M.P.H.

SHERMAN STREET	NB USH 51 EXIT TO SHERMAN STREET
A.D.T. (2010) = 8000	A.D.T. (2010) = 5300
A.D.T. (2030) = 10,700	A.D.T. (2030) = 7900
R.D.S.= 30 M.P.H.	R.D.S.= 55 M.P.H.

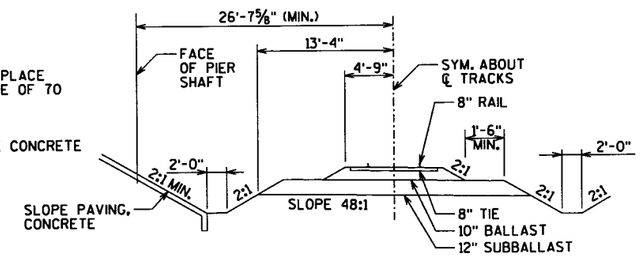

TYPICAL SECTION THRU RAILROAD

BUREAU OF STRUCTURES CONTACT = FINN HUBBARD (608) 266-8489
CONSULTANT CONTACT = ALBERT M. LINDNER (414) 259-1500

NO.	DATE	REVISION	BY

PLANS PREPARED BY: GRAEF ANHALT SCHLOERMER and Associates Inc. — ENGINEERS & SCIENTISTS, One Honey Creek Corporate Center, 125 South 84th Street, Suite 401, Milwaukee, WI 53214-1470

WISDOT BUREAU OF STRUCTURES

STRUCTURE B-37-360-001

NB USH 51 TO WB STH 29

COUNTY MARATHON	CITY WAUSAU	
DESIGN SPEC. AASHTO 2002	LOAD HS-25	CONST. SPEC. 2003
DESIGNED BY JRS / DESIGN CK'D. SDH	DRAWN BY RBH	PLANS CK'D. WAH/JRS

APPROVED William C. Dreher SDR — CHIEF STRUCTURAL DESIGN ENGINEER — DATE 9-26-06

GENERAL PLAN

SHEET 1 OF 31

℄ 330

FILE = SCALE =

8

8

STATE PROJECT NUMBER
1166-09-74

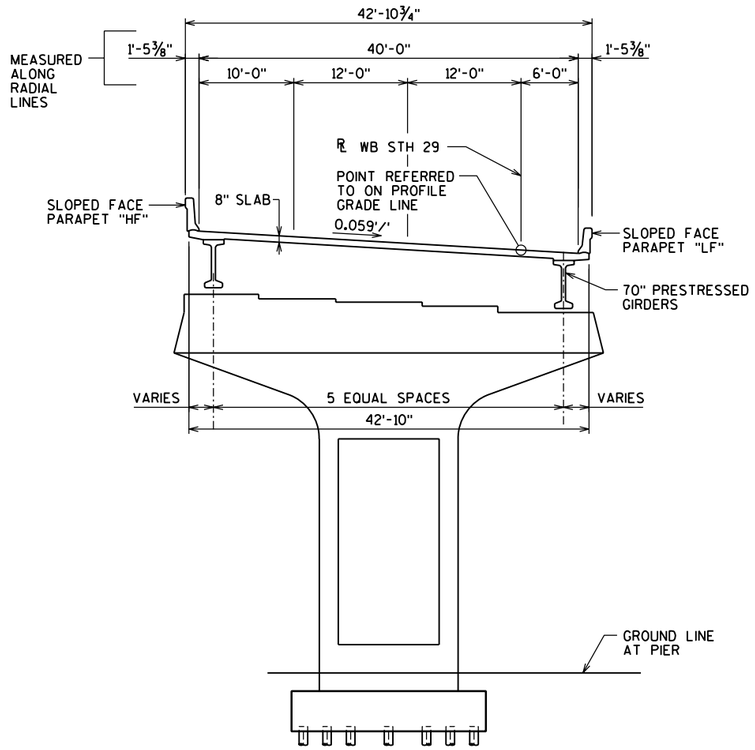

CROSS SECTION THRU ROADWAY - UNIT 1

(LOOKING EAST)

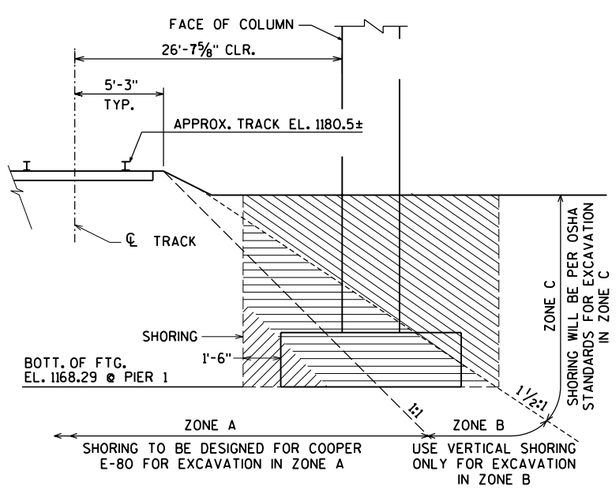

LIMITS BEFORE SHORING REQUIRED

ZONE A SHORING

ZONE B SHORING

ZONE C SHORING

GENERAL NOTES

DRAWINGS SHALL NOT BE SCALED.

BAR STEEL REINFORCEMENT SHALL BE EMBEDDED 2" CLEAR UNLESS OTHERWISE SHOWN OR NOTED.

FILLER SHALL CONFORM TO THE REQUIREMENTS OF AASHTO DESIGNATION M153, TYPE I, II, OR III, OR M213.

NON-LAMINATED ELASTOMERIC BEARING PADS NEED NOT BE INDIVIDUALLY MOLDED PROVIDED THE CUT EDGES ARE SMOOTH AND TRUE.

THE SLOPE OF THE FILL IN FRONT OF THE ABUTMENTS SHALL BE COVERED WITH SLOPE PAVING, CONCRETE, TO THE LIMITS SHOWN ON SHEET 1, ON THE ABUTMENT SHEETS, OR AS DIRECTED BY THE ENGINEER.

AT THE BACKFACE OF ABUTMENT ALL VOLUME WHICH CANNOT BE IN PLACE BEFORE ABUTMENT CONSTRUCTION AND NOT OCCUPIED BY THE NEW STRUCTURE SHALL BE BACKFILLED WITH STRUCTURE BACKFILL.

THE EXISTING GROUND LINE SHALL BE USED AS THE UPPER LIMITS OF EXCAVATION AT THE PIERS.

THE FIRST DIGIT OF A THREE DIGIT AND THE FIRST TWO DIGITS OF A FOUR DIGIT BAR MARK SIGNIFIES THE BAR SIZE.

THE MINIMUM CONCRETE HAUNCH SHALL BE ACCORDING TO "70" PRESTRESSED GIRDER DETAILS" SHEET FOR DESIGN CALCULATIONS. THE HAUNCH CONCRETE QUANTITY IS BASED ON AN AVERAGE DEPTH OF 3½" WHICH IS THE MAXIMUM QUANTITY FOR WHICH THE CONTRACTOR WILL BE PAID.

THE JOINT BETWEEN THE FASCIA GIRDERS OVER THE PIERS SHALL BE FINISHED TO HAVE A SMOOTH APPEARANCE. COST INCIDENTAL TO BID ITEM "CONCRETE MASONRY BRIDGES".

BENCH MARKS

NO.	STATION	DESCRIPTION	ELEVATION
127	617+28, 67.2' RT.	BLUE SQ. NE. END OF USH 51 NB. STRUCTURE OVER SHERMAN ST.	1197.11

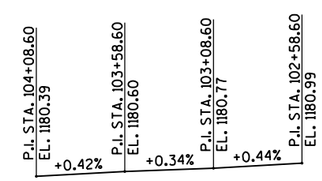

PROFILE GRADE LINE
CN/WCL RR

(FOR INFORMATION ONLY)

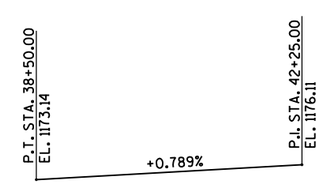

PROFILE GRADE LINE
SHERMAN STREET

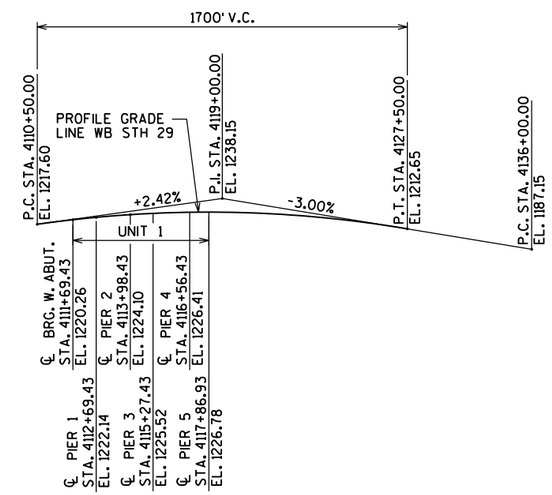

PROFILE GRADE LINE
WB STH 29

WB STH 29
CURVE DATA

P.I. STA. 4119+37.60
N = 200,002.53
E = 272,014.03
P.C. STA. 4102+55.35
P.T. STA. 4128+43.51
Δ = 93°10'26" (RT)
D = 3°36'00"
T = 1682.25'
L = 2588.16'
R = 1591.55'
S.E. = 0.059'/'

NO.	DATE	REVISION	BY

STATE OF WISCONSIN
DEPARTMENT OF TRANSPORTATION
STRUCTURES DESIGN SECTION

STRUCTURE B-37-360-001

CONST. SPEC.	2003	DRAWN BY	RBH	PLANS CK'D.	WAH

CROSS SECTION, PROFILES & NOTES

SHEET 2 OF 31
331

8

8

TOTAL ESTIMATED QUANTITIES - UNIT 1

BID ITEMS	UNIT	WEST ABUT.	PIER 1	PIER 2	PIER 3	PIER 4	PIER 5	SUPER.	TOTALS	
DEBRIS CONTAINMENT STRUCTURE B-37-360-001	LS	-	-	-	-	-	-	-	1	
EXCAVATION FOR STRUCTURES BRIDGES B-37-360-001	LS	-	-	-	-	-	-	-	1	
TEMPORARY SHORING	SF	-	360	-	-	-	715	-	1075	
BACKFILL STRUCTURE	CY	340	-	-	-	-	-	-	340	
CONCRETE MASONRY BRIDGES	CY	122	151	153	155	158	171	987	1,897	(*)
EXPANSION DEVICE B-37-360-001	LS	-	-	-	-		-	-	1	
PROTECTIVE SURFACE TREATMENT	SY	-	-	-	-	-	-	3,230	3,230	(1)
PRESTRESSED GIRDER TYPE I 70-INCH	LF	-	-	-	-	-		3,722	3,722	
BAR STEEL REINFORCEMENT HS BRIDGES	LB	3,790	2,450	2,450	2,450	2,450	2,490	-	16,080	
BAR STEEL REINFORCEMENT HS COATED BRIDGES	LB	6,510	30,470	30,780	30,930	31,540	29,170	224,550	383,950	(*)
BEARING PAD ELASTOMERIC NON-LAMINATED	EACH	-	6	6	-	6	-	-	18	
BEARING ASSEMBLIES EXPANSION B-37-360-001	EACH	6	-	-	12	-	6	-	24	
STEEL DIAPHRAGMS B-37-360-001	EACH	-	-	-	-	-	-	50	50	
PREBORING CIP CONCRETE PILING	LF	434	-	-	-	-	-	-	434	
PILING CAST IN PLACE CONCRETE DELIVERED AND DRIVEN 12¾-INCH	LF	1,330	1,820	1,820	1,820	1,820	1,950	-	10,560	
FLOOR DRAINS TYPE GC	EACH	-	-	-	-	-	-	1	1	
DOWNSPOUT 6-INCH	LF	-	-	-	60	-	-	-	60	
RUBBERIZED MEMBRANE WATERPROOFING	SY	15	-	-	-	-	-	-	15	
SLOPE PAVING CONCRETE	SY	400	-	-	-	-	-	-	400	
PIPE UNDERDRAIN 6-INCH	LF	80	-	-	-	-	-	-	80	
PIPE UNDERDRAIN UNPERFORATED 6-INCH	LF	25	-	-	-	-	-	-	25	
ANCHOR ASSEMBLIES FOR STEEL PLATE BEAM GUARD	EACH	-	-	-	-	-	-	2	2	
DELINEATORS	EACH	-	-	-	-	-	-	12	12	
DELINEATORS BRACKETS	EACH	-	-	-	-	-	-	12	12	
GEOTEXTILE FABRIC TYPE DF SCHEDULE A	SY	60	-	-	-	-	-	-	60	
CONDUIT RIGID METALLIC 2-INCH	LF	30	-	-	-	-	-	20	50	
CONDUIT RIGID NON-METALLIC SCHEDULE 80 2-INCH	LF	-	-	-	-	-	-	600	600	
JUNCTION BOXES 18X6X6-INCH	EACH	-	-	-	-	-	-	5	5	
CONCRETE STAINING B-37-360-001	SF	810	1,860	2,030	2,070	2,110	1,600	18,390	28,870	★
ANTISKID TREATMENT	SY	-	-	-	-	-	-	2,780	2,780	
ACCESS PLATFORM B-37-360-001	LS	-	-	-	-	-	1	-	1	
MANAGEMENT OF SOLID WASTE	TON	-	-	-	-	-	-	-	100	
MANAGEMENT OF PETROLEUM-CONTAMINATED MATERIALS	TON	-	-	-	-	154	-	-	154	
NON-BID ITEMS										
FILLER	SIZE	——	——	——	——	——	——	——	½" & ¾"	
BRIDGE SEAT PROTECTION	LS	——	——	——	——	——	——	——	1	

LEGEND

(*) THE CONCRETE AND BARS OF THE PARAPET ON THE WINGWALLS ARE INCLUDED IN THE ABUTMENT QUANTITIES. SUPERSTRUCTURE QUANTITIES INCLUDE THE CONCRETE AND BARS OF THE PARAPET ON THE DECK.

★ CONCRETE STAIN SHALL BE IN ACCORDANCE WITH THE SPECIAL PROVISIONS. STAIN SHALL BE FEDERAL COLOR #36424, SHALL EXTEND 1'-0" BELOW PROPOSED GRADE, AND SHALL BE APPLIED TO THE FOLLOWING AREAS:
- PARAPETS: OUTSIDE FACE ONLY (NOT ALONG TOP)
- OUTSIDE EDGE OF DECK AND BOTTOM OF OVERHANGS
- GIRDERS: OUTSIDE FACE AND BOTTOM OF EXTERIOR GIRDERS ONLY
- PIERS: ENTIRE PIER EXCEPT TOP OF CAP
- ABUTMENTS: FRONT FACE AND SIDES

(1) THE EXPANSION DEVICE FOR THIS BID ITEM IS AT THE WEST ABUTMENT AND PIER 3

8

8

NO.	DATE	REVISION	BY

STATE OF WISCONSIN
DEPARTMENT OF TRANSPORTATION
STRUCTURES DESIGN SECTION

STRUCTURE B-37-360-001

CONST. SPEC. 2003 | DRAWN BY RBH | PLANS CK'D. WAH

QUANTITIES

STATE PROJECT NUMBER

1166-09-74

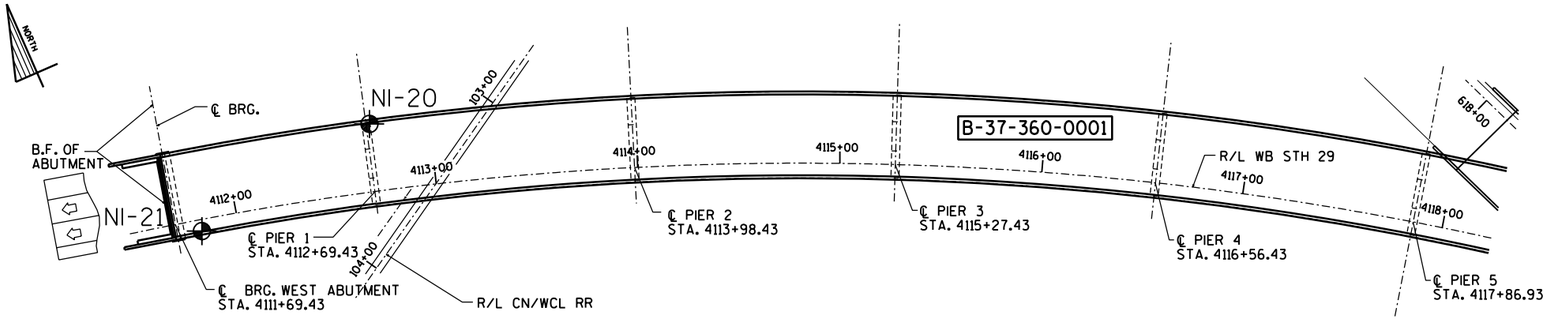

BORINGS TAKEN BY:
STS
3909 CONCORD AVENUE
SCHOFIELD, WISCONSIN 54476

BORINGS TAKEN ON:
NI-21 FEB. 10, 2004
NI-20 JAN. 8, 2004

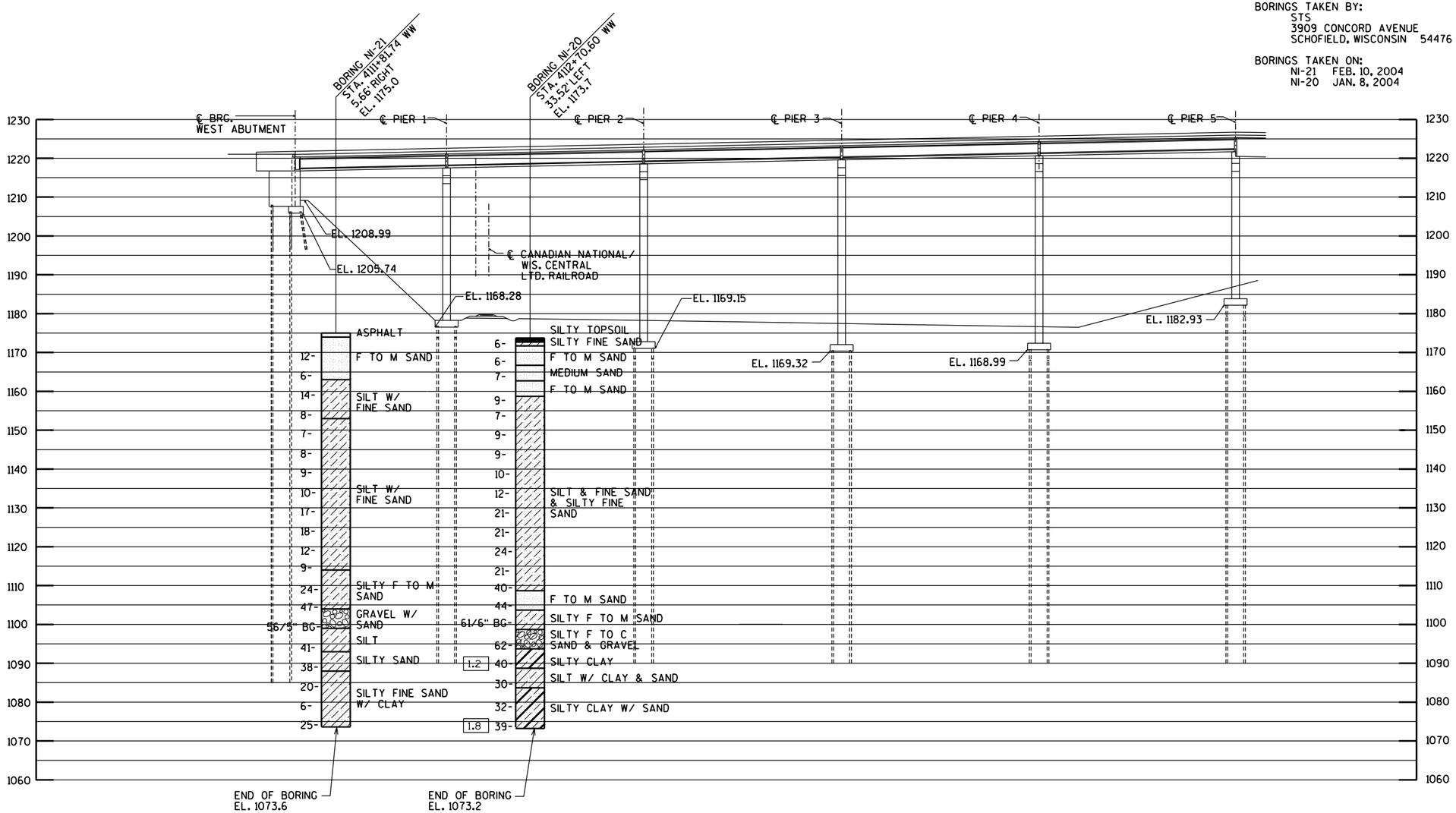

ABBREVIATIONS

F ---- Fine M ---- Medium C ---- Coarse
Ws ---- Weathered So ---- Sound

MATERIAL SYMBOLS

Fill, Topsoil, Sand, Gravel, Silt, Silty Clay, Clay, Sandy Gravel, Limestone, Clayey Silt, Silty Sand

LEGEND OF PROBING

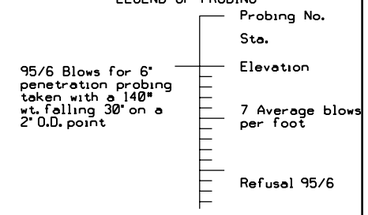

LEGEND OF BORING

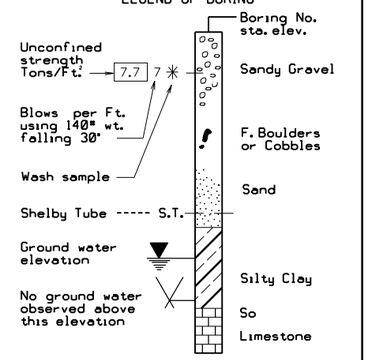

Unless otherwise specified, the blows per foot at the locations indicated are based on driving a 2" O.D. x 1.4" I.D. split spoon sampler with a 140# hammer having a free fall of 30". The blow count is taken in undisturbed soil immediately below a cased or open hole eliminating side friction on the drive pipe.

SUBSURFACE EXPLORATION FOR FOUNDATION DESIGN AND BIDDERS INFORMATION

To obtain relative data concerning the character of material in and upon which the foundation might be built, borings and/or soundings were made at points approximately as indicated on this drawing. The data presented herein represents the findings of the sub-surface explorations made. However, because the depths investigated are limited and the area of the borings and/or soundings is very small in relation to the entire area, the Division of Highways does not warrant conditions below the depths investigated or that the classification of material encountered in these investigations is necessarily typical of the entire site.

NO.	DATE	REVISION	BY

STATE OF WISCONSIN
DEPARTMENT OF TRANSPORTATION
STRUCTURES DESIGN SECTION

STRUCTURE B-37-360-001

CONST. SPEC.	2003	DRAWN BY	RBH	PLANS CK'D.	WAH

SUBSURFACE EXPLORATION

SHEET 4 OF 31
333

8

STATE PROJECT NUMBER

1166-09-74

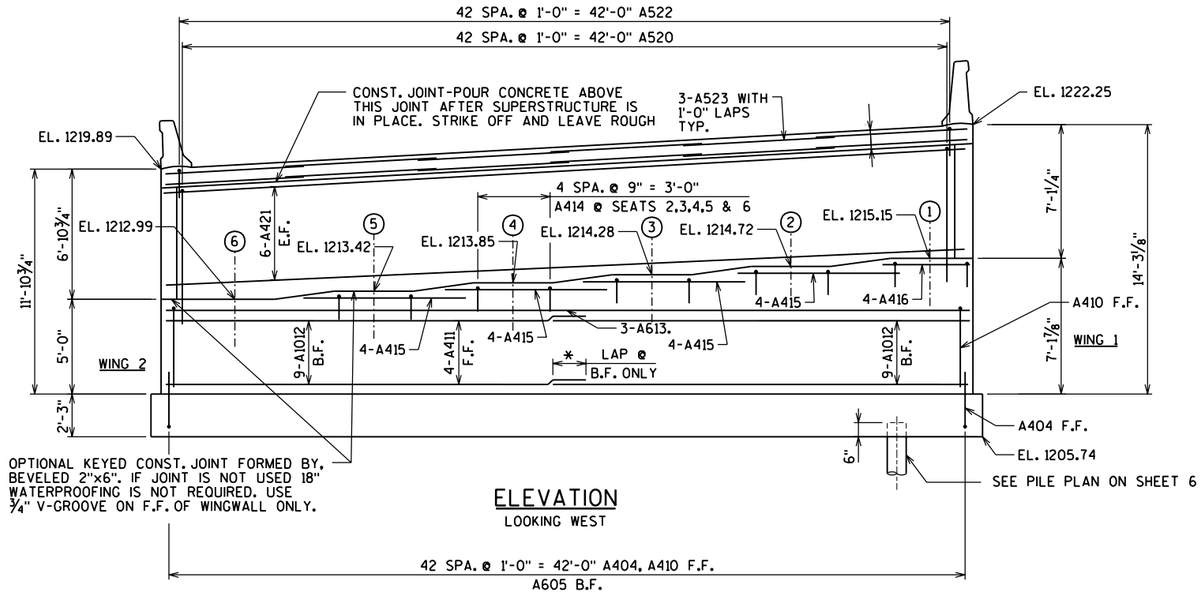

ELEVATION

LOOKING WEST

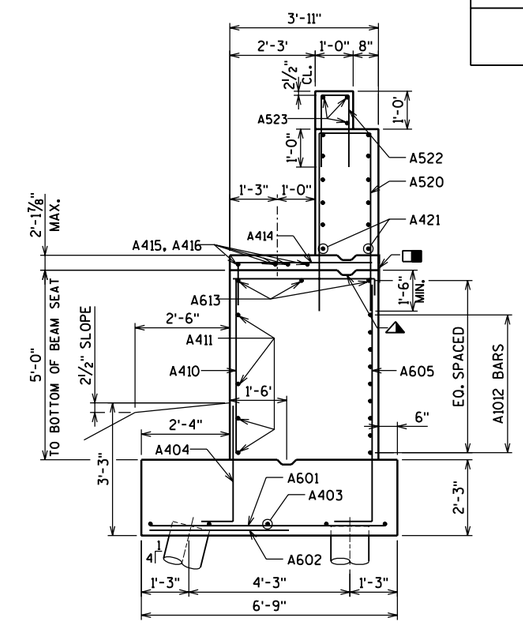

SECTION A-A

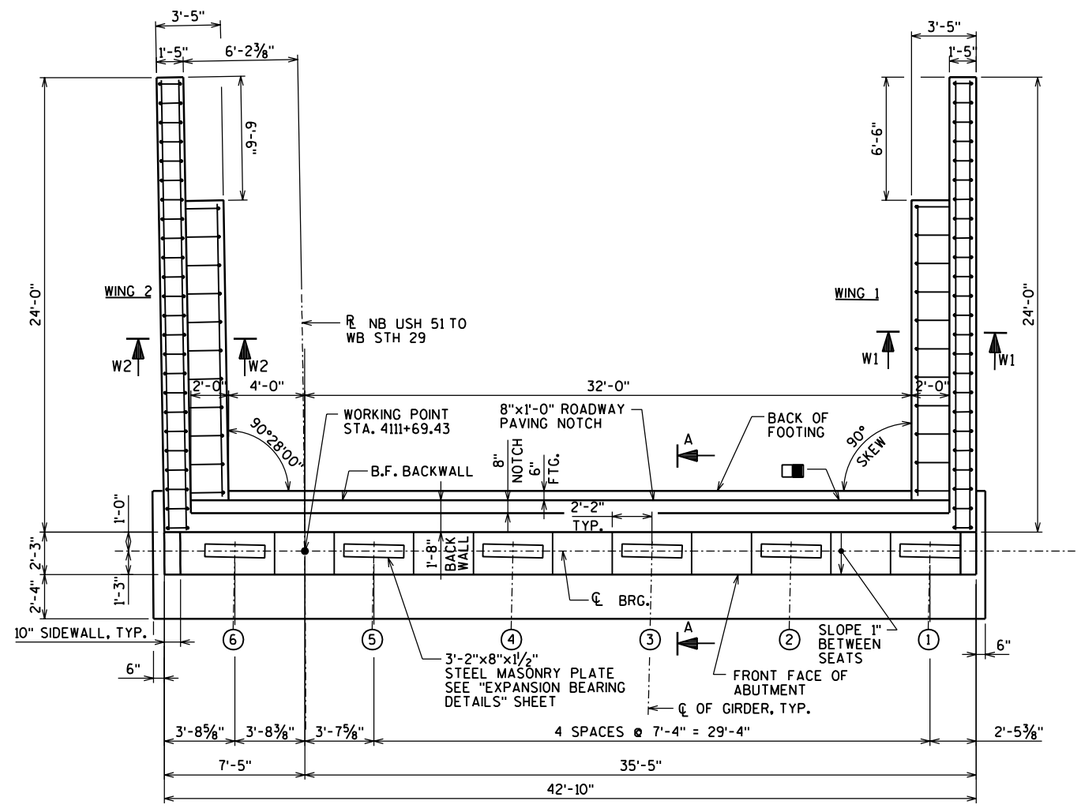

PLAN

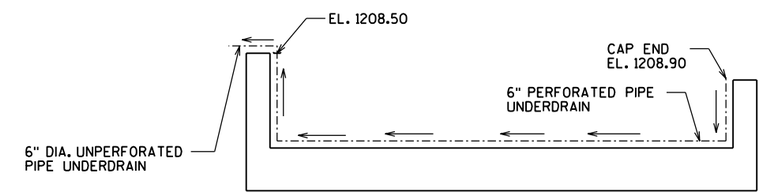

UNDERDRAIN PLAN

NOTES

18" RUBBERIZED MEMBRANE WATERPROOFING. SEAL ALL HORIZ. AND VERT. JOINTS ON BACKFACE ABOVE FOOTING.

SEE SHEET 7 FOR SECTIONS W1 & W2.

(X) GIRDER NUMBER

WEST ABUTMENT SUPPORTED ON 12¾" DIA. CAST-IN-PLACE CONCRETE PILING DRIVEN TO A CAPACITY OF 70 TONS/PILE.

KEYED CONSTRUCTION JOINT FORMED BY BEVELED 2"x6".

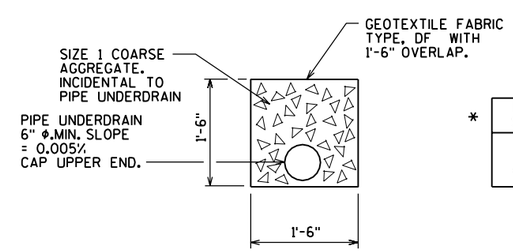

PIPE UNDERDRAIN DETAIL

*

BAR SIZE	MIN. LAP
#4	2'-3"
#6	2'-11"
#10	8'-2"

NO.	DATE	REVISION	BY

STATE OF WISCONSIN
DEPARTMENT OF TRANSPORTATION
STRUCTURES DESIGN SECTION

STRUCTURE B-37-360-001

CONST. SPEC. 2003 | DRAWN BY RBH | PLANS CK'D. JRS

WEST ABUTMENT

SHEET 5 OF 31
334

8

8

STATE PROJECT NUMBER
1166-09-74

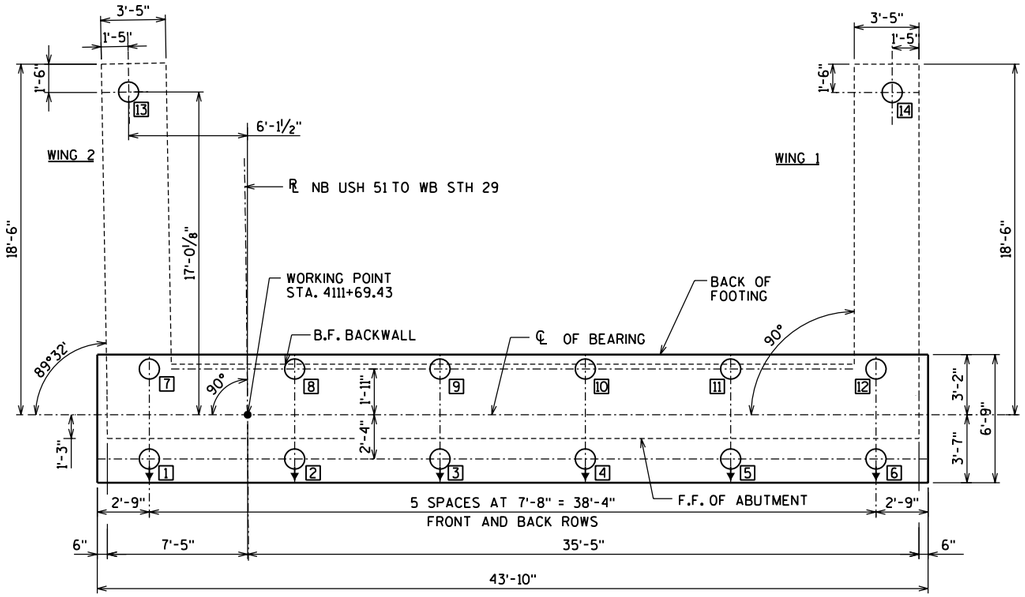

PILE PLAN

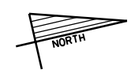

NOTES

WEST ABUTMENT TO BE SUPPORTED ON 12¾" DIA. CAST IN PLACE CONCRETE PILING DRIVEN TO A MINIMUM BEARING CAPACITY OF 70 TONS.
ESTIMATED 95 FEET LONG AT WEST ABUTMENT.

PILING SHALL BE PREBORED THROUGH THE PROPOSED ROADWAY EMBANKMENT.

= BATTERED PILE AT 4:1 IN DIRECTION SHOWN

[X] = PILE NUMBER

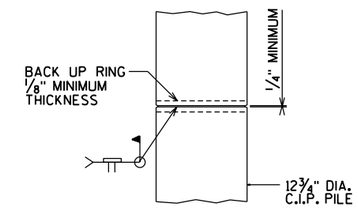

CAST-IN-PLACE PIPE PILE

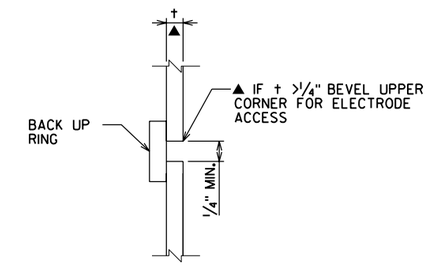

C.I.P PIPE WELD DETAIL

NOTE

CAST-IN-PLACE PILE SHELL MATERIAL SHALL BE A.S.T.M. DESIGNATION A-252, GRADE 2 OR EQUAL. MINIMUM WALL THICKNESS = 0.25 IN.

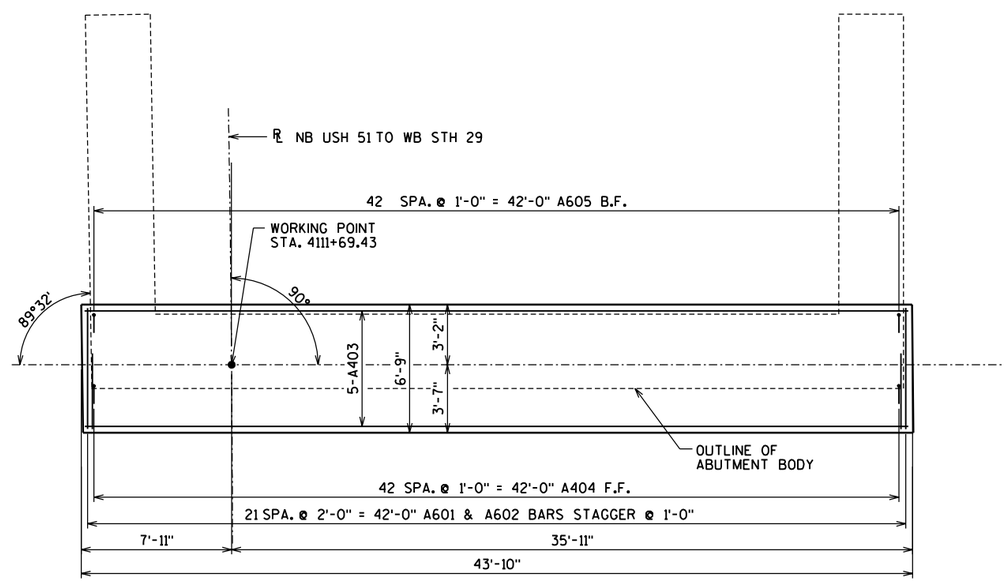

FOOTING PLAN

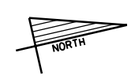

8

8

NO.	DATE	REVISION	BY

STATE OF WISCONSIN
DEPARTMENT OF TRANSPORTATION
STRUCTURES DESIGN SECTION

STRUCTURE B-37-360-001

CONST. SPEC.	2003	DRAWN BY	RBH	PLANS CK'D.	JRS

WEST ABUTMENT PILE PLAN

SHEET 6 OF 31
335

STATE PROJECT NUMBER

1166-09-74

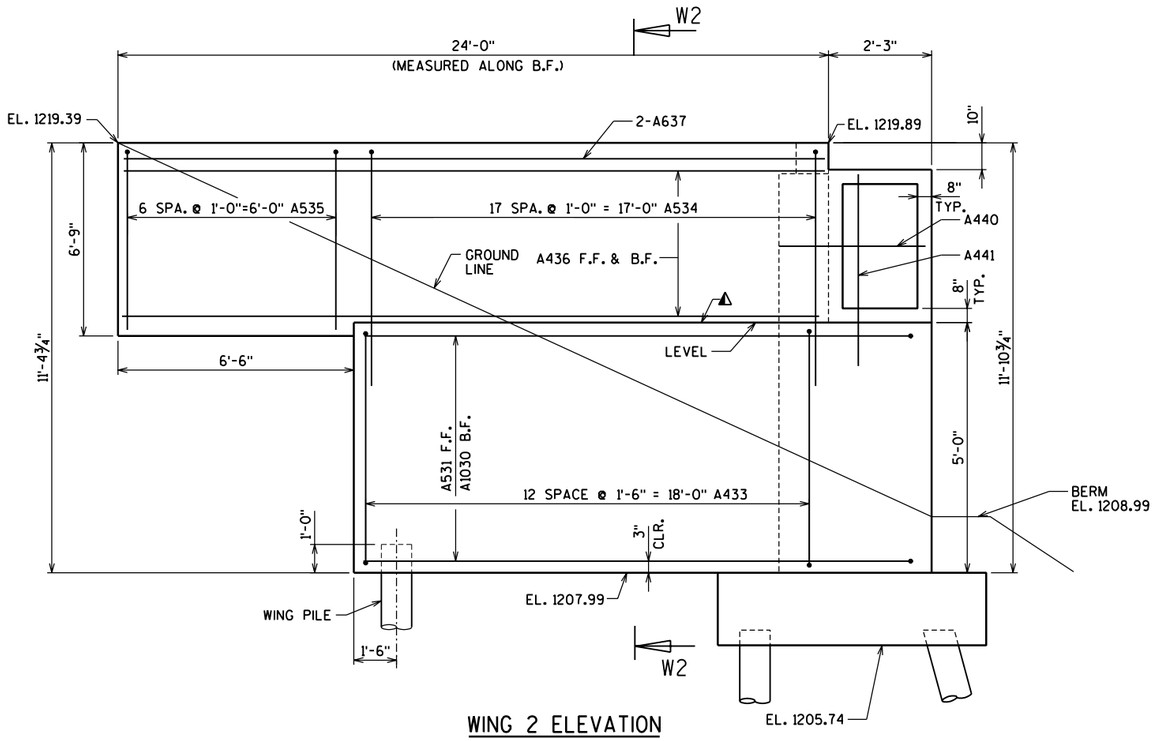

WING 2 ELEVATION

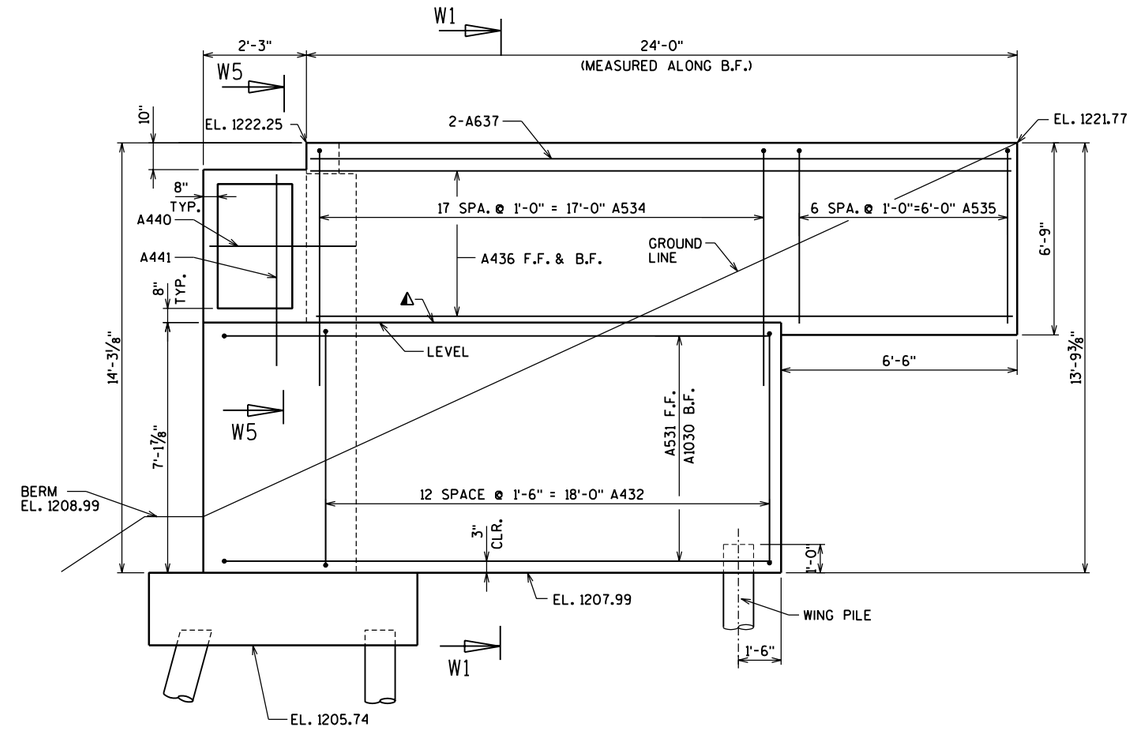

WING 1 ELEVATION

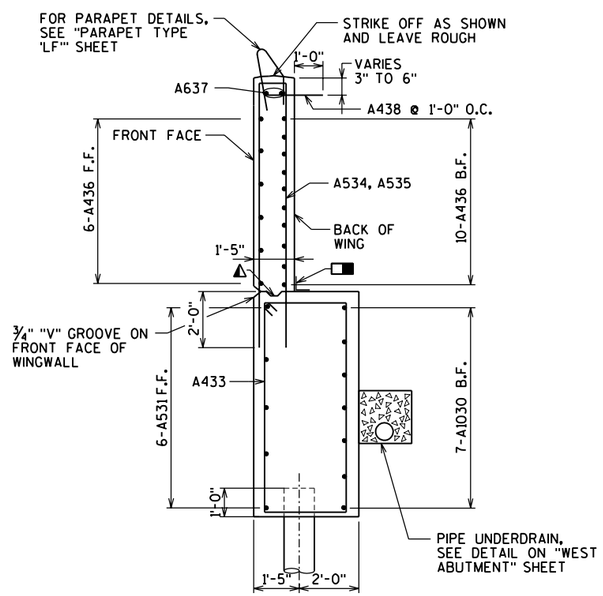

SECTION W2

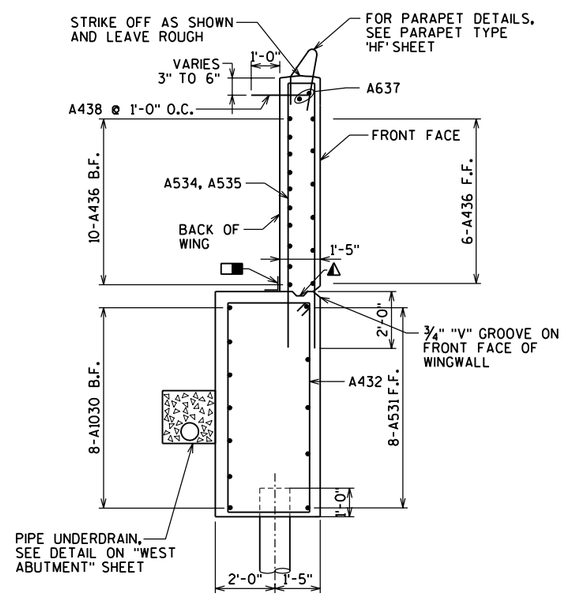

SECTION W1

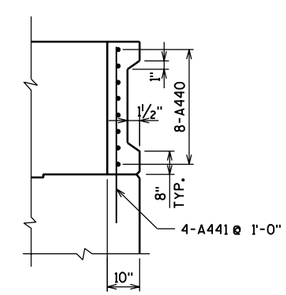

SECTION W5

NOTES

- 18" RUBBERIZED MEBRANE WATERPROOFING.
- OPTIONAL CONSTRUCTION JOINT FORMED BY BEVELED 2"x6" KEYWAY.

NO.	DATE	REVISION	BY

STATE OF WISCONSIN
DEPARTMENT OF TRANSPORTATION
STRUCTURES DESIGN SECTION

STRUCTURE B-37-360-001

CONST. SPEC.	2003	DRAWN BY	RBH	PLANS CK'D.	JRS

WEST ABUTMENT WINGWALLS

SHEET 7 OF 31

336

8

8

STATE PROJECT NUMBER

1166-09-74

WEST ABUTMENT - BILL OF BARS

MARK	COATED	NO. REQ'D.	LENGTH	BENT	BAR SERIES	LOCATION
A601		22	6'-3"			FOOTING TRANSVERSE
A602		22	3'-8"			FOOTING TRANSVERSE
A403		5	43'-4"			FOOTING LONGITUDINAL
A404		43	4'-4"	X		FOOTING DOWELS FF
A605		43	7'-4"	X		FOOTING DOWELS BF
A410		43	8'-9"	X		BODY VERTICAL FF
A411		4	42'-6"			BODY HORIZONTAL FF
A1012		18	25'-6"			BODY HORIZONTAL BF
A613		3	42'-6"			BODY HORIZONTAL TOP
A414		25	7'-0"	X		BODY HORIZONTAL TOP AT SEATS 2 THRU 6
A415		16	5'-4"			BODY HORIZONTAL TOP AT SEATS 2 THRU 6
A416		4	3'-9"			BODY HORIZONTAL TOP AT SEAT 6
A520	X	43	16'-1"	X		BACKWALL VERTICAL
A421	X	12	42'-6"			BACKWALL HORIZONTAL FF & BF
A522	X	43	4'-5"	X		BACKWALL VERTICAL
A523	X	18	8'-0"			BACKWALL HORIZONTAL
A1030	X	15	20'-7"	X		WINGS 1 & 2 HORIZONTAL BF
A531	X	14	18'-10"			WINGS 1 & 2 HORIZONTAL FF
A432	X	13	20'-0"	X		WING 1 VERTICAL
A433	X	13	15'-8"	X		WING 2 VERTICAL
A534	X	36	18'-8"	X		WINGS 1 & 2 VERTICAL
A535	X	14	13'-8"	X		WINGS 1 & 2 VERTICAL
A436	X	32	23'-8"			WINGS 1 & 2 HORIZONTAL
A637	X	4	23'-8"			WINGS 1 & 2 HORIZONTAL TOP
A438	X	50	2'-0"			WINGS 1 & 2 SURFACE DRAIN ANCHORS
A440	X	16	3'-6"			WINGS 1 & 2 HORIZONTAL AT SIDEWALLS
A441	X	8	7'-6"			WINGS 1 & 2 VERTICAL AT SIDEWALLS

THE FIRST DIGIT OF A 3 DIGIT BAR MARK OR THE FIRST TWO DIGITS OF A FOUR DIGIT BAR MARK INDICATES BAR SIZE. ALL DIMENSIONS IN THE BAR BENDS ARE OUT TO OUT.

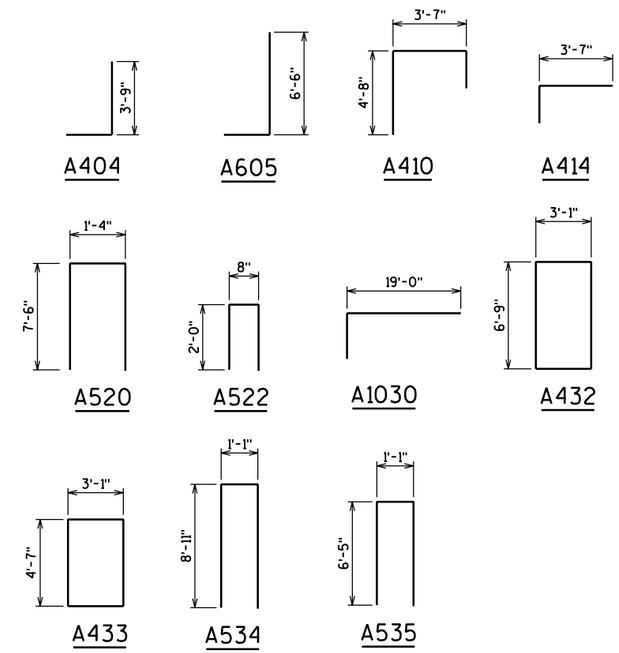

8

8

NO.	DATE	REVISION	BY

STATE OF WISCONSIN
DEPARTMENT OF TRANSPORTATION
STRUCTURES DESIGN SECTION

STRUCTURE B-37-360-001

CONST. SPEC.	2003	DRAWN BY	RBH	PLANS CK'D.	JRS

WEST ABUTMENT
BILL OF BARS

SHEET 8 OF 31

337

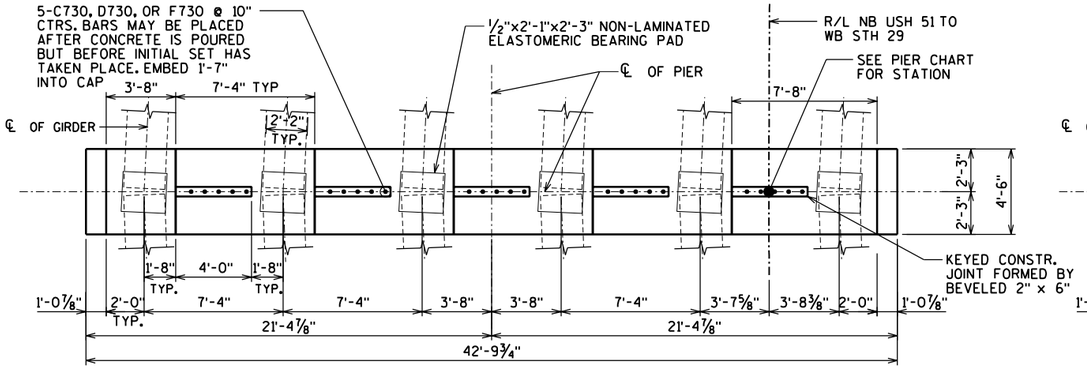

PLAN - FIXED PIERS 1, 2 & 4

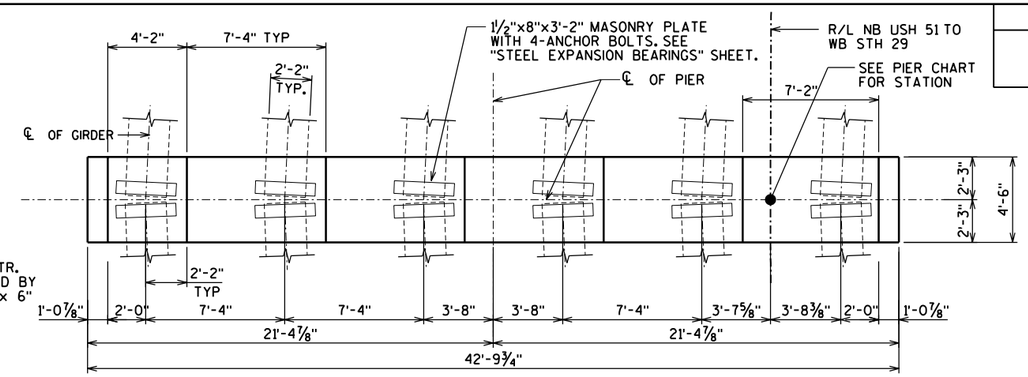

PLAN - EXPANSION PIER 3

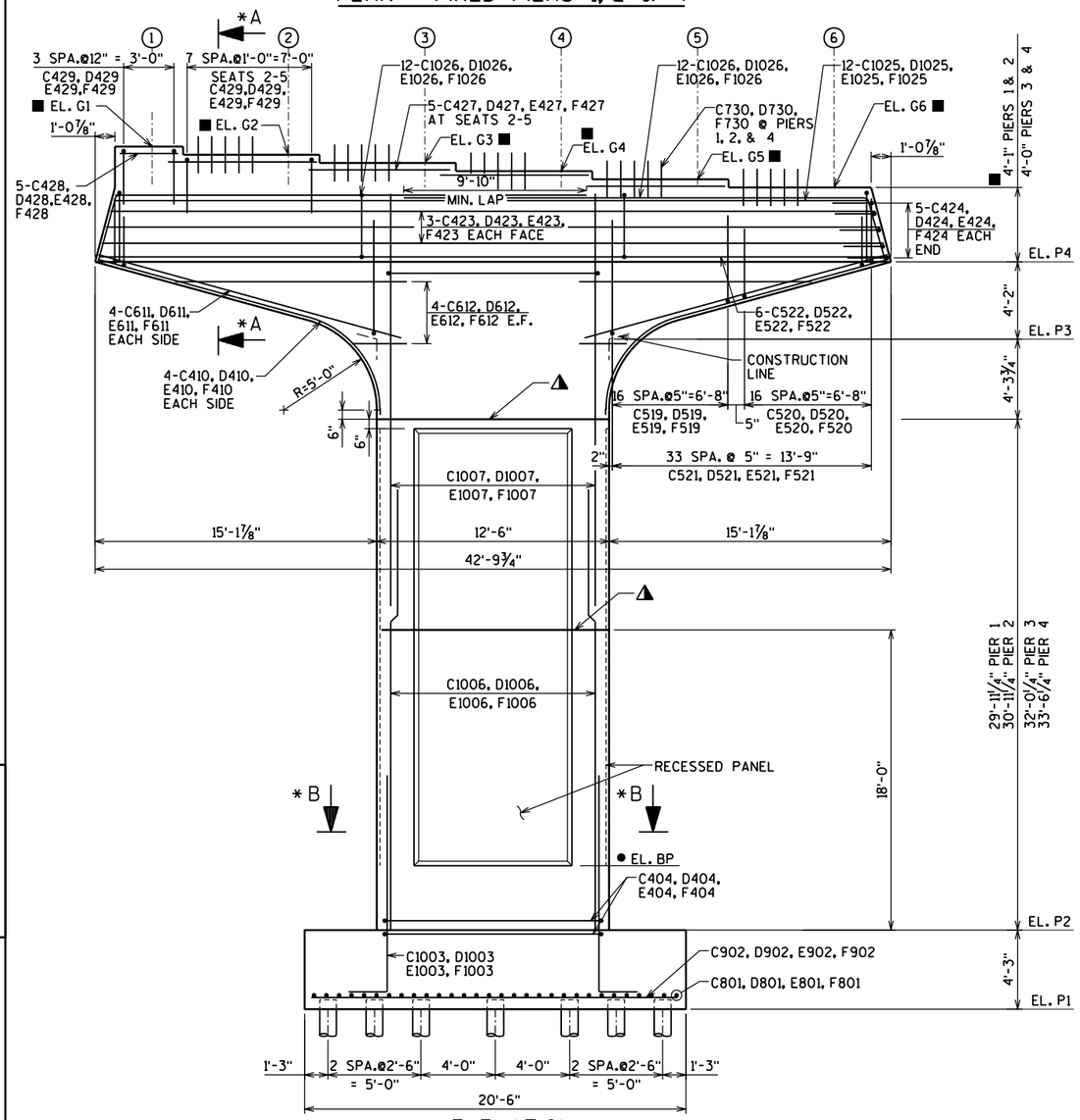

ELEVATION
LOOKING EAST

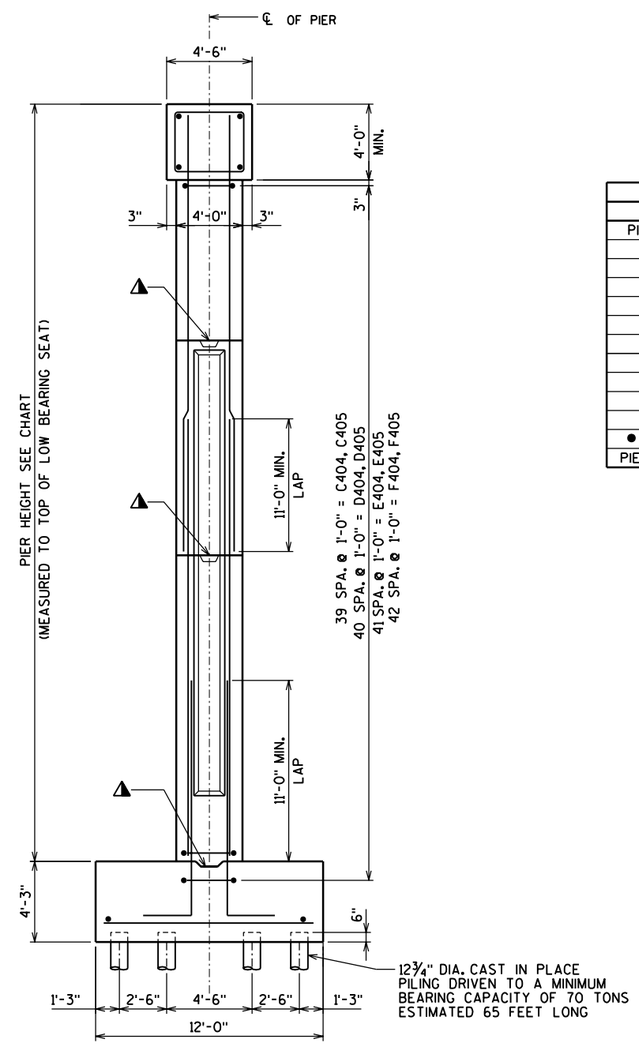

END VIEW

PIER ELEVATION CHART				
ITEM	PIER #1	PIER #2	PIER #3	PIER #4
PIER STA.	4112+69.43	4113+98.43	4115+27.43	4116+56.43
EL. G1	1217.21	1219.07	1220.23	1221.41
EL. G2	1216.78	1218.64	1219.80	1220.98
EL. G3	1216.34	1218.21	1219.37	1220.55
EL. G4	1215.91	1217.77	1218.93	1220.11
EL. G5	1215.48	1217.34	1218.50	1219.68
EL. G6	1215.04	1216.91	1218.07	1219.25
EL. P4	1210.96	1212.83	1214.07	1215.25
EL. P3	1206.79	1208.66	1209.90	1211.08
EL. P2	1172.54	1173.41	1173.57	1173.25
EL. P1	1168.29	1169.16	1169.32	1169.00
● EL. BP	1177.30	1178.30	1177.90	1177.70
PIER HEIGHT	42'-6"	43'-6"	44'-6"	46'-0"

LEGEND

(X) DENOTES GIRDER NUMBER

◭ KEYED CONSTRUCTION JOINT FORMED BY BEVELED KEYWAY 4"x1'-4"x8'-6". EXPOSED EDGES OF CONSTRUCTION JOINT SHALL BE FLUSH AND NOT BEVELED.

* SEE SHEET 10 FOR SECTION A-A & B-B

● ELEVATION TO BE 3 FEET ABOVE FINISHED GRADE. ELEVATION TO BE ADJUSTED IF FINAL GROUND ELEVATION DIFFERS FROM PLANS.

■ ELEVATION 'A' AS SHOWN ON GIRDER SEAT DETAIL. DIMENSIONS TO ELEVATION 'A'.

NO.	DATE	REVISION	BY

STATE OF WISCONSIN
DEPARTMENT OF TRANSPORTATION
STRUCTURES DESIGN SECTION

STRUCTURE B-37-360-001

CONST. SPEC. 2003 | DRAWN BY RBH | PLANS CK'D. JRS

PIERS 1,2,3, & 4

SHEET 9 OF 31
338

8

STATE PROJECT NUMBER

1166-09-74

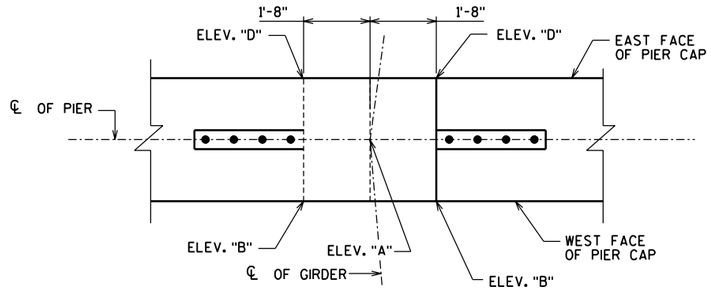

INTERIOR GIRDER

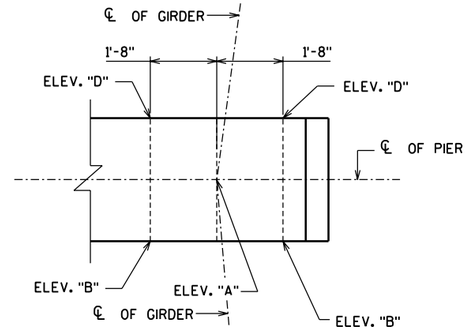

EXTERIOR GIRDER

SLOPING GIRDER SEAT DETAIL
(PIERS 1 & 2)

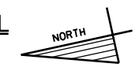

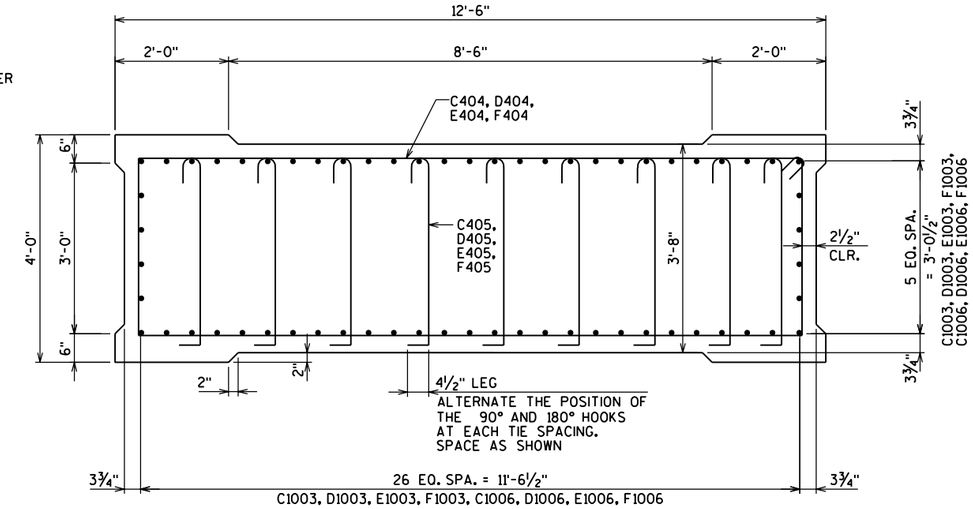

SECTION B-B

PIER #1 SEAT ELEVATIONS

GIRDER	ELEV. 'A'	ELEV. 'B'	ELEV. 'D'
1	1217.21	1217.17	1217.25
2	1216.78	1216.74	1216.81
3	1216.34	1216.30	1216.38
4	1215.91	1215.87	1215.95
5	1215.48	1215.44	1215.52
6	1215.04	1215.01	1215.08

PIER #2 SEAT ELEVATIONS

GIRDER	ELEV. 'A'	ELEV. 'B'	ELEV. 'D'
1	1219.07	1219.04	1219.10
2	1218.64	1218.61	1218.67
3	1218.21	1218.18	1218.24
4	1217.77	1217.74	1217.80
5	1217.34	1217.31	1217.37
6	1216.91	1216.88	1216.94

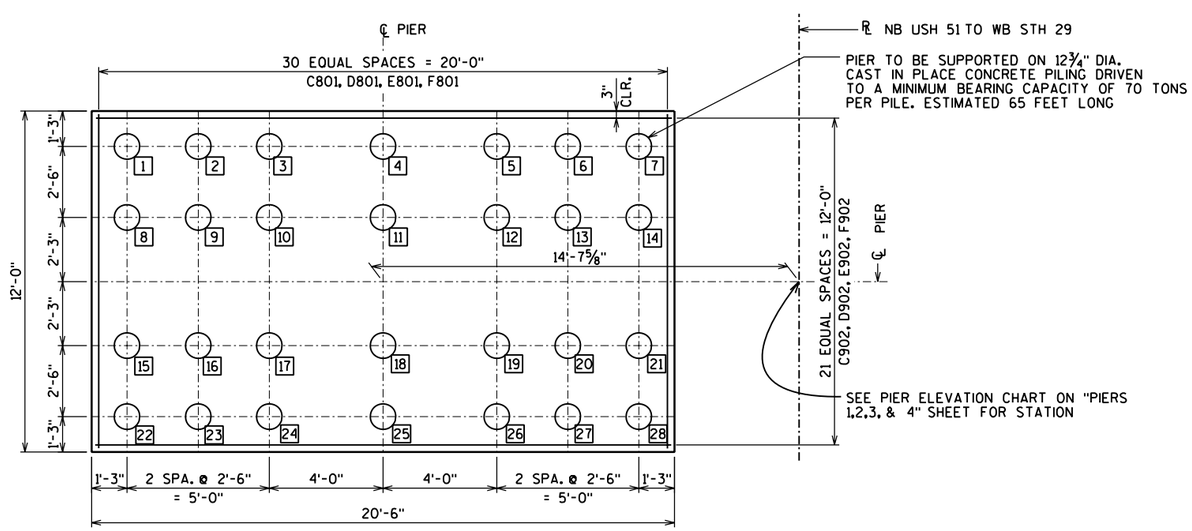

PILE PLAN - PIERS 1 - 4

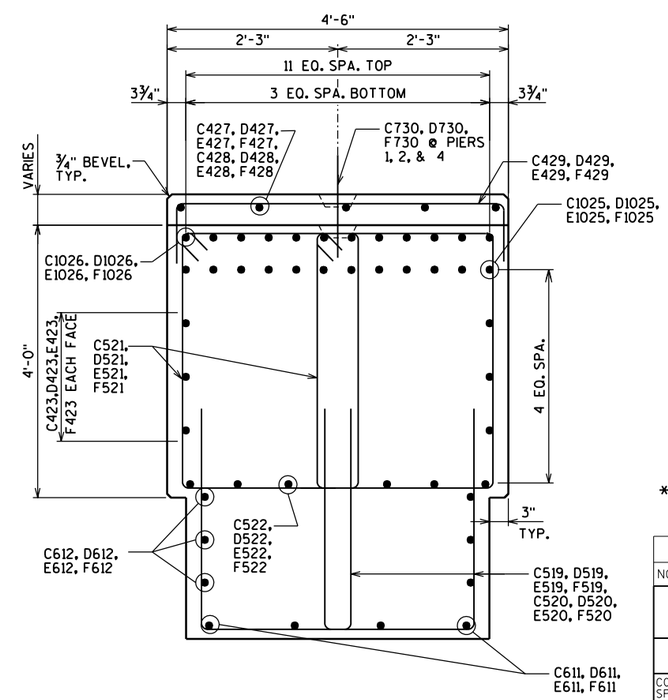

SECTION A-A

* SEE "WEST ABUTMENT PILE PLAN" SHEET FOR PILE SPLICE DETAIL.

NO.	DATE	REVISION	BY

STATE OF WISCONSIN
DEPARTMENT OF TRANSPORTATION
STRUCTURES DESIGN SECTION

STRUCTURE B-37-360-001

CONST. SPEC. 2003	DRAWN BY RBH	PLANS CK'D. JRS

PIERS 1,2,3, & 4 DETAILS

SHEET 10 OF 31
339

8

8

STATE PROJECT NUMBER

1166-09-74

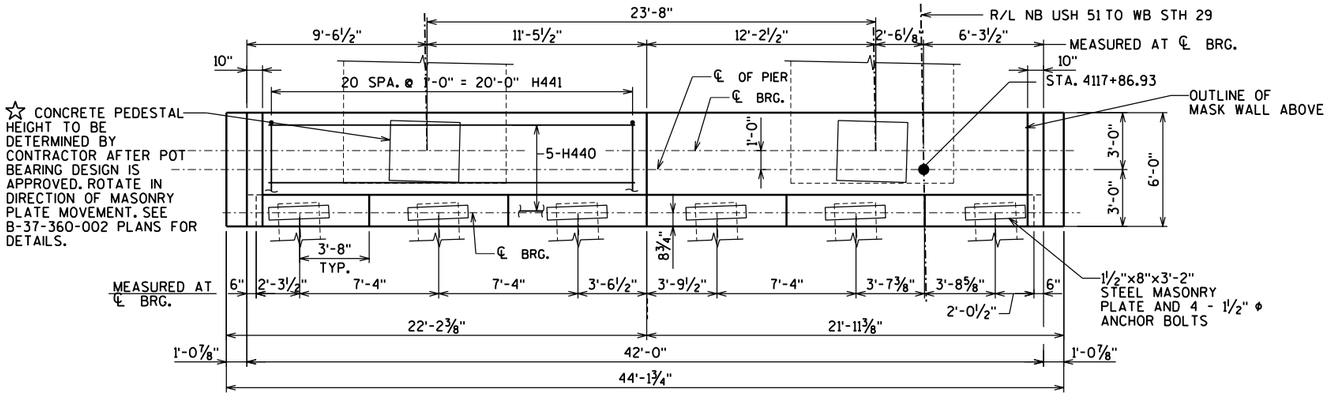

PLAN OF PIER CAP

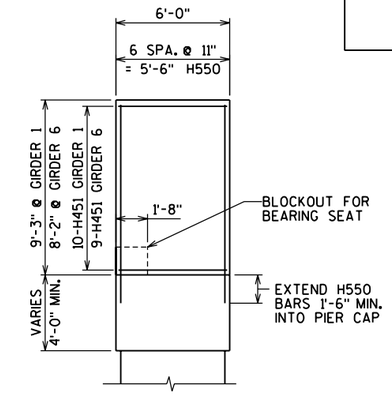

MASK WALL END VIEW

(LOOKING NORTH)

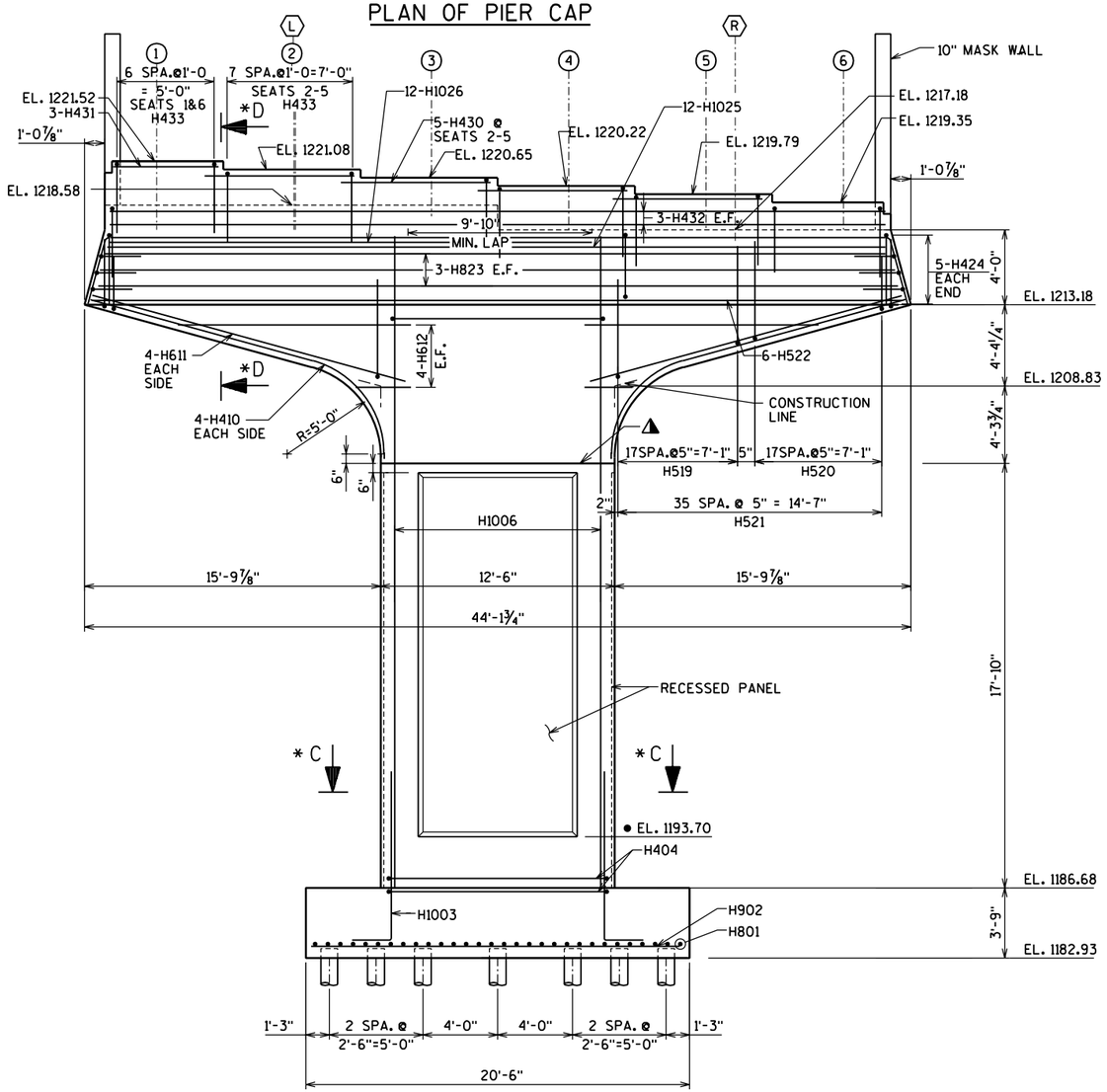

ELEVATION

LOOKING EAST

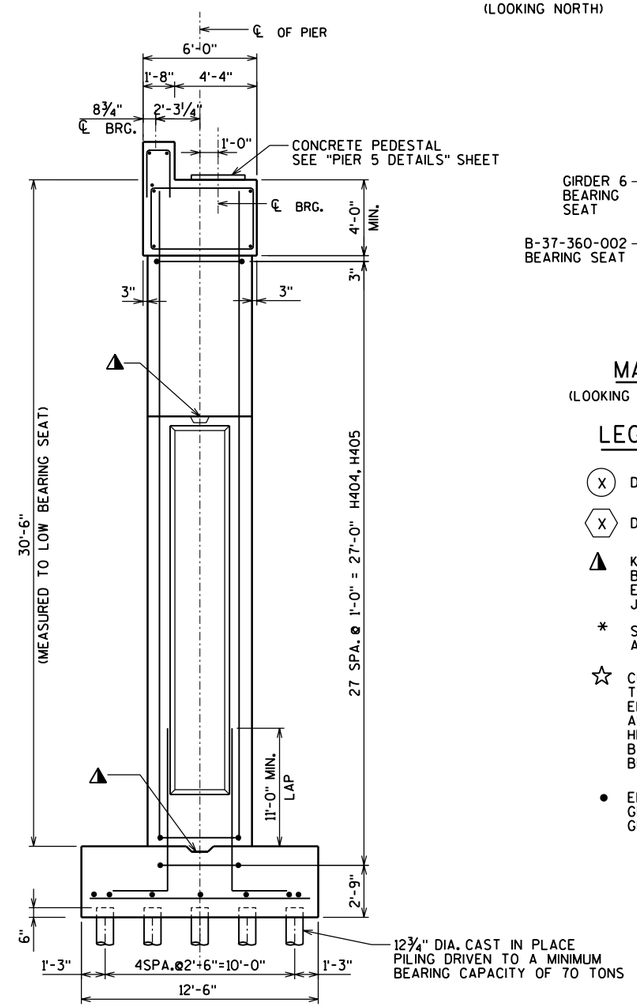

END VIEW

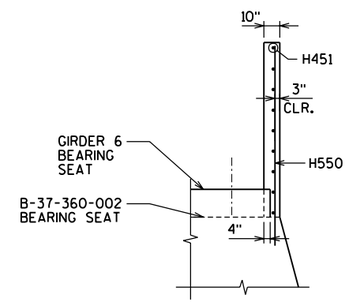

MASK WALL ELEVATION

(LOOKING EAST GIRDER 6 SHOWN GIRDER 1 SIMILAR)

LEGEND

(X) DENOTES PRESTRESSED GIRDER NUMBER B-37-360-001

⟨X⟩ DENOTES STEEL GIRDER NUMBER B-37-360-002

◭ KEYED CONSTRUCTION JOINT FORMED BY BEVELED KEYWAY 4"x1'-0"x6'-0". EXPOSED EDGES OF CONSTRUCTION JOINT SHALL BE FLUSH AND NOT BEVELED.

* SEE PIER DETAILS SHEET FOR SECTION C-C AND D-D.

☆ CONCRETE PEDESTAL HEIGHT WAS ASSUMED TO BE 4" FOR DETERMINING PIER SEAT ELEVATIONS. FINAL TOTAL HEIGHT FOR BEARING AND PEDESTAL SHALL EQUAL TOTAL OF ASSUMED HEIGHTS SHOWN ON THE PLANS. SEE B-37-360-002 PLANS FOR ASSUMED PIER BEARING HEIGHTS

● ELEVATION TO BE 3 FEET ABOVE FINISHED GRADE. ELEVATION TO BE ADJUSTED IF FINAL GROUND ELEVATION DIFFERS FROM PLANS.

NO.	DATE	REVISION	BY

STATE OF WISCONSIN
DEPARTMENT OF TRANSPORTATION
STRUCTURES DESIGN SECTION

STRUCTURE B-37-360-001

CONST. SPEC.	2003	DRAWN BY	RBH	PLANS CK'D.	JRS

PIER 5

SHEET 11 OF 31

340

8

8

STATE PROJECT NUMBER

1166-09-74

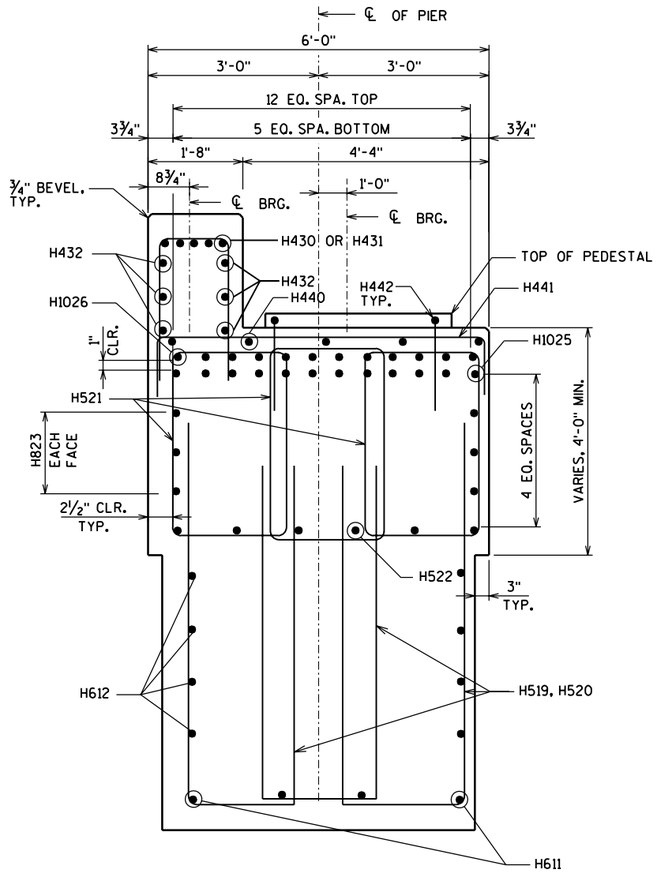

SECTION D-D

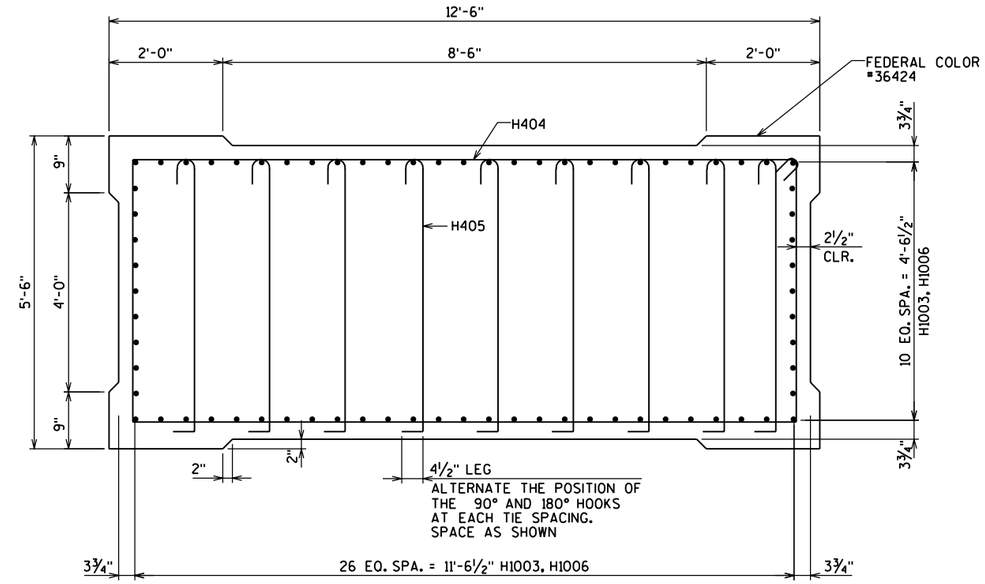

SECTION C-C

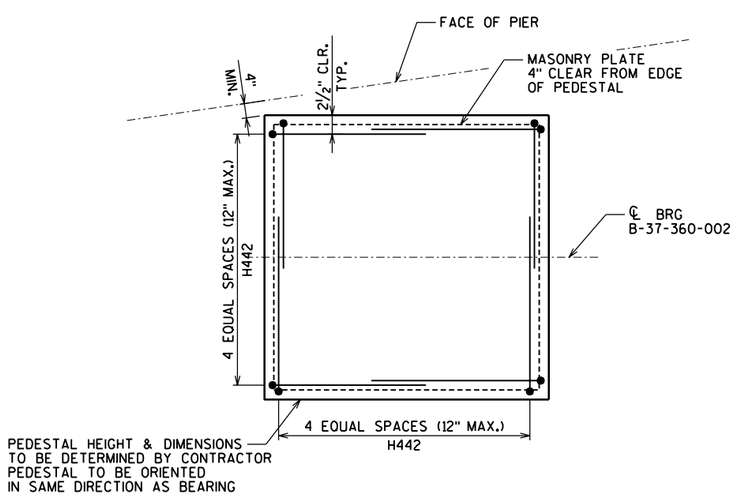

BEARING PEDESTAL PLAN

*SEE B-37-360-002 PLAN FOR BEARING DETAILS

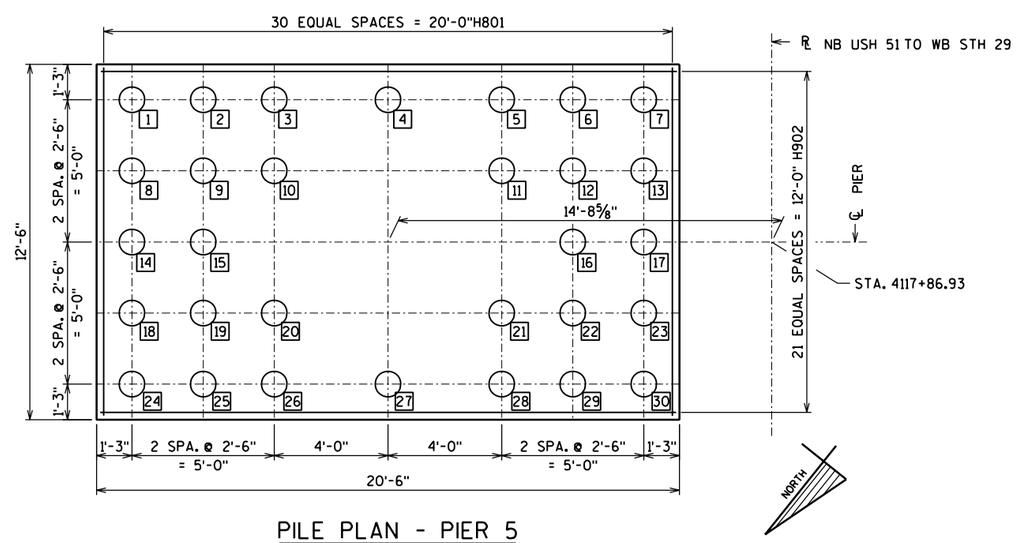

PILE PLAN - PIER 5

NO.	DATE	REVISION	BY

STATE OF WISCONSIN
DEPARTMENT OF TRANSPORTATION
STRUCTURES DESIGN SECTION

STRUCTURE B-37-360-001

CONST. SPEC.	2003	DRAWN BY	RBH	PLANS CK'D.	JRS

PIER 5 DETAILS

SHEET 12 OF 31

8

8

STATE PROJECT NUMBER

1166-09-74

PIER 1 - BILL OF BARS

MARK	COATED	NO. REQ'D.	LENGTH	BENT	BAR SERIES	LOCATION
C801		31	11'-6"			FOOTING HORIZONTAL
C902		22	20'-0"			FOOTING HORIZONTAL
C1003	X	62	16'-6"	X		FOOTING DOWELS
C404	X	40	30'-4"	X		SHAFT TIES
C405	X	360	4'-1"	X		SHAFT TIES
C1006	X	62	29'-6"			SHAFT VERTICAL
C1007	X	62	23'-6"			SHAFT VERTICAL
C410	X	8	19'-0"	X		SHAFT TO CAP TRANSITION
C611	X	8	17'-0"			SHAFT TO CAP TRANSITION
C612	X	16	9'-1"		⚠	SHAFT TO CAP TRANSITION
C519	X	68	13'-7"	X		CAP STIRRUPS
C520	X	68	9'-5"	X		CAP STIRRUPS
C521	X	136	12'-10"	X		CAP STIRRUPS
C522	X	6	41'-3"			CAP HORIZONTAL BOTTOM
C423	X	6	40'-4"			CAP HORIZONTAL SIDES
C424	X	10	9'-11"	X		CAP HORIZONTAL ENDS
C1025	X	12	40'-5"			CAP HORIZONTAL TOP
C1026	X	24	29'-8"	X		CAP HORIZONTAL TOP
C427	X	20	7'-0"			CAP HORIZONTAL SEATS 2-5
C428	X	5	5'-4"			CAP HORIZONTAL SEAT 1
C429	X	36	10'-5"	X		CAP VERTICAL SEATS 1-5
C730	X	25	3'-2"			CAP DOWELS

PIER 2 - BILL OF BARS

MARK	COATED	NO. REQ'D.	LENGTH	BENT	BAR SERIES	LOCATION
D801		31	11'-6"			FOOTING HORIZONTAL
D902		22	20'-0"			FOOTING HORIZONTAL
D1003	X	62	16'-6"	X		FOOTING DOWELS
D404	X	41	30'-4"	X		SHAFT TIES
D405	X	369	4'-1"	X		SHAFT TIES
D1006	X	62	29'-6"			SHAFT VERTICAL
D1007	X	62	24'-6"			SHAFT VERTICAL
D410	X	8	19'-0"	X		SHAFT TO CAP TRANSITION
D611	X	8	17'-0"			SHAFT TO CAP TRANSITION
D612	X	16	9'-1"		⚠	SHAFT TO CAP TRANSITION
D519	X	68	13'-7"	X		CAP STIRRUPS
D520	X	68	9'-5"	X		CAP STIRRUPS
D521	X	136	12'-10"	X		CAP STIRRUPS
D522	X	6	41'-3"			CAP HORIZONTAL BOTTOM
D423	X	6	40'-4"			CAP HORIZONTAL SIDES
D424	X	10	9'-11"	X		CAP HORIZONTAL ENDS
D1025	X	12	40'-5"			CAP HORIZONTAL TOP
D1026	X	24	29'-8"	X		CAP HORIZONTAL TOP
D427	X	20	7'-0"			CAP HORIZONTAL SEATS 2-5
D428	X	5	5'-4"			CAP HORIZONTAL SEAT 1
D429	X	36	10'-5"	X		CAP VERTICAL SEATS 1-5
D730	X	25	3'-2"			CAP DOWELS

PIER 3 - BILL OF BARS

MARK	COATED	NO. REQ'D.	LENGTH	BENT	BAR SERIES	LOCATION
E801		31	11'-6"			FOOTING HORIZONTAL
E902		22	20'-0"			FOOTING HORIZONTAL
E1003	X	62	16'-6"	X		FOOTING DOWELS
E404	X	42	30'-4"	X		SHAFT TIES
E405	X	378	4'-1"	X		SHAFT TIES
E1006	X	62	29'-6"			SHAFT VERTICAL
E1007	X	62	25'-6"			SHAFT VERTICAL
E410	X	8	19'-0"	X		SHAFT TO CAP TRANSITION
E611	X	8	17'-0"			SHAFT TO CAP TRANSITION
E612	X	16	9'-1"		⚠	SHAFT TO CAP TRANSITION
E519	X	68	13'-7"	X		CAP STIRRUPS
E520	X	68	9'-5"	X		CAP STIRRUPS
E521	X	136	12'-10"	X		CAP STIRRUPS
E522	X	6	41'-3"			CAP HORIZONTAL BOTTOM
E423	X	6	40'-4"			CAP HORIZONTAL SIDES
E424	X	10	9'-11"	X		CAP HORIZONTAL ENDS
E1025	X	12	40'-5"			CAP HORIZONTAL TOP
E1026	X	24	29'-8"	X		CAP HORIZONTAL TOP
E427	X	20	7'-0"			CAP HORIZONTAL SEATS 2-5
E428	X	5	5'-4"			CAP HORIZONTAL SEAT 1
E429	X	36	10'-5"	X		CAP VERTICAL SEATS 1-5

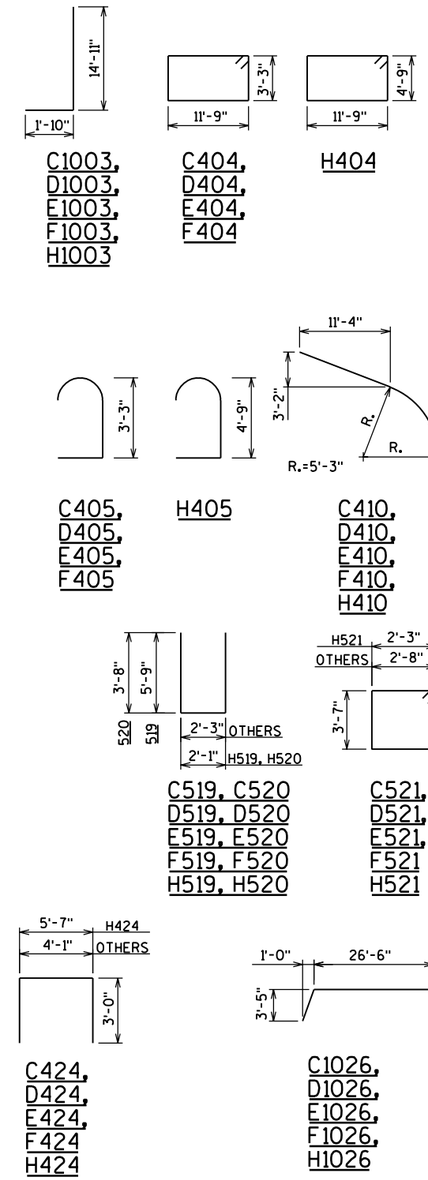

PIER 4 - BILL OF BARS

MARK	COATED	NO. REQ'D.	LENGTH	BENT	BAR SERIES	LOCATION
F801		31	11'-6"			FOOTING HORIZONTAL
F902		22	20'-0"			FOOTING HORIZONTAL
F1003	X	62	16'-6"	X		FOOTING DOWELS
F404	X	43	30'-4"	X		SHAFT TIES
F405	X	387	4'-1"	X		SHAFT TIES
F1006	X	62	29'-6"			SHAFT VERTICAL
F1007	X	62	27'-0"			SHAFT VERTICAL
F410	X	8	19'-0"	X		SHAFT TO CAP TRANSITION
F611	X	8	17'-0"			SHAFT TO CAP TRANSITION
F612	X	16	9'-1"		⚠	SHAFT TO CAP TRANSITION
F519	X	68	13'-7"	X		CAP STIRRUPS
F520	X	68	9'-5"	X		CAP STIRRUPS
F521	X	136	12'-10"	X		CAP STIRRUPS
F522	X	6	41'-3"			CAP HORIZONTAL BOTTOM
F423	X	6	40'-4"			CAP HORIZONTAL SIDES
F424	X	10	9'-11"	X		CAP HORIZONTAL ENDS
F1025	X	12	40'-5"			CAP HORIZONTAL TOP
F1026	X	24	29'-8"	X		CAP HORIZONTAL TOP
F427	X	20	7'-0"			CAP HORIZONTAL SEATS 2-5
F428	X	5	5'-4"			CAP HORIZONTAL SEAT 1
F429	X	36	10'-5"	X		CAP VERTICAL SEATS 1-5
F730	X	25	3'-2"			CAP DOWELS

PIER 5 - BILL OF BARS

MARK	COATED	NO. REQ'D.	LENGTH	BENT	BAR SERIES	LOCATION
H801		31	12'-0"			FOOTING HORIZONTAL
H902		22	20'-0"			FOOTING HORIZONTAL
H1003	X	72	16'-6"	X		FOOTING DOWELS
H404	X	28	33'-4"	X		SHAFT TIES
H405	X	252	5'-8"	X		SHAFT TIES
H1006	X	72	30'-0"			SHAFT VERTICAL
H410	X	8	19'-0"	X		SHAFT TO CAP TRANSITION
H611	X	8	17'-0"			SHAFT TO CAP TRANSITION
H612	X	16	9'-1"		⚠	SHAFT TO CAP TRANSITION
H519	X	108	13'-5"	X		CAP STIRRUPS
H520	X	108	9'-3"	X		CAP STIRRUPS
H521	X	216	12'-0"	X		CAP STIRRUPS
H522	X	6	43'-0"			CAP HORIZONTAL BOTTOM
H823	X	6	42'-0"			CAP HORIZONTAL SIDES
H424	X	10	11'-5"	X		CAP HORIZONTAL ENDS
H1025	X	12	41'-8"			CAP HORIZONTAL TOP
H1026	X	24	29'-8"	X		CAP HORIZONTAL TOP
H430	X	20	7'-0"			CAP HORIZONTAL SEATS 2-5
H431	X	5	5'-4"			CAP HORIZONTAL SEAT 1
H432	X	6	41'-8"			CAP HORIZONTAL
H433	X	46	11'-2"	X		CAP VERTICAL SEATS 1-6
H440	X	5	20'-0"			CAP HORIZONTAL STEEL BOX GIRDER SEAT 'L'
H441	X	21	10'-6"	X		CAP VERTICAL STEEL BOX GIRDER SEAT 'L'
H442	X	40	3'-11"	X		BEARING PEDESTALS
H550	X	14	10'-9"			MASKWALL VERTICAL
H451	X	19	5'-8"			MASKWALL HORIZONTAL

BAR SERIES TABLE

MARK	NO. REQ'D.	LENGTH
C612	4 SERIES OF 4	3'-10" TO 14'-4"
D612	4 SERIES OF 4	3'-10" TO 14'-4"
E612	4 SERIES OF 4	3'-10" TO 14'-4"
F612	4 SERIES OF 4	3'-10" TO 14'-4"
H612	4 SERIES OF 4	3'-10" TO 14'-4"

⚠ LENGTH SHOWN FOR BAR IS AN AVERAGE LENGTH AND SHOULD ONLY BE USED FOR BAR WEIGHT CALCULATIONS. SEE BAR SERIES TABLE FOR ACTUAL LENGTHS. BUNDLE AND TAG EACH SERIES SEPARATELY.

THE FIRST DIGIT OF A THREE DIGIT BAR MARK OR THE FIRST TWO DIGITS OF A FOUR DIGIT BAR MARK INDICATES BAR SIZE. ALL DIMENSIONS IN THE BAR BENDS ARE OUT TO OUT.

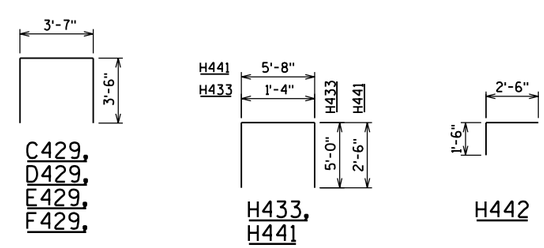

8

8

NO.	DATE	REVISION	BY

STATE OF WISCONSIN
DEPARTMENT OF TRANSPORTATION
STRUCTURES DESIGN SECTION

STRUCTURE B-37-360-001

CONST. SPEC. 2003 | DRAWN BY RBH | PLANS CK'D. JRS

PIER BILL OF BARS

SHEET 13 OF 31
342

STATE PROJECT NUMBER

1166-09-74

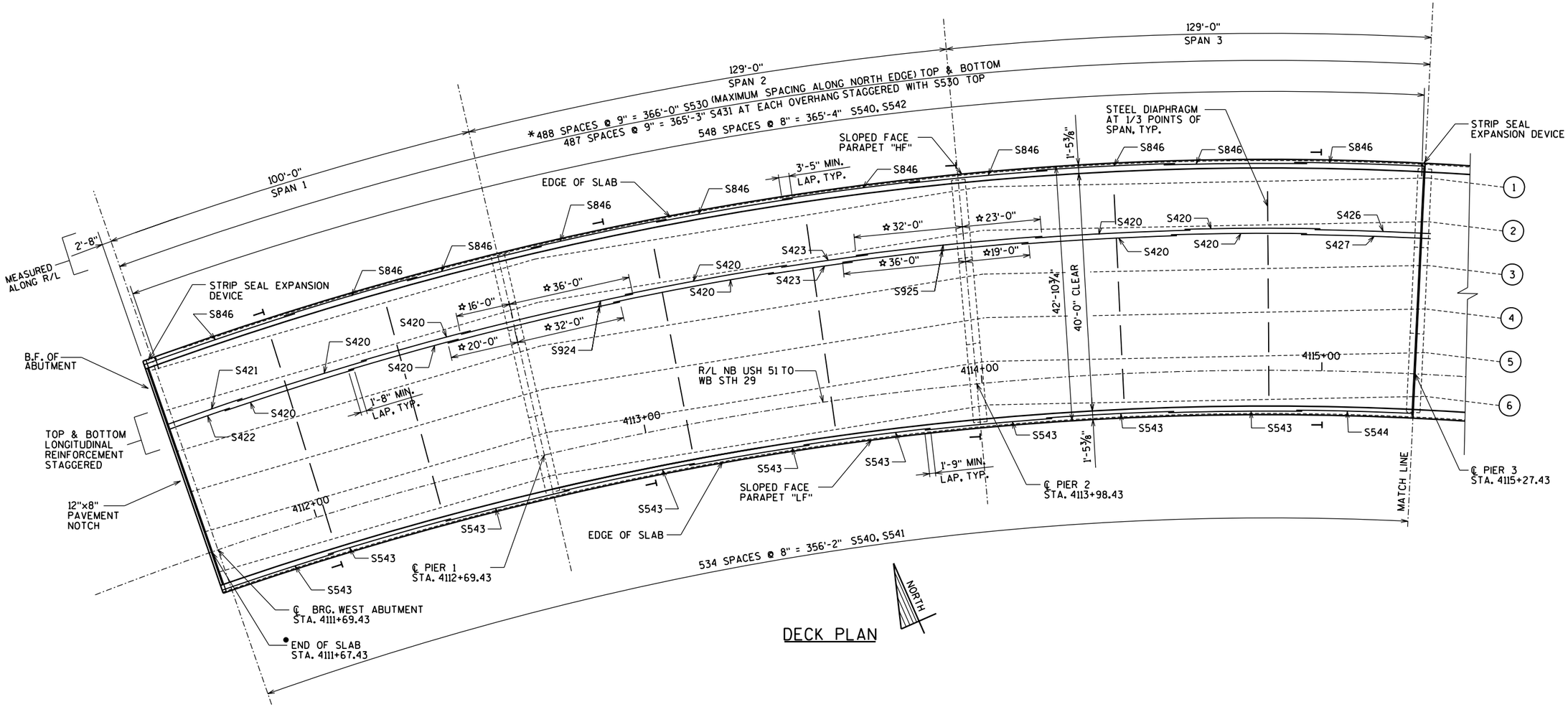

DECK PLAN

TOP OF DECK ELEVATIONS

LOCATION	W. ABUT	0.1 PT.	0.2 PT.	0.3 PT.	0.4 PT.	0.5 PT.	0.6 PT.	0.7 PT.	0.8 PT.	0.9 PT.	PIER 1	0.1 PT.	0.2 PT.	0.3 PT.	0.4 PT.	0.5 PT.	0.6 PT.	0.7 PT.	0.8 PT.	0.9 PT.	PIER 2	0.1 PT.	0.2 PT.	0.3 PT.	0.4 PT.	0.5 PT.	0.6 PT.	0.7 PT.	0.8 PT.	0.9 PT.	PIER 3
EDGE OF SLAB	1222.35	1222.55	1222.75	1222.95	1223.14	1223.33	1223.52	1223.70	1223.88	1224.06	1224.23	1224.45	1224.67	1224.87	1225.08	1225.28	1225.47	1225.66	1225.84	1226.01	1226.18	1226.35	1226.51	1226.67	1226.82	1226.96	1227.10	1227.24	1227.37	1227.49	1227.61
GIRDER 1	1222.21	1222.39	1222.58	1222.77	1222.95	1223.14	1223.33	1223.52	1223.71	1223.90	1224.09	1224.28	1224.47	1224.66	1224.86	1225.05	1225.25	1225.45	1225.64	1225.84	1226.04	1226.18	1226.32	1226.46	1226.60	1226.74	1226.88	1227.03	1227.17	1227.32	1227.46
GIRDER 2	1221.78	1221.96	1222.15	1222.33	1222.52	1222.71	1222.90	1223.09	1223.27	1223.46	1223.65	1223.85	1224.04	1224.23	1224.42	1224.62	1224.82	1225.01	1225.21	1225.41	1225.61	1225.75	1225.89	1226.03	1226.17	1226.31	1226.45	1226.60	1226.74	1226.89	1227.03
GIRDER 3	1221.34	1221.53	1221.71	1221.90	1222.09	1222.28	1222.46	1222.65	1222.84	1223.03	1223.22	1224.41	1223.61	1223.80	1223.99	1224.19	1224.38	1224.58	1224.78	1224.98	1225.17	1225.31	1225.45	1225.59	1225.73	1225.88	1226.02	1226.16	1226.31	1226.45	1226.59
GIRDER 4	1220.91	1221.10	1221.28	1221.47	1221.66	1221.84	1222.03	1222.22	1222.41	1222.60	1222.79	1222.98	1223.17	1223.37	1223.56	1223.76	1223.95	1224.15	1224.35	1224.54	1224.74	1224.88	1225.02	1225.16	1225.30	1225.44	1225.59	1225.73	1225.88	1226.02	1226.16
GIRDER 5	1220.48	1220.66	1220.85	1221.04	1221.22	1221.41	1221.60	1221.79	1221.98	1222.17	1222.36	1222.55	1222.74	1222.93	1223.13	1223.32	1223.52	1223.72	1223.91	1224.11	1224.31	1224.45	1224.59	1224.73	1224.87	1225.01	1225.15	1225.30	1225.44	1225.59	1225.73
GIRDER 6	1220.04	1220.23	1220.42	1220.60	1220.79	1220.98	1221.17	1221.36	1221.54	1221.73	1221.92	1222.12	1222.31	1222.50	1222.70	1222.89	1223.09	1223.28	1223.48	1223.68	1223.88	1224.02	1224.16	1224.30	1224.44	1224.58	1224.72	1224.87	1225.01	1225.16	1225.30
EDGE OF SLAB	1219.83	1220.03	1220.23	1220.42	1220.62	1220.80	1220.99	1221.17	1221.35	1221.53	1221.70	1221.92	1222.14	1222.35	1222.55	1222.75	1222.94	1223.13	1223.31	1223.49	1223.66	1223.83	1223.99	1224.14	1224.29	1224.44	1224.58	1224.71	1224.84	1224.96	1225.08

NOTES:

1. THE BOTTOM TRANSVERSE BAR STEEL REINFORCEMENT SHALL BE SUPPORTED BY CONTINUOUS BAR CHAIRS WITH A CENTER TO CENTER SPACING NOT TO EXCEED 4'-0". ONE LINE OF CONTINUOUS BAR CHAIRS SHALL BE PLACED NEAR EACH EDGE OF SLAB TO SUPPORT THE ENDS OF THE BOTTOM TRANSVERSE BAR STEEL.
2. THE TOP LONGITUDINAL BAR STEEL REINFORCEMENT SHALL BE SUPPORTED BY CONTINUOUS BAR CHAIRS IN TRANSVERSE DIRECTION ON 4'-0" CENTERS.
3. ALL TRANSVERSE BAR STEEL SHALL BE PLACED RADIALLY TO THE R/L NB USH 51 TO WB STH 29.
4. ALL LONGITUDINAL BAR STEEL SHALL BE PLACED CONCENTRIC TO R/L NB USH 51 TO WB STH 29.

LEGEND

* PLACE RADIALLY. OFFSET BARS AS SHOWN ON "SUPERSTRUCTURE DETAILS" SHEET.

● END OF SLAB = END OF PAVING NOTCH. SEE SECTION AT ABUTMENT ON THE "SUPERSTRUCTURE DETAILS 2" SHEET FOR FURTHER INFORMATION.

☆ STAGGER OFFSET AS SHOWN FOR EACH ADJACENT BAR

(X) GIRDER NUMBER

⊣ "DELINEATOR" AND "DELINATOR BRACKETS" MOUNTED ON TOP OF THE PARAPET, SPACED APPROX. 100' ALONG THE RIGHT SIDE OF THE BRIDGE. YELLOW, ON THE LEFT SIDE OF THE ROADWAY. CRYSTAL, ON THE RIGHT SIDE OF THE ROADWAY. THE LEFT SIDE AND RIGHT SIDE DELINEATORS SHALL BE PERPRNDICULAR FROM EACH OTHER.

THE UNIT SHALL BE INSTALLED AS RECOMMENDED BY THE MANUFACTURER AND THE ADHESIVE SHALL BE APPLIED TO THE BASE OF THE DELINEATOR FOR BONDING TO CONCRETE BARRIER. DO NOT INSTALL WHEN TEMPERATURES LESS THAN 50° FAHRENHEIT.

NO.	DATE	REVISION	BY

STATE OF WISCONSIN
DEPARTMENT OF TRANSPORTATION
STRUCTURES DESIGN SECTION

STRUCTURE B-37-360-001

CONST. SPEC. 2003 | DRAWN BY RBH | PLANS CK'D. JRS

SUPERSTRUCTURE PLAN SPANS 1-3

SHEET 14 OF 31
343

STATE PROJECT NUMBER

1166-09-74

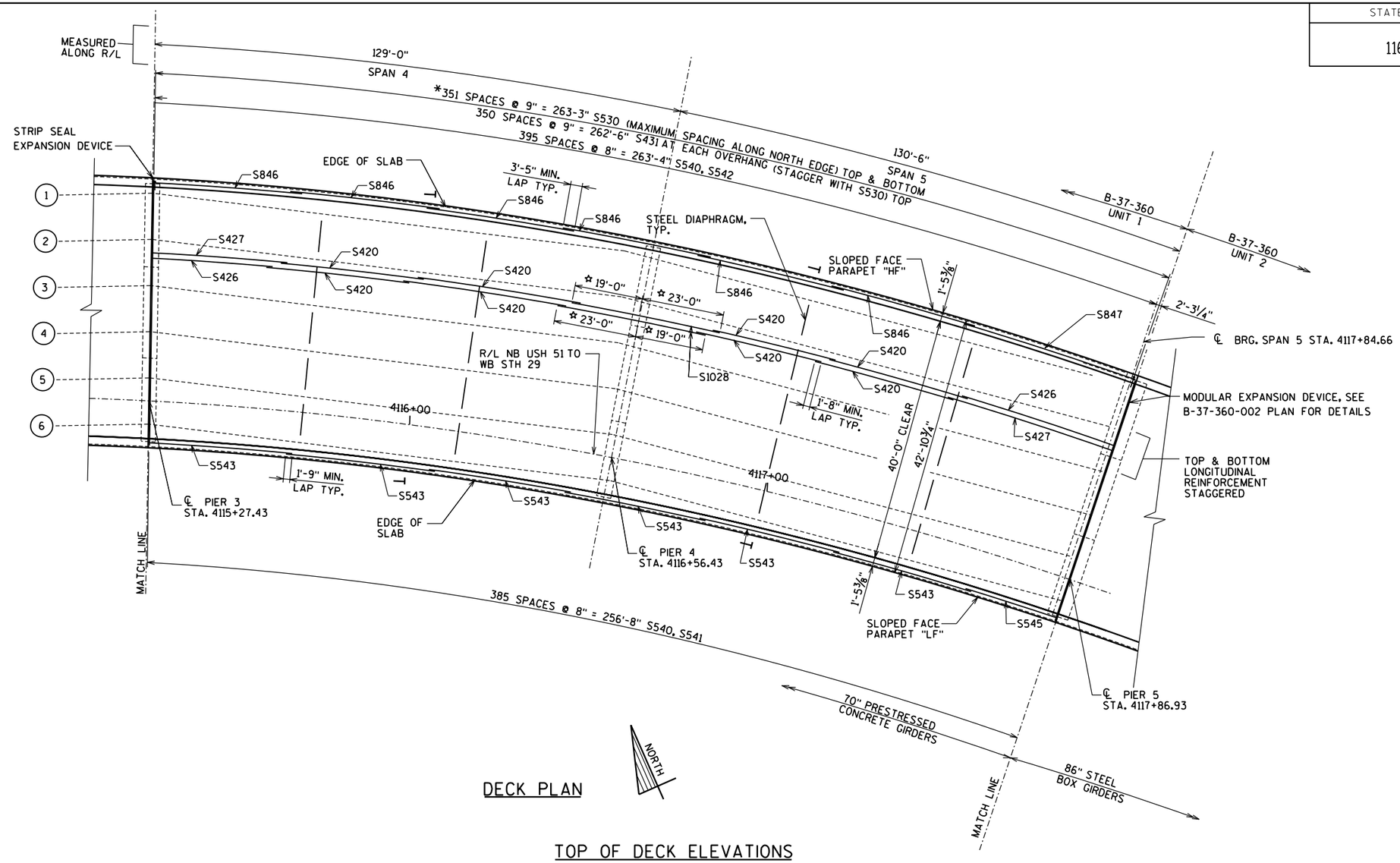

DECK PLAN

TOP OF DECK ELEVATIONS

LOCATION	PIER 3	0.1 PT.	0.2 PT.	0.3 PT.	0.4 PT.	0.5 PT.	0.6 PT.	0.7 PT.	0.8 PT.	0.9 PT.	PIER 4	0.1 PT.	0.2 PT.	0.3 PT.	0.4 PT.	0.5 PT.	0.6 PT.	0.7 PT.	0.8 PT.	0.9 PT.	PIER 5
EDGE OF SLAB	1227.61	1227.72	1227.83	1227.93	1228.03	1228.12	1228.21	1228.29	1228.37	1228.44	1228.50	1228.56	1228.62	1228.67	1228.71	1228.75	1228.79	1228.81	1228.84	1228.85	1228.86
GIRDER 1	1227.46	1227.55	1227.64	1227.72	1227.81	1227.90	1227.99	1228.08	1228.17	1228.26	1228.35	1228.39	1228.42	1228.46	1228.49	1228.53	1228.56	1228.60	1228.64	1228.68	1228.71
GIRDER 2	1227.03	1227.12	1227.20	1227.29	1227.38	1227.47	1227.56	1227.65	1227.74	1227.83	1227.92	1227.96	1227.99	1228.02	1228.06	1228.09	1228.13	1228.17	1228.21	1228.25	1228.28
GIRDER 3	1226.59	1226.68	1226.77	1226.86	1226.95	1227.03	1227.12	1227.22	1227.31	1227.40	1227.49	1227.52	1227.56	1227.59	1227.63	1227.66	1227.70	1227.74	1227.78	1227.82	1227.85
GIRDER 4	1226.16	1226.25	1226.34	1226.43	1226.51	1226.60	1226.69	1226.78	1226.87	1226.97	1227.06	1227.09	1227.13	1227.16	1227.19	1227.23	1227.27	1227.30	1227.34	1227.38	1227.42
GIRDER 5	1225.73	1225.82	1225.91	1225.99	1226.08	1226.17	1226.26	1226.35	1226.44	1226.53	1226.62	1226.66	1226.69	1226.73	1226.76	1226.80	1226.83	1226.87	1226.91	1226.95	1226.98
GIRDER 6	1225.30	1225.39	1225.47	1225.56	1225.65	1225.74	1225.83	1225.92	1226.01	1226.10	1226.19	1226.23	1226.26	1226.29	1226.33	1226.37	1226.40	1226.44	1226.48	1226.52	1226.55
EDGE OF SLAB	1225.08	1225.20	1225.30	1225.41	1225.50	1225.60	1225.68	1225.76	1225.84	1225.91	1225.97	1226.04	1226.09	1226.14	1226.19	1226.23	1226.26	1226.29	1226.31	1226.33	1226.34

NOTES:

1. THE BOTTOM TRANSVERSE BAR STEEL REINFORCEMENT SHALL BE SUPPORTED BY CONTINUOUS BAR CHAIRS WITH A CENTER TO CENTER SPACING NOT TO EXCEED 4'-0". ONE LINE OF CONTINUOUS BAR CHAIRS SHALL BE PLACED NEAR EACH EDGE OF SLAB TO SUPPORT THE ENDS OF THE BOTTOM TRANSVERSE BAR STEEL.
2. THE TOP LONGITUDINAL BAR STEEL REINFORCEMENT SHALL BE SUPPORTED BY CONTINUOUS BAR CHAIRS IN TRANSVERSE DIRECTION ON 4'-0" CENTERS.
3. ALL TRANSVERSE BAR STEEL SHALL BE PLACED RADIALLY TO THE R/L NB USH 51 TO WB STH 29.
4. ALL LONGITUDINAL BAR STEEL SHALL BE PLACED CONCENTRIC TO R/L NB USH 51 TO WB STH 29.

LEGEND

* PLACE RADIALLY. OFFSET BARS AS SHOWN ON "SUPERSTRUCTURE DETAILS" SHEET.

● END OF SLAB = END OF PAVING NOTCH. SEE SECTION AT ABUTMENT ON THE "SUPERSTRUCTURE DETAILS 2" SHEET FOR FURTHER INFORMATION.

☆ STAGGER OFFSET AS SHOWN FOR EACH ADJACENT BAR

(X) GIRDER NUMBER

⊢ "DELINEATOR" AND "DELINATOR BRACKETS" MOUNTED ON TOP OF THE PARAPET, SPACED APPROX. 100' ALONG THE RIGHT SIDE OF THE BRIDGE. YELLOW, ON THE LEFT SIDE OF THE ROADWAY, CRYSTAL, ON THE RIGHT SIDE OF THE ROADWAY. THE LEFT SIDE AND RIGHT SIDE DELINEATORS SHALL BE PERPRNDICULAR FROM EACH OTHER.

THE UNIT SHALL BE INSTALLED AS RECOMMENDED BY THE MANUFACTURER AND THE ADHESIVE SHALL BE APPLIED TO THE BASE OF THE DELINEATOR FOR BONDING TO CONCRETE BARRIER. DO NOT INSTALL WHEN TEMPERATURES LESS THAN 50° FAHRENHEIT.

NO.	DATE	REVISION	BY

STATE OF WISCONSIN
DEPARTMENT OF TRANSPORTATION
STRUCTURES DESIGN SECTION

STRUCTURE B-37-360-001

CONST. SPEC. 2003 | DRAWN BY RBH | PLANS CK'D. JRS

SUPERSTRUCTURE PLAN SPANS 4 & 5

SHEET 15 OF 31
344

STATE PROJECT NUMBER

1166-09-74

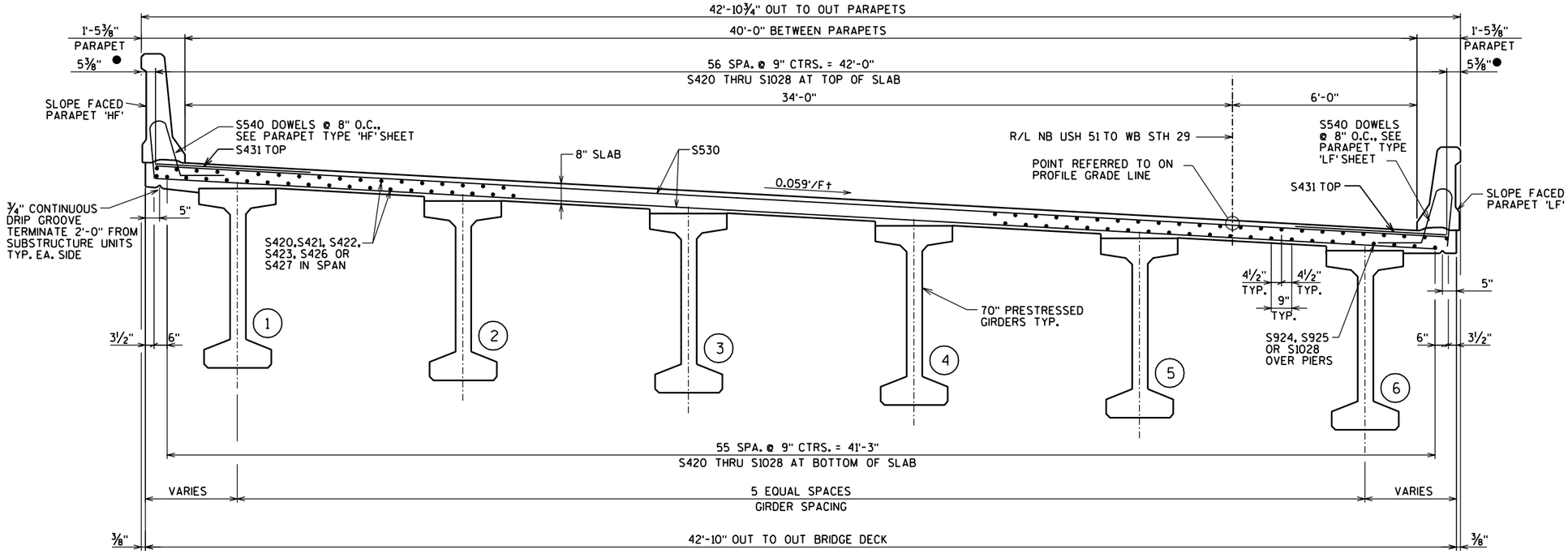

DECK CROSS SECTION

LEGEND

● 5 " FROM EDGE OF DECK

(X) GIRDER NUMBER

◪ SLAB THICKNESS SHALL BE INCREASED TO CONCEAL INTERSECTION OF SLAB AND TOP OF GIRDER

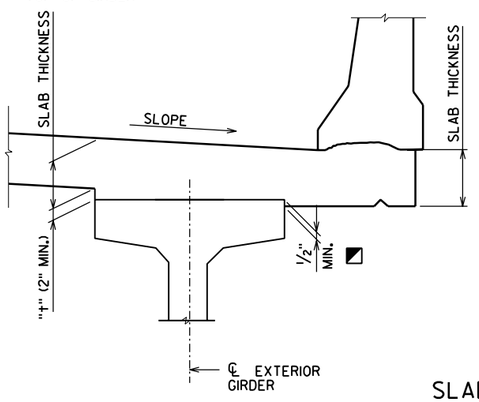

LOOKING EAST

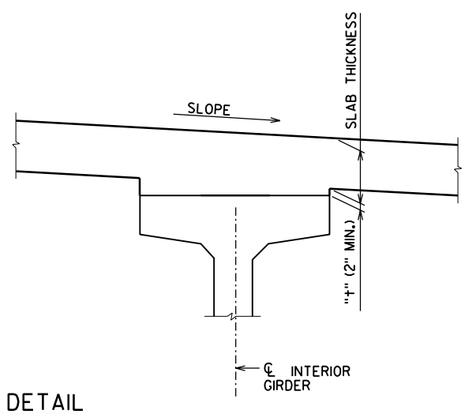

SLAB HAUNCH DETAIL

IF 2" MINIMUM HAUNCH HEIGHT 't' CANNOT BE MAINTAINED, THE GRADE LINE SHALL BE REVISED BY THE CONTRACTOR WITH THE APPROVAL OF THE ENGINEER. THE PLAN SLAB THICKNESS SHALL BE HELD. MAXIMUM HAUNCH HEIGHT EQUALS "STIRRUP PROJECTION" MINUS 3 INCHES.

TO DETERMINE 't': ELEVATION OF TOP OF GIRDERS AT ℄ OF SUBSTRUCTURE UNITS AND AT 0.1 POINTS OF EACH SPAN SHALL BE TAKEN. THEN FOLLOW THIS PROCESS:

TOP OF DECK EL. AT FINAL GRADE
- TOP OF GIRDER ELEVATION
+ DEADLOAD DEFLECTION
- SLAB THICKNESS
= HAUNCH HEIGHT 't'

NOTE:
SEE GIRDER SHEET FOR DEAD LOAD DEFLECTIONS.

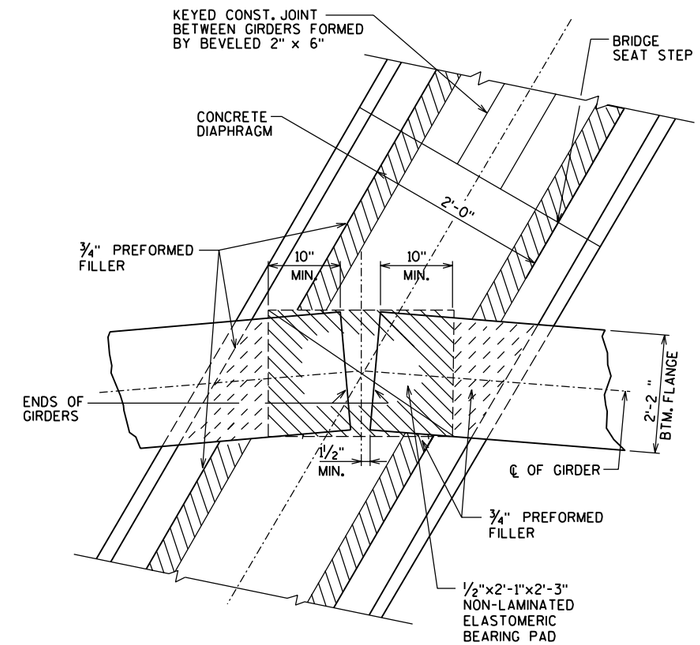

FIXED BEARING DETAIL (AT PIERS 1,2 & 4)

8

8

NO.	DATE	REVISION	BY

STATE OF WISCONSIN
DEPARTMENT OF TRANSPORTATION
STRUCTURES DESIGN SECTION

STRUCTURE B-37-360-001

CONST. SPEC.	2003	DRAWN BY	RBH	PLANS CK'D.	JRS

SUPERSTRUCTURE DETAILS - 1

SHEET 16 OF 31
345

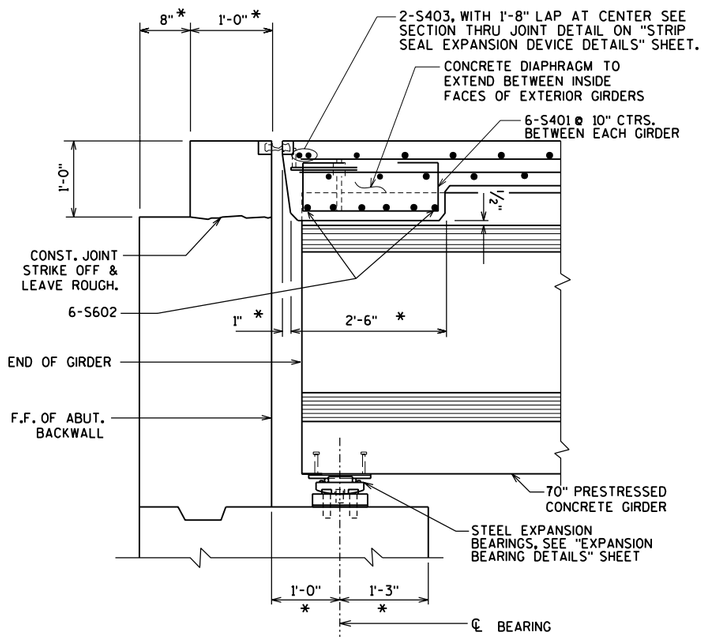

AT ABUTMENT

NOTE: FOR EXPANSION DEVICE DETAILS NOT SHOWN. SEE "EXPANSION DEVICE DETAILS" SHEET

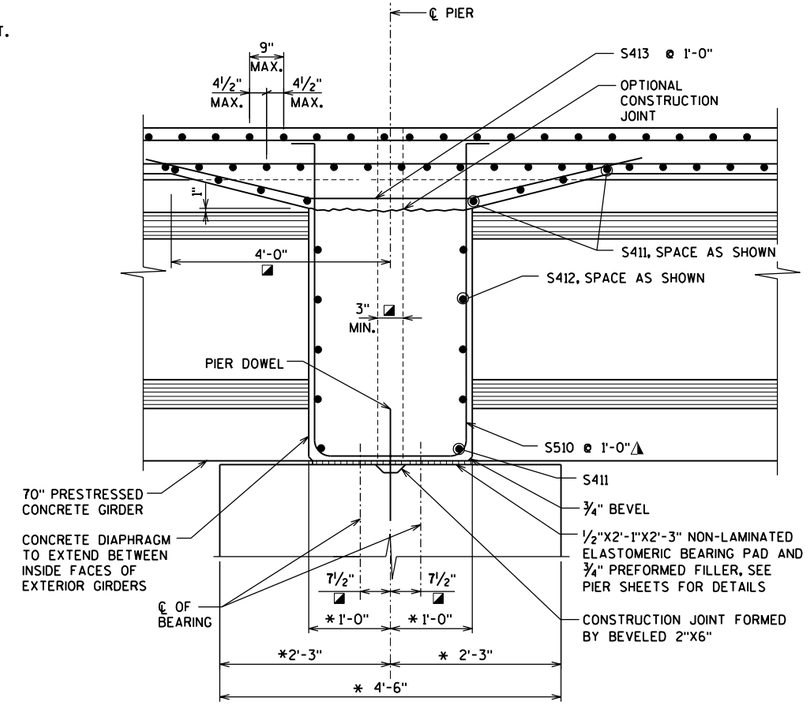

AT FIXED PIERS

(PIERS 1,2 & 4)

PART LONGITUDINAL SECTION

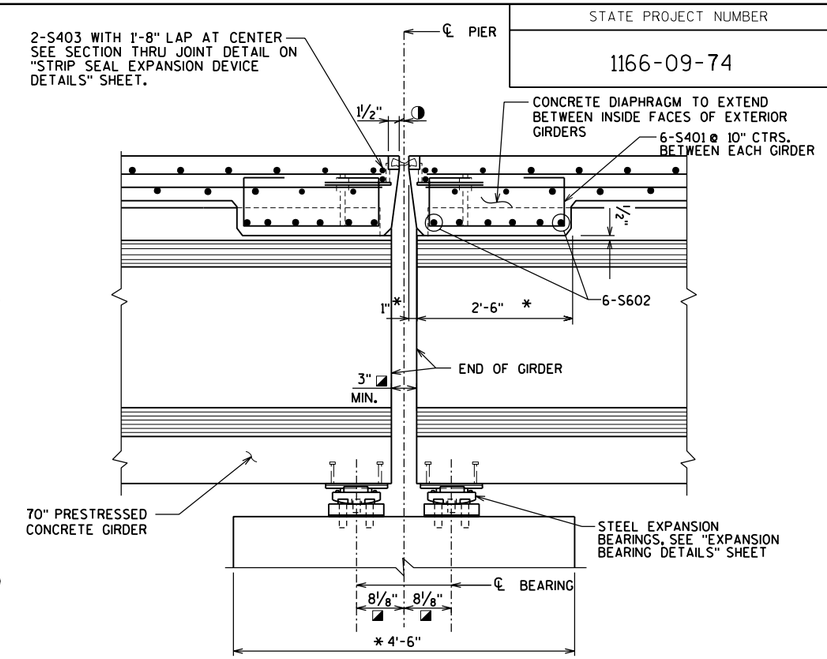

AT EXPANSION PIER 3

NOTE: FOR EXPANSION DEVICE DETAILS NOT SHOWN. SEE "EXPANSION DEVICE DETAILS" SHEET

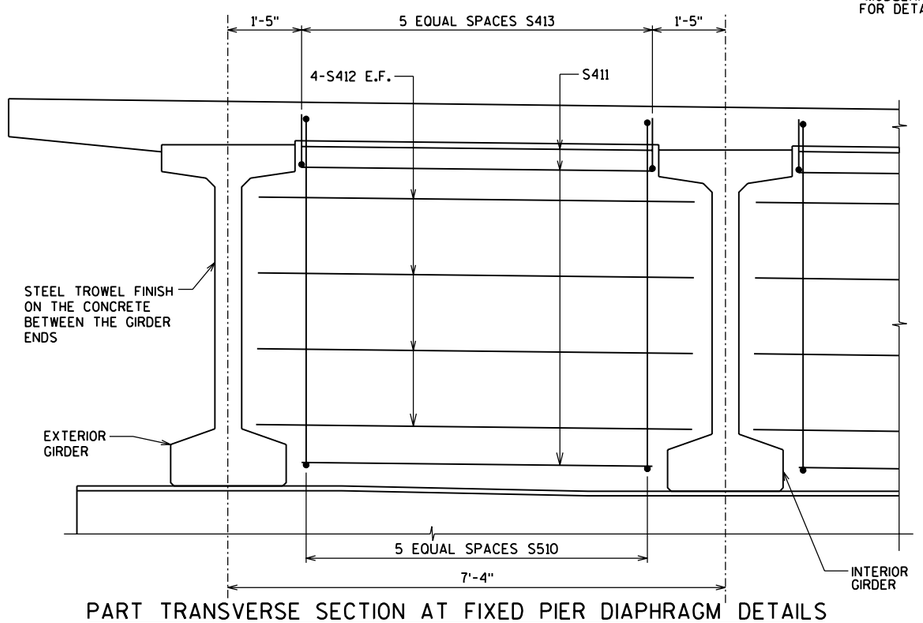

PART TRANSVERSE SECTION AT FIXED PIER DIAPHRAGM DETAILS

(PIERS 1,2 & 4)

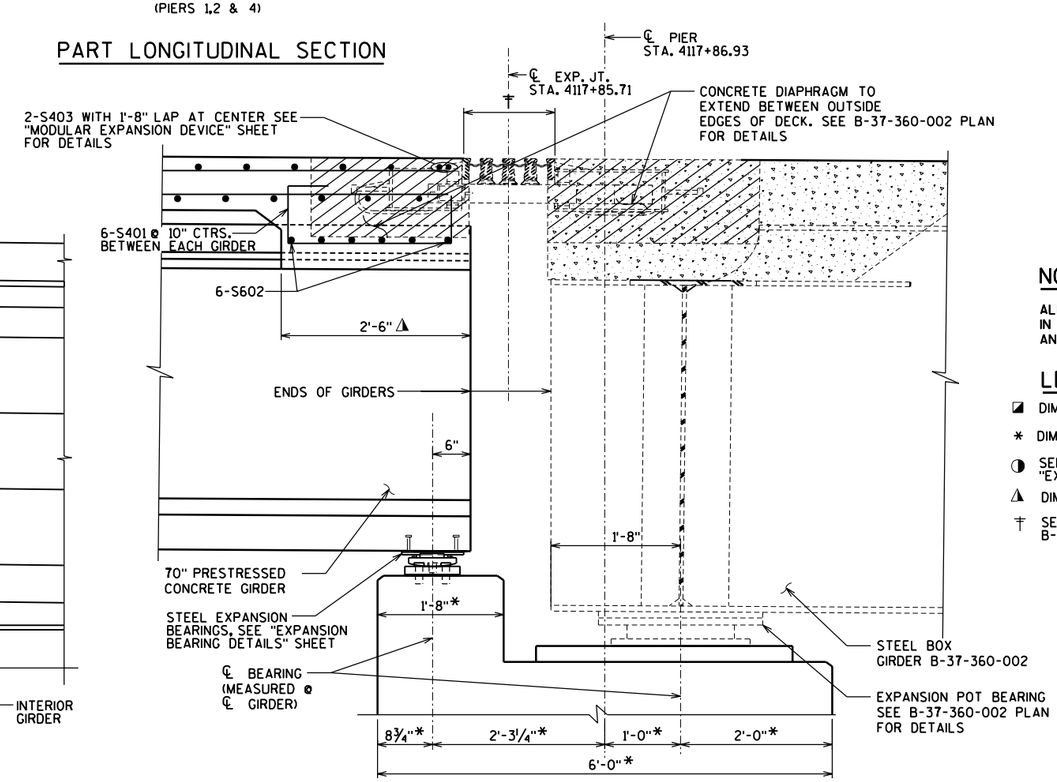

PART LONGITUDINAL SECTION AT PIER 5

NOTES

ALL VERTICAL BAR STEEL REINFORCEMENT IN CONCRETE DIAPHRAGMS SHALL BE SPACED AND PLACED PARALLEL TO GIRDERS

LEGEND

- ◪ DIMENSION IS PARALLEL TO GIRDER
- * DIMENSION IS TAKEN NORMAL TO ℄ SUBSTRUCTURE UNITS.
- ◑ SEE TEMPERATURE TABLE ON STRIP SEAL "EXPANSION DEVICE" SHEET
- ◭ DIMENSION TAKEN PERPENDICULAR TO GIRDER
- ‡ SEE "MODULAR EXPANSION DEVICE" SHEET IN B-37-360-002 PLANS.

NO.	DATE	REVISION	BY

STATE OF WISCONSIN
DEPARTMENT OF TRANSPORTATION
STRUCTURES DESIGN SECTION

STRUCTURE B-37-360-001

CONST. SPEC. 2003 | DRAWN BY RBH | PLANS CK'D. JRS

SUPERSTRUCTURE DETAILS 2

SHEET 17 OF 31
346

TOTAL WEIGHT = 224,550 LBS

SUPERSTRUCTURE - BILL OF BARS

MARK	COATED	NO. REQ'D.	LENGTH	BENT	BAR SERIES	LOCATION
S401	X	120	4'-8"	X		ABUTMENT, PIERS 3 & 5 DIAPHRAM VERTICAL
S602	X	120	4'-6"			ABUTMENT, PIERS 3 & 5 DIAPHRAM HORIZONTAL
S403	X	16	22'-3"			ABUTMENT, PIERS 3 & 5 DIAPHRAM HORIZONTAL
S510	X	90	15'-10"	X		PIERS 1, 2 & 4 DIAPHRAM VERTICAL
S411	X	150	4'-6"			PIERS 1, 2 & 4 DIAPHRAM HORIZONTAL
S412	X	120	6'-8"			PIERS 1, 2 & 4 DIAPHRAM HORIZONTAL
S413	X	90	9'-7"	X		PIERS 1, 2 & 4 DIAPHRAM VERTICAL
S420	X	1035	40'-0"			DECK LONGITUDINAL SPAN 1-6
S421	X	58	11'-6"			DECK LONGITUDINAL SPAN 1
S422	X	57	7'-6"			DECK LONGITUDINAL SPAN 1
S423	X	115	29'-2"			DECK LONGITUDINAL SPAN 2
S924	X	115	52'-0"			DECK LONGITUDINAL OVER PIER 1
S925	X	115	55'-0"			DECK LONGITUDINAL OVER PIER 2
S426	X	171	34'-2"			DECK LONGITUDINAL SPAN 3, 4 & 5
S427	X	174	38'-2"			DECK LONGITUDINAL SPAN 3, 4 & 5
S1028	X	115	42'-0"			DECK LONGITUDINAL OVER PIER 4
S530	X	1682	42'-6"			DECK TRANSVERSE TOP AND BOTTOM
S431	X	1678	5'-6"			DECK TRANSVERSE TOP @ OVERHANGS
S540	X	1866	4'-7"	X		DECK PARAPET DOWELS
S541	X	921	4'-10"	X		PARAPET VERT. @ SOUTH EDGE OF DECK
S542	X	945	6'-6"	X		PARAPET VERT. @ NORTH EDGE OF DECK
S543	X	75	40'-0"			PARAPET LONGITUDINAL @ SOUTH SIDE
S544	X	5	12'-4"			PARAPET LONGITUDINAL @ SOUTH SIDE
S545	X	5	27'-6"			PARAPET LONGITUDINAL @ SOUTH SIDE
S846	X	128	40'-0"			PARAPET LONGITUDINAL @ NORTH SIDE
S847	X	8	37'-0"			PARAPET LONGITUDINAL @ NORTH SIDE

THE FIRST DIGIT OF A 3 DIGIT OR THE FIRST TWO DIGITS OF A FOUR DIGIT BAR MARK INDICATES BAR SIZE. ALL DIMENSIONS IN THE BAR BENDS ARE OUT TO OUT.

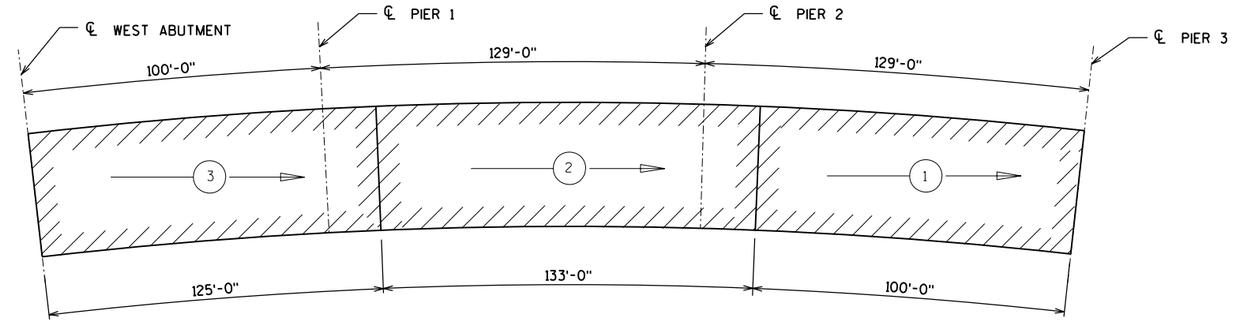

SLAB POURING SEQUENCE - SPANS 1 - 3

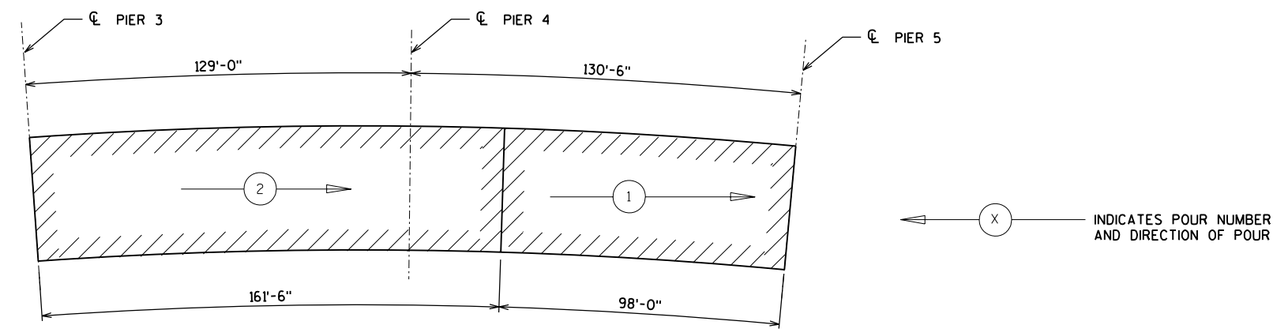

SLAB POURING SEQUENCE - SPANS 4 & 5

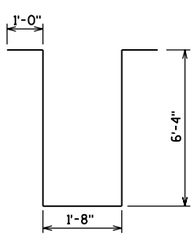

S510

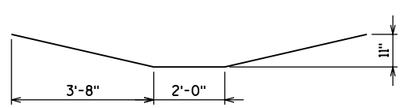

S413

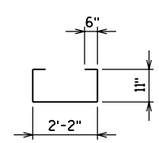

S401

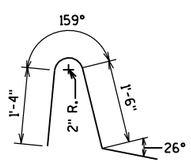

S540

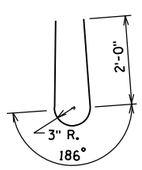

S541

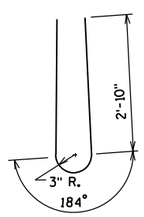

S542

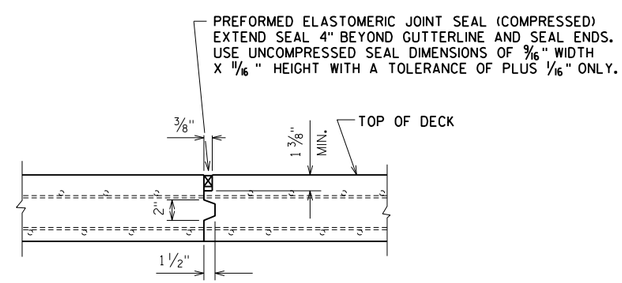

SECTION P

NOTES ON PLANS

THE RATE OF PLACING CONCRETE SHALL EQUAL OR EXCEED 1/2 SPAN LENGTH PER HOUR BUT NEED NOT EXCEED 100 CU. YDS. PER HOUR.

TRANSVERSE CONSTRUCTION JOINTS MAY BE OMITTED WITH THE APPROVAL OF THE STRUCTURES DESIGN SECTION.

TWO OR MORE ALTERNATE POURS MAY BE PLACED ON THE SAME DAY.

THE CONTRACTOR MAY SUBMIT AN ALTERNATE POURING SEQUENCE SUBJECT TO THE APPROVAL OF THE STRUCTURES DESIGN SECTION.

8

8

NO.	DATE	REVISION	BY

STATE OF WISCONSIN
DEPARTMENT OF TRANSPORTATION
STRUCTURES DESIGN SECTION

STRUCTURE B-37-360-001

CONST. SPEC.	2003	DRAWN BY	RBH	PLANS CK'D.	JRS

SUPERSTRUCTURE DETAILS - 3

STATE PROJECT NUMBER

1166-09-74

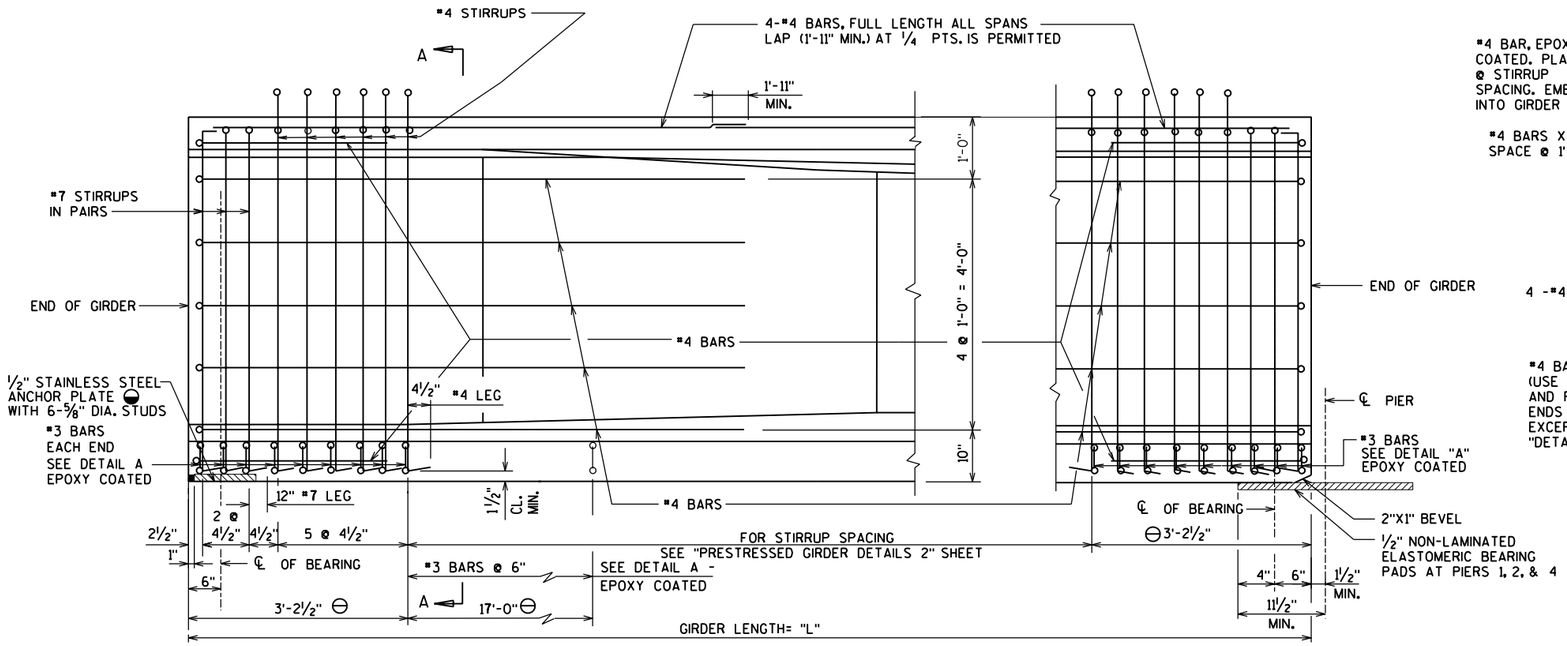

⊖ DETAIL TYPICAL AT EACH END

AT SUPPORT WITH STEEL EXPANSION BRGS.

SIDE VIEW OF GIRDER

AT SUPPORT WITH 1/2" ELASTOMERIC BRG. PADS

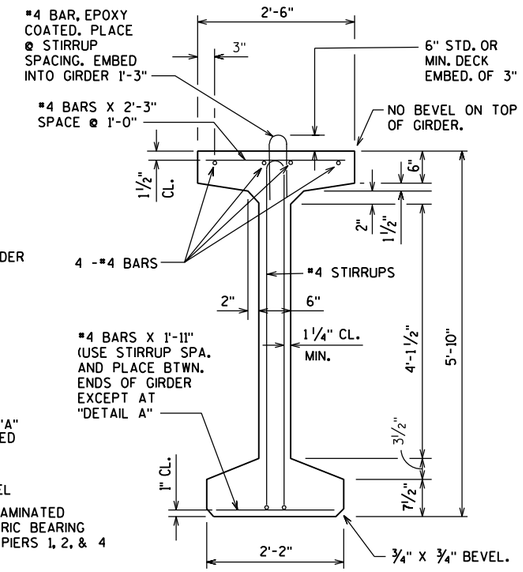

SECTION THRU GIRDER

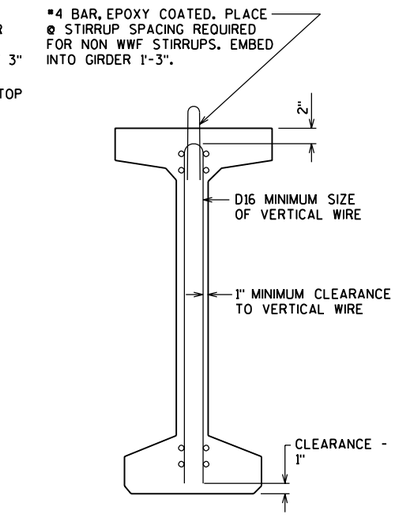

SECTION THRU GIRDER

SHOWING WELDED WIRE FABRIC (WWF) STIRRUPS

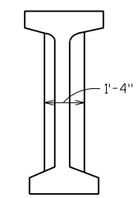

SECTION A-A

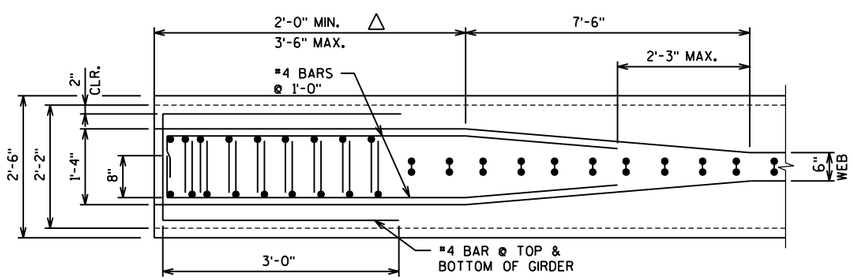

TOP VIEW OF GIRDER ⊖

GIRDER NOTES

THE GIRDERS SHALL BE PROVIDED WITH A SUITABLE LIFTING DEVICE FOR HANDLING AND ERECTING THE GIRDERS. ALL GIRDERS SHALL BE CAST FULL LENGTH AS SHOWN.

STRANDS SHALL BE FLUSH WITH END OF GIRDER. ENDS OF STRANDS SHALL BE PAINTED WITH NON-STAINING GRAY NON-BITUMINOUS JOINT SEALER. THIS APPLIES ONLY TO THOSE ENDS OF GIRDERS THAT ARE FINALLY EXPOSED.

TOP OF GIRDER TO BE ROUGH FLOATED AND BROOMED TRANSVERSELY FOR BONDING TO THE SLAB, EXCEPT THE OUTSIDE 2" OF GIRDER, WHICH SHALL BE TROWEL FINISHED.

SPACING SHOWN FOR #4 STIRRUPS IS FOR GRADE 60 REINFORCEMENT. IF THE FABRICATOR WANTS TO BUILD A BAR STEEL CAGE BY WELDING LONGITUDINAL REINFORCEMENT TO THE #4 STIRRUPS, TWO OPTIONS ARE AVAILABLE:

1. USE ASTM A706, GRADE 60 REINFORCEMENT AND THE STIRRUP SPACING AS SHOWN ON THE PLANS.

2. USE ASTM A615, GRADE 40 REINFORCEMENT AND A MODIFIED STIRRUP SPACING SUBMITTED TO AND APPROVED BY THE STRUCTURES DEVELOPMENT SECTION.

AN ALTERNATE EQUIVALENT OF WELDED WIRE FABRIC (WWF) MAY BE SUBSTITUTED FOR THE STIRRUP REINFORCEMENT SHOWN, UPON APPROVAL OF THE STRUCTURES DEVELOPMENT SECTION. (608) 266-8494

WELDED WIRE FABRIC SHALL CONFORM TO THE REQUIREMENTS OF ASTM A497.

IF THE CONTRACTOR USES THE BOTTOM FLANGE TO SUPPORT CONSTRUCTION FORMS, THE CONTRACTOR SHALL SUBMIT FALSEWORK PLANS FOR APPROVAL BY THE STRUCTURES DESIGN SECTION.

△ SET THE END BLOCK LENGTHS OF GIRDERS RESTING ON THE SAME PIER TO 2"+/-.

BID ITEM SHALL BE "PRESTRESSED GIRDER, I-TYPE, 70-INCH".

◒ STAINLESS STEEL ANCHOR PLATE ONLY AT THE ENDS AT THE WEST ABUTMENT, PIER 3 AND PIER 5. SEE "EXPANSION BEARING DETAILS" SHEET FOR THE 6-5/8" DIAMETER STUDS.

APPROX. CONCRETE HAUNCH DEPTHS ARE AS FOLLOWS:

W. ABUTMENT:	2 1/4"
MIDSPAN 1:	2"
PIER 1:	3 1/4"
MIDSPAN 2:	2 5/8"
PIER 2:	4 1/4"
MIDSPAN 3:	2"
PIER 3:	4 1/4"
MIDSPAN 4:	2"
PIER 4:	4"
MIDSPAN 5:	2"
PIER 5:	3 7/8"

NOTE: HAUNCH DEPTHS ARE TAKEN AT EDGE OF GIRDER AT LOW SIDE OF SUPERELEVATION

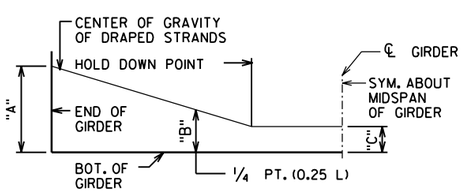

DRAPED STRAND PROFILE

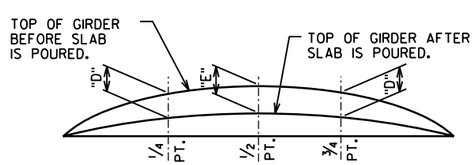

DEAD LOAD DEFLECTION DIAGRAM

NO.	DATE	REVISION	BY

STATE OF WISCONSIN
DEPARTMENT OF TRANSPORTATION
STRUCTURES DESIGN SECTION

STRUCTURE B-37-360-001

CONST. SPEC. 2003 | DRAWN BY RBH | PLANS CK'D. JRS

70" PRESTRESSED GIRDER DETAILS 1

SHEET 19 OF 31
348

8

8

STATE PROJECT NUMBER

1166-09-74

SPAN 1 GIRDER DATA

GIRDER NO.	GIRDER LENGTH "L"	DEAD LOAD DEFL. (IN.) "D"	DEAD LOAD DEFL. (IN.) "E"	CONCRETE STRENGTH f'c (PSI)	TOTAL INTIAL PRESTRESS FORCE (KIPS)	DIA. OF STRANDS (IN.)	TOTAL No. OF STRANDS	RELEASE STRENGTH f'ci (PSI) *	DRAPED PATTERN INCHES "A"	DRAPED PATTERN INCHES "B" MIN.	DRAPED PATTERN INCHES "B" MAX.	DRAPED PATTERN INCHES "C"	#4 STIRRUP SPACING FROM 3'-2½" TO 0.1 L	#4 STIRRUP SPACING FROM 0.1L TO 0.2 L	#4 STIRRUP SPACING FROM 0.2L TO 0.5 L	#5 STIRRUP SPACING FROM 3'-2½" TO 0.1 L	#5 STIRRUP SPACING FROM 0.1L TO 0.2 L	#5 STIRRUP SPACING FROM 0.2L TO 0.5 L
1	102'-4⅝"	½	⅝	7,000	879	0.6	20	4,800	52	16	19	4	12"	15"	16"	16"	16"	16"
2	101'-11⅛"	½	⅝	7,000	879	0.6	20	4,800	52	16	19	4	12"	15"	16"	16"	16"	16"
3	101'-5⅝"	½	⅝	7,000	879	0.6	20	4,800	52	16	19	4	12"	15"	16"	16"	16"	16"
4	101'-0⅛"	½	⅝	7,000	879	0.6	20	4,800	52	16	19	4	12"	15"	16"	16"	16"	16"
5	100'-6⅝"	½	⅝	7,000	879	0.6	20	4,800	52	16	19	4	12"	15"	16"	16"	16"	16"
6	100'-1"	½	⅝	7,000	879	0.6	20	4,800	52	16	19	4	12"	15"	16"	16"	16"	16"

SPAN 2 GIRDER DATA

GIRDER NO.	GIRDER LENGTH "L"	DEAD LOAD DEFL. (IN.) "D"	DEAD LOAD DEFL. (IN.) "E"	CONCRETE STRENGTH f'c (PSI)	TOTAL INTIAL PRESTRESS FORCE (KIPS)	DIA. OF STRANDS (IN.)	TOTAL No. OF STRANDS	RELEASE STRENGTH f'ci (PSI) *	DRAPED PATTERN INCHES "A"	DRAPED PATTERN INCHES "B" MIN.	DRAPED PATTERN INCHES "B" MAX.	DRAPED PATTERN INCHES "C"	#4 STIRRUP SPACING FROM 3'-2½" TO 0.1 L	#4 STIRRUP SPACING FROM 0.1L TO 0.2 L	#4 STIRRUP SPACING FROM 0.2L TO 0.5 L	#5 STIRRUP SPACING FROM 3'-2½" TO 0.1 L	#5 STIRRUP SPACING FROM 0.1L TO 0.2 L	#5 STIRRUP SPACING FROM 0.2L TO 0.5 L
1	131'-3⅜"	1¼	1¾	7,000	1,318	0.6	30	5,200	66	19.5	22.5	4	9"	12"	16"	12"	16"	16"
2	130'-8¼"	1¼	1¾	7,000	1,318	0.6	30	5,200	66	19.5	22.5	4	9"	12"	16"	12"	16"	16"
3	130'-1⅛"	1¼	1¾	7,000	1,318	0.6	30	5,200	66	19.5	22.5	4	9"	12"	16"	12"	16"	16"
4	129'-6"	1¼	1¾	7,000	1,318	0.6	30	5,200	66	19.5	22.5	4	9"	12"	16"	12"	16"	16"
5	128'-10⅞"	1¼	1¾	7,000	1,318	0.6	30	5,200	66	19.5	22.5	4	9"	12"	16"	12"	16"	16"
6	128'-3¾"	1¼	1¾	7,000	1,318	0.6	30	5,200	66	19.5	22.5	4	9"	12"	16"	12"	16"	16"

SPAN 3 GIRDER DATA

GIRDER NO.	GIRDER LENGTH "L"	DEAD LOAD DEFL. (IN.) "D"	DEAD LOAD DEFL. (IN.) "E"	CONCRETE STRENGTH f'c (PSI)	TOTAL INTIAL PRESTRESS FORCE (KIPS)	DIA. OF STRANDS (IN.)	TOTAL No. OF STRANDS	RELEASE STRENGTH f'ci (PSI) *	DRAPED PATTERN INCHES "A"	DRAPED PATTERN INCHES "B" MIN.	DRAPED PATTERN INCHES "B" MAX.	DRAPED PATTERN INCHES "C"	#4 STIRRUP SPACING FROM 3'-2½" TO 0.1 L	#4 STIRRUP SPACING FROM 0.1L TO 0.2 L	#4 STIRRUP SPACING FROM 0.2L TO 0.5 L	#5 STIRRUP SPACING FROM 3'-2½" TO 0.1 L	#5 STIRRUP SPACING FROM 0.1L TO 0.2 L	#5 STIRRUP SPACING FROM 0.2L TO 0.5 L
1	131'-3⅜"	1¼	1¾	7,000	1,670	0.6	38	6,200	65	20	23	5	7"	12"	16"	12"	16"	16"
2	130'-8¼"	1¼	1¾	7,000	1,670	0.6	38	6,200	65	20	23	5	7"	12"	16"	12"	16"	16"
3	130'-1⅛"	1¼	1¾	7,000	1,670	0.6	38	6,200	65	20	23	5	7"	12"	16"	12"	16"	16"
4	129'-6"	1¼	1¾	7,000	1,670	0.6	38	6,200	65	20	23	5	7"	12"	16"	12"	16"	16"
5	128'-10⅞"	1¼	1¾	7,000	1,670	0.6	38	6,200	65	20	23	5	7"	12"	16"	12"	16"	16"
6	128'-3¾"	1¼	1¾	7,000	1,670	0.6	38	6,200	65	20	23	5	7"	12"	16"	12"	16"	16"

SPAN 4 GIRDER DATA

GIRDER NO.	GIRDER LENGTH "L"	DEAD LOAD DEFL. (IN.) "D"	DEAD LOAD DEFL. (IN.) "E"	CONCRETE STRENGTH f'c (PSI)	TOTAL INTIAL PRESTRESS FORCE (KIPS)	DIA. OF STRANDS (IN.)	TOTAL No. OF STRANDS	RELEASE STRENGTH f'ci (PSI) *	DRAPED PATTERN INCHES "A"	DRAPED PATTERN INCHES "B" MIN.	DRAPED PATTERN INCHES "B" MAX.	DRAPED PATTERN INCHES "C"	#4 STIRRUP SPACING FROM 3'-2½" TO 0.1 L	#4 STIRRUP SPACING FROM 0.1L TO 0.2 L	#4 STIRRUP SPACING FROM 0.2L TO 0.5 L	#5 STIRRUP SPACING FROM 3'-2½" TO 0.1 L	#5 STIRRUP SPACING FROM 0.1L TO 0.2 L	#5 STIRRUP SPACING FROM 0.2L TO 0.5 L
1	131'-3⅜"	1¼	1¾	7,000	1,582	0.6	36	5,800	65	20	23	5	8"	11"	16"	12"	12"	16"
2	130'-8¼"	1¼	1¾	7,000	1,582	0.6	36	5,800	65	20	23	5	8"	11"	16"	12"	12"	16"
3	130'-1⅛"	1¼	1¾	7,000	1,582	0.6	36	5,800	65	20	23	5	8"	11"	16"	12"	12"	16"
4	129'-6"	1¼	1¾	7,000	1,582	0.6	36	5,800	65	20	23	5	8"	11"	16"	12"	12"	16"
5	128'-10⅞"	1¼	1¾	7,000	1,582	0.6	36	5,800	65	20	23	5	8"	11"	16"	12"	12"	16"
6	128'-3¾"	1¼	1¾	7,000	1,582	0.6	36	5,800	65	20	23	5	8"	11"	16"	12"	12"	16"

SPAN 5 GIRDER DATA

GIRDER NO.	GIRDER LENGTH "L"	DEAD LOAD DEFL. (IN.) "D"	DEAD LOAD DEFL. (IN.) "E"	CONCRETE STRENGTH f'c (PSI)	TOTAL INTIAL PRESTRESS FORCE (KIPS)	DIA. OF STRANDS (IN.)	TOTAL No. OF STRANDS	RELEASE STRENGTH f'ci (PSI) *	DRAPED PATTERN INCHES "A"	DRAPED PATTERN INCHES "B" MIN.	DRAPED PATTERN INCHES "B" MAX.	DRAPED PATTERN INCHES "C"	#4 STIRRUP SPACING FROM 3'-2½" TO 0.1 L	#4 STIRRUP SPACING FROM 0.1L TO 0.2 L	#4 STIRRUP SPACING FROM 0.2L TO 0.5 L	#5 STIRRUP SPACING FROM 3'-2½" TO 0.1 L	#5 STIRRUP SPACING FROM 0.1L TO 0.2 L	#5 STIRRUP SPACING FROM 0.2L TO 0.5 L
1	131'-2⅝"	1¼	1¾	7,000	1,582	0.6	36	5,800	65	20	23	5	8"	11"	16"	12"	12"	16"
2	130'-7⅜"	1¼	1¾	7,000	1,582	0.6	36	5,800	65	20	23	5	8"	11"	16"	12"	12"	16"
3	130'-0⅛"	1¼	1¾	7,000	1,582	0.6	36	5,800	65	20	23	5	8"	11"	16"	12"	12"	16"
4	129'-5"	1¼	1¾	7,000	1,582	0.6	36	5,800	65	20	23	5	8"	11"	16"	12"	12"	16"
5	128'-9¾"	1¼	1¾	7,000	1,582	0.6	36	5,800	65	20	23	5	8"	11"	16"	12"	12"	16"
6	128'-2½"	1¼	1¾	7,000	1,582	0.6	36	5,800	65	20	23	5	8"	11"	16"	12"	12"	16"

* MINIMUM CYLINDER STRENGTH AT TIME OF TRANSFER OF PRESTRESS FORCE.

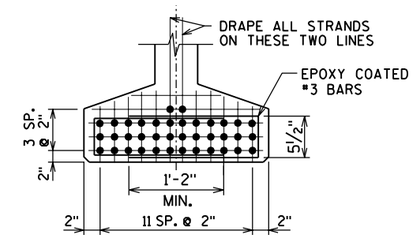

DETAIL A

20 - 879

TOTAL NO. OF STRANDS — TOTAL INITIAL PRESTRESS FORCE IN KIPS

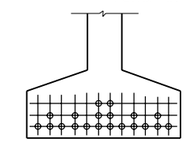

20 STRANDS

SPAN 1

30 - 1,318

TOTAL NO. OF STRANDS — TOTAL INITIAL PRESTRESS FORCE IN KIPS

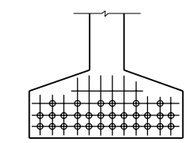

30 STRANDS

SPAN 2

36 - 1,582

TOTAL NO. OF STRANDS — TOTAL INITIAL PRESTRESS FORCE IN KIPS

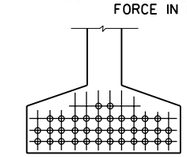

36 STRANDS

SPANS 4 & 5

38 - 1,670

TOTAL NO. OF STRANDS — TOTAL INITIAL PRESTRESS FORCE IN KIPS

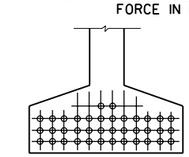

38 STRANDS

SPANS 3

8

NO.	DATE	REVISION	BY

STATE OF WISCONSIN
DEPARTMENT OF TRANSPORTATION
STRUCTURES DESIGN SECTION

STRUCTURE B-37-360-001

CONST. SPEC. 2003 | DRAWN BY RBH | PLANS CK'D. JRS

70" PRESTRESSED GIRDER DETAILS 2

SHEET 20 OF 31

STATE PROJECT NUMBER

1166-09-74

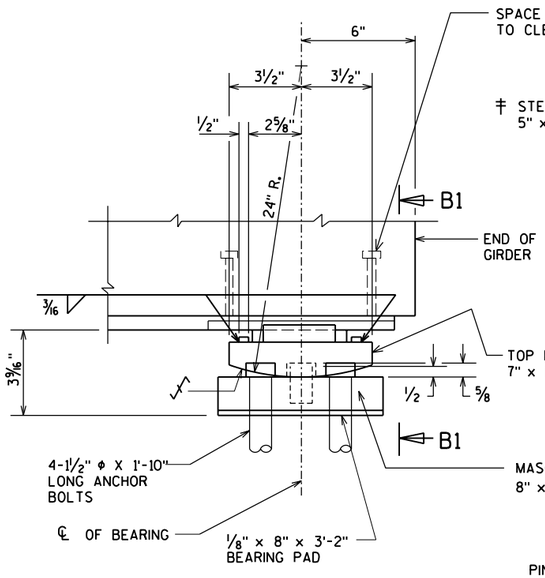

EXPANSION BEARING

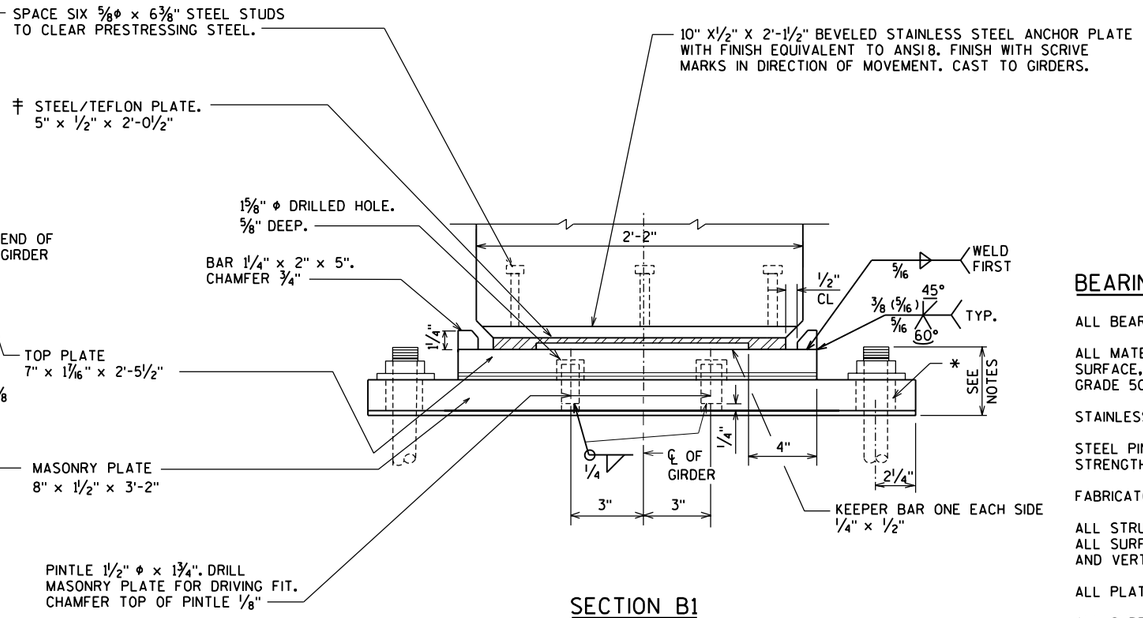

SECTION B1

‡ TEFLON SURFACE, USE UNFILLED MIN. 1/16" THICKNESS. PLACE WITH SCRIVE MARKS IN DIRECTION OF MOVEMENT. BOND STEEL AND TEFLON WITH ADHESIVE MATERIAL MEETING FED. SPEC. MMM-A-134, FEP FILM OR EQUAL.

BEARING NOTES

ALL BEARINGS ARE SYMMETRICAL ABOUT ℄ OF GIRDER AND ℄ OF BEARING.

ALL MATERIAL INCLUDING SHIMS, BUT EXCLUDING STAINLESS STEEL PLATE, TEFLON SURFACE, PINTLES, ANCHOR BOLTS, NUTS AND WASHERS SHALL CONFORM TO ASTM A709 GRADE 50W.

STAINLESS STEEL PLATE SHALL CONFORM TO A.S.T.M. A240, TYPE 304.

STEEL PINTLES SHALL CONFORM TO ASTM A449 OR MATERIAL OF EQUIVALENT YIELD STRENGTH AND ELONGATION.

FABRICATOR MAY INCREASE "MASONRY PLATE" THICKNESS AS AN ALTERNATE TO SHIMS.

ALL STRUCTURAL STEEL BEARING PLATES SHALL BE FLAT ROLLED STEEL PLATES WITH ALL SURFACES SMOOTH AND FREE FROM WARP AND ALL EDGES SMOOTH, STRAIGHT, AND VERTICAL.

ALL PLATE CUTS SHALL BE MACHINE OR MACHINE FLAME CUTS.

ALL SURFACES MARKED ✓ SHALL BE MACHINE FINISHED ANSI 250 UNLESS OTHERWISE SHOWN.

ALL FINISHED SURFACES SHALL BE MACHINE FINISHED BY AN AUTOMATIC PROCESS.

ALL ANCHOR BOLTS, NUTS AND WASHERS SHALL CONFORM TO ASTM A709 GRADE 36, OR MATERIAL OF EQUIVALENT YIELD STRENGTH AND ELONGATION.

CHAMFER ANCHOR BOLTS PRIOR TO THREADING.

* DRILLED HOLES FOR ANCHOR BOLTS SHALL HAVE A DIAMETER ⅜" LARGER THAN ANCHOR BOLT.

MASONRY PLATE, TOP PLATE, KEEPER BARS, ANCHOR BOLTS, NUTS AND WASHERS SHALL BE GALVANIZED AS REQUIRED BY ASTM DESIGNATION A153, CLASS "C". STEEL PLATE ATTACHED TO TEFLON SURFACE SHALL BE SHOP PAINTED.

ANCHOR BOLTS SHALL BE THREADED 3". PROVIDE ONE STANDARD WROUGHT WASHER AND ONE HEX NUT PER BOLT. PROJECT ANCHOR BOLTS "MASONRY PLATE" THICKNESS +2¼" ABOVE TOP OF CONCRETE.

ALL MATERIALS IN "STEEL BEARINGS FOR PRESTRESSED CONCRETE GIRDERS", INCLUDING SHIMS, SHALL BE PAID FOR AT THE UNIT PRICE BID FOR "BEARING ASSEMBLIES EXPANSION B-37-360-001".

● ℄ OF BEARING ASSEMBLY SHALL BE 90° TO ℄ OF GIRDER. ℄ OF BEARING ASSEMBLY MAY NOT COINCIDE WITH ℄ OF BEARING OF THE SUBSTRUCTURE UNIT.

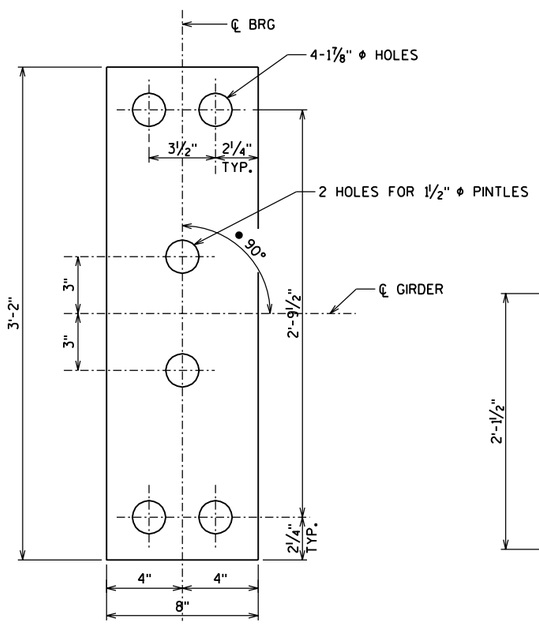

MASONRY PLATE

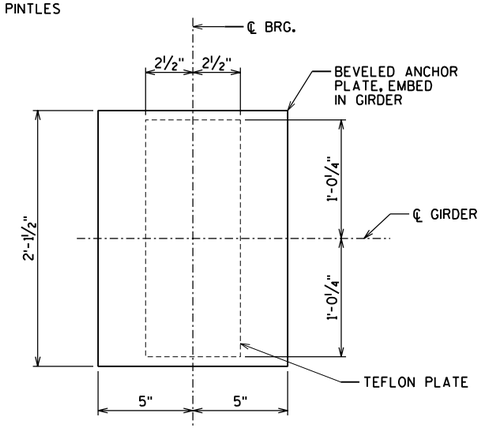

ANCHOR PLATE

NO.	DATE	REVISION	BY

STATE OF WISCONSIN
DEPARTMENT OF TRANSPORTATION
STRUCTURES DESIGN SECTION

STRUCTURE B-37-360-001

CONST. SPEC.	2003	DRAWN BY	RBH	PLANS CK'D.	JRS

EXPANSION BEARING DETAILS

SHEET 21 OF 31

350

8

8

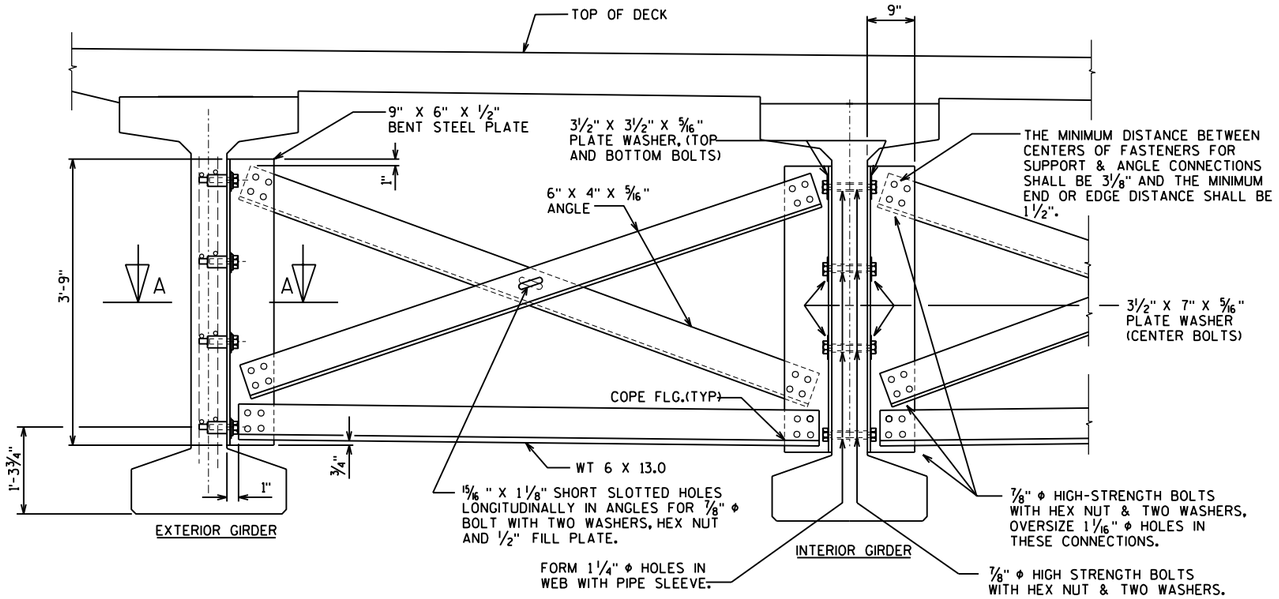

PART TRANSVERSE SECTION AT DIAPHRAGM

FOR DIAPHRAGM LOCATIONS SEE "SUPERSTRUCTURE PLAN" SHEETS

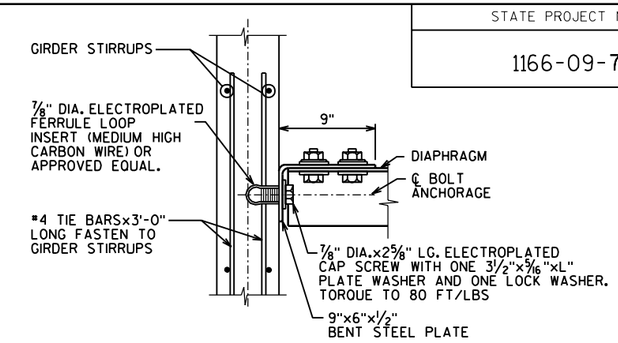

L= 3 1/2" FOR TOP & BOTTOM BOLT
L= 7" FOR CENTER BOLTS.

SECTION A-A

(FOR EXTERIOR ATTACHMENT)

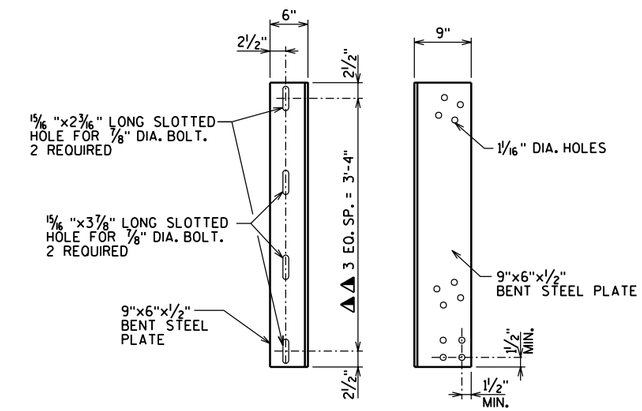

BEAM FACE DIAPHRAGM FACE

DIAPHRAGM SUPPORT

◮◮ BOLT HOLES SHALL BE SPACED SO AS TO MISS PRESTRESSED STRANDS IN CONCRETE BEAMS

DIAPHRAGM NOTES

ALL DIAPHRAGM MATERIAL NOT EMBEDDED IN THE CONCRETE GIRDER SHALL BE PAID FOR AT THE UNIT PRICE BID FOR "STEEL DIAPHRAGM, STRUCTURE B-37-360-001" EACH.

EACH DIAPHRAGM BETWEEN GIRDERS SHALL CONSTITUTE ONE UNIT.

ALL DIAPHRAGM STRUCTURAL STEEL SHALL BE ASTM A709 GRADE 36. ALL BOLTS, NUTS AND WASHERS SHALL BE ASTM A325 TYPE 1.

ALL DIAPHRAGM STRUCTURAL STEEL SHOWN SHALL BE HOT-DIPPED GALVANIZED. ALL BOLTS, NUTS AND WASHERS SHALL BE HOT-DIPPED GALVANIZED IN ACCORDANCE WITH ASTM A153 CLASS C. GALVANIZED NUTS SHALL BE TAPPED OVERSIZE IN ACCORDANCE WITH THE REQUIREMENTS OF ASTM A563 AND SHALL MEET THE REQUIREMENTS OF SUPPLEMENTARY REQUIREMENT S1 OF ASTM A563. LUBRICANT AND TEST FOR COATED NUTS.

NO.	DATE	REVISION	BY

STATE OF WISCONSIN
DEPARTMENT OF TRANSPORTATION
STRUCTURES DESIGN SECTION

STRUCTURE B-37-360-001

CONST. SPEC.	2003	DRAWN BY	RBH	PLANS CK'D.	JRS

STEEL DIAPHRAGMS

STATE PROJECT NUMBER

1166-09-74

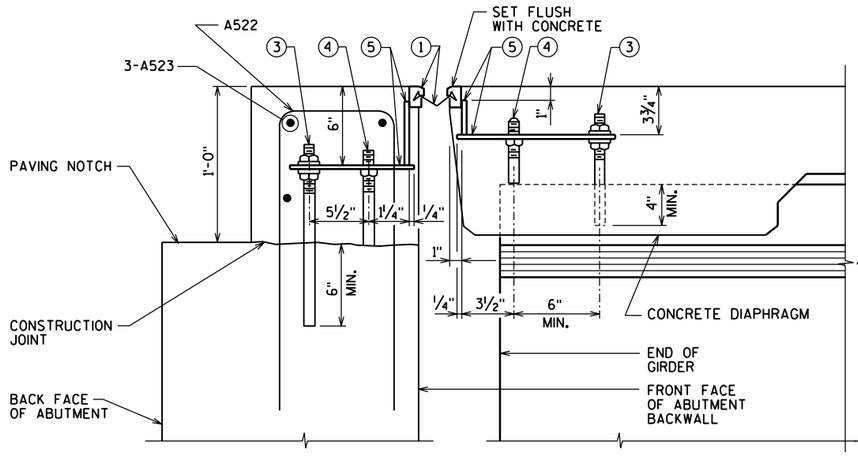

TYPICAL SECTION AT ABUTMENT

NORMAL TO ℄ SUBSTRUCTURE

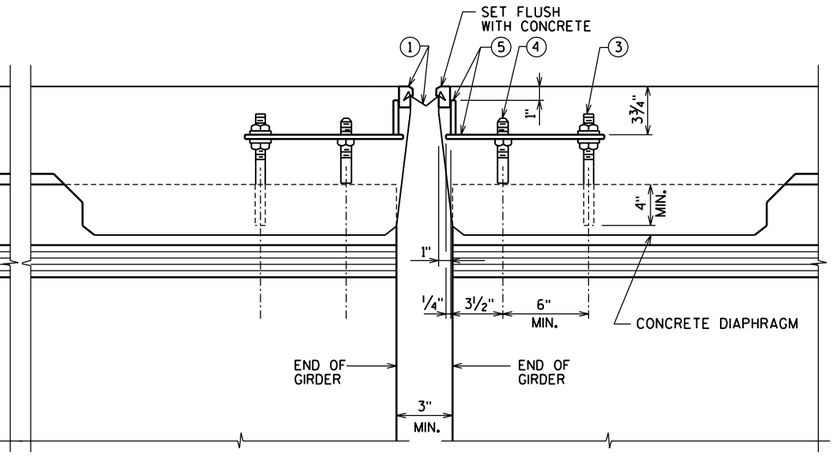

TYPICAL SECTION AT PIER 3

NORMAL TO ℄ SUBSTRUCTURE

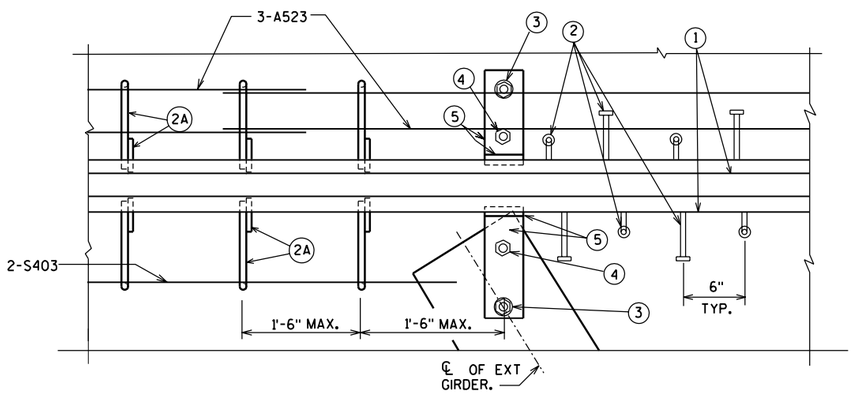

PART PLAN

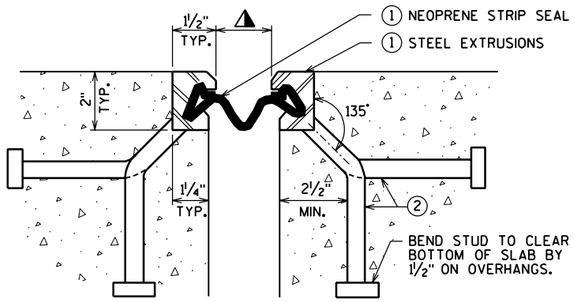

SECTION THRU JOINT

EXTERIOR GIRDER TO EDGE OF SLAB AND AT PARAPETS

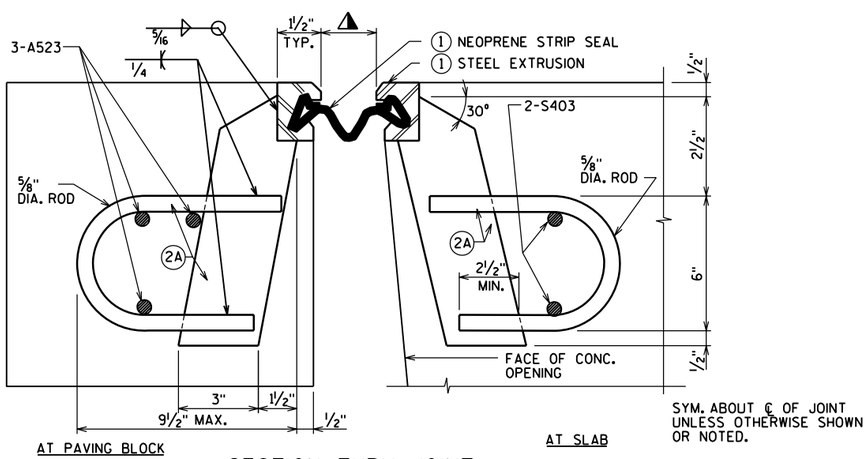

SECTION THRU JOINT

AREA BETWEEN EXTERIOR GIRDERS.

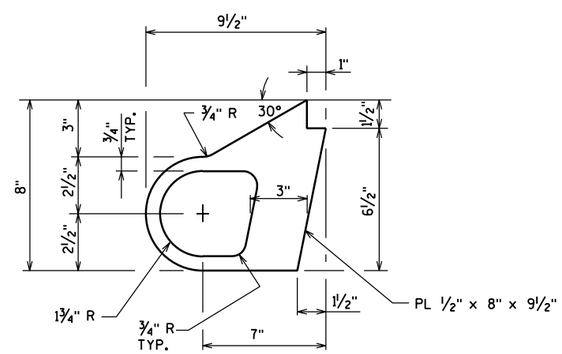

ALTERNATE STRIP SEAL ANCHOR

LEGEND

1. NEOPRENE STRIP SEAL (5-INCH AT ABUTMENTS) & STEEL EXTRUSIONS. SET JOINT OPENING NORMAL TO JOINT PER TABLE
2. STUDS ⅝" Φ × 6⅜" LONG AT 6" ALTERNATE CENTERS. WELD TO EXTRUSIONS & BEND AS SHOWN AFTER WELDING.

2A. ½" THICK ANCHOR PLATE WITH ⅝" Φ ROD (OR ALTERNATE STRIP SEAL ANCHOR). WELD ROD TO ANCHOR PLATE, WELD ANCHOR PL TO NO. 1 AT 1'-6" CTRS. BETWEEN GIRDERS.

3. ¾" Φ THREADED ROD WITH 2 NUTS AND WASHERS. FOR PRESTRESSED GIRDERS FIELD SET ON ℄ OF GIRDER. ON ABUTMENT SIDE GROUT THREADED ROD INTO FIELD DRILLED HOLES IN ABUTMENT BACKWALL AS SHOWN.
4. ¾" Φ THREADED ROD WITH NUT. TACK WELD NUT TO NO. 5.
5. FABRICATE SUPPORT FROM 3" × ½" BAR AS SHOWN OR EQUIVALENT. ONE PER GIRDER PER SIDE. SHOP OR FIELD WELD TO NO. 1. IF FIELD WELDED, COVER WELDED AREAS WITH EPOXY-COATING MATERIAL. PROVIDE 1½" Φ HOLE FOR NO. 3 & 1" Φ HOLE FOR NO. 4.
6. GALVANIZED PLATE ⅜" × 10½" × (2'-0" LONG FOR SKEWS TO 45° & 3'-0" LONG FOR SKEWS > 45°) WITH HOLES FOR NO. 7. BEND AS SHOWN.
7. ¾" Φ × 1½" STAINLESS STEEL SOCKET FLAT HEAD SCREWS WITH ANTI-SEIZE LUBRICANT. RECESS 1/16" BELOW PLATE SURFACE.
8. ¾" Φ × 4" GALVANIZED HEX HEAD BOLT. BEND 45°.
9. ¾" Φ × 2¼" GALVANIZED THREADED COUPLING.
10. GALVANIZED SIDEWALK PLATE ⅜" × (2'-0" WIDE FOR SKEWS TO 45° & 3'-0" WIDE FOR SKEWS > 45°) × LIMITS SHOWN. BEND DOWN FACE OF SIDEWALK WITH HOLES FOR NO. 7.
11. 1" × 5" SLOTTED CSK. HOLE FOR NO. 7. SLOT PARALLEL TO DIRECTION OF MOVEMENT.

NOTES

* STRIP SEAL GLAND MAY BE PLACED PRIOR TO PLACEMENT OF CONCRETE. GLAND SHALL BE PROTECTED DURING CONCRETE POUR.

ONE FIELD SPLICE PERMITTED IN STEEL EXTRUSIONS. IF USED, DETAILS SHALL BE SUBMITTED FOR APPROVAL. NO SPLICING PERMITTED IN NEOPRENE STRIP SEAL.

AFTER FABRICATION, BUT BEFORE SHIPMENT, STRAIGHTEN STEEL EXTRUSIONS SUCH THAT THEY SHALL BE FREE FROM WARP, TWIST AND SWEEP.

FABRICATOR SHALL PROVIDE A MEANS OF KEEPING THE GALVANIZED EXTRUSIONS CLEAN AND SMOOTH DURING SHIPMENT AND PRIOR TO APPLYING LUBRICANT ADHESIVE FOR NEOPRENE GLAND INSTALLATION.

SANDBLAST PLATES & EXTRUSIONS AFTER FABRICATION IN ACCORDANCE WITH SSPC SP. #6 "COMMERCIAL BLAST CLEANING". AFTER BLAST CLEANING THE PLATES & EXTRUSIONS SHALL BE HOT DIPPED GALVANIZED.

ANCHOR SYSTEM #8 AND #9 SHALL CONFORM TO ASTM A307 AND SHALL BE GALVANIZED IN ACCORDANCE WITH ASTM A153 CLASS C AND D.

STRIP SEAL EXPANSION JOINT ASSEMBLY, INCLUDING ANCHOR STUDS, HARDWARE AND PARAPET PLATES WILL BE PAID FOR AT THE LUMP SUM PRICE BID FOR "EXPANSION DEVICE, STRUCTURE B-37-360-001".

* ABUTMENT TEMPERATURE TABLE

SETTING TEMPERATURE (DEGREES)	JOINT OPENING (INCHES)
-5	2¼"
45	1⅝"
85	1⅛"

* PIER #3 TEMPERATURE TABLE

SETTING TEMPERATURE (DEGREES)	JOINT OPENING (INCHES)
-5	2¾"
45	1½"
85	½"

8

8

NO.	DATE	REVISION	BY

STATE OF WISCONSIN
DEPARTMENT OF TRANSPORTATION
STRUCTURES DESIGN SECTION

STRUCTURE B-37-360-001

CONST. SPEC. 2003 | DRAWN BY RBH | PLANS CK'D. JRS

STRIP SEAL EXPANSION DEVICE

SHEET 23 OF 31

352

STATE PROJECT NUMBER

1166-09-74

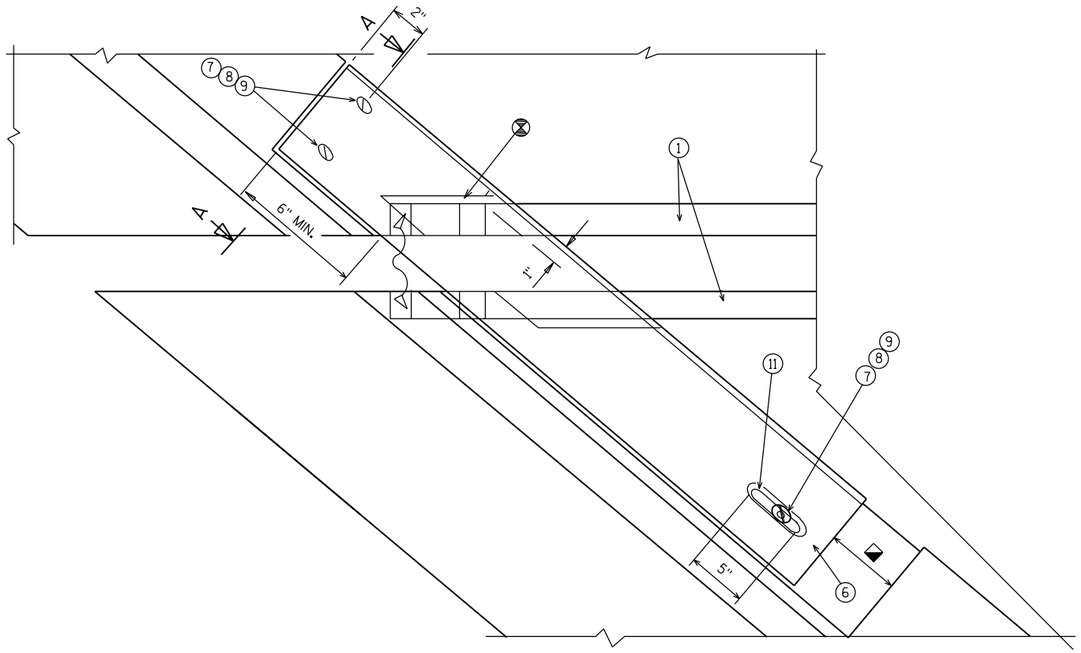

PLAN AT PARAPETS

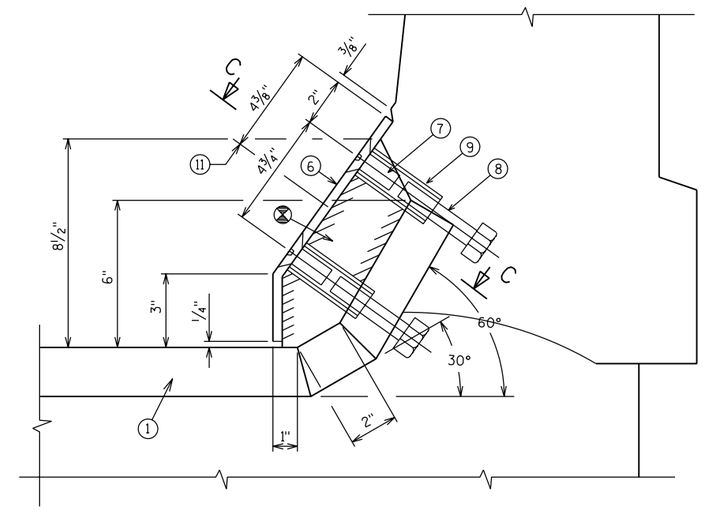

SECTION A-A

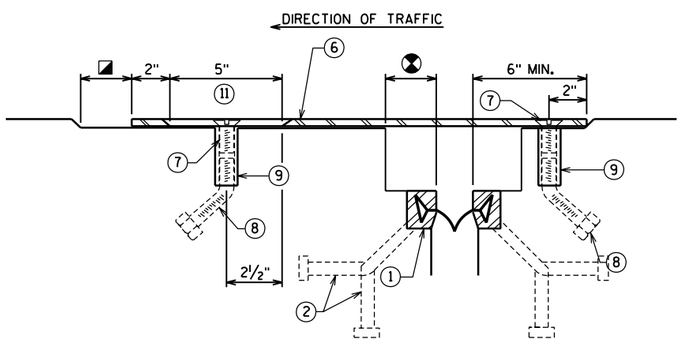

SECTION C-C

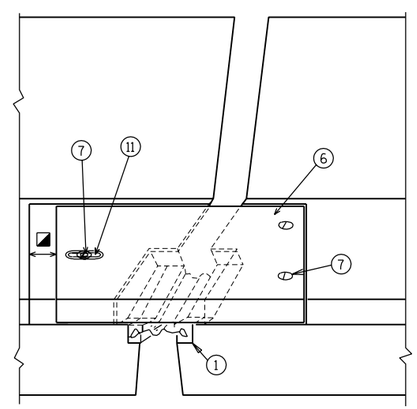

VIEW OF PARAPET PLATES FROM ROADWAY

COVER PLATE DETAIL AT ALL EXPANSION DEVICE LOCATIONS.

SEE SHEET "STRIP SEAL EXPANSION DEVICE" SHEET FOR NOTES

BLOCK OUT CONCRETE 2" EACH SIDE FOR JOINT OPENING.

JOINT OPENING DIMENSION ALONG SKEW PLUS ½".

NO.	DATE	REVISION	BY

STATE OF WISCONSIN
DEPARTMENT OF TRANSPORTATION
STRUCTURES DESIGN SECTION

STRUCTURE B-37-360-001

CONST. SPEC.	2003	DRAWN BY	RBH	PLANS CK'D.	JRS

EXPANSION DEVICE DETAILS

SHEET 24 OF 31

353

8

8

STATE PROJECT NUMBER
1166-09-74

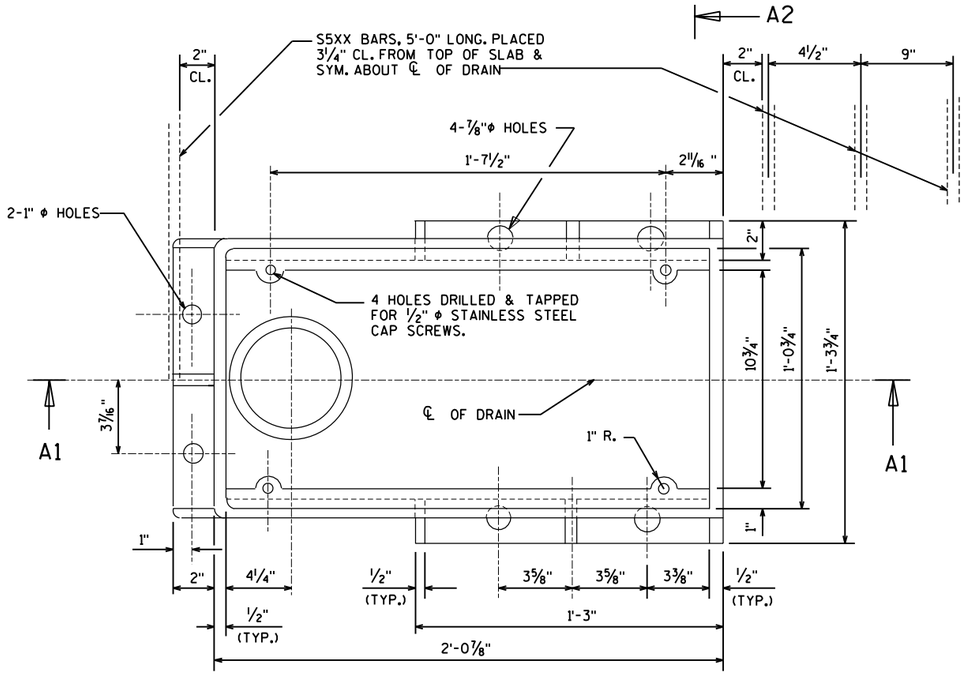

PLAN

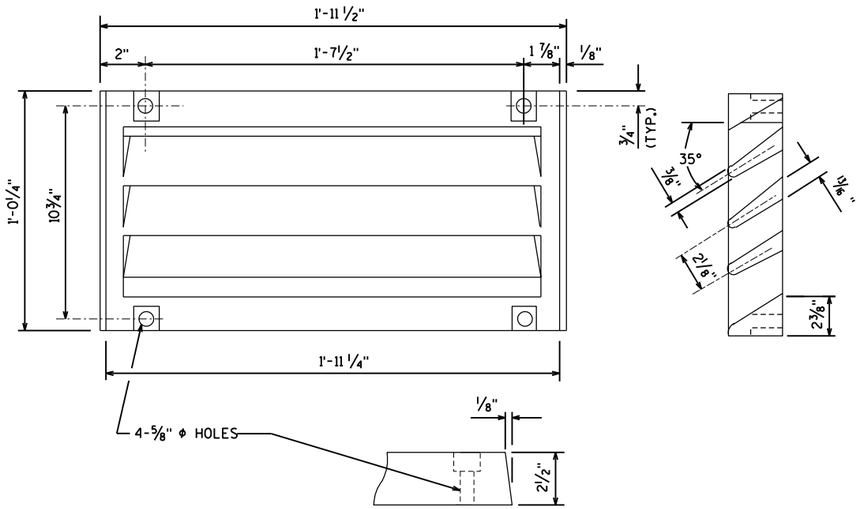

GRATE CASTING DETAIL

ATTACH GRATE TO FRAME FOR SHIPMENT

GENERAL NOTES

ALL MATERIAL FOR TYPE "GC" CASTING, EXCLUDING GRATE HOLD DOWN SCREWS, SHALL BE GRAY IRON CONFORMING TO ASTM A48, CLASS 30.

MATERIAL FOR BRACKETS SHALL CONFORM TO ASTM A36.

THE CONTRACTOR MAY PROPOSE AN ALTERNATE TYPE OF BRACKET. THE PROPOSED ALTERNATE DETAILS SHALL BE SUBMITTED AND SUBJECT TO THE APPROVAL OF THE ENGINEER.

FLANGED 6" DIA. DOWNSPOUTS SHALL BE EITHER CAST MATERIAL OR FIBERGLASS CONFORMING TO ASTM D2996, GRADE 1, CLASS A.

TRANS. AND LONGIT. SLAB BAR REINF. TO BE CUT A MAX. OF 1" CL. FROM DRAIN FRAME. DISPLACE BARS WHERE POSSIBLE.

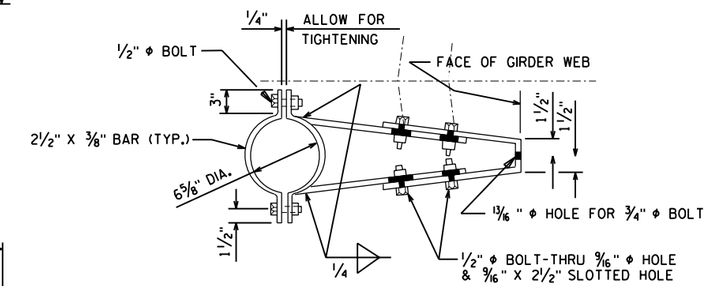

BRACKET DETAIL

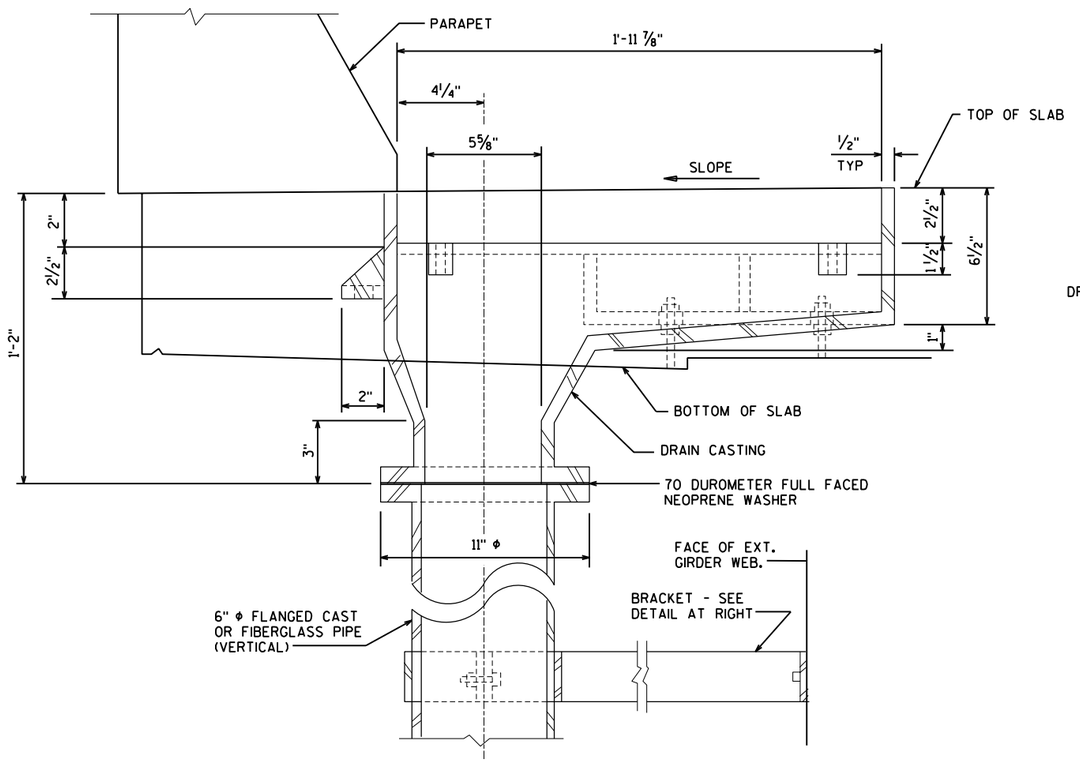

SECTION A1

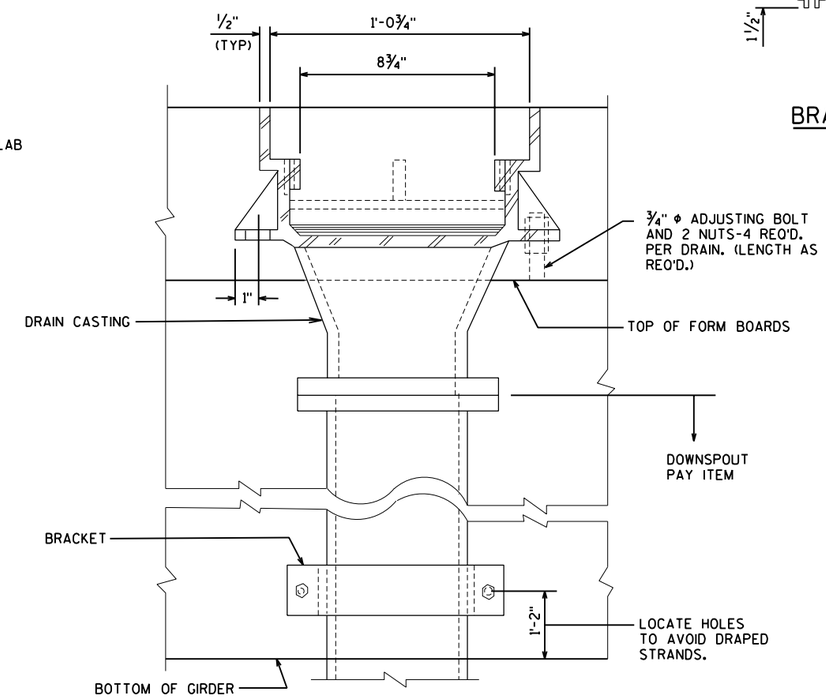

SECTION A2

FLOOR DRAIN LOCATIONS
STA. 4115+32.43

NO.	DATE	REVISION	BY

STATE OF WISCONSIN
DEPARTMENT OF TRANSPORTATION
STRUCTURES DESIGN SECTION

STRUCTURE B-37-360-001

CONST. SPEC.	2003	DRAWN BY	RBH	PLANS CK'D.	JRS

FLOOR DRAIN TYPE 'GC'

SHEET 25 OF 31
354

8

8

STATE PROJECT NUMBER

1166-09-74

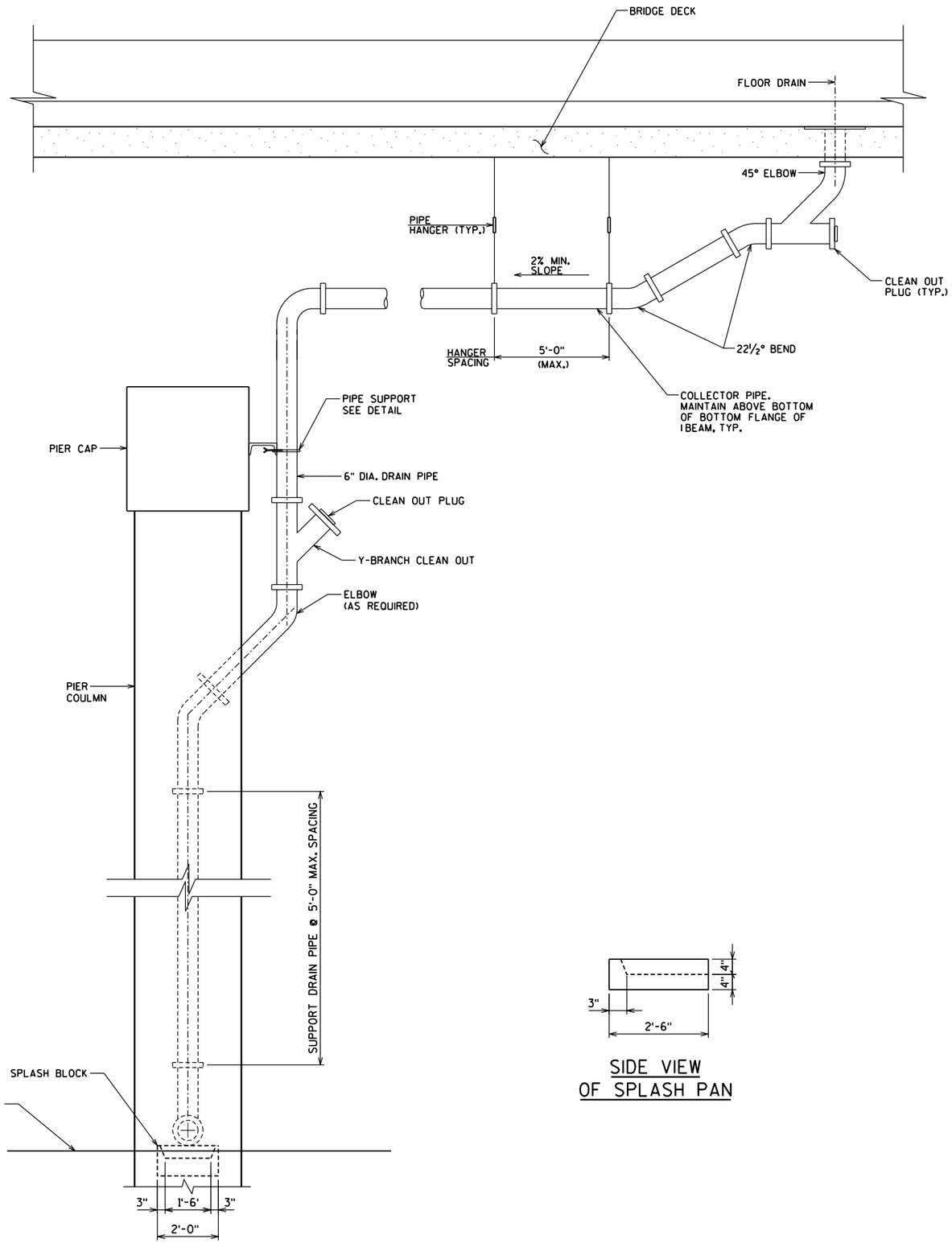

SIDE VIEW OF SPLASH PAN

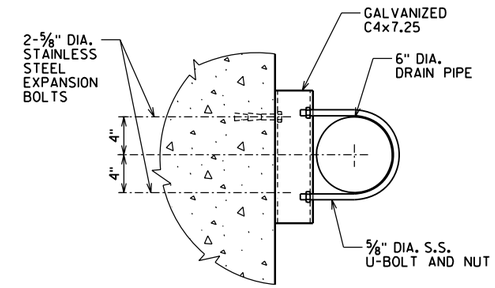

PLAN

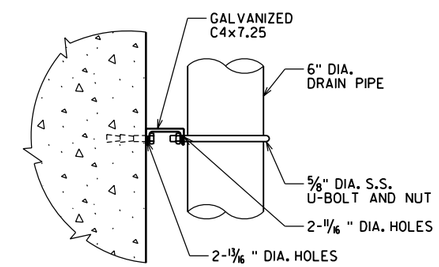

ELEVATION

PIPE SUPPORT DETAILS

NOTES:

1. COLLECTOR AND DRAIN PIPES AND FITTINGS SHALL BE 6" SCHEDULE 80, PVC CONFORMING TO ASTM STANDARDS D1785, D2464 OR D2467.
2. ALL HARDWARE, HANGERS, SPLASH BLOCKS, STEEL, AND ANY OTHER MISCELLANEOUS ITEMS SHOWN ARE INCLUDED AND INCIDENTAL IN THE BID ITEM "DOWNSPOUT 6-INCH".

8

8

NO.	DATE	REVISION	BY

STATE OF WISCONSIN
DEPARTMENT OF TRANSPORTATION
STRUCTURES DESIGN SECTION

STRUCTURE B-37-360-001

CONST. SPEC.	2003	DRAWN BY	RBH	PLANS CK'D.	WAH

DOWNSPOUT

SHEET 26 OF 31

355

STATE PROJECT NUMBER

1166-09-74

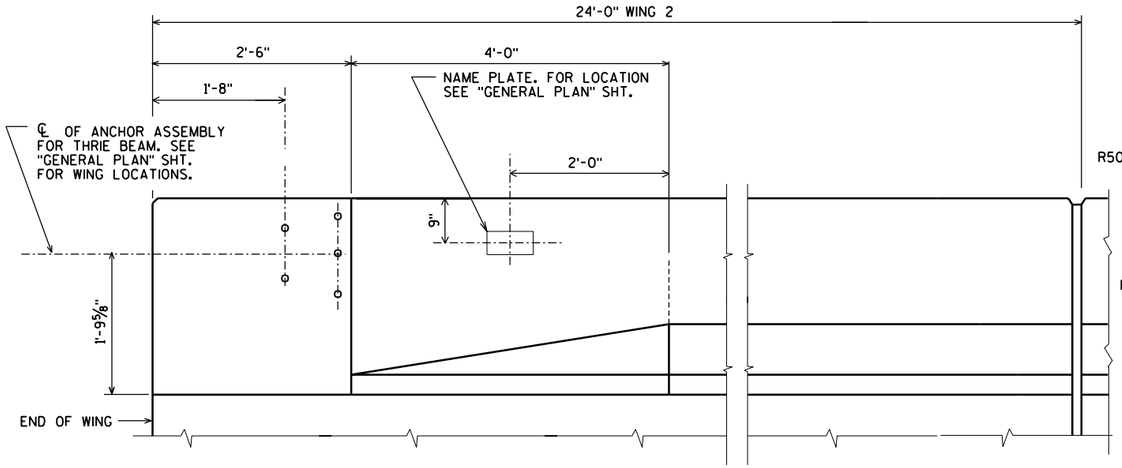

INSIDE ELEVATION

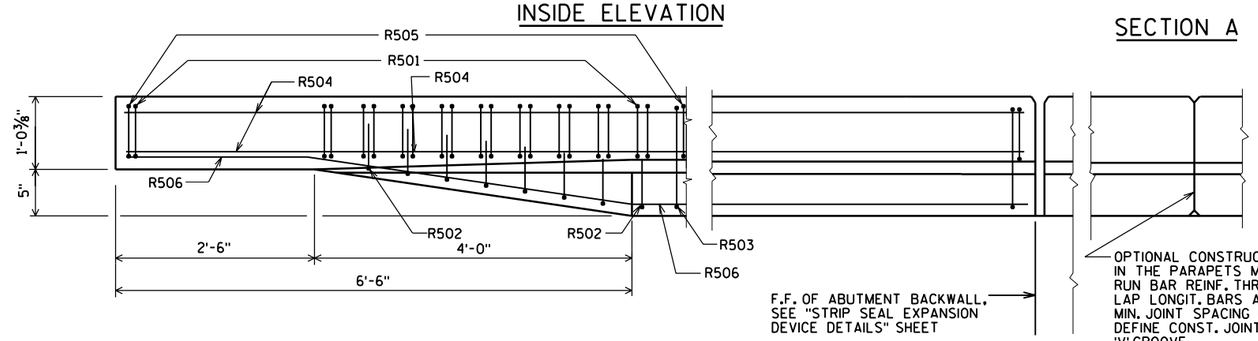

PLAN

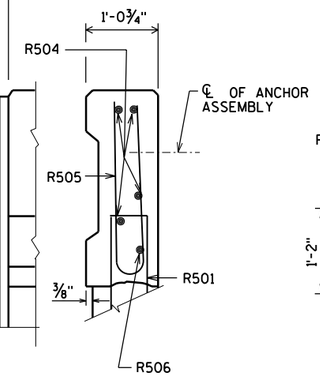

SECTION A

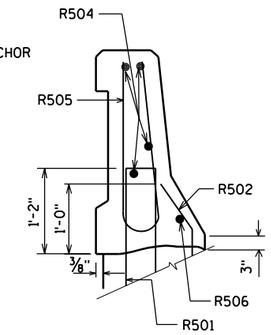

SECTION B

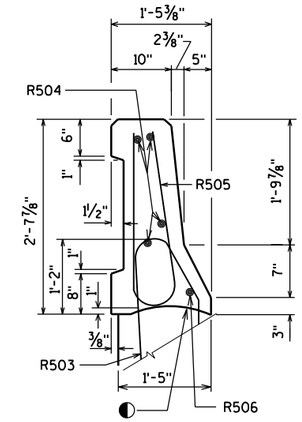

SECTION C

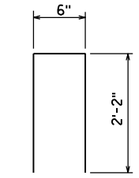

R501

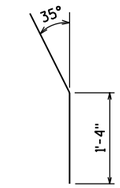

R502

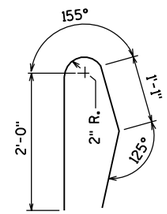

R503

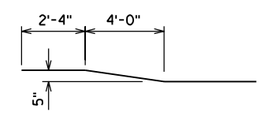

R506

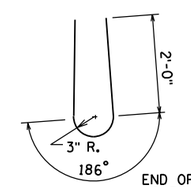

R505

BILL OF BARS

FOR ABUTMENT PARAPETS

BAR MARK	COAT	NO. REQD	LENGTH	BENT	LOCATION
R501	X	14	4'-7"	X	PARAPET VERT.
R502	X	8	2'-4"	X	PARAPET VERT.
R503	X	26	4'-7"	X	PARAPET VERT.
R504	X	4	23'-8"		PARAPET HORIZ.
R505	X	40	4'-10"	X	PARAPET VERT.
R506	X	1	23'-8"	X	PARAPET HORIZ.

THE CONCRETE AND BARS FOR THE PARAPET ON THE WINGS ARE INCLUDED IN THE ABUTMENT QUANTITIES.

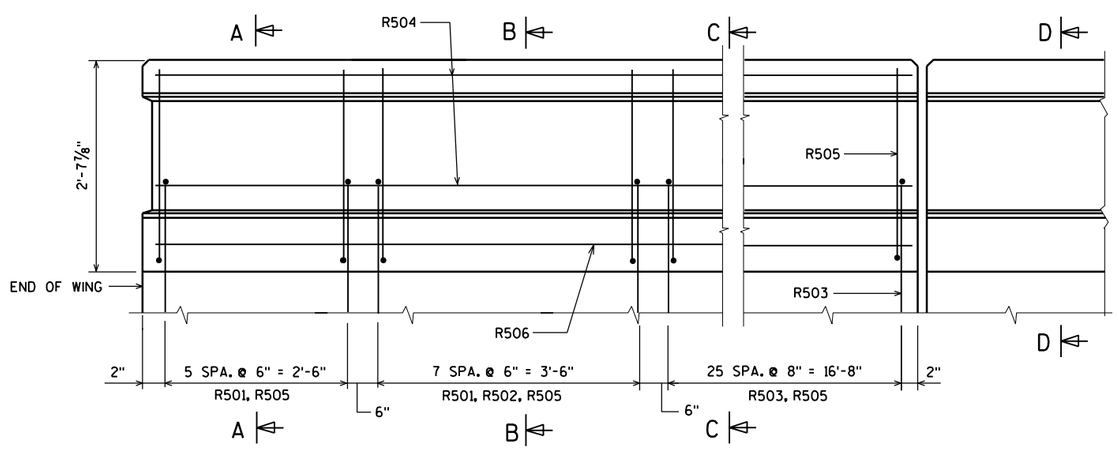

OUTSIDE ELEVATION

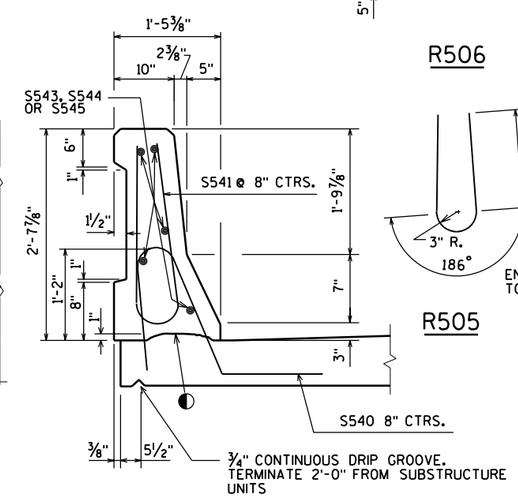

SECTION D

THRU PARAPET ON BRIDGE

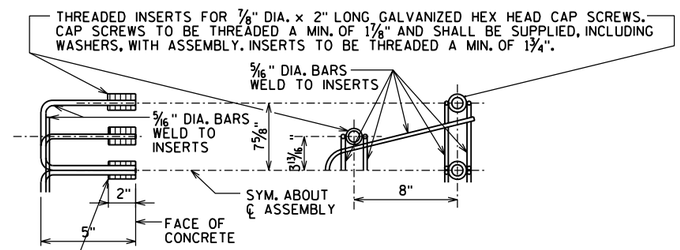

DETAIL OF ANCHOR ASSEMBLY

NOTE: HEX HEAD CAP SCREWS & WASHERS TO BE GALVANIZED IN ACCORDANCE WITH AASHTO M232 CLASS C. ASSEMBLY SHALL BE BID ITEM 'ANCHOR ASSEMBLY FOR BEAM GUARD'

◐ CONST. JOINT - STRIKE OFF AS SHOWN.

NO.	DATE	REVISION	BY

STATE OF WISCONSIN
DEPARTMENT OF TRANSPORTATION
STRUCTURES DESIGN SECTION

STRUCTURE B-37-360-001

CONST. SPEC. 2003 | DRAWN BY RBH | PLANS CK'D. JRS

PARAPET TYPE 'LF'

SHEET 27 OF 31
356

8

8

STATE PROJECT NUMBER
1166-09-74

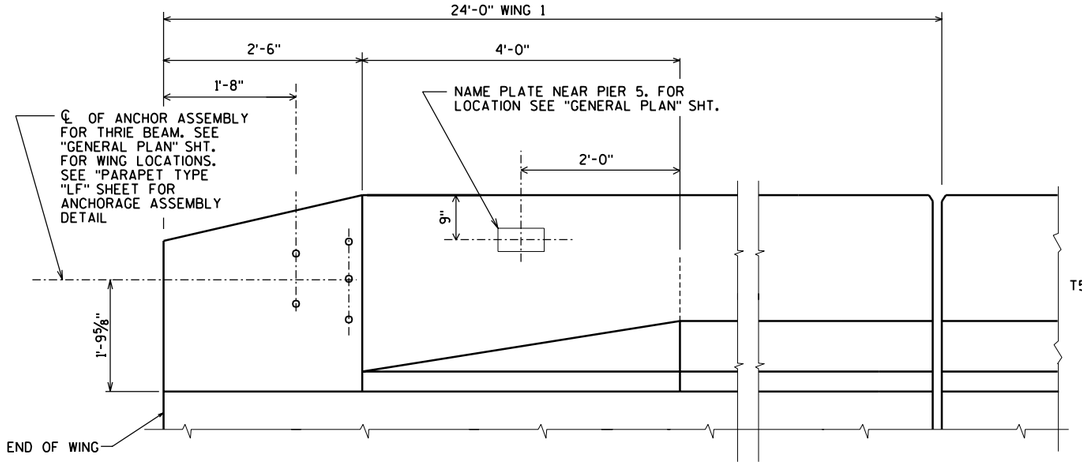

INSIDE ELEVATION

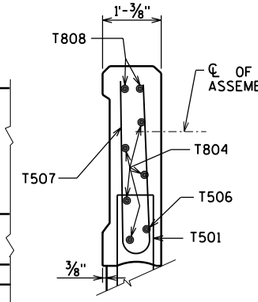

SECTION A

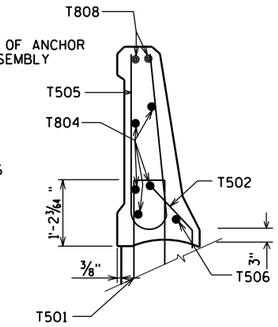

SECTION B

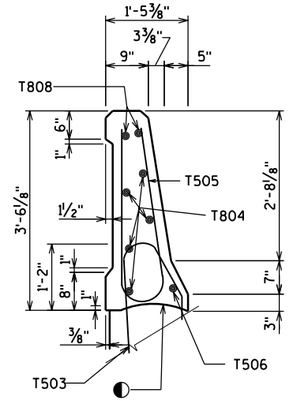

SECTION C

BILL OF BARS

FOR ABUTMENT PARAPETS

BAR MARK	COAT	NO. REQD	LENGTH	BENT	BAR SERIES	LOCATION
T501	X	14	4'-7"	X		PARAPET VERT.
T502	X	8	2'-4"	X		PARAPET VERT.
T503	X	26	4'-7"	X		PARAPET VERT.
T804	X	5	23'-8"			PARAPET HORIZ.
T505	X	34	6'-6"	X		PARAPET VERT.
T506	X	1	23'-8"	X		PARAPET HORIZ.
T507	X	6	5'-8"	X	▲	PARAPET VERT.
T808	X	2	23'-8"	X		PARAPET HORIZ.

THE CONCRETE AND BARS ARE INCLUDED IN THE ABUTMENT QUANTITIES.

BAR SERIES TABLE

MARK	NO. REQD.	LENGTH
T507	1 SERIES OF 6	4'-10" to 6'-6"

▲ LENGTH SHOWN FOR BAR IS AN AVERAGE LENGTH AND SHOULD ONLY BE USED FOR BAR WEIGHT CALCULATIONS. SEE BAR SERIES TABLE FOR ACTUAL LENGTHS.

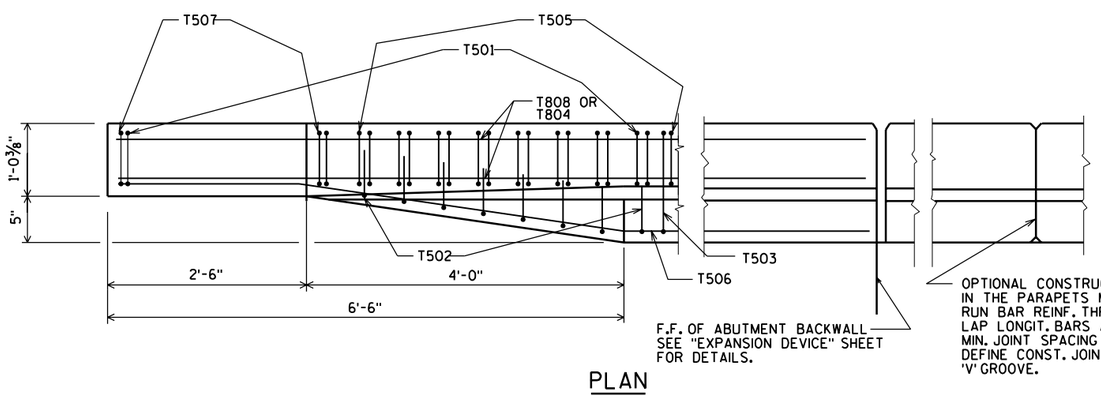

PLAN

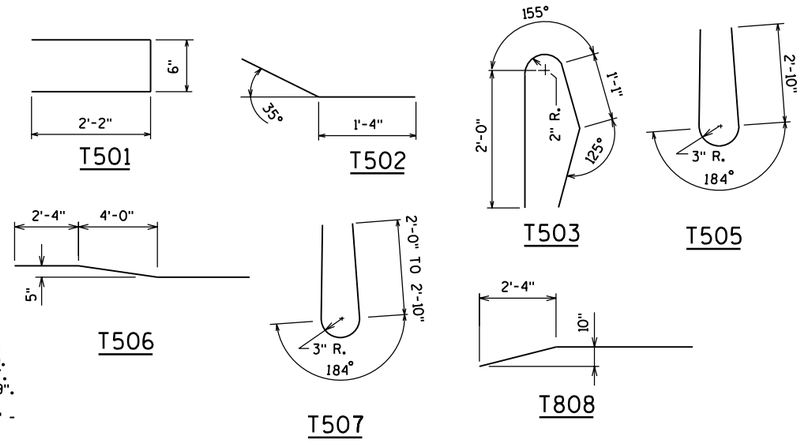

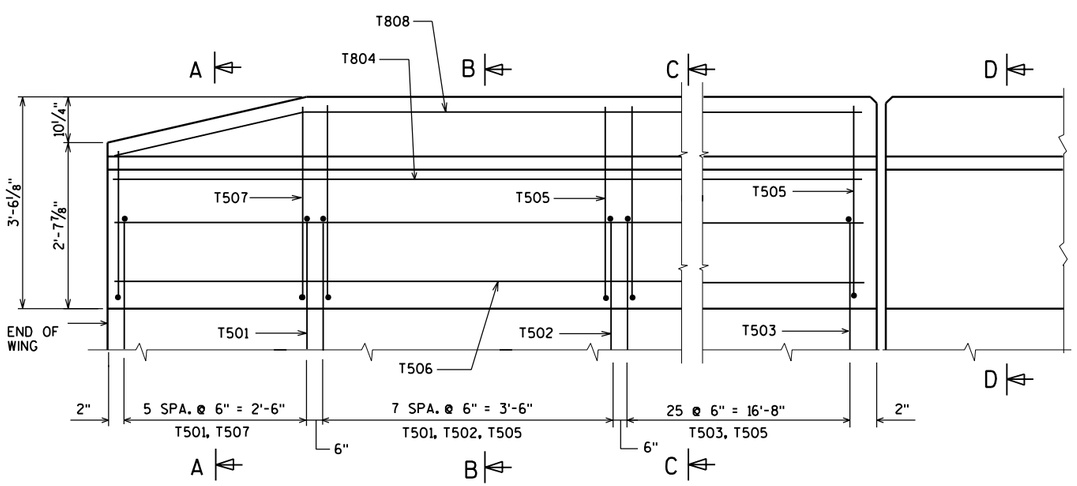

OUTSIDE ELEVATION

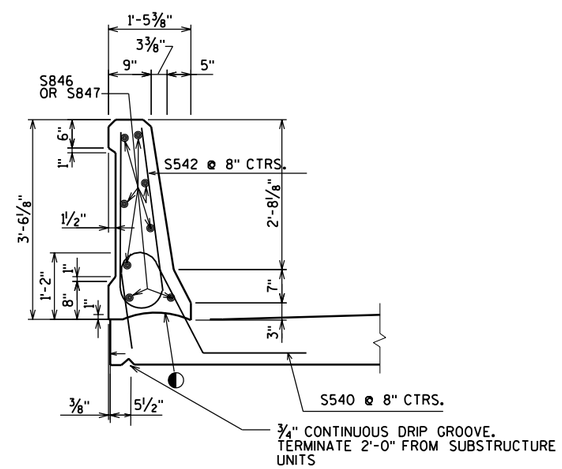

SECTION D-D

◐ - CONSTRUCTION JOINT - STRIKE OFF AS SHOWN

NO.	DATE	REVISION	BY

STATE OF WISCONSIN
DEPARTMENT OF TRANSPORTATION
STRUCTURES DESIGN SECTION

STRUCTURE B-37-360-001

CONST. SPEC.	2003	DRAWN BY	RBH	PLANS CK'D.

PARAPET TYPE 'HF'

SHEET 28 OF 31
357

8

8

STATE PROJECT NUMBER

1166-09-74

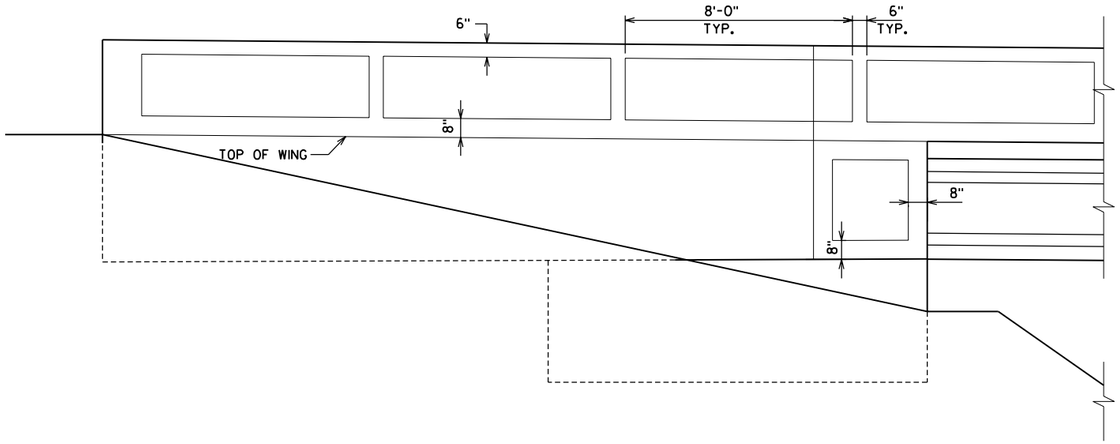

ELEVATION AT ABUTMENT

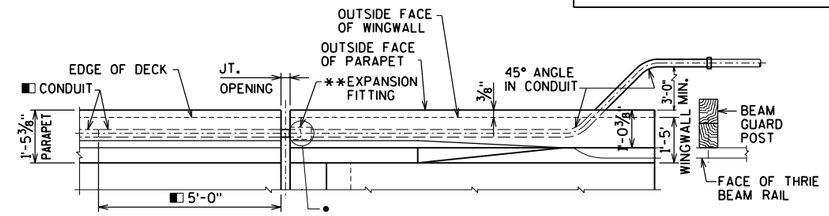

PLAN OF PARAPET AT WINGWALL

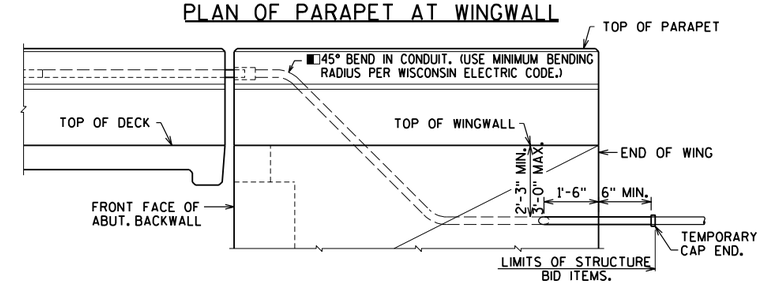

OUTSIDE ELEVATION OF PARAPET AT WINGWALL

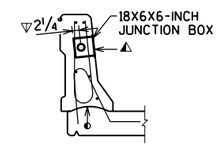

SECTION THRU PARAPET

- ● POSITION MOVABLE END OF CONDUIT INSIDE EXPANSION FITTING, SUCH THAT IT WILL HAVE THE SAME ALLOWANCE FOR MOVEMENT (EXPANSION/CONTRACTION) AS THE EXPANSION DEVICE SET IN PLACE IN THE DECK BELOW IT. TAKE CARE TO INSTALL EXPANSION FITTING AND CONDUIT EXACTLY PARALLEL TO BRIDGE MOVEMENT.
- ◐ CONSTR. JT. STRIKE OFF AS SHOWN
- ◧ USE 2"φ RIGID NONMETALLIC CONDUIT EXCEPT AT EXPANSION FITTING. AT EXPANSION FITTING USE RIGID METALLIC CONDUIT 5'-0" INTO PARAPET ON DECK SIDE AND THRU PARAPET AND WINGWALL TO A MINIMUM OF 6" BEYOND END OF WINGWALL. (FOR GROUNDING PURPOSES.)
- ◭ CUT OUT ± 1" OF GASKET AT BOTTOM OF JUNCTION BOX COVER TO ALLOW FOR DRAINAGE.
- ▽ LOCATION OF CONDUIT IS MEASURED FROM OUTSIDE EDGE OF JUNCTION BOX.

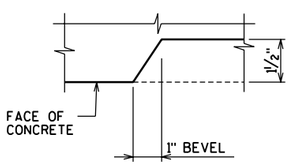

RECESS DETAIL FOR PARAPETS

NOTES

ELECTRICAL BID ITEMS, LISTED BELOW, ARE TO BE LOCATED IN THE SOUTH SIDE PARAPET ONLY, FOR FUTURE USE.
"JUNCTION BOXES 18X6X6-INCH", EACH.
"CONDUIT RIGID NONMETALLIC SCHEDULE 80 2-INCH"
"CONDUIT RIGID METALLIC 2-INCH"

EXPANSION FITTINGS, ANGLES AND ADAPTER FITTINGS TO BE INCIDENTAL TO "CONDUIT RIGID METALLIC 2-INCH".

WHEN CONNECTING NONMETALLIC CONDUIT TO METALLIC CONDUIT, ONLY ADAPTER FITTINGS U.L. LISTED FOR ELECTRICAL USE SHALL BE USED.

APPROVED MANUFACTURERS - JUNCTION BOXES:
SEE APPROVED MATERIAL LIST.

APPROVED MANUFACTURER OR EQUIVALENT - EXPANSION FITTING (SPECIFY SIZE ON PLANS):
O-Z/GEDNEY TYPE AX-200 AND BONDING JUMPER (4" TOTAL CONDUIT MOVEMENT).
O-Z/GEDNEY TYPE AX-8-200 AND BONDING JUMPER (8" TOTAL CONDUIT MOVEMENT).
O-Z/GEDNEY TYPE EX-200 WITH PBS-200-12S AND BONDING JUMPER (10" TOTAL CONDUIT MOVEMENT).

JUNCTION BOX REQUIREMENTS
USE A JUNCTION BOX TO KEEP A CONTINUOUS RUN OF CONDUIT (PULL LENGTH) TO A MAXIMUM OF 190 FT. AS DIRECTED BY THE ENGINEER.

** EXPANSION FITTING REQUIREMENTS
USE AN APPROVED EXPANSION FITTING AT EACH SEMIEXPANSION OR EXPANSION JOINT. RUN CONDUIT STRAIGHT THROUGH (WITHOUT A FITTING) AT EACH FIXED JOINT.

8

8

NO.	DATE	REVISION	BY

STATE OF WISCONSIN
DEPARTMENT OF TRANSPORTATION
STRUCTURES DESIGN SECTION

STRUCTURE B-37-360-001

CONST. SPEC.	2003	DRAWN BY	RBH	PLANS CK'D.	JRS

ARCHITECTURAL & ELECTRIC DETAILS

SHEET 29 OF 31
358

STATE PROJECT NUMBER

1166-09-74

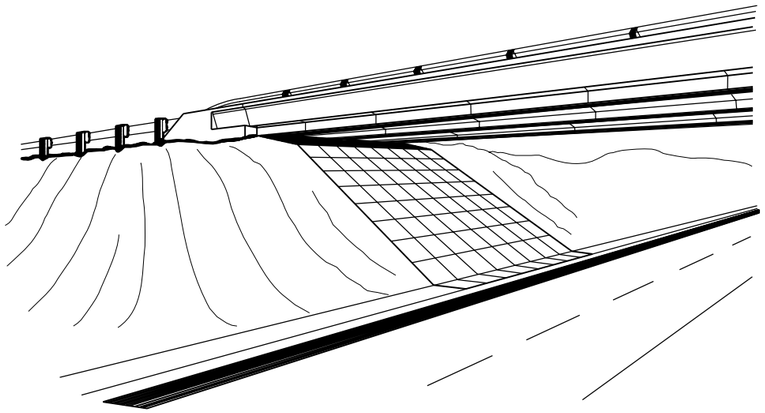

SLOPE PAVING UNDER STRUCTURES

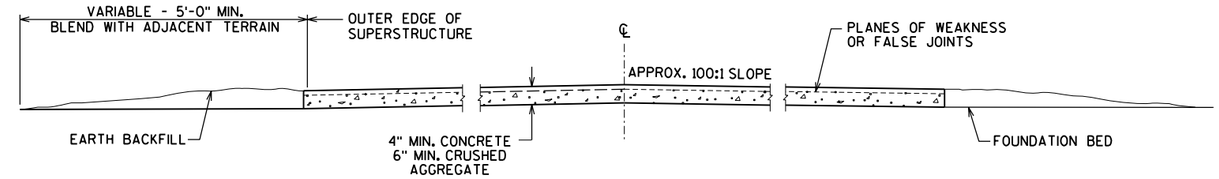

SECTION A-A

TO BE USED WHEN △ = 75° + TO 90°

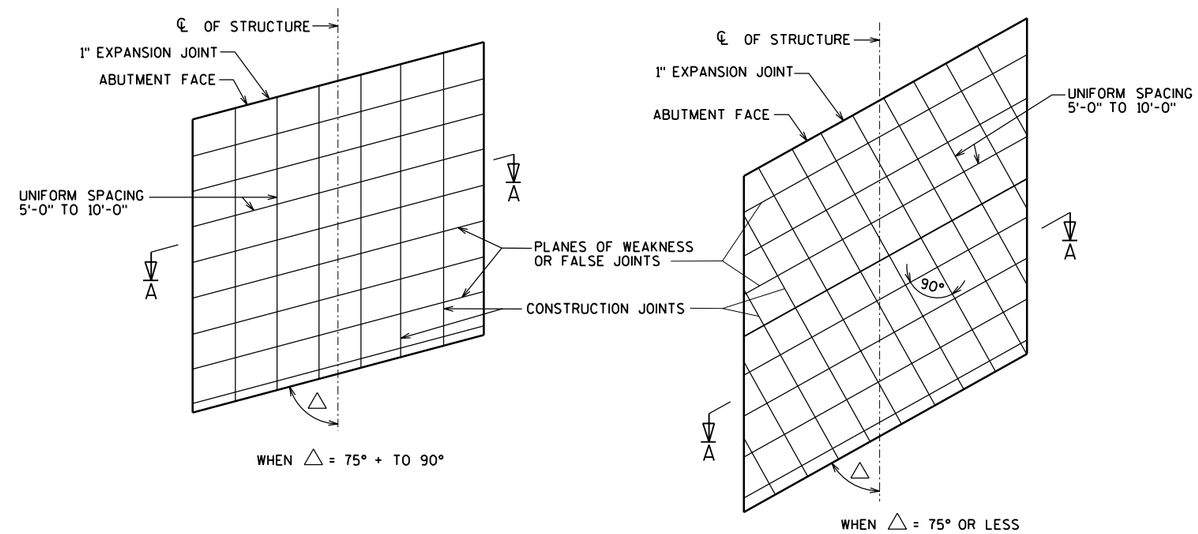

CONSTRUCTION JOINT DESIGNS

SHOWING PLANES OF WEAKNESS FOR
SKEWED TYPE INSTALLATIONS

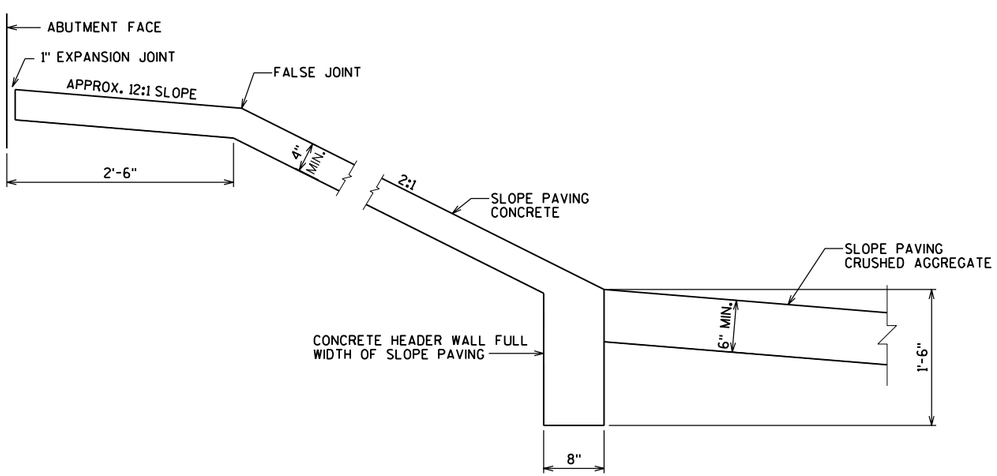

TYPICAL SECTION

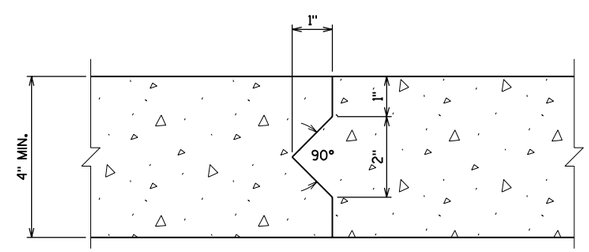

SLOPE PAVING CONSTRUCTION JOINT

8

8

NO.	DATE	REVISION	BY

STATE OF WISCONSIN
DEPARTMENT OF TRANSPORTATION
STRUCTURES DESIGN SECTION

STRUCTURE B-37-360-001

CONST. SPEC.	2003	DRAWN BY	RBH	PLANS CK'D.	WAH

SLOPE PAVING DETAILS

SHEET 30 OF 31
359

STATE PROJECT NUMBER

1166-09-74

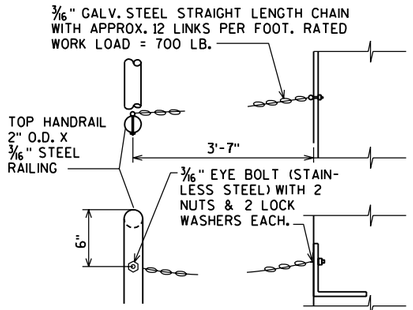

SAFETY CHAIN DETAIL

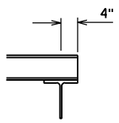

TERMINATION DETAIL

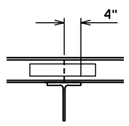

SPLICE LOCATION DETAIL

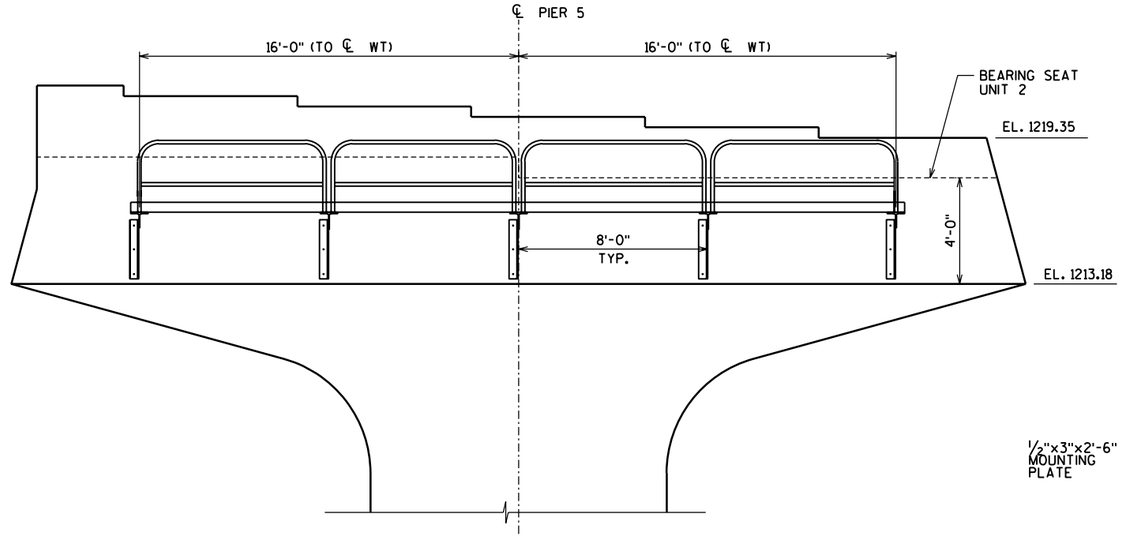

ELEVATION
(LOOKING EAST)

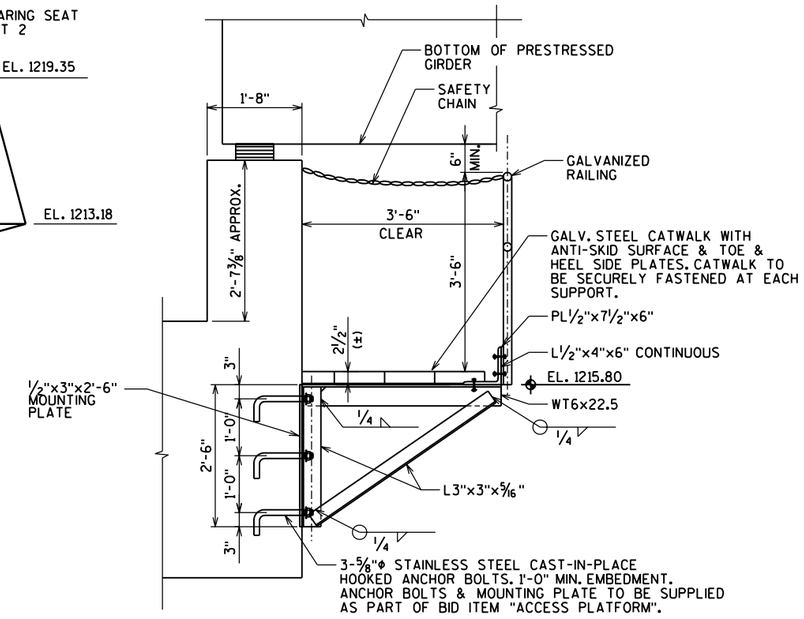

SECTION THRU WALKWAY

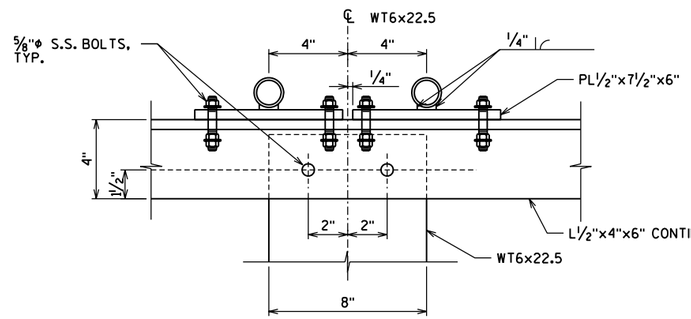

RAILING CONNECTION DETAIL

CATWALK NOTES:

1) MATERIALS SHALL BE AS FOLLOWS:
   STEEL WT SHAPES= ASTM A992 GRADE 50
   STEEL ANGLES= ASTM A36
   STEEL PLATES= ASTM A36
   STEEL PIPE= ASTM A53 GRADE B
   WELD METAL - E70XX
   BOLTS (EXCEPT ANCHOR BOLTS) - ASTM F593, TYPE 316, CONDITION CW1

2) STAINLESS STEEL ANCHOR BOLTS SHALL BE F593, TYPE 316, CONDITION CW1. NUTS FOR ANCHOR BOLTS SHALL BE ASTM F594 GRADE A HEAVY HEX. ANCHOR BOLTS SHALL HAVE DOUBLE NUTS.

3) ALL STEEL ITEMS (EXCEPT STAINLESS STEEL) SHALL BE GALVANIZED AFTER FABRICATION AS FOLLOWS: STRUCTURAL SHAPES AND PLATES - ASTM A123

4) EXCEPT FOR ANCHOR BOLTS, ALL BOLT HOLE DIAMETERS SHALL BE EQUAL TO THE BOLT DIAMETER PLUS 1/16", PRIOR TO GALVANIZING. HOLE DIAMETERS FOR ANCHOR BOLTS SHALL NOT EXCEED THE BOLT DIAMETER PLUS 1/2".

5) ANCHOR BOLTS SHALL BE PROVIDED WITH GALVANIZED TEMPLATES TOP AND BOTTOM TO MAINTAIN VERTICAL ALIGNMENT AND SPACING DURING CONCRETE PLACEMENT. TEMPLATES MAY NOT BE WELDED TO THE ANCHOR BOLTS.

6) CATWALK SHALL MEET A.A.S.H.T.O. "SPECIFICATIONS FOR THE DESIGN & CONSTRUCTION OF STRUCTURAL SUPPORTS FOR HIGHWAY SIGNS" 1985. (500 LB. DISTRIBUTED OVER 2'-0" TRANSVERSELY WITH THE BASIC ALLOWABLE UNIT STRESS - A.A.S.H.T.O. HIGHWAY BRIDGES 1985 (INCREASED 25%). MAX. SPAN IS 8'-0". CATWALK SHALL ALSO MEET O.S.H.A. 1970 STD'S. FOR WALKING-WORKING SURFACES.

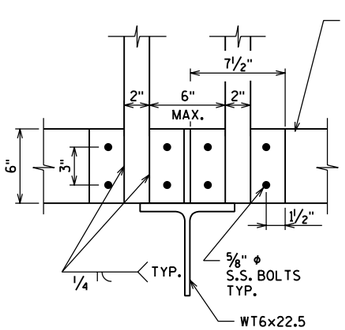

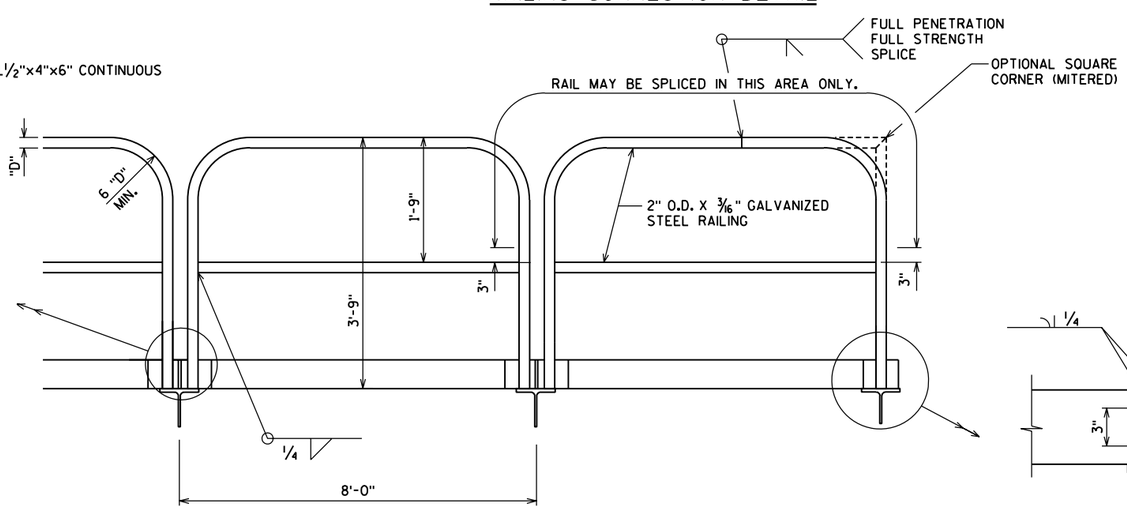

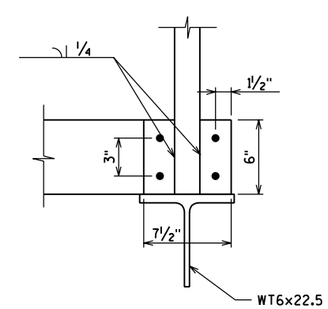

S.S. STAINLESS STEEL

TYPICAL RAILING DETAILS

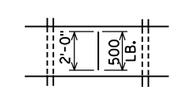

NO.	DATE	REVISION	BY

STATE OF WISCONSIN
DEPARTMENT OF TRANSPORTATION
STRUCTURES DESIGN SECTION

STRUCTURE B-37-360-001

CONST. SPEC.	2003	DRAWN BY	MSM	PLANS CK'D.

ACCESS PLATFORM

SHEET 31 OF 31
360

8

8

STATE PROJECT NUMBER

1166-09-74

FLOOR DRAINS SEE SHEET 45 FOR STATIONS

"DELINEATOR" AND "DELINEATOR BRACKETS" MOUNTED ON TOP OF THE PARAPET, SEE "SUPERSTRUCTURE PLAN"

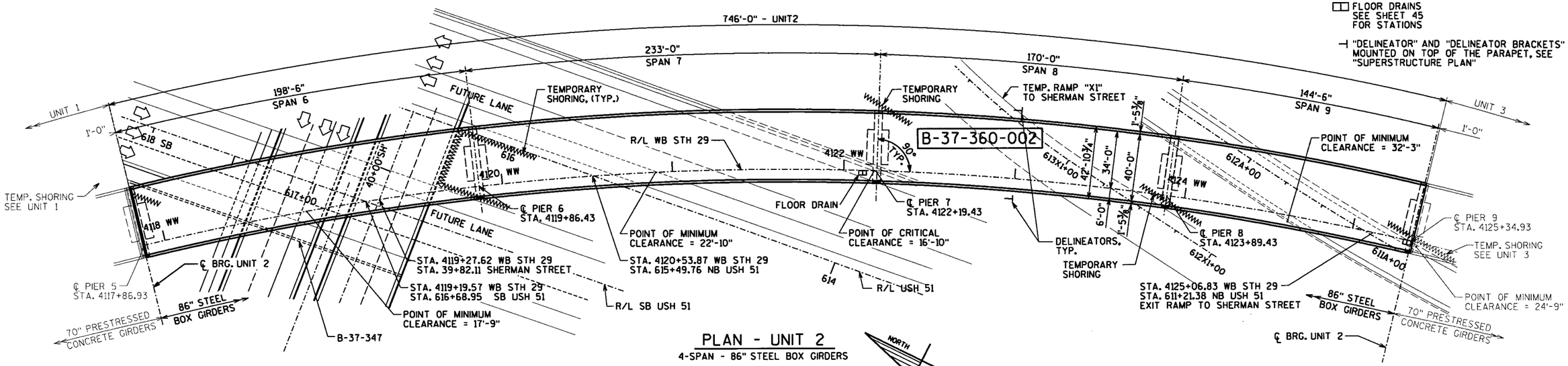

PLAN - UNIT 2

4-SPAN - 86" STEEL BOX GIRDERS

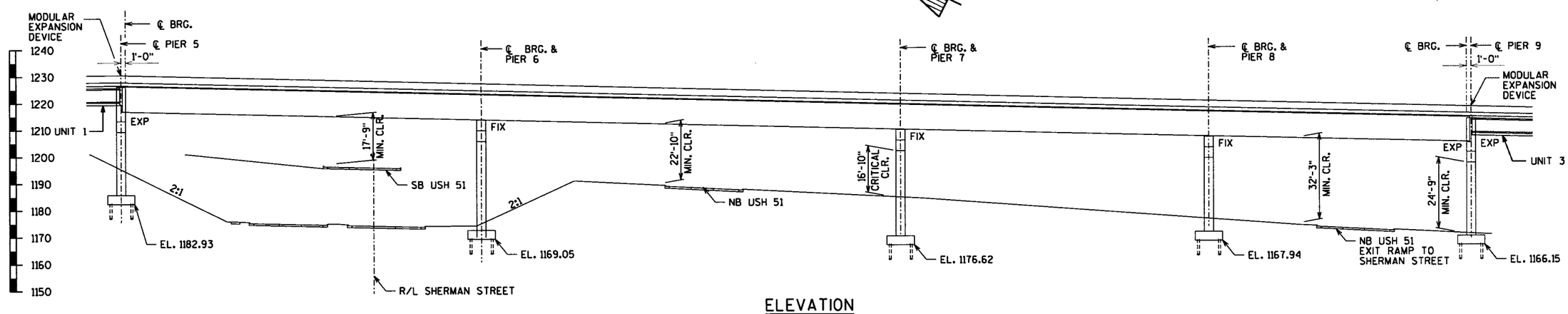

ELEVATION

DESIGN DATA

LIVE LOAD:

DESIGN RATING; HS-25
INVENTORY RATING; HS-26
OPERATIONAL RATING; HS-44
MAXIMUM STANDARD PERMIT VEHICLE LOAD = 250 KIPS.

STRUCTURE IS DESIGNED FOR A FUTURE WEARING SURFACE OF 20 POUNDS PER SQUARE FOOT.

ULTIMATE DESIGN STRESSES:

CONCRETE MASONRY
- SLAB — f'c = 4,000 P.S.I.
- ALL OTHER — f'c = 3,500 P.S.I.

HIGH STRENGTH
- BAR STEEL REINFORCEMENT, GRADE 60 — fy = 60,000 P.S.I.
- STRUCTURAL CARBON STEEL, (ASTM A709 GRADE 36) — fy = 36,000 P.S.I.
- HIGH STRENGTH STRUCTURAL STEEL, (ASTM A709, GRADE 50) — fy = 50,000 P.S.I.

FOUNDATION DATA

PIERS TO BE SUPPORTED ON 12 3/4" DIA. CAST-IN-PLACE PILING DRIVEN TO A MINIMUM BEARING VALUE OF 70 TONS PER PILE. ESTIMATED 70 FEET LONG.

TRAFFIC VOLUME

WB STH 29	USH 51
A.D.T. (2010) = 7200	A.D.T. (2010) = 56,100
A.D.T. (2030) = 10,800	A.D.T. (2030) = 62,200
R.D.S.= 60 M.P.H.	R.D.S.= 70 M.P.H.

SHERMAN STREET	NB USH 51 EXIT TO SHERMAN STREET
A.D.T. (2010) = 8000	A.D.T. (2010) = 5300
A.D.T. (2030) = 10,700	A.D.T. (2030) = 7900
R.D.S.= 30 M.P.H.	R.D.S.= 55 M.P.H.

WISCONSIN PROFESSIONAL ENGINEER ALBERT M. LINDNER E-18992 BROOKFIELD, WIS.

July 27, 2006

BUREAU OF STRUCTURES CONTACT = FINN HUBBARD (608) 266-8489
CONSULTANT CONTACT = ALBERT M. LINDNER (414) 259-1500

NO.	DATE	REVISION	BY

PLANS PREPARED BY: GRAEF ANHALT SCHLOEMER and Associates Inc. — ENGINEERS & SCIENTISTS, One Honey Creek Corporate Center, 125 South 84th Street, Suite 401, Milwaukee, WI 53214-1470

WISDOT
BUREAU OF STRUCTURES

STRUCTURE B-37-360-002

NB USH 51 TO WB STH 29

COUNTY MARATHON	CITY WAUSAU	
DESIGN SPEC. AASHTO 2002	LOAD HS-25	CONST. SPEC. 2003
DESIGNED BY JZ / DESIGN CK'D. KW	DRAWN BY RBH	PLANS CK'D. AML

APPROVED William C. Dreher SDR — CHIEF STRUCTURAL DESIGN ENGINEER — DATE 9-26-06

GENERAL PLAN

SHEET 1 OF 46

361

8

8

STATE PROJECT NUMBER

1166-09-74

DRAWING LIST

8

8

NO.	DATE	REVISION	BY

STATE OF WISCONSIN
DEPARTMENT OF TRANSPORTATION
STRUCTURES DESIGN SECTION

STRUCTURE B-37-360-002

CONST. SPEC.	2003	DRAWN BY	RBH	PLANS CK'D.	JZ

DRAWING LIST

SHEET 2 OF 46

362

FILE=
SCALE =

STATE PROJECT NUMBER
1166-09-74

BENCH MARKS			
NO.	STATION	DESCRIPTION	ELEVATION
127	617+28 67.2' RT	BLUE SQ. NE. END OF USH 51 NB. STRUCTURE OVER SHERMAN ST.	1197.11

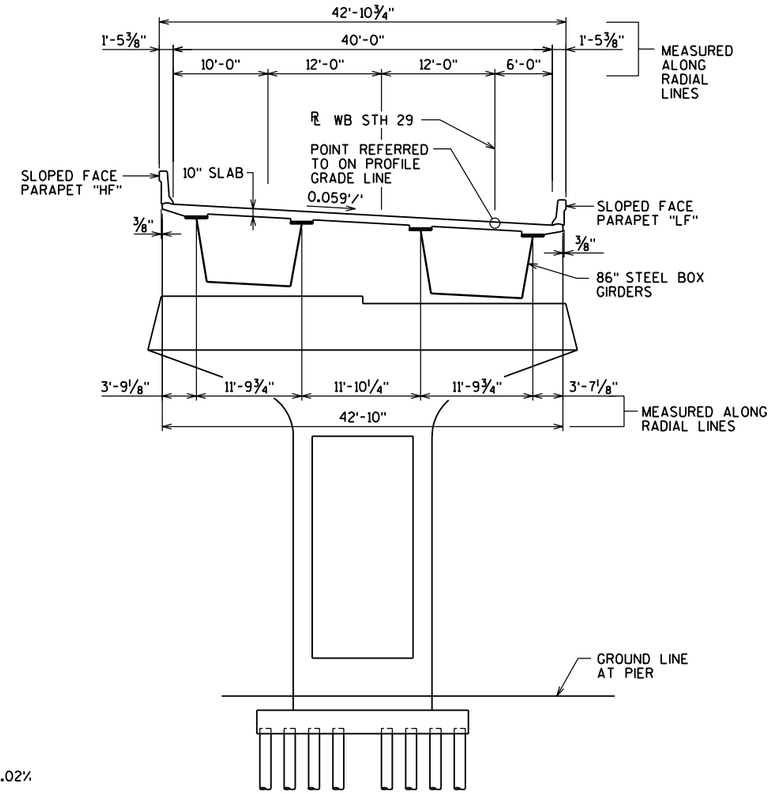

CROSS SECTION THRU ROADWAY - UNIT 2

(LOOKING UPSTATION)

NB USH 51 TO WB STH 29 CURVE DATA

P.I. STA. 4119+37.60
N = 200,002.53
E = 272,014.03
P.C. STA. 4102+55.35
P.T. STA. 4128+43.51
Δ = 93°10'26" (RT)
D = 3°36'00"
T = 1682.25'
L = 2588.16'
R = 1591.55'
* S.E. = 0.059'/'

NB USH 51 EXIT RAMP TO SHERMAN STREET CURVE DATA

P.I. STA. 611+08.72
N = 198,645.70
E = 271,906.99
P.C. STA. 610+07.86
P.T. STA. 612+09.24
Δ = 8°03'19"
D = 4°00'00"
T = 100.86'
L = 201.38'
R = 1432.39'
S.E. = 0.057%

* START OF UNIT 3 TO STA. 4127+91.85, S.E. = 0.059%
STA. 4127+91.85 TO STA. 4129+94.96, SUPERELEVATION TRANSITION FROM 0.059% TO 0.02%
STA. 4129+94.96 TO END OF UNIT 3, S.E. = 0.02%

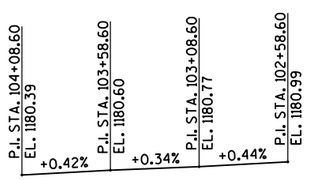

PROFILE GRADE LINE
CN/WCL RR
(FOR INFORMATION ONLY)

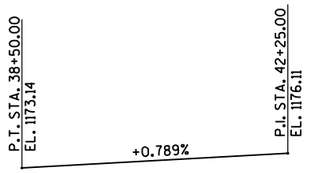

PROFILE GRADE LINE
SHERMAN STREET

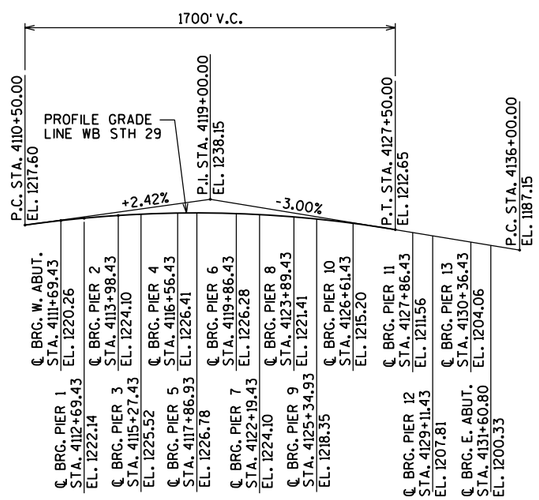

PROFILE GRADE LINE
WB STH 29

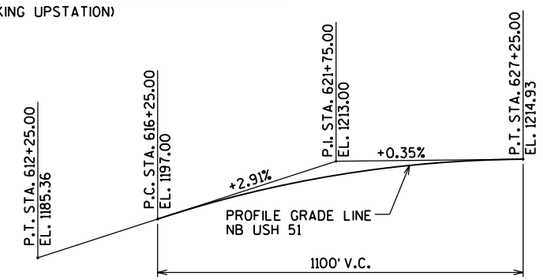

PROFILE GRADE LINE
NB USH 51

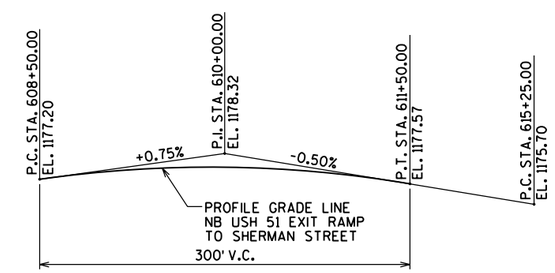

PROFILE GRADE LINE
NB USH 51 EXIT RAMP
TO SHERMAN STREET

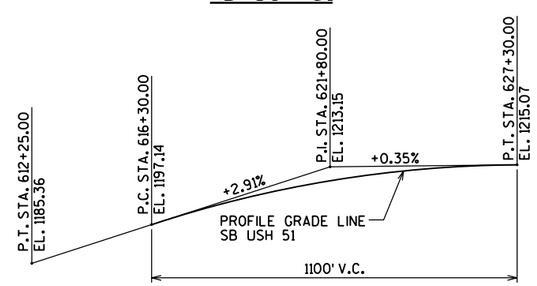

PROFILE GRADE LINE
SB USH 51

8

8

NO.	DATE	REVISION	BY

STATE OF WISCONSIN
DEPARTMENT OF TRANSPORTATION
STRUCTURES DESIGN SECTION

STRUCTURE B-37-360-002

CONST. SPEC.	2003	DRAWN BY	RBH	PLANS CK'D.	JZ

CROSS SECTION & PROFILES

SHEET 3 OF 46
363

FILE =
SCALE =

STATE PROJECT NUMBER

1166-09-74

GENERAL

1. DRAWINGS SHALL NOT BE SCALED.

2. ALL DIMENSIONS ARE IN FEET AND INCHES. ALL STATIONS AND ELEVATIONS ARE IN FEET.

3. GIRDERS AND OTHER ELEMENTS OF THE STRUCTURE ARE REFERRED TO AS 'LEFT' AND 'RIGHT'. THESE DIRECTIONS ARE WITH RESPECT TO THE REFERENCE LINE WHEN LOOKING IN THE DIRECTION OF INCREASING STATION.

4. TRANSVERSE DIMENSIONS ARE RADIAL TO THE REFERENCE LINE UNLESS NOTED OTHERWISE.

5. THE UTILITY INFORMATION SHOWN ON THESE DRAWINGS CONCERNING TYPE AND LOCATION OF UNDERGROUND UTILITIES IS NOT GUARANTEED TO BE ACCURATE OR ALL-INCLUSIVE. THE CONTRACTOR IS RESPONSIBLE FOR MAKING THEIR OWN DETERMINATION AS TO TYPE AND LOCATION OF UNDERGROUND UTILITIES AS MAY BE NECESSARY TO AVOID DAMAGE.

EXCAVATION AND BACKFILL

6. THE FINISHED GRADE LINE SHALL BE THE UPPER LIMITS OF EXCAVATION FOR STRUCTURES.

DESIGN

7. DESIGN IS IN ACCORDANCE WITH AASHTO STANDARD SPECIFICATIONS FOR HIGHWAY BRIDGES, SEVENTEENTH EDITION, 2002, LOAD FACTOR DESIGN UNLESS NOTED OTHERWISE.

8. STEEL BOX GIRDERS ARE DESIGNED IN ACCORDANCE WITH THE 2003 AASHTO GUIDE SPECIFICATIONS FOR HORIZONTALLY CURVED STEEL GIRDER HIGHWAY BRIDGES.

9. LIVE LOAD DEFLECTION LIMIT = SPAN / 1200.

DESIGN LIVE LOAD

10. STRENGTH DESIGN RATING: HS25

11. INVENTORY RATING: HS28 GIRDERS HS28.

12. OPERATING RATING: HS47 GIRDERS HS47.

13. MAXIMUM STANDARD PERMIT VEHICLE: 220 KIPS

OTHER DESIGN LOADS

14. STRUCTURE IS DESIGNED FOR 20 PSF FUTURE WEARING SURFACE.

15. RELATIVE TEMPERATURE RANGE FOR DETERMINING SUBSTRUCTURE FORCES = 90°F

16. ABSOLUTE TEMPERATURE RANGE FOR DETERMINING BEARING AND EXPANSION JOINT MOVEMENTS = -30°F TO +120°F

17. ALL OTHER LOADS IN ACCORDANCE WITH AASHTO.

REINFORCING STEEL

18. REINFORCEMENT SCHEDULES AND BREAKDOWNS IN THIS PLAN SET ARE FOR INFORMATION ONLY. VERIFY ALL REINFORCING BAR DIMENSIONS AND PLAN QUANTITIES AND BE RESPONSIBLE FOR ANY VARIATIONS.

19. REINFORCING STEEL SHALL BE HIGH STRENGTH, GRADE 60 WITH Fy=60 KSI.

20. REINFORCING STEEL SHALL BE UNCOATED IN FOUNDATIONS (EXCEPT PIER SHAFT DOWELS) AND EPOXY COATED IN ALL OTHER LOCATIONS (INCLUDING PIER SHAFT DOWELS).

21. PLACE ALL REINFORCEMENT WITH A MINIMUM CLEAR COVER OF 2" UNLESS NOTED OTHERWISE.

22. PLACE REINFORCEMENT IN FOOTINGS AND PILECAPS WITH A MINIMUM CLEAR COVER OF 3" ON SIDES AND 4" TOP AND BOTTOM UNLESS NOTED OTHERWISE.

23. PLACE TOP LAYER OF REINFORCING STEEL IN THE DECK SURFACE WITH 2½" CLEAR COVER TO TOP OF SLAB (EXCLUDING WEARING SURFACE OVERLAY).

24. PLACE BOTTOM LAYER OF REINFORCING STEEL IN THE DECK WITH 1½" CLEAR COVER.

25. ONLY REINFORCEMENT REQUIRED BY DESIGN IS SHOWN EXPLICITLY ON THE DRAWINGS. ADDITIONAL REINFORCEMENT MAY BE USED TO SIMPLIFY ASSEMBLY AND ERECTION OF THE REINFORCING STEEL AND MAY BE REQUIRED TO ENSURE STABILITY AND POSITIONING OF THE COMPLETED REINFORCEMENT CAGE. REINFORCEMENT IN ADDITION TO THAT SHOWN WILL NOT BE INCLUDED FOR PAYMENT.

26. LAP SPLICE LENGTHS THAT ARE NOT EXPLICITLY DIMENSIONED OR EVIDENT FROM THE BAR LENGTHS DETAILED SHALL CONFORM TO THE FOLLOWING TABLE:

#4	1'-6"	#8	4'-8"
#5	2'-5"	#9	5'-10"
#6	2'-10"	#10	7'-5"
#7	3'-7"	#11	9'-2"

STRUCTURAL STEEL

27. ALL STRUCTURAL STEEL FOR BOX GIRDERS SHALL BE HIGH STRENGTH ASTM A709 (AASHTO M270) GRADE 50 (Fy=50 KSI) - SEE STEEL DRAWINGS FOR SPECIFIC LOCATIONS.

28. SOME MEMBERS REQUIRE FABRICATION AND TESTING IN ACCORDANCE WITH REQUIREMENTS FOR FRACTURE CRITICAL MEMBERS (FCM). SEE SHEET 19 FOR SPECIFICS.

29. ALL ROLLED SECTIONS SHALL BE IN ACCORDANCE WITH ASTM A709 GRADE 50 (Fy=50 KSI).

30. CHARPY V-NOTCH TOUGHNESS REQUIREMENTS FOR ALL STEEL SHALL CONFORM TO THE REQUIREMENTS FOR ZONE 2.

31. ALL WELDING SHALL BE IN ACCORDANCE WITH AASHTO D1.5 BRIDGE WELDING CODE.

32. SEE SHEET 19 FOR TABLE OF MINIMUM FILLET WELD SIZES. USE THESE SIZES AT ALL LOCATIONS WHERE A SPECIFIC WELD SIZE IS NOT OTHERWISE INDICATED.

33. USE WELD MATERIAL WITH A TENSILE STRENGTH AT LEAST 20 KSI GREATER THAN THE YIELD STRENGTH OF THE STEEL BEING WELDED. NON-WEATHERING CONSUMABLES MAY BE USED FOR SINGLE-PASS FILLET WELDS.

34. BEARING AND EXPANSION JOINT ASSEMBLIES SHALL BE FABRICATED FROM ASTM A709 GRADE 50 MATERIAL (Fy=50 KSI) AND SHALL BE HOT-DIP GALVANIZED AFTER FABRICATION IN ACCORDANCE WITH ASTM A123.

35. ANCHOR BOLTS, NUTS AND WASHERS SHALL CONFORM TO ASTM F1554 (GRADE 105). HOT-DIP GALVANIZED IN ACCORDANCE WITH AASHTO M232.

36. ALL BOLTS SHALL BE ASTM A325 TYPE 1. BOLTS SHALL BE ⅞" DIAMETER UNLESS NOTED OTHERWISE. ALL HOLES SHALL BE STANDARD DIAMETER - NO OVERSIZE HOLES. ALL CONNECTIONS SHALL BE FABRICATED AND ASSEMBLED AS SLIP-CRITICAL CONNECTIONS. DESIGN ASSUMED SURFACE CLASS A.

37. PAINT ALL STRUCTURAL STEEL, INCLUDING SURFACES AND BRACING MEMBERS ON THE INSIDE OF THE BOX GIRDERS. SELECT THE FINISH COAT COLOR FOR EXTERIOR SURFACES TO MATCH THE SAMPLE TO BE PROVIDED BY THE DEPARTMENT. OBTAIN APPROVAL OF THE COLOR MATCH FROM THE ENGINEER BEFORE ORDERING. FINISH COAT FOR INTERIOR SURFACES SHALL BE WHITE.

38. CAMBER DIAGRAMS HAVE BEEN DEVELOPED ASSUMING A CONSTANT 4" HAUNCH HEIGHT, MEASURED FROM THE UNDERSIDE OF THE TOP FLANGE TO THE UNDERSIDE OF THE DECK (TOP OF STAY-IN-PLACE METAL FORMS). ANY ADDITIONAL QUANTITIES REQUIRED AS A RESULT OF VARIATION IN THE HAUNCH HEIGHT ARE ASSUMED TO BE INCIDENTAL TO OTHER PAY ITEMS AND WILL NOT BE PAID FOR SEPARATELY. THIS INCLUDES ADDITIONAL CONCRETE IN THE HAUNCH, ADDITIONAL OR MORE COMPLICATED FORMWORK, EXTRA SHEAR STUD LENGTH AND ANY REQUIRED REINFORCEMENT IN THE HAUNCH.

39. TEMPORARY SUPPORTS AND FALSEWORK (INCLUDING CANTILEVER BRACKETS) SHALL NOT BE ATTACHED TO OR BEAR ON GIRDER WEBS EXCEPT AT WEB STIFFENER LOCATIONS.

40. DESIGN CONNECTION BETWEEN STAY-IN-PLACE METAL FORMS AND GIRDER FLANGES TO PROVIDE ADJUSTMENT OF VERTICAL POSITION BASED ON THE ACTUAL HAUNCH HEIGHT REQUIRED.

41. TOP OF STAY-IN-PLACE METAL FORMS SHALL BE ALIGNED WITH THE UNDERSIDE OF THE 10" DECK SLAB AS SHOWN IN THE SECTIONS ON SHEET 13 .

CONCRETE

42. MINIMUM 28-DAY STRENGTH (f'c) SHALL BE AS FOLLOWS:

CONCRETE MASONRY, SUBSTRUCTURES: 3,500 PSI
CONCRETE MASONRY, SLAB: 4,000 PSI

43. PROTECTIVE SURFACE TREATMENT SHALL BE APPLIED TO THE TOP AND INSIDE FACE OF BOTH PARAPETS AND TO THE DECK SLAB.

44. CONCRETE QUANTITY IN THE HAUNCHES IS CALCULATED BASED ON A CONSTANT DEPTH OF 4" MEASURED FROM TOP OF WEB TO UNDERSIDE OF SLAB (EXCLUDING THE VOLUME TAKEN UP BY THE TOP FLANGE). THIS IS THE MAXIMUM HAUNCH QUANTITY FOR WHICH PAYMENT WILL BE MADE.

45. CHAMFER ALL EXPOSED OUTSIDE CORNERS ¾" UNLESS NOTED OTHERWISE.

8

8

NO.	DATE	REVISION	BY

STATE OF WISCONSIN
DEPARTMENT OF TRANSPORTATION
STRUCTURES DESIGN SECTION

STRUCTURE B-37-360-002

CONST. SPEC. 2003 | DRAWN BY RBH | PLANS CK'D. JZ

GENERAL NOTES

SHEET 4 OF 46
364

FILE =
SCALE =

WB STH 29 CURVE DATA

P.I. STA. 4119+37.60
N = 200,002.53
E = 272,014.03
P.C. STA. 4102+55.35
P.T. STA. 4128+43.51
Δ = 93°10'26" (RT)
D = 3°36'00"
T = 1682.25'
L = 2588.16'
R = 1591.55'
S.E. = 0.059'/'

NB USH 51 CURVE DATA

P.I. STA. 613+68.59
N = 198,907.37
E = 271,790.47
P.C. STA. 607+38.18
P.T. STA. 619+98.68
Δ = 3°09'18" (LT)
D = 0°15'01"
T = 630.41'
L = 1260.50'
R = 22,891.31'
S.E. = NORMAL CROWN

NB USH 51 EXIT RAMP TO SHERMAN STREET CURVE DATA

P.I. STA. 611+08.72
N = 198,645.70
E = 271,906.99
P.C. STA. 610+07.86
P.T. STA. 612+09.24
Δ = 8°03'19"
D = 4°00'00"
T = 100.86'
L = 201.38'
R = 1432.39'
S.E. = 0.057%

TOTAL ESTIMATED QUANTITIES - UNIT 2

BID ITEMS	UNIT	PIER 5	PIER 6	PIER 7	PIER 8	PIER 9	SUPER.	TOTALS
DEBRIS CONTAINMENT STRUCTURE B-37-360-002	LS	-	-	-	-	-	-	1
EXCAVATION FOR STRUCTURES BRIDGES B-37-360-002	LS	-	-	-	-	-	-	1
TEMPORARY SHORING	SF	-	1,830	470	300	-	-	2,600
CONCRETE MASONRY BRIDGES	CY	-	203	159	171	-	1,350	1,883
EXPANSION DEVICE MODULAR B-37-360-002	LS	-	-	-	-	-	-	1 (1)
PROTECTIVE SURFACE TREATMENT	SY	-	-	-	-	-	3,880	3,880
BAR STEEL REINFORCEMENT HS BRIDGES	LB	-	3,820	2,810	2,810	-	-	9,440
BAR STEEL REINFORCEMENT HS COATED BRIDGES	LB	-	35,180	30,470	31,420	-	331,780	428,850
STRUCTURAL STEEL HS	LB	-	-	-	-	-	2,006,200	2,006,200
WELDED STUD SHEAR CONNECTORS 7/8X6-INCH	EACH	-	-	-	-	-	7,590	7,590
PILING CAST IN PLACE CONCRETE DELIVERED AND DRIVEN 12 3/4-INCH	LF	-	2800	2,100	2,100	-	-	7,000
FLOOR DRAINS TYPE GC	EACH	-	-	-	-	-	2	2
DOWNSPOUT 6-INCH	LF	-	-	-	-	-	110	110
PAINTING EPOXY SYSTEM B-37-360-002	LS	-	-	-	-	-	-	1
DELINEATORS	EACH	-	-	-	-		16	16
DELINEATORS BRACKETS	EACH	-	-		-	-	16	16
CONDUIT RIGID NONMETALLIC SCHEDULE 80 2-INCH	LF	-	-	-	-	-	736	736
CONDUIT RIGID METALLIC 2-INCH	LF			-	-	-	10	10
JUNCTION BOXES 18X6X6-INCH	EACH		-	-	-	-	5	5
ACCESS DOORS	EACH	-	-	-	-	-	4	4
BEARINGS HIGH LOAD MULTI-ROTATIONAL FIXED	EACH	-	2	2	2	-	-	6
BEARINGS HIGH LOAD MULTI-ROTATIONAL UNI-DIRECTIONAL	EACH	2	-	-	-	2	-	4 ★
CONCRETE STAINING B-37-360-002	SF	-	2,220	1,800	2,010	-	10,200	16,230
ANTI SKID TREATMENT	SY	-	-	-	-	-	3,360	3,360
TEMPORARY SHORING	SF							
NON-BID ITEMS								
FILLER	SIZE	——	——	——	——	——		1/2" & 3/4"
BRIDGE SEAT PROTECTION	LS	——	——	——	——	——		1

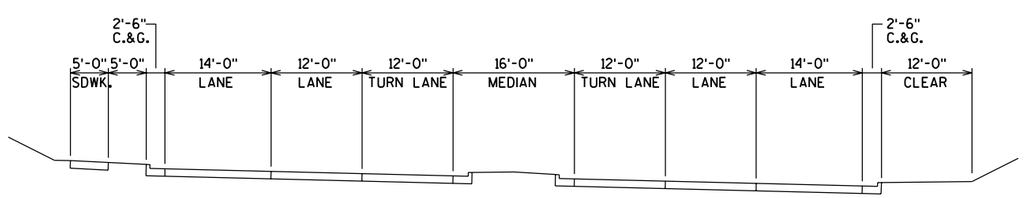

TYPICAL FINISHED SECTION - SHERMAN STREET

LEGEND

★ CONCRETE STAIN SHALL BE IN ACCORDANCE WITH THE SPECIAL PROVISIONS. STAIN SHALL BE FEDERAL COLOR #36424, SHALL EXTEND 1'-0" BELOW PROPOSED GRADE, AND SHALL BE APPLIED TO THE FOLLOWING AREAS:
- PARAPETS: OUTSIDE FACE ONLY (NOT ALONG TOP)
- OUTSIDE EDGE OF DECK AND BOTTOM OF OVERHANGS
- PIERS: ENTIRE PIER EXCEPT TOP OF CAP
- ABUTMENTS: FRONT FACE AND SIDES

(1) THE EXPANSION DEVICE FOR THIS BID ITEM IS AT PIERS 5 AND 9.

NO.	DATE	REVISION	BY

STATE OF WISCONSIN
DEPARTMENT OF TRANSPORTATION
STRUCTURES DESIGN SECTION

STRUCTURE B-37-360-002

CONST. SPEC. 2003 | DRAWN BY RBH | PLANS CK'D. WAH

QUANTITIES

FILE =
SCALE =

STATE PROJECT NUMBER

1166-09-74

BORINGS TAKEN BY:
STS
3909 CONCORD AVENUE
SCHOFIELD, WISCONSIN 54476

BORINGS TAKEN ON:
NI-16 JAN. 26, 2004
NI-15 JAN. 27, 2004

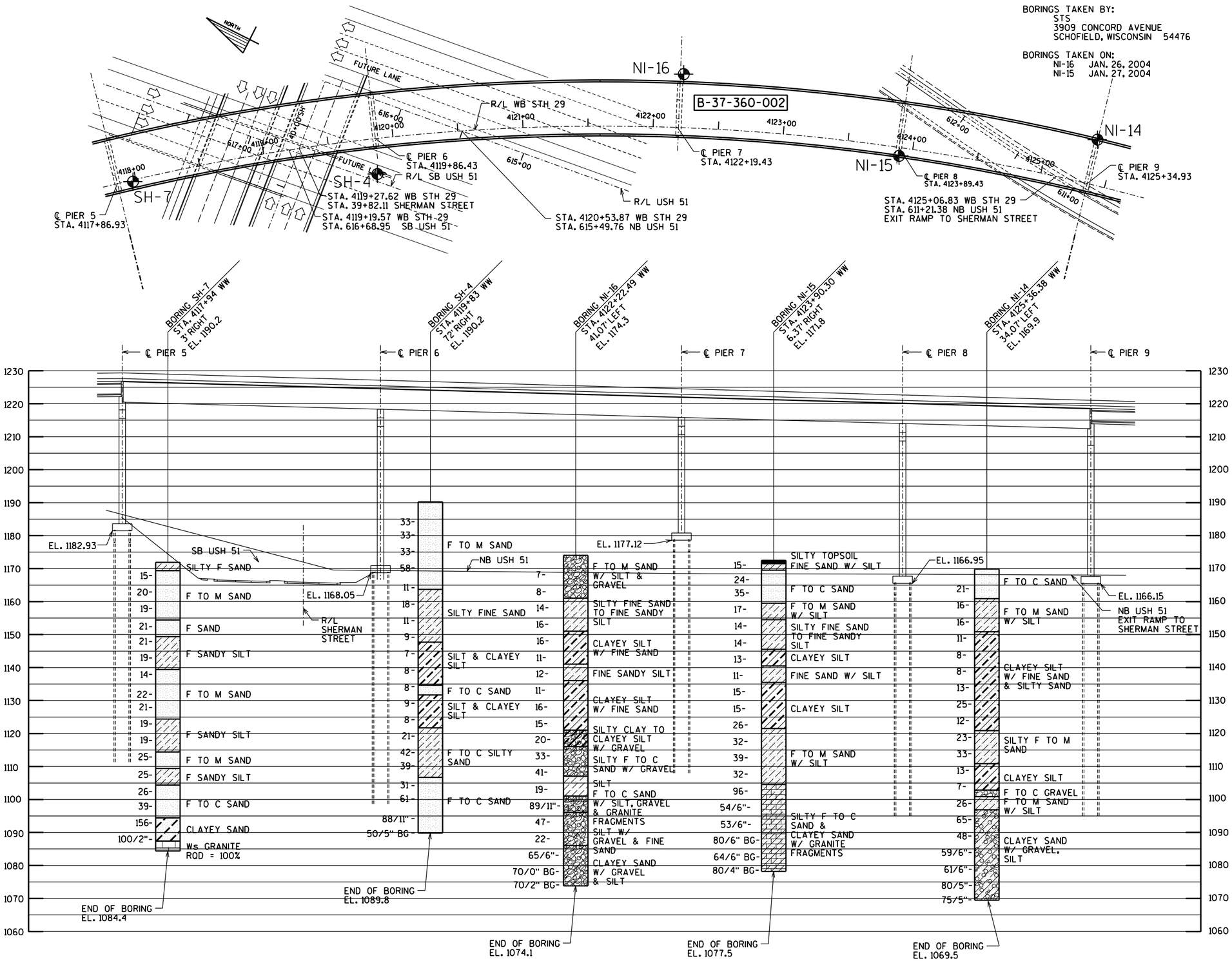

ABBREVIATIONS

F ---- Fine M ---- Medium C ---- Coarse
Ws ---- Weathered So ---- Sound

MATERIAL SYMBOLS

Fill, Topsoil, Sand, Gravel, Silt, Silty Clay, Clay, Sandy Gravel, Limestone, Clayey Silt, Silty Sand

LEGEND OF PROBING

95/6 Blows for 6" penetration probing taken with a 140# wt. falling 30" on a 2" O.D. point

Probing No.
Sta.
Elevation
7 Average blows per foot
Refusal 95/6

LEGEND OF BORING

Unconfined strength Tons/Ft. — 7.7
7 ✳ Blows per Ft. using 140# wt. falling 30"
Wash sample
Shelby Tube ----- S.T.
Ground water elevation
No ground water observed above this elevation

Boring No.
sta. elev.
Sandy Gravel
F. Boulders or Cobbles
Sand
Silty Clay
So
Limestone

Unless otherwise specified, the blows per foot at the locations indicated are based on driving a 2" O.D. x 1.4" I.D. split spoon sampler with a 140# hammer having a free fall of 30". The blow count is taken in undisturbed soil immediately below a cased or open hole eliminating side friction on the drive pipe.

SUBSURFACE EXPLORATION FOR FOUNDATION DESIGN AND BIDDERS INFORMATION

To obtain relative data concerning the character of material in and upon which the foundation might be built, borings and/or soundings were made at points approximately as indicated on this drawing. The data presented herein represents the findings of the sub-surface explorations made. However, because the depths investigated are limited and the area of the borings and/or soundings is very small in relation to the entire area, the Division of Highways does not warrant conditions below the depths investigated or that the classification of material encountered in these investigations is necessarily typical of the entire site.

NO.	DATE	REVISION	BY

STATE OF WISCONSIN
DEPARTMENT OF TRANSPORTATION
STRUCTURES DESIGN SECTION

STRUCTURE B-37-360-002

DRAWN BY RBH PLANS CK'D. WAH

SUBSURFACE EXPLORATION

SHEET 6 OF 46
366

8

8

I:\jobs2001\20015020\d4_11660900ec\design\0900\mil_unit 2\gs_b-37-360-002-06.dgn
7/27/2006

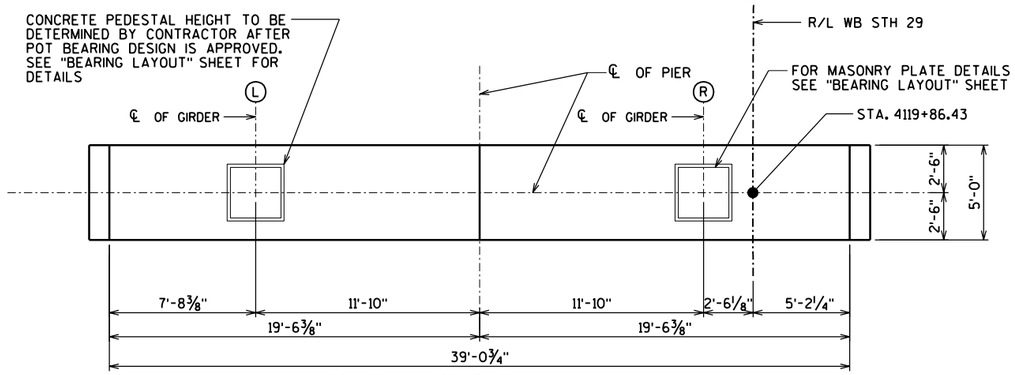

PLAN - PIER 6

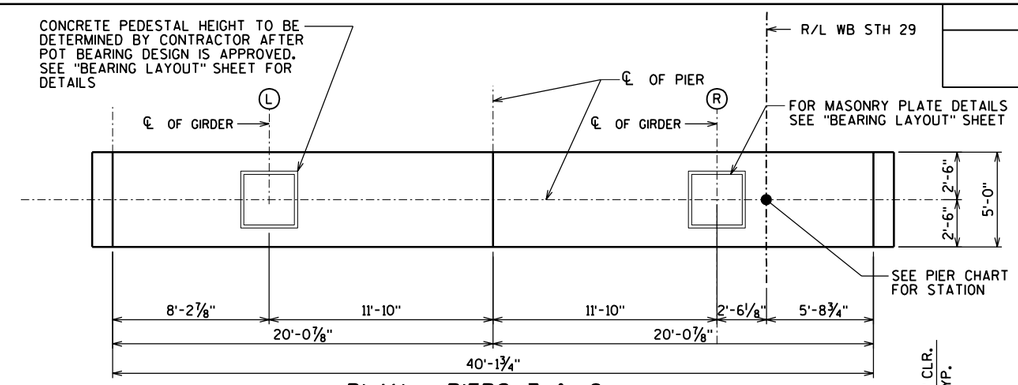

PLAN - PIERS 7 & 8

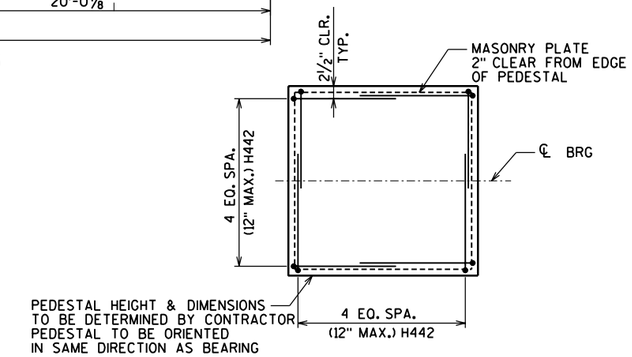

BEARING PEDESTAL PLAN

* SEE "BEARING LAYOUT" SHEET FOR BEARING DETAILS

PIER ELEVATION CHART			
ITEM	PIER #6	PIER #7	PIER #8
PIER STA.	4119+86.43	4122+19.43	4123+89.43
EL. L	1218.12	1216.02	1213.34
EL. R	1216.72	1214.62	1211.94
EL. P4	1209.72	1209.62	1206.94
EL. P3	1205.55	1205.45	1202.77
EL. P2	1173.72	1180.62	1171.94
EL. P1	1169.05	1176.62	1167.94
PIER HEIGHT	43.00	34.00	40.00

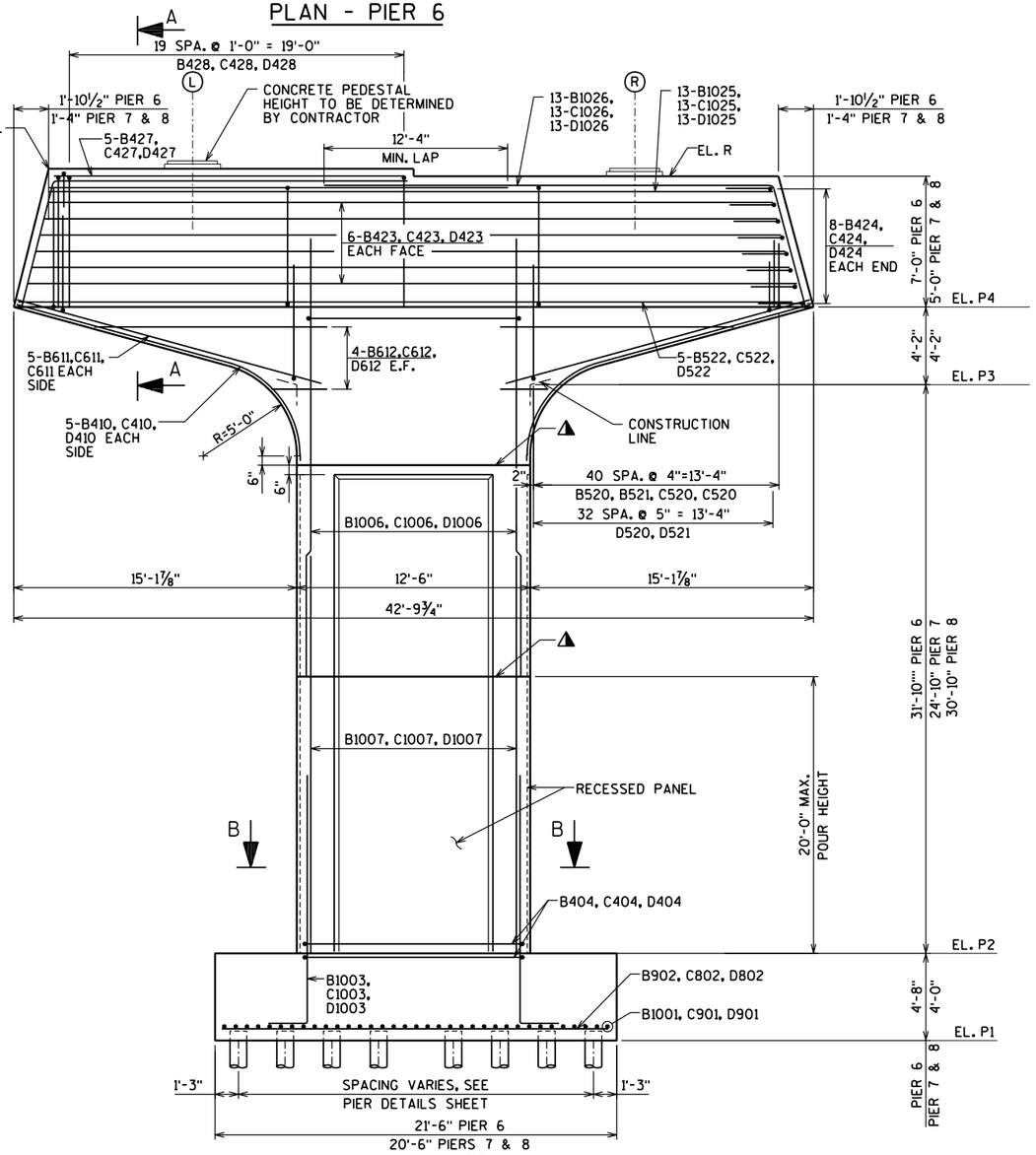

ELEVATION
LOOKING EAST

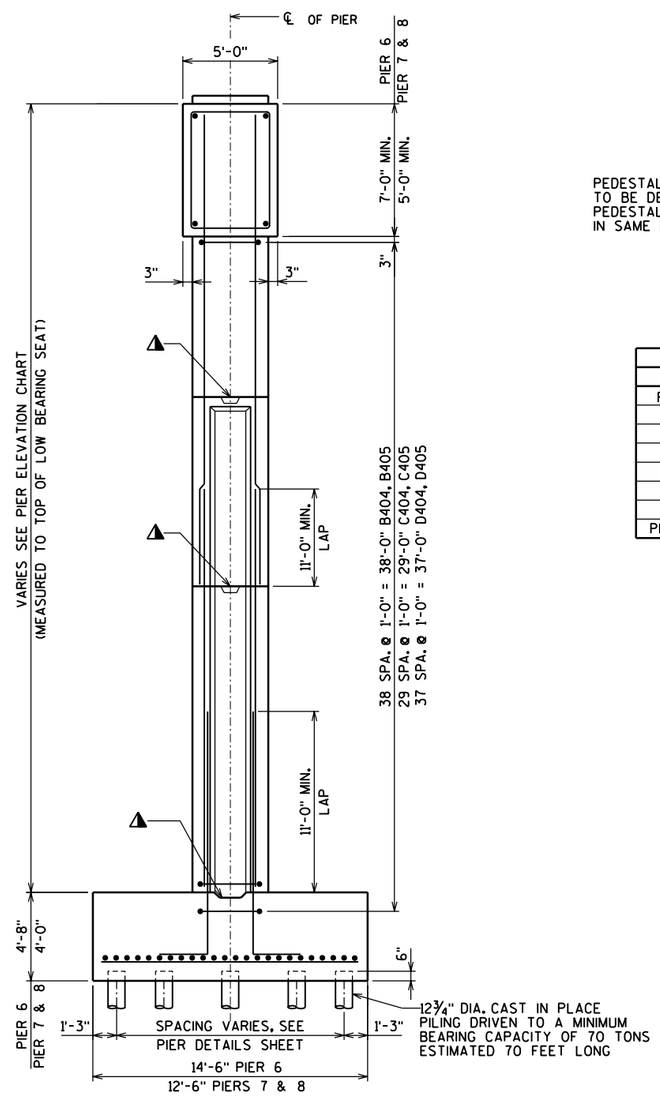

END VIEW

LEGEND

(X) DENOTES GIRDER DESIGNATION

◭ KEYED CONSTRUCTION JOINT FORMED BY BEVELED KEYWAY 4"x1'-6"x8'-2". EXPOSED EDGES OF CONSTRUCTION JOINT SHALL BE FLUSH AND NOT BEVELED.

SEE "PIER DETAILS" SHEET FOR SECTION A-A & B-B.

NO.	DATE	REVISION	BY

STATE OF WISCONSIN
DEPARTMENT OF TRANSPORTATION
STRUCTURES DESIGN SECTION

STRUCTURE B-37-360-002

CONST. SPEC. 2003	DRAWN BY RBH	PLANS CK'D. WAH

PIERS 6, 7 & 8

SHEET 7 OF 46
367

FILE=
SCALE =

WB STH 29

8

8

STATE PROJECT NUMBER

1166-09-74

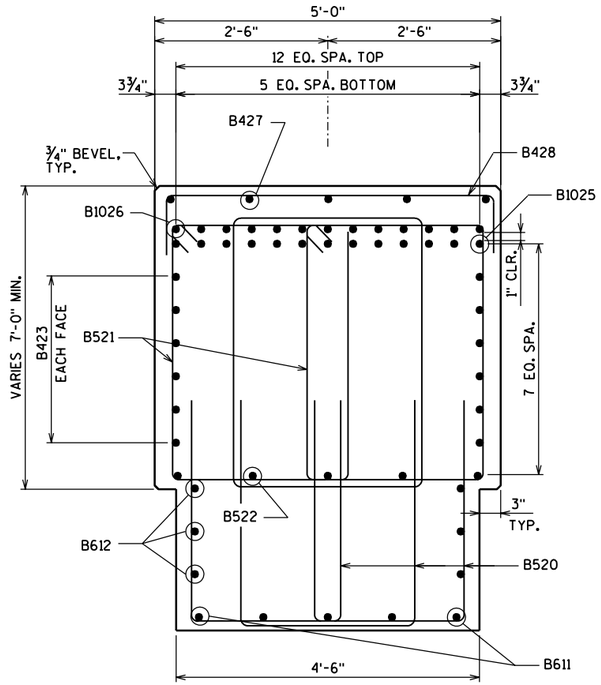

SECTION A-A

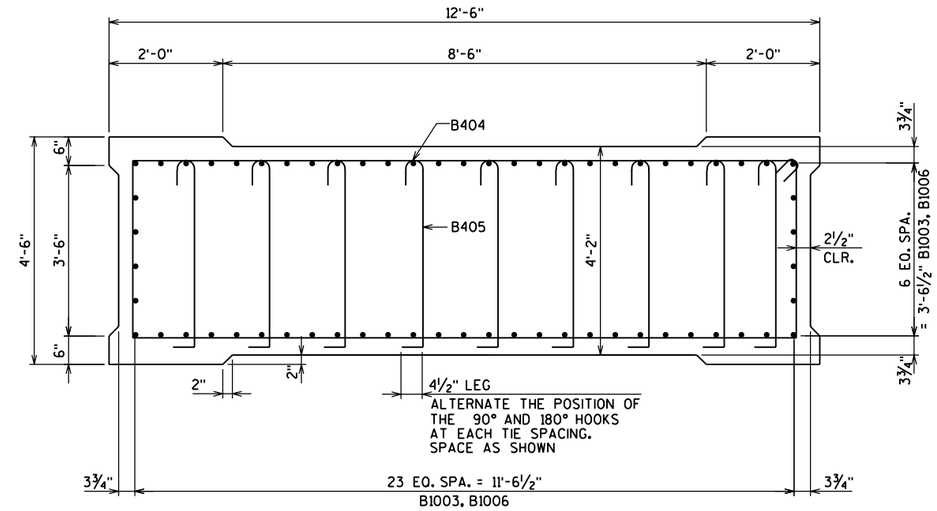

SECTION B-B

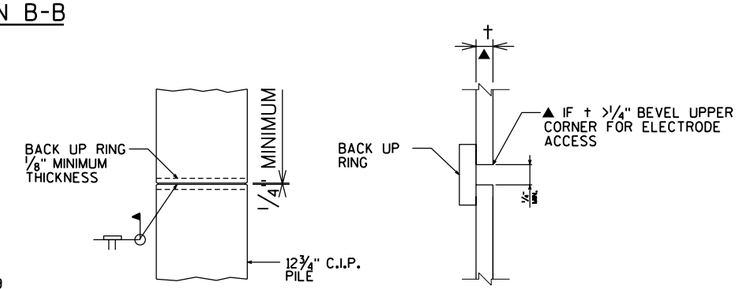

CAST-IN-PLACE PIPE PILE

C.I.P PIPE WELD DETAIL

NOTE

CAST-IN-PLACE PILE SHALL BE A.S.T.M. DESIGNATION A-252, GRADE 2 OR EQUAL. MINIMUM WALL THICKNESS = 0.25 IN.

PIER TO BE SUPPORTED ON 12¾" DIA. CAST IN PLACE CONCRETE PILING DRIVEN TO A MINIMUM BEARING CAPACITY OF 70 TONS PER PILE. ESTIMATED 70 FEET LONG

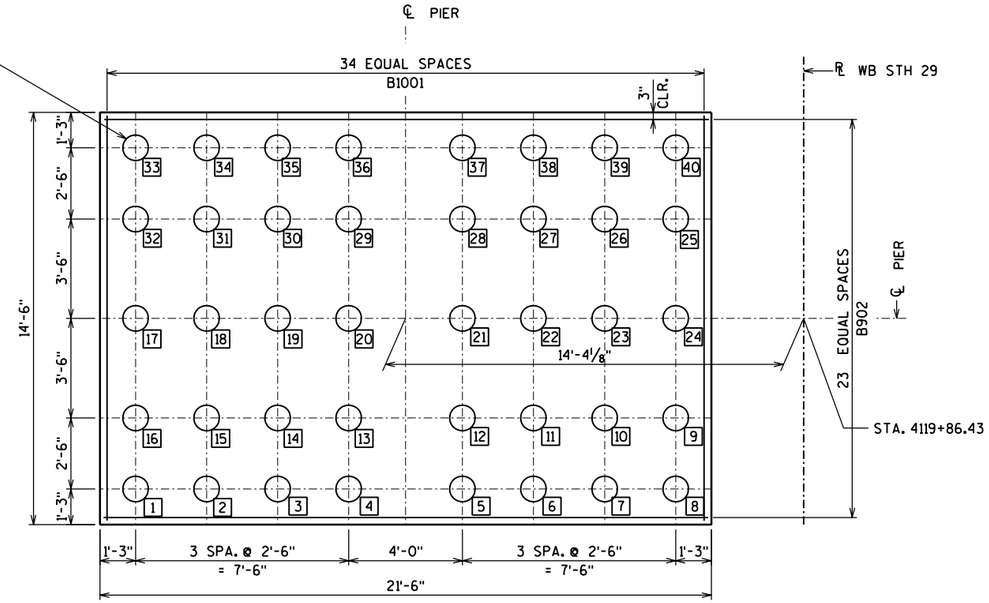

PILE PLAN - PIER 6

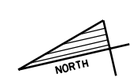

NO.	DATE	REVISION	BY

STATE OF WISCONSIN
DEPARTMENT OF TRANSPORTATION
STRUCTURES DESIGN SECTION

STRUCTURE B-37-360-002

CONST. SPEC.	2003	DRAWN BY	RBH	PLANS CK'D.	WAH

PIER 6 DETAILS

SHEET 8 OF 46
368

8

8

FILE =
SCALE =

STATE PROJECT NUMBER

1166-09-74

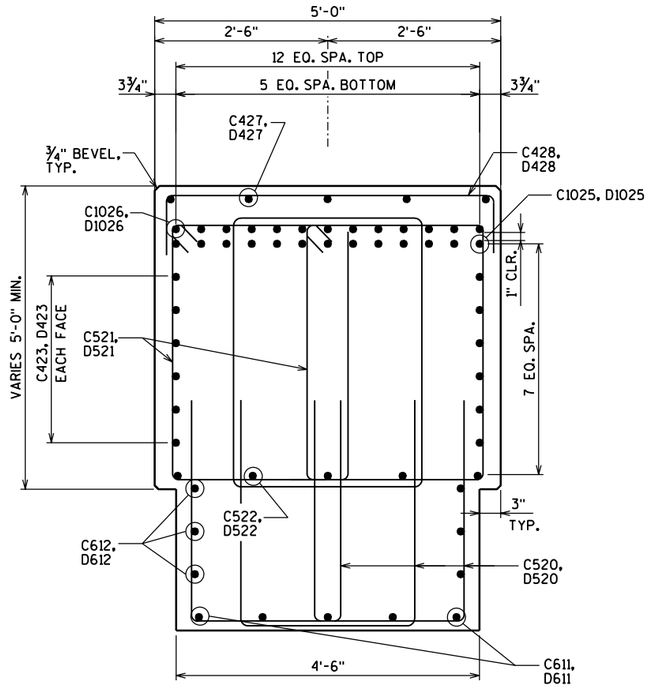

SECTION A-A

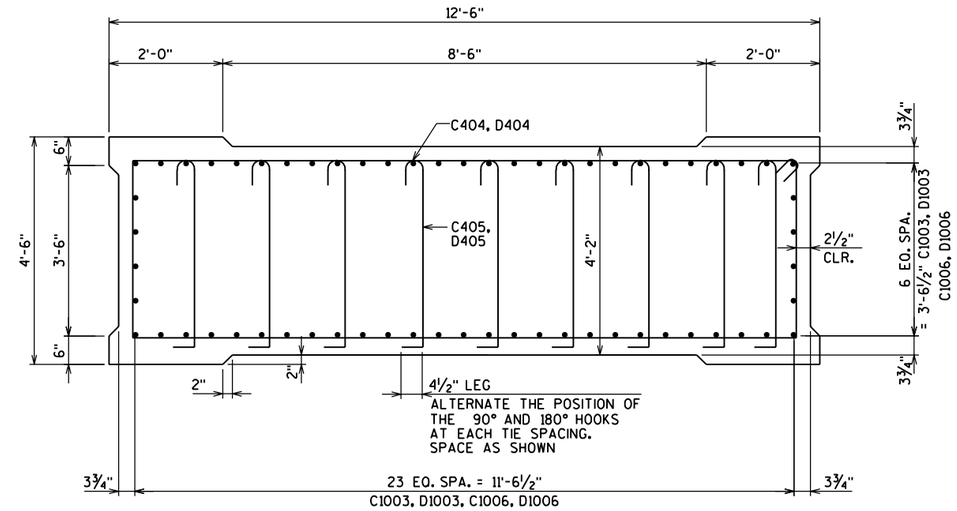

SECTION B-B

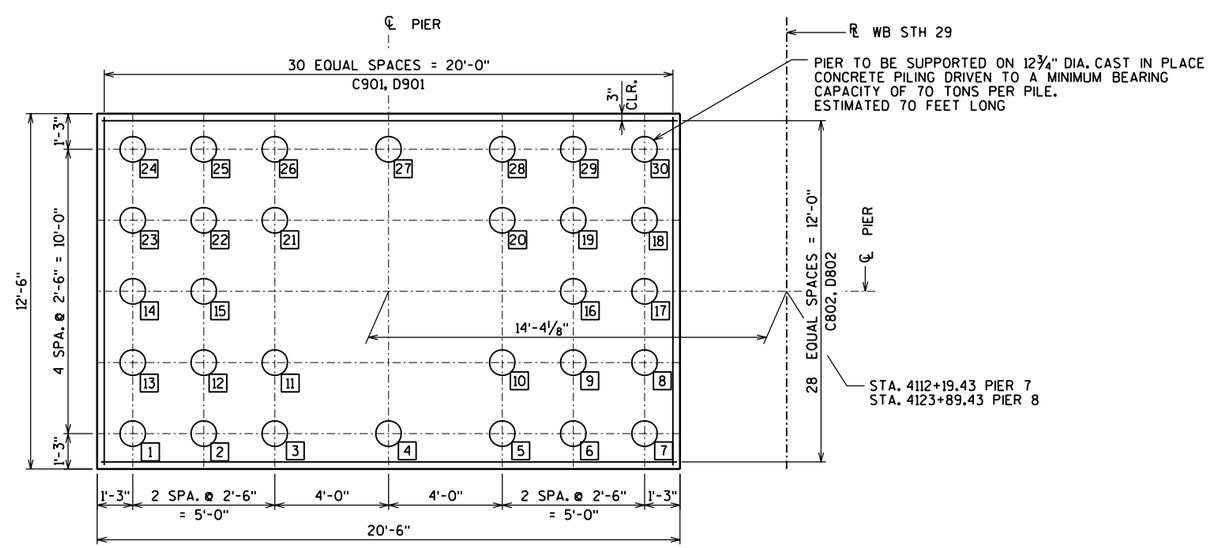

PILE PLAN - PIERS 7 & 8

* SEE "PIER 6 DETAILS" SHEET FOR PILE SPLICE DETAIL.

NO.	DATE	REVISION	BY

STATE OF WISCONSIN
DEPARTMENT OF TRANSPORTATION
STRUCTURES DESIGN SECTION

STRUCTURE B-37-360-002

CONST. SPEC.	2003	DRAWN BY	RBH	PLANS CK'D.	WAH

PIERS 7 & 8 DETAILS

SHEET 9 OF 46

369

FILE =
SCALE =

8

8

STATE PROJECT NUMBER

1166-09-74

PIER 6 - BILL OF BARS

MARK	COATED	NO. REQ'D.	LENGTH	BENT	BAR SERIES	LOCATION
B1001		35	14'-0"			FOOTING HORIZONTAL
B902		24	21'-0"			FOOTING HORIZONTAL
B1003	X	58	16'-6"	X		FOOTING DOWELS
B404	X	39	31'-6"	X		SHAFT TIES
B405	X	351	5'-1"	X		SHAFT TIES
B1006	X	58	24'-6"			SHAFT VERTICAL
B1007	X	58	29'-0"			SHAFT VERTICAL
B410	X	10	19'-0"	X		SHAFT TO CAP TRANSITION
B611	X	10	17'-0"			SHAFT TO CAP TRANSITION
B612	X	16	9'-1"		⚠	SHAFT TO CAP TRANSITION
B520	X	246	13'-7"	X	⚠	CAP STIRRUPS
B521	X	246	19'-2"	X		CAP STIRRUPS
B522	X	5	42'-5"			CAP HORIZONTAL BOTTOM
B423	X	12	39'-4"			CAP HORIZONTAL SIDES
B424	X	16	10'-5"	X		CAP HORIZONTAL ENDS
B1025	X	13	38'-6"			CAP HORIZONTAL TOP
B1026	X	26	32'-0"	X		CAP HORIZONTAL TOP
B427	X	5	19'-2"			CAP HORIZONTAL SEAT 'L'
B428	X	20	11'-5"	X		CAP VERTICAL SEAT 'L'
B430	X	40	3'-9"	X		DOWEL PEDESTALS

PIER 7 - BILL OF BARS

MARK	COATED	NO. REQ'D.	LENGTH	BENT	BAR SERIES	LOCATION
C901		31	12'-0"			FOOTING HORIZONTAL
C802		29	20'-0"			FOOTING HORIZONTAL
C1003	X	58	16'-6"	X		FOOTING DOWELS
C404	X	30	31'-6"	X		SHAFT TIES
C405	X	270	5'-1"	X		SHAFT TIES
C1006	X	58	14'-0"			SHAFT VERTICAL
C1007	X	58	29'-0"			SHAFT VERTICAL
C410	X	10	19'-0"	X		SHAFT TO CAP TRANSITION
C611	X	10	17'-0"			SHAFT TO CAP TRANSITION
C612	X	16	9'-1"		⚠	SHAFT TO CAP TRANSITION
C520	X	246	11'-7"	X	⚠	CAP STIRRUPS
C521	X	246	15'-2"	X		CAP STIRRUPS
C522	X	5	42'-5"			CAP HORIZONTAL BOTTOM
C423	X	12	40'-0"			CAP HORIZONTAL SIDES
C424	X	16	10'-5"	X		CAP HORIZONTAL ENDS
C1025	X	13	39'-10"			CAP HORIZONTAL TOP
C1026	X	26	30'-6"	X		CAP HORIZONTAL TOP
C427	X	5	19'-8"			CAP HORIZONTAL SEAT 'L'
C428	X	20	11'-5"	X		CAP VERTICAL SEAT 'L'
C430	X	40	3'-9"	X		DOWEL PEDESTALS

PIER 8 - BILL OF BARS

MARK	COATED	NO. REQ'D.	LENGTH	BENT	BAR SERIES	LOCATION
D901		31	12'-0"			FOOTING HORIZONTAL
D802		29	20'-0"			FOOTING HORIZONTAL
D1003	X	58	16'-6"	X		FOOTING DOWELS
D404	X	38	31'-6"	X		SHAFT TIES
D405	X	342	5'-1"	X		SHAFT TIES
D1006	X	58	21'-6"			SHAFT VERTICAL
D1007	X	58	29'-0"			SHAFT VERTICAL
D410	X	10	19'-0"	X		SHAFT TO CAP TRANSITION
D611	X	10	17'-0"			SHAFT TO CAP TRANSITION
D612	X	16	9'-1"		⚠	SHAFT TO CAP TRANSITION
D520	X	198	11'-7"	X	⚠	CAP STIRRUPS
D521	X	198	15'-2"	X		CAP STIRRUPS
D522	X	5	42'-5"			CAP HORIZONTAL BOTTOM
D423	X	12	40'-0"			CAP HORIZONTAL SIDES
D424	X	16	10'-5"	X		CAP HORIZONTAL ENDS
D1025	X	13	39'-10"			CAP HORIZONTAL TOP
D1026	X	26	30'-6"	X		CAP HORIZONTAL TOP
D427	X	5	19'-8"			CAP HORIZONTAL SEAT 'L'
D428	X	20	11'-5"	X		CAP VERTICAL SEAT 'L'
D430	X	40	3'-9"	X		DOWEL PEDESTALS

THE FIRST DIGIT OF A THREE DIGIT BAR MARK OR THE FIRST TWO DIGITS OF A FOUR DIGIT BAR MARK INDICATES BAR SIZE. ALL DIMENSIONS IN THE BAR BENDS ARE OUT TO OUT.

⚠ LENGTH SHOWN FOR BAR IS AN AVERAGE LENGTH AND SHOULD ONLY BE USED FOR BAR WEIGHT CALCULATIONS. SEE BAR SERIES TABLE FOR ACTUAL LENGTHS. BUNDLE AND TAG EACH SERIES SEPARATELY.

BAR SERIES TABLE

MARK	NO. REQ'D.	LENGTH
B612	4 SERIES OF 4	3'-10" TO 14'-4"
C612	4 SERIES OF 4	3'-10" TO 14'-4"
D612	4 SERIES OF 4	3'-10" TO 14'-4"
B520	6 SERIES OF 41	9'-7" TO 17'-7"
C520	6 SERIES OF 41	7'-7" TO 15'-7"
D520	6 SERIES OF 33	7'-7" TO 15'-7"

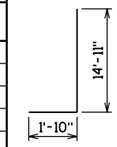

B1003, C1003, D1003,

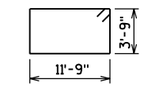

B404, C404, D404,

B405, C405, D405,

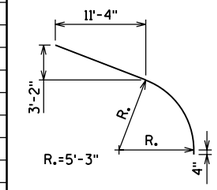

B410, C410, D410,

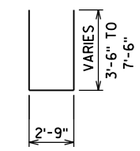

B520

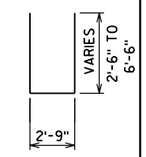

C520, D520

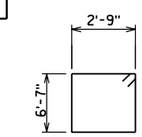

B521

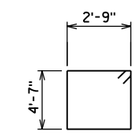

C521, D521,

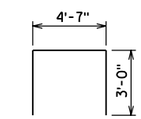

B424, C424, D424,

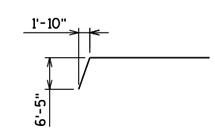

B1026

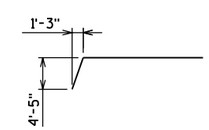

C1026, D1026,

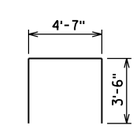

B428, C428, D428,

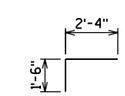

B430, C430, D430

8

NO.	DATE	REVISION	BY

STATE OF WISCONSIN
DEPARTMENT OF TRANSPORTATION
STRUCTURES DESIGN SECTION

STRUCTURE B-37-360-002

CONST. SPEC.	2003	DRAWN BY	RBH	PLANS CK'D.	JZ

PIER
BILL OF BARS

SHEET 10 OF 46
370

FILE =
SCALE =

WB STH 29

STATE PROJECT NUMBER
1166-09-74

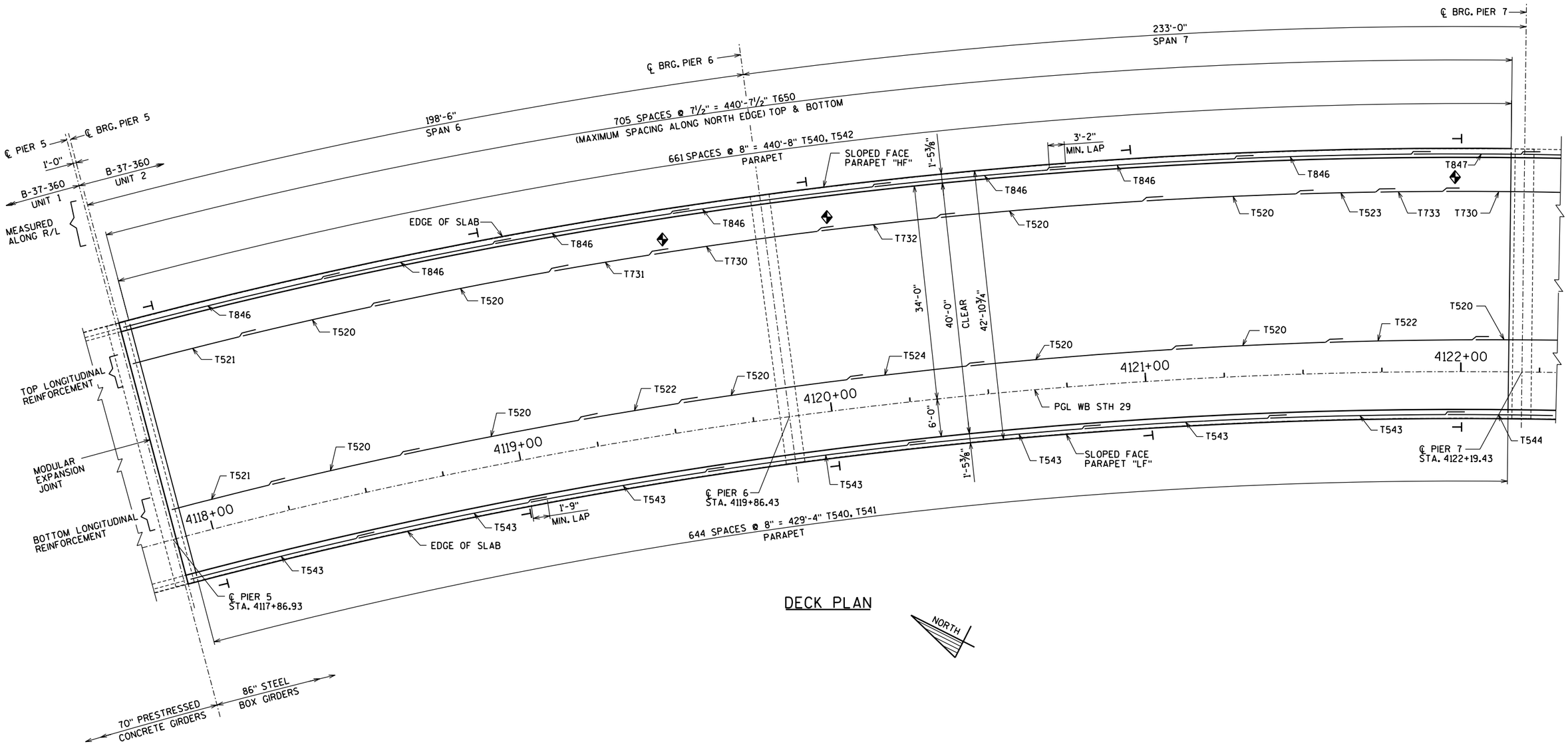

DECK PLAN

NOTES:

1. THE BOTTOM TRANSVERSE BAR STEEL REINFORCEMENT SHALL BE SUPPORTED BY CONTINUOUS BAR CHAIRS WITH A CENTER TO CENTER SPACING NOT TO EXCEED 4'-0". ONE LINE OF CONTINUOUS BAR CHAIRS SHALL BE PLACED NEAR EACH EDGE OF SLAB TO SUPPORT THE ENDS OF THE BOTTOM TRANSVERSE BAR STEEL.
2. THE TOP LONGITUDINAL BAR STEEL REINFORCEMENT SHALL BE SUPPORTED BY CONTINUOUS BAR CHAIRS IN TRANSVERSE DIRECTION ON 4'-0" CENTERS.
3. ALL TRANSVERSE BAR STEEL SHALL BE PLACED RADIALLY TO THE R/L WB STH 29.
4. ALL LONGITUDINAL BAR STEEL SHALL BE PLACED CONCENTRIC TO R/L WB STH 29.

LEGEND

◆ SLICE ALL DECK LONGITUDINAL BARS 2'-11" UNLESS NOTED OTHERWISE THUS ◆ ON PLAN.

◆ = 4'-5"

⊣ "DELINEATOR" AND "DELINATOR BRACKETS" MOUNTED ON TOP OF THE PARAPET, SPACED APPROX. 100' ALONG THE RIGHT SIDE OF THE BRIDGE. YELLOW, ON THE LEFT SIDE OF THE ROADWAY, CRYSTAL, ON THE RIGHT SIDE OF THE ROADWAY. THE LEFT SIDE AND RIGHT SIDE DELINEATORS SHALL BE PERPRNDICULAR FROM EACH OTHER.

THE UNIT SHALL BE INSTALLED AS RECOMMENDED BY THE MANUFACTURER AND THE ADHESIVE SHALL BE APPLIED TO THE BASE OF THE DELINEATOR FOR BONDING TO CONCRETE BARRIER. DO NOT INSTALL WHEN TEMPERATURES LESS THAN 50° FAHRENHEIT.

NO.	DATE	REVISION	BY

STATE OF WISCONSIN
DEPARTMENT OF TRANSPORTATION
STRUCTURES DESIGN SECTION

STRUCTURE B-37-360-002

CONST. SPEC.	2003	DRAWN BY	RBH	PLANS CK'D.	JZ

SUPERSTRUCTURE PLAN SPANS 6 & 7

SHEET 11 OF 46
371

8

8

FILE =
SCALE =

STATE PROJECT NUMBER

1166-09-74

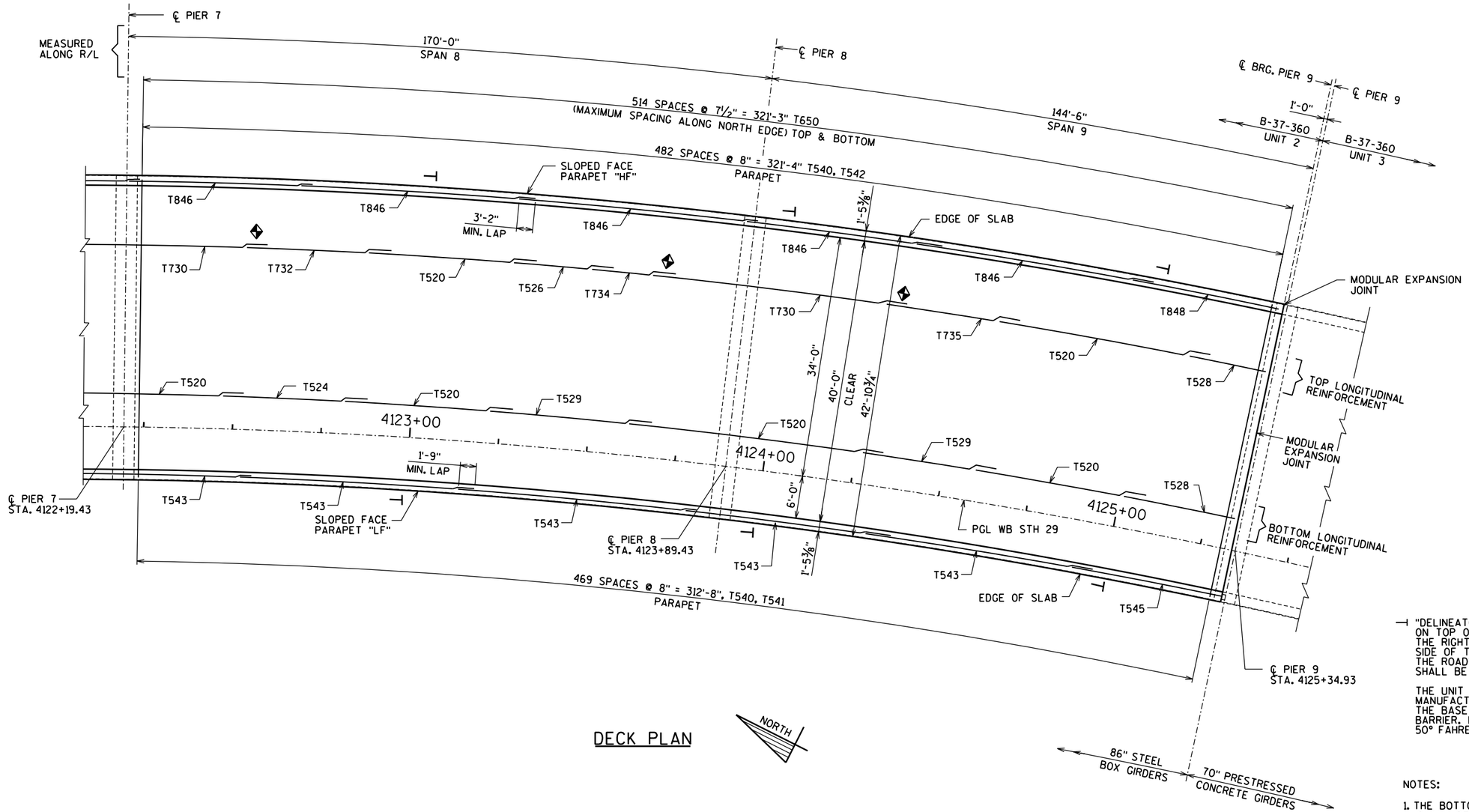

DECK PLAN

LEGEND

◆ SLICE ALL DECK LONGITUDINAL BARS 2'-11" UNLESS NOTED OTHERWISE THUS ◆ ON PLAN.

◆ = 4'-5"

⊣ "DELINEATOR" AND "DELINATOR BRACKETS" MOUNTED ON TOP OF THE PARAPET, SPACED APPROX. 100' ALONG THE RIGHT SIDE OF THE BRIDGE. YELLOW, ON THE LEFT SIDE OF THE ROADWAY, CRYSTAL, ON THE RIGHT SIDE OF THE ROADWAY. THE LEFT SIDE AND RIGHT SIDE DELINEATORS SHALL BE PERPRNDICULAR FROM EACH OTHER.

THE UNIT SHALL BE INSTALLED AS RECOMMENDED BY THE MANUFACTURER AND THE ADHESIVE SHALL BE APPLIED TO THE BASE OF THE DELINEATOR FOR BONDING TO CONCRETE BARRIER. DO NOT INSTALL WHEN TEMPERATURES LESS THAN 50° FAHRENHEIT.

NOTES:

1. THE BOTTOM TRANSVERSE BAR STEEL REINFORCEMENT SHALL BE SUPPORTED BY CONTINUOUS BAR CHAIRS WITH A CENTER TO CENTER SPACING NOT TO EXCEED 4'-0". ONE LINE OF CONTINUOUS BAR CHAIRS SHALL BE PLACED NEAR EACH EDGE OF SLAB TO SUPPORT THE ENDS OF THE BOTTOM TRANSVERSE BAR STEEL.
2. THE TOP LONGITUDINAL BAR STEEL REINFORCEMENT SHALL BE SUPPORTED BY CONTINUOUS BAR CHAIRS IN TRANSVERSE DIRECTION ON 4'-0" CENTERS.
3. ALL TRANSVERSE BAR STEEL SHALL BE PLACED RADIALLY TO THE R/L WB STH 29.
4. ALL LONGITUDINAL BAR STEEL SHALL BE PLACED CONCENTRIC TO R/L WB STH 29.

NO.	DATE	REVISION	BY

STATE OF WISCONSIN
DEPARTMENT OF TRANSPORTATION
STRUCTURES DESIGN SECTION

STRUCTURE B-37-360-002

CONST. SPEC.	2003	DRAWN BY	MSM	PLANS CK'D.	JZ

SUPERSTRUCTURE PLAN SPANS 8 & 9

SHEET 12 OF 46
372

FILE =
SCALE =

8

8

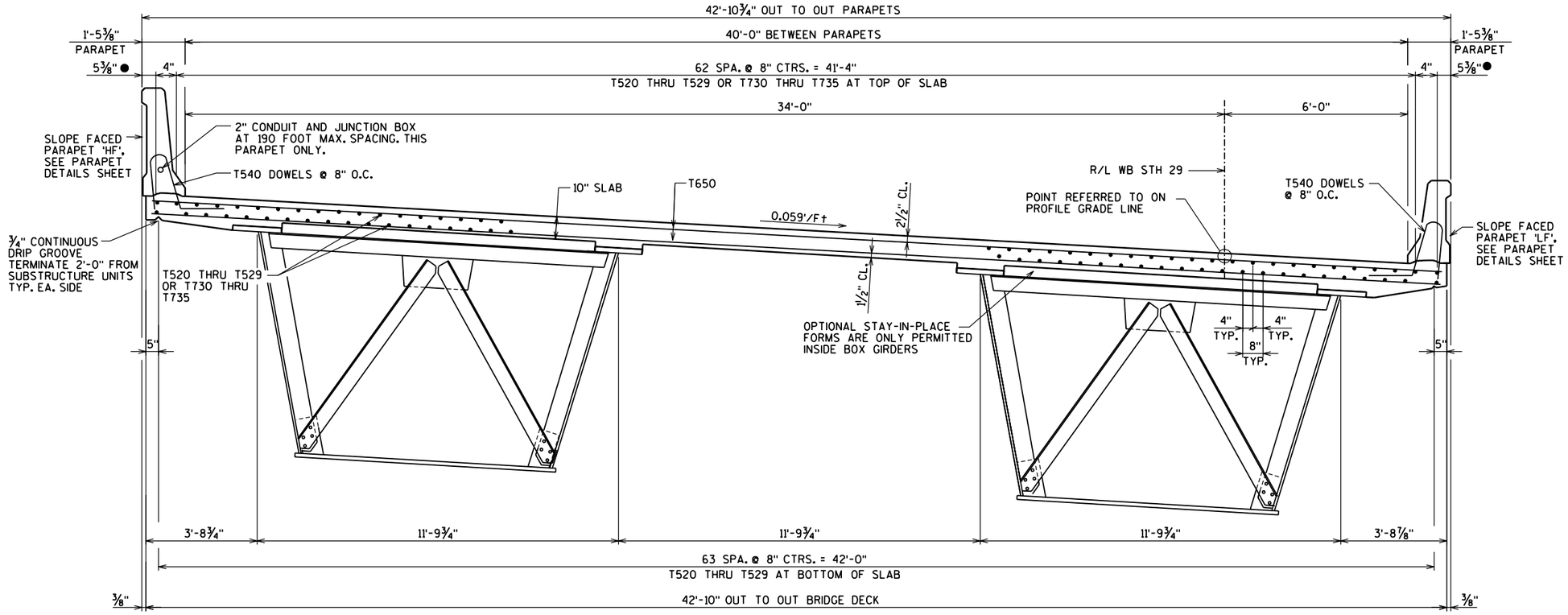

DECK CROSS SECTION

(LOOKING EAST)

LEGEND

● 5 " FROM EDGE OF DECK

8

8

NO.	DATE	REVISION	BY

STATE OF WISCONSIN
DEPARTMENT OF TRANSPORTATION
STRUCTURES DESIGN SECTION

STRUCTURE B-37-360-002

CONST. SPEC.	2003	DRAWN BY	RBH	PLANS CK'D.	JZ

SUPERSTRUCTURE CROSS SECTION

SHEET 13 OF 46
373

FILE =
SCALE =

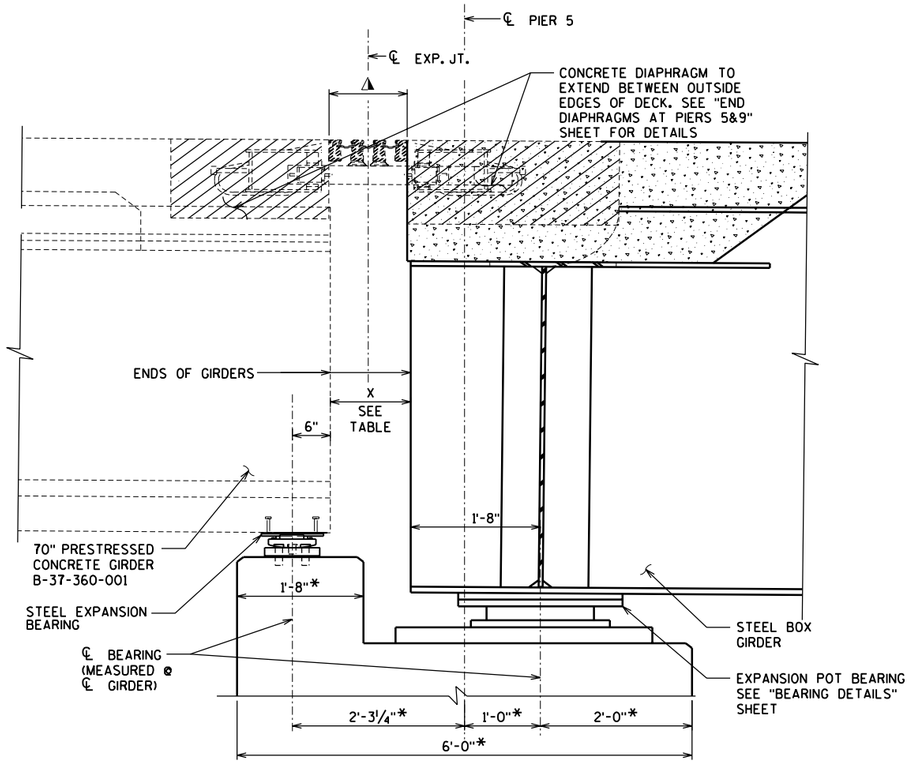

PART LONGITUDINAL SECTION AT PIER 5

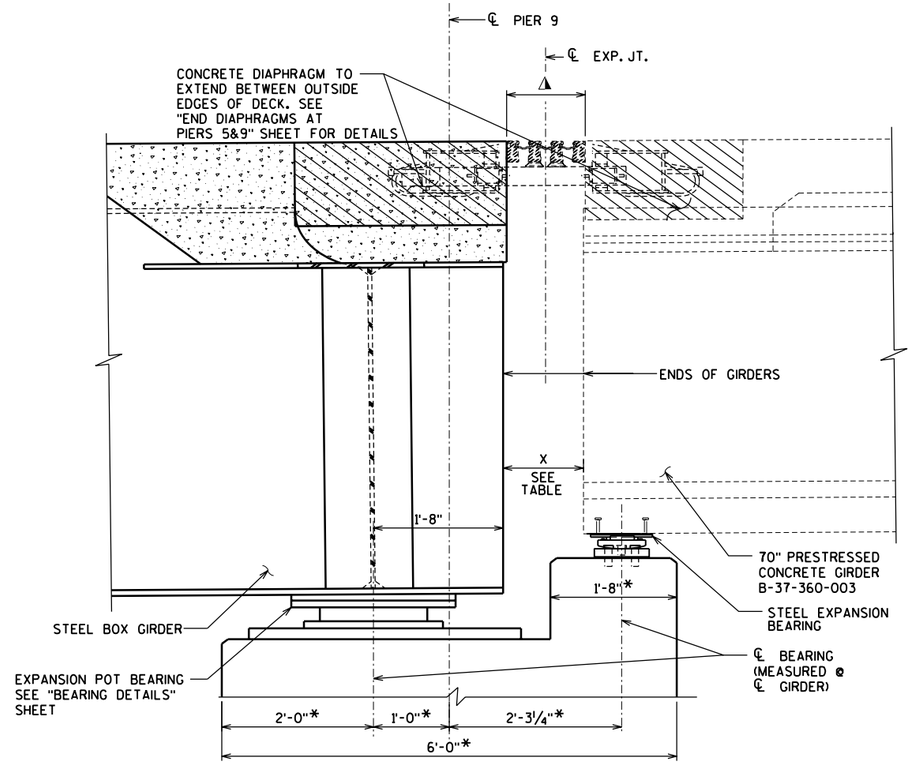

PART LONGITUDINAL SECTION AT PIER 9

LEGEND

◪ THESE DIMENSIONS PARALLEL TO GIRDER

* DIMENSION IS TAKEN NORMAL TO ℄ SUBSTRUCTURE UNITS.

◮ FOR JOINT OPENING SEE SHEET 76

NOTES:

1. SEE SHEET 28 FOR END DIAPHRAGM DETAILS.
2. SEE SHEET 41 FOR PLAN LAYOUT OF EXPANSION JOINTS.
3. SEE SHEET 42 FOR CONCRETE REINFORCEMENT AT EXPANSION JOINTS.
4. SEE SHEET 40 FOR DETAILS OF THE MODULAR EXPANSION DEVICES INCLUDING REQUIRED MOVEMENT CAPACITY, NUMBER OF SEALS, ANCHORAGES AND TEMPORARY SUPPORTS.
5. JOINT OPENING DIMENSION ◮ VARIES WITH LOCATION AND SETTING TEMPERATURE.
6. ADJACENT STRUCTURES ARE SHOWN FOR EASE OF REFERENCE ONLY. ALL INFORMATION RELATING TO THESE STRUCTURES SHALL BE VERIFIED FROM THE APPROPRIATE PLAN SET.
7. MINIMUM SPACE BETWEEN ANY PORTION OF ADJACENT STRUCTURES (DIMENSION 'X') SHALL BE AS GIVEN IN THE TABLE ON THIS SHEET.

   DIMENSION 'X' IS MEASURED AT TIME OF JOINT CONSTRUCTION AND DOES NOT INCLUDE MOVEMENT DUE TO CREEP OF PRESTRESSED GIRDERS. MEASURE THIS DIMENSION PRIOR TO PLACING THE EXPANSION DEVICE IN THE BLOCKOUTS.

   IF ACTUAL MEASURED DIMENSION IS LESS THAN THE SPECIFIED MINIMUM, NOTIFY THE ENGINEER AND WAIT FOR INSTRUCTIONS BEFORE PROCEEDING FURTHER WITH EXPANSION DEVICE INSTALLATION AT THE DEFICIENT LOCATION.
8. SUPPORT BARS ARE SHOWN SLOPED TO FOLLOW DECK GRADE. BECAUSE THE BEARINGS ARE INSTALLED HORIZONTAL, DETAILED DESIGN OF THE MODULAR EXPANSION DEVICE MAY REQUIRE THESE BARS TO BE HORIZONTAL ALSO. CONFIRM BLOCKOUT DIMENSIONS AFTER EXPANSION DEVICES HAVE BEEN DETAILED.

MINIMUM SPACE - DIM'N 'X'		
AMBIENT TEMP	PIER 5	PIER 9
-5°F	11⅛"	11½"
20°F	12⅛"	12⅜"
45°F	13¼"	13¼"
70°F	14⅜"	14⅛"
95°F	15⅜"	15"

8

8

NO.	DATE	REVISION	BY

STATE OF WISCONSIN
DEPARTMENT OF TRANSPORTATION
STRUCTURES DESIGN SECTION

STRUCTURE B-37-360-002

CONST. SPEC. 2003 | DRAWN BY RBH | PLANS CK'D. JZ

SUPERSTRUCTURE LONGITUDINAL SECTIONS

SHEET 14 OF 46
374

FILE =
SCALE =

STATE PROJECT NUMBER

1166-09-74

SUPERSTRUCTURE - BILL OF BARS

MARK	COATED	NO.	LENGTH	BAR SERIES	BENT	DESCRIPTION
T520	X	966	60'-0"			DECK LONGITUDINAL TOP AND BOTTOM
T521	X	129	34'-0"			DECK LONGITUDINAL TOP AND BOTTOM SPAN 6
T522	X	128	30'-0"			DECK LONGITUDINAL TOP AND BOTTOM SPAN 6 & 7
T523	X	65	22'-0"			DECK LONGITUDINAL BOTTOM SPAN 7
T524	X	128	44'-0"			DECK LONGITUDINAL BOTTOM SPAN 7 & 8
T526	X	65	14'-0"			DECK LONGITUDINAL TOP & BOTTOM SPAN 8
T528	X	129	41'-0"			DECK LONGITUDINAL TOP & BOTTOM SPAN 9
T529	X	128	25'-0"			DECK LONGITUDINAL BOTTOM SPAN 8 & 9
T730	X	195	60'-0"			DECK LONGITUDINAL TOP OVER PIERS
T731	X	65	32'-0"			DECK LONGITUDINAL TOP SPAN 6
T732	X	65	46'-0"			DECK LONGITUDINAL TOP SPAN 7
T733	X	65	11'-0"			DECK LONGITUDINAL TOP SPAN 7
T734	X	65	12'-0"			DECK LONGITUDINAL TOP SPAN 8
T735	X	65	27'-0"			DECK LONGITUDINAL TOP SPAN 9
T540	X	2260	4'-7"		X	DECK PARAPET DOWELS
T541	X	1115	4'-10"		X	PARAPET VERTICAL SOUTH EDGE OF DECK
T542	X	1145	6'-6"		X	PARAPET VERTICAL NORTH EDGE OF DECK
T543	X	60	60'-0"			PARAPET LONGITUDINAL SOUTH SIDE
T544	X	5	24'-0"			PARAPET LONGITUDINAL SOUTH SIDE
T545	X	5	22'-0"			PARAPET LONGITUDINAL SOUTH SIDE
T846	X	96	60'-0"			PARAPET LONGITUDINAL NORTH SIDE
T847	X	8	49'-0"			PARAPET LONGITUDINAL NORTH SIDE
T848	X	8	39'-0"			PARAPET LONGITUDINAL NORTH SIDE
T650	X	2442	42'-6"			DECK TRANSVERSE TOP & BOTTOM
T460	X	130	6'-0"		X	EXP. JOINT- VERT.
T661	X	20	21'-2"			EXP. JOINT- HORIZ.
T462	X	118	3'-6"		X	EXP. JOINT- VERT.
T463	X	104	3'-1"		X	EXP. JOINT- VERT.
T464	X	118	5'-8"		X	EXP. JOINT- VERT.
T665	X	12	11'-6"			EXP. JOINT- HORIZ.
T666	X	40	5'-5"		X	EXP. JOINT- HORIZ.
T567	X	72	8'-0"			EXP. JOINT BLOCKOUT- HORIZ.
T468	X	12	2'-1"	◭	X	EXP. JOINT- VERT.
T469	X	12	2'-9"	◭	X	EXP. JOINT- VERT.
T470	X	12	5'-1"	◭	X	EXP. JOINT- VERT.
T671	X	8	2'-5"			EXP. JOINT- HORIZ.

THE FIRST TWO DIGITS OF A FOUR DIGIT BAR MARK INDICATES BAR SIZE.
ALL DIMENSIONS IN THE BAR BENDS ARE OUT TO OUT.

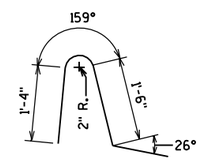

T540

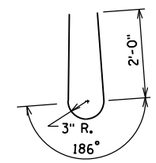

T541

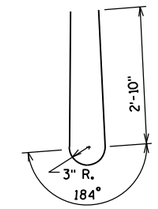

T542

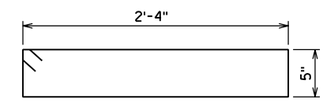

T460

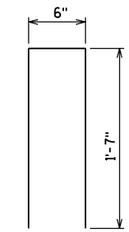

T462

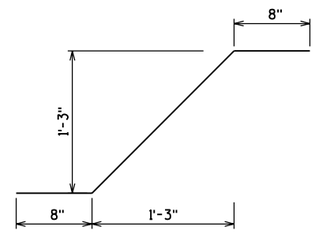

T463

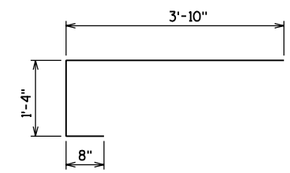

T464

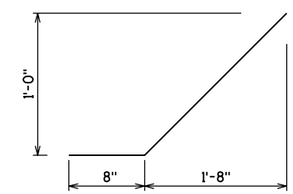

T666

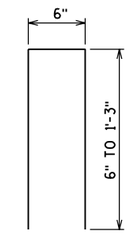

T468

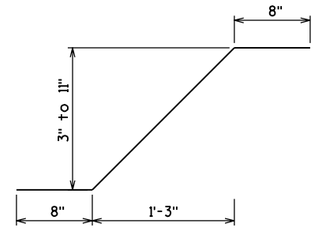

T469

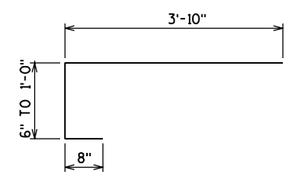

T470

BAR SERIES TABLE

MARK	NO REQ'D	LENGTH
T468	4 SERIES OF 3	1'-4" TO 2'-10"
T469	4 SERIES OF 3	2'-7" TO 2'-10"
T470	4 SERIES OF 3	4'-10" TO 5'-4"

◭ LENGTH SHOWN FOR BAR IS AN AVERAGE LENGTH AND SHOULD ONLY BE USE FOR BAR WEIGHT CALCULATIONS. SEE BAR SERIES TABLE FOR ACTUAL LENGTHS. BUNDLE AND TAG EACH SERIES SEPARATELY.

8

8

NO.	DATE	REVISION	BY

STATE OF WISCONSIN
DEPARTMENT OF TRANSPORTATION
STRUCTURES DESIGN SECTION

STRUCTURE B-37-360-002

CONST. SPEC. 2003 | DRAWN BY RBH | PLANS CK'D. JZ

SUPERSTRUCTURE BILL OF BARS

SHEET 15 OF 46
375

FILE =
SCALE =

STATE PROJECT NUMBER
1166-09-74

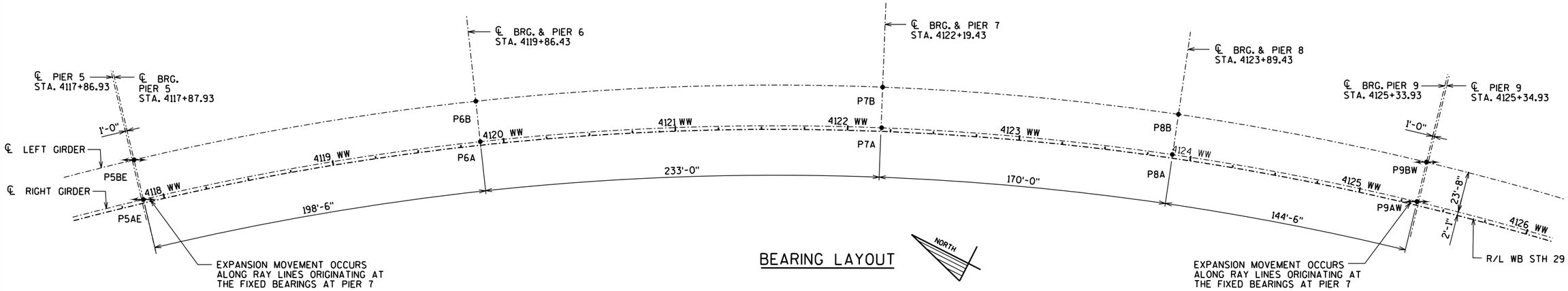

BEARING LAYOUT

BEARING LEGEND

⟷ MULTIROTATIONAL UNIDIRECTIONAL (GUIDED) ARROWHEADS DENOTE MOVEMENT DIRECTIONS.

• MULTIROTATIONAL FIXED

BEARING MARK	BEARING TYPE	SKEW ANGLE 'SK'	ASSUMED TOP OF PEDESTAL ELEV.	DEAD LOAD (KIPS)	TOTAL LOAD (KIPS)	HORIZ FORCES		MOVEMENT RANGE		SHIM PLATE THICKNESS					NOMINAL BEARING DIMENSIONS						ANCHOR BOLTS
						TRANS (KIPS)	LONG (KIPS)	TRANS (IN)	LONG (IN)	LL (IN)	RL (IN)	LH (IN)	RH (IN)	CC (IN)	A (IN)	B (IN)	C (IN)	D (IN)	E (IN)	H (IN)	
P5AE	GUIDED	3°34' LHF	1217.515	330	550	35	10		5 5/8	3 7/16	1 5/16	3 1/8	1 1/16	2 1/4	38	32	38	32	1 1/2	9 3/4	4-1"Φ
P5BE	GUIDED		1218.914	410	660	35	12		5 5/8	3 7/16	1 5/16	3 1/8	1 1/16	2 1/4	38	32	38	32	1 1/2	9 3/4	4-1"Φ
P6A	FIXED	N/A	1217.052	1385	1910	40	70		0	3 7/16	1	3 7/16	1	2 3/8	40	40	40	40	1 1/2	8 1/4	4-1 1/4"Φ
P6B	FIXED		1218.451	1345	1880	40	70		0	3 7/16	1	3 7/16	1	2 3/8	40	40	40	40	1 1/2	8 1/4	4-1 1/4"Φ
P7A	FIXED	N/A	1214.952	1055	1530	35	50		0	3 1/4	1	3 1/4	1	2 3/8	38	38	38	38	1 1/2	7 5/8	4-1 1/4"Φ
P7B	FIXED		1216.351	1050	1535	35	50		0	3 1/4	1	3 1/4	1	2 3/8	38	38	38	38	1 1/2	7 5/8	4-1 1/4"Φ
P8A	FIXED	N/A	1212.276	900	1315	30	60		0	3 1/8	1	3 1/8	1	2 3/8	36	36	36	36	1 1/2	7 1/4	4-1 1/4"Φ
P8B	FIXED		1213.675	900	1320	30	60		0	3 1/8	1	3 1/8	1	2 3/8	36	36	36	36	1 1/2	7 1/4	4-1 1/4"Φ
P9A W	GUIDED	2°36' LHF	1209.237	270	460	30	8		4 1/4	3 13/16	1 7/8	2 15/16	1	2 7/16	34	32	34	32	1 1/2	8 1/2	4-1"Φ
P9B W	GUIDED		1210.635	310	515	30	10		4 1/4	3 13/16	1 7/8	2 15/16	1	2 7/16	34	32	34	32	1 1/2	8 1/2	4-1"Φ

NOTES

1. SEE SHEET 17 FOR TYPICAL BEARING DETAILS
2. BEARING DIMENSIONS SHOWN ARE NOMINAL VALUES ONLY AND WILL VARY WITH THE SELECTED MANUFACTURER.

   MAKE ALL NECESSARY ADJUSTMENTS TO DIMENSIONS AND ELEVATIONS AS REQUIRED TO INCORPORATE THE SPECIFIC BEARINGS SELECTED. PEDESTAL HEIGHT IS ASSUMED TO BE 4".
3. ALL FORCES SPECIFIED ARE SERVICE (UNFACTORED) FORCES INCORPORATING AASHTO-SPECIFIED REDUCTIONS FOR ALLOWABLE OVERSTRESS WHERE APPLICABLE.
4. HORIZONTAL FORCES SPECIFIED IN THE TABLE ARE THE EXPECTED APPLIED FORCES. DESIGN BEARINGS FOR THESE VALUES OR 10 PERCENT OF THE VERTICAL DEAD LOAD, WHICHEVER IS LARGER.
5. 'RHF' (RIGHT HAND FORWARD) DENOTES A COUNTER-CLOCKWISE ROTATION WHEN VIEWED FROM ABOVE. 'LHF' (LEFT HAND FORWARD) DENOTES A CLOCKWISE ROTATION WHEN VIEWED FROM ABOVE.

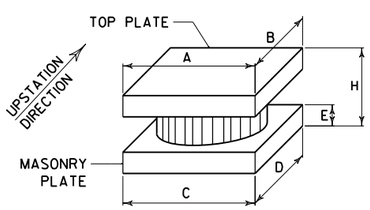

BEARING DIMENSION KEY

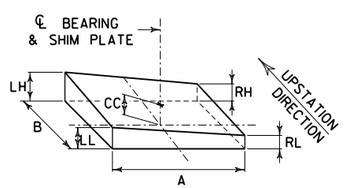

SHIM PLATE DIMENSION KEY

NO.	DATE	REVISION	BY

STATE OF WISCONSIN
DEPARTMENT OF TRANSPORTATION
STRUCTURES DESIGN SECTION

STRUCTURE B-37-360-002

CONST. SPEC.	2003	DRAWN BY	RBH	PLANS CK'D.	JZ

BEARING LAYOUT

SHEET 16 OF 46
376

FILE =
SCALE =

WB STH 29

8

8

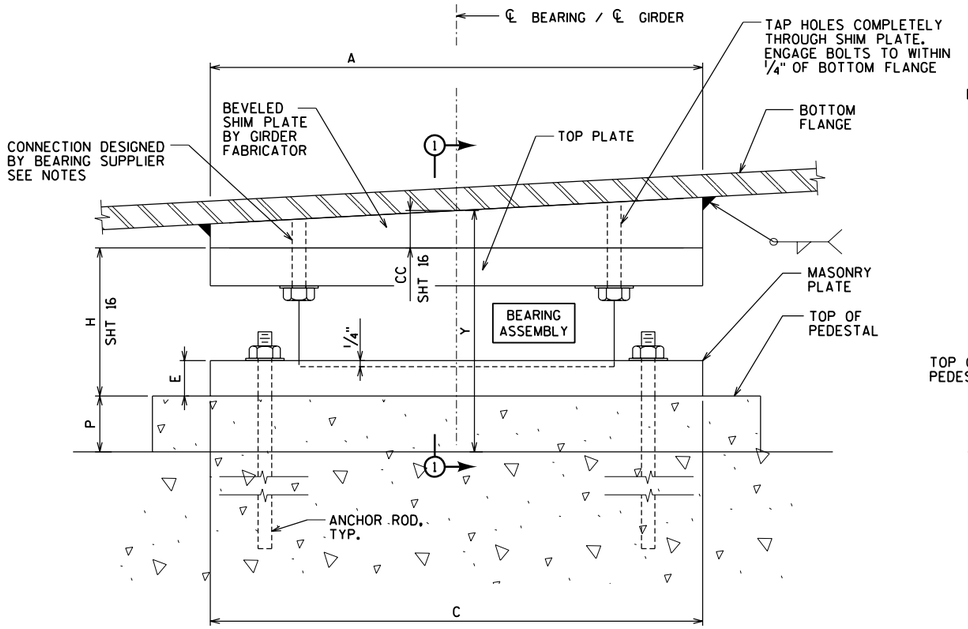

FRONT ELEVATION

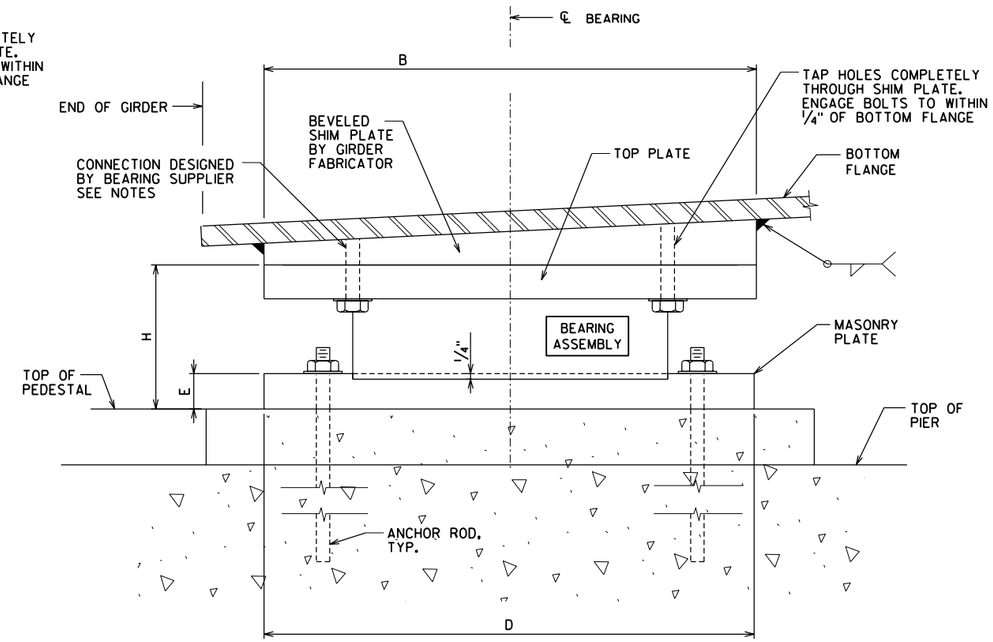

SECTION 1-1

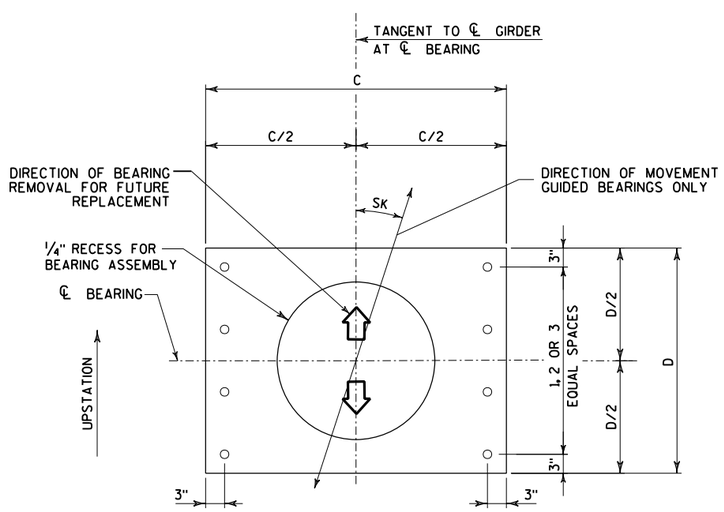

PLAN - MASONRY PLATE
ANCHOR BOLT ARRANGEMENT

NOTES

1. SEE SHEET 16 FOR BEARING LAYOUT AND LOCATION-SPECIFIC DIMENSIONS.
2. SEE SHEET 18 FOR BEARING REPLACEMENT JACKING PADS.
3. DESIGN BOLTED CONNECTION BETWEEN TOP PLATE AND SHIM PLATE FOR A MINIMUM OF 1.25 TIMES THE COMBINED SPECIFIED HORIZONTAL LOADS.

   ARRANGE CONNECTION TO ENSURE ALL BOLTS CAN BE REMOVED WITHOUT INTERFERENCE FROM ANCHOR BOLTS OR OTHER OBSTRUCTIONS AFTER BEARING IS INSTALLED.

   TAPPED HOLE ARRANGEMENT SHOWN MAY BE REPLACED BY BOLTING DOWNWARD THROUGH THE GIRDER BOTTOM FLANGE USING BEVELED WASHER PLATES BELOW BOLT HEADS.

   HOLES IN TOP PLATE MAY BE SLOTTED OR OVERSIZED AS REQUIRED TO FACILITATE STEEL ERECTION. IF OVERSIZE OR SLOTTED HOLES ARE USED, THE CONNECTION SHALL BE DESIGNED AS SLIP-RESISTANT.

   NOTE THAT SPECIFIED BEARING LOADS ARE INTENDED FOR WORKING STRESS DESIGN AND ALREADY INCLUDE THE OVERSTRESS PERCENTAGE FROM COLUMN 14 OF TABLE 3.22.1A OF AASHTO STANDARD SPECIFICATIONS - NO FURTHER REDUCTION IS PERMITTED.
4. SKEW ANGLE SHOWN IS LEFT HAND FORWARD (LHF) - SKEW ANGLES THAT ARE RIGHT HAND FORWARD (RHF) WILL BE OPPOSITE TO THAT SHOWN.
5. GROUT SHALL BE HIGH MODULUS FLOWABLE EPOXY RESIN GROUT, SIKADUR 42 GROUT-PAK OR ACCEPTED EQUAL.
6. FOR PAYMENT PURPOSES, GROUTING MATERIALS AND INSTALLATION ARE CONSIDERED INCIDENTAL TO THE PAY ITEM FOR THE BEARING ASSEMBLY.
7. HOLES IN MASONRY PLATE SHALL BE A MAXIMUM OF 1/8" LARGER THAN THE SPECIFIED ANCHOR BOLT DIAMETER.
8. TOP PLATE, SHIM PLATE AND MASONRY PLATES ARE ALIGNED WITH THE GIRDER AND/OR THE PIER BELOW, EVEN FOR GUIDED BEARINGS WITH A NON-ZERO SKEW ANGLE. ONLY THE MOVEMENT DIRECTION VARIES AS SHOWN.
9. TOP PLATE THICKNESS TO BE SELECTED BY THE BEARING DESIGNER. MINIMUM 1".
10. MASONRY PLATE THICKNESS TO BE CONFIRMED BY THE BEARING DESIGNER AND INCREASED IF REQUIRED. NO REDUCTION PERMITTED.
11. ANCHOR BOLTS SHALL BE IN ACCORDANCE WITH ASTM F1554 (GRADE 105) AND HOT-DIP GALVANIZED IN ACCORDANCE WITH AASHTO M232.
12. BEARINGS SHALL BE DESIGNED TO PERMIT REPLACEMENT BY JACKING THE BRIDGE A MAXIMUM OF 1/2".
13. SHIM PLATES SHALL BE FABRICATED BY STEEL GIRDER CONTRACTOR COORDINATING WITH THE BEARING MANUFACTURER.
14. FINAL DISTANCE BETWEEN BOTTOM OF STEEL GIRDER AND TOP OF PIER IS THE SUMMATION OF "CC", THE ACTUAL "H", OF THE BEARING AND THE ACTUAL PEDESTAL HEIGHT "P". HEIGHT "P" WAS ASSUMED TO BE 4" FOR DETERMINING PIER ELEVATION.

NO.	DATE	REVISION	BY

STATE OF WISCONSIN
DEPARTMENT OF TRANSPORTATION
STRUCTURES DESIGN SECTION

STRUCTURE B-37-360-002

CONST. SPEC.	2003	DRAWN BY	RBH	PLANS CK'D.	JZ

BEARING DETAILS

FILE =
SCALE =

8

8

STATE PROJECT NUMBER

1060-05-74

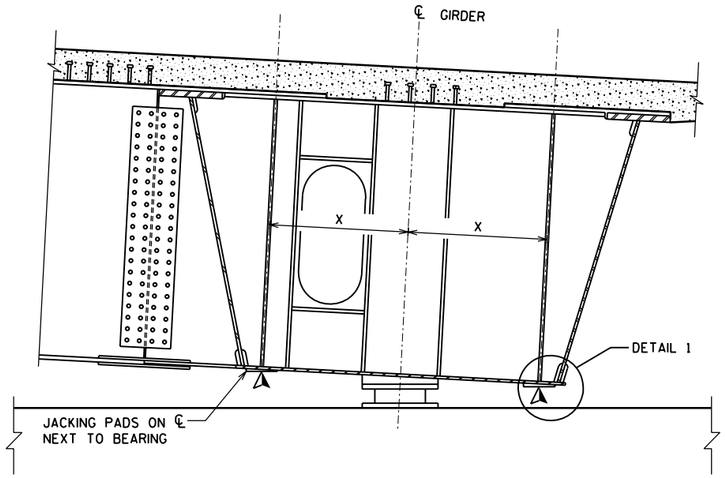

DETAIL A - SECTION AT ℄ PIERS 5 & 9

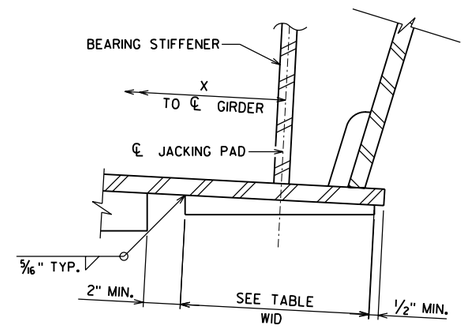

DETAIL 1

NOT TO SCALE

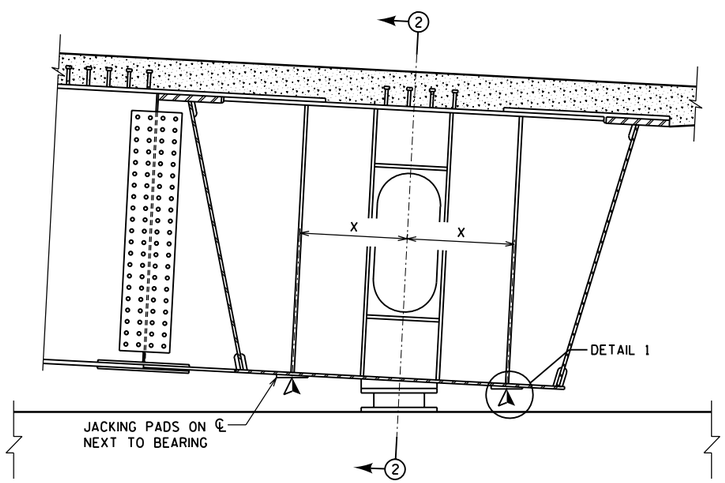

DETAIL B - SECTION AT ℄ PIERS 6, 7, & 8

LOCATION	NUMBER OF PADS PER BOX GIRDER	JACKING PAD DIMENSIONS							OFFSET 'X'	MIN. JACK FORCE (KIP)
		WID (IN)	LEN (IN)	LL (IN)	RL (IN)	LH (IN)	RH (IN)	CC (IN)		
PIER 5	2	12	24	1 1/8	1 1/16	1 7/16	1 3/8	1 3/4	3'-8"	210
PIER 6	2	12	24	1 3/4	1 1/16	1 3/4	1 1/16	1 1/2	2'-10"	700
PIER 7	2	12	24	1 13/16	1 1/8	1 13/16	1 1/8	1 5/8	2'-10"	530
PIER 8	2	12	24	1 3/4	1	1 3/4	1	1 5/8	2'-10"	450
PIER 9	2	12	24	1 7/16	1 3/8	1 1/8	1 1/16	1 3/4	3'-8"	155

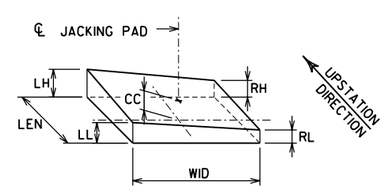

JACKING PAD DIMENSION KEY

LEGEND

⅄ SUGGESTED JACKING LOCATIONS FOR FUTURE BEARING REPLACEMENT.

NOTES

1. THIS DRAWING SHOWS DETAILS AND LOCATION OF JACKING PADS AND ADDITIONAL WEB STIFFENERS REQUIRED FOR FUTURE BEARING REPLACEMENT.
2. JACKING PAD DIMENSIONS AND LOCATIONS ARE BASED ON THE MINIMUM CLEARANCES SHOWN AND THE NOMINAL BEARING DIMENSIONS GIVEN ON SHEETS 16 & 17. MAKE ADJUSTMENTS AS REQUIRED TO ACCOMMODATE ACTUAL BEARINGS SUPPLIED.
3. JACKING PADS ARE PROVIDED TO GIVE A JACKING SURFACE THAT IS APPROXIMATELY LEVEL AND TO ENSURE THAT JACKING LOADS ARE APPLIED TO THE CORRECT LOCATION.

   ADDITIONAL MEASURES SHALL BE TAKEN TO CORRECT FOR ANY UNINTENDED SLOPE AND TO ENSURE THAT JACKS ARE POSITIVELY HELD IN POSITION ON THE JACKING PADS.
4. ESTIMATED JACKING FORCES ARE GIVEN AT EACH PAD AND ARE BASED ON DEAD LOAD REACTIONS ONLY - NO LIVE LOAD IS INCLUDED AND NO ADDITIONAL ALLOWANCES HAVE BEEN MADE.

   THESE FORCES MUST BE INCREASED TO ALLOW FOR JACK FRICTION AND OTHER FACTORS. RECOMMENDED MINIMUM JACK CAPACITY IS 2 TIMES THE TABULATED VALUES.
5. FORCES AND RECOMMENDATIONS ARE PROVIDED FOR INFORMATION ONLY AND MUST BE VERIFIED BY THE ENGINEER RESPONSIBLE FOR JACKING OPERATIONS.
6. JACKING PROVISIONS HAVE BEEN DESIGNED ASSUMING THAT THE STRUCTURE IS CLOSED TO TRAFFIC AT ALL TIMES THAT THE STRUCTURE IS NOT RESTING ON THE PERMANENT BEARINGS.
7. CONTROL JACKS TO ENSURE THAT FORCES APPLIED TO ALL JACKING PADS AT A SINGLE BEARING LOCATION ARE APPROXIMATELY EQUAL.

   IF THIS REQUIREMENT IS NOT MET, A COMPLETE ANALYSIS OF THE PIER DIAPHRAGM SYSTEM WILL BE REQUIRED IN ORDER TO ACCOUNT FOR THE REDISTRIBUTION OF FORCES WITHIN THE SYSTEM.

NO.	DATE	REVISION	BY

STATE OF WISCONSIN
DEPARTMENT OF TRANSPORTATION
STRUCTURES DESIGN SECTION

STRUCTURE B-37-360-002

CONST. SPEC. 2003 | DRAWN BY RBH | PLANS CK'D. JZ

JACKING PROVISIONS

SHEET 18 OF 46

378

8

8

FILE=
SCALE =

STATE PROJECT NUMBER

1166-09-74

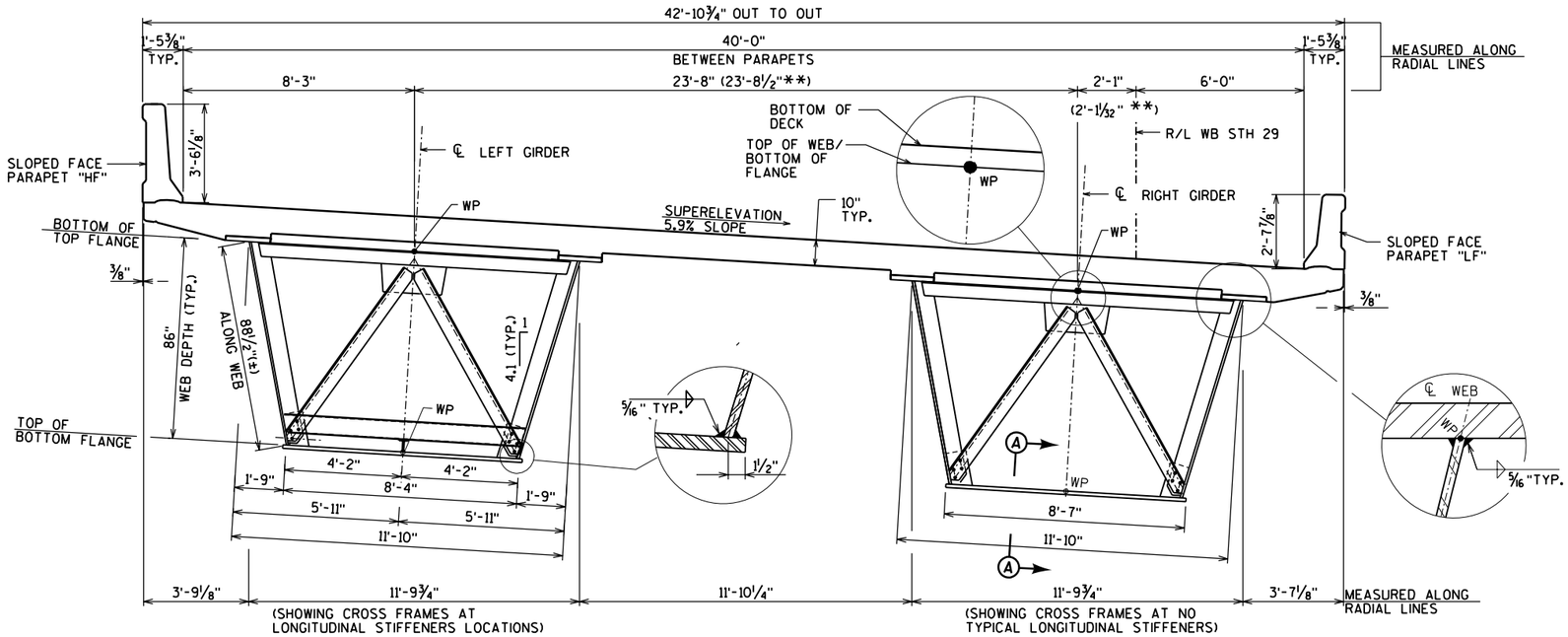

TYPICAL CROSS SECTION

(LOOKING UPSTATION)

** DENOTES ALTERNATIVE SLOPED DIMENSIONS ALONG DECK CALCULATED BASED ON THE SUPERELEVATION OF 5.9%.

CONTRACTOR MAY ELECT TO DETAIL AND FABRICATE STEEL GIRDERS BASED ON EITHER THE HORIZONTAL DIMENSIONS OR THE ALTERNATE SLOPED DIMENSIONS.

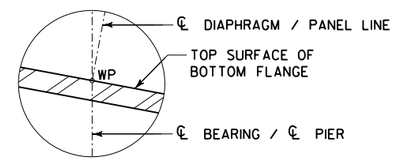

SECTION A-A

NOTES

1. ENSURE THE STABILITY OF ALL COMPONENTS DURING FABRICATION, HANDLING, TRANSPORTATION AND ERECTION UNTIL THE STRUCTURAL STEEL IS IN FINAL POSITION WITH ALL PERMANENT BRACING, CONNECTIONS AND SUPPORTS IN PLACE AND THE CONCRETE IN THE DECK HAS REACHED THE SPECIFIED DESIGN STRENGTH.

   DESIGN AND USE TEMPORARY CROSS FRAMES, SUPPORTS, BRACES OR WHATEVER OTHER MEANS AND METHODS DEEMED NECESSARY.

2. CONTRACTOR SHALL CARRY OUT DESIGN CALCULATIONS AS REQUIRED TO VERIFY MATERIAL STRESSES AND SUPPORT FORCES (INCLUDING UPLIFT) DURING ALL STAGES OF ERECTION AS REQUIRED BY AASHTO SPECIFICATIONS.

3. CAMBER DIAGRAMS HAVE BEEN DEVELOPED ASSUMING THAT ALL SLAB WEIGHT IS APPLIED TO A NON-COMPOSITE STRUCTURE. VERIFY THE VALIDITY OF THIS ASSUMPTION BASED ON THE SELECTED POUR SEQUENCE. ADJUST CAMBER TABLES AS NECESSARY FOR ANY EXPECTED VARIATIONS EXCEEDING .04' (½").

4. CAMBER GIRDERS TO THE VALUES SHOWN ON SHEETS 34 TO 38, AFTER INCORPORATING ANY REQUIRED ADJUSTMENTS FOR THE SELECTED POUR SEQUENCE.

5. TOP OF ERECTED STEEL ELEVATION INCLUDES DEFLECTIONS DUE TO SELF WEIGHT OF STEEL AND STAY-IN-PLACE METAL FORMWORK ONLY. ELEVATIONS ARE GIVEN AT CENTERLINE OF TOP FLANGE OR TOP FLANGE SPLICE PLATE, AS APPLICABLE.

6. STEEL FABRICATION AND TESTING STANDARDS SHALL BE THE SAME AS IF TOP AND BOTTOM GIRDER FLANGES (WITHIN TENSION ZONES) AND ALL WEB PLATES WERE CLASSIFIED AS FRACTURE CRITICAL MEMBERS (FCM).

MINIMUM FILLET WELD SIZE:

THICKNESS OF THICKER PART JOINED	MINIMUM WELD SIZE
T <= ½"	3/16"
½" < T <= ¾"	¼"
¾" < T <= 1½"	5/16"
1½" < T <= 2¼"	⅜"
T > 2¼"	½"

1. MINIMUM WELD SIZES SHOWN SHALL BE USED WHEN A SIZE IS NOT OTHERWISE SPECIFIED OR SHOWN.
2. WELD SIZE SHALL NOT EXCEED THE THICKNESS OF THE THINNER PART BEING JOINED.
3. FOR ALL WELDS 5/16" OR LARGER, THE MINIMUM PASS SIZE SHALL BE 5/16".

8

8

NO.	DATE	REVISION	BY

STATE OF WISCONSIN
DEPARTMENT OF TRANSPORTATION
STRUCTURES DESIGN SECTION

STRUCTURE B-37-360-002

CONST. SPEC. 2003 | DRAWN BY RBH | PLANS CK'D. JZ

GIRDER SECTION & ELEVATIONS

SHEET 19 OF 46
379

FILE =
SCALE =

STATE PROJECT NUMBER

1166-09-74

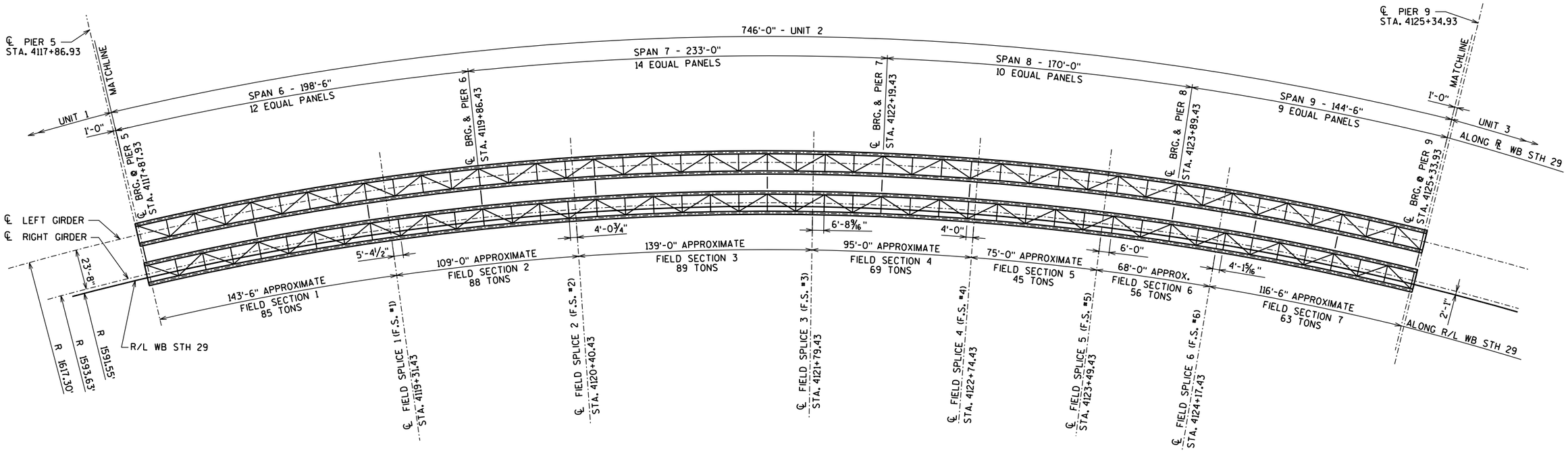

FRAMING PLAN - UNIT 2

4-SPAN - 86" STEEL BOX GIRDERS

NORTH

NOTES:

1. ALL DIMENSIONS SHOWN ARE ASSUMED TO BE MEASURED AT 70° F.
2. SPAN AND UNIT LENGTHS SHOWN ARE MEASURED HORIZONTALLY ALONG THE VERTICAL PLANE DEFINED BY THE REFERENCE LINE.
3. FIELD SECTION LENGTHS ARE MEASURED ALONG THE R/L WB STH 29.
4. CURVE LENGTHS SHOWN ARE MEASURED HORIZONTALLY ALONG THE VERTICAL PLANE DEFINED BY THE CENTERLINE OF LEFT OR RIGHT GIRDER AS APPLICABLE. SEE SHEET 19 FOR LOCATION OF CENTERLINE GIRDER WORK POINTS.
5. FIELD SECTION WEIGHTS ARE APPROXIMATE AND PROVIDED FOR INFORMATION ONLY.
6. RELOCATION OF FIELD SPLICES MAY BE ACCEPTED BUT WILL REQUIRE REDESIGN BY THE CONTRACTOR AND ACCEPTANCE BY THE ENGINEER. ADDITIONAL FIELD SPLICES WILL NOT BE ACCEPTED.
7. ADDITIONAL SHOP SPLICES MAY BE ADDED IF REQUIRED TO SUIT AVAILABLE MATERIAL LENGTHS. THE NUMBER AND LOCATION OF ADDITIONAL SPLICES IS SUBJECT TO ACCEPTANCE BY THE ENGINEER

8

NO.	DATE	REVISION	BY

STATE OF WISCONSIN
DEPARTMENT OF TRANSPORTATION
STRUCTURES DESIGN SECTION

STRUCTURE B-37-360-002

CONST. SPEC.	2003	DRAWN BY	RBH	PLANS CK'D.	JZ

FRAMING PLAN

SHEET 20 OF 46
380

FILE =
SCALE =

WB STH 29

STATE PROJECT NUMBER

1166-09-74

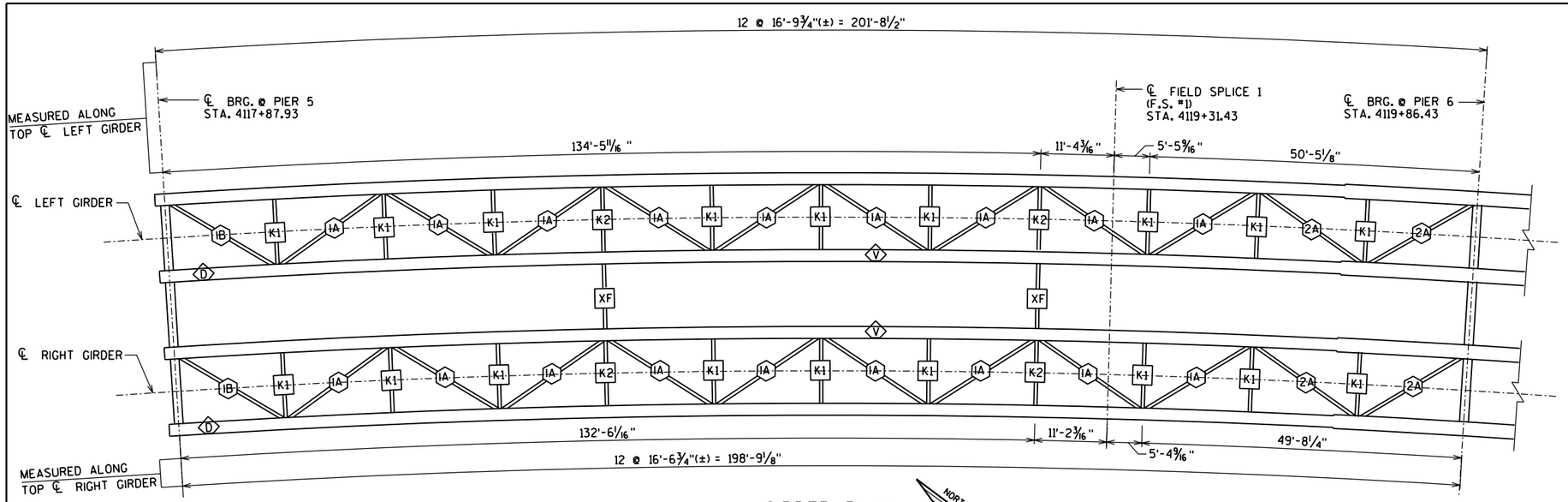

GIRDER PLAN

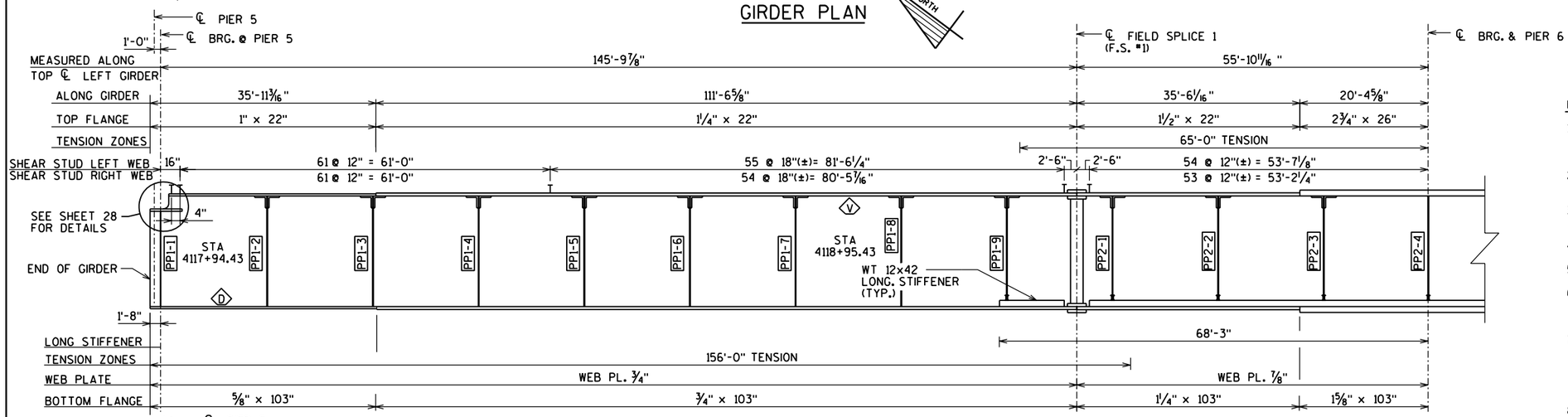

LEFT GIRDER INTERIOR ELEVATION

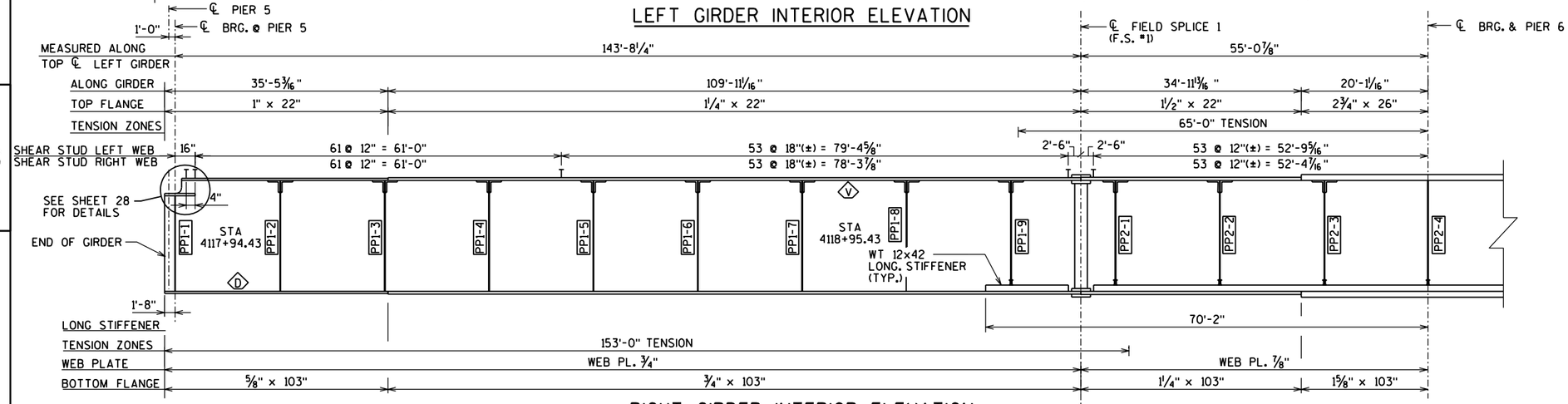

RIGHT GIRDER INTERIOR ELEVATION

LEGEND

- K1 — K-FRAME MARK NUMBER. SEE SHEET 29.
- XF — EXTERIOR CROSS FRAME LOCATION. SEE SHEET 30.
- IA — LATERAL BRACING MARK NUMBER. SEE SHEET 31.
- D — BOTTOM FLANGE DRAIN HOLE LOCATION. SEE DETAIL ON SHEET 32.
- V — WEB PLATE VENT HOLE LOCATION. SEE DETAIL ON SHEET 32.
- PP1-2 — PANEL POINT LOCATION AND IDENTIFICATION NUMBER i.e. 2ND DIAPHRAGM IN SECTION 1

NOTES:

1. STATIONS SHOWN FOR K-FRAME LOCATIONS REFER TO THE BOTTOM FLANGE WORKPOINT. SEE DETAIL ON SHEET 19.
2. SEE SHEET 27 FOR TYPICAL CROSS FRAMES AND DIAPHRAGMS AT INTERIOR PIERS 6, 7, AND 8.
3. SEE SHEET 28 FOR CROSS FRAMES AND DIAPHRAGMS AT END PIERS 5 AND 9.
4. SEE SHEET 32 FOR MISCELLANEOUS GIRDER DETAILS.
5. SEE SHEETS 34 TO 38 FOR CAMBER REQUIREMENTS.
6. SEE SHOP SPLICE DETAIL ON SHEET 32 FOR OFFSET REQUIREMENTS TO AVOID CONFLICT WITH DIAPHRAGM CONNECTIONS.
7. ALL SHEAR STUDS ARE ⅞" DIA. BY 6" LONG. EACH POSITION SHOWN REPRESENTS 3 STUDS ON EACH GIRDER FLANGE, LOCATED 3" FROM EDGES OF FLANGE AND EQUALLY SPACED BETWEEN. SEE DETAIL ON SHEET 32.
8. "TENSION" DENOTES ZONES OF TOP AND BOTTOM FLANGES ASSUMED TO CARRY TENSILE STRESS IN THE COMPLETED STRUCTURE.
9. STEEL GRADE FOR WEBS AND FLANGES SHALL BE GRADE 50

   STEEL GRADE FOR PIER AND INTERMEDIATE DIAPHRAGMS LOCATED WITHIN THESE FIELD SECTIONS SHALL BE THE SAME GRADE.
10. STEEL GRADE FOR EXTERIOR CROSS FRAMES. ALL OTHER STEEL (INCLUDING ROLLED SHAPES) SHALL BE GRADE 50.

NO.	DATE	REVISION	BY

STATE OF WISCONSIN
DEPARTMENT OF TRANSPORTATION
STRUCTURES DESIGN SECTION

STRUCTURE B-37-360-002

CONST. SPEC.	2003	DRAWN BY	RBH	PLANS CK'D.	JZ

GIRDER PLAN & ELEVATION SPAN 6

SHEET 21 OF 46
381

FILE =
SCALE =

8

8

STATE PROJECT NUMBER

1166-09-74

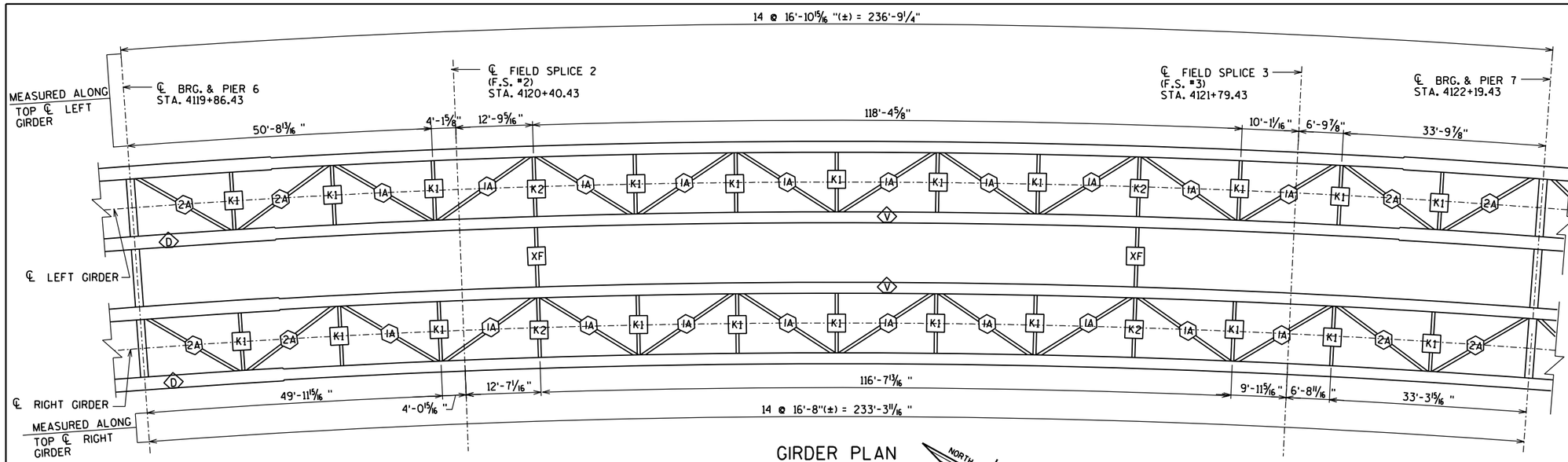

GIRDER PLAN

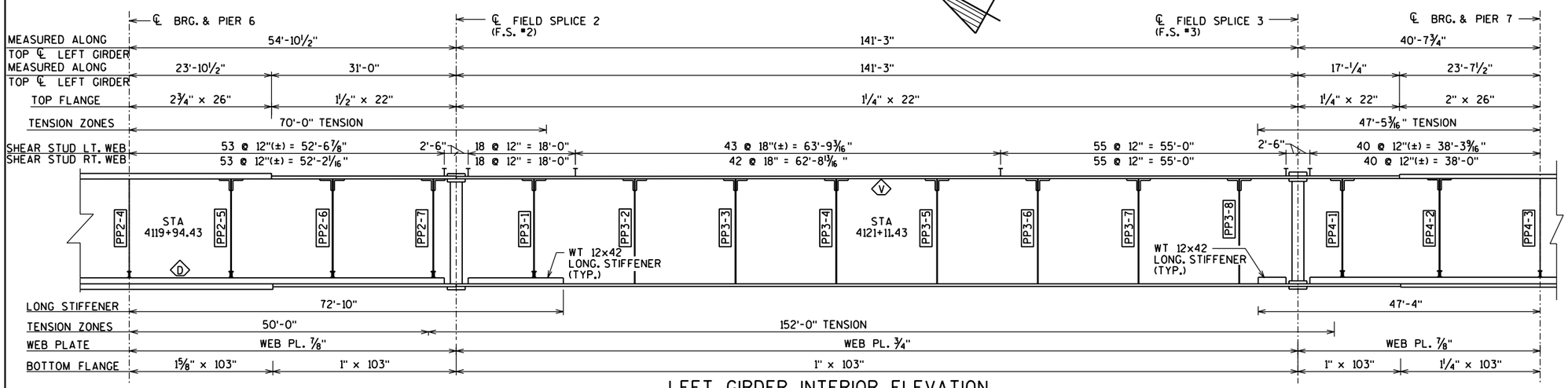

LEFT GIRDER INTERIOR ELEVATION

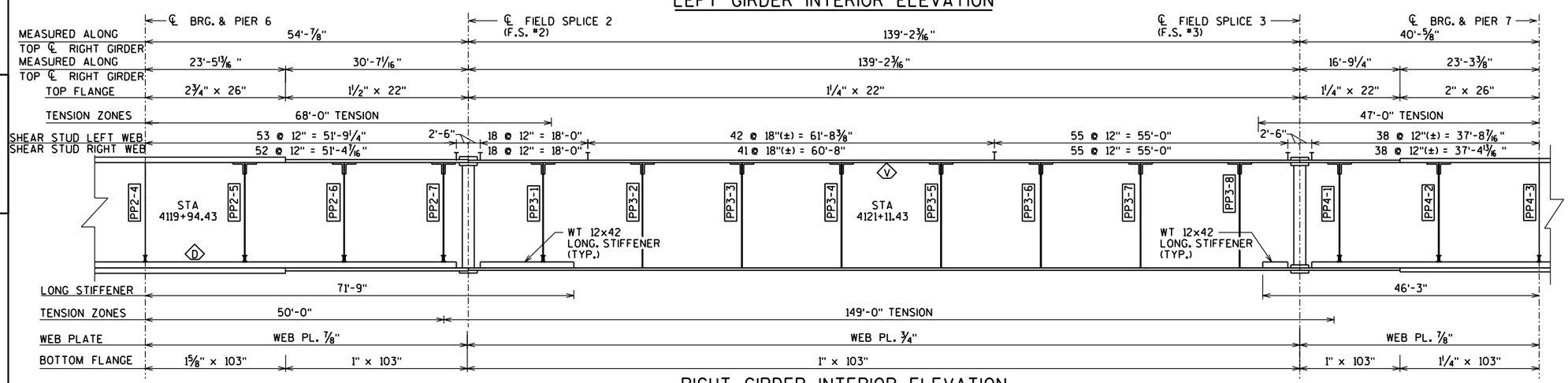

RIGHT GIRDER INTERIOR ELEVATION

LEGEND

- K1 — K-FRAME MARK NUMBER. SEE SHEET 29.
- XF — EXTERIOR CROSS FRAME LOCATION. SEE SHEET 30.
- 1A — LATERAL BRACING MARK NUMBER. SEE SHEET 31.
- D — BOTTOM FLANGE DRAIN HOLE LOCATION. SEE DETAIL ON SHEET 32.
- V — WEB PLATE VENT HOLE LOCATION. SEE DETAIL ON SHEET 32.
- PP1-2 — PANEL POINT LOCATION AND IDENTIFICATION NUMBER i.e. 2ND DIAPHRAGM IN SECTION 1

NOTES:

1. STATIONS SHOWN FOR K-FRAME LOCATIONS REFER TO THE BOTTOM FLANGE WORKPOINT. SEE DETAIL ON SHEET 19.
2. SEE SHEET 27 FOR TYPICAL CROSS FRAMES AND DIAPHRAGMS AT INTERIOR PIERS 6, 7, AND 8.
3. SEE SHEET 28 FOR CROSS FRAMES AND DIAPHRAGMS AT END PIERS 5 AND 9.
4. SEE SHEET 32 FOR MISCELLANEOUS GIRDER DETAILS.
5. SEE SHEETS 34 TO 38 FOR CAMBER REQUIREMENTS.
6. SEE SHOP SPLICE DETAIL ON SHEET 32 FOR OFFSET REQUIREMENTS TO AVOID CONFLICT WITH DIAPHRAGM CONNECTIONS.
7. ALL SHEAR STUDS ARE 7/8" DIA. BY 6" LONG. EACH POSITION SHOWN REPRESENTS 3 STUDS ON EACH GIRDER FLANGE, LOCATED 3" FROM EDGES OF FLANGE AND EQUALLY SPACED BETWEEN. SEE DETAIL ON SHEET 32.
8. "TENSION" DENOTES ZONES OF TOP AND BOTTOM FLANGES ASSUMED TO CARRY TENSILE STRESS IN THE COMPLETED STRUCTURE.
9. STEEL GRADE FOR WEBS AND FLANGES SHALL BE GRADE 50

   STEEL GRADE FOR PIER AND INTERMEDIATE DIAPHRAGMS LOCATED WITHIN THESE FIELD SECTIONS SHALL BE THE SAME GRADE.
10. STEEL GRADE FOR EXTERIOR CROSS FRAMES. ALL OTHER STEEL (INCLUDING ROLLED SHAPES) SHALL BE GRADE 50.

8

8

NO.	DATE	REVISION	BY

STATE OF WISCONSIN
DEPARTMENT OF TRANSPORTATION
STRUCTURES DESIGN SECTION

STRUCTURE B-37-360-002

CONST. SPEC. 2003 | DRAWN BY RBH | PLANS CK'D. JZ

GIRDER PLAN & ELEVATION SPAN 7

SHEET 22 OF 46
382

FILE =
SCALE =

WB STH 29

STATE PROJECT NUMBER
1166-09-74

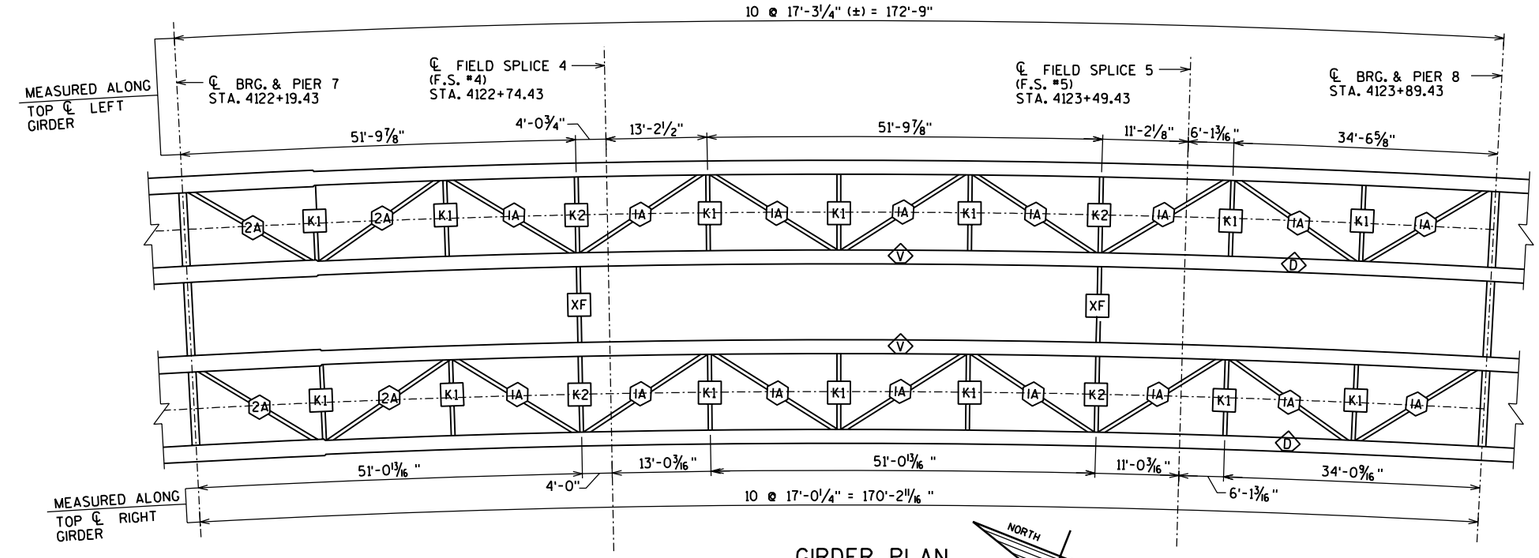

GIRDER PLAN

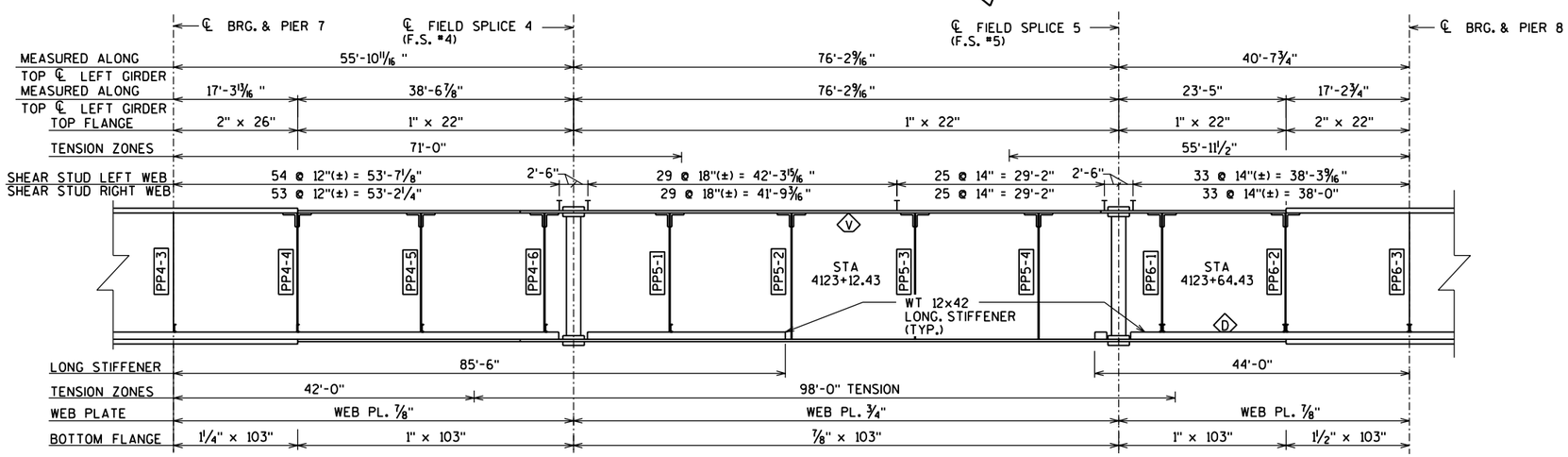

LEFT GIRDER INTERIOR ELEVATION

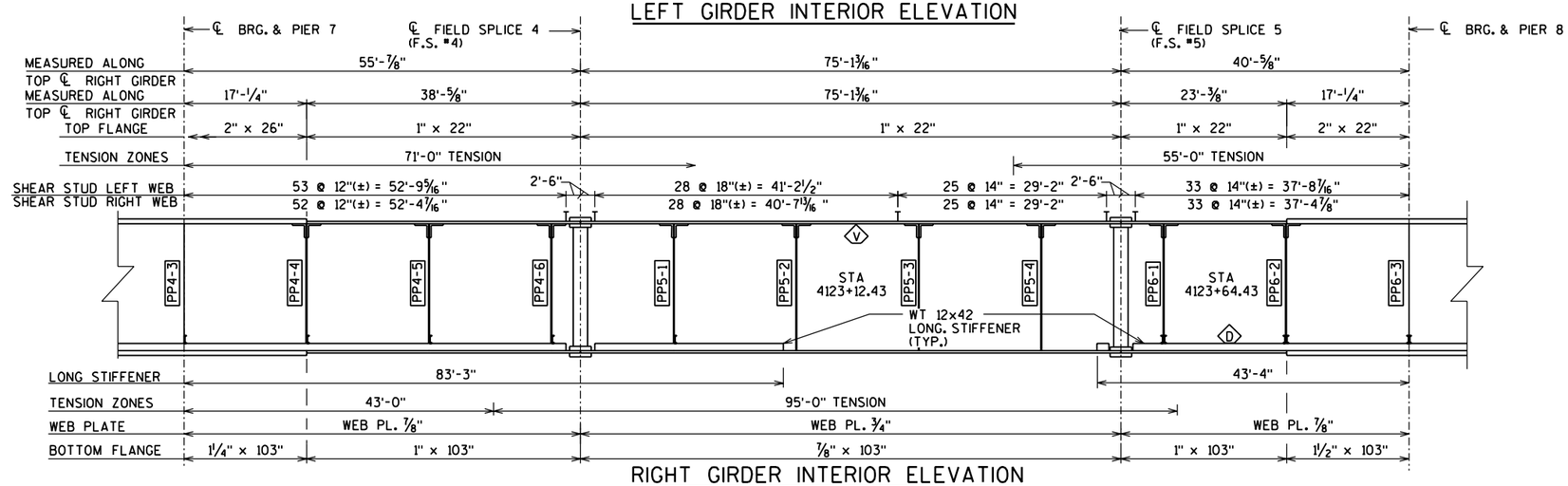

RIGHT GIRDER INTERIOR ELEVATION

LEGEND

- K1 — K-FRAME MARK NUMBER. SEE SHEET 29.
- XF — EXTERIOR CROSS FRAME LOCATION. SEE SHEET 30.
- IA — LATERAL BRACING MARK NUMBER. SEE SHEET 31.
- D — BOTTOM FLANGE DRAIN HOLE LOCATION. SEE DETAIL ON SHEET 32.
- V — WEB PLATE VENT HOLE LOCATION. SEE DETAIL ON SHEET 32.
- PP1-2 — DIAPHRAGM LOCATION AND IDENTIFICATION NUMBER i.e. 2ND DIAPHRAGM IN SECTION 1

NOTES:

1. STATIONS SHOWN FOR K-FRAME LOCATIONS REFER TO THE BOTTOM FLANGE WORKPOINT. SEE DETAIL ON SHEET 19.
2. SEE SHEET 27 FOR TYPICAL CROSS FRAMES AND DIAPHRAGMS AT INTERIOR PIERS 6, 7, AND 8.
3. SEE SHEET 28 FOR CROSS FRAMES AND DIAPHRAGMS AT END PIERS 5 AND 9.
4. SEE SHEET 32 FOR MISCELLANEOUS GIRDER DETAILS.
5. SEE SHEETS 34 TO 38 FOR CAMBER REQUIREMENTS.
6. SEE SHOP SPLICE DETAIL ON SHEET 32 FOR OFFSET REQUIREMENTS TO AVOID CONFLICT WITH DIAPHRAGM CONNECTIONS.
7. ALL SHEAR STUDS ARE ⅞" DIA. BY 6" LONG. EACH POSITION SHOWN REPRESENTS 3 STUDS ON EACH GIRDER FLANGE, LOCATED 3" FROM EDGES OF FLANGE AND EQUALLY SPACED BETWEEN. SEE DETAIL ON SHEET 32.
8. "TENSION" DENOTES ZONES OF TOP AND BOTTOM FLANGES ASSUMED TO CARRY TENSILE STRESS IN THE COMPLETED STRUCTURE.
9. STEEL GRADE FOR WEBS AND FLANGES SHALL BE GRADE 50

   STEEL GRADE FOR PIER AND INTERMEDIATE DIAPHRAGMS LOCATED WITHIN THESE FIELD SECTIONS SHALL BE THE SAME GRADE.
10. STEEL GRADE FOR EXTERIOR CROSS FRAMES. ALL OTHER STEEL (INCLUDING ROLLED SHAPES) SHALL BE GRADE 50.

8

NO.	DATE	REVISION	BY

STATE OF WISCONSIN
DEPARTMENT OF TRANSPORTATION
STRUCTURES DESIGN SECTION

STRUCTURE B-37-360-002

CONST. SPEC.	2003	DRAWN BY	RBH	PLANS CK'D.	JZ

GIRDER PLAN & ELEVATION SPAN 8

SHEET 23 OF 46
383

FILE =
SCALE =

WB STH 29

STATE PROJECT NUMBER
1166-09-74

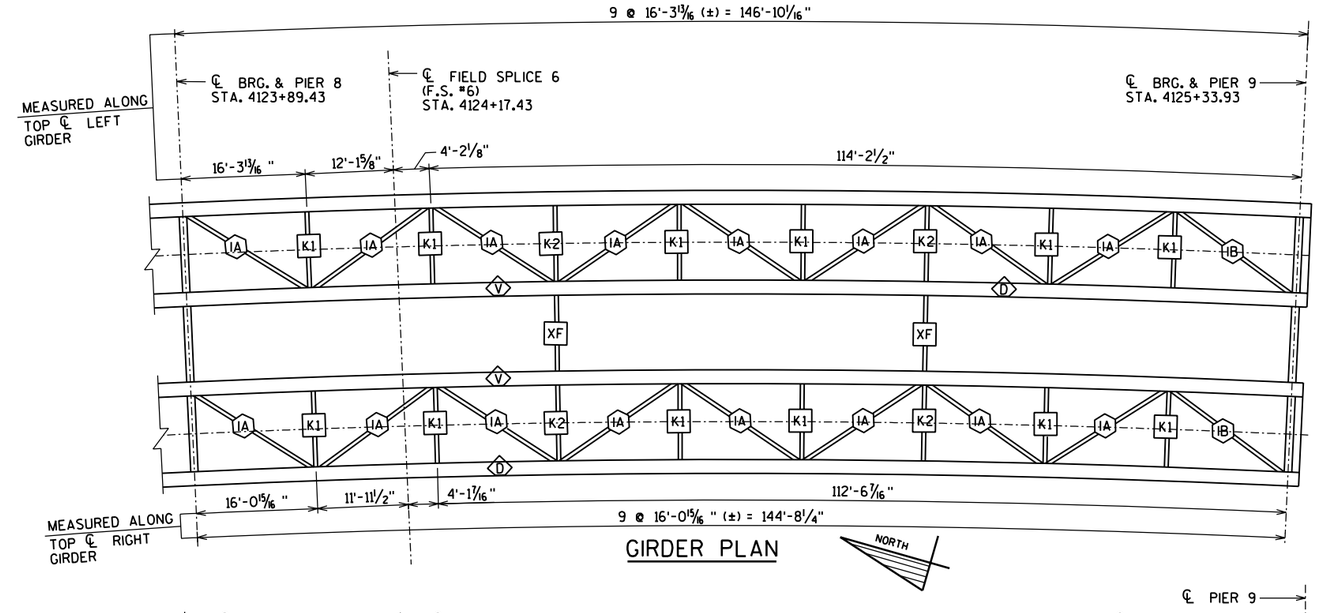

GIRDER PLAN

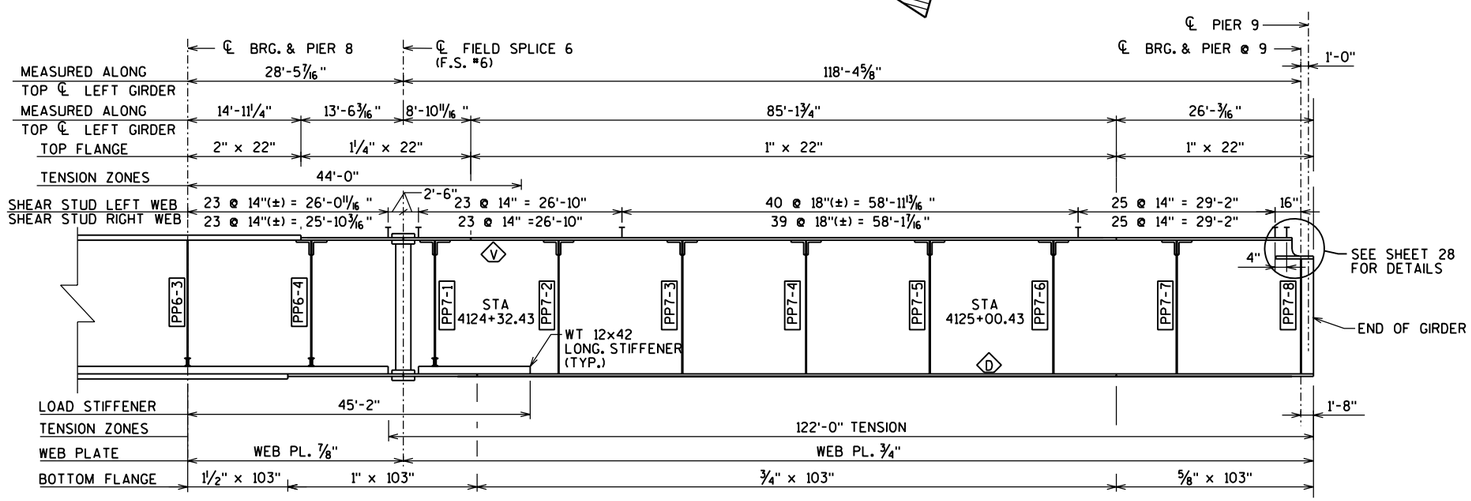

LEFT GIRDER INTERIOR ELEVATION

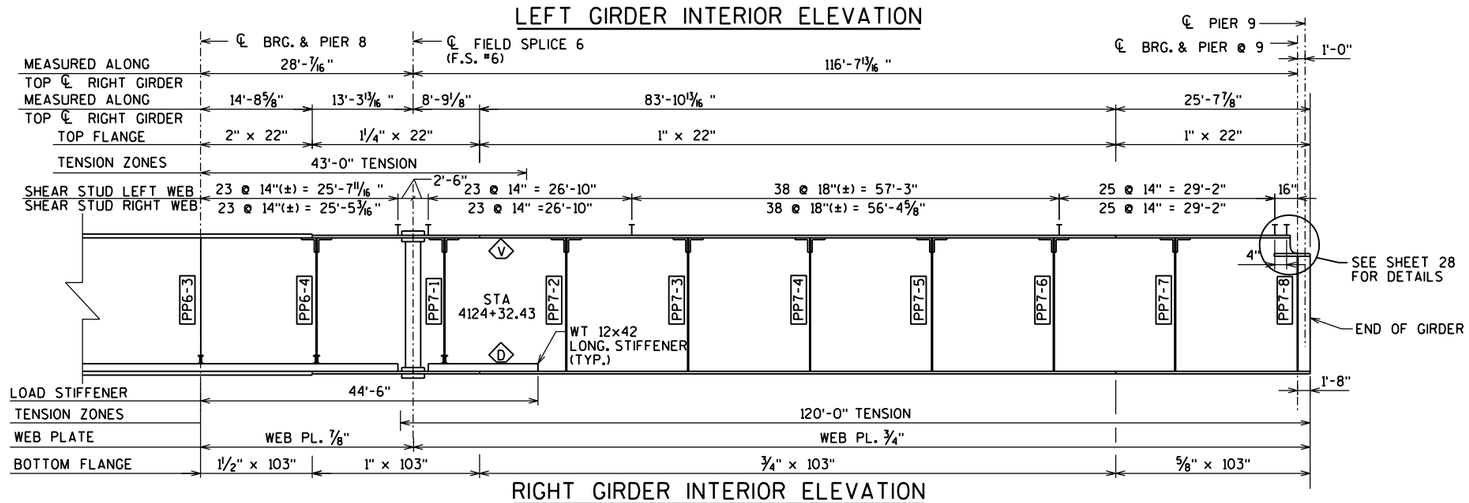

RIGHT GIRDER INTERIOR ELEVATION

LEGEND

- K1 — K-FRAME MARK NUMBER. SEE SHEET 29.
- XF — EXTERIOR CROSS FRAME LOCATION. SEE SHEET 30.
- IA — LATERAL BRACING MARK NUMBER. SEE SHEET 31.
- D — BOTTOM FLANGE DRAIN HOLE LOCATION. SEE DETAIL ON SHEET 32.
- V — WEB PLATE VENT HOLE LOCATION. SEE DETAIL ON SHEET 32.
- PP1-2 — PANEL POINT LOCATION AND IDENTIFICATION NUMBER i.e. 2ND DIAPHRAGM IN SECTION 1

NOTES:

1. STATIONS SHOWN FOR K-FRAME LOCATIONS REFER TO THE BOTTOM FLANGE WORKPOINT. SEE DETAIL ON SHEET 19.
2. SEE SHEET 27 FOR TYPICAL CROSS FRAMES AND DIAPHRAGMS AT INTERIOR PIERS 6, 7, AND 8.
3. SEE SHEET 28 FOR CROSS FRAMES AND DIAPHRAGMS AT END PIERS 5 AND 9.
4. SEE SHEET 32 FOR MISCELLANEOUS GIRDER DETAILS.
5. SEE SHEETS 34 TO 38 FOR CAMBER REQUIREMENTS.
6. SEE SHOP SPLICE DETAIL ON SHEET 32 FOR OFFSET REQUIREMENTS TO AVOID CONFLICT WITH DIAPHRAGM CONNECTIONS.
7. ALL SHEAR STUDS ARE 7/8" DIA. BY 6" LONG. EACH POSITION SHOWN REPRESENTS 3 STUDS ON EACH GIRDER FLANGE, LOCATED 3" FROM EDGES OF FLANGE AND EQUALLY SPACED BETWEEN. SEE DETAIL ON SHEET 32.
8. "TENSION" DENOTES ZONES OF TOP AND BOTTOM FLANGES ASSUMED TO CARRY TENSILE STRESS IN THE COMPLETED STRUCTURE.
9. STEEL GRADE FOR WEBS AND FLANGES SHALL BE GRADE 50

   STEEL GRADE FOR PIER AND INTERMEDIATE DIAPHRAGMS LOCATED WITHIN THESE FIELD SECTIONS SHALL BE THE SAME GRADE.
10. STEEL GRADE FOR EXTERIOR CROSS FRAMES. ALL OTHER STEEL (INCLUDING ROLLED SHAPES) SHALL BE GRADE 50.

NO.	DATE	REVISION	BY

STATE OF WISCONSIN
DEPARTMENT OF TRANSPORTATION
STRUCTURES DESIGN SECTION

STRUCTURE B-37-360-002

CONST. SPEC.	2003	DRAWN BY	RBH	PLANS CK'D.	JZ

GIRDER PLAN & ELEVATION SPAN 9

SHEET 24 OF 46
384

FILE =
SCALE =

8

8

STATE PROJECT NUMBER

1166-09-74

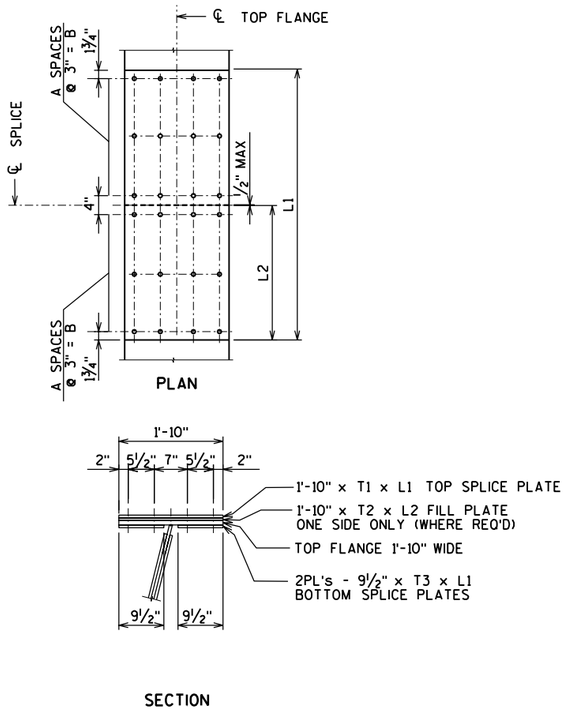

TYPICAL TOP FLANGE CONNECTION

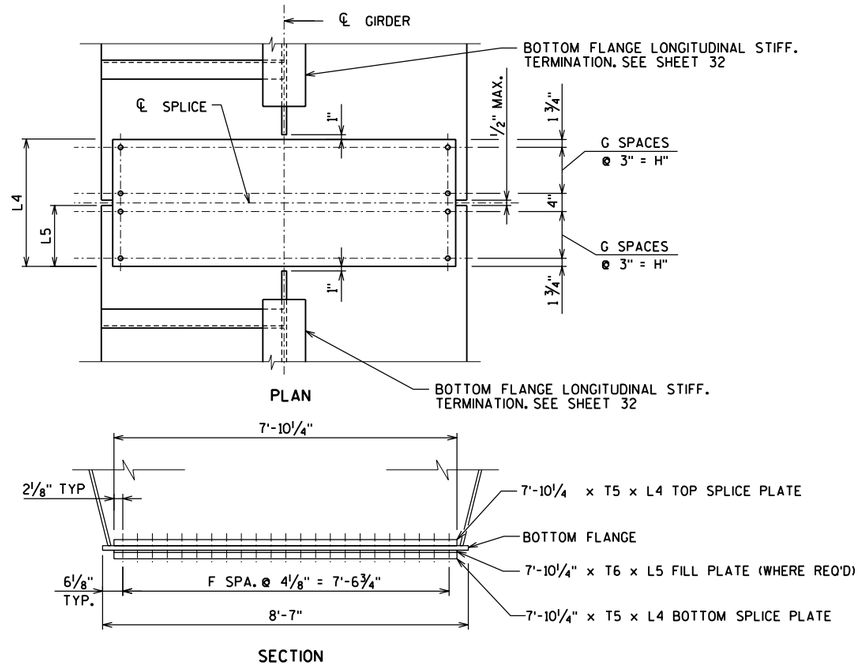

TYPICAL BOTTOM FLANGE CONNECTION

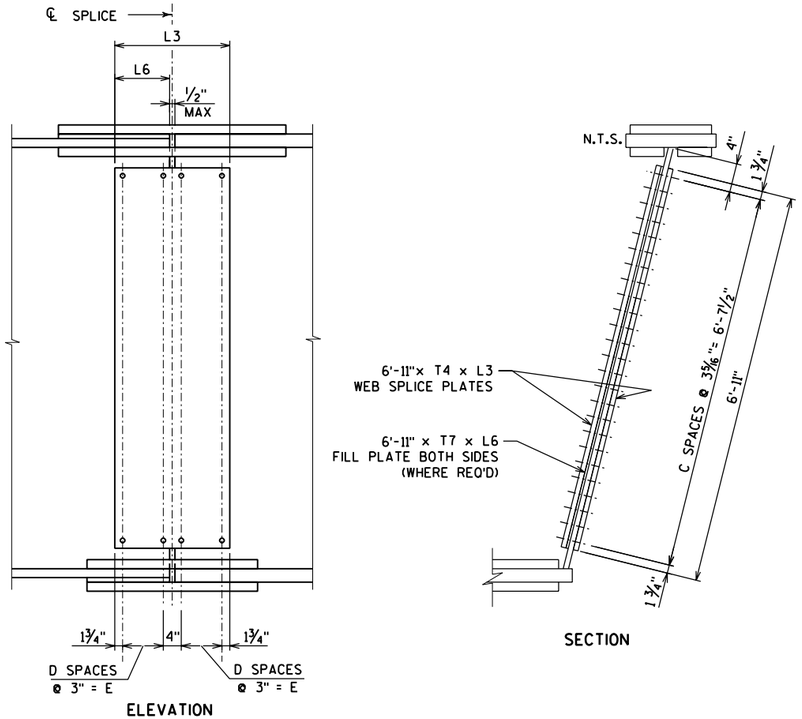

TYPICAL WEB CONNECTION

N.T.S.

NOTES

1. SEE SHEET 26 FOR VARIABLE DIMENSIONS AND SPACINGS DEFINED ON THIS SHEET.
2. ALL BOLTS SHOWN ARE ⅞" DIAMETER ASTM A325 TYPE 1.
3. ALL HOLES SHALL BE STANDARD DIAMETER - NO OVERSIZE HOLES.
4. ALL CONNECTIONS SHALL BE FABRICATED AND ASSEMBLED AS SLIP-CRITICAL CLASS A CONNECTIONS.
5. ALL SPLICE PLATES SHALL BE GRADE 50.

NO.	DATE	REVISION	BY

STATE OF WISCONSIN
DEPARTMENT OF TRANSPORTATION
STRUCTURES DESIGN SECTION

STRUCTURE B-37-360-002

CONST. SPEC.	2003	DRAWN BY	RBH	PLANS CK'D.	JZ

TYPICAL FIELD SPLICE LAYOUTS

SHEET 25 OF 46
385

8

8

FILE=
SCALE =

STATE PROJECT NUMBER

1166-09-74

FIELD SPLICE NUMBER	STATION	TOP FLANGE SPLICE							WEB SPLICE							BOTTOM FLANGE SPLICE						
		T1	T2	T3	L1	L2	A	B	T4	T7	L3	L6	C	D	E	T5	T6	L4	L5	F	G	H
F.S. #1	4119+31.43	5/8"	1/4"	3/4"	4'-7 1/2"	2'-3 1/2"	8	2'-0"	1/2"	1/8"	2'-1 1/2"	1'-0 1/2"	24	3	9"	5/8"	1/2"	3'-1 1/2"	1'-6 1/2"	22	5	1'-3"
F.S. #2	4120+40.43	5/8"	1/4"	3/4"	4'-7 1/2"	2'-3 1/2"	8	2'-0"	1/2"	1/8"	2'-1 1/2"	1'-0 1/2"	24	3	9"	5/8"	-	3'-1 1/2"	-	22	5	1'-3"
F.S. #3	4121+79.43	5/8"	-	3/4"	3'-7 1/2"	-	6	1'-6"	1/2"	1/8"	2'-1 1/2"	1'-0 1/2"	24	3	9"	5/8"	-	2'-7 1/2"	-	22	4	1'-0"
F.S. #4	4122+74.43	1/2"	-	5/8"	3'-7 1/2"	-	6	1'-6"	1/2"	1/8"	2'-1 1/2"	1'-0 1/2"	24	3	9"	5/8"	1/8"	3'-1 1/2"	1'-6 1/2"	22	5	1'-3"
F.S. #5	4123+49.43	1/2"	-	5/8"	3'-7 1/2"	-	6	1'-6"	1/2"	1/8"	2'-1 1/2"	1'-0 1/2"	24	3	9"	5/8"	1/8"	2'-7 1/2"	1'-3 1/2"	22	4	1'-0"
F.S. #6	4124+17.43	1/2"	-	5/8"	4'-1 1/2"	-	7	1'-9"	1/2"	1/8"	2'-1 1/2"	1'-0 1/2"	24	3	9"	5/8"	-	3'-1 1/2"	-	22	5	1'-3"

NOTES

1. SEE SHEET 25 FOR TYPICAL FIELD SPLICE LAYOUTS THAT DEFINE THE CONTENTS OF THIS TABLE.
2. ALL BOLTS IN GIRDER SPLICES ARE 7/8" DIAMETER ASTM A325 TYPE 1.
3. ALL HOLES SHALL BE STANDARD DIAMETER - NO OVERSIZE HOLES.
4. ALL CONNECTIONS SHALL BE FABRICATED AND ASSEMBLED AS SLIP-CRITICAL CLASS A CONNECTIONS.
5. ALL SPLICE PLATES SHALL BE GRADE 50.

8

8

NO.	DATE	REVISION	BY

STATE OF WISCONSIN
DEPARTMENT OF TRANSPORTATION
STRUCTURES DESIGN SECTION

STRUCTURE B-37-360-002

CONST. SPEC. 2003 | DRAWN BY RBH | PLANS CK'D. JZ

FIELD SPLICE TABLE

SHEET 26 OF 46
386

FILE=
SCALE =

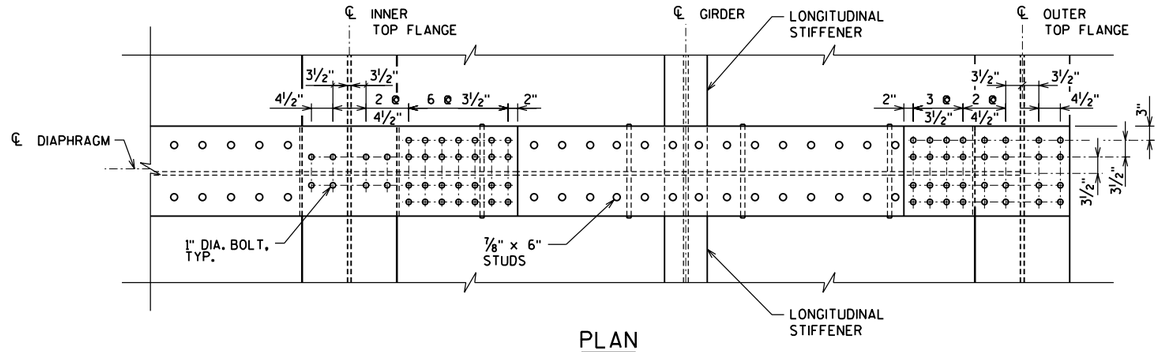

PLAN
VIEWED NORMAL TO DECK SURFACE

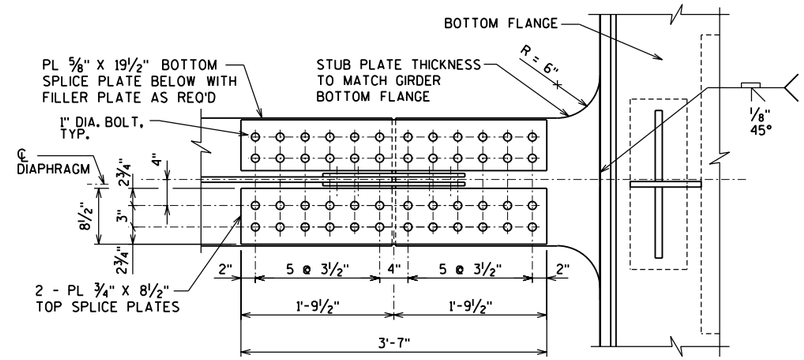

SECTION 3-3
NOT TO SCALE

STATE PROJECT NUMBER

1166-09-74

LEGEND

SUGGESTED JACKING LOCATIONS FOR FUTURE BEARING REPLACEMENT. SEE SHEET 18 FOR DETAILS.

NOTES

1. SEE SHEET 19 FOR DETAIL DEFINING WORKPOINT BETWEEN DIAPHRAGM AND BEARING CENTERLINES.
2. ALL BOLTS IN PIER DIAPHRAGMS ARE 1" DIAMETER ASTM A325 TYPE 1.
3. DIAPHRAGMS AND CROSS FRAMES ARE ALIGNED NORMAL TO THE GIRDER UNLESS OTHERWISE NOTED.
4. THIS DRAWING SHOWS TYPICAL DIAPHRAGM DETAILS FOR ONE SPECIFIC GRADE AND SUPERELEVATION. GRADE AND SUPERELEVATION VARY BETWEEN PIER LOCATIONS.
5. ADJACENT LATERAL BRACING CONNECTIONS ARE NOT SHOWN FOR CLARITY. SEE SHEETS 20 AND 31 FOR BRACING LAYOUT AND CONNECTION DETAILS.
6. SEE SHEET 33 FOR ACCESS HOLE DETAILS.

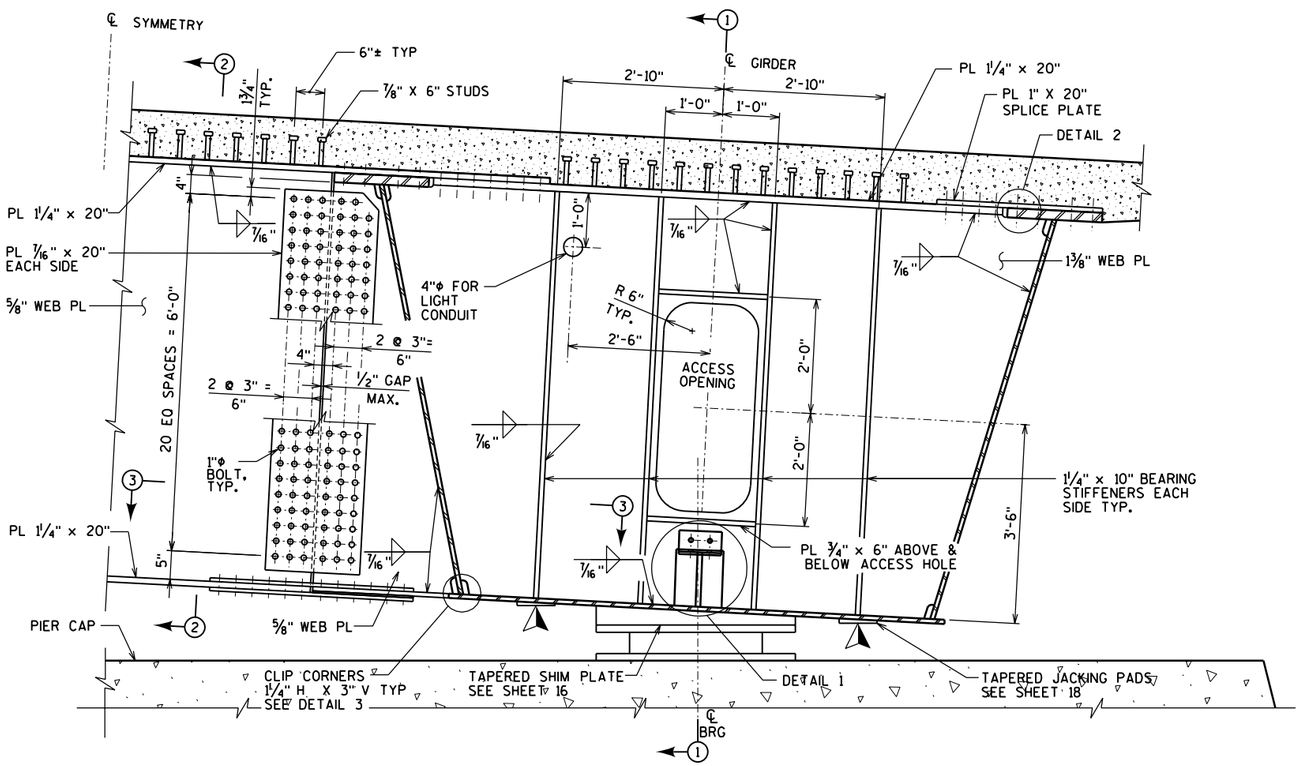

ELEVATION
(LOOKING UPSTATION)

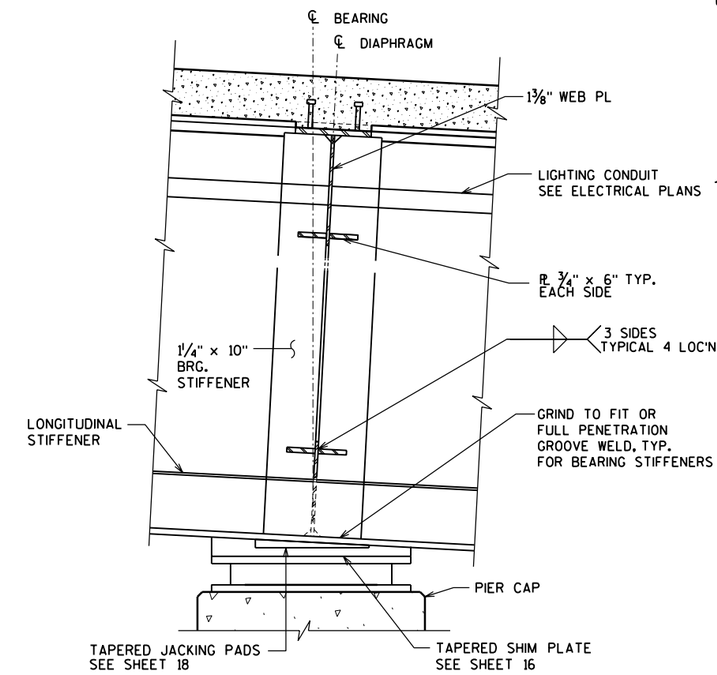

SECTION 1-1

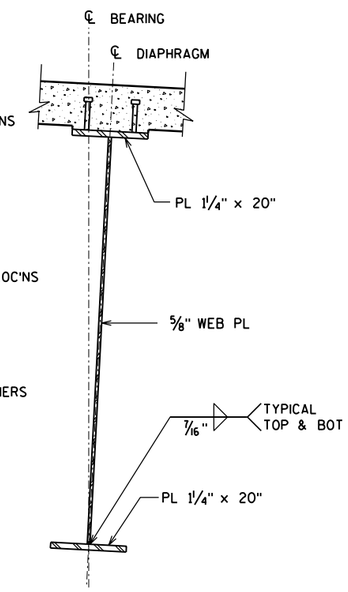

SECTION 2-2

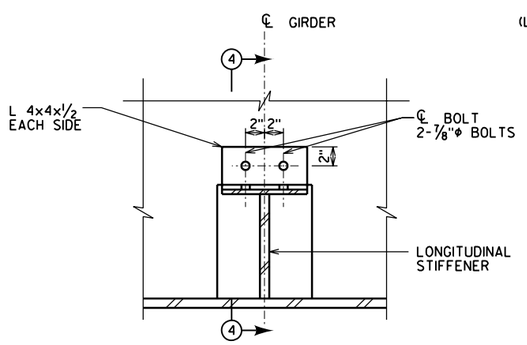

DETAIL 1

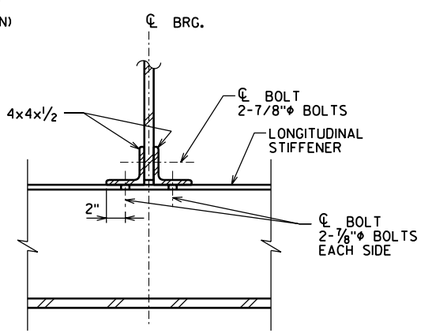

SECTION 4-4

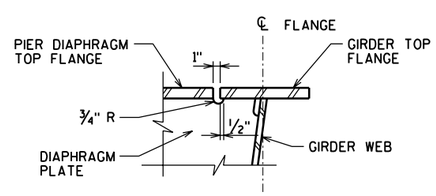

DETAIL 2

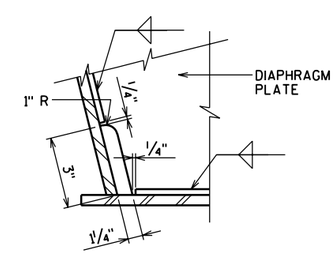

DETAIL 3

NO.	DATE	REVISION	BY

STATE OF WISCONSIN
DEPARTMENT OF TRANSPORTATION
STRUCTURES DESIGN SECTION

STRUCTURE B-37-360-002

CONST. SPEC.	2003	DRAWN BY	RBH	PLANS CK'D.	JZ

INTERIOR PIER DIAPHRAGMS AT PIERS 6, 7, & 8

SHEET 27 OF 46
387

8

8

STATE PROJECT NUMBER

1166-09-74

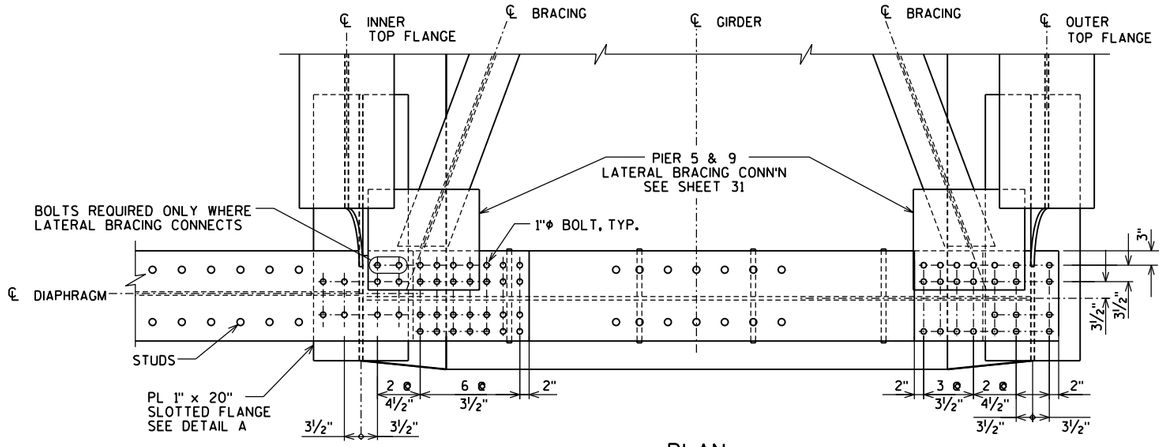

PLAN

VIEWED NORMAL TO DECK SURFACE

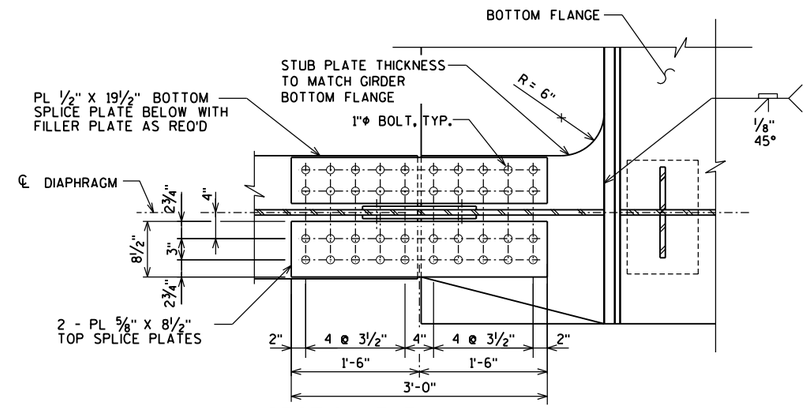

SECTION 3-3

NOT TO SCALE

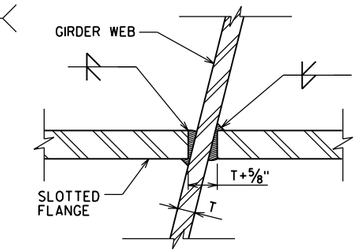

DETAIL A

NOT TO SCALE

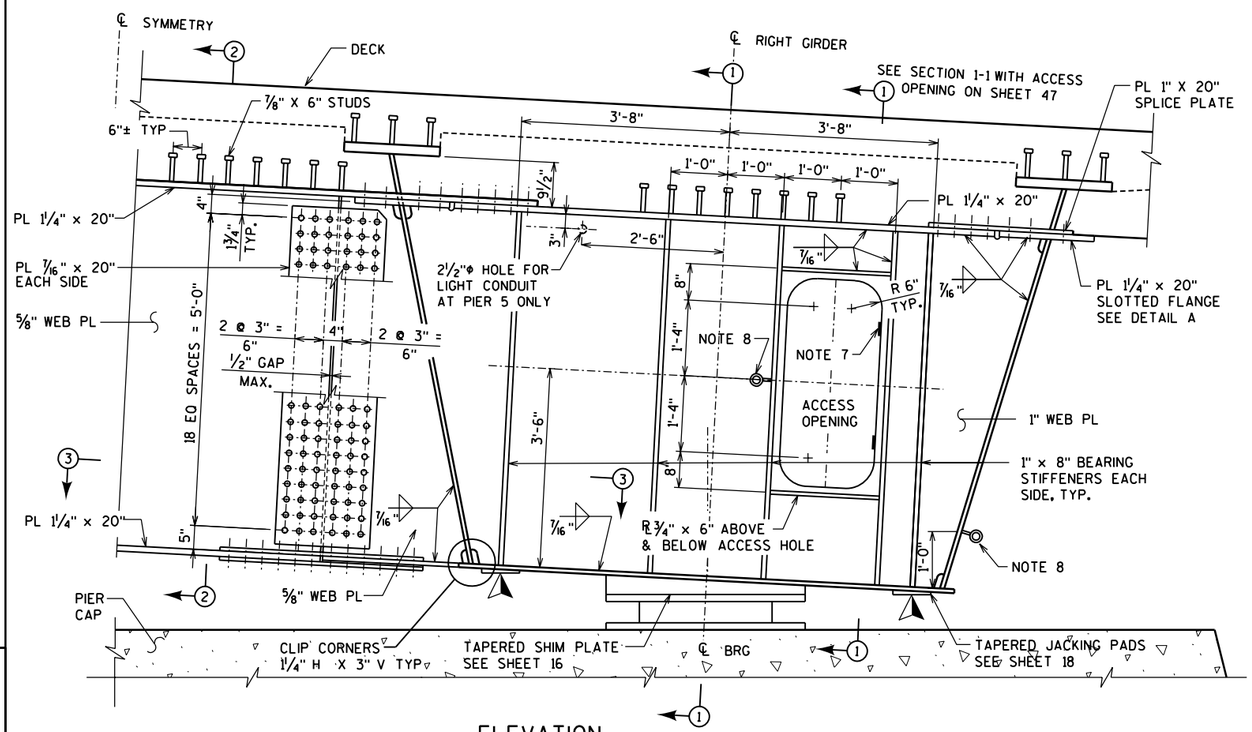

ELEVATION

(LOOKING UPSTATION)

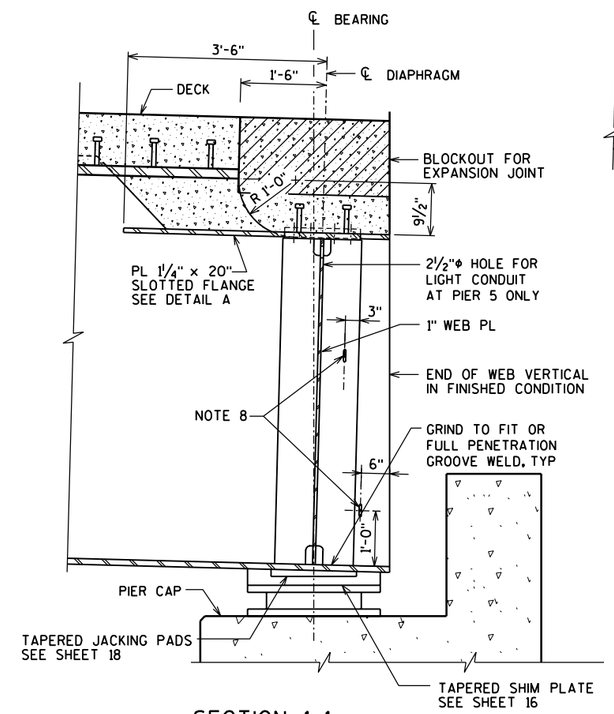

SECTION 1-1

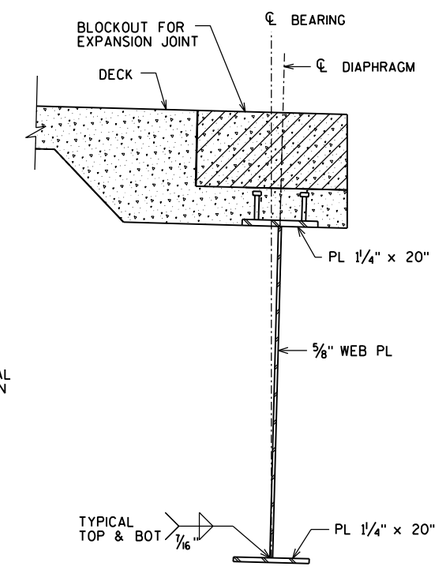

SECTION 2-2

8

8

LEGEND

⚠ SUGGESTED JACKING LOCATIONS FOR FUTURE BEARING REPLACEMENT. SEE SHEET 18 FOR DETAILS.

NOTES

1. SEE SHEET 19 FOR DETAIL DEFINING WORKPOINT BETWEEN DIAPHRAGM AND BEARING CENTERLINES.
2. ALL BOLTS IN PIER DIAPHRAGMS ARE 1" DIAMETER ASTM A325 TYPE 1.
3. DIAPHRAGMS AND CROSS FRAMES ARE ALIGNED NORMAL TO THE GIRDER UNLESS OTHERWISE NOTED.
4. THIS DRAWING SHOWS TYPICAL DIAPHRAGM DETAILS FOR ONE SPECIFIC GRADE AND SUPERELEVATION. GRADE AND SUPERELEVATION VARY BETWEEN PIER LOCATIONS.
5. DIAPHRAGM IS SYMMETRIC ABOUT THE INDICATED LINE WITH THE EXCEPTION OF LATERAL BRACING DIRECTION.
6. ACCESS HOLE SHOWN FOR RIGHT GIRDER AT PIER 5. ACCESS HOLE ON LEFT GIRDER AT PIER 5 IS ON LEFT SIDE OF CENTERLINE OF LEFT GIRDER. (SIMILAR TO ACCESS HOLES AT PIER 9.) SEE SHEET 33 FOR ACCESS HOLE DETAILS.
7. PROVIDE DOOR HINGES ON LOW SIDE OF GIRDER SO DOOR WILL SWING OPEN IF NOT HATCHED.
8. PROVIDE 2-⅝" STAINLESS STEEL EYE-HOOK W/NUT & WASHER ON OUTSIDE, DOUBLE NUT & WASHER ON EACH SIDE.

NO.	DATE	REVISION	BY

STATE OF WISCONSIN
DEPARTMENT OF TRANSPORTATION
STRUCTURES DESIGN SECTION

STRUCTURE B-37-360-002

CONST. SPEC.	2003	DRAWN BY	RBH	PLANS CK'D.	JZ

END PIER DIAPHRAMS AT PIERS 5 & 9

SHEET 28 OF 46
388

FILE =
SCALE =

STATE PROJECT NUMBER

1166-09-74

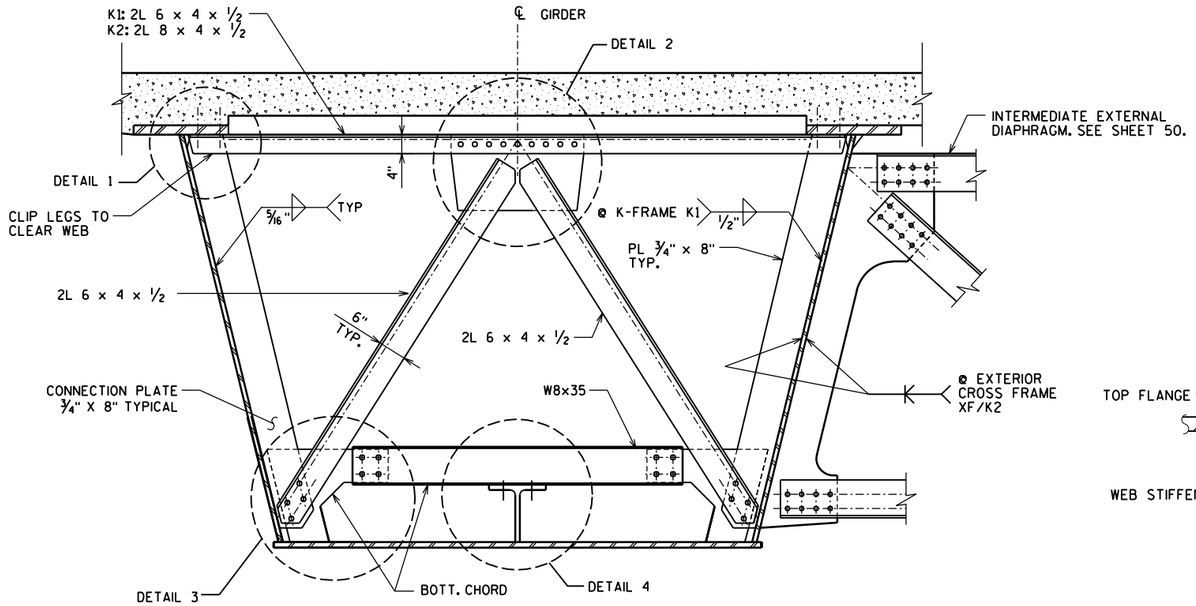

TYPICAL SECTION AT K-FRAME, K1, K2

(SHOWING K-FRAME WITH BOTTOM CHORD, SIMILAR FOR K-FRAME WITHOUT BOTTOM CHORD)

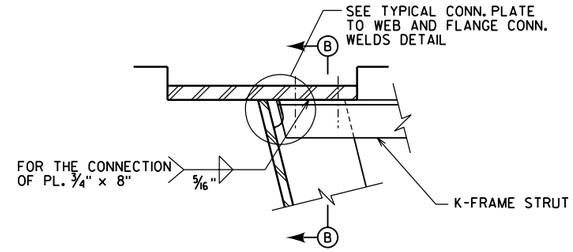

DETAIL 1

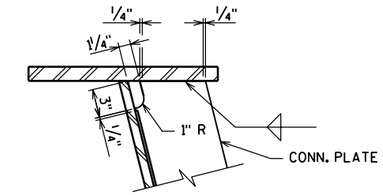

TYPICAL CONN. PLATE TO WEB AND FLANGE CONN. WELDS

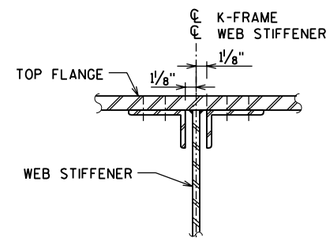

SECTION B-B

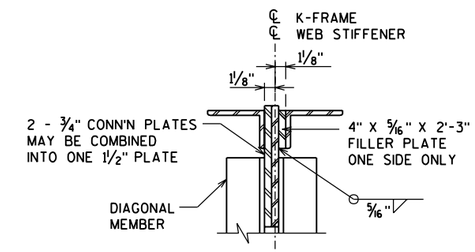

SECTION A-A

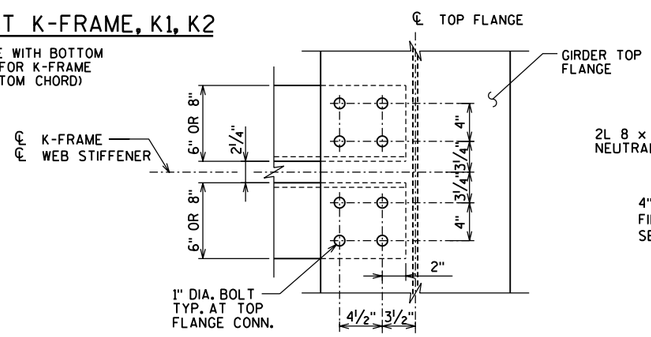

PLAN VIEW AT K-FRAME

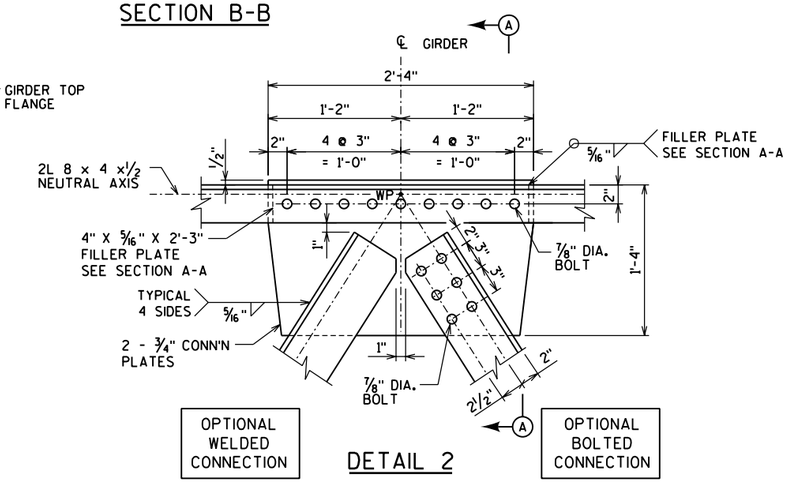

DETAIL 2

NOTES

1. BOLTS CONNECTING K-FRAMES TO TOP FLANGE ARE 1" DIAMETER ASTM A325 TYPE 1.
2. BOLTS CONNECTING K-FRAME DIAGONALS TO WEB STIFFENERS ARE 7/8" DIAMETER ASTM A325 TYPE 1.
3. K-FRAMES ARE ALIGNED NORMAL TO THE GIRDER UNLESS OTHERWISE NOTED.
4. CONNECTION PLATES JOINING DIAGONALS TO TOP STRUT ARE SHOWN AS SEPARATE 3/4" PLATES. THESE PLATES MAY BE REPLACED BY A SINGLE 1 1/2" PLATE.
5. ALL DIAGONALS AT EACH SPECIFIC K-FRAME LOCATION SHALL USE THE SAME CONNECTION DETAIL, EITHER BOLTED OR WELDED.
6. SEE SHEETS 21 TO 24 FOR LOCATION OF K-FRAMES.
7. STIFFENER PLATES WELDED TO WEBS SHALL MATCH THE GIRDER STEEL GRADE. ALL OTHER STEEL SHALL BE GRADE 50.

NOTE THAT THE REQUIREMENTS OF THE AASHTO GUIDE SPECIFICATIONS FOR HORIZONTALLY CURVED STEEL GIRDER HIGHWAY BRIDGES 2003, CLAUSE 10.2.2.3, FOR TRANSVERSE BRACING MEMBERS ACROSS THE BOTTOM FLANGE AT INTERMEDIATE BRACING LOCATIONS WAS EXPLICITLY SUPERCEDED BY THE DESIGN CRITERIA.

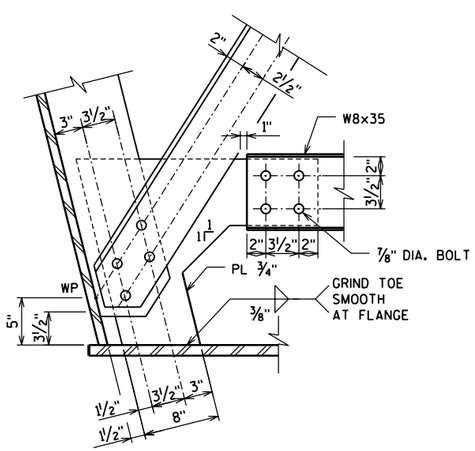

DETAIL 3

(DETAILS WITH BOTTOM CHORD)

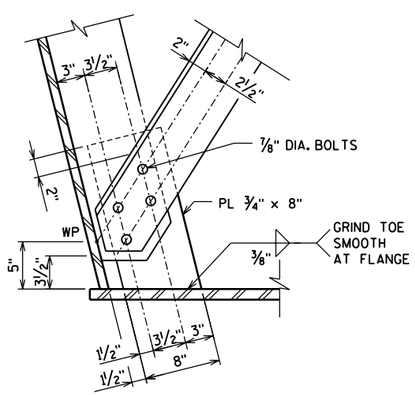

DETAIL 3

(DETAILS WITHOUT BOTTOM CHORD)

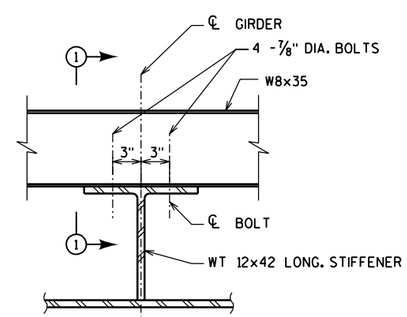

DETAIL 4

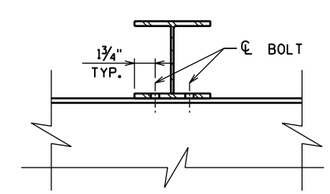

SECTION 1-1

NO.	DATE	REVISION	BY

STATE OF WISCONSIN
DEPARTMENT OF TRANSPORTATION
STRUCTURES DESIGN SECTION

STRUCTURE B-37-360-002

CONST. SPEC.	2003	DRAWN BY	RBH	PLANS CK'D.	JZ

INTERMEDIATE K-FRAMES

SHEET 29 OF 46

389

FILE=
SCALE =

8

8

STATE PROJECT NUMBER

1166-09-74

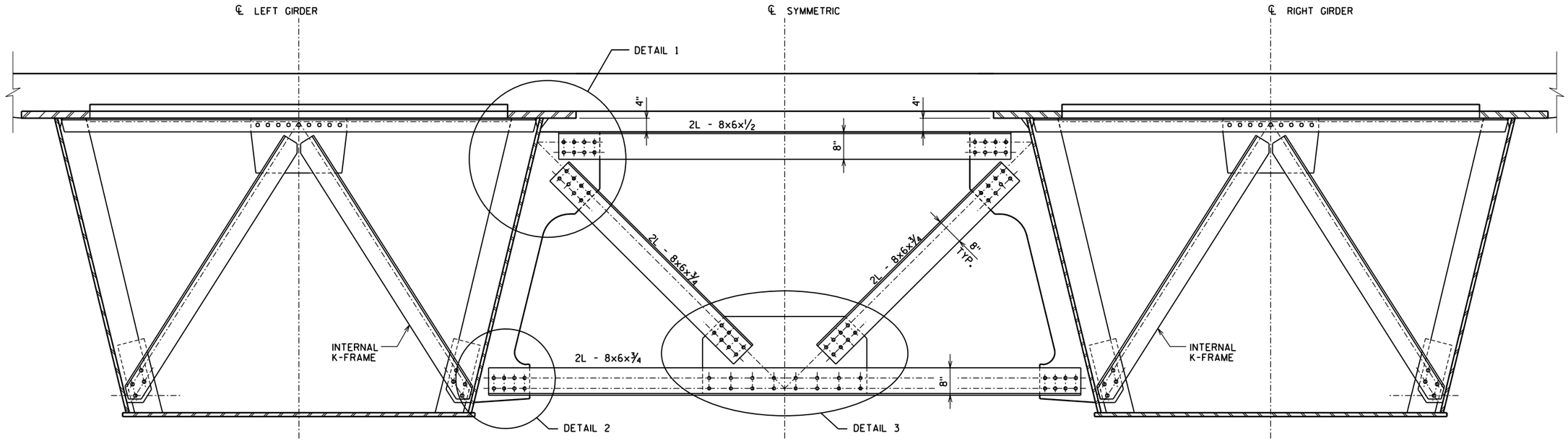

ELEVATION OF EXTERIOR CROSS FRAME XF

(LOOKING UPSTATION)

NOTES

1. ALL BOLTS CONNECTING CROSS FRAMES ARE 1" DIAMETER ASTM A325 TYPE 1.
2. ALL HOLES SHALL BE STANDARD DIAMETER - NO OVERSIZE HOLES.
3. ALL CONNECTIONS SHALL BE FABRICATED AND ASSEMBLED AS SLIP-CRITICAL CONNECTIONS.
4. EXTERIOR CROSS FRAME SHALL BE GRADE 50.
5. ALL CONNECTION PLATES SHALL BE GRADE 50.
6. CROSS FRAMES ARE ALIGNED NORMAL TO THE GIRDERS.
7. EXTERIOR CONNECTION PLATES SHALL BE LOCATED DIRECTLY IN LINE WITH THE CORRESPONDING WEB STIFFENER LOCATED INSIDE THE BOX.

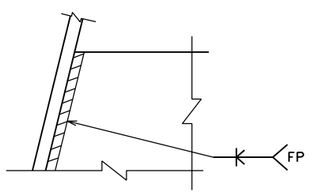

DETAIL 4

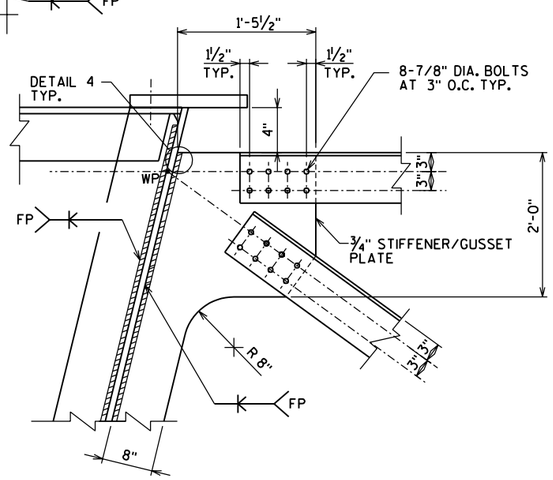

DETAIL 1

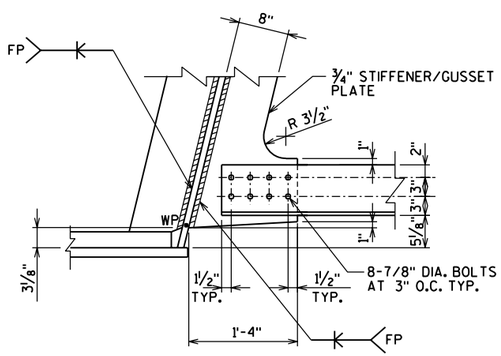

DETAIL 2

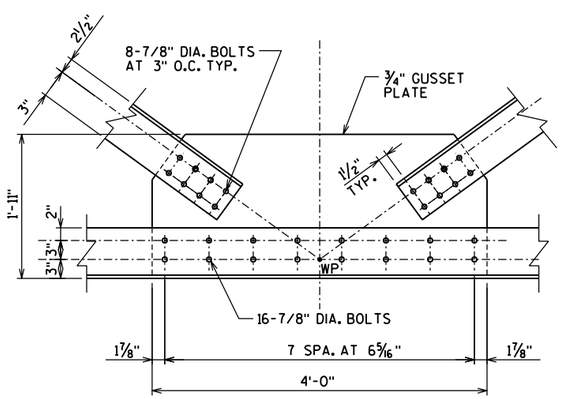

DETAIL 3

NO.	DATE	REVISION	BY

STATE OF WISCONSIN
DEPARTMENT OF TRANSPORTATION
STRUCTURES DESIGN SECTION

STRUCTURE B-37-360-002

CONST. SPEC.	2003	DRAWN BY	RBH	PLANS CK'D.	JZ

EXTERIOR CROSS FRAMES

SHEET 30 OF 46

390

FILE =
SCALE =

WB STH 29

8

8

STATE PROJECT NUMBER

1166-09-74

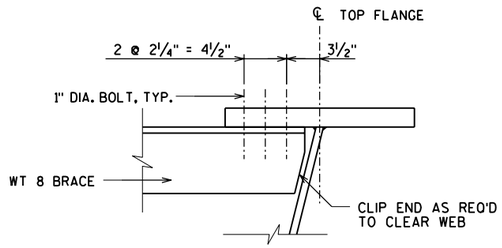

SECTION 1-1

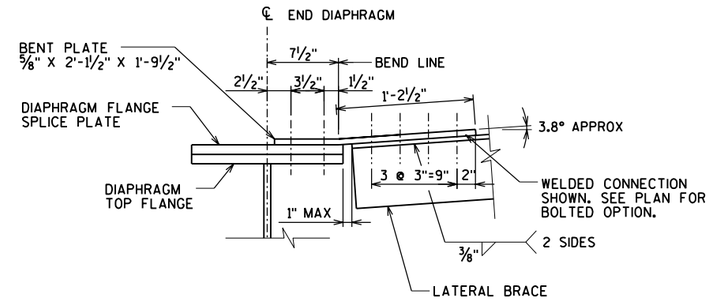

SECTION 2-2

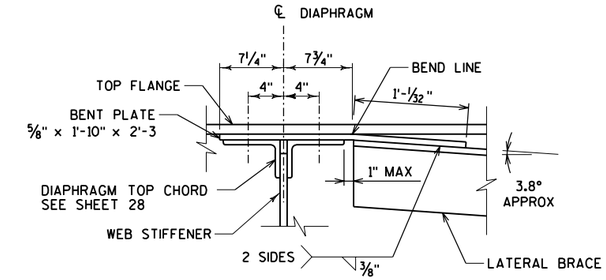

SECTION 3-3

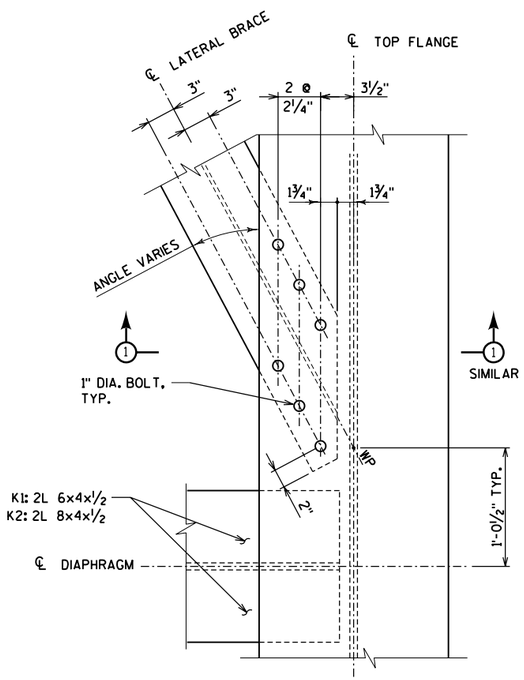

DETAIL A

AT INTERMEDIATE DIPHRAGM

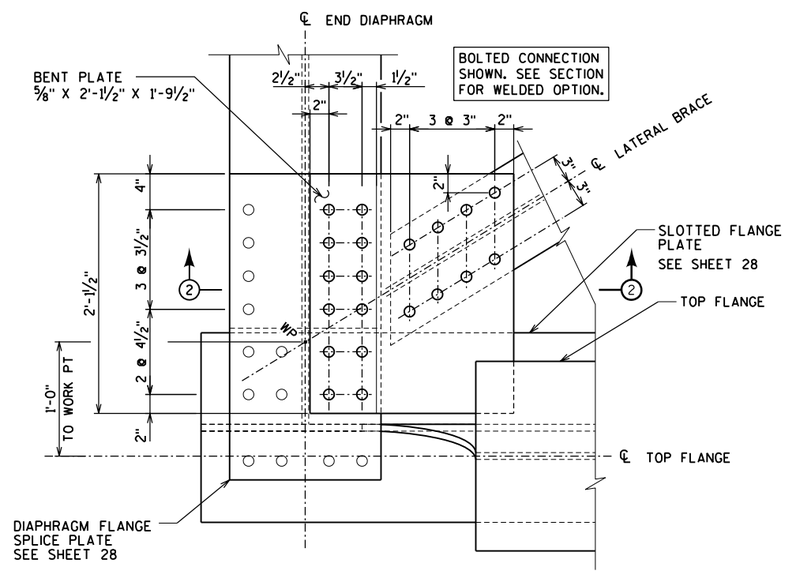

DETAIL B

AT END DIAPHRAGM

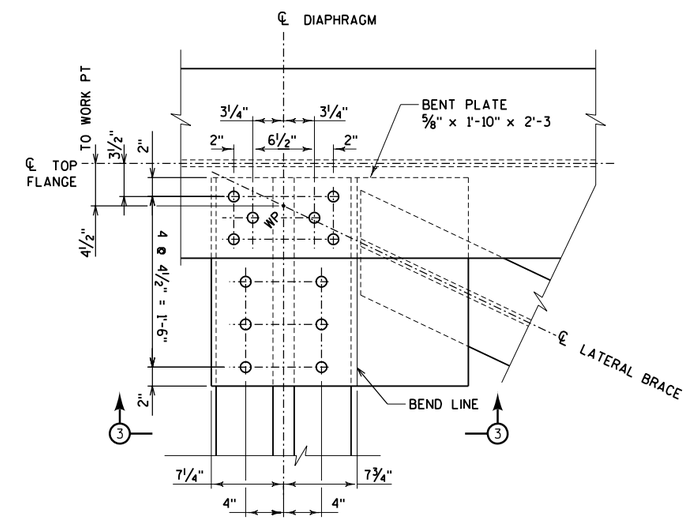

DETAIL B

AT FIRST INTERMEDIATE DIAPHRAGM

8

8

SECTION MARKS

THE FIRST DIGIT OF THE LATERAL BRACING MARK NUMBER IDENTIFIES THE SECTION AS FOLLOWS:

1 WT 8 X 38.5

2 WT 8 X 44.5

THE SECOND CHARACTER OF THE LATERAL BRACING MARK NUMBER IDENTIFIES THE END CONNECTION DETAIL TO BE USED.

NOTES

1. ALL BOLTS CONNECTING LATERAL BRACING MEMBER ARE 1" DIAMETER ASTM A325 TYPE 1.
2. DETAILS ON THIS SHEET SHOW TYPICAL DIMENSIONS ONLY AND WILL HAVE TO BE MIRRORED OR REVERSED AS REQUIRED.
3. DETAIL B IS SHOWN AT AN EXTERIOR WEB LOCATION. AT INTERIOR WEB LOCATIONS THE LATERAL BRACING CONNECTION IS IDENTICAL AND THE DIAPHRAGM BELOW IS SIMILAR. SEE SHEET 28.

   SEE FRAMING AND GIRDER PLANS ON SHEETS 20 TO 24 FOR CORRECT ALIGNMENT OF ALL LATERAL BRACE MEMBERS.
4. SEE SHEET 27 FOR TYPICAL INTERIOR PIER DIAPHRAGM DETAILS AND CONNECTIONS.
5. SEE SHEET 28 FOR END PIER DIAPHRAGM DETAILS AND CONNECTIONS.
6. SEE SHEET 29 FOR INTERMEDIATE DIAPHRAGM K-FRAME CONNECTION DETAILS.

NO.	DATE	REVISION	BY

STATE OF WISCONSIN
DEPARTMENT OF TRANSPORTATION
STRUCTURES DESIGN SECTION

STRUCTURE B-37-360-002

CONST. SPEC.	2003	DRAWN BY	RBH	PLANS CK'D.	JZ

LATERAL BRACING DETAILS

SHEET 31 OF 46

391

FILE =
SCALE =

STATE PROJECT NUMBER

1166-09-74

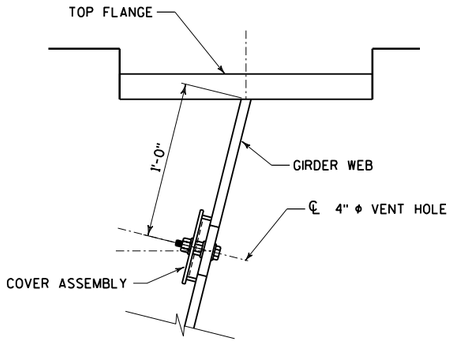

VENT HOLE LOCATION

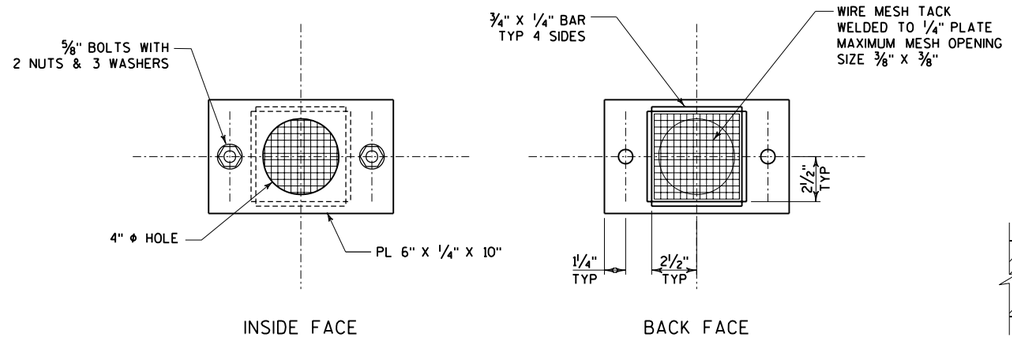

VENT HOLE COVER ASSEMBLY

NOT TO SCALE

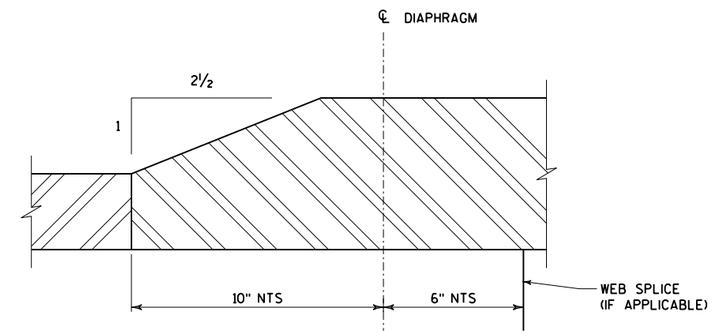

SHOP SPLICE DETAIL

NOT TO SCALE

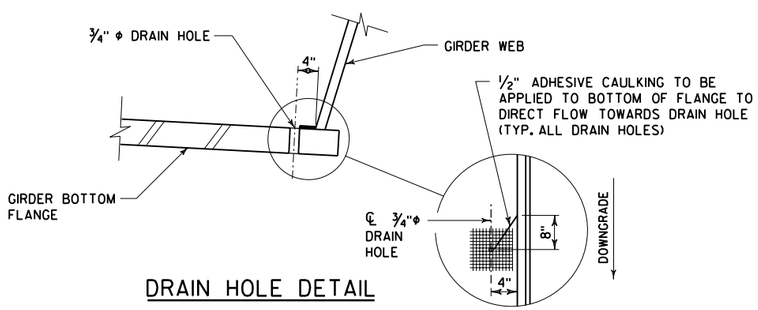

DRAIN HOLE DETAIL

PLAN OF DRAIN HOLES

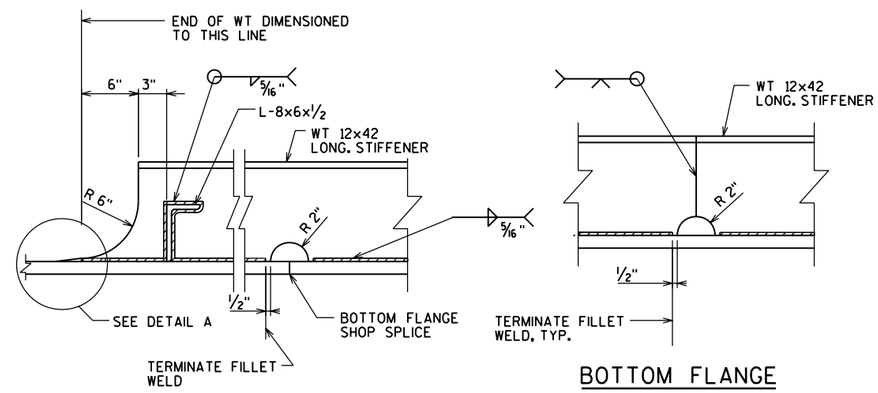

ELEVATION

BOTTOM FLANGE
LONGITUDINAL STIFFENER SPLICE

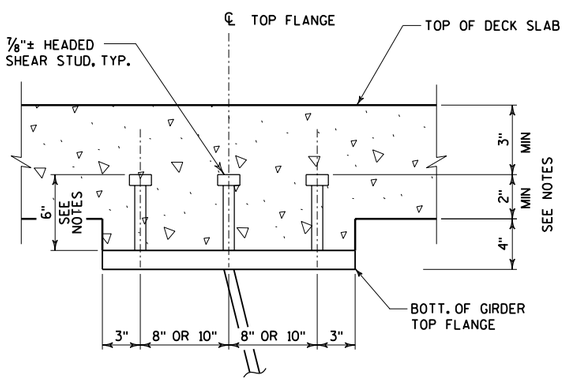

SHEAR STUD DETAIL

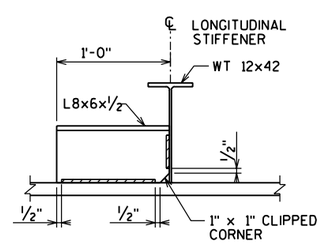

SECTION

BOTTOM FLANGE LONGITUDINAL
STIFFENER TERMINATION DETAIL

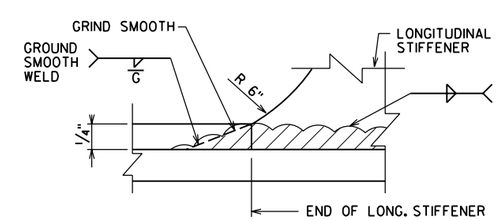

DETAIL A

NOTES

1. SEE SHEETS 21 TO 24 FOR DRAIN AND VENT HOLE LOCATIONS.
2. LOCATE ALL VENT HOLES ON THE INTERIOR WEBS - I.E. THE RIGHT WEB OF THE LEFT GIRDER AND THE LEFT WEB OF THE RIGHT GIRDER.
3. VENT HOLE COVER ASSEMBLIES SHALL BE HOT-DIP GALVANIZED AFTER FABRICATION AND INSTALLED AFTER GIRDERS ARE PAINTED.
4. LOCATE ALL DRAIN HOLES ON THE LOW SIDE OF THE GIRDER AS SHOWN.
5. THE SPECIFIED 6" SHEAR STUDS MEET THE MINIMUM EMBEDMENT AND COVER REQUIREMENTS SHOWN BASED ON A THEORETICAL HAUNCH HEIGHT OF 4".

   WHERE THE HAUNCH HEIGHT VARIES, USE LONGER OR SHORTER STUD LENGTHS AS NECESSARY TO MEET ALL OF THE REQUIREMENTS SHOWN.

NO.	DATE	REVISION	BY

STATE OF WISCONSIN
DEPARTMENT OF TRANSPORTATION
STRUCTURES DESIGN SECTION

STRUCTURE B-37-360-002

CONST. SPEC.	2003	DRAWN BY	RBH	PLANS CK'D.	JZ

MISCELLANEOUS
GIRDER DETAILS

8

8

STATE PROJECT NUMBER

1166-09-74

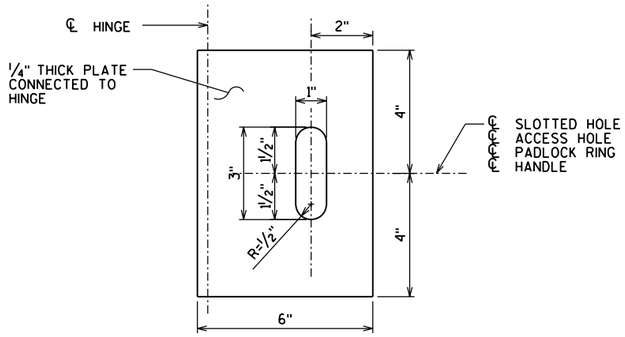

PADLOCK ASSEMBLY DETAIL

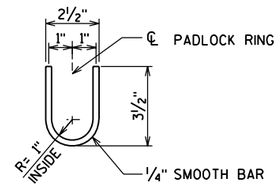

PADLOCK RING DETAIL

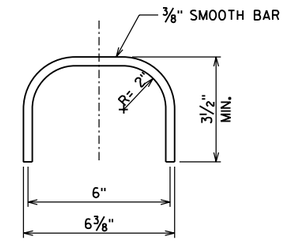

HANDLE DETAIL

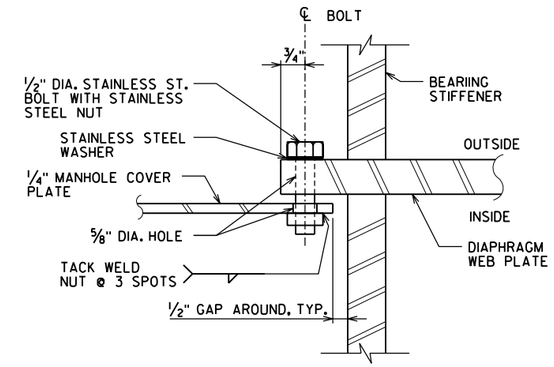

SECTION 2-2

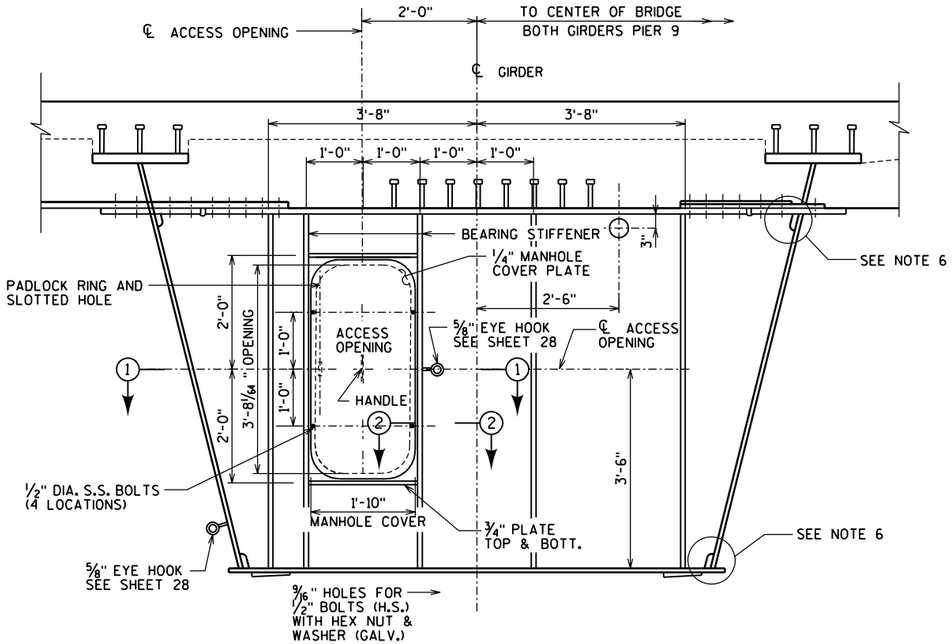

ELEVATION

(FROM INTERIOR OF BOX GIRDER)

DOOR SHALL HAVE A WATERTIGHT FIT ALL AROUND

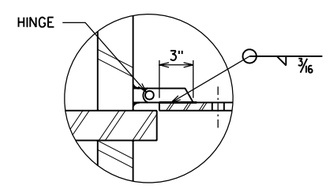

DETAIL C

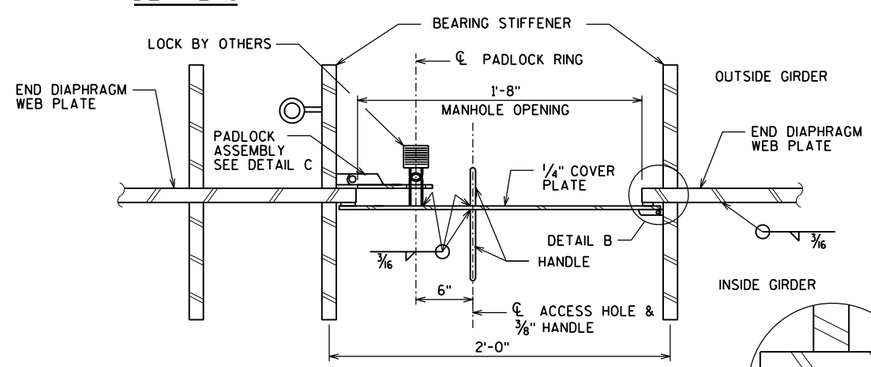

SECTION 1-1

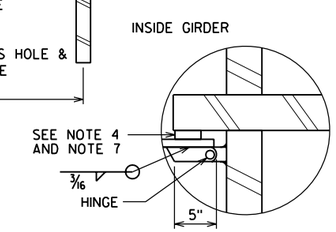

DETAIL B

NOTES:

1. DOORS REQUIRED AT PIER 5 & PIER 9
2. DOOR OPENS TOWARDS THE INSIDE OF THE BOX GIRDERS. PROVIDE 6" RADIUS ON ALL CORNERS OF THE DOOR.
3. 2 HANDLES, ONE AT EACH SIDE OF DOORS.
4. 1/4" x 1/2" NEOPRENE SEAL ATTACHED TO THE DOOR AROUND THE OPENING AS SHOWN TO ATTAIN A WATERTIGHT FIT.
5. ALL EXPOSED EDGES AT PLATES & OPENINGS SHALL BE GROUND SMOOTH.
6. CAULK OPENINGS AFTER PAINTED.
7. PROVIDE DOOR HINGES ON LOW SIDE OF GIRDER SO DOOR WILL SWING OPEN IF NOT HATCHED.

NO.	DATE	REVISION	BY

STATE OF WISCONSIN
DEPARTMENT OF TRANSPORTATION
STRUCTURES DESIGN SECTION

STRUCTURE B-37-360-002

CONST. SPEC.	2003	DRAWN BY	RBH	PLANS CK'D.	JZ

ACCESS HATCH DETAILS

SHEET 33 OF 46

393

8

8

FILE=
SCALE =

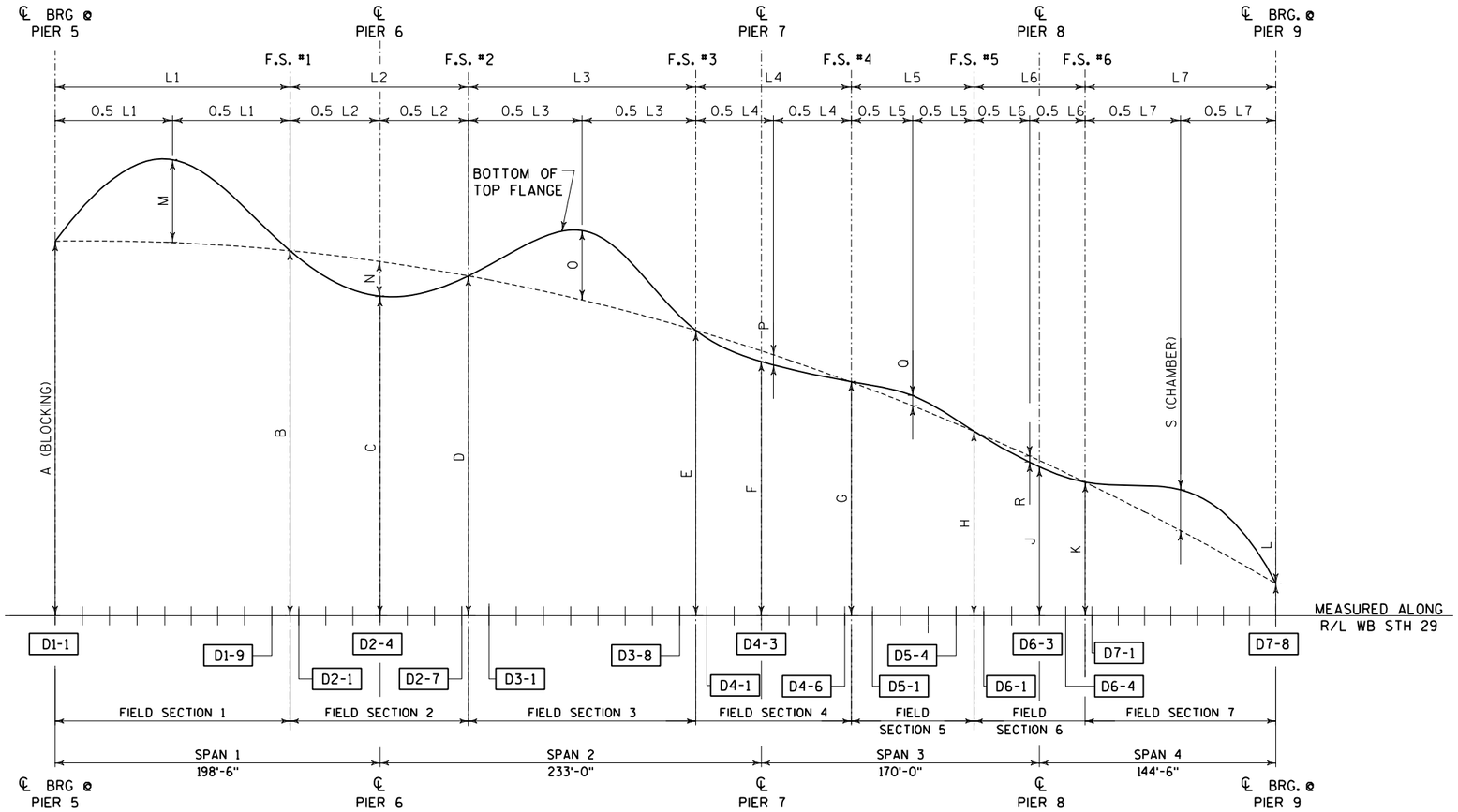

CAMBER & BLOCKING DIAGRAM

LEGEND

D1-8 — INTERMEDIATE ELEVATION POINT (DIAPHRAGM LOCATION).

IN THIS EXAMPLE, '1' IS THE FIELD SECTION NUMBER AND '8' IS THE DIAPHRAGM NUMBER WITHIN THIS FIELD SECTION.

NOTES

1. SEE SHEET 4 FOR GENERAL NOTES. SEE SHEETS 19 AND 20 FOR ADDITIONAL STEEL FABRICATION NOTES.
2. POSITIVE DEFLECTIONS ARE DOWNWARD.
3. POSITIVE CAMBER IS UPWARD RELATIVE TO A CHORD LINE JOINING THE FIELD SECTION ENDPOINTS.
4. T.S. ELEVATIONS ARE TO TOP OF STEEL (SPLICE AND COVER PLATE THICKNESS, IF APPLICABLE, ARE ACCOUNTED FOR) AND THEY ARE FOR THE MATERIAL AS ERECTED. THE ELEVATION OF THE TOP STEEL AT THE FIELD SPLICE PONTS SHALL BE CHECKED, AND CORRECTED, IF POSSIBLE, AFTER ERECTION AND BEFORE PERMANENTLY BOLTING THE DIAPHRAGMS IN PLACE.
5. T.D.: TOP OF DECK
6. BECAUSE VERTICAL PROFILE AND DEFLECTIONS ARE EXAGGERATED TO DIFFERENT DEGREES, THE CAMBERS SHOWN ON THIS DIAGRAM ARE SCHEMATIC ONLY.

   SPECIFICALLY, COMPARING RELATIVE CAMBER MAGNITUDES BETWEEN FIELD SECTIONS MAY BE MISLEADING.
7. CAMBERS DO NOT ACCOUNT FOR PERMANENT FORMWORK WEIGHT. THE CONTRACTOR MAY NEED TO REVISE THE CAMBERS IF THE PERMANENT FORMWORK IS USED IN THE INTERIOR BAY OF THE BOX GIRDERS AS SHOWN ON THE PLANS.

CAMBER & BLOCKING TABLE

LOCATION	BLOCKING HEIGHT											CAMBER (INCHES)						
	A	B	C	D	E	F	G	H	J	K	L	M	N	O	P	Q	R	S
LEFT GIRDER FASCIA WEB	8'-4 3/8"	8'-4 3/4"	7'-10 1/2"	7'-8 3/4"	6'-4 7/8"	5'-8 1/4"	4'-11 1/4"	3'-9"	3'-0 1/8"	2'-6 5/8"	0	5 3/4"	-2 1/8"	4 1/4"	-5/8"	5/8"	-3/8"	2 1/2"
LEFT GIRDER INTERIOR WEB	8'-4 3/8"	8'-4 5/8"	7'-10 1/2"	7'-8 5/8"	6'-4 5/8"	5'-8 1/4"	4'-11 1/4"	3'-9"	3'-0 1/8"	2'-6 1/2"	0	5 1/2"	-2"	4 1/8"	-5/8"	5/8"	-1/4"	2 1/2"
RIGHT GIRDER INTERIOR WEB	8'-4 3/8"	6'-4 1/2"	7'-10 1/2"	7'-8 1/2"	6'-4 1/2"	5'-8 1/4"	4'-11 3/8"	3'-9"	3'-0 1/8"	2'-6 1/2"	0	5 1/8"	-1 7/8"	3 7/8"	-1/2"	5/8"	-1/4"	2 1/4"
RIGHT GIRDER FASCIA WEB	8'-4 3/8"	6'-4 3/8"	7'-10 1/2"	7'-8 3/8"	6'-4 3/8"	5'-8 1/4"	4'-11 3/8"	3'-9"	3'-0 1/8"	2'-6 3/8"	0	5"	-1 3/4"	3 3/4"	-1/2"	5/8"	-1/4"	2 1/4"

HAUNCH NOTE:

†= HAUNCH HEIGHT AT CENTERLINE OF GIRDER.
HAUNCH HEIGHTS WILL NORMALLY BE MADE 2" AT EDGE OF GIRDER, AT ABUTMENTS, HINGES, AND FIELD SPLICES.

HAUNCH DEPTH VARIATIONS NEED NOT BE SHOWN ON THE PLANS.

(TO DETERMINE "†" AFTER ALL STRUCTURAL STEEL HAS BEEN ERECTED. ELEVATIONS OF THE TOP FLANGES, TOP OF SPLICE PLATES, OR TOP OF COVER PLATES, WHICHEVER APPLES, SHALL BE TAKEN AT CENTERLINE OF BEARINGS, CENTERLINE OF FIELD SPLICES, AND AT O.I. POINTS.

TOP OF DECK ELEV. AT FINAL GRADE.

\- TOP OF STEEL ELEV. AFTER PLACEMENT.

\+ CONC. ONLY DEFLECTIONS: DOWNWARD DEFLECTION IS ADDES, UPWARD IS ADDED, UPWARD DEFLECTION IS SUBTRACTED.

\- SLAB THICKNESS (10")

= "†" VALUE FOR SETTING HAUCH.

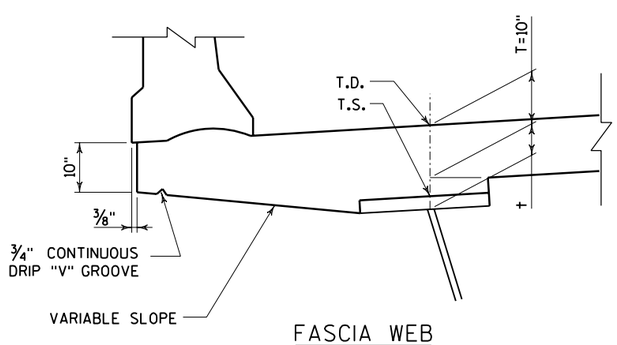

FASCIA WEB

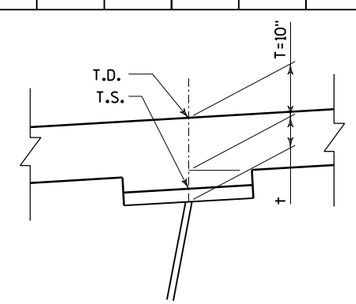

INTERIOR WEB

NO.	DATE	REVISION	BY

STATE OF WISCONSIN
DEPARTMENT OF TRANSPORTATION
STRUCTURES DESIGN SECTION

STRUCTURE B-37-360-002

CONST. SPEC. 2003 | DRAWN BY RBH | PLANS CK'D. JZ

CAMBER DIAGRAM

FILE =
SCALE =

8

8

ELEVATIONS AT TOP OF DECK (T.D.) & TOP OF STEEL (T.S.)

POSITION NO.		DIAPHRAGM & FIELD SPLICE LOCATION																	
		Pier 5 & D1-1	D1-2	D1-3	D1-4	D1-5	D1-6	D1-7	D1-8	D1-9	F.S. #1	D2-1	D2-2	D2-3	Pier 6 & D2-4	D2-5	D2-6	D2-7	F.S. #2
1. LEFT DECK EDGE	T.D.	1228.86	1228.87	1228.87	1228.86	1228.84	1228.81	1228.77	1228.73	1228.67	1228.63	1228.61	1228.54	1228.46	1228.37	1228.27	1228.16	1228.05	1228.02
2. LEFT GIRDER FASCIA WEB	T.D.	1228.65	1228.65	1228.65	1228.64	1228.62	1228.59	1228.56	1228.51	1228.46	1228.41	1228.39	1228.32	1228.24	1228.15	1228.05	1227.95	1227.83	1227.80
	T.S.	1227.56									1227.62				1227.21				1226.96
3. LEFT GIRDER INTERIOR WEB	T.D.	1227.95	1227.95	1227.95	1227.94	1227.92	1227.89	1227.86	1227.81	1227.76	1227.72	1227.69	1227.62	1227.54	1227.45	1227.35	1227.25	1227.13	1227.10
	T.S.	1226.86									1226.91				1226.52				1226.25
4. RIGHT GIRDER INTERIOR WEB	T.D.	1227.25	1227.26	1227.25	1227.24	1227.22	1227.20	1227.16	1227.11	1227.06	1227.02	1227.00	1226.92	1226.84	1226.75	1226.66	1226.55	1226.43	1226.40
	T.S.	1226.17									1226.20				1225.82				1225.54
5. RIGHT GIRDER FASCIA WEB	T.D.	1226.55	1226.56	1226.56	1226.55	1226.53	1226.50	1226.46	1226.42	1226.36	1226.32	1226.30	1226.23	1226.15	1226.06	1225.96	1225.85	1225.73	1225.70
	T.S.	1225.47									1225.497				1225.12				1224.84
6. RIGHT DECK EDGE	T.D.	1226.33	1226.34	1226.34	1226.33	1226.31	1226.28	1226.24	1226.20	1226.14	1226.10	1226.08	1226.01	1225.93	1225.84	1225.74	1225.63	1225.52	1225.49

DEAD LOAD DEFLECTIONS

POSITION NO.		DIAPHRAGM & FIELD SPLICE LOCATION																	
		Pier 5 & D1-1	D1-2	D1-3	D1-4	D1-5	D1-6	D1-7	D1-8	D1-9	F.S. #1	D2-1	D2-2	D2-3	Pier 6 & D2-4	D2-5	D2-6	D2-7	F.S. #2
2. LEFT GIRDER FASCIA WEB	CONCRETE DECK & PARAPET	0	1 5/8	3	4	4 5/8	4 7/8	4 5/8	3 7/8	3	2 3/8	2	1 1/8	3/8	0	1/4	3/4	1 1/2	1 3/4
	TOTAL DL	0	2 1/8	4	5 3/8	6 1/4	6 3/8	6 1/8	5 1/4	4	3 1/8	2 3/4	1 3/8	1/2	0	1/4	1	2 1/8	2 1/2
3. LEFT GIRDER INTERIOR WEB	CONCRETE DECK & PARAPET	0	1 1/2	2 7/8	3 7/8	4 3/8	4 5/8	4 3/8	3 3/4	2 7/8	2 1/4	1 7/8	1	3/8	0	1/8	5/8	1 3/8	1 5/8
	TOTAL DL	0	2	3 3/4	5 1/8	5 7/8	6 1/8	5 3/4	5	3 7/8	3	2 1/2	1 3/8	1/2	0	1/4	1	2	2 1/4
4. RIGHT GIRDER INTERIOR WEB	CONCRETE DECK & PARAPET	0	1 3/8	2 5/8	3 5/8	4 1/8	4 1/4	4 1/8	3 1/2	2 3/4	2 1/8	1 3/4	1	3/8	0	1/4	5/8	1 3/8	1 1/2
	TOTAL DL	0	1 7/8	3 5/8	4 3/4	5 1/2	5 3/4	5 1/2	4 3/4	3 5/8	2 7/8	2 3/8	1 1/4	1/2	0	1/4	7/8	1 7/8	2 1/4
5. RIGHT GIRDER FASCIA WEB	CONCRETE DECK & PARAPET	0	1 3/8	2 1/2	3 3/8	4	4 1/8	3 7/8	3 3/8	2 5/8	2	1 3/4	1	3/8	0	1/8	5/8	1 1/4	1 1/2
	TOTAL DL	0	1 7/8	3 3/8	4 5/8	5 1/4	5 1/2	5 1/4	4 1/2	3 1/2	2 5/8	2 1/4	1 1/4	1/2	0	1/4	7/8	1 7/8	2 1/8

LEGEND

D1-8 INTERMEDIATE ELEVATION POINT (DIAPHRAGM LOCATION).

IN THIS EXAMPLE, '1' IS THE FIELD SECTION NUMBER AND '8' IS THE DIAPHRAGM NUMBER WITHIN THIS FIELD SECTION.

NOTES

1. SEE SHEET 4 FOR GENERAL NOTES. SEE SHEETS 19 AND 20 FOR ADDITIONAL STEEL FABRICATION NOTES.
2. POSITIVE DEFLECTIONS ARE DOWNWARD.
3. POSITIVE CAMBER IS UPWARD RELATIVE TO A CHORD LINE JOINING THE FIELD SECTION ENDPOINTS.
4. ALL TABULATED VALUES ARE IN DECIMALS OF A FOOT.
5. T.S. ELEVATIONS ARE TO TOP OF STEEL (SPLICE AND COVER PLATE THICKNESS, IF APPLICABLE, ARE ACCOUNTED FOR) AND THEY ARE FOR THE MATERIAL AS ERECTED. THE ELEVATION OF THE TOP STEEL AT THE FIELD SPLICE PONTS SHALL BE CHECKED, AND CORRECTED, IF POSSIBLE, AFTER ERECTION AND BEFORE PERMANENTLY BOLTING THE DIAPHRAGMS IN PLACE.

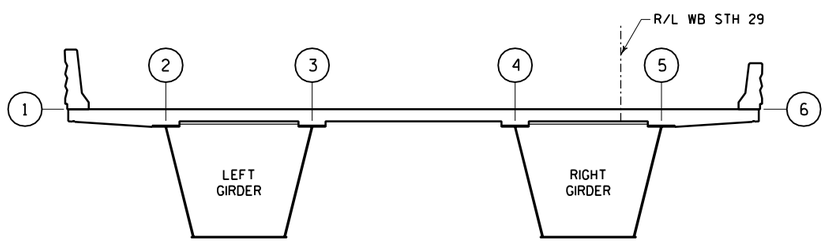

HORIZONTAL LOCATION KEY
(LOOKING UPSTATION)

8

NO.	DATE	REVISION	BY

STATE OF WISCONSIN
DEPARTMENT OF TRANSPORTATION
STRUCTURES DESIGN SECTION

STRUCTURE B-37-360-002

CONST. SPEC. 2003 | DRAWN BY RBH | PLANS CK'D. JZ

CAMBER AND DECK ELEVATIONS: FIELD SECTION #1 & #2

FILE=
SCALE =

ELEVATIONS AT TOP OF DECK (T.D.) & TOP OF STEEL (T.S.)

POSITION NO.		DIAPHRAGM & FIELD SPLICE LOCATION																
		F.S. #2	D3-1	D3-2	D3-3	D3-4	D3-5	D3-6	D3-7	D3-8	F.S. #3	D4-1	D4-2	Pier 7 & D4-3	D4-4	D4-5	D4-6	F.S. #4
1. LEFT DECK EDGE	T.D.	1228.02	1227.92	1227.79	1227.64	1227.49	1227.33	1227.16	1226.98	1226.80	1226.68	1226.60	1226.40	1226.18	1225.96	1225.72	1225.48	1225.42
2. LEFT GIRDER FASCIA WEB	T.D.	1227.80	1227.70	1227.57	1227.43	1227.28	1227.12	1226.95	1226.77	1226.58	1226.47	1226.39	1226.18	1225.97	1225.74	1225.50	1225.26	1225.20
	T.S.	1226.96									1225.61			1224.97				1224.17
3. LEFT GIRDER INTERIOR WEB	T.D.	1227.10	1227.01	1226.87	1226.73	1226.58	1226.42	1226.25	1226.07	1225.88	1225.77	1225.69	1225.48	1225.27	1225.04	1224.81	1224.56	1224.50
	T.S.	1226.25									1224.90			1224.27				1223.47
4. RIGHT GIRDER INTERIOR WEB	T.D.	1226.40	1226.31	1226.17	1226.03	1225.88	1225.72	1225.55	1225.37	1225.19	1225.07	1224.99	1224.78	1224.57	1224.34	1224.11	1223.86	1223.80
	T.S.	1225.54									1224.19			1223.57				1222.78
5. RIGHT GIRDER FASCIA WEB	T.D.	1225.70	1225.61	1225.48	1225.33	1225.18	1225.02	1224.85	1224.67	1224.49	1224.37	1224.29	1224.09	1223.87	1223.65	1223.41	1223.16	1223.11
	T.S.	1224.84									1223.49			1222.87				1222.08
6. RIGHT DECK EDGE	T.D.	1225.49	1225.39	1225.26	1225.12	1224.97	1224.80	1224.64	1224.46	1224.27	1224.15	1224.07	1223.87	1223.66	1223.43	1223.19	1222.95	1222.89

DEAD LOAD DEFLECTIONS

POSITION NO.		DIAPHRAGM & FIELD SPLICE LOCATION																
		F.S. #2	D3-1	D3-2	D3-3	D3-4	D3-5	D3-6	D3-7	D3-8	F.S. #3	D4-1	D4-2	Pier 7 & D4-3	D4-4	D4-5	D4-6	F.S. #4
2. LEFT GIRDER FASCIA WEB	CONCRETE DECK & PARAPET	1 3/4	2 3/8	3 1/4	3 7/8	4 1/4	4 1/4	3 7/8	3 1/4	2 3/8	1 7/8	1 1/2	5/8	0	- 1/8	- 1/8	1/8	1/8
	TOTAL DL	2 1/2	3 3/8	4 1/2	5 3/8	5 7/8	5 7/8	5 3/8	4 1/2	3 1/4	2 1/2	2	7/8	0	- 1/4	- 1/8	1/8	1/4
3. LEFT GIRDER INTERIOR WEB	CONCRETE DECK & PARAPET	1 5/8	2 1/4	3	3 5/8	4	4	3 5/8	3	2 1/4	1 3/4	1 3/8	5/8	0	- 1/8	- 1/8	1/8	1/8
	TOTAL DL	2 1/4	3 1/4	4 1/4	5 1/8	5 1/2	5 1/2	5 1/8	4 1/4	3 1/8	2 3/8	1 7/8	3/4	0	- 1/4	- 1/8	1/8	1/4
4. RIGHT GIRDER INTERIOR WEB	CONCRETE DECK & PARAPET	1 1/2	2 1/8	2 7/8	3 1/2	3 3/4	3 3/4	3 3/8	2 7/8	2 1/8	1 5/8	1 1/4	1/2	0	- 1/8	- 1/8	1/8	1/8
	TOTAL DL	2 1/4	3	4	4 7/8	5 1/4	5 1/4	4 3/4	4	2 7/8	2 1/4	1 3/4	3/4	0	- 1/4	- 1/8	1/8	1/4
5. RIGHT GIRDER FASCIA WEB	CONCRETE DECK & PARAPET	1 1/2	2	2 3/4	3 1/4	3 5/8	3 1/2	3 1/4	2 3/4	2	1 1/2	1 1/4	1/2	0	- 1/8	0	1/8	1/4
	TOTAL DL	2 1/8	2 7/8	3 7/8	4 5/8	5	5	4 1/2	3 3/4	2 3/4	2 1/8	1 3/4	3/4	0	- 1/4	0	1/4	1/4

LEGEND

D1-8 INTERMEDIATE ELEVATION POINT (DIAPHRAGM LOCATION).

IN THIS EXAMPLE, '1' IS THE FIELD SECTION NUMBER AND '8' IS THE DIAPHRAGM NUMBER WITHIN THIS FIELD SECTION.

NOTES

1. SEE SHEET 4 FOR GENERAL NOTES. SEE SHEETS 19 AND 20 FOR ADDITIONAL STEEL FABRICATION NOTES.
2. POSITIVE DEFLECTIONS ARE DOWNWARD.
3. POSITIVE CAMBER IS UPWARD RELATIVE TO A CHORD LINE JOINING THE FIELD SECTION ENDPOINTS.
4. ALL TABULATED VALUES ARE IN DECIMALS OF A FOOT.
5. T.S. ELEVATIONS ARE TO TOP OF STEEL (SPLICE AND COVER PLATE THICKNESS, IF APPLICABLE, ARE ACCOUNTED FOR) AND THEY ARE FOR THE MATERIAL AS ERECTED. THE ELEVATION OF THE TOP STEEL AT THE FIELD SPLICE PONTS SHALL BE CHECKED, AND CORRECTED, IF POSSIBLE, AFTER ERECTION AND BEFORE PERMANENTLY BOLTING THE DIAPHRAGMS IN PLACE.

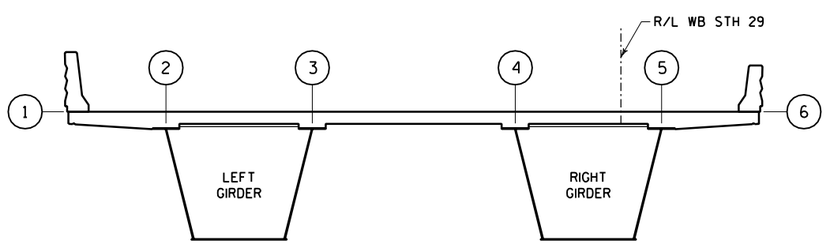

HORIZONTAL LOCATION KEY
(LOOKING UPSTATION)

8

NO.	DATE	REVISION	BY

STATE OF WISCONSIN
DEPARTMENT OF TRANSPORTATION
STRUCTURES DESIGN SECTION

STRUCTURE B-37-360-002

CONST. SPEC. 2003 | DRAWN BY RBH | PLANS CK'D. JZ

CAMBER AND DECK ELEVATIONS: FIELD SECTION #3 & #4

FILE=
SCALE =

ELEVATIONS AT TOP OF DECK (T.D.) & TOP OF STEEL (T.S.)

POSITION NO.		DIAPHRAGM & FIELD SPLICE LOCATION										
		F.S. #4	D5-1	D5-2	D5-3	D5-4	F.S. #5	D6-1	D6-2	Pier 8 & D6-3	D6-4	F.S. #6
1. LEFT DECK EDGE	T.D.	1225.42	1225.22	1224.96	1224.68	1224.40	1224.21	1224.11	1223.81	1223.50	1223.20	1222.97
2. LEFT GIRDER FASCIA WEB	T.D.	1225.20	1225.00	1224.74	1224.47	1224.19	1224.00	1223.89	1223.59	1223.28	1222.98	1222.75
	T.S.	1224.17					1222.98			1222.28		1221.78
3. LEFT GIRDER INTERIOR WEB	T.D.	1224.50	1224.31	1224.04	1223.77	1223.49	1223.30	1223.20	1222.89	1222.58	1222.28	1222.05
	T.S.	1223.47					1222.28			1221.58		1221.08
4. RIGHT GIRDER INTERIOR WEB	T.D.	1223.80	1223.61	1223.34	1223.07	1222.79	1222.60	1222.50	1222.20	1221.89	1221.59	1221.36
	T.S.	1222.78					1221.58			1220.89		1220.38
5. RIGHT GIRDER FASCIA WEB	T.D.	1223.11	1222.91	1222.65	1222.37	1222.09	1221.90	1221.80	1221.50	1221.19	1220.89	1220.66
	T.S.	1222.08					1220.88			1220.19		1219.68
6. RIGHT DECK EDGE	T.D.	1222.89	1222.69	1222.43	1222.16	1221.87	1221.69	1221.58	1221.28	1220.97	1220.67	1220.44

DEAD LOAD DEFLECTIONS

POSITION NO.		DIAPHRAGM & FIELD SPLICE LOCATION										
		F.S. #4	D5-1	D5-2	D5-3	D5-4	F.S. #5	D6-1	D6-2	Pier 8 & D6-3	D6-4	F.S. #6
2. LEFT GIRDER FASCIA WEB	CONCRETE DECK & PARAPET	1/8	3/8	1/2	1/2	3/8	1/4	1/8	0	0	3/8	5/8
	TOTAL DL	1/4	1/2	5/8	5/8	1/2	1/4	1/4	0	0	3/8	7/8
3. LEFT GIRDER INTERIOR WEB	CONCRETE DECK & PARAPET	1/8	3/8	1/2	1/2	3/8	1/4	1/8	0	0	1/4	5/8
	TOTAL DL	1/4	3/8	5/8	5/8	1/2	1/4	1/4	0	0	3/8	3/4
4. RIGHT GIRDER INTERIOR WEB	CONCRETE DECK & PARAPET	1/8	3/8	1/2	1/2	3/8	1/4	1/8	0	0	1/4	5/8
	TOTAL DL	1/4	1/2	5/8	5/8	1/2	3/8	1/4	0	0	3/8	3/4
5. RIGHT GIRDER FASCIA WEB	CONCRETE DECK & PARAPET	1/4	3/8	1/2	1/2	3/8	1/4	1/8	0	0	1/4	1/2
	TOTAL DL	1/4	1/2	5/8	5/8	1/2	3/8	1/4	0	0	3/8	3/4

LEGEND

D1-8 INTERMEDIATE ELEVATION POINT (DIAPHRAGM LOCATION).

IN THIS EXAMPLE, '1' IS THE FIELD SECTION NUMBER AND '8' IS THE DIAPHRAGM NUMBER WITHIN THIS FIELD SECTION.

NOTES

1. SEE SHEET 4 FOR GENERAL NOTES. SEE SHEETS 19 AND 20 FOR ADDITIONAL STEEL FABRICATION NOTES.
2. POSITIVE DEFLECTIONS ARE DOWNWARD.
3. POSITIVE CAMBER IS UPWARD RELATIVE TO A CHORD LINE JOINING THE FIELD SECTION ENDPOINTS.
4. ALL TABULATED VALUES ARE IN DECIMALS OF A FOOT.
5. T.S. ELEVATIONS ARE TO TOP OF STEEL (SPLICE AND COVER PLATE THICKNESS, IF APPLICABLE, ARE ACCOUNTED FOR) AND THEY ARE FOR THE MATERIAL AS ERECTED. THE ELEVATION OF THE TOP STEEL AT THE FIELD SPLICE PONTS SHALL BE CHECKED, AND CORRECTED, IF POSSIBLE, AFTER ERECTION AND BEFORE PERMANENTLY BOLTING THE DIAPHRAGMS IN PLACE.

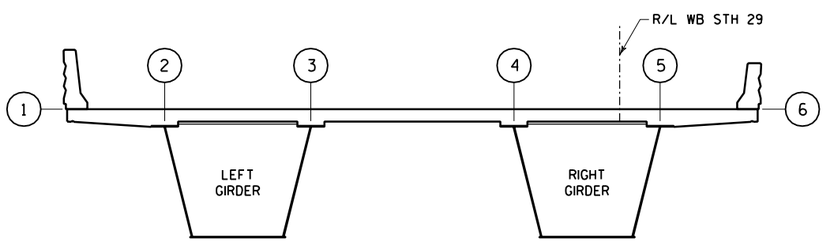

HORIZONTAL LOCATION KEY
(LOOKING UPSTATION)

8

NO.	DATE	REVISION	BY

STATE OF WISCONSIN
DEPARTMENT OF TRANSPORTATION
STRUCTURES DESIGN SECTION

STRUCTURE B-37-360-002

CONST. SPEC. 2003 | DRAWN BY RBH | PLANS CK'D. JZ

CAMBER AND DECK ELEVATIONS: FIELD SECTION #5 & #6

FILE=
SCALE =

ELEVATIONS AT TOP OF DECK (T.D.) & TOP OF STEEL (T.S.)

POSITION NO.		DIAPHRAGM & FIELD SPLICE LOCATION								
		F.S. #6	D7-1	D7-2	D7-3	D7-4	D7-5	D7-6	D7-7	Pier 9 & D7-8
1. LEFT DECK EDGE	T.D.	1222.97	1222.89	1222.57	1222.25	1221.91	1221.57	1221.22	1220.86	1220.49
2. LEFT GIRDER FASCIA WEB	T.D.	1222.75	1222.67	1222.35	1222.03	1221.69	1221.35	1221.00	1220.64	1220.28
	T.S.	1221.78								1219.19
3. LEFT GIRDER INTERIOR WEB	T.D.	1222.05	1221.97	1221.66	1221.33	1221.00	1220.65	1220.3	1219.94	1219.58
	T.S.	1221.08								1218.49
4. RIGHT GIRDER INTERIOR WEB	T.D.	1221.36	1221.28	1220.96	1220.63	1220.30	1219.96	1219.61	1219.25	1218.88
	T.S.	1220.38								1217.80
5. RIGHT GIRDER FASCIA WEB	T.D.	1220.66	1220.58	1220.26	1219.93	1219.60	1219.26	1218.91	1218.55	1218.18
	T.S.	1219.68								1217.10
6. RIGHT DECK EDGE	T.D.	1220.44	1220.36	1220.04	1219.72	1219.38	1219.04	1218.69	1218.33	1217.97

DEAD LOAD DEFLECTIONS

POSITION NO.		DIAPHRAGM & FIELD SPLICE LOCATION								
		F.S. #6	D7-1	D7-2	D7-3	D7-4	D7-5	D7-6	D7-7	Pier 9 & D7-8
2. LEFT GIRDER FASCIA WEB	CONCRETE DECK & PARAPET	5/8	3/4	1 1/4	1 5/8	1 3/4	15/8	1 1/4	3/4	0
	TOTAL DL	7/8	1	1 5/8	2 1/8	2 1/4	2 1/4	1 3/4	1	0
3. LEFT GIRDER INTERIOR WEB	CONCRETE DECK & PARAPET	5/8	5/8	1 1/8	1 1/2	1 5/8	1 1/2	1 1/4	5/8	0
	TOTAL DL	3/4	7/8	1 1/2	2	2 1/4	2 1/8	1 5/8	7/8	0
4. RIGHT GIRDER INTERIOR WEB	CONCRETE DECK & PARAPET	5/8	5/8	1 1/8	1 3/8	1 1/2	1 1/2	1 1/8	5/8	0
	TOTAL DL	3/4	7/8	1 1/2	1 7/8	2	2	1 1/2	7/8	0
5. RIGHT GIRDER FASCIA WEB	CONCRETE DECK & PARAPET	1/2	5/8	1	1 3/8	1 1/2	1 3/8	1 1/8	5/8	0
	TOTAL DL	3/4	7/8	1 3/8	1 3/4	2	1 7/8	1 1/2	7/8	0

LEGEND

D1-8 INTERMEDIATE ELEVATION POINT (DIAPHRAGM LOCATION).

IN THIS EXAMPLE, '1' IS THE FIELD SECTION NUMBER AND '8' IS THE DIAPHRAGM NUMBER WITHIN THIS FIELD SECTION.

NOTES

1. SEE SHEET 4 FOR GENERAL NOTES. SEE SHEETS 19 AND 20 FOR ADDITIONAL STEEL FABRICATION NOTES.
2. POSITIVE DEFLECTIONS ARE DOWNWARD.
3. POSITIVE CAMBER IS UPWARD RELATIVE TO A CHORD LINE JOINING THE FIELD SECTION ENDPOINTS.
4. ALL TABULATED VALUES ARE IN DECIMALS OF A FOOT.
5. T.S. ELEVATIONS ARE TO TOP OF STEEL (SPLICE AND COVER PLATE THICKNESS, IF APPLICABLE, ARE ACCOUNTED FOR) AND THEY ARE FOR THE MATERIAL AS ERECTED. THE ELEVATION OF THE TOP STEEL AT THE FIELD SPLICE PONTS SHALL BE CHECKED, AND CORRECTED, IF POSSIBLE, AFTER ERECTION AND BEFORE PERMANENTLY BOLTING THE DIAPHRAGMS IN PLACE.

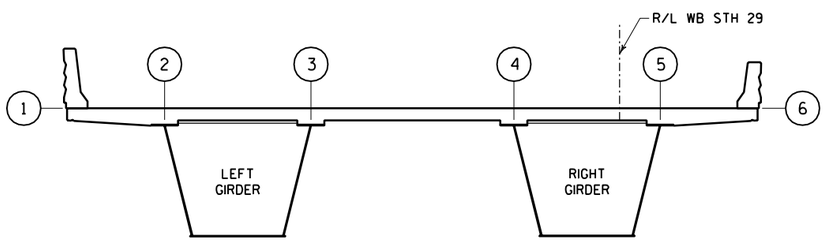

HORIZONTAL LOCATION KEY
(LOOKING UPSTATION)

8

8

NO.	DATE	REVISION	BY

STATE OF WISCONSIN
DEPARTMENT OF TRANSPORTATION
STRUCTURES DESIGN SECTION

STRUCTURE B-37-360-002

CONST. SPEC. 2003 | DRAWN BY RBH | PLANS CK'D. JZ

CAMBER AND DECK ELEVATIONS: FIELD SECTION #7

FILE=
SCALE =

STATE PROJECT NUMBER
1166-09-74

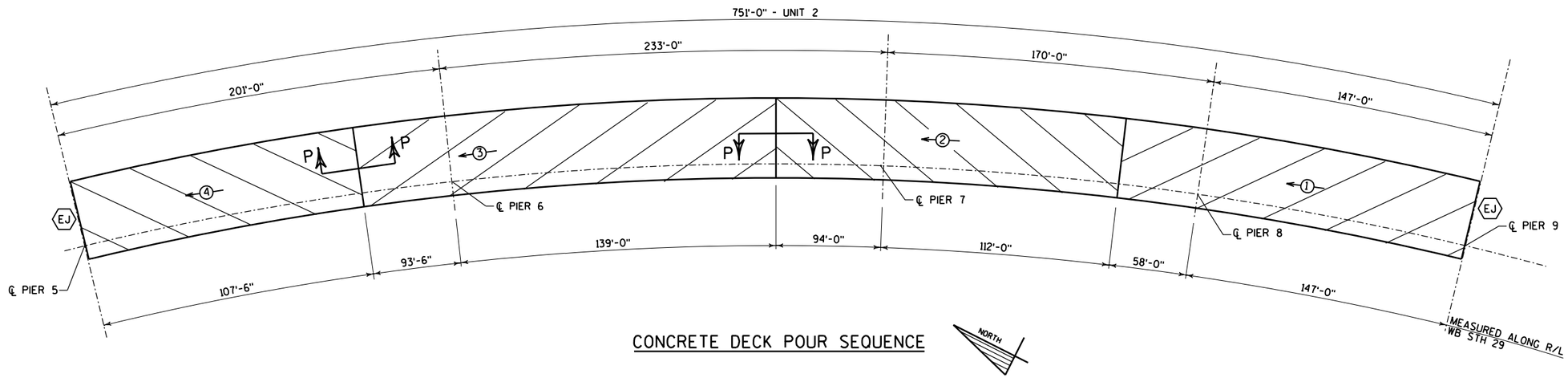

CONCRETE DECK POUR SEQUENCE

NOTES

1. SEE SHEET 4 FOR GENERAL NOTES.
2. SEE SHEETS 40 TO 43 FOR BLOCKOUTS AND OTHER DETAILS REQUIRED AT EXPANSION JOINT LOCATIONS.
3. DIMENSIONS ON THIS DRAWING ARE MEASURED ALONG THE ACTUAL PROFILE OF THE FINISHED EDGE OF DECK.
4. THE CONTRACTOR IS RESPONSIBLE FOR SCHEDULING AND COORDINATING DECK POURS TO BEST SUIT THE MEANS AND METHODS AVAILABLE, SUBJECT TO THE FOLLOWING RESTRICTIONS.
5. CONTRACTOR MAY PLACE THE DECK CONTINUOUSLY FROM EITHER END OF THE STRUCTURE. IF MORE THAN ONE POUR IS REQUIRED, BULKHEADS BETWEEN POURS SHALL BE POSITIONED AT THE LOCATIONS IDENTIFIED ON THIS PLAN - SEE LEGEND.
6. CONTROL POUR SEQUENCE AND PLACEMENT RATE TO ENSURE THAT BEFORE THE CONCRETE IN ANY 'PIER' AREA REACHES THE INITIAL SET CONDITION, THE CONCRETE IN BOTH ADJACENT 'SPAN' AREAS IS ALREADY BE IN PLACE.
7. PREVENT UPLIFT AT ALL BEARING LOCATIONS. NOTE THAT ANY POUR SEQUENCE THAT REQUIRES POURING THE FIRST INTERIOR SPAN BEFORE THE ADJACENT END SPAN (SUCH AS THE END-TO-END SEQUENCES REFERRED TO ABOVE) WILL RESULT IN UPLIFT FORCES AT THE EXPANSION END BEARINGS.
8. DEPOSIT FRESH CONCRETE FIRST IN THE AREA BETWEEN THE GIRDERS FOLLOWED BY THE OVERHANG AREA TO THE INSIDE OF THE CURVE AND THEN BY THE OVERHANG AREA TO THE OUTSIDE OF THE CURVE.
9. CONTROL THE PLACEMENT TO ENSURE THAT THE FURTHEST PROGRESS OF FRESH CONCRETE VARIES BY NO MORE THAN 10 FEET ACROSS THE WIDTH OF THE DECK.
10. PREVIOUSLY PLACED DECK CONCRETE MUST HAVE ATTAINED A MINIMUM COMPRESSIVE STRENGTH OF 3000 PSI BEFORE THE AREAS IMMEDIATELY ADJACENT MAY BE PLACED.
11. FOLLOW PROCEDURES OUTLINED IN THE SPECIAL PROVISIONS FOR PROMPTLY FOGGING, COVERING AND CURING FRESHLY PLACED CONCRETE.
12. STAY-IN-PLACE METAL FORMS WILL ONLY BE PERMITTED INSIDE THE BOX GIRDERS - THE OVERHANGS AND THE ZONE BETWEEN THE GIRDERS SHALL USE CONVENTIONAL TEMPORARY FORMS.
13. THE USE OF STAY-IN-PLACE METAL FORMS IS OPTIONAL - CONVENTIONAL FORMWORK MAY BE USED INSIDE THE BOXES BUT MUST BE COMPLETELY REMOVED.
14. DESIGN CONNECTION BETWEEN STAY-IN-PLACE METAL FORMS AND GIRDER FLANGES TO PROVIDE ADJUSTMENT OF VERTICAL POSITION BASED ON THE ACTUAL HAUNCH HEIGHT REQUIRED. WELDED DETAILS SHALL BE FATIGUE STRESS CATEGORY C OR BETTER.
15. ALL STEEL SHALL BE SECURED IN ITS PROPER PLACE & ELEVATION PRIOR TO ANY CONCRETE PLACEMENT.

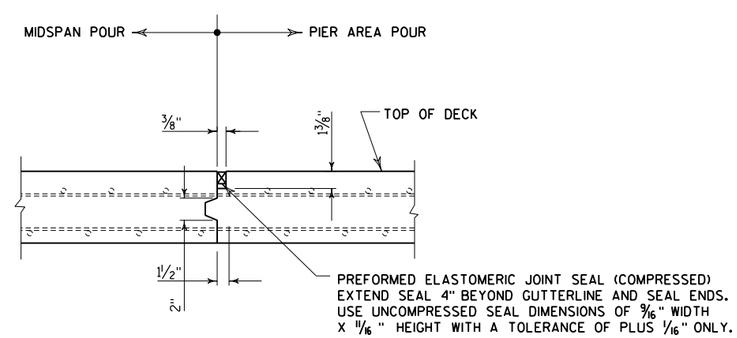

SECTION P-P

POUR AREA IDENTIFIERS. NUMBER INDICATES THE POUR SEQUENCE IN THE DIRECTION SHOWN.

EJ EXPANSION JOINT LOCATION.

NO.	DATE	REVISION	BY

STATE OF WISCONSIN
DEPARTMENT OF TRANSPORTATION
STRUCTURES DESIGN SECTION

STRUCTURE B-37-360-002

CONST. SPEC.	2003	DRAWN BY	RBH	PLANS CK'D.	JZ

DECK POUR SEQUENCE

SHEET 39 OF 46
399

FILE =
SCALE =

8

8

STATE PROJECT NUMBER

1166-09-74

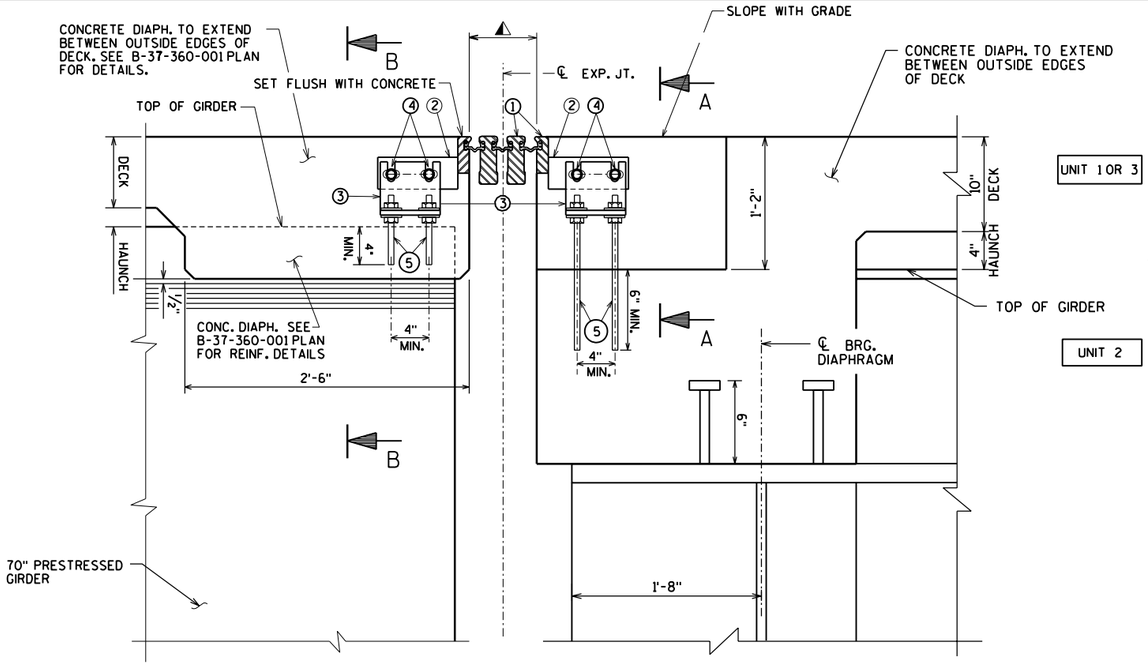

JOINT @ PIER 5
JOINT @ PIER 9 OPP. HAND

NORMAL TO ℄ SUBSTRUCTURE

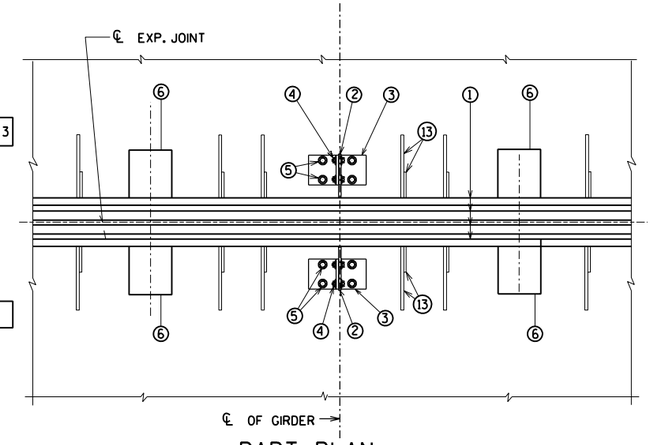

PART PLAN

NOTE:
FABRICATOR WILL DESIGN EACH JOINT DEPENDING ON THE CONDITIONS AND THE DESIGN CRITERIA USED BY THE SUPPLIER. FABRICATION DRAWING IS SUBJECT TO THE APPROVAL OF THE BUREAU OF STRUCTURES.

SUPPORT BOXES ARE SHOWN FOR GENERAL INFORMATION AND LOCATION MAY VARY ACCORDING TO FABRICATOR DESIGN.

NOTES

MOVEMENT CAPACITY AND NUMBER OF SEALS SHALL BE AS FOLLOWS:
PIER 5 = 7 INCHES/4 SEALS
PIER 9 = 5 INCHES/3 SEALS

ONE FIELD SPLICE PERMITTED IN STEEL EXTRUSIONS. DETAILS SHALL BE SUBMITTED FOR APPROVAL. NO SPLICING PERMITTED IN NEOPRENE GLAND.

AFTER FABRICATION, BUT BEFORE SHIPMENT, STRAIGHTEN STEEL EXTRUSIONS SUCH THAT THEY SHALL BE FREE FROM WARP, TWIST & SWEEP.

NO EXPANSION JOINT PROTRUSIONS PERMITTED ABOVE ROADWAY SURFACE OR ON PARAPET ROADWAY FACE.

THE EXPANSION JOINT SEALS SHALL BE PLACED, BONDED & SEALED AS RECOMMENDED BY THE MANUFACTURER. FORM WORK SHALL BE PLACED BETWEEN THE SUPPORT BOXES TO PREVENT CONCRETE INTRUSION INTO THE SUPPORT BOX. A TECHNICAL REPRESENTATIVE OF THE MANUFACTURER SHALL BE PRESENT DURING INSTALLATION. PRIOR TO SETTING THE JOINT ASSEMBLY INTO POSITION, THE PROJECT ENGINEER SHALL DETERMINE THE PROPER JOINT OPENING.

EXPANSION JOINT EXTRUSIONS SHALL BE FABRICATED TO CONFORM TO ROADWAY CROWN & GRADE. FABRICATOR SHALL PROVIDE MEANS OF KEEPING GALVANIZED EXTRUSIONS CLEAN & SMOOTH DURING SHIPMENT AND PRIOR TO APPLYING LUBRICANT ADHESIVE FOR NEOPRENE GLAND INSTALLATION.

SANDBLAST BARS, PLATES, WT-SECTION, ANCHORAGE LOOP, & EXTRUSIONS AFTER FABRICATION IN ACCORDANCE WITH SSPC SP. #6 "COMMERCIAL BLAST CLEANING". AFTER BLAST CLEANING, THIS ASSEMBLY SHALL BE HOT DIPPED GALVANIZED.

COST OF FURNISHING & PLACING OF THE EXPANSION JOINTS COMPLETE WITH PARAPET PLATES SHALL BE PAID FOR UNDER THE PRICE BID FOR "EXPANSION DEVICE MODULAR B-37-360-002".

BAR STEEL REINF. IN DECK AND CONC. DIAPHRAGM SHALL BE RESPACED AS NECESSARY TO ALLOW PLACEMENT OF JOINT ASSEMBLY.

JOINT MANUFACTURER SHALL INFORM AND PROVIDE NECESSARY DETAILS TO THE PRESTRESSED GIRDER FABRICATOR, WHEN FORM-OUT OF THE TOP FLANGE IS REQ'D. TO ALLOW PLACEMENT OF SUPPORT BOX ASSEMBLY.

LEGEND

1. MODULAR EXPANSION JOINT DEVICE.
2. 1/2" PLATE, ONE PER GIRDER MIN. PROVIDE 2 - 1" X 2" MIN. SLOTTED HOLES PLACED HORIZONTALLY FOR NO. 4.
3. WT 6 X 29 (OR EQUIVALENT BUILT UP T-SECTION). ONE PER GIRDER. PROVIDE 2 - 1" X 3" MIN. SLOTTED HOLES PLACED VERTICALLY IN WEB OF WT FOR BOLTS NO. 4.
4. 3/4" Φ HIGH STRENGTH BOLTS WITH NUTS & WASHERS. (A325 GALV.)
5. 3/4" Φ THREADED ROD WITH 2 NUTS & WASHERS. GROUT THREADED ROD INTO FIELD DRILLED HOLES. (GALV.)
6. SUPPORT BOX ASSEMBLY FOR SUPPORT BAR (SPA. PER MANUFACTURER). SPACE TO MISS GIRDERS. FABRICATE BOX FROM 1/2" PLATES.
13. 1/2" PLATE WITH 5/8" DIA. LOOP ANCHOR FABRICATED AS SHOWN, SPACED AT MANUFACTURER'S SPECIFICATIONS.

◭ MANUFACTURER'S RECOMMENDED JOINT OPENING BASED ON THE TEMPERATURE ON THE DAY OF PLACEMENT PER TEMPERATURE TABLE.

■ (2) L-SHAPED #5 BARS @ 1'-0" SPA. (COATED) ANCHOR INTO PLACE W/ EPOXY RESIN AFTER MODULAR JOINT IS IN POSITION. FOLLOW STD. SPEC. FOR CONCRETE MASONRY ANCHOR, TYPE S WITH A MIN. PULLOUT CAPACITY OF 20 KIPS AND EMBEDM'T OF 1'-0".

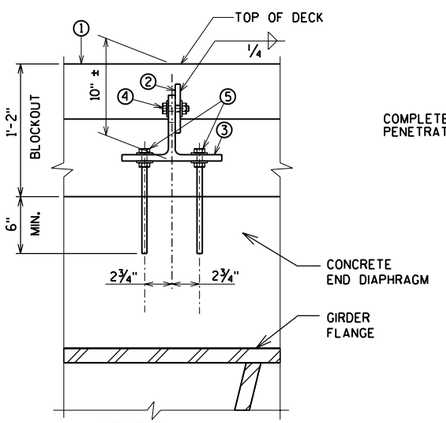

SECTION A-A

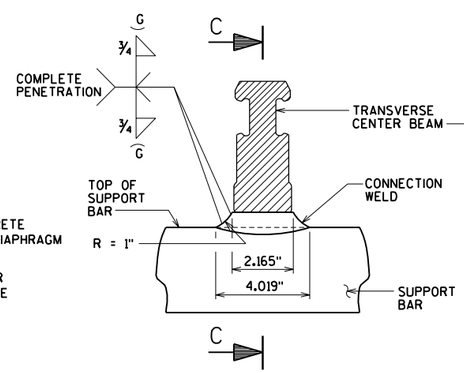

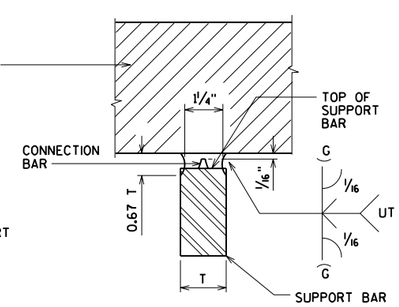

SECTION C-C

MODULAR EXPANSION JOINT CONNECTION DETAIL AND WELD SPECIFICATION

TEMP. TABLE

TEMPERATURE TABLE FOR SETTING JOINT OPENINGS TO BE DETERMINED BY JOINT MANUFACTURER WITH THE FOLLOWING DESIGN DATA:

1. 7/16" OF MOVEMENT PER 10° F AT PIER 5
   3/8" OF MOVEMENT PER 10° F AT PIER 9
2. MEDIAN TEMPERATURE OF 45° F
3. TEMP. RANGE IN TABLE FROM (- 5° F) TO (+ 95°F)
4. ADJUST INITIAL JOINT OPENINGS BY A REDUCTION OF 1/2" IN., WHICH ACCOUNTS FOR SHRINKAGE (CREEP) OF THE SUPERSTRUCTURE OVER TIME, TO PRODUCE FINAL JOINT OPENINGS FOR TABLE.

A TABLE OF JOINT OPENINGS BASED ON ABOVE DATA SHALL BE SUBMITTED TO THE ENGINEER FOR APPROVAL.

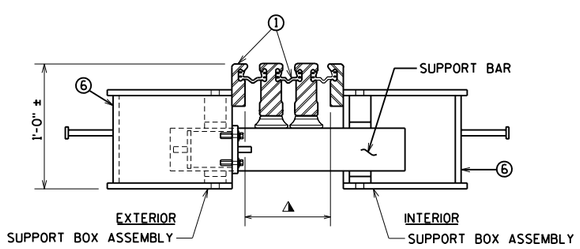

JOINT DETAIL

AT SUPPORT BAR & SUPPORT BOX ASSEMBLY

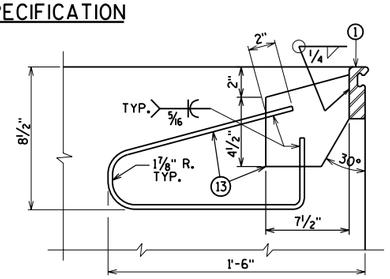

ANCHORAGE DETAIL

PLACE ADJACENT TO SUPPORT BOXES IN DECK @ CONC. DIAPH.

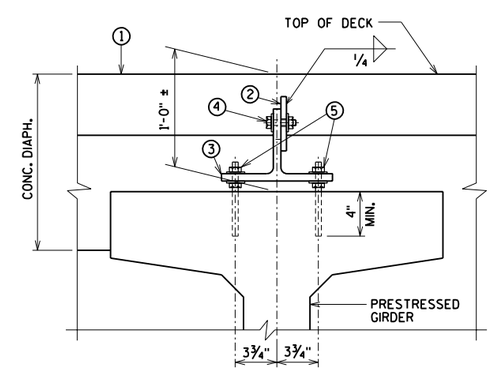

SECTION B-B

NO.	DATE	REVISION	BY

STATE OF WISCONSIN
DEPARTMENT OF TRANSPORTATION
STRUCTURES DESIGN SECTION

STRUCTURE B-37-360-002

CONST. SPEC.	2003	DRAWN BY	RBH	PLANS CK'D.	JZ

MODULAR EXPANSION JOINT DETAILS

SHEET 40 OF 46
400

FILE =
SCALE =

8

8

STATE PROJECT NUMBER

1166-09-74

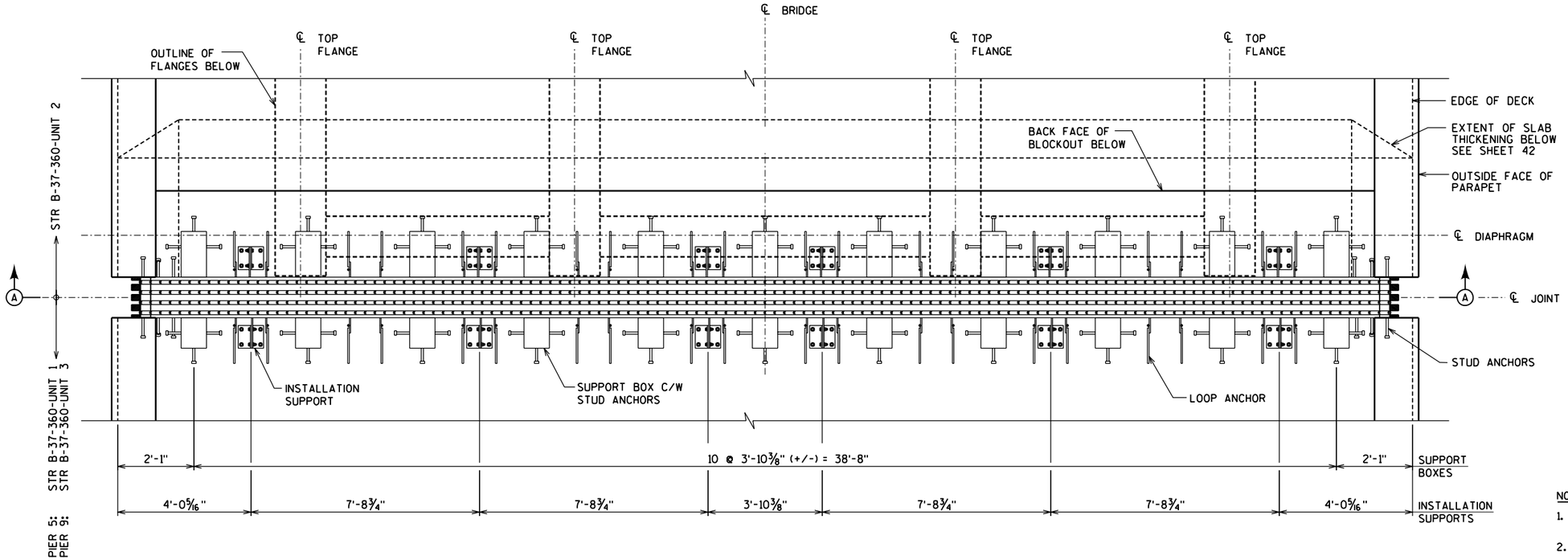

PLAN

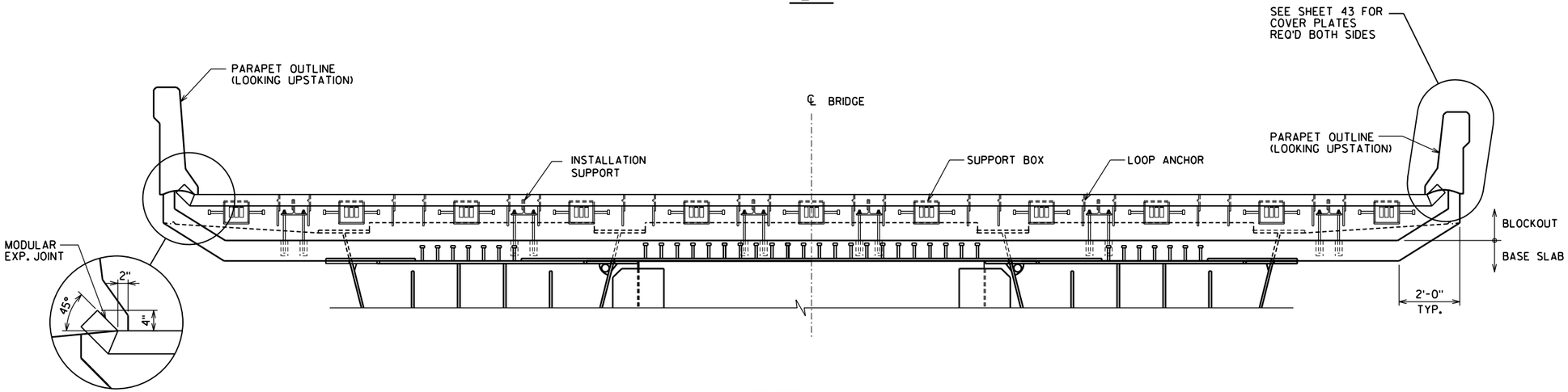

SECTION A-A

LOOKING UPSTATION

NOTES

1. SEE SHEET 28 FOR END DIAPHRAGM DETAILS.
2. SEE SHEET 14 FOR SECTIONS THROUGH EXPANSION JOINT REGIONS.
3. SEE SHEET 42 FOR CONCRETE REINFORCEMENT IN EXPANSION JOINT REGIONS.
4. SEE SHEET 40 FOR DETAILS OF THE MODULAR EXPANSION DEVICES INCLUDING REQUIRED MOVEMENT CAPACITY, NUMBER OF SEALS, ANCHORAGES AND TEMPORARY SUPPORTS.
5. SEE SHEET 43 FOR DETAILS OF THE PARAPET COVER PLATES.

   COVER PLATES ARE REQUIRED AT ALL PARAPETS BUT FOR CLARITY ARE NOT SHOWN ON THIS DRAWING.
6. SUPPORT BOX SIZE AS SHOWN IS APPROXIMATE ONLY AND IS BASED ON A 4-SEAL EXPANSION DEVICE. DIMENSIONS WILL VARY FOR DIFFERENT JOINT SIZES AND MANUFACTURERS.
7. EXPANSION DEVICE DETAILS SHOWN ON THIS DRAWING (INCLUDING SIZE AND SPACING OF SUPPORT BOXES, LOOP ANCHORS AND INSTALLATION SUPPORTS) ARE PICTORIAL ONLY.
8. ALL CONSTRUCTION SHALL BE CARRIED OUT USING THE APPROVED EXPANSION JOINT SHOP DRAWINGS ONLY.

8

8

NO.	DATE	REVISION	BY

STATE OF WISCONSIN
DEPARTMENT OF TRANSPORTATION
STRUCTURES DESIGN SECTION

STRUCTURE B-37-360-002

CONST. SPEC.	2003	DRAWN BY	RBH	PLANS CK'D.	JZ

TYPICAL EXPANSION JOINT LAYOUT

SHEET 41 OF 46

401

FILE =
SCALE =

STATE PROJECT NUMBER
1060-05-75
1166-09-74

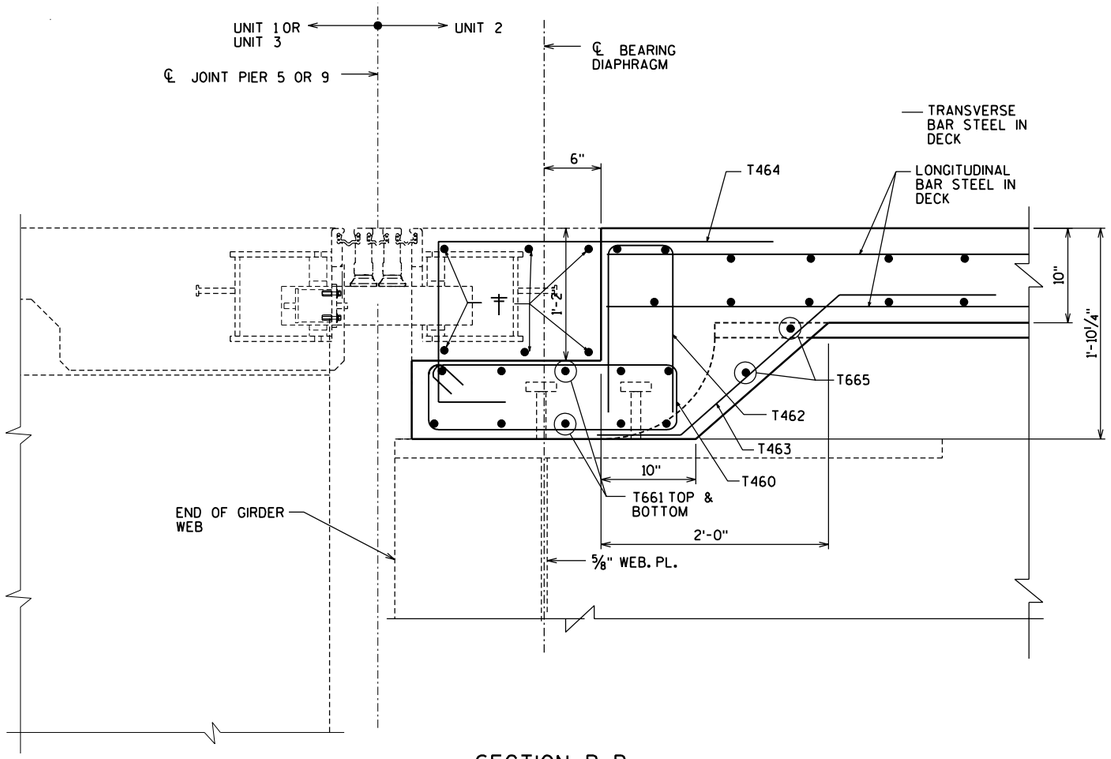

SECTION B-B

(PIER 5 SHOWN, PIER 9 OPP. HAND)

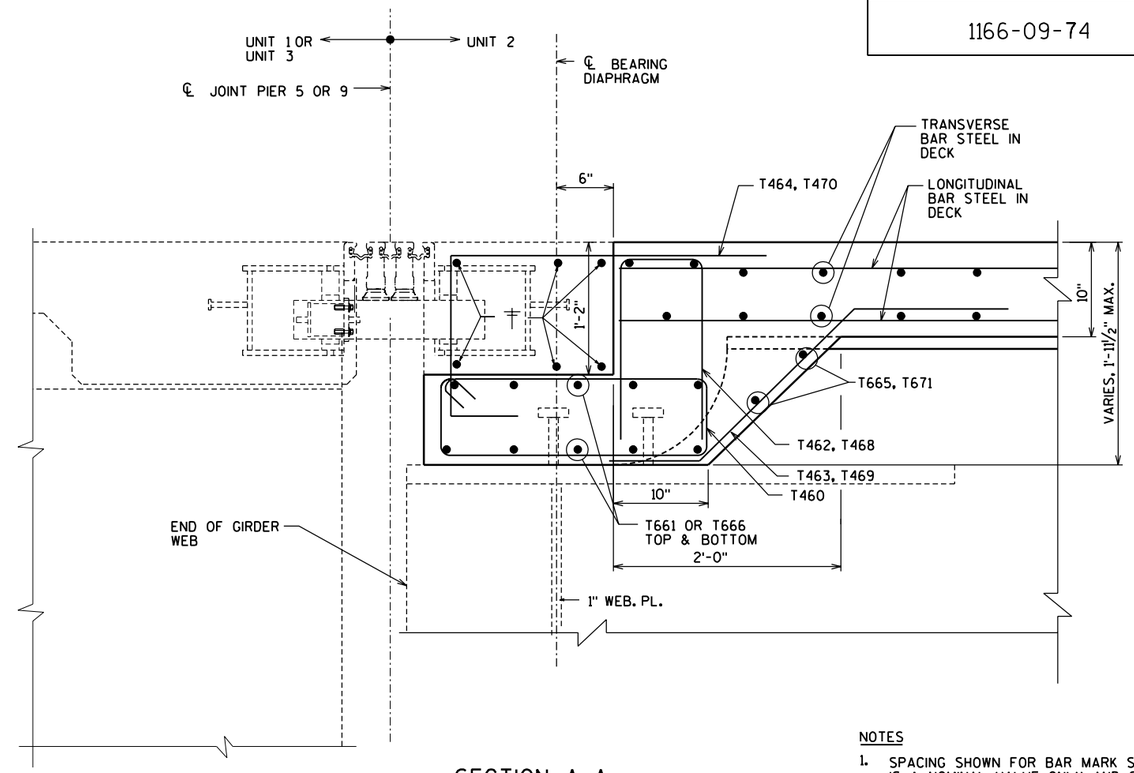

SECTION A-A

(PIER 5 SHOWN, PIER 9 OPP. HAND)

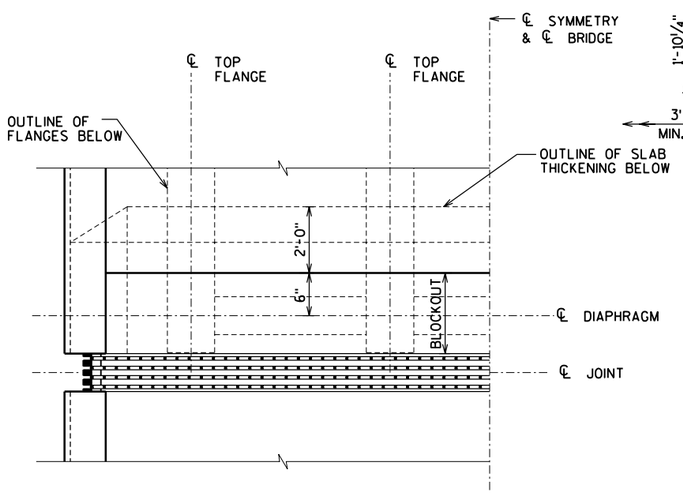

PARTIAL PLAN

NOT TO SCALE

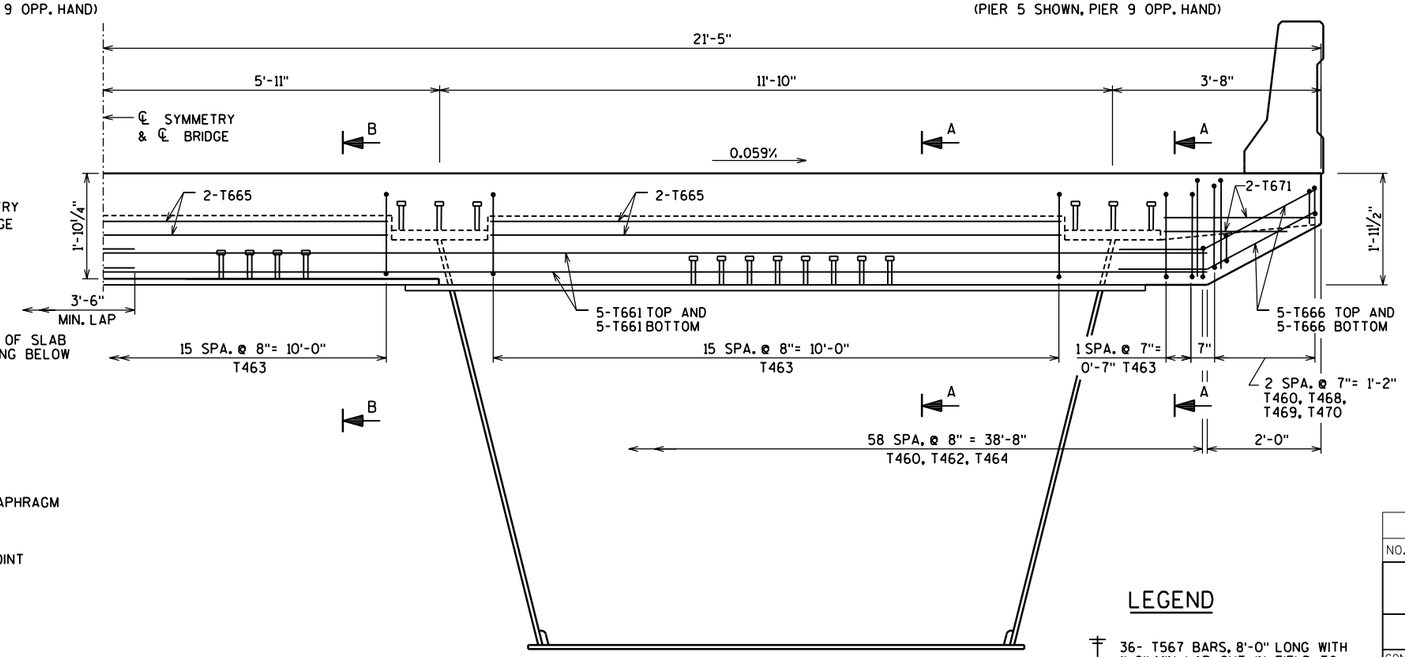

SECTION THRU DECK AT END DIAPHRAGMS

(DECK REINFORCEMENT NOT SHOWN FOR CLARITY)
LOOKING UPSTATION

LEGEND

† 36- T567 BARS, 8'-0" LONG WITH 1'-0" MIN. LAP. CUT IN FIELD TO CLEAR JOINT SUPPORT AS REQ'D.

NOTES

1. SPACING SHOWN FOR BAR MARK S04022 IS A NOMINAL VALUE ONLY AND SHALL BE ADJUSTED TO SUIT THE SELECTED EXPANSION DEVICE.

   PREPARE PLACING DIAGRAMS FOR THESE BARS AFTER THE EXPANSION JOINTS HAVE BEEN DETAILED.

   PROVIDE SPECIFIC OFFSETS FOR EACH BAR TO MAINTAIN THE TOTAL NUMBER OF BARS AND AVOID CONFLICT WITH THE EXPANSION DEVICE, LOOP ANCHORS AND INSTALLATION SUPPORTS.
2. SEE SHEET 28 FOR END DIAPHRAGM DETAILS.
3. SEE SHEET 41 FOR PLAN LAYOUT OF EXPANSION JOINTS.
4. SEE SHEET 40 FOR DETAILS OF THE MODULAR EXPANSION DEVICE.
5. EXPANSION JOINT DETAILS SHOWN ON THIS DRAWING ARE PICTORIAL ONLY.
6. ALL SIZE, SPACING AND DETAIL INFORMATION SHALL BE TAKEN ONLY FROM THE APPROVED EXPANSION JOINT SHOP DRAWINGS.
7. SPACE REINFORCEMENT TO MISS LOOP ANCHORS AND SUPPORT BOX ASSEMBLIES.

NO.	DATE	REVISION	BY

STATE OF WISCONSIN
DEPARTMENT OF TRANSPORTATION
STRUCTURES DESIGN SECTION

STRUCTURE B-37-360-002

CONST. SPEC.	2003	DRAWN BY	RBH	PLANS CK'D.	JZ

REINFORCING AT EXPANSION JOINT

SHEET 42 OF 46
402

8

8

FILE =
SCALE =

STATE PROJECT NUMBER

1166-09-74

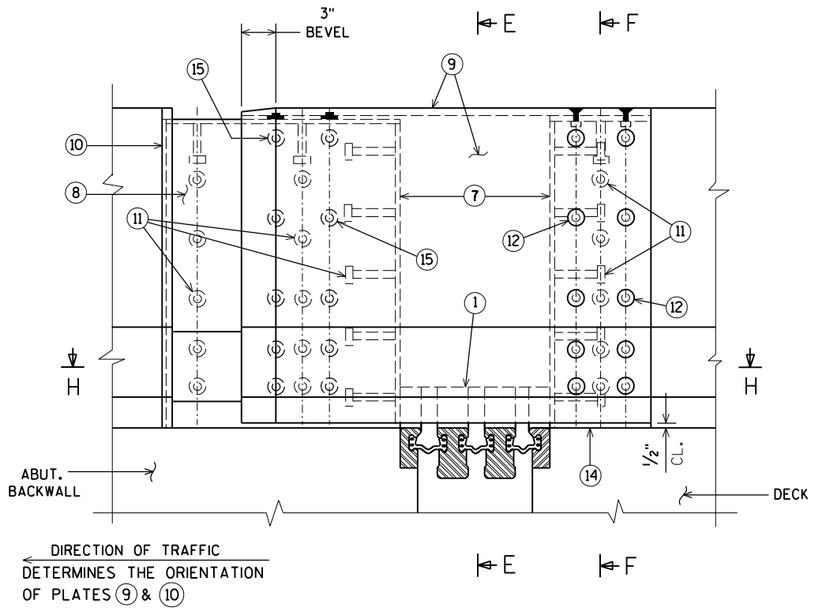

ELEVATION OF PARAPET LF/HF

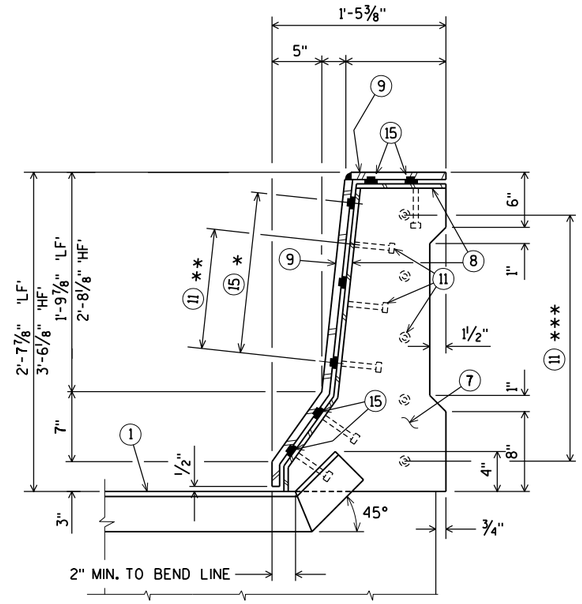

SECTION E-E

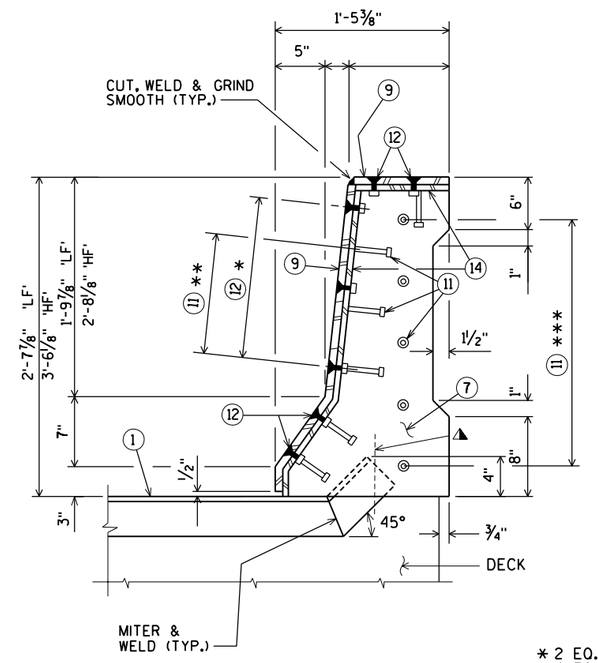

SECTION F-F

* 2 EQ. SPA. (LF)
4 EQ. SPA. (HF)

** 2 EQ. SPA. (LF)
4 EQ. SPA. (HF)

*** 4 EQ. SPA. (LF)
6 EQ. SPA. (HF)

NOTES

7. 3/8" BULKHEAD PLATE. WELD TO NO. 1, NO. 8 AND NO.14.
8. INSIDE PLATE. FABRICATE FROM 3/8" PLATE.
9. OUTSIDE PLATE. FABRICATE FROM 5/8" PLATE.
10. 7/8" SQUARE BAR. WELD TO NO. 8 AS SHOWN.
11. 3/4" Φ X 4" LONG STUDS. WELD TO NO. 8 , NO. 7 & NO. 14 AS SHOWN.
12. 3/4" Φ X 2" STAINLESS STEEL FLAT CTSK. SLOTTED HEAD CAP SCREWS. RECESS 1/16" BELOW PLATE SURFACE.
13. 1/2" PLATE WITH 5/8" Φ LOOP ANCHOR FABRICATED AS SHOWN. SPACED AT MANUFACTURER'S SPEC.
14. INSIDE PLATE. FABRICATE FROM 5/8" PLATE
15. ADIPRENE BUTTON. SEE DETAIL. SET IN OUTSIDE PLATE.

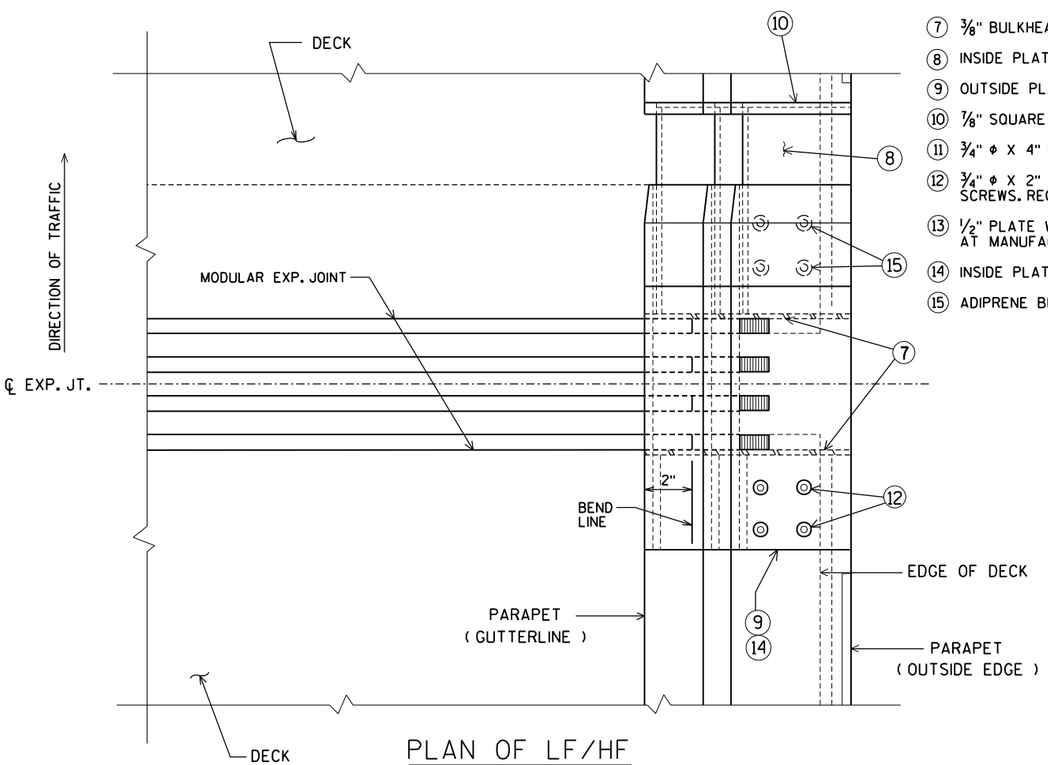

PLAN OF LF/HF

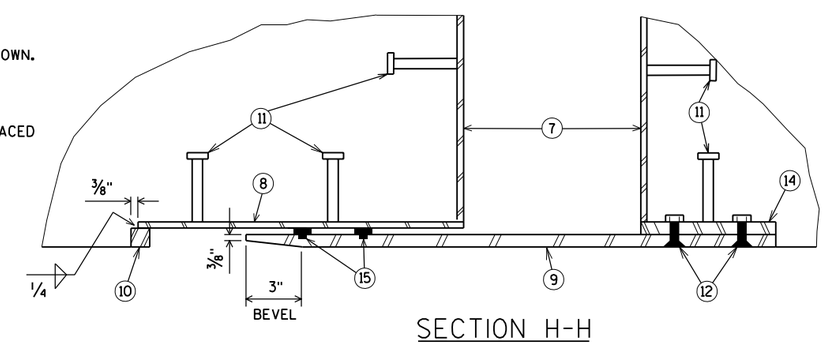

SECTION H-H

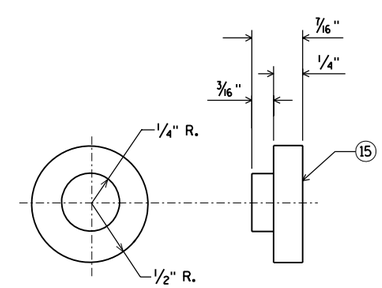

ADIPRENE BUTTON DETAIL

NO.	DATE	REVISION	BY

STATE OF WISCONSIN
DEPARTMENT OF TRANSPORTATION
STRUCTURES DESIGN SECTION

STRUCTURE B-37-360-002

CONST. SPEC.	2003	DRAWN BY	RBH	PLANS CK'D.	JZ

EXPANSION JOINT COVER PLATES

SHEET 43 OF 46
403

FILE=
SCALE =

8

8

STATE PROJECT NUMBER

1166-09-74

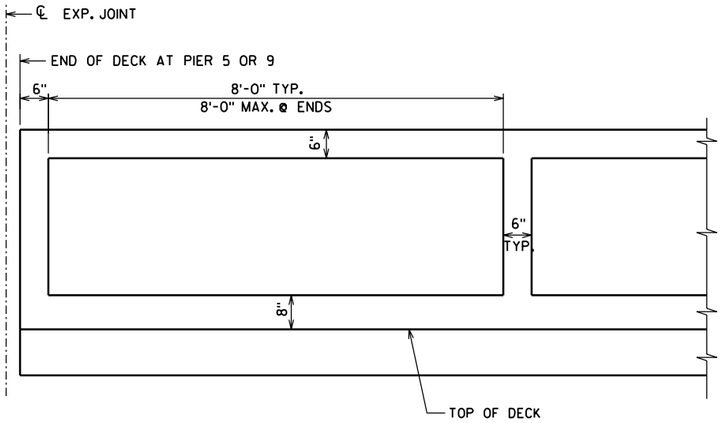

OUTSIDE ELEVATION OF 'HF' PARAPET

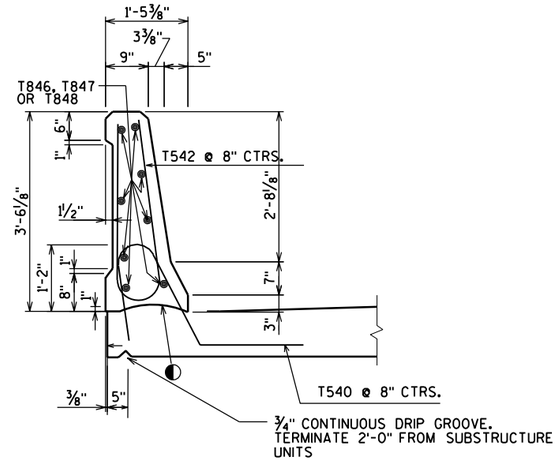

SECTION THRU 'HF' PARAPET

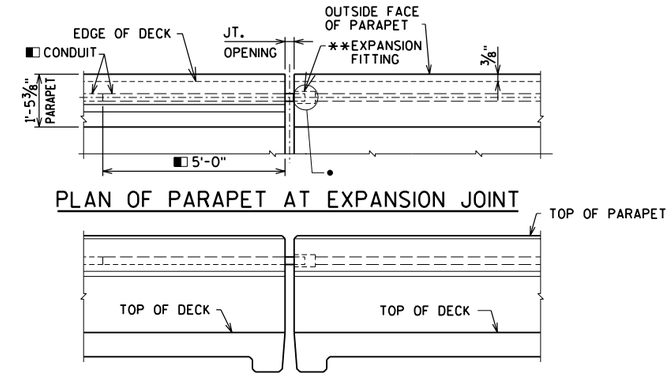

PLAN OF PARAPET AT EXPANSION JOINT

OUTSIDE ELEVATION OF PARAPET AT EXPANSION JOINT

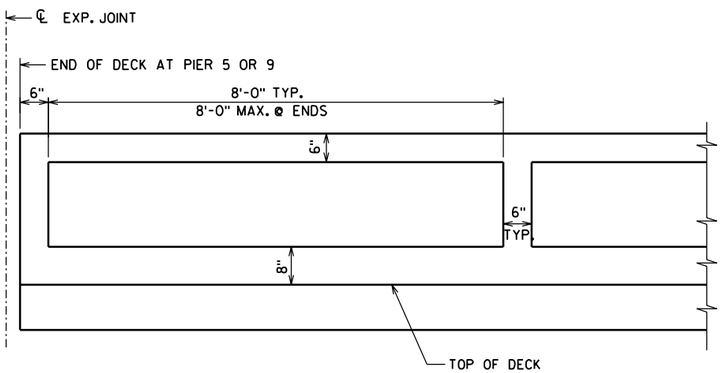

OUTSIDE ELEVATION OF 'LF' PARAPET

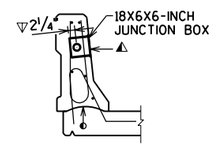

SECTION THRU PARAPET

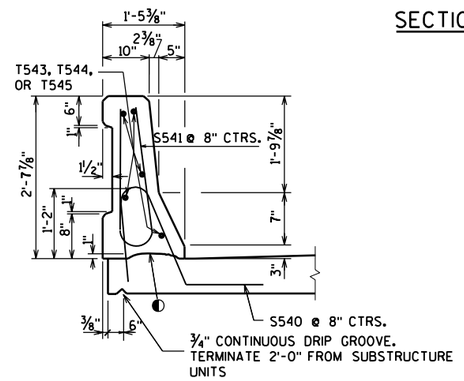

SECTION THRU 'LF' PARAPET

THRU PARAPET ON BRIDGE

- ● POSITION MOVABLE END OF CONDUIT INSIDE EXPANSION FITTING, SUCH THAT IT WILL HAVE THE SAME ALLOWANCE FOR MOVEMENT (EXPANSION/CONTRACTION) AS THE EXPANSION DEVICE SET IN PLACE IN THE DECK BELOW IT. TAKE CARE TO INSTALL EXPANSION FITTING AND CONDUIT EXACTLY PARALLEL TO BRIDGE MOVEMENT.
- ◐ CONSTR. JT. STRIKE OFF AS SHOWN
- ◧ USE 2"ϕ RIGID NONMETALLIC CONDUIT EXCEPT AT EXPANSION FITTING. AT EXPANSION FITTING USE RIGID METALLIC CONDUIT 5'-0" INTO PARAPET ON EACH SIDE OF JOINT
- ◭ CUT OUT ± 1" OF GASKET AT BOTTOM OF JUNCTION BOX COVER TO ALLOW FOR DRAINAGE.
- ▽ LOCATION OF CONDUIT IS MEASURED FROM OUTSIDE EDGE OF JUNCTION BOX.

NOTES

ELECTRICAL BID ITEMS, LISTED BELOW, ARE TO BE LOCATED IN THE SOUTH SIDE PARAPET ONLY, FOR FUTURE USE.
"JUNCTION BOXES 18X6X6-INCH", EACH.
"CONDUIT RIGID NONMETALLIC SCHEDULE 80 2-INCH"
"CONDUIT RIGID METALLIC 2-INCH"

EXPANSION FITTINGS, ANGLES AND ADAPTER FITTINGS TO BE INCIDENTAL TO "CONDUIT RIGID METALLIC 2-INCH".

WHEN CONNECTING NONMETALLIC CONDUIT TO METALLIC CONDUIT, ONLY ADAPTER FITTINGS U.L. LISTED FOR ELECTRICAL USE SHALL BE USED.

APPROVED MANUFACTURERS - JUNCTION BOXES:
SEE APPROVED MATERIAL LIST.

APPROVED MANUFACTURER OR EQUIVALENT - EXPANSION FITTING (SPECIFY SIZE ON PLANS):
O-Z/GEDNEY TYPE AX-200 AND BONDING JUMPER (4" TOTAL CONDUIT MOVEMENT).
O-Z/GEDNEY TYPE AX-8-200 AND BONDING JUMPER (8" TOTAL CONDUIT MOVEMENT).
O-Z/GEDNEY TYPE EX-200 WITH PBS-200-12S AND BONDING JUMPER (10" TOTAL CONDUIT MOVEMENT).

JUNCTION BOX REQUIREMENTS
USE A JUNCTION BOX TO KEEP A CONTINUOUS RUN OF CONDUIT (PULL LENGTH) TO A MAXIMUM OF 190 FT. AS DIRECTED BY THE ENGINEER.

** EXPANSION FITTING REQUIREMENTS
USE AN APPROVED EXPANSION FITTING AT EACH SEMI EXPANSION OR EXPANSION JOINT. RUN CONDUIT STRAIGHT THROUGH (WITHOUT A FITTING) AT EACH FIXED JOINT.

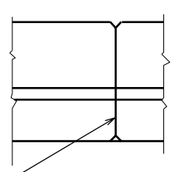

OPTIONAL CONSTRUCTION JOINTS IN THE PARAPETS MAY BE USED. RUN BAR REINF. THRU THE JOINT. LAP LONGIT. BARS A MIN. OF 1'-9" FOR LF, 3'-2" FOR HF PARAPET. MIN. JOINT SPACING OF 80'-0". DEFINE CONST. JOINT WITH A ¾" - 'V' GROOVE.

PLAN

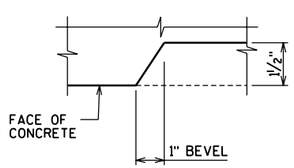

RECESS DETAIL FOR PARAPETS

8

8

NO.	DATE	REVISION	BY

STATE OF WISCONSIN
DEPARTMENT OF TRANSPORTATION
STRUCTURES DESIGN SECTION

STRUCTURE B-37-360-002

CONST. SPEC.	2003	DRAWN BY	RBH	PLANS CK'D.	JZ

PARAPET DETAILS

SHEET 44 OF 46
404

FILE =
SCALE =

STATE PROJECT NUMBER

1166-09-74

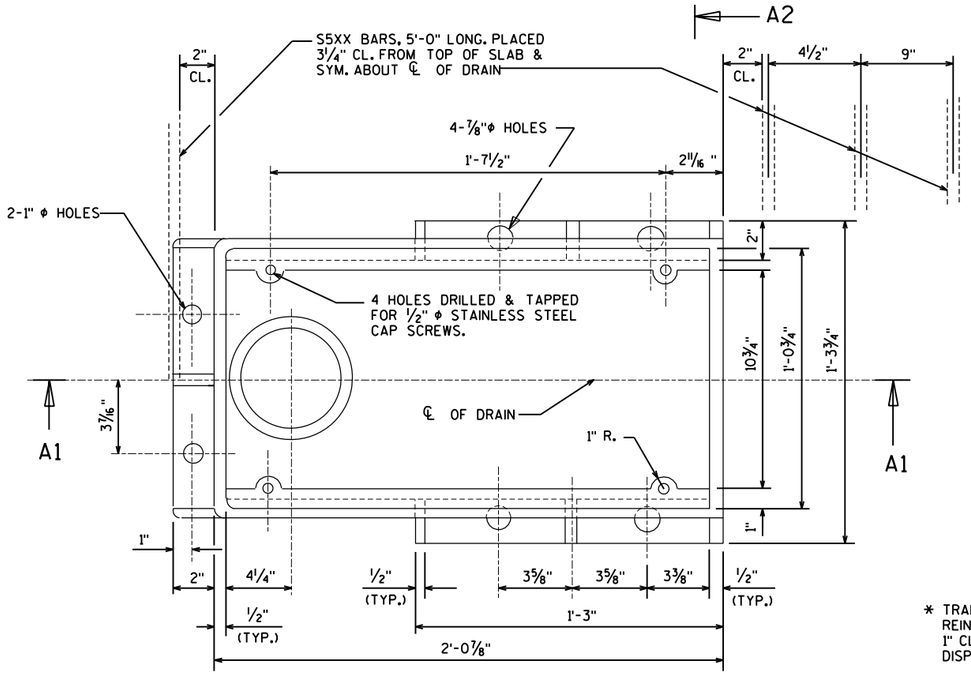

PLAN

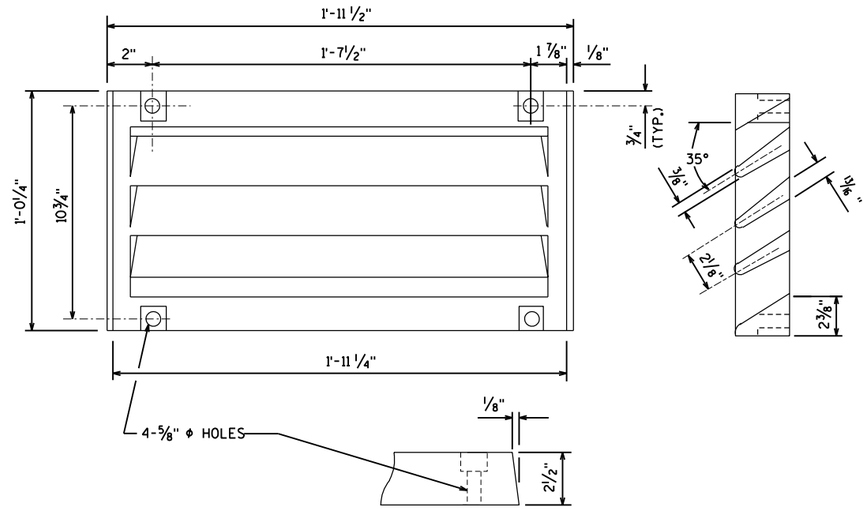

GRATE CASTING DETAIL

ATTACH GRATE TO FRAME FOR SHIPMENT

GENERAL NOTES

ALL MATERIAL FOR TYPE "GC" CASTING, EXCLUDING GRATE HOLD DOWN SCREWS, SHALL BE GRAY IRON CONFORMING TO ASTM A48, CLASS 30.

MATERIAL FOR BRACKETS SHALL CONFORM TO ASTM A36.

THE CONTRACTOR MAY PROPOSE AN ALTERNATE TYPE OF BRACKET. THE PROPOSED ALTERNATE DETAILS SHALL BE SUBMITTED AND SUBJECT TO THE APPROVAL OF THE ENGINEER.

FLANGED 6" DIA. DOWNSPOUTS SHALL BE EITHER CAST MATERIAL OR FIBERGLASS CONFORMING TO ASTM D2996, GRADE 1, CLASS A.

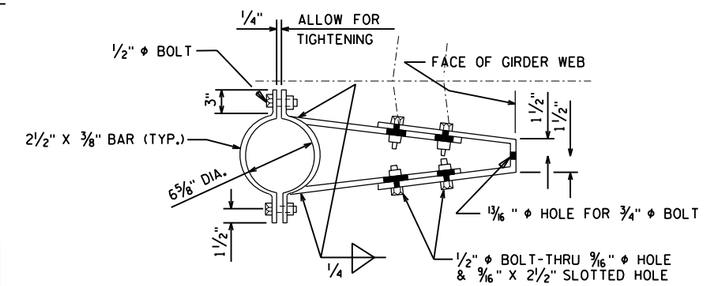

BRACKET DETAIL

* TRANS. AND LONGIT. SLAB BAR REINF. TO BE CUT A MAX. OF 1" CL. FROM DRAIN FRAME. DISPLACE BARS WHERE POSSIBLE.

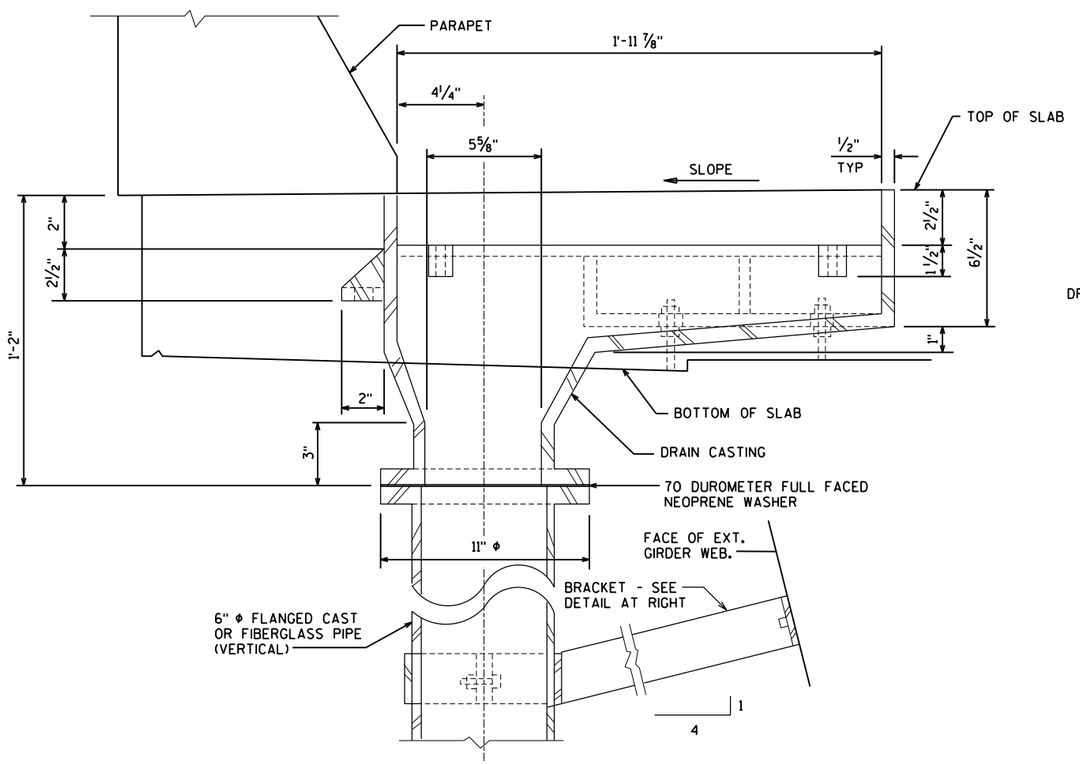

SECTION A1

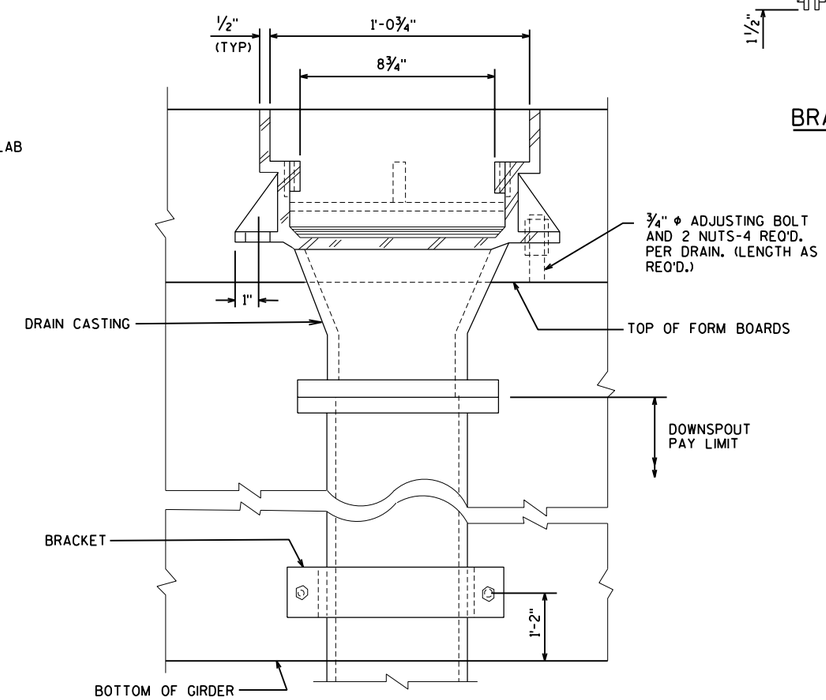

SECTION A2

FLOOR DRAIN LOCATIONS
STA. 4122+14.33
STA. 4125+28.93

NO.	DATE	REVISION	BY

STATE OF WISCONSIN
DEPARTMENT OF TRANSPORTATION
STRUCTURES DESIGN SECTION

STRUCTURE B-37-360-002

CONST. SPEC.	2003	DRAWN BY	RBH	PLANS CK'D.	JZ

FLOOR DRAIN TYPE "GC"

SHEET 45 OF 46

405

8

8

FILE=
SCALE =

STATE PROJECT NUMBER

1166-09-74

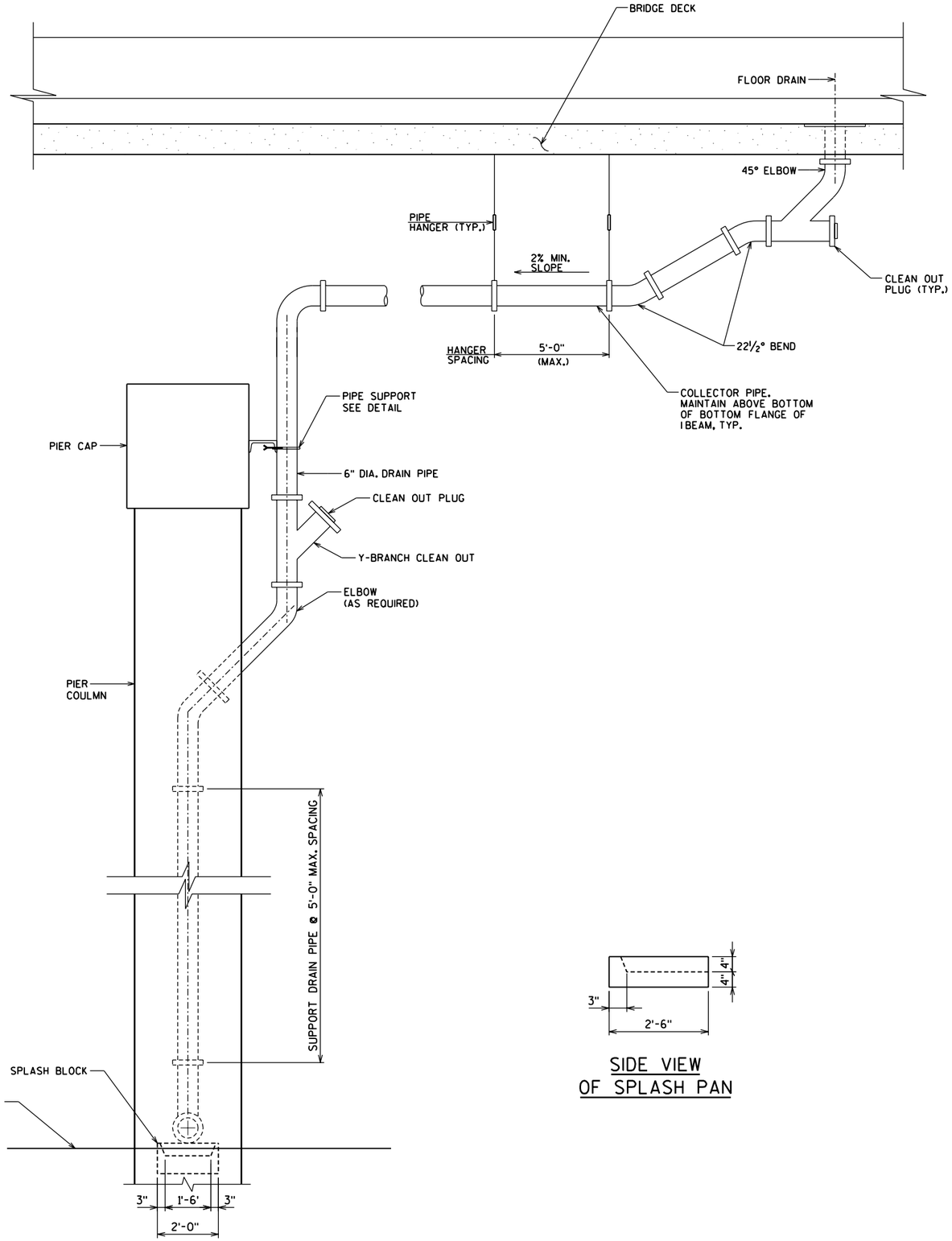

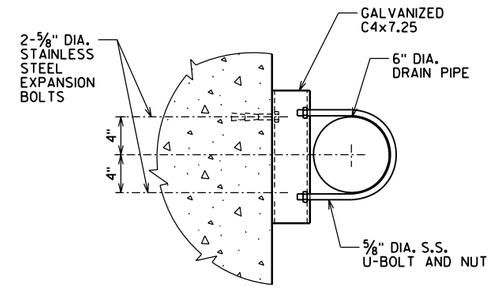

PLAN

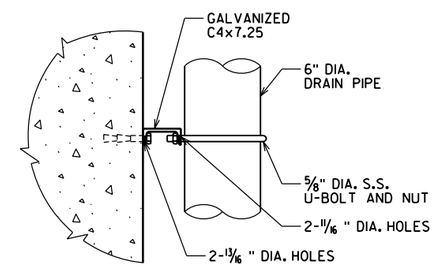

ELEVATION

PIPE SUPPORT DETAILS

SIDE VIEW OF SPLASH PAN

NOTES:

1. COLLECTOR AND DRAIN PIPES AND FITTINGS SHALL BE 6" SCHEDULE 80, PVC CONFORMING TO ASTM STANDARDS D1785, D2464 OR D2467.
2. ALL HARDWARE, HANGERS, SPLASH BLOCKS, STEEL, AND ANY OTHER MISCELLANEOUS ITEMS SHOWN ARE INCLUDED AND INCIDENTAL IN THE BID ITEM "DOWNSPOUT 6-INCH".

8

NO.	DATE	REVISION	BY

STATE OF WISCONSIN
DEPARTMENT OF TRANSPORTATION
STRUCTURES DESIGN SECTION

STRUCTURE B-37-360-002

CONST. SPEC.	2003	DRAWN BY	RBH	PLANS CK'D.	JZ

DOWNSPOUT

SHEET 46 OF 46
406

FILE =
SCALE =

STATE PROJECT NUMBER
1166-09-74

* PROVIDE FOR THRIE BEAM GUARD RAIL ATTACHMENT

⬡ INDICATES WING NUMBER

NOTE: SURFACE DRAIN ANCHORS REQUIRED ON WINGS.

FLOOR DRAINS SEE SHEET 25 FOR STATIONS

"DELINEATOR" AND "DELINEATOR BRACKETS" MOUNTED ON TOP OF THE PARAPET. SEE "SUPERSTRUCTURE PLAN"

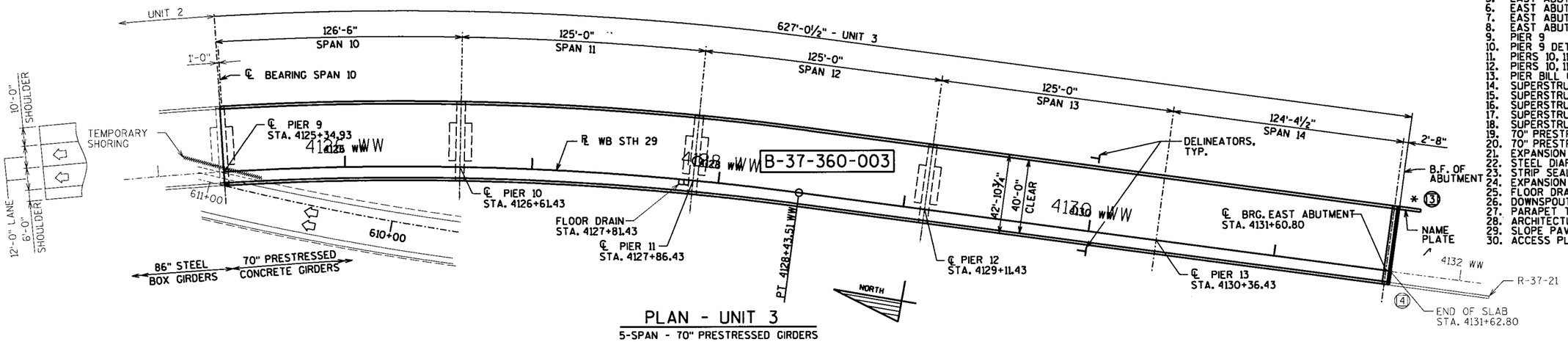

PLAN - UNIT 3

5-SPAN - 70" PRESTRESSED GIRDERS

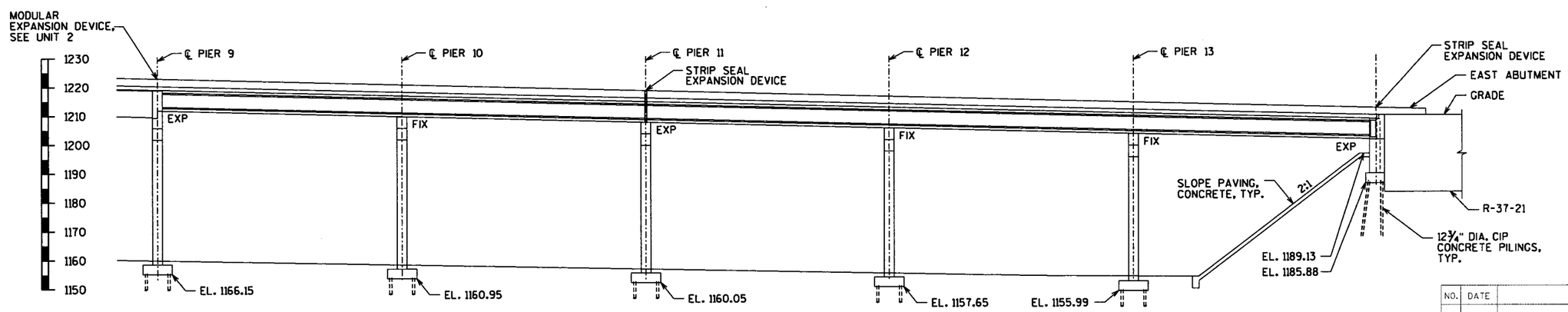

ELEVATION

LIST OF DRAWINGS

DESIGN DATA

LIVE LOAD:

DESIGN RATING; HS-25
INVENTORY RATING; HS-27
OPERATIONAL RATING; HS-55
MAXIMUM STANDARD PERMIT VEHICLE LOAD = 250 KIPS.

STRUCTURE IS DESIGNED FOR A FUTURE WEARING SURFACE OF 20 POUNDS PER SQUARE FOOT.

ULTIMATE DESIGN STRESSES:

CONCRETE MASONRY
SLAB — f'c = 4,000 P.S.I.
ALL OTHER — f'c = 3,500 P.S.I.

BAR STEEL REINFORCEMENT, GRADE 60 — fy = 60,000 P.S.I.
70" PRESTRESSED GIRDERS, CONCRETE MASONRY — f'c = 8,000 P.S.I.
STRANDS - 0.6" ϕ WITH ULTIMATE TENSILE STRENGTH OF 270,000 P.S.I.

FOUNDATION DATA

ABUTMENT TO BE SUPPORTED ON 12 3/4" DIA. CAST-IN-PLACE PILING DRIVEN TO A MINIMUM BEARING VALUE OF 70 TONS PER PILE. ESTIMATED 85 FEET LONG.

PIERS TO BE SUPPORTED ON 12 3/4" DIA. CAST-IN-PLACE PILING DRIVEN TO A MINIMUM BEARING VALUE OF 70 TONS PER PILE.
ESTIMATED 60 FEET LONG AT PIER 9
ESTIMATED 50 FEET LONG AT PIER 10
ESTIMATED 75 FEET LONG AT PIERS 11-13

TRAFFIC VOLUME

WB STH 29
A.D.T. (2010) = 7200
A.D.T. (2030) = 10,800
R.D.S.= 60 M.P.H.

USH 51
A.D.T. (2010) = 56,100
A.D.T. (2030) = 62,200
R.D.S.= 70 M.P.H.

SHERMAN STREET
A.D.T. (2010) = 8000
A.D.T. (2030) = 10,700
R.D.S.= 30 M.P.H.

NB USH 51 EXIT TO SHERMAN STREET
A.D.T. (2010) = 5300
A.D.T. (2030) = 7900
R.D.S.= 55 M.P.H.

WISCONSIN ALBERT M. LINDNER E-18992 BROOKFIELD, WIS. PROFESSIONAL ENGINEER
July 27, 2006

BUREAU OF STRUCTURES CONTACT = FINN HUBBARD (608) 266-8489
CONSULTANT CONTACT = ALBERT M. LINDNER (414) 259-1500

NO.	DATE	REVISION	BY

PLANS PREPARED BY: GRAEF ANHALT SCHLOEMER and Associates Inc. — ENGINEERS & SCIENTISTS, One Honey Creek Corporate Center, 125 South 84th Street, Suite 401, Milwaukee, WI 53214-1470

WISDOT
BUREAU OF STRUCTURES

STRUCTURE B-37-360-003

NB USH 51 TO WB STH 29

COUNTY	CITY	
MARATHON	WAUSAU	
DESIGN SPEC. AASHTO 2002	LOAD HS-25	CONST. SPEC. 2003
DESIGNED BY JRS / DESIGN CK'D. WAH	DRAWN BY RBH	PLANS CK'D. WAH

APPROVED William C. Dreher SDR 9-26-06
CHIEF STRUCTURAL DESIGN ENGINEER — DATE

GENERAL PLAN

SHEET 1 OF 30

D 407

8

STATE PROJECT NUMBER

1166-09-74

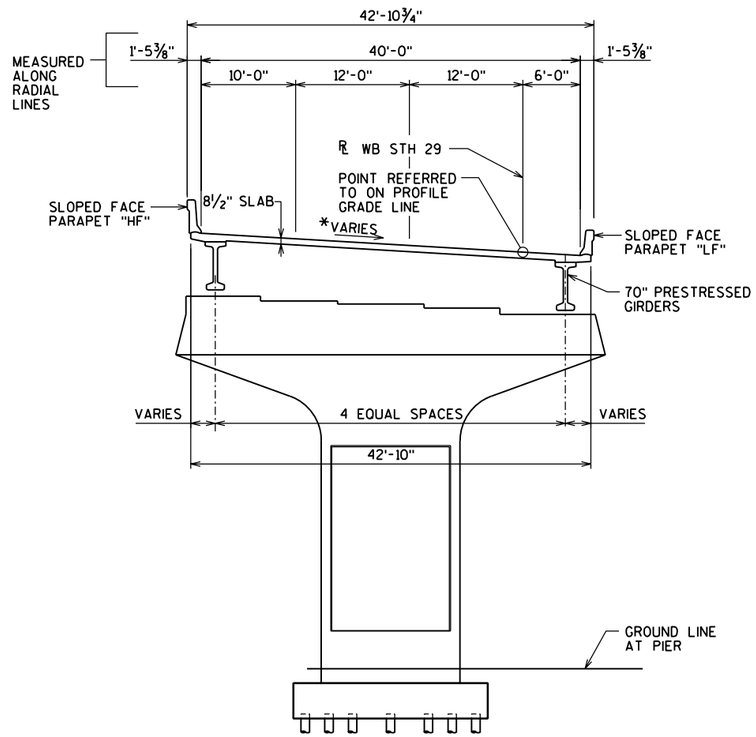

CROSS SECTION THRU ROADWAY - UNIT 3

(LOOKING EAST)

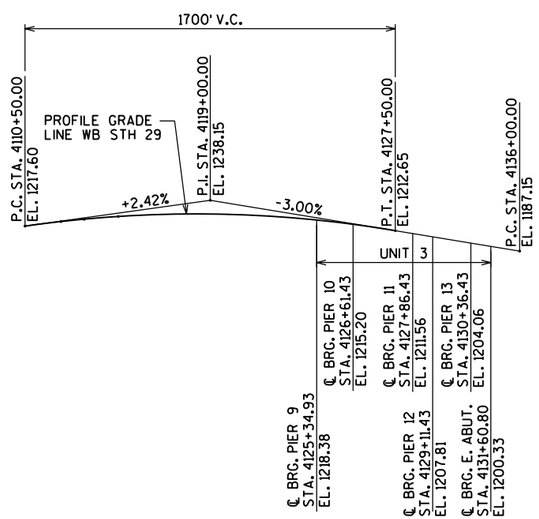

PROFILE GRADE LINE WB STH 29

GENERAL NOTES

DRAWINGS SHALL NOT BE SCALED.

BAR STEEL REINFORCEMENT SHALL BE EMBEDDED 2" CLEAR UNLESS OTHERWISE SHOWN OR NOTED.

FILLER SHALL CONFORM TO THE REQUIREMENTS OF AASHTO DESIGNATION M153, TYPE I, II, OR III, OR M213.

NON-LAMINATED ELASTOMERIC BEARING PADS NEED NOT BE INDIVIDUALLY MOLDED PROVIDED THE CUT EDGES ARE SMOOTH AND TRUE.

THE SLOPE OF THE FILL IN FRONT OF THE ABUTMENTS SHALL BE COVERED WITH SLOPE PAVING, CONCRETE, TO THE LIMITS SHOWN ON SHEET 1, ON THE ABUTMENT SHEETS, OR AS DIRECTED BY THE ENGINEER.

AT THE BACKFACE OF ABUTMENT ALL VOLUME WHICH CANNOT BE IN PLACE BEFORE ABUTMENT CONSTRUCTION AND NOT OCCUPIED BY THE NEW STRUCTURE SHALL BE BACKFILLED WITH STRUCTURE BACKFILL.

THE EXISTING GROUND LINE SHALL BE USED AS THE UPPER LIMITS OF EXCAVATION AT THE PIERS.

THE FIRST DIGIT OF A THREE DIGIT AND THE FIRST TWO DIGITS OF A FOUR DIGIT BAR MARK SIGNIFIES THE BAR SIZE.

THE MINIMUM CONCRETE HAUNCH SHALL BE ACCORDING TO "70" PRESTRESSED GIRDER DETAILS" SHEET FOR DESIGN CALCULATIONS. THE HAUNCH CONCRETE QUANTITY IS BASED ON AN AVERAGE DEPTH OF 3" WHICH IS THE MAXIMUM QUANTITY FOR WHICH THE CONTRACTOR WILL BE PAID.

THE JOINT BETWEEN THE FASCIA GIRDERS OVER THE PIERS SHALL BE FINISHED TO HAVE A SMOOTH APPEARANCE. COST INCIDENTAL TO BID ITEM "CONCRETE MASONRY BRIDGES".

NB USH 51 TO WB STH 29 CURVE DATA

P.I. STA. 4119+37.60
N = 200,002.53
E = 272,014.03
P.C. STA. 4102+55.35
P.T. STA. 4128+43.51
Δ = 93°10'26" (RT)
D = 3°36'00"
T = 1682.25'
L = 2588.16'
R = 1591.55'
* S.E. = 0.059'/'

NB USH 51 EXIT RAMP TO SHERMAN STREET CURVE DATA

P.I. STA. 611+08.72
N = 198,645.70
E = 271,906.99
P.C. STA. 610+07.86
P.T. STA. 612+09.24
Δ = 8°03'19"
D = 4°00'00"
T = 100.86'
L = 201.38'
R = 1432.39'
S.E. = 0.057%

* START OF UNIT 3 TO STA. 4127+91.85, S.E. = 0.059%
STA. 4127+91.85 TO STA. 4129+94.96, SUPERELEVATION TRANSITION FROM 0.059% TO 0.02%
STA. 4129+94.96 TO END OF UNIT 3, S.E. = 0.02%

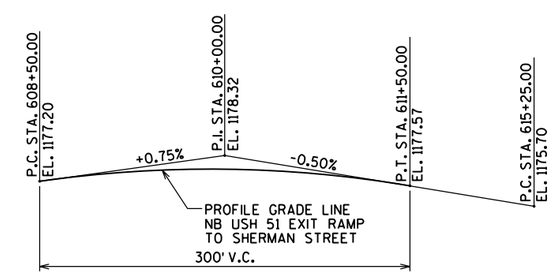

PROFILE GRADE LINE NB USH 51 EXIT RAMP TO SHERMAN STREET

BENCH MARKS

NO.	STATION	DESCRIPTION	ELEVATION
127	617+28 67.2' RT	BLUE SQ. NE. END OF USH 51 NB. STRUCTURE OVER SHERMAN ST.	1197.11

NO.	DATE	REVISION	BY

STATE OF WISCONSIN
DEPARTMENT OF TRANSPORTATION
STRUCTURES DESIGN SECTION

STRUCTURE B-37-360-003

CONST. SPEC. 2003 | DRAWN BY RBH | PLANS CK'D. WAH

CROSS SECTION, PROFILES & NOTES

SHEET 2 OF 30
408

8

8

TOTAL ESTIMATED QUANTITIES - UNIT 3

BID ITEMS	UNIT	PIER 9	PIER 10	PIER 11	PIER 12	PIER 13	EAST ABUT.	SUPER.	TOTALS	
EXCAVATION FOR STRUCTURES BRIDGES B-37-360-003	LS	-	-	-	-	-	-	-	1	
TEMPORARY SHORING	SF	396	-	-	-	-	-	-	396	
BACKFILL STRUCTURE	CY	-	-	-	-	-	275	-	275	
CONCRETE MASONRY BRIDGES	CY	190	148	143	141	138	94	1,009	1,863	(*)
EXPANSION DEVICE B-37-360-003	LS	-	-	-	-	-	-	-	1	(II)
PROTECTIVE SURFACE TREATMENT	SY	-	-	-	-	-	-	3,250	3,250	
PRESTRESSED GIRDER TYPE I 70-INCH	LF	-	-	-	-	-	-	3133	3,133	
BAR STEEL REINFORCEMENT HS BRIDGES	LB	2,160	2,140	2,140	2,140	2,140	2,500	-	13,220	
BAR STEEL REINFORCEMENT HS COATED BRIDGES	LB	34,600	28,370	27,380	27,290	26,760	4,080	230,790	379,270	(*)
BEARING PAD ELASTOMERIC NON-LAMINATED	EACH	-	5	-	5	5	-	-	15	
BEARING ASSEMBLIES EXPANSION B-37-360-003	EACH	5	-	10	-	-	5	-	20	
STEEL DIAPHRAGMS B-37-360-003	EACH	-	-	-	-	-	-	40	40	
PREBORING CIP CONCRETE PILING	LF	-	-	-	-	-	336	-	336	
PILING CAST IN PLACE CONCRETE DELIVERED AND DRIVEN 12¾-INCH	LF	1,680	1,500	2,250	2,250	2,250	980	-	10,910	
FLOOR DRAINS TYPE GC	EACH	-	-	-	-	-	-	1	1	
DOWNSPOUT 6-INCH	LF	-	-	60	-	-	-	-	60	
RUBBERIZED MEMBRANE WATERPROOFING	SY	-	-	-	-	-	11	-	11	
SLOPE PAVING CONCRETE	SY	-	-	-	-	-	315	-	315	
PIPE UNDERDRAIN 6-INCH	LF	-	-	-	-	-	60	-	60	
PIPE UNDERDRAIN UNPERFORATED 6-INCH	LF	-	-	-	-	-	25	-	25	
ANCHOR ASSEMBLIES FOR STEEL PLATE BEAM GUARD	EACH	-	-	-	-	-	-	1	1	
DELINEATORS	EACH	-	-	-	-	-	-	12	12	
DELINEATORS BRACKETS	EACH	-	-	-	-	-	-	12	12	
GEOTEXTILE FABRIC TYPE DF SCHEDULE A	SY	-	-	-	-	-	50	-	50	
CONDUIT RIGID METALLIC 2-INCH	LF	-	-	-	-	-	45	20	65	
CONDUIT RIGID NON-METALLIC SCHEDULE 80 2-INCH	LF	-	-	-	-	-	-	615	615	
JUNCTION BOXES 18X6X6-INCH	EACH	-	-	-	-	-	-	5	5	
CONCRETE STAINING B-37-360-003	SF	2,090	2,000	1.850	1,760	1,690	515	18,620	28,525	★
ANTI SKID TREATMENT	SY	-	-	-	-	-	-	2,810	2,810	
ACCESS PLATFORM B-37-360-003	LS	1	-	-	-	-	-	-	1	
NON-BID ITEMS										
FILLER	SIZE	——	——	——	——	——	——	——	½" & ¾"	
BRIDGE SEAT PROTECTION	LS	——	——	——	——	——	——	——	1	

LEGEND

(*) THE CONCRETE AND BARS OF THE PARAPET ON THE WINGWALLS ARE INCLUDED IN THE ABUTMENT QUANTITIES. SUPERSTRUCTURE QUANTITIES INCLUDE THE CONCRETE AND BARS OF THE PARAPET ON THE DECK.

★ CONCRETE STAIN SHALL BE IN ACCORDANCE WITH THE SPECIAL PROVISIONS. STAIN SHALL BE FEDERAL COLOR #36424, SHALL EXTEND 1'-0" BELOW PROPOSED GRADE, AND SHALL BE APPLIED TO THE FOLLOWING AREAS:
- PARAPETS: OUTSIDE FACE ONLY (NOT ALONG TOP)
- OUTSIDE EDGE OF DECK AND BOTTOM OF OVERHANGS
- GIRDERS: OUTSIDE FACE AND BOTTOM OF EXTERIOR GIRDERS ONLY
- PIERS: ENTIRE PIER EXCEPT TOP OF CAP
- ABUTMENTS: FRONT FACE AND SIDES

(II) THE EXPANSION DEVICE FOR THIS BID ITEM IS AT THE EAST ABUTMENT AND PIER 11

NO.	DATE	REVISION	BY

STATE OF WISCONSIN
DEPARTMENT OF TRANSPORTATION
STRUCTURES DESIGN SECTION

STRUCTURE B-37-360-003

CONST. SPEC. 2003 | DRAWN BY RBH | PLANS CK'D. WAH

QUANTITIES

BORINGS TAKEN BY:
STS
3909 CONCORD AVENUE
SCHOFIELD, WISCONSIN 54476

BORINGS TAKEN ON:
NI-14 JAN. 21, 2004
NI-13 JAN. 26, 2004
B-34 MAR. 13, 2003
NI-11 JAN. 14, 2004
B-32 JAN. 21, 2003
NI-10 JAN. 15, 2004
NI-9 JAN. 20, 2004

STATE PROJECT NUMBER

1166-09-74

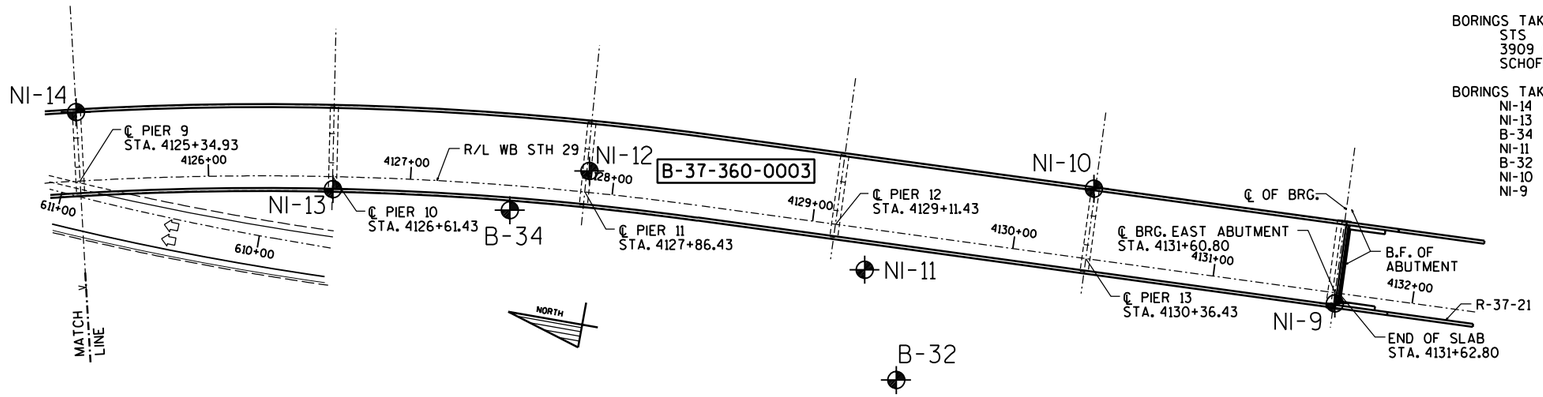

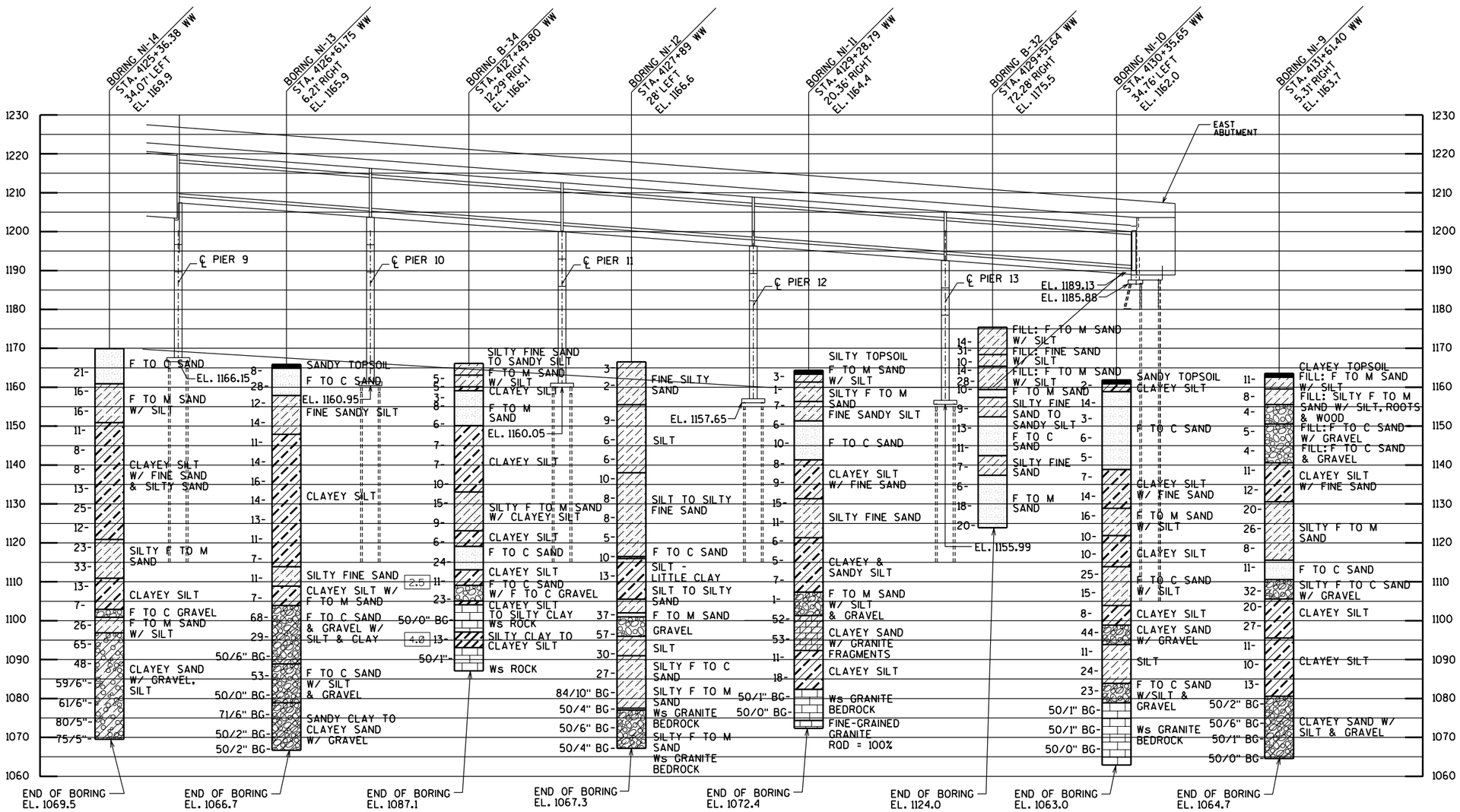

ABBREVIATIONS

F ---- Fine M ---- Medium C ---- Coarse
Ws ---- Weathered So ---- Sound

MATERIAL SYMBOLS

Fill, Topsoil, Sand, Gravel, Silt, Silty Clay, Clay, Sandy Gravel, Limestone, Clayey Silt, Silty Sand

LEGEND OF PROBING

95/6 Blows for 6" penetration probing taken with a 140# wt. falling 30" on a 2" O.D. point

- Probing No.
- Sta.
- Elevation
- 7 Average blows per foot
- Refusal 95/6

LEGEND OF BORING

- Boring No. sta. elev.
- Unconfined strength Tons/Ft.: 7.7
- Blows per Ft. using 140# wt. falling 30": 7
- Wash sample
- Shelby Tube ----- S.T.
- Ground water elevation
- No ground water observed above this elevation
- Sandy Gravel
- F. Boulders or Cobbles
- Sand
- Silty Clay
- So
- Limestone

Unless otherwise specified, the blows per foot at the locations indicated are based on driving a 2" O.D. x 1.4" I.D. split spoon sampler with a 140# hammer having a free fall of 30". The blow count is taken in undisturbed soil immediately below a cased or open hole eliminating side friction on the drive pipe.

SUBSURFACE EXPLORATION FOR FOUNDATION DESIGN AND BIDDERS INFORMATION

To obtain relative data concerning the character of material in and upon which the foundation might be built, borings and/or soundings were made at points approximately as indicated on this drawing. The data presented herein represents the findings of the sub-surface explorations made. However, because the depths investigated are limited and the area of the borings and/or soundings is very small in relation to the entire area, the Division of Highways does not warrant conditions below the depths investigated or that the classification of material encountered in these investigations is necessarily typical of the entire site.

8

NO.	DATE	REVISION	BY

STATE OF WISCONSIN
DEPARTMENT OF TRANSPORTATION
STRUCTURES DESIGN SECTION

STRUCTURE B-37-360-003

CONST SPEC	2003	DRAWN BY	RBH	PLANS CK'D.	WAH

SUBSURFACE EXPLORATION

SHEET 4 OF 30
410

SCALE

STATE PROJECT NUMBER

1166-09-74

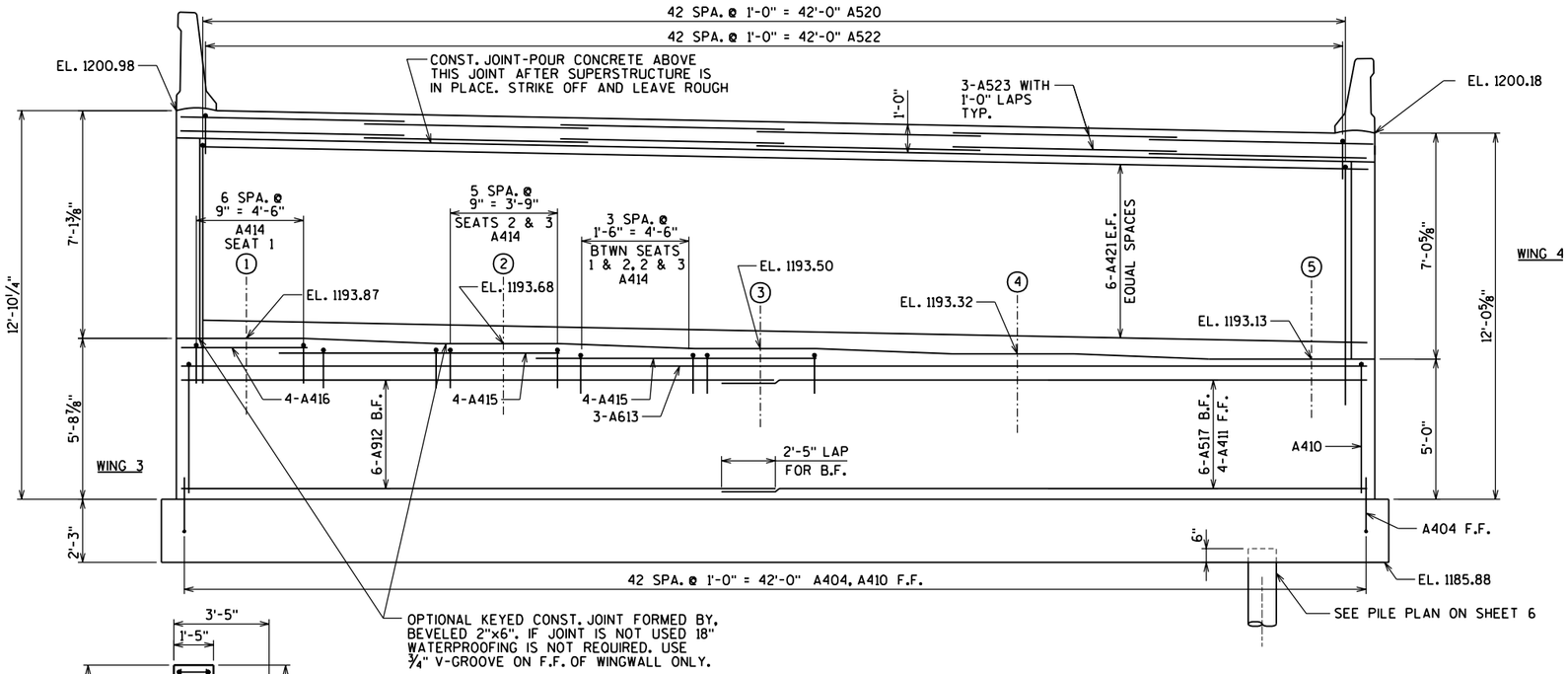

ELEVATION
(LOOKING EAST)

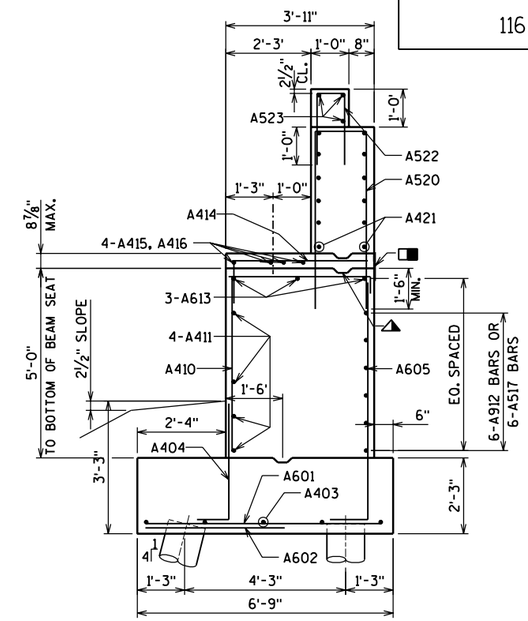

SECTION A-A

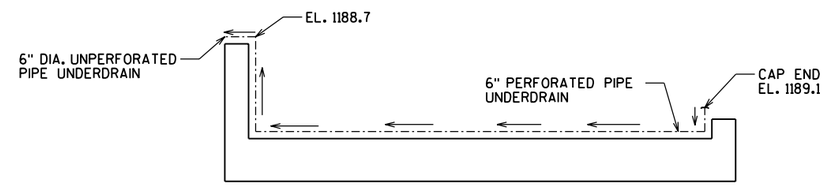

UNDERDRAIN PLAN

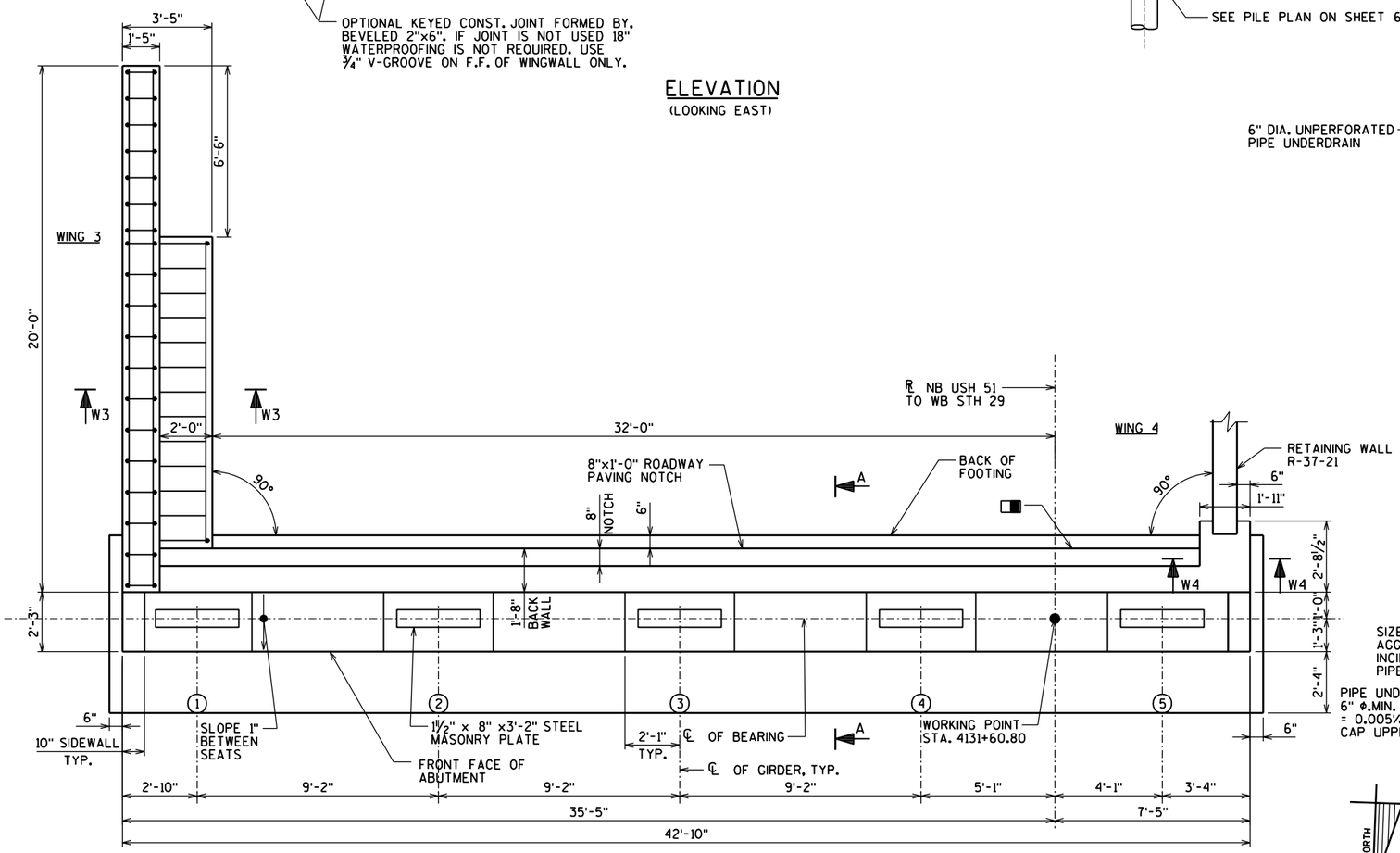

PLAN

*

BAR SIZE	MIN. LAP
#4	2'-3"
#5	2'-5"
#6	2'-11"
#9	6'-6"

NOTES

■ 18" RUBBERIZED MEMBRANE WATERPROOFING. SEAL ALL HORIZ. AND VERT. JOINTS ON BACKFACE ABOVE FOOTING.

SEE SHEET 7 FOR SECTION W3 & W4.

(X) GIRDER NUMBER

EAST ABUTMENT SUPPORTED ON 12¾" DIA. CAST-IN-PLACE CONCRETE PILING DRIVEN TO A CAPACITY OF 70 TONS/PILE.

◭ KEYED CONSTRUCTION JOINT FORMED BY BEVELED 2" X 6".

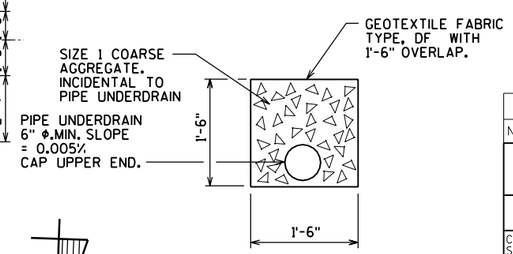

PIPE UNDERDRAIN DETAIL

NORTH

NO.	DATE	REVISION	BY

STATE OF WISCONSIN
DEPARTMENT OF TRANSPORTATION
STRUCTURES DESIGN SECTION

STRUCTURE B-37-360-003

CONST. SPEC.	DRAWN BY	PLANS CK'D.
2003		

EAST ABUTMENT

SHEET 5 OF 30
411

8

8

STATE PROJECT NUMBER

1166-09-74

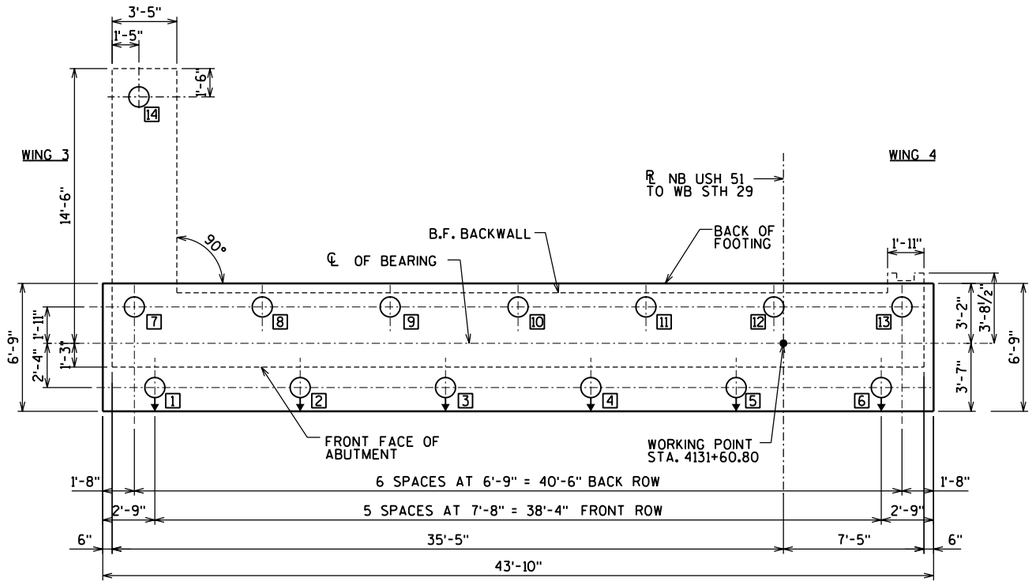

PILE PLAN

NOTES

EAST ABUTMENT TO BE SUPPORTED ON 12¾" DIA. CAST IN PLACE CONCRETE PILING DRIVEN TO A MINIMUM BEARING CAPACITY OF 70 TONS.
ESTIMATED 85 FEET LONG.

PILING SHALL BE PREBORED THROUGH THE PROPOSED ROADWAY EMBANKMENT

= BATTERED PILE AT 4:1 IN DIRECTION SHOWN

[X] = PILE NUMBER

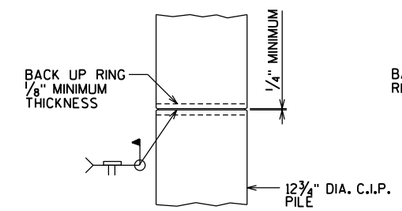

CAST-IN-PLACE
PIPE PILE

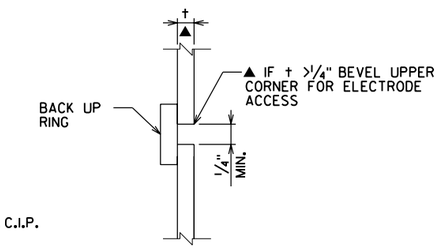

C.I.P PIPE WELD DETAIL

NOTE

CAST-IN-PLACE PILE SHELL MATERIAL SHALL BE A.S.T.M. DESIGNATION A-252, GRADE 2 OR EQUAL. MINIMUM WALL THICKNESS = 0.25 IN.

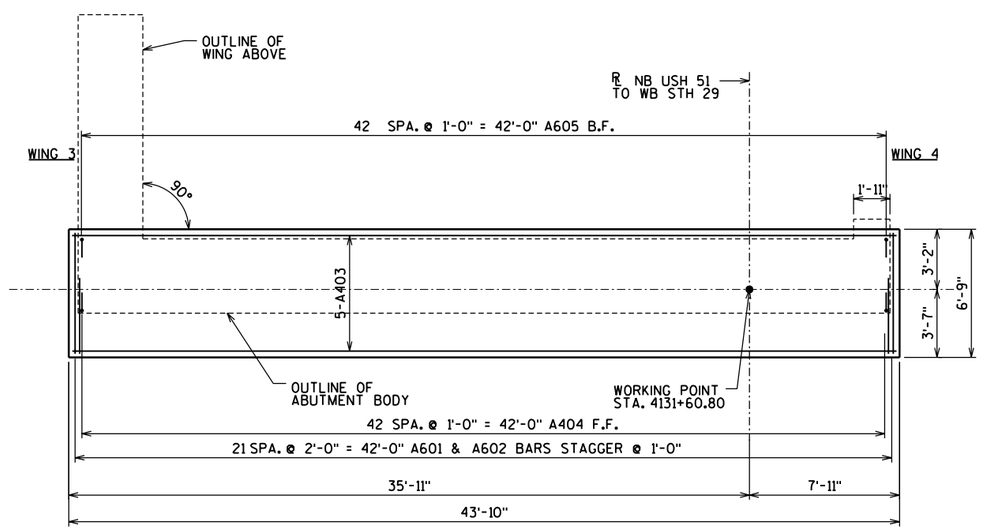

FOOTING PLAN

8

8

NO.	DATE	REVISION	BY

STATE OF WISCONSIN
DEPARTMENT OF TRANSPORTATION
STRUCTURES DESIGN SECTION

STRUCTURE B-37-360-003

CONST. SPEC.	2003	DRAWN BY	RBH	PLANS CK'D.

EAST ABUTMENT
PILE PLAN

SHEET 6 OF 30
412

STATE PROJECT NUMBER

1166-09-74

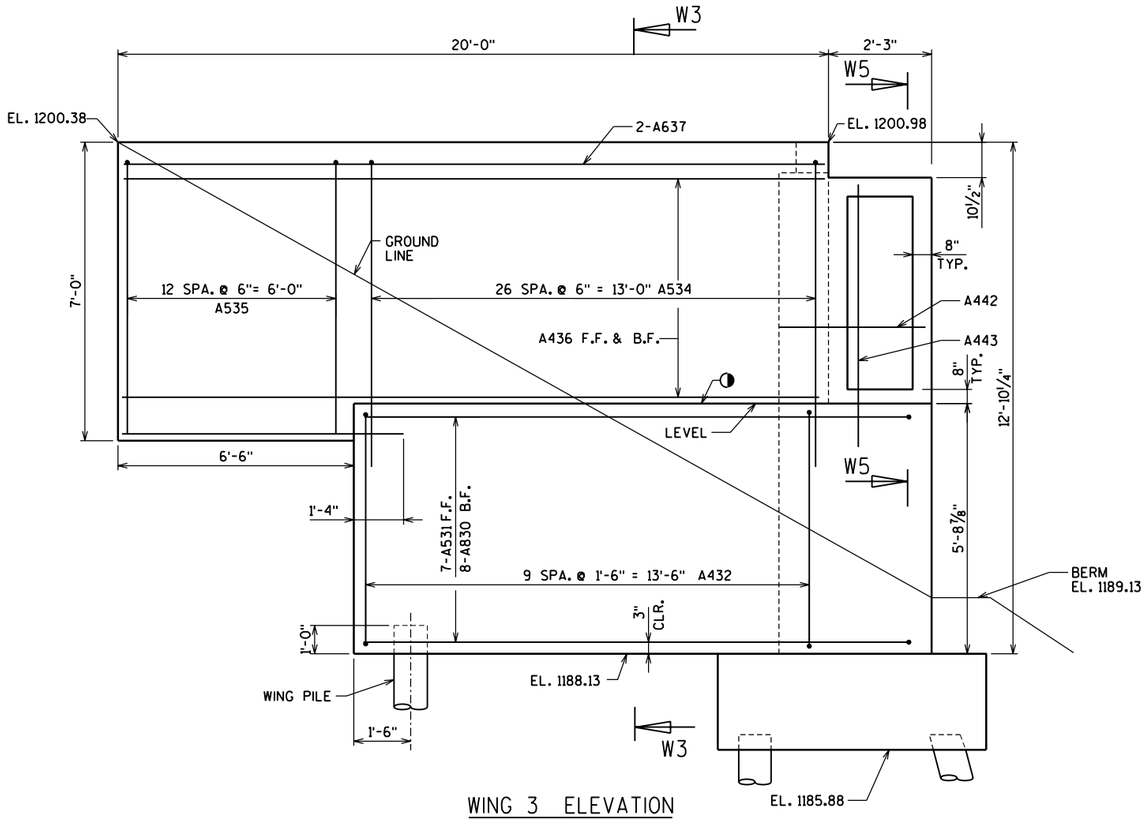

WING 3 ELEVATION

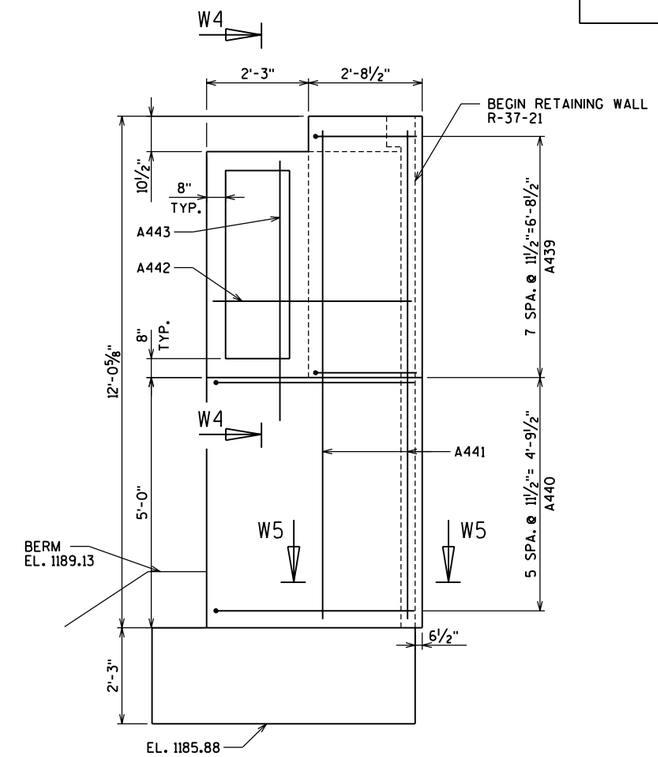

WING 4 ELEVATION

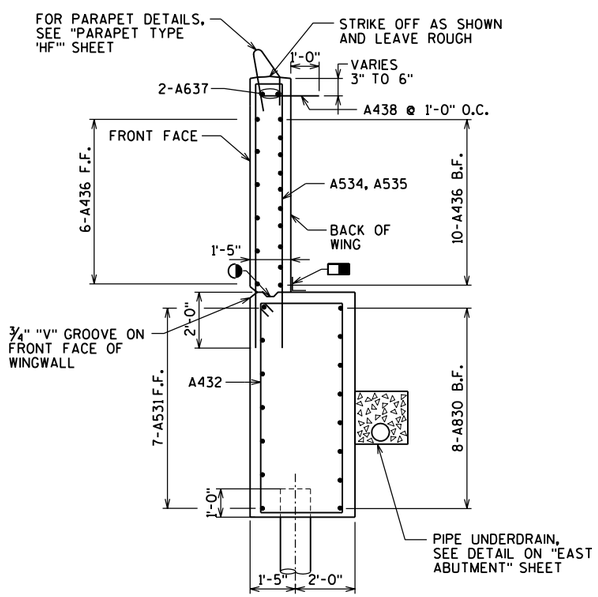

SECTION W3

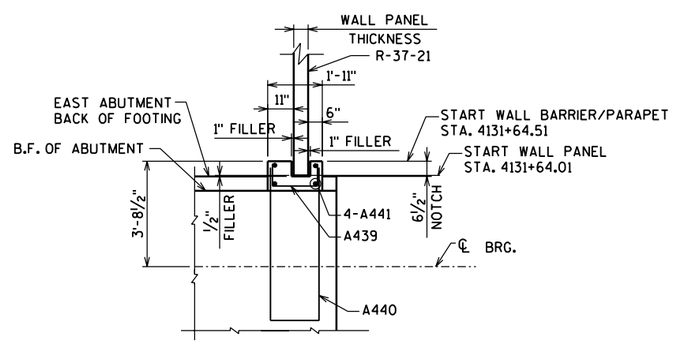

SECTION W5

NOTES

- 18" RUBBERIZED MEBRANE WATERPROOFING.
- OPTIONAL CONSTRUCTION JOINT FORMED BY BEVELED 2"x6" KEYWAY.

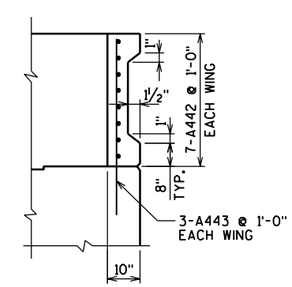

SECTION W4

NO.	DATE	REVISION	BY

STATE OF WISCONSIN
DEPARTMENT OF TRANSPORTATION
STRUCTURES DESIGN SECTION

STRUCTURE B-37-360-003

CONST. SPEC.	DRAWN BY	PLANS CK'D.
2003	RBH	

EAST ABUTMENT WINGWALLS

SHEET 7 OF 30
413

8

8

STATE PROJECT NUMBER

1166-09-74

EAST ABUTMENT - BILL OF BARS

MARK	COATED	NO. REQ'D.	LENGTH	BENT	BAR SERIES	LOCATION
A601		22	6'-3"			FOOTING TRANSVERSE
A602		22	3'-8"			FOOTING TRANSVERSE
A403		5	43'-4"			FOOTING LONGITUDINAL
A404		43	4'-4"	X		FOOTING DOWELS FF
A605		43	7'-4"	X		FOOTING DOWELS BF
A410		43	8'-9"	X		BODY VERTICAL FF
A411		4	42'-6"			BODY HORIZONTAL FF
A912		6	30'-0"			BODY HORIZONTAL BF NEAR WING 3
A613		3	42'-6"			BODY HORIZONTAL TOP
A414		27	5'-9"	X		BODY VERTICAL TOP AT SEATS 1 THRU 3
A415		8	10'-6"			BODY HORIZONTAL TOP AT SEATS 2 & 3
A416		4	4'-7"			BODY HORIZONTAL TOP AT SEAT 1
A517		6	15'-0"			BODY HORIZONTAL BF NEAR WING 4
A520	X	43	16'-7"	X		BACKWALL VERTICAL
A421	X	12	42'-6"			BACKWALL HORIZONTAL FF & BF
A522	X	43	4'-5"	X		BACKWALL VERTICAL
A523	X	18	8'-0"			BACKWALL HORIZONTAL
A830	X	8	16'-6"	X		WING 3 HORIZONTAL BF
A531	X	7	15'-0"			WING 3 HORIZONTAL FF
A432	X	10	17'-2"	X		WING 3 VERTICAL
A534	X	27	19'-6"	X		WING 3 VERTICAL
A535	X	13	14'-2"	X		WING 3 VERTICAL
A436	X	16	19'-8"			WING 3 HORIZONTAL
A637	X	2	19'-8"			WING 3 HORIZONTAL TOP
A438	X	21	2'-0"			WING 3 SURFACE DRAIN ANCHORS
A439	X	8	6'-1"	X		WING 4 HORIZONTAL
A440	X	6	10'-7"	X		WING 4 HORIZONTAL
A441	X	4	11'-6"			WING 4 VERTICAL
A442	X	14	3'-6"			WINGS 3&4 HORIZONTAL AT SIDEWALLS
A443	X	6	7'-6"			WINGS 3&4 VERTICAL AT SIDEWALLS

THE FIRST DIGIT OF A 3 DIGIT MARK OR THE FIRST TWO DIGITS OF A FOUR DIGIT BAR MARK INDICATES BAR SIZE. ALL DIMENSIONS IN THE BAR BENDS ARE OUT TO OUT.

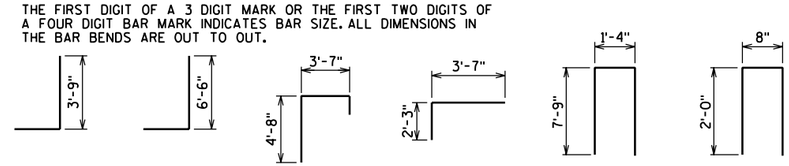

A404 A605 A410 A414 A520 A522

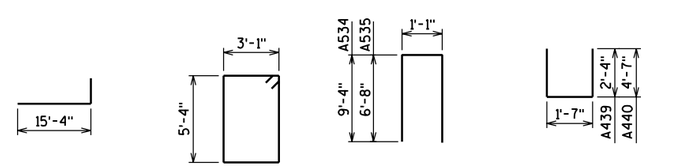

A830 A432 A534, A535 A439, A440

8

8

NO.	DATE	REVISION	BY

STATE OF WISCONSIN
DEPARTMENT OF TRANSPORTATION
STRUCTURES DESIGN SECTION

STRUCTURE B-37-360-003

CONST. SPEC. 2003 | DRAWN BY | PLANS CK'D.

EAST ABUTMENT BILL OF BARS

SHEET 8 OF 30
414

STATE PROJECT NUMBER
1166-09-74

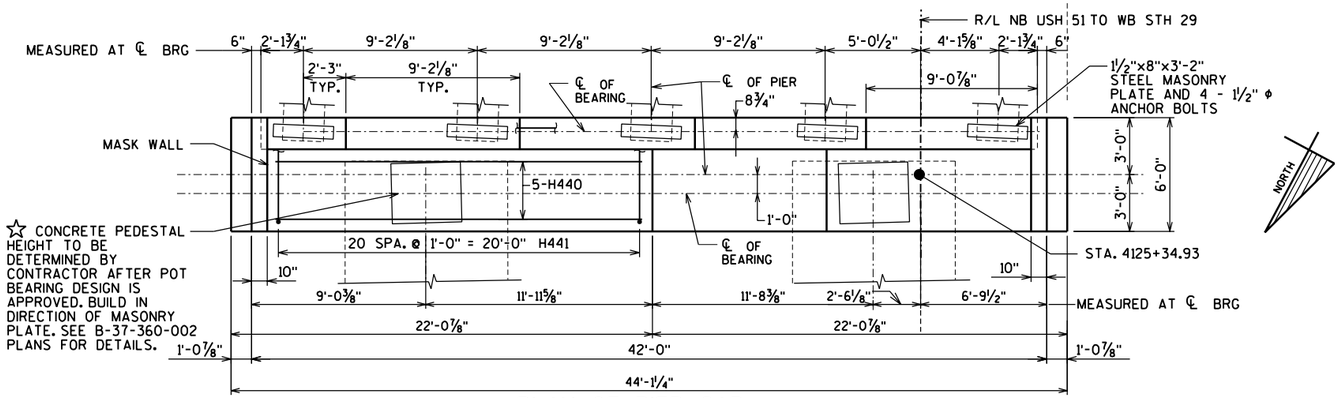

PLAN OF PIER CAP

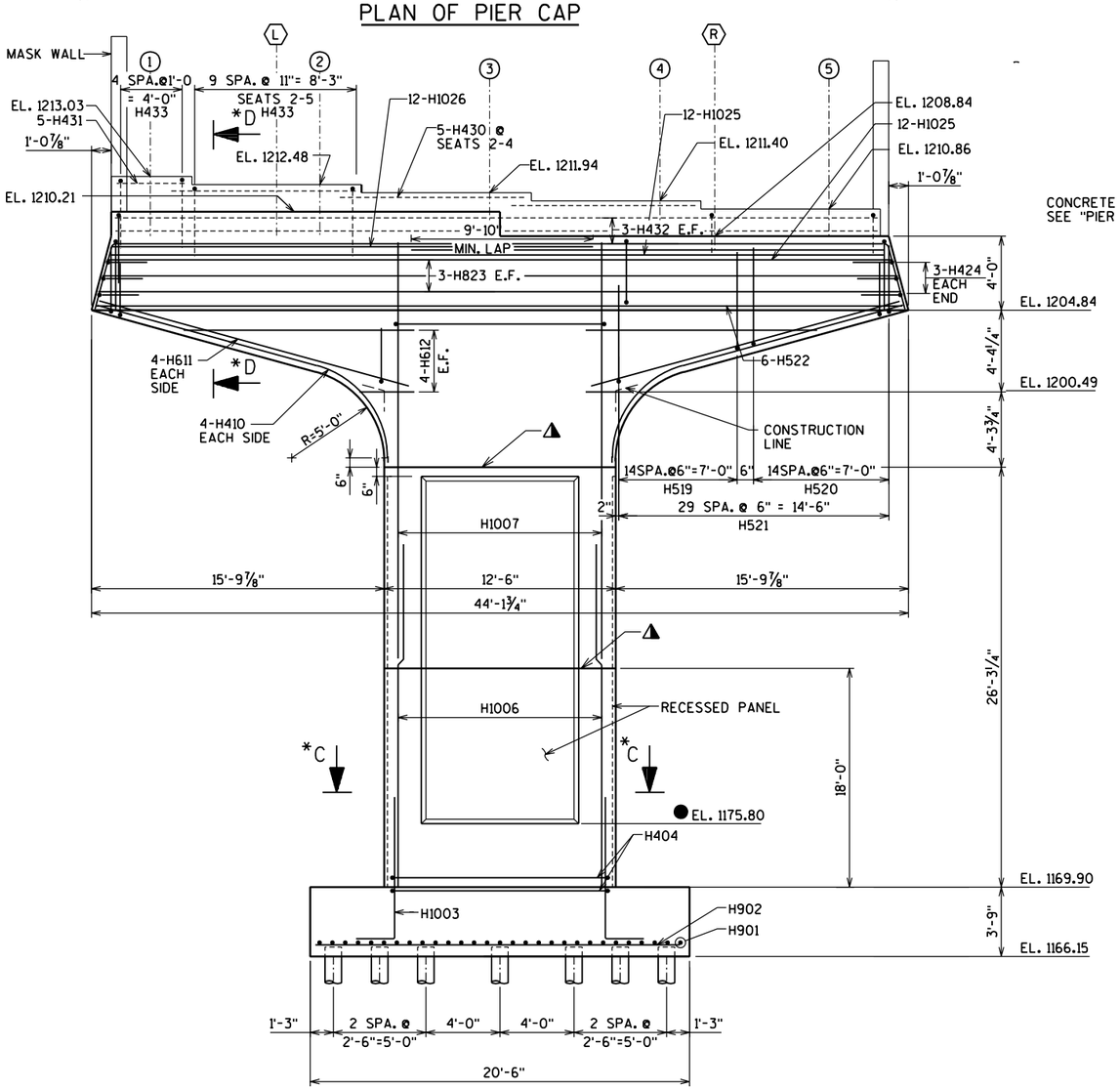

ELEVATION

LOOKING EAST

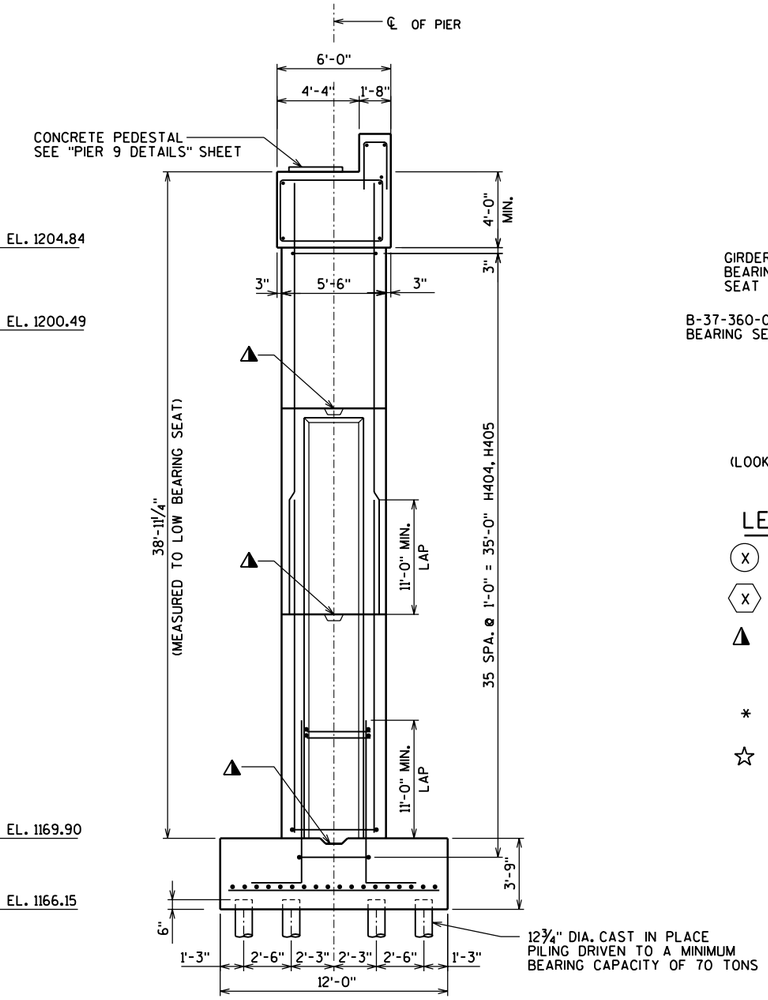

END VIEW

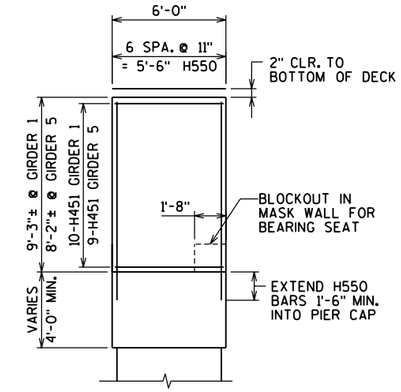

MASK WALL END VIEW

(LOOKING NORTH)

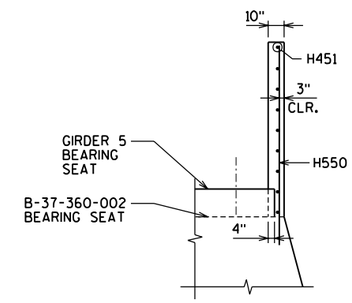

MASK WALL ELEVATION

(LOOKING EAST GIRDER 5 SHOWN GIRER 1 SIMILAR)

LEGEND

(X) DENOTES GIRDER NUMBER B-37-360-003

⟨X⟩ DENOTES GIRDER NUMBER B-37-360-002

◭ KEYED CONSTRUCTION JOINT FORMED BY BEVELED KEYWAY 4"x1'-0"x6'-0". EXPOSED EDGES OF CONSTRUCTION JOINT SHALL BE FLUSH AND NOT BEVELED.

* SEE PIER 9 DETAILS SHEET FOR SECTION C-C AND D-D.

☆ CONCRETE PEDESTAL HEIGHT WAS ASSUMED TO BE 4" FOR DETERMINING PIER SEAT ELEVATIONS. FINAL TOTAL HEIGHT FOR BEARING AND PEDESTAL SHALL EQUAL TOTAL OF ASSUMED HEIGHTS SHOWN ON THE PLANS. SEE B-37-360-002 PLANS FOR ASSUMED PIER BEARING HEIGHTS

● ELEVATION TO BE 3 FEET ABOVE FINISHED GRADE. ELEVATION TO BE ADJUSTED IF FINISHED GROUND ELEVATION DIFFERS FROM PLANS.

NO.	DATE	REVISION	BY

STATE OF WISCONSIN
DEPARTMENT OF TRANSPORTATION
STRUCTURES DESIGN SECTION

STRUCTURE B-37-360-003

CONST. SPEC.	2003	DRAWN BY	RBH	PLANS CK'D.	WAH

PIER 9

SHEET 9 OF 30
415

8

8

STATE PROJECT NUMBER

1166-09-74

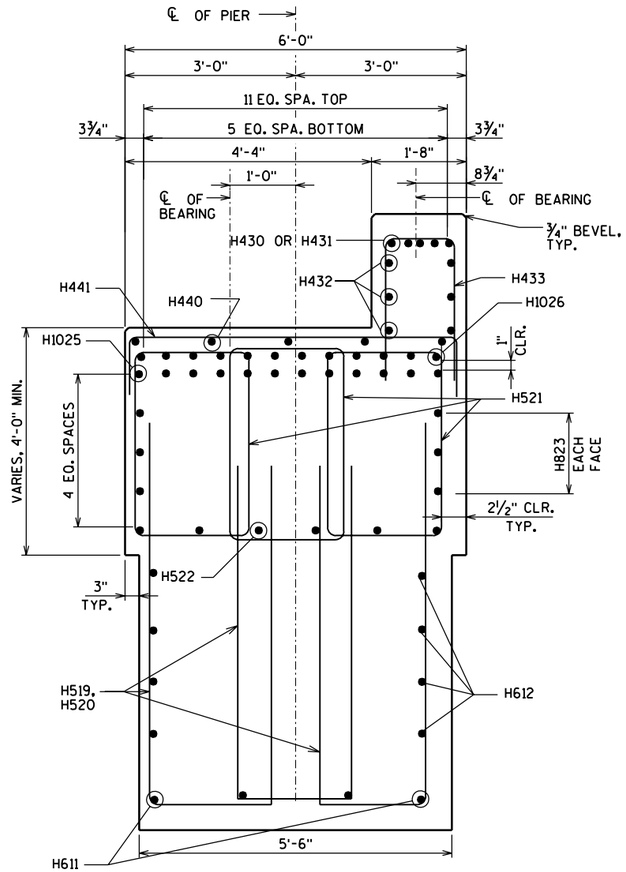

SECTION D-D

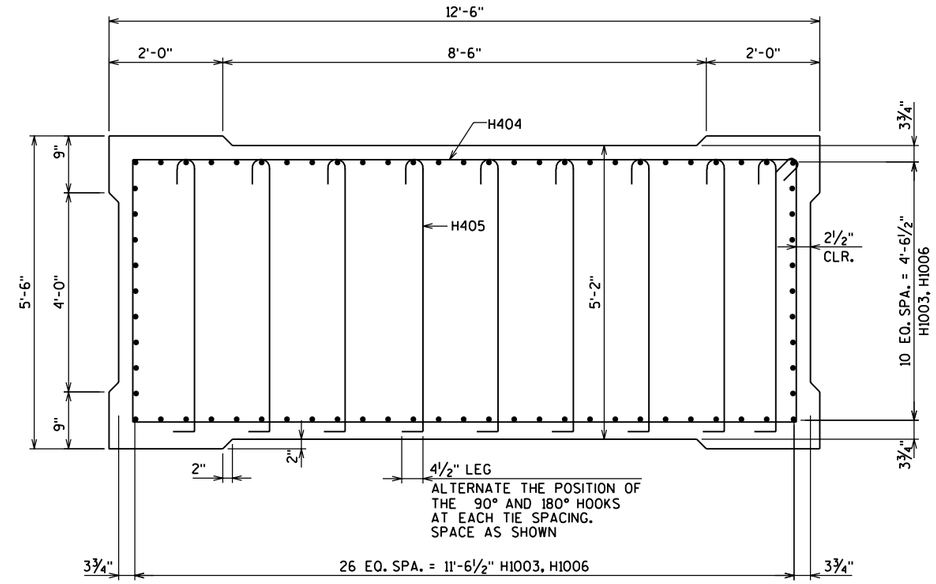

SECTION C-C

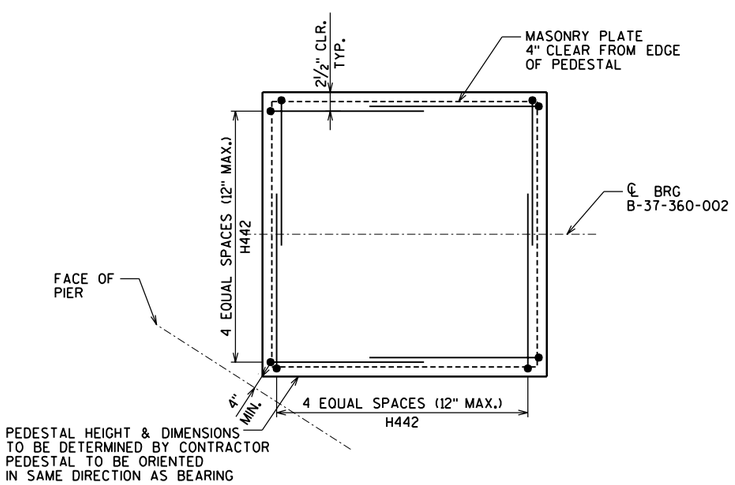

BEARING PEDESTAL PLAN

*SEE B-37-360-002 PLAN FOR BEARING DETAILS

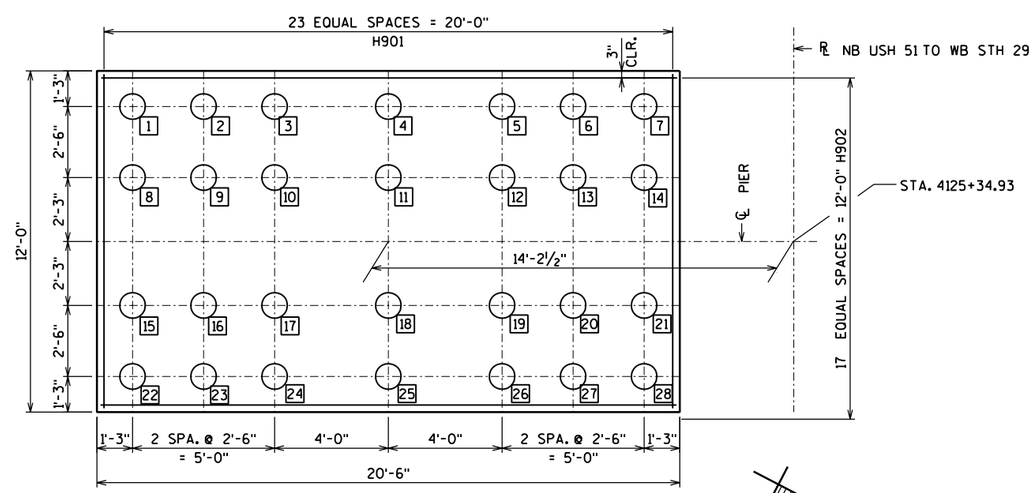

PILE PLAN - PIER 9

8

8

NO.	DATE	REVISION	BY

STATE OF WISCONSIN
DEPARTMENT OF TRANSPORTATION
STRUCTURES DESIGN SECTION

STRUCTURE B-37-360-003

CONST. SPEC. 2003	DRAWN BY RBH	PLANS CK'D. WAH

PIER 9 DETAILS

SHEET 10 OF 30
416

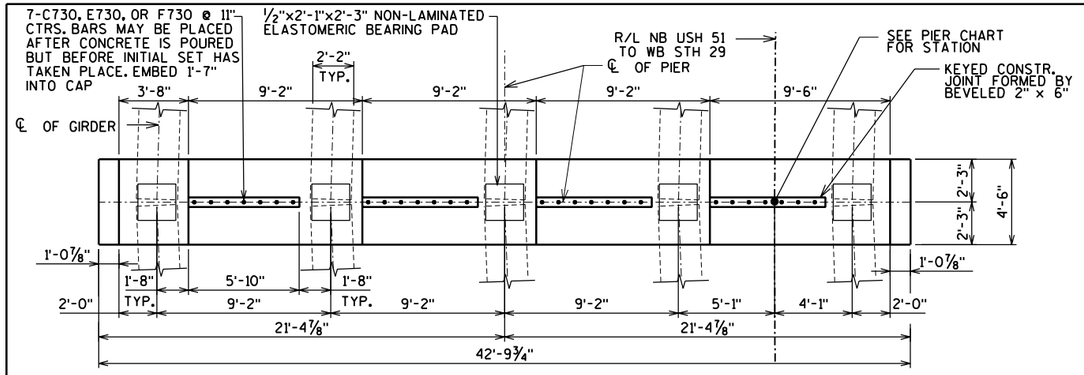

PLAN OF PIER CAP - FIXED PIERS 10, 12 & 13

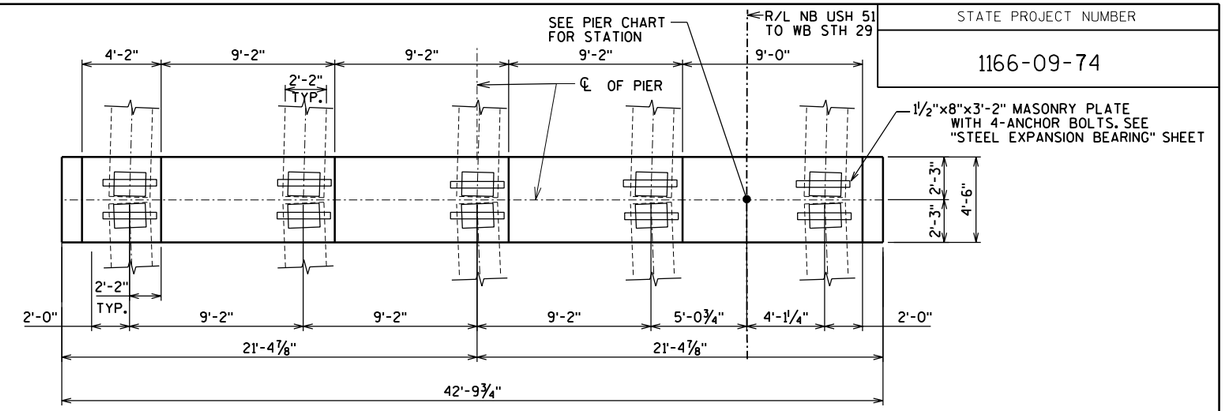

PLAN OF PIER CAP - EXPANSION PIER 11

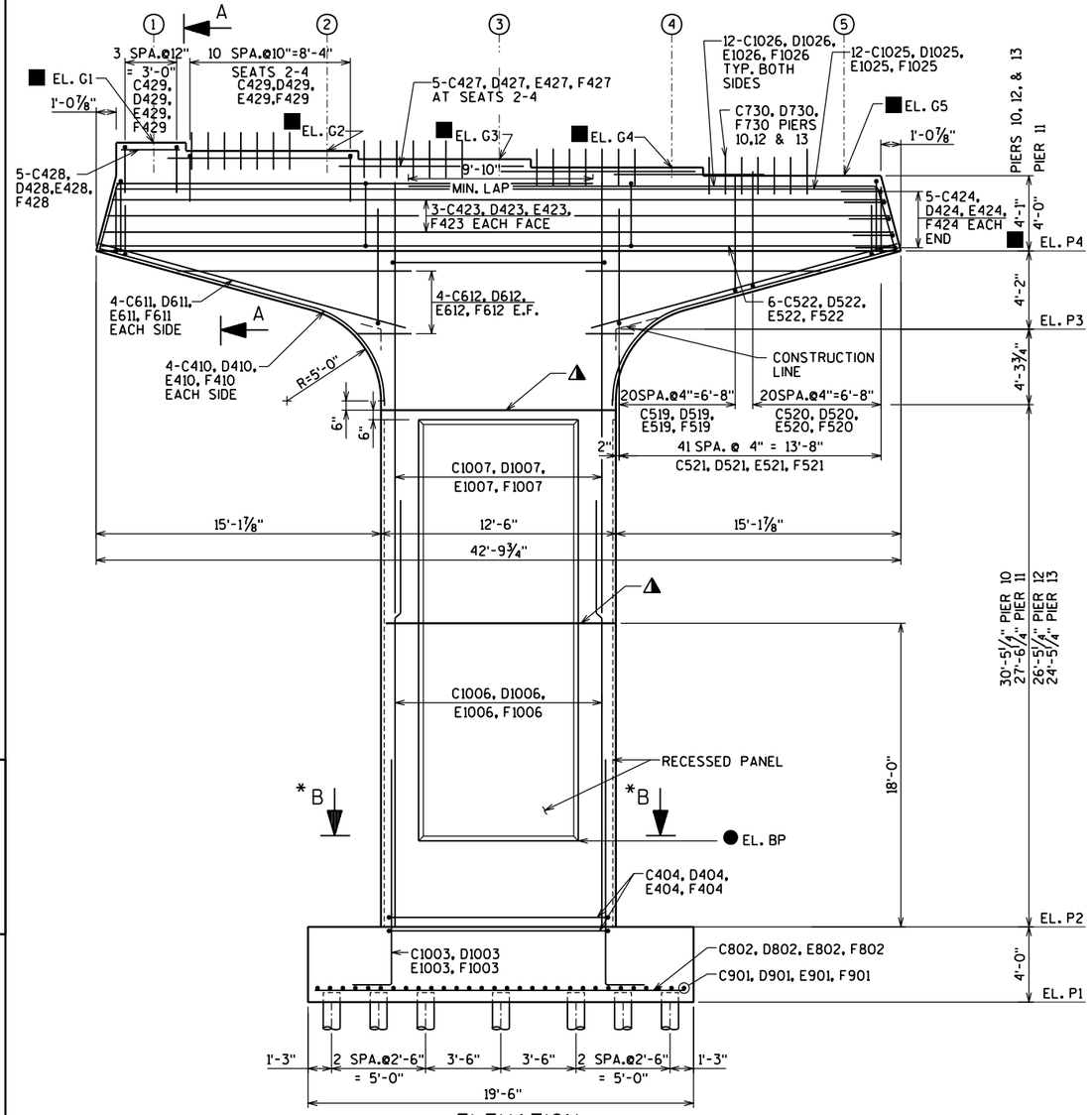

ELEVATION
LOOKING EAST

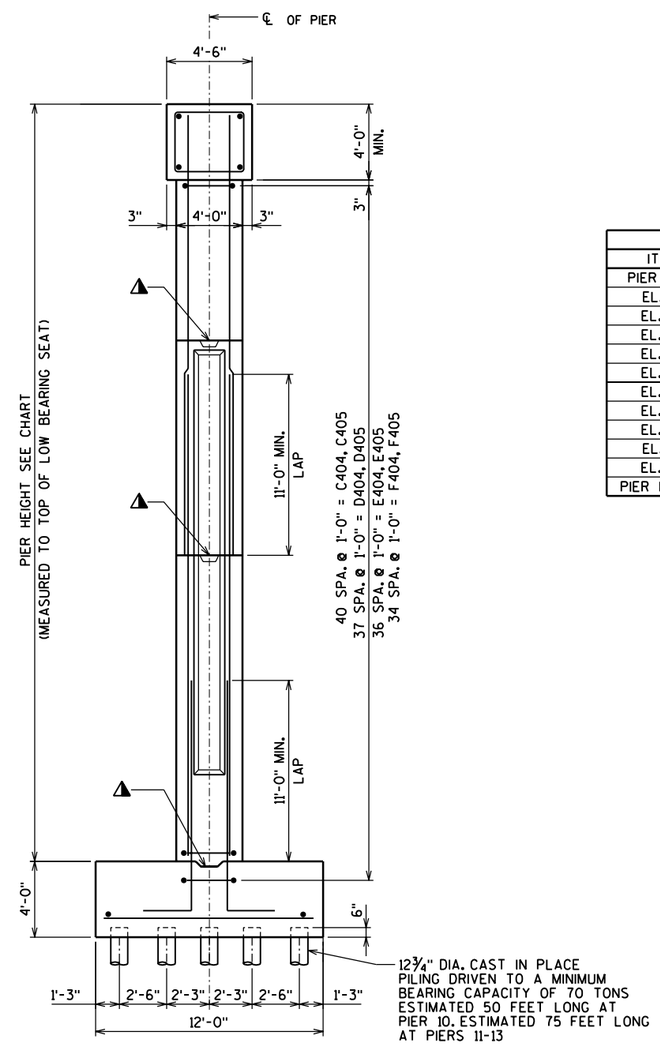

END VIEW

PIER ELEVATION CHART				
ITEM	PIER #10	PIER #11	PIER #12	PIER #13
PIER STA.	4126+61.43	4127+86.43	4129+11.43	4130+36.43
EL. G1	1210.11	1206.21	1201.97	1197.72
EL. G2	1209.57	1205.67	1201.64	1197.54
EL. G3	1209.03	1205.13	1201.31	1197.35
EL. G4	1208.49	1204.59	1200.98	1197.17
EL. G5	1207.95	1204.05	1200.65	1196.99
EL. P4	1203.87	1200.05	1196.57	1192.91
EL. P3	1199.70	1195.88	1192.40	1188.74
EL. P2	1164.95	1164.05	1161.65	1159.99
EL. P1	1160.95	1160.05	1157.65	1155.99
EL. BP	1169.80	1169.00	1167.40	1165.00
PIER HEIGHT	43'-0"	40'-0"	39'-0"	37'-0"

LEGEND

(X) DENOTES GIRDER NUMBER

■ ELEVATION "A" AS SHOWN ON GIRDER SEAT DETAIL NEXT SHEET. DIMENSIONS TO ELEVATION "A".

◭ KEYED CONSTRUCTION JOINT FORMED BY BEVELED KEYWAY 4"x1'-4"x8'-6". EXPOSED EDGES OF CONSTRUCTION JOINT SHALL BE FLUSH AND NOT BEVELED.

* SEE SHEET 12 FOR SECTION B-B

● ELEVATION TO BE 3 FEET ABOVE FINISHED GRADE. ELEVATION TO BE ADJUSTED IF FINAL GROUND ELEVATION DIFFERS FROM PLANS.

STATE PROJECT NUMBER
1166-09-74

NO.	DATE	REVISION	BY

STATE OF WISCONSIN
DEPARTMENT OF TRANSPORTATION
STRUCTURES DESIGN SECTION

STRUCTURE B-37-360-003

CONST. SPEC. 2003 | DRAWN BY RBH | PLANS CK'D. WAH

PIERS 10,11,12, &13

SHEET 11 OF 30
417

8

STATE PROJECT NUMBER

1166-09-74

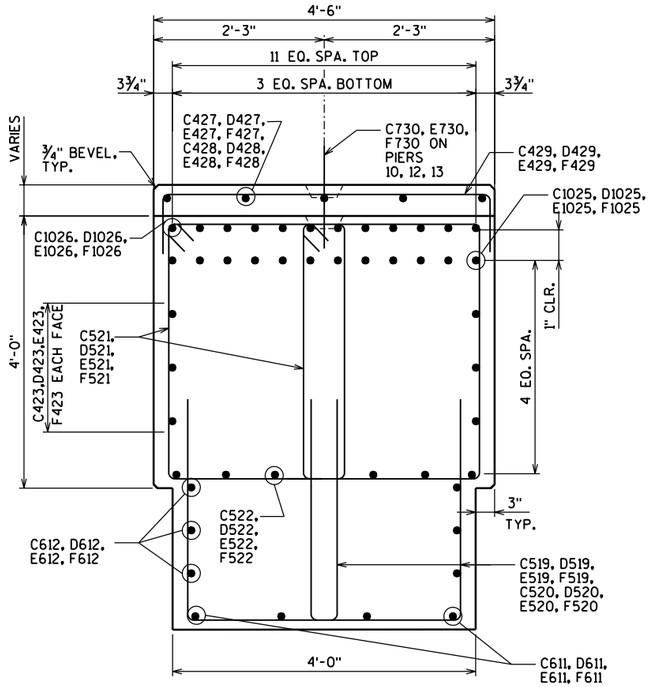

SECTION A-A

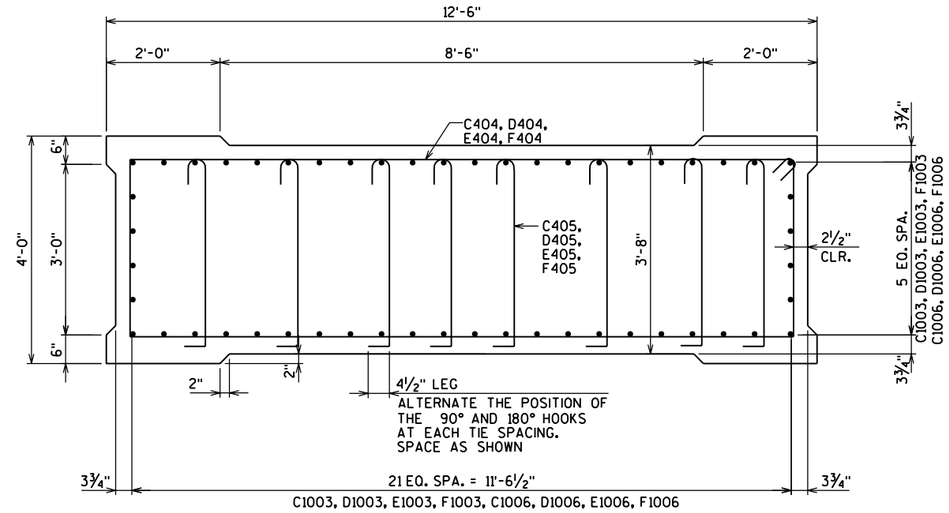

SECTION B-B

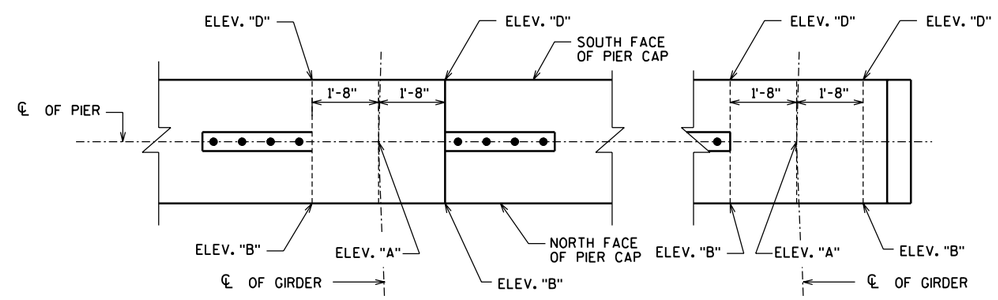

INTERIOR GIRDER

EXTERIOR GIRDER

SLOPING GIRDER SEAT DETAIL
(PIERS 10, 12, & 13)

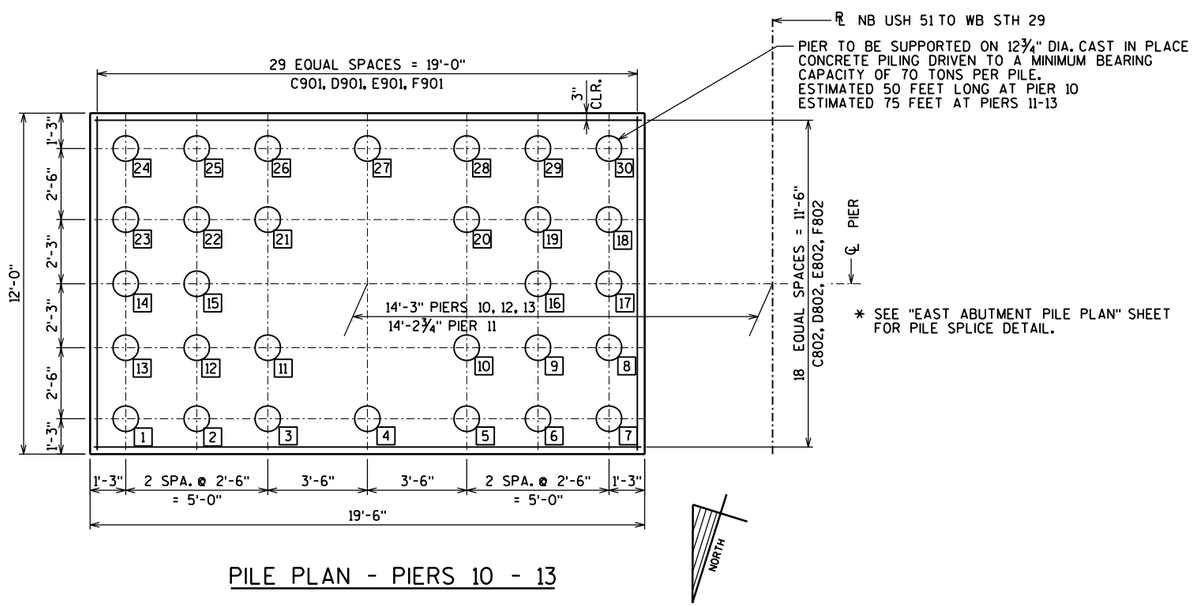

PILE PLAN - PIERS 10 - 13

TABLE OF GIRDER SEAT ELEVATIONS:

PIER 10 SEAT ELEVATIONS

GIRDER	ELEV. 'A'	ELEV. 'B'	ELEV. 'D'
1	1210.11	1210.18	1210.05
2	1209.57	1209.63	1209.51
3	1209.03	1209.09	1208.97
4	1208.49	1208.55	1208.43
5	1207.95	1208.01	1207.89

PIER 12 SEAT ELEVATIONS

GIRDER	ELEV. 'A'	ELEV. 'B'	ELEV. 'D'
1	1201.97	1202.04	1201.90
2	1201.64	1201.71	1201.57
3	1201.31	1201.38	1201.24
4	1200.98	1201.05	1200.91
5	1200.65	1200.72	1200.58

PIER 13 SEAT ELEVATIONS

GIRDER	ELEV. 'A'	ELEV. 'B'	ELEV. 'D'
1	1197.72	1197.79	1197.65
2	1197.54	1197.61	1197.47
3	1197.35	1197.42	1197.29
4	1197.17	1197.24	1197.10
5	1196.99	1197.06	1196.92

8

8

NO.	DATE	REVISION	BY

STATE OF WISCONSIN
DEPARTMENT OF TRANSPORTATION
STRUCTURES DESIGN SECTION

STRUCTURE B-37-360-003

CONST. SPEC. 2003 | DRAWN BY RBH | PLANS CK'D. WAH

PIERS 10,11,12&13 DETAILS

SHEET 12 OF 30
418

STATE PROJECT NUMBER

1166-09-74

PIER 9 - BILL OF BARS

MARK	COATED	NO. REQ'D.	LENGTH	BENT	BAR SERIES	LOCATION
H901		24	11'-6"			FOOTING HORIZONTAL
H902		18	20'-0"			FOOTING HORIZONTAL
H1003	X	72	16'-6"	X		FOOTING DOWELS
H404	X	36	33'-4"	X		SHAFT TIES
H405	X	324	5'-8"	X		SHAFT TIES
H1006	X	72	29'-0"			SHAFT VERTICAL
H1007	X	72	20'-0"			SHAFT VERTICAL
H410	X	8	19'-0"	X		SHAFT TO CAP TRANSITION
H611	X	8	17'-9"			SHAFT TO CAP TRANSITION
H612	X	16	9'-1"		⚠	SHAFT TO CAP TRANSITION
H519	X	90	13'-5"	X		CAP STIRRUPS
H520	X	90	9'-3"	X		CAP STIRRUPS
H521	X	180	12'-0"	X		CAP STIRRUPS
H522	X	6	43'-0"			CAP HORIZONTAL BOTTOM
H823	X	6	42'-0"			CAP HORIZONTAL SIDES
H424	X	6	11'-5"	X		CAP HORIZONTAL ENDS
H1025	X	12	41'-8"			CAP HORIZONTAL TOP
H1026	X	24	29'-8"	X		CAP HORIZONTAL TOP
H430	X	15	9'-6"			CAP HORIZONTAL SEATS 2-4
H431	X	5	4'-1"			CAP HORIZONTAL SEAT 1
H432	X	6	41'-8"			CAP HORIZONTAL
H433	X	45	11'-2"	X		CAP VERTICAL SEATS 1-5
H440	X	5	20'-8"			CAP HORIZ. BOX GIRDER SEAT 'L'
H441	X	21	10'-6"	X		CAP VERT. BOX GIRDER SEAT 'L'
H442	X	40	3'-11"	X		BEARING PEDESTALS
H550	X	14	10'-9"			MASKWALL VERTICAL
H451	X	19	5'-8"			MASKWALL HORIZONTAL

PIER 10 - BILL OF BARS

MARK	COATED	NO. REQ'D.	LENGTH	BENT	BAR SERIES	LOCATION
C901		30	11'-6"			FOOTING HORIZONTAL
C802		19	19'-0"			FOOTING HORIZONTAL
C1003	X	52	16'-6"	X		FOOTING DOWELS
C404	X	41	30'-4"	X		SHAFT TIES
C405	X	369	4'-1"	X		SHAFT TIES
C1006	X	52	29'-0"			SHAFT VERTICAL
C1007	X	52	24'-0"			SHAFT VERTICAL
C410	X	8	19'-0"	X		SHAFT TO CAP TRANSITION
C611	X	8	17'-0"			SHAFT TO CAP TRANSITION
C612	X	16	9'-1"		⚠	SHAFT TO CAP TRANSITION
C519	X	84	13'-7"	X		CAP STIRRUPS
C520	X	84	9'-5"	X		CAP STIRRUPS
C521	X	168	12'-10"	X		CAP STIRRUPS
C522	X	6	41'-3"			CAP HORIZONTAL BOTTOM
C423	X	6	40'-4"			CAP HORIZONTAL SIDES
C424	X	10	9'-11"	X		CAP HORIZONTAL ENDS
C1025	X	12	40'-5"			CAP HORIZONTAL TOP
C1026	X	24	29'-8"	X		CAP HORIZONTAL TOP
C427	X	15	10'-6"			CAP HORIZ. SEATS 2-4
C428	X	5	3'-4"			CAP HORIZONTAL SEAT 1
C429	X	37	10'-5"	X		CAP VERTICAL SEATS 1-4
C730	X	28	3'-2"			CAP DOWELS

PIER 11 - BILL OF BARS

MARK	COATED	NO. REQ'D.	LENGTH	BENT	BAR SERIES	LOCATION
D901		30	11'-6"			FOOTING HORIZONTAL
D802		19	19'-0"			FOOTING HORIZONTAL
D1003	X	52	16'-6"	X		FOOTING DOWELS
D404	X	38	30'-4"	X		SHAFT TIES
D405	X	342	4'-1"	X		SHAFT TIES
D1006	X	52	29'-0"			SHAFT VERTICAL
D1007	X	52	21'-0"			SHAFT VERTICAL
D410	X	8	19'-0"	X		SHAFT TO CAP TRANSITION
D611	X	8	17'-0"			SHAFT TO CAP TRANSITION
D612	X	16	9'-1"		⚠	SHAFT TO CAP TRANSITION
D519	X	84	13'-7"	X		CAP STIRRUPS
D520	X	84	9'-5"	X		CAP STIRRUPS
D521	X	168	12'-10"	X		CAP STIRRUPS
D522	X	6	41'-3"			CAP HORIZONTAL BOTTOM
D423	X	6	40'-4"			CAP HORIZONTAL SIDES
D424	X	10	9'-11"	X		CAP HORIZONTAL ENDS
D1025	X	12	40'-5"			CAP HORIZONTAL TOP
D1026	X	24	29'-8"	X		CAP HORIZONTAL TOP
D427	X	15	10'-6"			CAP HORIZ. SEATS 2-4
D428	X	5	3'-4"			CAP HORIZONTAL SEAT 1
D429	X	37	10'-5"	X		CAP VERTICAL SEATS 1-4

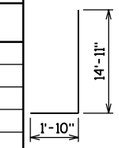

C1003, D1003, E1003, F1003, H1003

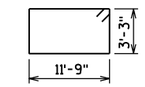

C404, D404, E404, F404

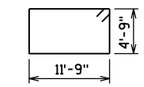

H404

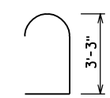

C405, D405, E405, F405

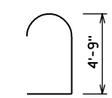

H405

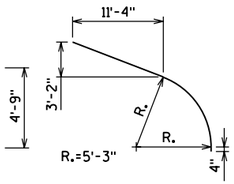

C410, D410, E410, F410, H410

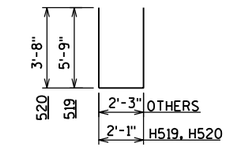

C519, C520
D519, D520
E519, E520
F519, F520
H519, H520

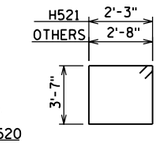

C521, D521, E521, F521 H521

BAR SERIES TABLE

MARK	NO. REQ'D.	LENGTH
C612	4 SERIES OF 4	3'-10" TO 14'-4"
D612	4 SERIES OF 4	3'-10" TO 14'-4"
E612	4 SERIES OF 4	3'-10" TO 14'-4"
F612	4 SERIES OF 4	3'-10" TO 14'-4"
H612	4 SERIES OF 4	3'-10" TO 14'-4"

⚠ LENGTH SHOWN FOR BAR IS AN AVERAGE LENGTH AND SHOULD ONLY BE USED FOR BAR WEIGHT CALCULATIONS. SEE BAR SERIES TABLE FOR ACTUAL LENGTHS. BUNDLE AND TAG EACH SERIES SEPARATELY.

THE FIRST DIGIT OF A THREE DIGIT BAR MARK OR THE FIRST TWO DIGITS OF A FOUR DIGIT BAR MARK INDICATES BAR SIZE. ALL DIMENSIONS IN THE BAR BENDS ARE OUT TO OUT.

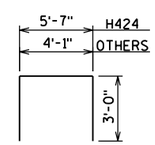

C424, D424, E424, F424 H424

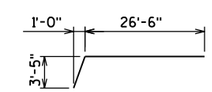

C1026, D1026, E1026, F1026, H1026

PIER 12 - BILL OF BARS

MARK	COATED	NO. REQ'D.	LENGTH	BENT	BAR SERIES	LOCATION
E901		30	11'-6"			FOOTING HORIZONTAL
E802		19	19'-0"			FOOTING HORIZONTAL
E1003	X	52	16'-6"	X		FOOTING DOWELS
E404	X	37	30'-4"	X		SHAFT TIES
E405	X	333	4'-1"	X		SHAFT TIES
E1006	X	52	29'-0"			SHAFT VERTICAL
E1007	X	52	20'-0"			SHAFT VERTICAL
E410	X	8	19'-0"	X		SHAFT TO CAP TRANSITION
E611	X	8	17'-0"			SHAFT TO CAP TRANSITION
E612	X	16	9'-1"		⚠	SHAFT TO CAP TRANSITION
E519	X	84	13'-7"	X		CAP STIRRUPS
E520	X	84	9'-5"	X		CAP STIRRUPS
E521	X	168	12'-10"	X		CAP STIRRUPS
E522	X	6	41'-3"			CAP HORIZONTAL BOTTOM
E423	X	6	40'-4"			CAP HORIZONTAL SIDES
E424	X	10	9'-11"	X		CAP HORIZONTAL ENDS
E1025	X	12	40'-5"			CAP HORIZONTAL TOP
E1026	X	24	29'-8"	X		CAP HORIZONTAL TOP
E427	X	15	10'-6"			CAP HORIZONTAL SEATS 2-4
E428	X	5	3'-4"			CAP HORIZONTAL SEAT 1
E429	X	37	10'-5"	X		CAP VERTICAL SEATS 1-4
E730	X	28	3'-2"			CAP DOWELS

PIER 13 - BILL OF BARS

MARK	COATED	NO. REQ'D.	LENGTH	BENT	BAR SERIES	LOCATION
F901		30	11'-6"			FOOTING HORIZONTAL
F802		19	19'-0"			FOOTING HORIZONTAL
F1003	X	52	16'-6"	X		FOOTING DOWELS
F404	X	35	30'-4"	X		SHAFT TIES
F405	X	315	4'-1"	X		SHAFT TIES
F1006	X	52	29'-0"			SHAFT VERTICAL
F1007	X	52	18'-0"			SHAFT VERTICAL
F410	X	8	19'-0"	X		SHAFT TO CAP TRANSITION
F611	X	8	17'-0"			SHAFT TO CAP TRANSITION
F612	X	16	9'-1"		⚠	SHAFT TO CAP TRANSITION
F519	X	84	13'-7"	X		CAP STIRRUPS
F520	X	84	9'-5"	X		CAP STIRRUPS
F521	X	168	12'-10"	X		CAP STIRRUPS
F522	X	6	41'-3"			CAP HORIZONTAL BOTTOM
F423	X	6	40'-4"			CAP HORIZONTAL SIDES
F424	X	10	9'-11"	X		CAP HORIZONTAL ENDS
F1025	X	12	40'-5"			CAP HORIZONTAL TOP
F1026	X	24	29'-8"	X		CAP HORIZONTAL TOP
F427	X	15	10'-6"			CAP HORIZONTAL SEATS 2-4
F428	X	5	3'-4"			CAP HORIZONTAL SEAT 1
F429	X	37	10'-5"	X		CAP VERTICAL SEATS 1-4
F730	X	28	3'-2"			CAP DOWELS

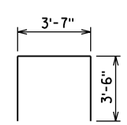

C429, D429, E429, F429,

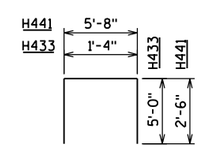

H433, H441

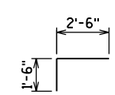

H442

NO.	DATE	REVISION	BY

STATE OF WISCONSIN
DEPARTMENT OF TRANSPORTATION
STRUCTURES DESIGN SECTION

STRUCTURE B-37-360-003

CONST. SPEC. 2003 | DRAWN BY | PLANS CK'D.

PIER BILL OF BARS

SHEET 13 OF 30
419

8

8

STATE PROJECT NUMBER

1166-09-74

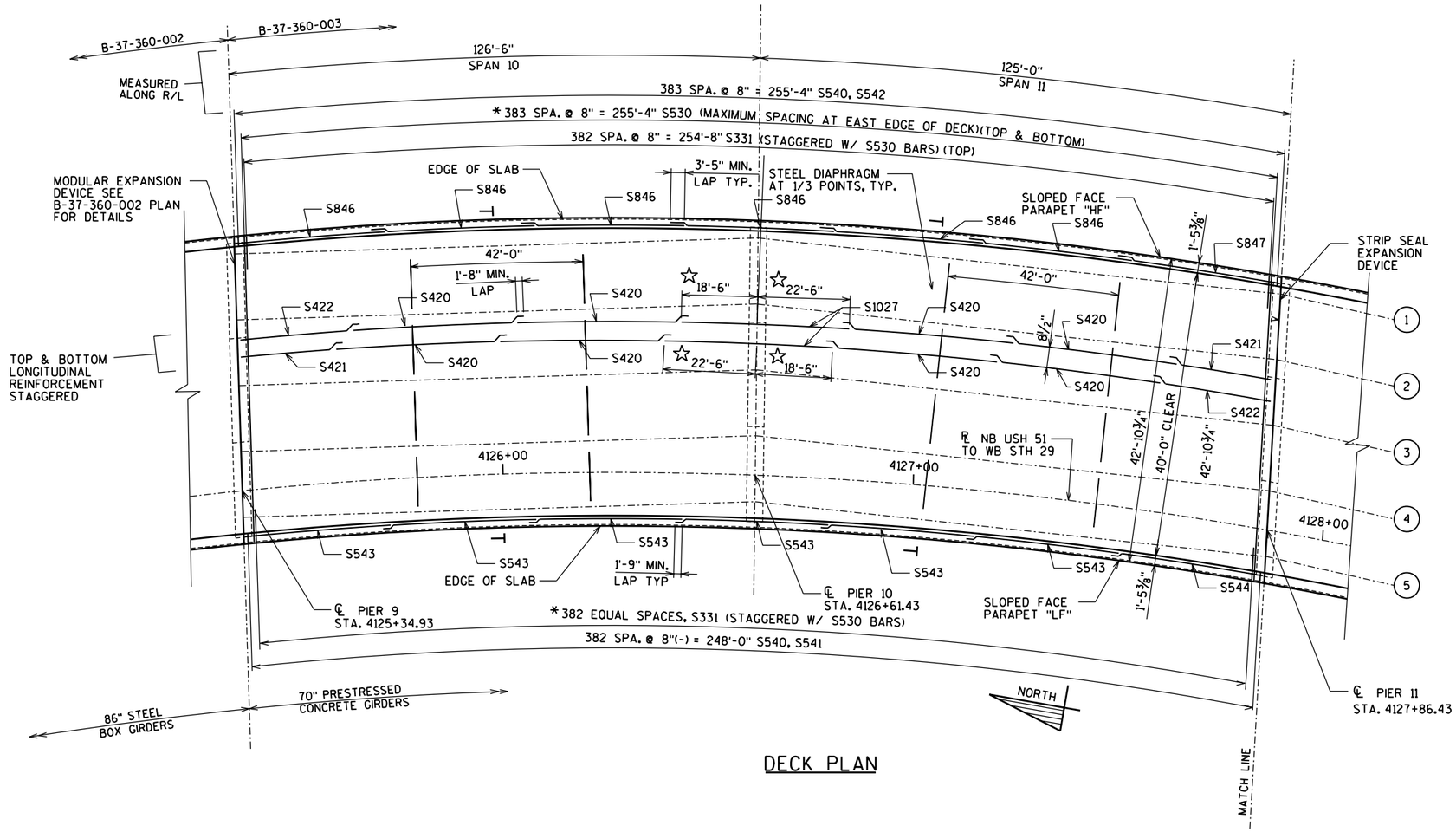

DECK PLAN

LEGEND

☆ STAGGER OFFSET AS SHOWN FOR EACH ADJACENT BAR

(X) DENOTES GIRDER NUMBER

* PLACE RADIALLY. OFFSET BAR AS SHOWN ON "SUPERSTRUCTURE DETAILS" SHEET.

⊣ "DELINEATOR" AND "DELINATOR BRACKETS" MOUNTED ON TOP OF THE PARAPET, SPACED APPROX. 100' ALONG THE RIGHT SIDE OF THE BRIDGE. YELLOW, ON THE LEFT SIDE OF THE ROADWAY, CRYSTAL, ON THE RIGHT SIDE OF THE ROADWAY. THE LEFT SIDE AND RIGHT SIDE DELINEATORS SHALL BE PERPRNDICULAR FROM EACH OTHER.

THE UNIT SHALL BE INSTALLED AS RECOMMENDED BY THE MANUFACTURER AND THE ADHESIVE SHALL BE APPLIED TO THE BASE OF THE DELINEATOR FOR BONDING TO CONCRETE BARRIER. DO NOT INSTALL WHEN TEMPERATURES LESS THAN 50° FAHRENHEIT.

NOTES:

1. THE BOTTOM TRANSVERSE BAR STEEL REINFORCEMENT SHALL BE SUPPORTED BY CONTINUOUS BAR CHAIRS WITH A CENTER TO CENTER SPACING NOT TO EXCEED 4'-0". ONE LINE OF CONTINUOUS BAR CHAIRS SHALL BE PLACED NEAR EACH EDGE OF SLAB TO SUPPORT THE ENDS OF THE BOTTOM TRANSVERSE BAR STEEL.
2. THE TOP LONGITUDINAL BAR STEEL REINFORCEMENT SHALL BE SUPPORTED BY CONTINUOUS BAR CHAIRS IN TRANSVERSE DIRECTION ON 4'-0" CENTERS.
3. ALL TRANSVERSE BAR STEEL SHALL BE PLACED RADIALLY TO THE R/L NB USH 51 TO WB STH 29.
4. ALL LONGITUDINAL BAR STEEL SHALL BE PLACED CONCENTRIC TO R/L NB USH 51 TO WB STH 29.
5. DECK ELEVATIONS SHOWN AT PIER 9 ARE AT THE END OF SLAB.

TOP OF DECK ELEVATIONS

LOCATION	PIER 9	0.1 PT.	0.2 PT.	0.3 PT.	0.4 PT.	0.5 PT.	0.6 PT.	0.7 PT.	0.8 PT.	0.9 PT.	PIER 10	0.1 PT.	0.2 PT.	0.3 PT.	0.4 PT.	0.5 PT.	0.6 PT.	0.7 PT.	0.8 PT.	0.9 PT.	PIER 11
EDGE OF SLAB	1220.42	1220.18	1219.88	1219.57	1219.26	1218.95	1218.63	1218.30	1217.97	1217.63	1217.29	1216.95	1216.60	1216.25	1215.89	1215.53	1215.16	1214.79	1214.40	1214.02	1213.65
GIRDER 1	1220.25	1219.99	1219.66	1219.34	1219.02	1218.70	1218.39	1218.07	1217.75	1217.44	1217.12	1216.76	1216.39	1216.02	1215.65	1215.29	1214.92	1214.56	1214.18	1213.83	1213.48
GIRDER 2	1219.71	1219.44	1219.12	1218.80	1218.48	1218.16	1217.85	1217.53	1217.21	1216.90	1216.58	1216.22	1215.85	1215.48	1215.11	1214.75	1214.38	1214.02	1213.64	1213.29	1212.93
GIRDER 3	1219.17	1218.90	1218.58	1218.26	1217.94	1217.62	1217.30	1216.99	1216.67	1216.36	1216.04	1215.67	1215.31	1214.94	1214.57	1214.21	1213.84	1213.48	1213.10	1212.75	1212.40
GIRDER 4	1218.63	1218.36	1218.04	1217.72	1217.40	1217.08	1216.76	1216.45	1216.13	1215.82	1215.50	1215.13	1214.77	1214.40	1214.03	1213.67	1213.30	1212.94	1212.56	1212.20	1211.85
GIRDER 5	1218.08	1217.82	1217.50	1217.18	1216.86	1216.54	1216.22	1215.91	1215.59	1215.28	1214.96	1214.59	1214.23	1213.86	1213.49	1213.13	1212.76	1212.40	1212.02	1211.66	1211.31
EDGE OF SLAB	1217.89	1217.65	1217.35	1217.05	1216.74	1216.42	1216.10	1215.77	1215.44	1215.11	1214.76	1214.42	1214.08	1213.72	1213.37	1213.00	1212.64	1212.26	1211.87	1211.49	1211.12

NO.	DATE	REVISION	BY

STATE OF WISCONSIN
DEPARTMENT OF TRANSPORTATION
STRUCTURES DESIGN SECTION

STRUCTURE B-37-360-003

CONST. SPEC. 2003 | DRAWN BY RBH | PLANS CK'D.

SUPERSTRUCTURE PLAN SPANS 10 & 11

SHEET 14 OF 30
420

8

8

STATE PROJECT NUMBER
1166-09-74

"DELINEATOR" AND "DELINATOR BRACKETS" MOUNTED ON TOP OF THE PARAPET, SPACED APPROX. 100' ALONG THE RIGHT SIDE OF THE BRIDGE. YELLOW, ON THE LEFT SIDE OF THE ROADWAY, CRYSTAL, ON THE RIGHT SIDE OF THE ROADWAY. THE LEFT SIDE AND RIGHT SIDE DELINEATORS SHALL BE PERPRNDICULAR FROM EACH OTHER.

THE UNIT SHALL BE INSTALLED AS RECOMMENDED BY THE MANUFACTURER AND THE ADHESIVE SHALL BE APPLIED TO THE BASE OF THE DELINEATOR FOR BONDING TO CONCRETE BARRIER. DO NOT INSTALL WHEN TEMPERATURES LESS THAN 50° FAHRENHEIT.

LEGEND

- ☆ STAGGER OFFSET AS SHOWN FOR EACH ADJACENT BAR
- (X) DENOTES GIRDER NUMBER
- * PLACE RADIALLY. OFFSET BAR AS SHOWN ON "SUPERSTRUCTURE DETAILS" SHEET.
- ● END OF SLAB = END OF PAVING NOTCH. SEE SECTION AT ABUTMENT ON THE "SUPERSTRUCTURE DETAILS 2" SHEET FOR FURTHER INFORMATION.

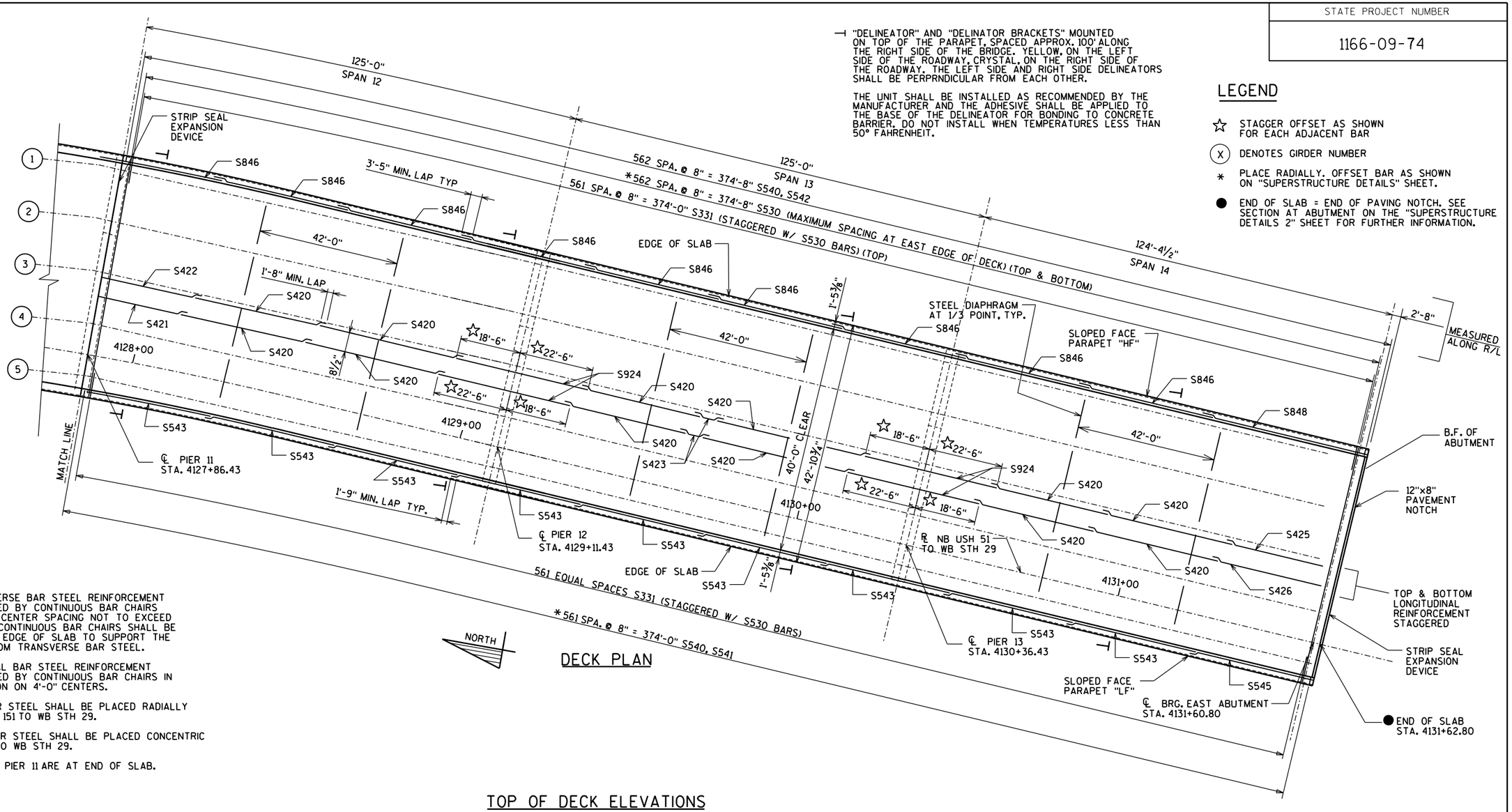

DECK PLAN

NOTES:

1. THE BOTTOM TRANSVERSE BAR STEEL REINFORCEMENT SHALL BE SUPPORTED BY CONTINUOUS BAR CHAIRS WITH A CENTER TO CENTER SPACING NOT TO EXCEED 4'-0". ONE LINE OF CONTINUOUS BAR CHAIRS SHALL BE PLACED NEAR EACH EDGE OF SLAB TO SUPPORT THE ENDS OF THE BOTTOM TRANSVERSE BAR STEEL.
2. THE TOP LONGITUDINAL BAR STEEL REINFORCEMENT SHALL BE SUPPORTED BY CONTINUOUS BAR CHAIRS IN TRANSVERSE DIRECTION ON 4'-0" CENTERS.
3. ALL TRANSVERSE BAR STEEL SHALL BE PLACED RADIALLY TO THE R/L NB USH 151 TO WB STH 29.
4. ALL LONGITUDINAL BAR STEEL SHALL BE PLACED CONCENTRIC TO R/L NB USH 151 TO WB STH 29.
5. DECK ELEVATIONS AT PIER 11 ARE AT END OF SLAB.

TOP OF DECK ELEVATIONS

LOCATION	PIER 11	0.1 PT.	0.2 PT.	0.3 PT.	0.4 PT.	0.5 PT.	0.6 PT.	0.7 PT.	0.8 PT.	0.9 PT.	PIER 12	0.1 PT.	0.2 PT.	0.3 PT.	0.4 PT.	0.5 PT.	0.6 PT.	0.7 PT.	0.8 PT.	0.9 PT.	PIER 13	0.1 PT.	0.2 PT.	0.3 PT.	0.4 PT.	0.5 PT.	0.6 PT.	0.7 PT.	0.8 PT.	0.9 PT.	E. ABUT
EDGE OF SLAB	1213.65	1213.22	1212.75	1212.29	1211.82	1211.36	1210.90	1210.45	1209.99	1209.54	1209.09	1208.62	1208.16	1207.70	1207.24	1206.78	1206.32	1205.89	1205.52	1205.14	1204.76	1204.39	1204.02	1203.65	1203.27	1202.90	1202.53	1202.15	1201.78	1201.41	1201.03
GIRDER 1	1213.48	1213.05	1212.59	1212.14	1211.69	1211.24	1210.79	1210.34	1209.89	1209.43	1208.98	1208.53	1208.07	1207.62	1207.17	1206.72	1206.26	1205.83	1205.46	1205.08	1204.71	1204.34	1203.96	1203.59	1203.22	1202.84	1202.47	1202.10	1201.72	1201.35	1200.98
GIRDER 2	1212.93	1212.52	1212.08	1211.65	1211.22	1210.80	1210.37	1209.94	1209.51	1209.08	1208.65	1208.22	1207.79	1207.36	1206.93	1206.49	1206.06	1205.65	1205.28	1204.90	1204.52	1204.15	1203.78	1203.41	1203.03	1202.66	1202.29	1201.91	1201.54	1201.17	1200.79
GIRDER 3	1212.40	1211.99	1211.57	1211.16	1210.75	1210.35	1209.94	1209.54	1209.13	1208.73	1208.32	1207.91	1207.50	1207.09	1206.68	1206.27	1205.87	1205.47	1205.09	1204.72	1204.34	1203.97	1203.60	1203.22	1202.85	1202.48	1202.10	1201.73	1201.36	1200.98	1200.61
GIRDER 4	1211.85	1211.46	1211.06	1210.67	1210.28	1209.90	1209.52	1209.14	1208.76	1208.37	1207.99	1207.60	1207.22	1206.83	1206.44	1206.05	1205.67	1205.28	1204.91	1204.53	1204.16	1203.79	1203.41	1203.04	1202.67	1202.29	1201.92	1201.55	1201.17	1200.80	1200.43
GIRDER 5	1211.31	1210.93	1210.55	1210.18	1209.82	1209.46	1209.10	1208.74	1208.38	1208.02	1207.66	1207.29	1206.93	1206.56	1206.20	1205.83	1205.47	1205.10	1204.73	1204.35	1203.97	1203.60	1203.23	1202.86	1202.48	1202.11	1201.74	1201.36	1200.99	1200.62	1200.24
EDGE OF SLAB	1211.12	1210.76	1210.40	1210.04	1209.69	1209.33	1208.97	1208.61	1208.26	1207.90	1207.54	1207.18	1206.83	1206.47	1206.11	1205.75	1205.40	1205.03	1204.66	1204.28	1203.91	1203.54	1203.16	1202.79	1202.42	1202.04	1201.67	1201.30	1200.92	1200.55	1200.18

8

8

NO.	DATE	REVISION	BY

STATE OF WISCONSIN
DEPARTMENT OF TRANSPORTATION
STRUCTURES DESIGN SECTION

STRUCTURE B-37-360-003

CONST. SPEC. 2003 | DRAWN BY RBH | PLANS CK'D.

SUPERSTRUCTURE PLAN SPANS 12-14

SHEET 15 OF 30
421

STATE PROJECT NUMBER

1166-09-74

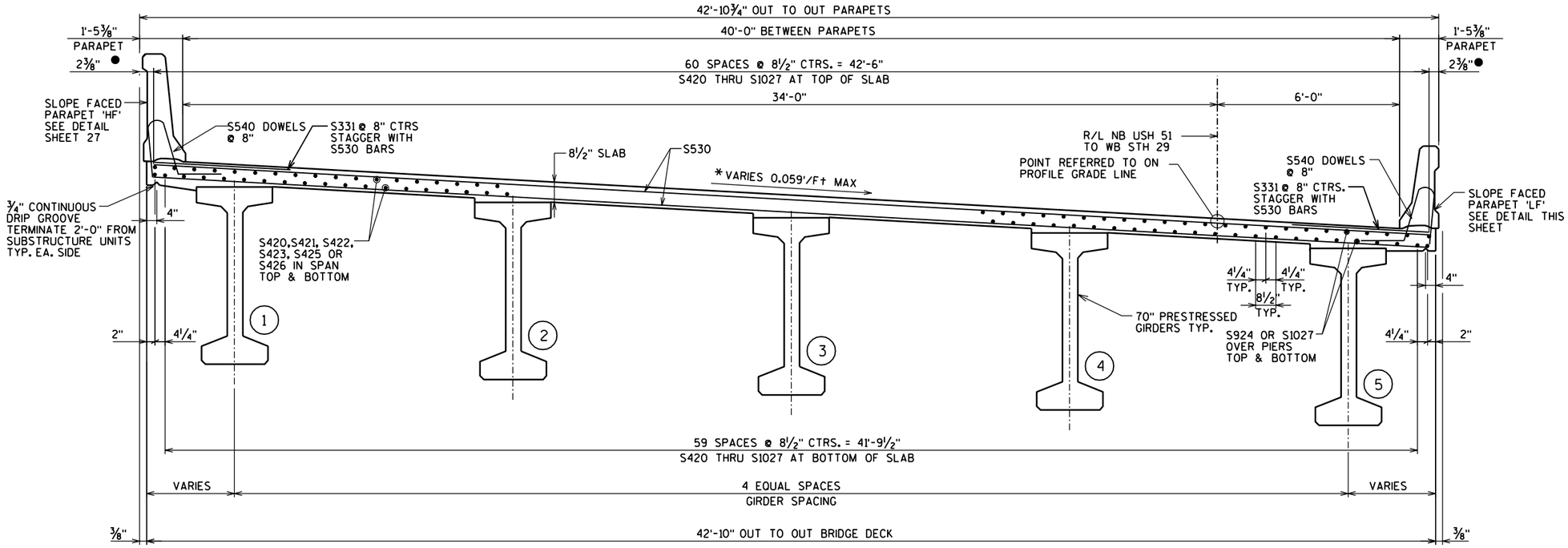

DECK CROSS SECTION

LOOKING EAST

LEGEND

- ● 5" FROM EDGE OF DECK
- (X) GIRDER NUMBER
- * SEE SHEET 2 FOR SUPERELEVATION TRANSITION INFORMATION

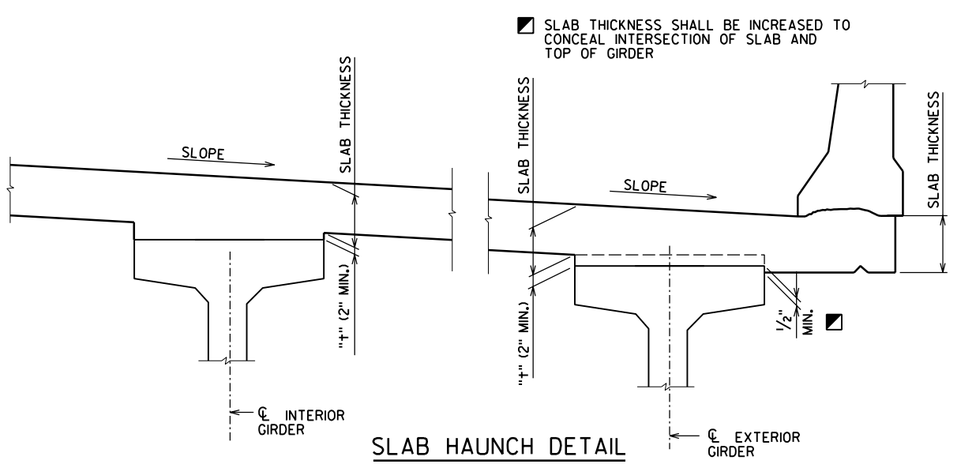

SLAB HAUNCH DETAIL

IF 2" MINIMUM HAUNCH HEIGHT 't' CANNOT BE MAINTAINED, THE GRADE LINE SHALL BE REVISED BY THE CONTRACTOR WITH THE APPROVAL OF THE ENGINEER. THE PLAN SLAB THICKNESS SHALL BE HELD. MAXIMUM HAUNCH HEIGHT EQUALS "STIRRUP PROJECTION" MINUS 3 INCHES.

TO DETERMINE 't': ELEVATION OF TOP OF GIRDERS AT ℄ OF SUBSTRUCTURE UNITS AND AT 0.1 POINTS OF EACH SPAN SHALL BE TAKEN. THEN FOLLOW THIS PROCESS:

TOP OF DECK EL. AT FINAL GRADE
- TOP OF GIRDER ELEVATION
+ DEADLOAD DEFLECTION
- SLAB THICKNESS
= HAUNCH HEIGHT 't'

NOTE:
SEE GIRDER SHEET FOR DEAD LOAD DEFLECTIONS.

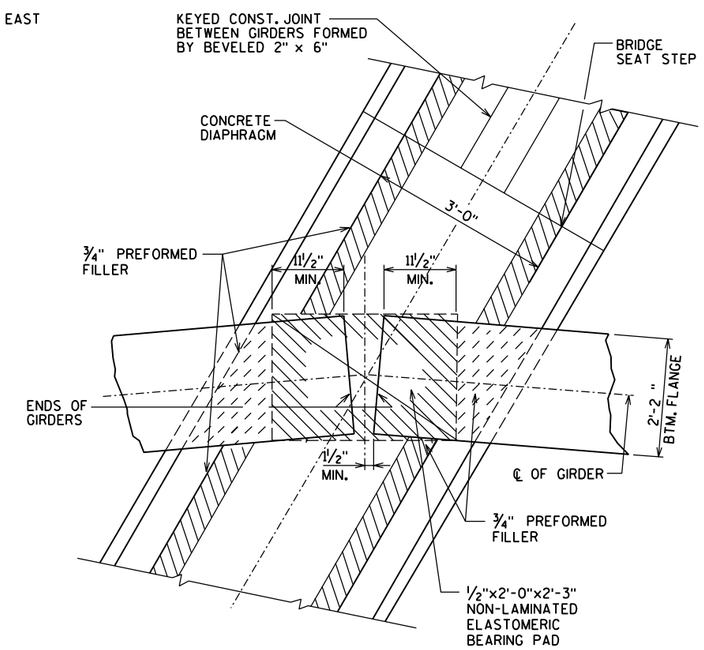

FIXED BEARING DETAIL (AT PIERS 10, 12 & 13)

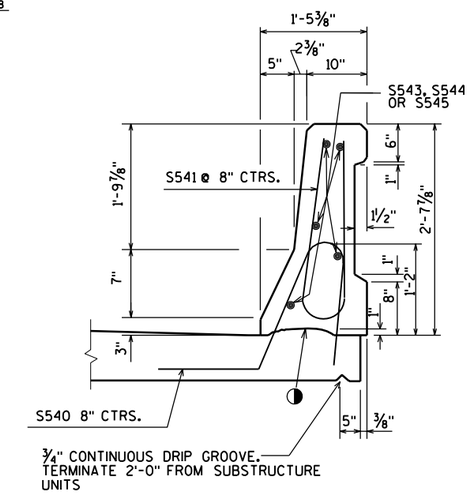

SECTION THRU 'LF' PARAPET

◐ CONST. JOINT - STRIKE OFF AS SHOWN.

SEE SHEET 27 FOR SECTION THRU 'HF' PARAPET.

NO.	DATE	REVISION	BY

STATE OF WISCONSIN
DEPARTMENT OF TRANSPORTATION
STRUCTURES DESIGN SECTION

STRUCTURE B-37-360-003

CONST. SPEC.	DRAWN BY	PLANS CK'D.
2003	RBH	

SUPERSTRUCTURE DETAILS - 1

SHEET 16 OF 30
422

8

8

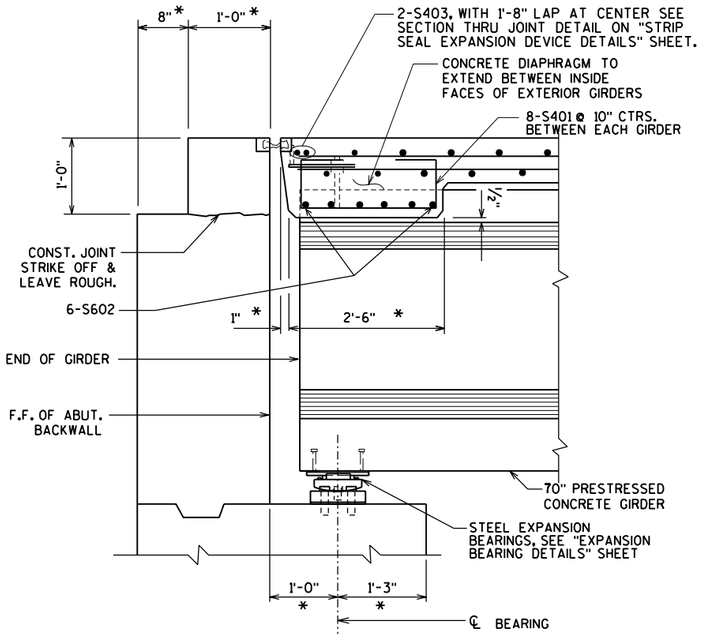

AT ABUTMENT

NOTE: FOR EXPANSION DEVICE DETAILS NOT SHOWN. SEE SHEET 24.

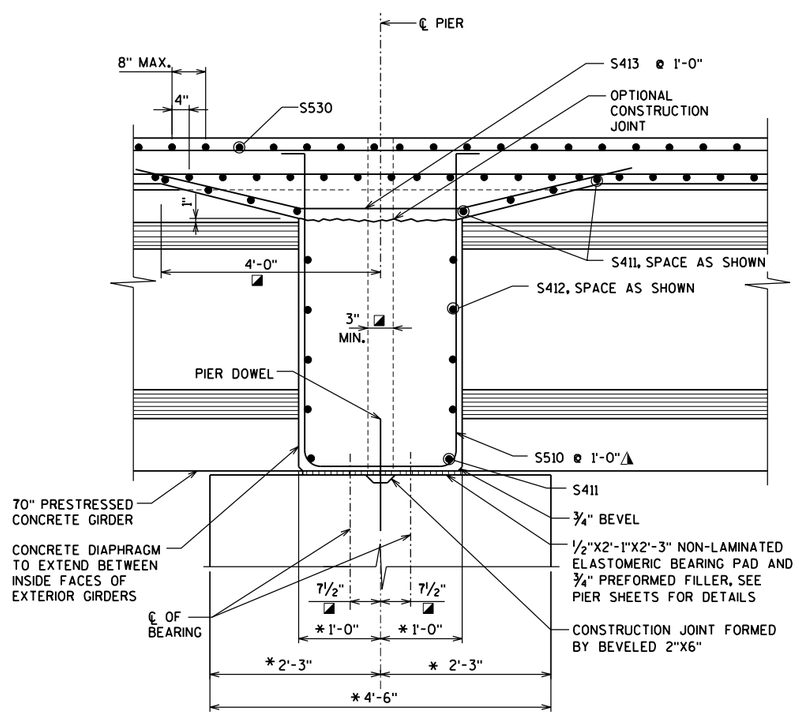

AT FIXED PIERS

(PIERS 10, 12 & 13)

PART LONGITUDINAL SECTION

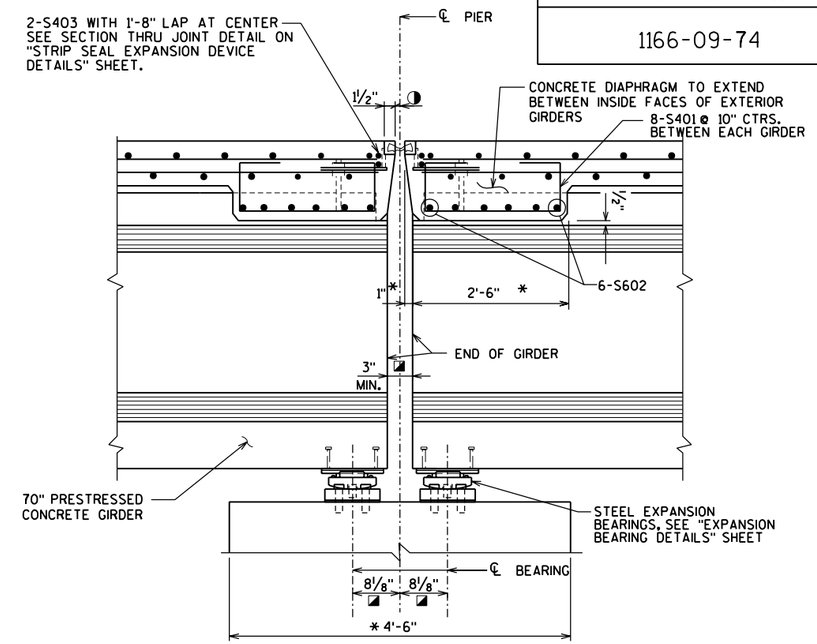

AT EXPANSION PIER 11

NOTE: FOR EXPANSION DEVICE DETAILS NOT SHOWN. SEE SHEET 24.

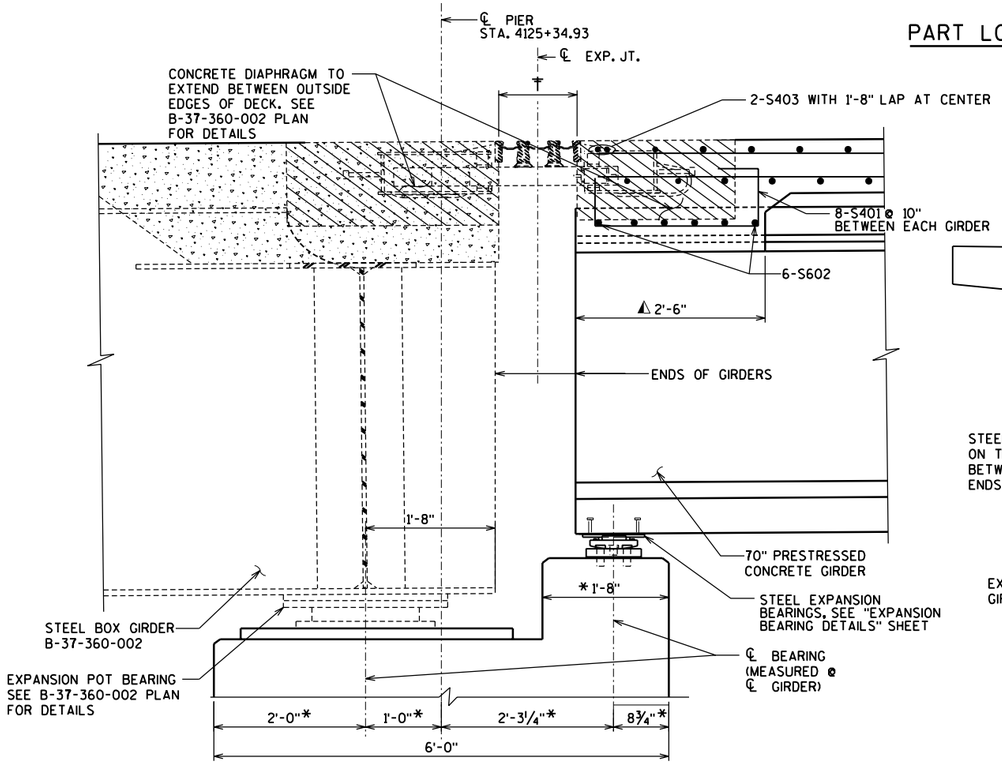

PART LONGITUDINAL SECTION AT PIER 9

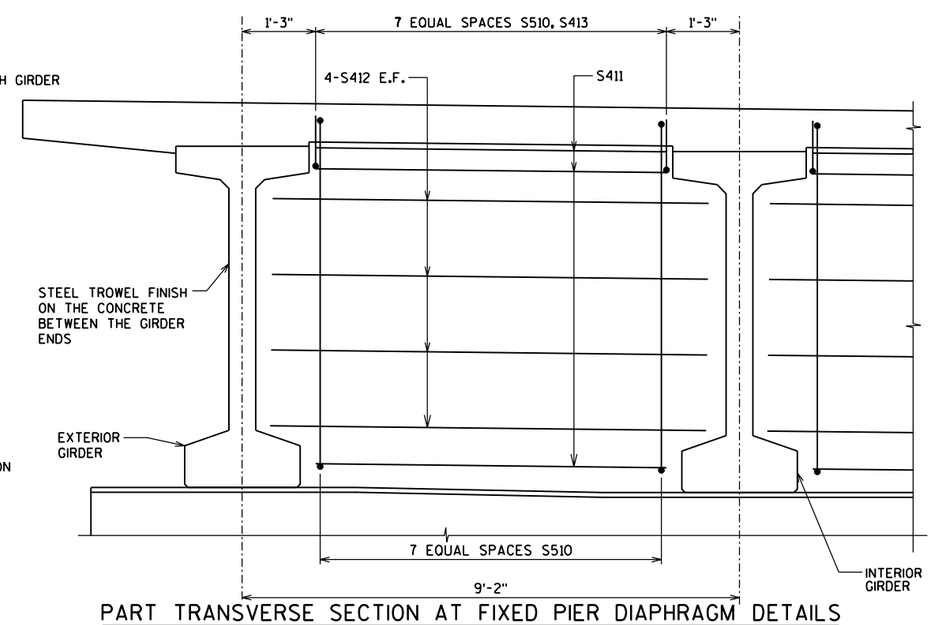

PART TRANSVERSE SECTION AT FIXED PIER DIAPHRAGM DETAILS

(PIERS 10, 12 & 13)

NOTES

ALL VERTICAL BAR STEEL REINFORCEMENT IN CONCRETE DIAPHRAGMS SHALL BE SPACED AND PLACED PARALLEL TO GIRDERS

LEGEND

- ◪ DIMENSION IS PARALLEL TO GIRDER
- * DIMENSION IS TAKEN NORMAL TO ℄ SUBSTRUCTURE UNITS.
- ◑ SEE TEMPERATURE TABLE ON STRIP SEAL "EXPANSION DEVICE" SHEET
- ◭ DIMENSION TAKEN PERPENDICULAR TO GIRDER
- ⊤ SEE"MODULAR EXPANSION DEVICE" SHEET IN B-37-360-002 PLANS.

NO.	DATE	REVISION	BY

STATE OF WISCONSIN
DEPARTMENT OF TRANSPORTATION
STRUCTURES DESIGN SECTION

STRUCTURE B-37-360-003

CONST. SPEC. 2003	DRAWN BY RBH	PLANS CK'D. WAH

SUPERSTRUCTURE DETAILS 2

8

8

STATE PROJECT NUMBER

1166-09-74

TOTAL WEIGHT = 170,140 LBS

SUPERSTRUCTURE - BILL OF BARS

MARK	COATED	NO. REQ'D.	LENGTH	BENT	BAR SERIES	LOCATION
S401	X	128	4'-8"	X		ABUTMENT, PIERS 9 & 11 DIAPHRAGM VERTICAL
S602	X	96	6'-4"			ABUTMENT, PIERS 9 & 11 DIAPHRAGM HORIZONTAL
S403	X	16	21'-4"			ABUTMENT, PIERS 9 & 11 DIAPHRAGM HORIZONTAL
S510	X	96	15'-10"	X		PIERS 10, 12 & 13 DIAPHRAGM VERTICAL
S411	X	120	6'-4"			PIERS 10, 12 & 13 DIAPHRAGM HORIZONTAL
S412	X	96	8'-4"			PIERS 10, 12 & 13 DIAPHRAGM HORIZONTAL
S413	X	96	9'-7"	X		PIERS 10, 12 & 13 DIAPHRAGM VERTICAL
S420	X	1230	40'-0"			DECK LONGITUDINAL SPAN 10-14
S421	X	183	30'-4"			DECK LONGITUDINAL SPAN 10, 11 & 12
S422	X	186	34'-4"			DECK LONGITUDINAL SPAN 10, 11 & 12
S423	X	123	9'-0"			DECK LONGITUDINAL SPAN 13
S924	X	246	41'-0"			DECK LONGITUDINAL OVER PIERS 12&13
S425	X	61	27'-0"			DECK LONGITUDINAL SPAN 14
S426	X	62	31'-0"			DECK LONGITUDINAL SPAN 14
S1027	X	123	41'-0"			DECK LONGITUDINAL OVER PIER 10
S530	X	1894	42'-6"			DECK TRANSVERSE TOP AND BOTTOM
S331	X	1890	5'-6"			DECK TRANSVERSE TOP @ OVERHANGS
S540	X	1892	4'-7"	X		DECK PARAPET DOWELS
S541	X	945	4'-10"	X		PARAPET VERT. @ EAST EDGE OF DECK
S542	X	947	6'-6"	X		PARAPET VERT. @ WEST EDGE OF DECK
S543	X	75	40'-0"			PARAPET LONGITUDINAL @ SOUTH SIDE
S544	X	5	19'-0"			PARAPET LONGITUDINAL @ SOUTH SIDE SPAN 11
S545	X	5	31'-0"			PARAPET LONGITUDINAL @ SOUTH SIDE
S846	X	120	40'-0"			PARAPET LONGITUDINAL @ NORTH SIDE
S847	X	8	36'-0"			PARAPET LONGITUDINAL @ NORTH SIDE SPAN 11
S848	X	8	46'-0"			PARAPET LONGITUDINAL @ NORTH SIDE SPAN 14

THE FIRST DIGIT OF A 3 DIGIT OR THE FIRST TWO DIGITS OF A FOUR DIGIT BAR MARK INDICATES BAR SIZE. ALL DIMENSIONS IN THE BAR BENDS ARE OUT TO OUT.

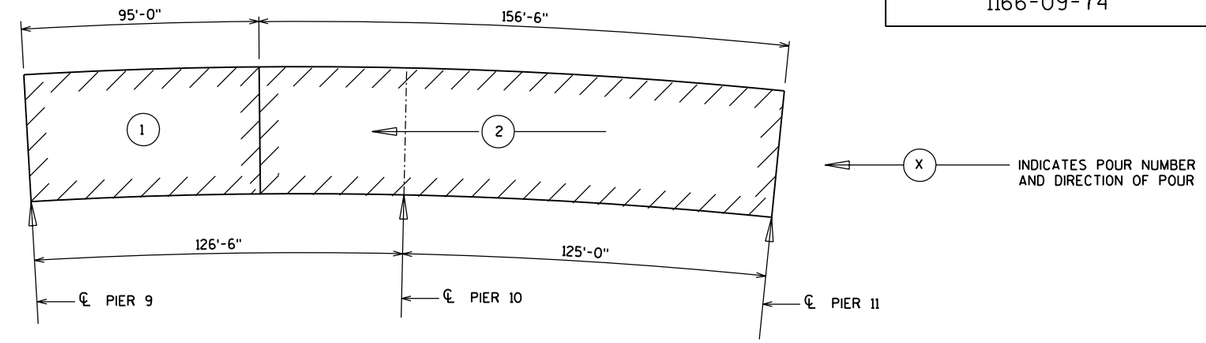

SLAB POURING SEQUENCE SPANS 10 & 11

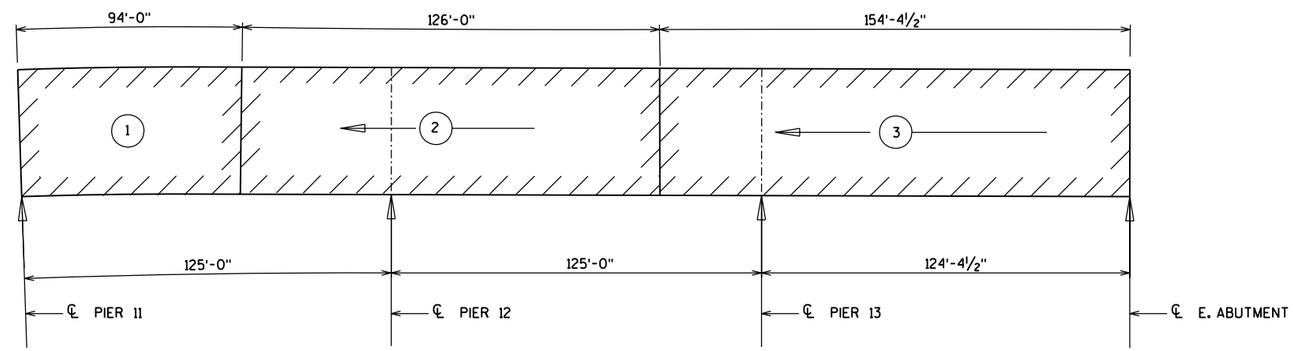

SLAB POURING SEQUENCE SPANS 12 - 14

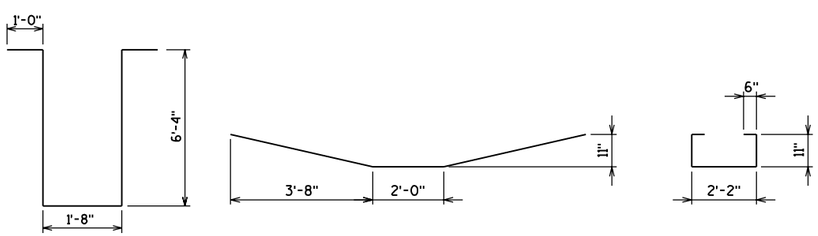

S510 S413 S401

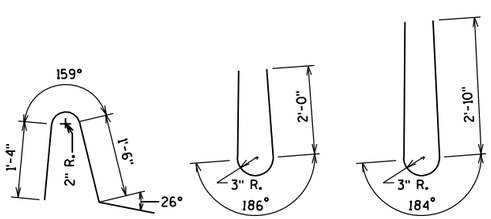

S540 S541 S542

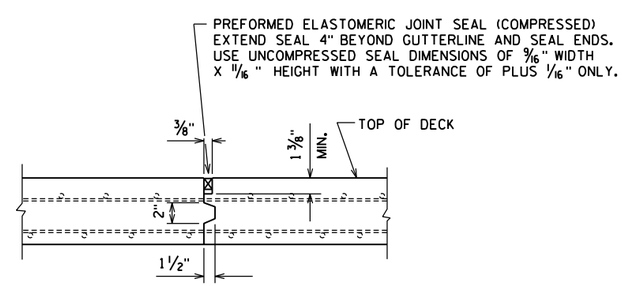

SECTION P

NOTES ON PLANS

THE RATE OF PLACING CONCRETE SHALL EQUAL OR EXCEED ½ SPAN LENGTH PER HOUR BUT NEED NOT EXCEED 100 CU. YDS. PER HOUR.

TRANSVERSE CONSTRUCTION JOINTS, MAY BE OMITTED WITH THE APPROVAL OF THE STRUCTURES DESIGN SECTION.

TWO OR MORE ALTERNATE POURS MAY BE PLACED ON THE SAME DAY.

THE CONTRACTOR MAY SUBMIT AN ALTERNATE POURING SEQUENCE SUBJECT TO THE APPROVAL OF THE STRUCTURES DESIGN SECTION.

8

8

NO.	DATE	REVISION	BY

STATE OF WISCONSIN
DEPARTMENT OF TRANSPORTATION
STRUCTURES DESIGN SECTION

STRUCTURE B-37-360-003

CONST. SPEC. 2003 | DRAWN BY RBH | PLANS CK'D.

SUPERSTRUCTURE DETAILS - 3

SHEET 18 OF 30
424

STATE PROJECT NUMBER

1166-09-74

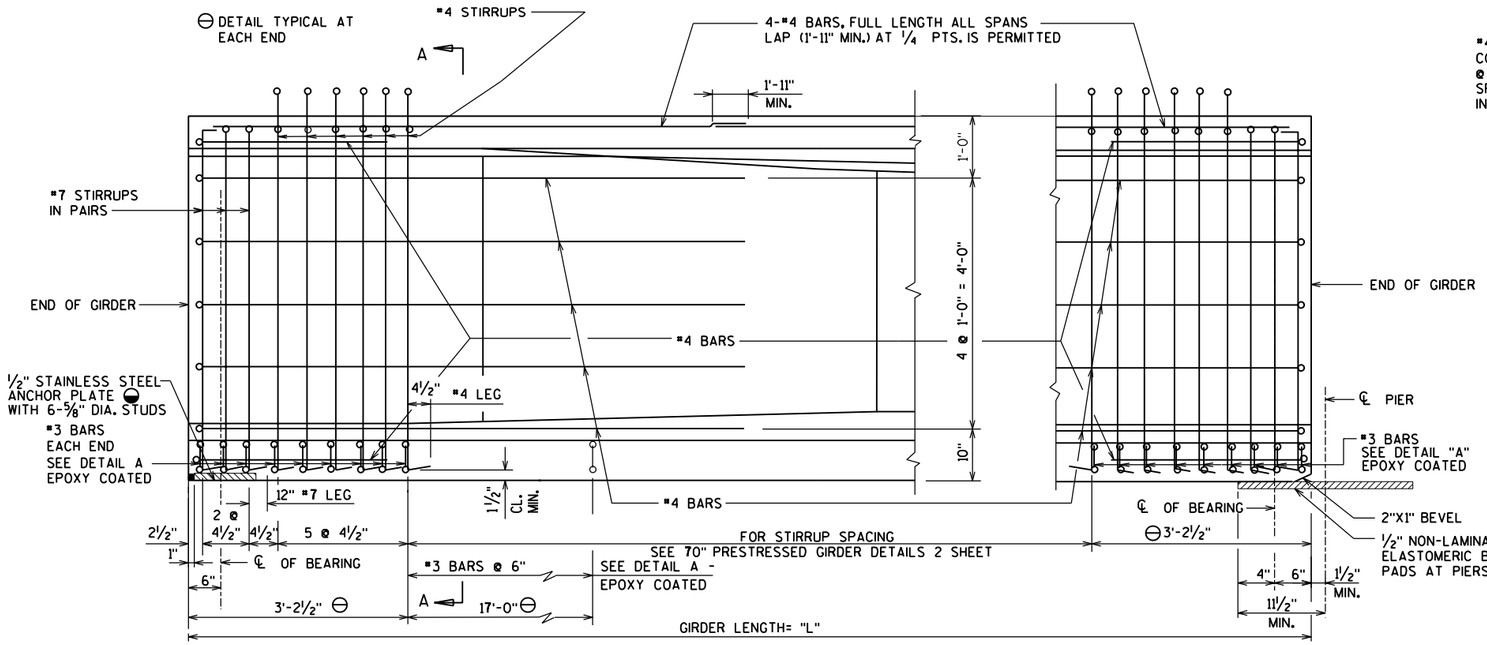

AT SUPPORT WITH STEEL EXPANSION BRGS.

SIDE VIEW OF GIRDER

AT SUPPORT WITH 1/2" ELASTOMERIC BRG. PADS

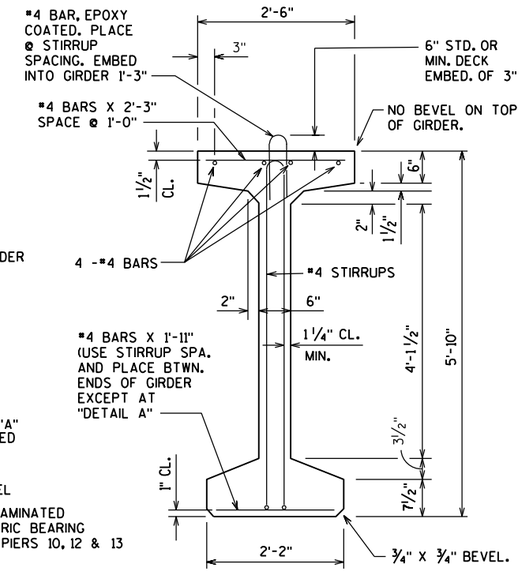

SECTION THRU GIRDER

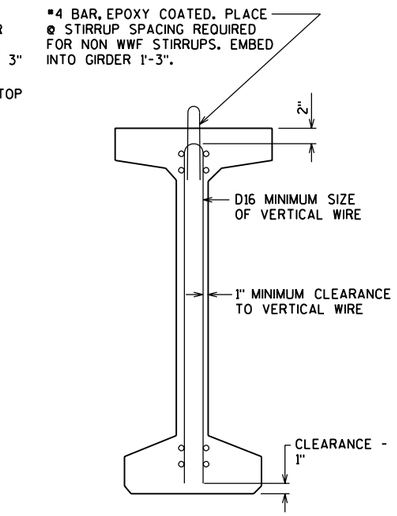

SECTION THRU GIRDER

SHOWING WELDED WIRE FABRIC (WWF) STIRRUPS

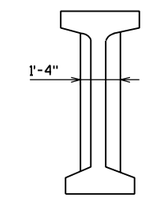

SECTION A-A

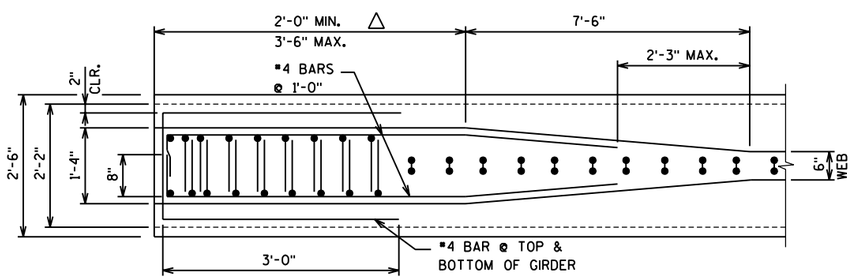

TOP VIEW OF GIRDER

GIRDER NOTES

THE GIRDERS SHALL BE PROVIDED WITH A SUITABLE LIFTING DEVICE FOR HANDLING AND ERECTING THE GIRDERS. ALL GIRDERS SHALL BE CAST FULL LENGTH AS SHOWN.

STRANDS SHALL BE FLUSH WITH END OF GIRDER. ENDS OF STRANDS SHALL BE PAINTED WITH NON-STAINING GRAY NON-BITUMINOUS JOINT SEALER. THIS APPLIES ONLY TO THOSE ENDS OF GIRDERS THAT ARE FINALLY EXPOSED.

TOP OF GIRDER TO BE ROUGH FLOATED AND BROOMED TRANSVERSELY FOR BONDING TO THE SLAB, EXCEPT THE OUTSIDE 2" OF GIRDER, WHICH SHALL BE TROWEL FINISHED.

SPACING SHOWN FOR #4 STIRRUPS IS FOR GRADE 60 REINFORCEMENT. IF THE FABRICATOR WANTS TO BUILD A BAR STEEL CAGE BY WELDING LONGITUDINAL REINFORCEMENT TO THE #4 STIRRUPS, TWO OPTIONS ARE AVAILABLE:

1. USE ASTM A706, GRADE 60 REINFORCEMENT AND THE STIRRUP SPACING AS SHOWN ON THE PLANS.

2. USE ASTM A615, GRADE 40 REINFORCEMENT AND A MODIFIED STIRRUP SPACING SUBMITTED TO AND APPROVED BY THE STRUCTURES DEVELOPMENT SECTION.

AN ALTERNATE EQUIVALENT OF WELDED WIRE FABRIC (WWF) MAY BE SUBSTITUTED FOR THE STIRRUP REINFORCEMENT SHOWN, UPON APPROVAL OF THE STRUCTURES DEVELOPMENT SECTION. (608) 266-8494

WELDED WIRE FABRIC SHALL CONFORM TO THE REQUIREMENTS OF ASTM A497.

IF THE CONTRACTOR USES THE BOTTOM FLANGE TO SUPPORT CONSTRUCTION FORMS, THE CONTRACTOR SHALL SUBMIT FALSEWORK PLANS FOR APPROVAL BY THE STRUCTURES DESIGN SECTION.

◒ STAINLESS STEEL ANCHOR PLATE ONLY AT THE ENDS AT THE EAST ABUTMENT AND PIERS 9 & 11. SEE STEEL EXPANSION BEARING SHEET FOR THE 6-5/8" DIAMETER X 6-3/8" LONG STUDS.

△ SET THE END BLOCK LENGTHS OF GIRDERS RESTING ON THE SAME PIER TO 2"+/-.

BID ITEM SHALL BE "PRESTRESSED GIRDER, I-TYPE, 70-INCH".

APPROX. CONCRETE HAUNCH DEPTHS ARE AS FOLLOWS:

PIER 9:	3 3/4"
MIDSPAN 10:	2"
PIER 10:	4 1/4"
MIDSPAN 11:	2"
PIER 11:	4 1/4"
MIDSPAN 12:	2 3/4"
PIER 12:	4 1/2"
MIDSPAN 13:	2"
PIER 13:	4 1/2"
MIDSPAN 14:	2"
E. ABUTMENT:	2 3/4"

NOTE: HAUNCH DEPTHS ARE TAKEN AT EDGE OF GIRDER AT LOW SIDE OF SUPERELEVATION.

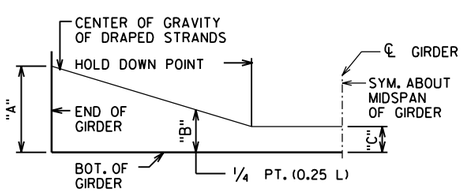

DRAPED STRAND PROFILE

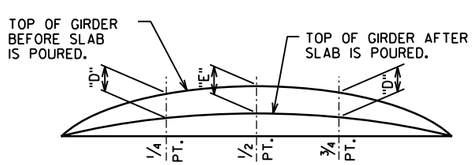

DEAD LOAD DEFLECTION DIAGRAM

8

8

NO.	DATE	REVISION	BY

STATE OF WISCONSIN
DEPARTMENT OF TRANSPORTATION
STRUCTURES DESIGN SECTION

STRUCTURE B-37-360-003

CONST. SPEC. 2003 | DRAWN BY RBH | PLANS CK'D.

70" PRESTRESSED GIRDER DETAILS 1

SHEET 19 OF 30
425

STATE PROJECT NUMBER

1166-09-74

SPAN 10 GIRDER DATA

GIRDER NO.	GIRDER LENGTH "L"	DEAD LOAD DEFL. (IN.) "D"	DEAD LOAD DEFL. (IN.) "E"	CONCRETE STRENGTH f'c (PSI)	TOTAL INTIAL PRESTRESS FORCE (KIPS)	DIA. OF STRANDS (IN.)	TOTAL No. OF STRANDS	RELEASE STRENGTH f'ci (PSI) *	DRAPED PATTERN INCHES "A"	DRAPED PATTERN INCHES "B" MIN.	DRAPED PATTERN INCHES "B" MAX.	DRAPED PATTERN INCHES "C"	#4 STIRRUP SPACING FROM 3'-2½" TO 0.1 L	#4 STIRRUP SPACING FROM 0.1L TO 0.2 L	#4 STIRRUP SPACING FROM 0.2L TO 0.5 L	#5 STIRRUP SPACING FROM 3'-2½" TO 0.1 L	#5 STIRRUP SPACING FROM 0.1L TO 0.2 L	#5 STIRRUP SPACING FROM 0.2L TO 0.5 L
1	127'-1¼"	1⅜	1⅞	8,000	1,846	0.6	42	6,900	65	20	23	5	7"	10"	13"	11"	12"	16"
2	126'-4½"	1⅜	1⅞	8,000	1,846	0.6	42	6,900	65	20	23	5	7"	10"	13"	11"	12"	16"
3	125'-7¾"	1⅜	1⅞	8,000	1,846	0.6	42	6,900	65	20	23	5	7"	10"	13"	11"	12"	16"
4	124'-11⅛"	1⅜	1⅞	8,000	1,846	0.6	42	6,900	65	20	23	5	7"	10"	13"	11"	12"	16"
5	124'-2⅜"	1⅜	1⅞	8,000	1,846	0.6	42	6,900	65	20	23	5	7"	10"	13"	11"	12"	16"

SPAN 11 GIRDER DATA

GIRDER NO.	GIRDER LENGTH "L"	DEAD LOAD DEFL. (IN.) "D"	DEAD LOAD DEFL. (IN.) "E"	CONCRETE STRENGTH f'c (PSI)	TOTAL INTIAL PRESTRESS FORCE (KIPS)	DIA. OF STRANDS (IN.)	TOTAL No. OF STRANDS	RELEASE STRENGTH f'ci (PSI) *	DRAPED PATTERN INCHES "A"	DRAPED PATTERN INCHES "B" MIN.	DRAPED PATTERN INCHES "B" MAX.	DRAPED PATTERN INCHES "C"	#4 STIRRUP SPACING FROM 3'-2½" TO 0.1 L	#4 STIRRUP SPACING FROM 0.1L TO 0.2 L	#4 STIRRUP SPACING FROM 0.2L TO 0.5 L	#5 STIRRUP SPACING FROM 3'-2½" TO 0.1 L	#5 STIRRUP SPACING FROM 0.1L TO 0.2 L	#5 STIRRUP SPACING FROM 0.2L TO 0.5 L
1	127'-2⅛"	1⅜	1⅞	8,000	1,846	0.6	42	6,900	65	20	23	5	7"	10"	13"	11"	12"	16"
2	126'-5½"	1⅜	1⅞	8,000	1,846	0.6	42	6,900	65	20	23	5	7"	10"	13"	11"	12"	16"
3	125'-8⅞"	1⅜	1⅞	8,000	1,846	0.6	42	6,900	65	20	23	5	7"	10"	13"	11"	12"	16"
4	125'-0¼"	1⅜	1⅞	8,000	1,846	0.6	42	6,900	65	20	23	5	7"	10"	13"	11"	12"	16"
5	124'-3⅝"	1⅜	1⅞	8,000	1,846	0.6	42	6,900	65	20	23	5	7"	10"	13"	11"	12"	16"

SPAN 12 GIRDER DATA

GIRDER NO.	GIRDER LENGTH "L"	DEAD LOAD DEFL. (IN.) "D"	DEAD LOAD DEFL. (IN.) "E"	CONCRETE STRENGTH f'c (PSI)	TOTAL INTIAL PRESTRESS FORCE (KIPS)	DIA. OF STRANDS (IN.)	TOTAL No. OF STRANDS	RELEASE STRENGTH f'ci (PSI) *	DRAPED PATTERN INCHES "A"	DRAPED PATTERN INCHES "B" MIN.	DRAPED PATTERN INCHES "B" MAX.	DRAPED PATTERN INCHES "C"	#4 STIRRUP SPACING FROM 3'-2½" TO 0.1 L	#4 STIRRUP SPACING FROM 0.1L TO 0.2 L	#4 STIRRUP SPACING FROM 0.2L TO 0.5 L	#5 STIRRUP SPACING FROM 3'-2½" TO 0.1 L	#5 STIRRUP SPACING FROM 0.1L TO 0.2 L	#5 STIRRUP SPACING FROM 0.2L TO 0.5 L
1	125'-10⅜"	1¼	1¾	8,000	1,758	0.6	40	6,600	65	20	23	5	8"	10"	13"	12"	16"	16"
2	125'-6⅜"	1¼	1¾	8,000	1,758	0.6	40	6,600	65	20	23	5	8"	10"	13"	12"	16"	16"
3	125'-2½"	1¼	1¾	8,000	1,758	0.6	40	6,600	65	20	23	5	8"	10"	13"	12"	16"	16"
4	124'-10½"	1¼	1¾	8,000	1,758	0.6	40	6,600	65	20	23	5	8"	10"	13"	12"	16"	16"
5	124'-6⅝"	1¼	1¾	8,000	1,758	0.6	40	6,600	65	20	23	5	8"	10"	13"	12"	16"	16"

SPANS 13 & 14 GIRDER DATA (ALL GIRDER LINES)

SPAN NO.	GIRDER LENGTH "L"	DEAD LOAD DEFL. (IN.) "D"	DEAD LOAD DEFL. (IN.) "E"	CONCRETE STRENGTH f'c (PSI)	TOTAL INTIAL PRESTRESS FORCE (KIPS)	DIA. OF STRANDS (IN.)	TOTAL No. OF STRANDS	RELEASE STRENGTH f'ci (PSI) *	DRAPED PATTERN INCHES "A"	DRAPED PATTERN INCHES "B" MIN.	DRAPED PATTERN INCHES "B" MAX.	DRAPED PATTERN INCHES "C"	#4 STIRRUP SPACING FROM 3'-2½" TO 0.1 L	#4 STIRRUP SPACING FROM 0.1L TO 0.2 L	#4 STIRRUP SPACING FROM 0.2L TO 0.5 L	#5 STIRRUP SPACING FROM 3'-2½" TO 0.1 L	#5 STIRRUP SPACING FROM 0.1L TO 0.2 L	#5 STIRRUP SPACING FROM 0.2L TO 0.5 L
13	124' - 9"	1¼	1¾	8,000	1,406	0.6	32	5,300	64	19.8	22.8	5	7"	11"	15"	12"	16"	16"
14	124' - 9"	1¼	1¾	8,000	1,670	0.6	38	6,300	65	20	23	5	7"	10"	14"	11"	16"	16"

* MINIMUM CYLINDER STRENGTH AT TIME OF TRANSFER OF PRESTRESS FORCE.

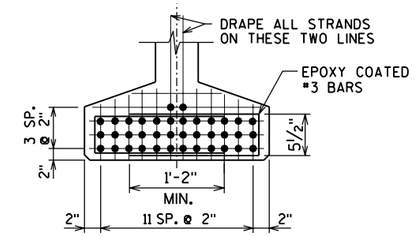

DETAIL A

32 - 1,406

TOTAL NO. OF STRANDS — TOTAL INITIAL PRESTRESS FORCE IN KIPS

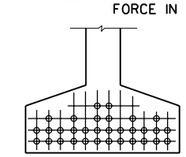

32 STRANDS

SPAN 13

40 - 1,758

TOTAL NO. OF STRANDS — TOTAL INITIAL PRESTRESS FORCE IN KIPS

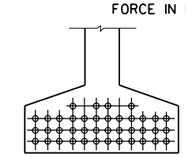

40 STRANDS

SPAN 12

42 - 1,846

TOTAL NO. OF STRANDS — TOTAL INITIAL PRESTRESS FORCE IN KIPS

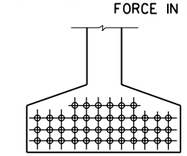

42 STRANDS

SPANS 10 & 11

38 - 1,670

TOTAL NO. OF STRANDS — TOTAL INITIAL PRESTRESS FORCE IN KIPS

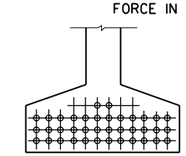

38 STRANDS

SPAN 14

8

8

NO.	DATE	REVISION	BY

STATE OF WISCONSIN
DEPARTMENT OF TRANSPORTATION
STRUCTURES DESIGN SECTION

STRUCTURE B-37-360-003

CONST. SPEC. 2003 | DRAWN BY RBH | PLANS CK'D.

70" PRESTRESSED GIRDER DETAILS 2

SHEET 20 OF 30
426

STATE PROJECT NUMBER

1166-09-74

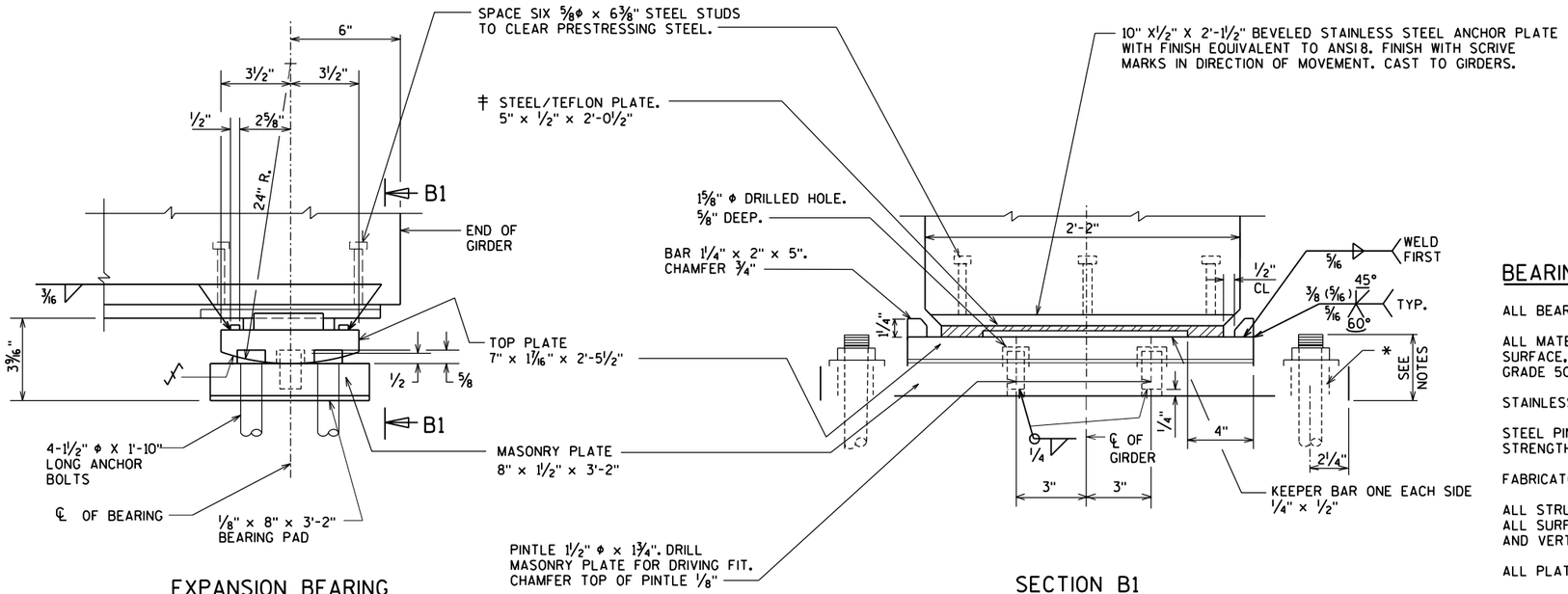

EXPANSION BEARING

SECTION B1

‡ TEFLON SURFACE, USE UNFILLED MIN. 1/16" THICKNESS. PLACE WITH SCRIVE MARKS IN DIRECTION OF MOVEMENT. BOND STEEL AND TEFLON WITH ADHESIVE MATERIAL MEETING FED. SPEC. MMM-A-134, FEP FILM OR EQUAL.

BEARING NOTES

ALL BEARINGS ARE SYMMETRICAL ABOUT ℄ OF GIRDER AND ℄ OF BEARING.

ALL MATERIAL INCLUDING SHIMS, BUT EXCLUDING STAINLESS STEEL PLATE, TEFLON SURFACE, PINTLES, ANCHOR BOLTS, NUTS AND WASHERS SHALL CONFORM TO ASTM A709 GRADE 50W.

STAINLESS STEEL PLATE SHALL CONFORM TO A.S.T.M. A240, TYPE 304.

STEEL PINTLES SHALL CONFORM TO ASTM A449 OR MATERIAL OF EQUIVALENT YIELD STRENGTH AND ELONGATION.

FABRICATOR MAY INCREASE "MASONRY PLATE" THICKNESS AS AN ALTERNATE TO SHIMS.

ALL STRUCTURAL STEEL BEARING PLATES SHALL BE FLAT ROLLED STEEL PLATES WITH ALL SURFACES SMOOTH AND FREE FROM WARP AND ALL EDGES SMOOTH, STRAIGHT, AND VERTICAL.

ALL PLATE CUTS SHALL BE MACHINE OR MACHINE FLAME CUTS.

ALL SURFACES MARKED √ SHALL BE MACHINE FINISHED ANSI 250 UNLESS OTHERWISE SHOWN.

ALL FINISHED SURFACES SHALL BE MACHINE FINISHED BY AN AUTOMATIC PROCESS.

ALL ANCHOR BOLTS, NUTS AND WASHERS SHALL CONFORM TO ASTM A709 GRADE 36, OR MATERIAL OF EQUIVALENT YIELD STRENGTH AND ELONGATION.

CHAMFER ANCHOR BOLTS PRIOR TO THREADING.

* DRILLED HOLES FOR ANCHOR BOLTS SHALL HAVE A DIAMETER ⅜" LARGER THAN ANCHOR BOLT.

MASONRY PLATE, TOP PLATE, KEEPER BARS, ANCHOR BOLTS, NUTS AND WASHERS SHALL BE GALVANIZED AS REQUIRED BY ASTM DESIGNATION A153, CLASS "C". STEEL PLATE ATTACHED TO TEFLON SURFACE SHALL BE SHOP PAINTED.

ANCHOR BOLTS SHALL BE THREADED 3". PROVIDE ONE STANDARD WROUGHT WASHER AND ONE HEX NUT PER BOLT. PROJECT ANCHOR BOLTS "MASONRY PLATE" THICKNESS +2¼" ABOVE TOP OF CONCRETE.

ALL MATERIALS IN "STEEL BEARINGS FOR PRESTRESSED CONCRETE GIRDERS", INCLUDING SHIMS, SHALL BE PAID FOR AT THE UNIT PRICE BID FOR "BEARING ASSEMBLIES EXPANSION B-37-360-003".

℄ OF BEARING ASSEMBLY SHALL BE 90° TO ℄ OF GIRDER. ℄ OF BEARING ASSEMBLY MAY NOT COINCIDE WITH ℄ OF BEARING OF THE SUBSTRUCTURE UNIT.

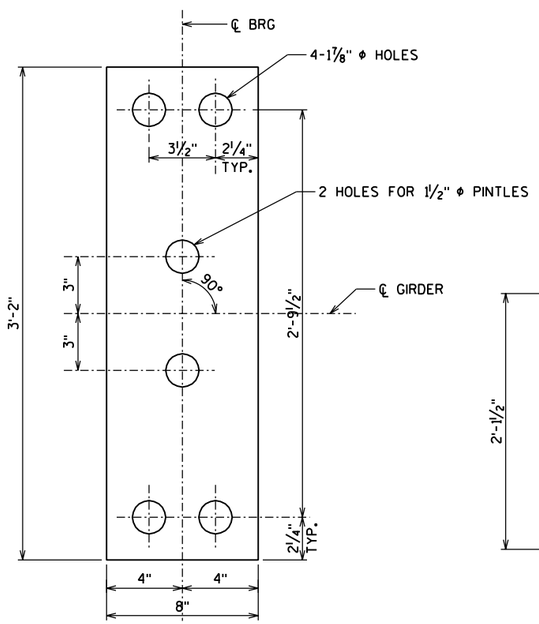

MASONRY PLATE

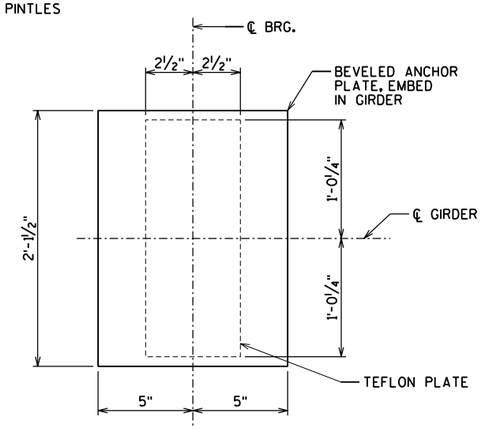

ANCHOR PLATE

NO.	DATE	REVISION	BY

STATE OF WISCONSIN
DEPARTMENT OF TRANSPORTATION
STRUCTURES DESIGN SECTION

STRUCTURE B-37-360-003

CONST. SPEC.	2003	DRAWN BY	RBH	PLANS CK'D.

STEEL EXPANSION BEARING DETAILS

SHEET 21 OF 30

427

8

8

STATE PROJECT NUMBER

1166-09-74

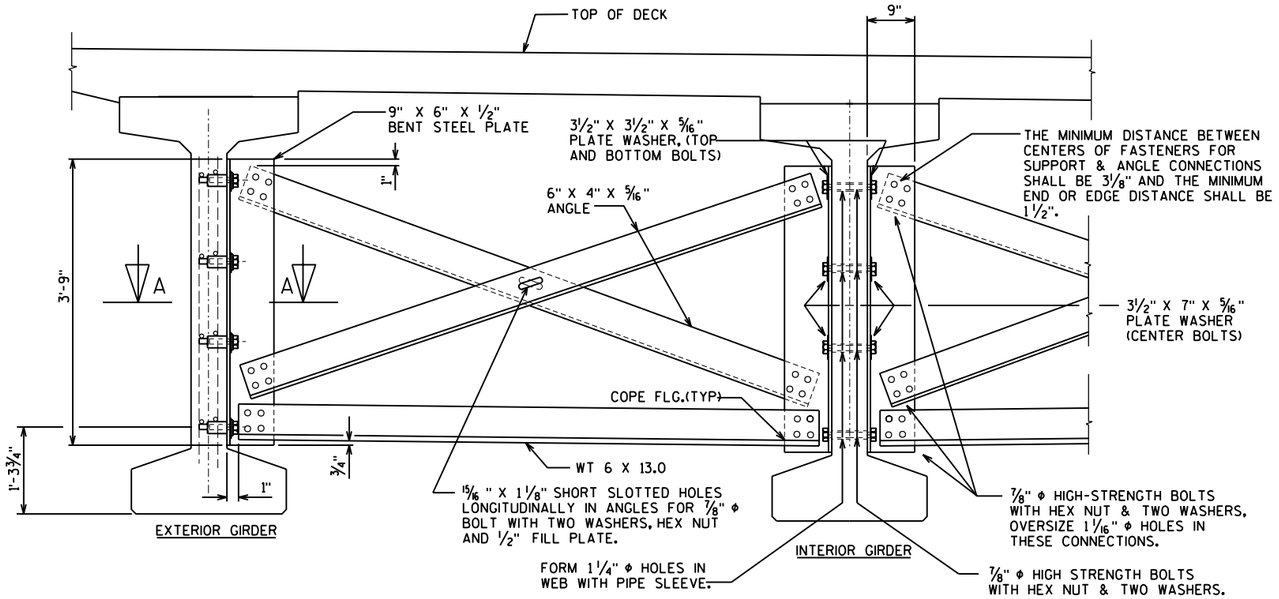

PART TRANSVERSE SECTION AT DIAPHRAGM

FOR DIAPHRAGM LOCATIONS SEE SHEET "SUPERSTRUCTURE PLAN" SHEETS

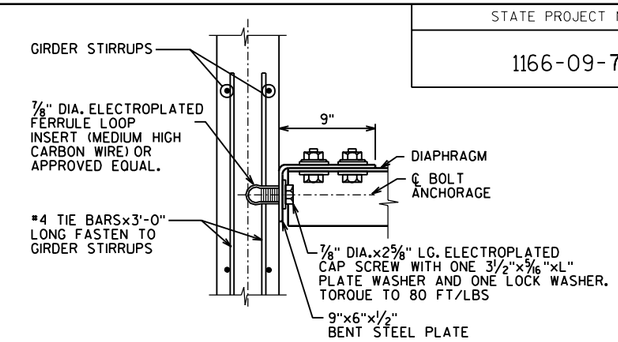

L= 3 1/2" FOR TOP & BOTTOM BOLT
L= 7" FOR CENTER BOLTS.

SECTION A-A

(FOR EXTERIOR ATTACHMENT)

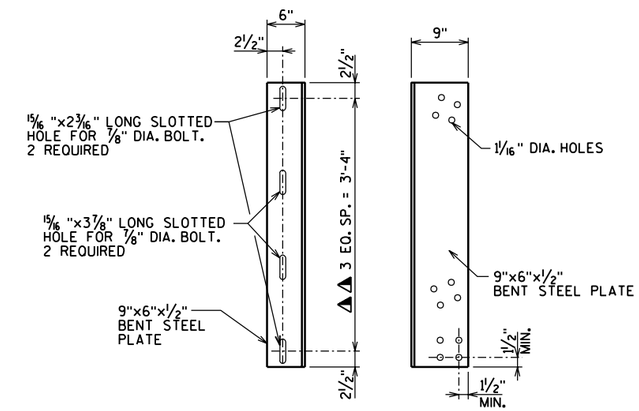

BEAM FACE DIAPHRAGM FACE

DIAPHRAGM SUPPORT

◮◮ BOLT HOLES SHALL BE SPACED SO AS TO MISS PRESTRESSED STRANDS IN CONCRETE BEAMS

DIAPHRAGM NOTES

ALL DIAPHRAGM MATERIAL NOT EMBEDDED IN THE CONCRETE GIRDER SHALL BE PAID FOR AT THE UNIT PRICE BID FOR "STEEL DIAPHRAGM, STRUCTURE B-37-360-003" EACH.

EACH DIAPHRAGM BETWEEN GIRDERS SHALL CONSTITUTE ONE UNIT.

ALL DIAPHRAGM STRUCTURAL STEEL SHALL BE ASTM A709 GRADE 36. ALL BOLTS, NUTS AND WASHERS SHALL BE ASTM A325 TYPE 1.

ALL DIAPHRAGM STRUCTURAL STEEL SHOWN SHALL BE HOT-DIPPED GALVANIZED. ALL BOLTS, NUTS AND WASHERS SHALL BE HOT-DIPPED GALVANIZED IN ACCORDANCE WITH ASTM A153 CLASS C. GALVANIZED NUTS SHALL BE TAPPED OVERSIZE IN ACCORDANCE WITH THE REQUIREMENTS OF ASTM A563 AND SHALL MEET THE REQUIREMENTS OF SUPPLEMENTARY REQUIREMENT S1 OF ASTM A563. LUBRICANT AND TEST FOR COATED NUTS.

NO.	DATE	REVISION	BY

STATE OF WISCONSIN
DEPARTMENT OF TRANSPORTATION
STRUCTURES DESIGN SECTION

STRUCTURE B-37-360-003

CONST. SPEC.	2003	DRAWN BY	RBH	PLANS CK'D.

STEEL DIAPHRAGMS

SHEET 22 OF 30
428

8

8

STATE PROJECT NUMBER

1166-09-74

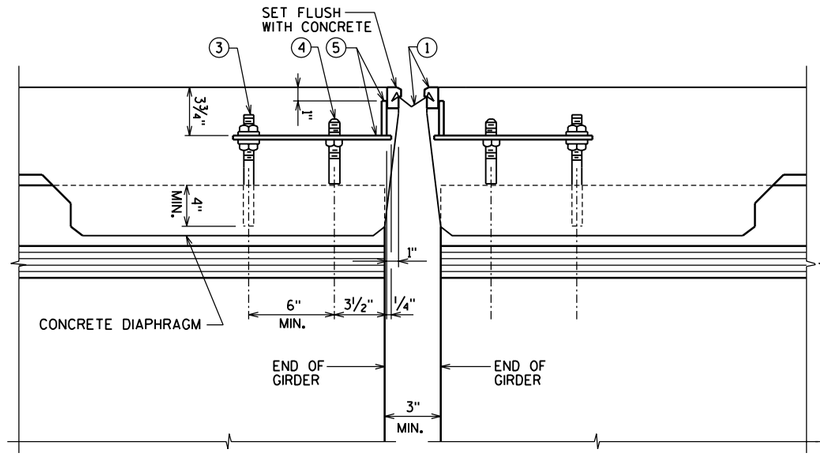

TYPICAL SECTION AT PIER 11

NORMAL TO ℄ SUBSTRUCTURE

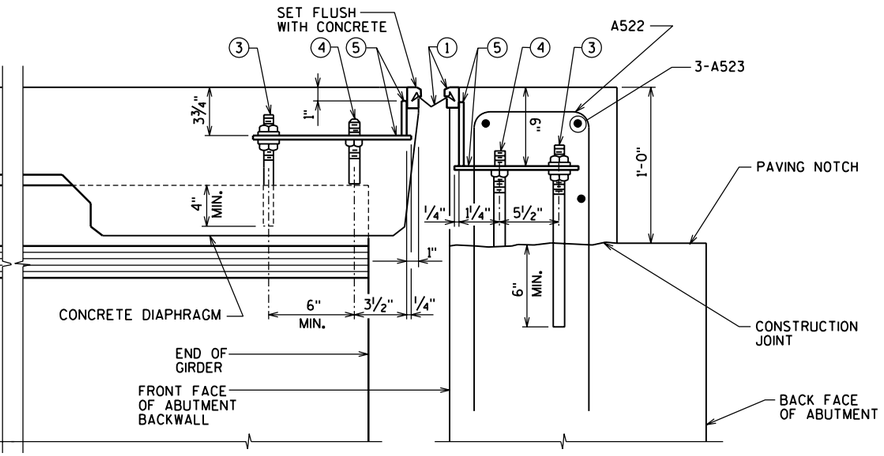

TYPICAL SECTION AT ABUTMENT

NORMAL TO ℄ SUBSTRUCTURE

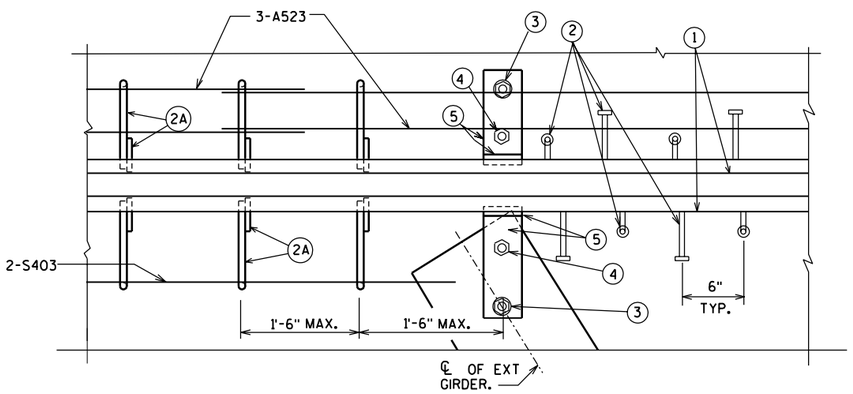

PART PLAN

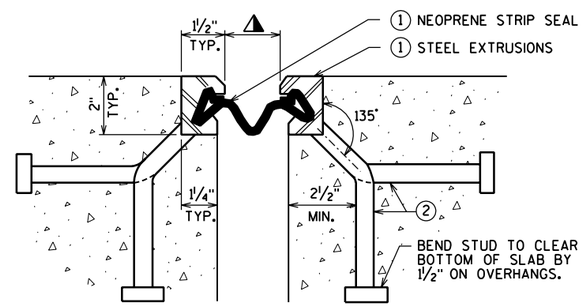

SECTION THRU JOINT

EXTERIOR GIRDER TO EDGE OF SLAB AND AT PARAPETS

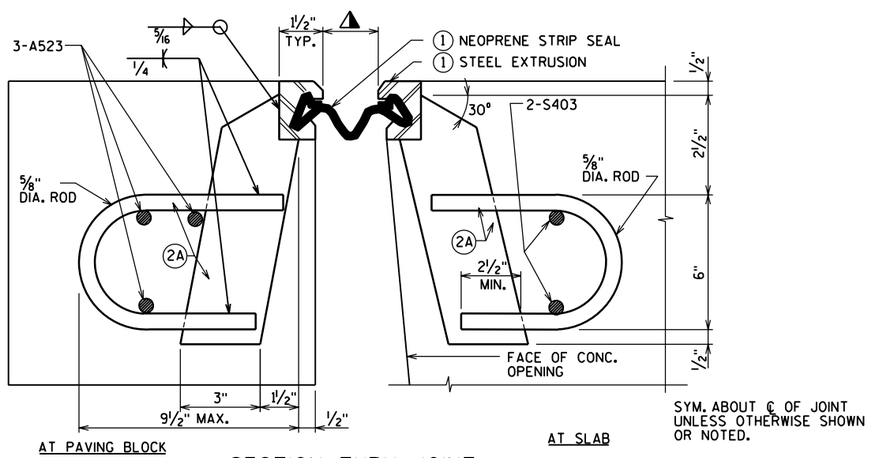

SYM. ABOUT ℄ OF JOINT UNLESS OTHERWISE SHOWN OR NOTED.

SECTION THRU JOINT

AREA BETWEEN EXTERIOR GIRDERS.

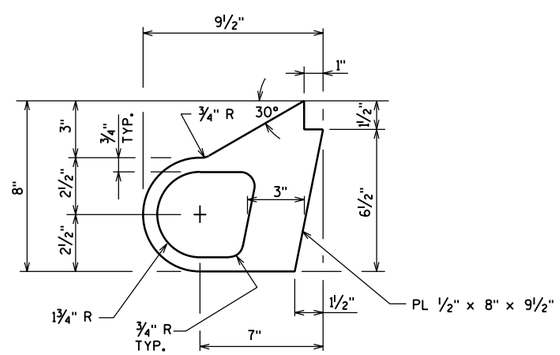

ALTERNATE STRIP SEAL ANCHOR

LEGEND

1. NEOPRENE STRIP SEAL (4-INCH) & STEEL EXTRUSIONS. SET JOINT OPENING NORMAL TO JOINT PER TABLE
2. STUDS ⅝" Φ x 6⅜" LONG AT 6" ALTERNATE CENTERS. WELD TO EXTRUSIONS & BEND AS SHOWN AFTER WELDING.

2A. ½" THICK ANCHOR PLATE WITH ⅝" Φ ROD (OR ALTERNATE STRIP SEAL ANCHOR). WELD ROD TO ANCHOR PLATE, WELD ANCHOR ⊥P. TO NO. 1 AT 1'-6" CTRS. BETWEEN GIRDERS.

3. ¾" Φ THREADED ROD WITH 2 NUTS AND WASHERS. FOR PRESTRESSED GIRDERS FIELD SET ON ℄ OF GIRDER. ON ABUTMENT SIDE GROUT THREADED ROD INTO FIELD DRILLED HOLES IN ABUTMENT BACKWALL AS SHOWN.
4. ¾" Φ THREADED ROD WITH NUT. TACK WELD NUT TO NO. 5.
5. FABRICATE SUPPORT FROM 3" x ½" BAR AS SHOWN OR EQUIVALENT. ONE PER GIRDER PER SIDE. SHOP OR FIELD WELD TO NO. 1. IF FIELD WELDED, COVER WELDED AREAS WITH EPOXY-COATING MATERIAL. PROVIDE 1½" Φ HOLE FOR NO. 3 & 1" Φ HOLE FOR NO. 4.
6. GALVANIZED PLATE ⅜" x 10½" x (2'-0" LONG FOR SKEWS TO 45° & 3'-0" LONG FOR SKEWS > 45°) WITH HOLES FOR NO. 7. BEND AS SHOWN.
7. ¾" Φ x 1½" STAINLESS STEEL SOCKET FLAT HEAD SCREWS WITH ANTI-SEIZE LUBRICANT. RECESS 1/16" BELOW PLATE SURFACE.
8. ¾" Φ x 4" GALVANIZED HEX HEAD BOLT. BEND 45°.
9. ¾" Φ x 2¼" GALVANIZED THREADED COUPLING.
10. GALVANIZED SIDEWALK PLATE ⅜" x (2'-0" WIDE FOR SKEWS TO 45° & 3'-0" WIDE FOR SKEWS > 45°) x LIMITS SHOWN. BEND DOWN FACE OF SIDEWALK WITH HOLES FOR NO. 7.
11. 1" x 5" SLOTTED CSK. HOLE FOR NO. 7. SLOT PARALLEL TO DIRECTION OF MOVEMENT.

NOTES

* STRIP SEAL GLAND MAY BE PLACED PRIOR TO PLACEMENT OF CONCRETE. GLAND SHALL BE PROTECTED DURING CONCRETE POUR.

ONE FIELD SPLICE PERMITTED IN STEEL EXTRUSIONS. IF USED, DETAILS SHALL BE SUBMITTED FOR APPROVAL. NO SPLICING PERMITTED IN NEOPRENE STRIP SEAL.

AFTER FABRICATION, BUT BEFORE SHIPMENT, STRAIGHTEN STEEL EXTRUSIONS SUCH THAT THEY SHALL BE FREE FROM WARP, TWIST AND SWEEP.

FABRICATOR SHALL PROVIDE A MEANS OF KEEPING THE GALVANIZED EXTRUSIONS CLEAN AND SMOOTH DURING SHIPMENT AND PRIOR TO APPLYING LUBRICANT ADHESIVE FOR NEOPRENE GLAND INSTALLATION.

SANDBLAST PLATES & EXTRUSIONS AFTER FABRICATION IN ACCORDANCE WITH SSPC SP. #6 "COMMERCIAL BLAST CLEANING". AFTER BLAST CLEANING THE PLATES & EXTRUSIONS SHALL BE HOT DIPPED GALVANIZED.

ANCHOR SYSTEM #8 AND #9 SHALL CONFORM TO ASTM A307 AND SHALL BE GALVANIZED IN ACCORDANCE WITH ASTM A153 CLASS C AND D.

STRIP SEAL EXPANSION JOINT ASSEMBLY, INCLUDING ANCHOR STUDS, HARDWARE AND PARAPET PLATES WILL BE PAID FOR AT THE LUMP SUM PRICE BID FOR "EXPANSION DEVICE, STRUCTURE B-37-360-003".

*ABUTMENT TEMPERATURE TABLE

SETTING TEMPERATURE (DEGREES)	JOINT OPENING (INCHES)
-5	2¼"
45	1½"
85	1"

*PIER #11 TEMPERATURE TABLE

SETTING TEMPERATURE (DEGREES)	JOINT OPENING (INCHES)
-5	2¾"
45	1½"
85	⅝"

NO.	DATE	REVISION	BY

STATE OF WISCONSIN
DEPARTMENT OF TRANSPORTATION
STRUCTURES DESIGN SECTION

STRUCTURE B-37-360-003

CONST. SPEC. 2003 | DRAWN BY RBH | PLANS CK'D.

EXPANSION DEVICE

SHEET 23 OF 30

429

8

8

STATE PROJECT NUMBER

1166-09-74

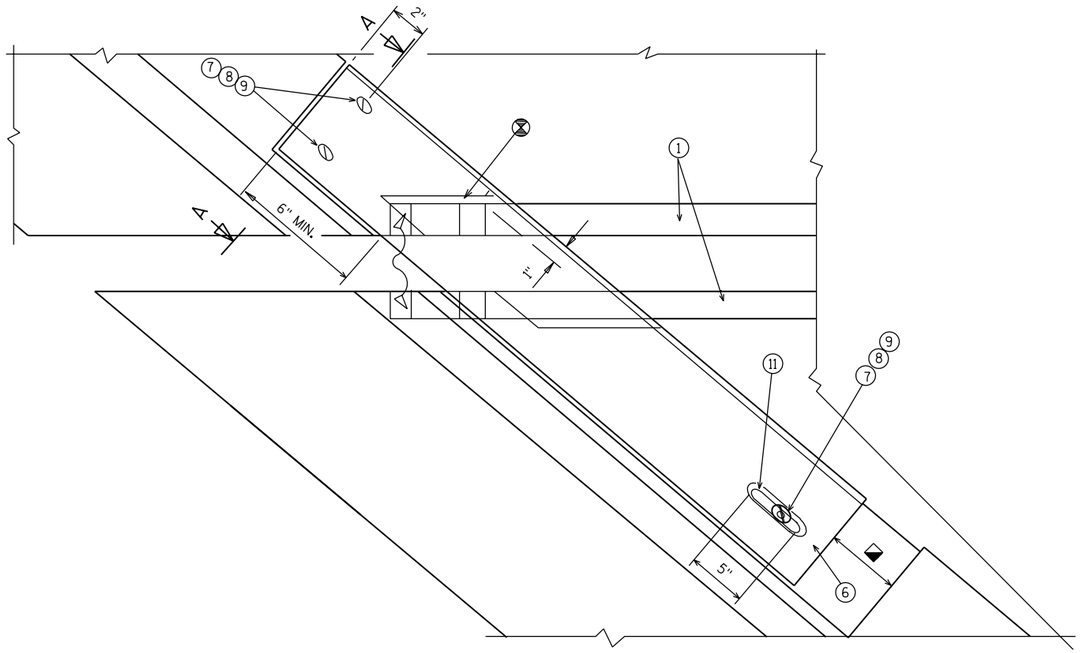

PLAN AT PARAPETS

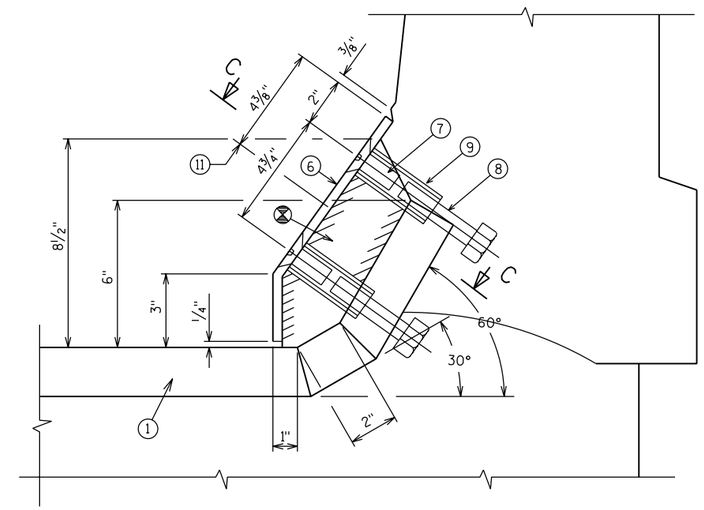

SECTION A-A

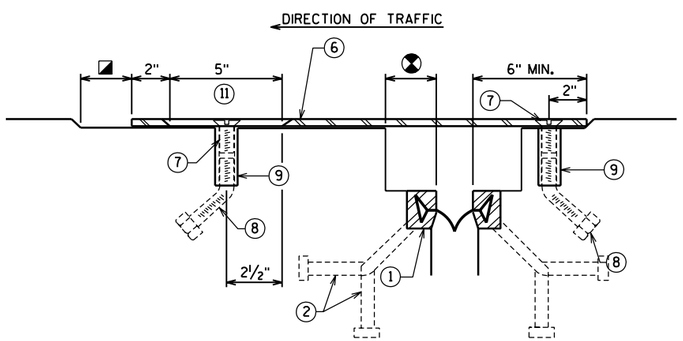

SECTION C-C

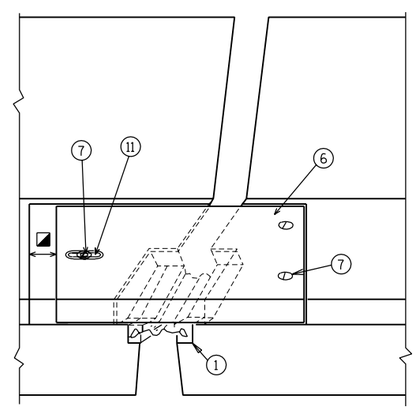

VIEW OF PARAPET PLATES FROM ROADWAY

COVER PLATE DETAIL AT ALL EXPANSION DEVICE LOCATIONS.

SEE SHEET "STRIP SEAL EXPANSION DEVICE" SHEET FOR NOTES

BLOCK OUT CONCRETE 2" EACH SIDE FOR JOINT OPENING.

JOINT OPENING DIMENSION ALONG SKEW PLUS 1/2".

NO.	DATE	REVISION	BY

STATE OF WISCONSIN
DEPARTMENT OF TRANSPORTATION
STRUCTURES DESIGN SECTION

STRUCTURE B-37-360-003

CONST. SPEC.	2003	DRAWN BY	RBH	PLANS CK'D.

EXPANSION DEVICE DETAILS

SHEET 24 OF 30

430

8

8

STATE PROJECT NUMBER

1166-09-74

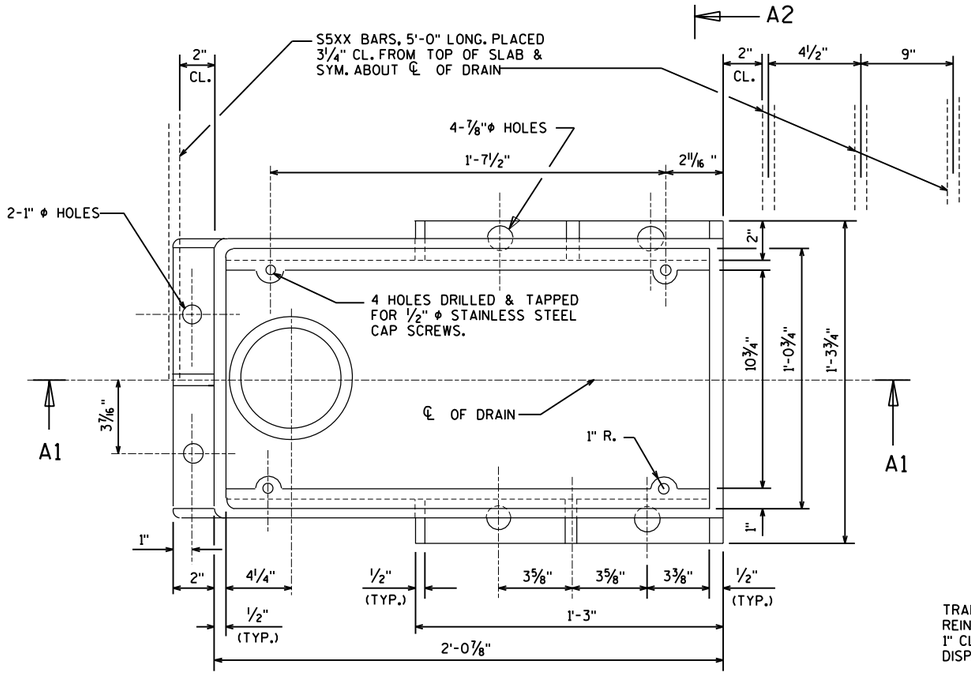

PLAN

A2

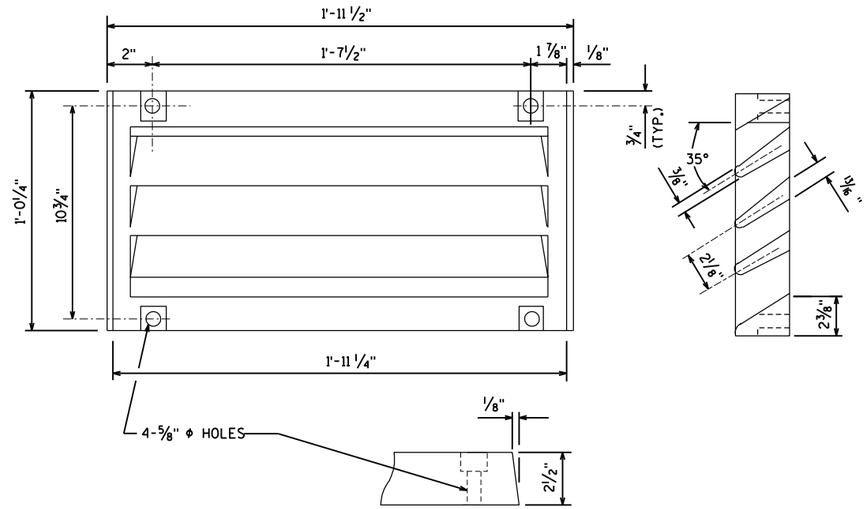

GRATE CASTING DETAIL

ATTACH GRATE TO FRAME FOR SHIPMENT

GENERAL NOTES

ALL MATERIAL FOR TYPE "GC" CASTING, EXCLUDING GRATE HOLD DOWN SCREWS, SHALL BE GRAY IRON CONFORMING TO ASTM A48, CLASS 30.

MATERIAL FOR BRACKETS SHALL CONFORM TO ASTM A36.

THE CONTRACTOR MAY PROPOSE AN ALTERNATE TYPE OF BRACKET. THE PROPOSED ALTERNATE DETAILS SHALL BE SUBMITTED AND SUBJECT TO THE APPROVAL OF THE ENGINEER.

FLANGED 6" DIA. DOWNSPOUTS SHALL BE EITHER CAST MATERIAL OR FIBERGLASS CONFORMING TO ASTM D2996, GRADE 1, CLASS A.

TRANS. AND LONGIT. SLAB BAR REINF. TO BE CUT A MAX. OF 1" CL. FROM DRAIN FRAME. DISPLACE BARS WHERE POSSIBLE.

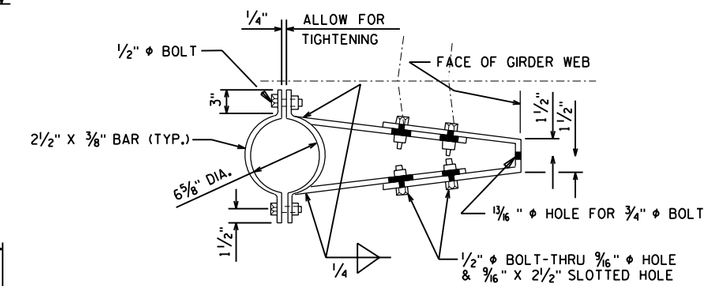

BRACKET DETAIL

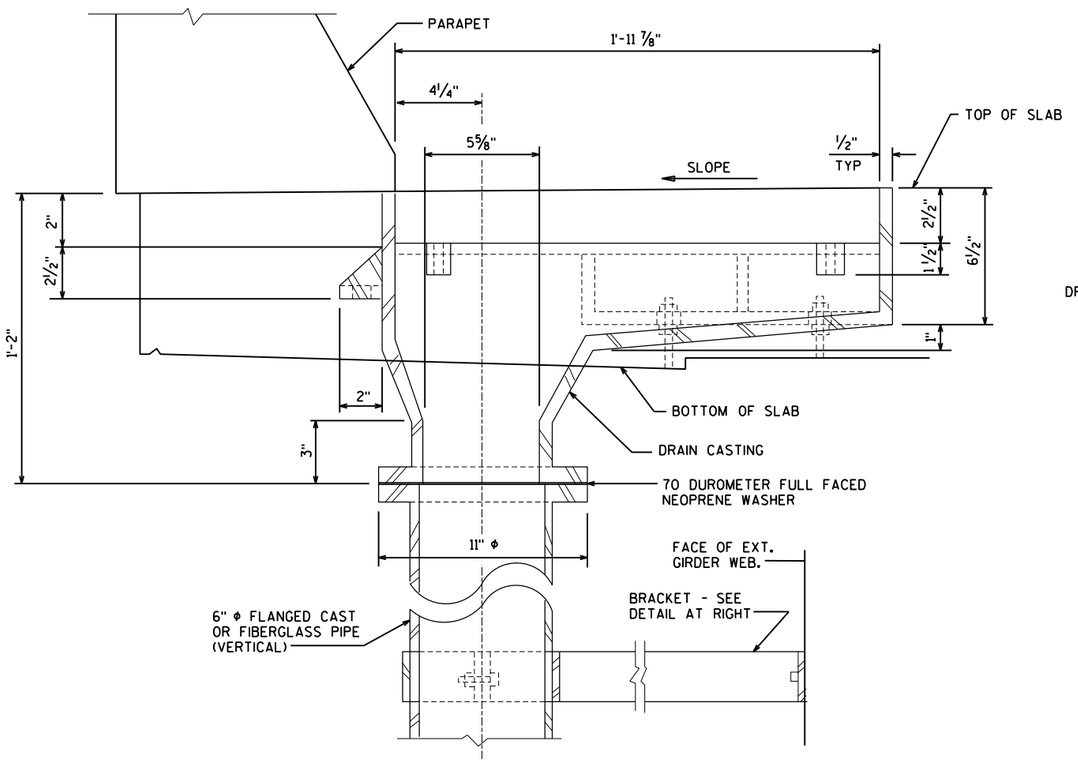

SECTION A1

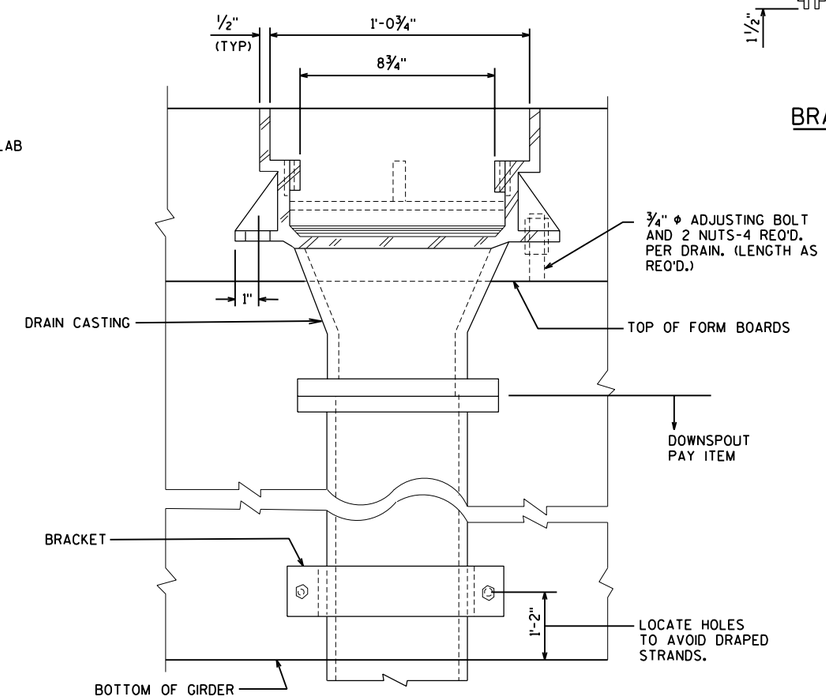

SECTION A2

FLOOR DRAIN LOCATIONS
STA. 4127+81.43

NO.	DATE	REVISION	BY

STATE OF WISCONSIN
DEPARTMENT OF TRANSPORTATION
STRUCTURES DESIGN SECTION

STRUCTURE B-37-360-003

CONST. SPEC.	2003	DRAWN BY	RBH	PLANS CK'D.

FLOOR DRAIN TYPE 'GC'

SHEET 25 OF 30

431

8

8

STATE PROJECT NUMBER

1166-09-74

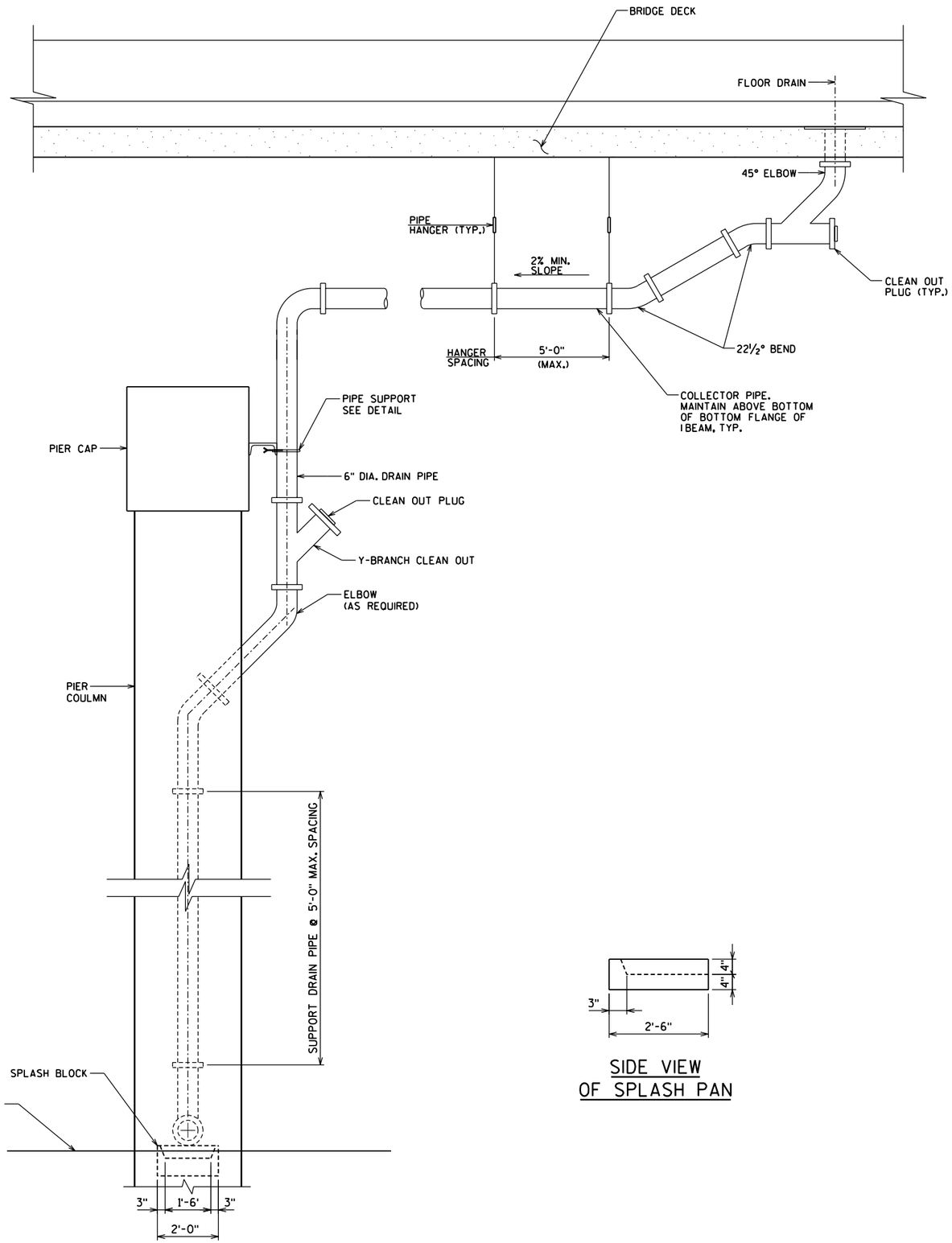

SIDE VIEW OF SPLASH PAN

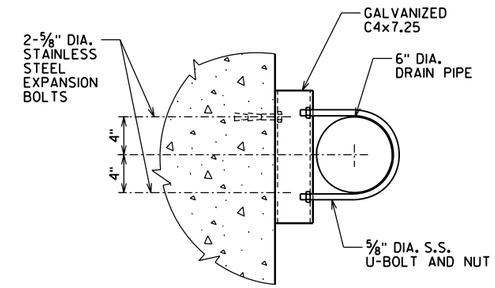

PLAN

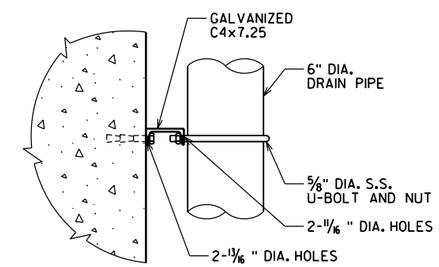

ELEVATION

PIPE SUPPORT DETAILS

NOTES:

1. COLLECTOR AND DRAIN PIPES AND FITTINGS SHALL BE 6" SCHEDULE 80, PVC CONFORMING TO ASTM STANDARDS D1785, D2464 OR D2467.
2. ALL HARDWARE, HANGERS, SPLASH BLOCKS, STEEL, AND ANY OTHER MISCELLANEOUS ITEMS SHOWN ARE INCLUDED AND INCIDENTAL IN THE BID ITEM "DOWNSPOUT 6-INCH".

8

8

NO.	DATE	REVISION	BY

STATE OF WISCONSIN
DEPARTMENT OF TRANSPORTATION
STRUCTURES DESIGN SECTION

STRUCTURE B-37-360-003

CONST. SPEC.	2003	DRAWN BY	RBH	PLANS CK'D.	WAH

DOWNSPOUT

STATE PROJECT NUMBER
1166-09-74

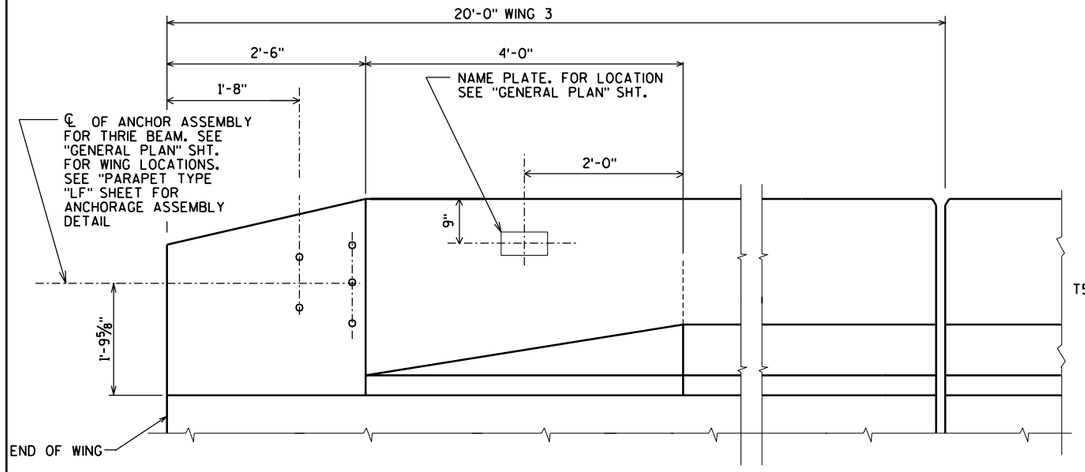

INSIDE ELEVATION

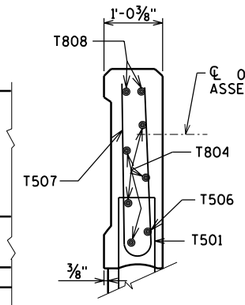

SECTION A

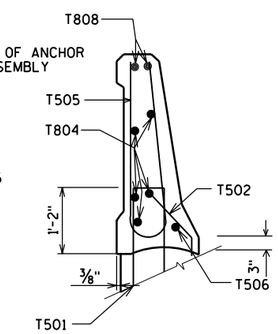

SECTION B

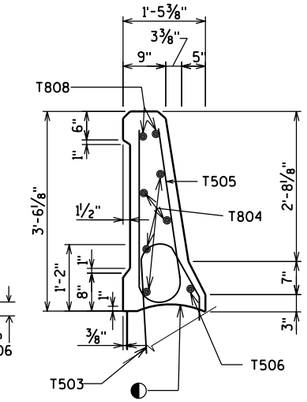

SECTION C

BILL OF BARS

FOR ABUTMENT PARAPETS

BAR MARK	COAT	NO. REQD	LENGTH	BENT	BAR SERIES	LOCATION
T501	X	14	4'-7"	X		PARAPET VERT.
T502	X	8	2'-4"	X		PARAPET VERT.
T503	X	26	4'-7"	X		PARAPET VERT.
T804	X	5	19'-8"			PARAPET HORIZ.
T505	X	34	6'-6"	X		PARAPET VERT.
T506	X	1	19'-8"	X		PARAPET HORIZ.
T507	X	6	5'-8"	X	▲	PARAPET VERT.
T808	X	2	19'-8"	X		PARAPET HORIZ.

THE CONCRETE AND BARS ARE INCLUDED IN THE ABUTMENT QUANTITIES.

BAR SERIES TABLE

MARK	NO. REQD.	LENGTH
T507	1 SERIES OF 6	4'-10" to 6'-6"

▲ LENGTH SHOWN FOR BAR IS AN AVERAGE LENGTH AND SHOULD ONLY BE USED FOR BAR WEIGHT CALCULATIONS. SEE BAR SERIES TABLE FOR ACTUAL LENGTHS.

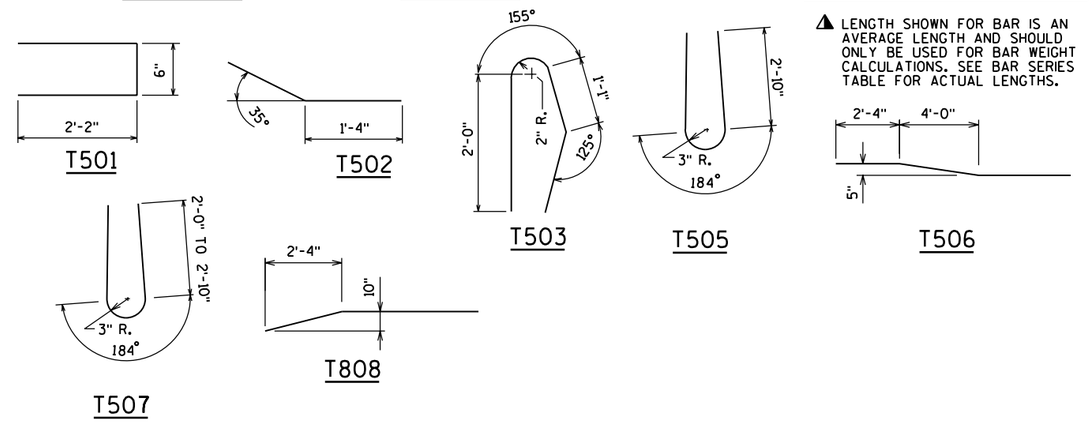

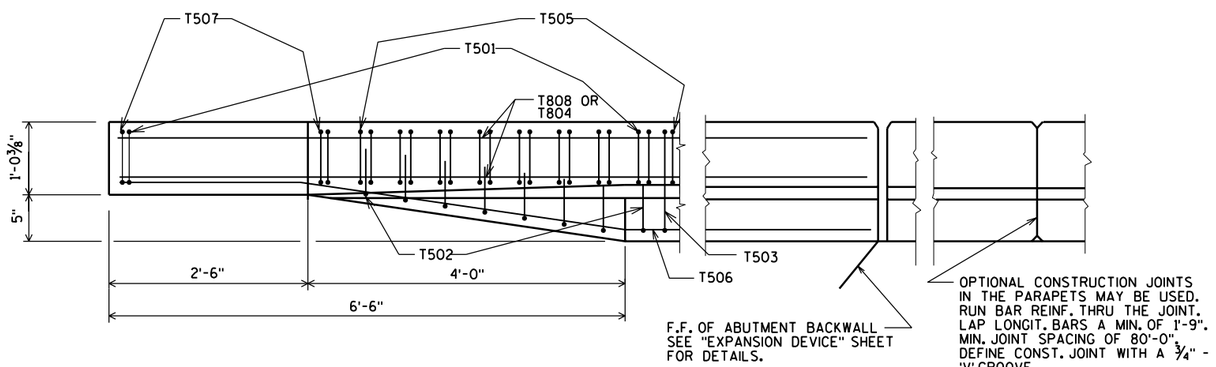

PLAN

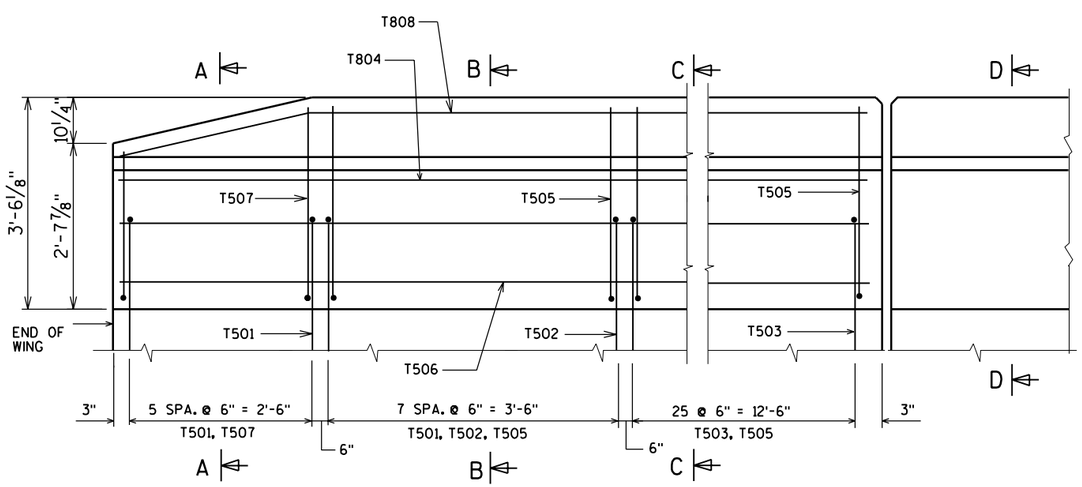

OUTSIDE ELEVATION

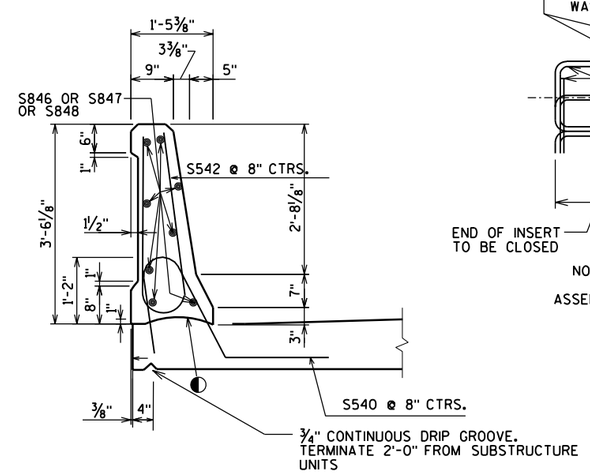

SECTION D-D

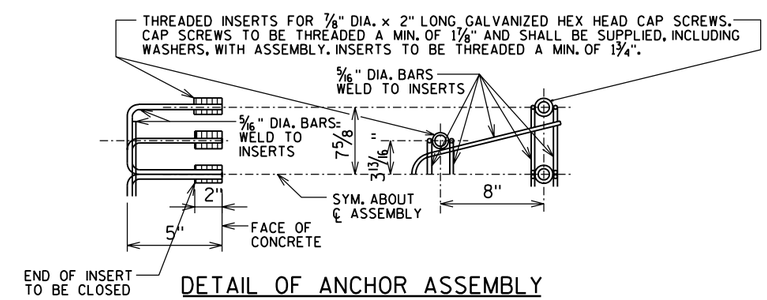

DETAIL OF ANCHOR ASSEMBLY

NOTE: HEX HEAD CAP SCREWS & WASHERS TO BE GALVANIZED IN ACCORDANCE WITH AASHTO M232 CLASS C. ASSEMBLY SHALL BE BID ITEM 'ANCHOR ASSEMBLY FOR BEAM GUARD'

◐ - CONSTRUCTION JOINT - STRIKE OFF AS SHOWN

NO.	DATE	REVISION	BY

STATE OF WISCONSIN
DEPARTMENT OF TRANSPORTATION
STRUCTURES DESIGN SECTION

STRUCTURE B-37-360-003

CONST. SPEC. 2003	DRAWN BY	PLANS CK'D.

PARAPET TYPE 'HF'

SHEET 27 OF 30
433

8

8

STATE PROJECT NUMBER

1166-09-74

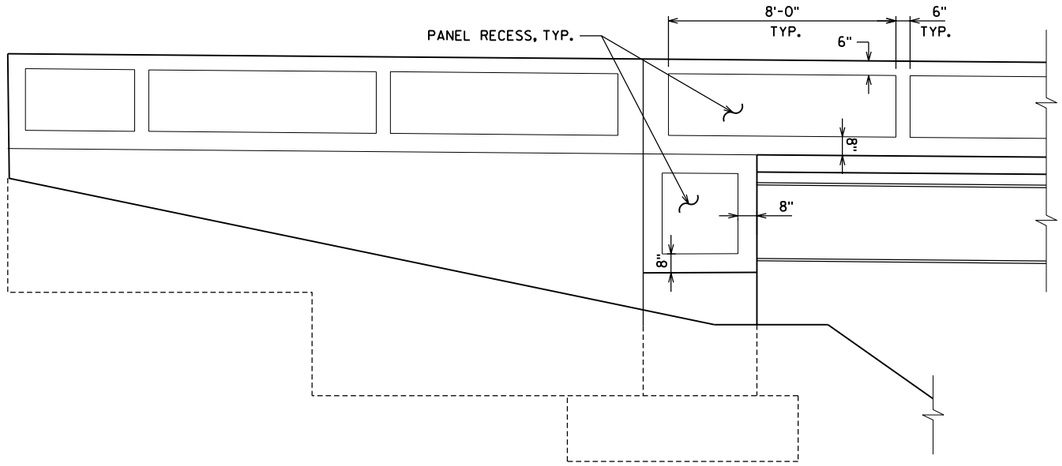

OUTSIDE ELEVATION AT ABUTMENT WING 3

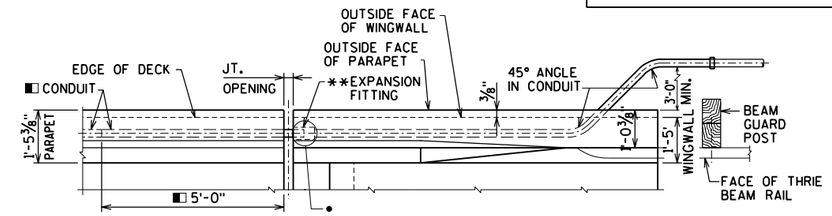

PLAN OF PARAPET AT WINGWALL

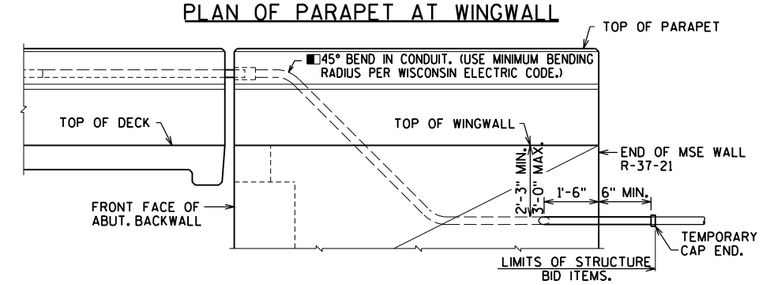

OUTSIDE ELEVATION OF PARAPET AT WINGWALL

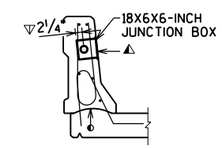

SECTION THRU PARAPET

● POSITION MOVABLE END OF CONDUIT INSIDE EXPANSION FITTING, SUCH THAT IT WILL HAVE THE SAME ALLOWANCE FOR MOVEMENT (EXPANSION/CONTRACTION) AS THE EXPANSION DEVICE SET IN PLACE IN THE DECK BELOW IT. TAKE CARE TO INSTALL EXPANSION FITTING AND CONDUIT EXACTLY PARALLEL TO BRIDGE MOVEMENT.

◐ CONSTR. JT. STRIKE OFF AS SHOWN

■ USE 2"Φ RIGID NONMETALLIC CONDUIT EXCEPT AT ALL EXPANSION FITTING. AT ALL EXPANSION FITTING USE RIGID METALLIC CONDUIT 5'-0" INTO PARAPET ON DECK SIDE AND THRU PARAPET AND WINGWALL TO A MINIMUM OF 6" BEYOND END OF WINGWALL. (FOR GROUNDING PURPOSES.)

◭ CUT OUT ± 1" OF GASKET AT BOTTOM OF JUNCTION BOX COVER TO ALLOW FOR DRAINAGE.

▽ LOCATION OF CONDUIT IS MEASURED FROM OUTSIDE EDGE OF JUNCTION BOX.

NOTES

ELECTRICAL BID ITEMS, LISTED BELOW, ARE TO BE LOCATED IN THE SOUTH SIDE PARAPET ONLY, FOR FUTURE USE.
"JUNCTION BOXES 18X6X6-INCH", EACH.
"CONDUIT RIGID NONMETALLIC SCHEDULE 80 2-INCH"
"CONDUIT RIGID METALLIC 2-INCH"

EXPANSION FITTINGS, ANGLES AND ADAPTER FITTINGS TO BE INCIDENTAL TO "CONDUIT RIGID METALLIC 2-INCH".

WHEN CONNECTING NONMETALLIC CONDUIT TO METALLIC CONDUIT, ONLY ADAPTER FITTINGS U.L. LISTED FOR ELECTRICAL USE SHALL BE USED.

APPROVED MANUFACTURERS - JUNCTION BOXES:
SEE APPROVED MATERIAL LIST.

APPROVED MANUFACTURER OR EQUIVALENT - EXPANSION FITTING (SPECIFY SIZE ON PLANS):
O-Z/GEDNEY TYPE AX-200 AND BONDING JUMPER (4" TOTAL CONDUIT MOVEMENT).
O-Z/GEDNEY TYPE AX-8-200 AND BONDING JUMPER (8" TOTAL CONDUIT MOVEMENT).
O-Z/GEDNEY TYPE EX-200 WITH PBS-200-12S AND BONDING JUMPER (10" TOTAL CONDUIT MOVEMENT).

JUNCTION BOX REQUIREMENTS
USE A JUNCTION BOX TO KEEP A CONTINUOUS RUN OF CONDUIT (PULL LENGTH) TO A MAXIMUM OF 190 FT. AS DIRECTED BY THE ENGINEER.

** EXPANSION FITTING REQUIREMENTS
USE AN APPROVED EXPANSION FITTING AT EACH SEMI EXPANSION OR EXPANSION JOINT. RUN CONDUIT STRAIGHT THROUGH (WITHOUT A FITTING) AT EACH FIXED JOINT.

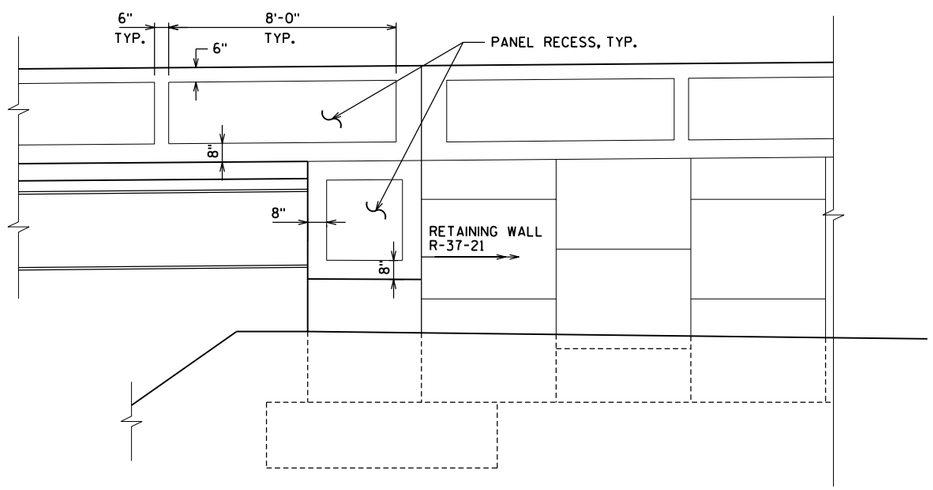

OUTSIDE ELEVATION AT ABUTMENT WING 4

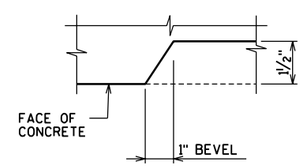

RECESS DETAIL FOR PARAPETS

NO.	DATE	REVISION	BY

STATE OF WISCONSIN
DEPARTMENT OF TRANSPORTATION
STRUCTURES DESIGN SECTION

STRUCTURE B-37-360-003

CONST. SPEC. 2003	DRAWN BY RBH	PLANS CK'D. JRS

ARCHITECTURAL & ELECTRICAL DETAILS

SHEET 28 OF 30
434

8

8

STATE PROJECT NUMBER

1166-09-74

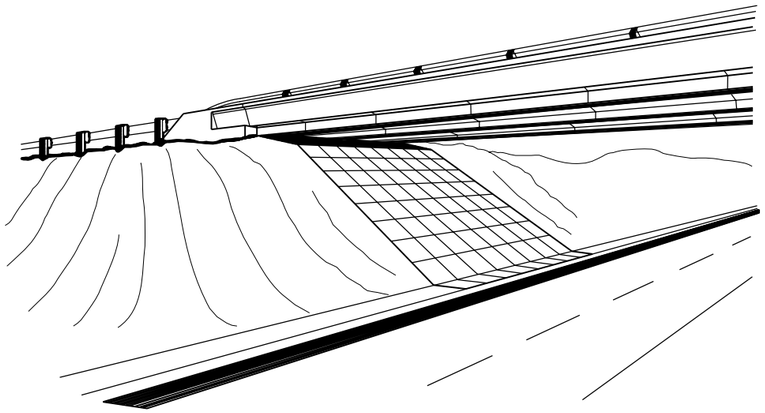

SLOPE PAVING UNDER STRUCTURES

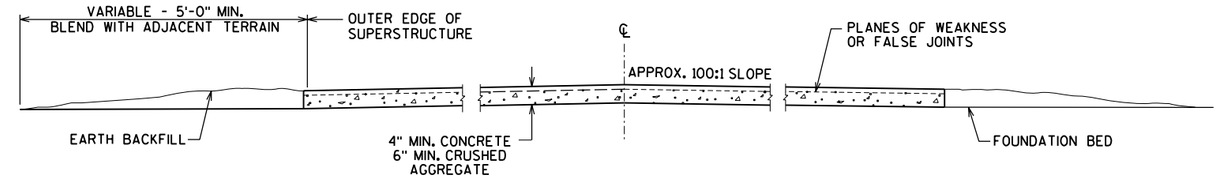

SECTION A-A

TO BE USED WHEN △ = 75° + TO 90°

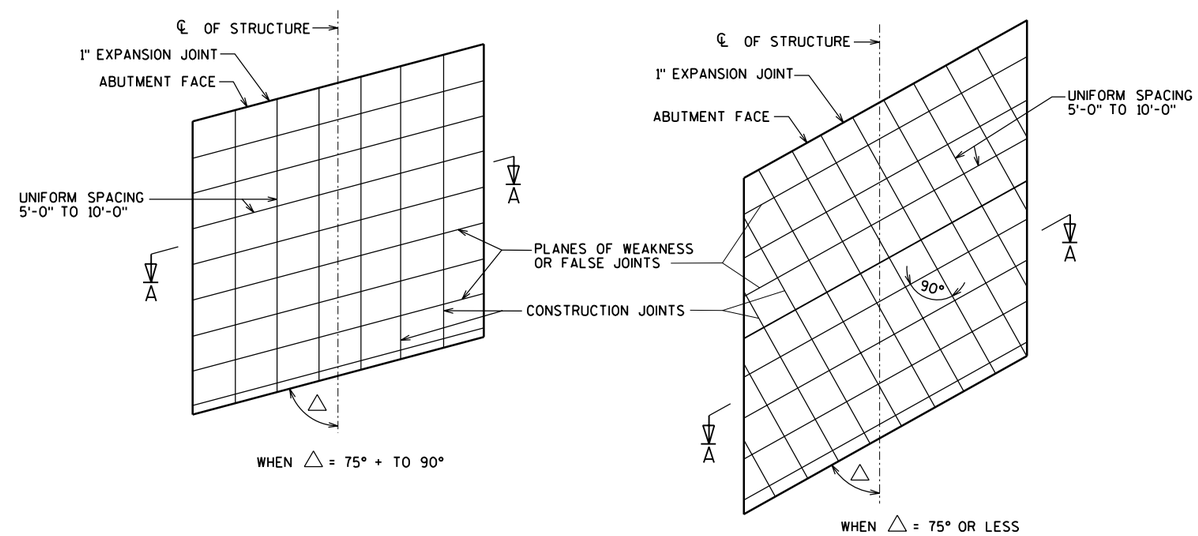

CONSTRUCTION JOINT DESIGNS

SHOWING PLANES OF WEAKNESS FOR
SKEWED TYPE INSTALLATIONS

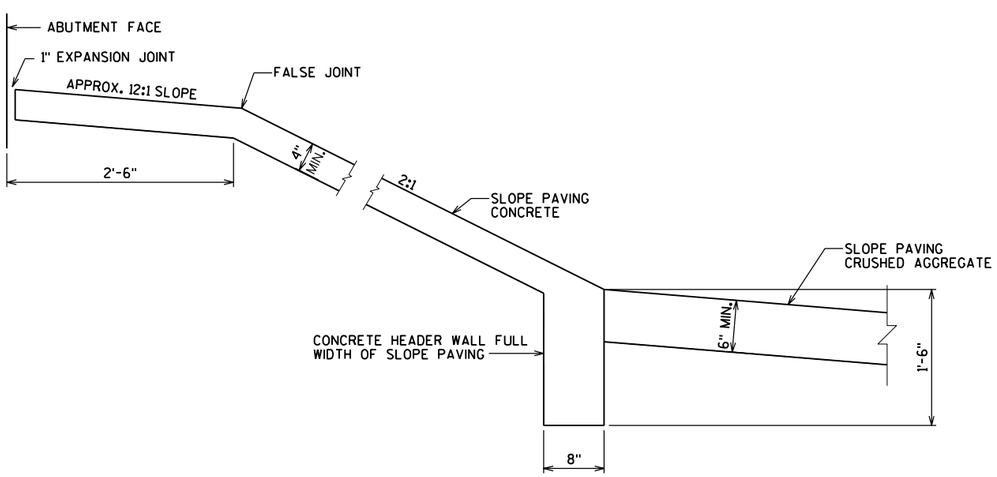

TYPICAL SECTION

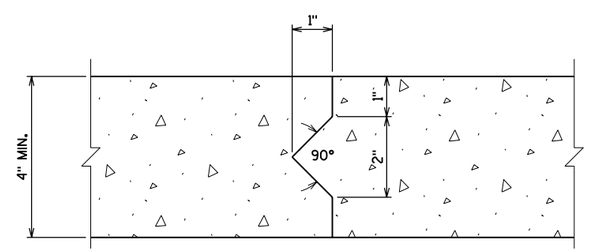

SLOPE PAVING CONSTRUCTION JOINT

8

8

NO.	DATE	REVISION	BY

STATE OF WISCONSIN
DEPARTMENT OF TRANSPORTATION
STRUCTURES DESIGN SECTION

STRUCTURE B-37-360-003

CONST. SPEC.	2003	DRAWN BY	RBH	PLANS CK'D.	WAH

SLOPE PAVING DETAILS

SHEET 29 OF 30
435

STATE PROJECT NUMBER

1166-09-74

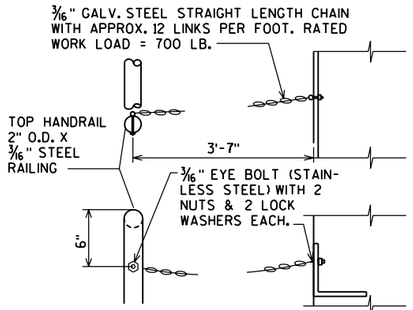

SAFETY CHAIN DETAIL

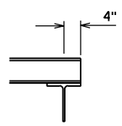

TERMINATION DETAIL

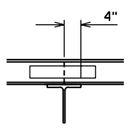

SPLICE LOCATION DETAIL

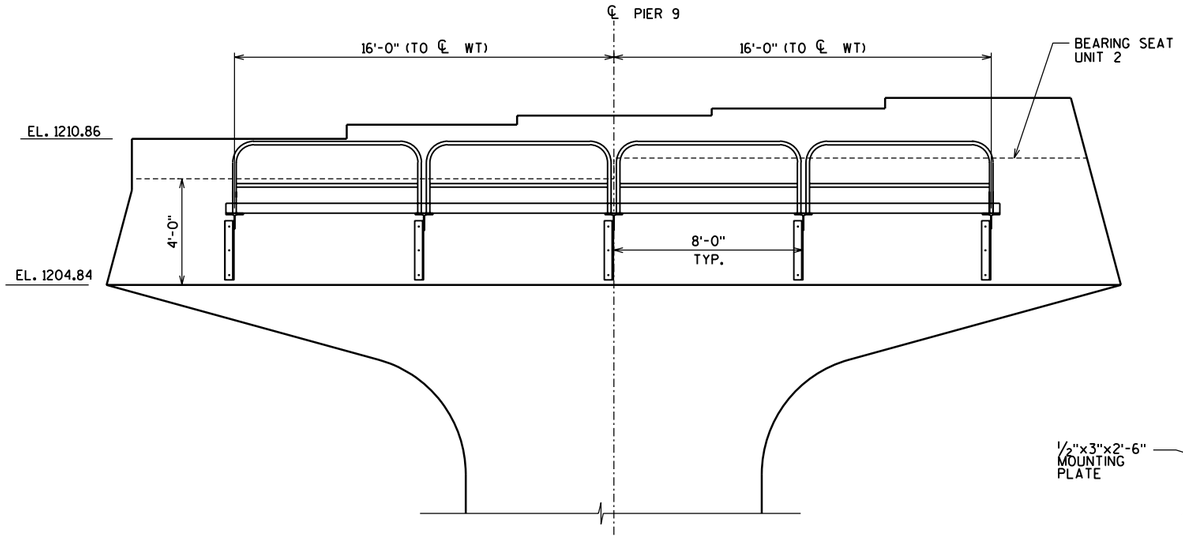

ELEVATION
(LOOKING WEST)

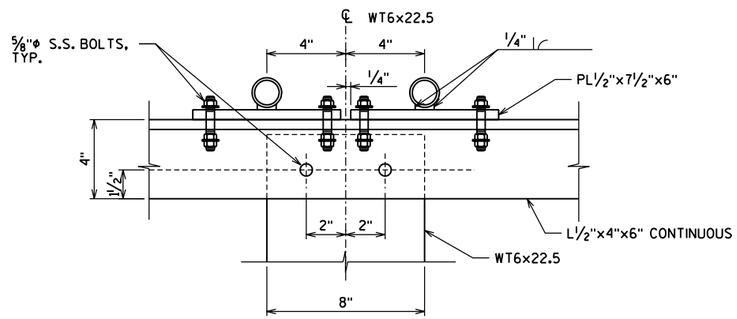

RAILING CONNECTION DETAIL

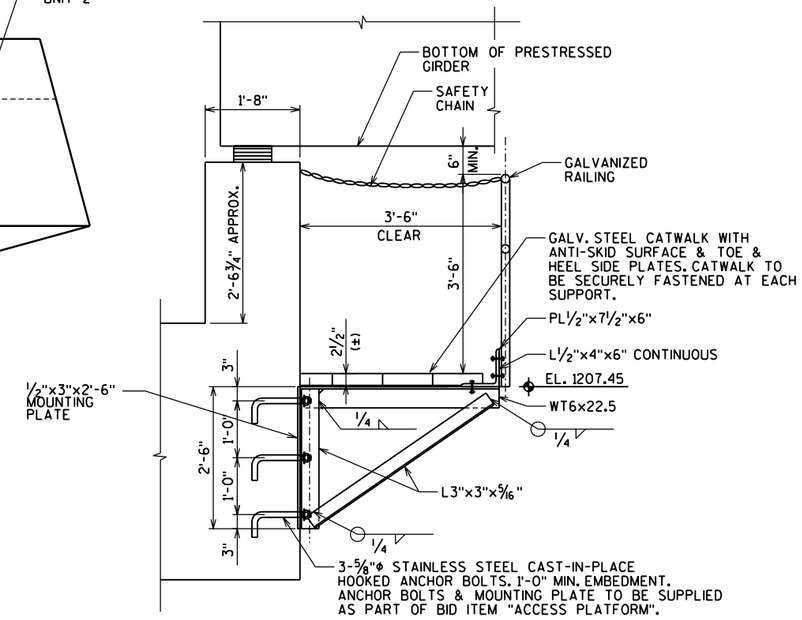

SECTION THRU WALKWAY

CATWALK NOTES:

1) MATERIALS SHALL BE AS FOLLOWS:
   STEEL WT SHAPES= ASTM A992 GRADE 50
   STEEL ANGLES= ASTM A36
   STEEL PLATES= ASTM A36
   STEEL PIPE= ASTM A53 GRADE B
   WELD METAL - E70XX
   BOLTS (EXCEPT ANCHOR BOLTS) - ASTM F593, TYPE 316, CONDITION CW1

2) STAINLESS STEEL ANCHOR BOLTS SHALL BE F593, TYPE 316, CONDITION CW1. NUTS FOR ANCHOR BOLTS SHALL BE ASTM F594 GRADE A HEAVY HEX. ANCHOR BOLTS SHALL HAVE DOUBLE NUTS.

3) ALL STEEL ITEMS (EXCEPT STAINLESS STEEL) SHALL BE GALVANIZED AFTER FABRICATION AS FOLLOWS: STRUCTURAL SHAPES AND PLATES - ASTM A123

4) EXCEPT FOR ANCHOR BOLTS, ALL BOLT HOLE DIAMETERS SHALL BE EQUAL TO THE BOLT DIAMETER PLUS 1/16", PRIOR TO GALVANIZING. HOLE DIAMETERS FOR ANCHOR BOLTS SHALL NOT EXCEED THE BOLT DIAMETER PLUS 1/2".

5) ANCHOR BOLTS SHALL BE PROVIDED WITH GALVANIZED TEMPLATES TOP AND BOTTOM TO MAINTAIN VERTICAL ALIGNMENT AND SPACING DURING CONCRETE PLACEMENT. TEMPLATES MAY NOT BE WELDED TO THE ANCHOR BOLTS.

6) CATWALK SHALL MEET A.A.S.H.T.O. "SPECIFICATIONS FOR THE DESIGN & CONSTRUCTION OF STRUCTURAL SUPPORTS FOR HIGHWAY SIGNS" 1985. (500 LB. DISTRIBUTED OVER 2'-0" TRANSVERSELY WITH THE BASIC ALLOWABLE UNIT STRESS - A.A.S.H.T.O. HIGHWAY BRIDGES 1985 (INCREASED 25%). MAX. SPAN IS 8'-0". CATWALK SHALL ALSO MEET O.S.H.A. 1970 STD'S. FOR WALKING-WORKING SURFACES.

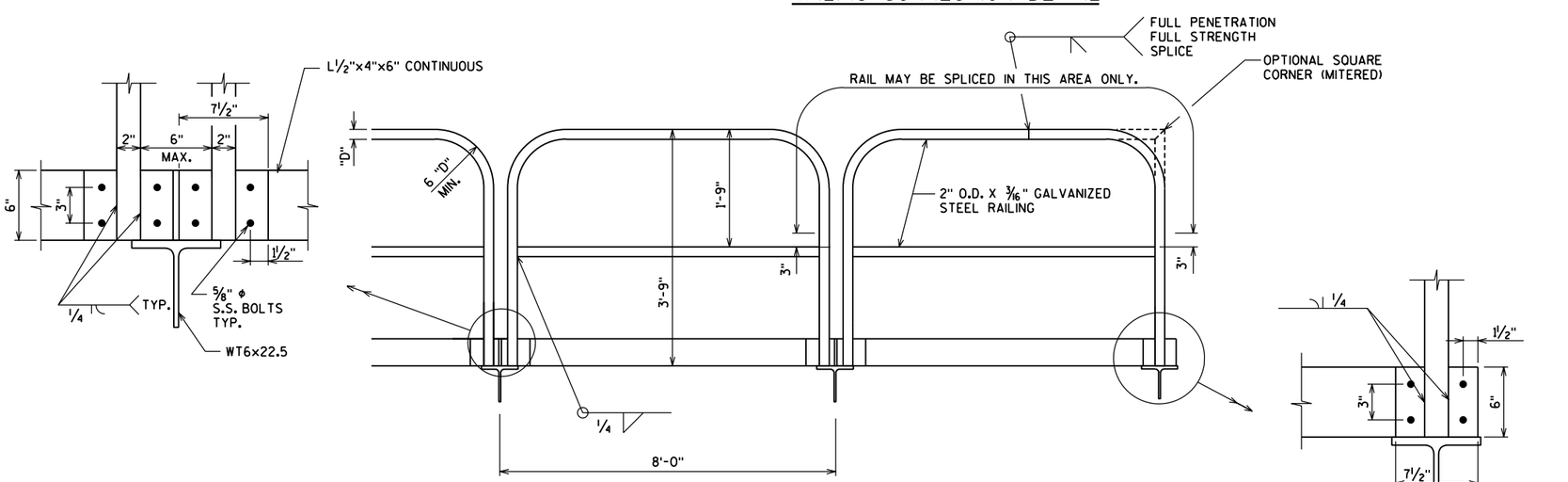

S.S. STAINLESS STEEL

TYPICAL RAILING DETAILS

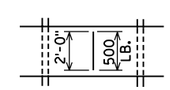

NO.	DATE	REVISION	BY

STATE OF WISCONSIN
DEPARTMENT OF TRANSPORTATION
STRUCTURES DESIGN SECTION

STRUCTURE B-37-360-003

CONST. SPEC.	2003	DRAWN BY	MSM	PLANS CK'D.

ACCESS PLATFORM

SHEET 30 OF 30
436

8

8

STATE PROJECT NUMBER
1166-09-76

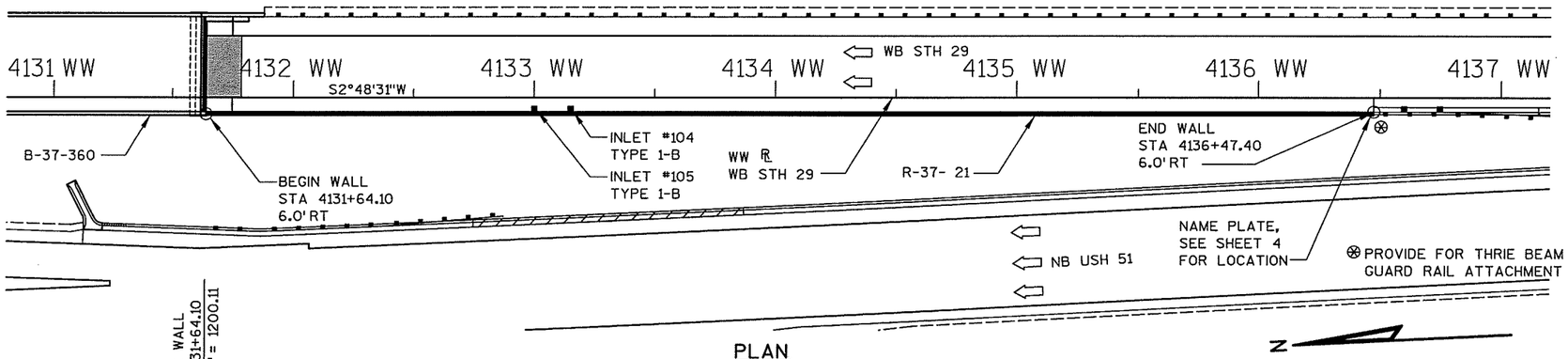

PLAN

(MSE CONCRETE PANEL WALL)

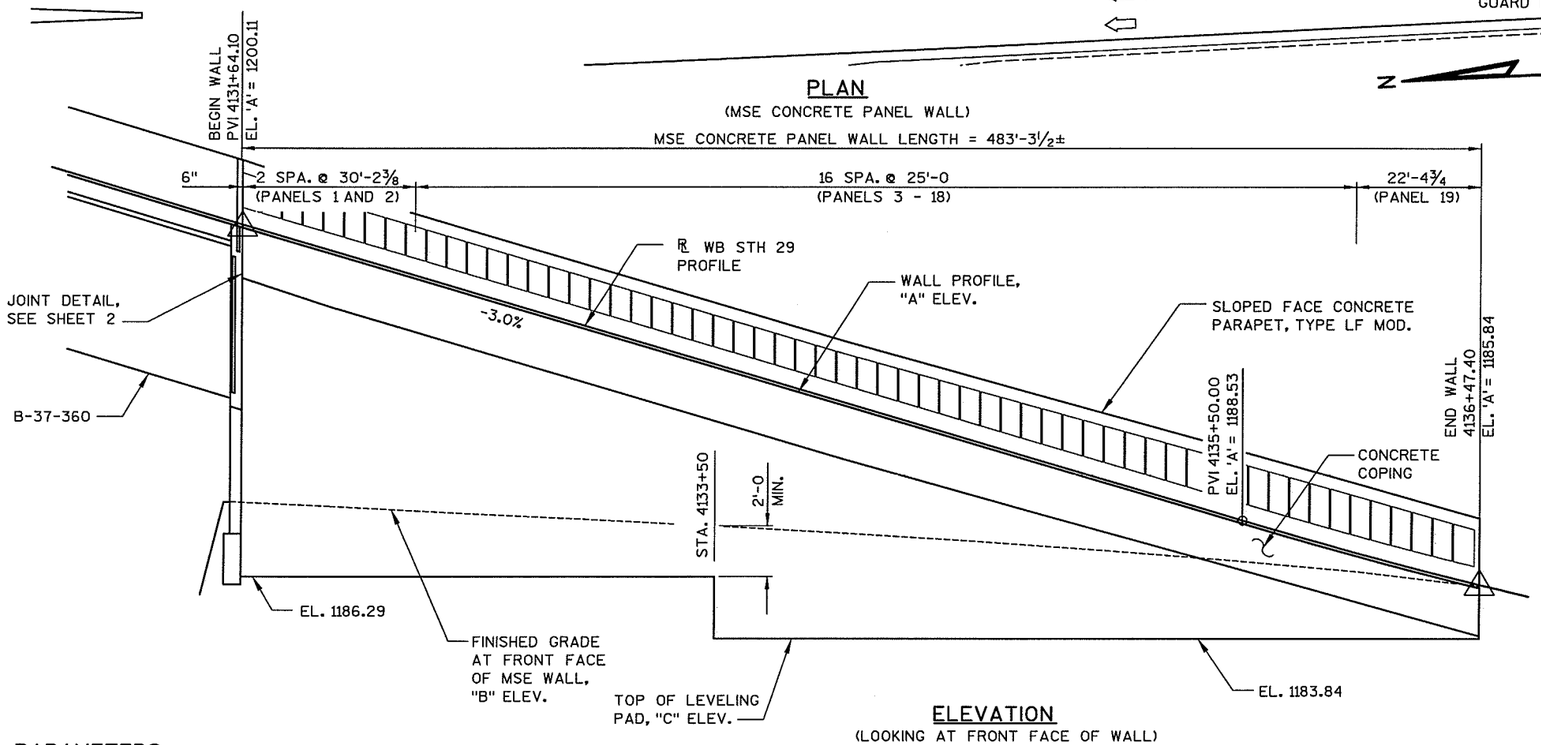

ELEVATION

(LOOKING AT FRONT FACE OF WALL)

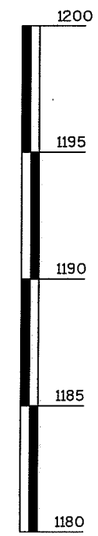

DESIGN DATA

THE CONTRACTOR SHALL PROVIDE COMPLETE DESIGN, PLANS, DETAILS, SPECIFICATIONS, AND SHOP DRAWINGS FOR THE RETAINING WALLS IN ACCORDANCE WITH THE SPECIAL PROVISIONS. THE RETAINING WALL MANUFACTURER SHALL PROVIDE TECHNICAL ASSISTANCE TO THE CONTRACTOR DURING CONSTRUCTION. THE COST OF FURNISHING THESE ITEMS SHALL BE INCLUDED IN THE BID ITEM "WALL CONCRETE PANEL MECHANICALLY STABILIZED EARTH".

PLANS, ELEVATIONS AND DETAILS SHOWN ON THESE DRAWINGS ARE INTENDED TO INDICATE WALL LOCATIONS, LENGTHS, HEIGHTS, AND DETAILS COMMON TO THE WALL SYSTEM SELECTED. THE CONTRACTOR SHALL VERIFY THAT THE WALL SYSTEM SELECTED WILL CONFORM TO THE REQUIRED ALIGNMENTS AND DETAILS.

THE RETAINING WALL IS TO BE DESIGNED USING THE ELEVATIONS GIVEN ON THIS SHEET.

DESIGN FOR RETAINING WALL TO PROVIDE FOR FINISHED GRADE SLOPED BEHIND WALL AS SHOWN.

DESIGN RETAINING WALL FOR A LIVE LOAD SURCHARGE OF 240 psf.

CONCRETE MASONRY ---------- f'c = 4,000 psi

HIGH STRENGTH BAR STEEL REINFORCEMENT ---------- fy = 60,000 psi

TOTAL ESTIMATED QUANTITIES

EXCAVATION FOR STRUCTURES RETAINING WALLS R-37-21	1	LS
PROTECTIVE SURFACE TREATMENT	215	SY
** CONCRETE MASONRY RETAINING WALLS	216	CY
** BAR STEEL REINFORCEMENT HS COATED RETAINING WALLS	23,910	LB
WALL CONCRETE PANEL MECHANICALLY STABILIZED EARTH	3,930	SF
ANCHOR ASSEMBLIES FOR STEEL PLATE BEAM GUARD	1	EACH
CONSTRUCTION STAKING STRUCTURE LAYOUT R-37-21	1	LS
CONCRETE STAINING R-37-21	1,290	SF

** QUANTITY INCLUDES: BARRIER FOOTING AND PARAPET

GENERAL NOTES

DRAWINGS SHALL NOT BE SCALED.

BAR STEEL REINFORCEMENT SHALL BE EMBEDDED 2" CLEAR UNLESS OTHERWISE SHOWN OR NOTED.

APPLY PROTECTIVE SURFACE TREATMENT TO THE INSIDE FACE, TOP AND END OF CONCRETE PARAPET AND EXPOSED TOP SURFACE (6") OF CONCRETE BARRIER FOOTING.

SEE ROAD PLANS FOR ℞ WB STH 29 'WW' PROFILE.

SOIL PARAMETERS

STRATUM LOCATIONS AND SOIL DESCRIPTIONS	UNIT WEIGHT (pcf)	FRICTION ANGLE (DEGREES)	COHESION (psf)
EL. 1170± - EL. 1184.13 *	120	30	0
RETAINED SOIL EL. 1200.20 - 1184.13 **	120	30	0

* ASSUMED GRANULAR FILL MATERIAL
** DESIGN WALL FOR THESE VALUES

SAFETY FACTORS

MINIMUM DOT STANDARD	MSE CONCRETE PANEL WALL
SLIDING (FS>1.5)	1.5 ▲
OVERTURNING (FS>2.0)	2.0 ▲
GLOBAL STABILITY (FS>1.3)	1.3 *
ULTIMATE BEARING CAPACITY (FS>2) BASED ON WALL WIDTHS & IMBEDMENT DEPTHS SHOWN IN TABLE	2.0 *

* FACTORS OF SAFETY DETERMINED BY SOILS ENGINEER

▲ FACTORS OF SAFETY TO BE DETERMINED BY WALL MANUFACTURER

LIST OF DRAWINGS

INLET LOCATIONS

INLET NUMBER	STATION	OFFSET	ELEV.
1	4133+00 WW	5'-0 RT.	1195.87
2	4133+15 WW	5'-0 RT.	1195.42

WISCONSIN
CHAD D. HALVERSON
E-34364
MADISON
WIS.
PROFESSIONAL ENGINEER
7/18/06

DESIGN CONTACT: CHAD HALVERSON (608)251-4843
BRIDGE OFFICE CONTACT: FINN HUBBARD (608)266-8489

NO.	DATE	REVISION	BY

STRAND ASSOCIATES, INC. ENGINEERS
910 WEST WINGRA DRIVE
MADISON, WISCONSIN 53715
(608)-251-4843
(608) 251-8655 FAX
WWW.STRAND.COM

WISDOT
BUREAU OF STRUCTURES

STRUCTURE R-37-21

WB STH 29 RETAINING WALL

COUNTY MARATHON		~~TOWN~~/CITY/~~VILLAGE~~ WAUSAU	
DESIGN SPEC. AASHTO STD. SPEC. 2002		LOAD HS-25	CONST. SPEC. 2003
DESIGNED BY CDH	DESIGN CK'D. DJW	DRAWN BY THS	PLANS CK'D. CDH

APPROVED William C. Dreher 10/19/06
CHIEF STRUCTURAL DESIGN ENGINEER — DATE

GENERAL PLAN

SHEET 437 1 OF 6
DATE:

8

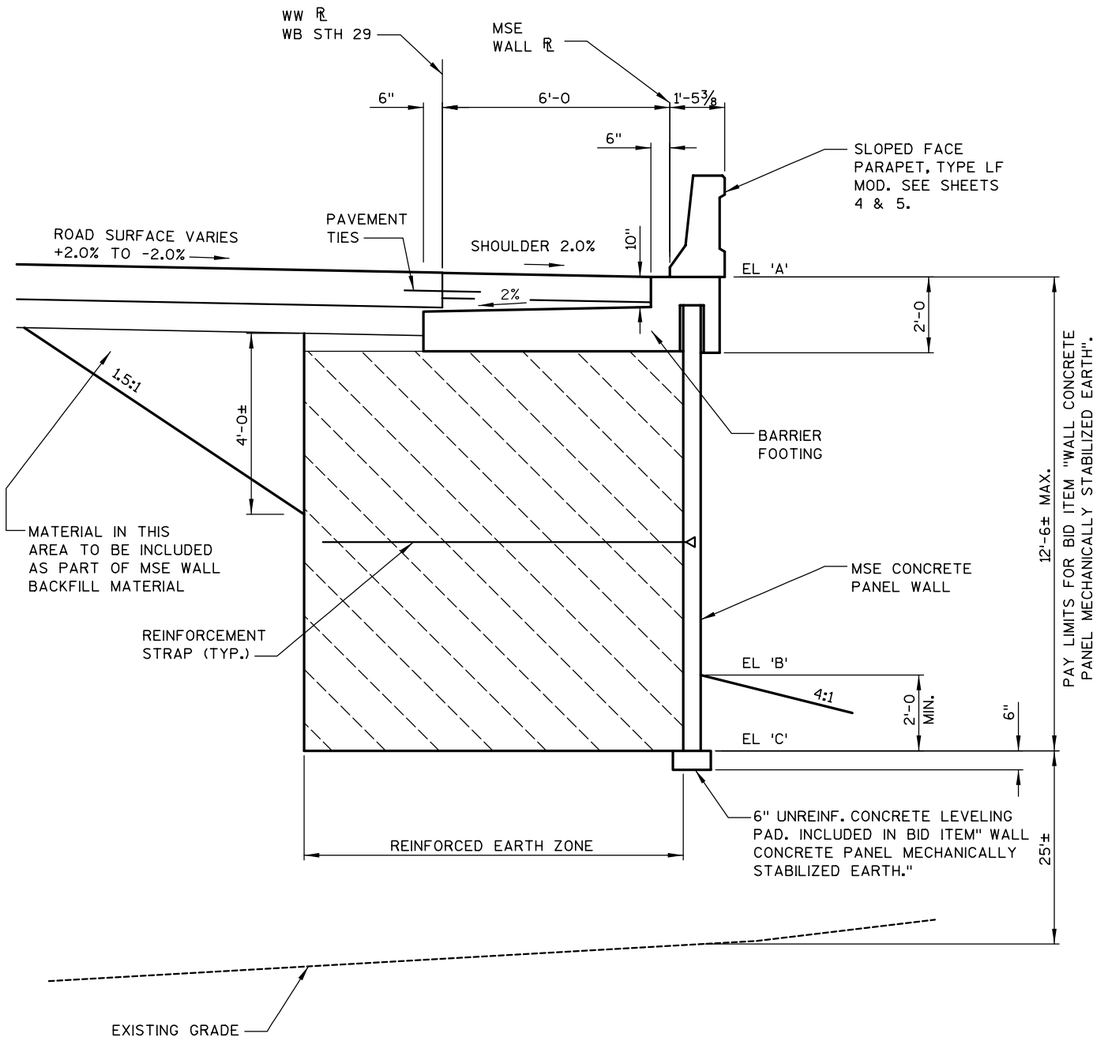

MSE RETAINING WALL TYPICAL SECTION

GEOMETRY TABLE

RAMP STATION WW	OFFSET	COORDINATES		ELEV. A	ELEV. B	ELEV. C
		N	E			
4131+64.10	6.0' RT	198,002.52	271,909.91	1200.11	1189.20	1186.29
4132+00	6.0' RT			1199.03	1189.05	1186.29
4332+50	6.0' RT			1197.53	1188.78	1186.29
4133+00	6.0' RT			1196.03	1188.54	1186.29
4133+50	6.0' RT			1194.53	1188.29	1186.29
4133+50	6.0' RT			1194.53	1188.29	1183.84
4134+00	6.0' RT			1193.03	1188.00	1183.84
4134+50	6.0' RT			1191.53	1187.69	1183.84
4135+00	6.0' RT			1190.03	1187.33	1183.84
4135+50	6.0' RT			1188.53	1186.93	1183.84
4136+00	6.0' RT			1187.08	1186.48	1183.84
4136+47.40	6.0' RT	197,519.68	217,886.22	1185.84	1185.84	1183.84

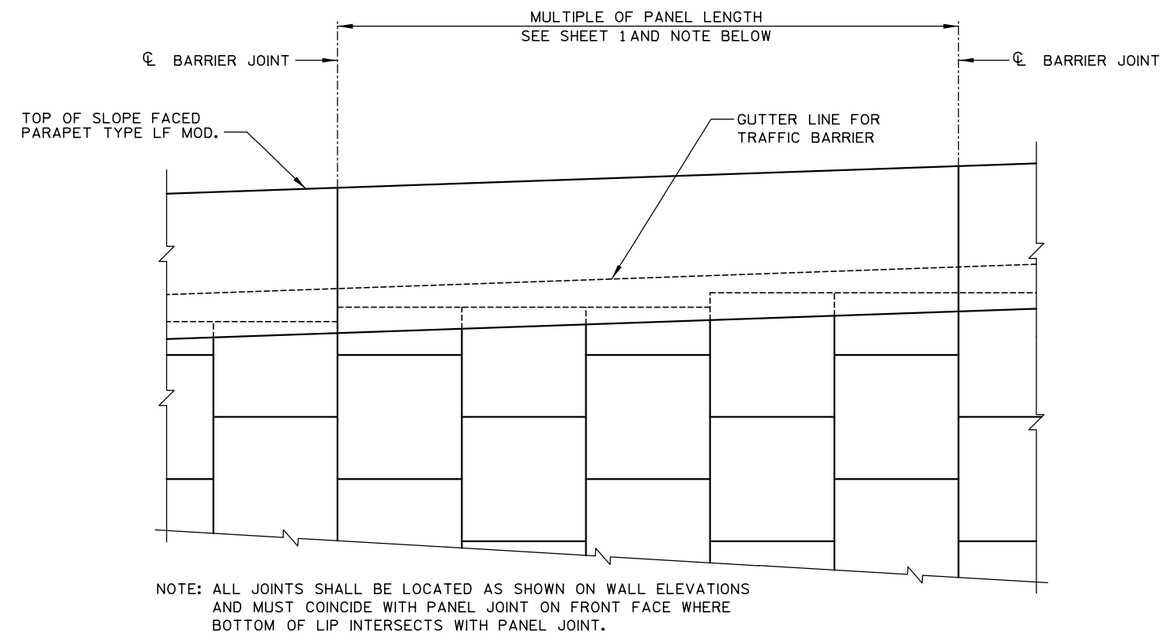

NOTE: ALL JOINTS SHALL BE LOCATED AS SHOWN ON WALL ELEVATIONS AND MUST COINCIDE WITH PANEL JOINT ON FRONT FACE WHERE BOTTOM OF LIP INTERSECTS WITH PANEL JOINT.

C.I.P. TRAFFIC BARRIER PARTIAL ELEVATION

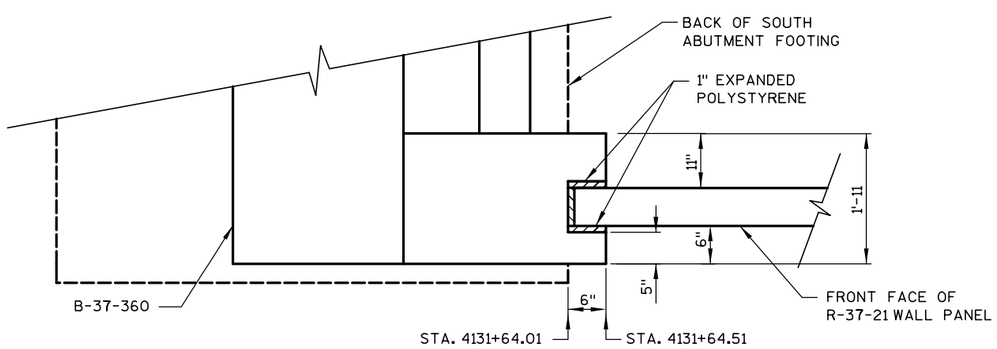

MSE RETAINING WALL CONNECTION AT ABUTMENT

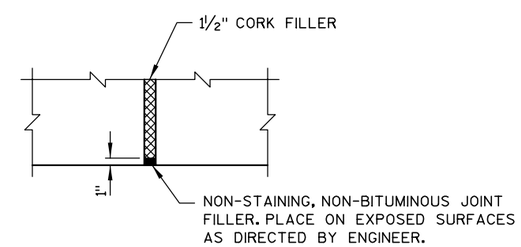

CONCRETE TRAFFIC BARRIER EXPANSION JOINT DETAIL

EXPANSION JOINT SPACING NOT TO EXCEED 30'±.
DO NOT RUN BAR STEEL THRU JOINT. LOCATE OVER WALL JOINT.

NO.	DATE	REVISION	BY

STATE OF WISCONSIN
DEPARTMENT OF TRANSPORTATION
STRUCTURES DESIGN SECTION

STRUCTURE R-37-21

CONST. SPEC.	2003	DRAWN BY	THS	PLANS CK'D.	CDH

SECTIONS & DETAILS

SHEET 438

8

STATE PROJECT NUMBER

1166-09-76

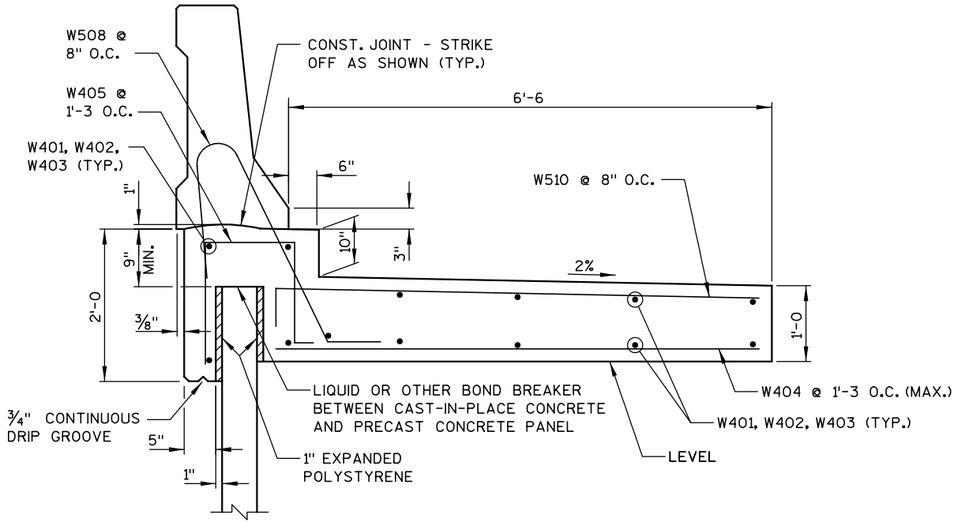

CAST-IN-PLACE CONCRETE TRAFFIC BARRIER DETAIL

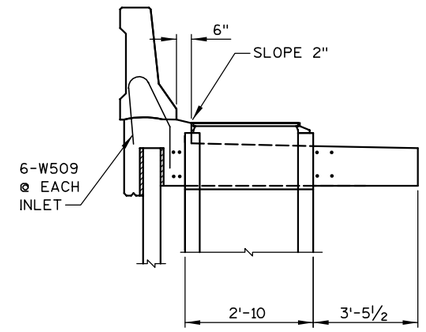

SECTION THRU WALL AT INLET

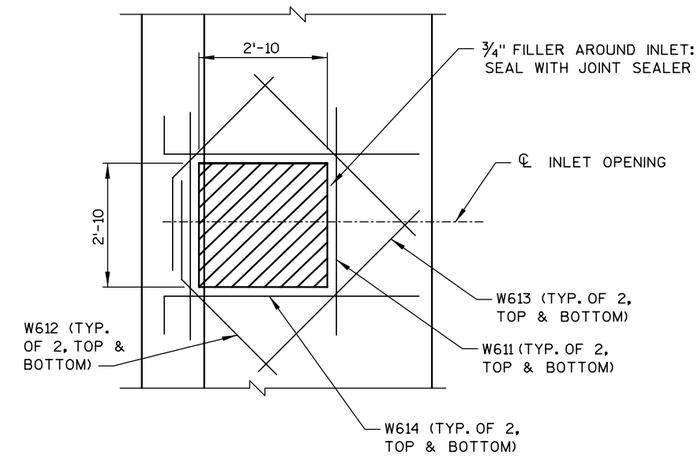

NOTES:

THE WALL MANUFACTURER SHALL OBTAIN INLET HEIGHT FROM THE CONTRACTOR TO DESIGN THE SOIL REINFORCEMENT AROUND THE INLET.

CUT OR DISPLACE (2" MAX.) REINFORCEMENT SHOWN IN "CAST-IN-PLACE" CONCRETE TRAFFIC BARRIER FOOTING DETAIL FOR PRECAST WALL PANELS" 2" CLEAR OF INLET OPENING (REINFORCEMENT SHOWN IS ADDITIONAL REINFORCEMENT).

INLET AND GRATE BY OTHERS.

WALL PLAN AT INLET

STA. 4133+00 WW (PANEL 6)
STA. 4133+15 WW (PANEL 7)

BARRIER FOOTING BILL OF BARS

COATED 17,730 LBS

MARK	NO. REQ'D	LENGTH	BENT	COAT	LOCATION
W401	13	21'-11		X	FOOTING - LONGIT - PANEL 19
W402	208	24'-6		X	FOOTING - LONGIT - PANELS 3-18
W403	26	29'-8		X	FOOTING - LONGIT - PANELS 1-2
W404	405	6'-6		X	FOOTING - TRANS. - BOTTOM
W405	405	4'-11	X	X	FOOTING - VERT.
W506	14	5'-11	X	X	FOOTING & PARAPET - VERT. - PANEL 19
W507	8	3'-5	X	X	FOOTING & PARAPET - VERT. - PANEL 19
W508	711	6'-1	X	X	FOOTING & PARAPET - VERT.
W509	12	4'-9	X	X	FOOTING & PARAPET - VERT. - @ FLOOR DRAINS
W510	733	7'-3	X	X	FOOTING - TRANS. - TOP
W611	8	7'-2		X	FOOTING - TOP & BOTTOM - @ DRAINS
W612	8	5'-1	X	X	FOOTING - TOP & BOTTOM - @ DRAINS
W613	8	5'-0		X	FOOTING - TOP & BOTTOM - @ DRAINS - DIAGONAL
W614	8	7'-7	X	X	FOOTING - TOP & BOTTOM - @ DRAINS

NOTE: THE FIRST DIGIT OF THE BAR MARK SIGNIFIES THE BAR SIZE.
BENDING DIMENSIONS ARE OUT TO OUT OF BARS.

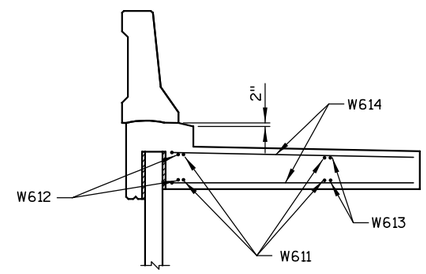

SECTION THRU WALL ADJACENT TO INLET

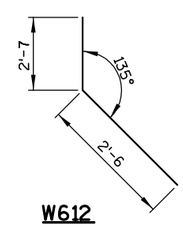

W612

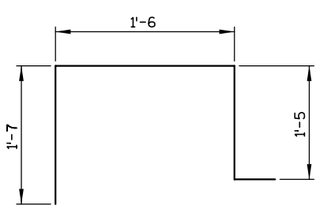

W405

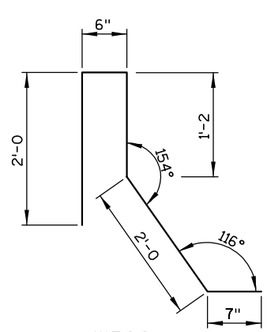

W506

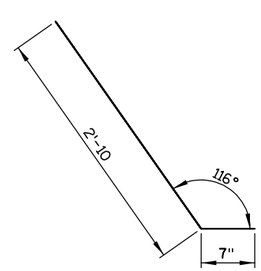

W507

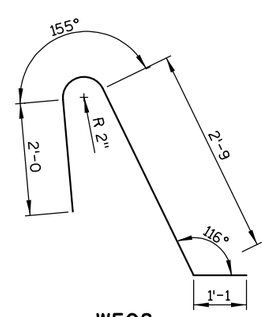

W508

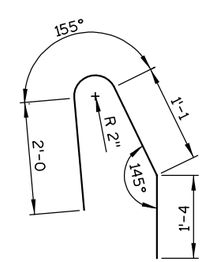

W509

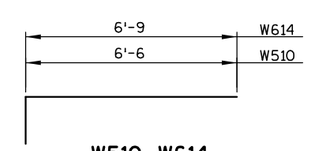

W510, W614

8

8

NO.	DATE	REVISION	BY

STATE OF WISCONSIN
DEPARTMENT OF TRANSPORTATION
STRUCTURES DESIGN SECTION

STRUCTURE R-37-21

CONST. SPEC.	2003	DRAWN BY	THS	PLANS CK'D.	CDH

BARRIER FOOTING & DETAILS

SHEET 439

STATE PROJECT NUMBER
1166-09-76

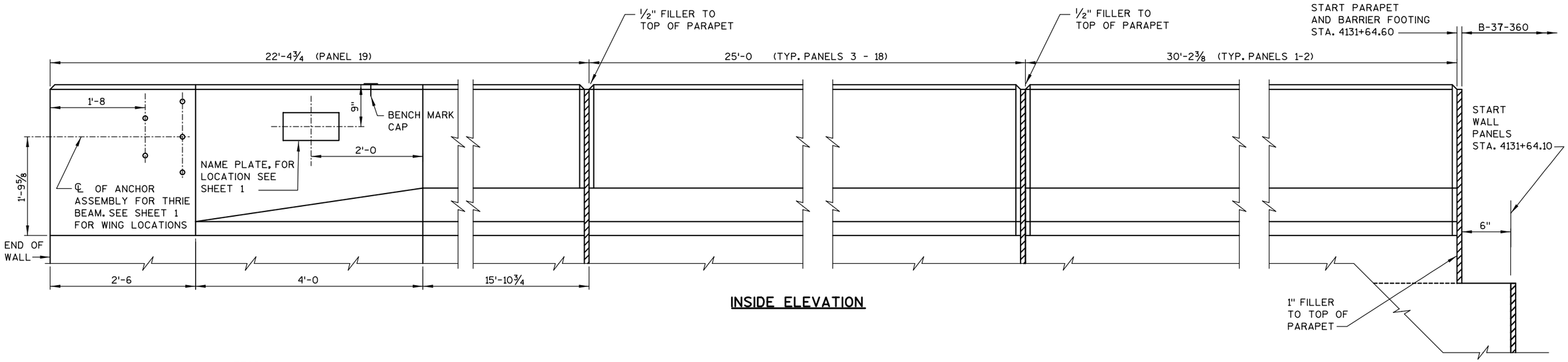

INSIDE ELEVATION

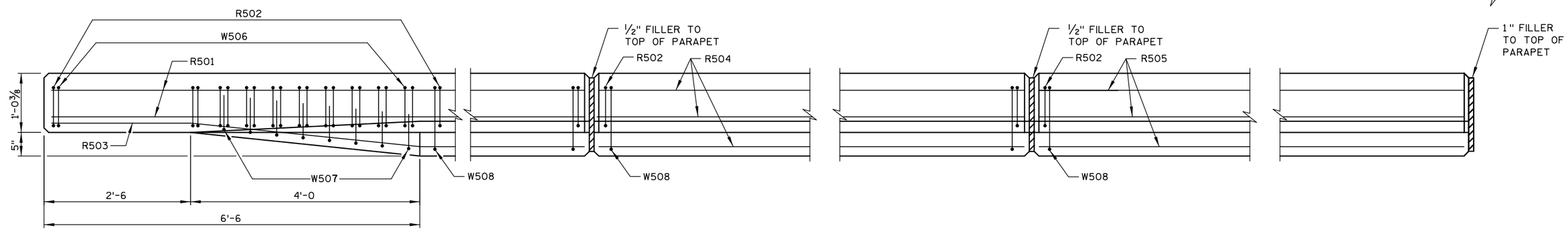

PLAN

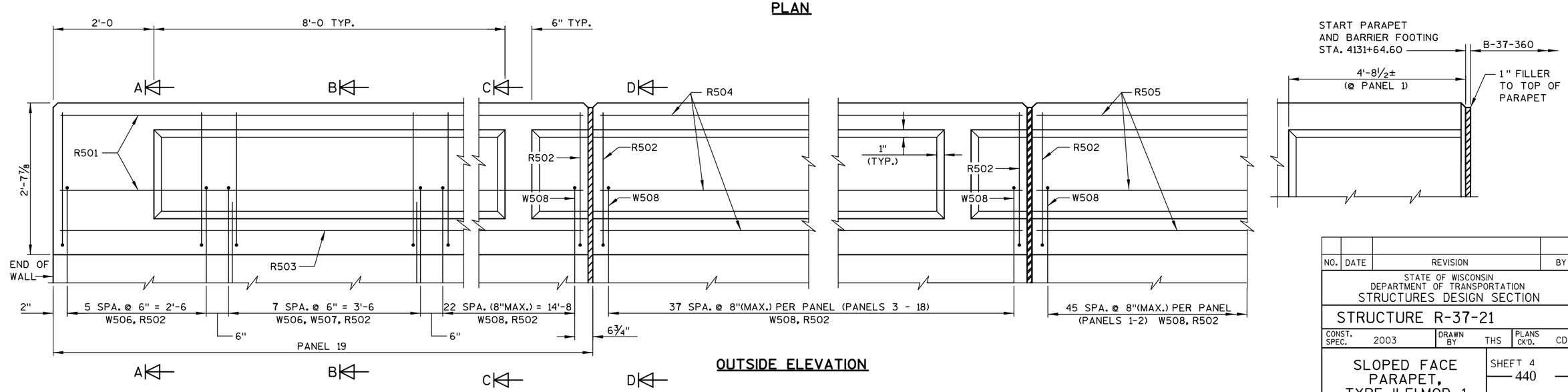

OUTSIDE ELEVATION

8

8

NO.	DATE	REVISION	BY

STATE OF WISCONSIN
DEPARTMENT OF TRANSPORTATION
STRUCTURES DESIGN SECTION

STRUCTURE R-37-21

CONST. SPEC.	2003	DRAWN BY	THS	PLANS CK'D.	CDH

SLOPED FACE PARAPET, TYPE 'LF' MOD. 1

SHEET 4
440

STATE PROJECT NUMBER

1166-09-76

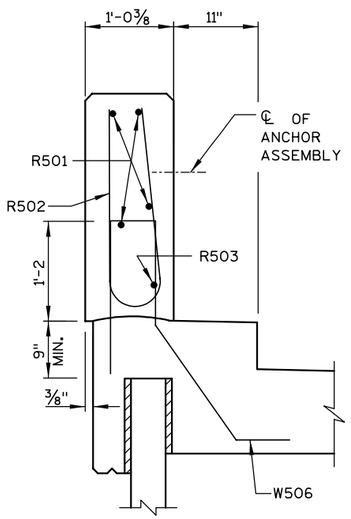

SECTION A-A

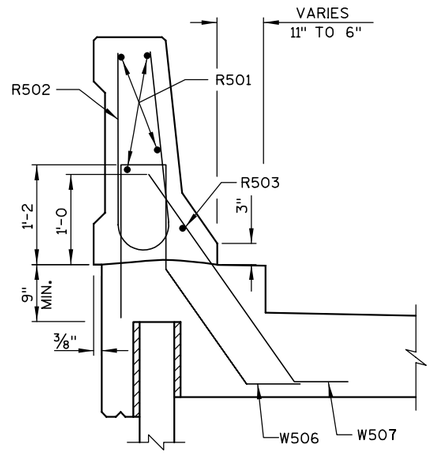

SECTION B-B

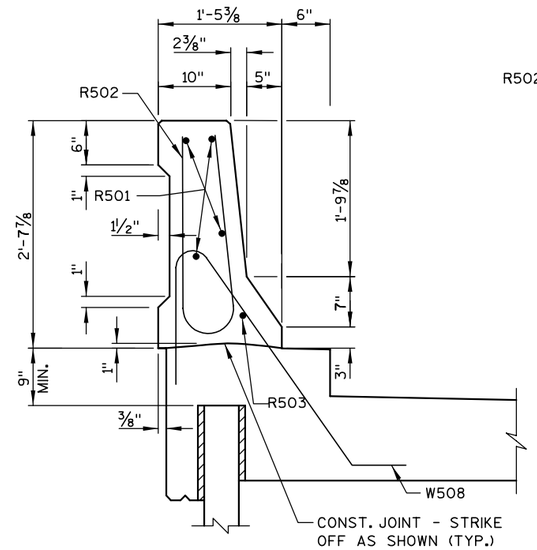

SECTION C-C

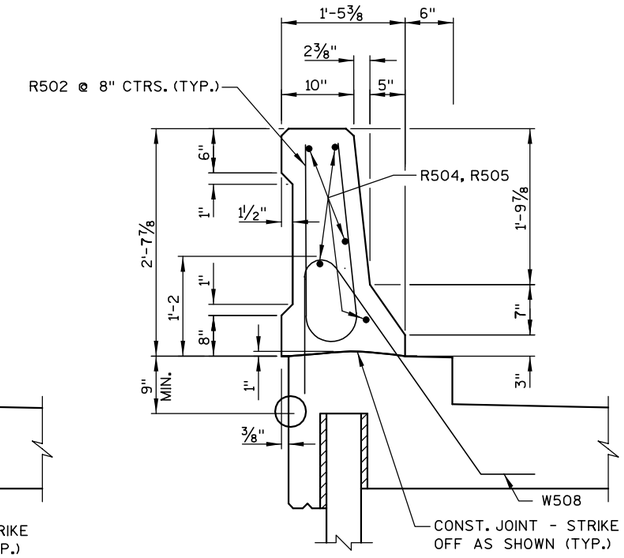

SECTION D-D THRU PARAPET ON BARRIER FOOTING

PARAPET BILL OF BARS

COATED 6,180 LBS

MARK	NO. REQ'D	LENGTH	BENT	COAT	LOCATION
R501	4	21'-11		X	PARAPET - HORZ. - PANEL 19
R502	737	4'-10	X	X	PARAPET - VERT.
R503	1	21'-11	X	X	PARAPET - HORIZ. - PANEL 19
R504	80	24'-6		X	PARAPET - HORIZ. - PANELS 3-18
R505	10	29'-8		X	PARAPET - HORIZ. - PANELS 1-2

NOTE: THE FIRST DIGIT OF THE BAR MARK SIGNIFIES THE BAR SIZE.
BENDING DIMENSIONS ARE OUT TO OUT OF BARS.

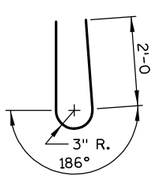

R502

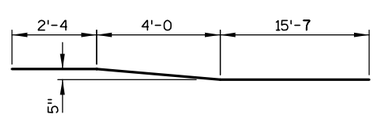

R503

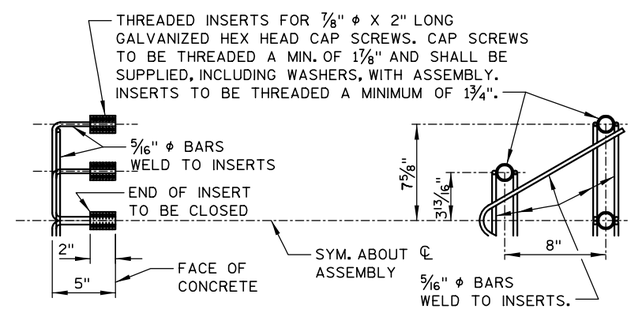

DETAIL OF ANCHOR ASEMBLY

NOTE: HEX HEAD CAP SCREWS & WASHERS TO BE GALVANIZED IN ACCORDANCE WITH AASHTO M232 CLASS C.

SEE SHEET 1 FOR LOCATION

ASSEMBLY SHALL BE BID ITEM "ANCHOR ASSEMBLIES FOR STEEL PLATE BEAM GUARD", EACH.

8

8

NO.	DATE	REVISION	BY

STATE OF WISCONSIN
DEPARTMENT OF TRANSPORTATION
STRUCTURES DESIGN SECTION

STRUCTURE R-37-21

CONST. SPEC.	2003	DRAWN BY	THS	PLANS CK'D.	CDH

SLOPED FACE PARAPET, TYPE 'LF' MOD. 2

SHEET 5
441

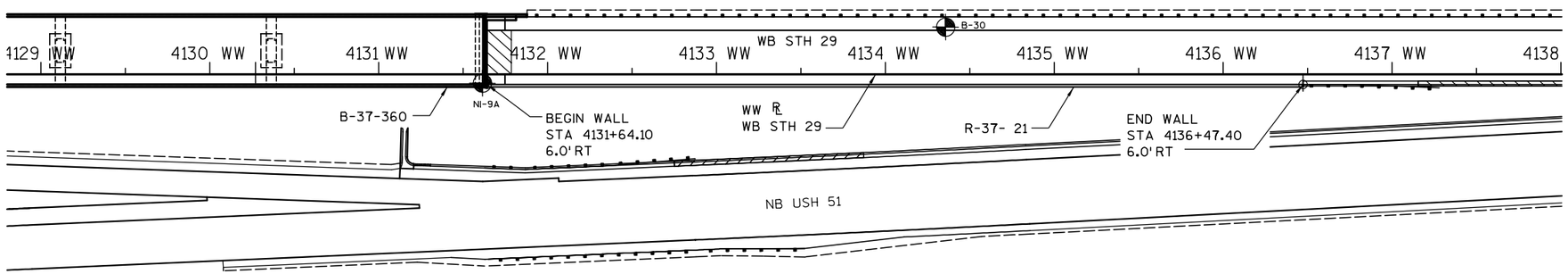

PLAN

(MSE CONCRETE PANEL WALL)

SOIL BORINGS PREPARED BY:
STS CONSULTANTS, LTD.
3909 CONCORD AVENUE
SCHOFIELD, WI 54476
SAMPLED JANUARY & MARCH 2004

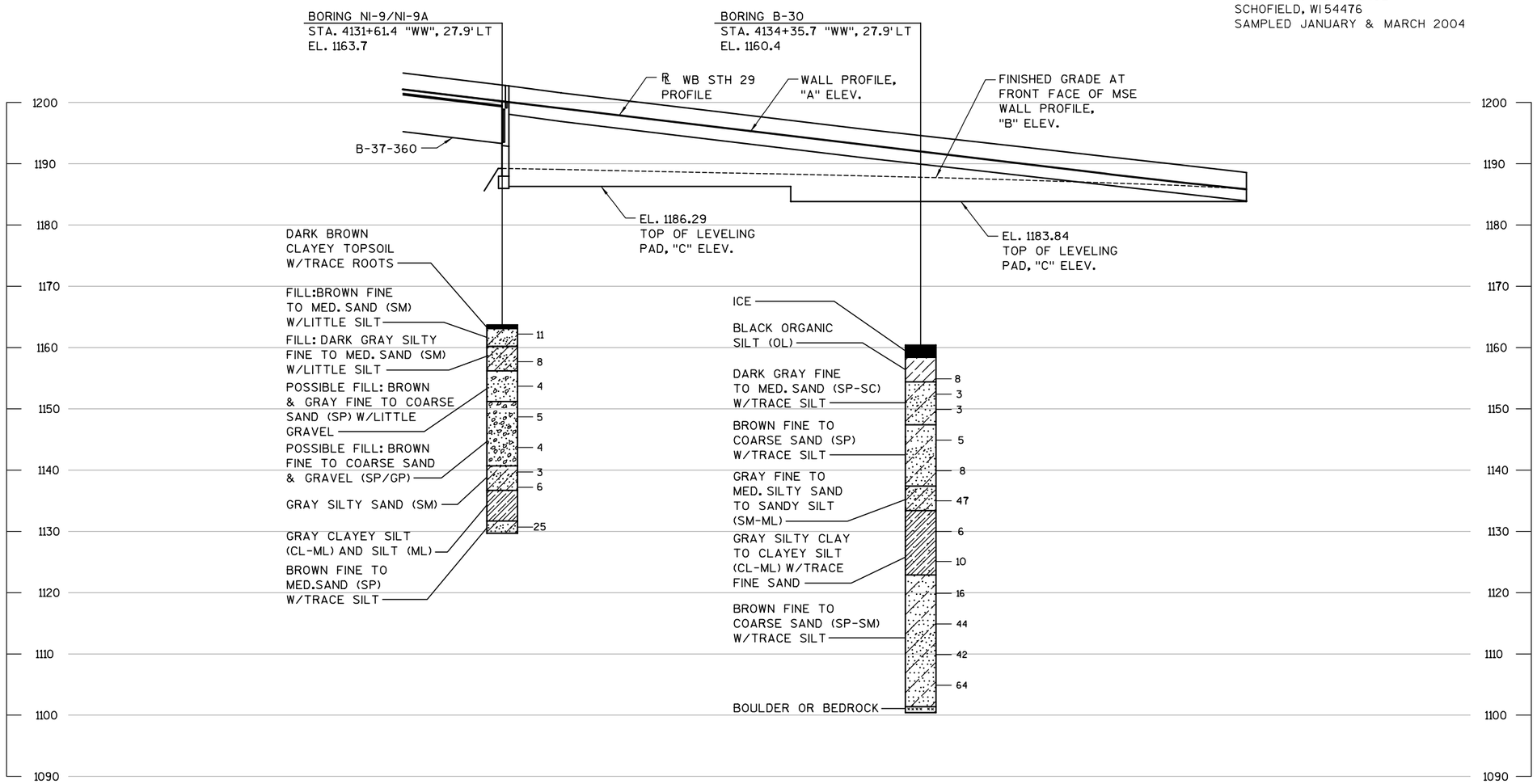

STATE PROJECT NUMBER

1166-09-76

ABBREVIATIONS

F — FINE M — MEDIUM C — COARSE
WS — WEATHERED SO — SOUND

MATERIAL SYMBOLS

TOPSOIL, SILT, SANDSTONE, SAND, PEAT, LIMESTONE, GRAVEL, CLAY, IGNEOUS ROCK

LEGEND OF PROBING

PROBING NO.
STA.
ELEVATION
7 AVERAGE BLOWS PER FOOT
REFUSAL 95/6

95/6=95 BLOWS FOR 6" PENETRATION PROBING TAKEN WITH A 350# WT. FALLING 18" ON A 2" O.D. POINT.

LEGEND OF BORING

BORING NO.
ELEV.
STA.
UNCONFINED STRENGTH → 7.7
7
BLOWS PER FT. USING 140# WT. FALLING 30"
SANDY GRAVEL
F. BOULDERS OR COBBLES
WASH SAMPLE
SAND
SHELBY TUBE — S.T.
GROUND WATER ELEVATION
SILTY CLAY
NO GROUND WATER OBSERVED ABOVE THIS ELEVATION
SO LIMESTONE

UNLESS OTHERWISE SPECIFIED, THE BLOWS PER FOOT AT THE LOCATIONS INDICATED ARE BASED ON DRIVING A 2" O.D. X 1.4" I.D. SPLIT SPOON SAMPLER WITH A 140# HAMMER HAVING A FREE FALL OF 30". THE BLOW COUNT IS TAKEN IN UNDISTURBED SOIL IMMEDIATELY BELOW A CASED OR OPEN HOLE ELIMINATING SIDE FRICTION ON THE DRIVE PIPE.

SUBSURFACE EXPLORATION FOR FOUNDATION DESIGN AND BIDDERS INFORMATION

TO OBTAIN RELATIVE DATA CONCERNING THE CHARACTER OF MATERIAL IN AND UPON WHICH THE FOUNDATION MIGHT BE BUILT, BORINGS AND/OR SOUNDINGS WERE MADE AT POINTS APPROXIMATELY AS INDICATED ON THIS DRAWING. THE DATA PRESENTED HEREIN REPRESENTS THE FINDINGS OF THE SUBSURFACE EXPLORATIONS MADE. HOWEVER, BECAUSE THE DEPTHS INVESTIGATED ARE LIMITED AND THE AREA OF THE BORINGS AND/OR SOUNDINGS IS VERY SMALL IN RELATION TO THE ENTIRE AREA, THE WISCONSIN DEPARTMENT OF TRANSPORTATION DOES NOT WARRANT CONDITIONS BELOW THE DEPTHS INVESTIGATED OR THAT THE CLASSIFICATION OF MATERIAL ENCOUNTERED IN THESE INVESTIGATIONS IS NECESSARILY TYPICAL OF THE ENTIRE SITE.

NO.	DATE	REVISION	BY

STATE OF WISCONSIN
DEPARTMENT OF TRANSPORTATION
STRUCTURES DESIGN SECTION

STRUCTURE R-37-21

CONST. SPEC.	2003	DRAWN BY	KAS	PLANS CK'D.	CDH

SUBSURFACE EXPLORATION

SHEET 6
442

8

STATE PROJECT NUMBER	SHEET NO.
1166-09-76	

DESIGN DATA

SIGN BRIDGE	DESIGN SIGN AREA (SQ. FT.)
S-37-58	396 (TOTAL OF 2 SIDES)
S-37-59	485
S-37-60	291

GENERAL NOTES

DRAWINGS SHALL NOT BE SCALED.

EXACT LOCATIONS OF SIGN BRIDGES SHALL BE LOCATED BY THE ENGINEER.

SUBSURFACE INVESTIGATION BY STS CONSULTANTS WAS PERFORMED AT THE LOCATION OF STRUCTURE S-37-58 AS NOTED ON THE SIGN BRIDGE LAYOUT. A COMPLETE SOILS REPORT IS AVAILABLE FROM THE DEPARTMENT OF TRANSPORTATION.

ALTERNATE DESIGNS ARE NOT ALLOWED.

PROVIDE SIGN BRIDGE IDENTIFICATION PLAQUE FOR ALL SIGN BRIDGES.

HANDHOLES ARE NOT REQUIRED.

THE DESIGN DOES NOT ALLOW FUTURE CATWALKS OR LIGHTING.

TOTAL ESTIMATED QUANTITIES

SIGN SUPPORTS CONCRETE MASONRY	32 CY
SIGN SUPPORTS STEEL COATED REINFORCEMENT HS	2810 LB
SIGN BRIDGE (S-37-59)	1 LS
SIGN BRIDGE (S-37-60)	1 LS
SIGN BRIDGE CANTILEVERED (S-37-58)	1 LS

LIST OF DRAWINGS

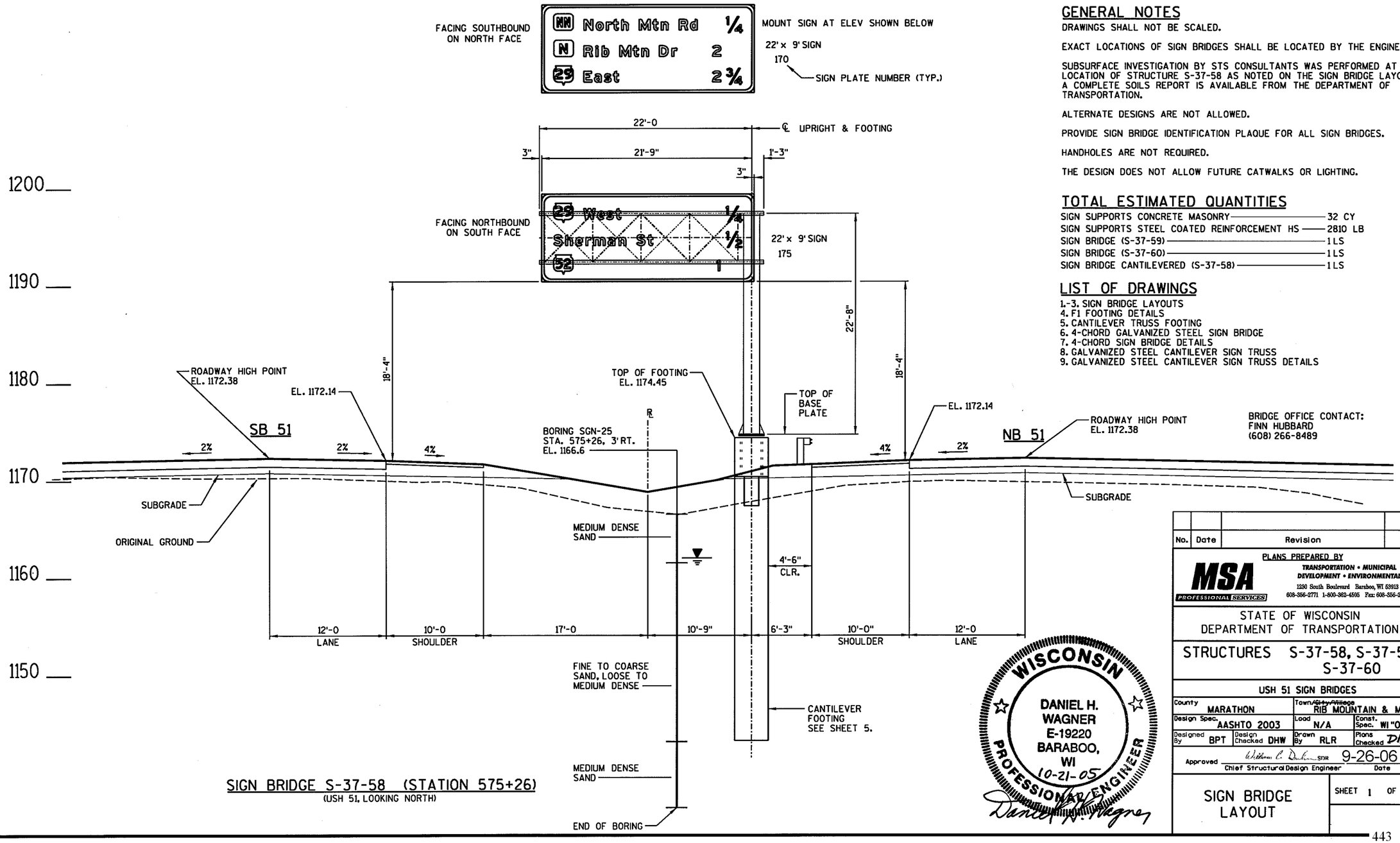

SIGN BRIDGE S-37-58 (STATION 575+26)
(USH 51, LOOKING NORTH)

WISCONSIN PROFESSIONAL ENGINEER
DANIEL H. WAGNER
E-19220
BARABOO, WI
10-21-05
Daniel H. Wagner

No.	Date	Revision	By

PLANS PREPARED BY
MSA PROFESSIONAL SERVICES
TRANSPORTATION • MUNICIPAL DEVELOPMENT • ENVIRONMENTAL
1230 South Boulevard Baraboo, WI 53913
608-356-2771 1-800-362-4505 Fax: 608-356-2770

STATE OF WISCONSIN
DEPARTMENT OF TRANSPORTATION

STRUCTURES S-37-58, S-37-59, S-37-60

USH 51 SIGN BRIDGES

County MARATHON		Town/City/Village RIB MOUNTAIN & MAINE	
Design Spec. AASHTO 2003		Load N/A	Const. Spec. WI "03"
Designed By BPT	Design Checked DHW	Drawn By RLR	Plans Checked DHW

Approved William C. Dreher SDR 9-26-06
Chief Structural Design Engineer Date

SIGN BRIDGE LAYOUT

SHEET 1 OF 9

8

8

FILE NAME: HDGN: k:±structures±sign bridges±plansheets±930415±93041501.dgn

REV. DATE: 10/21/2005

STATE PROJECT NUMBER	SHEET NO.
1166-09-76	

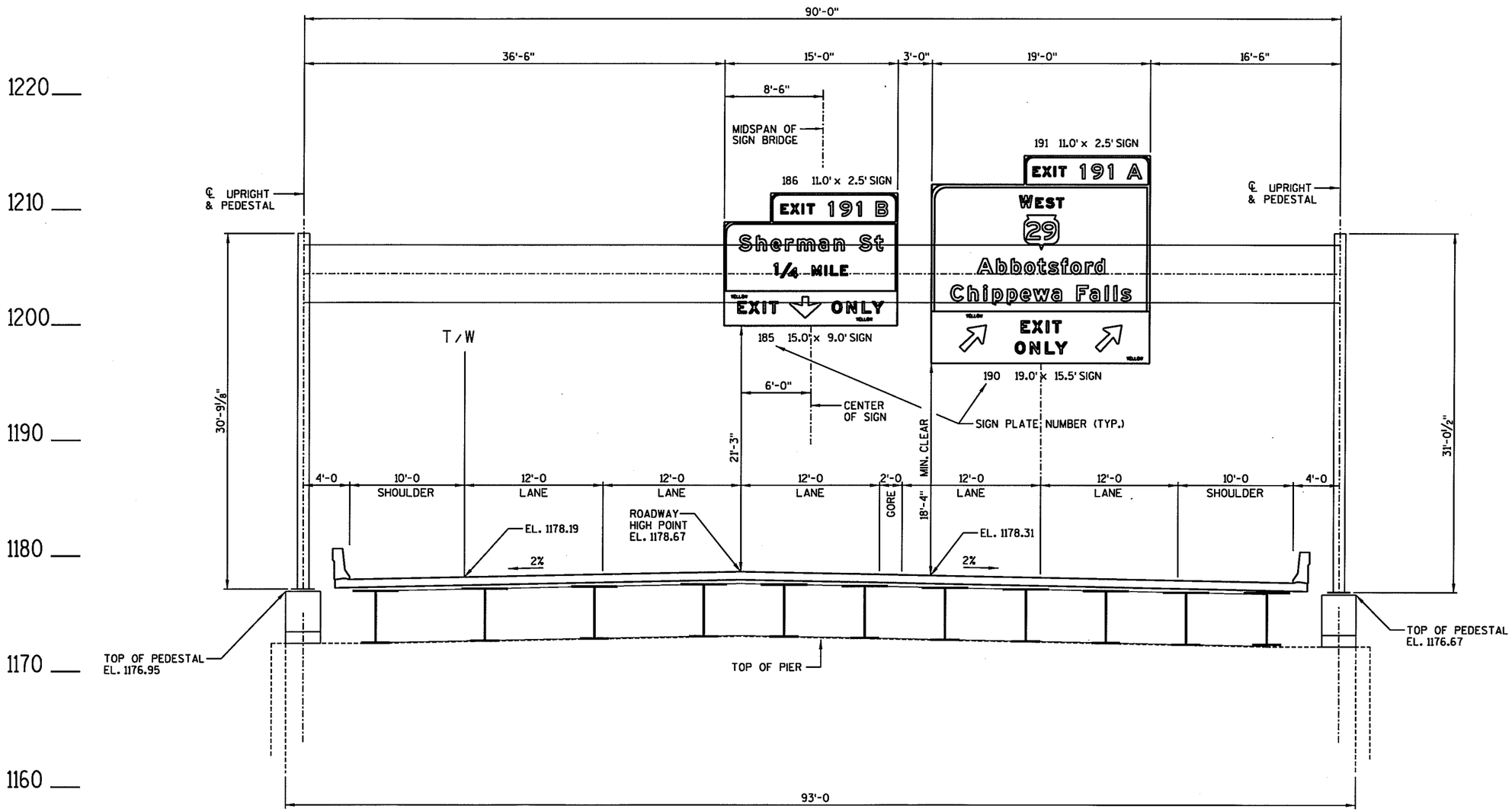

SIGN BRIDGE S-37-59 (STATION 591+81.03)

(NORTHBOUND USH 51 AT C/L OF PIER 2, STRUCTURE B-37-344 OVER THE RIB RIVER, LOOKING NORTH)

No.	Date	Revision	By

STATE OF WISCONSIN
DEPARTMENT OF TRANSPORTATION

STRUCTURE S-37-59

Const. Spec. WI "03"	Drawn By RLR	Plans Checked DHW

SIGN BRIDGE LAYOUT

SHEET 2 OF 9

8

8

FILE NAME: HDGN: g:±projects±90s±93±930232±structures±sign bridges±plansht±930415±93041502.dgn REV. DATE: 05/24/2005

STATE PROJECT NUMBER	SHEET NO.
1166-09-76	

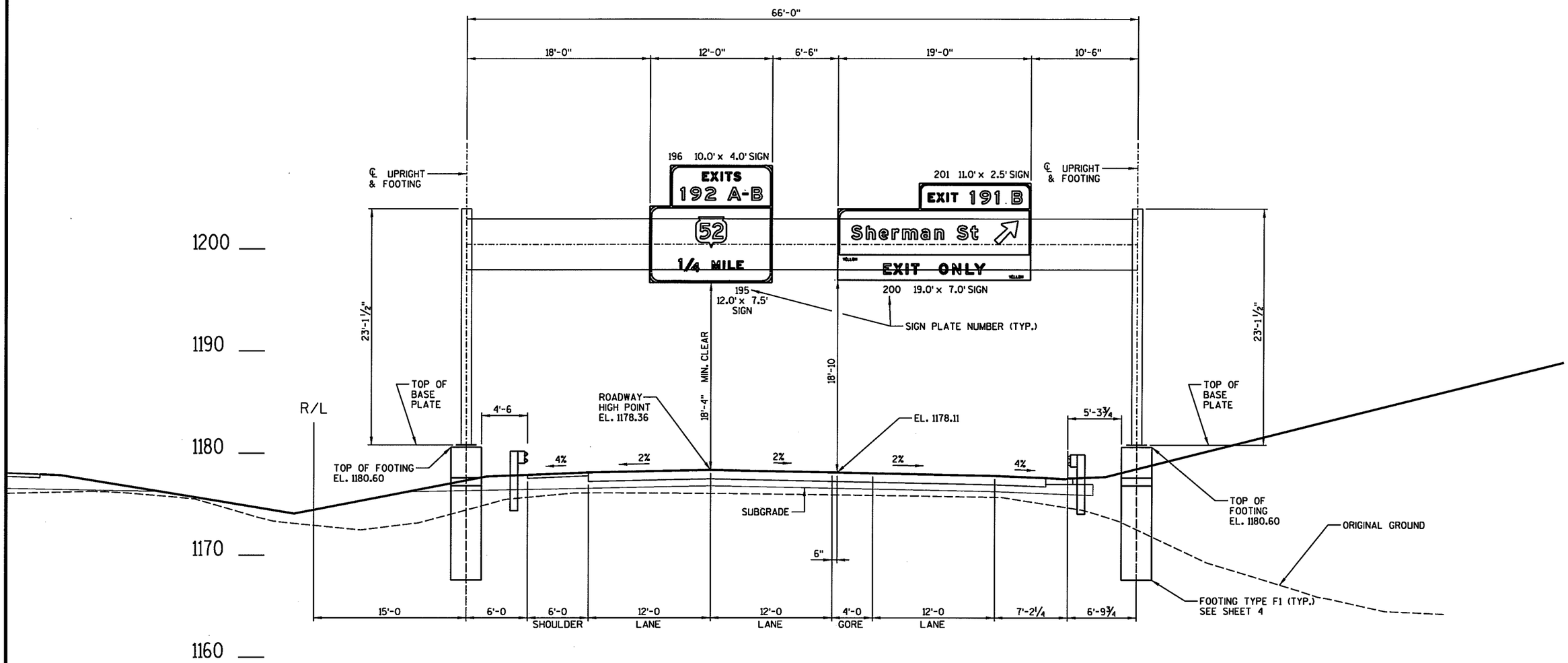

SIGN BRIDGE S-37-60 (STATION 604+57)
(NORTHBOUND USH 51, LOOKING NORTH)

8

No.	Date	Revision	By

STATE OF WISCONSIN
DEPARTMENT OF TRANSPORTATION

STRUCTURE S-37-60

Const. Spec. WI "03"	Drawn By RLR	Plans Checked DHW

SIGN BRIDGE LAYOUT

SHEET 3 OF 9

FILE NAME: HDGN: g:±projects±90s±93±930232±structures±sign bridges±plansht±930415±93041503.dgn REV. DATE: 05/24/2005

STATE PROJECT NUMBER	SHEET NO.
1166-09-76	

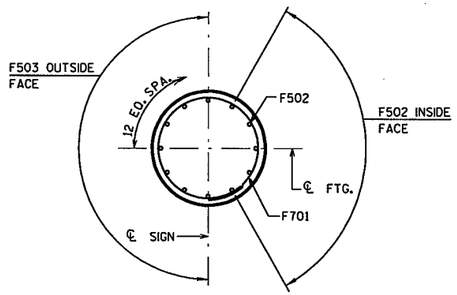

SECTION A

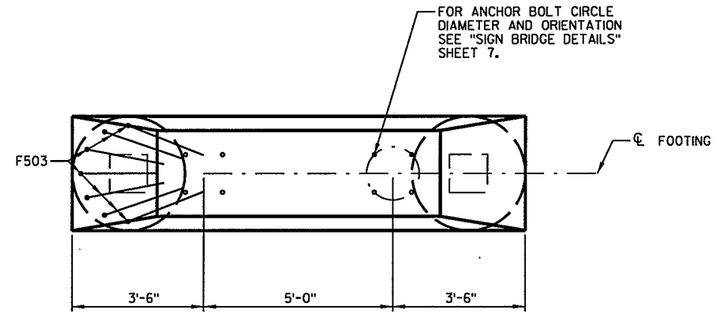

PLAN

SUMMARY OF QUANTITIES (1 FTG.)

ITEM	UNIT	FTG. TYPE F1
SIGN SUPPORTS CONCRETE MASONRY	CY	9
SIGN SUPPORTS STEEL COATED REINFORCEMENT HS	LB	680

GENERAL NOTES

DRAWINGS SHALL NOT BE SCALED.
BAR STEEL REINFORCEMENT SHALL BE EMBEDDED 3" CLEAR UNLESS DETAILED OTHERWISE.

ALLOWABLE DESIGN STRESSES

CONCRETE MASONRY — f'c=3,500 P.S.I.
BAR STEEL REINFORCEMENT HS COATED GRADE 60 — fy=60,000 P.S.I.
ANCHOR BOLTS A.A.S.H.T.O. M314 — fy=55,000 P.S.I.

FOUNDATION DATA

MINIMUM SOIL BEARING PRESSURE = 3T/SQ. FT.

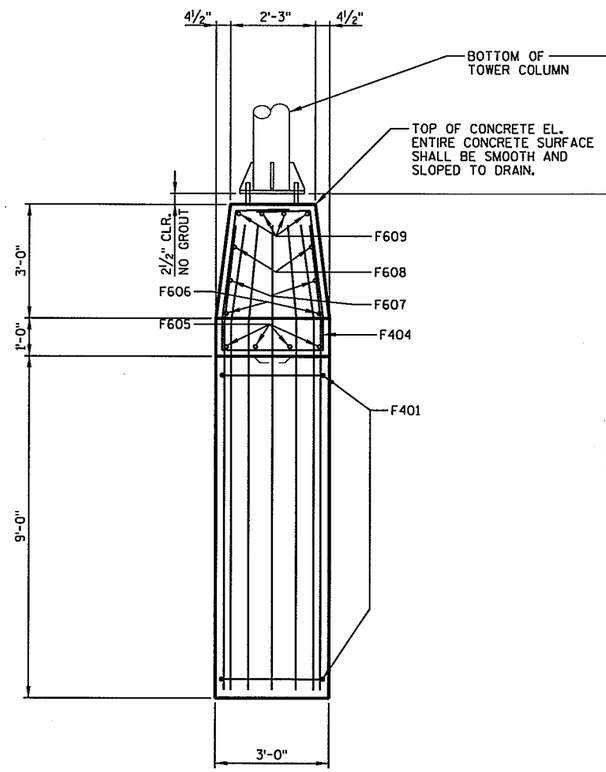

END VIEW

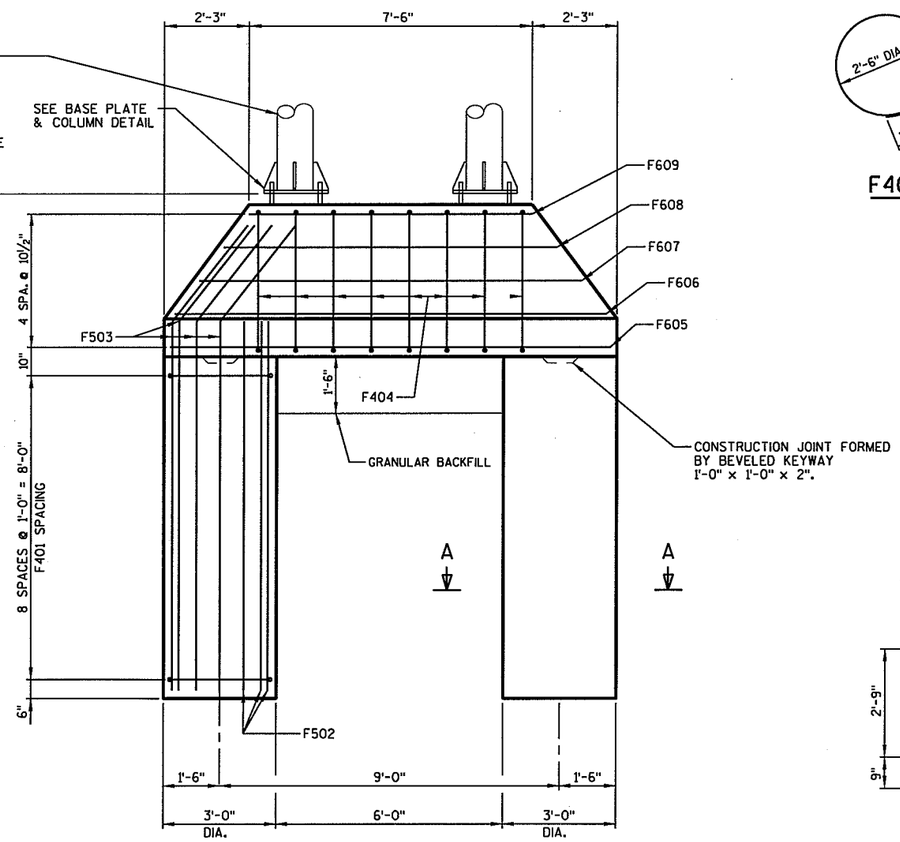

ELEVATION

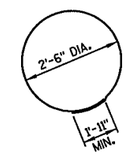

F401

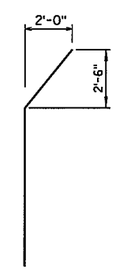

F503

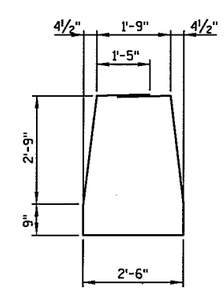

F404

1 FOOTING
BILL OF BARS (COATED) 680 LBS.

BAR MARK	NO. REQ'D	LENGTH	BENT	LOCATION
F401	18	9-10	X	CAISSON - HOOPS
F502	10	10-4		CAISSON - VERTICAL
F503	14	13-0	X	CAISSON - VERTICAL
F404	8	12-0	X	FOOTING - STIRRUP - VERT.
F605	4	11-6		FOOTING - BOTTOM - LONGIT.
F606	2	11-2		FOOTING - LONGIT.
F607	2	9-10		FOOTING - LONGIT.
F608	2	8-6		FOOTING - LONGIT.
F609	4	7-4		FOOTING - TOP - LONGIT.

NOTE:
THE FIRST DIGIT OF A BAR MARK SIGNIFIES THE BAR SIZE.
DIMENSIONS IN BENDING DETAILS ARE OUT TO OUT OF BAR.
EPOXY COAT ALL BARS.

8

No.	Date	Revision	By

STATE OF WISCONSIN
DEPARTMENT OF TRANSPORTATION

STRUCTURE S-37-60

Const. Spec. WI "03"	Drawn By RLR	Plans Checked DHW

F-1 FOOTING DETAILS

SHEET 4 OF 9

FILE NAME: k:\STRUCTURES\Sign Bridges\PLANSHTS\930415\93041504.dgn

REV. DATE: 10/19/2005

STATE PROJECT NUMBER	SHEET NO.
1166-09-76	

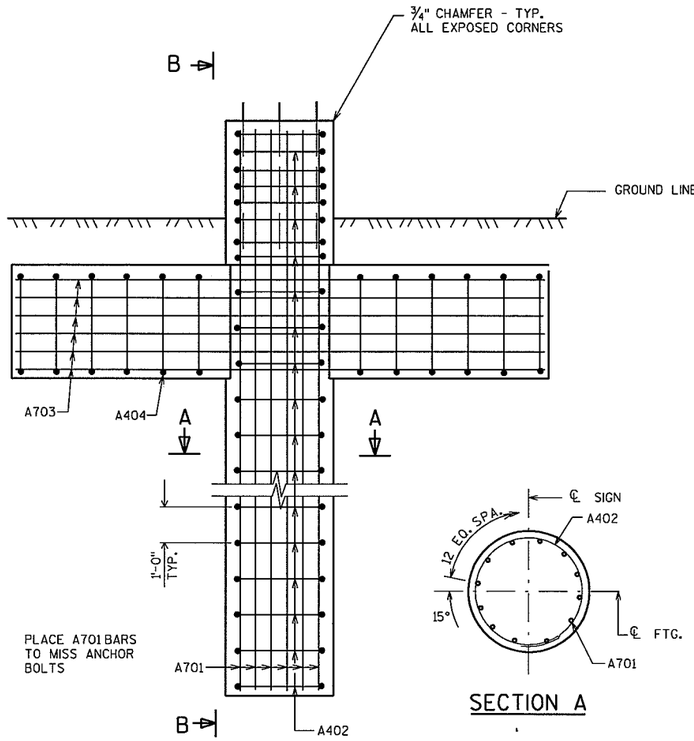

ELEVATION
(8 C.Y.)

SECTION A

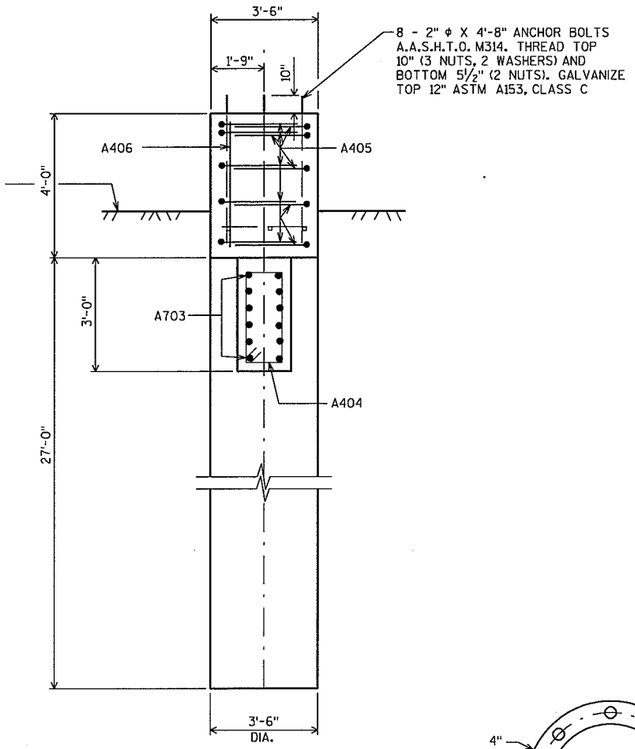

SECTION B

BILL OF BARS (COATED) 1450 LBS.

BAR MARK	NO. REQ'D	LENGTH	BENT	LOCATION
A701	12	30-6		FOOTING - COLUMN/TOP
A402	31	10-6	X	FOOTING - COLUMN/TOP
A703	12	15-0		FOOTING - WINGS
A404	12	7-6	X	FOOTING - WINGS
A405	10	8-0	X	FOOTING - TOP
A406	4	3-6		FOOTING - TOP - COLUMNS

NOTE:
THE FIRST DIGIT OF A BAR MARK SIGNIFIES THE BAR SIZE.
DIMENSIONS IN BENDING DETAILS ARE OUT TO OUT OF BAR.
EPOXY COAT ALL BARS.

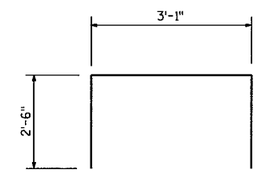

A405

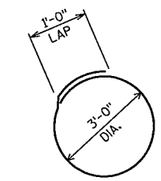

A402

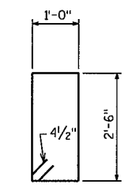

A404
(STIRRUP)

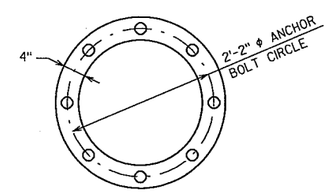

TOP VIEW OF TOP & BOTTOM TEMPLATES

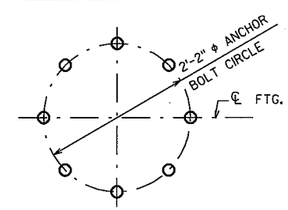

GENERAL NOTES

DRAWINGS SHALL NOT BE SCALED.
BAR STEEL REINFORCEMENT SHALL BE EMBEDDED 3" CLEAR UNLESS DETAILED OTHERWISE.

ALLOWABLE DESIGN STRESSES

CONCRETE MASONRY — f'c=3,500 P.S.I.
BAR STEEL REINFORCEMENT HS COATED GRADE 60 — fy=60,000 P.S.I.
ANCHOR BOLTS A.A.S.H.T.O. M314 — fy=55,000 P.S.I.

FOUNDATION DATA

ALLOWABLE SOIL BEARING PRESSURE = 2T/SQ. FT.

TOTAL ESTIMATED QUANTITIES (1 FTG.)

SIGN SUPPORTS CONCRETE MASONRY — 14 C.Y.
SIGN SUPPORTS STEEL COATED REINFORCEMENT HS — 1450 LB.

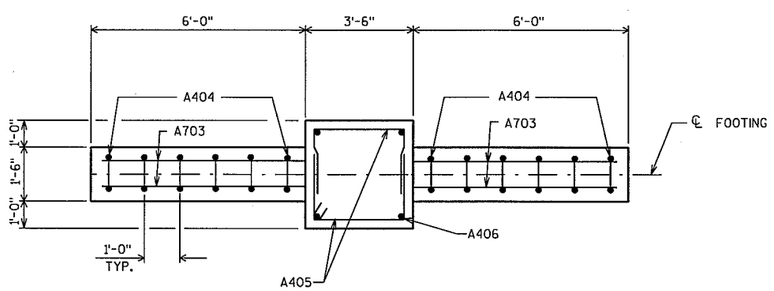

PLAN

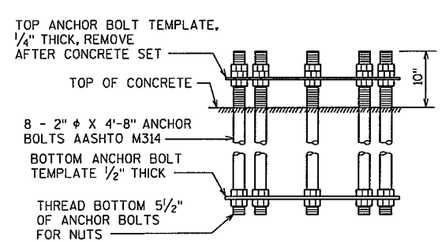

ANCHOR BOLT DETAILS

No.	Date	Revision	By

STATE OF WISCONSIN
DEPARTMENT OF TRANSPORTATION

STRUCTURE S-37-58

Const. Spec. WI "03" | Drawn By RLR | Plans Checked DHW

CANTILEVER TRUSS FOOTING

SHEET 5 OF 9

8

8

FILE NAME: k:\STRUCTURES\Sign Bridges\PLANSHTS\930415\93041505.dgn

REV. DATE: 10/19/2005

STATE PROJECT NUMBER	SHEET NO.
1166-09-76	

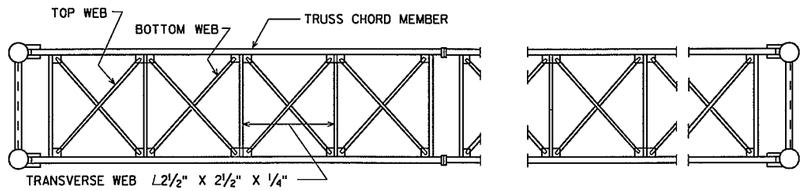

PLAN

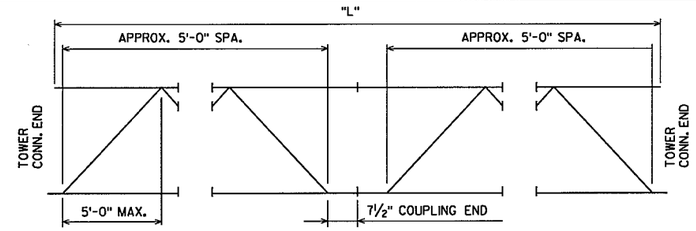

TRUSS ARRANGEMENT

FABRICATOR MAY MAKE TRUSSES ANY LENGTH KEEPING A SECTION A MINIMUM OF 20'-0" & A MULTIPLE OF 5'-0". CHORD FIELD SPLICES SHALL BE MADE WITH COUPLINGS. CHORD SHOP SPLICE SHALL BE THE WELDED SPLICE SHOWN ABOVE.

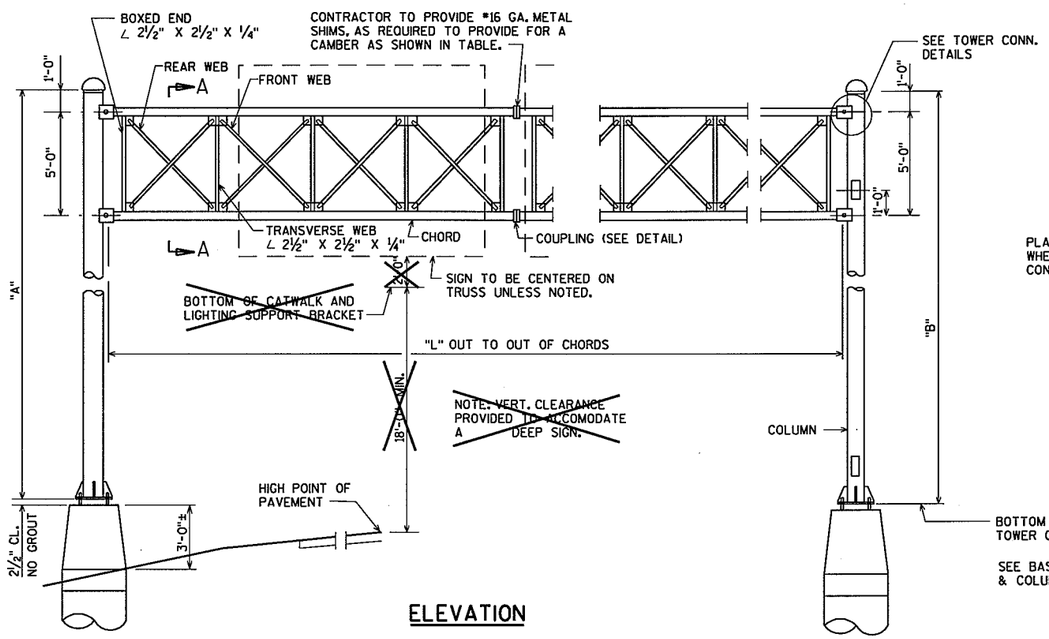

ELEVATION

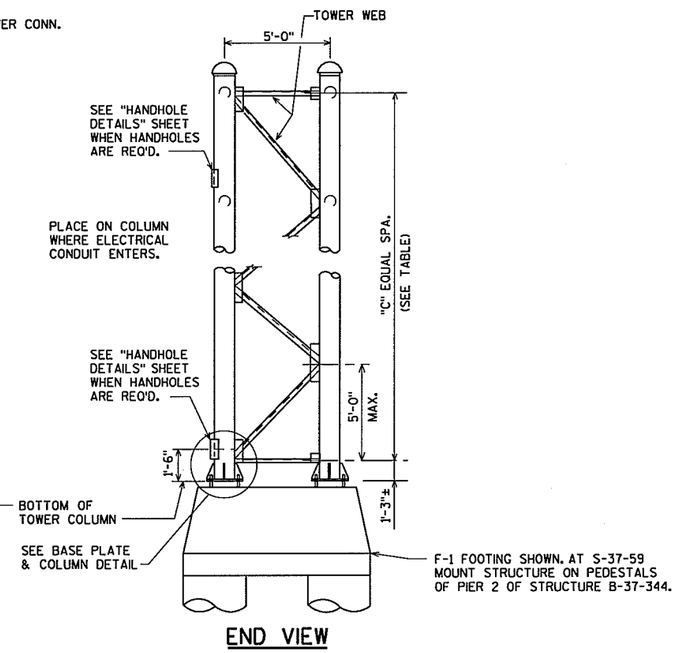

END VIEW

NOTES

DRAWINGS SHALL NOT BE SCALED.
STEEL COLUMN PIPE SHALL BE A.P.I. SPEC. 5L GRADE X42 Fy = 42,000 P.S.I.
ALL STEEL PIPE MEMBERS OF TRUSS SHALL BE A.P.I. SPEC. 5L GRADE X42 Fy = 42,000 P.S.I.
PLATES, BARS, STRUCTURAL ANGLES SHALL BE A.S.T.M. A709 GRADE 36 Fy = 36,000 P.S.I.
ALL STRUCTURAL STEEL MEMBERS SHALL BE GALVANIZED.
ALL BOLTED CONNECTIONS SHALL BE MADE WITH ¾" ϕ A325 BOLTS, GALVANIZED A.S.T.M. A153, CLASS C.
WELDED CONNECTIONS CAN BE USED IN LIEU OF BOLTED CONNECTIONS, IF UNIT CAN BE GALVANIZED IN ONE PIECE.
STEEL ANCHOR BOLTS SHALL BE A.A.S.H.T.O. M314-90 GRADE 55. Fy = 55,000 P.S.I.
SIGNS OR BLANKS SHALL BE INSTALLED ON TRUSS AT TIME OF ERECTION.
BLANKS SHALL BE ¼ THE LENGTH OF THE BRIDGE, 2'-0" DEEPER THAN C TO C OF CHORDS & SHALL BE CENTERED ON THE BRIDGE. SIGNS SHALL BE AS DESIGNATED IN PLANS.
THE UPPER 12" OF ANCHOR BOLTS, NUTS AND WASHERS SHALL BE GALVANIZED IN ACCORDANCE WITH THE A.A.S.H.T.O. SPECIFICATION AS STATED IN SECTION 641. OF THE WIS. D.O.T. STANDARD SPECIFICATIONS.
WELD TEST AS PER AWS D1.1.

DESIGN DATA

DEAD LOAD - WT. OF SIGN, SUPPORTING STRUCTURE, CATWALK, LIGHTS AND RAILINGS.
LIVE LOAD - NONE.
ICE LOAD - 3 P.S.F. TO 1 FACE OF SIGN & AROUND SURFACE OF MEMBERS.
WIND PRESSURE - 90 M.P.H. (3-SECOND GUST SPEED) TO SIGN AREA & EXPOSED MEMBERS.

WIND COMPONENTS	NORMAL	TRANSVERSE
COMBINATION 1	1.0	0.2
COMBINATION 2	0.6	0.3

GROUP LOADS	% OF ALLOWABLE STRESS
1. DEAD	100
2. DEAD + WIND	133
3. DEAD + ICE + ½ (WIND*)	133

*MIN. VALUE OF 25 PSF FOR GR. 3

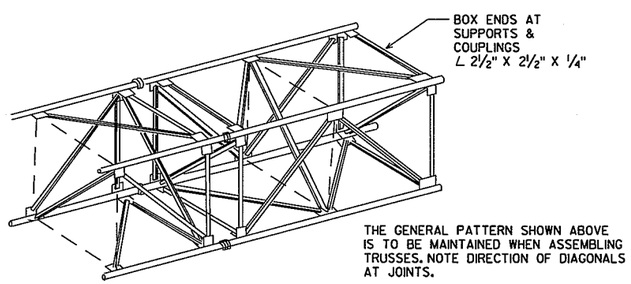

TYPICAL TRUSS SECTION

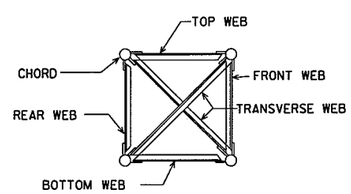

SECTION A

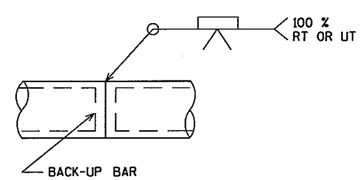

CHORD SPLICE

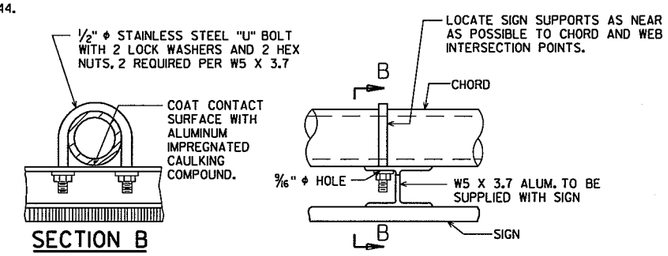

SECTION B

TYPICAL SIGN CONNECTION

TABLE

STRUCTURE	A	B	C	CHORDS O.D. X THK.	TOP & BOTTOM WEB	FRONT & REAR WEB	COUPLING PLATE "D1" & "T"	BOLT CIRCLE DIA. "D2"	NO. OF BOLTS IN COUPLING	CAMBER	COLUMN O.D. X THK.	TOWER WEBS	"L"
S-37-59	30'-9⅛"	31'-0½"	6	3.50" X 0.216"	L 3" X 3" X 3/16"	L 3" X 3" X 3/16"	9" X 1"	6"	4	1⅝"	14.00" X 0.500"	L 3" X 3" X ¼"	88'-7"
S-37-60	23'-1½"	23'-1½"	5	3.50" X 0.216"	L 3" X 3" X 3/16"	L 3" X 3" X 3/16"	9" X 1"	6"	4	⅞"	10.75" X 0.250"	L 3" X 3" X ¼"	64'-10¼"

No.	Date	Revision	By

STATE OF WISCONSIN
DEPARTMENT OF TRANSPORTATION

STRUCTURES S-37-59, 60

Const. Spec. WI "03" | Drawn By RLR | Plans Checked DHW

4-CHORD GALVANIZED STEEL SIGN BRIDGE

SHEET 6 OF 9

8

8

FILE NAME: K:\STRUCTURES\Sign Bridges\PLANSHTS\930415\93041506.dgn

REV. DATE: 10/19/2005

STATE PROJECT NUMBER	SHEET NO.
1166-09-76	

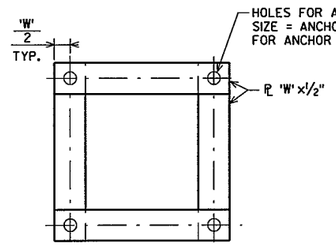

ALTERNATE
ANCHOR PLATE/TEMPLATE PLAN

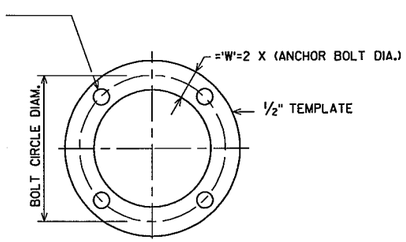

ANCHOR PLATE/TEMPLATE PLAN

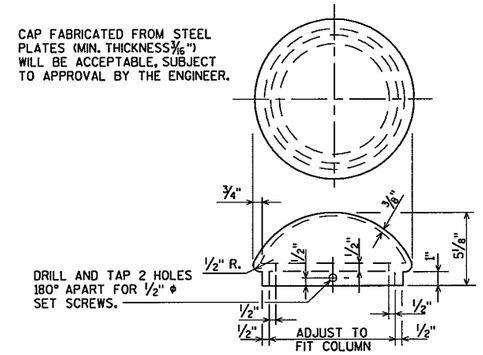

TOWER CAP DETAIL

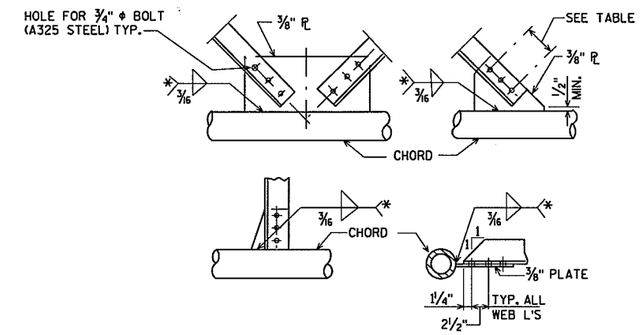

TYPICAL TRUSS CONNECTION DETAILS

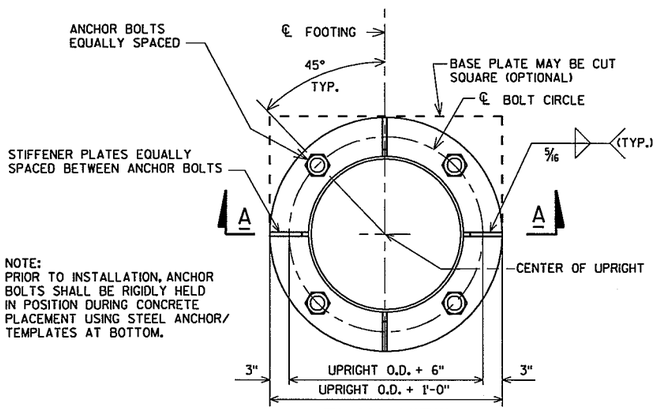

NOTE:
PRIOR TO INSTALLATION, ANCHOR BOLTS SHALL BE RIGIDLY HELD IN POSITION DURING CONCRETE PLACEMENT USING STEEL ANCHOR/TEMPLATES AT BOTTOM.

PLAN VIEW
(BASE PLATE)

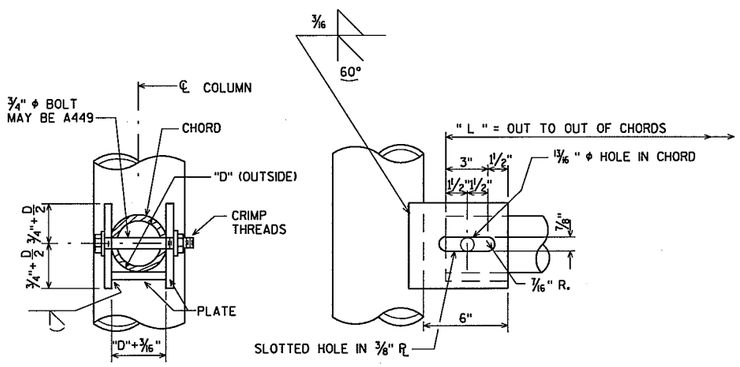

TOWER CONNECTION DETAIL

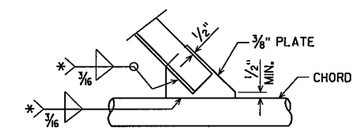

TYPICAL WELDED ALTERNATE

*ANGLE	WELD LENGTH	NO. OF BOLTS
● 2 1/2"×2 1/2"×1/4"	11"	3
3"×3"×3/16"	10"	3
3"×3"×1/4"	13"	4
3"×3"×5/16"	16 1/2"	5
3"×3"×3/8"	19 1/2"	6
4"×4"×1/4"	18"	5
4"×4"×5/16"	22"	6
4"×4"×3/8"	26"	8
4"×4"×7/16"	30"	9
4"×4"×1/2"	34"	10

● ONLY USED FOR BOXED END AND TRANSVERSE BRACING.

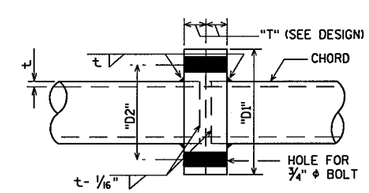

COUPLING DETAIL

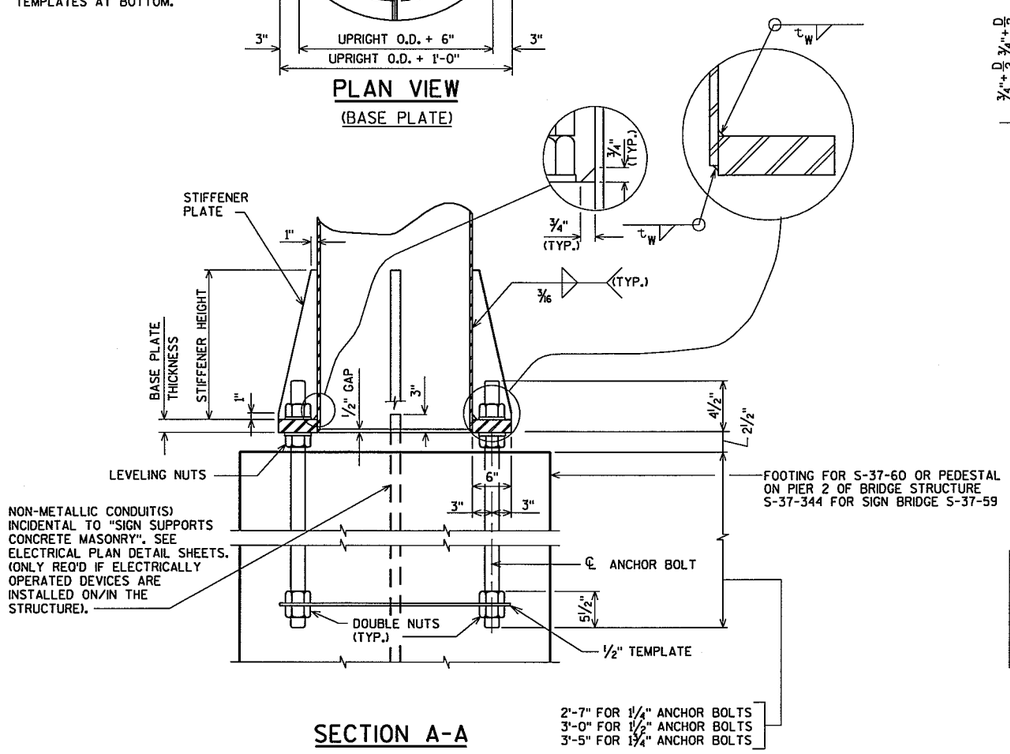

SECTION A-A

BASE PLATE & UPRIGHT COLUMN DETAILS

STRUCTURE	COLUMN O.D. X THK.	ANCHOR BOLTS	BASE PLATE THICKNESS (IN.)	STIFFENER PLATE THICKNESS (IN.)	STIFFENER PLATE HEIGHT (IN.)	t_W (IN.)
S-37-59	14.00" × 0.500"	4 - 1 1/4" ϕ	1 1/4"	1/2"	10"	1/4"
S-37-60	12.75" × 0.375"	4 - 1 1/4" ϕ	1 1/4"	1/2"	10"	1/4"

NOTE:

FOR S-37-59, FURNISH ANCHOR BOLTS & ANCHOR PLATE/TEMPLATE FOR INSTALLATION IN PIER 2 OF STRUCTURE B-37-344.

No.	Date	Revision	By

STATE OF WISCONSIN
DEPARTMENT OF TRANSPORTATION

STRUCTURES S-37-59, 60

Const. Spec. WI "03" | Drawn By RLR | Plans Checked DHW

4-CHORD SIGN BRIDGE DETAILS

SHEET 7 OF 9

8

8

FILE NAME: K:\STRUCTURES\Sign Bridges\PLANSHTS\930415\93041507.dgn

REV. DATE: 10/19/2005

STATE PROJECT NUMBER	SHEET NO.
1166-09-76	

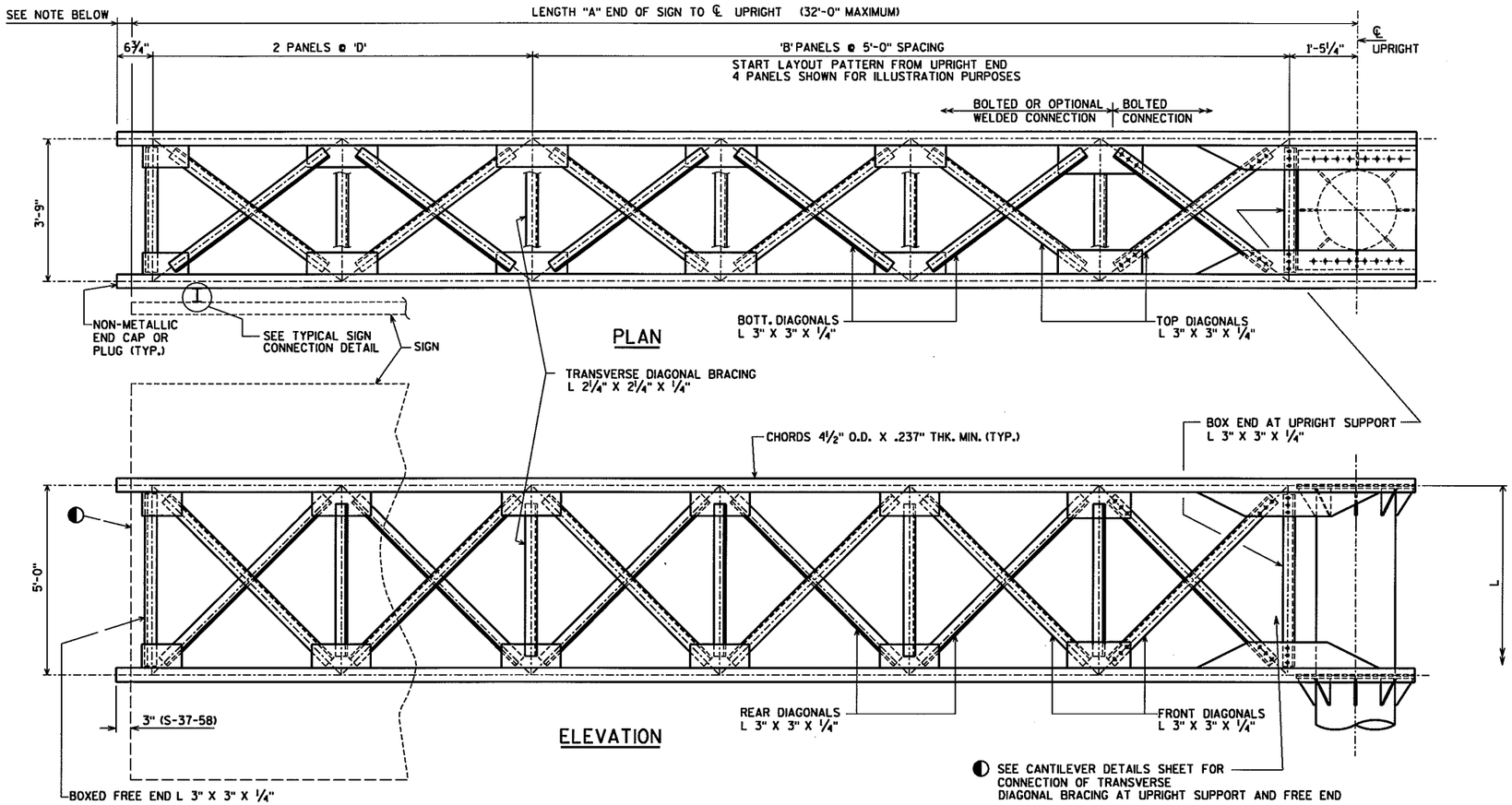

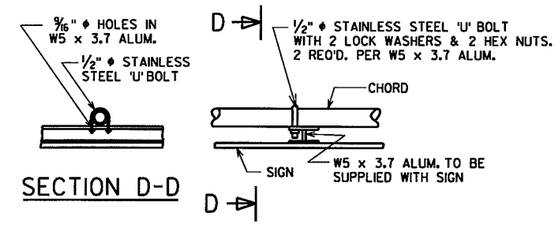

TYPICAL SIGN CONNECTION

ALLOWABLE DESIGN STRESSES

CHORDS & COLUMN (INCLD. HANDHOLE) — API-5L-X42 — fy=42,000 P.S.I.
STRUCTURAL ANGLES — A.S.T.M. A709 GRADE 36 — fy=36,000 P.S.I.
PLATES & BARS — A.S.T.M. A709 GRADE 36 — fy=36,000 P.S.I.
ANCHOR BOLTS — A.A.S.H.T.O. M314 — fy=55,000 P.S.I.
HIGH STRENGTH BOLTS - A325 — fy=92,000 P.S.I.
STRUCTURAL MEMBERS GALVANIZED A123
HARDWARE GALVANIZED — A153 CLASS C

STRUCTURE	"A"	"L"	"B"	"D"	"X"	"Y"
S-37-58	21'-9"	22'-8"	2	5'-0"	¼"	¾"

GENERAL NOTES

DRAWINGS SHALL NOT BE SCALED.

DESIGNED ACCORDING TO A.A.S.H.T.O. "STANDARD SPECIFICATIONS FOR STRUCTURAL SUPPORTS FOR HIGHWAY SIGNS, LUMINAIRES AND TRAFFIC SIGNALS"

WIND VELOCITY = 90 M.P.H. (3-SECOND GUST SPEED)

STRUCTURES ARE DESIGNED FOR MAXIMUM SIGN SIZE OF 12'-0" x 22'-0".

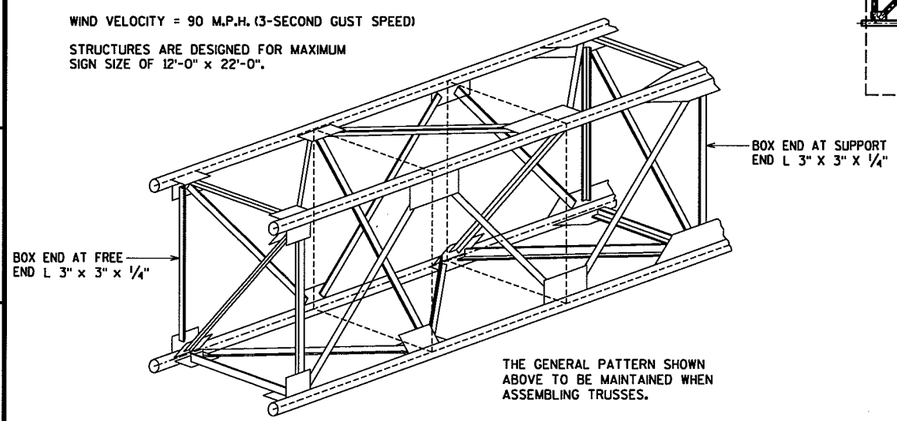

TYPICAL TRUSS SECTION

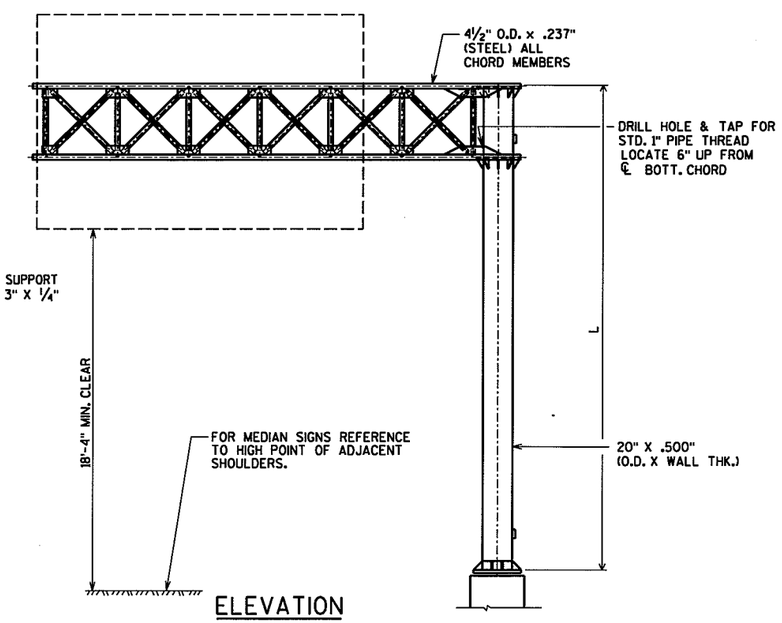

ELEVATION

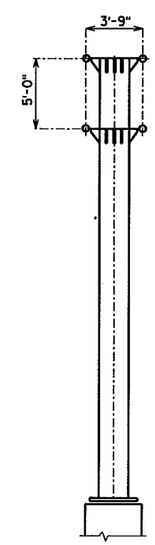

END VIEW

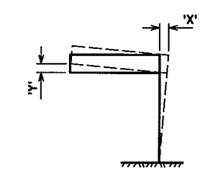

CAMBER DIAGRAM

8

8

No.	Date	Revision	By

STATE OF WISCONSIN
DEPARTMENT OF TRANSPORTATION

STRUCTURE S-37-58

Const. Spec. WI "03" | Drawn By RLR | Plans Checked DHW

GALVANIZED STEEL CANTILEVER SIGN TRUSS

SHEET 8 OF 9

FILE NAME: g:\projects\90s\93\930232\structures\sign bridges\plansht\930415\93041508.dgn

REV. DATE: 05/24/2005

STATE PROJECT NUMBER	SHEET NO.
1166-09-76	

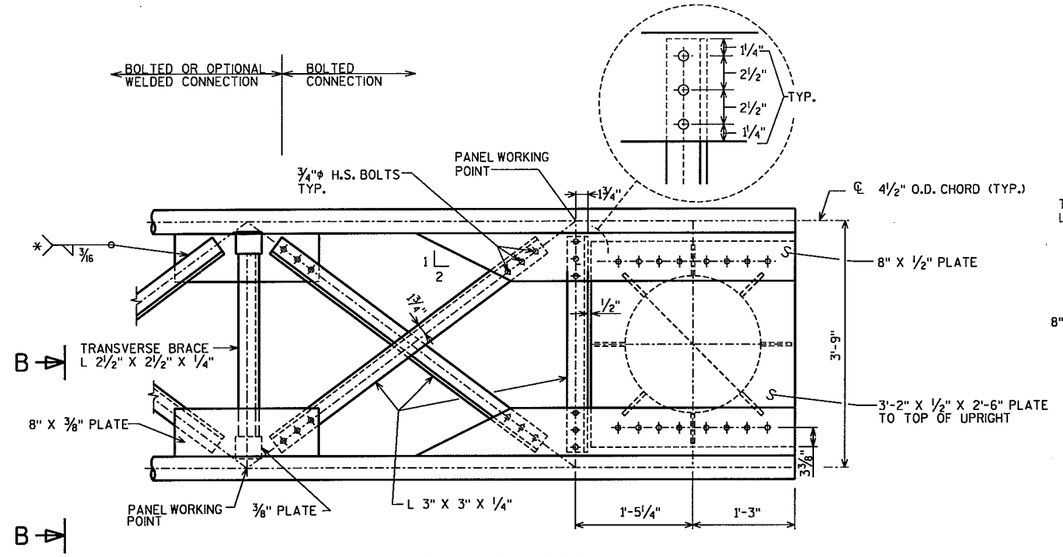

PLAN TRUSS TO UPRIGHT

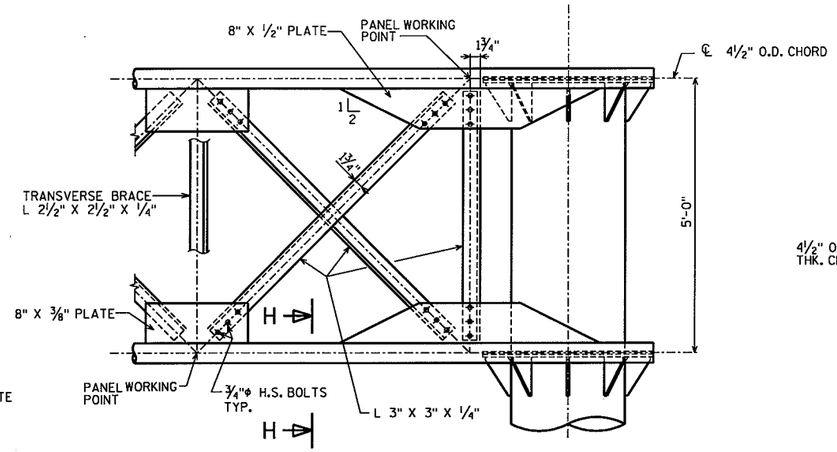

ELEVATION TRUSS TO UPRIGHT

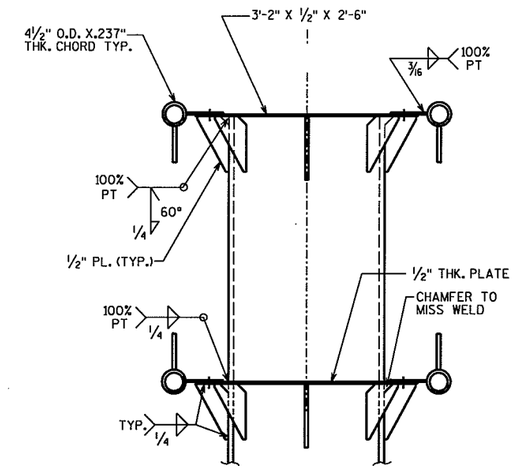

END VIEW
TRUSS TO UPRIGHT

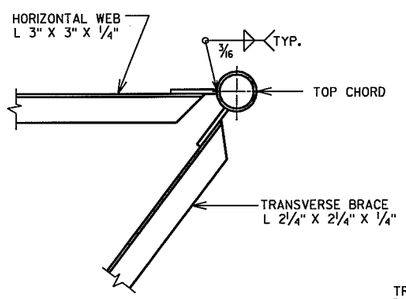

SECTION B-B

* ANGLE	WELD LENGTH (MIN.)
L 2½" X 2½" X ¼"	7"
L 3" X 3" X ¼"	8"

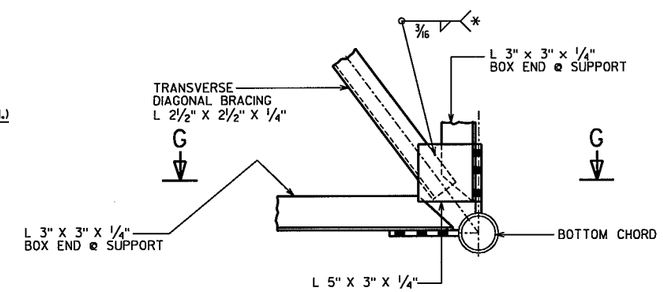

SECTION H-H

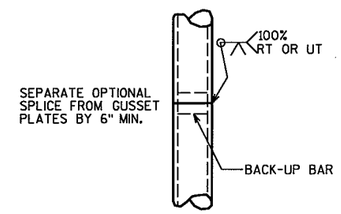

OPTIONAL COLUMN
OR CHORD SPLICE
DETAIL

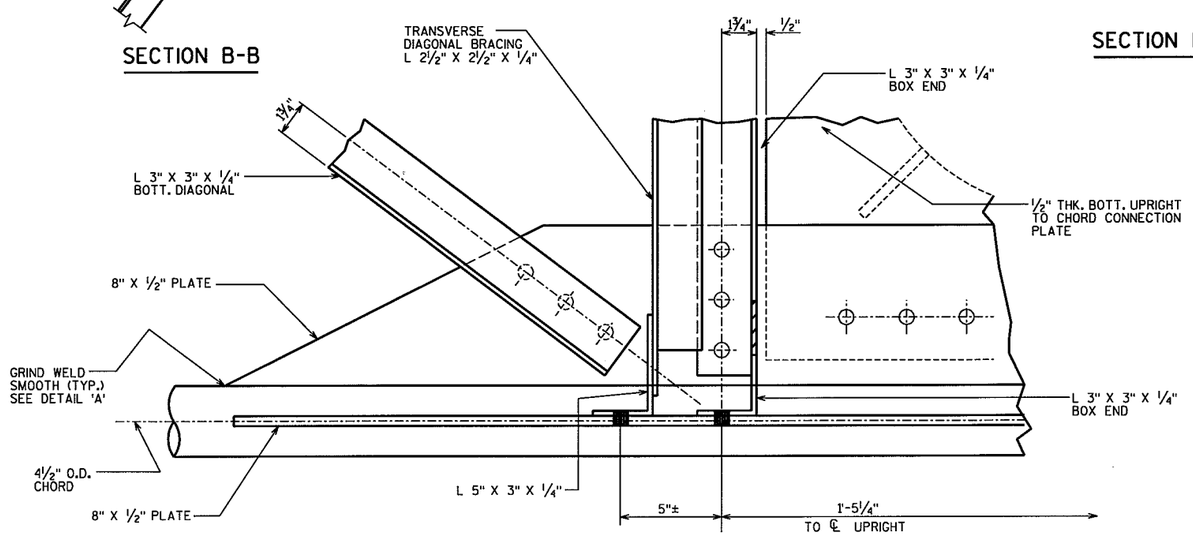

SECTION G-G
(LOOKING DOWN @ BOTT. HORIZ. PLANE @ FRONT CHORD)

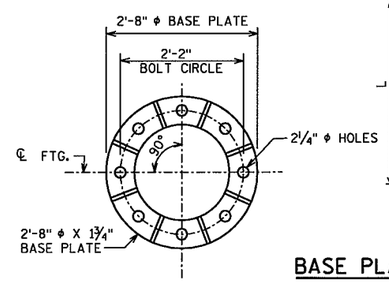

BASE PLATE DETAILS

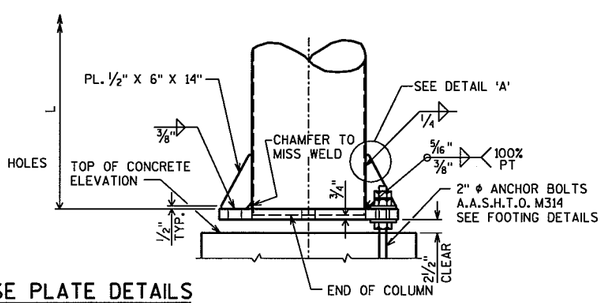

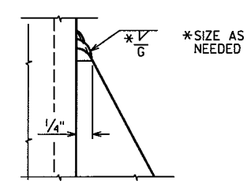

DETAIL 'A'

No.	Date	Revision	By

STATE OF WISCONSIN
DEPARTMENT OF TRANSPORTATION

STRUCTURE S-37-58

Const. Spec. WI "03"	Drawn By RLR	Plans Checked DHW

GALVANIZED STEEL CANTILEVER SIGN TRUSS DETAILS

SHEET 9 OF 9

8

8

FILE NAME: g:\projects\90s\93\930232\structures\sign bridges\planshts\930415\93041509.dgn

REV. DATE: 05/24/2005