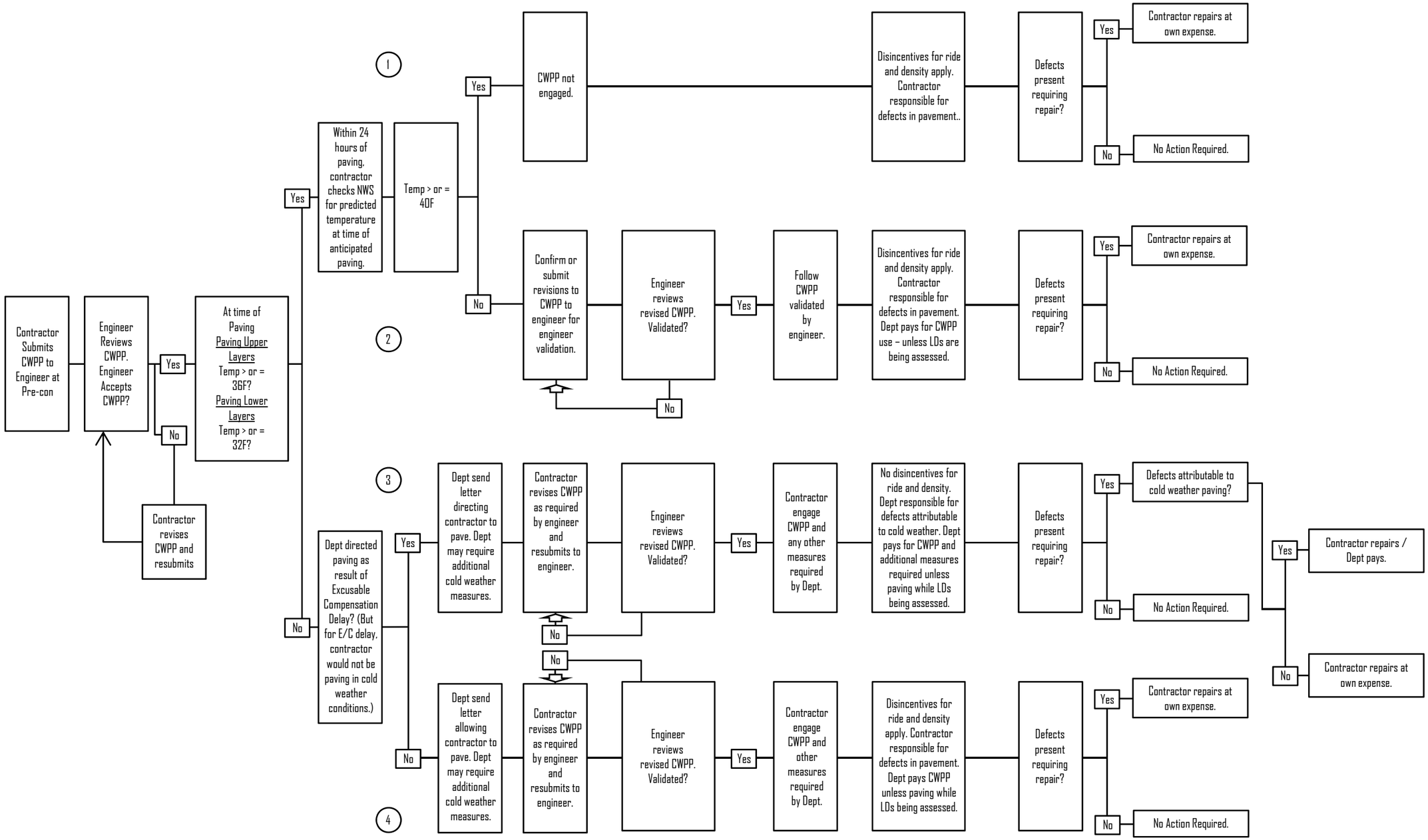HMA Paving Scenarios – Applicable to Section 460 Items