GRE

PROJECT ID: 4546-02-71

WITH: NA

COUNTY: BROWN COUNTY

FEBRUARY 2019

ORDER OF SHEETS

TOTAL SHEETS = 70

Sheets revised: 1, 3, 5, 9, 11, 38, 48

STATE OF WISCONSIN
DEPARTMENT OF TRANSPORTATION

PLAN OF PROPOSED IMPROVEMENT

T WRIGHTSTOWN, CTH D

PLUM CREEK BRIDGE

CTH D

BROWN COUNTY

STATE PROJECT	FEDERAL PROJECT	
	PROJECT	CONTRACT
4546-02-71	—	—

STATE PROJECT NUMBER

4546-02-71

AS-BUILT PLAN

SUPERVISOR: Rob Wagner
PROJECT MANAGER: Kyle Treml
PROJECT LEADER: Sam Bremer
CONTRACTOR: Radtke Contractors Inc.
CONSTRUCTION STARTED 07/22/19
SUBSTANTIALLY COMPLETE 10/25/19

PROJECT LOCATION

N

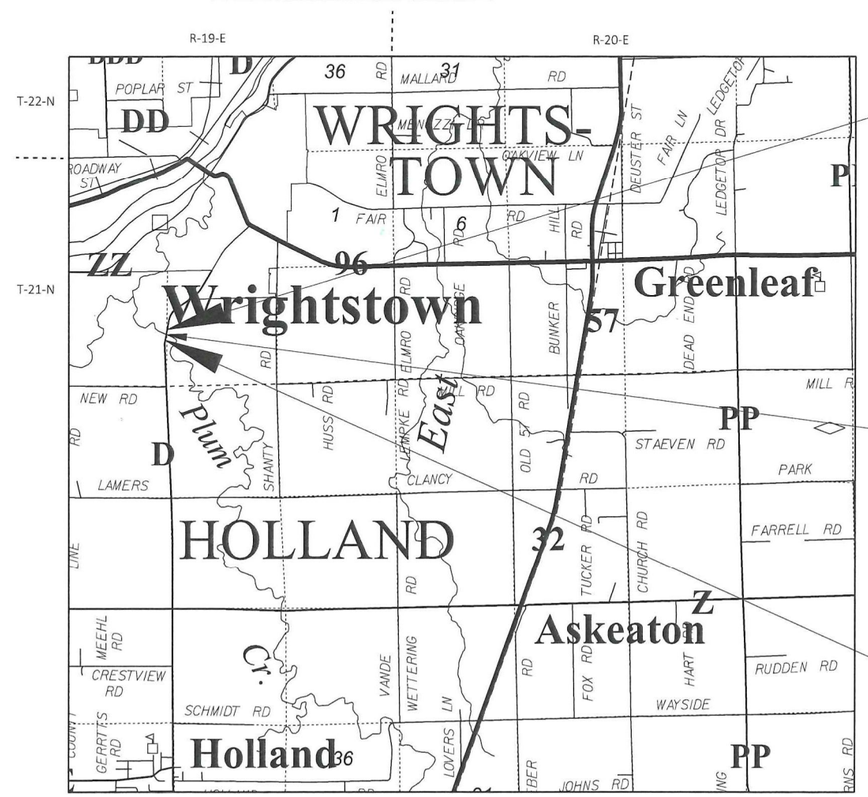

END PROJECT
~~STA 11+65.00~~
STA 12+12.00

STRUCTURE B-5-440

BEGIN PROJECT
STA 8+00.00
Y=490,824.068
X=58,720.016

DESIGN DESIGNATION

A.A.D.T.	(2019)	=	2,300
A.A.D.T.	(2039)	=	3,300
D.H.V.		=	N/A
D.D.		=	60/40
T.		=	6.0%
DESIGN SPEED		=	50 MPH
ESALS		=	380,000

Subcontractor List
Century Fence Company
Dirty Ducts Cleaning, Environmental, Inc.
G&J Site Solutions, Inc.
Mega Rentals, Inc.
Mid-State Concrete Cutting Co.
Northeast Asphalt
TNT Professional Land Surveyors, Inc.
Vinton Construction Company

CONVENTIONAL SYMBOLS

PLAN
- CORPORATE LIMITS
- PROPERTY LINE
- LOT LINE
- LIMITED HIGHWAY EASEMENT
- EXISTING RIGHT OF WAY
- PROPOSED OR NEW R/W LINE
- SLOPE INTERCEPT
- REFERENCE LINE (300'FEB')
- EXISTING CULVERT
- PROPOSED CULVERT (Box or Pipe)
- COMBUSTIBLE FLUIDS (CAUTION)
- MARSH AREA
- WOODED OR SHRUB AREA

PROFILE
- GRADE LINE
- ORIGINAL GROUND
- MARSH OR ROCK PROFILE (To be noted as such) (ROCK)
- SPECIAL DITCH (LABEL)
- GRADE ELEVATION (95.36)
- CULVERT (Profile View)

UTILITIES
- ELECTRIC (E)
- FIBER OPTIC (FO)
- GAS (G)
- SANITARY SEWER (SAN)
- STORM SEWER (SS)
- TELEPHONE (T)
- WATER (W)
- UTILITY PEDESTAL
- POWER POLE
- TELEPHONE POLE

LAYOUT
SCALE 0 — 1.0 MI

TOTAL NET LENGTH OF CENTERLINE = 0.069 MI

HORIZONTAL POSITIONS SHOWN ON THIS PLAN ARE WISCONSIN COUNTY COORDINATES, BROWN COUNTY, NAD83 (2011), IN U.S. SURVEY FEET. VALUES ARE GRID COORDINATES, GRID BEARINGS, AND GRID DISTANCES. GRID DISTANCES MAY BE USED AS GROUND DISTANCES.

ACCEPTED FOR BROWN COUNTY
DATE: 7/25/18 (Signature)
Senior Civil Engineer (Title of Official)

ORIGINAL PLANS PREPARED BY
CORRE
WISCONSIN ERIC T. PRICE E-38027 MADISON WI PROFESSIONAL ENGINEER
DATE: 7/18/18 (Signature)

STATE OF WISCONSIN
DEPARTMENT OF TRANSPORTATION

PREPARED BY
Surveyor: CORRE, INC.
Designer: CORRE, INC.
Management Consultant: SHORT ELLIOT HENDRICKSON, INC.

APPROVED FOR THE DEPARTMENT
DATE: 7/30/18 MANAGEMENT CONSULTANT SIGNATURE

E

GENERAL NOTES

ELEVATIONS SHOWN ON THE PLAN ARE REFERENCED TO NAVD88 (2012).

CURVE DATA IS BASED ON THE ARC DEFINITION.

BEARINGS SHOWN ON THE PLANS ARE GRID/GROUND/PROJECT BEARINGS TO THE NEAREST SECOND.

THE LOCATION OF EXISTING AND PROPOSED UTILITY INSTALLATIONS AS SHOWN ON THE PLANS IS APPROXIMATE. THERE MAY BE OTHER UTILITY INSTALLATIONS WITHIN THE PROJECT AREA THAT ARE NOT SHOWN.

NO TREES OR SHRUBS ARE TO BE REMOVED WITHOUT THE APPROVAL OF THE ENGINEER.

THE EXACT LOCATION OF THE EROSION CONTROL DEVICES SHALL BE DETERMINED IN THE FIELD.

SILT FENCE IS TO BE PLACED AS SHOWN ON THE PLANS OR AS DIRECTED BY THE ENGINEER, AND IN PLACE PRIOR TO BRIDGE REMOVAL.

DISTURBED AREAS WITHIN THE RIGHT-OF-WAY, EXCEPT THE AREAS WITHIN THE FINISHED SHOULDER POINTS, ARE TO BE 4-INCH TOPSOILED, FERTILIZED, AND SEEDED AND MULCHED. FINISHED SEEDED SURFACE SHALL BE 1-INCH BELOW THE TOP OF ADJACENT CONCRETE.

THE LOCATION OF ALL DRIVEWAYS WILL BE DETERMINED BY THE ENGINEER.

ALL PAVEMENT DIMENSIONS AND STATIONS ARE SHOWN TO THE EDGE OF PAVEMENT UNLESS NOTED OTHERWISE.

A VERTICAL SAWCUT SHALL BE MADE THROUGH EXISTING DRIVEWAYS AND PAVEMENTS AT REMOVAL LIMITS.

EXCAVATION BELOW SUBGRADE (EBS) IS NOT USED TO BALANCE YARDAGE AND IS NOT SHOWN ON THE CROSS SECTIONS BUT IS MEASURED AND PAID FOR AS COMMON OR ROCK EXCAVATION.

4.5-INCH HMA PAVEMENT SHALL BE CONSTRUCTED WITH A 2.25-INCH UPPER LAYER AND A 2.25-INCH LOWER LAYER.

UTILITY CONTACTS

* ELECTRIC

WISCONSIN PUBLIC SERVICE CORP
RANDY STEIER
2850 S. ASHLAND AVENUE
PO BOX 19001
GREEN BAY, WI 54307-9001
PHONE: (920) 671-5167
EMAIL: RDSTEIER@WISCONSINPUBLICSERVICE.COM

* GAS

WISCONSIN PUBLIC SERVICE CORP
DAVE CZARNECKI
2850 S. ASHLAND AVENUE
PO BOX 19001
GREEN BAY, WI 54307-9001
PHONE: (920) 412-4746
EMAIL: DFCZARNECKI@WISCONSINPUBLICSERVICE.COM

* TELEPHONE

AT&T
JOE KASSAB
205 S. JEFFERSON STREET
GREEN BAY, WI 54301
PHONE: (920) 202-4002
EMAIL: JK572K@ATT.COM

GAGING STATION

US GEOLOGICAL SURVEY
PAUL RENEAU
8505 RESEARCH WAY
MIDDLETON, WI 53562
PHONE: (608) 821-3901
EMAIL: PCRENEAU@USGS.GOV

* DENOTES DIGGERS HOTLINE MEMBER

DIGGERS HOTLINE
Dial 811 or (800)242-8511
www.DiggersHotline.com

CONTROL POINT TIES

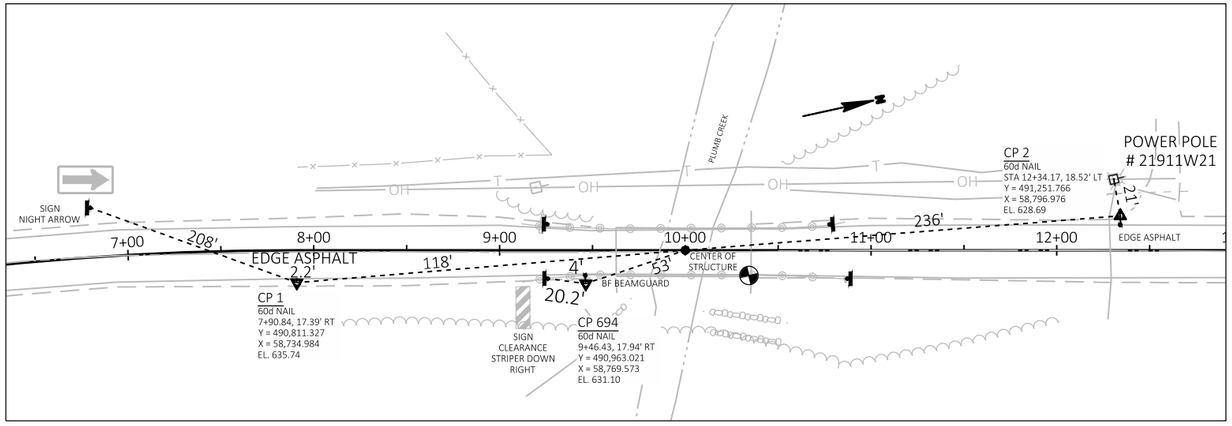

CONSULTANT CONTACT

CORRE, INC.
6510 GRAND TETON PLAZA
SUITE 314
MADISON, WI 53719

ERIC PRICE, P.E.
(608)-828-6146
EPRICE@CORREINC.COM

DNR CONTACT

DEPARTMENT OF NATURAL RESOURCES
2984 SHAWANO AVENUE
GREEN BAY, WI 54313

JIM DOPERALSKI
(920) 662-5119
JAMES.DOPERALSKI@WISCONSIN.GOV

SPONSOR CONTACT

BROWN COUNTY HIGHWAY DEPT.
2198 GLENDALE AVENUE
GREEN BAY, WI 54303

WILL BERG
(920) 662-2171
BERG_WR@CO.BROWN.WI.US

RUNOFF COEFFICIENT TABLE

	HYDROLOGIC SOIL GROUP											
	A			B			C			D		
	SLOPE RANGE (PERCENT)			SLOPE RANGE (PERCENT)			SLOPE RANGE (PERCENT)			SLOPE RANGE (PERCENT)		
LAND USE:	0-2	2-6	6 & OVER	0-2	2-6	6 & OVER	0-2	2-6	6 & OVER	0-2	2-6	6 & OVER
ROW CROPS	.08 .22	.16 .30	.22 .38	.12 .26	.20 .34	.27 .44	.15 .30	.24 .37	.33 .50	.19 .34	.28 .41	.38 .56
MEDIAN STRIP-TURF	.19 .24	.20 .26	.24 .30	.19 .25	.22 .28	.26 .33	.20 .26	.23 .30	.30 .37	.20 .27	.25 .32	.30 .40
SIDE SLOPE-TURF			.25 .32			.27 .34			.28 .36			.30 .38
PAVEMENT:												
ASPHALT	.70 - .95											
CONCRETE	.80 - .95											
BRICK	.70 - .80											
DRIVES, WALKS	.75 - .85											
ROOFS	.75 - .95											
GRAVEL ROADS, SHOULDERS	.40 - .60											

TOTAL PROJECT AREA = 1.77 ACRES
TOTAL AREA EXPECTED TO BE DISTURBED BY CONSTRUCTION ACTIVITIES = 1.25 ACRES

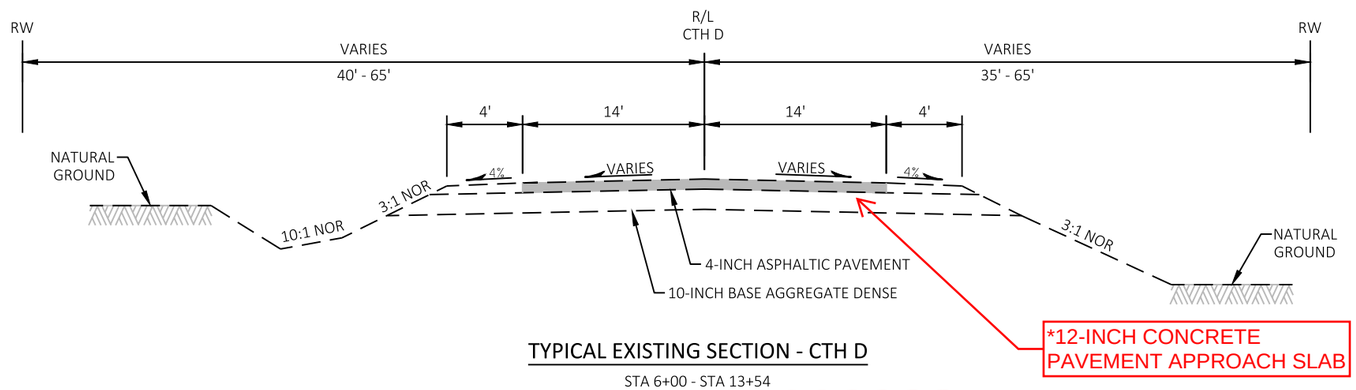

TYPICAL EXISTING SECTION - CTH D

STA 6+00 - STA 13+54

*12-INCH CONCRETE APPROACH SLAB AT 24' WIDE UNDER EXISTING ASPHALT PAVEMENT.
STA 9+24.00 - STA 9+54.73
STA 10+45.27 - STA 10+77

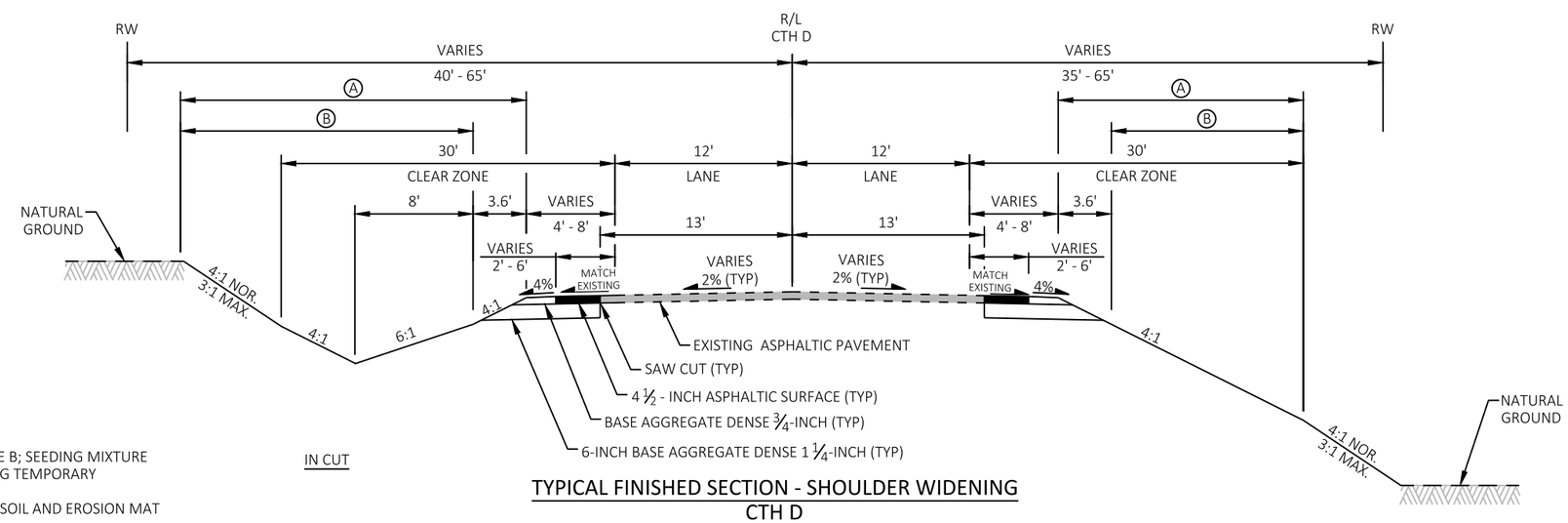

LEGEND

Ⓐ FERTILIZER TYPE B; SEEDING MIXTURE NO. 20; SEEDING TEMPORARY

Ⓑ SALVAGED TOPSOIL AND EROSION MAT

IN CUT

IN FILL

TYPICAL FINISHED SECTION - SHOULDER WIDENING
CTH D

STA 6+00.00 LT - STA 7+67.62 LT
STA 12+37.61 LT - STA 13+54.00 LT

STA 6+00.00 RT - STA 7+49.21 RT
STA 12+32.38 RT - STA 13+54.00 RT

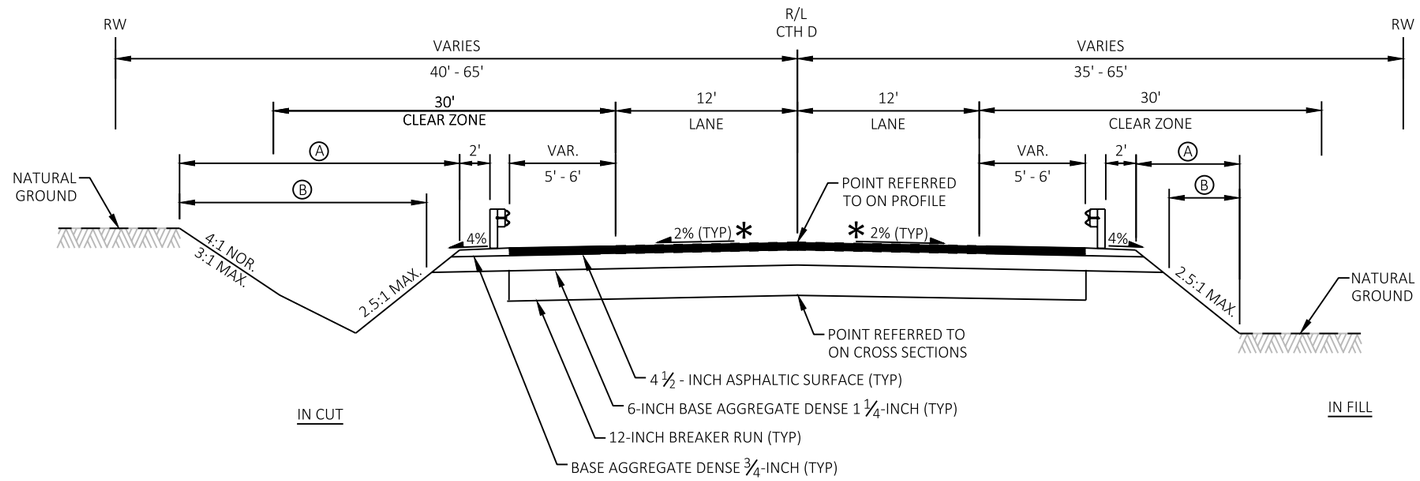

TYPICAL FINISHED SECTION
CTH D

STA 8+00.00 - STA 9+54.73
STA 10+45.27 - STA 11+65.00

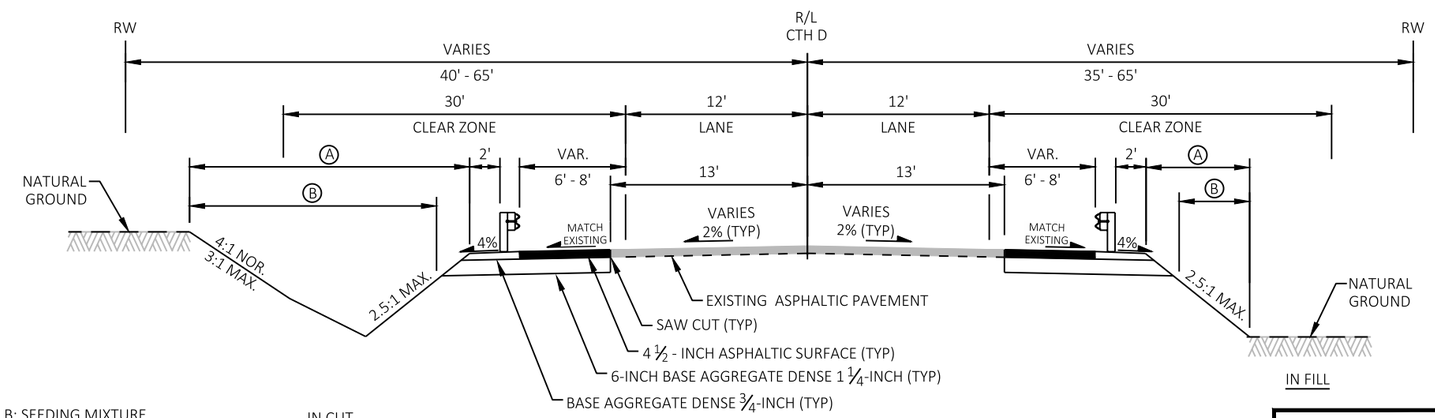

TYPICAL FINISHED SECTION - SHOULDER WIDENING
CTH D

STA 7+67.62 LT - STA 8+00.00 LT
STA 11+65.00 LT - STA 12+37.61 LT

STA 7+49.21 RT - STA 8+00.00 RT
STA 11+65.00 RT - STA 12+32.38 RT

LEGEND

- (A) FERTILIZER TYPE B; SEEDING MIXTURE NO. 20; SEEDING TEMPORARY
- (B) SALVAGED TOPSOIL AND EROSION MAT
- * UNLESS OTHERWISE SHOWN IN SUPER ELEVATION TABLE

SUPERELEVATION CURVE	STATION			LEFT		RIGHT	
	START	END	LENGTH	SHOULDER	LANE	LANE	SHOULDER
CURVE 1							
MATCH EXISTING	8+00			-4.00%	2.20%	-2.80%	-4.00%
REVERSE CROWN	8+35			-4.00%	2.00%	-2.00%	-4.00%
LEVEL CROWN	8+88			-4.00%	0.00%	-2.00%	-4.00%
RUNOUT	8+88	9+41	53.00'				
LEVEL CROWN	8+88			-4.00%	0.00%	-2.00%	-4.00%
BEGIN NORMAL CROWN	9+41			-4.00%	-2.00%	-2.00%	-4.00%

2

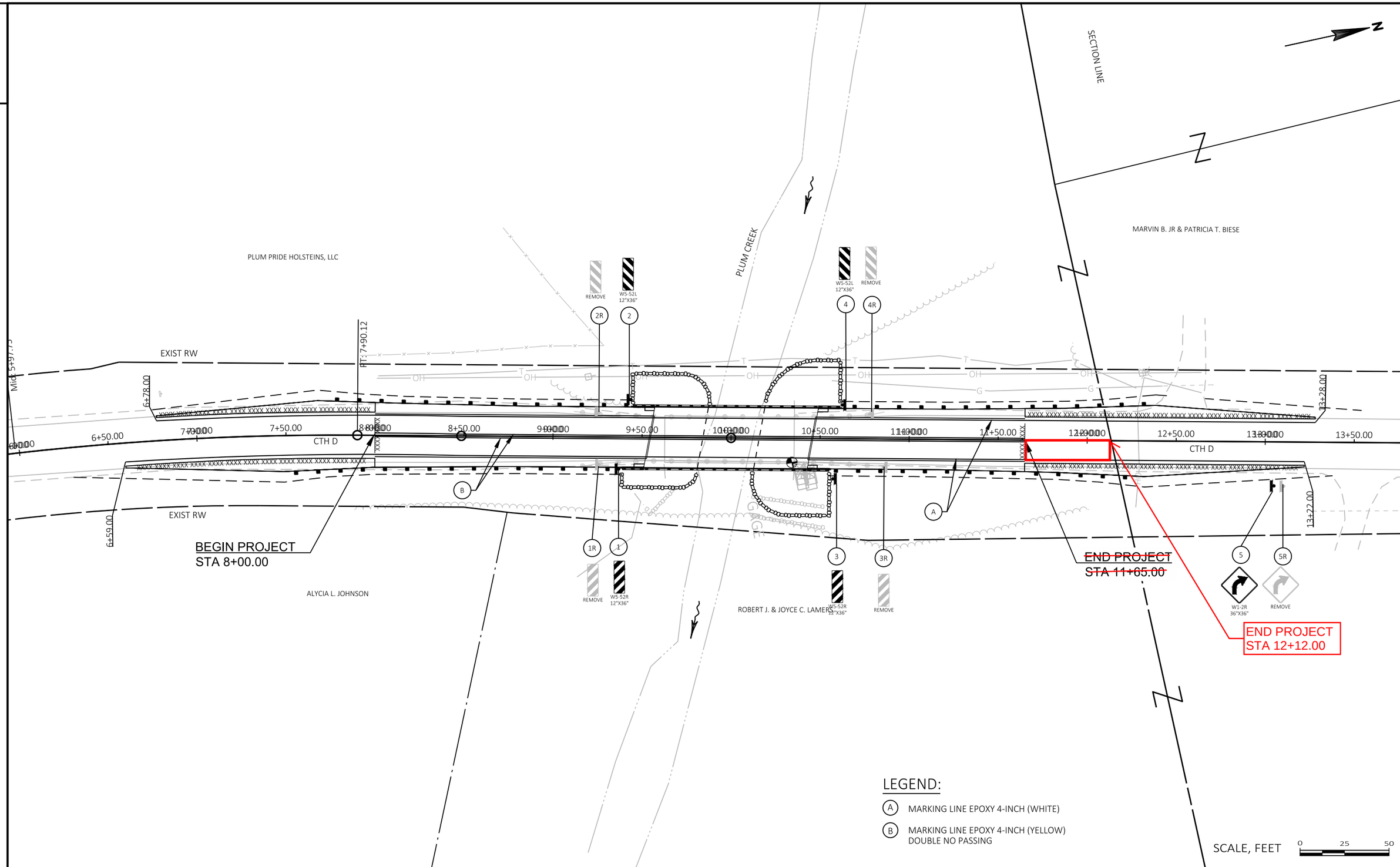

PROJECT NO: 4546-02-71	HWY: CTH D	COUNTY: BROWN	PERMANENT SIGNING	SHEET 5	E

FILE NAME : P:\WI - NE REGION\4546-02-00_CTH D_BROWN CO\500_CADD\501_C3D_2016\4546-02-00\SHEETSPLAN\023201-PM.DWG
LAYOUT NAME - 023201-pm
PLOT DATE : 7/20/2018 9:09 AM PLOT BY : BOBBY JONES PLOT NAME : PLOT SCALE : 1 IN:50 FT

WISDOT/CADDS SHEET 42

3

Division	From/To Station	Location	205.0100 Common Excavation (1)		Salvaged/Unusable Pavement Material (4)	Available Material (5)	Unexpanded Fill	Expanded Fill (6)	Mass Ordinate +/- (7)	Waste	208.0100 Borrow
			Cut (2)	EBS Excavation				Factor 1.30			
Division 1											
CTH D	6+25 - 8+00	LT	21	0	0	21	565	735	-714		
	6+00 - 8+00	RT	18	0	0	18	515	669	-651		
	8+00 - 9+45	MAINLINE	242	0	50	192	216	281	-88		
	10+55 - 11+65	MAINLINE	201	0	38	163	149	194	-31		
	11+65 - 13+54	LT	19	0	0	19	110	143	-123		
	11+65 - 13+54	RT	35	0	0	35	151	197	-162		
Division 1 Subtotal			537	0	88	448	1,706	2,218	-1,770	0	1,770
Grand Total			537	0	88	448	1,706	2,218	-1,770	0	1,770
Total Common Exc			537								

Notes:
(1) Common Excavation is the sum of the Cut and EBS Excavation columns. Item number 205.0100
(2) Salvaged/Unsuable Pavement Material is included in Cut.
(4) Salvaged/Unusable Pavement Material
(5) Available Material = Cut - Salvaged/Unusuable Pavement Material
(6) Expanded Fill Factor = 1.3
(7) The Mass Ordinate + or - Qty calculated for the Division. Plus quantity indicates an excess of material within the Division. Minus indicates a shortage of material within the Division.

CLEARING AND GRUBBING ITEMS

STATION	LOCATION	201.0105 CLEARING STA	201.0205 GRUBBING STA
CATEGORY CODE 0010			
6+00 - 12+00	CTH D	6	6
	TOTALS	6	6

REMOVING GUARDRAIL

STATION - STATION	LOCATION	204.0165 REMOVING GUARDRAIL LF
CATEGORY CODE 0010		
9+09 - 9+60	LT	51
9+09 - 9+60	RT	51
10+35 - 10+86	LT	51
10+35 - 10+86	RT	51
	TOTAL	204

FINISHING ROADWAY

	213.0100 EACH
CATEGORY CODE 0010	
ID 4546-02-71	1
TOTAL	1

BASE AGGREGATE DENSE

STATION - STATION	LOCATION	305.0110 BASE AGGREGATE DENSE 3/4-INCH TON	305.0120 BASE AGGREGATE DENSE 1 1/4-INCH TON	311.0110 BREAKER RUN TON
CATEGORY CODE 0010				
6+00 - 8+00	MAINLINE	33	96	--
8+00 - 9+54	MAINLINE	38	258	411
10+46 - 11+65	MAINLINE	30	200	317
11+65 - 13+54	MAINLINE	30	86	--
	TOTALS	98	544	728

WATER

LOCATION	624.0100 MGAL
CATEGORY CODE 0010	
BASE COMPACTION	7
DUST CONTROL	3
TOTAL	10

ASPHALTIC ITEMS

STATION - STATION	LOCATION	455.0605 TACK COAT GAL	465.0105 ASPHALTIC SURFACE TON
CATEGORY CODE 0010			
6+59 - 8+00	MAINLINE	9	34
8+00 - 9+54	MAINLINE	34	121
10+46 - 11+65	MAINLINE	26	93
11+65 - 13+28	MAINLINE	12	43
	TOTALS	72	257

3

MGS GUARDRAIL ITEMS

STATION - STATION	LOCATION	614.2300 MGS GUARDRAIL 3 LF	614.2500 THRIE BEAM TRANSITION LF	614.2610 TERMINAL EAT EACH
CATEGORY CODE 0010				
7+49 - 8+02	RT	--	--	1
8+02 - 9+02	RT	100.0	--	--
9+02 - 9+39	RT	--	36.8	--
7+68 - 8+21	LT	--	--	1
8+21 - 9+08	LT	87.5	--	--
9+08 - 9+45	LT	--	36.8	--
10+55 - 10+92	RT	--	36.8	--
10+92 - 11+79	RT	87.5	--	--
11+79 - 12+32	RT	--	--	1
10+60 - 10+97	LT	--	36.8	--
10+97 - 11+85	LT	87.5	--	--
11+85 - 12+38	LT	--	--	1
	TOTALS	**362.5**	**147.2**	**4**

LANDSCAPING ITEMS

STATION - STATION	LOCATION	625.0500 SALVAGED TOPSOIL SY	627.0200 MULCHING SY	628.2008 EROSION MAT URBAN CLASS I TYPE B SY	629.0210 FERTILIZER TYPE B CWT	630.0120 SEEDING MIXTURE NO. 20 LB	630.0200 SEEDING TEMPORARY LB
CATEGORY CODE 0010							
6+00 - 9+54	LT	985	--	985	0.6	27	13
6+00 - 9+54	RT	849	--	849	0.5	23	11
10+46 - 13+54	LT	559	--	559	0.4	15	8
10+46 - 13+54	RT	532	--	532	0.3	14	7
UNDISTRIBUTED		290	140	150	0.2	8	4
	TOTALS	**3,215**	**140**	**3,075**	**1.8**	**79**	**43**

3

REMOVING SIGN ITEMS

STATION	LOCATION	638.3000 REMOVING SMALL SIGN SUPPORTS EACH	638.2602 REMOVING SIGNS TYPE II EACH	SIGN MESSAGE
CATEGORY CODE 0010				
9+25	LT	1	1	BRIDGE HASH MARKS
9+25	RT	1	1	BRIDGE HASH MARKS
10+65	LT	1	1	BRIDGE HASH MARKS
10+65	RT	1	1	BRIDGE HASH MARKS
13+00	RT	1	1	CURVE
	TOTALS	**5**	**5**	

EROSION CONTROL

STATION - STATION	LOCATION	628.1504 SILT FENCE LF	628.1520 MAINTENANCE LF	MOBILIZATIONS 628.1905 EROSION CONTROL EACH	MOBILIZATIONS 628.1910 EMERGENCY EROSION CONTROL EACH
CATEGORY CODE 0010					
6+00 - 9+54	LT & RT	700	700	--	--
10+46 - 13+54	LT & RT	510	510	--	--
UNDISTRIBUTED	CTH D	--	--	2	2
	TOTALS	**1,210**	**1,210**	**2**	**2**

FIELD OFFICE TYPE B

	642.5001 EACH
CATEGORY CODE 0010	
PROJECT	1
TOTAL	**1**

SIGNING ITEMS

STATION	LOCATION	SIGN NUMBER	SIGN CODE	SIZE	634.0612 POSTS WOOD 4X6-INCH X 12-FT EACH	634.0614 POSTS WOOD 4X6-INCH X 14-FT EACH	637.2230 SIGNS TYPE II REFLECTIVE F SF	SIGN MESSAGE
CATEGORY CODE 0010								
9+45	LT	2	W5-52L	12" X 36"	1	--	3.00	BRIDGE HASH MARKS
9+39	RT	1	W5-52R	12" X 36"	1	--	3.00	BRIDGE HASH MARKS
10+55	LT	4	W5-52L	12" X 36"	1	--	3.00	BRIDGE HASH MARKS
10+60	RT	3	W5-52R	12" X 36"	1	--	3.00	BRIDGE HASH MARKS
13+00	RT	5	W1-2R	36" X 36"	--	1	9.00	CURVE RIGHT
				TOTALS	**4**	**1**	**21.00**	

3

TRAFFIC CONTROL ITEMS

LOCATION	643.5000 TRAFFIC CONTROL EACH	643.0420 BARRICADES TYPE III DAYS	643.0705 WARNING LIGHTS TYPE A DAYS	643.0900 SIGNS DAYS
CATEGORY CODE 0010				
PROJECT	1	1,476	2,296	1,148
TOTALS	**1**	**1,476**	**2,296**	**1,148**

MARKING LINE EPOXY 4-INCH

STATION - STATION	LOCATION	646.1020 LF	REMARKS
CATEGORY CODE 0010			
6+78 - 13+28	RT EDGELINE	650	WHITE
8+00 - 11+65	CENTERLINE	730	DOUBLE YELLOW
6+59 - 13+22	LT EDGELINE	663	WHITE
	TOTAL	**2,043**	

3

SAWING PAVEMENT

STATION	LOCATION	690.0150 ASPHALT LF
CATEGORY CODE 0010		
6+78 - 8+00	LT	122
6+59 - 8+00	RT	141
8+00	MAINLINE	26
11+65	MAINLINE	26
11+65 - 13+22	RT	157
11+65 - 13+28	LT	163
TOTAL		**635**

CONSTRUCTION STAKING ITEMS

STATION - STATION	LOCATION	650.4500 SUBGRADE LF	650.5000 BASE LF	650.6500* STRUCTURE LAYOUT LS	650.9910 SUPPLEMENTAL CONTROL LS	650.9920 SLOPE STAKES LF
CATEGORY CODE 0010						
6+00 - 9+54	MAINLINE	--	--	--	--	354
8+00 9+54	MAINLINE	154	154	--	--	--
10+46 11+65	MAINLINE	119	119	--	--	--
10+46 - 13+54	MAINLINE	--	--	--	--	308
UNDISTRIBUTED		--	--	1	1	--
	TOTALS	**273**	**273**	**1**	**1**	**662**

* PAID FOR UNDER CATEGORY 0020

PROJECT NO: 4546-02-71	HWY: CTH D	COUNTY: Brown	MISCELLANEOUS QUANTITIES	SHEET NO: 8	E

R/W PROJECT NUMBER 4546-02-00	SHEET NUMBER	TOTAL SHEETS
R/W PROJECT NUMBER	4.01	2

PLAT OF RIGHT OF WAY REQUIRED FOR

T WRIGHTSTOWN, CTH D
PLUM CREEK BRIDGE

CTH D — BROWN COUNTY

CONSTRUCTION PROJECT NUMBER: 4546-02-71

CONVENTIONAL SYMBOLS

SECTION LINE
QUARTER LINE
SIXTEENTH LINE
NEW REFERENCE LINE
NEW R/W LINE
EXISTING R/W OR HE LINE
PROPERTY LINE
LOT, TIE & OTHER MINOR LINES
SLOPE INTERCEPT
CORPORATE LIMITS
UNDERGROUND FACILITY (COMMUNICATIONS, ELECTRIC, ETC)
NEW R/W (FEE OR HE) (HATCHING VARIES BY OWNER)
TEMPORARY LIMITED EASEMENT AREA
EASEMENT AREA (PERMANENT LIMITED OR RESTRICTED DEVELOPMENT)
TRANSMISSION STRUCTURES
BUILDING — TO BE REMOVED
BRIDGE

SECTION CORNER SYMBOL
SECTION CORNER MONUMENT
GEODETIC SURVEY MONUMENT
SIXTEENTH CORNER MONUMENT
SIGN
OFF-PREMISE SIGN
R/W MONUMENT (TO BE SET)
NON-MONUMENTED R/W POINT
FOUND IRON PIN (1-INCH UNLESS NOTED)

	COMPENSABLE	NON-COMPENSABLE
ELECTRIC POLE		
TELEPHONE POLE		
PEDESTAL (LABEL TYPE) (TV, TEL, ELEC, ETC.)		

ACCESS RESTRICTED BY ACQUISITION
NO ACCESS (BY STATUTORY AUTHORITY)
ACCESS RESTRICTED (BY PREVIOUS PROJECT OR CONTROL)
NO ACCESS (NEW HIGHWAY)
PARCEL NUMBER (25)
UTILITY NUMBER (40)
PARALLEL OFFSETS

CONVENTIONAL ABBREVIATIONS

ACCESS RIGHTS	AR	POINT OF INTERSECTION	PI
ACRES	AC	PROPERTY LINE	PL
AHEAD	AH	RECORDED AS	(100')
ALUMINUM	ALUM	REEL / IMAGE	R/I
AND OTHERS	ET AL	REFERENCE LINE	R/L
BACK	BK	REMAINING	REM
BLOCK	BLK	RESTICTIVE DEVELOPMENT EASEMENT	RDE
CENTERLINE	C/L	RIGHT	RT
CERTIFIED SURVEY MAP	CSM	RIGHT OF WAY	R/W
CONCRETE	CONC	SECTION	SEC
COUNTY	CO	SEPTIC VENT	SEPV
COUNTY TRUNK HIGHWAY	CTH	SQUARE FEET	SF
DISTANCE	DIST	STATE TRUNK HIGHWAY	STH
CORNER	COR	STATION	STA
DOCUMENT NUMBER	DOC	TELEPHONE PEDESTAL	TP
EASEMENT	EASE	TEMPORARY LIMITED EASEMENT	TLE
EXISTING	EX	TRANSPORTATION PROJECT PLAT	TPP
GAS VALVE	GV	UNITED STATES HIGHWAY	USH
GRID NORTH	GN	VOLUME	V
HIGHWAY EASEMENT	HE		
IDENTIFICATION	ID		
LAND CONTRACT	LC		
LEFT	LT		
MONUMENT	MON		
NATIONAL GEODETIC SURVEY	NGS		
NUMBER	NO		
OUTLOT	OL		
PAGE	P		
POINT OF TANGENCY	PT		
PERMANENT LIMITED EASEMENT	PLE		
POINT OF BEGINNING	POB		
POINT OF CURVATURE	PC		
POINT OF COMPOUND CURVE	PCC		

CURVE DATA

LONG CHORD	LCH
LONG CHORD BEARING	LCB
RADIUS	R
DEGREE OF CURVE	D
CENTRAL ANGLE	Δ/DELTA
LENGTH OF CURVE	L
TANGENT	T
DIRECTION AHEAD	DA
DIRECTION BACK	DB

NOTES:

POSITIONS SHOWN ON THIS PLAT ARE WISCONSIN COORDINATE REFERENCE SYSTEM COORDINATES (WISCRS), BROWN COUNTY, NAD 83 (2011) IN US SURVEY FEET. VALUES SHOWN ARE GRID COORDINATES, GRID BEARINGS, AND GRID DISTANCES. GRID DISTANCES MAY BE USED AS GROUND DISTANCES.

RIGHT OF WAY MONUMENTS ARE REBAR AND ARE PLACED PRIOR TO THE COMPLETION OF THE PROJECT.

RIGHT OF WAY BOUNDARIES ARE DEFINED WITH COURSES OF THE PERIMETER OF THE HIGHWAY LANDS REFERENCED TO THE U.S. PUBLIC LAND SURVEY OR OTHER SURVEYS OF PUBLIC RECORD.

CAUTION
THIS PLAT IS FOR ILLUSTRATIVE PURPOSES ONLY. DEEDS MUST BE CHECKED TO DETERMINE PROPERTY BOUNDARIES.

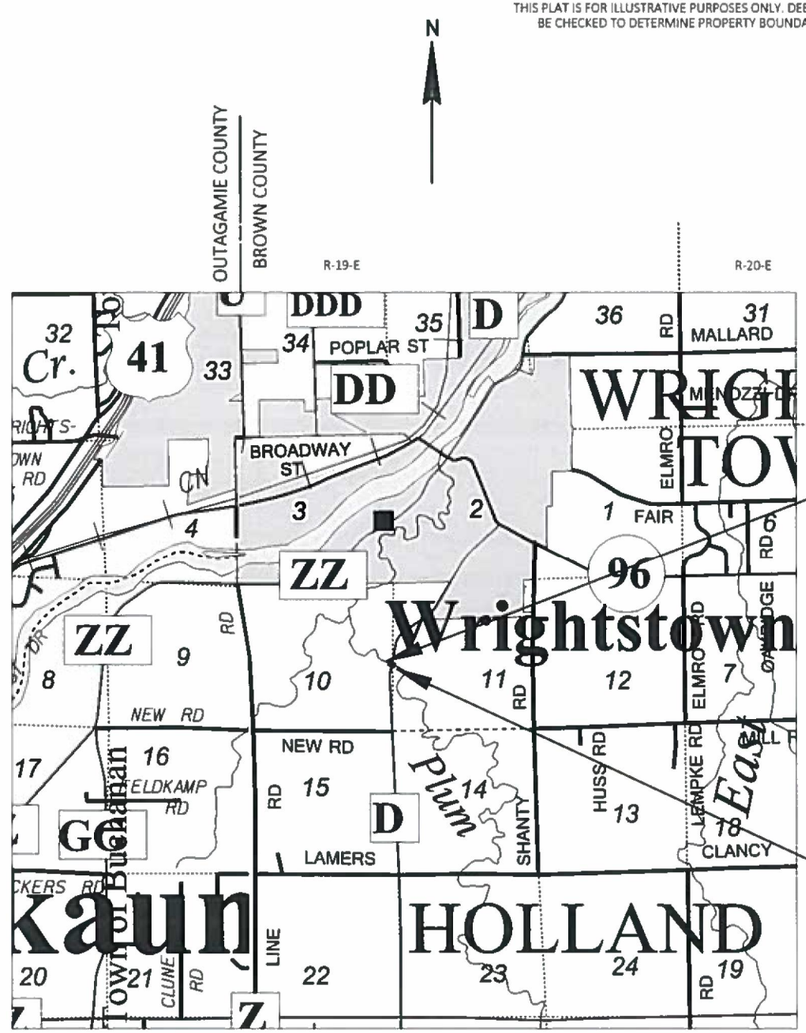

END RELOCATION ORDER
STA 13+00.00
166.23' EAST AND 84.91' SOUTH OF THE WEST QUARTER CORNER, SEC 11, T-21-N, R-19-E

BEGIN RELOCATION ORDER
STA 6+00.00
24.15' EAST AND 600.16' SOUTH OF THE WEST QUARTER CORNER, SEC 11, T-21-N, R-19-E

LAYOUT
SCALE 0 — 1 MILE

TOTAL NET LENGTH OF CENTERLINE = 0.133 MILES

CONVENTIONAL UTILITY SYMBOLS

WATER
GAS
TELEPHONE
OVERHEAD TRANSMISSION LINES
ELECTRIC
CABLE TELEVISION
FIBER OPTIC
SANITARY SEWER
STORM SEWER

The most current Right of Way information should be viewed in DOTView using the Real Estate Project ID. The Plat information contained in this AsBuilt Plan may not be the final records.

RECEIVED
FEB 2018
Sandra L. Juno
Brown County Clerk

CORRE
1802 WARDEN STREET
EAU CLAIRE, WI 54703
(608)828-1011
www.correinc.com

WISCONSIN
BRYON J. MOTSZKO
S-2846
MENOMONIE WI
LAND SURVEYOR

I, BRYON J. MOTSZKO, REGISTERED LAND SURVEYOR, S-2846, HEREBY CERTIFY THAT I HAVE SURVEYED THE LAND DESCRIBED HEREON AND THAT THE MAP HEREON IS A CORRECT REPRESENTATION OF THAT SURVEY TO THE BEST OF MY KNOWLEDGE AND BELIEF.

DATE: 1/23/18 (Signature)

BROWN COUNTY

APPROVED FOR COUNTY

DATE: 2/5/18 (Signature)

SCHEDULE OF LANDS & INTERESTS REQUIRED

OWNERS NAMES ARE SHOWN FOR REFERENCE ONLY AND ARE SUBJECT TO CHANGE PRIOR TO THE TRANSFER OF LAND INTERESTS TO THE COUNTY.

PARCEL NUMBER	OWNER	INTEREST REQUIRED	R/W ACRES REQUIRED		
			NEW (AC)	EXISTING (AC)	TOTAL (AC)
1	PLUM PRIDE HOLSTEINS, LLC	FEE	0.09	0.00	0.09
2	ALYCIA L. JOHNSON	FEE	0.12	0.00	0.12
3	MARVIN B. JR. AND PATRICIA T. BIESE	FEE	0.10	0.00	0.10
80	AT&T	RELEASE OF RIGHTS			

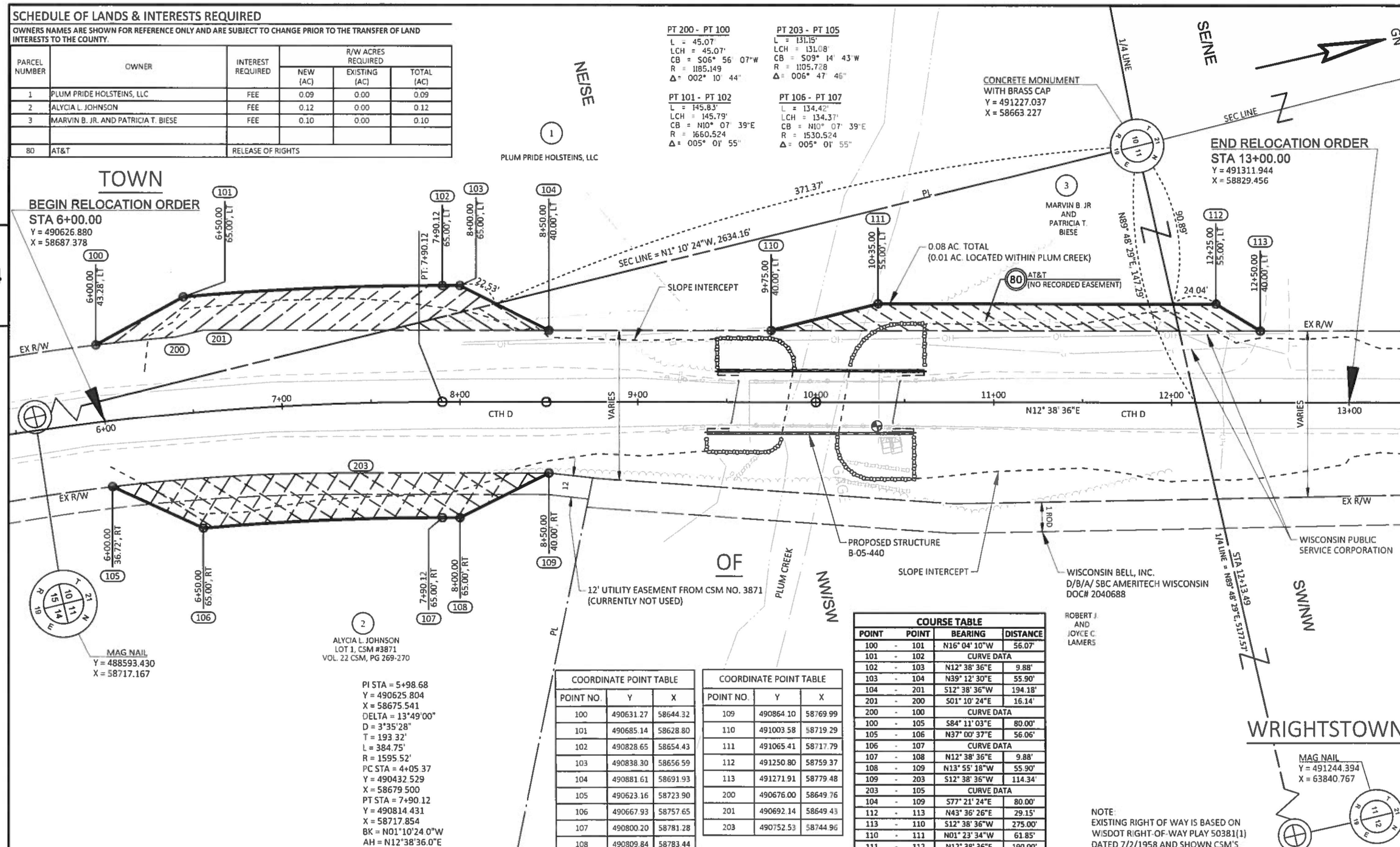

COORDINATE POINT TABLE		
POINT NO.	Y	X
100	490631.27	58644.32
101	490685.14	58628.80
102	490828.65	58654.43
103	490838.30	58656.59
104	490881.61	58691.93
105	490623.16	58723.90
106	490667.93	58757.65
107	490800.20	58781.28
108	490809.84	58783.44

COORDINATE POINT TABLE		
POINT NO.	Y	X
109	490864.10	58769.99
110	491003.58	58719.29
111	491065.41	58717.79
112	491250.80	58759.37
113	491271.91	58779.48
200	490676.00	58649.76
201	490692.14	58649.43
203	490752.53	58744.96

COURSE TABLE				
POINT		POINT	BEARING	DISTANCE
100	-	101	N16° 04' 10"W	56.07'
101	-	102	CURVE DATA	
102	-	103	N12° 38' 36"E	9.88'
103	-	104	N39° 12' 30"E	55.90'
104	-	201	S12° 38' 36"W	194.18'
201	-	200	S01° 10' 24"E	16.14'
200	-	100	CURVE DATA	
100	-	105	S84° 11' 03"E	80.00'
105	-	106	N37° 00' 37"E	56.06'
106	-	107	CURVE DATA	
107	-	108	N12° 38' 36"E	9.88'
108	-	109	N13° 55' 18"W	55.90'
109	-	203	S12° 38' 36"W	114.34'
203	-	105	CURVE DATA	
104	-	109	S77° 21' 24"E	80.00'
112	-	113	N43° 36' 26"E	29.15'
113	-	110	S12° 38' 36"W	275.00'
110	-	111	N01° 23' 34"W	61.85'
111	-	112	N12° 38' 36"E	190.00'

REVISION DATE	DATE 1/23/18	HWY: CTH D	STATE R/W PROJECT NUMBER: 4546-02-00
	GRID FACTOR N/A	COUNTY: BROWN	CONSTRUCTION PROJECT NUMBER: 4546-02-71

SCALE, FEET 0 25 50

PLAT SHEET 4.02

PS&E SHEET

E

FILE NAME : 040102-RP.DWG
LAYOUT NAME : 040102-rp
PLOT DATE : 1/10/2018 8:22 AM PLOT BY : BOBBY JONES PLOT NAME : PLOT SCALE : 1 IN:50 FT

WISDOT/CAE

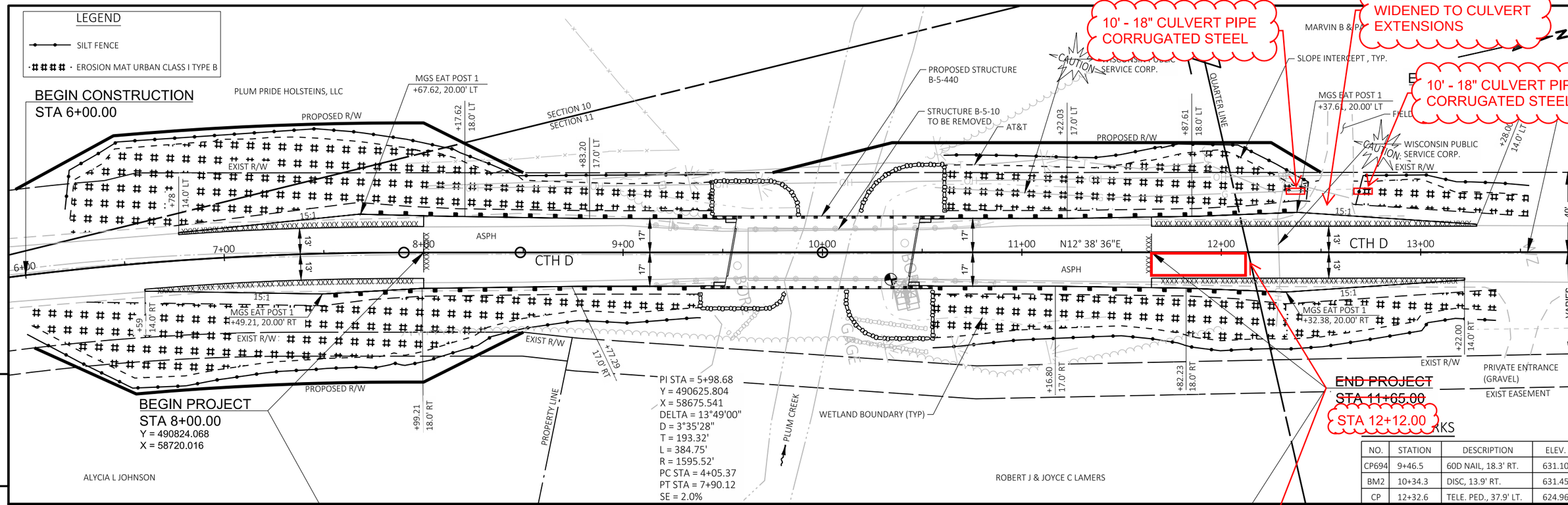

NO.	STATION	DESCRIPTION	ELEV.
CP694	9+46.5	60D NAIL, 18.3' RT.	631.10
BM2	10+34.3	DISC, 13.9' RT.	631.45
CP	12+32.6	TELE. PED., 37.9' LT.	624.96

PROJECT NO: 4546-02-71	HWY: CTH D	COUNTY: BROWN	PLAN AND PROFILE: CTH D	SHEET 11	E

FILE NAME : P:\WI - NE REGION\4546-02-00_CTH D_BROWN CO\500_CADD\501_C3D_2016\4546-02-00\SHEETSPLAN\050101-PP.DWG
LAYOUT NAME - 050101-pp
PLOT DATE : 7/20/2018 9:10 AM PLOT BY : BOBBY JONES PLOT NAME : PLOT SCALE : 1 IN:50 FT

Standard Detail Drawing List

08E09-06	SILT FENCE
12A03-10	NAME PLATE (STRUCTURES)
14B42-06A	MIDWEST GUARDRAIL SYSTEM (MGS) GUARDRAIL
14B42-06B	MIDWEST GUARDRAIL SYSTEM (MGS) GUARDRAIL
14B42-06C	MIDWEST GUARDRAIL SYSTEM (MGS) GUARDRAIL
14B44-04A	MIDWEST GUARDRAIL SYSTEM ENERGY ABSORBING TERMINAL (MGS)
14B44-04B	MIDWEST GUARDRAIL SYSTEM ENERGY ABSORBING TERMINAL (MGS)
14B44-04C	MIDWEST GUARDRAIL SYSTEM ENERGY ABSORBING TERMINAL (MGS)
14B45-05A	MIDWEST GUARDRAIL SYSTEM THRIE BEAM TRANSITION (MGS)
14B45-05B	MIDWEST GUARDRAIL SYSTEM THRIE BEAM TRANSITION (MGS)
14B45-05C	MIDWEST GUARDRAIL SYSTEM THRIE BEAM TRANSITION (MGS)
14B45-05H	MIDWEST GUARDRAIL SYSTEM THRIE BEAM TRANSITION (MGS)
15C02-06A	BARRICADES AND SIGNS FOR MAINLINE CLOSURES
15C02-06B	BARRICADES AND SIGNS FOR MAINLINE CLOSURES
15C06-09	SIGNING & MARKING FOR TWO LANE BRIDGES
15C08-19A	LONGITUDINAL MARKING (MAINLINE)
15C11-07B	CHANNELIZING DEVICES DRUMS, CONES, BARRICADES AND VERTICAL PANELS
15D38-02A	TEMPORARY TRAFFIC CONTROL SIGN MOUNTING
15D38-02B	ATTACHMENT OF SIGNS TO POSTS

6

6

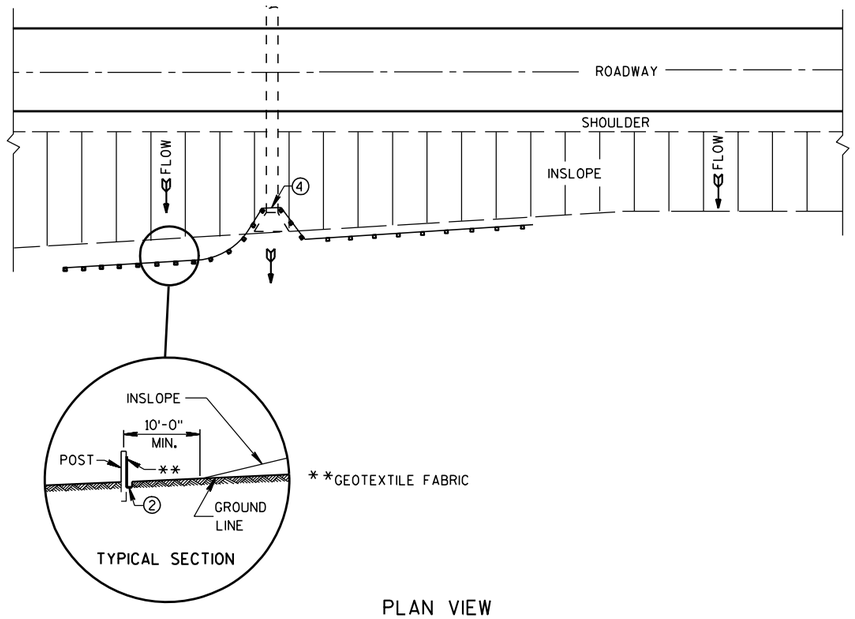

PLAN VIEW

TYPICAL APPLICATION OF SILT FENCE

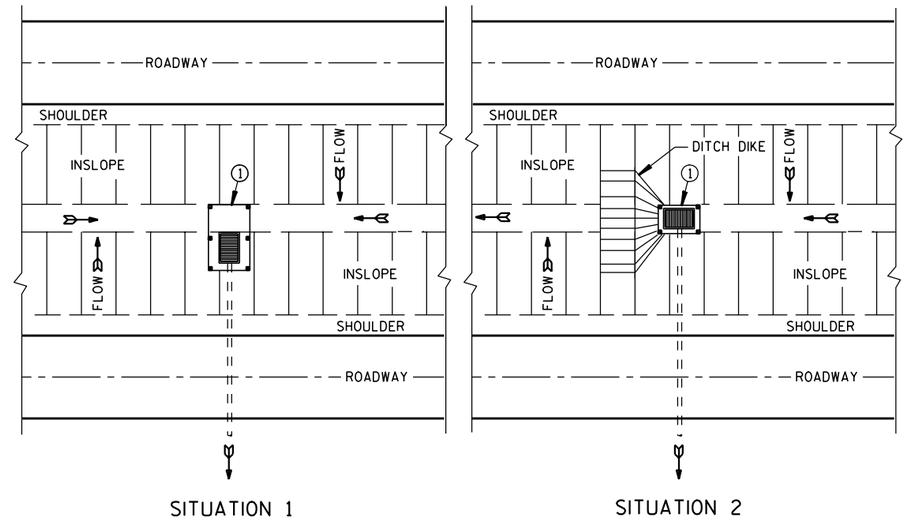

PLAN VIEW

SILT FENCE AT MEDIAN SURFACE DRAINS

GENERAL NOTES

DETAILS OF CONSTRUCTION NOT SHOWN ON THIS DRAWING SHALL CONFORM TO THE PERTINENT REQUIREMENTS OF THE STANDARD SPECIFICATIONS AND APPLICABLE SPECIAL PROVISIONS.

① HORIZONTAL BRACE REQUIRED WITH 2" X 4" WOODEN FRAME OR EQUIVALENT AT TOP OF POSTS.

② FOR MANUAL INSTALLATIONS THE TRENCH SHALL BE A MINIMUM OF 4" WIDE & 6" DEEP TO BURY AND ANCHOR THE GEOTEXTILE FABRIC. FOLD MATERIAL TO FIT TRENCH AND BACKFILL & COMPACT TRENCH WITH EXCAVATED SOIL.

③ WOOD POSTS SHALL BE A MINIMUM SIZE OF 1⅛" X 1⅛" OF OAK OR HICKORY.

④ SILT FENCE TO EXTEND ACROSS THE TOP OF THE PIPE.

⑤ CONSTRUCT SILT FENCE FROM A CONTINUOUS ROLL IF POSSIBLE BY CUTTING LENGTHS TO AVOID JOINTS. IF A JOINT IS NECESSARY USE ONE OF THE FOLLOWING TWO METHODS; A) OVERLAP THE END POSTS AND TWIST, OR ROTATE, AT LEAST 180 DEGREES. B) HOOK THE END OF EACH SILT FENCE LENGTH.

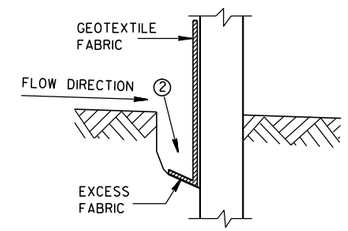

TRENCH DETAIL

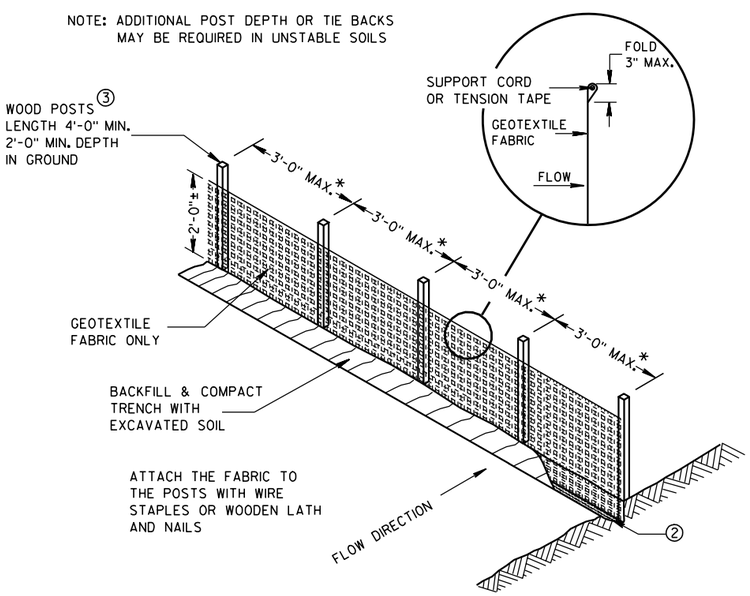

*NOTE: 8'-0" POST SPACING ALLOWED IF A WOVEN GEOTEXTILE FABRIC IS USED.

SILT FENCE

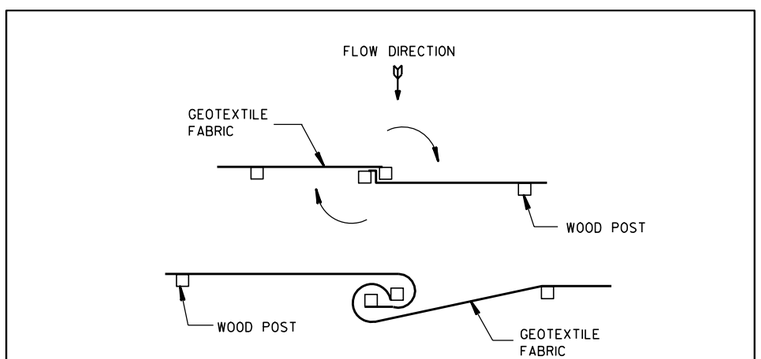

TWIST METHOD

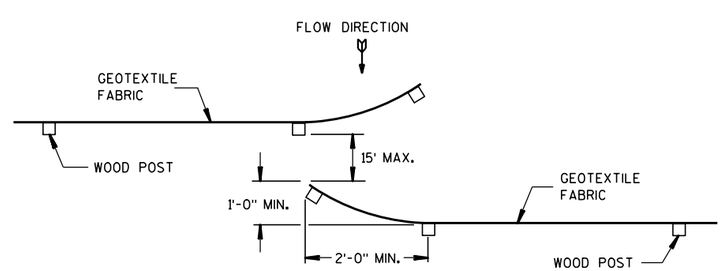

HOOK METHOD

JOINING TWO LENGTHS OF SILT FENCE ⑤

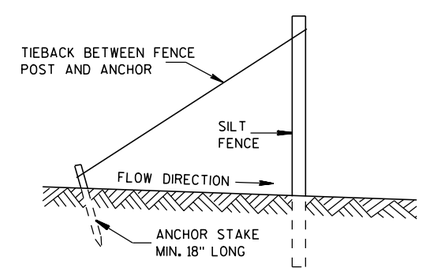

SILT FENCE TIE BACK

(WHEN REQUIRED BY THE ENGINEER)

SILT FENCE
STATE OF WISCONSIN DEPARTMENT OF TRANSPORTATION
APPROVED 4-29-05 /S/ Beth Cann----- DATE CHIEF ROADWAY DEVELOP ENGINEER FHWA

6

6

S.D.D. 8 E 9-6

S.D.D. 8 E 9-6

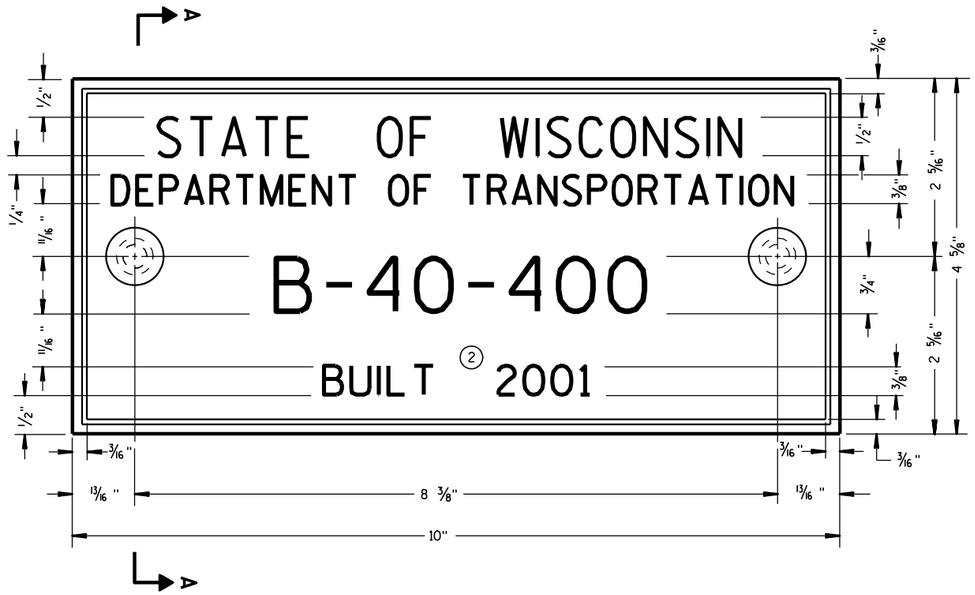

TYPICAL NAME PLATE

(BRIDGES, CULVERTS, AND RETAINING WALLS)

GENERAL NOTES

NAME PLATES TO BE INSTALLED ON BRIDGES, CULVERTS, AND RETAINING WALLS SHALL CONFORM TO THE REQUIREMENTS OF SECTION 502.3.11 OF THE STANDARD SPECIFICATIONS.

THE BRIDGE NUMBER AND YEAR BUILT SHOWN ON THIS DRAWING ARE EXAMPLES ONLY. SEE CONSTRUCTION PLANS FOR INDIVIDUAL NUMBERING AND YEAR BUILT.

① EPOXY RESIN SHALL BE FROM AN APPROVED MANUFACTURER AND USED IN ACCORDANCE WITH MANUFACTURER'S RECOMMENDATIONS.

② REHABILITATION OF AN EXISTING STRUCTURE SHOULD USE THE DATE OF ORIGINAL STRUCTURE CONSTRUCTION.

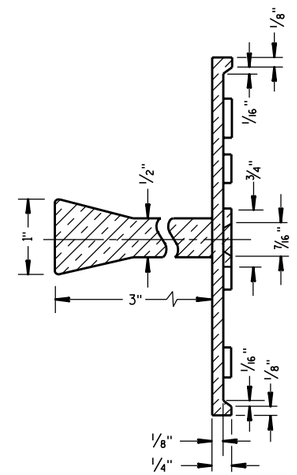

SECTION A-A

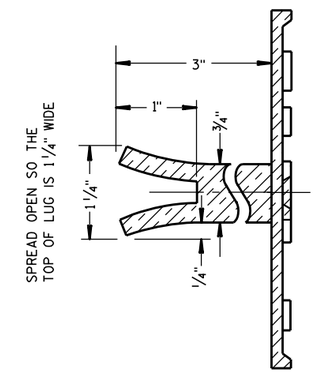

ALTERNATE LUG

FOR MULTI-UNIT STRUCTURES
LINE 3 ABOVE SHALL READ

B = BRIDGE
C = CULVERT
R = RETAINING WALL

COUNTY NO.

BRIDGE NO.

UNIT NO. FOR MULTIPLE
UNIT BRIDGE

B-40-400-1A

NUMBERING DESIGNATION
MULTI-UNIT STRUCTURES

① ADHERE ANCHOR LUG TO PRECAST RETAINING WALL WITH EPOXY RESIN.

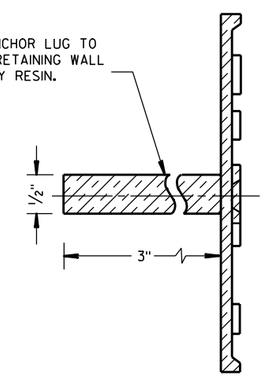

ALTERNATE LUG

(FOR ATTACHMENT TO PRECAST STRUCTURES)

NAME PLATE (STRUCTURES)		
STATE OF WISCONSIN DEPARTMENT OF TRANSPORTATION		
APPROVED		
3/26/10 DATE	/S/ Scot Beck-- CHIEF STRUCTURAL DEVELOP	ENGINEER
FHWA		

6

6

S.D.D. 12 A 3-10

S.D.D. 12 A 3-10

1. WOOD OR STEEL POSTS (w6X9 OR w6X8.5) MAY BE USED. DO NOT INTERMIX WOOD AND STEEL POSTS. INSTALL STEEL POSTS WITH HOLES ON APPROACHING TRAFFIC SIDE.
2. USE WOOD OR APPROVED PLASTIC BLOCKOUTS. WOOD BLOCKOUTS MAY BE CONSTRUCTED OUT OF TWO OR MORE WOOD BLOCKOUTS. SEE ALTERNATE WOOD BLOCKOUT DETAIL. DIMENSIONS OF APPROVED PLASTIC BLOCKOUTS MAY VARY.
3. IF ROCK IS ENCOUNTERED DURING EXCAVATION, PROVIDE A HOLE 12 INCHES IN DIAMETER EXTENDING 20 INCHES DEEP INTO THE ROCK. PLACE APPROXIMATELY 2 1/2" INCHES OF GRANULAR MATERIAL IN THE BOTTOM OF THE HOLE. CUT THE POSTS THE TO LENGTH AMD INSTALL. BACKFILL WITH EXCAVATED MATERIAL AND COMPACT. BACKFILL IS TO BE FREE OF LARGE ROCKS.
4. WHEN THE DISTANCE FROM BACK OF POST TO SHOULDER HINGE POINT IS LESS THAN 2 FEET INSTALL LONGER POST AT HALF POST SPACING (K).
5. FOR NEW MGS INSTALLATION TOP OF W-BEAM RAIL TOLERANCE IS ±1". FOR EXISTING MGS INSTALLATION TOP OF W-BEAM IS BETWEEN 27 ¾" TO 32".
6. WHEN USING STEEL POST AND WOOD BLOCKOUTS INSTALL FOUR 16D GALVANIZED NAILS. INSTALL NAILS AT THE BACK CORNERS OF THE BLOCK AND BEND THE NAILS OVER THE FLANGE OF THE STEEL POST.
7. TOTAL POST LENGTH FOR TYPE K IS 7' - 0".
TOTAL POST LENGTH FOR OTHER MGS TYPES IS 6' - 0".

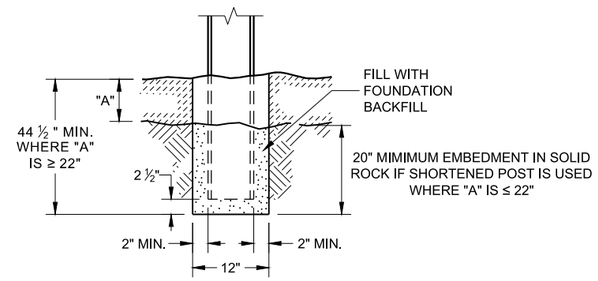

END VIEW
SETTING STEEL OR WOOD POST IN ROCK (3)

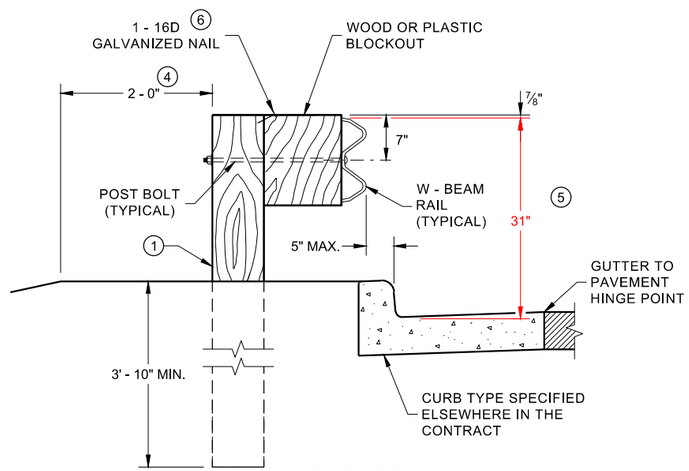

END VIEW
LOCATED ALONG A CURBED ROADWAY

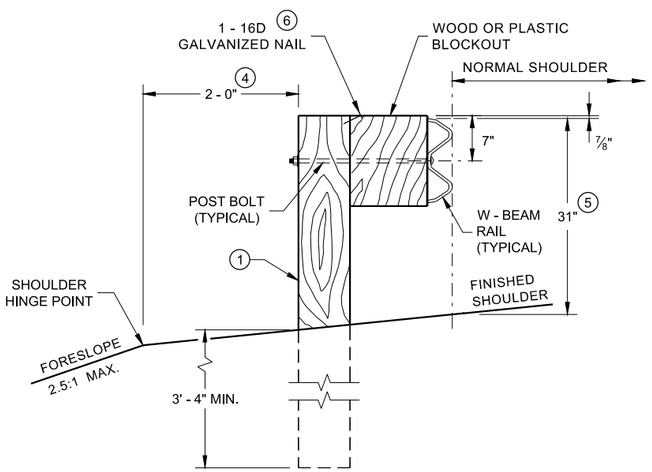

END VIEW
LOCATED ALONG A ROADWAY SHOULDER
STANDARD INSTALLATION

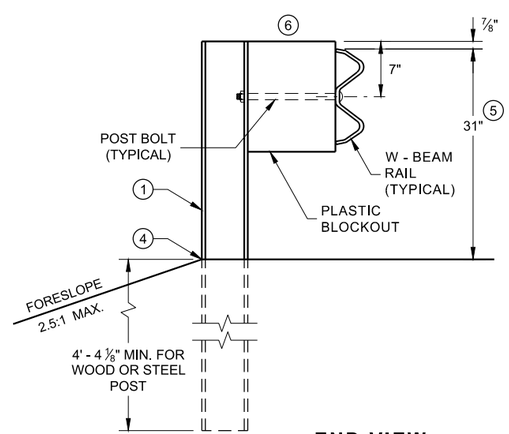

END VIEW
MGS LONGER POST AT HALFPOST
SPACING W BEAM (K)

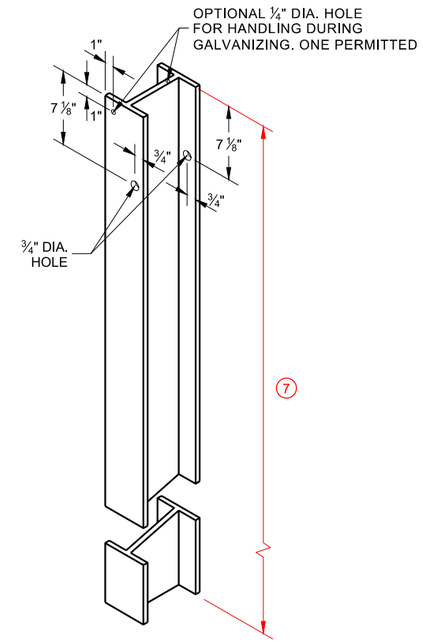

STEEL POST & HOLE
PUNCHING DETAIL
(W 6 X 9) (1)

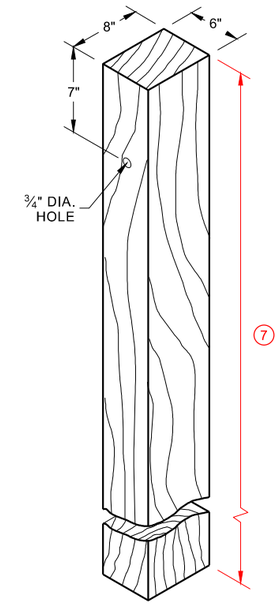

WOOD POST
(6" X 8") NOMINAL (1)

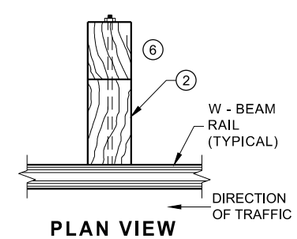

PLAN VIEW
WOOD POST,
BLOCKOUT & BEAM

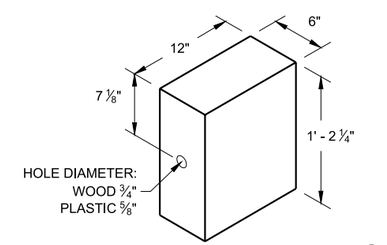

WOOD OR PLASTIC (2)
BLOCKOUT

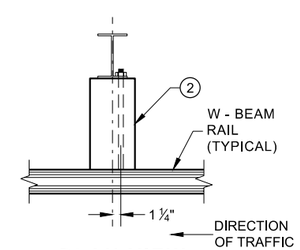

PLAN VIEW
STEEL POST,
PLASTIC BLOCKOUT & BEAM

MIDWEST GUARDRAIL SYSTEM (MGS) GUARDRAIL

STATE OF WISCONSIN
DEPARTMENT OF TRANSPORTA

6

6

SDD 14B42 - 06a

SDD 14B42 - 06a

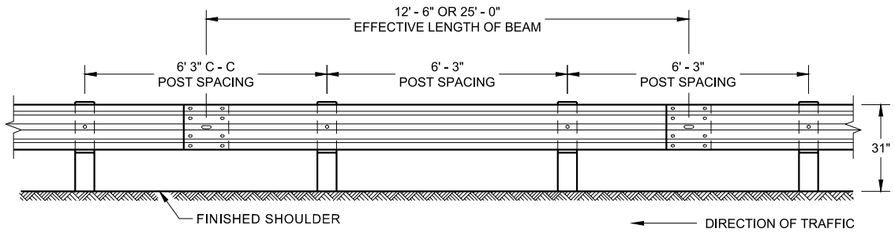

FRONT VIEW
POST SPACING STANDARD INSTALLATION

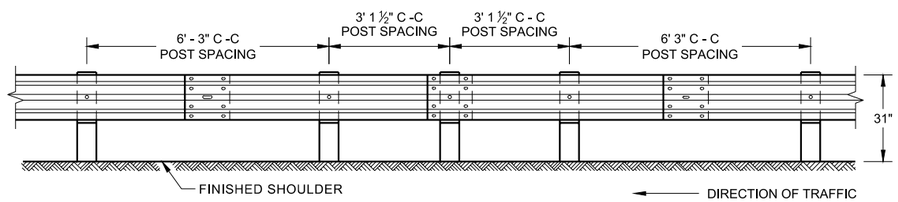

FRONT VIEW
HALF POST SPACING (HS) AND HALF POST SPACING WITH LONGER POSTS (K)

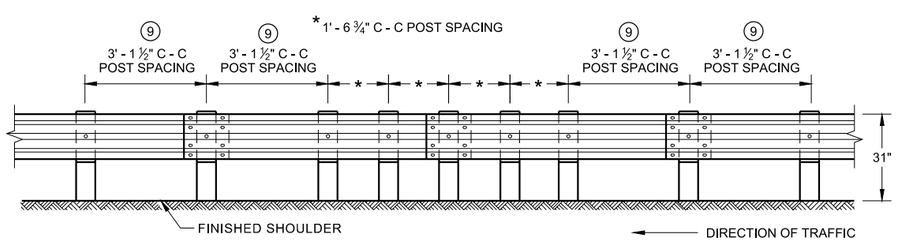

FRONT VIEW
QUARTER POST SPACING (QS)

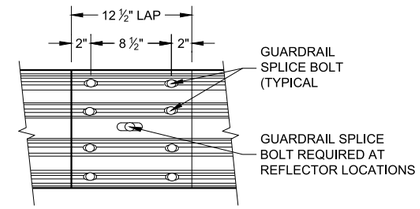

FRONT VIEW
MID-SPAN BEAM SPLICE

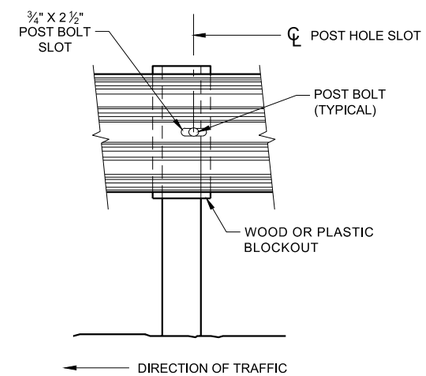

FRONT VIEW AT STEEL POST

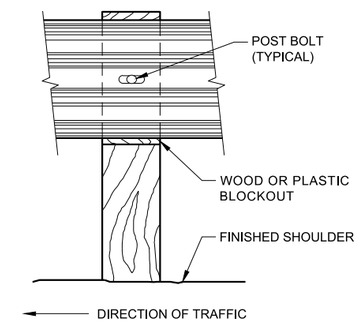

FRONT VIEW AT WOOD POST

GENERAL NOTES

(8) DO NOT INSTALL REFLECTORS ON THE FIRST 50 FEET OF THE APPROACH END OF THE ENERGY ABSORBING TERMINAL. RAIL SPLICE LOCATIONS ARE THE ONLY ACCEPTABLE LOCATIONS FOR REFLECTORS.

(9) 25 FEET OF HALF POST SPACING IS REQUIRED ON APPROACH AND DEPARTURE ENDS OF QUARTER POST SPACING.

POST BOLTS ARE A ⅝" DIAMETER ASTM A307 GUARDRAIL BOLT. A POST BOLT REQUIRES ⅝" DIAMETER A563A DOUBLE RECESSED (DR) HEAVY HEX NUT AND ⅝" DIAMETER F844 FLAT WASHER. POST BOLTS MAY BE LONGER IF MULTIPLE BLOCKOUTS ARE BEING USED.

GUARD RAIL SPLICE BOLTS ARE A ⅝" DIAMETER ASTM A307 GUARDRAIL HEAD BOLT. A GUARDRAIL SPLICE BOLT REQUIRES ⅝" DIAMETER A563A DOUBLE RECESSED (DR) HEAVY HEX NUT.

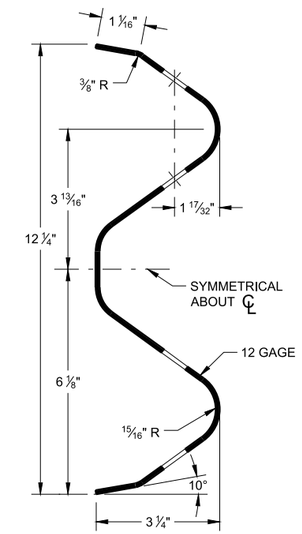

SECTION THRU W-BEAM RAIL

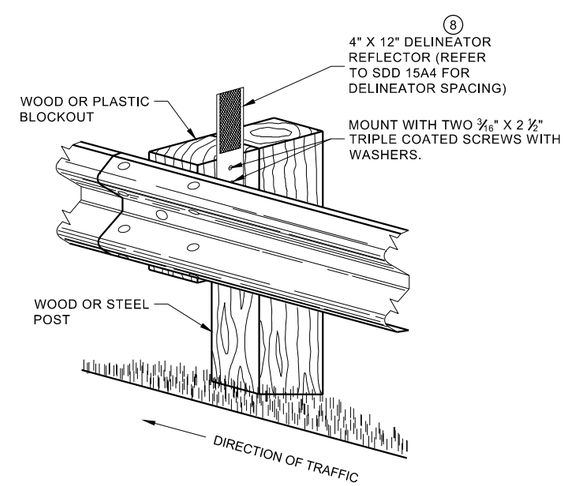

ONE SIDED REFLECTOR DETAIL AND TYPICAL INSTALLATION

MIDWEST GUARDRAIL SYSTEM (MGS) GUARDRAIL

STATE OF WISCONSIN
DEPARTMENT OF TRANSPORTA

6

SDD 14B42 - 06b

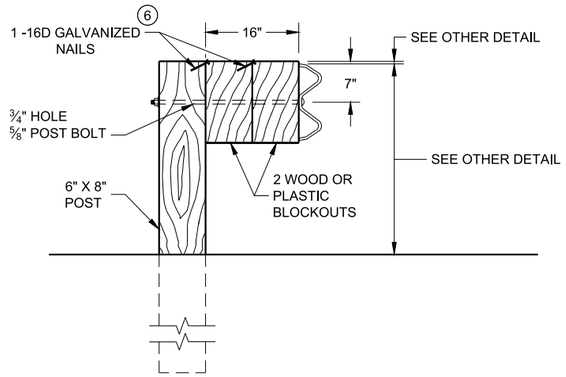

DETAIL FOR 16" BLOCKOUT DEPTH

IT IS ACCEPTABLE TO USE BLOCKOUTS UP TO 16" DEEP TO INCREASE THE POST OFFSET TO AVOID UNDERGROUND OBSTACLES. THERE IS NO LIMIT TO THE NUMBER OF POSTS THAT CAN HAVE ADDITIONAL BLOCKOUTS UP TO 16" DEEP.

NOTE:

1. ALL FILLETS SHALL HAVE A MINIMUM RADIUS OF 3/16".
2. IF THE BOLT EXTENDS MORE THAN ¼" FROM THE NUT THE BOLT SHOULD BE TRIMMED BACK.

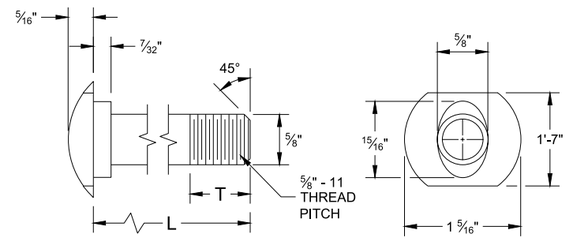

POST BOLT TABLE

L	T (MIN.)
1 ¼"	1 ⅛"
2"	1 ¾"
10"	4"
14"	4 1/16"
18"	4"
21"	4 1/16"
25"	4"

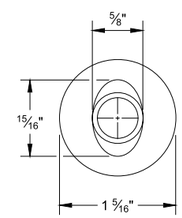

ALTERNATE BOLT HEAD

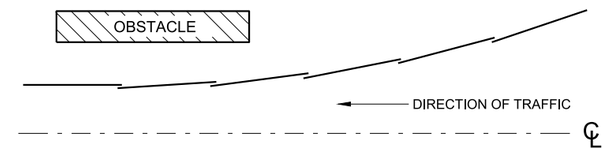

PLAN VIEW
BEAM LAPPING DETAIL

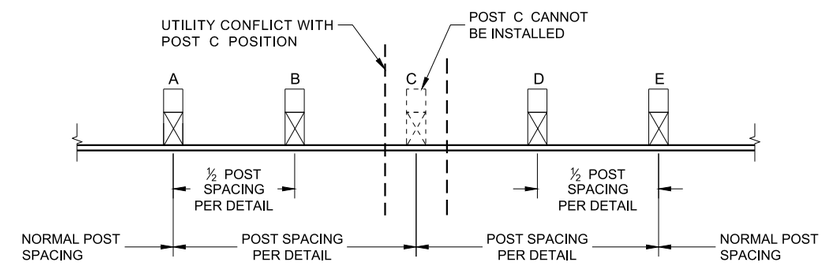

POST DRIVING FOR CONTINUOUS UNDERGROUND OBSTRUCTION

6

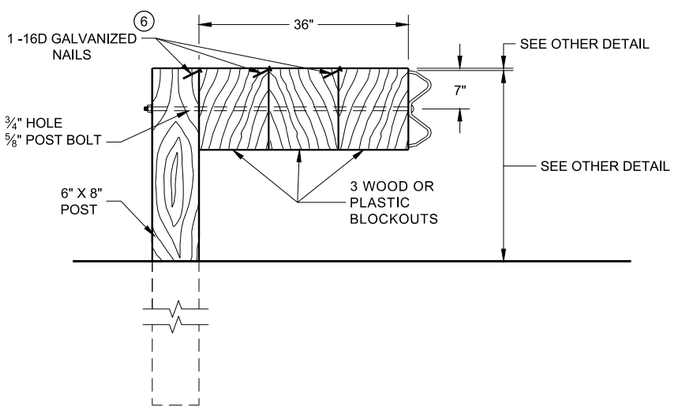

DETAIL FOR 36" BLOCKOUT DEPTH

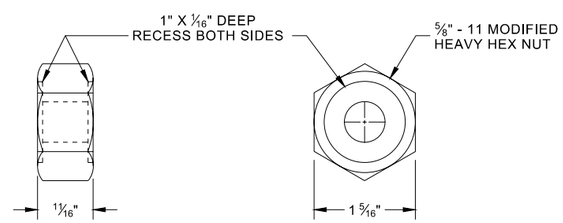

POST BOLT, SPLICE BOLT AND RECESS NUT

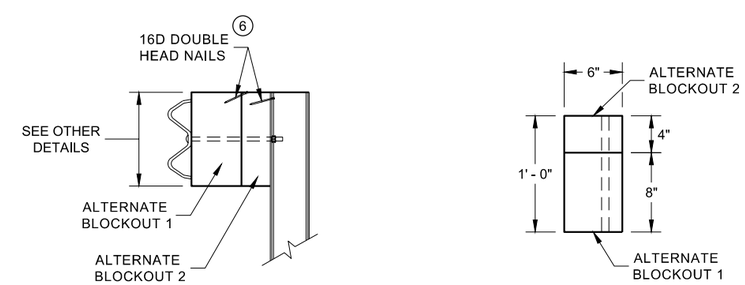

SIDE VIEW

PLAN VIEW

ALTERNATE WOOD BLOCKOUT DETAIL

NOTES: UNDER SPECIAL CIRCUMSTANCES, SUCH AS AVOIDING OBSTACLES THAT ARE NOT RELOCATED, IT IS ACCEPTABLE TO INSTALL ADDITIONAL BLOCKOUTS TO OBTAIN UP TO 36" DEPTH FOR ONE OR TWO POSTS IN A SECTION OF GUARDRAIL.

DO NOT USE 16" OR 36" BLOCKOUTS IF IT CAUSES THE POST TO BE DRIVEN BEYOND SHOULDER HINGE POINT OR CAUSES A FIXED OBJECT TO BE WITHIN THE DEFLECTION DISTANCE OF THE BARRIER.

(6) WHEN USING STEEL POST AD WOOD BLOCKOUTS, INSTALL FOUR 16D GALVANIZED NAILS. INSTALL NAILS AT THE BACK CORNERS OF THE BLOCK AND BEND THE NAILS OVER THE FLANGE OF THE STEEL POST.

MIDWEST GUARDRAIL SYSTEM (MGS) GUARDRAIL

STATE OF WISCONSIN
DEPARTMENT OF TRANSPORTA

SDD 14B42 - 06c

GENERAL NOTES

(A) THE SLOPE IN THE AREA BOUNDED BY THE GRADELINE, THE HINGE POINT LINE (HPL) AND THE CLEAR ZONE LIMITS (CZL) SHALL BE 4:1 OR FLATTER.

(B) AFTER FINAL ASSEMBLY, RECHECK CABLE TO BE SURE IT IS TAUT AND HAS NOT RELAXED

(C) DIFFERENT MANUFACTURERS REQUIRE DIFFERENT PERFORATED W - BEAM RAIL END PANELS. SEE MANUFACTURER'S INFORMATION.

(D) ATTACH ALUMINUM SHEET TO E.A.T. HEAD USING 4 STAINLESS STEEL SELF - TAPPING SCREWS. ONE SCREW PER CORNER.

(E) HARDWARE MAY VARY BETWEEN MANUFACTURER. SEE MANUFACTURER'S DRAWING FOR INFORMATION.

DIMENSIONS MAY VARY, MANUFACTURER'S INFORMATION.

SEE SDD 14B42 FOR MORE INFORMATION.

* DO NOT ATTACH BLOCKOUTS TO POST 1 AND 2.

DO NOT INSTALL REFLECTORS ON THE FIRST 50 FEET OF THE APPROACH END OF THE ENERGY ABSORBING TERMINAL.

SEE MANUFACTURER'S DRAWING FOR SPLICE LOCATION, HARDWARE DIMENSIONS AND INSTALLATION INSTRUCTIONS.

THE CENTER OF THE UPPER 3 ½" DIAMETER HOLE ON POST NUMBER 3 THROUGH POST 9 IS TO BE FLUSH WITH THE GROUND LINE UP TO A MAXIMUM OF 2" ABOVE GROUND LINE. WOOD BLOCKS ON POSTS NUMBERED 3 THROUGH 9 MAY BE ADJUSTED UP TO 3" ABOVE THE TOP OF POST.

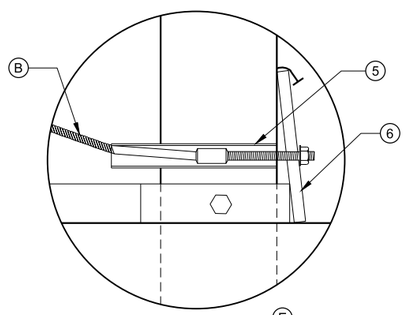

DETAIL "A" (E)

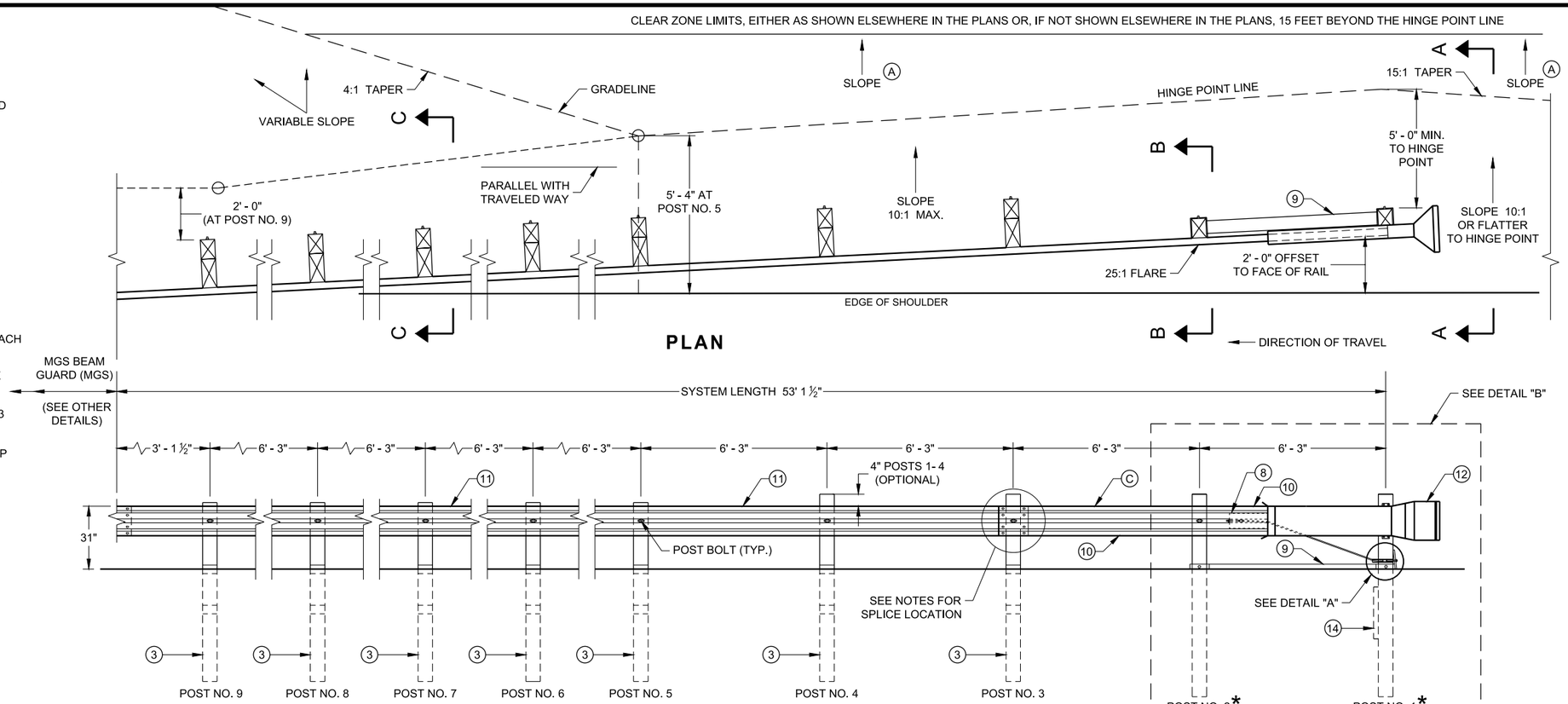

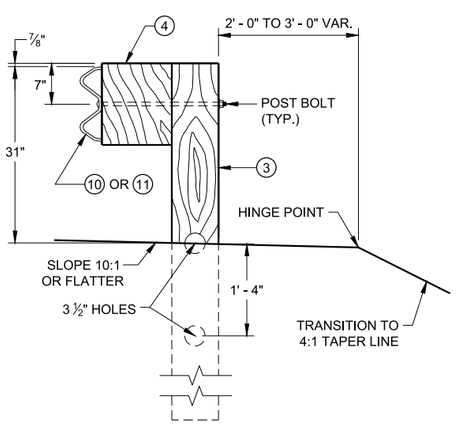

SECTION C - C
TYPICAL AT POST NOS. 3 - 9

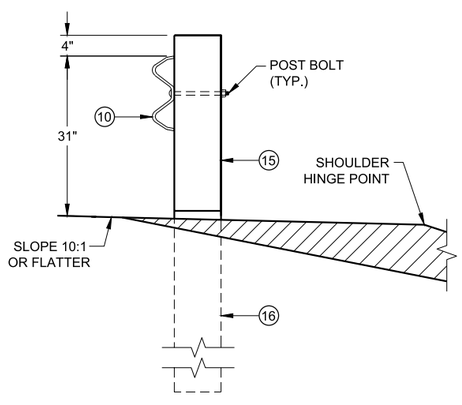

SECTION B - B
TYPICAL AT POST NO. 2*

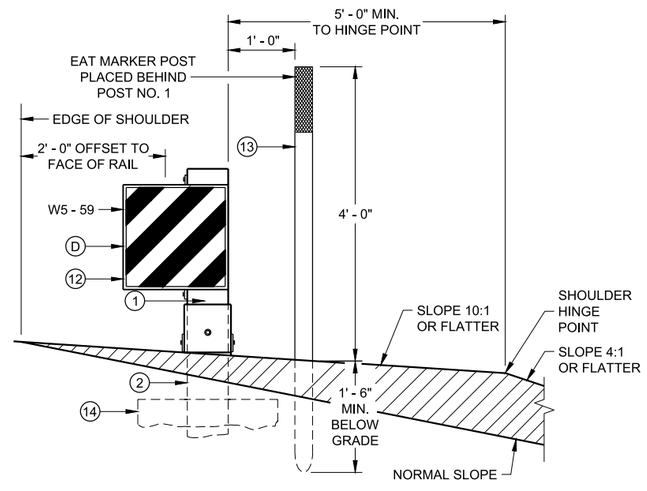

SECTION A - A
TYPICAL AT POST NO. 1*

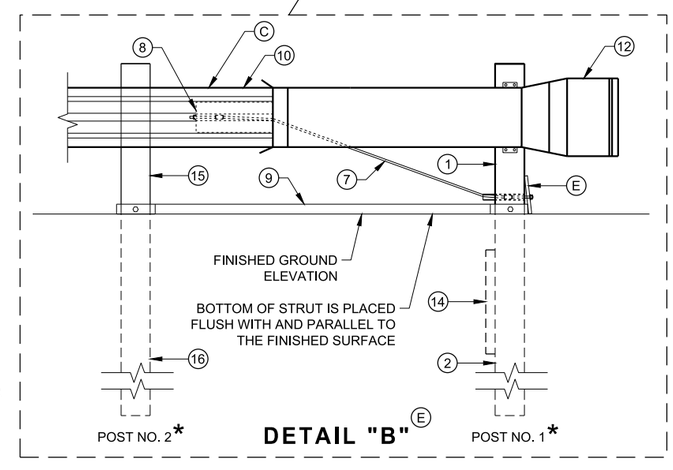

DETAIL "B" (E)

MIDWEST GUARDRAIL SYSTEM ENERGY ABSORBING TERMINAL (MGS)

STATE OF WISCONSIN
DEPARTMENT OF TRANSPORTATION

6

6

SDD 14B44 - 04a

SDD 14B44 - 04a

BILL OF MATERIALS

PART NO.	DESCRIPTION MATERIALS PROVIDED BY MGS EAT MANUFACTURER. SEE MANUGACTURER'S DETAILS FOR MORE INFORMATION.
1	UPPER POST NO. 1 6" X 6" TUBE
2	LOWER POST NO. 1
3	WOOD CRT
4	WOOD BLOCKOUT
5	PIPE SLEEVE
6	BEARING PLATE
7	BCT CABLE ASSEMBLY
8	ANCHOR CABLE BOX
9	GROUND STRUT
10	PERFORATED W-BEAM RAIL END PANEL, 12'-6" LONG.
11	STANDARD W-BEAM RAIL. MULTIPLE SECTIONS REQUIRED. SECTIONS VARY IN LENGTH.
12	IMPACT HEAD
13	EAT MARKER POST - YELLOW (SEE APPROVED PRODUCTS LIST)
14	SOIL PLATE
15	UPPER POST NO. 2
16	LOWER POST NO. 2

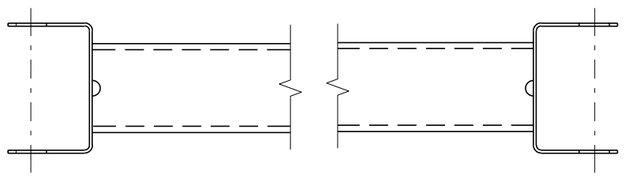

GENERIC GROUND STRUT 9 E

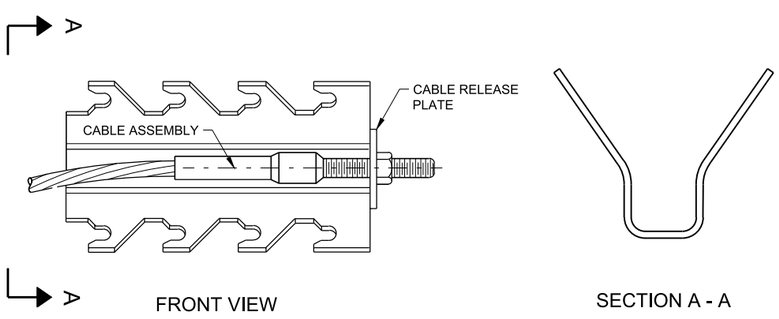

GENERIC ANCHOR CABLE BOX 9 E

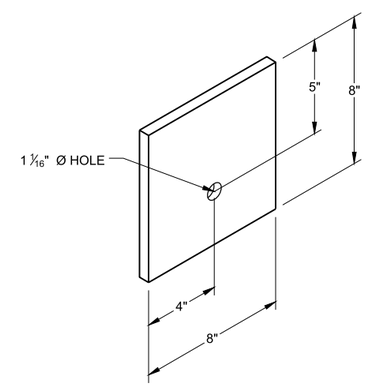

BEARING PLATE 6 E

MIDWEST GUARDRAIL SYSTEM ENERGY ABSORBING TERMINAL (MGS)

STATE OF WISCONSIN
DEPARTMENT OF TRANSPORTAT

6

SDD 14B45 - 04b

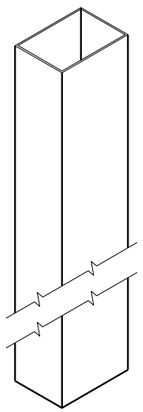

UPPER POST NO. 1 (1) (E)

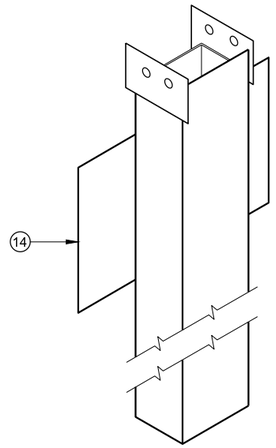

LOWER POST NO. 1 (2) (E)

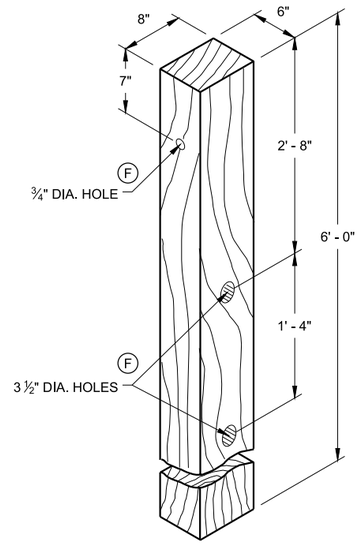

WOOD CRT POST (3) (E)
POSTS NUMBER 3-9

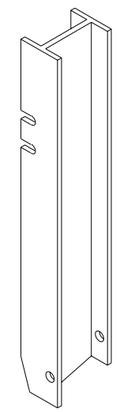

UPPER POST NO. 2 (15) (E)

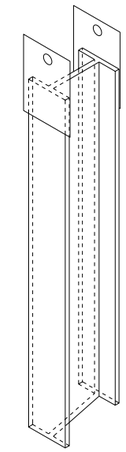

LOWER POST NO. 2 (16) (E)

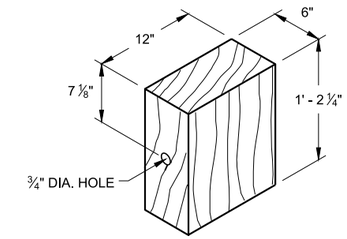

WOOD BLOCKOUT (4)
REQ'D. AT ALL POSTS EXCEPT POST NO'S 1 & 2

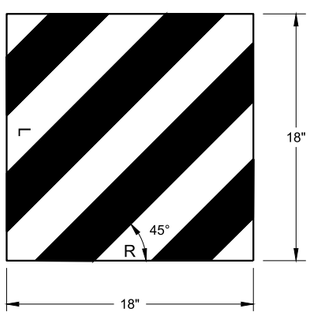

W5 - 59

REFLECTIVE SHEETING DETAIL (E)

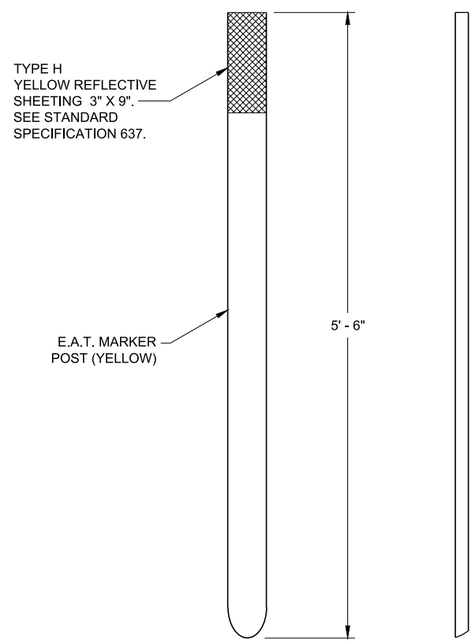

FRONT VIEW SIDE VIEW

E.A.T. MARKER POST (13)

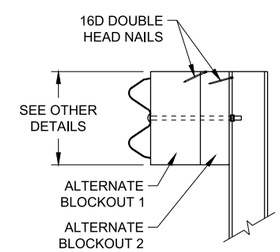

SIDE VIEW

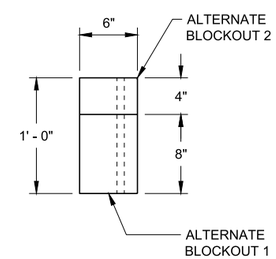

TOP VIEW

ALTERNATE WOOD BLOCKOUT DETAIL

MIDWEST GUARDRAIL SYSTEM ENERGY ABSORBING TERMINAL (MGS)

STATE OF WISCONSIN
DEPARTMENT OF TRANSPORTATION

APPROVED
7/2018 — DATE
/S/ Rodney Taylor — ROADWAY STANDARDS DEVE UNIT SUPERVISOR
FHWA

6

6

SDD 14B44 - 04c

SDD 14B44 - 04c

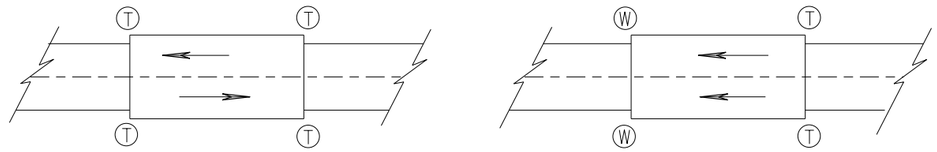

TWO WAY TRAFFIC **ONE WAY TRAFFIC**

(T) THRIE BEAM CONNECTION

(W) W-BEAM CONNECTION WHEN REQUIRED

TYPICAL LOCATIONS OF THRIE BEAM AND W-BEAM CONNECTIONS TO BRIDGE

GENERAL NOTES

IF ROCK IS ENCOUNTERED, REMOVE ROCK TO FULL DEPTH OF POST PLUS 2½", AND 12" DIAMETER AROUND POST. SEE 14B42 FOR MORE DETAILS.

TRANSITION USES STEEL POSTS ONLY.

SEE STANDARD DETAIL DRAWING 14 B 42 FOR MORE INFORMATION.

POST 2 THROUGH 17 USES STEEL POST ONLY

(1) BRIDGE RAILING TYPE "W" DOES NOT REQUIRE A TERMINAL CONNECTOR.

(2) OPTIONAL CURB AND GUTTER OR DRAINAGE FEATURE SEE PLAN FOR INFORMATION.

(13) STEEL OR WOOD POST IS ACCEPTABLE AT POST 1. SEE SDD14B42

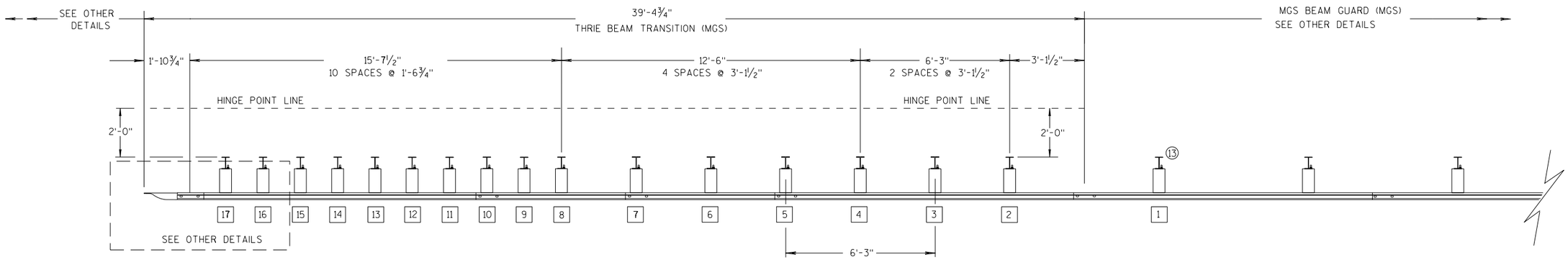

PLAN VIEW

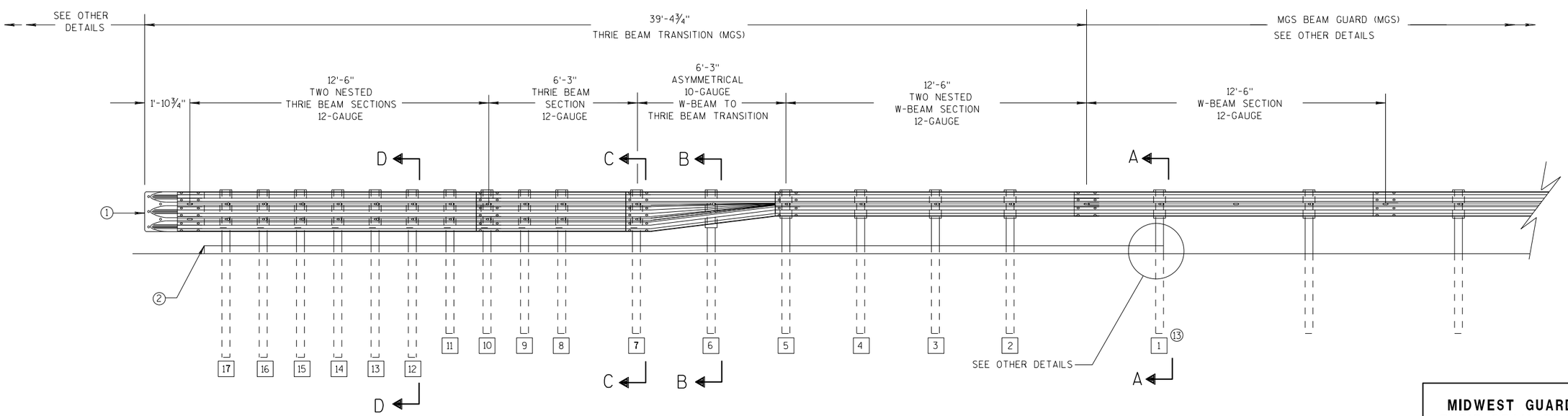

ELEVATION VIEW

MIDWEST GUARDRAIL SYSTEM THRIE BEAM TRANSITION

MIDWEST GUARDRAIL SYSTEM THRIE BEAM TRANSITION (MGS)

STATE OF WISCONSIN
DEPARTMENT OF TRANSPOR

6

S.D.D. 14 B 45-5a

GENERAL NOTES

(2) OPTIONAL CURB AND GUTTER OR DRAINAGE FEATURE SEE PLAN FOR INFORMATION.

(3) WHEN USING STEEL POSTS AND WOOD BLOCKOUTS INSTALL FOUR 10D GALVANIZED NAILS. INSTALL NAILS AT THE BACK CORNERS OF THE BLOCK AND BEND THE NAILS OVER THE FLANGE OF THE STEEL POST.

(4) TOLERANCE FOR TOP OF W-BEAM RAIL IS ± 1".

(13) STEEL OR WOOD POST IS ACCEPTABLE AT POST 1. SEE SDD 14B42

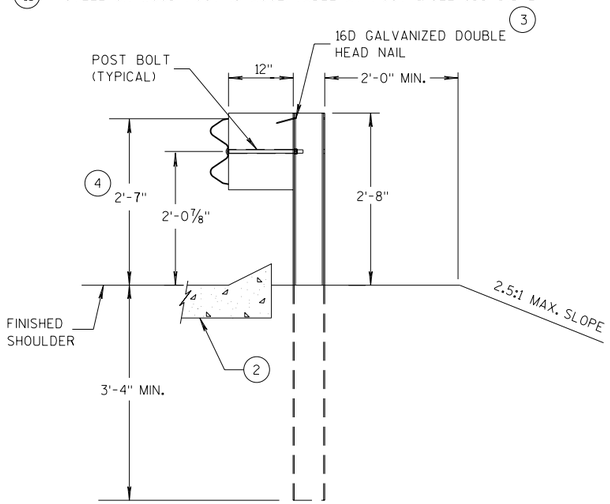

SECTION A-A (13)

POSTS 1-5

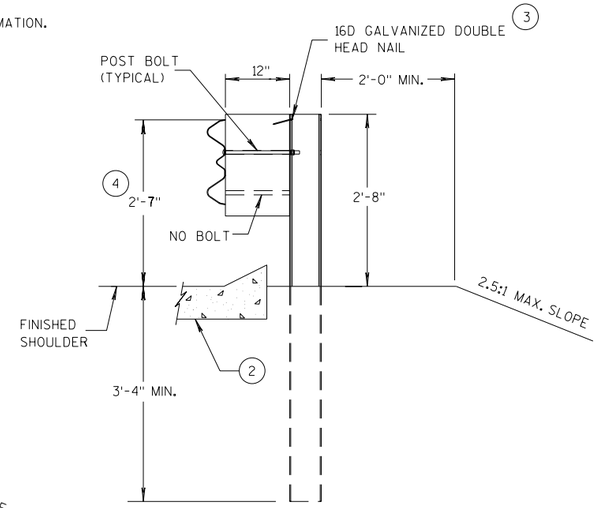

SECTION B-B

POST 6

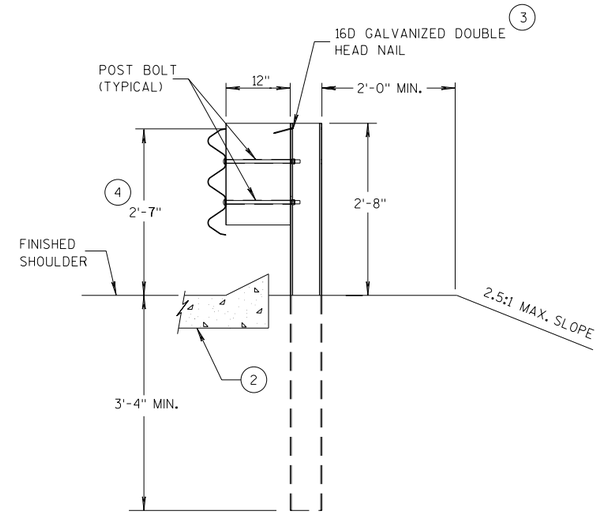

SECTION C-C

POSTS 7-11

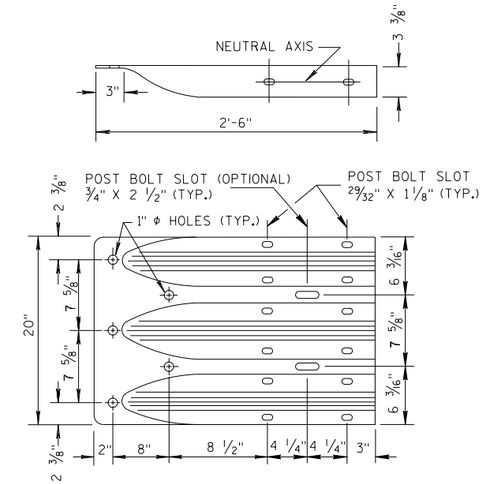

THRIE BEAM TERMINAL CONNECTOR

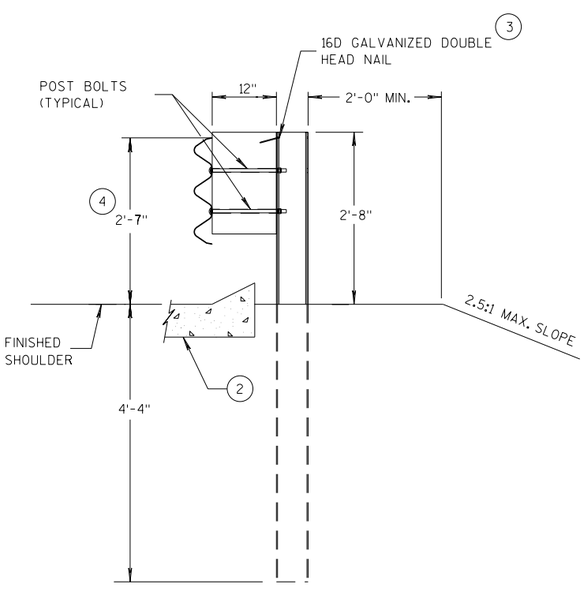

SECTION D-D

POSTS 12-17

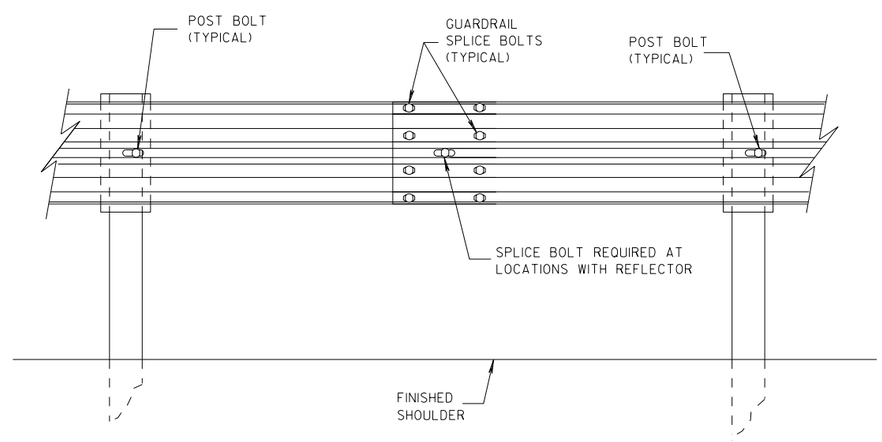

SPLICE DETAIL

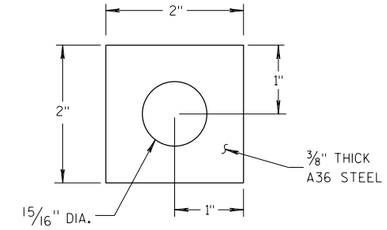

PLATE WASHER DETAIL

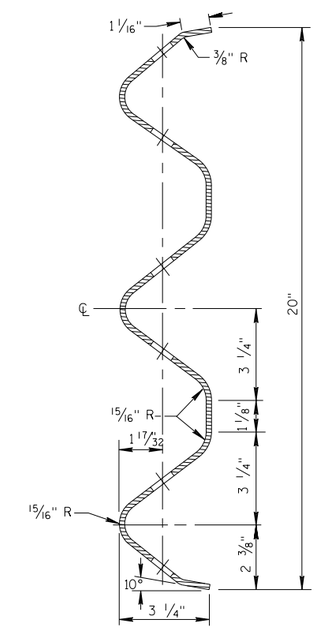

SECTION THRU THRIE BEAM RAIL ELEMENT

MIDWEST GUARDRAIL SYSTEM
THRIE BEAM TRANSITION (MGS)

STATE OF WISCONSIN
DEPARTMENT OF TRANSPORT

6

S.D.D. 14 B 45-5b

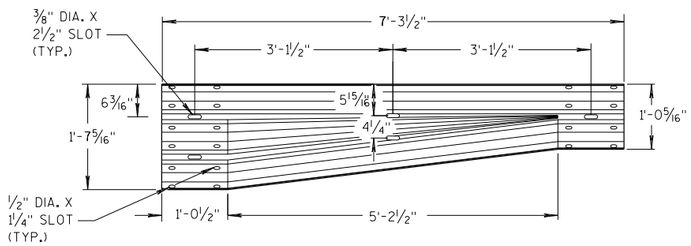

W-BEAM TO THRIE BEAM TRANSITION SECTION

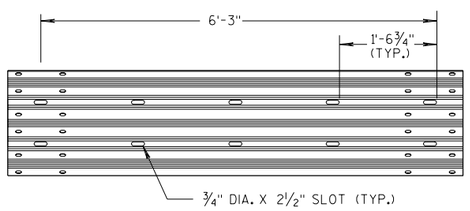

6'-3" THRIE BEAM SECTION

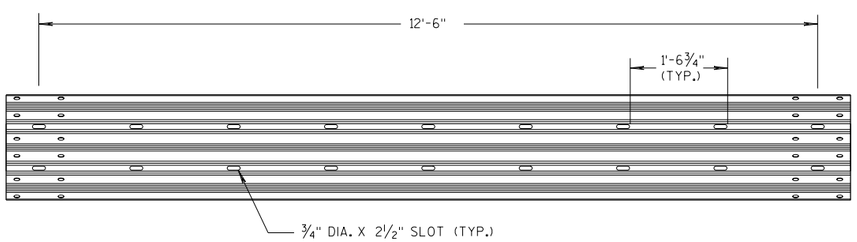

12'-6" THRIE BEAM SECTION

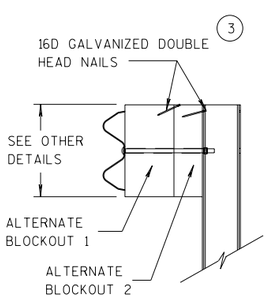

SIDE VIEW

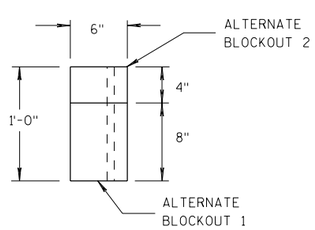

TOP VIEW

ALTERNATE WOOD BLOCKOUT DETAIL

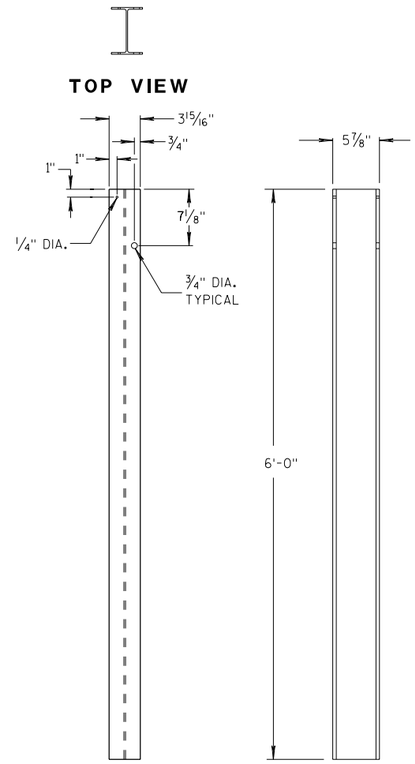

STEEL POSTS 1-5 (13)

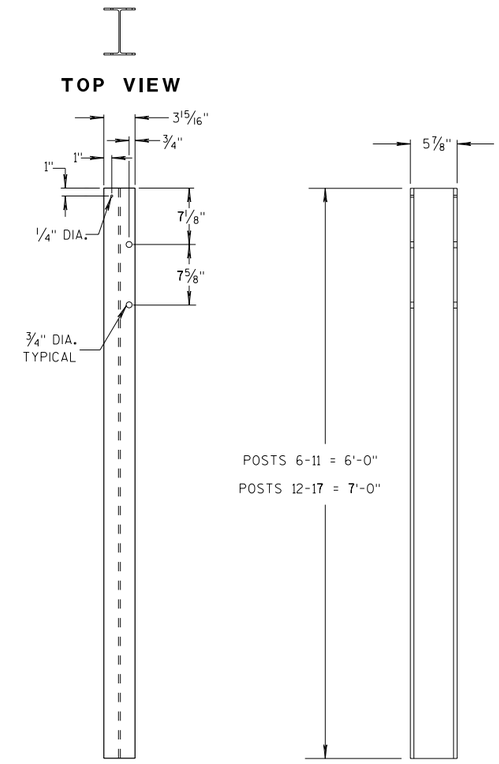

STEEL POSTS 6-17

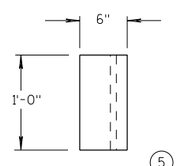

TOP VIEW (5)

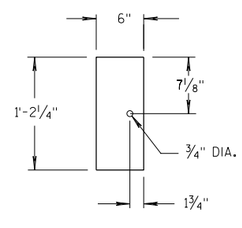

FRONT VIEW

BLOCKOUT POSTS 1-5

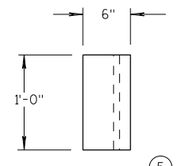

TOP VIEW (5)

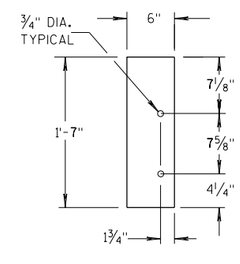

FRONT VIEW

BLOCKOUT POSTS 6-17

GENERAL NOTES

STEEL POSTS ARE W6X9 OR W6X8.5.

BOLT HOLES FOR POST ARE ON FRONT AND OF SIDE OF POST.

(3) WHEN USING STEEL POSTS AND WOOD BLOCKOUTS INSTALL FOUR 16D GALVANIZED NAILS. INSTALL NAILS AT THE BACK CORNERS OF THE BLOCK AND BEND THE NAILS OVER THE FLANGE OF THE STEEL POST.

(5) WOOD BLOCKS MAY BE CONSTRUCTED OUT OF 2 WOOD BLOCKS. SEE ALTERNATE WOOD BLOCK DETAIL.

(13) STEEL OR WOOD POST IS ACCEPTABLE AT POST 1. SEE SDD 14B42.

MIDWEST GUARDRAIL SYSTEM THRIE BEAM TRANSITION (MGS)

STATE OF WISCONSIN
DEPARTMENT OF TRANSPOR

6

S.D.D. 14 B 45-5c

GENERAL NOTES

(4) TOLERANCE FOR TOP OF W-BEAM RAIL IS ± 1".

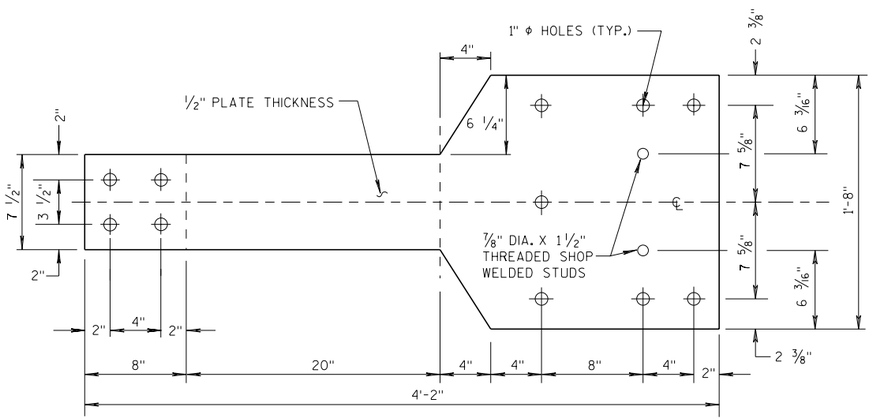

FRONT VIEW

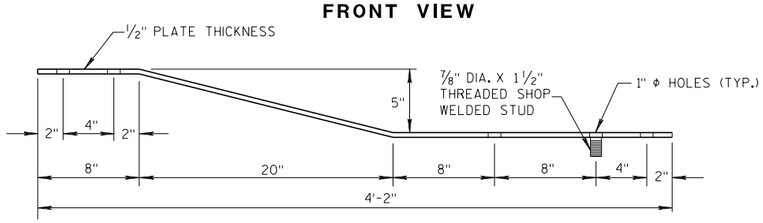

PLAN VIEW

BACK-UP PLATE DETAIL, TYPE "M"

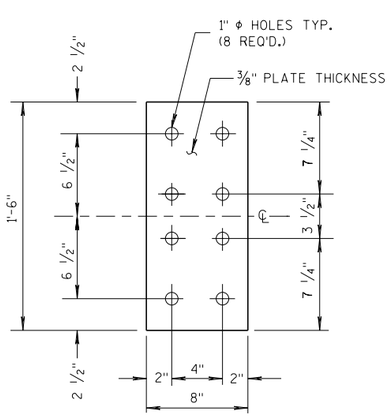

FRONT VIEW

ANCHOR PLATE DETAIL, TYPE "M"

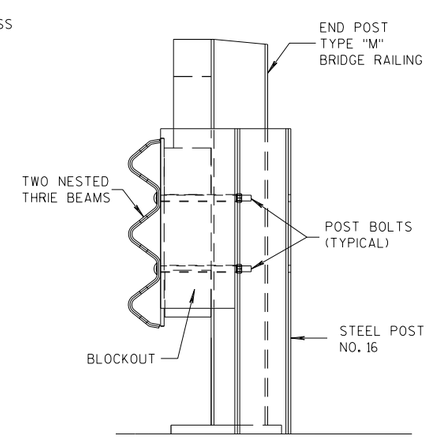

SECTION M-M

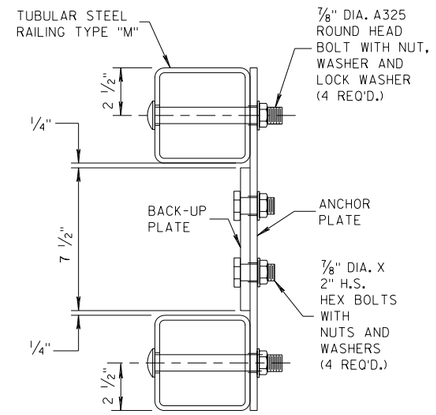

SECTION L-L

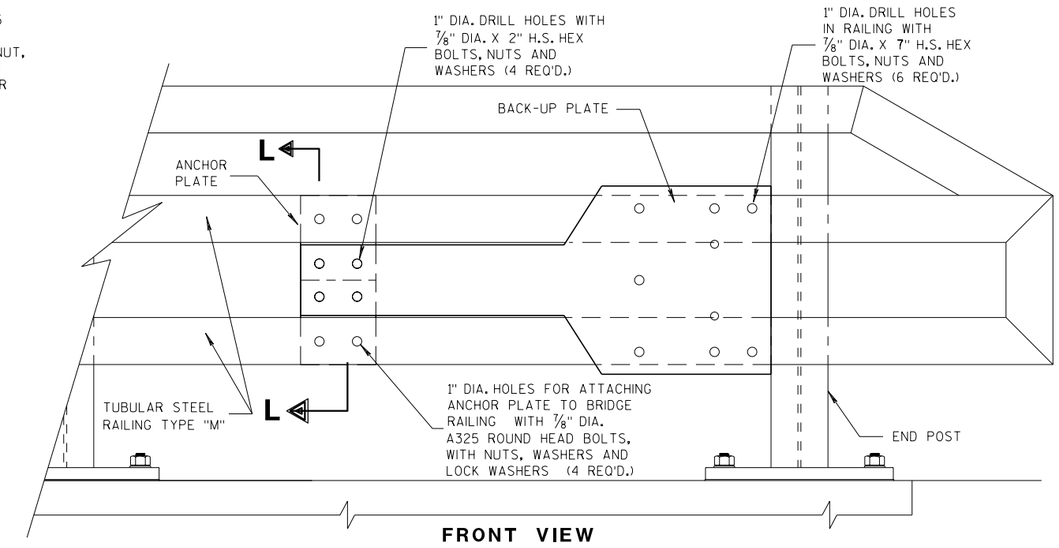

FRONT VIEW

ANCHOR AND BACK-UP PLATE MOUNTING TO BRIDGE RAILING, TYPE "M"

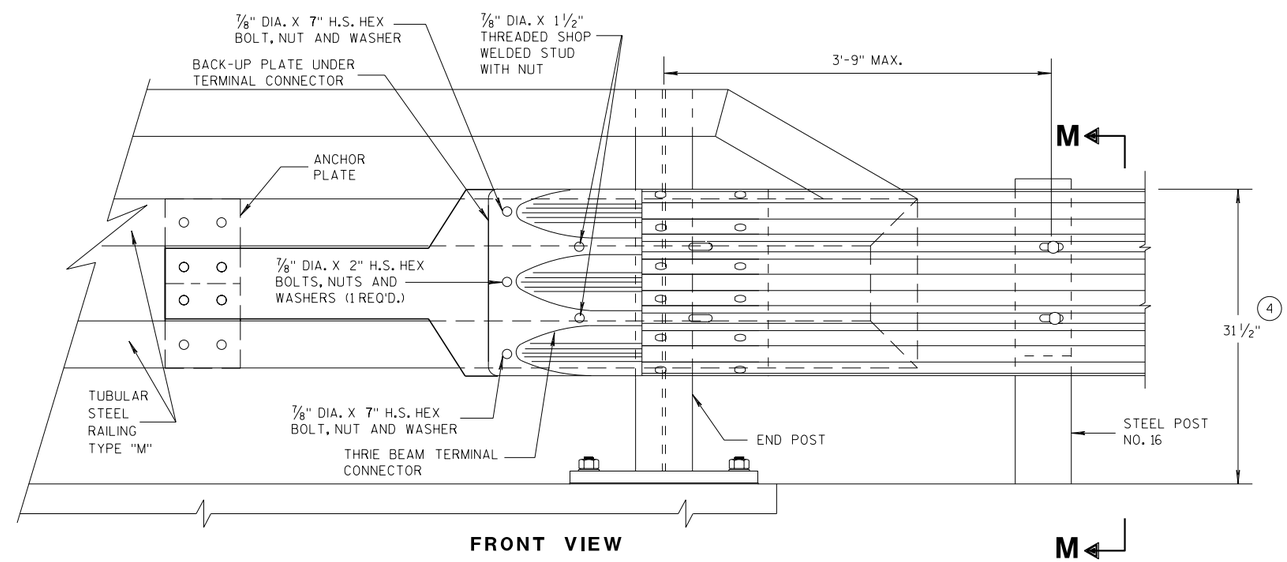

FRONT VIEW

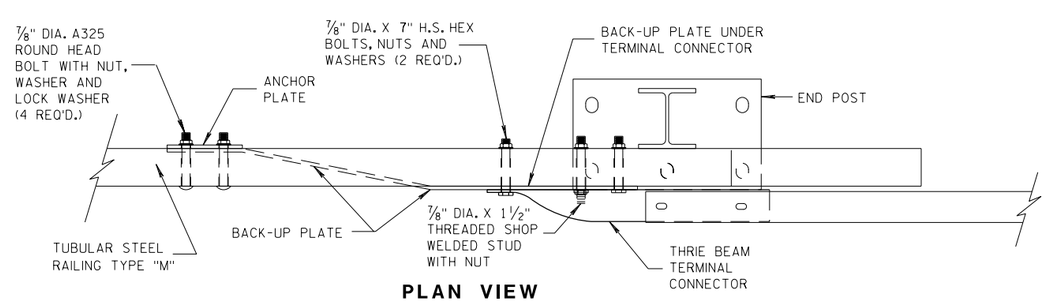

PLAN VIEW

THRIE BEAM CONNECTION TO TUBULAR RAILING, TYPE "M"

MIDWEST GUARDRAIL SYSTEM THRIE BEAM TRANSITION (MGS)

STATE OF WISCONSIN
DEPARTMENT OF TRANSPORTATION

APPROVED
07/2018 — DATE
/S/ Rodney Taylor — ROADWAY STANDARDS DEVELOPMENT UNIT SUPERVISOR
FHWA

6

6

S.D.D. 14 B 45-5h

S.D.D. 14 B 45-5h

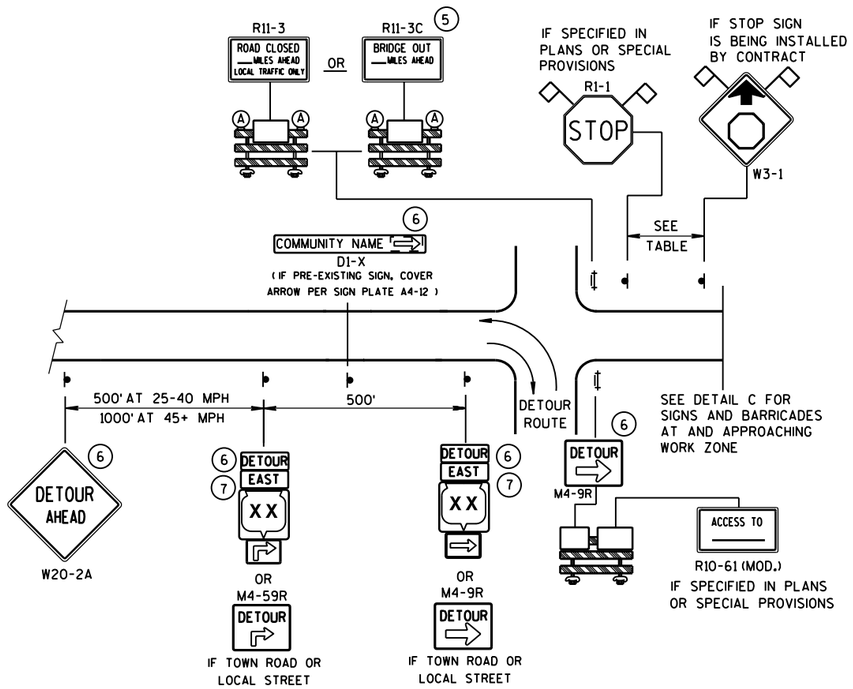

DETAIL A

MAINLINE CLOSURE WITH POSTED DETOUR

WORK ZONE GREATER THAN 1/2 MILE FROM DETOUR ROUTE (1000 FEET IF URBAN)

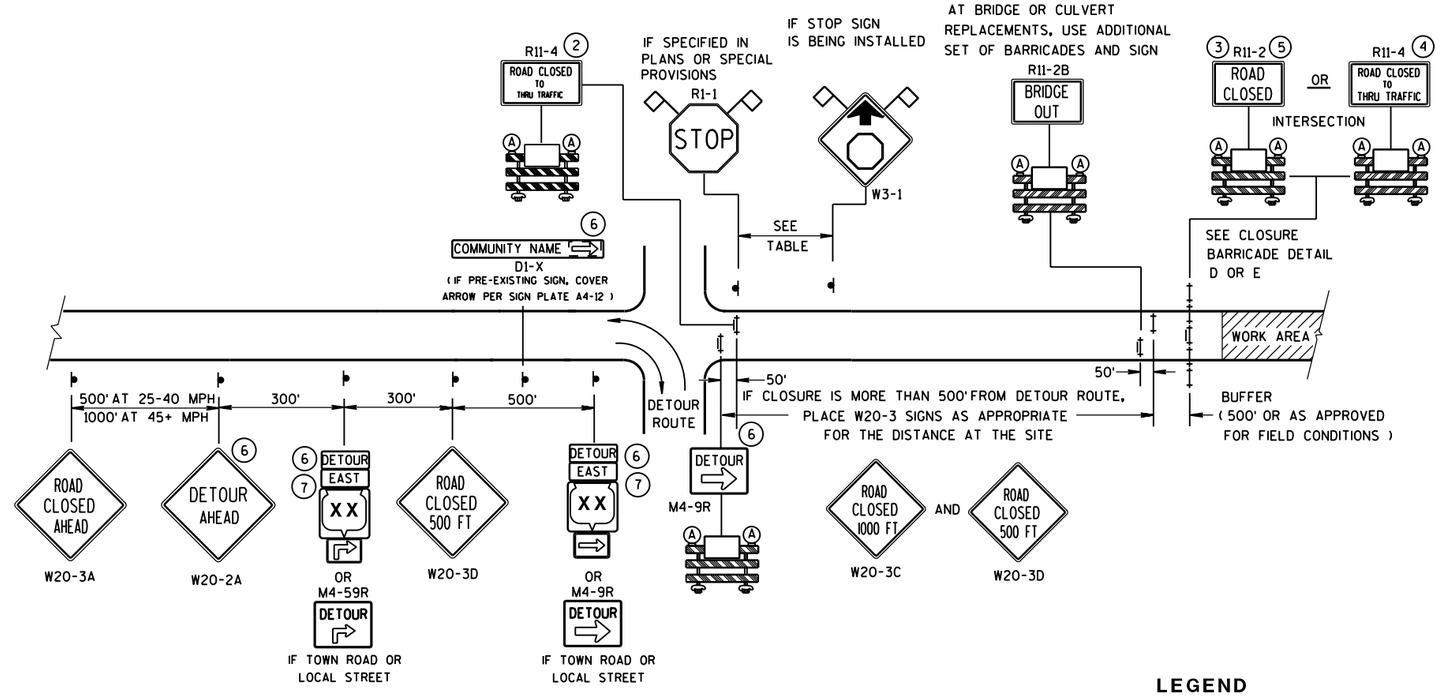

DETAIL B

MAINLINE CLOSURE WITH POSTED DETOUR

WORK ZONE LESS THAN 1/2 MILE FROM DETOUR ROUTE (1000 FEET IF URBAN)

LEGEND

- SIGN ON PERMANENT SUPPORT
- TYPE III BARRICADE
- TYPE III BARRICADE WITH ATTACHED SIGN
- (A) TYPE "A" WARNING LIGHT (FLASHING)
- WORK AREA
- DETOUR / EAST — M4-8 / M3-X
- XX — M1-4; XX COUNTY XX — M1-5A; XX — M1-6
- M05-1 OR M06-1
- FLAGS, 16" X 16" MIN., (ORANGE)

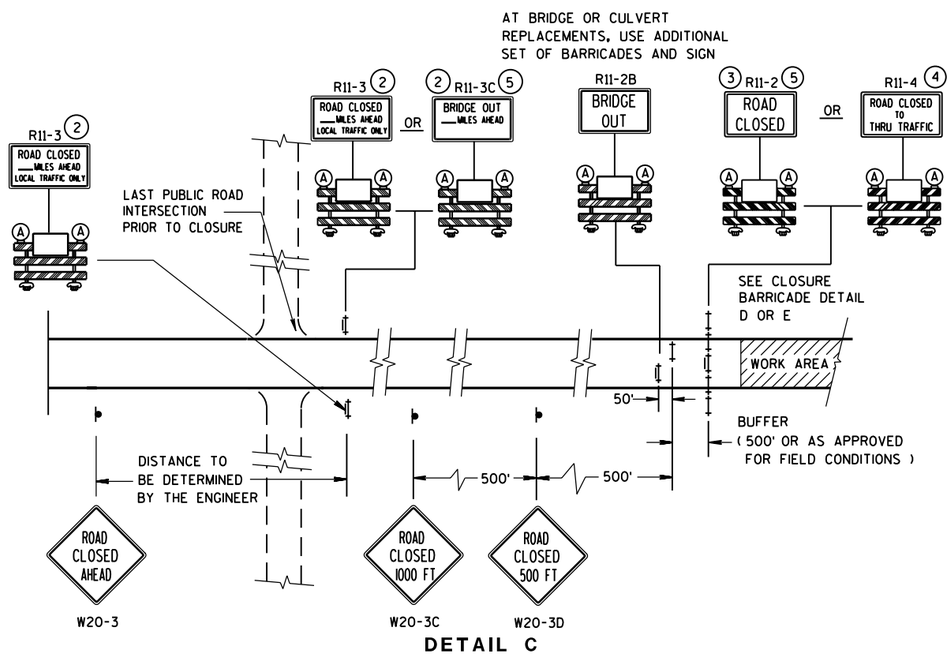

DETAIL C

MAINLINE CLOSURE, NO POSTED DETOUR

SPEED LIMIT (MPH)	"STOP AHEAD" ADVANCE WARNING DISTANCE (FT)
25	200
30	200
35	350
40	350
45	500
50	550
55	750

SEE SDD 15C2-SHEET "**b**"
FOR GENERAL NOTES
AND FOOTNOTES (1) THROUGH (7)

BARRICADES AND SIGNS FOR MAINLINE CLOSURES

STATE OF WISCONSIN
DEPARTMENT OF TRANSPORTATION

Sept. 2015 — DATE
/S/ Peter Amakobe Atepe — STATEWIDE WORK ZONE TRAFFIC SAFETY ENGINEER
FHWA

6

6

S.D.D. 15 C 2-6a

S.D.D. 15 C 2-6a

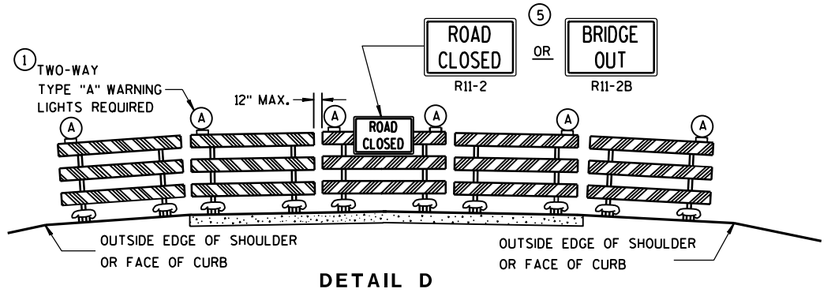

DETAIL D

ROAD CLOSURE BARRICADE DETAIL

APPROACH VIEW

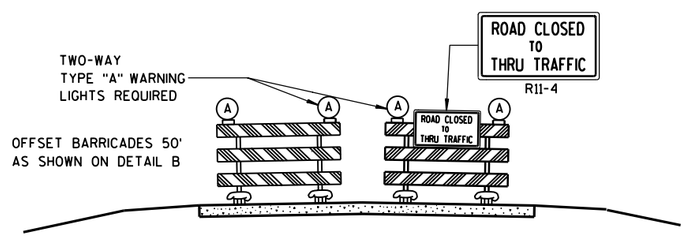

DETAIL E

LANE CLOSURE BARRICADE DETAIL

APPROACH VIEW

SEE SDD 15C2-SHEET "**a**" FOR LEGEND

GENERAL NOTES

THE EXACT NUMBER, LOCATION, AND SPACING OF ALL SIGNS AND BARRICADES SHALL BE ADJUSTED TO FIT FIELD CONDITIONS AS APPROVED BY THE ENGINEER.

ANY SIGNS TEMPORARY OR EXISTING, WHICH CONFLICT WITH TRAFFIC CONTROL "IN USE" SHALL BE REMOVED OR COVERED AS NEEDED AND AS APPROVED BY THE ENGINEER.

THE SPACING BETWEEN TRAFFIC CONTROL SIGNS SHOULD BE ADJUSTED TO NOT CONFLICT WITH AND SHOULD PROVIDE A DESIRABLE MINIMUM OF 200 FEET CLEARANCE TO EXISTING SIGNS THAT WILL REMAIN IN PLACE.

BARRICADES THAT MUST BE MOVED FOR A WORK OPERATION SHALL BE IMMEDIATELY RE-ESTABLISHED UPON COMPLETION OF THE OPERATION OR, FOR CONTINUING OPERATIONS, AT THE END OF EACH WORKING DAY.

SIGNS THAT WILL BE IN PLACE LESS THAN 7 CONTINUOUS DAYS AND NIGHTS MAY BE MOUNTED ON PORTABLE SUPPORTS.

ALL TYPE III BARRICADES SHALL HAVE RAILS REFLECTORIZED ON BOTH FACES. STRIPES SHALL BE PROPERLY SLOPED DOWN TOWARD THE TRAFFIC SIDE OR AS SHOWN IN THE ROAD CLOSURE BARRICADE DETAIL D FOR FULL ROAD CLOSURES.

TYPE "A" LOW-INTENSITY FLASHING WARNING LIGHTS SHALL BE VISIBLE ON BOTH SIDES OF THE BARRICADE.

THE R11-2, R11-3, M4-9, R11-4 AND R10-61 SIGNS PLACED ON BARRICADES SHALL COVER NO MORE THAN THE TOP RAIL. THE SIGNS SHALL NOT COVER ANY PORTION OF THE MIDDLE OR BOTTOM RAILS.

"WO AND "MO" SIGNS ARE THE SAME AS "W" AND "M" SIGNS EXCEPT THE BACKGROUND IS ORANGE.

ALL SIGNS SHALL BE 48" X 48" UNLESS OTHERWISE NOTED BELOW:

R11-2 SHALL BE 48" X 30".
R11-3, R11-4 AND R10-61 SHALL BE 60" X 30".
M4-9 SHALL BE 30" X 24".
M3-X SHALL BE 24" X 12". (36" X 18" IF NEEDED TO MATCH EXISTING SIGNS.)
M4-8 SHALL BE 24" X 12". (30" X 15" IF NEEDED TO MATCH EXISTING SIGNS.)
M1-4, M1-5A, AND M1-6 SHALL BE 24" X 24". (36" X 36" IF NEEDED TO MATCH EXISTING SIGNS.)
M05-1 AND M06-1 SHALL BE 21" X 21". (30" X 30" IF NEEDED TO MATCH EXISTING SIGNS.)
D1-X SHALL BE AS SHOWN ON SPECIFIC PROJECT SIGNING DETAIL SHEETS.
R1-1 SHALL BE 36" X 36".

1. TWO WARNING LIGHTS SHALL BE PROVIDED ON THE CENTER BARRICADE AND A MINIMUM OF ONE WARNING LIGHT SHALL BE PROVIDED ON EACH OF THE OTHER BARRICADES WITHIN THE ROADWAY LIMITS. SPACING OF THE WARNING LIGHTS SHALL BE UNIFORM TO THE EDGE OF ROADWAY AS SHOWN (APPROX. 8-FOOT LIGHT SPACING).
2. THESE SIGNS AND BARRICADES ARE NOT REQUIRED IF ROAD CLOSURE BEGINS AT INTERSECTION.
3. FOR ROAD CLOSURE WITHOUT LOCAL ACCESS TO PROJECT, SEE ROAD CLOSURE BARRICADE DETAIL D.
4. FOR ROAD CLOSURE WITH LOCAL ACCESS TO PROJECT, SEE LANE CLOSURE BARRICADE DETAIL E.
5. FOR BRIDGE OR CULVERT REPLACEMENTS, SUBSTITUTE "BRIDGE OUT" INSTEAD OF "ROAD CLOSED" ON R11-2 AND R11-3 SIGNS.
6. INSTALL DETOUR AND COMMUNITY GUIDE SIGNS AND ARROWS ONLY IF SPECIFIED IN THE CONTRACT. IF THERE ARE EXISTING ROUTE MARKER ASSEMBLIES THAT WILL REMAIN IN PLACE, ADJUST THE LOCATION OF THE DETOUR ROUTE SIGNS TO CORRESPOND WITH THE EXISTING ASSEMBLIES. MODIFY EXISTING SIGNS WHERE POSSIBLE. SEE SPECIFIC PROJECT DETOUR SIGNING DETAIL SHEETS. IF DETOUR SIGNS ARE BEING INSTALLED BY OTHERS, PLACE THE CONTRACTED TRAFFIC CONTROL SIGNS TO ALLOW FOR PLACEMENT OF ALL WARNING, DETOUR AND GUIDE SIGNS AS SHOWN.
7. "EAST" CARDINAL DIRECTION MARKERS AND RIGHT TURN ARROWS ARE SHOWN. USE OTHER CARDINAL DIRECTIONS AND ARROWS AS APPROPRIATE.

BARRICADES AND SIGNS FOR MAINLINE CLOSURES

STATE OF WISCONSIN
DEPARTMENT OF TRANSPORTATION

Sept. 2015 — DATE
/S/ Peter Amakobe Atepe — STATEWIDE WORK ZONE TRAFFIC SAFETY ENGINEER
FHWA

6

S.D.D. 15 C 2-6b

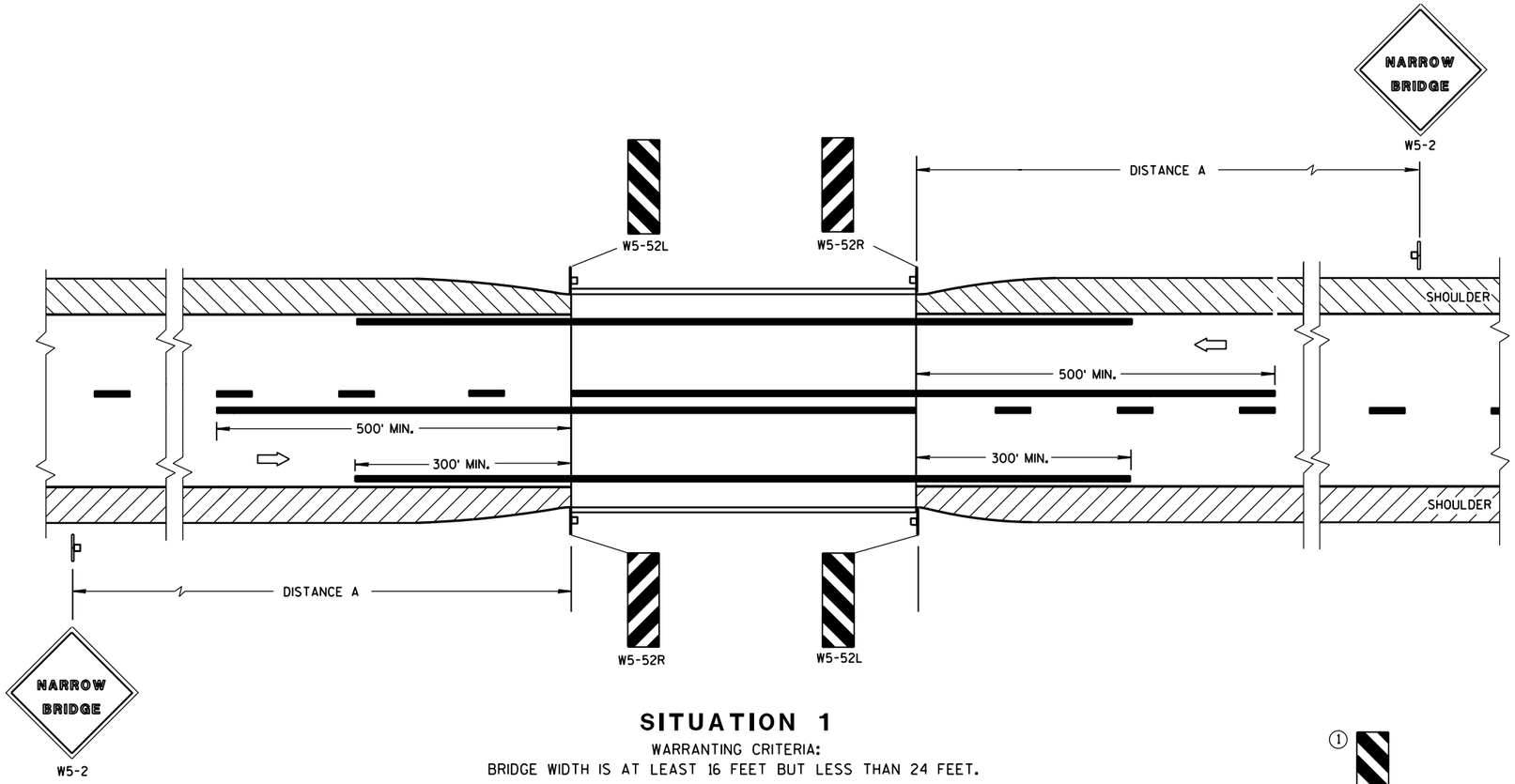

SITUATION 1

WARRANTING CRITERIA:
BRIDGE WIDTH IS AT LEAST 16 FEET BUT LESS THAN 24 FEET.

GENERAL NOTES

DETAILS OF TRAFFIC CONTROL DEVICES AND INSTALLATION NOT SHOWN ON THIS DRAWING SHALL CONFORM TO THE PERTINENT REQUIREMENTS OF THE STANDARD SPECIFICATIONS, THE SPECIAL PROVISIONS, AND THE MANUAL ON UNIFORM TRAFFIC CONTROL DEVICES.

LOCATE W5-52 SIGN POST(S) BEHIND GUARDRAIL WHEN PRESENT.

PLACE THE EDGE OF THE W5-52 SIGN IN LINE WITH FACE OF CURB OR PARAPET.

(1) OMIT ON ONE-WAY TRAVELLED WAYS.

⇨ DIRECTION OF TRAFFIC

DISTANCE TABLE

POSTED OR 85th PERCENTILE SPEED	DISTANCE "A"
25	150'
30	200'
35	250'
40	300'
45	400'
50	550'
55	750'

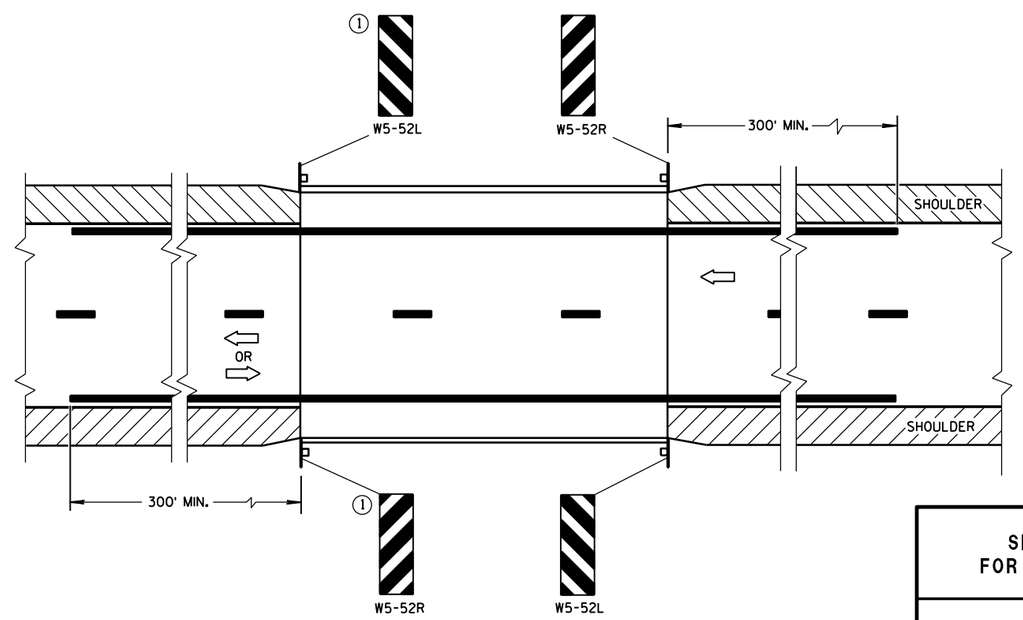

SITUATION 2

WARRANTING CRITERIA:

1. BRIDGE WIDTH IS AT LEAST 24 FEET AND
2. BRIDGE SHOULDER WIDTH IS LESS THAN 6 FEET.

SIGNING & MARKING FOR TWO LANE BRIDGES

STATE OF WISCONSIN
DEPARTMENT OF TRANSPORTATION

APPROVED
June 2017 — DATE
/S/ Matthew R. Rauch — STATE SIGNING AND MAR ... NEER
FHWA

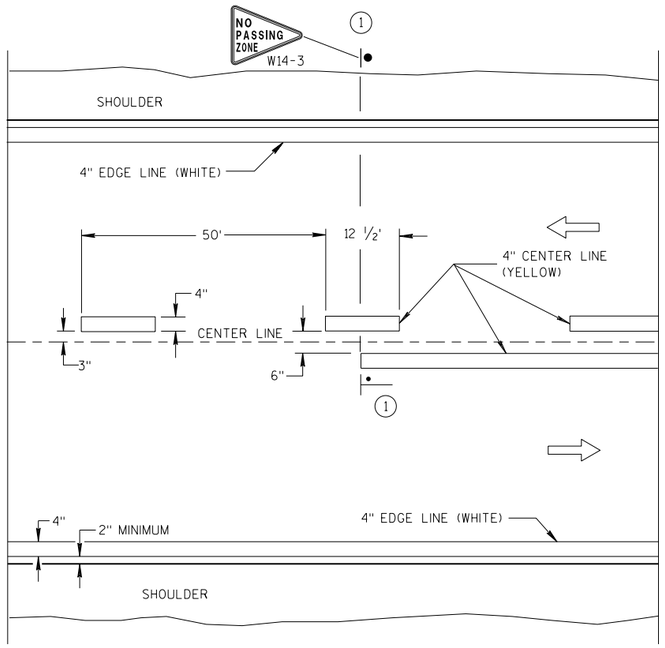

TWO WAY TRAFFIC

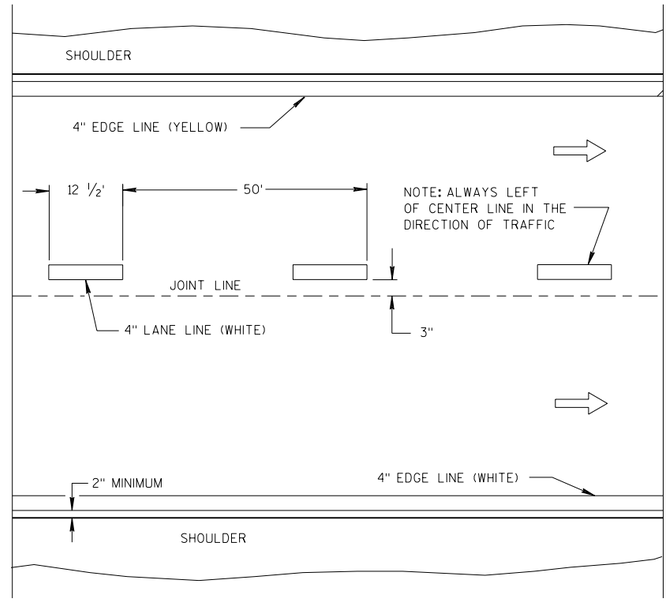

ONE WAY TRAFFIC

PERMANENT PAVEMENT MARKING

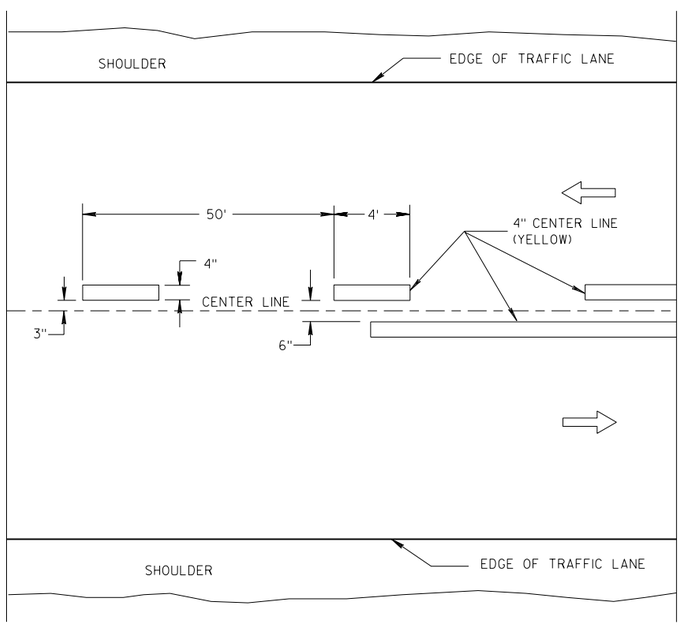

TWO WAY TRAFFIC

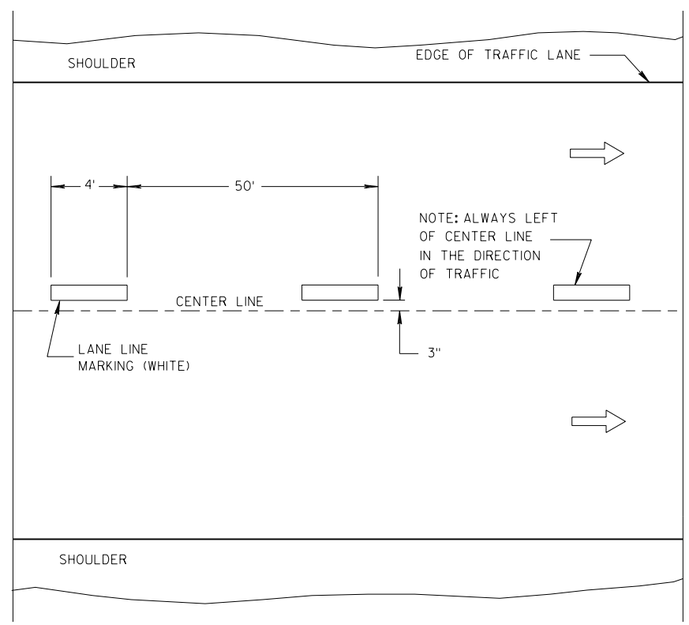

ONE WAY TRAFFIC

TEMPORARY PAVEMENT MARKING

GENERAL NOTES

DETAILS OF CONSTRUCTION NOT SHOWN ON THIS DRAWING SHALL CONFORM TO STANDARD SPECIFICATIONS AND SPECIAL PROVISIONS.

(1) LOCATE THE NO PASSING ZONE W14-3 SIGN WITHIN 50 FEET OF THE "T" MARKING.

NOTE

ARROW SYMBOL (⇨) SHOWS DIRECTION OF TRAVEL

LEGEND

"T" MARKING

POST MOUNTED SIGN

LONGITUDINAL MARKING (MAINLINE)

STATE OF WISCONSIN
DEPARTMENT OF TRANSPORTATION

APPROVED
7/2018 — DATE
/S/ Matthew R. Rauch — STATE SIGNING AND MAR INEER
FHWA

6

S.D.D. 15 C 8-19a

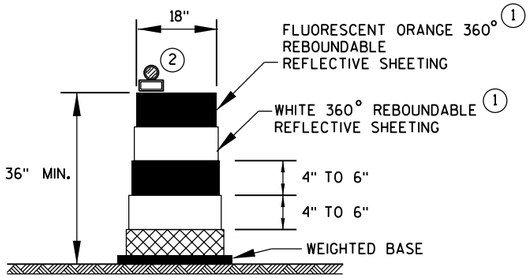

DRUM

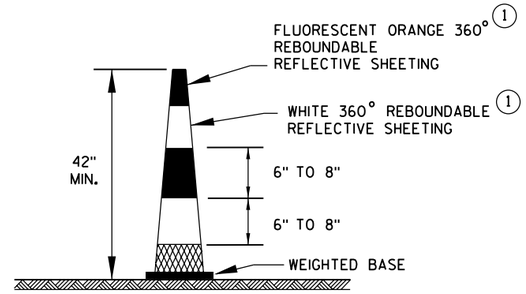

42" CONE

DO NOT USE IN TAPERS
½ SPACING OF DRUMS

GENERAL NOTES

1. REFLECTIVE SHEETING SHALL FOLLOW THE REQUIREMENTS IN THE APPROVED PRODUCTS LISTING FOR SIGN SHEETING.
2. LOCATION OF WARNING LIGHTS WHEN SHOWN ON THE PLAN.

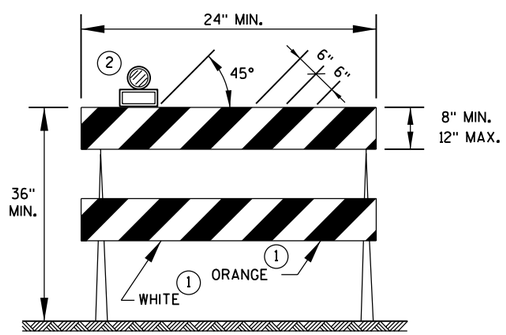

TYPE 2 BARRICADE

FOR RAILS LESS THAN 36" LONG, 4" WIDE STRIPES MAY BE USED. ALL STRIPES SHALL SLOPE DOWNWARD TO THE TRAFFIC SIDE FOR CHANNELIZATION.

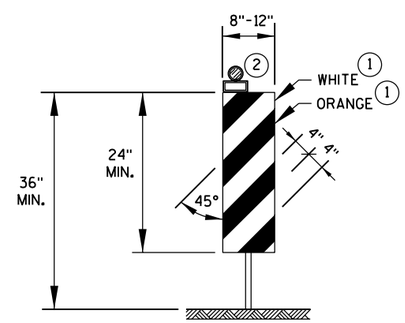

VERTICAL PANEL

THE STRIPES SHALL SLOPE DOWNWARD TO THE TRAFFIC SIDE FOR CHANNELIZATION.

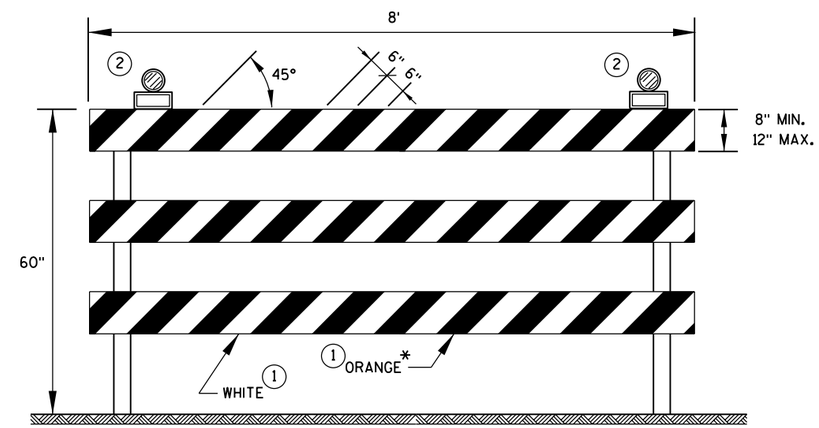

TYPE 3 BARRICADE

IF SIGN MOUNTED, DO NOT COVER MORE THAN 50% OF THE TOP TWO RAILS OR 33% OF THE TOTAL AREA OF THE THREE RAILS.

* IF USED FOR A PERMANENT APPLICATION, USE RED SHEETING.

CHANNELIZING DEVICES DRUMS, CONES, BARRICADES AND VERTICAL PANELS	
STATE OF WISCONSIN DEPARTMENT OF TRANSPORTATION	
APPROVED	
June 2017	/S/ Andrew Heldtke
DATE	WORK ZONE ENG
FHWA	

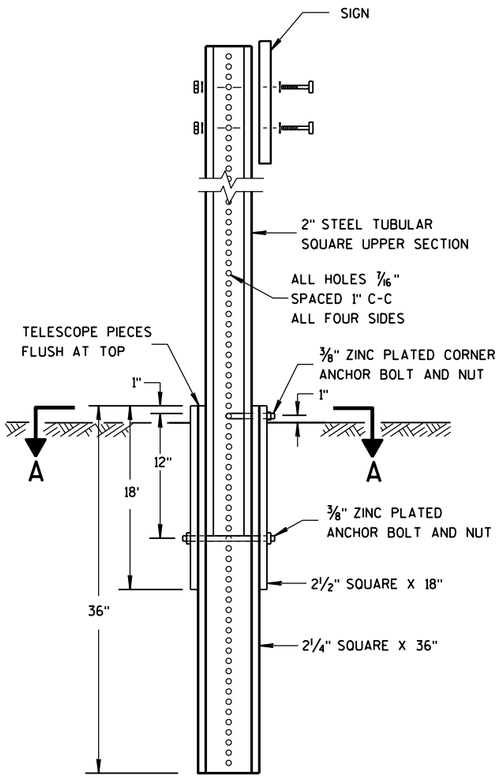

DETAIL OF TUBULAR STEEL SIGN POST

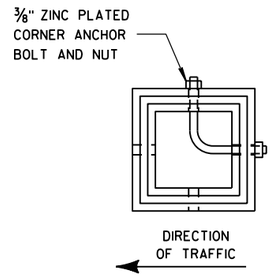

SECTION A-A

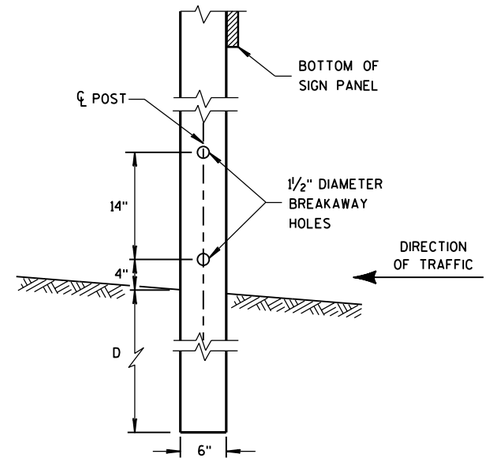

4"x6" WOOD POST MODIFICATION

GENERAL NOTES

1. 6 FEET FROM THE EDGE OF PAVEMENT (EDGE LINE LOCATION) UNLESS OTHERWISE DIRECTED BY THE PROJECT ENGINEER. LATERAL OFFSET SHOULD BE ADJUSTED TO AVOID THE DITCH FLOWLINE.
2. THE EXISTENCE OF CURB AND GUTTER DOES NOT IN ITSELF MANDATE THE VERTICAL CLEARANCE ILLUSTRATED. THAT HEIGHT IS TYPICALLY MEASURED WHERE THERE IS SIDEWALK ADJACENT TO THE ROADWAY OR PARKING IS PERMITTED. IN THE ABSENCE OF SIDEWALK, VERTICAL CLEARANCE IS MEASURED FROM THE TOP OF THE CURB. IF NO SIDEWALK AND NO PARKING, VERTICAL CLEARANCE MAY BE REDUCED TO 5 FOOT MINIMUM. OFFSET OF SIGNS IS MEASURED FROM THE CURB FLOWLINE.
3. FOR SIGNS REQUIRING 4 POSTS, SPACE INTERMEDIATE POSTS EVENLY.

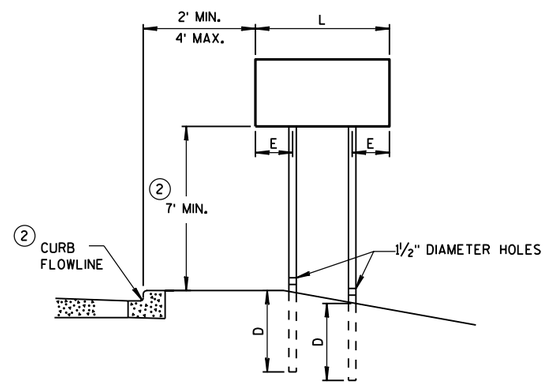

URBAN AREA

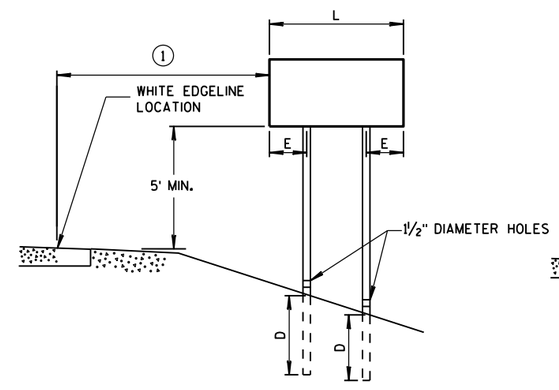

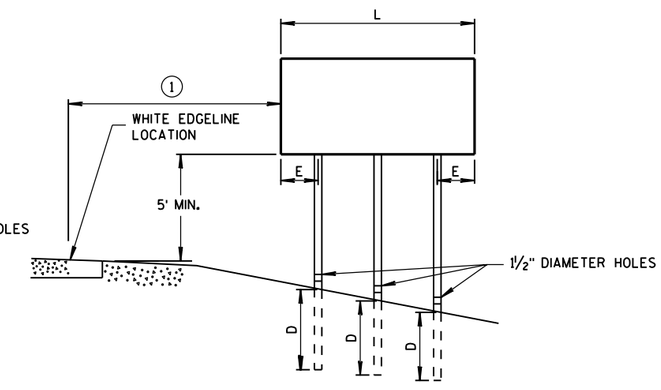

RURAL AREA

POST MOUNTING DETAIL FOR TEMPORARY TRAFFIC CONTROL FIXED MESSAGE SIGNS

TUBULAR STEEL POSTS

AREA OF SIGN INSTALLATION (SQ. FT.)	NUMBER OF REQUIRED TUBULAR STEEL POSTS
9 OR LESS	1
GREATER THAN 9 LESS THAN OR EQUAL TO 18	2
GREATER THAN 18 LESS THAN OR EQUAL TO 27	3

SIGNS WIDER THAN 3 FEET OR LARGER THAN 9 SQ. FT. SHALL BE MOUNTED ON MULTIPLE POSTS (SEE ABOVE TABLE).

SIGNS LARGER THAN 27 SQ. FT. SHALL NOT BE MOUNTED ON TUBULAR STEEL POSTS.

WOOD POST EMBEDMENT DEPTH

AREA OF SIGN INSTALLATION (SQ. FT.)	D (MIN)
20 OR LESS	4'
GREATER THAN 20	5'

4" X 6" WOOD POST

POST SPACING REQUIREMENTS		NUMBER OF WOOD POSTS REQUIRED
L	E	
48" OR LESS AND LESS THAN 20 SQ. FT.	-	1
LESS THAN 60"	12"	2
60" TO 120"	L/5	2
GREATER THAN 120" LESS THAN 168"	12"	3
168" AND GREATER	12"	4

SEE NOTE 3

TEMPORARY TRAFFIC CONTROL SIGN MOUNTING

STATE OF WISCONSIN
DEPARTMENT OF TRANSPO

6

S.D.D. 15 D 38-2a

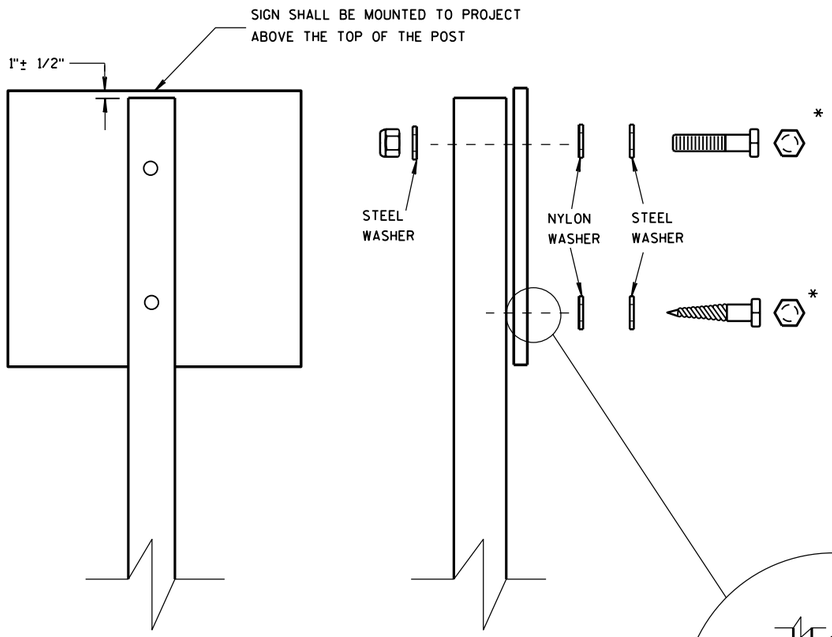

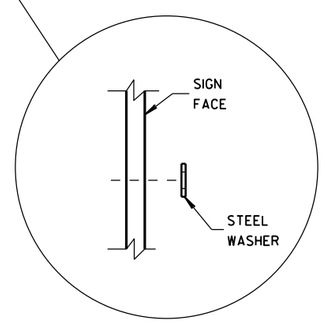

WASHER PLACEMENT WHEN SIGN HAS OTHER THAN TYPE H OR TYPE F FACE

NUTS, BOLTS AND LAGS USED FOR MOUNTING SIGNS SHALL HAVE HEXAGONAL HEADS AND SHALL BE EITHER:

A. HOT DIP GALVANIZED IN ACCORDANCE WITH ASTM DESIGNATION: A 153, CLASS D, OR SC 3

B. ELECTRO-GALVANIZED IN ACCORDANCE WITH ASTM DESIGNATION: B 633, TYPE III, SC 3

THREADS ON BOLTS AND NUTS SHALL BE MANUFACTURED WITH SUFFICIENT ALLOWANCE FOR THE CADMIUM PLATE OR GALVANIZED COATING TO PERMIT THE NUTS TO RUN FREELY ON THE BOLTS.

WOOD POSTS (4" x 4" or 4" x 6")

LAG SCREWS - 3/8" X 3"

MACHINE BOLTS - 5/16" X 6-1/2" OR 7" LENGTH W/ NUTS

SQUARE STEEL POSTS (2" x 2")

MACHINE BOLTS - 3/8" X 3-1/4" LENGTH W/ NUTS

RIVETS - 9/32" (6605-9-6) BULB-TITE, TRI-FOLD, ALUMINUM BODY/MANDREL O.D. FLANGE .720-.765 INCH, GRIP RANGE .042-.375 INCH

WASHERS (ALL POSTS) -

1-1/4" O.D. X 3/8" I.D. X 1/16" STEEL

1-1/4" O.D. X 3/8" I.D. X .080 NYLON FOR ALL TYPE H SIGNS

* TWO DIFFERENT FASTENING SYSTEMS ARE SHOWN FOR ILLUSTRATION PURPOSES. ON ANY INDIVIDUAL SIGN, EITHER ONE OR THE OTHER SYSTEM SHALL BE USED. ACTUAL NUMBER OF FASTENERS PER SIGN VARIES WITH THE SIGN AREA. FOR A SINGLE POST INSTALLATION, ALL SIGNS GREATER THAN 9 SQ. FT. REQUIRE THE USE OF 3 FASTENERS.

6

6

S.D.D. 15 D 38-2b

S.D.D. 15 D 38-2b

ATTACHMENT OF SIGNS TO POSTS

STATE OF WISCONSIN
DEPARTMENT OF TRANSPORTATION

APPROVED

June 2017 — /S/ Andrew Heldtke
DATE — WORK ZONE ENG

FHWA

URBAN AREA

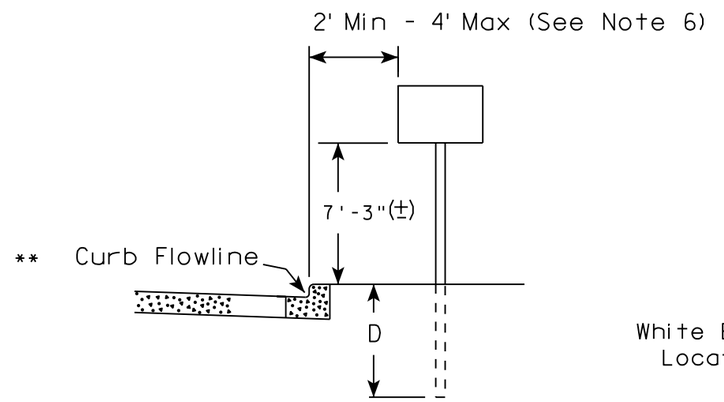

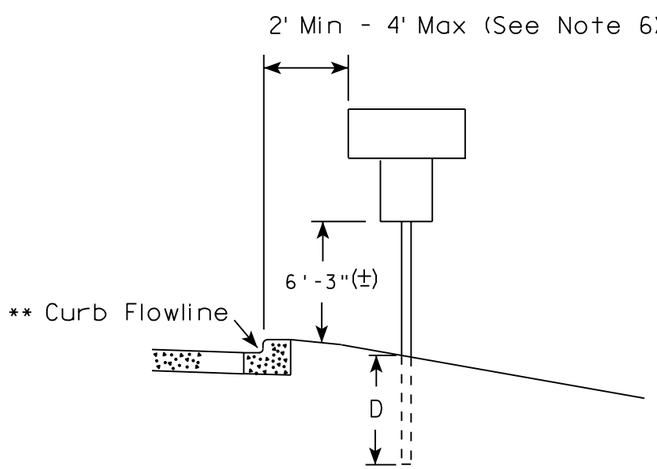

RURAL AREA (See Note 2)

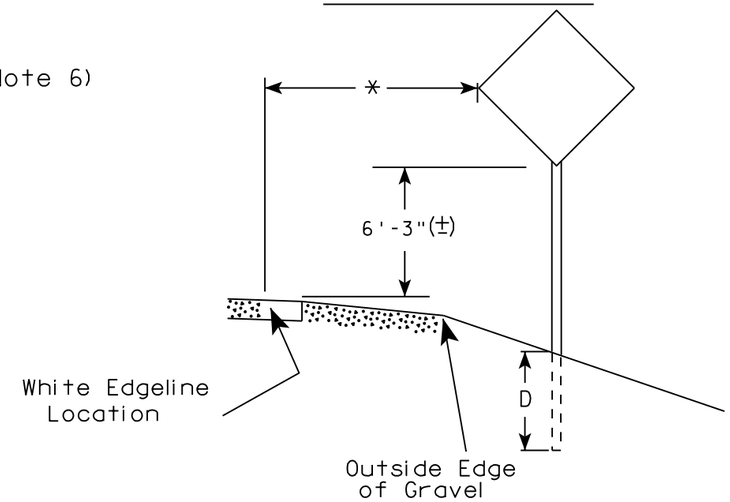

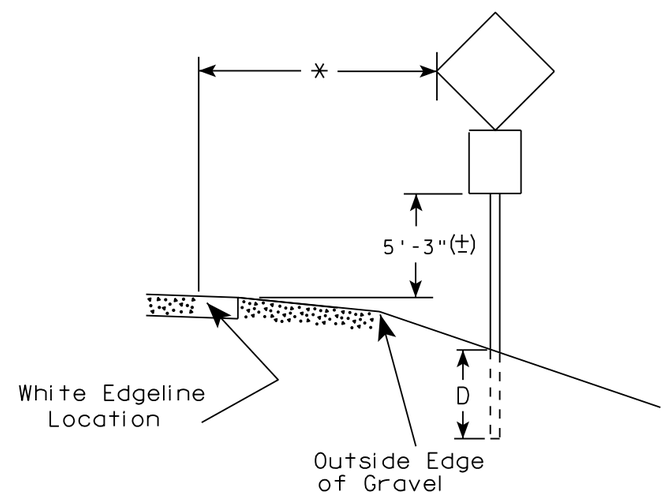

** The existence of curb and gutter does not in itself mandate the vertical clearance illustrated. That height is typically measured where there is sidewalk adjacent to the roadway or parking is permitted. In the absence of sidewalk vertical clearance is measured from the top of the curb. Offset of signs is measured from the flow line.

* 6 feet from edge of a paved shoulder or 12 feet from the edge of pavement (edge line location) or 2 feet from outside edge of gravel, whichever is greater unless directed by project engineer.

GENERAL NOTES

1. Signs wider than 4 feet or 20 sq.ft or larger, shall be mounted on multiple posts. Refer to plate A4-4.
2. If signs are mounted on barrier wall, see A4-10 sign plate.
3. For expressways and freeways, mounting height is 7'- 3" (±) or 6'-3" (±) depending upon existence of a sub-sign.
4. J-Assemblies are considered to be one sign for mounting height.
5. Minimum mounting height for signs mounted on traffic signal poles is 5'- 3" (±).
6. Offset distance shall be consistent with existing signs or consistent throughout length of project.
7. The (±) tolerance for mounting height is 3 inches.
8. Folding signs shall be mounted at a height of 5'-3" (±) or as directd by the Engineer.
9. The Double Arrow sign (W12-1) shall be mounted at a height of 2'-3" (±). The Chevron sign (W1-8), Roundabout Chevron panel (R6-4B), Enhanced Reference Markers, Clearance Markers (W5-52), Mile Markers (D10 series), In Road Object Markers (W5-54) & End of Road Markers (W5-56) shall be mounted at a height of 4'-3" (±).

POST EMBEDMENT DEPTH

Area of Sign Installation (Sq. Ft.)	D (Min)
20 or Less	4'
Greater than 20	5'

TYPICAL INSTALLATION OF PERMANENT TYPE II SIGNS ON SINGLE POSTS

WISCONSIN DEPT OF TRANSPORTATION

APPROVED Matthew R Rauch for State Traffic Engineer

DATE 8/21/17 PLATE NO. A4-3.21

7

7

PROJECT NO:	HWY:	COUNTY:		SHEET NO: 32	E

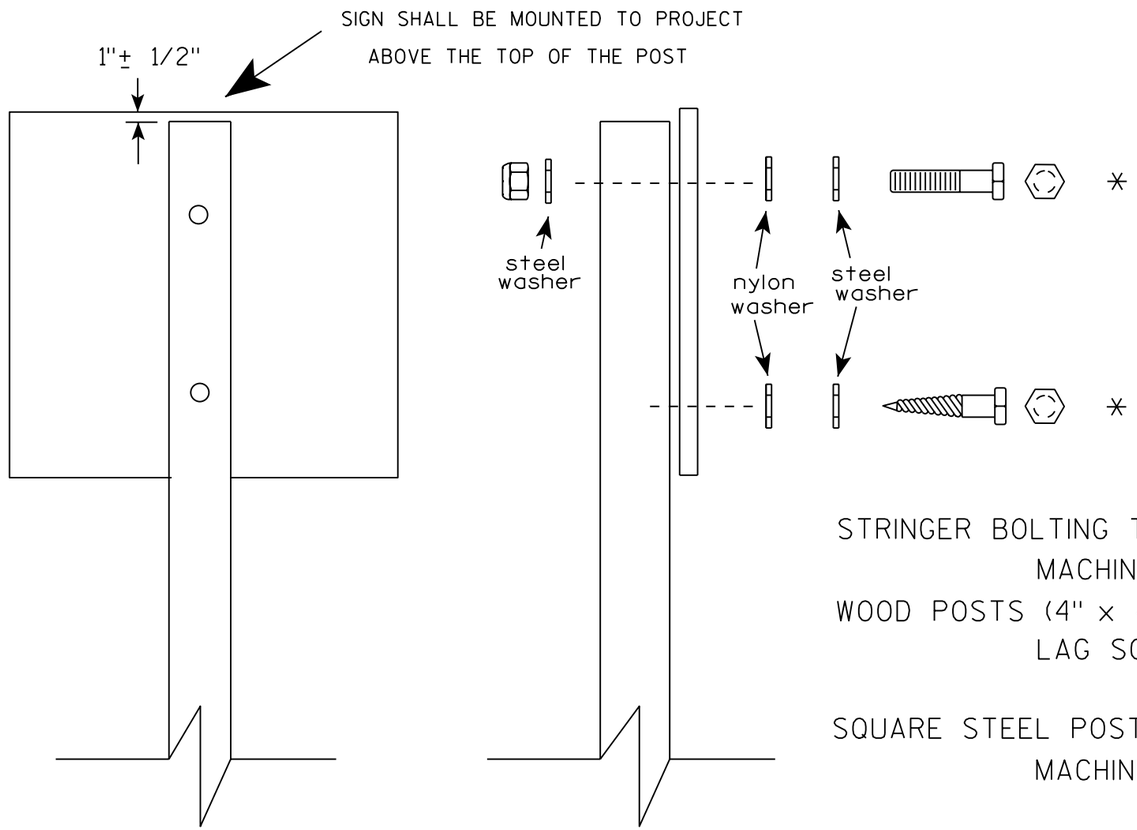

Nuts, bolts and lags used for mounting signs shall have hexagonal heads and shall be either :

a. Hot dip galvanized in accordance with ASTM Designation: A 153, Class D, or SC 3

b. Electro-galvanized in accordance with ASTM Designation : B 633, TYPE III, SC 3.

Threads on bolts and nuts shall be manufactured with sufficient allowance for the cadmium plate or galvanized coating to permit the nuts to run freely on the bolts.

STRINGER BOLTING TO ALUMINUM SIGNS (SEE SIGN PLATE A4-18)

MACHINE BOLTS - 5/16" X 1-3/4" Length w/ lock nuts

WOOD POSTS (4" x 4" or 4" x 6")

LAG SCREWS - 3/8" X 3" (NO STRINGERS ON BACK OF SIGN)

3/8" X 4" (STRINGERS ON BACK OF SIGN)

SQUARE STEEL POSTS (2" x 2")

MACHINE BOLTS - 3/8" X 3-1/4" Length w/ nuts (NO STRINGER ON BACK OF SIGN)

3/8" X 5" Length w/ nuts (STRINGERS ON BACK OF SIGN)

RIVETS - 9/32 " (6605-9-6) BULB-TITE, TRI-FOLD, ALUMINUM BODY/MANDREL

O.D. FLANGE .720-.765 INCH, GRIP RANGE .042-.375 INCH

WASHERS (ALL POSTS) -

1-1/4" O.D. X 3/8" I.D. X 1/16" STEEL

1-1/4" O.D. X 3/8" I.D. X .080 NYLON

* Two different fastening systems are shown for illustration purposes. On any individual sign, either one or the other system shall be used. Actual number of fasteners per sign varies with the sign area, but normally there are two. For a single post installation, all signs greater than 9 sq. ft. require the use of 3 fasteners.

ATTACHMENT OF SIGNS TO POSTS

WISCONSIN DEPT OF TRANSPORTATION

APPROVED Matthew R Rauch
for State Traffic Engineer

DATE 8/11/16 PLATE NO. A4-8.8

PROJECT NO: SHEET NO: E

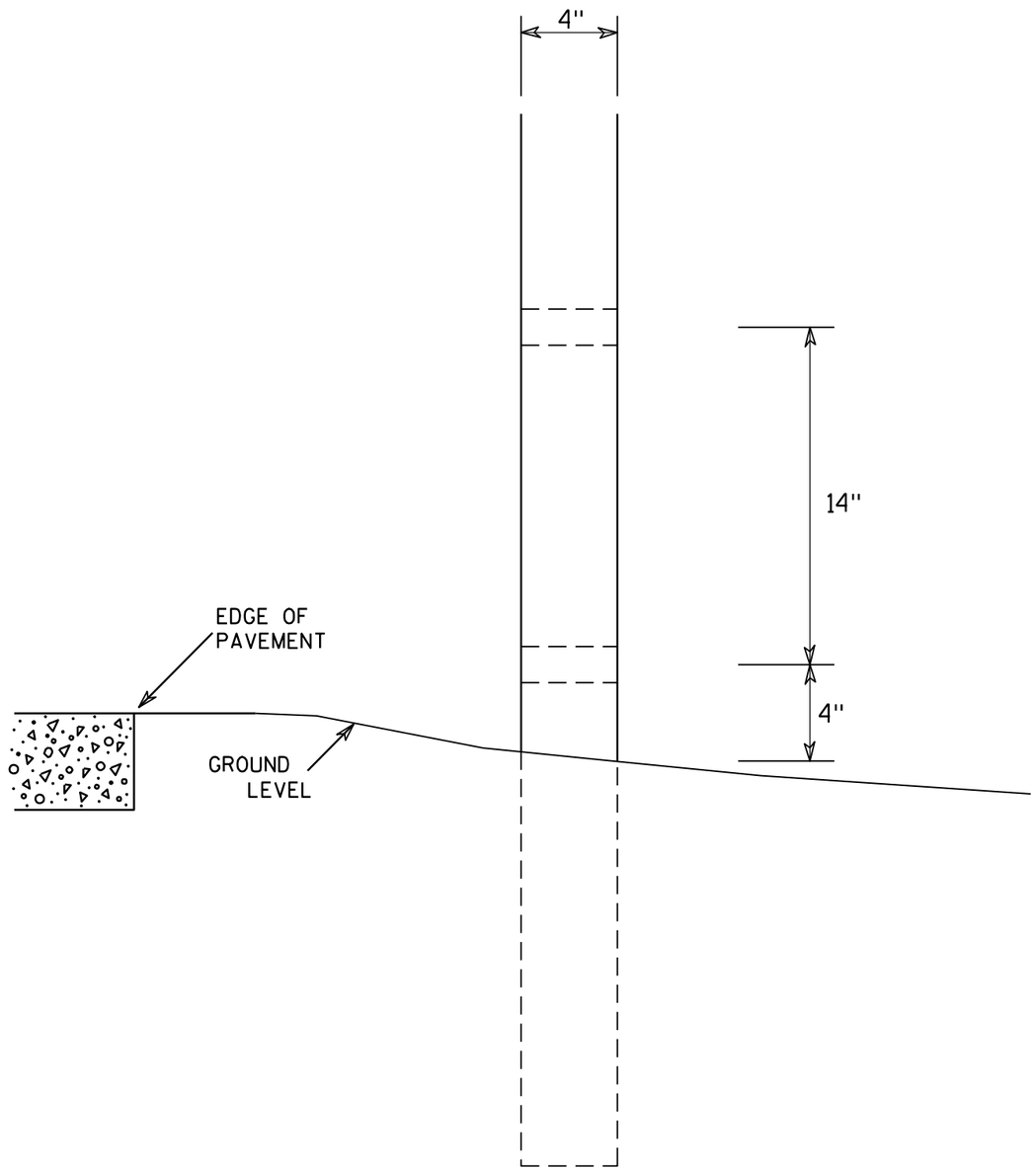

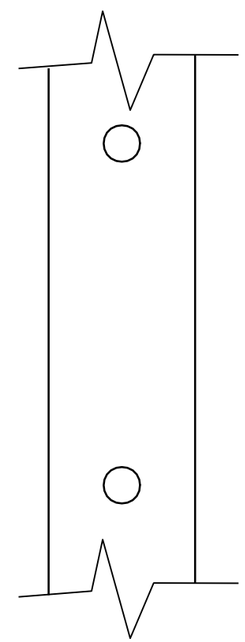

SIDE VIEW

GENERAL NOTES

1. All 4 x 6 Wood Posts shall be modified by having two 1½" diameter holes drilled perpendicular to the roadway centerline.

4 X 6 WOOD POST MODIFICATIONS

WISCONSIN DEPT OF TRANSPORTATION

APPROVED Chester J Spang for State Traffic Engineer

DATE 3/27/97 PLATE NO. A4-11.2

PROJECT NO:	HWY:	COUNTY:		SHEET NO: 34	E

NOTES

1. Sign is Type II - Type F Reflective - reference WIS DOT Standard Specification for HIGHWAY and STRUCTURE CONSTRUCTION latest edition.
2. Color:
   Background - Yellow
   Message - Black
3. Corners may be square or rounded when base material is plywood but borders shall be rounded as shown. When base material is metal, the corners and borders shall be rounded.
4. W1-2L is the same as W1-2R except the arrow is reversed along the vertical centerline.

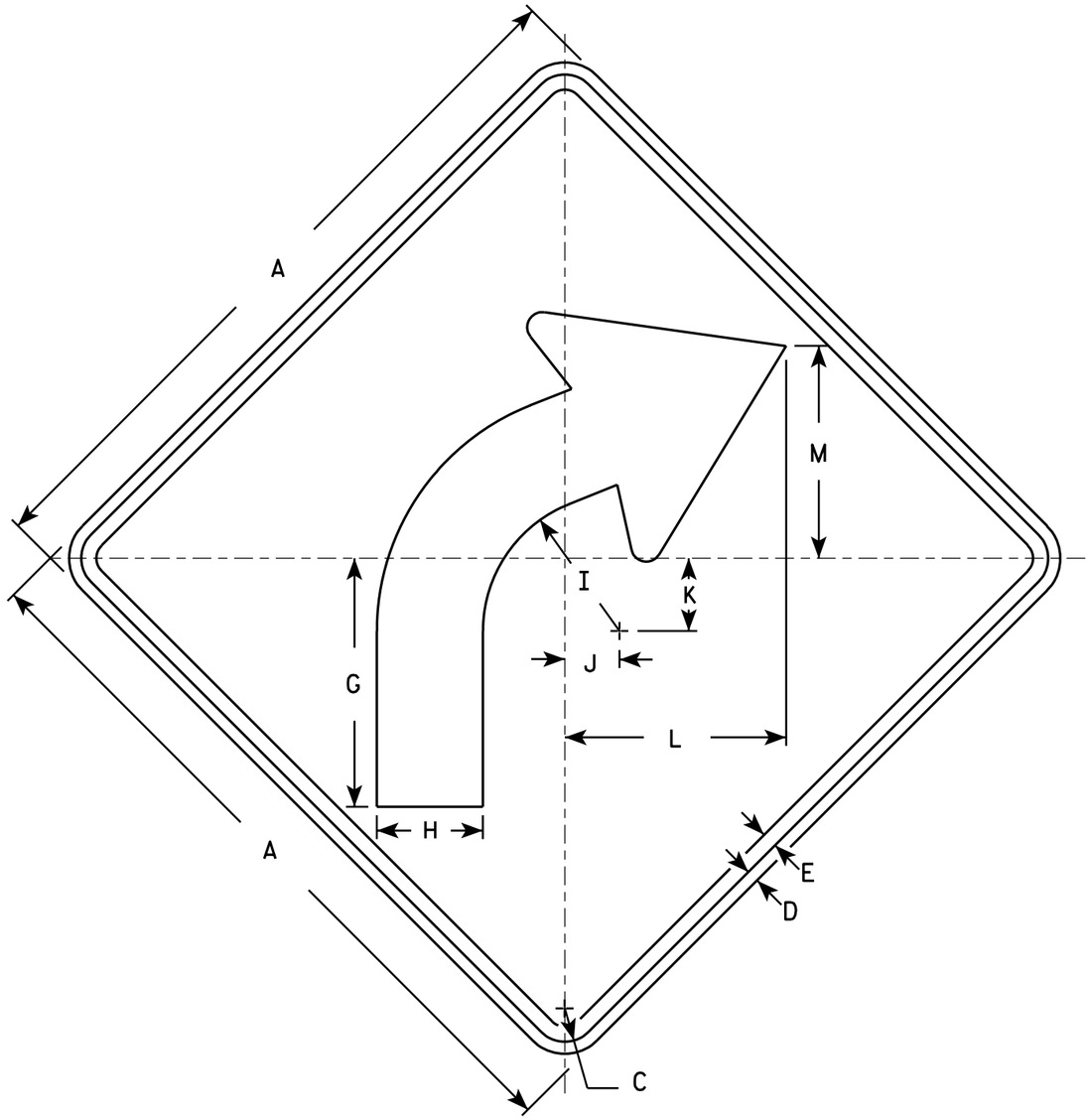

W1-2R

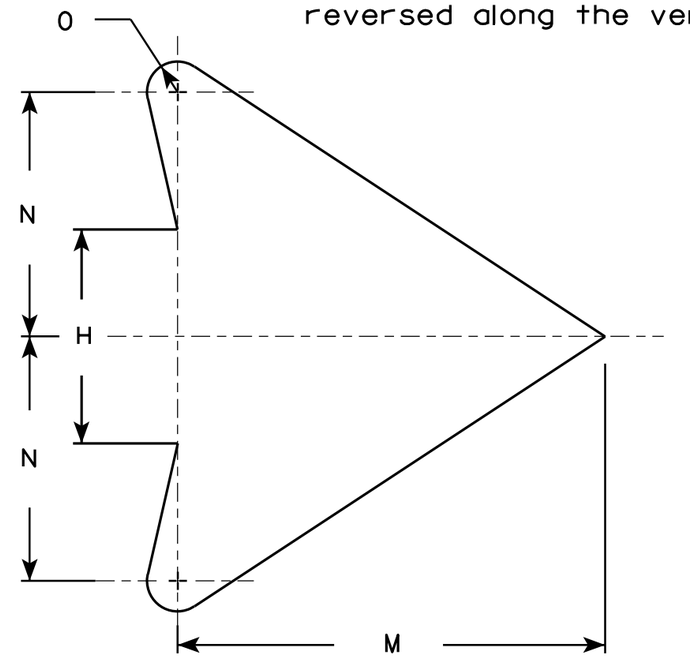

ARROW DETAIL

SIZE	A	B	C	D	E	F	G	H	I	J	K	L	M	N	O	P	Q	R	S	T	U	V	W	X	Y	Z	Area sq. ft.
1	24		1 1/8	3/8	1/2		8 1/4	3 1/2	4 1/2	1 3/4	2 3/8	7 1/4	7	4	1/2												4.0
2S	30		1 3/8	1/2	5/8		10 1/4	4 3/8	5 5/8	2 1/4	3	9 1/8	8 3/4	5	5/8												6.25
2M	36		1 5/8	5/8	3/4		12 3/8	5 1/4	6 3/4	2 5/8	3 1/2	10 7/8	10 1/2	6	3/4												9.0
3	36		1 5/8	5/8	3/4		12 3/8	5 1/4	6 3/4	2 5/8	3 1/2	10 7/8	10 1/2	6	3/4												9.0
4	36		1 5/8	5/8	3/4		12 3/8	5 1/4	6 3/4	2 5/8	3 1/2	10 7/8	10 1/2	6	3/4												9.0
5	48		2 1/4	3/4	1		16 1/2	7	9	3 1/2	4 5/8	14 1/2	14	8	1												16.0

STANDARD SIGN
W1-2

WISCONSIN DEPT OF TRANSPORTATION

APPROVED Matthew R Rauch
for State Traffic Engineer

DATE 5/15/12 PLATE NO. W1-2.10

PROJECT NO:	HWY:	COUNTY:		SHEET NO: 35	E

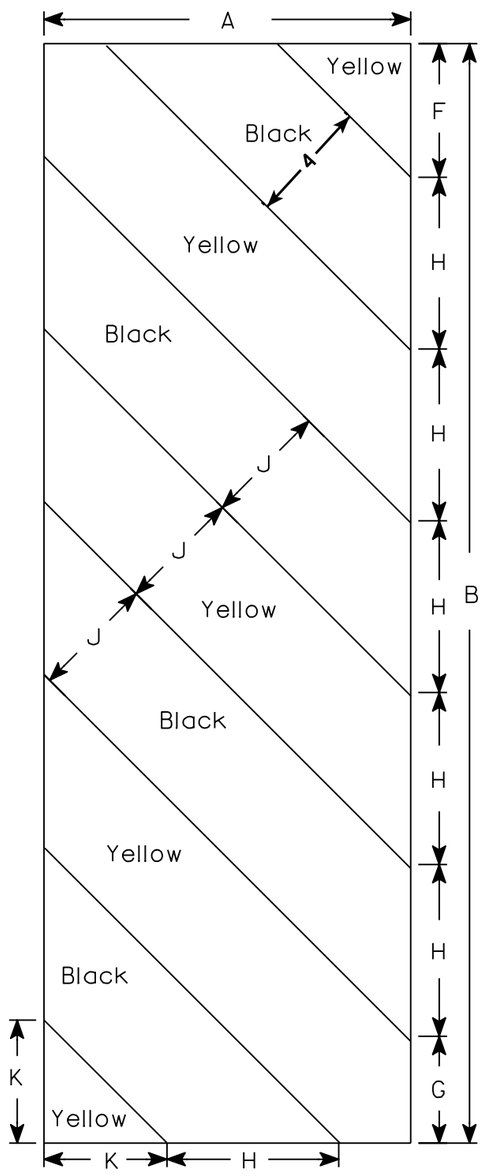

W5-52L

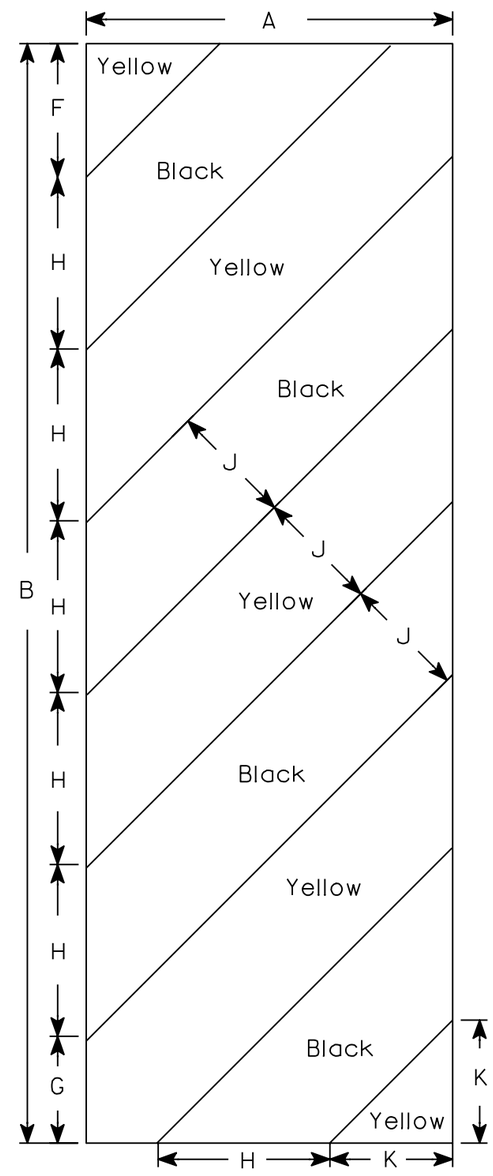

W5-52R

NOTES

1. Sign is Type II - Type F Reflective - reference WIS DOT Standard Specification for HIGHWAY and STRUCTURE CONSTRUCTION latest edition.
2. Color:
   Background - Yellow
   Message - Black
3. Corners may be square or rounded when base material is plywood but borders shall be rounded as shown. When base material is metal, the corners and borders shall be rounded.
4. Alternate colors of stripes as shown.

SIZE	A	B	C	D	E	F	G	H	I	J	K	L	M	N	O	P	Q	R	S	T	U	V	W	X	Y	Z	Area sq. ft.
1																											
2S	12	36				4 3/8	3 1/2	5 5/8	45°	4	4																3.0
2M	12	36				4 3/8	3 1/2	5 5/8	45°	4	4																3.0
3	18	54				6	5 1/2	8 1/2	45°	6	6 9/16																6.75
4																											
5																											

STANDARD SIGN
W5-52L & W5-52R

WISCONSIN DEPT OF TRANSPORTATION

APPROVED Matthew R Rauch
for State Traffic Engineer

DATE 5/29/12 PLATE NO. W5-52.9

PROJECT NO: | HWY: | COUNTY: | SHEET NO: 36 | E

STATE PROJECT NUMBER
4546-02-71

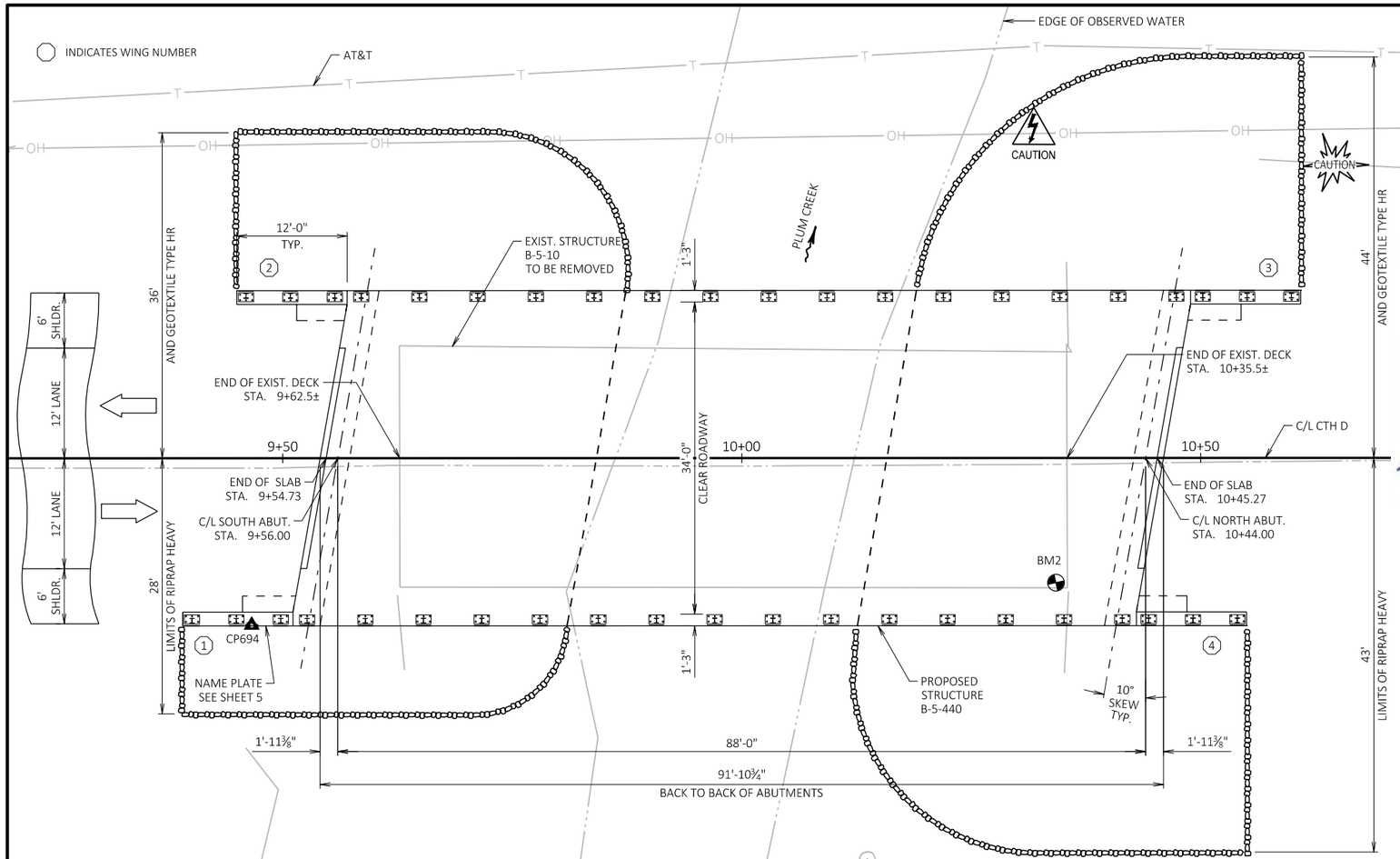

PLAN

(SINGLE SPAN 36W" PRESTRESSED CONCRETE GIRDERS)

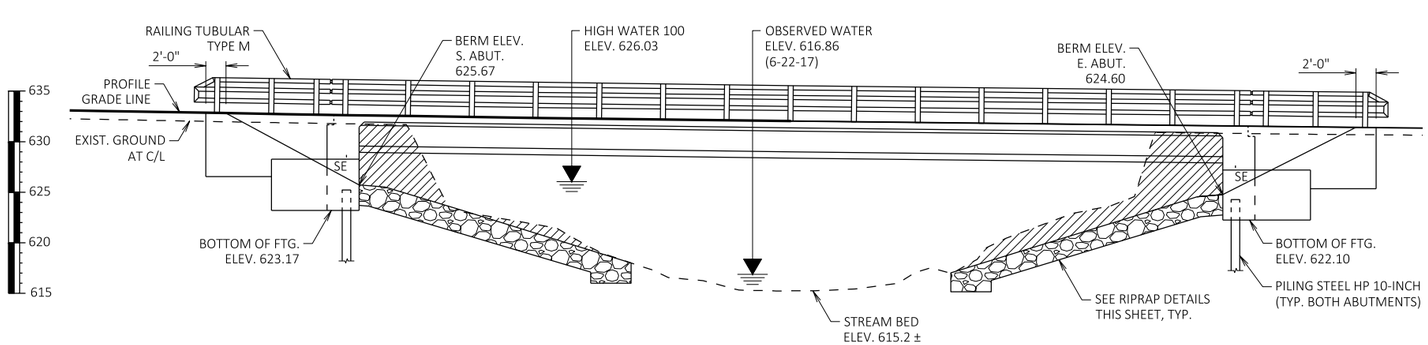

ELEVATION

(LOOKING WEST)

AREA TO EXCAVATE INCLUDED IN "EXCAVATION FOR STRUCTURES BRIDGES B-5-440"

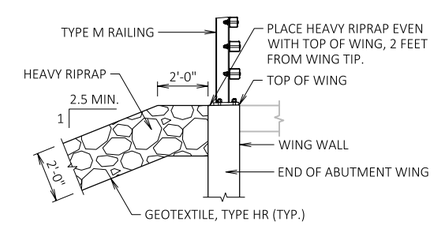

TYPICAL FILL SECTION AT WING TIPS

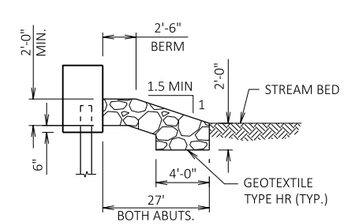

RIPRAP DETAIL

BENCH MARKS

NO.	STATION	DESCRIPTION	ELEV.
CP694	9+46.5	60D NAIL, 18.3' RT.	631.10
BM2	10+34.3	DISC, 13.9' RT.	631.45
CP	12+32.6	TELE. PED., 37.9' LT.	624.96

DESIGN DATA

DESIGN LOADING	HL-93
INVENTORY RATING FACTOR	1.17
OPERATIONAL RATING FACTOR	1.86
WISCONSIN STANDARD PERMIT VEHICLE (WIS-SPV)	240 KIPS

STRUCTURE IS DESIGNED FOR A FUTURE WEARING SURFACE OF 20 PSF.

MATERIAL PROPERTIES

CONCRETE MASONRY, SLAB	f'c = 4,000 PSI
ALL OTHER	f'c = 3,500 PSI
HIGH STRENGTH BAR STEEL REINFORCEMENT	fy = 60,000 PSI
36W" PRESTRESSED GIRDERS, CONCRETE MASONRY	f'c = 6,000 PSI
STRANDS-0.6" DIA ULTIMATE TENSILE STRENGTH	fu = 270,000 PSI

TRAFFIC DATA

ADT (2019) = 2,300
ADT (2039) = 3,300
DESIGN SPEED = 50 MPH

FOUNDATION DATA

ABUTMENTS TO BE SUPPORTED ON HP 10-INCH X 42 LB STEEL PILING DRIVEN TO A REQUIRED DRIVING RESISTANCE OF 165* TONS PER PILE AS DETERMINED BY THE MODIFIED GATES DYNAMIC FORMULA. ESTIMATED 90' LONG AT BOTH ABUTMENTS.

* THE FACTORED AXIAL RESISTANCE OF PILES IN COMPRESSION USED FOR DESIGN IS THE REQUIRED DRIVING RESISTANCE MULTIPLIED BY A RESISTANCE FACTOR OF 0.5 USING MODIFIED GATES TO DETERMINE DRIVEN PILE CAPACITY.

HYDRAULIC DATA

100 YEAR FREQUENCY
Q_{100} = 3,340 C.F.S.
VEL. = 7.0 F.P.S.
HW_{100} = EL. 626.03
WATERWAY AREA = 475 SQ. FT.
DRAINAGE AREA = 21.2 SQ. MI.
SCOUR CRITICAL CODE = 5

2 YEAR FREQUENCY
Q_2 = 1,220 C.F.S.
VEL. = 5.0 F.P.S.
HW_2 = EL. 622.57

Nov 21, 2018

WISCONSIN ERIC T. PRICE E-39027 MADISON WI PROFESSIONAL ENGINEER

LIST OF DRAWINGS

NO.	DATE	REVISION	BY

BRIDGE OFFICE CONTACT
BILL DREHER, P.E.
TELEPHONE: (608) 266-8489

CONSULTANT CONTACT
ERIC PRICE, P.E.
TELEPHONE: (608) 826-6146

CORRE

STATE OF WISCONSIN
DEPARTMENT OF TRANSPORTATION

ACCEPTED William C. Dreher SDR 11/23/18
CHIEF STRUCTURES DESIGN ENGINEER DATE

STRUCTURE B-5-440

CTH D OVER PLUM CREEK

COUNTY	TOWN/~~CITY/VILLAGE~~
BROWN	WRIGHTSTOWN

DESIGN SPEC. AASHTO LRFD BRIDGE DESIGN SPECIFICATIONS

DESIGNED BY	DESIGN CK'D.	DRAWN BY	PLANS CK'D.
ERA	ETP	PKF	ETP

GENERAL PLAN

SHEET 1 OF 13

37

8

STATE PROJECT NUMBER
4546-02-71

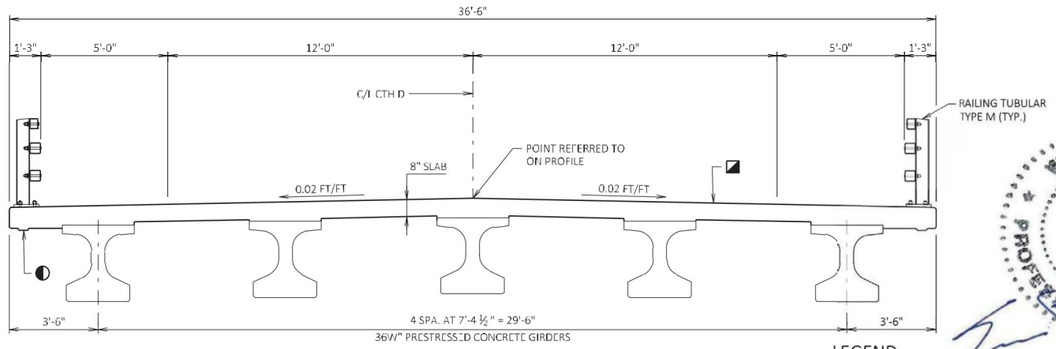

CROSS SECTION THRU BRIDGE

(LOOKING NORTH)

LEGEND

◐ SPECIAL DRIP EDGE REQ'D. EXTEND 6" FROM F.F. OF ABUTMENT BODY.

◪ COAT WITH "PROTECTIVE SURFACE TREATMENT" AS PER THE STANDARD SPECIFICATIONS.

WISCONSIN ERIC T. PRICE E-39027 MADISON WI PROFESSIONAL ENGINEER

January 23, 2019

William C. Drehn SDR

01/24/19

GENERAL NOTES

DRAWINGS SHALL NOT BE SCALED.

BAR STEEL REINFORCEMENT SHALL BE EMBEDDED 2" CLEAR UNLESS SHOWN OR NOTED OTHERWISE.

THE FIRST DIGIT OF A THREE DIGIT BAR NO. AND THE FIRST TWO DIGITS OF A FOUR DIGIT BAR NO. SIGNIFIES THE BAR SIZE.

JOINT FILLER SHALL CONFORM TO THE REQUIREMENTS OF AASHTO DESIGNATION M153 TYPE I, II OR III OR AASHTO DESIGNATION M213.

THE SLOPE OF THE FILL IN FRONT OF THE ABUTMENTS SHALL BE COVERED WITH RIPRAP HEAVY AND GEOTEXTILE TYPE HR TO THE EXTENT SHOWN ON THE GENERAL PLAN SHEET AND IN THE ABUTMENT DETAILS, OR AS DIRECTED BY THE ENGINEER.

THE UPPER LIMITS OF "EXCAVATION FOR STRUCTURES BRIDGES B-5-440" SHALL BE THE EXISTING GROUNDLINE.

EXCAVATION BELOW THE ABUTMENT AND ABUTMENT BEDDING MATERIALS REQUIRES ENGINEER APPROVAL. GEOTEXTILE SHALL BE SET AT THE BOTTOM OF EXCAVATION AND EXTEND 2'-0" ABOVE BOTTOM OF ABUTMENT.

THE HAUNCH CONCRETE QUANTITY IS BASED ON THE AVERAGE HAUNCH SHOWN ON THE PRESTRESSED GIRDER DETAILS SHEET.

PROTECTIVE SURFACE TREATMENT IS TO BE APPLIED TO THE TOP OF DECK AND WINGS, EXTERIOR EXPOSED FACE OF WINGS, AND THE END 1'-0" OF THE ABUTMENT FRONT FACES.

THE EXISTING STRUCTURE B-5-10, TO BE REMOVED, IS A SINGLE SPAN STEEL DECK GIRDER BRIDGE, 73.0 FT. LONG WITH A 24.0 FT. CLEAR ROADWAY WIDTH.

THE ELASTOMERIC BEARING PADS NON-LAMINATED NEED NOT BE INDIVIDUALLY MOLDED PROVIDED THE CUT EDGES ARE SMOOTH AND TRUE.

AT THE BACKFACE OF ABUTMENT ALL VOLUME WHICH CANNOT BE PLACED BEFORE ABUTMENT CONSTRUCTION AND IS NOT OCCUPIED BY THE NEW STRUCTURE SHALL BE BACKFILLED WITH BACKFILL STRUCTURE.

THE BACKFILL QUANTITIES ARE BASED ON THE PAY LIMITS SHOWN ON THE PLANS AND MAY NOT REFLECT ACTUAL PLACE QUANTITIES. "BACKFILL STRUCTURE TYPE A" REQUIRED DIRECTLY BEHIND ABUTMENTS AND ABUTMENT WINGS FOR 3 FEET. BACKFILL PLACED BEYOND PAY LIMITS OR EXCEEDING PLAN QUANTITIES SHALL BE INCIDENTAL TO EXCAVATION FOR STRUCTURES.

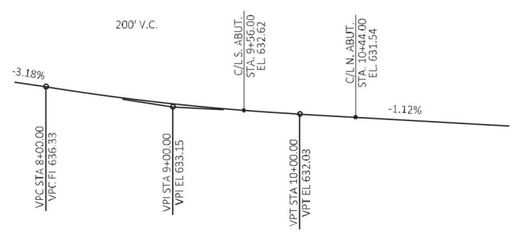

PROFILE GRADE LINE

(CTH D)

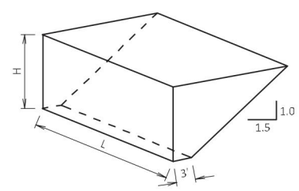

ABUTMENT BACKFILL QUANTITY DIAGRAM

L = OUT TO OUT OF ABUTMENT, INCLUDING WINGS (FT)
H = AVERAGE ABUTMENT FILL HEIGHT (FT)
EF = EXPANSION FACTOR (1.20 FOR CY BID ITEMS AND 1.00 FOR TON BID ITEMS)
V_{CF} = (L)(3.0')(H) + (L)(0.5)(1.5H)(H)
V_{CY} = V_{CF}(EF)/27
V_{TON} = V_{CY}(2.0)

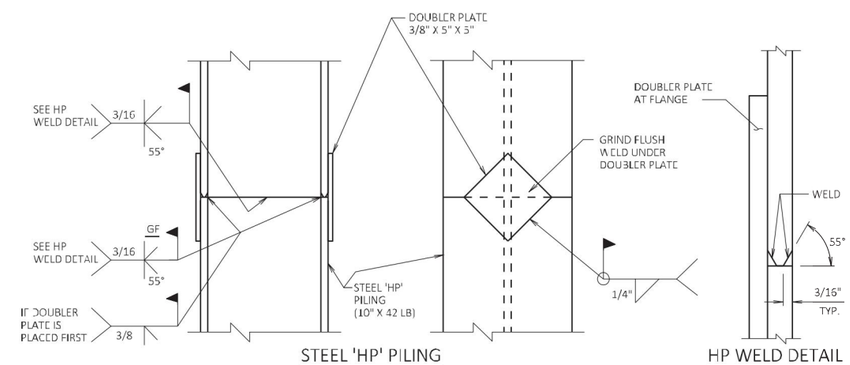

STEEL 'HP' PILING

STEEL 'HP' PILE MATERIAL SHALL BE A.S.T.M. DESIGNATION A36.

HP WELD DETAIL

FLANGE SHOWN, WEB SIMILAR

PILE SPLICE DETAILS

TOTAL ESTIMATED QUANTITIES

BID NUMBER	BID ITEM	UNIT	SOUTH ABUT.	NORTH ABUT.	SUPER	TOTALS
203.0600.S	REMOVING OLD STRUCTURE OVER WATERWAY WITH MINIMAL DEBRIS STA. 10+00	LS	-----	-----	-----	1
206.1000	EXCAVATION FOR STRUCTURES BRIDGES B-5-440	LS	-----	-----	-----	1
210.1500	BACKFILL STRUCTURE TYPE A	TON	170	170	-----	340
502.0100	CONCRETE MASONRY BRIDGES	CY	36	36	127	340
502.3200	PROTECTIVE SURFACE TREATMENT	SY	12	12	373	397
503.0137	PRESTRESSED GIRDER TYPE I 36W-INCH	LF	-----	-----	445	445
505.0400	BAR STEEL REINFORCEMENT HS STRUCTURES	LB	2,440	2,440	-----	4,880
505.0600	BAR STEEL REINFORCEMENT HS COATED STRUCTURES	LB	1,430	1,420	21,950	24,800
506.2605	BEARING PADS ELASTOMERIC NON-LAMINATED	EACH	5	5	-----	10
506.4000	STEEL DIAPHRAGMS B-5-440	EACH	-----	-----	8	8
513.4061	RAILING TUBULAR TYPE M	LF	26	26	184	236
516.0500	RUBBERIZED MEMBRANE WATERPROOFING	SY	9	9	-----	18
550.0500	PILE POINTS	EACH	9	9	-----	18
550.1100	PILING STEEL HP 10-INCH X 42 LB	LF	810	810	-----	1,620
606.0300	RIPRAP HEAVY	CY	190	265	-----	455
612.0406	PIPE UNDERDRAIN WRAPPED 6-INCH	LF	90	90	-----	180
645.0111	GEOTEXTILE TYPE DF SCHEDULE A	SY	36	36	-----	72
645.0120	GEOTEXTILE TYPE HR	SY	260	360	-----	620
	NON-BID ITEMS					
	FILLER	SIZE	-----	-----	-----	½" & ¼"

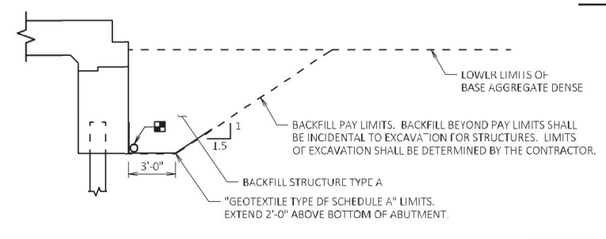

STRUCTURE BACKFILL LIMITS

◪ PIPE UNDERDRAIN WRAPPED (6-INCH). SLOPE 0.5% MIN. TO SUITABLE DRAINAGE. ATTACH RODENT SHIELD AT ENDS OF PIPE UNDERDRAIN.

ORIGINAL PLAN PREPARED BY CORRE

NO.	DATE	REVISION	BY
1	1/23/19	QUANTITY REVISION	ETP

STATE OF WISCONSIN
DEPARTMENT OF TRANSPORTATION

STRUCTURE B-5-440

DRAWN BY PKF | PLANS CKD. ETP

CROSS SECTION & QUANTITIES

SHEET 2 OF 13

38

8

8

BORING #	DATE COMPLETED	NORTHING (Y)	EASTING (X)
1	JULY 11, 2017	490976.2	58760.96
2	JULY 10, 2017	491060.5	58768.35

BORINGS COMPLETED BY: RIVER VALLEY TESTING CORP.
REPORT COMPLETED BY: RIVER VALLEY TESTING CORP.
ALL COORDINATES REFERENCED TO WCCS NAD 83(91) BROWN COUNTY

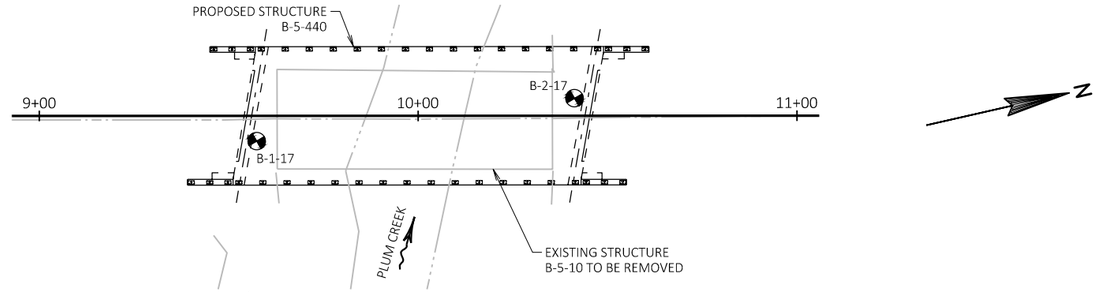

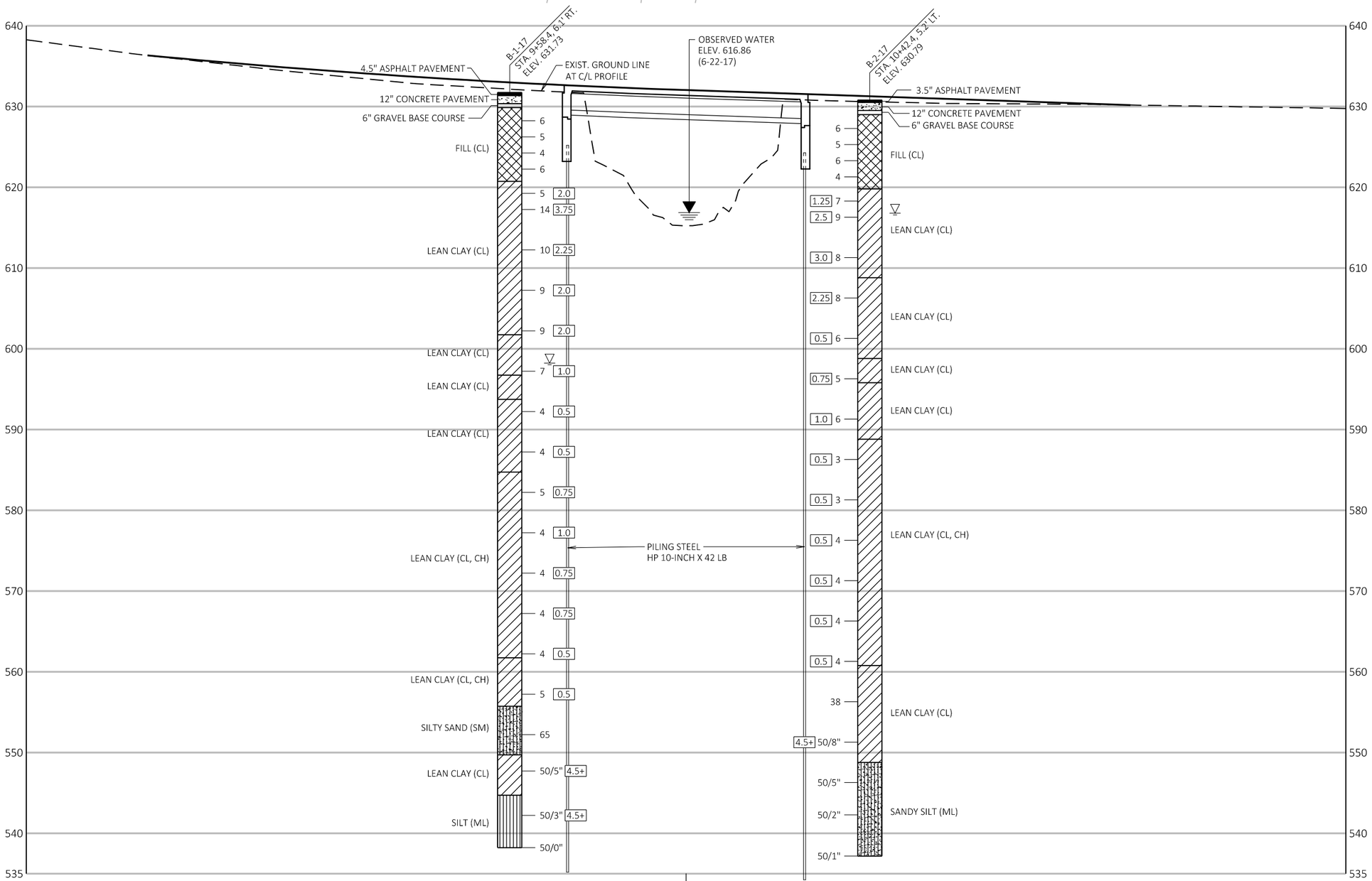

STATE PROJECT NUMBER

4546-02-71

MATERIAL SYMBOLS

ASPHALT	TOPSOIL	PEAT
CONCRETE	FILL	GRAVEL
SAND	CLAY	SILT
BOULDERS OR COBBLES	LIMESTONE	BEDROCK (UNKNOWN)
SHALE	SANDSTONE	IGNEOUS/ META

LEGEND OF BORING

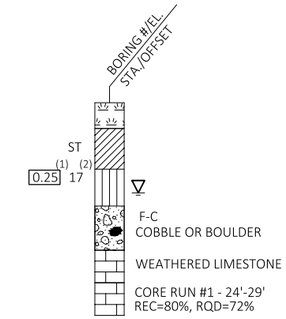

(1) UNCONFINED STRENGTH, AS DETERMINED BY A POCKET PENETROMETER (TSF)

(2) UNLESS OTHERWISE, SPECIFIED THE SPT 'N' VALUE IS BASED ON AASHTO T-206, STANDARD PENETRATION TEST. THE SPT 'N' VALUE PRESENTED HAS NOT BEEN CORRECTED FOR OVERBURDEN PRESSURE OR HAMMER EFFICIENCY.

GROUND WATER ELEVATION

- AT TIME OF DRILLING
- END OF DRILLING
- AFTER DRILLING

ABBREVIATIONS

F-FINE M-MEDIUM C-COARSE ST-SHELBY TUBE

SUBSURFACE EXPLORATION FOR FOUNDATION DESIGN AND BIDDERS INFORMATION

BORINGS WERE COMPLETED AT POINTS APPROXIMATELY AS INDICATED ON THIS DRAWING TO OBTAIN INFORMATION CONCERNING THE CHARACTER OF SUBSURFACE MATERIALS FOUND AT THE SITE. BECAUSE THE INVESTIGATED DEPTHS ARE LIMITED AND THE AREA OF THE BORINGS IS VERY SMALL IN RELATION TO THE ENTIRE SITE,THE WISCONSIN DEPARTMENT OF TRANSPORTATION DOES NOT WARRANT SIMILAR SUBSURFACE CONDITIONS BELOW, BETWEEN, OR BEYOND THESE BORINGS. VARIATIONS IN SOIL CONDITIONS SHOULD BE EXPECTED AND FLUCTUATIONS IN GROUNDWATER LEVELS MAY OCCUR.

NO.	DATE	REVISION	BY

STATE OF WISCONSIN
DEPARTMENT OF TRANSPORTATION

STRUCTURE B-5-440

DRAWN BY PKF PLANS CK'D. ETP

SUBSURFACE EXPLORATION

SHEET 3 OF 13

39

8

8

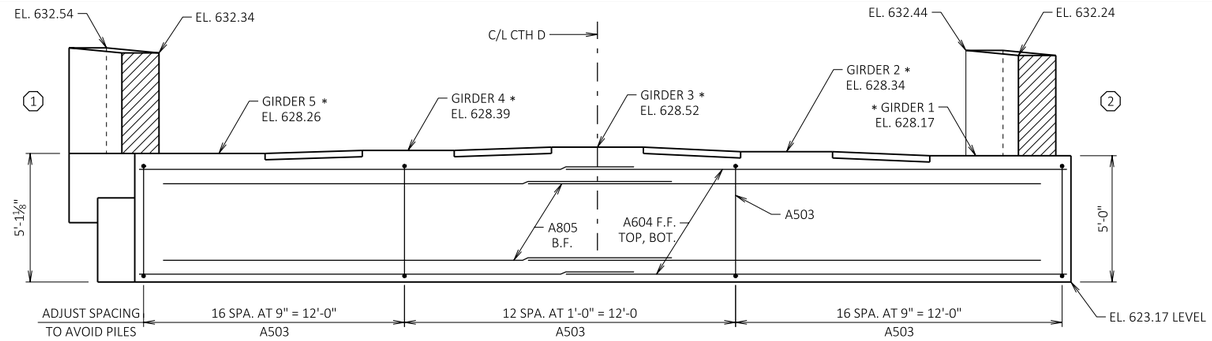

ELEVATION

(LOOKING SOUTH)

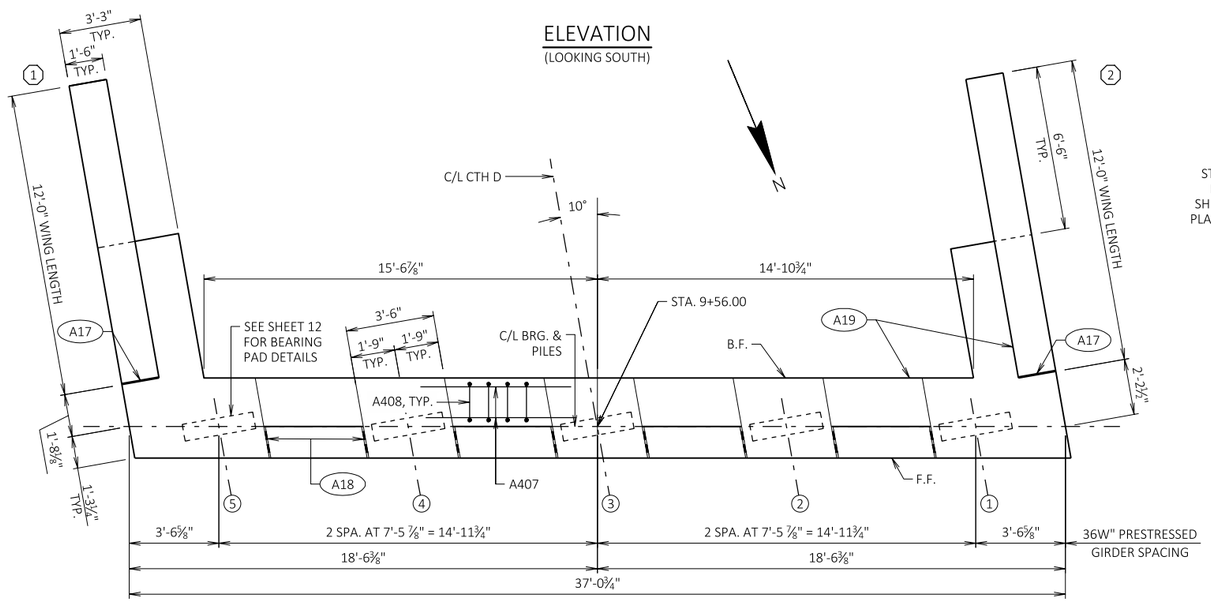

PLAN

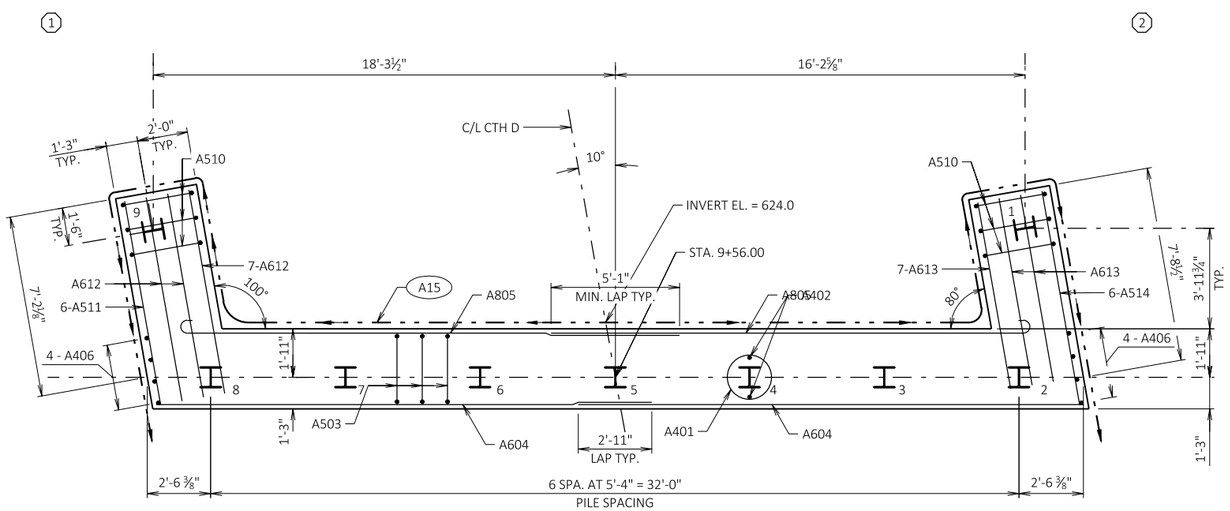

PILE PLAN

LEGEND

- ◯ INDICATES GIRDER NUMBER
- ⬡ INDICATES WING NUMBER
- * ELEVATION SHOWN AT THE TOP OF CONCRETE AT THE C/L OF BEARING.
- (A09) SUPPORT ABUTMENT ON PILING STEEL HP 10-INCH x 42 LB, ESTIMATED 90 FEET LONG, DRIVEN TO A REQUIRED DRIVING RESISTANCE OF 165 TONS PER PILE. SEE ADDITIONAL FOUNDATION DATA ON SHEET 1 AND PILE SPLICE DETAILS ON SHEET 2.
- (A15) PIPE UNDERDRAIN WRAPPED 6-INCH. SLOPE 0.5% MIN. TO SUITABLE DRAINAGE. ATTACH RODENT SCREEN AT ENDS OF PIPE UNDERDRAIN. RODENT SHIELD TO BE INCLUDED IN BID PRICE OF "PIPE UNDERDRAIN WRAPPED 6-INCH".
- (A17) ½" FILLER (INCLUDED IN WING LENGTH): SEAL ALL EXPOSED HORIZONTAL AND VERTICAL SURFACES OF ½" FILLER WITH NON-STAINING GRAY NON-BITUMNOUS JOINT SEALER. (1" DEEP AND HOLD 1/8" BELOW SURFACE OF CONCRETE.)
- (A18) ¾" CORK FILLER UP VERT. BEAM SEAT FACES THAT RUN PARALLEL WITH GIRDER.
- (A19) 18" RUBBERIZED MEMBRANE WATERPROOFING. SEAL ALL HORIZONTAL AND VERTICAL JOINTS ON BACKFACE.

B.F. DENOTES BACK FACE
F.F. DENOTES FRONT FACE

STATE PROJECT NUMBER

4546-02-71

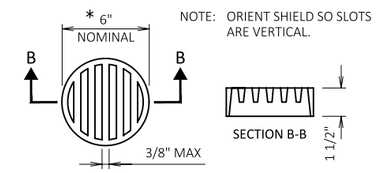

NOTE: ORIENT SHIELD SO SLOTS ARE VERTICAL.

* DIMENSION IS APPROXIMATE. THE GRATE IS SIZED TO FIT INTO A PIPE COUPLING.

RODENT SHIELD DETAIL

THE RODENT SHIELD, PIPE COUPLING AND SCREWS SHALL BE CONSIDERED INCIDENTAL TO THE BID ITEM "PIPE UNDERDRAIN WRAPPED 6-INCH".

THE RODENT SHIELD SHALL BE A PVC GRATE SIMILAR TO THIS DETAIL. THE GRATE IS COMMERCIALLY AVAILABLE AS A FLOOR STRAINER. A PIPE COUPLING IS REQUIRED FOR THE ATTACHMENT OF THIS SHIELD TO THE OUTFALL PIPE. THE SHIELD SHALL BE FASTENED TO THE PIPE COUPLING WITH TWO OR MORE NO. 10 X 1-INCH STAINLESS STEEL SHEET METAL SCREWS.

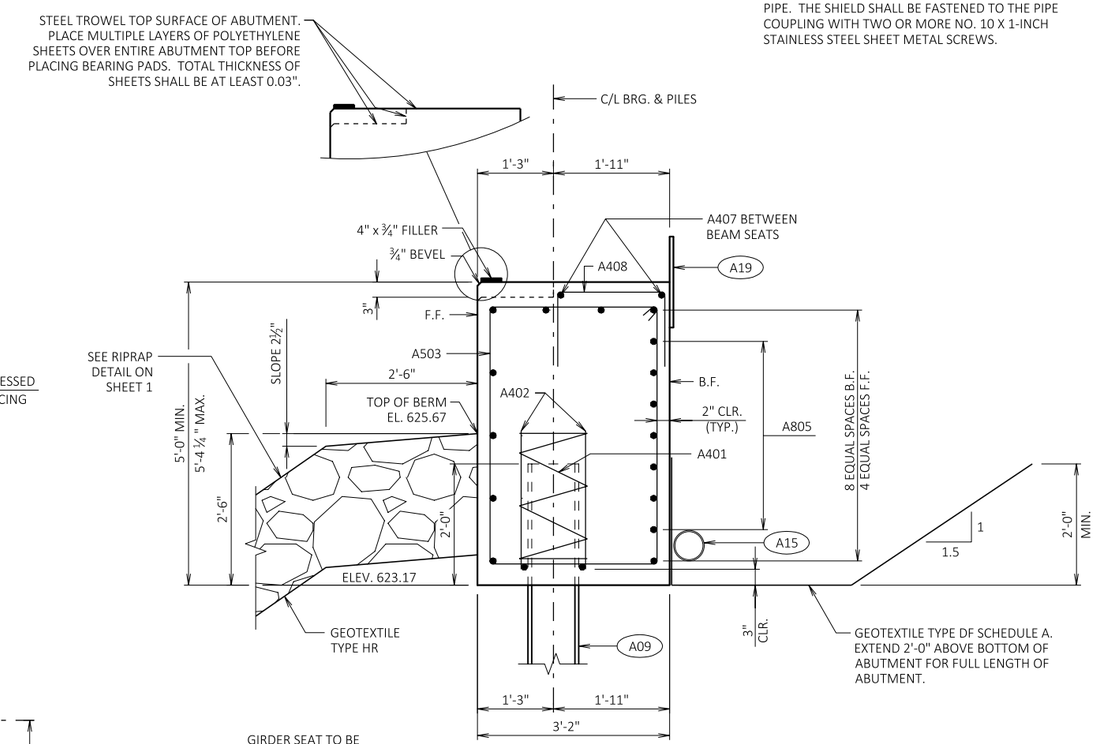

SECTION THRU BODY

HORIZONTAL BARS NOT OTHERWISE IDENTIFIED ARE A604 BARS

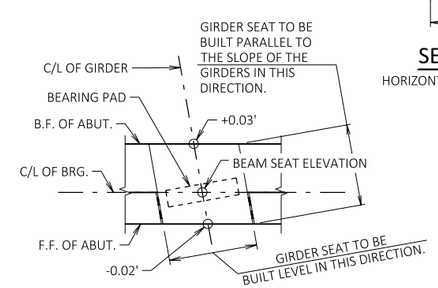

GIRDER SEAT DETAIL

NO.	DATE	REVISION	BY

STATE OF WISCONSIN
DEPARTMENT OF TRANSPORTATION

STRUCTURE B-5-440

DRAWN BY PKF | PLANS CK'D. ETP

ORIGINAL PLAN PREPARED BY CORRE

SOUTH ABUTMENT

SHEET 4 OF 13

40

8

8

STATE PROJECT NUMBER
4546-02-71

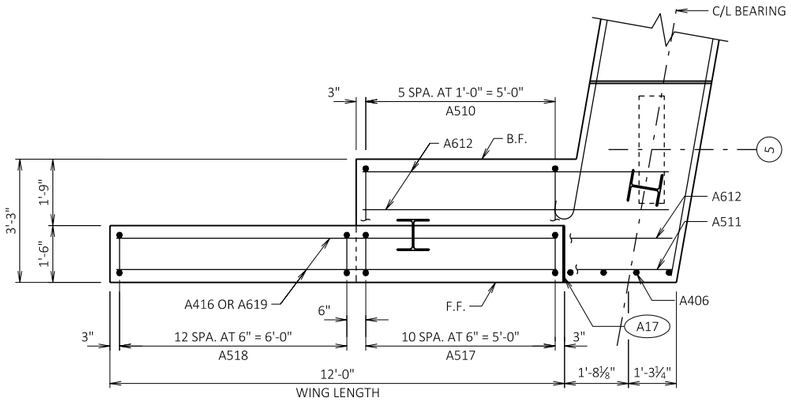

PLAN WING 1

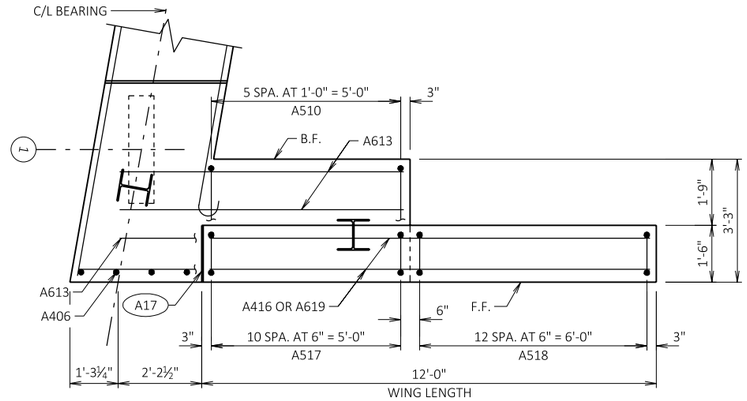

PLAN WING 2

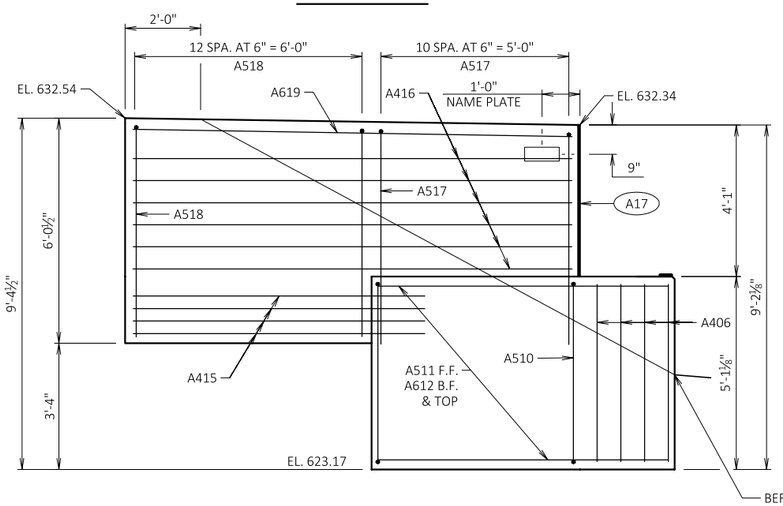

ELEVATION WING 1

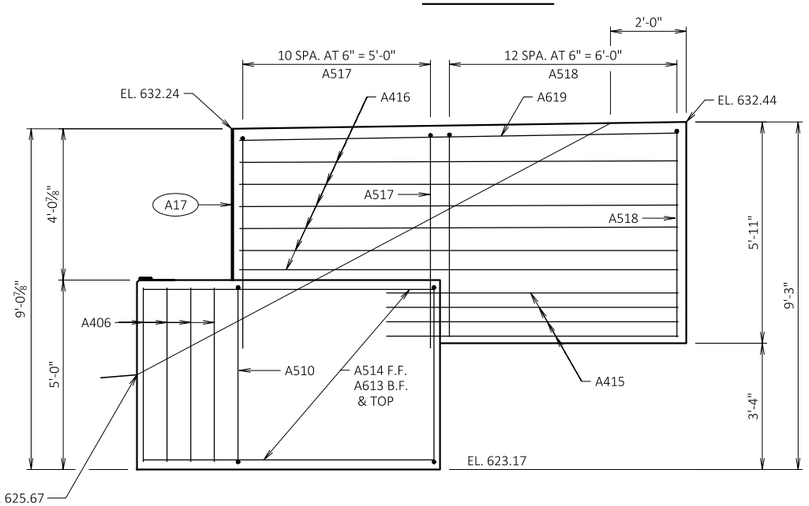

ELEVATION WING 2

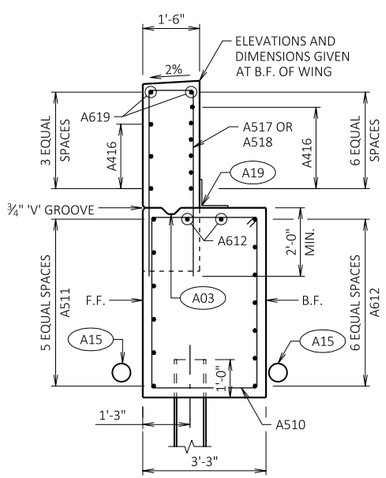

SECTION THRU WING 1

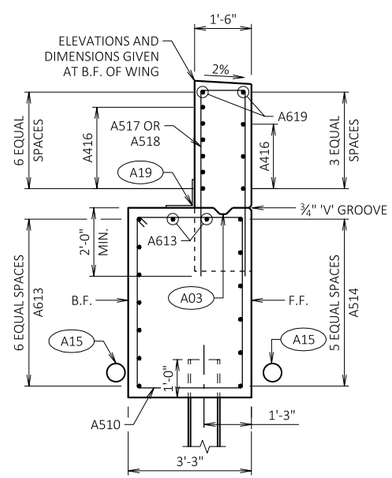

SECTION THRU WING 2

BILL OF BARS - SOUTH ABUTMENT

DIMENSIONS IN BENDING DETAILS ARE OUT-TO-OUT OF BAR.

BAR MARK	NO. REQ'D	LENGTH	BENT	BAR SERIES	LOCATION	
NON-COATED BARS						TOTAL WEIGHT = 2,440 LBS
A401	9	28'-0"	X		BODY - AT PILES - 1 PER PILE	VERT.
A402	18	2'-3"			BODY - AT PILES - 2 PER PILE	VERT.
A503	45	15'-2"	X		BODY - STIRRUPS	VERT.
A604	22	19'-10"			BODY - B.F. & F.F. & TOP & BTM	HORIZ.
A805	14	20'-4"	X		BODY - B.F.	HORIZ.
A406	8	4'-7"			BODY - ENDS	VERT.
A407	8	6'-0"			BODY - BTWN BEAM SEATS	HORIZ.
A408	16	4'-11"	X		BODY - BTWN BEAM SEATS	VERT.
COATED BARS						TOTAL WEIGHT = 1,430 LBS
A510	12	15'-4"	X		WINGS 1 & 2 - STIRRUPS	VERT.
A511	6	8'-1"			WING 1 - F.F.	HORIZ.
A612	9	8'-1"			WING 1 - TOP & B.F.	HORIZ.
A613	9	7'-6"			WING 2 - TOP & B.F.	HORIZ.
A514	6	8'-6"			WING 2 - F.F.	HORIZ.
A415	16	7'-9"			WINGS 1 & 2 - OVERHANG	HORIZ.
A416	18	11'-8"			WINGS 1 & 2	HORIZ.
A517	22	12'-11"	X		WINGS 1 & 2	VERT.
A518	26	11'-11"	X		WINGS 1 & 2 - OVERHANG	VERT.
A619	4	11'-8"			WINGS 1 & 2 - TOP	HORIZ.

THE FIRST DIGIT OR FIRST TWO DIGITS OF THE BAR MARK SIGNIFIES THE BAR SIZE.

LEGEND

- (A03) OPTIONAL KEYED CONST. JOINT FORMED BY BEVELED 2" x 6" (18" RUBBERIZED MEMBRANE WATERPROOFING AT B.F. & ¾" "V" GROOVE AT F.F. IF JOINT IS USED).
- (A09) SUPPORT ABUTMENT ON PILING STEEL HP 10-INCH x 42 LB, ESTIMATED 90 FEET LONG, DRIVEN TO A REQUIRED DRIVING RESISTANCE OF 165 TONS PER PILE. SEE ADDITIONAL FOUNDATION DATA ON SHEET 1 AND PILE SPLICE DETAILS ON SHEET 2.
- (A15) PIPE UNDERDRAIN WRAPPED 6-INCH. SLOPE 0.5% MIN. TO SUITABLE DRAINAGE. ATTACH RODENT SCREEN AT ENDS OF PIPE UNDERDRAIN. RODENT SHIELD TO BE INCLUDED IN BID PRICE OF "PIPE UNDERDRAIN WRAPPED 6-INCH".
- (A17) ½" FILLER (INCLUDED IN WING LENGTH): SEAL ALL EXPOSED HORIZONTAL AND VERTICAL SURFACES OF ½" FILLER WITH NON-STAINING GRAY NON-BITUMNOUS JOINT SEALER. (1" DEEP AND HOLD 1/8" BELOW SURFACE OF CONCRETE.)
- (A19) 18" RUBBERIZED MEMBRANE WATERPROOFING. SEAL ALL HORIZONTAL AND VERTICAL JOINTS ON BACKFACE.

B.F. DENOTES BACK FACE

F.F. DENOTES FRONT FACE

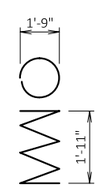

A401

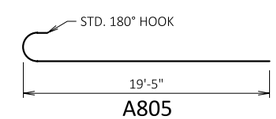

A805

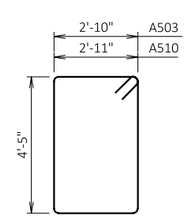

A503, A510

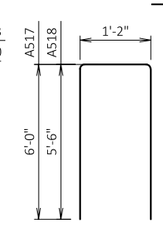

A517, A518

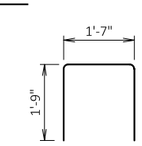

A408

NO.	DATE	REVISION	BY

STATE OF WISCONSIN
DEPARTMENT OF TRANSPORTATION

STRUCTURE B-5-440

DRAWN BY PKF | PLANS CK'D. ETP

ORIGINAL PLAN PREPARED BY CORRE

SOUTH ABUTMENT DETAILS

SHEET 5 OF 13

41

8

8

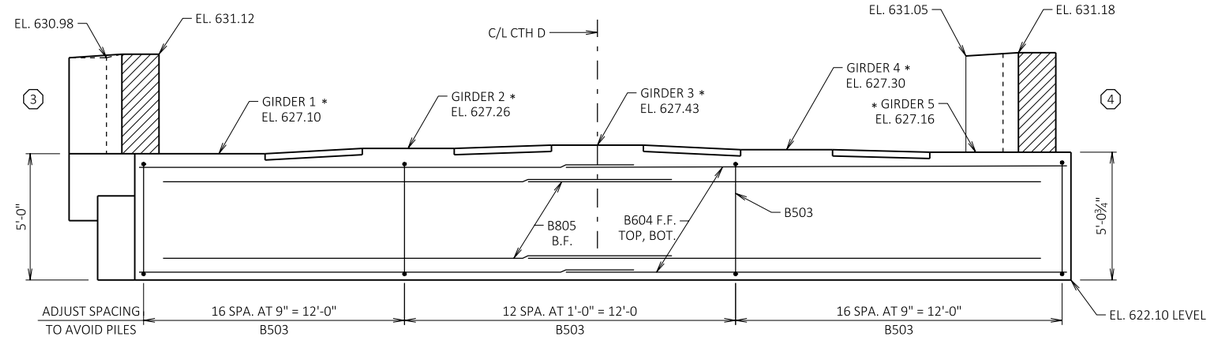

ELEVATION

(LOOKING NORTH)

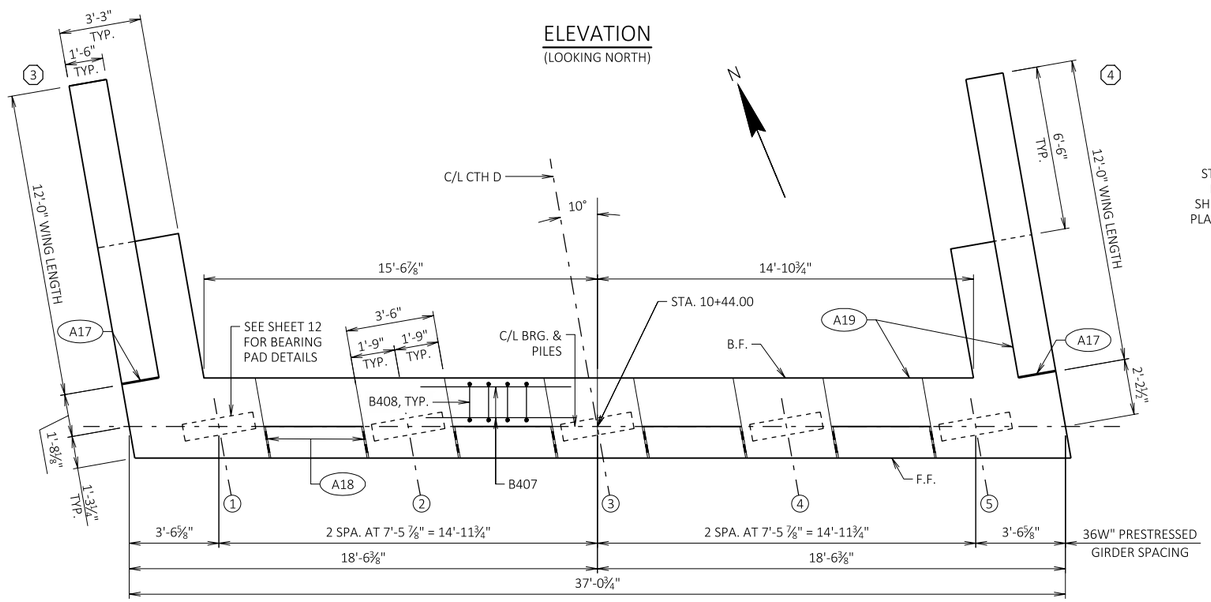

PLAN

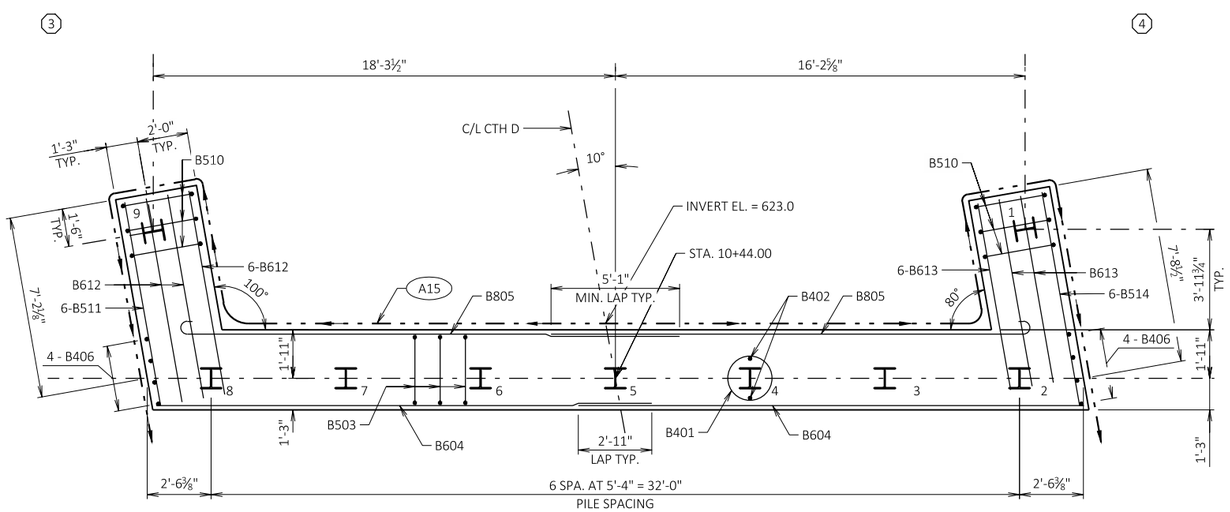

PILE PLAN

LEGEND

- ◯ INDICATES GIRDER NUMBER
- ⬡ INDICATES WING NUMBER
- * ELEVATION SHOWN AT THE TOP OF CONCRETE AT THE C/L OF BEARING.
- (A09) SUPPORT ABUTMENT ON PILING STEEL HP 10-INCH x 42 LB, ESTIMATED 90 FEET LONG, DRIVEN TO A REQUIRED DRIVING RESISTANCE OF 165 TONS PER PILE. SEE ADDITIONAL FOUNDATION DATA ON SHEET 1 AND PILE SPLICE DETAILS ON SHEET 2.
- (A15) PIPE UNDERDRAIN WRAPPED 6-INCH. SLOPE 0.5% MIN. TO SUITABLE DRAINAGE. ATTACH RODENT SCREEN AT ENDS OF PIPE UNDERDRAIN. RODENT SHIELD TO BE INCLUDED IN BID PRICE OF "PIPE UNDERDRAIN WRAPPED 6-INCH".
- (A17) ½" FILLER (INCLUDED IN WING LENGTH): SEAL ALL EXPOSED HORIZONTAL AND VERTICAL SURFACES OF ½" FILLER WITH NON-STAINING GRAY NON-BITUMNOUS JOINT SEALER. (1" DEEP AND HOLD 1/8" BELOW SURFACE OF CONCRETE.)
- (A18) ¾" CORK FILLER UP VERT. BEAM SEAT FACES THAT RUN PARALLEL WITH GIRDER.
- (A19) 18" RUBBERIZED MEMBRANE WATERPROOFING. SEAL ALL HORIZONTAL AND VERTICAL JOINTS ON BACKFACE.

B.F. DENOTES BACK FACE
F.F. DENOTES FRONT FACE

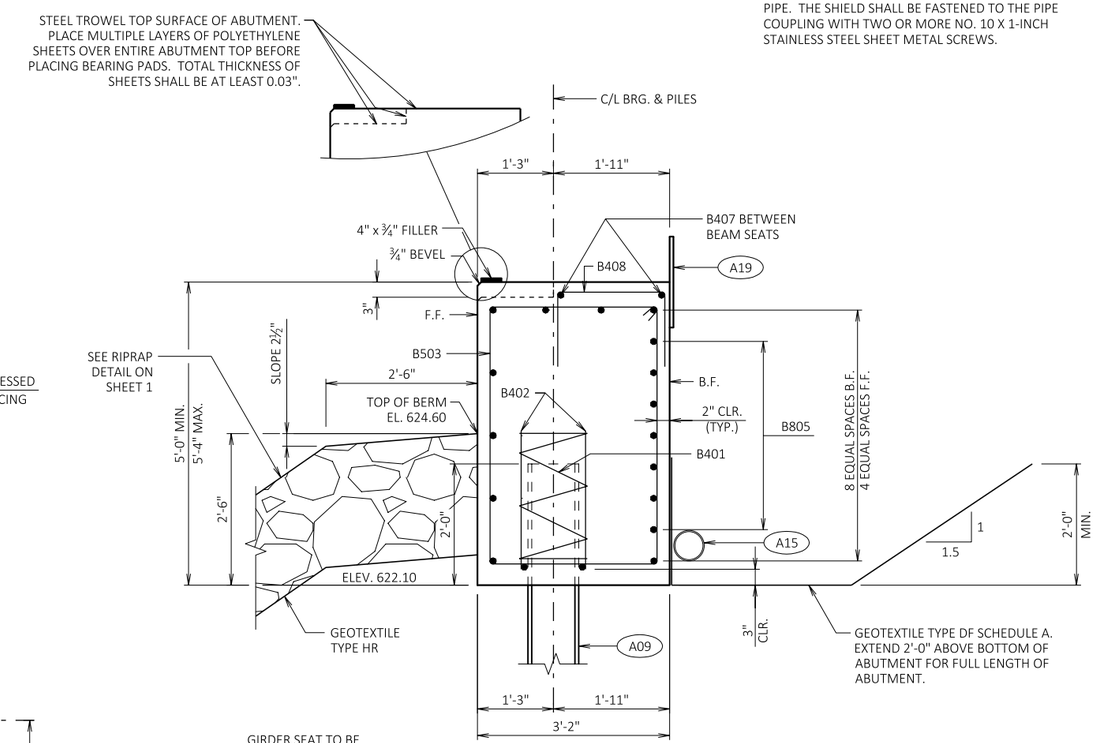

SECTION THRU BODY

HORIZONTAL BARS NOT OTHERWISE IDENTIFIED ARE B604 BARS

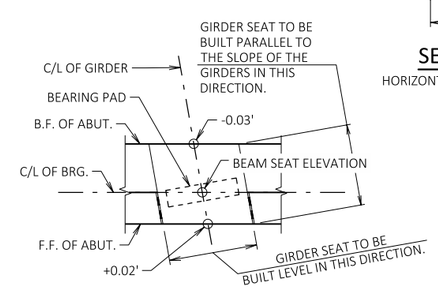

GIRDER SEAT DETAIL

STATE PROJECT NUMBER

4546-02-71

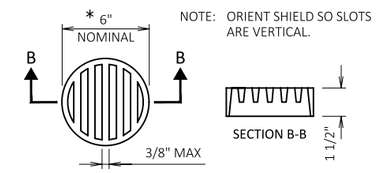

NOTE: ORIENT SHIELD SO SLOTS ARE VERTICAL.

* DIMENSION IS APPROXIMATE. THE GRATE IS SIZED TO FIT INTO A PIPE COUPLING.

RODENT SHIELD DETAIL

THE RODENT SHIELD, PIPE COUPLING AND SCREWS SHALL BE CONSIDERED INCIDENTAL TO THE BID ITEM "PIPE UNDERDRAIN WRAPPED 6-INCH".

THE RODENT SHIELD SHALL BE A PVC GRATE SIMILAR TO THIS DETAIL. THE GRATE IS COMMERCIALLY AVAILABLE AS A FLOOR STRAINER. A PIPE COUPLING IS REQUIRED FOR THE ATTACHMENT OF THIS SHIELD TO THE OUTFALL PIPE. THE SHIELD SHALL BE FASTENED TO THE PIPE COUPLING WITH TWO OR MORE NO. 10 X 1-INCH STAINLESS STEEL SHEET METAL SCREWS.

NO.	DATE	REVISION	BY

STATE OF WISCONSIN
DEPARTMENT OF TRANSPORTATION

STRUCTURE B-5-440

DRAWN BY PKF | PLANS CK'D. ETP

ORIGINAL PLAN PREPARED BY CORRE

NORTH ABUTMENT

SHEET 6 OF 13

42

8

8

STATE PROJECT NUMBER
4546-02-71

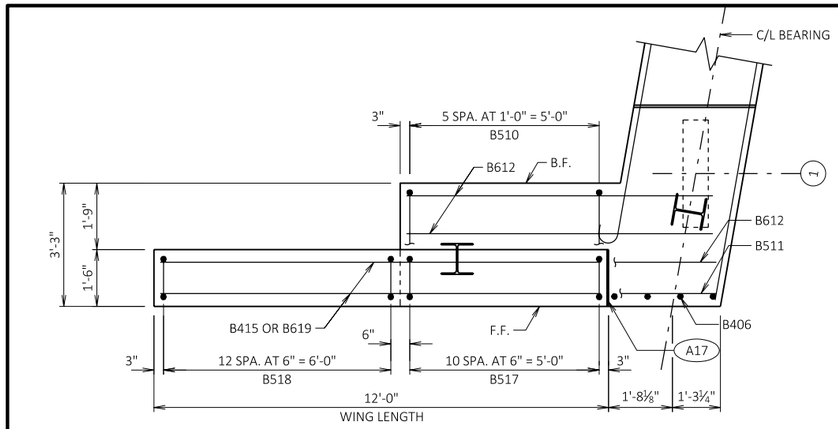

PLAN WING 3

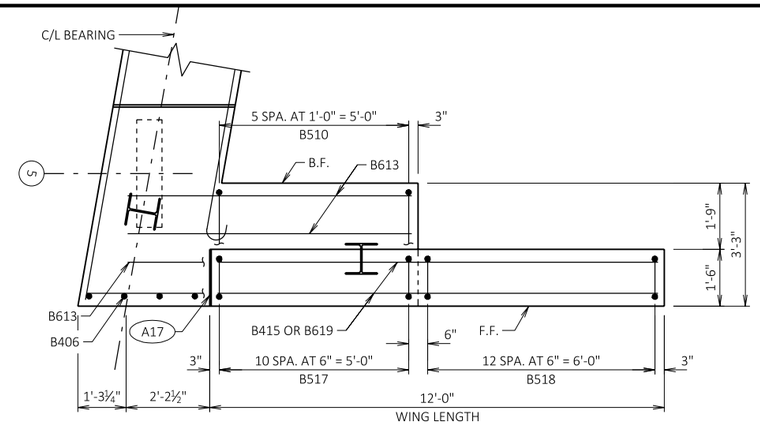

PLAN WING 4

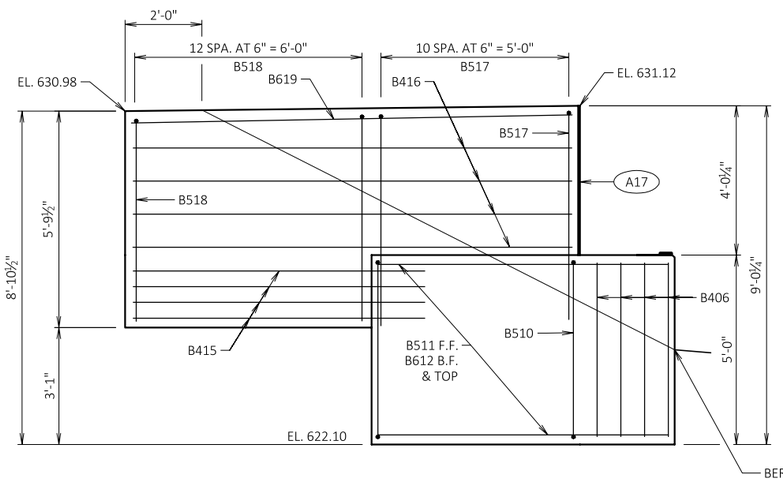

ELEVATION WING 3

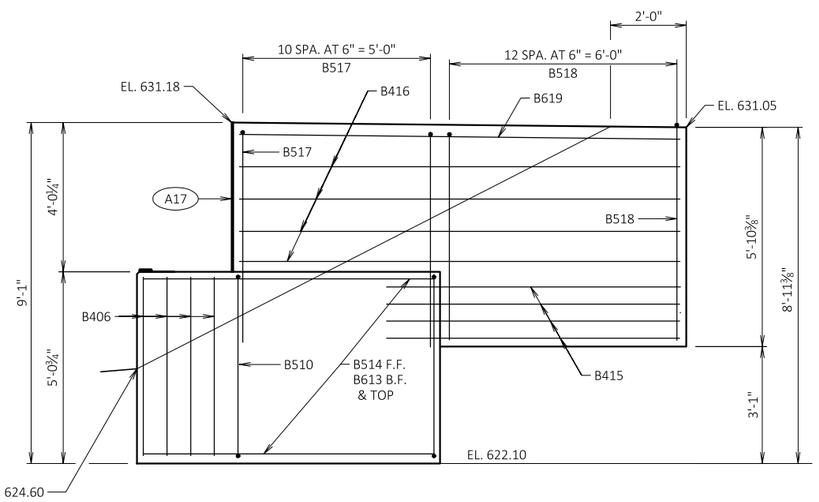

ELEVATION WING 4

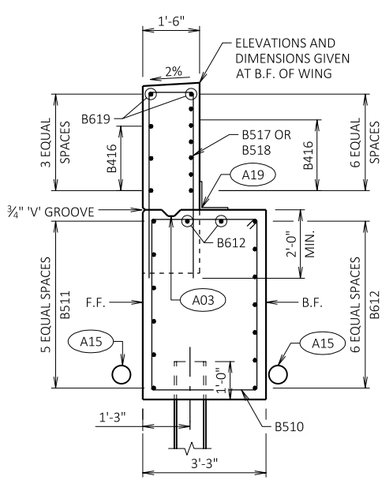

SECTION THRU WING 3

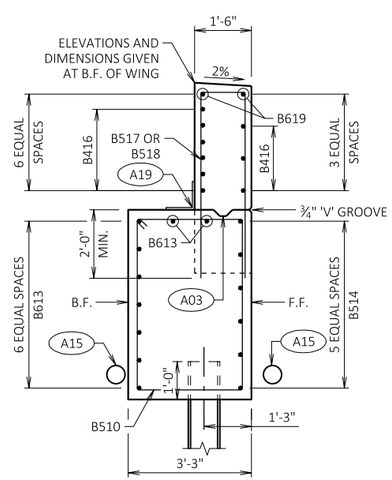

SECTION THRU WING 4

BILL OF BARS - NORTH ABUTMENT

DIMENSIONS IN BENDING DETAILS ARE OUT-TO-OUT OF BAR.

BAR MARK	NO. REQ'D	LENGTH	BENT	BAR SERIES	LOCATION	
NON-COATED BARS						TOTAL WEIGHT = 2,440 LBS
B401	9	28'-0"	X		BODY - AT PILES - 1 PER PILE	VERT.
B402	18	2'-3"			BODY - AT PILES - 2 PER PILE	VERT.
B503	45	15'-2"	X		BODY - STIRRUPS	VERT.
B604	22	19'-10"			BODY - B.F. & F.F. & TOP & BTM	HORIZ.
B805	14	20'-4"	X		BODY - B.F.	HORIZ.
B406	8	4'-7"			BODY - ENDS	VERT.
B407	8	6'-0"			BODY - BTWN BEAM SEATS	HORIZ.
B408	16	4'-11"	X		BODY - BTWN BEAM SEATS	VERT.
COATED BARS						TOTAL WEIGHT = 1,420 LBS
B510	12	15'-4"	X		WINGS 3 & 4 - STIRRUPS	VERT.
B511	6	8'-1"			WING 3 - F.F.	HORIZ.
B612	9	8'-1"			WING 3 - TOP & B.F.	HORIZ.
B613	9	7'-6"			WING 4 - TOP & B.F.	HORIZ.
B514	6	8'-6"			WING 4 - F.F.	HORIZ.
B415	16	7'-9"			WINGS 3 & 4 - OVERHANG	HORIZ.
B416	18	11'-8"			WINGS 3 & 4	HORIZ.
B517	22	12'-7"	X		WINGS 3 & 4	VERT.
B518	26	11'-11"	X		WINGS 3 & 4 - OVERHANG	VERT.
B619	4	11'-8"			WINGS 3 & 4 - TOP	HORIZ.

THE FIRST DIGIT OR FIRST TWO DIGITS OF THE BAR MARK SIGNIFIES THE BAR SIZE.

LEGEND

- A03 — OPTIONAL KEYED CONST. JOINT FORMED BY BEVELED 2" x 6" (18" RUBBERIZED MEMBRANE WATERPROOFING AT B.F. & ¾" "V" GROOVE AT F.F. IF JOINT IS USED).
- A09 — SUPPORT ABUTMENT ON PILING STEEL HP 10-INCH x 42 LB, ESTIMATED 90 FEET LONG, DRIVEN TO A REQUIRED DRIVING RESISTANCE OF 165 TONS PER PILE. SEE ADDITIONAL FOUNDATION DATA ON SHEET 1 AND PILE SPLICE DETAILS ON SHEET 2.
- A15 — PIPE UNDERDRAIN WRAPPED 6-INCH. SLOPE 0.5% MIN. TO SUITABLE DRAINAGE. ATTACH RODENT SCREEN AT ENDS OF PIPE UNDERDRAIN. RODENT SHIELD TO BE INCLUDED IN BID PRICE OF "PIPE UNDERDRAIN WRAPPED 6-INCH".
- A17 — ½" FILLER (INCLUDED IN WING LENGTH): SEAL ALL EXPOSED HORIZONTAL AND VERTICAL SURFACES OF ½" FILLER WITH NON-STAINING GRAY NON-BITUMNOUS JOINT SEALER. (1" DEEP AND HOLD 1/8" BELOW SURFACE OF CONCRETE.)
- A19 — 18" RUBBERIZED MEMBRANE WATERPROOFING. SEAL ALL HORIZONTAL AND VERTICAL JOINTS ON BACKFACE.

B.F. DENOTES BACK FACE

F.F. DENOTES FRONT FACE

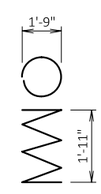

B401

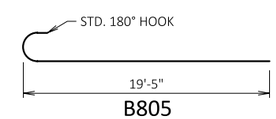

B805

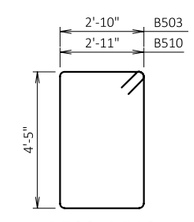

B503, B510

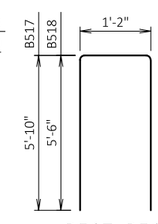

B517, B518

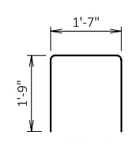

B408

NO.	DATE	REVISION	BY

STATE OF WISCONSIN
DEPARTMENT OF TRANSPORTATION

STRUCTURE B-5-440

DRAWN BY PKF | PLANS CK'D. ETP

ORIGINAL PLAN PREPARED BY CORRE

NORTH ABUTMENT DETAILS

SHEET 7 OF 13

43

8

8

STATE PROJECT NUMBER

4546-02-71

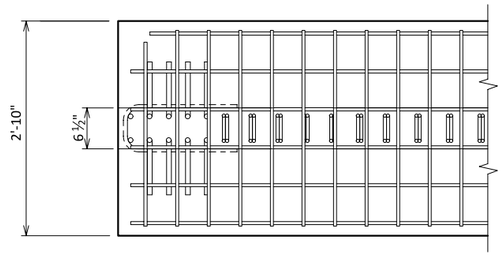

TOP FLANGE

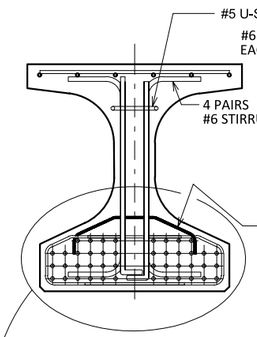

SECTION A-A

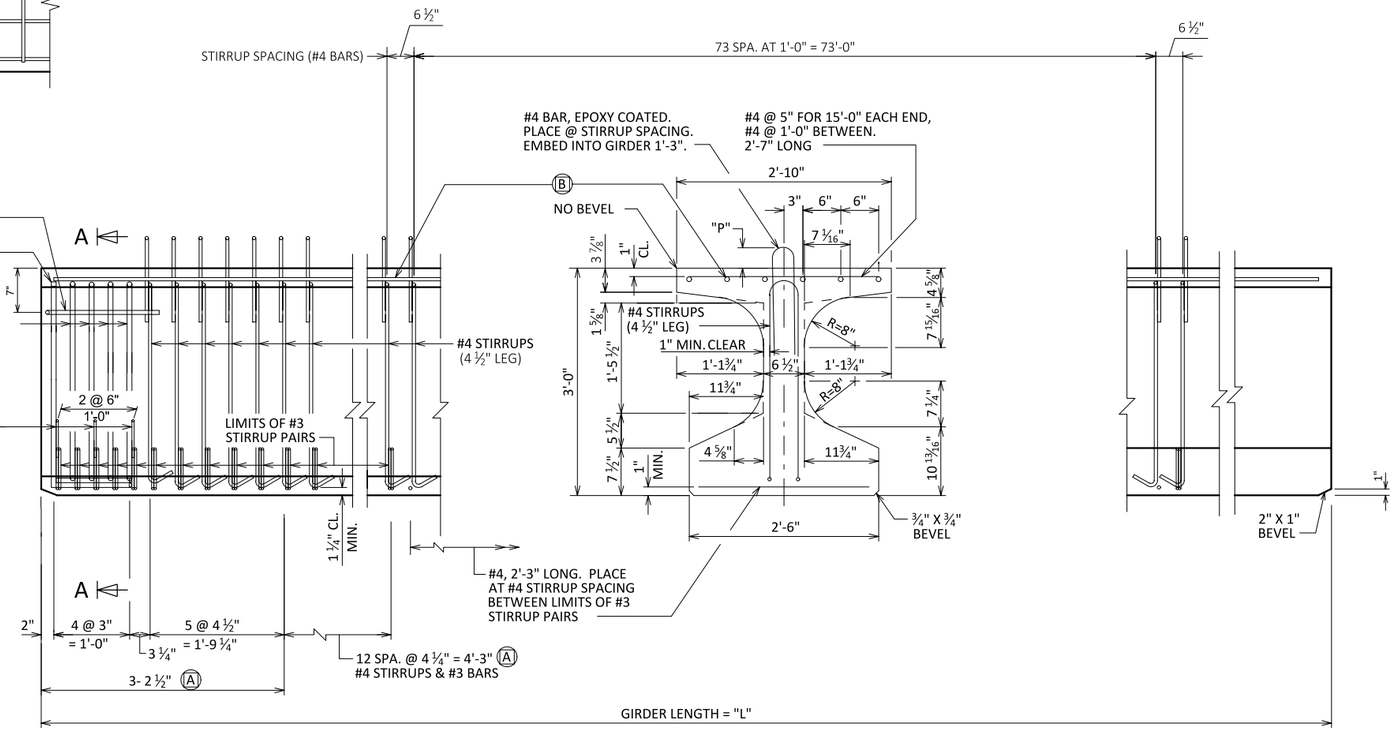

SIDE VIEW & TYPICAL SECTION IN SPAN

(A) DETAIL TYP. AT EACH END

(B) 6 #4 BARS, FULL LENGTH, MIN. LAP = 1'-11"

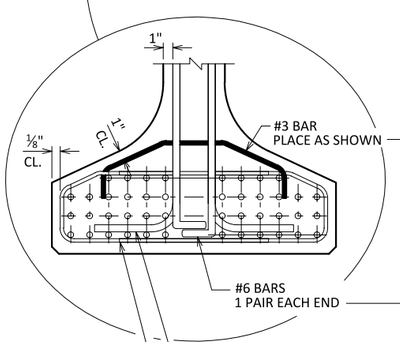

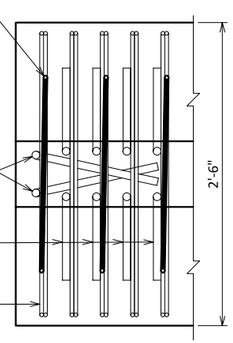

BOTTOM FLANGE

NOTES

TOP OF GIRDER TO BE ROUGH FLOATED AND BROOMED TRANSVERSELY, EXCEPT THE THE OUTSIDE 8" OF GIRDER, WHICH SHALL RECEIVE A SMOOTH FINISH. AN APPROVED CONCRETE SEALER SHALL BE APPLIED TO ALL SMOOTH SURFACES INCLUDING THE OUTSIDE 8" OF THE TOP FLANGE.

DO NOT APPLY CONCRETE SEALER OR EPOXY TO SURFACES RECEIVING APPLICATION OF CONCRETE STAINING.

THE GIRDERS SHALL BE PROVIDED WITH A SUITABLE LIFTING DEVICE FOR HANDLING AND ERECTING THE GIRDERS. SEE SECT. 503.3.3 OF STANDARD SPECIFICATIONS FOR GUIDANCE.

STRANDS SHALL BE FLUSH WITH END OF GIRDER. FOR GIRDER ENDS EMBEDDED COMPLETELY IN CONCRETE, END OF STRANDS SHALL BE COATED WITH NON-BITUMINOUS JOINT SEALER. FOR GIRDER ENDS THAT ARE FINALLY EXPOSED, COAT THE GIRDER ENDS, EXPOSED STRAND ENDS AND ALL NON-BONDING SURFACES WITHIN 2 FEET OF THE GIRDER ENDS WITH A NON-PIGMENTED EPOXY CONFORMING TO AASHTO M-235 TYPE III, GRADE 2, CLASS B OR C. THE EPOXY SHALL BE APPLIED AT LEAST 3 DAYS AFTER MOIST CURING HAS CEASED AND PRIOR TO THE APPLICATION OF THE SEALER.

ALL GIRDERS SHALL BE CAST FULL LENGTH AS SHOWN.

SPACING SHOWN FOR #4 STIRRUPS IS FOR GRADE 60 REINFORCEMENT.

AN ALTERNATE EQUIVALENT OF WELDED WIRE FABRIC (WWF) ASTM A1064 MAY BE SUBSTITUTED FOR THE STIRRUP REINFORCEMENT SHOWN, UPON APPROVAL OF THE STRUCTURES DEVELOPMENT SECTION.

PRESTRESSING STRANDS SHALL BE (0.6" DIA.)-7 WIRE LOW-RELAXATION STRANDS WITH AN ULTIMATE STRENGTH OF 270,000 PSI.

FOR DIAPHRAGM INSERT & CONNECTION DETAILS SEE "STEEL DIAPHRAGM" SHEET.

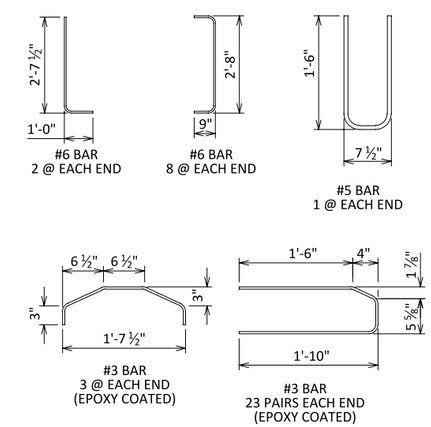

∗ MINIMUM CYLINDER STRENGTH OF CONCRETE @ TIME OF TRANSFER OF PRESTRESS FORCE.

GIRDER DATA

SPAN	GIRDER	GIRDER LENGTH "L" (FEET)	DEAD LOAD DEFL. (IN.)									CONC. STRGTH. f'c (P.S.I.)	"P" (IN.)			DIA. OF STRAND (IN.)	DRAPED PATTERN					
			1/10	2/10	3/10	4/10	5/10	6/10	7/10	8/10	9/10		1st 1/3 OF GIRDER	MID 1/3 OF GIRDER	END 1/3 OF GIRDER		TOTAL NO. OF STRANDS	f'ci (P.S.I.) ∗	(IN.) "A"	"B" MIN.	"B" MAX.	"C"
1	1-5	89.00	0.6	1.1	1.6	1.8	1.9	1.8	1.6	1.1	0.6	8,000	7.75	6.25	7.75	0.6	36	6,800	31	11.5	14.5	5

NO.	DATE	REVISION	BY

STATE OF WISCONSIN
DEPARTMENT OF TRANSPORTATION

STRUCTURE B-5-440

DRAWN BY PKF | PLANS CK'D. ETP

36W" PRESTRESSED GIRDER DETAILS 1

SHEET 8 OF 13

8

8

STATE PROJECT NUMBER

4546-02-71

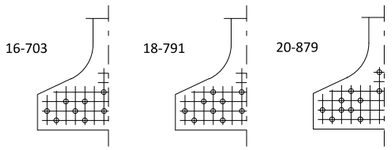

STANDARD ARRANGEMENTS TO RAISE CENTER OF GRAVITY TO AVOID DRAPING OF STRANDS

0.6"Ø STRANDS

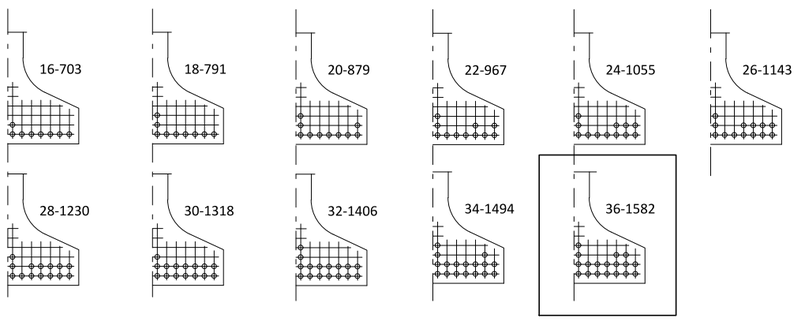

SPAN 1

ARRANGEMENT AT C/L SPAN - FOR GIRDERS WITH DRAPED STRANDS

0.6"Ø STRANDS

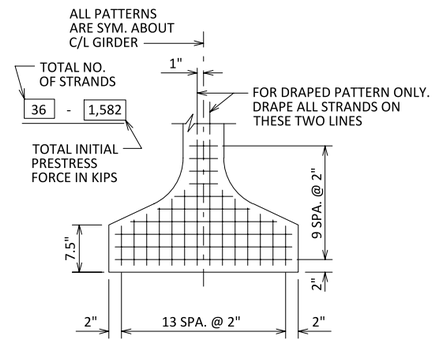

TYP. STRAND PATTERN

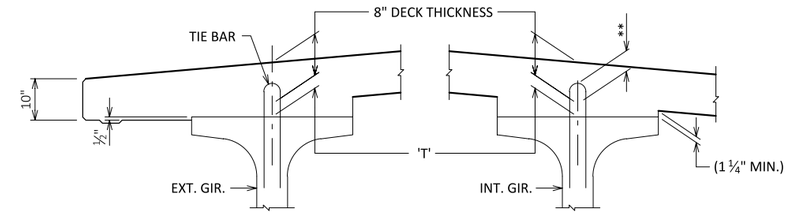

DECK HAUNCH DETAIL

IF 1 1/4" MINIMUM HAUNCH HEIGHT AT EDGE OF GIRDER CANNOT BE MAINTAINED, THE GRADE LINE MAY BE REVISED BY THE ENGINEER AT THE OPTION OF THE CONTRACTOR, THE PLAN DECK THICKNESS SHALL BE HELD. NOTIFY THE STRUCTURES SECTION IF THE GRADE LINE IS RAISED FROM THE PLAN PROFILE BY MORE THAN " OR,
** IF 3" MINIMUM DECK EMBEDMENT OF TIE BAR CANNOT BE OBTAINED.

TO DETERMINE 'T', ELEV. OF TOP OF GIR'S. AT C/L OF SUBSTRUCTURE UNITS & AT 1/10 POINTS OF EACH SPAN SHALL BE TAKEN. THEN FOLLOW THIS PROCESS:

TOP OF DECK ELEV. AT FINAL GRADE
- TOP OF GIRDER ELEVATION
+ DEAD LOAD DEFLECTION
- DECK THICKNESS
= HAUNCH HEIGHT 'T'

NOTE: AN AVERAGE HAUNCH ('T') OF 3⅝" WAS USED IN THE QUANTITY "CONCRETE MASONRY BRIDGES".

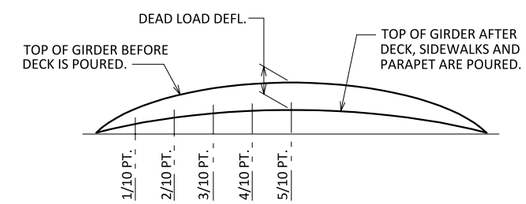

DEAD LOAD DEFLECTION DIAGRAM

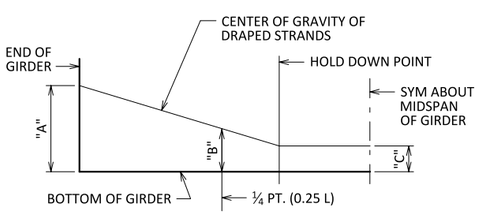

DRAPED STRAND PROFILE

* THE THEORETICAL INITIAL CAMBER VALUE AT THE TIME OF STRAND RELEASE AT MIDSPAN MULTIPLIED BY A FACTOR OF 1.4 TO ACCOUNT FOR CAMBER GROWTH FROM THE TIME OF STRAND RELEASE TO JOBSITE PLACEMENT.

SPAN	CAMBER (IN.) *
1	4 1/8"

THESE VALUES ARE NOT TO BE USED IN DETERMINING 'T', USE ACTUAL GIRDER SHOTS.

THESE VALUES ARE FOR INFORMATIONAL PURPOSES ONLY.

8

8

NO.	DATE	REVISION	BY

STATE OF WISCONSIN
DEPARTMENT OF TRANSPORTATION

STRUCTURE B-5-440

DRAWN BY PKF | PLANS CK'D. ETP

36W" PRESTRESSED GIRDER DETAILS 2

SHEET 9 OF 13

STATE PROJECT NUMBER

4546-02-71

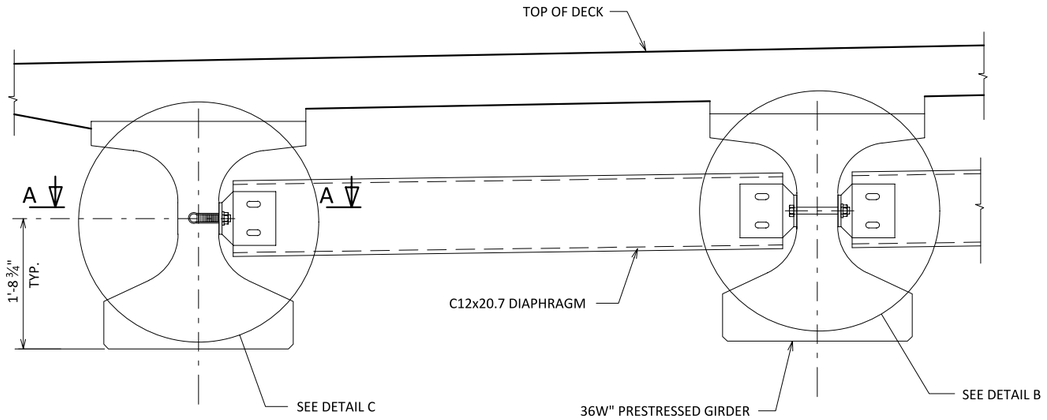

EXTERIOR GIRDER

INTERIOR GIRDER

PART TRANSVERSE SECTION AT DIAPHRAGM

NOTES

ALL DIAPHRAGM MATERIAL NOT EMBEDDED IN THE CONCRETE GIRDER SHALL BE PAID FOR AT THE UNIT PRICE BID FOR "STEEL DIAPHRAGMS B-5-440", EACH.

EACH DIAPHRAGM BETWEEN GIRDERS SHALL CONSTITUTE ONE UNIT.

ALL DIAPHRAGM STRUCTURAL STEEL SHALL BE ASTM A709 GRADE 36.

ALL DIAPHRAGM MATERIAL INCLUDING BOLTS, NUTS AND WASHERS SHALL BE GALVANIZED AFTER FABRICATION.

STEEL DIAPHRAGM TO CONCRETE WEB CONNECTION SHALL BE SNUG-TIGHT PLUS , TURN, UNLESS NOTED OTHERWISE. HIGH STRENGTH BOLTS FOR WEB CONNECTION SHALL MEET THE REQUIREMENTS FOR ASTM A325 OR ASTM A449.

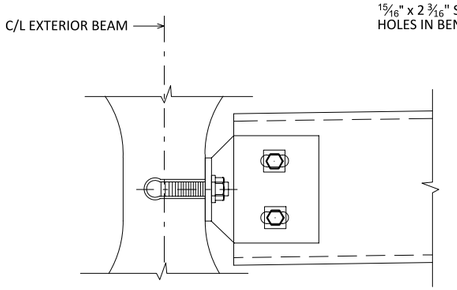

DETAIL C

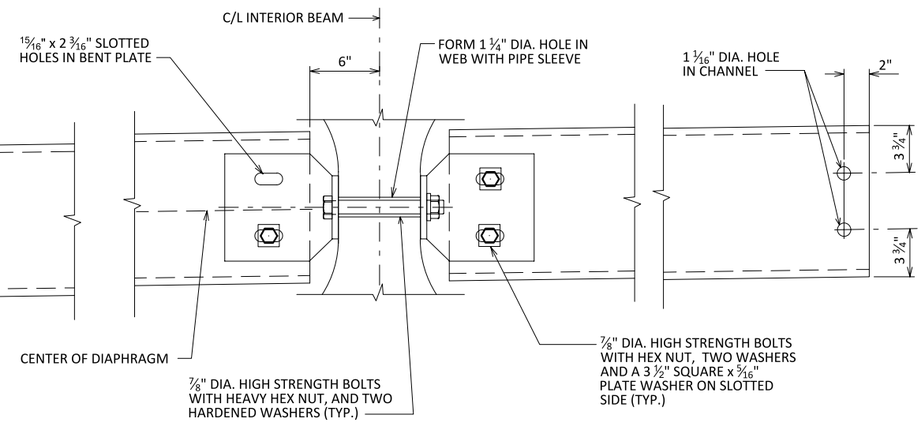

DETAIL B

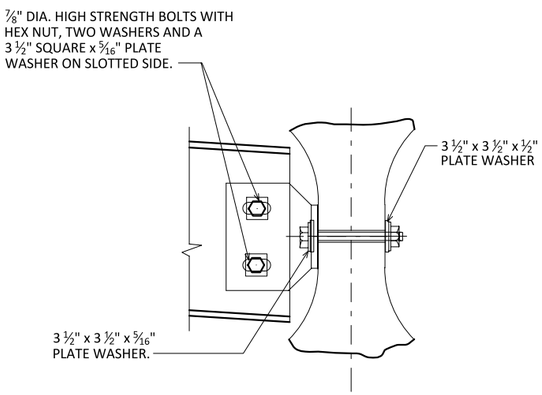

SECTION AT INTERIOR GIRDERS THRU DIAPHRAGM FOR SKEW ANGLES > 10°

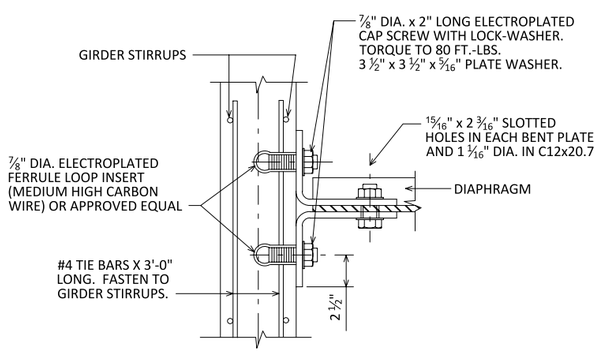

SECTION A-A

(FOR EXTERIOR ATTACHMENT)

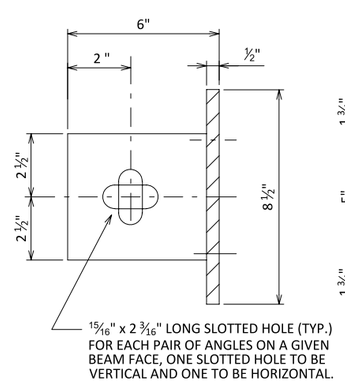

BEAM FACE

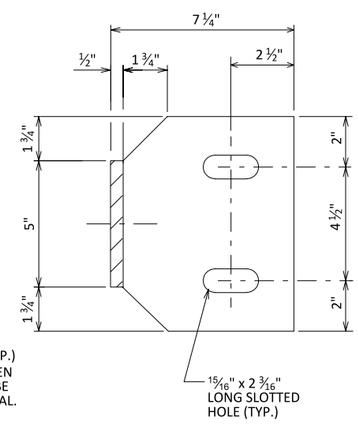

DIAPHRAGM FACE

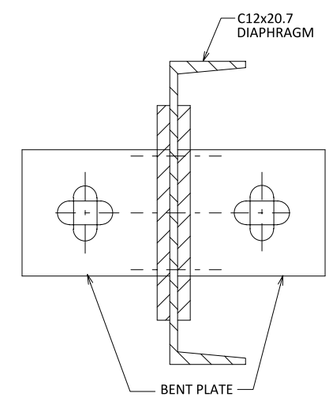

ATTACHMENT TO CHANNEL

8

8

NO.	DATE	REVISION	BY

STATE OF WISCONSIN
DEPARTMENT OF TRANSPORTATION

STRUCTURE B-5-440

DRAWN BY PKF | PLANS CK'D. ETP

ORIGINAL PLAN PREPARED BY CORRE

STEEL DIAPHRAGM

SHEET 10 OF 13

STATE PROJECT NUMBER

4546-02-71

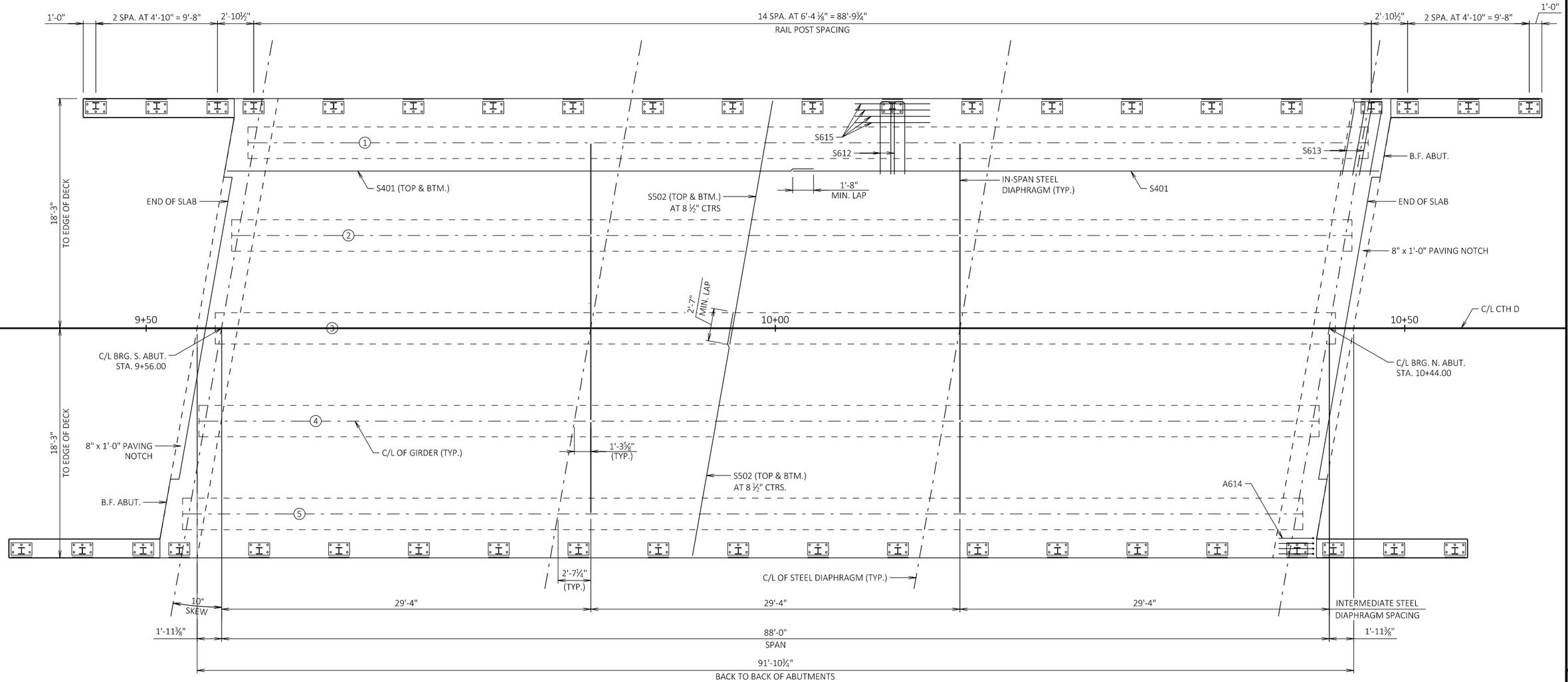

PLAN

8

TOP OF DECK ELEVATIONS

	C/L BRG. S. ABUT.	1/10	2/10	3/10	4/10	5/10	6/10	7/10	8/10	9/10	C/L BRG. N. ABUT.
GIRDER 1	632.29	632.15	632.03	631.91	631.81	631.71	631.61	631.51	631.41	631.31	631.21
GIRDER 2	632.45	632.32	632.20	632.08	631.97	631.87	631.77	631.67	631.57	631.47	631.38
GIRDER 3	632.62	632.49	632.36	632.24	632.13	632.03	631.93	631.83	631.73	631.64	631.54
GIRDER 4	632.50	632.36	632.23	632.11	632.00	631.90	631.80	631.70	631.60	631.50	631.40
GIRDER 5	632.37	632.23	632.10	631.98	631.87	631.76	631.67	631.57	631.47	631.37	631.27

NOTES

1. THE TOP LONGITUDINAL BAR STEEL REINFORCEMENT SHALL BE SUPPORTED BY CONTINUOUS BAR CHAIRS IN TRANSVERSE DIRECTION ON 4'-0" CENTERS.
2. THE BOTTOM TRANSVERSE BAR STEEL REINFORCEMENT SHALL BE CONTINUOUS BAR CHAIRS WITH A CENTER TO CENTER SPACING NOT TO EXCEED 4'-0". ONE LINE OF CONTINUOUS BAR CHAIRS SHALL BE PLACED NEAR EACH EDGE OF SLAB TO SUPPORT THE ENDS OF THE BOTTOM TRANSVERSE BAR STEEL.
3. ALL TRANSVERSE BAR STEEL REINFORCEMENT SHALL BE PLACED PARALLEL TO SUBSTRUCTURE UNITS.

8

NO.	DATE	REVISION	BY

STATE OF WISCONSIN
DEPARTMENT OF TRANSPORTATION

STRUCTURE B-5-440

DRAWN BY PKF | PLANS CK'D. ETP

ORIGINAL PLAN PREPARED BY CORRE

SUPERSTRUCTURE

SHEET 11 OF 13

STATE PROJECT NUMBER

4546-02-71

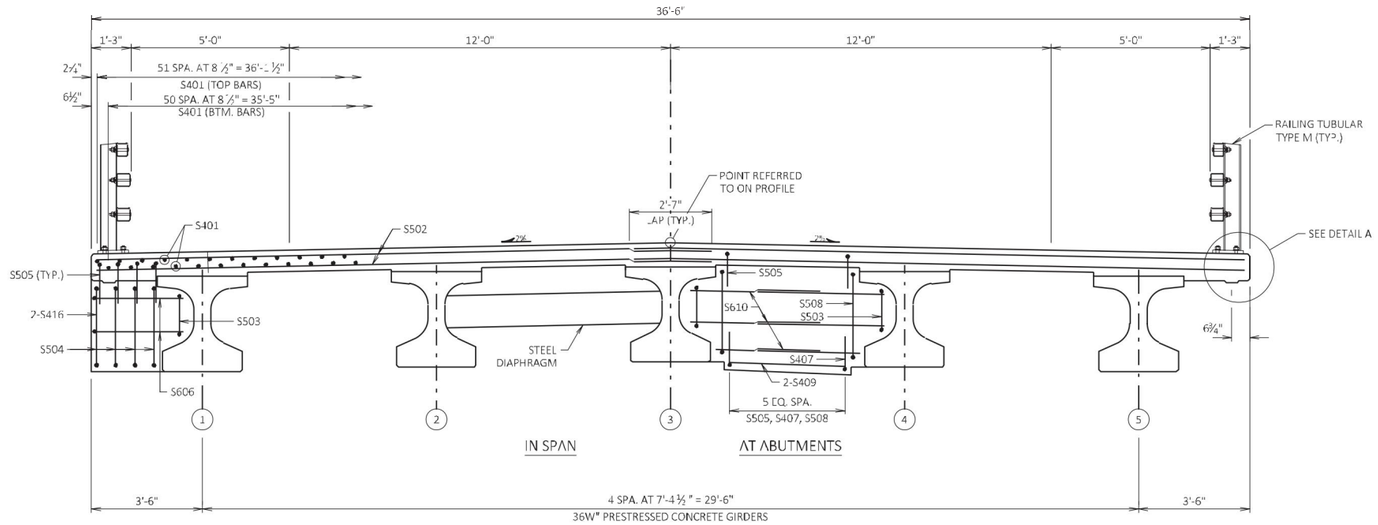

CROSS SECTION THRU ROADWAY

BILL OF BARS - SUPERSTRUCTURE

DIMENSIONS IN BENDING DETAILS ARE OUT-TO-OUT OF BAR.

BAR MARK	NO. REQ'D	LENGTH	BENT	BAR SERIES	LOCATION	
COATED BARS					TOTAL WEIGHT = 21,950 LBS	
S401	210	46'-8"			DECK - TOP & BTM	LONGIT.
S502	520	19'-8"			DECK - TOP & BTM	TRANS.
S503	20	9'-8"	X		DIAPHRAGMS - ALL GIRDERS	VERT.
S504	16	11'-4"	X		DIAPHRAGMS - EXT GIRDERS	VERT.
S505	64	6'-11"	X		DIAPHRAGMS - TOP	VERT.
S606	8	8'-2"	X		DIAPHRAGMS - EXT GIRDERS	HORIZ.
S407	48	3'-5"	X		DIAPHRAGMS - BTM	VERT.
S508	48	11'-10"	X		DIAPHRAGMS - INT GIRDERS	VERT.
S409	16	3'-6"			DIAPHRAGMS - BTM	HORIZ.
S610	48	4'-3"			DIAPHRAGMS - F.F.	HORIZ.
S611	20	19'-5"			DIAPHRAGMS - B.F.	HORIZ.
S612	52	12' 0"	X		DECK INT RAIL POSTS	TRANS.
S613	8	12' 4"	X		DECK - TOP - EXT. RAIL POSTS	TRANS.
S614	16	4'-2"	X		DECK - TOP - EXT. RAIL POSTS	LONGIT.
S615	104	6' 0"			DECK TOP INT. RAIL POSTS	LONGIT.
S416	8	2'-4"			DIAPHRAGMS - EXT GIRDERS	VERT.

THE FIRST DIGIT OR FIRST TWO DIGITS OF THE BAR MARK SIGNIFIES THE BAR SIZE.

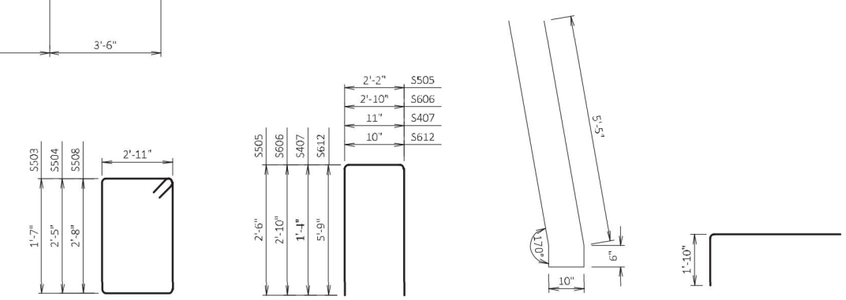

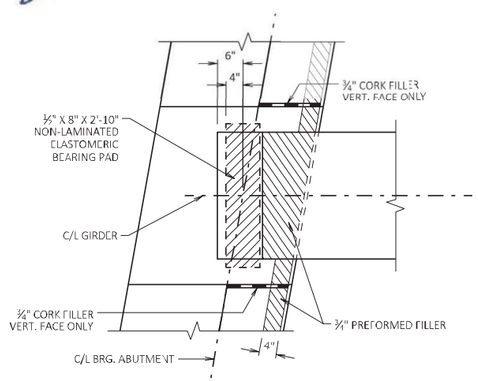

BEARING PAD DETAIL

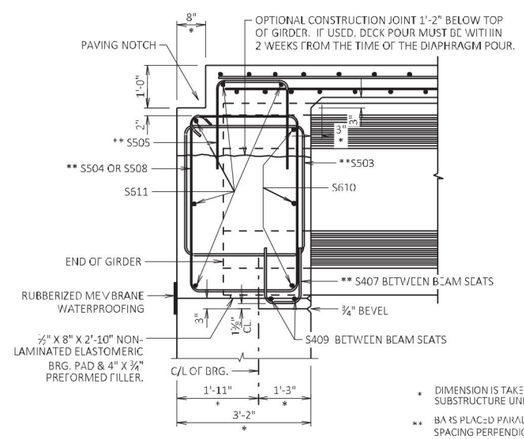

PART LONGIT. SECTION

* DIMENSION IS TAKEN NORMAL TO C/L SUBSTRUCTURE UNITS.

** BARS PLACED PARALLEL TO GIRDERS SPACING PERPENDICULAR TO C/L GIRDERS

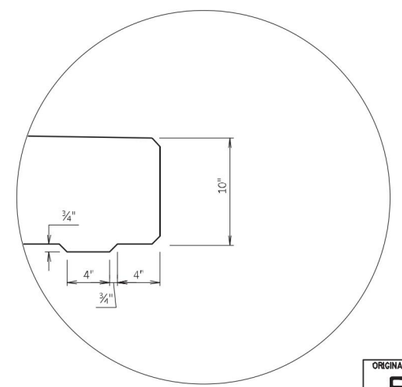

DETAIL A

WISCONSIN PROFESSIONAL ENGINEER ERIC T. PRICE E-39027 MADISON WI

January 23, 2019

William C. Drecher SDR

01/24/19

8

8

NO.	DATE	REVISION	BY
1	1/23/19	QUANTITY REVISION	ETP

STATE OF WISCONSIN
DEPARTMENT OF TRANSPORTATION

STRUCTURE B-5-440

DRAWN BY PKF | PLANS CKD. ETP

ORIGINAL PLAN PREPARED BY CORRE

SUPERSTRUCTURE DETAILS

SHEET 12 OF 13

48

FILE NAME : P:\WI - NE REGION\4546-02-00_CTH D_BROWN CO\500_CADD\503_STRUCTURES\502.4_FINAL\080701-SS_CTH D.DWG PLOT DATE : 1/23/2019 1:29 PM PLOT BY : NICHOLAS WATTIKE

STATE PROJECT NUMBER

4546-02-71

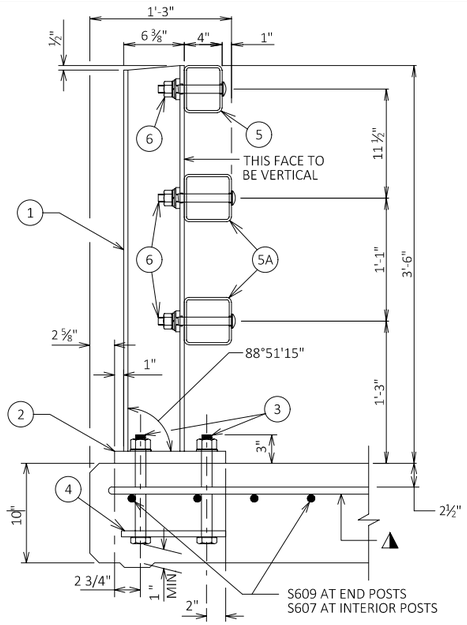

SECTION THRU RAILING ON DECK

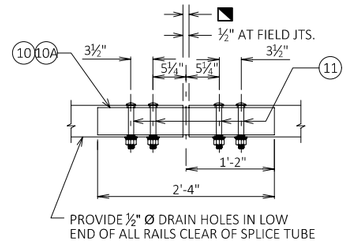

FIELD ERECTION JOINT DETAIL

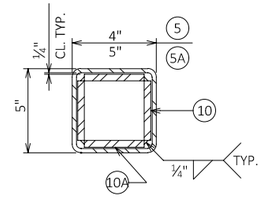

SECTION B-B

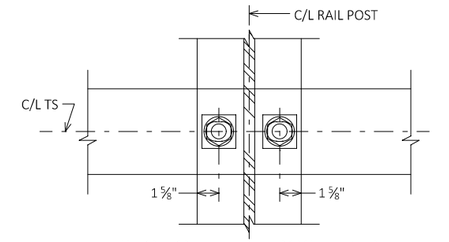

SECTION THRU POST WEB

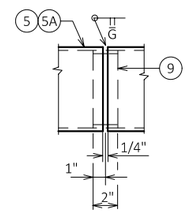

SHOP RAIL SPLICE DETAIL

LOCATION MUST BE SHOWN ON SHOP DRAWINGS

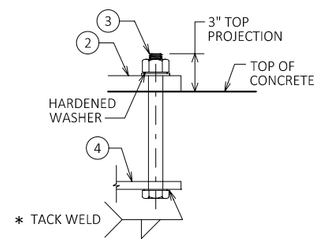

ANCHOR BOLTS

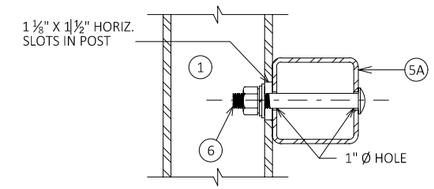

SECTION THRU RAIL

NOTE: CONNECTIONS AT LOWER RAILS SHOWN. CONNECTIONS AT TOP RAIL SIMILAR.

TYPICAL RAIL TO POST CONNECTIONS

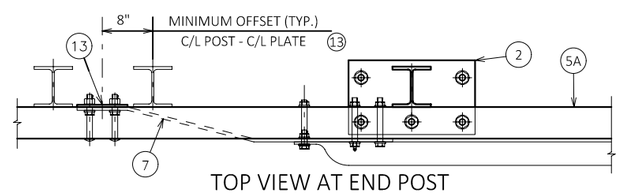

TOP VIEW AT END POST

THRIE BEAM RAIL ATTACHMENT

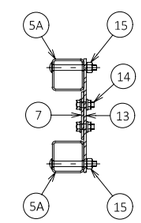

SECTION C-C

SECTION A-A

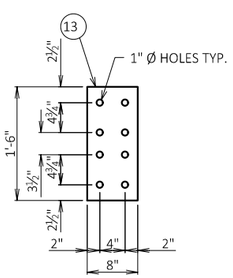

ANCHOR PLATE

AT BEAM GUARD ATTACHMENT

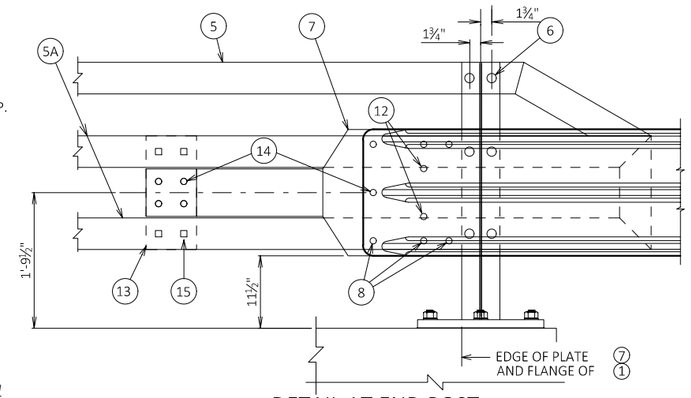

DETAIL AT END POST

THRIE BEAM RAIL ATTACHMENT

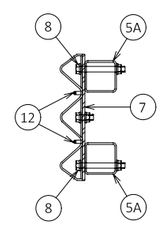

SECTION D-D

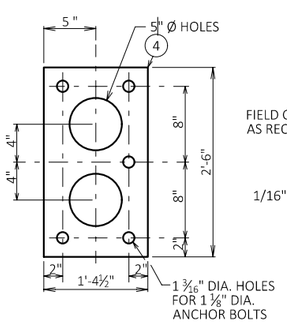

ANCHOR PLATE

AT RAIL TO DECK CONNECTION

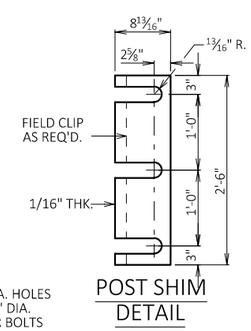

POST SHIM DETAIL

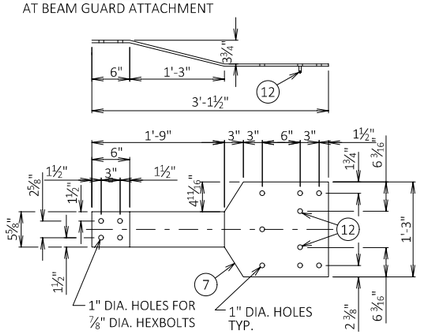

BACK-UP PLATE DETAIL

AT BEAM GUARD ATTACHMENT

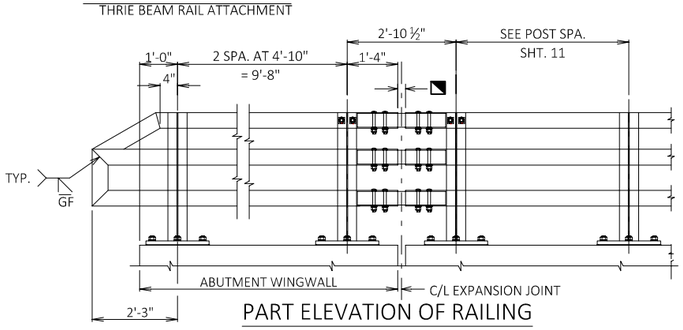

PART ELEVATION OF RAILING

LEGEND

1. W6 X 25 WITH 1 1/8" X 1 1/2" HORIZ. SLOTS ON EACH SIDE OF POST FOR BOLT NO. 6. CUT BOTTOM OF POST TO MATCH CROSS SLOPE OF ROADWAY. PLACE POST VERTICAL. PLACE POSTS NORMAL TO GRADE LINE.
2. PLATE 1 1/4" X 11 3/4" X 1'-8" WITH 1 5/16" X 1 5/8" SLOTTED HOLES FOR ANCHOR BOLTS NO. 3. WELD TO NO. 1 AS SHOWN. SLOTS PARALLEL TO SHORT SIDE OF
3. PLATE. ASTM A449 - 1 1/8" DIA. ANCHOR BOLTS WITH NUT AND HARDENED WASHER (ALL GALVANIZED). 5 REQ'D. PER POST. THREAD 3" AND PLACE NORMAL TO PLATE NO. 2. CHAMFER TOP OF BOLTS BEFORE THREADING. USE 1'-9" LONG IN ABUTMENT WINGS. AT POSTS ON CONCRETE SLAB SUPERSTRUCTURES WHERE THE SLAB THICKNESS IS > 16" USE 1'-3" LONG. USE 10 3/4" LONG AT ALL OTHER LOCATIONS. (AN EQUIVALENT THREADED ROD WITH NUTS AND HARDENED WASHERS MAY BE SUBSTITUTED FOR ANCHOR BOLTS IN WINGS IF REQ'D. FOR CONSTRUCTIBILITY.)
4. 5/8" X 11" X 1'-8" ANCHOR PLATE (GALVANIZED) WITH 1 3/16" DIA. HOLES FOR ANCHOR BOLTS NO. 3
5. TS 5 X 4 X 0.25 STRUCTURAL TUBING. ATTACH TO NO. 1 WITH NO. 6.

5A. TS 5 X 5 X 0.25 STRUCTURAL TUBING. ATTACH TO NO. 1 WITH NO. 6.

6. 7/8" DIA. A325 SLOTTED ROUND HEAD BOLT WITH NUT, 3/16" X 1 5/8" X 1 5/8" WASHER, AND LOCK WASHER (2 REQ'D. AT EACH RAIL TO POST LOCATION.)
7. 1/2" THK. BACK-UP PLATE WITH 2 - 7/8" X 1 1/2" THREADED SHOP WELDED STUDS (NO. 12). BOLT TO RAIL AS SHOWN IN DETAIL. REQUIRED AT THRIE BEAM GUARD RAIL ATTACHMENTS ONLY. PLACE SYMMETRICALLY ABOUT TUBES NO. 5A.
8. 1" DIA. HOLES IN PLATE NO. 7 & TUBES NO. 5A FOR 7/8" DIA. A325 BOLTS WITH HEX NUTS AND WASHERS. 6 HOLES IN TUBES AND PLATE NO. 7.
9. SPLICE SLEEVE FABRICATED FROM 1/4" PLATE. PROVIDE "SLIDING FIT".
10. 3/8" X 3 5/8" X 2'-4" PLATE. 2 PER RAIL. USED IN NO. 5 & 5A.

10A. 3/8" X 2 5/8" X 2'-4" PLATE USED IN NO. 5, 3/8" X 3 5/8" X 2'-4" PLATE USED IN NO. 5A. 2 PER RAIL.

11. 7/8" DIA. A325 ROUND HEAD BOLT WITH NUT, WASHER, AND LOCK WASHER. USE 15/16" X 1 1/4" LONGIT. SLOTTED HOLES AT FIELD JOINTS AND 13/16" X 2 1/4" MIN. LONGIT. SLOTTED HOLES AT EXP. JOINTS IN PLATE NO. 10A.
12. 7/8" DIA. X 1 1/2" LONG THREADED SHOP WELDED STUDS (2 REQ'D).
13. 3/8" X 8" X 1'-6" PLATE. BOLT TO RAIL AS SHOWN IN DETAIL. REQ'D. AT THRIE BEAM GUARD RAIL ATTACHMENTS ONLY. PLACE SYM. ABOUT TUBES NO. 5A.
14. 7/8" DIA. X 2" LONG A325 HEX BOLT WITH NUT AND WASHER (5 REQ'D.).
15. 1" DIA. HOLES IN TUBES NO. 5A FOR ‡" DIA. A325 ROUND HEAD BOLT WITH NUT, WASHER, AND LOCK WASHER (4 REQ'D.). 4 HOLES IN TUBES.

GENERAL NOTES

1. BID ITEM SHALL BE "RAILING TUBULAR TYPE M" WHICH INCLUDES ALL ITEMS SHOWN.
2. RAIL POST AND BASE PLATES SHALL CONFORM TO THE REQUIREMENTS OF ASTM A709 GRADE 50. HOLLOW RAILING STRUCTURAL TUBING SHALL CONFORM TO THE REQUIREMENTS OF ASTM A500 GRADE B OR C WITH A CERTIFIED FY = 50 KSI. ANCHOR PLATES, AND SPLICE TUBE PLATES SHALL CONFORM TO THE REQUIREMENTS OF ASTM A709 GRADE 36.
3. THE NUT SECURING THE POST BASE PLATE TO THE CONCRETE SHALL BE TIGHTENED TO A SNUG FIT AND GIVEN AN ADDITIONAL „ TURN.
4. RAILS SHALL BE CONTINUOUS OVER A MINIMUM OF THREE (3) POSTS WITHOUT SPLICES WHERE POSSIBLE. RAILS SHALL BE SPLICED IN A PANEL OVER EXPANSION JOINTS.
5. ENDS OF TUBE SECTIONS SHALL BE SAWED. GRIND SMOOTH EXPOSED EDGES. ALL CUT ENDS SHALL BE TRUE AND SMOOTH.
6. WELD IS THE SAME ON BOTH FLANGES. FLANGE WELD DOES NOT REQUIRE MAGNETIC PARTICLE TESTING.
7. FILL BOLT SLOT OPENINGS IN POST SHIMS AND PLATE NO. 2 AND CAULK AROUND PERIMETER OF PLATE NO. 2 WITH NON-STAINING GRAY NON-BITUMINOUS JOINT SEALER. STEEL POST SHIMS MAY BE USED UNDER POSTS WHERE REQ'D. FOR ALIGNMENT.
8. POST BASE PLATES SHALL BE FLAT WITH ALL SURFACES SMOOTH AND FREE FROM WARP AND ALL EDGES SMOOTH, STRAIGHT AND VERTICAL. ALL PLATE CUTS SHALL BE MACHINE OR MACHINE FLAME CUT.
9. ALL MATERIAL SHALL BE GALVANIZED AFTER FABRICATION. PRIOR TO GALVANIZING, ALL STEEL RAILING POSTS & STEEL TUBING SHALL BE GIVEN A NO. 6 BLAST CLEANING BY SSPC SPECIFICATIONS.

◭ TIE TO TOP MAT OF STEEL.

* FOR ANCHOR BOLTS IN WINGS, TACK WELD MAY BE USED IN FIELD AFTER ANCHOR PLATE IS IN POSITION IF REQ'D. FOR CONSTRUCTIBILITY.

◪ RDWY. OPENING OR 2 " MIN. FOR STRIP SEAL EXP. JOINT & " OPENING FOR A1 ABUTMENT.

NO.	DATE	REVISION	BY

STATE OF WISCONSIN
DEPARTMENT OF TRANSPORTATION

STRUCTURE B-5-440

DRAWN BY PKF | PLANS CK'D. ETP

RAILING TUBULAR TYPE M

SHEET 13 OF 13

STATION	Distance	AREA (SF) Cut	AREA (SF) Salvaged/Unusable Pavement Material	AREA (SF) Fill	Incremental Vol (CY) (Unadjusted) Cut	Incremental Vol (CY) (Unadjusted) Salvaged/Unusable Pavement Material	Incremental Vol (CY) (Unadjusted) Fill	Cumulative Vol (CY) Cut 1.00	Cumulative Vol (CY) Expanded Fill 1.30	Mass Ordinate
6+25 LT	0.00	0.00	0.00	0.00	0	0	0	0	0	0
6+50 LT	25.00	4.27	0.00	95.34	2	0	44	2	57	-55
6+76 LT	26.00	2.72	0.00	83.29	3	0	86	5	169	-164
7+00 LT	24.00	2.92	0.00	106.50	3	0	84	8	279	-271
7+50 LT	50.00	3.57	0.00	104.73	6	0	196	14	533	-519
7+68 LT	18.00	3.73	0.00	90.98	2	0	65	16	618	-602
7+92 LT	24.00	3.76	0.00	67.38	3	0	70	20	709	-690
8+00 LT	8.00	3.70	0.00	66.21	1	0	20	21	735	-714
				SUBTOTAL =	21	0	565			
6+00 RT	0.00	0.00	0.00	0.00	0	0	0	0	0	0
6+29 RT	29.00	2.32	0.00	33.86	1	0	18	1	24	-22
6+50 RT	21.00	2.15	0.00	106.04	2	0	54	3	94	-91
7+00 RT	50.00	2.55	0.00	89.12	4	0	181	7	329	-322
7+49 RT	49.00	2.98	0.00	72.62	5	0	147	12	520	-508
7+50 RT	1.00	2.98	0.00	71.57	0	0	3	12	524	-511
7+74 RT	24.00	3.11	0.00	65.98	3	0	61	15	603	-588
7+99 RT	25.00	3.02	0.00	40.32	3	0	49	18	667	-649
8+00 RT	1.00	3.00	0.00	38.87	0	0	1	18	669	-651
				SUBTOTAL =	18	0	515			
8+00	0.00	65.78	9.33	105.08	0	0	0	0	0	0
8+18	18.00	59.34	9.33	53.35	42	6	53	42	69	-33
8+50	32.00	47.80	9.33	20.50	63	11	44	105	126	-38
9+00	50.00	37.01	9.33	32.37	79	17	49	184	189	-40
9+39	39.00	34.14	9.33	49.52	51	13	59	235	266	-79
9+45	6.00	32.23	9.33	52.87	7	2	11	242	281	-88
				SUBTOTAL =	242	50	216			
		STRUCTURE B-5-440								
10+55	0.00	37.88	9.33	39.74	0	0	0	0	0	0
10+61	6.00	39.07	9.33	20.50	9	2	7	9	9	-2
11+00	39.00	45.51	9.33	32.37	61	13	38	70	58	-4
11+50	50.00	59.62	9.33	49.52	97	17	76	167	157	-23
11+65	15.00	62.86	9.33	52.87	34	5	28	201	194	-31
				SUBTOTAL =	201	38	149			
11+65 LT	0.00	2.00	0.00	29.63	0	0	0	0	0	0
11+88 LT	23.00	1.97	0.00	30.55	2	0	26	2	33	-32
12+00 LT	12.00	1.76	0.00	42.92	1	0	16	3	55	-52
12+13 LT	13.00	3.84	0.00	22.96	1	0	16	4	75	-71
12+38 LT	25.00	4.26	0.00	0.82	4	0	11	8	89	-82
12+50 LT	12.00	3.88	0.00	5.62	2	0	1	9	91	-82
13+00 LT	50.00	1.61	0.00	18.85	5	0	23	15	121	-106
13+38 LT	38.00	3.80	0.00	3.71	4	0	16	18	141	-123
13+54 LT	16.00	0.00	0.00	0.00	1	0	1	19	143	-123
				SUBTOTAL =	19	0	110			
11+65 RT	0.00	1.30	0.00	20.55	0	0	0	0	0	0
11+82 RT	20.00	1.31	0.00	24.91	1	0	17	1	22	-21
12+00 RT	15.00	1.30	0.00	40.36	1	0	18	2	45	-44
12+07 RT	7.00	1.32	0.00	40.42	0	0	10	2	59	-57
12+32 RT	25.00	1.31	0.00	38.89	1	0	37	3	107	-104
12+50 RT	18.00	1.30	0.00	31.93	1	0	24	4	137	-133
13+00 RT	50.00	1.39	0.00	9.72	2	0	39	7	188	-181
13+38 RT	38.00	27.17	0.00	0.00	20	0	7	27	197	-170
13+54 RT	16.00	0.00	0.00	0.00	8	0	0	35	197	-162
				SUBTOTAL =	35	0	151			
				TOTAL =	537	88	1,706			

9

9

PROJECT NO: 4546-02-71	HWY: CTH D	COUNTY: BROWN	EARTHWORK DETAIL – CTH D	SHEET 50	E

FILE NAME : PLOT DATE : 6/15/2018 PLOT BY : CORRE INC. PLOT NAME : ORG DATE : ORIGINATOR : PLOT SCALE : 1:1

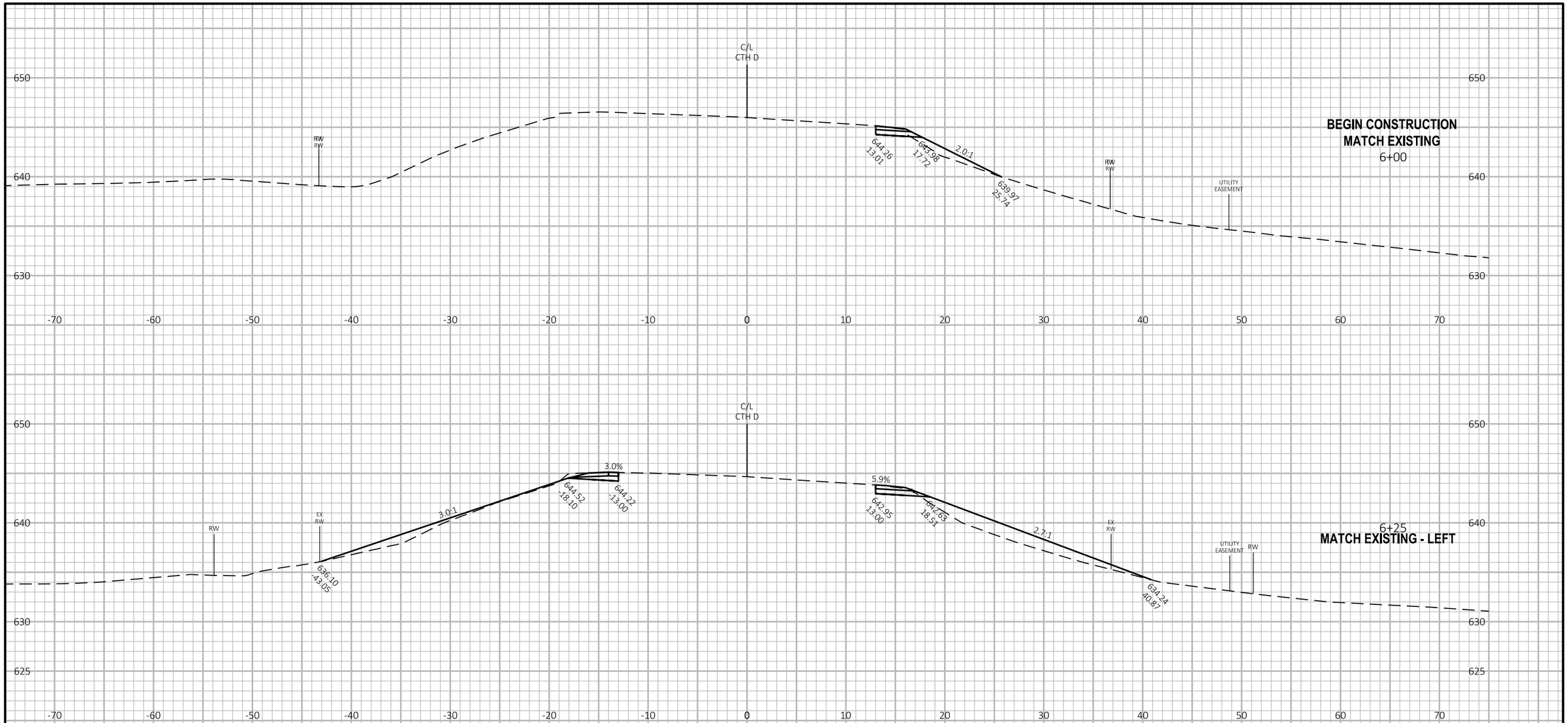

9

9

PROJECT NO: 4546-02-71	HWY: CTH D	COUNTY: BROWN	CROSS SECTIONS: CTH D	SHEET 51	E

FILE NAME : G:\WI - NE REGION\4546-02-00_CTH D_BROWN CO\500_CADD\501_C3D_2016\4546-02-00\SHEETSPLAN\090101-XS.DWG
LAYOUT NAME - xs - (1)
PLOT DATE : 7/22/2018 8:44 AM PLOT BY : CHARLENEANDBOBBY PLOT NAME : PLOT SCALE : 1 IN:10 FT HORZ. / 1 IN:10 FT VERT.

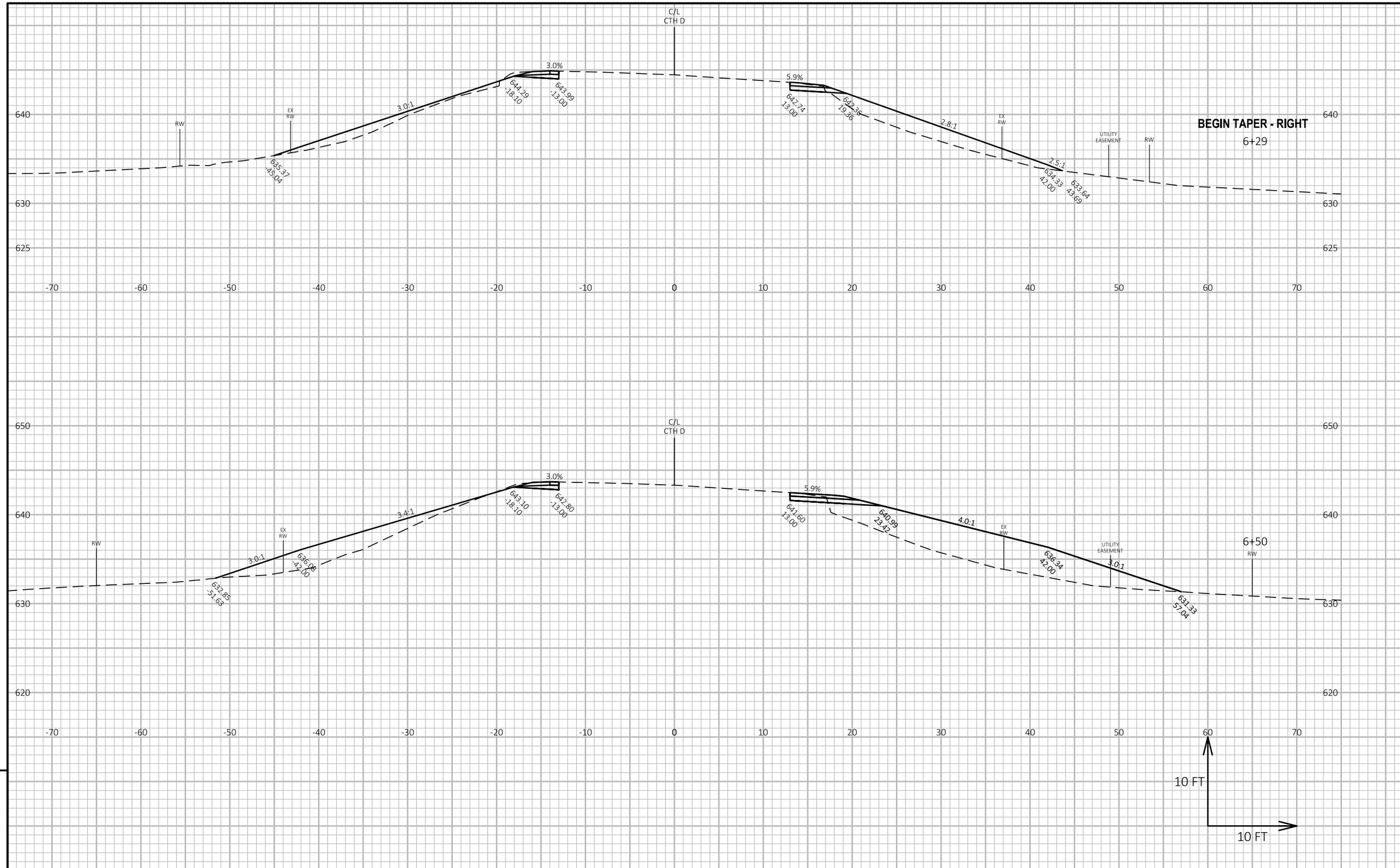

9

9

PROJECT NO: 4546-02-71	HWY: CTH D	COUNTY: BROWN	CROSS SECTIONS: CTH D	SHEET 52	E

FILE NAME : G:\WI - NE REGION\4546-02-00_CTH D_BROWN CO\500_CADD\501_C3D_2016\4546-02-00\SHEETSPLAN\090101-XS.DWG
LAYOUT NAME - xs - (2)
PLOT DATE : 7/22/2018 8:45 AM
PLOT BY : CHARLENEANDBOBBY
PLOT NAME :
PLOT SCALE : 1 IN:10 FT HORZ. / 1 IN:10 FT VERT.

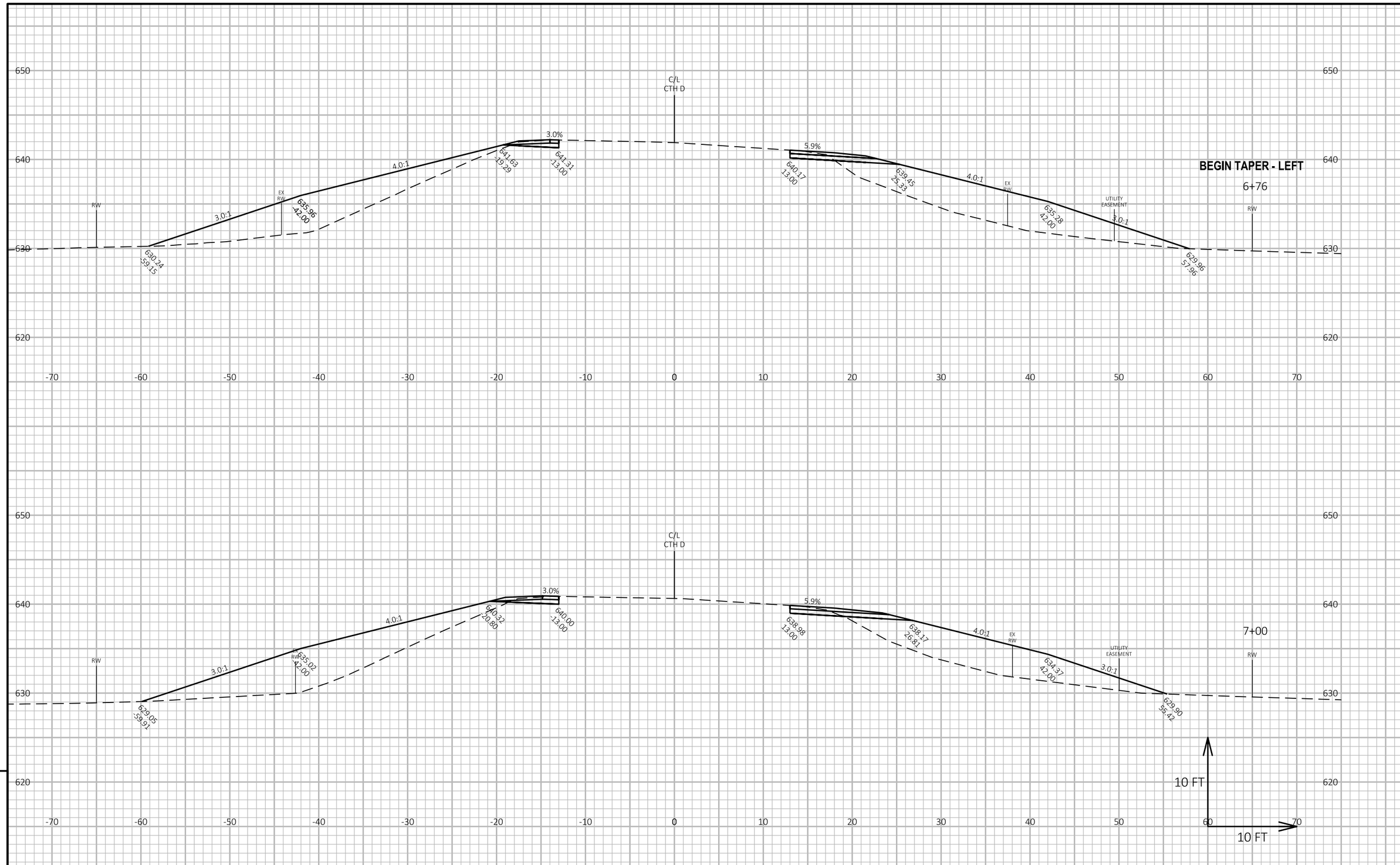

9

9

PROJECT NO: 4546-02-71	HWY: CTH D	COUNTY: BROWN	CROSS SECTIONS: CTH D	SHEET 53	E

FILE NAME : G:\WI - NE REGION\4546-02-00_CTH D_BROWN CO\500_CADD\501_C3D_2016\4546-02-00\SHEETSPLAN\090101-XS.DWG
LAYOUT NAME - xs - (3)
PLOT DATE : 7/22/2018 8:45 AM
PLOT BY : CHARLENEANDBOBBY
PLOT NAME :
PLOT SCALE : 1 IN:10 FT HORZ. / 1 IN:10 FT VERT.

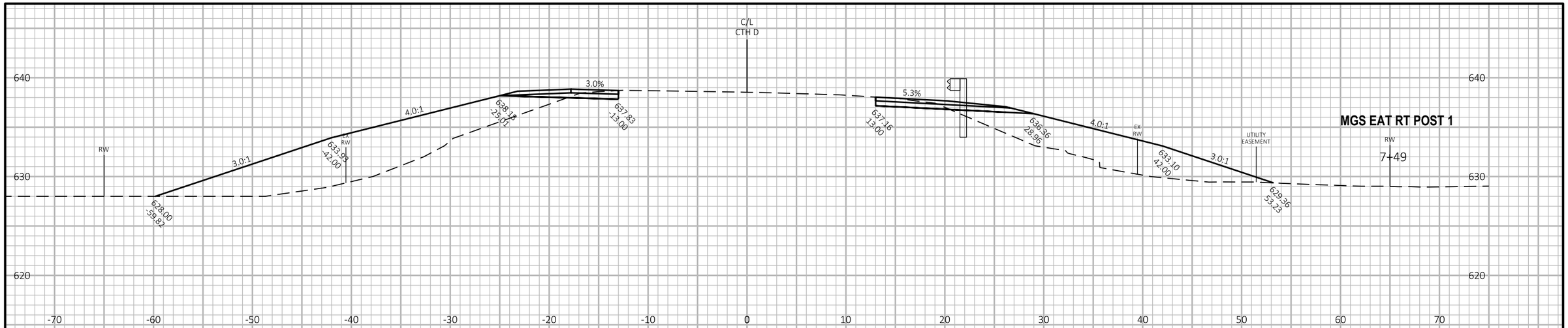

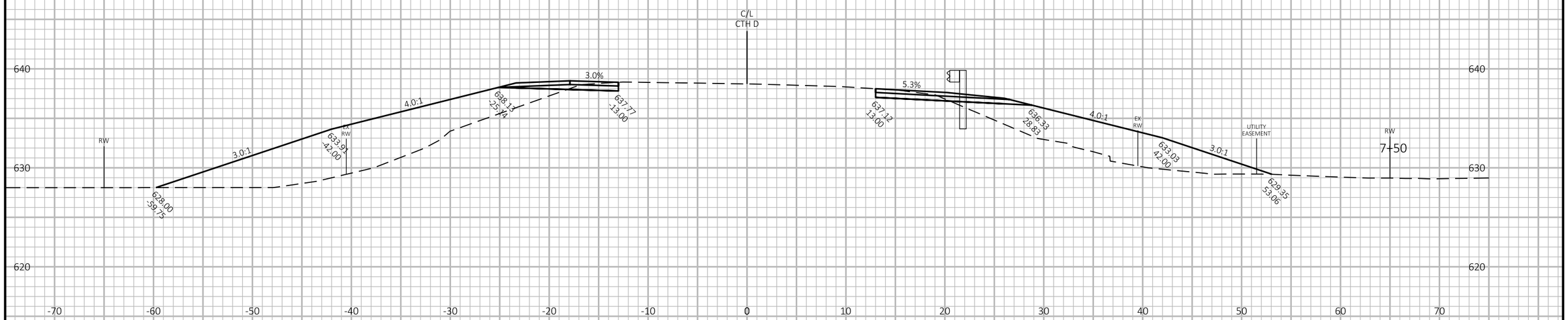

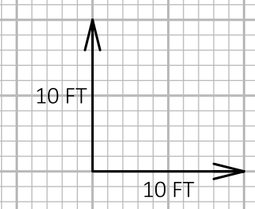

9

9

PROJECT NO: 4546-02-71	HWY: CTH D	COUNTY: BROWN	CROSS SECTIONS: CTH D	SHEET 54	E

FILE NAME : G:\WI - NE REGION\4546-02-00_CTH D_BROWN CO\500_CADD\501_C3D_2016\4546-02-00\SHEETSPLAN\090101-XS.DWG
LAYOUT NAME - xs - (4)
PLOT DATE : 7/22/2018 8:45 AM
PLOT BY : CHARLENEANDBOBBY
PLOT NAME :
PLOT SCALE : 1 IN:10 FT HORZ. / 1 IN:10 FT VERT.

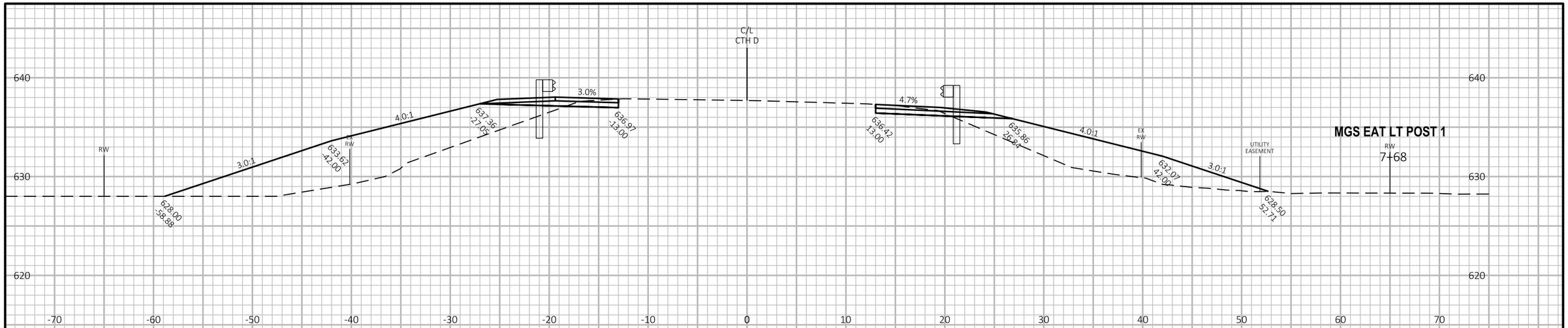

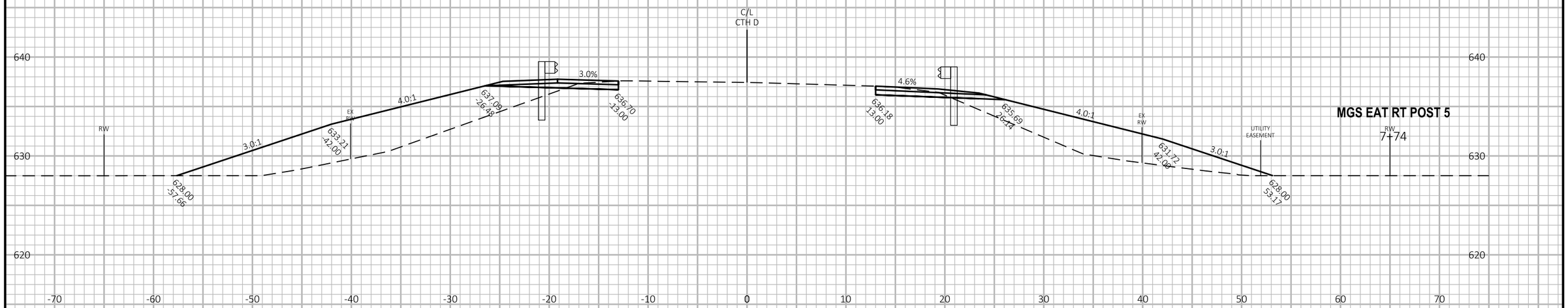

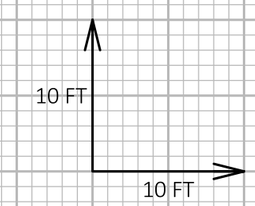

9

9

PROJECT NO: 4546-02-71	HWY: CTH D	COUNTY: BROWN	CROSS SECTIONS: CTH D	SHEET 55	E

FILE NAME : G:\WI - NE REGION\4546-02-00_CTH D_BROWN CO\500_CADD\501_C3D_2016\4546-02-00\SHEETSPLAN\090101-XS.DWG
LAYOUT NAME - xs - (5)
PLOT DATE : 7/22/2018 8:45 AM PLOT BY : CHARLENEANDBOBBY PLOT NAME : PLOT SCALE : 1 IN:10 FT HORZ. / 1 IN:10 FT VERT.

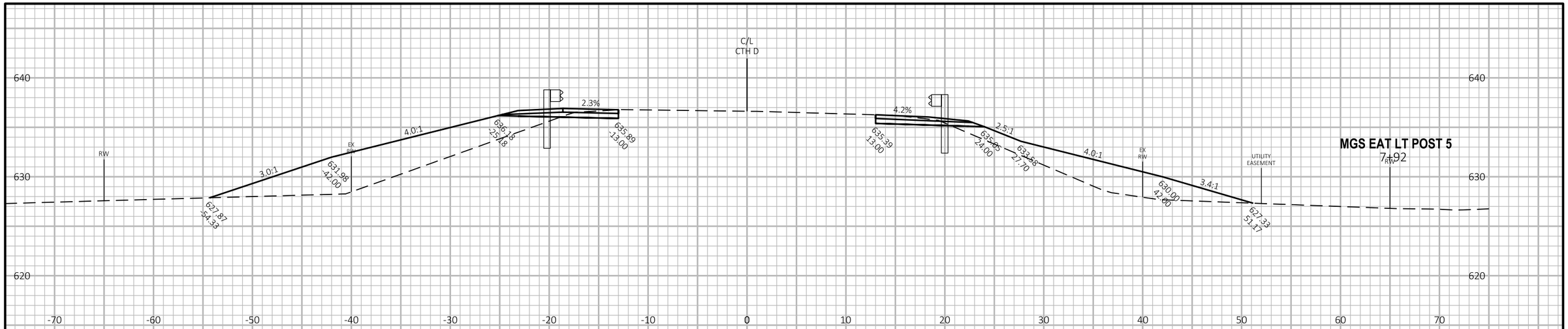

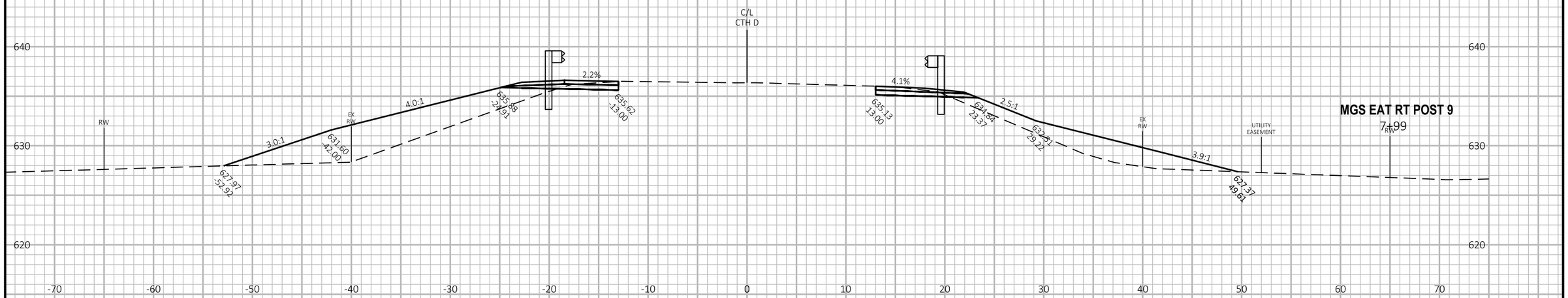

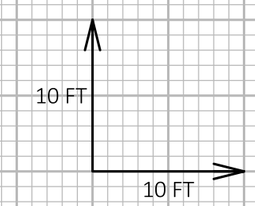

9

9

PROJECT NO: 4546-02-71	HWY: CTH D	COUNTY: BROWN	CROSS SECTIONS: CTH D	SHEET 56	E

FILE NAME : G:\WI - NE REGION\4546-02-00_CTH D_BROWN CO\500_CADD\501_C3D_2016\4546-02-00\SHEETSPLAN\090101-XS.DWG
LAYOUT NAME - xs - (6)
PLOT DATE : 7/22/2018 8:45 AM
PLOT BY : CHARLENEANDBOBBY
PLOT NAME :
PLOT SCALE : 1 IN:10 FT HORZ. / 1 IN:10 FT VERT.

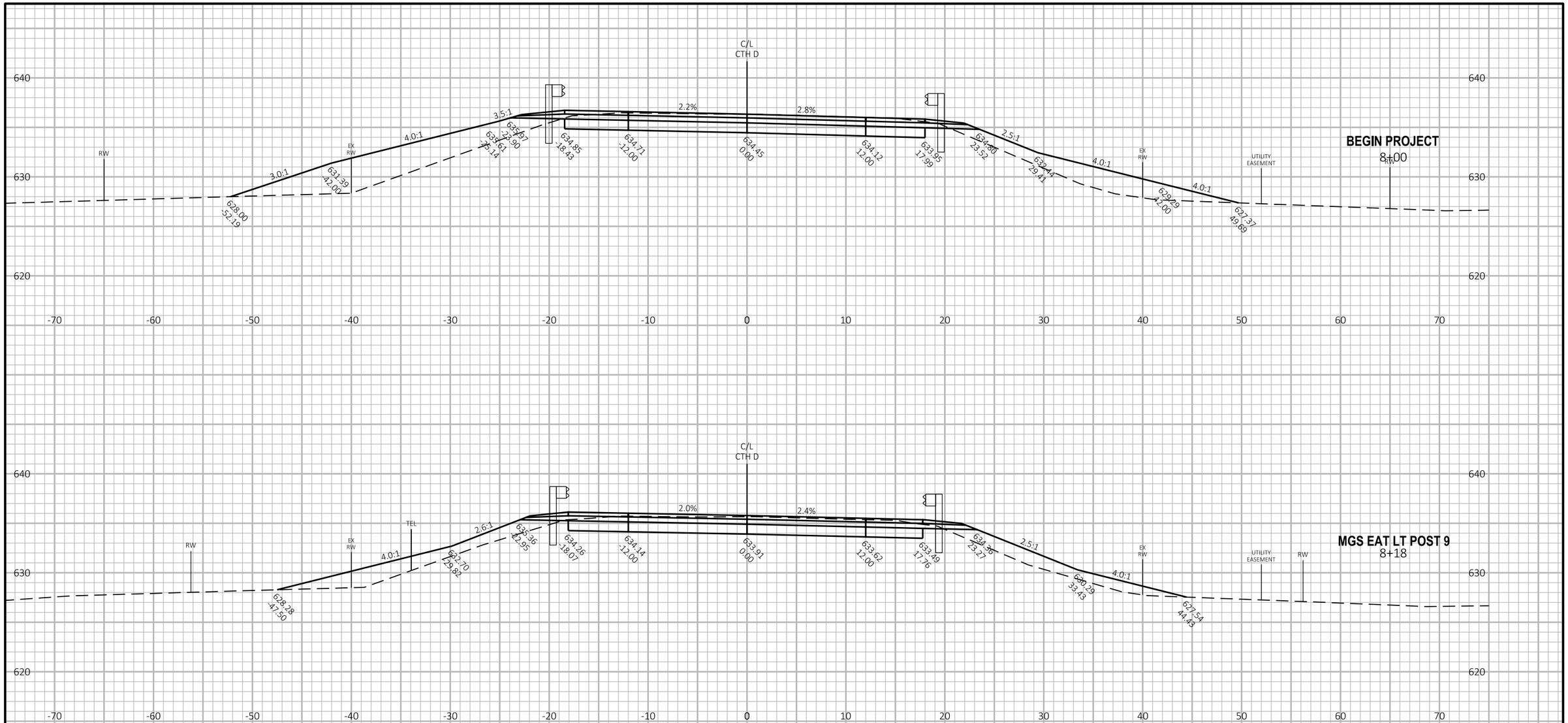

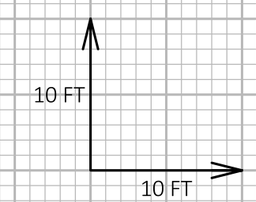

9

9

PROJECT NO: 4546-02-71	HWY: CTH D	COUNTY: BROWN	CROSS SECTIONS: CTH D	SHEET 57	E

FILE NAME : G:\WI - NE REGION\4546-02-00_CTH D_BROWN CO\500_CADD\501_C3D_2016\4546-02-00\SHEETSPLAN\090101-XS.DWG
LAYOUT NAME - xs - (7)
PLOT DATE : 7/22/2018 8:45 AM
PLOT BY : CHARLENEANDBOBBY
PLOT NAME :
PLOT SCALE : 1 IN:10 FT HORZ. / 1 IN:10 FT VERT.

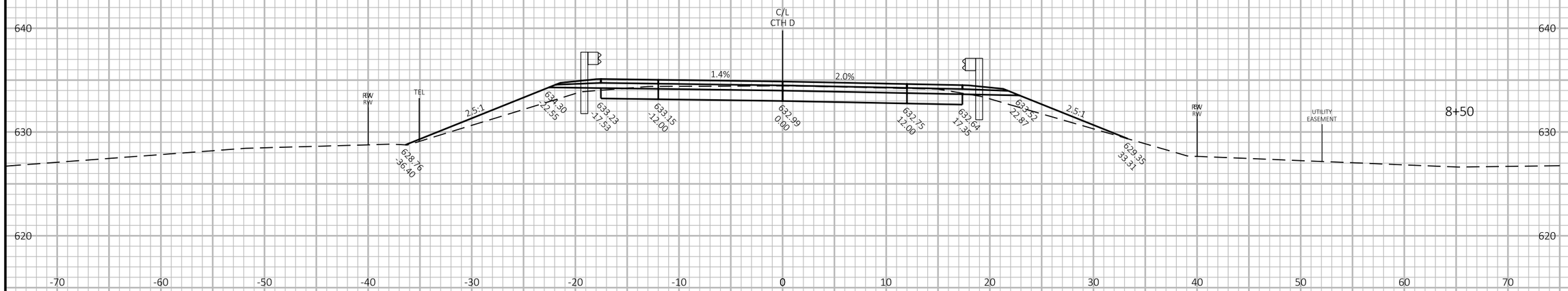

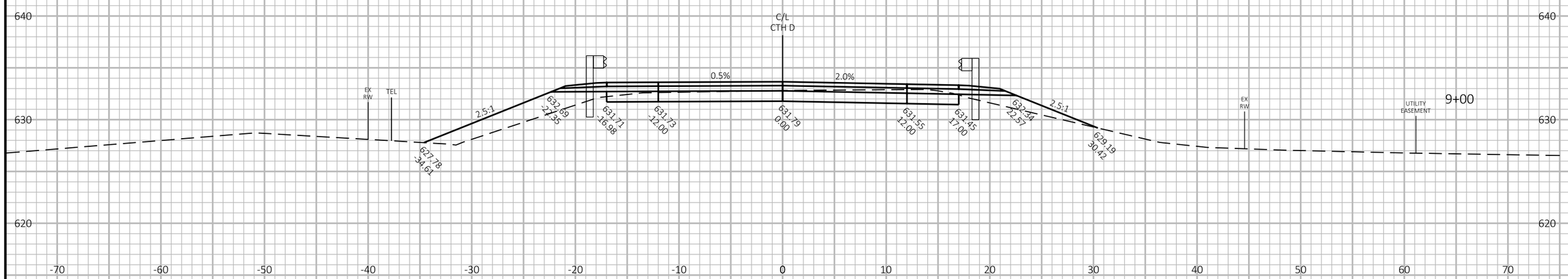

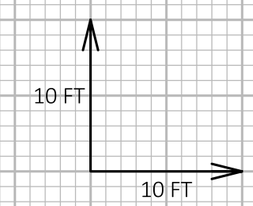

9

9

PROJECT NO: 4546-02-71	HWY: CTH D	COUNTY: BROWN	CROSS SECTIONS: CTH D	SHEET 58	E

FILE NAME : G:\WI - NE REGION\4546-02-00_CTH D_BROWN CO\500_CADD\501_C3D_2016\4546-02-00\SHEETSPLAN\090101-XS.DWG
LAYOUT NAME - xs - (8)
PLOT DATE : 7/22/2018 8:46 AM
PLOT BY : CHARLENEANDBOBBY
PLOT NAME :
PLOT SCALE : 1 IN:10 FT HORZ. / 1 IN:10 FT VERT.

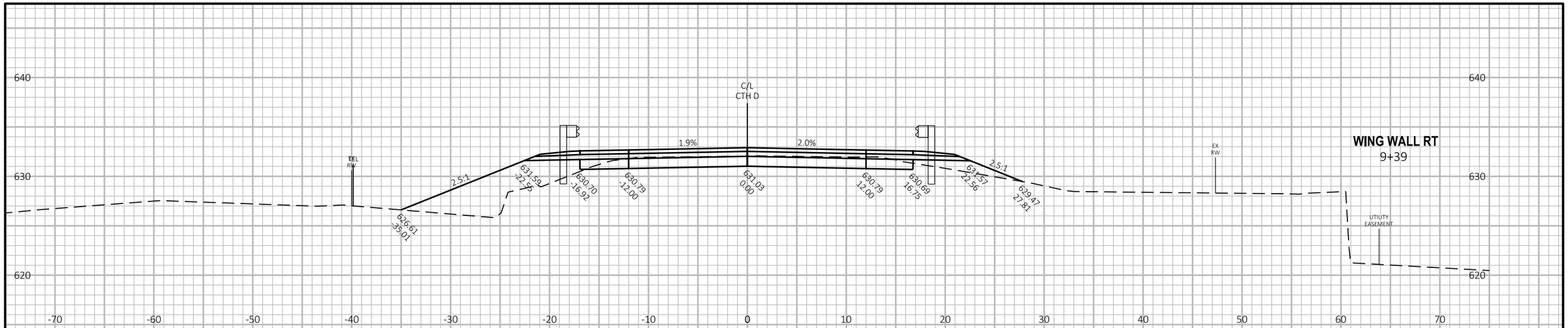

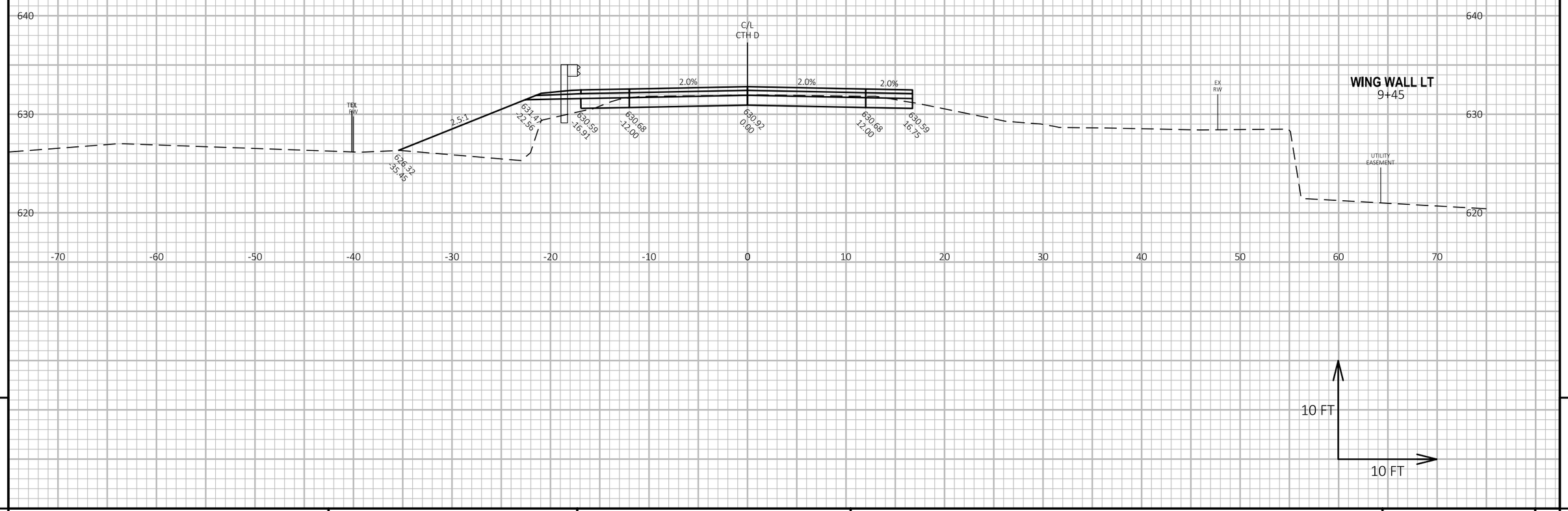

9

9

PROJECT NO: 4546-02-71	HWY: CTH D	COUNTY: BROWN	CROSS SECTIONS: CTH D	SHEET 59	E

FILE NAME : G:\WI - NE REGION\4546-02-00_CTH D_BROWN CO\500_CADD\501_C3D_2016\4546-02-00\SHEETSPLAN\090101-XS.DWG
LAYOUT NAME - xs - (9)
PLOT DATE : 7/22/2018 8:46 AM PLOT BY : CHARLENEANDBOBBY PLOT NAME : PLOT SCALE : 1 IN:10 FT HORZ. / 1 IN:10 FT VERT.

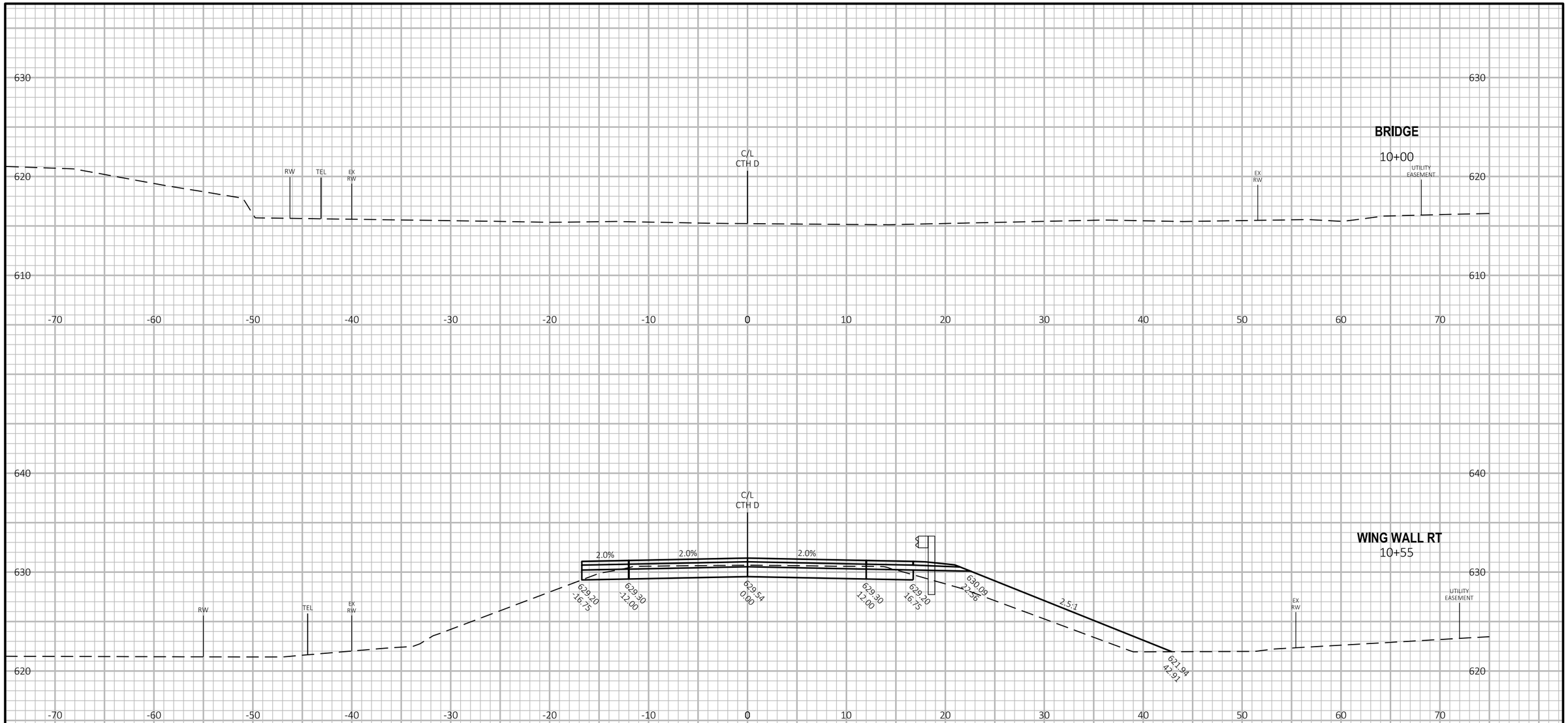

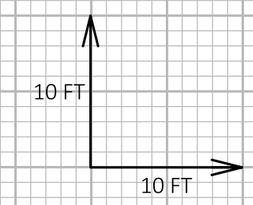

9

9

PROJECT NO: 4546-02-71	HWY: CTH D	COUNTY: BROWN	CROSS SECTIONS: CTH D	SHEET 60	E

FILE NAME : G:\WI - NE REGION\4546-02-00_CTH D_BROWN CO\500_CADD\501_C3D_2016\4546-02-00\SHEETSPLAN\090101-XS.DWG
LAYOUT NAME - xs - (10)
PLOT DATE : 7/22/2018 8:46 AM PLOT BY : CHARLENEANDBOBBY PLOT NAME : PLOT SCALE : 1 IN:10 FT HORZ. / 1 IN:10 FT VERT.

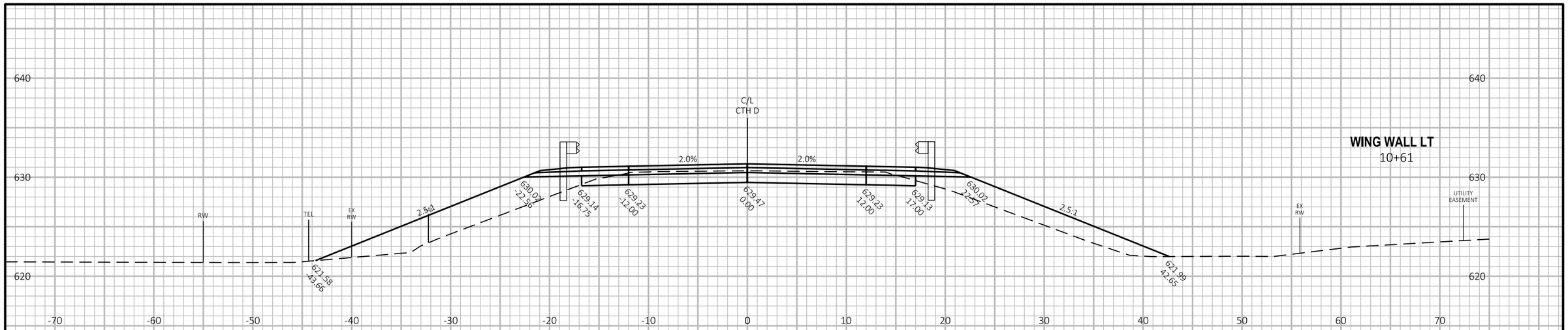

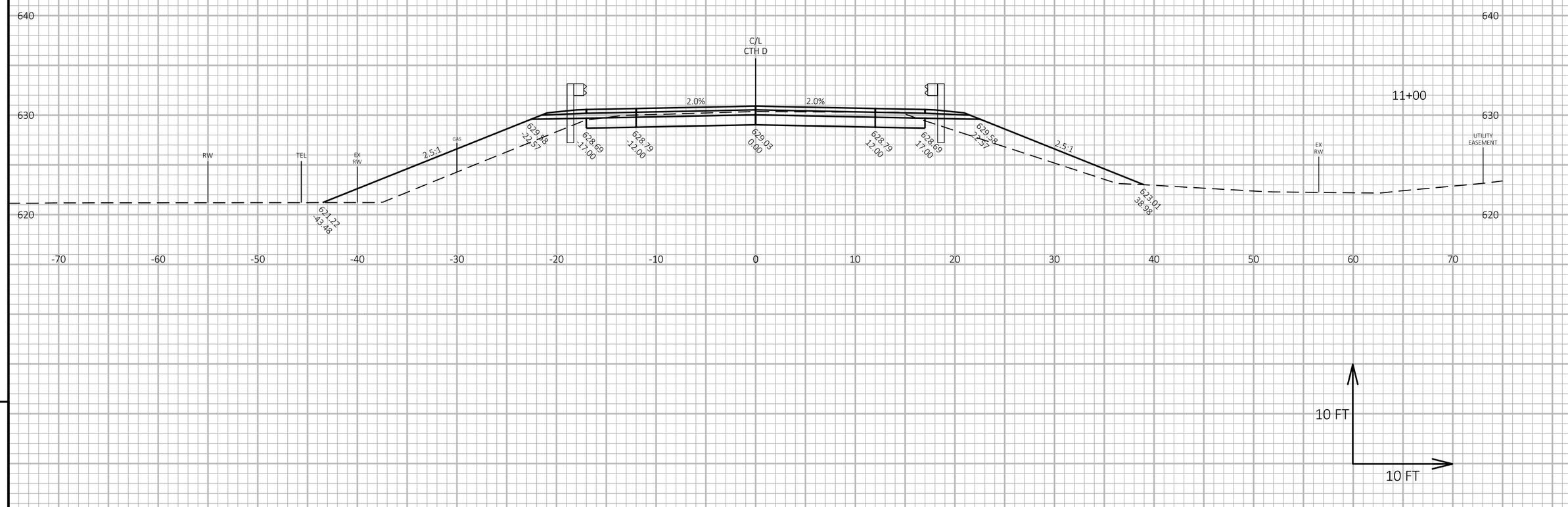

9

9

PROJECT NO: 4546-02-71	HWY: CTH D	COUNTY: BROWN	CROSS SECTIONS: CTH D	SHEET 61	E

FILE NAME : G:\WI - NE REGION\4546-02-00_CTH D_BROWN CO\500_CADD\501_C3D_2016\4546-02-00\SHEETSPLAN\090101-XS.DWG
LAYOUT NAME - xs - (11)
PLOT DATE : 7/22/2018 8:46 AM
PLOT BY : CHARLENEANDBOBBY
PLOT NAME :
PLOT SCALE : 1 IN:10 FT HORZ. / 1 IN:10 FT VERT.

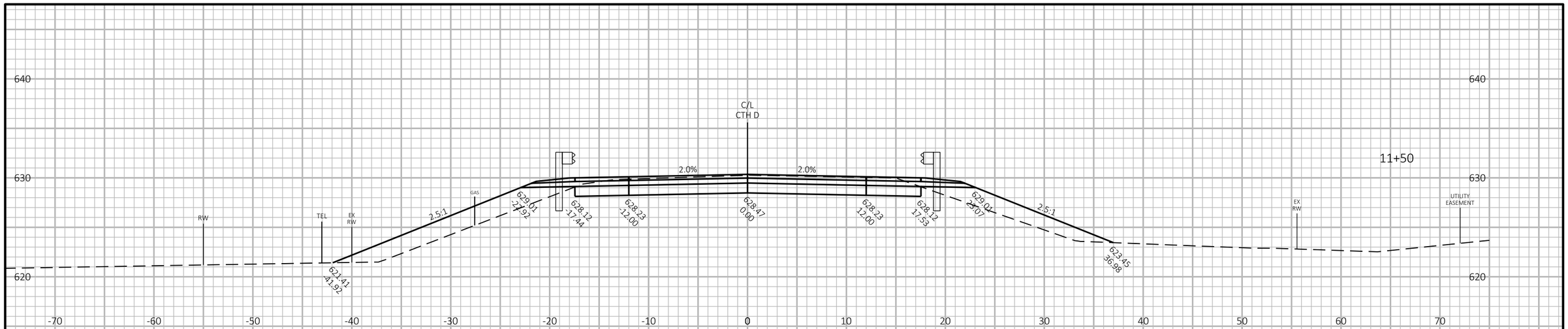

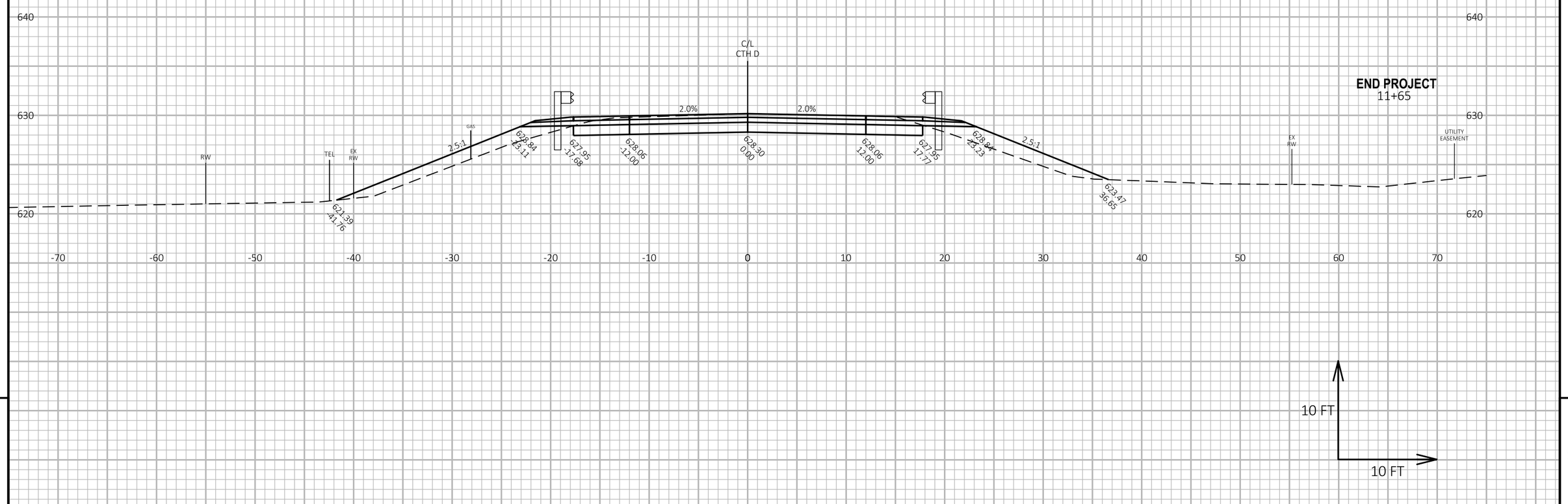

9

9

PROJECT NO: 4546-02-71	HWY: CTH D	COUNTY: BROWN	CROSS SECTIONS: CTH D	SHEET 62	E

FILE NAME : G:\WI - NE REGION\4546-02-00_CTH D_BROWN CO\500_CADD\501_C3D_2016\4546-02-00\SHEETSPLAN\090101-XS.DWG
LAYOUT NAME - xs - (12)
PLOT DATE : 7/22/2018 8:46 AM
PLOT BY : CHARLENEANDBOBBY
PLOT NAME :
PLOT SCALE : 1 IN:10 FT HORZ. / 1 IN:10 FT VERT.

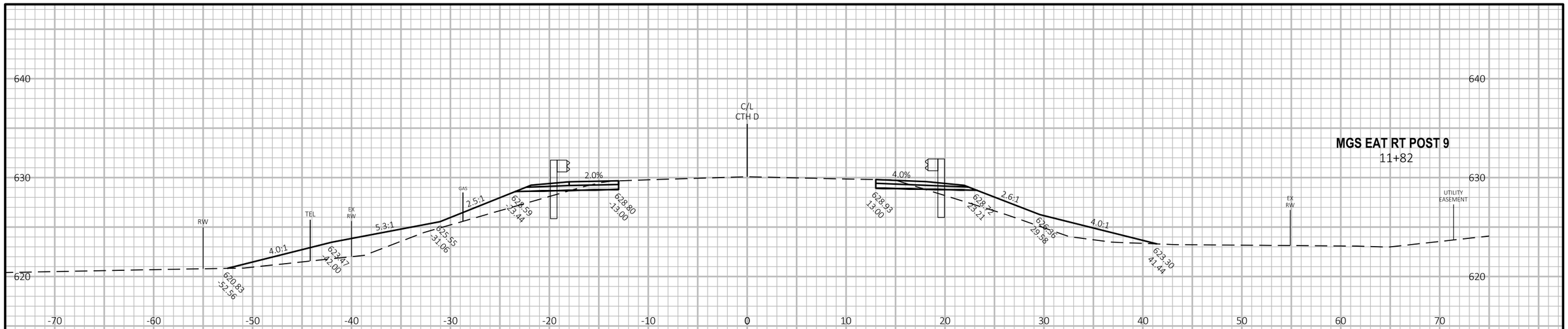

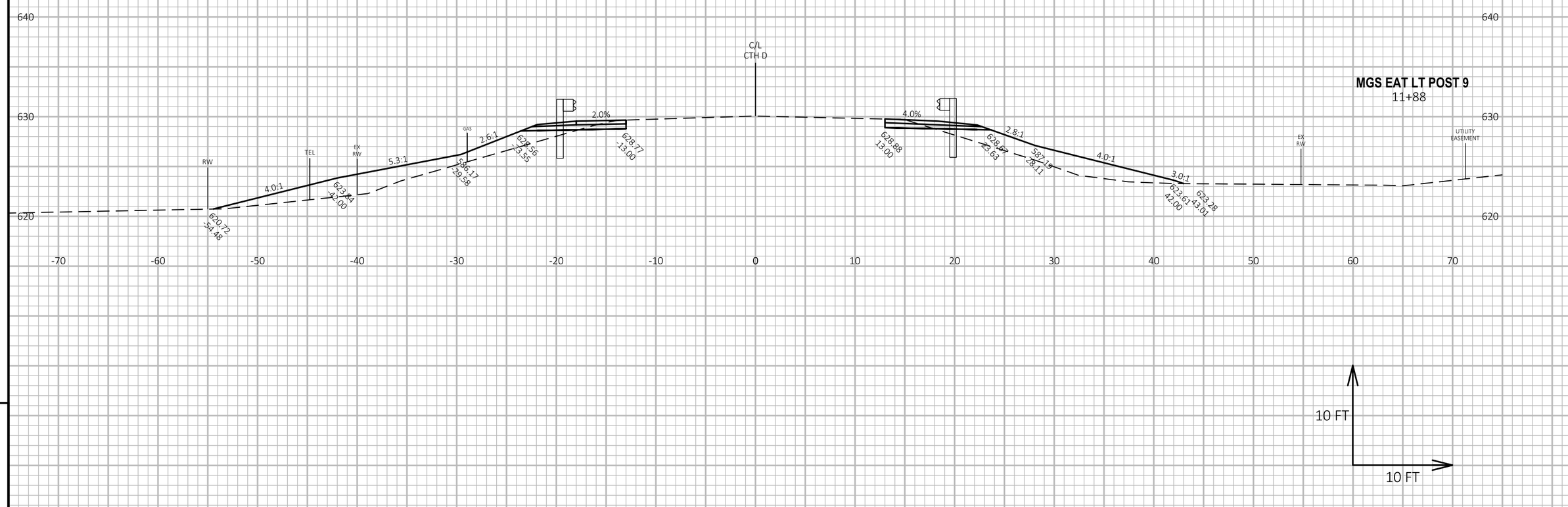

9

9

PROJECT NO: 4546-02-71	HWY: CTH D	COUNTY: BROWN	CROSS SECTIONS: CTH D	SHEET 63	E

FILE NAME : G:\WI - NE REGION\4546-02-00_CTH D_BROWN CO\500_CADD\501_C3D_2016\4546-02-00\SHEETSPLAN\090101-XS.DWG
LAYOUT NAME - xs - (13)
PLOT DATE : 7/22/2018 8:46 AM
PLOT BY : CHARLENEANDBOBBY
PLOT NAME :
PLOT SCALE : 1 IN:10 FT HORZ. / 1 IN:10 FT VERT.

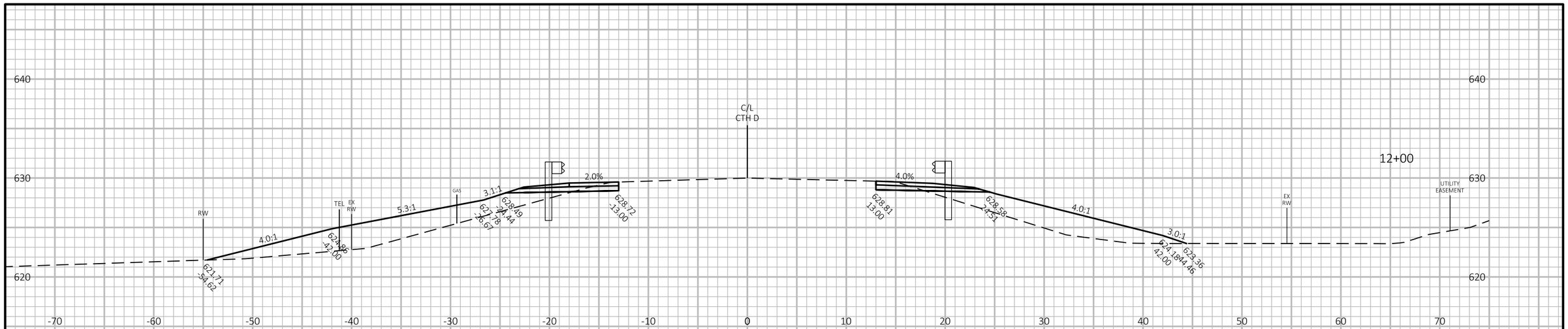

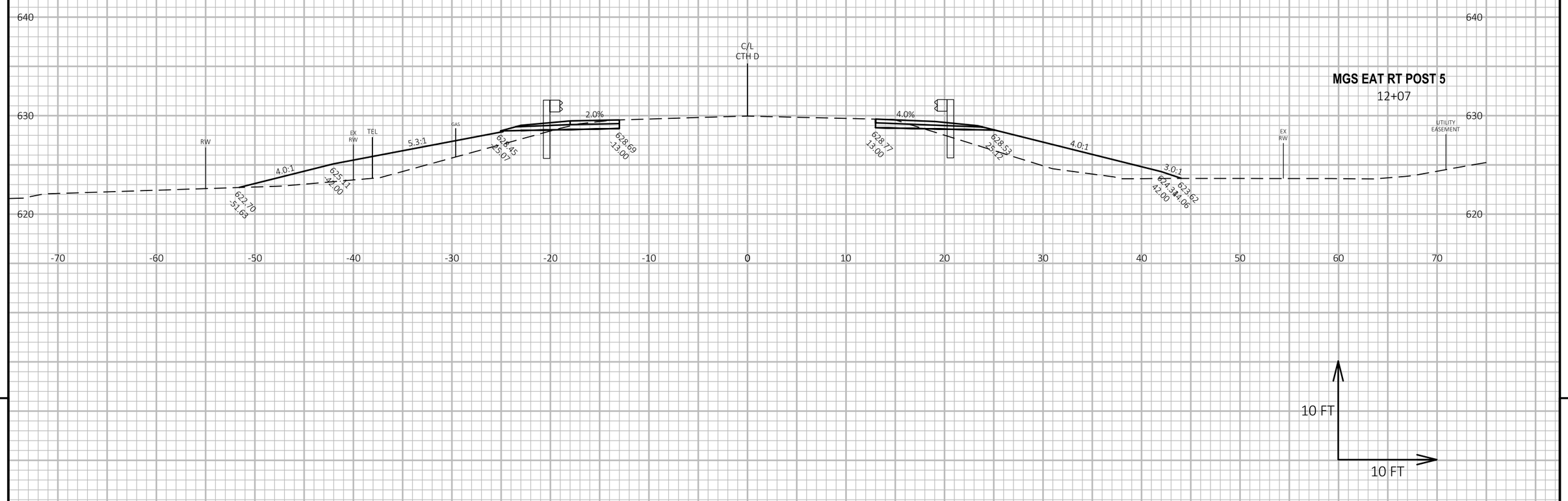

9

9

PROJECT NO: 4546-02-71	HWY: CTH D	COUNTY: BROWN	CROSS SECTIONS: CTH D	SHEET 64	E

FILE NAME : G:\WI - NE REGION\4546-02-00_CTH D_BROWN CO\500_CADD\501_C3D_2016\4546-02-00\SHEETSPLAN\090101-XS.DWG
LAYOUT NAME - xs - (14)
PLOT DATE : 7/22/2018 8:47 AM
PLOT BY : CHARLENEANDBOBBY
PLOT NAME :
PLOT SCALE : 1 IN:10 FT HORZ. / 1 IN:10 FT VERT.

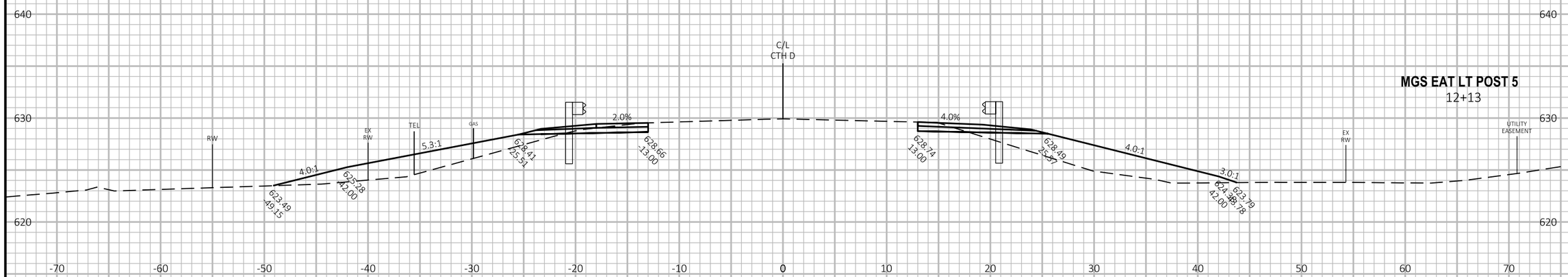

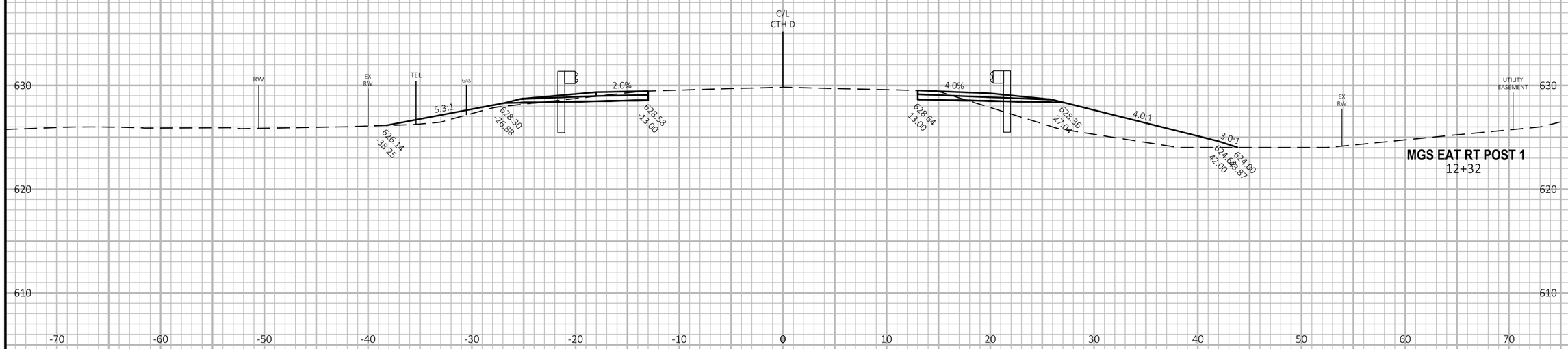

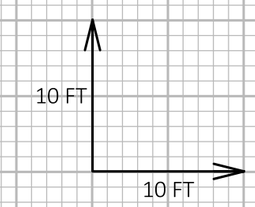

9

9

PROJECT NO: 4546-02-71	HWY: CTH D	COUNTY: BROWN	CROSS SECTIONS: CTH D	SHEET 65	E

FILE NAME : G:\WI - NE REGION\4546-02-00_CTH D_BROWN CO\500_CADD\501_C3D_2016\4546-02-00\SHEETSPLAN\090101-XS.DWG
LAYOUT NAME - xs - (15)
PLOT DATE : 7/22/2018 8:47 AM
PLOT BY : CHARLENEANDBOBBY
PLOT NAME :
PLOT SCALE : 1 IN:10 FT HORZ. / 1 IN:10 FT VERT.

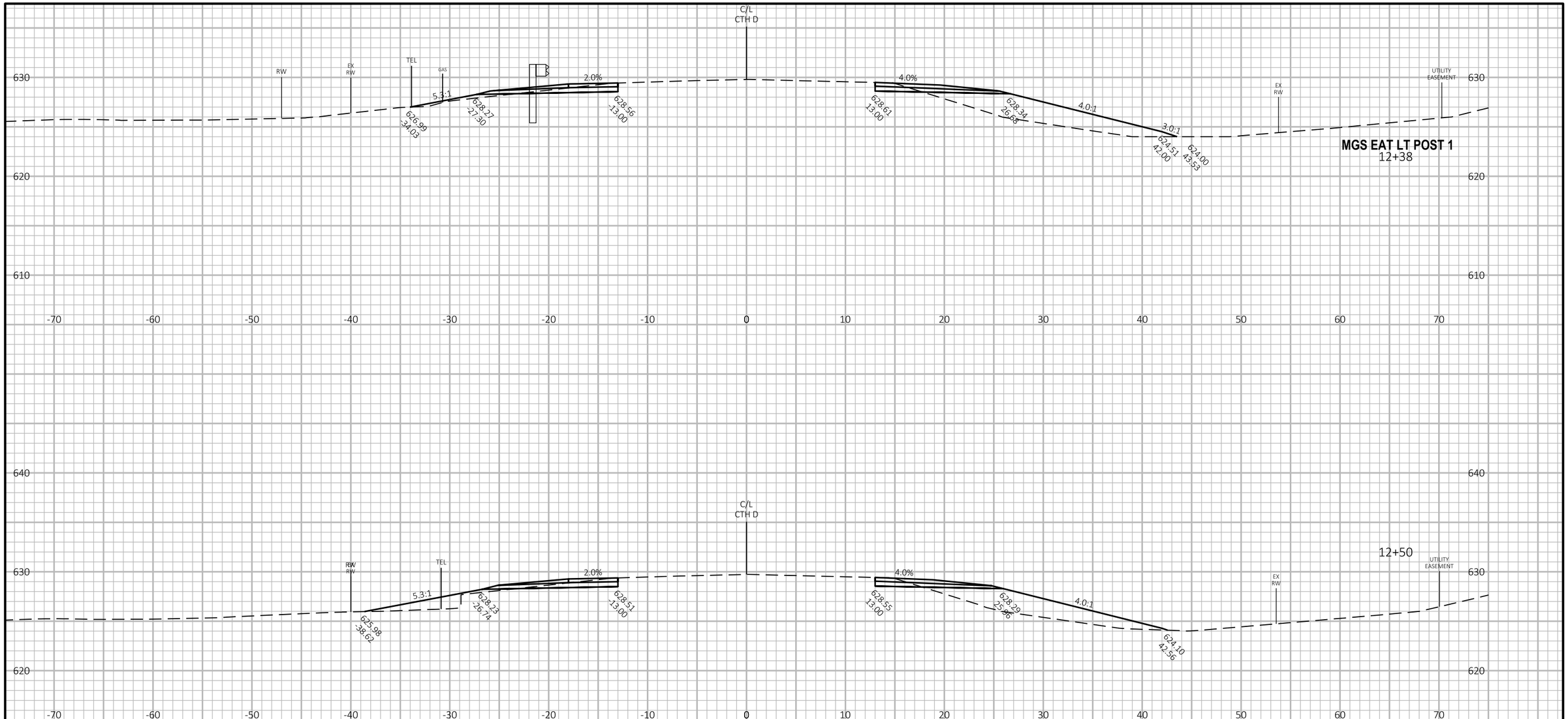

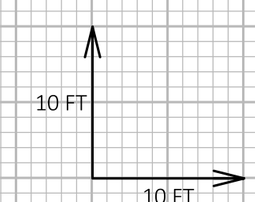

9

9

PROJECT NO: 4546-02-71	HWY: CTH D	COUNTY: BROWN	CROSS SECTIONS: CTH D	SHEET 66	E

FILE NAME : G:\WI - NE REGION\4546-02-00_CTH D_BROWN CO\500_CADD\501_C3D_2016\4546-02-00\SHEETSPLAN\090101-XS.DWG
LAYOUT NAME - xs - (16)
PLOT DATE : 7/22/2018 8:47 AM
PLOT BY : CHARLENEANDBOBBY
PLOT NAME :
PLOT SCALE : 1 IN:10 FT HORZ. / 1 IN:10 FT VERT.
WISDOT/CADDS SHEET 49

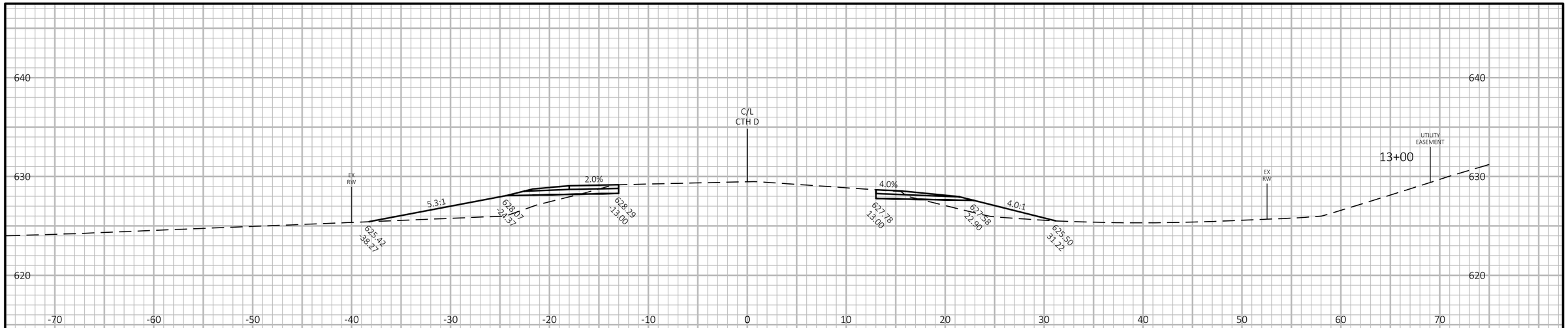

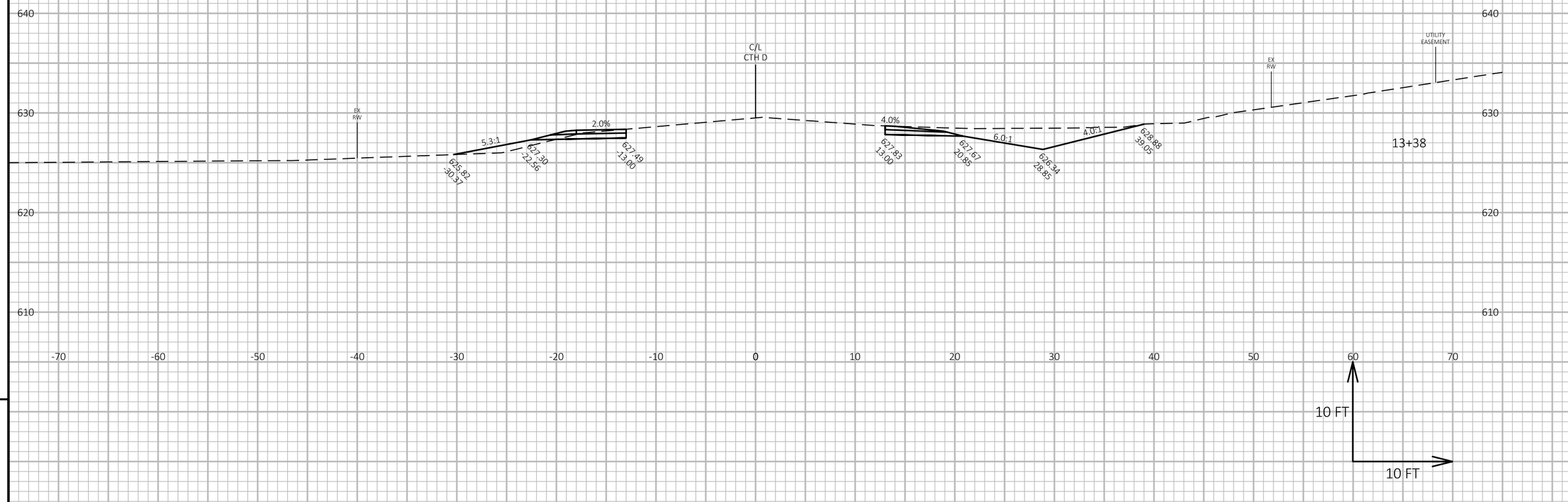

9

9

PROJECT NO: 4546-02-71	HWY: CTH D	COUNTY: BROWN	CROSS SECTIONS: CTH D	SHEET 67	E

FILE NAME : G:\WI - NE REGION\4546-02-00_CTH D_BROWN CO\500_CADD\501_C3D_2016\4546-02-00\SHEETSPLAN\090101-XS.DWG
LAYOUT NAME - xs - (17)
PLOT DATE : 7/22/2018 8:47 AM
PLOT BY : CHARLENEANDBOBBY
PLOT NAME :
PLOT SCALE : 1 IN:10 FT HORZ. / 1 IN:10 FT VERT.

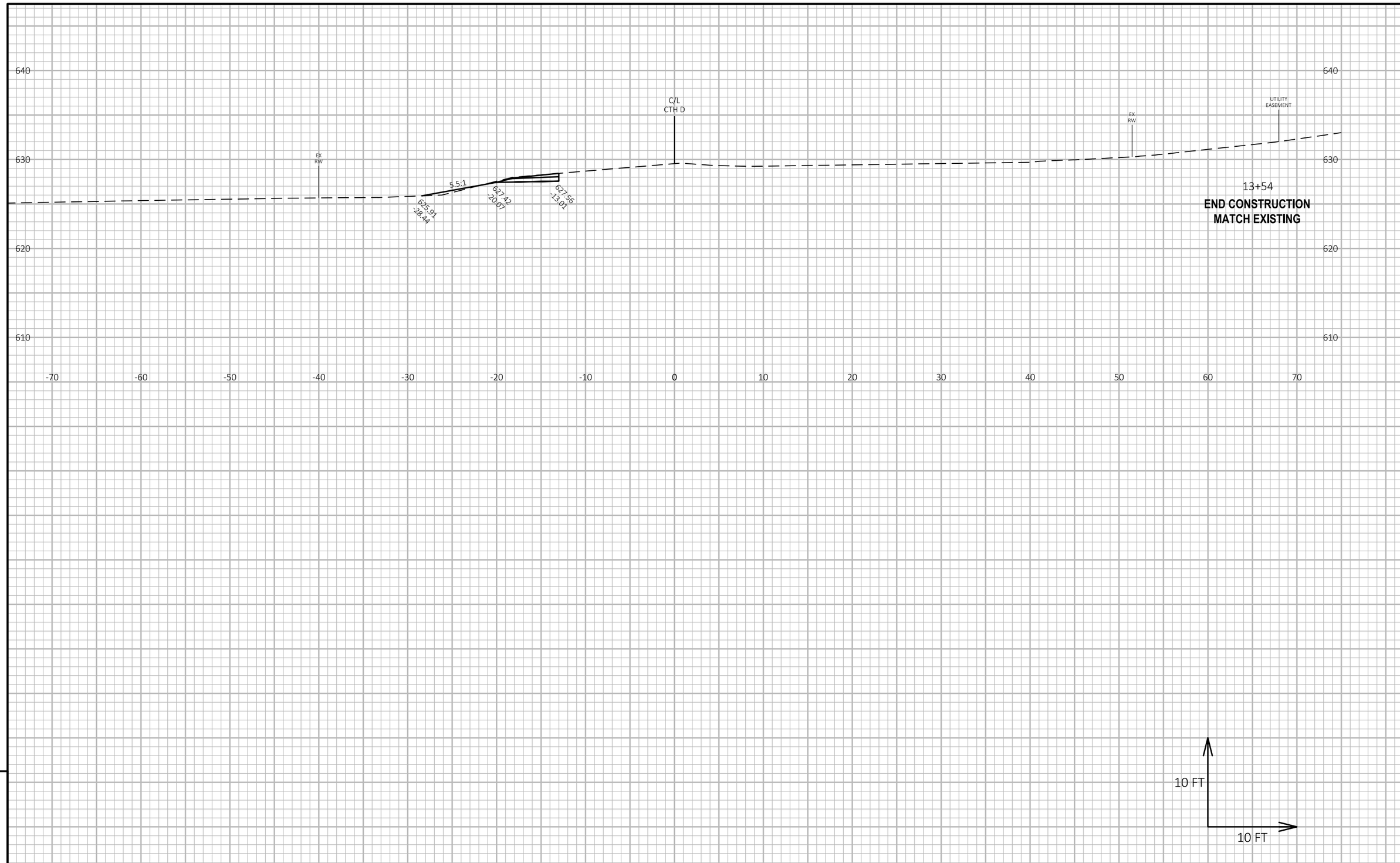

9

9

PROJECT NO: 4546-02-71	HWY: CTH D	COUNTY: BROWN	CROSS SECTIONS: CTH D	SHEET 68	E

FILE NAME : G:\WI - NE REGION\4546-02-00_CTH D_BROWN CO\500_CADD\501_C3D_2016\4546-02-00\SHEETSPLAN\090101-XS.DWG
LAYOUT NAME - xs - (18)
PLOT DATE : 7/22/2018 8:47 AM
PLOT BY : CHARLENEANDBOBBY
PLOT NAME :
PLOT SCALE : 1 IN:10 FT HORZ. / 1 IN:10 FT VERT.

Notes

Wisconsin Department of Transportation

Dedicated people creating transportation solutions through innovation and exceptional service.

http://www.dot.wisconsin.gov