STATE PROJECT	FEDERAL PROJECT	
	PROJECT	CONTRACT
4685-33-71		

STATE OF WISCONSIN
DEPARTMENT OF TRANSPORTATION

PLAN OF PROPOSED IMPROVEMENT

MENASHA - APPLETON

VAR HWY

VAR HWY
WINNEBAGO COUNTY

STATE PROJECT NUMBER
4685-33-71

TRANS 220
PROJECT PLAN
FOR
DESIGN OF UTILITY FACILITY
ALTERATIONS OR RELOCATIONS

Date: 11/22/2021

PROJECT ID: 4685-33-71
WITH: N/A

COUNTY: WINNEBAGO

ORDER OF SHEETS

Section No.	1	Title
Section No.	2	Typical Sections and Details
Section No.	3	Estimate of Quantities
Section No.	3	Miscellaneous Quantities
Section No.	4	Right of Way Plat
Section No.	5	Plan and Profile
Section No.	6	Standard Detail Drawings
Section No.	7	Sign Plates
Section No.	8	Structure Plans
Section No.	9	Computer Earthwork Data
Section No.	9	Cross Sections

TOTAL SHEETS =

N

DESIGN DESIGNATION

A.A.D.T. =
A.A.D.T. =
D.H.V. =
D.D. =
T. =
DESIGN SPEED =
ESALS =

CONVENTIONAL SYMBOLS

PLAN
CORPORATE LIMITS
PROPERTY LINE
LOT LINE
LIMITED HIGHWAY EASEMENT
EXISTING RIGHT OF WAY
PROPOSED OR NEW R/W LINE
SLOPE INTERCEPT
REFERENCE LINE (300'EB')
EXISTING CULVERT
PROPOSED CULVERT (Box or Pipe)
COMBUSTIBLE FLUIDS (CAUTION)
MARSH AREA
WOODED OR SHRUB AREA

PROFILE
GRADE LINE
ORIGINAL GROUND
MARSH OR ROCK PROFILE (To be noted as such) (ROCK)
SPECIAL DITCH (LABEL)
GRADE ELEVATION (95.36)
CULVERT (Profile View)

UTILITIES
ELECTRIC — E —
FIBER OPTIC — FO —
GAS — G —
SANITARY SEWER — SAN —
STORM SEWER — SS —
TELEPHONE — T —
WATER — W —
UTILITY PEDESTAL
POWER POLE
TELEPHONE POLE

STRUCTURE B-70-110
CTH P OVER USH 10/STH 441

STRUCTURE B-8-033
PEDESTRIAN BRIDGE OVER STH 441

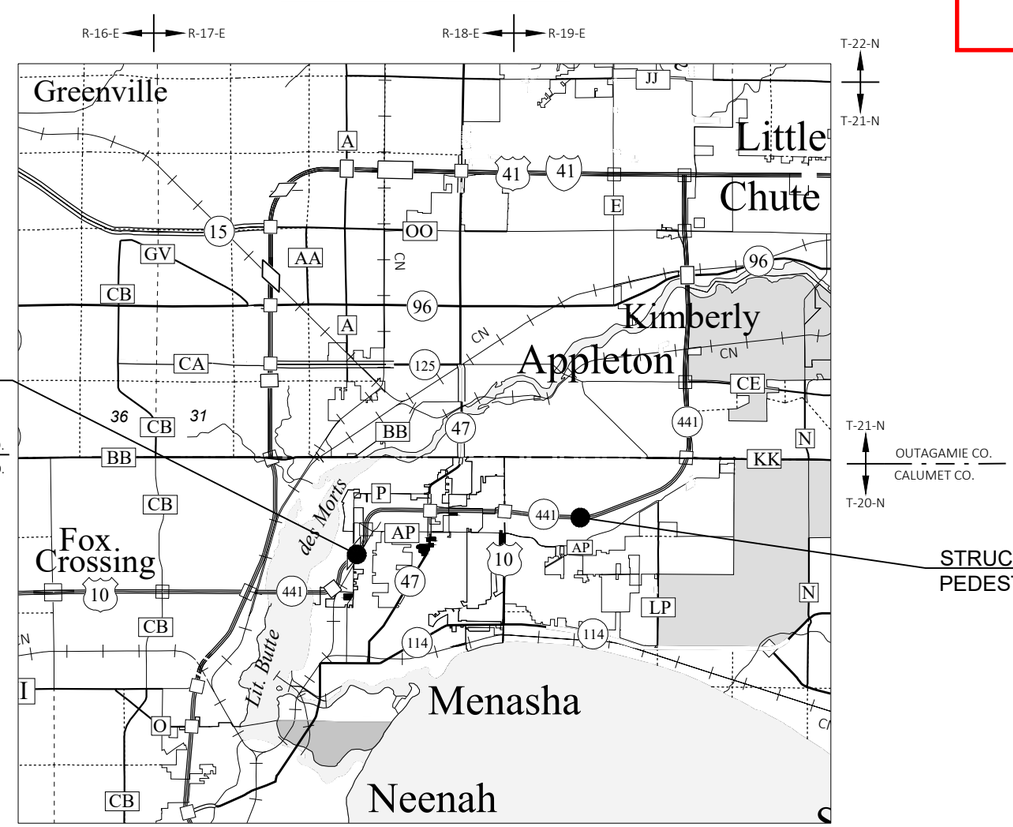

WINNEBAGO CO. | CALUMET CO.

LAYOUT

SCALE 0 — 2 MI.

TOTAL NET LENGTH OF CENTERLINE = 0.000

HORIZONTAL POSITIONS SHOWN ON THIS PLAN ARE WISCONSIN COORDINATE REFERENCE SYSTEM (WISCRS), WINNEBAGO COUNTY, NAD83 (2011), IN U.S. SURVEY FEET. POSITIONS SHOWN ARE GRID COORDINATES, GRID BEARINGS, AND GRID DISTANCES. GRID DISTANCES ARE THE SAME AS GROUND DISTANCES. ELEVATIONS ARE REFERENCED TO NAVD 88 (2012). GPS DERIVED ELEVATIONS ARE BASED ON GEOID 12A.

STATE OF WISCONSIN
DEPARTMENT OF TRANSPORTATION

PREPARED BY

Surveyor	NE REGION
Designer	B. HARDY
Project Manager	E. GWIDT
Regional Examiner	REGIONAL EXAMINER
Regional Supervisor	R. WAGNER

APPROVED FOR THE DEPARTMENT

DATE: _____ (Signature)

E

GENERAL NOTES

THE LOCATIONS OF EXISTING UTILITY FACILITIES AS SHOWN ON THE PLANS ARE APPROXIMATE. THERE MAY BE OTHER UTILITY FACILITIES WITHIN THE PROJECT AREA THAT ARE NOT SHOWN.

ORDER OF SECTION 2 DETAIL SHEETS

GENERAL NOTES
TYPICAL SECTIONS
CONSTRUCTION DETAILS
PLAN DETAILS
TRAFFIC CONTROL
DETOUR PLAN
ALIGNMENT PLAN

UTILITIES CONTACTS

COMMUNICATIONS

COMPANY NAME
CONTACT NAME
ADDRESS
CITY, STATE, ZIP
PHONE:
EMAIL:

DIGGERS HOTLINE
Dial 811 or (800)242-8511
www.DiggersHotline.com

EMERGENCY CONTACT NUMBERS FOR WISCONSIN POWER AND LIGHT COMPANY

ELECTRIC 24 HOUR EMERGENCY SERVICE: 1-800-862-6261
GAS 24 HOUR EMERGENCY SERVICE: 1-800-862-6263

EMERGENCY CONTACT NUMBERS FOR WISCONSIN PUBLIC SERVICE

ELECTRIC 24 HOUR EMERGENCY SERVICE: 1-800-450-7240
GAS 24 HOUR EMERGENCY SERVICE: 1-800-450-7280

EMERGENCY CONTACT NUMBERS FOR WE ENERGIES

ELECTRIC 24 HOUR EMERGENCY SERVICE: 1-800-662-4797
GAS 24 HOUR EMERGENCY SERVICE: 1-800-261-5325

DNR LIASION

DNR NORTHEAST REGIONAL HEADQUARTERS
2984 SHAWANO AVE.
GREEN BAY, WI 54313

MATT SCHAEVE (CALUMET & OUTAGAMIE)
(920) 366-1544
matthew.schaeve@wisconsin.gov

JAY SCHIEFELBEIN (WINNEBAGO)
(920) 360-3784
jeremiah.schiefelbein@wisconsin.gov

NE REGION SURVEY COORDINATOR

CORMAC MCINNIS, RLS
944 VANDERPERREN WAY
GREEN BAY, WI 54304
(920)492-5638
cormac.mcinnis@dot.wi.gov

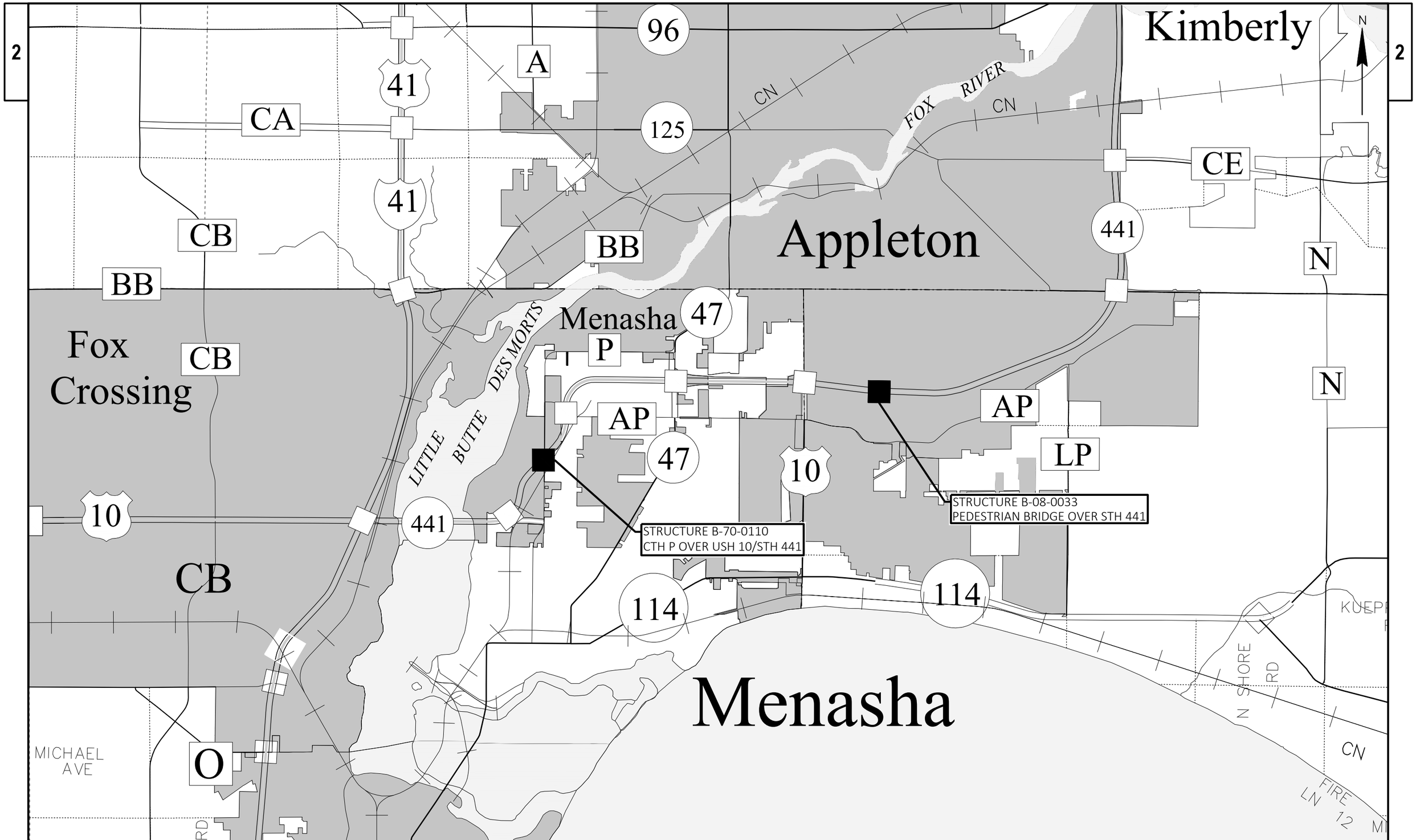

PROJECT NO: 4685-33-71	HWY: VAR HWY	COUNTY: WINNEBAGO	PROJECT OVERVIEW	SHEET	E

FILE NAME : N:\PDS\C3D\46853300\SHEETSPLAN\020201-PO.DWG
LAYOUT NAME - 020201-po
PLOT DATE : 11/2/2021 1:35 PM
PLOT BY : CAMPSHURE, MICHAEL R
PLOT NAME :
PLOT SCALE : 1 IN:3500 FT
WISDOT/CADDS SHEET 42

2

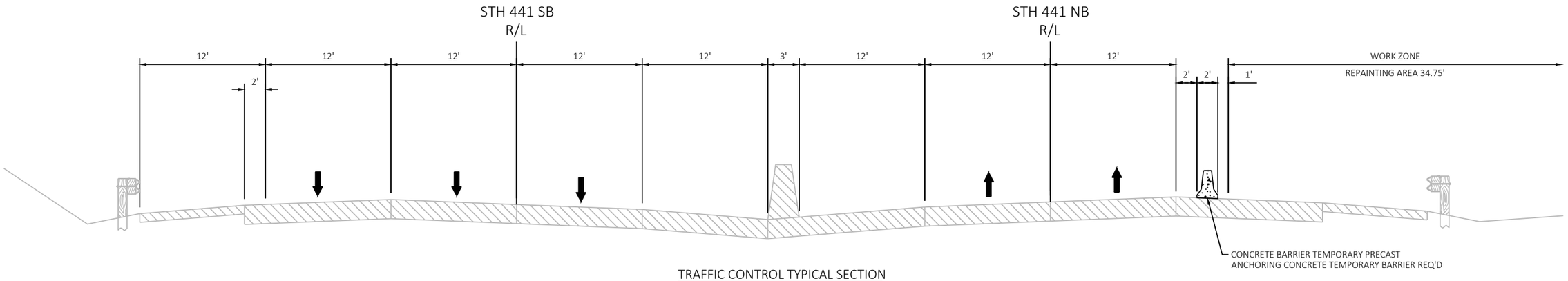

TRAFFIC CONTROL TYPICAL SECTION

B-08-0033 STAGE 1A
(LOOKING EAST)

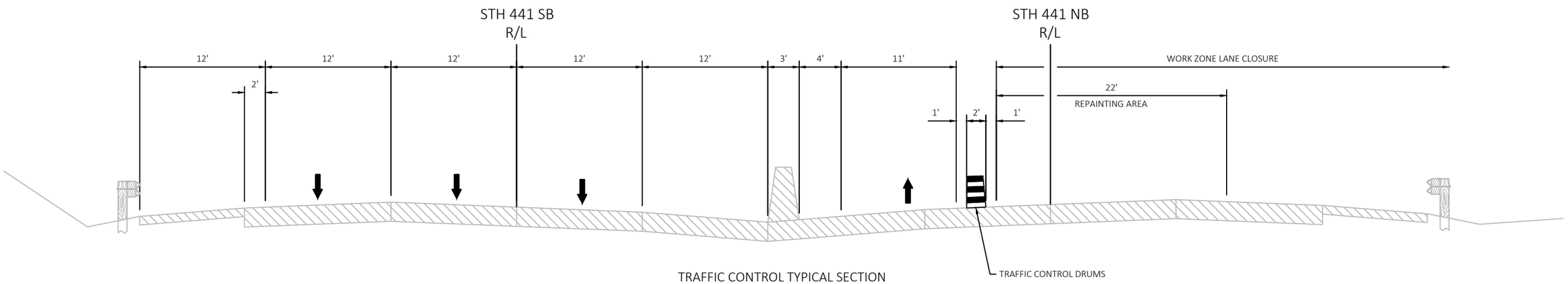

TRAFFIC CONTROL TYPICAL SECTION

B-08-0033 STAGE 1B
(LOOKING NORTH)

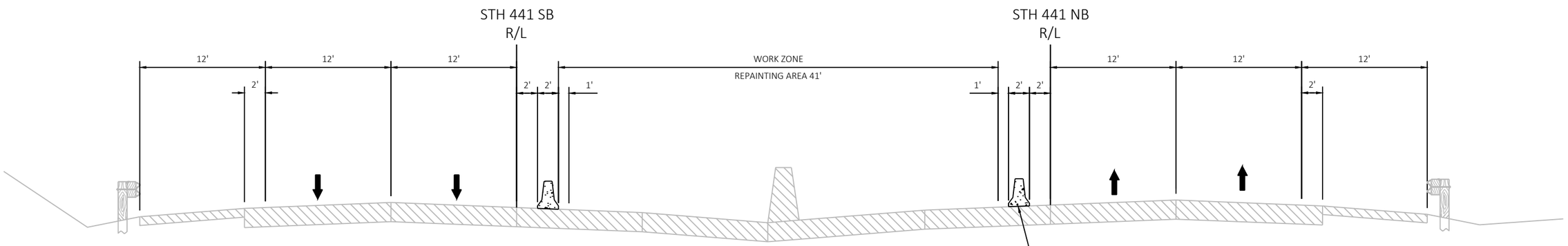

TRAFFIC CONTROL TYPICAL SECTION

B-08-0033 STAGE 2
(LOOKING EAST)

PROJECT NO: 4685-33-71	HWY: VAR HWY	COUNTY: WINNEBAGO	TRAFFIC CONTROL TYPICAL SECTIONS (B-08-0033)	SHEET	E

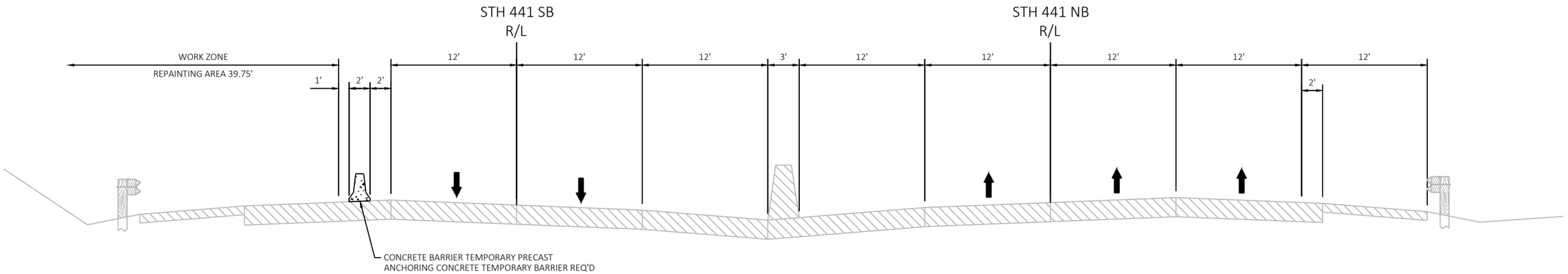

TRAFFIC CONTROL TYPICAL SECTION

B-08-0033 STAGE 3A

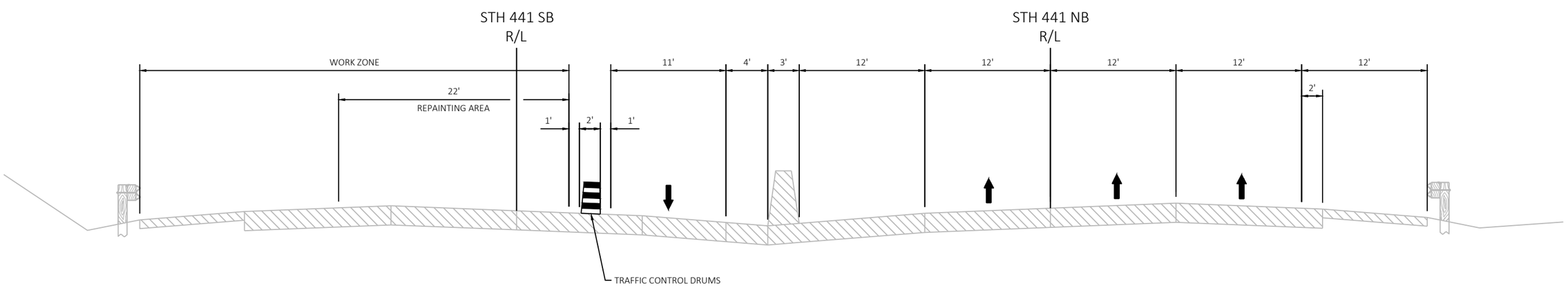

TRAFFIC CONTROL TYPICAL SECTION

B-08-0033 STAGE 3B

PROJECT NO: 4685-33-71	HWY: VAR HWY	COUNTY: WINNEBAGO	TRAFFIC CONTROL TYPICAL SECTIONS (B-08-0033)	SHEET	E

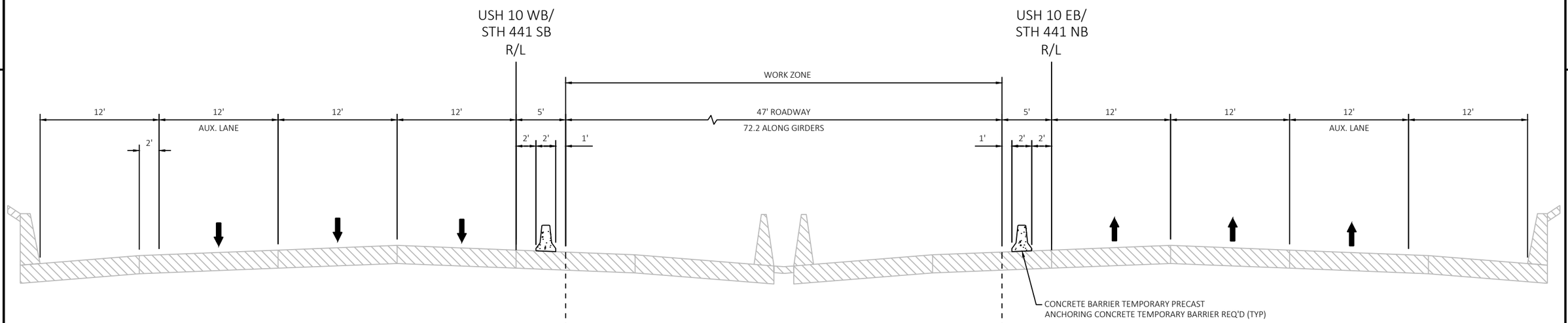

B-70-0110 STAGE 1

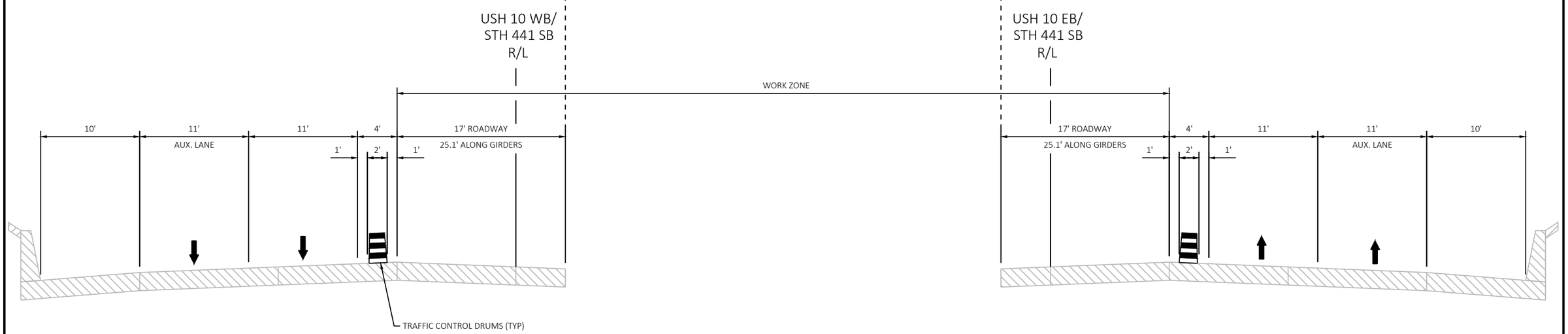

B-70-0110 STAGE 1A

B-70-0110 STAGE 1B

TRAFFIC CONTROL TYPICAL SECTION

B-70-0110 STAGE 1, 1A, 1B
(LOOKING EAST)

PROJECT NO: 4685-33-71	HWY: VAR HWY	COUNTY: WINNEBAGO	TRAFFIC CONTROL TYPICAL SECTIONS (B-70-0110)	SHEET	E

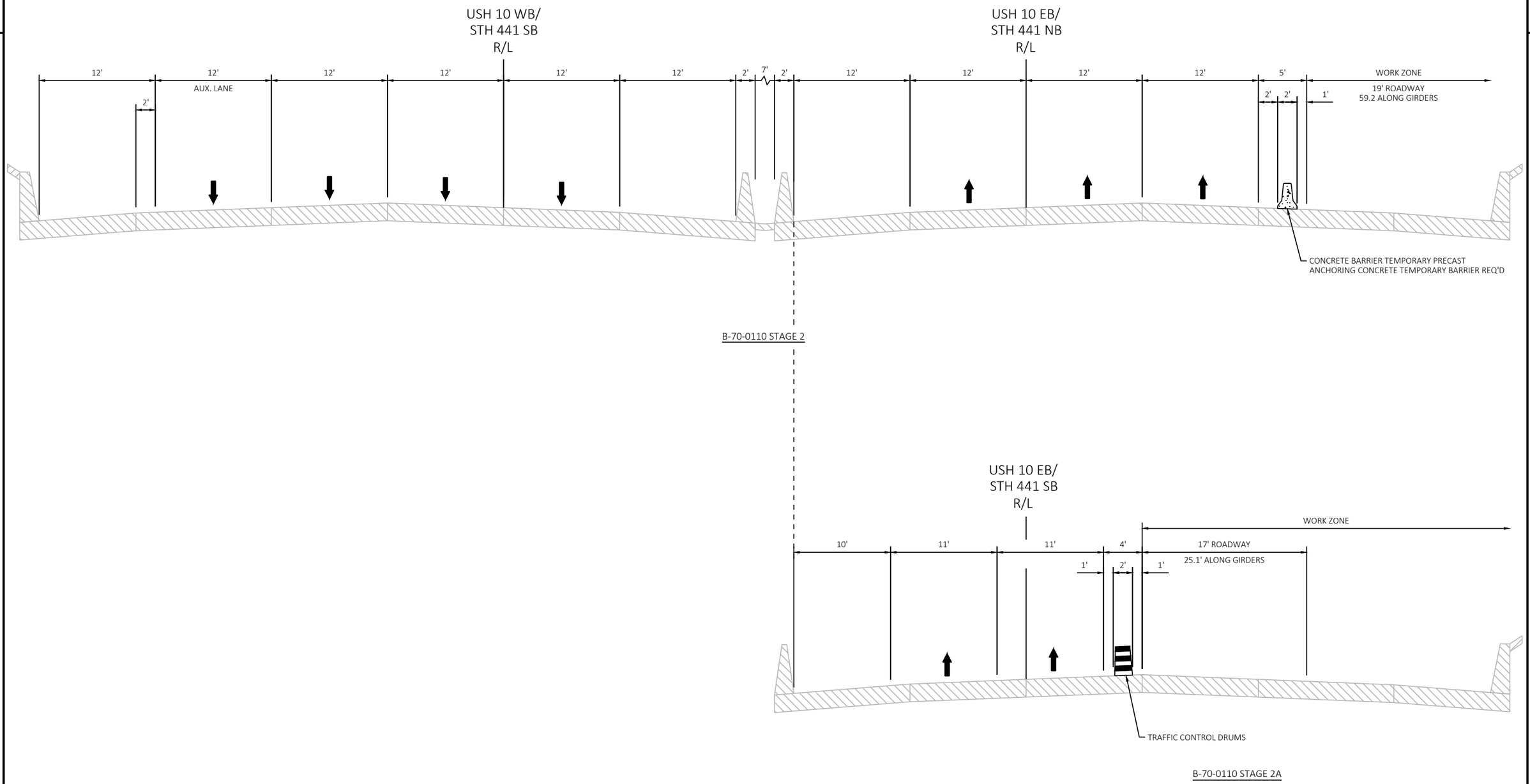

TRAFFIC CONTROL TYPICAL SECTION

B-70-0110 STAGE 2, 2A
(LOOKING EAST)

PROJECT NO: 4685-33-71	HWY: VAR HWY	COUNTY: WINNEBAGO	TRAFFIC CONTROL TYPICAL SECTIONS (B-70-0110)	SHEET	E

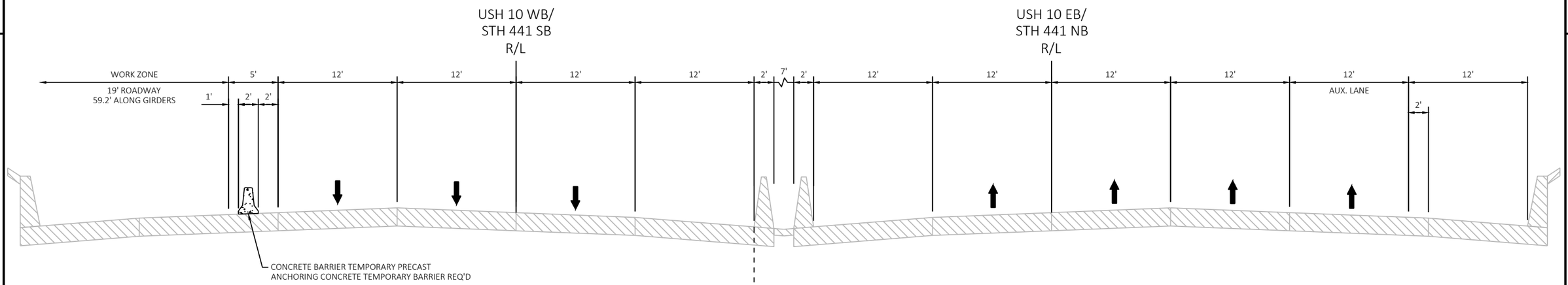

B-70-0110 STAGE 3

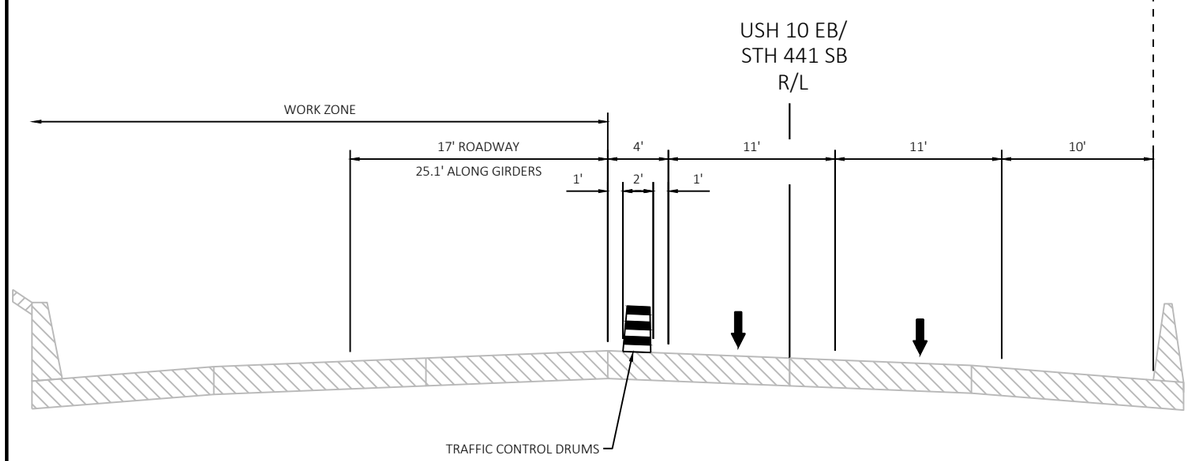

B-70-0110 STAGE 3A

TRAFFIC CONTROL TYPICAL SECTION

B-70-0110 STAGE 3, 3A
(LOOKING EAST)

STATE PROJECT NUMBER
4685-33-71

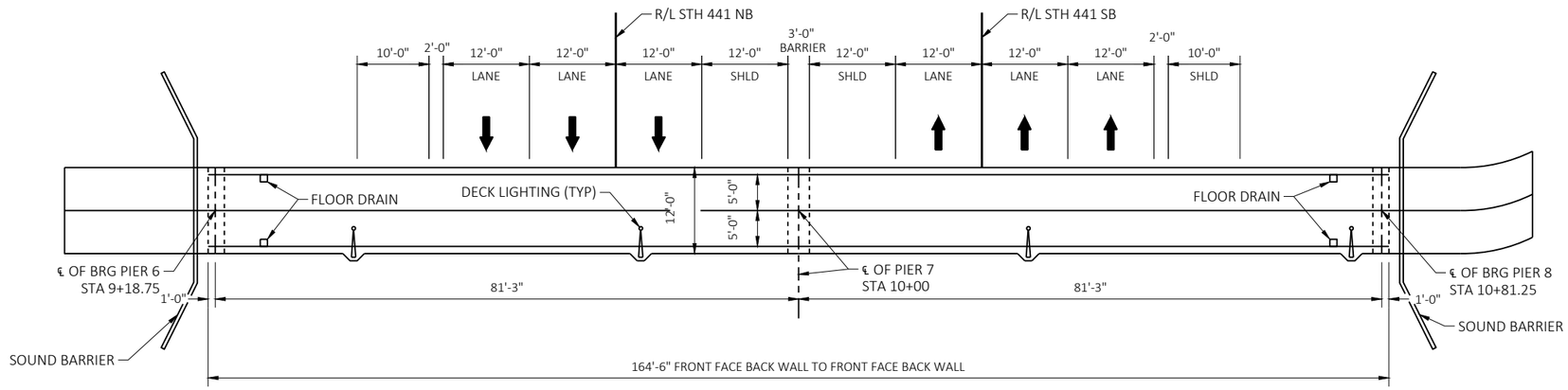

PLAN

2 SPAN PLATE GIRDER BRIDGE
B-8-33

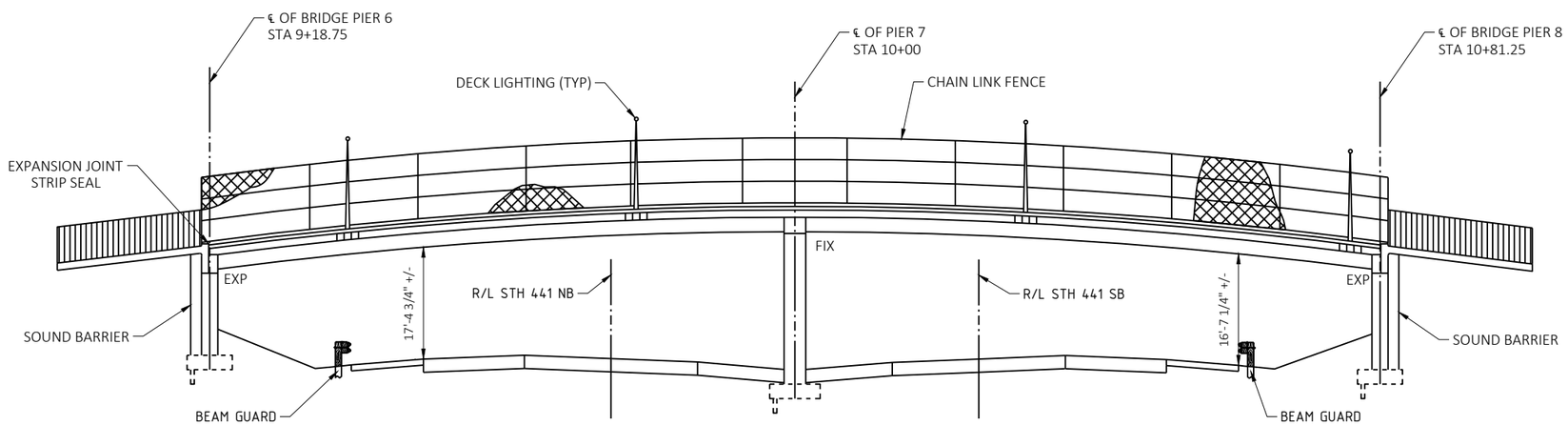

ELEVATION

(LOOKING WEST)

DESIGN DATA

LIVE LOAD:
DESIGN LOADING.....HS-XX
INVENTORY RATING:.....HS-XX
OPERATING RATING:.....HS-XX
WISCONSIN STANDARD
PERMIT VEHICLE (WIS-SPV)..... XXX KIPS

LIST OF DRAWINGS

1. GENERAL PLAN & ELEVATION
2. CROSS SECTION, QUANTITIES & NOTES
3. FRAMING PLAN, GIRDER & DIAPHRAGM DETAILS
4. MASKWALL DETAIL AT PIERS
5. DOWNSPOUT DETAIL

TRAFFIC DATA

STH 441
A.D.T. (2023) = 27,120
R.D.S. = 65 MPH

CONTACTS

NE REGION PROJECT MANAGER
ERIC GWIDT (920)366-8896

BUREAU OF STRUCTURES
NAME (608) Xxx-Xxxx

Plans Prepared By WISDOT

ACCEPTED _____ _____
CHIEF STRUCTURES DESIGN ENGINEER DATE

STRUCTURE	B-08-0033		
PEDESTRIAN BRIDGE OVER STH 441			
COUNTY CALUMET		CITY APPLETON	
DESIGN SPEC. REHABILITATION N/A			
DESIGNED BY BAH	DESIGN CK'D. XXX	DRAWN BY XXX	PLANS CK'D. XXX
GENERAL PLAN & ELEVATION		SHEET 1 OF 5	

8

8

STATE PROJECT NUMBER
4685-33-71

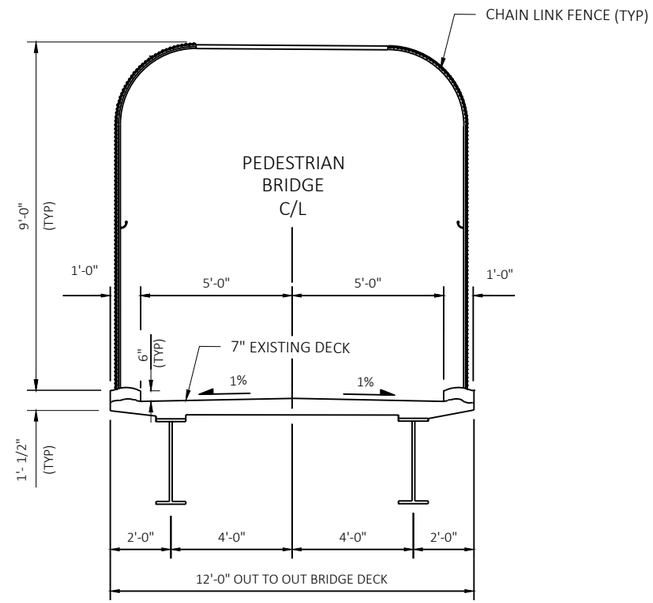

CROSS SECTION THRU ROADWAY

LOOKING NORTH

8

TOTAL ESTIMATED QUANTITIES

ITEM NO.	BID ITEMS	UNIT	TOTAL
517-1801.S	STRUCTURE REPAINTING RECYCLED ABRASIVE B-08-0033	LS	1
517.4500.S	NEGATIVE PRESSURE CONTAINMENT AND COLLECTION OF WASTE MATERIALS B-08-033	LS	1
517.6001.S	PORTABLE DECONTAMINATION FACILITY	EACH	1

FOR INFORMATION ONLY: APPROXIMATELY 3108 SF OF STRUCTURAL STEEL

NOTES

DRAWINGS SHALL NOT BE SCALED.

DIMENSIONS SHOWN ARE BASED ON ASBUILT STRUCTURE PLANS.

SEE HIGHWAY STRUCTURE INFORMATION SYSTEM FOR ADDITIONAL DETAIL.

PAINT COLOR SHALL BE FEDERAL STANDARD COLOR NO. 20122 BROWN.

ALL EXPOSED STEEL SURFACES UNDERNEATH THE BRIDGE ARE TO BE CLEANED AND PAINTED. THE SURFACES INCLUDE GIRDERS, CROSS FRAMING,
DIAPHRAGMS, STIFFENERS, BEARINGS AND CONNECTIONS.

FOUR (4) FIBERGLASS DOWNSPOUTS HAVE BEEN IDENTIFIED ON THE STRUCTURE. PRIOR TO BLASTING OPERATIONS, REMOVE DOWNSPOUT BRACKETS FROM GIRDER WEB AND STORE. REINSTALL DOWNSPOUT BRACKETS AFTER PAINTING OPERATIONS ARE COMPLETE. COVER AND PROTECT FIBERGLASS DOWNSPOUTS TO AVOID DAMAGE DURING BLASTING AND PAINTING OPERATIONS. THIS WORK IS INCIDENTAL TO BID ITEM 517.1801.S.

8

NO.	DATE	REVISION	BY

STATE OF WISCONSIN
DEPARTMENT OF TRANSPORTATION
STRUCTURES DESIGN SECTION

STRUCTURE B-08-0033

DRAWN BY | PLANS CK'D.

CROSS SECTION, QUANTITIES & NOTES

SHEET 2 OF 5

STATE PROJECT NUMBER
4685-33-71

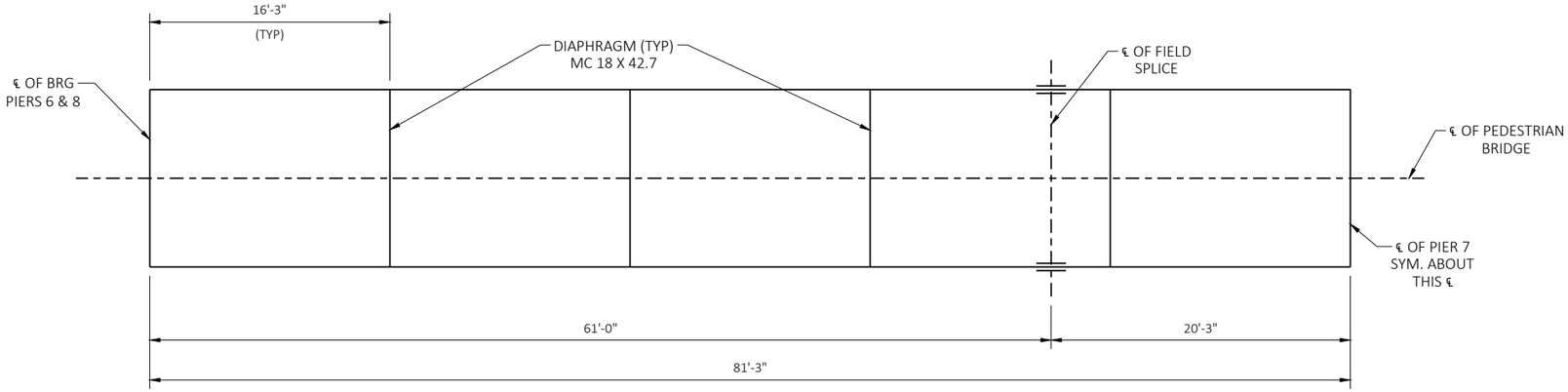

FRAMING PLAN

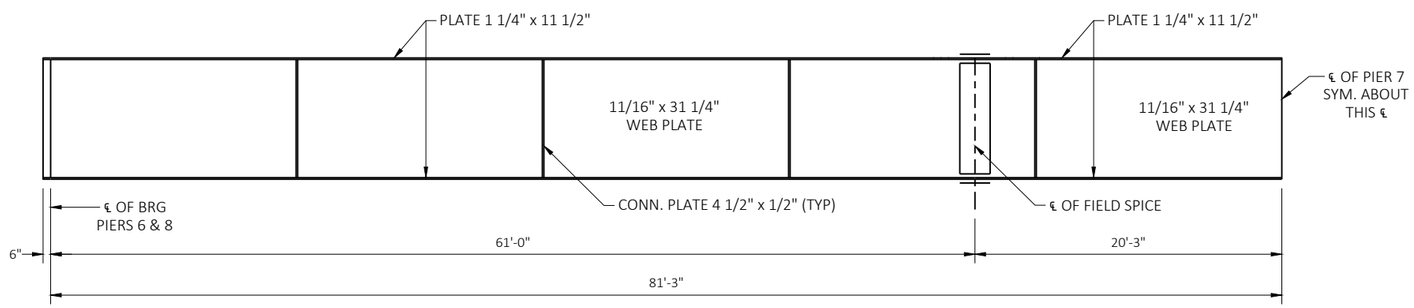

GIRDER ELEVATION

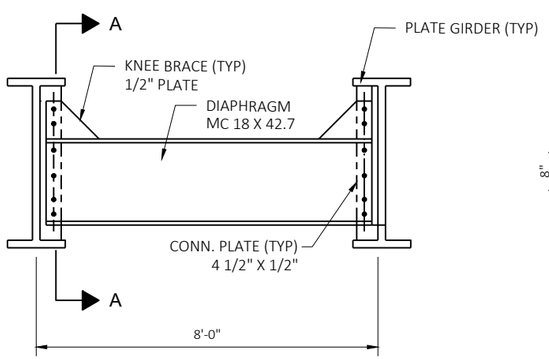

INTERMEDIATE & PIER 7 DIAPHRAGM DETAIL

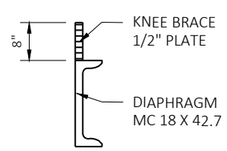

SECTION A

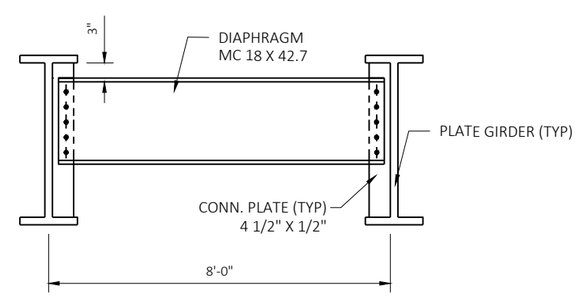

END DIAPHRAGM DETAIL AT PIERS 6 & 8

8

8

NO.	DATE	REVISION	BY

STATE OF WISCONSIN
DEPARTMENT OF TRANSPORTATION
STRUCTURES DESIGN SECTION

STRUCTURE B-08-0033

DRAWN BY	PLANS CK'D.

FRAMING PLAN, GIRDER & DIAPHRAGM DETAILS

SHEET 3 OF 5

STATE PROJECT NUMBER
4685-33-71

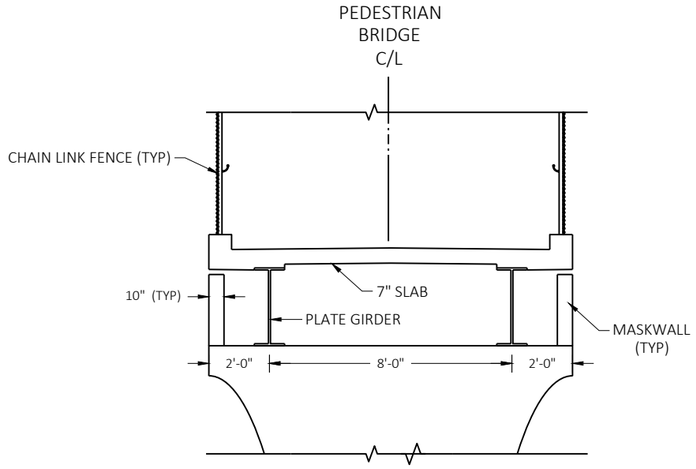

ELEVATION VIEW

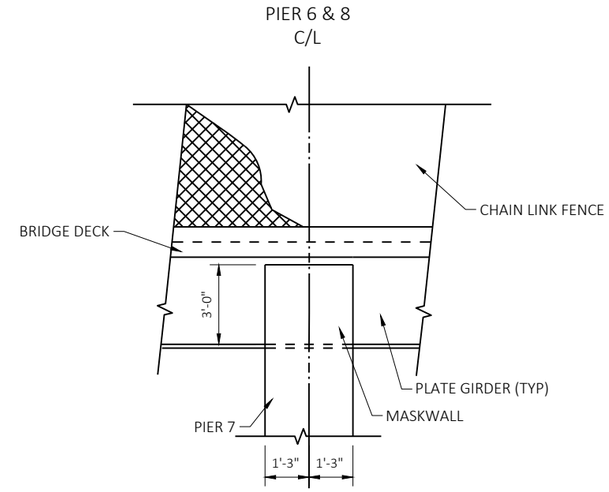

SIDE VIEW

MASKWALL DETAIL AT PIER 7

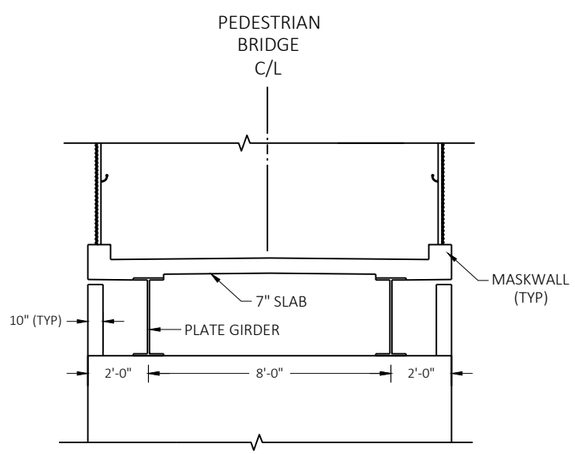

ELEVATION VIEW

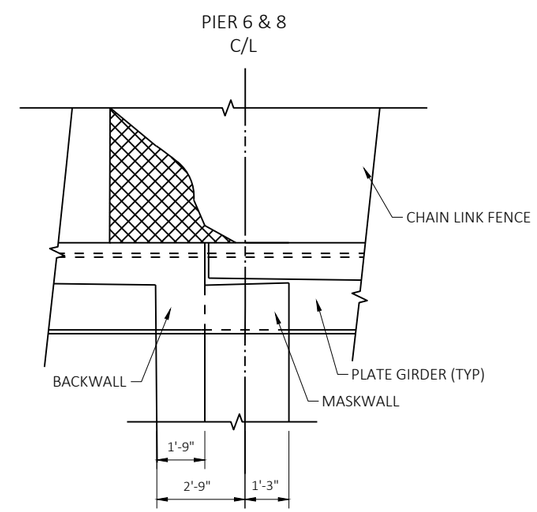

SIDE VIEW

MASKWALL DETAIL AT PIER 7

NO.	DATE	REVISION	BY

STATE OF WISCONSIN
DEPARTMENT OF TRANSPORTATION
STRUCTURES DESIGN SECTION

STRUCTURE B-08-0033

DRAWN BY	PLANS CK'D.

MASKWALL DETAIL AT PIERS

SHEET 4 OF 5

8

8

STATE PROJECT NUMBER
4685-33-71

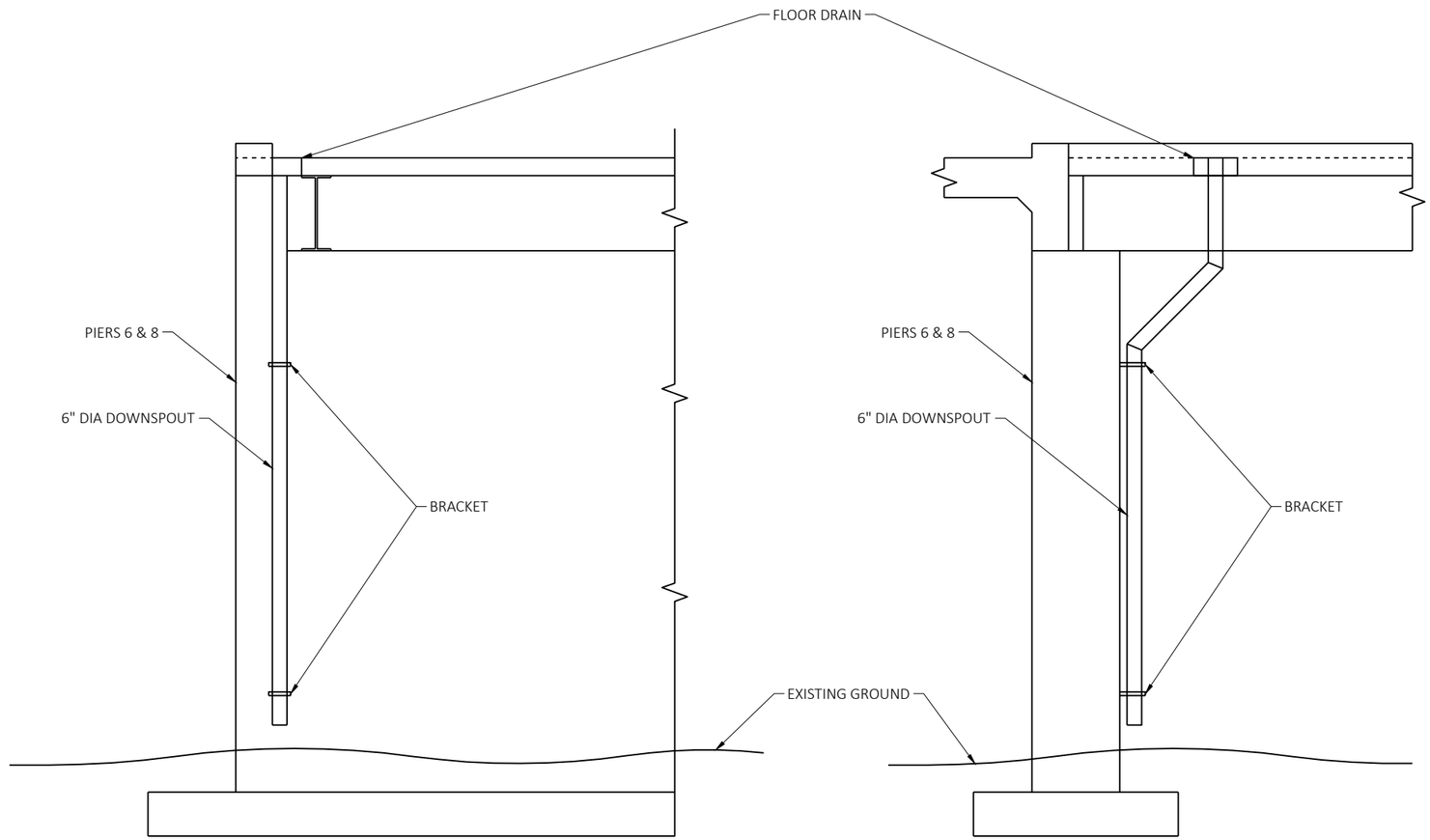

8

8

DOWNSPOUT DETAIL AT PIERS 6 & 8

NO.	DATE	REVISION	BY

STATE OF WISCONSIN
DEPARTMENT OF TRANSPORTATION
STRUCTURES DESIGN SECTION

STRUCTURE B-08-0033

DRAWN BY	PLANS CK'D.

DOWNSPOUT DETAIL

SHEET 5 OF 5

STATE PROJECT NUMBER
4685-33-71

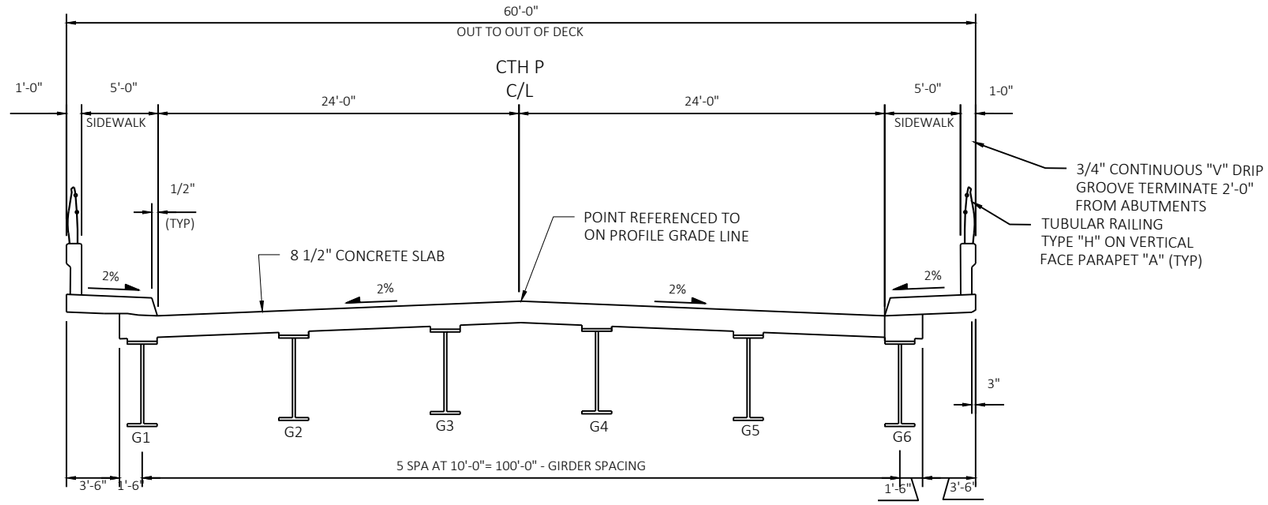

CROSS SECTION THRU ROADWAY

LOOKING NORTH

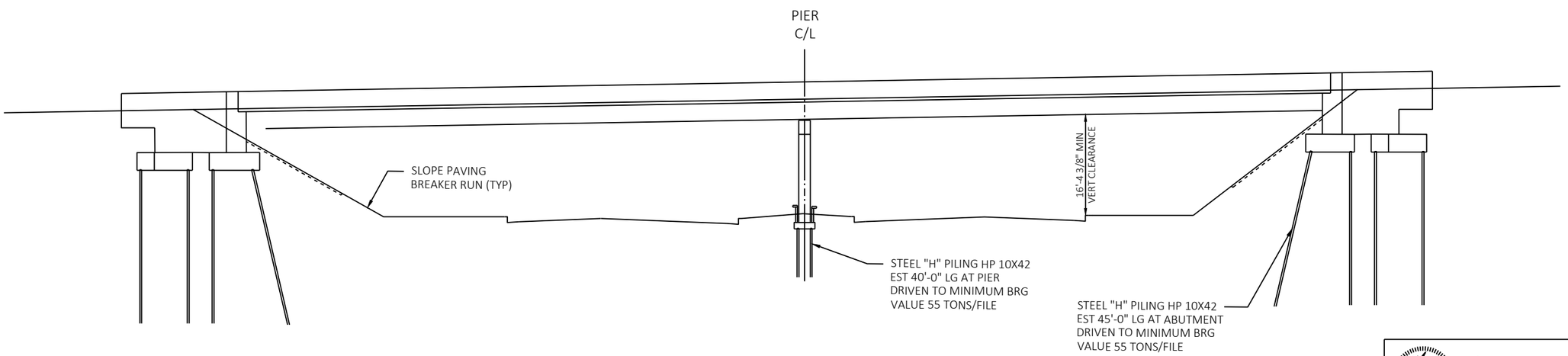

TYPICAL SECTION THRU STH 441

2 SPAN STEEL GIRDER

8

8

Plans Prepared By WISDOT

ACCEPTED _____ _____

CHIEF STRUCTURES DESIGN ENGINEER DATE

STRUCTURE B-70-0110			
CTH P OVER STH 441			
COUNTY WINNEBAGO		TOWN MENASHA	
DESIGN SPEC. XXXXXXXXX			
DESIGNED BY BAH	DESIGN CK'D. XXX	DRAWN BY XXX	PLANS CK'D. XXX
STH 441 CROSS SECTIONS		SHEET 1 OF 3	

STATE PROJECT NUMBER
4685-33-71

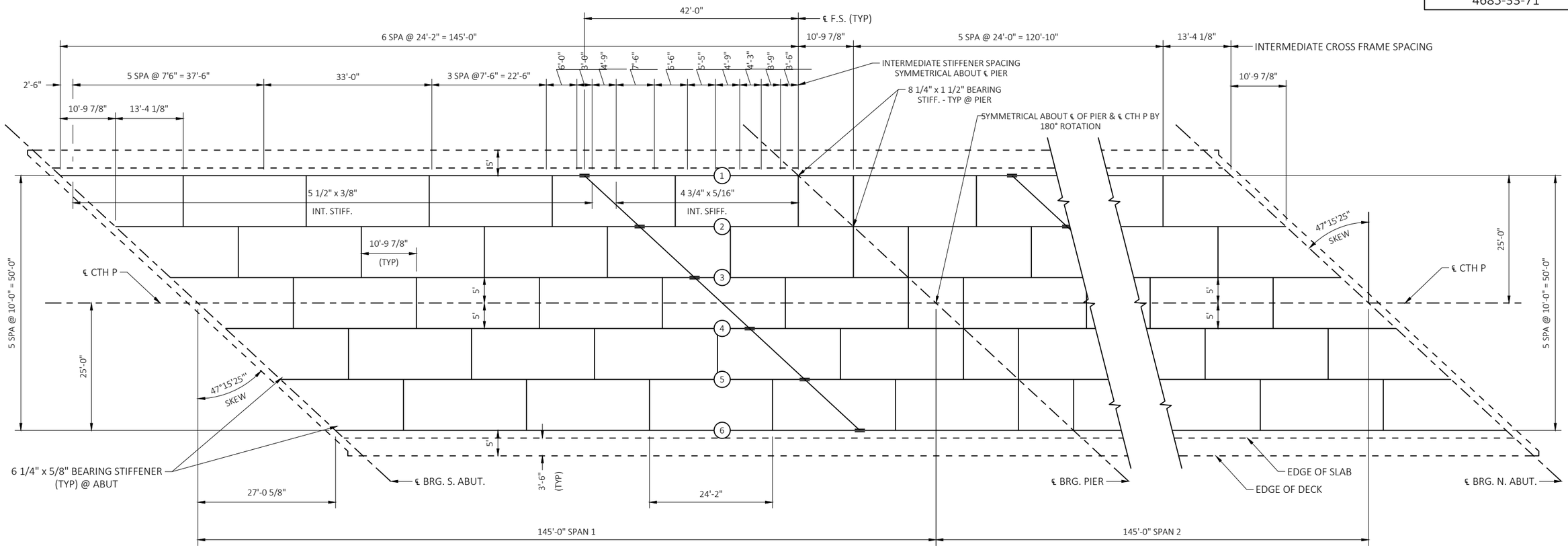

FRAMING PLAN

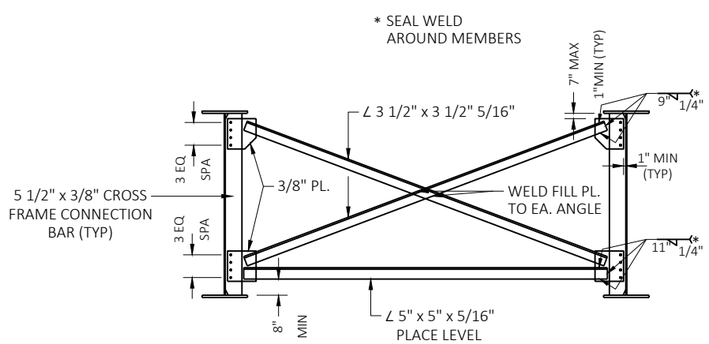

INTERMEDIATE CROSS FRAMING DETAIL

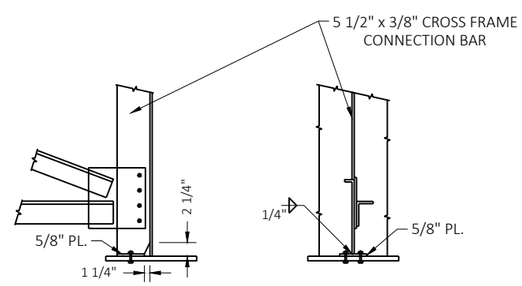

CROSS FRAME CONNECTION BAR
ATTACHMENT DETAIL @ TENSION FLANGE

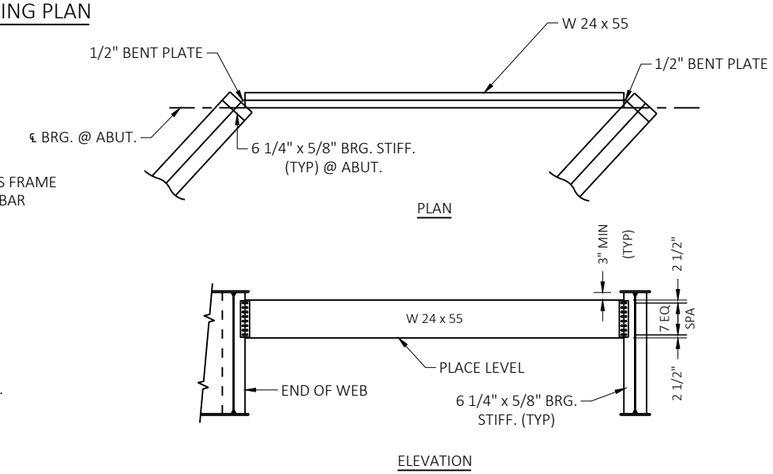

END DIAPHRAGM DETAIL

NO.	DATE	REVISION	BY

STATE OF WISCONSIN
DEPARTMENT OF TRANSPORTATION
STRUCTURES DESIGN SECTION

STRUCTURE B-70-0110

DRAWN BY | PLANS CK'D.

STH 441 FRAMING PLAN, FRAMING & END DIAPHRAGM DETAILS

SHEET 2 OF 3

STATE PROJECT NUMBER
4685-33-71

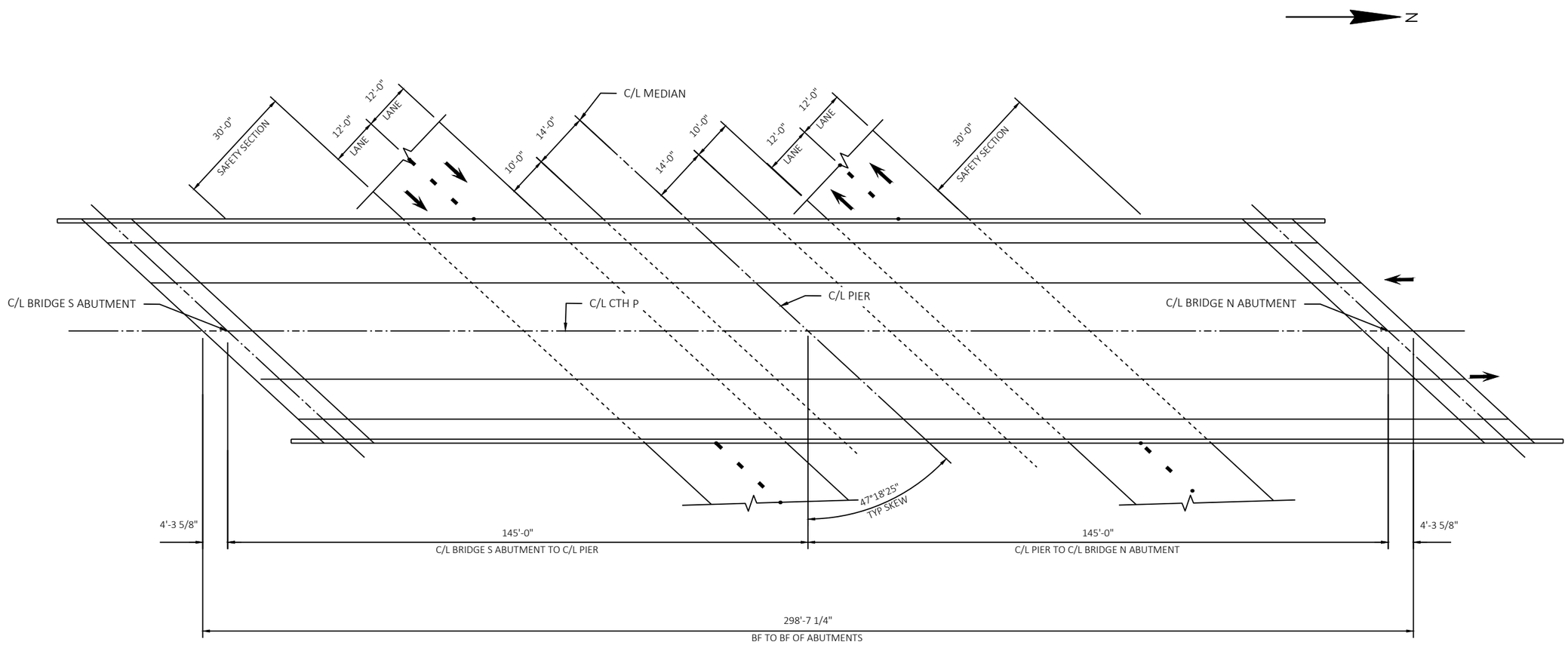

PLAN

2 SPAN STEEL GIRDER

8

8

NO.	DATE	REVISION	BY

STATE OF WISCONSIN
DEPARTMENT OF TRANSPORTATION
STRUCTURES DESIGN SECTION

STRUCTURE B-70-0110

DRAWN BY | PLANS CK'D.

STH 441
GENERAL PLAN

SHEET 3 OF 3