PROJECT ID: 4570-24-71
WITH: N/A

COUNTY: MANITOWOC

ORDER OF SHEETS

TOTAL SHEETS =

STATE OF WISCONSIN
DEPARTMENT OF TRANSPORTATION

PLAN OF PROPOSED IMPROVEMENT

HOWARDS GROVE - MANITOWOC

SILVER CREEK BRIDGE

STH 42

MANITOWOC COUNTY

STATE PROJECT NUMBER
4570-24-71

STATE PROJECT	FEDERAL PROJECT	
	PROJECT	CONTRACT
4570-24-71		

TRANS 220
PROJECT PLAN
FOR
DESIGN OF UTILITY FACILITY
ALTERATIONS OR RELOCATIONS

Date: SUBMITTAL #1 - 8/26/2020

N

DESIGN DESIGNATION

A.A.D.T.	2023	=	4600
A.A.D.T.	2043	=	4800
D.H.V.		=	12.9
D.D.		=	64/36
T.		=	15.4
DESIGN SPEED		=	55 MPH
ESALS		=	1,600,000

BEGIN PROJECT
STA 758+00
Y=291,528.524
X=215,135.605

END PROJECT
STA 763+75

STRUCTURE B-36-0239
STA 759+73TO STA 760+71

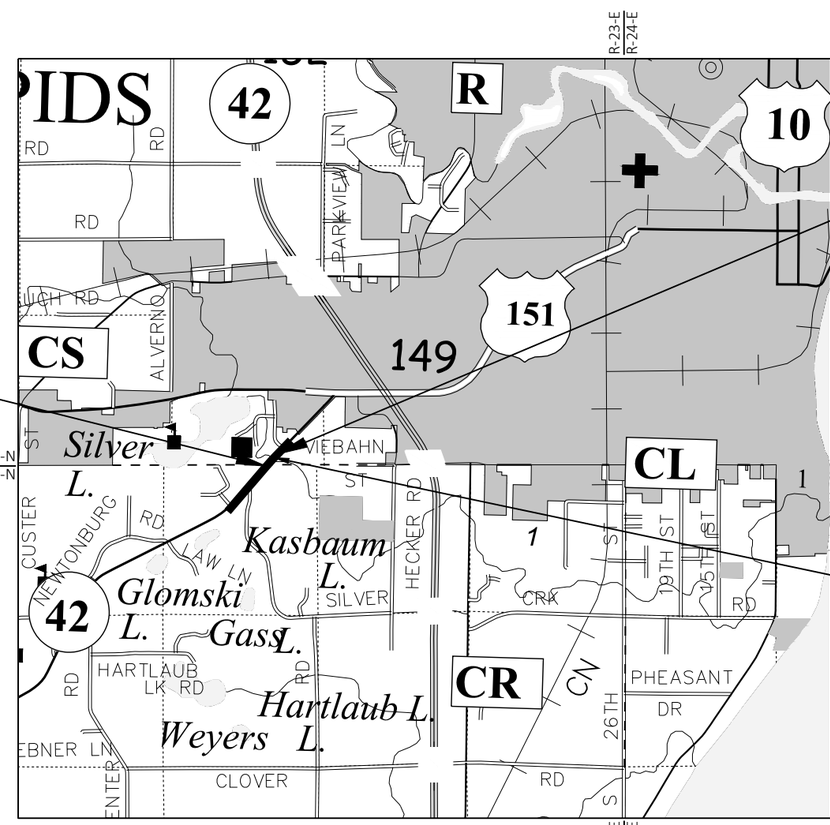

CONVENTIONAL SYMBOLS

PLAN
- CORPORATE LIMITS
- PROPERTY LINE
- LOT LINE
- LIMITED HIGHWAY EASEMENT
- EXISTING RIGHT OF WAY
- PROPOSED OR NEW R/W LINE
- SLOPE INTERCEPT
- REFERENCE LINE (300'EB')
- EXISTING CULVERT
- PROPOSED CULVERT (Box or Pipe)
- COMBUSTIBLE FLUIDS (CAUTION)
- MARSH AREA
- WOODED OR SHRUB AREA

PROFILE
- GRADE LINE
- ORIGINAL GROUND
- MARSH OR ROCK PROFILE (To be noted as such) (ROCK)
- SPECIAL DITCH (LABEL)
- GRADE ELEVATION (95.36)
- CULVERT (Profile View)

UTILITIES
- ELECTRIC (E)
- FIBER OPTIC (FO)
- GAS (G)
- SANITARY SEWER (SAN)
- STORM SEWER (SS)
- TELEPHONE (T)
- WATER (W)
- UTILITY PEDESTAL
- POWER POLE
- TELEPHONE POLE

LAYOUT

SCALE 0 — 1.0 MI

TOTAL NET LENGTH OF CENTERLINE = 7.814 MILES

HORIZONTAL POSITIONS SHOWN ON THIS PLAN ARE WISCONSIN COORDINATE REFERENCE SYSTEM (WISCRS), MANITOWOC COUNTY, NAD83 (2011), IN U.S. SURVEY FEET. POSITIONS SHOWN ARE GRID COORDINATES, GRID BEARINGS, AND GRID DISTANCES. GRID DISTANCES ARE THE SAME AS GROUND DISTANCES. ELEVATIONS ARE REFERENCED TO NAVD 88 (2012). GPS DERIVED ELEVATIONS ARE BASED ON GEOID 12A.

STATE OF WISCONSIN
DEPARTMENT OF TRANSPORTATION

PREPARED BY

Surveyor	NE REGION
Designer	TRAVIS MAATTA
Project Manager	BRIAN HAEN
Regional Examiner	REGIONAL EXAMINER
Regional Supervisor	CHAD DEGRAVE

APPROVED FOR THE DEPARTMENT

DATE: _____ (Signature)

PRE 1 E

GENERAL NOTES

THE LOCATIONS OF EXISTING AND PROPOSED UTILITY INSTALLATIONS AS SHOWN ON THE PLANS ARE APPROXIMATE. THERE MAY BE OTHER UTILITY INSTALLATIONS WITH THE PROJECT ARE THAT ARE NOT SHOWN.

ORDER OF SECTION 2 DETAIL SHEETS

UTILITY CONTACTS

DIGGERS HOTLINE
Dial 811 or (800)242-8511
www.DiggersHotline.com

DNR LIASION

MATT SCHAEVE
DEPARTMENT OF NATURAL RESOURCES
NORTHEAST REGION
2984 SHAWANO AVE
GREEN BAY, WI 54313
(920)366-1544
matthew.schaeve@wisconsin.gov

MANITOWOC COUNTY COMMISSIONER

MARC HOLSEN
HIGHWAY COMMISSIONER
3500 STATE HIGHWAY 310
MANITOWOC, WI 54220
(920)683-4353
marcholsen@co.manitowoc.wi.us

NE REGION SURVEY COORDINATOR

CORMAC MCINNIS, RLS
944 VANDERPERREN WAY
GREEN BAY, WI 54304
(920)492-5638
cormac.mcinnis@dot.wi.gov

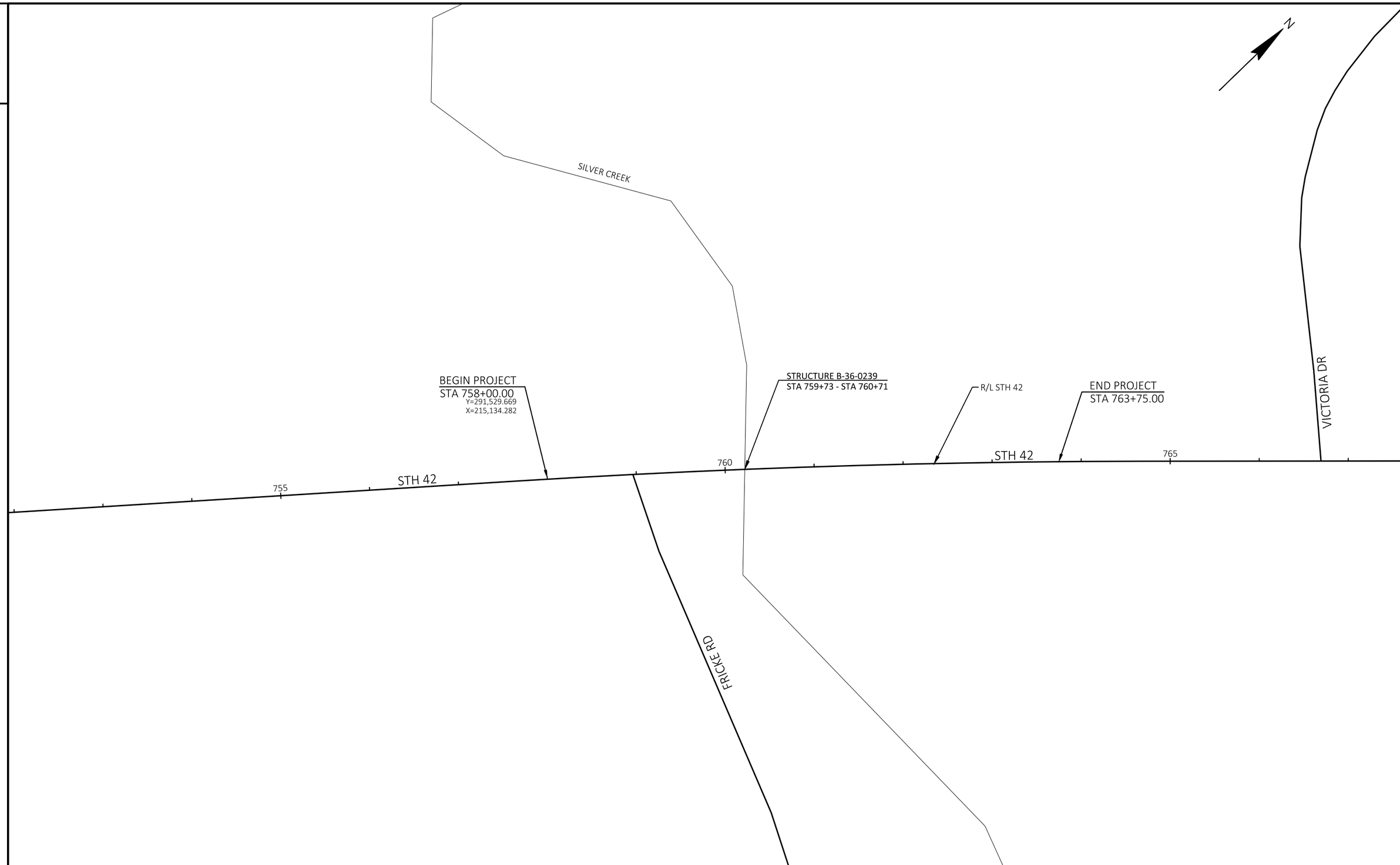

PROJECT NO: 4570-24-71	HWY: STH 42	COUNTY: MANITOWOC	PROJECT OVERVIEW	SHEET PRE 3 E

FILE NAME : C:\WISDOT\DESIGN\C3D\45702400\SHEETSPLAN\020201-PO.DWG
LAYOUT NAME - 020201-po
PLOT DATE : 4/20/2020 2:50 PM
PLOT BY : MAATTA, TRAVIS SHANE
PLOT NAME :
PLOT SCALE : 1 IN:100 FT
WISDOT/CADDS SHEET 42

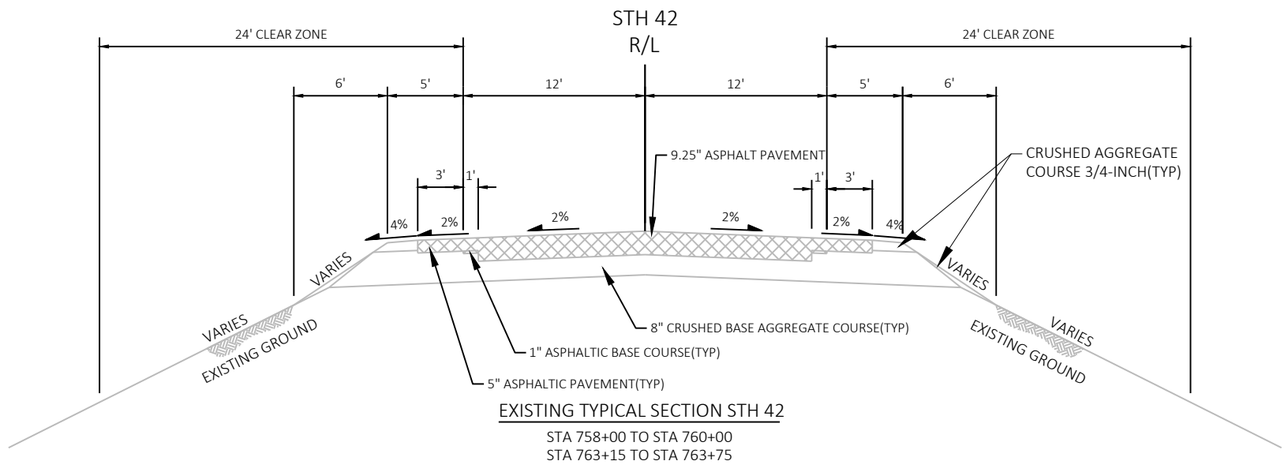

EXISTING TYPICAL SECTION STH 42

STA 758+00 TO STA 760+00
STA 763+15 TO STA 763+75

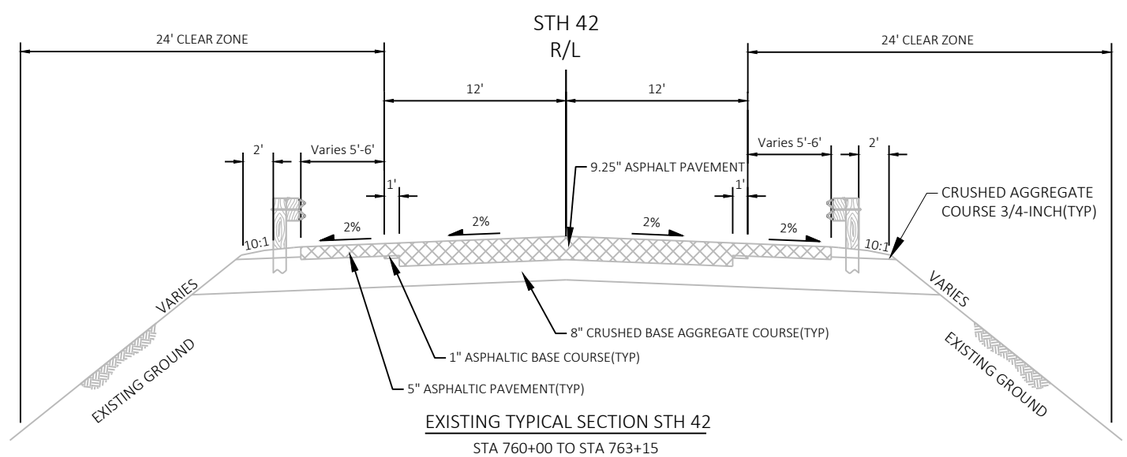

EXISTING TYPICAL SECTION STH 42

STA 760+00 TO STA 763+15

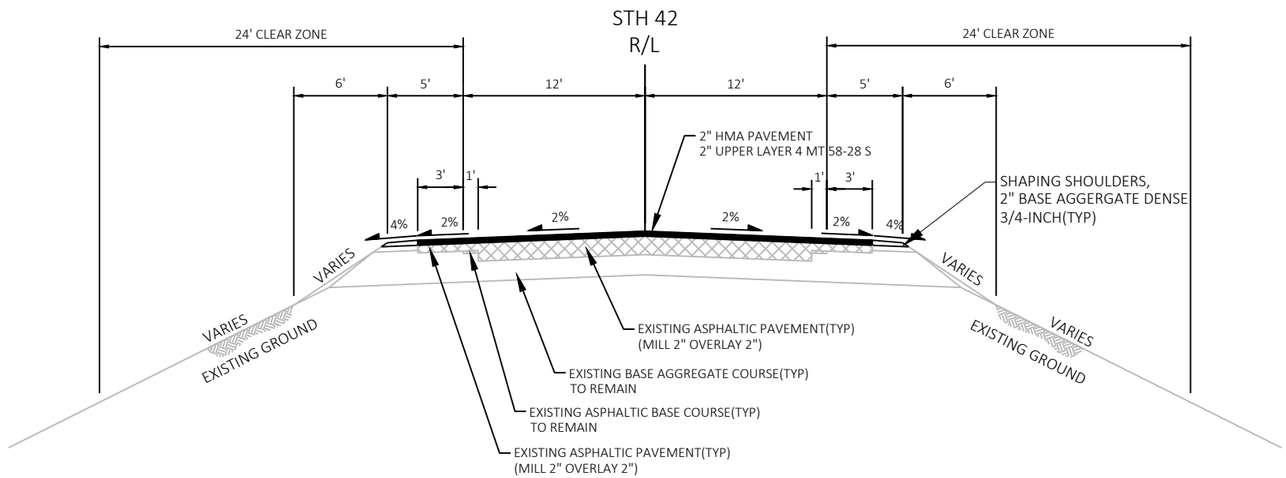

PROPOSED TYPICAL SECTION STH 42

STA 758+00 TO STA 759+23

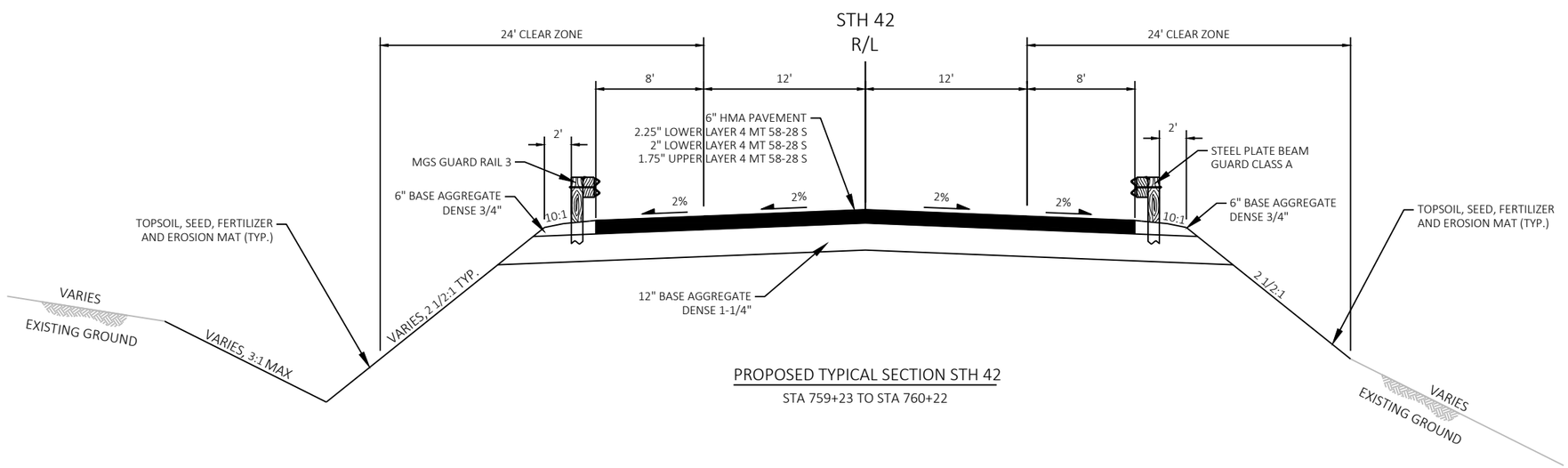

PROPOSED TYPICAL SECTION STH 42

STA 759+23 TO STA 760+22

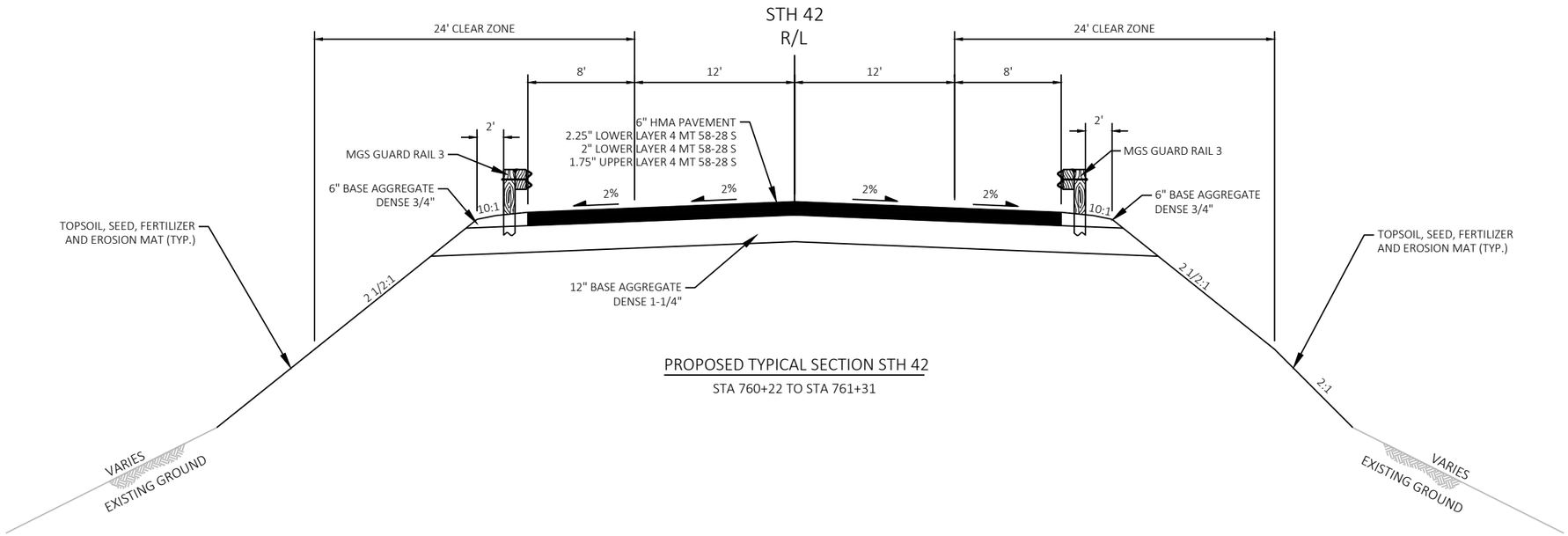

PROPOSED TYPICAL SECTION STH 42

STA 760+22 TO STA 761+31

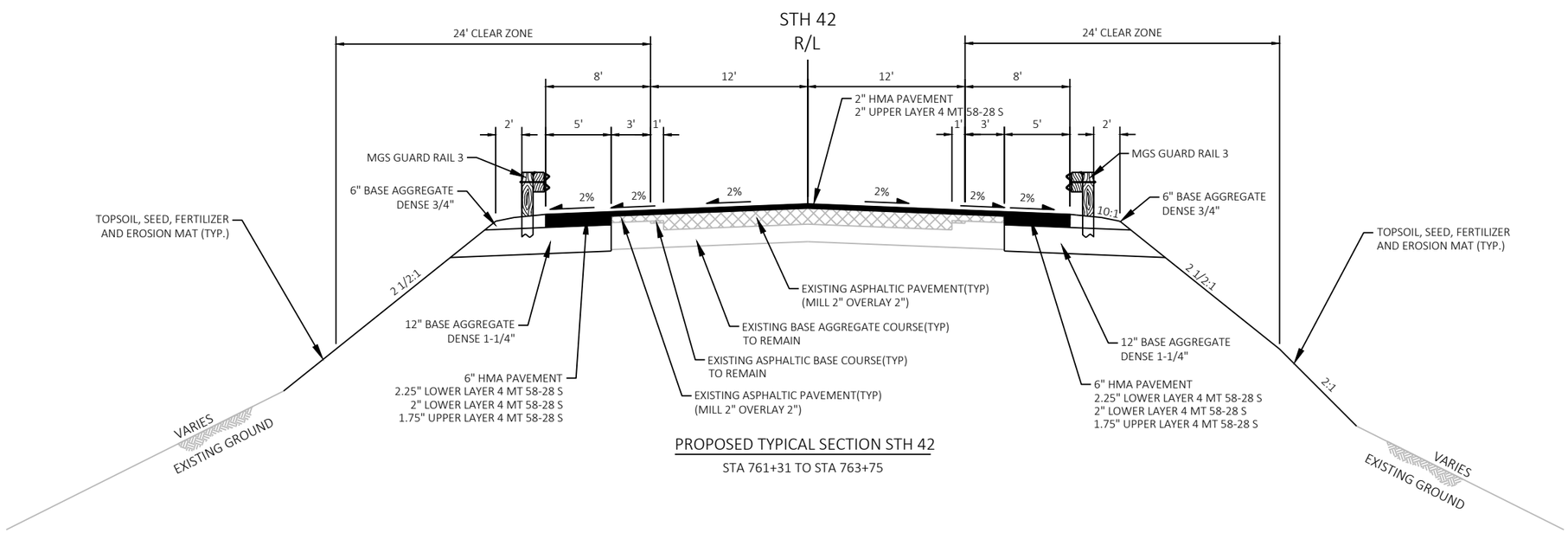

PROPOSED TYPICAL SECTION STH 42

STA 761+31 TO STA 763+75

2

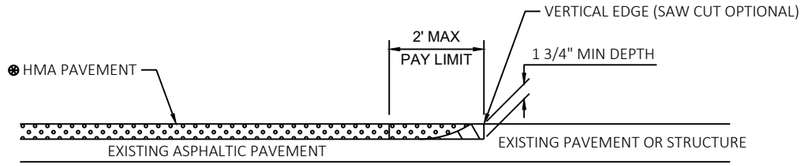

⊛ SEE TYPICAL CROSS SECTION FOR PAVEMENT TYPE AND THICKNESS OF INDIVIDUAL LAYERS

REMOVING ASPHALTIC SURFACE, MILLING

REMOVE ASPHALTIC SURFACE WEDGE AT BUTT JOINT TO CREATE VERTICAL EDGE

BUTT JOINT DETAIL FOR ASPHALTIC PAVEMENTS (NO PROFILE CHANGE)

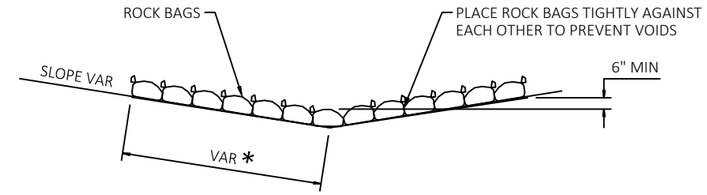

SIDE VIEW (SINGLE LAYER)

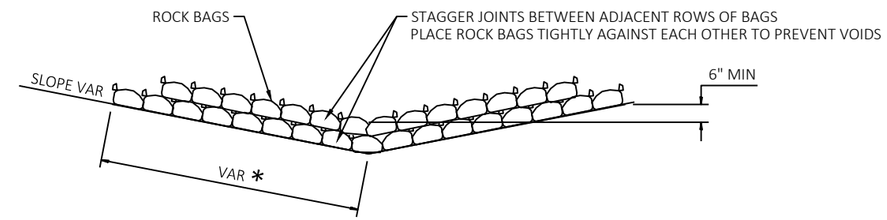

* LENGTH AND NUMBER OF BAGS MAY VARY DEPENDING ON DESIRED DEPTH OF WATER POOL

SIDE VIEW (MULTIPLE LAYER)

ROCK BAGS DITCH CHECK

PAID AS ROCK BAGS

2

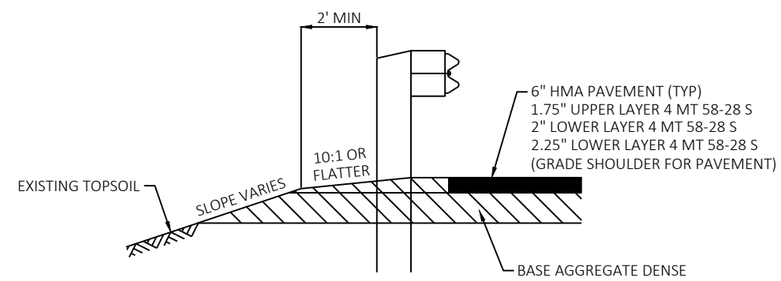

SECTION A-A

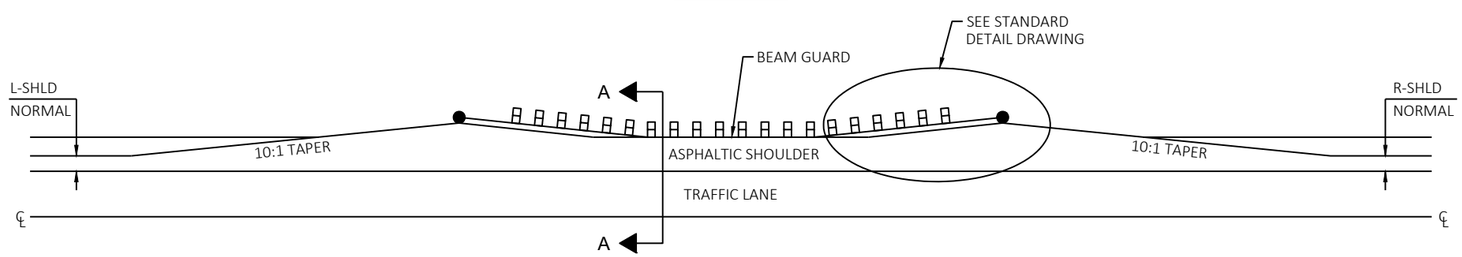

DETAIL FOR ASPHALTIC SHOULDER AT BEAM GUARD

STA 760+77 LT - STA 762+20 LT
STA 760+59 RT - STA 762+85 RT

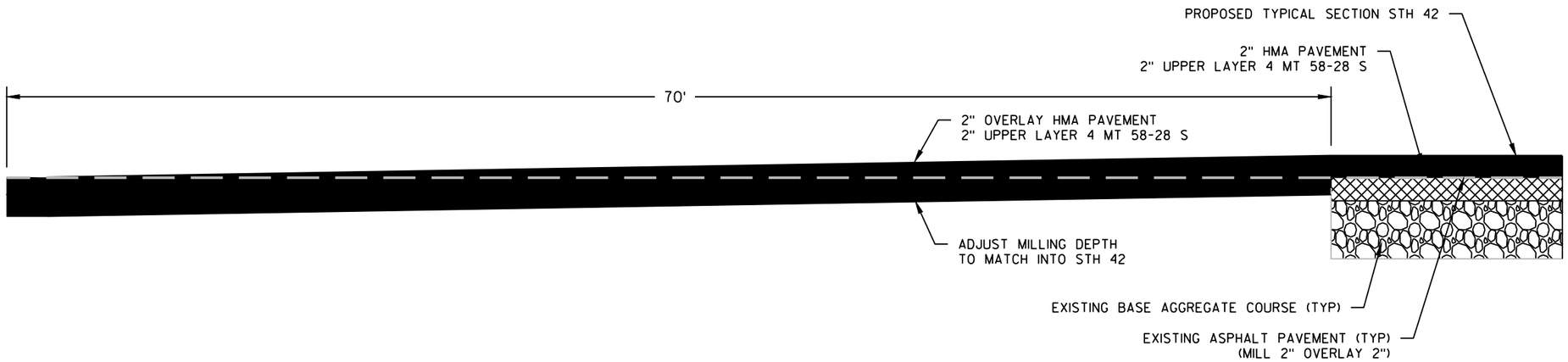

DETAIL FOR TRANSITION FROM FRICKE RD TO STH 42

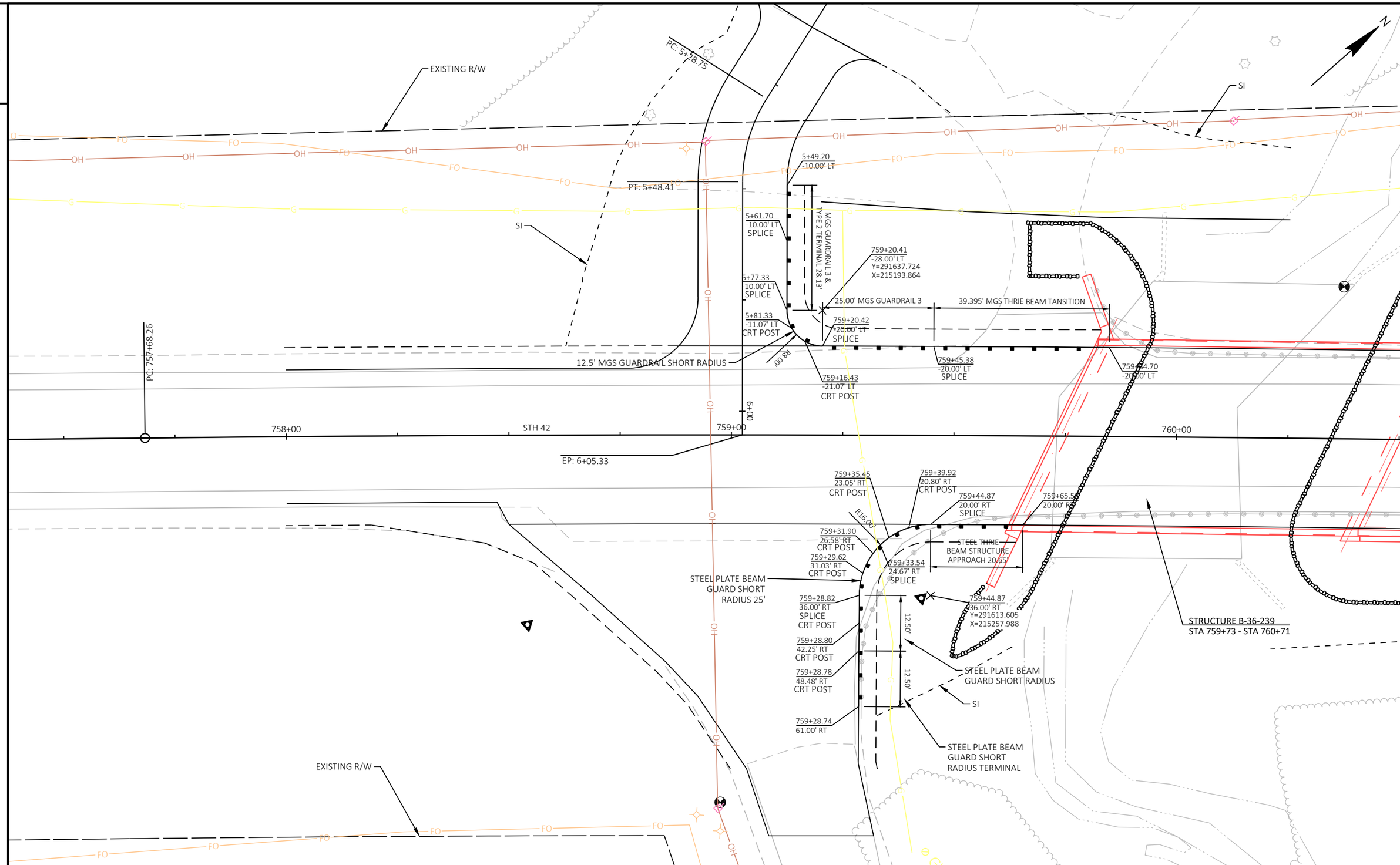
EXISTING R/W
PC: 5+28.75
PT: 5+48.41
SI
5+49.20
-10.00' LT
5+61.70
-10.00' LT
SPLICE
MGS GUARDRAIL 3 &
TYPE 2 TERMINAL 28.13'
759+20.41
-28.00' LT
Y=291637.724
X=215193.864
5+77.33
-10.00' LT
SPLICE
25.00' MGS GUARDRAIL 3
39.395' MGS THRIE BEAM TANSITION
5+81.33
-11.07' LT
CRT POST
759+20.42
-28.00' LT
SPLICE
R8.00'
12.5' MGS GUARDRAIL SHORT RADIUS
759+16.43
-21.07' LT
CRT POST
759+45.38
-20.00' LT
SPLICE
759+64.70
-20.00' LT
PC: 757+68.26
758+00
STH 42
759+00
6+00
760+00
EP: 6+05.33
759+35.45
23.05' RT
CRT POST
759+39.92
20.80' RT
CRT POST
759+44.87
20.00' RT
SPLICE
759+65.5
20.00' R
R16.00'
759+31.90
26.58' RT
CRT POST
STEEL THRIE
BEAM STRUCTURE
APPROACH 20.65'
759+29.62
31.03' RT
CRT POST
759+33.54
24.67' RT
SPLICE
STEEL PLATE BEAM
GUARD SHORT
RADIUS 25'
759+28.82
36.00' RT
SPLICE
CRT POST
759+44.87
36.00' RT
Y=291613.605
X=215257.988
12.50'
759+28.80
42.25' RT
CRT POST
STEEL PLATE BEAM
GUARD SHORT RADIUS
759+28.78
48.48' RT
CRT POST
12.50'
SI
759+28.74
61.00' RT
STEEL PLATE BEAM
GUARD SHORT
RADIUS TERMINAL
STRUCTURE B-36-239
STA 759+73 - STA 760+71
EXISTING R/W
N

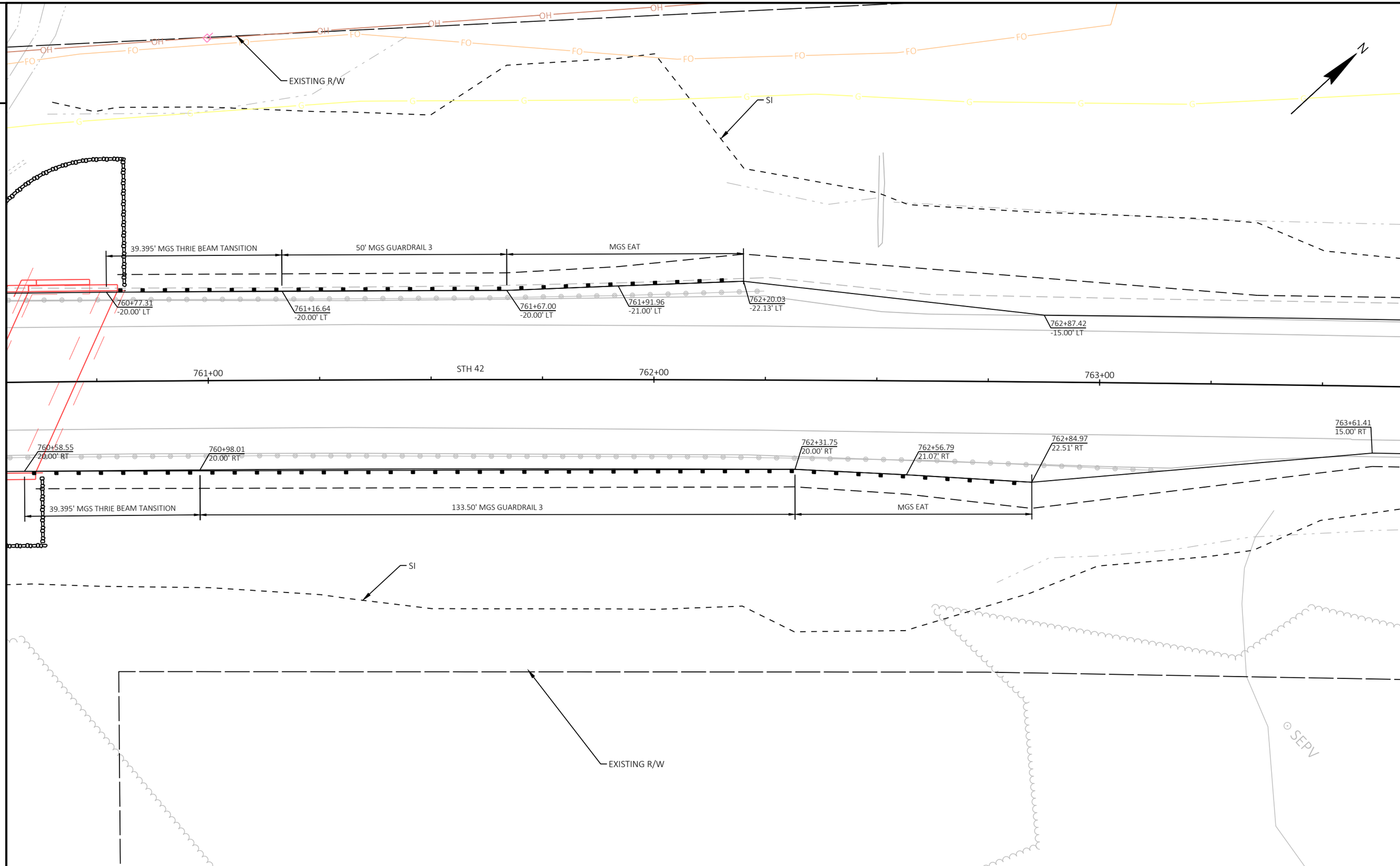

PROJECT NO: 4570-24-71	HWY: STH 42	COUNTY: MANITOWOC	BEAM GUARD DETAILS	SHEET PRE 10 E

FILE NAME : C:\WISDOT\DESIGN\C3D\45702400\SHEETSPLAN\021200-PD.DWG
LAYOUT NAME - 021202-pd
PLOT DATE : 4/15/2020 7:46 PM
PLOT BY : MAATTA, TRAVIS SHANE
PLOT NAME :
PLOT SCALE : 1 IN:20 FT
WISDOT/CADDS SHEET 42

2

LEGEND

- SILT FENCE
- SLOPE INTERCEPT
- TURBIDITY BARRIER*
- ROCK BAGS DITCH CHECK
- SURFACE WATER FLOW
- RIPRAP - SEE STRUCTURE PLANS
- EROSION MAT URBAN CLASS 1 TYPE B
- EROSION MAT CLASS 1 TYPE B

* NOTE:
SEE SDD 8E11 TURBIDITY BARRIER FOR MINIMUM BARRIER HEIGHT.
SEE STRUCTURE B-36-239 GENERAL PLAN FOR HYDRAULIC DATA.
ALL DISTURBED AREAS SHALL RECEIVE TOPSOIL, TEMP SEED, SEED, AND FERTILIZER

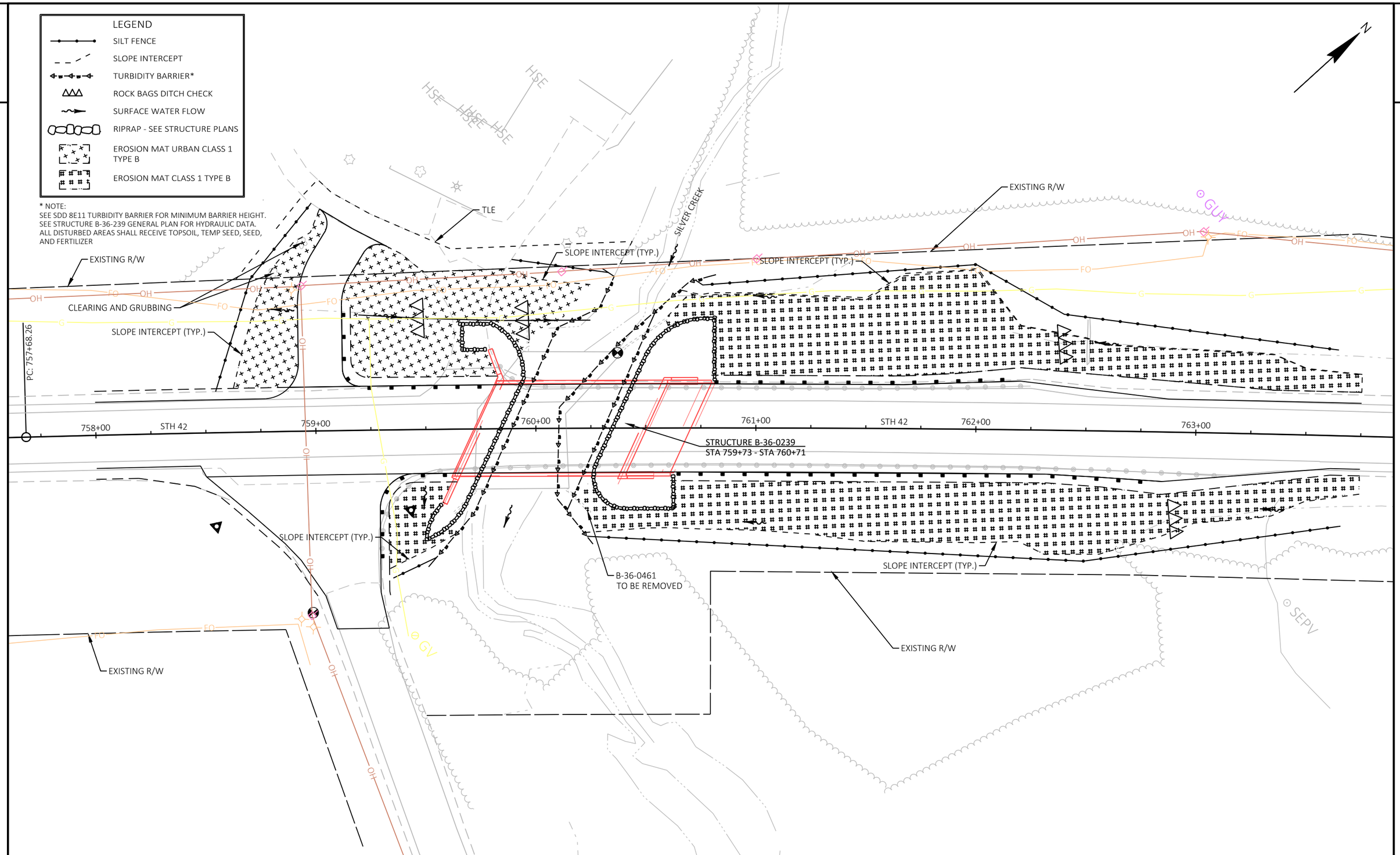

PROJECT NO: 4570-24-71	HWY: STH 42	COUNTY: MANITOWOC	EROSION CONTROL	SHEET PRE 11 E

FILE NAME : N:\PDS\C3D\45702400\SHEETSPLAN\022001-EC.DWG
LAYOUT NAME - 022001-ec
PLOT DATE : 4/29/2020 2:02 PM
PLOT BY : MAATTA, TRAVIS SHANE
PLOT NAME :
PLOT SCALE : 1 IN:40 FT
WISDOT/CADDS SHEET 42

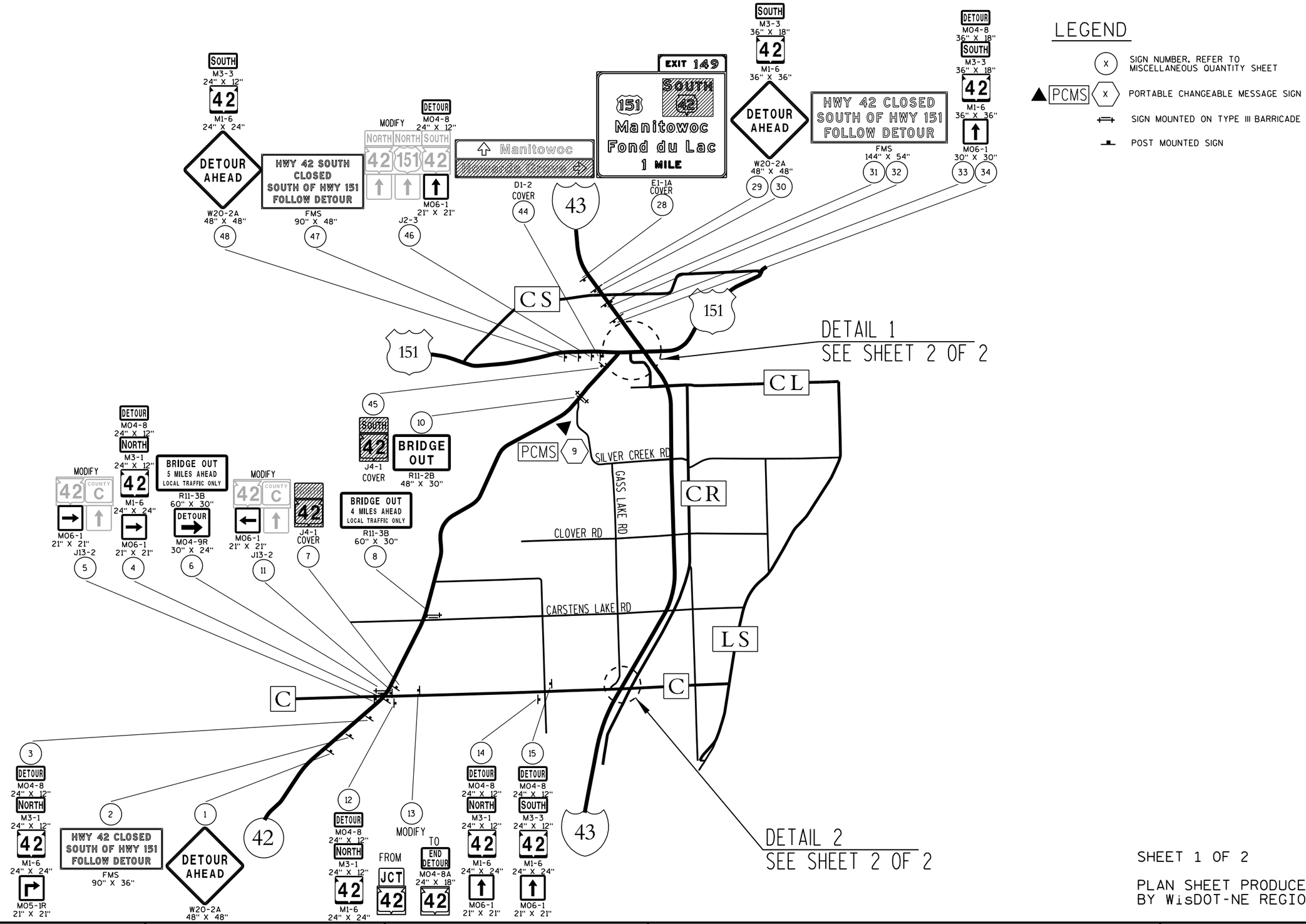

SHEET 1 OF 2

PLAN SHEET PRODUCED BY WisDOT-NE REGION

PROJECT NO:4570-24-71	HWY:STH 42	COUNTY:MANITOWOC	DETOUR SIGNING DETAIL	SHEET PRE 12 E

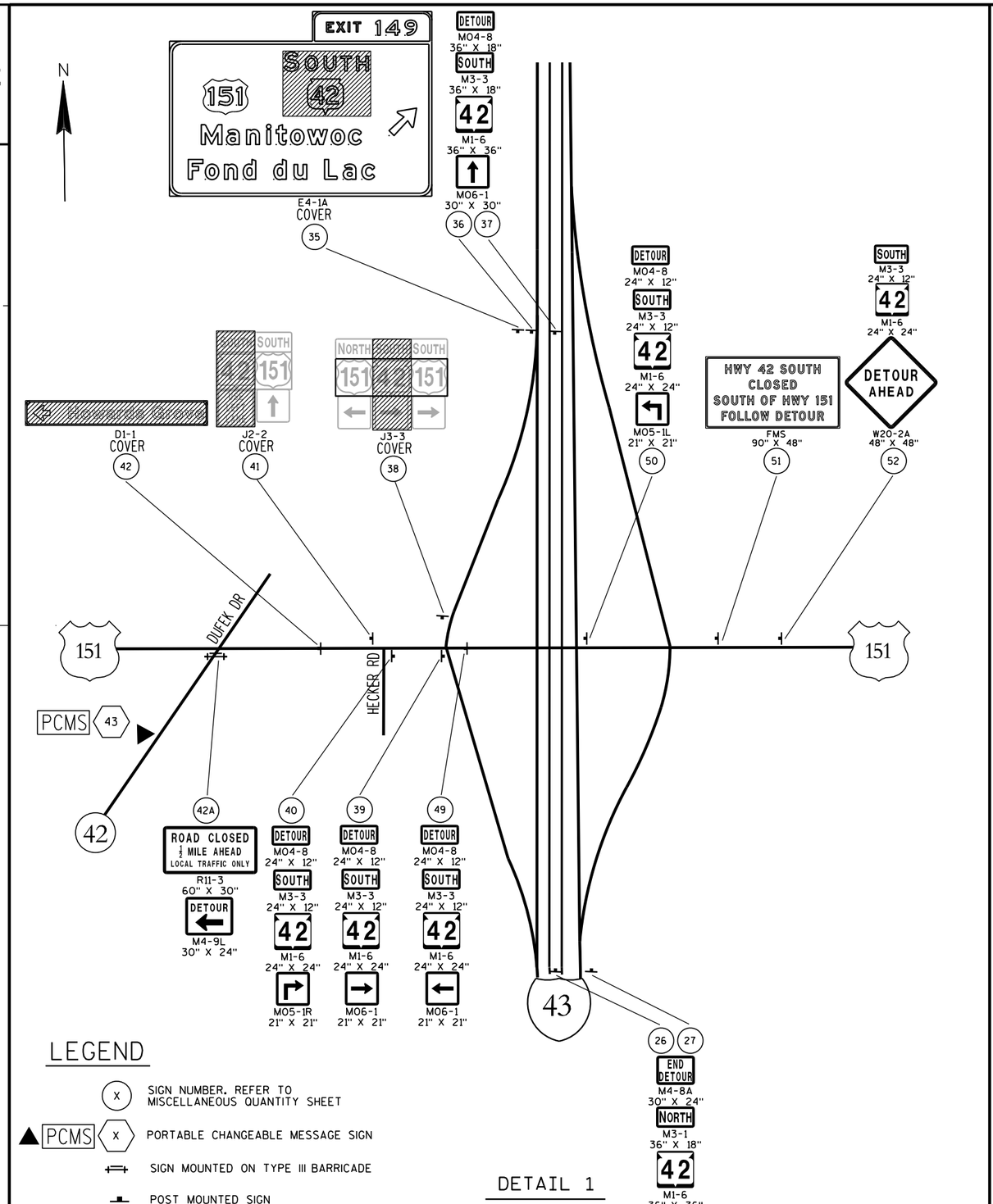

DETAIL 1

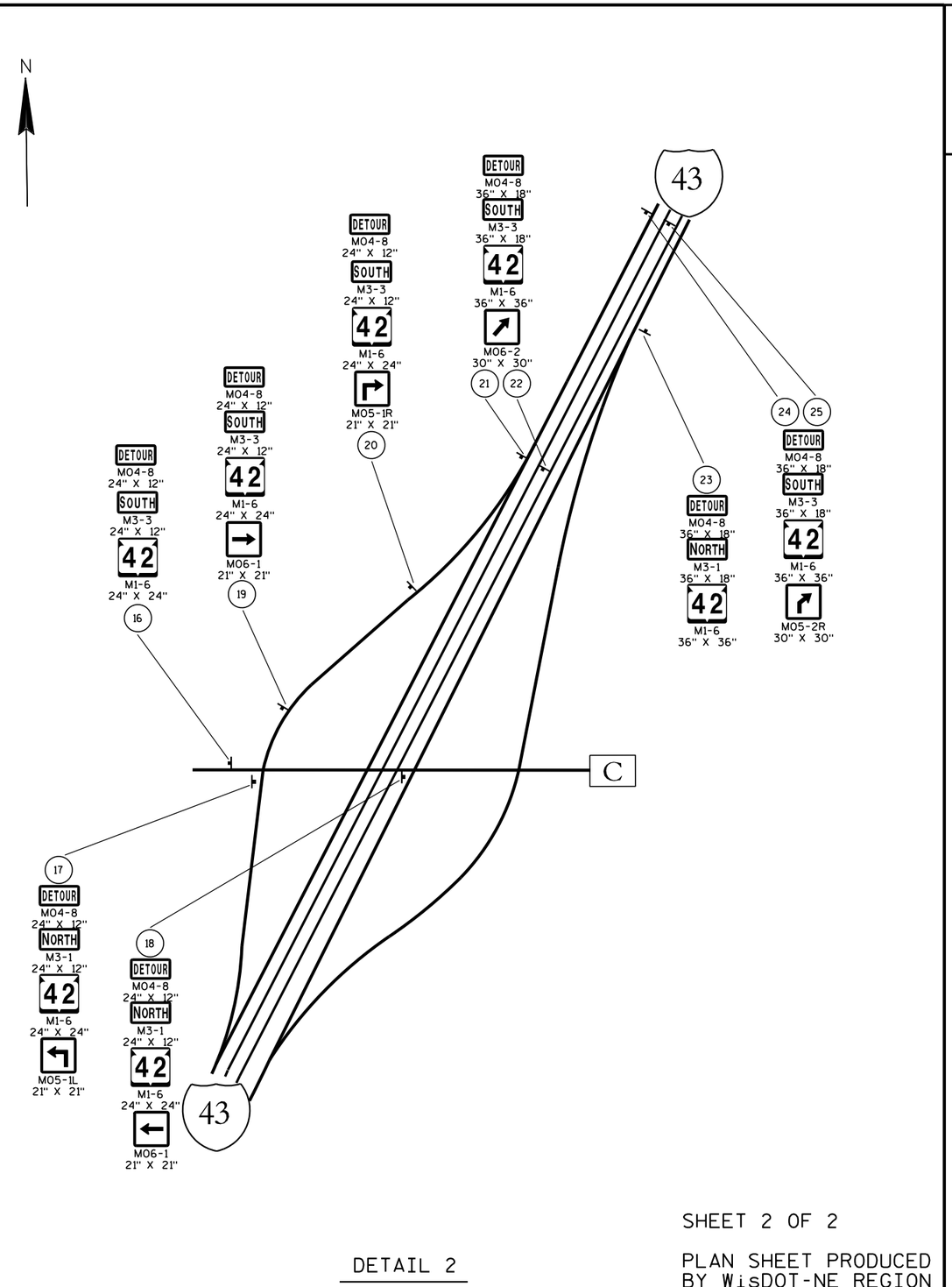

DETAIL 2

LEGEND

- (X) SIGN NUMBER. REFER TO MISCELLANEOUS QUANTITY SHEET
- ▲ PCMS (X) PORTABLE CHANGEABLE MESSAGE SIGN
- SIGN MOUNTED ON TYPE III BARRICADE
- POST MOUNTED SIGN

SHEET 2 OF 2

PLAN SHEET PRODUCED BY WisDOT-NE REGION

PROJECT NO:4570-24-71	HWY:STH 42	COUNTY:MANITOWOC	DETOUR SIGNING DETAIL	SHEET PRE 13 E

3

TRAFFIC CONTROL DETOUR SIGN SUMMARY

SIGN NO.	LOCATION	SIGN CODE	SIZE W X H	NUMBER IN SERVICE	APPROX. SERVICE PERIOD 90 DAYS	643.0900 SIGNS DAYS	643.0420 BARRICADES TYPE III DAYS	643.0705 WARNING LIGHTS TYPE A DAYS	643.1000 FIXED MESSAGE SIGNS SF	643.1050 SIGNS PORTABLE CHANGEABLE MESSAGE DAYS	NO OF CYCLES	643.0910 COVERING SIGNS TYPE I EACH	643.0920 COVERING SIGNS TYPE II EACH	REMARKS
1	STH 42, S. OF CTH C, PLACE 1/2 MILE S. OF CTH C INTERSECTION	W 20-2A	48"X48"	1	90	90								
2	STH 42, S. OF CTH C, PLACE 1/4 MILE S. OF CTH C INTERSECTION	FMS	90"X36"	1					22.5					SEE SIGN DETAIL
3	STH 42, S. OF CTH C, PLACE 750' S. OF CTH C INTERSECTION	MO 4-8	24"X12"	1	90	90								
	"	M 3-1	24"X12"	1	90	90								
	"	M 1-6	24"X24"	1	90	90								42
	"	MO 5-1R	21"X21"	1	90	90								
4	STH 42, AT CTH C, PLACE RIGHT OF EXISITNG J13-1 SIGN AT CTH C INTERSECTION	MO 4-8	24"X12"	1	90	90								
	"	M 3-1	24"X12"	1	90	90								
	"	M 1-6	24"X24"	1	90	90								42
	"	MO 6-1	21"X21"	1	90	90								RIGHT
5	CTH C, AT STH 42, MODIFY EXISTING J13-2 SIGN AS SHOWN	MO 6-1	21"X21"	1	90	90								RIGHT
6	STH 42, AT CTH C, PLACE ON RIGHT SHOULDER IN NE QUADRANT OF INTERSECTION	R 11-3B	60"X30"	1	90	90								5 MILES AHEAD
	"	MO 4-9R	30"X24"	1	90	90								
7	STH 42, N. OF CTH C, COVER EXISTING J4-1 SIGN AS SHOWN										1		1	
8	STH 42, AT CARSTENS LAKE RD, PLACE ON RIGHT SHOULDER IN NE QUADRANT OF INTERSECTION	R 11-3B	60"X30"	1	90	90	90	180						4 MILES AHEAD
9	STH 42, S. OF GASS LAKE RD, PLACE ON RIGHT SHOULDER, FIELD DETERMINED LOCATION	PCMS		1						7				
10	STH 42, N. OF GASS LAKE RD, PLACE IN ROADWAY PRIOR TO BRIDGE	R 11-2B	48"X30"	1	90	90	90	180						
11	CTH C, AT STH 42, MODIFY EXISTING J13-2 SIGN AS SHOWN	MO 6-1	21"X21"	1	90	90								LEFT
12	CTH C, E. OF STH 42, PLACE 150' E. OF STH 42 INTERSECTION	MO 4-8	24"X12"	1	90	90								
	"	M 3-1	24"X12"	1	90	90								
	"	M 1-6	24"X24"	1	90	90								42
13	CTH C, E. OF STH 42, MODIFY EXISTING J1-1 SIGN AS SHOWN	MO 4-8A	24"X18"	1	90	90								
14	CTH C, W. OF CENTER RD, PLACE 150' W. OF CENTER RD INTERSECTION	MO 4-8	24"X12"	1	90	90								
	"	M 3-1	24"X12"	1	90	90								
	"	M 1-6	24"X24"	1	90	90								42
	"	MO 6-1	21"X21"	1	90	90								AHEAD
15	CTH C, E. OF CENTER RD, PLACE 150' E. OF CENTER RD INTERSECTION	MO 4-8	24"X12"	1	90	90								
	"	M 3-3	24"X12"	1	90	90								
	"	M 1-6	24"X24"	1	90	90								42
	"	MO 6-1	21"X21"	1	90	90								AHEAD
16	CTH C, W. OF I-43 SB RAMP INTERSECTION, PLACE RIGHT OF EXISTING D1-2 SIGN	MO 4-8	24"X12"	1	90	90								
	"	M 3-3	24"X12"	1	90	90								
	"	M 1-6	24"X24"	1	90	90								42
17	CTH C, AT I-43 SB RAMP INTERSECTION, PLACE ABOVE EXISTING J3-2 SIGN AS SHOWN	MO 4-8	24"X12"	1	90	90								
	"	M 3-1	24"X12"	1	90	90								
	"	M 1-6	24"X24"	1	90	90								42
	"	MO 5-1L	21"X21"	1	90	90								
18	CTH C, UNDER I-43, PLACE IN MEDIAN NEXT TO BRIDGE PIER FOR I-43 NB	MO 4-8	24"X12"	1	90	90								
	"	M 3-1	24"X12"	1	90	90								
	"	M 1-6	24"X24"	1	90	90								42
	"	MO 6-1	21"X21"	1	90	90								LEFT
19	I-43 OFF-RAMP TO CTH C, PLACE 150' PRIOR TO CTH C INTERSECTION	MO 4-8	24"X12"	1	90	90								
	"	M 3-3	24"X12"	1	90	90								
	"	M 1-6	24"X24"	1	90	90								42
	"	MO 6-1	21"X21"	1	90	90								RIGHT
	PAGE SUBTOTALS			44		3,780	180	360	22.5	7		0	1	

PLAN SHEET PRODUCED

BY WisDOT - NE REGION

3

TRAFFIC CONTROL DETOUR SIGN SUMMARY

SIGN NO.	LOCATION	SIGN CODE	SIZE W X H	NUMBER IN SERVICE	APPROX. SERVICE PERIOD 90 DAYS	643.0900 SIGNS DAYS	643.0420 BARRICADES TYPE III DAYS	643.0705 WARNING LIGHTS TYPE A DAYS	643.1000 FIXED MESSAGE SIGNS SF	643.1050 SIGNS PORTABLE CHANGEABLE MESSAGE DAYS	NO OF CYCLES	643.0910 COVERING SIGNS TYPE I EACH	643.0920 COVERING SIGNS TYPE II EACH	REMARKS
20	I-43 OFF-RAMP TO CTH C, PLACE 850' PRIOR TO CTH C INTERSECTION	MO 4-8	24"X12"	1	90	90								
	"	M 3-3	24"X12"	1	90	90								
	"	M 1-6	24"X24"	1	90	90								42
	"	MO 5-1R	21"X21"	1	90	90								
21	I-43, AT CTH C OFF-RAMP, PLACE LEFT OF EXISTING TYPE I SIGN ON RIGHT SHOULDER	MO 4-8	36"X18"	1	90	90								
	"	M 3-3	36"X18"	1	90	90								
	"	M 1-6	36"X36"	1	90	90								42
	"	MO 6-2	30"X30"	1	90	90								TILT RIGHT
22	I-43, AT CTH C OFF-RAMP, PLACE ACROSS FROM SIGN #21 IN MEDIAN	MO 4-8	36"X18"	1	90	90								
	"	M 3-3	36"X18"	1	90	90								
	"	M 1-6	36"X36"	1	90	90								42
	"	MO 6-2	30"X30"	1	90	90								TILT RIGHT
23	I-43, N. OF CTH C, PLACE RIGHT OF EXISTING J4-1 SIGN	MO 4-8	36"X18"	1	90	90								
	"	M 3-1	36"X18"	1	90	90								
	"	M 1-6	36"X36"	1	90	90								42
24	I-43, N. OF CTH C, PLACE 1/4 MILE N. OF CTH C INTERCHANGE	MO 4-8	36"X18"	1	90	90								
	"	M 3-3	36"X18"	1	90	90								
	"	M 1-6	36"X36"	1	90	90								42
	"	MO 5-2R	30"X30"	1	90	90								
25	I-43, N. OF CTH C, PLACE 1/4 MILE N. OF CTH C INTERCHANGE	MO 4-8	36"X18"	1	90	90								
	"	M 3-3	36"X18"	1	90	90								
	"	M 1-6	36"X36"	1	90	90								42
	"	MO 5-2R	30"X30"	1	90	90								
26	I-43, S. OF US 151, PLACE IN MEDIAN ACROSS FROM SIGN #27	M 4-8A	30"X24"	1	90	90								
	"	M 3-1	36"X18"	1	90	90								
	"	M 1-6	36"X36"	1	90	90								42
27	I-43, S. OF US 151, PLACE LEFT OF EXISTING TYPE I SIGN ON RIGHT SHOULDER	M 4-8A	30"X24"	1	90	90								
	"	M 3-1	36"X18"	1	90	90								
	"	M 1-6	36"X36"	1	90	90								42
28	I-43, N. OF US 151, COVER EXISTING TYPE I SIGN AS SHOWN										1	1		COVER "SOUTH 42"
29	I-43, N. OF US 151, PLACE 3/4 MILE N. OF US 151 INTERCHANGE IN MEDIAN	M 3-3	36"X18"	1	90	90								
	"	M 1-6	36"X36"	1	90	90								42
	"	W 20-2A	48"X48"	1	90	90								
30	I-43, N. OF US 151, PLACE 3/4 MILE N. OF US 151 INTERCHANGE ON RIGHT SHOULDER	M 3-3	36"X18"	1	90	90								
	"	M 1-6	36"X36"	1	90	90								42
	"	W 20-2A	48"X48"	1	90	90								
31	I-43, N. OF US 151, PLACE 1/2 MILE N. OF US 151 INTERCHANGE IN MEDIAN	FMS	144"X54"	1					54					SEE SIGN DETAIL
32	I-43, N. OF US 151, PLACE 1/2 MILE N. OF US 151 INTERCHANGE ON RIGHT SHOULDER	FMS	144"X54"	1					54					SEE SIGN DETAIL
33	I-43, N. OF US 151, PLACE 1/4 MILE N. OF US 151 INTERCHANGE IN MEDIAN	MO 4-8	36"X18"	1	90	90								
	"	M 3-3	36"X18"	1	90	90								
	"	M 1-6	36"X36"	1	90	90								42
	"	MO 6-1	30"X30"	1	90	90								AHEAD
34	I-43, N. OF US 151, PLACE 1/4 MILE N. OF US 151 INTERCHANGE ON RIGHT SHOULDER	MO 4-8	36"X18"	1	90	90								
	"	M 3-3	36"X18"	1	90	90								
	"	M 1-6	36"X36"	1	90	90								42
	"	MO 6-1	30"X30"	1	90	90								AHEAD
	PAGE SUBTOTALS			45		3,870	0	0	108	0		1	0	

3

PLAN SHEET PRODUCED

BY WisDOT - NE REGION

3

TRAFFIC CONTROL DETOUR SIGN SUMMARY

SIGN NO.	LOCATION	SIGN CODE	SIZE W X H	NUMBER IN SERVICE	APPROX. SERVICE PERIOD 90 DAYS	643.0900 SIGNS DAYS	643.0420 BARRICADES TYPE III DAYS	643.0705 WARNING LIGHTS TYPE A DAYS	643.1000 FIXED MESSAGE SIGNS SF	643.1050 SIGNS PORTABLE CHANGEABLE MESSAGE DAYS	NO OF CYCLES	643.0910 COVERING SIGNS TYPE I EACH	643.0920 COVERING SIGNS TYPE II EACH	REMARKS
35	I-43, N. OF US 151, COVER EXISTING TYPE I SIGN AS SHOWN										1	1		COVER "SOUTH 42"
36	I-43, N. OF US 151, PLACE LEFT OF EXISTING TYPE I SIGN ON RIGHT SHOULDER	MO 4-8	36"X18"	1	90	90								
	"	M 3-3	36"X18"	1	90	90								
	"	M 1-6	36"X36"	1	90	90								42
	"	MO 6-1	30"X30"	1	90	90								AHEAD
37	I-43, N. OF US 151, PLACE ACROSS FROM SIGN #36 IN MEDIAN	MO 4-8	36"X18"	1	90	90								
	"	M 3-3	36"X18"	1	90	90								
	"	M 1-6	36"X36"	1	90	90								42
	"	MO 6-1	30"X30"	1	90	90								AHEAD
38	I-43 OFF-RAMP TO US 151, COVER EXISTING J3-3 SIGN AS SHOWN										1		1	COVER "S-42-RIGHT"
39	US 151, W. OF I-43 SB RAMP, PLACE 300' W. OF I-43 SB RAMP INTERSECTION	MO 4-8	24"X12"	1	90	90								
	"	M 3-3	24"X12"	1	90	90								
	"	M 1-6	24"X24"	1	90	90								42
	"	MO 6-1	21"X21"	1	90	90								RIGHT
40	US 151, W. OF I-43 SB RAMP, PLACE LEFT OF EXISTING D1-72 SIGN	MO 4-8	24"X12"	1	90	90								
	"	M 3-3	24"X12"	1	90	90								
	"	M 1-6	24"X24"	1	90	90								42
	"	MO 5-1R	21"X21"	1	90	90								
41	US 151, W. OF HECKER RD, COVER EXISTING J2-2 SIGN AS SHOWN										1		1	COVER "S-42-USE LEFT LANE"
42	US 151, W. OF HECKER RD, COVER EXISTING D1-1 SIGN AS SHOWN										1		1	COVER ENTIRE SIGN
42A	STH 42, AT US 151, PLACE ON RIGHT SHOULDER IN SW QUADRANT OF INTERSECTION	R 11-3	60"X30"	1	90	90	90	180						1/2 MILE AHEAD
	"	M 4-9L	30"X24"	1	90	90								
43	STH 42, S. OF US 151, PLACE ON RIGHT SHOULDER, FIELD DETERMINE LOCATION	PCMS		1						7				
44	US 151, W. OF STH 42, COVER EXISTING D1-2 SIGN AS SHOWN										1		1	COVER "HOWARDS GROVE"
45	STH 42, S. OF US 151, COVER EXISTING J4-2 SIGN AS SHOWN										1		1	COVER ENTIRE SIGN
46	US 151, W. OF STH 42, MODIFY EXISTING J2-3 SIGN AS SHOWN	MO 4-8	24"X12"	1	90	90								
	"	MO 6-1	21"X21"	1	90	90								AHEAD
47	US 151, W. OF STH 42, PLACE 1000' W. OF STH 42 INTERSECTION	FMS	90"X48"	1					30					SEE SIGN DETAIL
48	US 151, W. OF STH 42, PLACE 1400' W. OF STH 42 INTERSECTION	M 3-3	24"X12"	1	90	90								
	"	M 1-6	24"X24"	1	90	90								42
	"	W 20-2A	48"X48"	1	90	90								
49	US 151, BETWEEN I-43 RAMPS, PLACE IN MEDIAN	MO 4-8	24"X12"	1	90	90								
	"	M 3-3	24"X12"	1	90	90								
	"	M 1-6	24"X24"	1	90	90								42
	"	MO 6-1	21"X21"	1	90	90								LEFT
50	US 151, BETWEEN I-43 RAMPS, PLACE JUST E. OF I-43 STRUCTURE ON RIGHT SHOULDER	MO 4-8	24"X12"	1	90	90								
	"	M 3-3	24"X12"	1	90	90								
	"	M 1-6	24"X24"	1	90	90								42
	"	MO 5-1L	21"X21"	1	90	90								
51	US 151, E. OF I-43, PLACE ACROSS FROM J3-3 SIGN ON RIGHT SHOULDER	FMS	90"X48"	1					30					SEE SIGN DETAIL
52	US 151, E. OF I-43, PLACE 550' E. OF I-43 NB RAMP INTERSECTION	M 3-3	24"X12"	1	90	90								
	"	M 1-6	24"X24"	1	90	90								42
	"	W 20-2A	48"X48"	1	90	90								
	PAGE SUBTOTALS			37		3,060	90	180	60	7		1	5	
	PROJECT TOTALS			**126**		**10,710**	**270**	**540**	**190.5**	**14**		**2**	**6**	

3

PLAN SHEET PRODUCED

BY WisDOT - NE REGION

PROJECT NUMBER: 4570-24-71	HWY: STH 42	COUNTY: MAINTOWOC	MISCELLANEOUS QUANTITIES	SHEET	E

NOTES

1. Fixed Message Type II Signs - Type F Reflective
2. Color:
   Background - Orange
   Message - Black
3. Message Series - D

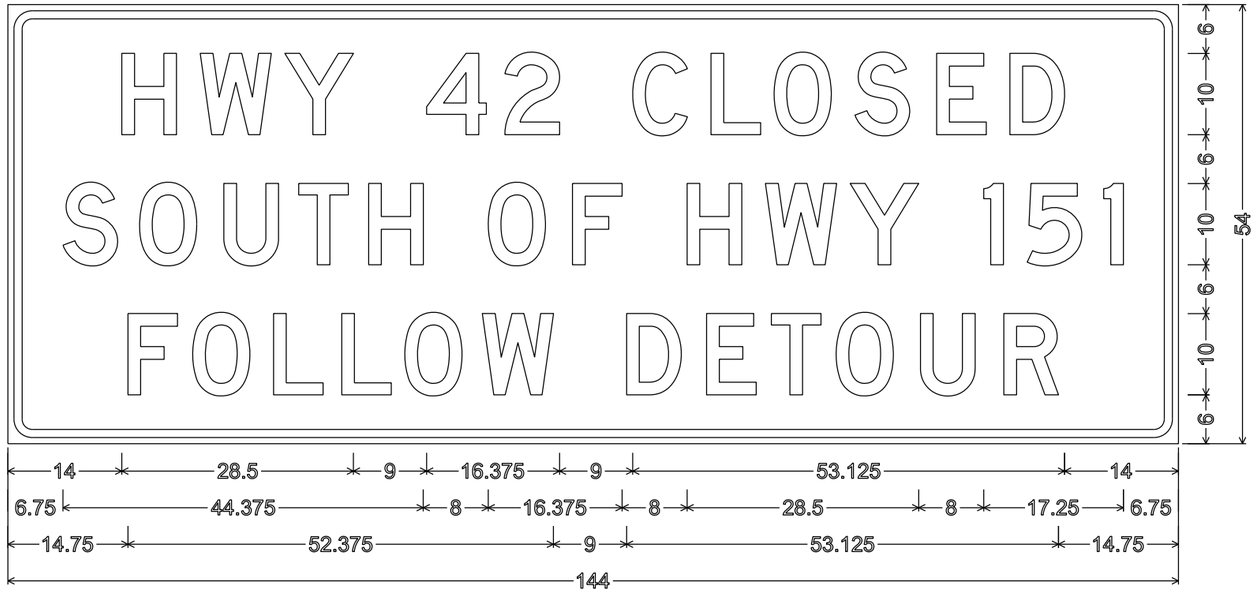

3.000" Radius, 1.000" Border, 0.750" Indent

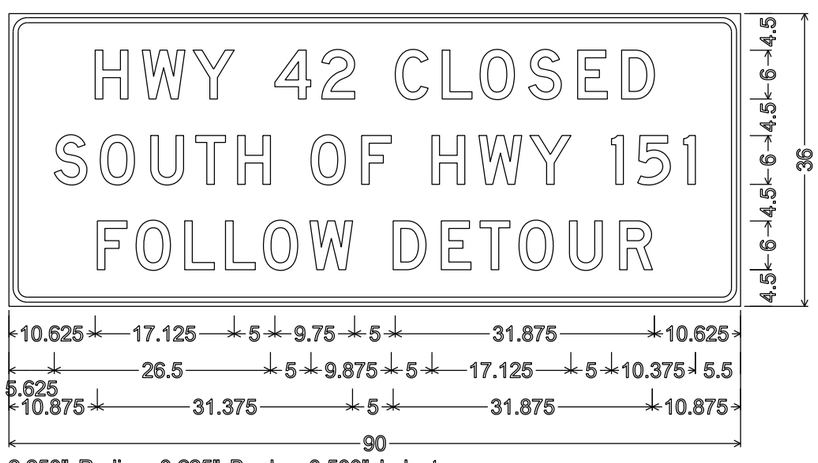

2.250" Radius, 0.625" Border, 0.500" Indent

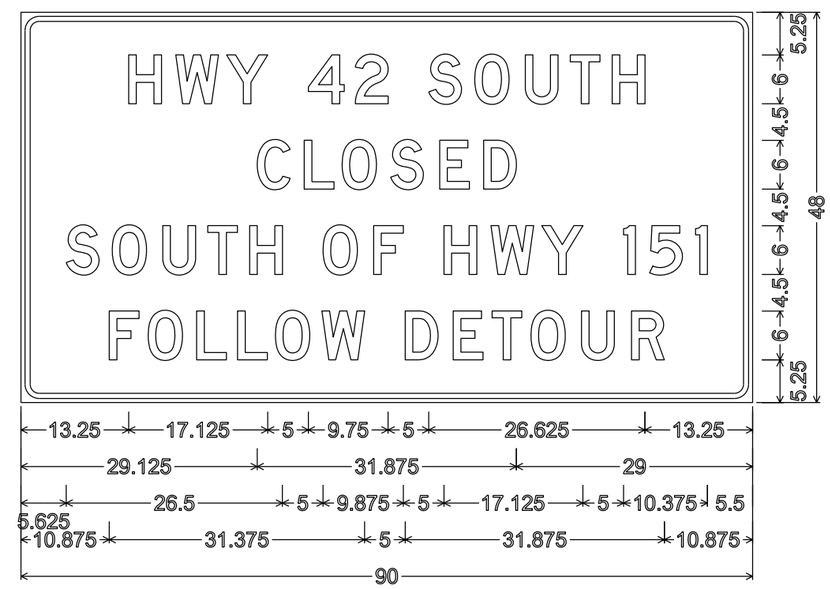

2.250" Radius, 0.625" Border, 0.500" Indent

7

7

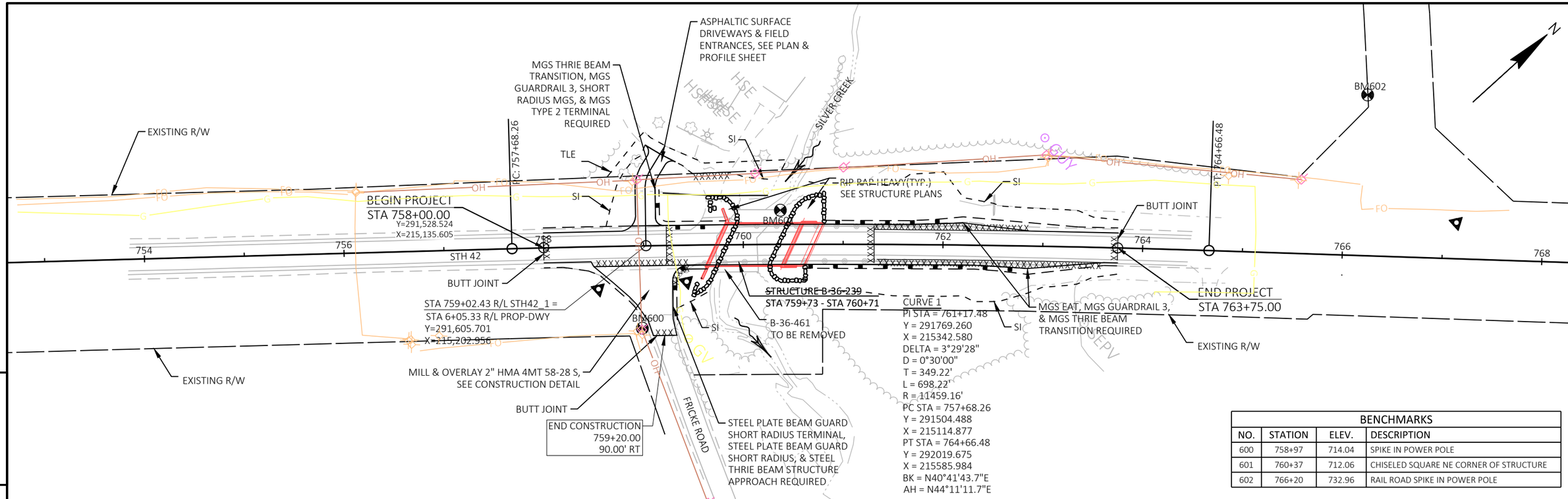

BENCHMARKS			
NO.	STATION	ELEV.	DESCRIPTION
600	758+97	714.04	SPIKE IN POWER POLE
601	760+37	712.06	CHISELED SQUARE NE CORNER OF STRUCTURE
602	766+20	732.96	RAIL ROAD SPIKE IN POWER POLE

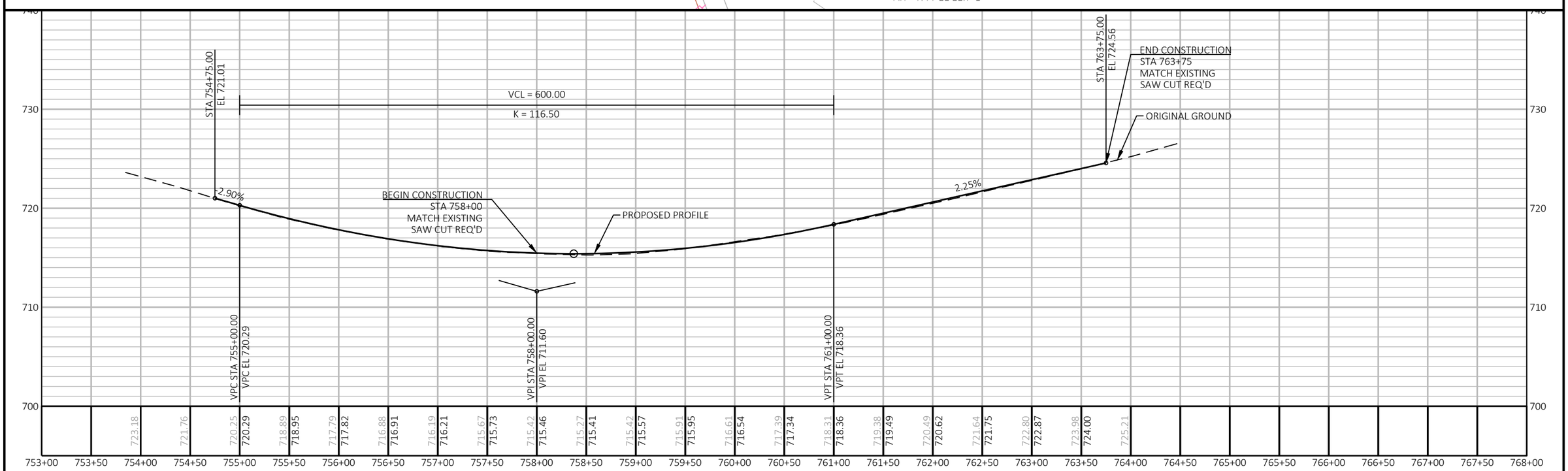

PROJECT NO: 4570-24-71	HWY: STH 42	COUNTY: MANITOWOC	PLAN AND PROFILE: PLAN PROFILE SHEETS	SHEET PRE 18 E

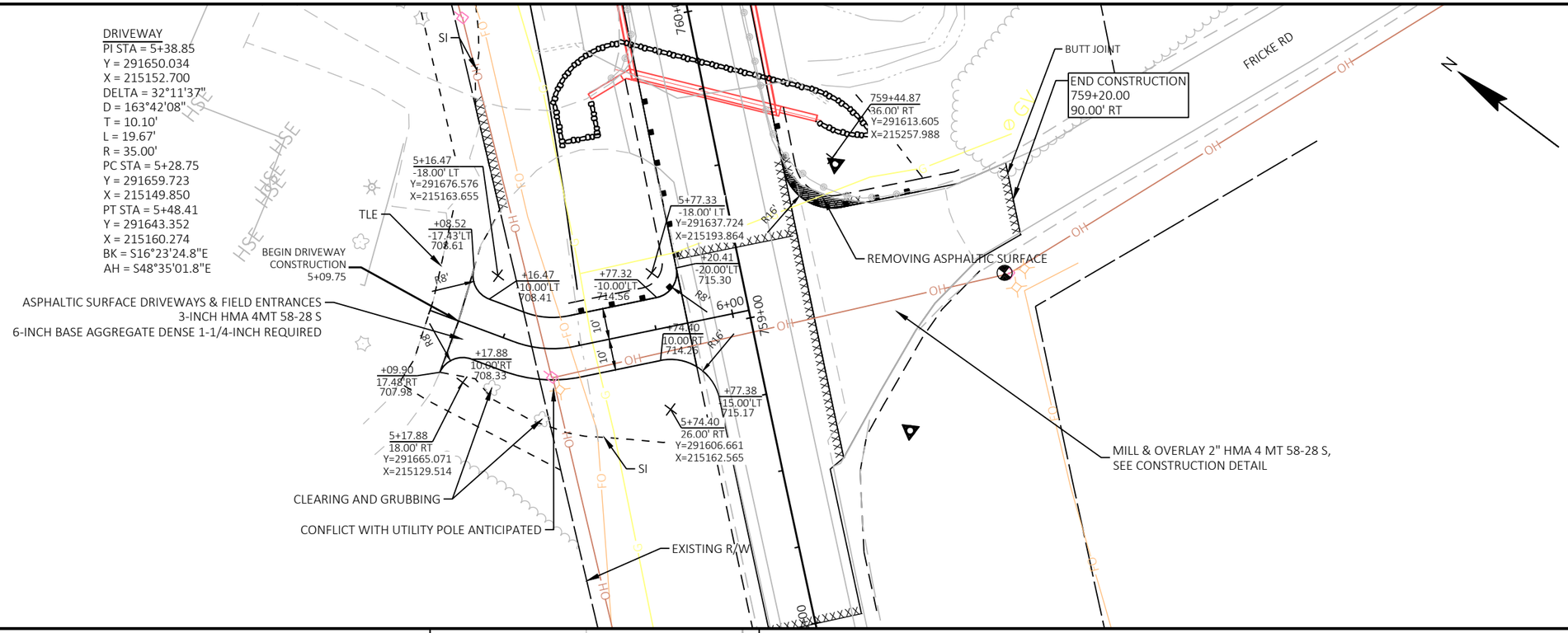

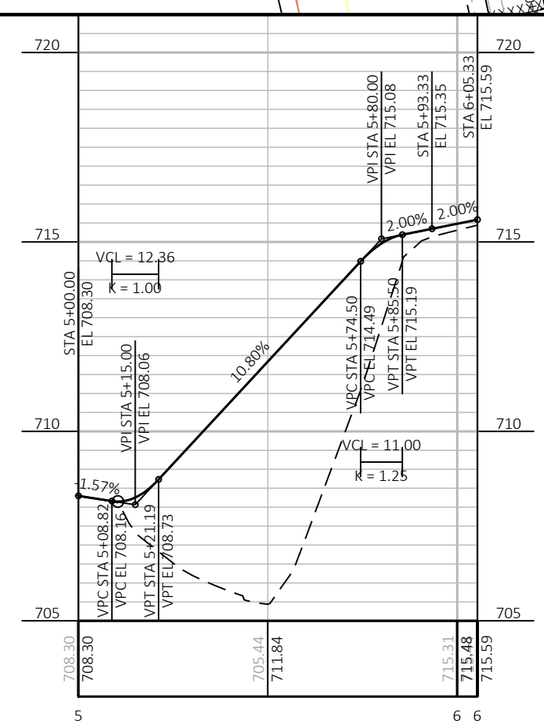

PROJECT NO: 4570-24-71	HWY: STH 42	COUNTY: MANITOWOC	PLAN AND PROFILE: PLAN PROFILE SHEETS	SHEET PRE 19 E

FILE NAME : C:\WISDOT\DESIGN\C3D\45702400\SHEETSPLAN\050102-PP.DWG
LAYOUT NAME - 050102-pp
PLOT DATE : 4/10/2020 2:28 PM PLOT BY : MAATTA, TRAVIS SHANE PLOT NAME : PLOT SCALE : 1 IN:40 FT

SDD 14b15-a Steel Plate Beam Guard, Class "A", Installation and Elements

GENERAL NOTES

1. W6 X 9 OR W6 X 8.5 STEEL POSTS AND NOTCHED PLASTIC BLOCKOUTS ARE ACCEPTABLE ALTERNATIVES FOR 6" X 8" WOOD POSTS WITH WOOD OR PLASTIC BLOCKOUTS. USE APPROVED NOTCHED PLASTIC BLOCKOUTS WITH STEEL POSTS. APPROVED PLASTIC BLOCKOUT DESIGNS MAY VARY FROM THIS TYPICAL DETAIL WHEN USED IN CONJUNCTION WITH STEEL POSTS.
   DO NOT MIX STEEL POSTS AND WOOD POSTS IN A SINGLE INSTALLATION.
2. USE STRUCTURAL STEEL POSTS CONFORMING TO ASTM A 36. GALVANIZED POSTS ACCORDING TO AASHTO M 111. EITHER SET THE POSTS IN DRILLED HOLES OR DRIVE TO GRADE. REMOVE MUSHROOMING CAUSED BY DRIVING AND REPAIR DAMAGED SPELTER COATING ON GALVANIZED POSTS.
3. INSTALL STEEL POSTS WITH HOLES ON APPROACHING TRAFFIC SIDE.
4. USE EITHER WOOD OR APPROVED PLASTIC BLOCKOUTS ON WOOD POSTS.
5. IF THE DISTANCE FROM BACK OF POST TO SHOULDER HINGE POINT IS LESS THAN 2 FEET INSTALL LONGER POST AT HALF POST SPACING, W BEAM (LHW).
6. IF ROCK IS ENCOUNTERED DURING EXCAVATION, THE ENGINEER MAY APPROVE USING A 12 INCH DIAMETER POST HOLE EXTENDING 20 INCHES DEEP INTO THE ROCK. PLACE GRANULAR MATERIAL IN THE BOTTOM OF THE HOLE APPROXIMATELY 2½ INCHES DEEP. CUT THE POSTS TO LENGTH AND PLACE IN YHE HOLE. BACKFILL WITH MATERIAL EXCAVATED FROM THE HOLE AND COMPACT ADEQUATEY.
7. WHEN USING STEEL POSTS AND WOOD BLOCKOUTS INSTALL FOUR 16D GALVANIZED NAILS. INSTALL NAILS AT THE BACK CORNERS OF THE BLOCK AND BEND THE NAILS OVER THE FLANGE OF THE STEEL POST.

INSTALL BEAM GUARD SECTIONS AND ALL NECESSARY HARDWARE ACCORDING TO THE APPLICABLE PLAN AND CURRENT STANDARD AND SUPPLEMENTAL SPECIFICATIONS.
ALL DIMENSIONS ARE SUBJECT TO MANUFACTURER'S TOLERANCES EXCEPT WHERE ALLOWABLE TOLERANCES ARE SHOWN.

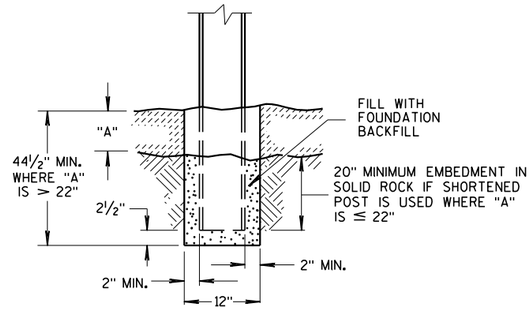

END VIEW
SETTING STEEL OR WOOD POST IN ROCK (6)

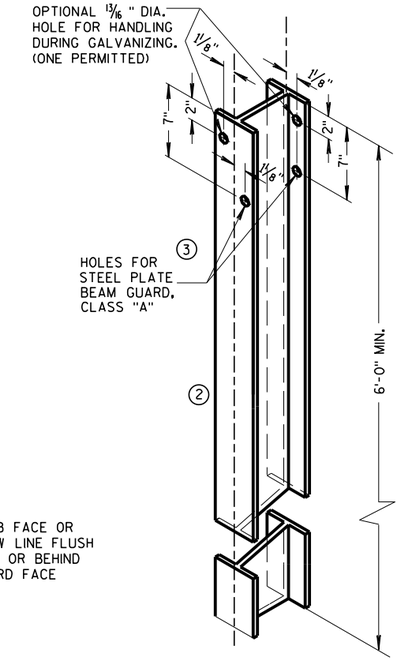

STEEL POST & HOLE PUNCHING DETAIL (W6 X 9) (1)

ALL HOLES 13/16" DIAMETER EXCEPT AS NOTED

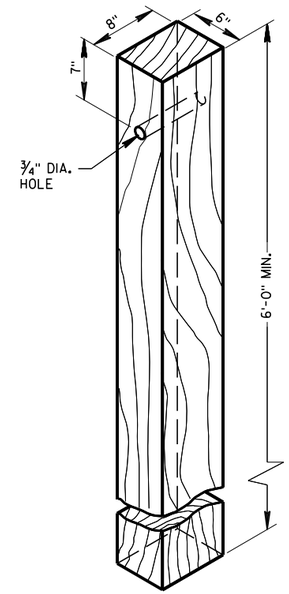

WOOD POST (6"X8") NOMINAL

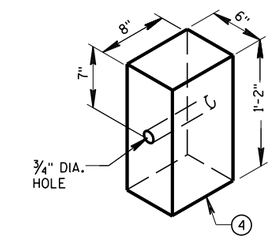

WOOD OR PLASTIC BLOCKOUT FOR WOOD POSTS

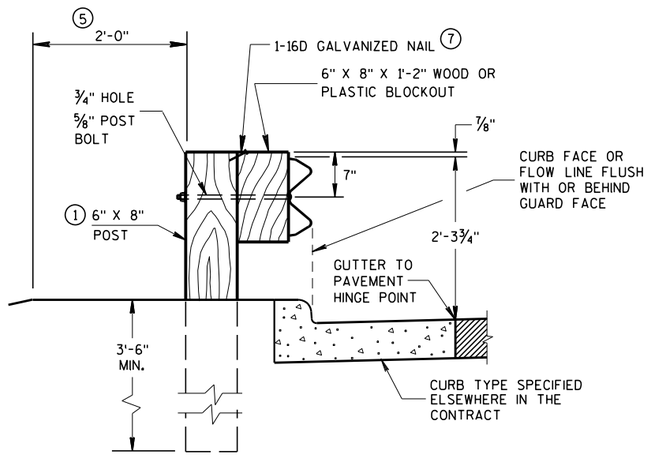

END VIEW
LOCATED ALONG A CURBED ROADWAY

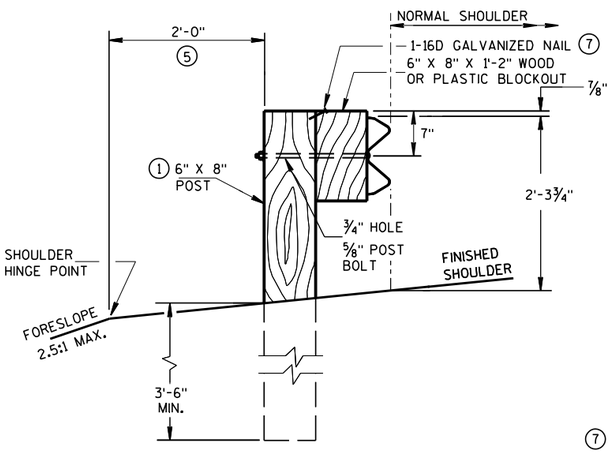

END VIEW
LOCATED ALONG A ROADWAY SHOULDER
STANDARD INSTALLATION

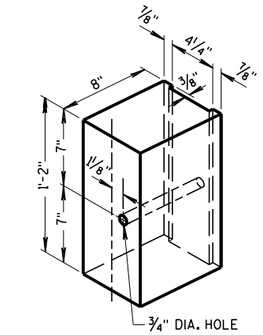

TYPICAL NOTCHED PLASTIC BLOCKOUT FOR STEEL POSTS (1)

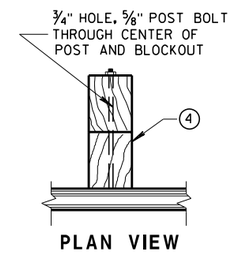

PLAN VIEW
WOOD POST, BLOCKOUT & BEAM

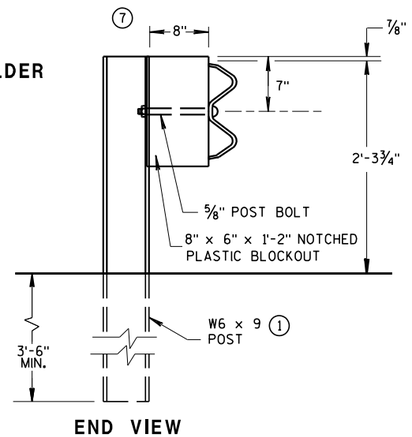

END VIEW
STEEL POST & NOTCHED
PLASTIC BLOCKOUT ALTERNATIVE
STANDARD INSTALLATION

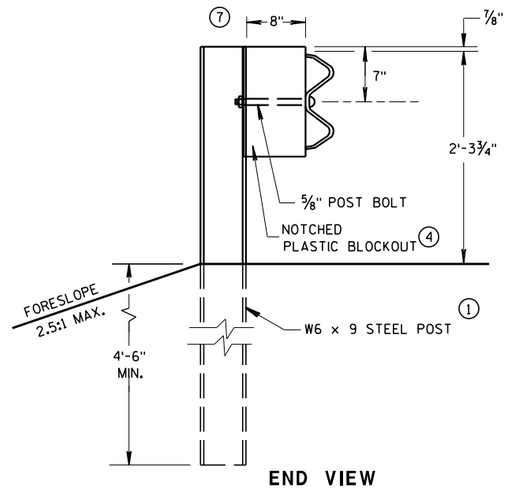

END VIEW
LONGER POST AT HALF
POST SPACING W BEAM
(LHW)

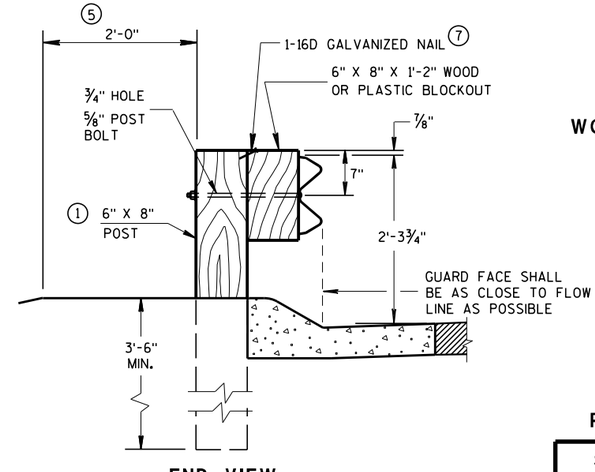

END VIEW
LOCATED ALONG A
MOUNTABLE CURBED ROADWAY

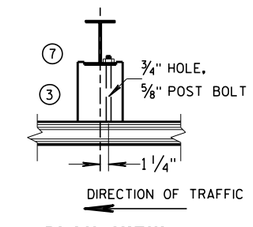

PLAN VIEW
STEEL POST, NOTCHED
PLASTIC BLOCKOUT & BEAM

TYPICAL INSTALLATION OF STEEL PLATE BEAM GUARD

STEEL PLATE BEAM GUARD, CLASS "A"
INSTALLATION & ELEMENTS

STATE OF WISCO PRE 20
DEPARTMENT OF TRANSPORTATION

6

S.D.D. 14 B 15-11a

6

S.D.D. 14 B 15-11a

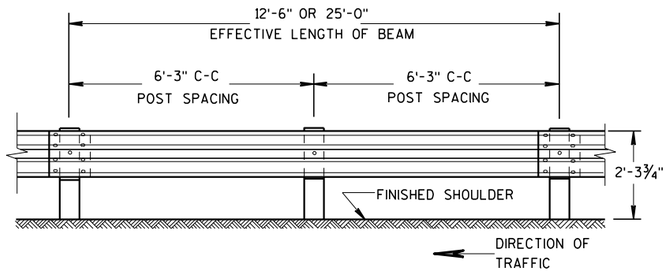

FRONT VIEW

POST SPACING STANDARD INSTALLATION

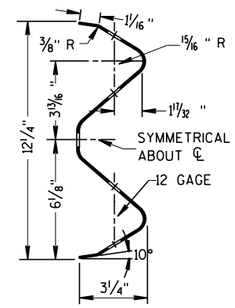

SECTION THRU W BEAM

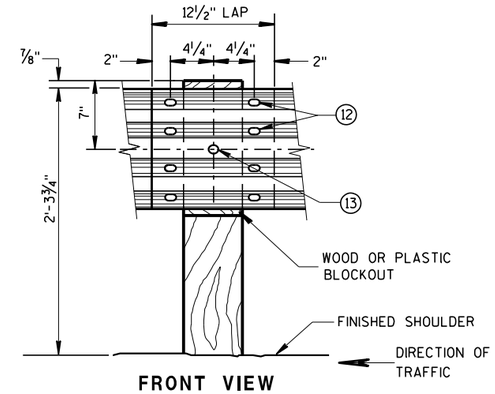

FRONT VIEW

BEAM SPLICE AT WOOD POST AND POST MOUNTING DETAIL

GENERAL NOTES

FURNISH GUARDRAIL DEFLECTORS FROM APPROVED PRODUCTS LIST.

(9) DO NOT INSTALL REFLECTORS ON THE FIRST 50 FEET OF THE APPROACH END OF THE ENERGY ABSORBING TERMINA. START REFLECTORS AT POST #9 AND SPACE EVENLY EVERY 100 FEET (MAX.) TO THE END OF GUARDRAIL RUN, USING A MINIMUM OF 3 REFLECTORS.

(12) 8 -⅝" Φ X 2" BUTTON HEAD BOLTS WITH OVAL SHOULDERS & RECESS NUTS.

(13) ⅝" DIA. BUTTON HEAD BOLT AND RECESS NUT WITH ⅝" DIA. F844 FLAT WASHER UNDER NUT.

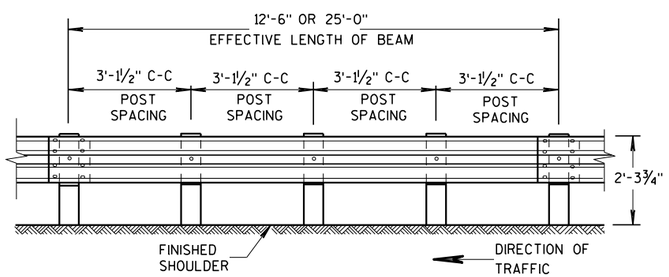

FRONT VIEW

POST SPACING FOR LONGER POST AT HALF POST SPACING W BEAM (LHW)

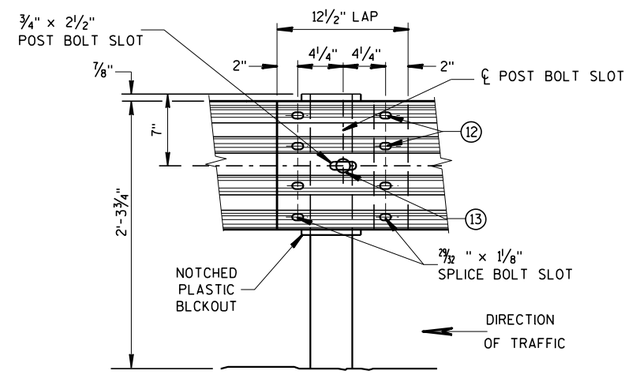

FRONT VIEW
BEAM SPLICE AT STEEL POST

TYPICAL SPLICING DETAILS OF STEEL PLATE BEAM GUARD

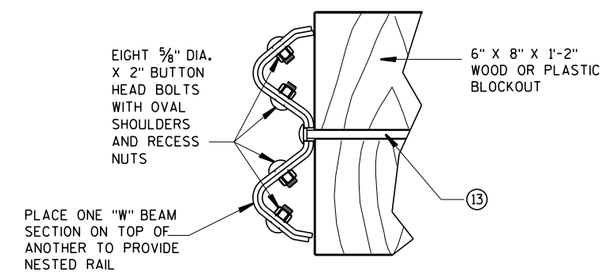

NESTED W BEAM (NW)

USE ALL OTHER STANDARD BEAM GUARD DETAILS FOR CONSTRUCTING NESTED W BEAM (NW)

* USE DOUBLE SIDED WHITE GUADRAIL REFLECTORS ON ROADWAYS WITH BI-DIRECTIONAL TRAFFIC (NO MEDIAN). USE SINGLE SIDED WHITE (RIGHT SIDE) AND SINGLE SIDED YELLOW (LEFT SIDE) ON ROADWAYS WITH MEDIAN SEPARATION.

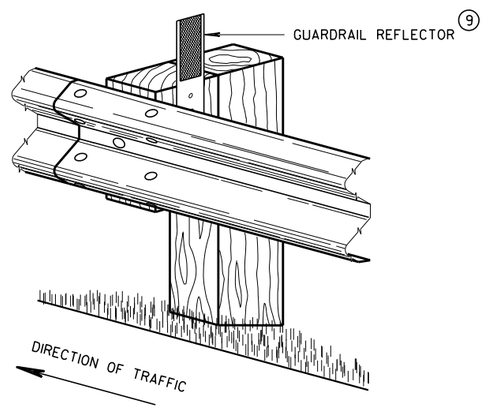

4" X 12" GUARDRAIL REFLECTOR DETAIL AND TYPICAL INSTALLATION *

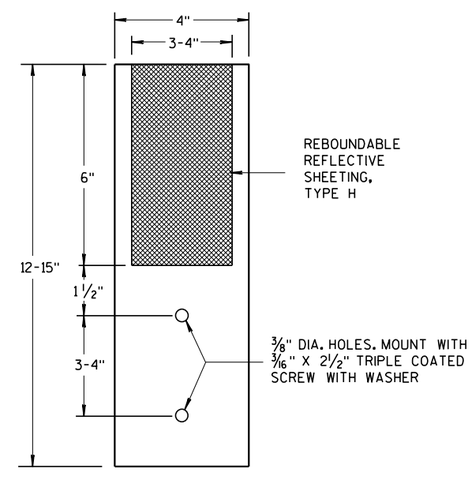

4"x 12" GUARDRAIL REFLECTOR

STEEL PLATE BEAM GUARD,
CLASS "A",
INSTALLATION & ELEMENTS

PRE 21

STATE OF WISCONSIN
DEPARTMENT OF TRANSPORTATION

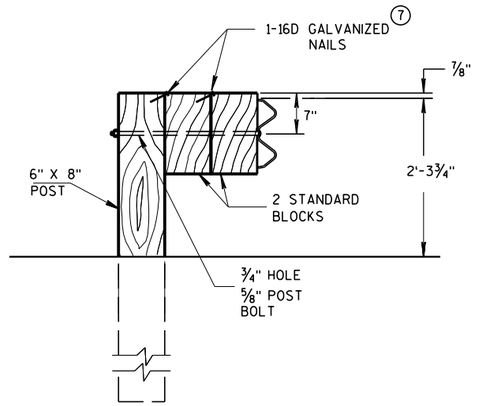

DETAIL FOR DOUBLE BLOCKS

THE NUMBER OF DOUBLE BLOCK POSTS WITHIN A BARRIER RUN IS UNLIMITED

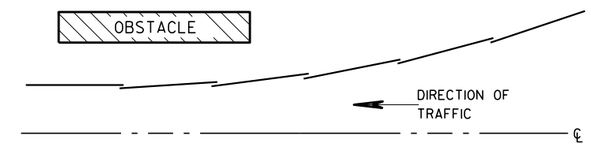

PLAN VIEW
BEAM LAPPING DETAIL

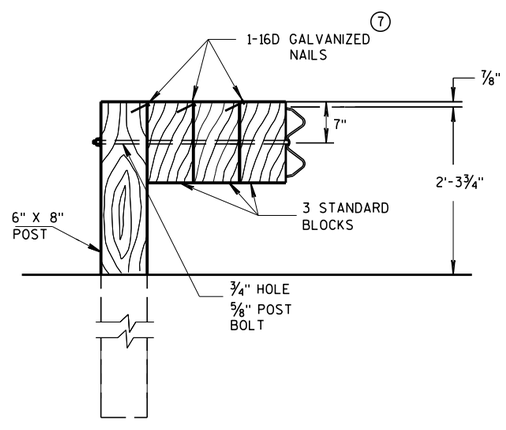

DETAIL FOR TRIPLE BLOCKS

TRIPLE BLOCK DETAIL IS LIMITED TO ONE LOCATION WITHIN A BEAM GUARD RUN.

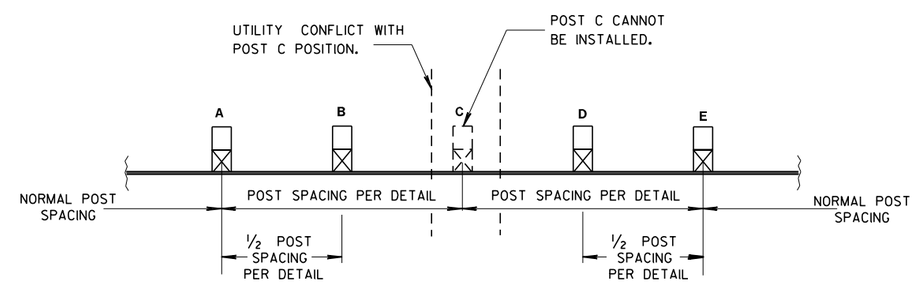

POST DRIVING FOR CONTINUOUS UNDERGROUND OBSTRUCTION

NOTES: USE DOUBLE OR TRIPLE BLOCKS WHEN UNDERGROUND OBSTACLES PREVENT THE POST FROM BEING INSTALLED.

DO NOT USE EXTRA BLOCKOUTS IF IT CAUSES THE POST TO BE DRIVEN BEYOND SHOULDER HINGE POINT OR CAUSES A FIXED OBJECT TO BE WITHIN THE DEFLECTION DISTANCE OF THE BARRIER.

STEEL PLATE BEAM GUARD, CLASS "A", INSTALLATION & ELEMENTS

STATE OF WISCONSIN
DEPARTMENT OF TRANSPORTATION

APPROVED
June 2017 — DATE
/S/ Rodne — ROADWAY STANDARDS DEVELOPMENT UNIT SUPERVISOR
FHWA

PRE 22

6
S.D.D. 14 B 15-11c

SDD 14b16-a Anchorage for Steel Plate Beam Guard Type 2

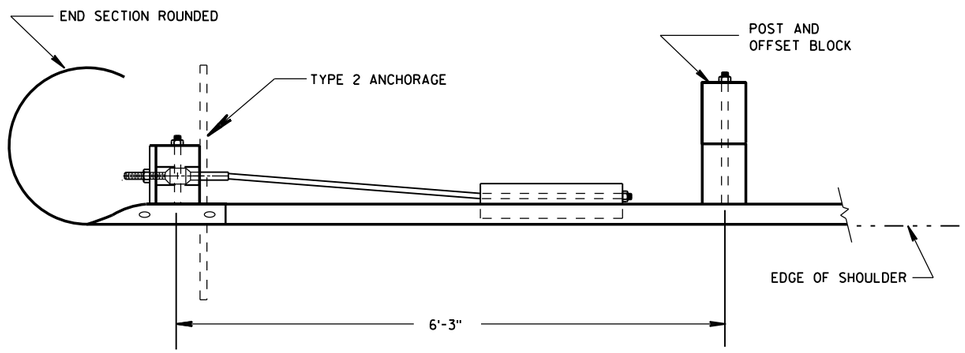

PLAN VIEW

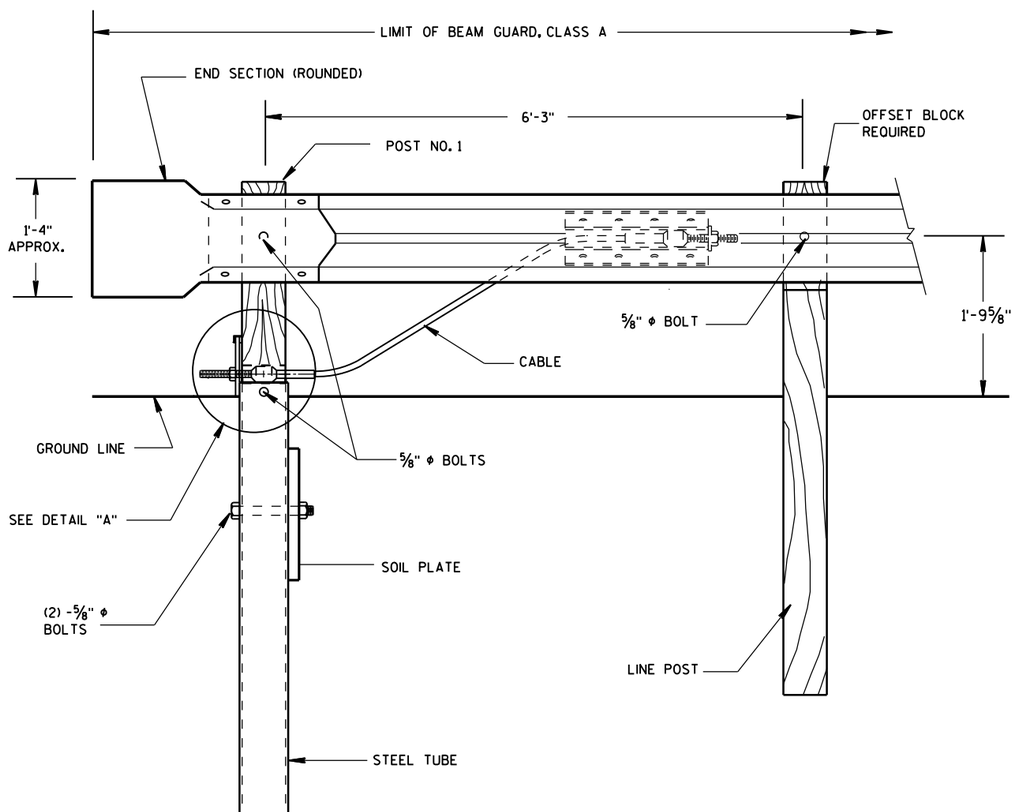

FRONT VIEW

END TREATMENT WITH TYPE 2 ANCHORAGE

(USE ON ONE-WAY ROADWAYS ONLY - DEPARTING END)

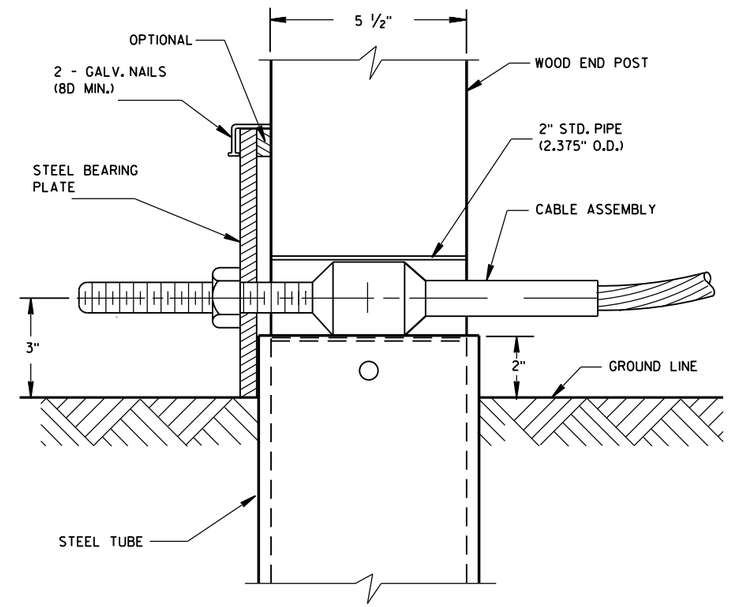

DETAIL "A"

POST NO. 1

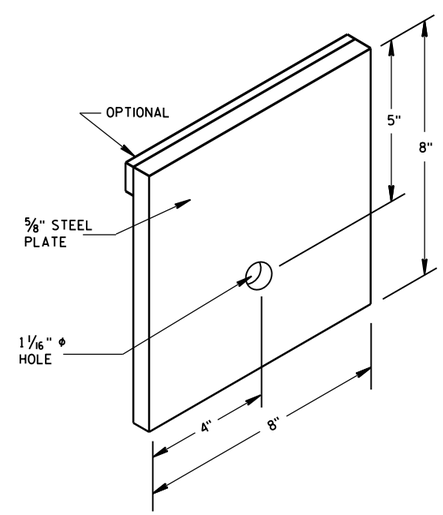

STEEL BEARING PLATE

ANCHORAGE FOR STEEL
PLATE BEAM GUARD
TYPE 2

STATE OF WISCONSIN
DEPARTMENT OF TRANSPORTATION

6

6

S.D.D. 14 B 16-4a

S.D.D. 14 B 16-4a

SDD 14b16-b Anchorage for Steel Plate Beam Guard Type 2

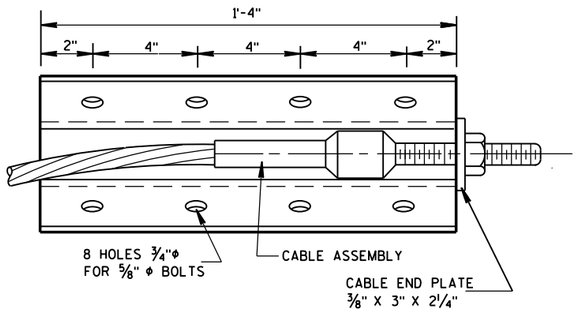

FRONT VIEW

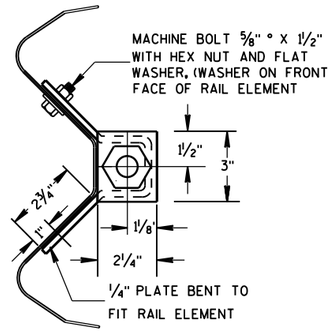

END VIEW

ANCHOR PLATE DETAIL

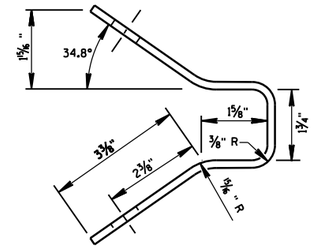

END VIEW OF BRACKET

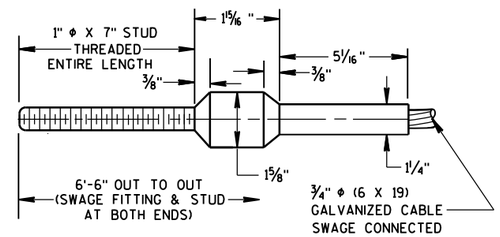

CABLE ASSEMBLY

CABLE, SWAGE FITTING, STUD AND NUT SHALL DEVELOP A MINIMUM BREAKING STRENGTH OF 40,000 LB (TIGHTEN UNTIL TAUT)

GENERAL NOTES

DETAILS OF CONSTRUCTION, MATERIALS AND WORKMANSHIP NOT SHOWN ON THIS DRAWING SHALL CONFORM TO THE PERTINENT REQUIREMENTS OF THW STANDARD SPECIFICATIONS AND THE APPLICABLE SPECIAL PROVISIONS.

STRUCTURAL TUBING SHALL CONFORM TO THE REQUIREMENTS OF ASTM A-500 GRADE B OR ASTM A-501.

POST NO. 1 SHALL BE WOOD BREAKAWAY POST INSERTED AND BOLTED INTO STEEL TUBE.

TYPE 2 ANCHORAGE SHALL CONSIST OF A STEEL TUBE, SOIL PLATE WOOD BREAKAWAY POST, BEARING PLATE, ANCHOR PLATE, CABLE ASSEMBLY AND ALL ASSOCIATED HARDWARE. ALL STEEL PARTS SHALL BE GALVANIZED.

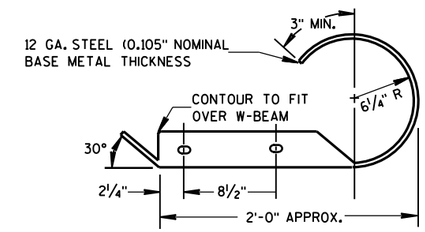

PLAN VIEW

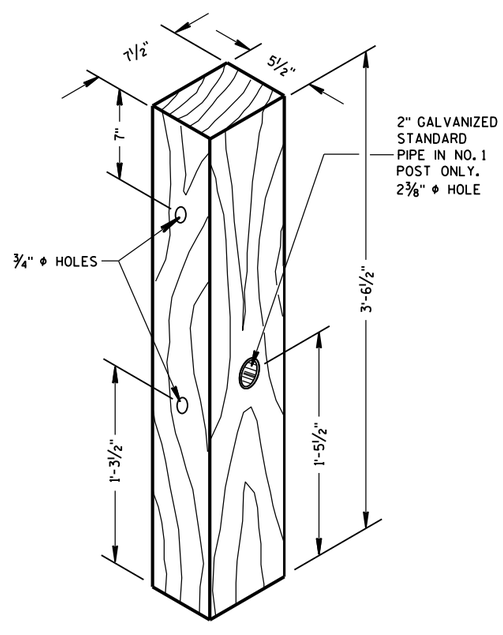

WOOD BREAKAWAY POST

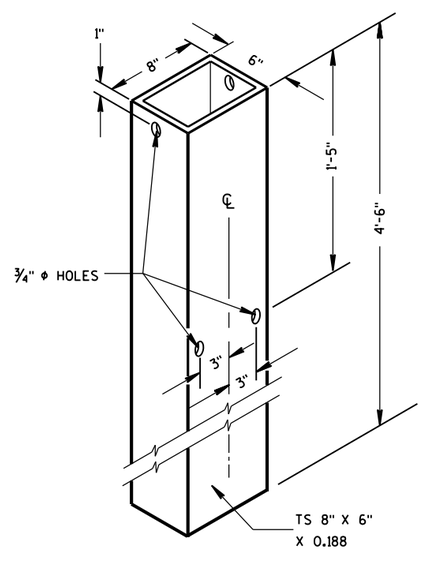

STEEL TUBE

STEEL TUBE SHALL CONFORM TO REQUIREMENTS OF ASTM A500

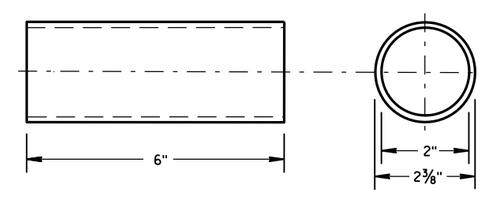

BREAKAWAY TERMINAL POST SLEEVE

GALVANIZED STANDARD STRENGTH STEEL PIPE, ASTM 53 GRADE "B"

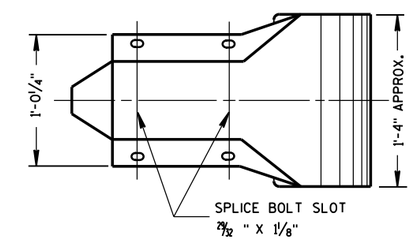

FRONT VIEW
W BEAM END SECTION ROUNDED

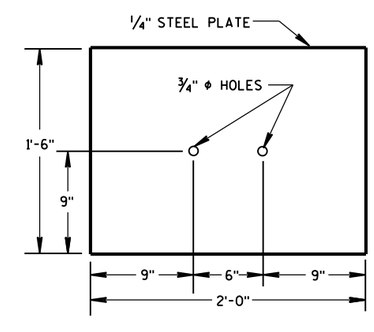

SOIL PLATE

ANCHORAGE FOR STEEL PLATE BEAM GUARD TYPE 2
STATE OF WISCONSIN DEPARTMENT OF TRANSPORTATION
APPROVED 8/21/2007 DATE — /S/ Jerry H ROADWAY STANDARDS ENGINEER — FHWA

6

6

S.D.D. 14 B 16-4b

S.D.D. 14 B 16-4b

SDD 14b18-a Steel Plate Beam Guard, Class "A" (at Bridges, Obstacles and Sideroads/Driveways)

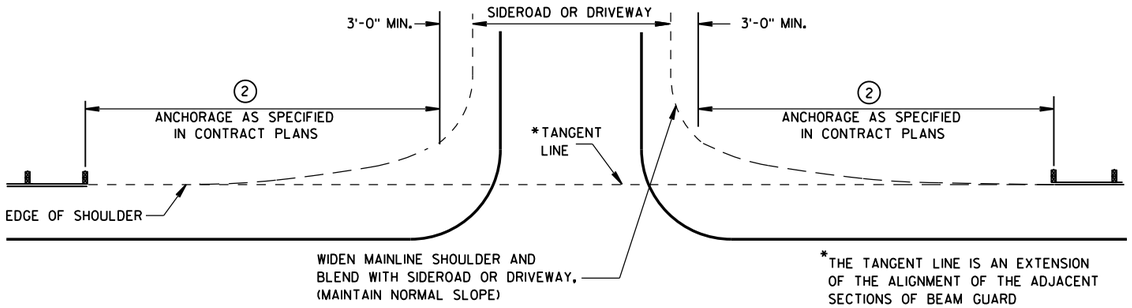

BEAM GUARD AT SIDEROADS OR DRIVEWAYS

GENERAL NOTES

DETAILS OF CONSTRUCTION, MATERIALS AND WORKMANSHIP SHALL CONFORM TO THE PERTINENT STANDARD SPECIFICATIONS AND THE APPLICABLE SPECIAL PROVISIONS.

W6 X 9 OR W6 X 8.5 STEEL POSTS WITH NOTCHED PLASTIC BLOCKOUTS ARE ACCEPTABLE ALTERNATIVES FOR 6" X 8" WOOD POSTS WITH WOOD OR PLASTIC BLOCKOUTS. USE APPROVED NOTCHED PLASTIC BLOCKOUTS WITH STEEL POSTS.

THE LOCATIONS AND LENGTHS OF BEAM GUARD ARE SHOWN ELSEWHERE IN THE PLAN.

1. STEEL THRIE BEAM STRUCTURAL APPROACH (STBSA) - SEE CURRENT SDD 14B20.
2. USE AN APPROVED END TREATMENT FOR THE TRAFFIC APPROACH SIDE OF BRIDGE/OBSTACLES. USE TYPE 2 ANCHORAGE ONLY AT THE DOWNSTREAM ENDS OF BEAM GUARD LOCATED ALONG ROADWAYS WITH ONE WAY TRAFFIC.
3.

MINIMUM LATERAL DISTANCE FROM FACE OF BEAM GUARD TO FIXED OBJECT	POST SPACING
3'-6"	3' - 1½"
4'-6"	6' - 3"

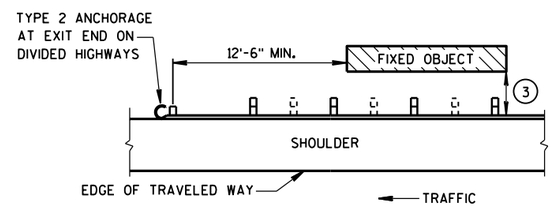

BEAM GUARD AT OBSTACLES EXIT END - ONE WAY TRAFFIC

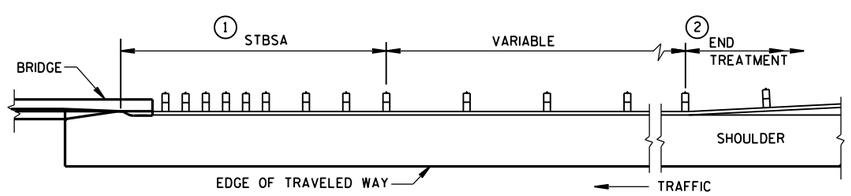

BEAM GUARD AT FULL WIDTH BRIDGES

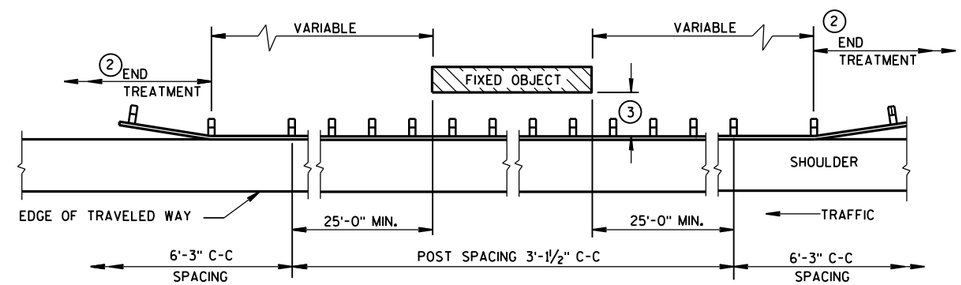

BEAM GUARD AT OBSTACLES - TWO WAY TRAFFIC

(RAIL TO OBSTACLE CLEARANCE 3'-6" TO 4'-6")

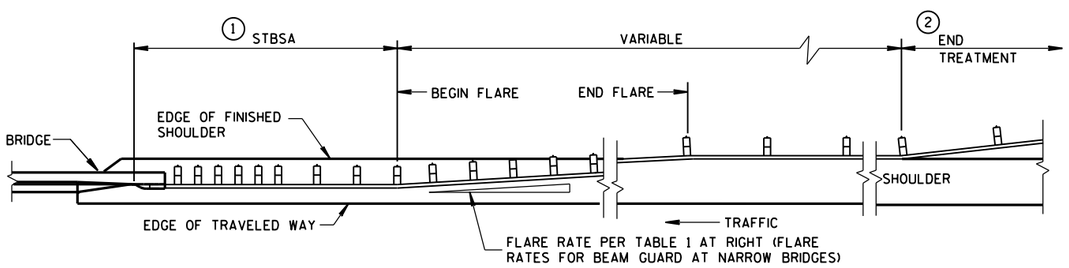

BEAM GUARD AT NARROW BRIDGES

(FLARED TO SHOULDER EDGE, THEN PARALLEL TO ROADWAY)

TABLE 1
FLARE RATES FOR BEAM GUARD AT NARROW BRIDGES

POSTED SPEED (MPH)	FLARE RATE
25	13:1
30	15:1
35	16:1
40	18:1
45	21:1
50	24:1
55	26:1
65	30:1

STEEL PLATE BEAM GUARD
CLASS "A"
AT BRIDGES, OBSTACLES
AND SIDEROADS/DRIVEWAYS

STATE OF WISCONSIN
DEPARTMENT OF TRANSPORTATION

APPROVED
8-21-07 — DATE
/S/ Jerry H — ROADWAY STANDARDS ENGINEER
FHWA

PRE 25

6

S.D.D. 14 B 18-6a

SDD 14b20-a Steel Thrie Beam Structure Approach

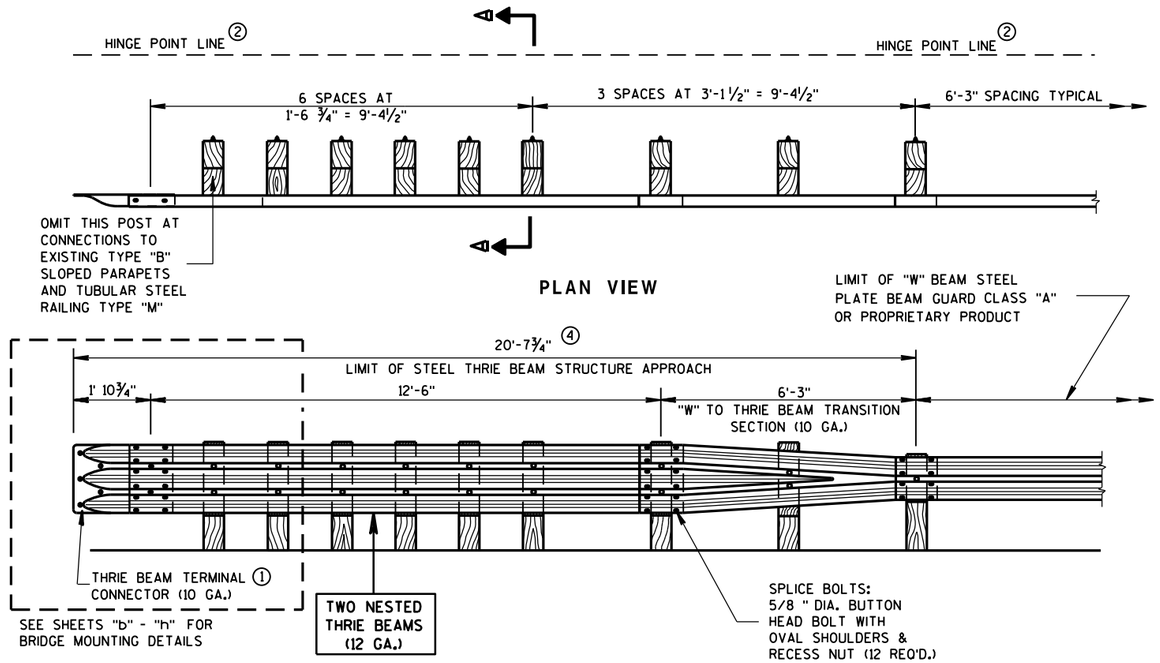

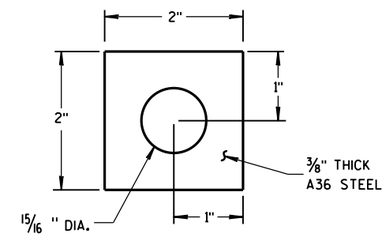

PLATE WASHER DETAIL

GENERAL NOTES

BOLT THE THRIE BEAM TO ALL POSTS AND BLOCKOUTS. DRILL OR PUNCH BOLT HOLES IN THE BEAM IF THE POST SPACING IS LESS THAN 6'-3".

DO NOT USE STEEL POSTS AND NOTCHED PLASTIC BLOCKOUTS IN THE STEEL THRIE BEAM STRUCTURAL APPROACH AND THE TRANSITION SECTION OF STEEL PLATE BEAM GUARD, CLASS "A" INSTALLATIONS.

IF ROCK IS ENCOUNTERED, REMOVE ROCK TO FULL DEPTH OF POST PLUS 2½" , AND 12" DIAMETER AROUND POST. SEE 14B15 FOR MORE DETAILS.

① BRIDGE RAILING TYPE "W" DOES NOT REQUIRE A TERMINAL CONNECTOR.

② MINIMUM EMBEDMENT SHALL BE 4'-0". WHERE EXISTING CONDITIONS DO NOT PERMIT THE APPROPRIATE EARTHWORK SHOWN ON THE PLAN TYPICAL SECTIONS OR DETAILS, THE ENGINEER MAY ALLOW THE REDUCTION OR ELIMINATION OF THE 2 FOOT DISTANCE TO THE HINGE POINT. OTHERWISE BUILD AS THE PLAN SHOWS OR AS THE ENGINEER DIRECTS. IF THE 2 FOOT DISTANCE TO THE HINGE POINT IS REDUCED OR ELIMINATED, INCREASE THE POST EMBEDMENT DEPTH TO 4'-6" OR MORE.

③ POST BOLTS ARE ⅝" DIAMETER ASTM A307 BUTTON HEAD BOLT. A POST BOLT REQUIRES A ⅝" DIAMETER A563A DOUBLE RECESSED (DR) HEAVY HEX AND A ⅝" DIAMETER F844 FLAT WASHER. LENGTH OF POST BOLT MAY VARY.

④ ALL WOOD POSTS MUST BE 6" X 8" AND AT LEAST 7'-0" LONG.

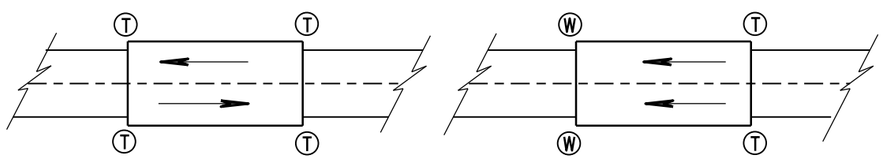

TWO WAY TRAFFIC

ONE WAY TRAFFIC

Ⓣ THRIE BEAM CONNECTION

Ⓦ W-BEAM CONNECTION WHEN REQUIRED

TYPICAL LOCATIONS OF THRIE BEAM AND W-BEAM CONNECTIONS TO BRIDGE

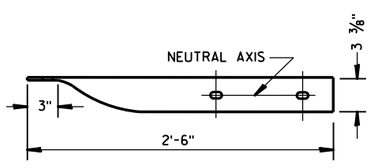

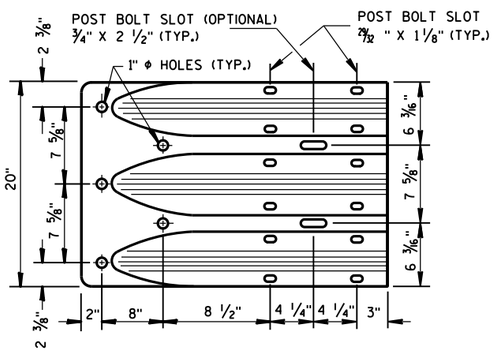

THRIE BEAM TERMINAL CONNECTOR

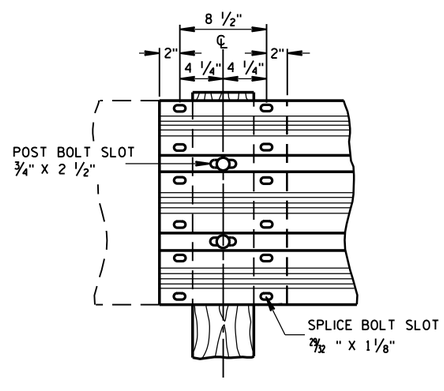

THRIE BEAM SPLICE

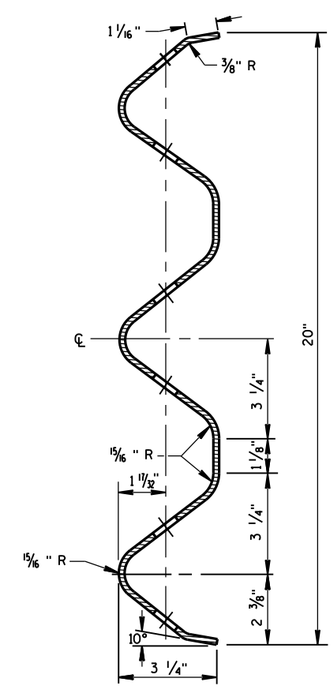

SECTION THRU THRIE BEAM RAIL ELEMENT

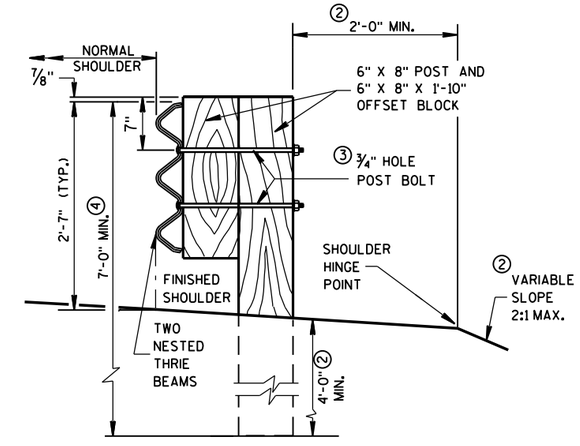

SECTION A-A

STEEL THRIE BEAM STRUCTURE APPROACH

STATE OF WISCONSIN
DEPARTMENT OF TRANSPORTATION

APPROVED
8-31-2012 — DATE
/S/ Jerry F. — ROADWAY STANDARDS ENGINEER
FHWA

6

S.D.D. 14 B 20-11a

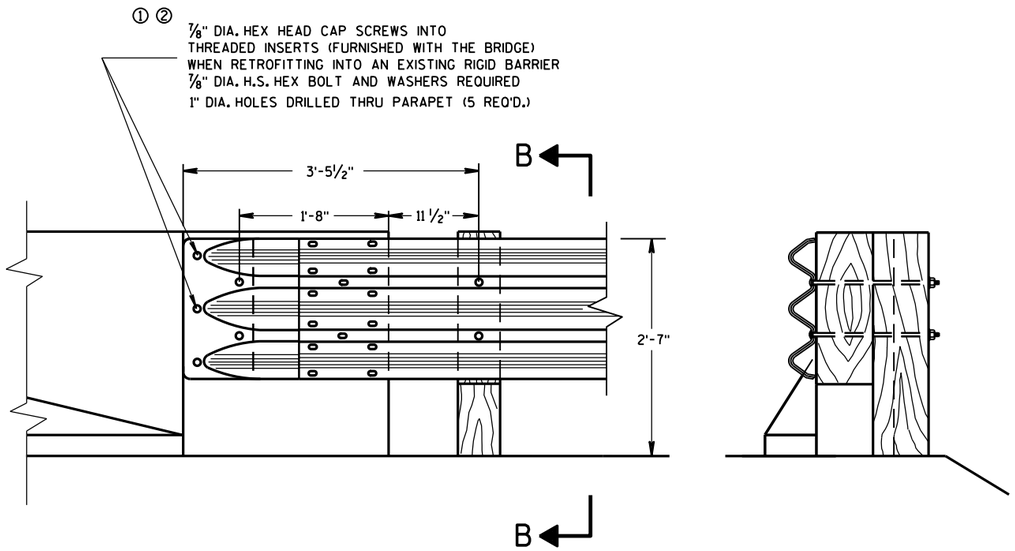

FRONT VIEW

SECTION B-B

THRIE BEAM CONNECTION TO BRIDGE PARAPET WITH SQUARE ENDS

GENERAL NOTES

THESE ARE TYPICAL CONNECTION DETAILS. ADJUST THE POSTION OF CONNECTIONS TO EXISTING BRIDGES TO FIT THE ACTUAL BRIDGE AND SITE DIMENSIONS.

BOLTS, NUTS AND WASHERS SHALL CONFORM TO ASTM A325, A449 AND GALVANIZED PER STANDARD SPECIFICATIONS 614.

① DRILLING BOLT HOLES THROUGH THE PARAPET, BOLTS, NUTS, WASHERS AND REPAIRING DAMAGED CONCRETE ARE INCIDENTAL TO THE CONTRACT.

② BOLTS MAY BE A325 BOLTS OR A449 BOLTS. BOLT LENGTH AND THREADING LENGTH ARE TO ALLOW FOR A TIGHT CONNECTION BETWEEN RIGID BARRIER AND THRIE BEAM CONNECTION PLATE. CONTRACTOR IS TO FIELD VERIFY BOLT LENGTH AND THREAD LENGTH. ONE ROUND WASHER REQUIRED BETWEEN BOLT HEAD AND THRIE BEAM TERMINAL CONNECTOR. BOLTS THAT EXTEND THROUGH THE PARAPET AND OUT THE BACK FACE REQUIRE A HARDENED ROUND STEEL WASHER THAT IS 2" O.D. X ⅝" THICK AND ONE PLATE WASHER. REPAIR ANY DAMAGED CONCRETE FROM BOLT INSTALLATION.

③ THE RECESS FOR A W-BEAM CONNECTION, WHICH EXISTS ON SOME PARAPETS OF THIS TYPE, SHALL BE FILLED WITH A TREATED TIMBER BLOCKOUT. BLOCKOUT SIZE IS 1'-6" X 2'-0" X 3½".

④ W6 X 9 OR W6 X 8.5 STEEL POSTS AND NOTCHED PLASTIC BLOCKOUTS ARE ACCEPTABLE ALTERNATIVES FOR 6" X 8" WOOD POST WITH WOOD OR PLASTIC BLOCKOUTS. USE APPROVED NOTCHED PLASTIC BLOCKOUTS WITH STEEL POSTS.

DO NOT USE STEEL POSTS AND NOTCHED PLASTIC BLOCKOUTS IN THE STEEL THRIE BEAM STRUCTURAL APPROACH AND THE TRANSITION SECTION OF STEEL PLATE BEAM GUARD, CLASS "A" INSTALLATIONS.

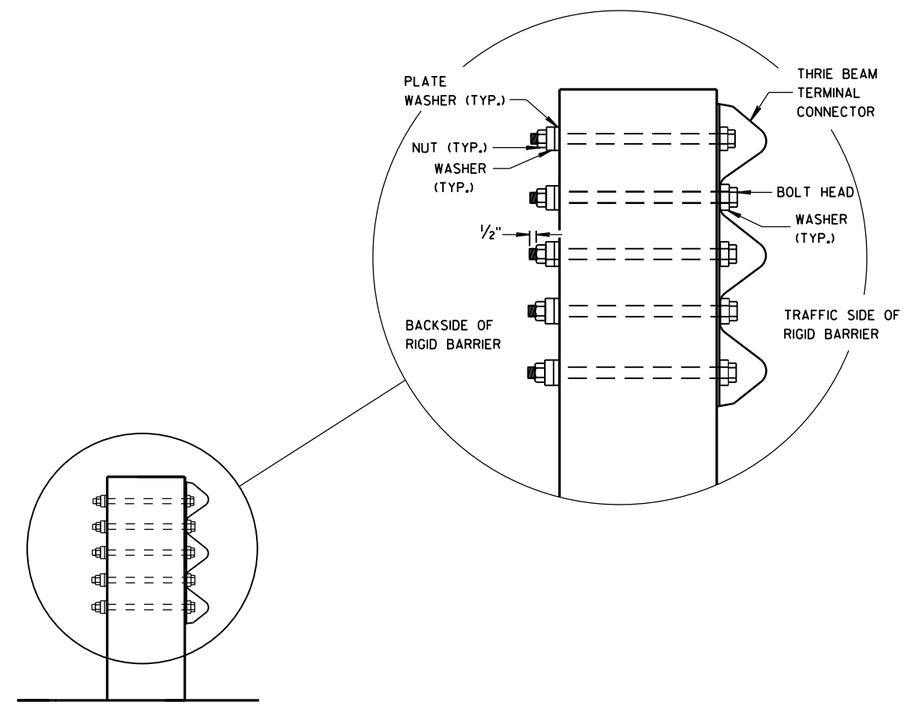

SECTION C-C

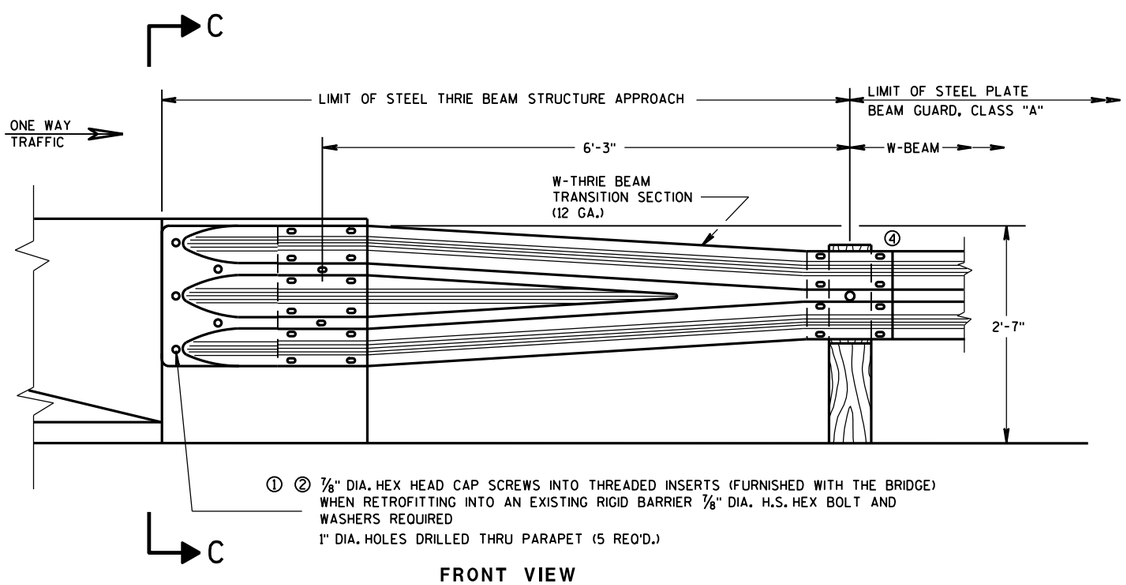

FRONT VIEW

W BEAM TRANSITION AND CONNECTION TO BRIDGE PARAPETS WITH SQUARE ENDS

(USE ONLY ON THE TRAFFIC EXIT END OF ONE WAY BRIDGES)

STEEL THRIE BEAM STRUCTURE APPROACH, CONNECTION TO SQUARE END PARAPETS

STATE OF WISCONSIN
DEPARTMENT OF TRANSPORTATION

APPROVED
8/31/2012 — DATE
/S/ Jerry H — ROADWAY STANDARDS ENGINEER
FHWA

SDD 14b20-g Steel Thrie Beam Structure Approach, Connector Plate Detail

GENERAL NOTES

COVER PLATE PANELS ARE 3/16" THICK.

ALL STIFFENERS ARE 1/4" THICK.

CONNECTOR PLATE SHALL BE FABRICATED FROM ASTM GRADE A36 STEEL AND GALVANIZED.

FOR GALVANIZED REQUIREMENTS, SEE SECTION 614 OF THE STANDARD SPECIFICATIONS.

ALL HOLE DIAMETERS SHALL BE 1".

FOR OPPOSITE SIDE INSTALLATION MIRROR DRAWINGS.

(1) STIFFENERS LOCATED AT THE OUTSIDE EDGES OF THE COVER PLATES SHALL BE WELDED AS FOLLOWS:
SINGLE BEVEL GROOVE WELD ON EXTERNAL SIDES AND 3/16" FILLET WELD BY 1" LONG SPACED AT 2" ON INTERNAL SIDES.

(2) STIFFENERS LOCATED ON THE INSIDE OF THE COVER PLATE SHALL BE WELDED AS FOLLOWS:
3/16" FILLET WELD BY 1" LONG SPACED AT 2".

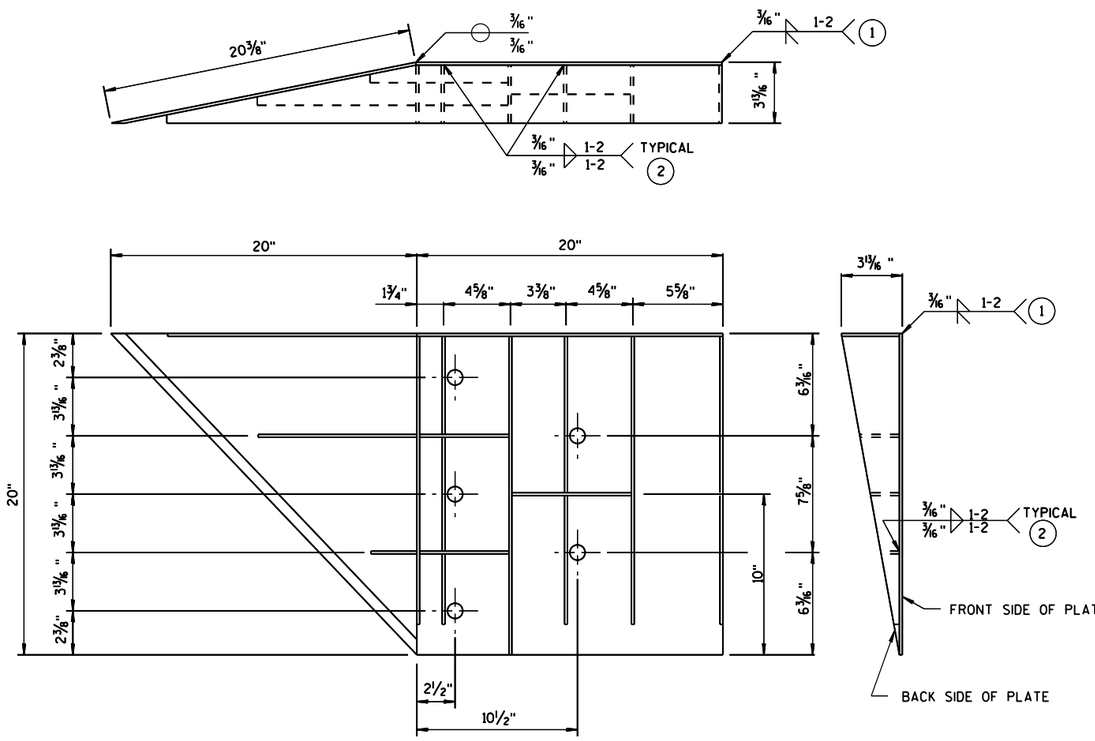

WELDING INSTRUCTION

(VIEWED FROM BACK SIDE OF PLATE)

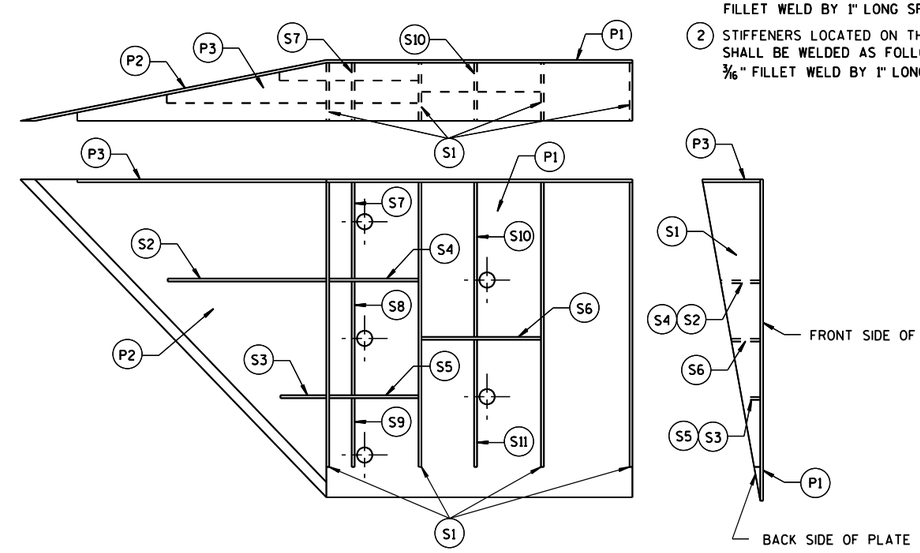

PLATE AND STIFFENER IDENTIFICATION

(VIEWED FROM BACK SIDE OF PLATE)

CONNECTOR PLATE DIMENSION (PER ASSEMBLY)

PLATE	QUANTITY	SHAPE	SIZE (A x B x C x D)	THICKNESS
P1	1		20" x 20"	3/16"
P2	1		20" x 20" x 28 9/16"	3/16"
P3	1		39" x 3 5/8" x 20" x 19 5/16"	3/16"
S1	4		18 7/16" x 3 5/8" x 18 3/4"	1/4"
S2	1		10 1/4" x 2 7/16" x 10 3/8" x 1/2"	1/4"
S3	1		3" x 1 1/16" x 3 1/8" x 1/2"	1/4"
S4	1		6 1/8" x 2 7/16"	1/4"
S5	1		6 1/8" x 1 1/16"	1/4"
S6	1		7 3/4" x 1 3/4"	1/4"
S7	1		2 9/16" x 6" x 3 5/8" x 5 7/8"	1/4"
S8	1		1 5/32" x 7 1/2" x 2 1/2" x 7 3/8"	1/4"
S9	1		6 1/16" x 6 3/16" x 1 1/32"	1/4"
S10	1		1 7/8" x 9 7/8" x 3 5/8" x 9 11/16"	1/4"
S11	1		8 1/2" x 8 3/4" x 1 13/16"	1/4"

STEEL THRIE BEAM STRUCTURE APPROACH

STEEL THRIE BEAM
STRUCTURE APPROACH,
CONNECTOR PLATE DETAIL

STATE OF WISCONSIN
DEPARTMENT OF TRANSPORTATION

APPROVED
8/31/2012 — DATE
/S/ Jerry — ROADWAY STANDARD ENGINEER
FHWA

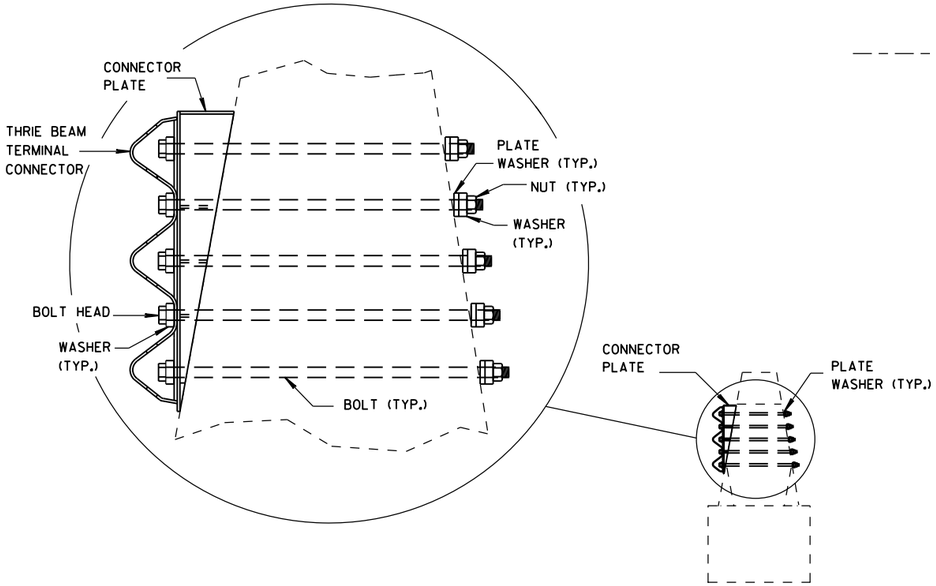

SECTION J-J

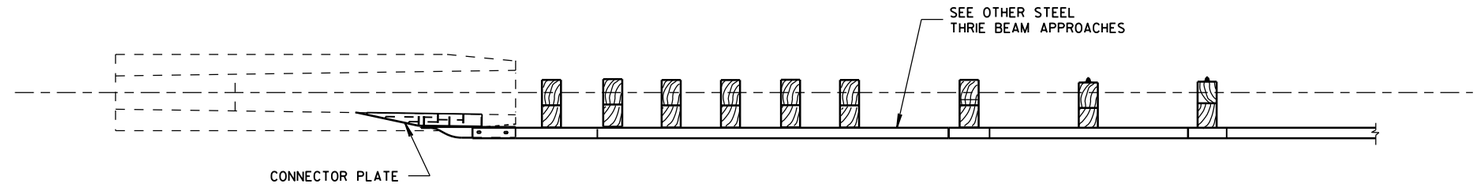

PLAN VIEW

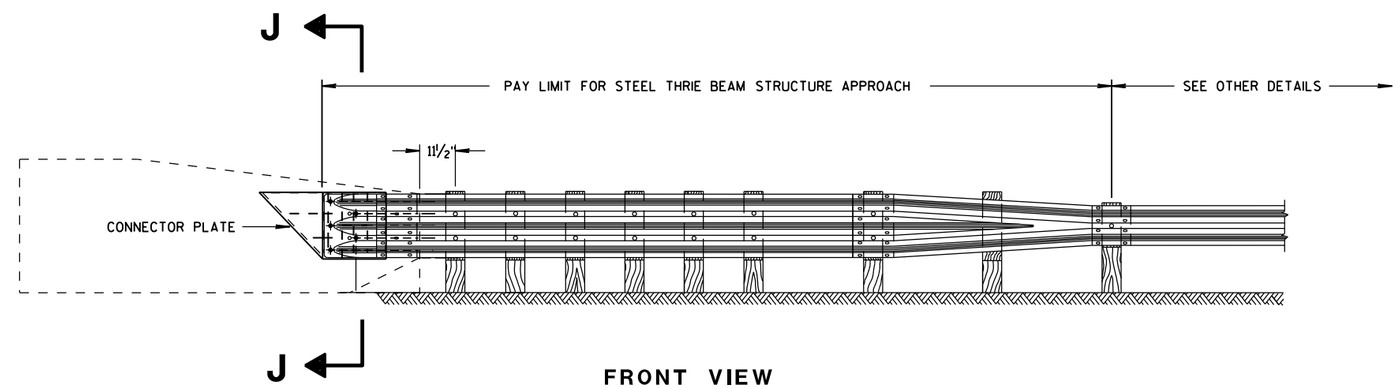

FRONT VIEW

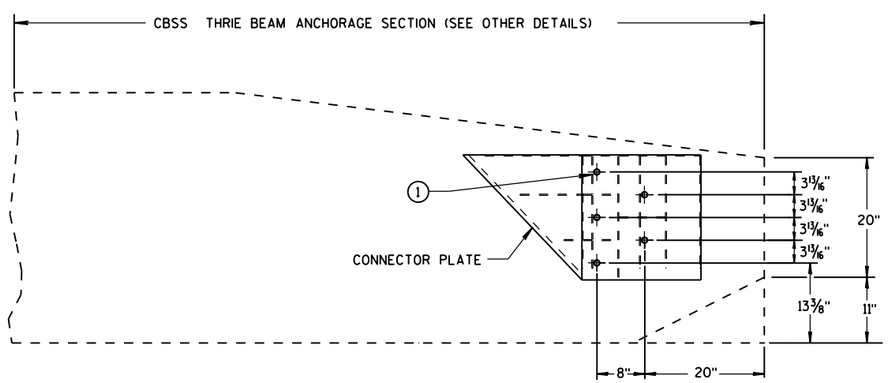

CONNECTOR PLATE LOCATION

GENERAL NOTES

CONSTRUCT PER STANDARD SPECIFICATION 614.

CONNECTOR PLATE, DRILLING HOLES THROUGH PARAPET, BOLTS, NUTS, WASHERS AND REPAIRING DAMAGED CONCRETE ARE INCIDENTAL TO THE CONTRACT.

(1) BOLTS MAY BE A325 BOLTS OR A449 BOLTS. BOLT LENGTH AND THREADING LENGTH ARE TO ALLOW FOR A TIGHT CONNECTION BETWEEN RIGID BARRIER AND THRIE BEAM CONNECTION PLATE. CONTRACTOR IS TO FIELD VERIFY BOLT LENGTH AND THREAD LENGTH. ONE ROUND WASHER REQUIRED BETWEEN BOLT HEAD AND THRIE BEAM TERMINAL CONNECTOR. BOLTS THAT EXTEND THROUGH THE PARAPET AND OUT THE BACK FACE REQUIRE A HARDENED ROUND STEEL WASHER THAT IS 2" O.D. X 5/8" THICK AND ONE PLATE WASHER. REPAIR ANY DAMAGED CONCRETE FROM BOLT INSTALLATION.

STEEL THRIE BEAM STRUCTURE APPROACH

STEEL THRIE BEAM STRUCTURE APPROACH, SINGLE SLOPE ATTACHMENT

STATE OF WISCONSIN
DEPARTMENT OF TRANSPORTATION

APPROVED
8/31/2012 — DATE
/S/ Jerry H — ROADWAY STANDARDS ENGINEER
FHWA

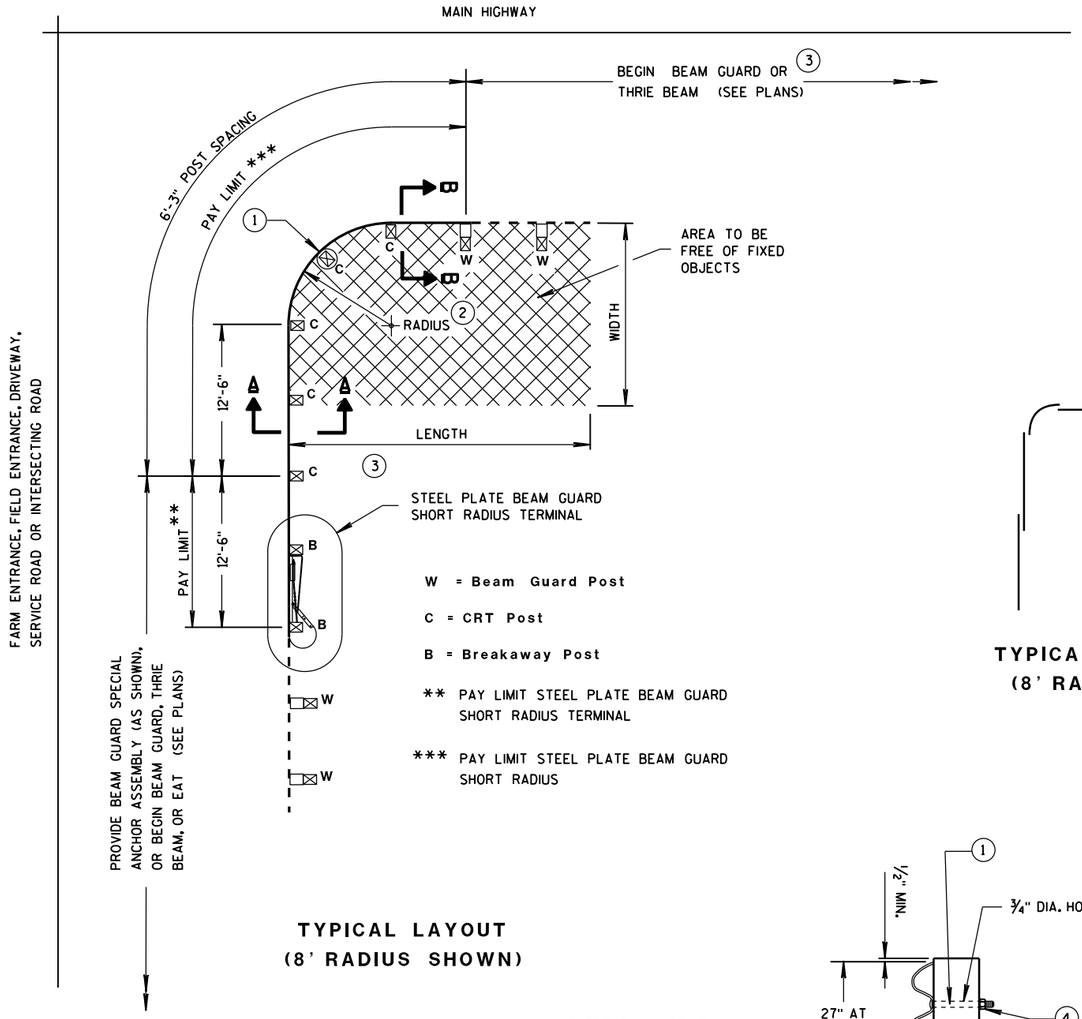

TYPICAL LAYOUT
(8' RADIUS SHOWN)

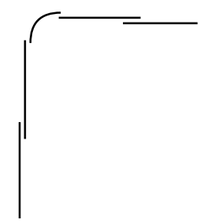

TYPICAL LAP SPLICES
(8' RADIUS SHOWN)

GENERAL NOTES

ALL ANGLES, CHANNELS, AND PLATES SHALL CONFORM TO THE REQUIREMENTS OF ASTM A36 AND THE STRUCTURAL TUBING SHALL CONFORM TO ASTM A 500. WELDING SHALL MEET THE CURRENT REQUIREMENTS OF THE AMERICAN WELDING SOCIETY STRUCTURAL WELDING CODE ANSI/AWS D1.1. ALL STRUCTURAL STEEL SHALL BE GALVANIZED IN ACCORDANCE WITH ASTM A 123. PUNCHING, DRILLING, CUTTING, OR WELDING WILL NOT BE PERMITTED AFTER GALVANIZING. FURNISH AND INSTALL HARDWARE PER STANDARD SPECIFICATION 614.2. UNLESS NOTED OTHERWISE.

SHOP BEND CURVED RAIL SECTIONS.

SEE STANDARD DETAIL DRAWING 14 B 15 FOR OTHER DETAIL.

1. ON THE 8 FOOT RADIUS INSTALLATION, DO NOT INSTALL BUTTON HEAD BOLT AT CENTER CRT POST.
2. RADIUS FROM 8' - 36'. SEE PLAN.
3. HEIGHT TRANSITION MAY BE REQUIRED. SEE PLAN OR PROJECT ENGINEER.
4. 5/8" ø X 1'-6" BUTTON HEAD BOLT AND RECESS NUT WITH ROUND WASHER UNDER NUT.

RADIUS	NUMBER OF CRT POSTS	* NUMBER AND LENGTH OF CURVED RAILS	REQUIRED AREA FREE OF FIXED OBJECTS (LENGTH x WIDTH)
8'	5	1 at 12.5'	25' x 15'
16'	7	1 at 25'	30' x 15'
24'	9	1 at 25' and 1 at 12.5'	40' x 20'
32'	11	2 at 25'	50' x 20'

* THE NUMBER OF RAILS IS BASED ON A 90° INTERSECTION. SEE PLAN FOR NON 90° INSTALLATIONS.

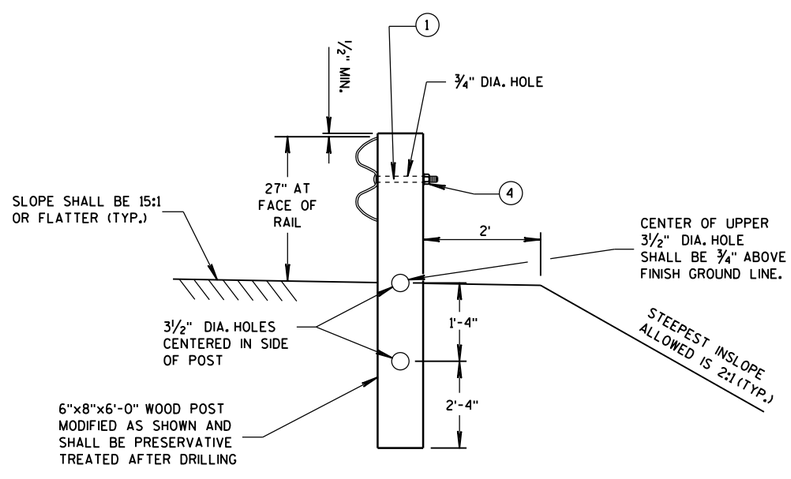

SECTION A-A
(CRT POST)

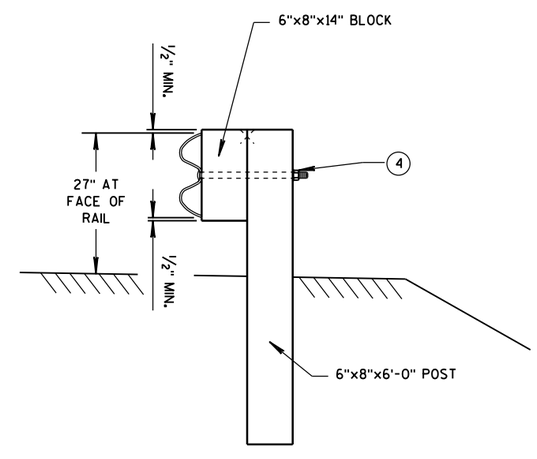

SECTION B-B
(BEAM GUARD POST)

STEEL PLATE BEAM GUARD SHORT RADIUS TERMINAL

STEEL PLATE BEAM GUARD SHORT RADIUS TERMINAL

STATE OF WISCONSIN
DEPARTMENT OF TRANSPORTATION

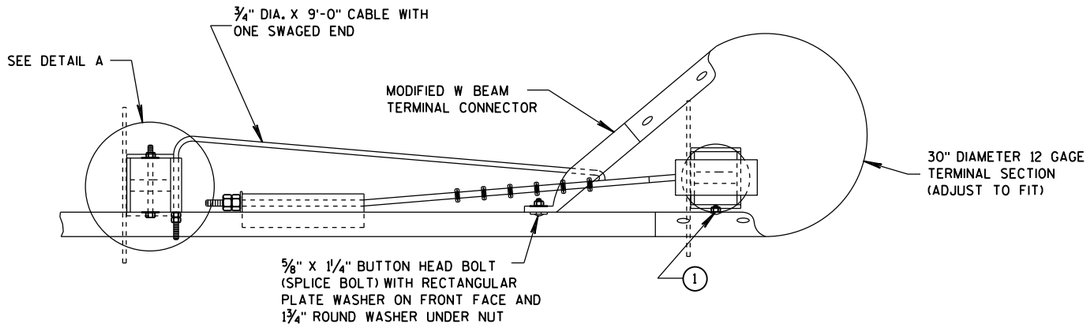

PLAN VIEW

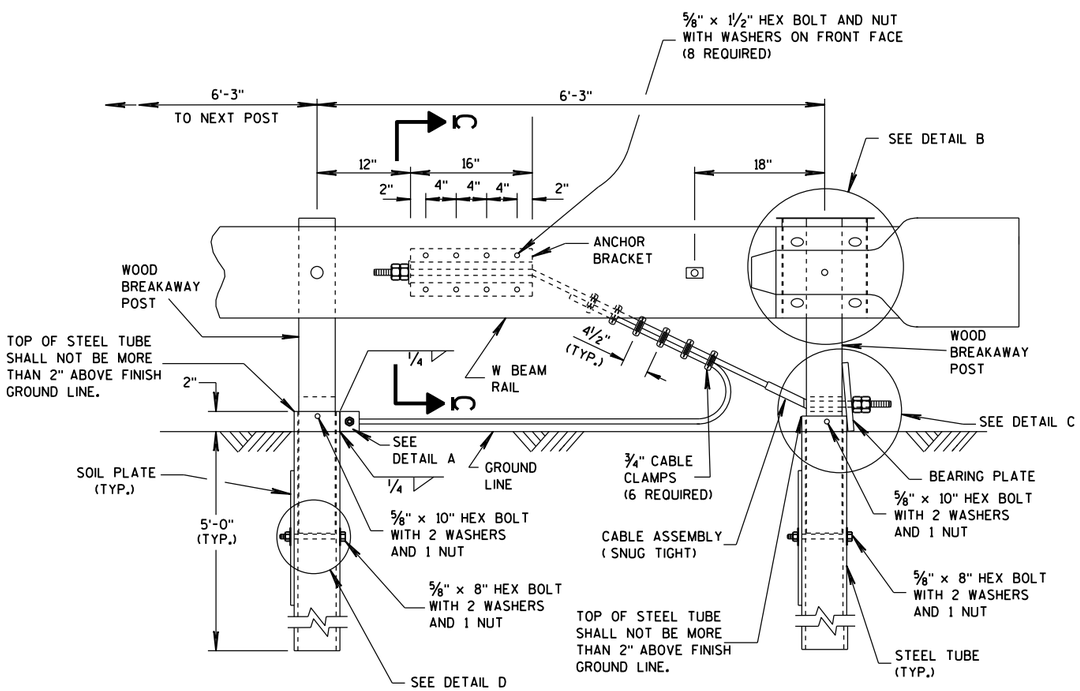

ELEVATION VIEW

STEEL PLATE BEAM GUARD SHORT RADIUS TERMINAL

GENERAL NOTES

1. ATTACH W BEAM RAIL TO THE STEEL PIPE WITH A ⅝" X 2" BUTTON HEAD BOLT WITH NO WASHER. CONNECTION TO THE POST IS NOT REQUIRED.

   INSTALL GALVANIZED ¾" (6X19) PREFORMED WIRE OR INDEPENDENT WIRE ROPE CORE CONFORMING TO AASHTO M 30. MANUFACTURE WIRE ROPE OUT OF IMPROVED PLOW STEEL WITH A MINIMUM BREAKING STRENGTH OF 42,800 PSI.

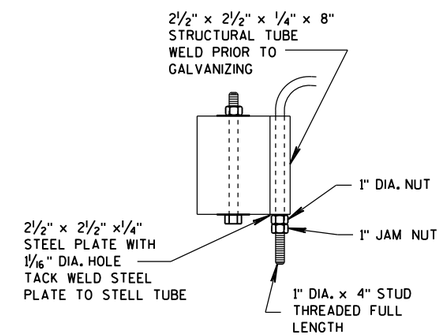

DETAIL A

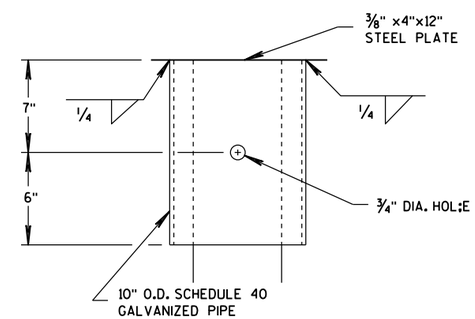

DETAIL B

(BEAM GUARD AND TERMINAL SECTION NOT SHOWN)

STEEL PLATE BEAM GUARD SHORT RADIUS TERMINAL

STATE OF WISCONSIN
DEPARTMENT OF TRANSPORTATION

SDD 14b27-c Steel Plate Beam Guard Short Radius Terminal

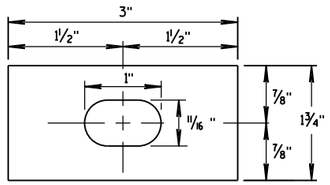

RECTANGULAR PLATE WASHER

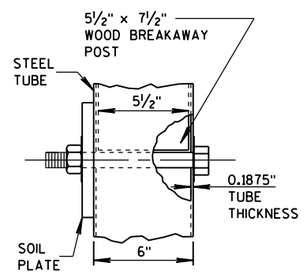

DETAIL D

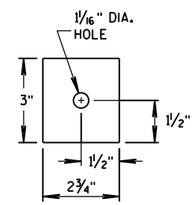

END PLATE

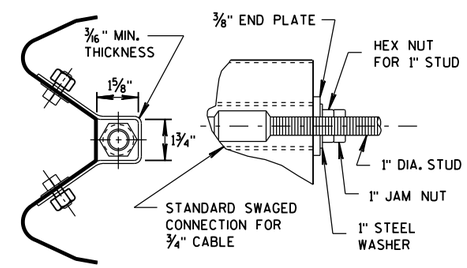

SECTION C-C
(END PLATE REMOVED)

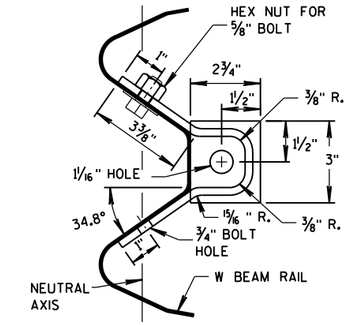

ANCHOR BRACKET

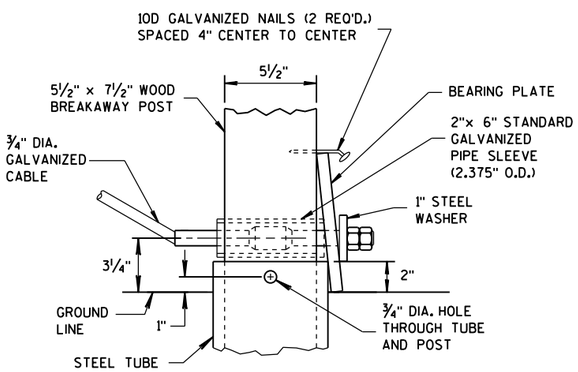

DETAIL C

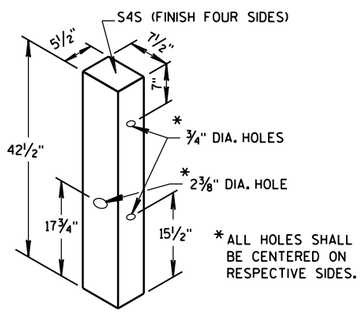

WOOD BREAKAWAY POST

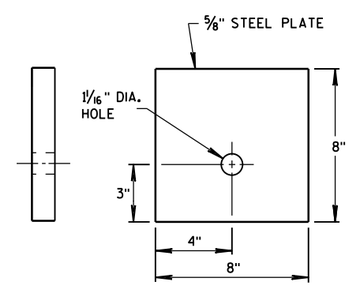

BEARING PLATE

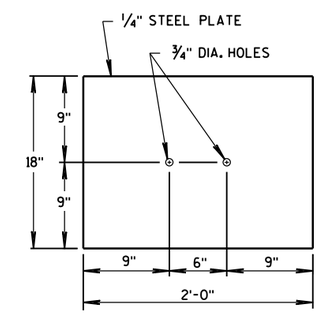

SOIL PLATE

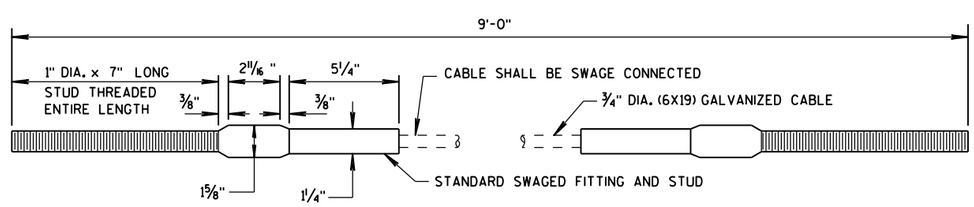

CABLE ASSEMBLY

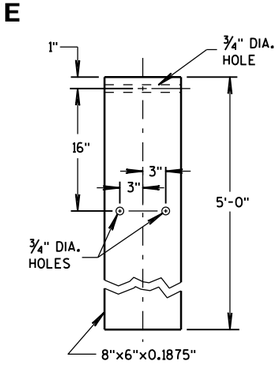

STEEL TUBE

STEEL PLATE BEAM GUARD
SHORT RADIUS TERMINAL

STATE OF WISCONSIN
DEPARTMENT OF TRANSPORTATION

APPROVED
12/18/08 — DATE
/S/ Jerry — ROADWAY STANDARDS ENGINEER
FHWA

PRE 32

6

S.D.D. 14 B 27-1c

SDD 14B42-a Midwest Guardrail System (MGS) Guardrail

1. WOOD OR STEEL POSTS (w6X9 OR w6X8.5) MAY BE USED. DO NOT INTERMIX WOOD AND STEEL POSTS. INSTALL STEEL POSTS WITH HOLES ON APPROACHING TRAFFIC SIDE.
2. USE WOOD OR APPROVED PLASTIC BLOCKOUTS. WOOD BLOCKOUTS MAY BE CONSTRUCTED OUT OF TWO OR MORE WOOD BLOCKOUTS. SEE ALTERNATE WOOD BLOCKOUT DETAIL. DIMENSIONS OF APPROVED PLASTIC BLOCKOUTS MAY VARY.
3. IF ROCK IS ENCOUNTERED DURING EXCAVATION, PROVIDE A HOLE 12 INCHES IN DIAMETER EXTENDING 20 INCHES DEEP INTO THE ROCK. PLACE APPROXIMATELY 2 1/2" INCHES OF GRANULAR MATERIAL IN THE BOTTOM OF THE HOLE. CUT THE POSTS THE TO LENGTH AMD INSTALL. BACKFILL WITH EXCAVATED MATERIAL AND COMPACT. BACKFILL IS TO BE FREE OF LARGE ROCKS.
4. WHEN THE DISTANCE FROM BACK OF POST TO SHOULDER HINGE POINT IS LESS THAN 2 FEET INSTALL LONGER POST AT HALF POST SPACING (K).
5. FOR NEW MGS INSTALLATION TOP OF W-BEAM RAIL TOLERANCE IS ±1". FOR EXISTING MGS INSTALLATION TOP OF W-BEAM IS BETWEEN 27 ¾" TO 32".
6. WHEN USING STEEL POST AND WOOD BLOCKOUTS INSTALL FOUR 16D GALVANIZED NAILS. INSTALL NAILS AT THE BACK CORNERS OF THE BLOCK AND BEND THE NAILS OVER THE FLANGE OF THE STEEL POST.
7. TOTAL POST LENGTH FOR TYPE K IS 7' - 0". TOTAL POST LENGTH FOR OTHER MGS TYPES IS 6' - 0".

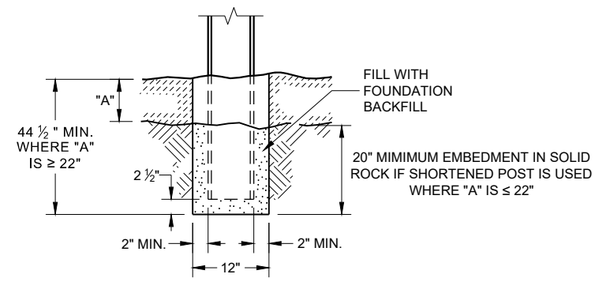

END VIEW
SETTING STEEL OR WOOD POST IN ROCK (3)

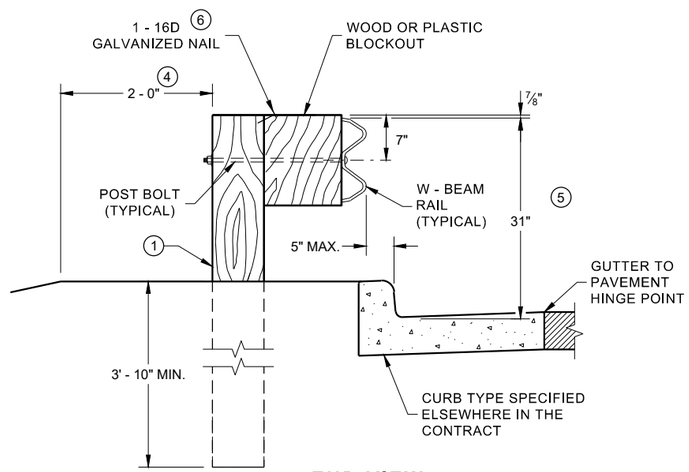

END VIEW
LOCATED ALONG A CURBED ROADWAY

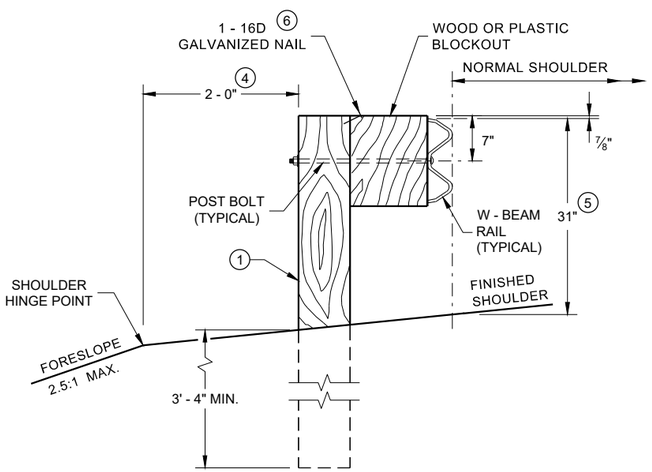

END VIEW
LOCATED ALONG A ROADWAY SHOULDER
STANDARD INSTALLATION

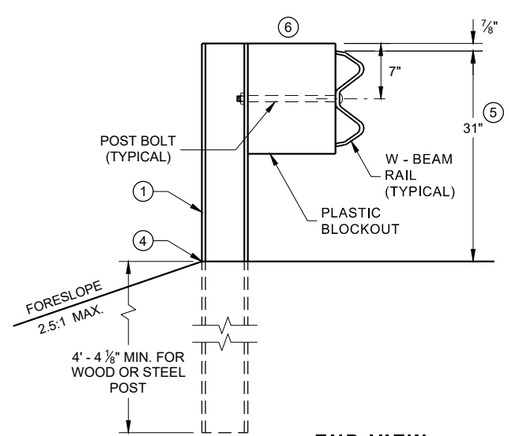

END VIEW
MGS LONGER POST AT HALFPOST
SPACING W BEAM (K)

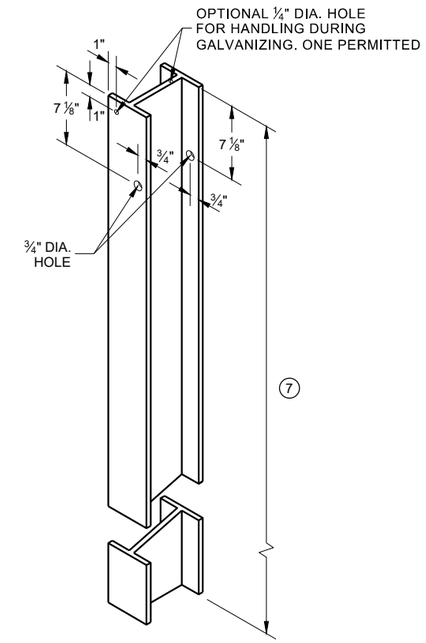

STEEL POST & HOLE
PUNCHING DETAIL
(W 6 X 9) (1)

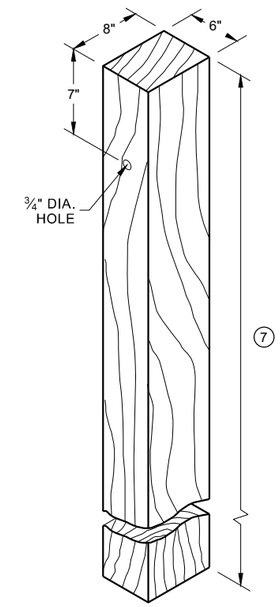

WOOD POST
(6" X 8") NOMINAL (1)

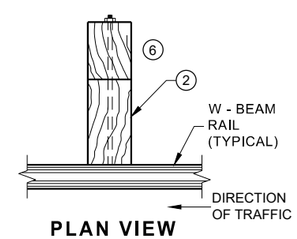

PLAN VIEW
WOOD POST,
BLOCKOUT & BEAM

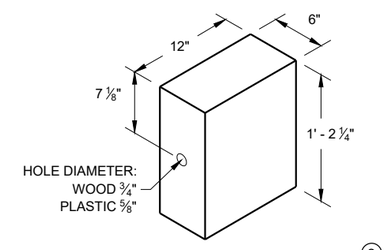

WOOD OR PLASTIC (2)
BLOCKOUT

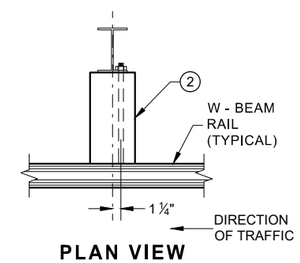

PLAN VIEW
STEEL POST,
PLASTIC BLOCKOUT & BEAM

MIDWEST GUARDRAIL SYSTEM (MGS) GUARDRAIL

STATE OF WISCONSIN
DEPARTMENT OF TRANSPORTATION

6

6

SDD 14B42 - 06a

SDD 14B42 - 06a

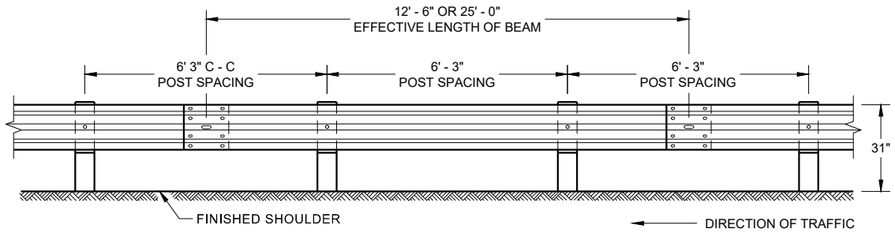

FRONT VIEW
POST SPACING STANDARD INSTALLATION

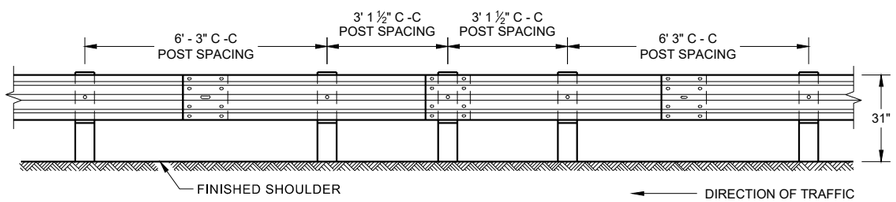

FRONT VIEW
HALF POST SPACING (HS) AND HALF POST SPACING WITH LONGER POSTS (K)

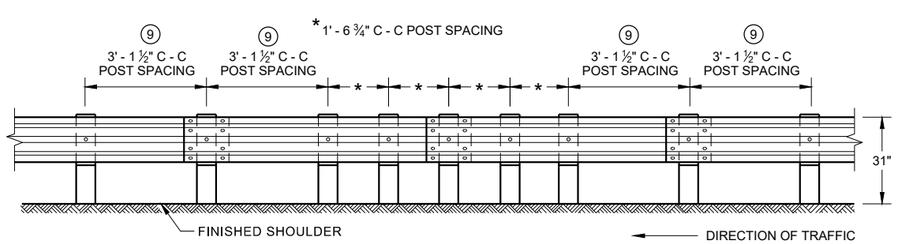

FRONT VIEW
QUARTER POST SPACING (QS)

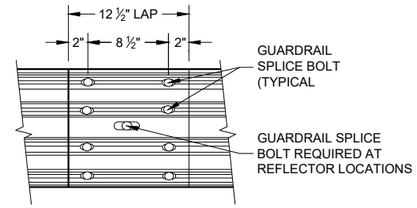

FRONT VIEW
MID-SPAN BEAM SPLICE

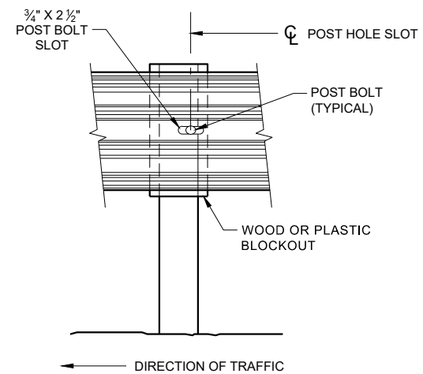

FRONT VIEW AT STEEL POST

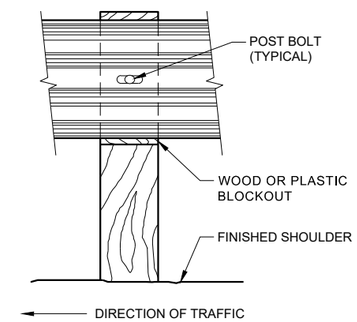

FRONT VIEW AT WOOD POST

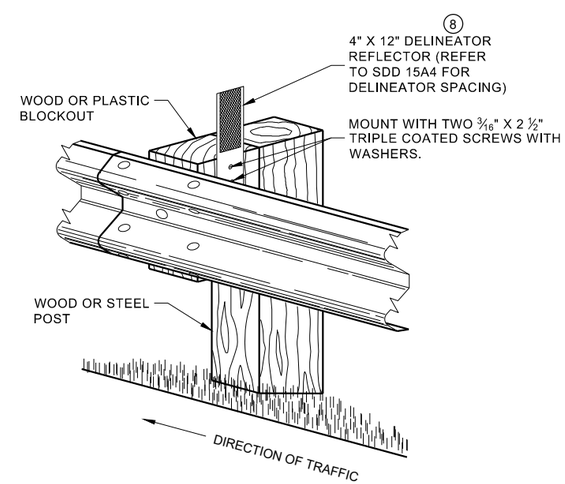

ONE SIDED REFLECTOR DETAIL AND TYPICAL INSTALLATION

GENERAL NOTES

8. DO NOT INSTALL REFLECTORS ON THE FIRST 50 FEET OF THE APPROACH END OF THE ENERGY ABSORBING TERMINAL.

9. 25 FEET OF HALF POST SPACING IS REQUIRED ON APPROACH AND DEPARTURE ENDS OF QUARTER POST SPACING.

POST BOLTS ARE A ⅝" DIAMETER ASTM A307 GUARDRAIL BOLT. A POST BOLT REQUIRES ⅝" DIAMETER A563A DOUBLE RECESSED (DR) HEAVY HEX NUT AND ⅝" DIAMETER F844 FLAT WASHER. POST BOLTS MAY BE LONGER IF MULTIPLE BLOCKOUTS ARE BEING USED.

GUARD RAIL SPLICE BOLTS ARE A ⅝" DIAMETER ASTM A307 GUARDRAIL HEAD BOLT. A GUARDRAIL SPLICE BOLT REQUIRES ⅝" DIAMETER A563A DOUBLE RECESSED (DR) HEAVY HEX NUT.

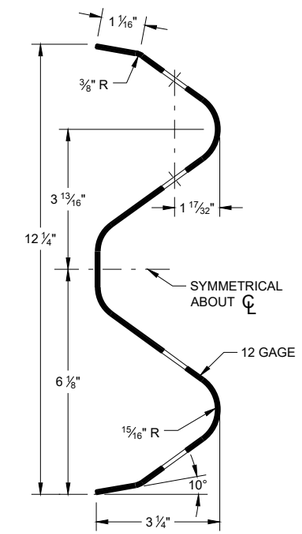

SECTION THRU W-BEAM RAIL

MIDWEST GUARDRAIL SYSTEM (MGS) GUARDRAIL

STATE OF WISCONSIN
DEPARTMENT OF TRANSPORTATION

6

SDD 14B42 - 06b

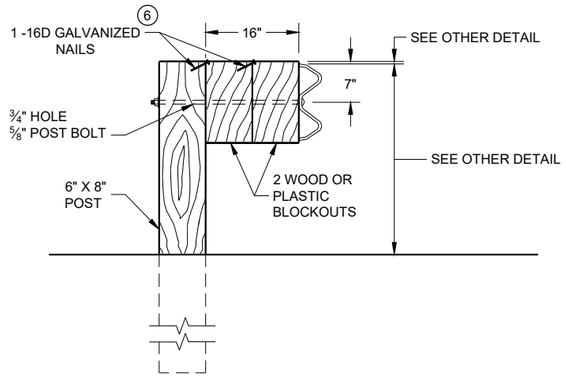

DETAIL FOR 16" BLOCKOUT DEPTH

IT IS ACCEPTABLE TO USE BLOCKOUTS UP TO 16" DEEP TO INCREASE THE POST OFFSET TO AVOID UNDERGROUND OBSTACLES. THERE IS NO LIMIT TO THE NUMBER OF POSTS THAT CAN HAVE ADDITIONAL BLOCKOUTS UP TO 16" DEEP.

NOTE:

1. ALL FILLETS SHALL HAVE A MINIMUM RADIUS OF 3/16".
2. IF THE BOLT EXTENDS MORE THAN ¼" FROM THE NUT THE BOLT SHOULD BE TRIMMED BACK.

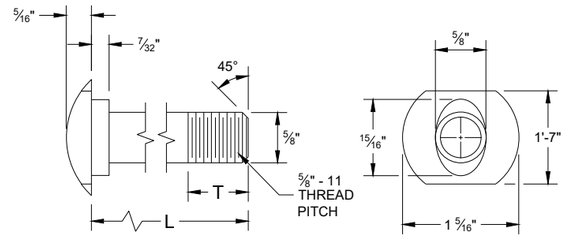

POST BOLT TABLE

L	T (MIN.)
1 ¼"	1 ⅛"
2"	1 ¾"
10"	4"
14"	4 1/16"
18"	4"
21"	4 1/16"
25"	4"

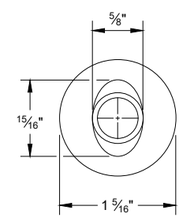

ALTERNATE BOLT HEAD

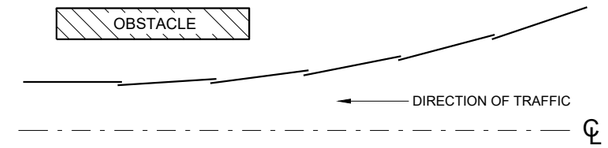

PLAN VIEW
BEAM LAPPING DETAIL

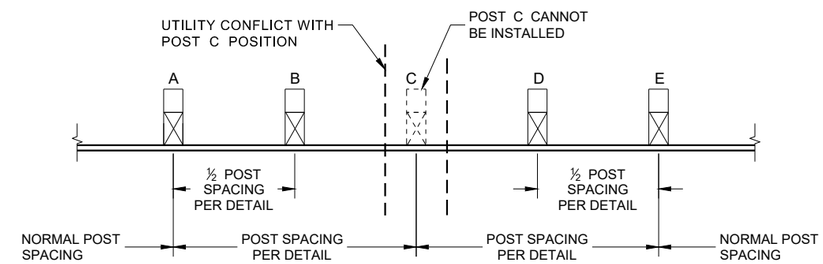

POST DRIVING FOR CONTINUOUS UNDERGROUND OBSTRUCTION

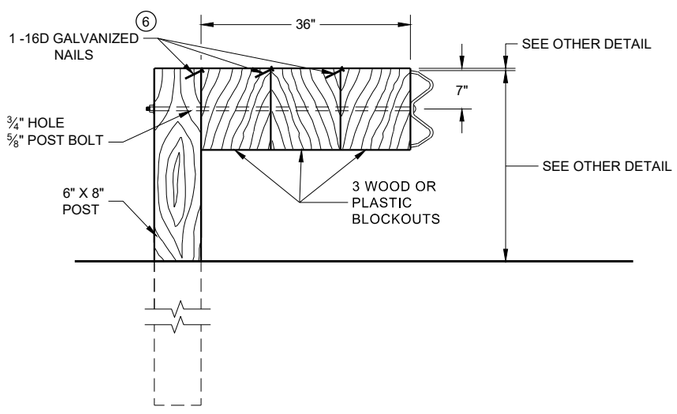

DETAIL FOR 36" BLOCKOUT DEPTH

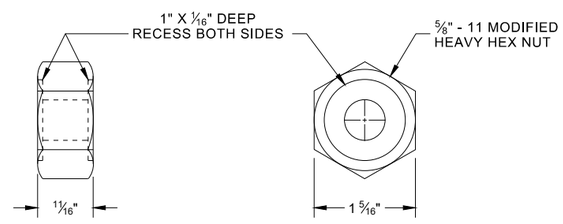

POST BOLT, SPLICE BOLT AND RECESS NUT

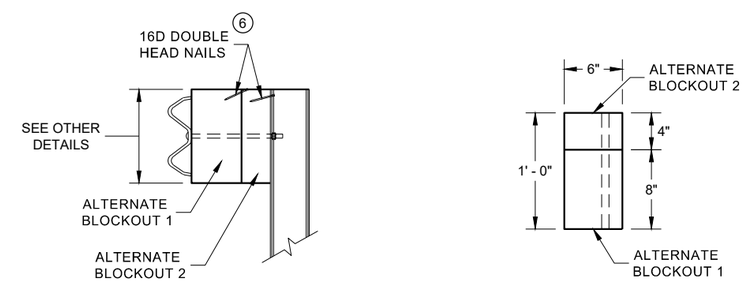

SIDE VIEW

PLAN VIEW

ALTERNATE WOOD BLOCKOUT DETAIL

NOTES: UNDER SPECIAL CIRCUMSTANCES, SUCH AS AVOIDING OBSTACLES THAT ARE NOT RELOCATED, IT IS ACCEPTABLE TO INSTALL ADDITIONAL BLOCKOUTS TO OBTAIN UP TO 36" DEPTH FOR ONE OR TWO POSTS IN A SECTION OF GUARDRAIL.

DO NOT USE 16" OR 36" BLOCKOUTS IF IT CAUSES THE POST TO BE DRIVEN BEYOND SHOULDER HINGE POINT OR CAUSES A FIXED OBJECT TO BE WITHIN THE DEFLECTION DISTANCE OF THE BARRIER.

(6) WHEN USING STEEL POST AD WOOD BLOCKOUTS, INSTALL FOUR 16D GALVANIZED NAILS. INSTALL NAILS AT THE BACK CORNERS OF THE BLOCK AND BEND THE NAILS OVER THE FLANGE OF THE STEEL POST.

MIDWEST GUARDRAIL SYSTEM (MGS) GUARDRAIL

STATE OF WISCONSIN
DEPARTMENT OF TRANSPORTATION

SDD 14B42 - 06c

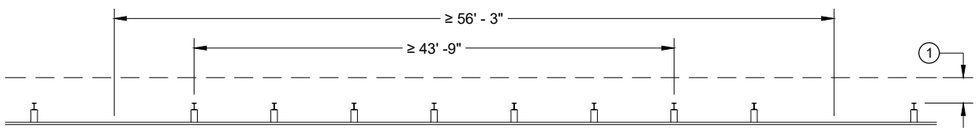

MISSING POST IN NORMAL BEAM GUARD RUN

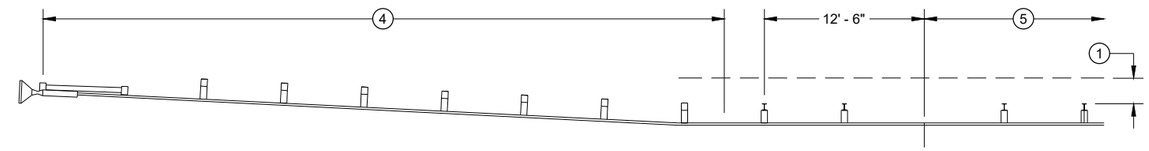

MISSING POST IN NORMAL BEAM GUARD RUN NEAR EAT

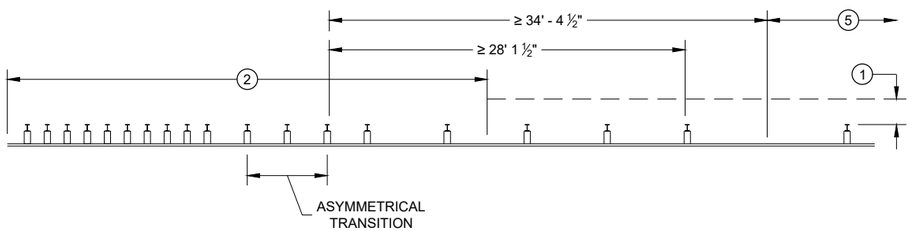

MISSING POST NEAR APPROACH THRIE BEAM TRANSITION

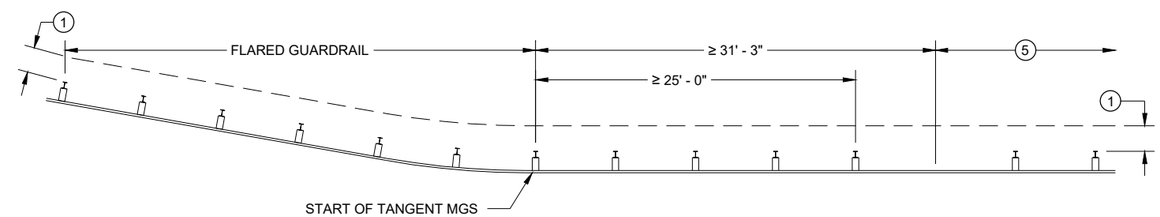

MISSING POST IN NORMAL BEAM GUARD RUN NEAR FLARED BEAM GUARD

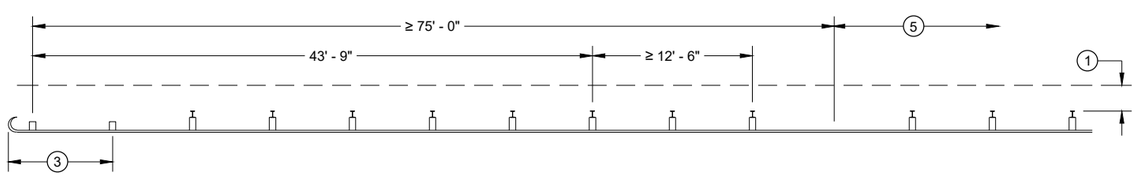

MISSING POST IN NORMAL BEAM GUARD RUN NEAR TYPE 2 TERMINAL

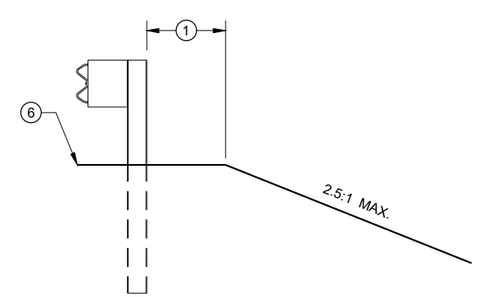

CROSS SECTION VIEW

1. MINIMUM OF 2 FEET OF GRADING BEHIND POST.
2. SEE SDD 14B45 FOR MORE DETAILS.
3. SEE SDD 14B47 FOR MORE DETAILS.
4. SEE SDD 14B44 FOR MORE DETAILS.
5. SEE MISSING POST IN NORMAL BEAM GUARD RUN FOR DISTANCE TO NEXT MISSING POST AND AREA FOR WELL DRAINED, COMPACTED SOILS.
6. SEE PLAN FOR SHOULDER DESIGN.

MIDWEST GUARDRAIL SYSTEM (MGS) GUARDRAIL

STATE OF WISCONSIN
DEPARTMENT OF TRANSPORTATION

APPROVED
7/2018 — DATE
/S/ Rodney Ta — ROADWAY STANDARDS DE UNIT SUPERVISOR
FHWA

SDD 14B42 - 06d

SDD 14B44-a Midwest Guardrail System (MGS) Energy Absorbing Terminal

GENERAL NOTES

(A) THE SLOPE IN THE AREA BOUNDED BY THE GRADELINE, THE HINGE POINT LINE (HPL) AND THE CLEAR ZONE LIMITS (CZL) SHALL BE 4:1 OR FLATTER.

(B) AFTER FINAL ASSEMBLY, RECHECK CABLE TO BE SURE IT IS TAUT AND HAS NOT RELAXED

(C) DIFFERENT MANUFACTURERS REQUIRE DIFFERENT PERFORATED W - BEAM RAIL END PANELS. SEE MANUFACTURER'S INFORMATION.

(D) ATTACH ALUMINUM SHEET TO E.A.T. HEAD USING 4 STAINLESS STEEL SELF - TAPPING SCREWS. ONE SCREW PER CORNER.

(E) HARDWARE MAY VARY BETWEEN MANUFACTURER. SEE MANUFACTURER'S DRAWING FOR INFORMATION.

(F) DIMENSIONS MAY VARY, MANUFACTURER'S INFORMATION.

SEE SDD 14B42 FOR MORE INFORMATION.

* DO NOT ATTACH BLOCKOUTS TO POST 1 AND 2.

DO NOT INSTALL REFLECTORS ON THE FIRST 50 FEET OF THE APPROACH END OF THE ENERGY ABSORBING TERMINAL.

SEE MANUFACTURER'S DRAWING FOR SPLICE LOCATION, HARDWARE DIMENSIONS AND INSTALLATION INSTRUCTIONS.

THE CENTER OF THE UPPER 3 ½" DIAMETER HOLE ON POST NUMBER 3 THROUGH POST 9 IS TO BE FLUSH WITH THE GROUND LINE UP TO A MAXIMUM OF 2" ABOVE GROUND LINE. WOOD BLOCKS ON POSTS NUMBERED 3 THROUGH 9 MAY BE ADJUSTED UP TO 3" ABOVE THE TOP OF POST.

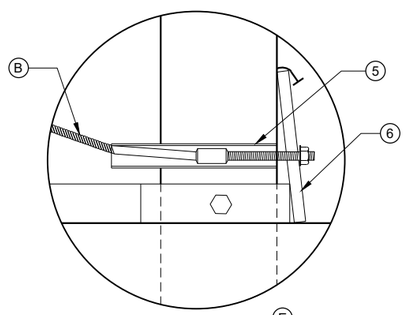

DETAIL "A" (E)

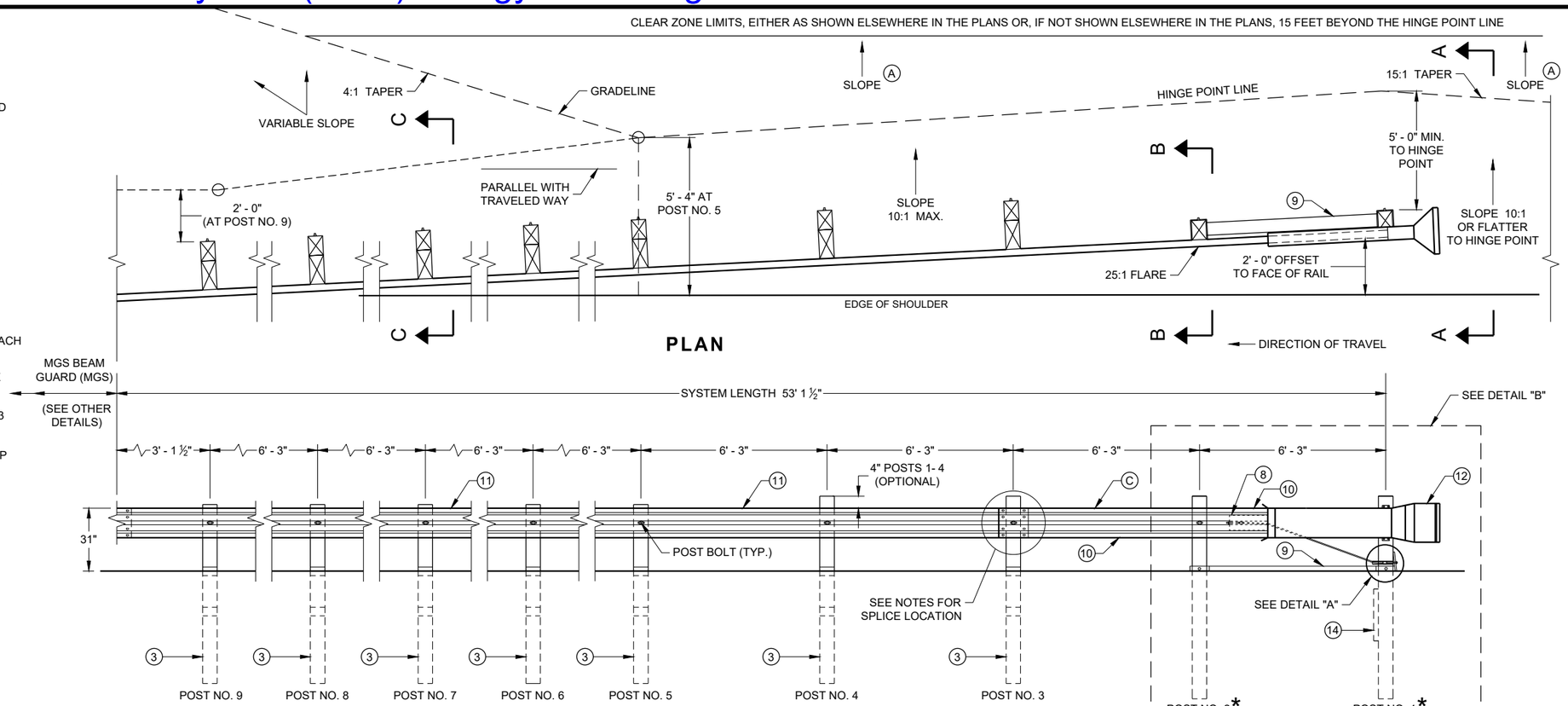

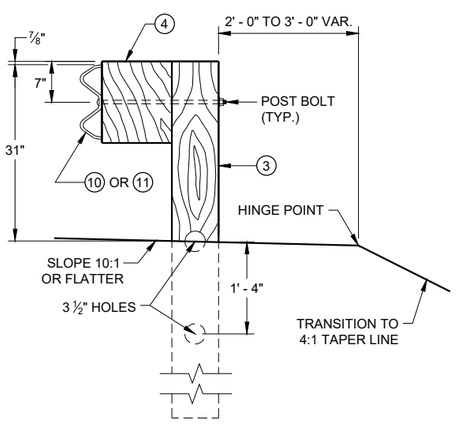

SECTION C - C
TYPICAL AT POST NOS. 3 - 9

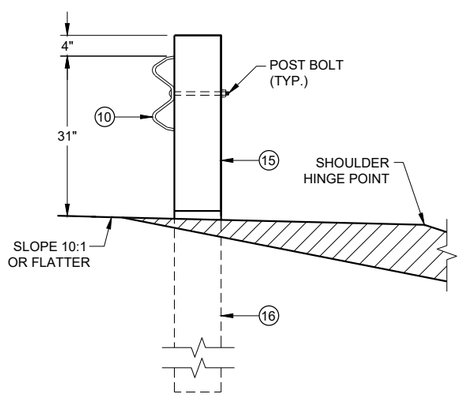

SECTION B - B
TYPICAL AT POST NO. 2*

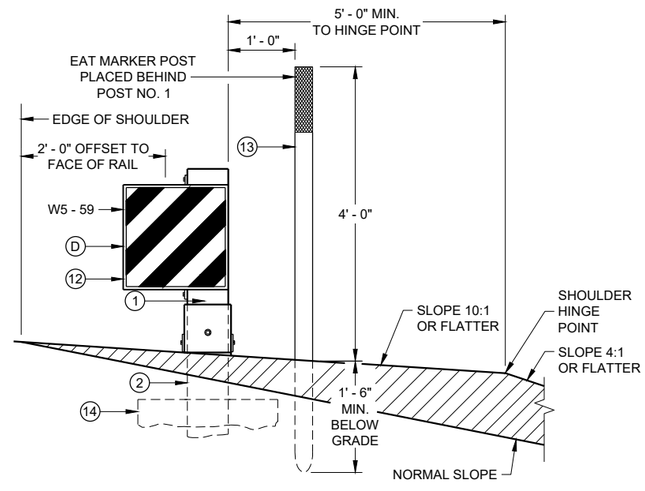

SECTION A - A
TYPICAL AT POST NO. 1*

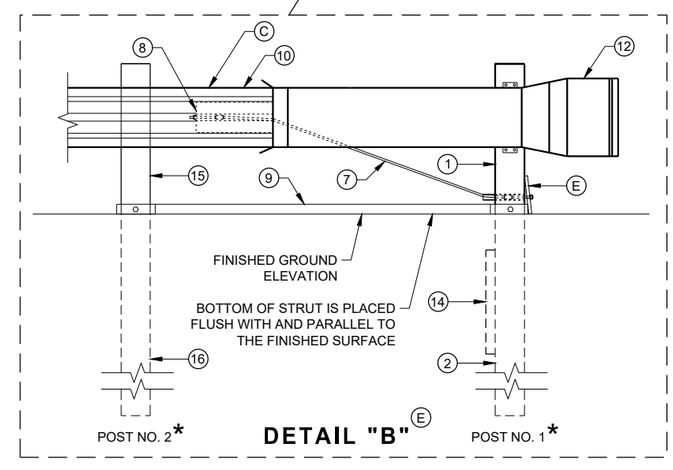

DETAIL "B" (E)

MIDWEST GUARDRAIL SYSTEM ENERGY ABSORBING TERMINAL (MGS)

STATE OF WISCONSIN
DEPARTMENT OF TRANSPORTATION

PRE 37

6

6

SDD 14B44 - 04a

SDD 14B44 - 04a

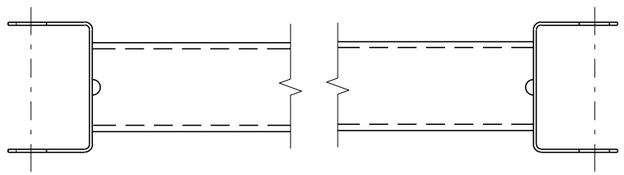

GENERIC GROUND STRUT (9)(E)

BILL OF MATERIALS

PART NO.	DESCRIPTION MATERIALS PROVIDED BY MGS EAT MANUFACTURER. SEE MANUGACTURER'S DETAILS FOR MORE INFORMATION.
1	UPPER POST NO. 1 6" X 6" TUBE
2	LOWER POST NO. 1
3	WOOD CRT
4	WOOD BLOCKOUT
5	PIPE SLEEVE
6	BEARING PLATE
7	BCT CABLE ASSEMBLY
8	ANCHOR CABLE BOX
9	GROUND STRUT
10	PERFORATED W-BEAM RAIL END PANEL, 12'-6" LONG.
11	STANDARD W-BEAM RAIL. MULTIPLE SECTIONS REQUIRED. SECTIONS VARY IN LENGTH.
12	IMPACT HEAD
13	EAT MARKER POST - YELLOW (SEE APPROVED PRODUCTS LIST)
14	SOIL PLATE
15	UPPER POST NO. 2
16	LOWER POST NO. 2

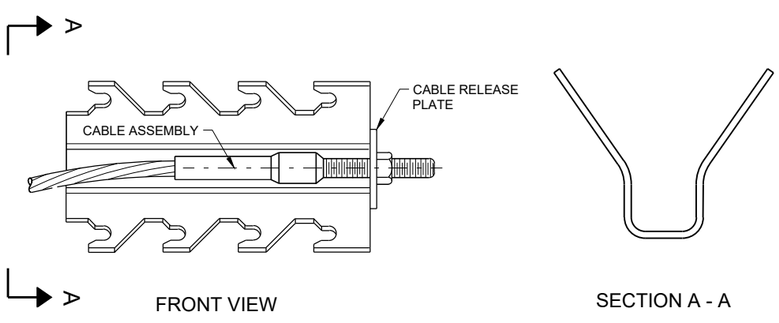

GENERIC ANCHOR CABLE BOX (9)(E)

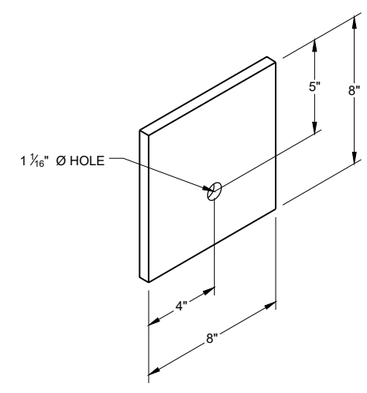

BEARING PLATE (6)(E)

6

6

SDD 14B44 - 04b

SDD 14B44 - 04b

MIDWEST GUARDRAIL SYSTEM ENERGY ABSORBING TERMINAL (MGS)

STATE OF WISCONSIN
DEPARTMENT OF TRANSPORTATION

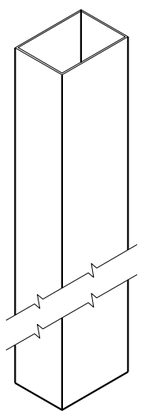

UPPER POST NO. 1 (1) (E)

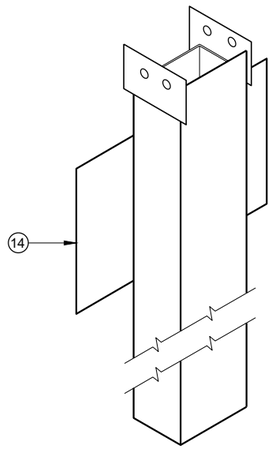

LOWER POST NO. 1 (2) (E)

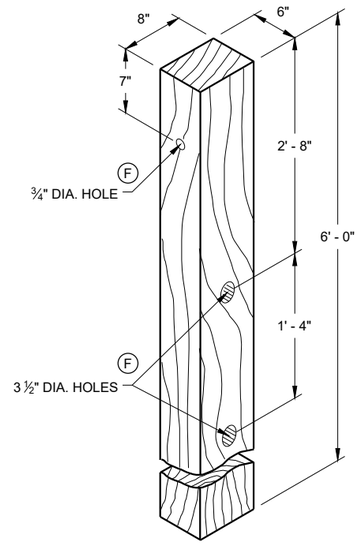

WOOD CRT POST (3) (E)
POSTS NUMBER 3-9

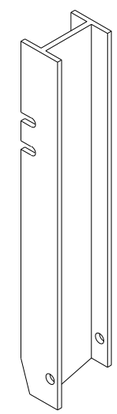

UPPER POST NO. 2 (15) (E)

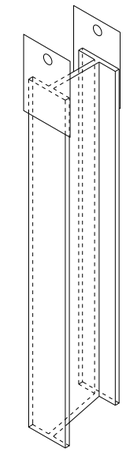

LOWER POST NO. 2 (16) (E)

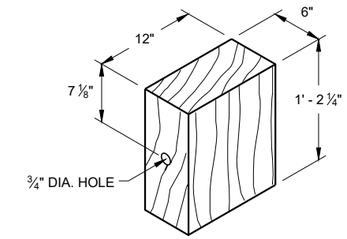

WOOD BLOCKOUT (4)
REQ'D. AT ALL POSTS EXCEPT POST NO'S 1 & 2

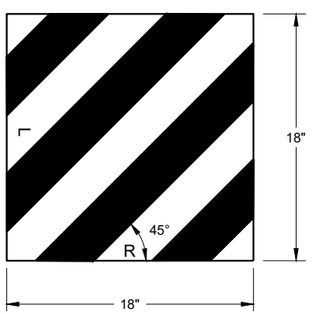

W5 - 59

REFLECTIVE SHEETING DETAIL (E)

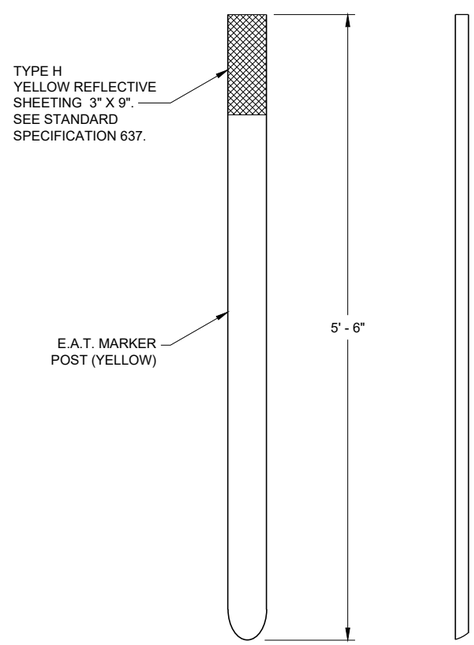

FRONT VIEW SIDE VIEW

E.A.T. MARKER POST (13)

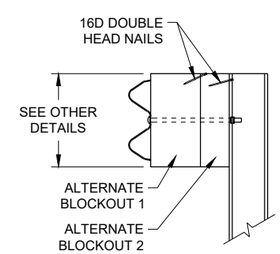

SIDE VIEW

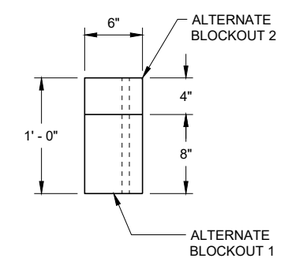

TOP VIEW

ALTERNATE WOOD
BLOCKOUT DETAIL

MIDWEST GUARDRAIL SYSTEM ENERGY ABSORBING TERMINAL (MGS)	
STATE OF WISCONSIN DEPARTMENT OF TRANSPORTATION	
APPROVED 7/2018 DATE	/S/ Rodney Ta ROADWAY STANDARDS DE UNIT SUPERVISOR
FHWA	

6

SDD 14B44 - 04c

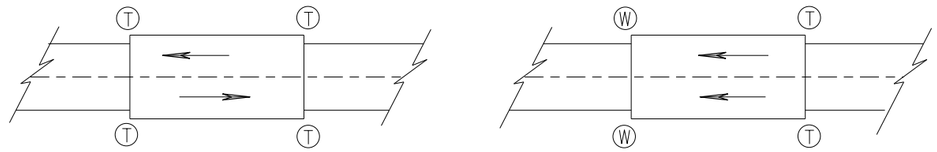

TWO WAY TRAFFIC **ONE WAY TRAFFIC**

(T) THRIE BEAM CONNECTION

(W) W-BEAM CONNECTION WHEN REQUIRED

TYPICAL LOCATIONS OF THRIE BEAM AND W-BEAM CONNECTIONS TO BRIDGE

GENERAL NOTES

IF ROCK IS ENCOUNTERED, REMOVE ROCK TO FULL DEPTH OF POST PLUS 2½", AND 12" DIAMETER AROUND POST. SEE 14B42 FOR MORE DETAILS.

TRANSITION USES STEEL POSTS ONLY.

SEE STANDARD DETAIL DRAWING 14 B 42 FOR MORE INFORMATION.

POST 2 THROUGH 17 USES STEEL POST ONLY

(1) BRIDGE RAILING TYPE "W" DOES NOT REQUIRE A TERMINAL CONNECTOR.

(2) OPTIONAL CURB AND GUTTER OR DRAINAGE FEATURE SEE PLAN FOR INFORMATION.

(13) STEEL OR WOOD POST IS ACCEPTABLE AT POST 1. SEE SDD14B42

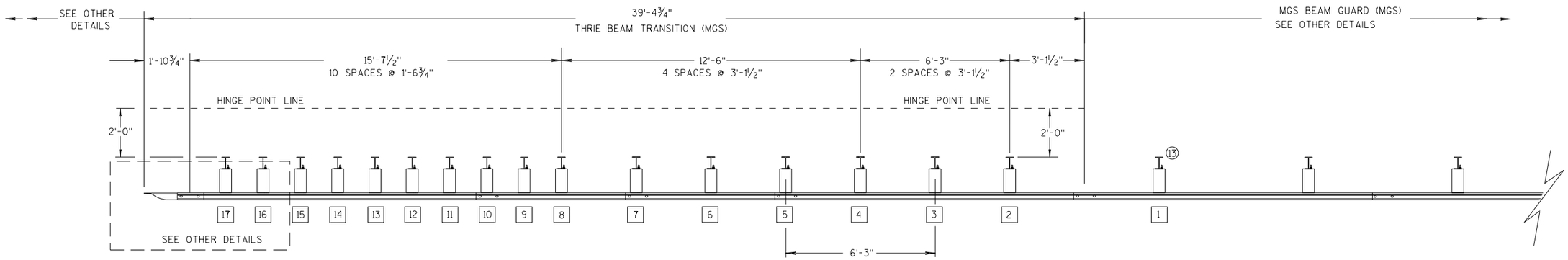

PLAN VIEW

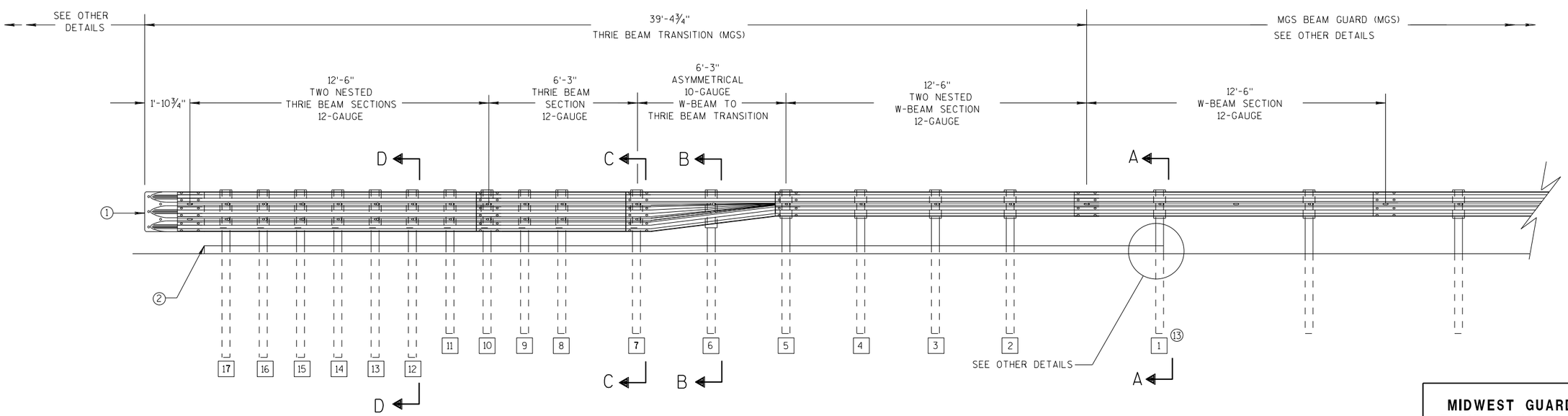

ELEVATION VIEW

MIDWEST GUARDRAIL SYSTEM THRIE BEAM TRANSITION

MIDWEST GUARDRAIL SYSTEM THRIE BEAM TRANSITION (MGS)

STATE OF WISCONSIN
DEPARTMENT OF TRANSPORTATION

PRE 40

6
S.D.D. 14 B 45-5a

GENERAL NOTES

(2) OPTIONAL CURB AND GUTTER OR DRAINAGE FEATURE SEE PLAN FOR INFORMATION.

(3) WHEN USING STEEL POSTS AND WOOD BLOCKOUTS INSTALL FOUR 10D GALVANIZED NAILS. INSTALL NAILS AT THE BACK CORNERS OF THE BLOCK AND BEND THE NAILS OVER THE FLANGE OF THE STEEL POST.

(4) TOLERANCE FOR TOP OF W-BEAM RAIL IS ± 1".

(13) STEEL OR WOOD POST IS ACCEPTABLE AT POST 1. SEE SDD 14B42

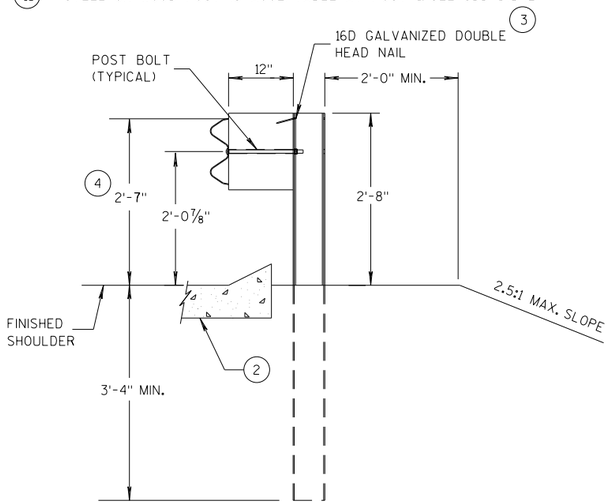

SECTION A-A (13)

POSTS 1-5

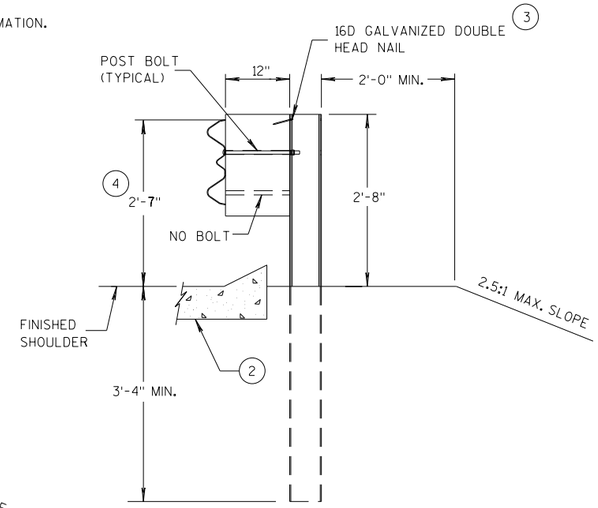

SECTION B-B

POST 6

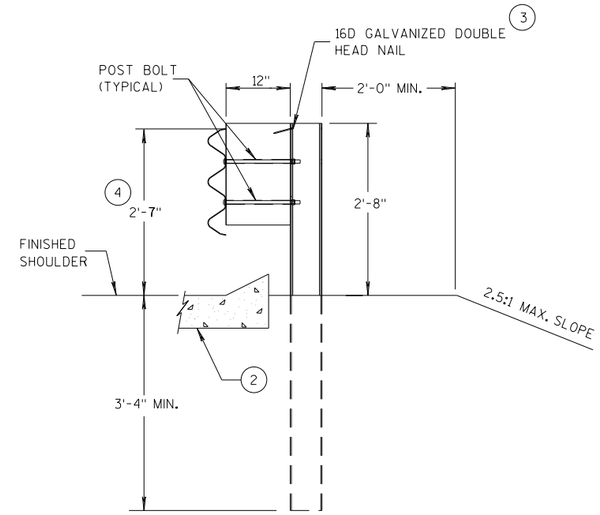

SECTION C-C

POSTS 7-11

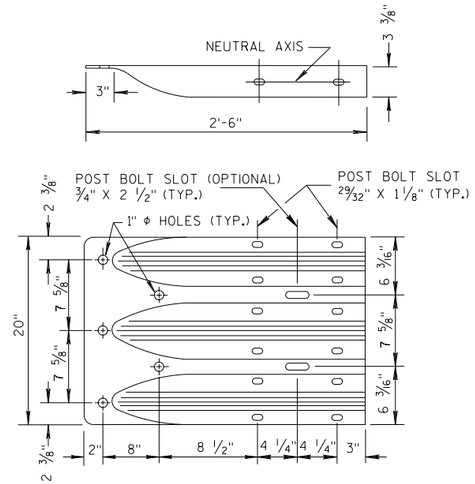

THRIE BEAM TERMINAL CONNECTOR

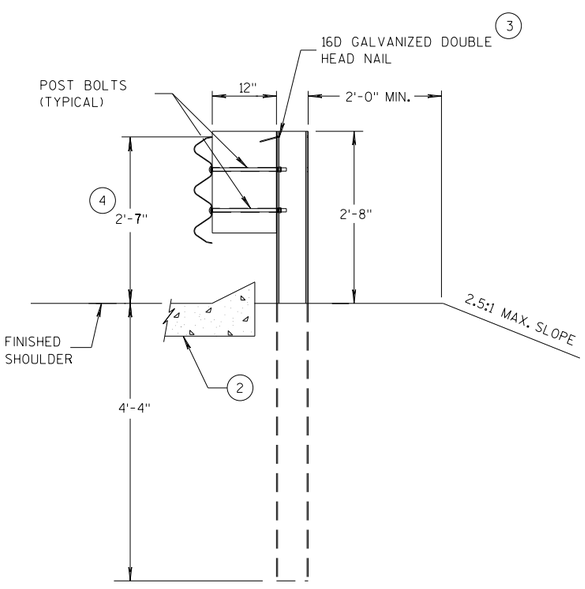

SECTION D-D

POSTS 12-17

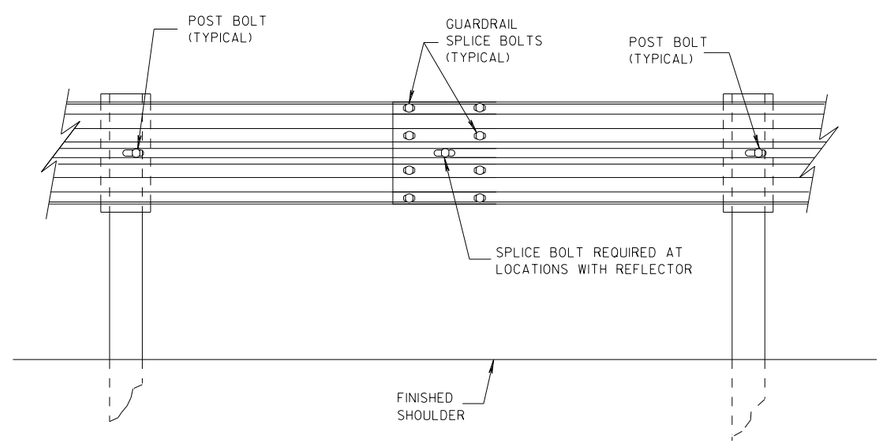

SPLICE DETAIL

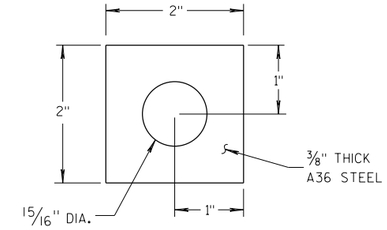

PLATE WASHER DETAIL

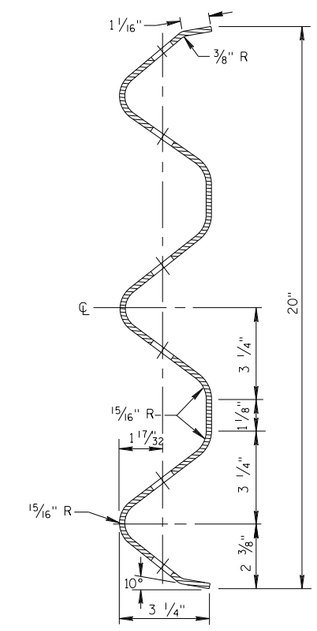

SECTION THRU THRIE BEAM RAIL ELEMENT

MIDWEST GUARDRAIL SYSTEM
THRIE BEAM TRANSITION (MGS)

STATE OF WISCONSIN
DEPARTMENT OF TRANSPORTATION

PRE 41

6

S.D.D. 14 B 45-5b

6

S.D.D. 14 B 45-5b

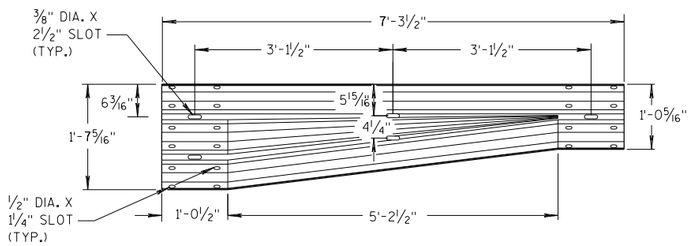

W-BEAM TO THRIE BEAM TRANSITION SECTION

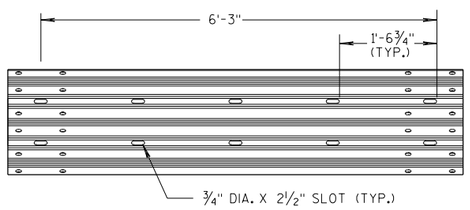

6'-3" THRIE BEAM SECTION

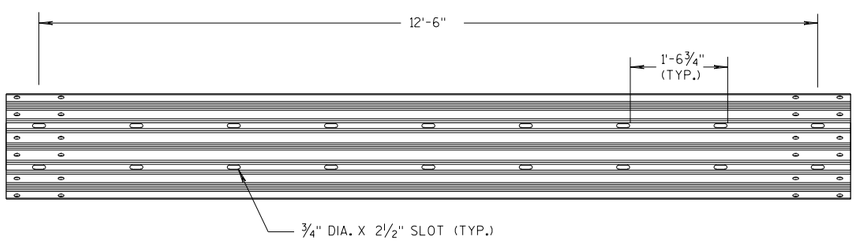

12'-6" THRIE BEAM SECTION

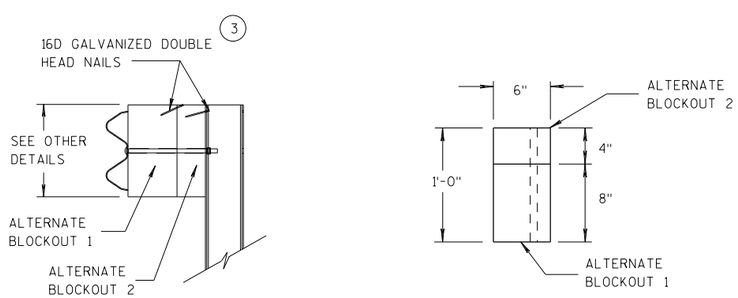

ALTERNATE WOOD BLOCKOUT DETAIL

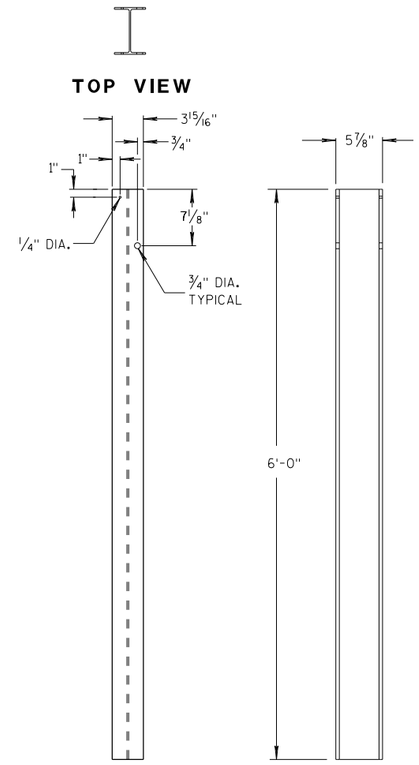

STEEL POSTS 1-5 (13)

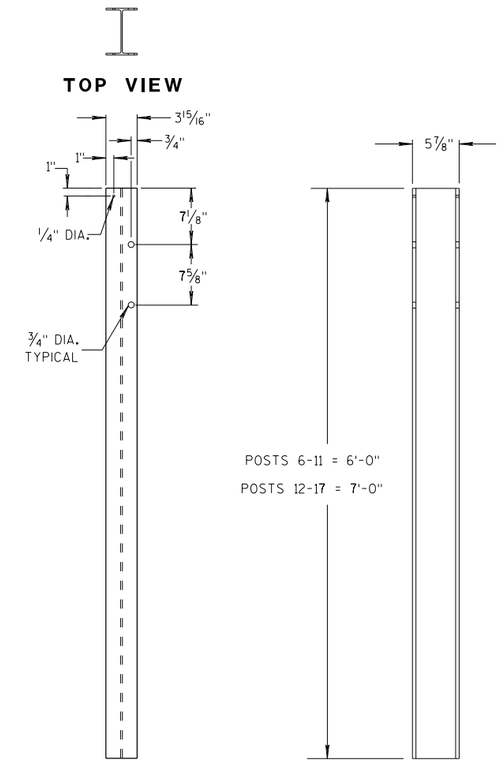

STEEL POSTS 6-17

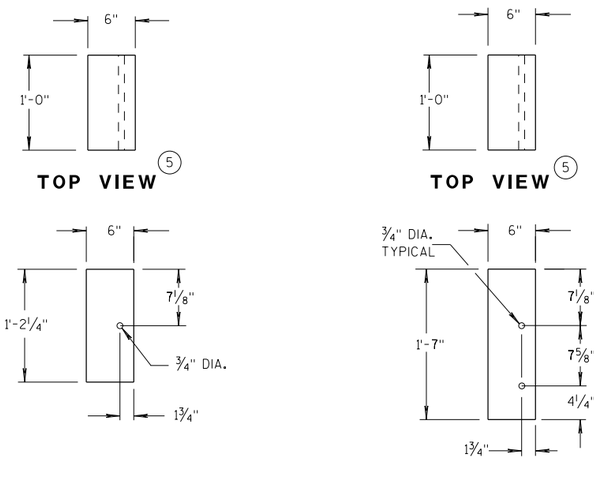

BLOCKOUT POSTS 1-5

BLOCKOUT POSTS 6-17

GENERAL NOTES

STEEL POSTS ARE W6X9 OR W6X8.5.

BOLT HOLES FOR POST ARE ON FRONT AND OF SIDE OF POST.

(3) WHEN USING STEEL POSTS AND WOOD BLOCKOUTS INSTALL FOUR 16D GALVANIZED NAILS. INSTALL NAILS AT THE BACK CORNERS OF THE BLOCK AND BEND THE NAILS OVER THE FLANGE OF THE STEEL POST.

(5) WOOD BLOCKS MAY BE CONSTRUCTED OUT OF 2 WOOD BLOCKS. SEE ALTERNATE WOOD BLOCK DETAIL.

(13) STEEL OR WOOD POST IS ACCEPTABLE AT POST 1. SEE SDD 14B42.

MIDWEST GUARDRAIL SYSTEM
THRIE BEAM TRANSITION (MGS)

STATE OF WISCONSIN
DEPARTMENT OF TRANSPORTATION

PRE 42

6

S.D.D. 14 B 45-5c

6

S.D.D. 14 B 45-5c

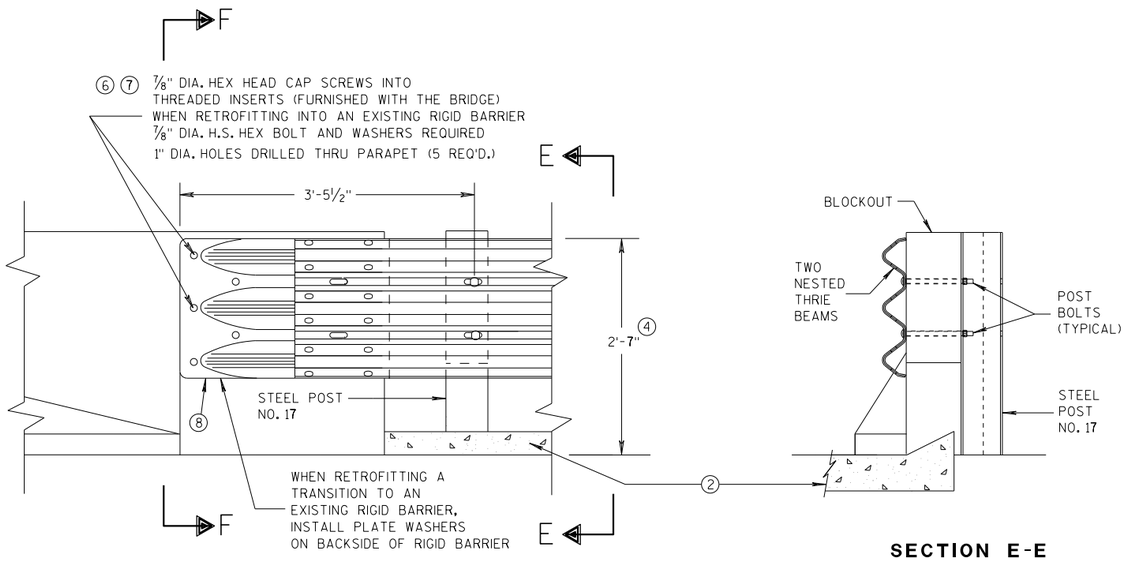

FRONT VIEW

SECTION E-E

THRIE BEAM CONNECTION TO BRIDGE PARAPET WITH SQUARE ENDS

GENERAL NOTES

THESE ARE TYPICAL CONNECTION DETAILS. ADJUST THE POSTION OF CONNECTIONS TO EXISTING BRIDGES TO FIT THE ACTUAL BRIDGE AND SITE DIMENSIONS.

② OPTIONAL CURB AND GUTTER OR DRAINAGE FEATURE SEE PLAN FOR INFORMATION.

④ TOLERANCE FOR TOP OF BEAM IS ± 1".

⑥ DRILLING BOLT HOLES THROUGH THE PARAPET, BOLTS, NUTS, WASHERS AND REPAIRING DAMAGED CONCRETE ARE INCIDENTAL TO THE CONTRACT.

⑦ BOLTS MAY BE A325 BOLTS OR A449 BOLTS. BOLT LENGTH AND THREADING LENGTH ARE TO ALLOW FOR A TIGHT CONNECTION BETWEEN RIGID BARRIER AND THRIE BEAM CONNECTION PLATE. CONTRACTOR IS TO FIELD VERIFY BOLT LENGTH AND THREAD LENGTH. ONE ROUND WASHER REQUIRED BETWEEN BOLT HEAD AND THRIE BEAM CONNECTOR PLATE. BOLTS THAT EXTEND THROUGH THE PARAPET AND OUT THE BACK FACE REQUIRE A HARDENED ROUND STEEL WASHER THAT IS 2" O.D. X 5/8" THICK AND ONE PLATE WASHER. REPAIR ANY DAMAGED CONCRETE FROM BOLT INSTALLATION.

⑧ THE RECESS FOR A W-BEAM CONNECTION, WHICH EXISTS ON SOME PARAPETS OF THIS TYPE, SHALL BE FILLED WITH A TREATED TIMBER BLOCKOUT. BLOCKOUT SIZE IS 1'-6" X 2'-0" X 3 1/2".

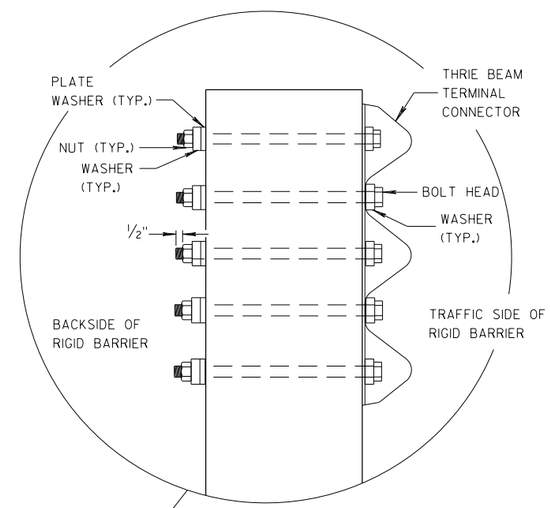

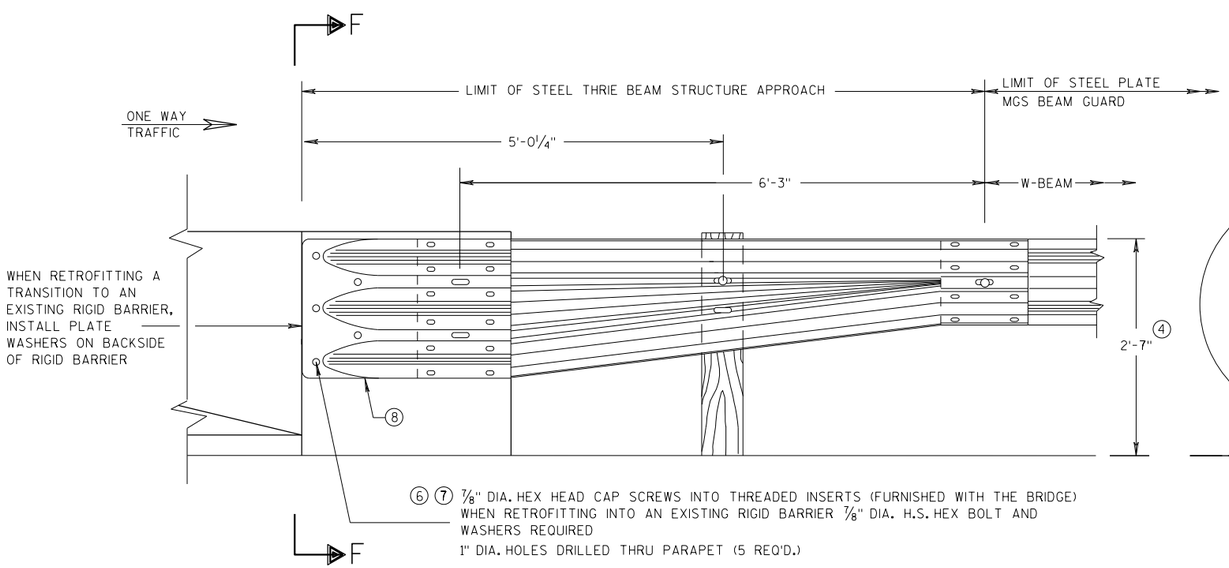

FRONT VIEW

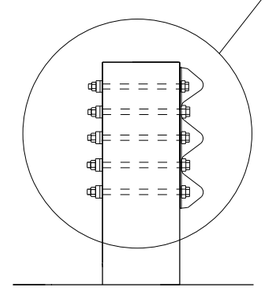

SECTION F-F

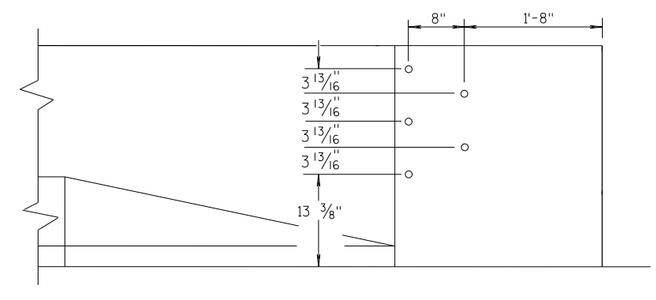

DRILL HOLE LOCATION

W BEAM TRANSITION AND CONNECTION TO BRIDGE PARAPETS WITH SQUARE ENDS

(USE ONLY ON THE TRAFFIC EXIT END OF ONE WAY BRIDGES)

MIDWEST GUARDRAIL SYSTEM THRIE BEAM TRANSITION (MGS)

STATE OF WISCONSIN
DEPARTMENT OF TRANSPORTATION

APPROVED
07/2018
DATE
FHWA

/S/ Rodney
ROADWAY STANDARDS UNIT SUPERVISOR

PRE 43

6

6

S.D.D. 14 B 45-5d

S.D.D. 14 B 45-5d

GENERAL NOTES

COVER PLATE PANELS ARE 3/16" THICK.

ALL STIFFENERS ARE 1/4" THICK.

CONNECTOR PLATE SHALL BE FABRICATED FROM ASTM GRADE A36 STEEL AND GALVANIZED.

FOR GALVANIZED REQUIREMENTS, SEE SECTION 614 OF THE STANDARD SPECIFICATIONS.

ALL HOLE DIAMETERS SHALL BE 1".

FOR OPPOSITE SIDE INSTALLATION MIRROR DRAWINGS.

(10) STIFFENERS LOCATED AT THE OUTSIDE EDGES OF THE COVER PLATES SHALL BE WELDED AS FOLLOWS:
SINGLE BEVEL GROOVE WELD ON EXTERNAL SIDES AND 3/16" FILLET WELD BY 1" LONG SPACED AT 2" ON INTERNAL SIDES.

(11) STIFFENERS LOCATED ON THE INSIDE OF THE COVER PLATE SHALL BE WELDED AS FOLLOWS:
3/16" FILLET WELD BY 1" LONG SPACED AT 2".

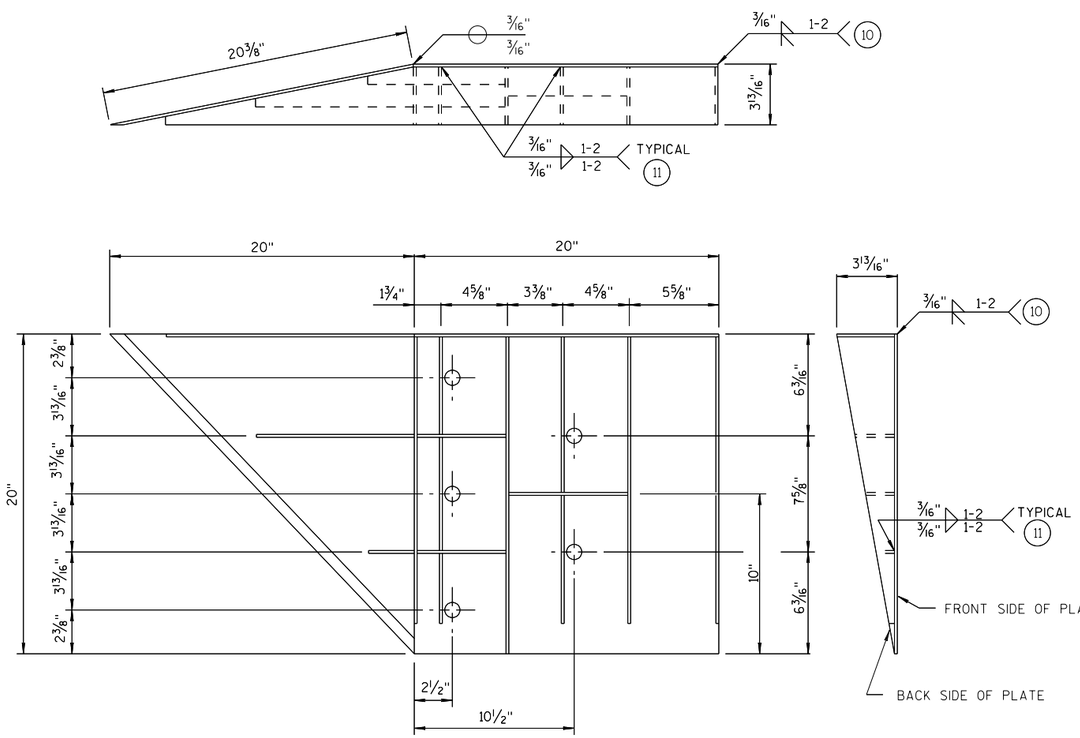

WELDING INSTRUCTION

(VIEWED FROM BACK SIDE OF PLATE)

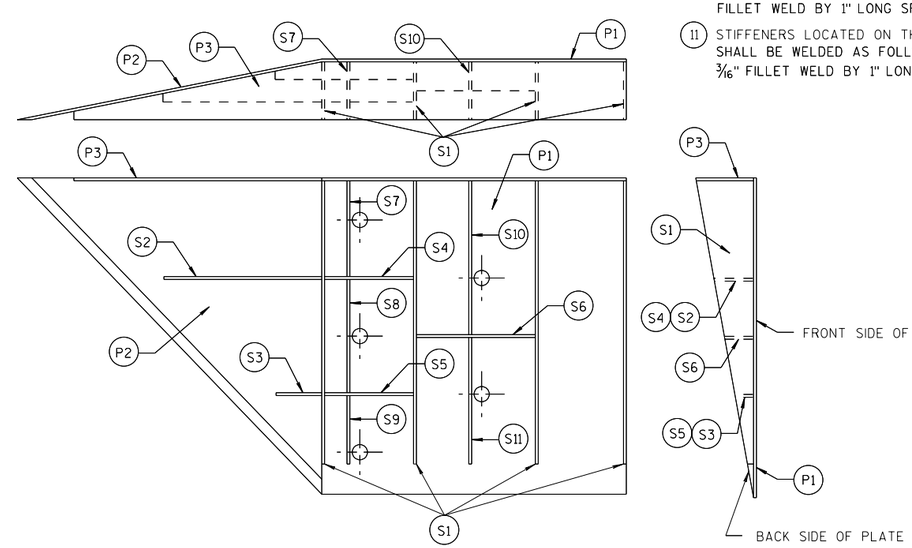

PLATE AND STIFFENER IDENTIFICATION

(VIEWED FROM BACK SIDE OF PLATE)

CONNECTOR PLATE DIMENSION (PER ASSEMBLY)

PLATE	QUANTITY	SHAPE	SIZE (A x B x C x D)	THICKNESS
P1	1		20" x 20"	3/16"
P2	1		20" x 20" x 28 9/16"	3/16"
P3	1		39" x 3 5/8" x 20" x 19 5/16"	3/16"
S1	4		18 7/16" x 3 5/8" x 18 3/4"	1/4"
S2	1		10 1/4" x 2 7/16" x 10 3/8" x 1/2"	1/4"
S3	1		3" x 1 1/16" x 3 1/8" x 1/2"	1/4"
S4	1		6 1/8" x 2 7/16"	1/4"
S5	1		6 1/8" x 1 1/16"	1/4"
S6	1		7 3/4" x 1 3/4"	1/4"
S7	1		2 9/16" x 6" x 3 5/8" x 5 7/8"	1/4"
S8	1		1 5/32" x 7 1/2" x 2 1/2" x 7 3/8"	1/4"
S9	1		6 1/16" x 6 3/16" x 1 3/32"	1/4"
S10	1		1 7/8" x 9 7/8" x 3 5/8" x 9 11/16"	1/4"
S11	1		8 1/2" x 8 3/4" x 1 13/16"	1/4"

SINGLE SLOPE CONNECTION PLATE

MIDWEST GUARDRAIL SYSTEM THRIE BEAM TRANSITION (MGS)

STATE OF WISCONSIN
DEPARTMENT OF TRANSPORTATION

APPROVED
7/2018
DATE
FHWA

/S/ Rodney Taylor
ROADWAY STANDARD UNIT SUPERVISOR

PRE 44

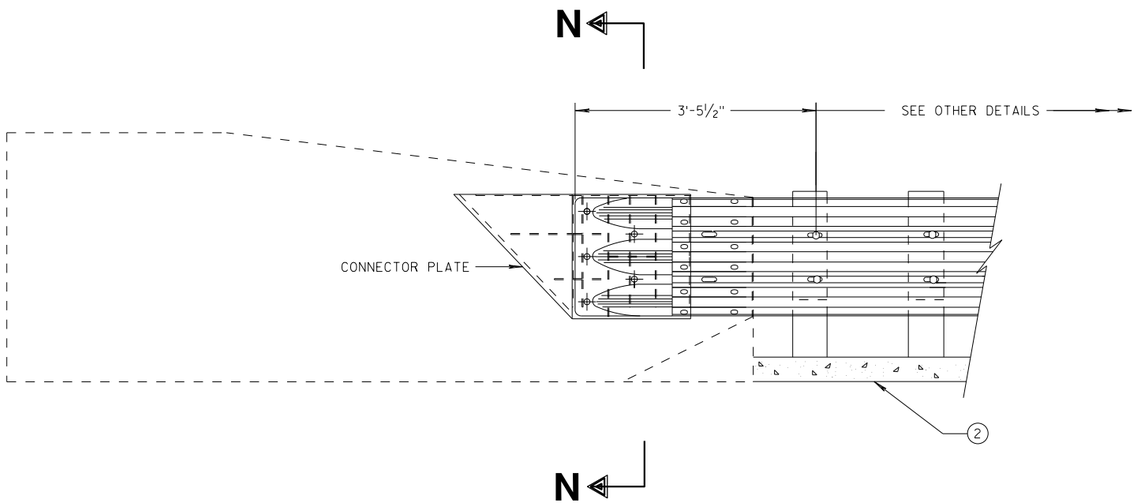

THRIE BEAM CONNECTION TO SINGLE SLOPE BARRIER

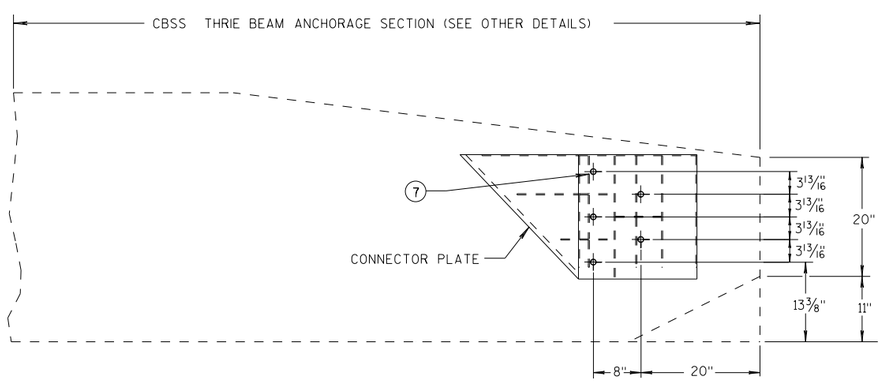

SINGLE SLOPE CONNECTION PLATE PLACEMENT

GENERAL NOTES

CONNECTOR PLATE, DRILLING BOLT HOLES THROUGH THE PARAPET, BOLTS, NUTS, WASHERS AND REPAIRING DAMAGED CONCRETE ARE INCIDENTAL TO THE CONTRACT.

(2) OPTIONAL CURB AND GUTTER OR DRAINAGE FEATURE SEE PLAN FOR INFORMATION.

(7) BOLTS MAY BE A325 BOLTS OR A449 BOLTS. BOLT LENGTH AND THREADING LENGTH ARE TO ALLOW FOR A TIGHT CONNECTION BETWEEN RIGID BARRIER AND THRIE BEAM CONNECTION PLATE. CONTRACTOR IS TO FIELD VERIFY BOLT LENGTH AND THREAD LENGTH. ONE ROUND WASHER REQUIRED BETWEEN BOLT HEAD AND THRIE BEAM CONNECTOR PLATE. BOLTS THAT EXTEND THROUGH THE PARAPET AND OUT THE BACK FACE REQUIRE A HARDENED ROUND STEEL WASHER THAT IS 2" O.D. X ⅝" THICK AND ONE PLATE WASHER. REPAIR ANY DAMAGED CONCRETE FROM BOLT INSTALLATION.

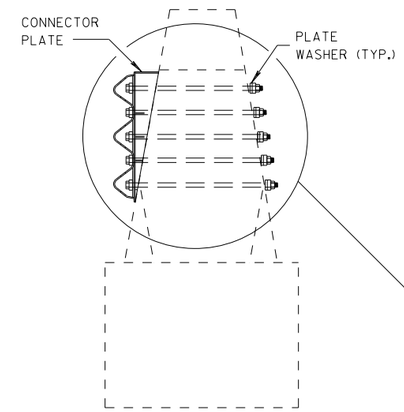

SECTION N-N

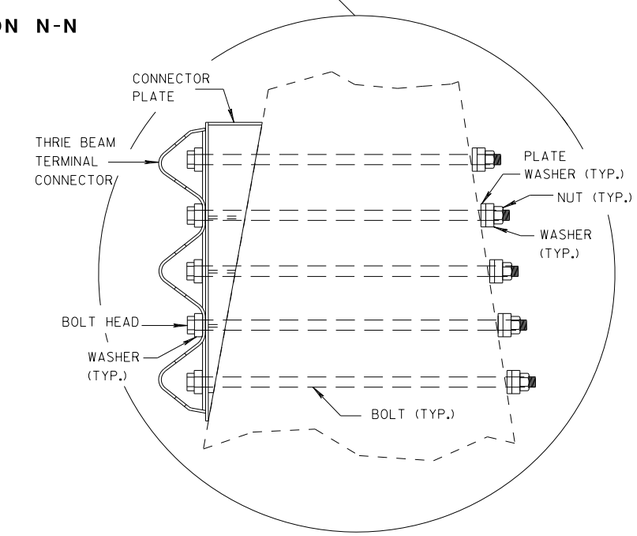

6

6

S.D.D. 14 B 45-5j

S.D.D. 14 B 45-5j

MIDWEST GUARDRAIL SYSTEM THRIE BEAM TRANSITION (MGS)

STATE OF WISCONSIN
DEPARTMENT OF TRANSPORTATION

APPROVED
7/2018
DATE
/S/ Rodney
ROADWAY STANDARDS UNIT SUPERVISOR
FHWA

PRE 45

SDD 14b47-a Midwest Guardrail System (MGS) Type 2 Terminal - Terminal Layout, End and Section Detail

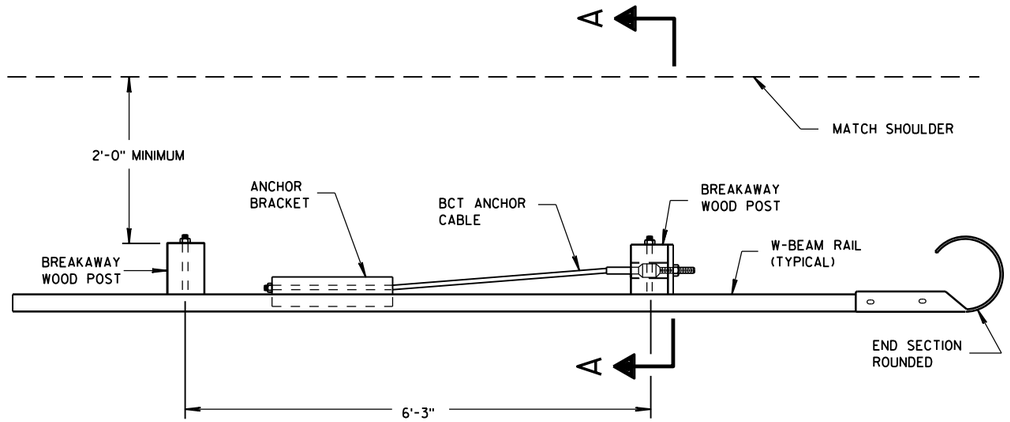

PLAN VIEW

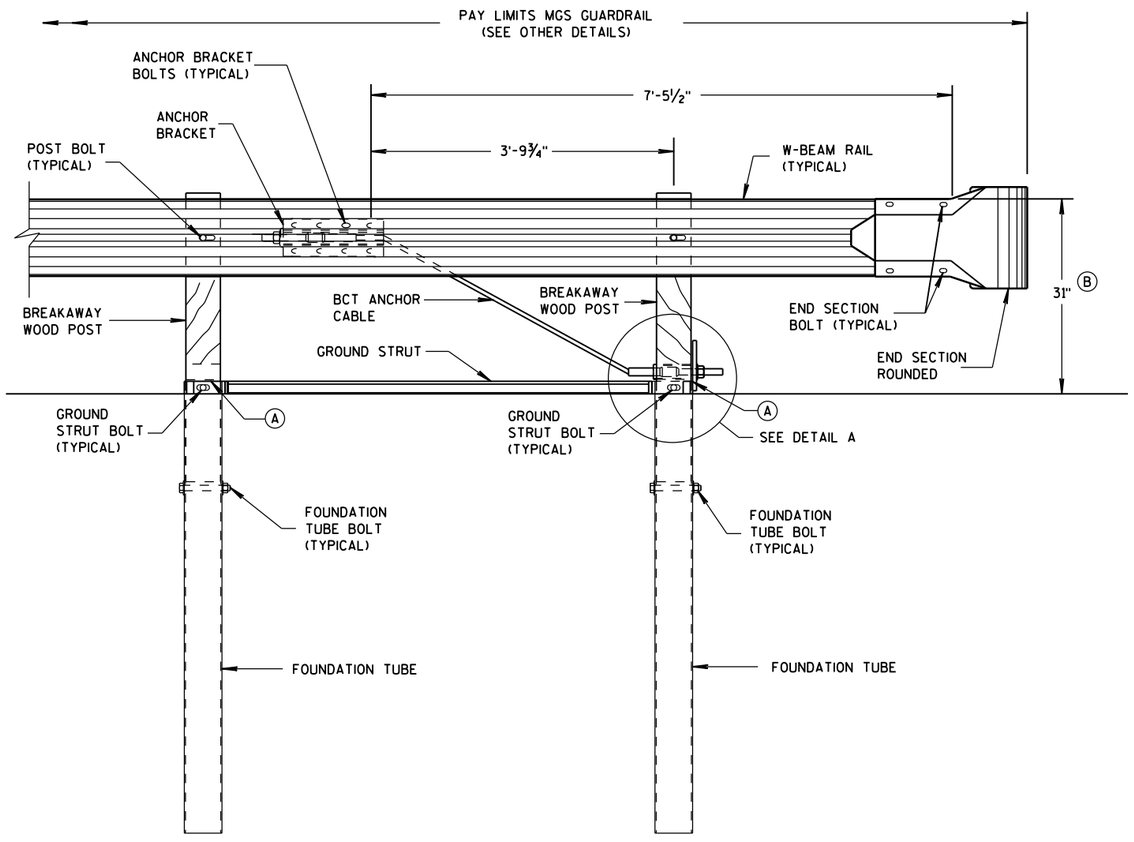

FRONT VIEW

END RAIL DETAIL

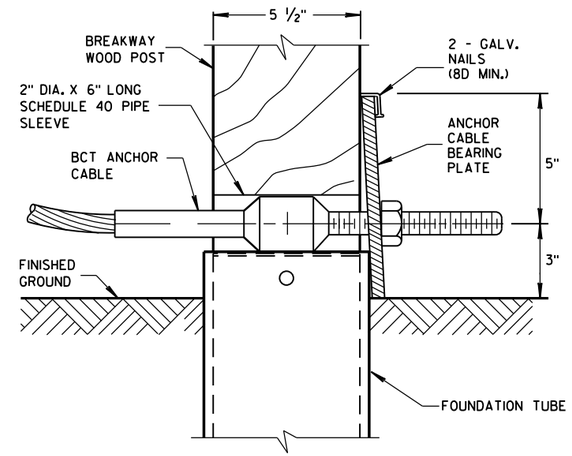

DETAIL A

POST NO. 1
GROUNG STRUT NOT SHOWN FOR CLARITY.

GENERAL NOTES

SEE SDD 14 B 42 FOR MORE INFORMATION.

END SECTION BOLTS AND NUTS HAVE THE SAME MATERIAL REQUIREMENTS AS SPLICE BOLTS.

FOUNDATION TUBE BOLTS ARE ⅞" DIAMETER ASTM A307 HEX HEAD BOLT. FOUNDATION TUBE BOLTS REQUIRE ASTM A563 A NUT AND TWO ASTM F844 ⅞" DIAMETER FLAT WASHERS. INSTALL ONE WASHER UNDER BOLT HEAD AND ONE WASHER UNDER NUT.

ANCHOR BRACKET AND GROUND STRUT BOLTS ARE A ⅝" DIAMETER ASTM A307 HEX HEAD BOLT. ANCHOR BRACKET BOLTS REQUIRE ASTM A563 A NUT AND TWO ASTM F844 ⅝" DIAMETER FLAT WASHERS. INSTALL ONE WASHER UNDER BOLT HEAD AND ONE WASHER UNDER NUT.

W-BEAM END SECTION ROUNDED HAS THE SAME MATERIAL PROPERTIES AS STANDARD STEEL RAIL.

(A) TOP OF FOUNDATION TUBE SHALL BE NO MORE THAN 3" ABOVE FINISHED GROUND.

(B) FOR NEW CONSTRUCTION TOP OF RAIL IS 31" ± 1".
FOR EXISTING INSTALLATIONS TOP OF RAIL IS BETWEEN 27¾" TO 32" ± 1".

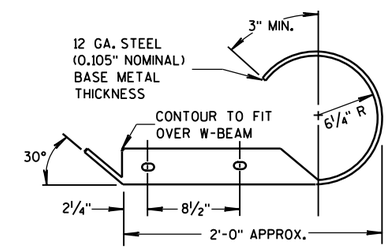

PLAN VIEW

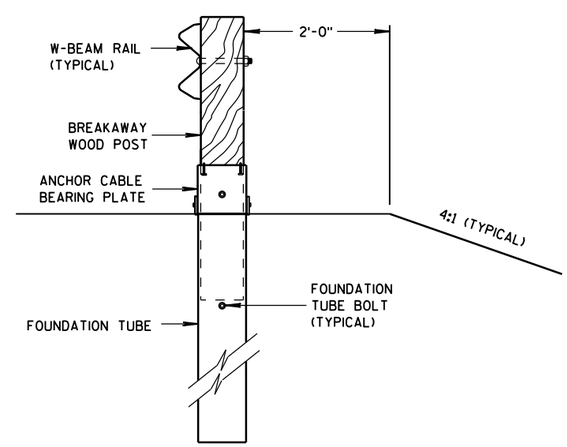

SECTION A-A

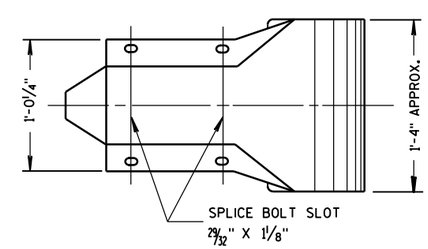

FRONT VIEW

W BEAM END SECTION ROUNDED

MIDWEST GUARDRAIL SYSTEM (MGS) TYPE 2 TERMINAL

STATE OF WISCONSIN
DEPARTMENT OF TRANSPORTATION

6

S.D.D. 14 B 47-2a

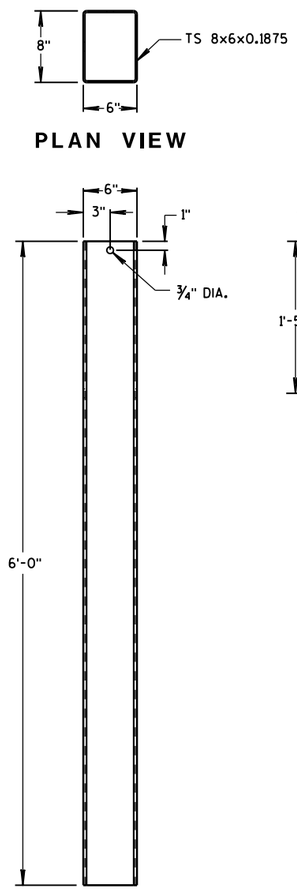

FOUNDATION TUBE

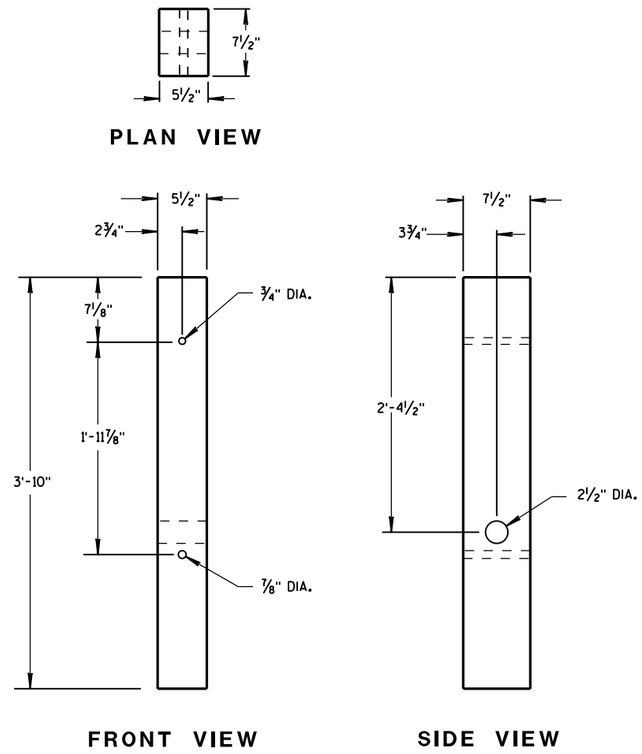

BREAKAWAY WOOD POST

GENERAL NOTES

BCT ANCHOR CABLE IS A ¾" DIAMETER 6X19 IWRC IPS GALVANIZED WIRE ROPE. THE SWAGED FITTINGS AND STUD ARE REQUIRED. END FITTING SHALL BE MACHINED FROM HOT-ROLLED CARBON STEEL CONFORMING TO ASTM A576 GRADE 1035 AND GALVANIZED ACCORDING TO ASTM A123. TREADED STUD SHALL CONFORM TO ASTM A325 OR SAE GRADE 5. MINIMUM BREAKING STRENGTH OF WIRE ROPE IS 43,000 LB. WIRE ROPE IS TO BE TAUT.

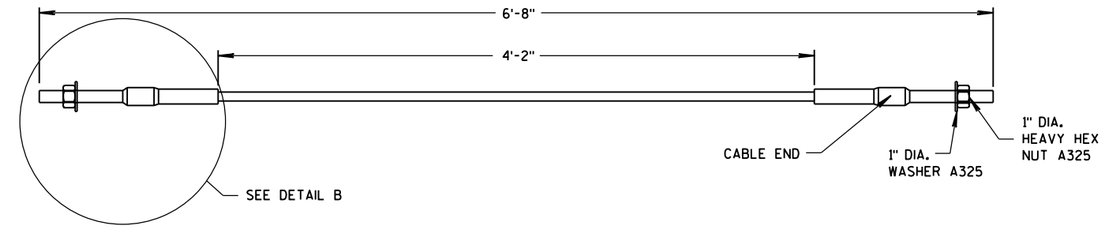

BCT ANCHOR CABLE

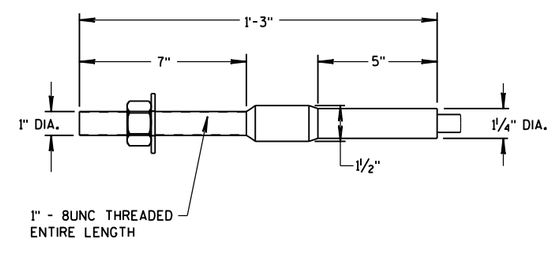

DETAIL B

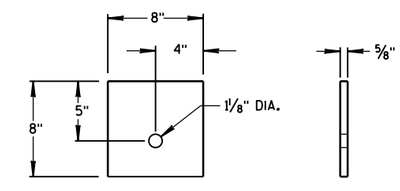

ANCHOR CABLE BEARING PLATE

MIDWEST GUARDRAIL SYSTEM (MGS) TYPE 2 TERMINAL

STATE OF WISCON PRE 47
DEPARTMENT OF TRANSPORTATION

6

6

S.D.D. 14 B 47-2b

S.D.D. 14 B 47-2b

SDD 14b47-c MGS Type 2 Terminal - Ground Strut, Strut and Yoke Details, Cable Barrier Anchor Bracket Details

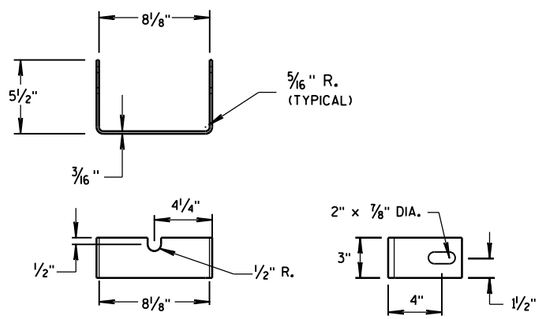

YOKE DETAIL

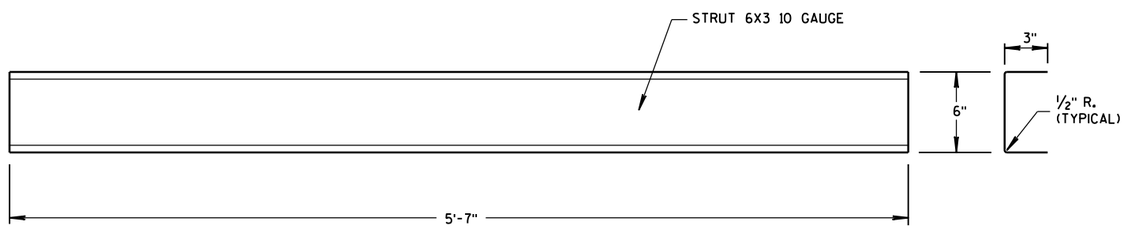

STRUT DETAIL

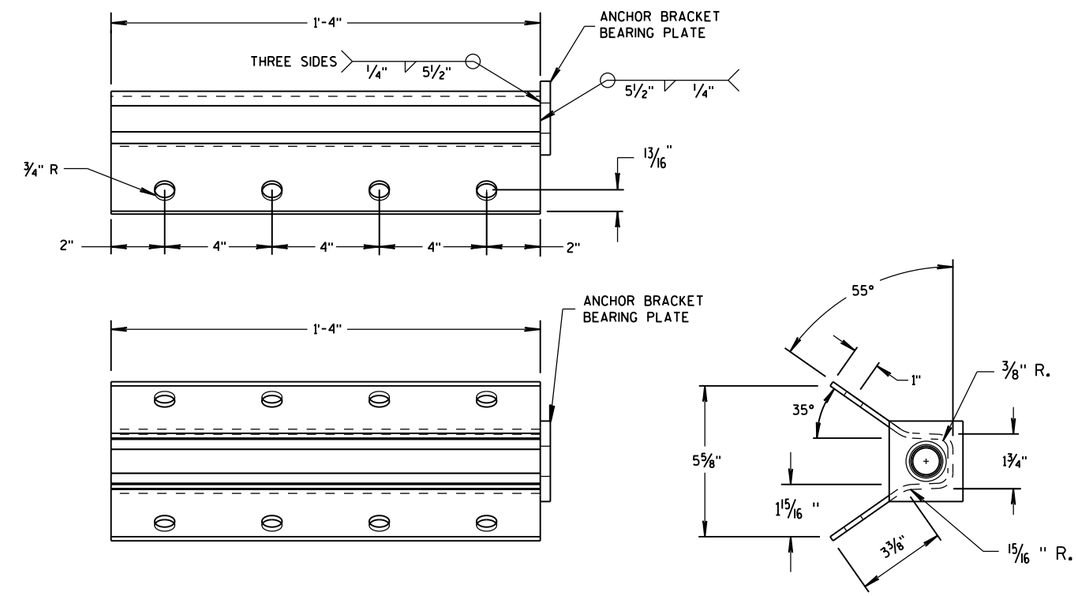

ANCHOR BRACKET

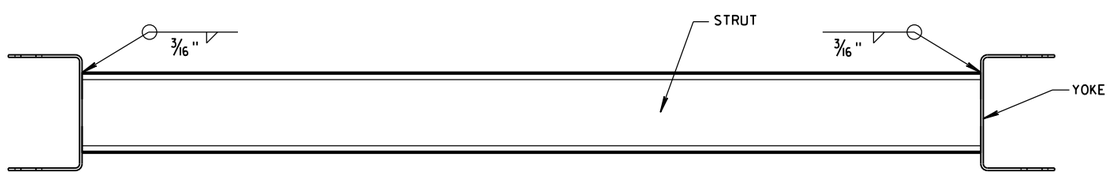

PLAN VIEW

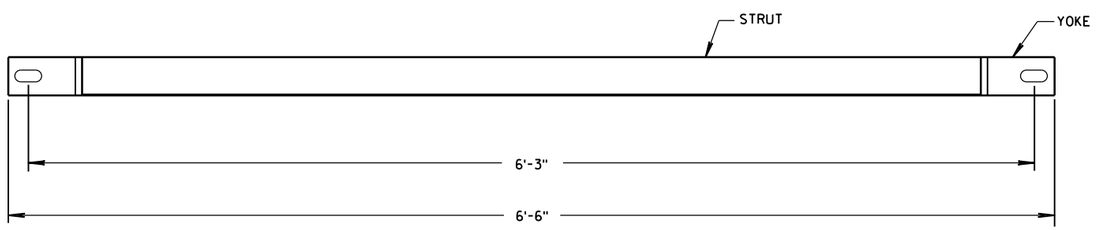

FRONT VIEW

GROUND STRUT DETAIL

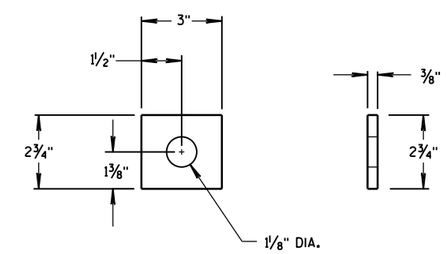

ANCHOR BRACKET
BEARING PLATE

MIDWEST GUARDRAIL SYSTEM (MGS) TYPE 2 TERMINAL
STATE OF WISCONSIN DEPARTMENT OF TRANSPORTATION
APPROVED June 2014 DATE — /S/ Jerry P. Zaec ROADWAY STANDARD ENGINEER — T — FHWA

6

6

S.D.D. 14 B 47-2c

S.D.D. 14 B 47-2c

SDD 14b53-a Short Radius Beam Guard and Terminal (MGS) - Layout

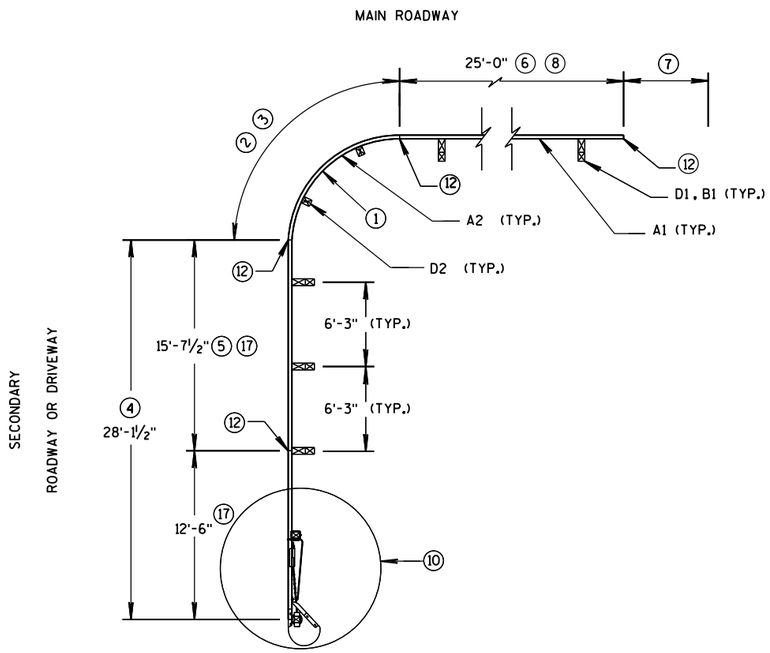

SHORT RADIUS BEAM GUARD WITH SHORT RADIUS TERMINAL ON SECONDARY ROAD OR DRIVEWAY PLAN VIEW

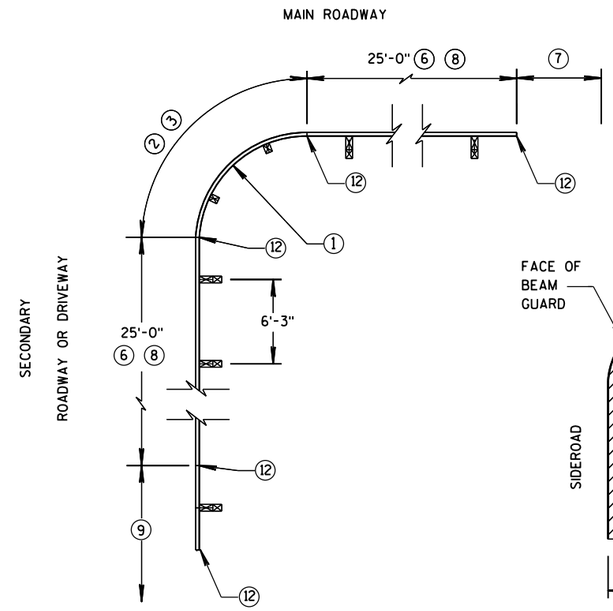

SHORT RADIUS BEAM GUARD WITH EAT, ADDITIONAL BEAM GUARD OR TRANSITION TO RIGID BARRIER ON SECONDARY ROAD OR DRIVEWAY PLAN VIEW

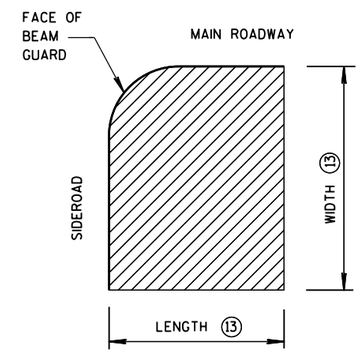

AREA FREE OF FIXED OBJECTS FOR RADIUS 32' AND LESS ⑯

TABLE FOR RADIUS OF 32' AND LESS

RADIUS FT	LENGTH FT	WIDTH FT
8	25	15
16	30	15
24	40	20
32	50	30

GENERAL NOTES

SEE PLANS FOR OTHER BARRIER SYSTEM AND LOCATION SPECIFICS.

SEE 14B42 FOR MORE INFORMATION ON BEAM GUARD INSTALLATION, PARTS, MATERIALS, AND INSTALLATION INFORMATION.

GALVANIZE PARTS AFTER FABRICATION.

WELDING IS TO FOLLOW CURRENT REQUIREMENTS OF THE AMERICAN WELDING SOCIETY STRUCTURAL WELDING CODE ANSI/AWS D1.1

UNLESS NOTED OTHERWISE, ALL PLATES ARE FLAT AND FREE OF WARP.

UNLESS NOTED OTHERWISE, ALL EDGES ARE SMOOTH, STRAIGHT AND VERITCAL.

ALL CUTS AND HOLES, EXCEPT IN BEAM GUARD RAIL ARE TO BE MACHINED OR MACHINE FLAME CUTS.

UNLESS NOTED OTHERWISE CUT OR PROVIDE BOLTS THAT ARE ¼" TO ½" BEYOND THE NUT

DRAWINGS ARE NOT TO SCALE.

① RADIUS MEASURE FROM INSIDE OF RAIL. LENGTH OF BEAM GUARD SHORT RADIUS GUARD MEASURED ALONG TRAFFIC SIDE OF RAIL. RADIUS BETWEEN 8 FEET TO 150 FEET. SEE PLAN FOR REQUIRED RADIUS. BEAM GUARD RAIL IN RADIUS IS SHOP BENT. ODD RAIL LENGTH OR FIELD CUTS MAY BE REQUIRED.

② CONTROLLED RELEASE TERMINAL (CRT) POSTS ARE USED IN THE RADIUS. CONTROLLED RELEASE TERMINAL (CRT) POSTS ARE SPACED 6'-3". SEE PLAN FOR NUMBER OF CONTROLLED RELEASE TERMINAL (CRT) POSTS.

③ WITHIN RADIUS BEAM GUARD RAILS ARE NOT BOLTED TO POSTS. BEAM GUARD RAILS RESTED ON TOP OF LAG SCREW.

④ MINIMUM LENGTH OF BEAM GUARD ALONG SIDE ROAD OR DRIVEWAY TO INSTALL SHORT RADIUS TERMINAL. BEAM GUARD IS PAID FOR WITH BEAM GUARD ITEM.

⑤ ODD LENGTH OF BEAM GUARD REQUIRED TO INSTALL SHORT RADIUS TERMINAL.

⑥ MINIMUM AMOUNT OF BEAM GUARD TO BE INSTALLED PRIOR TRANSITION TO RIGID BARRIER, ADDITIONAL BEAM GUARD, OR EAT. BEAM GUARD PAID FOR WITH BEAM GUARD ITEM. SEE PLANS FOR MORE DETAIL.

⑦ BEAM GUARD, EAT OR TRANSITION TO RIGID BARRIER. SEE PLAN.

⑧ TOP OF BEAM GUARD BY THE RADIUS IS 27". HEIGHT OF BEAM GUARD IS 31" BY TRANSITION TO RIGID BARRIER, ADDITIONAL BEAM GUARD OR EAT.

⑨ ADDITIONAL BEAM GUARD, EAT OR TRANSITION TO RIGID BARRIER. BEAM GUARD SHOWN. SEE PLAN FOR DETAILS.

⑩ SHORT RADIUS TERMINAL (SEE OTHER DETAILS)

⑪ HEIGHT VARIES. SEE NOTE ⑧ AND ⑰.

⑫ BEAM GUARD RAIL SPLICE LOCATION. SPLICE LOCATION REQUIRE PART F1 AND F2. SEE SDD 14B42 FOR DETAILS.

⑬ SEE TABLE FOR VALUES.

⑭ MAXIMUM HEIGHT FOR CENTER OF HOLE IS ¾" ABOVE FINISHED GROUND ±1".

⑮ DRILL 15/64" DIA. PILOT HOLE. DO NOT HAMMER LAG SCREW INTO POST.

⑯ SMALL SIGNS ON BREAKAWAY HARDWARE ARE ACCEPTABLE.

⑰ TOP OF RAIL HEIGHT IS 27" WHEN USING A SHORT RADIUS TERMINAL.

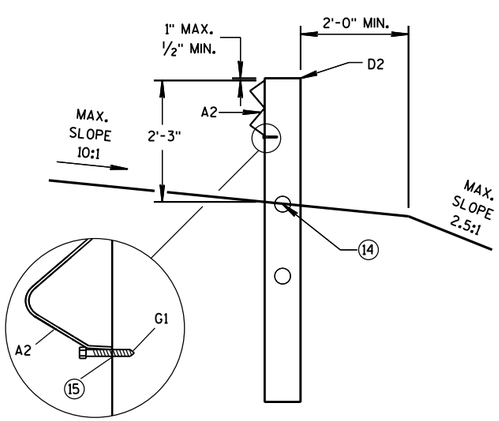

CONTROLLED RELEASE TERMINAL POST (CRT) IN RADIUS

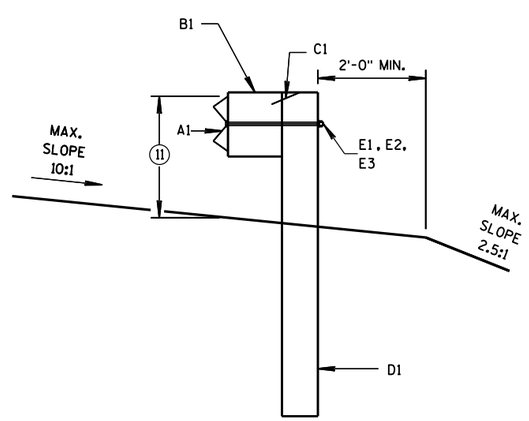

BEAM GUARD POSTS IN HEIGHT TRANSITION

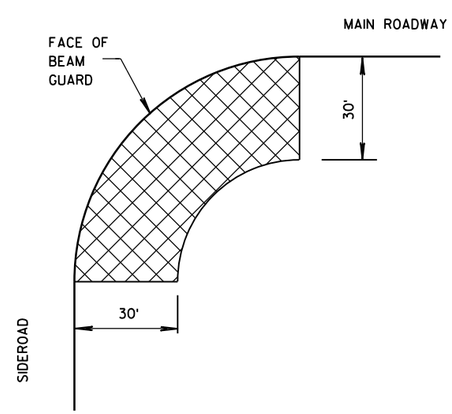

AREA FREE OF FIXED OBJECTS ⑯ RADIUS GREATER THAN 32'

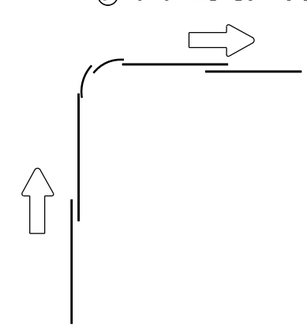

LAP SPLICE DETAIL

SHORT RADIUS BEAM GUARD (MGS) SHORT RADIUS TERMINAL (MGS)

STATE OF WISCONSIN
DEPARTMENT OF TRANSPORTATION

PRE 49

6

6

S.D.D. 14 B 53-1a

S.D.D. 14 B 53-1a

SDD 14b53-b Short Radius Beam Guard and Terminal (MGS) - Short Radius Terminal Views, Detail A

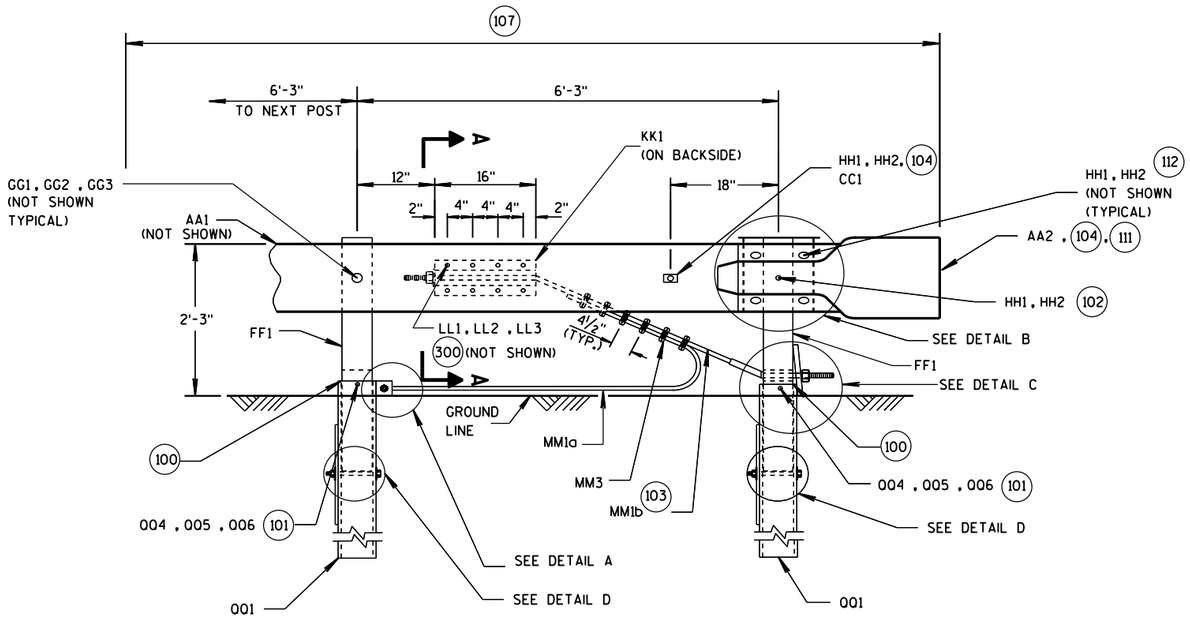

SHORT RADIUS TERMINAL
PROFILE VIEW

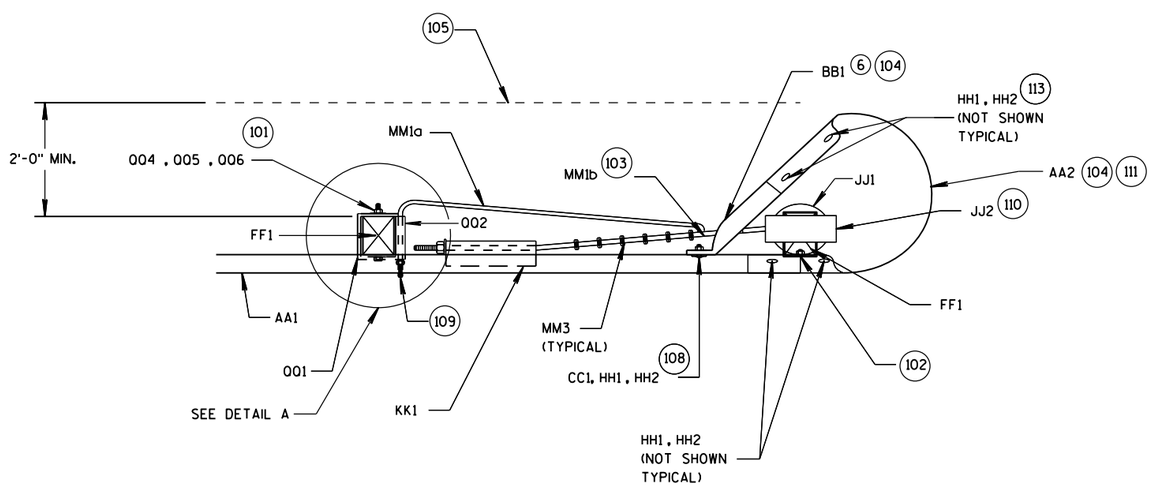

SHORT RADIUS TERMINAL
TOP VIEW

100 TOP OF FOUNDATION TUBE 2 INCHES MAXIMUM ABOVE FINISHED GROUND.

101 WASHERS REQUIRED BETWEEN BOLT HEAD AND FOUNDATION TUBE AND BETWEEN NUT AND FOUNDATION TUBE.

102 SPLICE BOLT AND NUT CONNECTS BEAM GUARD RAIL, W-BEAM END SECTION BUFFER, AND STEEL PIPE ASSEMBLY. NO WASHER REQUIRED. SEE DETAIL B.

103 CABLE IS TAUT.

104 ADJUST AA2 AND BB1 TO FIT.

105 BREAK POINT OF SHOULDER.

106 TACK WELD CABLE CONNECTOR TUBE PLATE TO CABLE CONNECTION TUBE. SEE DETAIL A PROFILE VIEW.

107 PAY LIMIT FOR BEAM GUARD.

108 SQUARE WASHER BETWEEN HEAD OF BOLT AND TRAFFIC FACE OF BEAM GUARD. ROUND WASHER REQUIRED BETWEEN NUT AND BB1.

109 CUT OR PROVIDE THREADED STUD THAT IS FLUSH WITH FACE OF BEAM GUARD RAIL KK1 (PLUS OR MINUS 1/2" TOLERANCE). DEBURR AFTER CUTTING.

110 SEE STEEL PIPE ASSEMBLY DETAILS.

111 ATTACH UU2 WITH UU3. SHOP APPLY UU1 TO UU2.

112 FOUR HH1 AND HH2 REQUIRED TO ATTACH AA1 TO AA2.

113 FOUR HH1 AND HH2 REQUIRED TO ATTACH AA2 TO BB1.

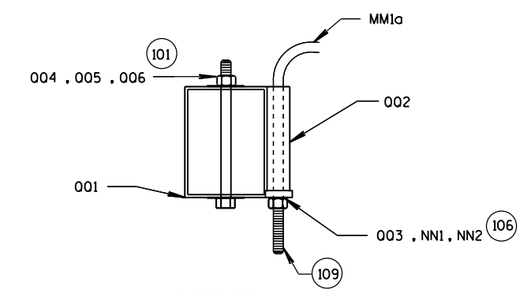

DETAIL A
TOP VIEW
(WOOD BREAKAWAY AND BEAM
GUARD RAIL POSTS NOT SHOWN)

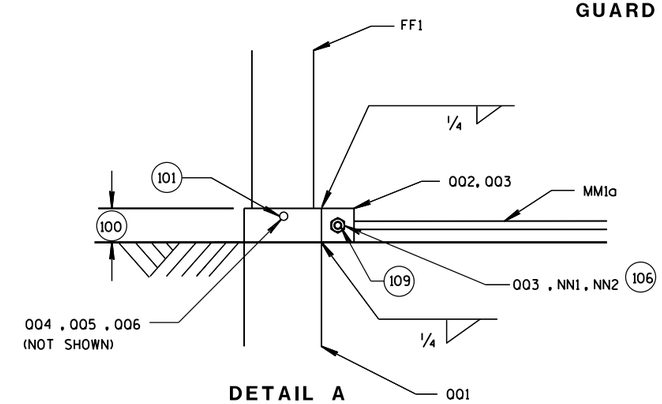

DETAIL A
PROFILE VIEW

STEEL PLATE BEAM GUARD
SHORT RADIUS TERMINAL
MGS

STATE OF WISCON
DEPARTMENT OF TRANSPORTATION

PRE 50

6

6

S.D.D. 14 B 53-1b

S.D.D. 14 B 53-1b

SDD 14b53-c Short Radius Beam Guard and Terminal (MGS) - Terminal Detail B, Detail C and Detail D

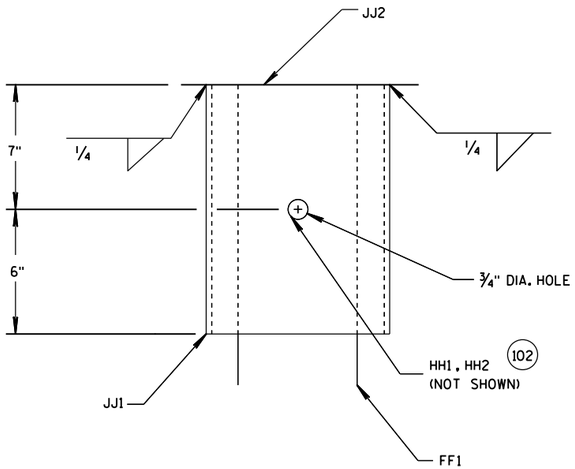

DETAIL B
PROFILE VIEW OF STEEL PIPE ASSEMBLY
(BEAM GUARD AND W-BEAM
END SECTION NOT SHOWN)

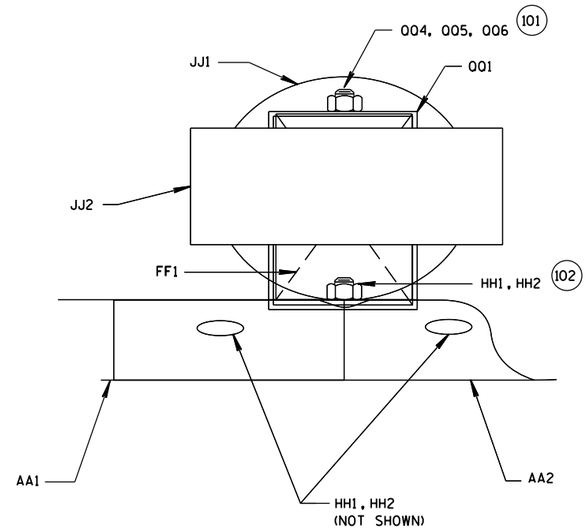

DETAIL B
PLAN VIEW OF STEEL PIPE ASSEMBLY

200 2 NAILS SPACED 4 INCHES CENTER TO CENTER.

6

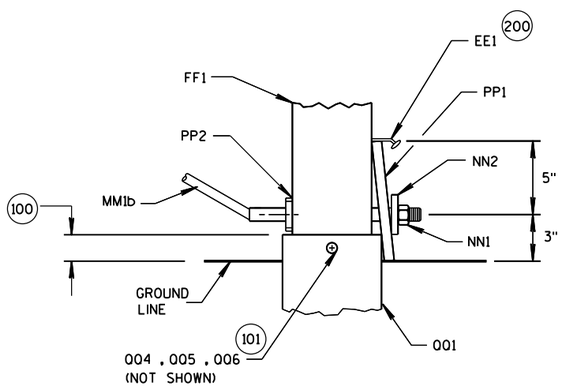

DETAIL C
PROFILE VIEW

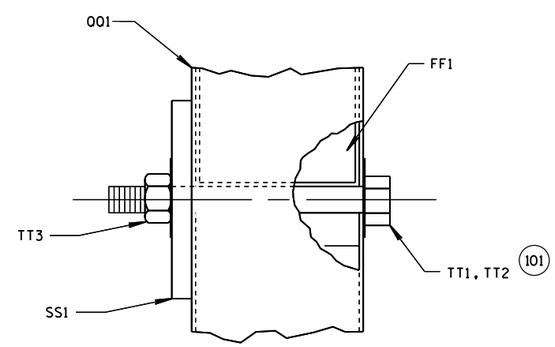

DETAIL D
PROFILE VIEW

SHORT RADIUS BEAM GUARD
(MGS) SHORT RADIUS
TERMINAL (MGS)

STATE OF WISCONSIN
DEPARTMENT OF TRANSPORTATION

PRE 51

S.D.D. 14 B 53-1c

6

S.D.D. 14 B 53-1c

SDD 14b53-d Short Radius Beam Guard and Terminal (MGS) - Terminal Anchor Bracket and Anchor Bracket Bearing Details

300 WASHERS REQUIRED BETWEEN BOLT HEAD AND BEAM GUARD RAIL AND BETWEEN NUT AND ANCHOR BRACKET. EIGHT LL1 AND LL3 REQUIRED. SIXTEEN LL2 REQUIRED.

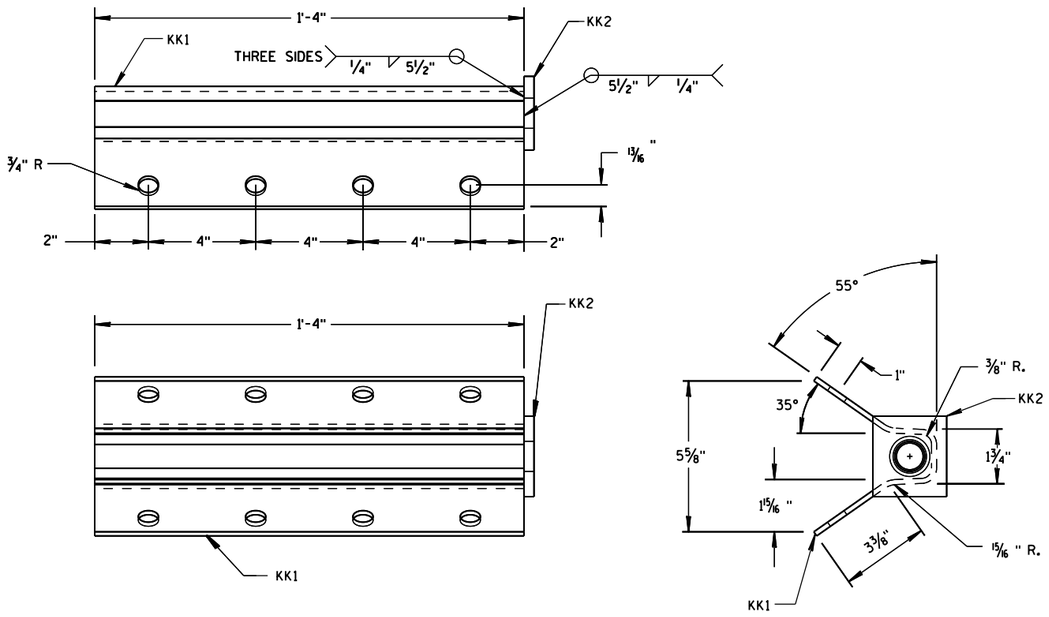

ANCHOR BRACKET (KK1, KK2)

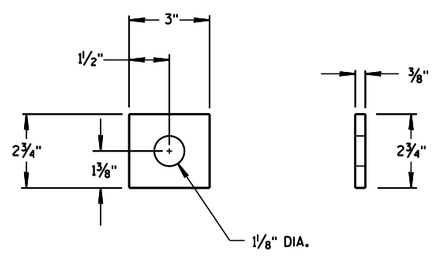

ANCHOR BRACKET BEARING PLATE (KK2)

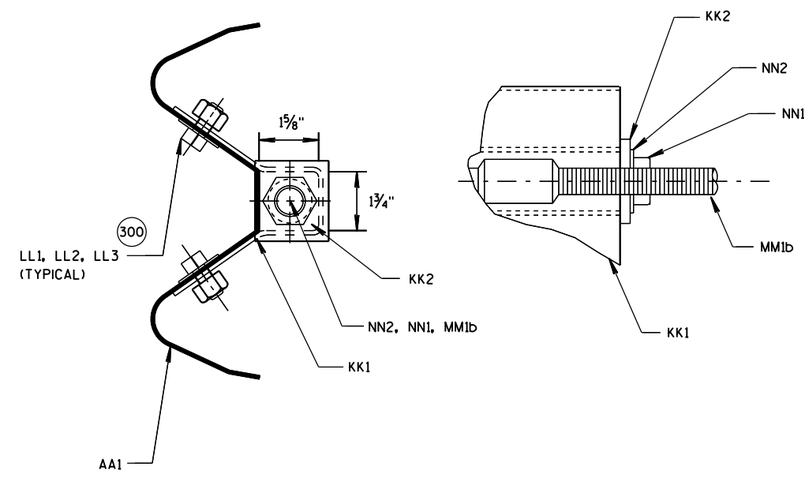

SECTION A-A

SHORT RADIUS BEAM GUARD
(MGS) SHORT RADIUS
TERMINAL (MGS)

STATE OF WISCONSIN
DEPARTMENT OF TRANSPORTATION

PRE 52

6

S.D.D. 14 B 53-1d

6

S.D.D. 14 B 53-1d

400 CROSS SECTON OF PART IS TO FIT OVER AA1.

401 CROSS SECTON OF PART IS TO FIT OVER OR UNDER AA1.

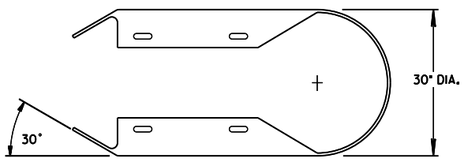

TOP VIEW

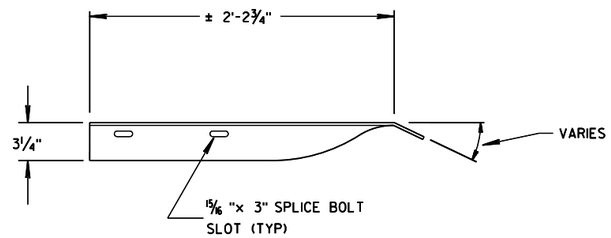

TOP VIEW

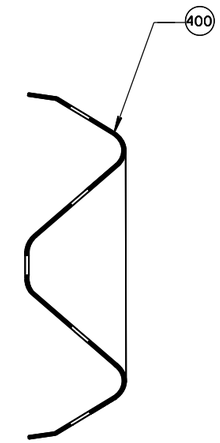

SECTION B-B

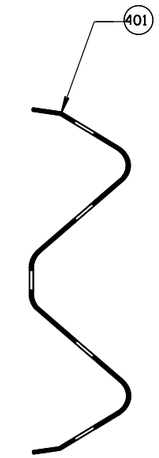

SECTION C-C

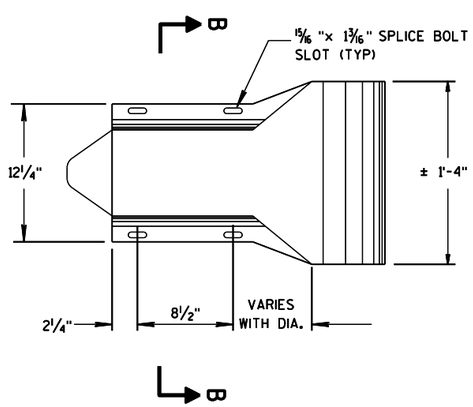

W-BEAM
END SECTION BUFFER (AA2)

PROFILE VIEW

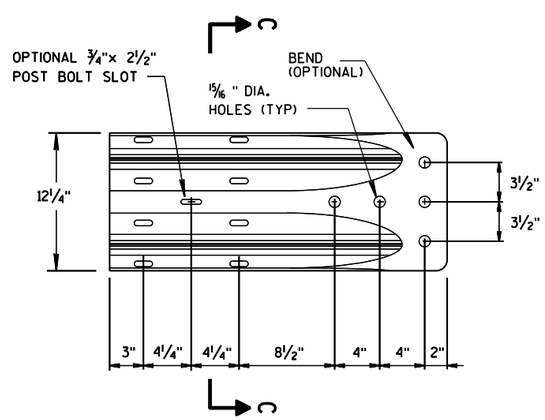

W-BEAM
TERMINAL CONNECTOR (BB1)

PROFILE VIEW

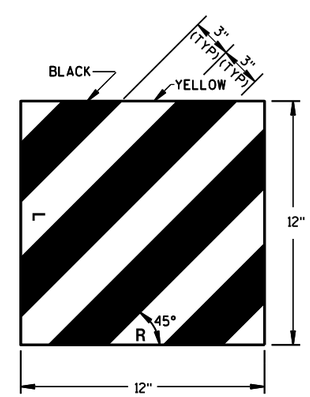

REFLECTIVE SHEETING
(UU1, UU2)

SHORT RADIUS BEAM GUARD
(MGS) SHORT RADIUS
TERMINAL (MGS)

STATE OF WISCON PRE 53
DEPARTMENT OF TRANSPORTATION

6

6

S.D.D. 14 B 53-1e

S.D.D. 14 B 53-1e

(500) SEE DETAIL "D" FOR LOCATION AND ATTACHING SS1.

(501) FOR MM1a THREADED STUD ONLY REQUIRED ON ONE END. SWAGED FITTING REQUIRED.

(502) LOCATE HOLES ON THE CENTERLINE OF THE SIDE OF THE POST.

(503) MM1a MAY HAVE ONE THREADED STUD 4 INCHES LONG. SEE NOTE (109).

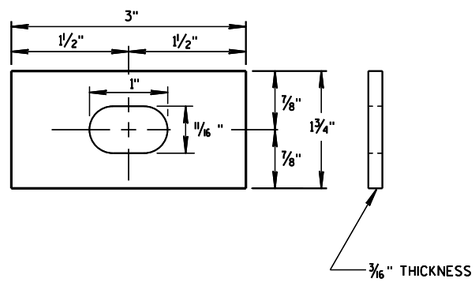

RECTANGULAR PLATE WASHER (CC1)

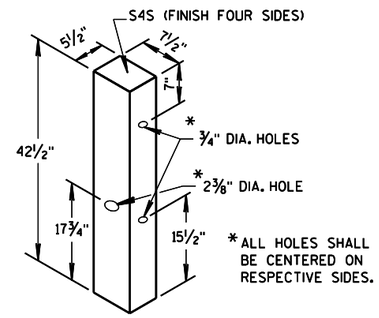

WOOD BREAKAWAY POST (FF1)

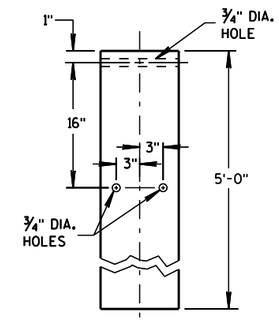

FOUNDATION TUBE (QQ1) (500)

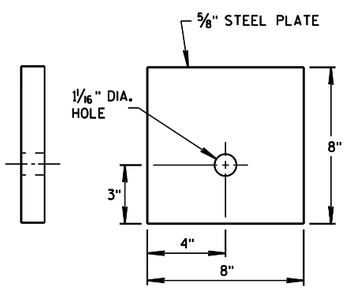

BEARING PLATE (PP1)

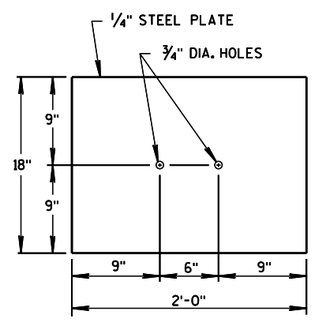

SOIL PLATE (SS1)

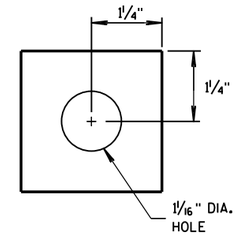

TUBE END PLATE (QQ3)

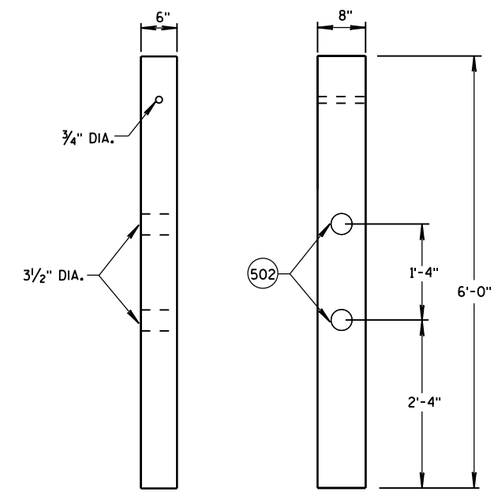

FRONT VIEW SIDE VIEW

CONTROLLED RELEASE TERMINAL POST (CRT) (D2)

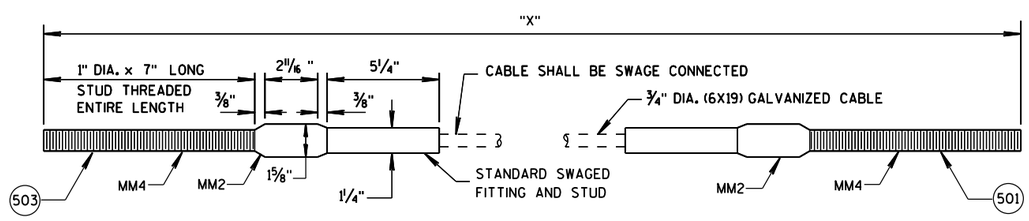

"X" LENGTH	
MM1a	9'-0"
MM1b	6'-8"

CABLE ASSEMBLY (MM1a , MM1b)

SHORT RADIUS BEAM GUARD (MGS) SHORT RADIUS TERMINAL (MGS)

STATE OF WISCONSIN
DEPARTMENT OF TRANSPORTATION

6

S.D.D. 14 B 53-1f

SDD 14b53-g Short Radius Beam Guard and Terminal (MGS) - Part List

BILL OF MATERIALS - SHORT RADIUS BEAM GUARD (MGS)

PART	DESCRIPTION	MATERIALS SPECIFICATIONS	NOTES
A1	BEAM GUARD RAIL	AASHTO M180, CLASS A, TYPE 2	
		APPROVED PRODUCER	
A2	BEAM GUARD RAIL - SHOP BENT	INDICATE ON BACK OF RAIL RADIUS THAT RAIL WAS BENT TO. SHOP BEND RADIUS IS TO THE NEAREST FOOT. FOLLOW AASHTO M180 ON HOW TO MARK RADIUS INFORMATION.	
		AASHTO M180, CLASS A, TYPE 2	
		APPROVED PRODUCER	
B1	BLOCK - WOOD	WISDOT SPEC. 614	SEE SDD 14B42
C1	NAIL	ASTM A153 HOT DIP CLASS D	
		ASTM F1667 TYPE 1 STYLE 12 (16 DOUBLE HEAD)	
D1	POST-STRONG POST-WOOD	WISDOT SPEC. 614	SEE SDD 14B42
D2	POST-CRT-WOOD	WISDOT SPEC. 614	
E1	POST BOLT	ASTM A307 GRADE A OR SAE J429 GRADE 2	5/8" DIA. SEE SDD 14B42 FOR BOLT GEOMETRY
		AASHTO M180	
		GALV. HOT DIP TO AASHTO M232 CLASS C/ASTM A153 CLASS C/ASTM F2329 OR GALV. MECHANICALLY TO AASHTO M298 CLASS 50, TYPE 1/ASTM B695 CLASS 50, TYPE 1	
		UNC	
E2	POST BOLT-WASHER	ASTM F436 TYPE 1 (HARDEN TYPICALLY USED WITH STEEL) OR ASTM F844 (UNHARDENED TYPICALLY WITH WOOD)	5/8" DIA.
		GALV. AASHTO M111/ASTM A 123 OR GALV. HOT DIP. TO AASHTO M232 CLASS C/ASTM A153 CLASS C/ASTM F2329	
E3	POST BOLT - NUT		5/8" DIA. SEE SDD 14B42 FOR GEOMETRY
		AASHTO M180 DOUBLE RECESSED HEAVY HEX HEAD	
		GALV. HOT DIP TO AASHTO M232 CLASS C/ASTM A153 CLASS C/ASTM F2329 OR GALV. MECHANICALLY TO AASHTO M298 CLASS 50, TYPE 1/ASTM B695 CLASS 50, TYPE 1	
		UNC	
		OVER TAPPED NUTS OVER-SIZE AS SPECIFIED IN AASHTO 291/ ASTM A 563	
		ASTM A563 GRADE A HEAVY HEX HEAD	
F1	SPLICE BOLT	GALV. HOT DIP TO AASHTO M232 CLASS C/ASTM A153 CLASS C/ASTM F2329 OR GALV. MECHANICALLY TO AASHTO M298 CLASS 50, TYPE 1/ASTM B695 CLASS 50, TYPE 1	5/8" DIA. SEE SDD 14B42 FOR GEOMETRY AND OTHER INFORMATION
		ASTM A307 GRADE A OR SAE J429 GRADE 2	
		UNC	
		AASHTO M180	

PART	DESCRIPTION	MATERIALS SPECIFICATIONS	NOTES
F2	SPLICE BOLT - NUT	ASTM A563 GRADE A	5/8" DIA. SEE SDD 14B42 FOR GEOMETRY
		AASHTO M180 DOUBLE RECESSED HEAVY HEX HEAD	
		GALV. HOT DIP TO AASHTO M232 CLASS C/ASTM A153 CLASS C/ASTM F2329 OR GALV. MECHANICALLY TO AASHTO M298 CLASS 50, TYPE 1/ASTM B695 CLASS 50, TYPE 1	
		OVER TAPPED NUTS OVER-SIZE AS SPECIFIED IN AASHTO 291/ ASTM A 563	
		UNC	
G1	LAG SCREW	ASTM A308 GRADE A ASTM A153 CLASS D	3/8" DIA. 3" LONG
H1	DELINEATOR - BEAM GUARD		SEE SDD 14B42 FOR MORE INFORMATION
H2	DELINEATION - SHEETING	YELLOW OR WHITE	
		WISDOT SPEC 637 TYPE SH	
		APPROVED PRODUCT LIST	
J1	FOUNDATION BACKFILL	STANDARD SPEC. 614	
AA1	BEAM GUARD RAIL - PUNCHED	AASHTO M180, CLASS A, TYPE 2	
		APPROVED PRODUCER	
AA2	BEAM GUARD RAIL - END SECTION BUFFER	AASHTO M180, CLASS A, TYPE 2	
		APPROVED PRODUCER	
BB1	BEAM GUARD RAIL - TERMINAL CONNECTOR MODIFIED	AASHTO M180, CLASS A, TYPE 2	
		APPROVED PRODUCER	
CC1	SHORT RADIUS - SQUARE WASHER	AASHTO M180	
		GALV. AASHTO M111/ ASTM A123	
EE1	NAIL	ASTM A153 HOT DIP CLASS D	
		ASTM F1667 TYPE 1 STYLE 12 (16 DOUBLE HEADED)	
FF1	POST - BCT - WOOD	S4S FINISH ON 4 SIDES	
		WISDOT SPEC. 614	
GG1	POST BOLT	ASTM A307 GRADE A OR SAE J429 GRADE 2	3/8" DIA. SEE SDD 14B42 FOR GEOMETRY
		AASHTO M180	
		GALV. HOT DIP TO AASHTO M232 CLASS C/ASTM A153 CLASS C / ASTM F2329 OR GALV. MECHANICALLY TO AASHTO M298 CLASS 50, TYPE 1/ASTM B695 CLASS 50, TYPE 1	
		UNC	
GG2	POST BOLT - WASHER	ASTM F436 TYPE 1 (HARDEN TYPICALLY USED WITH STEEL) OR ASTM F844 (UNHARDENED TYPICALLY WITH WOOD)	3/8" DIA.
		GALV. AASHTO M111/ ASTM A123 OR5 GALV. HOT DIP TO AASHTO M232 CLASS C / ASTM A153 CLASS C / ASTM F2329	

SHORT RADIUS BEAM GUARD (MGS) SHORT RADIUS TERMINAL (MGS)

STATE OF WISCONSIN
DEPARTMENT OF TRANSPORTATION

SDD 14b53-h Short Radius Beam Guard and Terminal (MGS) - Part List

BILL OF MATERIALS - SHORT RADIUS BEAM GUARD (MGS)

PART	DESCRIPTION	MATERIALS SPECIFICATIONS	NOTES
GG3	POST BOLT - NUT	ASTM A563 GRADE A	3/8" DIA.
		AASHTO M180 DOUBLE RECESSED HEAVY HEX HEAD	SEE 14B42 FOR GEOMETRY
		GALV. HOT DIP TO AASHTO M232 CLASS C/ASTM A153 CLASS C / ASTM F2329 OR GALV. MECHANICALLY TO AASHTO M298 CLASS 50, TYPE 1/ASTM B695 CLASS 50, TYPE 1	
		UNC	
		OVER TAPPED NUTS OVER-SIZE AS SPECIFIED IN AASHTO 291 / ASTM A 563	
		ASTM A563 GRADE A HEAVY HEX HEAD	
HH1	SPLICE BOLT	GALV. HOT DIP TO AASHTO M232 CLASS C/ASTM A153 CLASS C / ASTM F2329 OR GALV. MECHANICALLY TO AASHTO M298 CLASS 50, TYPE 1/ASTM B695 CLASS 50, TYPE 1	3/8" DIA. SEE 14B42 FOR GEOMETRY
		ASTM A307 GRADE A OR SAE J429 GRADE 2	
		UNC	
		AASHTO M180 HEAD GEOMETRY	
HH2	SPLICE BOLT - NUT	ASTM A563 GRADE A	3/8" DIA.
		AASHTO M180 DOUBLE RECESSED HEAVY HEX HEAD	
		GALV. HOT DIP TO AASHTO M232 CLASS C/ASTM A153 CLASS C / ASTM F2329 OR GALV. MECHANICALLY TO AASHTO M298 CLASS 50, TYPE 1/ASTM B695 CLASS 50, TYPE 1	SEE 14B42 FOR GEOMETRY
		OVER TAPPED NUTS OVER-SIZE AS SPECIFIED IN AASHTO 291 / ASTM A 563	
		UNC	
JJ1	PIPE - STEEL	ASTM A53 GALVANIZED GRADE B SCHEDULE 40	10" O.D.
JJ2	TOP PLATE	ASTM A36 MIN STRENGTH 36 KSI, OR ASTM A529 MAX. STRENGTH 50 KSI, OR ASTM A572 MAX STRENGTH 50 KSI OR ASTM A709 MAX STRENGTH 50 KSI OR ASTM A992 MAX STRENGTH 50 KSI	DIMENSIONS 3/8" X 4" X 1'-0"
		GALV. AASHTO M111 / ASTM A123	
KK1	ANCHOR BRACKET	ASTM A36 MIN STRENGTH 36 KSI, OR ASTM A529 MAX. STRENGTH 50 KSI, OR ASTM A572 MAX STRENGTH 50 KSI OR ASTM A709 MAX STRENGTH 50 KSI OR ASTM A992 MAX STRENGTH 50 KSI	
		GALV. AASHTO M111 / ASTM A123	
KK2	ANCHOR BRACKET - BEARING PLATE	ASTM A36 MIN STRENGTH 36 KSI, OR ASTM A529 MAX. STRENGTH 50 KSI, OR ASTM A572 MAX STRENGTH 50 KSI OR ASTM A709 MAX STRENGTH 50 KSI OR ASTM A992 MAX STRENGTH 50 KSI	
		GALV. AASHTO M111 / ASTM A123	
LL1	ANCHOR BRACKET - BOLT	ASTM A307 GRADE B HEAVY HEX HEAD OR SAE J429 GRADE 2 HEAVY HEX HEAD	5/8" DIA.
		GALV. HOT DIP TO AASHTO M232 CLASS C/ASTM A153 CLASS C / ASTM F2329 OR GALV. MECHANICALLY TO AASHTO M298 CLASS 50, TYPE 1/ASTM B695 CLASS 50, TYPE 1	
		UNC	
LL2	ANCHOR BRACKET - WASHER	ASTM F436 TYPE 1 (HARDEN WASHER ONLY)	5/8" DIA.
		GALV. AASHTO M111 / ASTM A123 OR5 GALV. HOT DIP TO AASHTO M232 CLASS C / ASTM A153 CLASS C / ASTM F2329	
LL3	ANCHOR BRACKET - NUT	ASTM A563 GRADE A	5/8" DIA.
		GALV. HOT DIP TO AASHTO M232 CLASS C/ASTM A153 CLASS C / ASTM F2329 OR GALV. MECHANICALLY TO AASHTO M298 CLASS 50, TYPE 1/ASTM B695 CLASS 50, TYPE 1	
		OVER TAPPED NUTS OVER-SIZE AS SPECIFIED IN AASHTO 291 / ASTM A563	
		UNC	

PART	DESCRIPTION	MATERIALS SPECIFICATIONS	NOTES
MM1a	ANCHOR CABLE	AASHTO M30 / ASTM A741 INDEPENDENT WIRE CORE (IWRC) OR WIRE STRAND CORE (WCS), IMPROVED PLOW STEEL (IPS), 6X19, TYPE II OR IIc CLASS C ZINC COATED	
MM1b	ANCHOR CABLE	AASHTO M30 / ASTM A741 INDEPENDENT WIRE CORE (IWRC) OR WIRE STRAND CORE (WCS), IMPROVED PLOW STEEL (IPS), 6X19, TYPE II OR IIc CLASS C ZINC COATED	
MM2	ANCHOR CABLE - SWAGE FITTING	ASTM A576 GRADE 1035	
		SWAGE FITTINGS ARE TO BE FACTORY SWEDGED. WITH A BREAKING STRENGTH 40,000 LBS.	
		GALV. AASHTO M111 / ASTM A123	
		ASME B30.26 FORGED, CAST, OR DIE STAMPED WITH THE FOLLOWING INTO CONNECTION: NAME OF MANUFACTURER OR TRADEMARK OF CONNECTION'S MANUFACTURER, SIZE OR RATED LOAD, GRADE.	
MM3	WIRE ROPE CABLE CLAMPS	FF-C-450D TYPE 1 CLASS 1	3/4"
		ASTM A153 HOT DIP CLASS D	
MM4	ANCHOR CABLE - SWAGE FITTING - STUD	ASTM F3125 GRADE A325 TYPE 1 OR SAE GRADE 5 OR ASTM A449 TYPE 1 HEAVY HEX HEAD	
		GALV. HOT DIP TO AASHTO M232 CLASS C/ASTM A153 CLASS C / ASTM F2329 OR GALV. MECHANICALLY TO AASHTO M298 CLASS 50, TYPE 1/ASTM B695 CLASS 50, TYPE 1	
		UNC	
NN1	ANCHOR CABLE - NUT	ASTM A563 GRADE A	1" DIA.
		AASHTO M180 DOUBLE RECESSED HEAVY HEX HEAD	
		GALV. HOT DIP TO AASHTO M232 CLASS C/ASTM A153 CLASS C / ASTM F2329 OR GALV. MECHANICALLY TO AASHTO M298 CLASS 50, TYPE 1/ASTM B695 CLASS 50, TYPE 1	
		OVER TAPPED NUTS OVER-SIZE AS SPECIFIED IN AASHTO 291 / ASTM A563	
		UNC	
NN2	ANCHOR CABLE - NUT - WASHER	ASTM F436 TYPE 1 (HARDEN WASHER ONLY)	1" DIA.
		GALV. AASHTO M111 / ASTM A123 OR5 GALV. HOT DIP TO AASHTO M232 CLASS C / ASTM A153 CLASS C / ASTM F2329	
PP1	BEARING PLATE AT POST	ASTM A36 MIN STRENGTH 36 KSI, OR ASTM A529 MAX. STRENGTH 50 KSI, OR ASTM A572 MAX STRENGTH 50 KSI OR ASTM A709 MAX STRENGTH 50 KSI OR ASTM A992 MAX STRENGTH 50 KSI	
		GALV. AASHTO M111 / ASTM A123	
PP2	PIPE - STEEL	ASTM A53 GALVANIZED GRADE B SCHEDULE 40	2" DIA. x 6" LONG
OO1	FOUNDATION TUBE	ASTM A500 GRADE B	8" X 6" X 3/16"
		GALV. AASHTO M111 / ASTM A123	
OO2	SHORT RADIUS - FOUNDATION TUBE - ANCHOR CABLE - TUBE	ASTM A500 GRADE B	DIMENSIONS 2 1/2" X 2 1/4" X 1/4" X 8"
		GALV. AASHTO M111 / ASTM A123	

6

S.D.D. 14 B 53-1h

SHORT RADIUS BEAM GUARD (MGS) SHORT RADIUS TERMINAL (MGS)

STATE OF WISCON PRE 56
DEPARTMENT OF TRANSPORTATION

BILL OF MATERIALS - SHORT RADIUS BEAM GUARD (MGS)

PART	DESCRIPTION	MATERIALS SPECIFICATIONS	NOTES
003	SHORT RADIUS - SOIL TUBE - ANCHOR CABLE - TUBE - END PLATE	ASTM A36 MIN STRENGTH 36 KSI, OR ASTM A529 MAX. STRENGTH 50 KSI, OR ASTM A572 MAX STRENGTH 50 KSI OR ASTM A709 MAX STRENGTH 50 KSI OR ASTM A992 MAX STRENGTH 50 KSI	DIMENSIONS 2½" X 2½" X ¼"
		GALV. AASHTO M111 / ASTM A123	
004	GROUND STRUT AND YOKE - BOLT	GALV. HOT DIP TO AASHTO M232 CLASS C/ASTM A153 CLASS C / ASTM F2329 OR GALV. MECHANICALLY TO AASHTO M298 CLASS 50, TYPE 1 / ASTM B695 CLASS 50, TYPE 1	⅝" DIA.
		ASTM A307 GRADE B HEAVY HEX HEAD OR SAE J429 GRADE 2 HEAVY HEX HEAD	
		UNC	
005	GROUND PLATE AND YOKE - WASHER	ASTM F436 TYPE 1 (HARDEN WASHER ONLY)	⅝" DIA.
		GALV. AASHTO M111 / ASTM A123 OR5 GALV. HOT DIP TO AASHTO M232 CLASS C / ASTM A153 CLASS C / ASTM F2329	
006	GROUND STRUT AND YOKE - NUT	HEAVY HEX	⅝" DIA.
		UNC	
		ASTM A563 GRADE A	
		OVER TAPPED NUTS AS SPECIFIED IN AASHTO 291 / ASTM A 563	
		GALV. HOT DIP TO AASHTO M232 CLASS C/ASTM A153 CLASS C / ASTM F2329 OR GALV. MECHANICALLY TO AASHTO M298 CLASS 50, TYPE 1 / ASTM B695 CLASS 50, TYPE 1	
SS1	SOIL PLATE	ASTM A36 MIN STRENGTH 36 KSI, OR ASTM A529 MAX. STRENGTH 50 KSI, OR ASTM A572 MAX STRENGTH 50 KSI OR ASTM A709 MAX STRENGTH 50 KSI OR ASTM A992 MAX STRENGTH 50 KSI	
		GALV. AASHTO M111 / ASTM A123	
TT1	SOIL PLATE - BOLT	ASTM A307 GRADE B HEAVY HEX HEAD OR SAE J429 GRADE 2 HEAVY HEX HEAD	⅝" DIA.
		GALV. HOT DIP TO AASHTO M232 CLASS C/ASTM A153 CLASS C / ASTM F2329 OR GALV. MECHANICALLY TO AASHTO M298 CLASS 50, TYPE 1/ASTM B695 CLASS 50, TYPE 1	
		UNC	
TT2	SOIL PLATE - WASHER	ASTM F436 TYPE 1 (HARDEN WASHER ONLY)	⅝" DIA.
		GALV. AASHTO M111 / ASTM A123 OR5 GALV. HOT DIP TO AASHTO M232 CLASS C / ASTM A153 CLASS C / ASTM F2329	
TT3	SOIL PLATE - NUT	GALV. HOT DIP TO AASHTO M232 CLASS C/ASTM A153 CLASS C / ASTM F2329 OR GALV. MECHANICALLY TO AASHTO M298 CLASS 50, TYPE 1 / ASTM B695 CLASS 50, TYPE 1	⅝" DIA.
UU1	OBJECT MARKER - SHEETING	MUTCD / WISDOT OBJECT MARKER TYPE 3	PATTERN AND COLOR FOR SHEETING SHEETING TYPE FOR MARKER
		WISDOT SPEC 637 TYPE F	
		APPROVED PRODUCT LIST	
UU2	OBJECT MARKER - ALUMINUM PLATE	WISDOT SPEC 637 ALUMINUM PLATE	MATERIAL AND THICKNESS OF MATERIALS
UU3	OBJECT MARKER - SCREWS	STAINLESS SELF-TAPPING SCREWS	
VV1	FOUNDATION BACKFILL	WISDOT SPEC 614	

SHORT RADIUS BEAM GUARD (MGS) SHORT RADIUS TERMINAL (MGS)

STATE OF WISCONSIN
DEPARTMENT OF TRANSPORTATION

APPROVED
June 2017
DATE
/S/ Rodney
ROADWAY STANDARDS UNIT SUPERVISOR
FHWA

6

S.D.D. 14 B 53-1i

STATE PROJECT NUMBER
4570-24-71

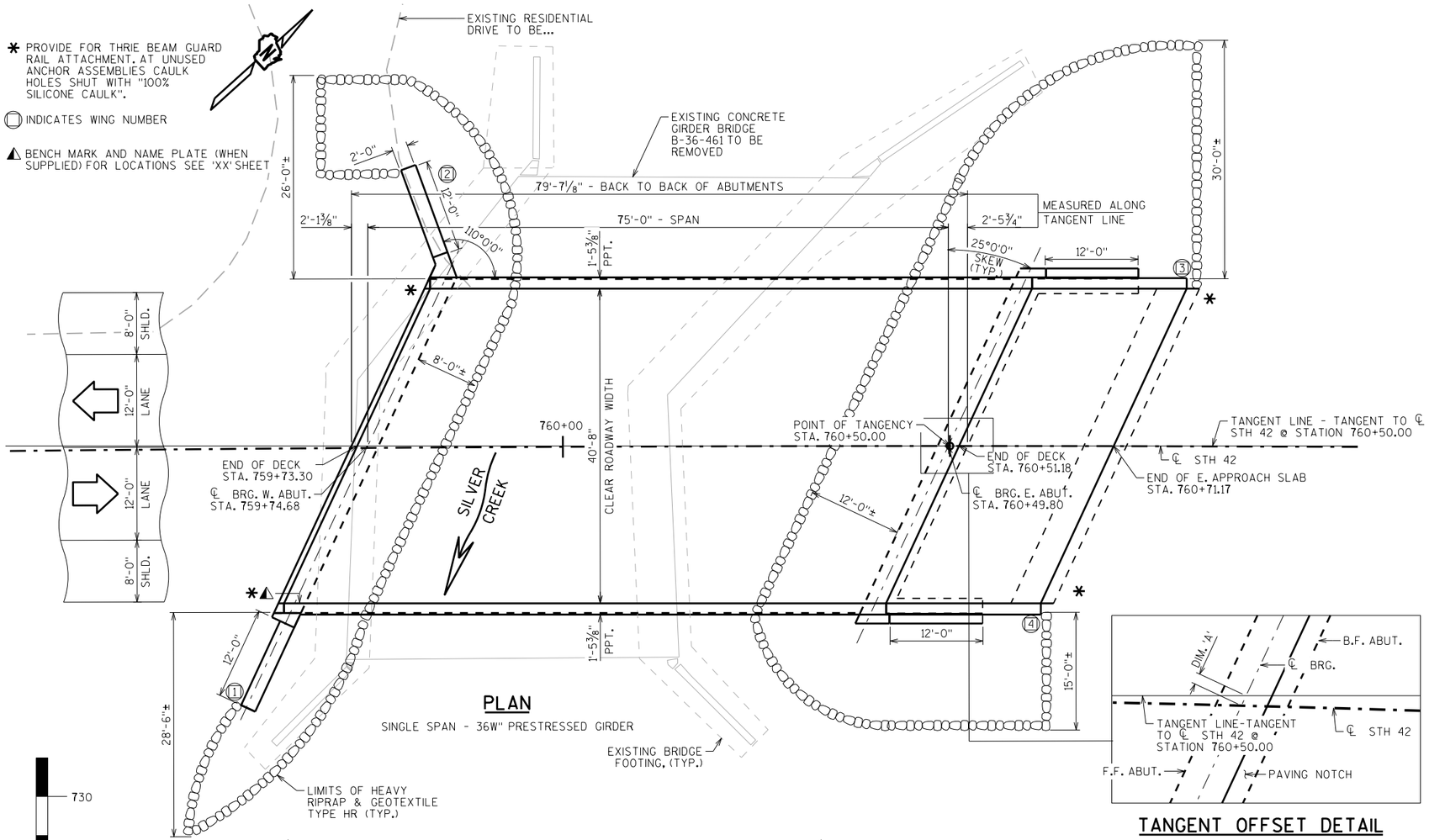

PLAN

SINGLE SPAN - 36W" PRESTRESSED GIRDER

TANGENT OFFSET DETAIL

EAST ABUT. SHOWN
WEST ABUT. SIMILAR

LOCATION	DIM 'A'
W. ABUT.	3 1/4"
E. ABUT.	0"
END OF E. APPR. SLAB	1/4"

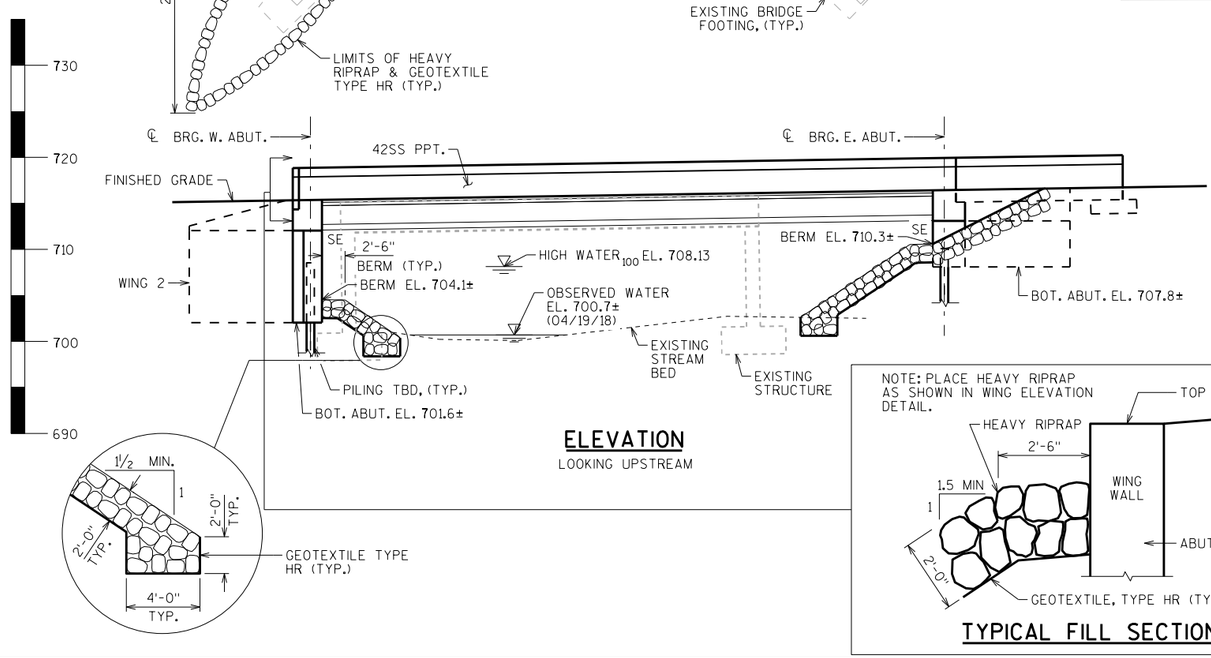

ELEVATION

LOOKING UPSTREAM

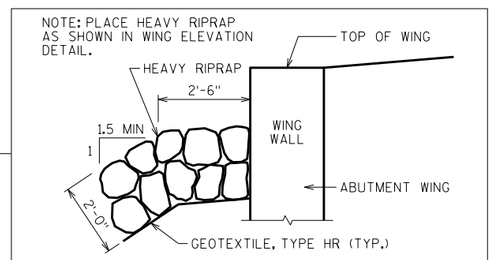

TYPICAL FILL SECTION

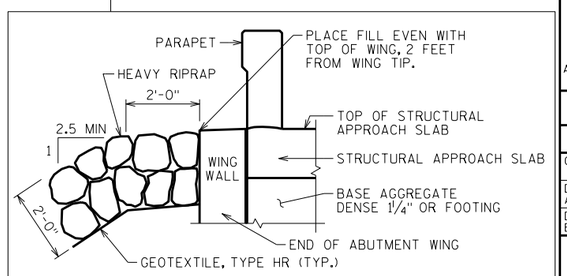

TYPICAL FILL SECTION AT WING TIPS

DESIGN DATA

LIVE LOAD:

DESIGN LOADING: HL-93
INVENTORY RATING FACTOR: RF =
OPERATING RATING FACTOR: RF =
WISCONSIN STANDARD PERMIT VEHICLE (WIS.-SPV): (KIPS)

STRUCTURE IS DESIGNED FOR A FUTURE WEARING SURFACE OF 20 POUNDS PER SQUARE FOOT.

MATERIAL PROPERTIES:

CONCRETE MASONRY:
SUPERSTRUCTURE & STRUCTURAL APPROACH SLAB — f'c = 4,000 P.S.I.
ALL OTHER — f'c = 3,500 P.S.I.

BAR STEEL REINFORCEMENT:
GRADE 60 — fy = 60,000 P.S.I.
STAINLESS, GRADE 60 — fy = 60,000 P.S.I.

36W" PRESTRESSED GIRDERS:
CONCRETE MASONRY — f'c = 8,000 P.S.I.
STRANDS: 0.6" DIA. WITH ULTIMATE TENSILE STRENGTH OF 270,000 P.S.I.

FOUNDATION DATA

ABUTMENTS TO BE SUPPORTED ON PILING DRIVEN TO A REQUIRED DRIVING RESISTANCE OF TONS ** PER PILE AS DETERMINED BY THE MODIFIED GATES DYNAMIC FORMULA. ESTIMATED LONG.

** THE FACTORED AXIAL RESISTANCE OF PILES IN COMPRESSION USED FOR DESIGN IS THE REQUIRED DRIVING RESISTANCE MULTIPLIED BY A RESISTANCE FACTOR OF 0.5 USING MODIFIED GATES TO DETERMINE DRIVEN PILE CAPACITY.

HYDRAULIC DATA

100 YEAR FREQUENCY

Q_{100} = 2,200 C.F.S.
$VEL._{100}$ = 5.2 F.P.S.
$HW._{100}$ = EL. 708.1
WATERWAY AREA = 427.18 SQ. FT.
DRAINAGE AREA = 18.5 SQ. MI.
ROADWAY OVERTOPPING = N/A
SCOUR CRITICAL CODE = 8

2 YEAR FREQUENCY

Q_2 = 320 C.F.S.
$VEL._2$ = 2.09 F.P.S.
$HW._2$ = EL. 702.96

TRAFFIC VOLUME

STH 42

ADT = 4,960 (2037)
R.D.S. = 60 M.P.H.

PRELIMINARY PLAN

STRUCTURE DESIGN CONTACTS:

JOHN SENDOR (608) 266-5163
AARON BONK (608) 261-0261

LIST OF DRAWINGS

1. GENERAL PLAN
2. CROSS SECTION & QUANTITIES

NO.	DATE	REVISION	BY

BUREAU OF STRUCTURES

ACCEPTED
CHIEF STRUCTURES DESIGN ENGINEER DATE

STRUCTURE B-36-239

STH 42 OVER SILVER CREEK

COUNTY MANITOWOC | TOWN MANITOWOC RAPIDS

DESIGN SPEC. AASHTO LRFD BRIDGE DESIGN SPECIFICATIONS

DESIGNED BY JJS | DESIGNED CK'D. SEW | DRAWN BY JJS | PLANS CK'D. SEW

GENERAL PLAN

SHEET 1 OF 2

PRE 58

PRELIMINARY

I.D. 4570-24-00A DATE: NOV. 2019

SCALE = 8.00

8

8

STATE PROJECT NUMBER
4570-24-71

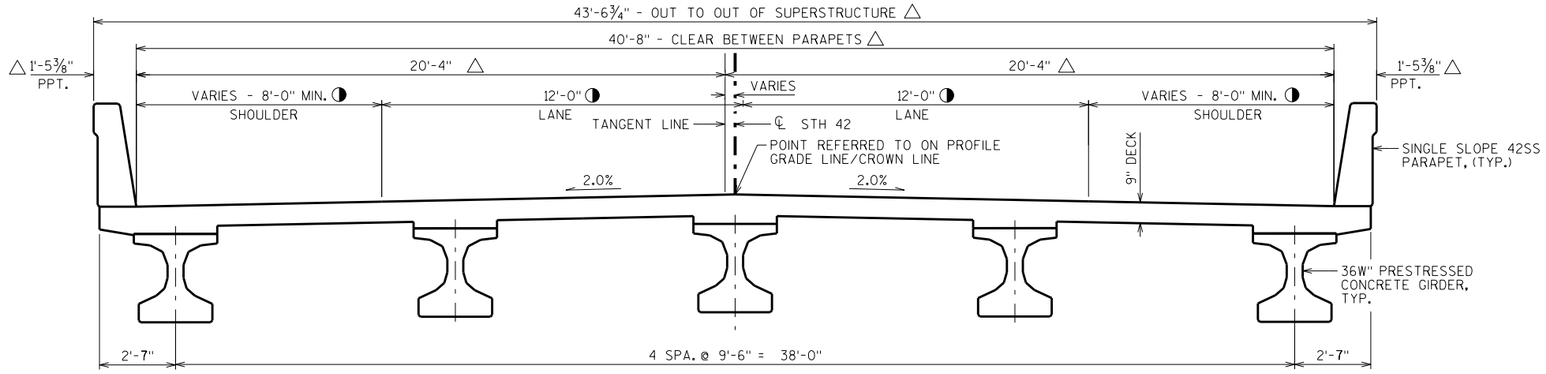

△ MEASURED NORMAL TO TANGENT LINE

◑ MEASURED NORMAL TO ℄ STH 42

CROSS SECTION THRU ROADWAY

(LOOKING EAST)

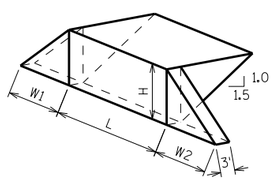

ABUTMENT BACKFILL DIAGRAM FOR WINGS PARALLEL TO ABUTMENT

L = OUT TO OUT OF ABUTMENT BODY (FT)
H = AVERAGE ABUTMENT FILL HEIGHT (FT)
W1 = WING 1 LENGTH (FT)
W2 = WING 2 LENGTH (FT)
EF = EXPANSION FACTOR (1.20 FOR CY BID ITEMS AND 1.00 FOR TON BID ITEMS)
V_{CF} = (L)(3.0')(H) + (L)(0.5)(1.5H)(H) + (3.0')(0.5)(W1+W2)(H)
V_{CY} = V_{CF} (EF)/27
V_{TON} = V_{CY} (2.0)

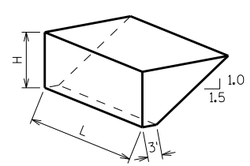

ABUTMENT BACKFILL DIAGRAM FOR WINGS PARALLEL TO ROADWAY

L = OUT TO OUT OF ABUTMENT, INCLUDING WINGS (FT)
H = AVERAGE ABUTMENT FILL HEIGHT (FT)
EF = EXPANSION FACTOR (1.20 FOR CY BID ITEMS AND 1.00 FOR TON BID ITEMS)
V_{CF} = (L)(3.0')(H) + (L)(0.5)(1.5H)(H)
V_{CY} = V_{CF} (EF)/27
V_{TON} = V_{CY} (2.0)

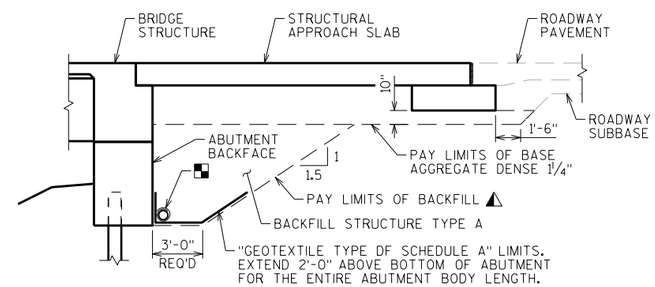

SECTION THRU EAST ABUTMENT

◭ BACKFILL PAY LIMITS. BACKFILL BEYOND BACKFILL PAY LIMITS SHALL BE INCIDENTAL TO EXCAVATION FOR STRUCTURES. LIMITS OF EXCAVATION SHALL BE DETERMINED BY THE CONTRACTOR.

◘ PIPE UNDERDRAIN WRAPPED (6 INCH). SLOPE 0.5% MIN. TO SUITABLE DRAINAGE. ATTACH RODENT SHIELD AT ENDS OF PIPE UNDERDRAIN.

GENERAL NOTES

DRAWINGS SHALL NOT BE SCALED.

BAR STEEL REINFORCEMENT SHALL BE EMBEDDED 2" CLEAR UNLESS OTHERWISE SHOWN OR NOTED.

THE FIRST OR FIRST TWO DIGITS OF THE BAR MARK SIGNIFIES THE BAR SIZE.

BEVEL EXPOSED EDGES OF CONCRETE ¾" UNLESS OTHERWISE NOTED.

THE UPPER LIMITS OF "EXCAVATION FOR STRUCTURES B-36-239" SHALL BE THE EXISTING GROUNDLINE.

AT THE BACK FACE OF ABUTMENT ALL VOLUME WHICH CANNOT BE PLACED BEFORE ABUTMENT CONSTRUCTION AND IS NOT OCCUPIED BY THE NEW STRUCTURE SHALL BE BACKFILLED WITH STRUCTURE BACKFILL TYPE A. ALSO EXCLUDED IS THE "BASE AGGREGATE DENSE 1 1/4-INCH" AS DETAILED ON THE STRUCTURAL APPROACH SLAB SHEETS.

EXCAVATION BELOW THE ABUTMENT AND ABUTMENT BEDDING MATERIALS REQUIRES ENGINEER APPROVAL. GEOTEXTILE SHALL BE SET AT THE BOTTOM OF EXCAVATION AND EXTEND 2'-0" ABOVE BOTTOM OF ABUTMENT.

THE QUANTITY FOR BACKFILL STRUCTURE IS CALCULATED BASED ON THE DETAIL SHOWN IN THE PLANS.

ELASTOMERIC BEARING PADS NEED NOT BE INDIVIDUALLY MOLDED PROVIDED THE CUT EDGES ARE SMOOTH AND TRUE.

PROTECTIVE SURFACE TREATMENT TO BE APPLIED TO THE ENTIRE EXPOSED TOP OF DECK AND APPROACH SLAB SURFACES AND TO THE VERTICAL AND HORIZONTAL SURFACES OF THE PAVING NOTCHES AT ABUTMENT DIAPHRAGMS.

PIGMENTED SURFACE SEALER TO BE APPLIED TO THE FRONT FACE AND THE TOP OF THE PARAPETS, INCLUDING PARAPETS ON THE APPROACH SLAB.

THE SLOPE OF THE FILL IN FRONT OF THE ABUTMENTS SHALL BE COVERED WITH HEAVY RIPRAP AND GEOTEXTILE TYPE "HR" TO THE EXTENT SHOWN ON SHEET 1 AND THE ABUTMENT DETAILS.

AT ABUTMENTS, HP 12X53 STEEL PILING MAY BE USED IN LIEU OF HP 10X42 STEEL PILING. PAYMENT SHALL BE BASED ON BID PRICE FOR HP 10X42 STEEL PILING.

THE HAUNCH CONCRETE QUANTITY IS BASED ON THE AVERAGE HAUNCH SHOWN ON THE "36W PRESTRESSED GIRDER DETAILS 2" SHEET.

AT ABUTMENTS, CONCRETE POURED UNDER WATER WILL BE ALLOWED AND SHALL BE DONE IN ACCORDANCE WITH SECTION 502.3.5.3 OF THE STANDARD SPECIFICATIONS.

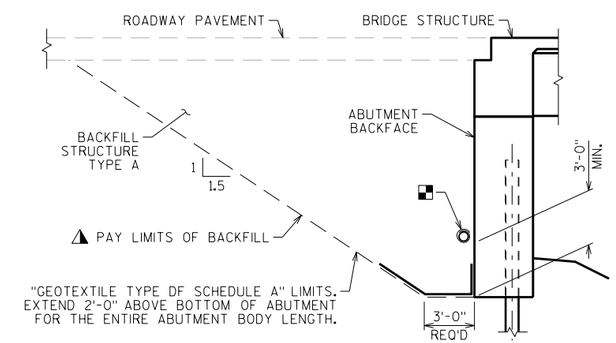

SECTION THRU WEST ABUTMENT

◭ BACKFILL PAY LIMITS. BACKFILL BEYOND BACKFILL PAY LIMITS SHALL BE INCIDENTAL TO EXCAVATION FOR STRUCTURES. LIMITS OF EXCAVATION SHALL BE DETERMINED BY THE CONTRACTOR.

◘ PIPE UNDERDRAIN WRAPPED (6 INCH). SLOPE 0.5% MIN. TO SUITABLE DRAINAGE. ATTACH RODENT SHIELD AT ENDS OF PIPE UNDERDRAIN.

TOTAL ESTIMATED QUANTITIES

BID ITEM NUMBER	BID ITEMS	UNIT	SUPER	WEST ABUT.	EAST ABUT.	E. STRUCT. APP. SLAB	TOTALS
203.0700.S	REMOVING OLD STRUCTURE OVER WATERWAY WITH MINIMAL DEBRIS STA. 760+12.68	LS	---	---	---	---	1
206.1000	EXCAVATION FOR STRUCTURES BRIDGES B-36-239	LS	---	---	---	---	1
210.1500	BACKFILL STRUCTURE TYPE A	TON	---	---	---	---	
305.0120	BASE AGGREGATE DENSE 1 1/4-INCH	TON	---	---	---	---	
502.0100	CONCRETE MASONRY BRIDGES	CY	---	---	---	---	
502.3200	PROTECTIVE SURFACE TREATMENT	SY	---	---	---	---	
502.3210	PIGMENTED SURFACE SEALER	SY	---	---	---	---	
503.0137	PRESTRESSED GIRDER TYPE I 36W-INCH	LF	---	---	---	---	
505.0400	BAR STEEL REINFORCEMENT HS STRUCTURES	LB	---	---	---	---	
505.0600	BAR STEEL REINFORCEMENT HS COATED STRUCTURES	LB	---	---	---	---	
505.0800.S	BAR STEEL REINFORCEMENT HS STAINLESS STRUCTURES	LB	---	---	---	---	
506.2605	BEARING PADS ELASTOMERIC NON-LAMINATED	EACH	---	---	---	---	
506.4000	STEEL DIAPHRAGMS B-36-239	EACH	---	---	---	---	
516.0500	RUBBERIZED MEMBRANE WATERPROOFING	SY	---	---	---	---	
550.XXXX	PILING XXXX	LF	---	---	---	---	
606.0300	RIPRAP HEAVY	CY	---	---	---	---	
612.0406	PIPE UNDERDRAIN WRAPPED 6-INCH	LF	---	---	---	---	
614.0150	ANCHOR ASSEMBLIES FOR STEEL PLATE BEAM GUARD	EACH	---	---	---	---	
645.0111	GEOTEXTILE TYPE DF SCHEDULE A	SY	---	---	---	---	
645.0120	GEOTEXTILE TYPE HR	SY	---	---	---	---	
	NON-BID ITEMS						
	FILLER	SIZE	---	---	---	---	½", ¾", 1½"

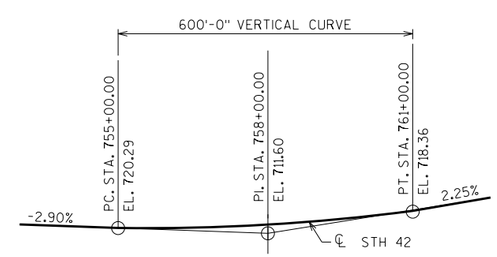

PROFILE GRADE LINE - STH 42

NO.	DATE	REVISION	BY

STATE OF WISCONSIN
DEPARTMENT OF TRANSPORTATION
STRUCTURES DESIGN SECTION

STRUCTURE B-36-239

DRAWN BY JJS | PLANS CK'D. SEW

CROSS SECTION & QUANTITIES

SHEET 2

PRE 59

PRELIMINARY

SCALE = 2.50

8

8

EARTHWORK DETAIL SUMMARY STH 42

STATION	REAL STATION	DISTANCE	AREA (SF)		INCREMENTAL VOL (CY) (UNADJUSTED)		CUMULATIVE VOL (CY)		
			CUT	FILL	CUT	FILL	CUT	EXPANDED FILL	MASS ORDINATE
							1.25	1.15	
								Note 1	Note 2
759+23	75923.00	0.00	56.74	5.92	0	0	0	0	0
759+25	75925.00	2.00	57.10	14.95	4	1	5	1	4
759+35	75935.00	10.00	193.94	3.20	46	3	63	5	58
759+50	75950.00	15.00	173.02	5.47	102	2	190	7	183
759+75	75975.00	25.00	218.48	0.00	181	3	416	10	406
760+00	76000.00	25.00	29.53	0.00	115	0	560	10	550
760+25	76025.00	25.00	0.00	0.82	14	0	578	10	567
760+37	76037.00	12.00	0.00	44.92	0	10	578	22	556
760+50	76050.00	13.00	0.00	37.64	0	20	578	45	533
760+75	76075.00	25.00	43.87	75.43	20	52	603	105	498
761+00	76100.00	25.00	64.00	118.18	50	90	665	208	457
761+25	76125.00	25.00	61.22	121.94	58	111	738	336	402
761+50	76150.00	25.00	16.46	134.40	36	119	783	473	310
761+75	76175.00	25.00	17.62	195.07	16	153	803	649	154
762+00	76200.00	25.00	20.31	172.36	18	170	825	844	-19
762+25	76225.00	25.00	21.55	110.49	19	131	849	995	-146
762+50	76250.00	25.00	17.72	110.30	18	102	871	1,112	-241
762+75	76275.00	25.00	18.81	74.21	17	85	893	1,210	-317
763+00	76300.00	25.00	21.60	34.74	19	50	916	1,267	-351
763+25	76325.00	25.00	22.25	16.89	20	24	941	1,295	-354
763+50	76350.00	25.00	16.33	4.05	18	10	964	1,306	-343
763+75	76375.00	25.00	17.58	0.80	16	2	984	1,309	-325

NOTE 1: DOES NOT INCLUDE UNUSABLE PAVEMENT VOLUME

NOTE 2: PLUS QUANTITY INDICATES AN EXCESS OF MATERIAL WITHIN THE DIVISION. MINUS INDICATES A SHORTAGE OF MATERIAL WITHIN THE DIVISION

EARTHWORK DETAIL SUMMARY DRIVEWAY

STATION	REAL STATION	DISTANCE	AREA (SF)		INCREMENTAL VOL (CY) (UNADJUSTED)		CUMULATIVE VOL (CY)		
			CUT	FILL	CUT	FILL	CUT	EXPANDED FILL	MASS ORDINATE
							1.25	1.15	
								Note 1	Note 2
05+10	510	0	0	7	0	0	0	0	0
05+25	525	15	0	66	0	20	0	23	-23
05+50	550	25	0	232	0	138	0	182	-182
05+75	575	25	0	111	0	159	0	365	-365
05+85	585	10	4	1	1	21	1	389	-388

NOTE 1: DOES NOT INCLUDE UNUSABLE PAVEMENT VOLUME

NOTE 2: PLUS QUANTITY INDICATES AN EXCESS OF MATERIAL WITHIN THE DIVISION. MINUS INDICATES A SHORTAGE OF MATERIAL WITHIN THE DIVISION

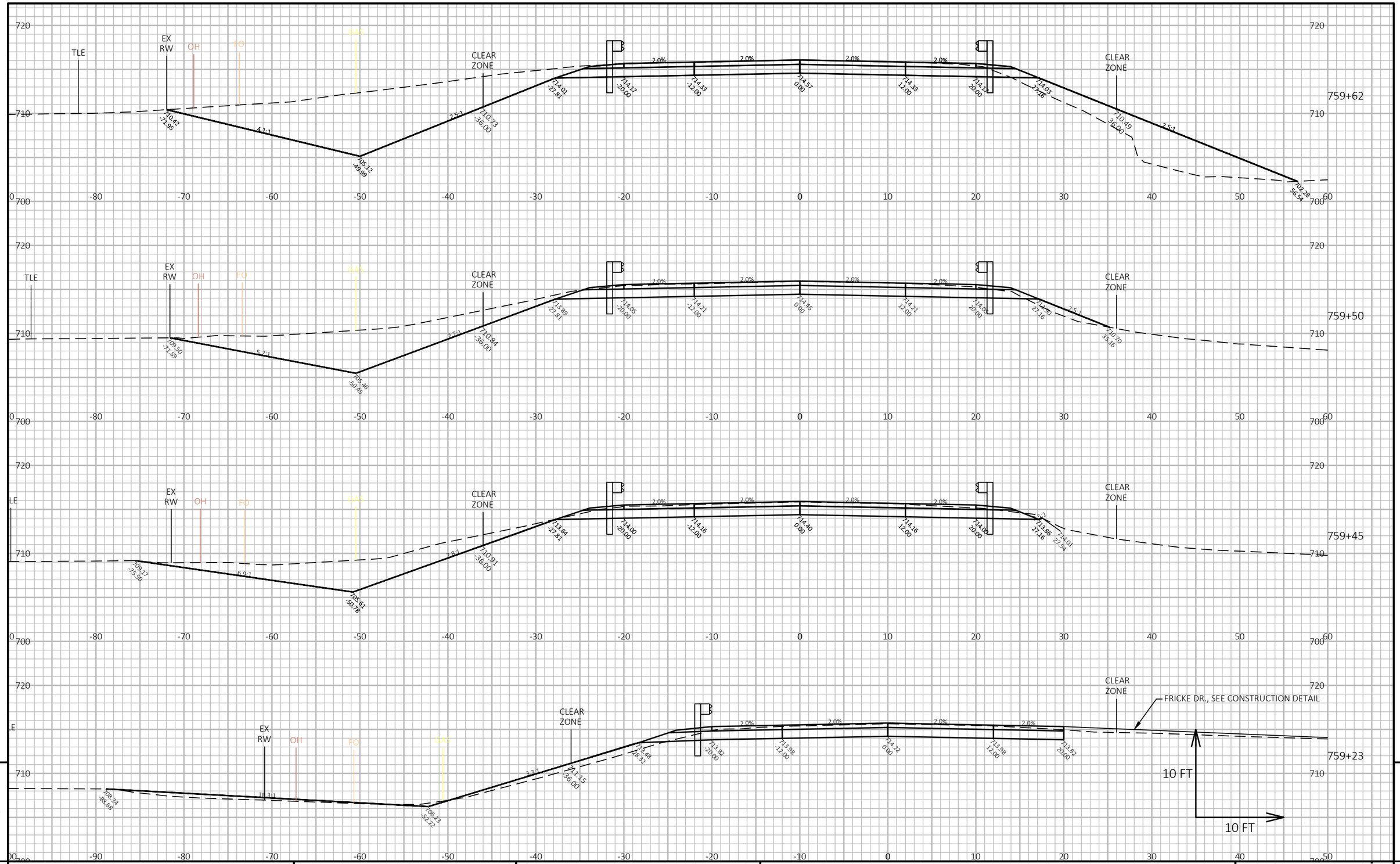

PROJECT NO: 4570-24-71	HWY: STH 42	COUNTY: MANITOWOC	CROSS SECTIONS: STH 42	SHEET PRE 62 E

FILE NAME : C:\WISDOT\DESIGN\C3D\45702400\SHEETSPLAN\090201-XS.DWG
LAYOUT NAME - 090201-xs
PLOT DATE : 4/20/2020 4:45 PM
PLOT BY : MAATTA, TRAVIS SHANE
PLOT NAME :
PLOT SCALE : 1 IN:10 FT HORZ. / 1 IN:10 FT VERT.
WISDOT/CADDS SHEET 49

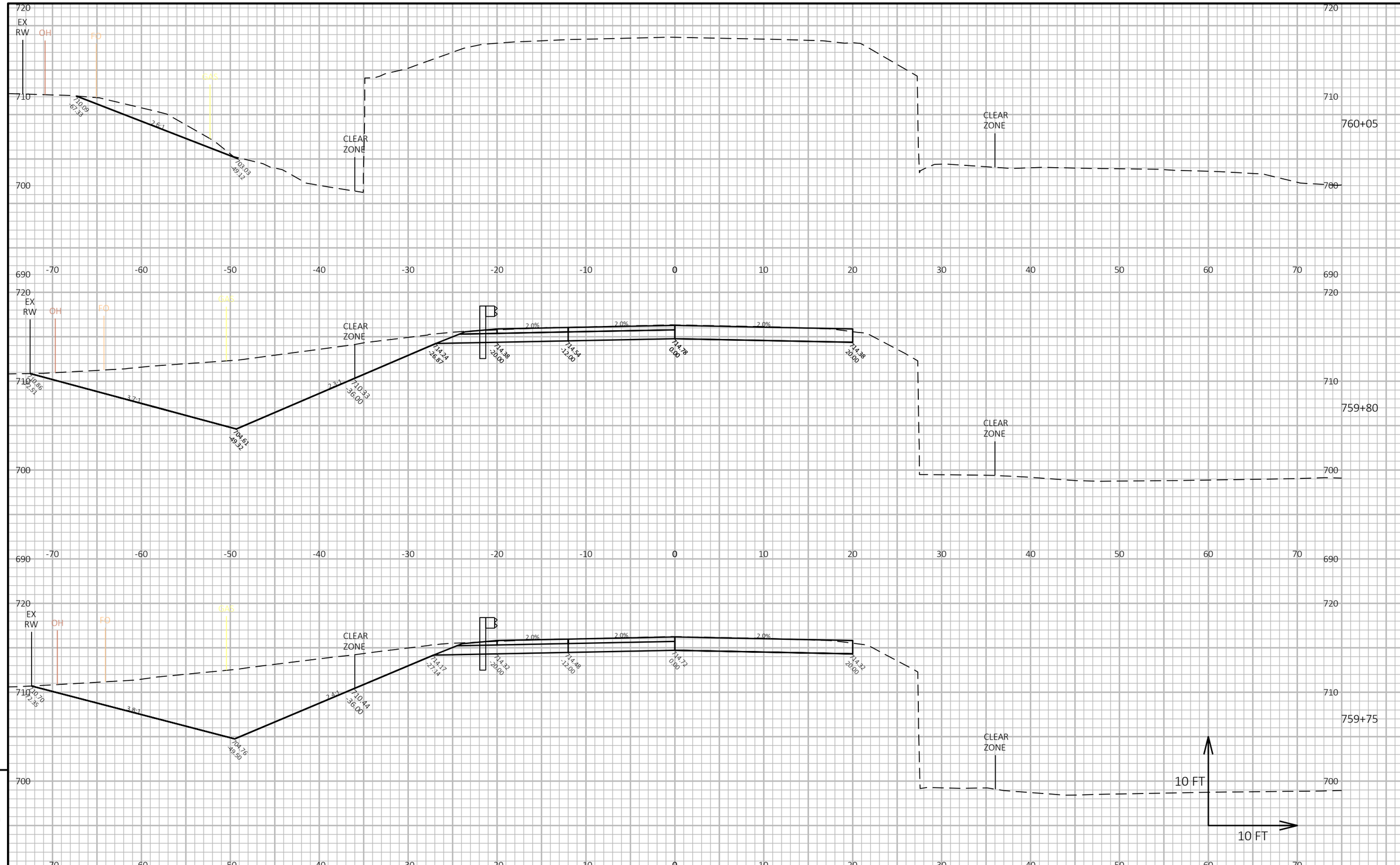

PROJECT NO: 4570-24-71	HWY: STH 42	COUNTY: MANITOWOC	CROSS SECTIONS: STH 42	SHEET PRE 63 E

FILE NAME : C:\WISDOT\DESIGN\C3D\45702400\SHEETSPLAN\090201-XS.DWG
LAYOUT NAME - 090202-xs
PLOT DATE : 4/20/2020 4:45 PM
PLOT BY : MAATTA, TRAVIS SHANE
PLOT NAME :
PLOT SCALE : 1 IN:10 FT HORZ. / 1 IN:10 FT VERT.
WISDOT/CADDS SHEET 49

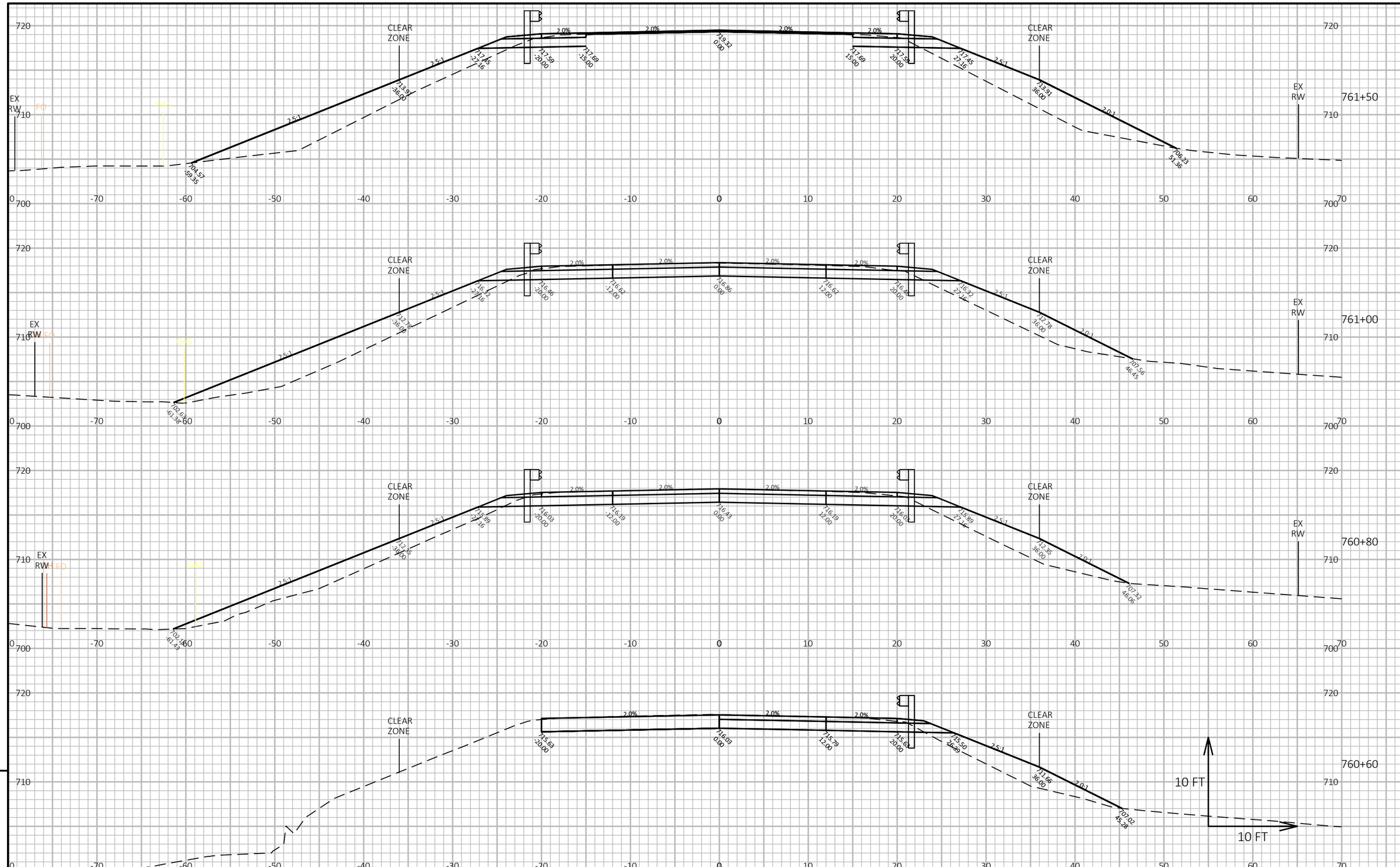

PROJECT NO: 4570-24-71	HWY: STH 42	COUNTY: MANITOWOC	CROSS SECTIONS: STH 42	SHEET PRE 64 E

FILE NAME : C:\WISDOT\DESIGN\C3D\45702400\SHEETSPLAN\090201-XS.DWG
LAYOUT NAME - 090203-xs
PLOT DATE : 4/20/2020 4:45 PM
PLOT BY : MAATTA, TRAVIS SHANE
PLOT NAME :
PLOT SCALE : 1 IN:10 FT HORZ. / 1 IN:10 FT VERT.
WISDOT/CADDS SHEET 49

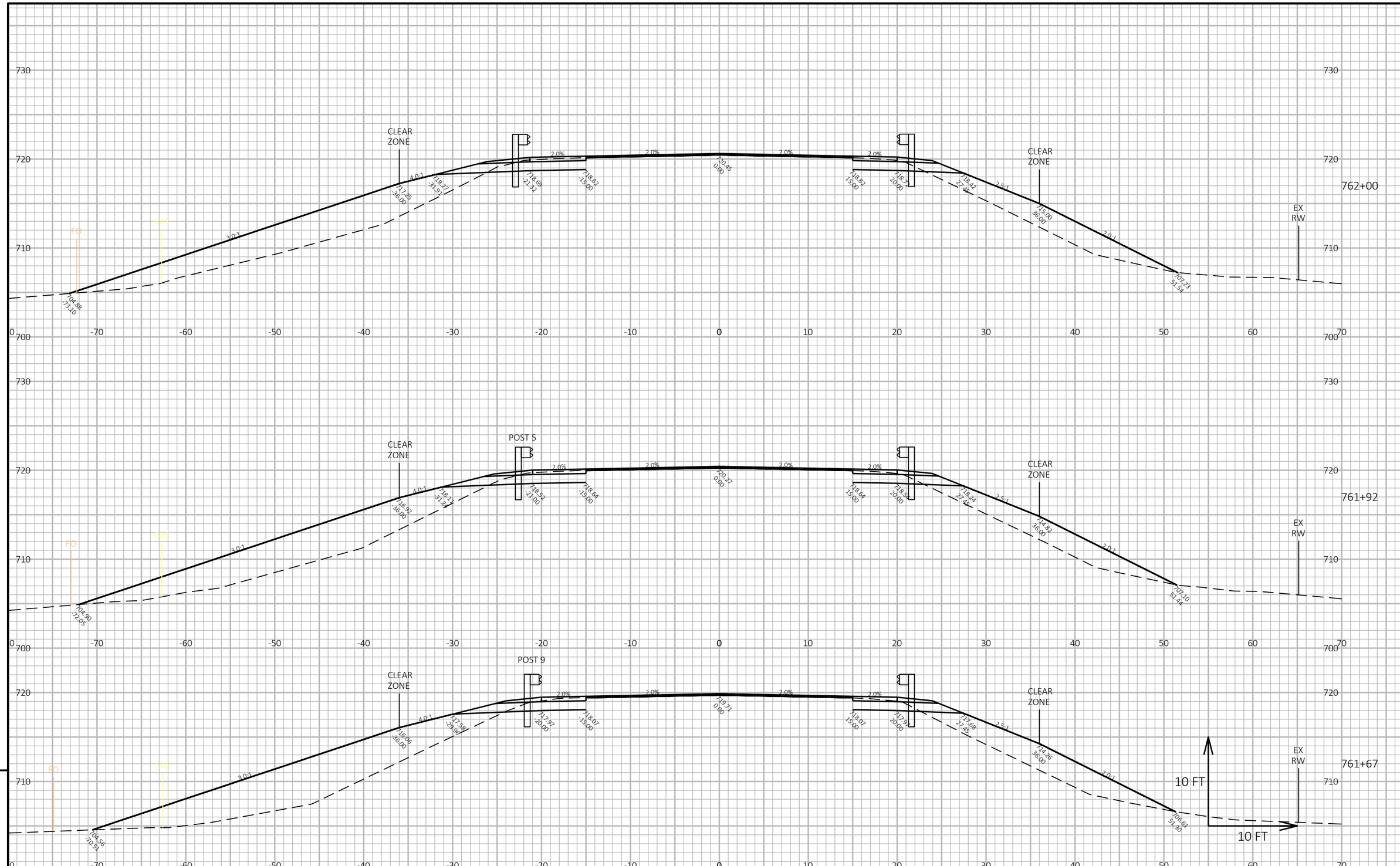

PROJECT NO: 4570-24-71	HWY: STH 42	COUNTY: MANITOWOC	CROSS SECTIONS: STH 42	SHEET PRE 65 E

FILE NAME : C:\WISDOT\DESIGN\C3D\45702400\SHEETSPLAN\090201-XS.DWG
LAYOUT NAME - 090204-xs
PLOT DATE : 4/20/2020 4:45 PM
PLOT BY : MAATTA, TRAVIS SHANE
PLOT NAME :
PLOT SCALE : 1 IN:10 FT HORZ. / 1 IN:10 FT VERT.

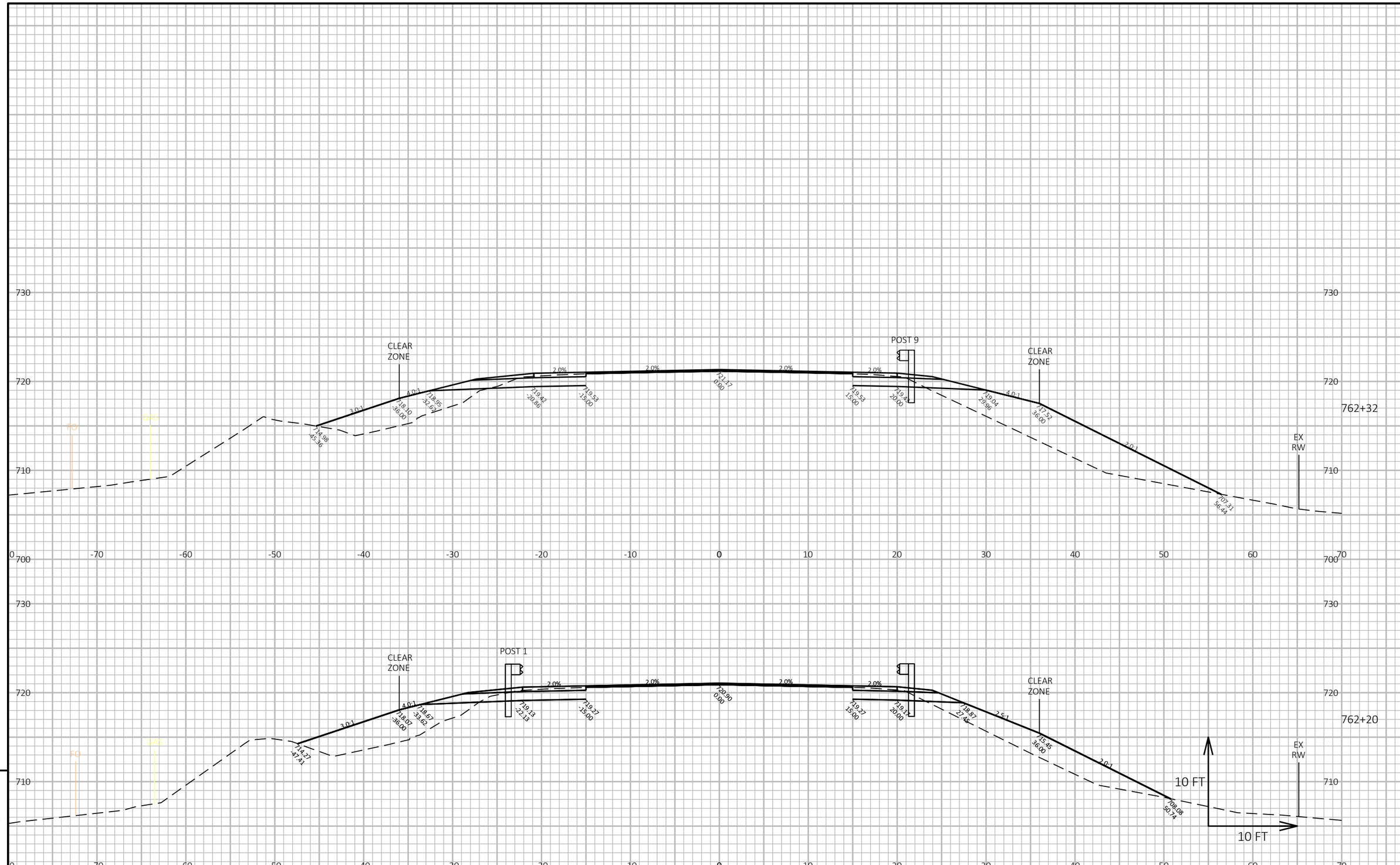

PROJECT NO: 4570-24-71	HWY: STH 42	COUNTY: MANITOWOC	CROSS SECTIONS: STH 42	SHEET PRE 66 E

FILE NAME : C:\WISDOT\DESIGN\C3D\45702400\SHEETSPLAN\090201-XS.DWG
LAYOUT NAME - 090205-xs
PLOT DATE : 4/20/2020 4:45 PM
PLOT BY : MAATTA, TRAVIS SHANE
PLOT NAME :
PLOT SCALE : 1 IN:10 FT HORZ. / 1 IN:10 FT VERT.
WISDOT/CADDS SHEET 49

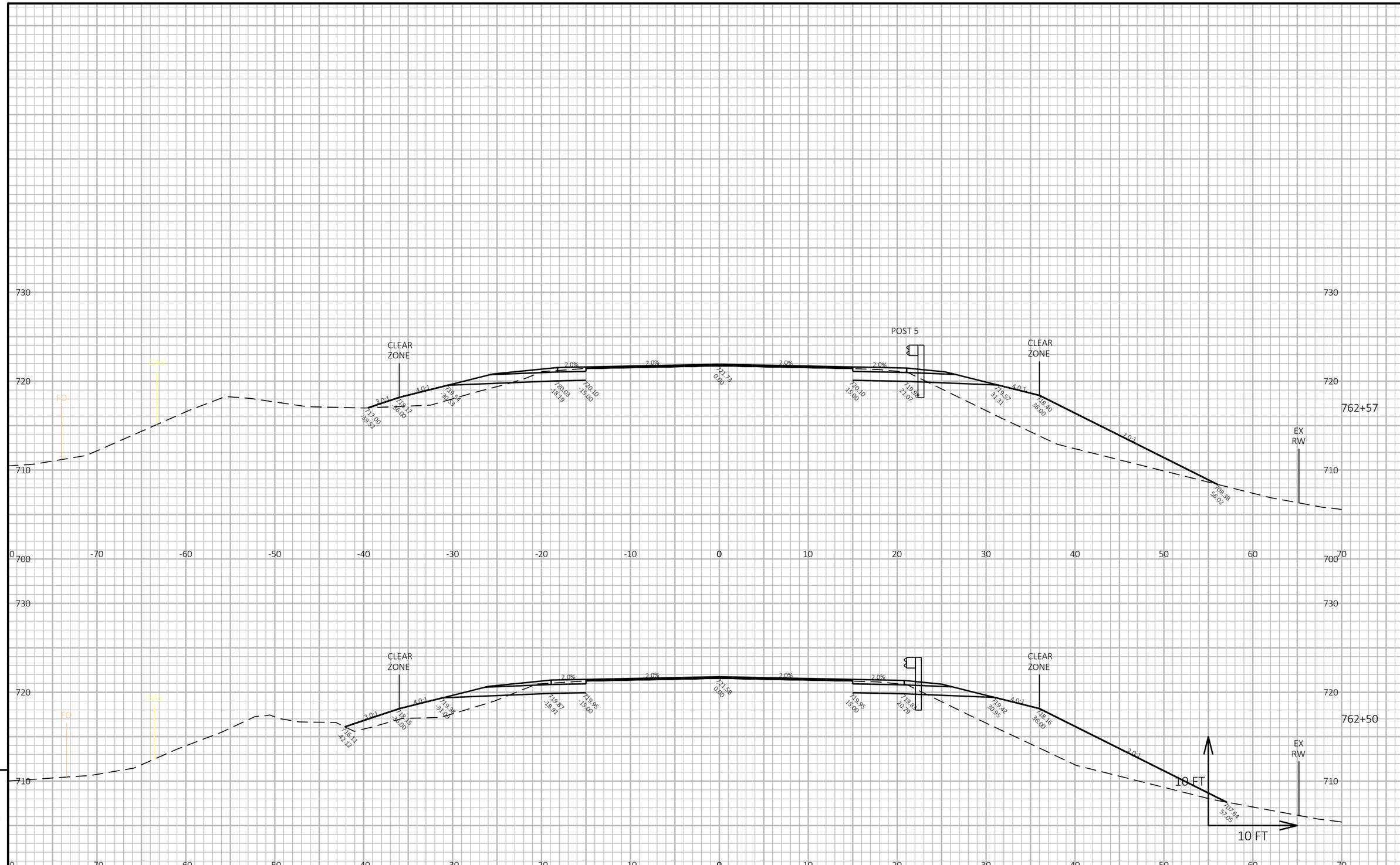

9

PROJECT NO: 4570-24-71	HWY: STH 42	COUNTY: MANITOWOC	CROSS SECTIONS: STH 42	SHEET PRE 67 E

FILE NAME : C:\WISDOT\DESIGN\C3D\45702400\SHEETSPLAN\090201-XS.DWG
LAYOUT NAME - 090206-xs
PLOT DATE : 4/20/2020 4:45 PM
PLOT BY : MAATTA, TRAVIS SHANE
PLOT NAME :
PLOT SCALE : 1 IN:10 FT HORZ. / 1 IN:10 FT VERT.
WISDOT/CADDS SHEET 49

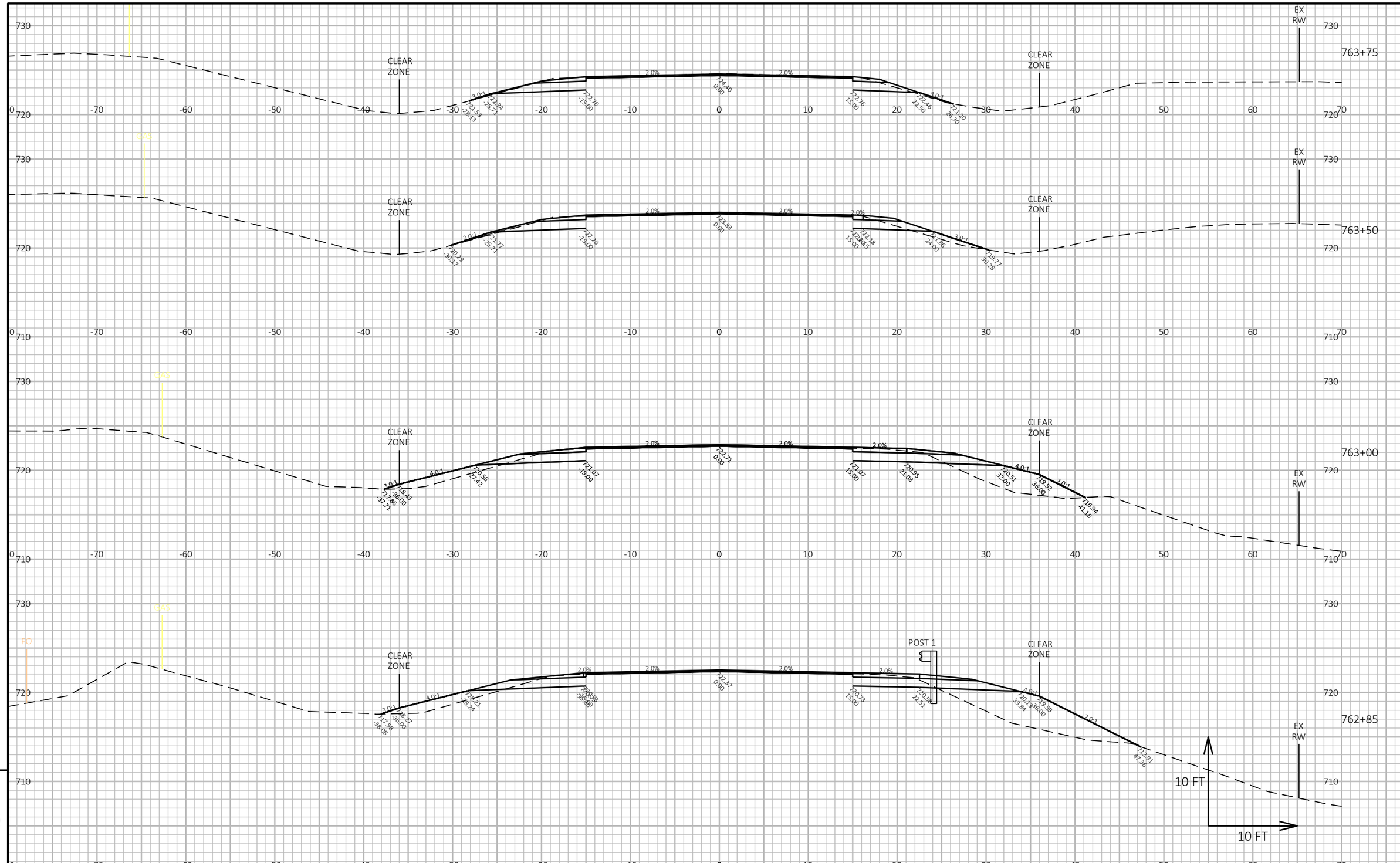

PROJECT NO: 4570-24-71	HWY: STH 42	COUNTY: MANITOWOC	CROSS SECTIONS: STH 42	SHEET PRE 68 E

FILE NAME : C:\WISDOT\DESIGN\C3D\45702400\SHEETSPLAN\090201-XS.DWG
LAYOUT NAME - 090207-xs
PLOT DATE : 4/20/2020 4:45 PM
PLOT BY : MAATTA, TRAVIS SHANE
PLOT NAME :
PLOT SCALE : 1 IN:10 FT HORZ. / 1 IN:10 FT VERT.

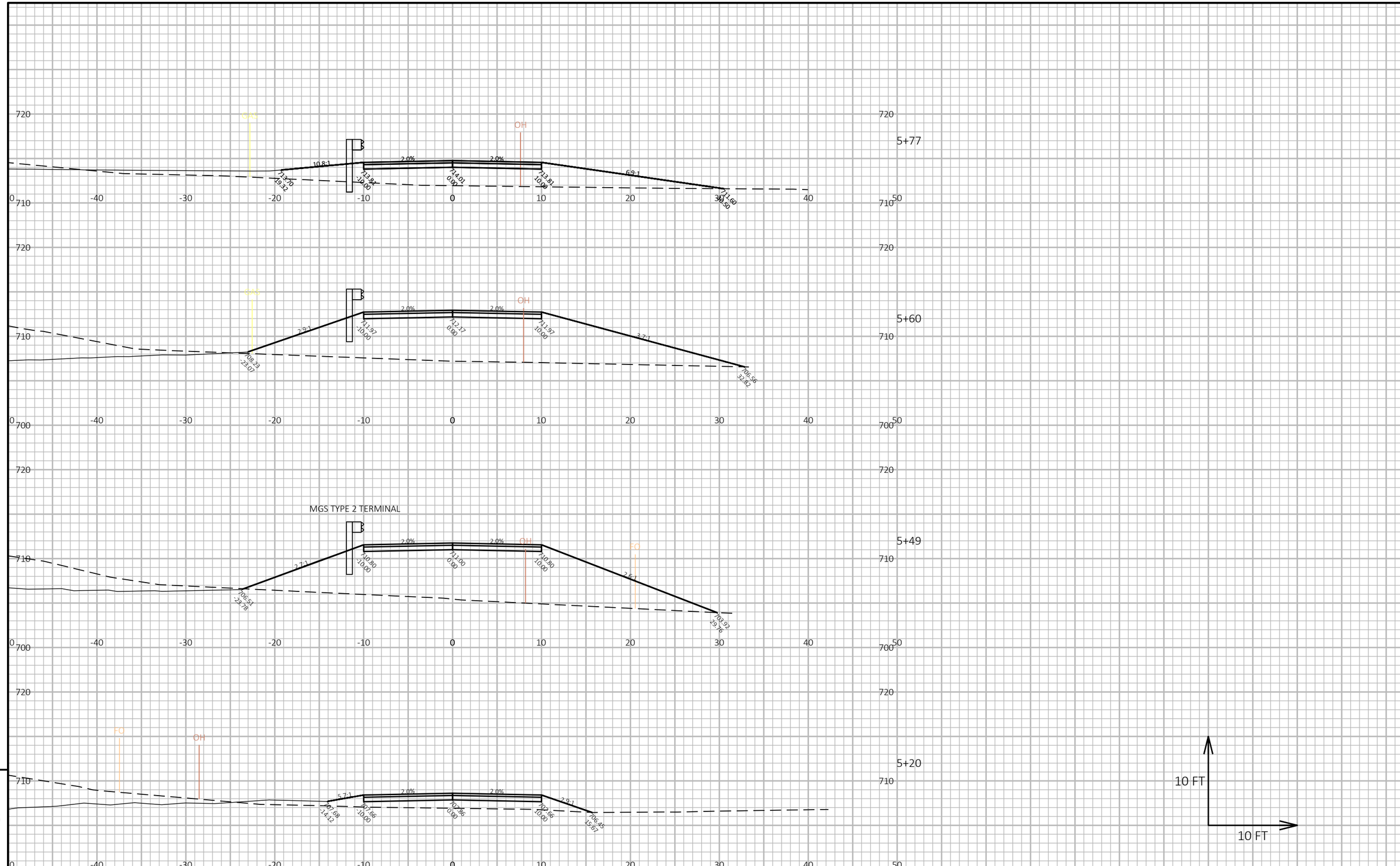

PROJECT NO: 4570-24-71	HWY: STH 42	COUNTY: MANITOWOC	CROSS SECTIONS: DRIVEWAY	SHEET PRE 69 E

FILE NAME : C:\WISDOT\DESIGN\C3D\45702400\SHEETSPLAN\090201-XS.DWG
LAYOUT NAME - 090208-xs
PLOT DATE : 4/20/2020 4:45 PM
PLOT BY : MAATTA, TRAVIS SHANE
PLOT NAME :
PLOT SCALE : 1 IN:10 FT HORZ. / 1 IN:10 FT VERT.
WISDOT/CADDS SHEET 49

WISCONSIN DEPARTMENT OF TRANSPORTATION

EPlans Preliminary Sheet Numbering Tool

This sheet: ftp://ftp.dot.state.wi.us/transp/roads/eplans/prelim_sheet_numbers.pdf

Notes

- Acrobat 5 or higher is required to use this tool.
- The Bureau of Highway Construction places sheet numbers in the final plan.
- This sheet is for placing preliminary sheet numbers with a “PRE_" prefix.
- If a plan contains multiple projects, number each plan individually.
- Leave this sheet in the plan.

TO ADD PRELIMINARY SHEET NUMBERS

1. Insert this sheet at the end of the plan

a. With the plan open in Acrobat, select Document > Insert Pages.
b. In the Select File to Insert dialog box, select this file (prelim_sheet_numbers.pdf)
c. In the Insert dialog box, choose After for Location and Last page for Page.
d. Click OK.

2. Click the Place Preliminary Sheet Numbers button

a. Go to the last sheet of the plan.
b. Click the Place Preliminary Sheet Numbers button once.
(The preliminary sheet number appears in the bottom right corner of the sheets.
The number should match te page number in the Acrobat Status bar).

3. Re-Save the PDF

a. Select File > Save As and save the PDF.

Place Preliminary Sheet Numbers

TO REMOVE PRELIMINARY SHEET NUMBERS

Remove