PROJECT ID: 4430-19-71
WITH: N/A

COUNTY: DOOR

ORDER OF SHEETS

Section No.	1	Title
Section No.	2	Typical Sections and Details
Section No.	3	Estimate of Quantities
Section No.	3	Miscellaneous Quantities
Section No.	4	Right of Way Plat
Section No.	5	Plan and Profile
Section No.	6	Standard Detail Drawings
Section No.	7	Sign Plates
Section No.	8	Structure Plans
Section No.	9	Computer Earthwork Data
Section No.	9	Cross Sections

TOTAL SHEETS =

STATE OF WISCONSIN
DEPARTMENT OF TRANSPORTATION

PLAN OF PROPOSED IMPROVEMENT

STH 42, CITY OF STURGEON BAY

S. JUNCTION STH 57 - BAY VIEW BRIDGE

STH 42
DOOR COUNTY

STATE PROJECT	FEDERAL PROJECT	
	PROJECT	CONTRACT
4430-19-71		

STATE PROJECT NUMBER
4430-19-71

TRANS 220
PROJECT PLAN
FOR
DESIGN OF UTILITY FACILITY ALTERATIONS OR RELOCATIONS

Date: SUBMITTAL #1 - 8/4/2020

N

DESIGN DESIGNATION 4430-19-00

A.A.D.T.	2022	=	15,960
A.A.D.T.	2042	=	18,220
D.H.V.		=	1,111
D.D.		=	59/41
T.		=	7.1%
DESIGN SPEED		=	50 - 60 mph
ESALS		=	2,500,000

BEGIN PROJECT
STA 100+00.00 'NB'
Y= 140,028.043
X= 466,244.945

END PROJECT
STA 481+88.67 'SB'
Y= 152,710.811
X= 498,853.818

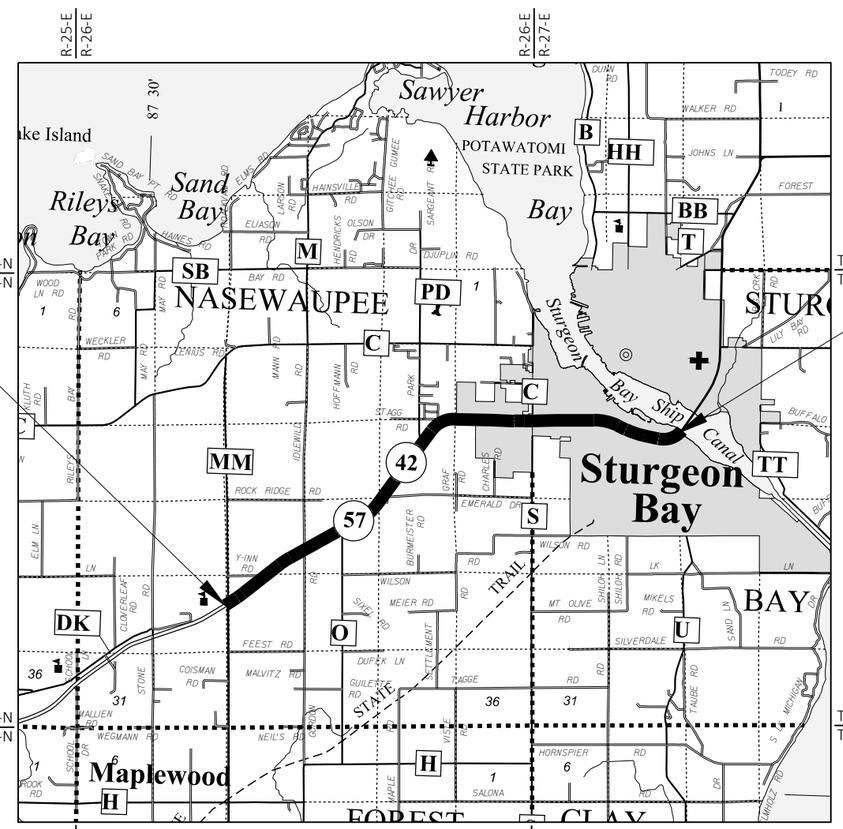

LAYOUT
SCALE 0 2 MI

TOTAL NET LENGTH OF CENTERLINE = 7.232 MILES

HORIZONTAL POSITIONS SHOWN ON THIS PLAN ARE WISCONSIN COORDINATE REFERENCE SYSTEM (WISCRS), DOOR COUNTY, NAD83 (XXXX), IN U.S. SURVEY FEET. POSITIONS SHOWN ARE GRID COORDINATES, GRID BEARINGS, AND GRID DISTANCES. GRID DISTANCES ARE THE SAME AS GROUND DISTANCES. ELEVATIONS ARE REFERENCED TO NAVD 88 (XXXX). GPS DERIVED ELEVATIONS ARE BASED ON GEOID 12A.

CONVENTIONAL SYMBOLS

PLAN
- CORPORATE LIMITS
- PROPERTY LINE
- LOT LINE
- LIMITED HIGHWAY EASEMENT
- EXISTING RIGHT OF WAY
- PROPOSED OR NEW R/W LINE
- SLOPE INTERCEPT
- REFERENCE LINE (300'EB')
- EXISTING CULVERT
- PROPOSED CULVERT (Box or Pipe)
- COMBUSTIBLE FLUIDS (CAUTION)
- MARSH AREA
- WOODED OR SHRUB AREA

PROFILE
- GRADE LINE
- ORIGINAL GROUND
- MARSH OR ROCK PROFILE (To be noted as such) (ROCK)
- SPECIAL DITCH (LABEL)
- GRADE ELEVATION (95.36)
- CULVERT (Profile View)

UTILITIES
- ELECTRIC (E)
- FIBER OPTIC (FO)
- GAS (G)
- SANITARY SEWER (SAN)
- STORM SEWER (SS)
- TELEPHONE (T)
- WATER (W)
- UTILITY PEDESTAL
- POWER POLE
- TELEPHONE POLE

STATE OF WISCONSIN
DEPARTMENT OF TRANSPORTATION

PREPARED BY

Surveyor	NE REGION
Designer	D. KIRST
Project Manager	J.J. ASHAUER
Regional Examiner	
Regional Supervisor	T. RABE

APPROVED FOR THE DEPARTMENT

DATE: _____ (Signature)

PRE_1

E

GENERAL NOTES

LOCATIONS OF UNDERGROUND UTILITIES AS SHOWN ON THE PLANS ARE APPROXIMATE, THERE MAY BE OTHER UTILITY INSTALLATIONS WITHIN THE PROJECT AREA THAT ARE NOT SHOWN.

EXISTING R/W SHOWN IS APPROXIMATE. VERIFY EXISTING R/W THROUGH RECORDED PLATS AND FIELD SURVEY.

ORDER OF SECTION 2 DETAIL SHEETS

GENERAL NOTES
TYPICAL SECTIONS
CONSTRUCTION DETAILS
PLAN DETAILS
TRAFFIC CONTROL
DETOUR PLAN
ALIGNMENT PLAN

DNR LIASION

MATT SCHAEVE
DEPARTMENT OF NATURAL RESOURCES
NORTHEAST REGION
2984 SHAWANO AVE
GREEN BAY, WI 54313
(920)366-1544
matthew.schaeve@wisconsin.gov

DOOR COUNTY COMMISSIONER

JOHN KOLODZIEJ
HIGHWAY COMMISSIONER
1001 S. DULUTH AVE
STURGEON BAY, WI 54235
(920)746-2500
kolodzie@co.door.wi.us

NE REGION SURVEY COORDINATOR

CORMAC MCINNIS, RLS
944 VANDERPERREN WAY
GREEN BAY, WI 54304
(920)492-5638
cormac.mcinnis@dot.wi.gov

NE REGION DESIGN PROJECT MANAGER

JEREMY ASHAUER, PE
944 VANDERPERREN WAY
GREEN BAY, WI 54304
(920) 412-6381
jeremy.ashauer@dot.wi.gov

RUNOFF COEFFICIENT TABLE

	HYDROLOGIC SOIL GROUP											
	A			B			C			D		
	SLOPE RANGE (PERCENT)			SLOPE RANGE (PERCENT)			SLOPE RANGE (PERCENT)			SLOPE RANGE (PERCENT)		
LAND USE:	0-2	2-6	6 & OVER	0-2	2-6	6 & OVER	0-2	2-6	6 & OVER	0-2	2-6	6 & OVER
ROW CROPS	.08 .22	.16 .30	.22 .38	.12 .26	.20 .34	.27 .44	.15 .30	.24 .37	.33 .50	.19 .34	.28 .41	.38 .56
MEDIAN STRIP-TURF	.19 .24	.20 .26	.24 .30	.19 .25	.22 .28	.26 .33	.20 .26	.23 .30	.30 .37	.20 .27	.25 .32	.30 .40
SIDE SLOPE-TURF			.25 .32			.27 .34			.28 .36			.30 .38
PAVEMENT:												
ASPHALT	.70 - .95											
CONCRETE	.80 - .95											
BRICK	.70 - .80											
DRIVES, WALKS	.75 - .85											
ROOFS	.75 - .95											
GRAVEL ROADS, SHOULDERS	.40 - .60											

TOTAL PROJECT AREA = _____ ACRES
TOTAL AREA EXPECTED TO BE DISTURBED BY CONSTRUCTION ACTIVITIES = _____ACRES

UTILITY CONTACTS

LORI BUTRY
WISCONSIN PUBLIC SERVICE - ELECTRICITY
700 N. ADAMS ST.
P.O. BOX 19001
GREEN BAY, WI 54307-9001
(920) 433-1703
UtilitiesRelocation@wisconsinpublicservice.com

JIM STAWICKI
STURGEON BAY UTILITIES - COMMUNICATION LINE
230 E. VINE ST.
PO BOX 27
STURGEON BAY, WI 54235-2039
(920) 746-2820
jstawicki@wppienergy.org

LORI BUTRY
WISCONSIN PUBLIC SERVICE - GAS/PETROLEUM
700 N. ADAMS ST.
P.O. BOX 19001
GREEN BAY, WI 54307-9001
(920) 433-1703
UtilitiesRelocation@wisconsinpublicservice.com

JIM STAWICKI
STURGEON BAY UTILITIES - ELECTRICITY
230 E. VINE ST.
PO BOX 27
STURGEON BAY, WI 54235-2039
(920) 746-2820
jstawicki@wppienergy.org

TONY MARCINIAK
ATC MANAGEMENT, INC. - ELECTRICITY-TRANSMISSION
W234 N2000 RIDGEVIEW PARKWAY CT.
PO BOX 47
WAUKESHA, WI 53187-0047
(262) 506-6814
amarciniak@atcllc.com

JIM STAWICKI
STURGEON BAY UTILITIES - SEWER
230 E. VINE ST.
PO BOX 27
STURGEON BAY, WI 54235-2039
(920) 746-2820
jstawicki@wppienergy.org

SHEA GORZELANCZYK
AT&T WISCONSIN - COMMUNICATION LINE
FIRST FLOOR ENGINEERING
205 S. JEFFERSON ST
GREEN BAY, WI 54301
(920) 433-4250
Sg2528@att.com

JIM STAWICKI
STURGEON BAY UTILITIES - WATER
230 E. VINE ST.
PO BOX 27
STURGEON BAY, WI 54235-2039
(920) 746-2820
jstawicki@wppienergy.org

RICK VINCENT
NET LEC LLC - COMMUNICATION LINE
450 SECURITY BLVD
P.O. BOX 19079
GREEN BAY, WI 54307-9079
(920) 617-7316
rick.vincent@nsight.com

MATT GUNDERSON
CENTURYLINK - COMMUNICATION LINE
212 CHURCH AVE.
CASCO, WI 54205
(920) 837-2344
Matt.gunderson@centurylink.com

BRUCE HENRY
CHARTER COMMUNICATIONS - COMMUNICATION LINE
1623 BROADWAY AVENUE
SHEBOYGAN, WI 53081
(920) 907-7720
bruce.henry@charter.com

DIGGERS HOTLINE
Dial 811 or (800)242-8511
www.DiggersHotline.com

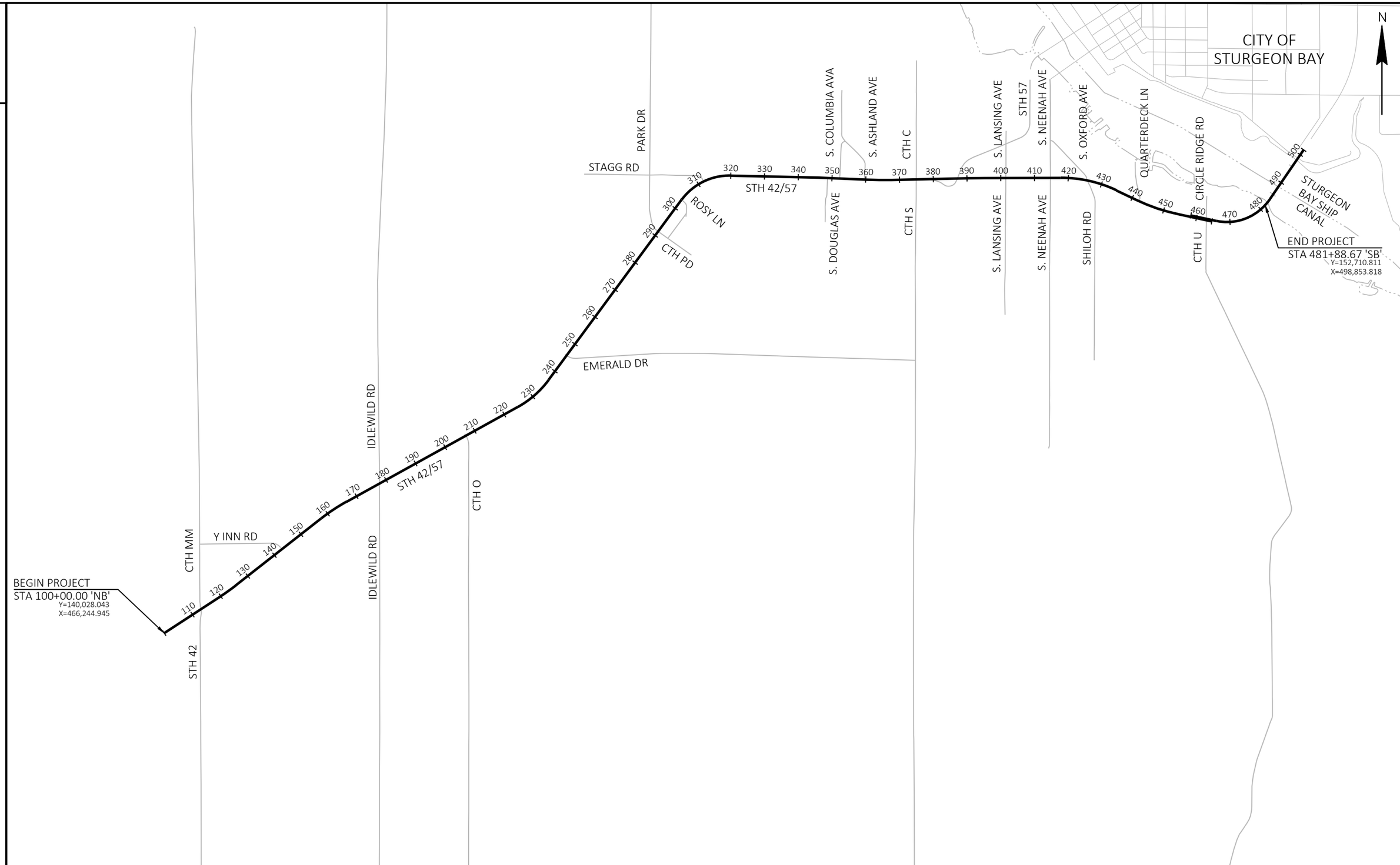

2

PROJECT NO: 4430-19-71	HWY: STH 42	COUNTY: DOOR	PROJECT OVERVIEW	SHEET PRE_3	E

2

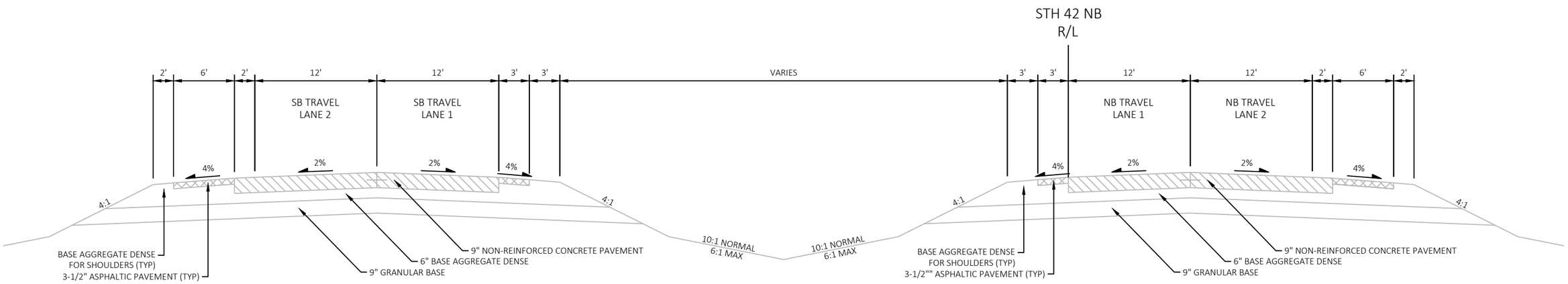

EXISTING TYPICAL SECTION STH 42/57

STA 100+00'NB' TO STA 305+84'NB'

EXCEPT THE FOLLOWING LOCATIONS
STA 129+51'NB' TO STA 150+81'NB' (SB LANES ONLY)
STA 169+33'NB' TO STA 220+63'NB' (NB LANES ONLY)
STA 238+82'NB' TO STA 299+37'NB' (SB LANES ONLY)

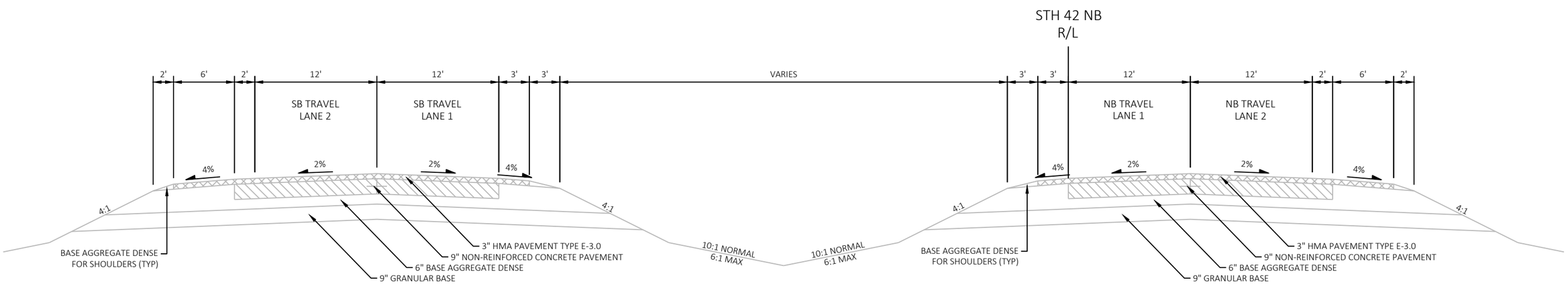

EXISTING TYPICAL SECTION STH 42/57

STA 129+51'NB' TO STA 150+81'NB' (SB LANES ONLY)
STA 169+33'NB' TO STA 220+63'NB' (NB LANES ONLY)
STA 238+82'NB' TO STA 299+37'NB' (SB LANES ONLY)

PROJECT NO: 4430-19-71	HWY: STH 42	COUNTY: DOOR	TYPICAL SECTIONS	SHEET PRE_4 E

FILE NAME : C:\CIVIL 3D PROJECTS\44301900\SHEETSPLAN\020301-TS.DWG
LAYOUT NAME - 020301-ts
PLOT DATE : 7/29/2020 10:23 AM PLOT BY : KIRST, DOUGLAS P PLOT NAME : PLOT SCALE : 1IN:10 FT

WISDOT/CADDS SHEET 42

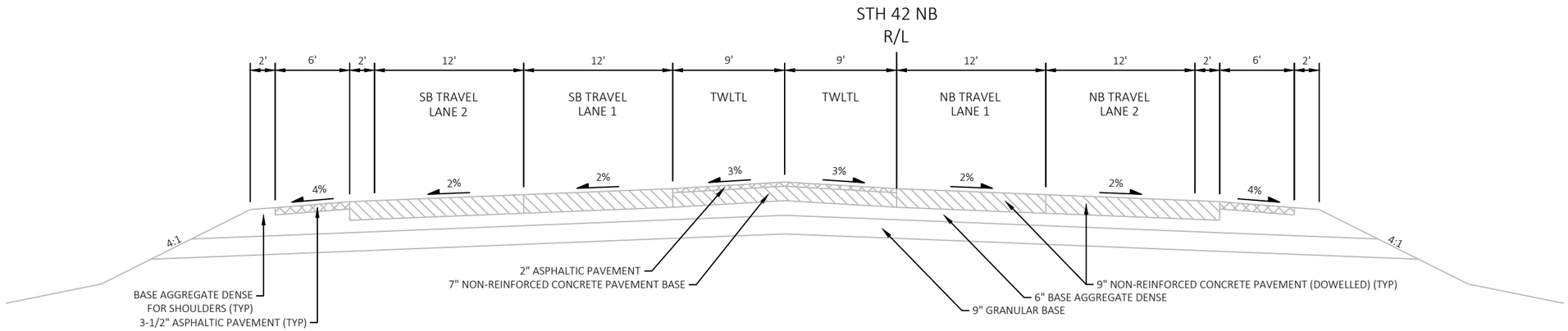

EXISTING TYPICAL SECTION STH 42/57

STA 305+84'NB' TO STA 335+80'NB'

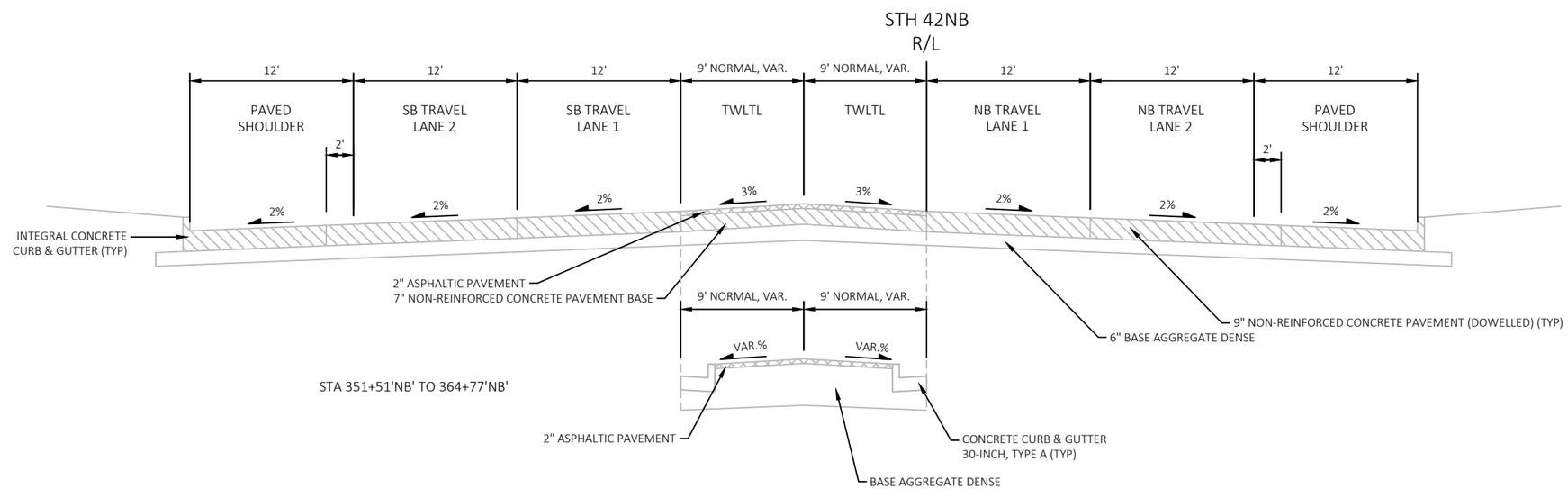

EXISTING TYPICAL SECTION STH 42/57

STA 335+80'NB' TO STA 369+90'NB'

PROJECT NO: 4430-19-71	HWY: STH 42	COUNTY: DOOR	TYPICAL SECTIONS	SHEET PRE_5 E

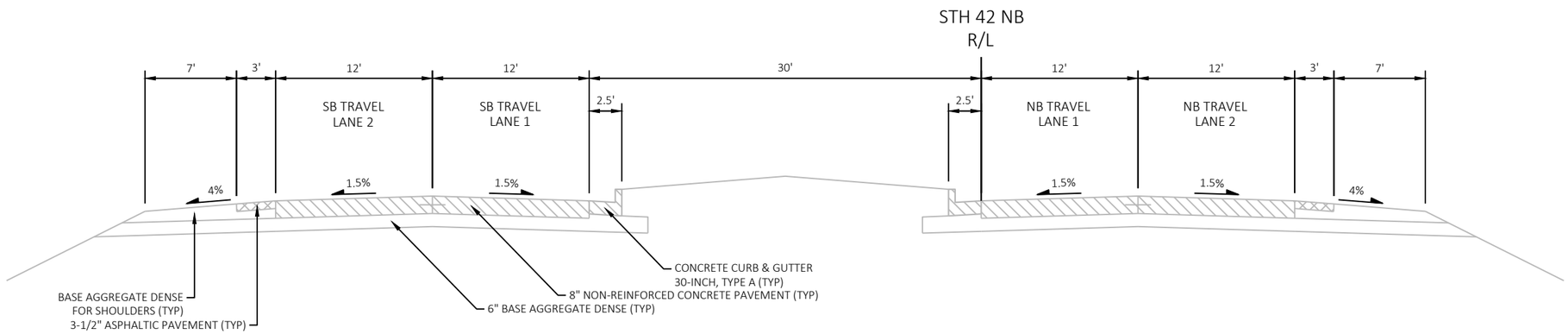

EXISTING TYPICAL SECTION STH 42/57

STA 378+56'NB' TO STA 464+66'NB'

EXCEPT THE FOLLOWING LOCATIONS
STA 397+57'NB' TO STA 406+11'NB' (LANSING AVE)
STA 410+56'NB' TO STA 419+53'NB' (NEENAH AVE)
STA 421+90'NB' TO STA 429+80'NB' (OXFORD AVE /SHILOH RD)

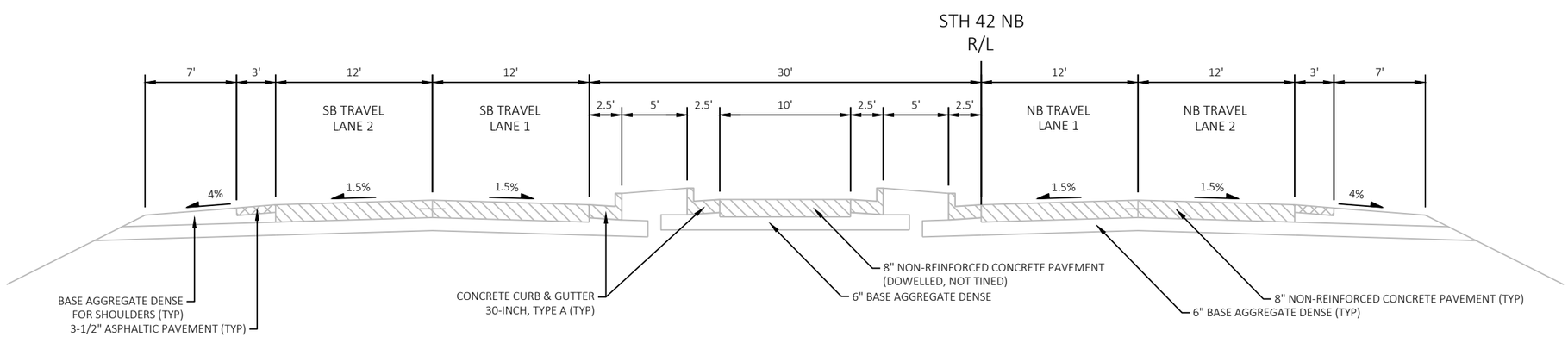

EXISTING TYPICAL SECTION STH 42/57

STA 369+90'NB' TO STA 378+56'NB' (CTH S (DULUTH AVE))
STA 397+57'NB' TO STA 406+11'NB' (LANSING AVE)
STA 410+56'NB' TO STA 419+53'NB' (NEENAH AVE)
STA 421+90'NB' TO STA 429+80'NB' (OXFORD AVE /SHILOH RD)

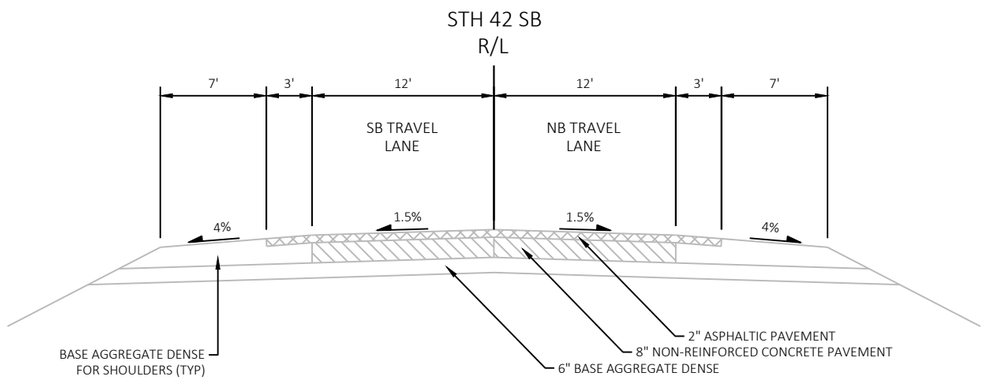

EXISTING TYPICAL SECTION STH 42/57

STA 464+66'SB' TO STA 481+89'SB'

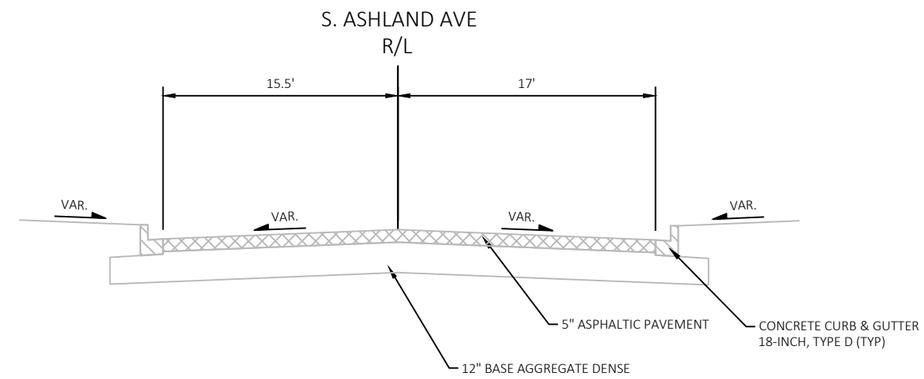

EXISTING TYPICAL SECTION S. ASHLAND AVE

STA 39+45'A' TO STA 40+96'A'

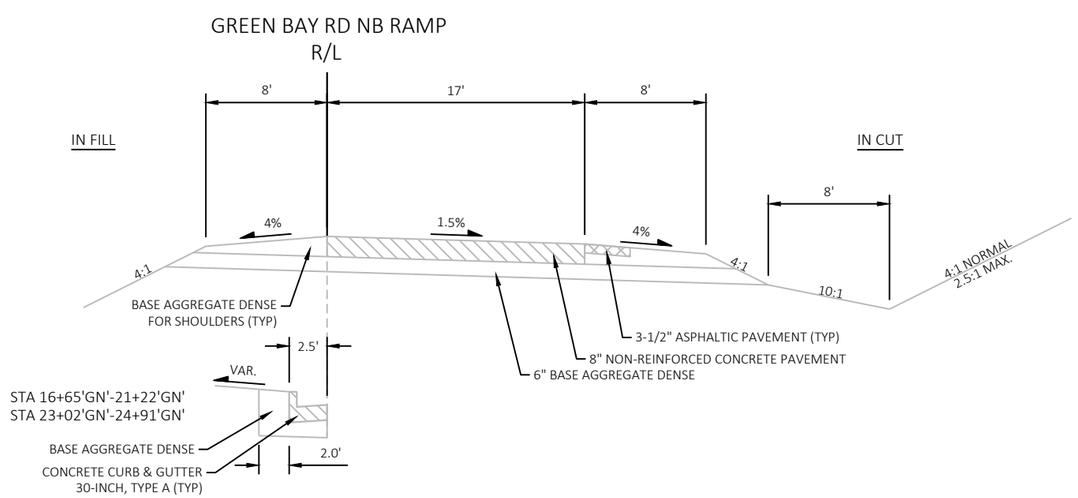

EXISTING TYPICAL SECTION GREEN BAY RD NB RAMP

STA 14+10'GN' TO 21+22'GN'
STA 23+02'GN' TO 30+06'GN'

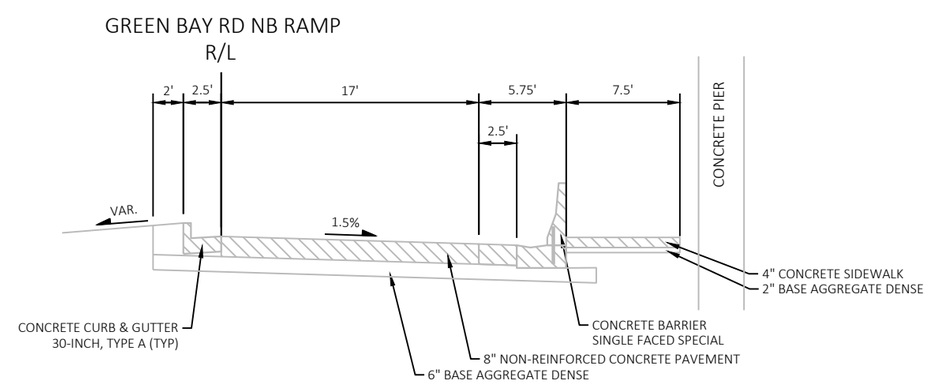

EXISTING TYPICAL SECTION GREEN BAY RD NB RAMP

STA 21+22'GN' TO 23+02'GN'

GREEN BAY RD SB RAMP
R/L

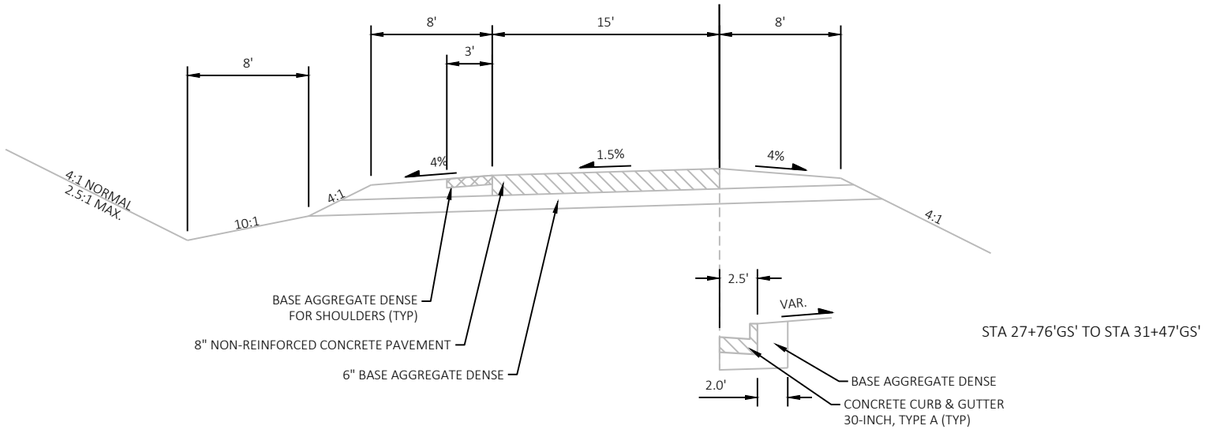

STA 27+76'GS' TO STA 31+47'GS'

EXISTING TYPICAL SECTION GREEN BAY RD SB RAMP

STA 20+00'GS' TO STA 31+47'GS'

S. NEENAH AVE
R/L

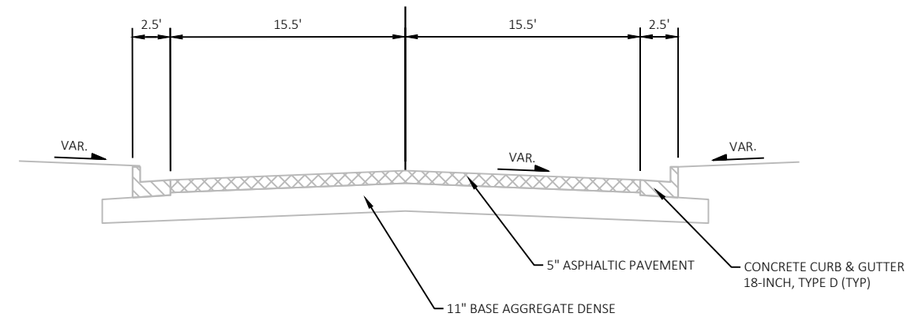

EXISTING TYPICAL SECTION S. NEENAH AVE

STA 66+04'N' TO STA 67+16'N'

CTH U
R/L

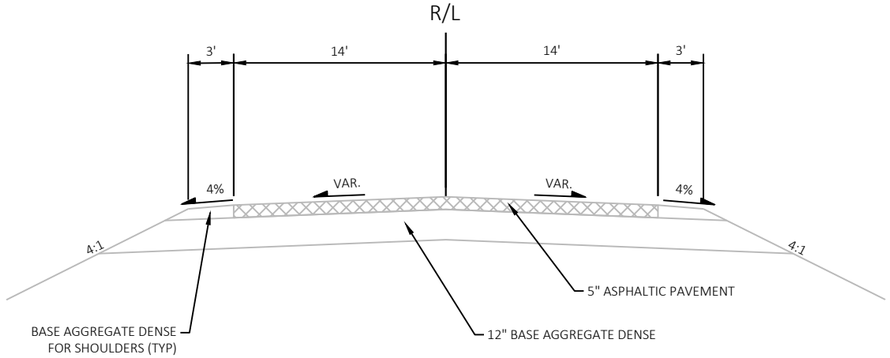

EXISTING TYPICAL SECTION CTH U

STA 78+99'U' TO 79+53'U'

CIRCLE RIDGE RD
R/L

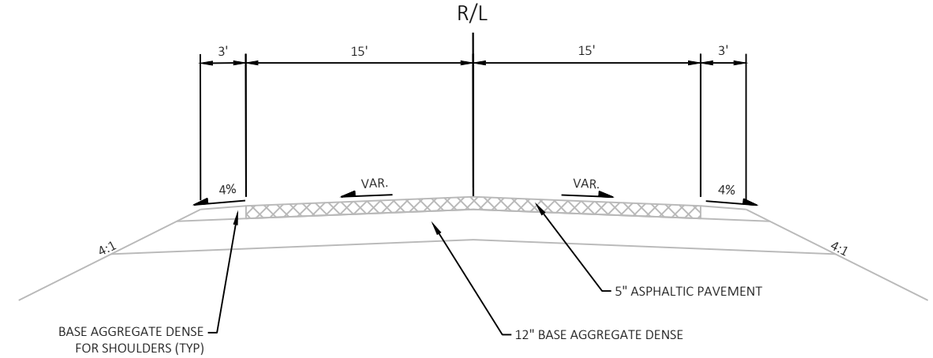

EXISTING TYPICAL SECTION CIRCLE RIDGE RD

STA 81+69'CI' TO 82+01'CI'

2

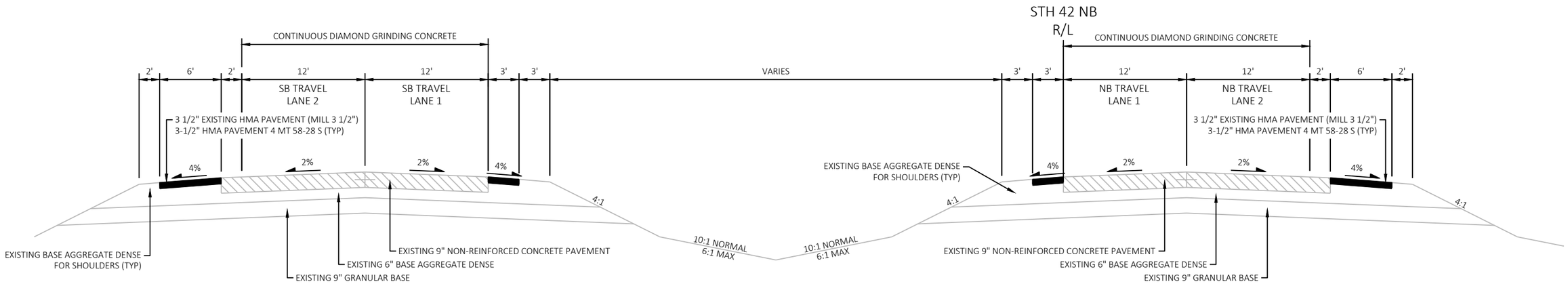

FINISHED TYPICAL SECTION STH 42/57

STA 100+00'NB' TO STA 305+84'NB'

EXCEPT THE FOLLOWING LOCATIONS
STA 129+51'NB' TO STA 150+81'NB' (SB LANES ONLY)
STA 169+33'NB' TO STA 220+63'NB' (NB LANES ONLY)
STA 238+82'NB' TO STA 299+37'NB' (SB LANES ONLY)

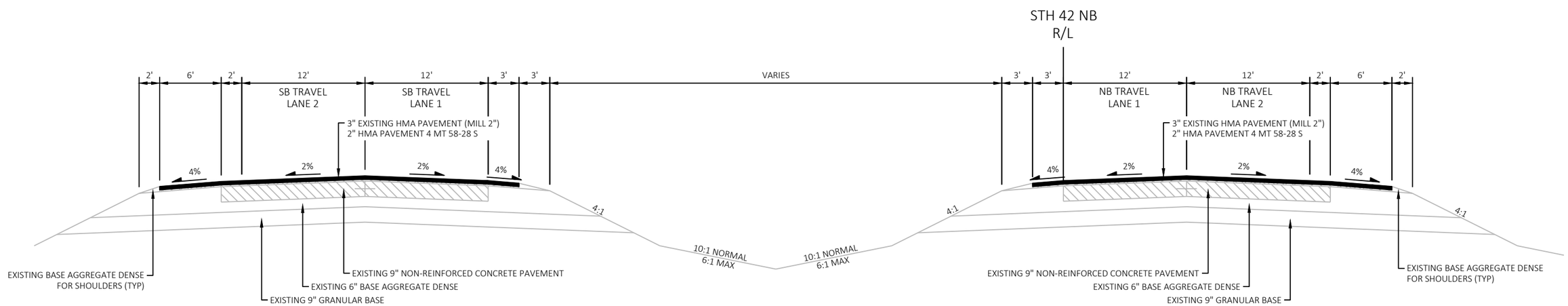

FINISHED TYPICAL SECTION STH 42/57

STA 129+51'NB' TO STA 150+81'NB' (SB LANES ONLY)
STA 169+33'NB' TO STA 220+63'NB' (NB LANES ONLY)
STA 238+82'NB' TO STA 299+37'NB' (SB LANES ONLY)

PROJECT NO: 4430-19-71	HWY: STH 42	COUNTY: DOOR	TYPICAL SECTIONS	SHEET PRE_9 E

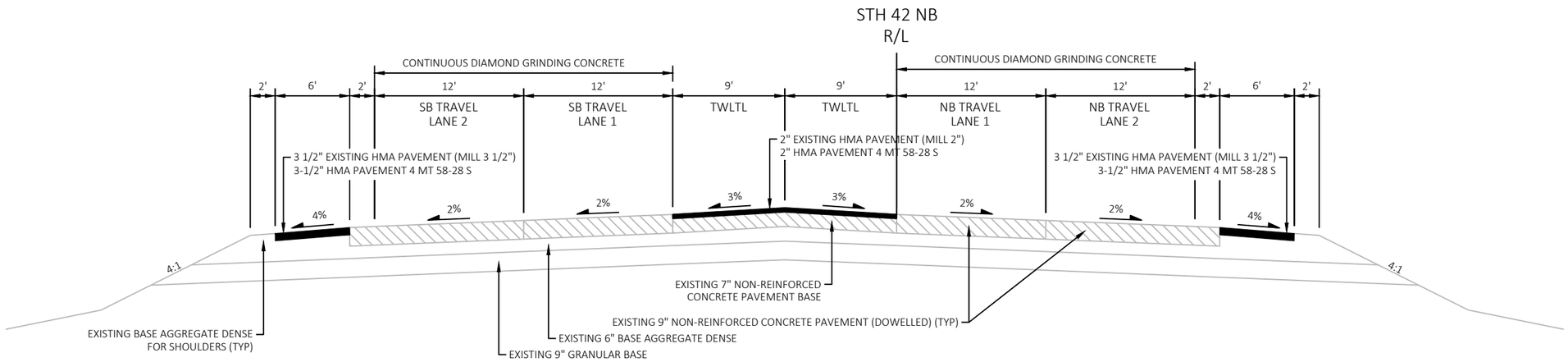

FINISHED TYPICAL SECTION STH 42/57

STA 305+84'NB' TO STA 335+80'NB'

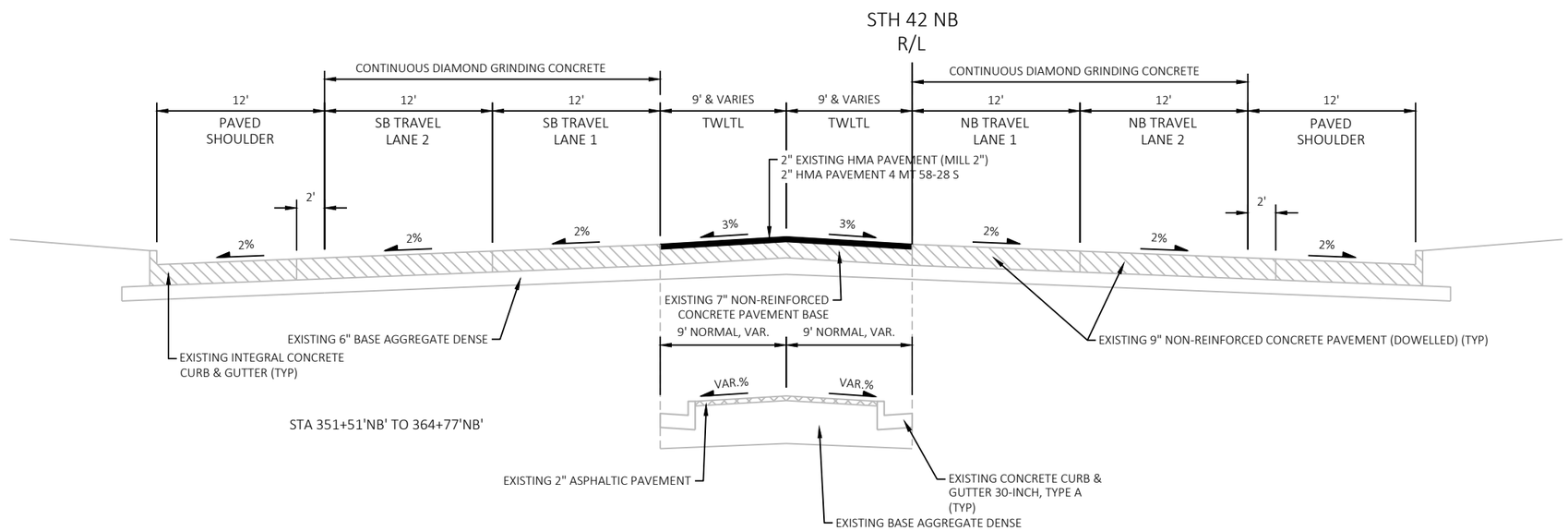

FINISHED TYPICAL SECTION STH 42/57

STA 335+80'NB' TO STA 369+90'NB'

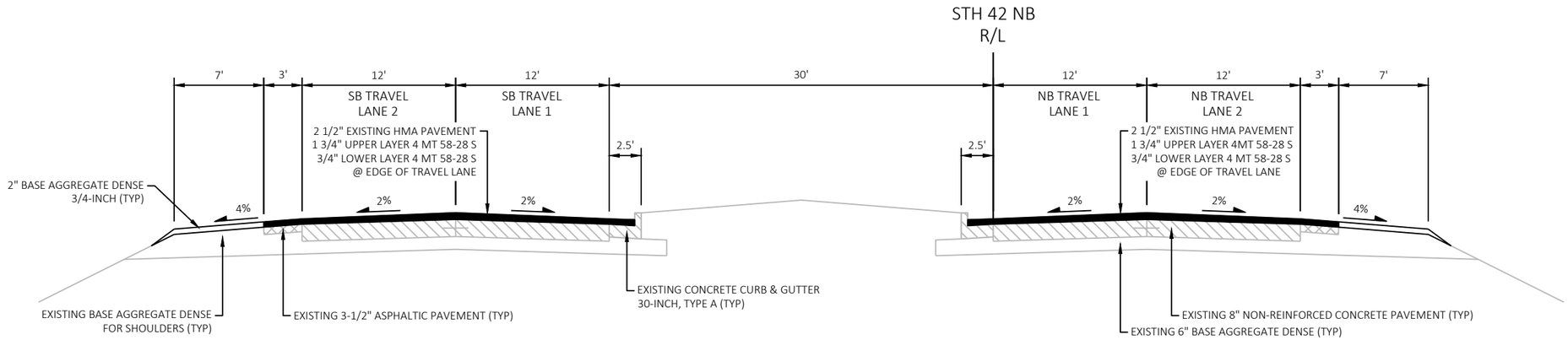

FINISHED TYPICAL SECTION STH 42/57

STA 378+56'NB' TO STA 464+66'NB'

EXCEPT THE FOLLOWING LOCATIONS
STA 397+57'NB' TO STA 406+11'NB' (LANSING AVE)
STA 410+56'NB' TO STA 419+53'NB' (NEENAH AVE)
STA 421+90'NB' TO STA 429+80'NB' (OXFORD AVE /SHILOH RD)

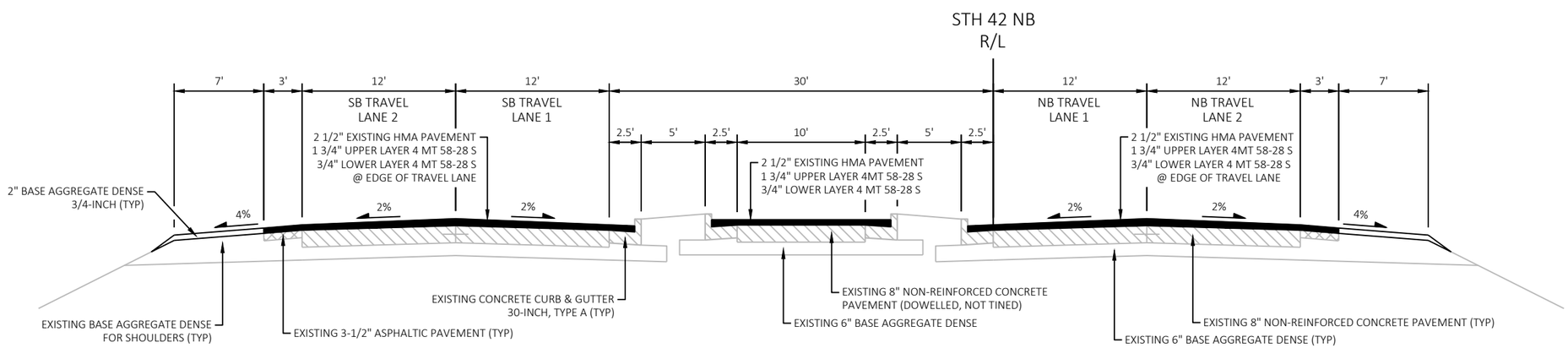

FINISHED TYPICAL SECTION STH 42/57

STA 369+90'NB' TO STA 378+56'NB' (CTH S (DULUTH AVE))
STA 397+57'NB' TO STA 406+11'NB' (LANSING AVE)
STA 410+56'NB' TO STA 419+53'NB' (NEENAH AVE)
STA 421+90'NB' TO STA 429+80'NB' (OXFORD AVE /SHILOH RD)

2

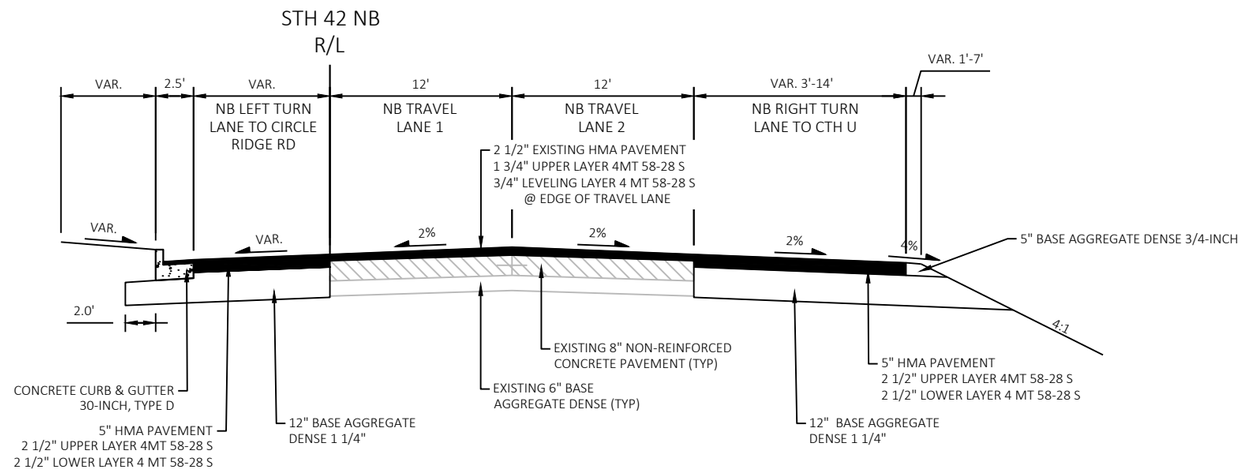

FINISHED TYPICAL SECTION STH 42 NB AT CTH U

STA 457+28'NB' TO 462+40'NB RT
STA 459+17'NB' TO 462+55'NB' LT

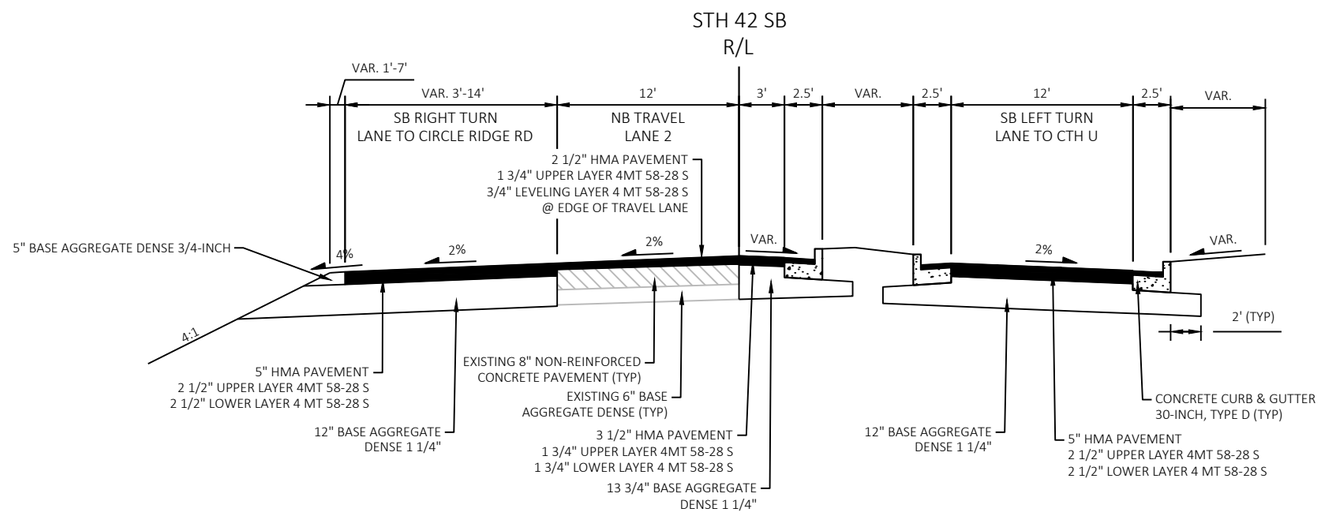

FINISHED TYPICAL SECTION STH 42 SB AT CIRCLE RIDGE RD

STA 463+23'SB' TO 471+56'SB' RT
STA 463+52'SB' TO 467+65'SB' LT

PROJECT NO: 4430-19-71	HWY: STH 42	COUNTY: DOOR	TYPICAL SECTIONS	SHEET PRE_12	E

FILE NAME : C:\CIVIL 3D PROJECTS\44301900\SHEETSPLAN\020301-TS.DWG
LAYOUT NAME - 020305-ts
PLOT DATE : 7/29/2020 10:24 AM PLOT BY : KIRST, DOUGLAS P PLOT NAME : PLOT SCALE : 1IN:10 FT
WISDOT/CADDS SHEET 42

2

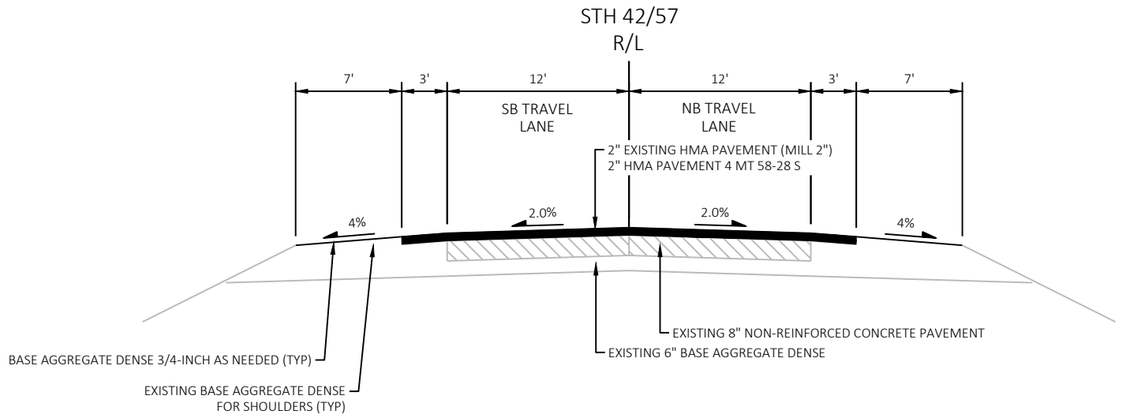

FINISHED TYPICAL SECTION STH 42/57

STA 471+56'SB' TO STA 481+89'SB'

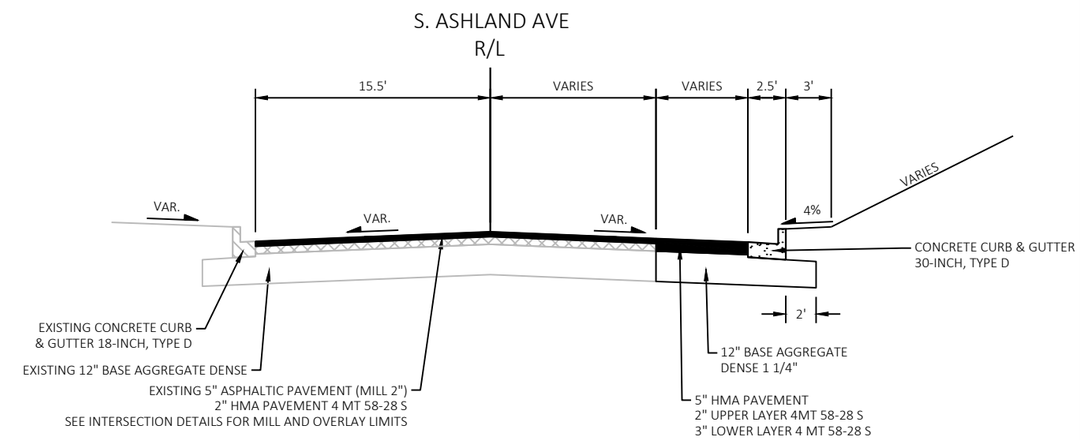

FINISHED TYPICAL SECTION S. ASHLAND AVE

STA 39+45'A' TO STA 40+96'A'

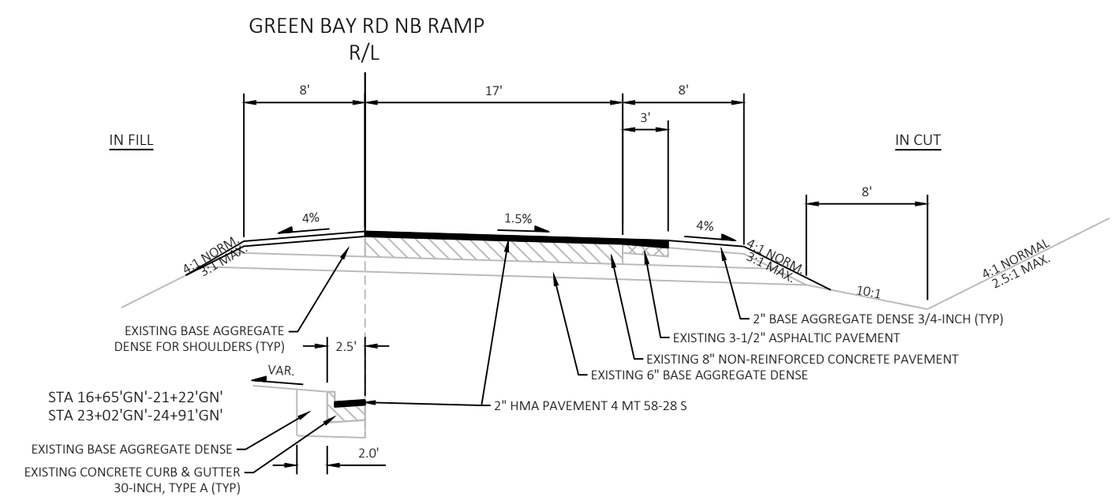

FINISHED TYPICAL SECTION GREEN BAY RD NB RAMP

STA 14+10'GN' TO 21+22'GN'
STA 23+02'GN' TO 30+06'GN'

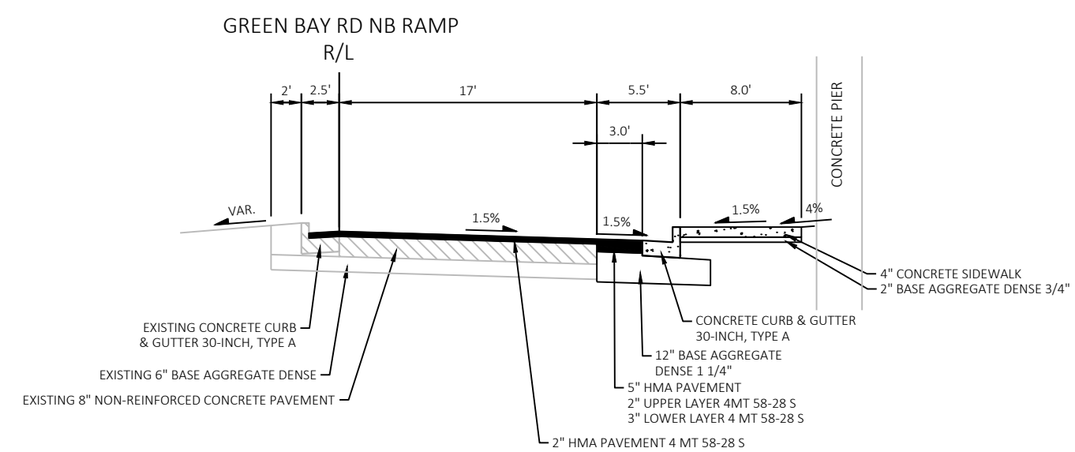

FINISHED TYPICAL SECTION GREEN BAY RD NB RAMP

STA 21+22'GN' TO 23+02'GN'

2

PROJECT NO: 4430-19-71	HWY: STH 42	COUNTY: DOOR	TYPICAL SECTIONS	SHEET PRE_13	E

GREEN BAY RD SB RAMP
R/L

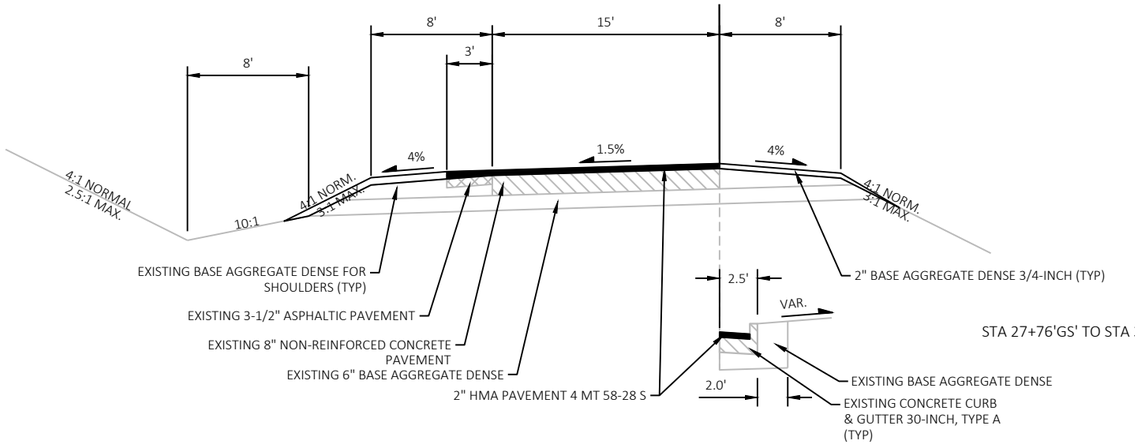

FINISHED TYPICAL SECTION GREEN BAY RD SB RAMP

STA 20+00'GS' TO STA 31+47'GS'

S. NEENAH AVE
R/L

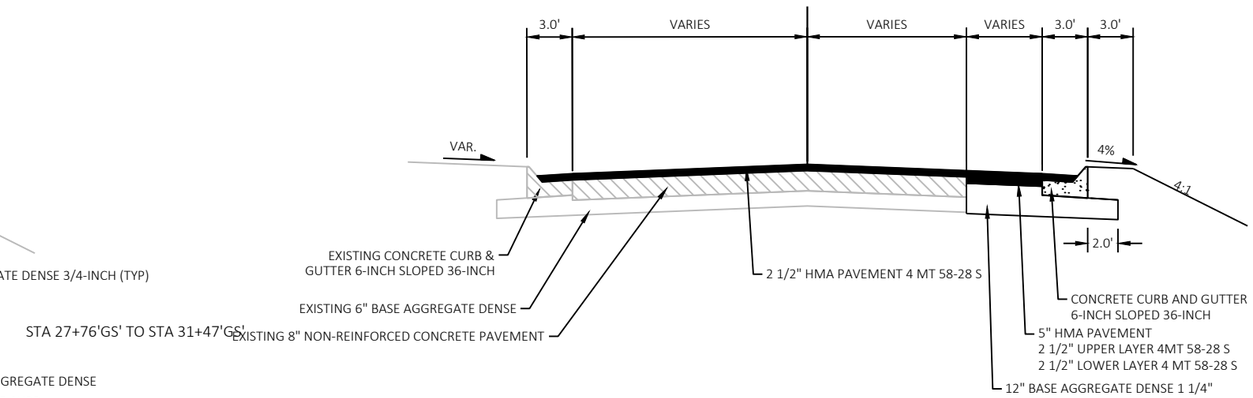

FINISHED TYPICAL SECTION S. NEENAH AVE

STA 65+52'N' TO 66+04'N'

S. NEENAH AVE
R/L

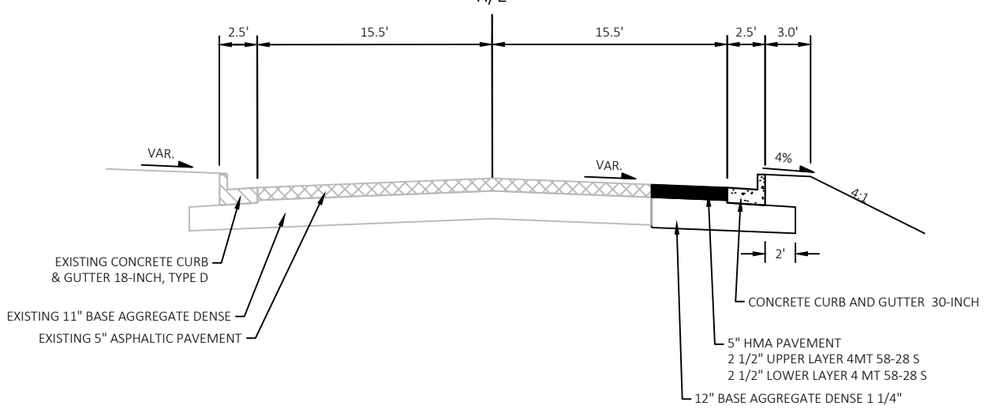

FINISHED TYPICAL SECTION S. NEENAH AVE

STA 66+04'N' TO STA 67+16'N'

CTH U
R/L

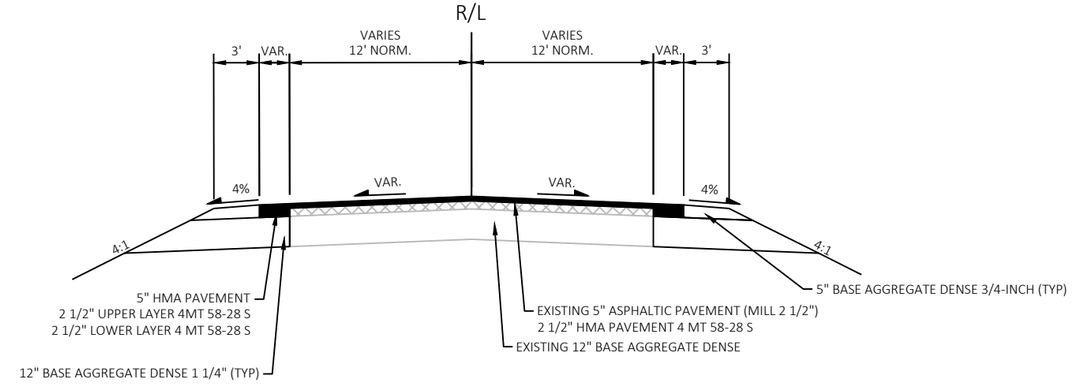

FINISHED TYPICAL SECTION CTH U

STA 78+99'U' TO 79+53'U'

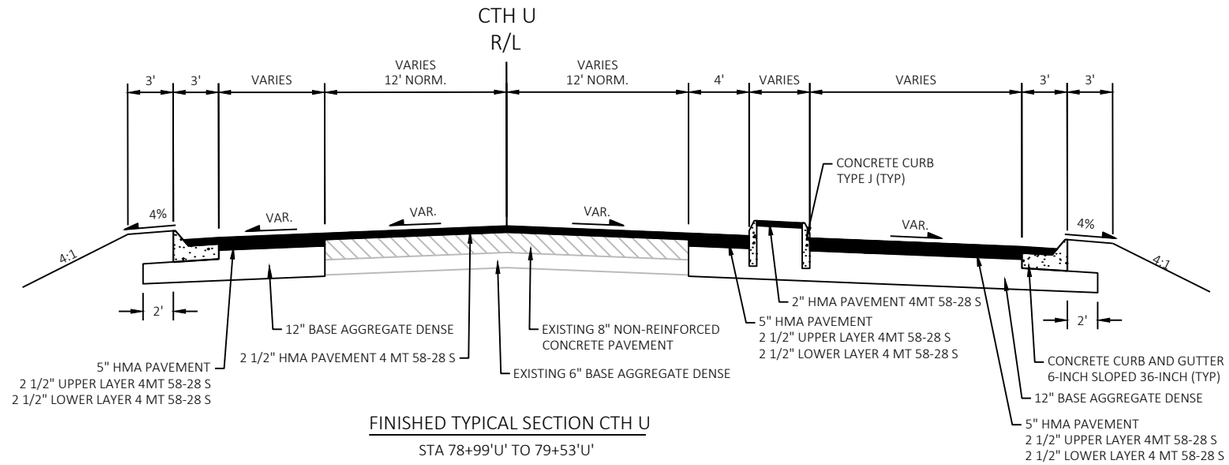

FINISHED TYPICAL SECTION CTH U

STA 78+99'U' TO 79+53'U'

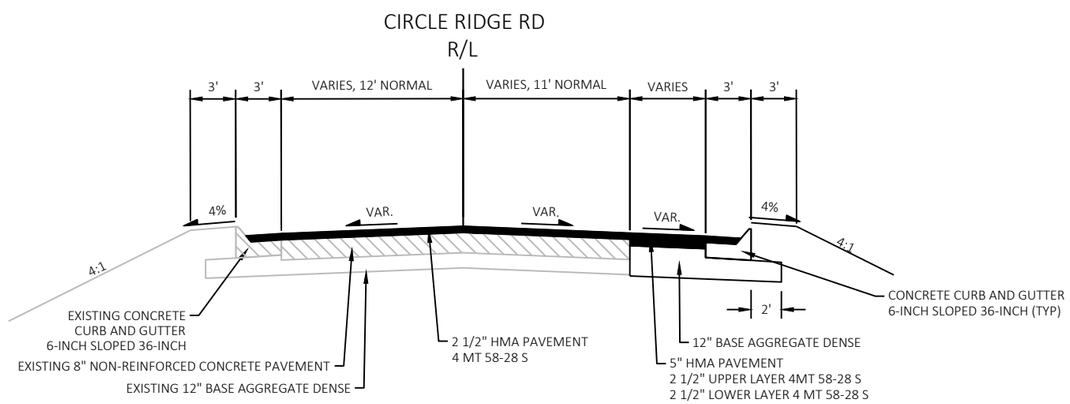

FINISHED TYPICAL SECTION CIRCLE RIDGE RD

STA 81+16'CI' TO 81+69'CI'

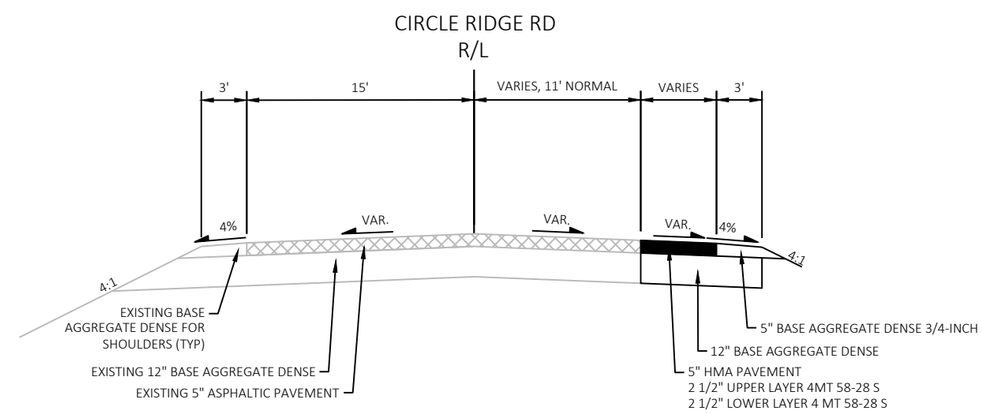

FINISHED TYPICAL SECTION CIRCLE RIDGE RD

STA 81+69'CI' TO 82+01'CI'

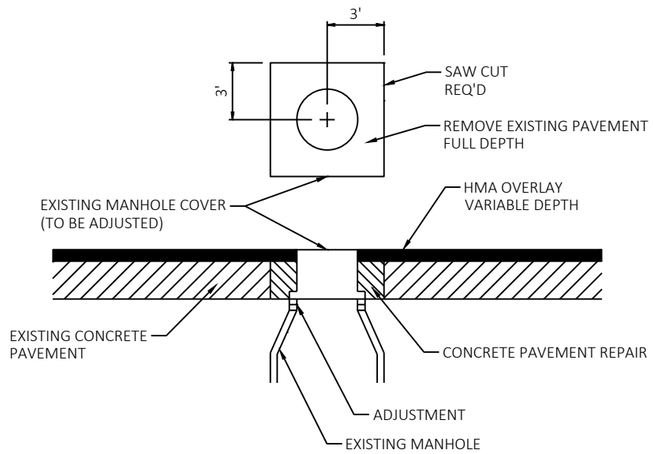

ADJUSTING MANHOLE COVERS

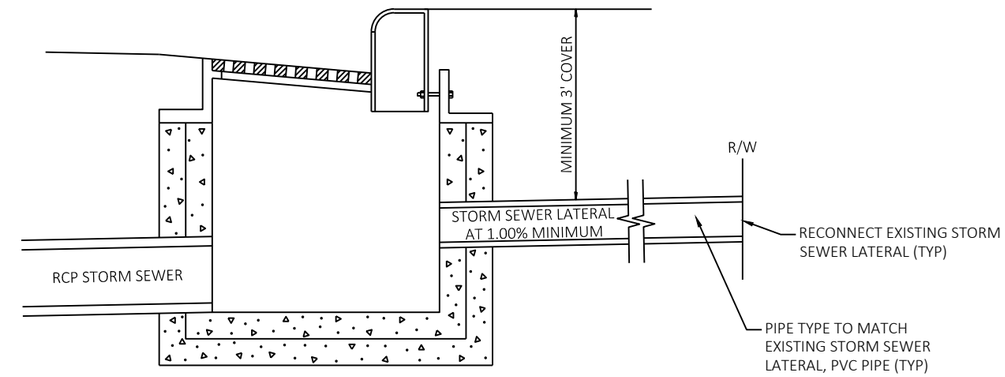

NOTE:
ALL LABOR AND MATERIALS NECESSARY FOR CONNECTION TO STORM SEWER SHALL BE INCIDENTAL TO THE BID ITEM OF RECONNECT STORM SEWER LATERALS.

RECONNECT STORM SEWER LATERAL DETAIL

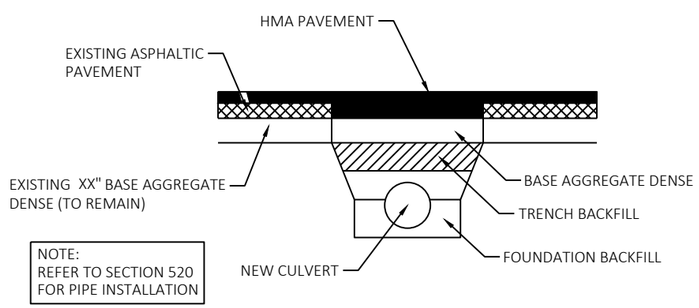

PAVEMENT AT CULVERT REPLACEMENTS

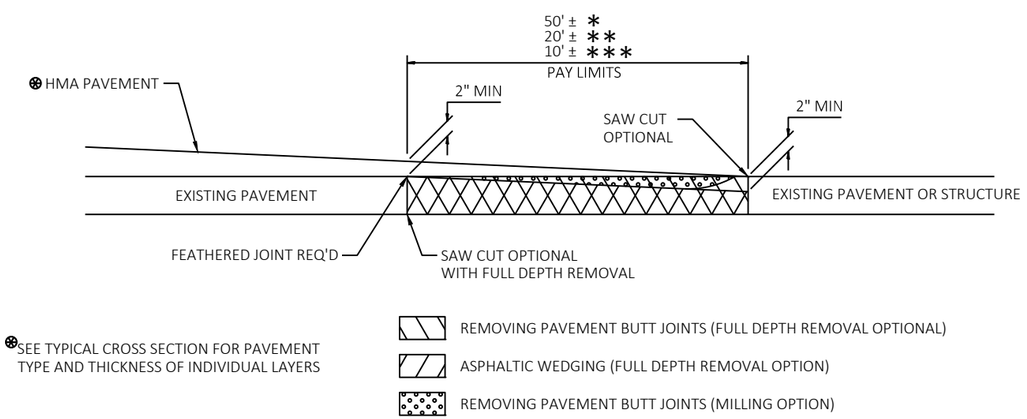

⊛SEE TYPICAL CROSS SECTION FOR PAVEMENT TYPE AND THICKNESS OF INDIVIDUAL LAYERS

BUTT JOINT DETAIL FOR PAVEMENT OVERLAY (PROFILE CHANGE)

* MAINLINE
** SIDEROADS
*** PRIVATE ENTRANCES

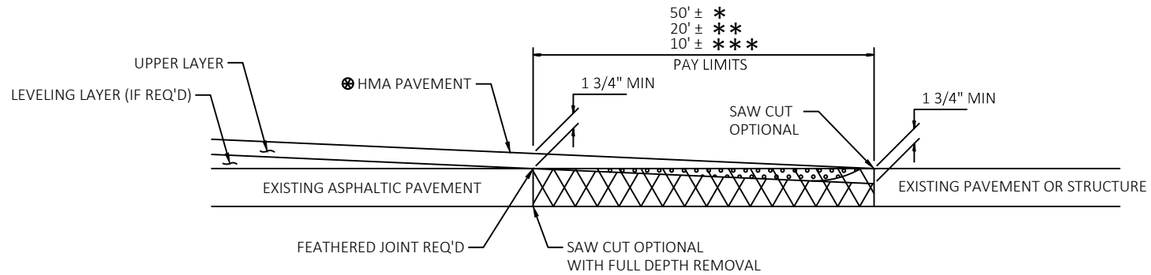

⊛SEE TYPICAL CROSS SECTION FOR PAVEMENT TYPE AND THICKNESS OF INDIVIDUAL LAYERS

REMOVING ASPHALTIC SURFACE, BUTT JOINTS (FULL DEPTH REMOVAL OPTIONAL)

ASPHALTIC WEDGING (FULL DEPTH REMOVAL OPTION)

REMOVING ASPHALTIC SURFACE, BUTT JOINTS (MILLING OPTION)

BUTT JOINT DETAIL FOR NON MILLED ASPHALTIC PAVEMENTS (PROFILE CHANGE)

* MAINLINE
** SIDEROADS
*** PRIVATE ENTRANCES

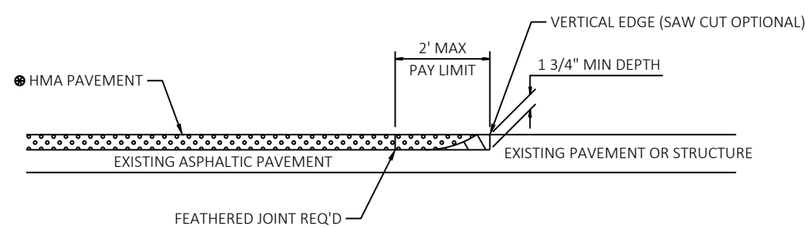

⊛ SEE TYPICAL CROSS SECTION FOR PAVEMENT TYPE AND THICKNESS OF INDIVIDUAL LAYERS

REMOVING ASPHALTIC SURFACE, MILLING

REMOVE ASPHALTIC SURFACE WEDGE AT BUTT JOINT TO CREATE VERTICAL EDGE

BUTT JOINT DETAIL FOR ASPHALTIC PAVEMENTS (NO PROFILE CHANGE)

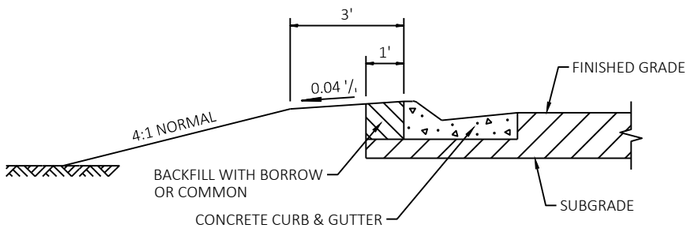

BERM DETAIL BEHIND CURB & GUTTER

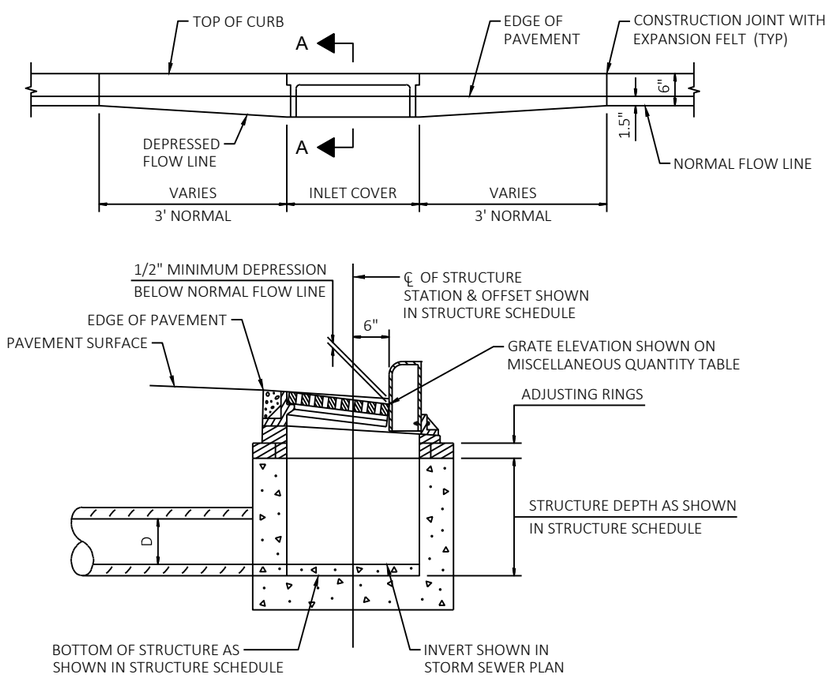

DETAIL OF CURB AND GUTTER AT INLETS

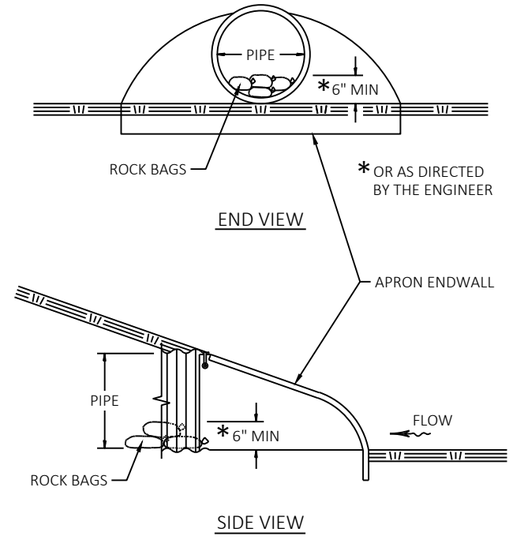

CULVERT PIPE CHECKS

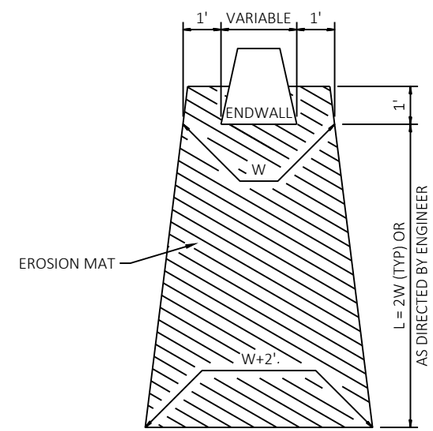

EROSION MAT TREATMENT AT CULVERTS

PROJECT NO: 4430-19-71	HWY: STH 42	COUNTY: DOOR	PLAN: CONSTRUCTION DETAILS	SHEET PRE_18 E

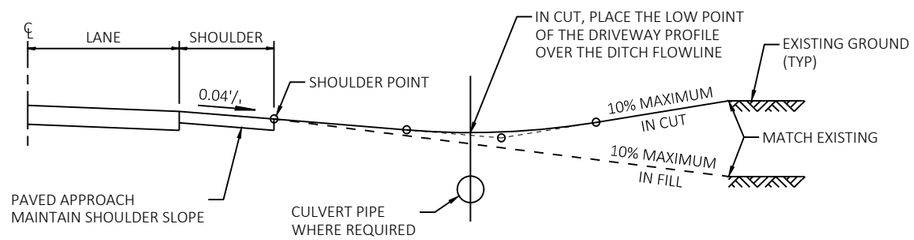

TYPICAL DRIVEWAY PROFILES

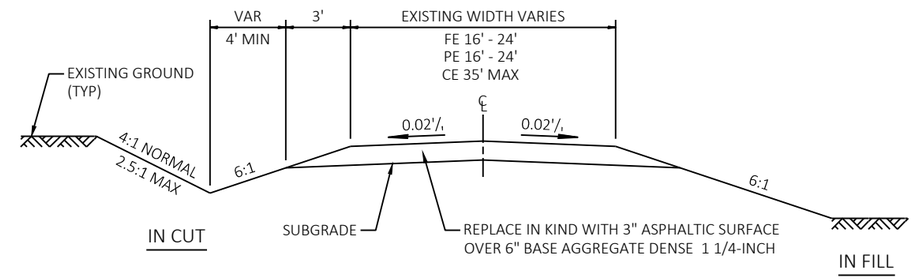

TYPICAL CROSS SECTION FOR DRIVEWAYS

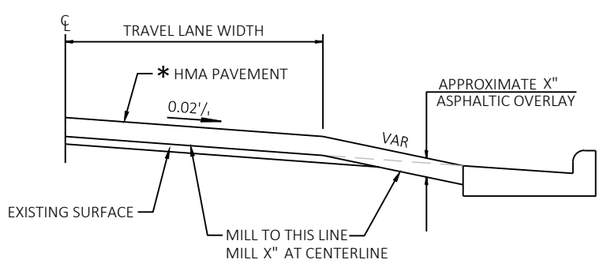

* SEE TYPICAL CROSS SECTION FOR PAVEMENT TYPE AND THICKNESS OF INDIVIDUAL LAYERS

TYPICAL CROSS SECTION WITH CURB & GUTTER (MILLED)

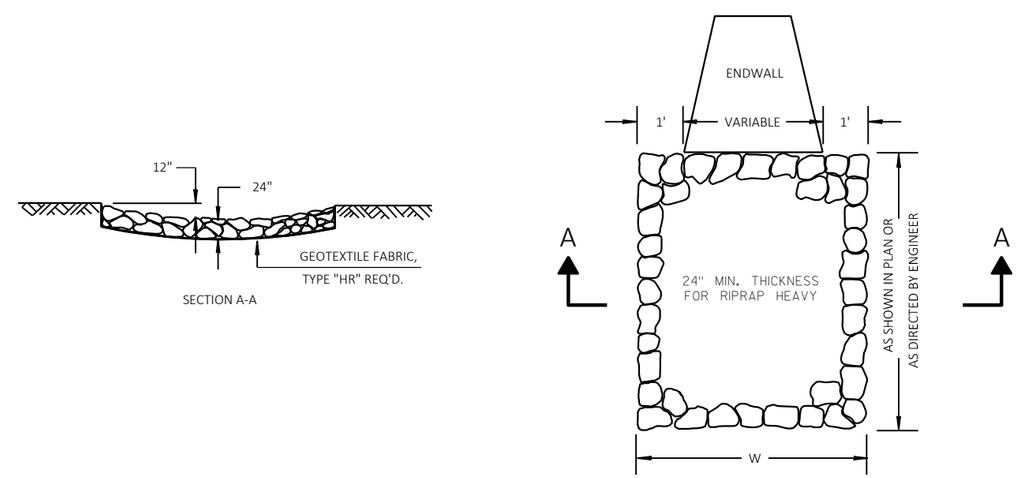

RIPRAP HEAVY TREATMENT AT APRON ENDWALS

2

SPLITTER ISLAND ASHLAND AVE					
POINT NUMBER	STATION	OFFSET	Y	X	CONCRETE NOSE
A	360+02.03 'SB'	27.29' LT	153518.486	487025.524	TYPE 2
B	360+02.03 'SB'	20.51' LT	153511.708	487025.341	TYPE 2
C	360+18.70 'SB'	21.46' LT	153512.197	487042.030	TYPE 1

* NOTE:
GUTTER FLANGE ELEVATION PRIOR TO BEING OVERLAID WITH HMA

** NOTE:
CITY OF STURGEON BAY TO PURCHASE PROPERTY FOR ASHLAND INTERSECTION WIDENING. CONTACT CHAD SHEFCHIK, CITY ENGINEER, FOR MORE INFORMATION, (920) 746-2913.

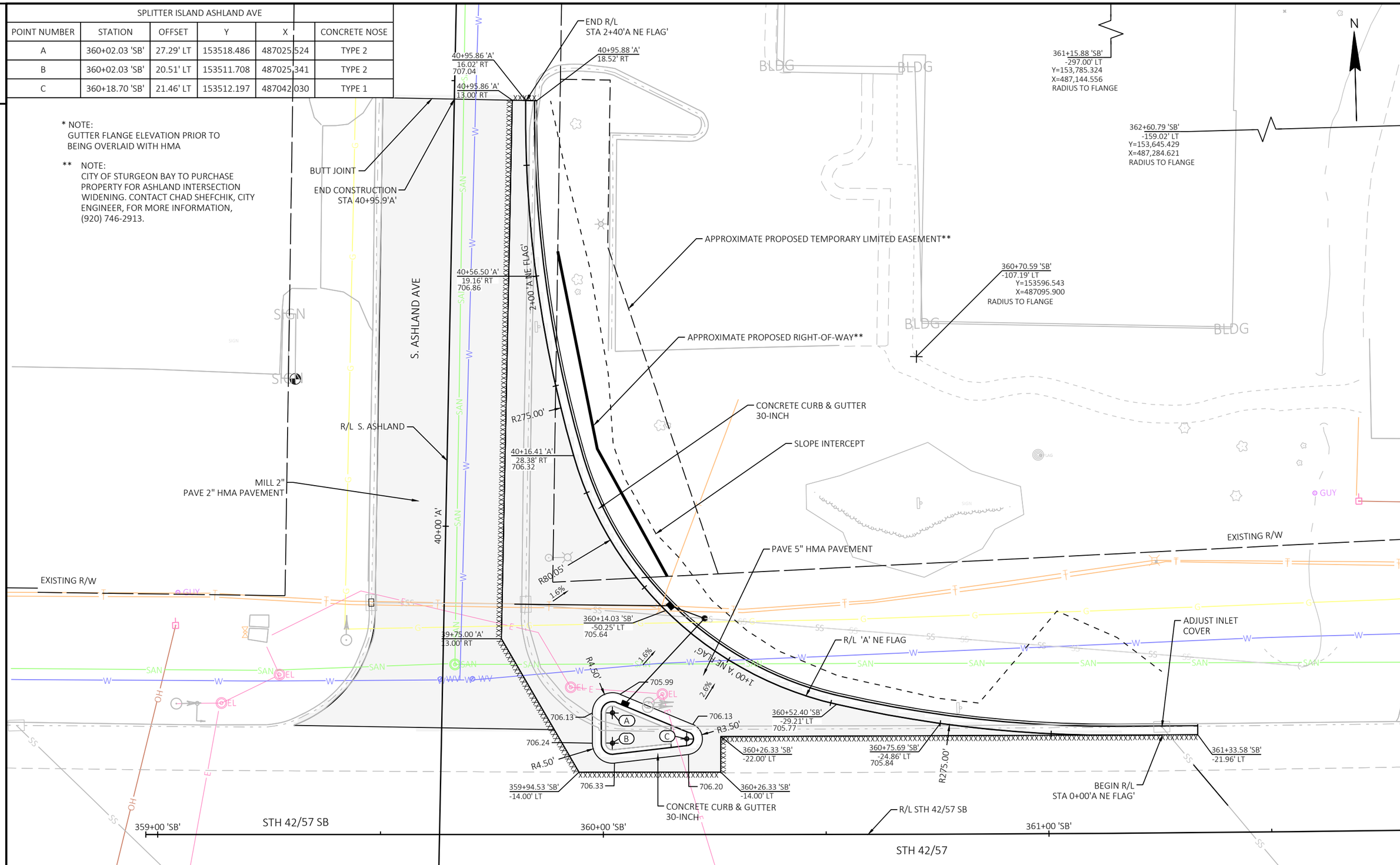

2

PROJECT NO: 4430-19-71	HWY: STH 42	COUNTY: DOOR	S. ASHLAND AVE.	SHEET PRE_20 E

FILE NAME : C:\CIVIL 3D PROJECTS\44301900\SHEETSPLAN\021001-ID.DWG
LAYOUT NAME - 021001-id
PLOT DATE : 7/29/2020 10:25 AM PLOT BY : KIRST, DOUGLAS P PLOT NAME : PLOT SCALE : 1 IN:20 FT
WISDOT/CADDS SHEET 42

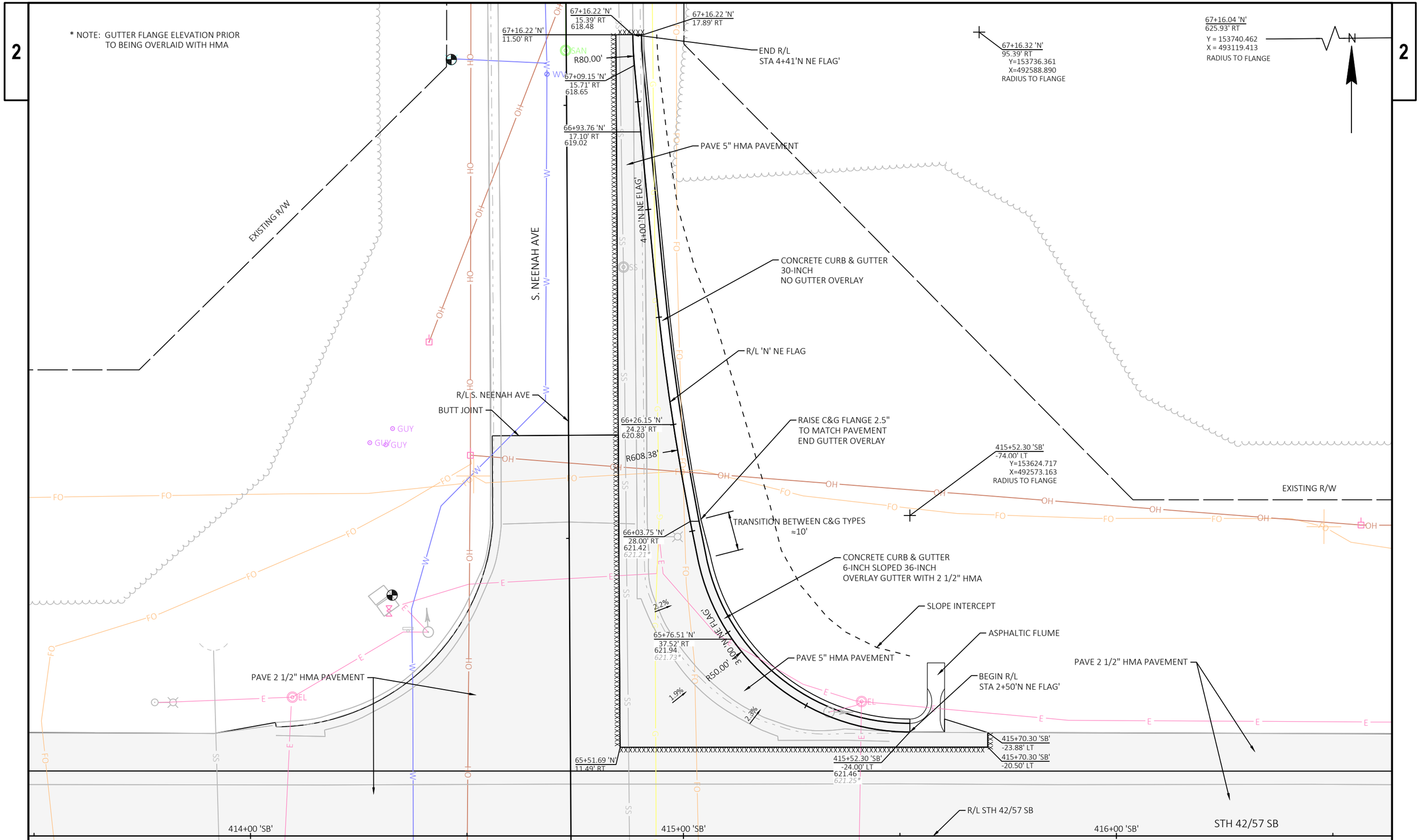

PROJECT NO: 4430-19-71	HWY: STH 42	COUNTY: DOOR	S. NEENAH ST	SHEET PRE_21	E

FILE NAME : C:\CIVIL 3D PROJECTS\44301900\SHEETSPLAN\021001-ID.DWG
LAYOUT NAME - 021002-id
PLOT DATE : 7/29/2020 10:25 AM
PLOT BY : KIRST, DOUGLAS P
PLOT NAME :
PLOT SCALE : 1 IN:20 FT
WISDOT/CADDS SHEET 42

2

* NOTE: GUTTER FLANGE ELEVATION PRIOR TO BEING OVERLAID WITH HMA

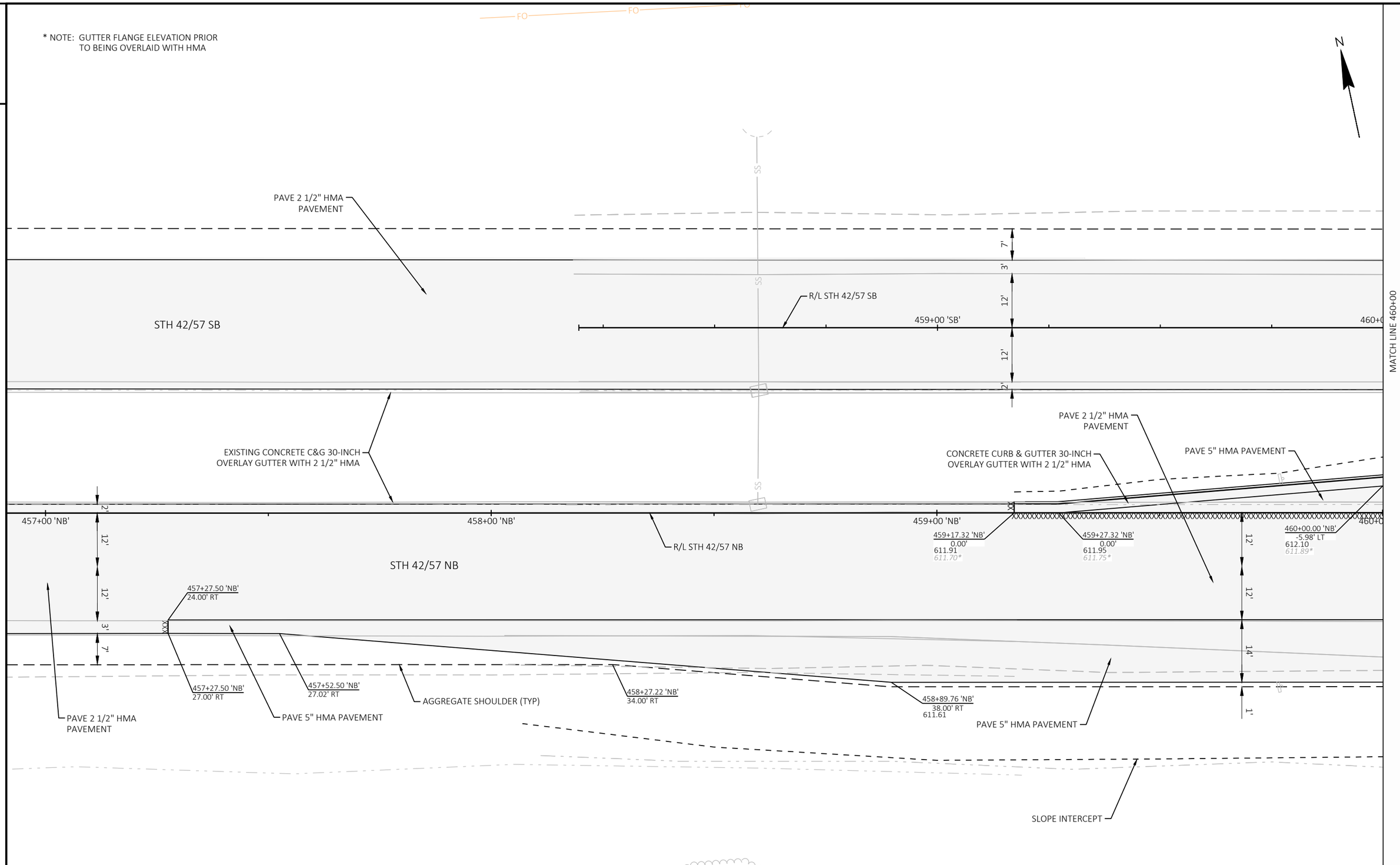

PROJECT NO: 4430-19-71	HWY: STH 42	COUNTY: DOOR	CIRCLE RIDGE RD - CTH U	SHEET PRE_22	E

FILE NAME : C:\CIVIL 3D PROJECTS\44301900\SHEETSPLAN\021001-ID.DWG
LAYOUT NAME - 021003-id
PLOT DATE : 7/29/2020 10:25 AM
PLOT BY : KIRST, DOUGLAS P
PLOT NAME :
PLOT SCALE : 1 IN:20 FT
WISDOT/CADDS SHEET 42

2

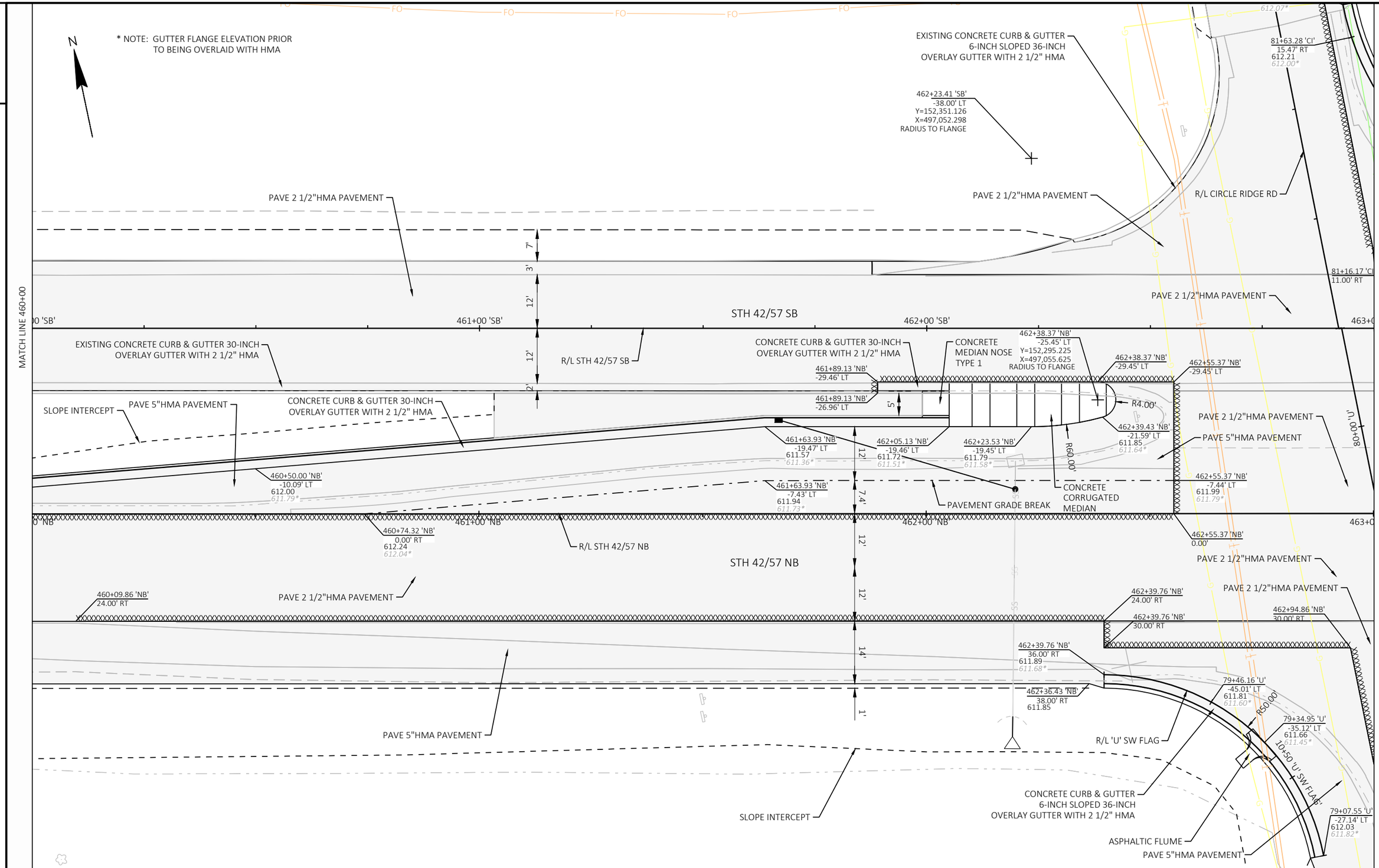

2

PROJECT NO: 4430-19-71	HWY: STH 42	COUNTY: DOOR	CIRCLE RIDGE RD - CTH U	SHEET PRE_23	E

FILE NAME : C:\CIVIL 3D PROJECTS\44301900\SHEETSPLAN\021001-ID.DWG
LAYOUT NAME - 021004-id
PLOT DATE : 7/29/2020 10:26 AM PLOT BY : KIRST, DOUGLAS P PLOT NAME : PLOT SCALE : 1 IN:20 FT

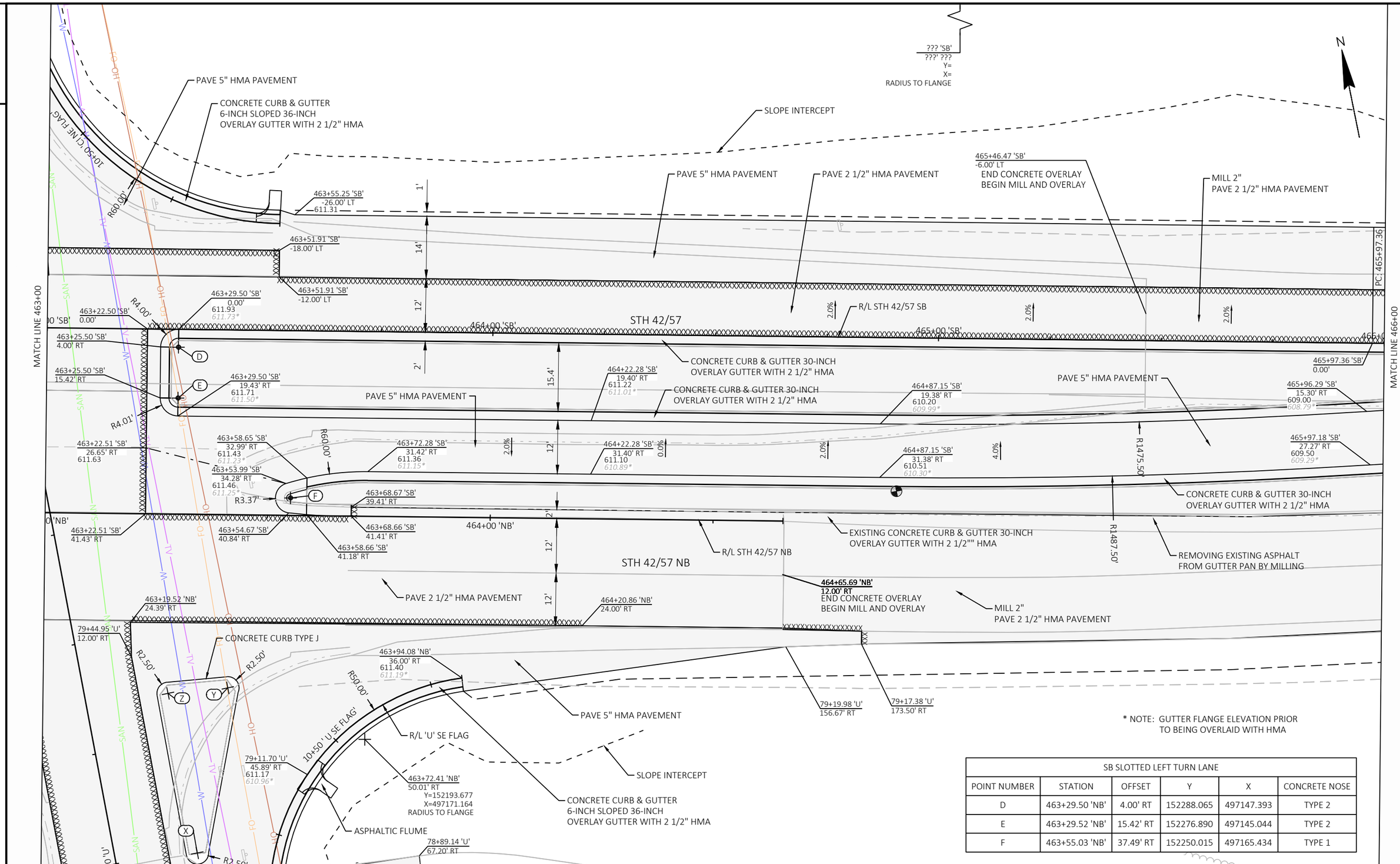

* NOTE: GUTTER FLANGE ELEVATION PRIOR TO BEING OVERLAID WITH HMA

SB SLOTTED LEFT TURN LANE					
POINT NUMBER	STATION	OFFSET	Y	X	CONCRETE NOSE
D	463+29.50 'NB'	4.00' RT	152288.065	497147.393	TYPE 2
E	463+29.52 'NB'	15.42' RT	152276.890	497145.044	TYPE 2
F	463+55.03 'NB'	37.49' RT	152250.015	497165.434	TYPE 1

2

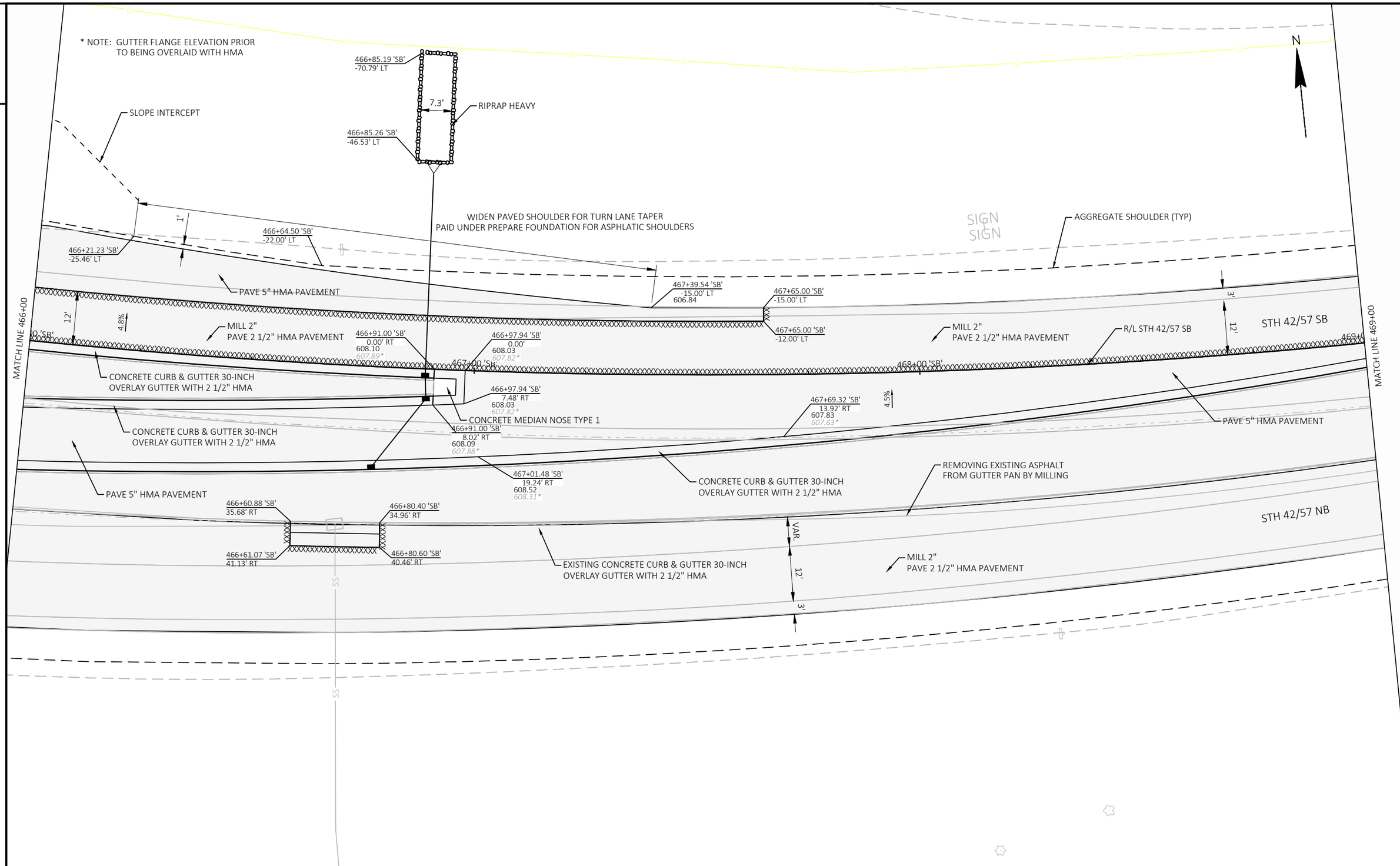

2

PROJECT NO: 4430-19-71	HWY: STH 42	COUNTY: DOOR	CIRCLE RIDGE RD - CTH U	SHEET PRE_25	E

FILE NAME : C:\CIVIL 3D PROJECTS\44301900\SHEETSPLAN\021001-ID.DWG
LAYOUT NAME - 021006-id
PLOT DATE : 7/29/2020 10:26 AM
PLOT BY : KIRST, DOUGLAS P
PLOT NAME :
PLOT SCALE : 1 IN:20 FT
WISDOT/CADDS SHEET 42

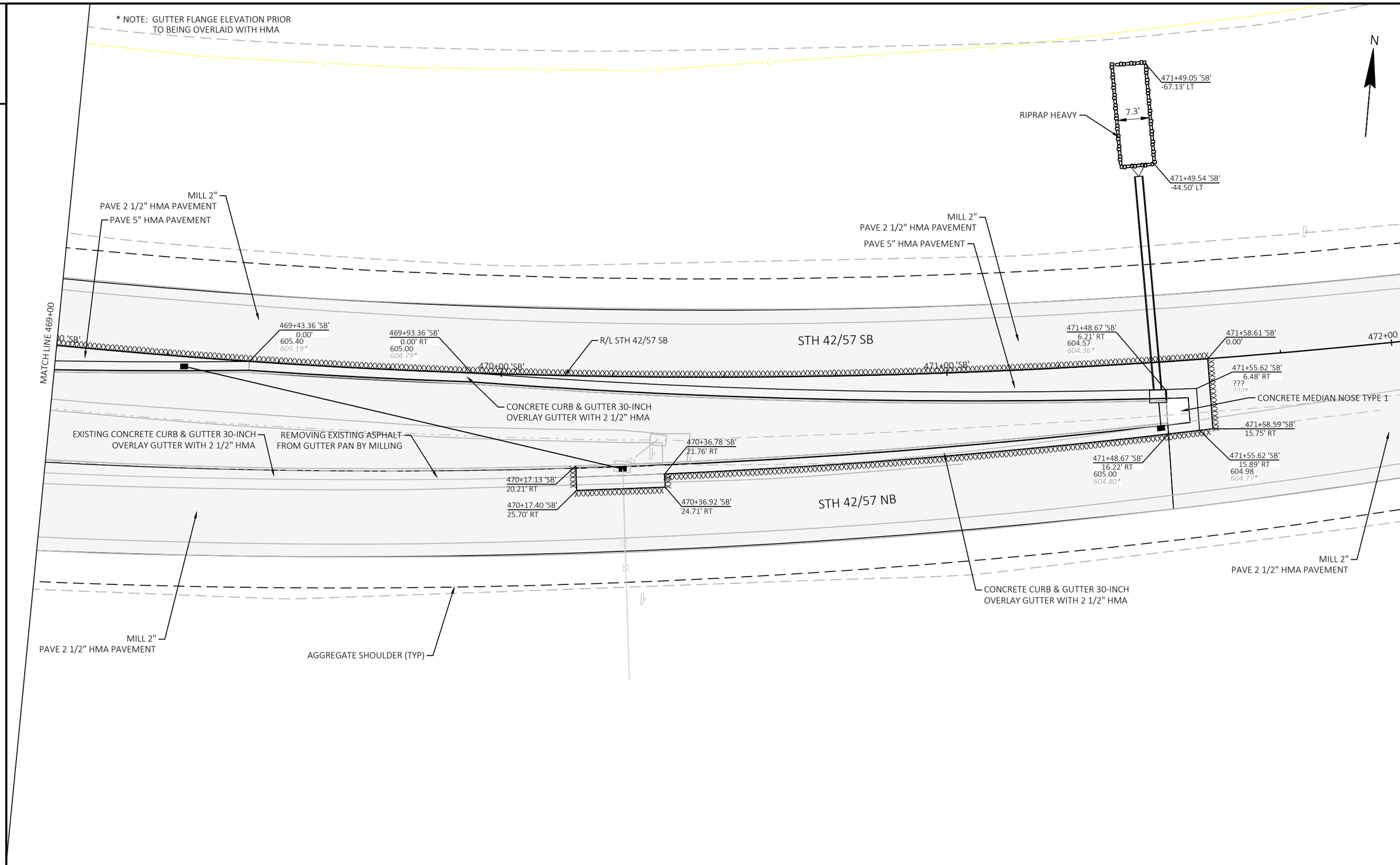
* NOTE: GUTTER FLANGE ELEVATION PRIOR TO BEING OVERLAID WITH HMA
N
471+49.05 'SB'
-67.13' LT
RIPRAP HEAVY
7.3'
471+49.54 'SB'
-44.50' LT
MILL 2"
PAVE 2 1/2" HMA PAVEMENT
PAVE 5" HMA PAVEMENT
MILL 2"
PAVE 2 1/2" HMA PAVEMENT
PAVE 5" HMA PAVEMENT
MATCH LINE 469+00
469+43.36 'SB'
0.00'
605.40
605.19*
469+93.36 'SB'
0.00' RT
605.00
604.79*
R/L STH 42/57 SB
STH 42/57 SB
471+48.67 'SB'
6.21' RT
604.57
604.36*
471+58.61 'SB'
0.00'
472+00 'SB'
470+00 'SB'
471+00 'SB'
471+55.62 'SB'
6.48' RT
???
???*
CONCRETE MEDIAN NOSE TYPE 1
CONCRETE CURB & GUTTER 30-INCH
OVERLAY GUTTER WITH 2 1/2" HMA
471+58.59 'SB'
15.75' RT
EXISTING CONCRETE CURB & GUTTER 30-INCH
OVERLAY GUTTER WITH 2 1/2" HMA
REMOVING EXISTING ASPHALT
FROM GUTTER PAN BY MILLING
470+36.78 'SB'
21.76' RT
471+48.67 'SB'
16.22' RT
605.00
604.80*
471+55.62 'SB'
15.89' RT
604.98
604.77*
470+17.13 'SB'
20.21' RT
470+17.40 'SB'
25.70' RT
470+36.92 'SB'
24.71' RT
STH 42/57 NB
MILL 2"
PAVE 2 1/2" HMA PAVEMENT
CONCRETE CURB & GUTTER 30-INCH
OVERLAY GUTTER WITH 2 1/2" HMA
MILL 2"
PAVE 2 1/2" HMA PAVEMENT
AGGREGATE SHOULDER (TYP)

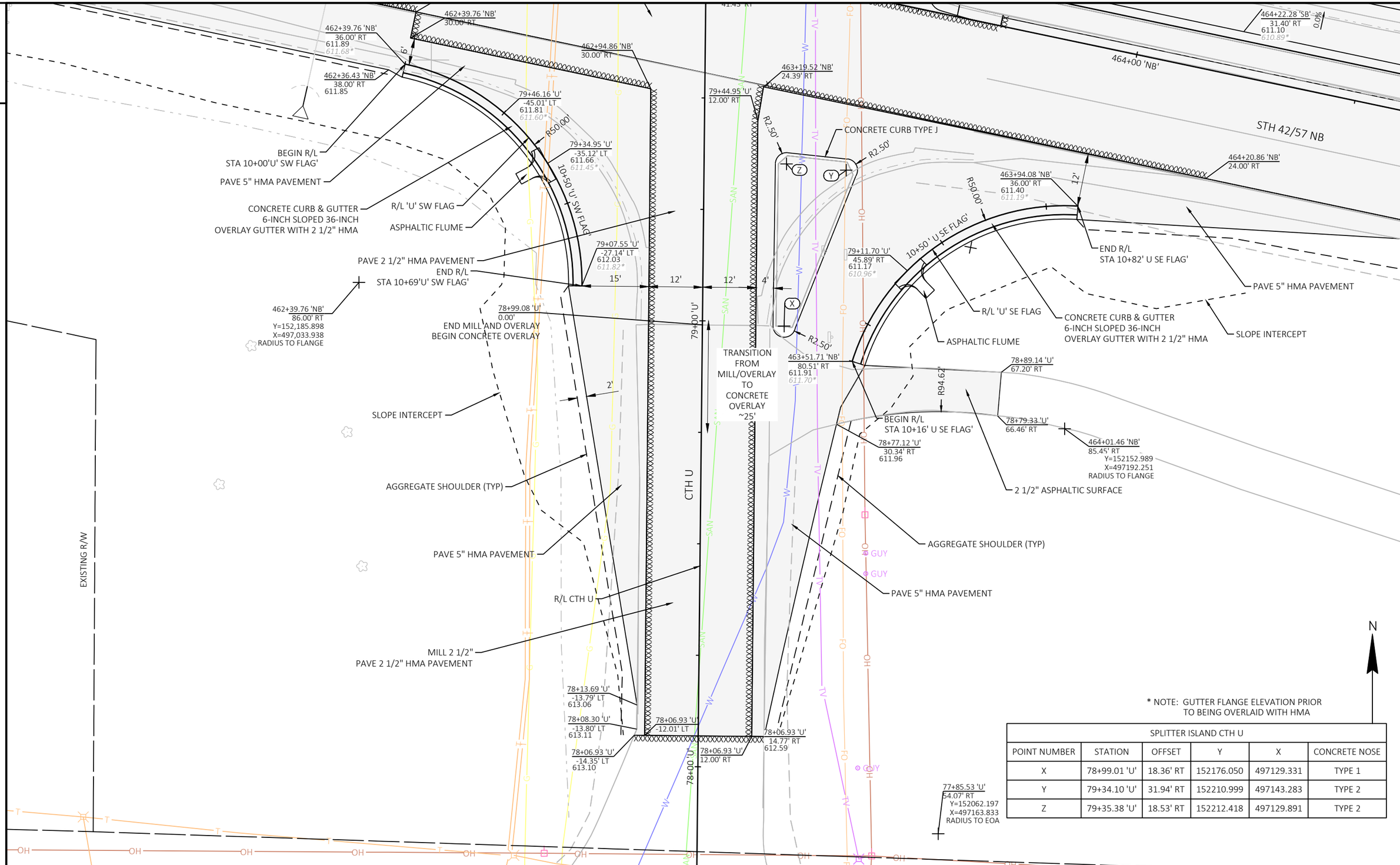

* NOTE: GUTTER FLANGE ELEVATION PRIOR TO BEING OVERLAID WITH HMA

SPLITTER ISLAND CTH U					
POINT NUMBER	STATION	OFFSET	Y	X	CONCRETE NOSE
X	78+99.01 'U'	18.36' RT	152176.050	497129.331	TYPE 1
Y	79+34.10 'U'	31.94' RT	152210.999	497143.283	TYPE 2
Z	79+35.38 'U'	18.53' RT	152212.418	497129.891	TYPE 2

PROJECT NO: 4430-19-71	HWY: STH 42	COUNTY: DOOR	CIRCLE RIDGE RD - CTH U	SHEET PRE_27	E

FILE NAME : C:\CIVIL 3D PROJECTS\44301900\SHEETSPLAN\021001-ID.DWG
LAYOUT NAME - 021008-id
PLOT DATE : 7/29/2020 10:27 AM PLOT BY : KIRST, DOUGLAS P PLOT NAME : PLOT SCALE : 1 IN:20 FT
WISDOT/CADDS SHEET 42

2

* NOTE: GUTTER FLANGE ELEVATION PRIOR TO BEING OVERLAID WITH HMA

N

CIRCLE RIDGE RD

EXISTING R/W

R/L CIRCLE RIDGE RD

BUTT JOINT REQ'D

82+01.47 'CI'
11.00' RT

82+01.39 'CI'
14.94' RT
611.87

82+00

PAVE 2 1/2" HMA PAVEMENT

END R/L
STA 10+83'CI NE FLAG'

R/L 'CI' NE FLAG

81+70.78 'CI'
15.00' RT
612.28
612.07*

81+70.78 'CI'
75.00' RT
Y=152369.513
X=497187.552
RADIUS TO FLANGE

11'

4'

81+63.28 'CI'
15.47' RT
612.21
612.00*

PAVE 5" HMA PAVEMENT

EXISTING CONCRETE CURB & GUTTER
6-INCH SLOPED 36-INCH
OVERLAY GUTTER WITH 2 1/2" HMA

SLOPE INTERCEPT

CONCRETE CURB & GUTTER
6-INCH SLOPED 36-INCH
OVERLAY GUTTER WITH 2 1/2" HMA

10+50 'CI NE FLAG'

ASPHALTIC FLUME

BEGIN R/L
STA 10+00'CI NE FLAG'

81+29.86 'CI'
31.12' RT
611.48
611.27*

R60.00'

463+55.25 'SB'
-26.00' LT
611.31

463+46.59 'SB'
-24.23' LT
611.40
611.19*

463+51.91 'SB'
-18.00' LT

7'

STH 42/57 SB

462+00 'SB'

461+89.13 'NB'
-29.46' LT

461+89.13 'NB'
-26.96' LT

5'

461+63.93 'NB'
-19.47' LT
611.57

462+38.37 'NB'
-29.45' LT

462+55.37 'NB'
-29.45' LT

81+16.17 'CI'
11.00' RT

463+00 'SB'

463+22.50 'SB'

463+29.50 'SB'

R4.00'

PROJECT NO: 4430-19-71	HWY: STH 42	COUNTY: DOOR	CIRCLE RIDGE RD - CTH U	SHEET PRE_28	E

FILE NAME : C:\CIVIL 3D PROJECTS\44301900\SHEETSPLAN\021001-ID.DWG
LAYOUT NAME - 021009-id

PLOT DATE : 7/29/2020 10:27 AM PLOT BY : KIRST, DOUGLAS P PLOT NAME : PLOT SCALE : 1 IN:20 FT

WISDOT/CADDS SHEET 42

2

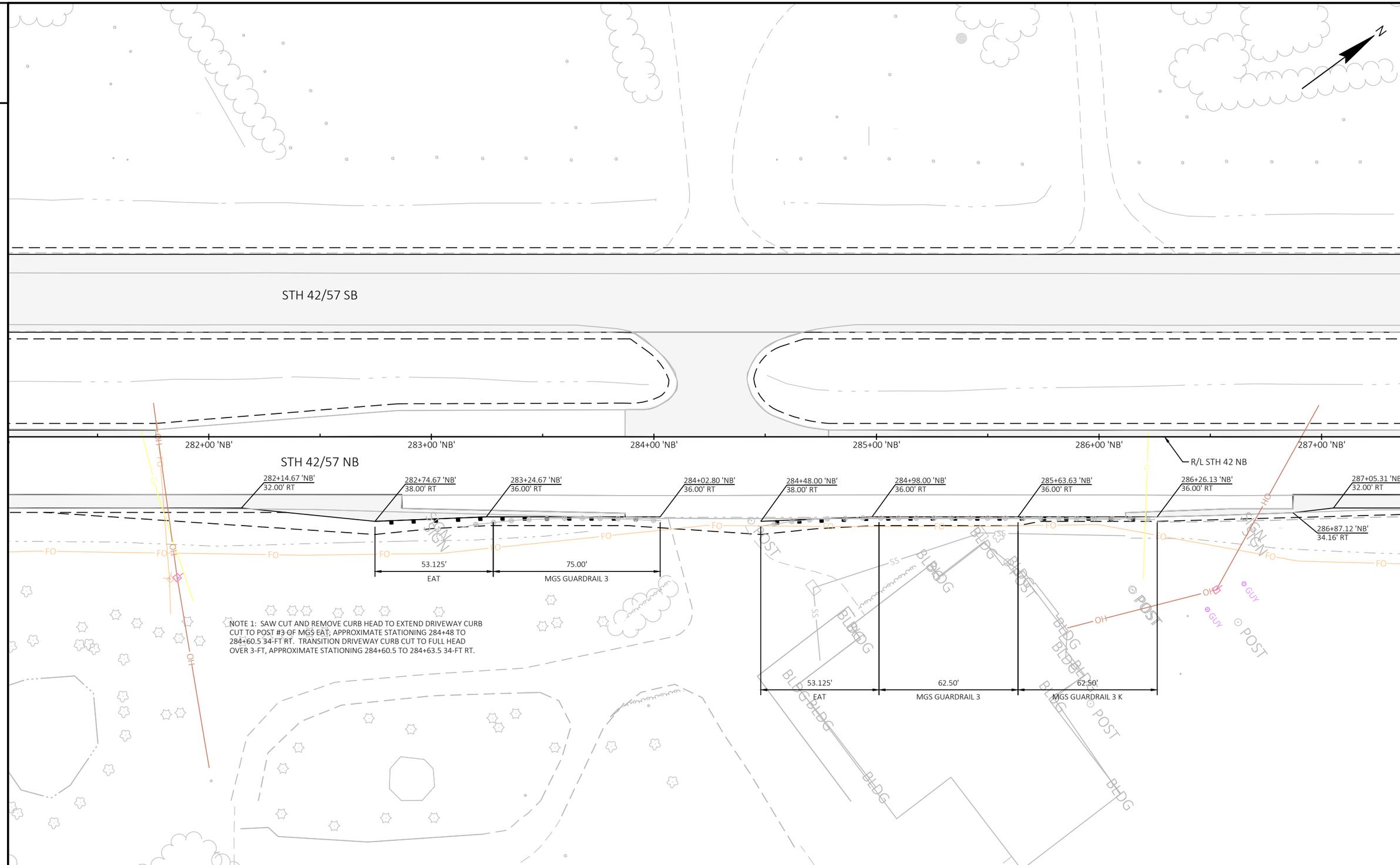

PROJECT NO: 4430-19-71	HWY: STH 42	COUNTY: DOOR	PLAN DETAILS	SHEET PRE_29 E

FILE NAME : C:\CIVIL 3D PROJECTS\44301900\SHEETSPLAN\021201-PD.DWG
LAYOUT NAME - 021201-pd
PLOT DATE : 7/29/2020 10:28 AM
PLOT BY : KIRST, DOUGLAS P
PLOT NAME :
PLOT SCALE : 1 IN:40 FT
WISDOT/CADDS SHEET 42

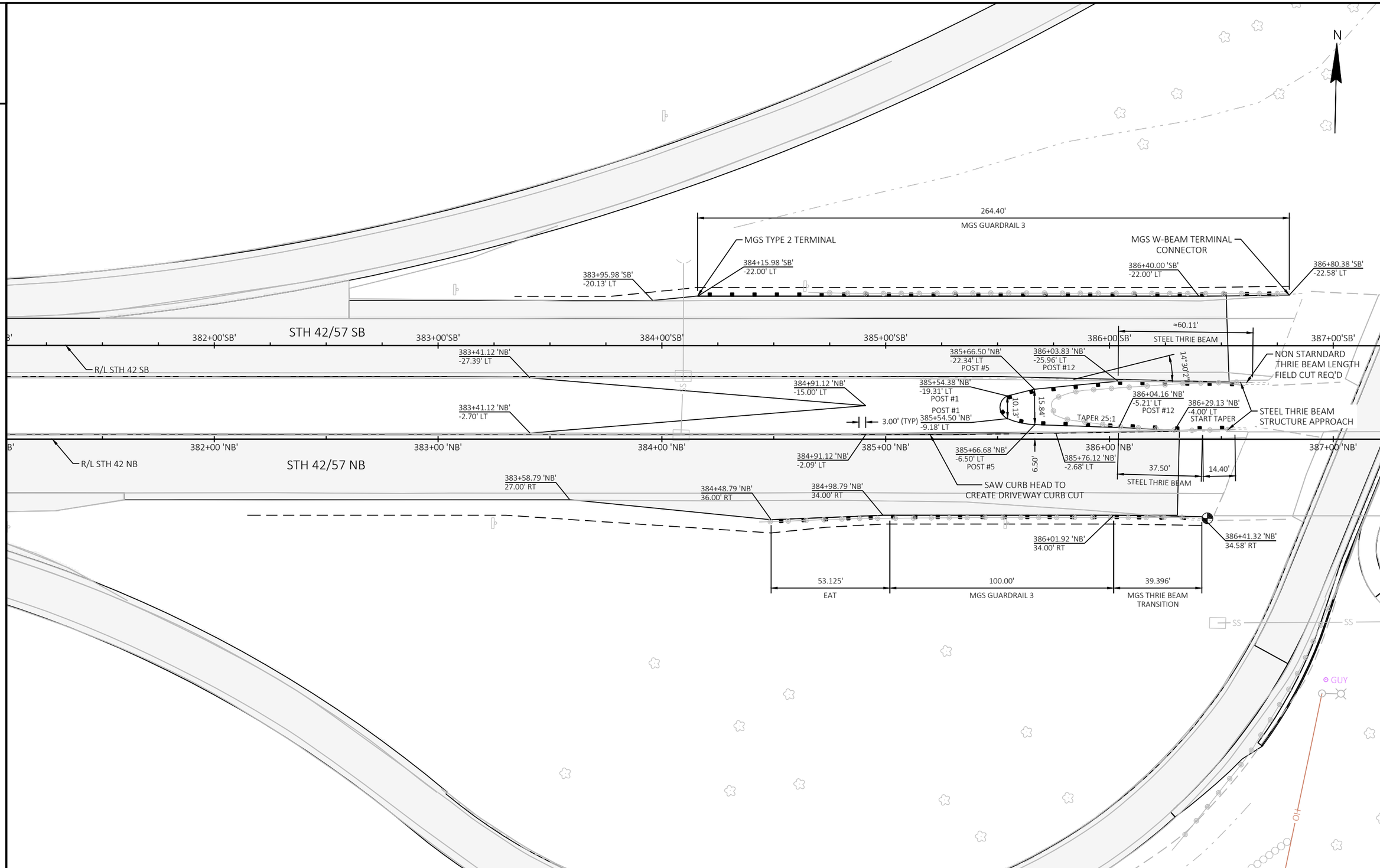
N
264.40'
MGS GUARDRAIL 3
MGS TYPE 2 TERMINAL
MGS W-BEAM TERMINAL CONNECTOR
384+15.98 'SB'
-22.00' LT
383+95.98 'SB'
-20.13' LT
386+40.00 'SB'
-22.00' LT
386+80.38 'SB'
-22.58' LT
STH 42/57 SB
382+00'SB'
383+00'SB'
384+00'SB'
385+00'SB'
386+00'SB'
387+00'SB'
≈60.11'
STEEL THRIE BEAM
R/L STH 42 SB
383+41.12 'NB'
-27.39' LT
385+66.50 'NB'
-22.34' LT
POST #5
386+03.83 'NB'
-25.96' LT
POST #12
14°30'2"
NON STARNDARD THRIE BEAM LENGTH FIELD CUT REQ'D
384+91.12 'NB'
-15.00' LT
385+54.38 'NB'
-19.31' LT
POST #1
10.13'
15.84'
386+04.16 'NB'
-5.21' LT
POST #12
386+29.13 'NB'
-4.00' LT
START TAPER
STEEL THRIE BEAM STRUCTURE APPROACH
383+41.12 'NB'
-2.70' LT
3.00' (TYP)
POST #1
385+54.50 'NB'
-9.18' LT
TAPER 25:1
382+00 'NB'
383+00 'NB'
384+00 'NB'
385+00 'NB'
386+00 'NB'
387+00 'NB'
MATCH LINE 387+25
R/L STH 42 NB
STH 42/57 NB
384+91.12 'NB'
-2.09' LT
385+66.68 'NB'
-6.50' LT
POST #5
6.50'
385+76.12 'NB'
-2.68' LT
37.50'
14.40'
STEEL THRIE BEAM
383+58.79 'NB'
27.00' RT
384+48.79 'NB'
36.00' RT
384+98.79 'NB'
34.00' RT
SAW CURB HEAD TO CREATE DRIVEWAY CURB CUT
386+01.92 'NB'
34.00' RT
386+41.32 'NB'
34.58' RT
53.125'
EAT
100.00'
MGS GUARDRAIL 3
39.396'
MGS THRIE BEAM TRANSITION
SS
GUY
OH

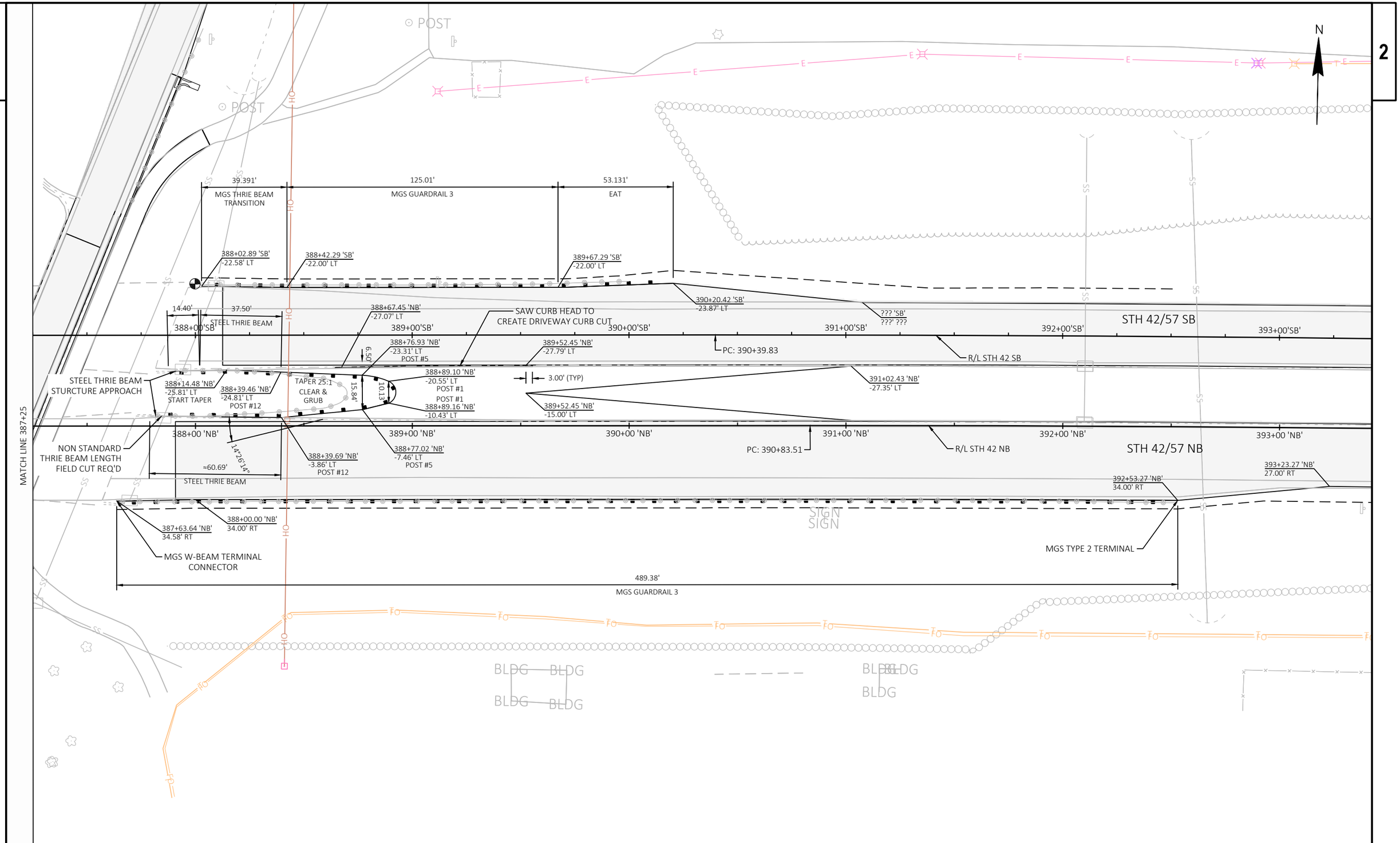

PROJECT NO: 4430-19-71	HWY: STH 42	COUNTY: DOOR	PLAN DETAILS	SHEET PRE_31 E

FILE NAME : C:\CIVIL 3D PROJECTS\44301900\SHEETSPLAN\021201-PD.DWG
LAYOUT NAME - 021203-pd
PLOT DATE : 7/29/2020 10:28 AM
PLOT BY : KIRST, DOUGLAS P
PLOT NAME :
PLOT SCALE : 1 IN:40 FT
WISDOT/CADDS SHEET 42

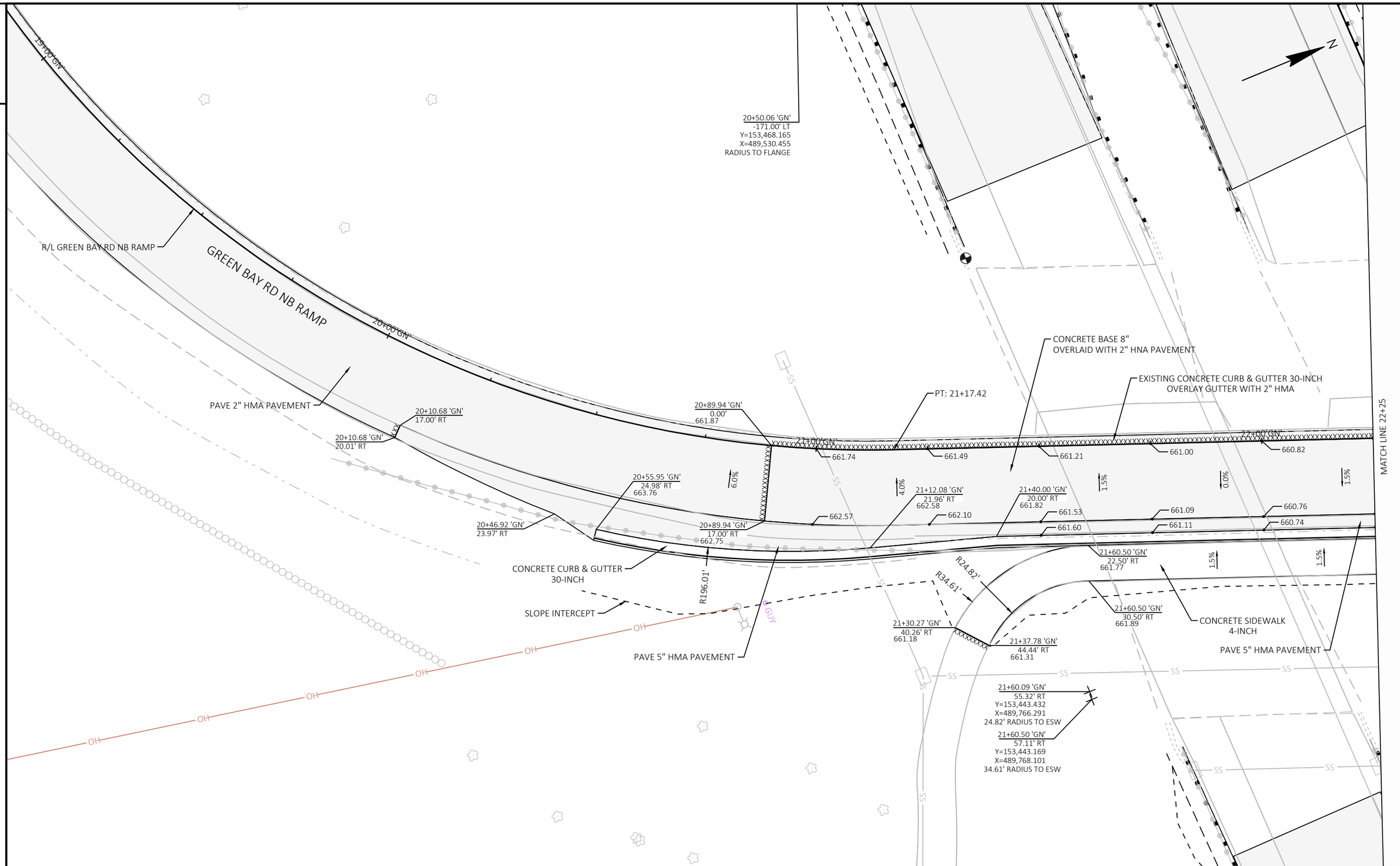
15+00 'GN'
20+00 'GN'
R/L GREEN BAY RD NB RAMP
GREEN BAY RD NB RAMP
20+50.06 'GN'
-171.00' LT
Y=153,468.165
X=489,530.455
RADIUS TO FLANGE
N
CONCRETE BASE 8"
OVERLAID WITH 2" HNA PAVEMENT
EXISTING CONCRETE CURB & GUTTER 30-INCH
OVERLAY GUTTER WITH 2" HMA
PT: 21+17.42
PAVE 2" HMA PAVEMENT
20+10.68 'GN'
17.00' RT
20+10.68 'GN'
20.01' RT
20+89.94 'GN'
0.00'
661.87
21+00 'GN'
22+00 'GN'
661.74
661.49
661.21
661.00
660.82
MATCH LINE 22+25
20+55.95 'GN'
24.98' RT
663.76
6.0%
4.0%
21+12.08 'GN'
21.96' RT
662.58
21+40.00 'GN'
20.00' RT
661.82
1.5%
0.0%
1.5%
662.57
662.10
661.53
661.60
661.09
661.11
660.76
660.74
20+46.92 'GN'
23.97' RT
20+89.94 'GN'
17.00' RT
662.75
21+60.50 'GN'
22.50' RT
661.77
1.5%
1.5%
CONCRETE CURB & GUTTER
30-INCH
R196.01'
R24.82'
R34.61'
SLOPE INTERCEPT
GUY
21+60.50 'GN'
30.50' RT
661.89
CONCRETE SIDEWALK
4-INCH
21+30.27 'GN'
40.26' RT
661.18
21+37.78 'GN'
44.44' RT
661.31
PAVE 5" HMA PAVEMENT
PAVE 5" HMA PAVEMENT
OH
SS
21+60.09 'GN'
55.32' RT
Y=153,443.432
X=489,766.291
24.82' RADIUS TO ESW
21+60.50 'GN'
57.11' RT
Y=153,443.169
X=489,768.101
34.61' RADIUS TO ESW

2

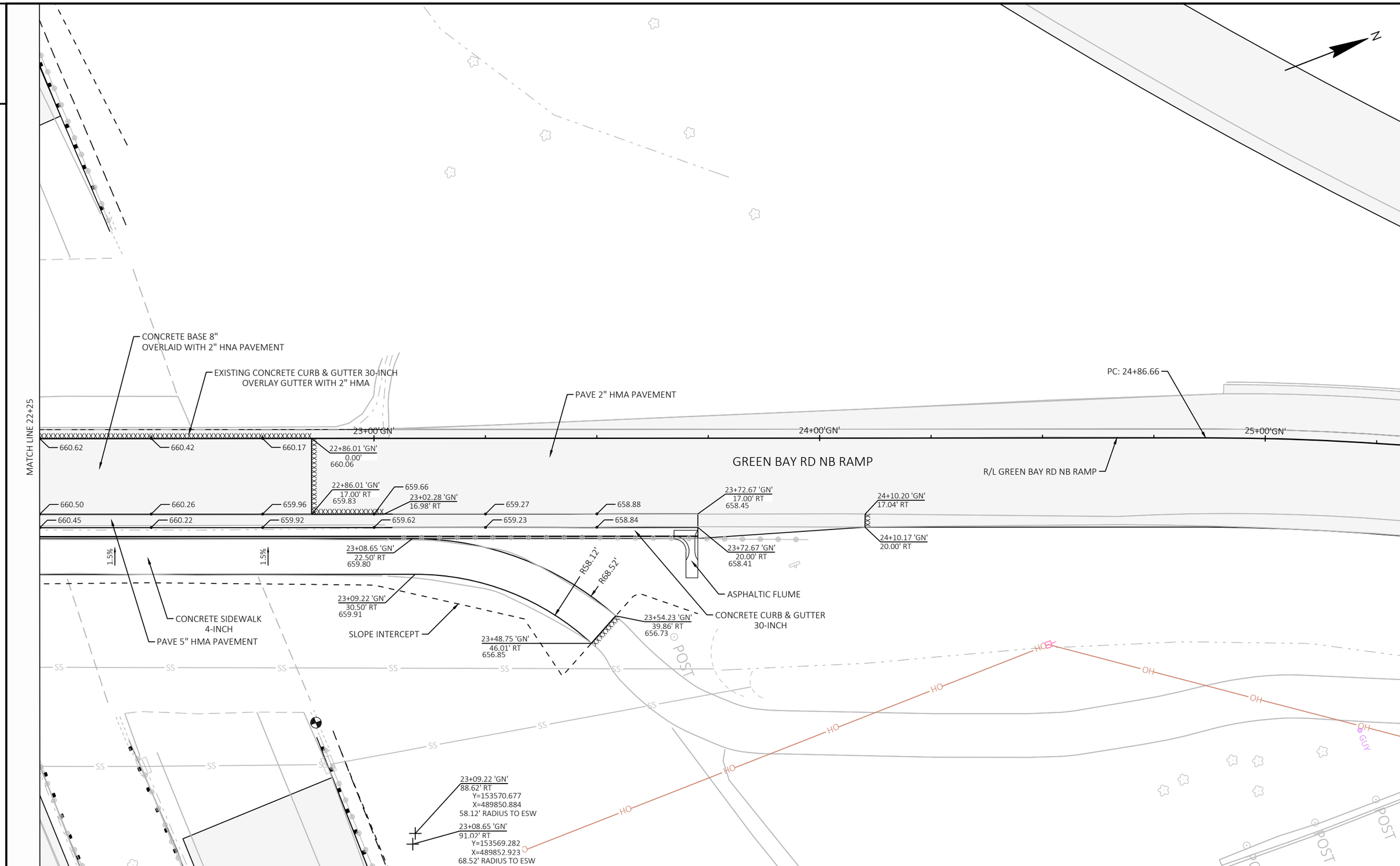

2

PROJECT NO: 4430-19-71	HWY: STH 42	COUNTY: DOOR	PLAN DETAILS	SHEET PRE_33 E

FILE NAME : C:\CIVIL 3D PROJECTS\44301900\SHEETSPLAN\021202-PD.DWG
LAYOUT NAME - 021205-pd
PLOT DATE : 7/29/2020 10:29 AM
PLOT BY : KIRST, DOUGLAS P
PLOT NAME :
PLOT SCALE : 1 IN:20 FT
WISDOT/CADDS SHEET 42

2

EXISTING R/W

STH 42/57 SB

37 STA 343+95 'NB', 7.4' LT
MANHOLES 4-J
TUCK POINT STRUCTURE INTERIOR
TO STOP WATER INFILTRATION

40 STA 346+76 'NB', 8.8' LT
MANHOLES 4-J
TUCK POINT STRUCTURE INTERIOR
TO STOP WATER INFILTRATION

44 STA 348+32 'NB', 10.1' LT
MANHOLES 4-J
TUCK POINT STRUCTURE INTERIOR
TO STOP WATER INFILTRATION

345+00'NB'

STH 42/57 NB

R/L STH 42/57 NB

36 STA 343+96 'NB', 36.1' RT
INLETS 2x3-H
TUCK POINT STRUCTURE INTERIOR
TO STOP WATER INFILTRATION

EXISTING R/W

STA 348+47 'NB', 64.2' RT
INLETS 2x3-H
42B
TUCK POINT STRUCTURE INTERIOR
TO STOP WATER INFILTRATION

N

EXISTING R/W

POND LN

EXISTING R/W

N

RELAID STORM SEWER 12-INCH
INSTALL JOINT TIES

354+74.9'NB'
-80.94' LT

354+75.0'NB'
-65.72' LT

STH 42/57 SB

355+00'NB'

STH 42/57 NB

R/L STH 42/57 NB

CONCRETE STRUCTURE REPAIR

EXISTING R/W

N

STH 42/57 SB

REPLACE 8FT 12-INCH SSCRP CLASS IV

374+39.5'NB'
-31.49' LT

CONCRETE
COLLAR REQ'D

374+39.7'NB'
-23.50' LT

372+18.9'NB'
17.57' RT

373+00 'NB'

REPLACE 8FT 12-INCH SSCRP CLASS IV

R/L STH 42/57 NB

STH 42/57 NB

CONCRETE
COLLAR REQ'D

372+19.9'NB'
25.51' RT

EXISTING R/W

2

PROJECT NO: 4430-19-71	HWY: STH 42	COUNTY: DOOR	STORM SEWER PLAN	SHEET E

PRE_34

FILE NAME : C:\CIVIL 3D PROJECTS\44301900\SHEETSPLAN\022501-SS.DWG
LAYOUT NAME - 022501-ss

PLOT DATE : 7/31/2020 7:47 AM PLOT BY : KIRST, DOUGLAS P PLOT NAME : PLOT SCALE : 1 IN:40 FT

WISDOT/CADDS SHEET 42

2

** NOTE:
CITY OF STURGEON BAY TO PURCHASE PROPERTY FOR ASHLAND INTERSECTION WIDENING. CONTACT CHAD SHEFCHIK, CITY ENGINEER, FOR MORE INFORMATION, (920) 746-2913.

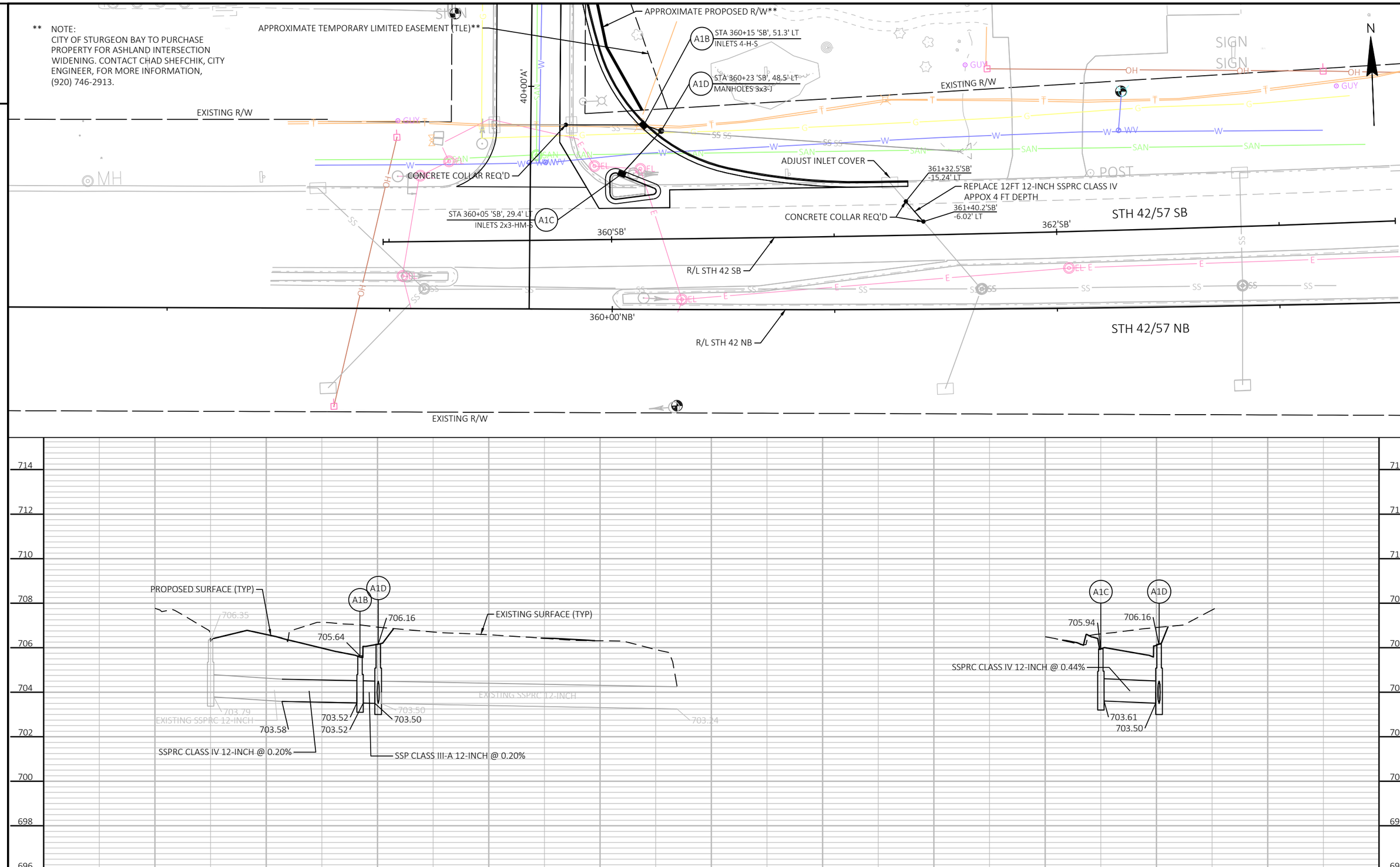

PROJECT NO: 4430-19-71	HWY: STH 42	COUNTY: DOOR	STORM SEWER	SHEET PRE_35 E

FILE NAME : C:\CIVIL 3D PROJECTS\44301900\SHEETSPLAN\022501-SS.DWG
LAYOUT NAME - 022502-ss
PLOT DATE : 7/31/2020 7:47 AM
PLOT BY : KIRST, DOUGLAS P
PLOT NAME :
PLOT SCALE : 1 IN:40 FT

WISDOT/CADDS SHEET 41

2

459+00'SB'
460+00'SB'
STH 42/57 SB
461+00'SB'
R/L STH 42/57 SB
462+00'SB'
463+00'SB'
464+00'SB'
465+00'SB'

STA 461+67 'NB', 21.0' LT
INLETS 2x3-H-S
U1A

460+00'NB'
STH 42/57 NB
R/L STH 42/57 NB
STA 462+20 'NB', 5.5' LT
MANHOLES 3x3-J
U1B

CONCRETE COLLAR REQ'D
STA 462+19 'NB', 49.8' RT
APRON ENDWALLS FOR CULVERT PIPE 12-INCH
U1E

CTH U

N

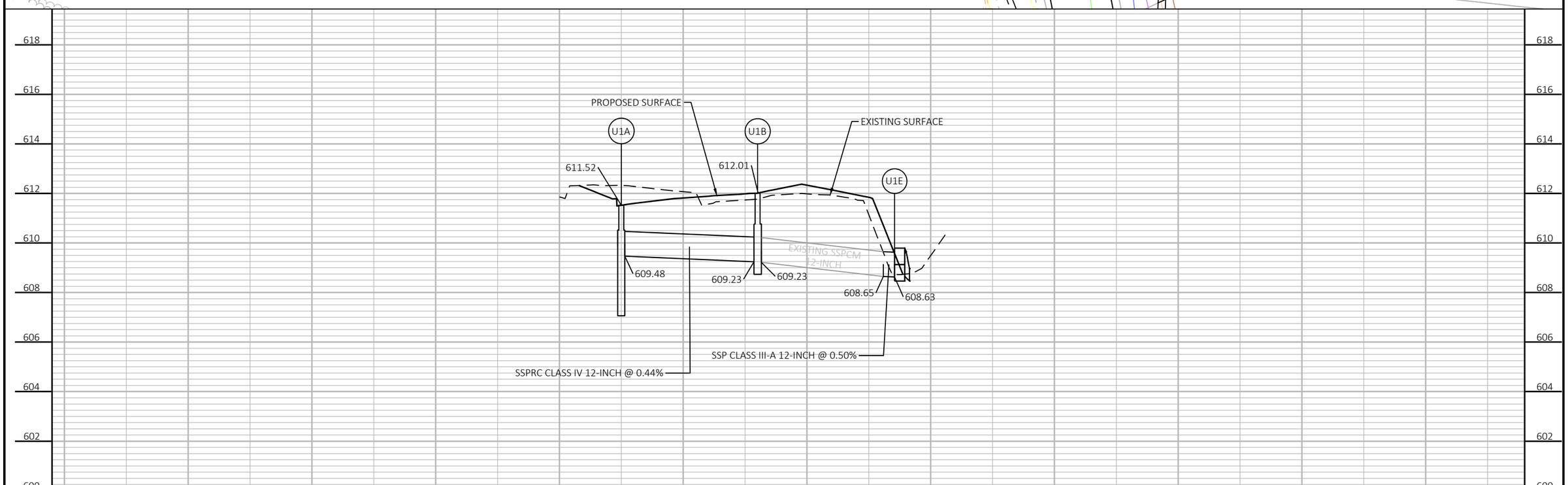

PROJECT NO: 4430-19-71	HWY: STH 42	COUNTY: DOOR	STORM SEWER	SHEET PRE_36	E

FILE NAME : C:\CIVIL 3D PROJECTS\44301900\SHEETSPLAN\022501-SS.DWG
LAYOUT NAME - 022503-ss
PLOT DATE : 7/31/2020 7:48 AM
PLOT BY : KIRST, DOUGLAS P
PLOT NAME :
PLOT SCALE : 1 IN:40 FT
WISDOT/CADDS SHEET 41

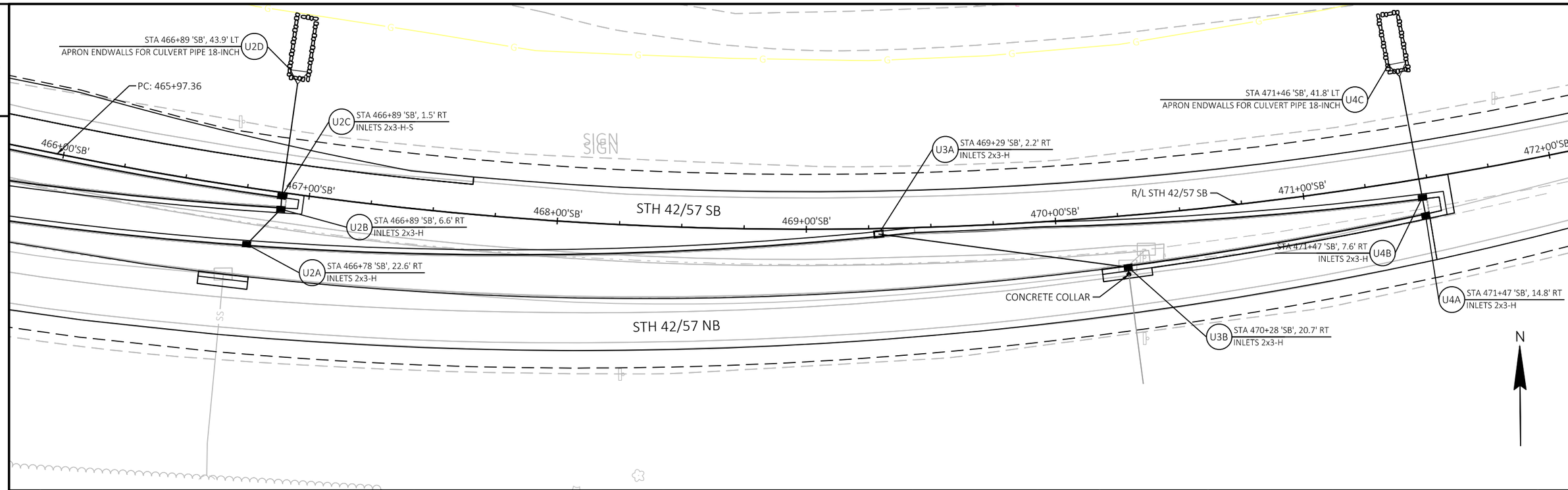

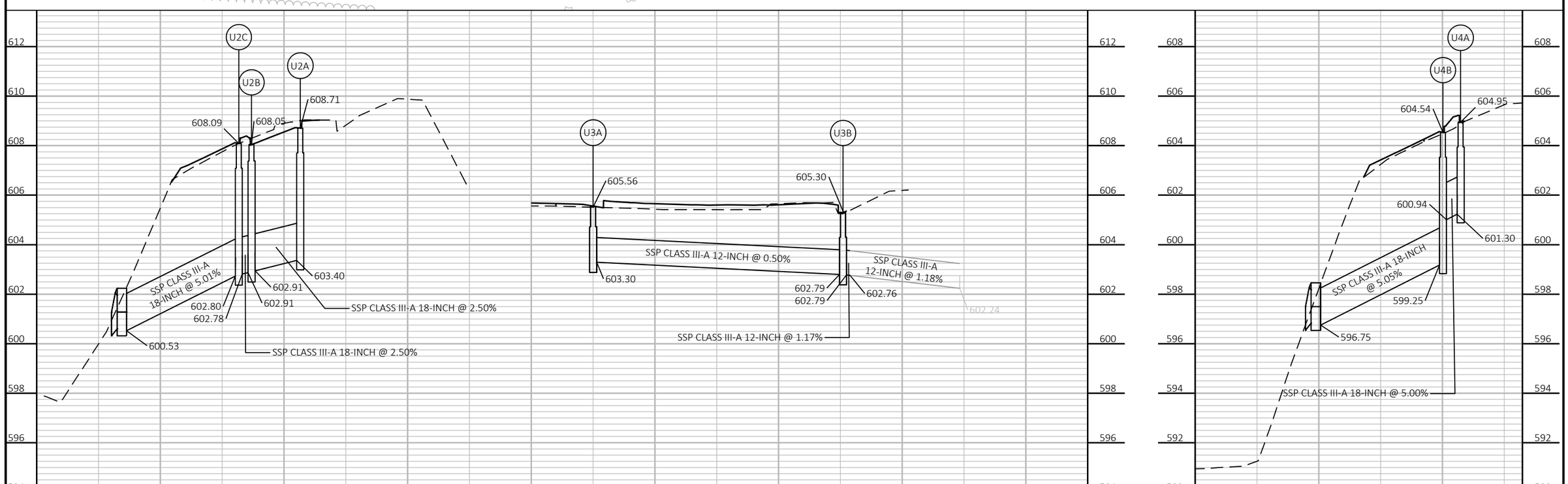

PROJECT NO: 4430-19-71	HWY: STH 42	COUNTY: DOOR	STORM SEWER	SHEET PRE_37 E

FILE NAME : C:\CIVIL 3D PROJECTS\44301900\SHEETSPLAN\022501-SS.DWG
LAYOUT NAME - 022504-ss
PLOT DATE : 7/31/2020 7:48 AM
PLOT BY : KIRST, DOUGLAS P
PLOT NAME :
PLOT SCALE : 1 IN:40 FT
WISDOT/CADDS SHEET 41

2

LEGEND

- PULL BOX 12" X 24"
- PULL BOX 24" X 36"
- PULL BOX 24" X 42"
- SIGNAL STANDARD, PEDESTAL MOUNT
- SIGNAL POLE, MAST-ARM, TRANSFORMER MOUNT
- LUMINAIRE (250 WATT)
- LUMINAIRE UNDER PERMIT
- CONTROL CABINET BASE
- CONDUIT
- SIGNAL HEAD NUMBER MOUNTING CONFIGURATION (2 R Y G)
- LOOP DETECTOR (IN CONDUIT) (22 3T)
- SIGNAL POLE, MONOTUBE ARM (40')
- MS SEDCO

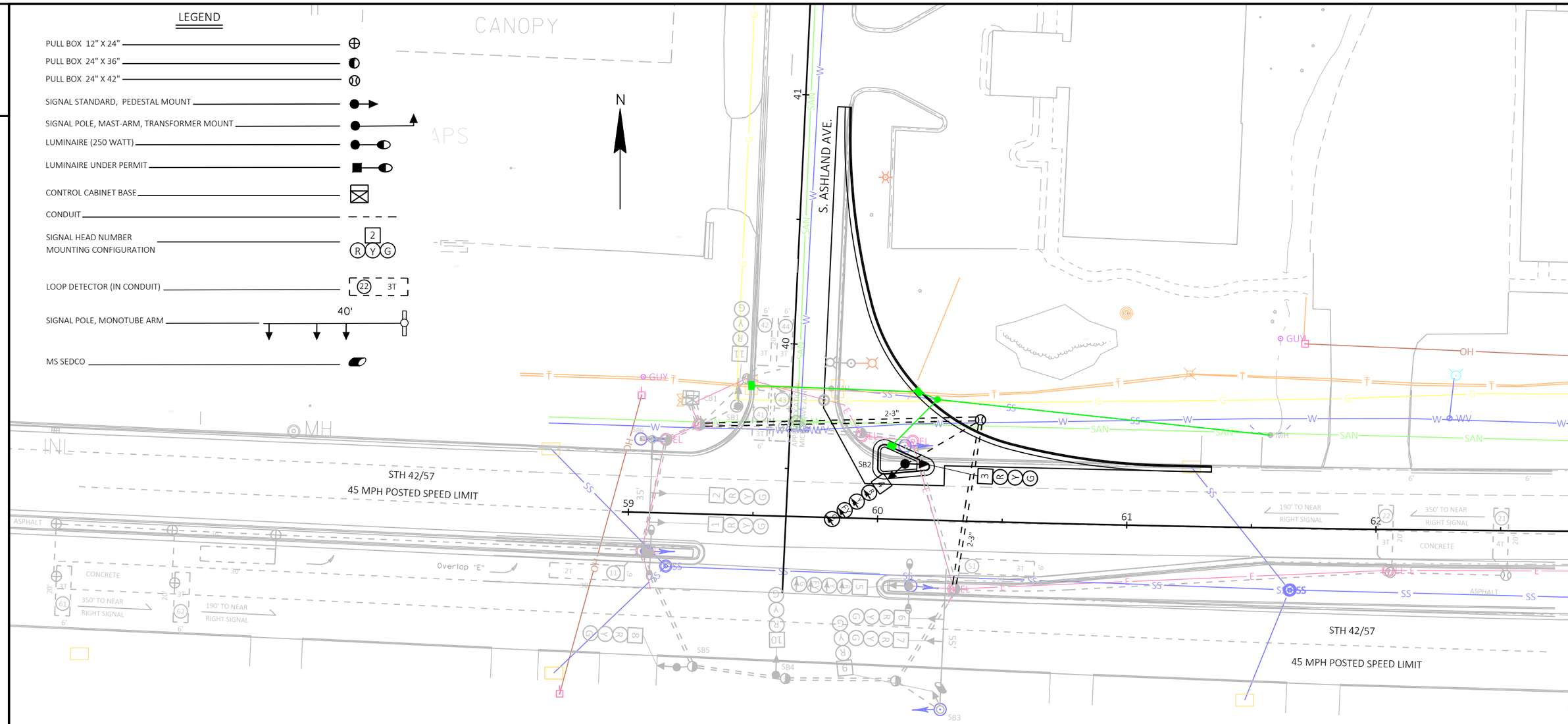

2

CONFIGURATION WITH HEAD NUMBERS	
3-V R Y G 1, 2, 3 6, 7, 8 9, 10, 11 15	4-VLFY R Y FY G 4, 5

MONOTUBE STRUCTURE NUMBERS	
SB3	S-15-0023
SB6	S-15-0024

NOTE:

HEAD #4 REQUIRE A TUNNEL VISOR
SB3 - Rock at 2.5', Drilled shaft to 10',
No wingwalls (Approved by Central Office)
SB6 - Rock at 4', Drilled shaft to 12.5'

LOOP 43 WAS CUT SO TEMPORARILY REPLACE WITH MS SEDCO

GENERAL NOTE

THE LOCATION OF EXISTING AND PROPOSED UTILITY INSTALLATIONS AS SHOWN ON THE PLANS ARE APPROXIMATE. THERE MAY BE OTHER UTILITY INSTALLATIONS WITHIN THE PROJECT AREA THAT ARE NOT SHOWN. THE CONTRACTOR SHALL VERIFY THE LOCATIONS OF ALL UTILITIES PRIOR TO CONSTRUCTION.

REVISION				
Rev. No.	NEW ECONOLITE TS2 CABINET ADD MONOTUBES AND ADD FYA			
	APPROVAL RECOMMENDED		APPROVED	
	REGION		CENTRAL OFFICE	
2	Date	By	Date	By
8-15-17	UPDATE 8/9/19 - ADDED MS SEDCO ON SB3 FOR LOOP 43			

TRAFFIC CONTROL SIGNAL

STH 42/57 & ASHLAND AVENUE
CITY OF STURGEON BAY
DOOR COUNTY

SIGNAL NO. 15-0831 CONTROLLER TYPE: ECONOLITE

WISCONSIN DEPARTMENT OF TRANSPORTATION

APPROVAL RECOMMENDED
Date 10-19-2000 BRIAN S. BROCK
REGION TRAFFIC ENGINEER

APPROVED
Date 10-30-2000 WILLIAM C. GILDING
STATE TRAFFIC ENGINEER

REGION CONTACT: RJS
DESIGNED BY: RJS
REVISED BY: RJS

PAGE 1 OF 2

PROJECT NO: 4430-19-71	HWY: STH 42/57	COUNTY: DOOR	TRAFFIC CONTROL SIGNAL - S15-0831-UPDATE	SHEET PRE_38 E

FILE NAME : F:\D3_TRAFFI\S15-0831 (42&57 & ASHLAND)\S15-0831-UPDATE.DWG
LAYOUT NAME - S15-0831-tcs-update
PLOT DATE : 7/16/2020 11:22 AM PLOT BY : MARTENS, JOHN M PLOT NAME : PLOT SCALE : 1 IN:40 FT
WISDOT/CADDS SHEET 42

CONFIGURATION WITH HEAD NUMBERS		
3-V	3-H	4-VLFY
R 3, 4, 5 Y 8, 9, 10 G 11, 13, 14 16	R Y G 12, 15	B Y FY G 1, 2 6, 7

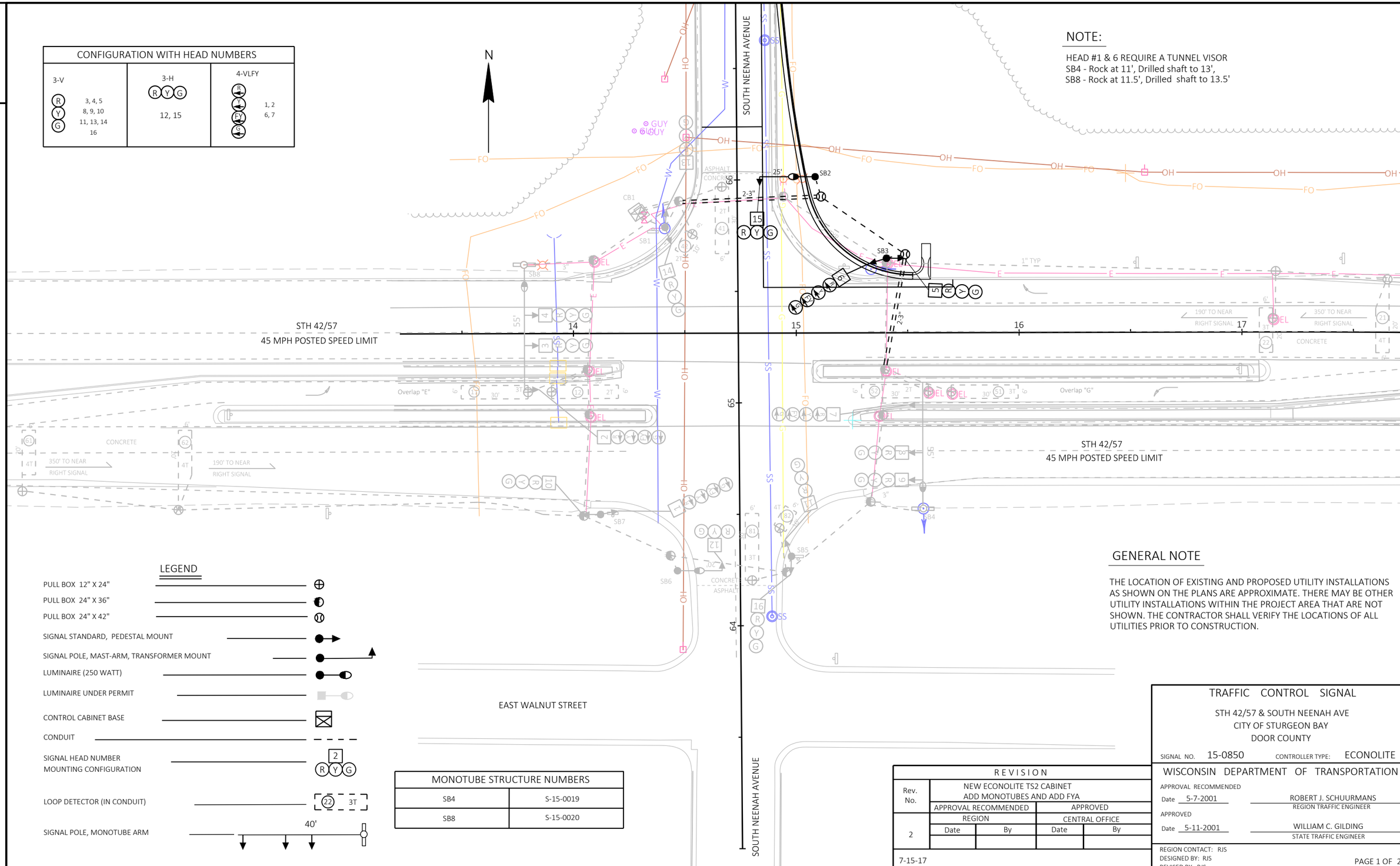

NOTE:

HEAD #1 & 6 REQUIRE A TUNNEL VISOR
SB4 - Rock at 11', Drilled shaft to 13',
SB8 - Rock at 11.5', Drilled shaft to 13.5'

LEGEND

- PULL BOX 12" X 24"
- PULL BOX 24" X 36"
- PULL BOX 24" X 42"
- SIGNAL STANDARD, PEDESTAL MOUNT
- SIGNAL POLE, MAST-ARM, TRANSFORMER MOUNT
- LUMINAIRE (250 WATT)
- LUMINAIRE UNDER PERMIT
- CONTROL CABINET BASE
- CONDUIT
- SIGNAL HEAD NUMBER MOUNTING CONFIGURATION (2 R Y G)
- LOOP DETECTOR (IN CONDUIT) (22 3T)
- SIGNAL POLE, MONOTUBE ARM (40')

MONOTUBE STRUCTURE NUMBERS	
SB4	S-15-0019
SB8	S-15-0020

GENERAL NOTE

THE LOCATION OF EXISTING AND PROPOSED UTILITY INSTALLATIONS AS SHOWN ON THE PLANS ARE APPROXIMATE. THERE MAY BE OTHER UTILITY INSTALLATIONS WITHIN THE PROJECT AREA THAT ARE NOT SHOWN. THE CONTRACTOR SHALL VERIFY THE LOCATIONS OF ALL UTILITIES PRIOR TO CONSTRUCTION.

REVISION				
Rev. No.	NEW ECONOLITE TS2 CABINET ADD MONOTUBES AND ADD FYA			
	APPROVAL RECOMMENDED		APPROVED	
	REGION		CENTRAL OFFICE	
2	Date	By	Date	By
7-15-17				

TRAFFIC CONTROL SIGNAL

STH 42/57 & SOUTH NEENAH AVE
CITY OF STURGEON BAY
DOOR COUNTY

SIGNAL NO. 15-0850 CONTROLLER TYPE: ECONOLITE

WISCONSIN DEPARTMENT OF TRANSPORTATION

APPROVAL RECOMMENDED
Date 5-7-2001 ROBERT J. SCHUURMANS, REGION TRAFFIC ENGINEER

APPROVED
Date 5-11-2001 WILLIAM C. GILDING, STATE TRAFFIC ENGINEER

REGION CONTACT: RJS
DESIGNED BY: RJS
REVISED BY: RJS

PAGE 1 OF 2

PROJECT NO: 4430-19-71	HWY: STH 42/57	COUNTY: DOOR	TRAFFIC CONTROL SIGNAL - S15-0850-UPDATE	SHEET PRE_39 E

FILE NAME : F:\D3_TRAFFI\S15-0850 (42&57 & NEENAH)\S15-0850-UPDATE.DWG
LAYOUT NAME - S15-0850-tcs-update
PLOT DATE : 7/16/2020 7:09 AM PLOT BY : MARTENS, JOHN M PLOT NAME : PLOT SCALE : 1 IN:40 FT

R/W PROJECT NUMBER	SHEET NUMBER	TOTAL SHEETS
4430-19-21	4.01	1
FEDERAL PROJECT NUMBER ----------		

PLAT OF RIGHT OF WAY REQUIRED FOR
CITY OF STURGEON BAY
S. JUNCTION STH 57 - BAYVIEW BRIDGE
STH 42/57 DOOR COUNTY

4

CONVENTIONAL ABBREVIATIONS AND SYMBOLS

ACCESS POINT AP
ACCESS RIGHTS AR
ACRES AC
CHORD BEARING CH BRG
CHORD DISTANCE CH DIS
DEED (D)
DOCUMENT DOC
EAST BOUND EB
GAS VALVE GV
INLET IL
LENGTH OF CURVE L
MANHOLE MH
MONUMENT MON
NORTH BOUND NB
PAGE PG
PERMANENT PERM
PERMANENT LIMITED EASEMENT PLE
PRIVATE DRIVEWAY PD
PROPERTY LINE PL
RADIUS RAD
REFERENCE LINE R
REMAINING REM
RIGHT OF WAY R/W
SECTION SEC
SECTION LINE S
FOUND IRON PIPE IP
STATION STA
TEMPORARY LIMITED EASEMENT TLE
TIE POINT DBI
VOLUME VOL
ADJOINING LANDS WITH SAME OWNER
PARALLEL TO LINE 00°
BUILDING TO BE RAZED
FEE ACQUISITION VARIOUS HATCHING
BEGIN POINT BP
END POINT EP

SECTION CORNER (MATERIAL AS NOTED)
SET R/W MONUMENT W/CAP (1-1/4" OUTSIDE DIA.x18" IRON PIPE 1.13 LBS/FT)
FOUND TYPE 2 MON.
FOUND 3/4" REBAR
SET P.K. NAIL
PROPOSED R/W BOUNDARY POINT PR#000
CORPORATE LIMITS
EXISTING R/W
SECTION LINE
QUARTER LINE
SIXTEENTH LINE
PROPOSED OR NEW R/W LINE
PROPOSED EASEMENT LINE
CSM, SUBDIVISION, OR PLAT OF SURVEY LINE
PARCEL NUMBER 00
UTILITY NUMBER 000
SIGN NUMBER 0-0
PROPERTY LINE
LOT, TIE AND OTHER MINOR DASHED LINES
ACCESS RESTRICTED (By Previous Project/ Control)
ACCESS RESTRICTED (By Acquisition)
NO ACCESS (By Statutory Authority)
LIMITED EASEMENT (Temporary)
LIMITED EASEMENT (Permanent)

CONVENTIONAL UTILITY SYMBOLS

WATER —W—
GAS —G—
TELEPHONE —T—
OVERHEAD —OH—
TRANSMISSION LINES
ELECTRIC —E—
CABLE TELEVISION —TV—
FIBER OPTIC —FO—
SANITARY SEWER —SAN—
STORM SEWER —SS—

	NON-COMPENSABLE	COMPENSABLE
POWER POLE		
TELEPHONE POLE		
TELEPHONE PEDESTAL		
ELECTRIC TOWER		

SHEET LOCATION
PROJECT 9190-24-21

SCHEDULE OF UTILITIES & INTERESTS REQUIRED

UTILITY NUMBER	OWNER	INTEREST REQUIRED
100	CHARTER COMMUNICATION	RELEASE OF RIGHTS

SCHEDULE OF LANDS & INTERESTS REQUIRED

PARCEL NUMBER	OWNER	INTEREST REQUIRED	FEE R/W ACRE(S) OR (S.F.) REQUIRED			T.L.E. AREA
			NEW	EXISTING	TOTAL	
1	JOHN L. YOST & ELAINE G. YOST	TLE	-	-	-	0.059

NOTES:

RIGHT OF WAY BOUNDARIES ARE DEFINED WITH COURSES OF THE PERIMETER OF THE HIGHWAY LANDS AND ARE REFERENCED TO THE US PUBLIC LAND SURVEY OR OTHER SURVEYS OF PUBLIC RECORD.

RIGHT OF WAY MONUMENTS ARE TYPE 2 MONUMENTS (TYPICALLY 1" X 24" IRON PIPE) AND WILL BE PLACED PRIOR TO COMPLETION OF PROJECT.

AREAS SHOWN IN THE TOTAL ACRES COLUMN OF THE SCHEDULE OF LANDS & INTEREST TABLE MAY BE APPROXIMATE AND ARE DERIVED FROM TAX ROLLS OR OTHER AVAILABLE SOURCES AND MAY NOT INCLUDE LANDS OF THE OWNER WHICH ARE NOT CONTIGUOUS TO THE AREA TO BE ACQUIRED.

COORDINATES AS SHOWN ARE NOT INTENDED TO BE USED FOR RETRACEMENT PURPOSES AND MUST BE VERIFIED WITH THE COUNTY SURVEY DEPARTMENT.

POSITIONS SHOWN ON THIS PLAT ARE WISCONSIN COUNTY COORDINATES, DOOR COUNTY, NAD 83 (1991) IN US SURVEY FEET. VALUES SHOWN ARE GRID COORDINATES, GRID BEARINGS, GRID DISTANCES. GRID DISTANCES MAY BE USED AS GROUND DISTANCES.

PROPERTY LINES SHOWN ON THIS PLAT ARE DRAWN FROM DATA DERIVED FROM MAPS AND DOCUMENTS OF PUBLIC RECORD AND/OR EXISTING OCCUPATIONAL LINES. THIS PLAT MAY NOT BE A TRUE REPRESENTATION OF EXISTING PROPERTY LINES AND SHOULD NOT BE USED AS A SUBSTITUTE FOR AN ACCURATE FIELD SURVEY.

EXISTING RIGHT OF WAY WAS ACQUIRED FROM PROJECT(S): 4430-12-00-4.07 & 4.08

FOR ACCESS/DRIVEWAY INFORMATION, CONTRACT THE WISCONSIN DEPARTMENT OF TRANSPORTATION REGIONAL OFFICE IN GREEN BAY.

RIGHT OF WAY REFERENCE LINE MAY NOT BE THE SAME AS THE CONSTRUCTION REFERENCE LINE.

OWNER'S NAMES ARE SHOWN FOR REFERENCE PURPOSES ONLY, AND ARE SUBJECT TO CHANGE PRIOR TO TRANSFER OF LAND INTERESTS TO DEPARTMENT OF TRANSPORTATION.

A TEMPORARY LIMITED EASEMENT (TLE) IS A RIGHT FOR CONSTRUCTION PURPOSES, AS DEFINED HEREIN, INCLUDING THE RIGHT TO OPERATE NECESSARY EQUIPMENT THEREON AND THE RIGHT OF INGRESS AND EGRESS AS LONG AS REQUIRED FOR SUCH PUBLIC PURPOSE, INCLUDING THE RIGHT TO PRESERVE, PROTECT, REMOVE OR PLANT THEREON ANY VEGETATION THAT THE HIGHWAY AUTHORITIES MAY DEEM NECESSARY OR DESIRABLE TO PREVENT EROSION OF THE SOIL. ALL TLEs ON THIS PLAT EXPIRE AT THE COMPLETION OF THE CONSTRUCTION PROJECT FOR WHICH THIS INSTRUMENT IS GIVEN.

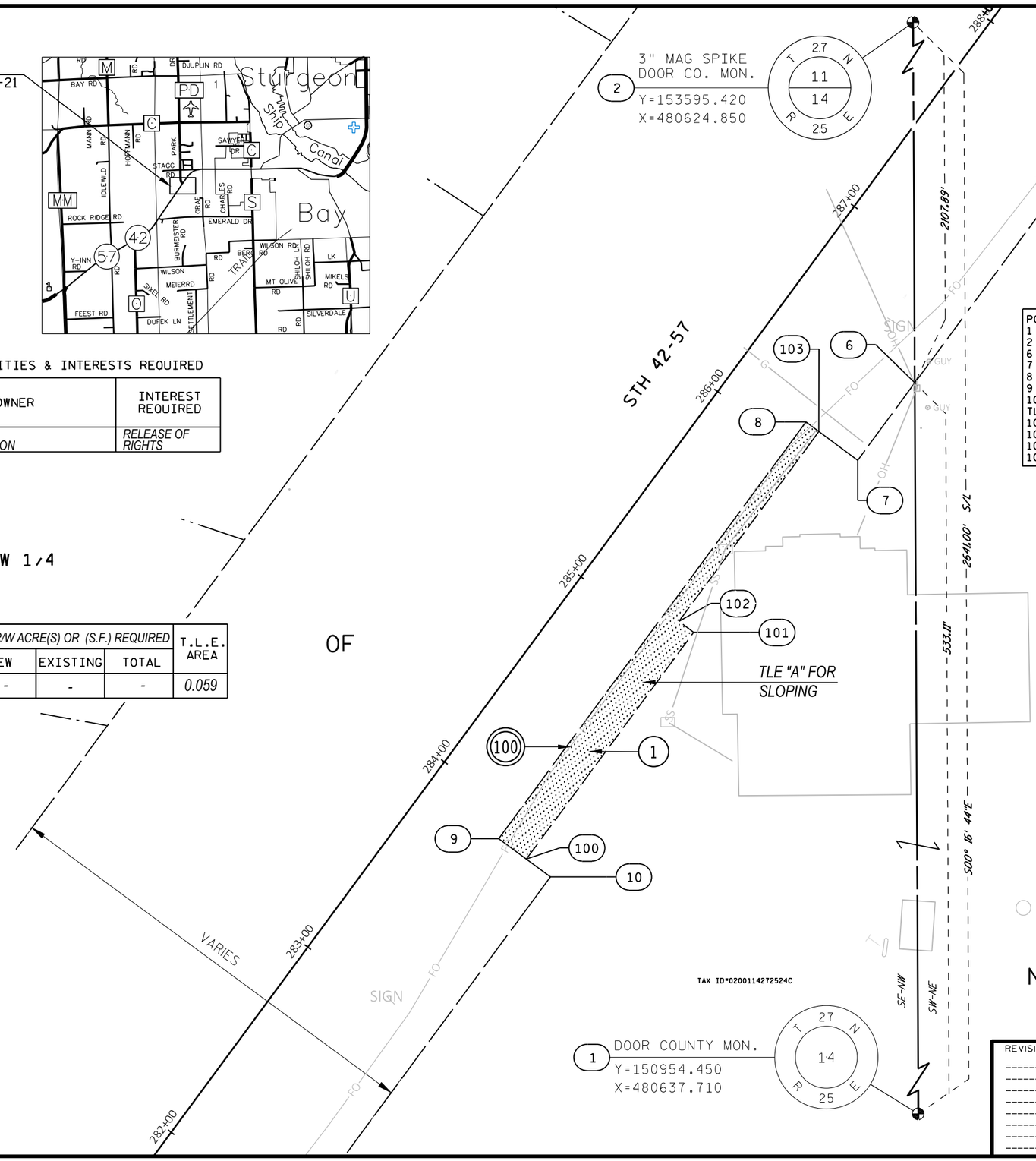

R/W REFERENCE LINE
COURSE TABLE
TANGENT
236+86.25 Y=147530.265 X=477631.335
N36°25'52"E 6626.84'
303+13.09 Y=152862.030 X=481566.724

POINT	STATION	OFFSET	COORDINATES	
1	282+26.61	385.37	Y=150954.450	X=480637.710
2	303+31.42	-1193.49	Y=153595.420	X=480624.850
6	286+53.93	66.74	Y=151487.484	X=480635.114
7	286+12.17	66.74	Y=151453.883	X=480610.316
8	286+12.17	38.74	Y=151470.510	X=480587.788
9	283+87.17	38.75	Y=151289.476	X=480454.178
10	283+87.17	66.75	Y=151272.849	X=480476.707
TLE "A"				
100	283+87.17	53.75	Y=151280.569	X=480466.247
101	285+09.67	53.74	Y=151379.132	X=480538.990
102	285+09.67	45.74	Y=151383.882	X=480532.553
103	286+12.17	45.74	Y=151466.354	X=480593.420

COURSE TABLE

POINT	-	POINT	BEARING	DISTANCE
2	-	6	S00°16'44"E	2107.96'
6	-	7	S36°25'43"W	41.76'
7	-	103	N53°34'17"W	21.00'
103	-	102	S36°25'43"W	102.50'
102	-	101	S53°34'17"E	8.00'
101	-	100	S36°25'43"W	122.50'
100	-	9	N53°34'17"W	15.00'
9	-	8	N36°25'43"E	225.00'
8	-	103	S53°34'17"E	7.00'

GN
0 25 50
GRAPHIC SCALE, FEET

REVISION DATE

STATE OF WISCONSIN
DEPARTMENT OF TRANSPORTATION

APPROVED:
DATE: 9-26-2019 Curt Van Eem
CUR

PRE_40

WISDOT/CADDS SHEET 100

5

SHOULDERS
MILL 3 1/2"
PAVE 3 1/2"

DIAMOND GRIND SB TRAVEL LANES

EXISTING R/W

STA 111+50
EXISTING 24" SS & AEW
TO REMAIN

INTERSECTION
MILL 2"
PAVE 2"

PT: 1023+56.77

CTH MM

R/L STH 42/CTH MM

PC: 1022+04.58

STH 42/57 SB

STA 115+00
EXISTING 18" SS & AEW
TO REMAIN

PT: 1021+61.85

BEGIN DIAMOND GRINDING
CONCRETE TRAVEL LANES

N56°51'59"E

105+00'NB'

110+00'NB'

115+00'NB'

STH 42/57 NB

BEGIN PROJECT
STA 100+00.00
Y=140,028.043
X=466,244.945

EXISTING R/W

SHOULDERS
MILL 3 1/2"
PAVE 3 1/2"

DIAMOND GRIND NB TRAVEL LANES

STA 112+99.42 R/L 42 NB RL =
STA 1021+49.92 R/L STH 42 - CTH MM
Y=140,738.300
X=467,333.079

INTERSECTION
MILL 2"
PAVE 2"

STH 42

PC: 1019+54.18

PT: 1018+86.82

MATCH LINE 115+25.00

LEGEND

CONCRETE IMPROVEMENT AREAS
(SEE PLAN DETAILS)

PROPOSED ASPHALT AREAS

INTERSECTION
MILL 2"
PAVE 2"

SHOULDERS
MILL 3 1/2"
PAVE 3 1/2"

EXISTING R/W

DIAMOND GRIND SB TRAVEL LANES

ROADWAY
MILL 2"
PAVE 2"

END DIAMOND GRINDING SB TRAVEL LANES
BEGIN SB MILL AND OVERLAY

APPROX STA 128+82
EXISTING 18" CULVERT & AEW
TO REMAIN

STH 42/57 SB

R/L STH 42 NB

PT: 125+50.09

N56°51'59"E

120+00'NB'

125+00'NB'

130+00'NB'

N51°54'44"E

PC: 120+05.03

STH 42/57 NB

CURVE 1

DIAMOND GRIND NB TRAVEL LANES

EXISTING R/W

STA 119+35
EXISTING 24" CULVERT & AEW
TO REMAIN

APPROX. STA 122+25
EXISTING 12" CULVERT & AEW
TO REMAIN

APPROX STA 122+50
EXISTING 18" CULVERT & AEW
TO REMAIN

INTERSECTION
MILL 2"
PAVE 2"

SHOULDERS
MILL 3 1/2"
PAVE 3 1/2"

MATCH LINE 115+25.00

MATCH LINE 130+50.00

CURVE 1
PI STA = 122+77.73
Y = 141273.036
X = 468152.310
DELTA = 4°57'15"
D = 0°54'32"
T = 272.70'
L = 545.06'
R = 6303.77'
PC STA = 120+05.03
Y = 141123.980
X = 467923.953
PT STA = 125+50.09
Y = 141441.255
X = 468366.942
BK = N56°51'58.8"E
AH = N51°54'44.1"E

5

PROJECT NO: 4430-19-71	HWY: STH 42	COUNTY: DOOR	PLAN SHEETS	SHEET E

PRE_41

FILE NAME : C:\CIVIL 3D PROJECTS\44301900\SHEETSPLAN\050201-PN.DWG
LAYOUT NAME - 050201-pn
PLOT DATE : 7/29/2020 10:37 AM
PLOT BY : KIRST, DOUGLAS P
PLOT NAME :
PLOT SCALE : 1 IN:100 FT

WISDOT/CADDS SHEET 44

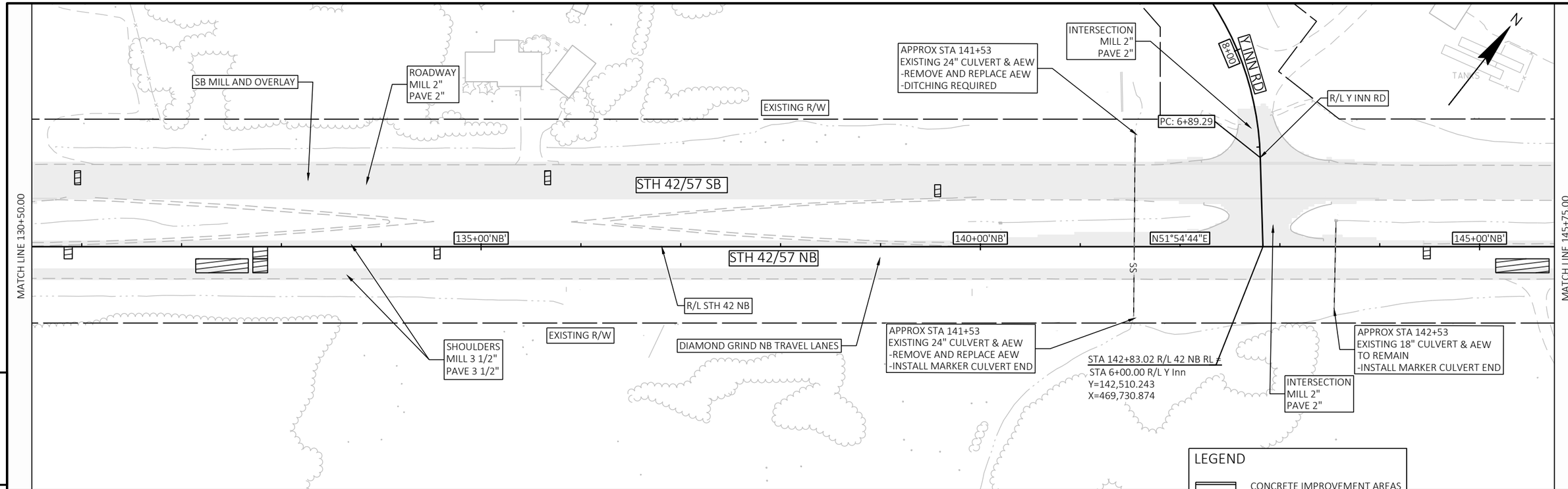

PROJECT NO: 4430-19-71	HWY: STH 42	COUNTY: DOOR	PLAN SHEETS	SHEET PRE_42	E

FILE NAME : C:\CIVIL 3D PROJECTS\44301900\SHEETSPLAN\050201-PN.DWG
LAYOUT NAME - 050202-pn
PLOT DATE : 7/29/2020 10:38 AM
PLOT BY : KIRST, DOUGLAS P
PLOT NAME :
PLOT SCALE : 1 IN:100 FT
WISDOT/CADDS SHEET 44

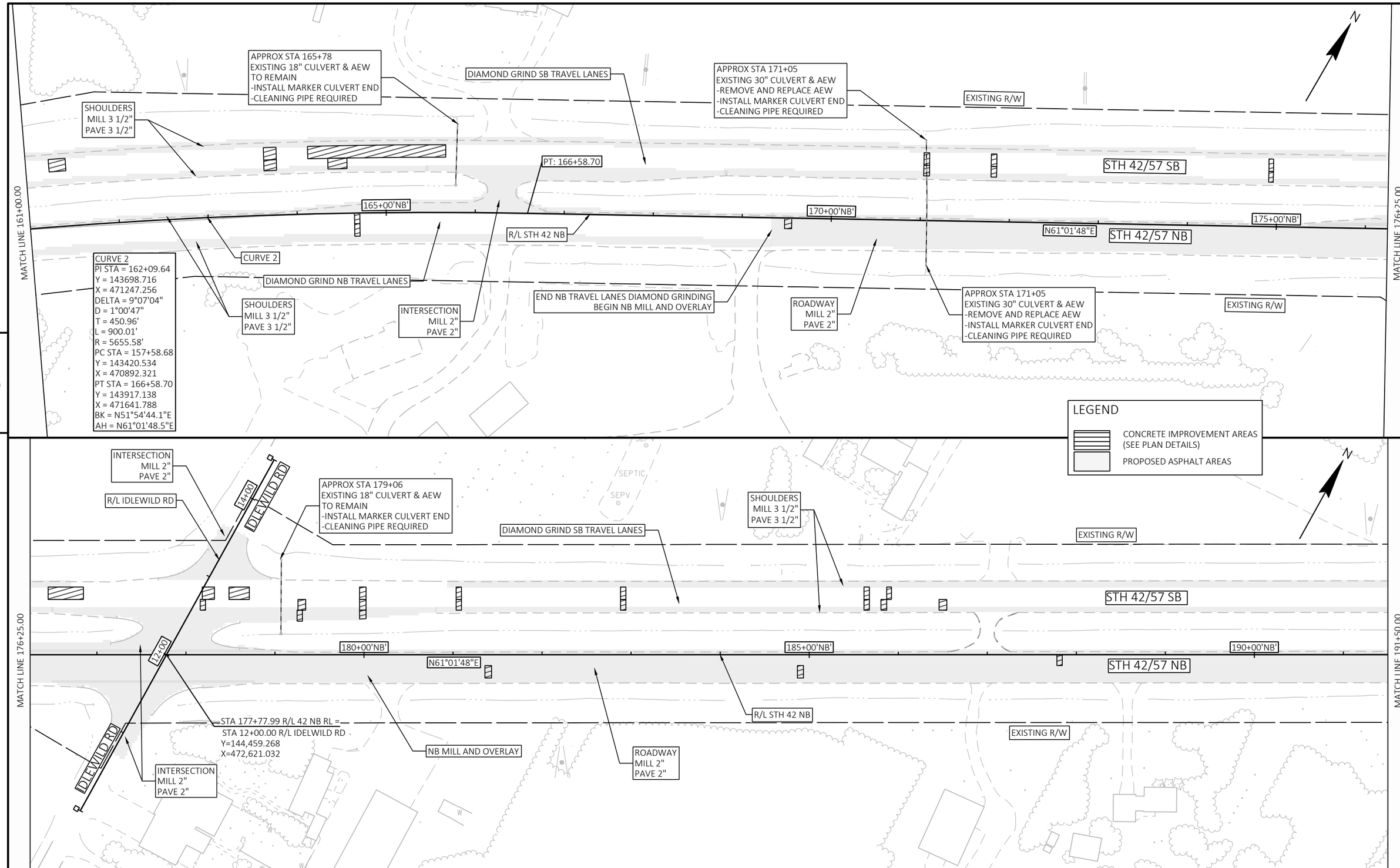

PROJECT NO: 4430-19-71	HWY: STH 42	COUNTY: DOOR	PLAN SHEETS	SHEET PRE_43	E

FILE NAME : C:\CIVIL 3D PROJECTS\44301900\SHEETSPLAN\050201-PN.DWG
LAYOUT NAME - 050203-pn
PLOT DATE : 7/29/2020 10:40 AM
PLOT BY : KIRST, DOUGLAS P
PLOT NAME :
PLOT SCALE : 1 IN:100 FT

WISDOT/CADDS SHEET 44

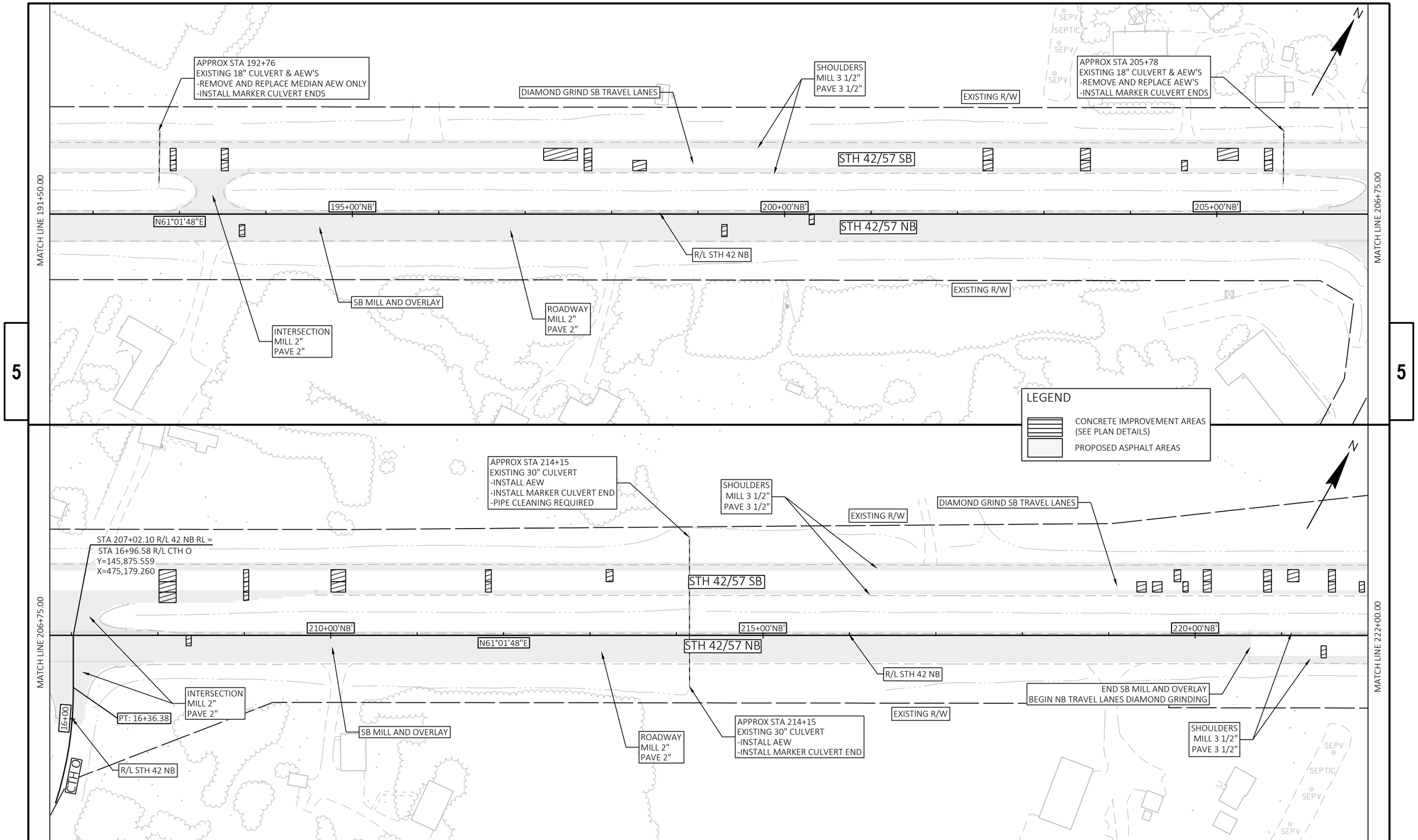

PROJECT NO: 4430-19-71	HWY: STH 42	COUNTY: DOOR	PLAN SHEETS	SHEET PRE_44	E

FILE NAME : C:\CIVIL 3D PROJECTS\44301900\SHEETSPLAN\050201-PN.DWG
LAYOUT NAME - 050204-pn
PLOT DATE : 7/29/2020 10:42 AM PLOT BY : KIRST, DOUGLAS P PLOT NAME : PLOT SCALE : 1 IN:100 FT

WISDOT/CADDS SHEET 44

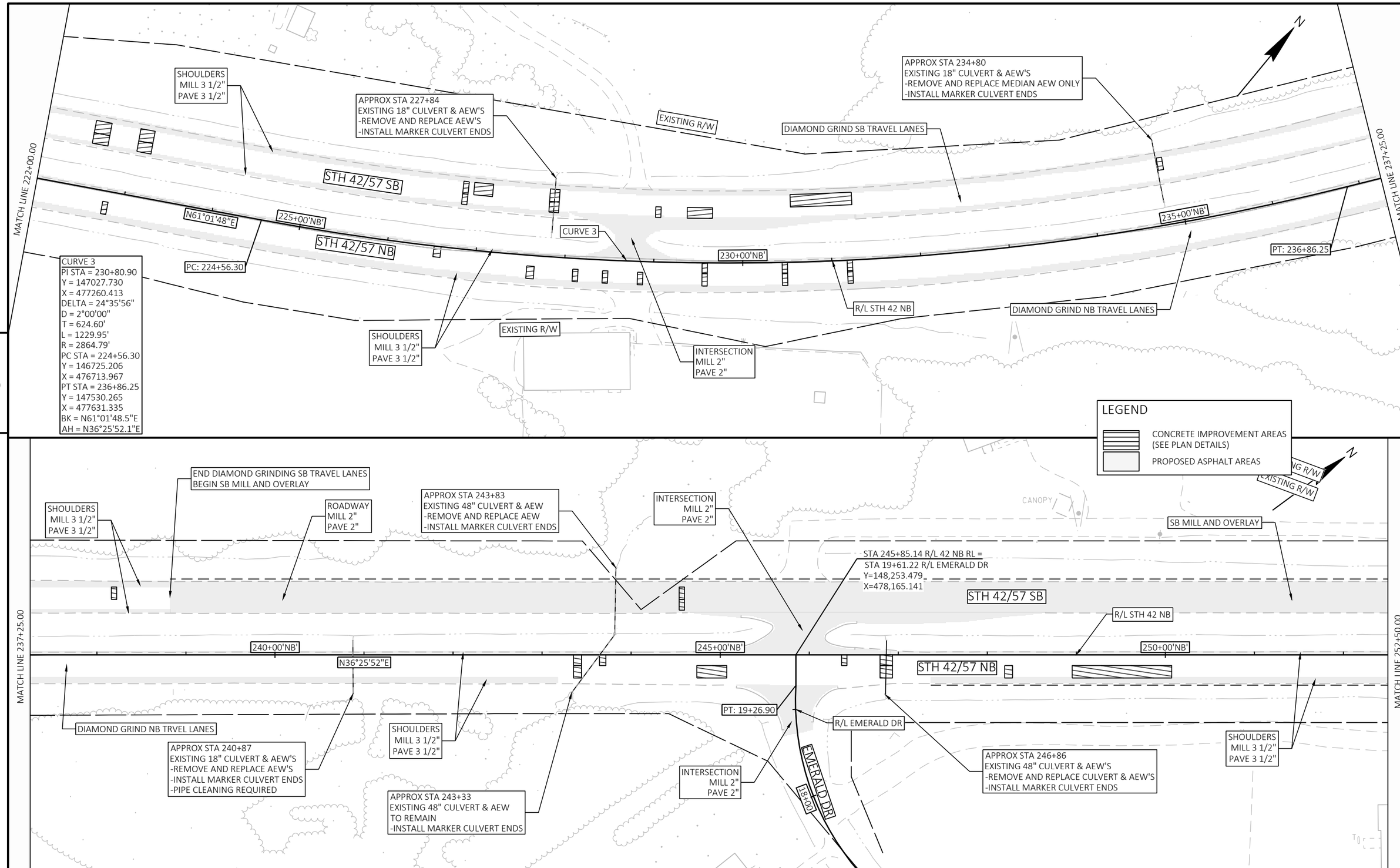

PROJECT NO: 4430-19-71	HWY: STH 42	COUNTY: DOOR	PLAN SHEETS	SHEET E

PRE_45

FILE NAME : C:\CIVIL 3D PROJECTS\44301900\SHEETSPLAN\050201-PN.DWG
LAYOUT NAME - 050205-pn
PLOT DATE : 7/29/2020 10:42 AM
PLOT BY : KIRST, DOUGLAS P
PLOT NAME :
PLOT SCALE : 1 IN:100 FT

WISDOT/CADDS SHEET 44

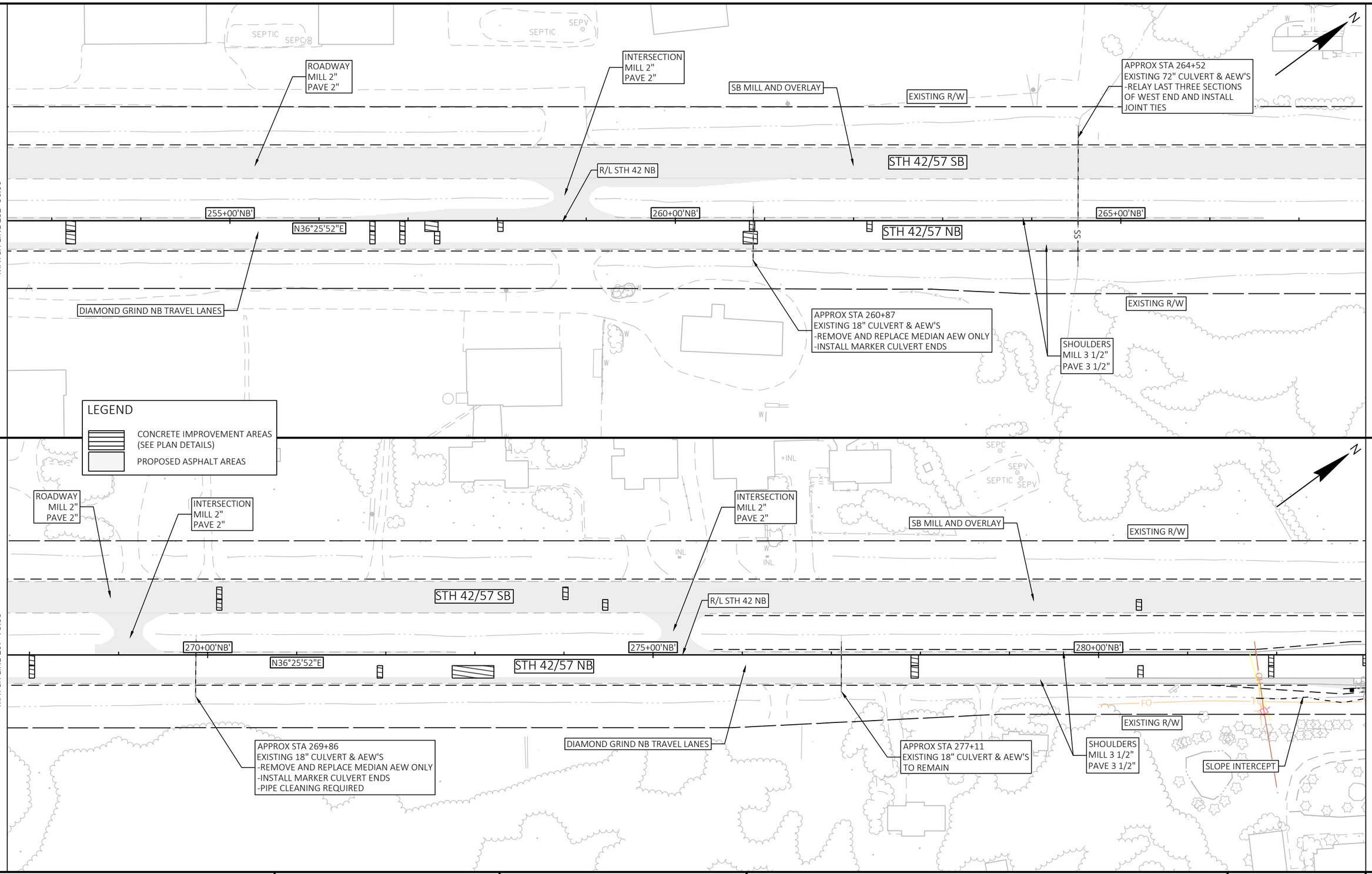

5

5

PROJECT NO: 4430-19-71	HWY: STH 42	COUNTY: DOOR	PLAN SHEETS	SHEET E

PRE_46

FILE NAME : C:\CIVIL 3D PROJECTS\44301900\SHEETSPLAN\050201-PN.DWG
LAYOUT NAME - 050206-pn
PLOT DATE : 7/29/2020 10:43 AM PLOT BY : KIRST, DOUGLAS P PLOT NAME : PLOT SCALE : 1 IN:100 FT

WISDOT/CADDS SHEET 44

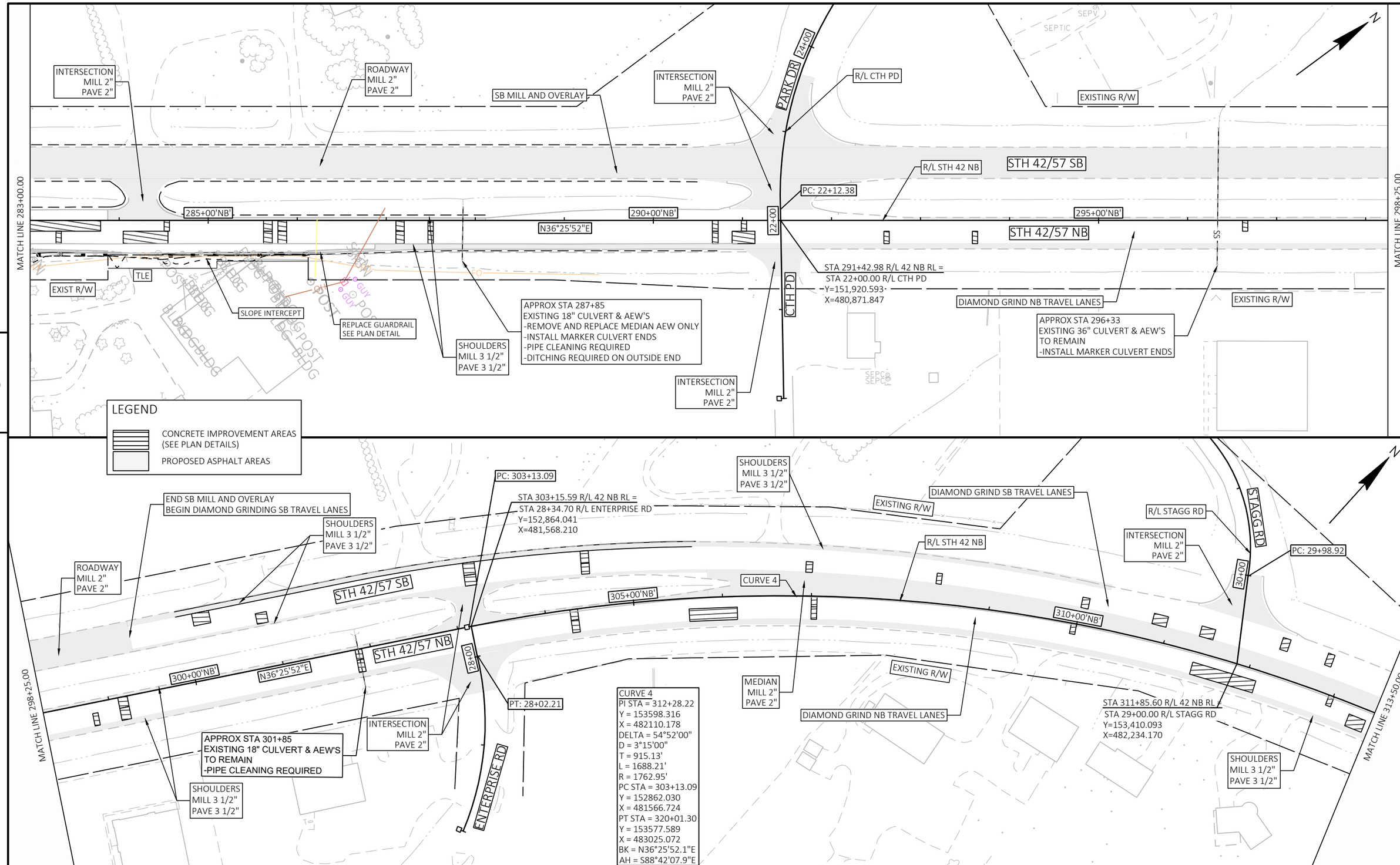

PROJECT NO: 4430-19-71	HWY: STH 42	COUNTY: DOOR	PLAN SHEETS	SHEET PRE_47	E

FILE NAME : C:\CIVIL 3D PROJECTS\44301900\SHEETSPLAN\050201-PN.DWG
LAYOUT NAME - 050207-pn
PLOT DATE : 7/29/2020 10:43 AM
PLOT BY : KIRST, DOUGLAS P
PLOT NAME :
PLOT SCALE : 1 IN:100 FT

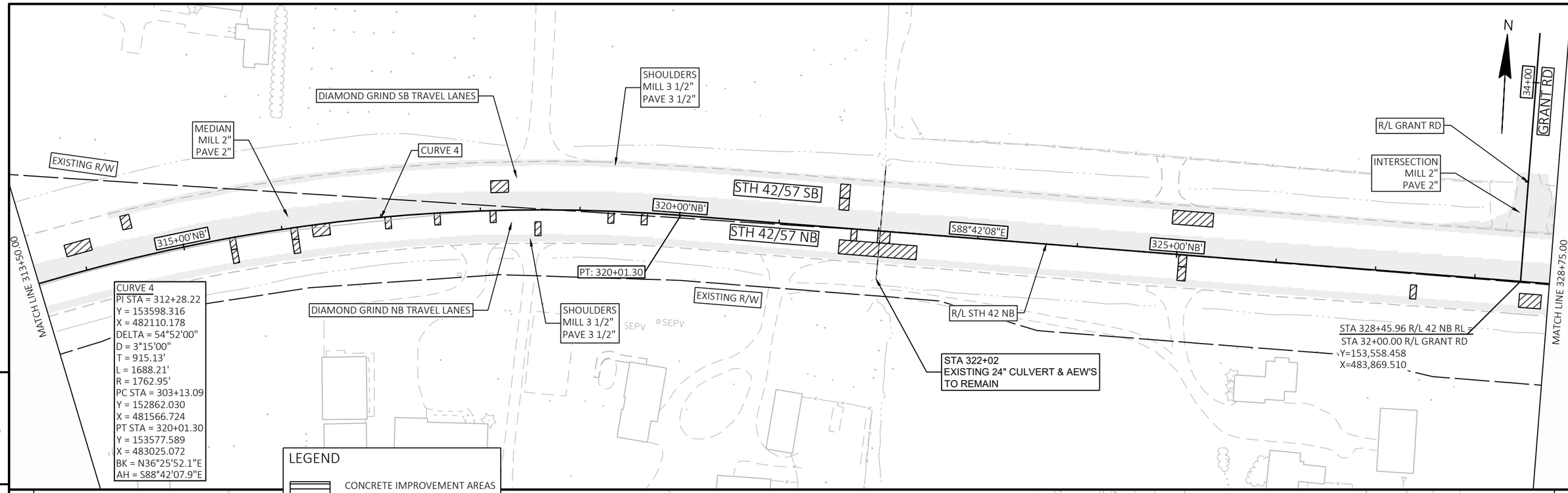

PROJECT NO: 4430-19-71	HWY: STH 42	COUNTY: DOOR	PLAN SHEETS	SHEET E

PRE_48

FILE NAME : C:\CIVIL 3D PROJECTS\44301900\SHEETSPLAN\050201-PN.DWG
LAYOUT NAME - 050208-pn
PLOT DATE : 7/29/2020 10:44 AM
PLOT BY : KIRST, DOUGLAS P
PLOT NAME :
PLOT SCALE : 1 IN:100 FT

WISDOT/CADDS SHEET 44

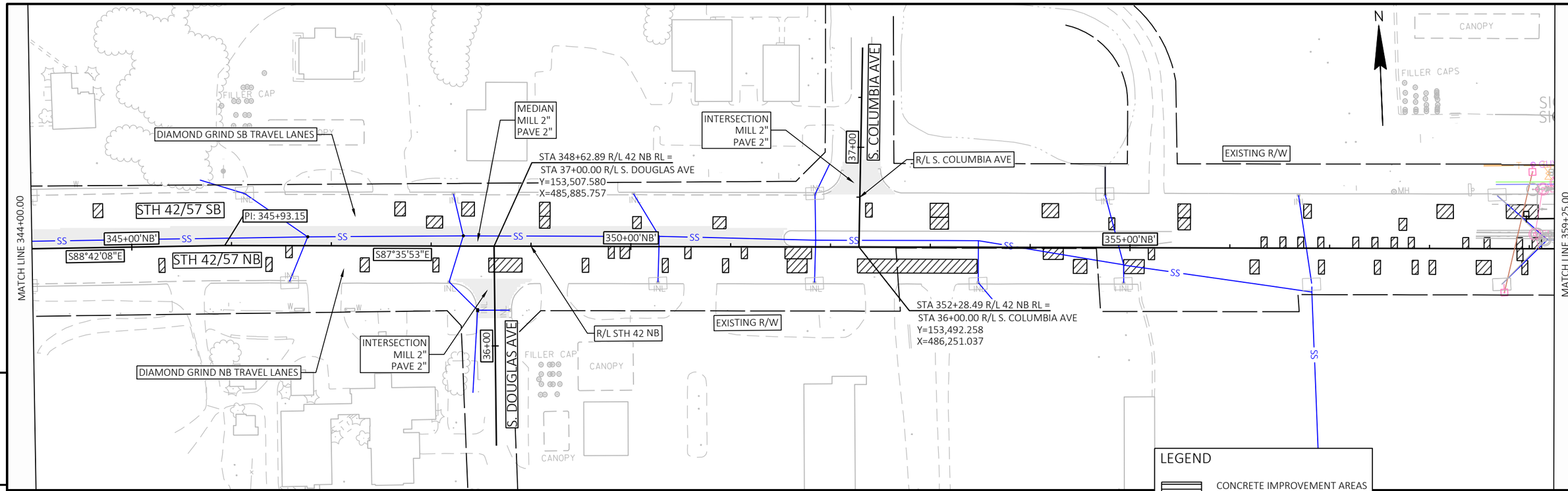

PROJECT NO: 4430-19-71	HWY: STH 42	COUNTY: DOOR	PLAN SHEETS	SHEET PRE_49	E

FILE NAME : C:\CIVIL 3D PROJECTS\44301900\SHEETSPLAN\050201-PN.DWG
LAYOUT NAME - 050209-pn
PLOT DATE : 7/31/2020 8:00 AM
PLOT BY : KIRST, DOUGLAS P
PLOT NAME :
PLOT SCALE : 1 IN:100 FT
WISDOT/CADDS SHEET 44

CAUTION: UNDERGROUND TRAFFIC SIGNAL CONDUIT EXISTS IN AREA FOR CTH S TRAFFIC SIGNALS. ≈373+00'NB'-377+00'NB'

INTERSECTION OVERLAY 2 1/2"

ROADWAY OVERLAY 2 1/2"

EXISTING R/W

RAMP OVERLAY 2"

R/L GREEN BAY RD SB RAMP

24+00'GS'

22+00'GS'

STRUCTURE B-15-005 (TO REMAIN)

REPLACE GUARDRAIL BARRIER SYSTEM GRADING SHAPING FINISHING SEE PLAN DETAILS

24+00'GN'

GREEN BAY RD

REPLACE GUARDRAIL BARRIER SYSTEM GRADING SHAPING FINISHING SEE PLAN DETAILS

CTH C

46+00

R/L CTH C/S

R/L STH 42 SB

380+00'SB'

385+00'SB'

STH 42/57 SB

375+00'NB'

44+00

R/L STH 42 NB

380+00'NB'

385+00'NB'

22+00'GN'

STH 42/57 NB

N88°48'13"E

12+00'GN'

14+00'GN'

STA 374+97.87 R/L 42 NB RL =
STA 44+00.00 R/L CTH C S
Y=153,466.155
X=488,519.382

CTH S

SLOPE INTERCEPT, TYP.

REPLACE GUARDRAIL BARRIER SYSTEM GRADING SHAPING FINISHING SEE PLAN DETAILS

STRUCTURE B-15-006 (TO REMAIN)

16+00'GN'

ROADWAY OVERLAY 2 1/2"

INTERSECTION OVERLAY 2 1/2"

R/L GREEN BAY RD NB RAMP

20+00'GN'

REPLACE GUARDRAIL BARRIER SYSTEM GRADING SHAPING FINISHING SEE PLAN DETAILS

REMOVE GUARDRAIL
REMOVE OVERHEAD SIGN SUPPORTS (S-151)

RAMP OVERLAY 2"

18+00'GN'

EXISTING R/W

MATCH LINE 374+50.00

MATCH LINE 389+75.00

5

5

LEGEND

CONCRETE IMPROVEMENT AREAS (SEE PLAN DETAILS)

PROPOSED ASPHALT AREAS

N

EXISTING R/W

INTERSECTION OVERLAY 2 1/2"

62+00

S. LANSING AVE

ROADWAY OVERLAY 2 1/2"

STA 401+50.81 R/L 42 NB RL =
STA 60+00.00 R/L S. LANSING AVE
Y=153,505.616
X=491,171.939

61+00

390+00'SB'

395+00'SB'

R/L STH 42 NB

STH 42/57 SB

PC: 390+83.51

390+00'NB'

395+00'NB'

400+00'NB'

60+00

405+00

N88°48'13"E

N89°52'24"E

STH 42/57 NB

CURVE 6

PT: 395+11.43

CURVE 6
PI STA = 392+97.48
Y = 153503.731
X = 490318.599
DELTA = 1°04'11"
D = 0°15'00"
T = 213.96'
L = 427.92'
R = 22918.31'
PC STA = 390+83.51
Y = 153499.263
X = 490104.681
PT STA = 395+11.43
Y = 153504.203
X = 490532.563
BK = N88°48'12.9"E
AH = N89°52'24.2"E

ROADWAY OVERLAY 2 1/2"

INTERSECTION OVERLAY 2 1/2"

59+00

S. LANSING AVE

W. WALNUT ST

EXISTING R/W

MATCH LINE 389+75.00

MATCH LINE 405+00.00

PROJECT NO: 4430-19-71	HWY: STH 42	COUNTY: DOOR	PLAN SHEETS	SHEET PRE_50	E

FILE NAME : C:\CIVIL 3D PROJECTS\44301900\SHEETSPLAN\050201-PN.DWG
LAYOUT NAME - 050210-pn

PLOT DATE : 7/29/2020 10:45 AM PLOT BY : KIRST, DOUGLAS P PLOT NAME : PLOT SCALE : 1 IN:100 FT

WISDOT/CADDS SHEET 44

5

EXISTING R/W

ROADWAY OVERLAY 2 1/2"

INTERSECTION OVERLAY 2 1/2"

S. NEENAH AVE INTERSECTION WIDENING SEE PLAN DETAILS

SLOPE INTERCEPT, TYP.

R/L S. NEENAH AVE

66+00'N'

S. NEENAH AVE

STH 42/57 SB

STH 42/57 NB

MATCH LINE 405+00.00

00'NB'

410+00'NB'

R/L STH 42 NB

N89°52'24"E

415+00'SB'

415+00'NB'

PC: 417+76.34

CURVE 7

420+00'SB'

420+00'NB'

MATCH LINE 420+25.00

STA 414+73.23 R/L 42 NB RL =
STA 64+89.29 R/L S. NEENAH AVE
Y=153,508.539
X=492,494.358

INTERSECTION OVERLAY 2 1/2"

64+00'N'

S. NEENAH AVE

E. WALNUT ST

ROADWAY OVERLAY 2 1/2"

EXISTING R/W

CURVE 7
PI STA = 426+44.58
Y = 153511.127
X = 493665.709
DELTA = 25°36'43"
D = 1°30'00"
T = 868.24'
L = 1707.47'
R = 3819.72'
PC STA = 417+76.34
Y = 153509.209
X = 492797.472
PT STA = 434+83.81
Y = 153137.541
X = 494449.464
BK = N89°52'24.2"E
AH = S64°30'52.7"E

5

LEGEND

CONCRETE IMPROVEMENT AREAS (SEE PLAN DETAILS)

PROPOSED ASPHALT AREAS

N

PT: 70+08.07

R/L S. OXFORD AVE

70+00

S. OXFORD AVE

PCC: 69+14.42

PC: 68+75.07

ROADWAY OVERLAY 2 1/2"

INTERSECTION OVERLAY 2 1/2"

STA 425+30.07 R/L 42 NB RL =
STA 68+00.00 R/L S. OXFORD AVE
Y=153,436.398
X=493,546.414

EXISTING R/W

R/L STH 42 NB

STH 42/57 SB

425+00'NB'

430+00'NB'

STH 42/57 NB

CURVE 7

MATCH LINE 420+25.00

INTERSECTION OVERLAY 2 1/2"

PT: 73+38.25

PC: 72+99.85

STA 426+31.22 R/L 42 NB RL =
STA 73+84.41 R/L SHILOH RD
Y=153,415.818
X=493,645.436

SHILOH RD

72+00

R/L S. SHILOH RD

ROADWAY OVERLAY 2 1/2"

EXISTING R/W

435+00'NB'

S64°30'53"E

PT: 434+83.81

MATCH LINE 435+50.00

PROJECT NO: 4430-19-71	HWY: STH 42	COUNTY: DOOR	PLAN SHEETS	SHEET E

PRE_51

FILE NAME : C:\CIVIL 3D PROJECTS\44301900\SHEETSPLAN\050201-PN.DWG
LAYOUT NAME - 050211-pn

PLOT DATE : 7/29/2020 10:45 AM PLOT BY : KIRST, DOUGLAS P PLOT NAME : PLOT SCALE : 1 IN:100 FT

WISDOT/CADDS SHEET 44

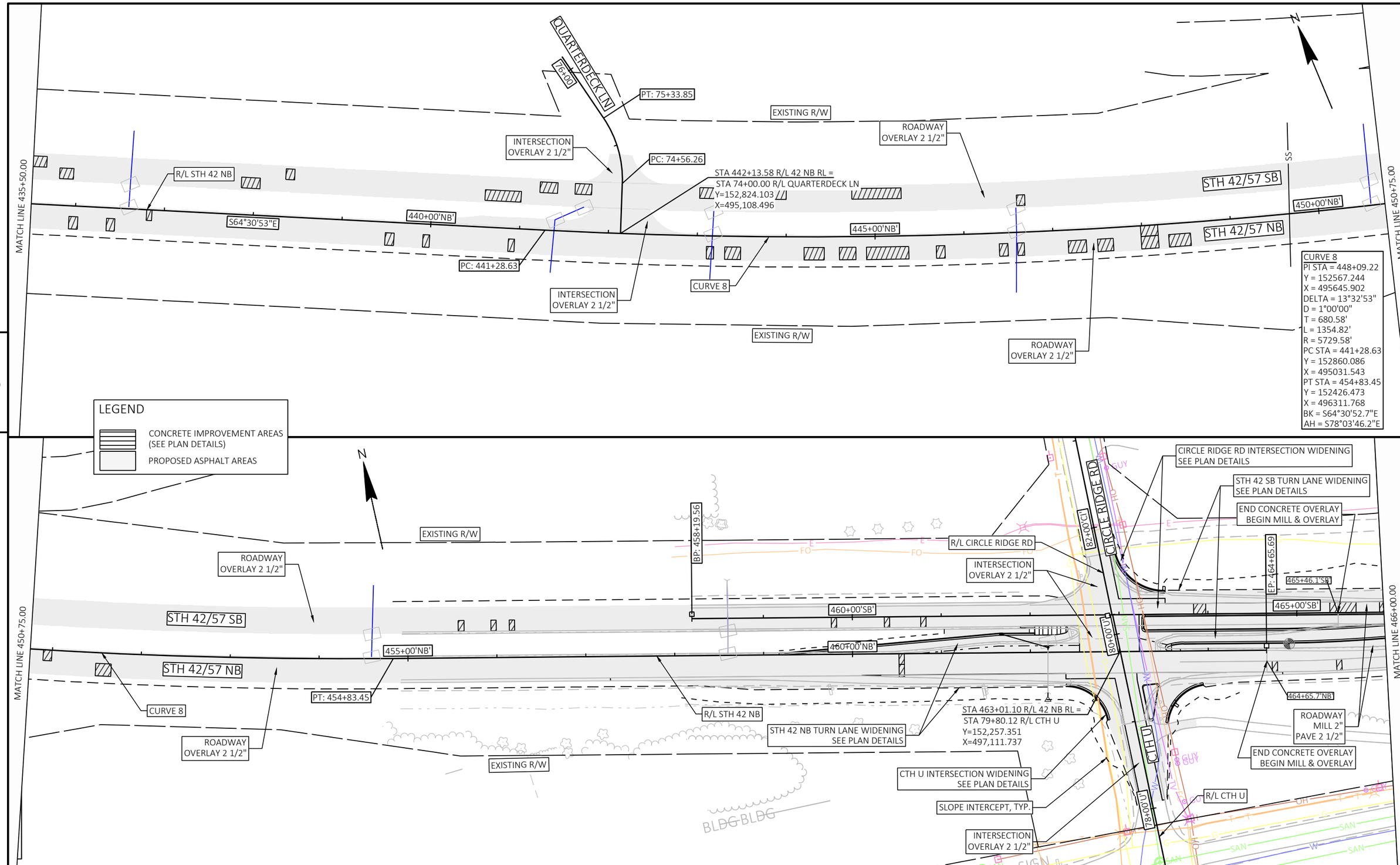

PROJECT NO: 4430-19-71	HWY: STH 42	COUNTY: DOOR	PLAN SHEETS	SHEET PRE_52	E

FILE NAME : C:\CIVIL 3D PROJECTS\44301900\SHEETSPLAN\050201-PN.DWG
LAYOUT NAME - 050212-pn
PLOT DATE : 7/29/2020 10:46 AM PLOT BY : KIRST, DOUGLAS P PLOT NAME : PLOT SCALE : 1 IN:100 FT

WISDOT/CADDS SHEET 44

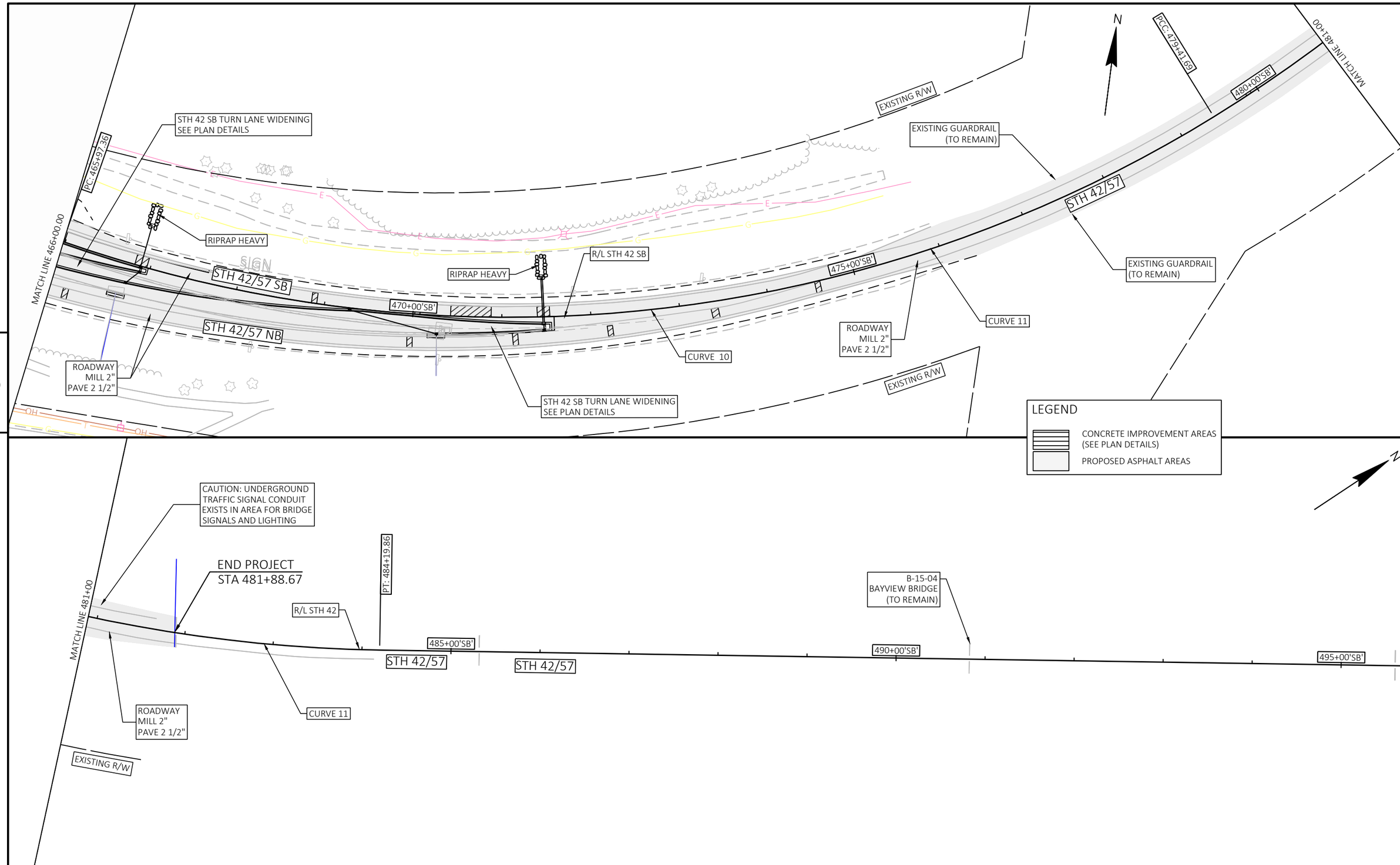

PROJECT NO: 4430-19-71	HWY: STH 42	COUNTY: DOOR	PLAN SHEETS	SHEET PRE_53 E

FILE NAME : C:\CIVIL 3D PROJECTS\44301900\SHEETSPLAN\050201-PN.DWG
LAYOUT NAME - 050213-pn
PLOT DATE : 7/29/2020 10:46 AM PLOT BY : KIRST, DOUGLAS P PLOT NAME : PLOT SCALE : 1 IN:100 FT

WISDOT/CADDS SHEET 44

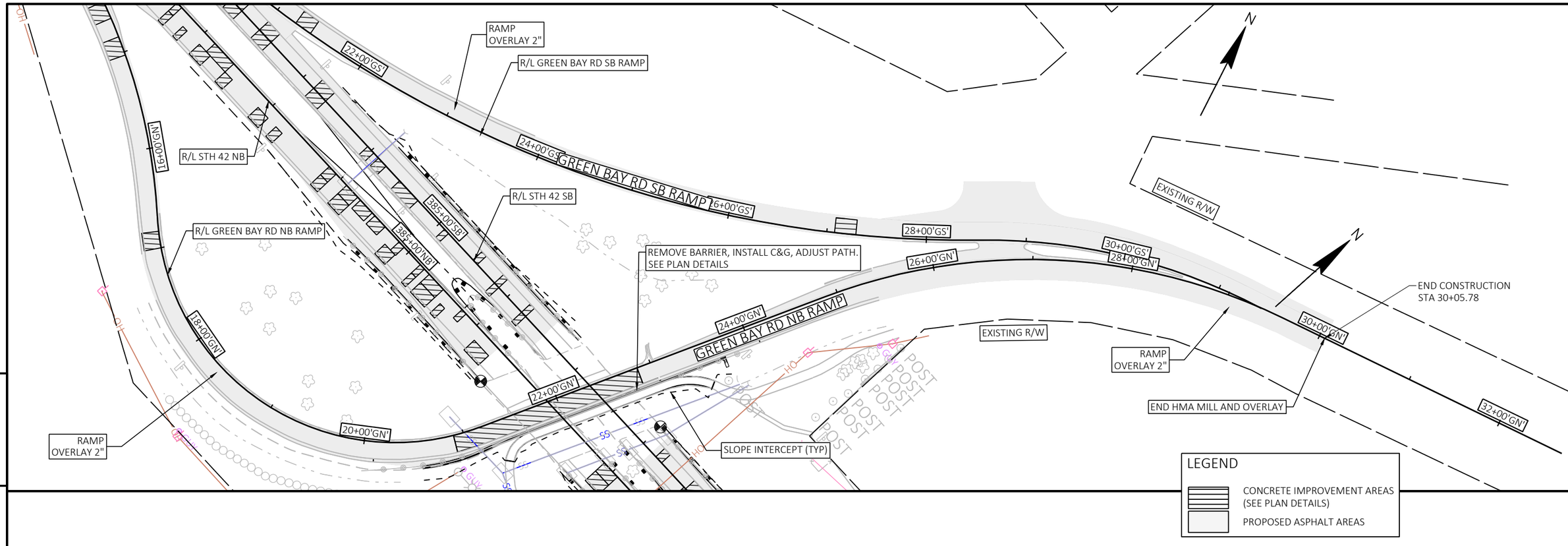

5

5

PROJECT NO: 4430-19-71	HWY: STH 42	COUNTY: DOOR	PLAN SHEETS	SHEET PRE_54	E

FILE NAME : C:\CIVIL 3D PROJECTS\44301900\SHEETSPLAN\050201-PN.DWG
LAYOUT NAME - 050214-pn
PLOT DATE : 7/29/2020 10:46 AM PLOT BY : KIRST, DOUGLAS P PLOT NAME : PLOT SCALE : 1 IN:100 FT

WISDOT/CADDS SHEET 44

Standard Detail Drawing List

08A05-19A	INLET COVERS TYPE A, H, A-S, H-S & Z
08A05-19B	INLET COVERS TYPE B, B-A, C, MS, MS-A, & WM
08A05-19C	INLET COVERS TYPE F, HM, HM-S, S, T, V, HM-GJ, & HM-GJ-S
08A05-19D	INLET COVER TYPE BW, MANHOLE COVERS, TYPE K, J, J-S, L & M
08B09-02	MANHOLES 3-FT, 4-FT, 5-FT, 6-FT, 7-FT AND 8-FT DIAMETER
08B10-02	MANHOLES 3X3-FT, 4X4-FT, 5X5-FT AND 6X6-FT
08C06-02	INLETS 3-FT AND 4-FT DIAMETER
08C07-02	INLETS 2X2-FT, 2X2.5-FT, 2X3-FT AND 2.5X3-FT
08D01-21A	CONCRETE CURB & GUTTER
08D01-21B	CONCRETE CURB, TIES AND CURB AND GUTTER APPLICATIONS
08D04-05	CONCRETE SURFACE DRAINS & ASPHALTIC FLUMES
08D20-01	DRIVEWAYS WITH CURB & GUTTER RETURNS
08D21-01	DRIVEWAYS WITHOUT CURB & GUTTER
08D22-01	DRIVEWAYS WITHOUT CURB & GUTTER RESURFACING PROJECTS RURAL
08E05-02	SODDED BACKSLOPE FLUME AND INTERCEPTING EMBANKMENT
08F01-11	APRON ENDWALLS FOR CULVERT PIPE
08F04-07	JOINT TIES FOR CONCRETE PIPE AND CONCRETE COLLAR DETAIL
09A01-13A	AT-GRADE SIDE ROAD INTERSECTION, TYPES "B1", "B2", "C" AND D AND TEE INTERSECTION BYPASS LANE
09A01-13B	AT-GRADE SIDE ROAD INTERSECTION, TYPE "A1" & "A2"
09B02-10	CONDUIT
09B04-11	PULL BOX
09C02-09	CONCRETE BASES, TYPES 1, 2, 5, & 6
09C03-04	TRANSFORMER/PEDESTAL BASES
09D01-05	CABINET SERVICE INSTALLATION (METER BREAKER PEDESTAL)
09E01-15A	POLE MOUNTINGS FOR TRAFFIC SIGNALS TYPE 2
09F01-04	DETAILS FOR THE INSTALLATION OF TEMPORARY TRAFFIC SIGNAL LOOP DETECTOR WIRES IN ANY EXISTING PAVEMENT
09G01-04A	SPAN WIRE TEMPORARY TRAFFIC SIGNAL
09H01-01	BASE ITS CONTROLLER CABINET
10A01-03	ELECTRICAL HANDHOLE WIRING
11A01-06	MAINTENANCE CROSSOVER FOR FREEWAYS
11B01-05	CONCRETE CORRUGATED MEDIAN
11B02-02	CONCRETE MEDIAN NOSE
12A03-10	NAME PLATE (STRUCTURES)
13A03-06	CONCRETE PAVEMENT SHOULDERS
13B01-10	PAVEMENT DETAILS FOR RAILROAD APPROACH
13C01-19	CONCRETE PAVEMENT LONGITUDINAL JOINTS AND TIES
13C09-15A	CONCRETE PAVEMENT REPAIR AND REPLACEMENT
13C09-15B	CONCRETE PAVEMENT REPAIR AND REPLACEMENT
13C09-15C	CONCRETE PAVEMENT REPAIR AND REPLACEMENT
13C14-07A	BASE PATCHING CONCRETE
13C14-07B	BASE PATCHING CONCRETE
13C14-07C	BASE PATCHING CONCRETE
13C15-06A	CONCRETE BASE
13C15-06B	CONCRETE BASE
13C18-07D	CONCRETE PAVEMENT JOINT TYPES AT UTILITY FIXTURES
14A01-03	TREE PRESERVATION DETAILS
14B07-15A	CONCRETE BARRIER TEMPORARY PRECAST, 12'-6"
14B20-11A	STEEL THRIE BEAM STRUCTURE APPROACH
14B26-03A	STEEL THRIE BEAM BULLNOSE TERMINAL
14B26-03B	STEEL THRIE BEAM BULLNOSE TERMINAL
14B26-03C	STEEL THRIE BEAM BULLNOSE TERMINAL
14B26-03D	STEEL THRIE BEAM BULLNOSE TERMINAL
14B42-06A	MIDWEST GUARDRAIL SYSTEM (MGS) GUARDRAIL
14B42-06B	MIDWEST GUARDRAIL SYSTEM (MGS) GUARDRAIL
14B44-04A	MIDWEST GUARDRAIL SYSTEM ENERGY ABSORBING TERMINAL (MGS)
14B45-05A	MIDWEST GUARDRAIL SYSTEM THRIE BEAM TRANSITION (MGS)
14B45-05B	MIDWEST GUARDRAIL SYSTEM THRIE BEAM TRANSITION (MGS)
14B47-02A	MIDWEST GUARDRAIL SYSTEM (MGS) TYPE 2 TERMINAL
14B47-02B	MIDWEST GUARDRAIL SYSTEM (MGS) TYPE 2 TERMINAL

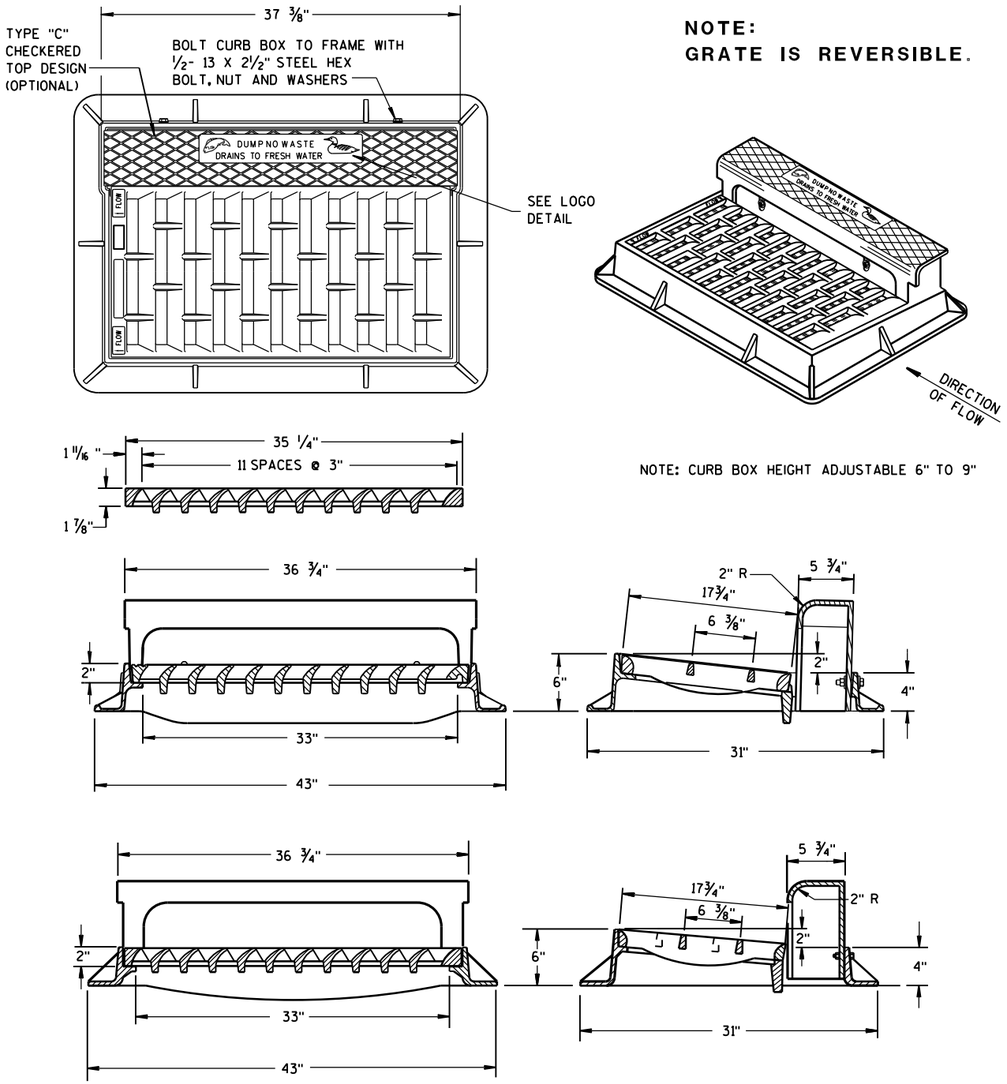

NOTE:
GRATE IS REVERSIBLE.

NOTE: CURB BOX HEIGHT ADJUSTABLE 6" TO 9"

TYPE "H"

NOTE: EITHER CASTING IS ACCEPTABLE

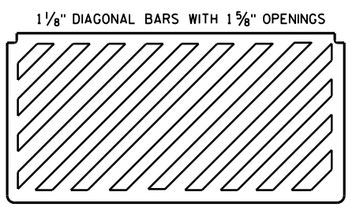

SPECIAL GRATE FOR TYPE "H" COVER

(MEASURES 35 1/4" X 17 3/4" X 2")

(NOTED AS TYPE H-S ON DRAINAGE TABLE)

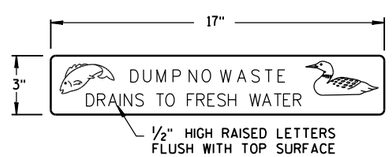

LOGO DETAIL

GENERAL NOTES

DETAILS OF CONSTRUCTION, MATERIALS AND WORKMANSHIP NOT SHOWN ON THIS DRAWING SHALL CONFORM TO THE PERTINENT REQUIREMENTS OF THE STANDARD SPECIFICATIONS AND THE APPLICABLE SPECIAL PROVISIONS.

DETAIL DRAWINGS FOR PROPOSED ALTERNATE DESIGNS FOR CATCH BASIN, MANHOLE AND INLET COVERS SHALL BE SUBMITTED TO THE ENGINEER FOR APPROVAL PROVIDING THAT SUCH ALTERNATE DESIGNS MAKE PROVISION FOR EQUIVALENT CAPACITY AND STRENGTH.

ROUND FRAMES AND COVERS SHALL HAVE CONTINUOUSLY MACHINED BEARING SURFACES TO PREVENT ROCKING AND RATTLING.

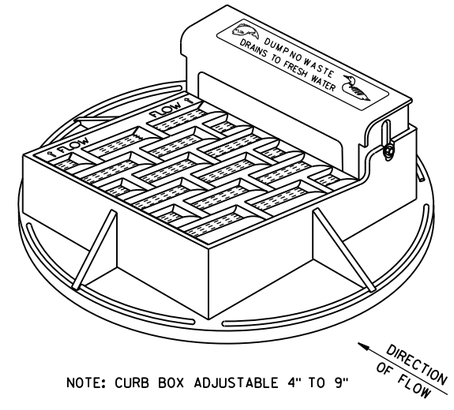

NOTE: CURB BOX ADJUSTABLE 4" TO 9"

NOTE:
GRATE IS REVERSIBLE.

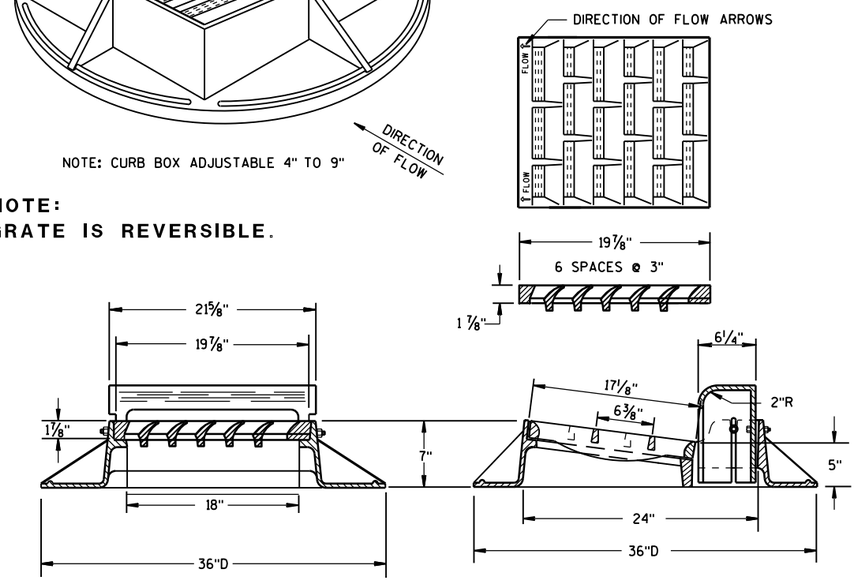

TYPE "A"

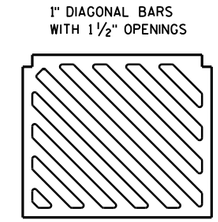

SPECIAL GRATE FOR TYPE "A" COVER

(MEASURES 19 3/4" X 17" X 1 7/8")

(NOTED AS TYPE A-S ON DRAINAGE TABLE)

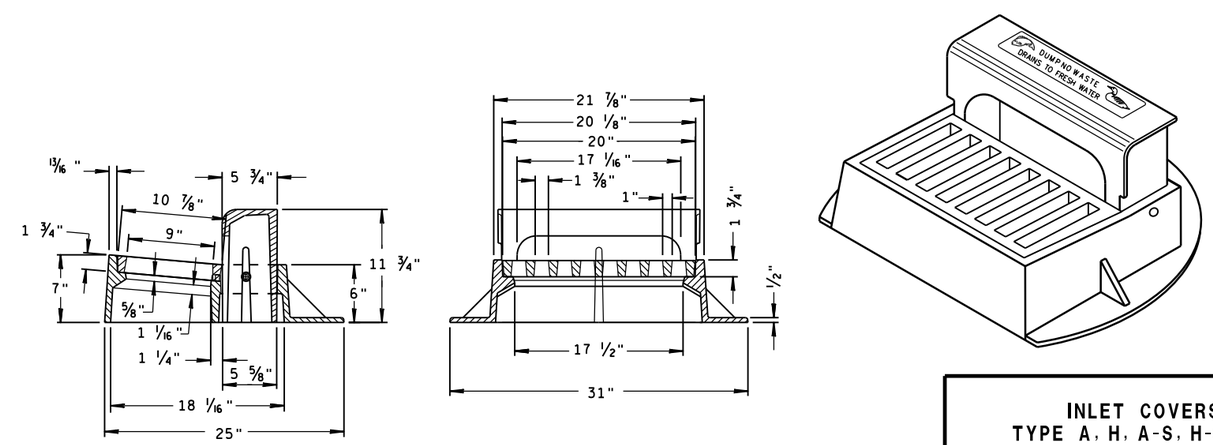

TYPE "Z"

INLET COVERS
TYPE A, H, A-S, H-S & Z

STATE OF WISCONSIN
DEPARTMENT OF TRANSPORTATION

APPROVED
11-27-13 /S/ Jerry H. Zogg
DATE ROADWAY STANDA ENGI NT
FHWA

6

S.D.D. 8 A 5-19a

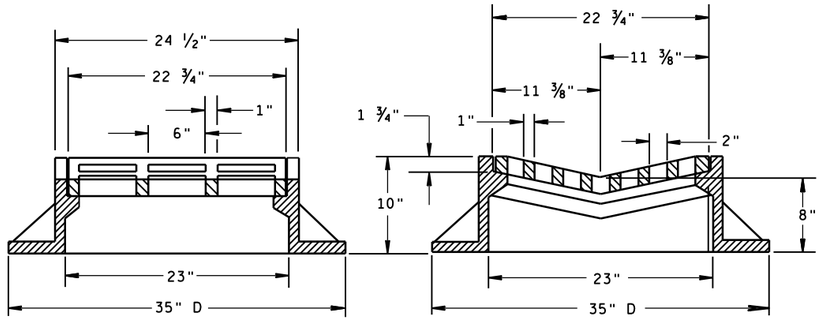

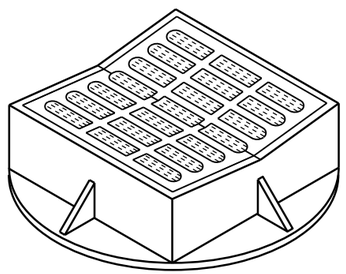

TYPE "B"

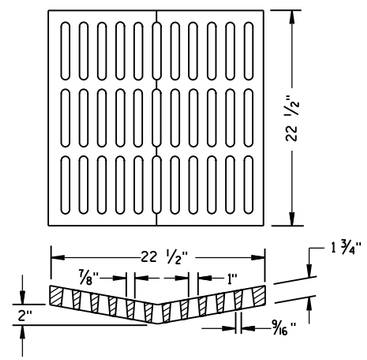

ALTERNATIVE GRATE FOR TYPE "B" COVER

USE WHERE PEDESTRIAN OR BICYCLE TRAFFIC IS POSSIBLE.

NOTED AS TYPE B-A ON THE DRAINAGE TABLE

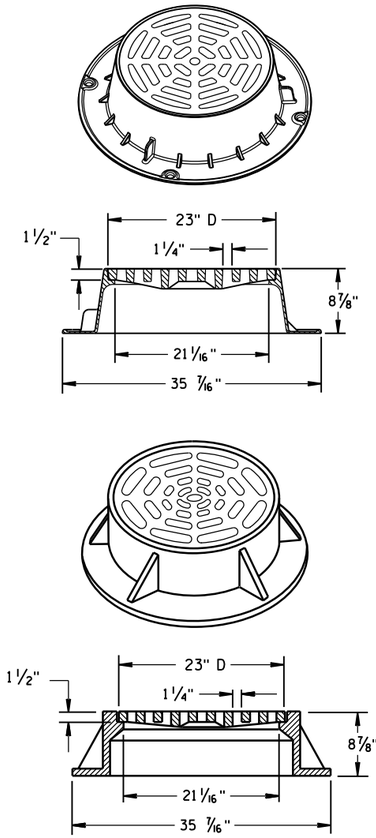

TYPE "C"

NOTE: EITHER CASTING IS ACCEPTABLE

GENERAL NOTES

DETAILS OF CONSTRUCTION, MATERIALS AND WORKMANSHIP NOT SHOWN ON THIS DRAWING SHALL CONFORM TO THE PERTINENT REQUIREMENTS OF THE STANDARD SPECIFICATIONS AND THE APPLICABLE SPECIAL PROVISIONS.

DETAIL DRAWINGS FOR PROPOSED ALTERNATE DESIGNS FOR CATCH BASIN, MANHOLE AND INLET COVERS SHALL BE SUBMITTED TO THE ENGINEER FOR APPROVAL PROVIDING THAT SUCH ALTERNATE DESIGNS MAKE PROVISION FOR EQUIVALENT CAPACITY AND STRENGTH.

ROUND FRAMES AND COVERS SHALL HAVE CONTINUOUSLY MACHINED BEARING SURFACES TO PREVENT ROCKING AND RATTLING.

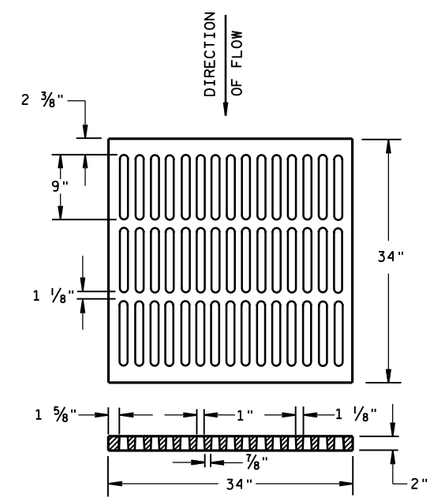

ALTERNATIVE TYPE "MS"

USE WHERE PEDESTRIAN OR BICYCLE TRAFFIC IS PERMITTED

NOTED AS TYPE MS-A ON THE DRAINAGE TABLE

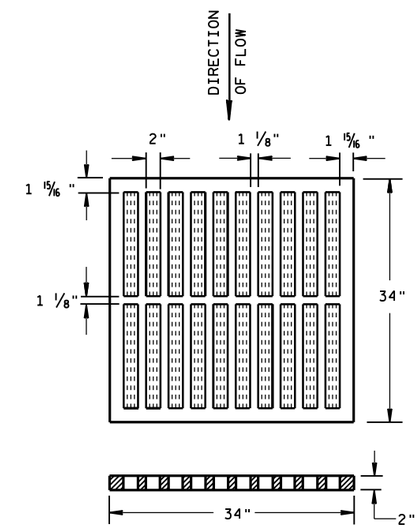

TYPE "MS"

USE ON FREEWAYS AND EXPRESSWAYS

NOTED AS TYPE MS ON DRAINAGE TABLE

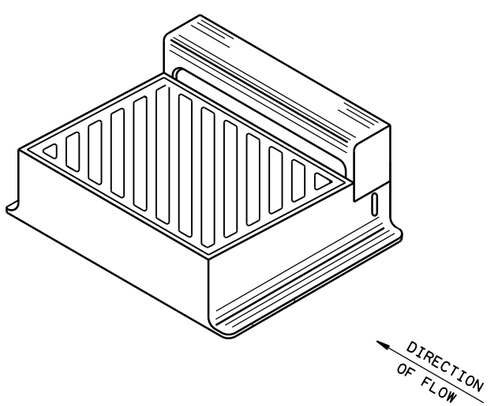

DIAGONAL SLOTS, SHALL BE ORIENTED TO THE DIRECTION OF FLOW AS ILLUSTRATED. GRATES ARE MANUFACTURED TO BE REVERSIBLE.

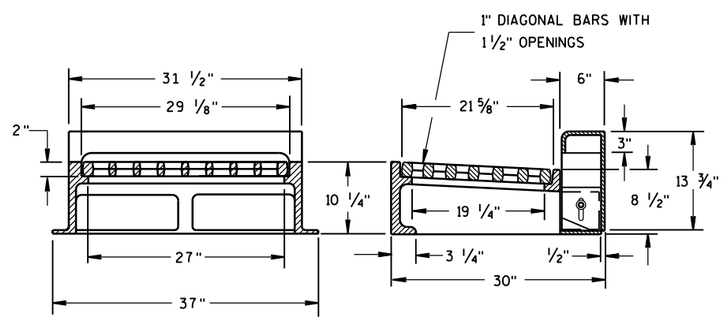

NOTE: CURB BOX HEIGHT ADJUSTABLE 6" TO 9"

TYPE "WM"

6

6

S.D.D. 8 A 5-19b

S.D.D. 8 A 5-19b

INLET COVERS
TYPE B, B-A, C, MS, MS-A, & WM

STATE OF WISCONSIN
DEPARTMENT OF TRANSPORTATION

APPROVED

11/27/2013 — DATE

/S/ Jerry H. Zogg — ROADWAY STANDA ENGI

FHWA

PRE_57

GENERAL NOTES

DETAILS OF CONSTRUCTION, MATERIALS AND WORKMANSHIP NOT SHOWN ON THIS DRAWING SHALL CONFORM TO THE PERTINENT REQUIREMENTS OF THE STANDARD SPECIFICATIONS AND THE APPLICABLE SPECIAL PROVISIONS.

DETAIL DRAWINGS FOR PROPOSED ALTERNATE DESIGNS FOR INLET COVERS SHALL BE SUBMITTED TO THE ENGINEER FOR APPROVAL PROVIDING THAT SUCH ALTERNATE DESIGNS MAKE PROVISION FOR EQUIVALENT CAPACITY AND STRENGTH.

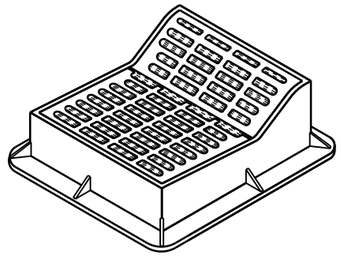

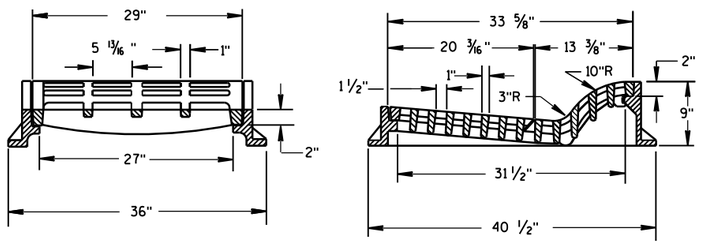

TYPE "F"

USE WITH TYPES A & D CONCRETE CURB & GUTTER, 36 INCH.

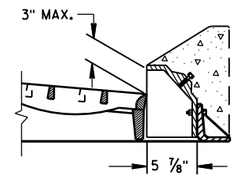

ALTERNATIVE CURB BOX FOR TYPE "HM" COVER

USE WITH TYPES G & J CONCRETE CURB & GUTTER, 30 INCH
NOTED AS TYPE HM-GJ ON DRAINAGE TABLE

NOTE:
SPECIAL GRATE FOR THE
TYPE "H" COVER MAY ALSO BE
USED FOR THE TYPE "HM-GJ" COVER
NOTED AS TYPE HM-GJ-S ON DRAINAGE TABLE

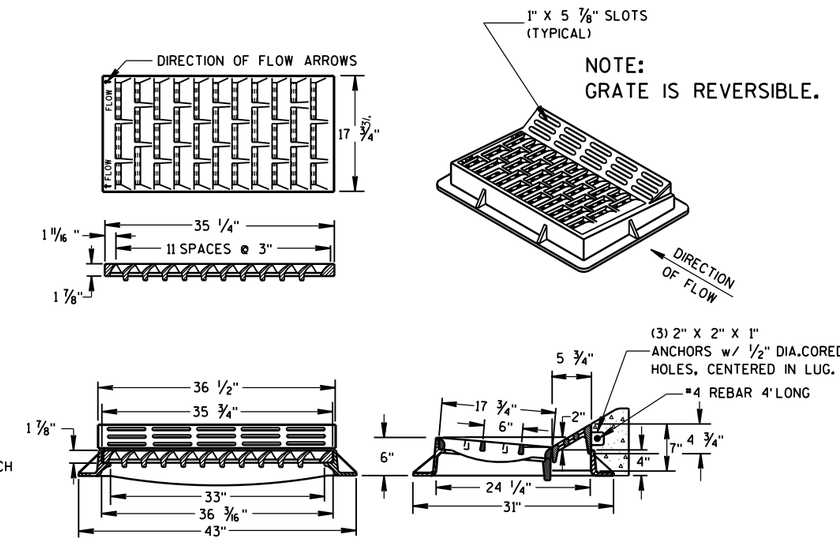

TYPE "HM"

USE WITH TYPES A & D CONCRETE CURB & GUTTER, 36 INCH.

NOTE:
SPECIAL GRATE FOR THE
TYPE "H" COVER MAY ALSO BE
USED FOR THE TYPE "HM" COVER
NOTED AS TYPE HM-S ON DRAINAGE TABLE

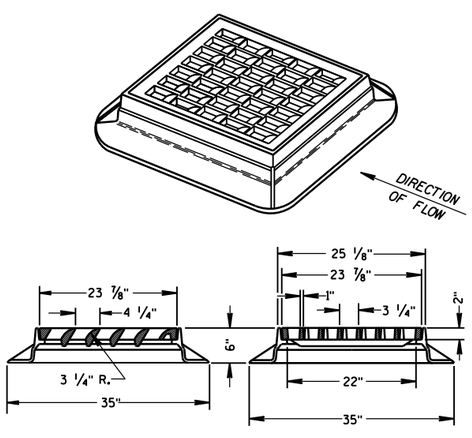

TYPE "S"

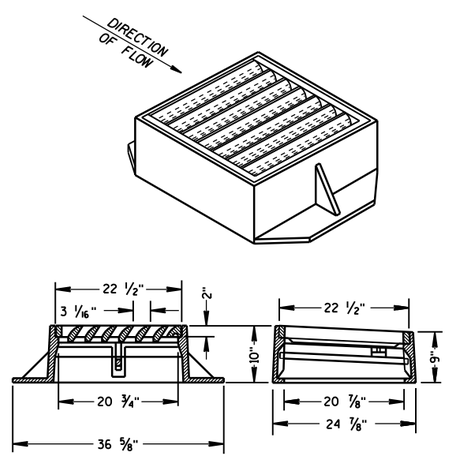

TYPE "V"

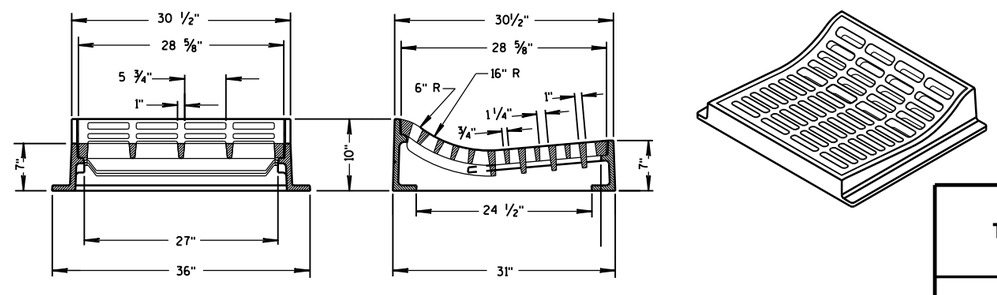

TYPE "T"

USE WITH TYPES R & T CONCRETE CURB & GUTTER, 36 INCH.

INLET COVERS
TYPE F, HM, HM-S, S, T, V, HM-GJ, & HM-GJ-S

STATE OF WISCONSIN
DEPARTMENT OF TRANSPORTATION

APPROVED
11/27/2013 — DATE
/S/ Jerry H. Zogg — ROADWAY STANDARDS DEVELOPMENT ENGINEER
FHWA

PRE_58

6

6

S.D.D. 8 A 5-19c

S.D.D. 8 A 5-19c

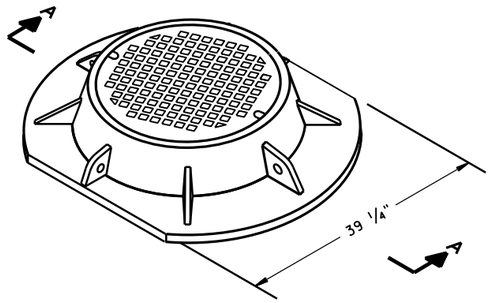

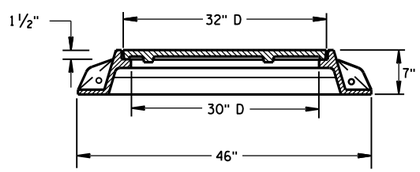

SECTION A-A
TYPE "K"

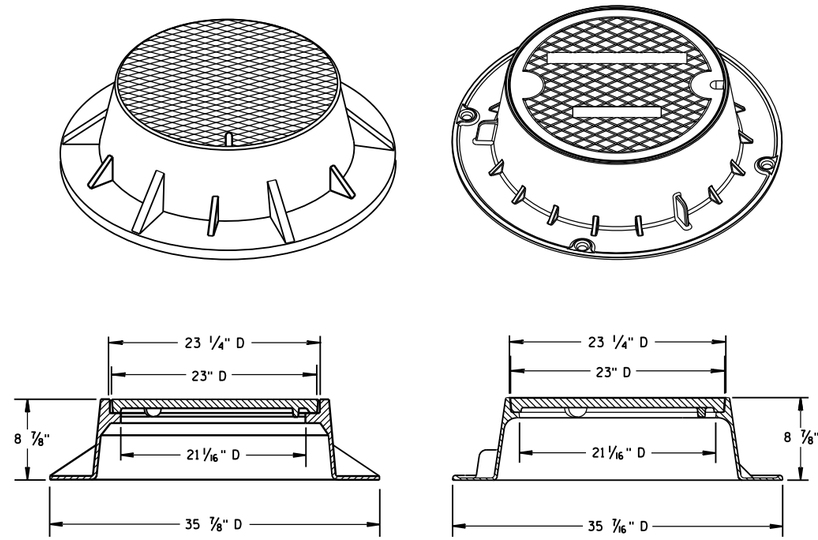

TYPE "J"
NOTE: EITHER CASTING IS ACCEPTABLE

GENERAL NOTES

DETAILS OF CONSTRUCTION, MATERIALS AND WORKMANSHIP NOT SHOWN ON THIS DRAWING SHALL CONFORM TO THE PERTINENT REQUIREMENTS OF THE STANDARD SPECIFICATIONS AND THE APPLICABLE SPECIAL PROVISIONS.

DETAIL DRAWINGS FOR PROPOSED ALTERNATE DESIGNS FOR MANHOLE COVERS SHALL BE SUBMITTED TO THE ENGINEER FOR APPROVAL PROVIDING THAT SUCH ALTERNATE DESIGNS MAKE PROVISION FOR EQUIVALENT CAPACITY AND STRENGTH.

ROUND FRAMES AND COVERS SHALL HAVE CONTINUOUSLY MACHINED BEARING SURFACES TO PREVENT ROCKING AND RATTLING.

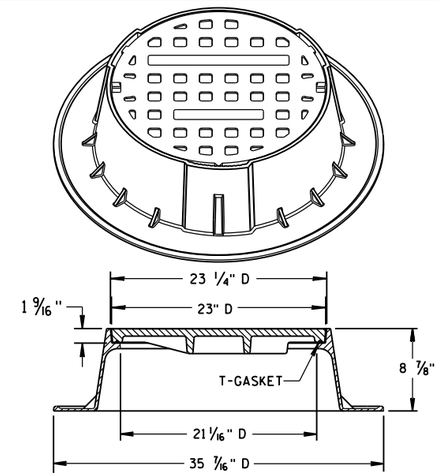

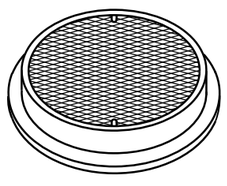

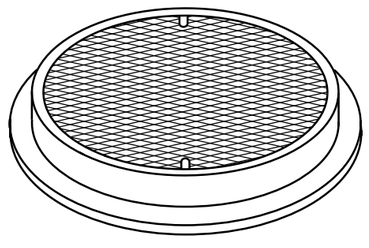

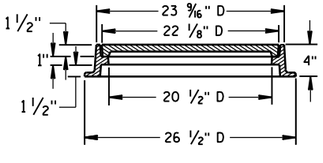

TYPE "L"

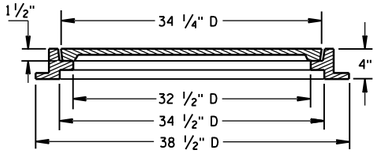

TYPE "M"

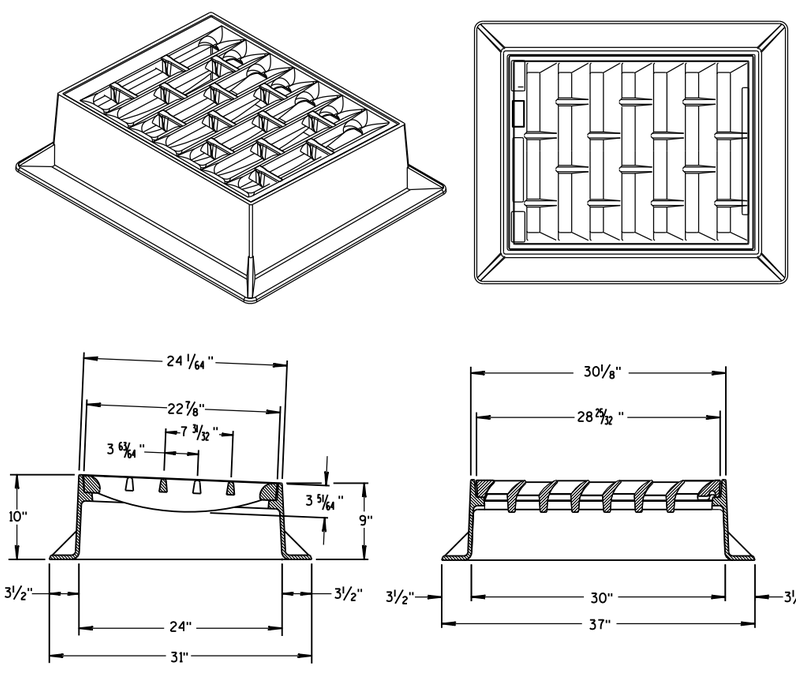

INLET COVER TYPE "BW"

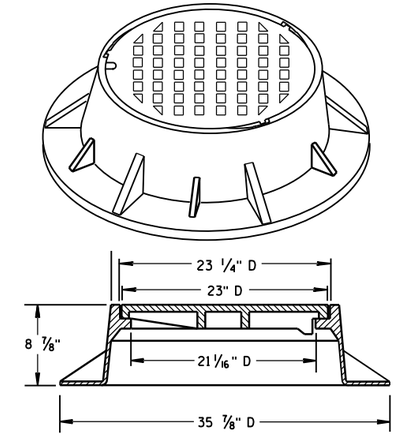

TYPE "J" SPECIAL
TYPE "B" NON-ROCKING SELF-SEAL LID
(NOTED AS TYPE J-S ON THE DRAINAGE TABLE)
NOTE: EITHER CASTING IS ACCEPTABLE

INLET COVER TYPE BW
MANHOLE COVERS, TYPE K, J, J-S, L & M

STATE OF WISCONSIN
DEPARTMENT OF TRANSPORTATION

APPROVED
11/27/2013 — DATE
/S/ Jerry H. Zogg — ROADWAY STANDARDS DEVELOPMENT ENGINEER
FHWA

6

S.D.D. 8 A 5-19d

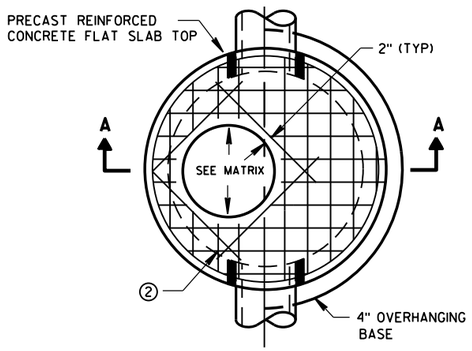

PLAN VIEW CIRCULAR OPENING

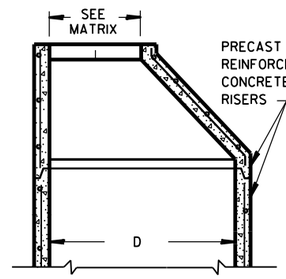

OPTIONAL PRECAST REINFORCED CONCRETE ECCENTRIC TOP

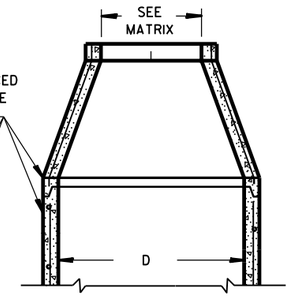

OPTIONAL PRECAST REINFORCED CONCRETE CONCENTRIC TOP

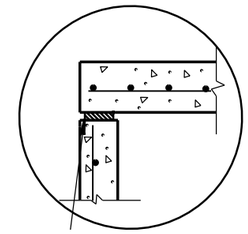

TOP WITH PLAIN END JOINT

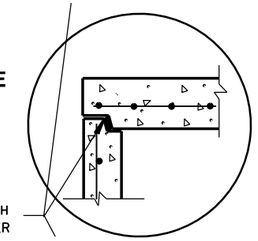

JOINTS TO BE SEALED WITH A BUTYL RUBBER SEAL PER SEALANT MANUFACTURERS RECOMMENDATIONS CONFORMING TO ASTM C990 (TYP)

TOP WITH TONGUE AND GROOVE JOINT

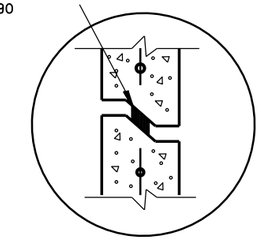

RISER WITH TONGUE AND GROOVE JOINT

DETAIL "B"

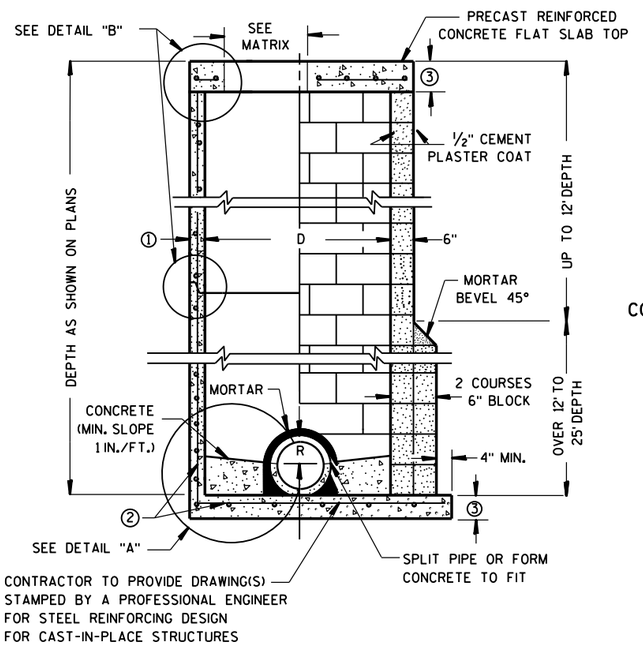

PRECAST REINFORCED CONCRETE WITH MONOLITHIC BASE

CONCRETE BLOCK WITH CAST-IN-PLACE OR PRECAST REINFORCED CONCRETE BASE ②

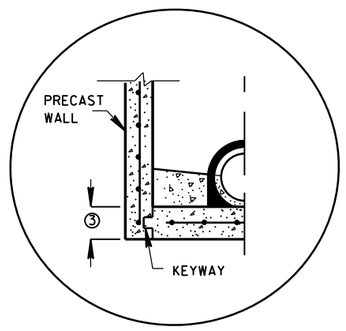

PRECAST REINFORCED CONCRETE WITH INTEGRAL BASE OPTION

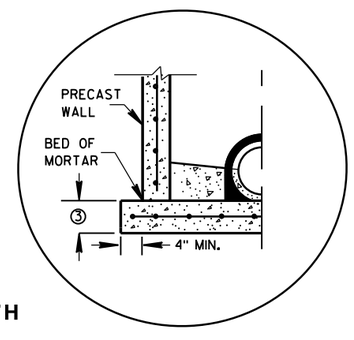

SEPARATE PRECAST REINFORCED CONCRETE BASE OPTION

DETAIL "A"

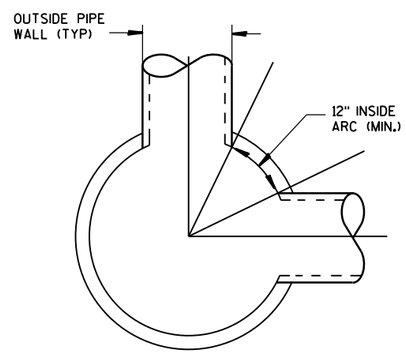

DETAIL "C"

GENERAL NOTES

DETAILS OF CONSTRUCTION, MATERIALS AND WORKMANSHIP NOT SHOWN ON THIS DRAWING SHALL CONFORM TO THE PERTINENT REQUIREMENTS OF THE STANDARD SPECIFICATIONS AND THE APPLICABLE SPECIAL PROVISIONS.

UNLESS OTHERWISE AUTHORIZED IN WRITING BY THE ENGINEER, THE CONTRACTOR SHALL NOT ORDER AND DELIVER PRECAST MANHOLE UNITS REQUIRED FOR THE PROJECT UNTIL A LIST OF SIZES IS FURNISHED BY THE ENGINEER.

DETAILED DRAWINGS FOR PROPOSED ALTERNATE DESIGNS FOR UNDERGROUND DRAINAGE STRUCTURES SHALL BE SUBMITTED TO THE ENGINEER FOR APPROVAL PROVIDING THAT SUCH ALTERNATE DESIGNS MAKE PROVISION FOR EQUIVALENT CAPACITY AND STRENGTH.

ALL DRAINAGE STRUCTURES ARE DESIGNATED ON THE PLANS AS "MANHOLES 3X3-L", "CATCH BASINS 4-B", "INLETS 2X3-H", ETC. THE FIRST NUMBERS DESIGNATE THE SIZE OF THE STRUCTURE, AND THE FOLLOWING LETTER DESIGNATES THE TYPE OF COVER TO BE USED TO COMPRISE THE COMPLETE UNIT.

BASES SHALL BE PLACED ON A BED OF MATERIAL AT LEAST 6 INCHES IN DEPTH, WHICH MEETS THE REQUIREMENTS OF FOUNDATION BACKFILL. THIS BEDDING SHALL BE COMPACTED AND PROVIDE UNIFORM SUPPORT FOR THE ENTIRE AREA OF THE BASE.

PRECAST REINFORCED CONE TOPS (ECCENTRIC OR CONCENTRIC) OR PRECAST REINFORCED FLAT SLAB TOPS MAY BE USED ON CONCRETE BLOCK STRUCTURES.

ECCENTRIC CONE TOPS MAY BE USED ON ALL STRUCTURES, AND CONCENTRIC CONE TOPS SHALL BE USED ONLY ON STRUCTURES 5 FEET OR LESS IN DEPTH, UNLESS OTHERWISE DIRECTED BY THE ENGINEER.

STEPS MEETING AASHTO M199 AND THE FOLLOWING REQUIREMENTS SHALL BE INSTALLED IN ALL STRUCTURES OVER 5 FEET IN DEPTH: 16 INCH C-C MAXIMUM SPACING; PROJECT A MINIMUM CLEAR DISTANCE OF 4 INCHES FROM THE WALL AT THE POINT OF EMBEDMENT; MINIMUM LENGTH OF 10 INCHES; MINIMUM WALL EMBEDMENT OF 3 INCHES. FERROUS METAL STEPS NOT PAINTED OR TREATED TO RESIST CORROSION SHALL HAVE A MINIMUM CROSS SECTIONAL DIMENSION OF 1 INCH.

STEPS OF APPROVED POLYPROPYLENE PLASTIC COATED REINFORCEMENT BAR ARE ACCEPTABLE. REINFORCING BAR MUST BE A MINIMUM OF ½" AND MEET THE REQUIREMENTS OF ASTM A615.

CERTIFICATION SHALL BE PROVIDED THAT INSTALLED STEPS WHEN TESTED IN ACCORDANCE WITH SECTION 10 OF AASHTO T280 CAN WITHSTAND A VERTICAL LOAD OF 800 LBS. AND A HORIZONTAL LOAD OF 400 LBS.

ALL BAR STEEL REINFORCEMENT SHALL BE EMBEDDED 2 INCHES CLEAR UNLESS OTHERWISE SHOWN OR NOTED.

CONCRETE BLOCK WILL NOT BE PERMITED FOR STRUCTURES GREATER THAN 4 FEET IN DIAMETER.

PRECAST REINFORCED RISERS SHALL HAVE A TONGUE AND GROOVE JOINT WITH TONGUE UP OR DOWN.

ALL PRECAST MANHOLE UNITS SHALL CONFORM TO THE PERTINENT REQUIREMENTS OF AASHTO DESIGNATION M 199.

4" OVERHANGING BASES ARE REQUIRED FOR ALL CONCRETE BLOCK INSTALLATIONS. 4" OVERHANG IS REQUIRED WHEN SEPARATE PRECAST BASE IS PROVIDED. OVERHANG IS NOT REQUIRED ON PRECAST STRUCTURES WITH AN INTEGRAL OR MONOLITHIC BASE.

FOR ADDITIONAL CONFIGURATIONS, MAINTAIN A MINIMUM OF 12 INCHES AS MEASURED FROM THE INSIDE OF THE STRUCTURE WALL BETWEEN THE OUTSIDE PIPE WALLS OF ADJACENT PIPES. SEE DETAIL "C".

① MINIMUM WALL THICKNESS SHALL BE 4 INCHES FOR 3-FT, 5 INCHES FOR 4-FT, 6 INCHES FOR 5-FT, 7 INCHES FOR 6-FT, 8 INCHES FOR 7-FT AND 9 INCHES FOR 8-FT DIAMETER PRECAST MANHOLES.

② FOR PRECAST MANHOLES PROVIDE REINFORCING STEEL IN ACCORDANCE TO AASHTO M199.

③ PRECAST FLAT SLAB TOPS AND BASES WITH A DIAMETER OF 48" AND LESS SHALL HAVE A MINIMUM THICKNESS OF 6". PRECAST FLAT SLAB TOPS AND BASES WITH A DIAMETER LARGER THAN 48" SHALL HAVE A MINIMUM THICKNESS OF 8".

MANHOLE COVER OPENING MATRIX

MANHOLE COVER TYPE	C	ALL J'S	K	L	M
OPENING SIZE (FT)					
2 DIA.	X	X		X	
3 DIA.			X		X

PIPE MATRIX

MANHOLE SIZE	MAXIMUM INSIDE PIPE DIAMETER FOR TWO PIPES	
	180° SEPARATION (IN)	90° SEPARATION (IN)
3-FT	15	12
4-FT	24	18
5-FT	36	24
6-FT	42	36
7-FT	48	36
8-FT	60	42

MANHOLES 3-FT, 4-FT, 5-FT, 6-FT, 7-FT AND 8-FT DIAMETER

MANHOLES 3-FT, 4-FT, 5-FT, 6-FT, 7-FT AND 8-FT DIAMETER

STATE OF WISCONSIN
DEPARTMENT OF TRANSPORTATION

APPROVED
Sept., 2016 — DATE
/S/ Rodney Taylor — ROADWAY STANDARDS DEVELOPMENT UNIT SU PRE_60
FHWA

6

S.D.D. 8 B 9-2

6

S.D.D. 8 B 9-2

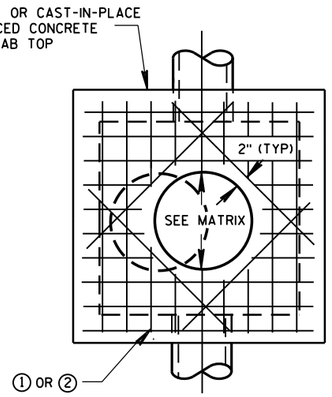

PLAN VIEW
CIRCULAR OPENING

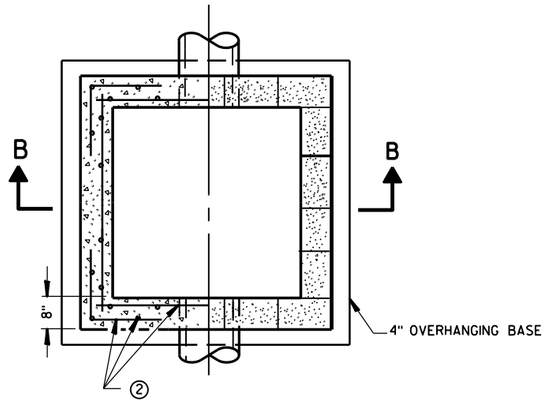

SECTION A-A
PLAN VIEW

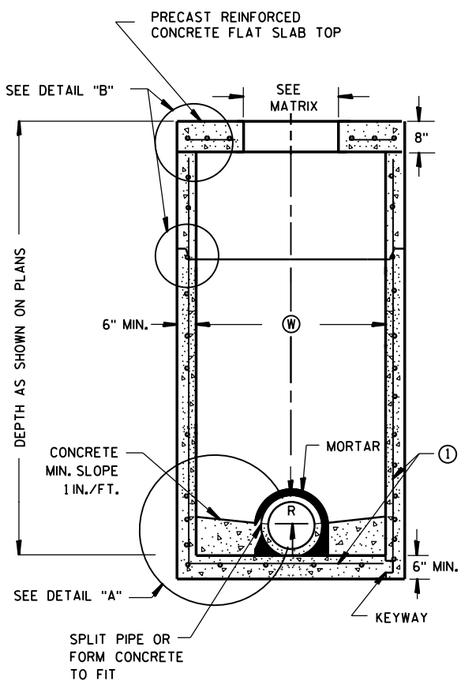

PRECAST REINFORCED CONCRETE WITH MONOLITHIC BASE

PRECAST REINFORCED CONCRETE WITH INTEGRAL BASE

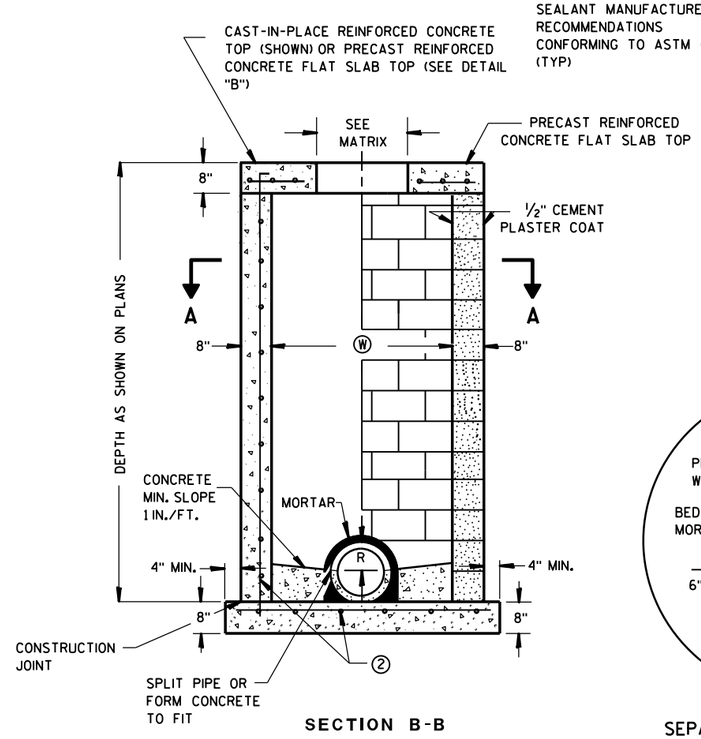

SECTION B-B

CAST-IN-PLACE REINFORCED CONCRETE

CONCRETE BLOCK WITH CAST-IN-PLACE OR PRECAST REINFORCED CONCRETE BASE

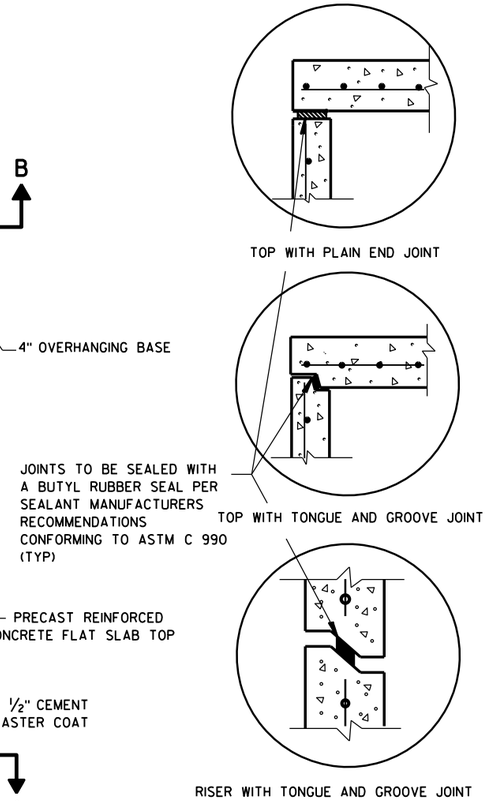

DETAIL "B"

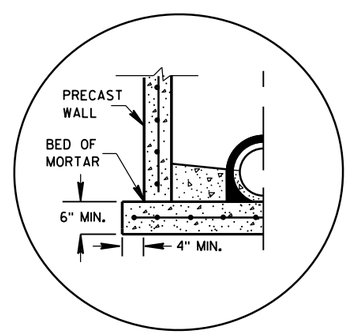

SEPARATE PRECAST REINFORCED CONCRETE BASE OPTION

DETAIL "A"

GENERAL NOTES

DETAILS OF CONSTRUCTION, MATERIALS AND WORKMANSHIP NOT SHOWN ON THIS DRAWING SHALL CONFORM TO THE PERTINENT REQUIREMENTS OF THE STANDARD SPECIFICATIONS AND THE APPLICABLE SPECIAL PROVISIONS.

UNLESS OTHERWISE AUTHORIZED IN WRITING BY THE ENGINEER, THE CONTRACTOR SHALL NOT ORDER AND DELIVER PRECAST MANHOLE UNITS REQUIRED FOR THE PROJECT UNTIL A LIST OF SIZES IS FURNISHED BY THE ENGINEER.

DETAILED DRAWINGS FOR PROPOSED ALTERNATE DESIGNS FOR UNDERGROUND DRAINAGE STRUCTURES SHALL BE SUBMITTED TO THE ENGINEER FOR APPROVAL PROVIDING THAT SUCH ALTERNATE DESIGNS MAKE PROVISION FOR EQUIVALENT CAPACITY AND STRENGTH.

ALL DRAINAGE STRUCTURES ARE DESIGNATED ON THE PLANS AS "MANHOLES 3X3-L", "CATCH BASINS 4-B", "INLETS 2X3-H", ETC. THE FIRST NUMBERS DESIGNATE THE SIZE OF THE STRUCTURE, AND THE FOLLOWING LETTER DESIGNATES THE TYPE OF COVER TO BE USED TO COMPRISE THE COMPLETE UNIT.

BASES SHALL BE PLACED ON A BED OF MATERIAL AT LEAST 6 INCHES IN DEPTH, WHICH MEETS THE REQUIREMENTS OF FOUNDATION BACKFILL. THIS BEDDING SHALL BE COMPACTED AND PROVIDE UNIFORM SUPPORT FOR THE ENTIRE AREA OF THE BASE.

PRECAST REINFORCED FLAT SLAB TOPS MAY BE USED ON CONCRETE BLOCK STRUCTURES.

STEPS MEETING AASHTO M199 AND THE FOLLOWING REQUIREMENTS SHALL BE INSTALLED IN ALL STRUCTURES OVER 5 FEET IN DEPTH: 16 INCH C-C MAXIMUM SPACING; PROJECT A MINIMUM CLEAR DISTANCE OF 4 INCHES FROM THE WALL AT THE POINT OF EMBEDMENT; MINIMUM LENGTH OF 10 INCHES; MINIMUM WALL EMBEDMENT OF 3 INCHES. FERROUS METAL STEPS NOT PAINTED OR TREATED TO RESIST CORROSION SHALL HAVE A MINIMUM CROSS SECTIONAL DIMENSION OF 1 INCH.

STEPS OF APPROVED POLYPROPYLENE PLASTIC COATED REINFORCEMENT BAR ARE ACCEPTABLE. REINFORCING BAR MUST BE A MINIMUM OF ½ INCH AND MEET THE REQUIREMENTS OF ASTM A615.

CERTIFICATION SHALL BE PROVIDED THAT INSTALLED STEPS WHEN TESTED IN ACCORDANCE WITH SECTION 10 OF AASHTO T280 CAN WITHSTAND A VERTICAL LOAD OF 800 LBS. AND A HORIZONTAL LOAD OF 400 LBS.

ALL BAR STEEL REINFORCEMENT SHALL BE EMBEDDED 2 INCHES CLEAR UNLESS OTHERWISE SHOWN OR NOTED.

CONCRETE BLOCK WILL NOT BE PERMITED FOR STRUCTURES GREATER THAN 4 FEET IN WIDTH.

PRECAST REINFORCED RISERS SHALL HAVE A TONGUE AND GROOVE JOINT WITH TONGUE UP OR DOWN.

ALL PRECAST MANHOLE UNITS SHALL CONFORM TO THE PERTINENT REQUIREMENTS OF ASTM C 913.

4" OVERHANGING BASES ARE REQUIRED FOR ALL CONCRETE BLOCK INSTALLATIONS. 4" OVERHANG IS REQUIRED WHEN SEPARATE PRECAST BASE IS PROVIDED. OVERHANG IS NOT REQUIRED ON PRECAST STRUCTURES WITH AN INTEGRAL OR MONOLITHIC BASE.

MAXIMUM PIPE DIAMETER DETERMINED BY 3 INCH CLEARANCE ON EACH SIDE OF THE OUTSIDE WALL OF THE PIPE. SEE DETAIL "C". ASSUMES PIPE ENTERS PERPENDICULAR TO THE STRUCTURE.

① FOR PRECAST MANHOLES PROVIDE REINFORCING STEEL IN ACCORDANCE TO ASTM C 913.

② CONTRACTOR TO PROVIDE DRAWING(S) STAMPED BY A PROFESSIONAL ENGINEER FOR STEEL REINFORCING DESIGN FOR CAST-IN-PLACE STRUCTURES.

MANHOLE COVER OPENING MATRIX

MANHOLE COVER TYPE	C	ALL J'S	K	L	M
OPENING SIZE (FT)					
2 DIA.	X	X		X	
3 DIA.			X		X

PIPE MATRIX

MANHOLE SIZE	MAXIMUM INSIDE PIPE DIAMETER	
	WIDTH (W) (IN)	LENGTH (L) (IN)
3X3-FT	24	24
4X4-FT	30	30
5X5-FT	42	42
6X6-FT	54	54

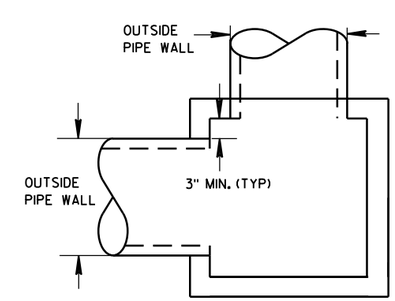

DETAIL "C"

SQUARE MANHOLES W/ FLAT TOP

MANHOLES 3X3-FT, 4X4-FT, 5X5-FT AND 6X6-FT

MANHOLES 3X3-FT, 4X4-FT
5X5-FT AND 6X6-FT

STATE OF WISCONSIN
DEPARTMENT OF TRANSPORTATION

APPROVED
Sept., 2016 /S/ Rodney Taylor
DATE ROADWAY STANDARDS DEVELOPMENT
FHWA UNIT SU

6

6

S.D.D. 8 B 10-2

S.D.D. 8 B 10-2

PRE_61

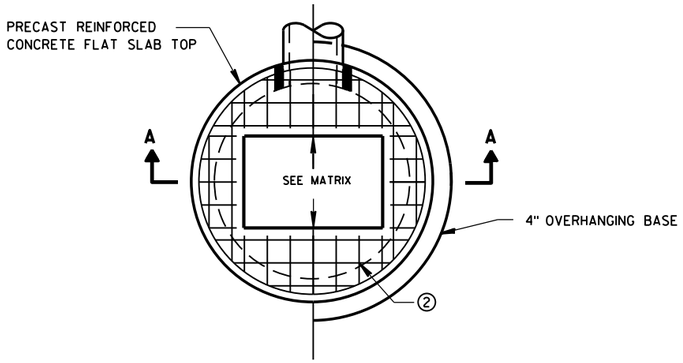

PLAN VIEW RECTANGULAR OPENING

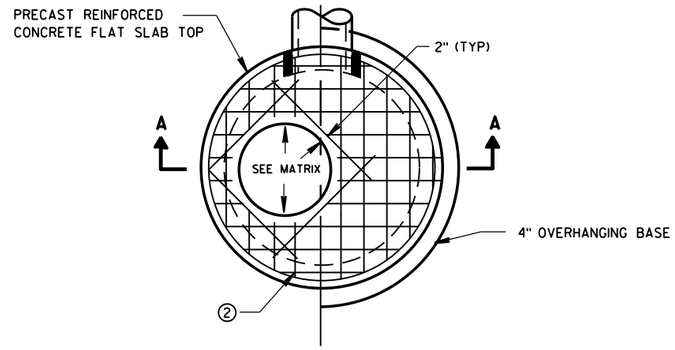

PLAN VIEW CIRCULAR OPENING

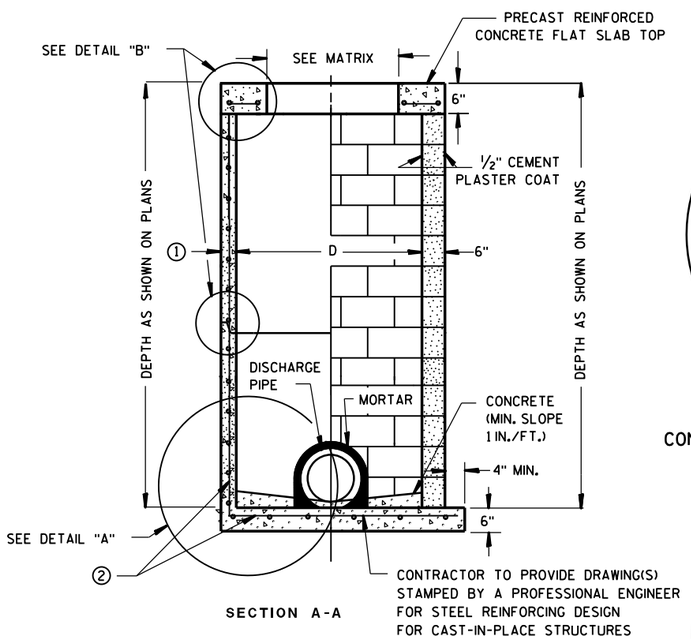

SECTION A-A

PRECAST REINFORCED CONCRETE WITH MONOLITHIC BASE

CONCRETE BLOCK WITH CAST-IN-PLACE OR PRECAST REINFORCED CONCRETE BASE ②

CIRCULAR INLETS W/ FLAT TOP

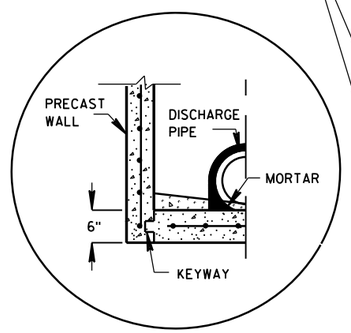

PRECAST REINFORCED CONCRETE WITH INTEGRAL BASE OPTION

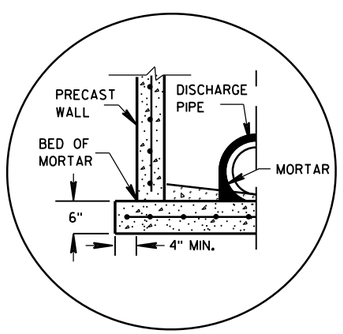

SEPARATE PRECAST REINFORCED CONCRETE BASE OPTION

DETAIL "A"

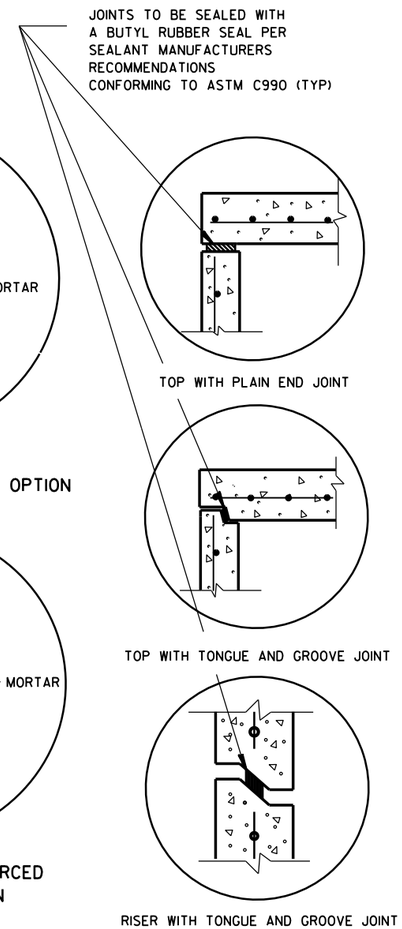

DETAIL "B"

GENERAL NOTES

DETAILS OF CONSTRUCTION, MATERIALS AND WORKMANSHIP NOT SHOWN ON THIS DRAWING SHALL CONFORM TO THE PERTINENT REQUIREMENTS OF THE STANDARD SPECIFICATIONS AND THE APPLICABLE SPECIAL PROVISIONS.

UNLESS OTHERWISE AUTHORIZED IN WRITING BY THE ENGINEER, THE CONTRACTOR SHALL NOT ORDER AND DELIVER PRECAST INLET UNITS REQUIRED FOR THE PROJECT UNTIL A LIST OF SIZES IS FURNISHED BY THE ENGINEER.

DETAILED DRAWINGS FOR PROPOSED ALTERNATE DESIGNS FOR UNDERGROUND DRAINAGE STRUCTURES SHALL BE SUBMITTED TO THE ENGINEER FOR APPROVAL PROVIDING THAT SUCH ALTERNATE DESIGNS MAKE PROVISION FOR EQUIVALENT CAPACITY AND STRENGTH.

ALL DRAINAGE STRUCTURES ARE DESIGNATED ON THE PLANS AS "MANHOLES 3X3-L", "CATCH BASINS 4-B", "INLETS 2X3-H", ETC. THE FIRST NUMBERS DESIGNATE THE SIZE OF THE STRUCTURE, AND THE FOLLOWING LETTER DESIGNATES THE TYPE OF COVER TO BE USED TO COMPRISE THE COMPLETE UNIT.

BASES SHALL BE PLACED ON A BED OF MATERIAL AT LEAST 6 INCHES IN DEPTH, WHICH MEETS THE REQUIREMENTS OF FOUNDATION BACKFILL. THIS BEDDING SHALL BE COMPACTED AND PROVIDE UNIFORM SUPPORT FOR THE ENTIRE AREA OF THE BASE.

ALL BAR STEEL REINFORCEMENT SHALL BE EMBEDDED 2 INCHES CLEAR UNLESS OTHERWISE SHOWN OR NOTED.

ALL PRECAST INLET UNITS SHALL CONFORM TO THE PERTINENT REQUIREMENTS OF AASHTO DESIGNATION M199.

PRECAST REINFORCED RISERS SHALL HAVE A TONGUE AND GROOVE JOINT WITH TONGUE UP OR DOWN.

4" OVERHANGING BASES ARE REQUIRED FOR ALL CONCRETE BLOCK INSTALLATIONS. 4" OVERHANG IS REQUIRED WHEN SEPARATE PRECAST BASE IS PROVIDED. OVERHANG IS NOT REQUIRED ON PRECAST STRUCTURES WITH AN INTEGRAL OR MONOLITHIC BASE.

FOR ADDITIONAL CONFIGURATIONS, MAINTAIN A MINIMUM OF 12 INCHES AS MEASURED FROM THE INSIDE OF THE STRUCTURE WALL BETWEEN THE OUTSIDE PIPE WALLS OF ADJACENT PIPES. SEE DETAIL "C".

① MINIMUM WALL THICKNESS SHALL BE 4-IN FOR 3-FT DIAMETER AND 5-IN FOR 4-FT DIAMETER PRECAST INLETS.

② FOR PRECAST CATCH BASINS PROVIDE REINFORCING STEEL IN ACCORDANCE TO AASHTO M199.

INLET COVER OPENING MATRIX

	INLET COVER TYPE	ALL A'S	ALL B'S	BW	C	F	ALL H'S	S	T	V	WM	Z
INLET SIZE	OPENING SIZE (FT)											
3-FT	2 DIA.				X							X
	2X2	X	X					X		X		
4-FT	2 DIA.				X							X
	2X2	X	X					X		X		
	2X2.5			X				X	X	X	X	
	2X3						X					
	2.5X3					X						

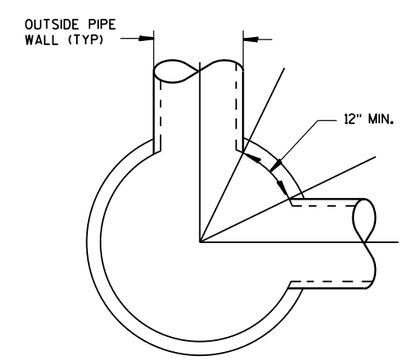

DETAIL "C"

PIPE MATRIX

INLET SIZE	MAXIMUM INSIDE PIPE DIAMETER FOR TWO PIPES	
	180° SEPARATION (IN)	90° SEPARATION (IN)
3-FT	15	12
4-FT	24	18

INLETS 3-FT AND 4-FT DIAMETER

INLETS 3-FT
AND 4-FT DIAMETER

STATE OF WISCONSIN
DEPARTMENT OF TRANSPORTATION

APPROVED
Sept., 2016 /S/ Rodney Taylor
DATE ROADWAY STANDARDS UNIT
FHWA

6

6

S.D.D. 8 C 6-2

S.D.D. 8 C 6-2

PRE_62

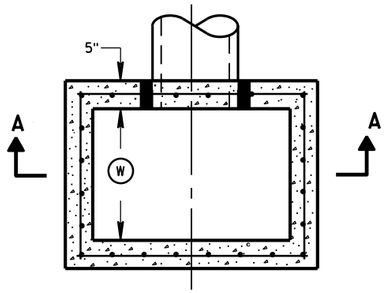

PLAN VIEW

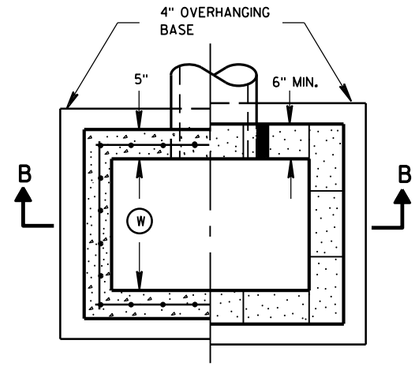

PLAN VIEW

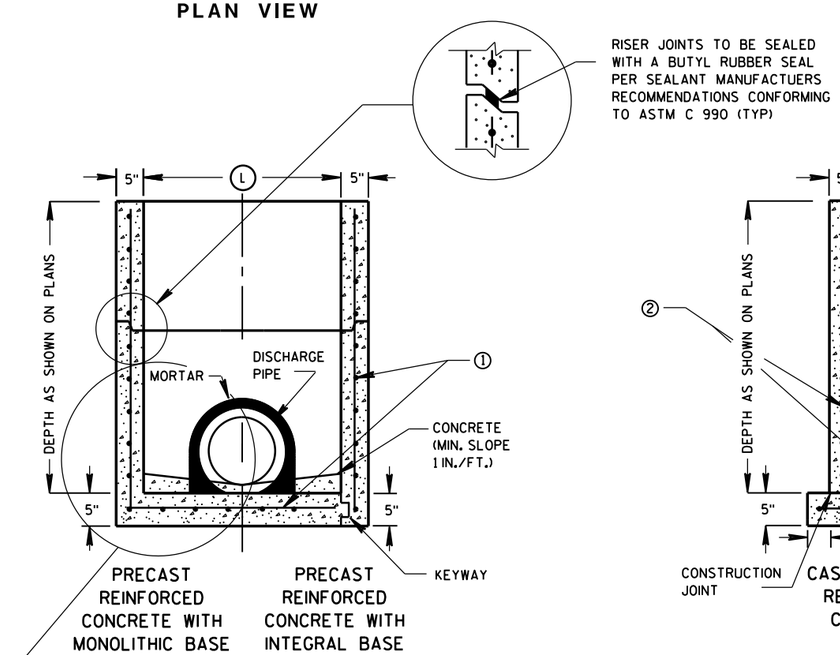

SECTION A-A

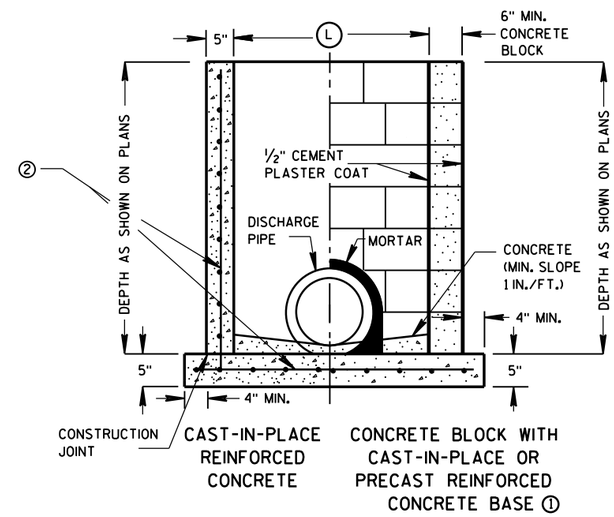

SECTION B-B

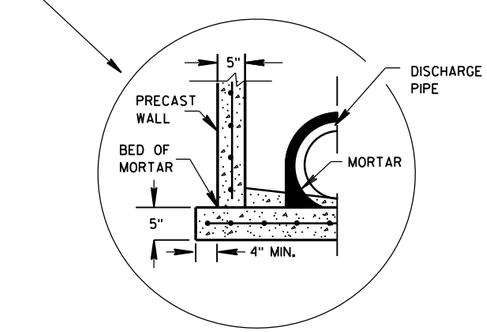

SEPARATE PRECAST REINFORCED CONCRETE BASE OPTION

GENERAL NOTES

DETAILS OF CONSTRUCTION, MATERIALS AND WORKMANSHIP NOT SHOWN ON THIS DRAWING SHALL CONFORM TO THE PERTINENT REQUIREMENTS OF THE STANDARD SPECIFICATIONS AND THE APPLICABLE SPECIAL PROVISIONS.

UNLESS OTHERWISE AUTHORIZED IN WRITING BY THE ENGINEER, THE CONTRACTOR SHALL NOT ORDER AND DELIVER PRECAST INLET UNITS REQUIRED FOR THE PROJECT UNTIL A LIST OF SIZES IS FURNISHED BY THE ENGINEER.

DETAILED DRAWINGS FOR PROPOSED ALTERNATE DESIGNS FOR UNDERGROUND DRAINAGE STRUCTURES SHALL BE SUBMITTED TO THE ENGINEER FOR APPROVAL PROVIDING THAT SUCH ALTERNATE DESIGNS MAKE PROVISION FOR EQUIVALENT CAPACITY AND STRENGTH.

ALL PRECAST INLET UNITS SHALL CONFORM TO THE PERTINENT REQUIREMENTS OF ASTM C 913.

ALL DRAINAGE STRUCTURES ARE DESIGNATED ON THE PLANS AS "MANHOLES 3X3-L", "CATCH BASINS 4-B", "INLETS 2X3-H", ETC. THE FIRST NUMBERS DESIGNATES THE SIZE OF THE STRUCTURE, AND THE FOLLOWING LETTER DESIGNATES THE TYPE OF COVER TO BE USED TO COMPRISE THE COMPLETE UNIT.

BASES SHALL BE PLACED ON A BED OF MATERIAL AT LEAST 6 INCHES IN DEPTH, WHICH MEETS THE REQUIREMENTS OF FOUNDATION BACKFILL. THIS BEDDING SHALL BE COMPACTED AND PROVIDE UNIFORM SUPPORT FOR THE ENTIRE AREA OF THE BASE.

ALL BAR STEEL REINFORCEMENT SHALL BE EMBEDDED 2 INCHES CLEAR UNLESS OTHERWISE SHOWN OR NOTED.

PRECAST REINFORCED RISERS SHALL HAVE A TONGUE AND GROOVE JOINT WITH TONGUE UP OR DOWN.

4" OVERHANGING BASES ARE REQUIRED FOR CAST-IN-PLACE REINFORCED CONCRETE AND CONCRETE BLOCK INSTALLATIONS.
4" OVERHANG IS REQUIRED WHEN SEPARATE PRECAST BASE IS PROVIDED.
OVERHANG IS NOT REQUIRED ON PRECAST STRUCTURES WITH AN INTEGRAL OR MONOLITHIC BASE.

MAXIMUM INSIDE PIPE DIAMETER DETERMINED BY 3 INCH CLEARANCE ON EACH SIDE OF THE OUTSIDE WALL OF THE PIPE. SEE DETAIL "A". ASSUMES PIPE ENTERS PERPENDICULAR TO THE STRUCTURE.

① FOR PRECAST INLETS PROVIDE REINFORCING STEEL IN ACCORDANCE TO ASTM C 913.

② CONTRACTOR TO PROVIDE DRAWING(S) STAMPED BY A PROFESSIONAL ENGINEER FOR STEEL REINFORCING DESIGN FOR CAST-IN-PLACE STRUCTURES.

INLET COVER MATRIX

INLET SIZE		INLET COVER TYPE	ALL A'S	ALL B'S	BW	F	ALL H'S	S	T	V	WM
	WIDTH Ⓦ (FT)	LENGTH Ⓛ (FT)									
2X2-FT	2	2	X	X				X		X	
2X2.5-FT	2	2.5			X			X	X	X	X
2X3-FT	2	3					X				
2.5X3-FT	2.5	3				X					

PIPE MATRIX

INLET SIZE	MAXIMUM INSIDE PIPE DIAMETER	
	WIDTH (IN)	LENGTH (IN)
2X2-FT	12	12
2X2.5-FT	12	18
2X3-FT	12	24
2.5X3-FT	18	24

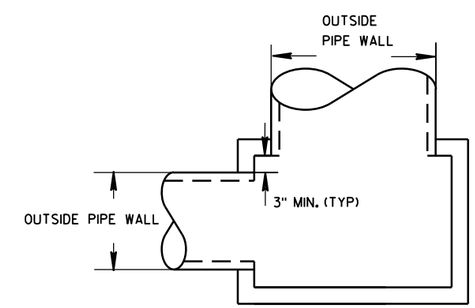

DETAIL "A"

INLETS 2X2-FT, 2X2.5-FT, 2X3-FT AND 2.5X3-FT

INLETS 2X2-FT, 2X2.5-FT, 2X3-FT AND 2.5X3-FT

STATE OF WISCONSIN
DEPARTMENT OF TRANSPORTATION

APPROVED
Sept., 2016 — DATE
/S/ Rodney Taylor — ROADWAY STANDARDS DEVELOPMENT UNIT SUPERVISOR
FHWA

PRE_63

6

6

S.D.D. 8 C 7-2

S.D.D. 8 C 7-2

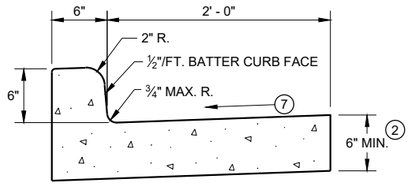

TYPES A(1) & D

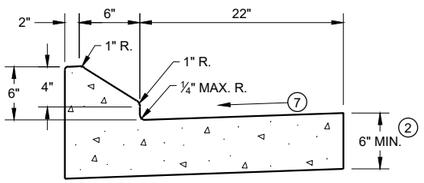

6" SLOPED CURB TYPES G(1) & J

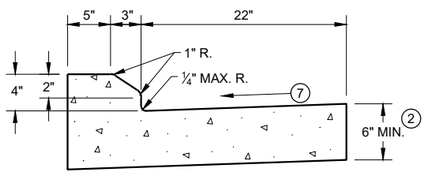

4" SLOPED CURB TYPES G(1) & J

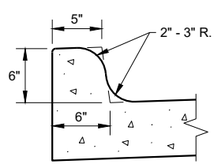

TYPES K(1) & L
(OPTIONAL CURB SHAPE)

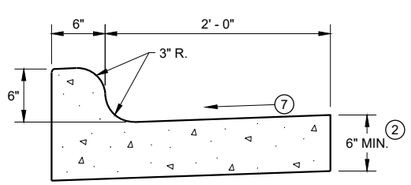

TYPES K(1) & L

CONCRETE CURB AND GUTTER 30"

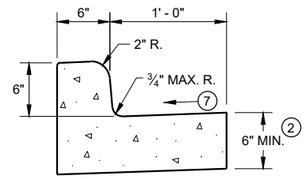

TYPES A(1) & D

CONCRETE CURB AND GUTTER 18"

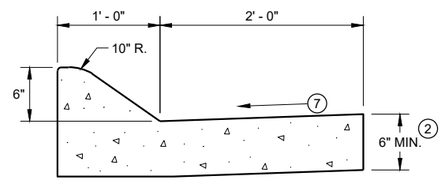

6" SLOPED CURB TYPES A(1) & D

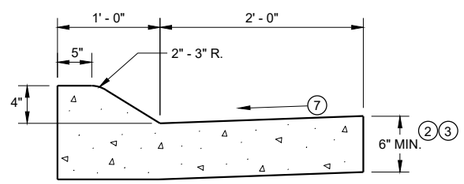

4" SLOPED CURB TYPES A(1) & D

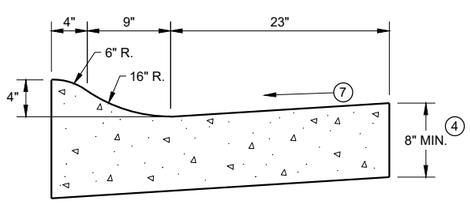

4" SLOPED CURB TYPES R(1) & T(5)

CONCRETE CURB AND GUTTER 36"

TBT & TBTT	X
30"	22"
36"	28"

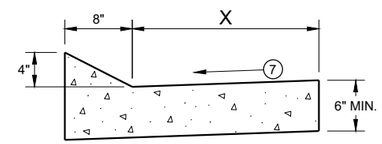

TYPES TBT & TBTT(1)

CONCRETE CURB AND GUTTER

PAVEMENT THICKNESS AND MAXIMUM CONCRETE PANEL WIDTH TABLE

PAVEMENT THICKNESS	MAXIMUM PANEL WIDTH
LESS THAN 10"	12'
10" & ABOVE	15'

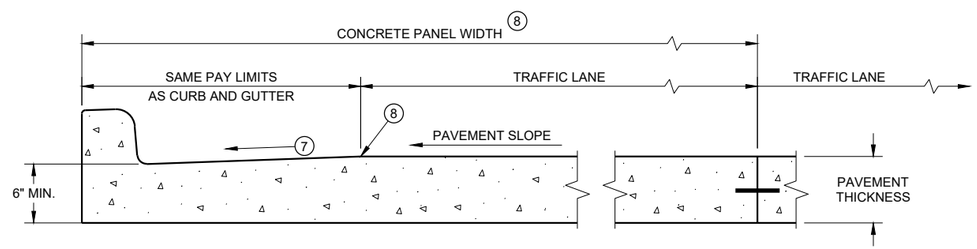

PARTIAL SECTION OF PAVEMENT * WITH INTEGRAL CURB AND GUTTER

* BIKE LANE IS NOT SHOWN

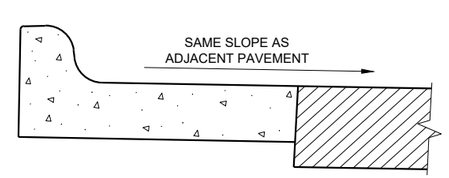

REVERSE SLOPE GUTTER(6)
(TYPICAL FOR ALL CURB & GUTTER TYPES)

GENERAL NOTES

DETAILS OF CONSTRUCTION AND WORKMANSHIP NOT SHOWN ON THIS DRAWING SHALL CONFORM TO THE PERTINENT REQUIREMENTS OF THE CONTRACT.

PAVEMENT TIES AND TIE BARS SHALL BE EPOXY COATED IN CONFORMANCE WITH SUBSECTION 505.2.6.2 OF THE STANDARD SPECIFICATIONS.

INTEGRAL CURB AND GUTTER SHALL CONFORM TO THE DETAILS SHOWN FOR CONCRETE CURB AND GUTTER INCLUDING THE TRANSVERSE GUTTER SLOPE.

UNLESS OTHERWISE SHOWN ON THE TYPICAL CROSS SECTIONS, THE BASE AGGREGATE AND COMMON EXCAVATION LIMITS ARE 2' - 0" BEHIND THE BACK OF CURBS.

1. TIE BARS ARE REQUIRED FOR CURB AND GUTTERS TYPES A, G, K, R, AND TBTT.
2. THE BOTTOM OF CURB AND GUTTER MAY BE CONSTRUCTED EITHER LEVEL OR PARALLEL TO THE SLOPE OF THE SUBGRADE OR BASE AGGREGATE PROVIDED A 6" MINIMUM GUTTER THICKNESS IS MAINTAINED.
3. USE 8" MINIMUM GUTTER THICKNESS WHEN USED WITH AN ADJACENT CONCRETE TRUCK APRON PLACED BEHIND BACK OF CURB.
4. THE BOTTOM OF CURB AND GUTTER MAY BE CONSTRUCTED EITHER LEVEL OR PARALLEL TO THE SLOPE OF THE SUBGRADE OR BASE AGGREGATE PROVIDED A 8" MINIMUM GUTTER THICKNESS IS MAINTAINED.
5. THE FACE OF CURB IS 6" FROM THE BACK OF CURB.
6. WHEN REVERSE SLOPE GUTTER IS REQUIRED, THE LOCATION(S) WILL BE SHOWN ELSEWHERE IN THE PLAN.
7. USE 4% GUTTER CROSS SLOPE UNLESS OTHERWISE NOTED IN THE PLANS.
8. INCLUDE LONGITUDINAL JOINT AND TIE BARS ALONG LANE EDGE WHEN CONCRETE PANEL WIDTH EXCEEDS THE MAXIMUM WIDTH PER TABLE BELOW. LONGITUDINAL JOINT(S) ARE NOT ALLOWED WITHIN TRAFFIC LANES AND BIKE LANES. LONGITUDINAL JOINT MAY BE SAWED.

CONCRETE CURB AND GUTTER

STATE OF WISCONSIN
DEPARTMENT OF TRANSPO PRE_64

6

SDD 08D01 - 21a

GENERAL NOTES

DETAILS OF CONSTRUCTION AND WORKMANSHIP NOT SHOWN ON THIS DRAWING SHALL CONFORM TO THE PERTINENT REQUIREMENTS OF THE CONTRACT.

PAVEMENT TIES AND TIE BARS SHALL BE EPOXY COATED IN CONFORMANCE WITH SUBSECTION 505.2.6.2 OF THE STANDARD SPECIFICATIONS.

UNLESS OTHERWISE SHOWN ON THE TYPICAL CROSS SECTIONS, THE BASE AGGREGATE AND COMMON EXCAVATION LIMITS ARE 2' - 0" BEHIND THE BACK OF CURBS.

(1) TIE BARS ARE REQUIRED FOR CURB AND GUTTERS TYPES A, G, K, R, AND TBTT.

(2) THE BOTTOM OF CURB AND GUTTER MAY BE CONSTRUCTED EITHER LEVEL OR PARALLEL TO THE SLOPE OF THE SUBGRADE OR BASE AGGREGATE PROVIDED A 6" MINIMUM GUTTER THICKNESS IS MAINTAINED.

(9) REFER TO SDD 08D18 AND 08D19 FOR ADDITIONAL DRIVEWAY ENTRANCE CURB DETAILS.

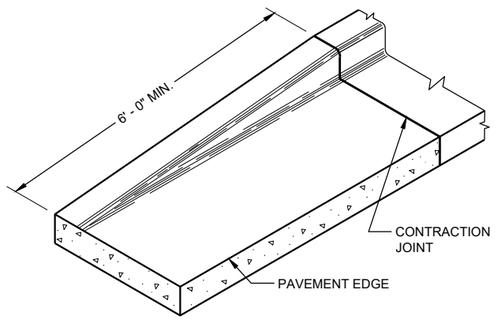

END SECTIONCURB AND GUTTER

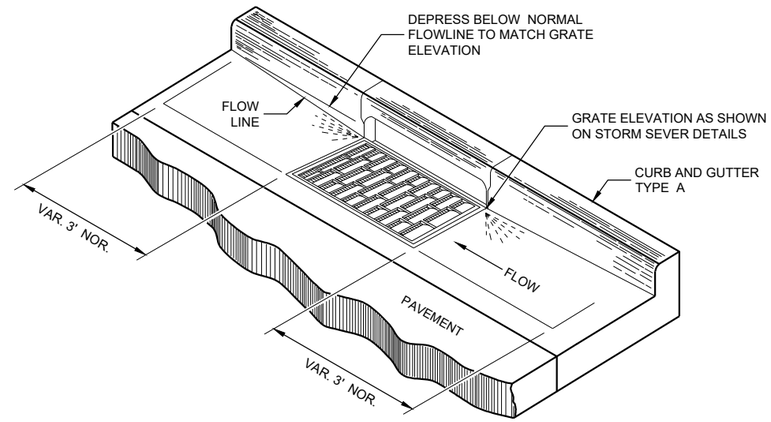

DETAIL OF CURB AND GUTTER AT INLETS
(TYPICAL H INLET COVER SHOWN)

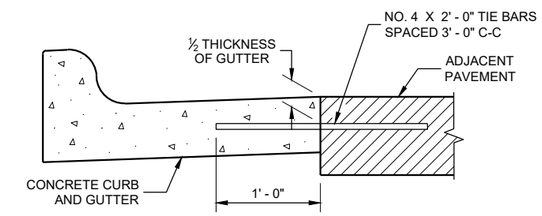

TYPICAL TIE BAR LOCATION (1)

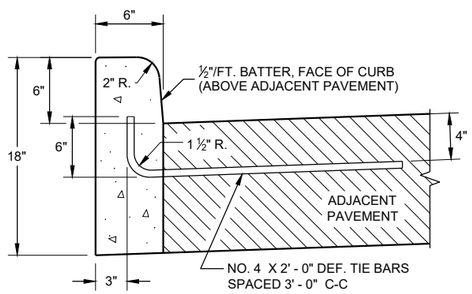

TYPES A (1) & D

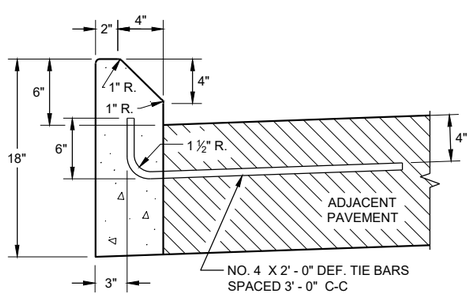

TYPES G (1) & J

CONCRETE CURB

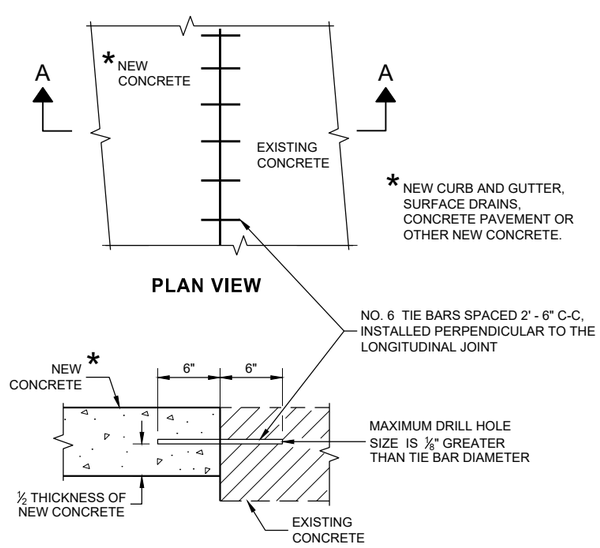

PLAN VIEW

SECTION A - A

TIE BARS DRILLED INTO EXISTING PAVEMENT

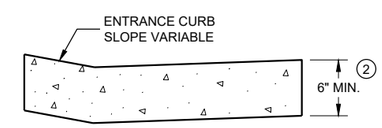

DRIVEWAY ENTRANCE CURB (9)
(WHEN DIRECTED BY THE ENGINEER)

CONCRETE CURB, TIES AND CURB AND GUTTER APPLICATIONS

STATE OF WISCONSIN
DEPARTMENT OF TRANSPORTATION

APPROVED
February 2020 — DATE
/S/ Rodney Tavlor — ROADWAY STANDARDS ENGINEE
FHWA

PRE_65

6

6

SDD 08D01 - 21b

SDD 08D01 - 21b

ASPHALTIC FLUME

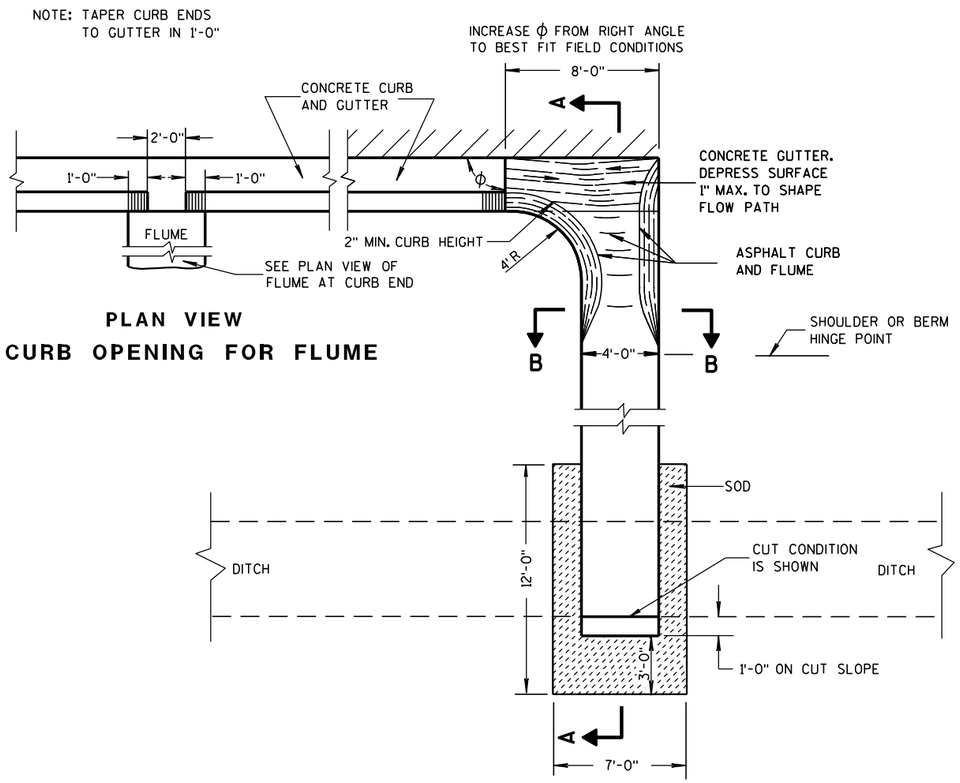

PLAN VIEW
CURB OPENING FOR FLUME

PLAN VIEW
FLUME AT CURB END

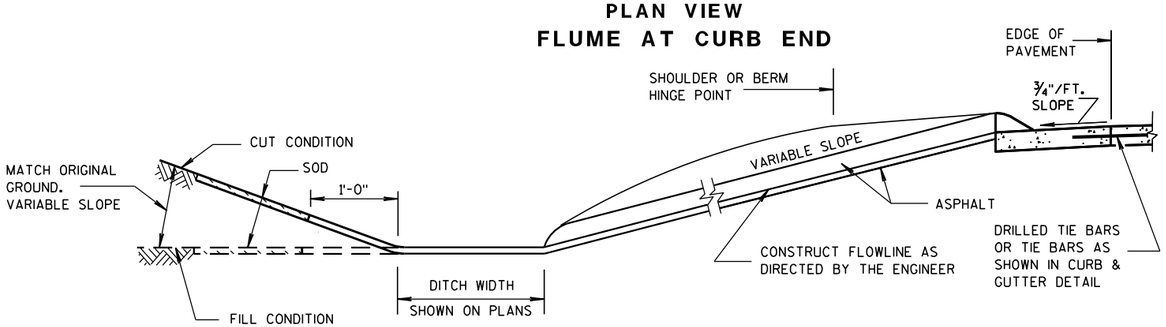

SECTION A-A

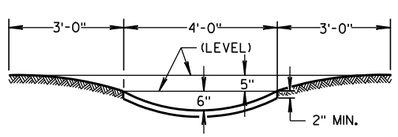

SECTION B-B

GENERAL NOTES

DETAILS OF CONSTRUCTION, MATERIALS AND WORKMANSHIP NOT SHOWN ON THIS DRAWING SHALL CONFORM TO PERTINENT REQUIREMENTS OF THE STANDARD SPECIFICATIONS AND APPLICABLE SPECIAL PROVISIONS.

WELDED STEEL WIRE FABRIC SHALL BE IN ACCORDANCE WITH AASHTO SPECIFICATION M55.

① JOINTS SHALL BE 1/8 TO 1/4 INCH WIDE BY 1 1/2 INCHES DEEP AND SPACED AT UNIFORM INTERVALS OF APPROXIMATELY 4 FEET.

② GEOTEXTILE FABRIC TYPE "R" SHALL UNDERLAY THE FULL LENGTH AND WIDTH OF THE CONCRETE SURFACE DRAIN AND RIPRAP.

③ CONCRETE SURFACE DRAIN WITHOUT CURB AND GUTTER MAY BE USED ON BACKSLOPES WHEN SPECIFIED

③ CONCRETE SURFACE DRAIN

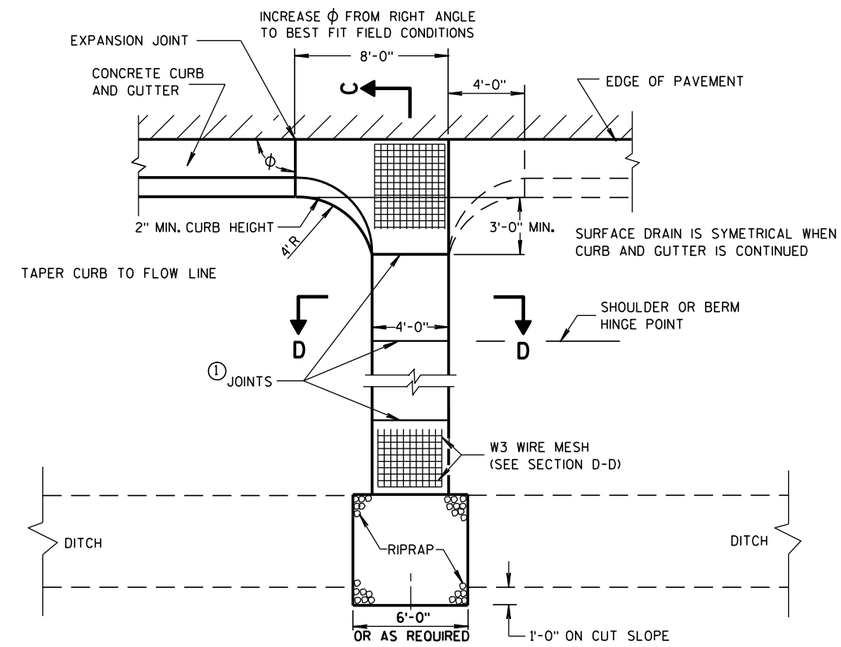

PLAN VIEW

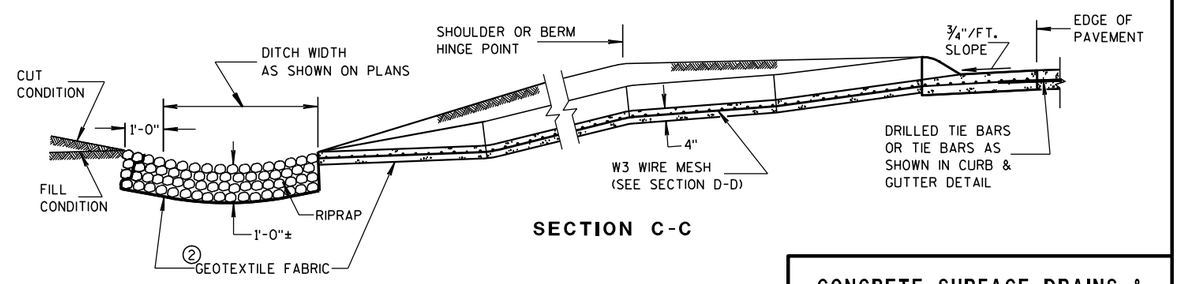

SECTION C-C

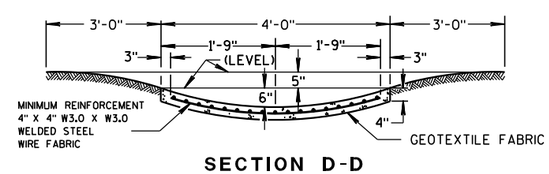

SECTION D-D

CONCRETE SURFACE DRAINS & ASPHALTIC FLUMES

STATE OF WISCONSIN
DEPARTMENT OF TRANSPORTATION

APPROVED

9-4-08 /S/ Jerry H. Zogg
DATE ROADWAY STANDARDS DEVELOPMENT ENGINEER

FHWA

PRE_66

6

6

S.D.D. 8 D 4-5

S.D.D. 8 D 4-5

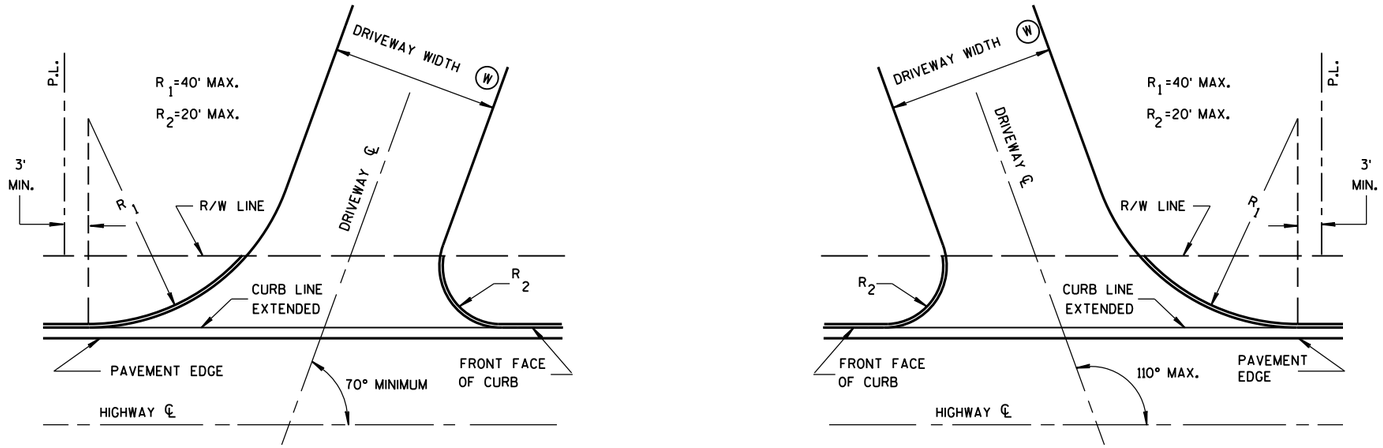

SKEWED DRIVEWAY DETAILS
(COMMERCIAL AND NON-COMMERCIAL)

SIDEWALK NOT SHOWN

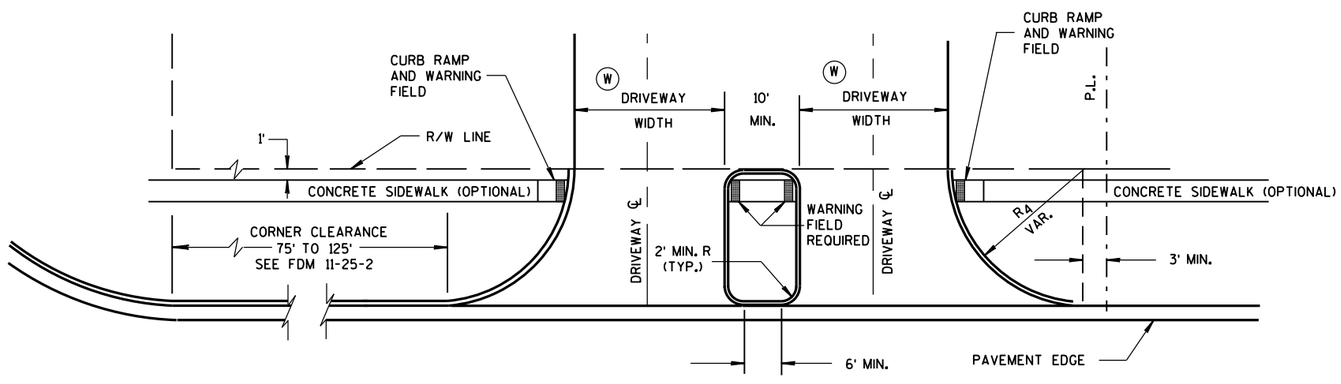

DRIVEWAY LOCATION AND SPACING DETAILS

SIDEWALK SHOWN

NOTES

A MAXIMUM RADIUS OF 10 FEET SHALL BE USED FOR NON-COMMERCIAL PRIVATE ENTRANCES. RADII FOR COMMERCIAL DRIVEWAYS SHALL BE DETERMINED BY THE ENGINEER BASED ON TRAFFIC AND DRIVEWAY PERMIT RESTRICTIONS.

THE MINIMUM ANGLE OF INTERSECTION BETWEEN THE DRIVEWAY AND HIGHWAY CENTERLINES SHALL BE 70°.

ALL CURVILINEAR PRIVATE ENTRANCE OUTLINES SHALL BE CONTAINED WITHIN THE HIGHWAY R/W.

NO DRIVEWAY SHALL BE BUILT WITHIN 3 FEET OF THE PROPERTY LINE EXCEPT FOR EXISTING JOINT DRIVEWAY SHARED BY TWO OWNERS.

(W) DRIVEWAY WIDTHS:

COMMERCIAL - 35' MAX., 16' MIN.

RESIDENTIAL AND NON-COMMERCIAL - 24' MAX., 12' MIN.

DRIVEWAYS WITH CURB & GUTTER RETURNS

STATE OF WISCONSIN
DEPARTMENT OF TRANSPORTATION

APPROVED
December, 2016 /S/ Rodney Taylor
DATE ROADWAY STANDA NT
UNIT SL
FHWA

PRE_67

6

6

S.D.D. 8 D 20-1

S.D.D. 8 D 20-1

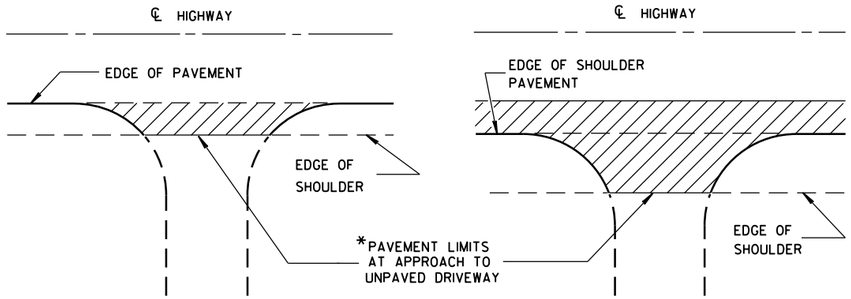

*WHERE DRIVEWAY IS PAVED, APPROACH PAVEMENT SHOULD BE EXTENDED TO MATCH DRIVEWAY PAVEMENT.

PLAN VIEW
(UNPAVED SHOULDER ON HIGHWAY)

PLAN VIEW
(PAVED SHOULDER ON HIGHWAY)

RURAL DRIVEWAY INTERSECTION DETAIL
(NO CURB & GUTTER OR SIDEWALK)

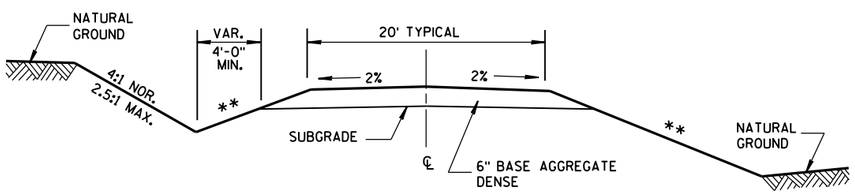

IN CUT IN FILL

TYPICAL CROSS SECTION FOR PRIVATE DRIVE OR FIELD ENTRANCE AGGREGATE SURFACE

** SLOPE CAN VARY WITH SPEED. SEE 11-45-2.6.2.

POSTED SPEED MPH	MAX. SLOPE
<35	4:1
≥35 TO <60	6:1
≥60	10:1

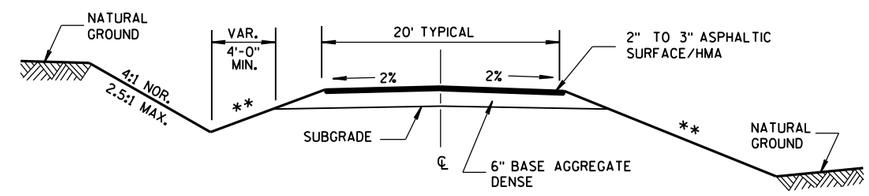

IN CUT IN FILL

TYPICAL CROSS SECTION FOR PRIVATE DRIVE OR FIELD ENTRANCE ASPHALTIC SURFACE

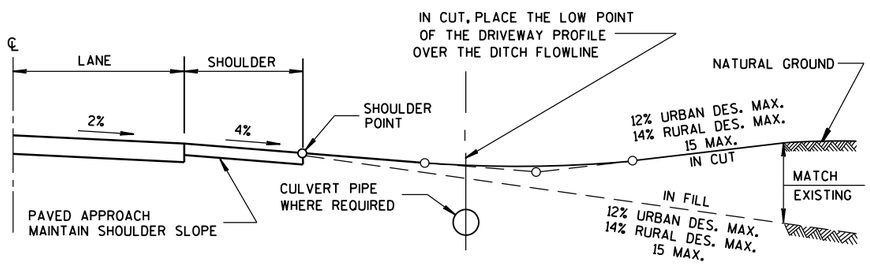

TYPICAL DRIVEWAY PROFILES

DRIVEWAYS WITHOUT CURB & GUTTER

STATE OF WISCONSIN
DEPARTMENT OF TRANSPORTATION

APPROVED
December, 2016 /S/ Rodney Taylor
DATE ROADWAY STANDA NT
UNIT SL
FHWA

PRE_68

6

S.D.D. 8 D 21-1

6

S.D.D. 8 D 21-1

W MIN. = 16'
W MAX. = 24'

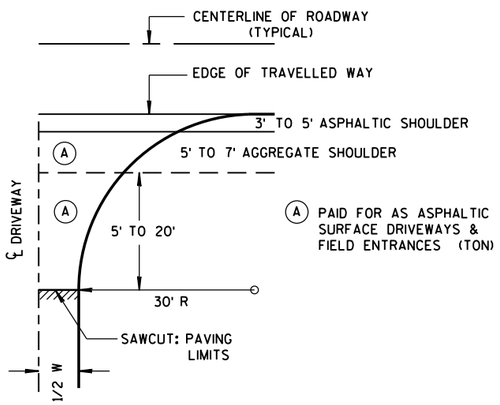

PLAN VIEW
HALF SECTION

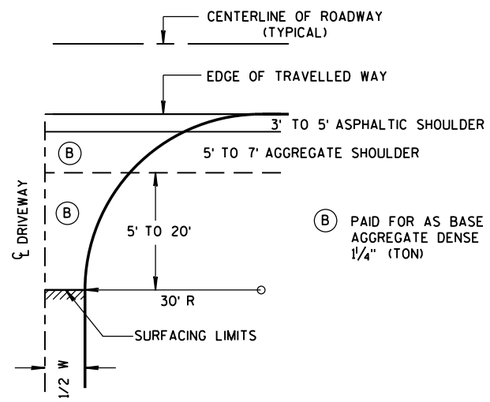

PLAN VIEW
HALF SECTION

GENERAL NOTES

1. DESIGN WILL DETERMINE FINAL DRIVEWAY ASPHALTIC THICKNESS BASED ON TYPE OF USAGE AND LOADINGS.

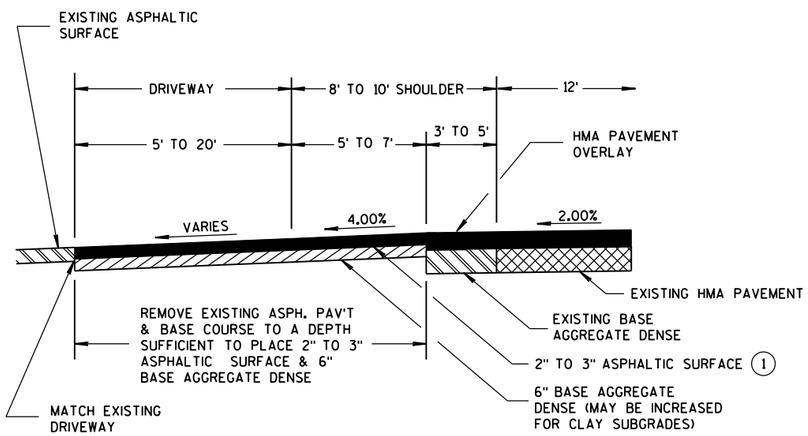

PROFILE VIEW

RURAL ENTRANCE WITH ASPHALTIC SURFACE

RESURFACING PROJECTS

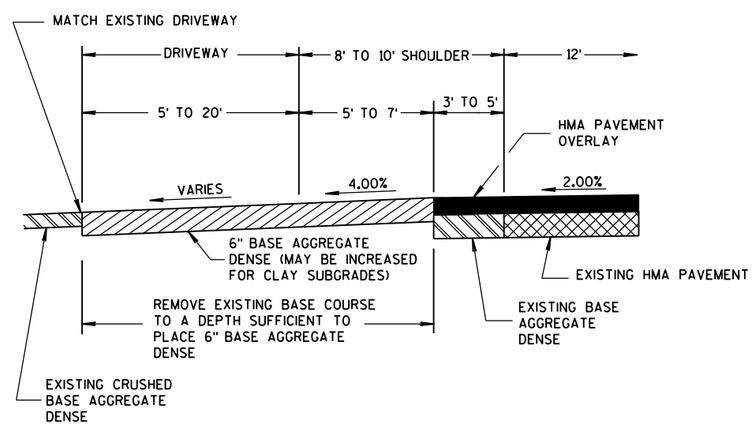

PROFILE VIEW

RURAL ENTRANCE WITH AGGREGATE SURFACE

6" BASE AGGREGATE DENSE
RESURFACING PROJECTS

DRIVEWAYS WITHOUT CURB & GUTTER RESURFACING PROJECTS RURAL
STATE OF WISCONSIN DEPARTMENT OF TRANSPORTATION
APPROVED December, 2016 /S/ Rodney Taylor DATE ROADWAY STANDA NT UNIT SL PRE_69 FHWA

6

6

S.D.D. 8 D 22-1

S.D.D. 8 D 22-1

METAL APRON ENDWALLS

PIPE DIA. (IN.)	MIN. THICK. (Inches) STEEL	MIN. THICK. (Inches) ALUM.	DIMENSIONS (Inches) A (±1")	B (MAX.)	H (±1")	L (±1 1/2")	L1 ①	L2 ①	W (±2")	APPROX. SLOPE	BODY
12	.064	.060	6	6	6	21	12	17 1/2	24	2 1/2 to 1	1 Pc.
15	.064	.060	7	8	6	26	14	21 3/4	30	2 1/2 to 1	1 Pc.
18	.064	.060	8	10	6	31	15	28 1/4	36	2 1/2 to 1	1 Pc.
21	.064	.060	9	12	6	36	18	29 5/8	42	2 1/2 to 1	1 Pc.
24	.064	.075	10	13	6	41	18	37 1/4	48	2 1/2 to 1	1 Pc.
30	.079	.075	12	16	8	51	18	52 1/4	60	2 1/2 to 1	1 Pc.
36	.079	.105	14	19	9	60	24	59 3/4	72	2 1/2 to 1	2 Pc.
42	.109	.105	16	22	11	69	24	75 5/8	84	2 1/2 to 1	2 Pc.
48	.109	.105	18	27	12	78	24	81	90	2 1/4 to 1	3 Pc.
54	.109	.105	18	30	12	84	30	85 1/2	102	2 1/4 to 1	3 Pc.
60	.109×	.105×	18	33	12	87	—	—	114	2 to 1	3 Pc.
66	.109×	.105×	18	36	12	87	—	—	120	2 to 1	3 Pc.
72	.109×	.105×	18	39	12	87	—	—	126	2 to 1	3 Pc.
78	.109×	.105×	18	42	12	87	—	—	132	1 1/2 to 1	3 Pc.
84	.109×	.105×	18	45	12	87	—	—	138	1 1/2 to 1	3 Pc.
90	.109×	.105×	18	37	12	87	—	—	144	1 1/2 to 1	3 Pc.
96	.109×	.105×	18	35	12	87	—	—	150	1 1/2 to 1	3 Pc.

× EXCEPT CENTER PANEL
SEE GENERAL NOTES

REINFORCED CONCRETE APRON ENDWALLS

PIPE DIA. (IN.)	DIMENSIONS (Inches) T	A	B	C	D	E	G	APPROX. SLOPE
12	2	4	24	48 7/8	72 7/8	24	2	3 to 1
15	2 1/4	6	27	46	73	30	2 1/4	3 to 1
18	2 1/2	9	27	46	73	36	2 1/2	3 to 1
21	2 3/4	9	36	37 1/2	73 1/2	42	2 3/4	3 to 1
24	3	9 1/2	43 1/2	30	73 1/2	48	3	3 to 1
27	3 1/4	10 1/2	49 1/2	24	73 1/2	54	3 1/4	3 to 1
30	3 1/2	12	54	19 3/4	73 1/2	60	3 1/2	3 to 1
36	4	15	63	34 3/4	97 3/4	72	4	3 to 1
42	4 1/2	21	63	35	98	78	4 1/2	3 to 1
48	5	24	72	26	98	84	5	3 to 1
54	5 1/2	27	65	*33 1/4-**35	*98 1/4-**100	90	5 1/2	2 2/5 to 1
60	6	*30-**35	60	39	99	96	5	2 to 1
66	6 1/2	*24-**30	*72-**78	*21-**27	99	102	5 1/2	2 to 1
72	7	*24-**36	78	21	99	108	6	2 to 1
78	7 1/2	*24-**36	78	21	99	114	6 1/2	2 to 1
84	8	36	90 1/2	21	111 1/2	120	6 1/2	1 1/2 to 1
90	8 1/2	41	87 1/2	24	111 1/2	132	6 1/2	1 1/2 to 1

*MINIMUM
**MAXIMUM

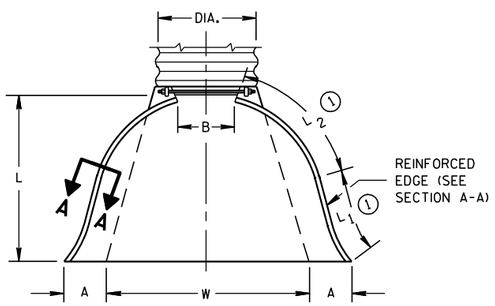

PLAN VIEW

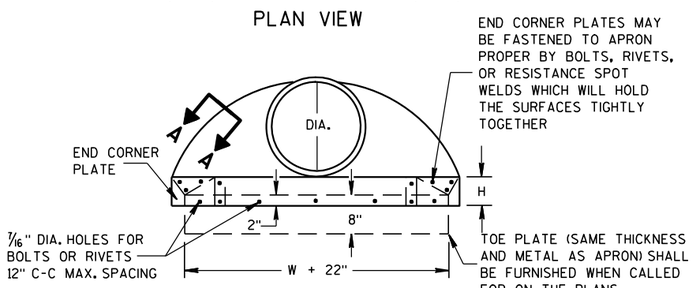

END VIEW

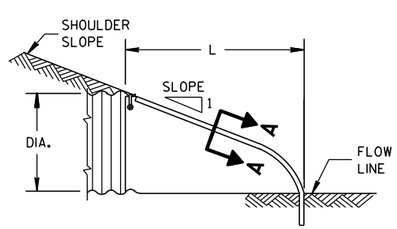

SIDE ELEVATION

METAL ENDWALLS

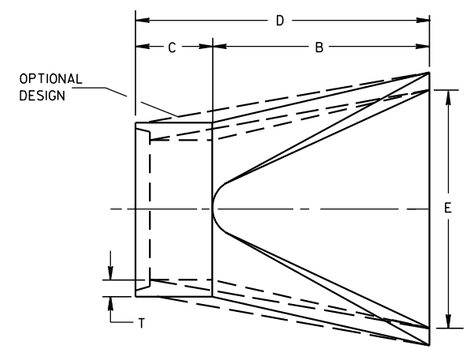

PLAN

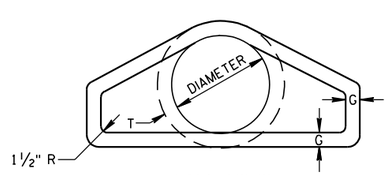

END VIEW

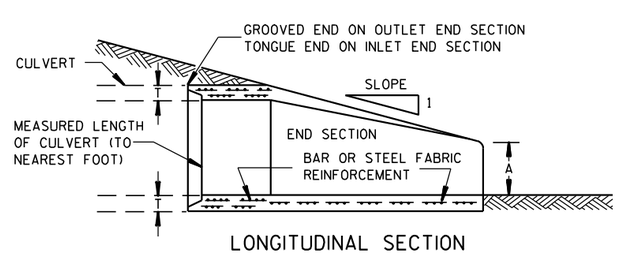

LONGITUDINAL SECTION

CONCRETE ENDWALLS

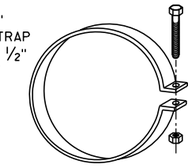

ALTERNATE FOR TYPE 1 CONNECTION

END SECTION CONNECTOR STRAP

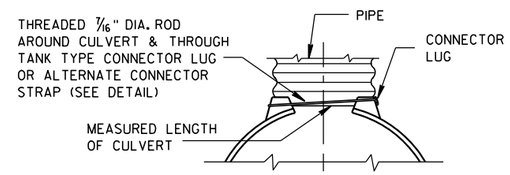

TYPE 1
FOR 12" THRU 24" CORR. PIPE

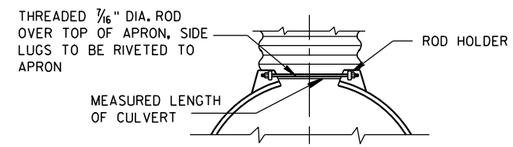

TYPE 2
FOR 30" THRU 96" CORR. PIPE

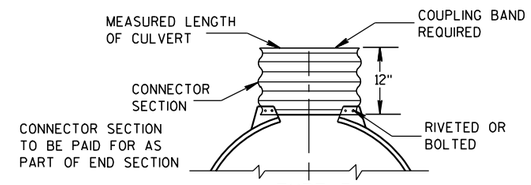

TYPE 3
FOR 42" THRU 96" CORR. PIPE

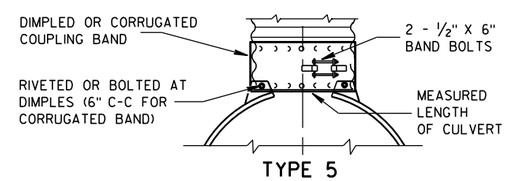

TYPE 5
ALTERNATE FOR:
ALL SIZES CORRUGATED CIRCULAR PIPE

NOTE: DIMPLED BAND FITS OVER OUTSIDE OF ENDWALL. AND CORRUGATED BAND FITS INSIDE ENDWALL. DIMPLED BAND MAY BE USED WITH HELICALLY CORRUGATED PIPE.

FOR CIRCUMFERENTIALLY CORRUGATED PIPE USE ENDWALL CONNECTION DETAILS 1, 2, 3 OR 5 AS APPLICABLE.

FOR HELICALLY CORRUGATED PIPE USE ENDWALL CONNECTION DETAILS 1, 2 OR 5.

FOR HELICALLY CORRUGATED PIPES WITH TWO CIRCUMFERENTIAL CORRUGATIONS AT EACH END USE ENDWALL CONNECTION DETAILS 1, 2 OR 3.

CONNECTION DETAILS

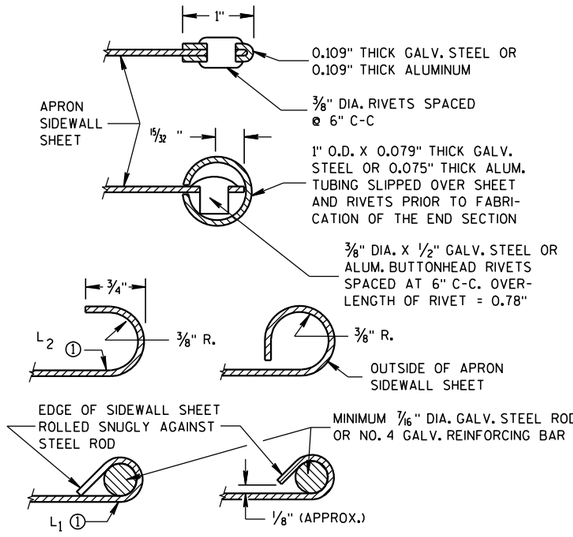

SECTION A-A

GENERAL NOTES

DETAILS OF CONSTRUCTION, MATERIALS AND WORKMANSHIP NOT SHOWN ON THIS DRAWING SHALL CONFORM TO THE PERTINENT REQUIREMENTS OF THE STANDARD SPECIFICATIONS AND THE APPLICABLE SPECIAL PROVISIONS.

CONCRETE CULVERT ENDWALLS MAY NOT BE USED WITH GALVANIZED STEEL OR ALUMINUM CULVERT PIPE OR VISE VERSA. GALVANIZED STEEL OR ALUMINUM ENDWALLS SHALL NORMALLY BE INSTALLED ON CULVERT PIPE OF THE SAME METAL.

ALL THREE PIECE STEEL APRON ENDWALLS FOR 60" DIAMETER PIPE AND LARGER SHALL HAVE 0.109" SIDES AND 0.138" CENTER PANELS. ALL THREE PIECE ALUMINUM APRON ENDWALLS FOR 60" DIAMETER PIPE AND LARGER SHALL HAVE 0.105" SIDES AND 0.134" CENTER PANELS. THE WIDTH OF CENTER PANELS SHALL BE GREATER THAN 20 PERCENT OF THE PIPE PERIMETER.

LAP SEAMS SHALL BE TIGHTLY JOINED BY GALVANIZED RIVETS OR BOLTS FOR STEEL UNITS AND ALUMINUM RIVETS AND BOLTS FOR ALUMINUM UNITS. FOR THE 60" THROUGH 96" DIAMETER APRON ENDWALL SIZES, THE REINFORCED EDGES AND CENTER PANEL SEAMS SHALL BE FURTHER REINFORCED WITH GALVANIZED STEEL OR ALUMINUM STIFFENER ANGLES. THE ANGLES SHALL BE ATTACHED BY GALVANIZED NUTS AND BOLTS FOR STEEL UNITS AND ALUMINUM NUTS AND BOLTS FOR ALUMINUM UNITS.

WHERE TWO OR MORE PIPES WITH APRON ENDWALLS ARE LAID ADJACENT TO EACH OTHER, THEY SHALL BE SEPARATED BY A DISTANCE SUFFICIENT TO PROVIDE A MINIMUM CLEARANCE OF 6 INCHES BETWEEN APRON ENDWALLS.

① FOR PIPE SIZES UP TO 60" DIAMETER, A 180° ROLLED EDGE MAY BE USED INSTEAD OF STEEL ROD REINFORCEMENT. SEE SECTION A-A.

APRON ENDWALLS FOR CULVERT PIPE

STATE OF WISCONSIN
DEPARTMENT OF TRANSPORTATION

APPROVED
11/30/94 — DATE
/S/ Rory L. [illegible] — CHIEF ROADWAY DE[illegible]IEER
FHWA

PRE_70

6

S.D.D. 8 F 1-11

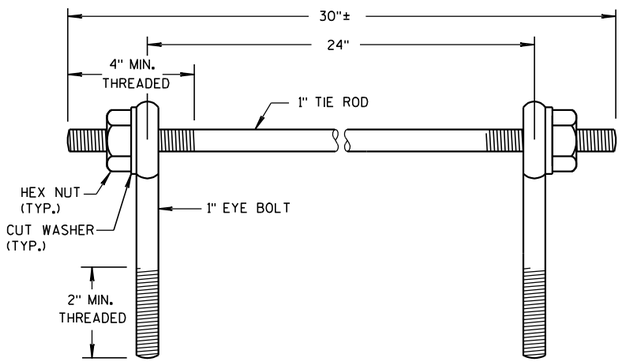

EYE BOLTS AND TIE ROD

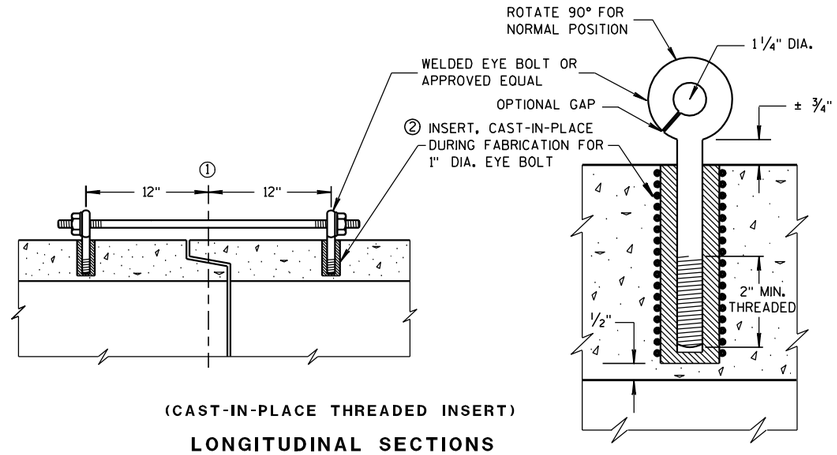

(CAST-IN-PLACE THREADED INSERT)

LONGITUDINAL SECTIONS

EYE BOLT AND TIE ROD ASSEMBLY (ALTERNATE NO. 1)

GENERAL NOTES

DETAILS OF CONSTRUCTION, MATERIALS, AND WORKMANSHIP NOT SHOWN ON THIS DRAWING SHALL CONFORM TO THE PERTINENT REQUIREMENTS OF THE STANDARD SPECIFICATIONS AND APPLICABLE SPECIAL PROVISIONS.

CONCRETE CULVERT AND STORM SEWER PIPE SHALL BE TIED TOGETHER IN THE MANNER ILLUSTRATED BY THIS DETAIL AT LOCATIONS DESIGNATED IN THE STANDARD SPECIFICATIONS AND THE PLAN. THE CONTRACTOR MAY USE EITHER ALTERNATE 1, 2 OR 3 FOR DRAINAGE STRUCTURES. ONLY ALTERNATE 1 AND 3 MAY BE USED FOR CATTLE PASSES, UNLESS OTHERWISE STATED IN THE CONTRACT. THE MATERIALS, FABRICATION AND WORK NECESSARY TO TIE THE PIPE BY THIS DETAIL WILL BE CONSIDERED INCIDENTAL TO THE PIPE AND APRON ENDWALLS IF REQUIRED.

DETAILED DRAWINGS FOR PROPOSED ALTERNATE DESIGNS FOR JOINT TIES SHALL BE SUBMITTED TO THE ENGINEER FOR APPROVAL.

JOINT TIES TO BE HOT-DIP GALVANIZED PER ASTM A 153.

① ℄ OF TONGUE AND GROOVE OR BELL AND SPIGOT JOINTS.

② THE INSIDE OF THE THREADED INSERTS SHALL BE CLEAN TO ALLOW THE INSERTION OF THREADED EYE BOLTS.

③ HOLES SHALL BE CAST-IN-PLACE OR DRILLED 12 INCHES FROM ℄ OF TONGUE AND GROOVE.

④ BOLT PROJECTION INSIDE OF PIPE SHALL NOT EXCEED 2 INCHES.

⑤ OPENING TO BE ROD DIAMETER PLUS 1 INCH.

⑥ LENGTH ADEQUATE TO EXTEND TO WITHIN 1/2 INCH OF THE INNER SURFACE OF THE PIPE.

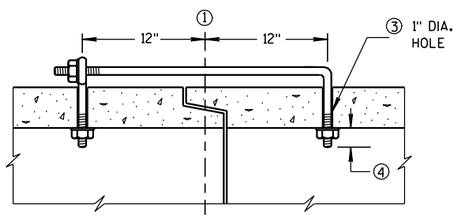

(TONGUE & GROOVE PIPE)

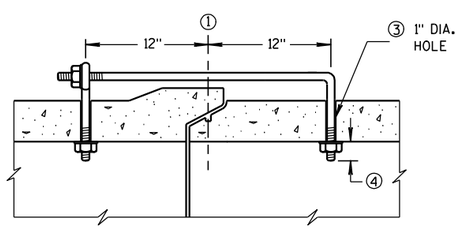

(MODIFIED BELL PIPE)

LONGITUDINAL SECTION

EYE BOLT DIMENSION TABLE

PIPE SIZE	L = LENGTH	
	TONGUE & GROOVE PIPE	MODIFIED BELL PIPE
18" TO 24"	4 1/2"	6 1/4"
30"	5"	7"
36"	5 1/2"	7"
42"	6"	
48"	6 1/2"	
60"	7 1/2"	
66"	8"	

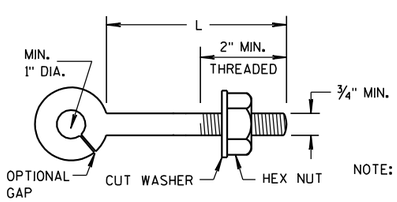

EYE BOLT

NOTE:

NOTE: TWO EYE BOLTS MAY BE USED WITH A 30" LONG THREADED ROD IN LIEU OF THE 90° BENT TIE ROD.

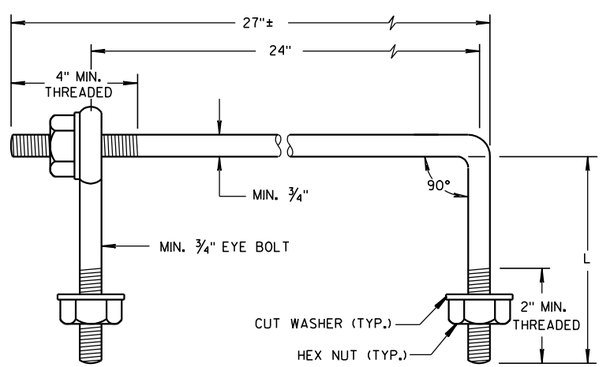

EYE BOLT AND TIE ROD

(JOINT TIES FOR 18" TO 66" DIA. CONCRETE PIPE)

EYE BOLT AND TIE ROD ASSEMBLY (ALTERNATE NO. 2)

ADJUSTABLE TIE ROD TABLE

PIPE DIAMETER	TIE ROD DIAMETER	D	L_1	N
12-60	5/8	5/8	5	1/2
66-84	3/4	3/4	5	1/2
90-108	1	1	7	1 7/16

DIMENSIONS SHOWN ARE IN INCHES

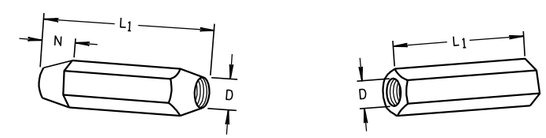

TAPERED PLAIN

RIGHT AND LEFT THREADS

SLEEVE NUTS

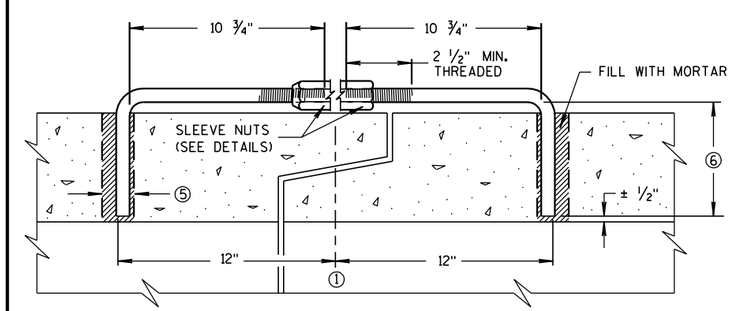

LONGITUDINAL SECTION

(JOINT TIES FOR 12" TO 108" DIA. CONCRETE PIPE)

ADJUSTABLE TIE ROD (ALTERNATE NO. 3)

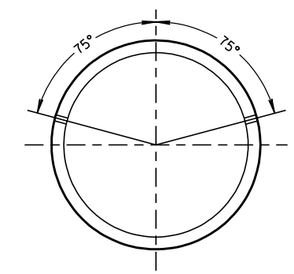

PLACEMENT OF (2) CAST-IN-PLACE INSERTS OR HOLES DURING FABRICATION FOR PIPE SECTIONS REQUIRING TIE RODS

TRANSVERSE SECTION

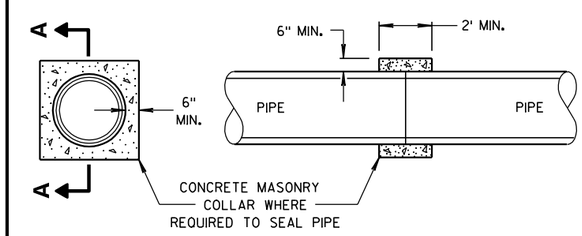

SECTION A-A

CONCRETE COLLAR DETAIL

JOINT TIES FOR CONCRETE PIPE AND CONCRETE COLLAR DETAIL

STATE OF WISCONSIN
DEPARTMENT OF TRANSPORTATION

APPROVED
6/5/2012 /S/ Jerry H. Zogg
DATE ROADWAY STANDARDS DEVELOPMENT ENGINEER
FHWA

6

6

S.D.D. 8 F 4-7

S.D.D. 8 F 4-7

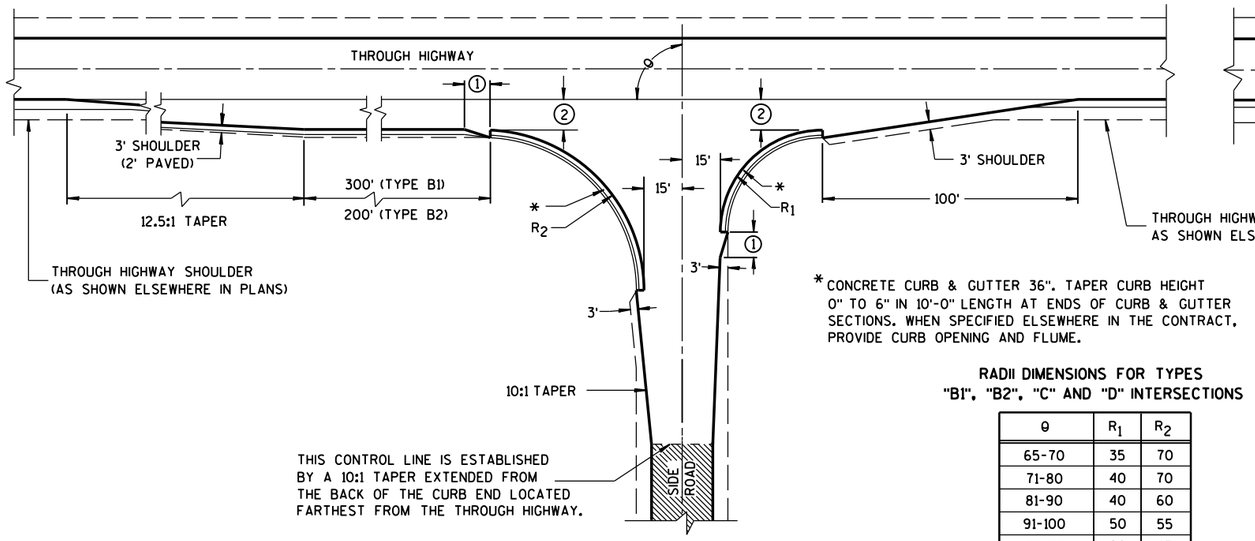

TYPE "B1" AND "B2"

*CONCRETE CURB & GUTTER 36". TAPER CURB HEIGHT 0" TO 6" IN 10'-0" LENGTH AT ENDS OF CURB & GUTTER SECTIONS. WHEN SPECIFIED ELSEWHERE IN THE CONTRACT, PROVIDE CURB OPENING AND FLUME.

RADII DIMENSIONS FOR TYPES "B1", "B2", "C" AND "D" INTERSECTIONS

θ	R_1	R_2
65-70	35	70
71-80	40	70
81-90	40	60
91-100	50	55
101-110	60	45

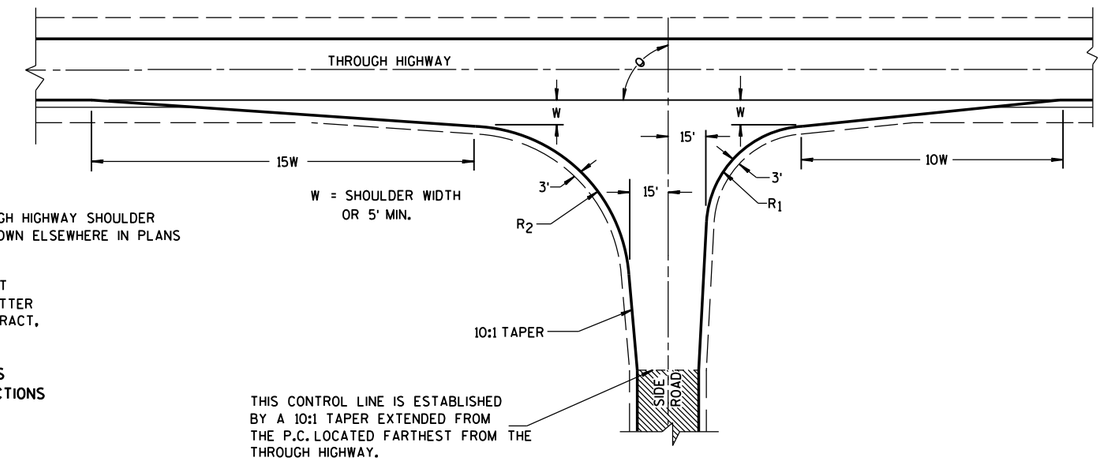

TYPE "C"

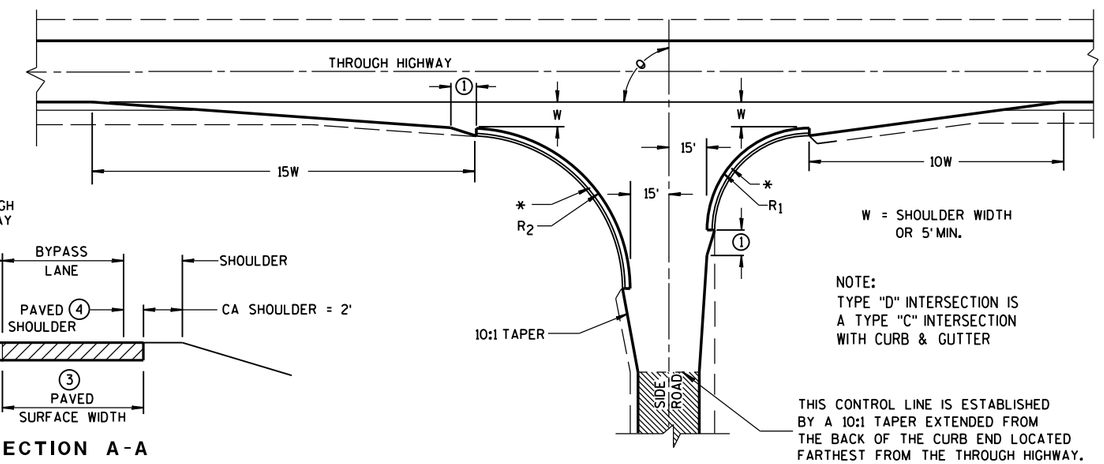

TYPE "D"

GENERAL NOTES

DESIGNS MAY BE USED INTERCHANGEABLY IN COMBINATION OR SEPARATELY FOR ANY ONE COMPLETE INTERSECTION DEPENDING UPON INTERSECTION ANGLE AND SURFACING OF EACH APPROACH ROADWAY.

SIDE ROAD SURFACING NOTE

WHEN THE SIDE ROAD IS NOT PRESENTLY PAVED, PAVEMENT SHALL BE PLACED TO THE LIMITS SHOWN UNLESS OTHERWISE PROVIDED IN THE CONTRACT. WHERE THE CONSTRUCTION LIMITS ARE BEYOND THE PAVING LIMITS, CRUSHED AGGREGATE SURFACING SHALL BE PLACED BETWEEN THE PAVING LIMITS AND CONSTRUCTION LIMITS.

WHEN THE SIDE ROAD IS PRESENTLY PAVED, NEW PAVEMENT SHALL BE PLACED TO THE LIMITS OF DESIGN AS SHOWN AND BEYOND, IF NECESSARY, TO MEET EXISTING PAVEMENT.

WHEN THE SIDE ROAD IS THE CONSTRUCTION PROJECT, THE INTERSECTION SURFACING SHALL BE THE SAME AS FOR THE PROJECT.

EXISTING PAVED SURFACE

BYPASS LANE

(1) 10-FT TYPICAL.

(2) 12-FT** PLUS ADDITIONAL WIDTH FOR BIKE LANE IF SHOWN ELSEWHERE IN THE PLAN.

**10-FT MAY BE USED ON TYPE B2 ON RESURFACING PROJECTS IF SPECIFIED IN THE CONTRACT.

(3) BYPASS LANE PAVED SURFACE WIDTH OUTSIDE OF TRAVEL LANE
-ASPHALT = 12-FT PLUS PAVED SHOULDER WIDTH.
-PC CPNCRETE = 13-FT PLUS PAVED SHOULDER WIDTH.

(4) BYPASS LANE PAVED SHOULDER WIDTH = THE GREATER OF 1-FT OR THE PAVED SHOULDER WIDTH OF THE THROUGH HIGHWAY.

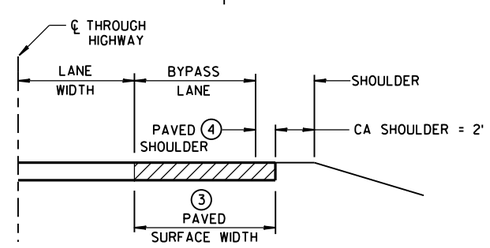

SECTION A-A
(SHOWING BYPASS LANE AND SHOULDER)

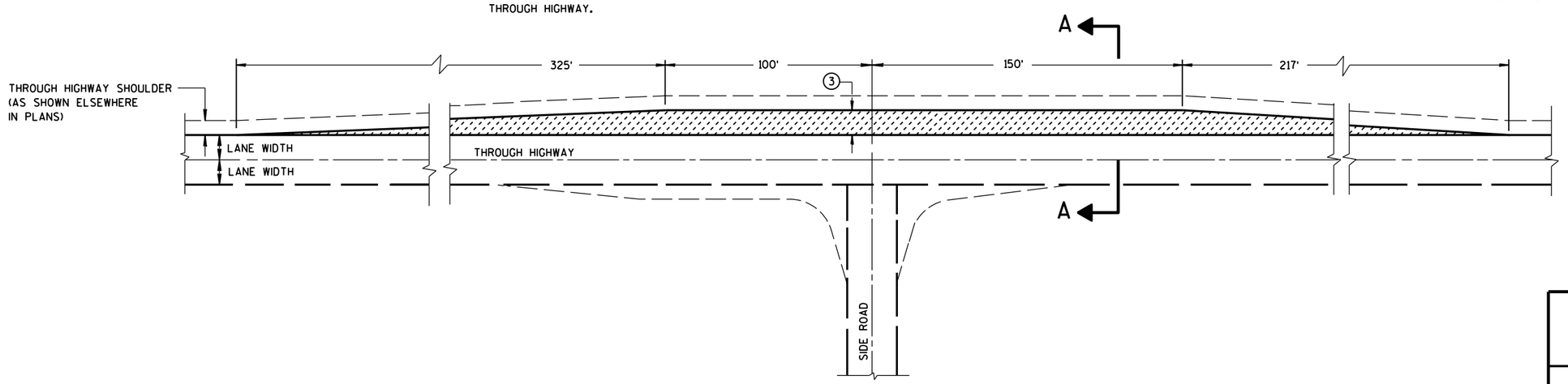

TEE INTERSECTION BYPASS LANE DETAIL

AT-GRADE SIDE ROAD INTERSECTION, TYPES "B1", "B2", "C" AND "D" AND TEE INTERSECTION BYPASS LANE

STATE OF WISCONSIN
DEPARTMENT OF TRAN PRE_72

6

S.D.D. 9 A 1-13a

6

S.D.D. 9 A 1-13a

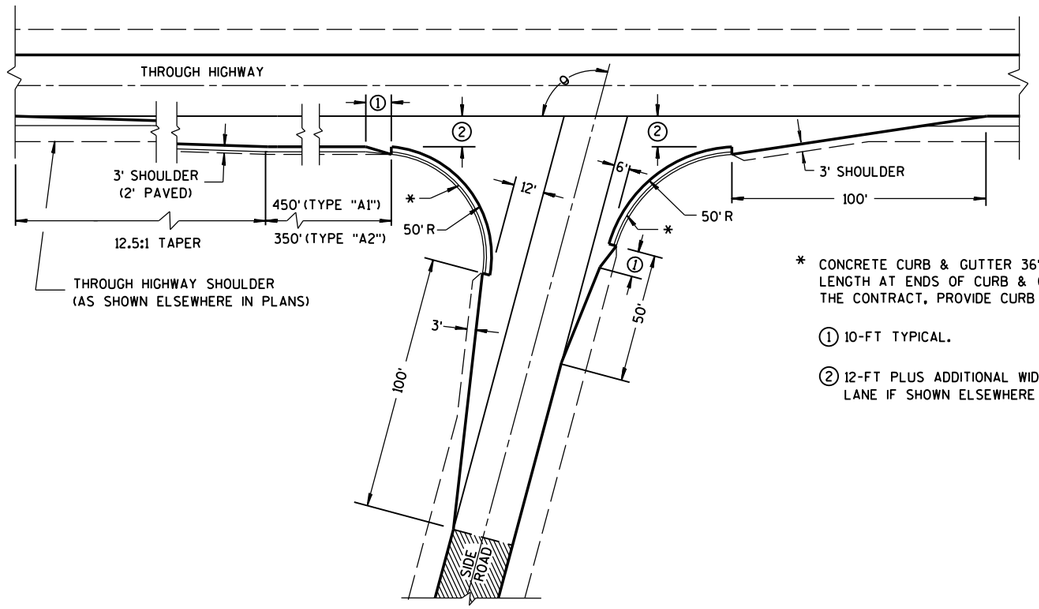

θ = MORE THAN 80°

* CONCRETE CURB & GUTTER 36". TAPER CURB HEIGHT 0" TO 6" IN 10'-0" LENGTH AT ENDS OF CURB & GUTTER SECTIONS. WHEN SPECIFIED ELSEWHERE IN THE CONTRACT, PROVIDE CURB OPENING AND FLUME.

① 10-FT TYPICAL.

② 12-FT PLUS ADDITIONAL WIDTH FOR BIKE LANE IF SHOWN ELSEWHERE IN THE PLANS.

EXISTING PAVED SURFACE

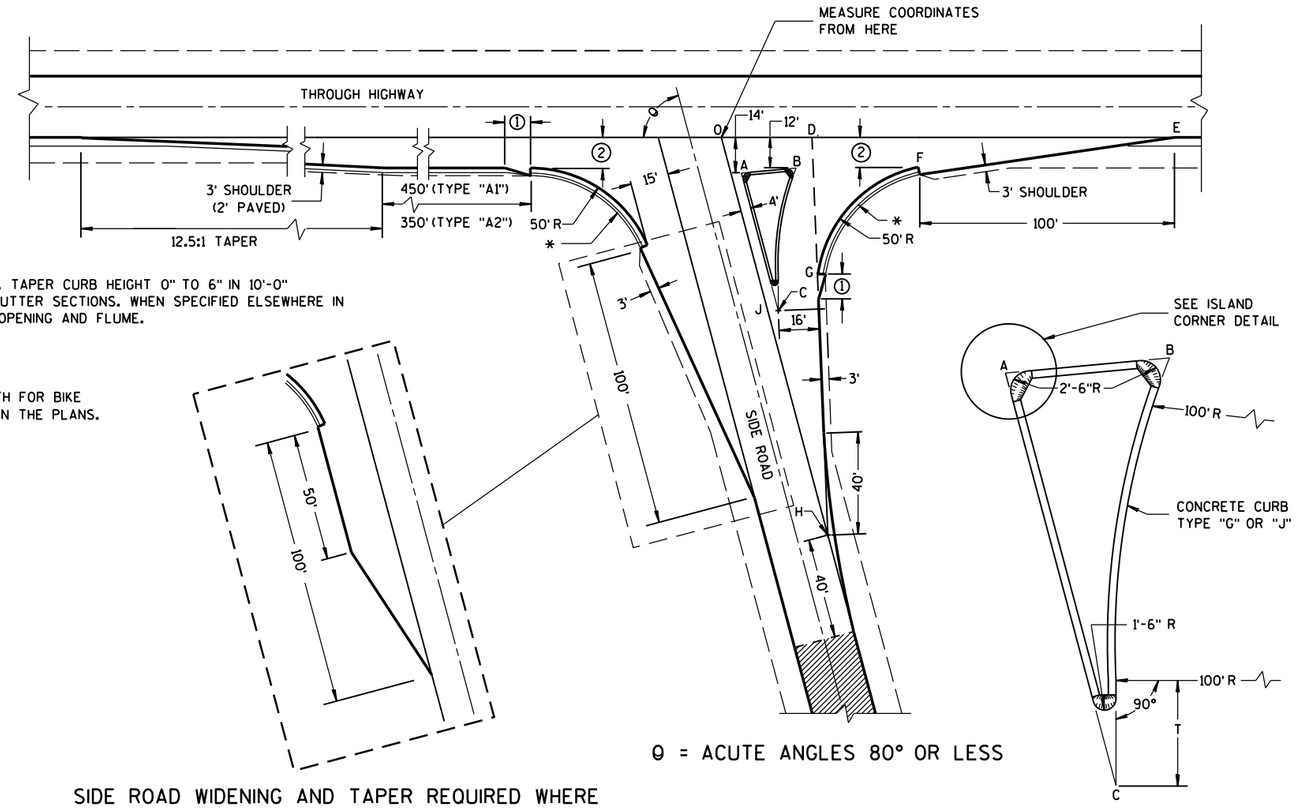

θ = ACUTE ANGLES 80° OR LESS

SIDE ROAD WIDENING AND TAPER REQUIRED WHERE THE THROUGH HIGHWAY CARRIES TWO-WAY TRAFFIC
θ = ACUTE ANGLES 70° OR LESS

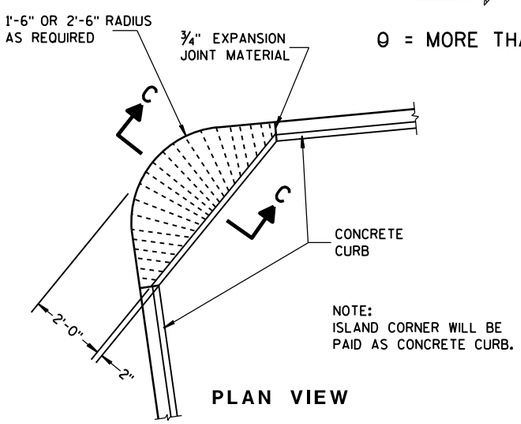

PLAN VIEW

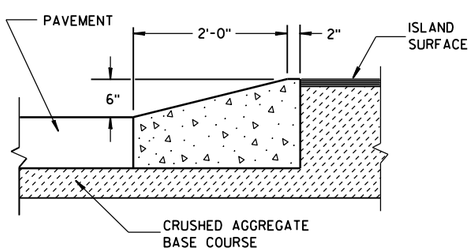

SECTION C-C

ISLAND CORNER DETAIL

(TO BE CONSTRUCTED AT ALL ISLAND CORNERS)

TABLE OF DIMENSIONS FOR
VARIABLE SIDE ROAD INTERSECTION ANGLES
(INTERPOLATE VALUES FOR ANGLES NOT SHOWN)

ANGLE θ DEGREES	COORDINATES IN FEET (MEASURED FROM POINT "O") X / Y								LENGTH IN FEET				
	A	B	C	D	E	F	G	H	AB	AC	T	OJ	OH
60	12.7 / -14.0	44.9 / -12.0	46.4 / -72.4	41.9 / 0.0	205.0 / 0.0	104.6 / -12.0	64.0 / -75.5	85.0 / -147.1	32.3	67.4	4.9	85.9	169.9
65	10.9 / -14.0	39.0 / -12.0	37.8 / -71.6	39.4 / 0.0	196.1 / 0.0	95.7 / -12.0	54.1 / -71.5	70.5 / -151.3	28.2	63.6	8.5	80.9	166.9
70	9.4 / -14.0	33.9 / -12.0	29.8 / -70.1	37.4 / 0.0	188.3 / 0.0	87.8 / -12.0	45.6 / -67.5	56.1 / -154.2	24.6	59.7	11.5	76.1	164.1
75	7.9 / -14.0	29.3 / -12.0	22.3 / -67.9	35.7 / 0.0	181.2 / 0.0	80.7 / -12.0	38.2 / -63.4	41.8 / -155.9	21.5	55.8	13.8	71.4	161.4
80	6.5 / -14.0	25.4 / -12.0	15.6 / -65.2	34.4 / 0.0	174.8 / 0.0	74.4 / -12.0	31.8 / -59.3	27.6 / -156.5	18.9	52.0	15.6	66.9	158.9

TYPE "A1" & "A2" SIDE ROAD INTERSECTION DETAILS

AT-GRADE SIDE ROAD
INTERSECTION, TYPE "A1" & "A2"

STATE OF WISCONSIN
DEPARTMENT OF TRANSPORTATION

APPROVED
12/18/12 — DATE
/S/ Jerry H. Zogg — ROADWAY STANDARDS DEVELOPMENT ENGINEER
FHWA

6

S.D.D. 9 A 1-13b

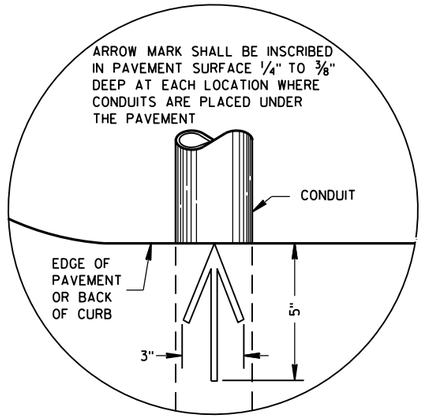

PLAN VIEW

ARROW MARK

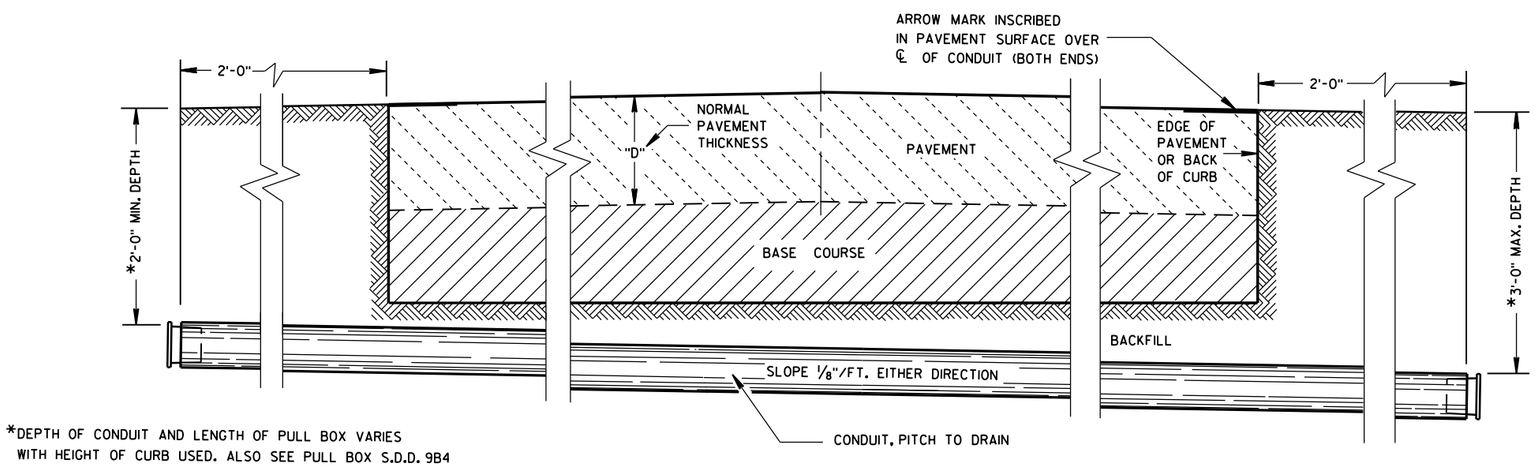

*DEPTH OF CONDUIT AND LENGTH OF PULL BOX VARIES WITH HEIGHT OF CURB USED. ALSO SEE PULL BOX S.D.D. 9B4

SIDE ELEVATION

DETAIL FOR CONDUIT UNDER PAVED HIGHWAYS

GENERAL NOTES

DETAILS OF CONSTRUCTION, MATERIALS AND WORKMANSHIP NOT SHOWN ON THIS DRAWING SHALL CONFORM TO THE PERTINENT REQUIREMENTS OF THE CONTRACT.

METALLIC (STANDARD SPECIFICATION 652.2.2) OR NONMETALLIC (STANDARD SPECIFICATION 652.2.3) CONDUIT SHALL BE FURNISHED AND PLACED AS SHOWN.

DEPTH OF CONDUIT INSTALLED BELOW THE TRAVELED WAY SHALL BE 24 INCHES MINIMUM AND 36 INCHES MAXIMUM.

DEPTH OF CONDUIT INSTALLED THAT IS NOT BELOW THE TRAVELED WAY SHALL BE 18 INCHES MINIMUM AND 36 INCHES MAXIMUM.

ANY EXCEPTION TO THE MAXIMUM DEPTH SHALL BE ONLY WITH THE WRITTEN APPROVAL OF THE ENGINEER.

THE TRENCH SHALL NOT BE BACKFILLED PRIOR TO INSPECTION OF THE CONDUIT.

ALL METALLIC CONDUIT RACEWAY ENDS SHALL BE REAMED AND THREADED.

ALL METALLIC CONDUIT IN WHICH WIRE OR CABLE IS TO BE INSTALLED SHALL BE BUSHED WITH APPROVED THREADED BUSHINGS BEFORE INSTALLATION OF THE WIRE OR CABLE.

ALL METALLIC CONDUITS IN WHICH WIRE OR CABLE IS NOT TO BE INSTALLED SHALL BE CAPPED WITH THREADED PROTECTIVE CAPS, AS APPROVED BY THE ENGINEER.

ALL NONMETALLIC CONDUIT SHALL BE CAPPED OR PLUGGED IMMEDIATELY AFTER INSTALLATION AND SHALL REMAIN CAPPED OR PLUGGED UNTIL WIRE/CABLES ARE INSTALLED.

NONMETALLIC CONDUITS IN WHICH WIRE OR CABLE IS NOT BEING INSTALLED SHALL REMAIN CAPPED OR PLUGGED.

BENDING OF PVC ELECTRICAL CONDUIT SHALL BE ACCOMPLISHED BY USING A BLANKET OR EMERSION TYPE TANK DESIGNED FOR THE PURPOSE OF BENDING PVC ELECTRICAL CONDUIT.

ALL CUT ENDS SHALL BE TRIMMED INSIDE AND OUTSIDE TO REMOVE ALL ROUGH EDGES ON NONMETALLIC CONDUIT. (SEE NEC 347.5)

WHEN REQUIRED TO CONNECT NONMETALLIC CONDUIT TO METALLIC CONDUIT, ONLY U.L. LISTED ADAPTER FITTINGS SHALL BE USED.

PRIOR TO CONDUIT ACCEPTANCE, CONDUIT CAPS OR PLUGS SHALL BE REMOVED, AND THE CAPS, PLUGS AND CONDUIT ENDS SHALL BE THOROUGHLY CLEANED AND THEN THE CAPS OR PLUGS REINSTALLED TO ENSURE THAT THE CAPS OR PLUGS CAN BE EASILY REMOVED IN THE FUTURE.

ALL CONDUIT BEING FURNISHED AND INSTALLED SHALL HAVE THE U.L. LABEL FIRMLY ATTACHED.

CONDUIT RUNS SHALL BE THE SAME SIZE OF CONDUIT FROM ONE END TO THE OTHER (FROM PULL BOX TO PULL BOX-OR-JUNCTION BOX TO JUNCTION BOX-OR-BASE TO BASE, ETC.).

TRACER WIRE SHALL BE INSTALLED AS STATED IN THE STANDARD SPECIFICATION, ITEM 652.3.1.1.

ALL CONDUIT RUNS SHALL BE STRAIGHT (WITHOUT BENDS) FROM PULL BOX TO PULL BOX, PULL BOX TO BASE AND BASE TO BASE AS SHOWN ON THE PLANS.

CONDUIT

STATE OF WISCONSIN
DEPARTMENT OF TRANSPORTATION

APPROVED
March, 2017 — /S/ Ahmet Demirbilek
DATE — STATE ELECTI
FHWA

6

S.D.D. 9 B 2-10

TABLE OF NOMINAL DIMENSIONS AND WEIGHTS

DIMENSION IN INCHES		CORRUGATED STEEL PIPE								
PIPE DIAMETER (INSIDE)	A	12	12	12	18	18	18	24	24	24
PIPE LENGTH **	B	24	30	36	24	30	36	36	42	48
WALL THICKNESS	C	0.064	0.064	0.064	0.064	0.064	0.064	0.064	0.064	0.064
COVER	D	10 1/4	10 1/4	10 1/4	16 1/4	16 1/4	16 1/4	22 1/4	22 1/4	22 1/4
FRAME	E	14 1/2	14 1/2	14 1/2	20 1/2	20 1/2	20 1/2	26 1/2	26 1/2	26 1/2
FRAME	F	8 1/2	8 1/2	8 1/2	14 1/2	14 1/2	14 1/2	20 1/2	20 1/2	20 1/2
FRAME	G	11 1/2	11 1/2	11 1/2	17 1/2	17 1/2	17 1/2	23 1/2	23 1/2	23 1/2
WEIGHT IN POUNDS *										
FRAME AND COVER		60	60	60	110	110	110	155	155	155

* THE ACTUAL WEIGHT OF THE MANHOLE FRAME AND COVER MAY VARY WITHIN 5 PERCENT PLUS OR MINUS OF THE WEIGHTS SHOWN.

** NORMALLY USED LENGTHS. THE PROJECT ENGINEER SHALL DETERMINE IF PIPE LENGTHS, OTHER THAN THOSE SPECIFIED, SHALL BE USED, TO A MAXIMUM OF 48" (CONTINUOUS LENGTH, NON-SPLICED). THE ADDITIONAL LENGTH SHALL BE INCIDENTAL TO THE PULL BOX BID PRICE.

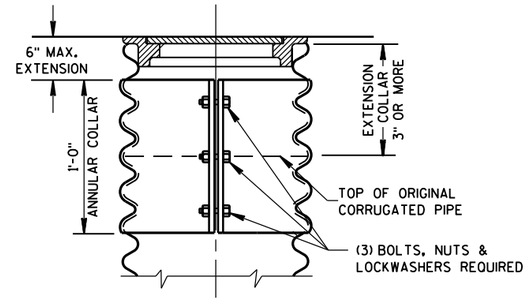

CORRUGATED PIPE EXTENDER

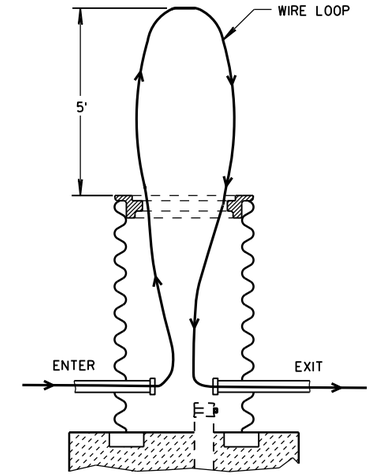

MEASUREMENT DETAIL FOR WIRE/CABLE IN THE PULL BOX

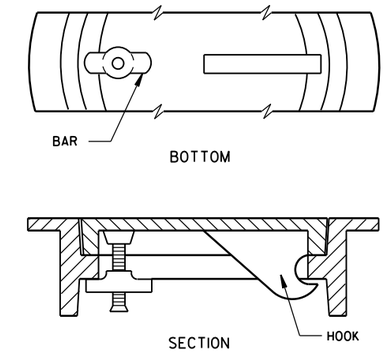

ALTERNATE COVER (LOCKING)

TIGHTENING BAR TYPE

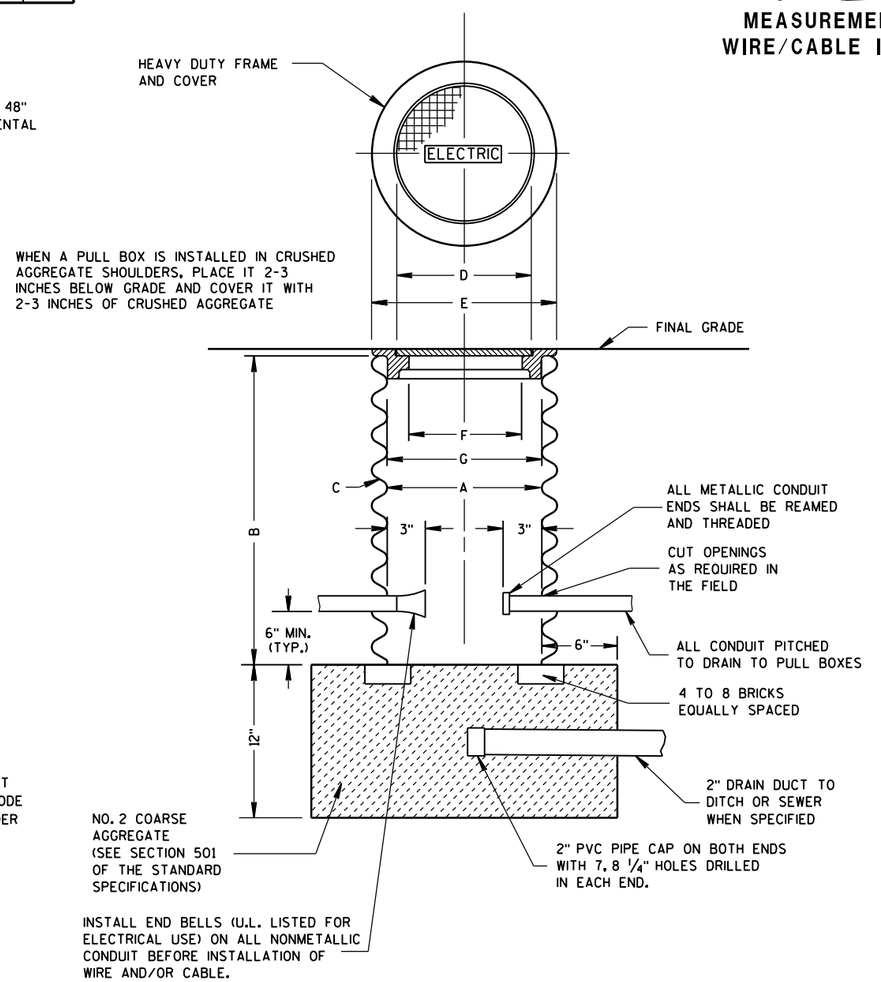

PULL BOX

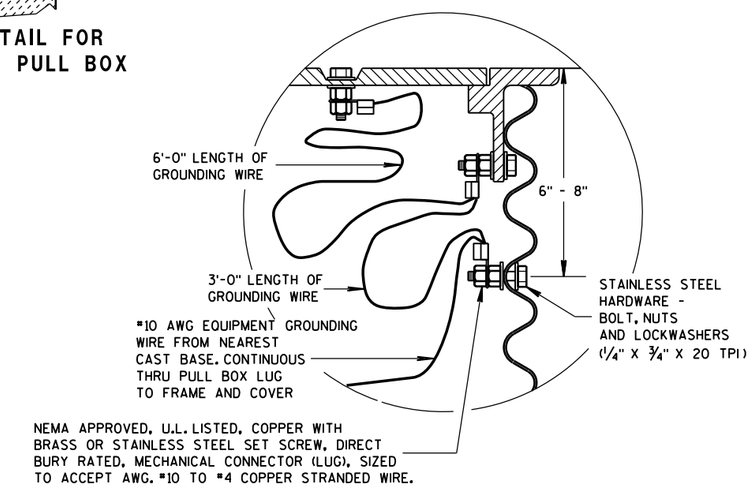

EQUIPMENT GROUNDING LUG AND LOCATION IN STEEL PULL BOXES

GENERAL NOTES

DETAILS OF CONSTRUCTION, MATERIALS AND WORKMANSHIP NOT SHOWN ON THIS DRAWING SHALL CONFORM TO THE PERTINENT REQUIREMENTS OF THE CONTRACT.

ALL FRAMES AND COVERS SHALL BE HEAVY DUTY TYPE, SUITABLE FOR VEHICULAR TRAFFIC LOADS.

PULL BOXES LOCATED IN THE ROADWAYS SHALL HAVE LOCKING COVERS.

ENTRANCE HOLES INTO PULL BOXES SHALL BE CUT WITH A CIRCULAR HOLE SAW OR HYDRAULIC CONDUIT PUNCH. HOLE SIZE SHALL BE THE OUTSIDE DIAMETER OF THE CONDUIT THAT IS TO FIT IN THE OPENING PLUS NO MORE THAN 1/4".

THE CONTRACTOR SHALL NOT INSTALL WIRE IN ANY PULL BOX UNTIL ITS INSTALLATION HAS BEEN INSPECTED AND ACCEPTED BY THE ENGINEER.

GROUNDING LUGS (MECHANICAL CONNECTORS) SHALL BE U.L. LISTED AND APPROVED FOR USE WITH COPPER WIRE.

ALL METALLIC CONDUIT IN WHICH WIRE AND/OR CABLE IS TO BE INSTALLED, SHALL BE BUSHED BEFORE INSTALLATION OF THE WIRE AND/OR CABLE.

WHEN PULL BOXES ARE INSTALLED FOR FUTURE USE, DO NOT INSTALL THE EQUIPMENT GROUNDING LUG. THE EQUIPMENT GROUNDING LUG, THE EQUIPMENT GROUNDING ELECTRODE AND THE EQUIPMENT GROUNDING CONDUCTOR SHALL BE REQUIRED AND INSTALLED UNDER A FUTURE WIRING CONTRACT.

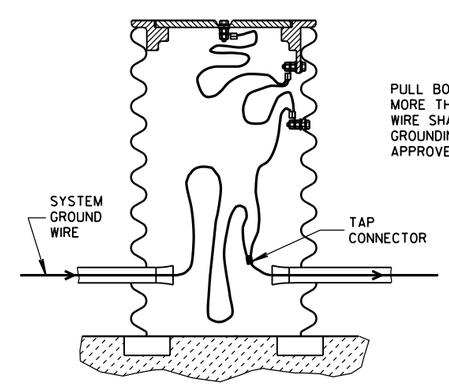

EQUIPMENT GROUNDING LUG AND LOCATION IN STEEL PULL BOXES

PULL BOX

STATE OF WISCONSIN
DEPARTMENT OF TRANSPORTATION

APPROVED
Sept. 2014 — /S/ Ahmet Demirbilek
DATE — STATE ELECTRICAL ENGINEER
FHWA

PRE_75

6

6

S.D.D. 9 B 4-11

S.D.D. 9 B 4-11

FORM DEPTH SHALL BE NO MORE THAN 6" BELOW GRADE ON THE LOWER SIDE OF BASE

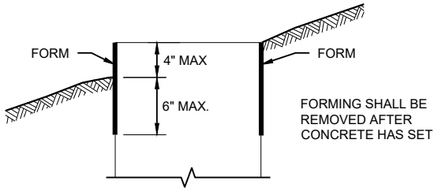

FORMING DETAIL

QUANTITY REQUIREMENTS	CONCRETE BASE TYPE		
	1	2	5 & 6
APPROX. CUBIC YARDS OF CONCRETE	0.40	0.57	0.40
LBS. OF HOOP BAR STEEL	NONE	23	16
LBS. OF VERTICAL BAR STEEL	NONE	60	18

GENERAL NOTES

DETAILS OF CONSTRUCTION, MATERIALS AND WORKMANSHIP NOT SHOWN ON THIS DRAWINGSHALL CONFORM TO THE PERTINENT REQUIREMENTS OF THE CONTRACT.

BASES SHALL BE EXCAVATED BY USE OF A CIRCULAR AUGER.

TOP SURFACES OF CONCRETE BASES SHALL BE TROWEL FINISHED SMOOTH AND LEVEL.

CONDUIT SIZES AND LOCATIONS SHALL BE SHOWN ON THE PLANS

THE FINAL OR TERMINATING CONCRETE BASE IN A CONDUIT RUN SHALL HAVE A 6" EXIT STUB INSTALLED FOR FUTURE CABLING USE. THE EXIT STUB SHALL BE SIZED AS USED THROUGHOUT THE CONDUIT RUN AS SHOWN A THE ENTRANCE OF THE BASE.

ENDS OF CONDUIT INSTALLED BELOW GRADE FRO FUTURE USE SHALL BE CAPPED IF METALLIC OR PLUGGED IF NON-METALLIC.

MINIMUM BENDING RADIUS OF CONDUIT IS EQUAL TO 6X THE DIAMETER.

CONDUIT HEIGHT ABOVE CONCRETE BASES SHALL BE 1 INCH. ALL METALLIC CONDUIT ENDS SHALL BE REAMED AND THREADED.

ALL CONDUIT ENDS AT THE TOP OF CONCRETE BASES SHALL BE CAPPED IF METALLIC OR PLUGGED IF NON-METALLIC IMMEDIATELY AFTER PLACEMENT AND BEFORE CONCRETE IS POURED. CONDUITS IN WHICH WIRE OR CABLE IS NOT INSTALLED SHALL REMAIN CAPPED OR PLUGGED.

BELL ENDS SHALL BE INSTALLED ON ALL PVC CONDUIT EXPOSED AT THE TOP OF CONCRETE BASES BEFORE INSTALLATION.

WHEN REQUIRED TO CONNECT NON-METALLIC CONDUIT TO METALLIC CONDUIT, ONLY ADAPTER FITTINGS, U.L. LISTED FOR ELECTRICAL USE, SHALL BE USED.

IF A BASE REQUIRES A DEEP FORM BECAUSE OF LOOSE DIRT OR FILL, THE FORM SHALL BE REMOVED BEFORE BACKFILLING AROUND THE BASE. BACKFILL SHALL BE TAMPED TIGHT AGAINST THE BARE CONCRETE BASE IN LAYERS OF 1 FOOT OR LESS.

A NO. 4 AWG STRANDED COPPER EQUIPMENT GROUNDING CONDUCTOR SHALL BE EXOTHERMICALLY WELDED TO THE EQUIPMENT GROUNDING ELECTRODE (GROUND ROD) FOR TYPE 2, TYPE 5 AND TYPE 6 BASES.

THE EQUIPMENT GROUNDING CONDUCTOR SHALL BE FURNISHED AND INSTALLED TO ENTER ALL BASE TYPES THROUGH A 1 INCH CONDUIT INSTALLED FOR GROUNDING PURPOSES, LEAVING A 4 FOOT COIL OF WIRE ABOVE THE CONCRETE BASE. THE EQUIPMENT GROUNDING CONDUCTOR SHALL BE NEATLY COILED AND THE COILS TIED TOGETHER.

ANCHOR RODS SHALL BE THREADED 12" IN LENGTH ON EACH END OF THE ROD. ANCHOR RODS SHALL BE MANUFACTURED IN ACCORDANCE WITH SECTION 654.2.1 OF THE STANDARD SPECIFICATIONS.

WASHERS AND LOCK WASHERS ARE REQUIRED ON ALL ANCHOR RODS.

WHEN ANCHOR RODS USING THE ALTERNATE "L" BEND ARE FURNISHED, THE 4 INCH"L" BEND SHALL BE IN ADDITION TO THE SPECIFIED ANCHOR ROD BAR LENGTH. THE "L" BEND SHALL NOT BE THREADED.

ANCHOR RODS SHALL BE INSTALLED WITH MISALIGNMENTS OF LESS THAN 1:40 FROM VERTICAL.

WELDING OF THE ANCHOR RODS TO THE CAGE IS UNACCEPTABLE. TIE WIRES SHALL BE USED.

BAR STEEL REINFORCEMENT SHALL BE COATED WITH POWDERED EPOXY RESIN IN ACCORDANCE WITH SECTION 505 OF THE STANDARD SPECIFICATIONS (LATEST EDITION).

1. THE MINIMUM DEPTH OF CONDUIT EXITING THE CONCRETE BASE AND INSTALLED BELOW THE TRAVELED WAY SHALL BE 24 INCHES. THE MINIMUM DEPTH OF CONDUIT EXITING THE CONCRETE BASE THAT IS NOT INSTALLED BELOW THE TRAVELED WAY SHALL BE 18 INCHES. THE MAXIMUM DEPTH OF ALL CONDUIT SHALL BE 36 INCHES EXCEPT WITH WRITTEN APPROVAL OF THE ENGINEER.
2. (4) 1" DIA. X 3' - 6" ANCHOR RODS.
3. (4) 1" DIA. X 5' - 0" ANCHOR RODS.
4. (6) NO. 6 X 6' - 8" BAR STEEL REINFORCEMENT.
5. (7) NO. 4 X 5' - 1" BAR STEEL REINFORCEMENT @ 1' - 0" C - C.
6. (4) 1" DIA. X 3' - 6" ANCHOR RODS.
7. (6) NO. 4 X 4' - 8" BAR STEEL REINFORCEMENT.
8. (5) NO. 4 X 5' - 1" BAR STELL REINFORCEMENT @ 1' - 0" C -C.
9. EXOTHERMIC CONNECTION TO EUIPMENT GROUNDING CONDUCTOR
10. ⅝" DIA. X 8' -0" COPPERCLAD EQUIPMENT GROUNDING ELECTRODE REQUIRED
11. ANY ANCHOR ROD PROJECTION SHORTER THAN 2 ¾" OR LONGER THAN 3 ¼" SHALL REQUIRE THE BASE TO BE REMOVED AND REPLACED AT THE CONTRACTORS EXPENSE.
12. FOR NON - BREAKAWAY INSTALLATIONS, 4 ½" ± ANCHOR ROD PROJECTION WITH THE USE OF LEVELING NUTS. RODENT SCREEN REQUIRED.

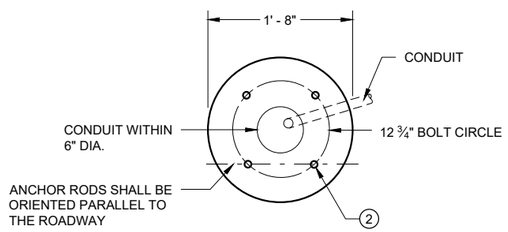

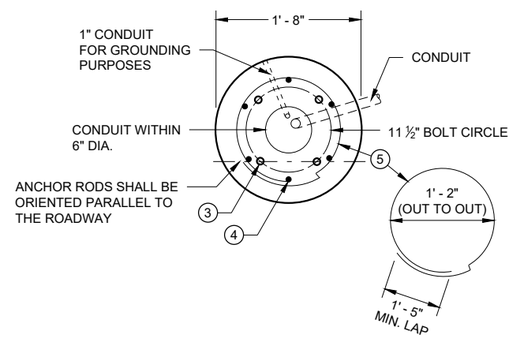

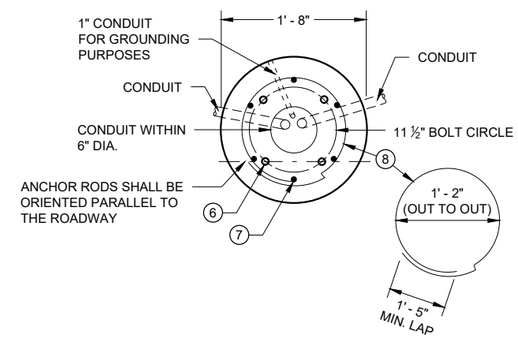

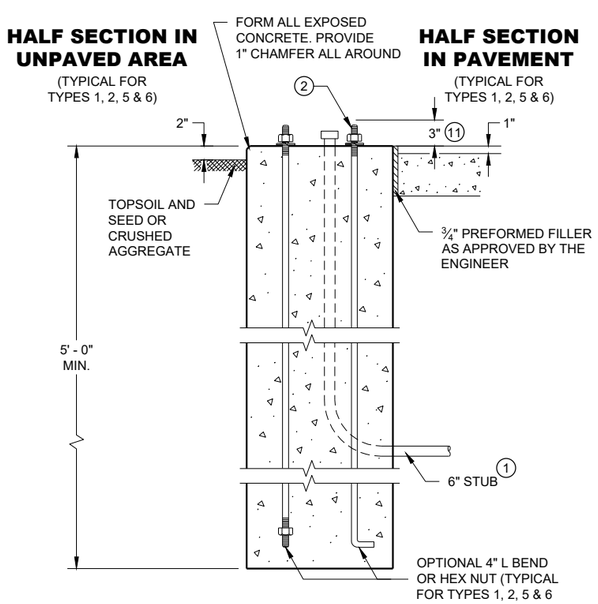

TYPE 1

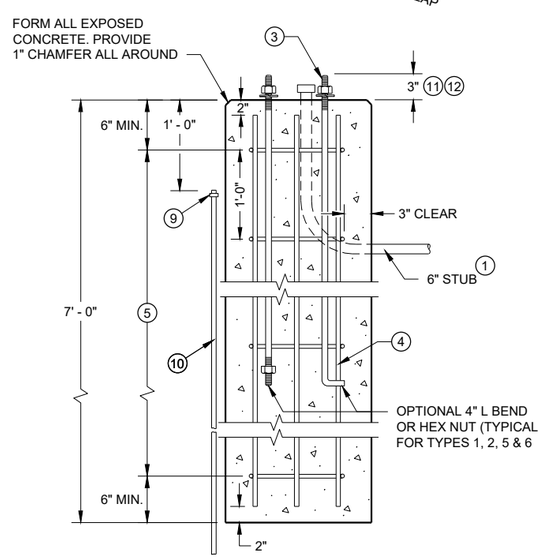

TYPE 2

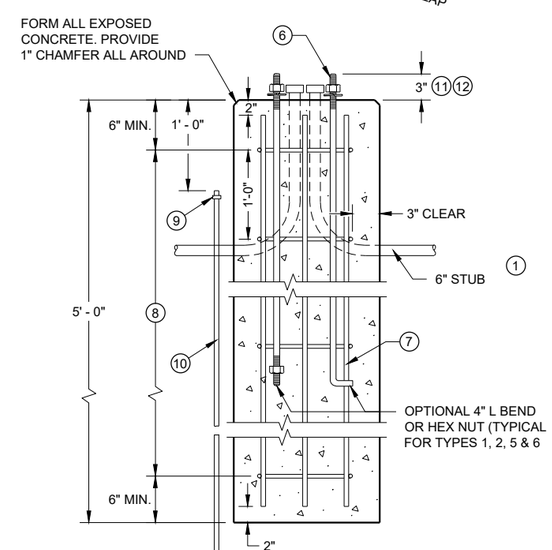

TYPE 5 & 6

CONCRETE BASES

CONCRETE BASES TYPES 1, 2, 5, & 6

STATE OF WISCONSIN
DEPARTMENT OF TRANSPORTATION

APPROVED
May 2019 — DATE
/S/ Ahmet Demirbilek — STATE ELECTRICAL
FHWA

PRE_76

6

SDD 09C02 - 09

6

SDD 09C02 - 09

GENERAL NOTES

DETAILS OF CONSTRUCTION, MATERIALS AND WORKMANSHIP NOT SHOWN ON THIS DRAWING SHALL CONFORM TO THE PERTINENT REQUIREMENTS OF THE CONTRACT.

FOUR (4) BOLTS SHALL BE FURNISHED WITH EACH TRANSFORMER BASE. BOLTS SHALL BE 1" DIAMETER, 4" IN LENGTH, WITH WASHERS, LOCK WASHERS AND NUTS. BOLTS, NUTS AND WASHERS SHALL BE MANUFACTURED IN ACCORDANCE WITH SECTION 641.2.2 OF THE STANDARD SPECIFICATIONS.

LEVELING SHIMS, IF NEEDED, SHALL BE DESIGNED FOR THE PURPOSE AND USED UNDER CAST BASES WHEN PLUMBING POLES OR STANDARDS DURING INSTALLATION. THE USE OF WASHERS IN LIEU OF PROPER LEVELING SHIMS IS NOT ACCEPTABLE.

SHIM LENGTH SHALL BE LONG ENOUGH TO COMPLETELY COVER THE AREA UNDER THE LENGTH AND WIDTH OF THE BASE MOUNTING FLANGE.

DOUBLE NUTTING IS NOT ACCEPTABLE FOR LEVELING OR MOUNTING PURPOSES.

A NEMA APPROVED, U.L. LISTED, COPPER WITH BRASS OR STAINLESS STEEL SET SCREW, DIRECT BURY RATED, MECHANICAL CONNECTOR (LUG), SIZED TO ACCEPT AWG. #10 TO #4 COPPER STRANDED WIRE SHALL BE FURNISHED AND INSTALLED IN THE PEDESTAL AND TRANSFORMER BASES.

THE MECHANICAL CONNECTOR SHALL BE INSTALLED USING A 1/4" - 20 (TPI) STAINLESS STEEL HEX HEAD BOLT OF SUFFICIENT LENGTH TO FIRMLY ATTACH THE LUG TO THE BASE.

SHOULD THE MANNER OF ATTACHMENT OF THE LUG REQUIRE WASHERS, HEX NUTS, LOCK WASHER - THEY SHALL BE STAINLESS STEEL AS IS THE BOLT. THE MANNER OF ATTACHMENT SHALL NOT BLOCK ACCESSIBILITY TO WIRE PLACEMENT IN THE CONNECTOR.

PEDESTAL BASE COLLAR THREADING SHALL BE TAPERED AND IN ACCORDANCE WITH NATIONAL PIPE THREADING DIMENSIONS.

BASE COLLAR THREADING SHALL EXTEND INTO THE BASE COLLAR WITH SUFFICIENT DEPTH TO ACCEPT THE INSTALLATION OF TRAFFIC SIGNAL STANDARDS TO A DEPTH OF 1 1/2", THEN TIGHTENING TO A POINT OF BEING IMMOVABLE.

THE ACCESS DOOR SHALL BE OF THE SAME MATERIAL AS THE BASE.

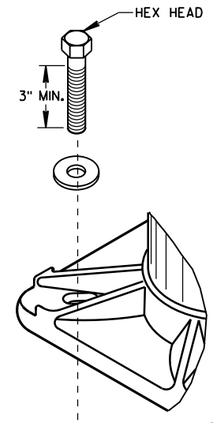

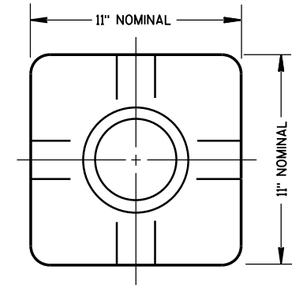

TOP VIEW
(PEDESTAL BASE)

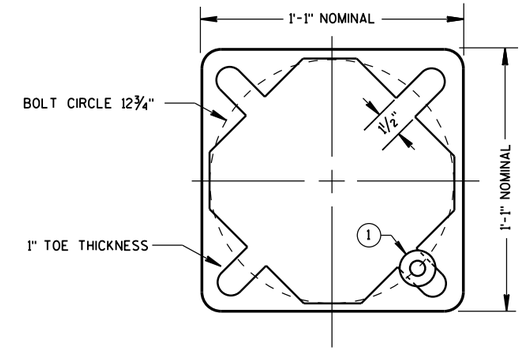

BOTTOM VIEW
(PEDESTAL BASE)

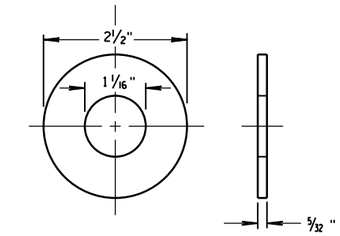

ZINC COATED STEEL WASHER
TO BE PROVIDED BY THE CONTRACTOR

PEDESTAL BASE WASHER (1)

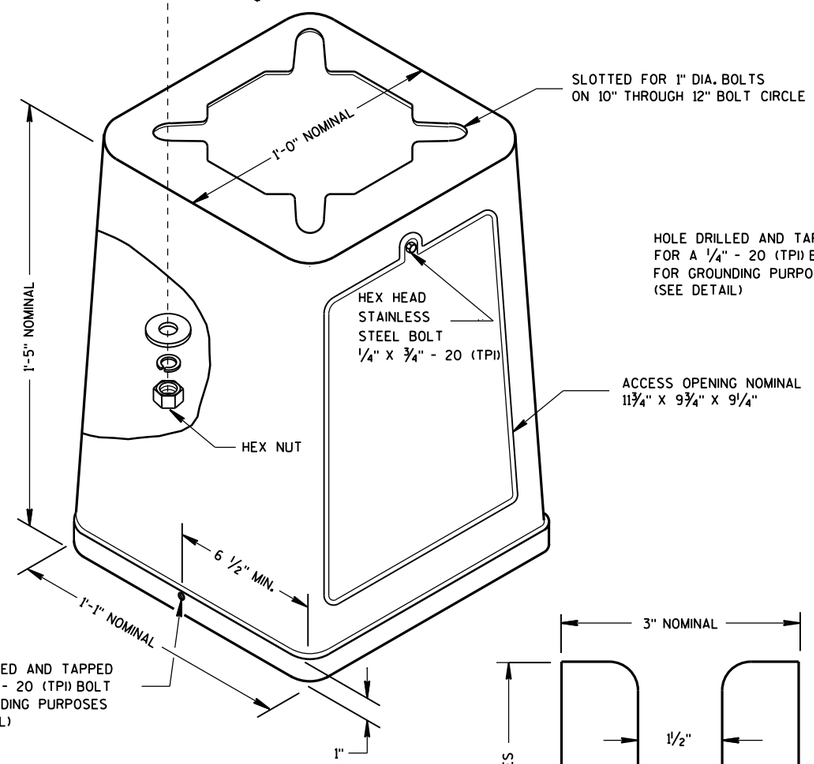

ISOMETRIC VIEW

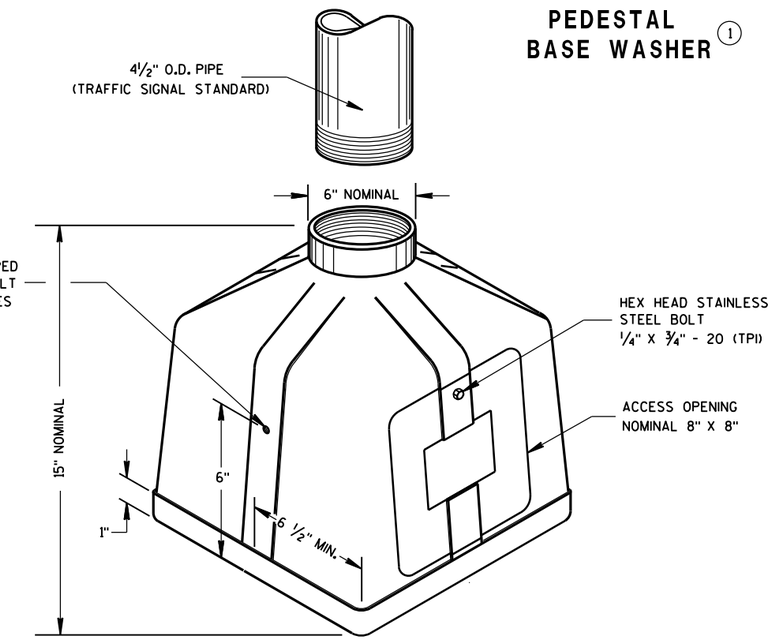

ISOMETRIC VIEW
PEDESTAL BASE

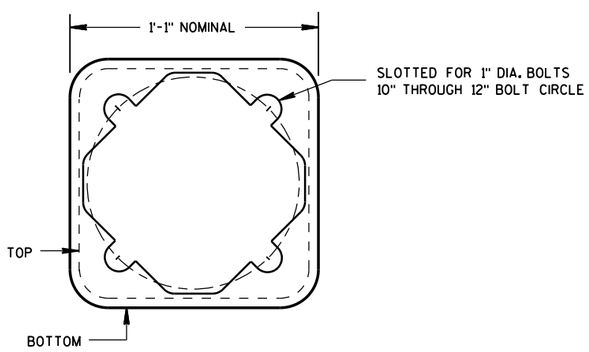

BOTTOM VIEW
(TRANSFORMER BASE)

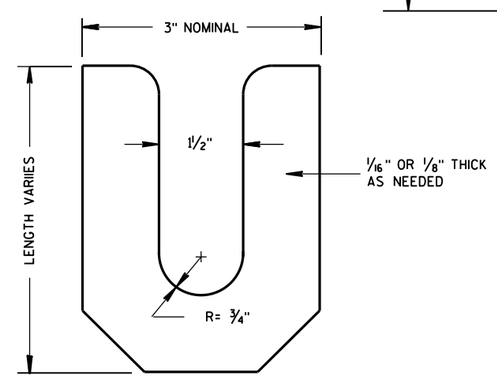

LEVELING SHIM

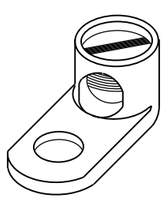

TYPICAL MECHANICAL CONNECTOR LUG

TO BE FURNISHED WITH EACH BASE

TRANSFORMER BASE

INTENDED FOR USE WITH TYPE 2, 3, 4, 5 & 6 POLES

TRANSFORMER/PEDESTAL BASES	
STATE OF WISCONSIN DEPARTMENT OF TRANSPORTATION	
APPROVED Sept. 2014 DATE	/S/ Ahmet Demirbilek STATE ELECTRICAL ENGINEER
FHWA	

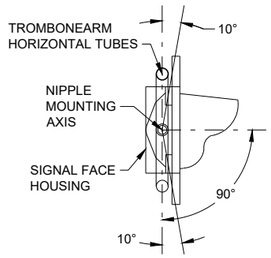

SECTION A-A

(10 DEGREES TILT REQUIREMENT OF FACE(S) IN THE TROMBONE MOUNTING)

FOR MANUFACTURERS USE ONLY

WELD TO BE 100% R.T. OR U.T. TESTED AS PER THE REQUIREMENTS OF AWS D 1.5-88. RECORDS OF COMPLIANCE OF SUCH TESTING SHALL BE FURNISHED TO THE OFFICE OF DESIGN / BRIDGE FOR VERIFICATION AND APPROVAL.

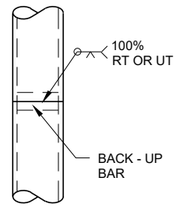

POLE SPLICE DETAIL

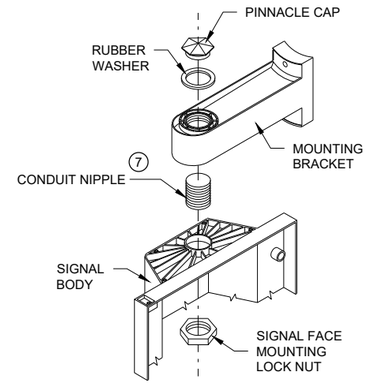

SIGNAL FACE MOUNTING DETAIL

(BANDED)

GENERAL NOTES

DETAILS OF CONSTRUCTION, MATERIALS AND WORKMANSHIP NOT SHOWN ON THIS DRAWING SHALL CONFORM TO THEPERTINENT REQUIREMENTS OF THE CONTRACT.

POLES SHALL BE EITHER ALUMINUM OR GALVANIZED STEEL AS CALLED FOR IN THE CONTRACT.

SECTION 657, POLES, OF THE STANDARD SPECIFICATIONS SHALL APPLY TO THIS DRAWING.

A PULL WIRE / ROPE SHALL BE INSTALLED IN EACH TROMBONE ARM RACEWAY DURING THE MANUFACTURING PROCESS.

TYPE 2 ALUMINUM POLES SHALL BE CONSTRUCTED OF 6063 - T6 ALUMINUM ALLOY. SLEEVING INSIDE THE POLE IS NOT ACCEPTABLE.

WHEN TRANSFORMER BASES ARE USED, WIRE CONNECTIONS SHALL BE MADE IN THE TRANSFORMER BASE.

1. 4" X 6" REINFORCED HANDHOLE AND COVER ASSEMBLY WITH TWO (2) ¼" X ¾" - 20 TPI , STAINLESS STEEL, HEX HEAD BOLTS.
2. SIGNAL FACE MOUNTING BRACKETS. MOUNT WITH CAP SCREWS AND BANDING.
3. GROMMETS. 1" CHASE NIPPLES OR 1" CLOSE CONDUIT NIPPLES WITH BUSHINGS SHALL BE PROVIDED FOR 1 ⅜" HOLE IN POLE SHAFT FOR WIRING.
4. SECURELY MOUNT DULL BLACK POLYCARBONATE BACKPLATES, PROJECTING 5" BEYOND ALL SIDES OF THE SIGNAL FACE HOUSING,PER MANUFACTURER'S RECOMMENDATIONS.
5. POLE MOUNTED SIGNAL FACES SHALL REQUIRE ONE OR MORE MOUNTING SPACERS UNDER THE TOP MOUNTING BRACKET(S) ASREQUIRED, TO PLUMB THE SIGNAL FACES.
6. CAST ALUMINUM TRANSFORMER BASE, WHEN REQUIRED.
7. USE 1 ½" ID NIPPLES ZINC-COATED RIGID METAL CONDUIT, LONG ENOUGH TO ACCOMMODATE FULL DEPTH THREADING INTO THE HEAD MOUNTING LOCK NUT IN ORDER TO TIGHTEN THE FACE, BUT THAT DO NOTINTERFERE WITH REFLECTOR CLOSURE. THREAD THE NIPPLE INTO THE MOUNTING BRACKET/ELBOW UNTIL TIGHT. USE APPROVED PINNACLE TYPE HARDWARE FROM A DEPARTMENT APPROVED MANUFACTURER TO CLOSE THE UNUSED 1 ½" OPENING IN SIGNAL FACES AND BRACKET ENDS.
8. VERTICAL STRUT (ADJUSTABLE). ONE (1) SET SCREW (¼" X ¾" - 20 TPI STAINLESS STEEL, HEX HEAD) INTO EACH ARM MEMBER IF STRUTIS THE SLIDING TYPE.
9. FURNISH AND INSTALL VENTILATED, CAST METALLIC (ALUMINUM ALLOY) CAPS. FASTEN CAPS WITH ONE (1) ¼" X ¾" - 20 TPI STAINLESS STEEL, HEX HEAD BOLT.
10. SHIMMING, IF NEEDED, SHALL BE LOCATED BETWEEN THE CONCRETE FOUNDATION AND THE TRANSFORMER BASE.
11. USE SERRATED LOCK WASHERS WITH NOTCHES BETWEEN END TEE AND SIGNAL HEAD.

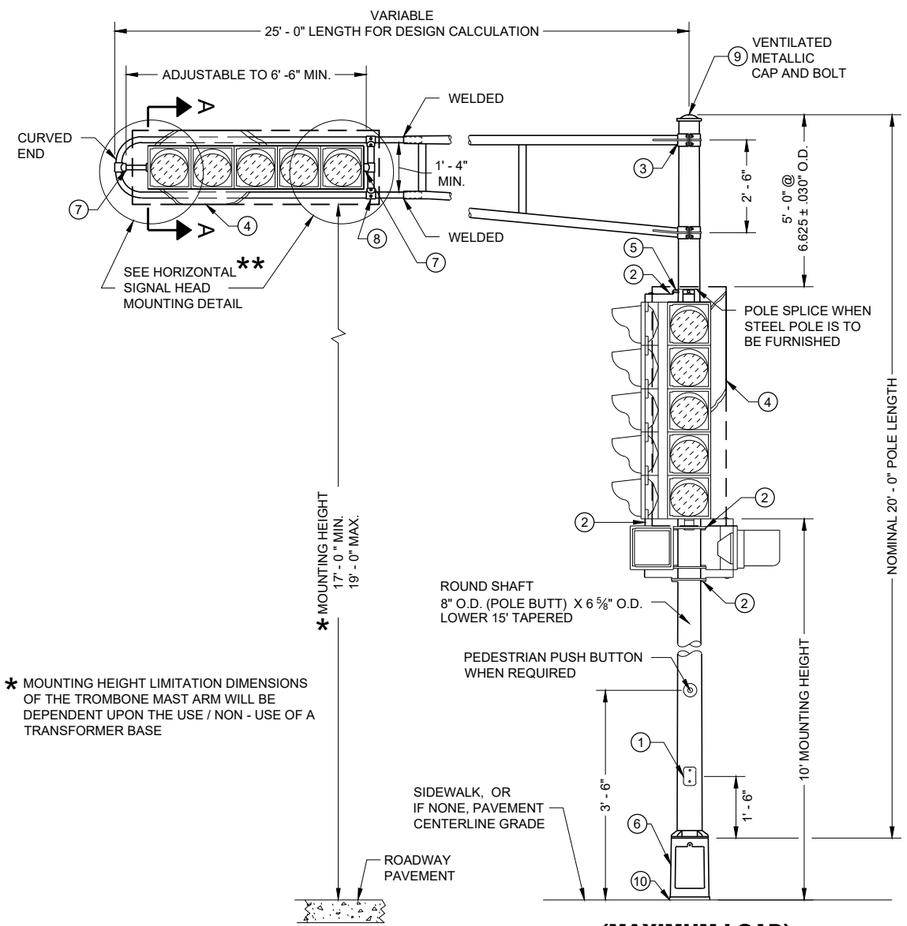

* MOUNTING HEIGHT LIMITATION DIMENSIONS OF THE TROMBONE MAST ARM WILL BE DEPENDENT UPON THE USE / NON - USE OF A TRANSFORMER BASE

(MAXIMUM LOAD)

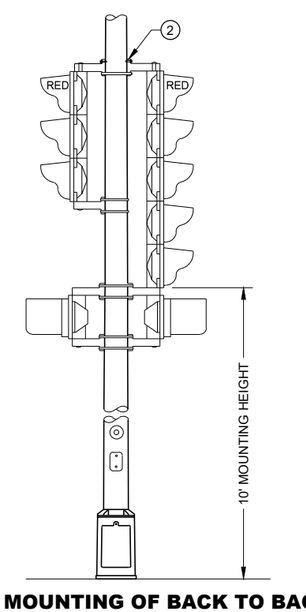

TYPICAL MOUNTING OF BACK TO BACK 3 AND 5 SECTION SIGNAL FACES

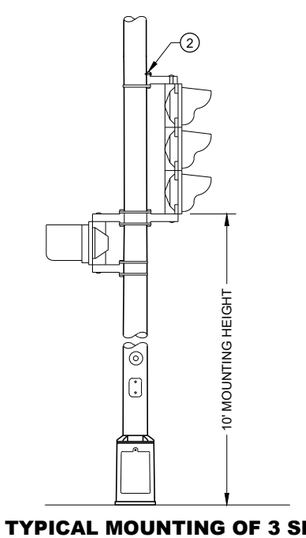

TYPICAL MOUNTING OF 3 SECTION SIGNAL FACE

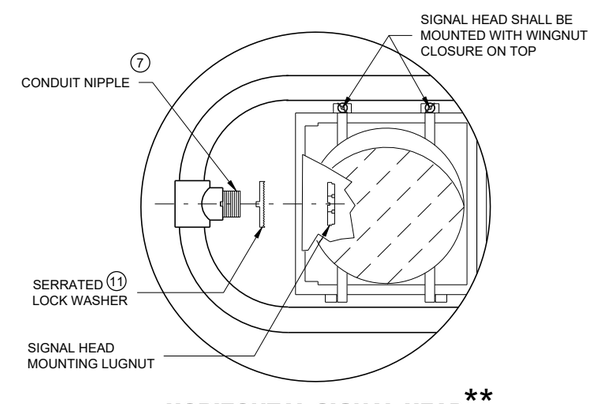

HORIZONTAL SIGNAL HEAD MOUNTING DETAIL **

** SIGNAL HEAD ATTACHMENT ALSO APPLIES TO MOUNTING AT CROSS BAR

TYPE 2 POLE MOUNTING CONFIGURATION

POLE MOUNTINGS FOR TRAFFIC SIGNALS TYPE 2

STATE OF WISCONSIN
DEPARTMENT OF TRANSPO PRE_78

6

SDD 09E01 - 15a

6

SDD 09E01 - 15a

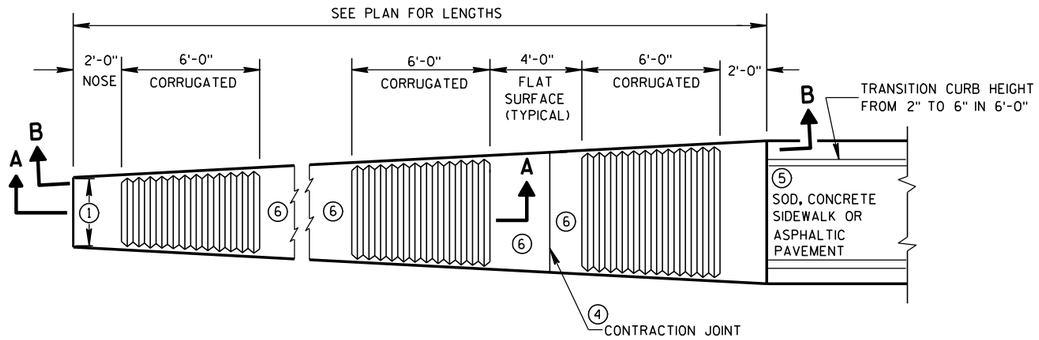

PLAN VIEW

VARIABLE WIDTH CONCRETE CORRUGATED MEDIAN

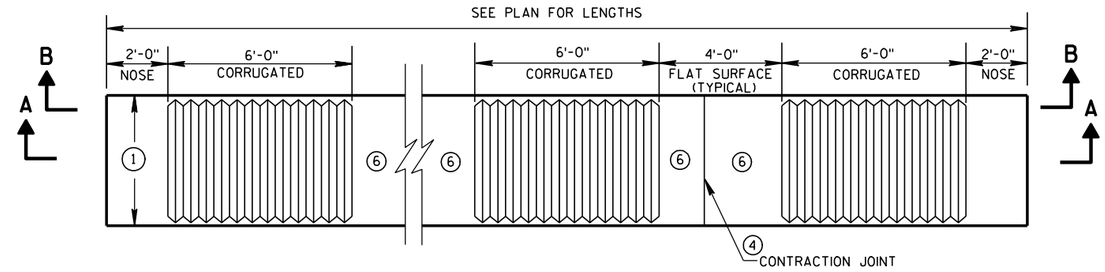

PLAN VIEW

UNIFORM WIDTH CONCRETE CORRUGATED MEDIAN

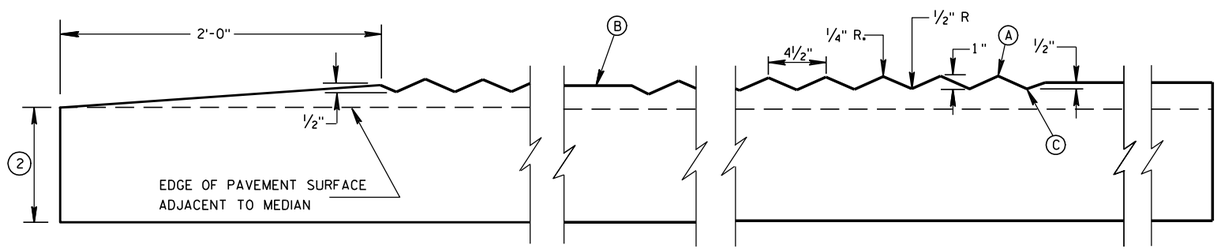

SECTION A-A

LONGITUDINAL SECTION

GENERAL NOTES

1. SEE PLANS FOR CONSTANT OR VARIABLE WIDTH.
2. THE DEPTH OF THE CONCRETE CORRUGATED MEDIAN SHALL BE 9-INCHES UNLESS SHOWN OTHERWISE IN THE PLAN.
   ADJACENT PAVEMENT STRUCTURE DETAILS ARE SHOWN IN THE PLAN. TYPICAL OPTIONS ARE:
   (1) NEW OR EXISTING CONCRETE PAVEMENT.
   (2) ASPHALTIC CONCRETE OVER NEW OR EXISTING CONCRETE BASE COURSE, OR PAVEMENT.
   (3) ASPHALTIC PAVEMENT OVER BASE AGGREGATE DENSE.
3. TIE BARS OR PAVEMENT TIES REQUIRED IN NEW CONCRETE PAVEMENT OR CONCRETE BASE COURSE. TIE BARS SHALL BE NO. 4 X 2'-0" SPACED AT 2'-0" C-C.
   INSTALL TIE BARS TO MAINTAIN A MINIMUM OF 3-INCHES OF COVER BETWEEN THE TIE BAR AND THE CONCRETE SURFACE (BOTTOM AND TOP).
   PAVEMENT TIES REQUIRED IN EXISTING CONCRETE PAVEMENT OR CONCRETE BASE COURSE, PAVEMENT TIES SHALL BE NO. 6 X 1'-0" SPACED AT 3'-0" C-C INSTALLED ON A HORIZONTAL SKEW OF 6:1. THE DIRECTION OF SKEW SHALL ALTERNATE AFTER EVERY ONE OR TWO BARS.
4. CONCRETE CORRUGATED MEDIAN CONTRACTION JOINTS SHALL BE CONSTRUCTED TO MATCH THE JOINTS IN ADJACENT CONCRETE PAVEMENT. WHERE ADJACENT PAVEMENT IS ASPHALT WITH BASE AGGREGATE DENSE. TRANSVERSE CONTRACTION JOINTS SHALL BE PROVIDED AT 20 FOOT INTERVALS.
5. SURFACE TYPE AND DETAILS ARE DEFINED ELSEWHERE IN THE PLAN.
6. YELLOW MARKING ON FLAT SURFACE WHEN MEDIAN SEPARATES OPPOSING TRAFFIC.

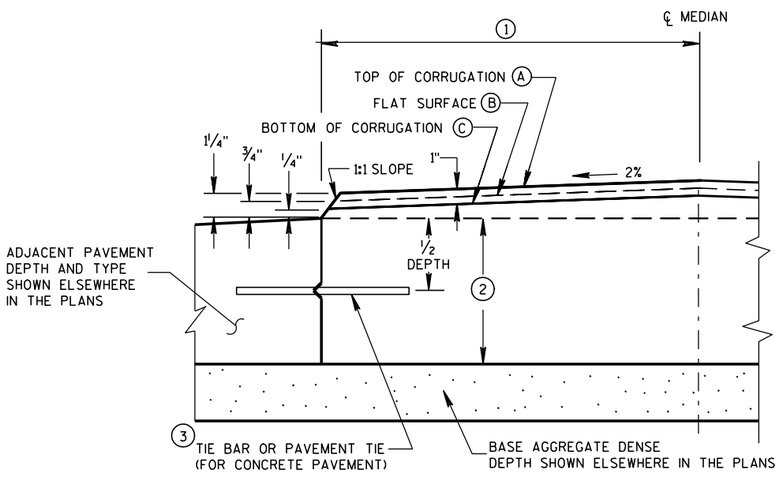

HALF CROSS SECTION

CONCRETE CORRUGATED MEDIAN AND ADJACENT PAVEMENT

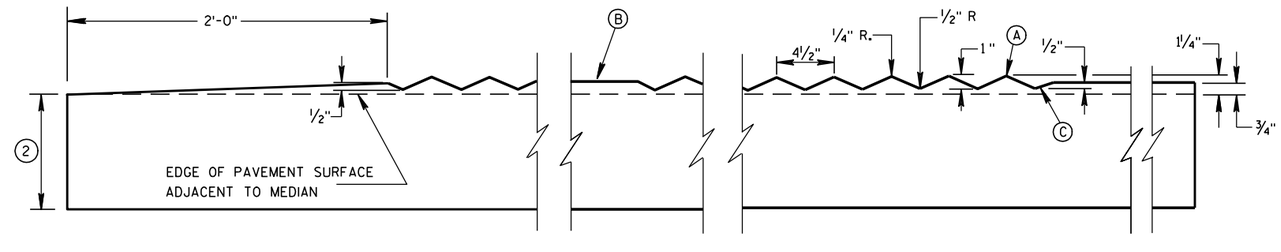

SECTION B-B

LONGITUDINAL SECTION

CONCRETE CORRUGATED MEDIAN

STATE OF WISCONSIN
DEPARTMENT OF TRANSPORTATION

APPROVED

12/17/07 — DATE

/S/ Jerry H. Zogg — ROADWAY STANDARDS DEVELOPMENT ENGINEER

FHWA

PRE_79

6

S.D.D. 11 B 1-5

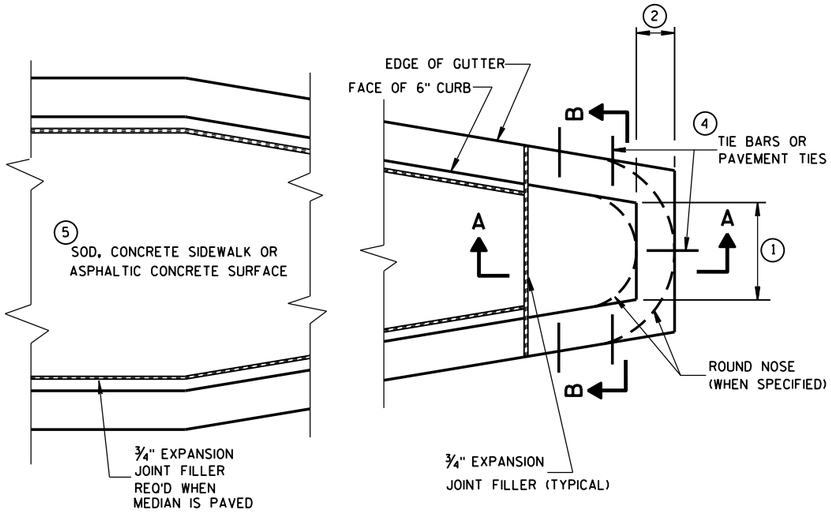

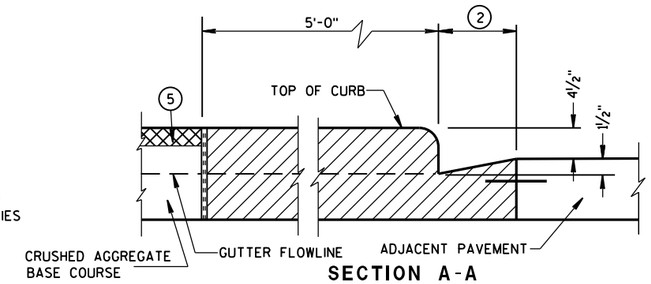

SECTION A-A

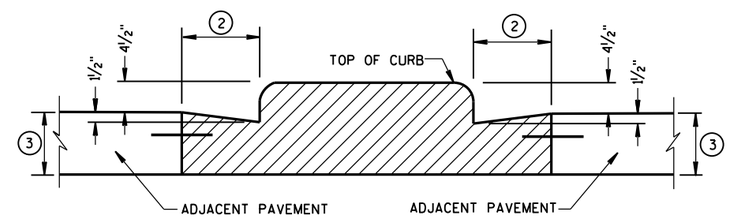

SECTION B-B

CONCRETE MEDIAN BLUNT NOSE DETAIL

GENERAL NOTES

DETAILS OF CONSTRUCTION, MATERIALS AND WORKMANSHIP NOT SHOWN ON THIS DRAWING SHALL CONFORM TO THE PERTINENT REQUIREMENTS OF THE STANDARD SPECIFICATIONS AND THE APPLICABLE SPECIAL PROVISIONS.

1. SEE PLAN FOR MEDIAN NOSE WIDTH AND RADIUS (FOR ROUND NOSE ALTERNATE).
2. WIDTH OF GUTTER TO MATCH EXISTING ADJACENT GUTTER OR AS SPECIFIED ELSEWHERE IN THE PLAN.
3. DEPTH EQUAL TO ADJACENT PAVEMENT. ADJACENT PAVEMENT STRUCTURE DETAILS ARE SHOWN ON THE PLAN. TYPICAL OPTIONS ARE:
   (1) NEW OR EXISTING CONCRETE PAVEMENT.
   (2) ASPHALTIC CONCRETE PAVEMENT OVER NEW OR EXISTING CONCRETE BASE COURSE.
   (3) ASPHALTIC CONCRETE PAVEMENT OVER CRUSHED AGGREGATE BASE COURSE.
4. TIE BARS OR PAVEMENT TIES REQUIRED IN NEW CONCRETE PAVEMENT OR CONCRETE BASE COURSE. TIE BARS SHALL BE NO. 4 X 2'-0" SPACED AT 2'-0" C-C.

   PAVEMENT TIES REQUIRED IN EXISTING CONCRETE BASE COURSE. PAVEMENT TIES SHALL BE NO. 6 X 1'-0" SPACED AT 3'-0" C-C INSTALLED ON A HORIZONTAL SKEW OF 6:1. THE DIRECTION OF SKEW SHALL ALTERNATE AFTER EVERY ONE OR TWO BARS.
5. SURFACE TYPE AND DETAILS ARE SHOWN ELSEWHERE IN THE PLAN.

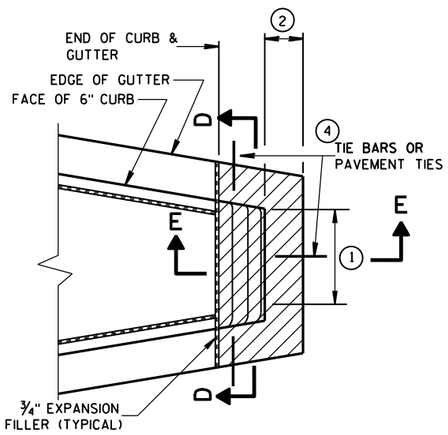

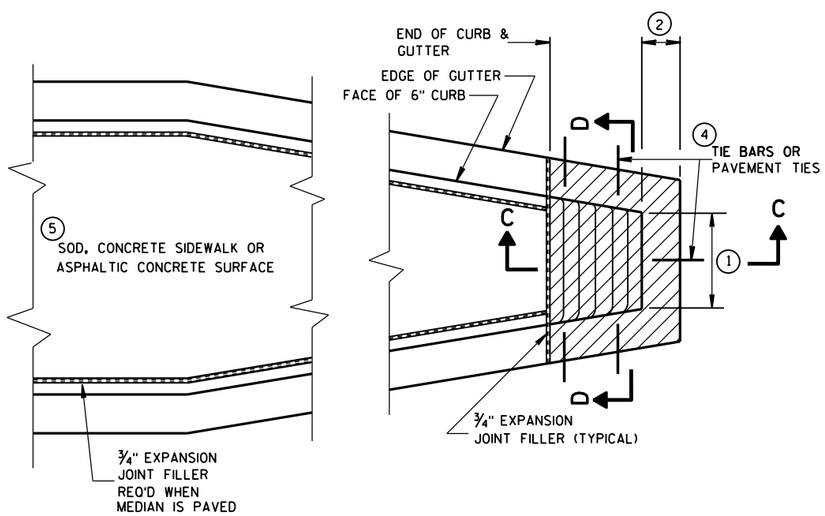

CONCRETE MEDIAN SLOPED NOSE TYPE 1

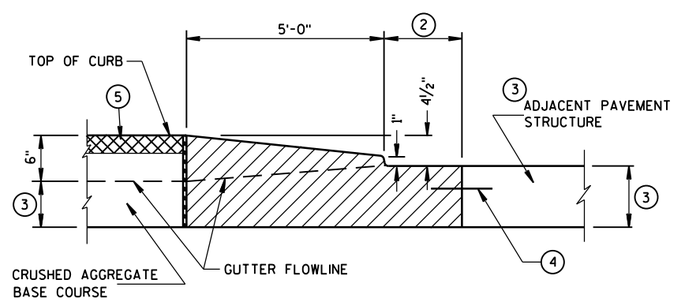

SECTION C-C

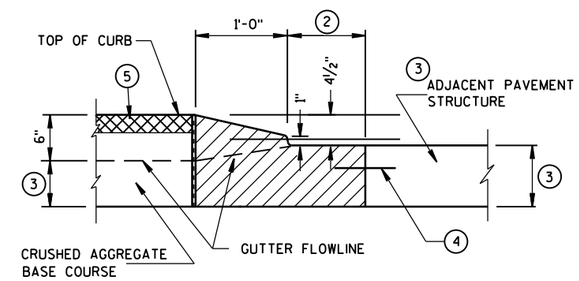

SECTION E-E

CONCRETE MEDIAN SLOPED NOSE TYPE 2

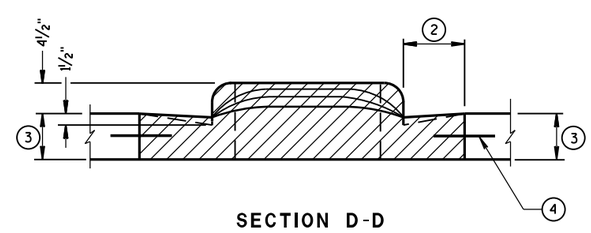

SECTION D-D

CONCRETE MEDIAN NOSE

STATE OF WISCONSIN
DEPARTMENT OF TRANSPORTATION

APPROVED
6/8/2006 — DATE
/S/ Jerry H. Zogg — ROADWAY STANDARDS DEVELOPMENT ENGINEER
FHWA

PRE_80

6

S.D.D. 11 B 2-2

GENERAL NOTES

SAW CUT, DRILL, AND LIFT OUT EXISTING CONCRETE PAVEMENT WITHIN THE BOUNDARIES OF CONCRETE REPAIR AREAS. THE CONTRACTOR MAY MAKE ADDITIONAL SAW CUTS INSIDE THE REPAIR LIMITS TO REDUCE WEIGHT AND SIZE OF CONCRETE PIECES.

PROVIDE A 6-FOOT MINIMUM DISTANCE FROM BOUNDARIES OF CONCRETE REPAIR AREAS TO ADJACENT TRANSVERSE JOINT OR CRACK IN THE SAME LANE.

THE LENGTH OF THE REPAIRS MAY VARY FROM THE DIMENSIONS SHOWN IF THE EXISTING CONCRETE PAVEMENT IS NONDOWELED AND THE PAVEMENT IS TO BE OVERLAID AFTER REPAIRING.

(1) DOWEL BARS MIGHT NOT EXIST.

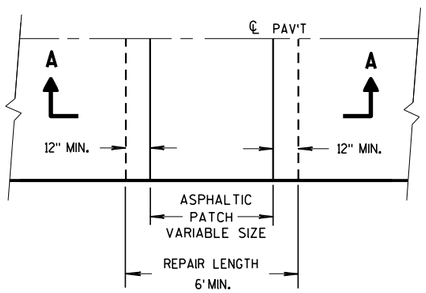

PLAN VIEW

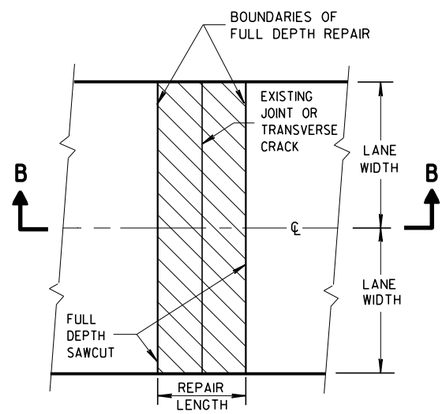

PLAN VIEW
(DOUBLE LANE REPAIR)

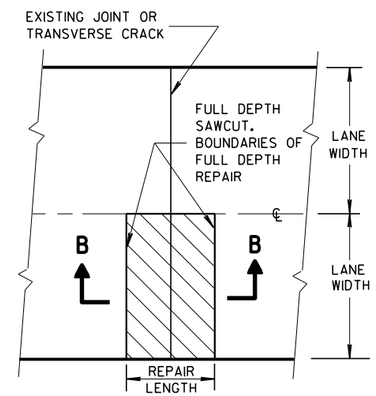

PLAN VIEW
(SINGLE LANE REPAIR)

FULL DEPTH CONCRETE PAVEMENT REMOVAL

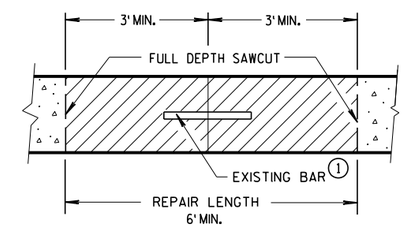

SECTION B-B

CONCRETE REMOVAL

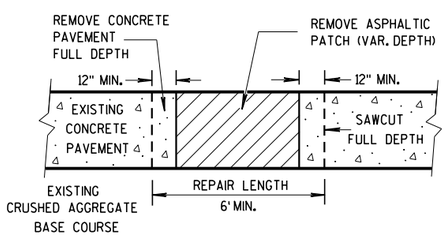

SECTION A-A

HMA PATCH REMOVAL

6

6

S.D.D. 13 C 9-15a

S.D.D. 13 C 9-15a

CONCRETE PAVEMENT REPAIR AND REPLACEMENT

STATE OF WISC
DEPARTMENT OF TRANSPORTATION

PRE_81

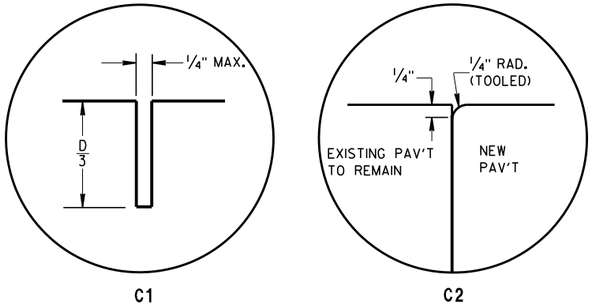

TRANSVERSE JOINTS

TIE BAR TABLE

PAVEMENT DEPTH (D)	TIE BAR SIZE	TIE BAR LENGTH (L)	MAX. TIE BAR SPACING
< 10 1/2"	NO. 4	30"	36"
≥ 10 1/2"	NO. 5	36"	36"
	NO. 4 *	30"	24" **

* SUBSTITUTE BENT BARS AT LONGITUDINAL JOINTS WHEN EQUIPMENT LIMITATIONS DURING CONSTRUCTION WARRANT (e.g. AUXILIARY LANES OR TURN LANES)

** CONFORM TO 15" MINUMUM SPACING FROM TRANSVERSE JOINTS; SPACING BETWEEN TIE BARS WILL BE 30" AT TRANSVERSE JOINTS.

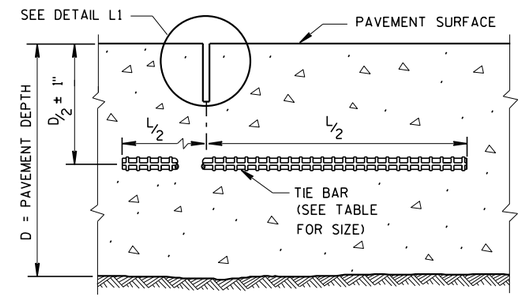

SECTION C-C

SAWED LONGITUDINAL JOINT

GENERAL NOTES

INSTALL DOWEL BARS PARALLEL TO THE PAVEMENT CENTERLINE AND PAVEMENT SURFACE.

CONCRETE PAVEMENT REPAIRS OF EXISTING NONDOWELED CONCRETE PAVEMENTS DO NOT NEED TO BE DOWELED.

ANCHOR DOWEL BARS AND TIE BARS INTO DRILLED HOLES WITH AN EPOXY.

FOR MULTI-LANE CONCRETE PAVEMENT REPLACEMENTS, PROVIDE A MINIMUM DISTANCE OF 15 INCHES FROM ALL TRANSVERSE JOINTS OR EDGES OF REPLACEMENT TO THE CENTER OF THE TIE BAR NEAREST THAT JOINT OR EDGE.

(1) APPLY A THIN UNIFORM COATING OF SURFACE TREATMENT TO THE FREE END OF DOWEL BARS TO PREVENT BONDING.

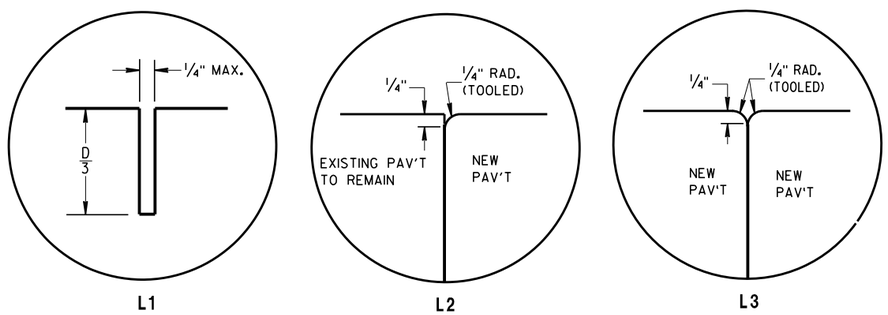

LONGITUDINAL JOINTS

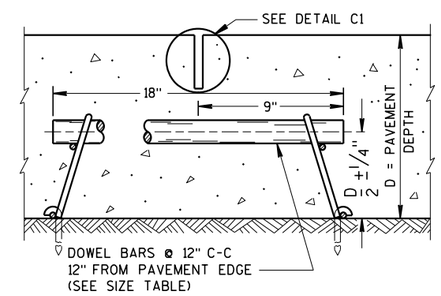

SECTION F-F

CONTRACTION JOINT

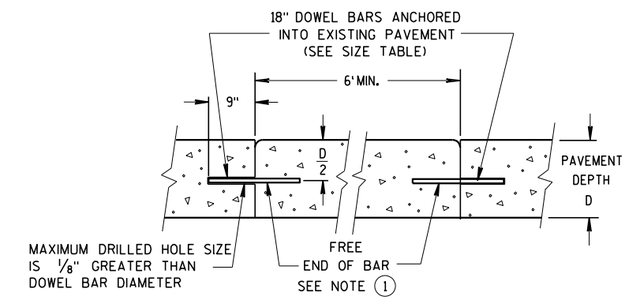

SECTION D-D

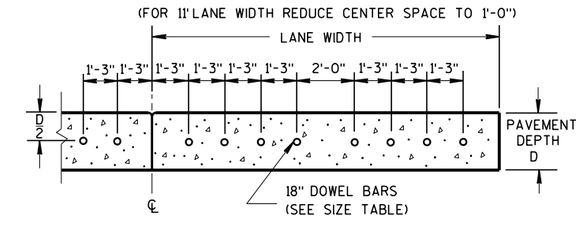

SECTION E-E

DRILLED DOWEL BAR CONSTRUCTION JOINT

PAVEMENT DEPTH, DOWEL BAR SIZE AND JOINT SPACING TABLE

PAVEMENT DEPTH (D)	DOWEL BAR DIAMETER	DRILLED DOWEL BAR DIAMETER	CONTRACTION JOINT SPACING
5 1/2", 6", 6 1/2"	NONE	NONE	12'
7", 7 1/2"	1"	1"	14'
8", 8 1/2"	1 1/4"	1 1/4"	15'
9", 9 1/2"	1 1/4"	1 1/4"	15'
10" & ABOVE	1 1/2"	1 1/4"	15'

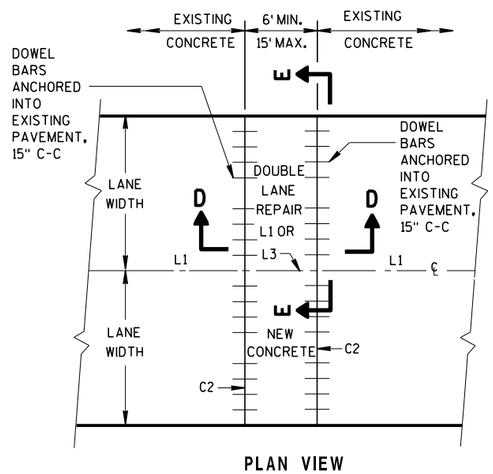

PLAN VIEW

MULTI-LANE CONCRETE PAVEMENT REPAIR

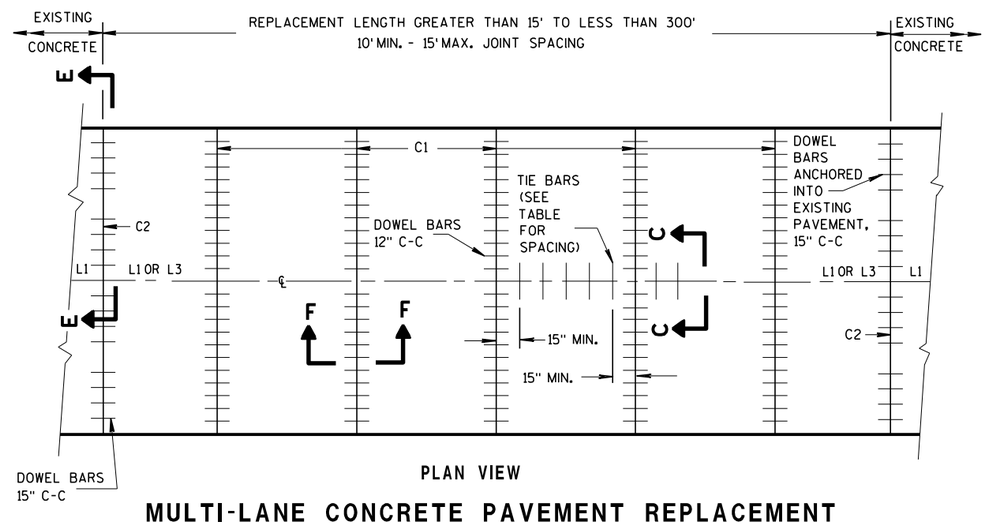

PLAN VIEW

MULTI-LANE CONCRETE PAVEMENT REPLACEMENT

CONCRETE PAVEMENT REPAIR AND REPLACEMENT

STATE OF WISC
DEPARTMENT OF TRANSPORTATION

PRE_82

6

6

S.D.D. 13 C 9-15b

S.D.D. 13 C 9-15b

GENERAL NOTES

1. WITH THE APPROVAL OF THE ENGINEER, FOR SINGLE LANE PAVEMENT REPLACEMENTS LESS THAN 30 FEET IN LENGTH, THE CONTRACTOR MAY INSTALL DRILLED TIE BARS ON 6:1 SKEW HORIZONTALLY, DIRECTION OF SKEW ALTERNATING WITH EACH SUCCESSIVE BAR. DRIVE SKEWED TIE BARS TO A DEPTH OF 6 INCHES IN A HOLE OF SUCH A DIAMETER AS TO PROVIDE A TIGHT DRIVEN FIT.
2. USE AN ENGINEER-APPROVED BOND BREAKER (E.G. RELEASE AGENT, CURING COMPOUND) FOR SINGLE LANE REPAIRS UP TO 15 FEET IN LENGTH.
3. ANCHOR TIE BARS INTO DRILLED HOLES WITH AN EPOXY.

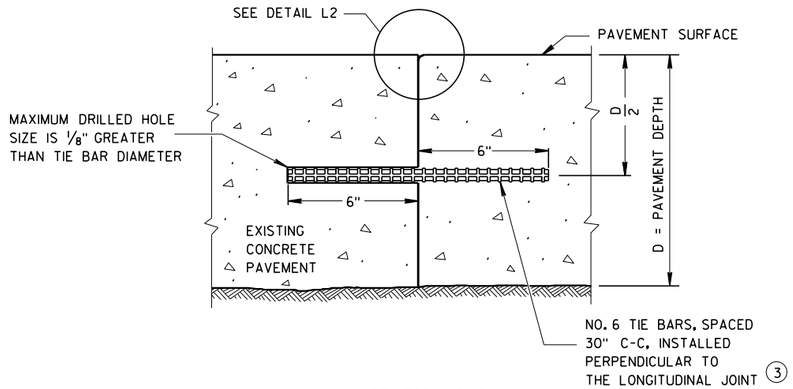

SECTION G-G

TIE BARS ANCHORED INTO EXISTING PAVEMENT

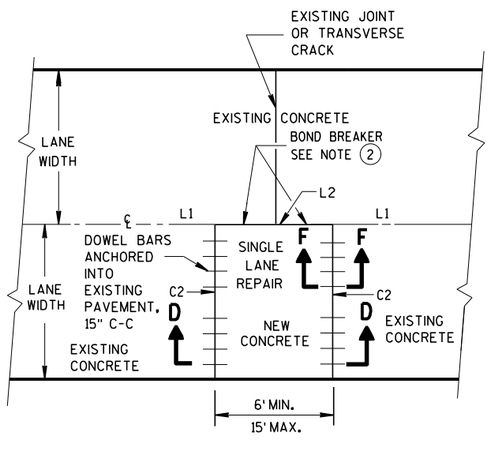

PLAN VIEW

SINGLE LANE CONCRETE PAVEMENT REPAIR

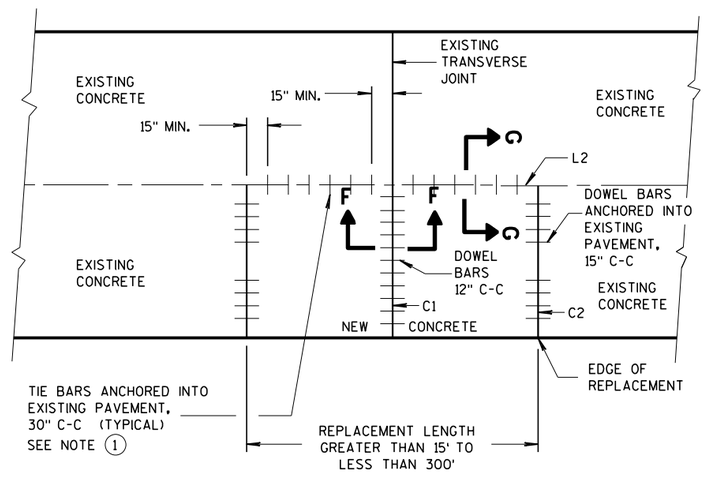

PLAN VIEW

SINGLE LANE CONCRETE PAVEMENT REPLACEMENT

CONCRETE PAVEMENT REPAIR AND REPLACEMENT

STATE OF WISCONSIN
DEPARTMENT OF TRANSPORTATION

APPROVED
March 2018 — /S/ Peter [illegible] P.E.
DATE — PAVEMENT PRE_83
FHWA

6
S.D.D. 13 C 9-15c

GENERAL NOTES

SAW CUT, DRILL, AND LIFT OUT EXISTING CONCRETE PAVEMENT WITHIN THE BOUNDARIES OF CONCRETE REPAIR AREAS. THE CONTRACTOR MAY MAKE ADDITIONAL SAW CUTS INSIDE THE REPAIR LIMITS TO REDUCE WEIGHT AND SIZE OF CONCRETE PIECES.

PROVIDE 6-FOOT MINIMUM DISTANCE FROM BOUNDARIES OF CONCRETE REPAIR AREAS TO ADJACENT TRANSVERSE JOINT OR CRACK.

THE LENGTH OF THE REPAIRS MAY VARY FROM THE DIMENSIONS SHOWN IF THE EXISTING CONCRETE PAVEMENT IS NONDOWELED AND THE PAVEMENT IS TO BE OVERLAID AFTER REPAIRING.

(1) DOWEL BARS MIGHT NOT EXIST.

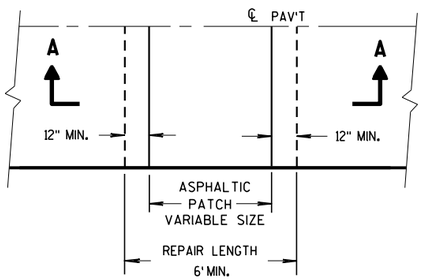

PLAN VIEW

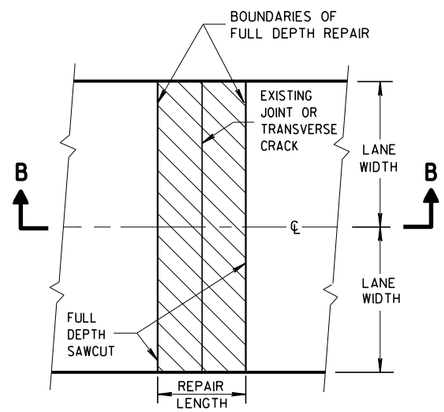

PLAN VIEW
(DOUBLE LANE REPAIR)

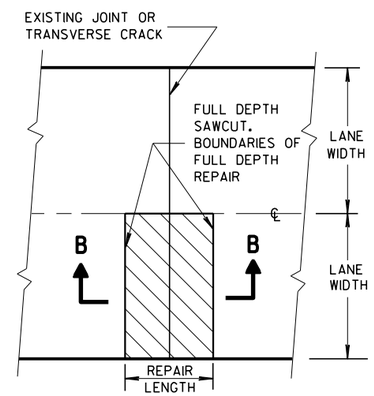

PLAN VIEW
(SINGLE LANE REPAIR)

FULL DEPTH CONCRETE PAVEMENT REMOVAL

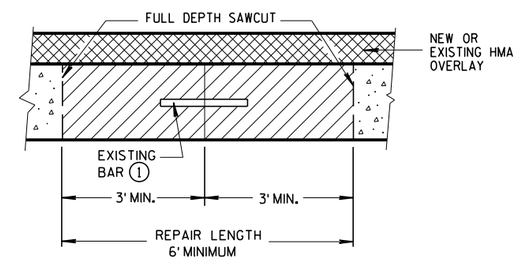

SECTION B-B

CONCRETE REMOVAL

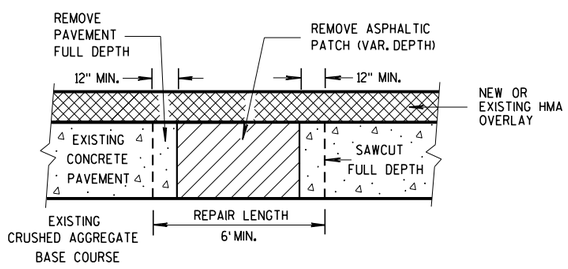

SECTION A-A

HMA PATCH REMOVAL

6

6

BASE PATCHING CONCRETE

STATE OF WISC
DEPARTMENT OF TRANSPORTATION

PRE_84

S.D.D. 13 C 14-7a

S.D.D. 13 C 14-7a

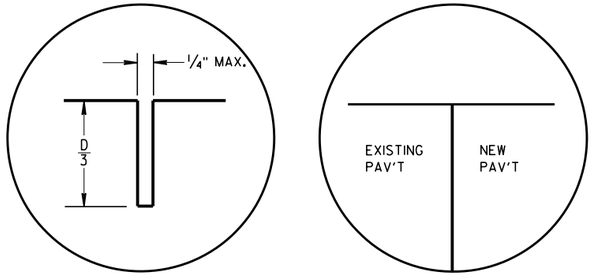

C1 C2

TRANSVERSE JOINTS

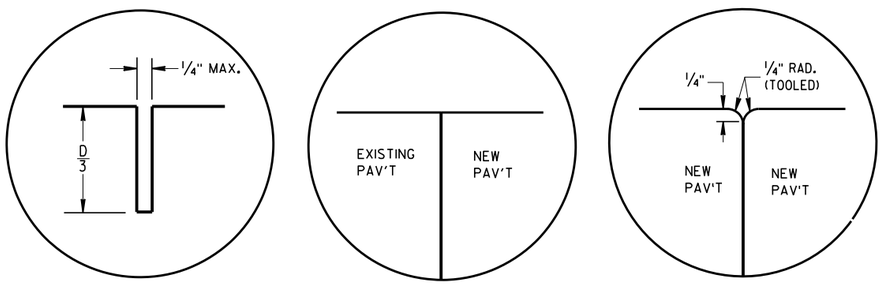

L1 L2 L3

LONGITUDINAL JOINTS

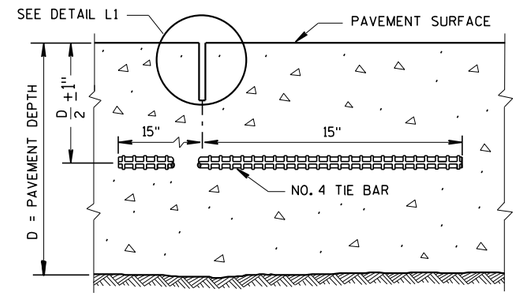

SECTION C-C

SAWED LONGITUDINAL JOINT

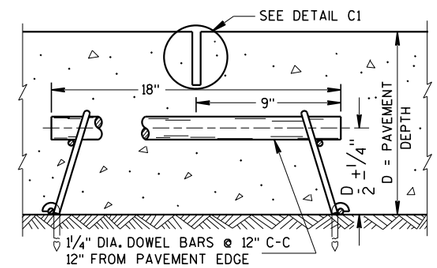

SECTION F-F

CONTRACTION JOINT

GENERAL NOTES

INSTALL DOWEL BARS PARALLEL TO THE PAVEMENT CENTERLINE AND PAVEMENT SURFACE.

CONCRETE BASE PATCHES OF EXISTING NONDOWELED CONCRETE PAVEMENTS DO NOT NEED TO BE DOWELED.

ANCHOR DOWEL BARS AND TIE BARS INTO DRILLED HOLES WITH AN EPOXY.

PROVIDE A MINIMUM DISTANCE OF 15 INCHES FROM AN EXISTING TRANSVERSE JOINT OR THE EDGE OF REPLACEMENT TO THE CENTER OF THE TIE BAR NEAREST THAT JOINT OR EDGE.

(1) APPLY A THIN UNIFORM COATING OF SURFACE TREATMENT TO THE FREE END OF DOWEL BARS TO PREVENT BONDING.

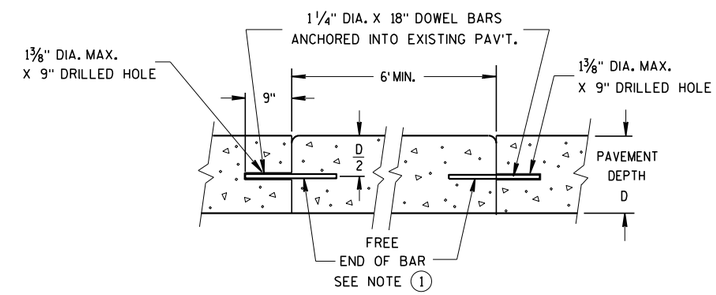

SECTION D-D

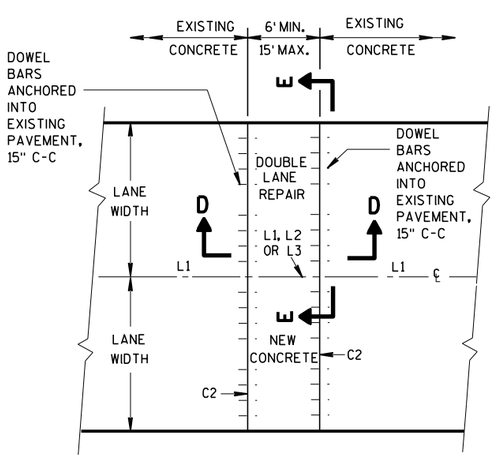

PLAN VIEW

MULTI-LANE CONCRETE BASE PATCH 15' MAXIMUM LENGTH

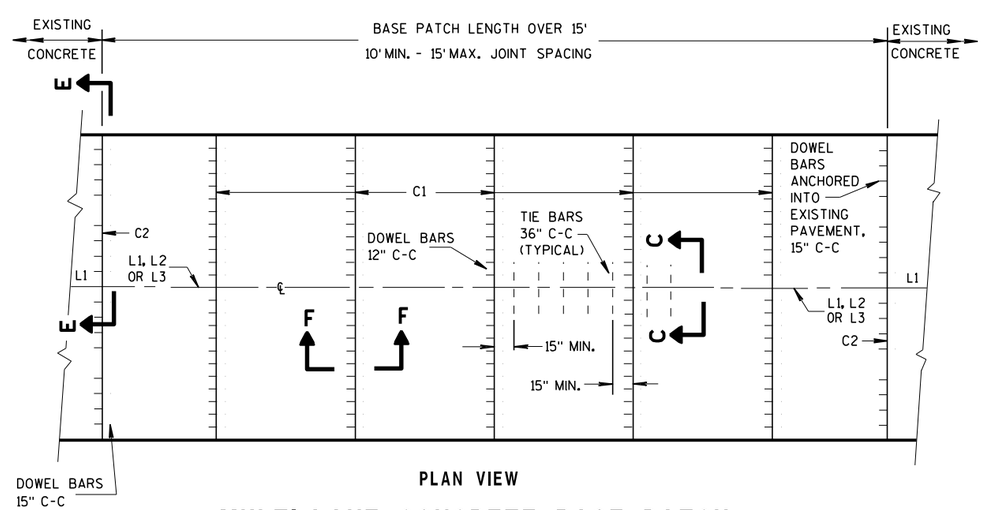

PLAN VIEW

MULTI-LANE CONCRETE BASE PATCH GREATER THAN 15' IN LENGTH

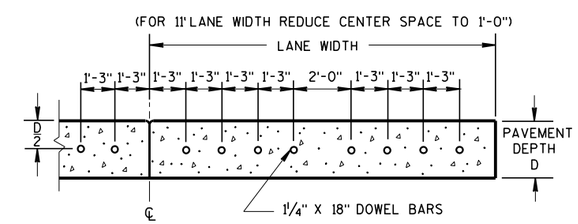

SECTION E-E

SPACING OF DOWEL BARS ANCHORED INTO EXISTING PAVEMENT

BASE PATCHING CONCRETE

STATE OF WISCONSIN
DEPARTMENT OF TRANSPORTATION

PRE_85

6

6

S.D.D. 13 C 14-7b

S.D.D. 13 C 14-7b

GENERAL NOTES

1. USE AN ENGINEER-APPROVED BOND BREAKER (E.G. RELEASE AGENT, CURING COMPOUND) FOR SINGLE LANE BASE PATCHES UP TO 15 FEET IN LENGTH.

2. WITH THE APPROVAL OF THE ENGINEER, FOR SINGLE LANE PAVEMENT REPLACEMENTS LESS THAN 30 FEET IN LENGTH, DRILLED TIE BARS MAY BE INSTALLED ON 6:1 SKEW HORIZONTALLY. DIRECTION OF SKEW ALTERNATING WITH EACH SUCCESSIVE BAR. DRIVE SKEWED TIE BARS TO A DEPTH OF 6 INCHES IN A HOLE OF SUCH A DIAMETER AS TO PROVIDE A TIGHT DRIVEN FIT.

3. ANCHOR TIE BARS INTO DRILLED HOLES WITH AN EPOXY.

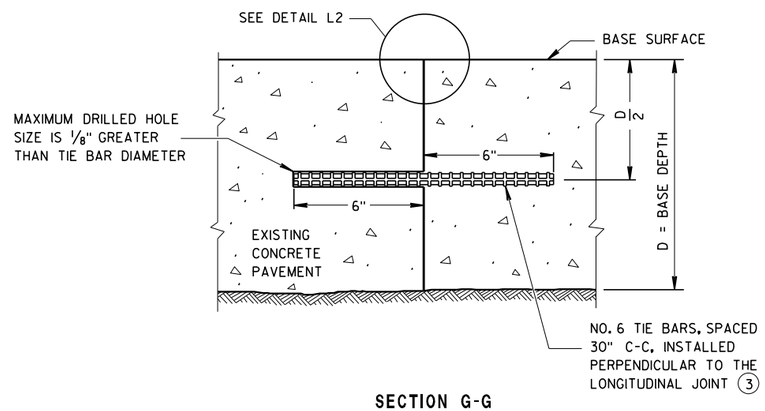

SECTION G-G

TIE BARS ANCHORED INTO EXISTING PAVEMENT

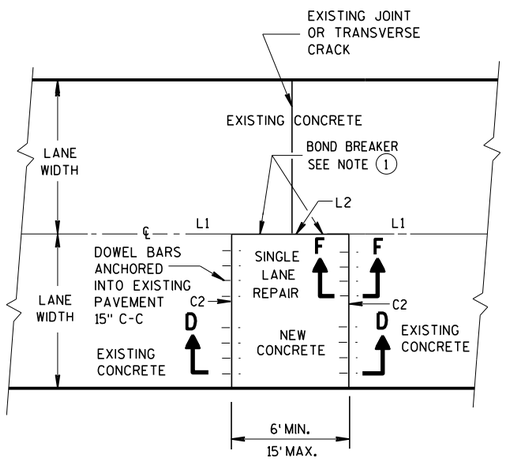

PLAN VIEW

SINGLE LANE CONCRETE BASE PATCH 15' MAXIMUM LENGTH

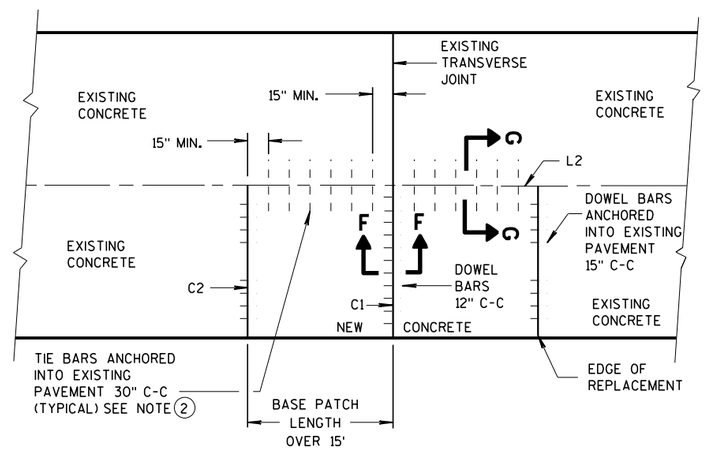

PLAN VIEW

SINGLE LANE CONCRETE BASE PATCH GREATER THAN 15' IN LENGTH

BASE PATCHING CONCRETE

STATE OF WISCONSIN
DEPARTMENT OF TRANSPORTATION

APPROVED
March 2018 — /S/ Peter Kemp P.E.
DATE — PAVEMENT : PRE_86
FHWA

6

S.D.D. 13 C 14-7c

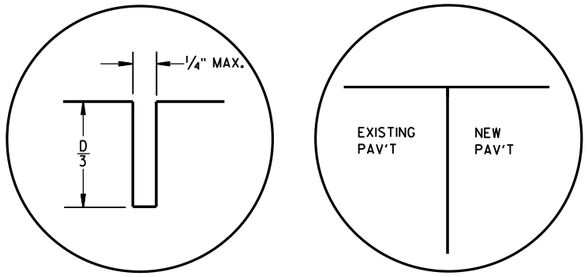

C1 C2

TRANSVERSE JOINTS

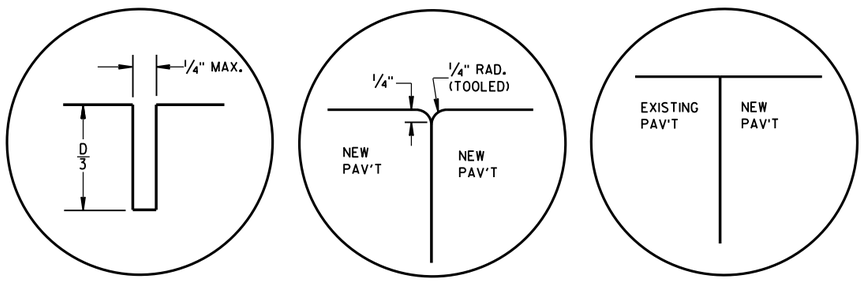

L1 L2 L3

LONGITUDINAL JOINTS

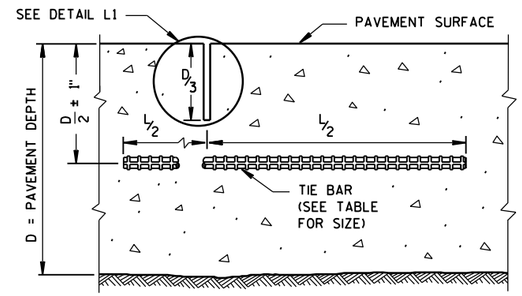

SECTION C-C

SAWED JOINT

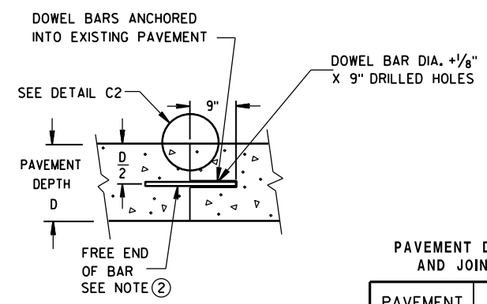

SECTION D-D

GENERAL NOTES

ANCHOR TIE BARS AND DOWEL BARS INTO DRILLED HOLES WITH AN EPOXY.

PROVIDE A MINIMUM DISTANCE OF 15 INCHES FROM AN EXISTING TRANSVERSE JOINT OR THE EDGE OF REPLACEMENT TO THE CENTER OF THE TIE BAR NEAREST THAT JOINT OR EDGE.

1. INSTALL DOWEL BARS PARALLEL TO THE PAVEMENT CENTERLINE AND PAVEMENT SURFACE.
2. APPLY A THIN UNIFORM COATING OF SURFACE TREATMENT TO THE FREE END OF DOWEL BARS TO PREVENT BONDING.

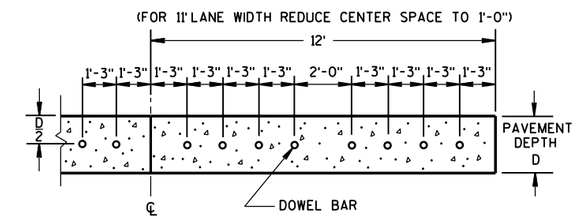

SECTION E-E

SPACING OF DOWEL BARS ANCHORED INTO EXISTING PAVEMENT

PAVEMENT DEPTH, DOWEL BAR SIZE AND JOINT SPACING TABLE

PAVEMENT DEPTH (D)	DOWEL BAR DIAMETER	CONTRACTION JOINT SPACING
5½", 6, 6 ½"	NONE	12'
7, 7 ½"	1"	14'
8, 8 ½"	1¼"	15'
9, 9 ½"	1¼"	15'
10" & ABOVE	1½"	15'

TIE BAR TABLE

PAVEMENT DEPTH (D)	TIE BAR SIZE	TIE BAR LENGTH (L)	MAX. TIE BAR SPACING
< 10 ½"	NO. 4	30"	36"
≥ 10 ½"	NO. 5	36"	36"
	NO. 4 *	30"	24" **

* SUBSTITUTE BENT BARS AT LONGITUDINAL JOINTS WHEN EQUIPMENT LIMITATIONS DURING CONSTRUCTION WARRANT (e.g. AUXILIARY LANES OR TURN LANES)

** CONFORM TO 15" MINUMUM SPACING FROM TRANSVERSE JOINTS; SPACING BETWEEN TIE BARS WILL BE 30" AT TRANSVERSE JOINTS.

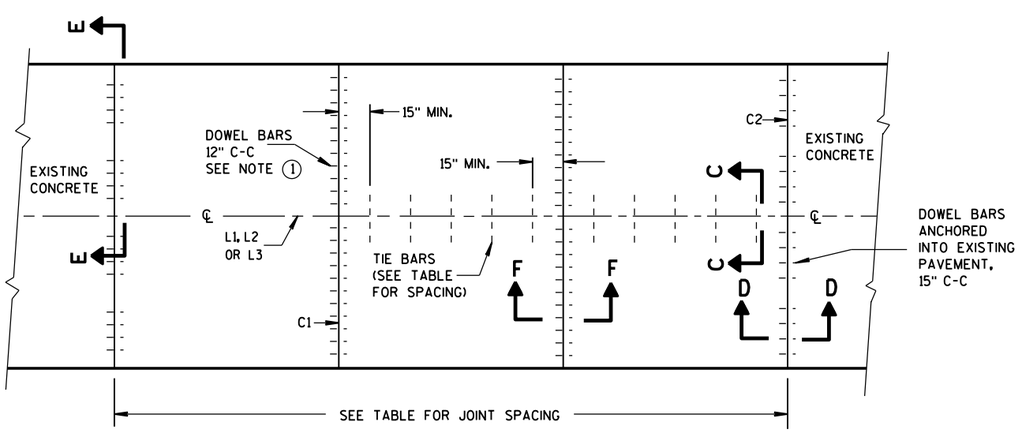

PLAN VIEW

CONCRETE BASE CONTRACTION JOINT LOCATIONS

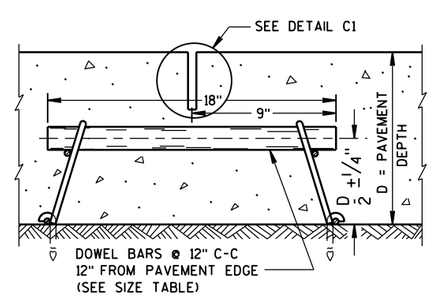

SECTION F-F

CONTRACTION JOINT

CONCRETE BASE

STATE OF WISCONSIN
DEPARTMENT OF TRAN PRE_87

6

S.D.D. 13 C 15-6a

6

S.D.D. 13 C 15-6a

GENERAL NOTES

1. USE AN ENGINEER-APPROVED BOND BREAKER (E.G. RELEASE AGENT, CURING COMPOUND) AT THE LONGITUDINAL JOINT IN LIEU OF TIE BARS FOR SINGLE LANE CONCRETE BASE REPAIRS UP TO 15 FEET IN LENGTH.

2. ANCHOR TIE BARS INTO DRILLED HOLES WITH AN EPOXY.

3. PAVEMENT THAT WAS IN PLACE PRIOR TO THE CONTRACT.

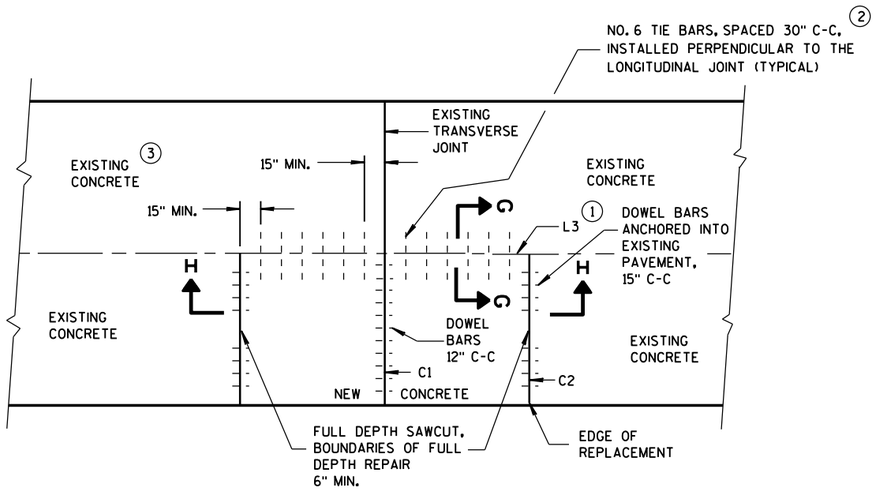

PLAN VIEW

SINGLE LANE CONCRETE BASE REPAIR

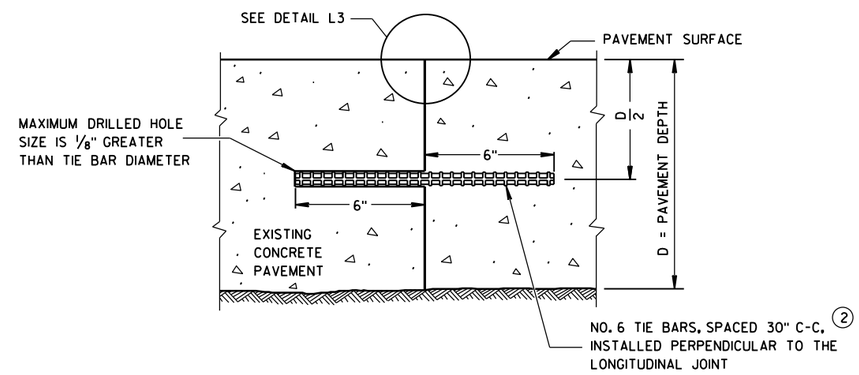

SECTION G-G

TIE BARS ANCHORED INTO EXISTING PAVEMENT

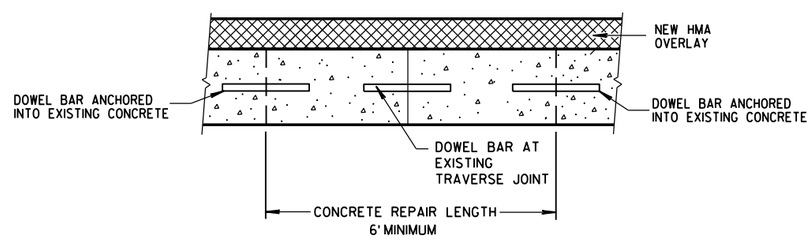

SECTION H-H

CONCRETE BASE

STATE OF WISCONSIN
DEPARTMENT OF TRANSPORTATION

APPROVED
June, 2015 — DATE
/S/ Peter Kemp, P.E. — PAVEMENT
FHWA

6

S.D.D. 13 C 15-6b

GENERAL NOTES

1. USE BOXOUTS WHEN UTILITY STRUCTURE IS IN THE PATH OF CONSTRUCTION JOINTS. PROVIDE A 1 FOOT MINIMUM CLEARANCE BETWEEN THE EXTERIOR LIMIT OF THE STRUCTURE TO THE DIAMOND BOXOUT.
2. ADJUST TRANSVERSE JOINT TO INTERSECT MANHOLE IF POSSIBLE.
3. IF DISTANCE BETWEEN THE LONGITUDINAL JOINT AND THE EDGE OF MANHOLE IS 2 FEET OR LESS, DIVERT THE LONGITUDINAL JOINT AT A 2:1 TAPER RATE TO THE CENTER OF THE MANHOLE. IF THE DISTANCE IS GREATER THAN 2 FEET, DO NOT DIVERT THE JOINT AND SAW AS NORMAL. PLACE REINFORCEMENT REBAR AROUND THE MANHOLE.
4. IF THE DISTANCE FROM THE EDGE OF THE MANHOLE TO THE NEAREST TRANSVERSE JOINT IS LESS 4 FEET OR LESS, REDIRECT JOINT TO INTERSECT THE CENTER OF THE MANHOLE. IF DISTANCE IS GREATER THAN 4 FEET, DO NOT DIVERT THE JOINT AND SAW AS NORMAL. PLACE REINFORCEMENT REBAR AROUND THE MANHOLE.
5. ALIGN TRANSVERSE JOINT WITH ONE EDGE OF INLET WHEN PRACTICAL.

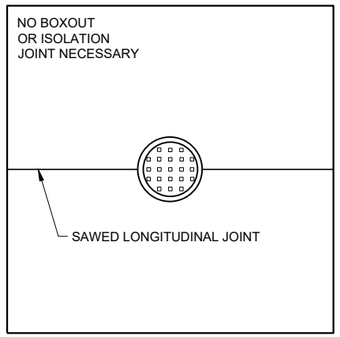

MANHOLE WITH LONGITUDINAL JOINT

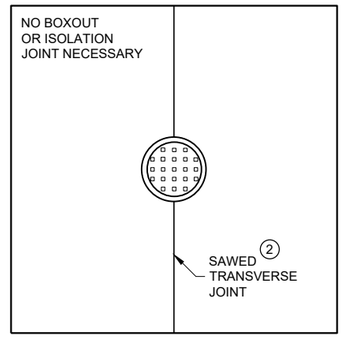

MANHOLE WITH TRANSVERSE JOINT

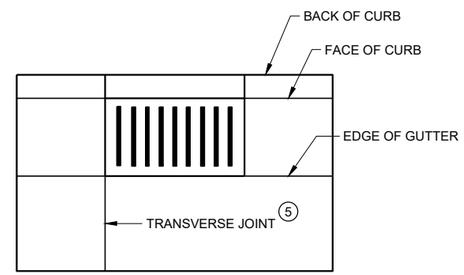

INLET WITH TRANSVERSE JOINT

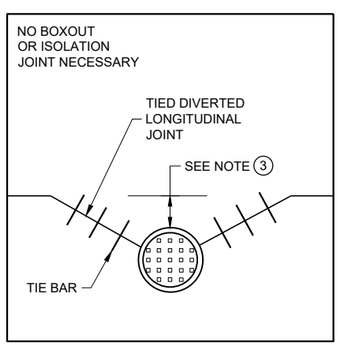

MANHOLE WITH DIVERTED LONGITUDINAL CONTRACTION JOINT

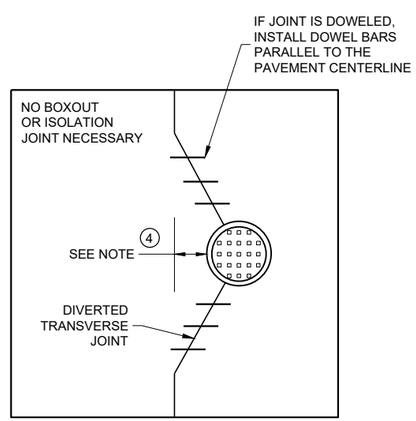

MANHOLE WITH DIVERTED TRANSVERSE CONTRACTION JOINT

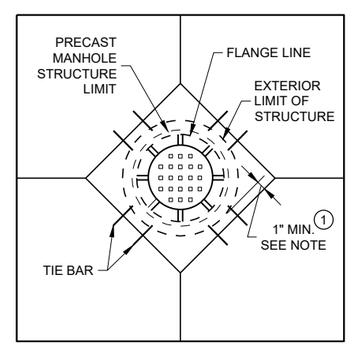

DIAGONAL MANHOLE BOXOUT FOR CONSTRUCTION JOINTS

CONCRETE PAVEMENT JOINTING AT UTILITY FIXTURES

STATE OF WISCONSIN
DEPARTMENT OF TRANSPORTATION

APPROVED
November 2018 /S/ Peter Kemp P.E.
DATE PAVEMENT SUP PRE_89
FHWA

6

SDD 13C18 - 07d

6

SDD 13C18 - 07d

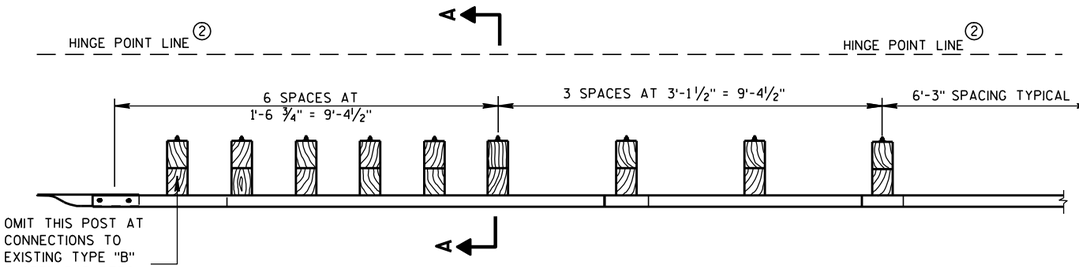

PLAN VIEW

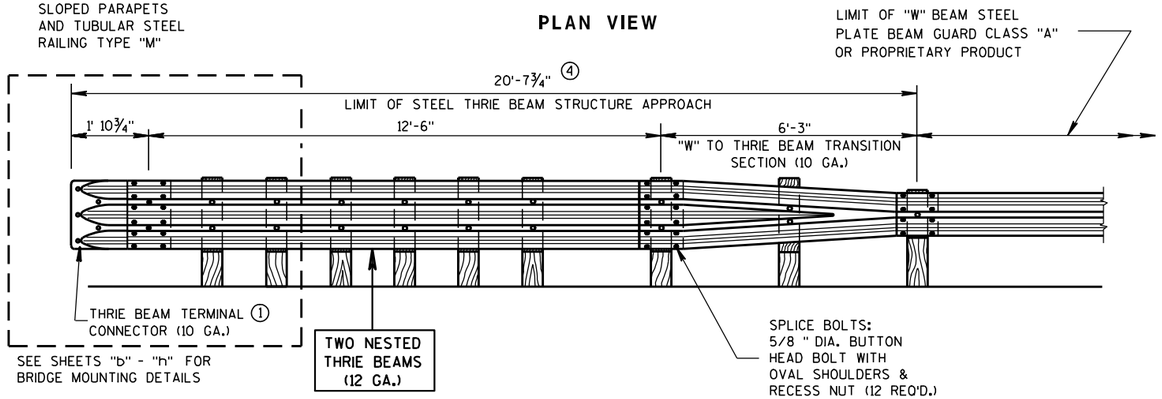

FRONT VIEW

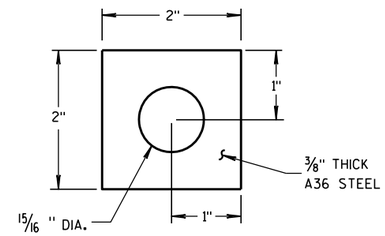

PLATE WASHER DETAIL

GENERAL NOTES

BOLT THE THRIE BEAM TO ALL POSTS AND BLOCKOUTS. DRILL OR PUNCH BOLT HOLES IN THE BEAM IF THE POST SPACING IS LESS THAN 6'-3".

DO NOT USE STEEL POSTS AND NOTCHED PLASTIC BLOCKOUTS IN THE STEEL THRIE BEAM STRUCTURAL APPROACH AND THE TRANSITION SECTION OF STEEL PLATE BEAM GUARD, CLASS "A" INSTALLATIONS.

IF ROCK IS ENCOUNTERED, REMOVE ROCK TO FULL DEPTH OF POST PLUS 2 1/2", AND 12" DIAMETER AROUND POST. SEE 14B15 FOR MORE DETAILS.

① BRIDGE RAILING TYPE "W" DOES NOT REQUIRE A TERMINAL CONNECTOR.

② MINIMUM EMBEDMENT SHALL BE 4'-0". WHERE EXISTING CONDITIONS DO NOT PERMIT THE APPROPRIATE EARTHWORK SHOWN ON THE PLAN TYPICAL SECTIONS OR DETAILS, THE ENGINEER MAY ALLOW THE REDUCTION OR ELIMINATION OF THE 2 FOOT DISTANCE TO THE HINGE POINT. OTHERWISE BUILD AS THE PLAN SHOWS OR AS THE ENGINEER DIRECTS. IF THE 2 FOOT DISTANCE TO THE HINGE POINT IS REDUCED OR ELIMINATED, INCREASE THE POST EMBEDMENT DEPTH TO 4'-6" OR MORE.

③ POST BOLTS ARE 5/8" DIAMETER ASTM A307 BUTTON HEAD BOLT. A POST BOLT REQUIRES A 5/8" DIAMETER A563A DOUBLE RECESSED (DR) HEAVY HEX AND A 5/8" DIAMETER F844 FLAT WASHER. LENGTH OF POST BOLT MAY VARY.

④ ALL WOOD POSTS MUST BE 6" X 8" AND AT LEAST 7'-0" LONG.

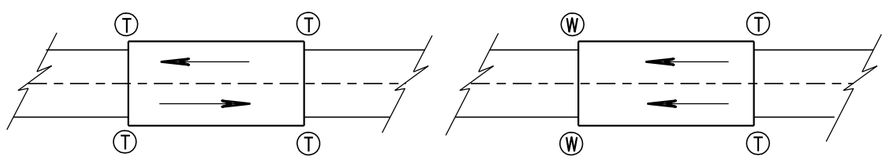

TWO WAY TRAFFIC

ONE WAY TRAFFIC

Ⓣ THRIE BEAM CONNECTION

Ⓦ W-BEAM CONNECTION WHEN REQUIRED

TYPICAL LOCATIONS OF THRIE BEAM AND W-BEAM CONNECTIONS TO BRIDGE

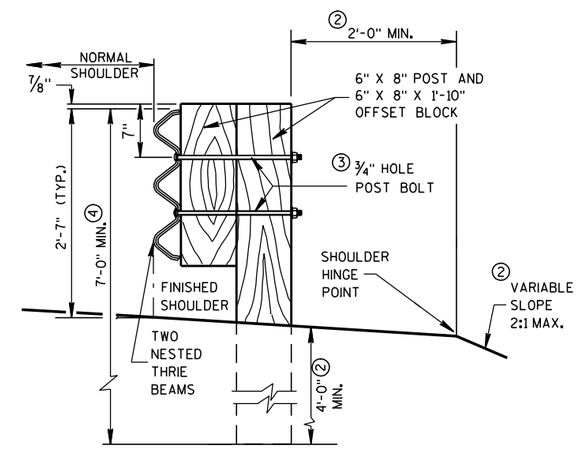

SECTION A-A

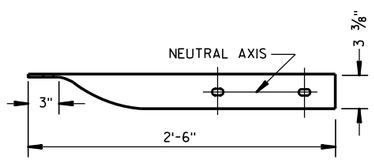

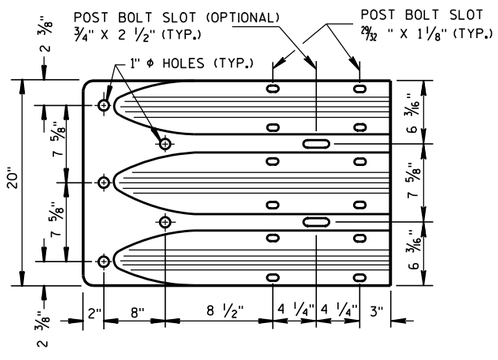

THRIE BEAM TERMINAL CONNECTOR

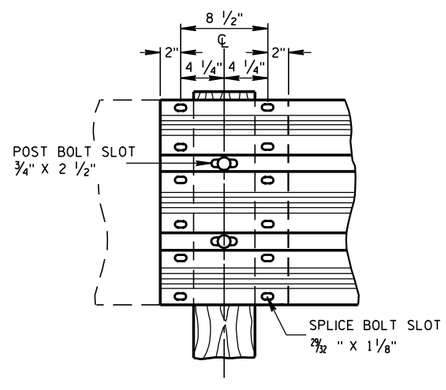

THRIE BEAM SPLICE

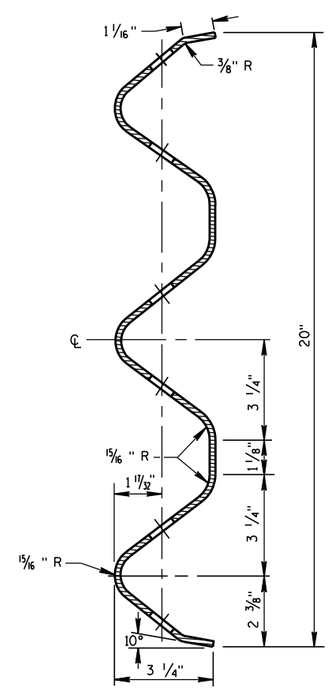

SECTION THRU THRIE BEAM RAIL ELEMENT

STEEL THRIE BEAM STRUCTURE APPROACH

STATE OF WISCONSIN
DEPARTMENT OF TRANSPORTATION

APPROVED

8/31/2012 — DATE

/S/ Jerry H. Zogg — ROADWAY STANDARDS DEVELOPMENT ENGINEER

FHWA

PRE_90

6

6

S.D.D. 14 B 20-11a

S.D.D. 14 B 20-11a

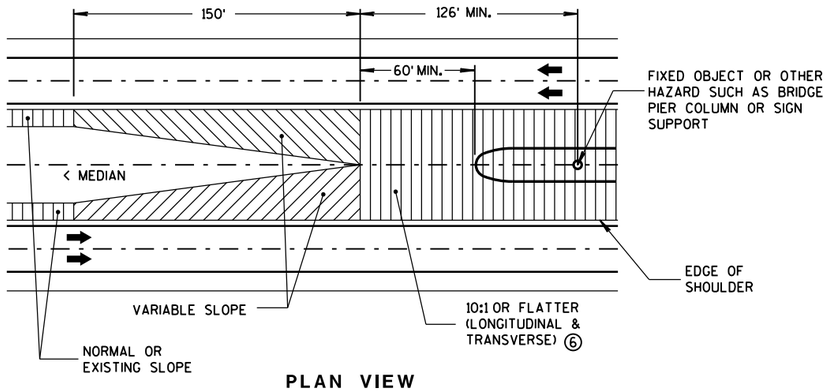

PLAN VIEW

GRADING AT BULLNOSE

(ALL INSTALLATIONS)

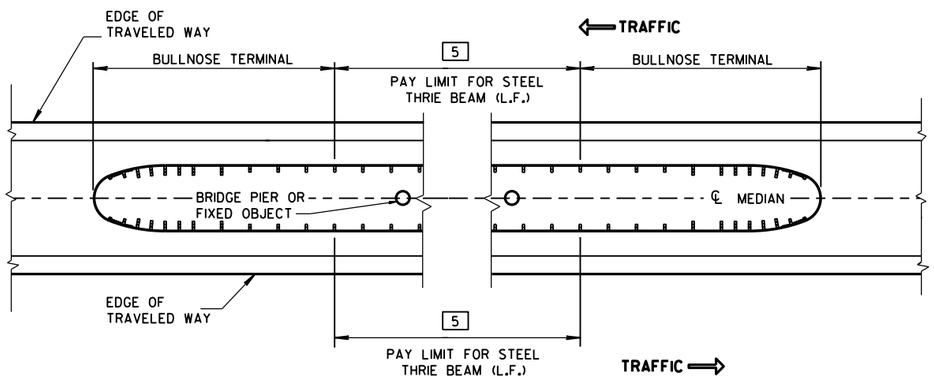

MEDIAN HAZARD PROTECTION PAY LIMITS

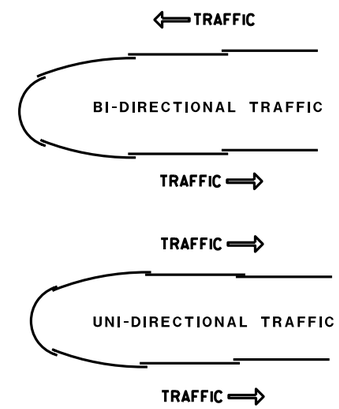

LAPPING DETAIL

(ALL INSTALLATIONS)

GENERAL NOTES

SEE STANDARD DETAIL DRAWINGS 14 B 26a-e.

PUNCHING, DRILLING, CUTTING OR WELDING IS NOT PERMITTED ON ANY GALVANIZED THRIE BEAM ACCESSORY OR TERMINAL ACCESSORY.

OTHER ANCHOR CABLE ASSEMBLIES HAVING 40,000 LBS. MIN. BREAKING STRENGTH MAY BE USED.

FOR POSTS 2 THROUGH 14, IF POST CANNOT BE INSTALLED AT SPECIFIED LOCATION 1 EXTRA STANDARD WOOD BLOCK MAY BE ADDED.

THE USE OF STEEL POSTS ON THE BULLNOSE IS NOT ALLOWED.

BOLTS AND ALL NECESSARY HARDWARE SHALL BE GALVANIZED IN ACCORDANCE WITH ASTM A 153.

ALL THRIE BEAM SHALL BE 12-GAUGE.

IF ROCK IS ENCOUNTERED, REMOVE ROCK TO FULL DEPTH OF POST PLUS 2½" AND 12" DIAMETER AROUND POST. SEE SDD 14B15 OR SDD 14B42 FOR MORE INFORMATION.

1 SLOTTED THRIE BEAM RAIL NO. 1. (POST 1 TO POST 1)

2A SLOTTED THRIE BEAM RAIL NO. 2A. (POST 1 TO POST 5)

3 SLOTTED THRIE BEAM RAIL NO. 3. (POST 5 TO POST 8)

4 UNBENT STANDARD THRIE-BEAM RAIL NO.4. (POST 8 TO POST 10 & POST 10 TO POST 12)

5 BEYOND POST 12: CONSTRUCT STEEL THRIE BEAM - USE UNBENT STANDARD THRIE BEAM RAIL NO. 5.

1. DIMENSIONS ARE FROM BACK OF RAIL TO BACK OF RAIL WHERE RAIL IS BOLTED TO POST OR BLOCK.
2. U-BOLT CABLE CLIPS (3 PER CABLE) SPACED OUT ON NOSE, TO HOLD CABLE TO BACKSIDE OF THE RAIL.
3. NOSE CABLE W/SWAGGED END BUTTONS.
4. NOSE CABLE ANCHOR PLATE (BACKSIDE OF SPLICE).
5. THE SLACK IN THE NOSE CABLES SHALL BE EVENLY DISTRIBUTED BETWEEN THE CABLE CLIP FASTENERS AND POST NO. 1 ON EITHER SIDE OF THE NOSE.
6. PROVIDE SUITABLE DRAINAGE WHEN MEDIAN GRADING IMPEDES NORMAL FLOW.
7. 2'-6" MINIMUM LATERAL DISTANCE BETWEEN BACK OF POST AND FACE OF FIXED OBJECT.
8. MAXIMUM WIDTH OF SYSTEM IS 14'-2½" MEASURED FROM BACK OF RAIL TO BACK OF RAIL WHERE RAIL IS BOLTED TO A POST OR BLOCK.

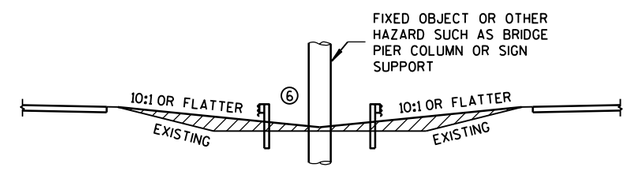

MEDIAN GRADING SECTION

(ALL INSTALLATIONS)

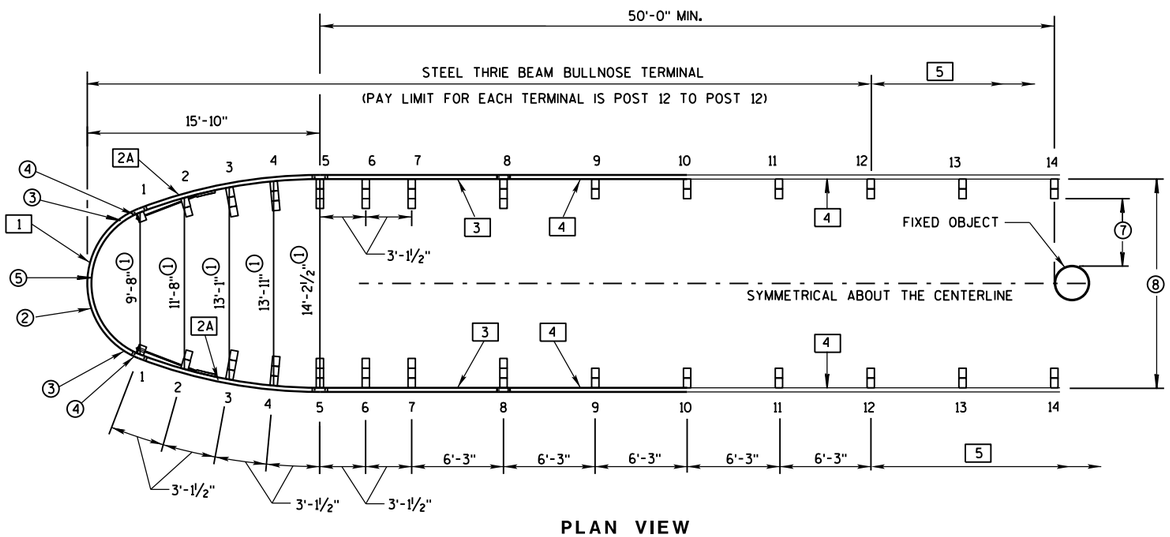

PLAN VIEW

TYPICAL BULLNOSE LAYOUT

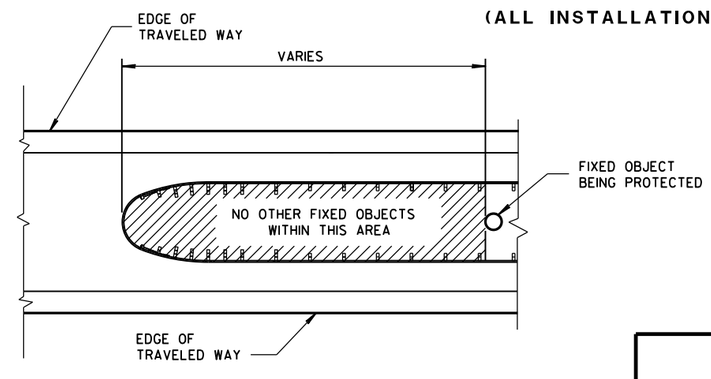

HAZARD FREE AREA INSIDE BULLNOSE

STEEL THRIE BEAM BULLNOSE TERMINAL

STATE OF WISCONSIN
DEPARTMENT OF TRAN

PRE_91

6

S.D.D. 14 B 26-3a

6

S.D.D. 14 B 26-3a

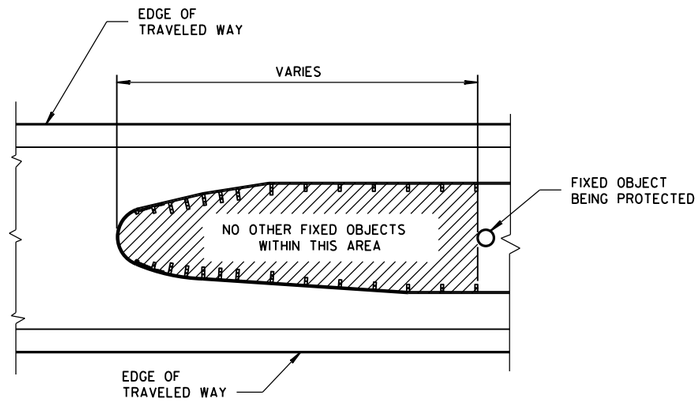

HAZARD FREE AREA INSIDE BULLNOSE

GENERAL NOTES

SEE STANDARD DETAIL DRAWINGS 14 B 26a-e.

FOR POSTS 2 THROUGH 14, IF POST CANNOT BE INSTALLED AT SPECIFIED LOCATION 1 EXTRA STANDARD WOOD BLOCK MAY BE ADDED.

- [1] SLOTTED THRIE BEAM RAIL NO. 1. (POST 1 TO POST 1)
- [2A] SLOTTED THRIE BEAM RAIL NO. 2A. (POST 1 TO POST 5)
- [2B] SLOTTED THRIE BEAM RAIL NO. 2B. (POST 1 TO POST 5)
- [3] SLOTTED THRIE BEAM RAIL NO. 3. (POST 5 TO POST 8)
- [4] UNBENT STANDARD THRIE-BEAM RAIL NO. 4. (POST 8 TO POST 10 & POST 10 TO POST 12)
- [5] BEYOND POST 12: CONSTRUCT STEEL THRIE BEAM - USE UNBENT STANDARD THRIE BEAM RAIL NO. 5.

(1) DIMENSIONS ARE FROM BACK OF RAIL TO BACK OF RAIL WHERE RAIL IS BOLTED TO POST.

(2) TAPER BEGINNING AT POST NO. 1 MUST CONTINUE TO POST NO. 5. PAST POST NO. 5 TAPER MAY END OR BE EXTENDED UP TO 15.6 DEGREES TO FIT VARIABLE MEDIAN WIDTHS. (SEE PLAN)

(3) FOR MEDIANS WIDER THAN 14'-2½" MEASURED FROM BACK OF RAIL TO BACK OF RAIL WHERE RAIL IS BOLTED TO A POST OR BLOCK.

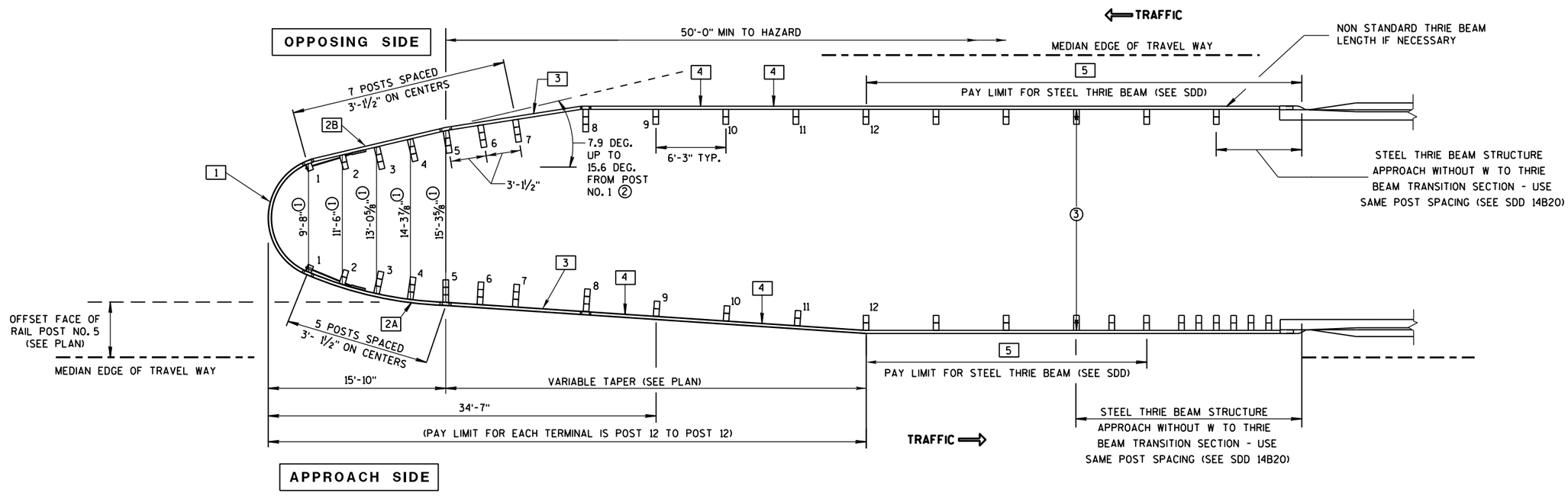

PLAN VIEW

WIDENED BULLNOSE DESIGN

(INSTALLATION AT TWIN BRIDGES WITH BI-DIRECTIONAL TRAFFIC SHOWN)

STEEL THRIE BEAM
BULLNOSE TERMINAL

STATE OF WISCONSIN
DEPARTMENT OF TRAN

PRE_92

6

S.D.D. 14 B 26-3b

6

S.D.D. 14 B 26-3b

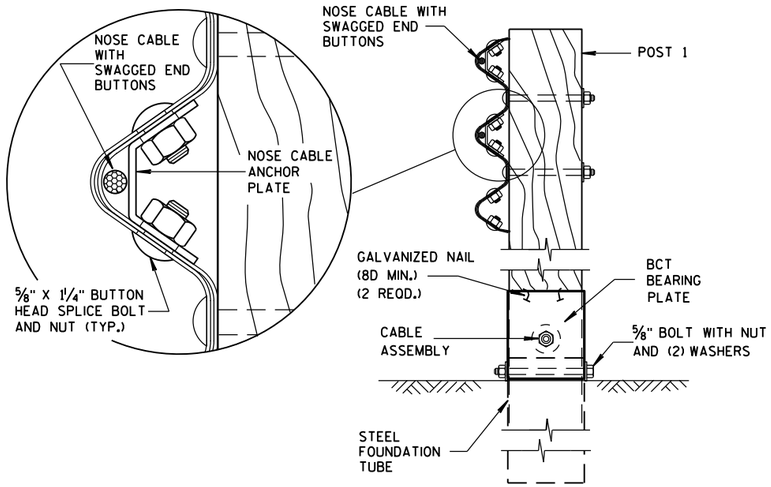

SIDE VIEW

NOSE CABLE ASSEMBLY AT POST NO. 1

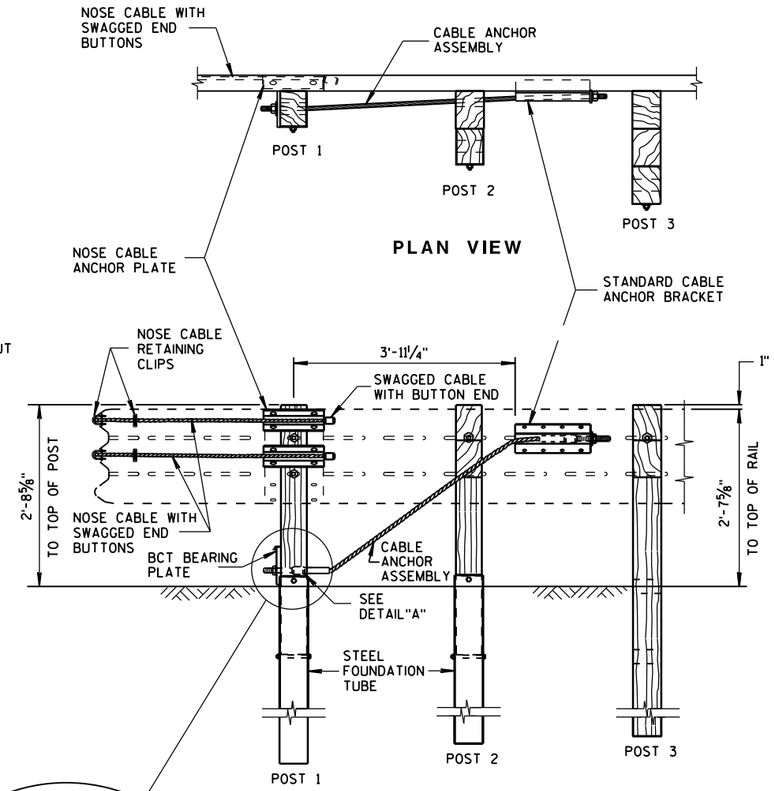

FRONT VIEW

NOSE CABLE ANCHOR AND STANDARD BRACKET ASSEMBLY

GENERAL NOTES

SEE STANDARD DETAIL DRAWINGS 14 B 26a-e.

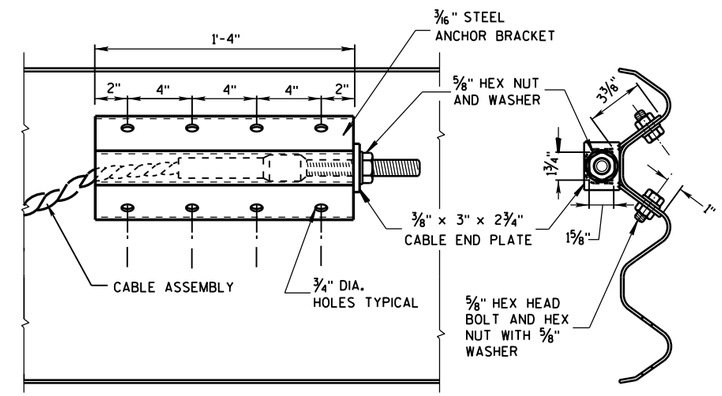

FRONT VIEW END VIEW

DETAILS OF CABLE ANCHOR BRACKET

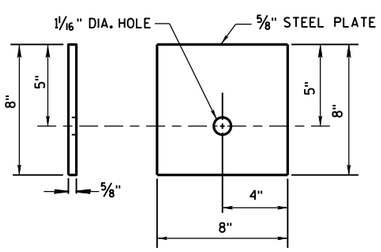

BCT BEARING PLATE

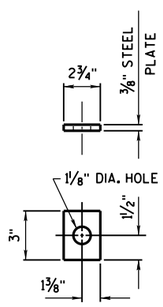

CABLE END PLATE

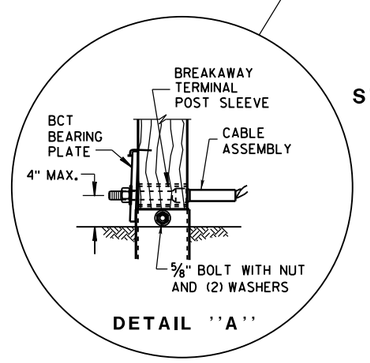

DETAIL ''A''

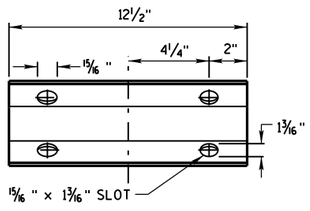

ELEVATION VIEW

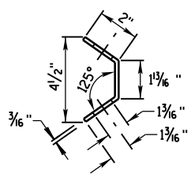

END VIEW

NOSE CABLE ANCHOR PLATE

NOTE: 12 1/2" x 5 13/16" x 3/16" STEEL PLATE (A306)

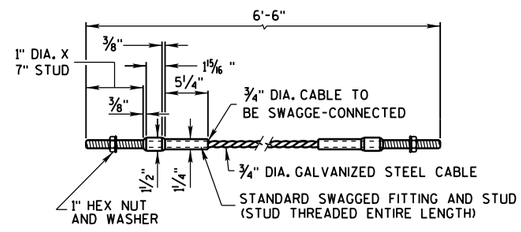

DETAILS OF CABLE ANCHOR ASSEMBLY

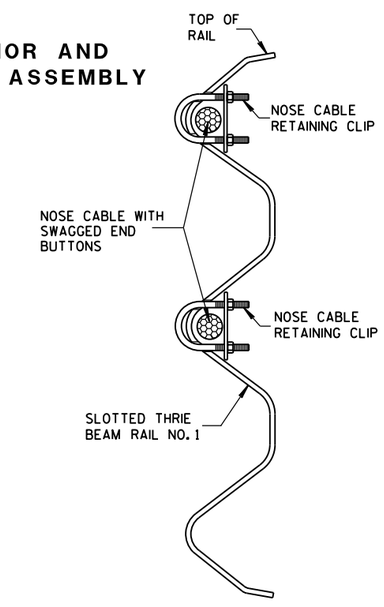

PLACEMENT OF NOSE CABLE RETAINING CLIP

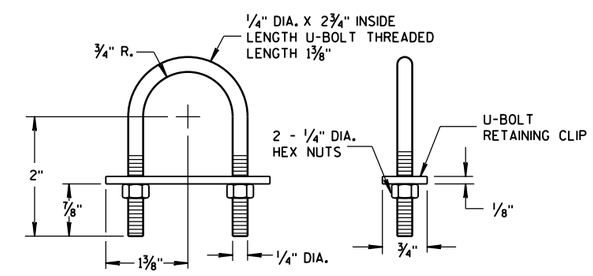

NOSE CABLE RETAINING CLIP

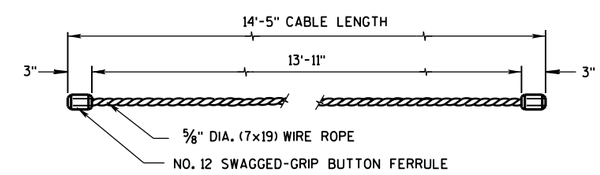

NOSE CABLE WITH SWAGGED END BUTTONS

TO PULL OFF SWAGGED GRIP BUTTON FERRULE FROM WIRE ROPE REQUIRES A FORCE EQUAL TO 98% OF THE WIRE ROPE'S BREAKING STRENGHT.

STEEL THRIE BEAM BULLNOSE TERMINAL

STATE OF WISCONSIN
DEPARTMENT OF TRAN PRE_93

6

S.D.D. 14 B 26-3c

6

S.D.D. 14 B 26-3c

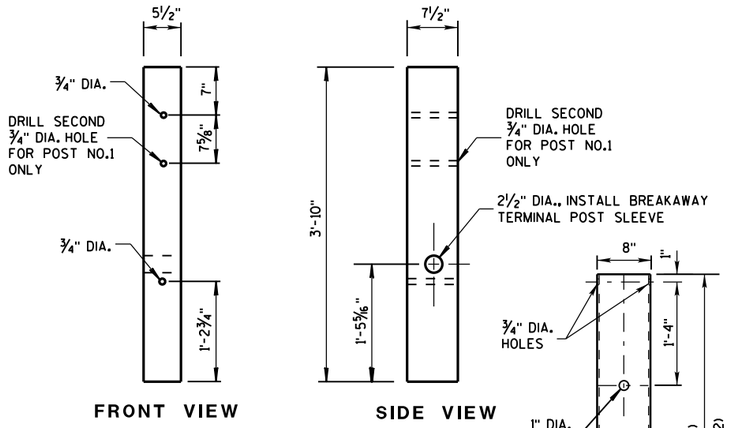

THRIE-BEAM BCT POSTS

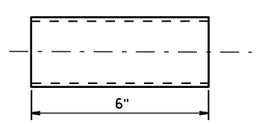

BREAKAWAY TERMINAL POST SLEEVE

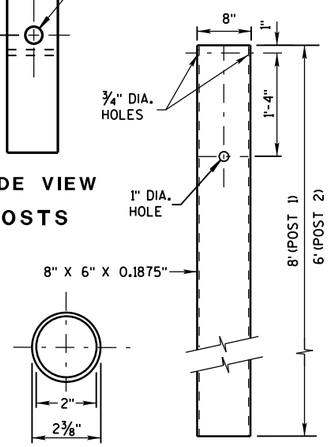

STEEL FOUNDATION TUBE

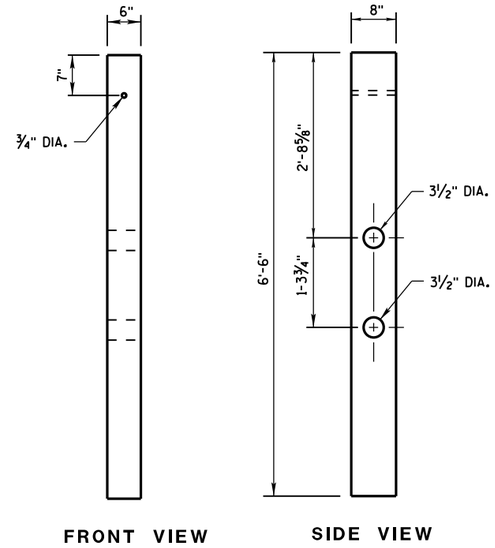

THRIE-BEAM CRT WOOD POSTS

GENERAL NOTES

SEE STANDARD DETAIL DRAWINGS 14 B 26a-e.

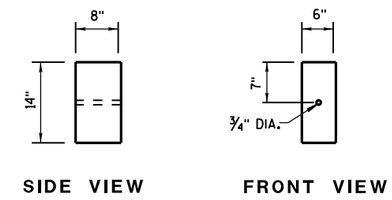

STANDARD WOOD BLOCK

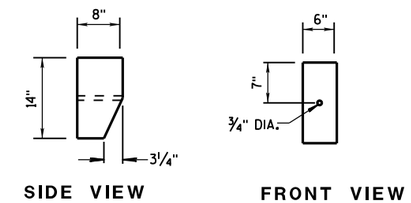

TAPERED WOOD BLOCK

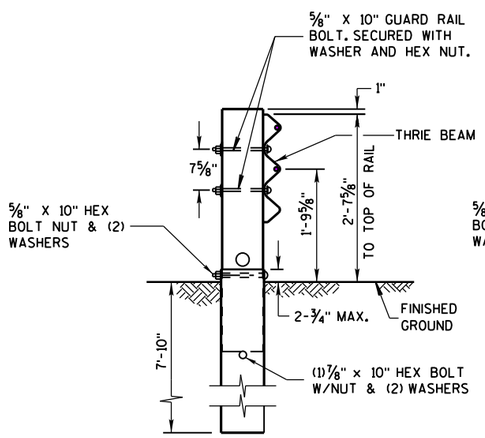

THRIE-BEAM BCT POST
(WITH 8'-0" FOUNDATION TUBE)

POST NO. 1

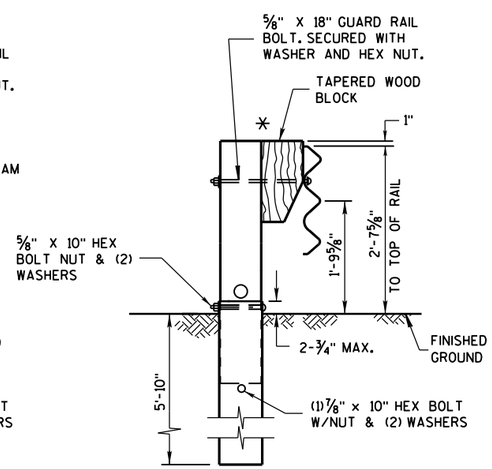

THRIE-BEAM BCT POST
(WITH 6'-0" FOUNDATION TUBE AND 1'-2" TAPERED BLOCK)

POST NO. 2

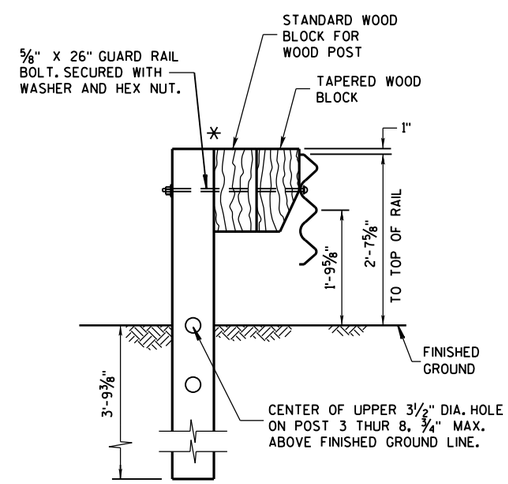

THRIE-BEAM CRT POST
(6'-6" LONG POST WITH 1'-2" BLOCK AND 1'-2" TAPERED BLOCK)

POST NO. 3,4,5,6,7, & 8

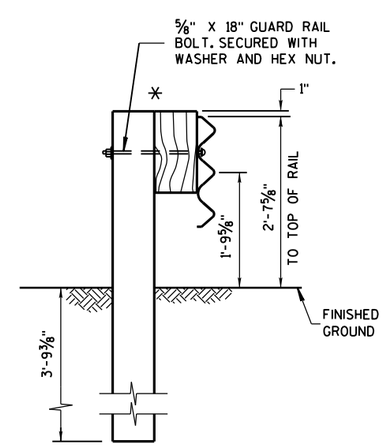

THRIE-BEAM POST
(6'-6" LONG POST WITH 1'-2" BLOCK)

POST NO. 9,10,11,& 12
(ALSO USE FOR STEEL THRIE BEAM BEYOND POST 12)

* IF NEEDED DUE TO AN UNDERGROUND OBSTACLE ADD 1 ADDITIONAL STANDARD BLOCKOUT TO POST.

STEEL THRIE BEAM BULLNOSE TERMINAL

STATE OF WISCONSIN
DEPARTMENT OF TRAN PRE_94

6

6

S.D.D. 14 B 26-3d

S.D.D. 14 B 26-3d

1. WOOD OR STEEL POSTS (w6X9 OR w6X8.5) MAY BE USED. DO NOT INTERMIX WOOD AND STEEL POSTS. INSTALL STEEL POSTS WITH HOLES ON APPROACHING TRAFFIC SIDE.
2. USE WOOD OR APPROVED PLASTIC BLOCKOUTS. WOOD BLOCKOUTS MAY BE CONSTRUCTED OUT OF TWO OR MORE WOOD BLOCKOUTS. SEE ALTERNATE WOOD BLOCKOUT DETAIL. DIMENSIONS OF APPROVED PLASTIC BLOCKOUTS MAY VARY.
3. IF ROCK IS ENCOUNTERED DURING EXCAVATION, PROVIDE A HOLE 12 INCHES IN DIAMETER EXTENDING 20 INCHES DEEP INTO THE ROCK. PLACE APPROXIMATELY 2 1/2" INCHES OF GRANULAR MATERIAL IN THE BOTTOM OF THE HOLE. CUT THE POSTS THE TO LENGTH AMD INSTALL. BACKFILL WITH EXCAVATED MATERIAL AND COMPACT. BACKFILL IS TO BE FREE OF LARGE ROCKS.
4. WHEN THE DISTANCE FROM BACK OF POST TO SHOULDER HINGE POINT IS LESS THAN 2 FEET INSTALL LONGER POST AT HALF POST SPACING (K).
5. FOR NEW MGS INSTALLATION TOP OF W-BEAM RAIL TOLERANCE IS +1". FOR EXISTING MGS INSTALLATION TOP OF W-BEAM IS BETWEEN 27 ¾" TO 32".
6. WHEN USING STEEL POST AND WOOD BLOCKOUTS INSTALL FOUR 16D GALVANIZED NAILS. INSTALL NAILS AT THE BACK CORNERS OF THE BLOCK AND BEND THE NAILS OVER THE FLANGE OF THE STEEL POST.
7. TOTAL POST LENGTH FOR TYPE K IS 7' - 0". TOTAL POST LENGTH FOR OTHER MGS TYPES IS 6' - 0".

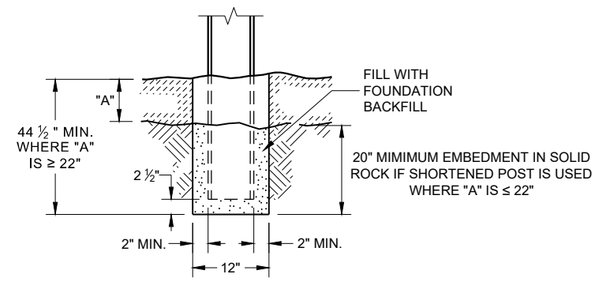

END VIEW
SETTING STEEL OR WOOD POST IN ROCK (3)

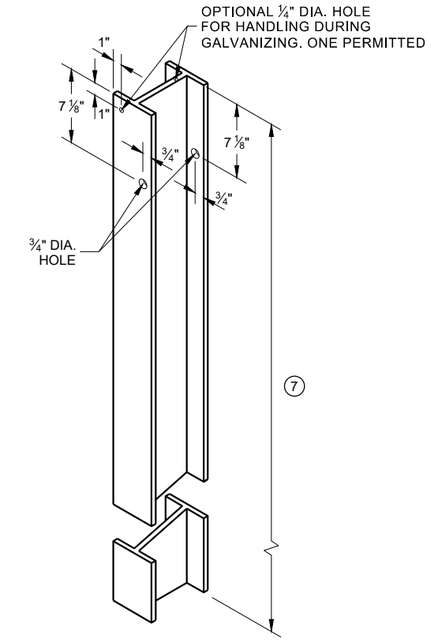

STEEL POST & HOLE PUNCHING DETAIL (W 6 X 9) (1)

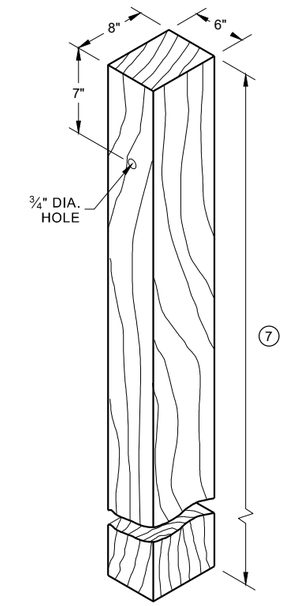

WOOD POST (6" X 8") NOMINAL (1)

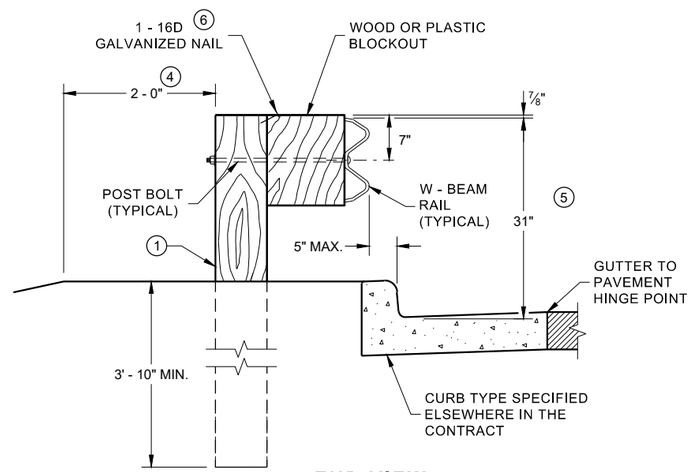

END VIEW
LOCATED ALONG A CURBED ROADWAY

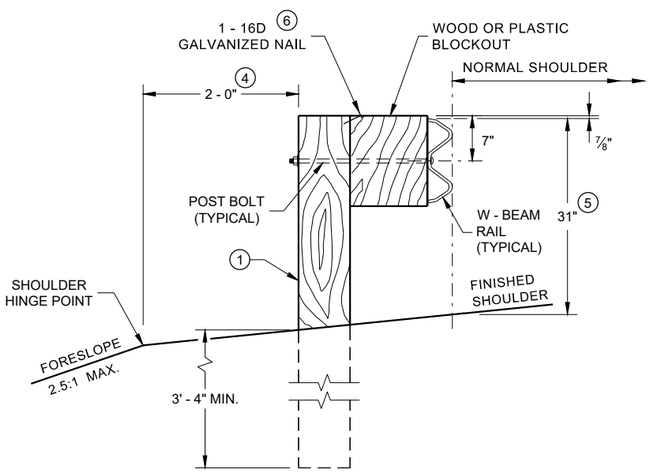

END VIEW
LOCATED ALONG A ROADWAY SHOULDER STANDARD INSTALLATION

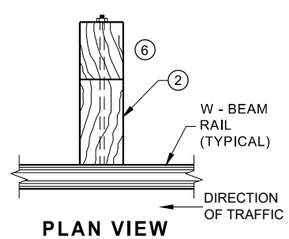

PLAN VIEW
WOOD POST, BLOCKOUT & BEAM

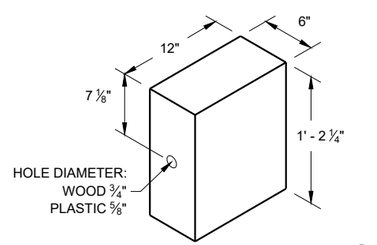

WOOD OR PLASTIC BLOCKOUT (2)

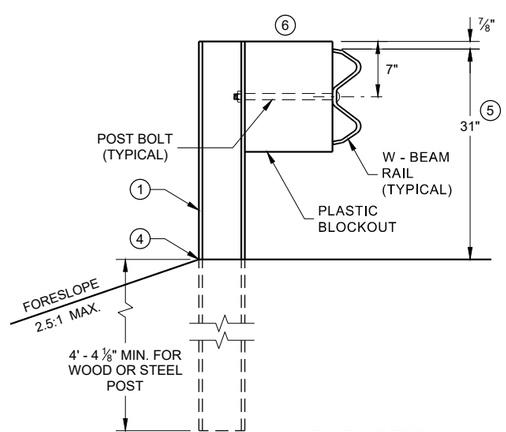

END VIEW
MGS LONGER POST AT HALFPOST SPACING W BEAM (K)

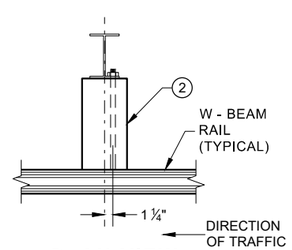

PLAN VIEW
STEEL POST, PLASTIC BLOCKOUT & BEAM

MIDWEST GUARDRAIL SYSTEM (MGS) GUARDRAIL

STATE OF WISCONSIN
DEPARTMENT OF TRANSPO PRE_95

6

6

SDD 14B42 - 06a

SDD 14B42 - 06a

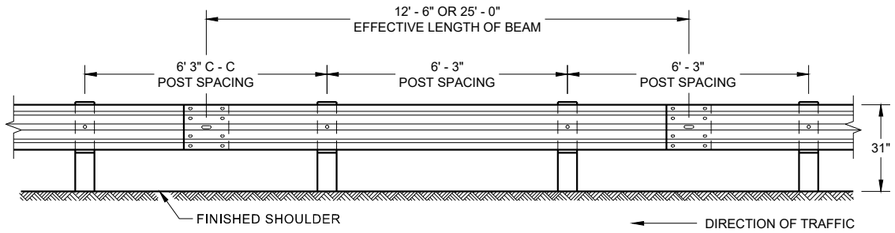

FRONT VIEW
POST SPACING STANDARD INSTALLATION

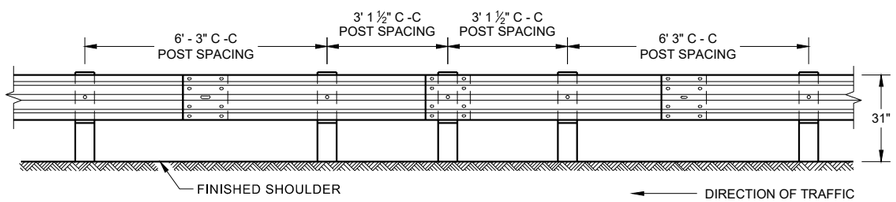

FRONT VIEW
HALF POST SPACING (HS) AND HALF POST SPACING WITH LONGER POSTS (K)

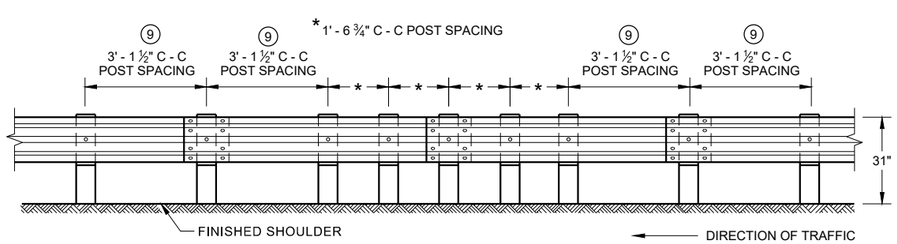

FRONT VIEW
QUARTER POST SPACING (QS)

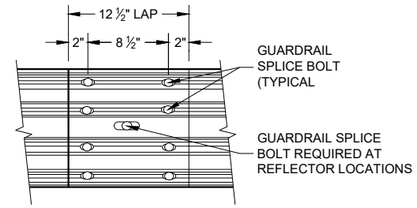

FRONT VIEW
MID-SPAN BEAM SPLICE

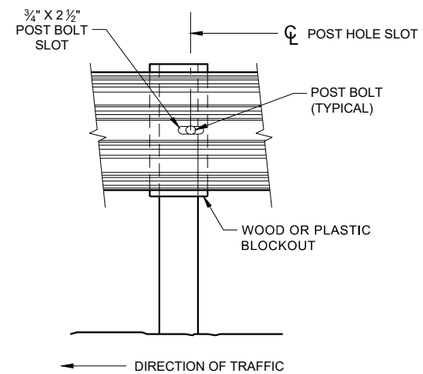

FRONT VIEW AT STEEL POST

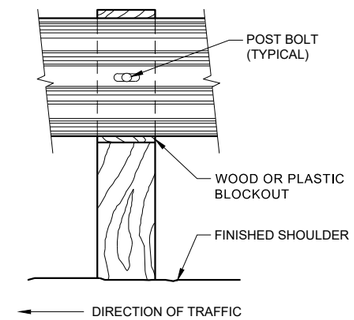

FRONT VIEW AT WOOD POST

GENERAL NOTES

8 DO NOT INSTALL REFLECTORS ON THE FIRST 50 FEET OF THE APPROACH END OF THE ENERGY ABSORBING TERMINAL.

9 25 FEET OF HALF POST SPACING IS REQUIRED ON APPROACH AND DEPARTURE ENDS OF QUARTER POST SPACING.

POST BOLTS ARE A ⅝" DIAMETER ASTM A307 GUARDRAIL BOLT. A POST BOLT REQUIRES ⅝" DIAMETER A563A DOUBLE RECESSED (DR) HEAVY HEX NUT AND ⅝" DIAMETER F844 FLAT WASHER. POST BOLTS MAY BE LONGER IF MULTIPLE BLOCKOUTS ARE BEING USED.

GUARD RAIL SPLICE BOLTS ARE A ⅝" DIAMETER ASTM A307 GUARDRAIL HEAD BOLT. A GUARDRAIL SPLICE BOLT REQUIRES ⅝" DIAMETER A563A DOUBLE RECESSED (DR) HEAVY HEX NUT.

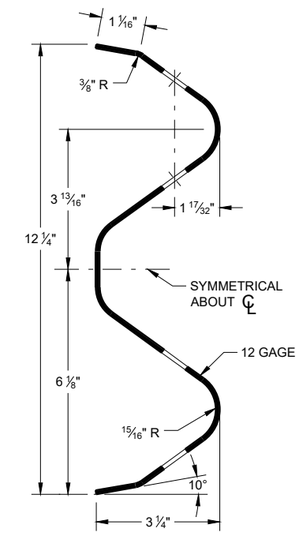

SECTION THRU W-BEAM RAIL

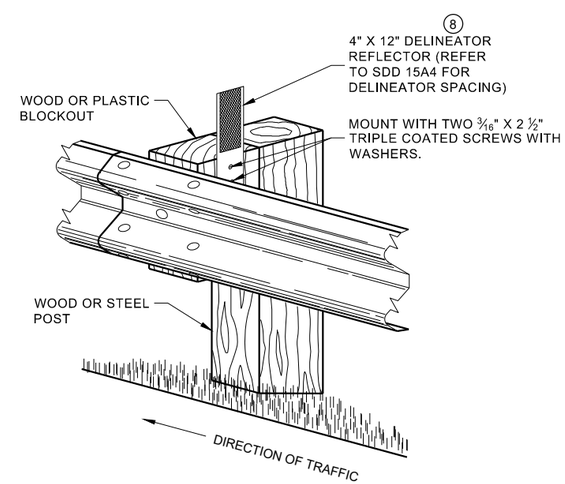

ONE SIDED REFLECTOR DETAIL AND TYPICAL INSTALLATION

MIDWEST GUARDRAIL SYSTEM (MGS) GUARDRAIL

STATE OF WISCONSIN
DEPARTMENT OF TRANSPO PRE_96

6
SDD 14B42 - 06b

GENERAL NOTES

(A) THE SLOPE IN THE AREA BOUNDED BY THE GRADELINE, THE HINGE POINT LINE (HPL) AND THE CLEAR ZONE LIMITS (CZL) SHALL BE 4:1 OR FLATTER.

(B) AFTER FINAL ASSEMBLY, RECHECK CABLE TO BE SURE IT IS TAUT AND HAS NOT RELAXED

(C) DIFFERENT MANUFACTURERS REQUIRE DIFFERENT PERFORATED W - BEAM RAIL END PANELS. SEE MANUFACTURER'S INFORMATION.

(D) ATTACH ALUMINUM SHEET TO E.A.T. HEAD USING 4 STAINLESS STEEL SELF - TAPPING SCREWS. ONE SCREW PER CORNER.

(E) HARDWARE MAY VARY BETWEEN MANUFACTURER. SEE MANUFACTURER'S DRAWING FOR INFORMATION.

DIMENSIONS MAY VARY, MANUFACTURER'S INFORMATION.

SEE SDD 14B42 FOR MORE INFORMATION.

* DO NOT ATTACH BLOCKOUTS TO POST 1 AND 2.

DO NOT INSTALL REFLECTORS ON THE FIRST 50 FEET OF THE APPROACH END OF THE ENERGY ABSORBING TERMINAL.

SEE MANUFACTURER'S DRAWING FOR SPLICE LOCATION, HARDWARE DIMENSIONS AND INSTALLATION INSTRUCTIONS.

THE CENTER OF THE UPPER 3 ½" DIAMETER HOLE ON POST NUMBER 3 THROUGH POST 9 IS TO BE FLUSH WITH THE GROUND LINE UP TO A MAXIMUM OF 2" ABOVE GROUND LINE. WOOD BLOCKS ON POSTS NUMBERED 3 THROUGH 9 MAY BE ADJUSTED UP TO 3" ABOVE THE TOP OF POST.

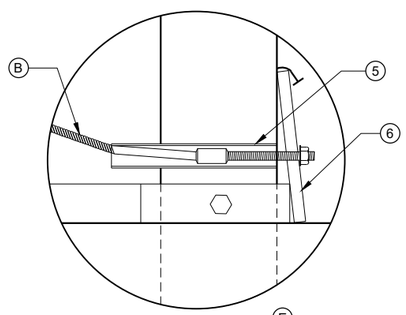

DETAIL "A" (E)

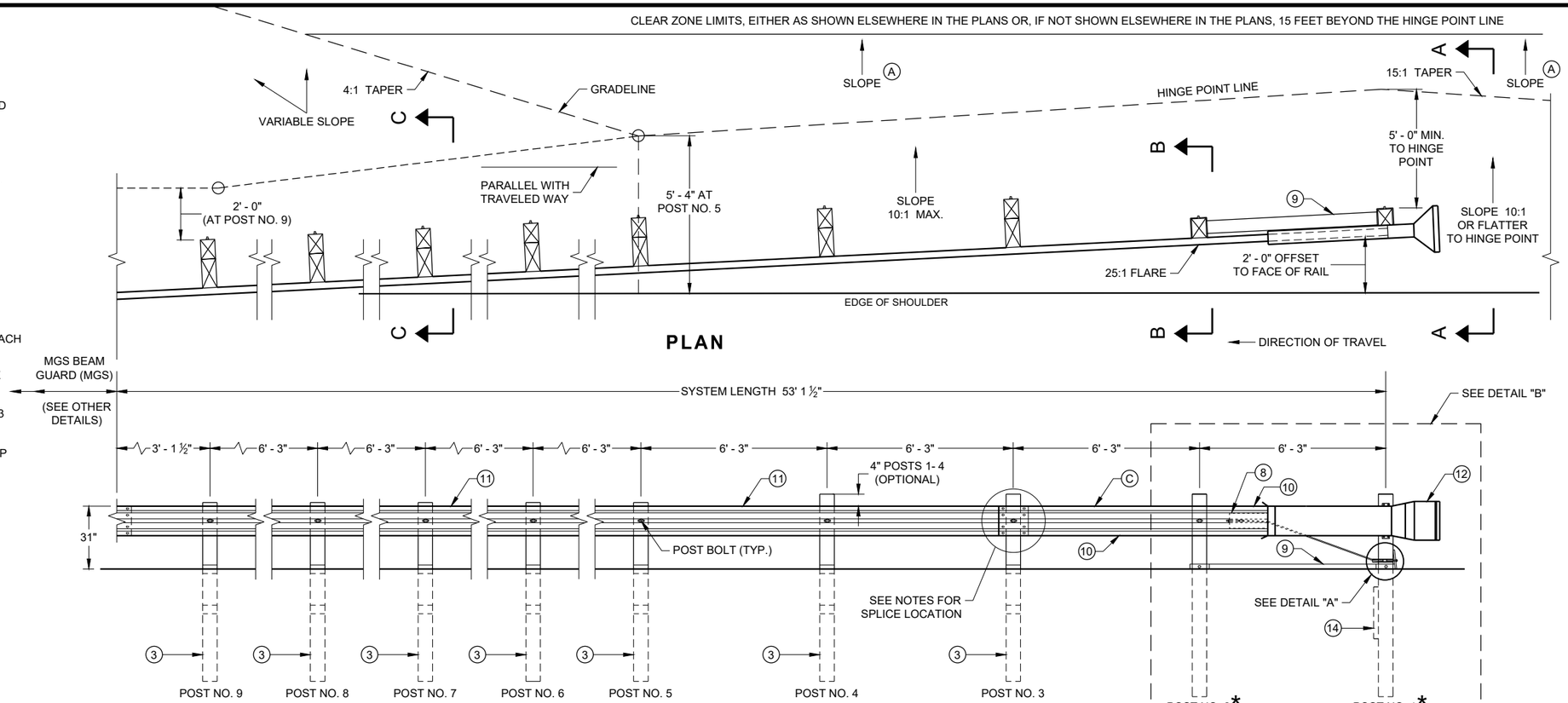

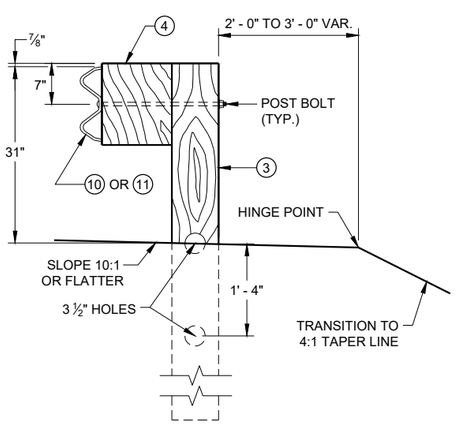

SECTION C - C
TYPICAL AT POST NOS. 3 - 9

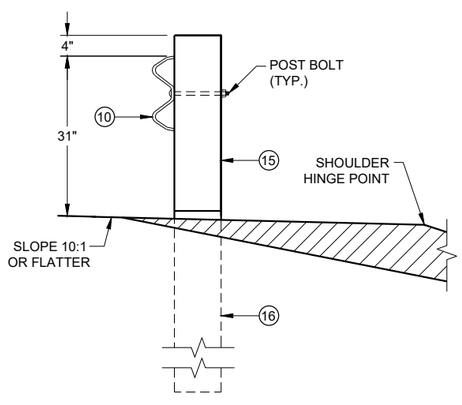

SECTION B - B
TYPICAL AT POST NO. 2*

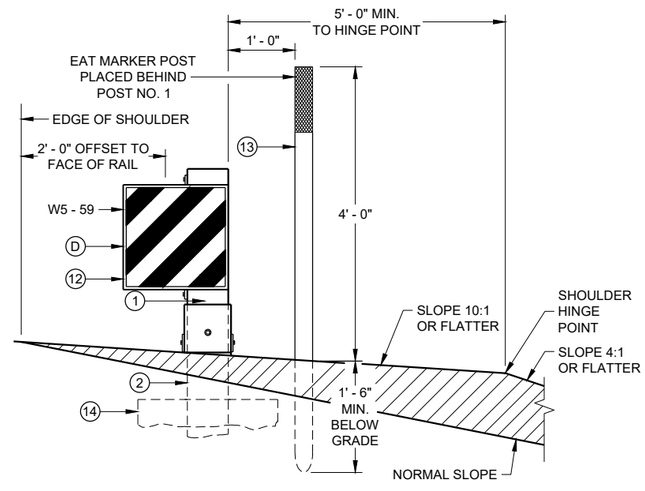

SECTION A - A
TYPICAL AT POST NO. 1*

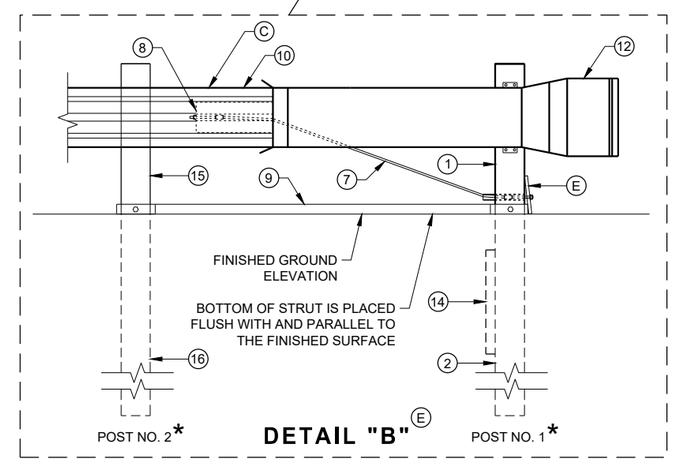

DETAIL "B" (E)

MIDWEST GUARDRAIL SYSTEM ENERGY ABSORBING TERMINAL (MGS)

STATE OF WISCONSIN
DEPARTMENT OF TRANSPO PRE_97

6

6

SDD 14B44 - 04a

SDD 14B44 - 04a

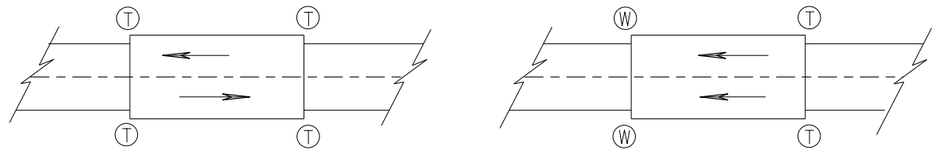

TWO WAY TRAFFIC **ONE WAY TRAFFIC**

(T) THRIE BEAM CONNECTION

(W) W-BEAM CONNECTION WHEN REQUIRED

TYPICAL LOCATIONS OF THRIE BEAM AND W-BEAM CONNECTIONS TO BRIDGE

GENERAL NOTES

IF ROCK IS ENCOUNTERED, REMOVE ROCK TO FULL DEPTH OF POST PLUS 2½", AND 12" DIAMETER AROUND POST. SEE 14B42 FOR MORE DETAILS.

TRANSITION USES STEEL POSTS ONLY.

SEE STANDARD DETAIL DRAWING 14 B 42 FOR MORE INFORMATION.

POST 2 THROUGH 17 USES STEEL POST ONLY

(1) BRIDGE RAILING TYPE "W" DOES NOT REQUIRE A TERMINAL CONNECTOR.

(2) OPTIONAL CURB AND GUTTER OR DRAINAGE FEATURE SEE PLAN FOR INFORMATION.

(13) STEEL OR WOOD POST IS ACCEPTABLE AT POST 1. SEE SDD14B42

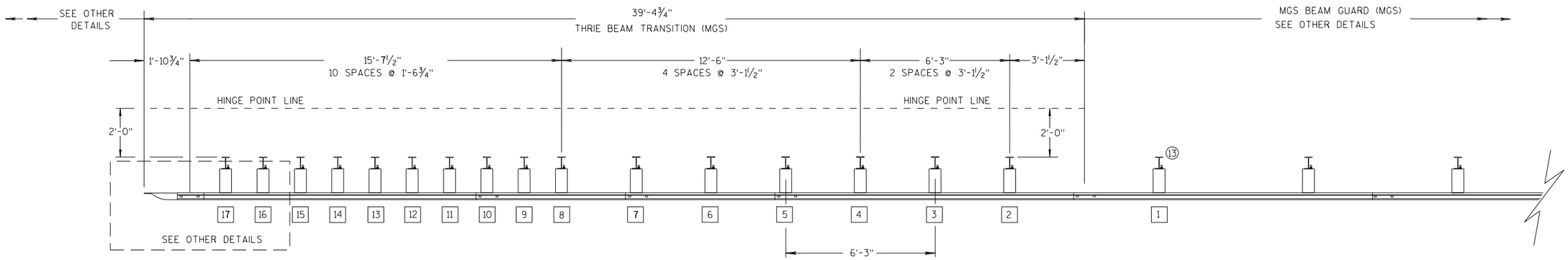

PLAN VIEW

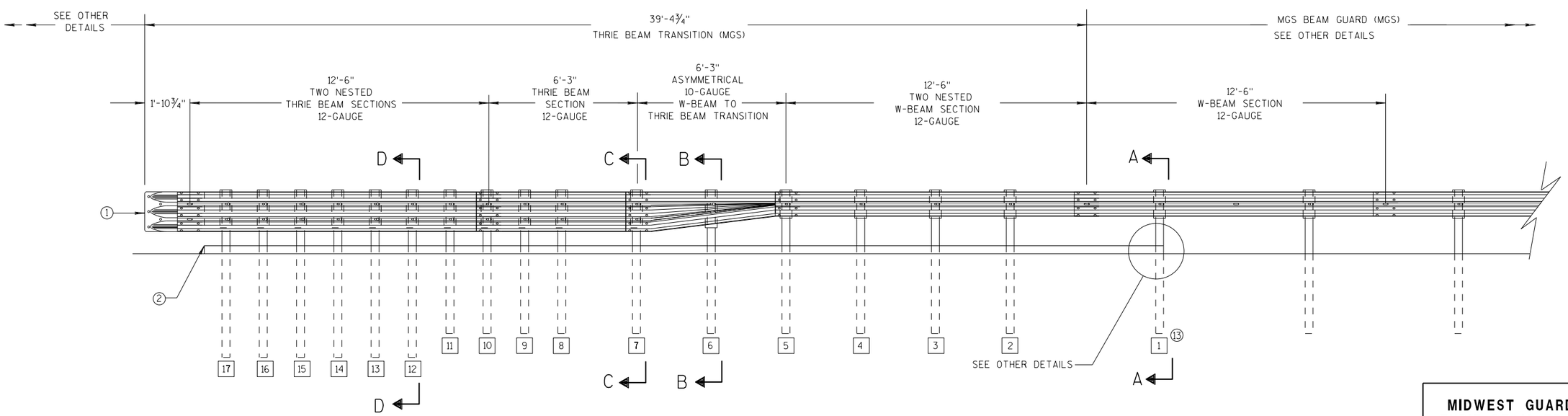

ELEVATION VIEW

MIDWEST GUARDRAIL SYSTEM THRIE BEAM TRANSITION

MIDWEST GUARDRAIL SYSTEM THRIE BEAM TRANSITION (MGS)

STATE OF WISCONSIN
DEPARTMENT OF TRANS PRE_98

6
S.D.D. 14 B 45-5a

GENERAL NOTES

(2) OPTIONAL CURB AND GUTTER OR DRAINAGE FEATURE SEE PLAN FOR INFORMATION.

(3) WHEN USING STEEL POSTS AND WOOD BLOCKOUTS INSTALL FOUR 10D GALVANIZED NAILS. INSTALL NAILS AT THE BACK CORNERS OF THE BLOCK AND BEND THE NAILS OVER THE FLANGE OF THE STEEL POST.

(4) TOLERANCE FOR TOP OF W-BEAM RAIL IS ± 1".

(13) STEEL OR WOOD POST IS ACCEPTABLE AT POST 1. SEE SDD 14B42

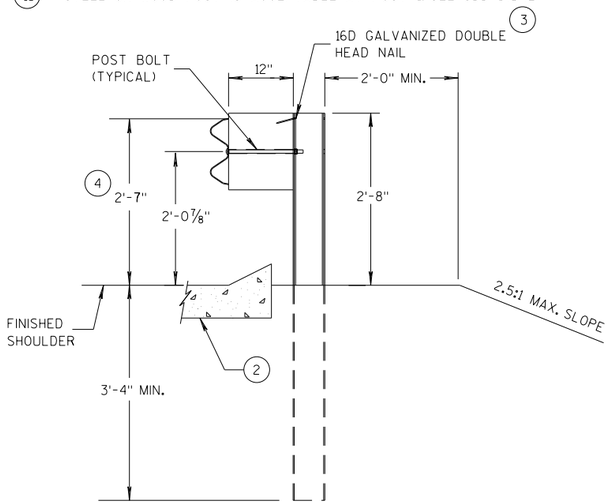

SECTION A-A (13)

POSTS 1-5

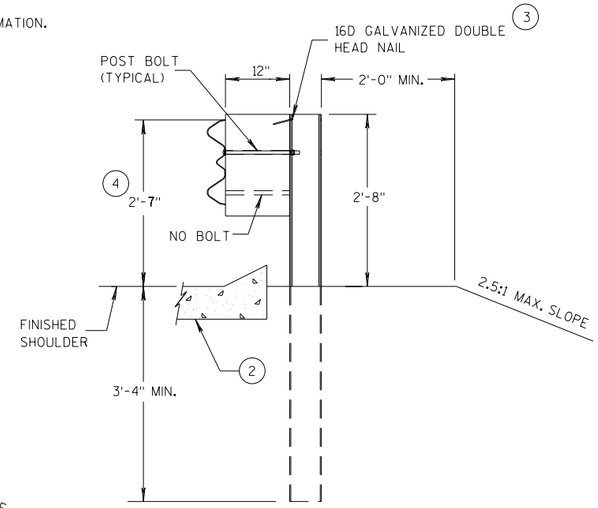

SECTION B-B

POST 6

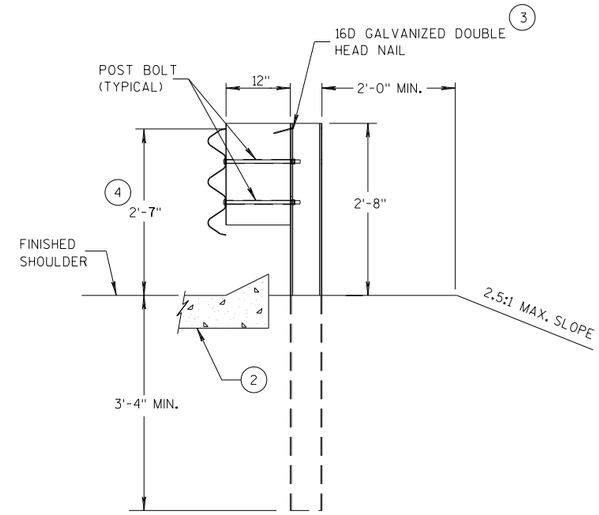

SECTION C-C

POSTS 7-11

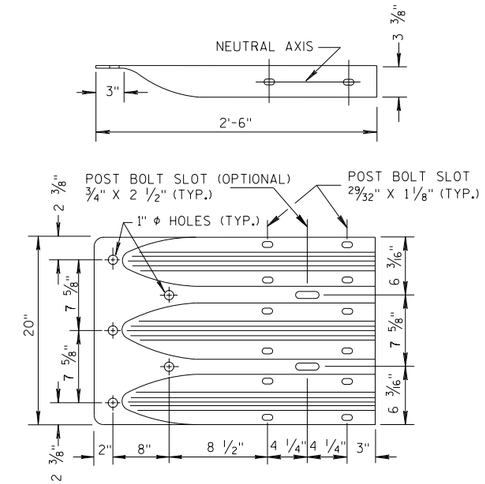

THRIE BEAM TERMINAL CONNECTOR

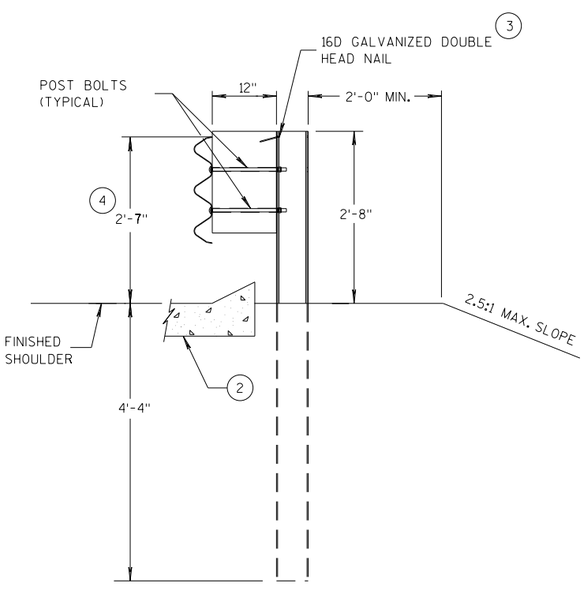

SECTION D-D

POSTS 12-17

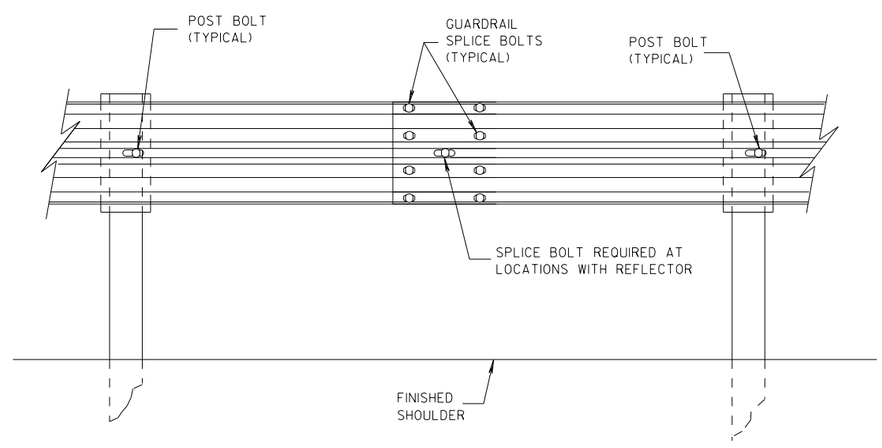

SPLICE DETAIL

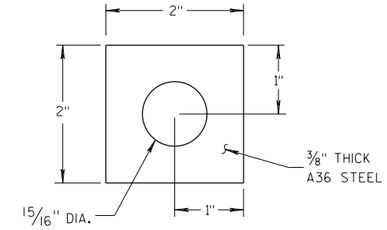

PLATE WASHER DETAIL

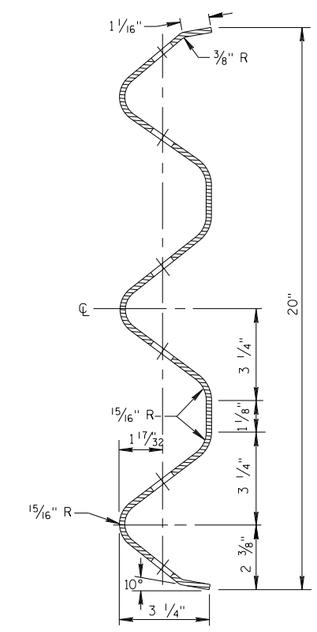

SECTION THRU THRIE BEAM RAIL ELEMENT

MIDWEST GUARDRAIL SYSTEM
THRIE BEAM TRANSITION (MGS)

STATE OF WISCONSIN
DEPARTMENT OF TRANS PRE_99

6

S.D.D. 14 B 45-5b

6

S.D.D. 14 B 45-5b

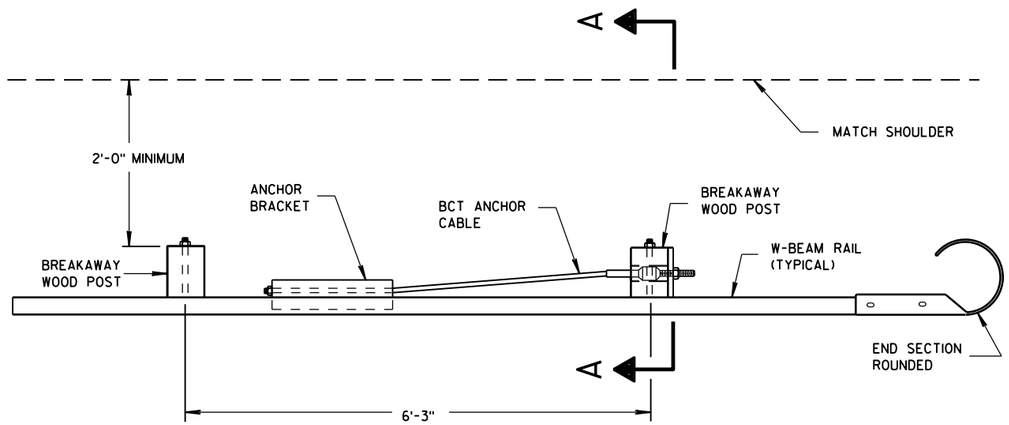

PLAN VIEW

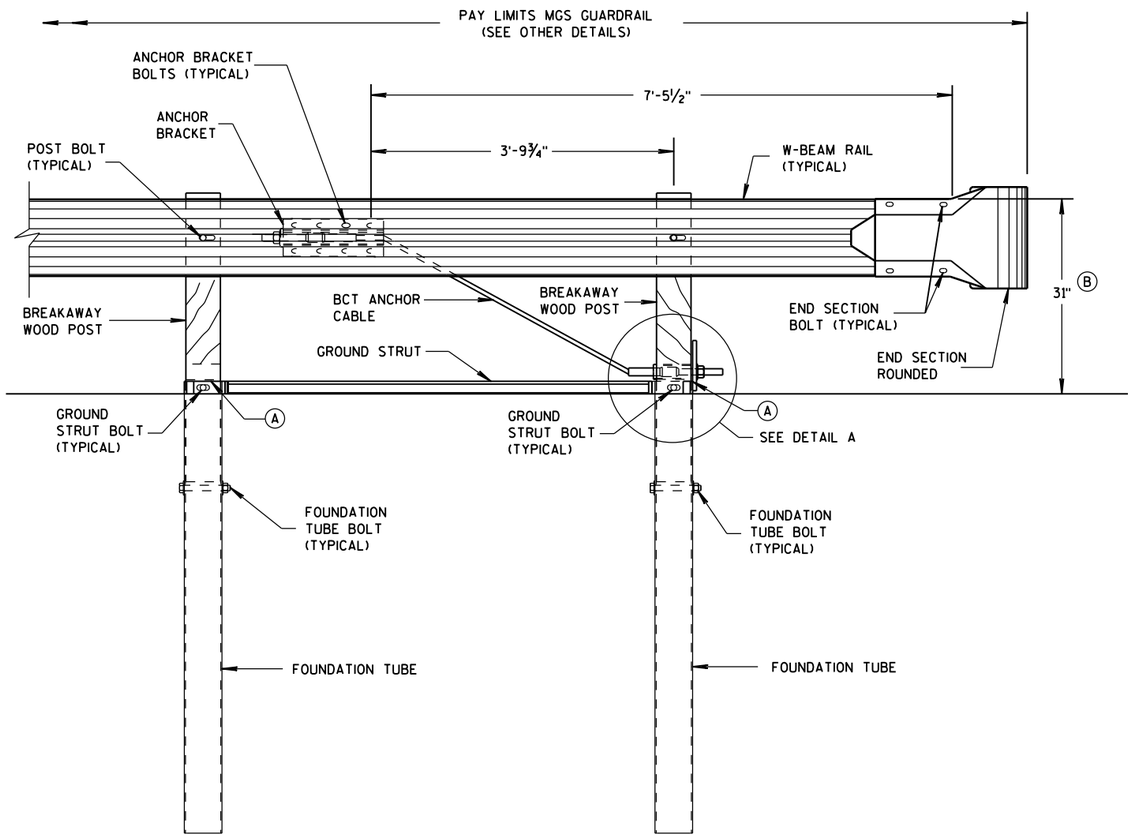

FRONT VIEW

END RAIL DETAIL

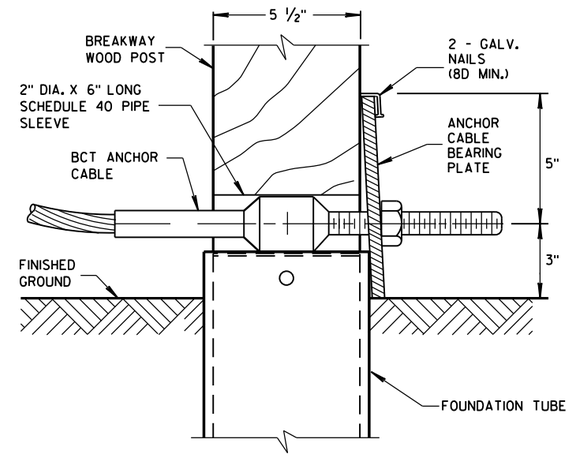

DETAIL A

POST NO. 1
GROUNG STRUT NOT SHOWN FOR CLARITY.

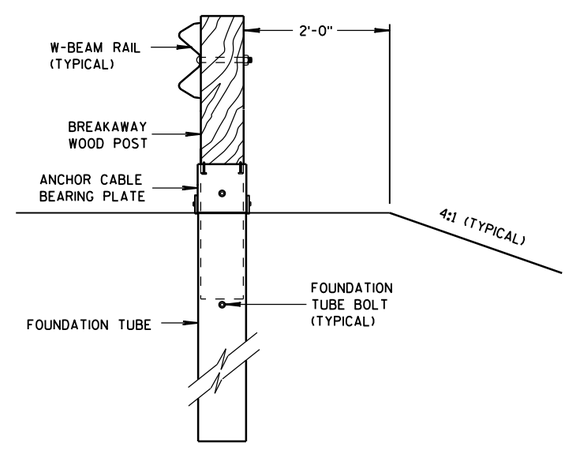

SECTION A-A

GENERAL NOTES

SEE SDD 14 B 42 FOR MORE INFORMATION.

END SECTION BOLTS AND NUTS HAVE THE SAME MATERIAL REQUIREMENTS AS SPLICE BOLTS.

FOUNDATION TUBE BOLTS ARE ⅞" DIAMETER ASTM A307 HEX HEAD BOLT. FOUNDATION TUBE BOLTS REQUIRE ASTM A563 A NUT AND TWO ASTM F844 ⅞" DIAMETER FLAT WASHERS. INSTALL ONE WASHER UNDER BOLT HEAD AND ONE WASHER UNDER NUT.

ANCHOR BRACKET AND GROUND STRUT BOLTS ARE A ⅝" DIAMETER ASTM A307 HEX HEAD BOLT. ANCHOR BRACKET BOLTS REQUIRE ASTM A563 A NUT AND TWO ASTM F844 ⅝" DIAMETER FLAT WASHERS. INSTALL ONE WASHER UNDER BOLT HEAD AND ONE WASHER UNDER NUT.

W-BEAM END SECTION ROUNDED HAS THE SAME MATERIAL PROPERTIES AS STANDARD STEEL RAIL.

(A) TOP OF FOUNDATION TUBE SHALL BE NO MORE THAN 3" ABOVE FINISHED GROUND.

(B) FOR NEW CONSTRUCTION TOP OF RAIL IS 31" ± 1".
FOR EXISTING INSTALLATIONS TOP OF RAIL IS BETWEEN 27¾" TO 32" ± 1".

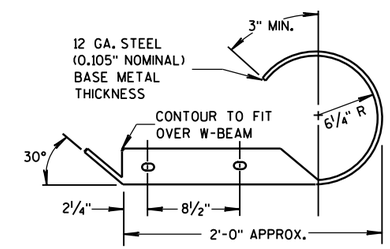

PLAN VIEW

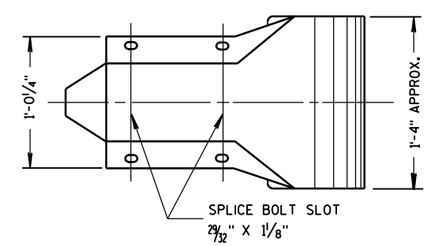

FRONT VIEW

W BEAM END SECTION ROUNDED

MIDWEST GUARDRAIL SYSTEM (MGS) TYPE 2 TERMINAL

STATE OF WISCONSIN
DEPARTMENT OF TRAN PRE_100

6

6

S.D.D. 14 B 47-2a

S.D.D. 14 B 47-2a

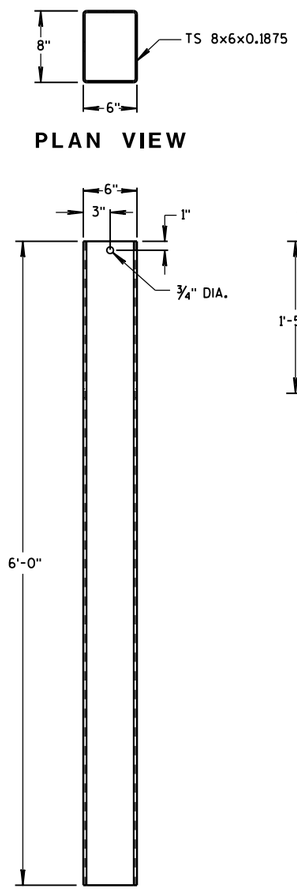

FOUNDATION TUBE

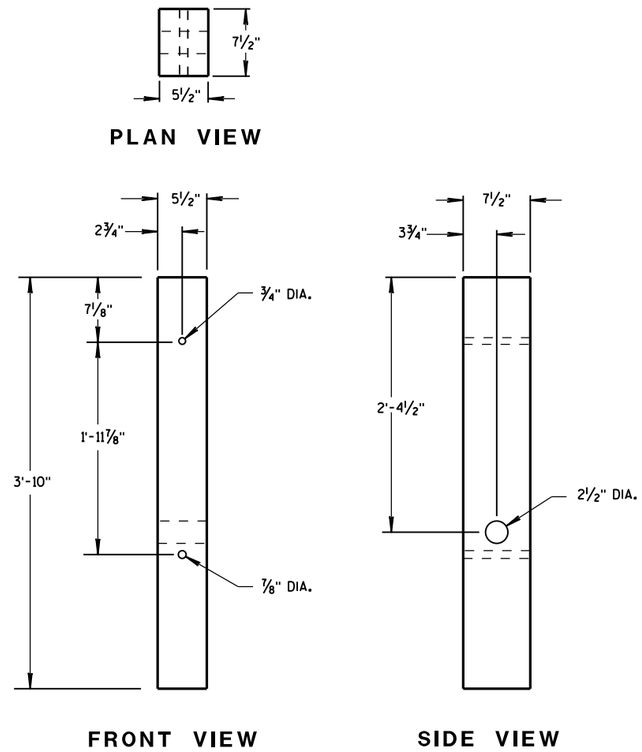

BREAKAWAY WOOD POST

GENERAL NOTES

BCT ANCHOR CABLE IS A 3/4" DIAMETER 6X19 IWRC IPS GALVANIZED WIRE ROPE. THE SWAGED FITTINGS AND STUD ARE REQUIRED. END FITTING SHALL BE MACHINED FROM HOT-ROLLED CARBON STEEL CONFORMING TO ASTM A576 GRADE 1035 AND GALVANIZED ACCORDING TO ASTM A123. TREADED STUD SHALL CONFORM TO ASTM A325 OR SAE GRADE 5. MINIMUM BREAKING STRENGTH OF WIRE ROPE IS 43,000 LB. WIRE ROPE IS TO BE TAUT.

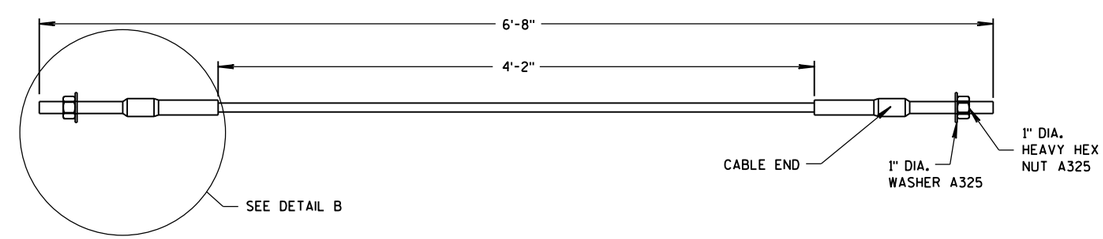

BCT ANCHOR CABLE

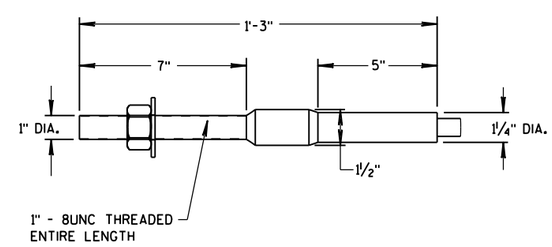

DETAIL B

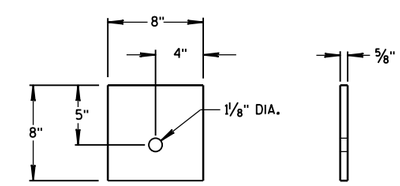

SIDE VIEW FRONT VIEW

ANCHOR CABLE BEARING PLATE

MIDWEST GUARDRAIL SYSTEM (MGS) TYPE 2 TERMINAL

STATE OF WISCONSIN
DEPARTMENT OF TRAN PRE_101

6

6

S.D.D. 14 B 47-2b

S.D.D. 14 B 47-2b

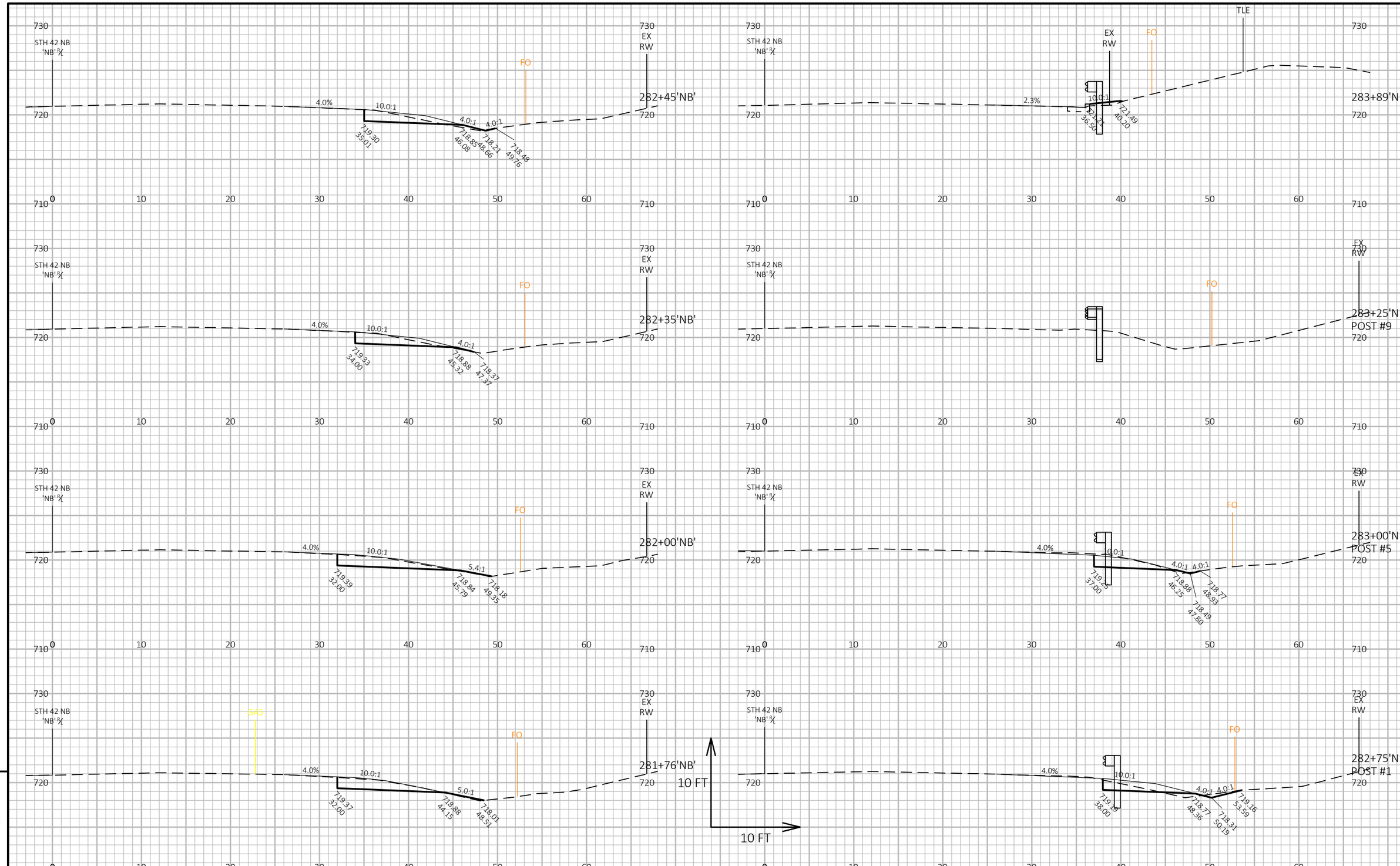

9

9

PROJECT NO: 4430-19-71	HWY: STH 42	COUNTY: DOOR	CROSS SECTIONS: STH 42 NB - MGS AT 282+00	SHEET PRE_102 E

FILE NAME : C:\CIVIL 3D PROJECTS\44301900\SHEETSPLAN\090201-XS.DWG
LAYOUT NAME - 090201-xs
PLOT DATE : 7/29/2020 8:49 AM
PLOT BY : KIRST, DOUGLAS P
PLOT NAME :
PLOT SCALE : 1 IN:10 FT HORZ. / 1 IN:10 FT VERT.

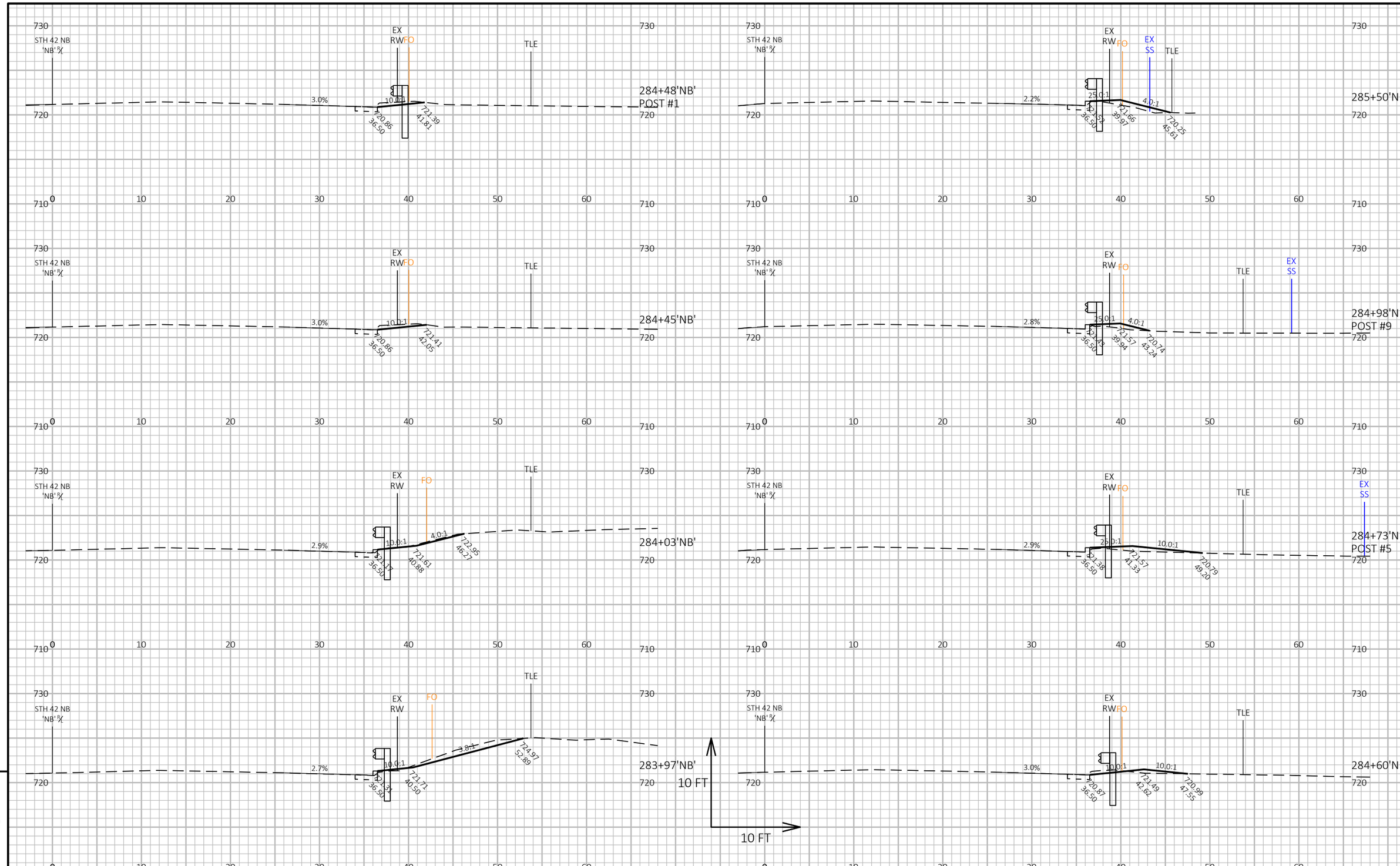

9

9

PROJECT NO: 4430-19-71	HWY: STH 42	COUNTY: DOOR	CROSS SECTIONS: STH 42 NB - MGS AT 282+00	SHEET PRE_103 E

FILE NAME : C:\CIVIL 3D PROJECTS\44301900\SHEETSPLAN\090201-XS.DWG
LAYOUT NAME - 090202-xs

PLOT DATE : 7/29/2020 8:49 AM

PLOT BY : KIRST, DOUGLAS P

PLOT NAME :

PLOT SCALE : 1 IN:10 FT HORZ. / 1 IN:10 FT VERT.

WISDOT/CADDS SHEET 49

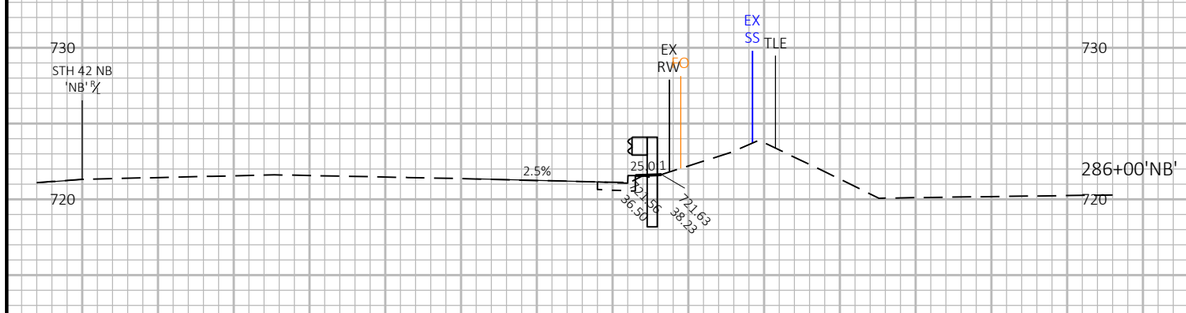

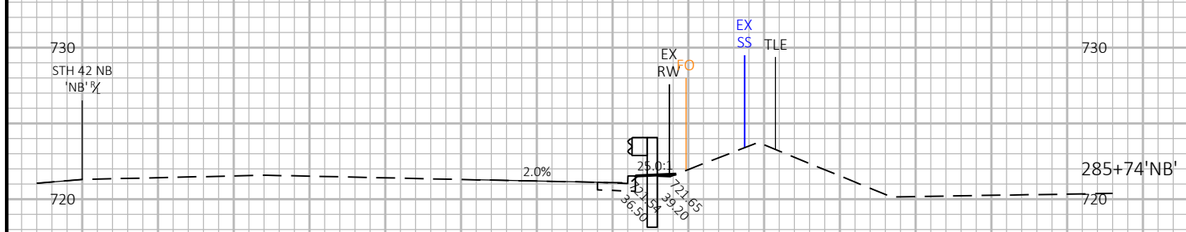

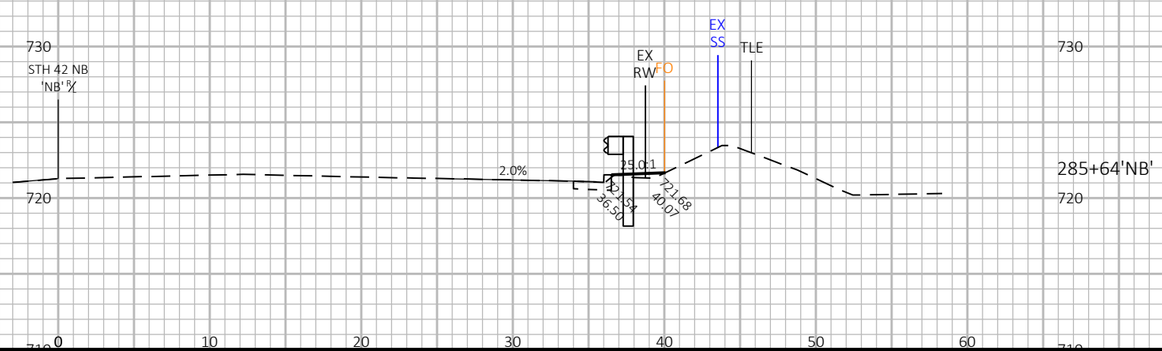

9

9

PROJECT NO: 4430-19-71	HWY: STH 42	COUNTY: DOOR	CROSS SECTIONS: STH 42 NB - MGS AT 282+00	SHEET PRE_104 E

FILE NAME : C:\CIVIL 3D PROJECTS\44301900\SHEETSPLAN\090201-XS.DWG
LAYOUT NAME - 090203-xs

PLOT DATE : 7/29/2020 8:49 AM PLOT BY : KIRST, DOUGLAS P PLOT NAME : PLOT SCALE : 1 IN:10 FT HORZ. / 1 IN:10 FT VERT.

WISDOT/CADDS SHEET 49

9

9

PROJECT NO: 4430-19-71	HWY: STH 42	COUNTY: DOOR	CROSS SECTIONS: STH 42 NB - MGS AT OVERPASS	SHEET PRE_105 E

FILE NAME : C:\CIVIL 3D PROJECTS\44301900\SHEETSPLAN\090207-XS.DWG
LAYOUT NAME - 090204-xs

PLOT DATE : 7/29/2020 8:50 AM PLOT BY : KIRST, DOUGLAS P PLOT NAME : **PLOT SCALE :** 1 IN:10 FT HORZ. / 1 IN:10 FT VERT.

WISDOT/CADDS SHEET 49

PROJECT NO: 4430-19-71	HWY: STH 42	COUNTY: DOOR	CROSS SECTIONS: STH 42 NB - MGS AT OVERPASS	SHEET PRE_106 E

FILE NAME : C:\CIVIL 3D PROJECTS\44301900\SHEETSPLAN\090207-XS.DWG
LAYOUT NAME - 090205-xs
PLOT DATE : 7/29/2020 8:50 AM
PLOT BY : KIRST, DOUGLAS P
PLOT NAME :
PLOT SCALE : 1 IN:10 FT HORZ. / 1 IN:10 FT VERT.

WISDOT/CADDS SHEET 49

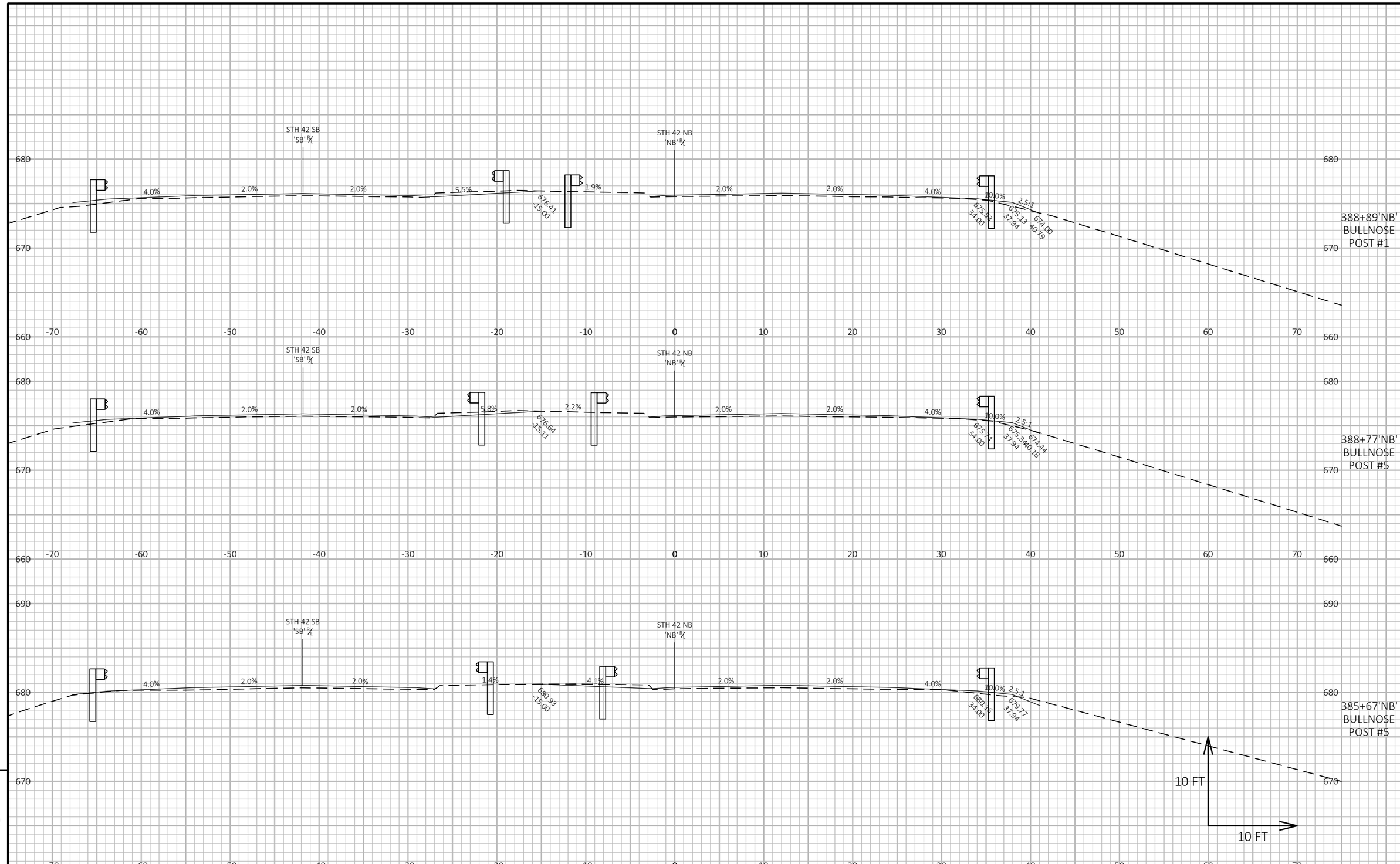

PROJECT NO: 4430-19-71	HWY: STH 42	COUNTY: DOOR	CROSS SECTIONS: STH 42 NB - MGS AT OVERPASS	SHEET E

PRE_107

FILE NAME : C:\CIVIL 3D PROJECTS\44301900\SHEETSPLAN\090207-XS.DWG
LAYOUT NAME - 090206-xs

PLOT DATE : 7/29/2020 8:50 AM PLOT BY : KIRST, DOUGLAS P PLOT NAME : PLOT SCALE : 1 IN:10 FT HORZ. / 1 IN:10 FT VERT.

WISDOT/CADDS SHEET 49

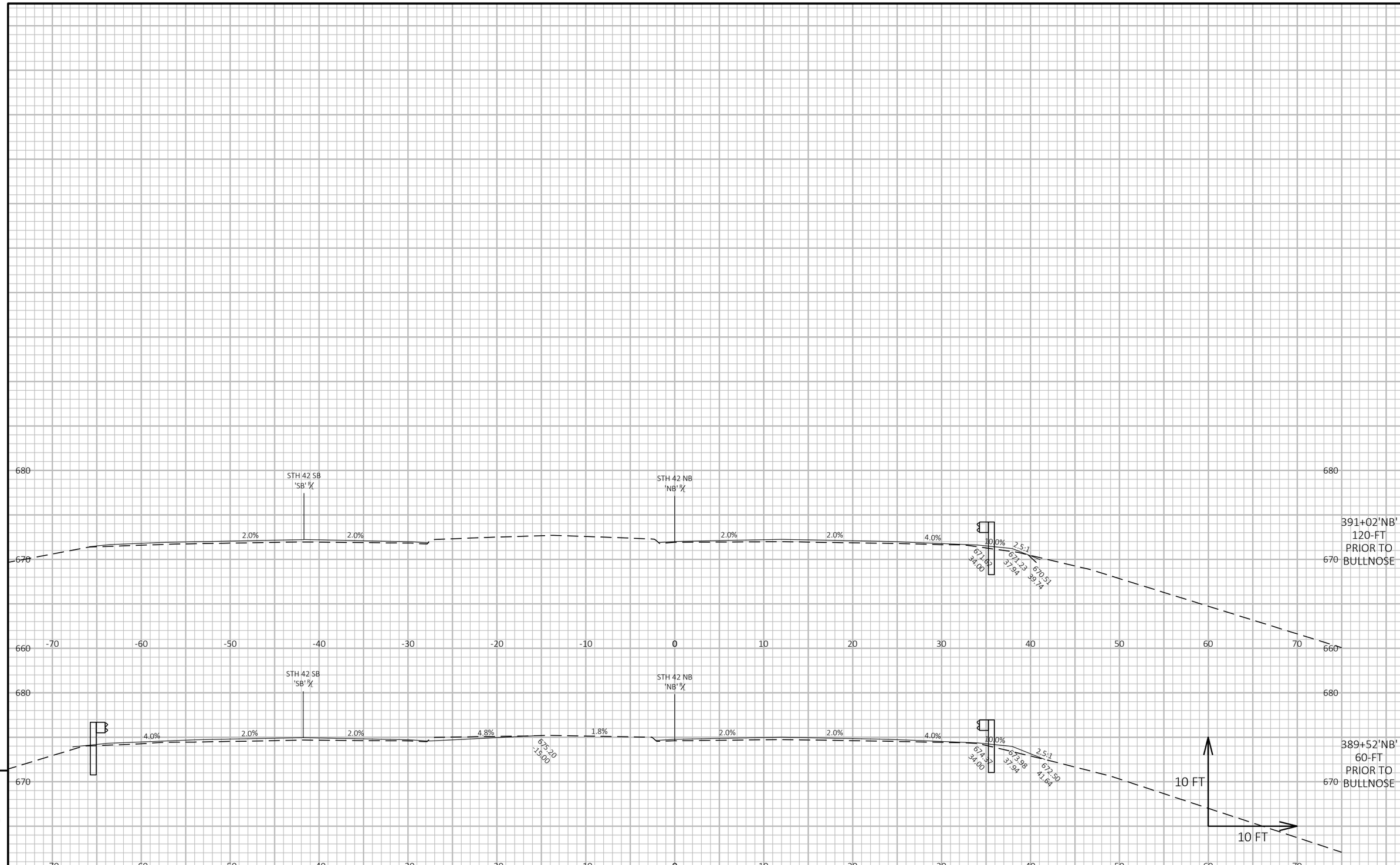

9

9

PROJECT NO: 4430-19-71	HWY: STH 42	COUNTY: DOOR	CROSS SECTIONS: STH 42 NB - MGS AT OVERPASS	SHEET PRE_108 E

FILE NAME : C:\CIVIL 3D PROJECTS\44301900\SHEETSPLAN\090207-XS.DWG
LAYOUT NAME - 090207-xs

PLOT DATE : 7/29/2020 8:50 AM

PLOT BY : KIRST, DOUGLAS P

PLOT NAME :

PLOT SCALE : 1 IN:10 FT HORZ. / 1 IN:10 FT VERT.

WISDOT/CADDS SHEET 49

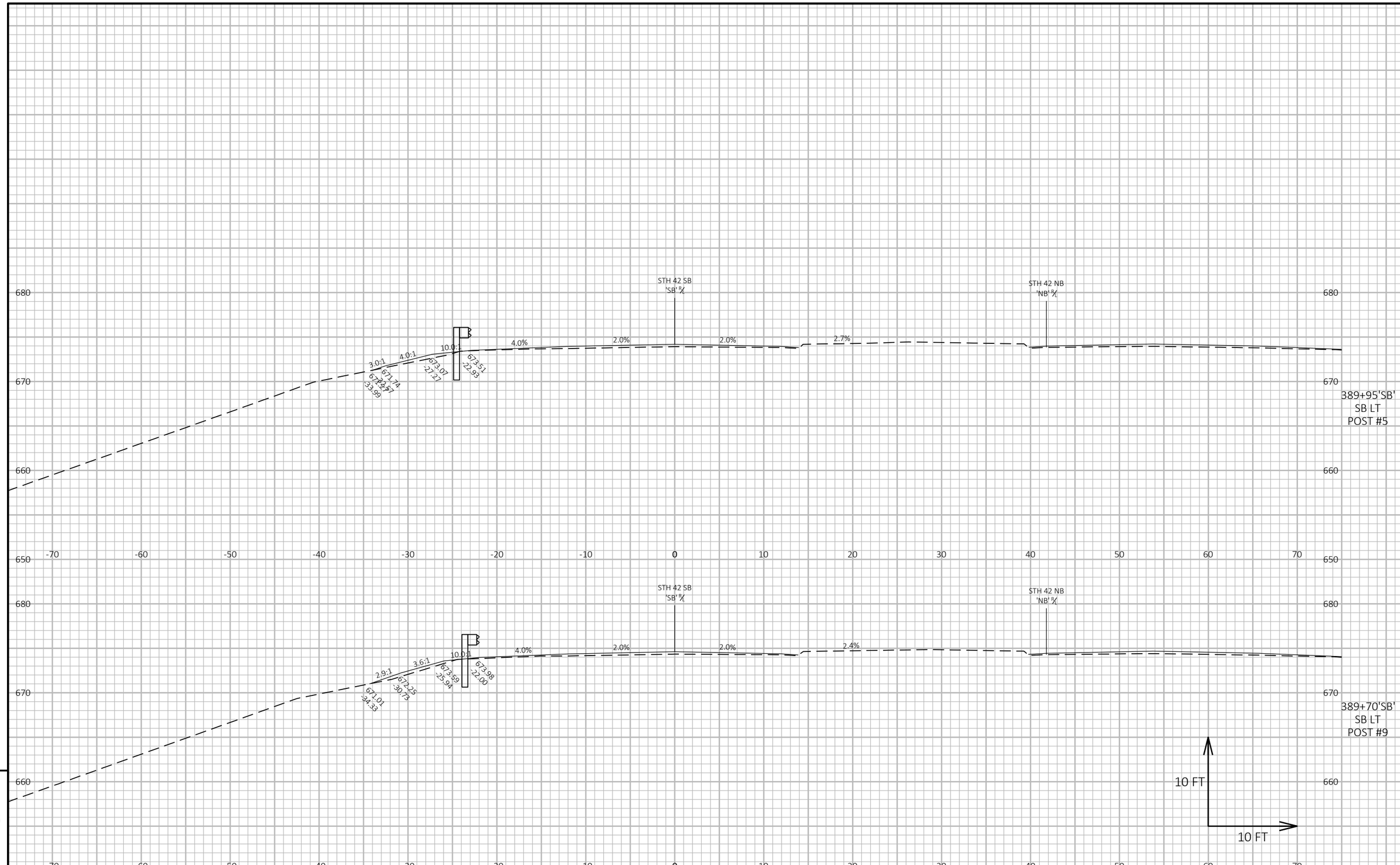

9

9

PROJECT NO: 4430-19-71	HWY: STH 42	COUNTY: DOOR	CROSS SECTIONS: STH 42 SB - MGS AT OVERPASS	SHEET PRE_109 E

FILE NAME : C:\CIVIL 3D PROJECTS\44301900\SHEETSPLAN\090207-XS.DWG
LAYOUT NAME - 090208-xs

PLOT DATE : 7/29/2020 8:50 AM

PLOT BY : KIRST, DOUGLAS P

PLOT NAME :

PLOT SCALE : 1 IN:10 FT HORZ. / 1 IN:10 FT VERT.

WISDOT/CADDS SHEET 49

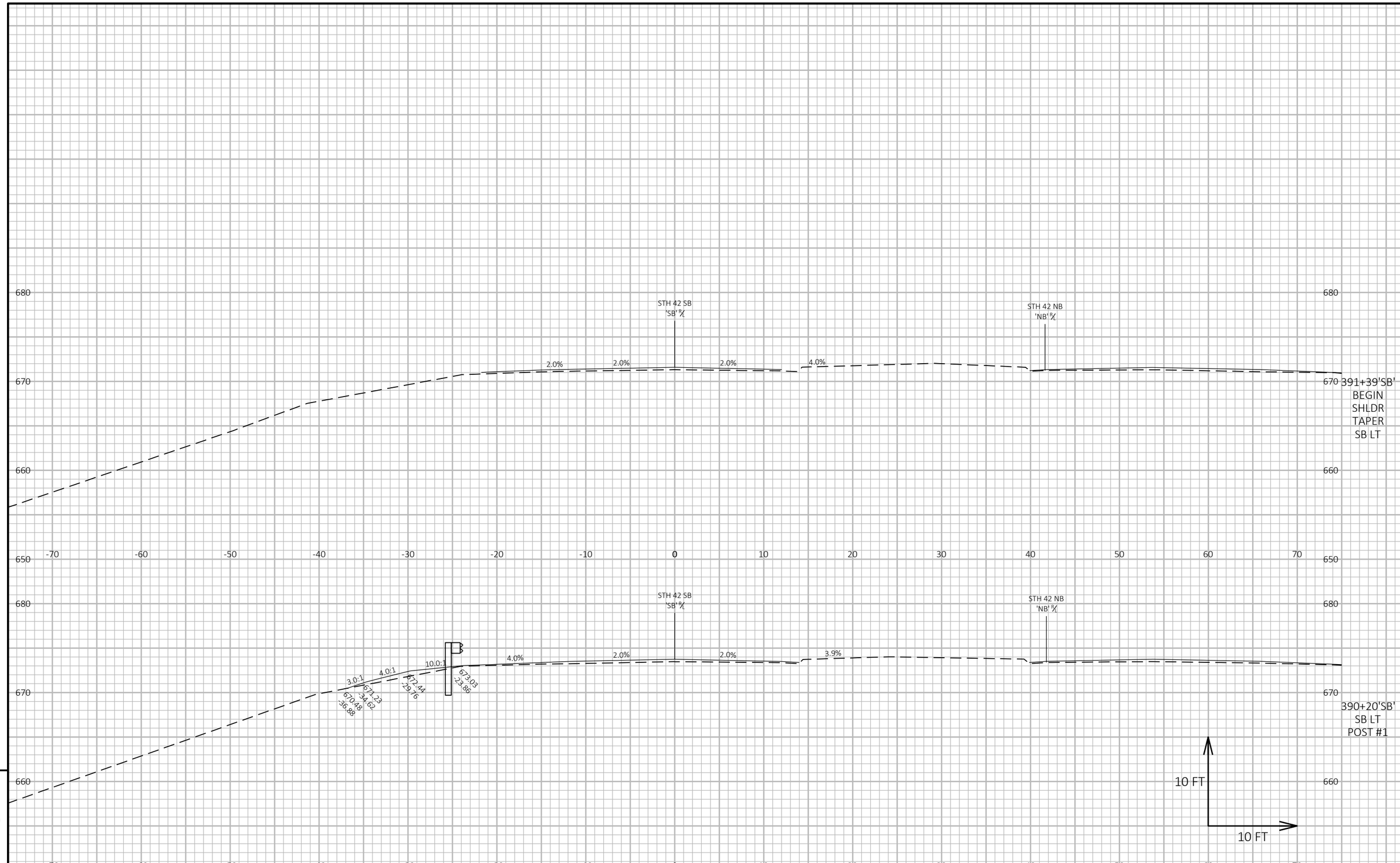

9

9

PROJECT NO: 4430-19-71	HWY: STH 42	COUNTY: DOOR	CROSS SECTIONS: STH 42 SB - MGS AT OVERPASS	SHEET E

PRE_110

FILE NAME : C:\CIVIL 3D PROJECTS\44301900\SHEETSPLAN\090207-XS.DWG
LAYOUT NAME - 090209-xs

PLOT DATE : 7/29/2020 8:50 AM PLOT BY : KIRST, DOUGLAS P PLOT NAME : **PLOT SCALE :** 1 IN:10 FT HORZ. / 1 IN:10 FT VERT.

WISDOT/CADDS SHEET 49

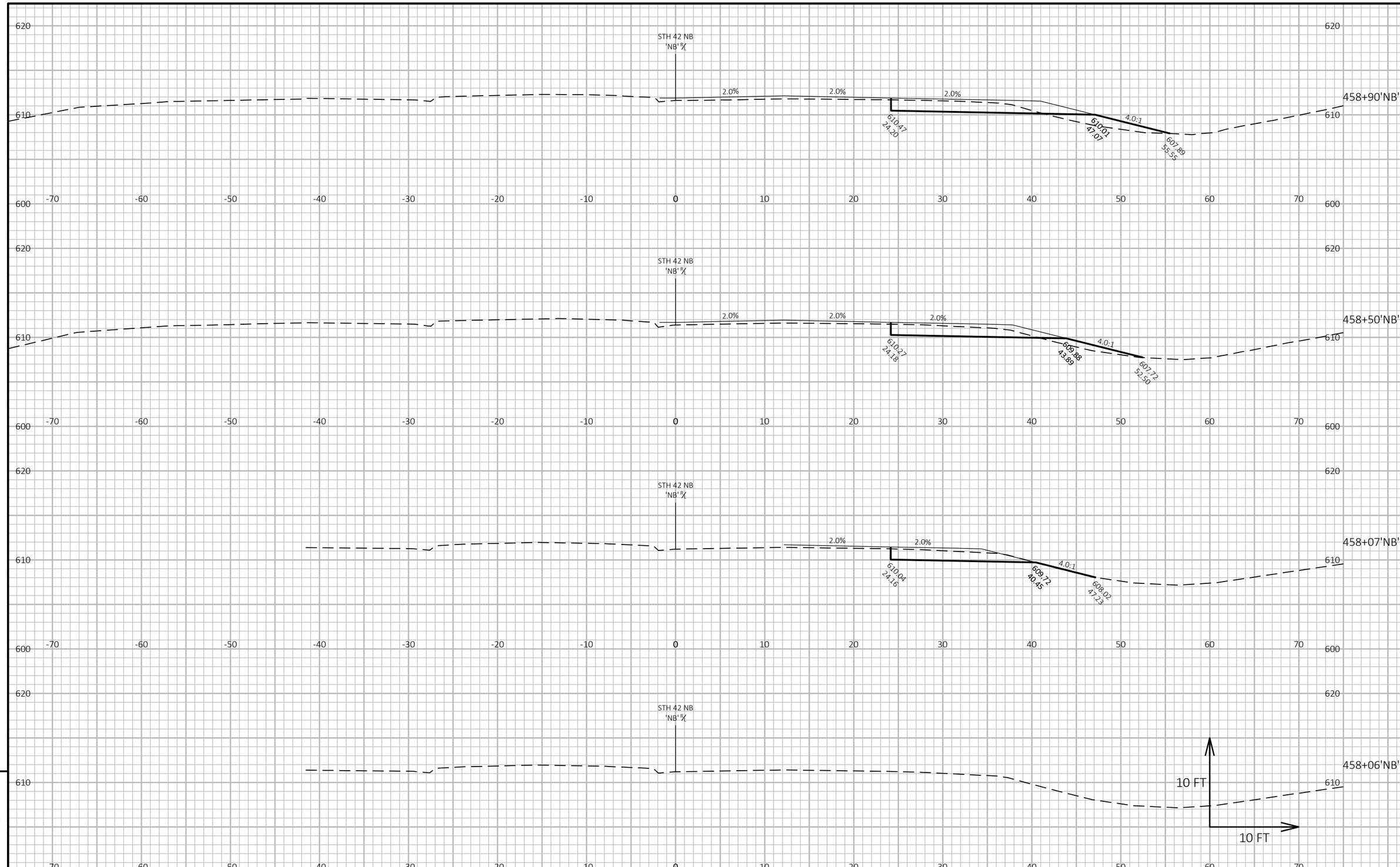

9

9

PROJECT NO: 4430-19-71	HWY: STH 42	COUNTY: DOOR	CROSS SECTIONS: STH 42 NB - TURN LANES AT CTH U	SHEET PRE_111 E

FILE NAME : C:\CIVIL 3D PROJECTS\44301900\SHEETSPLAN\090205-XS.DWG
LAYOUT NAME - 090210-xs

PLOT DATE : 7/29/2020 8:50 AM

PLOT BY : KIRST, DOUGLAS P

PLOT NAME :

PLOT SCALE : 1 IN:10 FT HORZ. / 1 IN:10 FT VERT.

WISDOT/CADDS SHEET 49

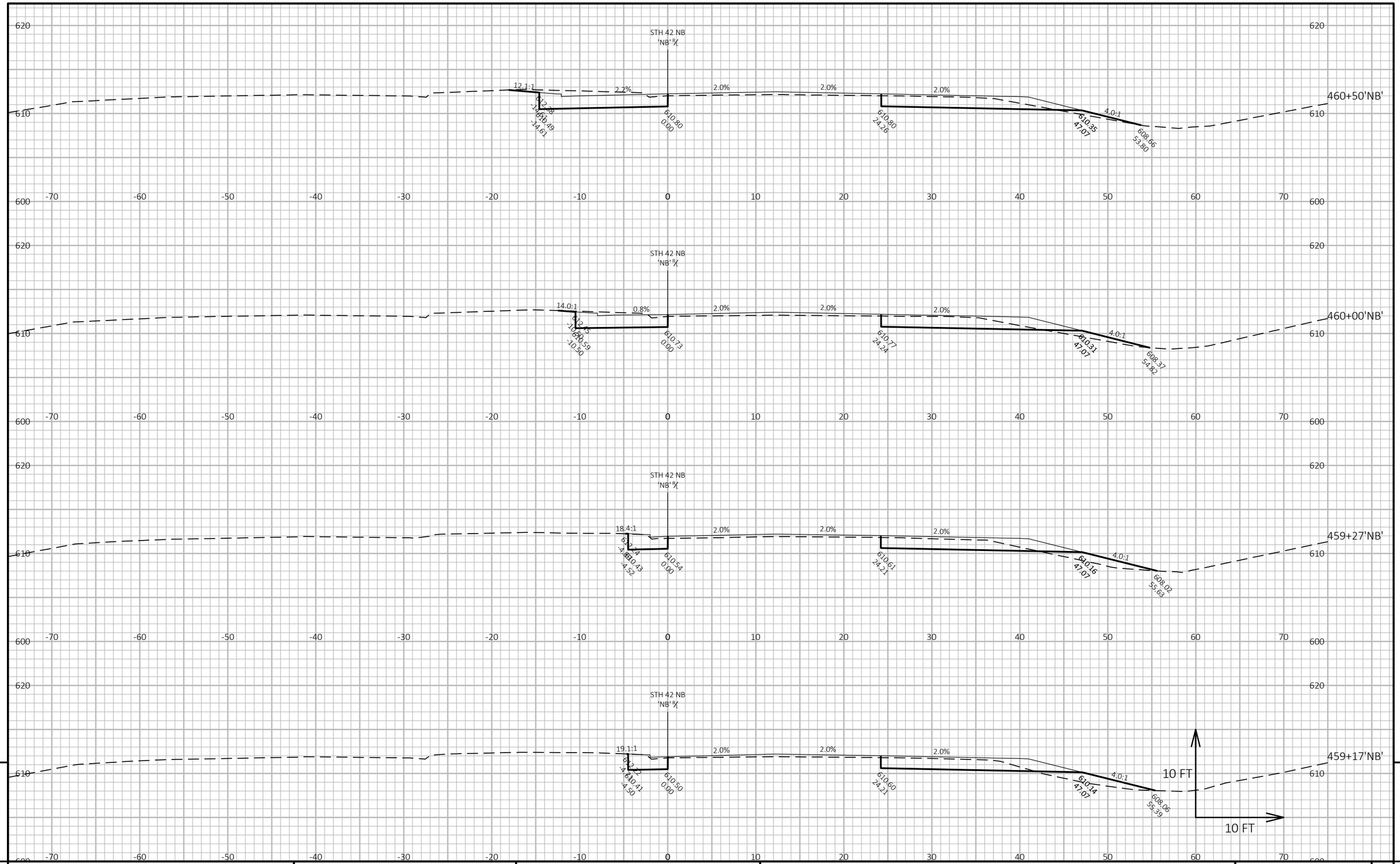

9

9

PROJECT NO: 4430-19-71	HWY: STH 42	COUNTY: DOOR	CROSS SECTIONS: STH 42 NB - TURN LANES AT CTH U	SHEET PRE_112 E

FILE NAME : C:\CIVIL 3D PROJECTS\44301900\SHEETSPLAN\090205-XS.DWG
LAYOUT NAME - 090211-xs

PLOT DATE : 7/29/2020 8:50 AM

PLOT BY : KIRST, DOUGLAS P

PLOT NAME :

PLOT SCALE : 1 IN:10 FT HORZ. / 1 IN:10 FT VERT.

WISDOT/CADDS SHEET 49

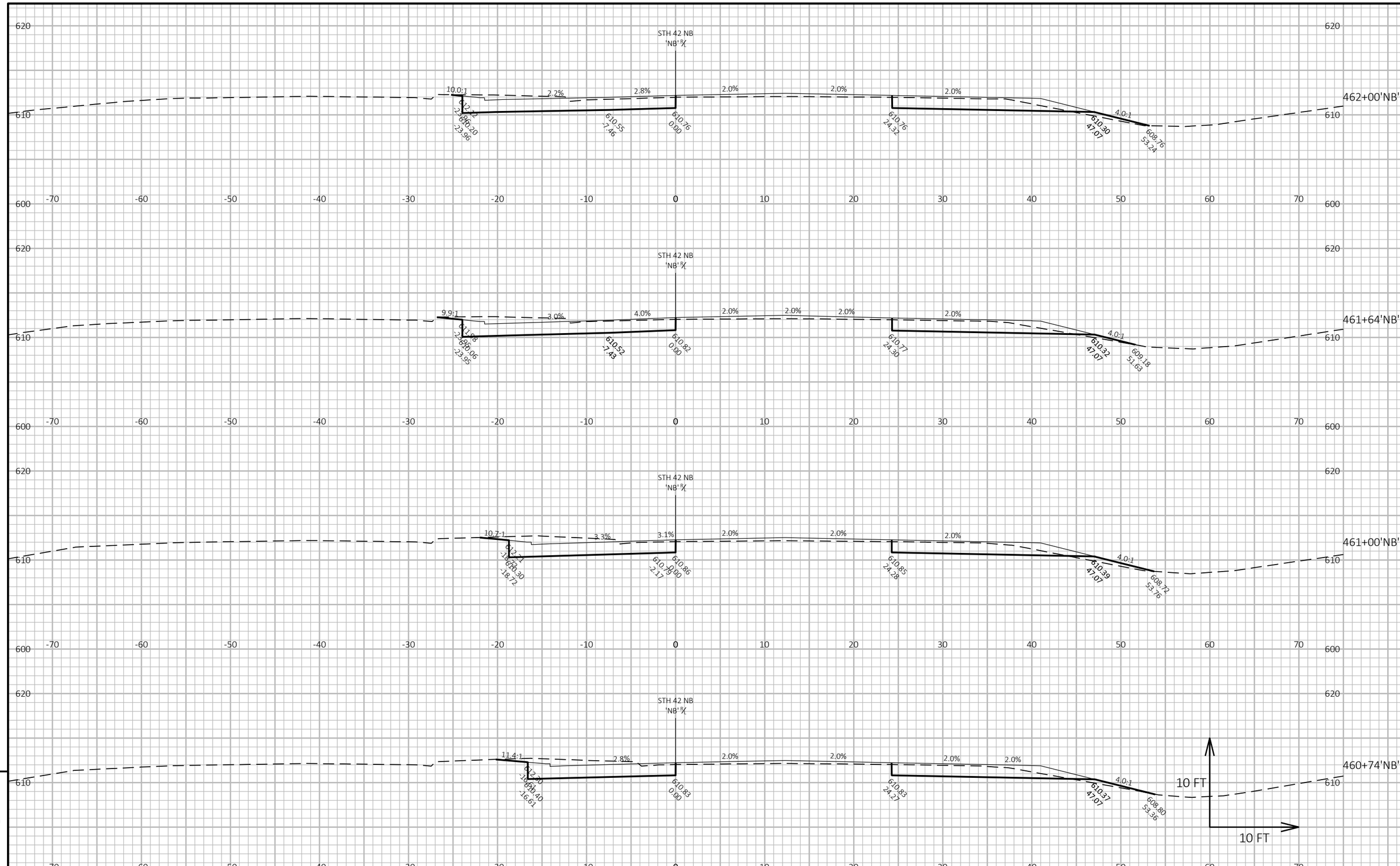

9

9

PROJECT NO: 4430-19-71	HWY: STH 42	COUNTY: DOOR	CROSS SECTIONS: STH 42 NB - TURN LANES AT CTH U	SHEET PRE_113 E

FILE NAME : C:\CIVIL 3D PROJECTS\44301900\SHEETSPLAN\090205-XS.DWG
LAYOUT NAME - 090212-xs

PLOT DATE : 7/29/2020 8:50 AM

PLOT BY : KIRST, DOUGLAS P

PLOT NAME :

PLOT SCALE : 1 IN:10 FT HORZ. / 1 IN:10 FT VERT.

WISDOT/CADDS SHEET 49

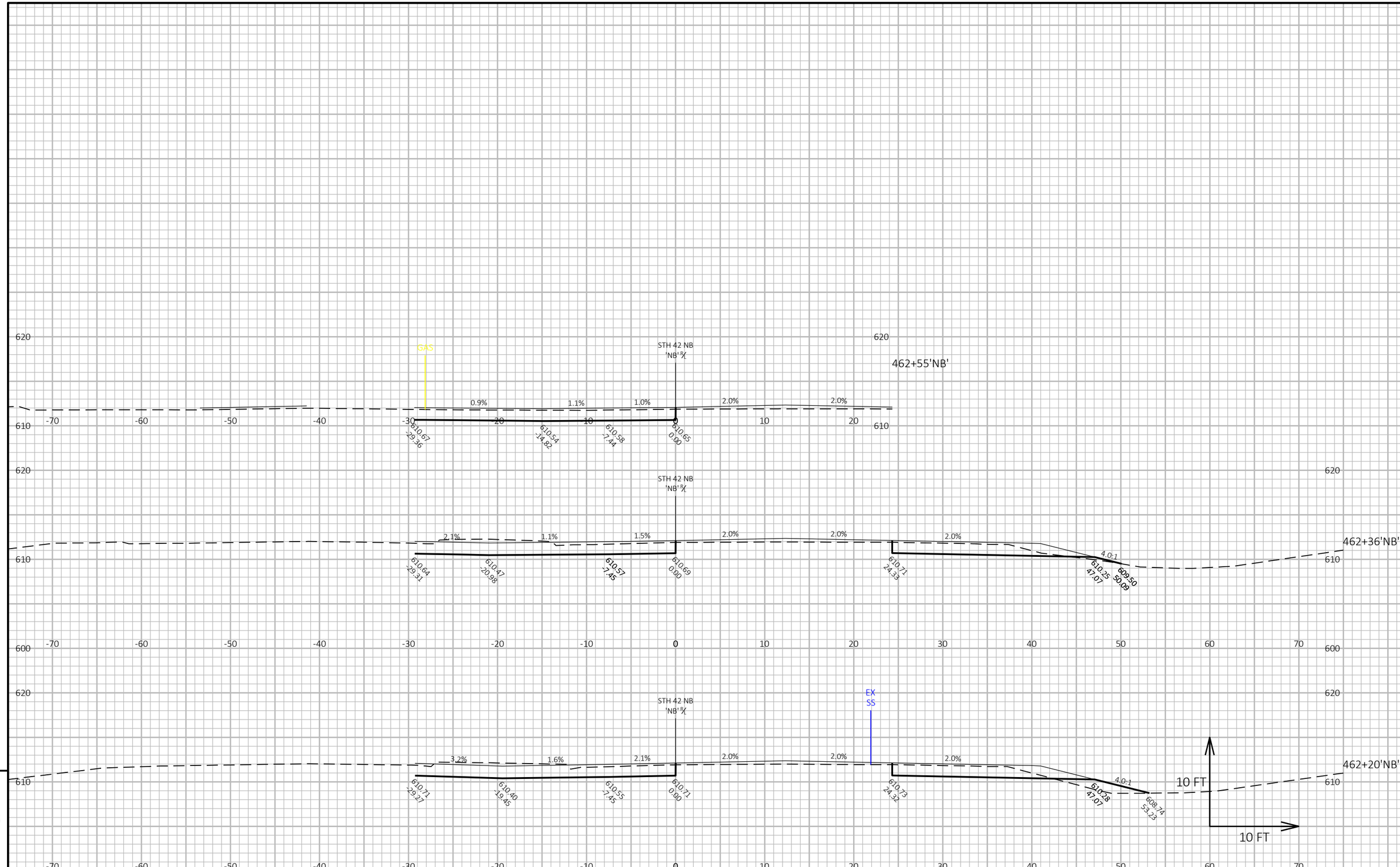

PROJECT NO: 4430-19-71	HWY: STH 42	COUNTY: DOOR	CROSS SECTIONS: STH 42 NB - TURN LANES AT CTH U	SHEET PRE_114 E

FILE NAME : C:\CIVIL 3D PROJECTS\44301900\SHEETSPLAN\090205-XS.DWG
LAYOUT NAME - 090213-xs
PLOT DATE : 7/29/2020 8:50 AM
PLOT BY : KIRST, DOUGLAS P
PLOT NAME :
PLOT SCALE : 1 IN:10 FT HORZ. / 1 IN:10 FT VERT.
WISDOT/CADDS SHEET 49

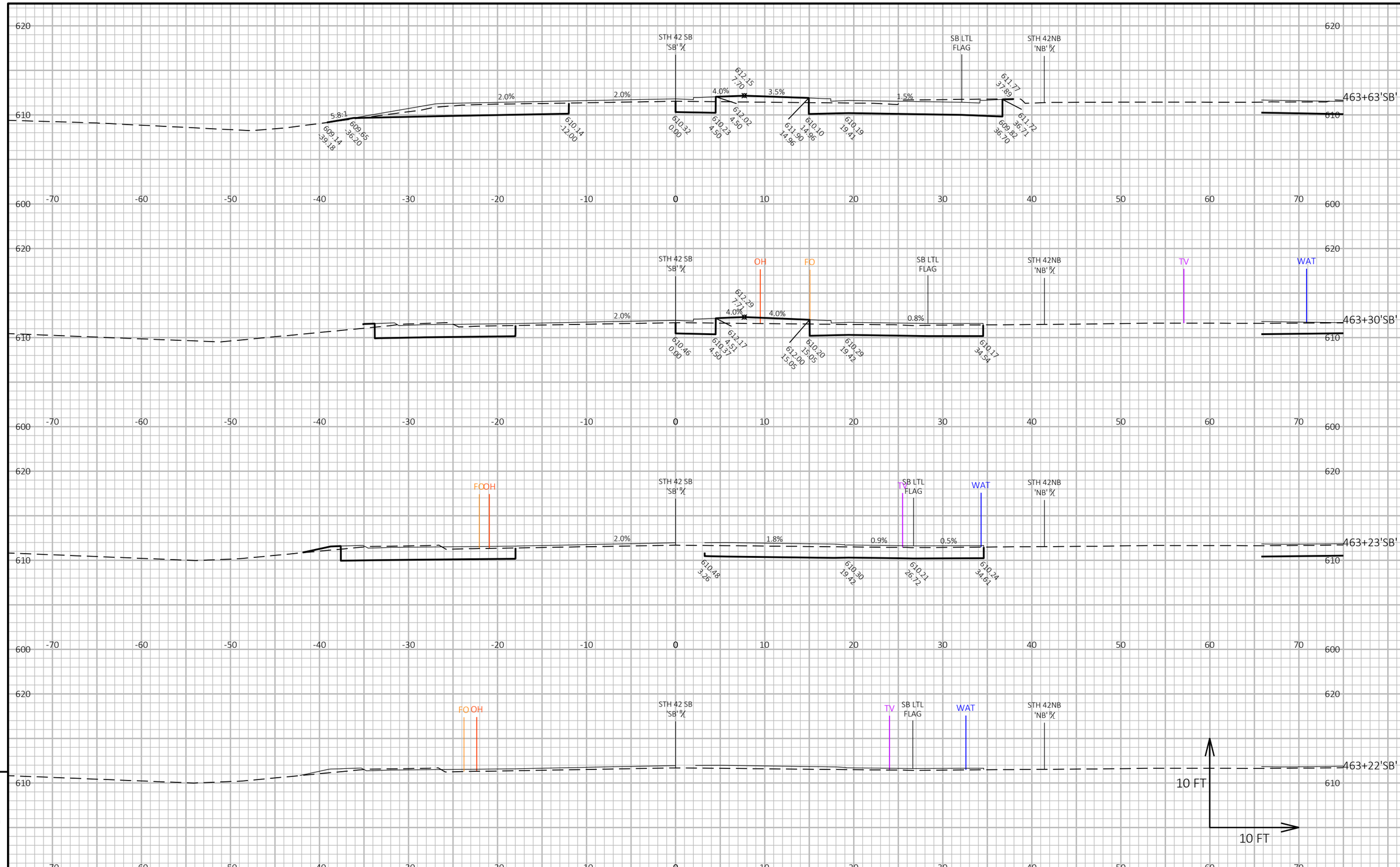

9

9

PROJECT NO: 4430-19-71	HWY: STH 42	COUNTY: DOOR	CROSS SECTIONS: STH 42 SB - TURN LANES AT CIRCLE RIDGE RD	SHEET PRE_115 E

FILE NAME : C:\CIVIL 3D PROJECTS\44301900\SHEETSPLAN\090206-XS.DWG
LAYOUT NAME - 090214-xs
PLOT DATE : 7/29/2020 8:51 AM
PLOT BY : KIRST, DOUGLAS P
PLOT NAME :
PLOT SCALE : 1 IN:10 FT HORZ. / 1 IN:10 FT VERT.

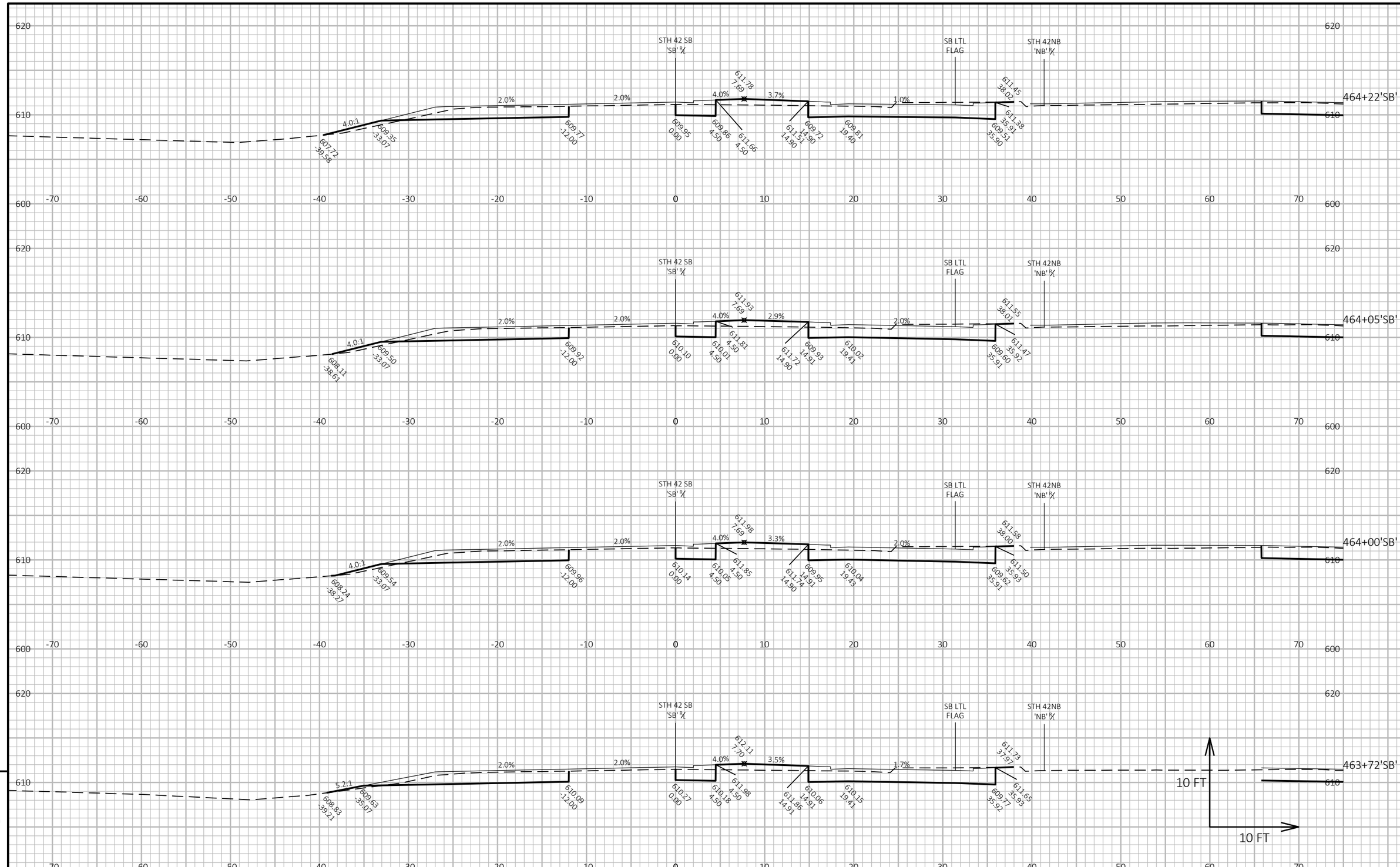

9

9

PROJECT NO: 4430-19-71	HWY: STH 42	COUNTY: DOOR	CROSS SECTIONS: STH 42 SB - TURN LANES AT CIRCLE RIDGE RD	SHEET PRE_116 E

FILE NAME : C:\CIVIL 3D PROJECTS\44301900\SHEETSPLAN\090206-XS.DWG
LAYOUT NAME - 090215-xs

PLOT DATE : 7/29/2020 8:51 AM PLOT BY : KIRST, DOUGLAS P PLOT NAME : **PLOT SCALE :** 1 IN:10 FT HORZ. / 1 IN:10 FT VERT.

WISDOT/CADDS SHEET 49

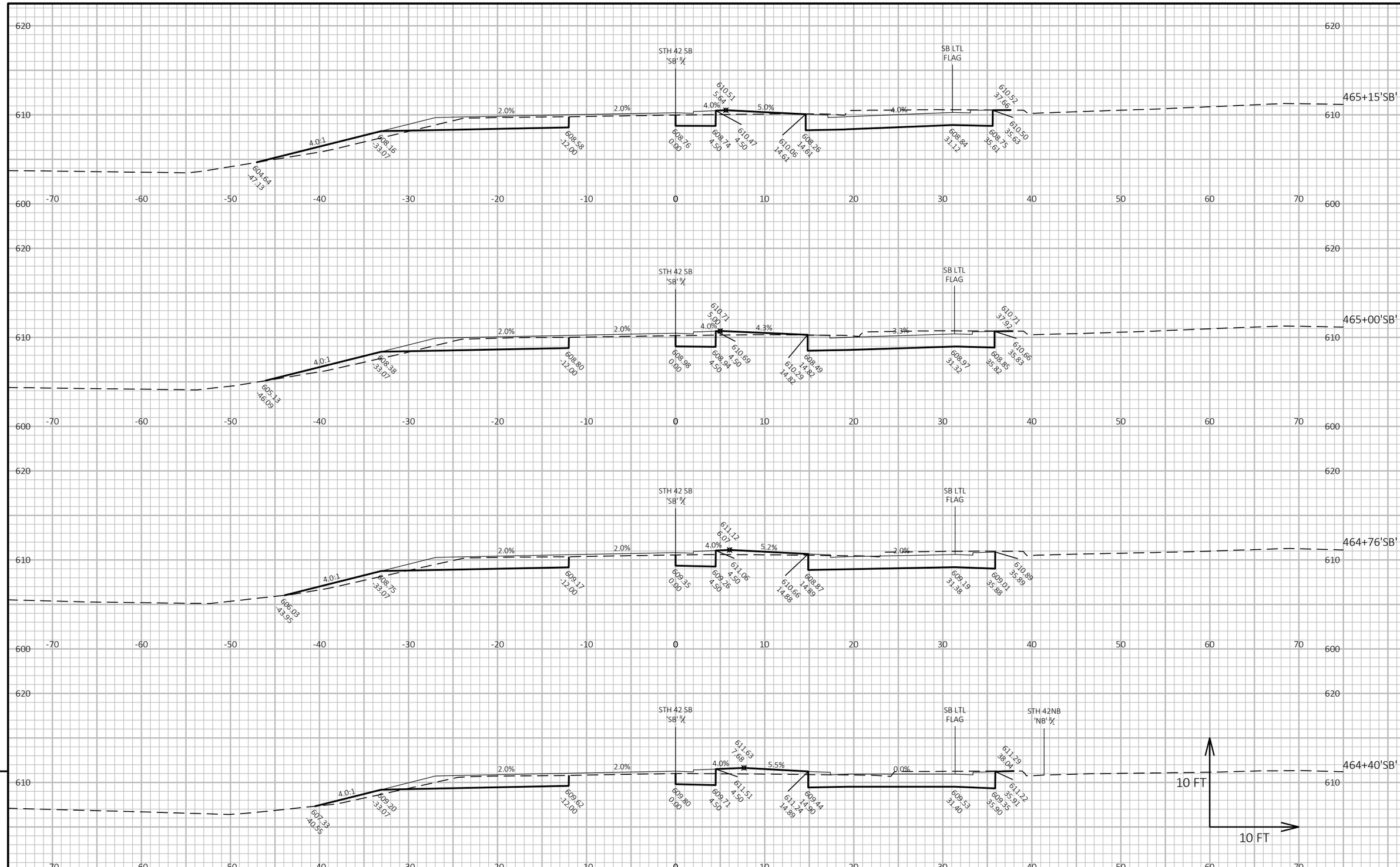

PROJECT NO: 4430-19-71	HWY: STH 42	COUNTY: DOOR	CROSS SECTIONS: STH 42 SB - TURN LANES AT CIRCLE RIDGE RD	SHEET PRE_117 E

FILE NAME : C:\CIVIL 3D PROJECTS\44301900\SHEETSPLAN\090206-XS.DWG
LAYOUT NAME - 090216-xs
PLOT DATE : 7/29/2020 8:51 AM
PLOT BY : KIRST, DOUGLAS P
PLOT NAME :
PLOT SCALE : 1 IN:10 FT HORZ. / 1 IN:10 FT VERT.

WISDOT/CADDS SHEET 49

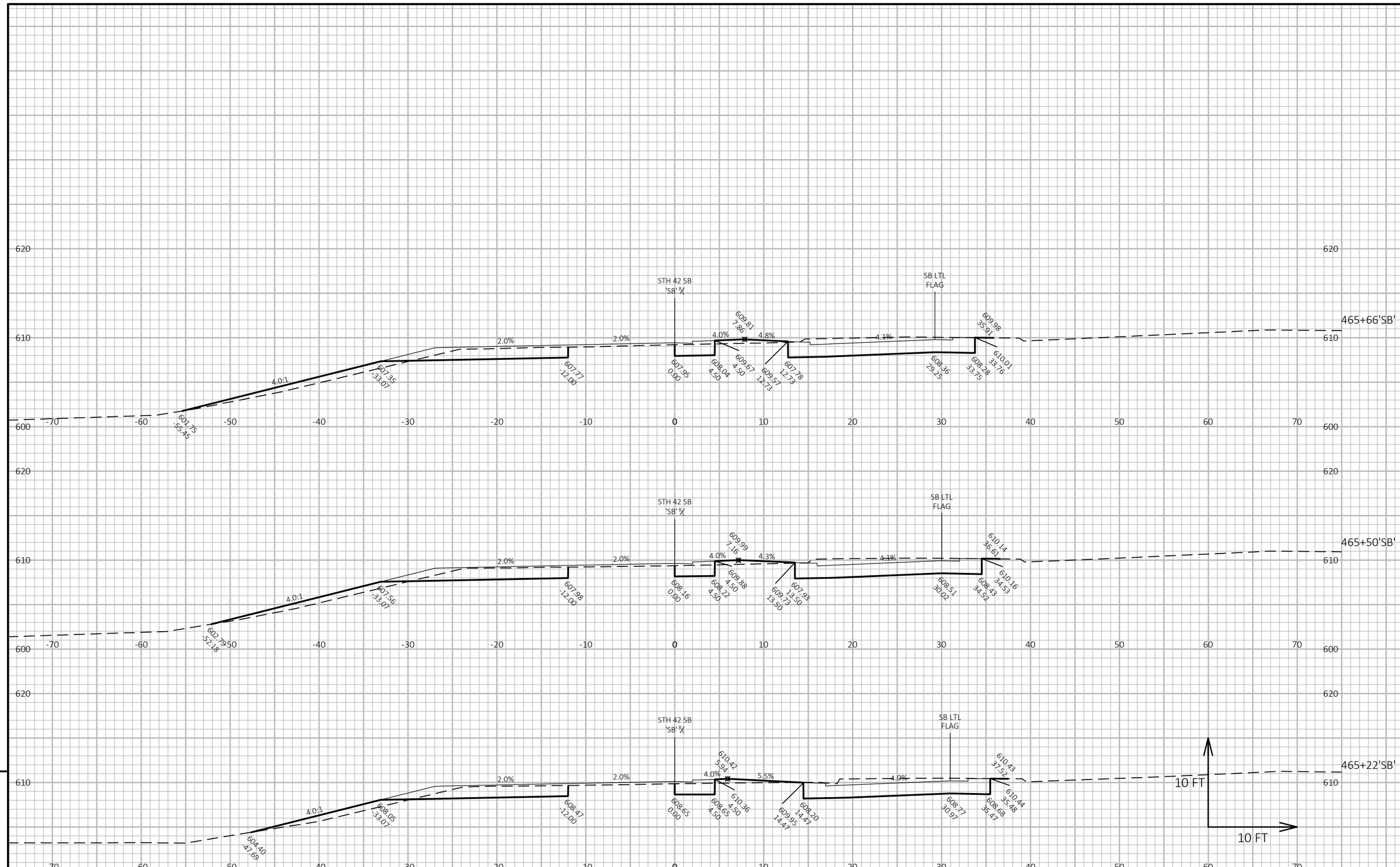

PROJECT NO: 4430-19-71	HWY: STH 42	COUNTY: DOOR	CROSS SECTIONS: STH 42 SB - TURN LANES AT CIRCLE RIDGE RD	SHEET PRE_118 E

FILE NAME : C:\CIVIL 3D PROJECTS\44301900\SHEETSPLAN\090206-XS.DWG
LAYOUT NAME - 090217-xs
PLOT DATE : 7/29/2020 8:51 AM
PLOT BY : KIRST, DOUGLAS P
PLOT NAME :
PLOT SCALE : 1 IN:10 FT HORZ. / 1 IN:10 FT VERT.

WISDOT/CADDS SHEET 49

9

9

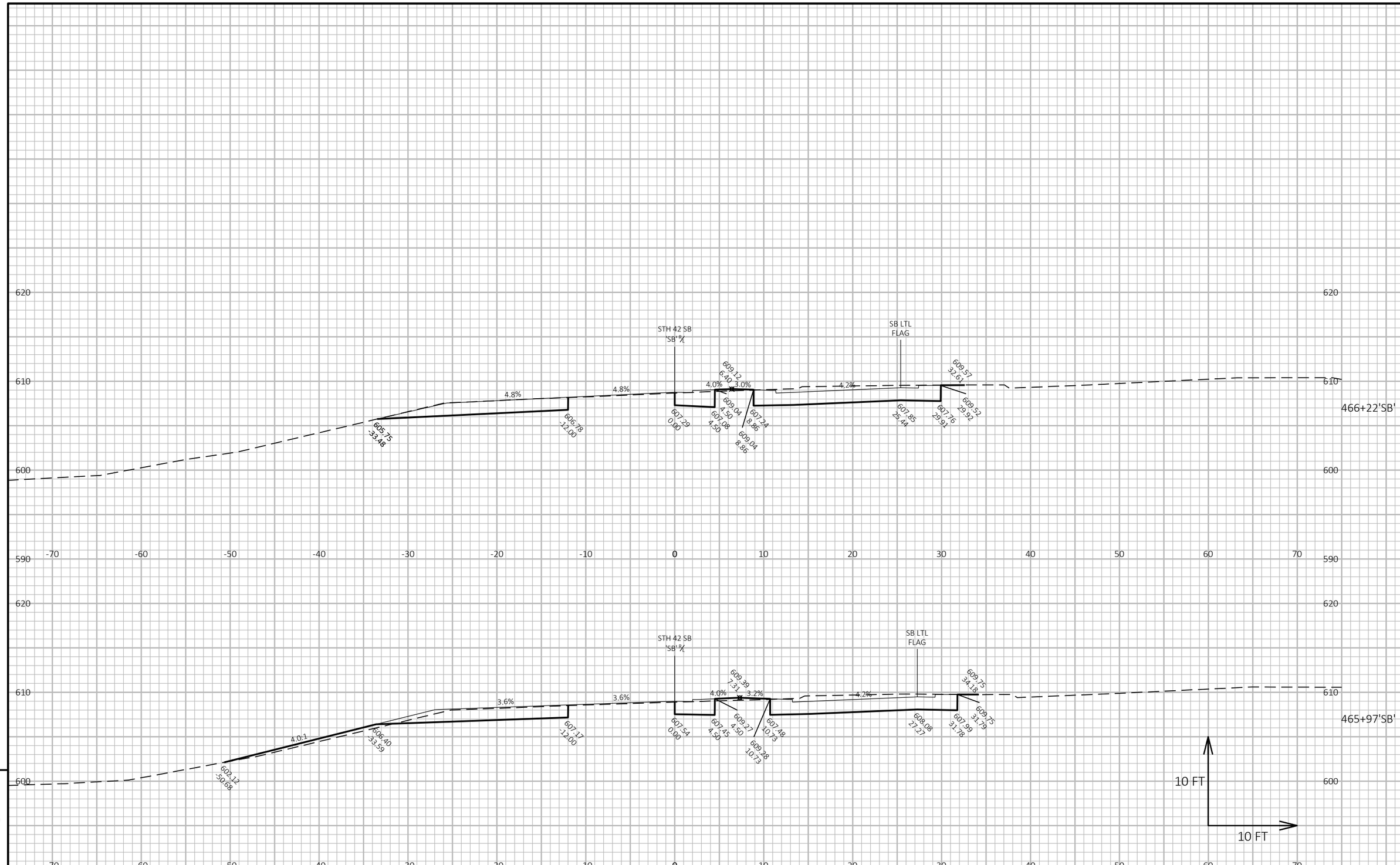

PROJECT NO: 4430-19-71	HWY: STH 42	COUNTY: DOOR	CROSS SECTIONS: STH 42 SB - TURN LANES AT CIRCLE RIDGE RD	SHEET E

FILE NAME : C:\CIVIL 3D PROJECTS\44301900\SHEETSPLAN\090206-XS.DWG
LAYOUT NAME - 090218-xs

PLOT DATE : 7/29/2020 8:51 AM PLOT BY : KIRST, DOUGLAS P PLOT NAME : **PLOT SCALE :** 1 IN:10 FT HORZ. / 1 IN:10 FT VERT.

PRE_119

WISDOT/CADDS SHEET 49

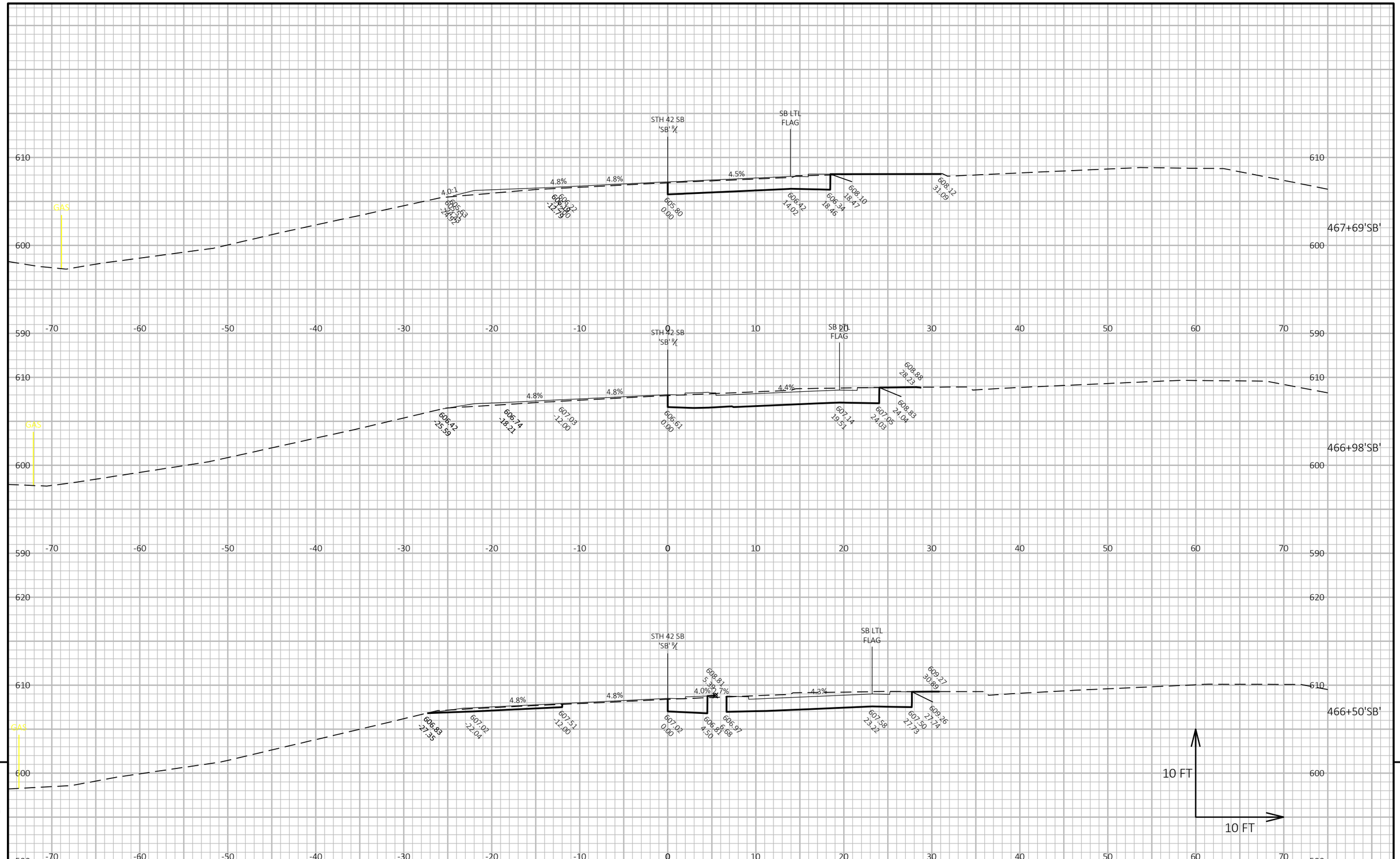

PROJECT NO: 4430-19-71	HWY: STH 42	COUNTY: DOOR	CROSS SECTIONS: STH 42 SB - TURN LANES AT CIRCLE RIDGE RD	SHEET E

FILE NAME : C:\CIVIL 3D PROJECTS\44301900\SHEETSPLAN\090206-XS.DWG
LAYOUT NAME - 090219-xs

PLOT DATE : 7/29/2020 8:51 AM PLOT BY : KIRST, DOUGLAS P PLOT NAME : **PLOT SCALE :** 1 IN:10 FT HORZ. / 1 IN:10 FT VERT.

PRE_120

WISDOT/CADDS SHEET 49

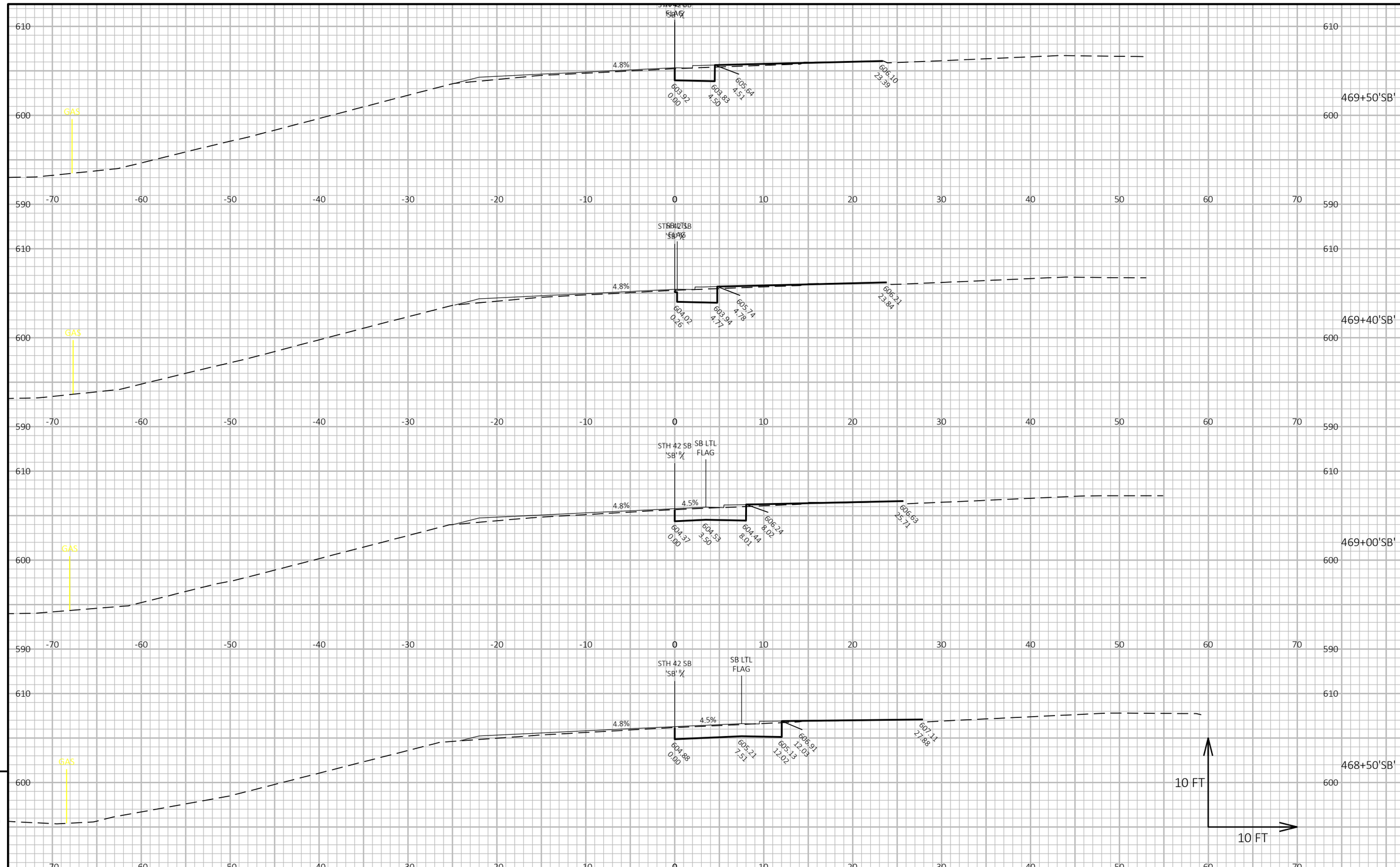

9

9

PROJECT NO: 4430-19-71	HWY: STH 42	COUNTY: DOOR	CROSS SECTIONS: STH 42 SB - TURN LANES AT CIRCLE RIDGE RD	SHEET PRE_121 E

FILE NAME : C:\CIVIL 3D PROJECTS\44301900\SHEETSPLAN\090206-XS.DWG
LAYOUT NAME - 090220-xs

PLOT DATE : 7/29/2020 8:51 AM PLOT BY : KIRST, DOUGLAS P PLOT NAME : PLOT SCALE : 1 IN:10 FT HORZ. / 1 IN:10 FT VERT.

WISDOT/CADDS SHEET 49

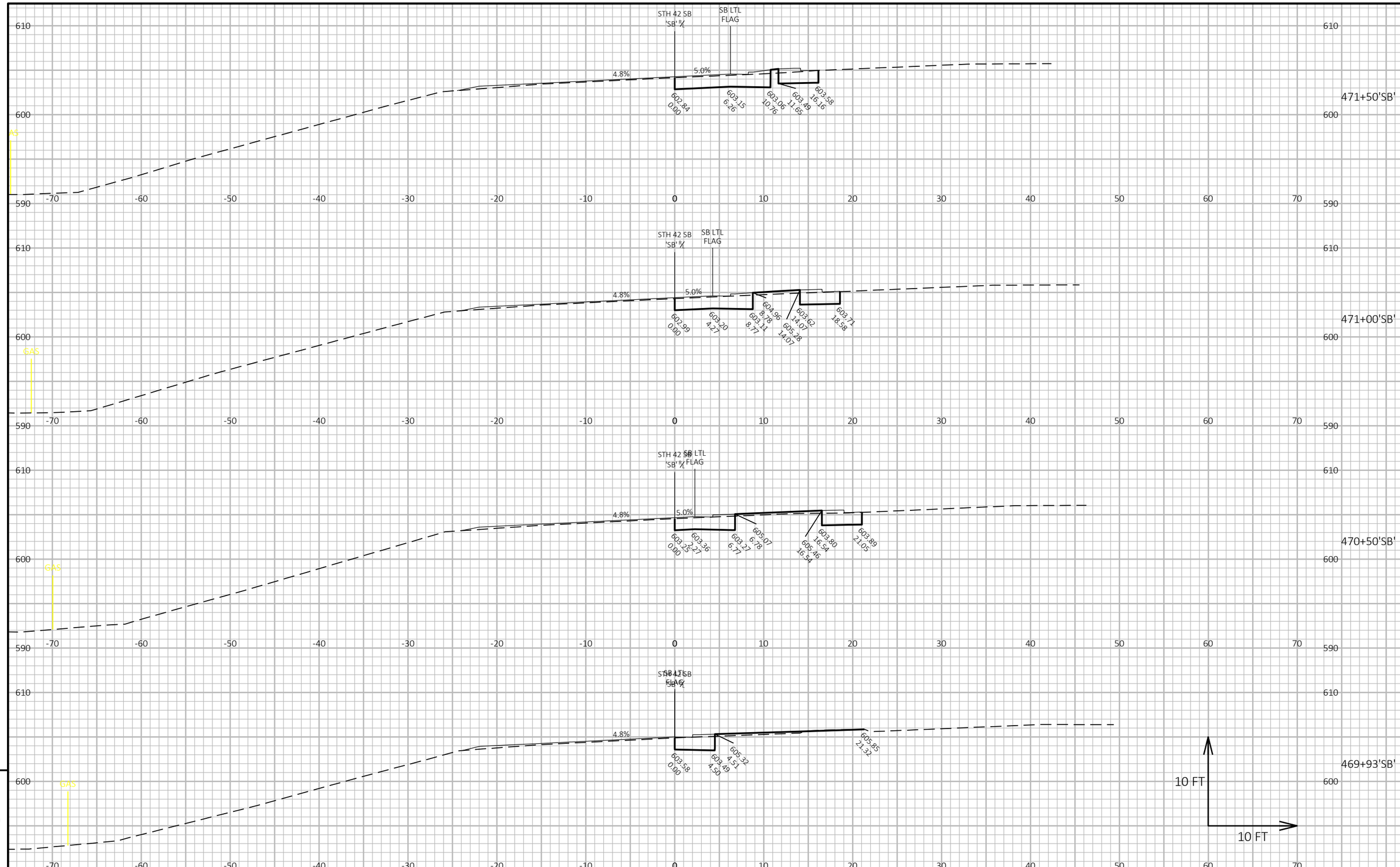

PROJECT NO: 4430-19-71	HWY: STH 42	COUNTY: DOOR	CROSS SECTIONS: STH 42 SB - TURN LANES AT CIRCLE RIDGE RD	SHEET E

PRE_122

FILE NAME : C:\CIVIL 3D PROJECTS\44301900\SHEETSPLAN\090206-XS.DWG
LAYOUT NAME - 090221-xs

PLOT DATE : 7/29/2020 8:51 AM PLOT BY : KIRST, DOUGLAS P PLOT NAME : **PLOT SCALE :** 1 IN:10 FT HORZ. / 1 IN:10 FT VERT.

WISDOT/CADDS SHEET 49

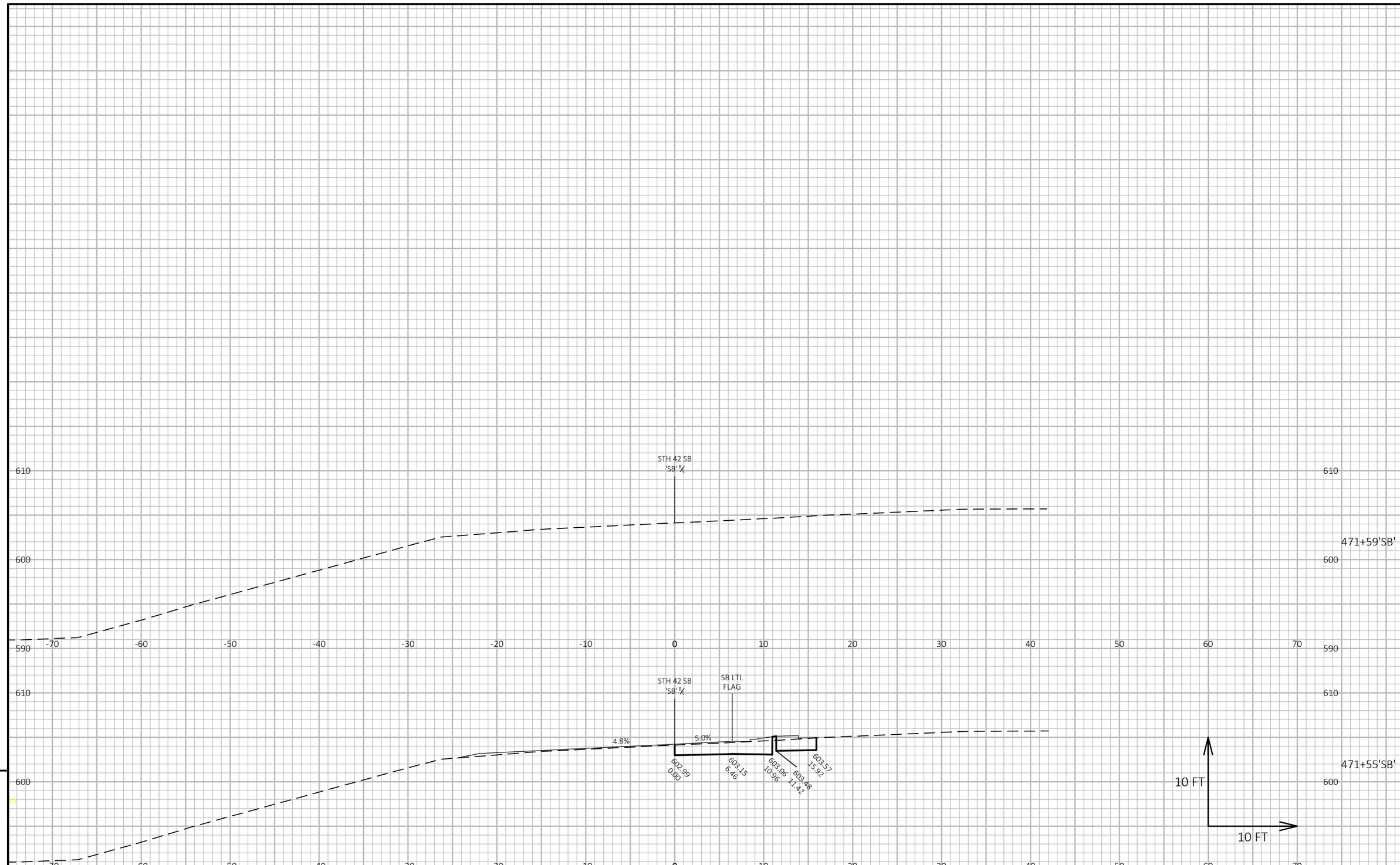

9

9

PROJECT NO: 4430-19-71	HWY: STH 42	COUNTY: DOOR	CROSS SECTIONS: STH 42 SB - TURN LANES AT CIRCLE RIDGE RD	SHEET E

PRE_123

FILE NAME : C:\CIVIL 3D PROJECTS\44301900\SHEETSPLAN\090206-XS.DWG
LAYOUT NAME - 090222-xs

PLOT DATE : 7/29/2020 8:51 AM PLOT BY : KIRST, DOUGLAS P PLOT NAME : **PLOT SCALE :** 1 IN:10 FT HORZ. / 1 IN:10 FT VERT.

WISDOT/CADDS SHEET 49

** NOTE:
PROPOSED R/W AND TEMPORARY LIMITED EASEMENT IS APPROXIMATE.
CITY OF STURGEON BAY TO PURCHASE PROPERTY FOR ASHLAND INTERSECTION WIDENING. CONTACT CHAD SHEFCHIK, CITY ENGINEER, FOR MORE INFORMATION, (920) 746-2913.

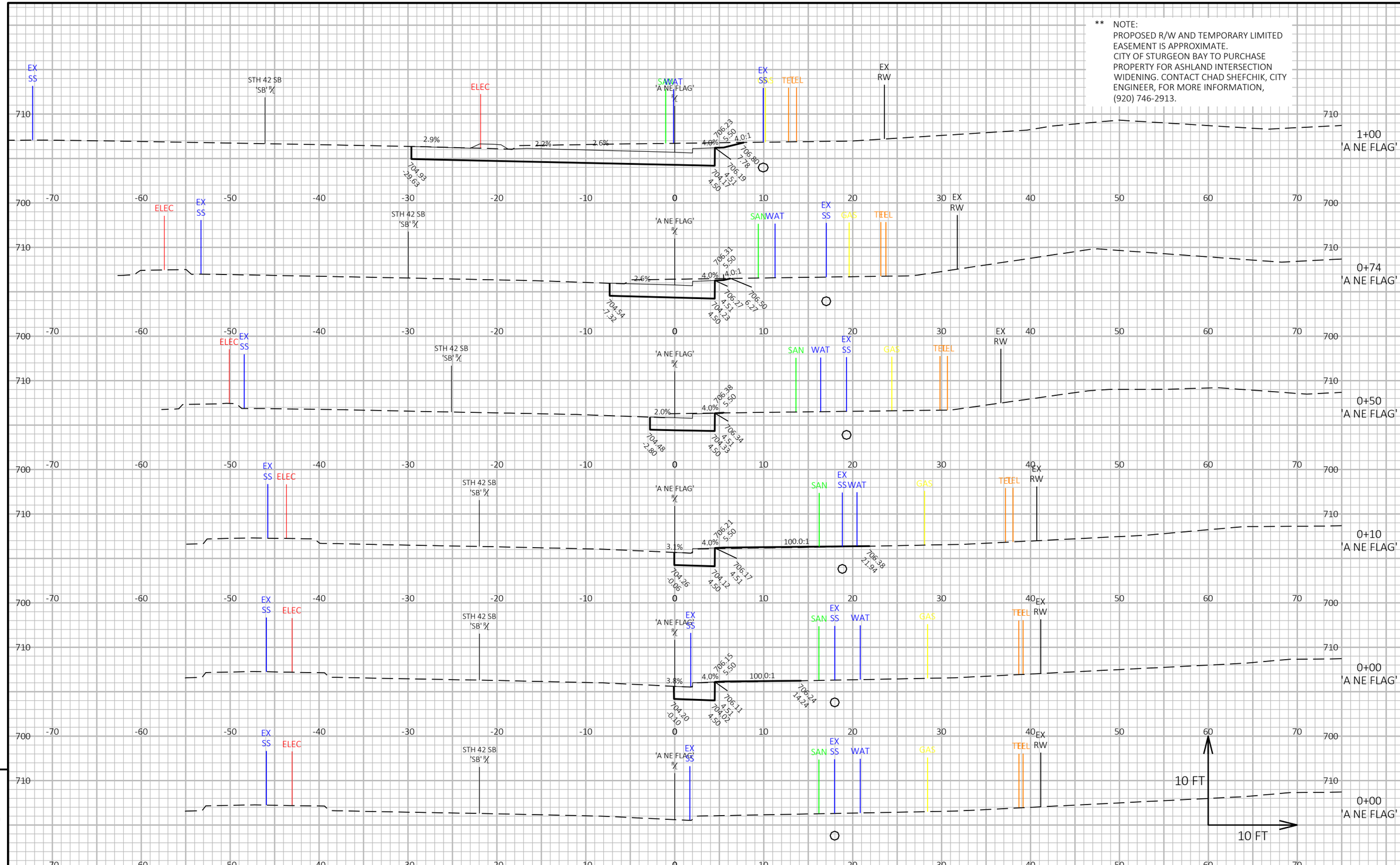

PROJECT NO: 4430-19-71	HWY: STH 42	COUNTY: DOOR	CROSS SECTIONS: S. ASHLAND AVE	SHEET PRE_124 E

FILE NAME : C:\CIVIL 3D PROJECTS\44301900\SHEETSPLAN\090202-XS.DWG
LAYOUT NAME - 090223-xs
PLOT DATE : 7/29/2020 8:52 AM
PLOT BY : KIRST, DOUGLAS P
PLOT NAME :
PLOT SCALE : 1 IN:10 FT HORZ. / 1 IN:10 FT VERT.
WISDOT/CADDS SHEET 49

** NOTE:
PROPOSED R/W AND TEMPORARY LIMITED EASEMENT IS APPROXIMATE.
CITY OF STURGEON BAY TO PURCHASE PROPERTY FOR ASHLAND INTERSECTION WIDENING. CONTACT CHAD SHEFCHIK, CITY ENGINEER, FOR MORE INFORMATION, (920) 746-2913.

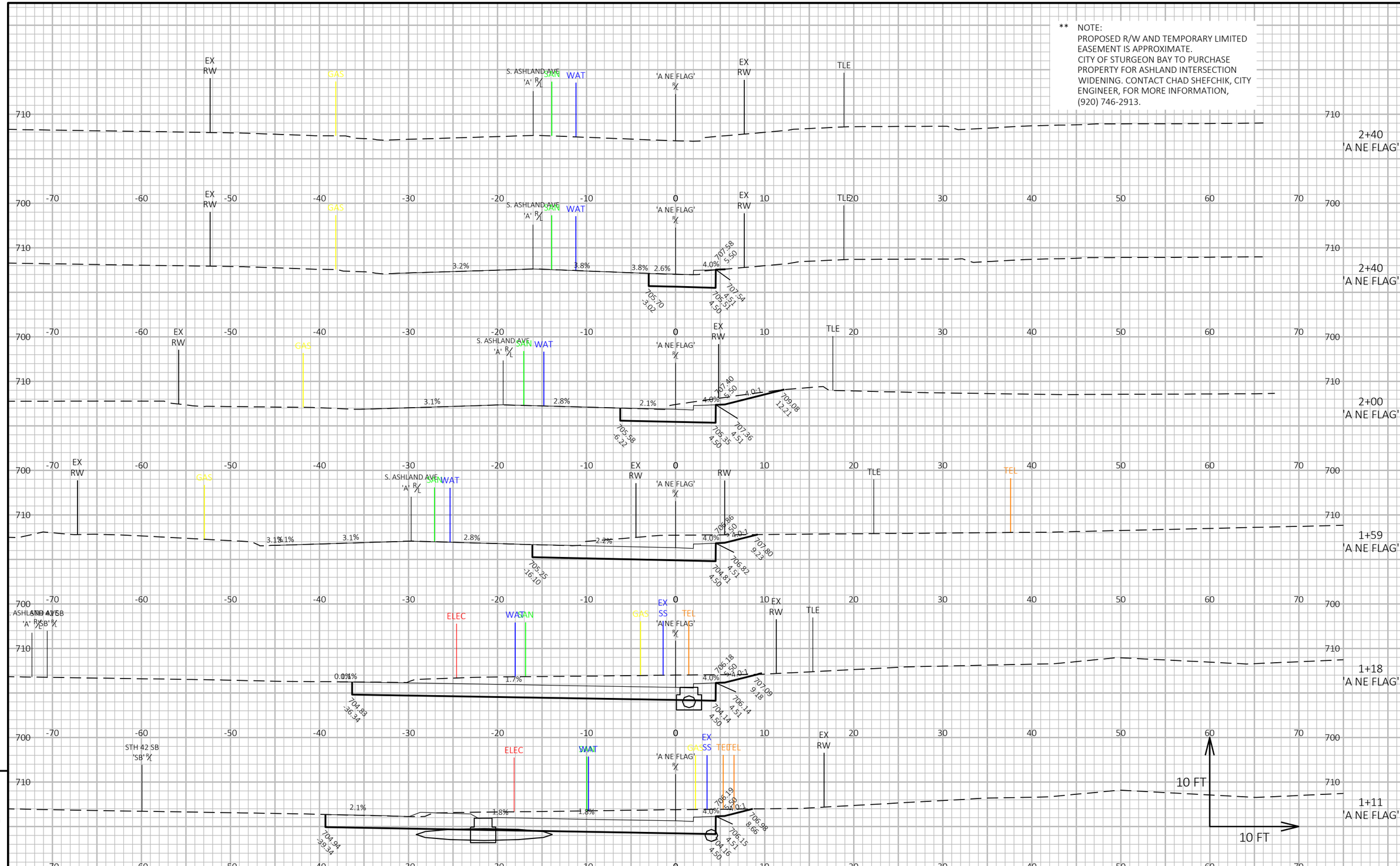

9

PROJECT NO: 4430-19-71	HWY: STH 42	COUNTY: DOOR	CROSS SECTIONS: S. ASHLAND AVE	SHEET PRE_125 E

FILE NAME : C:\CIVIL 3D PROJECTS\44301900\SHEETSPLAN\090202-XS.DWG
LAYOUT NAME - 090224-xs
PLOT DATE : 7/29/2020 8:52 AM
PLOT BY : KIRST, DOUGLAS P
PLOT NAME :
PLOT SCALE : 1 IN:10 FT HORZ. / 1 IN:10 FT VERT.
WISDOT/CADDS SHEET 49

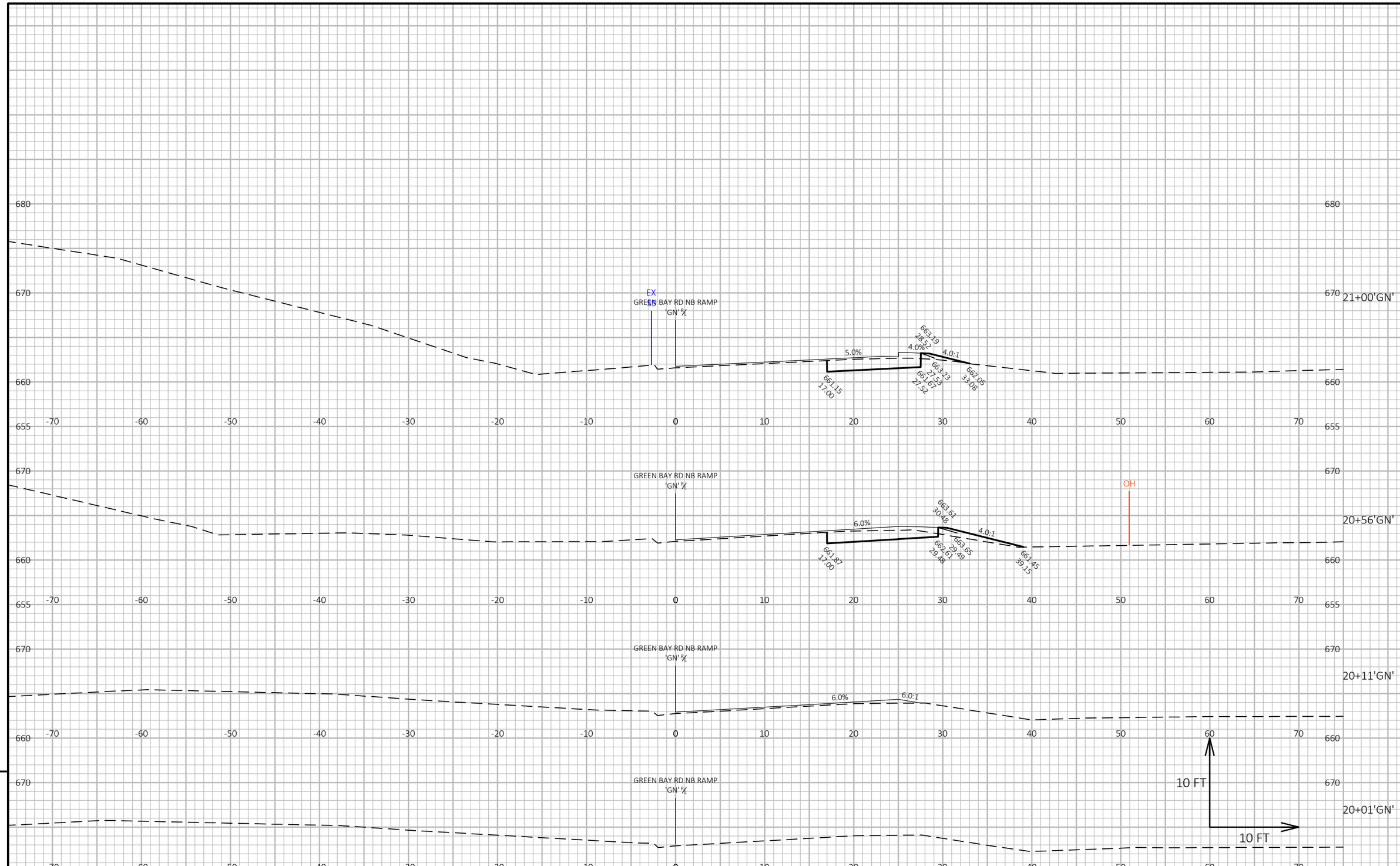

9

PROJECT NO: 4430-19-71	HWY: STH 42	COUNTY: DOOR	CROSS SECTIONS: GREEN BAY RD NB RAMP	SHEET PRE_126 E

FILE NAME : C:\CIVIL 3D PROJECTS\44301900\SHEETSPLAN\090203-XS.DWG
LAYOUT NAME - 090225-xs
PLOT DATE : 7/29/2020 8:52 AM
PLOT BY : KIRST, DOUGLAS P
PLOT NAME :
PLOT SCALE : 1 IN:10 FT HORZ. / 1 IN:10 FT VERT.
WISDOT/CADDS SHEET 49

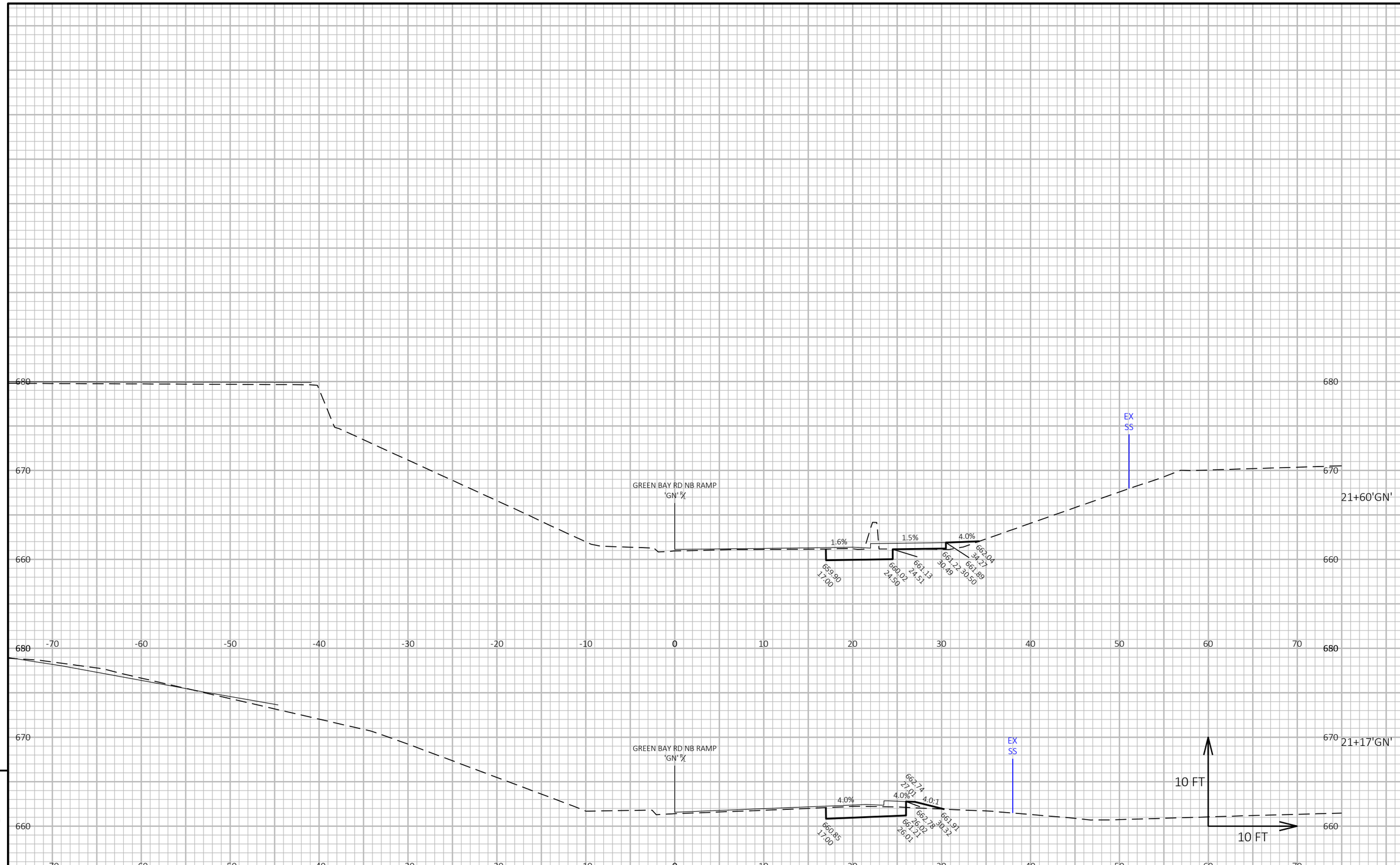

9

9

PROJECT NO: 4430-19-71	HWY: STH 42	COUNTY: DOOR	CROSS SECTIONS: GREEN BAY RD NB RAMP	SHEET PRE_127 E

FILE NAME : C:\CIVIL 3D PROJECTS\44301900\SHEETSPLAN\090203-XS.DWG
LAYOUT NAME - 090226-xs

PLOT DATE : 7/29/2020 8:52 AM

PLOT BY : KIRST, DOUGLAS P

PLOT NAME :

PLOT SCALE : 1 IN:10 FT HORZ. / 1 IN:10 FT VERT.

WISDOT/CADDS SHEET 49

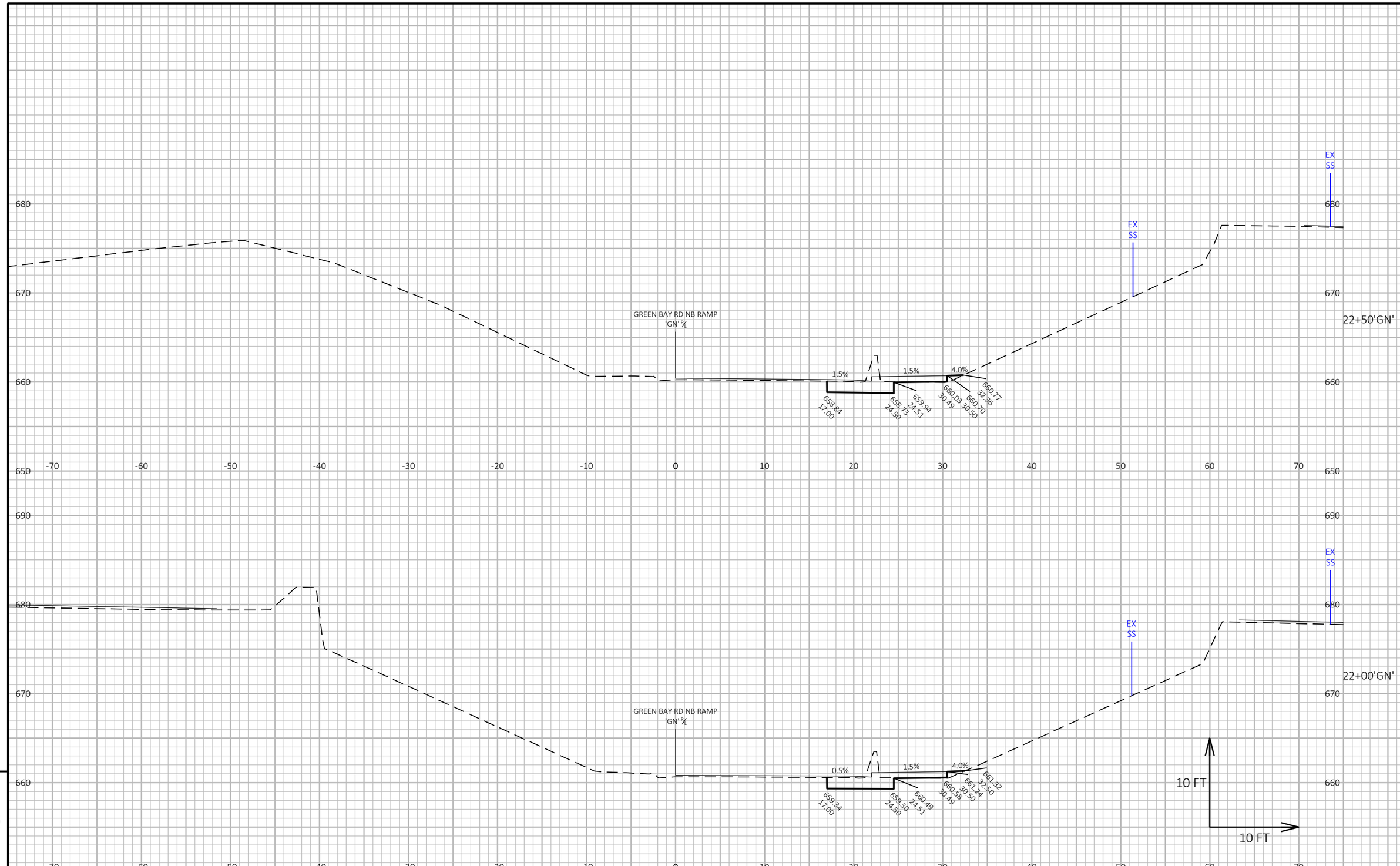

9

9

PROJECT NO: 4430-19-71	HWY: STH 42	COUNTY: DOOR	CROSS SECTIONS: GREEN BAY RD NB RAMP	SHEET PRE_128 E

FILE NAME : C:\CIVIL 3D PROJECTS\44301900\SHEETSPLAN\090203-XS.DWG
LAYOUT NAME - 090227-xs

PLOT DATE : 7/29/2020 8:52 AM

PLOT BY : KIRST, DOUGLAS P

PLOT NAME :

PLOT SCALE : 1 IN:10 FT HORZ. / 1 IN:10 FT VERT.

WISDOT/CADDS SHEET 49

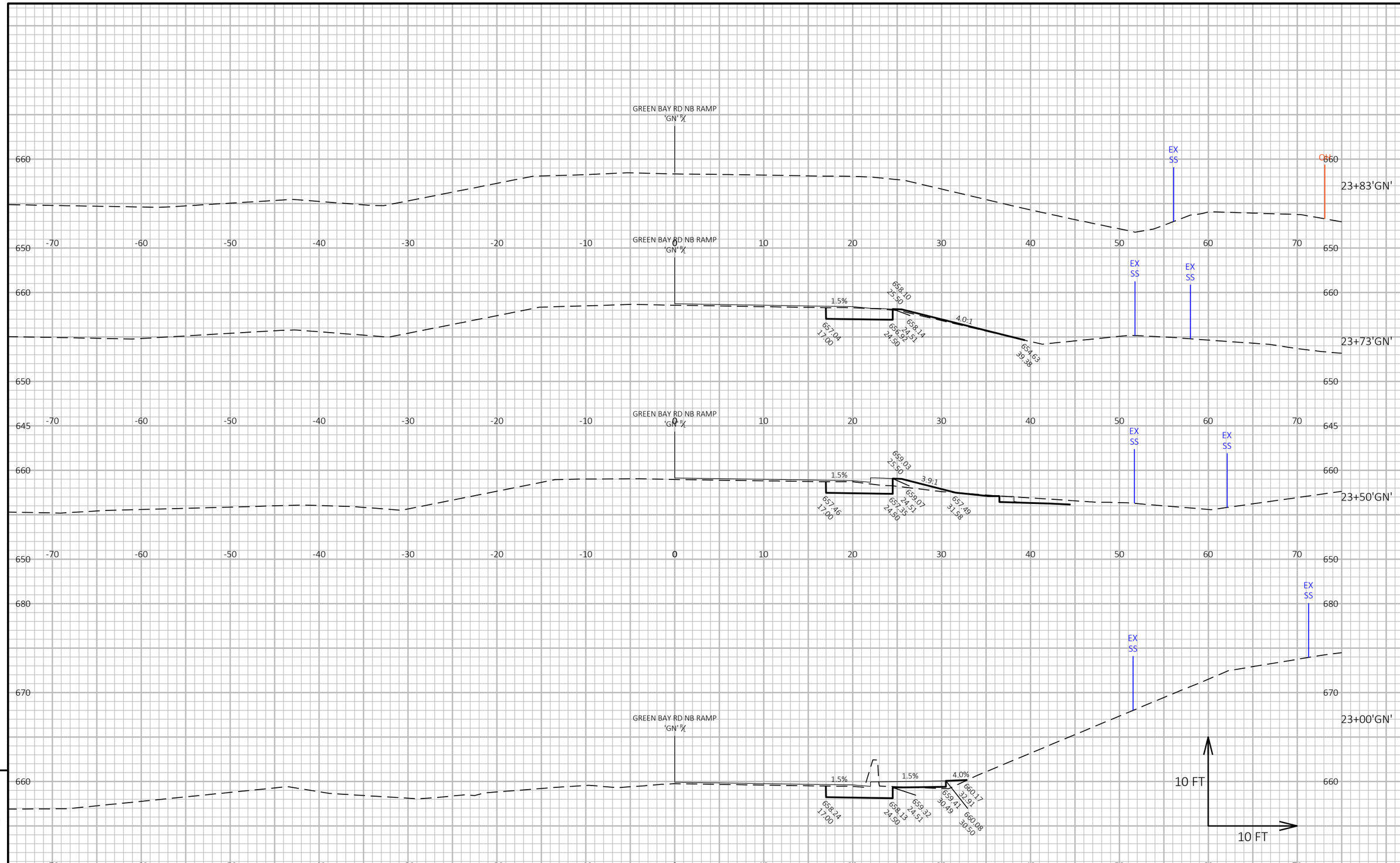

PROJECT NO: 4430-19-71	HWY: STH 42	COUNTY: DOOR	CROSS SECTIONS: GREEN BAY RD NB RAMP	SHEET E

PRE_129

FILE NAME : C:\CIVIL 3D PROJECTS\44301900\SHEETSPLAN\090203-XS.DWG
LAYOUT NAME - 090228-xs

PLOT DATE : 7/29/2020 8:52 AM PLOT BY : KIRST, DOUGLAS P PLOT NAME : PLOT SCALE : 1 IN:10 FT HORZ. / 1 IN:10 FT VERT.

WISDOT/CADDS SHEET 49

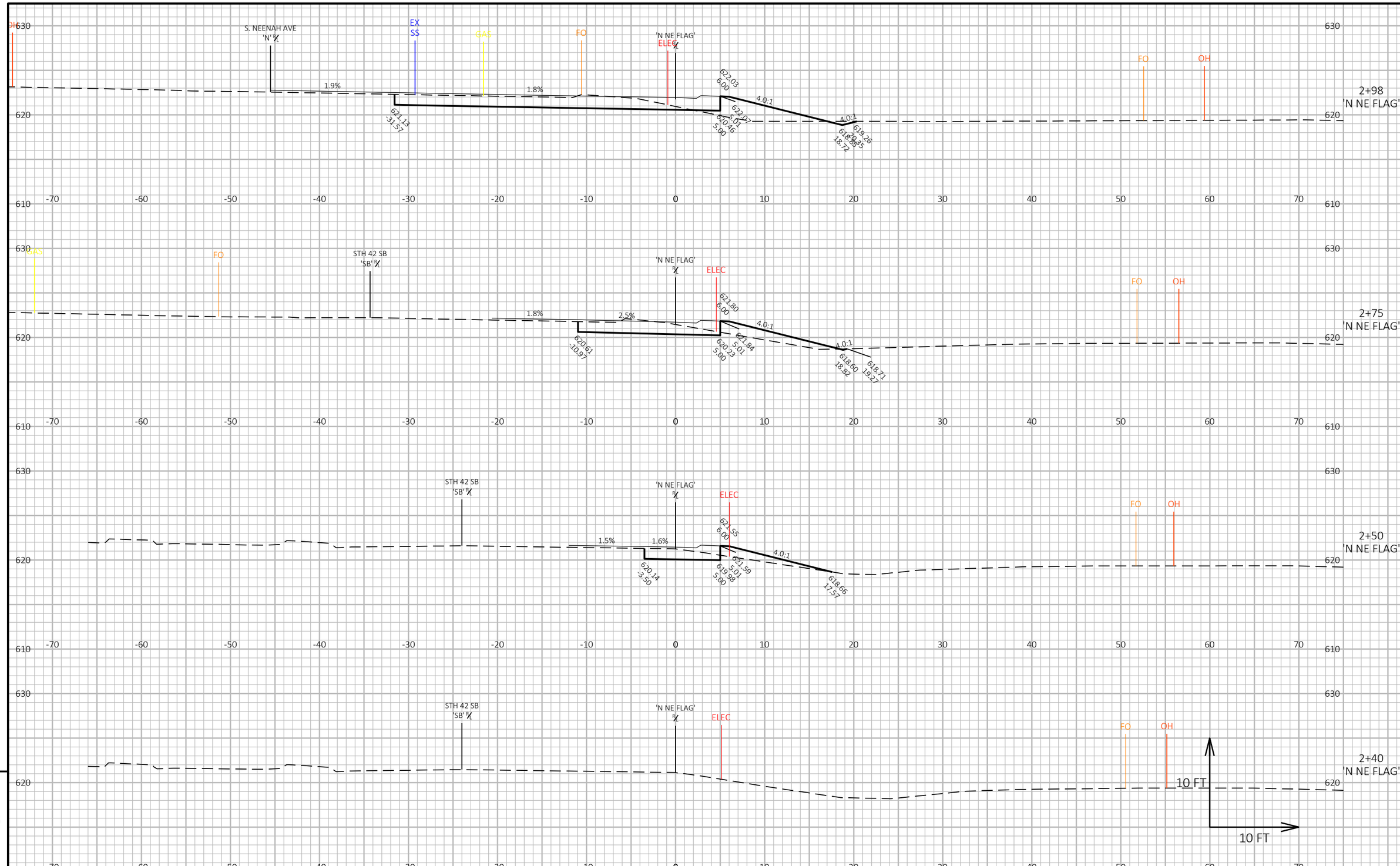

9

9

PROJECT NO: 4430-19-71	HWY: STH 42	COUNTY: DOOR	CROSS SECTIONS: S. NEENAH AVE	SHEET PRE_130	E

FILE NAME : C:\CIVIL 3D PROJECTS\44301900\SHEETSPLAN\090204-XS.DWG
LAYOUT NAME - 090229-xs

PLOT DATE : 7/29/2020 8:53 AM

PLOT BY : KIRST, DOUGLAS P

PLOT NAME :

PLOT SCALE : 1 IN:10 FT HORZ. / 1 IN:10 FT VERT.

WISDOT/CADDS SHEET 49

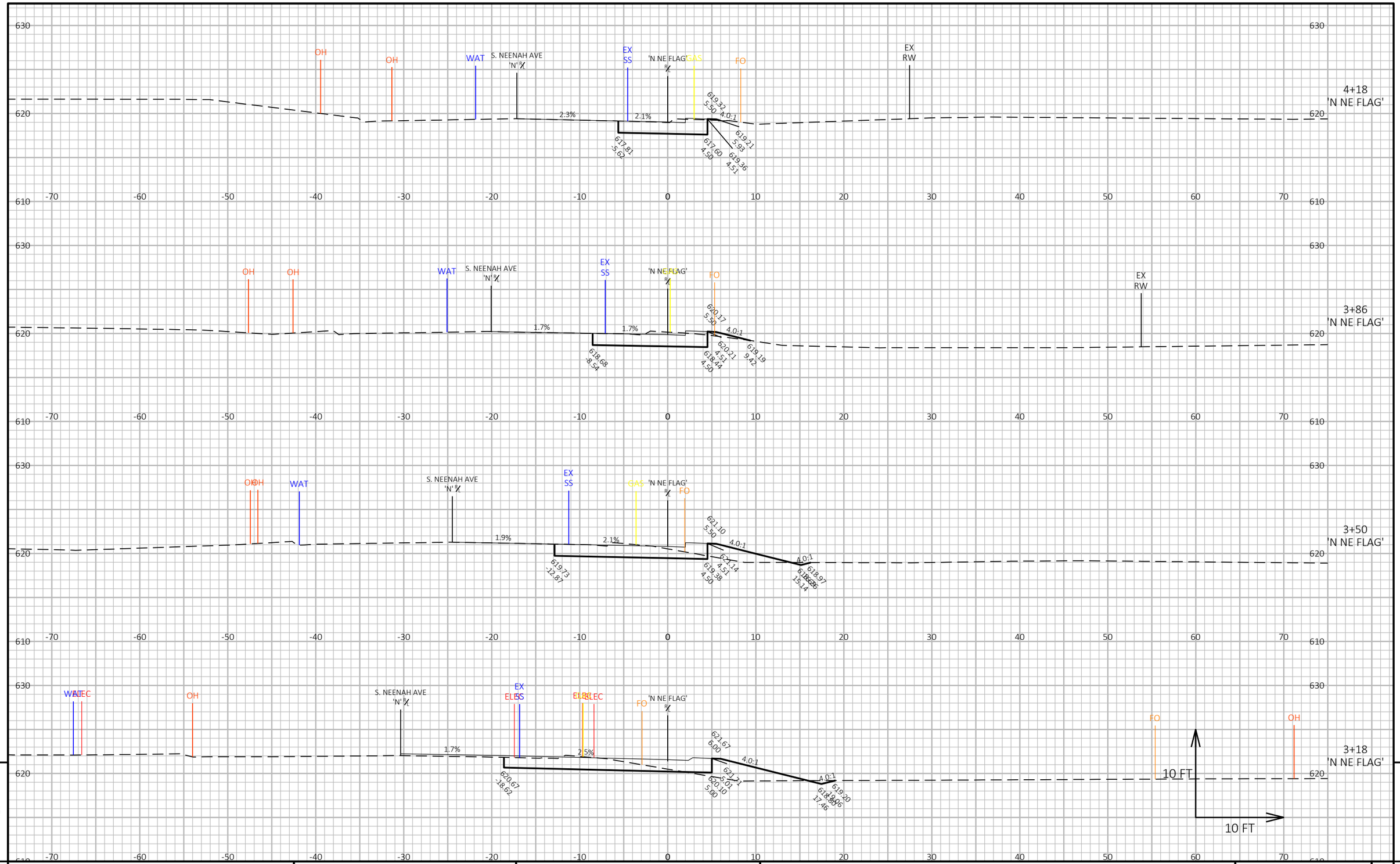

9

9

PROJECT NO: 4430-19-71	HWY: STH 42	COUNTY: DOOR	CROSS SECTIONS: S. NEENAH AVE	SHEET PRE_131	E

FILE NAME : C:\CIVIL 3D PROJECTS\44301900\SHEETSPLAN\090204-XS.DWG
LAYOUT NAME - 090230-xs

PLOT DATE : 7/29/2020 8:53 AM

PLOT BY : KIRST, DOUGLAS P

PLOT NAME :

PLOT SCALE : 1 IN:10 FT HORZ. / 1 IN:10 FT VERT.

WISDOT/CADDS SHEET 49

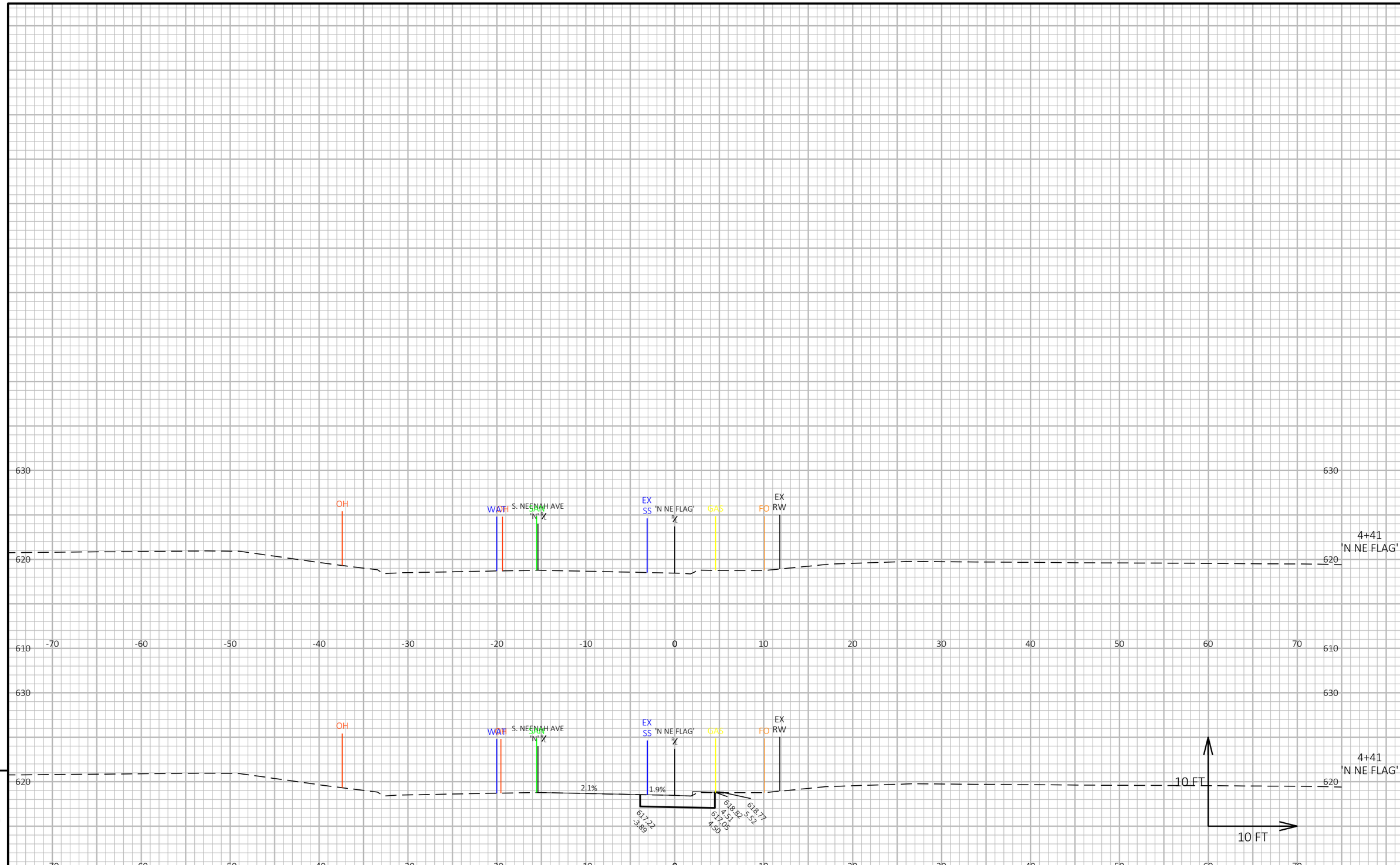

9

9

PROJECT NO: 4430-19-71	HWY: STH 42	COUNTY: DOOR	CROSS SECTIONS: S. NEENAH AVE	SHEET PRE_132 E

FILE NAME : C:\CIVIL 3D PROJECTS\44301900\SHEETSPLAN\090204-XS.DWG
LAYOUT NAME - 090231-xs

PLOT DATE : 7/29/2020 8:53 AM

PLOT BY : KIRST, DOUGLAS P

PLOT NAME :

PLOT SCALE : 1 IN:10 FT HORZ. / 1 IN:10 FT VERT.

WISDOT/CADDS SHEET 49

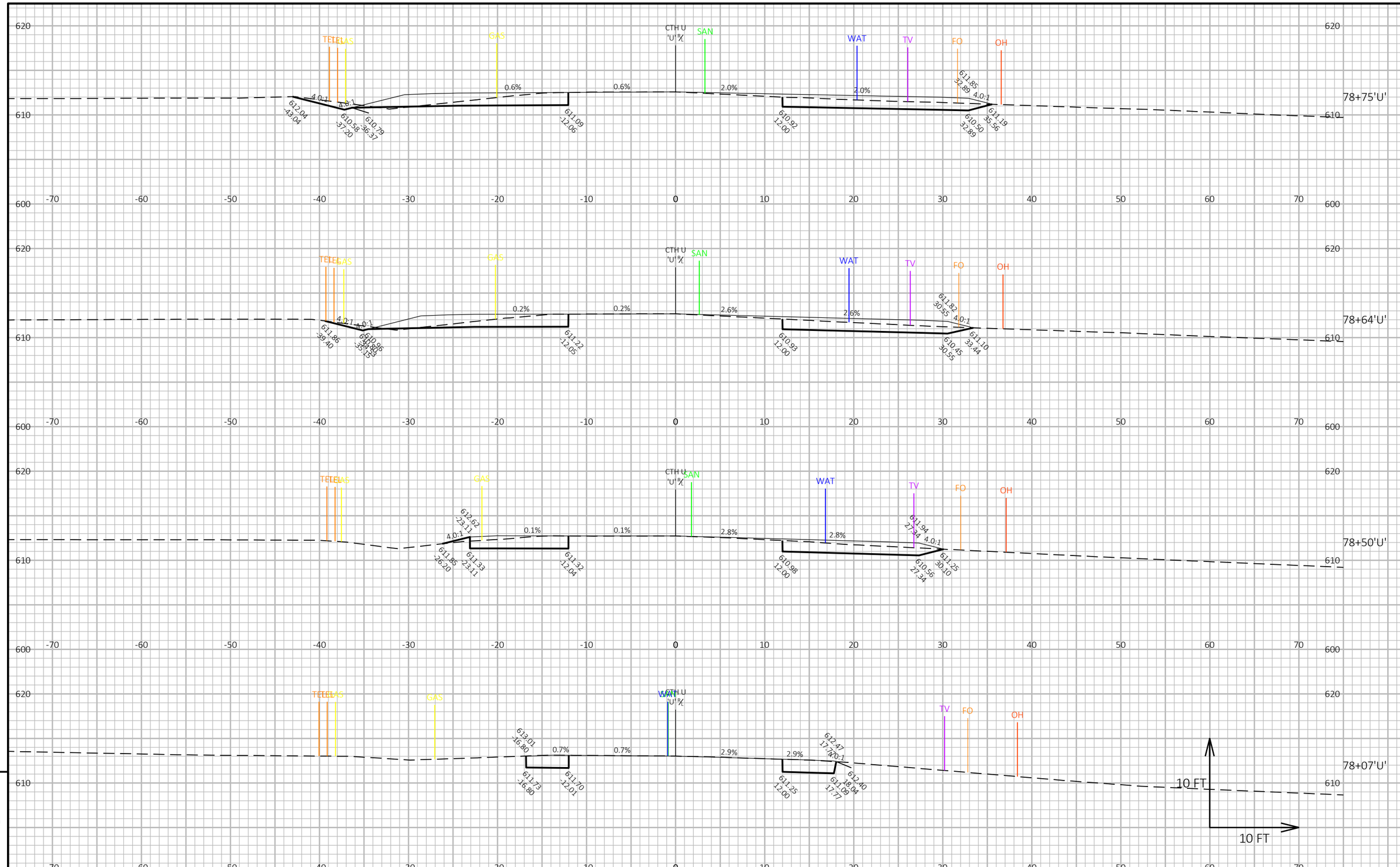

9

9

PROJECT NO: 4430-19-71	HWY: STH 42	COUNTY: DOOR	CROSS SECTIONS: CTH U	SHEET PRE_133 E

FILE NAME : C:\CIVIL 3D PROJECTS\44301900\SHEETSPLAN\090205-XS.DWG
LAYOUT NAME - 090232-xs

PLOT DATE : 7/29/2020 8:53 AM

PLOT BY : KIRST, DOUGLAS P

PLOT NAME :

PLOT SCALE : 1 IN:10 FT HORZ. / 1 IN:10 FT VERT.

WISDOT/CADDS SHEET 49

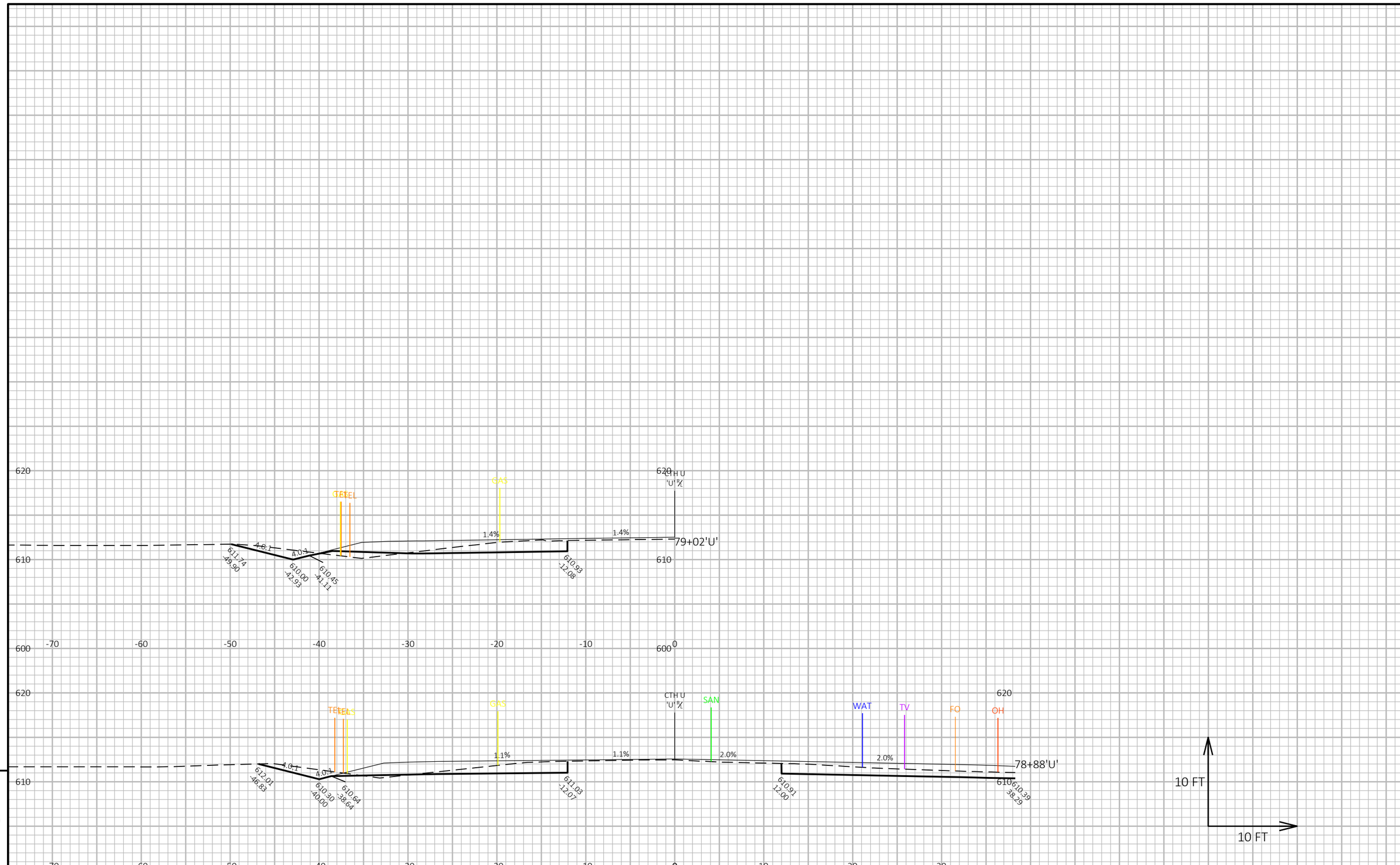

9

9

PROJECT NO: 4430-19-71	HWY: STH 42	COUNTY: DOOR	CROSS SECTIONS: CTH U	SHEET PRE_134 E

FILE NAME : C:\CIVIL 3D PROJECTS\44301900\SHEETSPLAN\090205-XS.DWG
LAYOUT NAME - 090233-xs

PLOT DATE : 7/29/2020 8:53 AM

PLOT BY : KIRST, DOUGLAS P

PLOT NAME :

PLOT SCALE : 1 IN:10 FT HORZ. / 1 IN:10 FT VERT.

WISDOT/CADDS SHEET 49

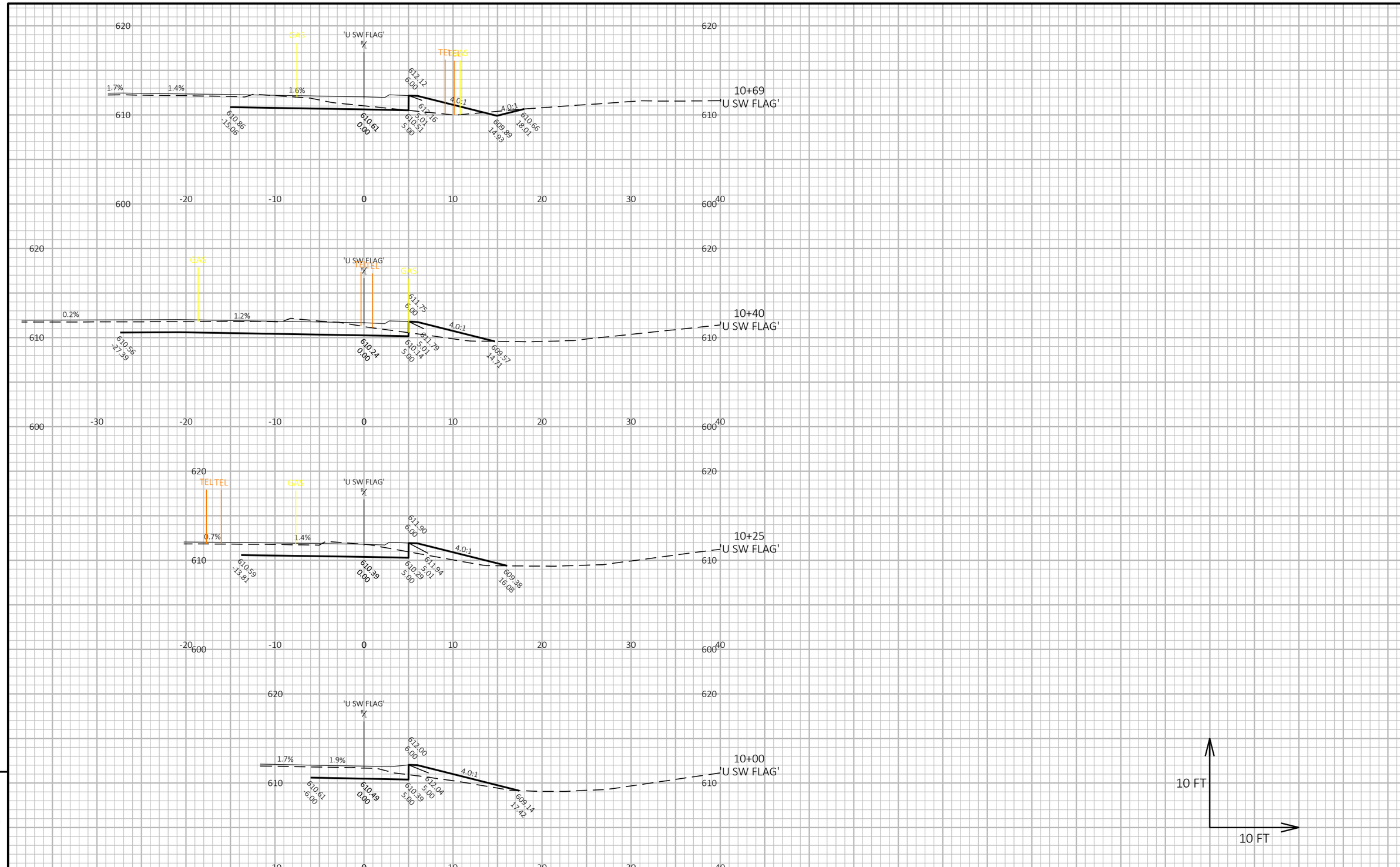

9

9

PROJECT NO: 4430-19-71	HWY: STH 42	COUNTY: DOOR	CROSS SECTIONS: CTH U - SW CURB RETURN	SHEET PRE_135 E

FILE NAME : C:\CIVIL 3D PROJECTS\44301900\SHEETSPLAN\090205-XS.DWG
LAYOUT NAME - 090234-xs
PLOT DATE : 7/29/2020 8:53 AM
PLOT BY : KIRST, DOUGLAS P
PLOT NAME :
PLOT SCALE : 1 IN:10 FT HORZ. / 1 IN:10 FT VERT.
WISDOT/CADDS SHEET 49

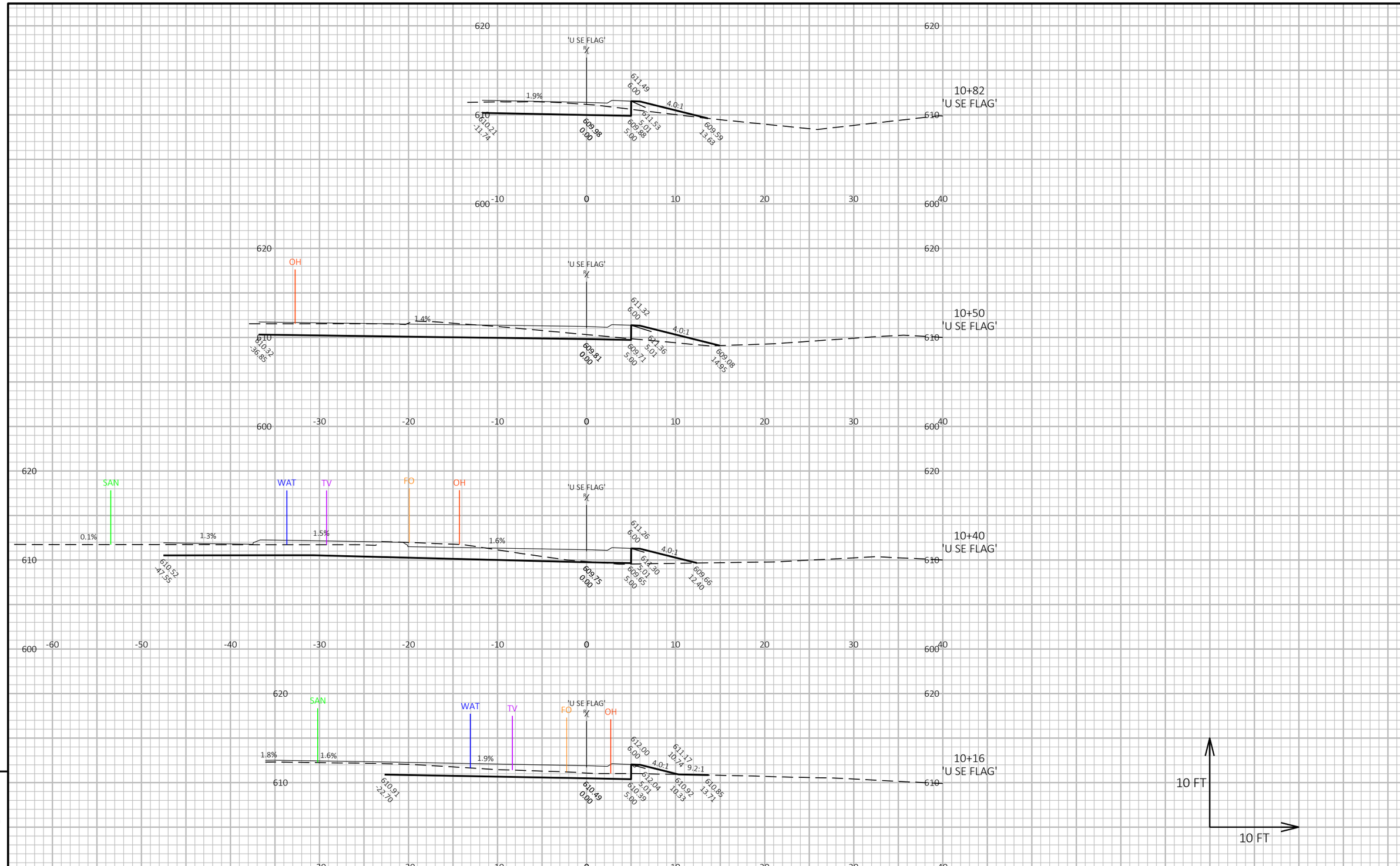

9

9

PROJECT NO: 4430-19-71	HWY: STH 42	COUNTY: DOOR	CROSS SECTIONS: CTH U - SE CURB RETURN	SHEET PRE_136 E

FILE NAME : C:\CIVIL 3D PROJECTS\44301900\SHEETSPLAN\090205-XS.DWG
LAYOUT NAME - 090235-xs

PLOT DATE : 7/29/2020 8:53 AM PLOT BY : KIRST, DOUGLAS P PLOT NAME : **PLOT SCALE :** 1 IN:10 FT HORZ. / 1 IN:10 FT VERT.

WISDOT/CADDS SHEET 49

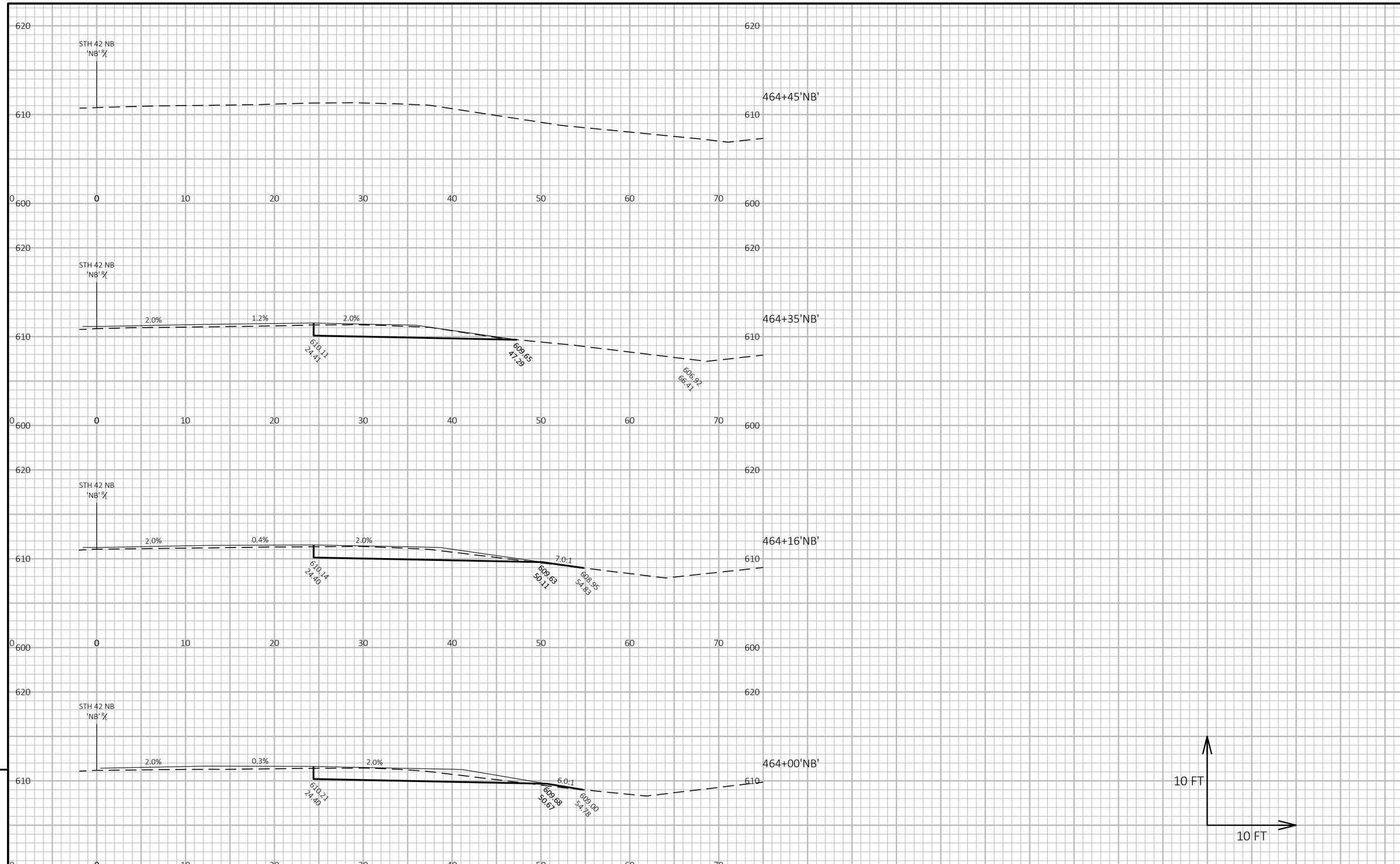

PROJECT NO: 4430-19-71	HWY: STH 42	COUNTY: DOOR	CROSS SECTIONS: CTH U - SE CURB RETURN	SHEET PRE_137 E

FILE NAME : C:\CIVIL 3D PROJECTS\44301900\SHEETSPLAN\090205-XS.DWG
LAYOUT NAME - 090236-xs
PLOT DATE : 7/29/2020 8:53 AM
PLOT BY : KIRST, DOUGLAS P
PLOT NAME :
PLOT SCALE : 1 IN:10 FT HORZ. / 1 IN:10 FT VERT.
WISDOT/CADDS SHEET 49

9

9

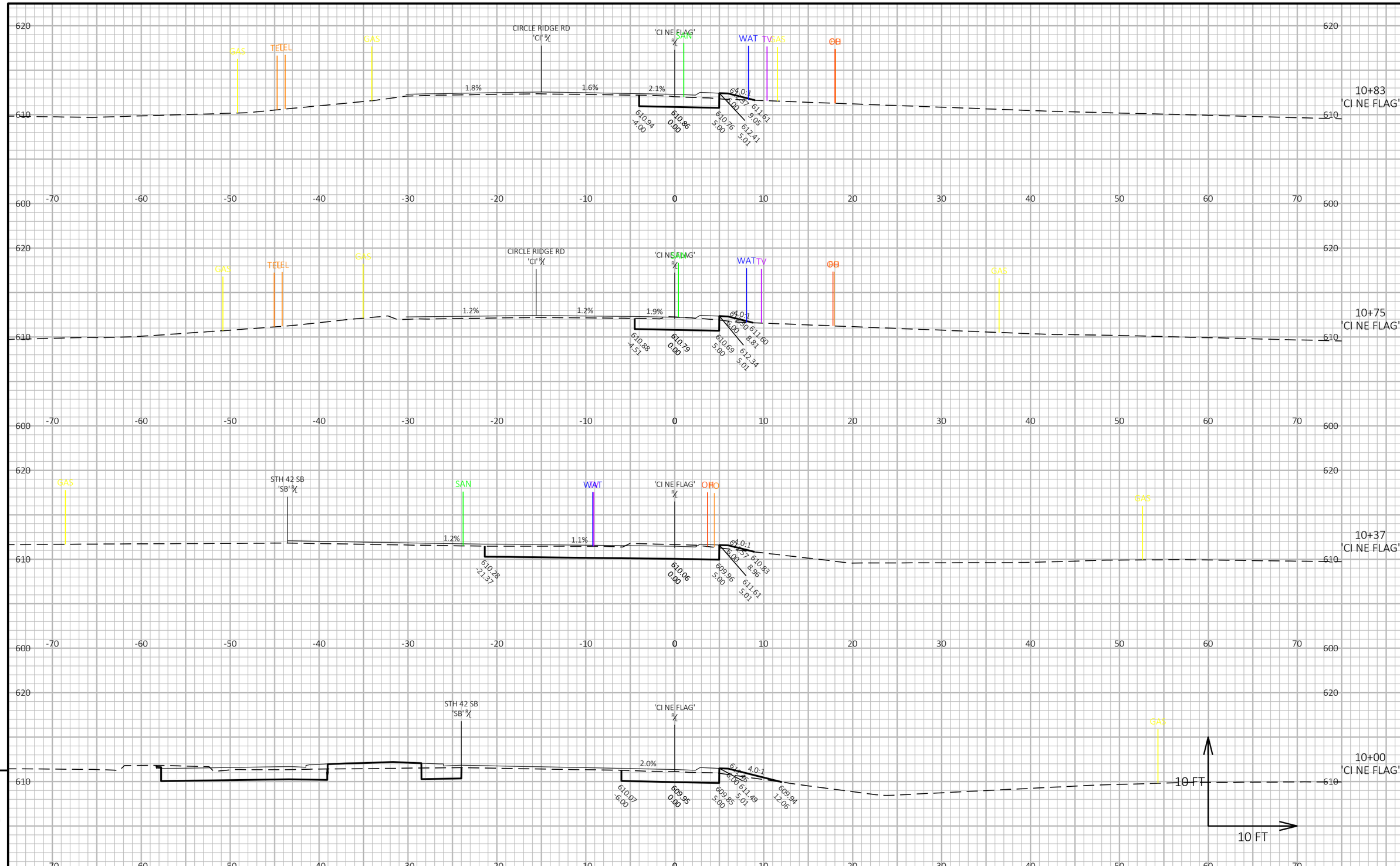

9

9

PROJECT NO: 4430-19-71	HWY: STH 42	COUNTY: DOOR	CROSS SECTIONS: CIRCLE RIDGE RD	SHEET PRE_138 E

FILE NAME : C:\CIVIL 3D PROJECTS\44301900\SHEETSPLAN\090206-XS.DWG
LAYOUT NAME - 090237-xs

PLOT DATE : 7/29/2020 8:54 AM

PLOT BY : KIRST, DOUGLAS P

PLOT NAME :

PLOT SCALE : 1 IN:10 FT HORZ. / 1 IN:10 FT VERT.

WISDOT/CADDS SHEET 49

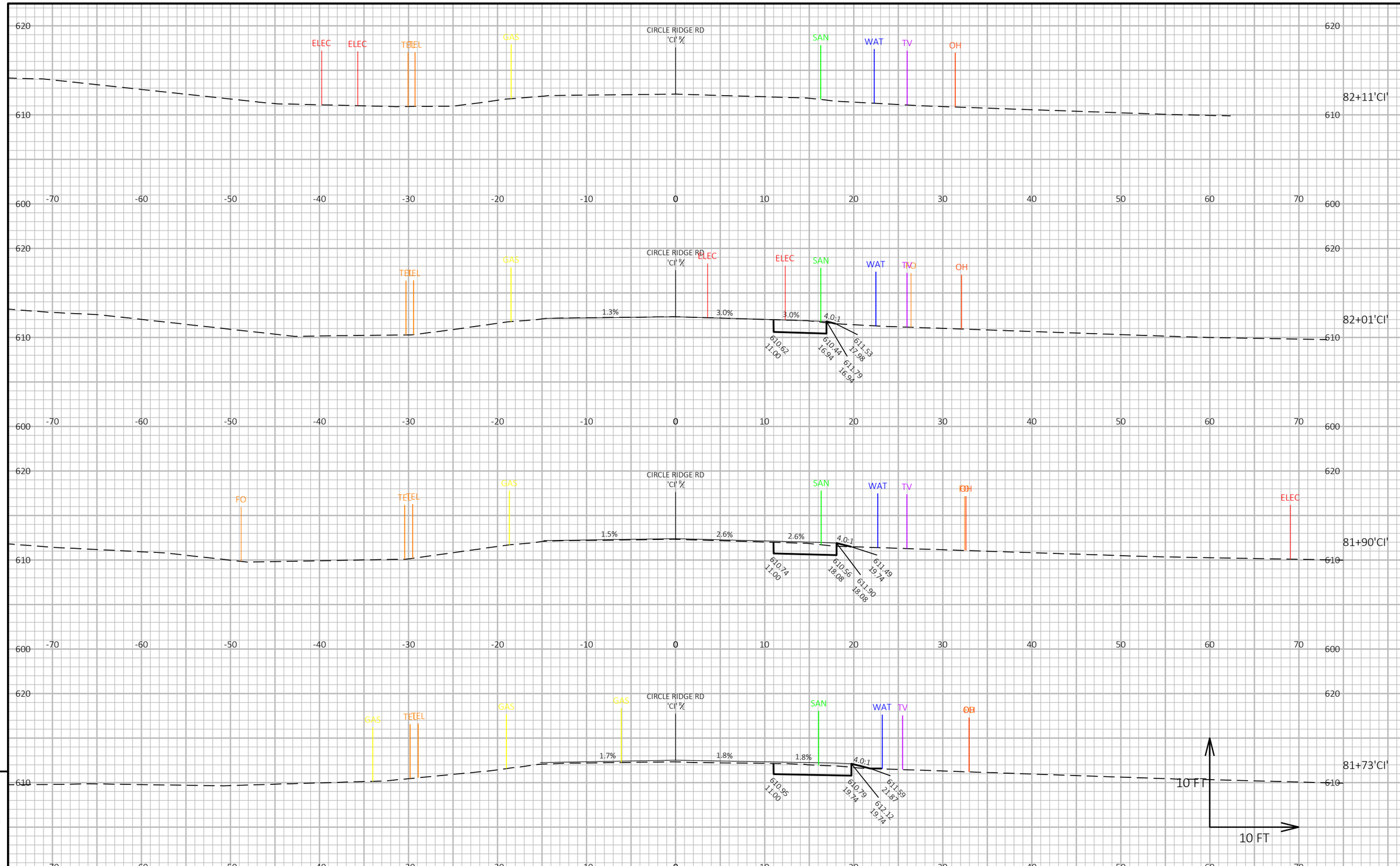

9

9

PROJECT NO: 4430-19-71	HWY: STH 42	COUNTY: DOOR	CROSS SECTIONS: CIRCLE RIDGE RD	SHEET PRE_139 E

FILE NAME : C:\CIVIL 3D PROJECTS\44301900\SHEETSPLAN\090206-XS.DWG
LAYOUT NAME - 090238-xs

PLOT DATE : 7/29/2020 8:54 AM

PLOT BY : KIRST, DOUGLAS P

PLOT NAME :

PLOT SCALE : 1 IN:10 FT HORZ. / 1 IN:10 FT VERT.

WISDOT/CADDS SHEET 49

WISCONSIN DEPARTMENT OF TRANSPORTATION

EPlans Preliminary Sheet Numbering Tool

This sheet: ftp://ftp.dot.state.wi.us/transp/roads/eplans/prelim_sheet_numbers.pdf

Notes

- Acrobat 5 or higher is required to use this tool.
- The Bureau of Highway Construction places sheet numbers in the final plan.
- This sheet is for placing preliminary sheet numbers with a “PRE_" prefix.
- If a plan contains multiple projects, number each plan individually.
- Leave this sheet in the plan.

TO ADD PRELIMINARY SHEET NUMBERS

1. Insert this sheet at the end of the plan

a. With the plan open in Acrobat, select Document > Insert Pages.
b. In the Select File to Insert dialog box, select this file (prelim_sheet_numbers.pdf)
c. In the Insert dialog box, choose After for Location and Last page for Page.
d. Click OK.

2. Click the Place Preliminary Sheet Numbers button

a. Go to the last sheet of the plan.
b. Click the Place Preliminary Sheet Numbers button once.
(The preliminary sheet number appears in the bottom right corner of the sheets.
The number should match te page number in the Acrobat Status bar).

3. Re-Save the PDF

a. Select File > Save As and save the PDF.

Place Preliminary Sheet Numbers

TO REMOVE PRELIMINARY SHEET NUMBERS

Remove