PROJECT ID: 1227-12-71
WITH: 1227-12-72

COUNTY: MANITOWOC

STATE PROJECT	FEDERAL PROJECT	
	PROJECT	CONTRACT
1227-12-71		
1227-12-72		

STATE OF WISCONSIN
DEPARTMENT OF TRANSPORTATION

PLAN OF PROPOSED IMPROVEMENT

MANITOWOC - GREEN BAY

STH 310 - DEVIL'S RIVER STATE TRAIL

IH 43
MANITOWOC COUNTY

STATE PROJECT NUMBER
1227-12-71

ORDER OF SHEETS

TOTAL SHEETS =

N

END PROJECT
STA 1604'NB'+57.64
Y = 362,003.226
X = 201,320.826

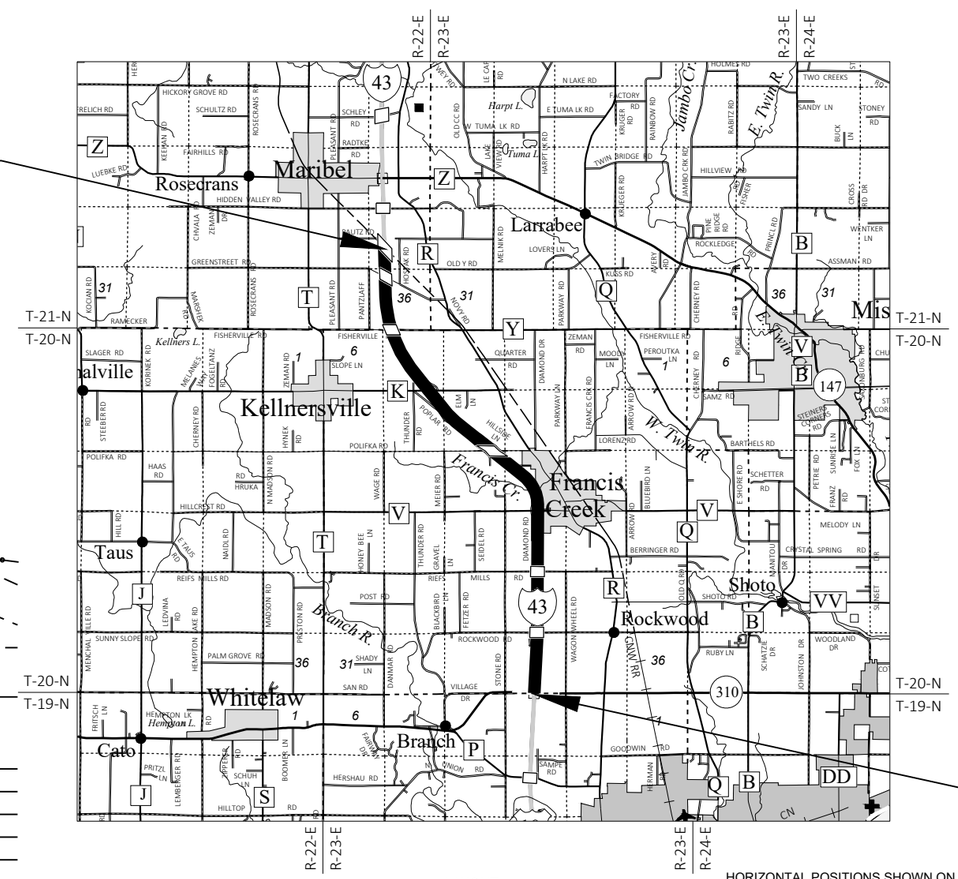

BEGIN PROJECT
STA 1167'NB'+61.56
Y = 323,437.735
X = 214,402.325

LAYOUT
SCALE 0 2.5 MI

TOTAL NET LENGTH OF CENTERLINE = 8.276 MI

HORIZONTAL POSITIONS SHOWN ON THIS PLAN ARE WISCONSIN COORDINATE REFERENCE SYSTEM (WISCRS), MANITOWOC COUNTY, NAD83 (2011), IN U.S. SURVEY FEET. POSITIONS SHOWN ARE GRID COORDINATES, GRID BEARINGS, AND GRID DISTANCES. GRID DISTANCES ARE THE SAME AS GROUND DISTANCES. ELEVATIONS ARE REFERENCED TO NAVD 88 (2012). GPS DERIVED ELEVATIONS ARE BASED ON GEOID 12A.

TRANS 220
PROJECT PLAN
FOR
DESIGN OF UTILITY FACILITY
ALTERATIONS OR RELOCATIONS

Date: _____

DESIGN DESIGNATION

A.A.D.T.	2022	=	20,230
A.A.D.T.	2042	=	22,520
D.H.V.		=	2,860
D.D.		=	58/42
T. (A.A.D.T)		=	20.6%
DESIGN SPEED		=	70 MPH
ESALS		=	12,000,000

CONVENTIONAL SYMBOLS

PLAN
- CORPORATE LIMITS
- PROPERTY LINE
- LOT LINE
- LIMITED HIGHWAY EASEMENT
- EXISTING RIGHT OF WAY
- PROPOSED OR NEW R/W LINE
- SLOPE INTERCEPT
- REFERENCE LINE (300'EB')
- EXISTING CULVERT
- PROPOSED CULVERT (Box or Pipe)
- COMBUSTIBLE FLUIDS (CAUTION)
- MARSH AREA
- WOODED OR SHRUB AREA

PROFILE
- GRADE LINE
- ORIGINAL GROUND
- MARSH OR ROCK PROFILE (To be noted as such) (ROCK)
- SPECIAL DITCH (LABEL)
- GRADE ELEVATION (95.36)
- CULVERT (Profile View)

UTILITIES
- ELECTRIC (E)
- FIBER OPTIC (FO)
- GAS (G)
- SANITARY SEWER (SAN)
- STORM SEWER (SS)
- TELEPHONE (T)
- WATER (W)
- UTILITY PEDESTAL
- POWER POLE
- TELEPHONE POLE

STATE OF WISCONSIN
DEPARTMENT OF TRANSPORTATION

PREPARED BY

Surveyor	NE REGION
Designer	J. MATERNOSKI
Project Manager	B. HAEN
Regional Examiner	
Regional Supervisor	C. DEGRAVE

APPROVED FOR THE DEPARTMENT

DATE: _____ _____ (Signature)

E

GENERAL NOTES

THE LOCATIONS OF EXISTING AND PROPOSED UTILITY INSTALLATIONS AS SHOWN ON THE PLANS ARE APPROXIMATE. THERE MAY BE OTHER UTILITY INSTALLATIONS WITHIN THE PROJECT AREA THAT ARE NOT SHOWN.

THE CONTRACTOR SHALL COORDINATE HIS CONSTRUCTION ACTIVITIES WITH A CALL TO DIGGERS HOTLINE AND/OR A DIRECT CALL TO UTILITIES THAT HAVE FACILITIES IN THE AREA. NOT ALL UTILITIES ARE MEMBERS OF DIGGERS HOTLINE.

ORDER OF SECTION 2 DETAIL SHEETS

GENERAL NOTES
PROJECT OVERVIEW
TYPICAL SECTIONS
CONSTRUCTION DETAILS
PLAN DETAILS
DETOUR

DNR LIAISON

MATT SCHAEVE
DNR NORTHEAST REGIONAL HEADQUARTERS
2984 SHAWANO AVE.
GREEN BAY, WI 54313
(920) 366-1544
matthew.schaeve@wisconsin.gov

MANITOWOC COUNTY HIGHWAY COMMISSIONER

MARC HOLSEN
MANITOWOC CO. HIGHWAY DEPT.
3500 STH 310
MANITOWOC, WI 54220
(920) 683-4353
marc.holsen@co.manitowoc.wi.us

NE REGION SURVEY COORDINATOR

CORMAC MCINNIS, RLS
944 VANDERPERREN WAY
GREEN BAY, WI 54304
(920)492-5638
cormac.mcinnis@dot.wi.gov

UTILITIES CONTACTS

COMPANY NAME
CONTACT NAME
ADDRESS
CITY, STATE, ZIP
PHONE
EMAIL

2

DIGGERS HOTLINE
Dial 811 or (800)242-8511
www.DiggersHotline.com

RUNOFF COEFFICIENT TABLE

	HYDROLOGIC SOIL GROUP											
	A			B			C			D		
	SLOPE RANGE (PERCENT)			SLOPE RANGE (PERCENT)			SLOPE RANGE (PERCENT)			SLOPE RANGE (PERCENT)		
LAND USE	O-2	2-6	6 & OVER	O-2	2-6	6 & OVER	O-2	2-6	6 & OVER	O-2	2-6	6 & OVER
ROW CROPS	0.08 0.22	0.16 0.30	0.22 0.38	0.12 0.26	0.20 0.34	0.27 0.44	0.15 0.30	0.24 0.37	0.33 0.50	0.19 0.34	0.28 0.41	0.38 0.56
MEDIAN STRIP TURF	0.19 0.24	0.20 0.26	0.24 0.30	0.19 0.25	0.22 0.28	0.26 0.33	0.20 0.26	0.23 0.30	0.30 0.37	0.20 0.27	0.25 0.32	0.30 0.40
SIDE STRIP TURF			0.25 0.32			0.27 0.34			0.28 0.36			0.30 0.38
PAVEMENT:												
ASPHALT	.70 - .95											
CONCRETE	.80 - .95											
BRICK	.70 - .80											
DRIVES, WALKS	.75 - .85											
ROOFS	.75 - .95											
GRAVEL ROADS, SHOULDERS	.40 - .60											

TOTAL PROJECT AREA = 85.16 ACRES

TOTAL AREA EXPECTED TO BE DISTURBED BY CONSTRUCTION ACTIVITIES = 0.20 ACRES

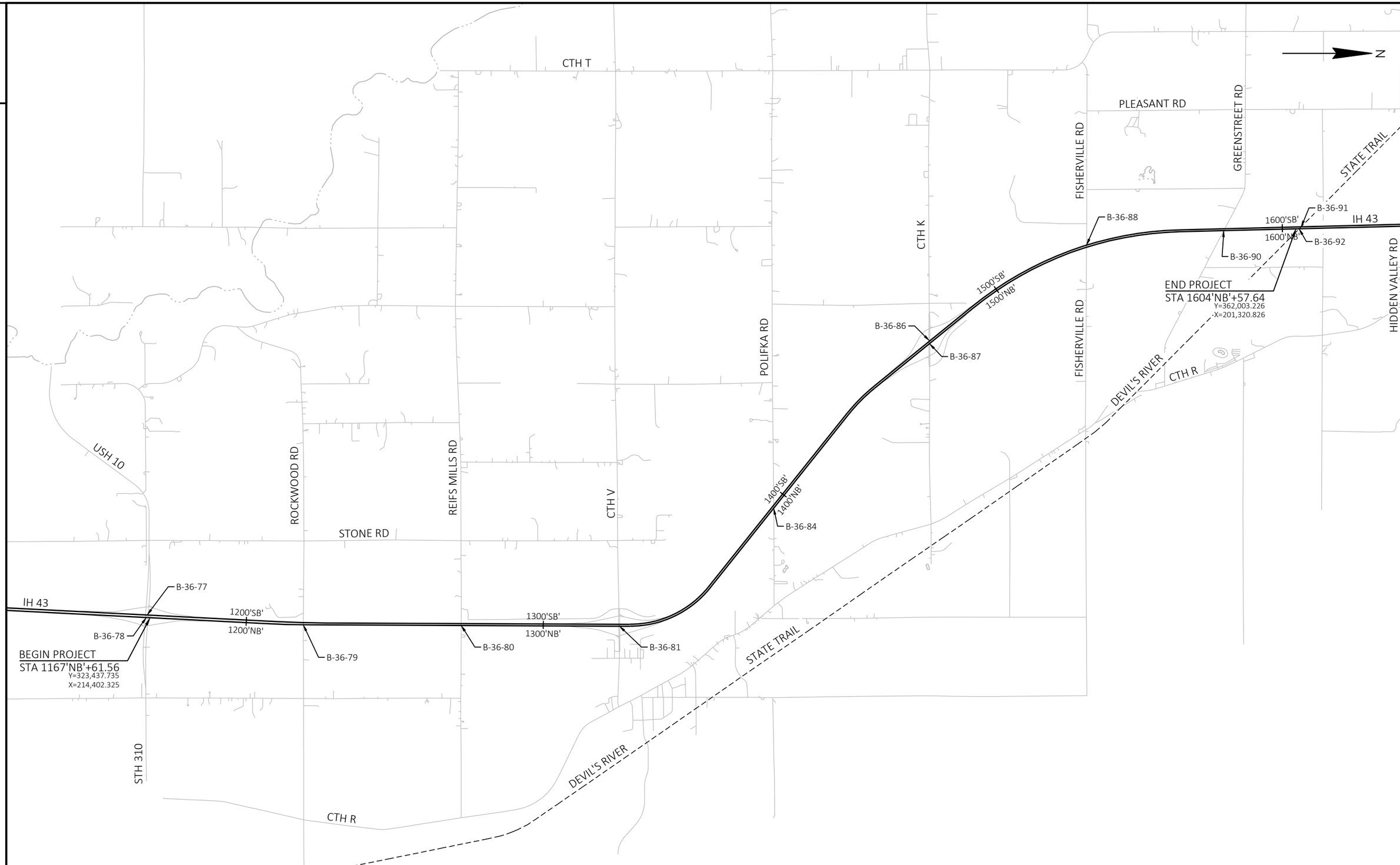
N
CTH T
PLEASANT RD
GREENSTREET RD
FISHERVILLE RD
STATE TRAIL
CTH K
B-36-88
B-36-91
1600'SB'
IH 43
1600'NB'
B-36-92
B-36-90
HIDDEN VALLEY RD
1500'SB'
1500'NB'
END PROJECT
STA 1604'NB'+57.64
Y=362,003.226
X=201,320.826
B-36-86
B-36-87
POLIFKA RD
FISHERVILLE RD
DEVIL'S RIVER
CTH R
USH 10
ROCKWOOD RD
REIFS MILLS RD
CTH V
1400'SB'
1400'NB'
B-36-84
STONE RD
B-36-77
IH 43
1200'SB'
1200'NB'
1300'SB'
1300'NB'
B-36-78
B-36-79
B-36-80
B-36-81
BEGIN PROJECT
STA 1167'NB'+61.56
Y=323,437.735
X=214,402.325
STATE TRAIL
STH 310
DEVIL'S RIVER
CTH R

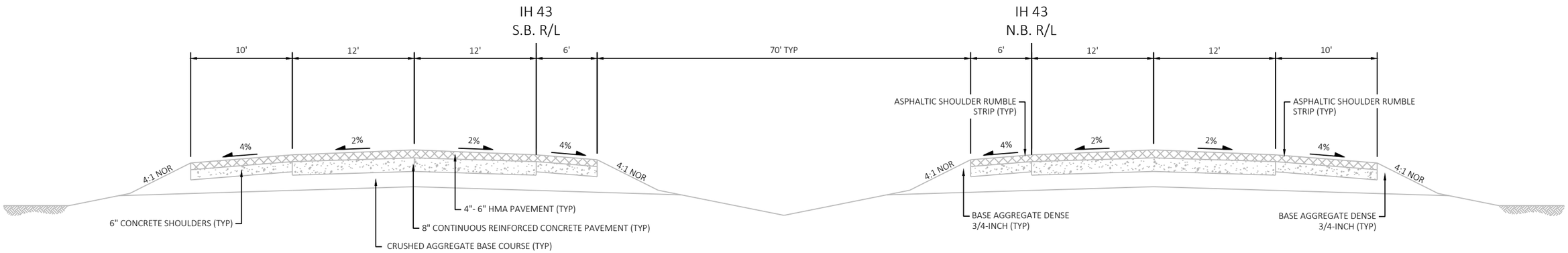

ASPHALT OVERLAYS 4" TOTAL THICKNESS AT EDGE OF TRAVEL LANES
CONCRETE TRAVEL LANES SLOPED AT 1.5 %
SUBGRADE SLOPED AT 1.5 %
CONCRETE SHOULDERS SLOPED AT 4.0 %

EXISTING TYPICAL SECTION IH 43

STA 1167'NB'+61 TO STA 1604'NB'+58

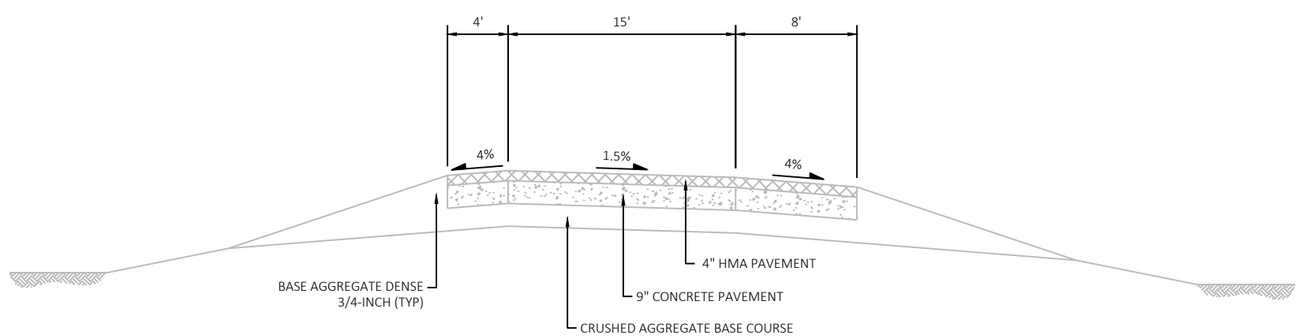

EXISTING TYPICAL SECTION FOR IH 43 RAMPS

STH 310

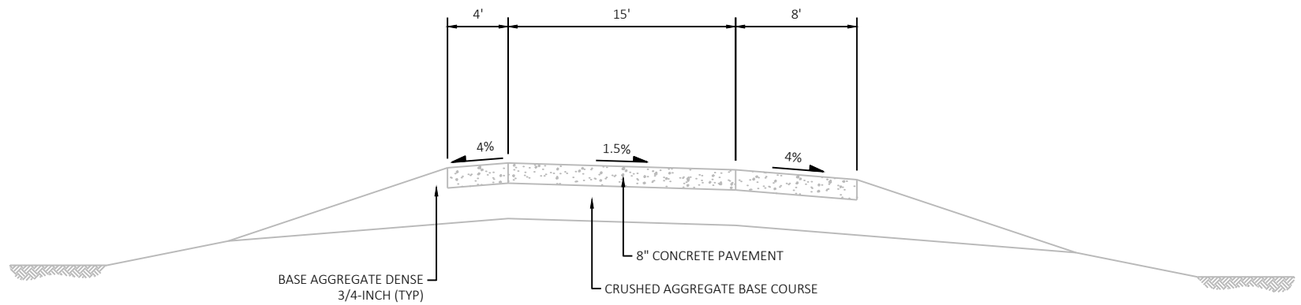

EXISTING TYPICAL SECTION FOR IH 43 RAMPS

CTH K & CTH V

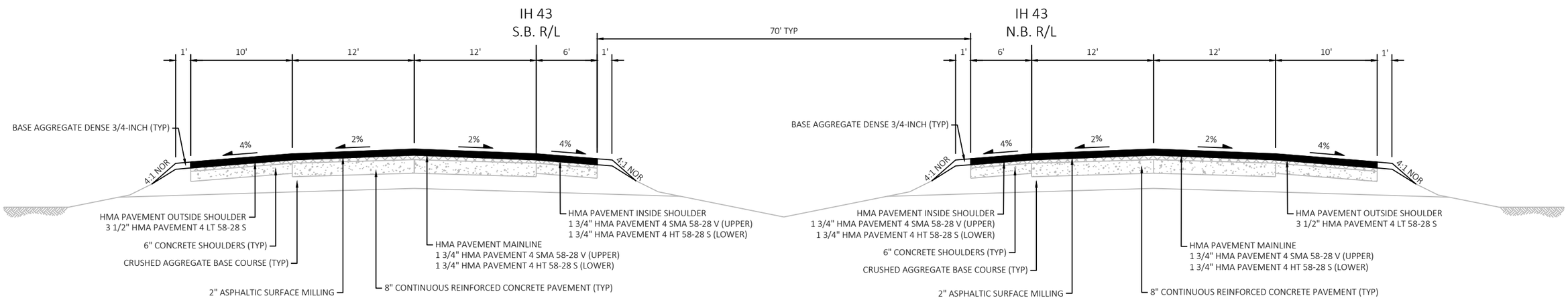

STA 1280'NB'+26 TO STA 1308'NB'+01
EXISTING CONCRETE PAVEMENT TO REMAIN

FINISHED TYPICAL SECTION IH 43

STA 1167'NB'+61 TO STA 1604'NB'+58

PROJECT NO: 1227-12-71	HWY: IH 43	COUNTY: MANITOWOC	PLAN: TYPICAL SECTIONS	SHEET	E

2

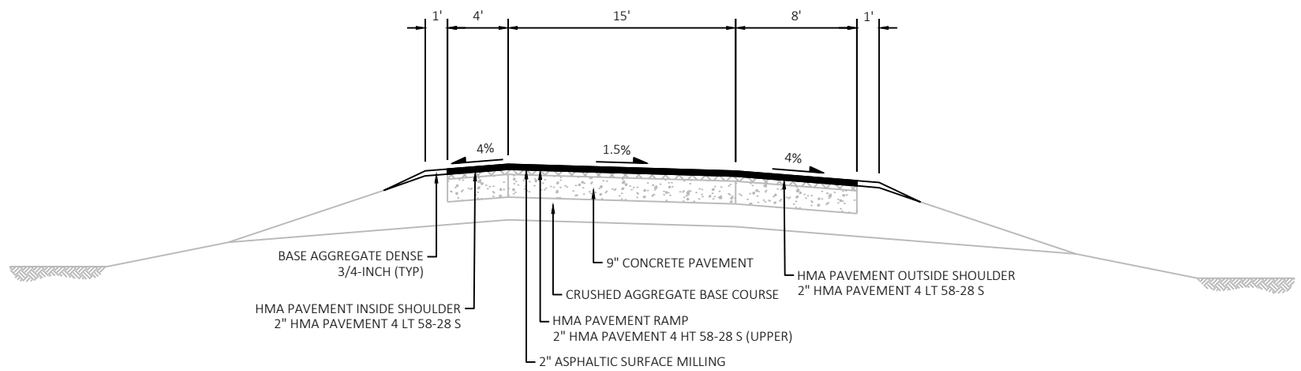

FINISHED TYPICAL SECTION FOR IH 43 RAMPS

STH 310

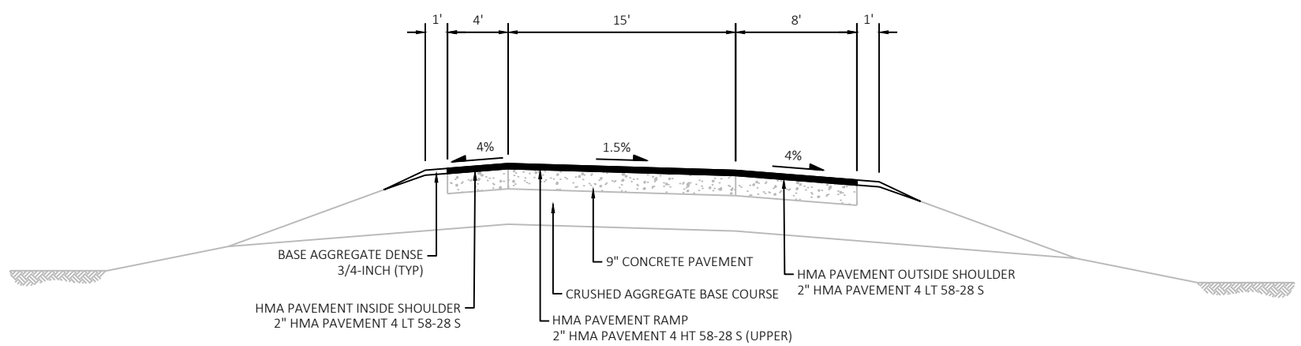

FINISHED TYPICAL SECTION FOR IH 43 RAMPS

CTH K
CTH V

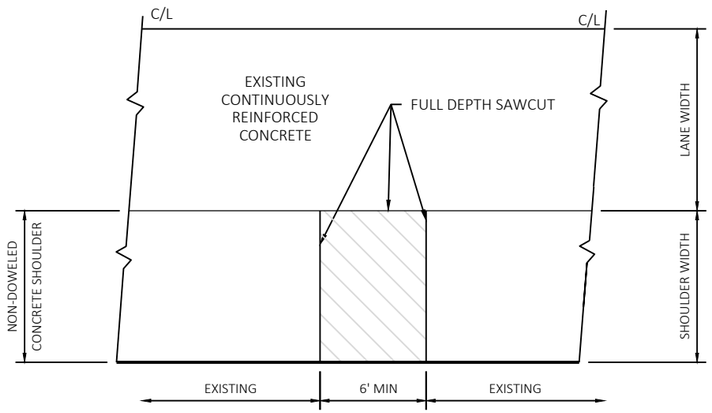

PLAN VIEW

FULL DEPTH CONCRETE PAVEMENT REMOVAL

SHOULDER ONLY

GENERAL NOTES

SAW CUT, DRILL, AND LIFT OUT EXISTING CONCRETE PAVEMENT WITHIN THE BOUNDARIES OF CONCRETE REPAIR AREAS. THE CONTRACTOR MAY MAKE ADDITIONAL SAW CUTS INSIDE THE REPAIR LIMITS TO REDUCE WEIGHT AND SIZE OF CONCRETE PIECES. THE DEPARTMENT WILL NOT MEASURE CUTS TO REDUCE REMOVAL SLABS TO A WIDTH LESS THAN 7 FEET.

PROVIDE 6-FOOT MINIMUM DISTANCE FROM BOUNDARIES OF CONCRETE REPAIR AREAS ADJACENT TRANSVERSE JOINT OR CRACK.

THE LENGTH OF THE REPAIRS MAY VARY FROM THE DIMENSIONS SHOWN IF THE EXISTING CONCRETE PAVEMENT IS NON-DOWELED AND THE PAVEMENT IS OVERLAID AFTER REPAIRING.

A REFER TO SDD 13A7: CONTINUOUSLY REINFORCED CONCRETE PAVEMENT REPAIR AND REPLACEMENT FOR BASE PATCHING OF CONTINUOUSLY REINFORCED CONCRETE.

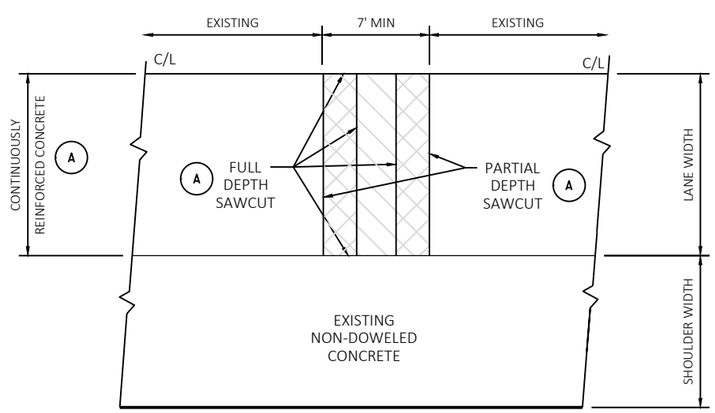

PLAN VIEW

FULL DEPTH CONCRETE PAVEMENT REMOVAL

MAINLINE ONLY

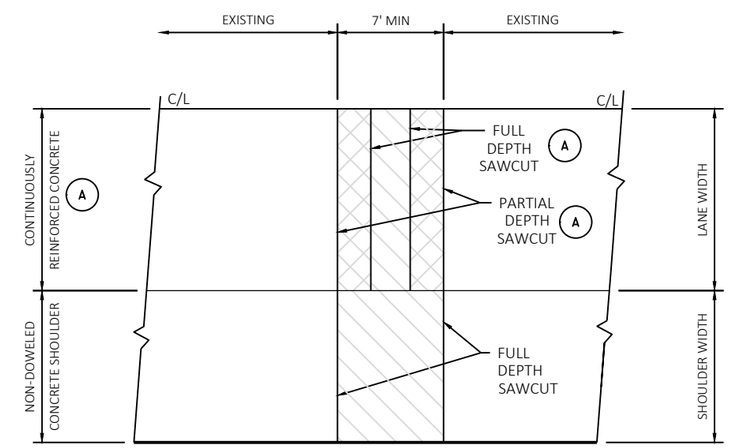

PLAN VIEW

FULL DEPTH CONCRETE PAVEMENT REMOVAL

MAINLINE AND SHOULDER REPAIR

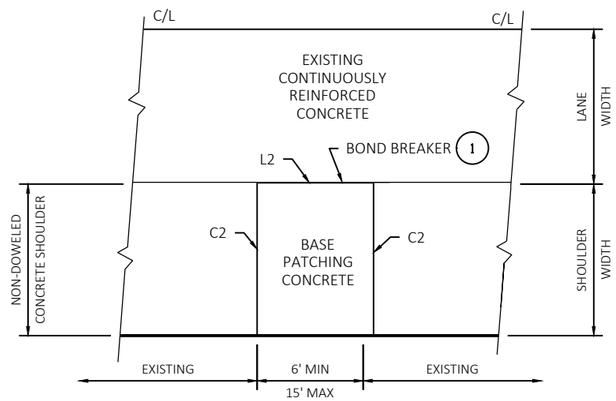

PLAN VIEW

SHOULDER BASE PATCH

15' MAXIMUM LENGTH

GENERAL NOTES

CONCRETE BASE PATCHES OF EXISTING NON-DOWELED CONCRETE PAVEMENTS DO NOT NEED TO BE DOWELED.

DO NOT SEAL OR FILL JOINTS.

1 USE AN ENGINEER-APPROVED BOND BREAKER (E.G. RELEASE AGENT, CURING COMPOUND) FOR SHOULDER BASE PATCHES UP TO 15 FEET IN LENGTH.

A REFER TO SDD 13A7: CONTINUOUSLY REINFORCED CONCRETE PAVEMENT REPAIR AND REPLACEMENT FOR BASE PATCHING OF CONTINUOUSLY REINFORCED CONCRETE.

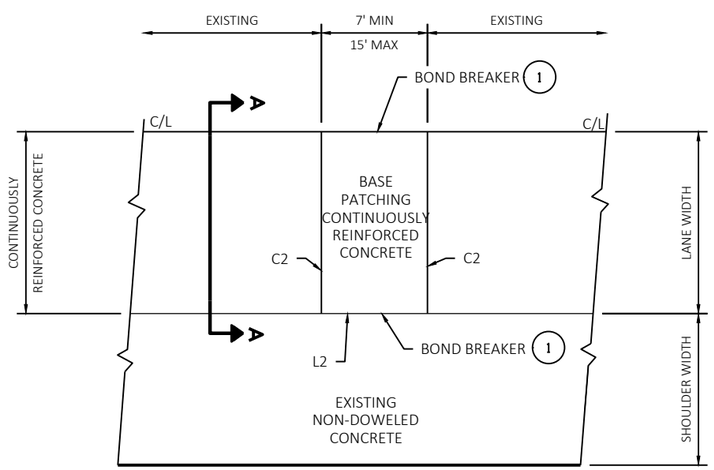

PLAN VIEW

LANE AND SHOULDER BASE PATCH

15' MAXIMUM LENGTH

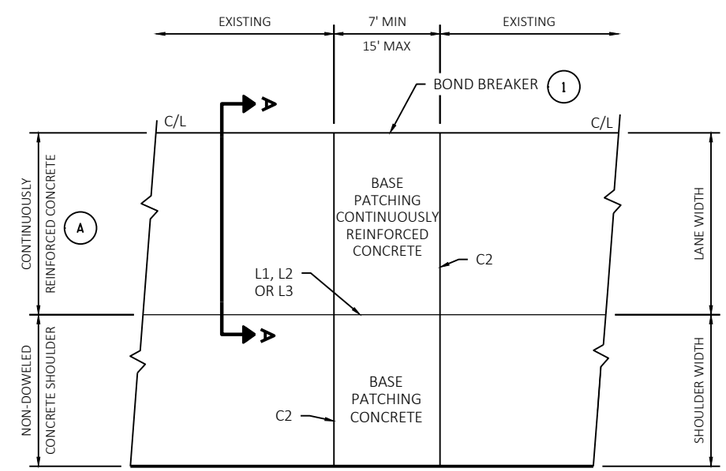

PLAN VIEW

LANE AND SHOULDER BASE PATCH

15' MAXIMUM LENGTH

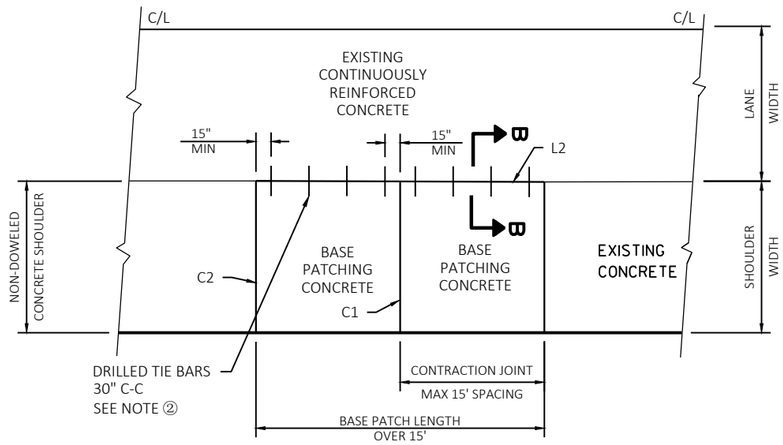

PLAN VIEW

SHOULDER BASE PATCH

GREATER THAN 15' IN LENGTH

NOTES

CONCRETE BASE PATCHES OF EXISTING NON-DOWELED CONCRETE PAVEMENTS DO NOT NEED TO BE DOWELED.

DRILLED TIE BARS ARE 12" NO. 6 BAR SPACED AT 30" C-C INTO EXISTING CONCRETE. TIE BARS PLACED IN NEW CONCRETE ARE 30" N0. 4 BARS SPACED AT 36". DRILLED TIE BARS WILL BE PAID UNDER THE DRILLED TIE BAR ITEM. ANCHOR TIE BARS INTO DRILLED HOLES WITH AN EPOXY.

DO NOT SEAL OR FILL JOINTS.

WITH THE APPROVAL OF THE ENGINEER, FOR SHOULDER PAVEMENT REPLACEMENTS LESS THAN 30 FEET IN LENGTH, DRILLED TIE BARS MAY BE INSTALLED ON 6:1 SKEW HORIZONTALLY, DIRECTION OF SKEW ALTERNATING WITH EACH SUCCESSIVE BAR. DRIVE SKEWED TIE BARS TO A DEPTH OF 6 INCHES AND TO SUCH A DIAMETER AS TO PROVIDE A TIGHT DRIVEN FIT.

(A) REFER TO SDD 13A7: CONTINUOUSLY REINFORCED CONCRETE PAVEMENT REPAIR AND REPLACEMENT FOR BASE PATCHING OF CONTINUOUSLY REINFORCED CONCRETE.

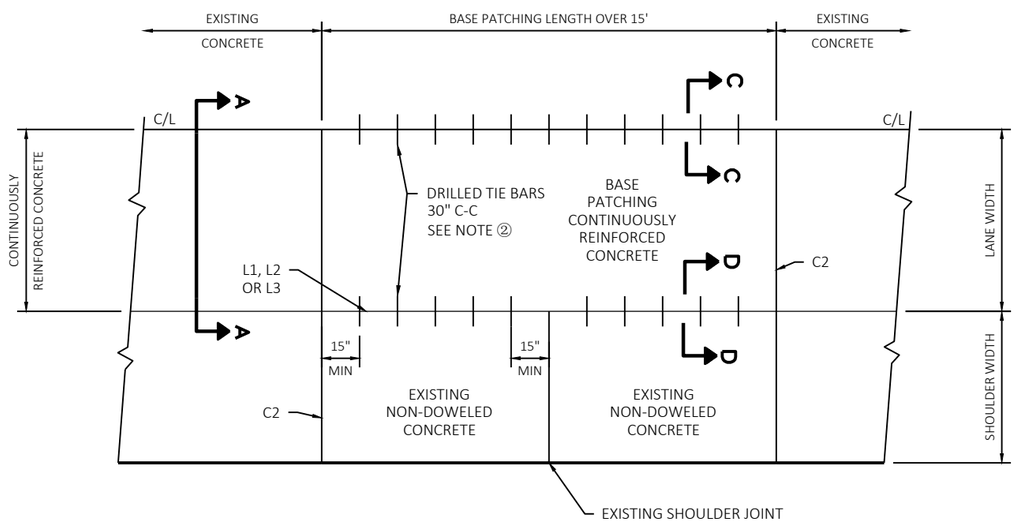

PLAN VIEW

MAINLINE BASE PATCH

GREATER THAN 15' IN LENGTH

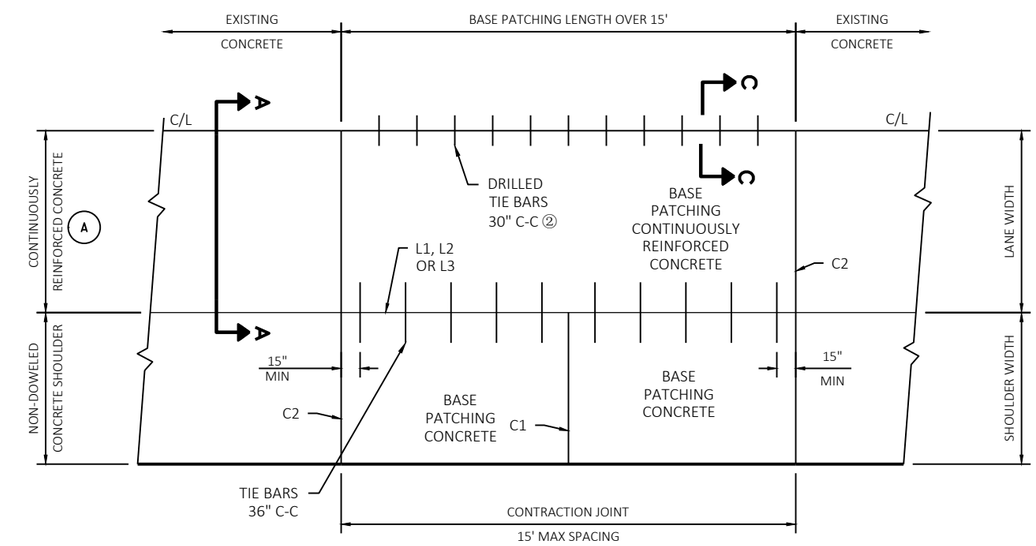

PLAN VIEW

MAINLINE AND SHOULDER BASE PATCH

GREATER THAN 15' IN LENGTH

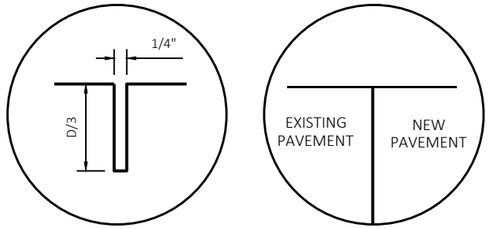

C1 C2

TRANSVERSE JOINTS

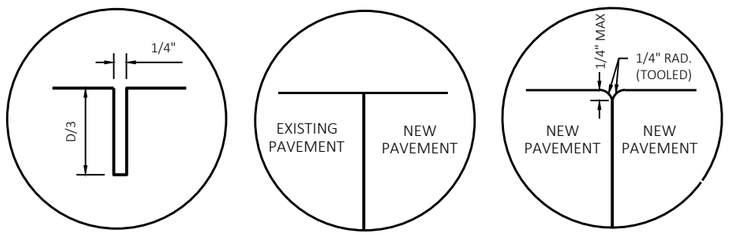

L1 L2 L3

LONGITUDINAL JOINTS

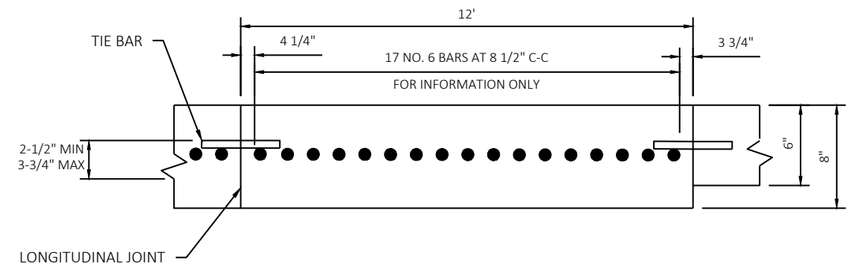

SECTION A-A

EXISTING LONGITUDINAL STEEL PLACEMENT IN CRCP REPAIRS

FOR INFORMATION ONLY

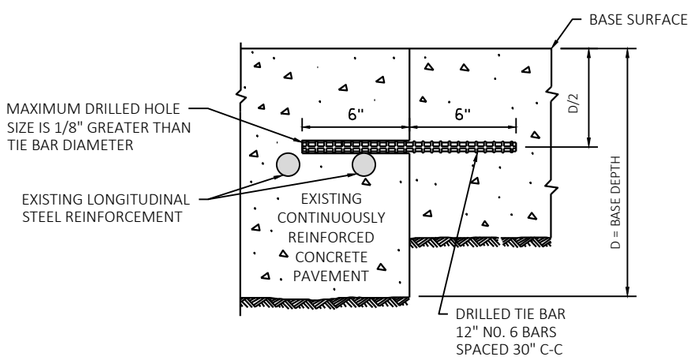

SECTION B-B

DRILLED TIE BAR

MAINLINE-SHOULDER

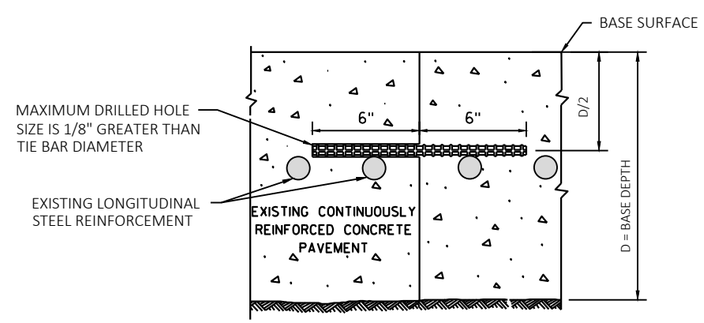

SECTION C-C

DRILLED TIE BAR

MAINLINE-SHOULDER

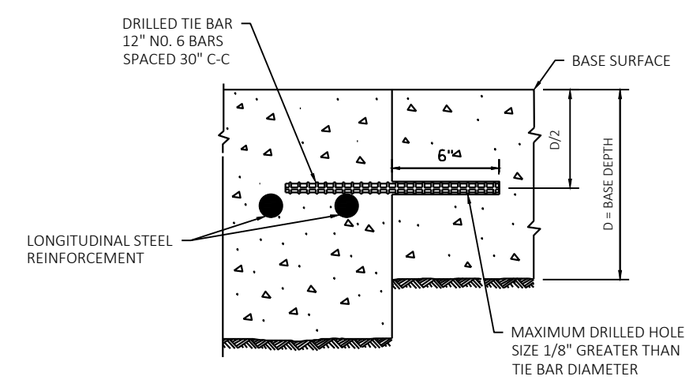

SECTION D-D

DRILLED TIE BAR

MAINLINE-SHOULDER

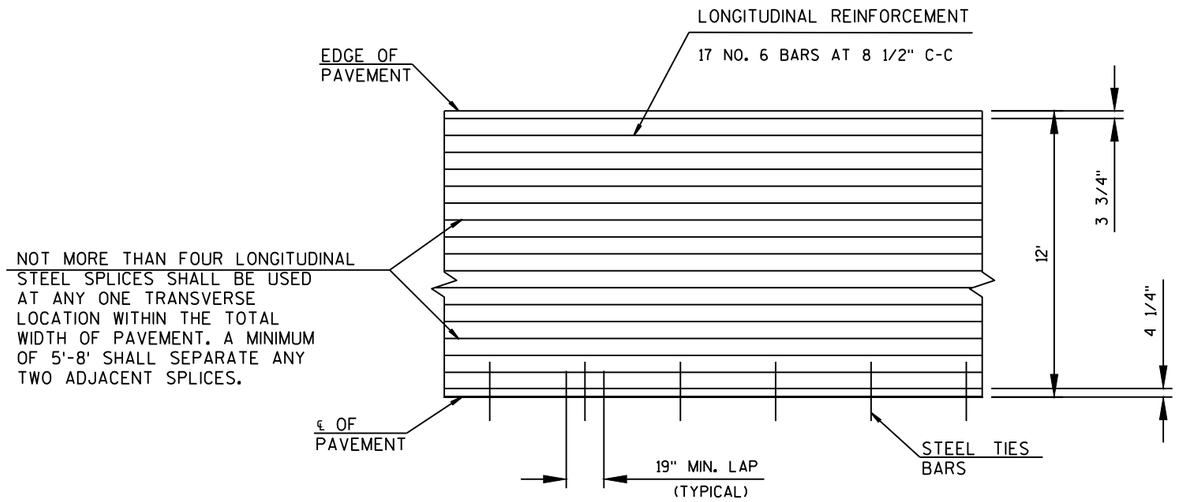

REINFORCEMENT STEEL PLACEMENT

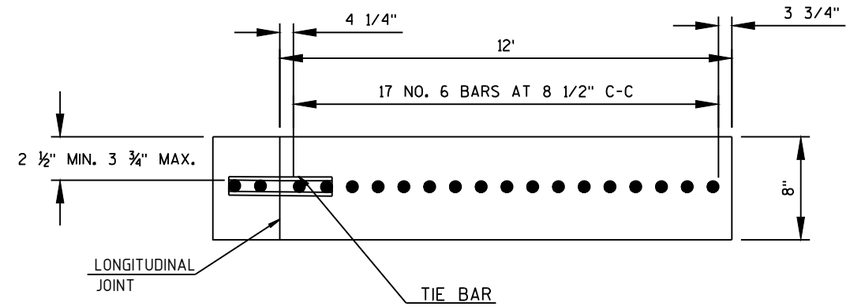

LONGITUDINAL CENTERLINE JOINT DETAIL

CONTINUOUSLY REINFORCED CONCRETE LONGITUDINAL BAR SPACING

NOTE: SEE STANDARD DETAIL FOR MORE INFORMATION

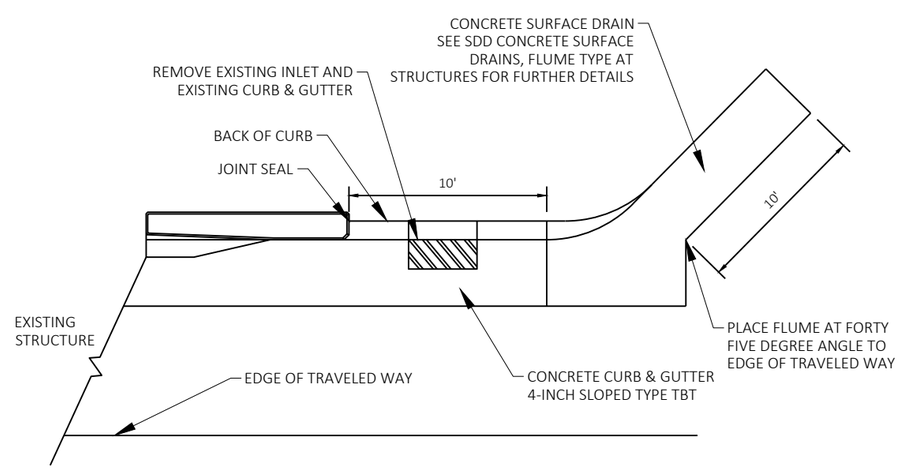

CONCRETE SURFACE DRAIN AT STRUCTURES WITHOUT BEAMGUARD

2

NOTES

MAINTAIN MINIMUM BRIDGE CLEARANCE OF 16 FT

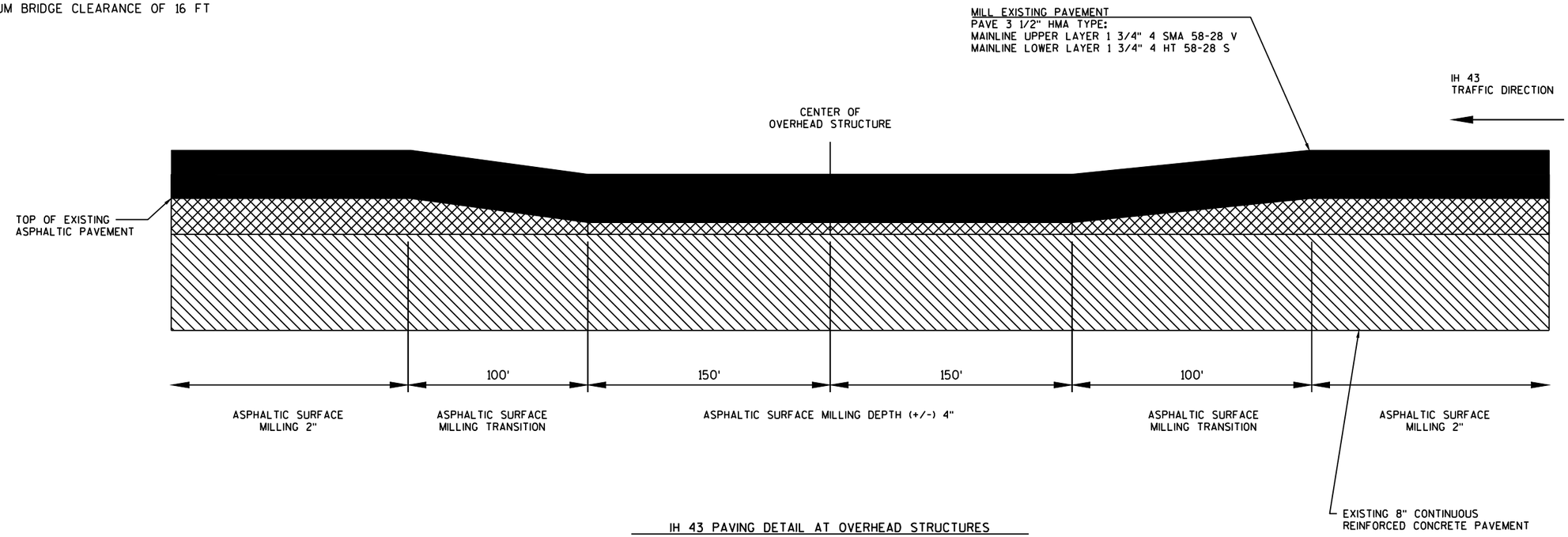

IH 43 PAVING DETAIL AT OVERHEAD STRUCTURES

EXISTING VERTICAL BRIDGE CLEARANCE DATA					
Roadway	Bridge	Overpass	Clearance	Approximate Asphalt Depths	
				NORTHBOUND	SOUTHBOUND
IH 43 NB	B-36-0079	ROCKWOOD RD	15.98'	4"-6"	-
IH 43 SB	B-36-0079	ROCKWOOD RD	17.22'	-	4"-6"
IH 43 NB	B-36-0080	REIFS MILLS RD	16.25'	4"-6"	-
IH 43 SB	B-36-0080	REIFS MILLS RD	16.35'	-	4"-6"
IH 43 NB	B-36-0081	CTH V	16.3'	4"-6"	-
IH 43 SB	B-36-0081	CTH V	18.8'	-	4"-6"
IH 43 NB	B-36-0084	POLIFKA RD	16.36'	4"-6"	-
IH 43 SB	B-36-0084	POLIFKA RD	19.55'	-	4"-6"
IH 43 NB	B-36-0088	FISHERVILLE RD	18.71'	4"-6"	-
IH 43 SB	B-36-0088	FISHERVILLE RD	16.26'	-	4"-6"
IH 43 NB	B-36-0090	GREENSTREET RD	16.48'	4"-6"	-
IH 43 SB	B-36-0090	GREENSTREET RD	17.22'	-	4"-6"

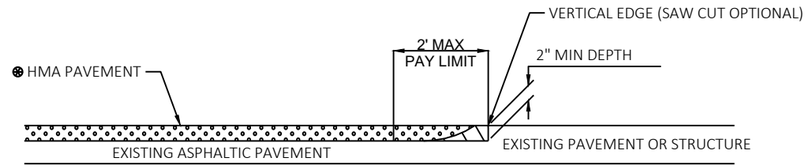

⊗ SEE TYPICAL CROSS SECTION FOR PAVEMENT TYPE AND THICKNESS OF INDIVIDUAL LAYERS

REMOVING ASPHALTIC SURFACE, MILLING

REMOVE ASPHALTIC SURFACE WEDGE AT BUTT JOINT TO CREATE VERTICAL EDGE

BUTT JOINT DETAIL FOR ASPHALTIC PAVEMENTS (NO PROFILE CHANGE)

STH 310 RAMPS

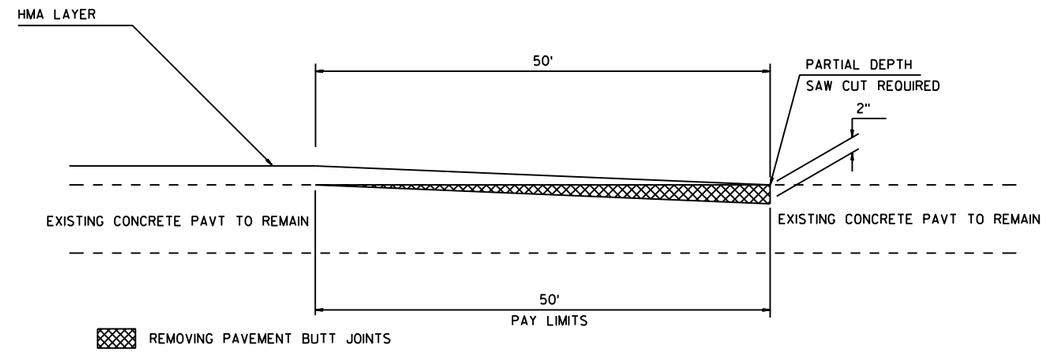

REMOVING PAVEMENT BUTT JOINT DETAIL

CTH V RAMPS
CTH K RAMPS

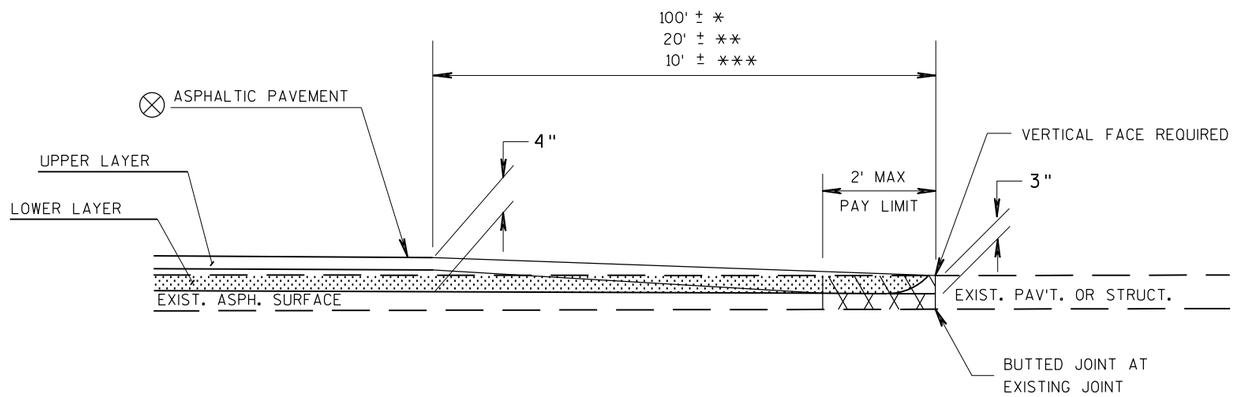

⊗ SEE TYPICAL CROSS SECTION FOR THICKNESS OF INDIVIDUAL LAYERS

REMOVING ASPHALTIC SURFACE, MILLING

REMOVING ASPHALTIC SURFACE, BUTT JOINTS (FULL DEPTH REMOVAL OPTIONAL)

ASPHALTIC WEDGING (FULL DEPTH REMOVAL OPTION)

BUTT JOINT DETAIL FOR MILLED ASPHALTIC PAVEMENTS

* IH 43 MAINLINE
** SIDEROADS
*** PRIVATE ENTRANCES

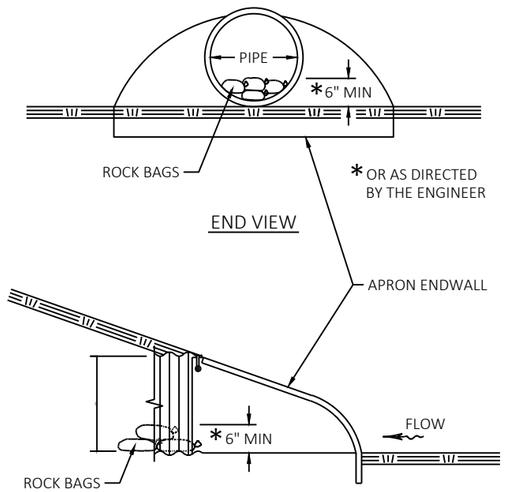

CULVERT PIPE CHECKS

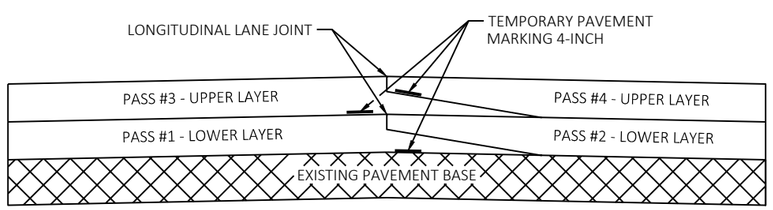

PAVEMENT MARKING DETAIL FOR TAPERED OVERLAPPING JOINTS IN HMA PAVEMENTS

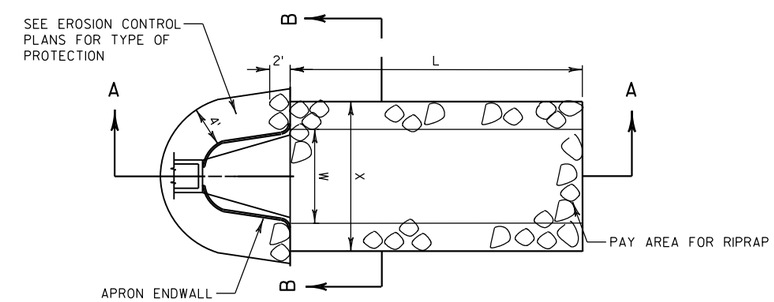

PLAN VIEW

L = 3 x W (NOR.) OR 10' MIN. OR AS INDICATED IN THE PLANS OR AS DIRECTED BY THE ENGINEER.

D = 12" FOR RIPRAP LIGHT
18" FOR RIPRAP MEDIUM
24" FOR RIPRAP HEAVY

X = W+(2 X (PIPE DIAMETER))

Y = 0' FOR TYPICAL CULVERT DISCHARGE INTO DITCH
12" FOR CULVERT DISCHARGE DOWN EMBANKMENT SLOPE

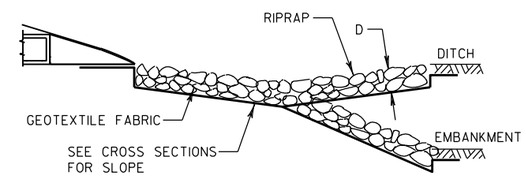

SECTION A-A

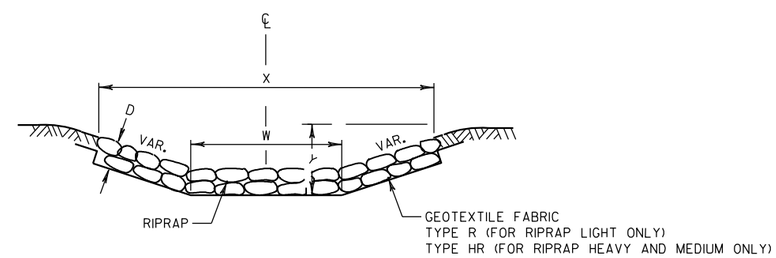

SECTION B-B

RIPRAP AND GEOTEXTILE FABRIC DETAIL AT APRON ENDWALLS

SEE EROSION CONTROL PLAN FOR LOCATIONS

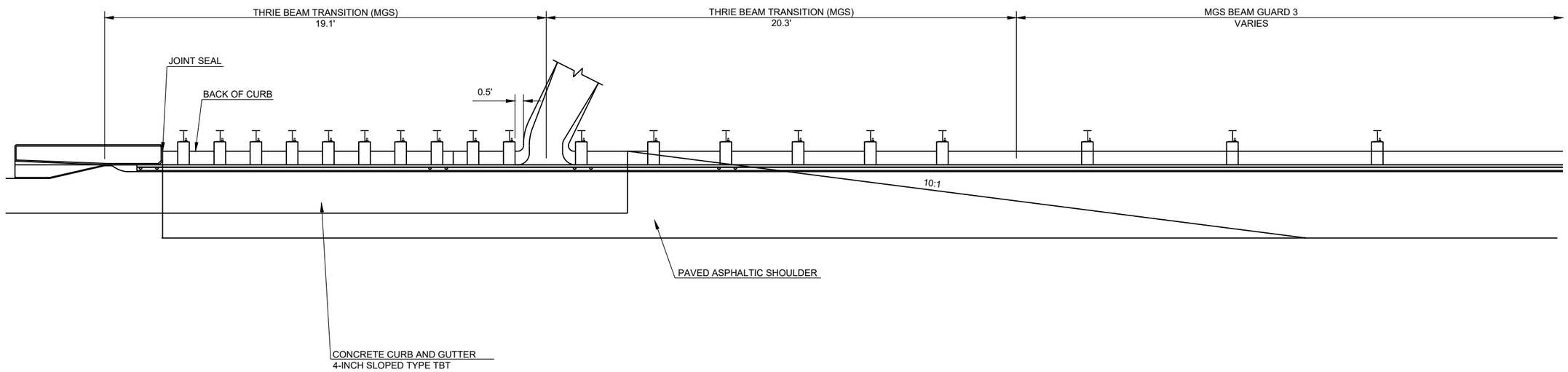

CONCRETE SURFACE DRAIN

PROJECT NO: 1227-12-71	HWY: IH 43	COUNTY: MANITOWOC	CONSTRUCTION DETAILS	SHEET	E

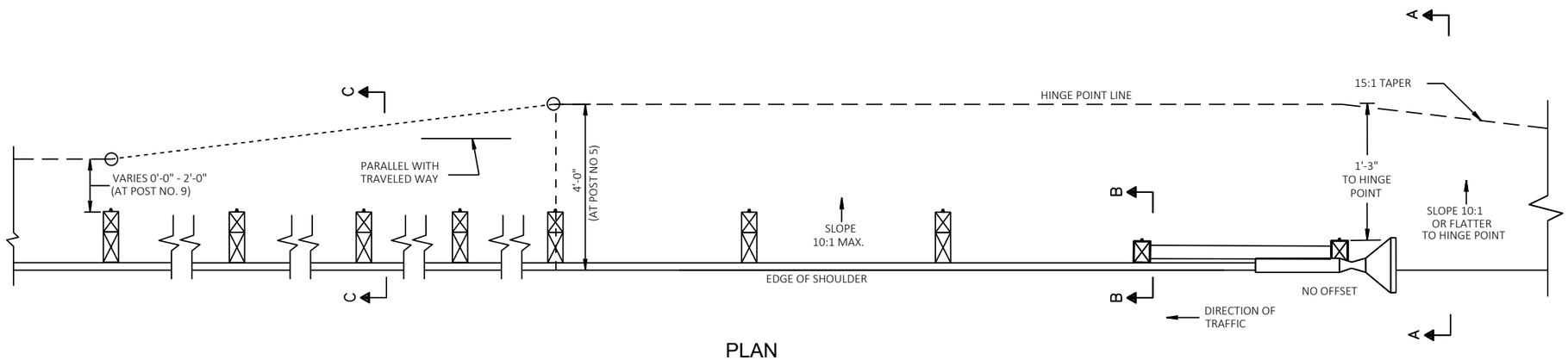

PLAN

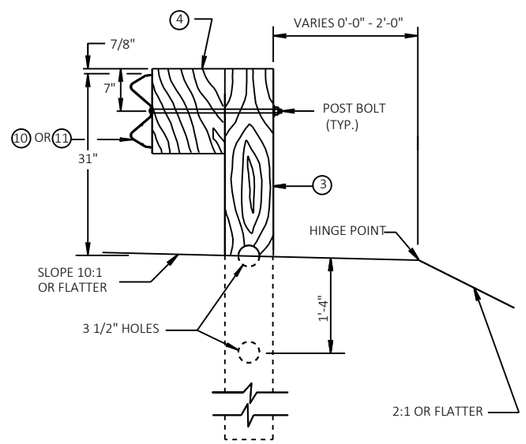

SECTION C-C
TYPICAL AT POST NOS. 3-9

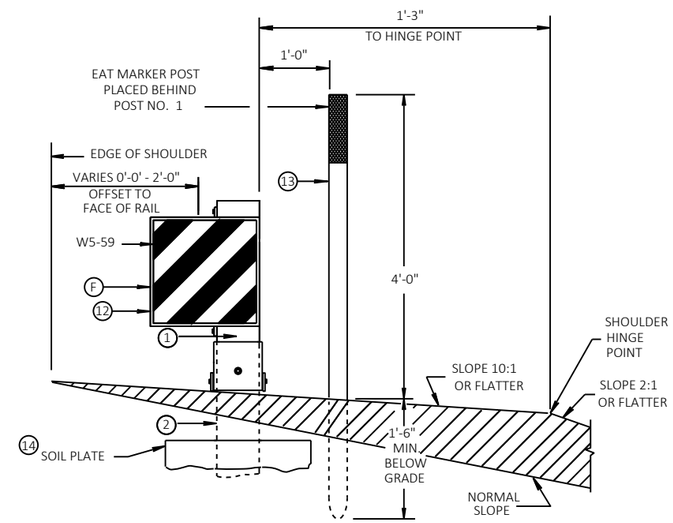

SECTION A-A
TYPICAL AT POST NO. 1 *

NOTE:
SEE SDD "MIDWEST GUARDRAIL SYSTEM
ENERGY ABSORBING TERMINAL (MGS)" FOR
OTHER DETAILS AND NOTES.

MIDWEST GUARDRAIL SYSTEM EAT AT OVERPASSES

PROJECT NO: 1227-12-71	HWY: IH 43	COUNTY: MANITOWOC	CONSTRUCTION DETAILS	SHEET	E

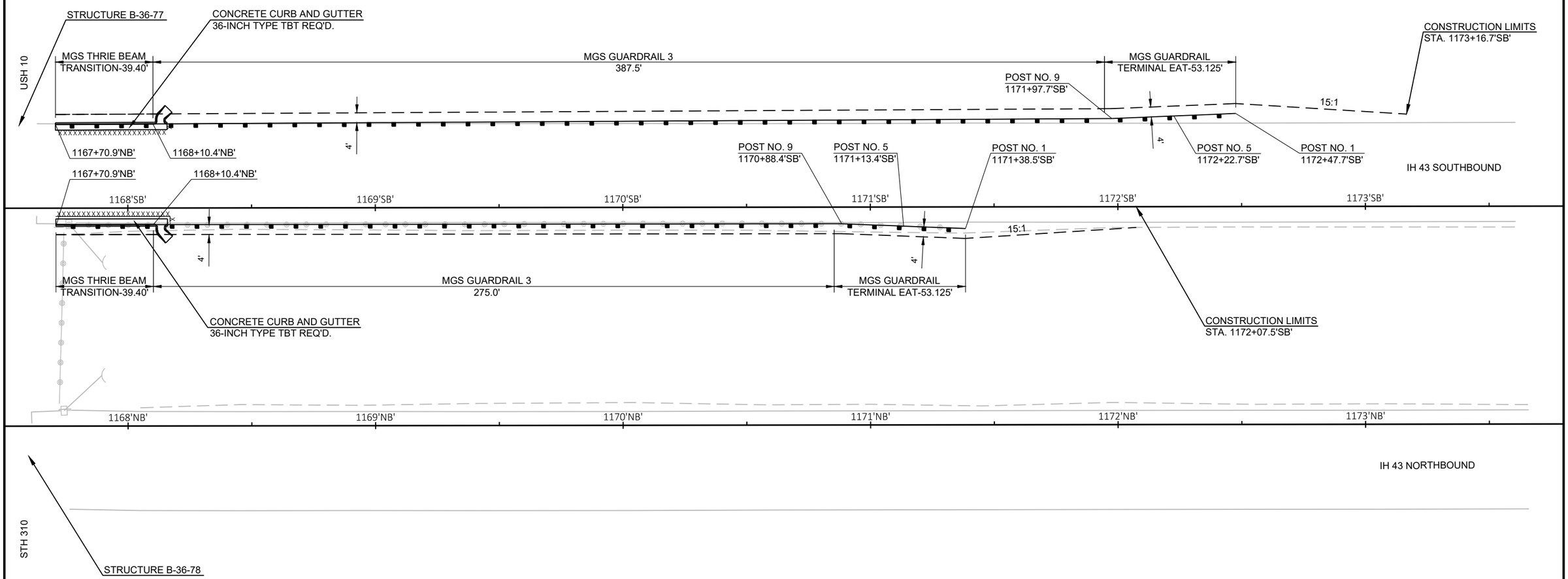

GUARDRAIL DETAIL
IH 43 SOUTHBOUND
STA. 1167+70.9'SB' - STA. 1173+16.7'SB'

LEGEND

xxxxxxxxx SAW CUT

PROJECT NO: 1227-12-71	HWY: IH 43	COUNTY: MANITOWOC	PLAN DETAILS - IH 43	SHEET	E

FILE NAME : I:\45\450504 IH 43 WISDOT GUARDRAIL\C3D\SHEETSPLAN\12271271 PLAN\021201_PD.DWG
LAYOUT NAME - 021201_pd
PLOT DATE : 11/3/2020 1:59 PM PLOT BY : GARNICA, BRANDON PLOT NAME : PLOT SCALE : 1 IN:40 FT

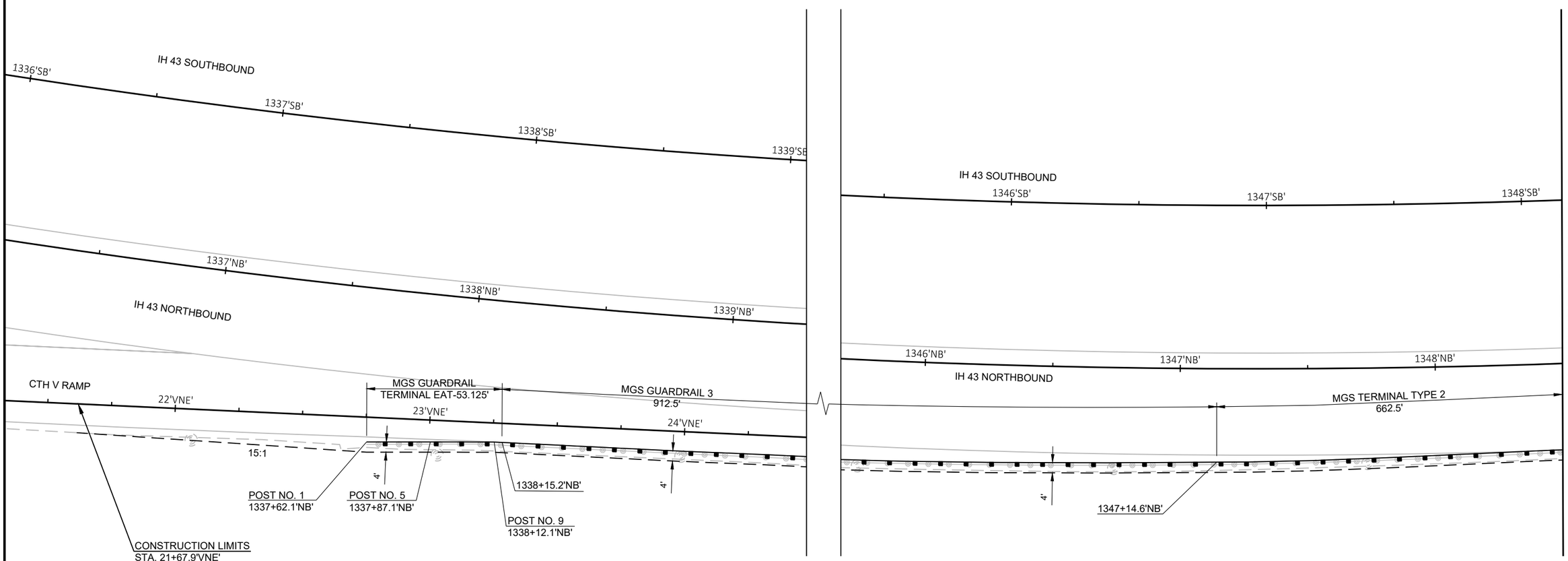

GUARDRAIL DETAIL

IH 43 EXIT FROM CTH V

STA. 1337+62.1'NB' - STA. 1353+85.3'NB'

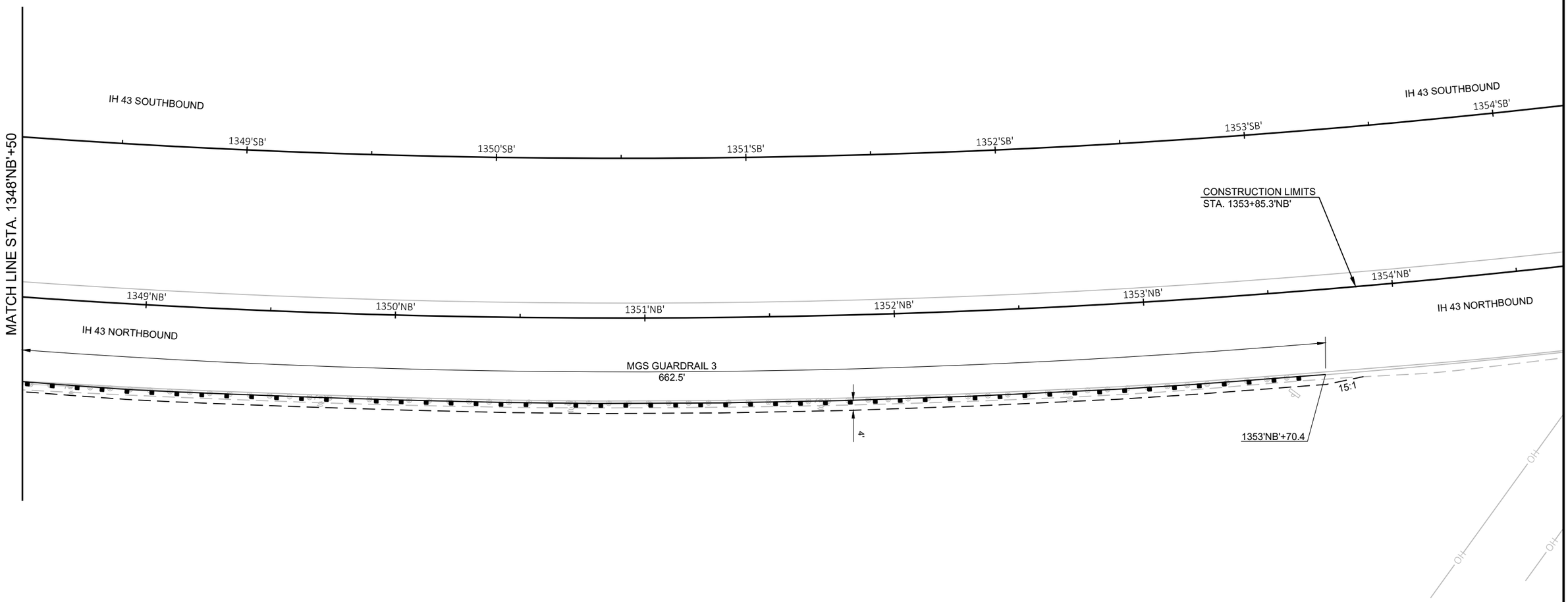

GUARDRAIL DETAIL

IH 43 EXIT FROM CTH V

STA. 1337+62.1'NB' - STA. 1353+85.3'NB'

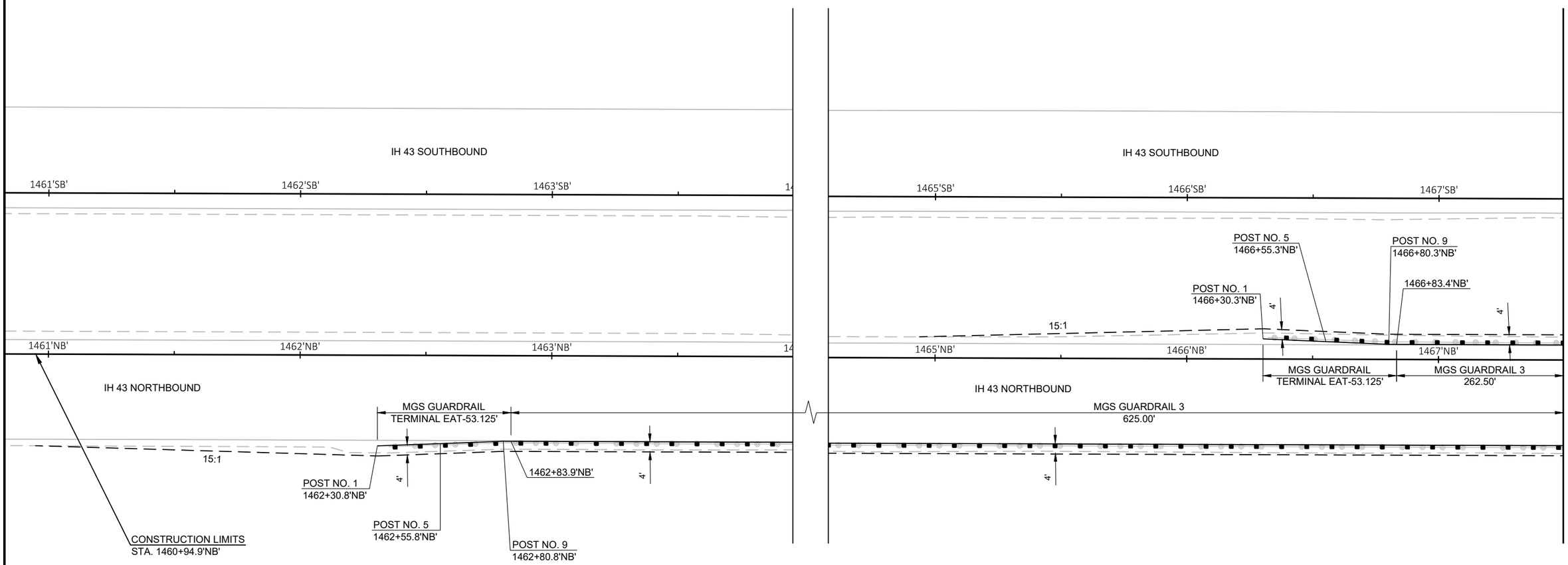

GUARDRAIL DETAIL
IH 43 NORTHBOUND
STA. 1460+94.9'NB' - STA. 1469+85.3'NB'

PROJECT NO: 1227-12-71	HWY: IH 43	COUNTY: MANITOWOC	PLAN DETAILS - IH 43	SHEET	E

2

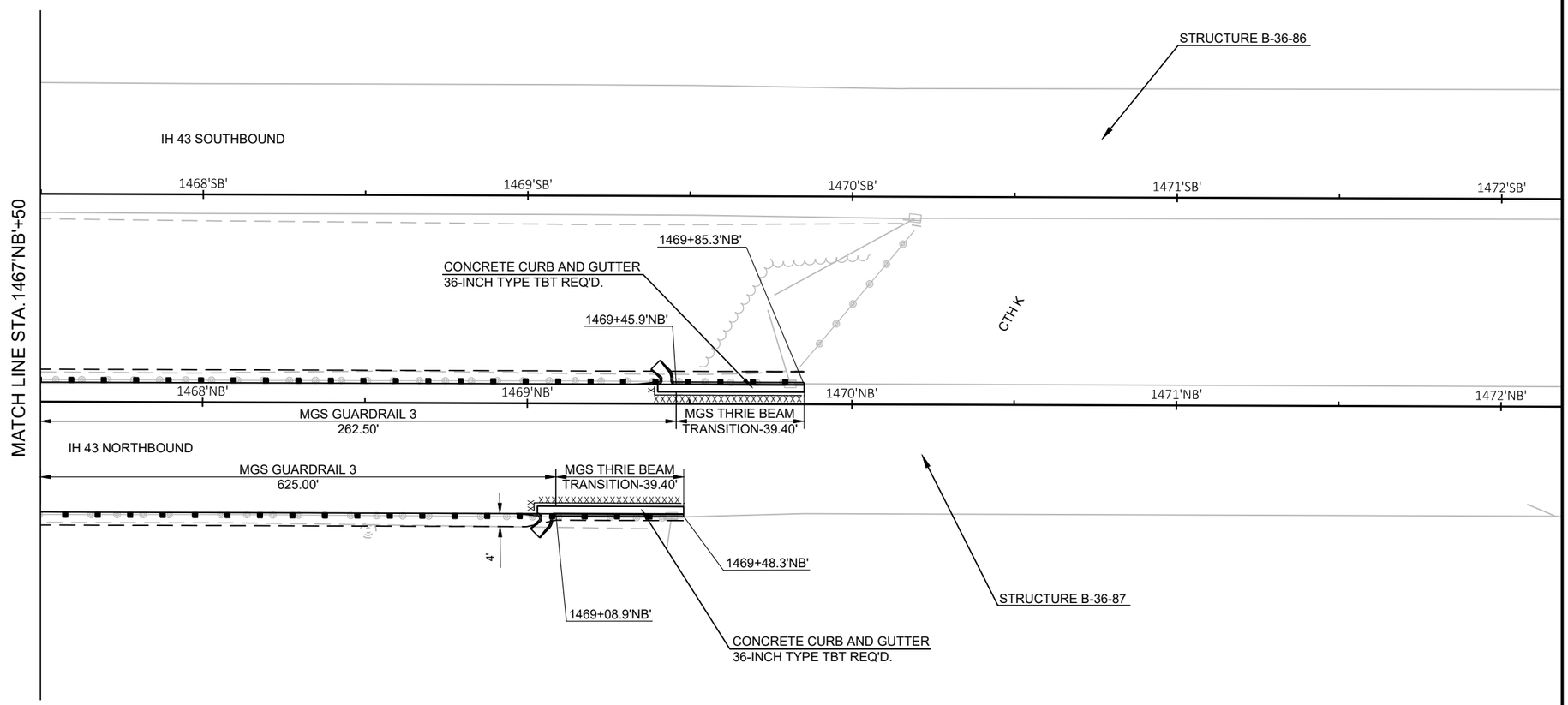

GUARDRAIL DETAIL
IH 43 NORTHBOUND
STA. 1462+30.8'NB' - STA. 1469+85.3'NB'

LEGEND

.xxxxxxxxx. SAW CUT

PROJECT NO: 1227-12-71	HWY: IH 43	COUNTY: MANITOWOC	PLAN DETAILS - IH 43	SHEET	E

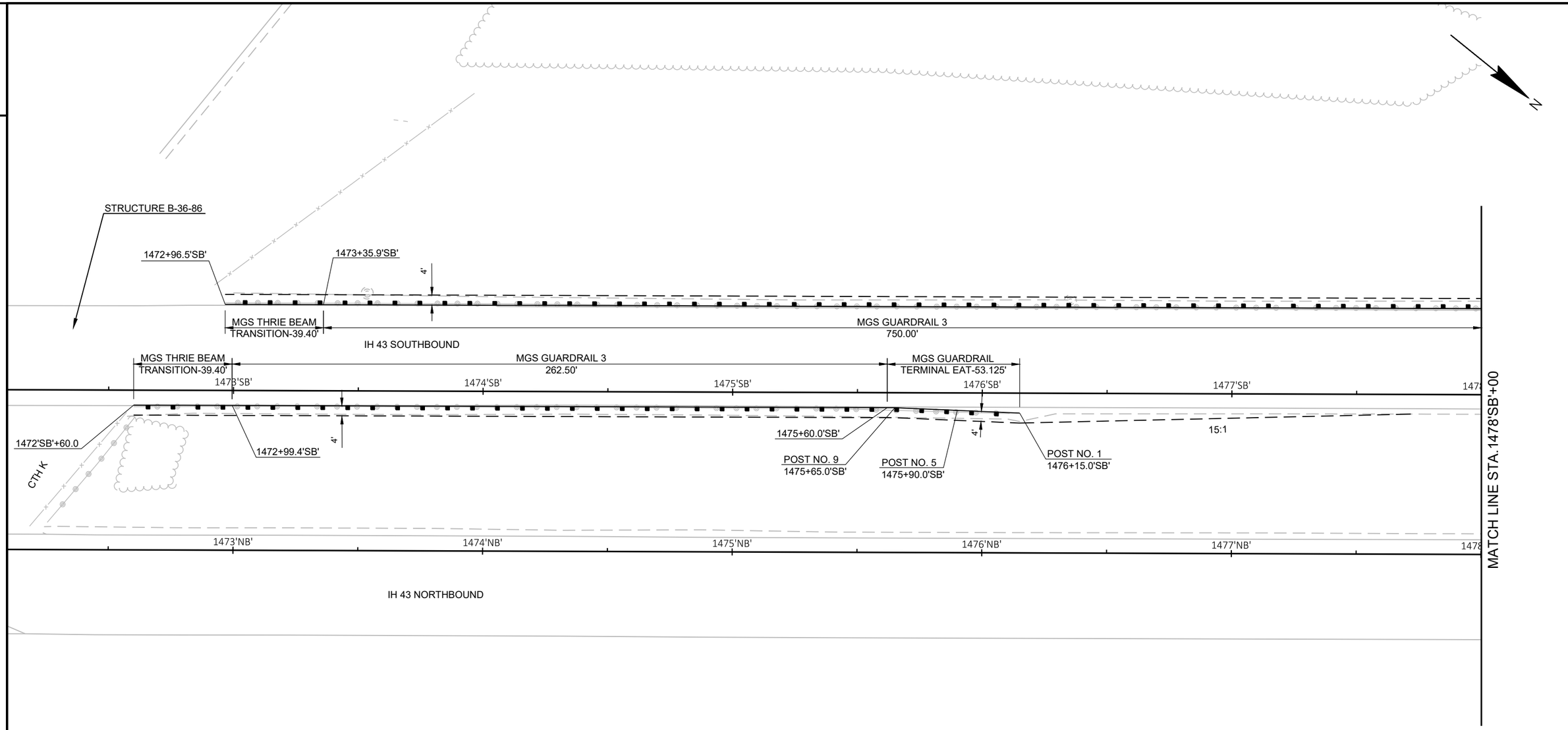

GUARDRAIL DETAIL

IH 43 SOUTHBOUND

STA. 1472+60.0'SB' - STA. 1481+39.0'SB'

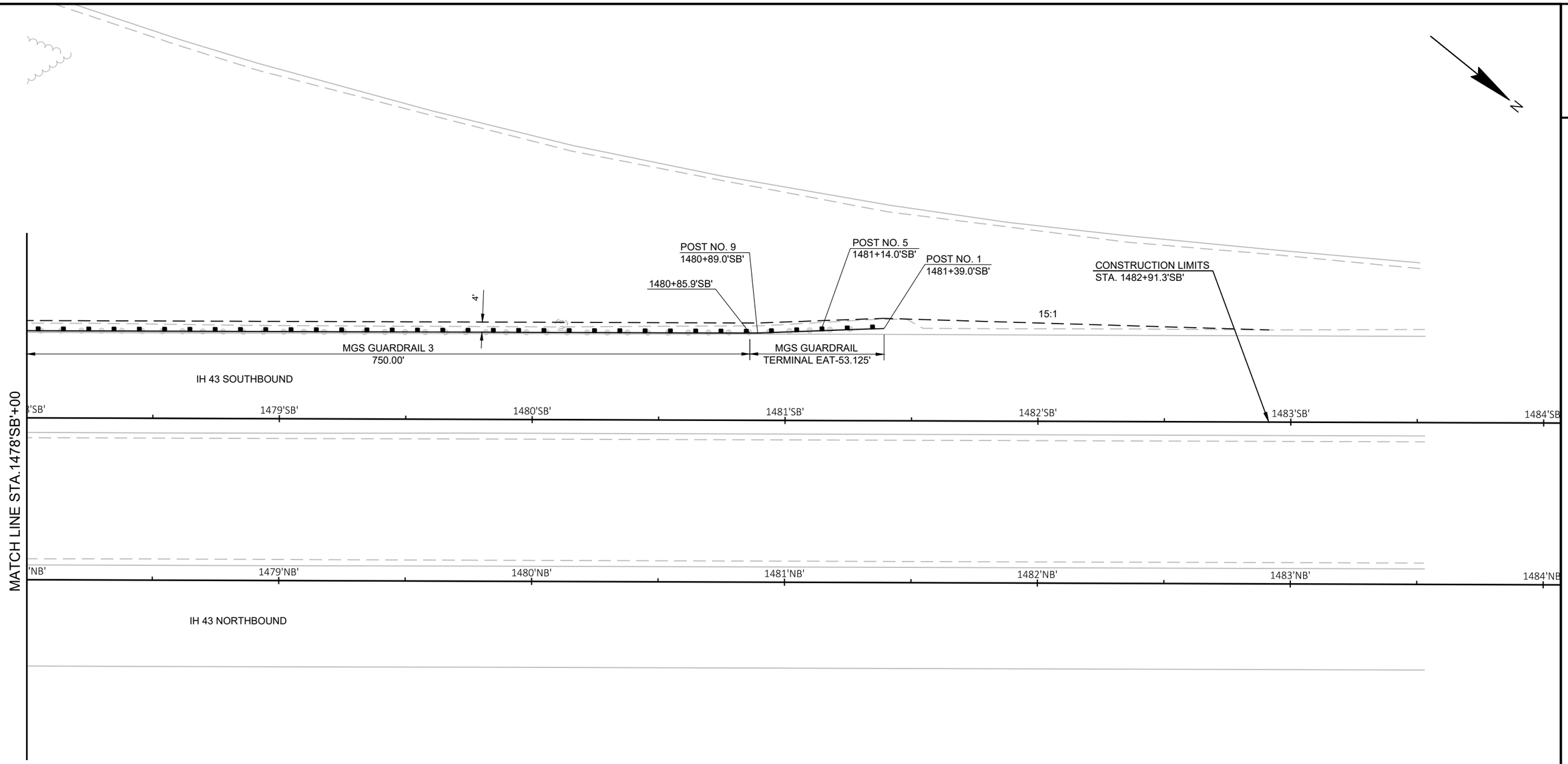

GUARDRAIL DETAIL

IH 43 SOUTHBOUND

STA. 1472+60.0'SB' - STA. 1482+91.3'SB'

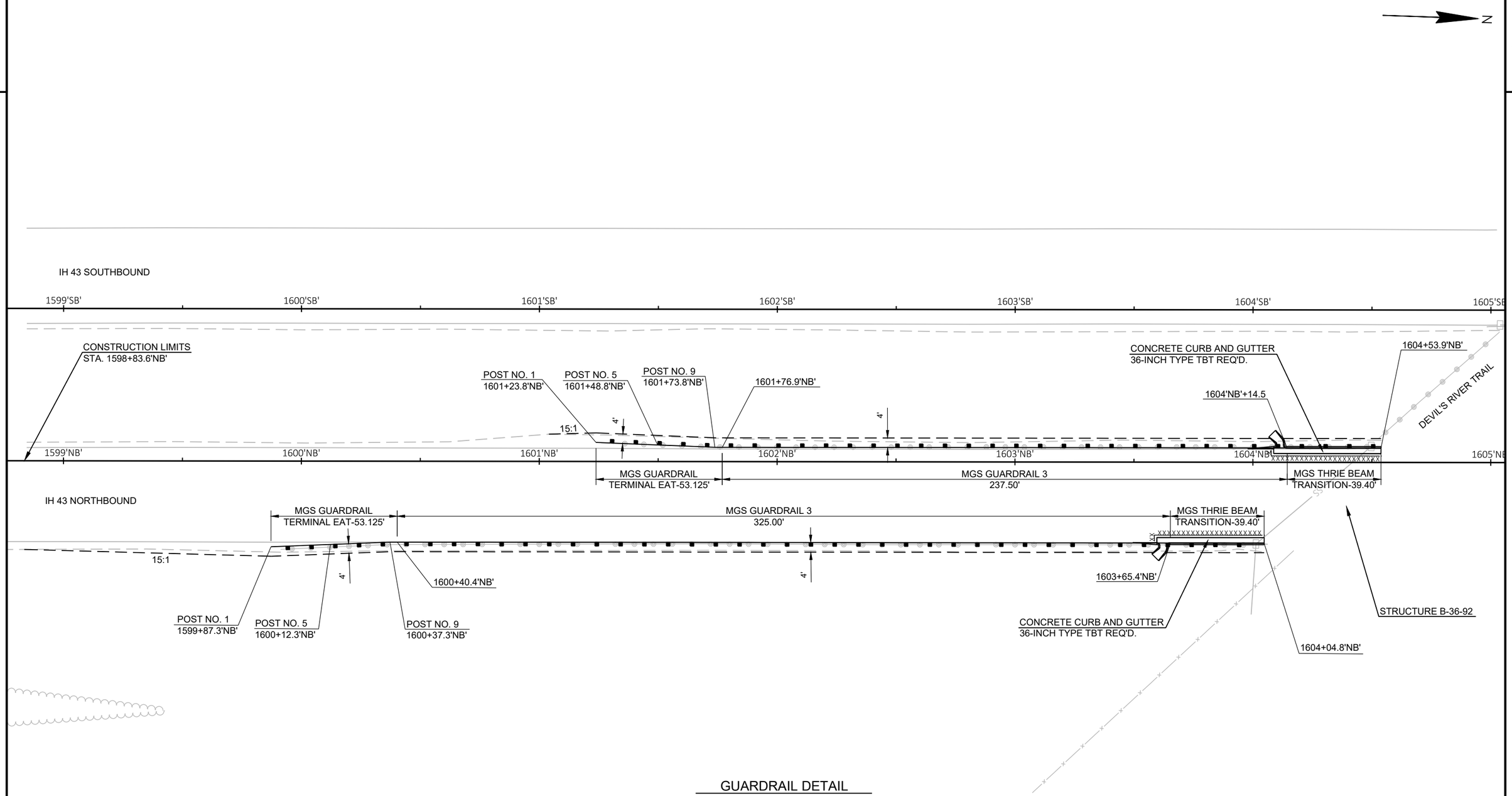

GUARDRAIL DETAIL
IH 43 NORTHBOUND
STA. 1598+83.6'NB' - STA. 1604+53.9'NB'

LEGEND

XXXXXXXXX SAW CUT

PROJECT NO: 1227-12-71	HWY: IH 43	COUNTY: MANITOWOC	PLAN DETAILS - IH 43	SHEET	E

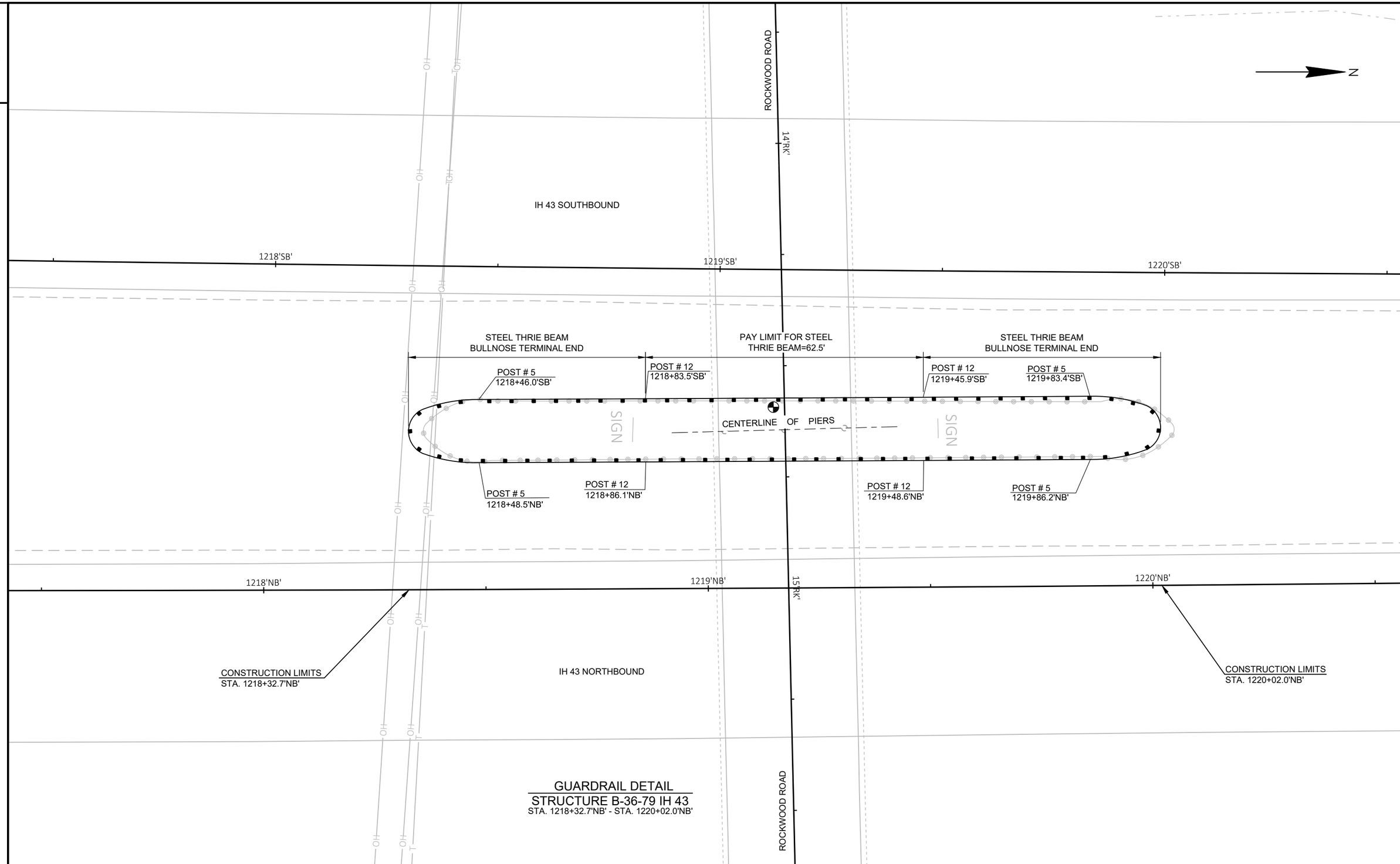

PROJECT NO: 1227-12-71	HWY: IH 43	COUNTY: MANITOWOC	PLAN DETAILS - IH 43	SHEET	E

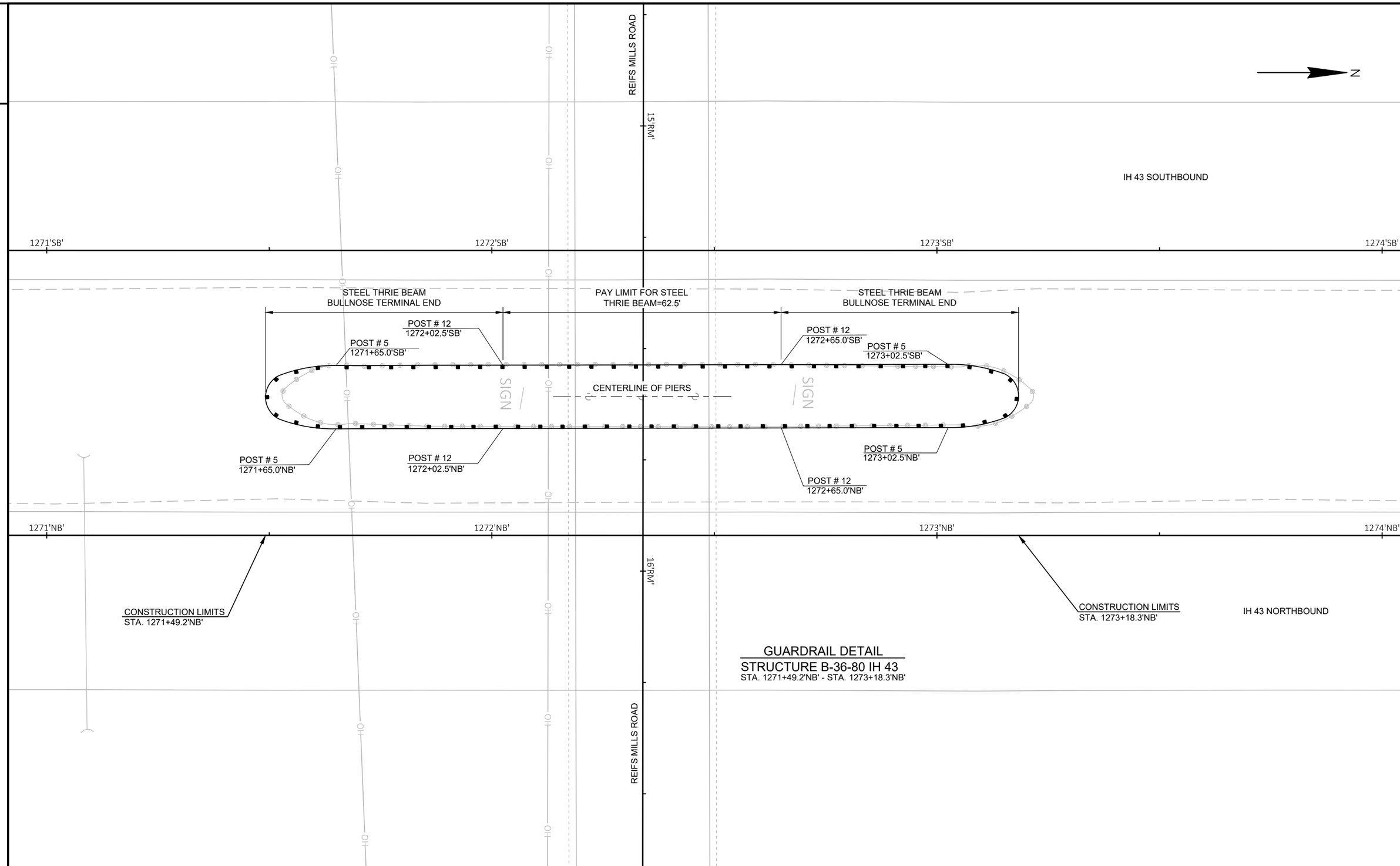

PROJECT NO: 1227-12-71	HWY: IH 43	COUNTY: MANITOWOC	PLAN DETAILS - IH 43	SHEET	E

FILE NAME : I:\45\450504 IH 43 WISDOT GUARDRAIL\C3D\SHEETSPLAN\12271271 PLAN\021202_PD.DWG
LAYOUT NAME - 021210_pd
PLOT DATE : 11/3/2020 2:01 PM PLOT BY : GARNICA, BRANDON PLOT NAME : PLOT SCALE : 1 IN:20 FT

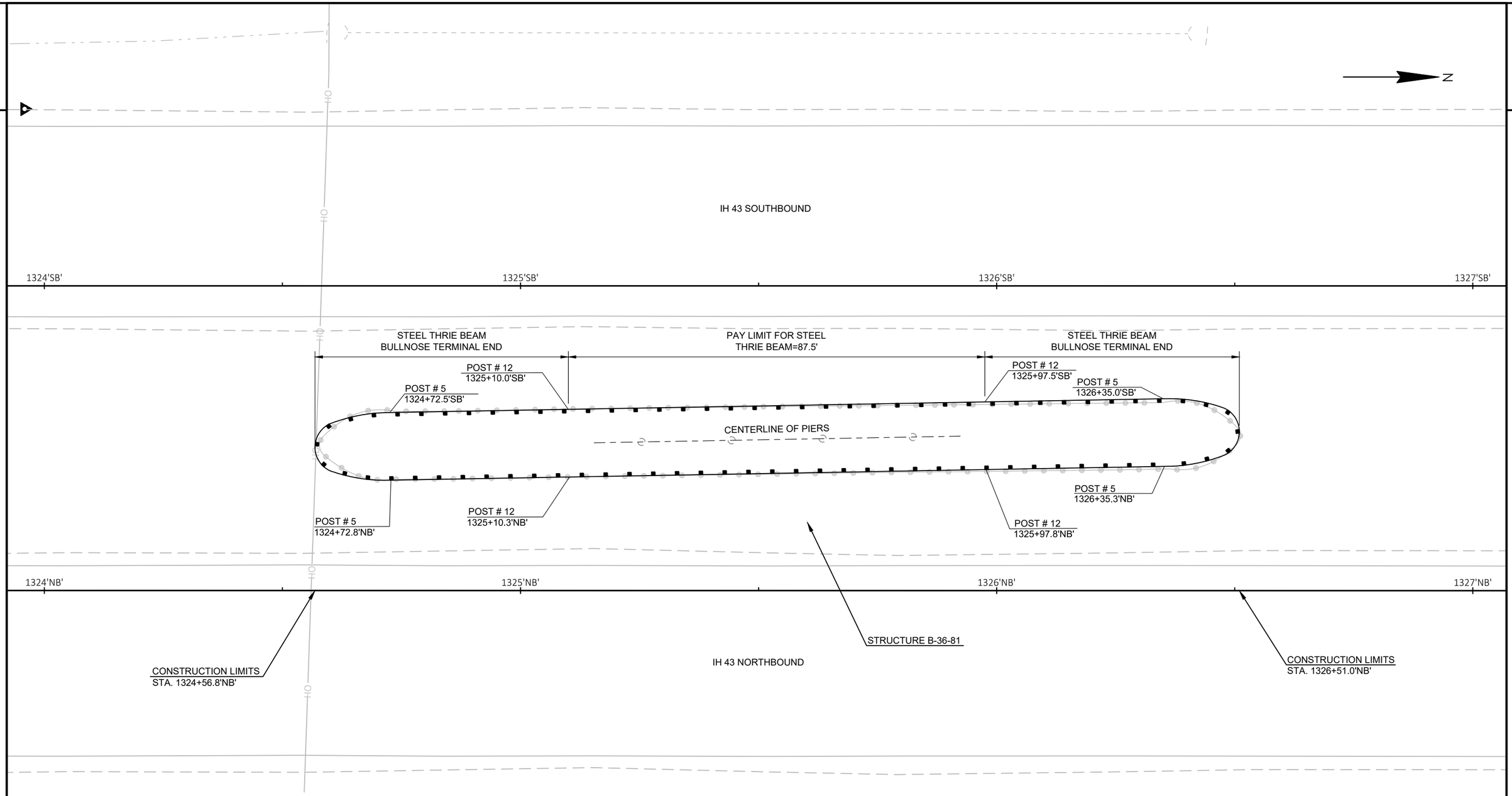

GUARDRAIL DETAIL

STRUCTURE B-36-81 IH 43

STA. 1324+56.8'NB' - STA. 1326+51.0'NB'

PROJECT NO: 1227-12-71	HWY: IH 43	COUNTY: MANITOWOC	PLAN DETAILS - IH 43	SHEET	E

FILE NAME : I:\45\450504 IH 43 WISDOT GUARDRAIL\C3D\SHEETSPLAN\12271271 PLAN\021202_PD.DWG
LAYOUT NAME - 021211_pd

PLOT DATE : 11/3/2020 2:01 PM PLOT BY : GARNICA, BRANDON PLOT NAME : PLOT SCALE : 1 IN:20 FT

WISDOT/CADDS SHEET 42

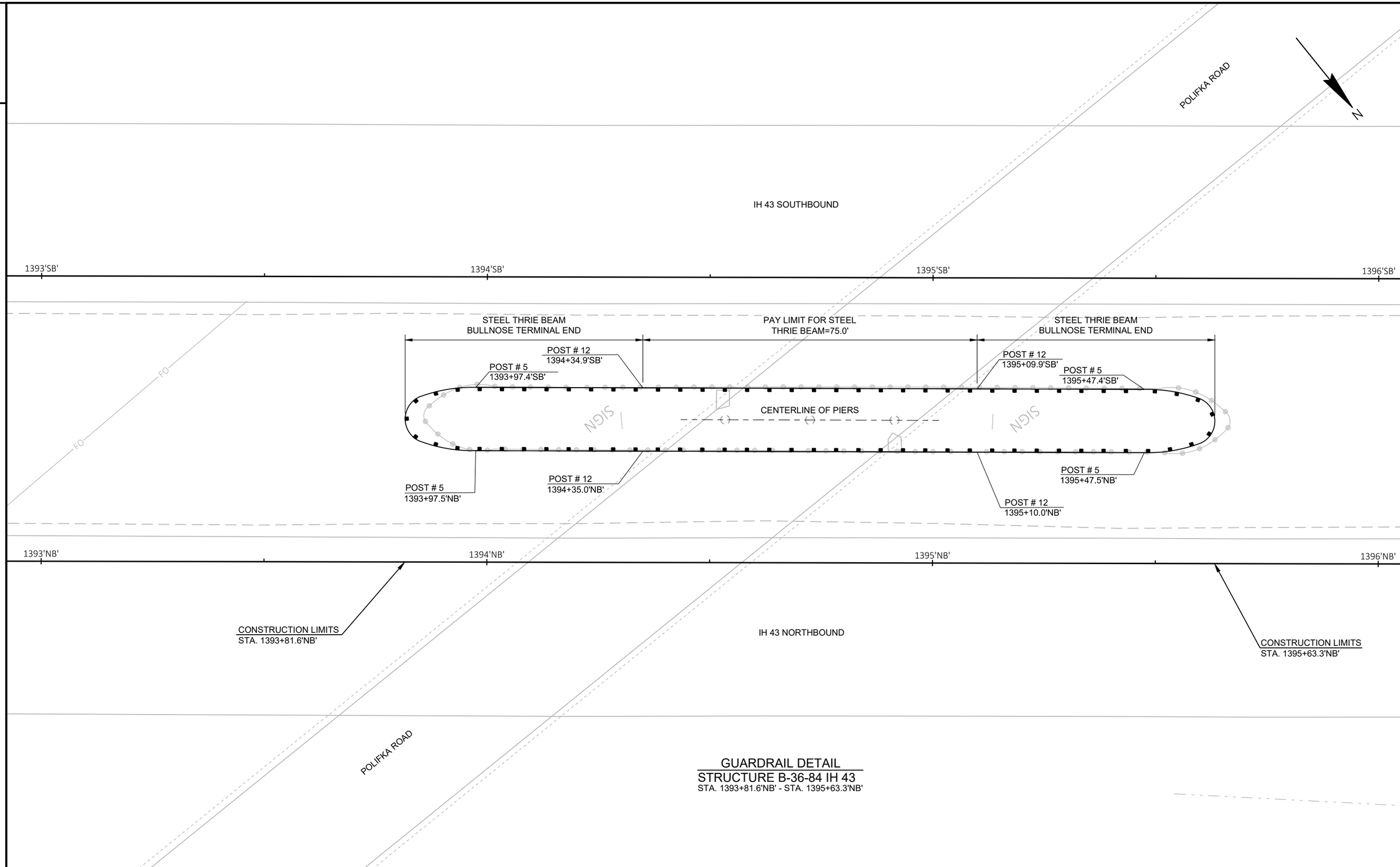

PROJECT NO: 1227-12-71	HWY: IH 43	COUNTY: MANITOWOC	PLAN DETAILS - IH 43	SHEET	E

FILE NAME : I:\45\450504 IH 43 WISDOT GUARDRAIL\C3D\SHEETSPLAN\12271271 PLAN\021202_PD.DWG
LAYOUT NAME - 021212_pd
PLOT DATE : 11/3/2020 2:01 PM
PLOT BY : GARNICA, BRANDON
PLOT NAME :
PLOT SCALE : 1 IN:20 FT
WISDOT/CADDS SHEET 42

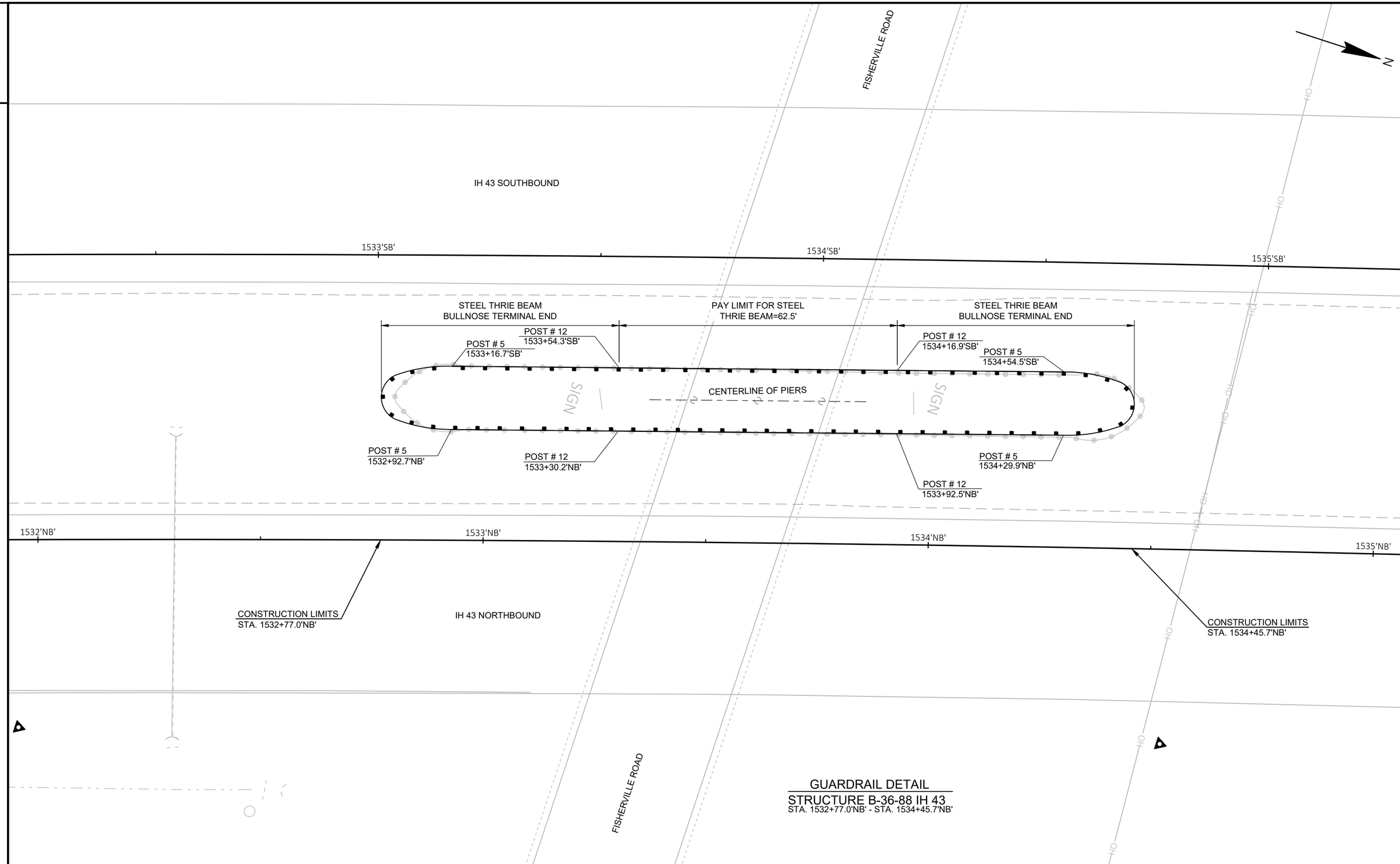

PROJECT NO: 1227-12-71	HWY: IH 43	COUNTY: MANITOWOC	PLAN DETAILS - IH 43	SHEET	E

FILE NAME : I:\45\450504 IH 43 WISDOT GUARDRAIL\C3D\SHEETSPLAN\12271271 PLAN\021202_PD.DWG
LAYOUT NAME - 021213_pd
PLOT DATE : 11/3/2020 2:02 PM
PLOT BY : GARNICA, BRANDON
PLOT NAME :
PLOT SCALE : 1 IN:20 FT

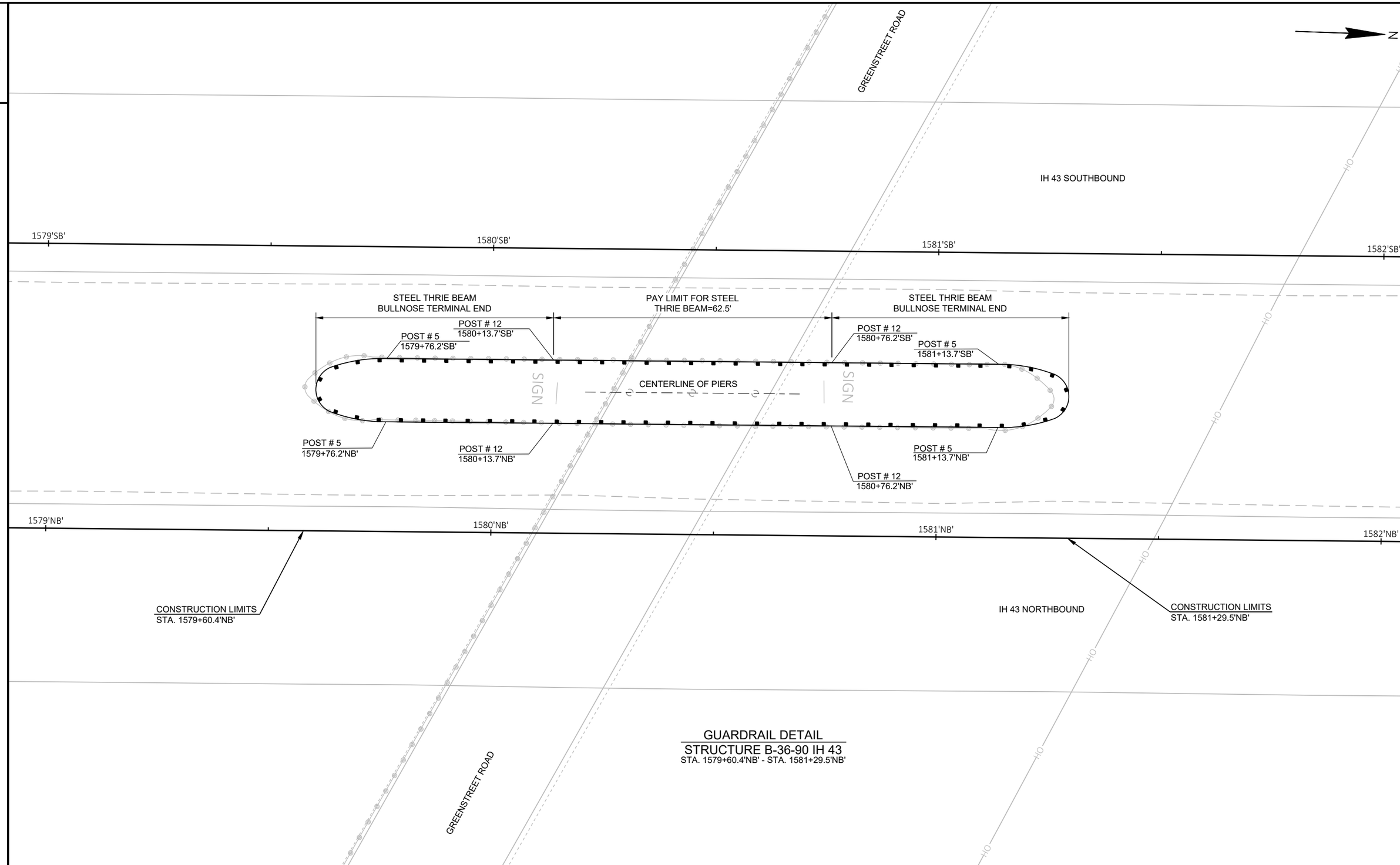

GUARDRAIL DETAIL
STRUCTURE B-36-90 IH 43
STA. 1579+60.4'NB' - STA. 1581+29.5'NB'

PROJECT NO: 1227-12-71	HWY: IH 43	COUNTY: MANITOWOC	PLAN DETAILS - IH 43	SHEET	E

2

N

IH 43 SOUTHBOUND

STRUCTURE B-36-79

CONSTRUCTION LIMITS
STA. 11+20.3'RK'

POST NO. 1
12+07.2'RK'

POST NO. 5
12+32.2'RK'

POST NO. 9
12+57.2'RK'

12+85.3'RK'

13+24.7'RK'

15:1

4'

MGS GUARDRAIL TERMINAL EAT
53.125'

MGS GUARDRAIL 3
25.00'

MGS THRIE BEAM TRANSITION
39.40'

ROCKWOOD RD

12'RK'

13'RK'

14'RK'

MGS GUARDRAIL TERMINAL EAT
53.125'

MGS GUARDRAIL 3
62.50'

MGS THRIE BEAM TRANSITION
39.40'

15:1

4'

POST NO. 1
11+69.7'RK'

POST NO. 5
11+94.7'RK'

POST NO. 9
12+19.7'RK'

12+85.3'RK'

13+24.7'RK'

CANARY LANE

GUY

POST

GUARDRAIL DETAIL
B-36-79 ROCKWOOD ROAD
STA. 11+20.3'RK' - STA. 13+24.7'RK'

2

PROJECT NO: 1227-12-71	HWY: IH 43	COUNTY: MANITOWOC	PLAN DETAILS - ROCKWOOD ROAD	SHEET	E

FILE NAME : I:\45\450504 IH 43 WISDOT GUARDRAIL\C3D\SHEETSPLAN\12271271 PLAN\021203_PD.DWG
LAYOUT NAME - 021215_pd

PLOT DATE : 11/3/2020 2:02 PM PLOT BY : GARNICA, BRANDON PLOT NAME : PLOT SCALE : 1 IN:20 FT

WISDOT/CADDS SHEET 42

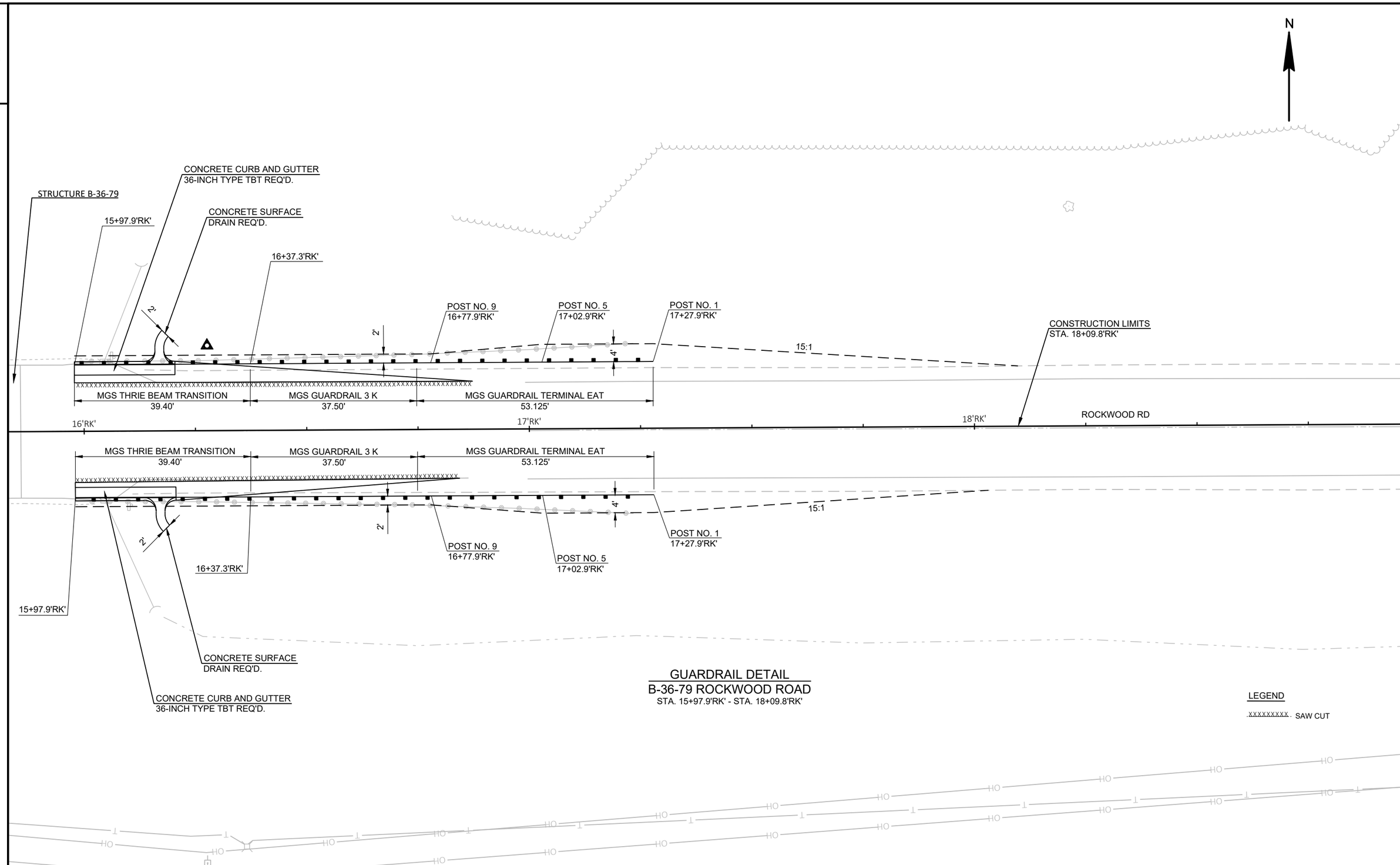

GUARDRAIL DETAIL
B-36-79 ROCKWOOD ROAD
STA. 15+97.9'RK' - STA. 18+09.8'RK'

PROJECT NO: 1227-12-71	HWY: IH 43	COUNTY: MANITOWOC	PLAN DETAILS - ROCKWOOD ROAD	SHEET	E

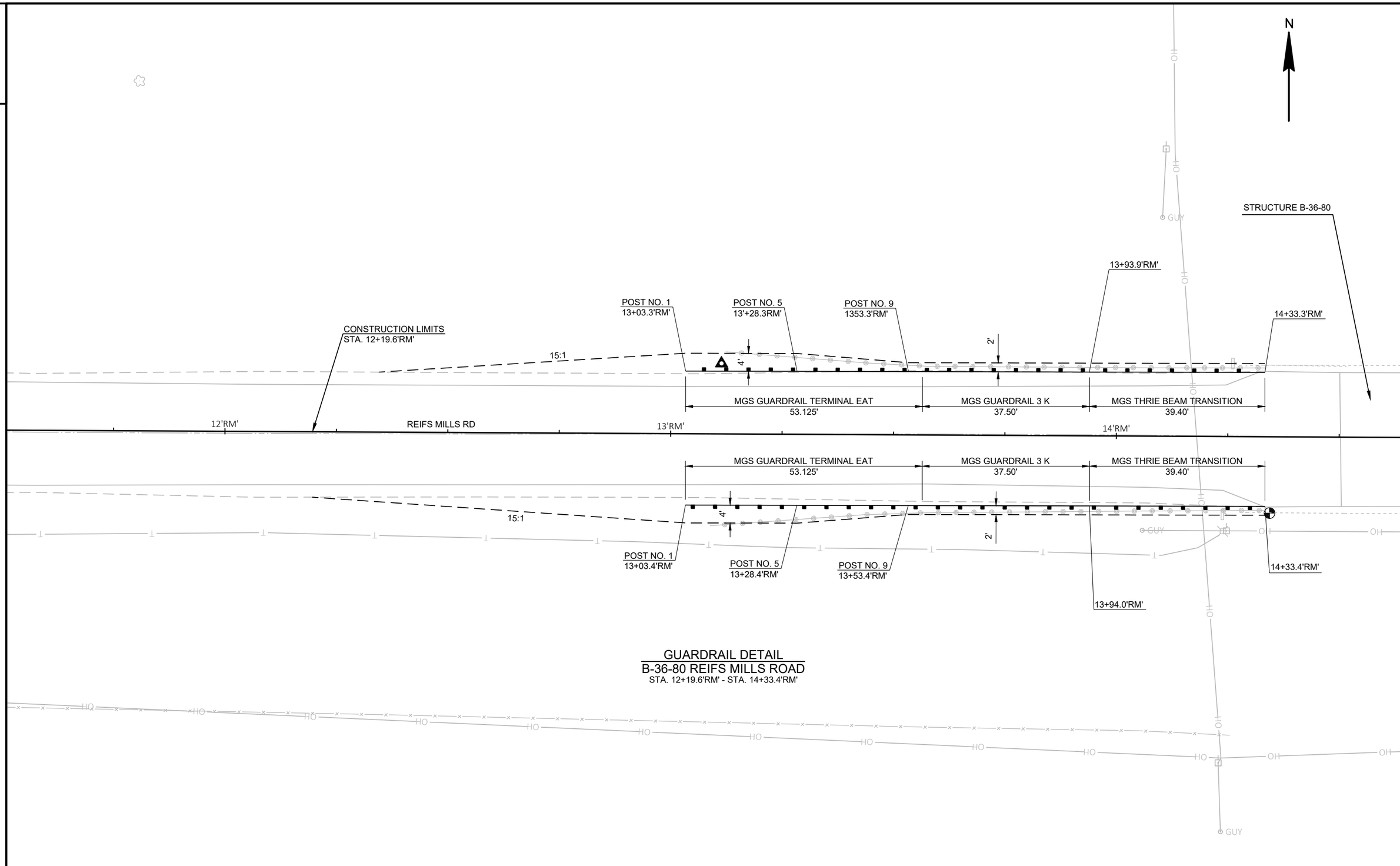
N
STRUCTURE B-36-80
13+93.9'RM'
14+33.3'RM'
POST NO. 1
13+03.3'RM'
POST NO. 5
13'+28.3RM'
POST NO. 9
1353.3'RM'
CONSTRUCTION LIMITS
STA. 12+19.6'RM'
15:1
4'
2'
MGS GUARDRAIL TERMINAL EAT
53.125'
MGS GUARDRAIL 3 K
37.50'
MGS THRIE BEAM TRANSITION
39.40'
12'RM'
REIFS MILLS RD
13'RM'
14'RM'
MGS GUARDRAIL TERMINAL EAT
53.125'
MGS GUARDRAIL 3 K
37.50'
MGS THRIE BEAM TRANSITION
39.40'
15:1
4'
2'
POST NO. 1
13+03.4'RM'
POST NO. 5
13+28.4'RM'
POST NO. 9
13+53.4'RM'
14+33.4'RM'
13+94.0'RM'
GUY
OH
GUARDRAIL DETAIL
B-36-80 REIFS MILLS ROAD
STA. 12+19.6'RM' - STA. 14+33.4'RM'

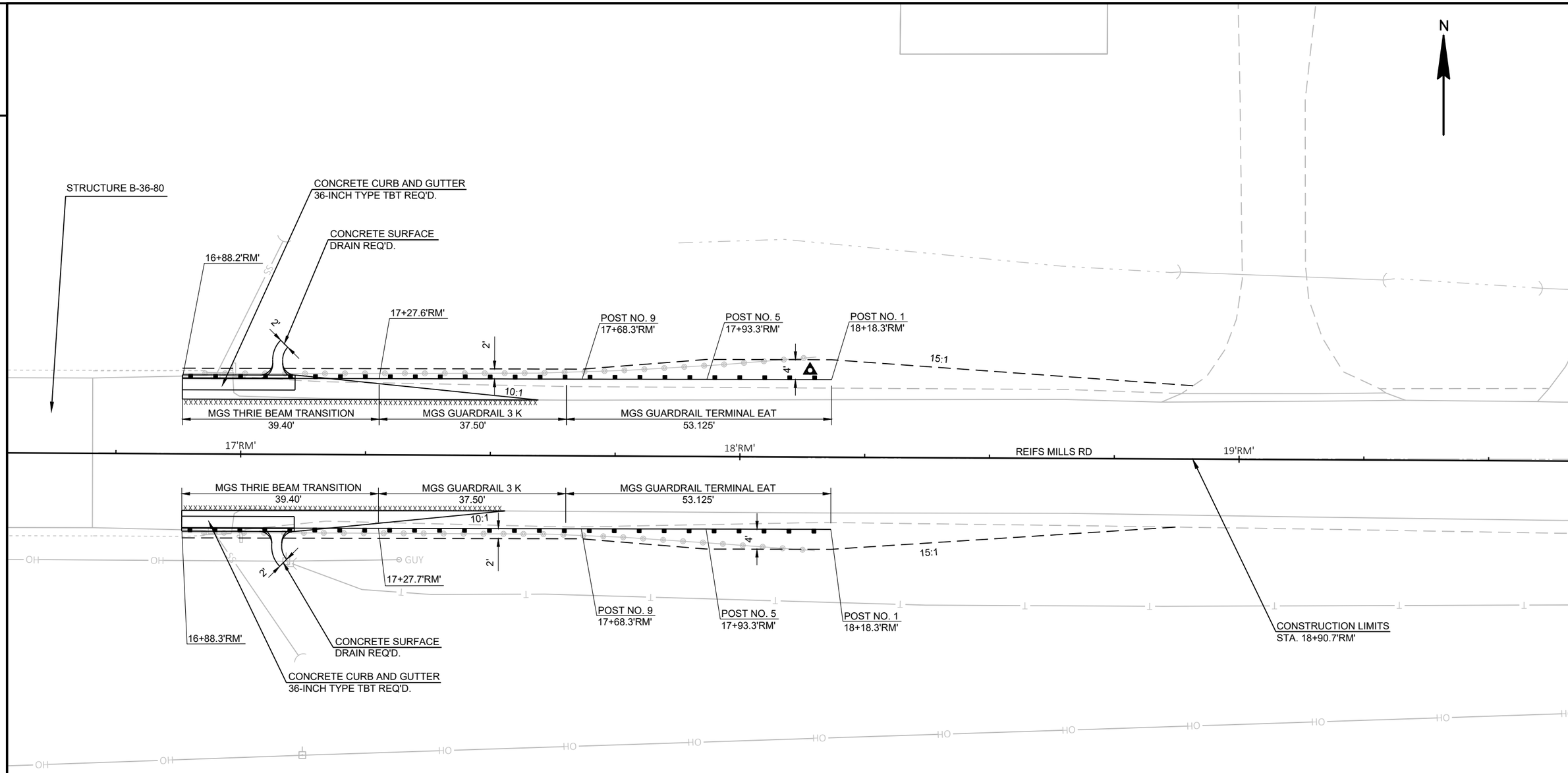

GUARDRAIL DETAIL
B-36-80 REIFS MILLS ROAD
STA. 16+88.2'RM' - STA. 18+90.7'RM'

LEGEND

xxxxxxxxx SAW CUT

PROJECT NO: 1227-12-71	HWY: IH 43	COUNTY: MANITOWOC	PLAN DETAILS - REIFS MILLS ROAD	SHEET	E

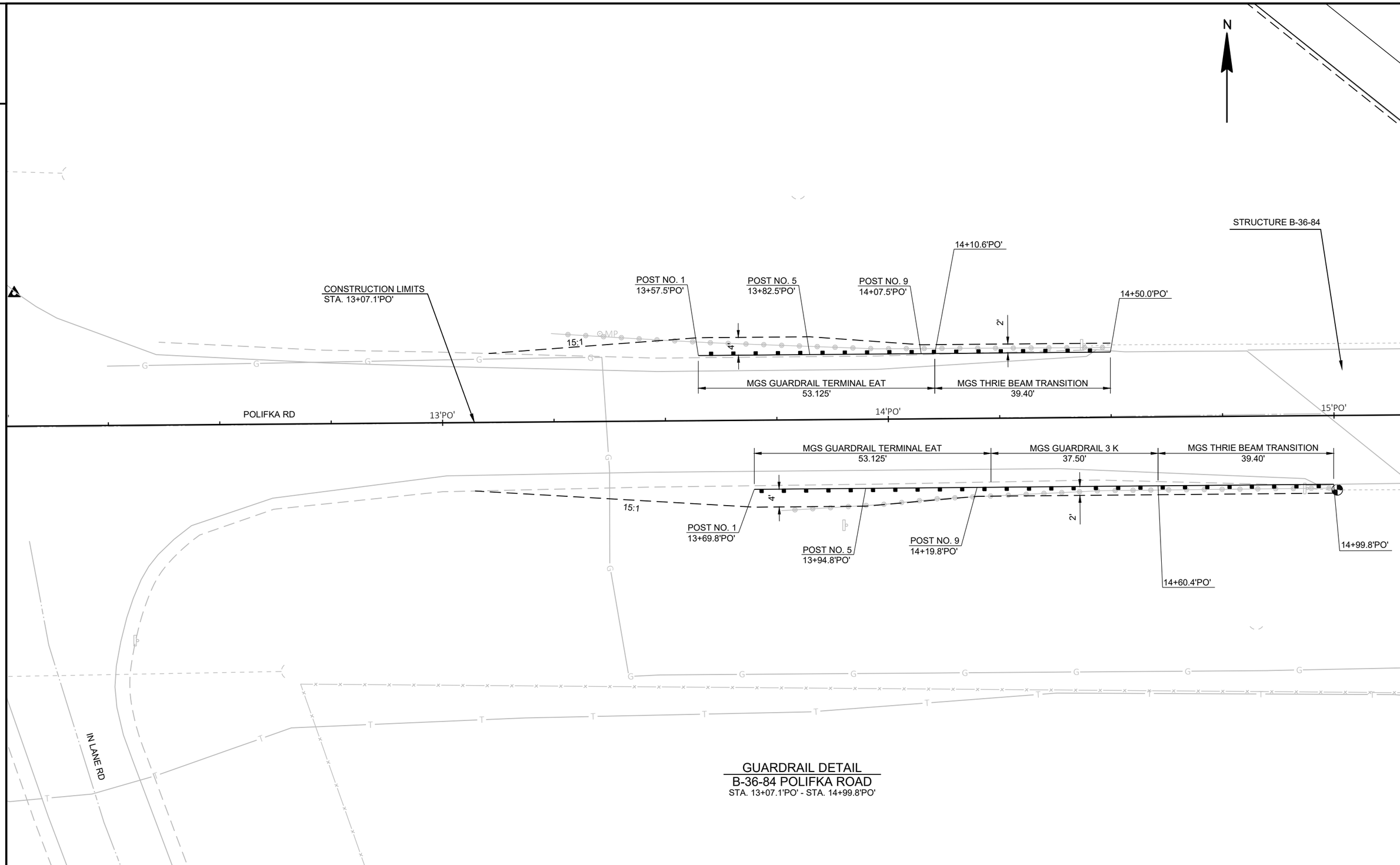

GUARDRAIL DETAIL
B-36-84 POLIFKA ROAD
STA. 13+07.1'PO' - STA. 14+99.8'PO'

PROJECT NO: 1227-12-71	HWY: IH 43	COUNTY: MANITOWOC	PLAN DETAILS - POLIFKA ROAD	SHEET	E

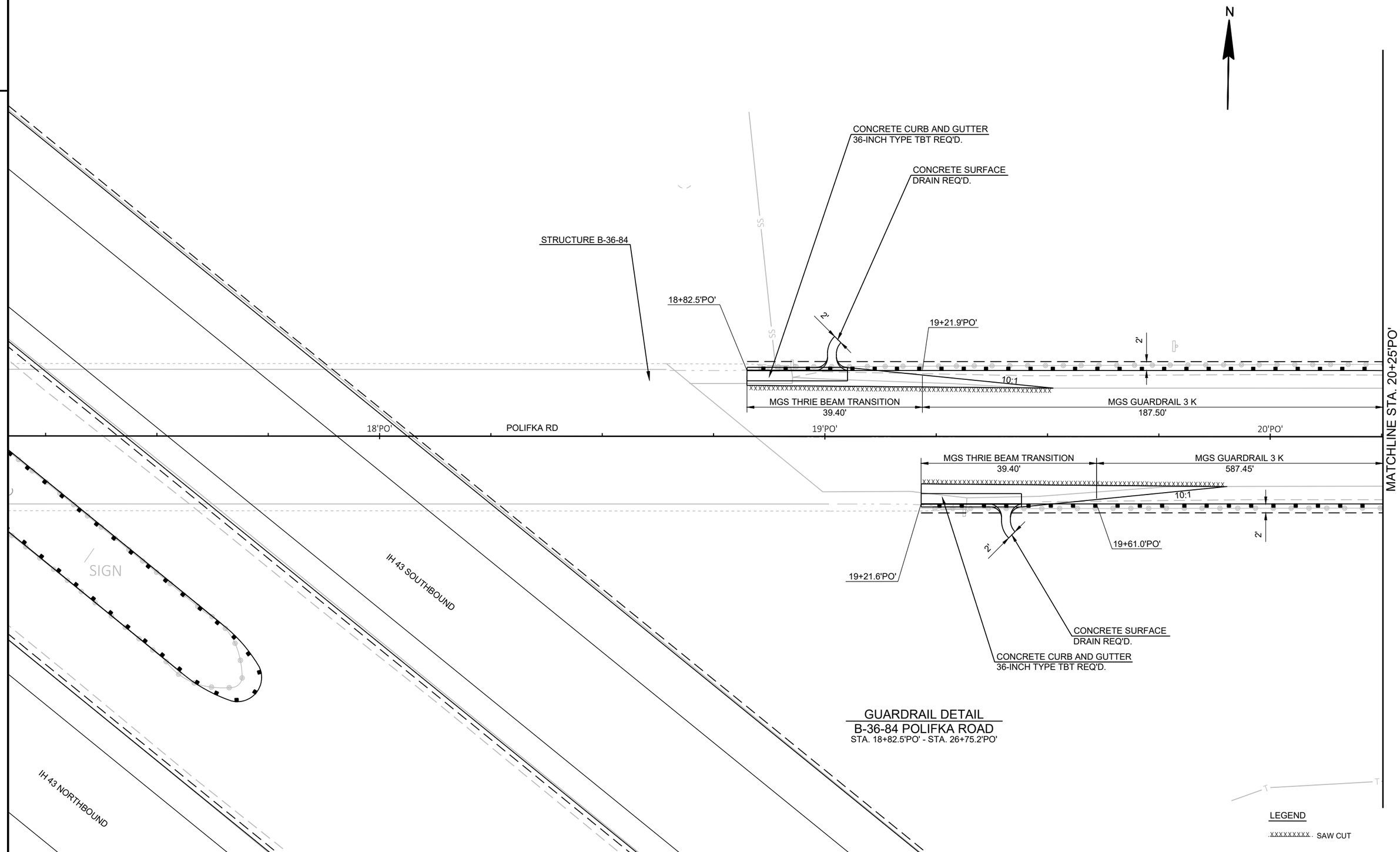

GUARDRAIL DETAIL
B-36-84 POLIFKA ROAD
STA. 18+82.5'PO' - STA. 26+75.2'PO'

PROJECT NO: 1227-12-71	HWY: IH 43	COUNTY: MANITOWOC	PLAN DETAILS - POLIFKA ROAD	SHEET	E

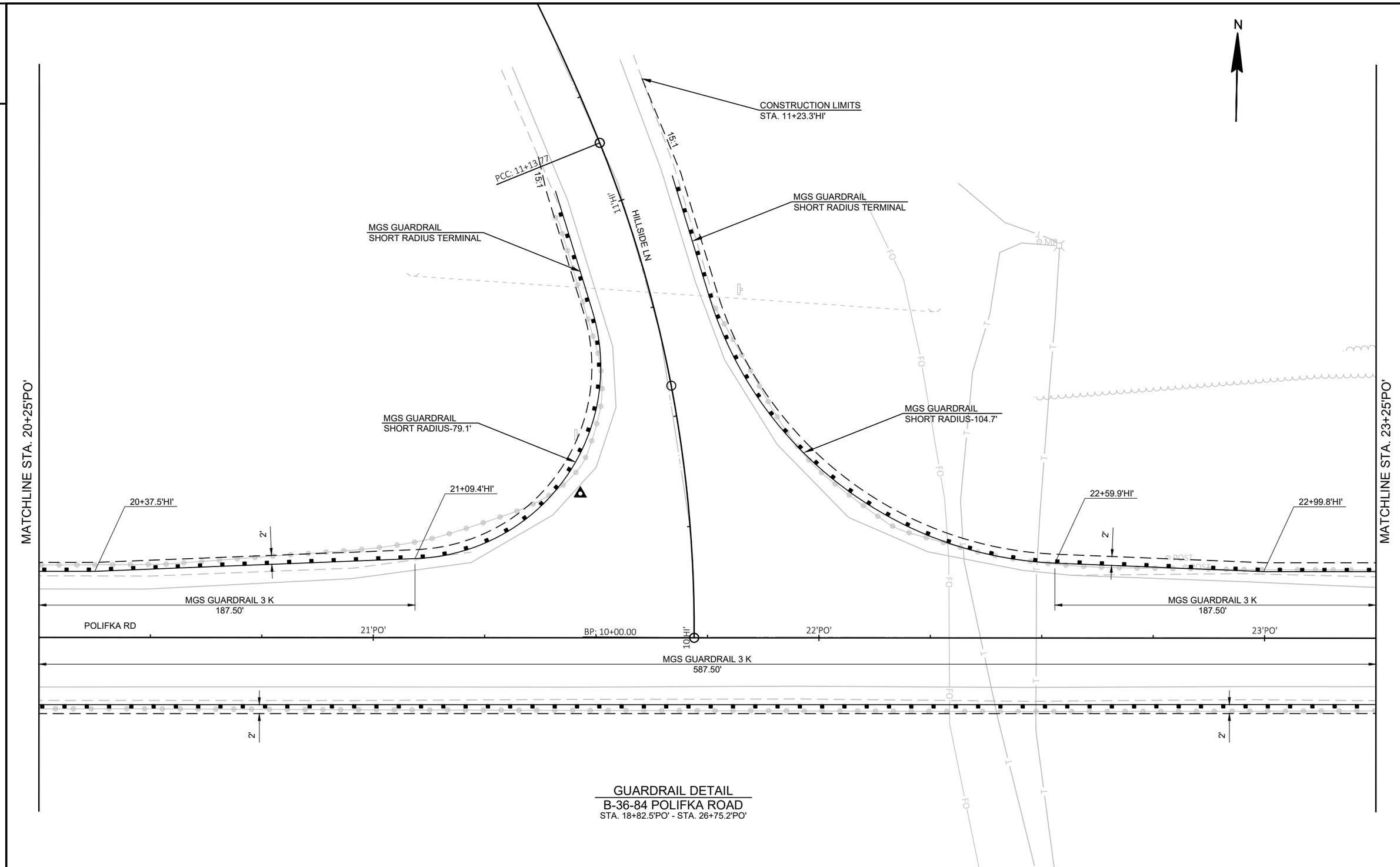

GUARDRAIL DETAIL
B-36-84 POLIFKA ROAD
STA. 18+82.5'PO' - STA. 26+75.2'PO'

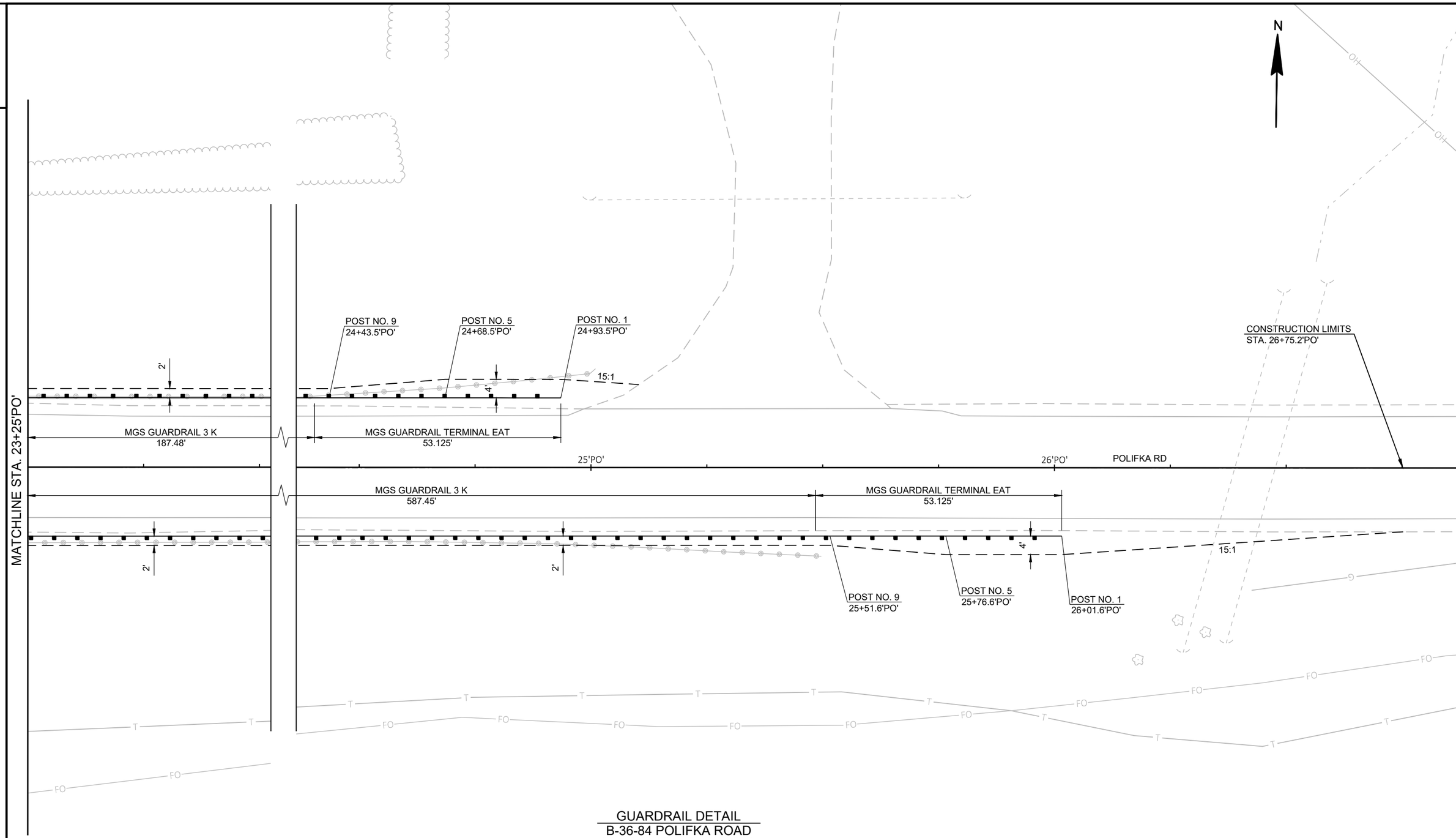

GUARDRAIL DETAIL
B-36-84 POLIFKA ROAD
STA. 18+82.5'PO' - STA. 26+75.2'PO'

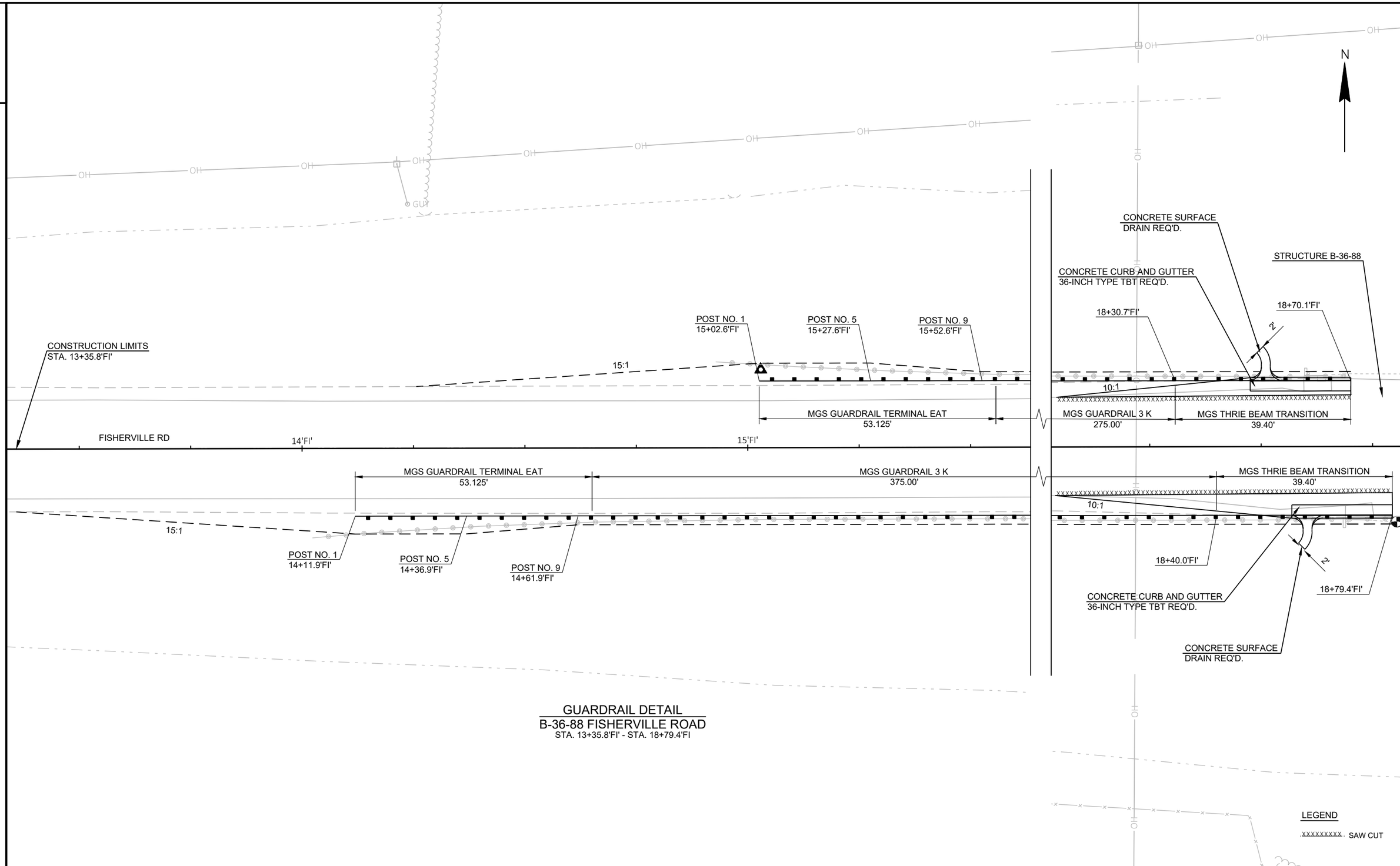

GUARDRAIL DETAIL
B-36-88 FISHERVILLE ROAD
STA. 13+35.8'FI' - STA. 18+79.4'FI

PROJECT NO: 1227-12-71	HWY: IH 43	COUNTY: MANITOWOC	PLAN DETAILS - FISHERVILLE ROAD	SHEET	E

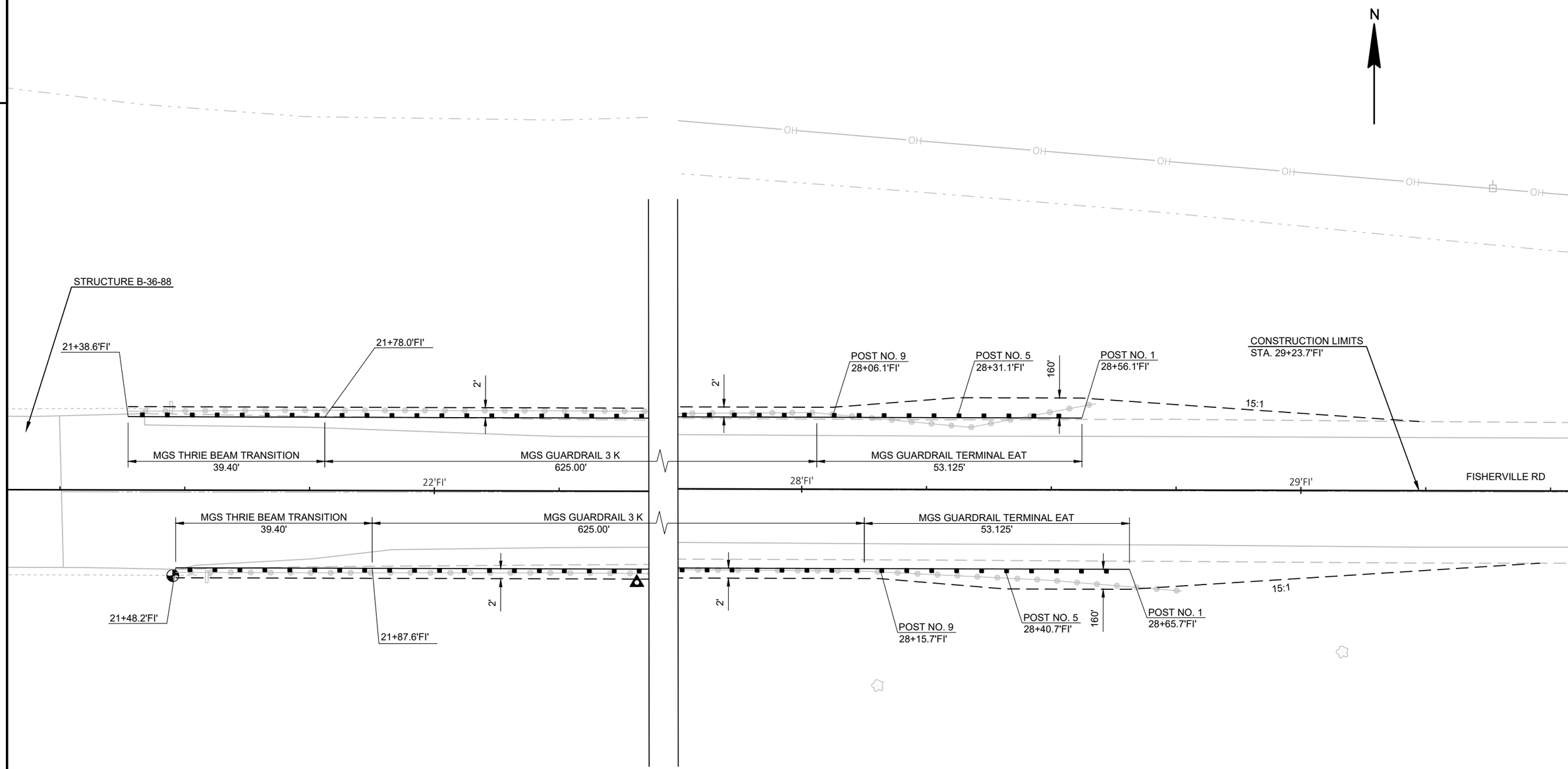

GUARDRAIL DETAIL
B-36-88 FISHERVILLE ROAD
STA. 21+38.6'FI' - STA. 29+23.7'FI

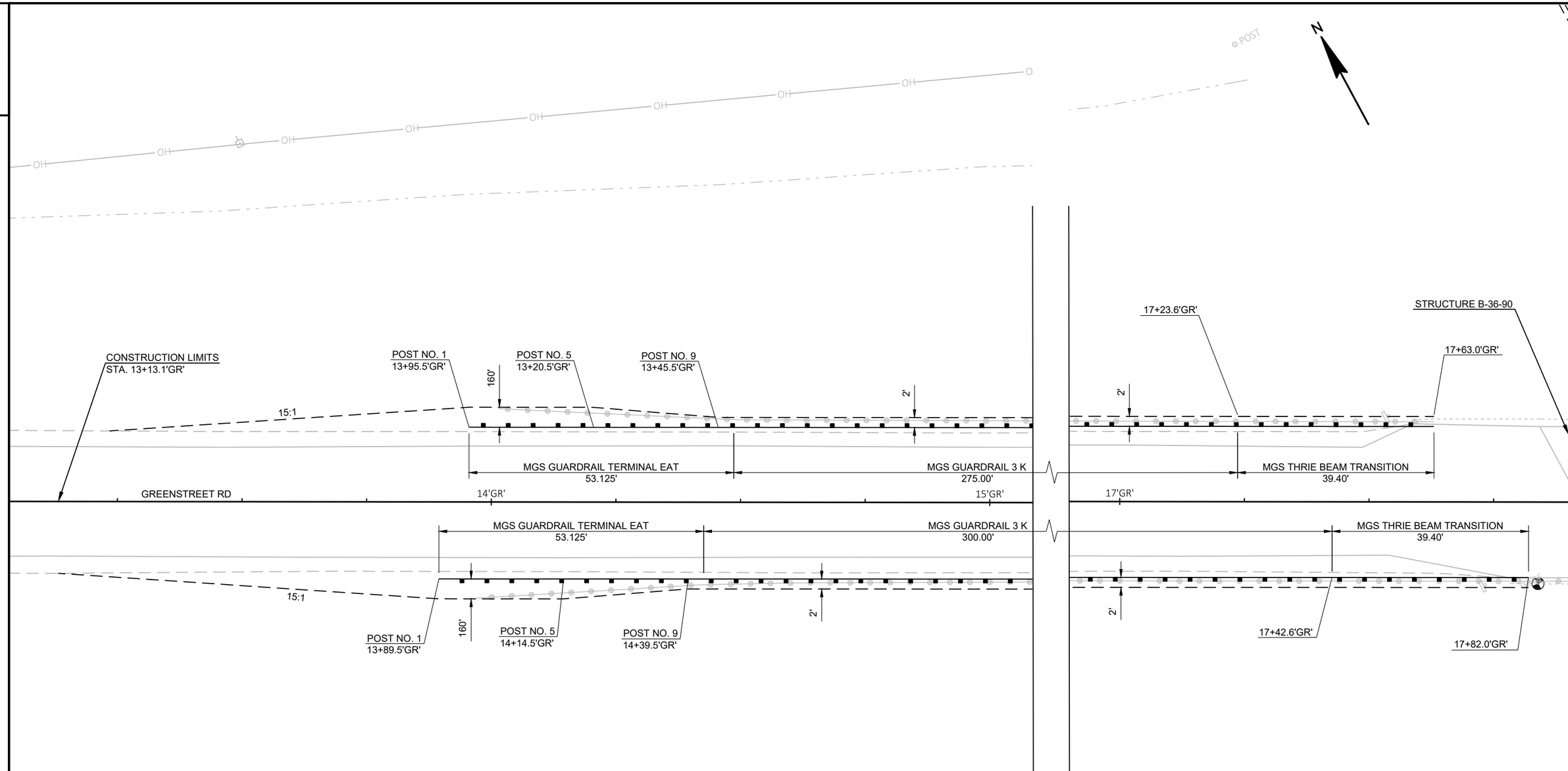

GUARDRAIL DETAIL

B-36-90 GREENSTREET RD

STA. 13+13.1'GR' - STA. 17+82.0'GR'

PROJECT NO: 1227-12-71	HWY: IH 43	COUNTY: MANITOWOC	PLAN DETAILS - GREENSTREET ROAD	SHEET	E

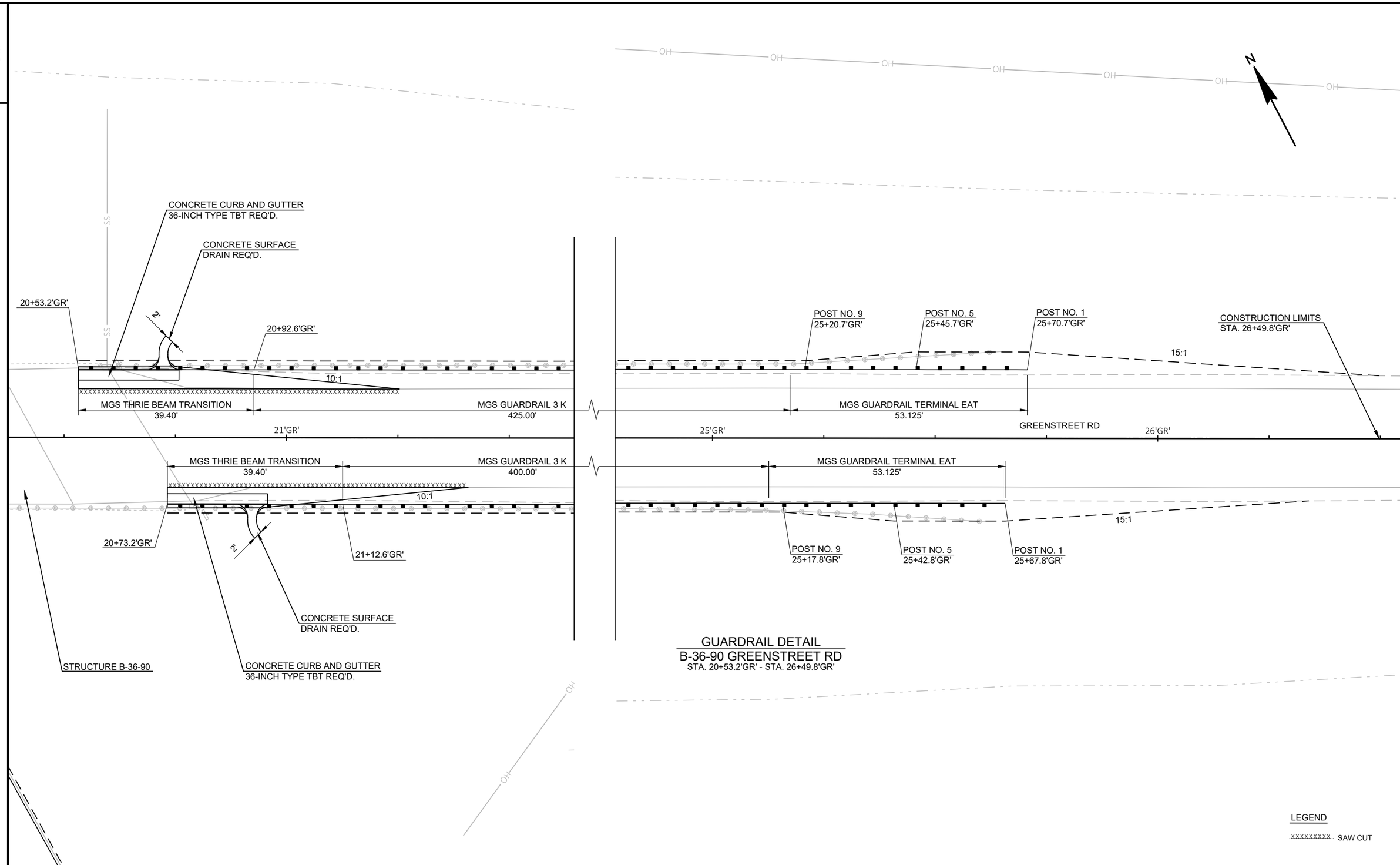

GUARDRAIL DETAIL
B-36-90 GREENSTREET RD
STA. 20+53.2'GR' - STA. 26+49.8'GR'

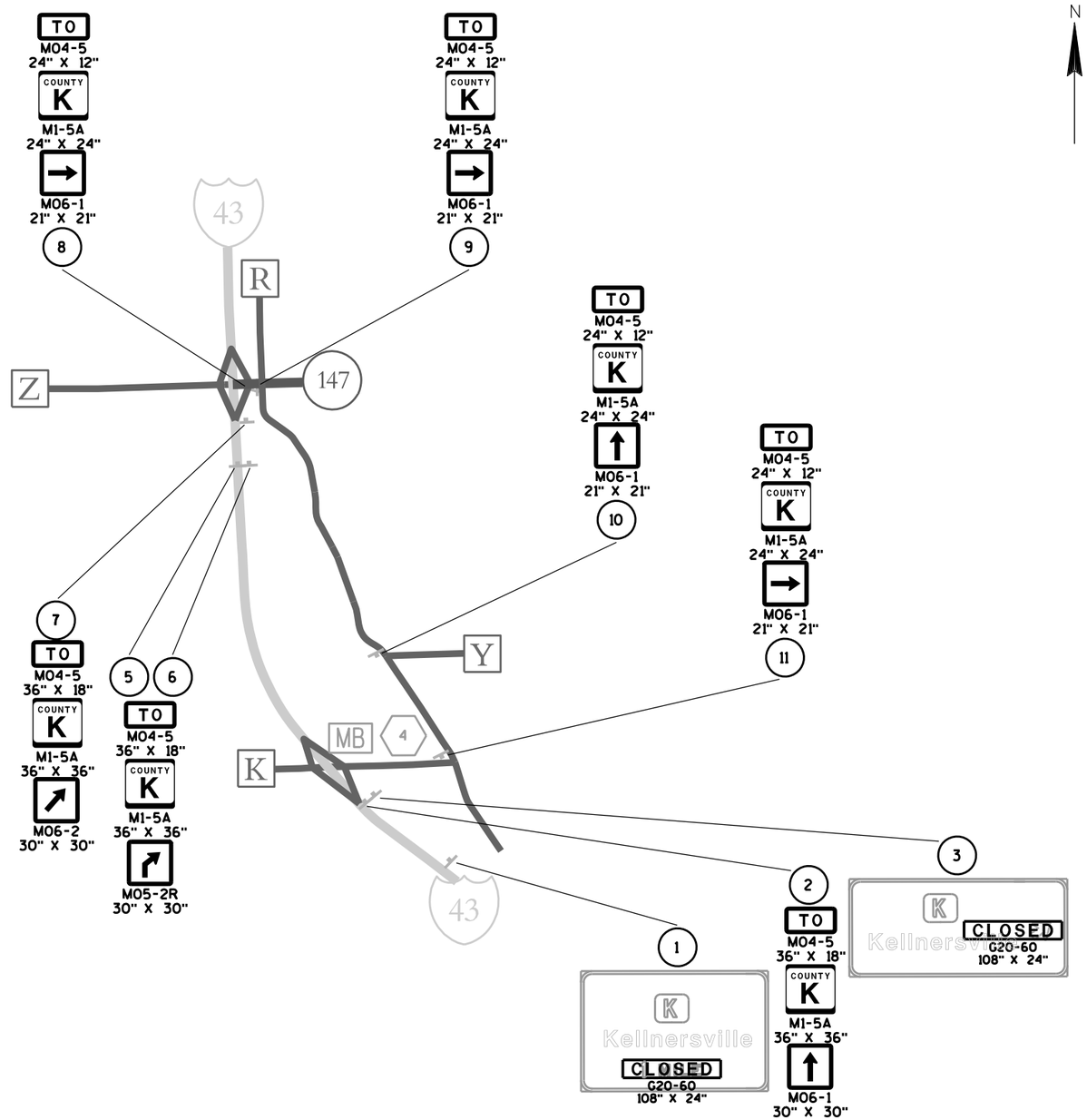

LEGEND

- (x) SIGN NUMBER. REFER TO MISCELLANEOUS QUANTITY SHEET
- MB (x) PORTABLE CHANGEABLE MESSAGE SIGN
- SIGN MOUNTED ON TYPE III BARRICADE
- POST MOUNTED SIGN

PLAN SHEET PRODUCED BY WisDOT-NE REGION

PROJECT NO:1227-12-71	HWY:I-43	COUNTY:MANITOWOC	DETOUR SIGNING DETAIL - 43 NB OFF-RAMP TO K	SHEET	E

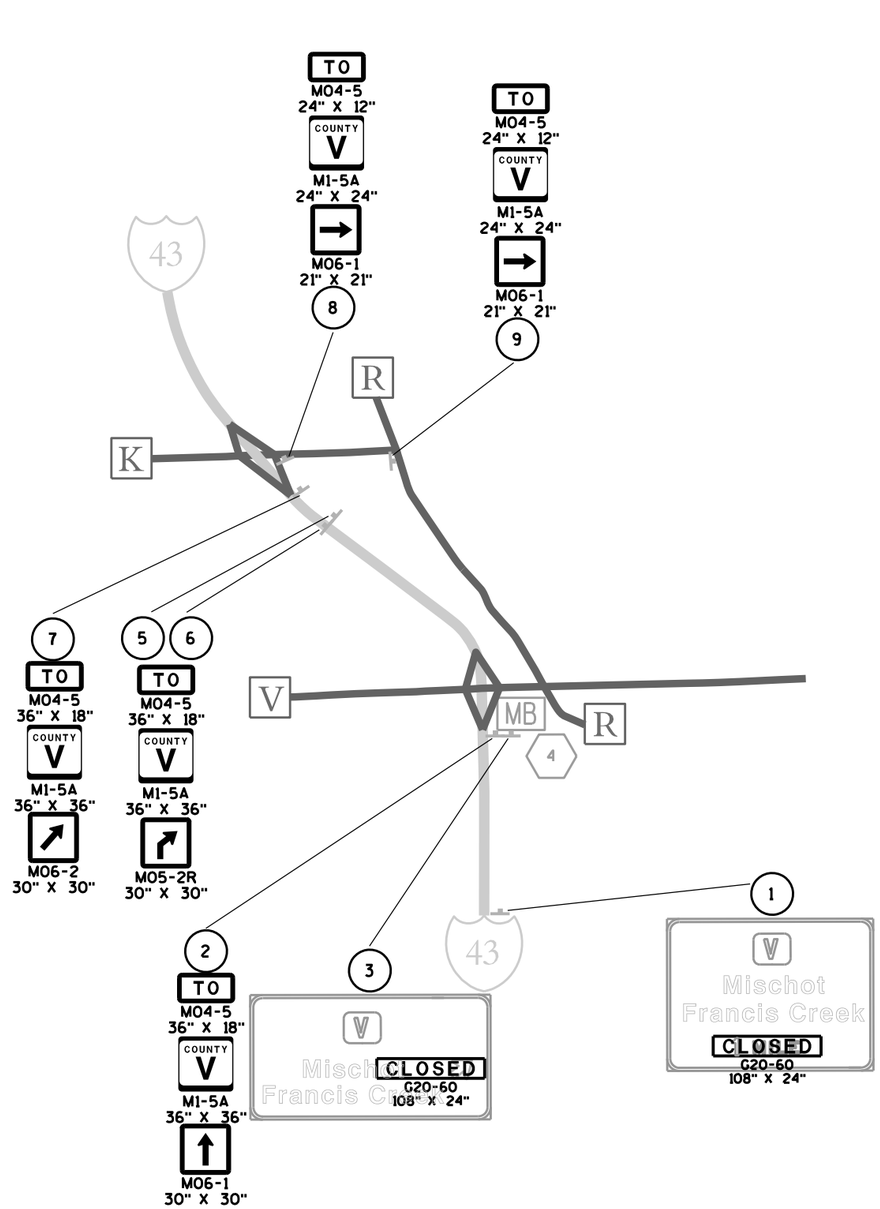

LEGEND

- (X) SIGN NUMBER. REFER TO MISCELLANEOUS QUANTITY SHEET
- MB (X) PORTABLE CHANGEABLE MESSAGE SIGN
- SIGN MOUNTED ON TYPE III BARRICADE
- POST MOUNTED SIGN

PLAN SHEET PRODUCED BY WisDOT-NE REGION

PROJECT NO:1227-12-71	HWY:I-43	COUNTY:MANITOWOC	DETOUR SIGNING DETAIL - I-43 NB OFF-RAMP TO V	SHEET	E

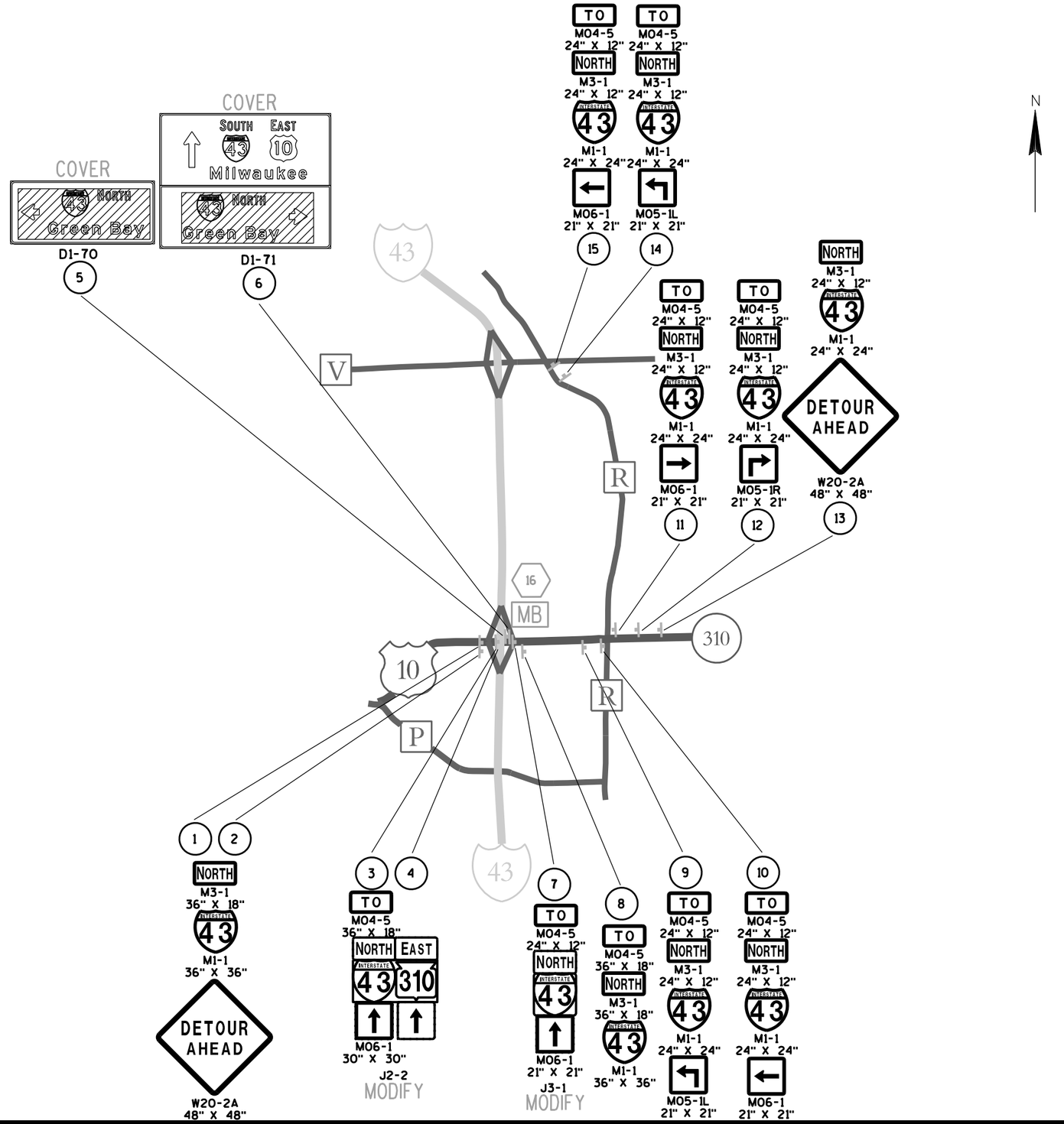

LEGEND

- (X) SIGN NUMBER. REFER TO MISCELLANEOUS QUANTITY SHEET
- MB (X) PORTABLE CHANGEABLE MESSAGE SIGN
- SIGN MOUNTED ON TYPE III BARRICADE
- POST MOUNTED SIGN

PLAN SHEET PRODUCED BY WisDOT-NE REGION

PROJECT NO:1227-12-71	HWY:I-43	COUNTY:MANITOWOC	DETOUR SIGNING DETAIL - US 10-STH 310 TO 43 NB ON-RAMP	SHEET	E

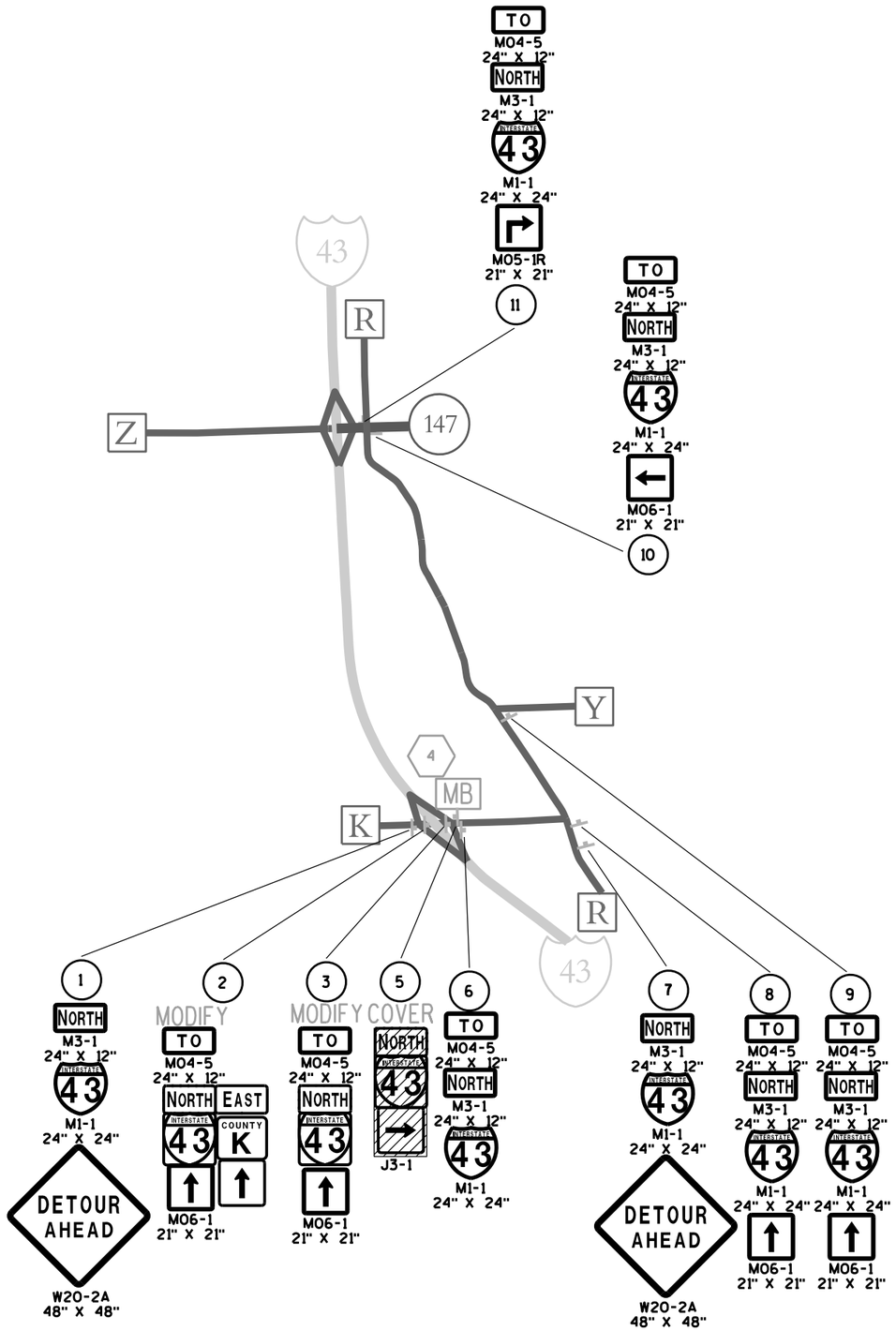

LEGEND

- (X) SIGN NUMBER. REFER TO MISCELLANEOUS QUANTITY SHEET
- MB (X) PORTABLE CHANGEABLE MESSAGE SIGN
- SIGN MOUNTED ON TYPE III BARRICADE
- POST MOUNTED SIGN

PLAN SHEET PRODUCED BY WisDOT-NE REGION

PROJECT NO:1227-12-71	HWY:I-43	COUNTY:MANITOWOC	DETOUR SIGNING DETAIL - CTH K TO 43 NB ON-RAMP	SHEET	E

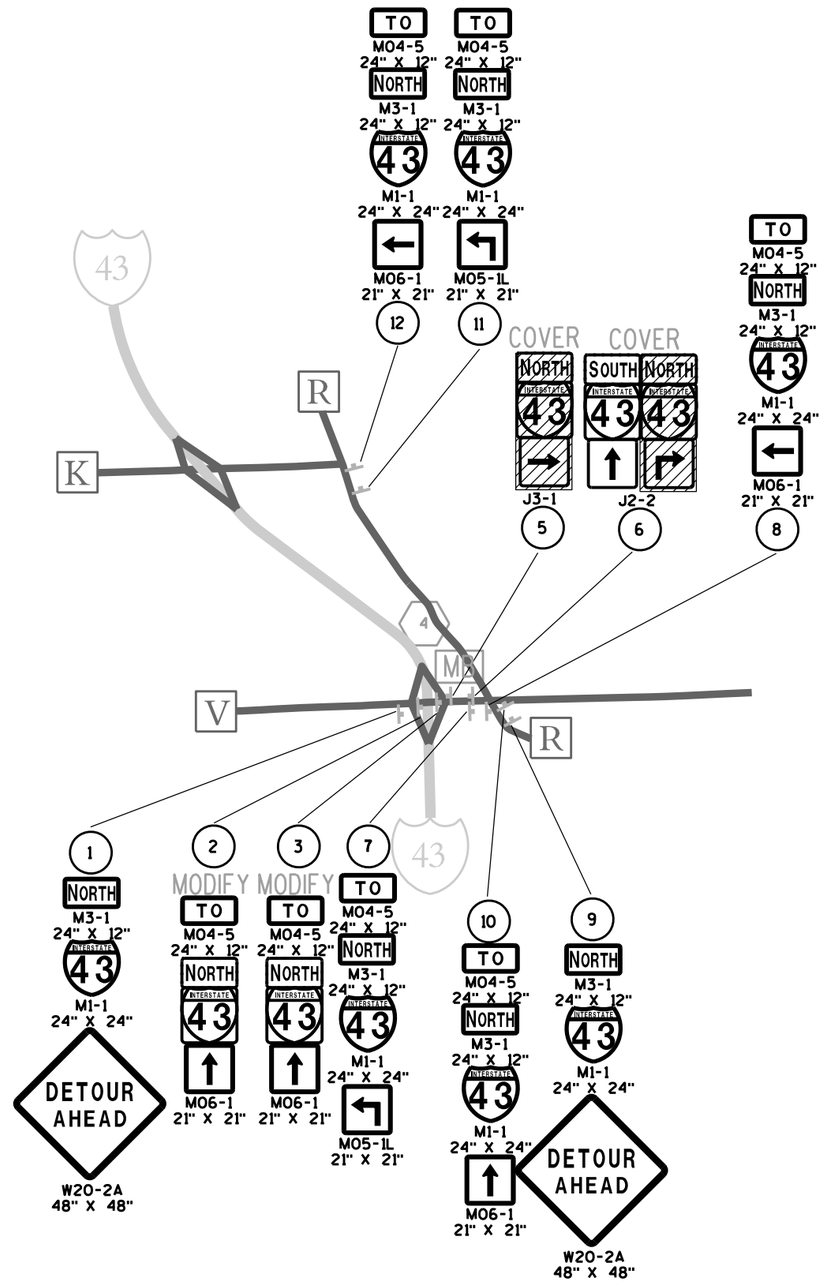

LEGEND

- (X) SIGN NUMBER. REFER TO MISCELLANEOUS QUANTITY SHEET
- MB (X) PORTABLE CHANGEABLE MESSAGE SIGN
- SIGN MOUNTED ON TYPE III BARRICADE
- POST MOUNTED SIGN

PLAN SHEET PRODUCED BY WisDOT-NE REGION

PROJECT NO:1227-12-71	HWY:I-43	COUNTY:MANITOWOC	DETOUR SIGNING DETAIL - CTH V TO 43 NB ON-RAMP	SHEET	E

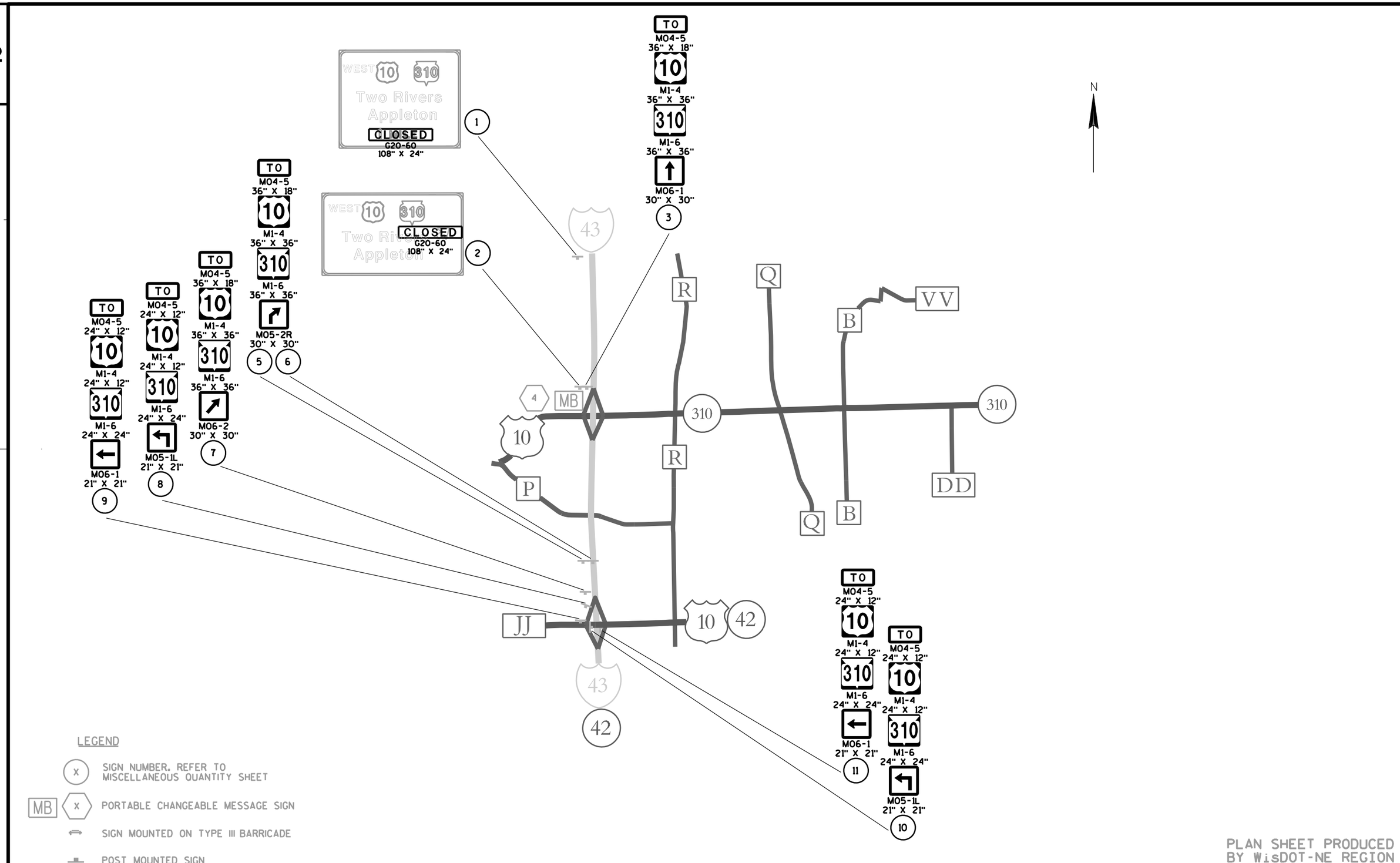

PLAN SHEET PRODUCED
BY WisDOT-NE REGION

PROJECT NO:1227-12-71	HWY:I-43	COUNTY:MANITOWOC	DETOUR SIGNING DETAIL - 43 SB OFF-RAMP TO 10/310	SHEET	E

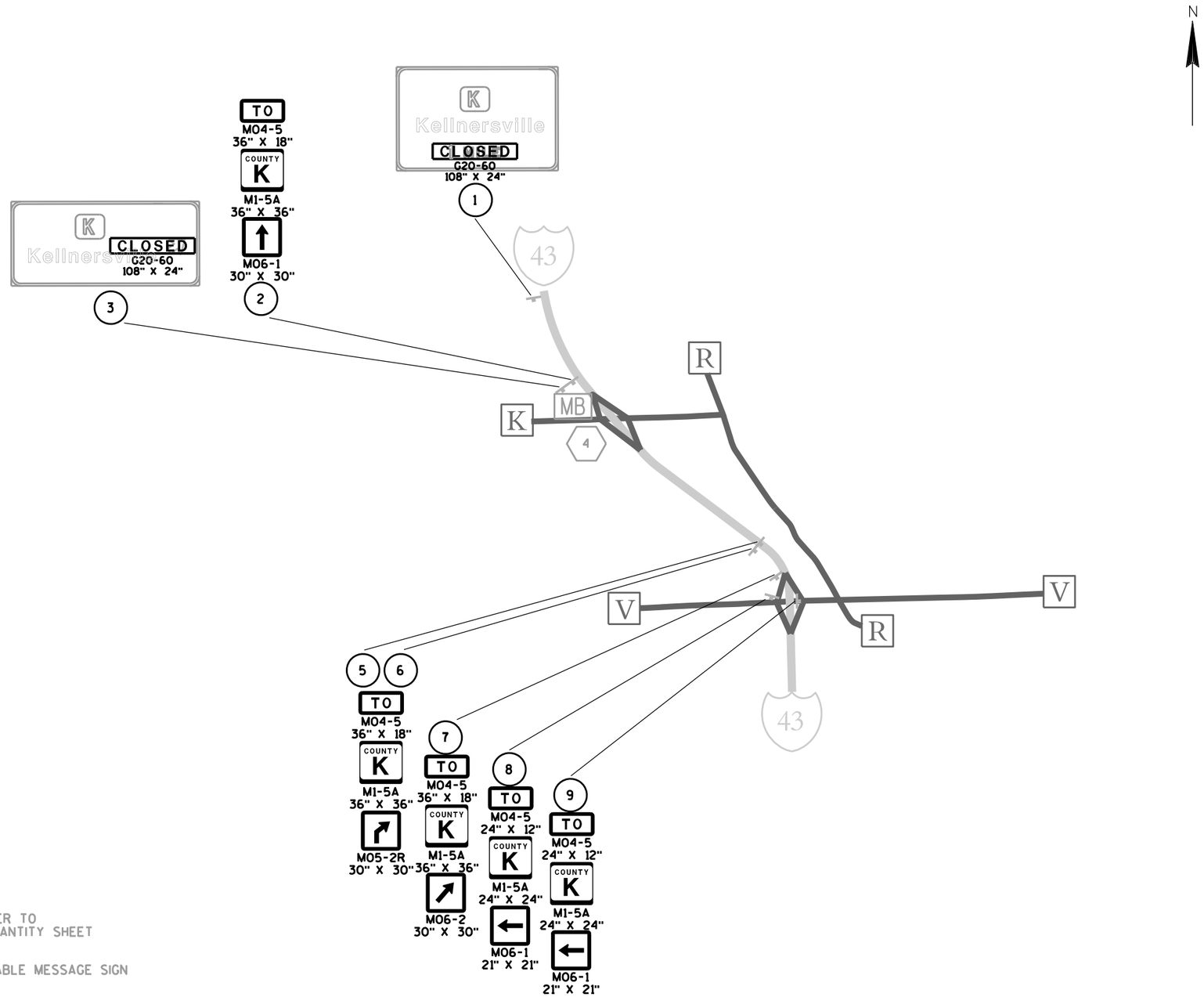

LEGEND

- (X) SIGN NUMBER. REFER TO MISCELLANEOUS QUANTITY SHEET
- MB (X) PORTABLE CHANGEABLE MESSAGE SIGN
- SIGN MOUNTED ON TYPE III BARRICADE
- POST MOUNTED SIGN

PLAN SHEET PRODUCED BY WisDOT-NE REGION

PROJECT NO:1227-12-71	HWY:I-43	COUNTY:MANITOWOC	DETOUR SIGNING DETAIL - 43 SB OFF-RAMP TO K	SHEET	E

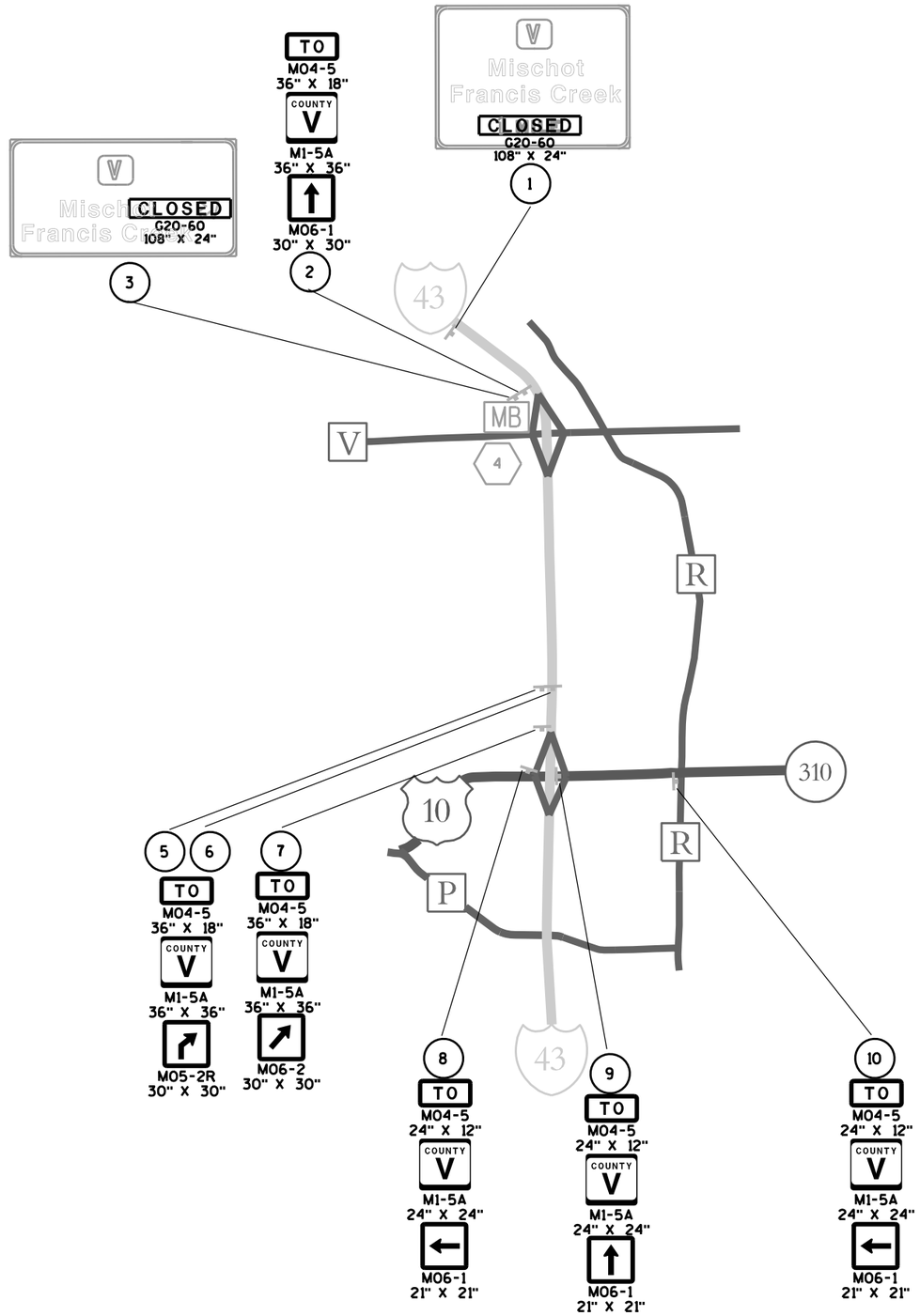

N

LEGEND

- (X) SIGN NUMBER. REFER TO MISCELLANEOUS QUANTITY SHEET
- MB (X) PORTABLE CHANGEABLE MESSAGE SIGN
- SIGN MOUNTED ON TYPE III BARRICADE
- POST MOUNTED SIGN

PLAN SHEET PRODUCED BY WisDOT-NE REGION

PROJECT NO:1227-12-71	HWY:I-43	COUNTY:MANITOWOC	DETOUR SIGNING DETAIL - 43 SB OFF-RAMP TO V	SHEET	E

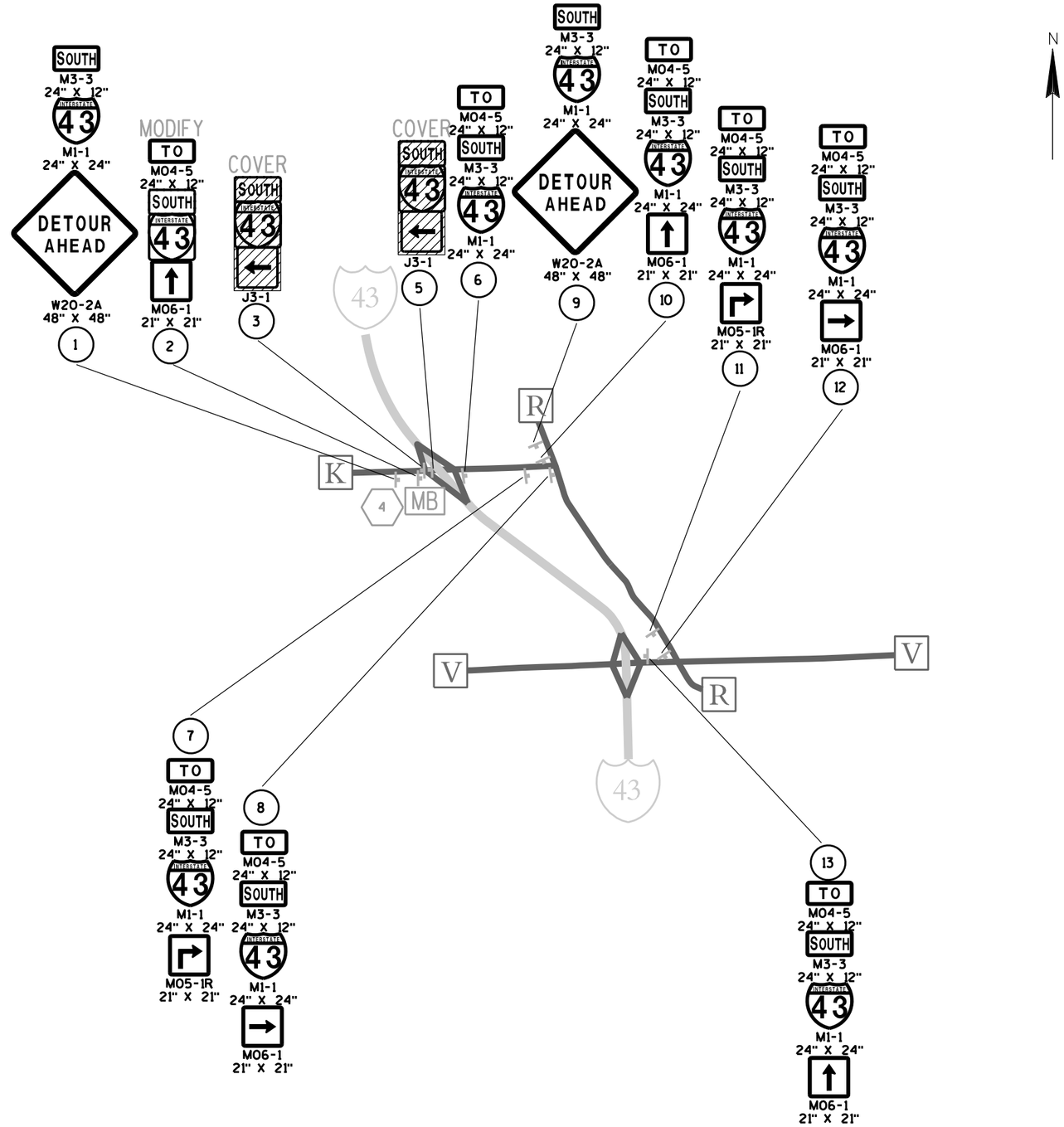

LEGEND

- (X) SIGN NUMBER. REFER TO MISCELLANEOUS QUANTITY SHEET
- MB (X) PORTABLE CHANGEABLE MESSAGE SIGN
- SIGN MOUNTED ON TYPE III BARRICADE
- POST MOUNTED SIGN

PLAN SHEET PRODUCED BY WisDOT-NE REGION

PROJECT NO:1227-12-71	HWY:I-43	COUNTY:MANITOWOC	DETOUR SIGNING DETAIL - CTH K TO 43 SB ON-RAMP	SHEET	E

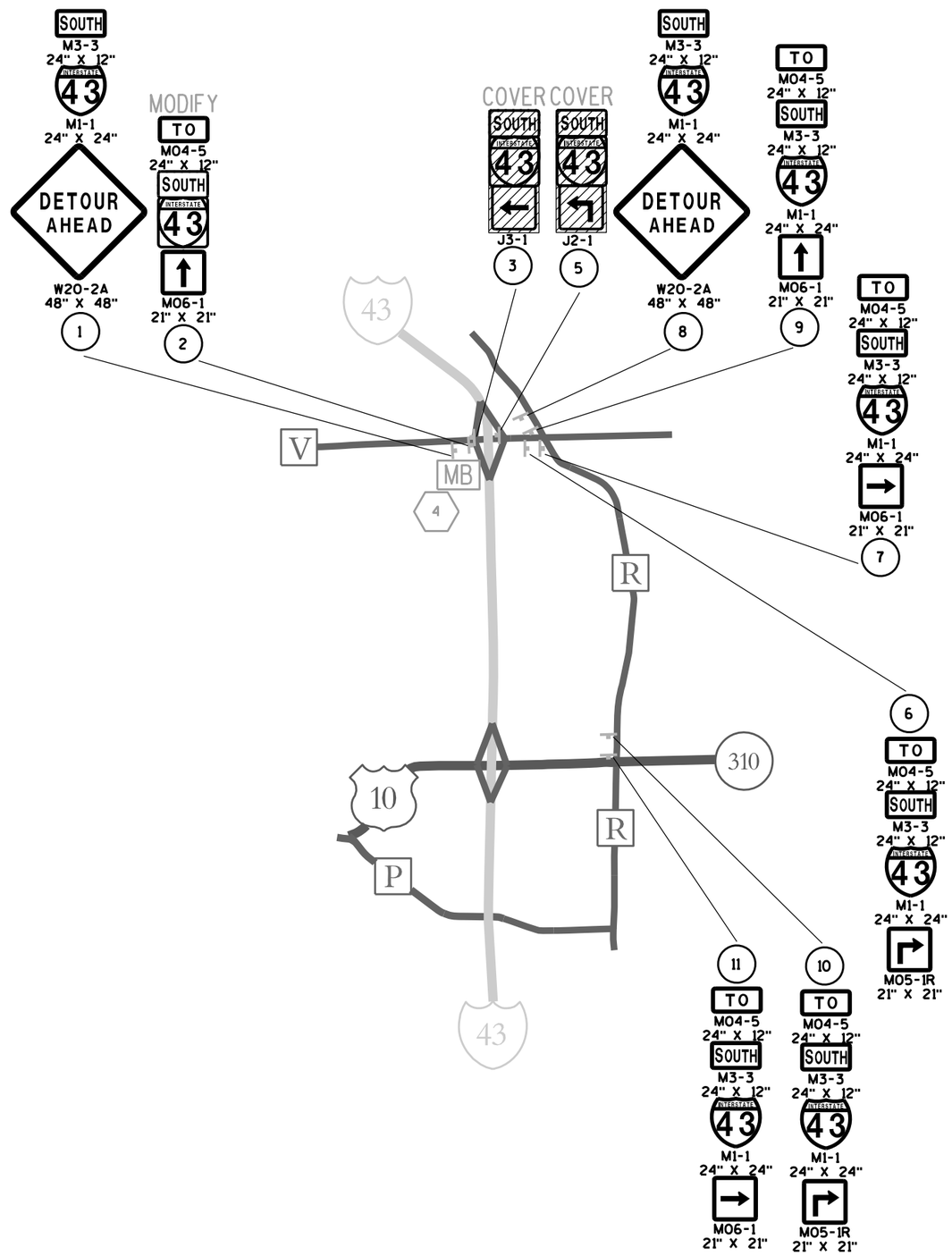

LEGEND

- (X) SIGN NUMBER. REFER TO MISCELLANEOUS QUANTITY SHEET
- MB (X) PORTABLE CHANGEABLE MESSAGE SIGN
- SIGN MOUNTED ON TYPE III BARRICADE
- POST MOUNTED SIGN

PLAN SHEET PRODUCED BY WisDOT-NE REGION

PROJECT NO:1227-12-71	HWY:I-43	COUNTY:MANITOWOC	DETOUR SIGNING DETAIL - CTH V ON-RAMP TO 43 SB	SHEET	E

REMOVING PAVEMENT

CATEGORY	ROADWAY	STATION	TO	STATION	OFFSET	204.0105 REMOVING PAVEMENT BUTT JOINTS SY	204.0115 REMOVING ASPHALTIC SURFACE BUTT JOINTS SY	204.0120 REMOVING ASPHALTIC SURFACE MILLING SY	REMARKS
0010									
	IH 43 NB	1167'NB'+62	-	1604'NB'+58	LT/RT	-	-	202,203	NB MAINLINE & SHOULDERS
	IH 43 SB	1167'SB'+63	-	1605'SB'+23	LT/RT	-	-	200,644	SB MAINLINE & SHOULDERS
	STH 310 NE RAMP	10'TNE'+23	-	10'TNE'+45	LT/RT	-	19	-	
	STH 310 NE RAMP	10'TNE'+37	-	21'TNE'+46	LT/RT	-	-	3,408	RAMP & SHOULDERS
	STH 310 NW RAMP	10'TNW'+25	-	10'TNW'+41	LT/RT	-	10	-	
	STH 310 NW RAMP	10'TNW'+38	-	24'TNW'+12	LT/RT	-	-	4,655	RAMP & SHOULDERS
	IH 43 NB	1193'NB'+03	-	1193'NB'+86	LT	-	-	344	MEDIAN TURNAROUND
	IH 43 NB	1298'NB'+15	-	1298'NB'+72	LT	-	-	221	MEDIAN TURNAROUND
	CTH V SE RAMP	19'VSE'+96	-	20'VSE'+49	LT/RT	192	-	-	
	CTH V SW RAMP	21'VSW'+65	-	22'VSW'+15	LT/RT	150	-	-	
	CTH V NE RAMP	10'VNE'+75	-	11'VNE'+25	LT/RT	150	-	-	
	CTH V NW RAMP	10'VNW'+95	-	11'VNW'+45	LT/RT	207	-	-	
	IH 43 NB	1361'NB'+95	-	1362'NB'+63	LT	-	-	223	MEDIAN TURNAROUND
	IH 43 NB	1437'NB'+28	-	1437'NB'+95	LT	-	-	237	MEDIAN TURNAROUND
	CTH K SE RAMP	20'KSE'+42	-	20'KSE'+92	LT/RT	188	-	-	
	CTH K SW RAMP	23'KSW'+51	-	24'KSW'+01	LT/RT	151	-	-	
	CTH K NE RAMP	10'KNE'+61	-	11'KNE'+11	LT/RT	150	-	-	
	CTH K NW RAMP	10'KNW'+75	-	11'KNW'+25	LT/RT	185	-	-	
	IH 43 NB	1508'NB'+63	-	1509'NB'+22	LT	-	-	230	MEDIAN TURNAROUND
					PROJECT TOTAL	**1,373**	**29**	**412,165**	

3

REMOVING GUARDRAIL

CATEGORY	ROADWAY	STATION	TO	STATION	OFFSET	204.0165 REMOVING GUARDRAIL LF
0010	IH 43 SB	1167'SB'+71	-	1171'SB'+44	RT	373
0010	IH 43 SB	1167'SB'+68	-	1172'SB'+59	LT	490
0010	IH 43 NB	1218'NB'+38	-	1220'NB'+06	LT	350
0010	ROCKWOOD RD	12'RK'+01	-	13'RK'+25	RT	123
0010	ROCKWOOD RD	12'RK'+01	-	13'RK'+25	LT	124
0010	ROCKWOOD RD	15'RK'+98	-	17'RK'+22	LT	125
0010	ROCKWOOD RD	15'RK'+98	-	17'RK+22	RT	125
0010	IH 43 NB	1271'NB'+55	-	1273'NB'+23	LT	352
0010	REIFS MILLS RD	13'RM'+07	-	14'RM'+33	LT	126
0010	REIFS MILLS RD	13'RM'+09	-	14'RM'+34	RT	125
0010	REIFS MILLS RD	16'RM'+88	-	18'RM'+15	RT	126
0010	REIFS MILLS RD	16'RM'+88	-	18'RM'+15	LT	127
0010	IH 43 NB	1324'NB'+57	-	1326'NB'+50	LT	400
0010	IH 43 NB	1337'NB'+55	-	1353'NB'+67	RT	1,632
0010	IH 43 NB	1393'NB'+86	-	1395'NB'+66	LT	376
0010	POLIFKA RD	13'PO'+24	-	14'PO'+50	LT	127
0010	POLIFKA RD	13'PO'+76	-	15'PO'+00	RT	124
0010	POLIFKA RD	18'PO'+82	-	21'PO'+51	LT	328
0010	POLIFKA RD	19'PO'+21	-	25'PO'+50	RT	628
0010	POLIFKA RD	21'PO'+75	-	25'PO'+01	LT	354
0010	IH 43 NB	1462'NB'+27	-	1469'NB'+49	RT	722
0010	IH 43 NB	1466'NB'+30	-	1469'NB'+89	LT	359
0010	IH 43 NB	1471'NB'+85	-	1475'NB'+95	RT	411
0010	IH 43 SB	1472'SB'+64	-	1476'SB'+22	RT	358
0010	IH 43 SB	1472'SB'+91	-	1481'SB'+47	LT	856
0010	IH 43 NB	1532'NB'+81	-	1534'NB'+49	LT	351
0010	FISHERVILLE RD	14'FI'+02	-	18'FI'+79	RT	478
0010	FISHERVILLE RD	14'FI'+93	-	18'FI'+70	LT	377
0010	FISHERVILLE RD	21'FI'+38	-	28'FI'+59	LT	721
0010	FISHERVILLE RD	21'FI'+48	-	28'FI'+77	RT	729
0010	IH 43 NB	1579'NB'+57	-	1581'NB'+26	LT	350
0010	GREENSTREET RD	13'GR'+96	-	17'GR'+84	RT	388
0010	GREENSTREET RD	14'GR'+02	-	17'GR'+64	LT	362
0010	GREENSTREET RD	20'GR'+53	-	25'GR'+65	LT	512
0010	GREENSTREET RD	20'GR'+75	-	25'GR'+61	RT	486
0010	IH 43 NB	1599'NB'+85	-	1605'NB'+10	RT	425
0010	IH 43 NB	1601'NB'+22	-	1604'NB'+55	LT	333
					PROJECT TOTAL	**14,753**

REMOVING FENCE

CATEGORY	ROADWAY	STATION	TO	STATION	OFFSET	204.0170 REMOVING FENCE LF
0010	IH 43 NB	1167'NB'+62	-	1604'NB'+58	RT	43,461
0010	IH 43 SB	1167'SB'+63	-	1605'SB'+23	LT	43,971
					PROJECT TOTAL	**87,432**

REMOVING INLETS & SEALING PIPES

CATEGORY	ROADWAY	STATION	OFFSET	204.0280 REMOVING INLETS EACH	204.0280 SEALING PIPES EACH
0010	IH 43 NB	1167'NB'+73	RT	1	1
0010	IH 43 NB	1167'NB'+73	LT	1	1
0010	IH 43 SB	1167'SB'+75	RT	1	1
0010	IH 43 SB	1167'SB'+75	LT	1	1
0010	ROCKWOOD RD	16'RK'+03	RT	1	1
0010	ROCKWOOD RD	16'RK'+03	LT	1	1
0010	REIFS MILLS RD	16'RM'+94	RT	1	1
0010	REIFS MILLS RD	16'RM'+94	LT	1	1
0010	POLIFKA RD	18'PO'+88	LT	1	1
0010	POLIFKA RD	19'PO'+28	RT	1	1
0010	IH 43 NB	1469'NB'+44	RT	1	1
0010	IH 43 NB	1469'NB'+81	LT	1	1
0010	IH 43 SB	1470'SB'+18	RT	1	1
0010	FISHERVILLE RD	18'FI'+63	LT	1	1
0010	FISHERVILLE RD	18'FI'+71	RT	1	1
0010	GREENSTREET RD	20'GR'+59	LT	1	1
0010	GREENSTREET RD	20'GR'+78	RT	1	1
0010	IH 43 NB	1604'NB'+01	RT	1	1
0010	IH 43 NB	1604'NB'+49	LT	1	1
0010	IH 43 SB	1605'SB'+03	RT	1	1
0010	IH 43 SB	1605'SB'+51	LT	1	1
			PROJECT TOTAL	**21**	**21**

3

3

REMOVING APRON ENDWALL

CATEGORY	ROADWAY	STATION	OFFSET	204.9060.S REMOVING APRON ENDWALL EACH
0010	IH 43 SB	1220'SB'+65	LT	1
0010	CTH V SW RAMP	14'VSW'+90	LT & RT	4
0010	CTH V SE RAMP	13'VSE'+08	RT	1
0010	IH 43 NB	1324'NB'+23	LT	1
0010	IH 43 NB	1396'NB'+51	RT	1
0010	IH 43 NB	1532'NB'+30	RT	1
0010	IH 43 NB	1545'NB'+66	RT	1
			PROJECT TOTAL	**10**

FINISHING ROADWAY

CATEGORY	PROJECT	213.0100 FINISHING ROADWAY (PROJECT) EACH
0010	1227-12-71	1
	PROJECT TOTAL	**1**

PREPARE FOUNDATION FOR ASPHALTIC PAVING

CATEGORY	PROJECT	211.0100 PREPARE FOUNDATION FOR ASPHALTIC PAVING LS
0010	1227-12-71	1
	PROJECT TOTAL	**1**

3

3

BASE PATCHING CONCRETE

CATEGORY	ROADWAY	STATION	TO	STATION	OFFSET	390.0303 BASE PATCHING CONCRETE SY	416.0610 DRILLED TIE BARS EACH	416.0620 DRILLED DOWEL BARS EACH	690.0150 SAWING CONCRETE LF	SPV.0180.01 BASE PATCHING CONCRETE HES SY	SPV.0180.02 CONTINUOUSLY REINFORCED CONCRETE REPAIR HES SY	SPV.0180.03 CONTINUOUSLY REINFORCED CONCRETE REPAIR SHES SY	REMARKS
0010													
	IH 43 NB	1167'NB'+62	-	1220'NB'+46	LT/RT	-	116	-	1,848	-	288	15	PROJECT LIMITS - MILE 156
	IH 43 NB	1220'NB'+46		1273'NB'+26	LT/RT	-	258	-	2,955	-	459	24	MILE 156 - MILE 157
	IH 43 NB	1273'NB'+26		1326'NB'+06	LT/RT	7	132	-	1,408	-	180	10	MILE 157 - MILE 158
	IH 43 NB	1326'NB'+06		1378'NB'+86	LT/RT	-	121	-	1,260	-	182	10	MILE 158 - MILE 159
	IH 43 NB	1378'NB'+86		1431'NB'+66	LT/RT	-	39	-	414	-	53	3	MILE 159 - MILE 160
	IH 43 NB	1431'NB'+66		1484'NB'+46	LT/RT	3	45	-	854	-	140	8	MILE 160 - MILE 161
	IH 43 NB	1484'NB'+46		1537'NB'+26	LT/RT	3	168	-	1,820	-	239	13	MILE 161 - MILE 162
	IH 43 NB	1537'NB'+26		1590'NB'+06	LT/RT	-	54	-	748	-	117	6	MILE 162 - MILE 163
	IH 43 NB	1590'NB'+06		1604'NB'+58	LT/RT	4	23	-	550	-	110	6	MILE 163 - PROJECT LIMITS
	IH 43 SB	1167'SB'+63	-	1220'SB'+44	LT/RT	3	112	-	1,420	-	196	10	PROJECT LIMITS - MILE 156
	IH 43 SB	1220'SB'+44		1273'SB'+26	LT/RT	-	168	-	1,956	-	282	15	MILE 156 - MILE 157
	IH 43 SB	1273'SB'+26		1326'SB'+06	LT/RT	-	144	-	1,912	-	271	14	MILE 157 - MILE 158
	IH 43 SB	1326'SB'+06		1378'SB'+86	LT/RT	3	96	-	939	-	149	8	MILE 158 - MILE 159
	IH 43 SB	1378'SB'+86		1431'SB'+66	LT/RT	-	63	-	663	-	106	6	MILE 159 - MILE 160
	IH 43 SB	1431'SB'+66		1484'SB'+46	LT/RT	3	132	-	1,642	-	241	13	MILE 160 - MILE 161
	IH 43 SB	1484'SB'+46		1537'SB'+52	LT/RT	13	156	-	1,956	-	272	15	MILE 161 - MILE 162
	IH 43 SB	1537'SB'+52		1590'SB'+06	LT/RT	5	123	-	1,666	-	280	15	MILE 162 - MILE 163
	IH 43 SB	1590'SB'+06		1605'SB'+23	LT/RT	-	18	-	596	-	115	6	MILE 163 - PROJECT LIMITS
	STH 310 NE RAMP	10'TNE'+00	-	25'TNE'+24	LT/RT	264	168	833	1,169	14	-	-	
	STH 310 NW RAMP	10'TNW'+00	-	24'TNW'+12	LT/RT	209	132	660	924	11	-	-	
	CTH V SE RAMP	10'VSE'+00	-	21'VSE'+31	LT/RT	152	50	300	476	8	-	-	
	CTH V SW RAMP	10'VSW'+00	-	22'VSW'+84	LT/RT	222	112	570	831	12	-	-	
	CTH V	16'V'+00	-	24'V'+00	LT/RT	124	78	342	512	7	-	-	
	CTH V NE RAMP	10'VNE'+00	-	24'VNE'+88	LT/RT	137	57	360	538	7	-	-	
	CTH V NW RAMP	10'VNW'+00	-	25'VNW'+57	LT/RT	170	83	240	462	9	-	-	
	CTH K SE RAMP	10'KSE'+00	-	21'KSE'+67	LT/RT	231	123	690	976	12	-	-	
	CTH K SW RAMP	10'KSW'+00	-	24'KSW'+62	LT/RT	362	216	1,110	1,574	19	-	-	
	CTH K	18'K'+00	-	28'K'+00	LT/RT	471	340	1,160	1,909	25	-	-	
	CTH K NE RAMP	10'KNE'+00	-	23'KNE'+61	LT/RT	164	78	420	630	9	-	-	
	CTH K NW RAMP	10'KNW'+00	-	18'KNW'+86	LT/RT	351	206	1,174	1,510	18	-	-	
		UNDISTRIBUTED				435	542	1,179	5,418	23	552	29	
					PROJECT TOTAL	**3,336**	**4,153**	**9,038**	***41,536**	**173**	**4,232**	**226**	

***ADDITIONAL QUANTITIES SHOWN ELSEWHERE**

3

3

HMA ITEMS

CATEGORY	ROADWAY	STATION	TO	STATION	OFFSET	204.0126.S REMOVING ASPHALTIC LONGITUDINAL NOTCHED WEDGE JOINT MILLING LF	455.0605 TACK COAT GAL	460.0105.S HMA PWL TEST STRIP VOLUMETRICS EACH	460.0110.S HMA PWL TEST STRIP DENSITY EACH	460.5224 HMA PAVEMENT 4 LT 58-28 S TON	460.7224 HMA PAVEMENT 4 HT 58-28 S TON	460.8624 HMA PAVEMENT 4 SMA 58-28 V TON	REMARKS
0010													
	IH 43 NB	1167'NB'+62	-	1604'NB'+58	LT/RT	43,484	24,265	-	-	9,939	16,626	15,088	NB MAINLINE & SHOULDERS
	IH 43 SB	1167'SB'+63	-	1605'SB'+23	LT/RT	43,548	24,208	-	-	10,050	16,518	14,989	SB MAINLINE & SHOULDERS
	STH 310 NE RAMP	10'TNE'+37	-	21'TNE'+46	LT/RT	-	239	-	-	172	-	244	RAMP & SHOULDERS
	STH 310 NW RAMP	10'TNW'+38	-	24'TNW'+12	LT/RT	-	251	-	-	178	-	257	RAMP & SHOULDERS
	IH 43 NB	1193'NB'+03	-	1193'NB'+86	LT	-	41	-	-	71	-		MEDIAN TURNAROUND
	IH 43 NB	1298'NB'+15	-	1298'NB'+72	LT	-	27	-	-	46	-	-	MEDIAN TURNAROUND
	CTH V SE RAMP	10'VSE'+00	-	20'VSE'+49	LT/RT	-	221	-	-	166	-	220	RAMP & SHOULDERS
	CTH V SW RAMP	10'VSW'+00	-	22'VSW'+15	LT/RT	-	173	-	-	134	-	167	RAMP & SHOULDERS
	CTH V NE RAMP	10'VNE'+74	-	21'VNE"+73	LT/RT	-	189	-	-	147	-	183	RAMP & SHOULDERS
	CTH V NW RAMP	10'VNW'+95	-	23'VNW'+29	LT/RT	-	224	-	-	163	-	227	RAMP & SHOULDERS
	IH 43 NB	1361'NB'+95	-	1362'NB'+63	LT	-	27	-	-	46	-	-	MEDIAN TURNAROUND
	IH 43 NB	1437'NB'+28	-	1437'NB'+95	LT	-	28	-	-	49	-	-	MEDIAN TURNAROUND
	CTH K SE RAMP	10'KSE'+00	-	20'KSE'+92	LT/RT	-	244	-	-	180	-	244	RAMP & SHOULDERS
	CTH K SW RAMP	11'KSW+53	-	24'KSW'+02	LT/RT	-	219	-	-	170	-	213	RAMP & SHOULDERS
	CTH K NE RAMP	10'KNE'+61	-	22'KNE'+11	LT/RT	-	199	-	-	155	-	193	RAMP & SHOULDERS
	CTH K NW RAMP	10'KNW'+75	-	18'KNW'+86	LT/RT	-	209	-	-	154	-	209	RAMP & SHOULDERS
	IH 43 NB	1508'NB'+63	-	1509'NB'+22	LT	-	28	-	-	47	-	-	MEDIAN TURNAROUND
		UNDISTRIBUTED				-	-	1	1	-	-	-	
					PROJECT TOTAL	**87,032**	**50,792**	**1**	**1**	**21,867**	**33,144**	**32,234**	

ASPHALTIC SHOULDER RUMBLE STRIPS

CATEGORY	ROADWAY	STATION	TO	STATION	OFFSET	465.0400 ASPHALTIC SHOULDER RUMBLE STRIPS LF
0010	IH 43 NB	1167'NB'+62	-	1604'NB'+58	LT/RT	83,943
0010	IH 43 SB	1167'SB'+63	-	1605'SB'+23	LT/RT	84,352
					PROJECT TOTAL	**168,295**

FENCE WOVEN WIRE 4-FT

CATEGORY	ROADWAY	STATION	TO	STATION	OFFSET	616.0100 FENCE WOVEN WIRE 4-FT LF
0010	IH 43 NB	1167'NB'+62	-	1604'NB'+58	RT	43,461
0010	IH 43 SB	1167'SB'+63	-	1605'SB'+23	LT	43,971
					PROJECT TOTAL	**87,432**

3

APRON ENDWALLS AND CULVERT PIPE LINERS

CATEGORY	ROADWAY	STATION	TO	STATION	OFFSET	520.8000 CONCRETE COLLARS FOR PIPE EACH	522.1018 APRON ENDWALLS FOR CULVERT PIPE REINFORCED CONCRETE 18-INCH EACH	522.1024 APRON ENDWALLS FOR CULVERT PIPE REINFORCED CONCRETE 24-INCH EACH
0010	IH 43 SB	1220'SB'+65	-	1220'SB'+65	LT	-	1	-
0010	IH 43 NB	1234'NB'+28	-	1234'NB'+28	LT	1	-	-
0010	CTH V SW RAMP	14'VSW'+90	-	14'VSW'+90	LT & RT	-	-	4
0010	CTH V SE RAMP	13'VSE'+08	-	13'VSE'+08	RT	-	1	-
0010	IH 43 NB	1324'NB'+23	-	1324'NB'+23	LT	-	1	-
0010	IH 43 NB	1387'NB'+18	-	1387'NB'+18	LT	1	-	-
0010	IH 43 NB	1396'NB'+51	-	1396'NB'+51	RT	-	1	-
0010	IH 43 NB	1532'NB'+30	-	1532'NB'+30	RT	-	1	-
0010	IH 43 NB	1545'NB'+66	-	1545'NB'+66	RT	-	1	-
					PROJECT TOTAL	**2**	**6**	**4**

3

TRAFFIC CONTROL DETOUR SIGN SUMMARY - STH 310 ON-RAMP TO I-43 NB RAMP CLOSURE

LOCATION	SIGN CODE	SIZE W X H	NUMBER IN SERVICE	APPROX. SERVICE PERIOD 12 DAYS	643.0900 SIGNS DAYS	643.1050 SIGNS PORTABLE CHANGEABLE MESSAGE DAYS	NO .OF CYCLES	643.0920 COVERING TYPE II SIGNS EACH	REMARKS
STH 310 ON-RAMP TO I-43 NB									
US 10, W. OF I-43, PLACE 1000' W. OF I-43 SB RAMP INTERSECTION IN MEDIAN	M 3-1	36"X18"	1	12	12				
"	M 1-1	36"X36"	1	12	12				43
"	W 20-2A	48"X48"	1	12	12				
US 10, W. OF I-43, PLACE 1000' W. OF I-43 SB RAMP INTERSECTION ON RIGHT SHOULDER	M 3-1	36"X18"	1	12	12				
"	M 1-1	36"X36"	1	12	12				43
"	W 20-2A	48"X48"	1	12	12				
US 10, BETWEEN RAMP INTERSECTIONS, MODIFY EXISTING J2-2 SIGN AS SHOWN	MO 4-5	36"X18"	1	12	12				
"	MO 6-1	30"X30"	1	12	12				AHEAD
US 10, BETWEEN RAMP INTERSECTIONS, MODIFY EXISTING J2-2 SIGN AS SHOWN	MO 4-5	36"X18"	1	12	12				
"	MO 6-1	30"X30"	1	12	12				AHEAD
US 10, AT I-43 NB, COVER EXISTING D1-70 SIGN AS SHOWN							1	1	COVER ENTIRE SIGN
US 10, AT I-43 NB, COVER EXISTING D1-71 SIGN AS SHOWN							1	1	COVER BOTTOM PORTION OF SIGN
US 10, AT I-43 NB, MODIFY EXISTING J3-1 SIGN AS SHOWN	MO 4-5	24"X12"	1	12	12				
"	MO 6-1	21"X21"	1	12	12				AHEAD
STH 310, E. OF I-43, PLACE RIGHT OF EXISTING J4-1 SIGN	MO 4-5	36"X18"	1	12	12				
"	M 3-1	36"X18"	1	12	12				
"	M 1-1	36"X36"	1	12	12				43
STH 310, W. OF CTH R, PLACE 750' W. OF CTH R INTERSECTION	MO 4-5	24"X12"	1	12	12				
"	M 3-1	24"X12"	1	12	12				
"	M 1-1	24"X24"	1	12	12				43
"	MO 5-1L	21"X21"	1	12	12				
STH 310, AT CTH R, PLACE RIGHT OF EXISTING J13-1 SIGN AT CTH R INTERSECTION	MO 4-5	24"X12"	1	12	12				
"	M 3-1	24"X12"	1	12	12				
"	M 1-1	24"X24"	1	12	12				43
"	MO 6-1	21"X21"	1	12	12				LEFT
STH 31O, AT CTH R, PLACE RIGHT OF EXISTING J13-1 SIGN AT CTH R INTERSECTION	MO 4-5	24"X12"	1	12	12				
"	M 3-1	24"X12"	1	12	12				
"	M 1-1	24"X24"	1	12	12				43
"	MO 6-1	21"X21"	1	12	12				RIGHT
STH 310, E. OF CTH R, PLACE 750' E. OF CTH R INTERSECTION	MO 4-5	24"X12"	1	12	12				
"	M 3-1	24"X12"	1	12	12				
"	M 1-1	24"X24"	1	12	12				43
"	MO 5-1R	21"X21"	1	12	12				
STH 310, E. OF CTH R, PLACE 1000' W. OF CTH R INTERSECTION ON RIGHT SHOULDER	M 3-1	24"X12"	1	12	12				
"	M 1-1	24"X24"	1	12	12				43
"	W 20-2A	48"X48"	1	12	12				
CTH R, S. OF CTH V, PLACE 750' S. OF CTH V INTERSECTION	MO 4-5	24"X12"	1	12	12				
"	M 3-1	24"X12"	1	12	12				
"	M 1-1	24"X24"	1	12	12				43
"	MO 5-1L	21"X21"	1	12	12				
CTH R, AT CTH V, PLACE RIGHT OF EXISTING R1-1 SIGN AT CTH V INTERSECTION	MO 4-5	24"X12"	1	12	12				
"	M 3-1	24"X12"	1	12	12				
"	M 1-1	24"X24"	1	12	12				43
"	MO 6-1	21"X21"	1	12	12				LEFT
STH 310 ON-RAMP TO I-43 NB, PLACE ON RIGHT SHOULDER, FIELD DETERMINE LOCATION	PCMS		1			7			PLACE IN ADVANCE OF CLOSURE
PAGE SUBTOTALS			43		504	7		2	
310 ON-RAMP TO 43 NB CLOSURE TOTALS			**43**		***504**	***7**		***2**	

* ADDITIONAL QUANTITY SHOWN ELSEWHERE

3

PROJECT NO: 1227-12-71	HWY: IH 13	COUNTY: MANITOWOC	MISCELLANEOUS QUANTITIES	SHEET:	E

3

TRAFFIC CONTROL DETOUR SIGN SUMMARY - I-43 SB OFF-RAMP TO STH 310-10 CLOSURE

SIGN NO.	LOCATION	SIGN CODE	SIZE W X H	NUMBER IN SERVICE	APPROX. SERVICE PERIOD 12 DAYS	643.0900 SIGNS DAYS	643.1050 SIGNS PORTABLE CHANGEABLE MESSAGE DAYS	REMARKS
	I-43 SB OFF-RAMP TO STH 310-10							
1	I-43 SB, N. OF STH 310, PLACE ON EXISTING TYPE I GROUND MOUNT SIGN	G 20-60	108"X24"	1	12	12		
2	I-43 SB, AT STH 310, PLACE LEFT OF EXISTING TYPE I GROUND MOUNT SIGN AT EXIT	MO 4-5	36"X18"	1	12	12		
	"	M 1-4	36"X36"	1	12	12		10
	"	M 1-6	36"X36"	1	12	12		310
	"	MO 6-1	30"X30"	1	12	12		AHEAD
3	I-43 SB, AT STH 310, PLACE ON EXISITNG TYPE I GROUND MOUNT SIGN	G 20-60	108"X24"	1	12	12		
4	I-43 SB OFF-RAMP TO STH 310-10, PLACE ON RIGHT SHOULDER, FIELD DETERMINE LOCATION	PCMS		1			7	PLACE IN ADVANCE OF CLOSURE
5	I-43 SB, N. OF STH 42/JJ, PLACE 1000' N. OF STH 42/JJ EXIT RAMP ON RIGHT SHOULDER	MO 4-5	36"X18"	1	12	12		
	"	M 1-4	36"X36"	1	12	12		10
	"	M 1-6	36"X36"	1	12	12		310
	"	MO 5-2R	30"X30"	1	12	12		
6	I-43 SB, N. OF STH 42/JJ, PLACE 1000' N. OF STH 42/JJ EXIT RAMP IN MEDIAN	MO 4-5	36"X18"	1	12	12		
	"	M 1-4	36"X36"	1	12	12		10
	"	M 1-6	36"X36"	1	12	12		310
	"	MO 5-2R	30"X30"	1	12	12		
7	I-43 SB, AT STH 43/JJ, PLACE LEFT OF EXISTING TYPE I GROUND MOUNT SIGN	MO 4-5	36"X18"	1	12	12		
	"	M 1-4	36"X36"	1	12	12		10
	"	M 1-6	36"X36"	1	12	12		310
	"	MO 6-2	30"X30"	1	12	12		TILT RIGHT
8	I-43 SB OFF-RAMP TO STH 42/JJ, PLACE 600' PRIOR TO RAMP INTERSECTION	MO 4-5	24"X12"	1	12	12		
	"	M 1-4	24"X24"	1	12	12		10
	"	M 1-6	24"X24"	1	12	12		310
	"	MO 5-1L	24"X24"	1	12	12		
9	I-43 SB OFF-RAMP TO STH 42/JJ, AT STH 42/JJ, PLACE RIGHT OF EXISTING R1-1 SIGN	MO 4-5	24"X12"	1	12	12		
	"	M 1-4	24"X24"	1	12	12		10
	"	M 1-6	24"X24"	1	12	12		310
	"	MO 6-1	24"X24"	1	12	12		LEFT
10	STH 42/JJ, BETWEEN RAMPS, PLACE RIGHT OF EXISTING J2-1 SIGN ON RIGHT SHOULDER	MO 4-5	24"X12"	1	12	12		
	"	M 1-4	24"X24"	1	12	12		10
	"	M 1-6	24"X24"	1	12	12		310
	"	MO 5-1L	24"X24"	1	12	12		
11	STH 42/JJ, AT I-43 NB, PLACE IN MEDIAN AT I-43 NB RAMP INTERSECTION	MO 4-5	24"X12"	1	12	12		
	"	M 1-4	24"X24"	1	12	12		10
	"	M 1-6	24"X24"	1	12	12		310
	"	MO 6-1	24"X24"	1	12	12		LEFT
	PAGE SUBTOTALS			35		408	7	
	I-43 SB OFF-RAMP TO 310-10 CLOSURE TOTALS			**35**		***408**	***7**	

* ADDITIONAL QUANTITY SHOWN ELSEWHERE

3

3

TRAFFIC CONTROL DETOUR SIGN SUMMARY - CTH V ON-RAMP TO I-43 SB CLOSURE

SIGN NO.	LOCATION	SIGN CODE	SIZE W X H	NUMBER IN SERVICE	APPROX. SERVICE PERIOD 12 DAYS	643.0900 SIGNS DAYS	643.1050 SIGNS PORTABLE CHANGEABLE MESSAGE DAYS	NO. OF CYCLES	643.0920 COVERING TYPE II SIGNS EACH	REMARKS
	CTH V ON-RAMP TO I-43 SB									
1	CTH V, W. OF I-43 SB, PLACE 1000' W. OF I-43 SB RAMP INTERSECTION	M 3-3	24"X12"	1	12	12				
	"	M 1-1	24"X24"	1	12	12				43
	"	W 20-2A	48"X48"	1	12	12				
2	CTH V, AT I-43 SB, MODIFY EXISTING J3-1 SIGN AS SHOWN AT I-43 SB RAMP INTERSECTION	MO 4-5	24"X12"	1	12	12				
	"	MO 6-1	21"X21"	1	12	12				AHEAD
3	CTH V, AT I-43 SB, COVER EXISTING J3-1 SIGN AS SHOWN AT I-43 SB RAMP INTERSECTION							1	1	COVER ENTIRE SIGN
4	CTH V ON-RAMP TO I-43 SB, PLACE ON RIGHT SHOULDER, FIELD DETERMINE LOCATION	PCMS		1			7			PLACE IN ADVANCE OF CLOSURE
5	CTH V, BETWEEN I-43 RAMPS, COVER EXISTING J2-1 SIGN AS SHOWN							1	1	COVER ENTIRE SIGN
6	CTH V, W. OF CTH R, PLACE 750' W. OF CTH R INTERSECTION	MO 4-5	24"X12"	1	12	12				
	"	M 3-3	24"X12"	1	12	12				
	"	M 1-1	24"X24"	1	12	12				43
	"	MO 5-1R	21"X21"	1	12	12				
7	CTH V, W. OF CTH R, PLACE RIGHT OF EXISTING R1-1 SIGN AT CTH R INTERSECTION	MO 4-5	24"X12"	1	12	12				
	"	M 3-3	24"X12"	1	12	12				
	"	M 1-1	24"X24"	1	12	12				43
	"	MO 6-1	21"X21"	1	12	12				RIGHT
8	CTH R, N. OF CTH V, PLACE 1000' N. OF CTH V INTERSECTION	M 3-3	24"X12"	1	12	12				
	"	M 1-1	24"X24"	1	12	12				43
	"	W 20-2A	48"X48"	1	12	12				
9	CTH R, AT CTH V, PLACE RIGHT OF EXISTING J3-2 SIGN AT CTH V INTERSECTION	MO 4-5	24"X12"	1	12	12				
	"	M 3-3	24"X12"	1	12	12				
	"	M 1-1	24"X24"	1	12	12				43
	"	MO 6-1	21"X21"	1	12	12				AHEAD
10	CTH R, N. OF STH 310, PLACE 750' N. OF STH 310 RAB INTERSECTION	MO 4-5	24"X12"	1	12	12				
	"	M 3-3	24"X12"	1	12	12				
	"	M 1-1	24"X24"	1	12	12				43
	"	MO 5-1R	21"X21"	1	12	12				
11	CTH R, AT STH 310, PLACE 100' N. OF STH 310 RAB INTERSECTION	MO 4-5	24"X12"	1	12	12				
	"	M 3-3	24"X12"	1	12	12				
	"	M 1-1	24"X24"	1	12	12				43
	"	MO 6-1	21"X21"	1	12	12				RIGHT
	PAGE SUBTOTALS			29		336	7		2	
	CTH V ON-RAMP TO 43 SB CLOSURE TOTALS			**29**		***336**	***7**		***2**	

* ADDITIONAL QUANTITY SHOWN ELSEWHERE

3

3

TRAFFIC CONTROL DETOUR SIGN SUMMARY - I-43 SB OFF-RAMP TO CTH V CLOSURE

SIGN NO.	LOCATION	SIGN CODE	SIZE W X H	NUMBER IN SERVICE	APPROX. SERVICE PERIOD 12 DAYS	643.0900 SIGNS DAYS	643.1050 SIGNS PORTABLE CHANGEABLE MESSAGE DAYS	REMARKS
	I-43 SB OFF-RAMP TO CTH V							
1	I-43 SB, N. OF CTH V, PLACE ON EXISTING TYPE I GROUND MOUNT SIGN AS SHOWN	G 20-60	108"X24"	1	12	12		
2	I-43 SB, AT CTH V, PLACE LEFT OF EXISTING TYPE I GROUND MOUNT SIGN	MO 4-5	36"X18"	1	12	12		
	"	M 1-5A	36"X36"	1	12	12		V
	"	MO 6-1	30"X30"	1	12	12		
3	I-43 SB, AT CTH V, PLACE ON EXISTING TYPE I GROUND MOUNT SIGN AS SHOWN	G 20-60	108"X24"	1	12	12		
4	I-43 SB OFF-RAMP TO CTH V, PLACE ON RIGHT SHOULDER, FIELD DETERMINE LOCATION	PCMS		1			7	PLACE IN ADVANCE OF CLOSURE
5	I-43 SB, N. OF US 10-310, PLACE 1000' N. OF US 10-310 RAMP ON RIGHT SHOULDER	MO 4-5	36"X18"	1	12	12		
	"	M 1-5A	36"X36"	1	12	12		V
	"	MO 5-2R	30"X30"	1	12	12		
6	I-43 SB, N. OF US 10-310, PLACE 1000' N. OF US 10-310 RAMP IN MEDIAN	MO 4-5	36"X18"	1	12	12		
	"	M 1-5A	36"X36"	1	12	12		V
	"	MO 5-2R	30"X30"	1	12	12		
7	I-43 SB, AT US 10-310, PLACE LEFT OF EXISTING TYPE I GROUND MOUNT SIGN	MO 4-5	36"X18"	1	12	12		
	"	M 1-5A	36"X36"	1	12	12		V
	"	MO 6-2	30"X30"	1	12	12		TILT RIGHT
8	I-43 SB OFF-RAMP TO US 10-310, AT US 10-310, PLACE RIGHT OF EXISTING R1-1 SIGN AT RAMP INTERSECTION	MO 4-5	24"X12"	1	12	12		
	"	M 1-5A	24"X24"	1	12	12		V
	"	MO 6-1	21"X21"	1	12	12		LEFT
9	US 10-310, AT I-43 NB, PLACE ON RIGHT SHOULDER AT I-43 NB RAMP INTERSECTION	MO 4-5	24"X12"	1	12	12		
	"	M 1-5A	24"X24"	1	12	12		V
	"	MO 6-1	21"X21"	1	12	12		AHEAD
10	STH 310, AT CTH R, PLACE RIGHT OF EXISTING J13-1 SIGN AT CTH R INTERSECTION	MO 4-5	24"X12"	1	12	12		
	"	M 1-5A	24"X24"	1	12	12		V
	"	MO 6-1	21"X21"	1	12	12		LEFT
	PAGE SUBTOTALS			24		276	7	
	I-43 SB OFF-RAMP TO V CLOSURE TOTALS			**24**		***276**	***7**	

* ADDITIONAL QUANTITY SHOWN ELSEWHERE

3

3

TRAFFIC CONTROL DETOUR SIGN SUMMARY - CTH V ON-RAMP TO I-43 NB CLOSURE

SIGN NO.	LOCATION	SIGN CODE	SIZE W X H	NUMBER IN SERVICE	APPROX. SERVICE PERIOD 12 DAYS	643.0900 SIGNS DAYS	643.1050 SIGNS PORTABLE CHANGEABLE MESSAGE DAYS	NO. OF CYCLES	643.0920 COVERING TYPE II SIGNS EACH	REMARKS
	CTH V ON-RAMP TO I-43 NB									
1	CTH V, W. OF I-43 SB RAMP, PLACE 1000' W. OF I-43 SB RAMP INTERSECTION	M 3-1	24"X12"	1	12	12				
	"	M 1-1	24"X24"	1	12	12				43
	"	W 20-2A	48"X48"	1	12	12				
2	CTH V, BETWEEN I-43 RAMPS, MODIFY EXISTING J2-1 SIGN AS SHOWN	MO 4-5	24"X12"	1	12	12				
	"	MO 6-1	21"X21"	1	12	12				AHEAD
3	CTH V, AT I-43 NB RAMP, MODIFY EXISTING J3-1 SIGN AS SHOWN	MO 4-5	24"X12"	1	12	12				
	"	MO 6-1	21"X21"	1	12	12				AHEAD
4	CTH V ON-RAMP TO I-43 NB, PLACE ON RIGHT SHOULDER, FIELD DETERMINE LOCATION	PCMS		1			7			PLACE IN ADVANCE OF CLOSURE
5	CTH V, AT I-43 NB RAMP, COVER EXISTING J3-1 SIGN AS SHOWN							1	1	COVER ENTIRE SIGN
6	CTH V, E. OF I-43, COVER EXISTING J2-2 SIGN AS SHOWN							1	1	COVER "NORTH 43 ADV RT"
7	CTH V, W. OF CTH R, PLACE 750' W. OF CTH R INTERSECTION	MO 4-5	24"X12"	1	12	12				
	"	M 3-1	24"X12"	1	12	12				
	"	M 1-1	24"X24"	1	12	12				43
	"	MO 5-1L	21"X21"	1	12	12				
8	CTH V, AT CTH R, PLACE RIGHT OF EXISTING R1-1 SIGN AT CTH R INTERSECTION	MO 4-5	24"X12"	1	12	12				
	"	M 3-1	24"X12"	1	12	12				
	"	M 1-1	24"X24"	1	12	12				43
	"	MO 6-1	21"X21"	1	12	12				LEFT
9	CTH R, S. OF CTH V, PLACE 1000' S. OF CTH V INTERSECTION	M 3-1	24"X12"	1	12	12				
	"	M 1-1	24"X24"	1	12	12				43
	"	W 20-2A	48"X48"	1	12	12				
10	CTH R, AT CTH V, PLACE RIGHT OF EXISTING R1-1 SIGN AT CTH V INTERSECTION	MO 4-5	24"X12"	1	12	12				
	"	M 3-1	24"X12"	1	12	12				
	"	M 1-1	24"X24"	1	12	12				43
	"	MO 6-1	21"X21"	1	12	12				AHEAD
11	CTH R, S. OF CTH K, PLACE 750' S. OF CTH K INTERSECTION	MO 4-5	24"X12"	1	12	12				
	"	M 3-1	24"X12"	1	12	12				
	"	M 1-1	24"X24"	1	12	12				43
	"	MO 5-1L	21"X21"	1	12	12				
12	CTH R, AT CTH K, PLACE RIGHT OF EXISTING R1-1 SIGN AT CTH K INTERSECTION	MO 4-5	24"X12"	1	12	12				
	"	M 3-1	24"X12"	1	12	12				
	"	M 1-1	24"X24"	1	12	12				43
	"	MO 6-1	21"X21"	1	12	12				LEFT
	PAGE SUBTOTALS			31		360	7		2	
	CTH V TO 43 NB RAMP CLOSURE TOTALS			**31**		***360**	***7**		***2**	

* ADDITIONAL QUANTITY SHOWN ELSEWHERE

3

PROJECT NO: 1227-12-71	HWY: IH 13	COUNTY: MANITOWOC	MISCELLANEOUS QUANTITIES	SHEET:	E

3

TRAFFIC CONTROL DETOUR SIGN SUMMARY - I-43 NB OFF-RAMP TO CTH V CLOSURE

SIGN NO.	LOCATION	SIGN CODE	SIZE W X H	NUMBER IN SERVICE	APPROX. SERVICE PERIOD 12 DAYS	643.0900 SIGNS DAYS	643.1050 SIGNS PORTABLE CHANGEABLE MESSAGE DAYS	REMARKS
	I-43 NB OFF-RAMP TO CTH V							
1	I-43 NB, S. OF CTH V, PLACE ON EXISTING TYPE I GROUND MOUNT SIGN AS SHOWN	G 20-60	108"X24"	1	12	12		
2	I-43 NB, AT CTH V, PLACE LEFT OF EXISTING TYPE I GROUND MOUNT SIGN	MO 4-5	36"X18"	1	12	12		
	"	M 1-5A	36"X36"	1	12	12		V
	"	MO 6-1	30"X30"	1	12	12		AHEAD
3	I-43 NB, AT CTH V, PLACE ON EXISTING TYPE I GROUND MOUNT SIGN AS SHOWN	G 20-60	108"X24"	1	12	12		
4	I-43 NB OFF-RAMP TO CTH V, PLACE ON RIGHT SHOULDER, FIELD DETERMINE LOCATION	PCMS		1			7	PLACE IN ADVANCE OF CLOSURE
5	I-43 NB, S. OF CTH K, PLACE 1000' S. OF CTH K EXIT RAMP IN MEDIAN	MO 4-5	36"X18"	1	12	12		
	"	M 1-5A	36"X36"	1	12	12		V
	"	MO 5-2R	30"X30"	1	12	12		
6	I-43 NB, S. OF CTH K, PLACE 1000' S. OF CTH K EXIT RAMP ON RIGHT SHOULDER	MO 4-5	36"X18"	1	12	12		
	"	M 1-5A	36"X36"	1	12	12		V
	"	MO 5-2R	30"X30"	1	12	12		
7	I-43 NB, AT CTH K EXIT RAMP, PLACE LEFT OF EXISTING TYPE I GROUND MOUNT SIGN	MO 4-5	36"X18"	1	12	12		
	"	M 1-5A	36"X36"	1	12	12		
	"	MO 6-2	30"X30"	1	12	12		TILT RIGHT
8	I-43 NB OFF-RAMP TO CTH K, PLACE RIGHT OF EXISTING R1-1 SIGN AT CTH K INTERSECTION	MO 4-5	24"X12"	1	12	12		
	"	M 1-5A	24"X24"	1	12	12		V
	"	MO 6-1	21"X21"	1	12	12		RIGHT
9	CTH K, AT CTH R, PLACE RIGHT OF EXISTING R1-1 SIGN AT CTH R INTERSECTION	MO 4-5	24"X12"	1	12	12		
	"	M 1-5A	24"X24"	1	12	12		V
	"	MO 6-1	21"X21"	1	12	12		RIGHT
	PAGE SUBTOTALS			21		240	7	
	43 NB OFF-RAMP TO V CLOSURE TOTALS			**21**		***240**	***7**	

* ADDITIONAL QUANTITY SHOWN ELSEWHERE

3

3

TRAFFIC CONTROL DETOUR SIGN SUMMARY - CTH K ON-RAMP TO I-43 SB CLOSURE

SIGN NO.	LOCATION	SIGN CODE	SIZE W X H	NUMBER IN SERVICE	APPROX. SERVICE PERIOD 12 DAYS	643.0900 SIGNS DAYS	643.1050 SIGNS PORTABLE CHANGEABLE MESSAGE DAYS	NO. OF CYCLES	643.0920 COVERING TYPE II SIGNS EACH	REMARKS
	CTH K ON-RAMP TO I-43 SB									
1	CTH K, W. OF I-43, PLACE 1000' W. OF I-43 SB RAMP INTERSECTION	M 3-3	24"X12"	1	12	12				
	"	M 1-1	24"X24"	1	12	12				43
	"	W 20-2A	48"X48"	1	12	12				
2	CTH K, AT I-43 SB, MODIFY EXISTING J3-1 SIGN AS SHOWN AT I-43 SB RAMP INTERSECTION	MO 4-5	24"X12"	1	12	12				
	"	MO 6-1	21"X21"	1	12	12				AHEAD
3	CTH K, AT I-43 SB, COVER EXISTING J3-1 SIGN AS SHOWN AT I-43 SB RAMP INTERSECTION							1	1	COVER ENTIRE SIGN
4	CTH K ON-RAMP TO I-43 SB, PLACE ON RIGHT SHOULDER, FIELD DETERMINE LOCATION	PCMS		1			7			PLACE IN ADVANCE OF CLOSURE
5	CTH K, AT I-43 SB, COVER EXISTING J3-1 SIGN AS SHOWN AT I-43 SB RAMP INTERSECTION							1	1	COVER ENTIRE SIGN
6	CTH K, E. OF I-43, PLACE RIGHT OF EXISTING M1-5A SIGN E. OF I-43	MO 4-5	24"X12"	1	12	12				
	"	M 3-3	24"X12"	1	12	12				
	"	M 1-1	24"X24"	1	12	12				43
7	CTH K, W. OF CTH R, PLACE 750' W. OF CTH R INTERSECTION	MO 4-5	24"X12"	1	12	12				
	"	M 3-3	24"X12"	1	12	12				
	"	M 1-1	24"X24"	1	12	12				43
	"	MO 5-1L	21"X21"	1	12	12				
8	CTH K, AT CTH R, PLACE RIGHT OF EXISTING R1-1 SIGN AT CTH R INTERSECTION	MO 4-5	24"X12"	1	12	12				
	"	M 3-3	24"X12"	1	12	12				
	"	M 1-1	24"X24"	1	12	12				43
	"	MO 6-1	21"X21"	1	12	12				RIGHT
9	CTH R, N. OF CTH K, PLACE 1000' N. OF CTH K INTERSECTION	M 3-3	24"X12"	1	12	12				
	"	M 1-1	24"X24"	1	12	12				43
	"	W 20-2A	48"X48"	1	12	12				
10	CTH R, AT CTH K, PLACE RIGHT OF EXISITNG J3-2 SIGN AT CTH K INTERSECTION	MO 4-5	24"X12"	1	12	12				
	"	M 3-3	24"X12"	1	12	12				
	"	M 1-1	24"X24"	1	12	12				43
	"	MO 6-1	21"X21"	1	12	12				AHEAD
11	CTH R, N. OF CTH V, PLACE 750' N. OF CTH V INTERSECTION	MO 4-5	24"X12"	1	12	12				
	"	M 3-3	24"X12"	1	12	12				
	"	M 1-1	24"X24"	1	12	12				43
	"	MO 5-1R	21"X21"	1	12	12				
12	CTH R, AT CTH V, PLACE RIGHT OF EXISTING J3-2 SIGN AT CTH V INTERSECTION	MO 4-5	24"X12"	1	12	12				
	"	M 3-3	24"X12"	1	12	12				
	"	M 1-1	24"X24"	1	12	12				43
	"	MO 6-1	21"X21"	1	12	12				RIGHT
13	CTH V, AT I-43 NB, PLACE RIGHT OF EXISTING J3-1 SIGN AT I-43 NB RAMP INTERSECTION	MO 4-5	24"X12"	1	12	12				
	"	M 3-3	24"X12"	1	12	12				
	"	M 1-1	24"X24"	1	12	12				43
	"	MO 6-1	21"X21"	1	12	12				AHEAD
	PAGE SUBTOTALS			36		420	7		2	
	CTH K ON-RAMP TO 43 SB CLOSURE TOTALS			**36**		***420**	***7**		***2**	

* ADDITIONAL QUANTITY SHOWN ELSEWHERE

3

3

TRAFFIC CONTROL DETOUR SIGN SUMMARY - I-43 SB OFF-RAMP TO CTH K CLOSURE

SIGN NO.	LOCATION	SIGN CODE	SIZE W X H	NUMBER IN SERVICE	APPROX. SERVICE PERIOD 12 DAYS	643.0900 SIGNS DAYS	643.1050 SIGNS PORTABLE CHANGEABLE MESSAGE DAYS	REMARKS
	I-43 SB OFF-RAMP TO CTH K							
1	I-43 SB, N. OF CTH K, PLAE ON EXISTING TYPE I GROUND MOUNT SIGN AS SHOWN	G 20-60	108"X24"	1	12	12		
2	I-43 SB, AT CTH K, PLACE LEFT OF EXISTING TYPE I GROUND MOUNT SIGN	MO 4-5	36"X18"	1	12	12		
	"	M 1-5A	36"X36"	1	12	12		K
	"	MO 6-1	30"X30"	1	12	12		AHEAD
3	I-43 SB, AT CTH K, PLACE ON EXISTING TYPE I GROUND MOUNT SIGN AS SHOWN	G 20-60	108"X24"	1	12	12		
4	I-43 SB OFF-RAMP TO CTH K, PLACE ON RIGHT SHOULDER, FIELD DETERMINE LOCATION	PCMS		1			7	PLACE IN ADVANCE OF CLOSURE
5	I-43 SB, N. OF CTH V, PLACE 1000' N. OF CTH V RAMP IN MEDIAN	MO 4-5	36"X18"	1	12	12		
	"	M 1-5A	36"X36"	1	12	12		K
	"	MO 5-2R	30"X30"	1	12	12		
6	I-43 SB, N. OF CTH V, PLACE 1000' N. OF CTH V RAMP ON RIGHT SHOULDER	MO 4-5	36"X18"	1	12	12		
	"	M 1-5A	36"X36"	1	12	12		K
	"	MO 5-2R	30"X30"	1	12	12		
7	I-43 SB, AT CTH V, PLACE LEFT OF EXISTING TYPE I SIGN AT CTH V RAMP	MO 4-5	36"X18"	1	12	12		
	"	M 1-5A	36"X36"	1	12	12		K
	"	MO 6-2	30"X30"	1	12	12		TILT RIGHT
8	I-43 SB OFF-RAMP TO CTH V, PLACE RIGHT OF EXISTING R1-1 SIGN AT CTH V RAMP INTERSECTION	MO 4-5	24"X12"	1	12	12		
	"	M 1-5A	24"X24"	1	12	12		5
	"	MO 6-1	21"X21"	1	12	12		LEFT
9	CTH V, AT I-43 NB, PLACE IN MEDIAN AT I-43 NB RAMP INTERSECTION	MO 4-5	24"X12"	1	12	12		
	"	M 1-5A	24"X24"	1	12	12		K
	"	MO 6-1	21"X21"	1	12	12		LEFT
	PAGE SUBTOTALS			21		240	7	
	I-43 SB OFF-RAMP TO K CLOSURE TOTALS			**21**		***240**	***7**	

* ADDITIONAL QUANTITY SHOWN ELSEWHERE

3

3

TRAFFIC CONTROL DETOUR SIGN SUMMARY - CTH K ON-RAMP TO I-43 NB CLOSURE

SIGN NO.	LOCATION	SIGN CODE	SIZE W X H	NUMBER IN SERVICE	APPROX. SERVICE PERIOD 12 DAYS	643.0900 SIGNS DAYS	643.1050 SIGNS PORTABLE CHANGEABLE MESSAGE DAYS	NO .OF CYCLES	643.0920 COVERING TYPE II SIGNS EACH	REMARKS
	CTH K ON-RAMP TO I-43 NB									
1	CTH K, W. OF I-43, PLACE 1000' W. OF I-43 SB RAMP INTERSECTION	M 3-1	24"X12"	1	12	12				
	"	M 1-1	24"X24"	1	12	12				43
	"	W 20-2A	48"X48"	1	12	12				
2	CTH K, BETWEEN I-43 RAMPS, MODIFY EXISTING J2-2 SIGN AS SHOWN	MO 4-5	24"X12"	1	12	12				
	"	MO 6-1	21"X21"	1	12	12				AHEAD
3	CTH K, AT I-43 NB RAMP, MODIFY EXISTING J3-1 SIGN AS SHOWN	MO 4-5	24"X12"	1	12	12				
	"	MO 6-1	21"X21"	1	12	12				AHEAD
4	CTH K ON-RAMP TO I-43 NB, PLACE ON RIGHT SHOULDER, FIELD DETERMINE LOCATION	PCMS		1			7			PLACE IN ADVANCE OF CLOSURE
5	CTH K, AT I-43 NB RAMP, COVER EXISTING J3-1 SIGN AS SHOWN							1	1	COVER ENTIRE SIGN
6	CTH K, E. OF I-43, PLACE RIGHT OF EXISTING J4-1 SIGN	MO 4-5	24"X12"	1	12	12				
	"	M 3-1	24"X12"	1	12	12				
	"	M 1-1	24"X24"	1	12	12				43
7	CTH R, S. OF CTH K, PLACE 1000' S. OF CTH K INTERSECTION	M 3-1	24"X12"	1	12	12				
	"	M 1-1	24"X24"	1	12	12				43
	"	W 20-2A	48"X48"	1	12	12				
8	CTH R, AT CTH K, PLACE RIGHT OF EXISTING R1-1 SIGN AT CTH K INTERSECTION	MO 4-5	24"X12"	1	12	12				
	"	M 3-1	24"X12"	1	12	12				
	"	M 1-1	24"X24"	1	12	12				43
	"	MO 6-1	21"X21"	1	12	12				AHEAD
9	CTH R, S. OF CTH Y, PLACE 150' S. OF CTH Y INTERSECTION	MO 4-5	24"X12"	1	12	12				
	"	M 3-1	24"X12"	1	12	12				
	"	M 1-1	24"X24"	1	12	12				43
	"	MO 6-1	21"X21"	1	12	12				AHEAD
10	CTH R, AT STH 147, PLACE RIGHT OF EXISTING R1-1 SIGN AT STH 147 INTERSECTION	MO 4-5	24"X12"	1	12	12				
	"	M 3-1	24"X12"	1	12	12				
	"	M 1-1	24"X24"	1	12	12				43
	"	MO 6-1	21"X21"	1	12	12				LEFT
11	STH 147, W. OF CTH R, PLACE 100' W. OF CTH R INTERSECTION	MO 4-5	24"X12"	1	12	12				
	"	M 3-1	24"X12"	1	12	12				
	"	M 1-1	24"X24"	1	12	12				43
	"	MO 5-1L	21"X21"	1	12	12				
	PAGE SUBTOTALS			30		348	7		1	
	K ON-RAMP TO 43 NB CLOSURE TOTALS			**30**		***348**	***7**		***1**	

* ADDITIONAL QUANTITY SHOWN ELSEWHERE

3

3

TRAFFIC CONTROL DETOUR SIGN SUMMARY - I-43 NB OFF-RAMP TO CTH K CLOSURE

SIGN NO.	LOCATION	SIGN CODE	SIZE W X H	NUMBER IN SERVICE	APPROX. SERVICE PERIOD 12 DAYS	643.0900 SIGNS DAYS	643.1050 SIGNS PORTABLE CHANGEABLE MESSAGE DAYS	REMARKS
	I-43 NB OFF-RAMP TO CTH K							
1	I-43 NB, S. OF CTH K, PLACE ON EXISTING TYPE I GROUND MOUNT SIGN AS SHOWN	G 20-60	108"X24"	1	12	12		
2	I-43 NB, AT CTH K EXIT RAMP, PLACE LEFT OF EXISTING TYPE I GROUND MOUNT SIGN	MO 4-5	36"X18"	1	12	12		
	"	M 1-5A	36"X36"	1	12	12		K
	"	MO 6-1	30"X30"	1	12	12		AHEAD
3	I-43 NB, AT CTH K EXIT RAMP, PLACE ON EXISTING TYPE I GROUND MOUNT SIGN AS SHOWN	G 20-60	108"X24"	1	12	12		
4	I-43 NB OFF-RAMP TO CTH K, PLACE ON RIGHT SHOULDER, FIELD DETERMINE LOCATION	PCMS		1			7	PLACE IN ADVANCE OF CLOSURE
5	I-43 NB, S. OF STH 147, PLACE 1000' S. OF STH 147 OFF-RAMP IN MEDIAN	MO 4-5	36"X18"	1	12	12		
	"	M 1-5A	36"X36"	1	12	12		K
	"	MO 5-2R	30"X30"	1	12	12		
6	I-43 NB, S. OF STH 147, PLACE 1000' S. OF STH 147 OFF-RAMP ON RIGHT SHOULDER	MO 4-5	36"X18"	1	12	12		
	"	M 1-5A	36"X36"	1	12	12		K
	"	MO 5-2R	30"X30"	1	12	12		
7	I-43 NB, AT STH 147 EXIT RAMP, PLACE LEFT OF EXISTING TYPE I GROUND MOUNT SIGN	MO 4-5	36"X18"	1	12	12		
	"	M 1-5A	36"X36"	1	12	12		K
	"	MO 6-2	30"X30"	1	12	12		TILT RIGHT
8	I-43 NB OFF-RAMP TO STH 147, AT RAMP INTERSECTION, PLACE RIGHT OF EXISTING R1-1 SIGN	MO 4-5	24"X12"	1	12	12		
	"	M 1-5A	24"X24'	1	12	12		K
	"	MO 6-1	21"X21"	1	12	12		RIGHT
9	STH 147, AT CTH R, PLACE RIGHT OF EXISTING J13-1 SIGN AT CTH R INTERSECTION	MO 4-5	24"X12"	1	12	12		
	"	M 1-5A	24"X24'	1	12	12		K
	"	MO 6-1	21"X21"	1	12	12		RIGHT
10	CTH R, N. OF CTH Y, PLACE 150' N. OF CTH Y INTERSECTION	MO 4-5	24"X12"	1	12	12		
	"	M 1-5A	24"X24'	1	12	12		K
	"	MO 6-1	21"X21"	1	12	12		AHEAD
11	CTH R, AT CTH K, PLACE RIGHT OF EXISTING R1-1 SIGN AT CTH K INTERSECTION	MO 4-5	24"X12"	1	12	12		
	"	M 1-5A	24"X24'	1	12	12		K
	"	MO 6-1	21"X21"	1	12	12		RIGHT
	PAGE SUBTOTALS			27		312	7	
	43 NB TO CTH K CLOSURE TOTALS			**27**		***312**	***7**	

* ADDITIONAL QUANTITY SHOWN ELSEWHERE

3

TRAFFIC CONTROL SUMMARY

CATEGORY	LOCATION	DURATION DAYS	643.0300 TRAFFIC CONTROL DRUMS EACH	643.0300 TRAFFIC CONTROL DRUMS DAY	643.0420 TRAFFIC CONTROL BARRICADES TYPE III EACH	643.0420 TRAFFIC CONTROL BARRICADES TYPE III DAY	643.0705 TRAFFIC CONTROL WARNING LIGHTS TYPE A EACH	643.0705 TRAFFIC CONTROL WARNING LIGHTS TYPE A DAY	643.0715 TRAFFIC CONTROL WARNING LIGHTS TYPE C EACH	643.0715 TRAFFIC CONTROL WARNING LIGHTS TYPE C DAY	643.0800 TRAFFIC CONTROL ARROW BOARDS EACH	643.0800 TRAFFIC CONTROL ARROW BOARDS DAY	643.0900 TRAFFIC CONROL SIGNS EACH	643.0900 TRAFFIC CONROL SIGNS DAY	643.1205.S BASIC TRAFFIC QUEUE WARNING SYSTEM EACH	643.1205.S BASIC TRAFFIC QUEUE WARNING SYSTEM DAY	REMARKS
0010																	
	ROCKWOOD RD	8	28	224	-	-	-	-	-	-	-	-	11	88	-	-	SDD 15D28, SDD 15C12
	REIFS MILLS RD	8	28	224	-	-	-	-	-	-	-	-	11	88	-	-	SDD 15D28, SDD 15C12
	POLIFKA RD	11	38	418	-	-	-	-	-	-	-	-	11	121	-	-	SDD 15D28, SDD 15C12
	FISHERVILLE RD	11	38	418	-	-	-	-	-	-	-	-	11	121	-	-	SDD 15D28, SDD 15C12
	GREENSTREET RD	11	38	418	-	-	-	-	-	-	-	-	11	121	-	-	SDD 15D28, SDD 15C12
	STH 310 ON RAMP TO IH 43 NB	94	34	3,196	2	188	4	376	24	2,256	-	-	6	564	-	-	SDD 15D15
	IH 43 SB OFF RAMP TO STH 310	94	10	940	2	188	4	376	8	752	-	-	4	376	-	-	SDD 15D15
	IH 43 NB OFF RAMP TO CTH V	94	10	940	2	188	4	376	8	752	-	-	4	376	-	-	SDD 15D15
	CTH V ON RAMP TO IH 43 NB	94	34	3,196	2	188	4	376	24	2,256	-	-	6	564	-	-	SDD 15D15
	IH 43 SB OFF RAMP TO CTH V	94	10	940	2	188	4	376	8	752	-	-	4	376	-	-	SDD 15D15
	CTH V ON RAMP TO IH 43 SB	94	34	3,196	2	188	4	376	24	2,256	-	-	6	564	-	-	SDD 15D15
	IH 43 NB OFF RAMP TO CTH K	94	10	940	2	188	4	376	8	752	-	-	4	376	-	-	SDD 15D15
	CTH K ON RAMP TO IH 43 NB	94	34	3,196	2	188	4	376	24	2,256	-	-	6	564	-	-	SDD 15D15
	IH 43 SB OFF RAMP TO CTH K	94	10	940	2	188	4	376	8	752	-	-	4	376	-	-	SDD 15D15
	CTH K ON RAMP TO IH 43 SB	94	34	3,196	2	188	4	376	24	2,256	-	-	6	564	-	-	SDD 15D15
	IH 43 NB MAINLINE	94	490	46,060	33	3,102	66	6,204	17	1,598	2	188	48	4,512	1	94	SDD 15D12-D
	IH 43 SB MAINLINE	94	490	46,060	33	3,102	66	6,204	17	1,598	2	188	48	4,512	1	94	SDD 15D12-D
	PROJECT SUBTOTAL			**114,502**		**8,084**		**16,168**		**18,236**		**376**		*** 14,263**		**188**	

*** ADDITIONAL QUANTITY SHOWN ELSEWHERE**

PAVEMENT MARKING SUMMARY

CATEGORY	ROADWAY	STATION	TO	STATION	646.1020 MARKING LINE EPOXY 4-INCH WHITE SOLID LF	646.1040 MARKING LINE GROOVED WET REF EPOXY 4-INCH WHITE SOLID LF	646.1040 MARKING LINE GROOVED WET REF EPOXY 4-INCH YELLOW SOLID LF	646.1555 MARKING LINE GROOVED CONTRAST PERMANENT TAPE 4-INCH WHITE 12.5' LINE, 37.5' GAP LF	646.3020 MARKING LINE EPOXY 8-INCH WHITE SOLID LF	646.3555 MARKING LINE GROOVED CONTRAST PERMANENT TAPE 8-INCH WHITE SOLID LF	646.5420 MARKING AERIAL ENFORCEMENT BAR EPOXY WHITE SOLID EACH	REMARKS
0010												
	IH 43 NB	1167'NB'+62	-	1604'NB'+58	-	38,821	43,696	10,921	-	-	-	MAINLINE
	IH 43 SB	1167'SB'+63	-	1605'SB'+23	-	39,873	43,754	10,941	-	-	-	MAINLINE
	STH 310 NE RAMP	10'TNE'+00	-	25'TNE'+24	-	2,356	1,033	-	-	1,428	-	RAMP & GORE
	STH 310 NW RAMP	10'TNW'+00	-	24'TNW'+12	-	1,633	1,102	-	-	700	-	RAMP & GORE
	CTH V SE RAMP	10'VSE'+00	-	21'VSE'+31	-	1,694	1,194	-	-	640	-	RAMP & GORE
	CTH V SW RAMP	10'VSW'+00	-	22'VSW'+84	-	2,223	984	-	-	1,393	-	RAMP & GORE
	CTH V	16'V'+00	-	24'V'+00	100	-	-	-	80	-	-	
	CTH V NE RAMP	10'VNE'+00	-	24'VNE'+88	-	2,269	1,048	-	-	1,234	-	RAMP & GORE
	CTH V NW RAMP	10'VNW'+00	-	25'VNW'+57	-	1,662	1,189	-	-	598	-	RAMP & GORE
	IH 43 SB	1328'SB'+60	-	1328'SB'+60	-	-	-	-	-	-	2	
	IH 43 NB	1328'NB'+62	-	1328'NB'+62	-	-	-	-	-	-	2	
	IH 43 NB	1335'NB'+21	-	1335'NB'+21	-	-	-	-	-	-	2	
	IH 43 SB	1335'SB'+22	-	1335'SB'+22	-	-	-	-	-	-	2	
	IH 43 NB	1341'NB'+79	-	1341'NB'+79	-	-	-	-	-	-	2	
	IH 43 SB	1341'SB'+85	-	1341'SB'+85	-	-	-	-	-	-	2	
	CTH K SE RAMP	10'KSE'+00	-	21'KSE'+67	-	1,743	1,256	-	-	599	-	RAMP & GORE
	CTH K SW RAMP	10'KSW'+00	-	24'KSW'+62	-	2,338	1,193	-	-	1,185	-	RAMP & GORE
	CTH K	18'K'+00	-	28'K'+00	60	-	-	-	150	-	-	
	CTH K NE RAMP	10'KNE'+00	-	23'KNE'+61	-	2,405	1,094	-	-	1,352	-	RAMP & GORE
	CTH K NW RAMP	10'KNW'+00	-	18'KNW'+86	-	1,619	1,132	-	-	616	-	RAMP & GORE
	IH 43 NB	1541'NB'+67	-	1541'NB'+67	-	-	-	-	-	-	2	
	IH 43 SB	1541'SB'+95	-	1541'SB'+95	-	-	-	-	-	-	2	
	IH 43 NB	1548'NB'+27	-	1548'NB'+27	-	-	-	-	-	-	2	
	IH 43 SB	1548'SB'+54	-	1548'SB'+54	-	-	-	-	-	-	2	
	IH 43 NB	1554'NB'+87	-	1554'NB'+87	-	-	-	-	-	-	2	
	IH 43 SB	1555'SB'+13	-	1555'SB'+13	-	-	-	-	-	-	2	
	IH 43 NB	1561'NB'+48	-	1561'NB'+48	-	-	-	-	-	-	2	
	IH 43 SB	1561'SB'+72	-	1561'SB'+72	-	-	-	-	-	-	2	
	IH 43 SB	1567'SB'+90	-	1567'SB'+90	-	-	-	-	-	-	2	
	IH 43 NB	1568'NB'+09	-	1568'NB'+09	-	-	-	-	-	-	2	
				PROJECT TOTAL	**160**	**197,311**		**21,862**	**230**	**9,745**	**32**	

TEMPORARY PAVEMENT MARKING

CATEGORY	ROADWAY	STATION	TO	STATION	649.0105 TEMPORARY MARKING LINE PAINT 4-INCH WHITE 4' SKIPS LF	WHITE SOLID LF	YELLOW SOLID LF	REMARKS
0010								
	IH 43 NB	1167'NB'+62	-	1604'NB'+58	3,495	-	-	CENTERLINE SKIPS ON MILLED SURFACE
	IH 43 SB	1167'SB'+63	-	1605'SB'+23	3,501	-	-	CENTERLINE SKIPS ON MILLED SURFACE
	IH 43 NB	1167'NB'+62	-	1604'NB'+58	3,495	-	-	CENTERLINE SKIPS ON LOWER LAYER
	IH 43 SB	1167'SB'+63	-	1605'SB'+23	3,501	-	-	CENTERLINE SKIPS ON LOWER LAYER
	IH 43 NB	1167'NB'+62	-	1604'NB'+58	3,495	54,541	49,321	SKIPS AND EDGELINES ON UPPER LAYER
	IH 43 SB	1167'SB'+63	-	1605'SB'+23	3,501	53,840	49,354	SKIPS AND EDGELINES ON UPPER LAYER
				PROJECT TOTAL		**228,044**		

CONSTRUCTION STAKING

CATEGORY	ROADWAY	STATION	TO	STATION	650.8000 CONSTRUCTION STAKING RESURFACING REFERENCE LF
0010					
	IH 43 NB	1167'NB'+62	-	1604'NB'+58	43,696
	IH 43 SB	1167'SB'+63	-	1605'SB'+23	43,754
	STH 310 NE RAMP	10'TNE'+00	-	25'TNE'+24	1,747
	STH 310 NW RAMP	10'TNW'+00	-	24'TNW'+12	1,453
	CTH V SE RAMP	10'VSE'+00	-	21'VSE'+31	1,514
	CTH V SW RAMP	10'VSW'+00	-	22'VSW'+84	1,681
	CTH V NE RAMP	10'VNE'+00	-	24'VNE'+88	1,665
	CTH V NW RAMP	10'VNW'+00	-	25'VNW'+57	1,488
	CTH K SE RAMP	10'KSE'+00	-	21'KSE'+67	1,555
	CTH K SW RAMP	10'KSW'+00	-	24'KSW'+62	1,785
	CTH K NE RAMP	10'KNE'+00	-	23'KNE'+61	1,770
	CTH K NW RAMP	10'KNW'+00	-	18'KNW'+86	1,439
				PROJECT TOTAL	**103,547**

CONSTRUCTION STAKING SUPPLEMENTAL CONTROL

CATEGORY	LOCATION	650.9910 CONSTRUCTION STAKING SUPPLEMENTAL CONTROL LS
0010	1227-12-71	1
	PROJECT TOTAL	**1**

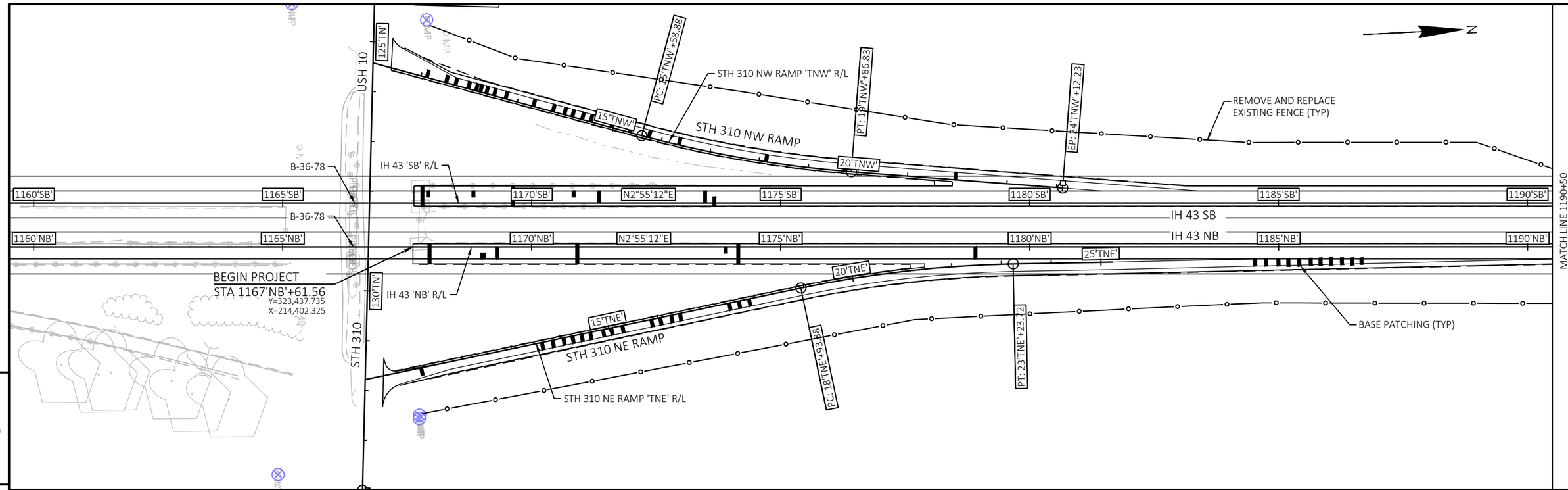

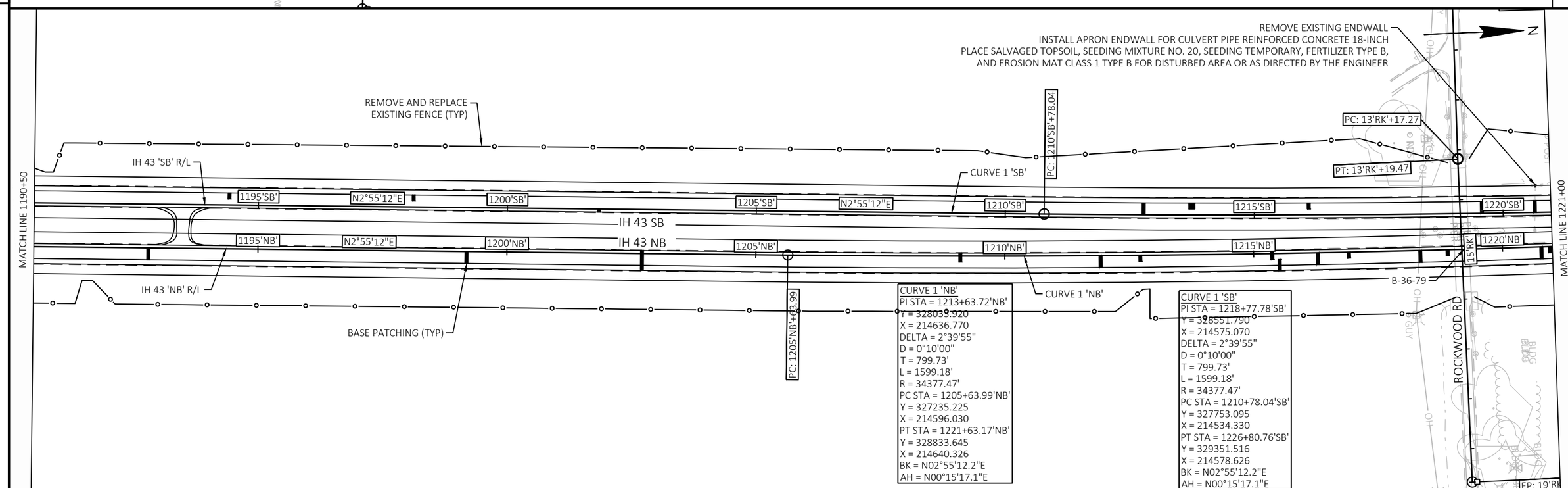

PROJECT NO: 1227-12-71	HWY: IH 43	COUNTY: MANITOWOC	PLAN SHEETS	SHEET	E

FILE NAME : C:\CIVIL 3D PROJECTS\12271200\SHEETSPLAN\1227-12-71\050201-PN.DWG
LAYOUT NAME - 050201-pn
PLOT DATE : 1/27/2021 10:17 AM PLOT BY : SMITH, JENNIFER B PLOT NAME : PLOT SCALE : 1 IN:200 FT

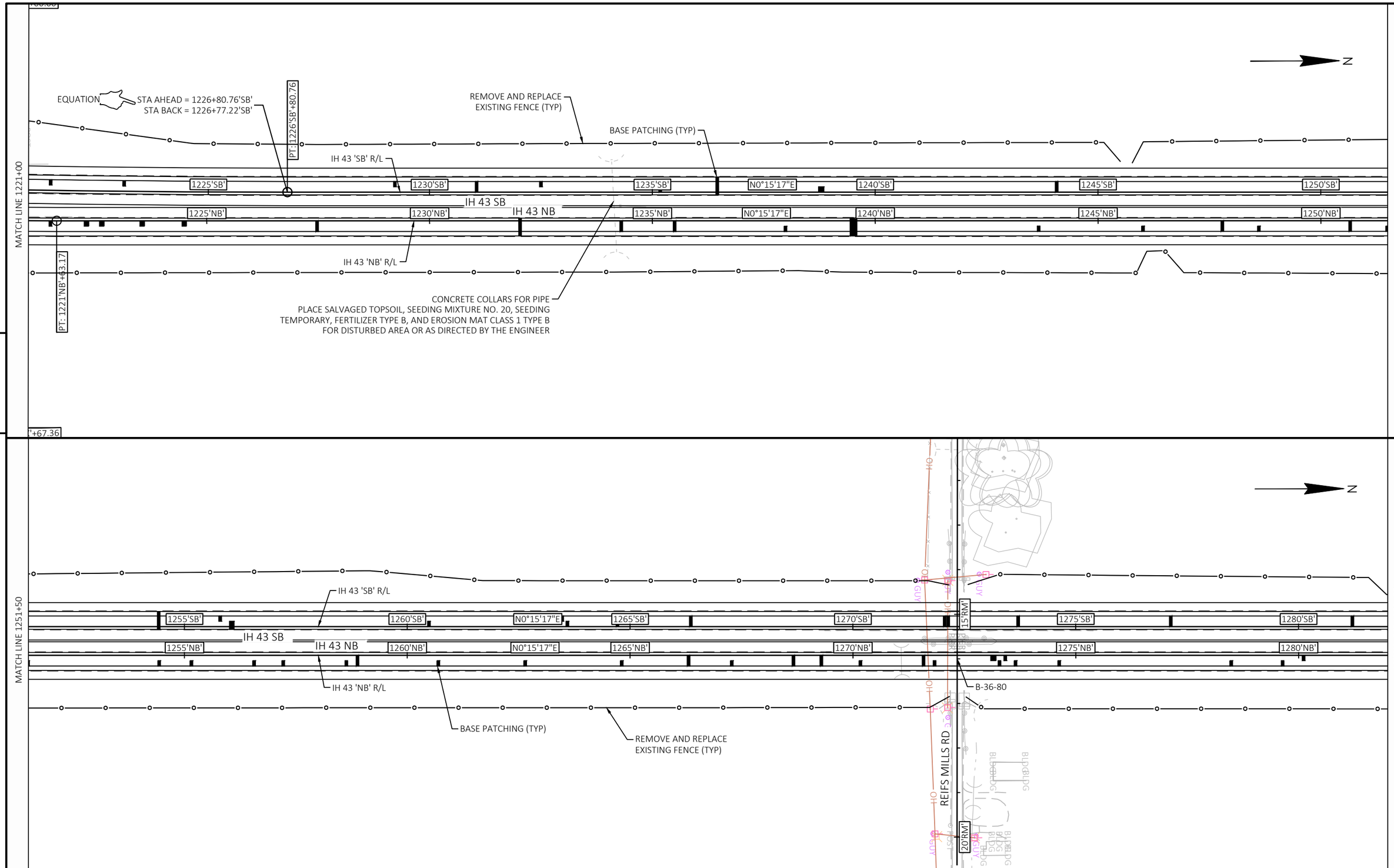

PROJECT NO: 1227-12-71	HWY: IH 43	COUNTY: MANITOWOC	PLAN SHEETS	SHEET	E

FILE NAME : C:\CIVIL 3D PROJECTS\12271200\SHEETSPLAN\1227-12-71\050201-PN.DWG
LAYOUT NAME - 050202-pn
PLOT DATE : 1/27/2021 10:17 AM
PLOT BY : SMITH, JENNIFER B
PLOT NAME :
PLOT SCALE : 1 IN:200 FT

WISDOT/CADDS SHEET 44

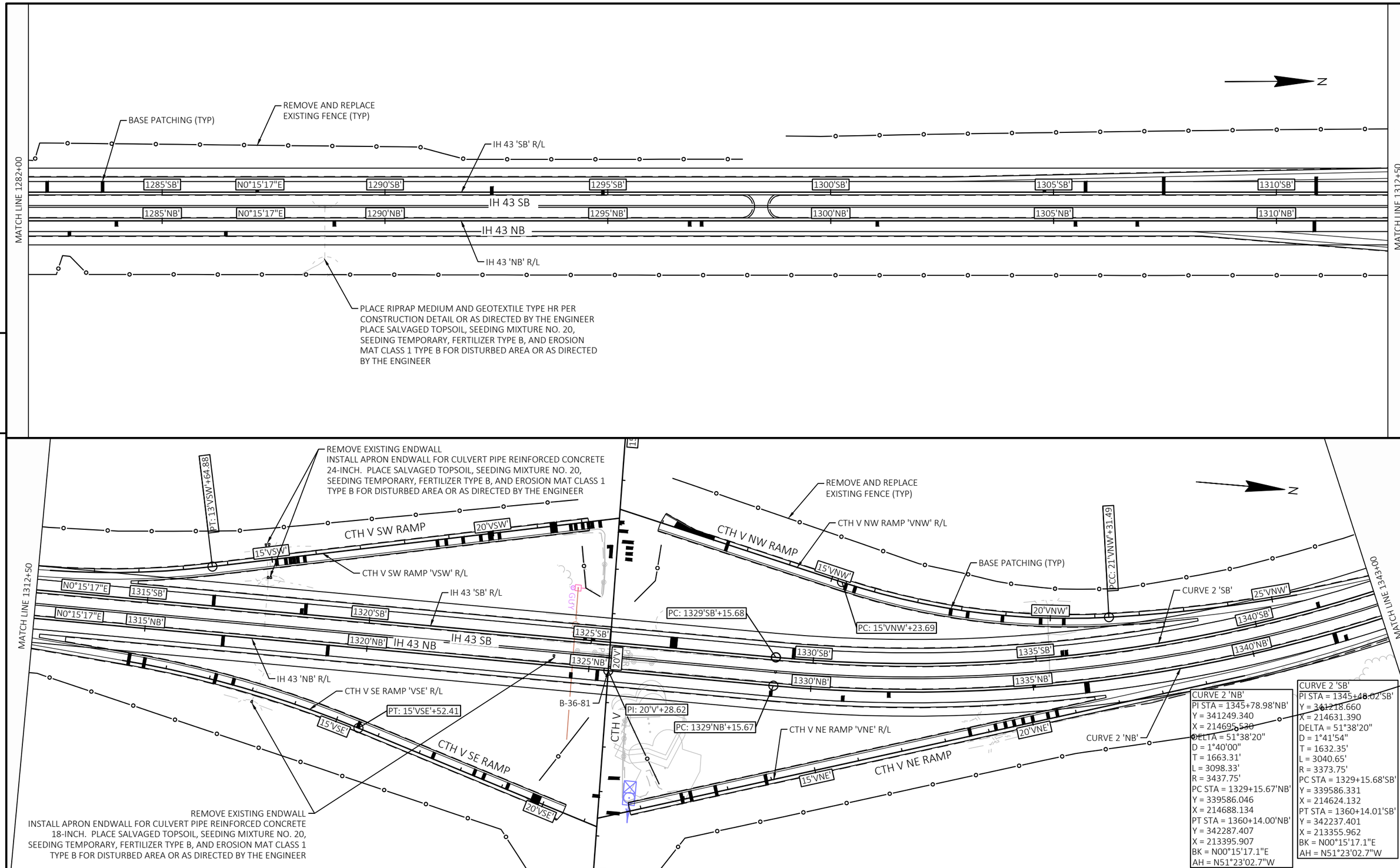

PROJECT NO: 1227-12-71	HWY: IH 43	COUNTY: MANITOWOC	PLAN SHEETS	SHEET	E

FILE NAME : C:\CIVIL 3D PROJECTS\12271200\SHEETSPLAN\1227-12-71\050201-PN.DWG
LAYOUT NAME - 050203-pn
PLOT DATE : 1/27/2021 10:18 AM
PLOT BY : SMITH, JENNIFER B
PLOT NAME :
PLOT SCALE : 1 IN:200 FT

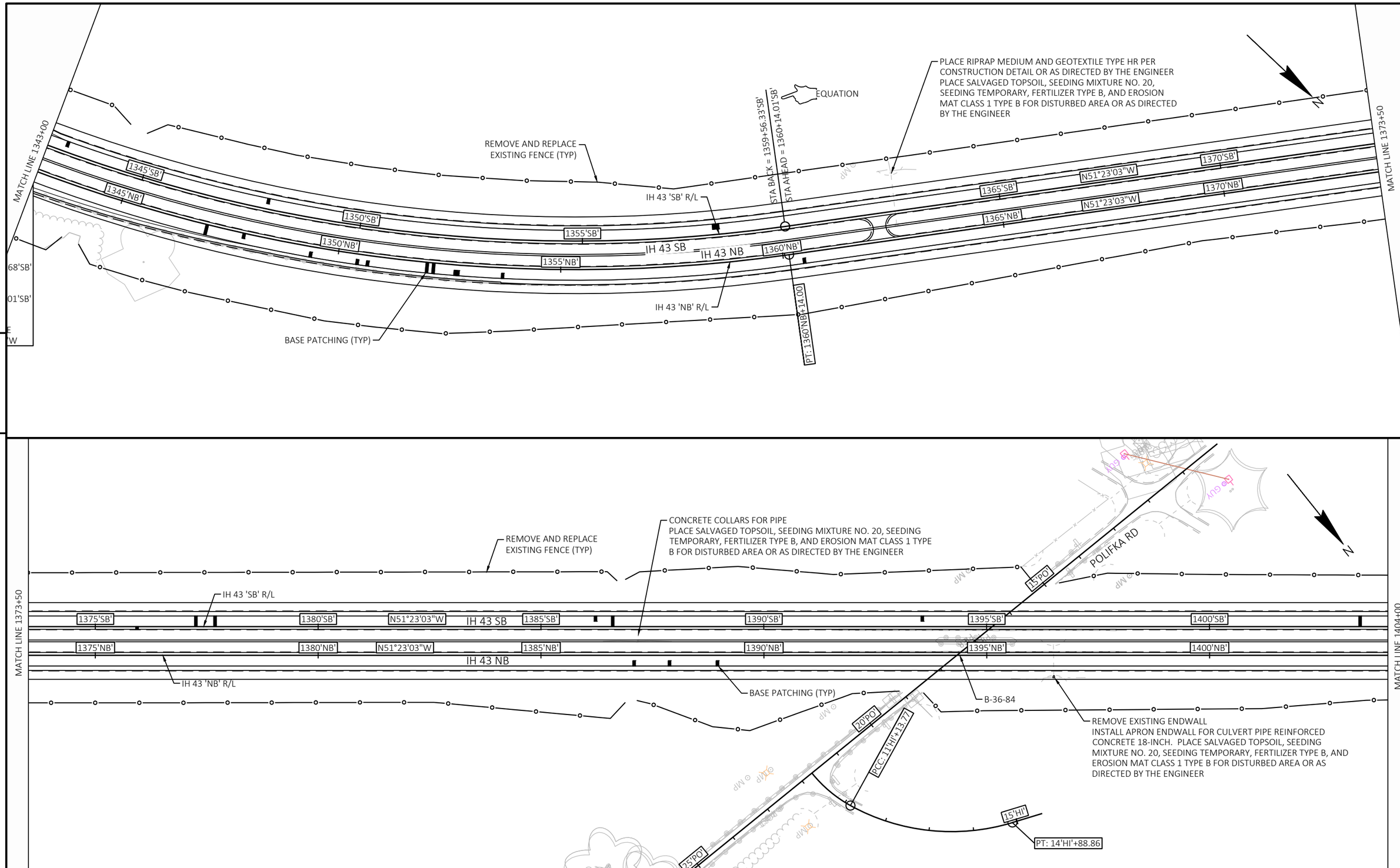

5

5

PROJECT NO: 1227-12-71	HWY: IH 43	COUNTY: MANITOWOC	PLAN SHEETS	SHEET	E

FILE NAME : C:\CIVIL 3D PROJECTS\12271200\SHEETSPLAN\1227-12-71\050201-PN.DWG
LAYOUT NAME - 050204-pn
PLOT DATE : 1/27/2021 10:18 AM
PLOT BY : SMITH, JENNIFER B
PLOT NAME :
PLOT SCALE : 1 IN:200 FT

WISDOT/CADDS SHEET 44

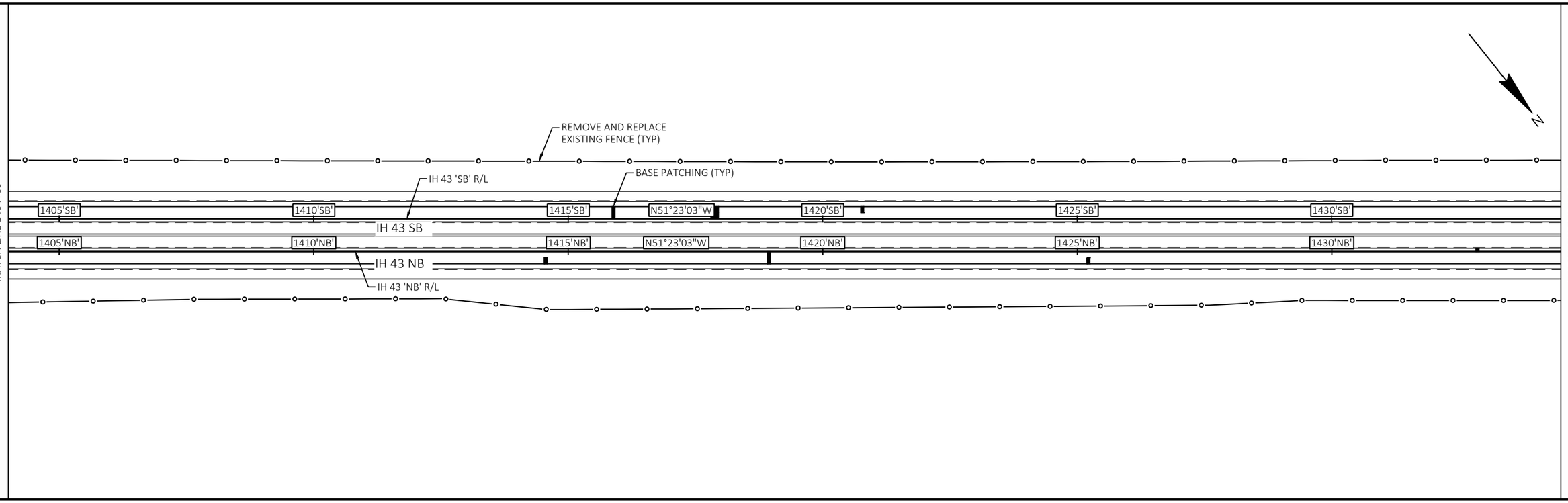

5

5

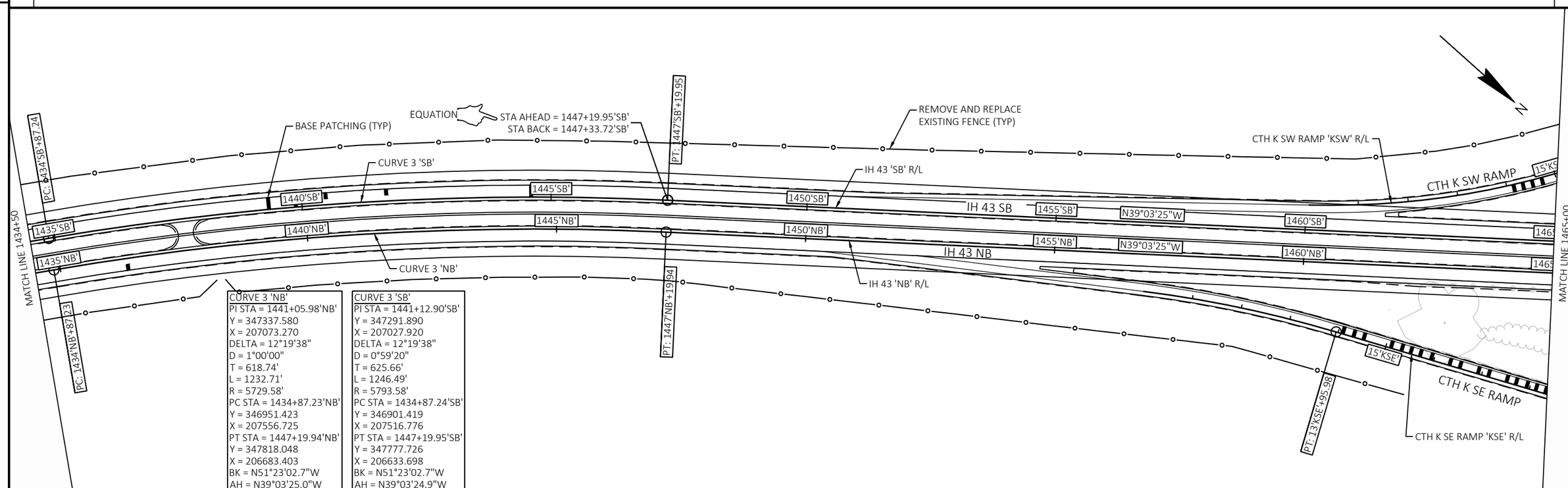

PROJECT NO: 1227-12-71	HWY: IH 43	COUNTY: MANITOWOC	PLAN SHEETS	SHEET	E

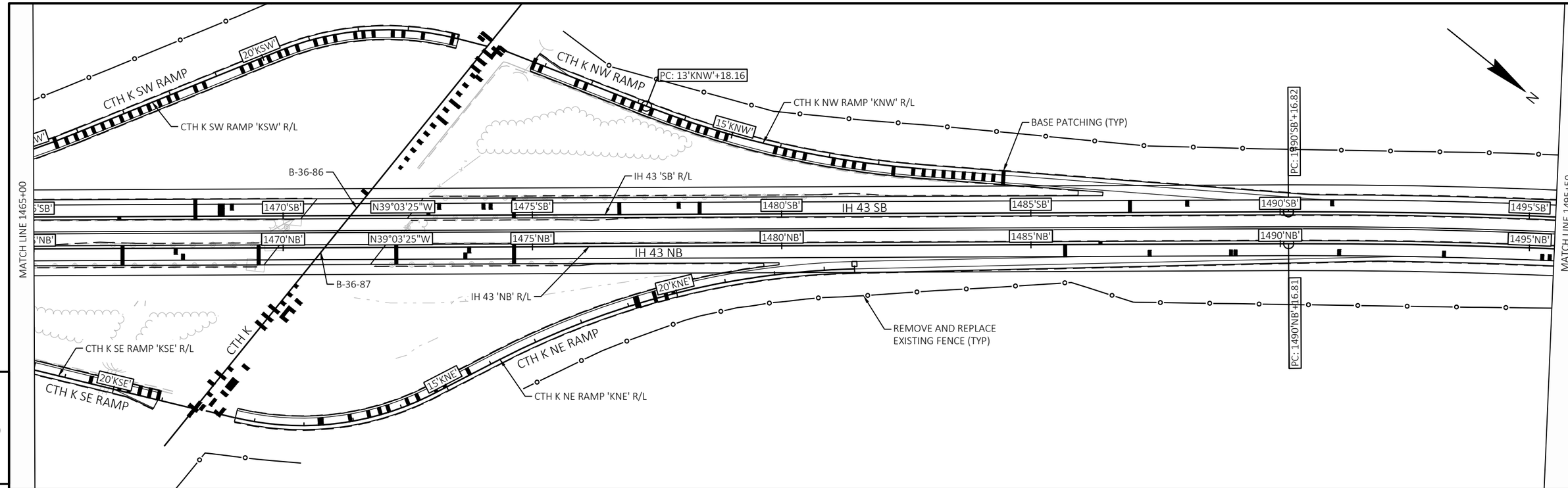

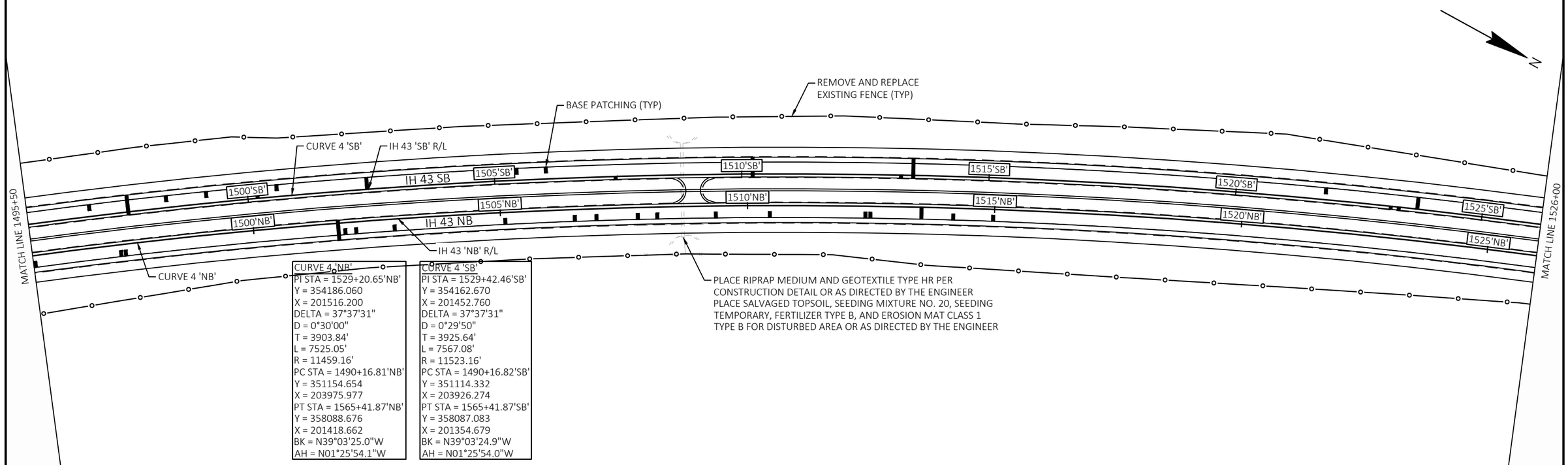

CURVE 4 'NB'
PI STA = 1529+20.65'NB'
Y = 354186.060
X = 201516.200
DELTA = 37°37'31"
D = 0°30'00"
T = 3903.84'
L = 7525.05'
R = 11459.16'
PC STA = 1490+16.81'NB'
Y = 351154.654
X = 203975.977
PT STA = 1565+41.87'NB'
Y = 358088.676
X = 201418.662
BK = N39°03'25.0"W
AH = N01°25'54.1"W

CURVE 4 'SB'
PI STA = 1529+42.46'SB'
Y = 354162.670
X = 201452.760
DELTA = 37°37'31"
D = 0°29'50"
T = 3925.64'
L = 7567.08'
R = 11523.16'
PC STA = 1490+16.82'SB'
Y = 351114.332
X = 203926.274
PT STA = 1565+41.87'SB'
Y = 358087.083
X = 201354.679
BK = N39°03'24.9"W
AH = N01°25'54.0"W

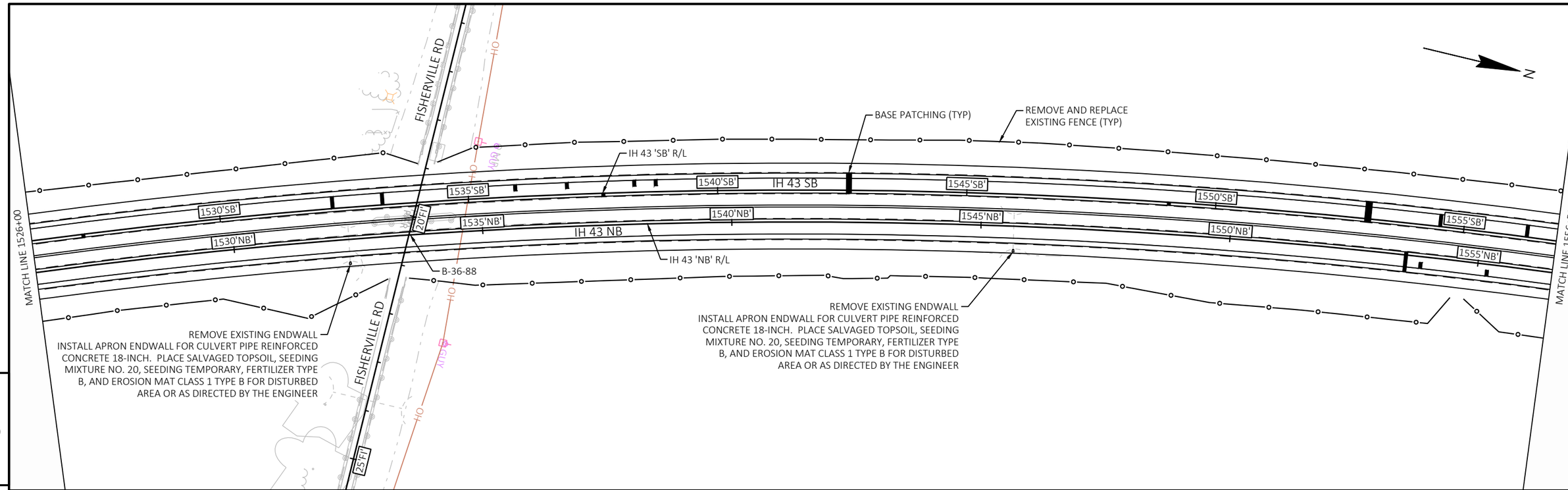

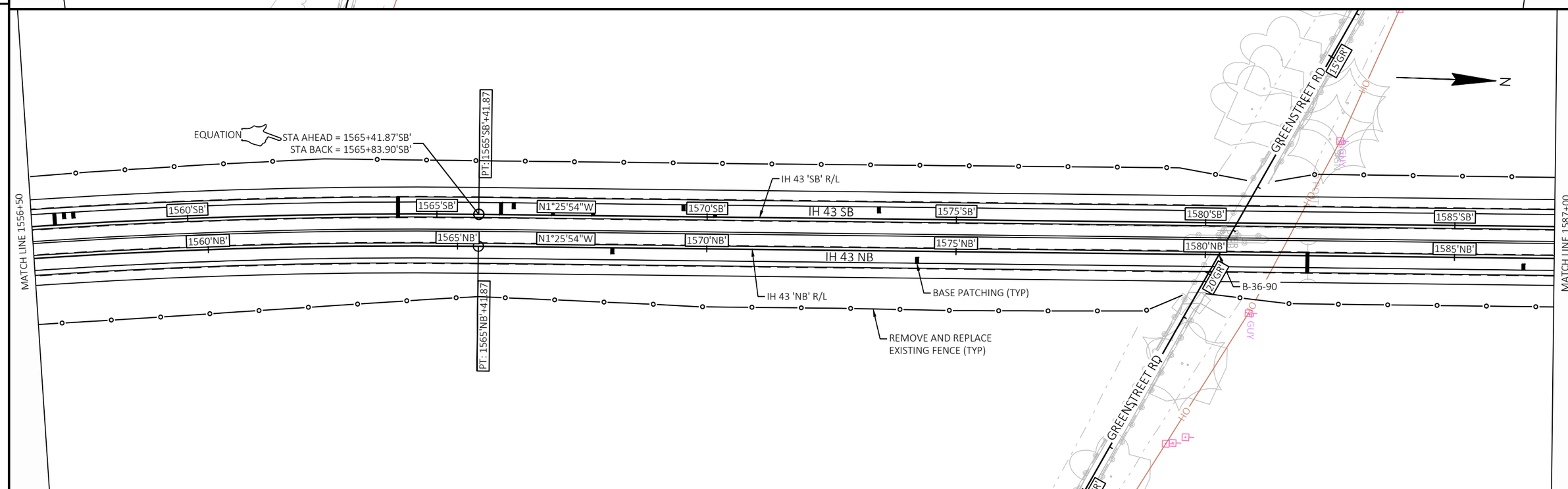

PROJECT NO: 1227-12-71	HWY: IH 43	COUNTY: MANITOWOC	PLAN SHEETS	SHEET	E

FILE NAME : C:\CIVIL 3D PROJECTS\12271200\SHEETSPLAN\1227-12-71\050201-PN.DWG
LAYOUT NAME - 050207-pn
PLOT DATE : 1/27/2021 10:18 AM
PLOT BY : SMITH, JENNIFER B
PLOT NAME :
PLOT SCALE : 1 IN:200 FT

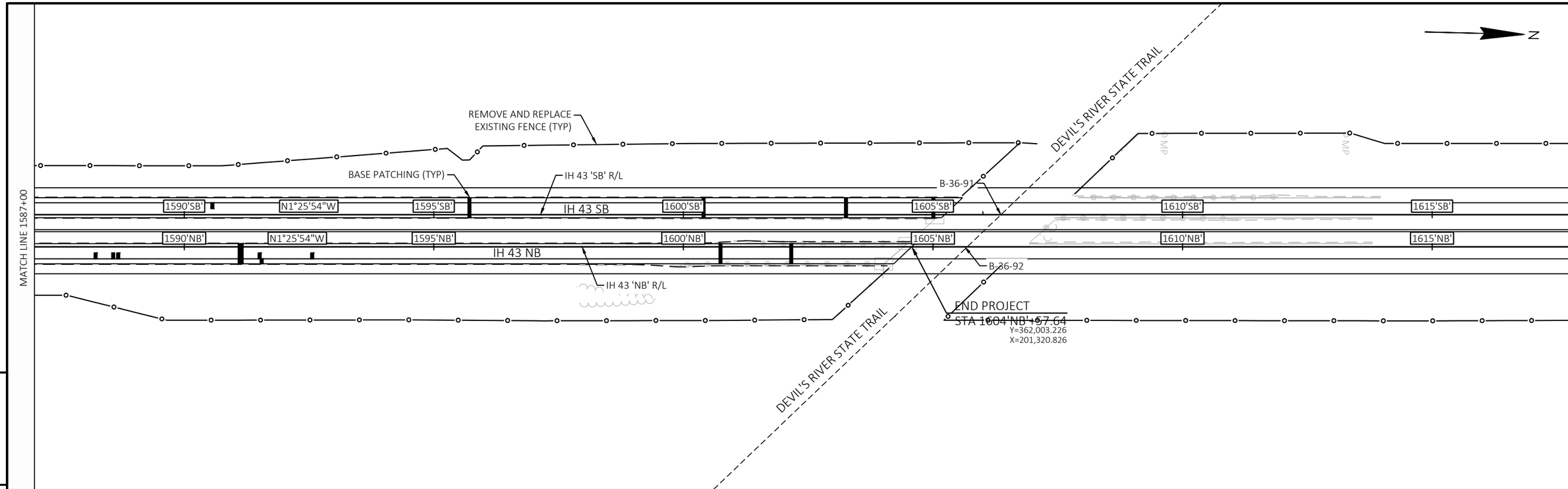

PROJECT NO: 1227-12-71	HWY: IH 43	COUNTY: MANITOWOC	PLAN SHEETS	SHEET	E

FILE NAME : C:\CIVIL 3D PROJECTS\12271200\SHEETSPLAN\1227-12-71\050201-PN.DWG
LAYOUT NAME - 050208-pn
PLOT DATE : 1/27/2021 10:18 AM
PLOT BY : SMITH, JENNIFER B
PLOT NAME :
PLOT SCALE : 1 IN:200 FT

WISDOT/CADDS SHEET 44

SDD 08D01-a Concrete Curb and Gutter

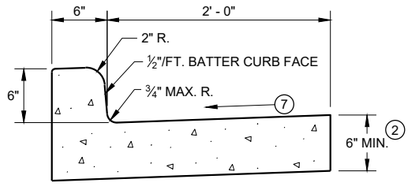

TYPES A[1] & D

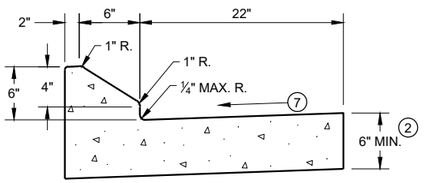

6" SLOPED CURB TYPES G[1] & J

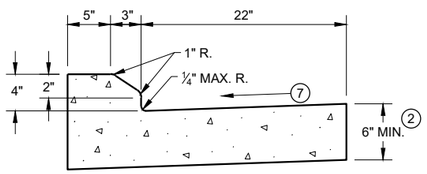

4" SLOPED CURB TYPES G[1] & J

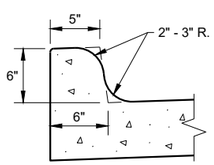

TYPES K[1] & L
(OPTIONAL CURB SHAPE)

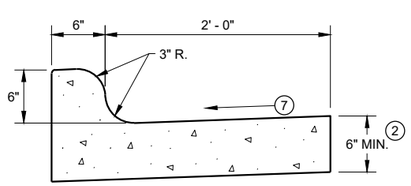

TYPES K[1] & L

CONCRETE CURB AND GUTTER 30"

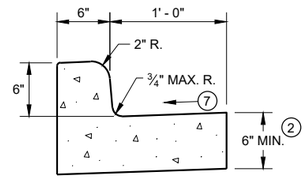

TYPES A[1] & D

CONCRETE CURB AND GUTTER 18"

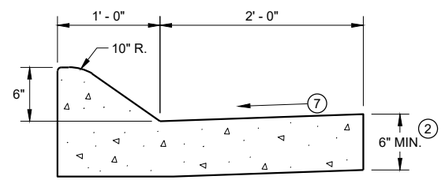

6" SLOPED CURB TYPES A[1] & D

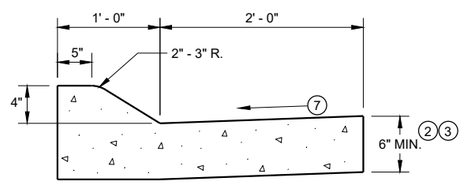

4" SLOPED CURB TYPES A[1] & D

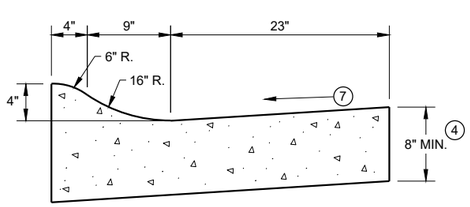

4" SLOPED CURB TYPES R[1] & T[5]

CONCRETE CURB AND GUTTER 36"

TBT & TBTT	X
30"	22"
36"	28"

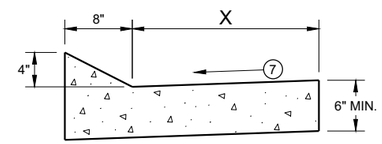

TYPES TBT & TBTT[1]

CONCRETE CURB AND GUTTER

GENERAL NOTES

DETAILS OF CONSTRUCTION AND WORKMANSHIP NOT SHOWN ON THIS DRAWING SHALL CONFORM TO THE PERTINENT REQUIREMENTS OF THE CONTRACT.

PAVEMENT TIES AND TIE BARS SHALL BE EPOXY COATED IN CONFORMANCE WITH SUBSECTION 505.2.6.2 OF THE STANDARD SPECIFICATIONS.

INTEGRAL CURB AND GUTTER SHALL CONFORM TO THE DETAILS SHOWN FOR CONCRETE CURB AND GUTTER INCLUDING THE TRANSVERSE GUTTER SLOPE.

UNLESS OTHERWISE SHOWN ON THE TYPICAL CROSS SECTIONS, THE BASE AGGREGATE AND COMMON EXCAVATION LIMITS ARE 2' - 0" BEHIND THE BACK OF CURBS.

1. TIE BARS ARE REQUIRED FOR CURB AND GUTTERS TYPES A, G, K, R, AND TBTT.
2. THE BOTTOM OF CURB AND GUTTER MAY BE CONSTRUCTED EITHER LEVEL OR PARALLEL TO THE SLOPE OF THE SUBGRADE OR BASE AGGREGATE PROVIDED A 6" MINIMUM GUTTER THICKNESS IS MAINTAINED.
3. USE 8" MINIMUM GUTTER THICKNESS WHEN USED WITH AN ADJACENT CONCRETE TRUCK APRON PLACED BEHIND BACK OF CURB.
4. THE BOTTOM OF CURB AND GUTTER MAY BE CONSTRUCTED EITHER LEVEL OR PARALLEL TO THE SLOPE OF THE SUBGRADE OR BASE AGGREGATE PROVIDED A 8" MINIMUM GUTTER THICKNESS IS MAINTAINED.
5. THE FACE OF CURB IS 6" FROM THE BACK OF CURB.
6. WHEN REVERSE SLOPE GUTTER IS REQUIRED, THE LOCATION(S) WILL BE SHOWN ELSEWHERE IN THE PLAN.
7. USE 4% GUTTER CROSS SLOPE UNLESS OTHERWISE NOTED IN THE PLANS.
8. INCLUDE LONGITUDINAL JOINT AND TIE BARS ALONG LANE EDGE WHEN CONCRETE PANEL WIDTH EXCEEDS THE MAXIMUM WIDTH PER TABLE BELOW. LONGITUDINAL JOINT(S) ARE NOT ALLOWED WITHIN TRAFFIC LANES AND BIKE LANES. LONGITUDINAL JOINT MAY BE SAWED.

PAVEMENT THICKNESS AND MAXIMUM CONCRETE PANEL WIDTH TABLE

PAVEMENT THICKNESS	MAXIMUM PANEL WIDTH
LESS THAN 10"	12'
10" & ABOVE	15'

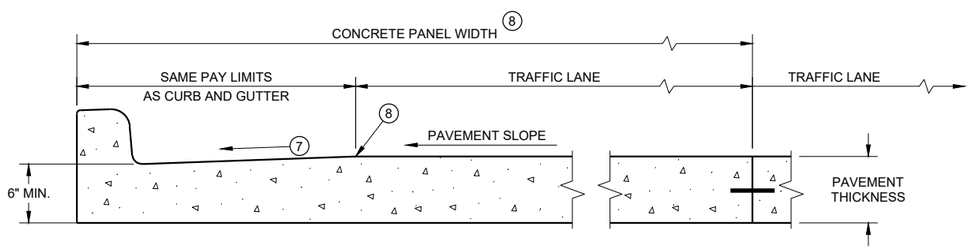

PARTIAL SECTION OF PAVEMENT *
WITH INTEGRAL CURB AND GUTTER

* BIKE LANE IS NOT SHOWN

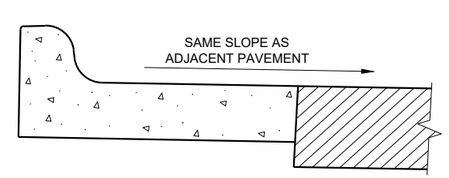

REVERSE SLOPE GUTTER[6]
(TYPICAL FOR ALL CURB & GUTTER TYPES)

CONCRETE CURB AND GUTTER

STATE OF WISCONSIN
DEPARTMENT OF TRANSPORTATION

6

SDD 08D01 - 21a

6

SDD 08D01 - 21a

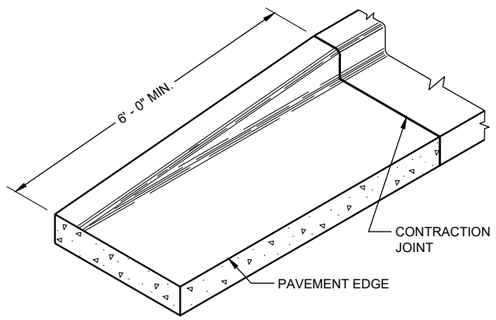

END SECTIONCURB AND GUTTER

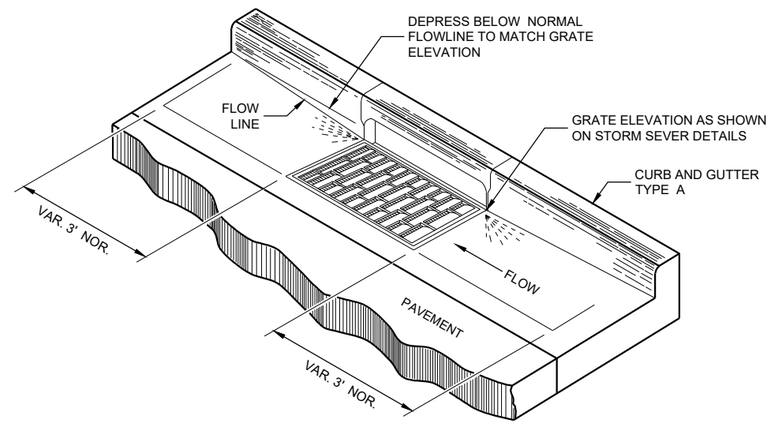

DETAIL OF CURB AND GUTTER AT INLETS
(TYPICAL H INLET COVER SHOWN)

GENERAL NOTES

DETAILS OF CONSTRUCTION AND WORKMANSHIP NOT SHOWN ON THIS DRAWING SHALL CONFORM TO THE PERTINENT REQUIREMENTS OF THE CONTRACT.

PAVEMENT TIES AND TIE BARS SHALL BE EPOXY COATED IN CONFORMANCE WITH SUBSECTION 505.2.6.2 OF THE STANDARD SPECIFICATIONS.

UNLESS OTHERWISE SHOWN ON THE TYPICAL CROSS SECTIONS, THE BASE AGGREGATE AND COMMON EXCAVATION LIMITS ARE 2' - 0" BEHIND THE BACK OF CURBS.

(1) TIE BARS ARE REQUIRED FOR CURB AND GUTTERS TYPES A, G, K, R, AND TBTT.

(2) THE BOTTOM OF CURB AND GUTTER MAY BE CONSTRUCTED EITHER LEVEL OR PARALLEL TO THE SLOPE OF THE SUBGRADE OR BASE AGGREGATE PROVIDED A 6" MINIMUM GUTTER THICKNESS IS MAINTAINED.

(9) REFER TO SDD 08D18 AND 08D19 FOR ADDITIONAL DRIVEWAY ENTRANCE CURB DETAILS.

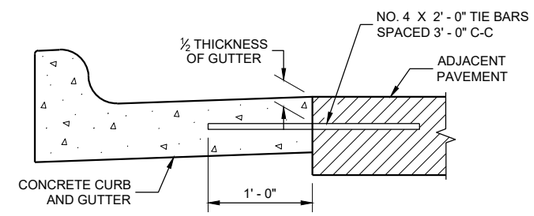

TYPICAL TIE BAR LOCATION (1)

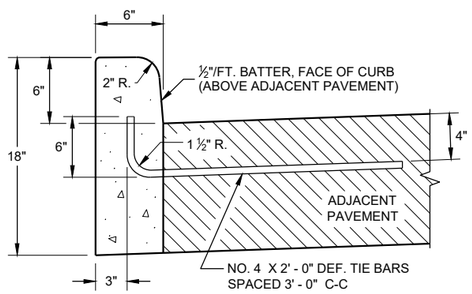

TYPES A (1) & D

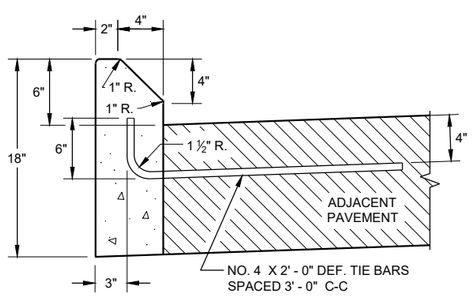

TYPES G (1) & J

CONCRETE CURB

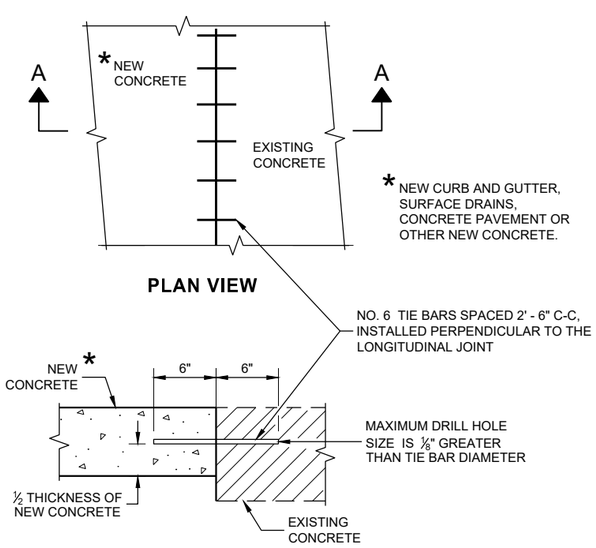

PLAN VIEW

SECTION A - A

TIE BARS DRILLED INTO EXISTING PAVEMENT

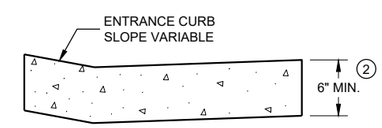

DRIVEWAY ENTRANCE CURB (9)
(WHEN DIRECTED BY THE ENGINEER)

CONCRETE CURB, TIES AND CURB AND GUTTER APPLICATIONS

STATE OF WISCONSIN
DEPARTMENT OF TRANSPORTATION

APPROVED
February 2020 — DATE
/S/ Rodney Taylor — ROADWAY STANDARDS DEVELOPMENT ENGINEER
FHWA

6
SDD 08D01 - 21b

SDD 08D02-a Concrete Surface Drains, Flume Type at Structures

GENERAL NOTES

DETAILS OF CONSTRUCTION, MATERIALS AND WORKMANSHIP NOT SHOWN ON THIS DRAWING SHALL CONFORM TO THE PERTINENT REQUIREMENTS OF THE STANDARD SPECIFICATIONS AND THE APPLICABLE SPECIAL PROVISIONS.

ALL STEEL REINFORCEMENT SHALL BE EMBEDDED 2 INCHES CLEAR UNLESS OTHERWISE SHOWN OR NOTED.

1. USE A JOINT SEALANT CONFORMING TO STANDARD SPECIFICATION 415.2.6.
2. NO. 4 X 2' - 0" TIE BARS SPACED AT 12" C-C TO BE PLACED BY BRIDGE CONTRACTOR OR DRILLED TIE BARS PLACED AS DIRECTED BY THE ENGINEER.
3. PAVED CONCRETE SHOULDER (SDD 13A03) OR CONCRETE DRAINAGE SLAB.
4. CONCRETE PAVEMENT APPROACH SLAB (SHOWN) OR STRUCTURE APPROACH SLAB AND CONCRETE PAVEMENT APPROACH SLAB. SEE SDD 13B02.
5. PAVED CONCRETE SHOULDER (SDD 13A03) OR ASPHALT SHOULDER.
6. CONCRETE CURB AND GUTTER 4-INCH SLOPED 36-INCH TYPE TBT OR TBTT. USE TYPE TBTT CURB WITH NO. 4 X 2' -0" TIE BARS SPACED AT 3' - 0" C-C ONLY WHEN ADJACENT TO CONCRETE PAVEMENTS.
7. PLACE FLUME BEFORE MSG THRIE BEAM TRANSITION POST 1 (SEE SDD 14B45)
8. CENTER FLUME BETWEEN POSTS. 6-INCH MINIMUM SEPARATION FROM OUTSIDE EDGE OF FLUME TO POSTS.
9. MINIMUM REINFORCEMENT SHALL BE 4" X 4" - W3.0 X W3.0 OR NO. 3 BARS LONGITUDINAL AND TRANSVERSE SPACING 12" C -C.
10. SEE ROADWAY PLANS FOR FLUME LOCATION.
11. START CURB AND GUTTER TRANSITION OR END SECTION.
12. DEPRESS FLOW LINE (SEE DETAIL)

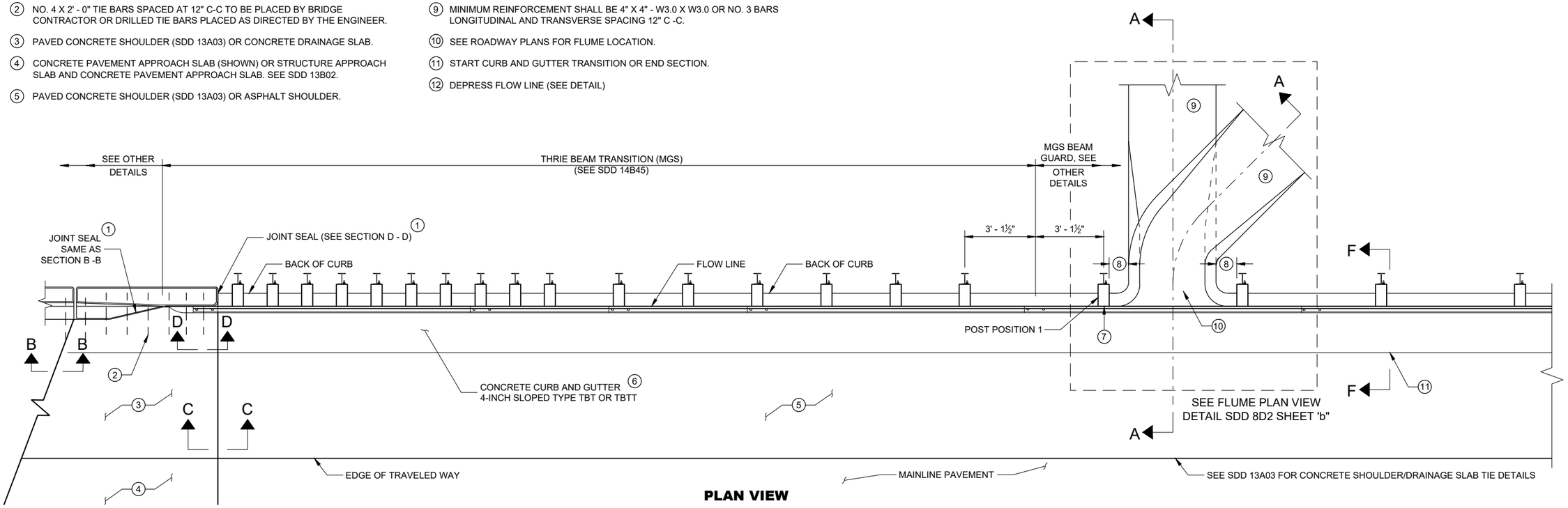

PLAN VIEW

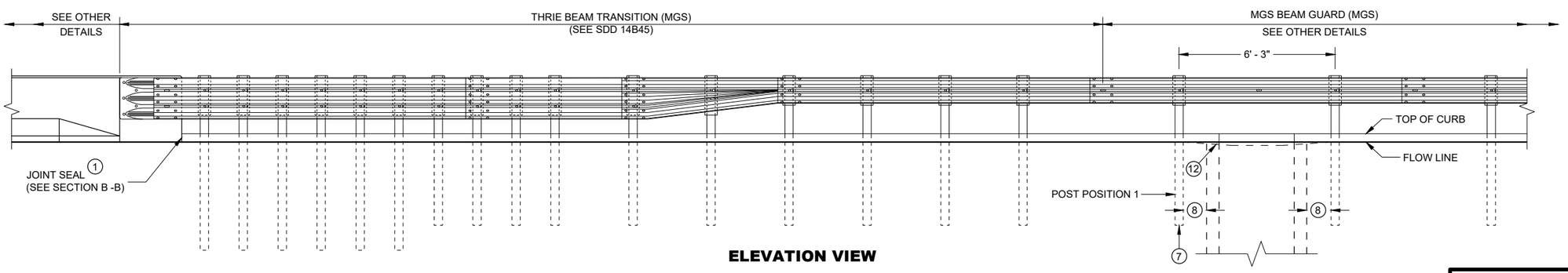

ELEVATION VIEW

CONCRETE SURFACE DRAINS FLUME TYPE AT STRUCTURES

STATE OF WISCONSIN
DEPARTMENT OF TRANSPORTATION

SDD 08D02-b Concrete Surface Drains, Flume Type at Structures

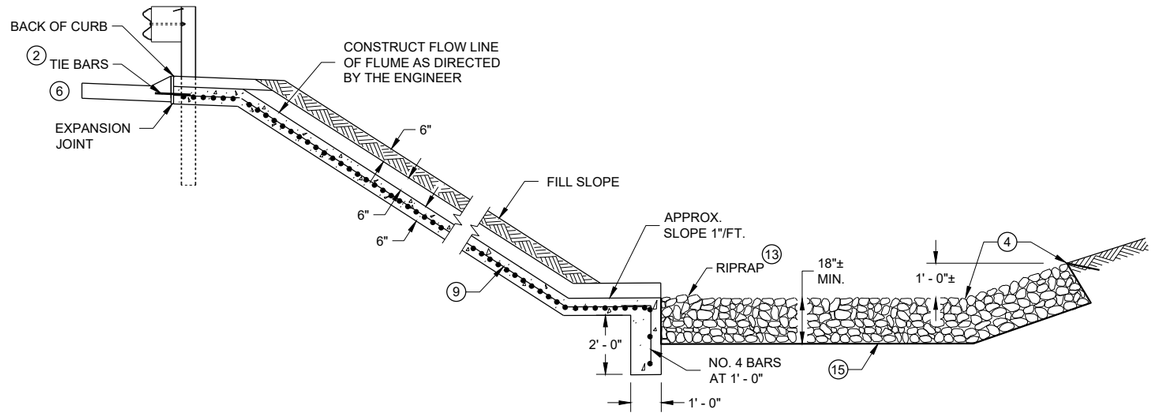

SECTION A - A

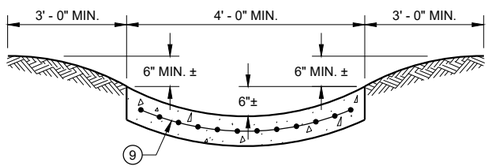

SECTION G - G

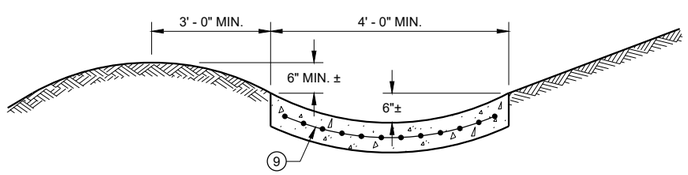

SECTION H - H

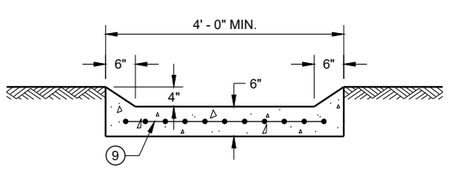

SECTION I - I

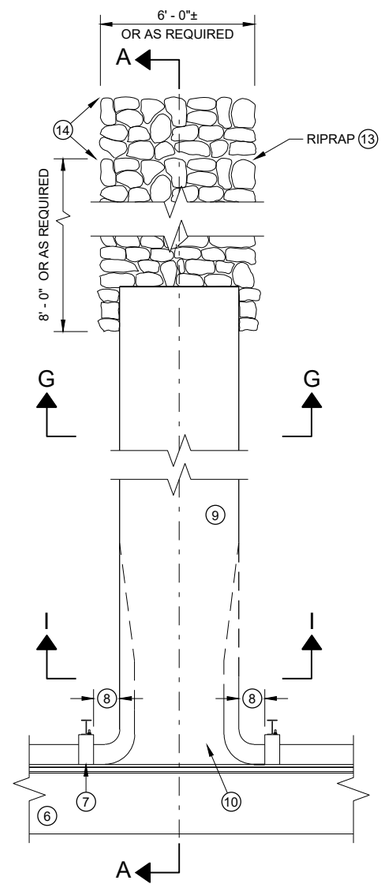

PLAN VIEW PERPENDICULAR FLUME

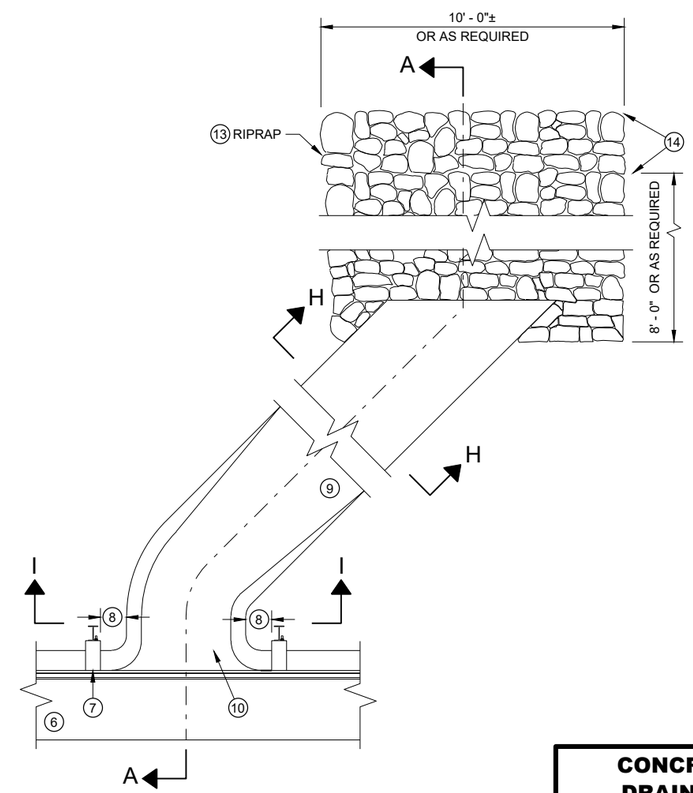

PLAN VIEW SKEWED FLUME

GENERAL NOTES

DETAILS OF CONSTRUCTION, MATERIALS AND WORKMANSHIP NOT SHOWN ON THIS DRAWING SHALL CONFORM TO THE PERTINENT REQUIREMENTS OF THE STANDARD SPECIFICATIONS AND THE APPLICABLE SPECIAL PROVISIONS.

ALL STEEL REINFORCEMENT SHALL BE EMBEDDED 2 INCHES CLEAR UNLESS OTHERWISE SHOWN OR NOTED.

1. USE A JOINT SEALANT CONFORMING TO STANDARD SPECIFICATION 415.2.6.
2. NO. 4 X 2' - 0" TIE BARS SPACED AT 12" C-C TO BE PLACED BY BRIDGE CONTRACTOR OR DRILLED TIE BARS PLACED AS DIRECTED BY THE ENGINEER.
3. PAVED CONCRETE SHOULDER (SDD 13A03) OR CONCRETE DRAINAGE SLAB.
4. CONCRETE PAVEMENT APPROACH SLAB (SHOWN) OR STRUCTURE APPROACH SLAB AND CONCRETE PAVEMENT APPROACH SLAB. SEE SDD 13B02 AND STRUCTURE PLANS.
5. PAVED CONCRETE SHOULDER (SDD 13A03) OR ASPHALT SHOULDER.
6. CONCRETE CURB AND GUTTER 4-INCH SLOPED 36-INCH TYPE TBT OR TBTT. USE TYPE TBTT CURB WITH NO. 4 X 2' -0" TIE BARS SPACED AT 3' - 0" C-C ONLY WHEN ADJACENT TO CONCRETE PAVEMENTS.
7. PLACE FLUME BEFORE MSG THRIE BEAM TRANSITION POST 1 (SEE SDD 14B45)
8. CENTER FLUME BETWEEN POSTS. 6-INCH MINIMUM SEPARATION FROM OUTSIDE EDGE OF FLUME TO POSTS.
9. MINIMUM REINFORCEMENT SHALL BE 4" X 4" - W3.0 X W3.0 OR NO. 3 BARS LONGITUDINAL AND TRANSVERSE SPACING 12" C -C.
10. SEE ROADWAY PLANS FOR FLUME LOCATION.
11. START CURB AND GUTTER TRANSITION OR END SECTION.
12. DEPRESS FLOW LINE (SEE DETAIL)
13. MEDIUM RIPRAP UNLESS OTHERWISE SPECIFIED.
14. LIMITS OF ADDITIONAL RIPRAP WHEN SPECIAL DITCH AS REQUIRED.
15. GEOTEXTILE FABRIC TYPE HR.

CONCRETE SURFACE DRAINS FLUME TYPE AT STRUCTURES

STATE OF WISCONSIN
DEPARTMENT OF TRANSPORTATION

6
SDD 08D02 - 07b

SDD 08D02-c Concrete Surface Drains, Flume Type at Structures

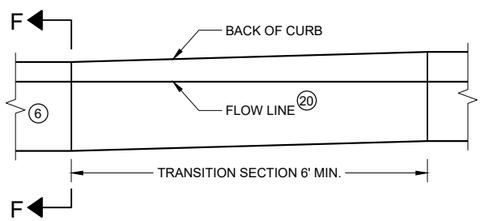

CURB AND GUTTER TRANSITION SECTION
CONCRETE CURB AND GUTTER 4-INCH SLOPED
36 INCH TYPE TBT OR TBTT

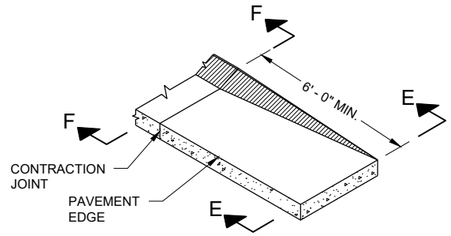

CURB AND GUTTER END SECTION
CONCRETE CURB AND GUTTER 4-INCH SLOPED
36 INCH TYPE TBT OR TBTT

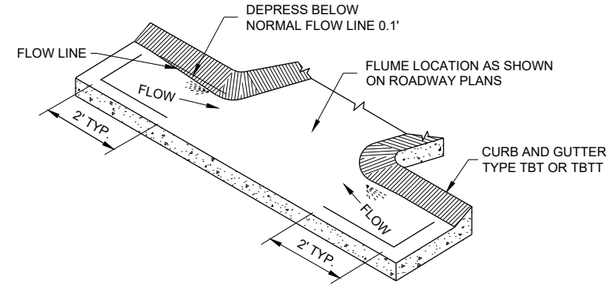

CURB AND GUTTER FLOW LINE DEPRESSION
AT FLUMES CONCRETE CURB AND GUTTER
4-INCH SLOPED 36 INCH TYPE TBT OR TBTT

GENERAL NOTES

DETAILS OF CONSTRUCTION, MATERIALS AND WORKMANSHIP NOT SHOWN ON THIS DRAWING SHALL CONFORM TO THE PERTINENT REQUIREMENTS OF THE STANDARD SPECIFICATIONS AND THE APPLICABLE SPECIAL PROVISIONS.

ALL STEEL REINFORCEMENT SHALL BE EMBEDDED 2 INCHES CLEAR UNLESS OTHERWISE SHOWN OR NOTED.

1. USE A JOINT SEALANT CONFORMING TO STANDARD SPECIFICATION 415.2.6.
2. NO. 4 X 2' - 0" TIE BARS SPACED AT 12" C-C TO BE PLACED BY BRIDGE CONTRACTOR OR DRILLED TIE BARS PLACED AS DIRECTED BY THE ENGINEER.
3. PAVED CONCRETE SHOULDER (SDD 13A03) OR CONCRETE DRAINAGE SLAB.
4. CONCRETE PAVEMENT APPROACH SLAB (SHOWN) OR STRUCTURE APPROACH SLAB AND CONCRETE PAVEMENT APPROACH SLAB. SEE SDD 13B02 AND STRUCTURE PLANS.
5. PAVED CONCRETE SHOULDER (SDD 13A03) OR ASPHALT SHOULDER.
6. CONCRETE CURB AND GUTTER 4-INCH SLOPED 36-INCH TYPE TBT OR TBTT. USE TYPE TBTT CURB WITH NO. 4 X 2' -0" TIE BARS SPACED AT 3' - 0" C-C ONLY WHEN ADJACENT TO CONCRETE PAVEMENTS.
7. PLACE FLUME BEFORE MSG THRIE BEAM TRANSITION POST 1 (SEE SDD 14B45)
8. CENTER FLUME BETWEEN POSTS. 6-INCH MINIMUM SEPARATION FROM OUTSIDE EDGE OF FLUME TO POSTS.
9. MINIMUM REINFORCEMENT SHALL BE 4" X 4" - W3.0 X W3.0 OR NO. 3 BARS LONGITUDINAL AND TRANSVERSE SPACING 12" C -C.
10. SEE ROADWAY PLANS FOR FLUME LOCATION.
11. START CURB AND GUTTER TRANSITION OR END SECTION.
12. DEPRESS FLOW LINE (SEE DETAIL)
13. MEDIUM RIPRAP UNLESS OTHERWISE SPECIFIED.
14. LIMITS OF ADDITIONAL RIPRAP WHEN SPECIAL DITCH IS REQUIRED.
15. GEOTEXTILE FABRIC TYPE HR.
16. MINIMUM REINFORCEMENT SHALL BE 6" X 6" - W4.0 X W4.0 OR NO. 3 BARS LONGITUDINAL AND TRANSVERSE SPACING 12" C - C.
17. MSG THRIE BEAM TRANSITION POST 1. SEE SDD 14B45 FOR ADDITIONAL CONSTRUCTION DETAILS AND ACCEPTABLE MATERIALS.
18. MAINTAIN WIDTH, THICKNESS AND CROSS SLOPE OF ADJACENT TYPE TBT OR TBTT CURB. SEE NOTE 6 FOR TIE BAR SPACING.
19. ALIGN FACE OF POST BLOCK WITH FLOW LINE.
20. MAINTAIN FLOW LINE AT EDGE OF PAVEMENT/FACE OF BEAM GUARD AS APPLICABLE.
21. DO NOT CONSTRUCT AN EXPANSION JOINT OR INSTALL DOWEL BARS WHEN ABUTTING HMA PAVEMENTS.

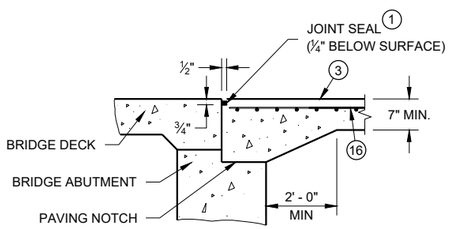

SECTION B-B 4

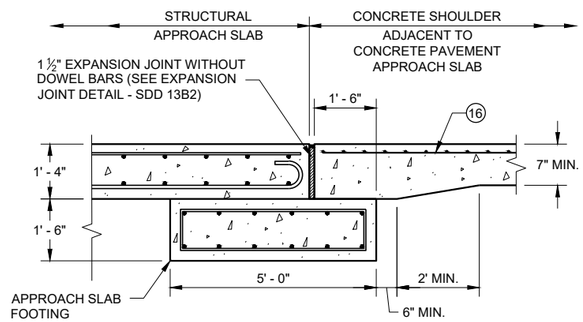

SECTION C - C
JOINT DETAIL FOR BRIDGE WITH STRUCTURAL
APPROACH SLAB AND CONCRETE APPROACH SLAB

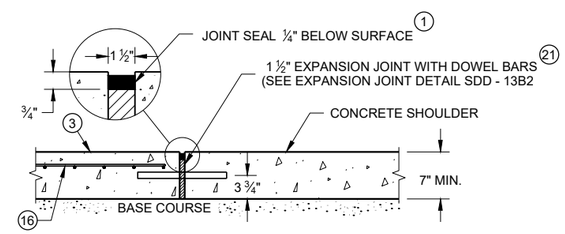

SECTION C - C
JOINT DETAIL FOR BRIDGE APPROACH
WITH CONCRETE SHOULDERS

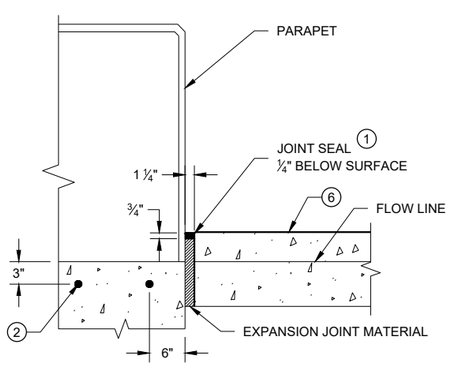

SECTION D - D

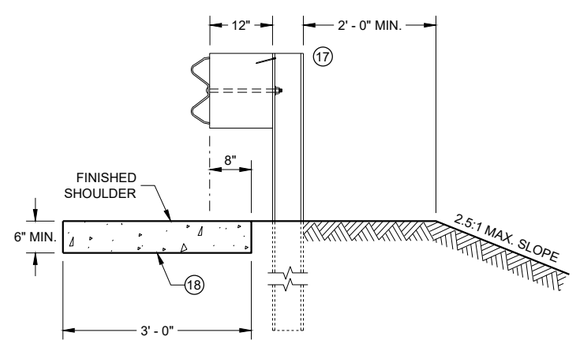

SECTION E - E

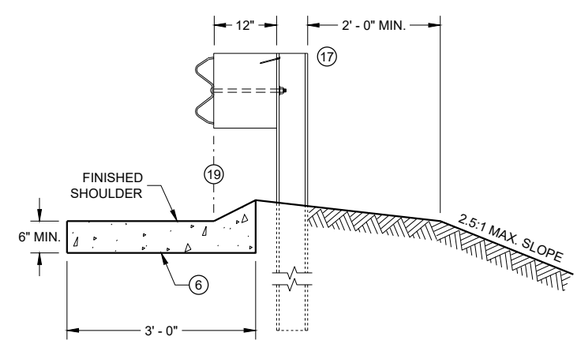

SECTION F - F

CONCRETE SURFACE DRAINS FLUME TYPE AT STRUCTURES

STATE OF WISCONSIN
DEPARTMENT OF TRANSPORTATION

APPROVED
February 2020 — DATE
/S/ Rodney Taylor — ROADWAY STANDARDS DEVELOPMENT ENGINEER

FHWA

6

6

SDD 08D02 - 07c

SDD 08D02 - 07c

GENERAL NOTES

DETAILS OF CONSTRUCTION, MATERIALS AND WORKMANSHIP NOT SHOWN ON THIS DRAWING SHALL CONFORM TO PERTINENT REQUIREMENTS OF THE STANDARD SPECIFICATIONS AND APPLICABLE SPECIAL PROVISIONS.

WELDED STEEL WIRE FABRIC SHALL BE IN ACCORDANCE WITH AASHTO SPECIFICATION M55.

① JOINTS SHALL BE 1/8 TO 1/4 INCH WIDE BY 1 1/2 INCHES DEEP AND SPACED AT UNIFORM INTERVALS OF APPROXIMATELY 4 FEET.

② GEOTEXTILE FABRIC TYPE "R" SHALL UNDERLAY THE FULL LENGTH AND WIDTH OF THE CONCRETE SURFACE DRAIN AND RIPRAP.

③ CONCRETE SURFACE DRAIN WITHOUT CURB AND GUTTER MAY BE USED ON BACKSLOPES WHEN SPECIFIED

ASPHALTIC FLUME

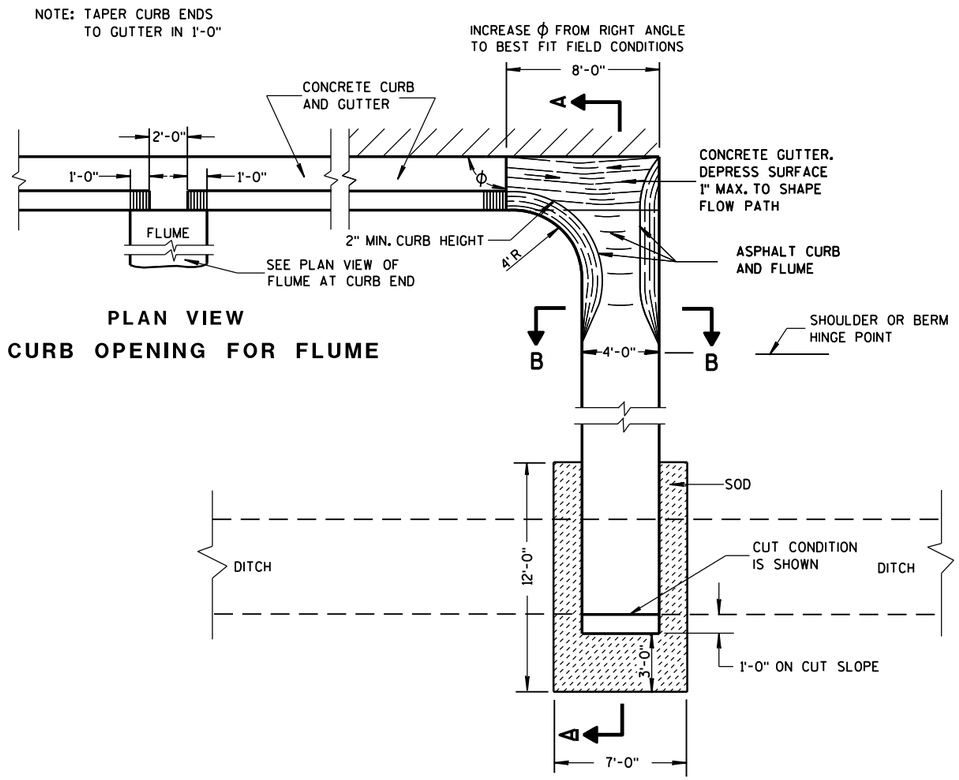

PLAN VIEW
CURB OPENING FOR FLUME

PLAN VIEW
FLUME AT CURB END

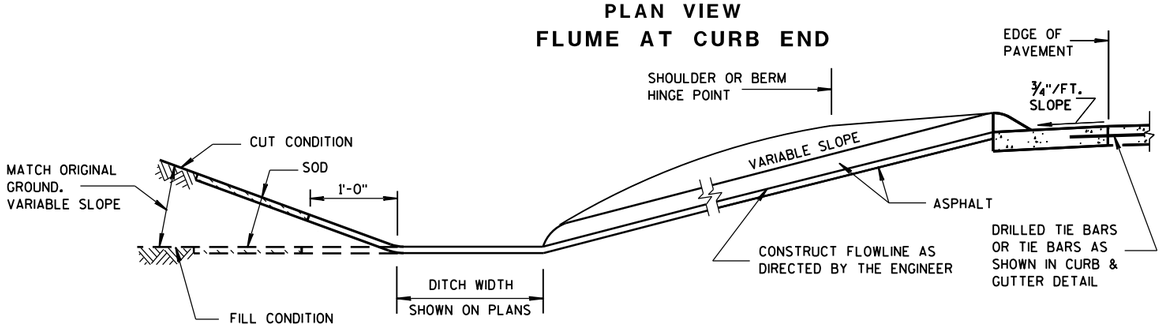

SECTION A-A

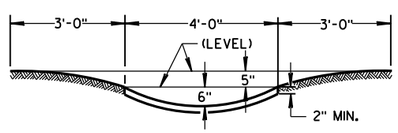

SECTION B-B

③ CONCRETE SURFACE DRAIN

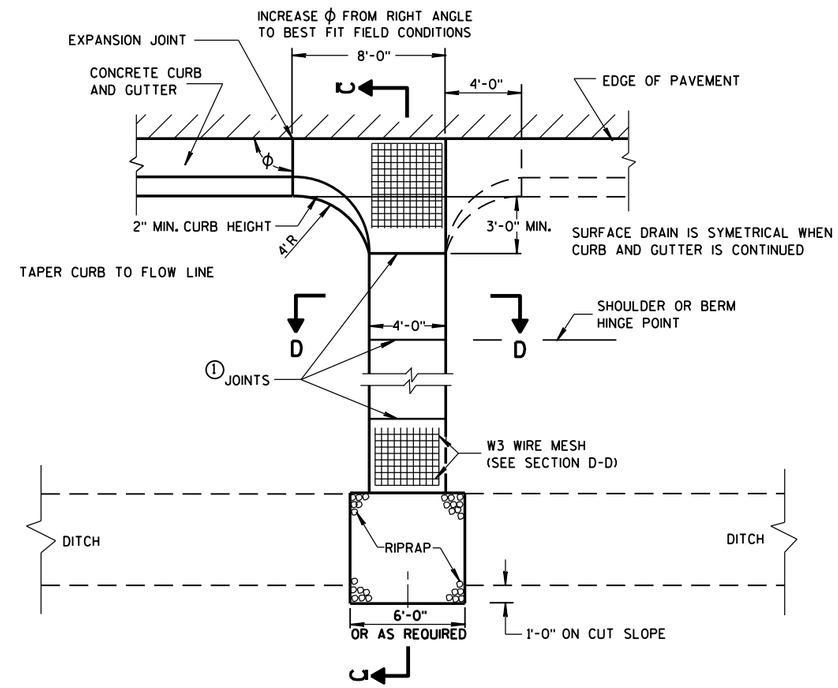

PLAN VIEW

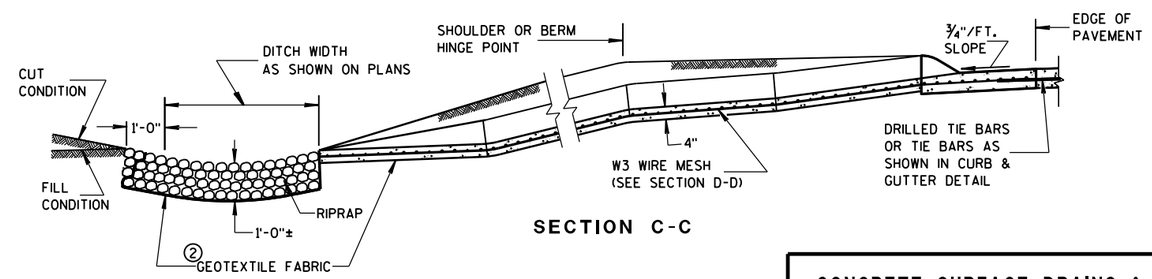

SECTION C-C

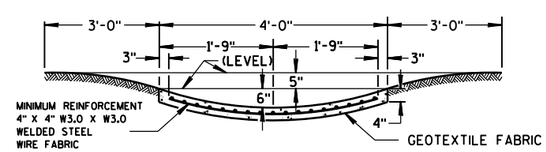

SECTION D-D

CONCRETE SURFACE DRAINS & ASPHALTIC FLUMES

STATE OF WISCONSIN
DEPARTMENT OF TRANSPORTATION

APPROVED

9/4/08	/S/ Jerry H. Zogg
DATE	ROADWAY STANDARDS DEVELOPMENT ENGINEER

FHWA

METAL APRON ENDWALLS

PIPE DIA. (IN.)	MIN. THICK. (Inches) STEEL	MIN. THICK. (Inches) ALUM.	DIMENSIONS (Inches) A (±1")	B (MAX.)	H (±1")	L (±1 1/2")	L1 ①	L2 ①	W (±2")	APPROX. SLOPE	BODY
12	.064	.060	6	6	6	21	12	17 1/2	24	2 1/2 to 1	1 Pc.
15	.064	.060	7	8	6	26	14	21 3/4	30	2 1/2 to 1	1 Pc.
18	.064	.060	8	10	6	31	15	28 1/4	36	2 1/2 to 1	1 Pc.
21	.064	.060	9	12	6	36	18	29 5/8	42	2 1/2 to 1	1 Pc.
24	.064	.075	10	13	6	41	18	37 1/4	48	2 1/2 to 1	1 Pc.
30	.079	.075	12	16	8	51	18	52 1/4	60	2 1/2 to 1	1 Pc.
36	.079	.105	14	19	9	60	24	59 3/4	72	2 1/2 to 1	2 Pc.
42	.109	.105	16	22	11	69	24	75 5/8	84	2 1/2 to 1	2 Pc.
48	.109	.105	18	27	12	78	24	81	90	2 1/4 to 1	3 Pc.
54	.109	.105	18	30	12	84	30	85 1/2	102	2 1/4 to 1	3 Pc.
60	.109×	.105×	18	33	12	87	—	—	114	2 to 1	3 Pc.
66	.109×	.105×	18	36	12	87	—	—	120	2 to 1	3 Pc.
72	.109×	.105×	18	39	12	87	—	—	126	2 to 1	3 Pc.
78	.109×	.105×	18	42	12	87	—	—	132	1 1/2 to 1	3 Pc.
84	.109×	.105×	18	45	12	87	—	—	138	1 1/2 to 1	3 Pc.
90	.109×	.105×	18	37	12	87	—	—	144	1 1/2 to 1	3 Pc.
96	.109×	.105×	18	35	12	87	—	—	150	1 1/2 to 1	3 Pc.

× EXCEPT CENTER PANEL
SEE GENERAL NOTES

REINFORCED CONCRETE APRON ENDWALLS

PIPE DIA. (IN.)	DIMENSIONS (Inches) T	A	B	C	D	E	G	APPROX. SLOPE
12	2	4	24	48 7/8	72 7/8	24	2	3 to 1
15	2 1/4	6	27	46	73	30	2 1/4	3 to 1
18	2 1/2	9	27	46	73	36	2 1/2	3 to 1
21	2 3/4	9	36	37 1/2	73 1/2	42	2 3/4	3 to 1
24	3	9 1/2	43 1/2	30	73 1/2	48	3	3 to 1
27	3 1/4	10 1/2	49 1/2	24	73 1/2	54	3 1/4	3 to 1
30	3 1/2	12	54	19 3/4	73 1/2	60	3 1/2	3 to 1
36	4	15	63	34 3/4	97 3/4	72	4	3 to 1
42	4 1/2	21	63	35	98	78	4 1/2	3 to 1
48	5	24	72	26	98	84	5	3 to 1
54	5 1/2	27	65	*33 1/4-**35	*98 1/4-**100	90	5 1/2	2 2/5 to 1
60	6	*30-**35	60	39	99	96	5	2 to 1
66	6 1/2	*24-**30	*72-**78	*21-**27	99	102	5 1/2	2 to 1
72	7	*24-**36	78	21	99	108	6	2 to 1
78	7 1/2	*24-**36	78	21	99	114	6 1/2	2 to 1
84	8	36	90 1/2	21	111 1/2	120	6 1/2	1 1/2 to 1
90	8 1/2	41	87 1/2	24	111 1/2	132	6 1/2	1 1/2 to 1

*MINIMUM
**MAXIMUM

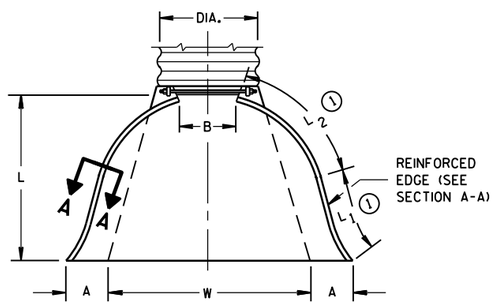

PLAN VIEW

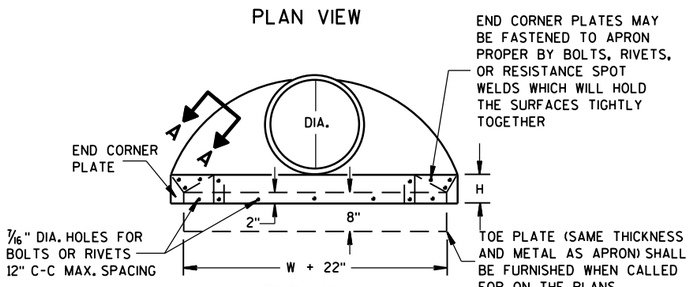

END VIEW

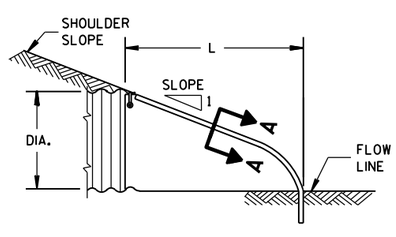

SIDE ELEVATION

METAL ENDWALLS

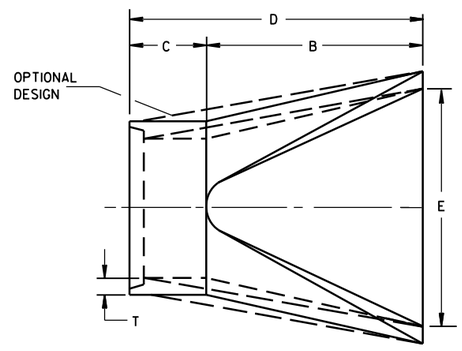

PLAN

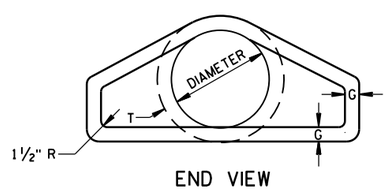

END VIEW

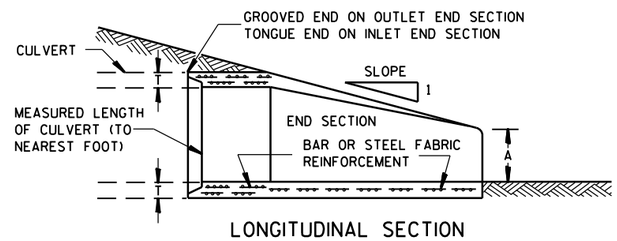

LONGITUDINAL SECTION

CONCRETE ENDWALLS

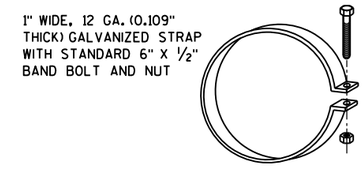

ALTERNATE FOR TYPE 1 CONNECTION

END SECTION CONNECTOR STRAP

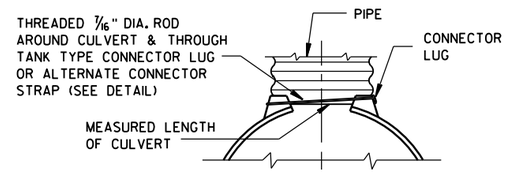

TYPE 1
FOR 12" THRU 24" CORR. PIPE

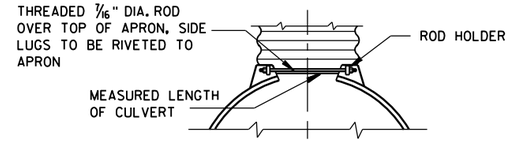

TYPE 2
FOR 30" THRU 96" CORR. PIPE

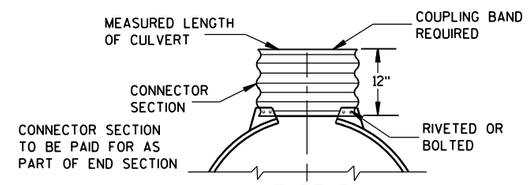

TYPE 3
FOR 42" THRU 96" CORR. PIPE

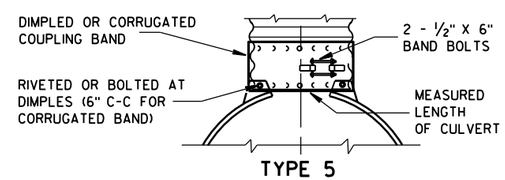

TYPE 5
ALTERNATE FOR:
ALL SIZES CORRUGATED CIRCULAR PIPE

NOTE: DIMPLED BAND FITS OVER OUTSIDE OF ENDWALL, AND CORRUGATED BAND FITS INSIDE ENDWALL. DIMPLED BAND MAY BE USED WITH HELICALLY CORRUGATED PIPE.

FOR CIRCUMFERENTIALLY CORRUGATED PIPE USE ENDWALL CONNECTION DETAILS 1, 2, 3 OR 5 AS APPLICABLE.

FOR HELICALLY CORRUGATED PIPE USE ENDWALL CONNECTION DETAILS 1, 2 OR 5.

FOR HELICALLY CORRUGATED PIPES WITH TWO CIRCUMFERENTIAL CORRUGATIONS AT EACH END USE ENDWALL CONNECTION DETAILS 1, 2 OR 3.

CONNECTION DETAILS

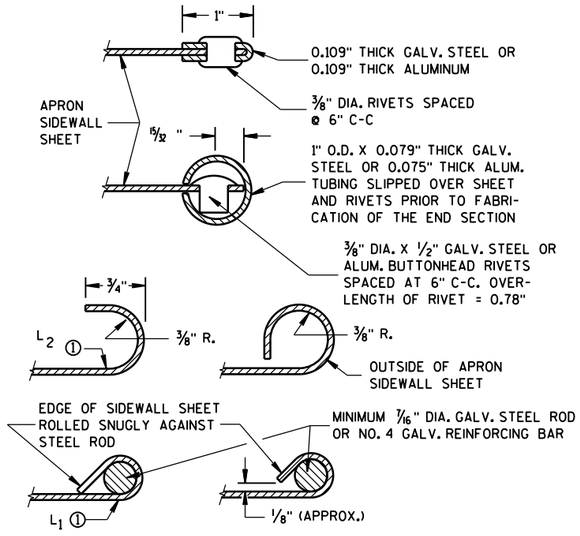

SECTION A-A

GENERAL NOTES

DETAILS OF CONSTRUCTION, MATERIALS AND WORKMANSHIP NOT SHOWN ON THIS DRAWING SHALL CONFORM TO THE PERTINENT REQUIREMENTS OF THE STANDARD SPECIFICATIONS AND THE APPLICABLE SPECIAL PROVISIONS.

CONCRETE CULVERT ENDWALLS MAY NOT BE USED WITH GALVANIZED STEEL OR ALUMINUM CULVERT PIPE OR VISE VERSA. GALVANIZED STEEL OR ALUMINUM ENDWALLS SHALL NORMALLY BE INSTALLED ON CULVERT PIPE OF THE SAME METAL.

ALL THREE PIECE STEEL APRON ENDWALLS FOR 60" DIAMETER PIPE AND LARGER SHALL HAVE 0.109" SIDES AND 0.138" CENTER PANELS. ALL THREE PIECE ALUMINUM APRON ENDWALLS FOR 60" DIAMETER PIPE AND LARGER SHALL HAVE 0.105" SIDES AND 0.134" CENTER PANELS. THE WIDTH OF CENTER PANELS SHALL BE GREATER THAN 20 PERCENT OF THE PIPE PERIMETER.

LAP SEAMS SHALL BE TIGHTLY JOINED BY GALVANIZED RIVETS OR BOLTS FOR STEEL UNITS AND ALUMINUM RIVETS AND BOLTS FOR ALUMINUM UNITS. FOR THE 60" THROUGH 96" DIAMETER APRON ENDWALL SIZES, THE REINFORCED EDGES AND CENTER PANEL SEAMS SHALL BE FURTHER REINFORCED WITH GALVANIZED STEEL OR ALUMINUM STIFFENER ANGLES. THE ANGLES SHALL BE ATTACHED BY GALVANIZED NUTS AND BOLTS FOR STEEL UNITS AND ALUMINUM NUTS AND BOLTS FOR ALUMINUM UNITS.

WHERE TWO OR MORE PIPES WITH APRON ENDWALLS ARE LAID ADJACENT TO EACH OTHER, THEY SHALL BE SEPARATED BY A DISTANCE SUFFICIENT TO PROVIDE A MINIMUM CLEARANCE OF 6 INCHES BETWEEN APRON ENDWALLS.

① FOR PIPE SIZES UP TO 60" DIAMETER, A 180° ROLLED EDGE MAY BE USED INSTEAD OF STEEL ROD REINFORCEMENT. SEE SECTION A-A.

APRON ENDWALLS FOR CULVERT PIPE

STATE OF WISCONSIN
DEPARTMENT OF TRANSPORTATION

APPROVED
8-30-94 — DATE
/S/ Rory L. Rhinesmith — CHIEF ROADWAY DEVELOPMENT ENGINEER
FHWA

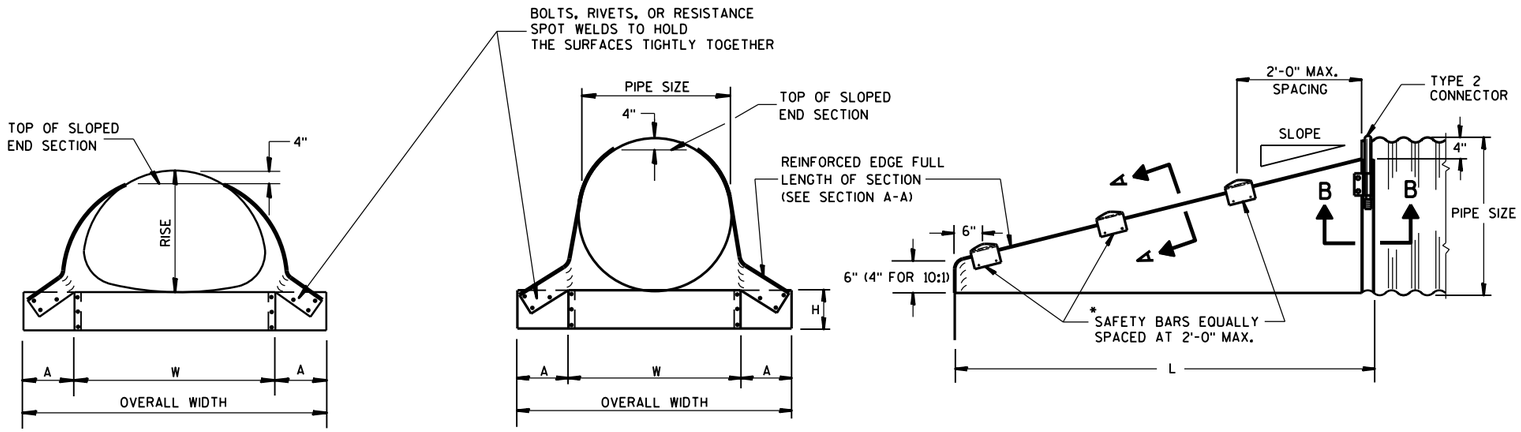

GENERAL NOTES

DETAILS OF CONSTRUCTION, MATERIALS AND WORKMANSHIP NOT SHOWN ON THIS DRAWING SHALL CONFORM TO THE PERTINENT REQUIREMENTS OF THE STANDARD SPECIFICATIONS AND THE APPLICABLE SPECIAL PROVISIONS.

SLOPED END SECTIONS SHALL CONFORM TO THE REQUIREMENTS OF THE STANDARD SPECIFICATIONS, SECTION 521 FOR STEEL APRON ENDWALLS.

SAFETY BARS SHALL BE FABRICATED FROM GALVANIZED STEEL PIPE MEETING THE REQUIREMENTS OF ASTM A-53, GRADE B, SCHEDULE 40 OR APPROVED EQUAL.

STEEL APRON ENDWALLS FOR CULVERT PIPE SLOPED SIDE DRAINS

PIPE DIA. (IN.)	MIN. THICK. (Inches)	DIMENSIONS (Inches)				L DIMENSIONS					
		A	H	W	OVERALL WIDTH	SLOPE	LENGTH INCHES	SLOPE	LENGTH INCHES	SLOPE	LENGTH INCHES
15	.064	8	6	21	37	4:1	20	6:1	30	10:1	70
18	.064	8	6	24	40	4:1	32	6:1	48	10:1	100
21	.064	8	6	27	43	4:1	44	6:1	66	10:1	130
24	.064	8	6	30	46	4:1	56	6:1	84	10:1	160
30	.109	12	9	36	60	4:1	80	6:1	120	10:1	220
36	.109	12	9	42	66	4:1	104	6:1	156	10:1	280
42	.109	16	12	48	80	4:1	128	6:1	192	——	——
48	.109	16	12	54	86	4:1	152	6:1	228	——	——
54	.109	16	12	60	92	4:1	176	6:1	264	——	——
60	.109	16	12	66	98	4:1	200	6:1	300	——	——

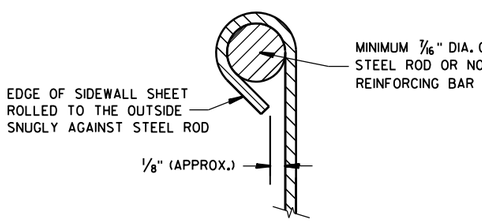

SECTION A-A

*NOTE:
THREE SAFETY BARS ARE SHOWN. ACTUAL NUMBER OF BARS REQUIRED AT A 2'-0" C-C MAX. SPACING WILL VARY DEPENDING ON THE LENGTH OF THE END SECTION.

3" GALVANIZED PIPE. FLATTEN ENDS, THEN BEND OUTSIDE 4" TO MATCH END SECTION SIDES.

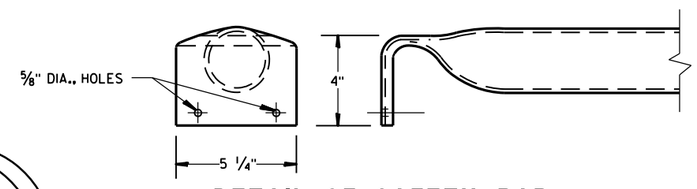

DETAIL OF SAFETY BAR

STEEL APRON ENDWALLS FOR PIPE ARCH SLOPED SIDE DRAINS

EQUIV. DIA. (Inches)	(Inches)		MIN. THICK. (Inches) ①	DIMENSIONS (Inches)				L DIMENSIONS					
	SPAN	RISE		A	H	W	OVERALL WIDTH	SLOPE	LENGTH INCHES	SLOPE	LENGTH INCHES	SLOPE	LENGTH INCHES
15	17	13	.064 *	7	6	30	44	4:1	19	6:1	30	10:1 ②	70
18	21	15	.064 *	8	6	27	43	4:1	20	6:1	30	10:1	70
21	24	18	.064 *	8	6	30	46	4:1	32	6:1	48	10:1	100
24	28	20	.064 *	8	6	34	50	4:1	40	6:1	60	10:1	120
30	35	24	.079 *	12	9	41	65	4:1	56	6:1	84	10:1	160
36	42	29	.109 *	12	9	48	72	4:1	76	6:1	114	10:1	210
42	49	33	.109	16	12	55	87	4:1	92	6:1	138	——	——
48	57	38	.109	16	12	63	95	4:1	112	6:1	168	——	——
54	64	43	.109	16	12	70	102	4:1	132	6:1	198	——	——

① * MINIMUM THICKNESS OF ALL 10:1 SLOPED SIDE DRAINS IS 0.109".
② ACTUAL SLOPE GREATER THAN 10:1.

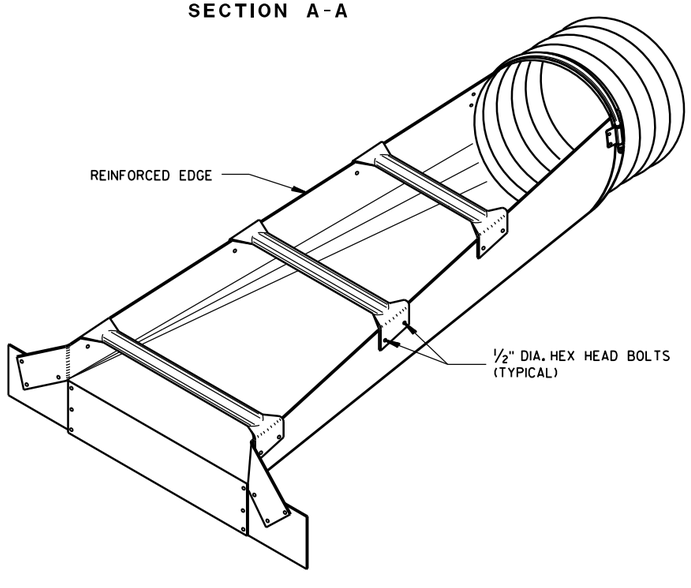

ISOMETRIC VIEW

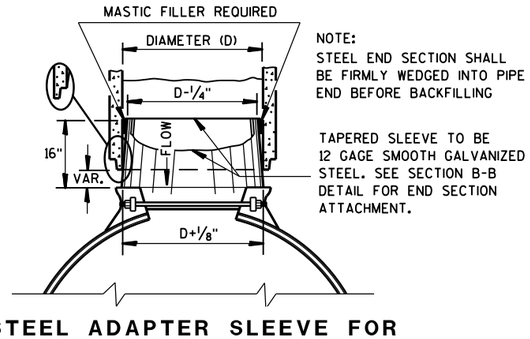

NOTE:
STEEL END SECTION SHALL BE FIRMLY WEDGED INTO PIPE END BEFORE BACKFILLING

TAPERED SLEEVE TO BE 12 GAGE SMOOTH GALVANIZED STEEL. SEE SECTION B-B DETAIL FOR END SECTION ATTACHMENT.

STEEL ADAPTER SLEEVE FOR CONCRETE PIPE

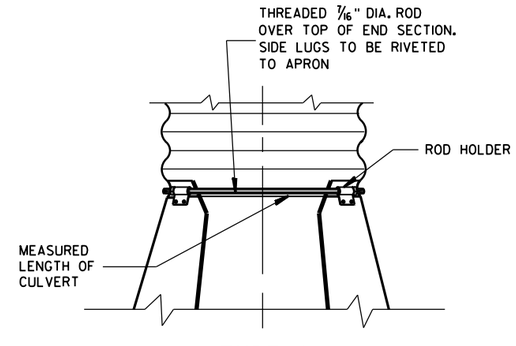

TYPE 2 CONNECTION DETAIL

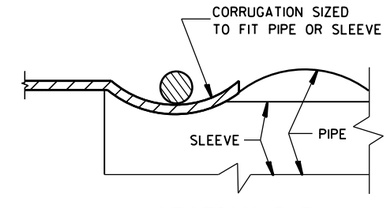

SECTION B-B

STEEL APRON ENDWALLS FOR CULVERT PIPE AND PIPE ARCH SLOPED SIDE DRAINS

STATE OF WISCONSIN
DEPARTMENT OF TRANSPORTATION

APPROVED
9/14/2012 — DATE
/S/ Jerry H. Zogg — ROADWAY STANDARDS DEVELOPMENT ENGINEER
FHWA

SDD 8f8 Steel Apron Endwalls for Culvert Pipe and Pipe Arch Sloped Cross Drains

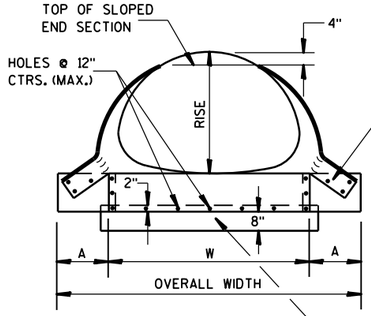

FRONT VIEW

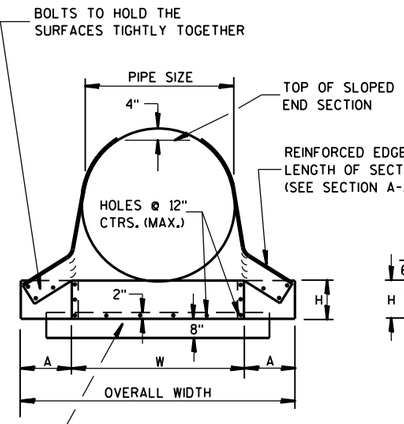

FRONT VIEW

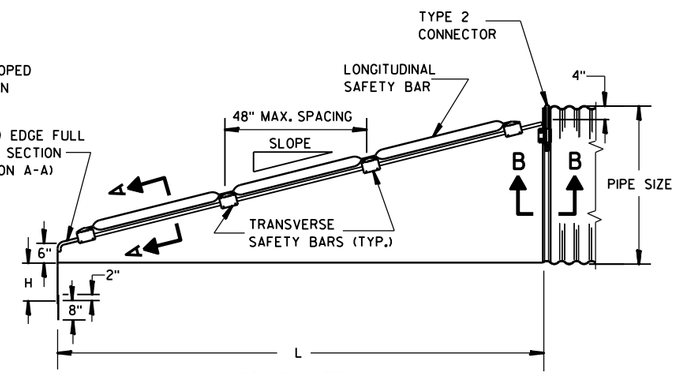

SIDE VIEW
(48" SIZE ILLUSTRATED)

GENERAL NOTES

DETAILS OF CONSTRUCTION, MATERIALS AND WORKMANSHIP NOT SHOWN ON THIS DRAWING SHALL CONFORM TO THE PERTINENT REQUIREMENTS OF THE STANDARD SPECIFICATIONS AND APPLICABLE SPECIAL PROVISIONS.

SAFETY GRATES SHALL BE FABRICATED FROM 3-INCH DIAMETER GALVANIZED PIPE MEETING THE REQUIREMENTS OF ASTM A-53, GRADE B, SCHEDULE 40 OR APPROVED EQUAL. THE LONGITUDINAL BAR SHALL BE WELDED TO THE TRANSVERSE BARS WHERE THE BARS CROSS. THE NUMBER OF TRANSVERSE BARS REQUIRED WILL VARY DEPENDING ON THE LENGTH OF THE END SECTION.

SLOPED STEEL ENDWALLS LOCATED AT THE ENDS OF CONCRETE CULVERT PIPE SHALL BE FURNISHED WITH STEEL ADAPTER SLEEVES.

STEEL APRON ENDWALLS FOR CULVERT PIPE CROSS DRAINS

PIPE DIA. (IN.)	MIN. THICK.		DIMENSIONS (Inches)				L DIMENSIONS			
	IN.	GAGE	A	H	W	OVERALL WIDTH	SLOPE	LENGTH INCHES	SLOPE	LENGTH INCHES
36	.109	12	12	9	42	66	4:1	104	6:1	156
42	.109	12	16	12	48	80	4:1	128	6:1	192
48	.109	12	16	12	54	86	4:1	152	6:1	228
54	.109	12	16	12	60	92	4:1	176	6:1	264
60	.109	12	16	12	66	98	4:1	200	6:1	300

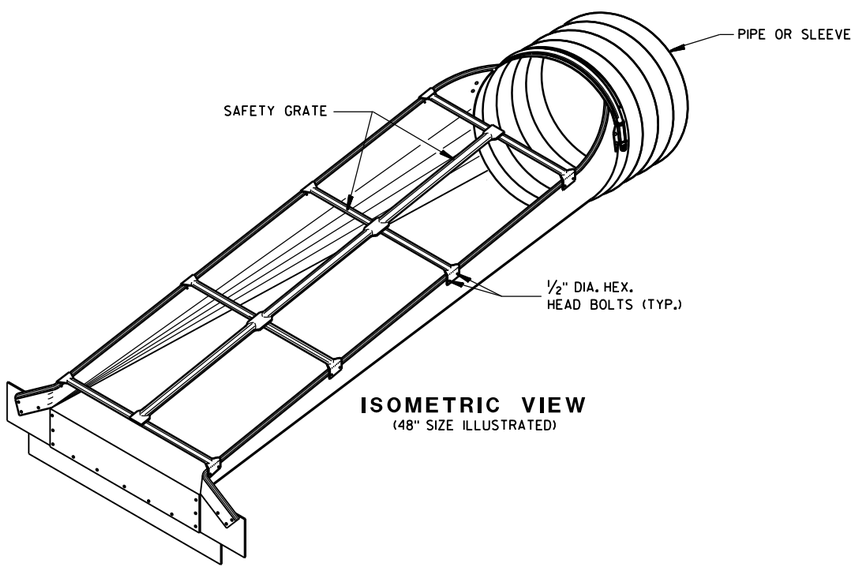

ISOMETRIC VIEW
(48" SIZE ILLUSTRATED)

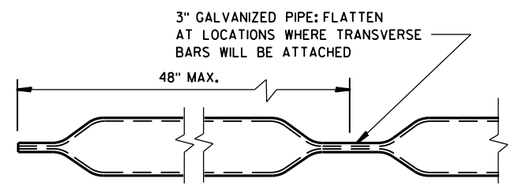

LONGITUDINAL SAFETY BAR

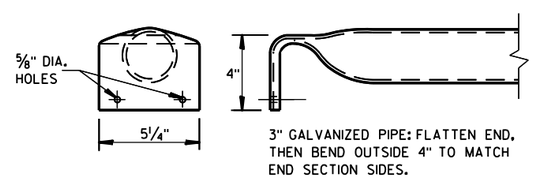

TRANSVERSE SAFETY BAR

STEEL APRON ENDWALLS FOR PIPE ARCH SLOPED CROSS DRAINS

EQUIV. DIA. (IN.)	INCHES		MIN. THICK.		DIMENSIONS (Inches)				L DIMENSIONS			
	SPAN	RISE	IN.	GAGE	A	H	W	OVERALL WIDTH	SLOPE	LENGTH INCHES	SLOPE	LENGTH INCHES
30	35	24	.079	14	12	9	41	65	4:1	56	6:1	84
36	42	29	.109	12	12	9	48	72	4:1	76	6:1	114
42	49	33	.109	12	16	12	55	87	4:1	92	6:1	138
48	57	38	.109	12	16	12	63	95	4:1	112	6:1	168
54	64	43	.109	12	16	12	70	102	4:1	132	6:1	198
60	71	47	.109	12	16	12	77	109	4:1	148	6:1	222

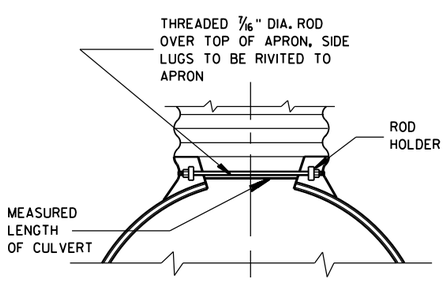

TYPE 2 CONNECTOR DETAIL

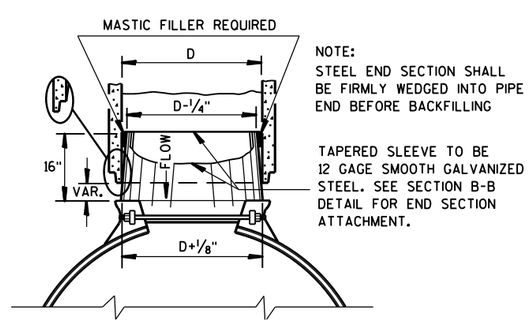

STEEL ADAPTER SLEEVE FOR CONCRETE PIPE

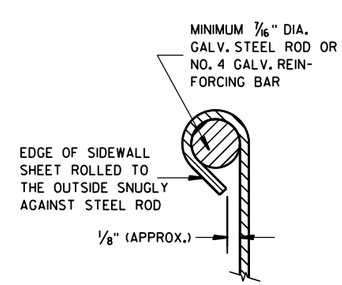

SECTION A-A

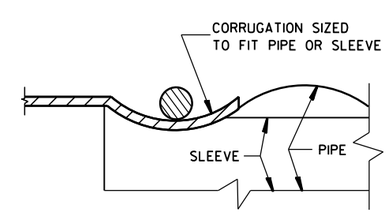

SECTION B-B

STEEL APRON ENDWALLS FOR CULVERT PIPE AND PIPE ARCH SLOPED CROSS DRAINS

STATE OF WISCONSIN
DEPARTMENT OF TRANSPORTATION

APPROVED
6/5/2012 — DATE
/S/ Jerry H. Zogg — ROADWAY STANDARDS DEVELOPMENT ENGINEER
FHWA

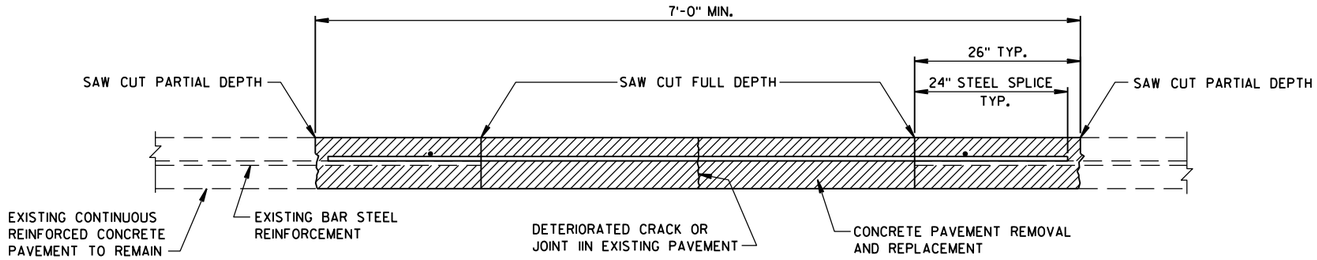

SECTION A-A

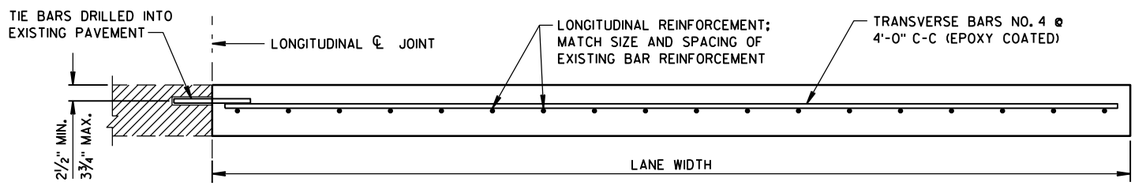

SECTION B-B

GENERAL NOTES

PLACE ALL BAR STEEL REINFORCEMENT AT MID PAVEMENT DEPTH UNLESS OTHERWISE NOTED.

PAY FOR THE TRANSVERSE AND LONGITUDINAL JOINT SAW CUT AS LINEAR FEET OF "SAWING CONCRETE".

WHEN THE PASSING AND TRAVELING LANES ARE TO BE REPLACED, REPLACE THE PASSING LANE FIRST.

ADD TRANSVERSE STEEL BARS TO REPAIRS GREATER THAN 6' IN LENGTH, USE NO. 4 BARS PLACED TRANSVERSELY AND SPACED 4' C-C. PAYMENT SHALL BE INCIDENTAL TO "CONCRETE PAVEMENT CONTINUOUS REINFORCEMENT".

TIE ALL CONCRETE PAVEMENT REPAIRS WHICH ARE GREATER THAN 15' IN LENGTH, AND ARE ADJACENT TO EXISING CONCRETE PAVEMENT, TO THE EXISTING PAVEMENT USING TIE BARS. DETAILS FOR TIE BAR CONSTRUCTION SHALL CONFORM TO THE STANDARD SPECIFICATIONS AND STANDARD DETAIL DRAWINGS.

① PROVIDE A MINIMUM DISTANCE OF 24 INCHES FROM AN EXISTING TRANSVERSE JOINT OR THE EDGE OF REPLACEMENT TO THE CENTER OF THE TIE BAR NEAREST THAT JOINT OR EDGE.

② ANCHOR TIE BARS INTO DRILLED HOLES WITH AN EPOXY.

③ SAW CUT THE LONGITUDINAL EDGE JOINT IF THE ADJACENT SHOULDER IS CONCRETE.

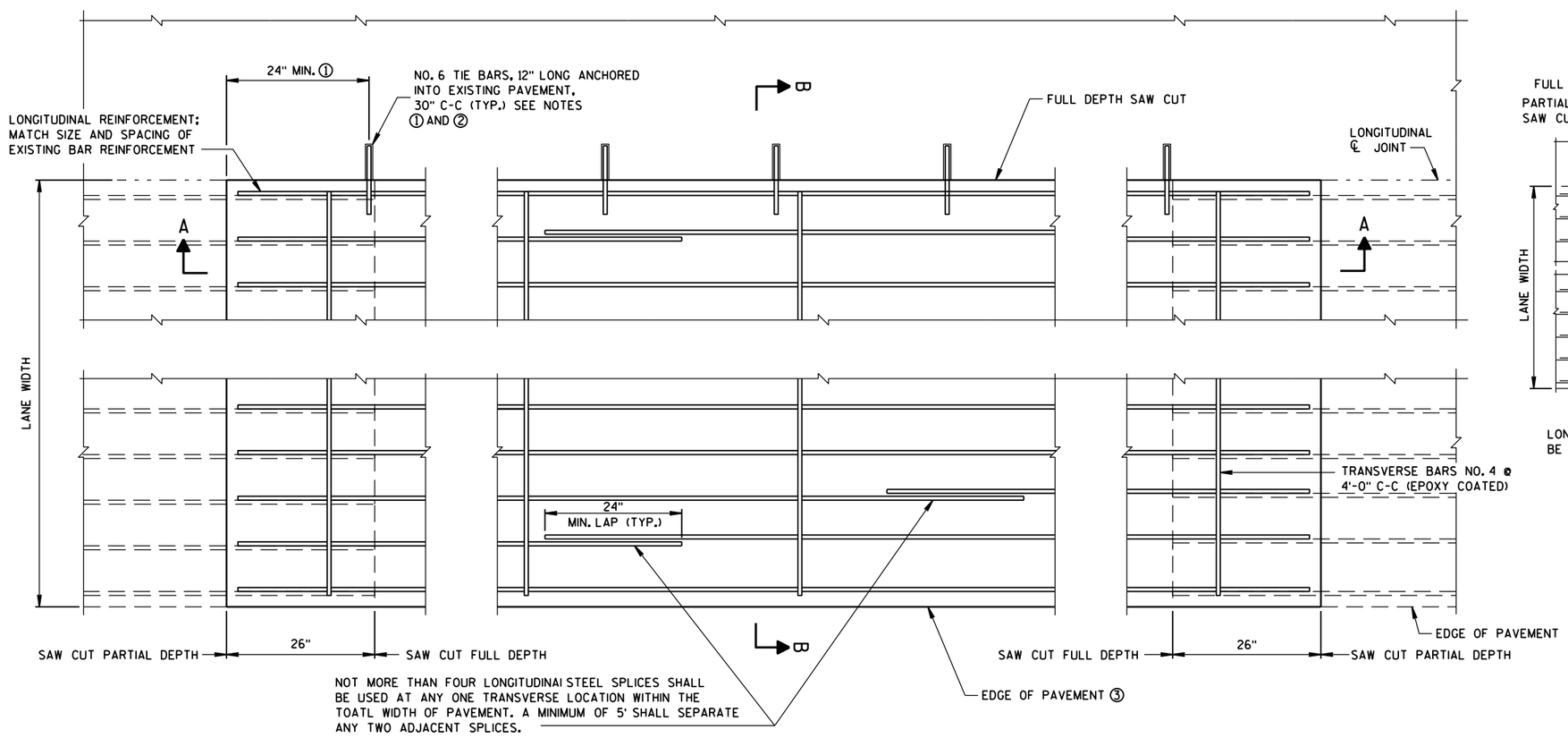

REINFORCEMENT STEEL PLACEMENT IN CONTINUOUSLY REINFORCED CONCRETE PAVEMENT REPLACEMENT

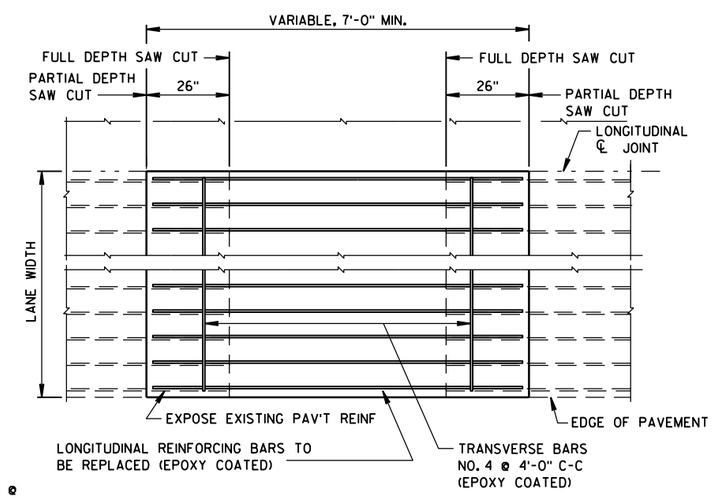

LONGITUDINAL STEEL PLACEMENT IN CRCP REPAIRS

PLAN VIEW

CONTINUOUSLY REINFORCED CONCRETE PAVEMENT REPAIR AND REPLACEMENT	
STATE OF WISCONSIN DEPARTMENT OF TRANSPORTATION	
APPROVED	
11/1/2011 DATE	/S/ Deb Bischoff PAVEMENT POLICY & DESIGN ENGINEER
FHWA	

6
S.D.D. 13 A 7-2

SDD 13B02-a Concrete Pavement Approach Slab

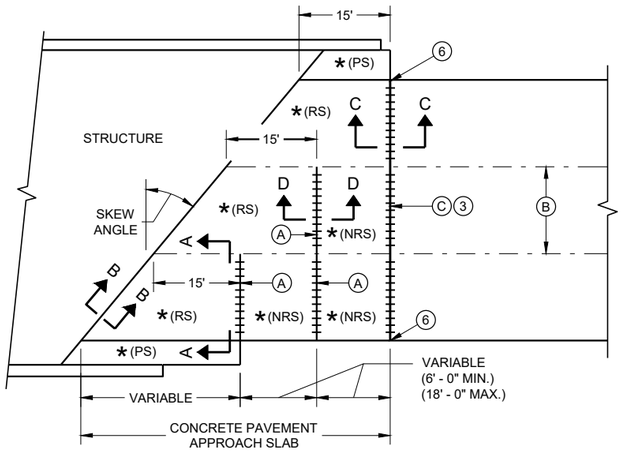

SKEWED APPROACH
(PAVEMENT MORE THAN TWO LANES)

* (RS) = REINFORCED CONCRETE SLAB

* (PS) = PAVED CONCRETE SHOULDER OR CONCRETE DRAINAGE SLAB

* (NRS) - NON - REINFORCED CONCRETE SLAB

*** STANDARD DOWEL BAR DIAMETER (SEE SDD 13C11 AND SDD 13C13)

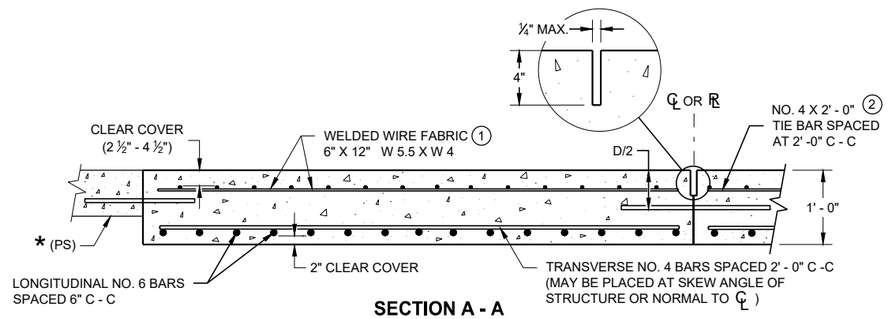

SECTION A - A
REINFORCEMENT POSITIONING DETAIL

GENERAL NOTES

THE CONTRACTOR MAY SPLICE NO. 6 BARS IN THE APPROACH SLAB FOR SKEWED STRUCTURES ONLY. STAGGER SPLICES WITH A MAXIMUM OF ONE SPLICE PER BAR. THE LENGTH OF LAP IS 20 INCHES.

TACK WELD DOWEL BARS TO THE BASKETS ON ALTERNATE ENDS.

1. THE CONTRACTOR MAY USE NO. 4 BARS SPACED AT 2' - 0 " C - C IN BOTH THE LONGITUDINAL AND TRANSVERSE DIRECTIONS FOR TOP REINFORCEMENT AS AN ALTERNATIVE TO THE WELDED WIRE FABRIC.
2. THE CONTRACTOR MAY OMIT THE BARS BETWEEN REINFORCED SLABS WHERE SLAB REINFORCEMENT BARS EXTEND ACROSS THE CENTERLINE OR REFERENCE LINE.
3. DO NOT CONSTRUCT AN EXPANSION JOINT OR INSTALL DOWEL BARS WHEN ABUTTING AN HMA PAVEMENT.
4. USE A JOINT SEALANT CONFORMING TO STANDARD SPECIFICATION 415.2.6.
5. PLACE EXPANSION CAP ON THE END OF THE DOWEL THAT IS NOT TACK WELDED TO THE BASKET. DO NOT FORCE DOWEL BAR PAST THE DOWEL STOP.
6. EXTEND EXPANSION JOINT THROUGH ANY ADJACENT TIED CONCRETE.

A. STANDARD CONTRACTION JOINT NORMAL TO ℄ OR ℞.

B. STANDARD LONGITUDINAL JOINT WITH TIE BARS.

C. 1 ½" EXPANSION JOINT WITH DOWEL BARS NORMAL TO ℄ OR ℞ .

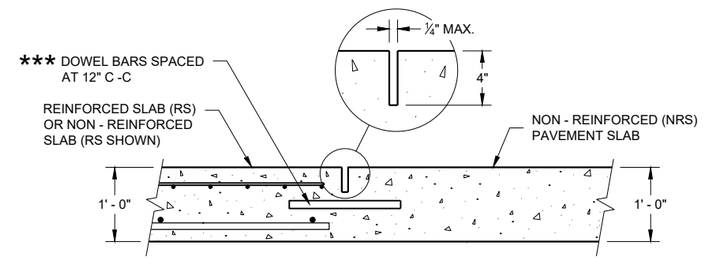

SECTION D - D
CONTRACTION JOINT

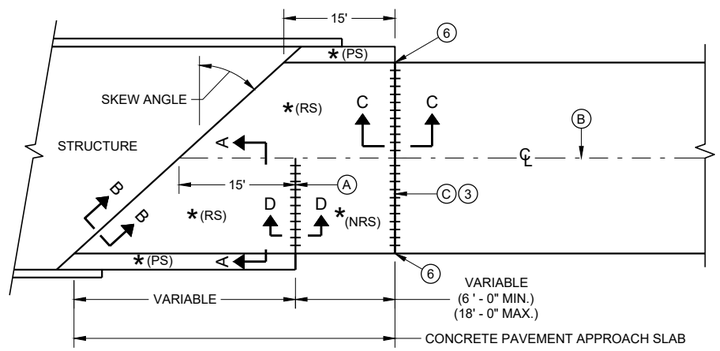

SKEWS > 20°
(PAVEMENT WIDTH ≤ 30')

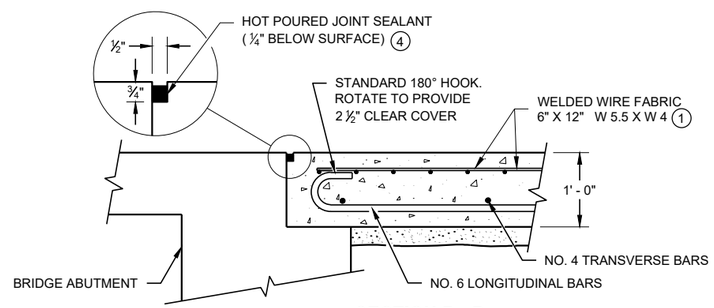

SECTION B - B
BEND DETAIL
BOTTOM REINFORCEMENT

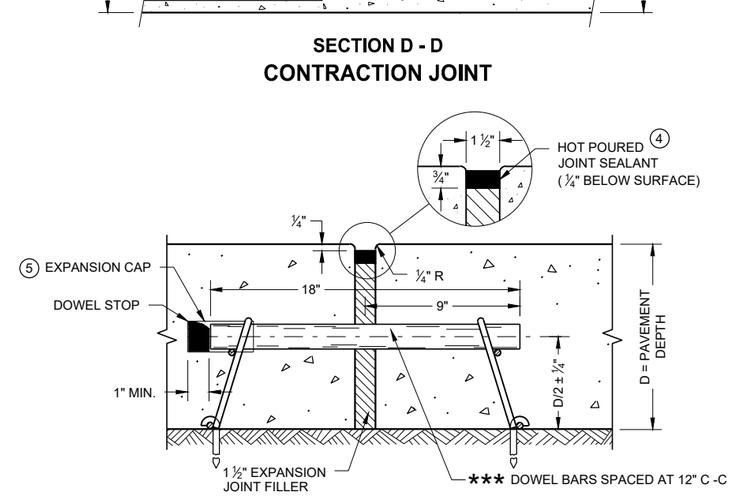

EXPANSION JOINT DETAIL

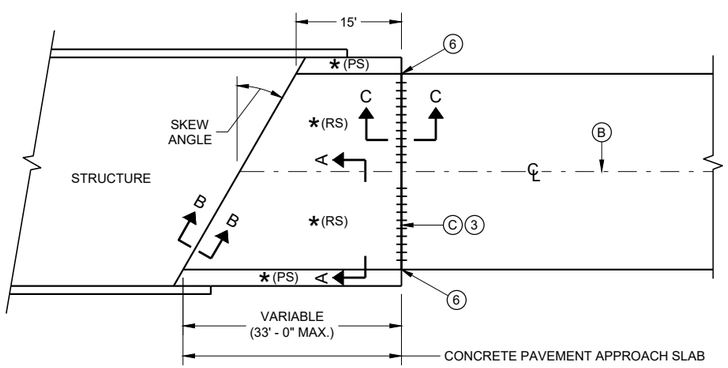

SKEWS ≤ 20°
(PAVEMENT WIDTH ≤ 30')

APPROACH SLAB AND ADJACENT PAVEMENT

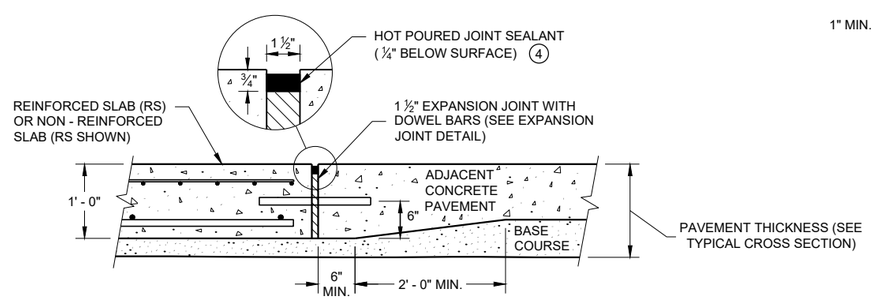

SECTION C - C
TRANSITION DETAIL
APPROACH SLAB TO ADJACENT PAVEMENT

CONCRETE PAVEMENT APPROACH SLAB

STATE OF WISCONSIN
DEPARTMENT OF TRANSPORTATION

APPROVED
November 2018 — DATE
/S/ Peter Kemp, P.E. — PAVEMENT SUPERVISOR
FHWA

6

6

SDD 13B02 - 09a

SDD 13B02 - 09a

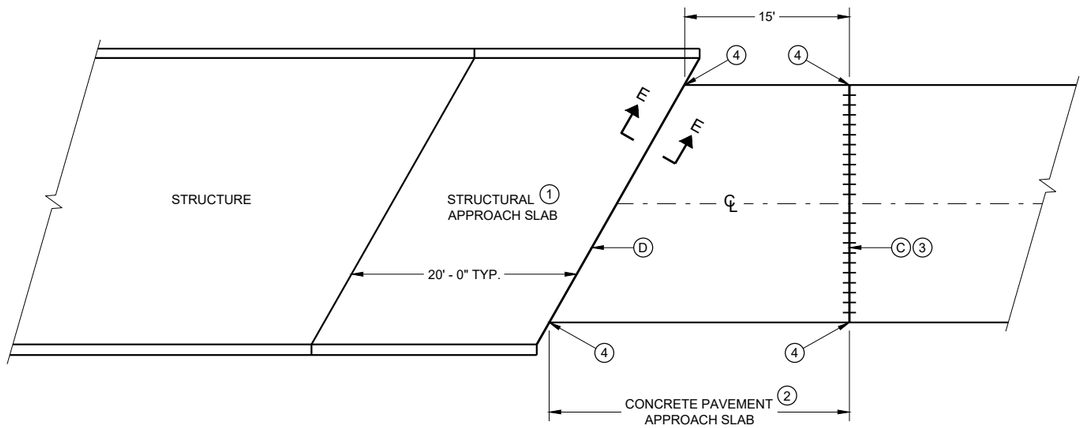

BRIDGE APPROACHES

GENERAL NOTES

ALL PROJECTS THAT INVOLVE A STRUCTURAL APPROACH SLAB WILL ALSO HAVE A CONCRETE PAVEMENT APPROACH SLAB.

1. SEE BRIDGE PLAN.
2. CONFORM TO SDD 13B02 SHEET A FOR CONCRETE PAVEMENT APPROACH SLAB DETAILS
3. DO NOT CONSTRUCT AN EXPANSION JOINT OR INSTALL DOWEL BARS WHEN ABUTTING AN HMA PAVEMENT.
4. EXTEND EXPANSION JOINT THROUGH ANY ADJACENT TIED CONCRETE.

C. 1 ½" EXPANSION JOINT WITH DOWEL BARS NORMAL TO ℄ OR ℞.

D. 1 ½" EXPANSION JOINT (NO DOWELS)

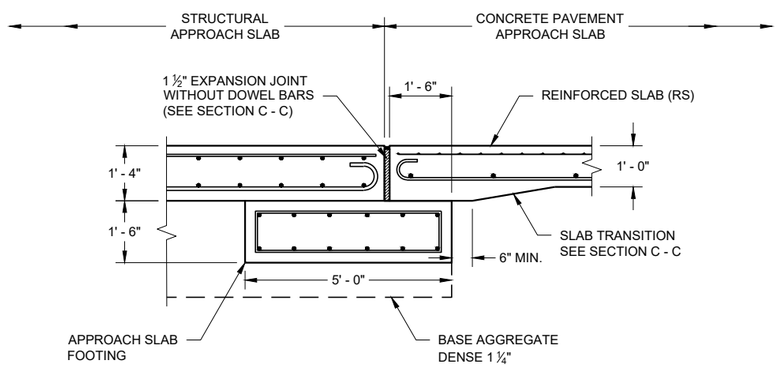

SECTION E - E
FOOTING DETAIL
STRUCTURAL APPROACH SLAB TO CONCRETE BRIDGE APPROACH

STRUCTURAL APPROACH SLAB AND CONCRETE PAVEMENT APPROACH SLAB

STATE OF WISCONSIN
DEPARTMENT OF TRANSPORTATION

APPROVED
November 2018 — DATE
/S/ Peter Kemp P.E. — PAVEMENT SUPERVISOR
FHWA

6
SDD 13B02 - 09b

GENERAL NOTES

SAW CUT, DRILL, AND LIFT OUT EXISTING CONCRETE PAVEMENT WITHIN THE BOUNDARIES OF CONCRETE REPAIR AREAS. THE CONTRACTOR MAY MAKE ADDITIONAL SAW CUTS INSIDE THE REPAIR LIMITS TO REDUCE WEIGHT AND SIZE OF CONCRETE PIECES.

PROVIDE 6-FOOT MINIMUM DISTANCE FROM BOUNDARIES OF CONCRETE REPAIR AREAS TO ADJACENT TRANSVERSE JOINT OR CRACK.

THE LENGTH OF THE REPAIRS MAY VARY FROM THE DIMENSIONS SHOWN IF THE EXISTING CONCRETE PAVEMENT IS NONDOWELED AND THE PAVEMENT IS TO BE OVERLAID AFTER REPAIRING.

(1) DOWEL BARS MIGHT NOT EXIST.

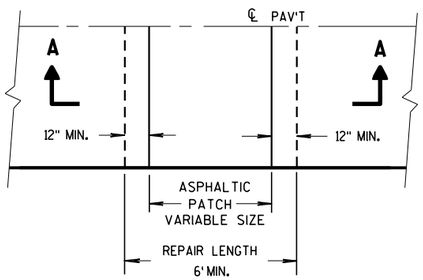

PLAN VIEW

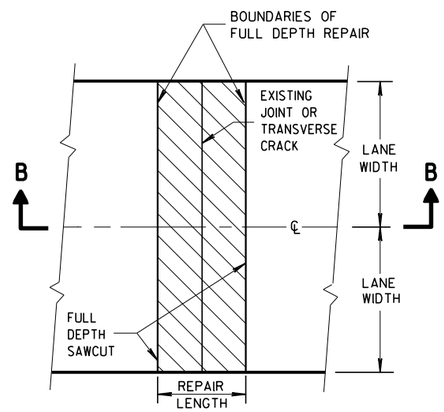

PLAN VIEW
(DOUBLE LANE REPAIR)

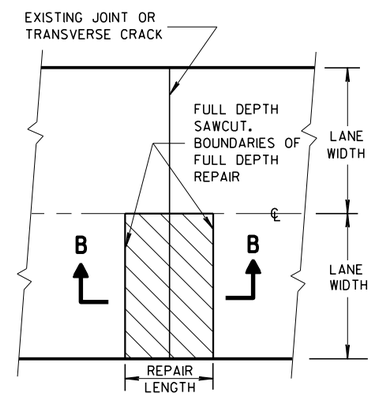

PLAN VIEW
(SINGLE LANE REPAIR)

FULL DEPTH CONCRETE PAVEMENT REMOVAL

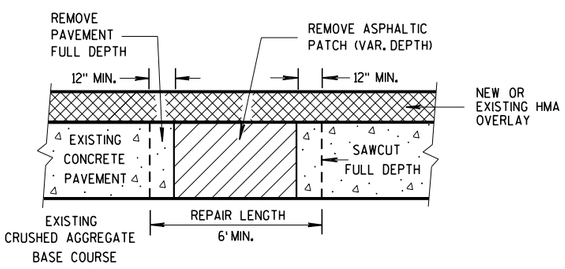

SECTION A-A

HMA PATCH REMOVAL

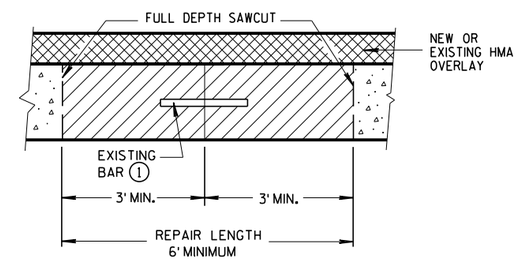

SECTION B-B

CONCRETE REMOVAL

6

6

S.D.D. 13 C 14-7a

S.D.D. 13 C 14-7a

BASE PATCHING CONCRETE

STATE OF WISCONSIN
DEPARTMENT OF TRANSPORTATION

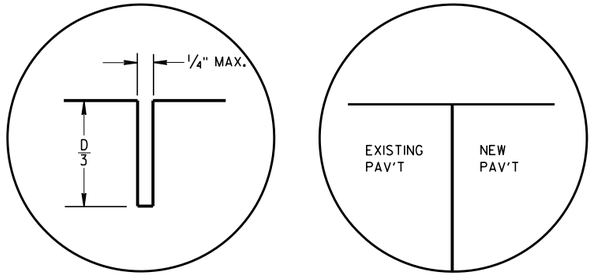

C1 C2

TRANSVERSE JOINTS

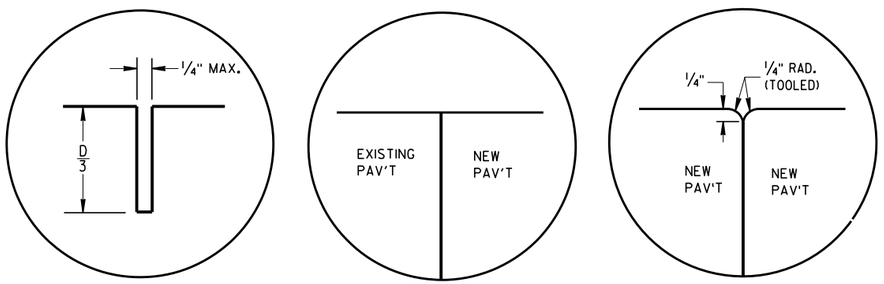

L1 L2 L3

LONGITUDINAL JOINTS

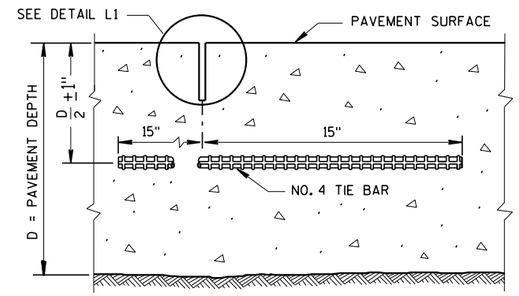

SECTION C-C

SAWED LONGITUDINAL JOINT

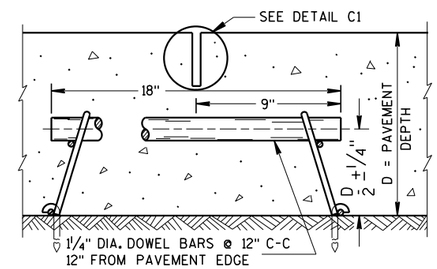

SECTION F-F

CONTRACTION JOINT

GENERAL NOTES

INSTALL DOWEL BARS PARALLEL TO THE PAVEMENT CENTERLINE AND PAVEMENT SURFACE.

CONCRETE BASE PATCHES OF EXISTING NONDOWELED CONCRETE PAVEMENTS DO NOT NEED TO BE DOWELED.

ANCHOR DOWEL BARS AND TIE BARS INTO DRILLED HOLES WITH AN EPOXY.

PROVIDE A MINIMUM DISTANCE OF 15 INCHES FROM AN EXISTING TRANSVERSE JOINT OR THE EDGE OF REPLACEMENT TO THE CENTER OF THE TIE BAR NEAREST THAT JOINT OR EDGE.

(1) APPLY A THIN UNIFORM COATING OF SURFACE TREATMENT TO THE FREE END OF DOWEL BARS TO PREVENT BONDING.

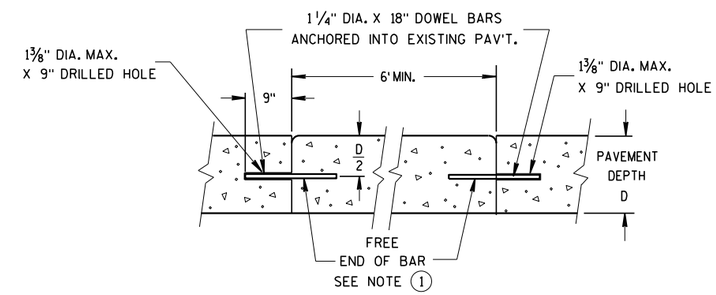

SECTION D-D

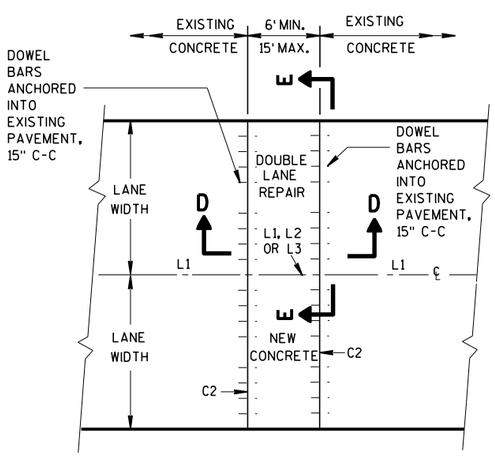

PLAN VIEW

MULTI-LANE CONCRETE BASE PATCH 15' MAXIMUM LENGTH

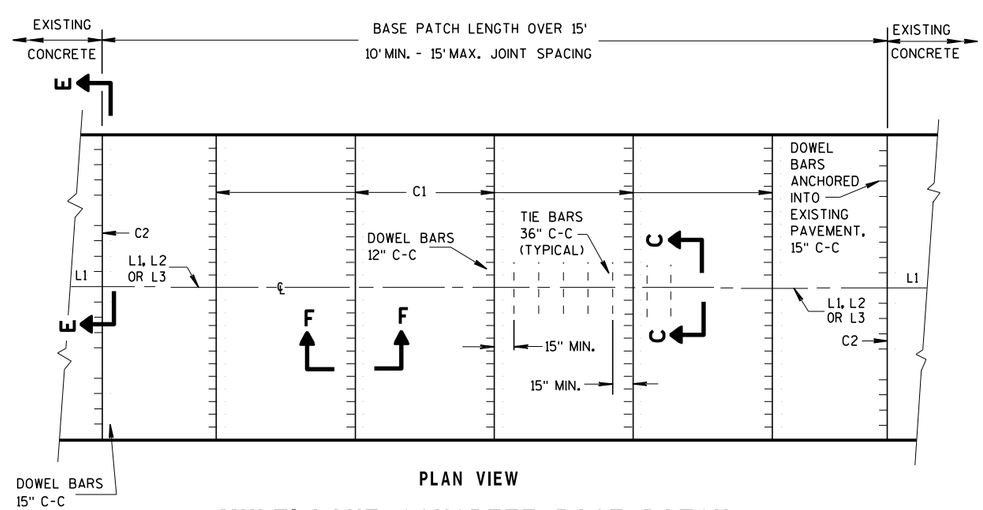

PLAN VIEW

MULTI-LANE CONCRETE BASE PATCH GREATER THAN 15' IN LENGTH

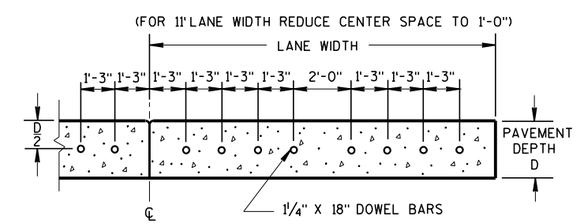

SECTION E-E

SPACING OF DOWEL BARS ANCHORED INTO EXISTING PAVEMENT

BASE PATCHING CONCRETE

STATE OF WISCONSIN
DEPARTMENT OF TRANSPORTATION

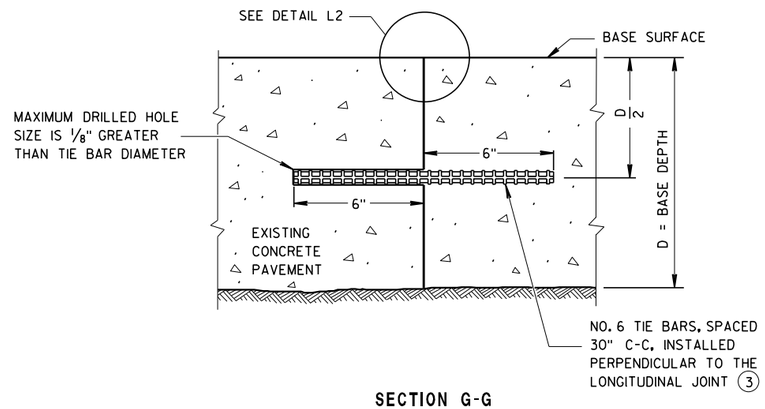

SECTION G-G

TIE BARS ANCHORED INTO EXISTING PAVEMENT

GENERAL NOTES

1. USE AN ENGINEER-APPROVED BOND BREAKER (E.G. RELEASE AGENT, CURING COMPOUND) FOR SINGLE LANE BASE PATCHES UP TO 15 FEET IN LENGTH.

2. WITH THE APPROVAL OF THE ENGINEER, FOR SINGLE LANE PAVEMENT REPLACEMENTS LESS THAN 30 FEET IN LENGTH, DRILLED TIE BARS MAY BE INSTALLED ON 6:1 SKEW HORIZONTALLY. DIRECTION OF SKEW ALTERNATING WITH EACH SUCCESSIVE BAR. DRIVE SKEWED TIE BARS TO A DEPTH OF 6 INCHES IN A HOLE OF SUCH A DIAMETER AS TO PROVIDE A TIGHT DRIVEN FIT.

3. ANCHOR TIE BARS INTO DRILLED HOLES WITH AN EPOXY.

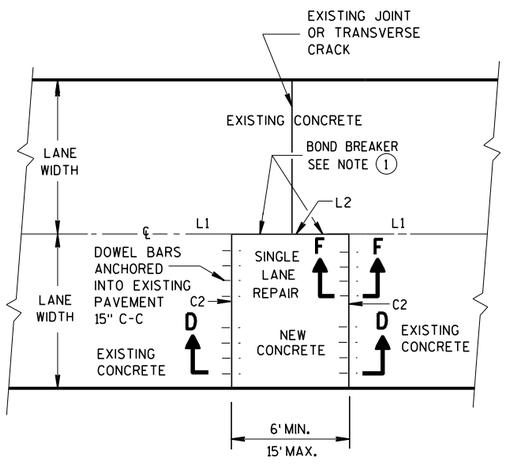

PLAN VIEW

SINGLE LANE CONCRETE BASE PATCH 15' MAXIMUM LENGTH

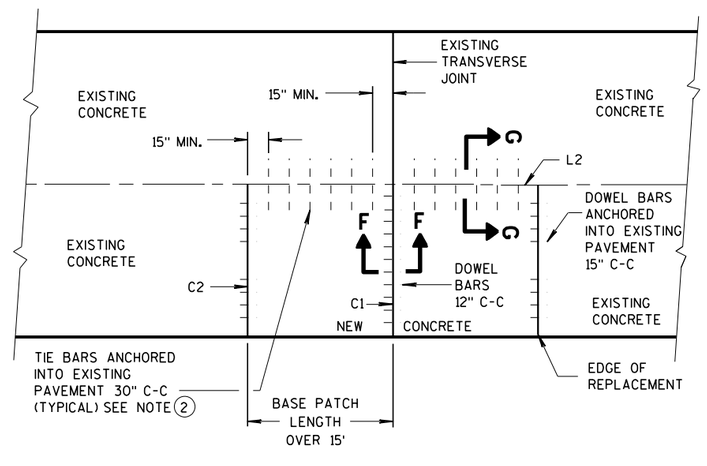

PLAN VIEW

SINGLE LANE CONCRETE BASE PATCH GREATER THAN 15' IN LENGTH

BASE PATCHING CONCRETE	
STATE OF WISCONSIN DEPARTMENT OF TRANSPORTATION	
APPROVED March 2018 DATE	/S/ Peter Kemp, P.E. PAVEMENT SUPERVISOR
FHWA	

SDD 14B26-a Steel Thrie Beam Bullnose Terminal

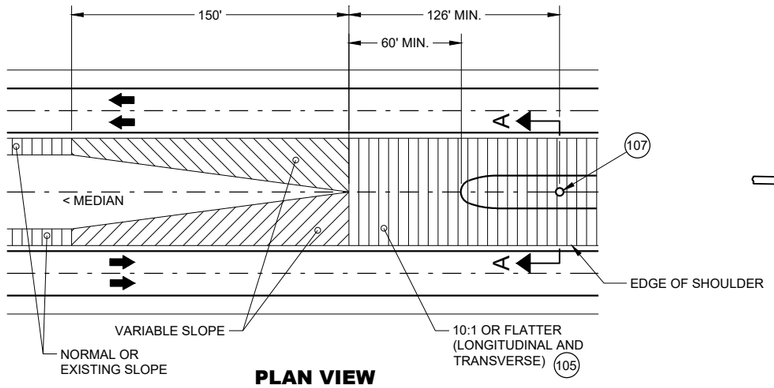

PLAN VIEW
GRADING AT BULLNOSE
(ALL INSTALLATIONS)

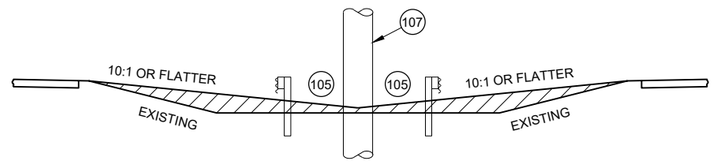

SECTION A -A
MEDIAN GRADING
(ALL INSTALLATIONS)

GENERAL NOTES

THRIE BEAM RAILS MAY NEED TO BE FIELD BENT TO FIT THE LOCATION.

SEE STANDARD DETAIL DRAWINGS 14B26 SHEETS a-h.

IF ROCK IS ENCOUNTERED, REMOVE ROCK TO FULL DEPTH OF POST PLUS 2 ½". MINIMUM DIAMETER OF THE ROCK REMOVAL IS 12" DIAMETER

- E1 UNBENT STANDARD THRIE BEAM RAIL B1 (POST 8 TO POST 10 AND POST 10 TO POST 12)
- E2 SLOTTED THRIE BEAM RAIL E1 (POST 1 TO POST 1)
- E3 SLOTTED THRIE BEAM RAIL B3 (POST 5 TO POST 8)
- E4 SLOTTED THRIE BEAM RAIL E4 (POST 1 TO POST 5)
- 5 BEYOND POST 12: CONSTRUCT STEEL THRIE BEAM - USE UNBENT STANDARD THRIE BEAM RAIL NO. 5.
- 100 DIMENSIONS ARE FROM BACK OF RAIL TO BACK OF RAIL WHERE RAIL IS BOLTED TO POST OR BLOCK.
- 101 U-BOLT CABLE CLIPS (3 PER CABLE) SPACED OUT ON NOSE, TO HOLD CABLE TO BACKSIDE OF THE RAIL.
- 102 NOSE CABLE WITH SWAGGED END BUTTONS.
- 103 NOSE CABLE ANCHOR PLATE (BACKSIDE OF SPLICE).
- 104 THE SLACK IN THE NOSE CABLES SHALL BE EVENLY DISTRIBUTED BETWEEN THE CABLE CLIP FASTENERS AND POST NO. 1 ON EITHER SIDE OF THE NOSE.
- 105 MINIMUM WORKING WIDTH 4' - 2".
- 106 MAX. WIDTH OF SYSTEM IS 14' - 2 ½" MEASURED FROM THE BACK OF RAIL TO BACK OF RAIL WHERE RAIL IS BOLTED TO A POST OR BLOCK.
- 107 FIXED OBJECT OR OTHER HAZARD.
- 108 PLAN IS TO PROVIDE STATION OFFSET TO CENTER OF POST 5 IN PLANS.

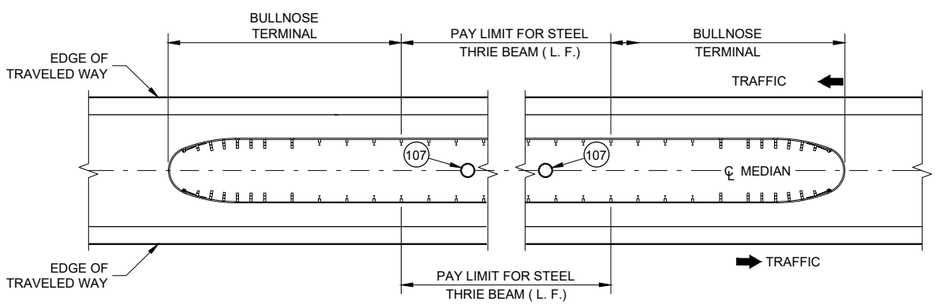

MEDIAN HAZARD PROTECTION PAY LIMITS

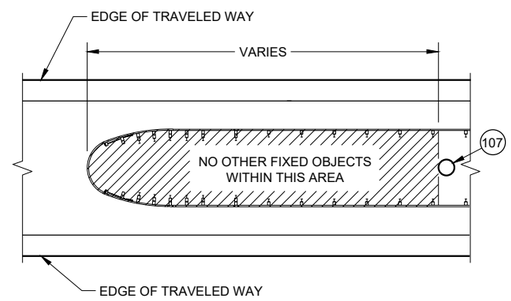

HAZARD FREE AREA
INSIDE BULLNOSE

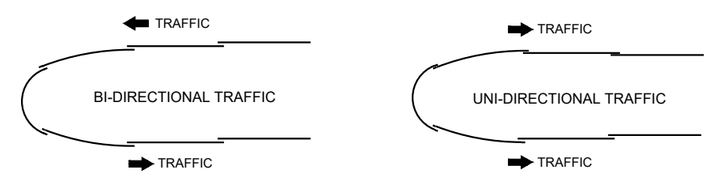

LAPPING DETAIL

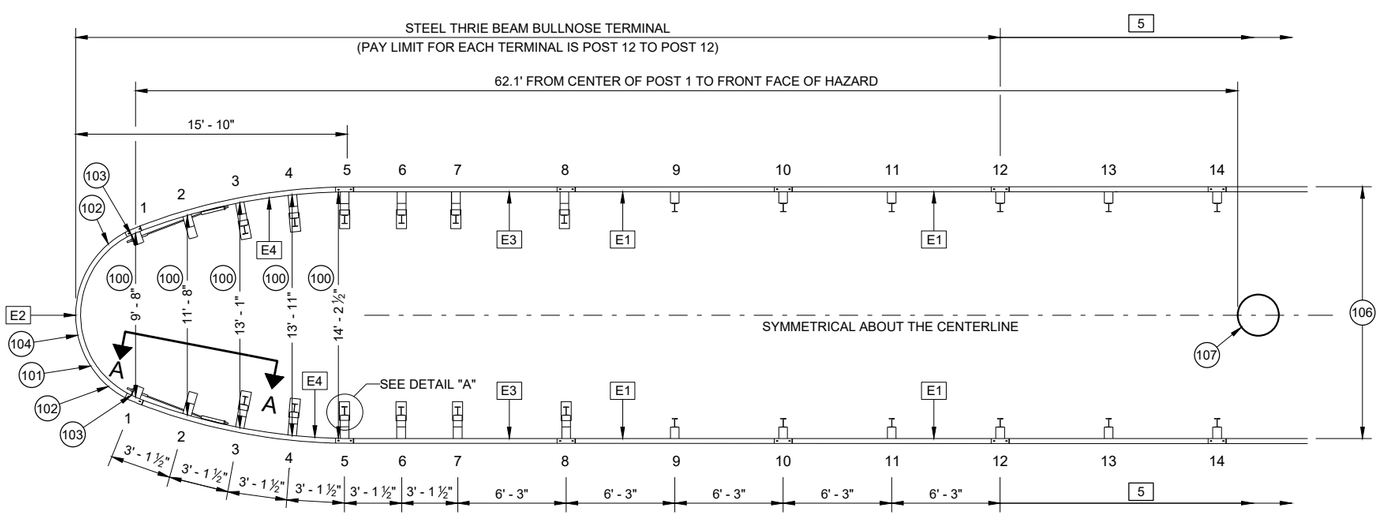

PLAN VIEW
TYPICAL BULLNOSE LAYOUT

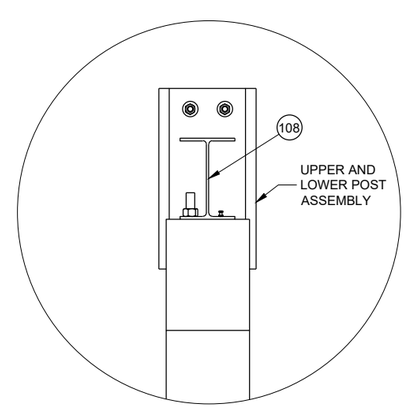

DETAIL "A"

STEEL THRIE BEAM BULLNOSE TERMINAL

STATE OF WISCONSIN
DEPARTMENT OF TRANSPORTATION

6

6

SDD 14B26 - 04a

SDD 14B26 - 04a

SDD 14B26-b Variable Width Steel Thrie Beam Bullnose Terminal

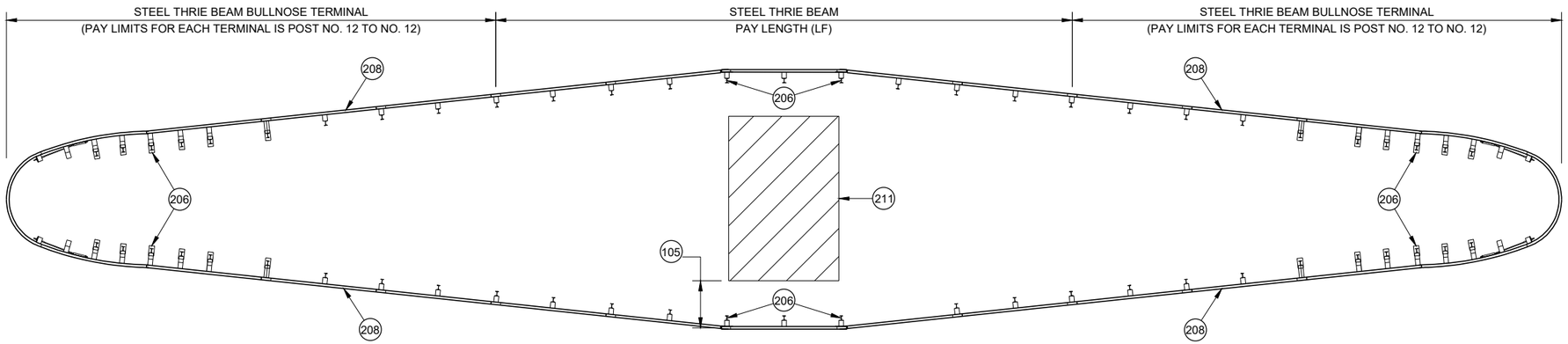

VARIABLE WIDTH BULLNOSE

GENERAL NOTES

200 6' - 3" ASYMMETRICAL 10-GAUGE W-BEAM TO THRIE BEAM GUARD TRANSITION. SEE SDD 14B45 FOR MORE INFORMATION.

201 W-BEAM RAIL. SEE SDD 14B42 FOR MORE INFORMATION.

202 SEE POST NO. 9 AND ALL STEEL THRIE BEAM POST BEYOND DETAIL.

203 SEE SDD 14B42 FOR INSTALLATION INFORMATION.

204 SEE SDD 14B45 FOR INSTALLATION DETAILS. REPLACE ASYMMETRICAL W-BEAM TO THRIE BEAM TRANSITION AND W-BEAM RAIL WITH E1. PAY FOR MODIFIED THRIE BEAM TRANSITION.

205 CONCRETE BARRIER OR BRIDGE RAIL.

206 SEE PLAN FOR STATION AND OFFSET TO CENTER OF POST.

207 SEE PLAN FOR STATION AND OFFSET TO CENTER OF SPLICE.

208 SEE PLAN FOR FLARE RATE.

209 A MINIMUM OF 25 FT OF THRIE BEAM TANGENT BEFORE TRANSITIONING TO BEAM GUARD OR THRIE BEAM TRANSITION.

210 NOT ALL BULLNOSE HARDWARE SHOWN. SEE OTHER SHEETS IN 14B26.

211 WIDER HAZARD TO BE SHIELDED.

212 TRANSITION RAIL HEIGHT TO 31" OVER THE LENGTH OF A 12' - 6" BEAM SECTION.

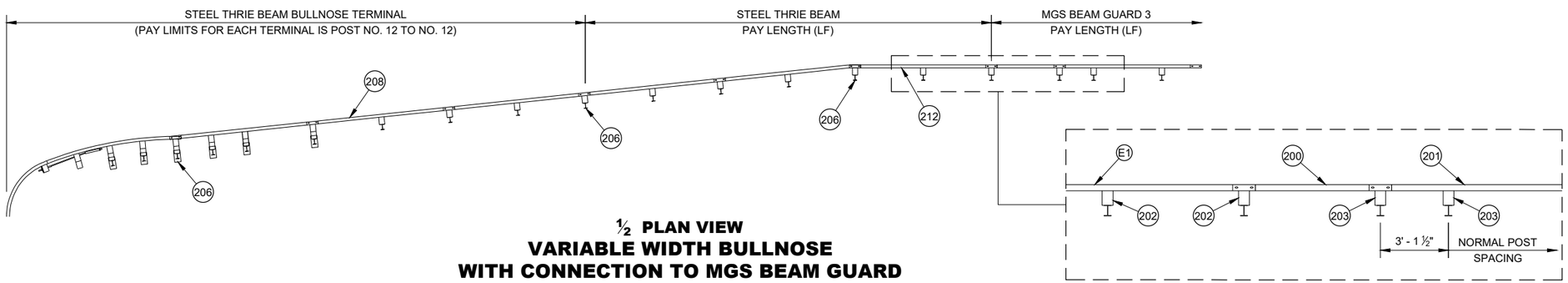

½ PLAN VIEW
VARIABLE WIDTH BULLNOSE
WITH CONNECTION TO MGS BEAM GUARD

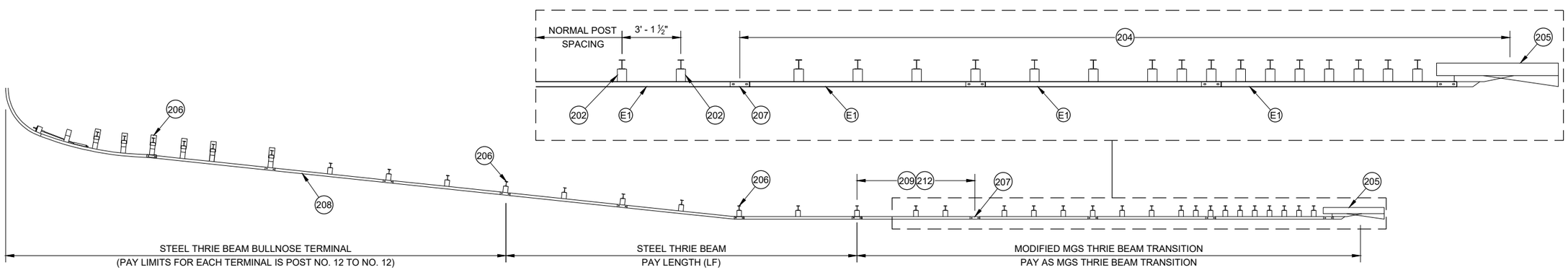

½ PLAN VIEW

VARIABLE WIDTH BULLNOSE
WITH CONNECTION TO RIGID BARRIER

STEEL THRIE BEAM BULLNOSE TERMINAL

STATE OF WISCONSIN
DEPARTMENT OF TRANSPORTATION

6

6

SDD 14B26 - 04b

SDD 14B26 - 04b

SDD 14B26-c Steel Thrie Beam Bullnose Terminal

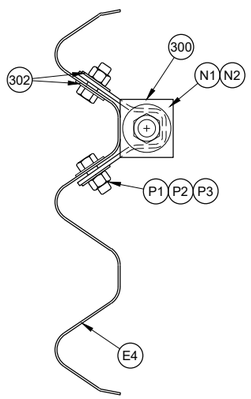

PROFILE VIEW

CABLE ANCHOR ASSEMBLY CONNECTION

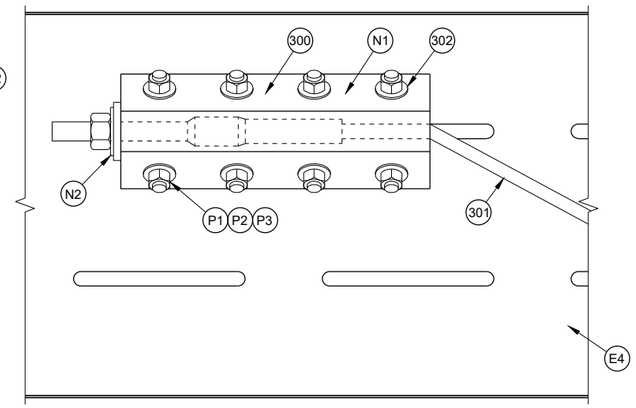

CABLE ANCHOR ASSEMBLY

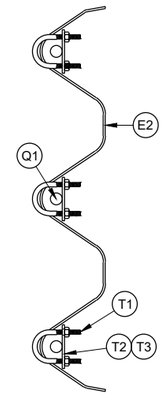

NOSE CABLE RETAINING CLIP

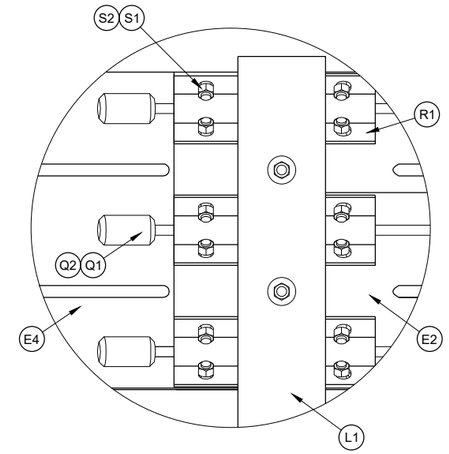

DETAIL "A"

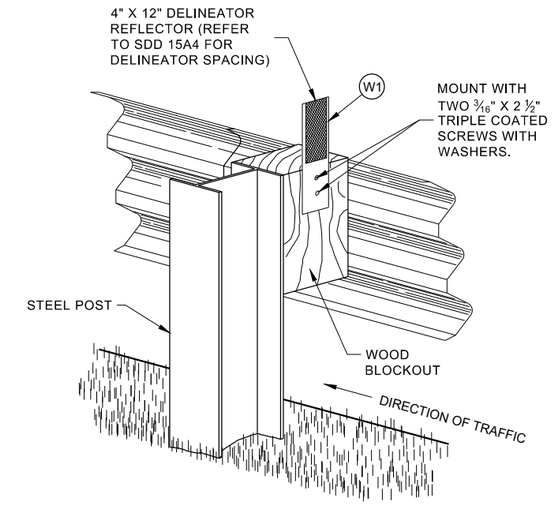

ONE SIDED REFLECTOR DETAIL AND TYPICAL INSTALLATION

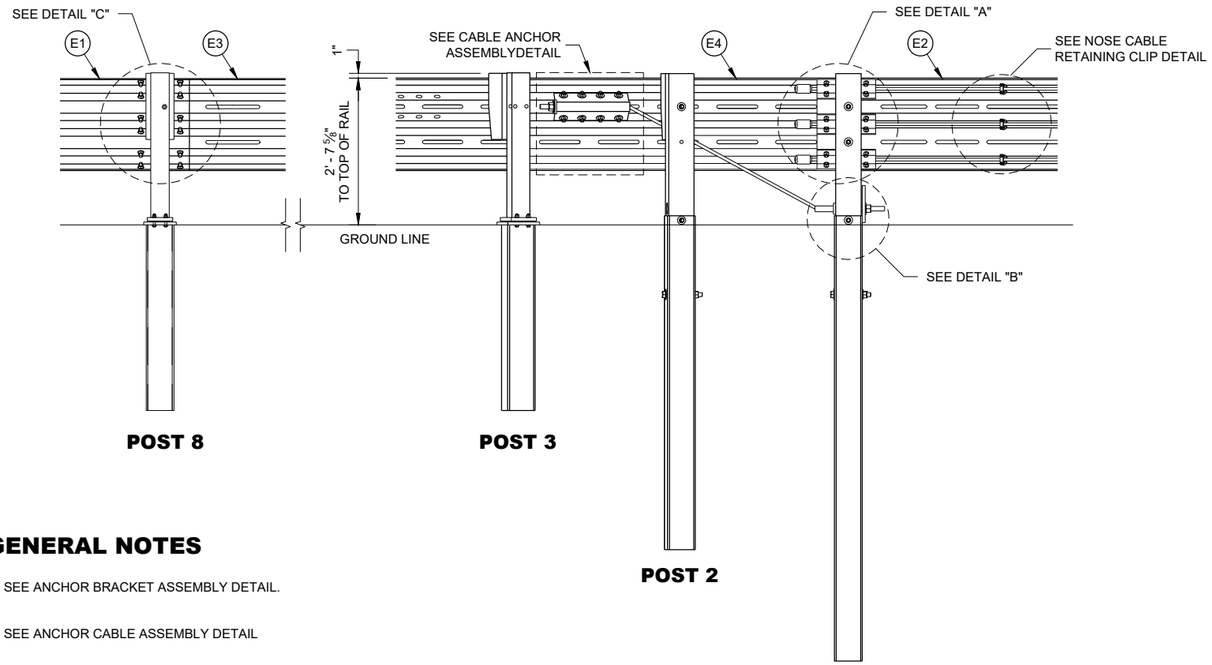

POST 8

POST 3

POST 2

POST 1

CROSS SECTION A - A

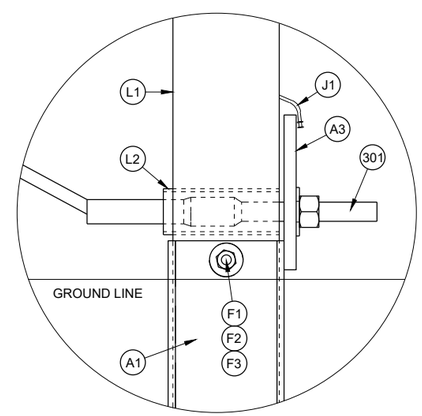

DETAIL "B"

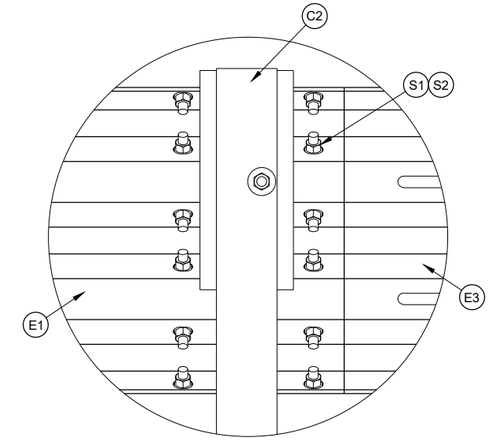

DETAIL "C"
THRIE BEAM SPLICE

GENERAL NOTES

300 SEE ANCHOR BRACKET ASSEMBLY DETAIL.

301 SEE ANCHOR CABLE ASSEMBLY DETAIL

302 ONE WASHER BETWEEN BOLT HEAD AND RAIL AND BETWEEN NUT AND ANCHOR BRACKET ASSEMBLY.

303 ONE WASHER BETWEEN BOLD HEAD AND FOUNDATION TUBE AND BETWEEN NUT AND FOUNDATION TUBE.

STEEL THRIE BEAM BULLNOSE TERMINAL

STATE OF WISCONSIN
DEPARTMENT OF TRANSPORTATION

6
SDD 14B26 - 04c

SDD 14B26-d Steel Thrie Beam Bullnose Terminal

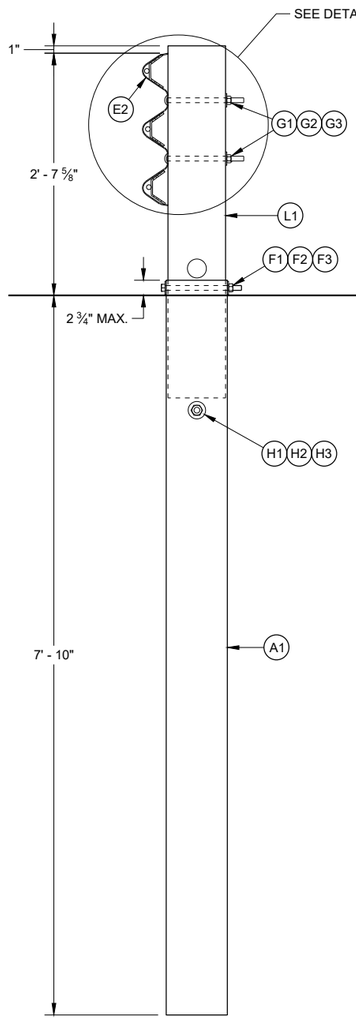

POST NO. 1

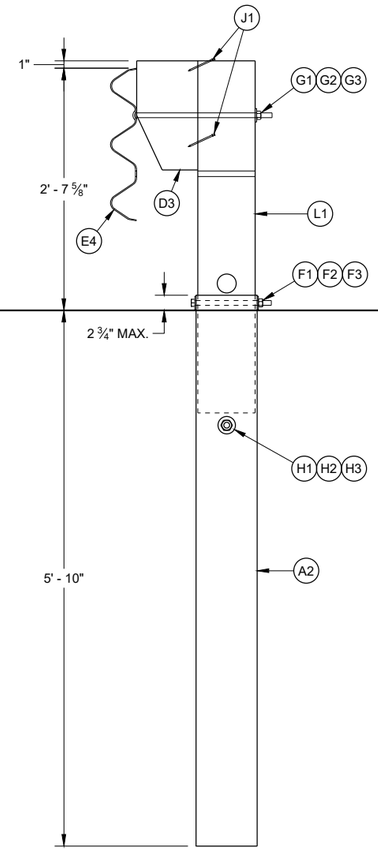

POST NO. 2

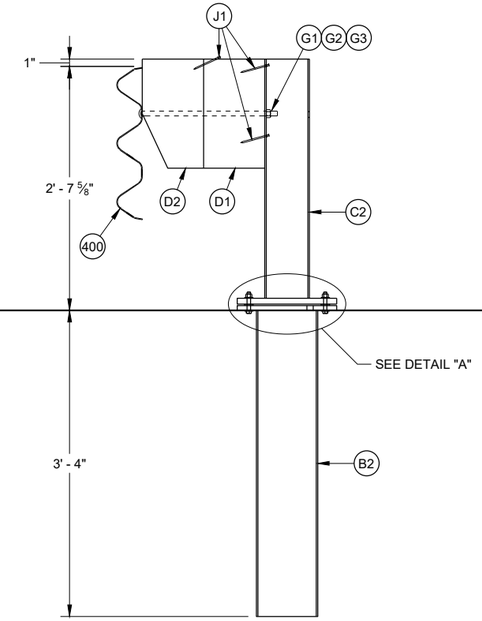

POST NOS. 3-8

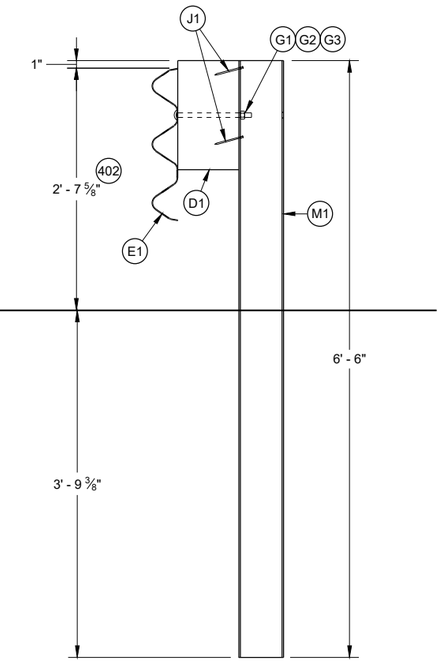

POST NOS. 9 AND ALL STEEL THRIE BEAM POSTS BEYOND

GENERAL NOTES

400 RAIL CAN BE E3 OR E4 DEPENDING ON POST LOCATION.

401 TORQUE BOLD BETWEEN 60-75 FT-LB

402 HEIGHT WILL VARY WITHIN HEIGHT TRANSITION TO OTHER HARDWARE. SEE NOTE 213, SHEET "b".

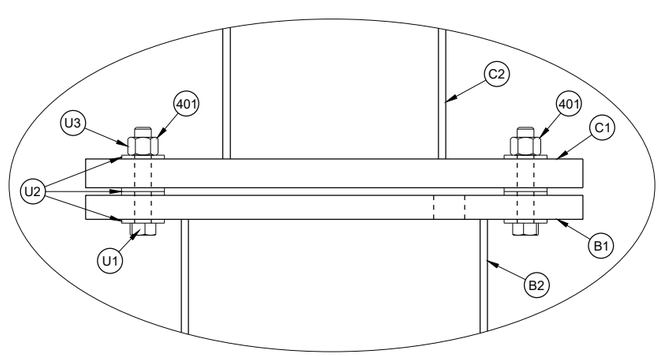

DETAIL "A"

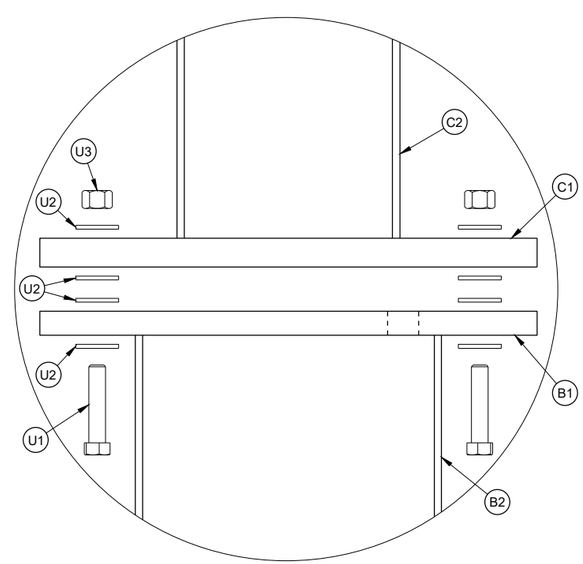

EXPLODED VIEW
DETAIL "A"

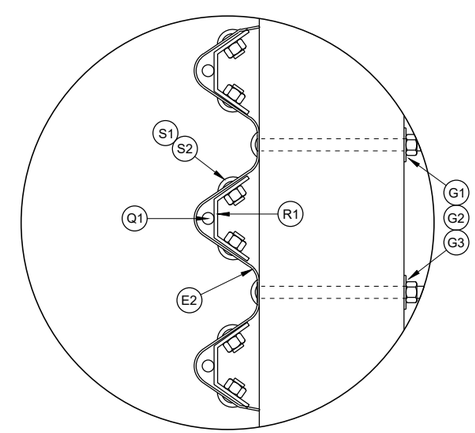

DETAIL "B"

STEEL THRIE BEAM BULLNOSE TERMINAL

STATE OF WISCONSIN
DEPARTMENT OF TRANSPORTATION

6

6

SDD 14B26 - 04d

SDD 14B26 - 04d

SDD 14B26-e Steel Thrie Beam Bullnose Terminal

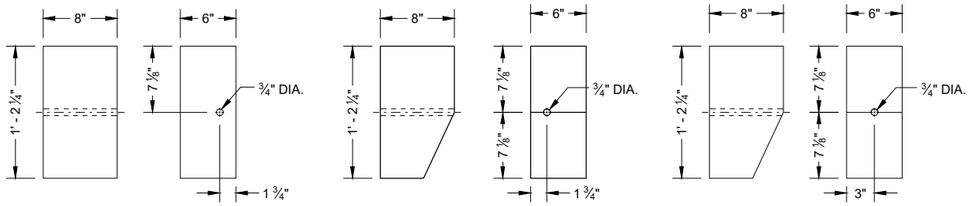

ELEVATION PROFILE
BLOCKOUT (D1)

ELEVATION PROFILE
BLOCKOUT (D2)

ELEVATION PROFILE
BLOCKOUT (D3)

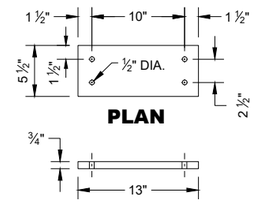

PLAN

PROFILE
UPPER SHEAR PLATE (C1)

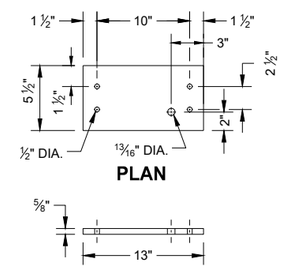

PLAN

PROFILE
LOWER SHEAR PLATE (B1)

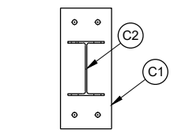

PLAN

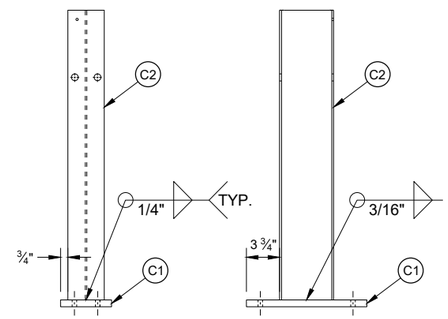

ELEVATION PROFILE
UPPER POST ASSEMBLY

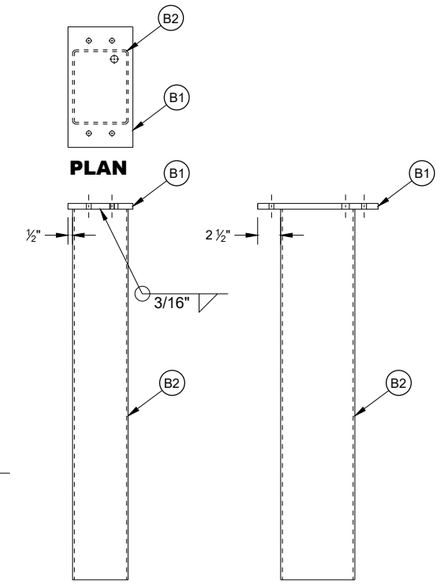

PLAN

ELEVATION PROFILE
LOWER POST ASSEMBLY

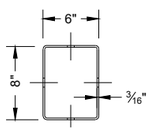

PLAN

PART	LENGTH "X"
A1	8' - 0"
A2	6' - 0"
B2	3' - 6"

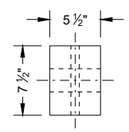

PLAN

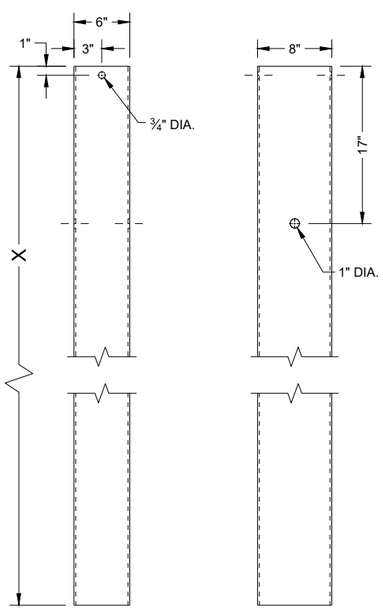

ELEVATION PROFILE
FOUNDATION TUBE

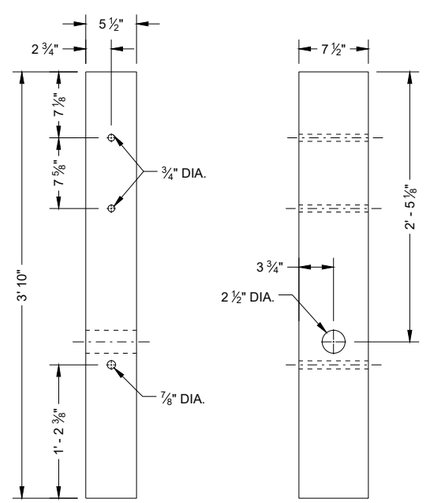

ELEVATION PROFILE
BCT POST (L1)

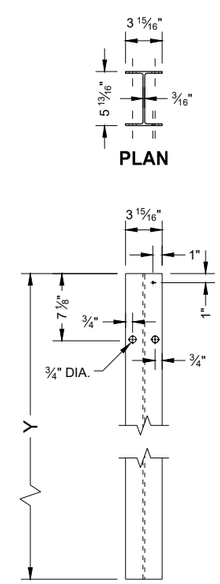

PLAN

ELEVATION
POST

PART	LENGTH "Y"
M1	6' - 6"
M2	5' - 8 5/8"
C2	2' - 8 5/8"

STEEL THRIE BEAM BULLNOSE TERMINAL

STATE OF WISCONSIN
DEPARTMENT OF TRANSPORTATION

6

6

SDD 14B26 - 04e

SDD 14B26 - 04e

SDD 14B26-f Steel Thrie Beam Bullnose Terminal

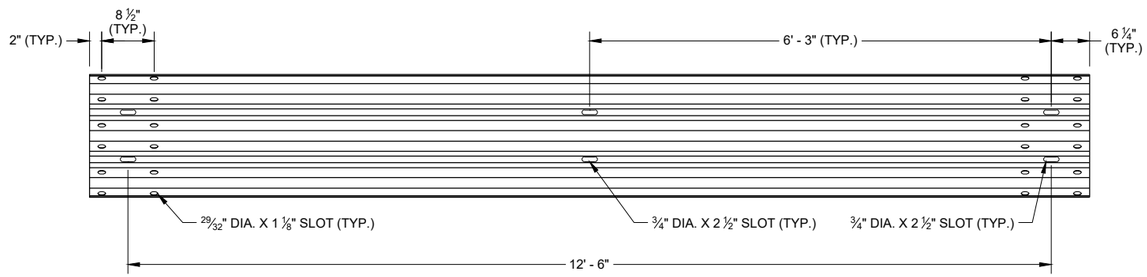

SLOTTED THRIE BEAM RAIL E1

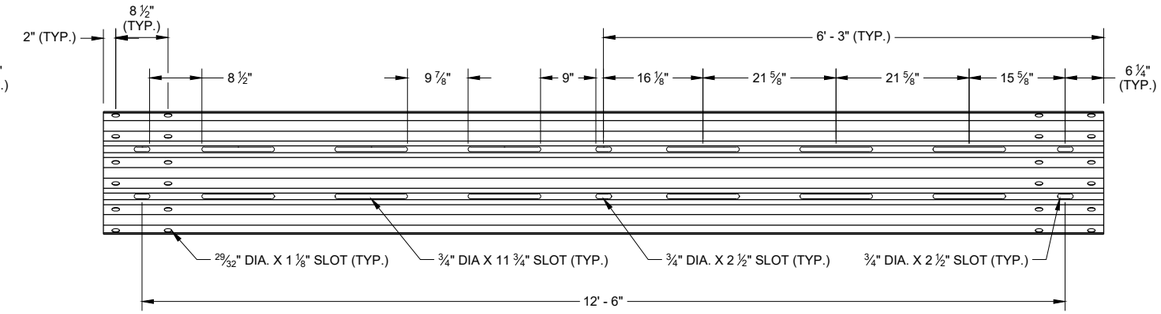

SLOTTED THRIE BEAM RAIL E3

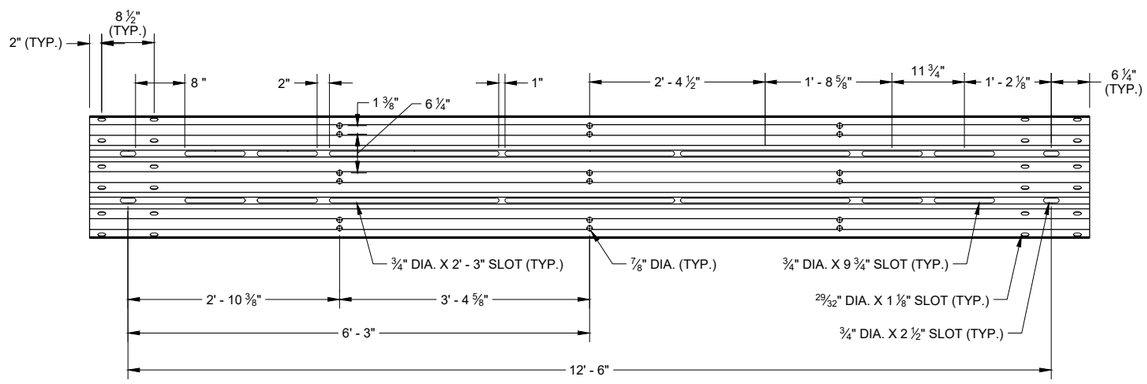

ELEVATION VIEW NON - RADIUSED
SLOTTED THRIE BEAM RAIL E2

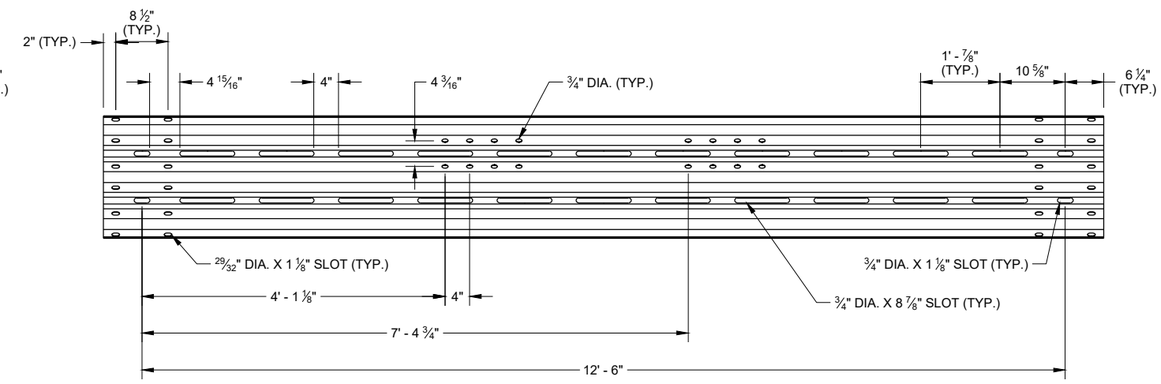

ELEVATION VIEW NON - RADIUSED
SLOTTED THRIE BEAM RAIL E4

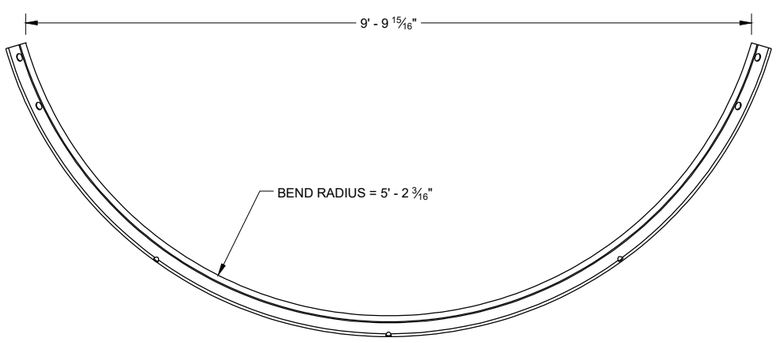

PLAN VIEW
SLOTTED THRIE BEAM RAIL E2

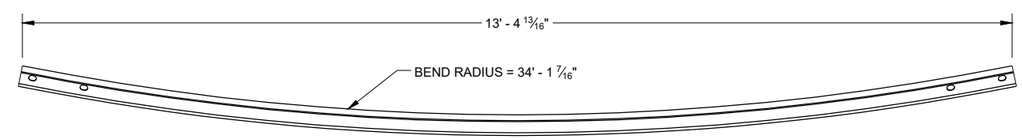

PLAN VIEW
SLOTTED THRIE BEAM RAIL E4

6

6

STEEL THRIE BEAM BULLNOSE TERMINAL

STATE OF WISCONSIN
DEPARTMENT OF TRANSPORTATION

SDD 14B26 - 04f

SDD 14B26 - 04f

SDD 14B26-g Steel Thrie Beam Bullnose Terminal

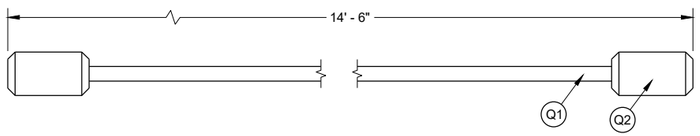

NOSE CABLE AND SWAGE BUTTON

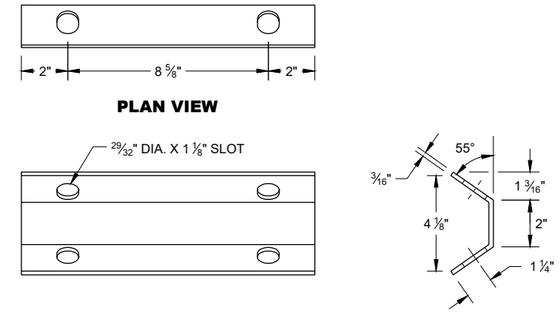

ELEVATION VIEW **PROFILE VIEW**

NOSE CABLE ANCHOR (R1)

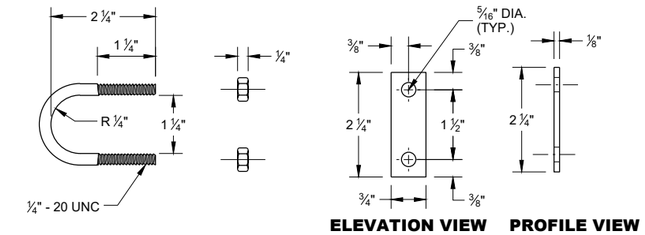

ELEVATION VIEW **PROFILE VIEW**

U - BOLT (T1) **U - BOLT NUT (T3)** **U - BOLT PLATE WASHER (T2)**

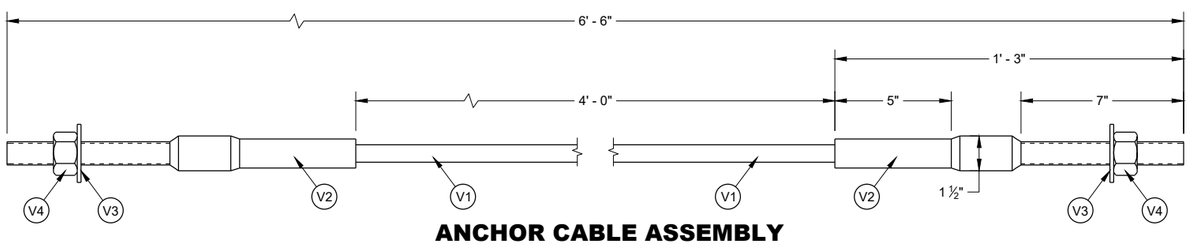

ANCHOR CABLE ASSEMBLY

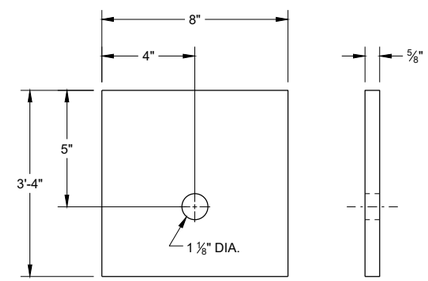

ELEVATION VIEW **PROFILE VIEW**

BCT BEARING PLATE (A3)

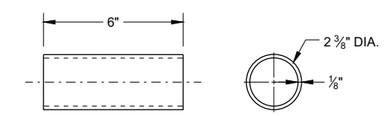

ELEVATION VIEW **PROFILE VIEW**

BCT POST SLEEVE (L2)

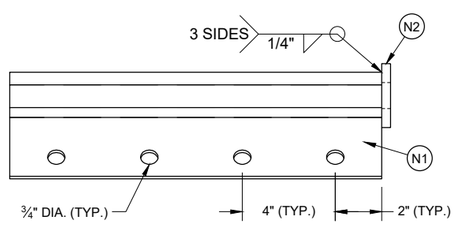

PLAN VIEW

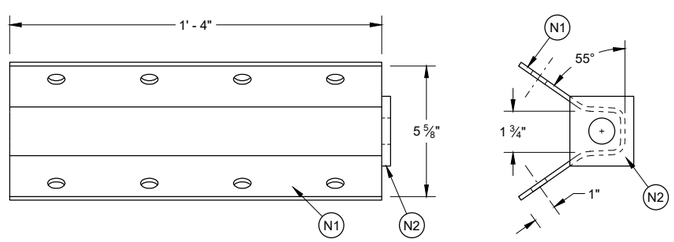

ELEVATION VIEW **PROFILE VIEW**

ANCHOR BRACKET ASSEMBLY (N1)

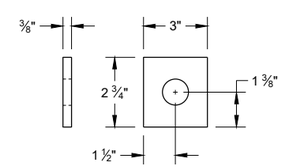

ANCHOR BRACKET END PLATE (N2)

STEEL THRIE BEAM BULLNOSE TERMINAL

STATE OF WISCONSIN
DEPARTMENT OF TRANSPORTATION

6

6

SDD 14B26 - 04g

SDD 14B26 - 04g

SDD 14B42-a Midwest Guardrail System (MGS) Guardrail

1. WOOD OR STEEL POSTS (w6X9 OR w6X8.5) MAY BE USED. DO NOT INTERMIX WOOD AND STEEL POSTS. INSTALL STEEL POSTS WITH HOLES ON APPROACHING TRAFFIC SIDE.
2. USE WOOD OR APPROVED PLASTIC BLOCKOUTS. WOOD BLOCKOUTS MAY BE CONSTRUCTED OUT OF TWO OR MORE WOOD BLOCKOUTS. SEE ALTERNATE WOOD BLOCKOUT DETAIL. DIMENSIONS OF APPROVED PLASTIC BLOCKOUTS MAY VARY.
3. IF ROCK IS ENCOUNTERED DURING EXCAVATION, PROVIDE A HOLE 12 INCHES IN DIAMETER EXTENDING 20 INCHES DEEP INTO THE ROCK. PLACE APPROXIMATELY 2 1/2" INCHES OF GRANULAR MATERIAL IN THE BOTTOM OF THE HOLE. CUT THE POSTS THE TO LENGTH AMD INSTALL. BACKFILL WITH EXCAVATED MATERIAL AND COMPACT. BACKFILL IS TO BE FREE OF LARGE ROCKS.
4. WHEN THE DISTANCE FROM BACK OF POST TO SHOULDER HINGE POINT IS LESS THAN 2 FEET INSTALL LONGER POST AT HALF POST SPACING (K).
5. FOR NEW MGS INSTALLATION TOP OF W-BEAM RAIL TOLERANCE IS ±1". FOR EXISTING MGS INSTALLATION TOP OF W-BEAM IS BETWEEN 27 ¾" TO 32".
6. WHEN USING STEEL POST AND WOOD BLOCKOUTS INSTALL FOUR 16D GALVANIZED NAILS. INSTALL NAILS AT THE BACK CORNERS OF THE BLOCK AND BEND THE NAILS OVER THE FLANGE OF THE STEEL POST.
7. TOTAL POST LENGTH FOR TYPE K IS 7' - 0". TOTAL POST LENGTH FOR OTHER MGS TYPES IS 6' - 0".

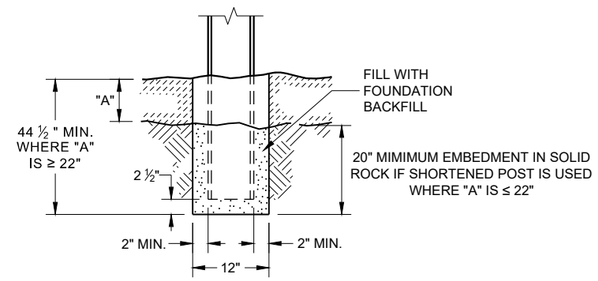

END VIEW
SETTING STEEL OR WOOD POST IN ROCK (3)

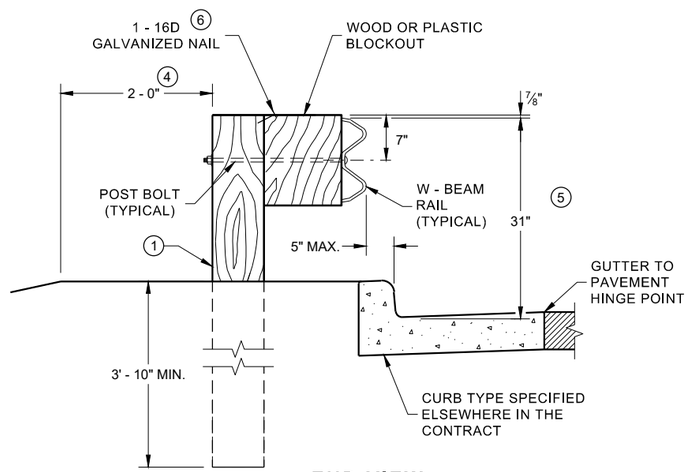

END VIEW
LOCATED ALONG A CURBED ROADWAY

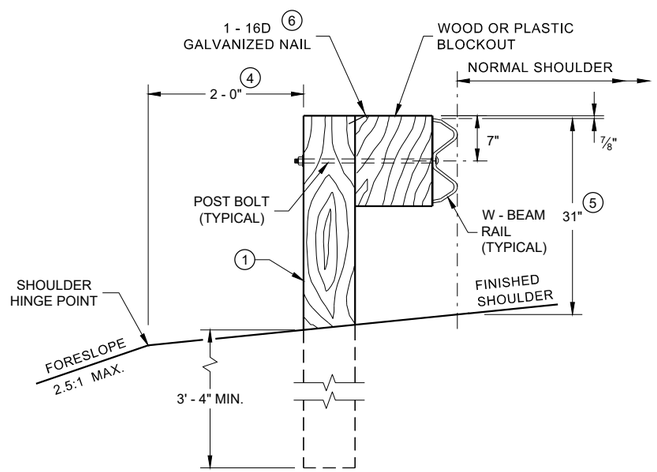

END VIEW
LOCATED ALONG A ROADWAY SHOULDER
STANDARD INSTALLATION

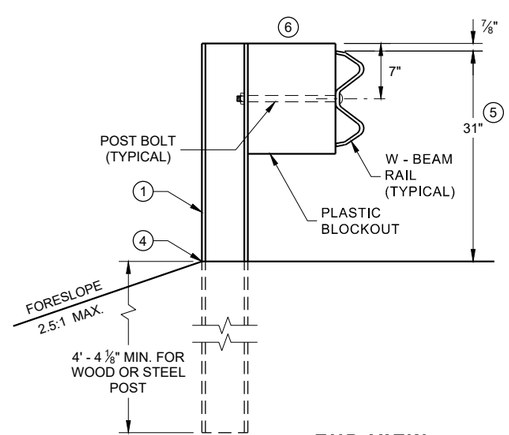

END VIEW
MGS LONGER POST AT HALFPOST
SPACING W BEAM (K)

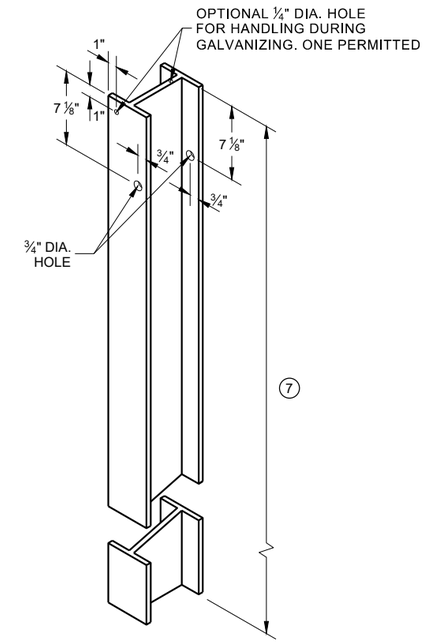

STEEL POST & HOLE
PUNCHING DETAIL
(W 6 X 9) (1)

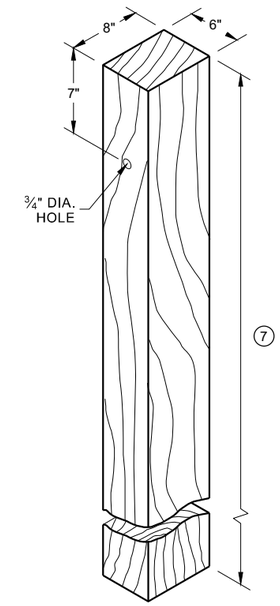

WOOD POST
(6" X 8") NOMINAL (1)

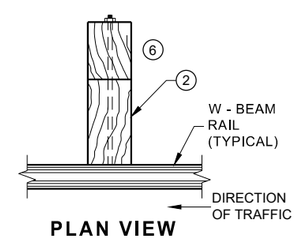

PLAN VIEW
WOOD POST,
BLOCKOUT & BEAM

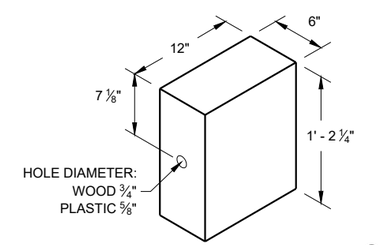

WOOD OR PLASTIC (2)
BLOCKOUT

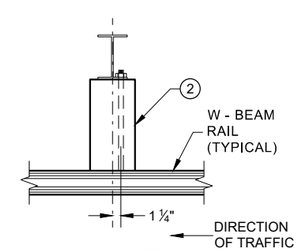

PLAN VIEW
STEEL POST,
PLASTIC BLOCKOUT & BEAM

MIDWEST GUARDRAIL SYSTEM (MGS) GUARDRAIL

STATE OF WISCONSIN
DEPARTMENT OF TRANSPORTATION

6

6

SDD 14B42 - 06a

SDD 14B42 - 06a

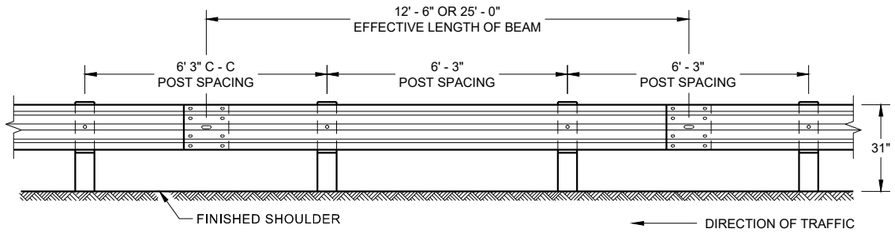

FRONT VIEW
POST SPACING STANDARD INSTALLATION

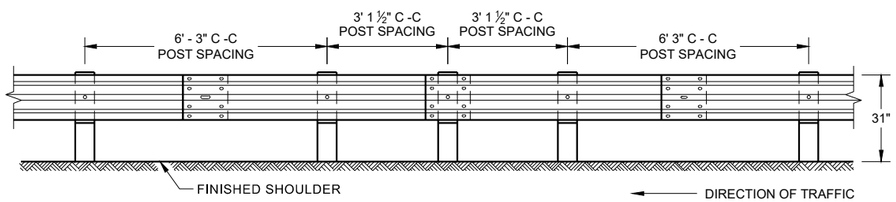

FRONT VIEW
HALF POST SPACING (HS) AND HALF POST SPACING WITH LONGER POSTS (K)

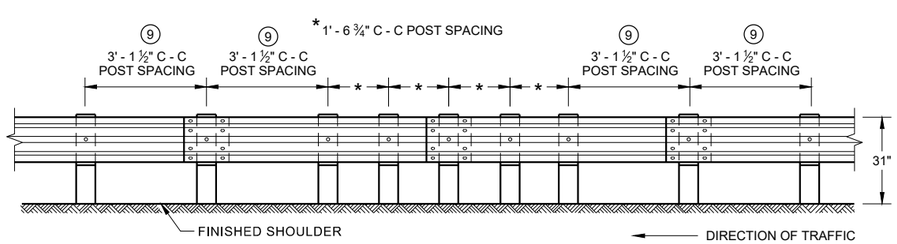

FRONT VIEW
QUARTER POST SPACING (QS)

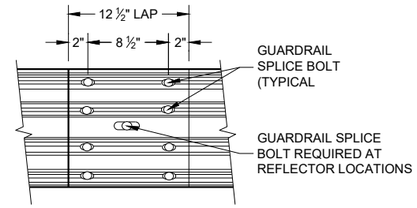

FRONT VIEW
MID-SPAN BEAM SPLICE

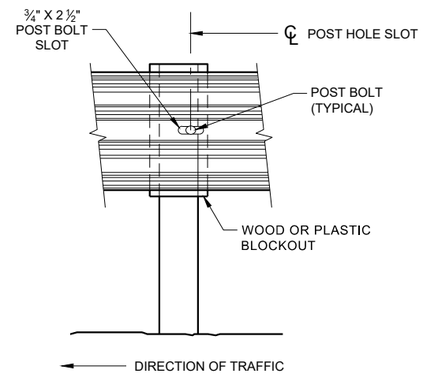

FRONT VIEW AT STEEL POST

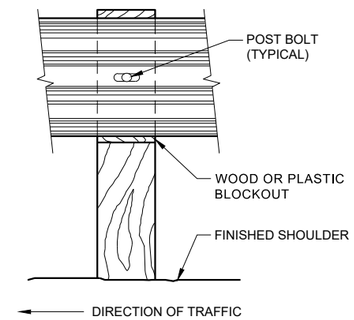

FRONT VIEW AT WOOD POST

GENERAL NOTES

8. DO NOT INSTALL REFLECTORS ON THE FIRST 50 FEET OF THE APPROACH END OF THE ENERGY ABSORBING TERMINAL.

9. 25 FEET OF HALF POST SPACING IS REQUIRED ON APPROACH AND DEPARTURE ENDS OF QUARTER POST SPACING.

POST BOLTS ARE A ⅝" DIAMETER ASTM A307 GUARDRAIL BOLT. A POST BOLT REQUIRES ⅝" DIAMETER A563A DOUBLE RECESSED (DR) HEAVY HEX NUT AND ⅝" DIAMETER F844 FLAT WASHER. POST BOLTS MAY BE LONGER IF MULTIPLE BLOCKOUTS ARE BEING USED.

GUARD RAIL SPLICE BOLTS ARE A ⅝" DIAMETER ASTM A307 GUARDRAIL HEAD BOLT. A GUARDRAIL SPLICE BOLT REQUIRES ⅝" DIAMETER A563A DOUBLE RECESSED (DR) HEAVY HEX NUT.

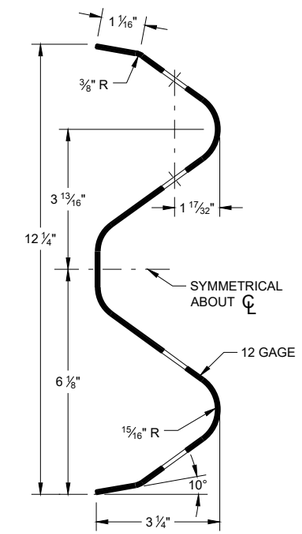

SECTION THRU W-BEAM RAIL

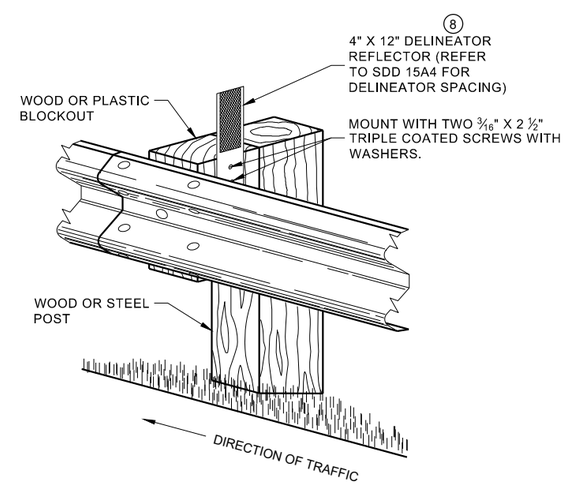

ONE SIDED REFLECTOR DETAIL AND TYPICAL INSTALLATION

MIDWEST GUARDRAIL SYSTEM (MGS) GUARDRAIL

STATE OF WISCONSIN
DEPARTMENT OF TRANSPORTATION

6
SDD 14B42 - 06b

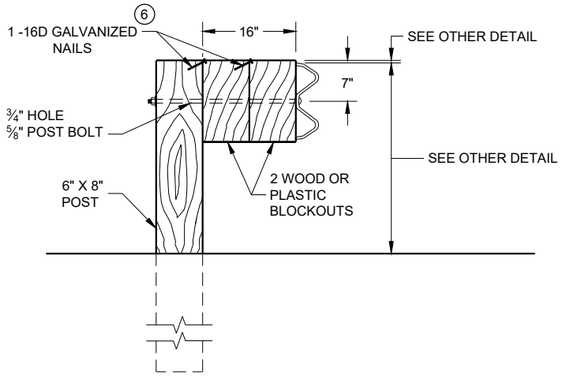

DETAIL FOR 16" BLOCKOUT DEPTH

IT IS ACCEPTABLE TO USE BLOCKOUTS UP TO 16" DEEP TO INCREASE THE POST OFFSET TO AVOID UNDERGROUND OBSTACLES. THERE IS NO LIMIT TO THE NUMBER OF POSTS THAT CAN HAVE ADDITIONAL BLOCKOUTS UP TO 16" DEEP.

NOTE:

1. ALL FILLETS SHALL HAVE A MINIMUM RADIUS OF 3/16".
2. IF THE BOLT EXTENDS MORE THAN ¼" FROM THE NUT THE BOLT SHOULD BE TRIMMED BACK.

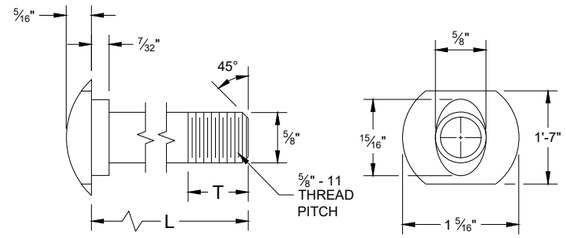

POST BOLT TABLE

L	T (MIN.)
1 ¼"	1 ⅛"
2"	1 ¾"
10"	4"
14"	4 1/16"
18"	4"
21"	4 1/16"
25"	4"

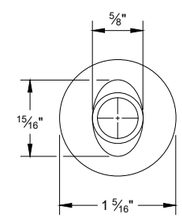

ALTERNATE BOLT HEAD

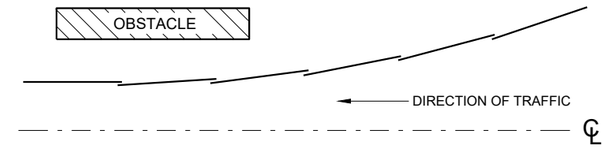

PLAN VIEW
BEAM LAPPING DETAIL

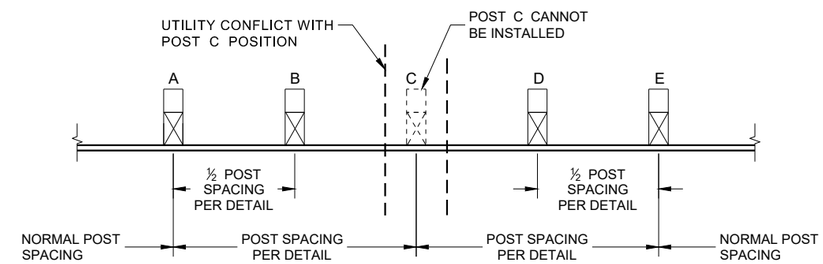

POST DRIVING FOR CONTINUOUS UNDERGROUND OBSTRUCTION

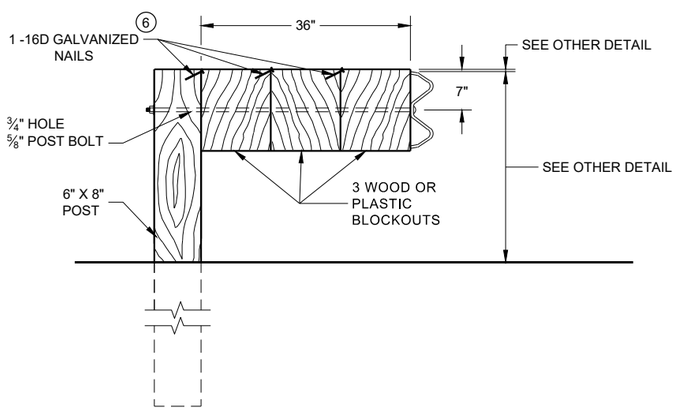

DETAIL FOR 36" BLOCKOUT DEPTH

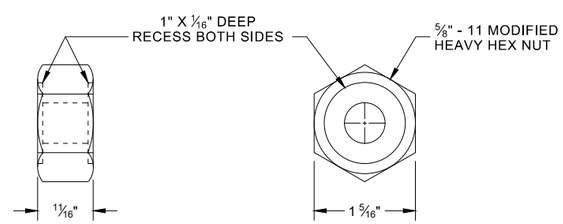

POST BOLT, SPLICE BOLT AND RECESS NUT

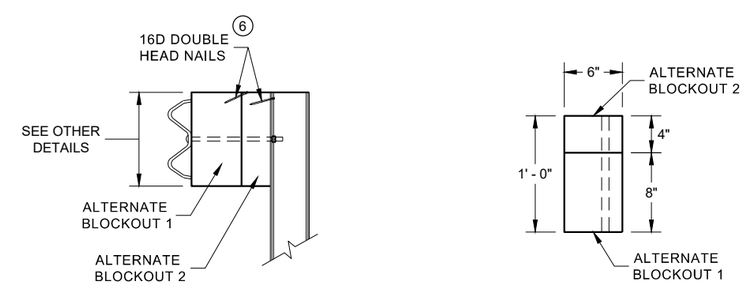

SIDE VIEW

PLAN VIEW

ALTERNATE WOOD BLOCKOUT DETAIL

NOTES: UNDER SPECIAL CIRCUMSTANCES, SUCH AS AVOIDING OBSTACLES THAT ARE NOT RELOCATED, IT IS ACCEPTABLE TO INSTALL ADDITIONAL BLOCKOUTS TO OBTAIN UP TO 36" DEPTH FOR ONE OR TWO POSTS IN A SECTION OF GUARDRAIL.

DO NOT USE 16" OR 36" BLOCKOUTS IF IT CAUSES THE POST TO BE DRIVEN BEYOND SHOULDER HINGE POINT OR CAUSES A FIXED OBJECT TO BE WITHIN THE DEFLECTION DISTANCE OF THE BARRIER.

(6) WHEN USING STEEL POST AD WOOD BLOCKOUTS, INSTALL FOUR 16D GALVANIZED NAILS. INSTALL NAILS AT THE BACK CORNERS OF THE BLOCK AND BEND THE NAILS OVER THE FLANGE OF THE STEEL POST.

MIDWEST GUARDRAIL SYSTEM (MGS) GUARDRAIL

STATE OF WISCONSIN
DEPARTMENT OF TRANSPORTATION

6
SDD 14B42 - 06c

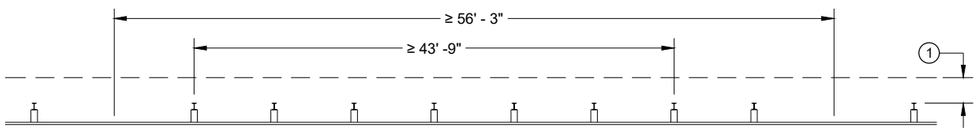

MISSING POST IN NORMAL BEAM GUARD RUN

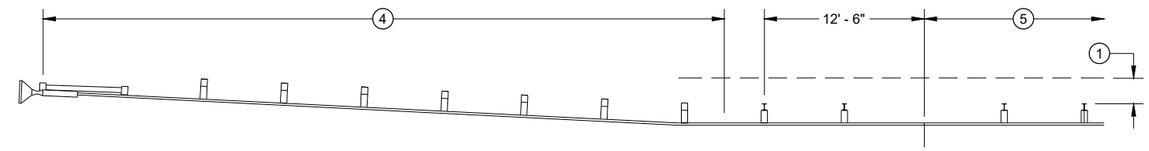

MISSING POST IN NORMAL BEAM GUARD RUN NEAR EAT

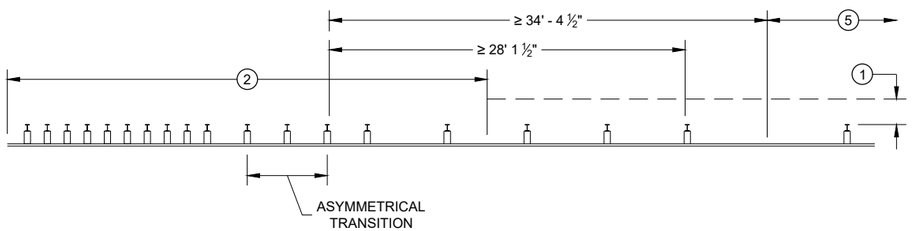

MISSING POST NEAR APPROACH THRIE BEAM TRANSITION

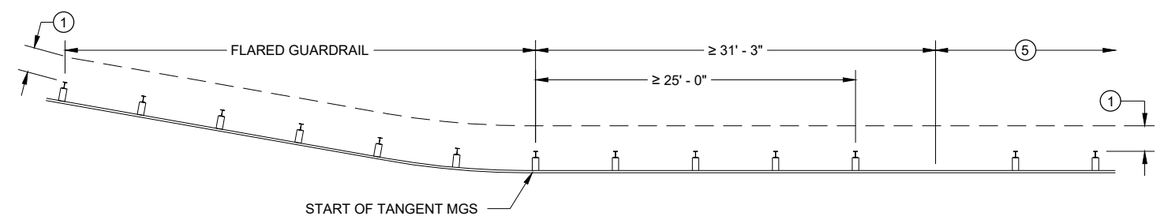

MISSING POST IN NORMAL BEAM GUARD RUN NEAR FLARED BEAM GUARD

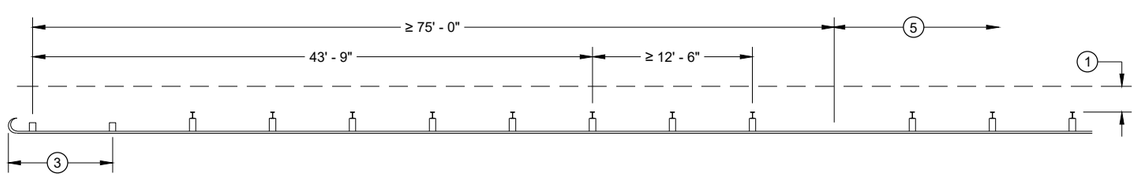

MISSING POST IN NORMAL BEAM GUARD RUN NEAR TYPE 2 TERMINAL

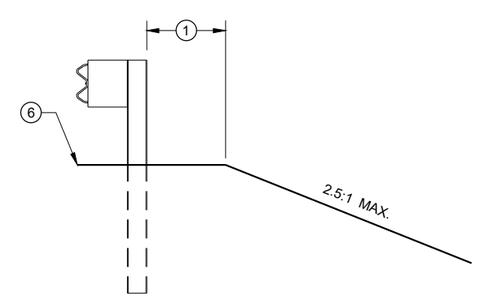

CROSS SECTION VIEW

1. MINIMUM OF 2 FEET OF GRADING BEHIND POST.
2. SEE SDD 14B45 FOR MORE DETAILS.
3. SEE SDD 14B47 FOR MORE DETAILS.
4. SEE SDD 14B44 FOR MORE DETAILS.
5. SEE MISSING POST IN NORMAL BEAM GUARD RUN FOR DISTANCE TO NEXT MISSING POST AND AREA FOR WELL DRAINED, COMPACTED SOILS.
6. SEE PLAN FOR SHOULDER DESIGN.

MIDWEST GUARDRAIL SYSTEM (MGS) GUARDRAIL

STATE OF WISCONSIN
DEPARTMENT OF TRANSPORTATION

APPROVED
7/2018 — DATE
/S/ Rodney Taylor — ROADWAY STANDARDS DEVELOPMENT UNIT SUPERVISOR
FHWA

6

SDD 14B42 - 06d

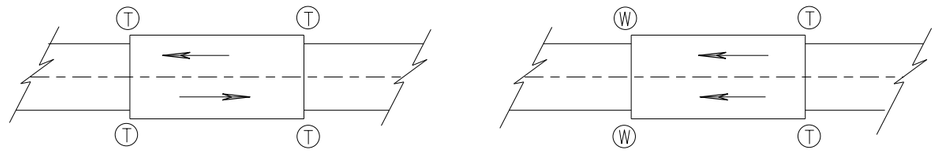

TWO WAY TRAFFIC **ONE WAY TRAFFIC**

(T) THRIE BEAM CONNECTION

(W) W-BEAM CONNECTION WHEN REQUIRED

TYPICAL LOCATIONS OF THRIE BEAM AND W-BEAM CONNECTIONS TO BRIDGE

GENERAL NOTES

IF ROCK IS ENCOUNTERED, REMOVE ROCK TO FULL DEPTH OF POST PLUS 2½", AND 12" DIAMETER AROUND POST. SEE 14B42 FOR MORE DETAILS.

TRANSITION USES STEEL POSTS ONLY.

SEE STANDARD DETAIL DRAWING 14 B 42 FOR MORE INFORMATION.

POST 2 THROUGH 17 USES STEEL POST ONLY

(1) BRIDGE RAILING TYPE "W" DOES NOT REQUIRE A TERMINAL CONNECTOR.

(2) OPTIONAL CURB AND GUTTER OR DRAINAGE FEATURE SEE PLAN FOR INFORMATION.

(13) STEEL OR WOOD POST IS ACCEPTABLE AT POST 1. SEE SDD14B42

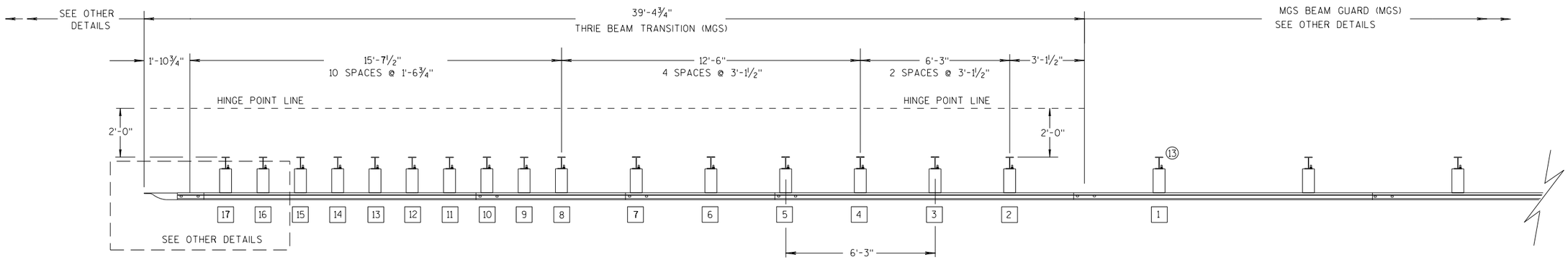

PLAN VIEW

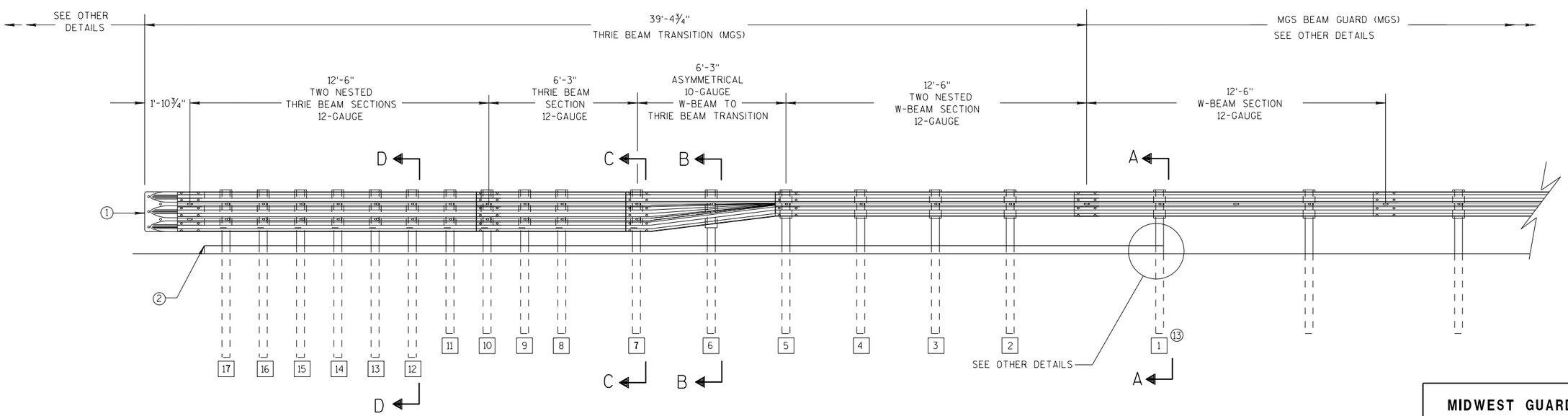

ELEVATION VIEW

MIDWEST GUARDRAIL SYSTEM THRIE BEAM TRANSITION

MIDWEST GUARDRAIL SYSTEM THRIE BEAM TRANSITION (MGS)

STATE OF WISCONSIN
DEPARTMENT OF TRANSPORTATION

6
S.D.D. 14 B 45-5a

GENERAL NOTES

(2) OPTIONAL CURB AND GUTTER OR DRAINAGE FEATURE SEE PLAN FOR INFORMATION.

(3) WHEN USING STEEL POSTS AND WOOD BLOCKOUTS INSTALL FOUR 10D GALVANIZED NAILS. INSTALL NAILS AT THE BACK CORNERS OF THE BLOCK AND BEND THE NAILS OVER THE FLANGE OF THE STEEL POST.

(4) TOLERANCE FOR TOP OF W-BEAM RAIL IS ± 1".

(13) STEEL OR WOOD POST IS ACCEPTABLE AT POST 1. SEE SDD 14B42

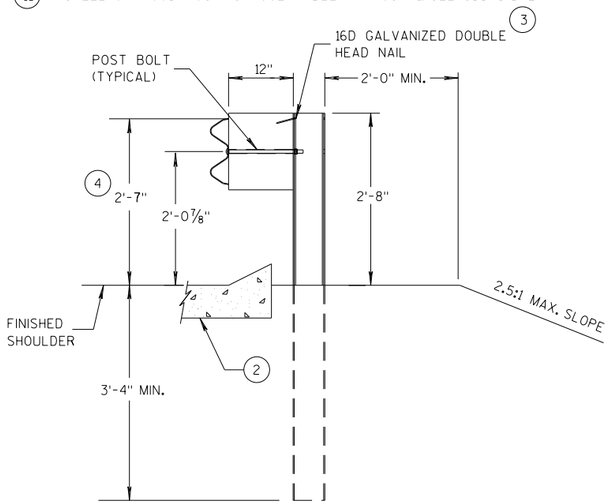

SECTION A-A (13)

POSTS 1-5

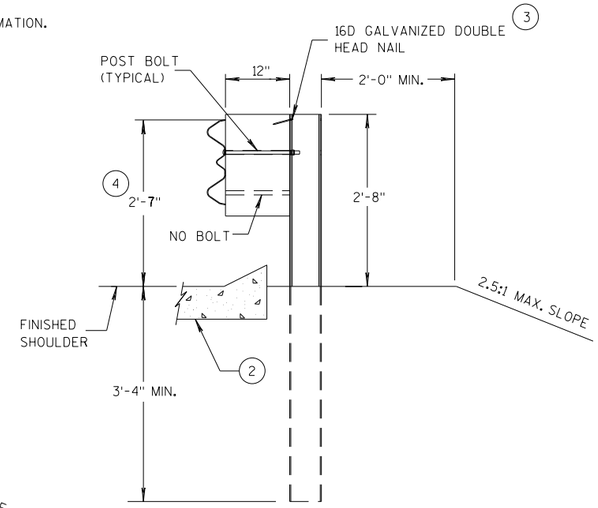

SECTION B-B

POST 6

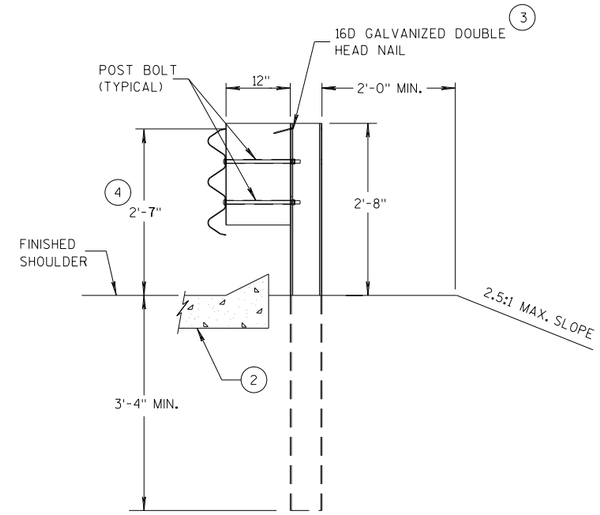

SECTION C-C

POSTS 7-11

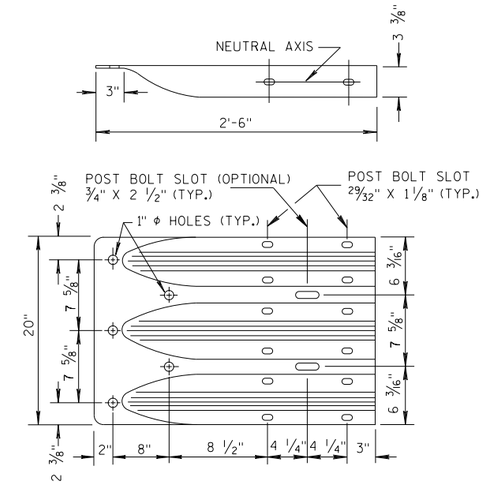

THRIE BEAM TERMINAL CONNECTOR

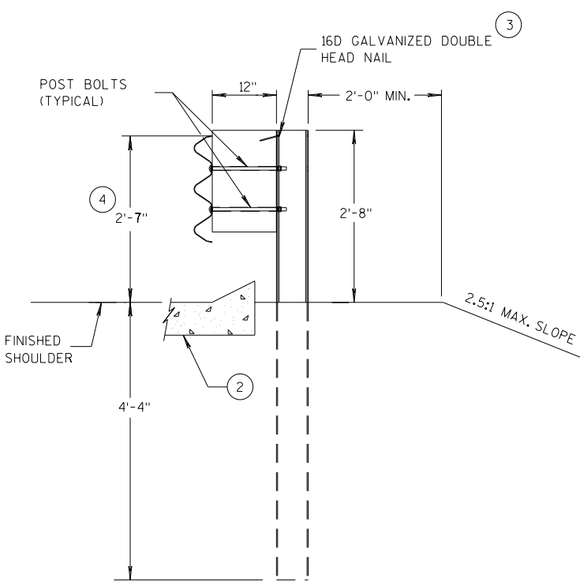

SECTION D-D

POSTS 12-17

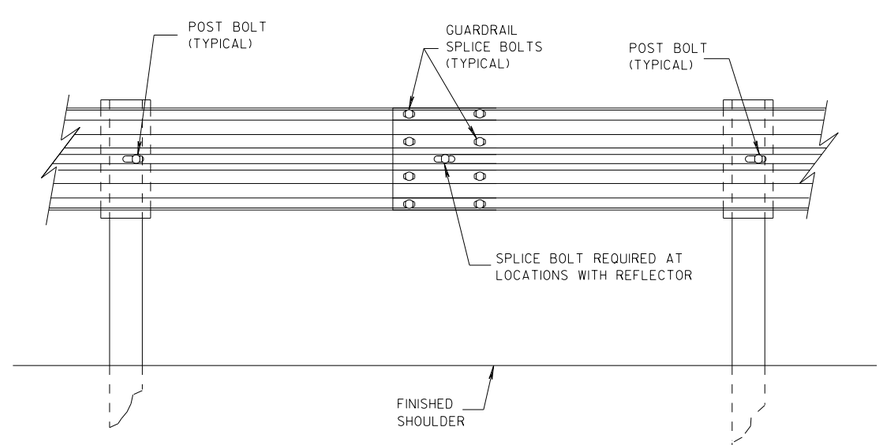

SPLICE DETAIL

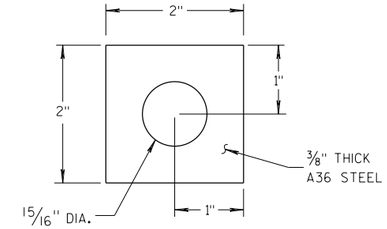

PLATE WASHER DETAIL

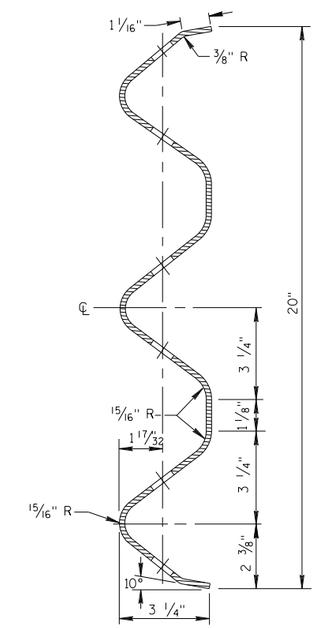

SECTION THRU THRIE BEAM RAIL ELEMENT

MIDWEST GUARDRAIL SYSTEM
THRIE BEAM TRANSITION (MGS)

STATE OF WISCONSIN
DEPARTMENT OF TRANSPORTATION

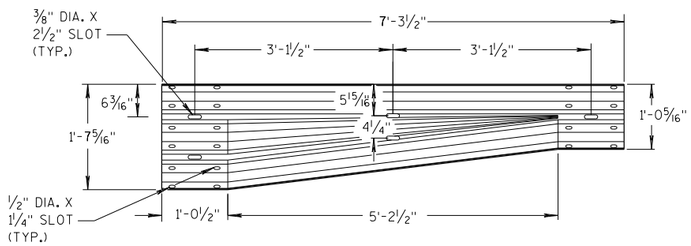

W-BEAM TO THRIE BEAM TRANSITION SECTION

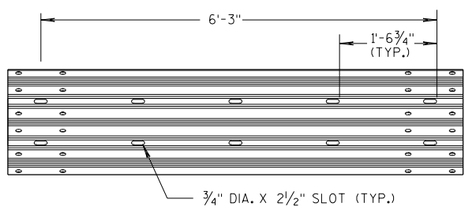

6'-3" THRIE BEAM SECTION

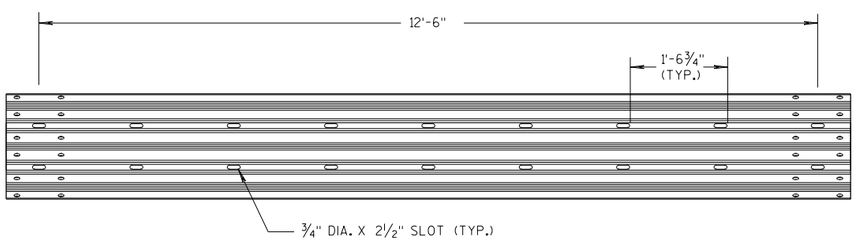

12'-6" THRIE BEAM SECTION

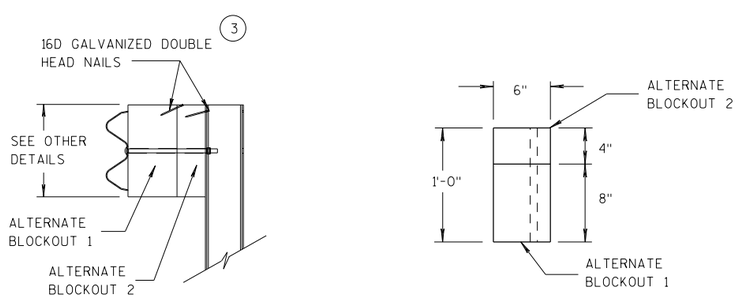

SIDE VIEW TOP VIEW

ALTERNATE WOOD BLOCKOUT DETAIL

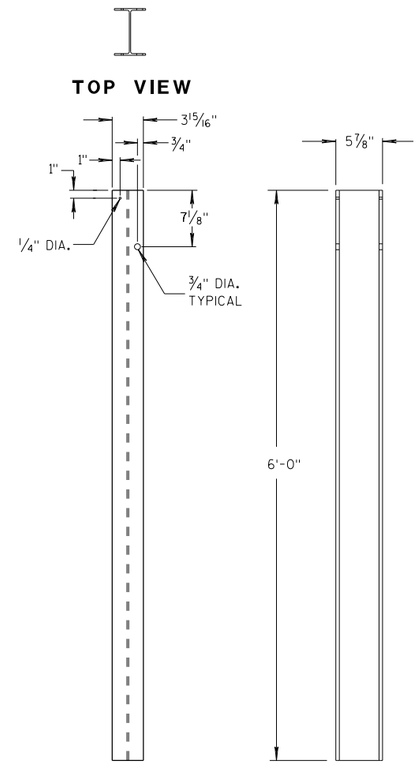

STEEL POSTS 1-5 (13)

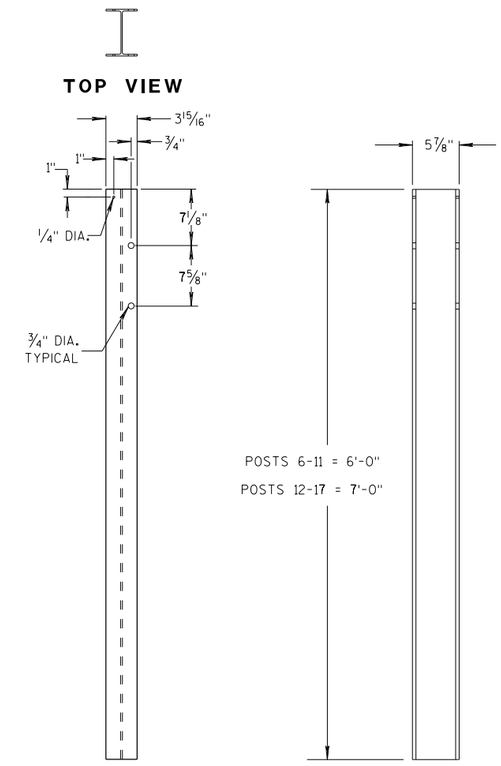

STEEL POSTS 6-17

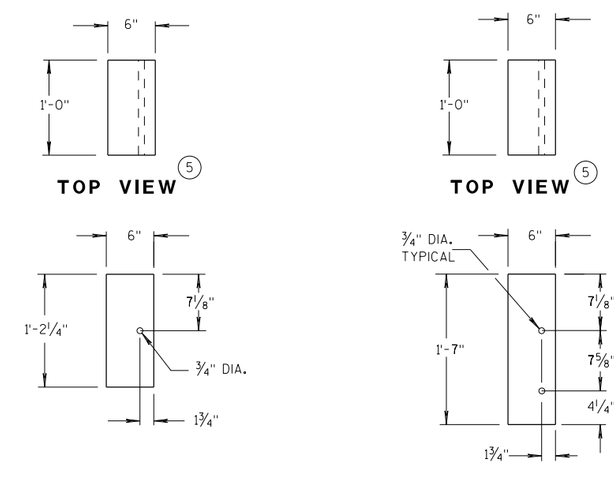

BLOCKOUT POSTS 1-5

BLOCKOUT POSTS 6-17

GENERAL NOTES

STEEL POSTS ARE W6X9 OR W6X8.5.

BOLT HOLES FOR POST ARE ON FRONT AND OF SIDE OF POST.

(3) WHEN USING STEEL POSTS AND WOOD BLOCKOUTS INSTALL FOUR 16D GALVANIZED NAILS. INSTALL NAILS AT THE BACK CORNERS OF THE BLOCK AND BEND THE NAILS OVER THE FLANGE OF THE STEEL POST.

(5) WOOD BLOCKS MAY BE CONSTRUCTED OUT OF 2 WOOD BLOCKS. SEE ALTERNATE WOOD BLOCK DETAIL.

(13) STEEL OR WOOD POST IS ACCEPTABLE AT POST 1. SEE SDD 14B42.

MIDWEST GUARDRAIL SYSTEM
THRIE BEAM TRANSITION (MGS)

STATE OF WISCONSIN
DEPARTMENT OF TRANSPORTATION

6
S.D.D. 14 B 45-5c

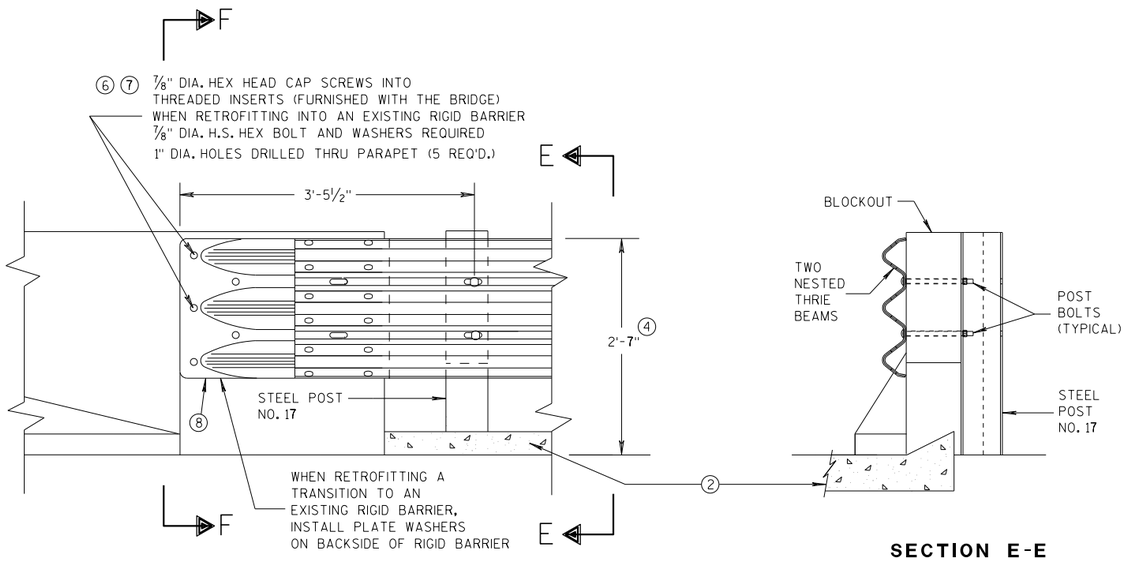

FRONT VIEW

SECTION E-E

THRIE BEAM CONNECTION TO BRIDGE PARAPET WITH SQUARE ENDS

GENERAL NOTES

THESE ARE TYPICAL CONNECTION DETAILS. ADJUST THE POSTION OF CONNECTIONS TO EXISTING BRIDGES TO FIT THE ACTUAL BRIDGE AND SITE DIMENSIONS.

② OPTIONAL CURB AND GUTTER OR DRAINAGE FEATURE SEE PLAN FOR INFORMATION.

④ TOLERANCE FOR TOP OF BEAM IS ± 1".

⑥ DRILLING BOLT HOLES THROUGH THE PARAPET, BOLTS, NUTS, WASHERS AND REPAIRING DAMAGED CONCRETE ARE INCIDENTAL TO THE CONTRACT.

⑦ BOLTS MAY BE A325 BOLTS OR A449 BOLTS. BOLT LENGTH AND THREADING LENGTH ARE TO ALLOW FOR A TIGHT CONNECTION BETWEEN RIGID BARRIER AND THRIE BEAM CONNECTION PLATE. CONTRACTOR IS TO FIELD VERIFY BOLT LENGTH AND THREAD LENGTH. ONE ROUND WASHER REQUIRED BETWEEN BOLT HEAD AND THRIE BEAM CONNECTOR PLATE. BOLTS THAT EXTEND THROUGH THE PARAPET AND OUT THE BACK FACE REQUIRE A HARDENED ROUND STEEL WASHER THAT IS 2" O.D. X 5/32" THICK AND ONE PLATE WASHER. REPAIR ANY DAMAGED CONCRETE FROM BOLT INSTALLATION.

⑧ THE RECESS FOR A W-BEAM CONNECTION, WHICH EXISTS ON SOME PARAPETS OF THIS TYPE, SHALL BE FILLED WITH A TREATED TIMBER BLOCKOUT. BLOCKOUT SIZE IS 1'-6" X 2'-0" X 3 1/2".

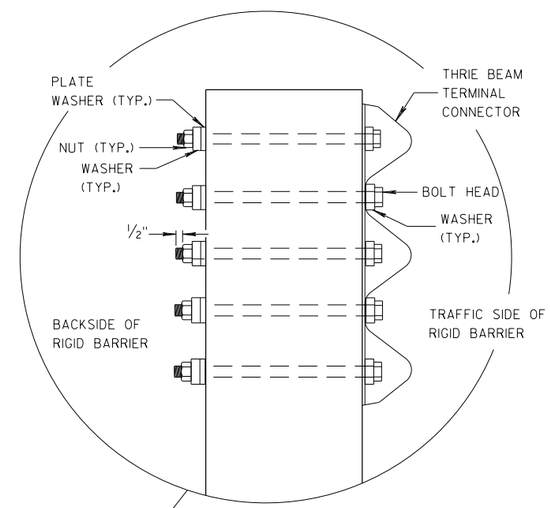

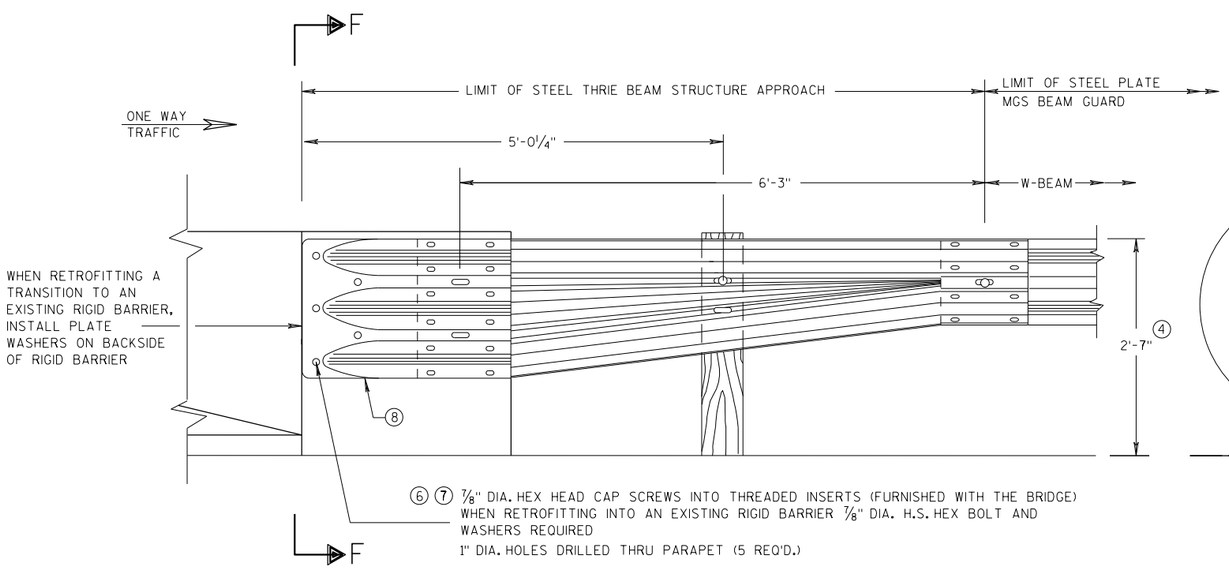

FRONT VIEW

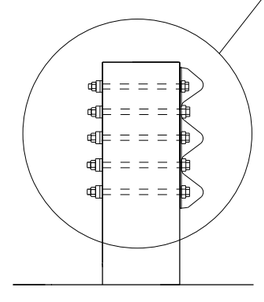

SECTION F-F

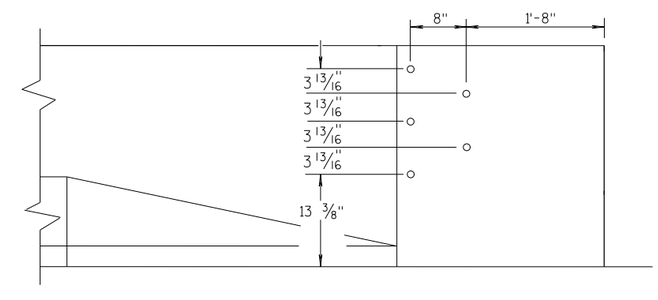

DRILL HOLE LOCATION

W BEAM TRANSITION AND CONNECTION TO BRIDGE PARAPETS WITH SQUARE ENDS

(USE ONLY ON THE TRAFFIC EXIT END OF ONE WAY BRIDGES)

MIDWEST GUARDRAIL SYSTEM THRIE BEAM TRANSITION (MGS)

STATE OF WISCONSIN
DEPARTMENT OF TRANSPORTATION

APPROVED
07/2018
DATE
FHWA

/S/ Rodney Taylor
ROADWAY STANDARDS DEVELOPMENT UNIT SUPERVISOR

6
S.D.D. 14 B 45-5d

GENERAL NOTES

THESE ARE TYPICAL CONNECTION DETAILS. ADJUST THE POSTION OF CONNECTIONS TO EXISTING BRIDGES TO FIT THE ACTUAL BRIDGE AND SITE DIMENSIONS.

(2) OPTIONAL CURB AND GUTTER OR DRAINAGE FEATURE SEE PLAN FOR INFORMATION.

(4) TOLERANCE FOR TOP OF BEAM IS ± 1".

(6) DRILLING BOLT HOLES THROUGH THE PARAPET, BOLTS, NUTS, WASHERS AND REPAIRING DAMAGED CONCRETE ARE INCIDENTAL TO THE CONTRACT.

(7) BOLTS MAY BE A325 BOLTS OR A449 BOLTS. BOLT LENGTH AND THREADING LENGTH ARE TO ALLOW FOR A TIGHT CONNECTION BETWEEN RIGID BARRIER AND THRIE BEAM CONNECTION PLATE. CONTRACTOR IS TO FIELD VERIFY BOLT LENGTH AND THREAD LENGTH. ONE ROUND WASHER REQUIRED BETWEEN BOLT HEAD AND THRIE BEAM CONNECTOR PLATE. BOLTS THAT EXTEND THROUGH THE PARAPET AND OUT THE BACK FACE REQUIRE A HARDENED ROUND STEEL WASHER THAT IS 2" O.D. X 5/32" THICK AND ONE PLATE WASHER. REPAIR ANY DAMAGED CONCRETE FROM BOLT INSTALLATION.

(8) THE RECESS FOR A W-BEAM CONNECTION, WHICH EXISTS ON SOME PARAPETS OF THIS TYPE, SHALL BE FILLED WITH A TREATED TIMBER BLOCKOUT. BLOCKOUT SIZE IS 1'-6" X 2'-0" X 3 1/2".

(9) BOLT, NUT AND WASHERS NOT REQUIRED FOR THIS LOCATION WHEN RETROFITTING AN EXISTING PAPAPET AND THE HOLE IS EITHER ABOVE PARAPET OR WITHIN 4 INCHES OF THE EDGE OF PARAPET.

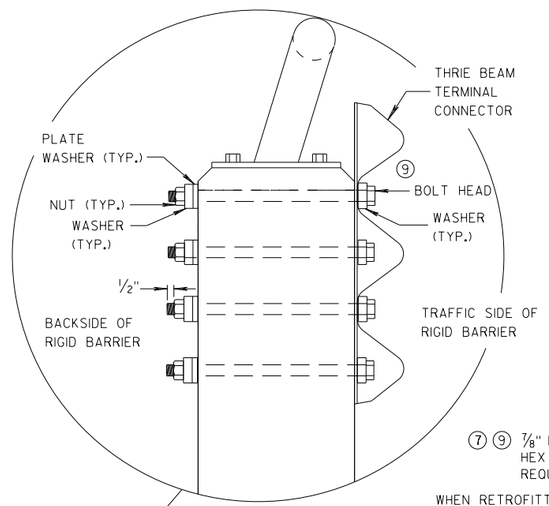

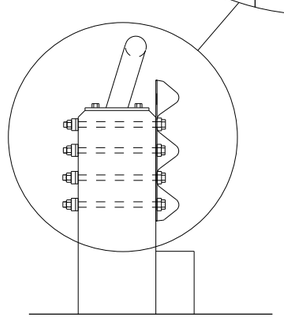

SECTION G-G

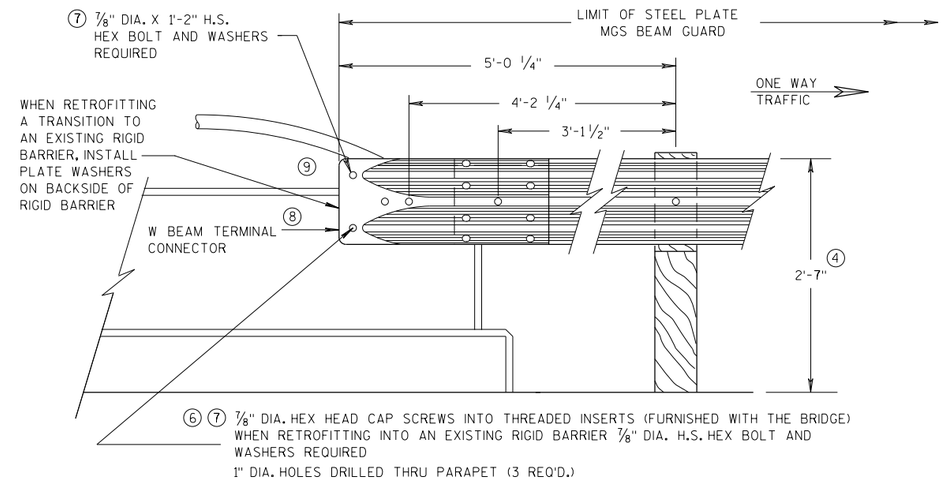

FRONT VIEW

W BEAM CONNECTION TO VERTICAL FACE PARAPET

(USE ONLY ON THE TRAFFIC EXIT END OF ONE WAY BRIDGES)

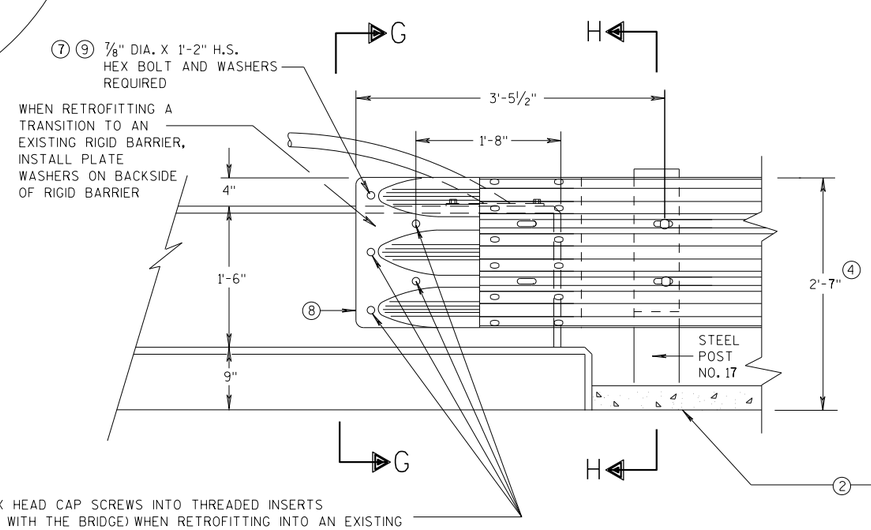

FRONT VIEW

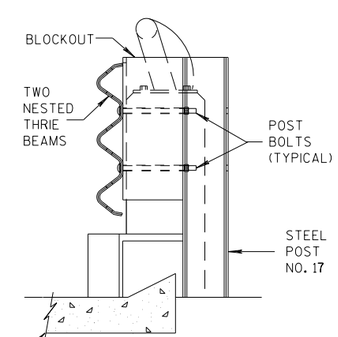

SECTION H-H

THRIE BEAM CONNECTION TO VERTICAL FACED PARAPETS

MIDWEST GUARDRAIL SYSTEM THRIE BEAM TRANSITION (MGS)

STATE OF WISCONSIN
DEPARTMENT OF TRANSPORTATION

APPROVED 07/2018 — DATE
/S/ Rodney Taylor — ROADWAY STANDARDS DEVELOPMENT UNIT SUPERVISOR
FHWA

6
S.D.D. 14 B 45-5e

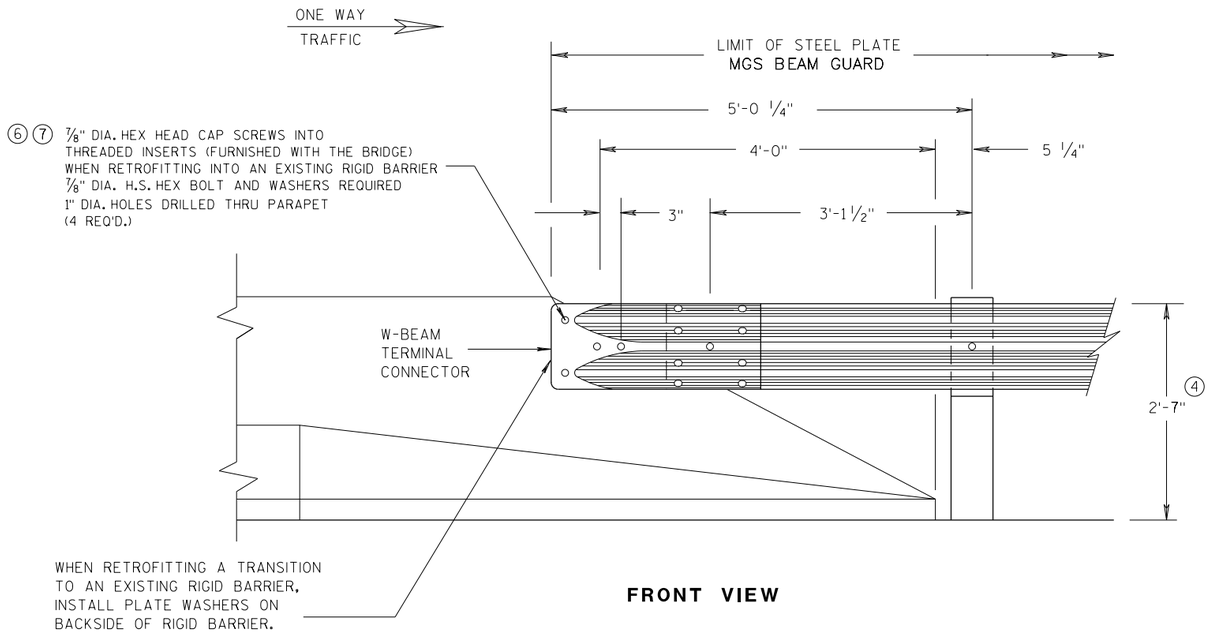

FRONT VIEW

W BEAM CONNECTION TO PARAPETS WITH SLOPED ENDS

(USE ONLY AT TRAFFIC EXIT END OF ONE WAY BRIDGE)

GENERAL NOTES

② OPTIONAL CURB AND GUTTER OR DRAINAGE FEATURE SEE PLAN FOR INFORMATION.

④ TOLERANCE FOR TOP OF BEAM IS ± 1".

⑥ DRILLING BOLT HOLES THROUGH THE PARAPET, BOLTS, NUTS, WASHERS AND REPAIRING DAMAGED CONCRETE ARE INCIDENTAL TO THE CONTRACT.

⑦ BOLTS MAY BE A325 BOLTS OR A449 BOLTS. BOLT LENGTH AND THREADING LENGTH ARE TO ALLOW FOR A TIGHT CONNECTION BETWEEN RIGID BARRIER AND THRIE BEAM CONNECTION PLATE. CONTRACTOR IS TO FIELD VERIFY BOLT LENGTH AND THREAD LENGTH. ONE ROUND WASHER REQUIRED BETWEEN BOLT HEAD AND THRIE BEAM CONNECTOR PLATE. BOLTS THAT EXTEND THROUGH THE PARAPET AND OUT THE BACK FACE REQUIRE A HARDENED ROUND STEEL WASHER THAT IS 2" O.D. X 5/32" THICK AND ONE PLATE WASHER. REPAIR ANY DAMAGED CONCRETE FROM BOLT INSTALLATION.

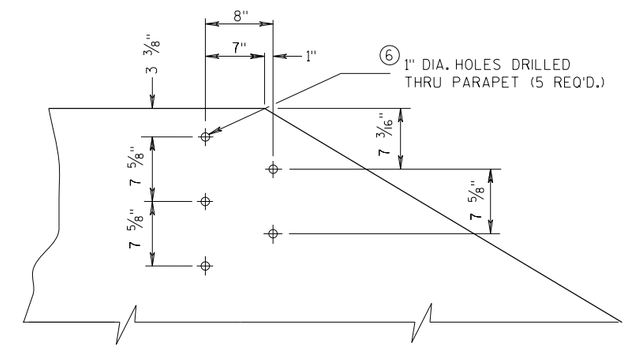

DRILL HOLE LOCATION AND PATTERN FOR THRIE BEAM CONNECTION

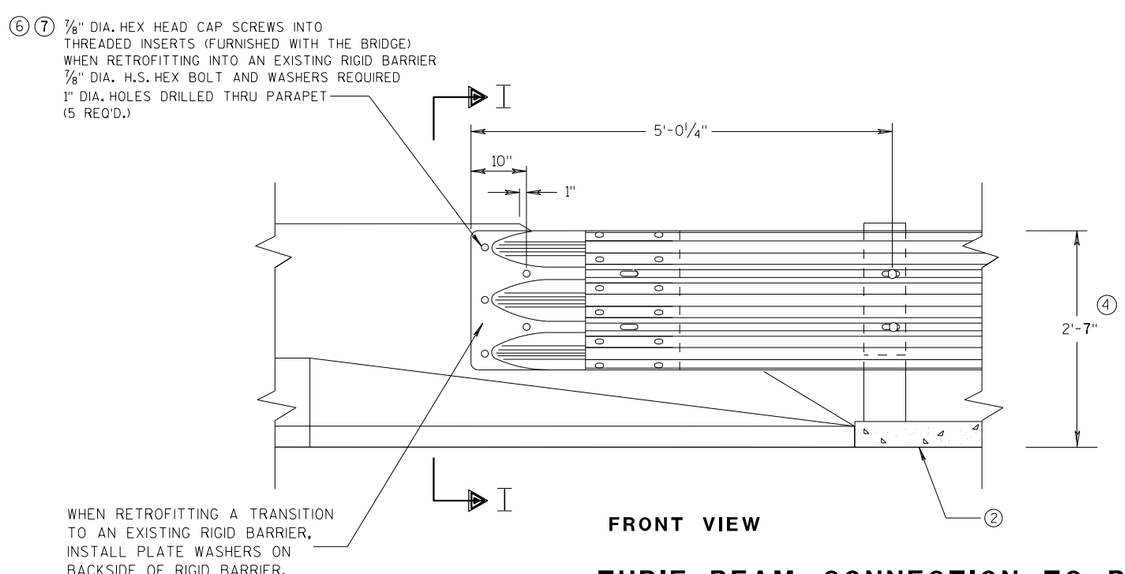

FRONT VIEW

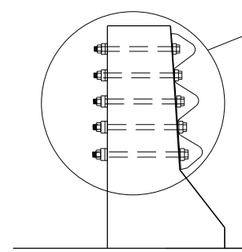

SECTION I-I

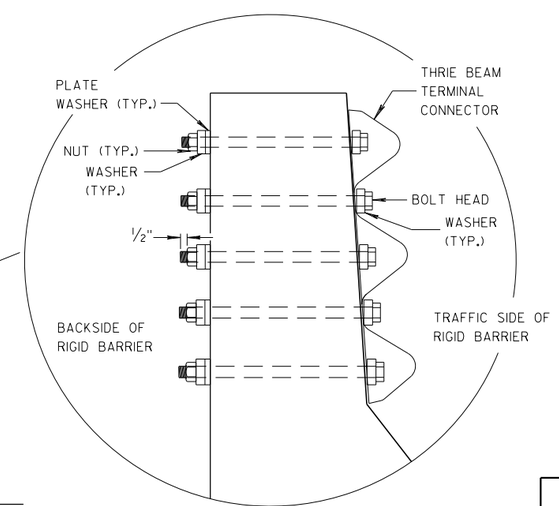

THRIE BEAM CONNECTION TO BRIDGE PARAPETS WITH SLOPED ENDS

MIDWEST GUARDRAIL SYSTEM THRIE BEAM TRANSITION (MGS)

STATE OF WISCONSIN
DEPARTMENT OF TRANSPORTATION

APPROVED
07/2018 — DATE
/S/ Rodney Taylor — ROADWAY STANDARDS DEVELOPMENT UNIT SUPERVISOR
FHWA

6

6

S.D.D. 14 B 45-5f

S.D.D. 14 B 45-5f

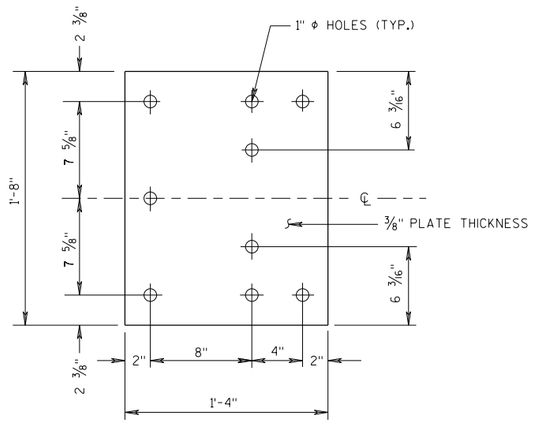

BACK-UP PLATE DETAIL

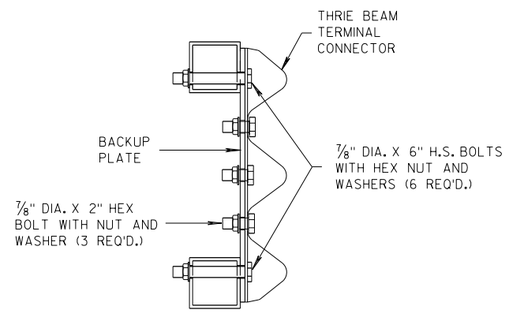

SECTION J-J

GENERAL NOTES

(4) TOLERANCE FOR TOP OF BEAM IS ± 1".

(6) DRILLING HOLES THROUGH THE PAPRPET, BOLTS, NUTS, WASHERS AND REPAIRING DAMAGED CONCRETE ARE INCIDENTAL TO THE CONTRACT.

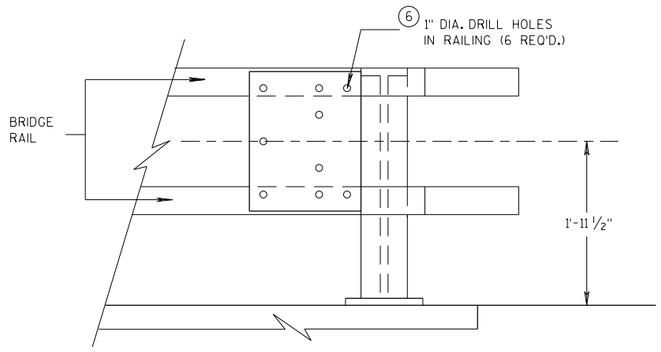

BACK-UP PLATE MOUNTING ONTO BRIDGE RAILING

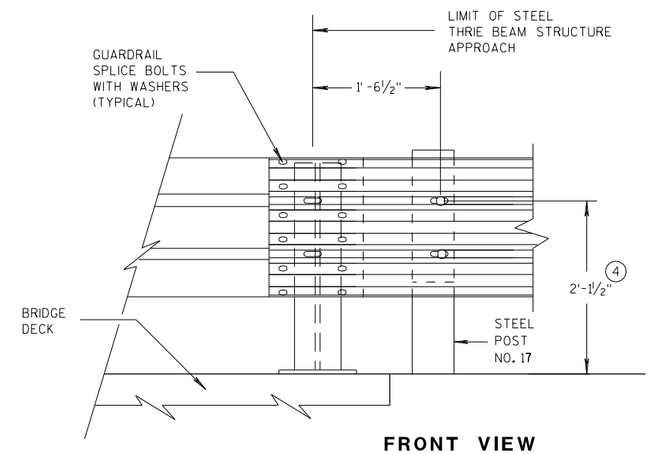

FRONT VIEW

THRIE BEAM CONNECTION TO STEEL RAILING TYPE "W"

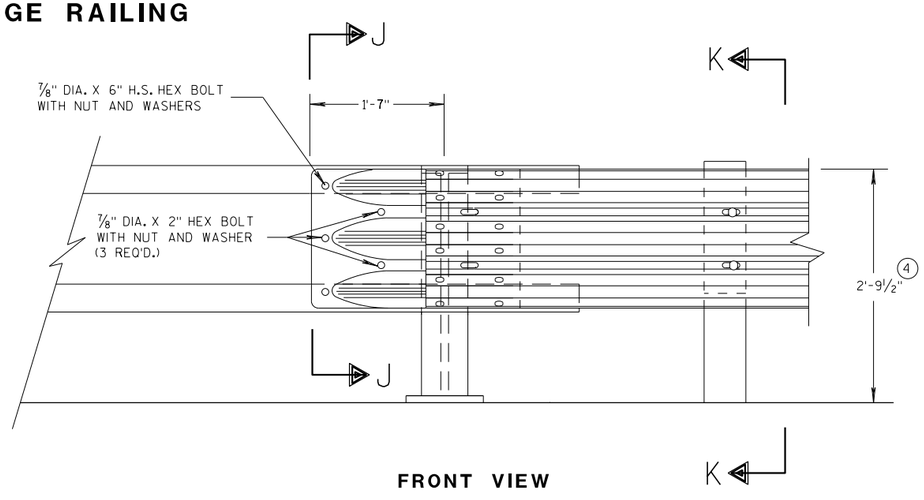

FRONT VIEW

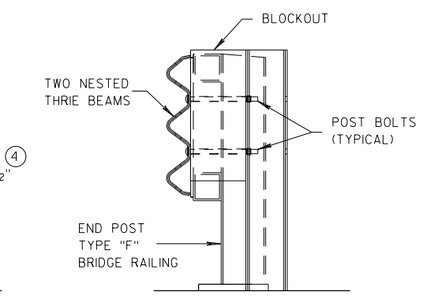

SECTION K-K

THRIE BEAM CONNECTION TO TUBULAR RAILING TYPE "F"

MIDWEST GUARDRAIL SYSTEM THRIE BEAM TRANSITION (MGS)

STATE OF WISCONSIN
DEPARTMENT OF TRANSPORTATION

APPROVED 07/2018 — DATE — FHWA

/S/ Rodney Taylor — ROADWAY STANDARDS DEVELOPMENT UNIT SUPERVISOR

6

S.D.D. 14 B 45-5g

GENERAL NOTES

(4) TOLERANCE FOR TOP OF W-BEAM RAIL IS ± 1".

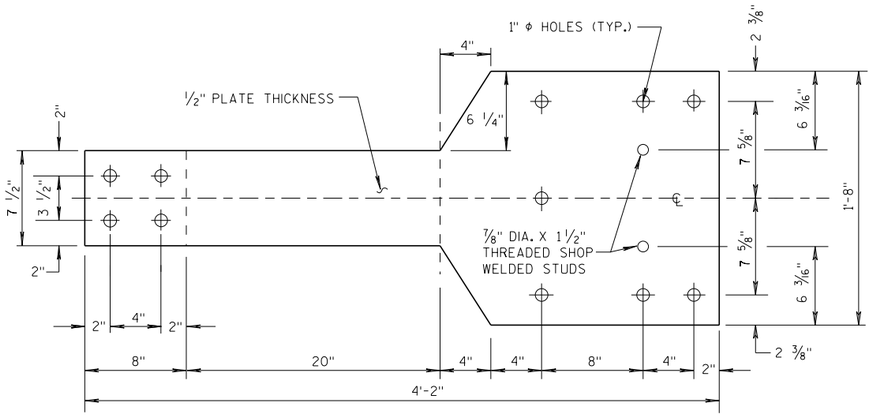

FRONT VIEW

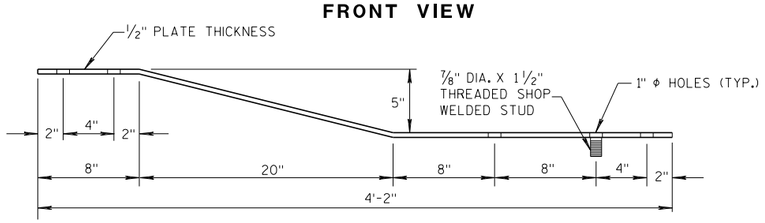

PLAN VIEW

BACK-UP PLATE DETAIL, TYPE "M"

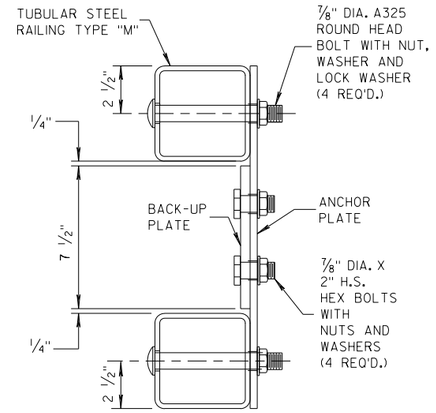

SECTION L-L

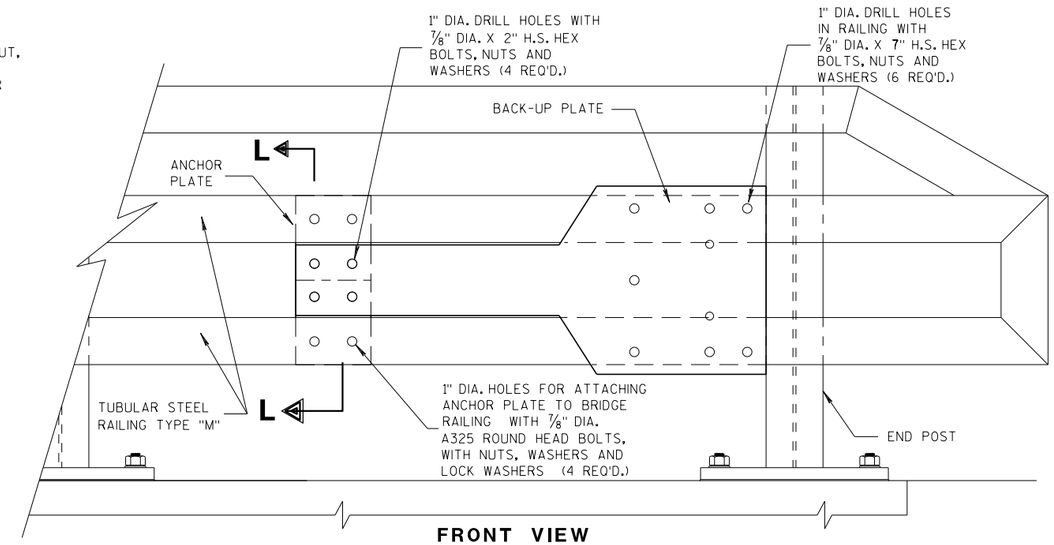

FRONT VIEW

ANCHOR AND BACK-UP PLATE MOUNTING TO BRIDGE RAILING, TYPE "M"

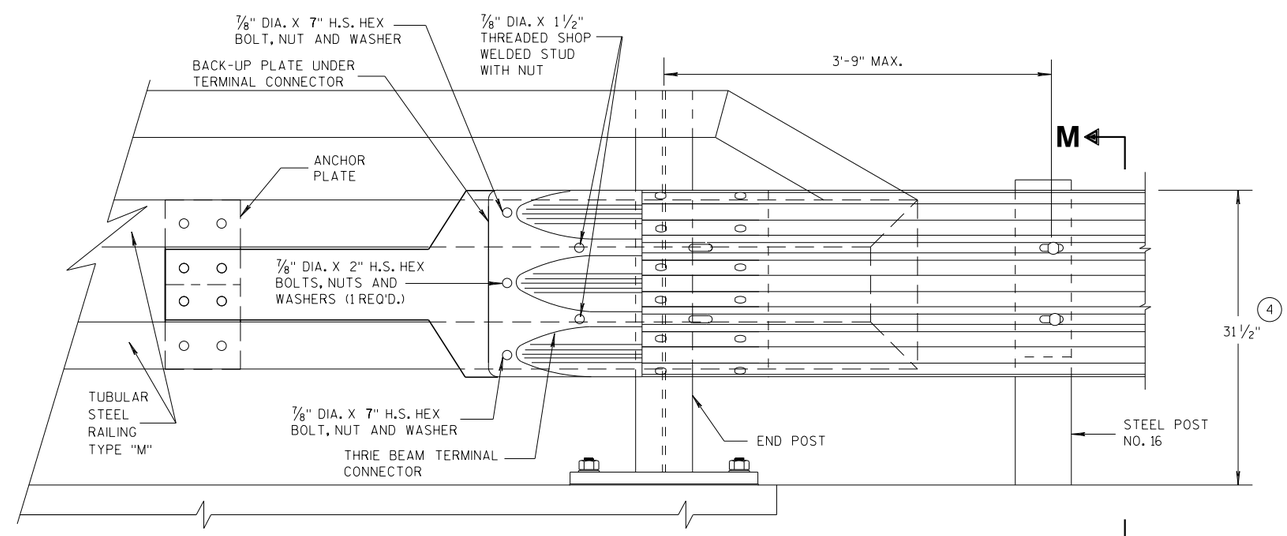

FRONT VIEW

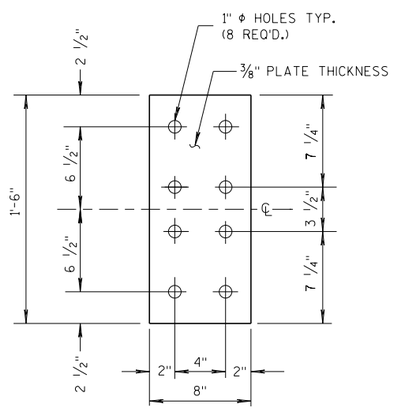

FRONT VIEW

ANCHOR PLATE DETAIL, TYPE "M"

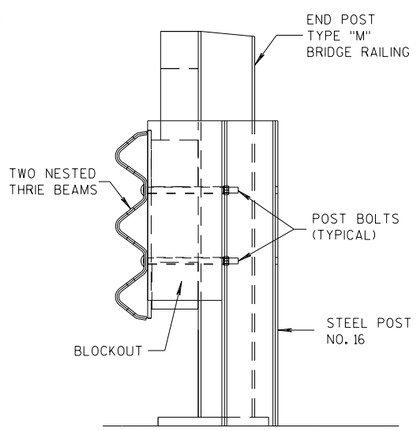

SECTION M-M

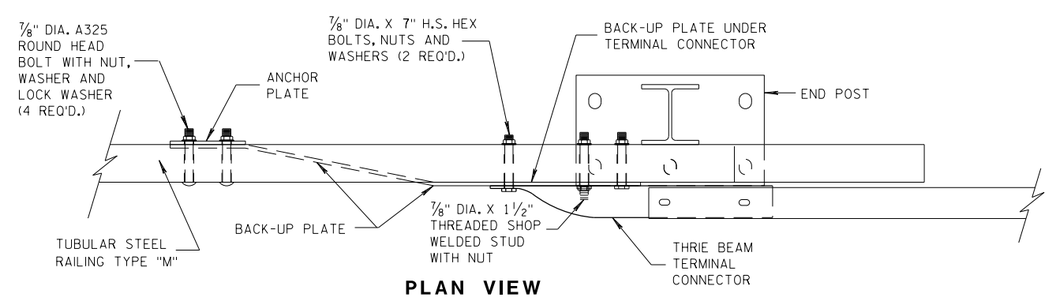

PLAN VIEW

THRIE BEAM CONNECTION TO TUBULAR RAILING, TYPE "M"

MIDWEST GUARDRAIL SYSTEM THRIE BEAM TRANSITION (MGS)

STATE OF WISCONSIN
DEPARTMENT OF TRANSPORTATION

APPROVED
07/2018 — DATE
/S/ Rodney Taylor — ROADWAY STANDARDS DEVELOPMENT UNIT SUPERVISOR
FHWA

6
S.D.D. 14 B 45-5h

GENERAL NOTES

COVER PLATE PANELS ARE 3/16" THICK.

ALL STIFFENERS ARE 1/4" THICK.

CONNECTOR PLATE SHALL BE FABRICATED FROM ASTM GRADE A36 STEEL AND GALVANIZED.

FOR GALVANIZED REQUIREMENTS, SEE SECTION 614 OF THE STANDARD SPECIFICATIONS.

ALL HOLE DIAMETERS SHALL BE 1".

FOR OPPOSITE SIDE INSTALLATION MIRROR DRAWINGS.

(10) STIFFENERS LOCATED AT THE OUTSIDE EDGES OF THE COVER PLATES SHALL BE WELDED AS FOLLOWS:
SINGLE BEVEL GROOVE WELD ON EXTERNAL SIDES AND 3/16" FILLET WELD BY 1" LONG SPACED AT 2" ON INTERNAL SIDES.

(11) STIFFENERS LOCATED ON THE INSIDE OF THE COVER PLATE SHALL BE WELDED AS FOLLOWS:
3/16" FILLET WELD BY 1" LONG SPACED AT 2".

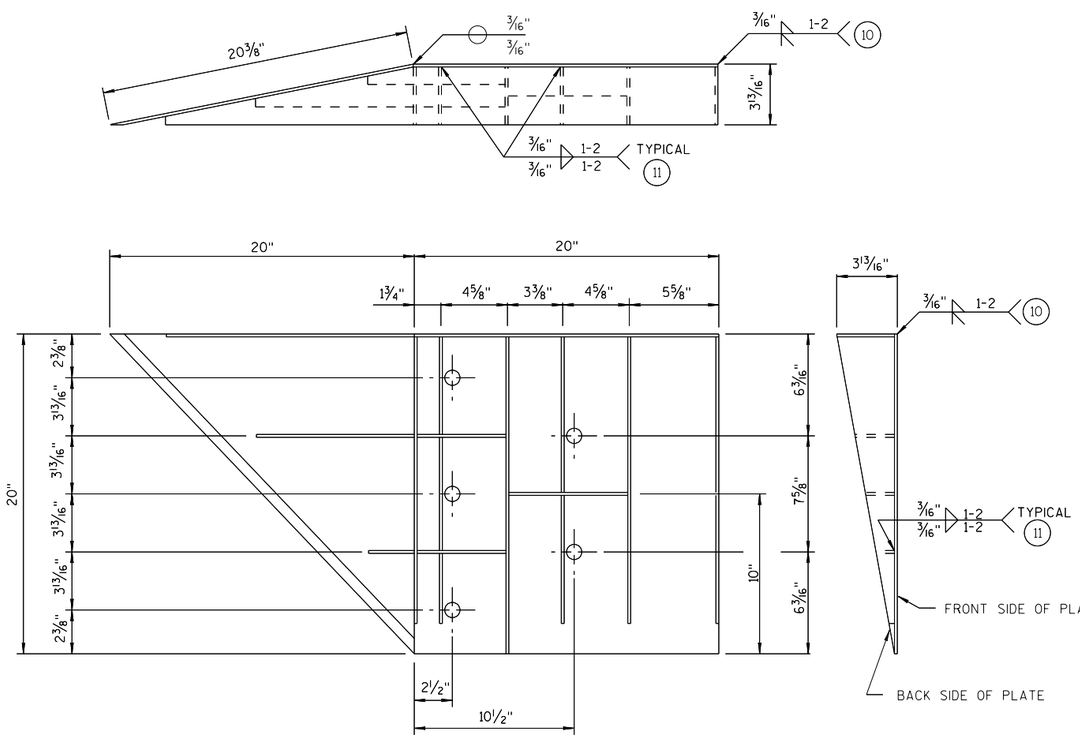

WELDING INSTRUCTION

(VIEWED FROM BACK SIDE OF PLATE)

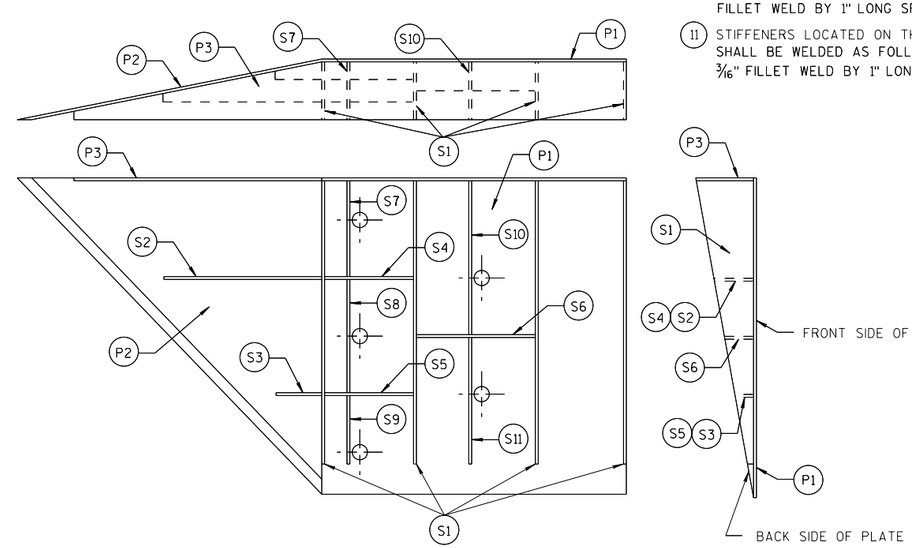

PLATE AND STIFFENER IDENTIFICATION

(VIEWED FROM BACK SIDE OF PLATE)

CONNECTOR PLATE DIMENSION (PER ASSEMBLY)				
PLATE	QUANTITY	SHAPE	SIZE (A x B x C x D)	THICKNESS
P1	1		20" x 20"	3/16"
P2	1		20" x 20" x 28 9/16"	3/16"
P3	1		39" x 3 5/8" x 20" x 19 5/16"	3/16"
S1	4		18 7/16" x 3 5/8" x 18 3/4"	1/4"
S2	1		10 1/4" x 2 7/16" x 10 3/8" x 1/2"	1/4"
S3	1		3" x 1 1/16" x 3 1/8" x 1/2"	1/4"
S4	1		6 1/8" x 2 7/16"	1/4"
S5	1		6 1/8" x 1 1/16"	1/4"
S6	1		7 3/4" x 1 3/4"	1/4"
S7	1		2 9/16" x 6" x 3 5/8" x 5 7/8"	1/4"
S8	1		1 5/32" x 7 1/2" x 2 1/2" x 7 3/8"	1/4"
S9	1		6 1/16" x 6 3/16" x 1 3/32"	1/4"
S10	1		1 7/8" x 9 7/8" x 3 5/8" x 9 11/16"	1/4"
S11	1		8 1/2" x 8 3/4" x 1 13/16"	1/4"

SINGLE SLOPE CONNECTION PLATE

MIDWEST GUARDRAIL SYSTEM
THRIE BEAM TRANSITION (MGS)

STATE OF WISCONSIN
DEPARTMENT OF TRANSPORTATION

APPROVED
7/2018
DATE
FHWA

/S/ Rodney Taylor
ROADWAY STANDARDS DEVELOPMENT UNIT SUPERVISOR

6
S.D.D. 14 B 45-5i

GENERAL NOTES

CONNECTOR PLATE, DRILLING BOLT HOLES THROUGH THE BARRIER, BOLTS, NUTS, WASHERS AND REPAIRING DAMAGED CONCRETE ARE INCIDENTAL TO THE CONTRACT.

(2) OPTIONAL CURB AND GUTTER OR DRAINAGE FEATURE SEE PLAN FOR INFORMATION.

(7) BOLTS MAY BE A325 BOLTS OR A449 BOLTS. BOLT LENGTH AND THREADING LENGTH ARE TO ALLOW FOR A TIGHT CONNECTION BETWEEN RIGID BARRIER AND THRIE BEAM CONNECTION PLATE. CONTRACTOR IS TO FIELD VERIFY BOLT LENGTH AND THREAD LENGTH. ONE ROUND WASHER REQUIRED BETWEEN BOLT HEAD AND THRIE BEAM CONNECTOR PLATE. BOLTS THAT EXTEND THROUGH THE BARRIER AND OUT THE BACK FACE REQUIRE A HARDENED ROUND STEEL WASHER THAT IS 2" O.D. X 5/32" THICK AND ONE PLATE WASHER. REPAIR ANY DAMAGED CONCRETE FROM BOLT INSTALLATION.

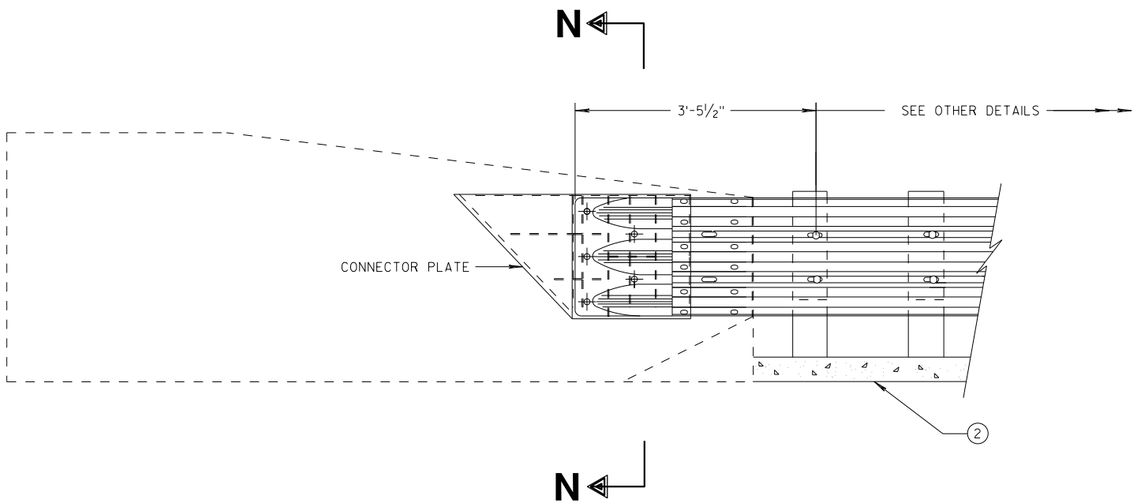

THRIE BEAM CONNECTION TO SINGLE SLOPE BARRIER

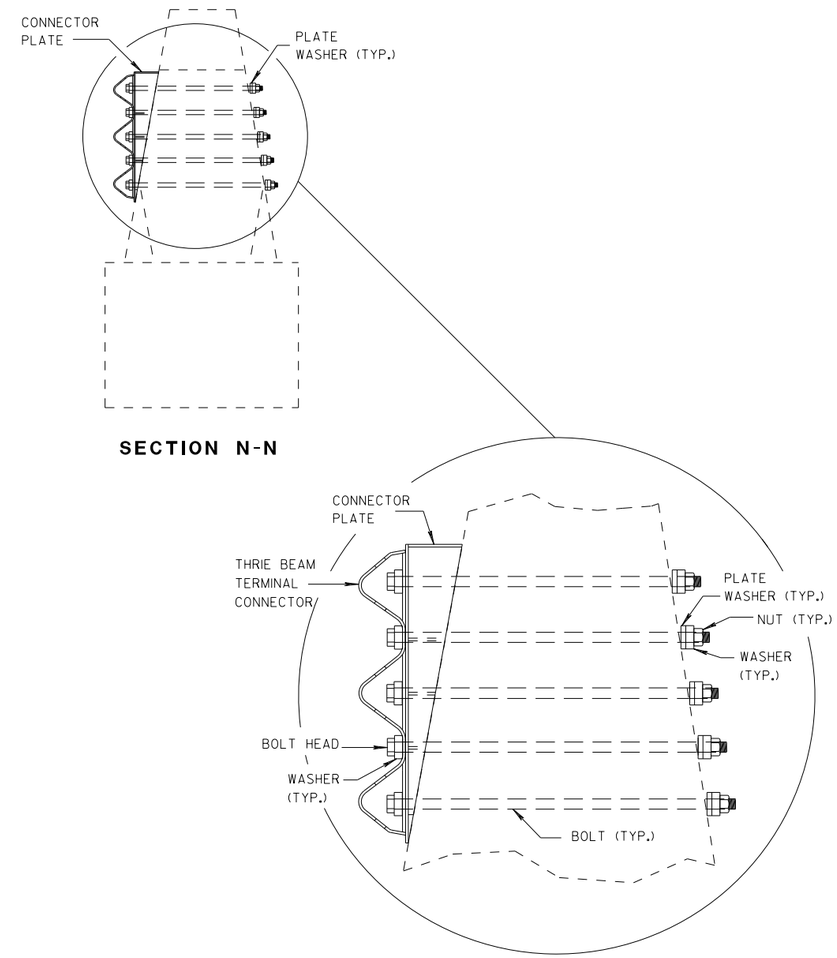

SECTION N-N

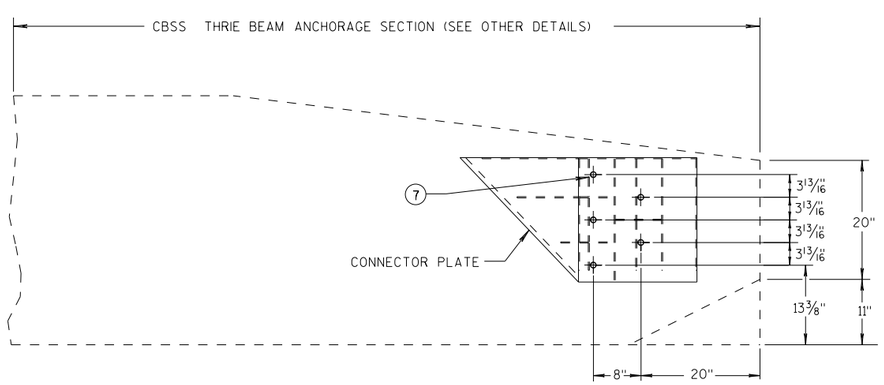

SINGLE SLOPE CONNECTION PLATE PLACEMENT

MIDWEST GUARDRAIL SYSTEM THRIE BEAM TRANSITION (MGS)

STATE OF WISCONSIN
DEPARTMENT OF TRANSPORTATION

APPROVED
7/2018
DATE
FHWA

/S/ Rodney Taylor
ROADWAY STANDARDS DEVELOPMENT UNIT SUPERVISOR

6
S.D.D. 14 B 45-5j

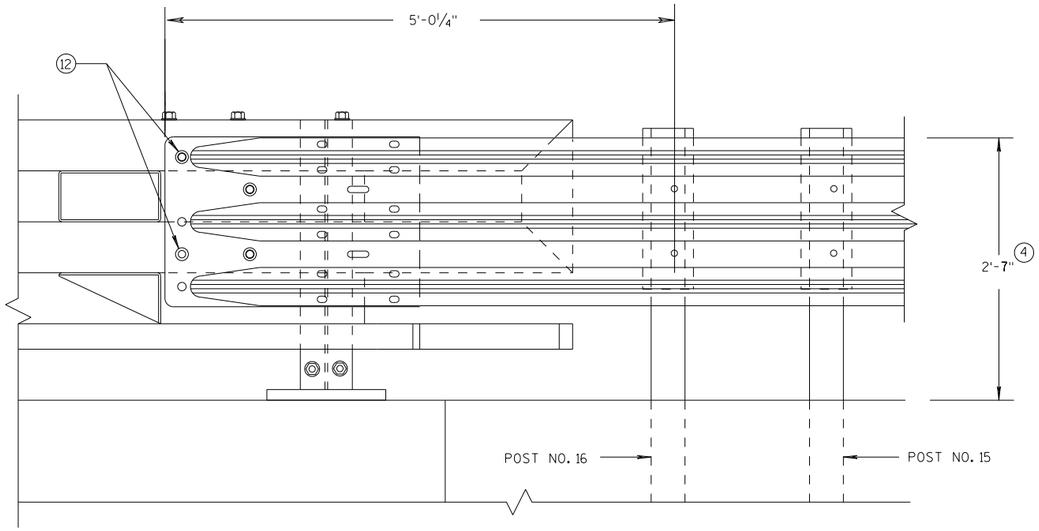

ELEVATION OF DETAIL AT NY3 END POST

THRIE BEAM RAIL ATTACHMENT

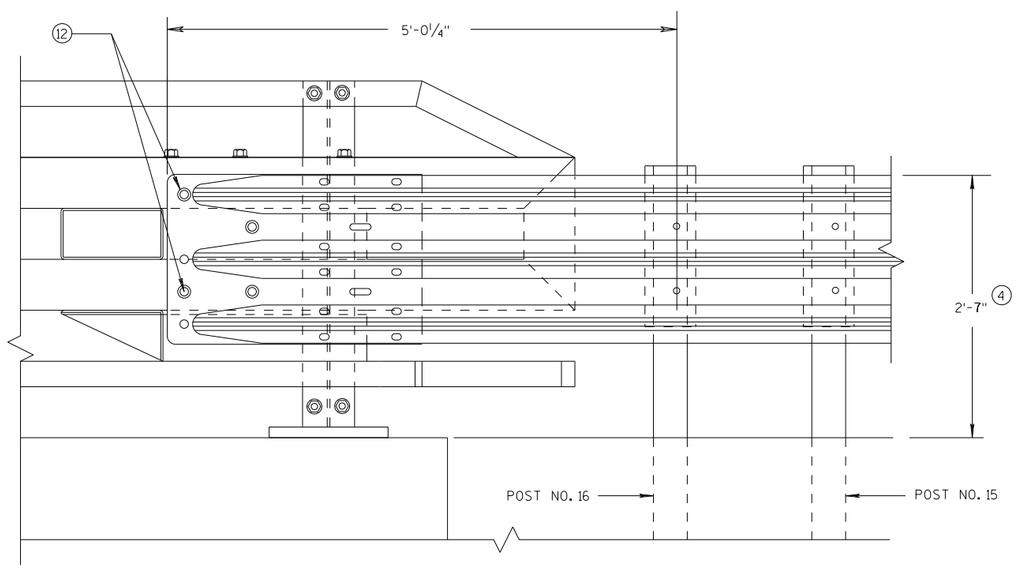

ELEVATION OF DETAIL AT NY4 END POST

THRIE BEAM RAIL ATTACHMENT

GENERAL NOTES

(4) TOLERANCE FOR TOP OF BEAM IS ± 1".

(12) BOLTS MAY BE A325 BOLTS OR A449 BOLTS. BOLT LENGTH AND THREADING LENGTH ARE TO ALLOW FOR A TIGHT CONNECTION BETWEEN RIGID BARRIER AND THRIE BEAM CONNECTION PLATE. CONTRACTOR IS TO FIELD VERIFY BOLT LENGTH AND THREAD LENGTH. ONE ROUND WASHER REQUIRED BETWEEN BOLT HEAD AND THRIE BEAM CONNECTOR PLATE. ON BACKSIDE OF PARAPET ONE ROUND WASHER, AND NUT REQUIRED. BOLT THREAD IS TO EXTEND ½-INCH BEYOND NUT.

MIDWEST GUARDRAIL SYSTEM
THRIE BEAM TRANSITION (MGS)

STATE OF WISCONSIN
DEPARTMENT OF TRANSPORTATION

APPROVED
7/2018
DATE
FHWA

/S/ Rodney Taylor
ROADWAY STANDARDS DEVELOPMENT
UNIT SUPERVISOR

6

S.D.D. 14 B 45-5k

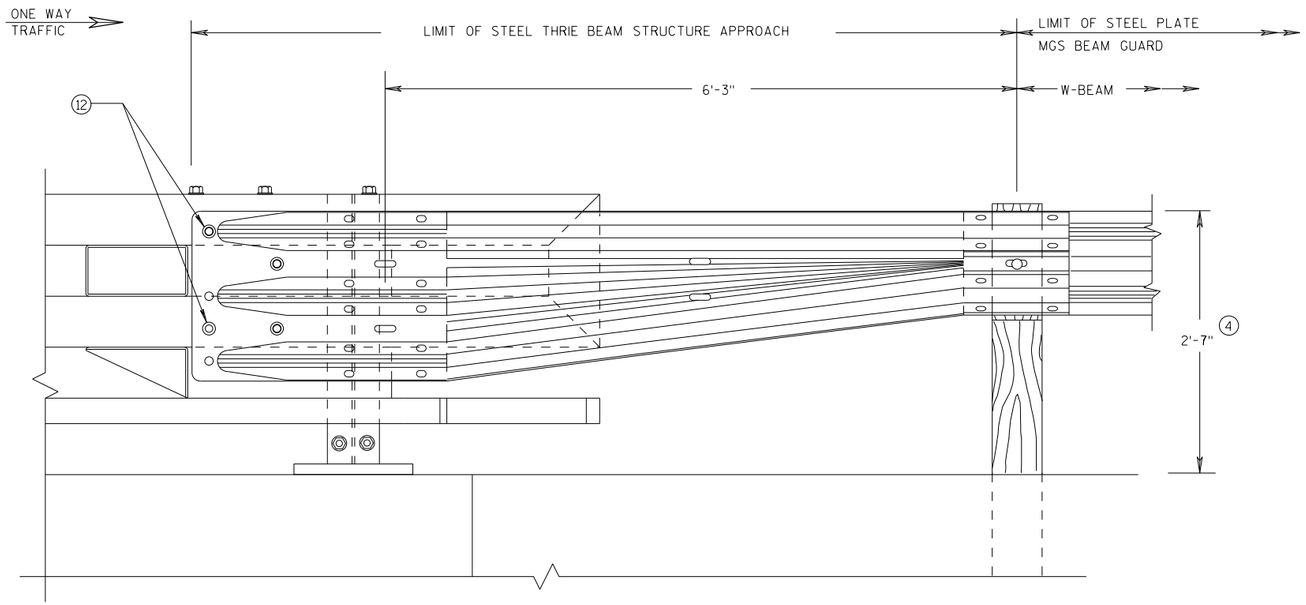

FRONT VIEW

W BEAM TRANSITION AND CONNECTION TO BRIDGE RAILING TYPE "NY3"

(USE ONLY ON THE TRAFFIC EXIT END OF ONE WAY BRIDGES)

GENERAL NOTES

(4) TOLERANCE FOR TOP OF BEAM IS ± 1".

(12) BOLTS MAY BE A325 BOLTS OR A449 BOLTS. BOLT LENGTH AND THREADING LENGTH ARE TO ALLOW FOR A TIGHT CONNECTION BETWEEN RIGID BARRIER AND THRIE BEAM CONNECTION PLATE. CONTRACTOR IS TO FIELD VERIFY BOLT LENGTH AND THREAD LENGTH. ONE ROUND WASHER REQUIRED BETWEEN BOLT HEAD AND THRIE BEAM CONNECTOR PLATE. ON BACKSIDE OF PARAPET ONE ROUND WASHER, AND NUT REQUIRED. BOLT THREAD IS TO EXTEND ½-INCH BEYOND NUT.

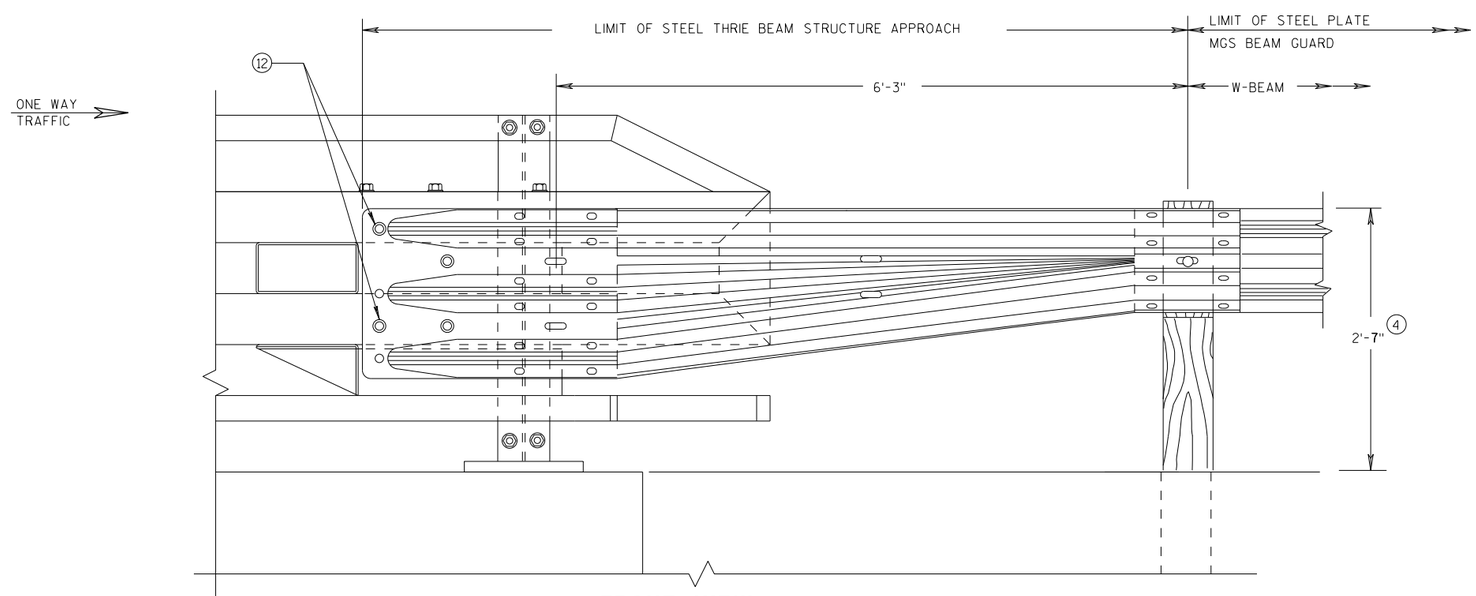

FRONT VIEW

W BEAM TRANSITION AND CONNECTION TO BRIDGE RAILING TYPE "NY4"

(USE ONLY ON THE TRAFFIC EXIT END OF ONE WAY BRIDGES)

MIDWEST GUARDRAIL SYSTEM THRIE BEAM TRANSITION (MGS)

STATE OF WISCONSIN
DEPARTMENT OF TRANSPORTATION

APPROVED
7/2018
DATE
FHWA

/S/ Rodney Taylor
ROADWAY STANDARDS DEVELOPMENT UNIT SUPERVISOR

6
S.D.D. 14 B 45-5L

SDD 14b47-a Midwest Guardrail System (MGS) Type 2 Terminal - Terminal Layout, End and Section Detail

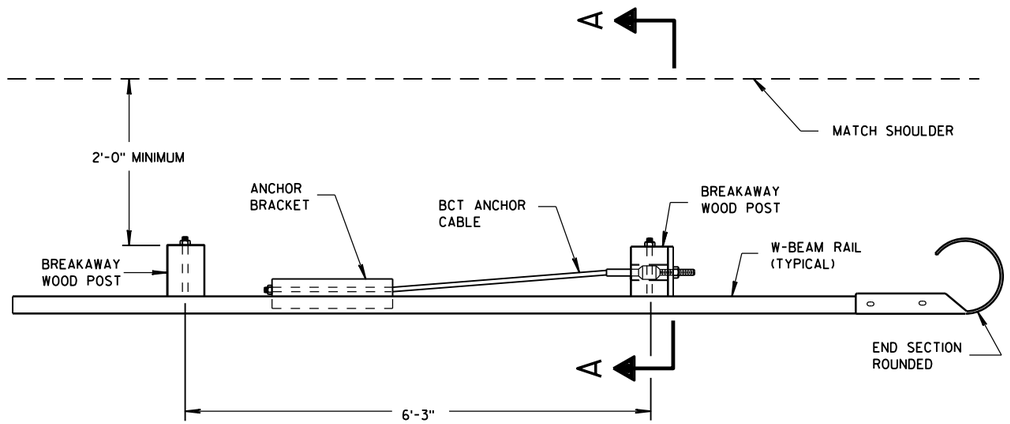

PLAN VIEW

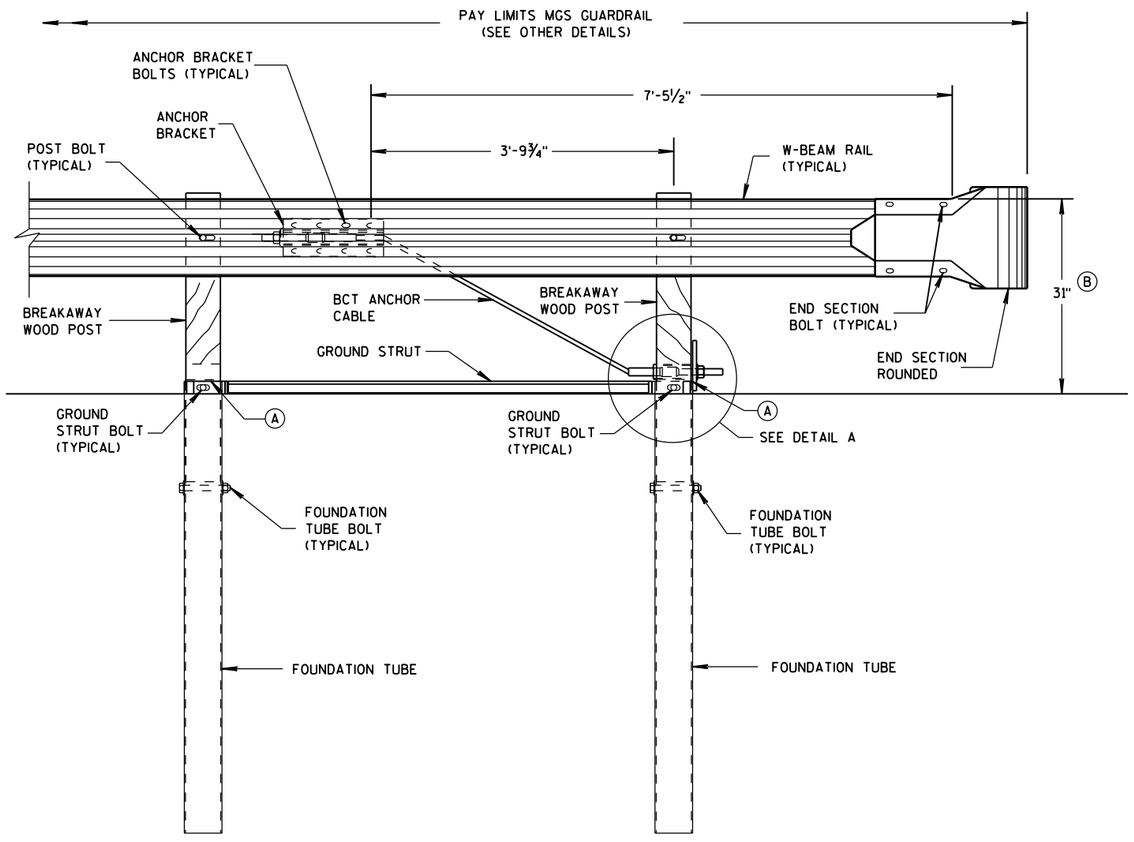

FRONT VIEW

END RAIL DETAIL

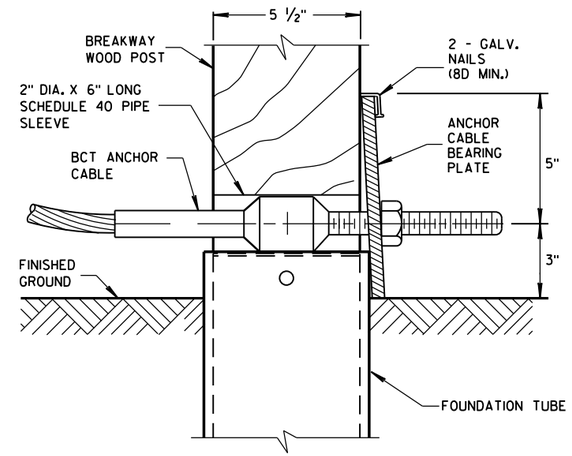

DETAIL A

POST NO. 1
GROUNG STRUT NOT SHOWN FOR CLARITY.

GENERAL NOTES

SEE SDD 14 B 42 FOR MORE INFORMATION.

END SECTION BOLTS AND NUTS HAVE THE SAME MATERIAL REQUIREMENTS AS SPLICE BOLTS.

FOUNDATION TUBE BOLTS ARE ⅞" DIAMETER ASTM A307 HEX HEAD BOLT. FOUNDATION TUBE BOLTS REQUIRE ASTM A563 A NUT AND TWO ASTM F844 ⅞" DIAMETER FLAT WASHERS. INSTALL ONE WASHER UNDER BOLT HEAD AND ONE WASHER UNDER NUT.

ANCHOR BRACKET AND GROUND STRUT BOLTS ARE A ⅝" DIAMETER ASTM A307 HEX HEAD BOLT. ANCHOR BRACKET BOLTS REQUIRE ASTM A563 A NUT AND TWO ASTM F844 ⅝" DIAMETER FLAT WASHERS. INSTALL ONE WASHER UNDER BOLT HEAD AND ONE WASHER UNDER NUT.

W-BEAM END SECTION ROUNDED HAS THE SAME MATERIAL PROPERTIES AS STANDARD STEEL RAIL.

(A) TOP OF FOUNDATION TUBE SHALL BE NO MORE THAN 3" ABOVE FINISHED GROUND.

(B) FOR NEW CONSTRUCTION TOP OF RAIL IS 31" ± 1".
FOR EXISTING INSTALLATIONS TOP OF RAIL IS BETWEEN 27¾" TO 32" ± 1".

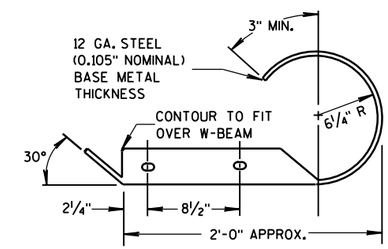

PLAN VIEW

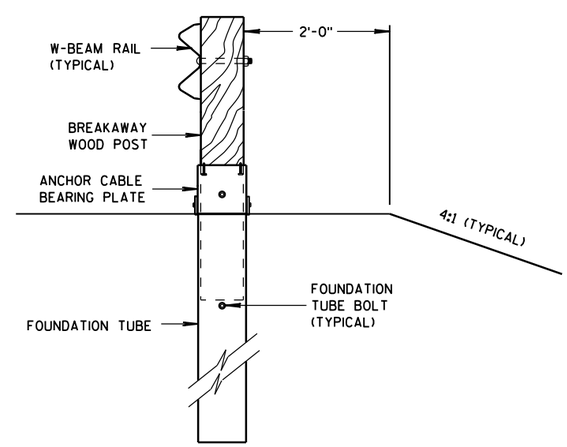

SECTION A-A

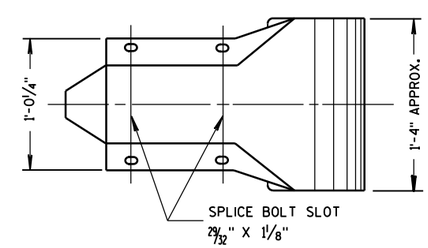

FRONT VIEW

W BEAM END SECTION ROUNDED

MIDWEST GUARDRAIL SYSTEM (MGS) TYPE 2 TERMINAL

STATE OF WISCONSIN
DEPARTMENT OF TRANSPORTATION

6

6

S.D.D. 14 B 47-2a

S.D.D. 14 B 47-2a

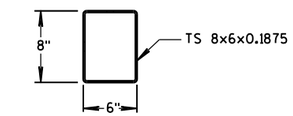

PLAN VIEW

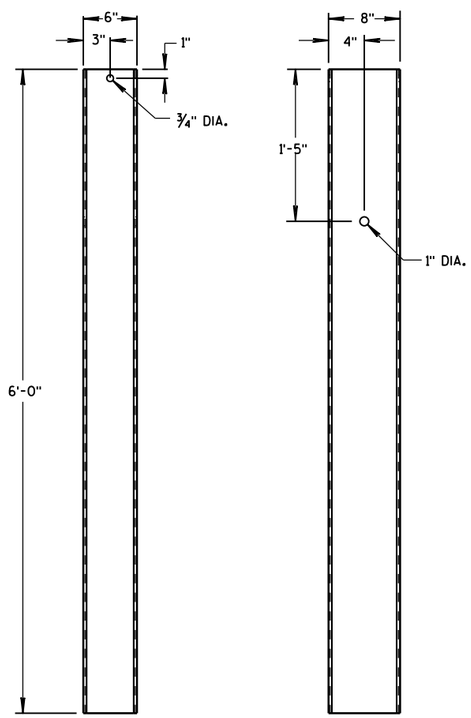

FRONT VIEW SIDE VIEW

FOUNDATION TUBE

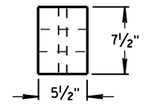

PLAN VIEW

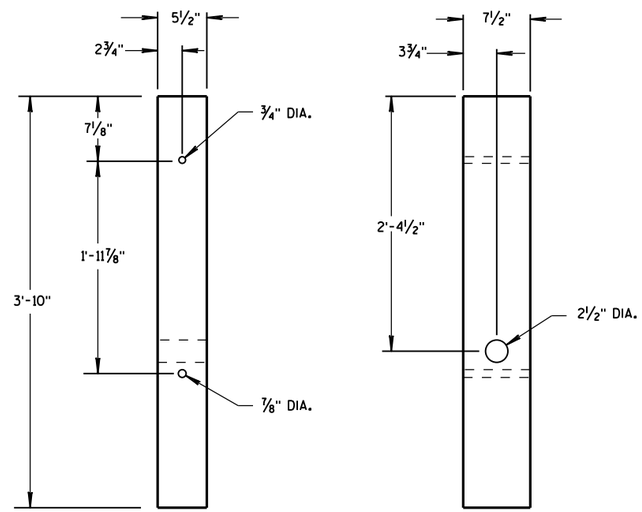

FRONT VIEW SIDE VIEW

BREAKAWAY WOOD POST

GENERAL NOTES

BCT ANCHOR CABLE IS A ¾" DIAMETER 6X19 IWRC IPS GALVANIZED WIRE ROPE. THE SWAGED FITTINGS AND STUD ARE REQUIRED. END FITTING SHALL BE MACHINED FROM HOT-ROLLED CARBON STEEL CONFORMING TO ASTM A576 GRADE 1035 AND GALVANIZED ACCORDING TO ASTM A123. TREADED STUD SHALL CONFORM TO ASTM A325 OR SAE GRADE 5. MINIMUM BREAKING STRENGTH OF WIRE ROPE IS 43,000 LB. WIRE ROPE IS TO BE TAUT.

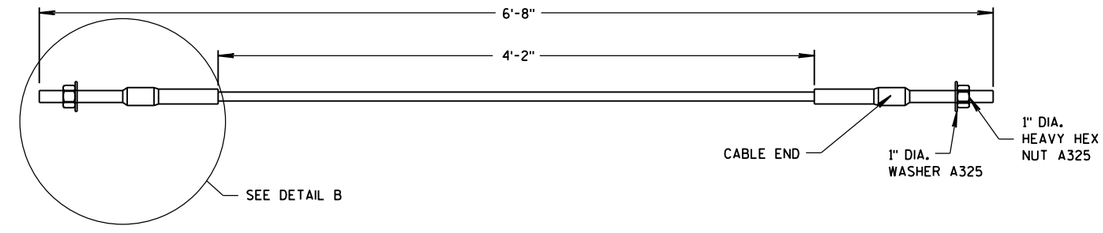

BCT ANCHOR CABLE

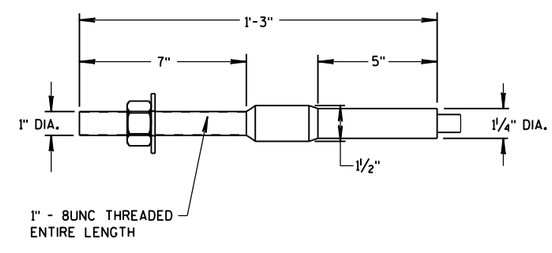

DETAIL B

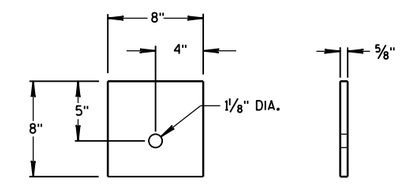

SIDE VIEW FRONT VIEW

ANCHOR CABLE BEARING PLATE

MIDWEST GUARDRAIL SYSTEM (MGS) TYPE 2 TERMINAL

STATE OF WISCONSIN
DEPARTMENT OF TRANSPORTATION

6
S.D.D. 14 B 47-2b

SDD 14b47-c MGS Type 2 Terminal - Ground Strut, Strut and Yoke Details, Cable Barrier Anchor Bracket Details

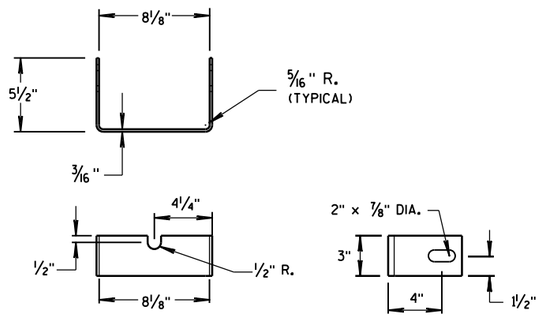

YOKE DETAIL

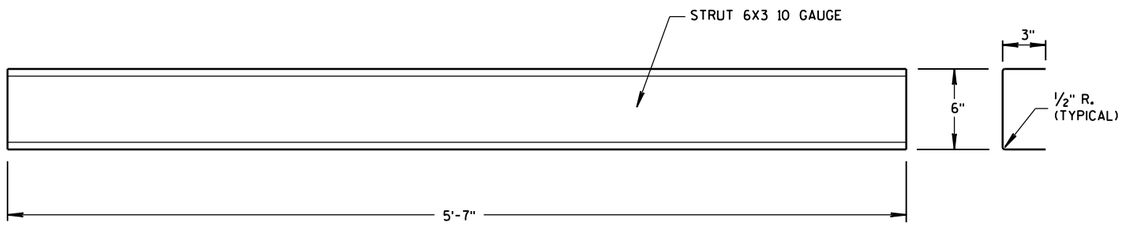

STRUT DETAIL

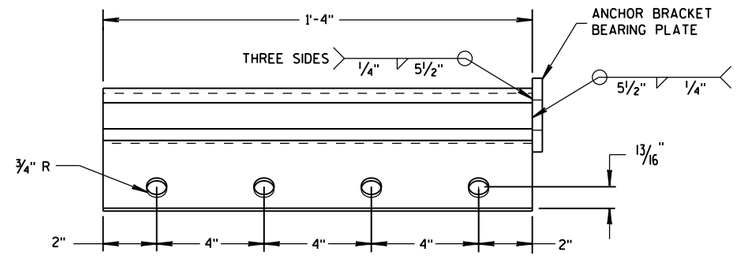

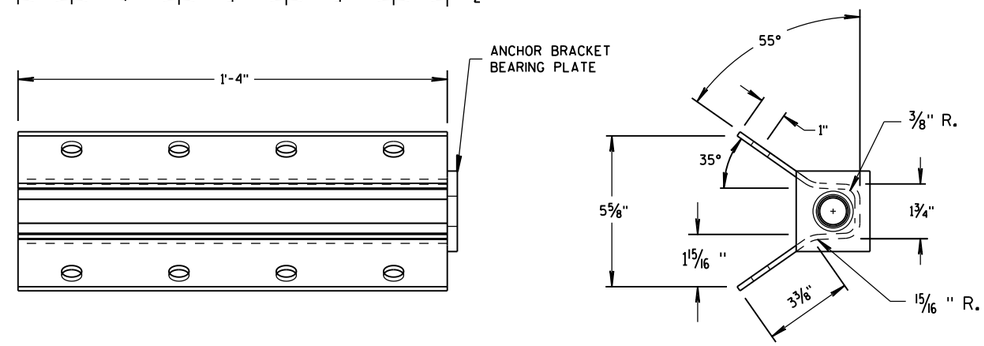

ANCHOR BRACKET

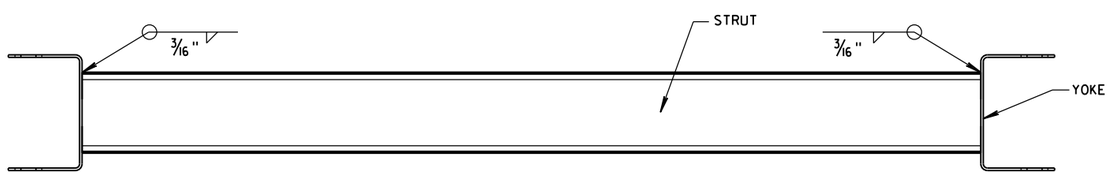

PLAN VIEW

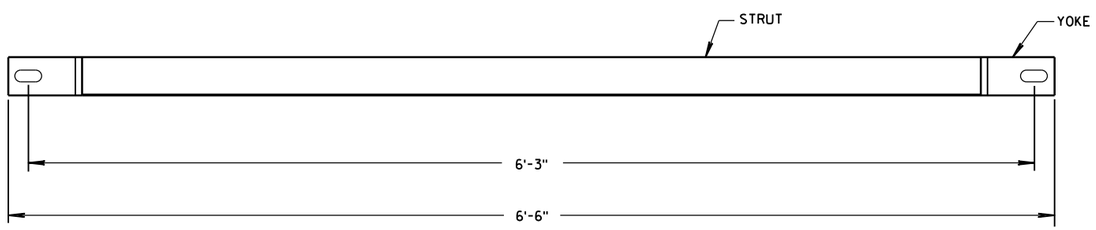

FRONT VIEW

GROUND STRUT DETAIL

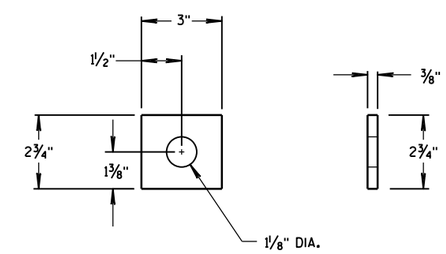

ANCHOR BRACKET
BEARING PLATE

MIDWEST GUARDRAIL
SYSTEM (MGS) TYPE 2 TERMINAL

STATE OF WISCONSIN
DEPARTMENT OF TRANSPORTATION

APPROVED
June 2014
DATE
FHWA

/S/ Jerry H. Zogg
ROADWAY STANDARDS DEVELOPMENT ENGINEER

6
S.D.D. 14 B 47-2c

SDD 14B53-a Short Radius Beam Guard and Terminal (MGS) - Layout

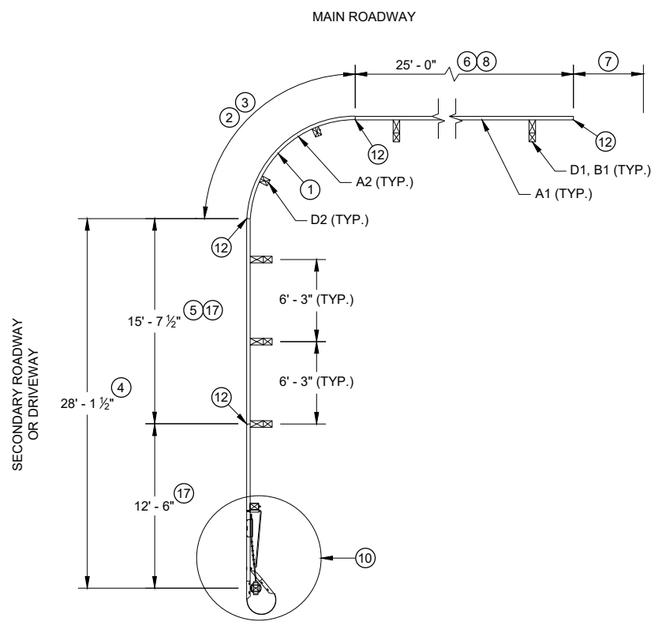

PLAN VIEW

SHORT RADIUS BEAM GUARD WITH SHORT RADIUS TERMINAL ON SECONDARY ROAD OR DRIVEWAY

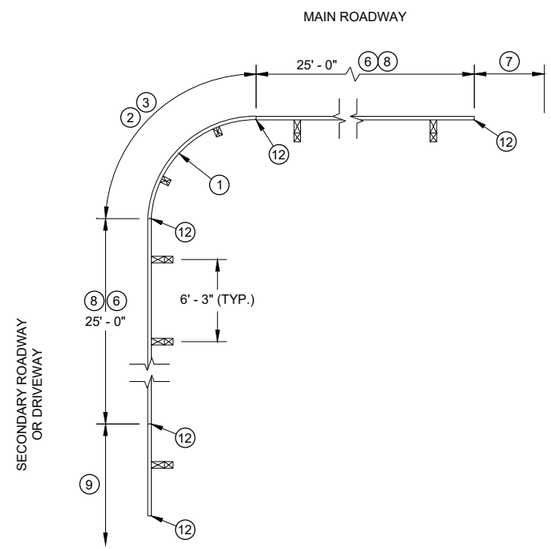

PLAN VIEW

SHORT RADIUS BEAM GUARD WITH EAT, ADDITIONAL BEAM GUARD OR TRANSITION TO RIGID BARRIER ON SECONDARY ROAD OR DRIVEWAY

TABLE FOR RADIUS OF 32' AND LESS

RADIUS (FT)	LENGTH (FT)	WIDTH (FT)
8	25	15
16	30	15
24	40	20
32	50	30

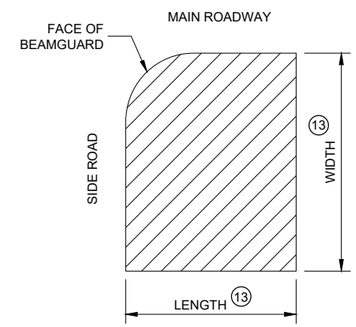

AREA FREE OF FIXED OBJECTS FOR RADIUS 32' AND LESS 16

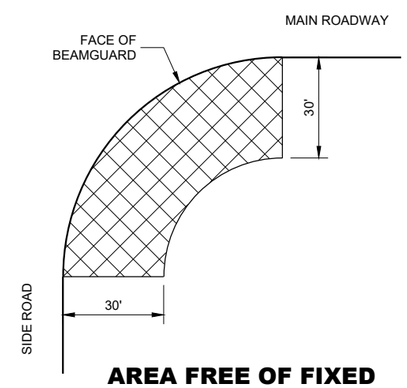

AREA FREE OF FIXED OBJECTS FOR RADIUS GREATER THAN 32'

GENERAL NOTES

SEE PLANS FOR OTHER BARRIER SYSTEM AND LOCATION SPECIFICS.

SEE SDD 14B42 FOR MORE INFORMATION ON BEAM GUARD INSTALLATION, PARTS, MATERIALS, AND INSTALLATION INFORMATION.

GALVANIZE PARTS AFTER FABRICATION.

WELDING TO FOLLOW CURRENT REQUIREMENTS OF THE AMERICAN WELDING SOCIETY STRUCTURAL WELDING CODE ANSI / AWS D1.1.

UNLESS NOTED OTHERWISE, ALL PLATES ARE FLAT AND FREE OF WARP.

UNLESS NOTED OTHERWISE, ALL EDGES ARE SMOOTH, STRAIGHT AND VERTICAL.

ALL CUTS AND HOLES, EXCEPT IN BEAM GUARD RAIL ARE TO BE MACHINED OR MACHINE FLAME CUT.

UNLESS NOTED OTHERWISE, CUT OR PROVIDE BOLTS THAT ARE ¼" TO ½" BEYOND THE NUT.

DRAWINGS ARE NOT TO SCALE.

1. RADIUS MEASURE FROM INSIDE OF RAIL. LENGTH OF BEAM GUARD SHORT RADIUS GUARD MEASURED ALONG TRAFFIC SIDE OF RAIL. RADIUS BETWEEN 8 FEET TO 150 FEET. SEE PLAN FOR REQUIRED RADIUS. BEAM GUARD RAIL IN RADIUS IS SHOP BENT. ODD RAIL LENGTH OR FIELD CUTS MAY BE REQUIRED.
2. CONTROLLED RELEASE TERMINAL (CRT) POSTS ARE USED IN THE RADIUS. CONTROLLED RELEASE TERMINAL (CRT) POSTS ARE SPACED 6' - 3". SEE PLAN FOR NUMBER OF CONTROLLED RELEASE (CRT) POSTS.
3. WITHIN RADIUS BEAM GUARD RAILS ARE NOT BOLTED TO POSTS. BEAM GUARD RAIL IS RESTED ON TOP OF LAG SCREW.
4. MINIMUM LENGTH OF BEAM GUARD ALONG SIDE ROAD OR DRIVEWAY TO INSTALL SHORT RADIUS TERMINAL. BEAM GUARD IS PAID WITH BEAM GUARD ITEM.
5. ODD LENGTH OF BEAM GUARD REQUIRED TO INSTALL SHORT RADIUS TERMINAL.
6. MINIMUM AMOUNT OF BEAM GUARD TO BE INSTALLED PRIOR TO TRANSITION TO RIGID BARRIER. ADDITIONAL BEAM GUARD, OR EAT. BEAM GUARD PAID FOR WITH BEAM GUARD ITEM. SEE PLANS FOR MORE DETAIL.
7. BEAM GUARD, EAT, OR TRANSITION TO RIGID BARRIER. SEE PLAN.
8. TOP OF BEAM GUARD BY THE RADIUS IS 27". HEIGHT OF BEAM GUARD IS 31" BY TRANSITION TO RIGID BARRIER, ADDITIONAL BEAM GUARD OR EAT.
9. ADDITIONAL BEAM GUARD, EAT OR TRANSITION TO RIGID BARRIER. BEAM GUARD SHOWN. SEE PLAN FOR DETAILS.
10. SHORT RADIUS TERMINAL (SEE OTHER DETAILS).
11. HEIGHT VARIES. SEE NOTE 8 AND 8.
12. BEAM GUARD RAIL SPLICE LOCATION. SPLICE LOCATION REQUIRES PART F1 AND F2. SEE SDD 14B42 FOR DETAILS.
13. SEE TABLE FOR VALUES.
14. MAXIMUM HEIGHT FOR CENTER OF HOLE IS ¾" ABOVE FINISHED GROUND ±1".
15. DRILL POST 15/64" DIA. PILOT HOLE. DO NOT HAMMER LAG SCREW INTO POST.
16. SMALL SIGNS ON BREAKAWAY HARDWARE ARE ACCEPTABLE.
17. TOP OF RAIL HEIGHT IS 27" WHEN USING A SHORT RADIUS TERMINAL (CRT).

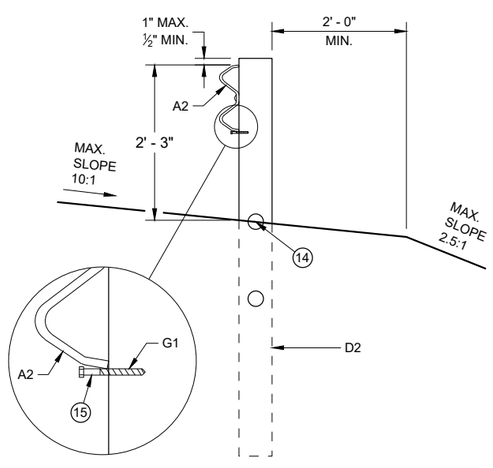

CONTROLLED RELEASE TERMINAL POST (CRT) IN RADIUS

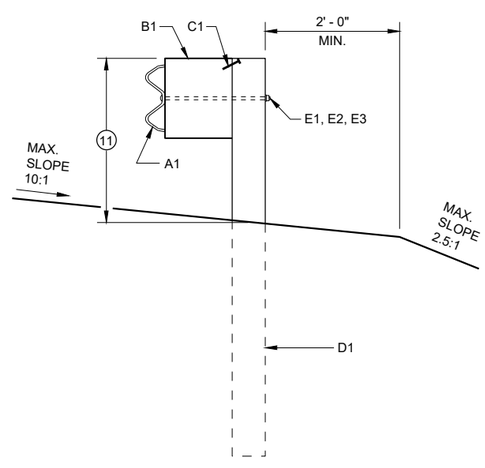

BEAM GUARD POSTS IN HEIGHT TRANSITION

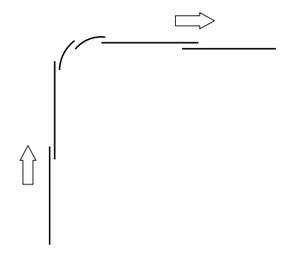

LAP SPLICE DETAIL

SHORT RADIUS BEAM GUARD (MGS) SHORT RADIUS TERMINAL (MGS)

STATE OF WISCONSIN
DEPARTMENT OF TRANSPORTATION

6

6

SDD 14B53 - 01a

SDD 14B53 - 01a

SDD 14B53-b Short Radius Beam Guard and Terminal (MGS) - Short Radius Terminal View, Detail A

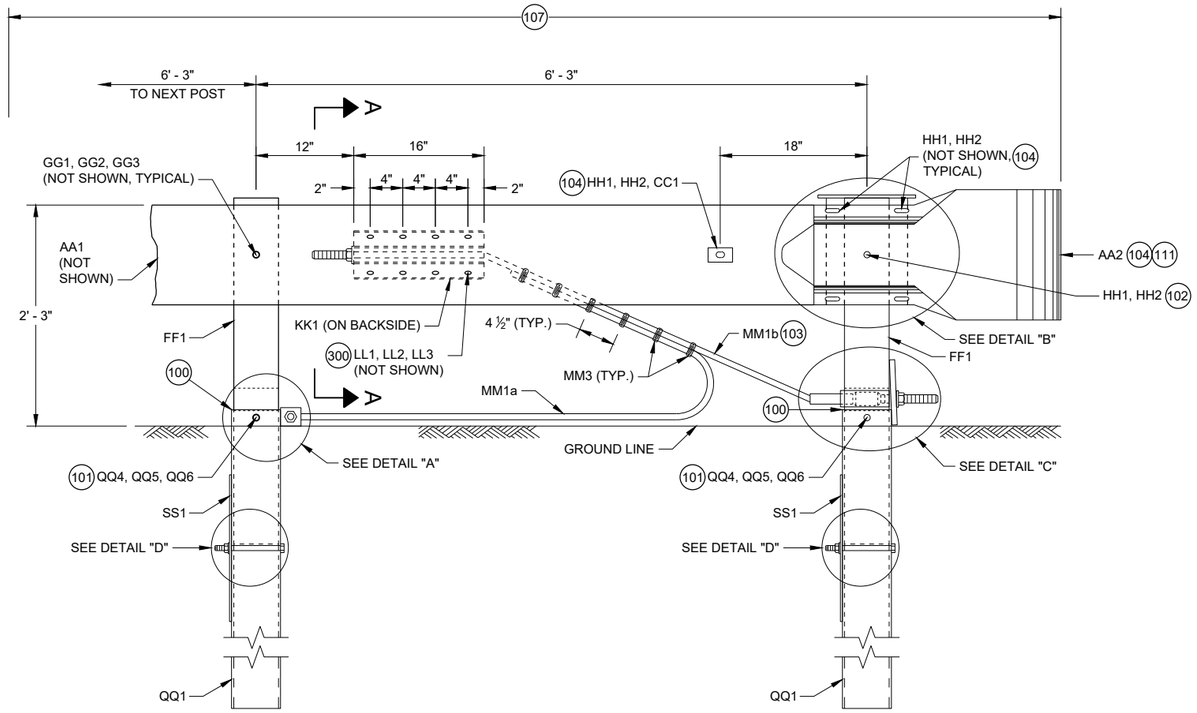

PROFILE VIEW

SHORT RADIUS TERMINAL

GENERAL NOTES

100 TOP OF FOUNDATION TUBE 2 INCHES MAXIMUM ABOVE FINISHED GROUND.

101 WASHERS REQUIRED BETWEEN BOLT HEAD AND FOUNDATION TUBE AND BETWEEN NUT AND FOUNDATION TUBE.

102 SPLICE BOLT AND NUT CONNECTS BEAM GUARD RAIL, W-BEAM SECTION BUFFER, AND STEEL PIPE ASSEMBLY. NO WASHER REQUIRED. SEE DETAIL "B".

103 CABLE IS TAUT.

104 ADJUST AA2 AND BB1 TO FIT.

105 BREAK POINT OF SHOULDER.

106 TACK WELD CABLE CONNECTOR TUBE PLATE TO CABLE CONNECTION TUBE. SEE DETAIL "A" PROFILE VIEW.

107 PAY LIMIT FOR BEAM GUARD.

108 SQUARE WASHER BETWEEN HEAD OF BOLT AND TRAFFIC FACE OF BEAM GUARD. ROUND WASHER REQUIRED BETWEEN NUT AND BB1.

109 CUT OR PROVIDE THREADED STUD THAT IS FLUSH WITH FACE OF BEAM GUARD RAIL KK1 (PLUS OR MINUS ½" TOLERANCE). DEBURR AFTER CUTTING.

110 SEE STEEL PIPE ASSEMBLY DETAILS.

111 ATTACH UU2 WITH UU3. SHOP APPLY UU1 TO UU2.

112 FOUR (4) HH1 AND HH2 REQUIRED TO ATTACH AA1 TO AA2.

113 FOUR (4) HH1 AND HH2 REQUIRED TO ATTACH AA2 TO BB1.

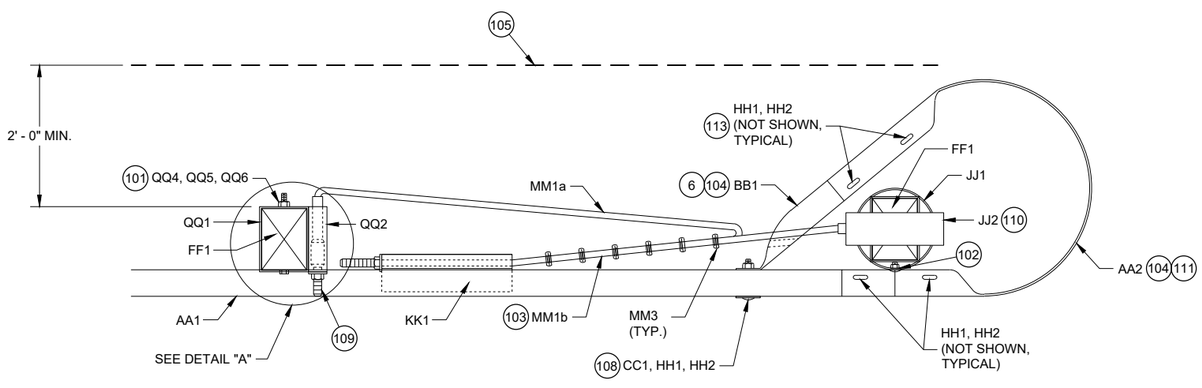

TOP VIEW

SHORT RADIUS TERMINAL

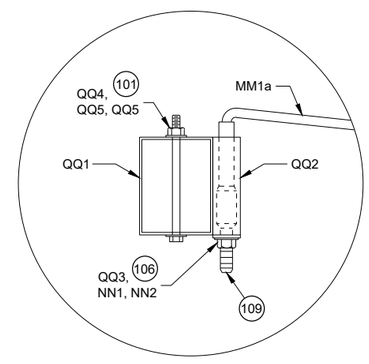

TOP VIEW

DETAIL "A"

(WOOD BREAKAWAY AND BEAM GUARD RAIL POSTS NOT SHOWN)

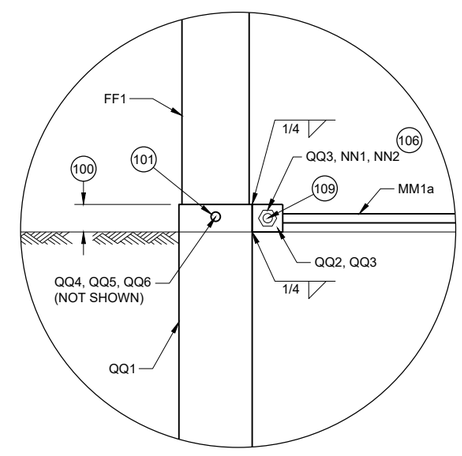

PROFILE VIEW

DETAIL "A"

6

6

SDD 14B53 - 01b

SDD 14B53 - 01b

SHORT RADIUS BEAM GUARD (MGS) SHORT RADIUS TERMINAL (MGS)

STATE OF WISCONSIN
DEPARTMENT OF TRANSPORTATION

GENERAL NOTES

(200) TWO (2) NAILS SPACED 4 INCHES CENTER TO CENTER.

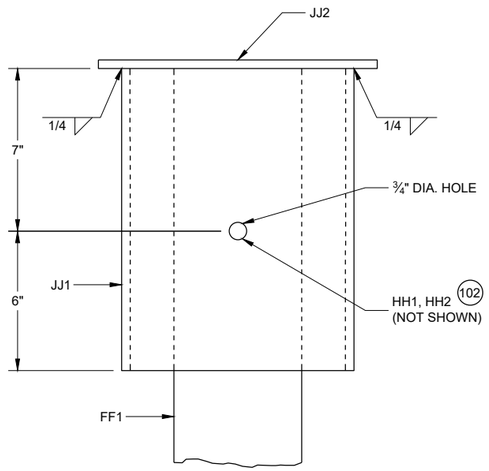

PROFILE VIEW

DETAIL "B"
STEEL PIPE ASSEMBLY
(BEAM GUARD AND W BEAM END SECTION NOT SHOWN)

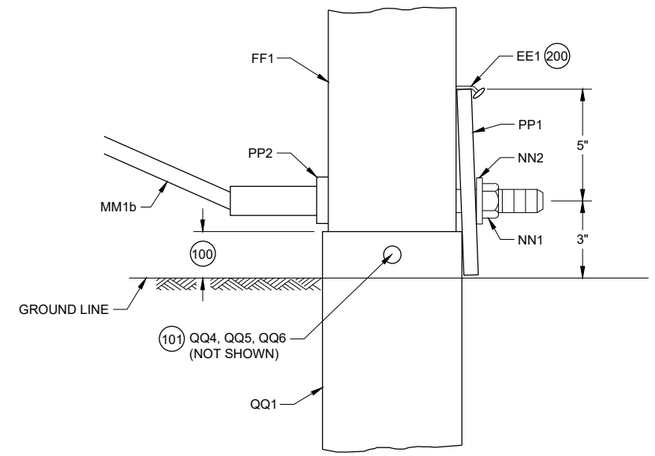

PROFILE VIEW

DETAIL "C"

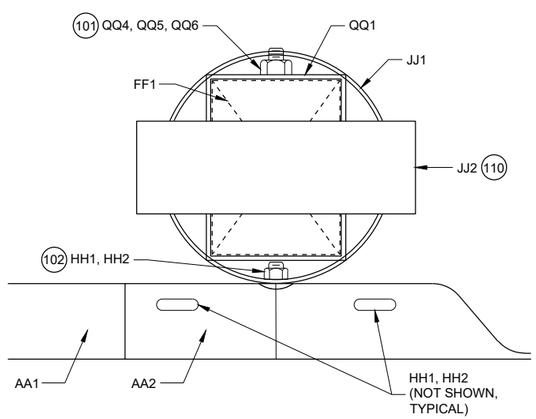

PLAN VIEW

DETAIL "B"
STEEL PIPE ASSEMBLY

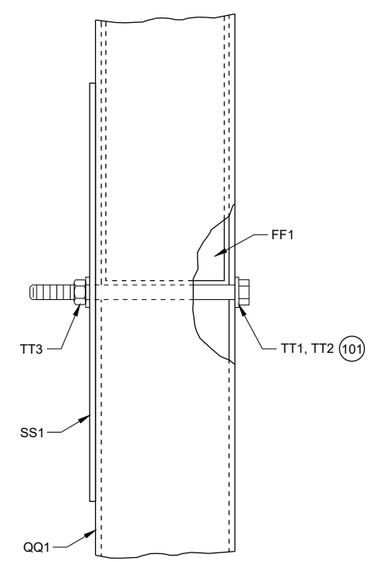

PROFILE VIEW

DETAIL "D"

SHORT RADIUS BEAM GUARD (MGS) SHORT RADIUS TERMINAL (MGS)

STATE OF WISCONSIN
DEPARTMENT OF TRANSPORTATION

6
SDD 14B53 - 01c

SDD 14B53-d Short Radius Beam Guard and Terminal (MGS) - Terminal Anchor Bracket and Bracket Bearing Details

GENERAL NOTES

300 WASHERS REQUIRED BETWEEN BOLT HEAD AND BEAM GUARD RAIL AND BETWEEN NUT AND ANCHOR BRACKET. EIGHT (8) LL1 AND LL3 REQUIRED. SIXTEEN (16) LL2 REQUIRED.

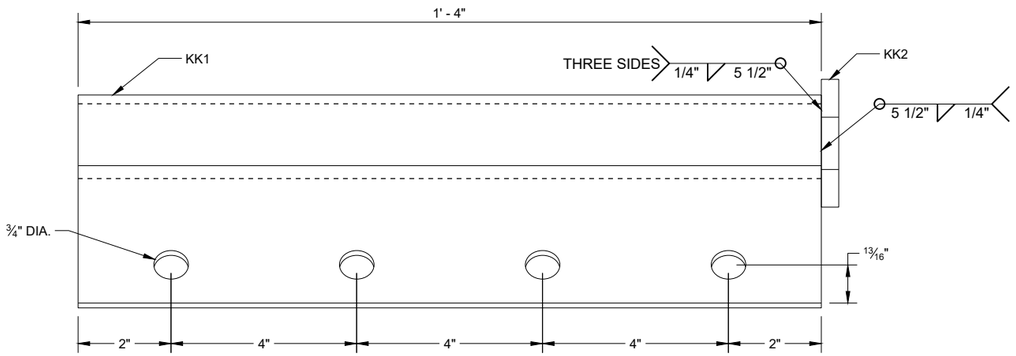

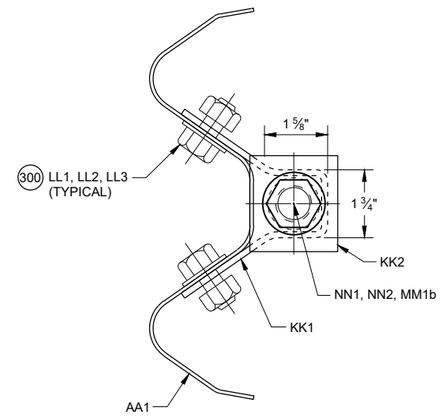

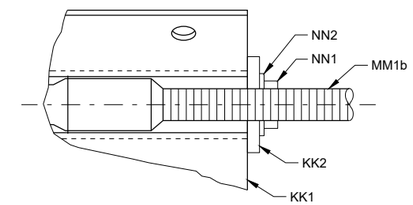

SECTION A - A

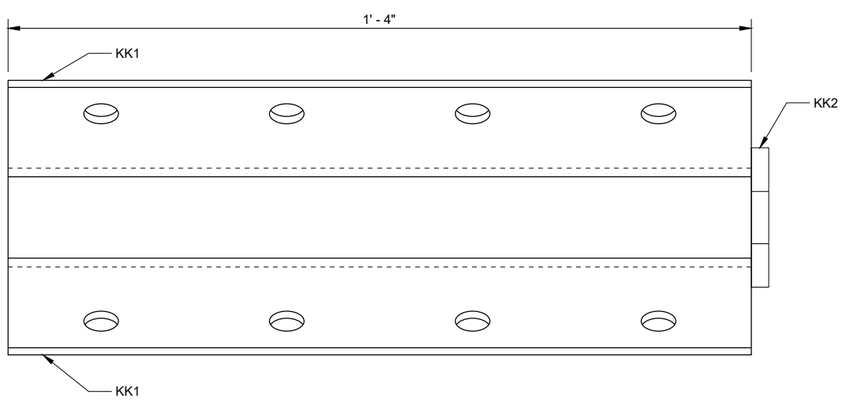

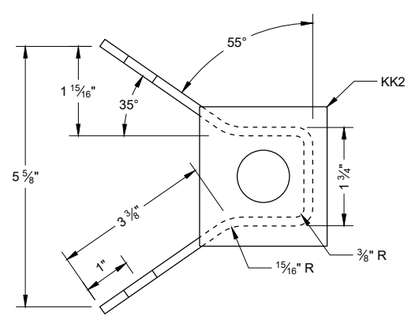

ANCHOR BRACKET (KK1, KK2)

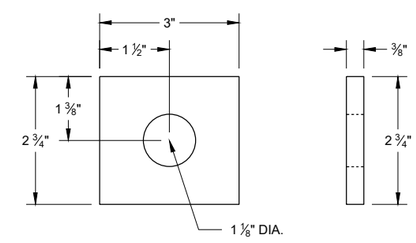

ANCHOR BRACKET BEARING PLATE (KK2)

6

6

SDD 14B53 - 01d

SDD 14B53 - 01d

SHORT RADIUS BEAM GUARD (MGS) SHORT RADIUS TERMINAL (MGS)

STATE OF WISCONSIN
DEPARTMENT OF TRANSPORTATION

SDD 14B53-e Short Radius Beam Guard and Terminal (MGS)-End Section Buffer,Terminal Connector, Reflector Sheeting

GENERAL NOTES

400 CROSS SECTION OF PART IS TO FIT OVER AA1 .

401 CROSS SECTION OF PART IS TO FIT OVER OR UNDER AA1 .

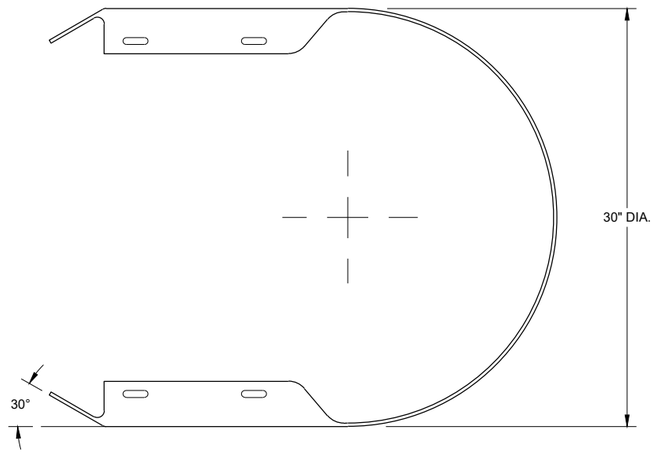

TOP VIEW

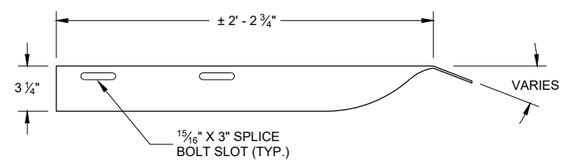

TOP VIEW

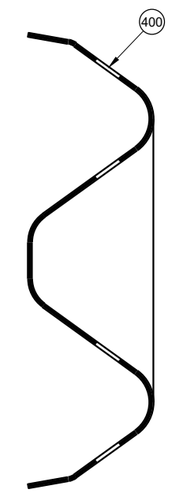

SECTION B -B

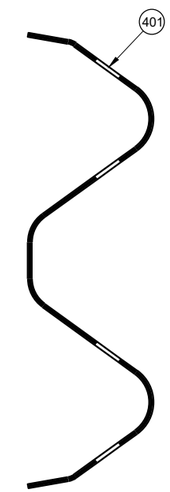

SECTION C -C

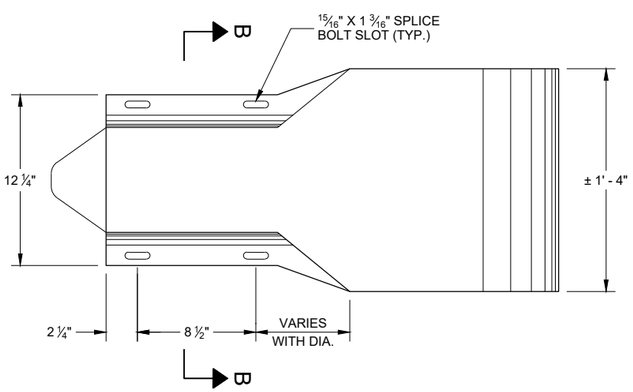

PROFILE VIEW

W BEAM
END SECTION BUFFER (AA2)

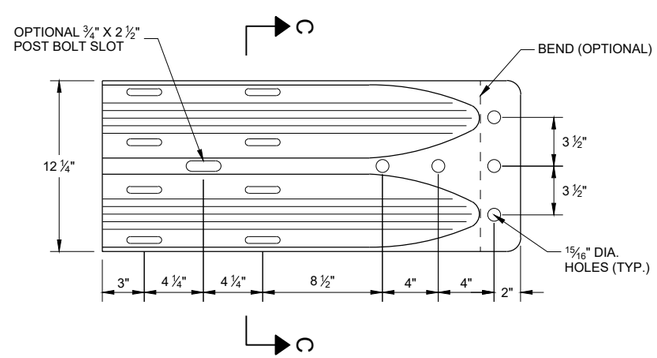

PROFILE VIEW

W BEAM
TERMINAL CONNECTOR (BB1)

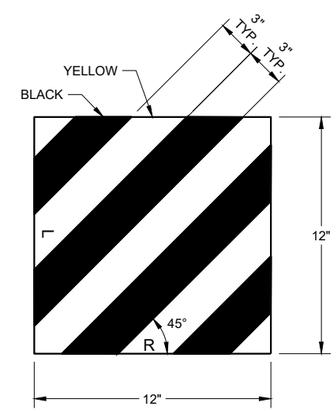

REFLECTIVE SHEETING (UU1, UU2)

SHORT RADIUS BEAM GUARD (MGS) SHORT RADIUS TERMINAL (MGS)

STATE OF WISCONSIN
DEPARTMENT OF TRANSPORTATION

6

6

SDD 14B53 - 01e

SDD 14B53 - 01e

SDD 14B53-f Short Radius Beam Guard and Terminal (MGS)-Cable Assembly,Terminal Post Details,Tube, Plate, Washer

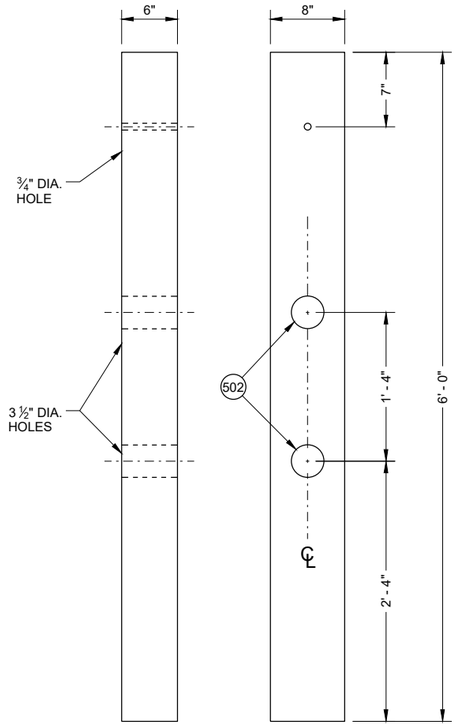

FRONT VIEW SIDE VIEW

CONTROLLED RELEASE POST (CRT) (DD2)

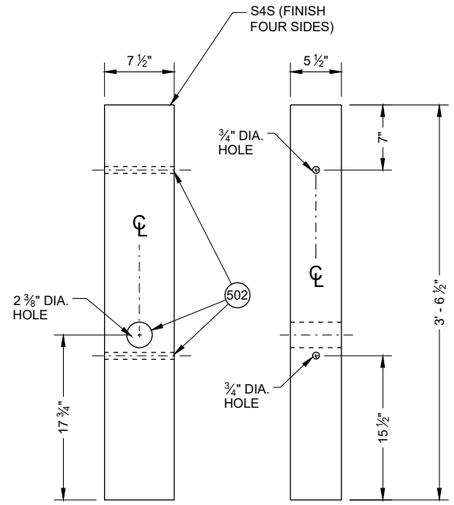

FRONT VIEW SIDE VIEW

WOOD BREAKAWAY POST (FF1)

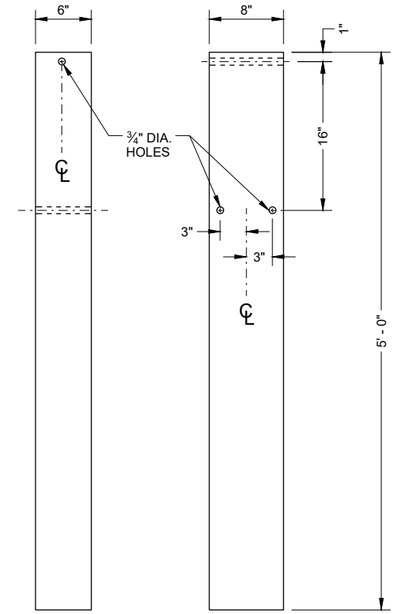

FRONT VIEW SIDE VIEW

FOUNDATION TUBE (QQ1) 500

GENERAL NOTES

500 SEE DETAIL "D" FOR LOCATION AND ATTACHMENT OF SS1.

501 FOR MM1a THREADED STUD ONLY REQUIRED ON ONE END. SWAGED FITTING REQUIRED.

502 LOCATE HOLES ON THE CENTERLINE OF THE SIDE OF THE POST.

503 MM1a MAY HAVE ONE THREADED STUD 4 INCHES LONG. SEE NOTE 109.

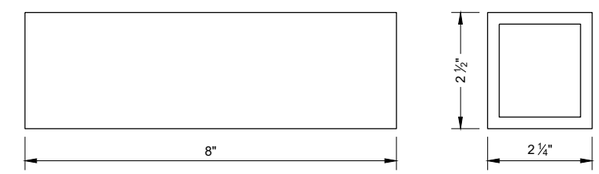

FOUNDATION TUBE - ANCHOR CABLE TUBE (QQ2)

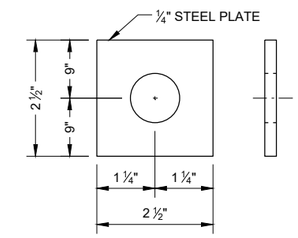

ANCHOR CABLE TUBE END PLATE (QQ3)

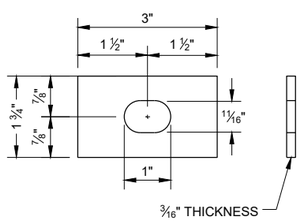

RECTANGULAR PLATE WASHER (CC1)

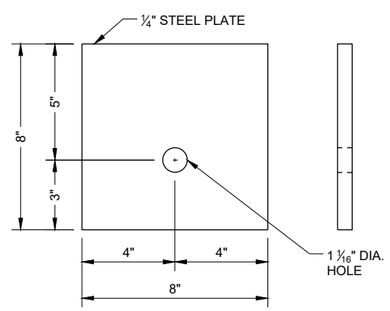

BEARING PLATE (PP1)

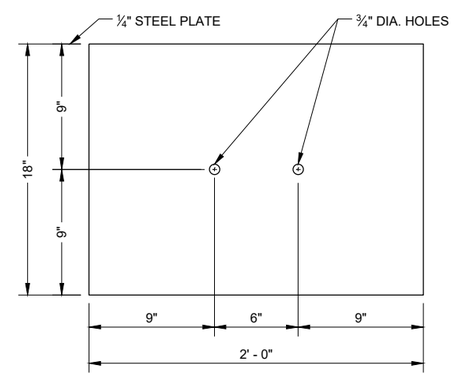

SOIL PLATE (SS1)

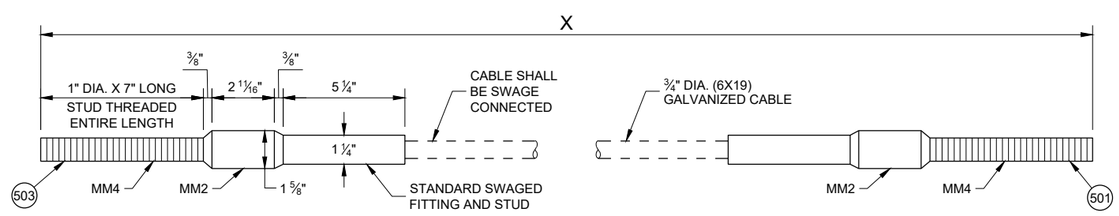

CABLE ASSEMBLY (MM1a, MM1b)

"X" LENGTH

MM1b	9' - 0"
MM1b	6' - 8"

SHORT RADIUS BEAM GUARD (MGS) SHORT RADIUS TERMINAL (MGS)

STATE OF WISCONSIN
DEPARTMENT OF TRANSPORTATION

6

6

SDD 14B53 - 01f

SDD 14B53 - 01f

SDD 15b1-a Fence Woven Wire

NOTE: PULL OR STRETCHER POST ASSEMBLIES SHALL BE PLACED MIDWAY BETWEEN END POSTS AND CORNER POSTS WHERE A RUN OF FENCE EXCEEDS 660' BUT IS LESS THAN 1,320'. FOR RUNS OF FENCE IN EXCESS OF 1,320' MAXIMUM SPACING OF PULL OR STRETCHER POST ASSEMBLIES SHALL BE 660'± C-C.

ILLUSTRATION SHOWS POSITION OF STANDARD STEEL BRACE, DOUBLE STRAND GALVANIZED WIRE, AND THE POST TO BE EMBEDDED IN CONCRETE WHEN WIRE FENCE IS INSTALLED FROM LEFT TO RIGHT. THE BRACES SHALL BE POSITIONED ON THE OPPOSITE DIAGONALS AND THE OPPOSITE POST SHALL BE EMBEDDED IN CONCRETE WHEN WIRE FENCE IS INSTALLED FROM RIGHT TO LEFT.

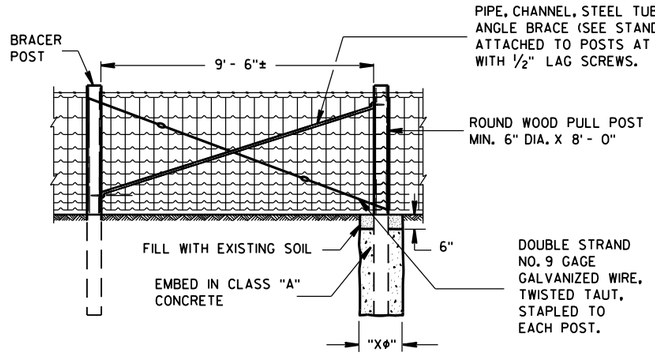

PULL OR STRETCHER POSTS ASSEMBLY

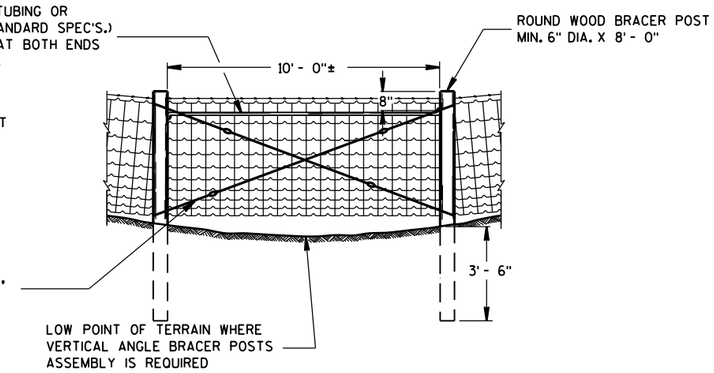

VERTICAL ANGLE BRACER POSTS ASSEMBLY

GENERAL NOTES

"XΦ" = DIAMETER OF THE POST PLUS 12".

FENCE STAPLES SHOULD NEVER BE DRIVEN VERTICALLY INTO WOOD POSTS (WITH BOTH LEGS PARALLEL WITH THE WOOD GRAIN). DOING SO CAN SEPARATE THE GRAIN AND SIGNIFICANTLY REDUCE THE HOLDING POWER. ROTATING THE STAPLES SLIGHTLY OFF VERTICAL STRADDLES THE GRAIN AND PROVIDES MORE RESISTANCE TO PULL-OUT.

DO NOT STAPLE WIRE TIGHT TO THE LINE POSTS. ALLOW MOVEMENT OF WIRE FOR EXPANSION AND CONTRACTION. STAPLE ARRANGEMENT SHALL BE THE SAME FOR ALL OTHER POSTS EXCEPT THAT THEY SHALL BE DRIVEN TIGHT TO POSTS. ALL STAPLES SHALL BE 2" X 9 GAGE AND SHALL BE MANUFACTURED FROM GALVANIZED WIRE OR HOT DIP GALVANIZED AFTER FORMING. STAPLES SHALL HAVE SLASH-CUT POINTS.

FENCE SHALL BE LOCATED 3'-0" INSIDE THE RIGHT OF WAY LINE UNLESS OTHERWISE INDICATED ON THE PLANS.

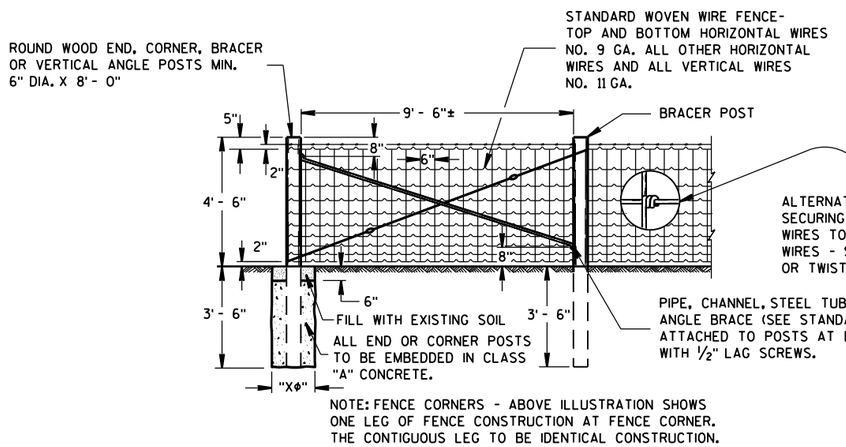

NOTE: FENCE CORNERS - ABOVE ILLUSTRATION SHOWS ONE LEG OF FENCE CONSTRUCTION AT FENCE CORNER. THE CONTIGUOUS LEG TO BE IDENTICAL CONSTRUCTION.

END OR CORNER POSTS ASSEMBLY

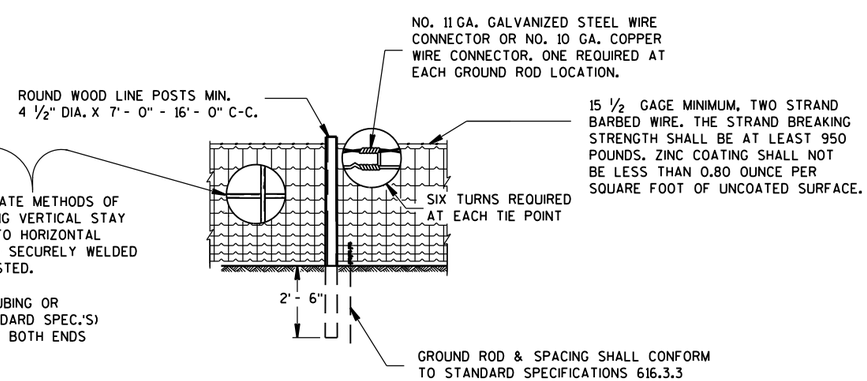

LINE FENCE CONSTRUCTION

GENERAL ROADSIDE VIEW OF WOVEN WIRE FENCE

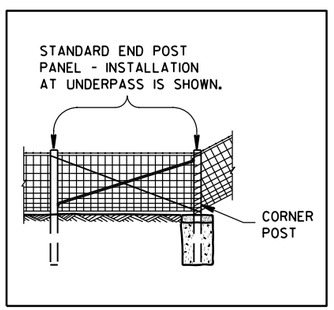

ALTERNATE FENCE DESIGN AT STRUCTURE

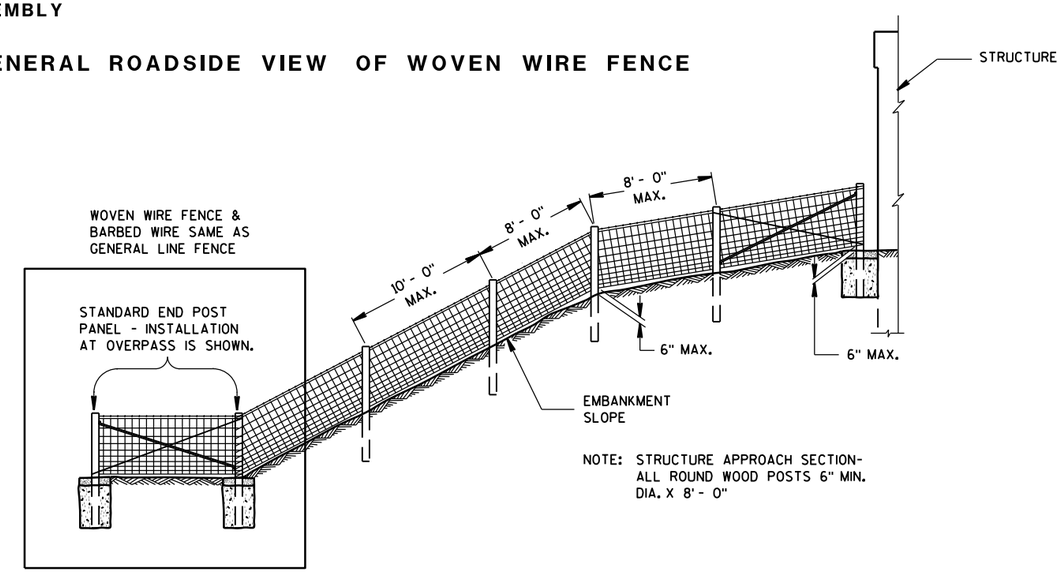

NOTE: STRUCTURE APPROACH SECTION- ALL ROUND WOOD POSTS 6" MIN. DIA. X 8' - 0"

FENCE DESIGN AT STRUCTURE APPROACH

FENCE WOVEN WIRE

STATE OF WISCONSIN
DEPARTMENT OF TRANSPORTATION

6

6

S.D.D. 15 B 1-8a

S.D.D. 15 B 1-8a

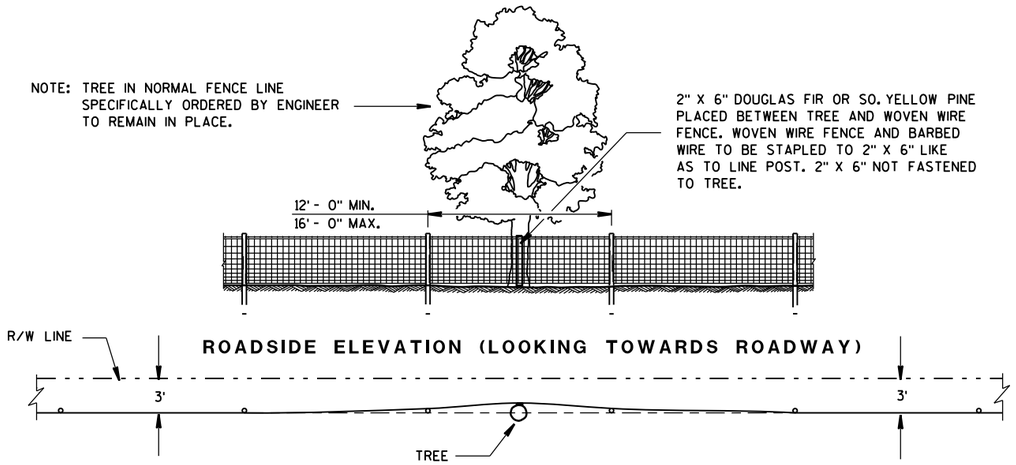

PLAN VIEW

FENCE DESIGN AT TREES REMAINING IN NORMAL FENCE LINE

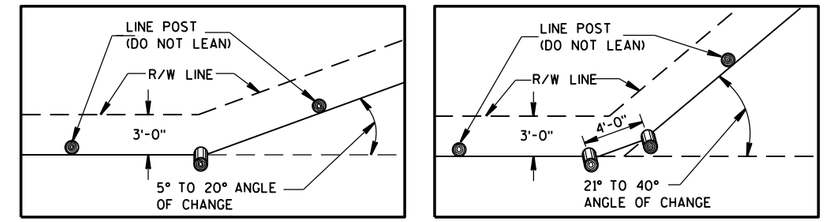

PLAN VIEW
SINGLE POST CORNER

PLAN VIEW
DOUBLE POST CORNER

RIGHT OF WAY LINE CHANGE 40° AND LESS

NOTE: SINGLE AND DOUBLE POSTS SHALL BE A MIN. 6" DIA. X 8'-0" WITH A LEAN OF 4" TOWARD THE OUTSIDE OF THE CURVE.

WHEN THE RIGHT OF WAY LINE CHANGE IS MORE THAN 40° USE THE CORNER OR STRETCHER POSTS ASSEMBLY.

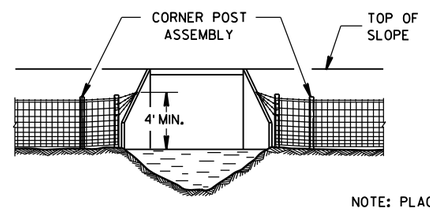

NOTE: PLACE A MINUMUM OF 4 STRANDS OF BARBED WIRE, 6" MAXIMUM CENTERS IN FAN SHAPE CONNECTED TO AN EYE BOLT ON WINGWALL OR SET A LONE POST WHEN NECESSARY TO CONNECT BARBED WIRE.

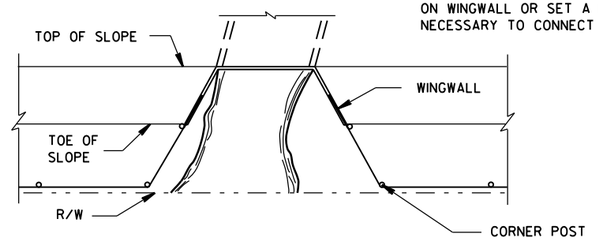

FENCE INSTALLATION TO WINGWALLS

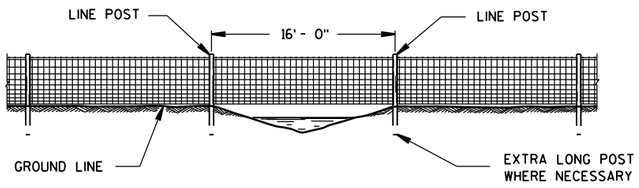

FENCE CONSTRUCTION OVER STREAM COURSES OF 15 FT. OR LESS IN WIDTH

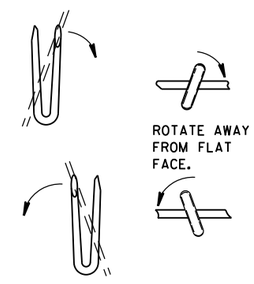

LINE POST

NOTE: WHEN POSTS ARE DRIVEN THE SMALL END SHALL BE DOWN.

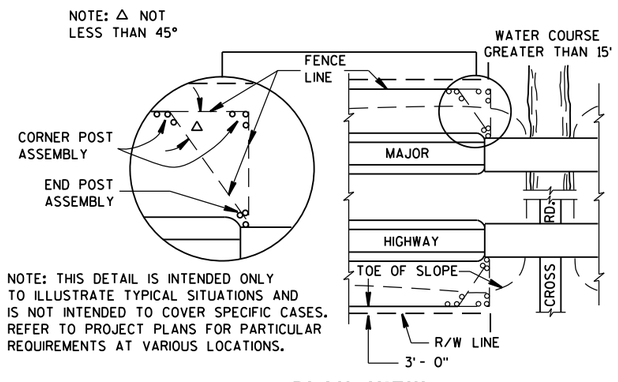

NOTE: THIS DETAIL IS INTENDED ONLY TO ILLUSTRATE TYPICAL SITUATIONS AND IS NOT INTENDED TO COVER SPECIFIC CASES. REFER TO PROJECT PLANS FOR PARTICULAR REQUIREMENTS AT VARIOUS LOCATIONS.

PLAN VIEW

MAJOR HIGHWAY OVERPASS OR STREAM COURSE CROSSING OF GREATER THAN 15 FT. IN WIDTH

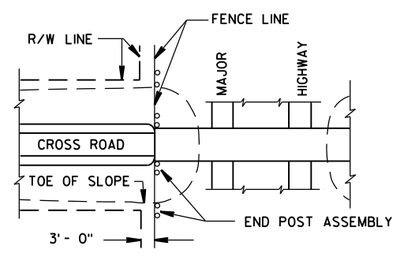

PLAN VIEW

MAJOR HIGHWAY UNDERPASS

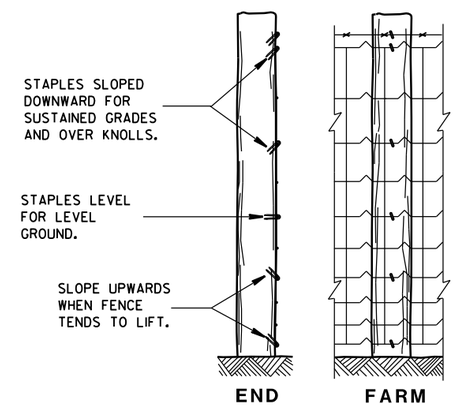

END ELEVATION

FARM SIDE ELEVATION

FENCE MOUNTING DETAIL

FENCE LOCATION AT STRUCTURES

FENCE WOVEN WIRE	
STATE OF WISCONSIN DEPARTMENT OF TRANSPORTATION	
APPROVED 4/4/2008 DATE	/S/ Jerry H. Zogg ROADWAY STANDARDS DEVELOPMENT ENGINEER
FHWA	

6

6

S.D.D. 15 B 1-8b

S.D.D. 15 B 1-8b

STRUCTURE B-36-0077 TOTAL ESTIMATED QUANTITIES

BID ITEM NUMBER	BID ITEM DESCRIPTION	UNIT	QUANTITY	COMMENTS
502.3210	PIGMENTED SURFACE SEALER	SY	223	BOTH PARAPETS
509.1500	CONCRETE SURFACE REPAIR	SF	50	PARAPET
509.9050.S	CLEANING PARAPETS	LF	543	BOTH PARAPETS
SPV.0060	PAINT BEARINGS AT ABUTMENTS	EACH	10	-
SPV.0090	HOT RUBBER JOINTS	LF	80	-
SPV.0165	SEAL DECK CRACKS (TK 9030)	SF	1,300	-

STRUCTURE B-36-0078 TOTAL ESTIMATED QUANTITIES

BID ITEM NUMBER	BID ITEM DESCRIPTION	UNIT	QUANTITY	COMMENTS
502.3210	PIGMENTED SURFACE SEALER	SY	223	BOTH PARAPETS
509.1500	CONCRETE SURFACE REPAIR	SF	30	PARAPET
509.9050.S	CLEANING PARAPETS	LF	543	BOTH PARAPETS
SPV.0060	PAINT BEARINGS AT ABUTMENTS	EACH	10	-
SPV.0090	HOT RUBBER JOINTS	LF	80	-
SPV.0165	SEAL DECK CRACKS (TK 9030)	SF	1,600	-

STRUCTURE B-36-0079 TOTAL ESTIMATED QUANTITIES

BID ITEM NUMBER	BID ITEM DESCRIPTION	UNIT	QUANTITY	COMMENTS
502.3210	PIGMENTED SURFACE SEALER	SY	232	BOTH PARAPETS
509.1500	CONCRETE SURFACE REPAIR	SF	8	ABUTMENT
509.9050.S	CLEANING PARAPETS	LF	565	BOTH PARAPETS
SPV.0090	HOT RUBBER JOINTS	LF	60	-
SPV.0165	SEAL DECK CRACKS (TK 9030)	SF	200	-

STRUCTURE B-36-0080 TOTAL ESTIMATED QUANTITIES

BID ITEM NUMBER	BID ITEM DESCRIPTION	UNIT	QUANTITY	COMMENTS
502.3210	PIGMENTED SURFACE SEALER	SY	213	BOTH PARAPETS
'509.9050.S	CLEANING PARAPETS	LF	532	BOTH PARAPETS
SPV.0060	PAINT BEARINGS AT ABUTMENTS	EACH	8	-
SPV.0090	HOT RUBBER JOINTS	LF	60	-
SPV.0165	SEAL DECK CRACKS (TK 9030)	SF	1,800	-

STRUCTURE B-36-0081 TOTAL ESTIMATED QUANTITIES

BID ITEM NUMBER	BID ITEM DESCRIPTION	UNIT	QUANTITY	COMMENTS
502.3210	PIGMENTED SURFACE SEALER	SY	222	BOTH PARAPETS
'509.9050.S	CLEANING PARAPETS	LF	540	BOTH PARAPETS
SPV.0090	HOT RUBBER JOINTS	LF	136	-

STRUCTURE B-36-0084 TOTAL ESTIMATED QUANTITIES

BID ITEM NUMBER	BID ITEM DESCRIPTION	UNIT	QUANTITY	COMMENTS
502.3210	PIGMENTED SURFACE SEALER	SY	356	BOTH PARAPETS
509.9050.S	CLEANING PARAPETS	LF	862	BOTH PARAPETS
604.9015.S	RESEAL CRUSHED AGGREGATE SLOPE PAVING	SY	560	-
SPV.0060	PAINT BEARINGS AT ABUTMENTS	EACH	8	-
SPV.0090	HOT RUBBER JOINTS	LF	94	-
SPV.0165	SEAL DECK CRACKS (TK 9030)	SF	800	-

STRUCTURE B-36-0086 TOTAL ESTIMATED QUANTITIES

BID ITEM NUMBER	BID ITEM DESCRIPTION	UNIT	QUANTITY	COMMENTS
502.3210	PIGMENTED SURFACE SEALER	SY	198	BOTH PARAPETS
509.1500	CONCRETE SURFACE REPAIR	SF	30	PARAPET
509.9050.S	CLEANING PARAPETS	LF	482	BOTH PARAPETS
SPV.0090	HOT RUBBER JOINTS	LF	102	-
SPV.0165	SEAL DECK CRACKS (TK 9030)	SF	8,538	-

STRUCTURE B-36-0087 TOTAL ESTIMATED QUANTITIES

BID ITEM NUMBER	BID ITEM DESCRIPTION	UNIT	QUANTITY	COMMENTS
502.3210	PIGMENTED SURFACE SEALER	SY	198	BOTH PARAPETS
509.9050.S	CLEANING PARAPETS	LF	482	BOTH PARAPETS
604.9015.S	RESEAL CRUSHED AGGREGATE SLOPE PAVING	SY	495	-
SPV.0090	HOT RUBBER JOINTS	LF	102	-

STRUCTURE B-36-0088 TOTAL ESTIMATED QUANTITIES

BID ITEM NUMBER	BID ITEM DESCRIPTION	UNIT	QUANTITY	COMMENTS
502.3210	PIGMENTED SURFACE SEALER	SY	230	BOTH PARAPETS
509.1500	CONCRETE SURFACE REPAIR	SF	10	PARAPET
509.9050.S	CLEANING PARAPETS	LF	552	BOTH PARAPETS
604.9015.S	RESEAL CRUSHED AGGREGATE SLOPE PAVING	SY	219	-
SPV.0060	PAINT BEARINGS AT ABUTMENTS	EACH	8	-
SPV.0090	HOT RUBBER JOINTS	LF	64	-
SPV.0165	SEAL DECK CRACKS (TK 9030)	SF	420	-

STRUCTURE B-36-0090 TOTAL ESTIMATED QUANTITIES

BID ITEM NUMBER	BID ITEM DESCRIPTION	UNIT	QUANTITY	COMMENTS
502.3210	PIGMENTED SURFACE SEALER	SY	241	BOTH PARAPETS
509.9050.S	CLEANING PARAPETS	LF	586	BOTH PARAPETS
604.9015.S	RESEAL CRUSHED AGGREGATE SLOPE PAVING	SY	220	-
SPV.0090	HOT RUBBER JOINTS	LF	68	-

STRUCTURE B-36-0091 TOTAL ESTIMATED QUANTITIES

BID ITEM NUMBER	BID ITEM DESCRIPTION	UNIT	QUANTITY	COMMENTS
502.3210	PIGMENTED SURFACE SEALER	SY	204	BOTH PARAPETS
509.1500	CONCRETE SURFACE REPAIR	SF	20	PARAPET
509.9050.S	CLEANING PARAPETS	LF	498	BOTH PARAPETS
604.9015.S	RESEAL CRUSHED AGGREGATE SLOPE PAVING	SY	770	-
SPV.0090	HOT RUBBER JOINTS	LF	110	-

STRUCTURE B-36-0092 TOTAL ESTIMATED QUANTITIES

BID ITEM NUMBER	BID ITEM DESCRIPTION	UNIT	QUANTITY	COMMENTS
502.3210	PIGMENTED SURFACE SEALER	SY	204	BOTH PARAPETS
509.1500	CONCRETE SURFACE REPAIR	SF	21	PARAPET
509.9050.S	CLEANING PARAPETS	LF	498	BOTH PARAPETS
604.9015.S	RESEAL CRUSHED AGGREGATE SLOPE PAVING	SY	770	-
SPV.0090	HOT RUBBER JOINTS	LF	110	-
SPV.0165	SEAL DECK CRACKS (TK 9030)	SF	4,700	-

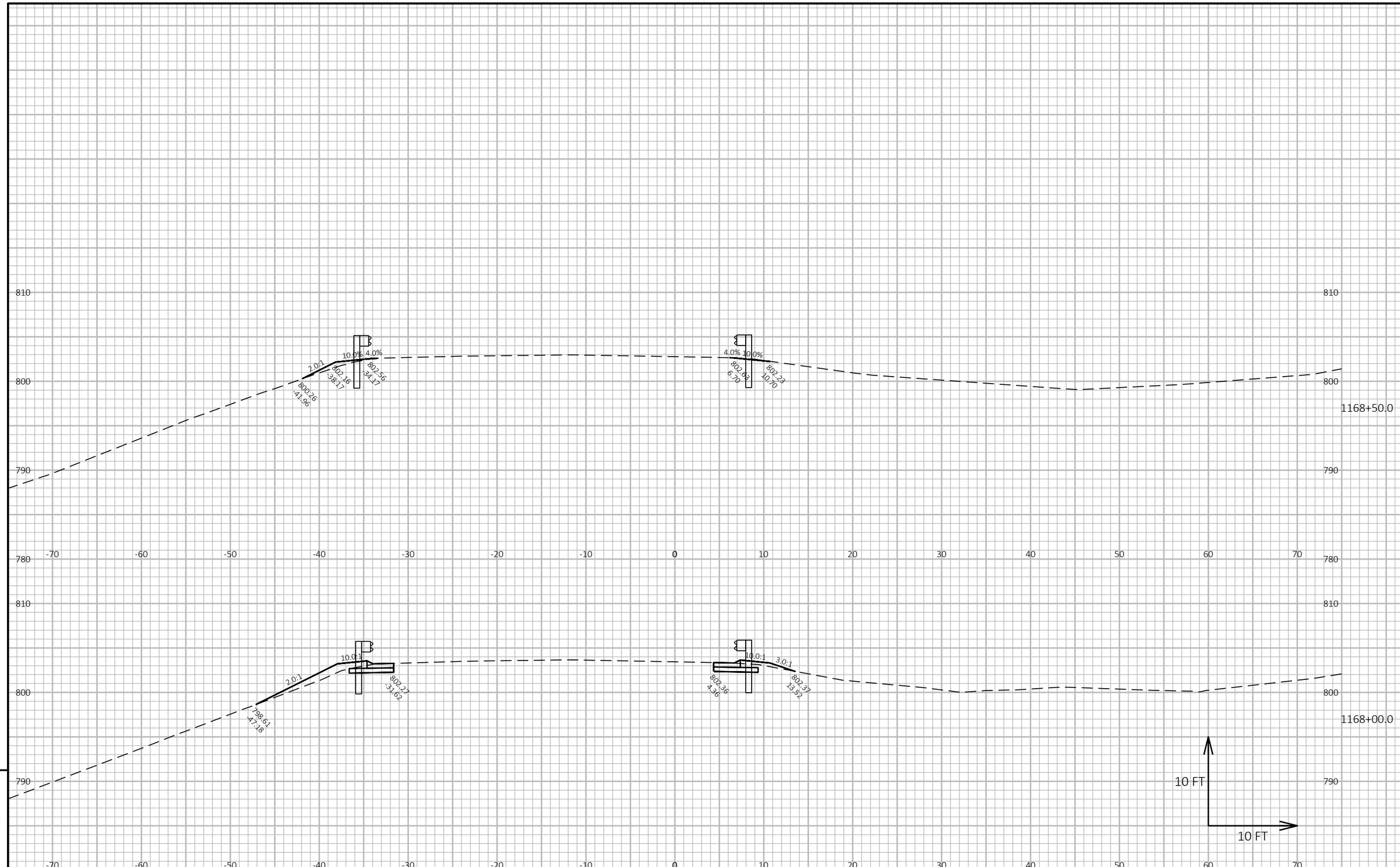

PROJECT NO: 1227-12-71	HWY: IH 43	COUNTY: MANITOWOC	CROSS SECTIONS: MAIN LINE	SHEET	E

FILE NAME : I:\45\450504 IH 43 WISDOT GUARDRAIL\C3D\SHEETSPLAN\12271271 PLAN\090201_XS.DWG
LAYOUT NAME - IH43 SB @ USH 10 1

PLOT DATE : 1/27/2021 10:19 AM PLOT BY : GARNICA, BRANDON PLOT NAME : PLOT SCALE : 1 IN:10 FT HORZ. / 1 IN:10 FT VERT.

WISDOT/CADDS SHEET 49

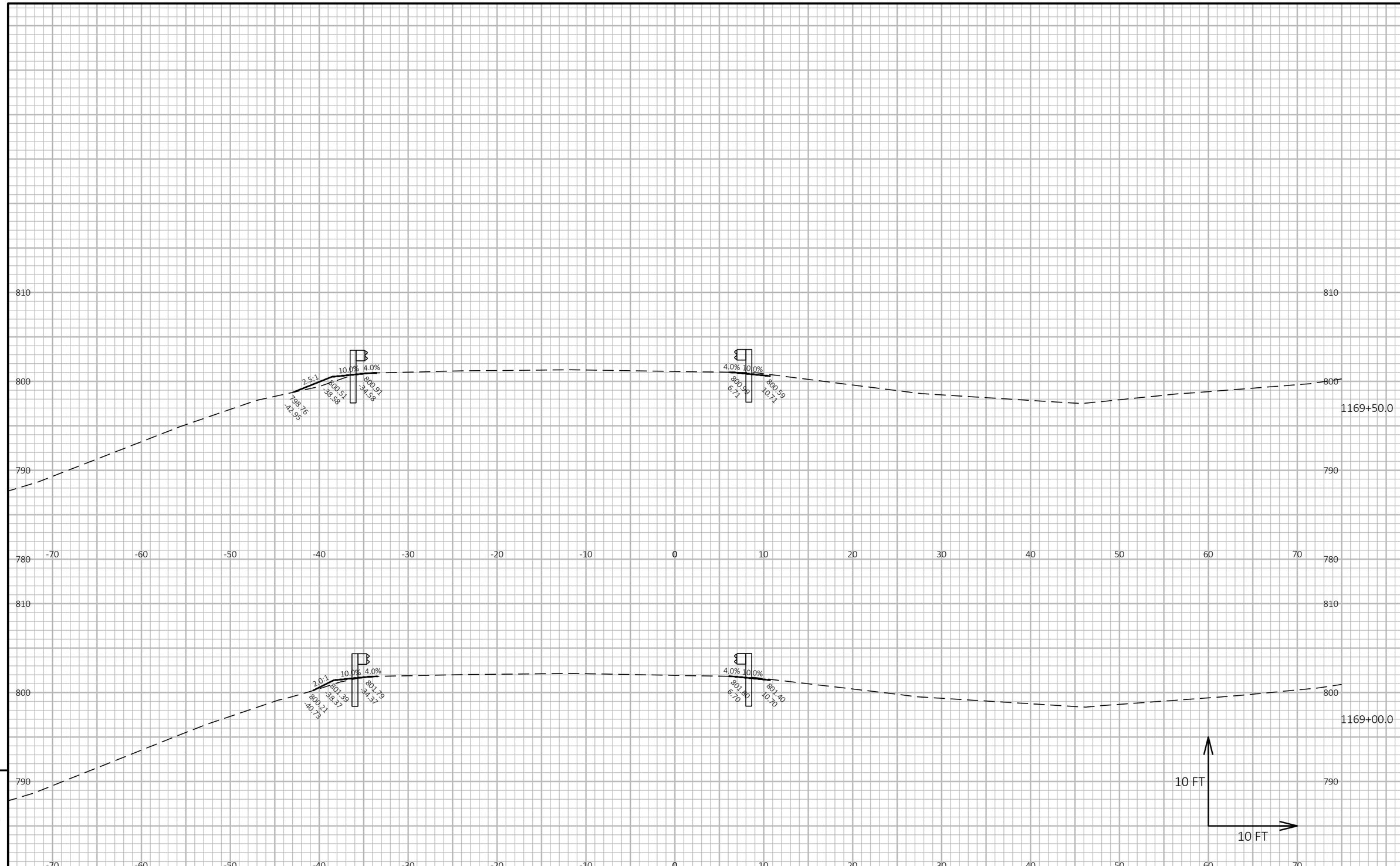

PROJECT NO: 1227-12-71	HWY: IH 43	COUNTY: MANITOWOC	CROSS SECTIONS: MAIN LINE	SHEET	E

FILE NAME : I:\45\450504 IH 43 WISDOT GUARDRAIL\C3D\SHEETSPLAN\12271271 PLAN\090201_XS.DWG
LAYOUT NAME - IH43 SB @ USH 10 2

PLOT DATE : 1/27/2021 10:19 AM PLOT BY : GARNICA, BRANDON PLOT NAME : PLOT SCALE : 1 IN:10 FT HORZ. / 1 IN:10 FT VERT.

WISDOT/CADDS SHEET 49

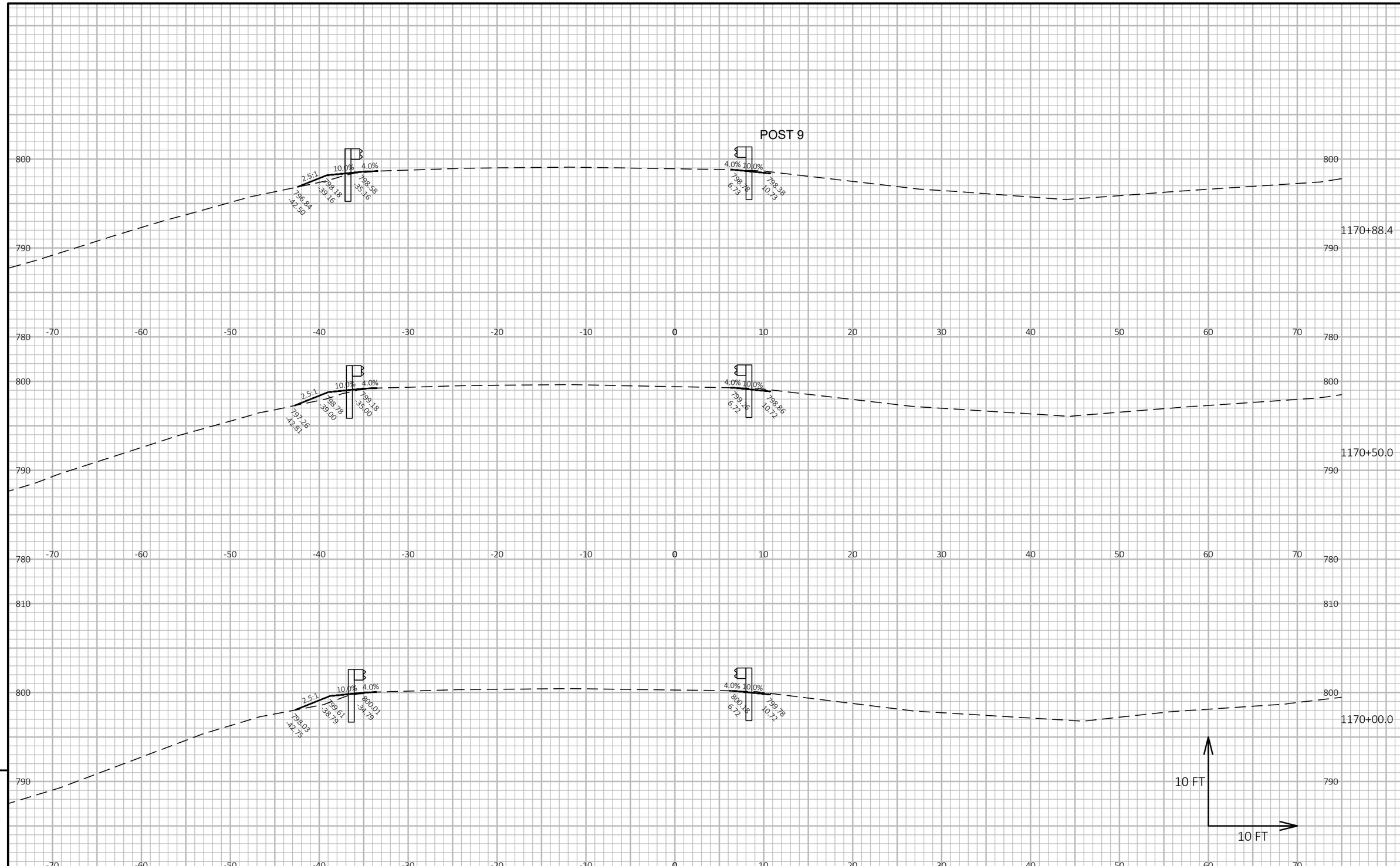

PROJECT NO: 1227-12-71	HWY: IH 43	COUNTY: MANITOWOC	CROSS SECTIONS: MAIN LINE	SHEET	E

FILE NAME : I:\45\450504 IH 43 WISDOT GUARDRAIL\C3D\SHEETSPLAN\12271271 PLAN\090201_XS.DWG
LAYOUT NAME - IH43 SB @ USH 10 3
PLOT DATE : 1/27/2021 10:20 AM
PLOT BY : GARNICA, BRANDON
PLOT NAME :
PLOT SCALE : 1 IN:10 FT HORZ. / 1 IN:10 FT VERT.
WISDOT/CADDS SHEET 49

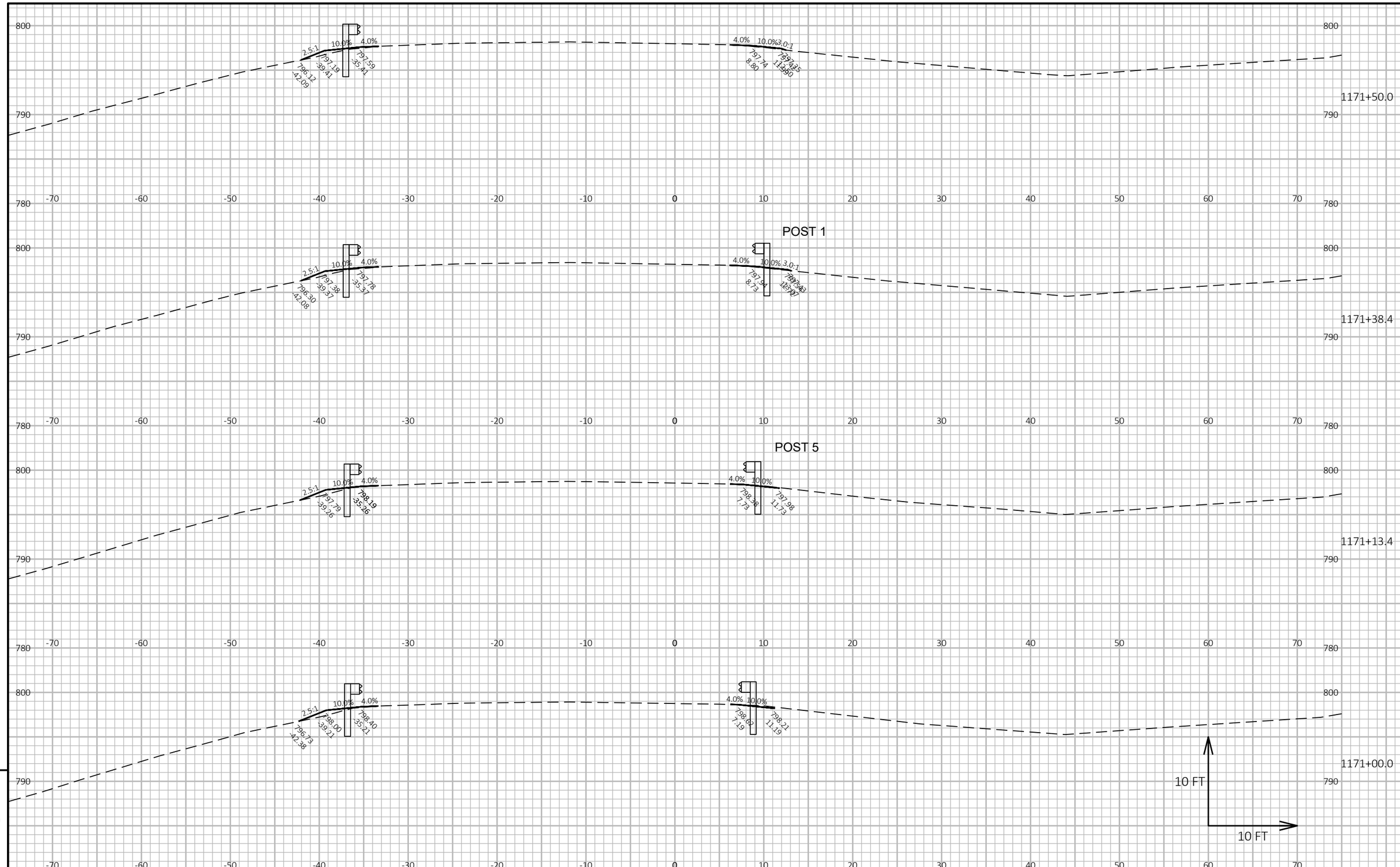

PROJECT NO: 1227-12-71	HWY: IH 43	COUNTY: MANITOWOC	CROSS SECTIONS: MAIN LINE	SHEET	E

FILE NAME : I:\45\450504 IH 43 WISDOT GUARDRAIL\C3D\SHEETSPLAN\12271271 PLAN\090201_XS.DWG
LAYOUT NAME - IH43 SB @ USH 10 4

PLOT DATE : 1/27/2021 10:20 AM PLOT BY : GARNICA, BRANDON PLOT NAME : **PLOT SCALE :** 1 IN:10 FT HORZ. / 1 IN:10 FT VERT.

WISDOT/CADDS SHEET 49

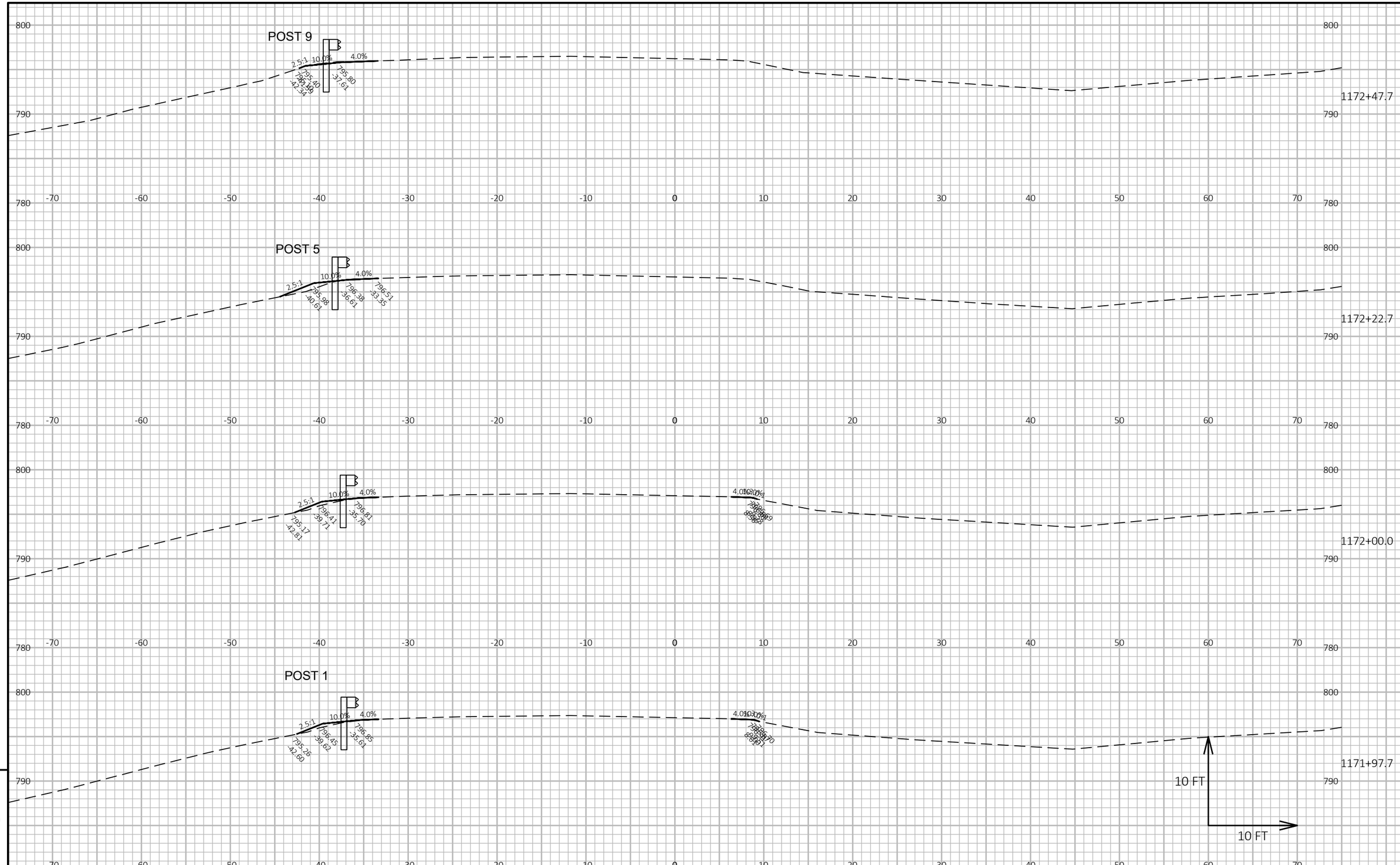

9

9

PROJECT NO: 1227-12-71	HWY: IH 43	COUNTY: MANITOWOC	CROSS SECTIONS: MAIN LINE	SHEET	E

FILE NAME : I:\45\450504 IH 43 WISDOT GUARDRAIL\C3D\SHEETSPLAN\12271271 PLAN\090201_XS.DWG
LAYOUT NAME - IH43 SB @ USH 10 5

PLOT DATE : 1/27/2021 10:20 AM PLOT BY : GARNICA, BRANDON PLOT NAME : **PLOT SCALE :** 1 IN:10 FT HORZ. / 1 IN:10 FT VERT.

WISDOT/CADDS SHEET 49

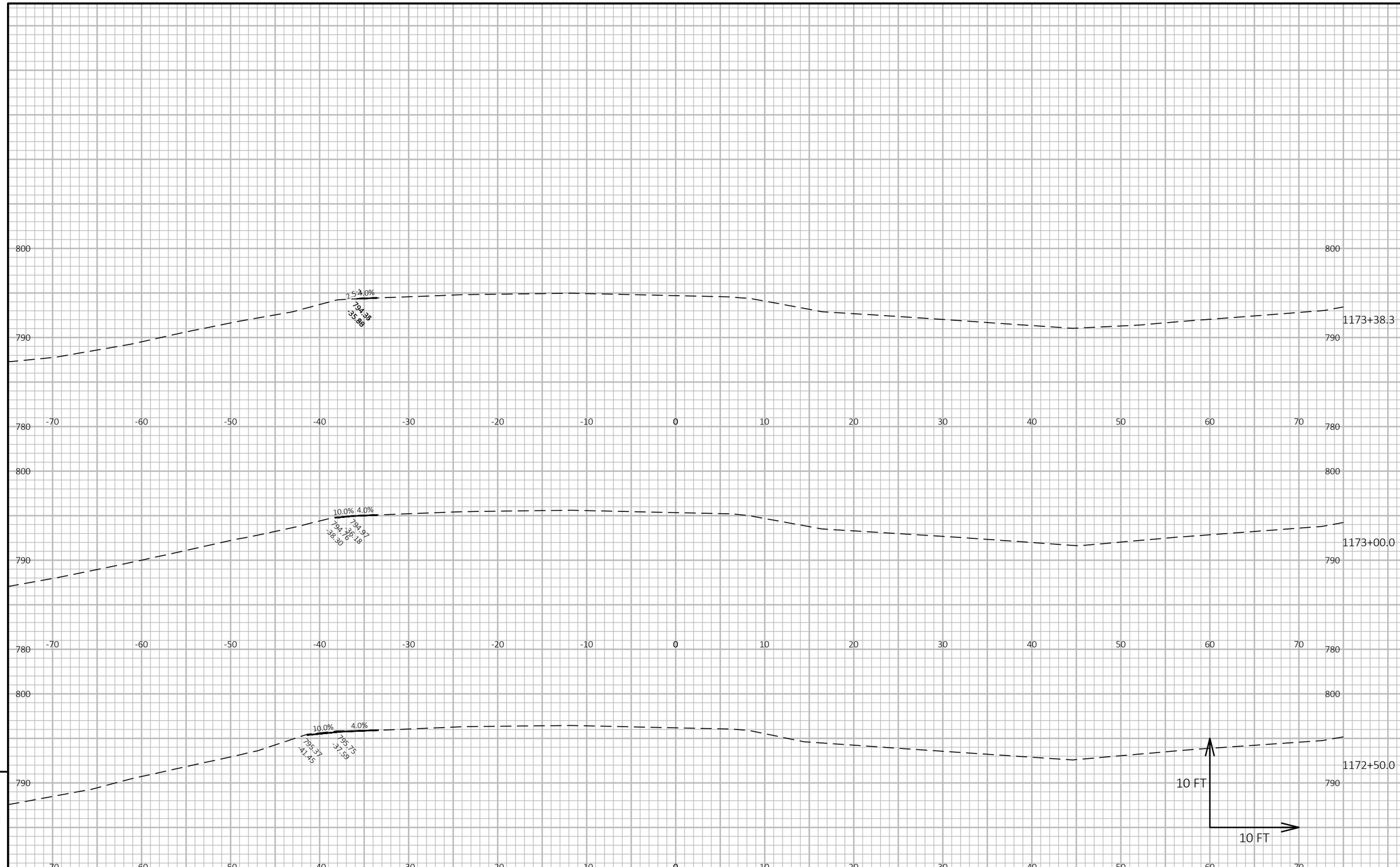

9

9

PROJECT NO: 1227-12-71	HWY: IH 43	COUNTY: MANITOWOC	CROSS SECTIONS: MAIN LINE	SHEET	E

FILE NAME : I:\45\450504 IH 43 WISDOT GUARDRAIL\C3D\SHEETSPLAN\12271271 PLAN\090201_XS.DWG
LAYOUT NAME - IH43 SB @ USH 10 6

PLOT DATE : 1/27/2021 10:20 AM PLOT BY : GARNICA, BRANDON PLOT NAME : **PLOT SCALE :** 1 IN:10 FT HORZ. / 1 IN:10 FT VERT.

WISDOT/CADDS SHEET 49

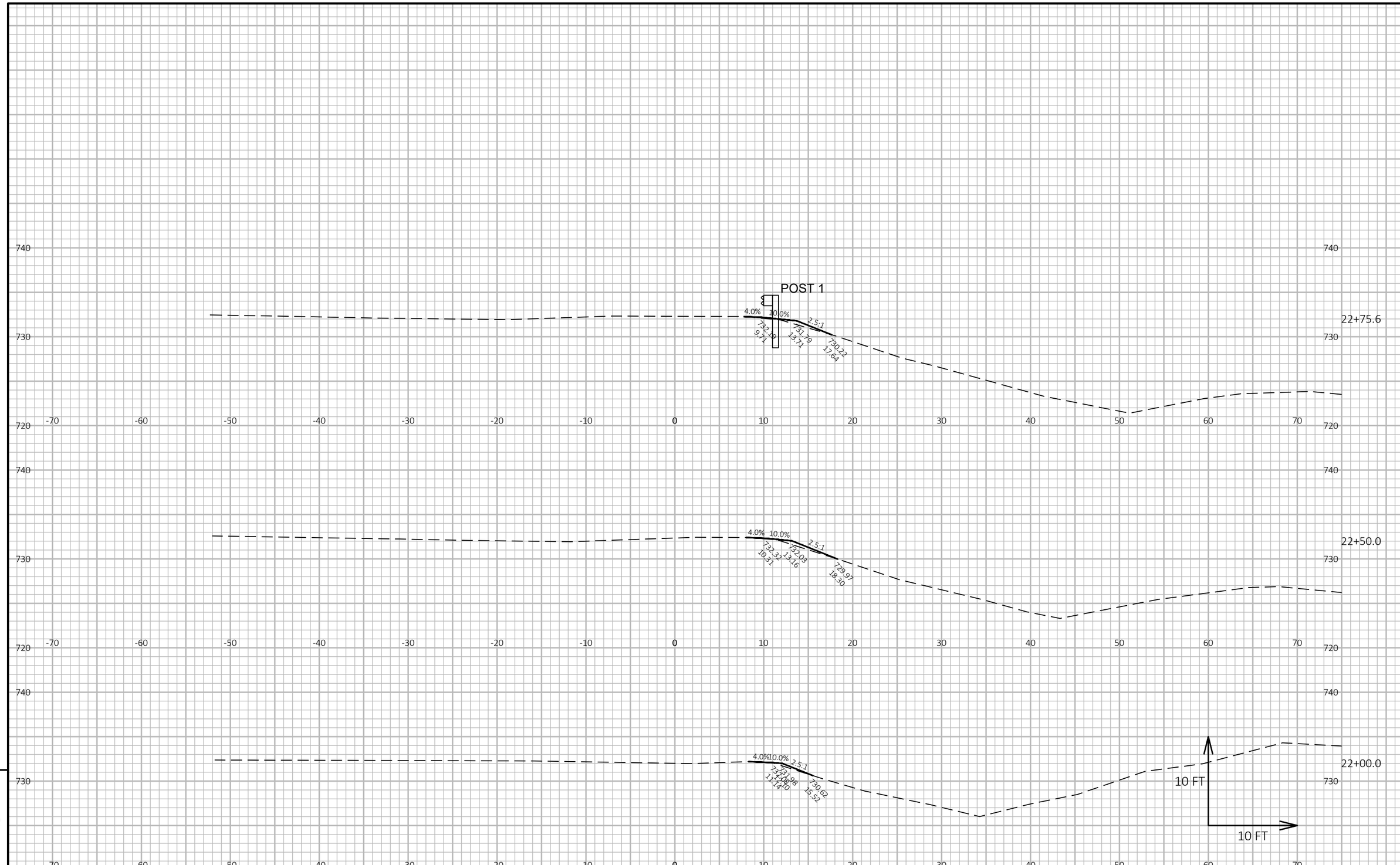

9

9

PROJECT NO: 1227-12-71	HWY: IH 43	COUNTY: MANITOWOC	CROSS SECTIONS: MAIN LINE	SHEET	E

FILE NAME : I:\45\450504 IH 43 WISDOT GUARDRAIL\C3D\SHEETSPLAN\12271271 PLAN\090201_XS.DWG
LAYOUT NAME - IH43 NB @ RAMP CTH V 1

PLOT DATE : 1/27/2021 10:21 AM PLOT BY : GARNICA, BRANDON PLOT NAME : **PLOT SCALE :** 1 IN:10 FT HORZ. / 1 IN:10 FT VERT.

WISDOT/CADDS SHEET 49

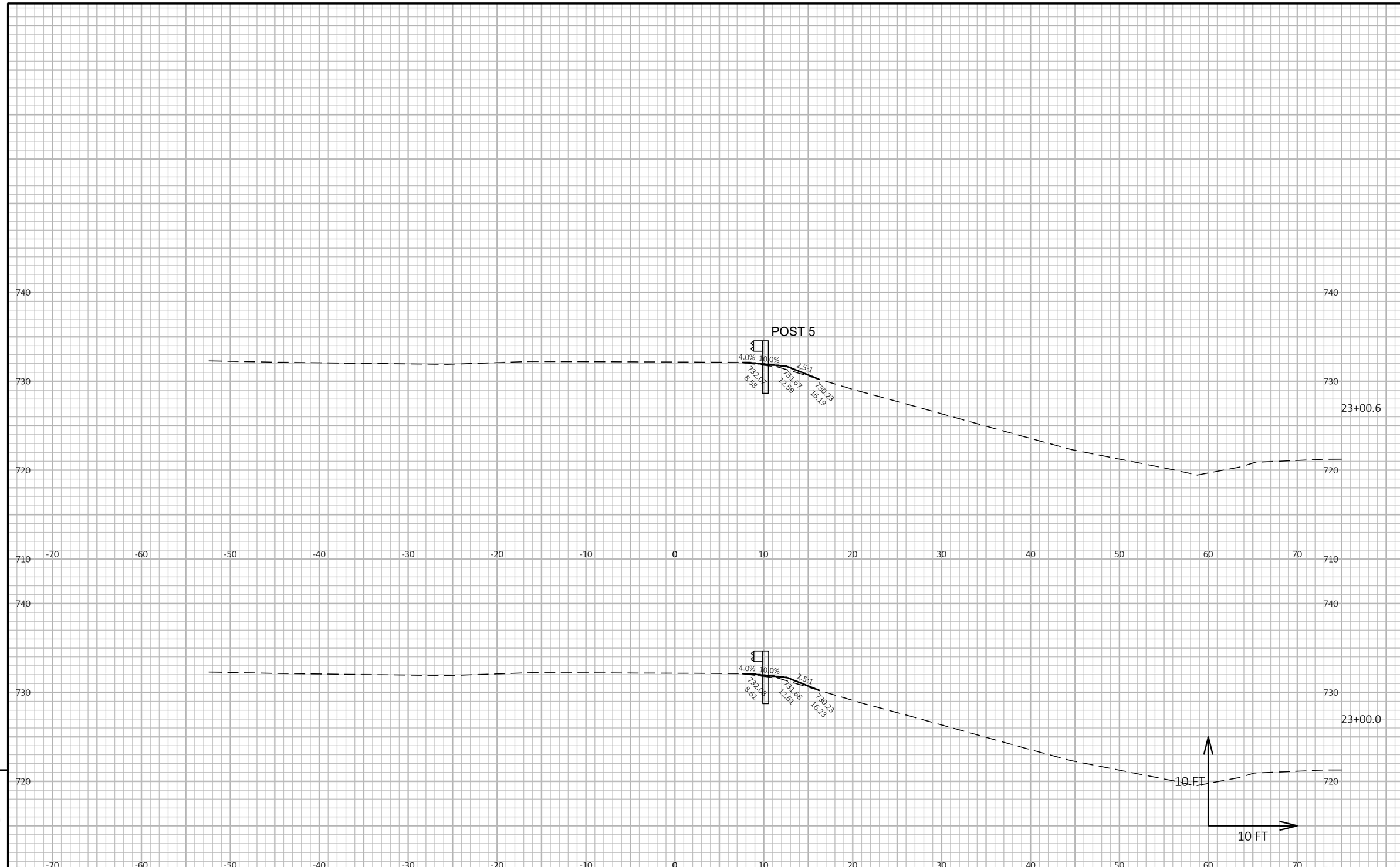

9

9

PROJECT NO: 1227-12-71	HWY: IH 43	COUNTY: MANITOWOC	CROSS SECTIONS: MAIN LINE	SHEET	E

FILE NAME : I:\45\450504 IH 43 WISDOT GUARDRAIL\C3D\SHEETSPLAN\12271271 PLAN\090201_XS.DWG
LAYOUT NAME - IH43 NB @ RAMP CTH V 2

PLOT DATE : 1/27/2021 10:21 AM PLOT BY : GARNICA, BRANDON PLOT NAME : PLOT SCALE : 1 IN:10 FT HORZ. / 1 IN:10 FT VERT.

WISDOT/CADDS SHEET 49

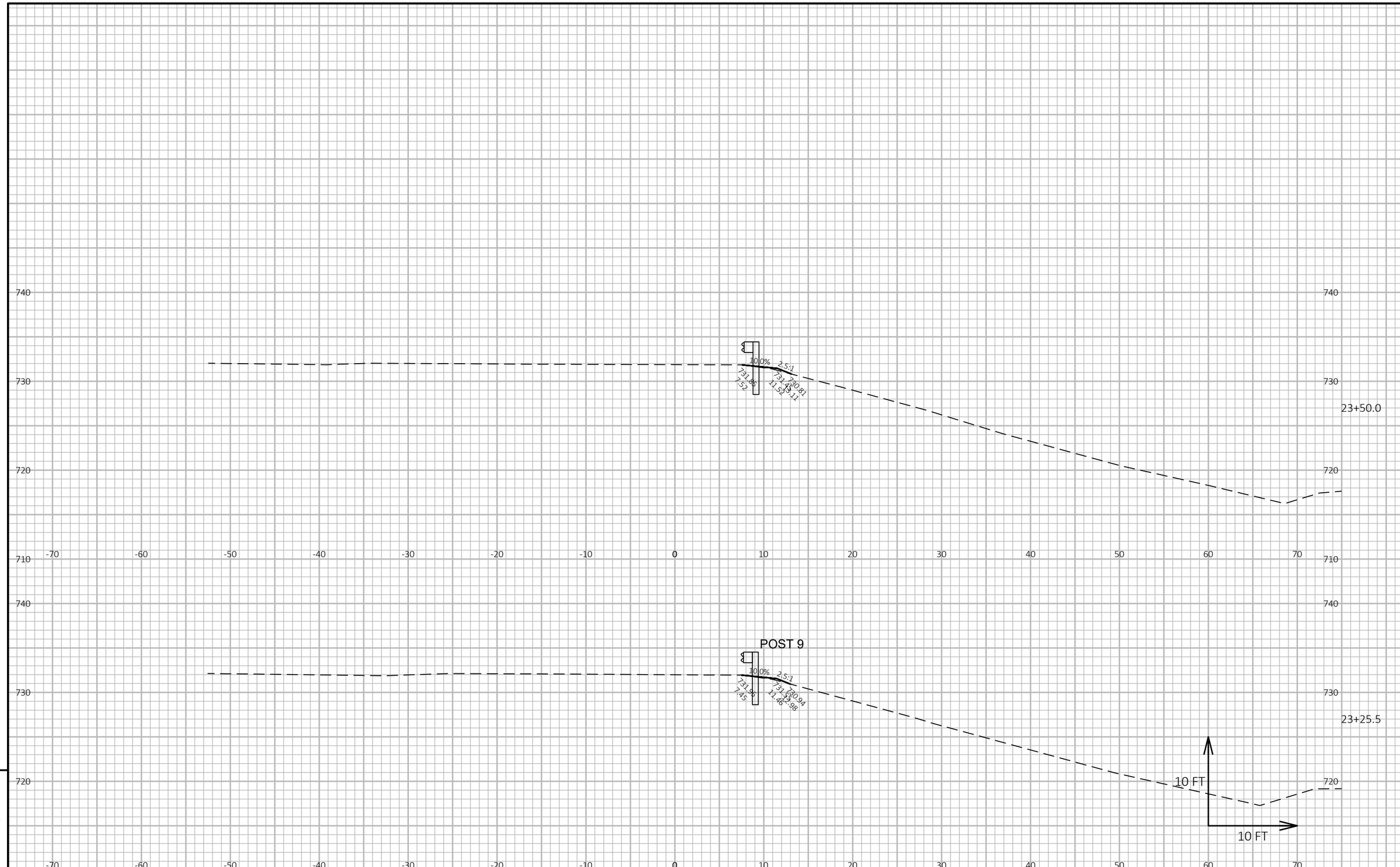

PROJECT NO: 1227-12-71	HWY: IH 43	COUNTY: MANITOWOC	CROSS SECTIONS: MAIN LINE	SHEET	E

FILE NAME : I:\45\450504 IH 43 WISDOT GUARDRAIL\C3D\SHEETSPLAN\12271271 PLAN\090201_XS.DWG
LAYOUT NAME - IH43 NB @ RAMP CTH V 3

PLOT DATE : 1/27/2021 10:21 AM PLOT BY : GARNICA, BRANDON PLOT NAME : **PLOT SCALE :** 1 IN:10 FT HORZ. / 1 IN:10 FT VERT.

WISDOT/CADDS SHEET 49

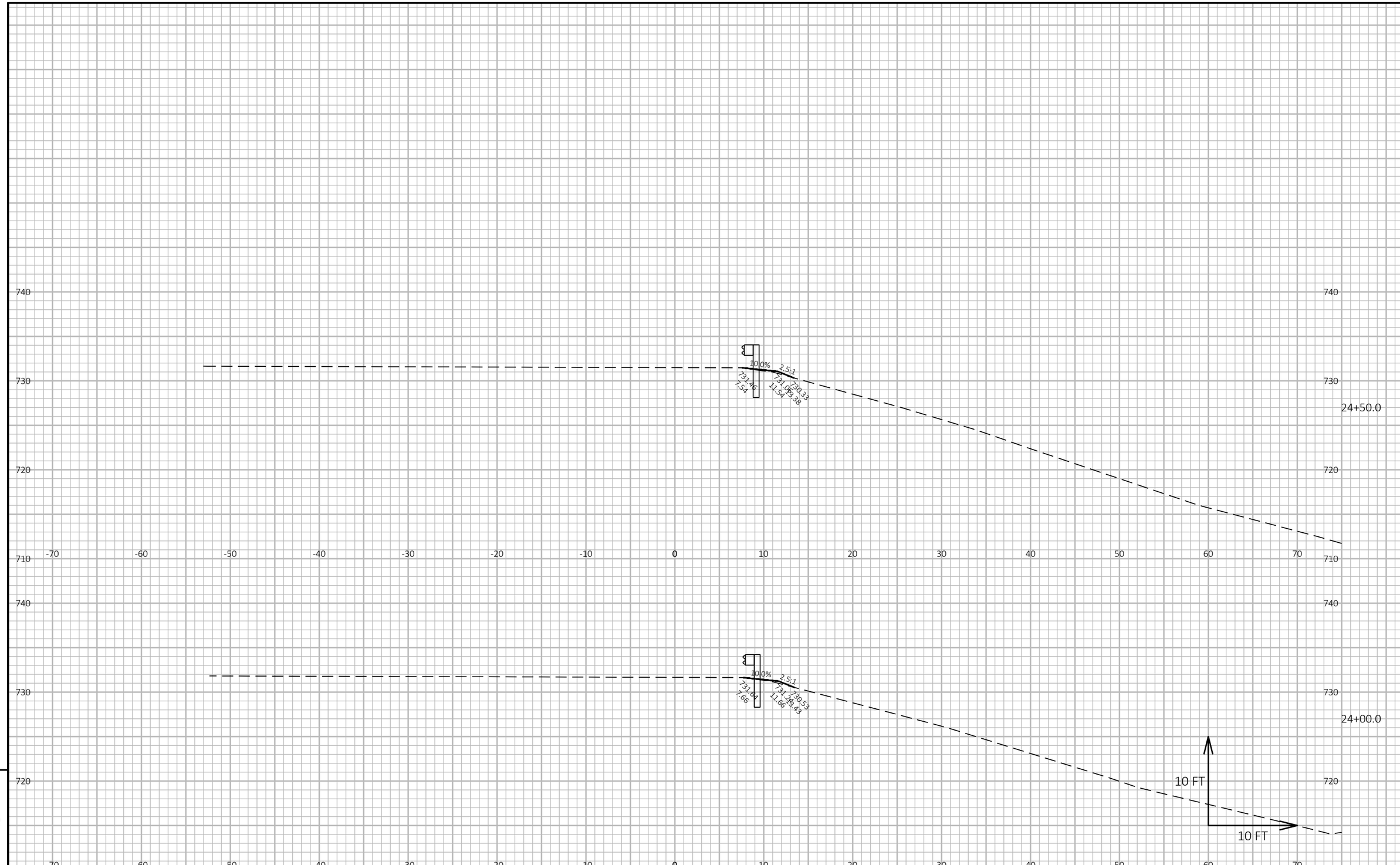

9

9

PROJECT NO: 1227-12-71	HWY: IH 43	COUNTY: MANITOWOC	CROSS SECTIONS: MAIN LINE	SHEET	E

FILE NAME : I:\45\450504 IH 43 WISDOT GUARDRAIL\C3D\SHEETSPLAN\12271271 PLAN\090201_XS.DWG
LAYOUT NAME - IH43 NB @ RAMP CTH V 4

PLOT DATE : 1/27/2021 10:22 AM PLOT BY : GARNICA, BRANDON PLOT NAME : **PLOT SCALE :** 1 IN:10 FT HORZ. / 1 IN:10 FT VERT.

WISDOT/CADDS SHEET 49

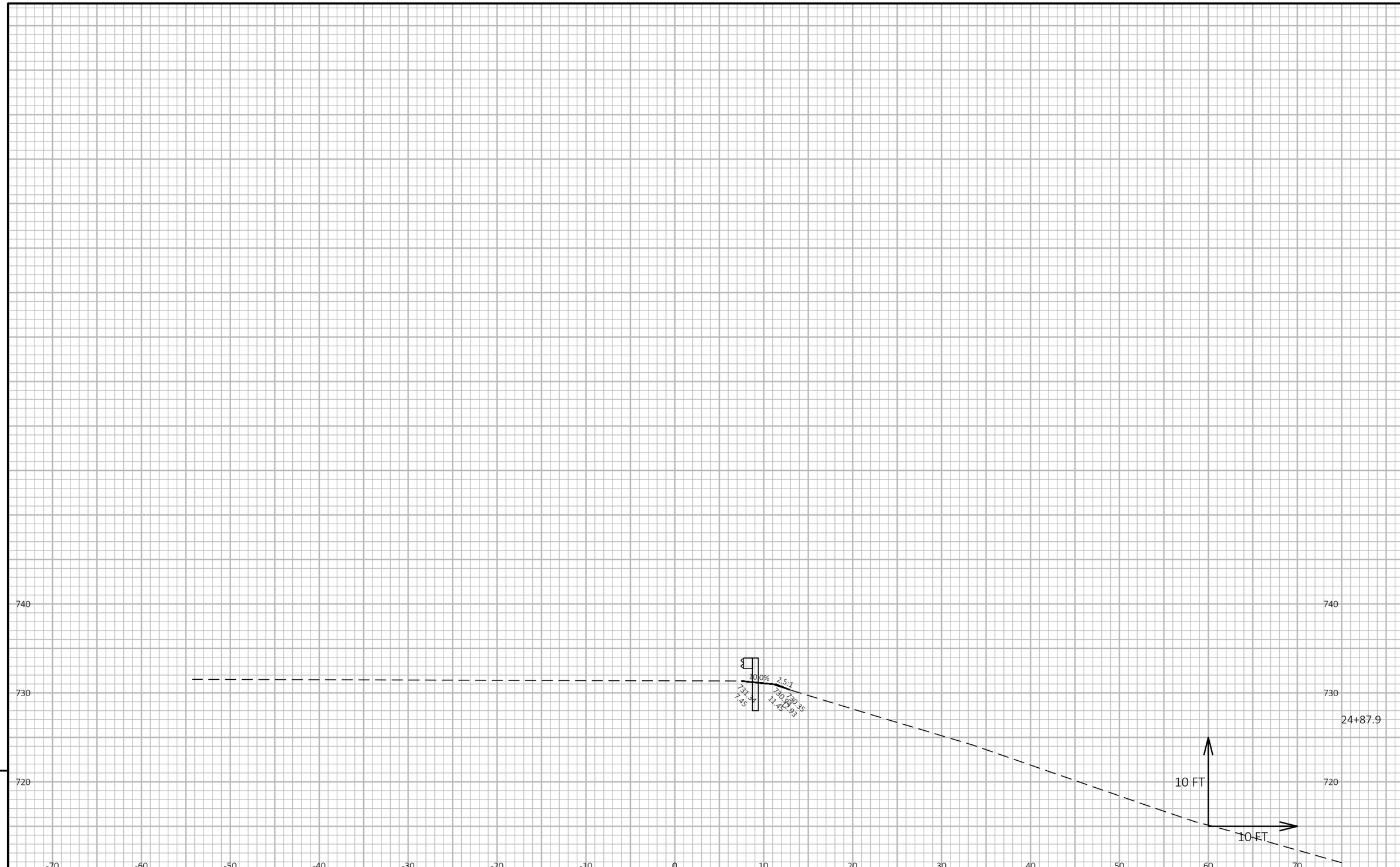

9

9

PROJECT NO: 1227-12-71	HWY: IH 43	COUNTY: MANITOWOC	CROSS SECTIONS: MAIN LINE	SHEET	E

FILE NAME : I:\45\450504 IH 43 WISDOT GUARDRAIL\C3D\SHEETSPLAN\12271271 PLAN\090201_XS.DWG
LAYOUT NAME - IH43 NB @ RAMP CTH V 5

PLOT DATE : 1/27/2021 10:22 AM PLOT BY : GARNICA, BRANDON PLOT NAME :

PLOT SCALE : 1 IN:10 FT HORZ. / 1 IN:10 FT VERT.

WISDOT/CADDS SHEET 49

9

9

PROJECT NO: 1227-12-71	HWY: IH 43	COUNTY: MANITOWOC	CROSS SECTIONS: MAIN LINE	SHEET	E

FILE NAME : I:\45\450504 IH 43 WISDOT GUARDRAIL\C3D\SHEETSPLAN\12271271 PLAN\090201_XS.DWG
LAYOUT NAME - IH43 NB @ RAMP CTH V 6

PLOT DATE : 1/27/2021 10:22 AM PLOT BY : GARNICA, BRANDON PLOT NAME : **PLOT SCALE :** 1 IN:10 FT HORZ. / 1 IN:10 FT VERT.

WISDOT/CADDS SHEET 49

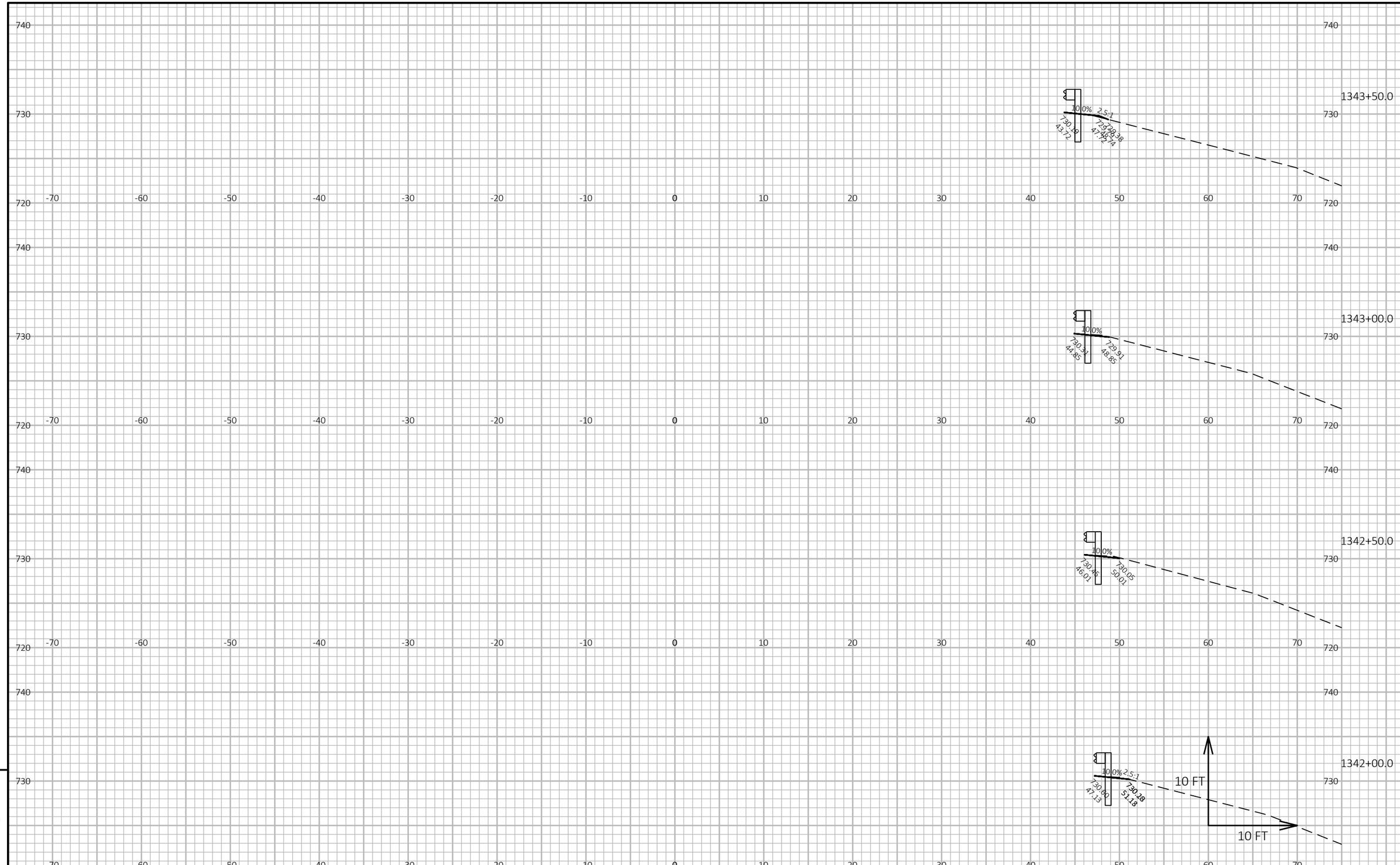

PROJECT NO: 1227-12-71	HWY: IH 43	COUNTY: MANITOWOC	CROSS SECTIONS: MAIN LINE	SHEET	E

FILE NAME : I:\45\450504 IH 43 WISDOT GUARDRAIL\C3D\SHEETSPLAN\12271271 PLAN\090201_XS.DWG
LAYOUT NAME - IH43 NB @ RAMP CTH V 7
PLOT DATE : 1/27/2021 10:22 AM PLOT BY : GARNICA, BRANDON PLOT NAME : **PLOT SCALE :** 1 IN:10 FT HORZ. / 1 IN:10 FT VERT.

WISDOT/CADDS SHEET 49

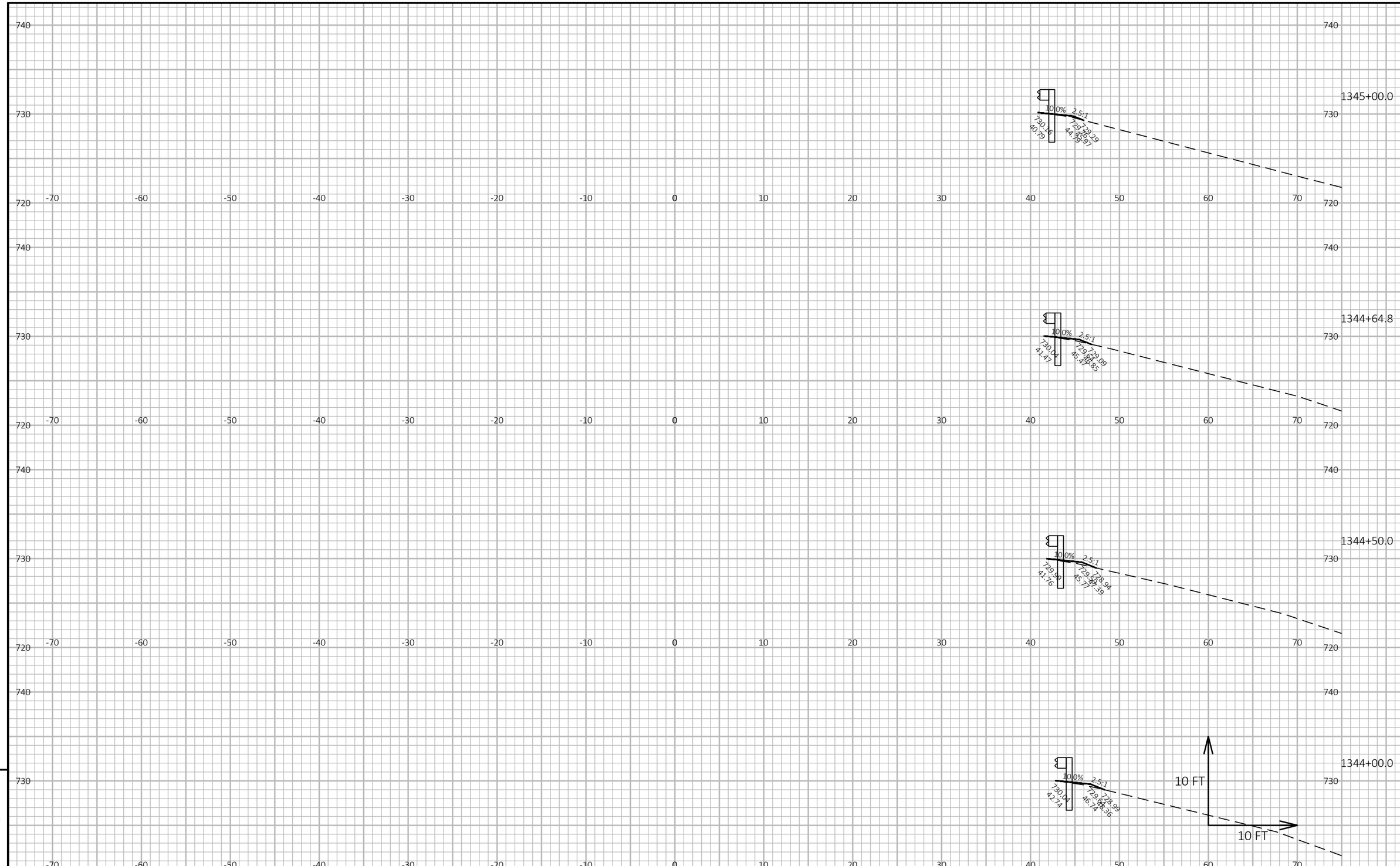

9

9

PROJECT NO: 1227-12-71	HWY: IH 43	COUNTY: MANITOWOC	CROSS SECTIONS: MAIN LINE	SHEET	E

FILE NAME : I:\45\450504 IH 43 WISDOT GUARDRAIL\C3D\SHEETSPLAN\12271271 PLAN\090201_XS.DWG
LAYOUT NAME - IH43 NB @ RAMP CTH V 8

PLOT DATE : 1/27/2021 10:23 AM PLOT BY : GARNICA, BRANDON PLOT NAME : **PLOT SCALE :** 1 IN:10 FT HORZ. / 1 IN:10 FT VERT.

WISDOT/CADDS SHEET 49

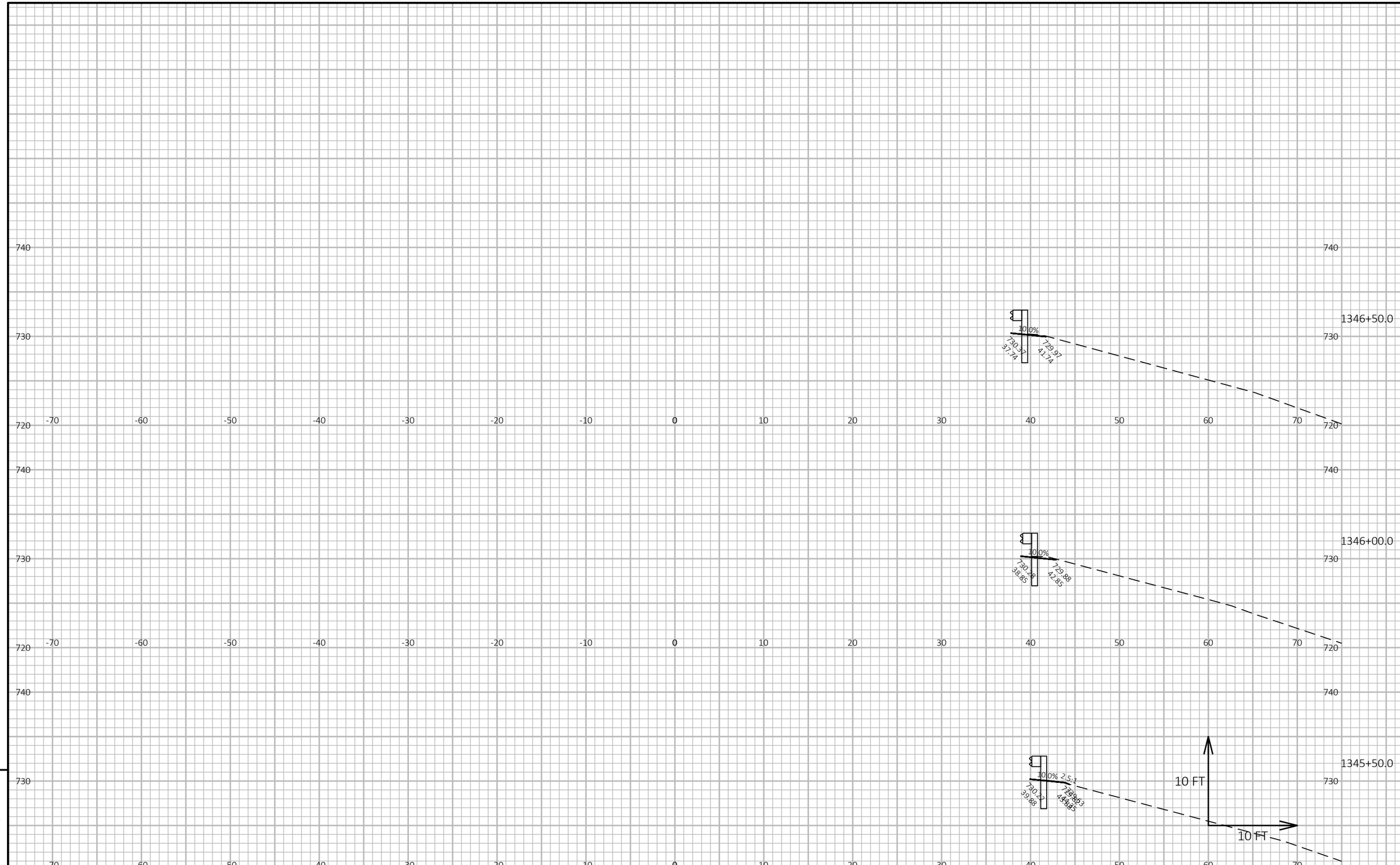

9

9

PROJECT NO: 1227-12-71	HWY: IH 43	COUNTY: MANITOWOC	CROSS SECTIONS: MAIN LINE	SHEET	E

FILE NAME : I:\45\450504 IH 43 WISDOT GUARDRAIL\C3D\SHEETSPLAN\12271271 PLAN\090201_XS.DWG
LAYOUT NAME - IH43 NB @ RAMP CTH V 9

PLOT DATE : 1/27/2021 10:23 AM PLOT BY : GARNICA, BRANDON PLOT NAME : **PLOT SCALE :** 1 IN:10 FT HORZ. / 1 IN:10 FT VERT.

WISDOT/CADDS SHEET 49

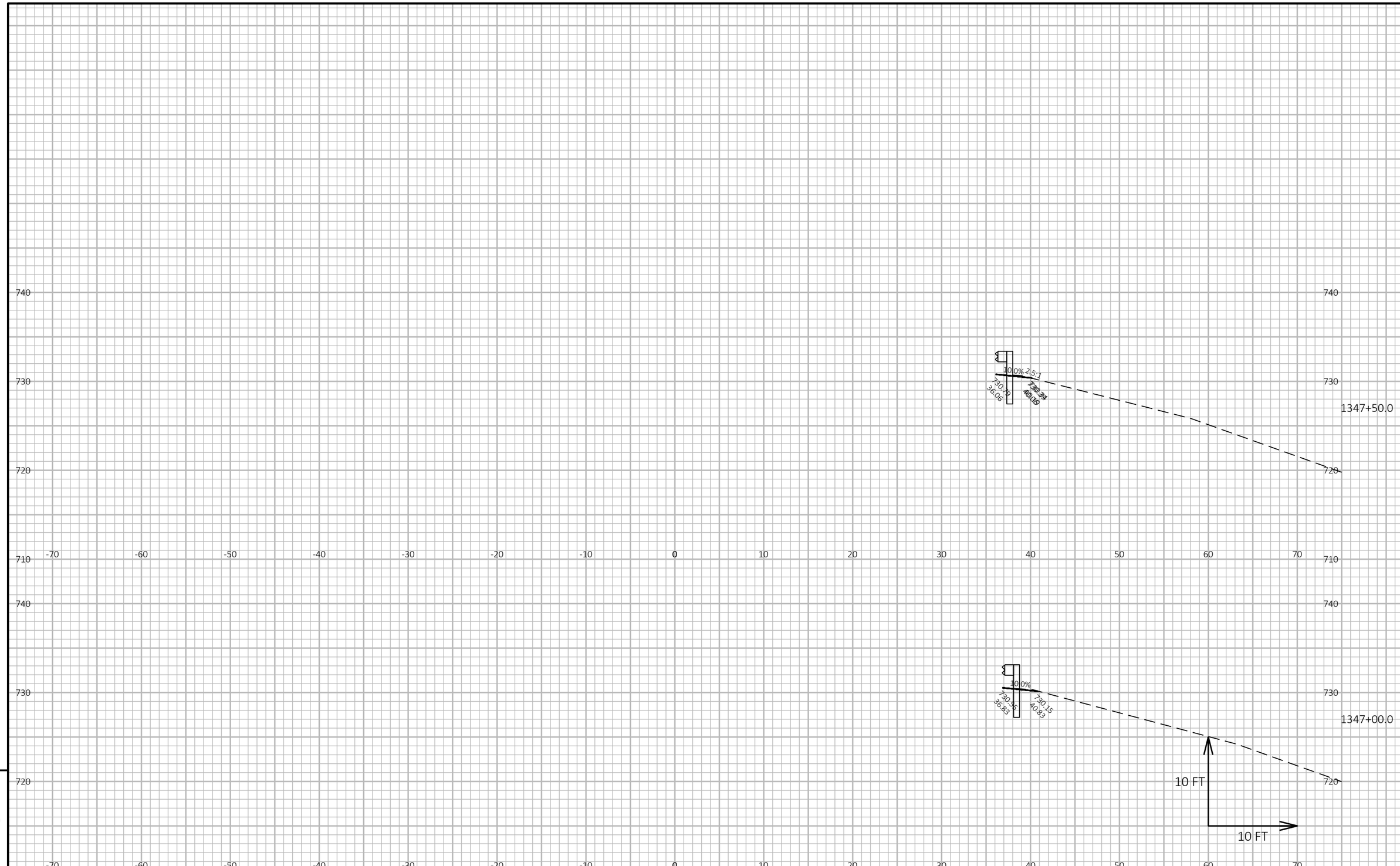

9

9

PROJECT NO: 1227-12-71	HWY: IH 43	COUNTY: MANITOWOC	CROSS SECTIONS: MAIN LINE	SHEET	E

FILE NAME : I:\45\450504 IH 43 WISDOT GUARDRAIL\C3D\SHEETSPLAN\12271271 PLAN\090201_XS.DWG
LAYOUT NAME - IH43 NB @ RAMP CTH V 10

PLOT DATE : 1/27/2021 10:23 AM PLOT BY : GARNICA, BRANDON PLOT NAME :

PLOT SCALE : 1 IN:10 FT HORZ. / 1 IN:10 FT VERT.

WISDOT/CADDS SHEET 49

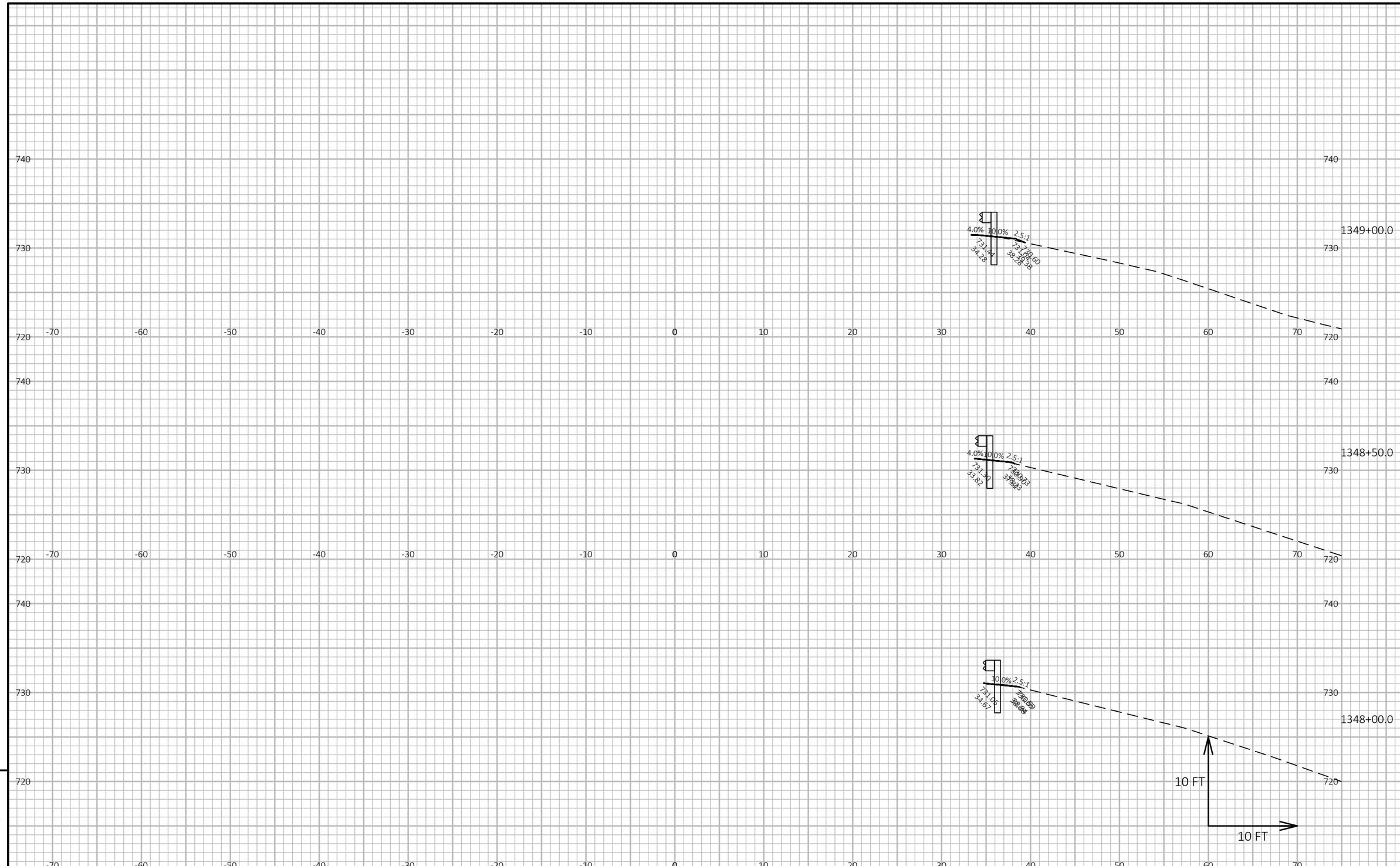

9

9

PROJECT NO: 1227-12-71	HWY: IH 43	COUNTY: MANITOWOC	CROSS SECTIONS: MAIN LINE	SHEET	E

FILE NAME : I:\45\450504 IH 43 WISDOT GUARDRAIL\C3D\SHEETSPLAN\12271271 PLAN\090201_XS.DWG
LAYOUT NAME - IH43 NB @ RAMP CTH V 11

PLOT DATE : 1/27/2021 10:24 AM PLOT BY : GARNICA, BRANDON PLOT NAME : **PLOT SCALE :** 1 IN:10 FT HORZ. / 1 IN:10 FT VERT.

WISDOT/CADDS SHEET 49

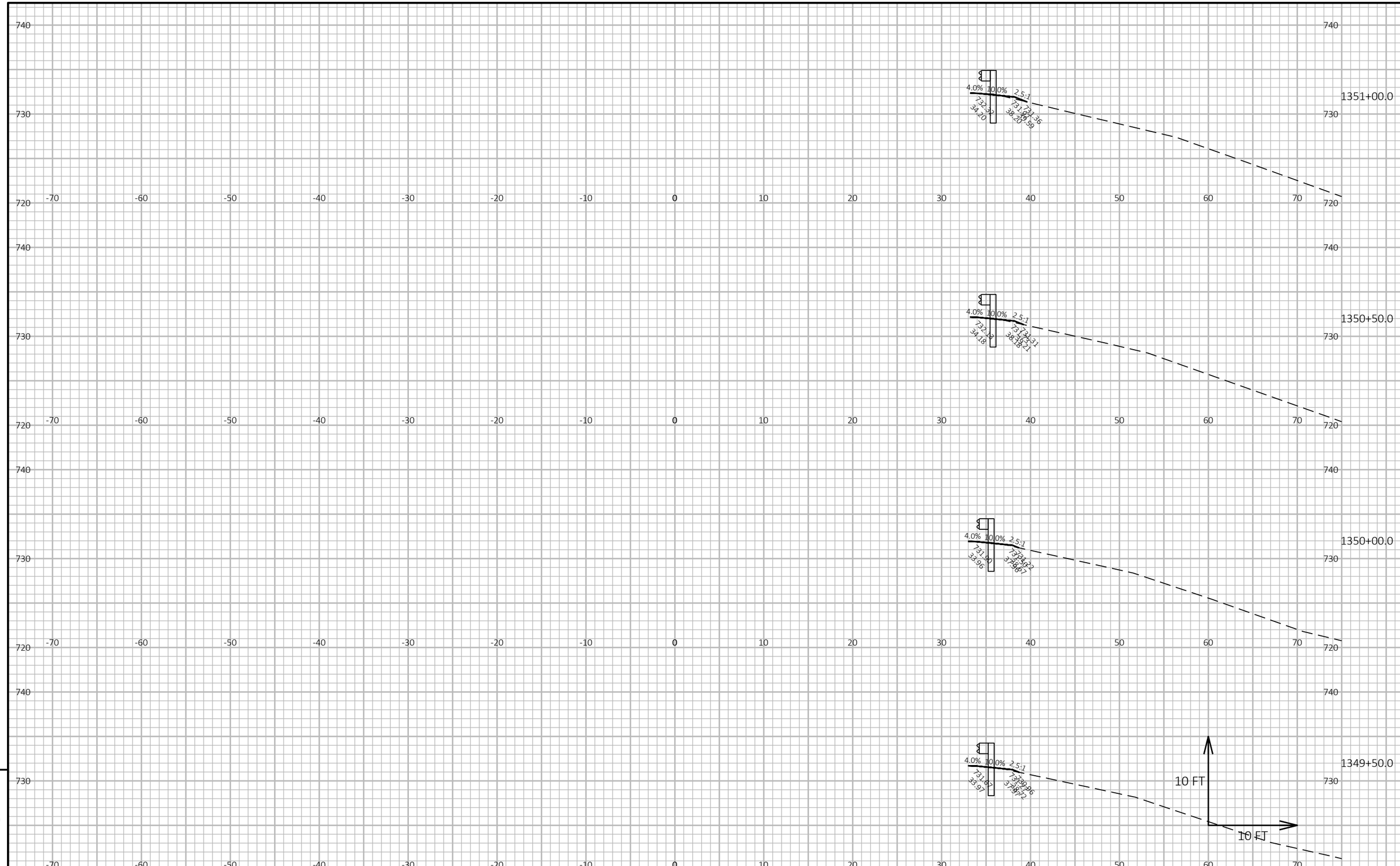

9

9

PROJECT NO: 1227-12-71	HWY: IH 43	COUNTY: MANITOWOC	CROSS SECTIONS: MAIN LINE	SHEET	E

FILE NAME : I:\45\450504 IH 43 WISDOT GUARDRAIL\C3D\SHEETSPLAN\12271271 PLAN\090201_XS.DWG
LAYOUT NAME - IH43 NB @ RAMP CTH V 12

PLOT DATE : 1/27/2021 10:24 AM PLOT BY : GARNICA, BRANDON PLOT NAME : **PLOT SCALE :** 1 IN:10 FT HORZ. / 1 IN:10 FT VERT.

WISDOT/CADDS SHEET 49

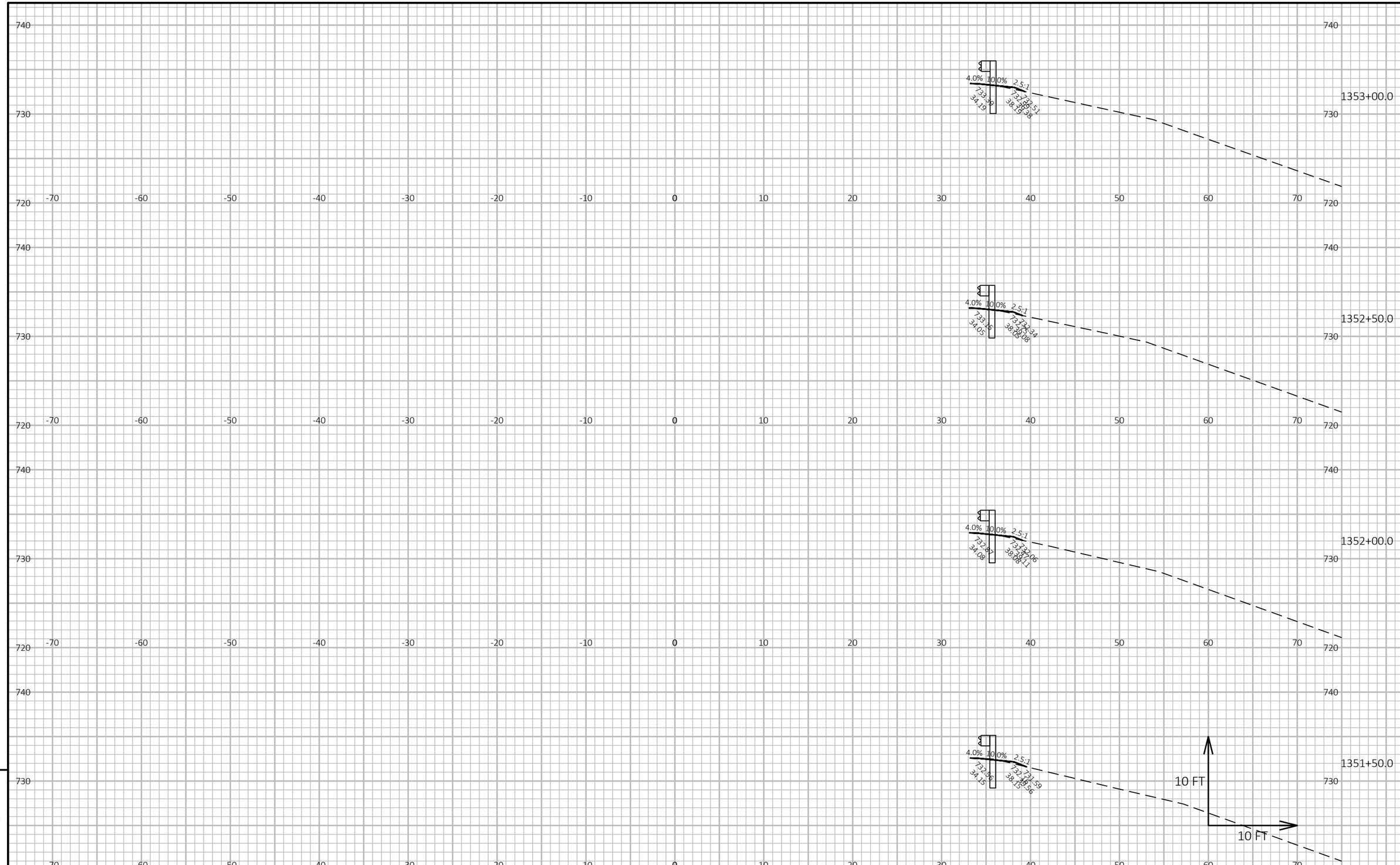

9

9

PROJECT NO: 1227-12-71	HWY: IH 43	COUNTY: MANITOWOC	CROSS SECTIONS: MAIN LINE	SHEET	E

FILE NAME : I:\45\450504 IH 43 WISDOT GUARDRAIL\C3D\SHEETSPLAN\12271271 PLAN\090201_XS.DWG
LAYOUT NAME - IH43 NB @ RAMP CTH V 13

PLOT DATE : 1/27/2021 10:24 AM PLOT BY : GARNICA, BRANDON PLOT NAME : **PLOT SCALE :** 1 IN:10 FT HORZ. / 1 IN:10 FT VERT.

WISDOT/CADDS SHEET 49

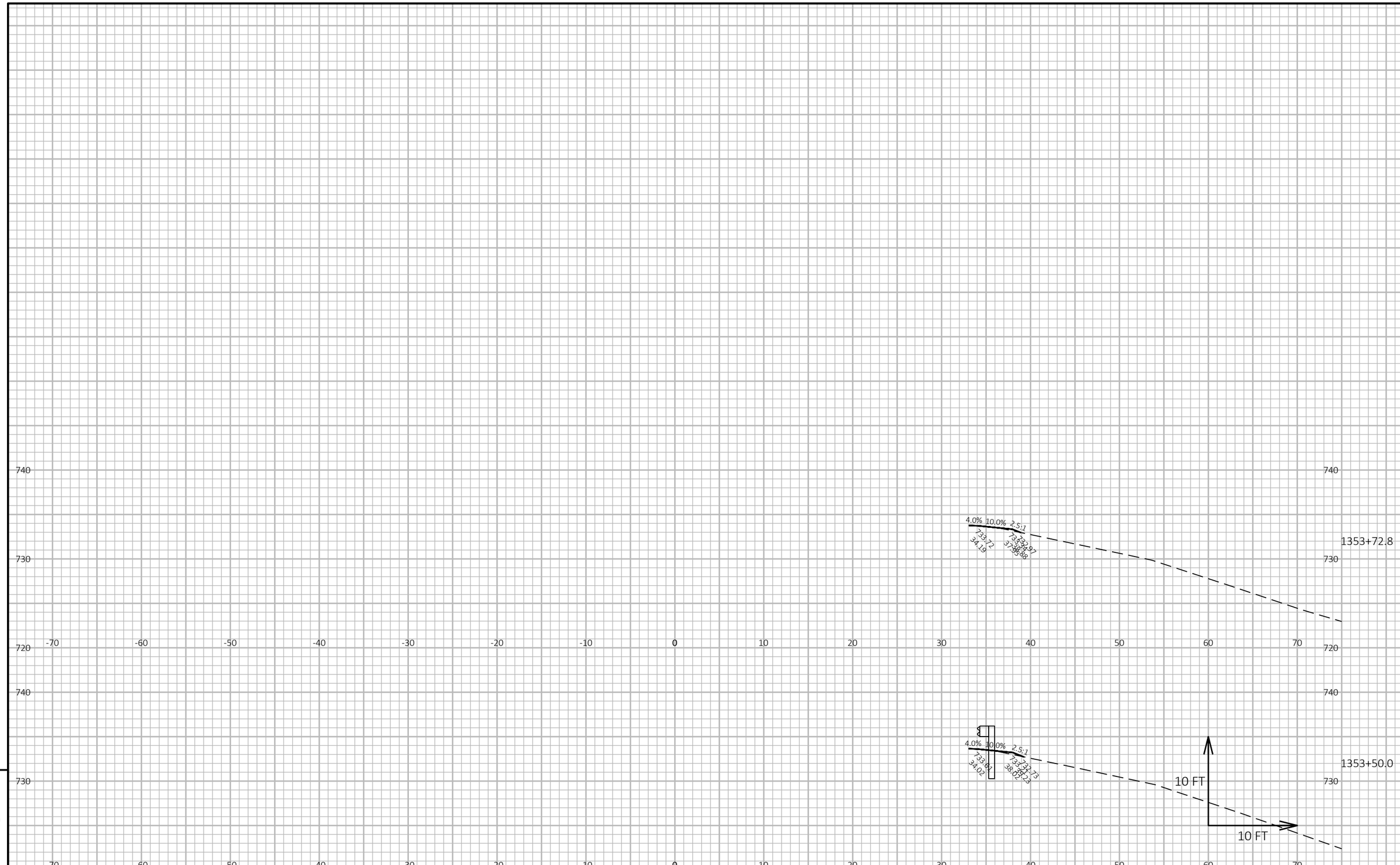

9

9

PROJECT NO: 1227-12-71	HWY: IH 43	COUNTY: MANITOWOC	CROSS SECTIONS: MAIN LINE	SHEET	E

FILE NAME : I:\45\450504 IH 43 WISDOT GUARDRAIL\C3D\SHEETSPLAN\12271271 PLAN\090201_XS.DWG
LAYOUT NAME - IH43 NB @ RAMP CTH V 14

PLOT DATE : 1/27/2021 10:25 AM PLOT BY : GARNICA, BRANDON PLOT NAME : **PLOT SCALE :** 1 IN:10 FT HORZ. / 1 IN:10 FT VERT.

WISDOT/CADDS SHEET 49

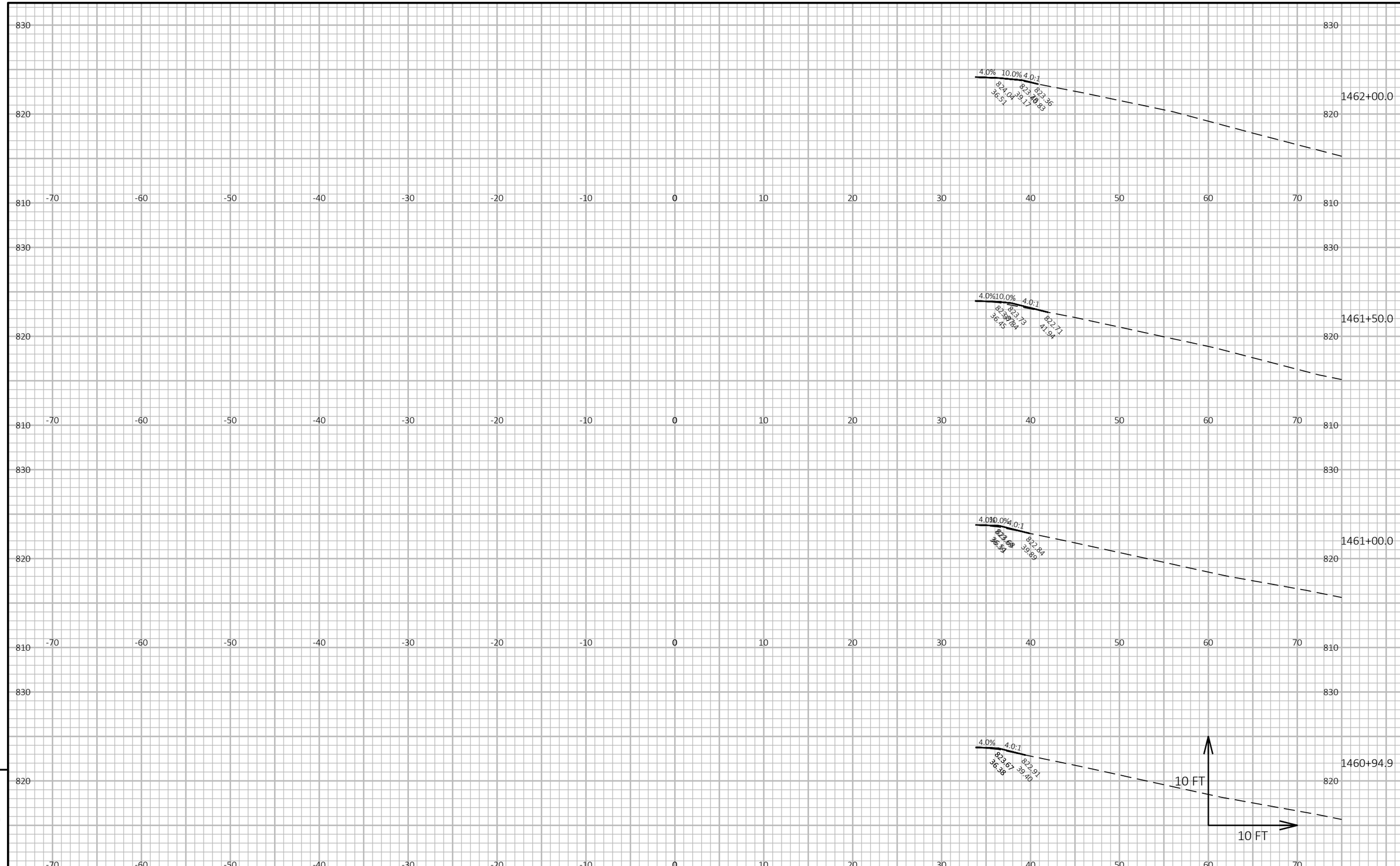

9

9

PROJECT NO: 1227-12-71	HWY: IH 43	COUNTY: MANITOWOC	CROSS SECTIONS: MAIN LINE	SHEET	E

FILE NAME : I:\45\450504 IH 43 WISDOT GUARDRAIL\C3D\SHEETSPLAN\12271271 PLAN\090201_XS.DWG
LAYOUT NAME - IH43 NB @ CTH K 1

PLOT DATE : 1/27/2021 10:25 AM PLOT BY : GARNICA, BRANDON PLOT NAME : **PLOT SCALE :** 1 IN:10 FT HORZ. / 1 IN:10 FT VERT.

WISDOT/CADDS SHEET 49

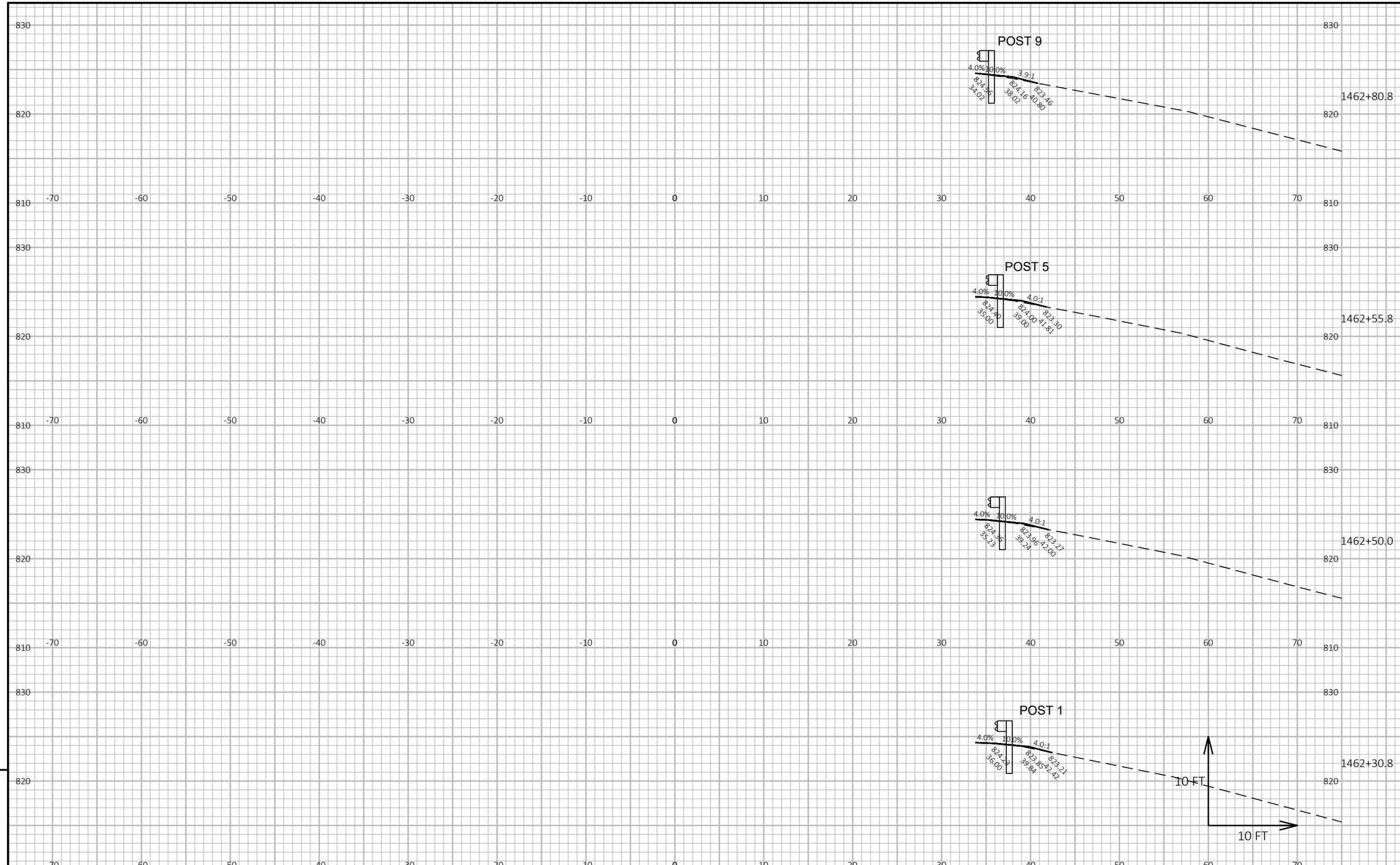

9

9

PROJECT NO: 1227-12-71	HWY: IH 43	COUNTY: MANITOWOC	CROSS SECTIONS: MAIN LINE	SHEET	E

FILE NAME : I:\45\450504 IH 43 WISDOT GUARDRAIL\C3D\SHEETSPLAN\12271271 PLAN\090201_XS.DWG
LAYOUT NAME - IH43 NB @ CTH K 2

PLOT DATE : 1/27/2021 10:25 AM PLOT BY : GARNICA, BRANDON PLOT NAME : **PLOT SCALE :** 1 IN:10 FT HORZ. / 1 IN:10 FT VERT.

WISDOT/CADDS SHEET 49

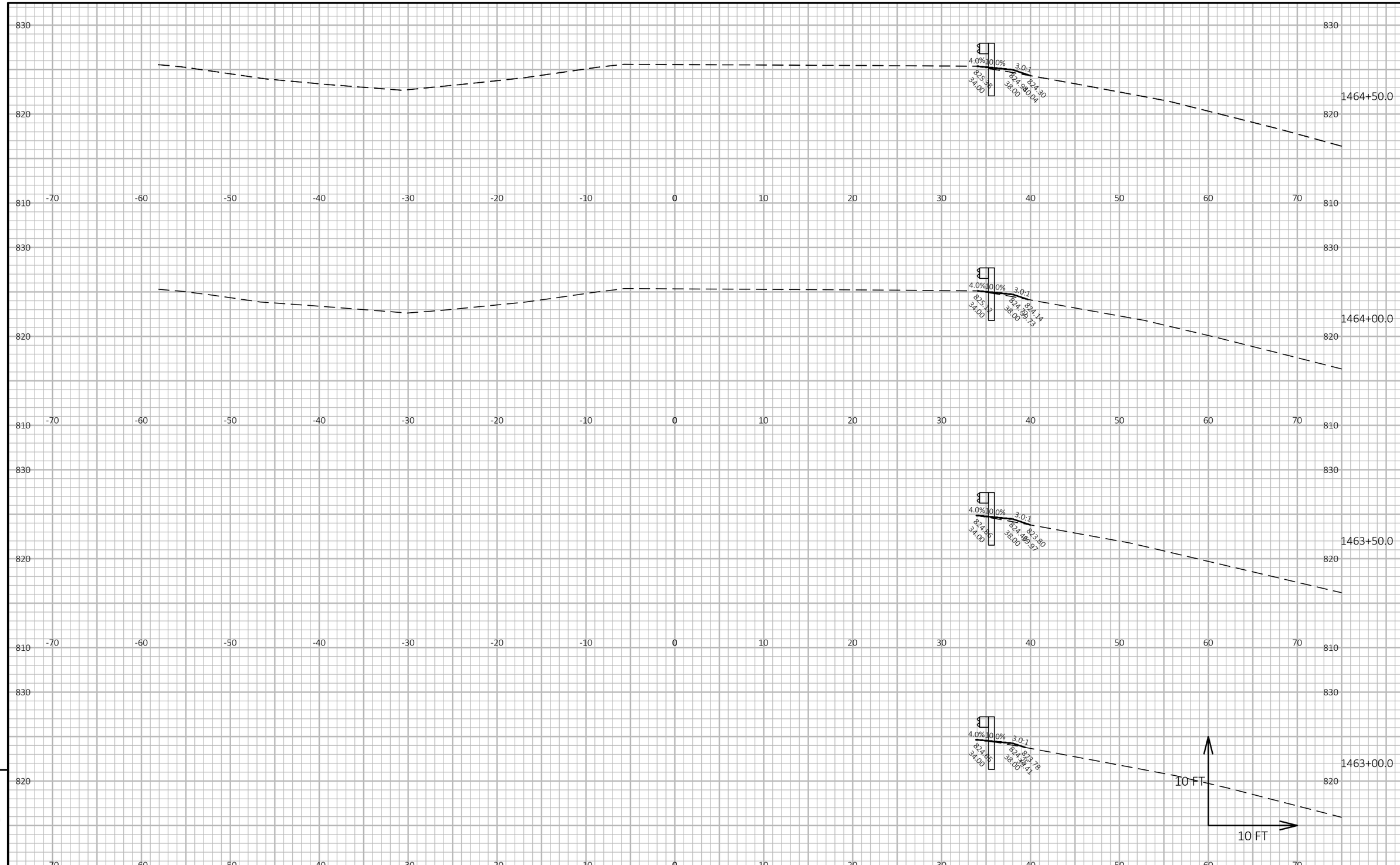

9

9

PROJECT NO: 1227-12-71	HWY: IH 43	COUNTY: MANITOWOC	CROSS SECTIONS: MAIN LINE	SHEET	E

FILE NAME : I:\45\450504 IH 43 WISDOT GUARDRAIL\C3D\SHEETSPLAN\12271271 PLAN\090201_XS.DWG
LAYOUT NAME - IH43 NB @ CTH K 3

PLOT DATE : 1/27/2021 10:26 AM PLOT BY : GARNICA, BRANDON PLOT NAME : **PLOT SCALE :** 1 IN:10 FT HORZ. / 1 IN:10 FT VERT.

WISDOT/CADDS SHEET 49

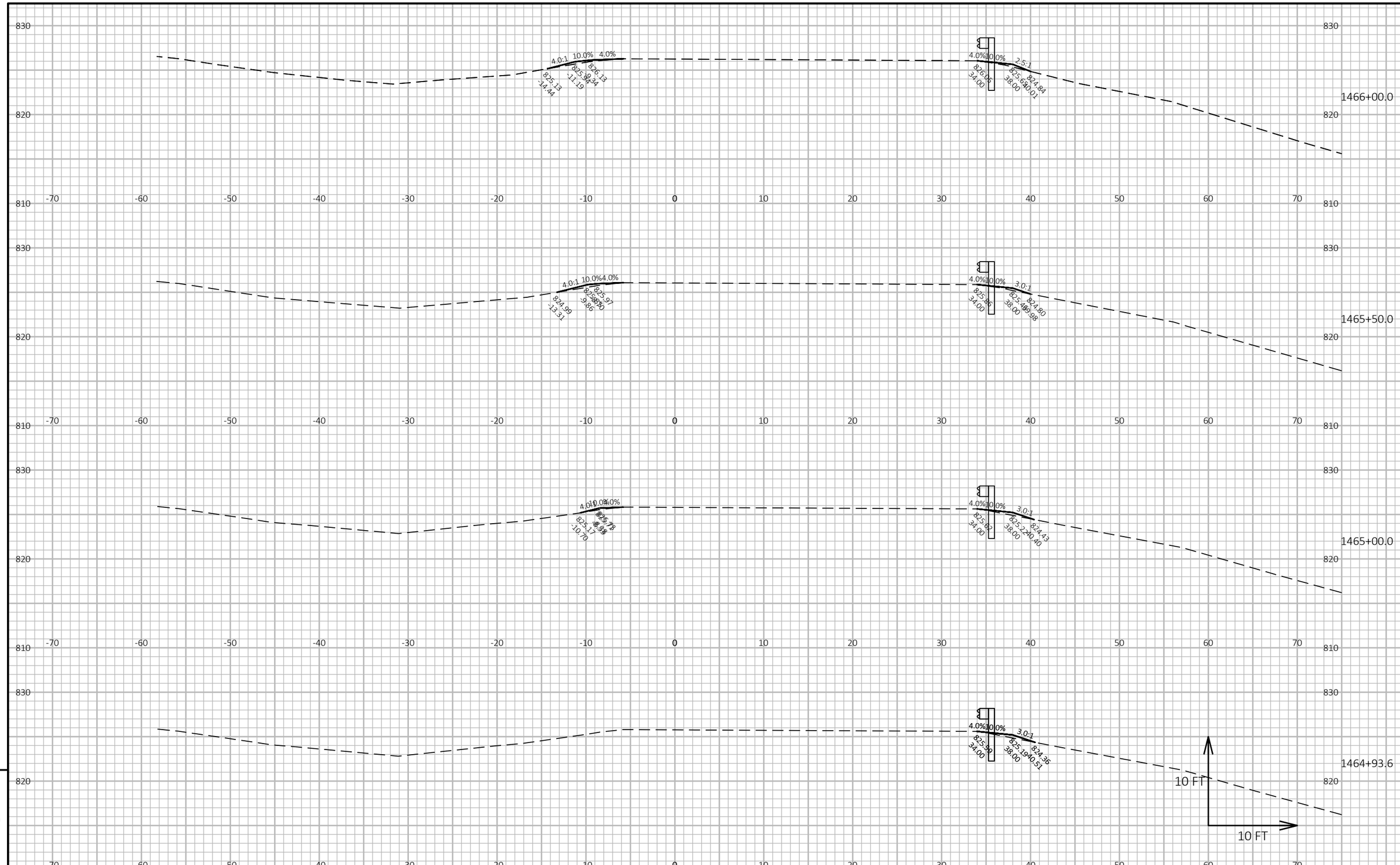

PROJECT NO: 1227-12-71	HWY: IH 43	COUNTY: MANITOWOC	CROSS SECTIONS: MAIN LINE	SHEET	E

FILE NAME : I:\45\450504 IH 43 WISDOT GUARDRAIL\C3D\SHEETSPLAN\12271271 PLAN\090201_XS.DWG
LAYOUT NAME - IH43 NB @ CTH K 4
PLOT DATE : 1/27/2021 10:26 AM PLOT BY : GARNICA, BRANDON PLOT NAME : PLOT SCALE : 1 IN:10 FT HORZ. / 1 IN:10 FT VERT.

WISDOT/CADDS SHEET 49

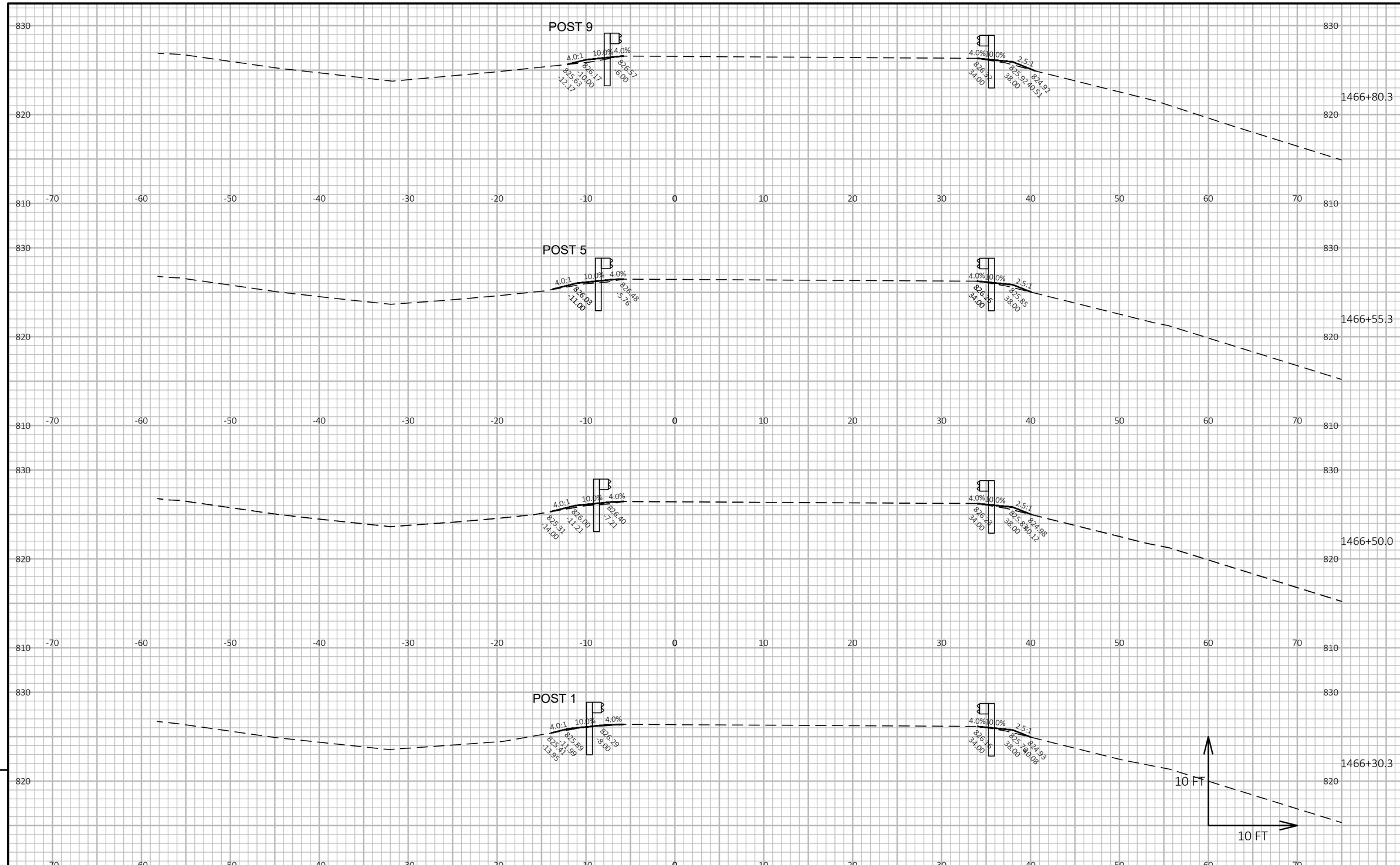

9

9

PROJECT NO: 1227-12-71	HWY: IH 43	COUNTY: MANITOWOC	CROSS SECTIONS: MAIN LINE	SHEET	E

FILE NAME : I:\45\450504 IH 43 WISDOT GUARDRAIL\C3D\SHEETSPLAN\12271271 PLAN\090201_XS.DWG
LAYOUT NAME - IH43 NB @ CTH K 5

PLOT DATE : 1/27/2021 10:26 AM PLOT BY : GARNICA, BRANDON PLOT NAME : **PLOT SCALE :** 1 IN:10 FT HORZ. / 1 IN:10 FT VERT.

WISDOT/CADDS SHEET 49

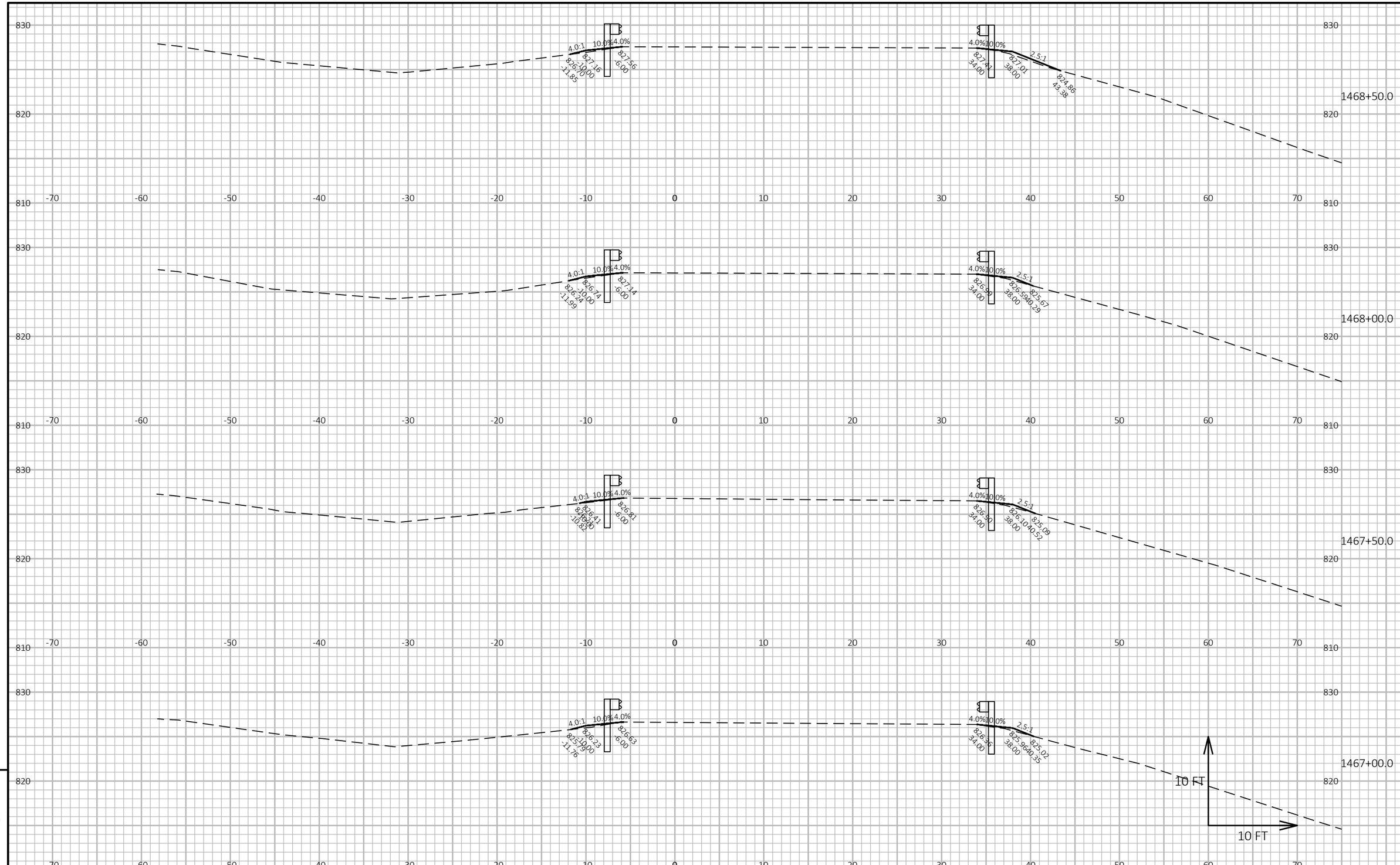

9

9

PROJECT NO: 1227-12-71	HWY: IH 43	COUNTY: MANITOWOC	CROSS SECTIONS: MAIN LINE	SHEET	E

FILE NAME : I:\45\450504 IH 43 WISDOT GUARDRAIL\C3D\SHEETSPLAN\12271271 PLAN\090201_XS.DWG
LAYOUT NAME - IH43 NB @ CTH K 6

PLOT DATE : 1/27/2021 10:27 AM PLOT BY : GARNICA, BRANDON PLOT NAME : **PLOT SCALE :** 1 IN:10 FT HORZ. / 1 IN:10 FT VERT.

WISDOT/CADDS SHEET 49

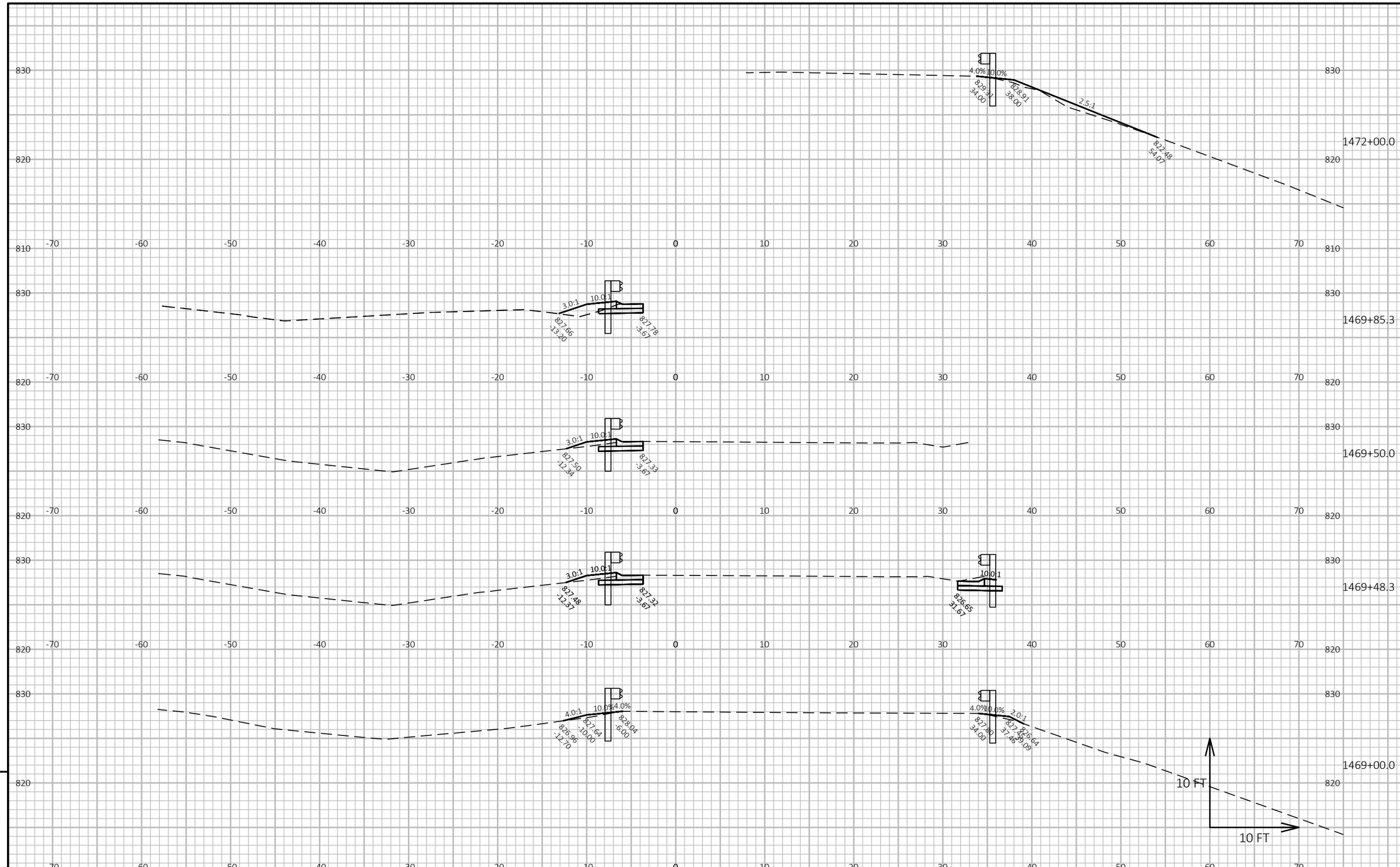

9

9

PROJECT NO: 1227-12-71	HWY: IH 43	COUNTY: MANITOWOC	CROSS SECTIONS: MAIN LINE	SHEET E

FILE NAME : I:\45\450504 IH 43 WISDOT GUARDRAIL\C3D\SHEETSPLAN\12271271 PLAN\090201_XS.DWG
LAYOUT NAME - IH43 NB @ CTH K 7

PLOT DATE : 1/27/2021 10:27 AM PLOT BY : GARNICA, BRANDON PLOT NAME : **PLOT SCALE :** 1 IN:10 FT HORZ. / 1 IN:10 FT VERT.

WISDOT/CADDS SHEET 49

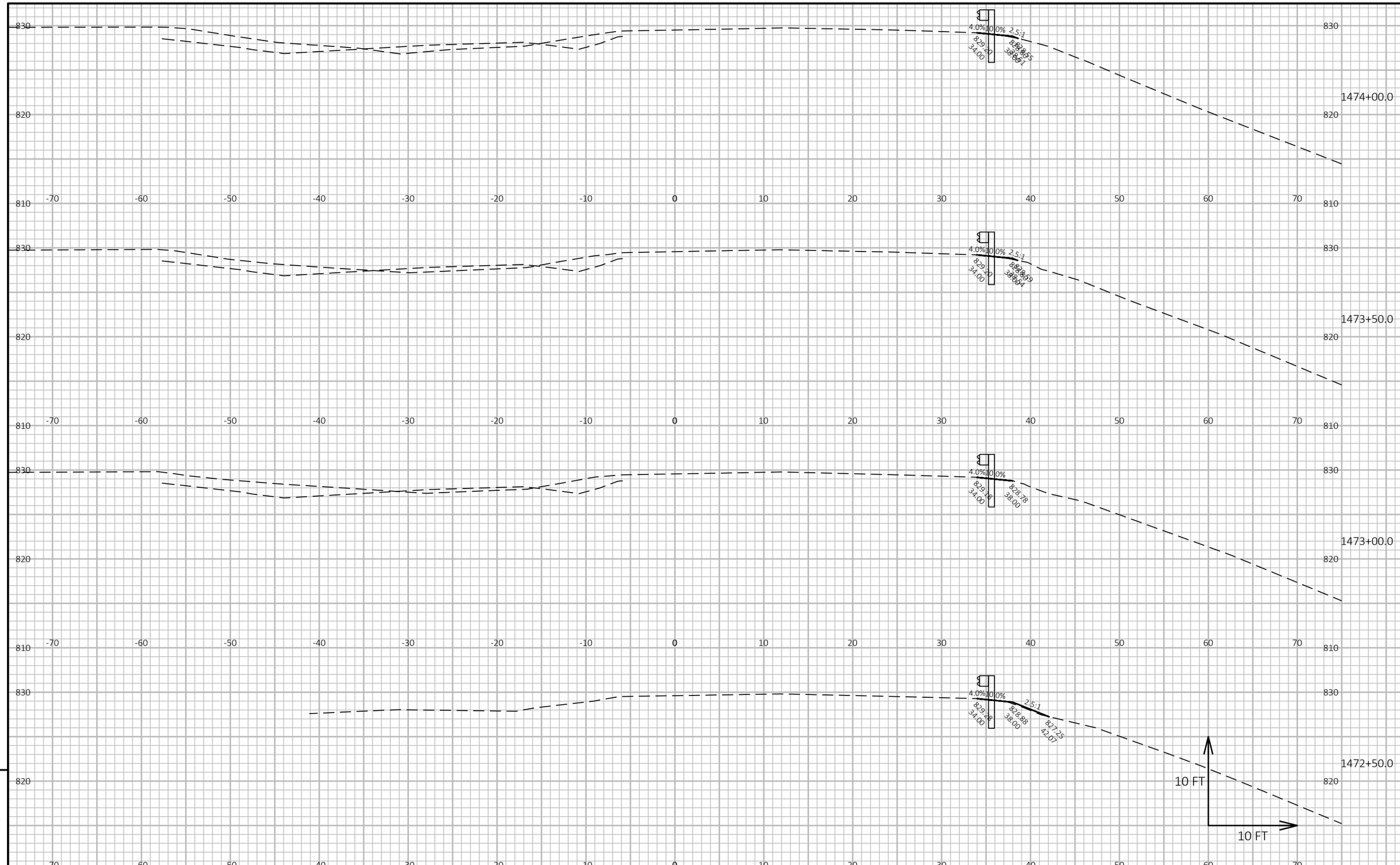

9

9

PROJECT NO: 1227-12-71	HWY: IH 43	COUNTY: MANITOWOC	CROSS SECTIONS: MAIN LINE	SHEET	E

FILE NAME : I:\45\450504 IH 43 WISDOT GUARDRAIL\C3D\SHEETSPLAN\12271271 PLAN\090201_XS.DWG
LAYOUT NAME - IH43 NB @ CTH K 8

PLOT DATE : 1/27/2021 10:27 AM PLOT BY : GARNICA, BRANDON PLOT NAME : **PLOT SCALE :** 1 IN:10 FT HORZ. / 1 IN:10 FT VERT.

WISDOT/CADDS SHEET 49

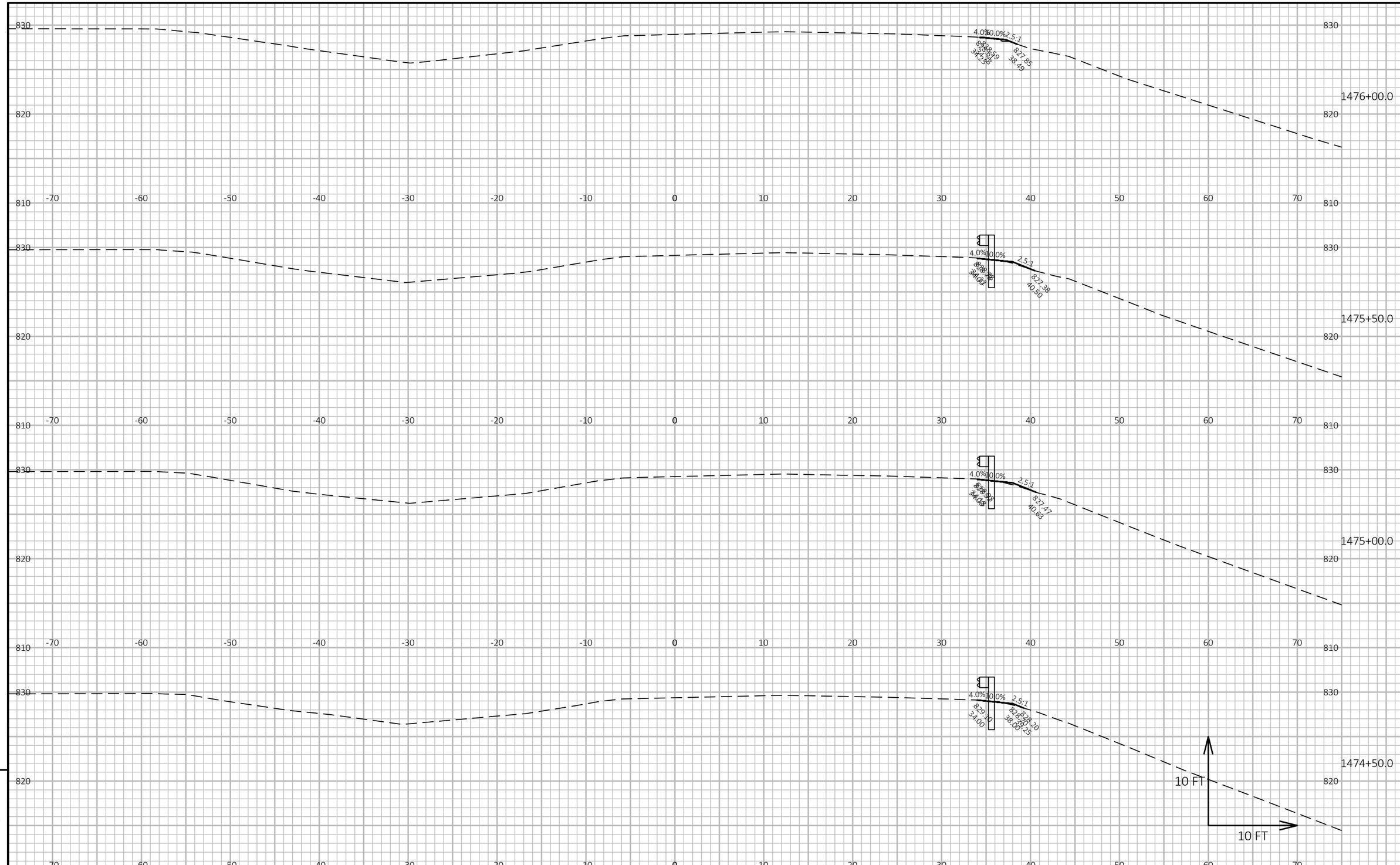

9

9

PROJECT NO: 1227-12-71	HWY: IH 43	COUNTY: MANITOWOC	CROSS SECTIONS: MAIN LINE	SHEET	E

FILE NAME : I:\45\450504 IH 43 WISDOT GUARDRAIL\C3D\SHEETSPLAN\12271271 PLAN\090201_XS.DWG
LAYOUT NAME - IH43 NB @ CTH K 9

PLOT DATE : 1/27/2021 10:27 AM PLOT BY : GARNICA, BRANDON PLOT NAME : **PLOT SCALE :** 1 IN:10 FT HORZ. / 1 IN:10 FT VERT.

WISDOT/CADDS SHEET 49

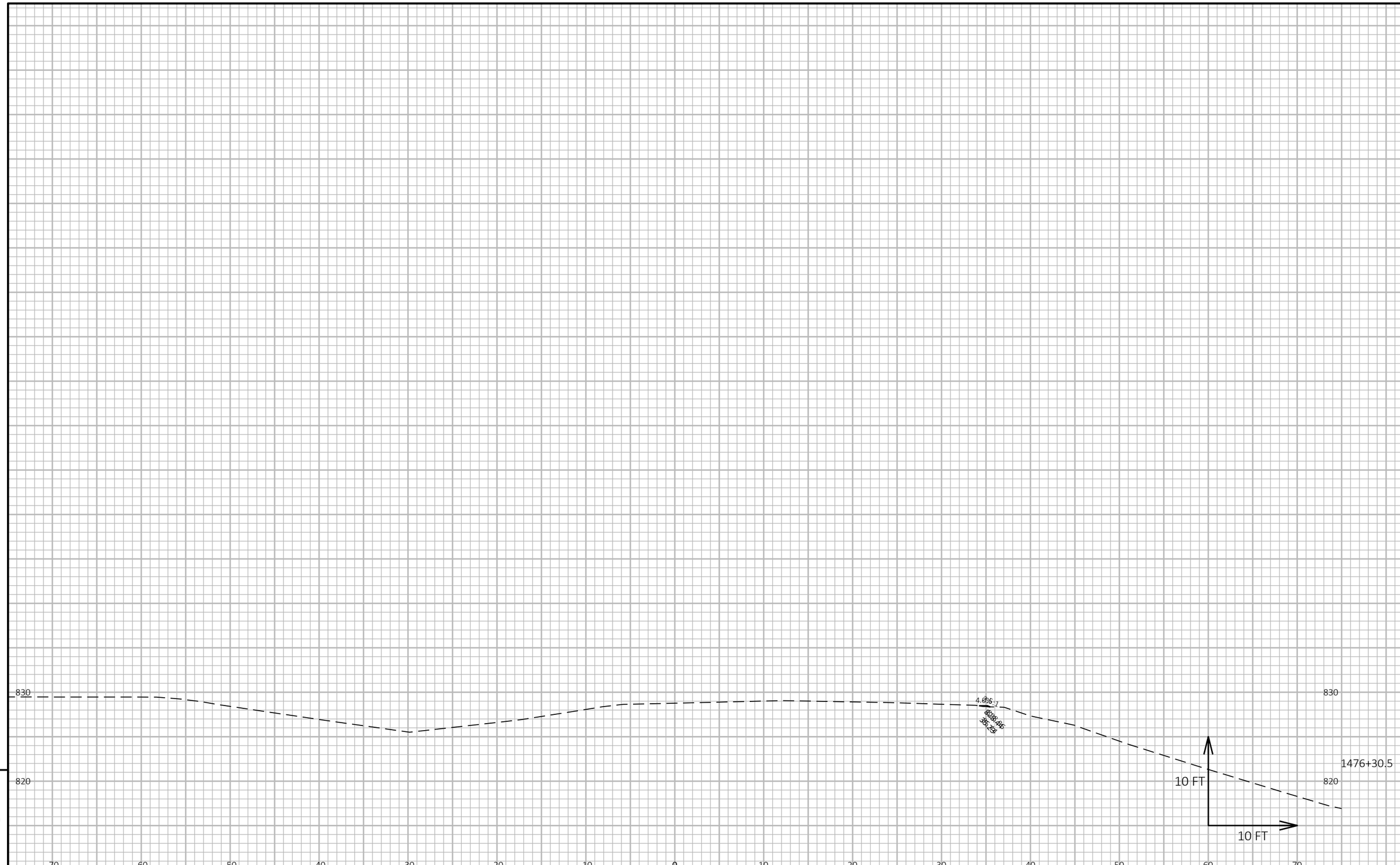

9

9

PROJECT NO: 1227-12-71	HWY: IH 43	COUNTY: MANITOWOC	CROSS SECTIONS: MAIN LINE	SHEET	E

FILE NAME : I:\45\450504 IH 43 WISDOT GUARDRAIL\C3D\SHEETSPLAN\12271271 PLAN\090201_XS.DWG
LAYOUT NAME - IH43 NB @ CTH K 10

PLOT DATE : 1/27/2021 10:28 AM PLOT BY : GARNICA, BRANDON PLOT NAME :

PLOT SCALE : 1 IN:10 FT HORZ. / 1 IN:10 FT VERT.

WISDOT/CADDS SHEET 49

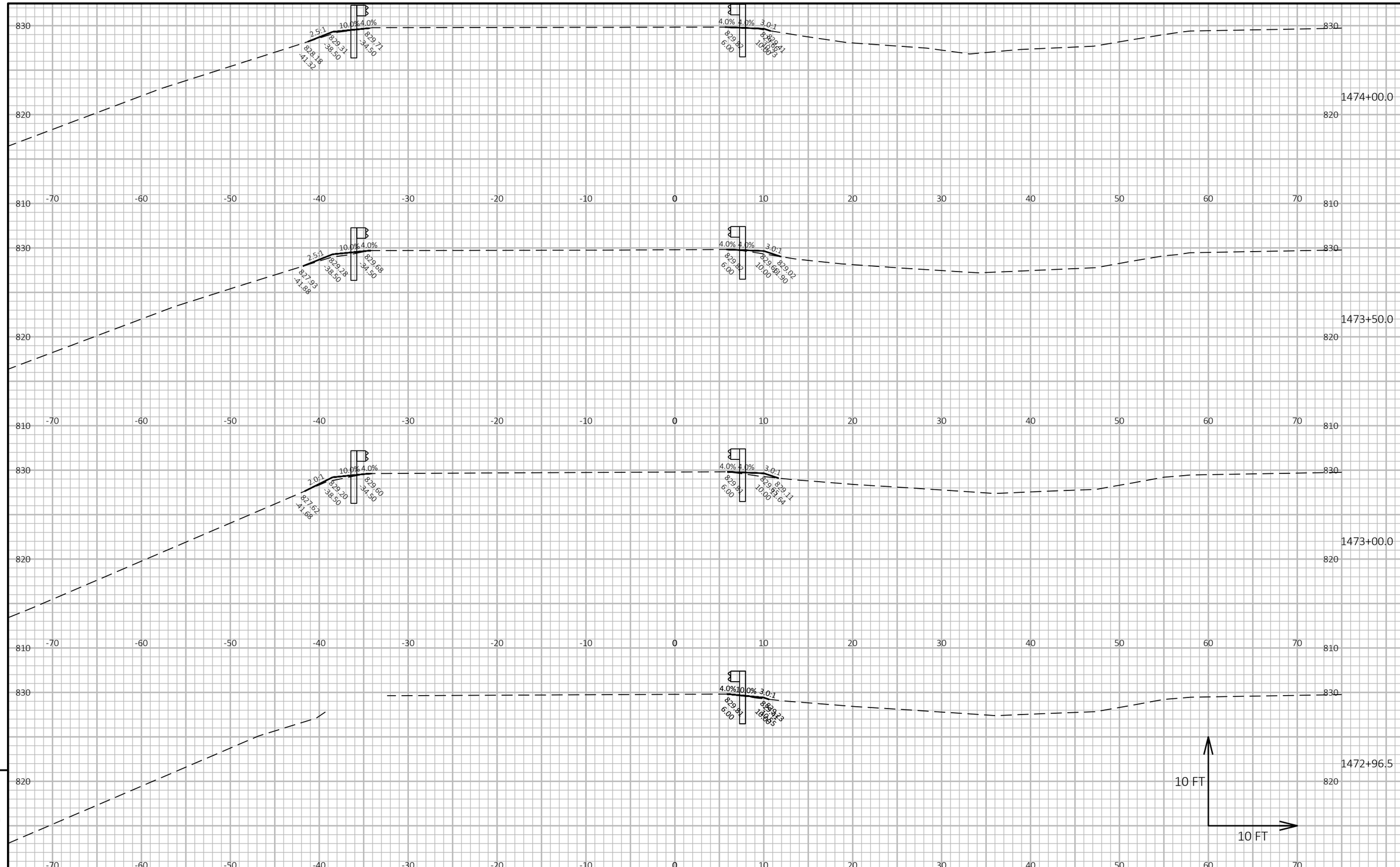

PROJECT NO: 1227-12-71	HWY: IH 43	COUNTY: MANITOWOC	CROSS SECTIONS: MAIN LINE	SHEET	E

FILE NAME : I:\45\450504 IH 43 WISDOT GUARDRAIL\C3D\SHEETSPLAN\12271271 PLAN\090201_XS.DWG
LAYOUT NAME - IH43 SB @ CTH K 1
PLOT DATE : 1/27/2021 12:11 PM PLOT BY : GARNICA, BRANDON PLOT NAME : PLOT SCALE : 1 IN:10 FT HORZ. / 1 IN:10 FT VERT.

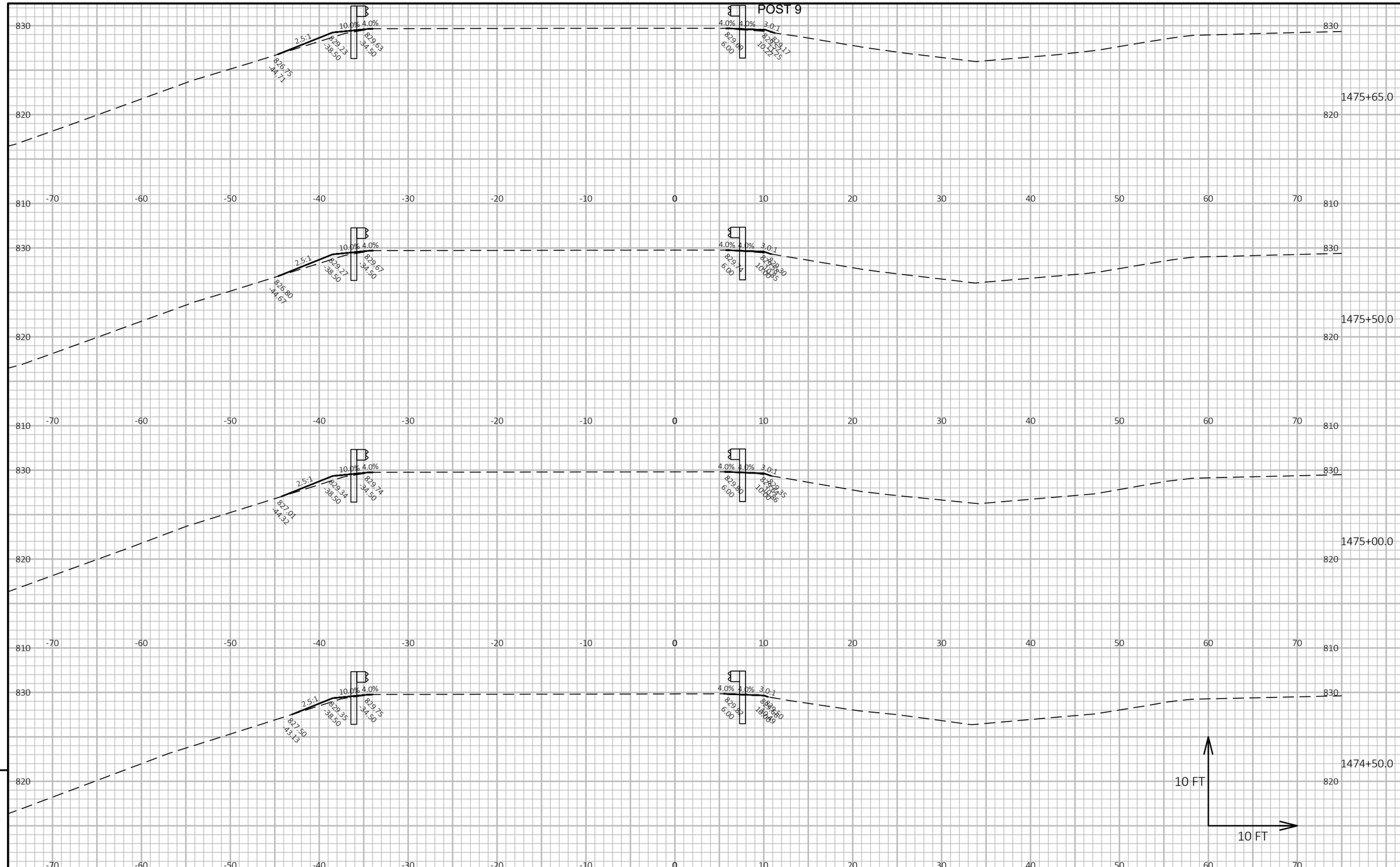

PROJECT NO: 1227-12-71	HWY: IH 43	COUNTY: MANITOWOC	CROSS SECTIONS: MAIN LINE	SHEET	E

FILE NAME : I:\45\450504 IH 43 WISDOT GUARDRAIL\C3D\SHEETSPLAN\12271271 PLAN\090201_XS.DWG
LAYOUT NAME - IH43 SB @ CTH K 2
PLOT DATE : 1/27/2021 12:11 PM
PLOT BY : GARNICA, BRANDON
PLOT NAME :
PLOT SCALE : 1 IN:10 FT HORZ. / 1 IN:10 FT VERT.

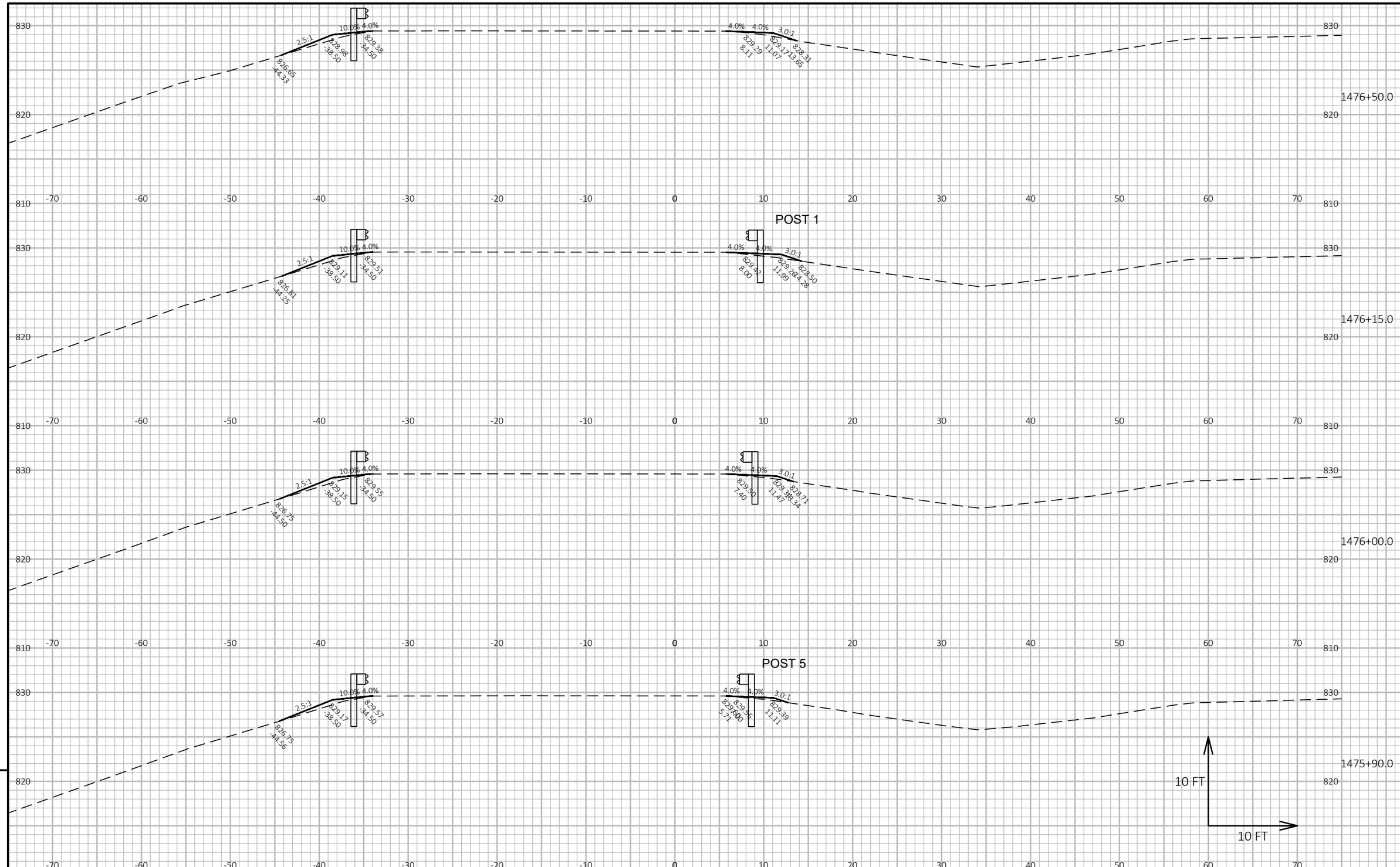

9

9

PROJECT NO: 1227-12-71	HWY: IH 43	COUNTY: MANITOWOC	CROSS SECTIONS: MAIN LINE	SHEET	E

FILE NAME : I:\45\450504 IH 43 WISDOT GUARDRAIL\C3D\SHEETSPLAN\12271271 PLAN\090201_XS.DWG
LAYOUT NAME - IH43 SB @ CTH K 3

PLOT DATE : 1/27/2021 12:11 PM PLOT BY : GARNICA, BRANDON PLOT NAME : **PLOT SCALE :** 1 IN:10 FT HORZ. / 1 IN:10 FT VERT.

WISDOT/CADDS SHEET 49

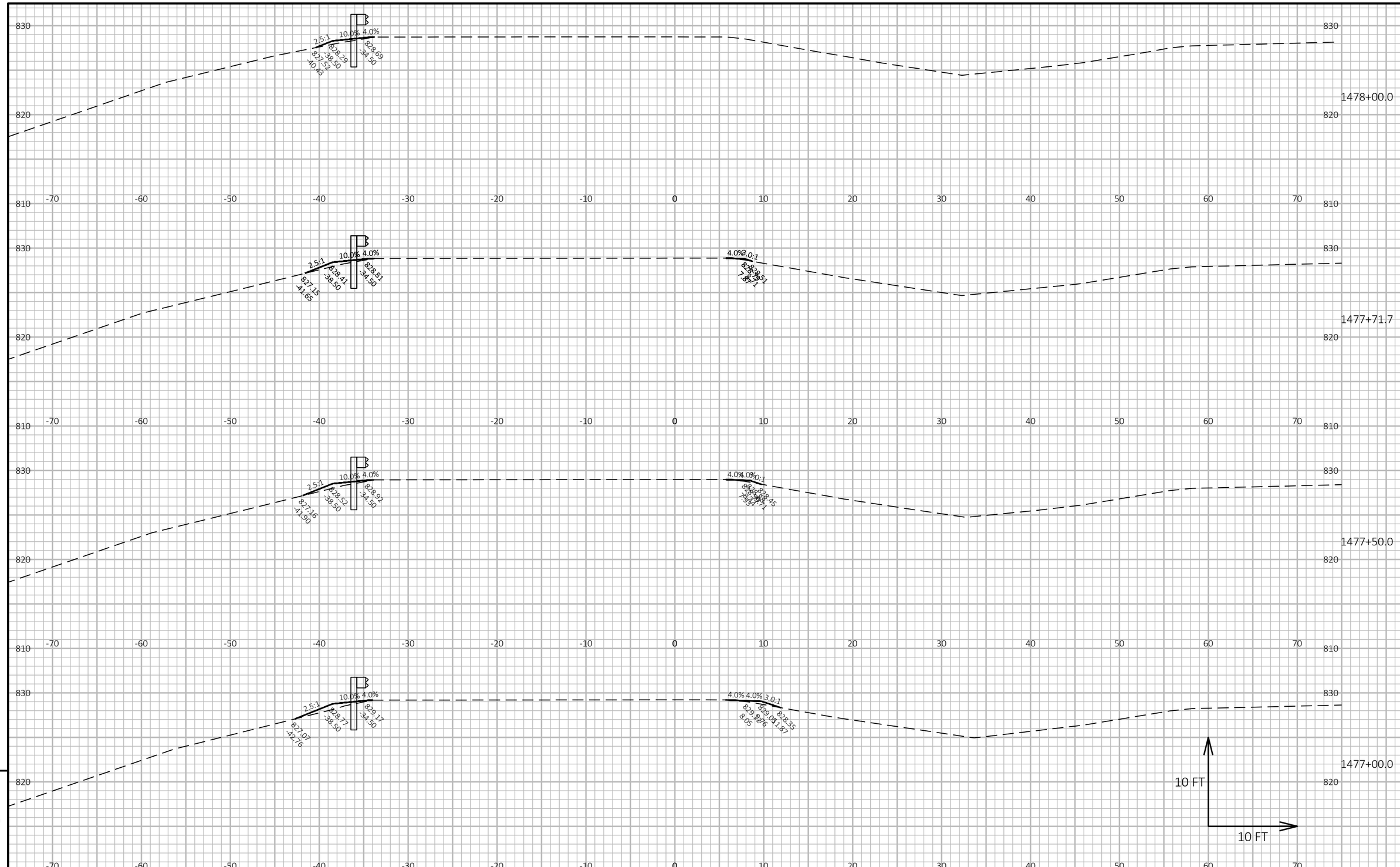

PROJECT NO: 1227-12-71	HWY: IH 43	COUNTY: MANITOWOC	CROSS SECTIONS: MAIN LINE	SHEET	E

FILE NAME : I:\45\450504 IH 43 WISDOT GUARDRAIL\C3D\SHEETSPLAN\12271271 PLAN\090201_XS.DWG
LAYOUT NAME - IH43 SB @ CTH K 4
PLOT DATE : 1/27/2021 12:11 PM PLOT BY : GARNICA, BRANDON PLOT NAME : PLOT SCALE : 1 IN:10 FT HORZ. / 1 IN:10 FT VERT.

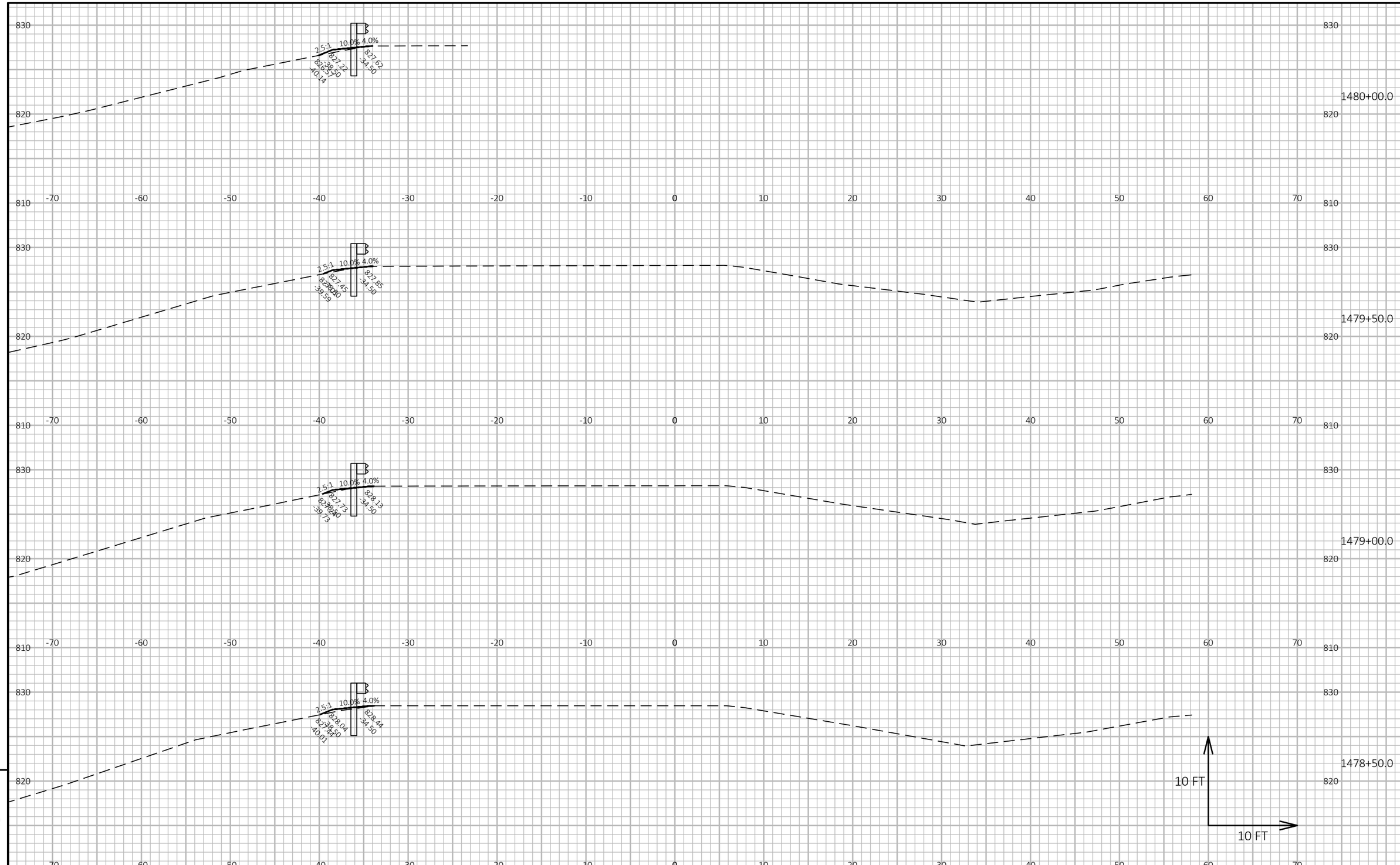

PROJECT NO: 1227-12-71	HWY: IH 43	COUNTY: MANITOWOC	CROSS SECTIONS: MAIN LINE	SHEET	E

FILE NAME : I:\45\450504 IH 43 WISDOT GUARDRAIL\C3D\SHEETSPLAN\12271271 PLAN\090201_XS.DWG
LAYOUT NAME - IH43 SB @ CTH K 5
PLOT DATE : 1/27/2021 12:12 PM PLOT BY : GARNICA, BRANDON PLOT NAME : PLOT SCALE : 1 IN:10 FT HORZ. / 1 IN:10 FT VERT.

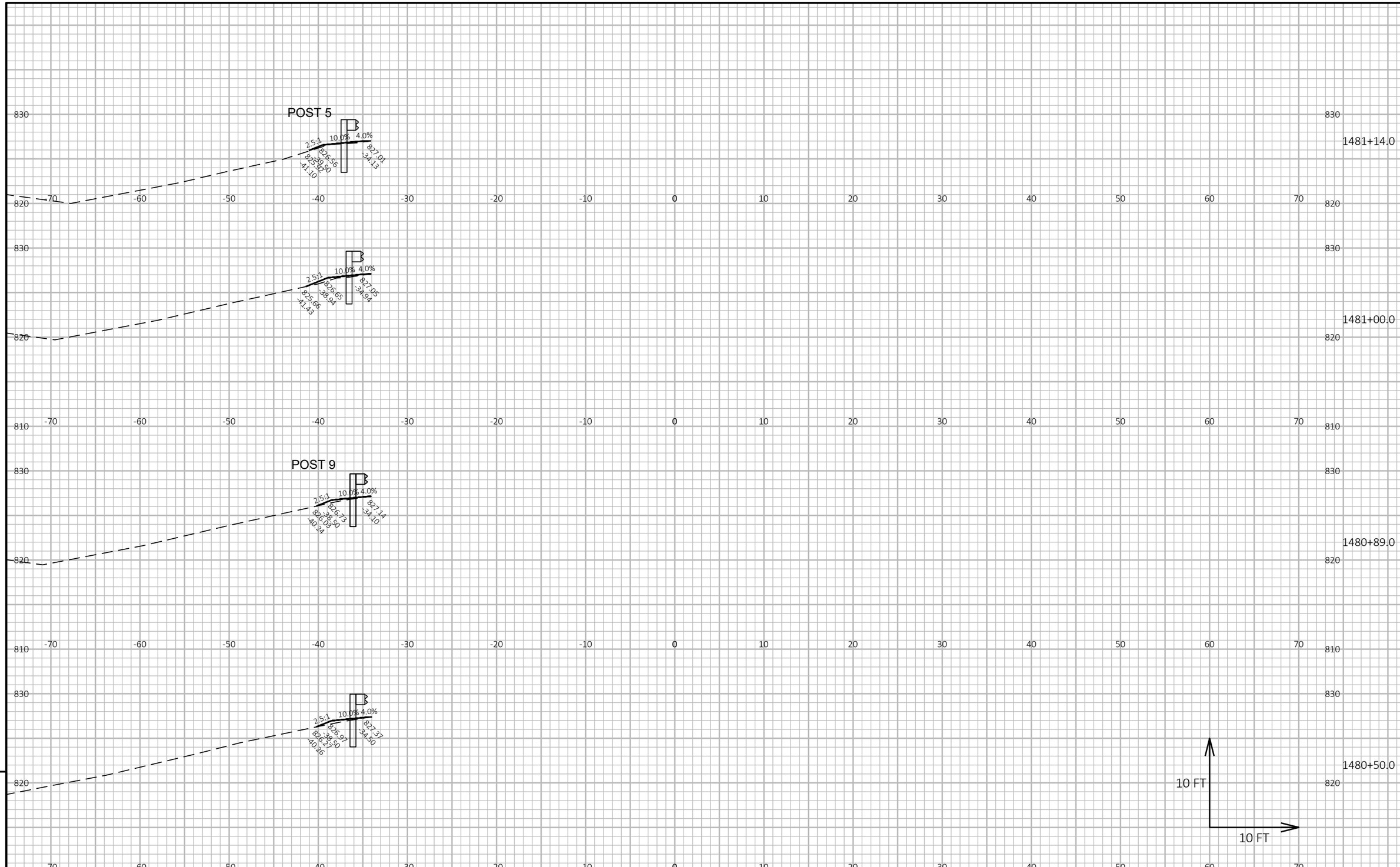

PROJECT NO: 1227-12-71	HWY: IH 43	COUNTY: MANITOWOC	CROSS SECTIONS: MAIN LINE	SHEET	E

FILE NAME : I:\45\450504 IH 43 WISDOT GUARDRAIL\C3D\SHEETSPLAN\12271271 PLAN\090201_XS.DWG
LAYOUT NAME - IH43 SB @ CTH K 6
PLOT DATE : 1/27/2021 12:12 PM
PLOT BY : GARNICA, BRANDON
PLOT NAME :
PLOT SCALE : 1 IN:10 FT HORZ. / 1 IN:10 FT VERT.
WISDOT/CADDS SHEET 49

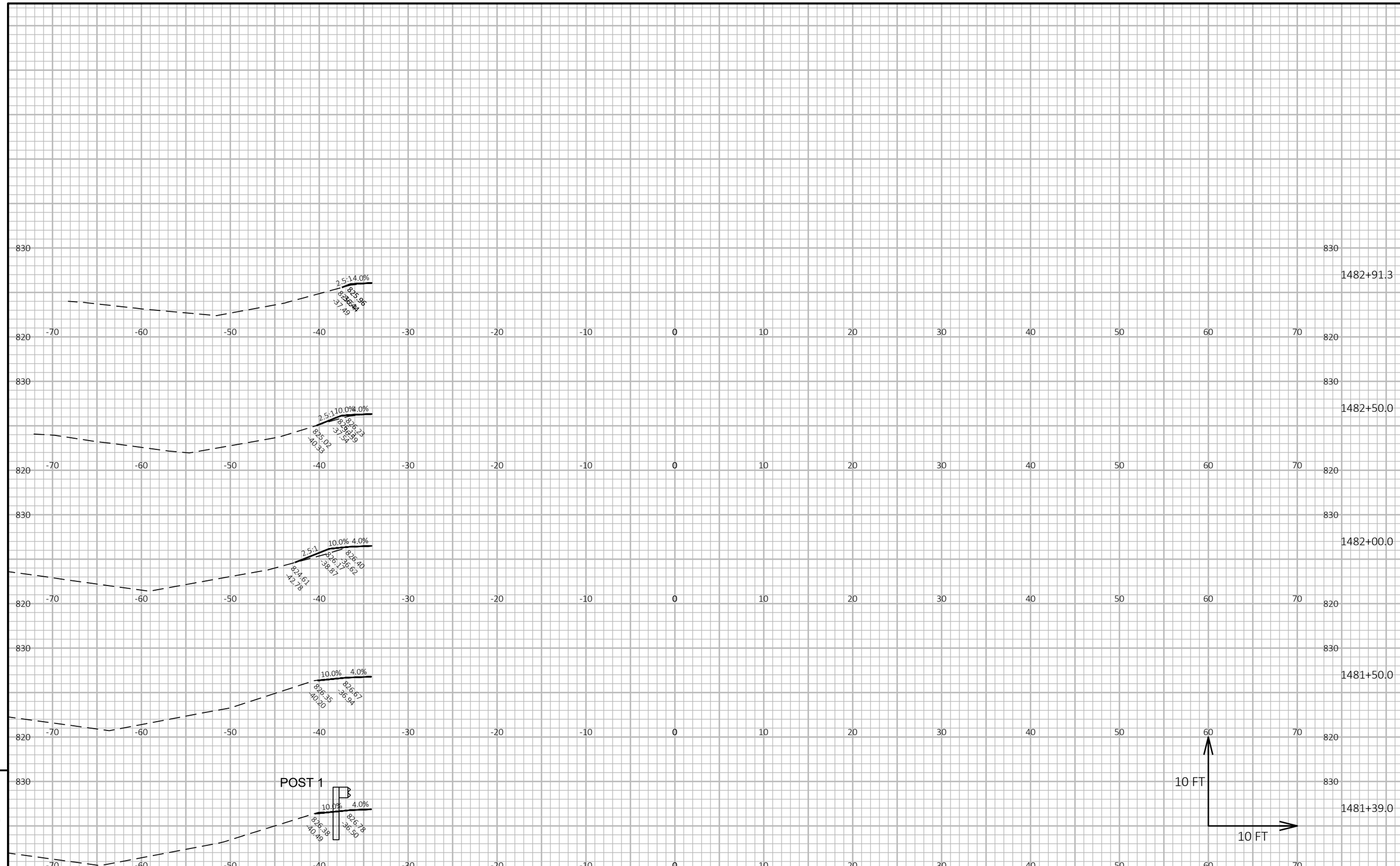

9

9

PROJECT NO: 1227-12-71	HWY: IH 43	COUNTY: MANITOWOC	CROSS SECTIONS: MAIN LINE	SHEET	E

FILE NAME : I:\45\450504 IH 43 WISDOT GUARDRAIL\C3D\SHEETSPLAN\12271271 PLAN\090201_XS.DWG
LAYOUT NAME - IH43 SB @ CTH K 7

PLOT DATE : 1/27/2021 12:12 PM PLOT BY : GARNICA, BRANDON PLOT NAME : **PLOT SCALE :** 1 IN:10 FT HORZ. / 1 IN:10 FT VERT.

WISDOT/CADDS SHEET 49

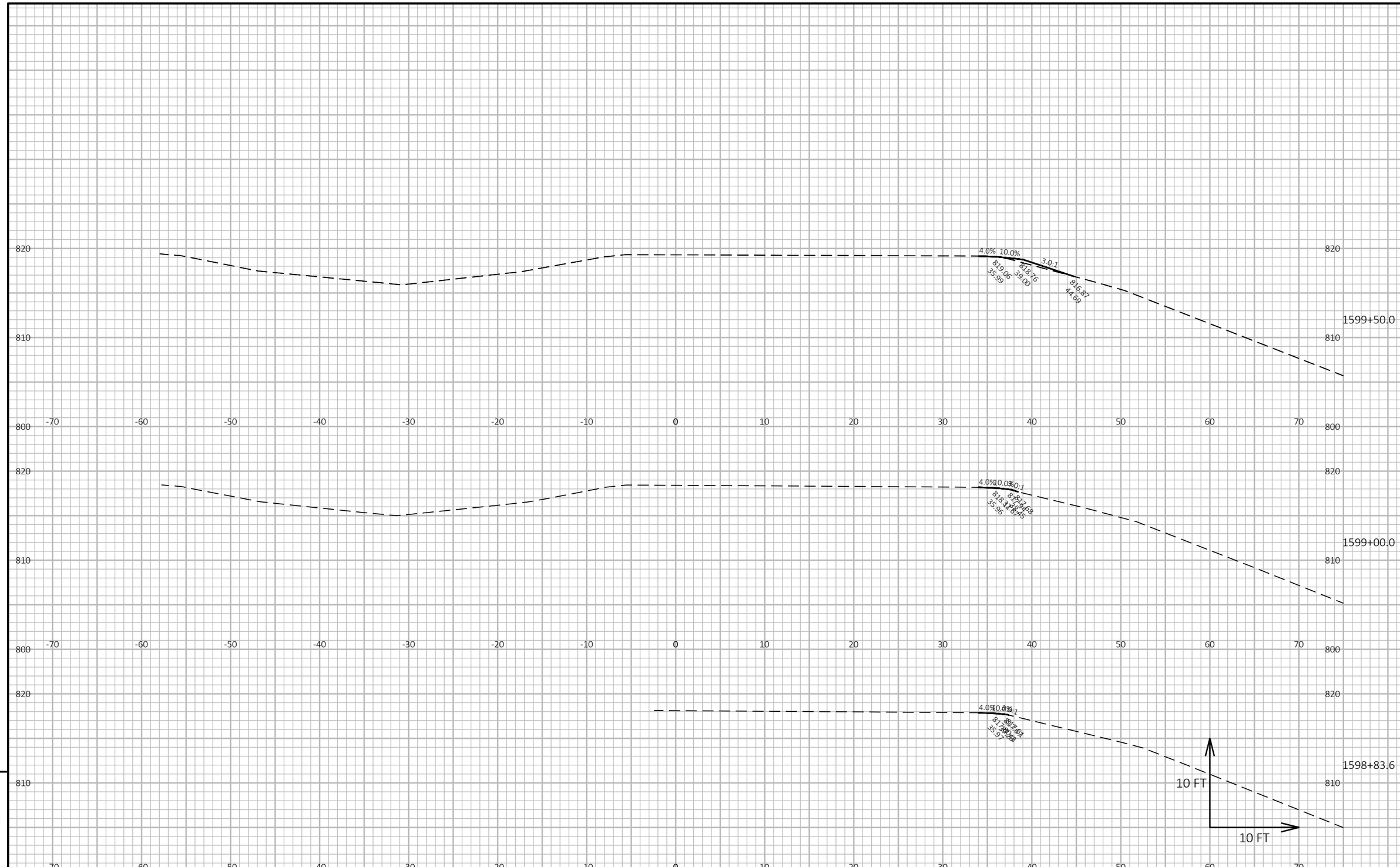

9

9

PROJECT NO: 1227-12-71	HWY: IH 43	COUNTY: MANITOWOC	CROSS SECTIONS: MAIN LINE	SHEET	E

FILE NAME : I:\45\450504 IH 43 WISDOT GUARDRAIL\C3D\SHEETSPLAN\12271271 PLAN\090201_XS.DWG
LAYOUT NAME - IH43 NB @ Devil River State Trail 1

PLOT DATE : 1/27/2021 10:30 AM PLOT BY : GARNICA, BRANDON PLOT NAME : **PLOT SCALE :** 1 IN:10 FT HORZ. / 1 IN:10 FT VERT.

WISDOT/CADDS SHEET 49

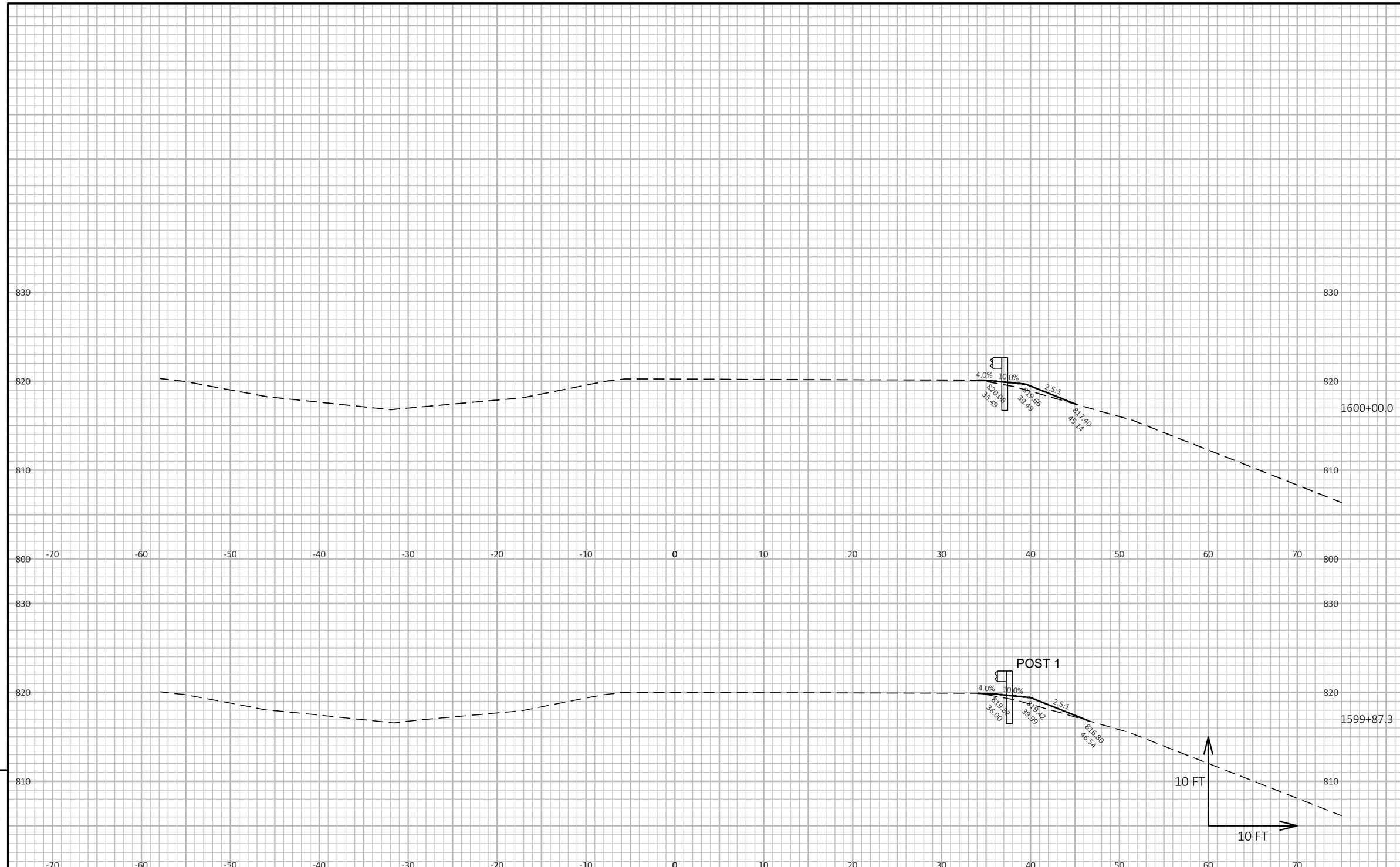

9

9

PROJECT NO: 1227-12-71	HWY: IH 43	COUNTY: MANITOWOC	CROSS SECTIONS: MAIN LINE	SHEET	E

FILE NAME : I:\45\450504 IH 43 WISDOT GUARDRAIL\C3D\SHEETSPLAN\12271271 PLAN\090201_XS.DWG
LAYOUT NAME - IH43 NB @ Devil River State Trail 2

PLOT DATE : 1/27/2021 10:31 AM PLOT BY : GARNICA, BRANDON PLOT NAME : PLOT SCALE : 1 IN:10 FT HORZ. / 1 IN:10 FT VERT.

WISDOT/CADDS SHEET 49

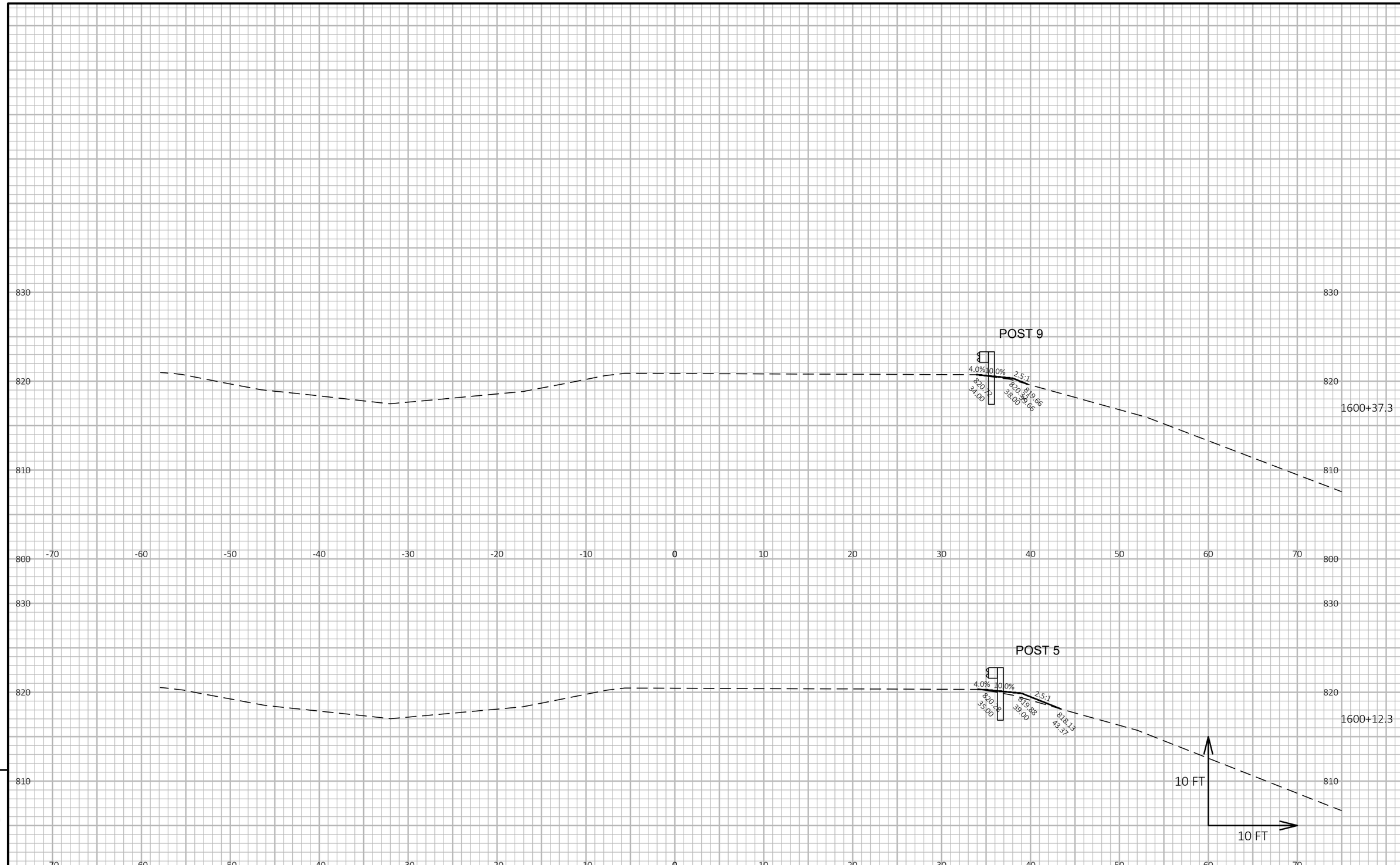

9

9

PROJECT NO: 1227-12-71	HWY: IH 43	COUNTY: MANITOWOC	CROSS SECTIONS: MAIN LINE	SHEET	E

FILE NAME : I:\45\450504 IH 43 WISDOT GUARDRAIL\C3D\SHEETSPLAN\12271271 PLAN\090201_XS.DWG
LAYOUT NAME - IH43 NB @ Devil River State Trail 3

PLOT DATE : 1/27/2021 10:31 AM PLOT BY : GARNICA, BRANDON PLOT NAME : **PLOT SCALE :** 1 IN:10 FT HORZ. / 1 IN:10 FT VERT.

WISDOT/CADDS SHEET 49

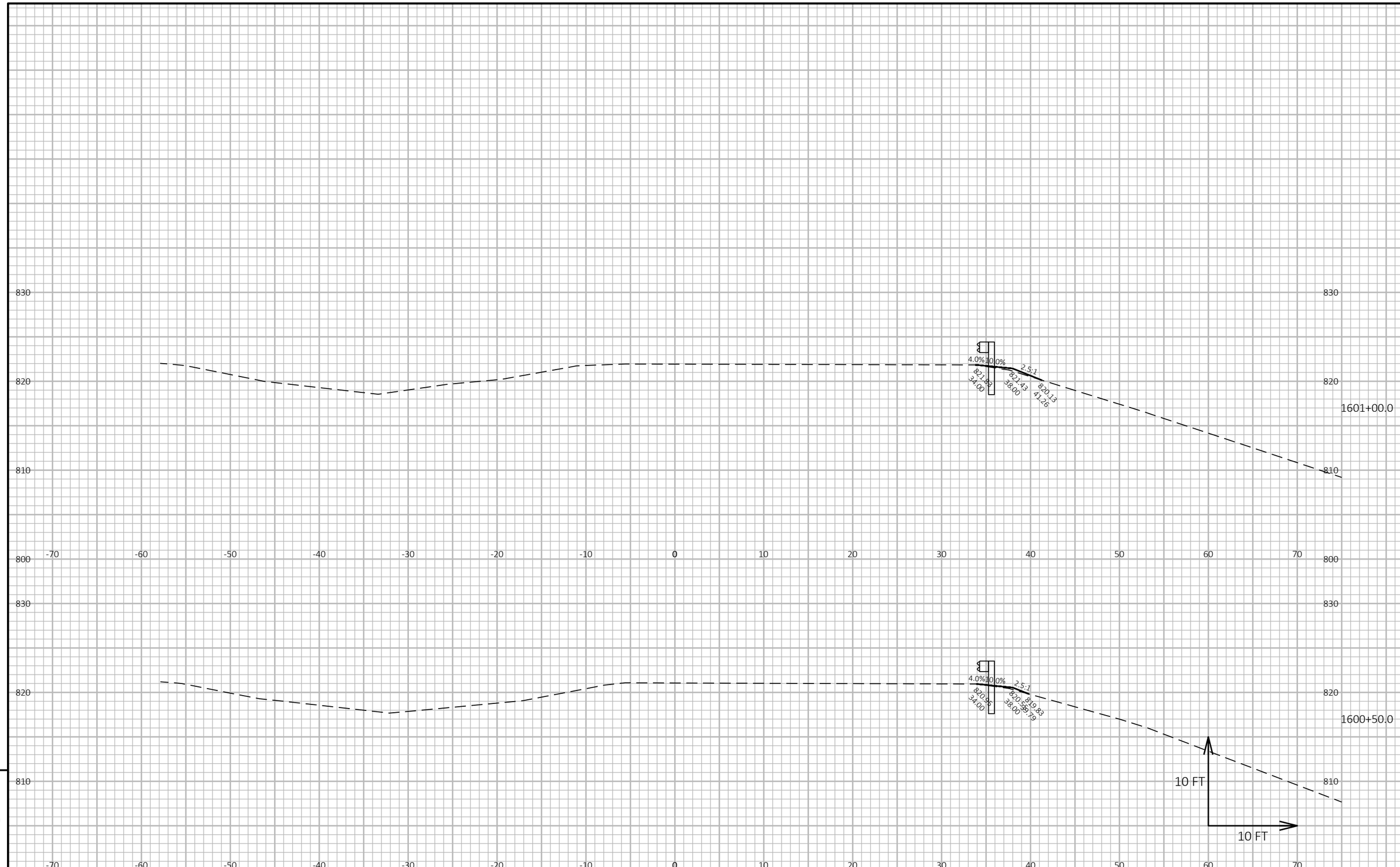

PROJECT NO: 1227-12-71	HWY: IH 43	COUNTY: MANITOWOC	CROSS SECTIONS: MAIN LINE	SHEET	E

FILE NAME : I:\45\450504 IH 43 WISDOT GUARDRAIL\C3D\SHEETSPLAN\12271271 PLAN\090201_XS.DWG
LAYOUT NAME - IH43 NB @ Devil River State Trail 4

PLOT DATE : 1/27/2021 10:31 AM PLOT BY : GARNICA, BRANDON PLOT NAME : PLOT SCALE : 1 IN:10 FT HORZ. / 1 IN:10 FT VERT.

WISDOT/CADDS SHEET 49

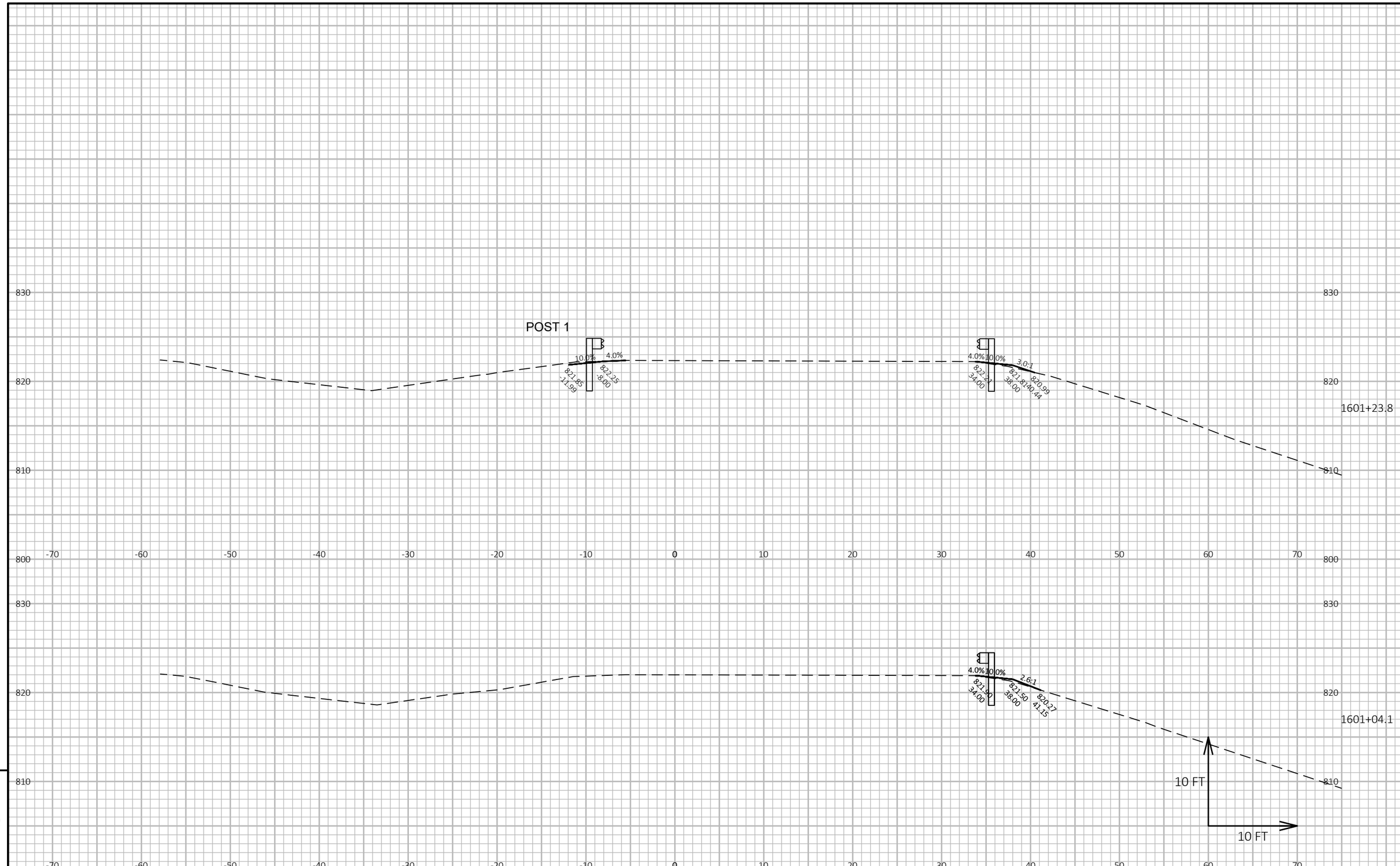

9

9

PROJECT NO: 1227-12-71	HWY: IH 43	COUNTY: MANITOWOC	CROSS SECTIONS: MAIN LINE	SHEET	E

FILE NAME : I:\45\450504 IH 43 WISDOT GUARDRAIL\C3D\SHEETSPLAN\12271271 PLAN\090201_XS.DWG
LAYOUT NAME - IH43 NB @ Devil River State Trail 5

PLOT DATE : 1/27/2021 10:32 AM PLOT BY : GARNICA, BRANDON PLOT NAME : **PLOT SCALE :** 1 IN:10 FT HORZ. / 1 IN:10 FT VERT.

WISDOT/CADDS SHEET 49

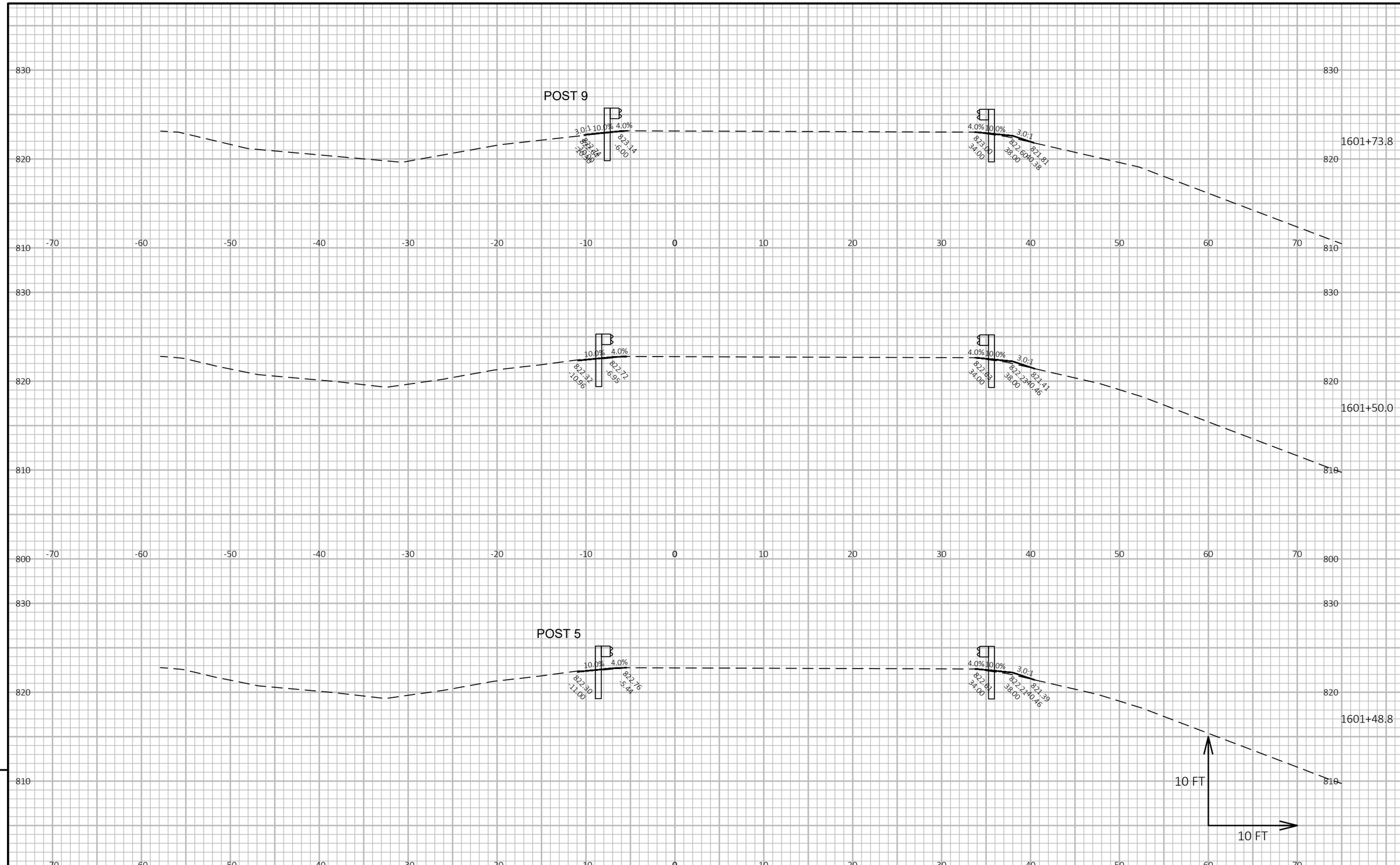

9

9

PROJECT NO: 1227-12-71	HWY: IH 43	COUNTY: MANITOWOC	CROSS SECTIONS: MAIN LINE	SHEET	E

FILE NAME : I:\45\450504 IH 43 WISDOT GUARDRAIL\C3D\SHEETSPLAN\12271271 PLAN\090201_XS.DWG
LAYOUT NAME - IH43 NB @ Devil River State Trail 6

PLOT DATE : 1/27/2021 10:32 AM PLOT BY : GARNICA, BRANDON PLOT NAME : **PLOT SCALE :** 1 IN:10 FT HORZ. / 1 IN:10 FT VERT.

WISDOT/CADDS SHEET 49

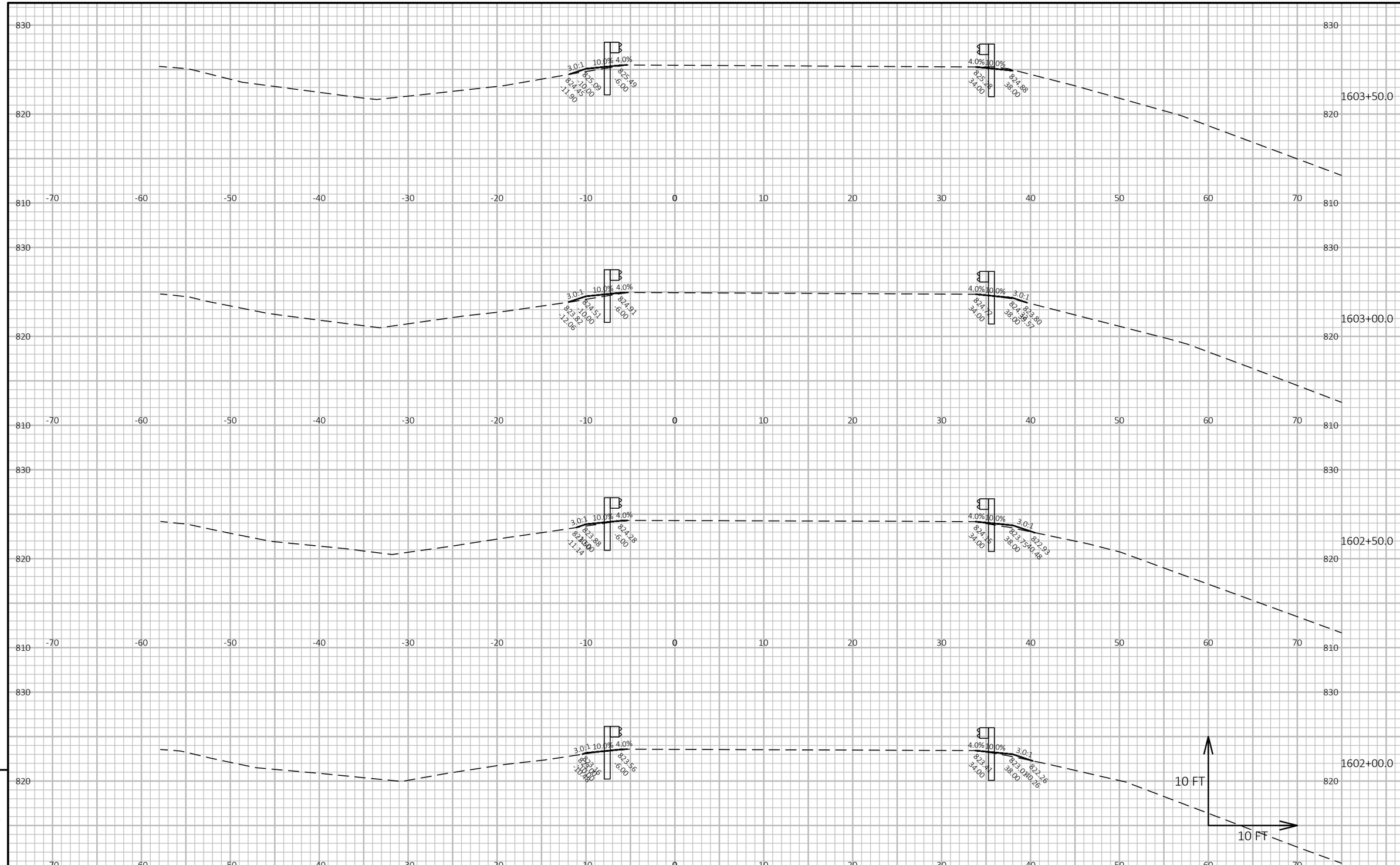

9

9

PROJECT NO: 1227-12-71	HWY: IH 43	COUNTY: MANITOWOC	CROSS SECTIONS: MAIN LINE	SHEET	E

FILE NAME : I:\45\450504 IH 43 WISDOT GUARDRAIL\C3D\SHEETSPLAN\12271271 PLAN\090201_XS.DWG
LAYOUT NAME - IH43 NB @ Devil River State Trail 7

PLOT DATE : 1/27/2021 10:32 AM PLOT BY : GARNICA, BRANDON PLOT NAME : **PLOT SCALE :** 1 IN:10 FT HORZ. / 1 IN:10 FT VERT.

WISDOT/CADDS SHEET 49

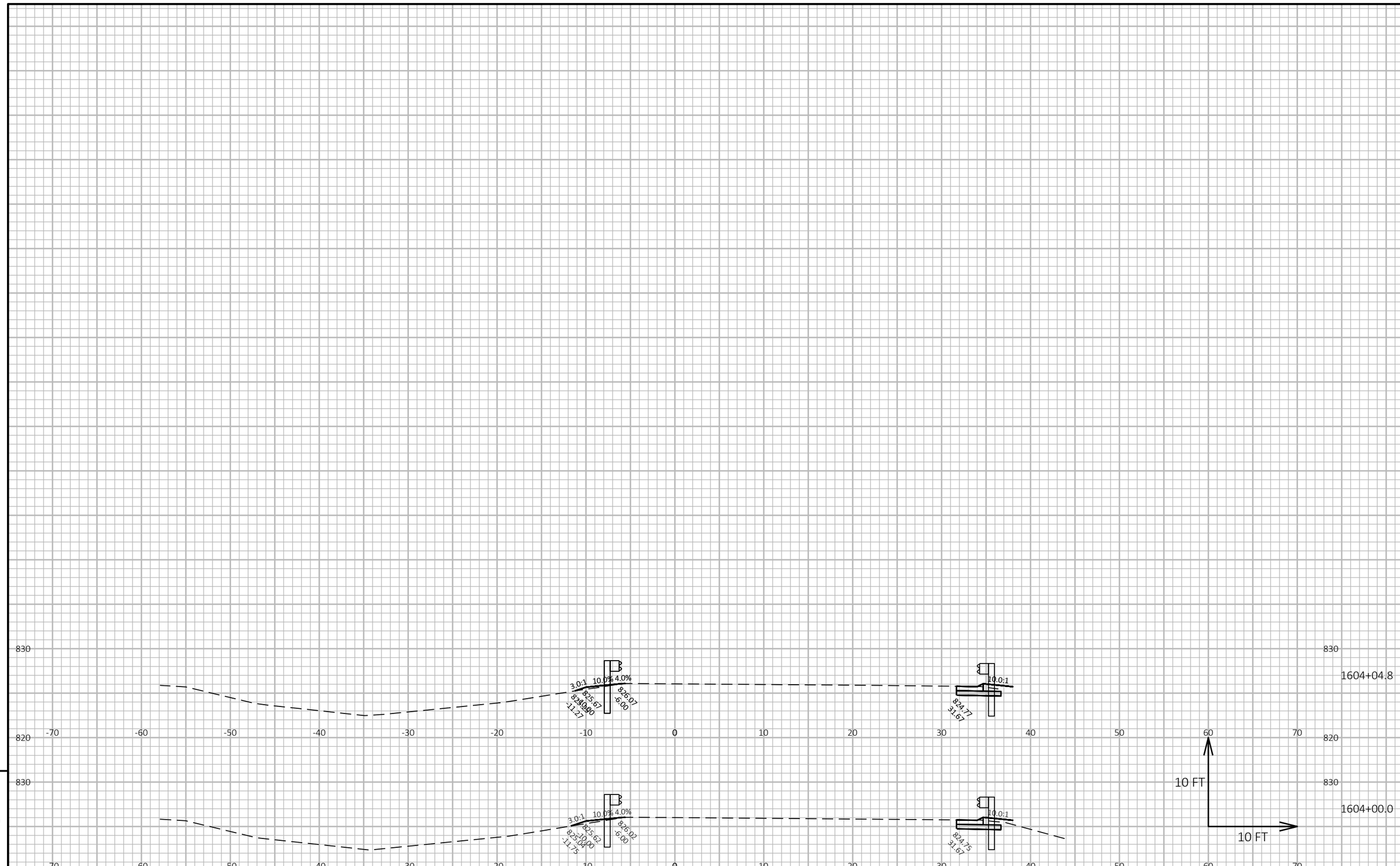

9

9

PROJECT NO: 1227-12-71	HWY: IH 43	COUNTY: MANITOWOC	CROSS SECTIONS: MAIN LINE	SHEET	E

FILE NAME : I:\45\450504 IH 43 WISDOT GUARDRAIL\C3D\SHEETSPLAN\12271271 PLAN\090201_XS.DWG
LAYOUT NAME - IH43 NB @ Devil River State Trail 8

PLOT DATE : 1/27/2021 10:32 AM PLOT BY : GARNICA, BRANDON PLOT NAME : **PLOT SCALE :** 1 IN:10 FT HORZ. / 1 IN:10 FT VERT.

WISDOT/CADDS SHEET 49

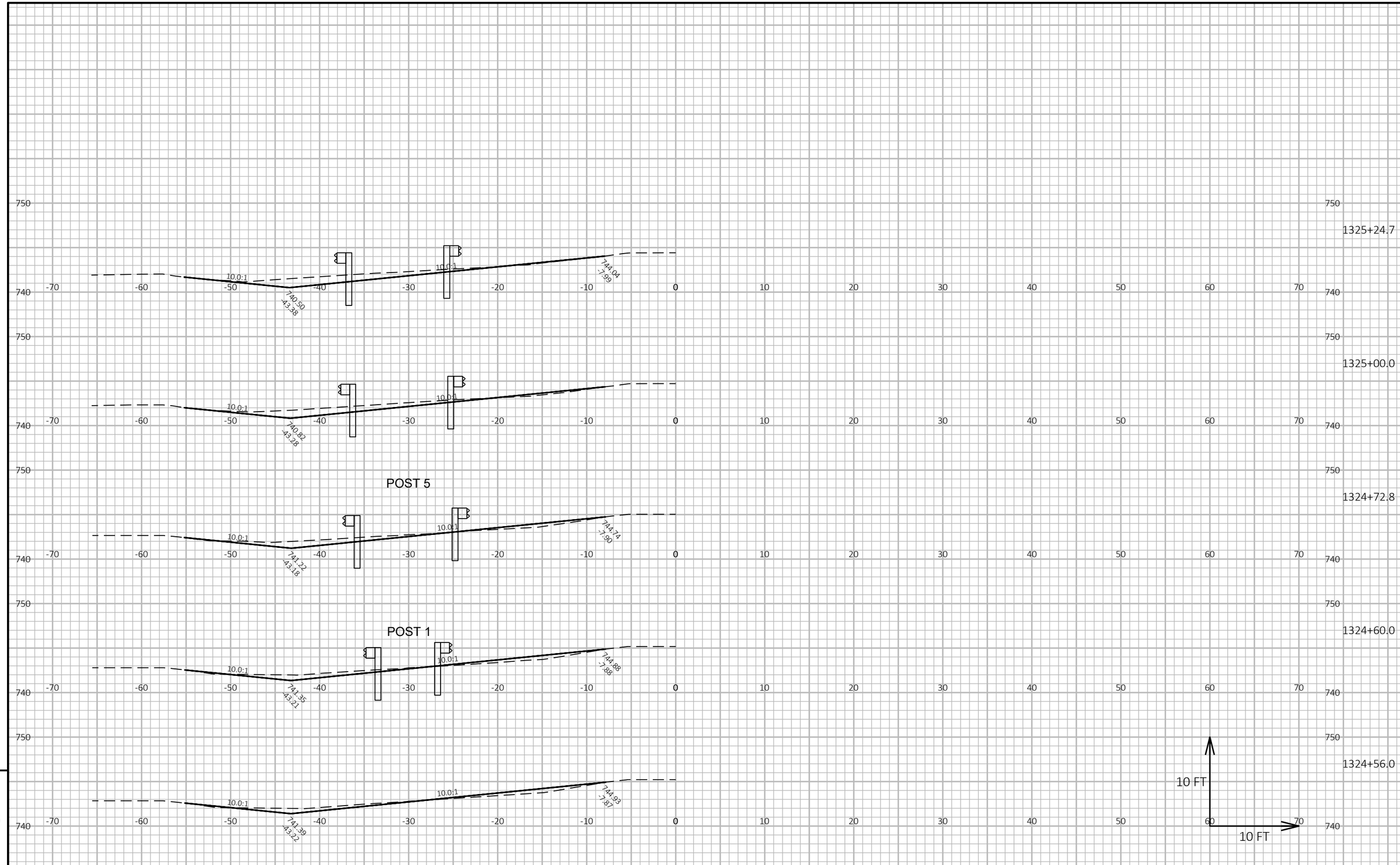

PROJECT NO: 1227-12-71	HWY: IH 43	COUNTY: MANITOWOC	CROSS SECTIONS: BULLNOSE CTH V	SHEET	E

FILE NAME : I:\45\450504 IH 43 WISDOT GUARDRAIL\C3D\SHEETSPLAN\12271271 PLAN\090201_XS.DWG
LAYOUT NAME - Bullnose CTH V 1
PLOT DATE : 1/27/2021 10:33 AM
PLOT BY : GARNICA, BRANDON
PLOT NAME :
PLOT SCALE : 1 IN:10 FT HORZ. / 1 IN:10 FT VERT.

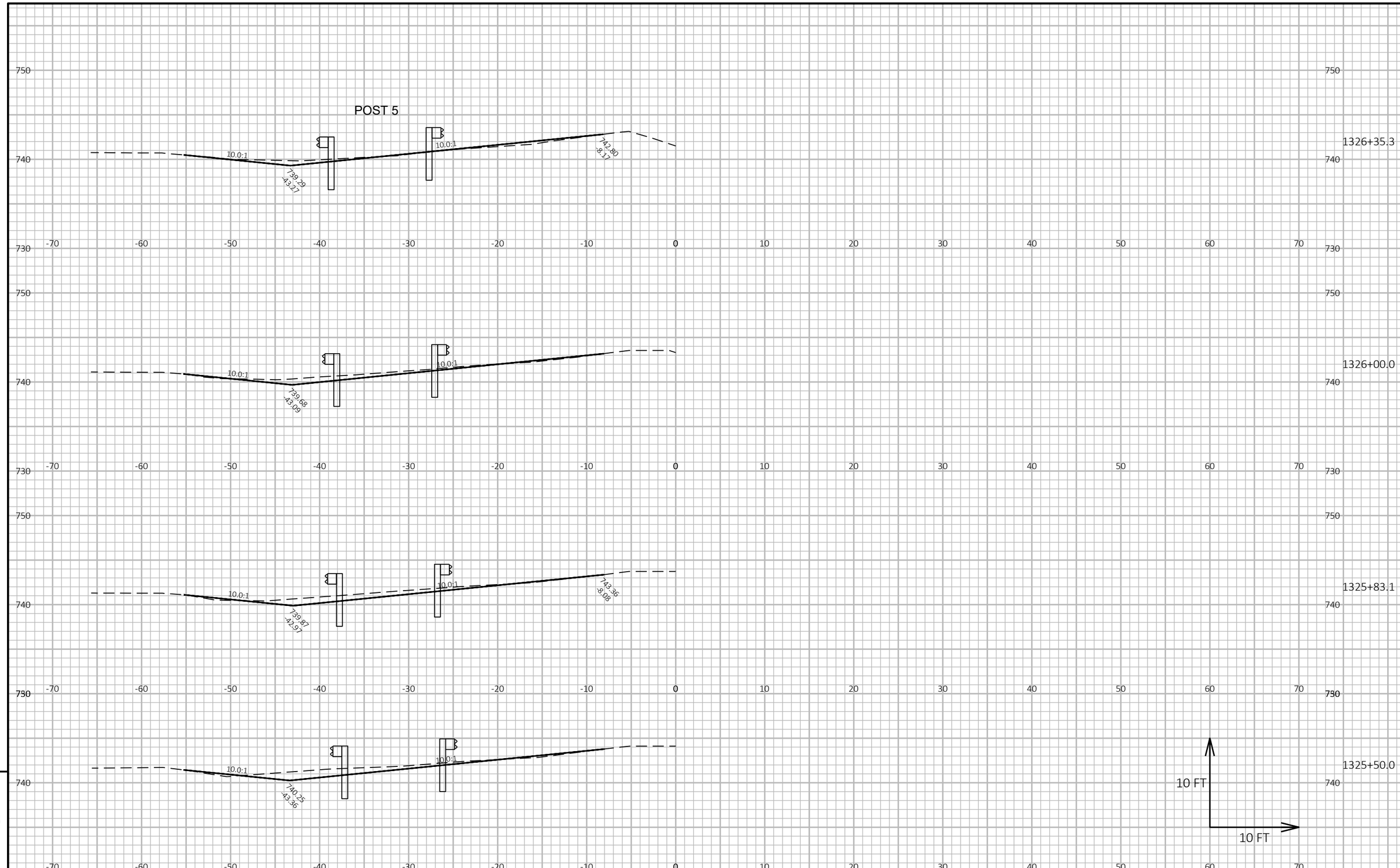

PROJECT NO: 1227-12-71	HWY: IH 43	COUNTY: MANITOWOC	CROSS SECTIONS: BULLNOSE CTH V	SHEET	E

FILE NAME : I:\45\450504 IH 43 WISDOT GUARDRAIL\C3D\SHEETSPLAN\12271271 PLAN\090201_XS.DWG
LAYOUT NAME - Bullnose CTH V 2
PLOT DATE : 1/27/2021 10:33 AM
PLOT BY : GARNICA, BRANDON
PLOT NAME :
PLOT SCALE : 1 IN:10 FT HORZ. / 1 IN:10 FT VERT.
WISDOT/CADDS SHEET 49

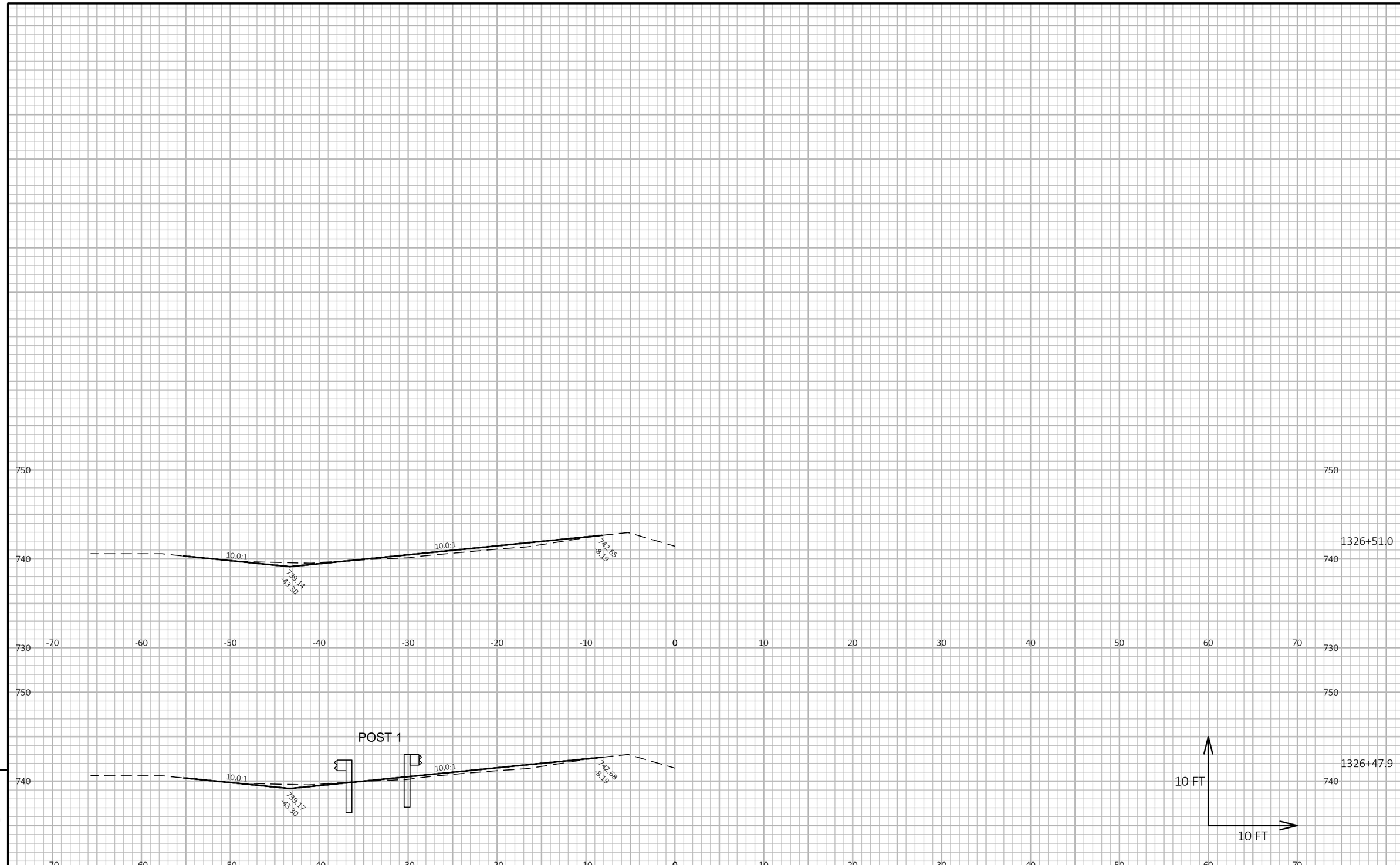

9

9

PROJECT NO: 1227-12-71	HWY: IH 43	COUNTY: MANITOWOC	CROSS SECTIONS: BULLNOSE CTH V	SHEET	E

FILE NAME : I:\45\450504 IH 43 WISDOT GUARDRAIL\C3D\SHEETSPLAN\12271271 PLAN\090201_XS.DWG
LAYOUT NAME - Bullnose CTH V 3

PLOT DATE : 1/27/2021 10:33 AM PLOT BY : GARNICA, BRANDON PLOT NAME : **PLOT SCALE :** 1 IN:10 FT HORZ. / 1 IN:10 FT VERT.

WISDOT/CADDS SHEET 49

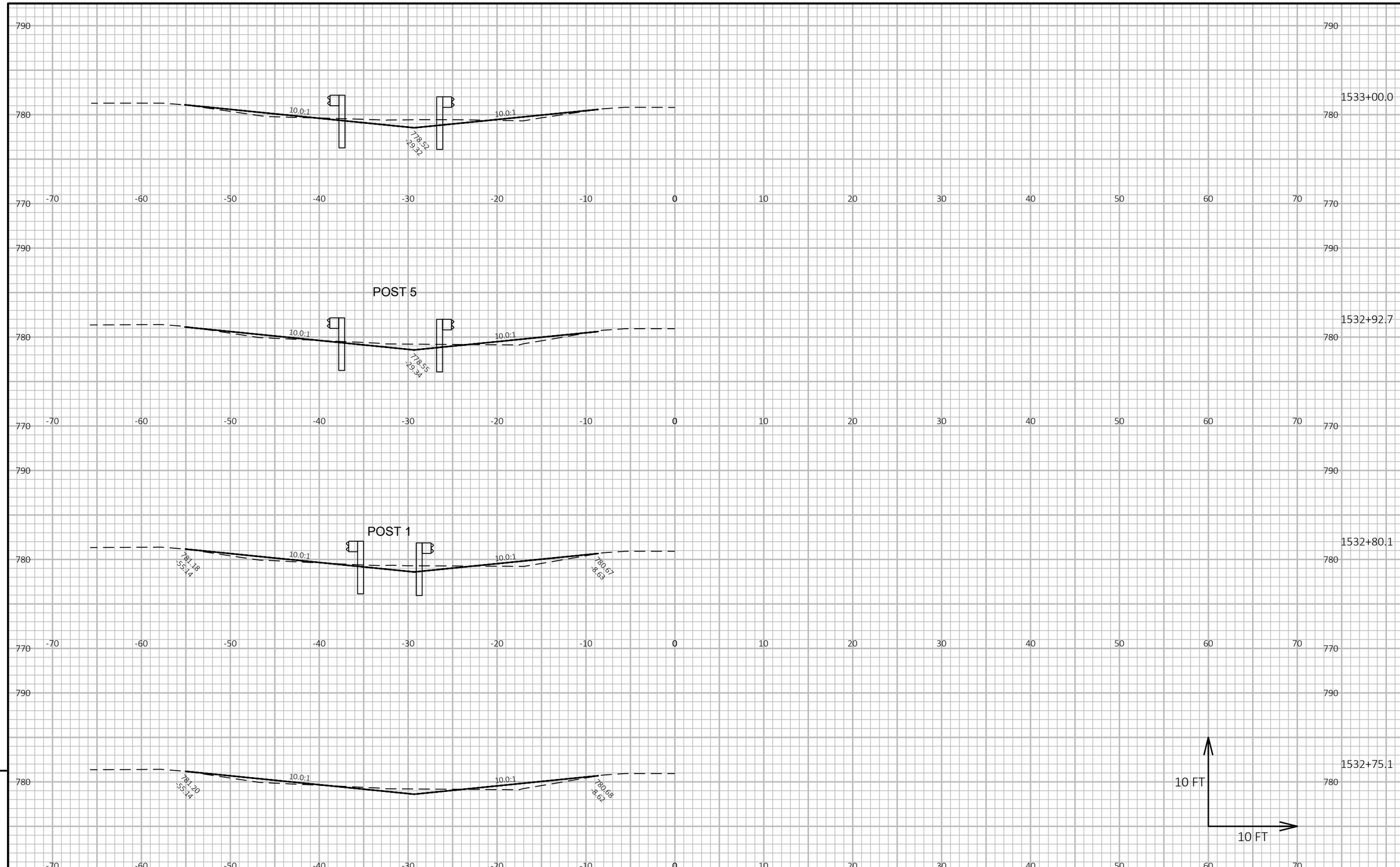

9

9

PROJECT NO: 1227-12-71	HWY: IH 43	COUNTY: MANITOWOC	CROSS SECTIONS: BULLNOSE FISHERVILLE	SHEET	E

FILE NAME : I:\45\450504 IH 43 WISDOT GUARDRAIL\C3D\SHEETSPLAN\12271271 PLAN\090201_XS.DWG
LAYOUT NAME - Bullnose Fisherville 1

PLOT DATE : 1/27/2021 10:34 AM PLOT BY : GARNICA, BRANDON PLOT NAME : **PLOT SCALE :** 1 IN:10 FT HORZ. / 1 IN:10 FT VERT.

WISDOT/CADDS SHEET 49

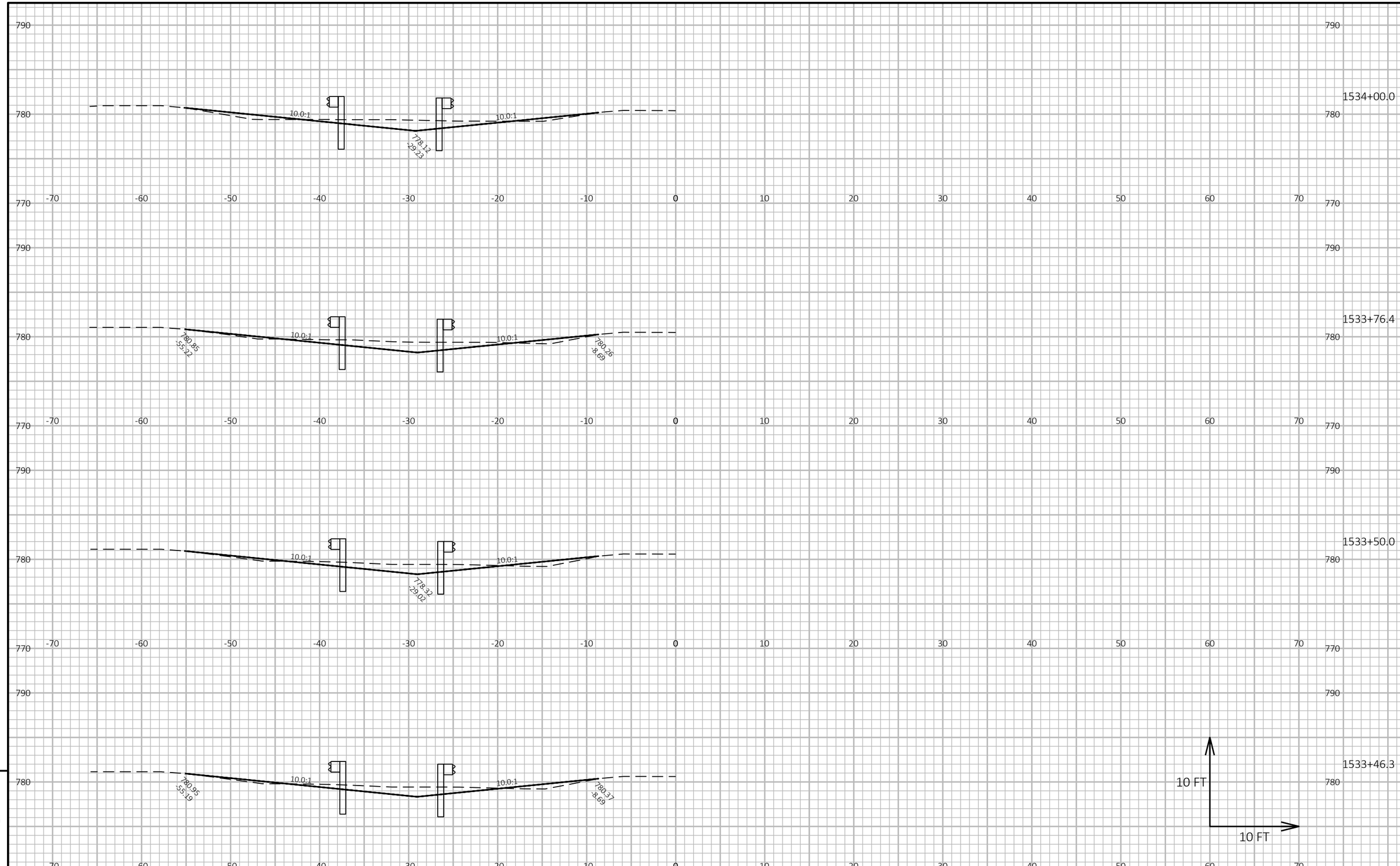

9

9

PROJECT NO: 1227-12-71	HWY: IH 43	COUNTY: MANITOWOC	CROSS SECTIONS: BULLNOSE FISHERVILLE	SHEET	E

FILE NAME : I:\45\450504 IH 43 WISDOT GUARDRAIL\C3D\SHEETSPLAN\12271271 PLAN\090201_XS.DWG
LAYOUT NAME - Bullnose Fisherville 2

PLOT DATE : 1/27/2021 10:34 AM PLOT BY : GARNICA, BRANDON PLOT NAME : **PLOT SCALE :** 1 IN:10 FT HORZ. / 1 IN:10 FT VERT.

WISDOT/CADDS SHEET 49

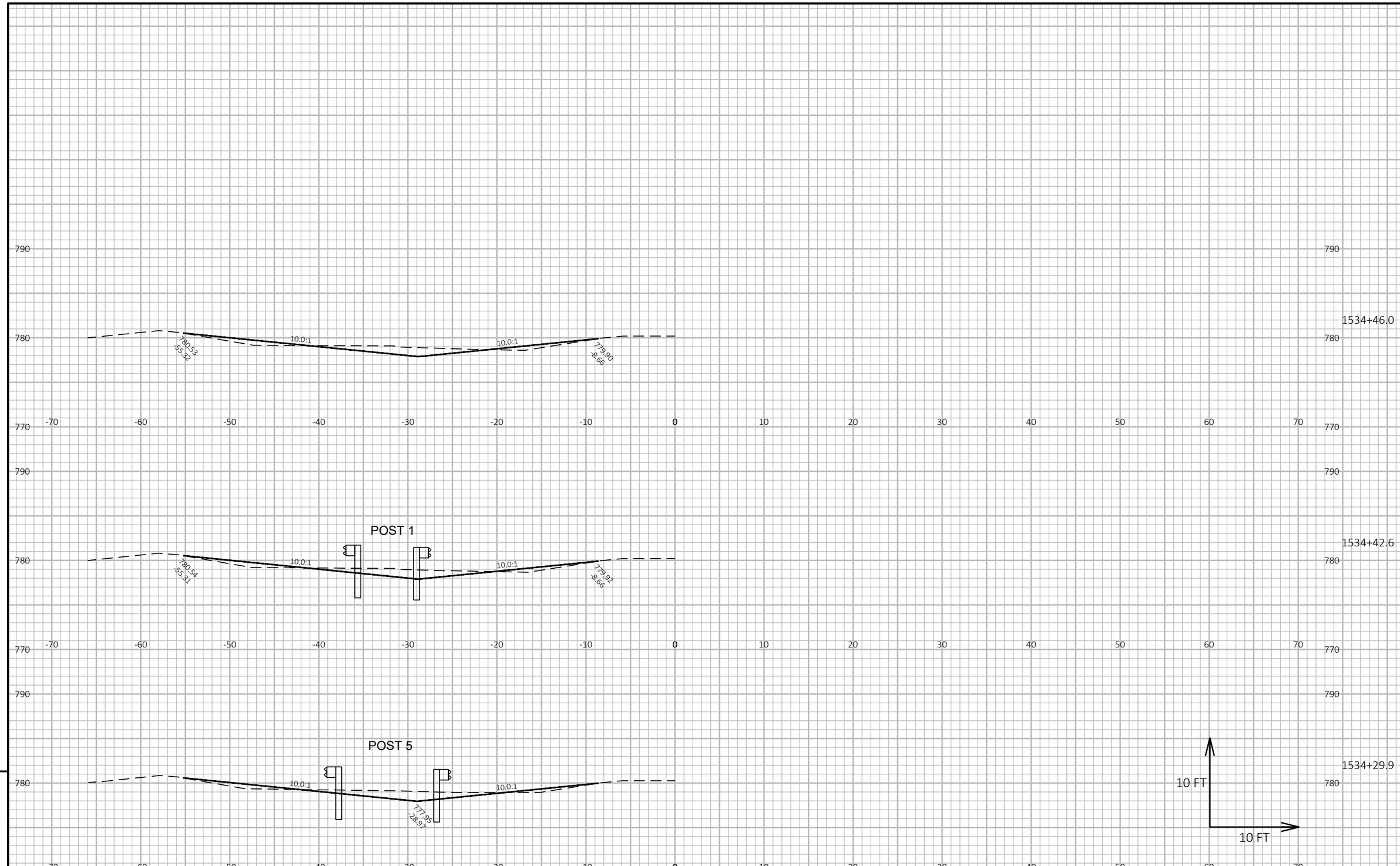

9

9

PROJECT NO: 1227-12-71	HWY: IH 43	COUNTY: MANITOWOC	CROSS SECTIONS: BULLNOSE FISHERVILLE	SHEET	E

FILE NAME : I:\45\450504 IH 43 WISDOT GUARDRAIL\C3D\SHEETSPLAN\12271271 PLAN\090201_XS.DWG
LAYOUT NAME - Bullnose Fisherville 3

PLOT DATE : 1/27/2021 10:34 AM PLOT BY : GARNICA, BRANDON PLOT NAME :

PLOT SCALE : 1 IN:10 FT HORZ. / 1 IN:10 FT VERT.

WISDOT/CADDS SHEET 49

9

9

PROJECT NO: 1227-12-71	HWY: IH 43	COUNTY: MANITOWOC	CROSS SECTIONS: ROCKWOOD ROAD	SHEET	E

FILE NAME : I:\45\450504 IH 43 WISDOT GUARDRAIL\C3D\SHEETSPLAN\12271271 PLAN\090202_XS.DWG
LAYOUT NAME - Rockwood WB 1

PLOT DATE : 1/27/2021 10:35 AM PLOT BY : GARNICA, BRANDON PLOT NAME : **PLOT SCALE :** 1 IN:10 FT HORZ. / 1 IN:10 FT VERT.

WISDOT/CADDS SHEET 49

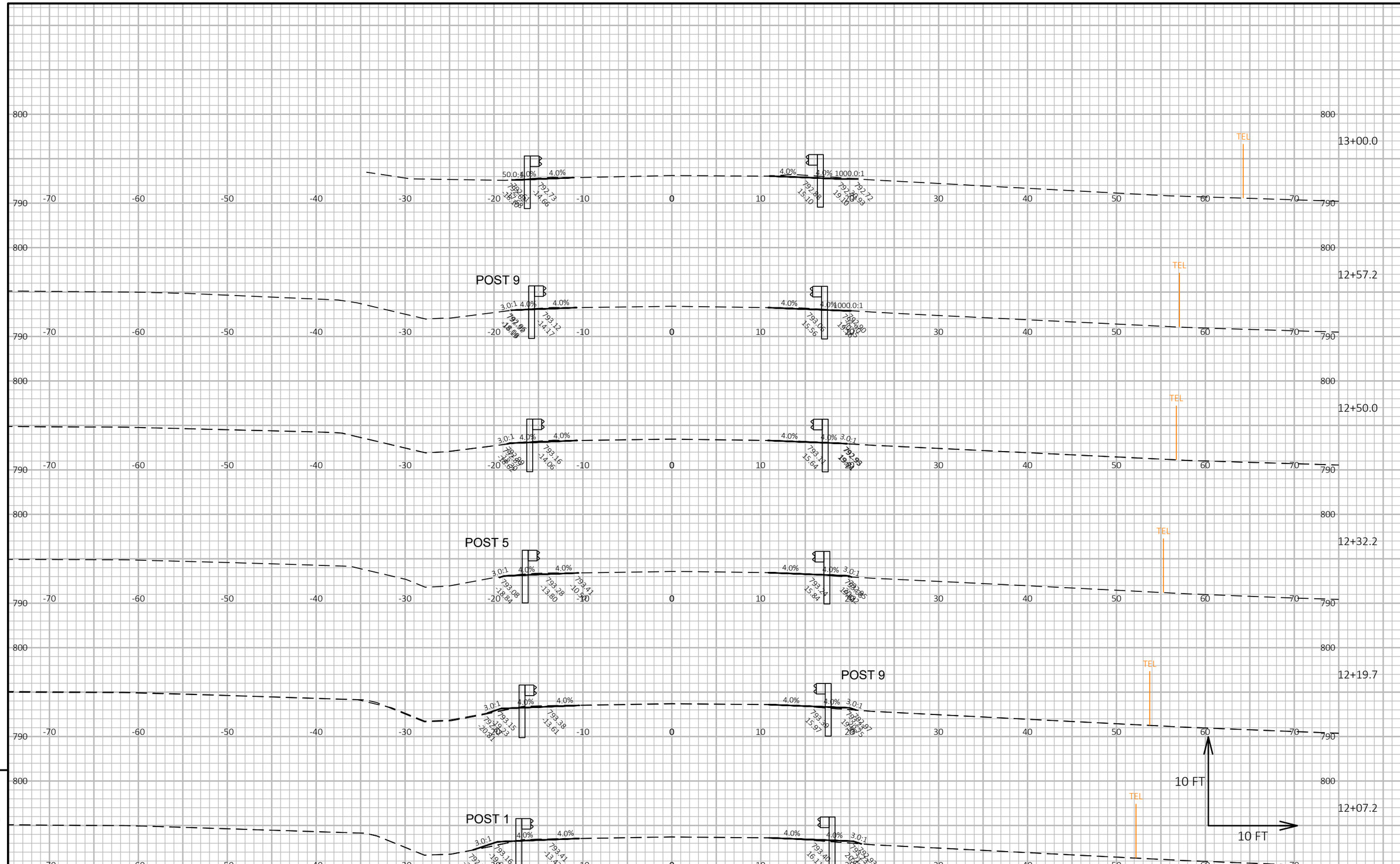

PROJECT NO: 1227-12-71	HWY: IH 43	COUNTY: MANITOWOC	CROSS SECTIONS: ROCKWOOD ROAD	SHEET	E

FILE NAME : I:\45\450504 IH 43 WISDOT GUARDRAIL\C3D\SHEETSPLAN\12271271 PLAN\090202_XS.DWG
LAYOUT NAME - Rockwood WB 2
PLOT DATE : 1/27/2021 10:35 AM PLOT BY : GARNICA, BRANDON PLOT NAME : PLOT SCALE : 1 IN:10 FT HORZ. / 1 IN:10 FT VERT.

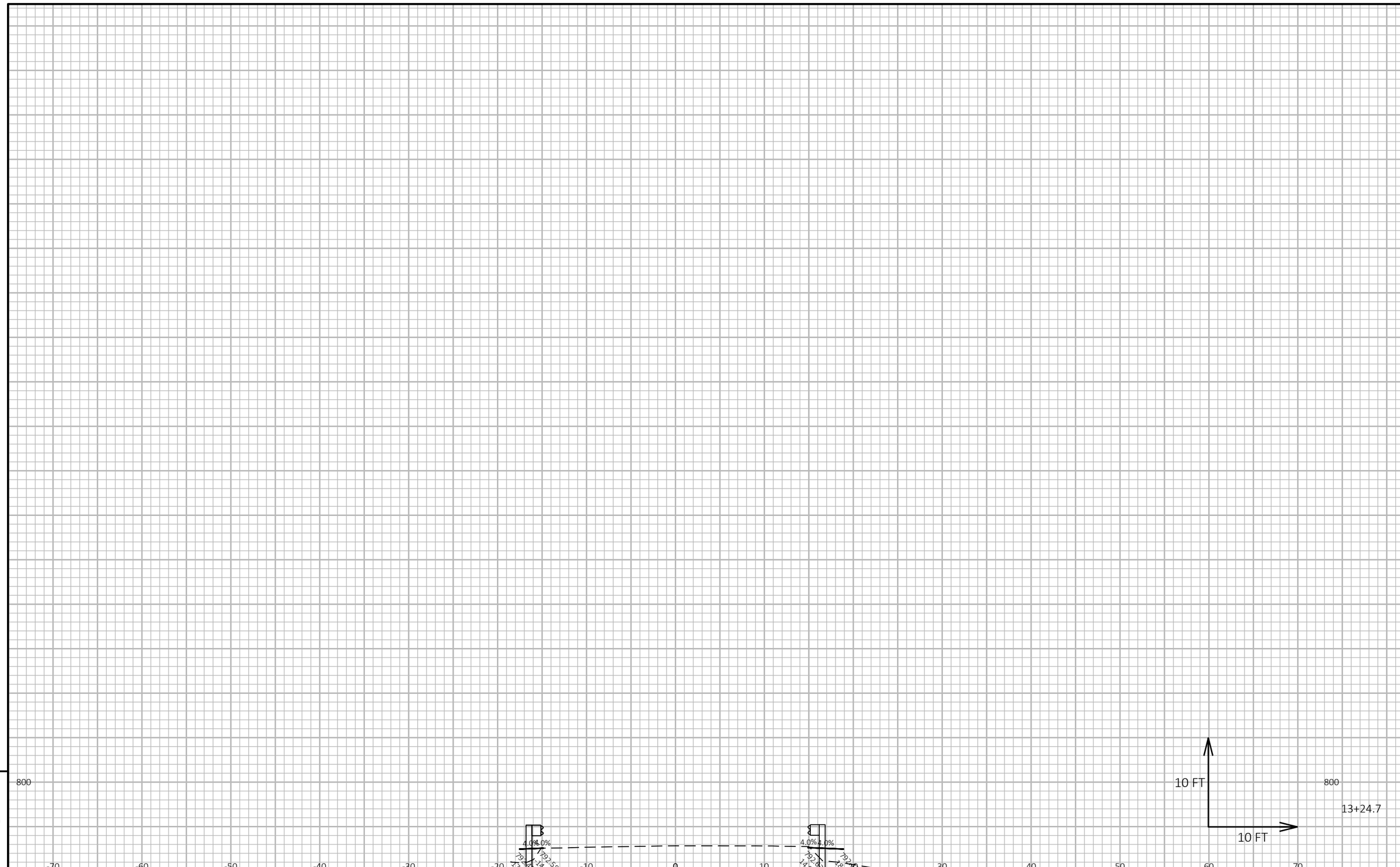

9

9

PROJECT NO: 1227-12-71	HWY: IH 43	COUNTY: MANITOWOC	CROSS SECTIONS: ROCKWOOD ROAD	SHEET	E

FILE NAME : I:\45\450504 IH 43 WISDOT GUARDRAIL\C3D\SHEETSPLAN\12271271 PLAN\090202_XS.DWG
LAYOUT NAME - Rockwood WB 3

PLOT DATE : 1/27/2021 10:35 AM PLOT BY : GARNICA, BRANDON PLOT NAME : **PLOT SCALE :** 1 IN:10 FT HORZ. / 1 IN:10 FT VERT.

WISDOT/CADDS SHEET 49

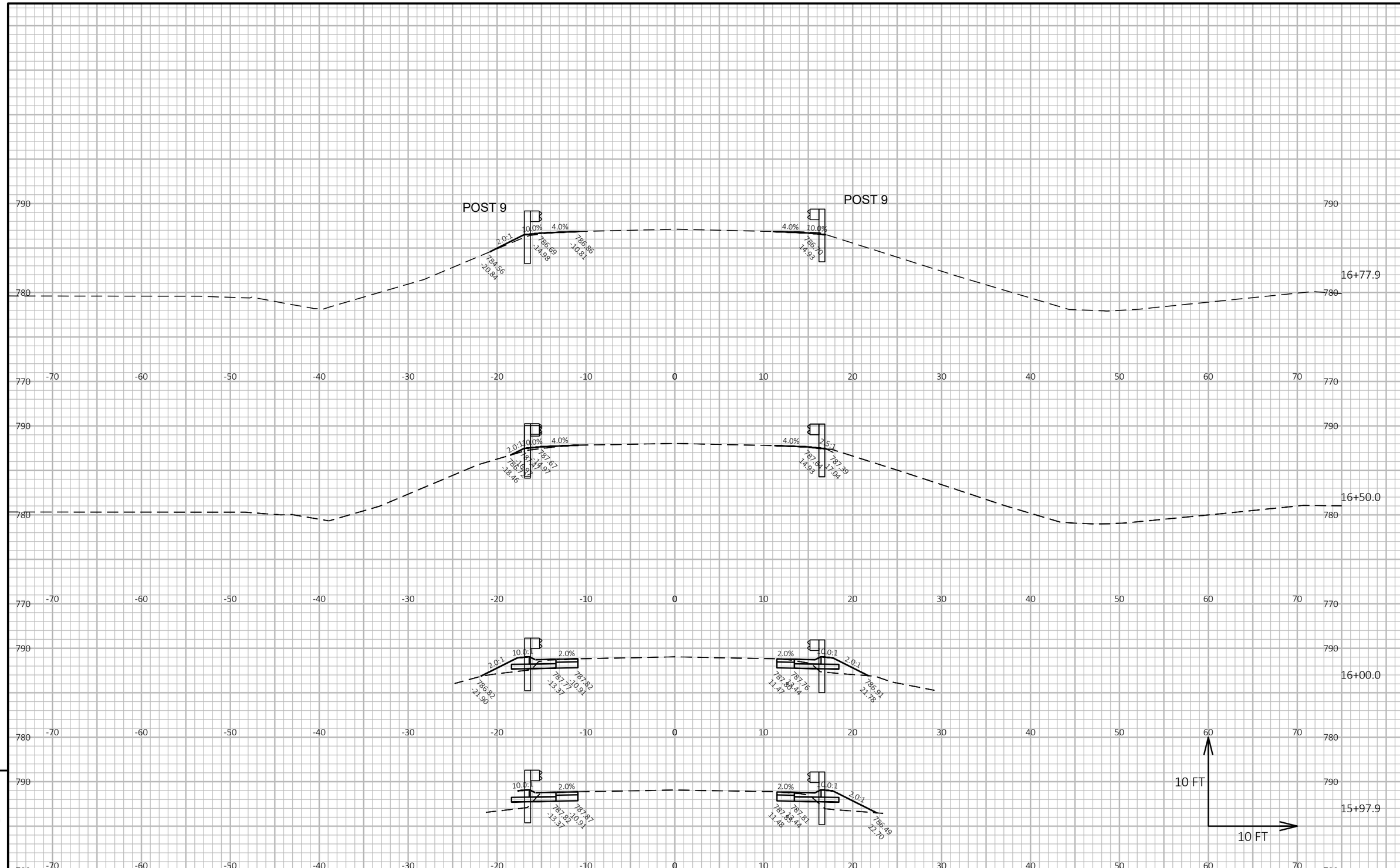

9

PROJECT NO: 1227-12-71	HWY: IH 43	COUNTY: MANITOWOC	CROSS SECTIONS: ROCKWOOD ROAD	SHEET	E

FILE NAME : I:\45\450504 IH 43 WISDOT GUARDRAIL\C3D\SHEETSPLAN\12271271 PLAN\090202_XS.DWG
LAYOUT NAME - Rockwood EB 1
PLOT DATE : 1/27/2021 10:36 AM
PLOT BY : GARNICA, BRANDON
PLOT NAME :
PLOT SCALE : 1 IN:10 FT HORZ. / 1 IN:10 FT VERT.
WISDOT/CADDS SHEET 49

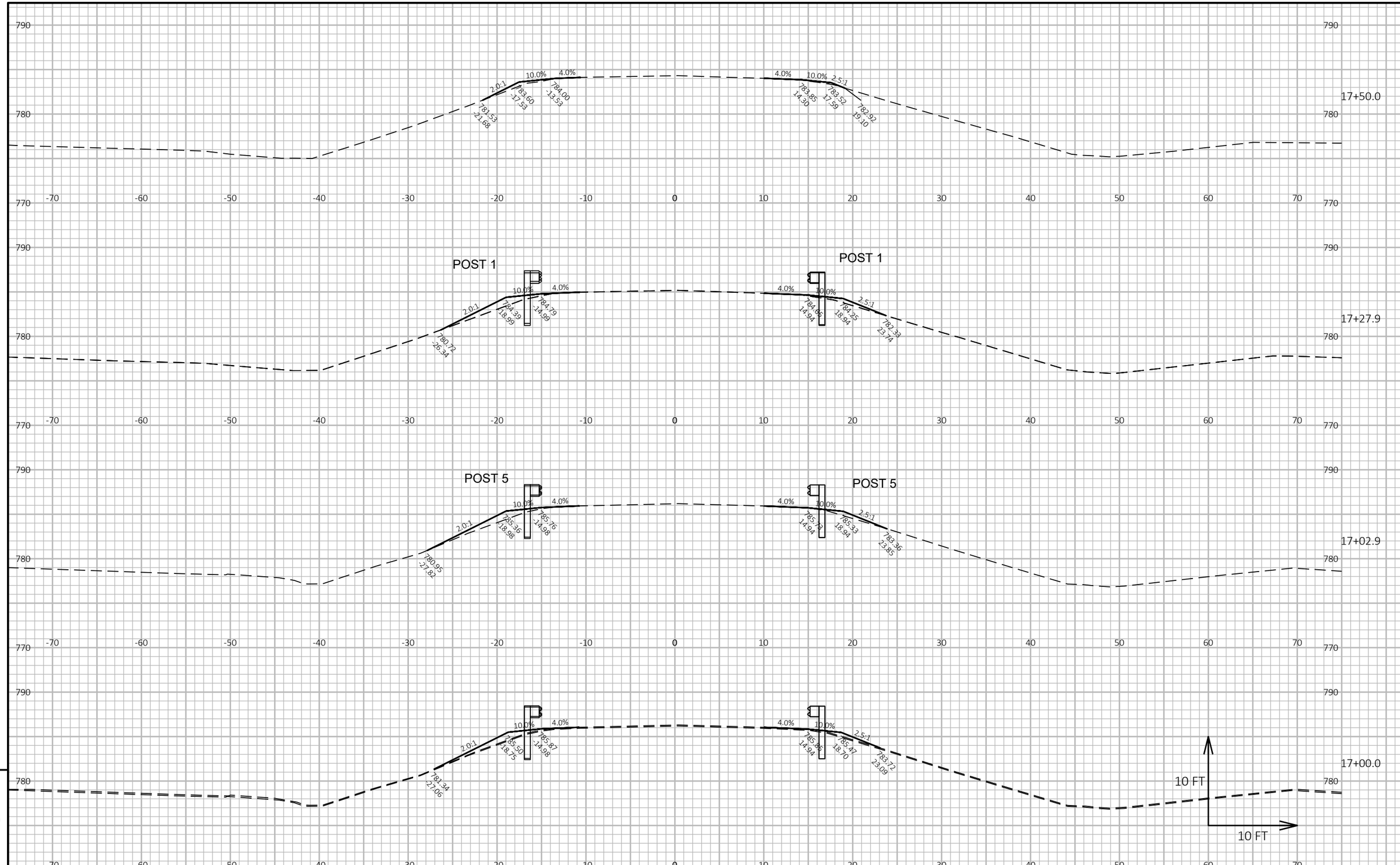

PROJECT NO: 1227-12-71	HWY: IH 43	COUNTY: MANITOWOC	CROSS SECTIONS: ROCKWOOD ROAD	SHEET	E

FILE NAME : I:\45\450504 IH 43 WISDOT GUARDRAIL\C3D\SHEETSPLAN\12271271 PLAN\090202_XS.DWG
LAYOUT NAME - Rockwood EB 2
PLOT DATE : 1/27/2021 10:36 AM PLOT BY : GARNICA, BRANDON PLOT NAME : PLOT SCALE : 1 IN:10 FT HORZ. / 1 IN:10 FT VERT.

WISDOT/CADDS SHEET 49

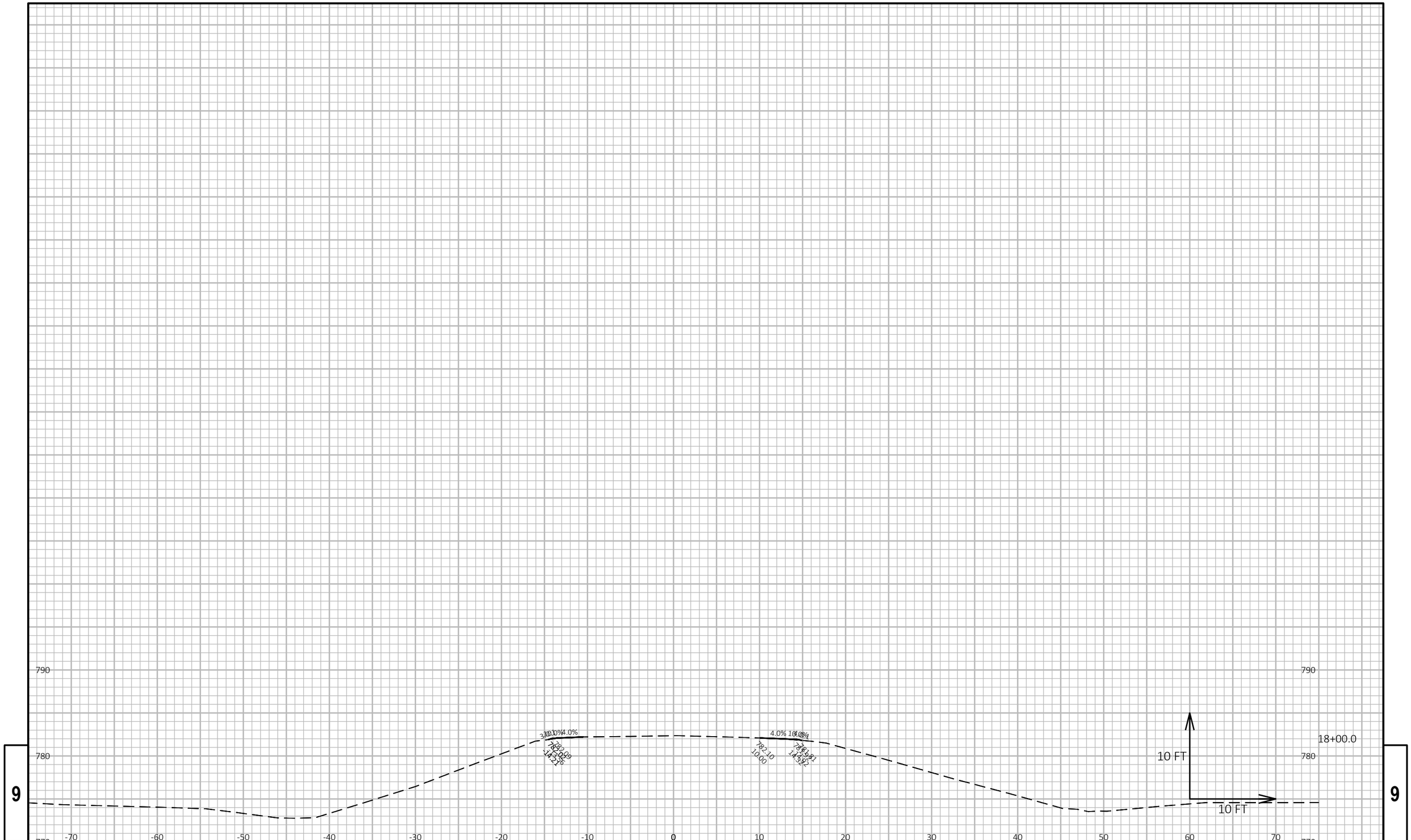

PROJECT NO: 1227-12-71	HWY: IH 43	COUNTY: MANITOWOC	CROSS SECTIONS: ROCKWOOD ROAD	SHEET	E

FILE NAME : I:\45\450504 IH 43 WISDOT GUARDRAIL\C3D\SHEETSPLAN\12271271 PLAN\090202_XS.DWG
LAYOUT NAME - Rockwood EB 3
PLOT DATE : 1/27/2021 10:36 AM
PLOT BY : GARNICA, BRANDON
PLOT NAME :
PLOT SCALE : 1 IN:10 FT HORZ. / 1 IN:10 FT VERT.
WISDOT/CADDS SHEET 49

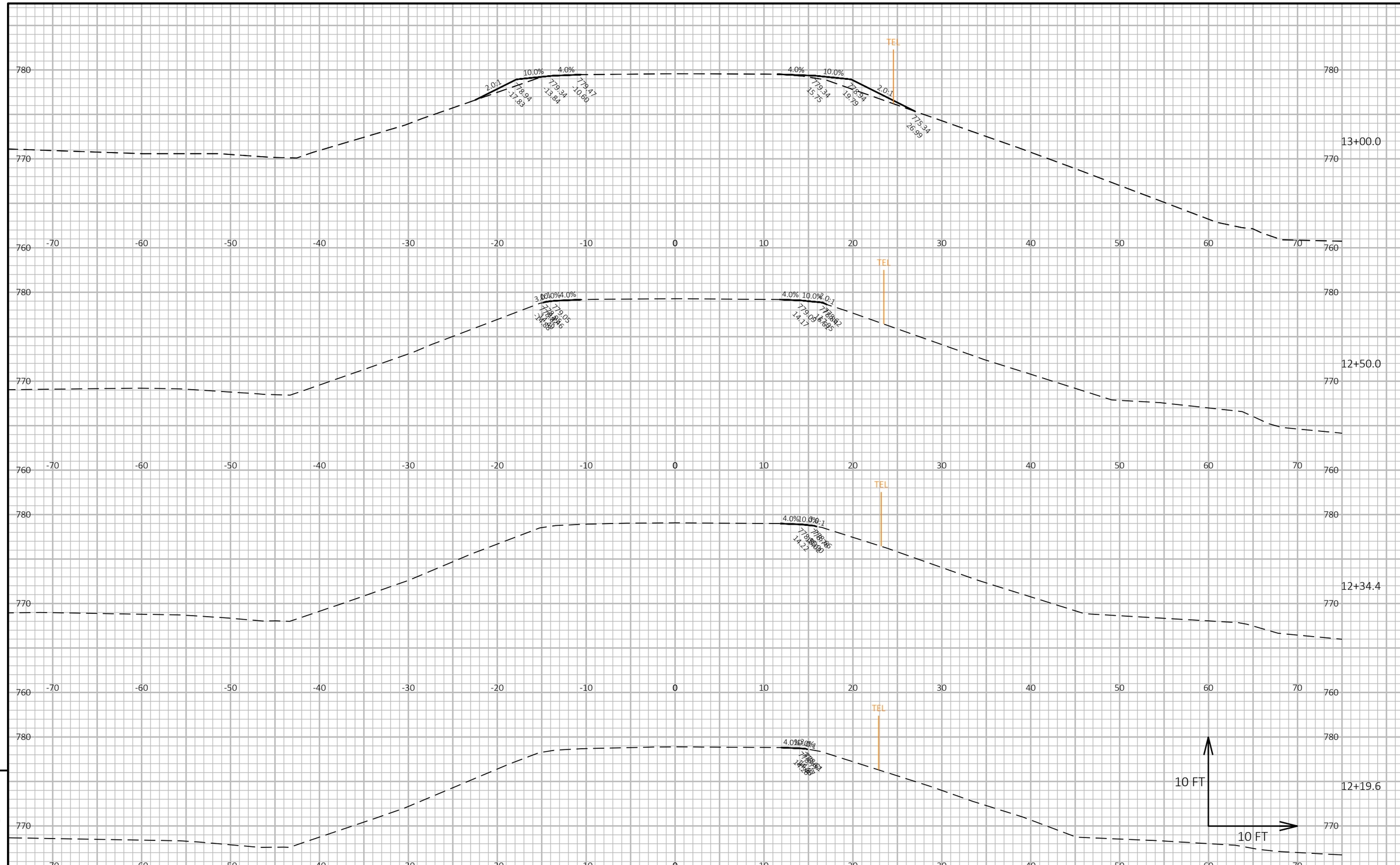

PROJECT NO: 1227-12-71	HWY: IH 43	COUNTY: MANITOWOC	CROSS SECTIONS: REIF MILLS ROAD	SHEET	E

FILE NAME : I:\45\450504 IH 43 WISDOT GUARDRAIL\C3D\SHEETSPLAN\12271271 PLAN\090202_XS.DWG
LAYOUT NAME - Reif Mills WB 1
PLOT DATE : 1/27/2021 12:22 PM PLOT BY : GARNICA, BRANDON PLOT NAME : **PLOT SCALE :** 1 IN:10 FT HORZ. / 1 IN:10 FT VERT.

WISDOT/CADDS SHEET 49

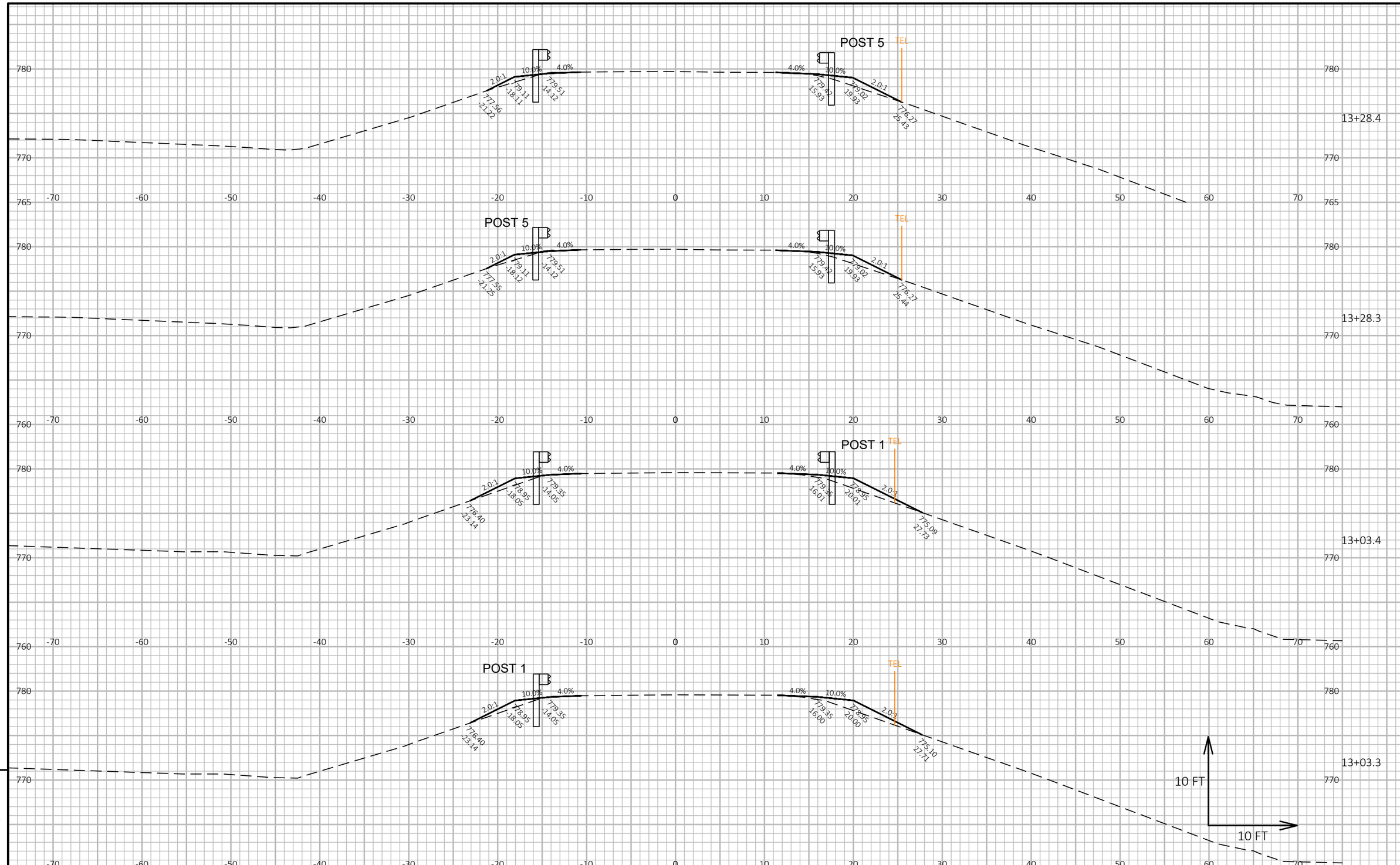

9

9

PROJECT NO: 1227-12-71	HWY: IH 43	COUNTY: MANITOWOC	CROSS SECTIONS: REIF MILLS ROAD	SHEET	E

FILE NAME : I:\45\450504 IH 43 WISDOT GUARDRAIL\C3D\SHEETSPLAN\12271271 PLAN\090202_XS.DWG
LAYOUT NAME - Reif Mills WB 2

PLOT DATE : 1/27/2021 12:23 PM PLOT BY : GARNICA, BRANDON PLOT NAME : **PLOT SCALE :** 1 IN:10 FT HORZ. / 1 IN:10 FT VERT.

WISDOT/CADDS SHEET 49

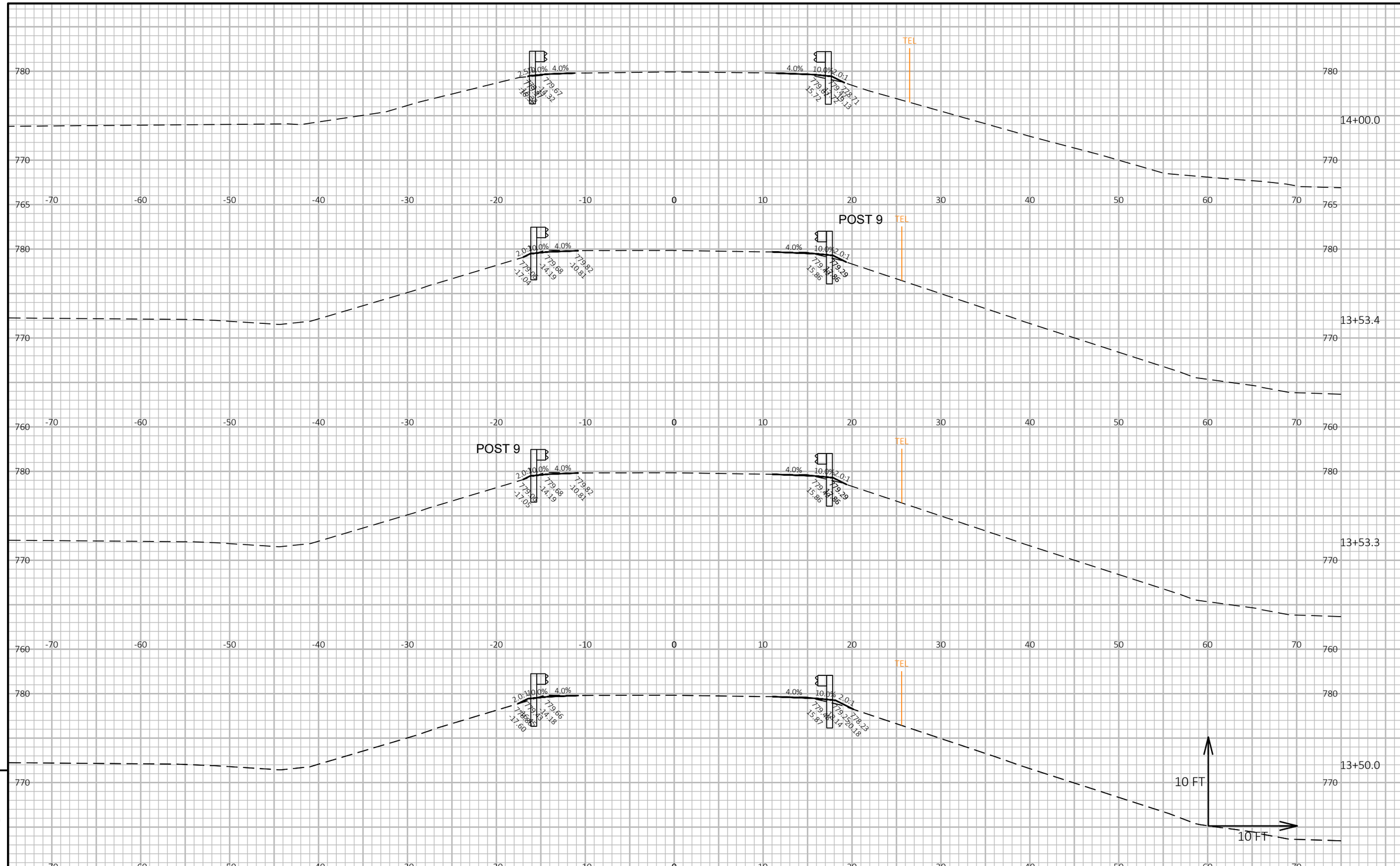

PROJECT NO: 1227-12-71	HWY: IH 43	COUNTY: MANITOWOC	CROSS SECTIONS: REIF MILLS ROAD	SHEET	E

FILE NAME : I:\45\450504 IH 43 WISDOT GUARDRAIL\C3D\SHEETSPLAN\12271271 PLAN\090202_XS.DWG
LAYOUT NAME - Reif Mills WB 3
PLOT DATE : 1/27/2021 12:23 PM
PLOT BY : GARNICA, BRANDON
PLOT NAME :
PLOT SCALE : 1 IN:10 FT HORZ. / 1 IN:10 FT VERT.
WISDOT/CADDS SHEET 49

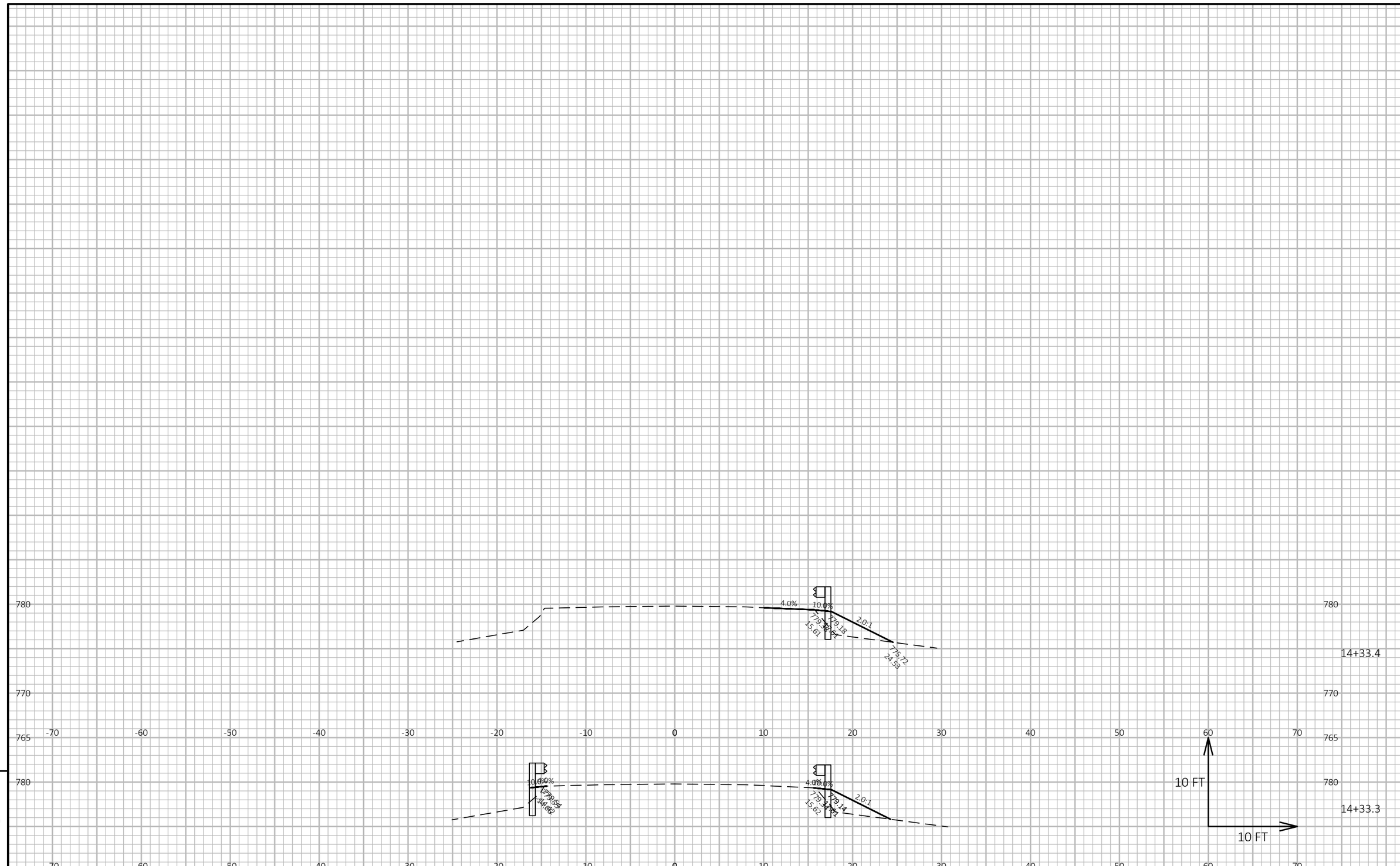

9

9

PROJECT NO: 1227-12-71	HWY: IH 43	COUNTY: MANITOWOC	CROSS SECTIONS: REIF MILLS ROAD	SHEET	E

FILE NAME : I:\45\450504 IH 43 WISDOT GUARDRAIL\C3D\SHEETSPLAN\12271271 PLAN\090202_XS.DWG
LAYOUT NAME - Reif Mills WB 4

PLOT DATE : 1/27/2021 12:23 PM PLOT BY : GARNICA, BRANDON PLOT NAME :

PLOT SCALE : 1 IN:10 FT HORZ. / 1 IN:10 FT VERT.

WISDOT/CADDS SHEET 49

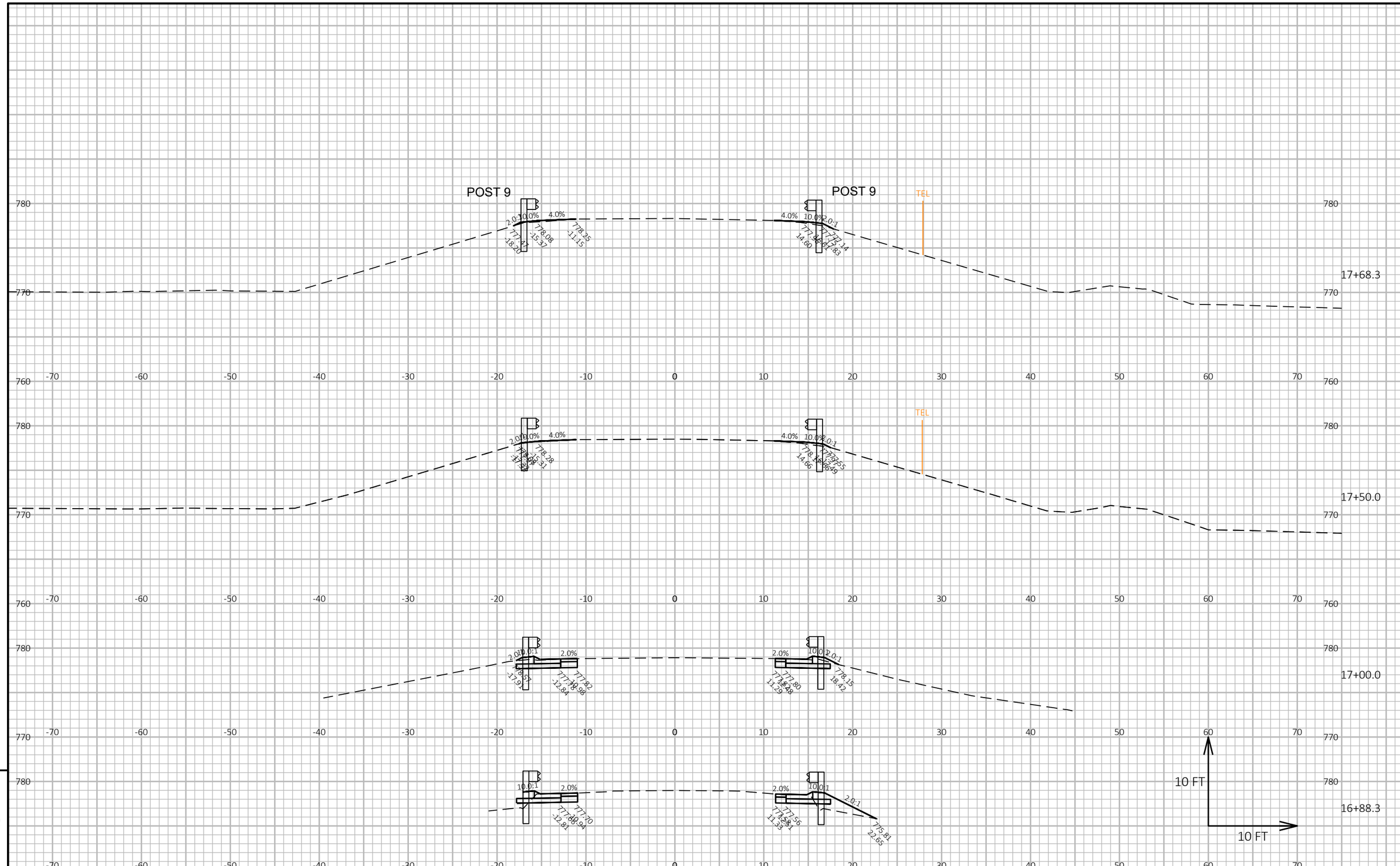

9

9

PROJECT NO: 1227-12-71	HWY: IH 43	COUNTY: MANITOWOC	CROSS SECTIONS: REIF MILLS ROAD	SHEET	E

FILE NAME : I:\45\450504 IH 43 WISDOT GUARDRAIL\C3D\SHEETSPLAN\12271271 PLAN\090202_XS.DWG
LAYOUT NAME - Reif Mills EB 1

PLOT DATE : 1/27/2021 10:37 AM PLOT BY : GARNICA, BRANDON PLOT NAME : **PLOT SCALE :** 1 IN:10 FT HORZ. / 1 IN:10 FT VERT.

WISDOT/CADDS SHEET 49

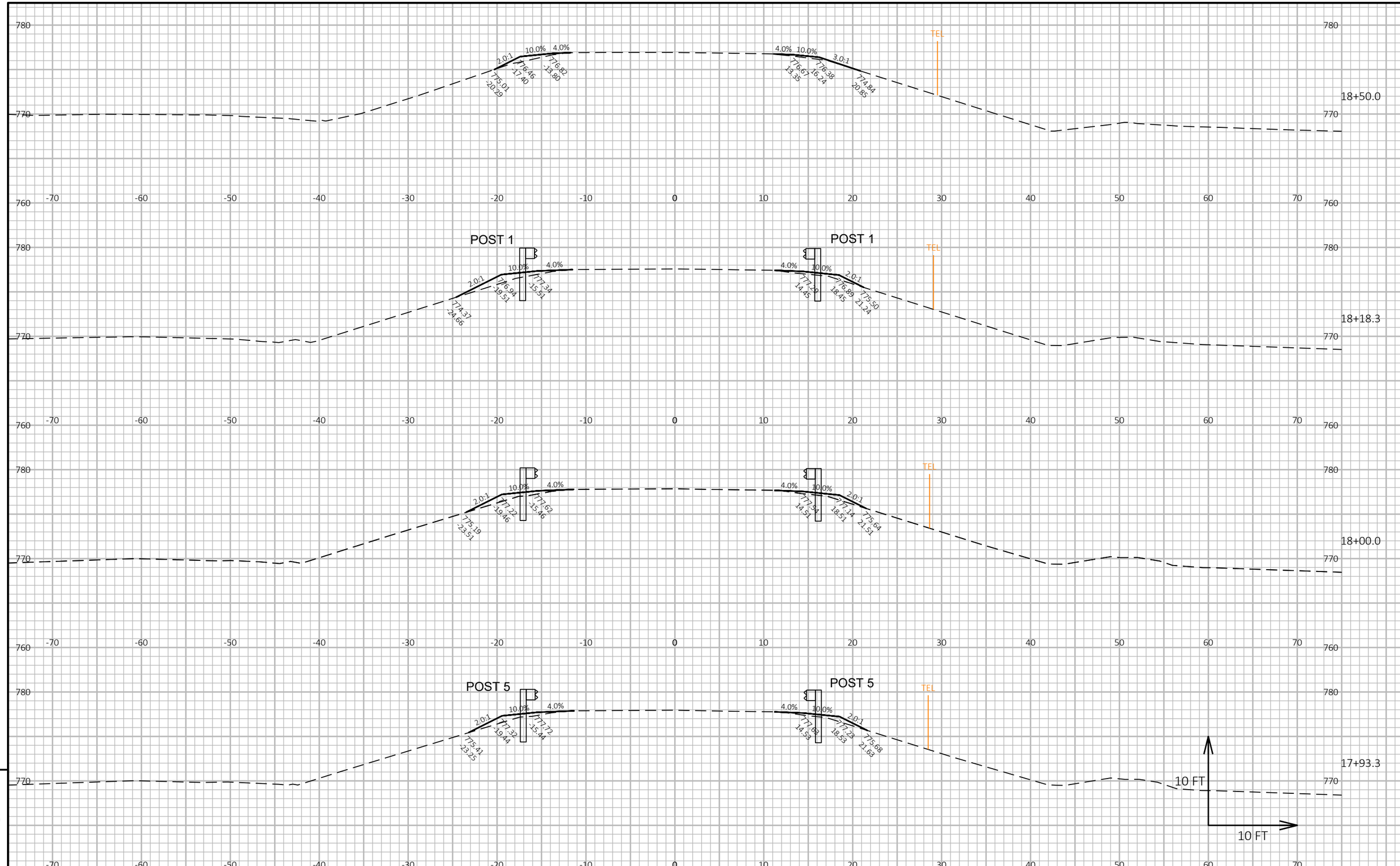

9

9

PROJECT NO: 1227-12-71	HWY: IH 43	COUNTY: MANITOWOC	CROSS SECTIONS: REIF MILLS ROAD	SHEET	E

FILE NAME : I:\45\450504 IH 43 WISDOT GUARDRAIL\C3D\SHEETSPLAN\12271271 PLAN\090202_XS.DWG
LAYOUT NAME - Reif Mills EB 2

PLOT DATE : 1/27/2021 10:37 AM PLOT BY : GARNICA, BRANDON PLOT NAME : **PLOT SCALE :** 1 IN:10 FT HORZ. / 1 IN:10 FT VERT.

WISDOT/CADDS SHEET 49

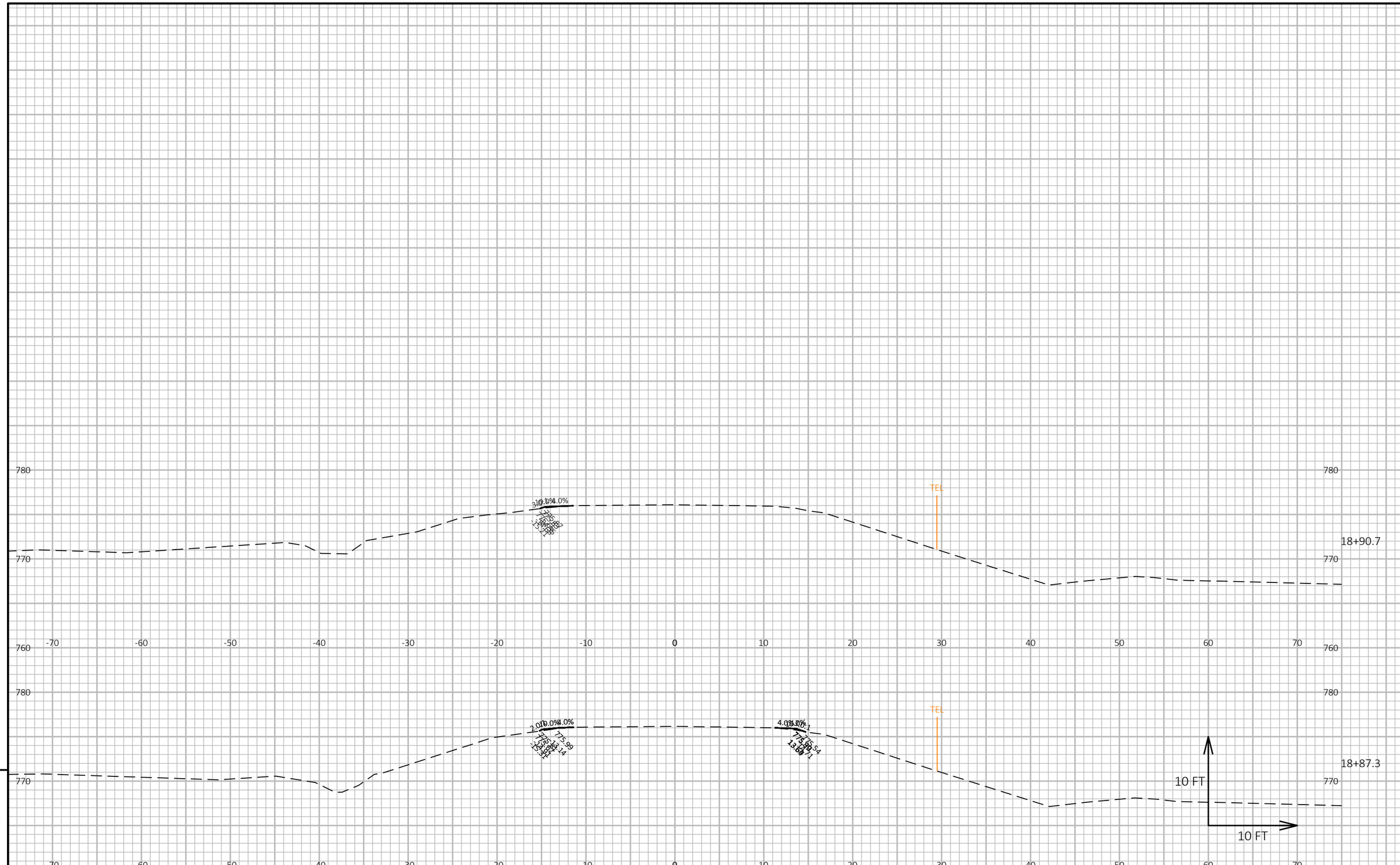

9

9

PROJECT NO: 1227-12-71	HWY: IH 43	COUNTY: MANITOWOC	CROSS SECTIONS: REIF MILLS ROAD	SHEET	E

FILE NAME : I:\45\450504 IH 43 WISDOT GUARDRAIL\C3D\SHEETSPLAN\12271271 PLAN\090202_XS.DWG
LAYOUT NAME - Reif Mills EB 3

PLOT DATE : 1/27/2021 10:38 AM PLOT BY : GARNICA, BRANDON PLOT NAME : **PLOT SCALE :** 1 IN:10 FT HORZ. / 1 IN:10 FT VERT.

WISDOT/CADDS SHEET 49

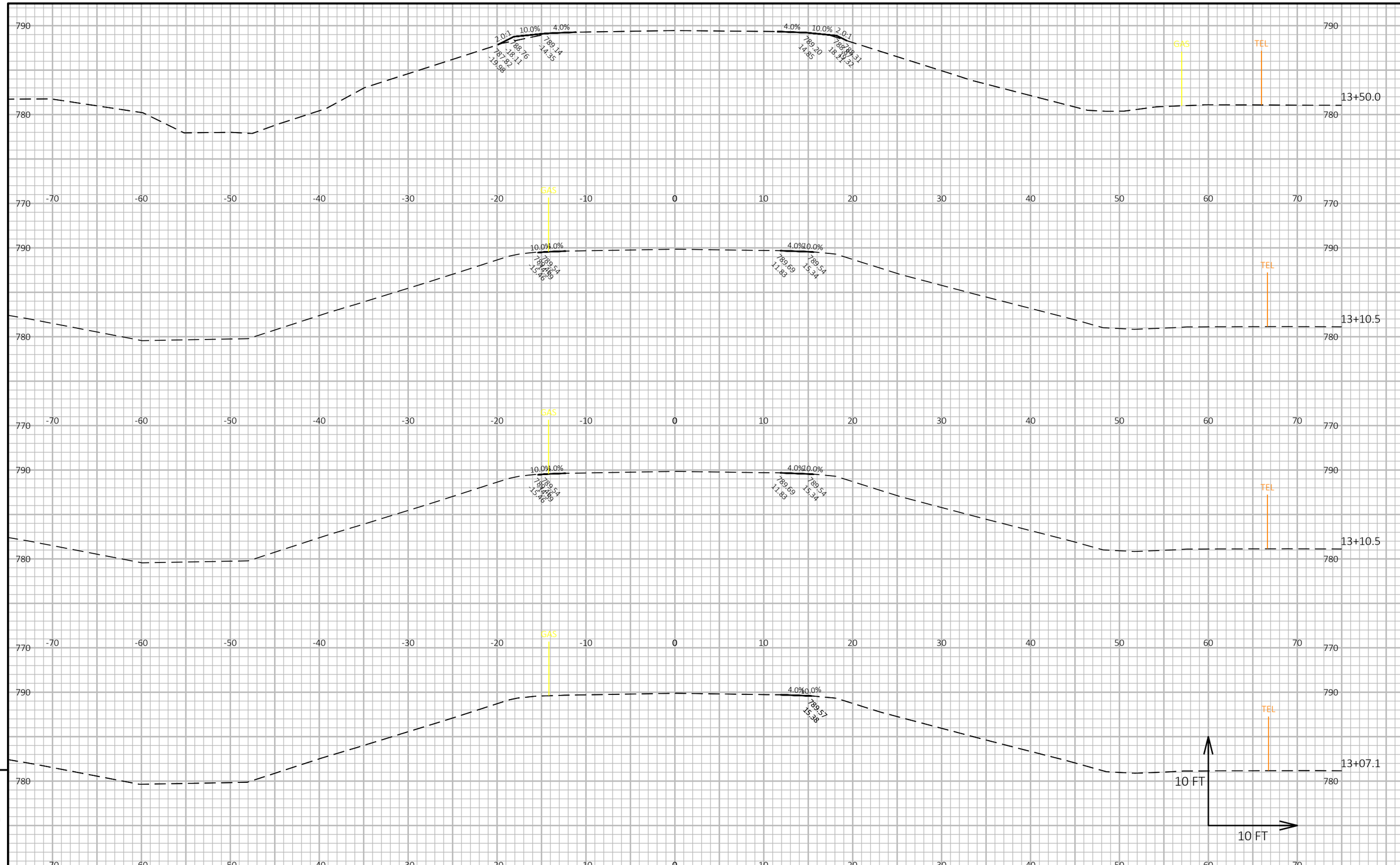

9

9

PROJECT NO: 1227-12-71	HWY: IH 43	COUNTY: MANITOWOC	CROSS SECTIONS: POLIFKA ROAD	SHEET	E

FILE NAME : I:\45\450504 IH 43 WISDOT GUARDRAIL\C3D\SHEETSPLAN\12271271 PLAN\090202_XS.DWG
LAYOUT NAME - Polifka WB 1

PLOT DATE : 1/27/2021 10:38 AM PLOT BY : GARNICA, BRANDON PLOT NAME : **PLOT SCALE :** 1 IN:10 FT HORZ. / 1 IN:10 FT VERT.

WISDOT/CADDS SHEET 49

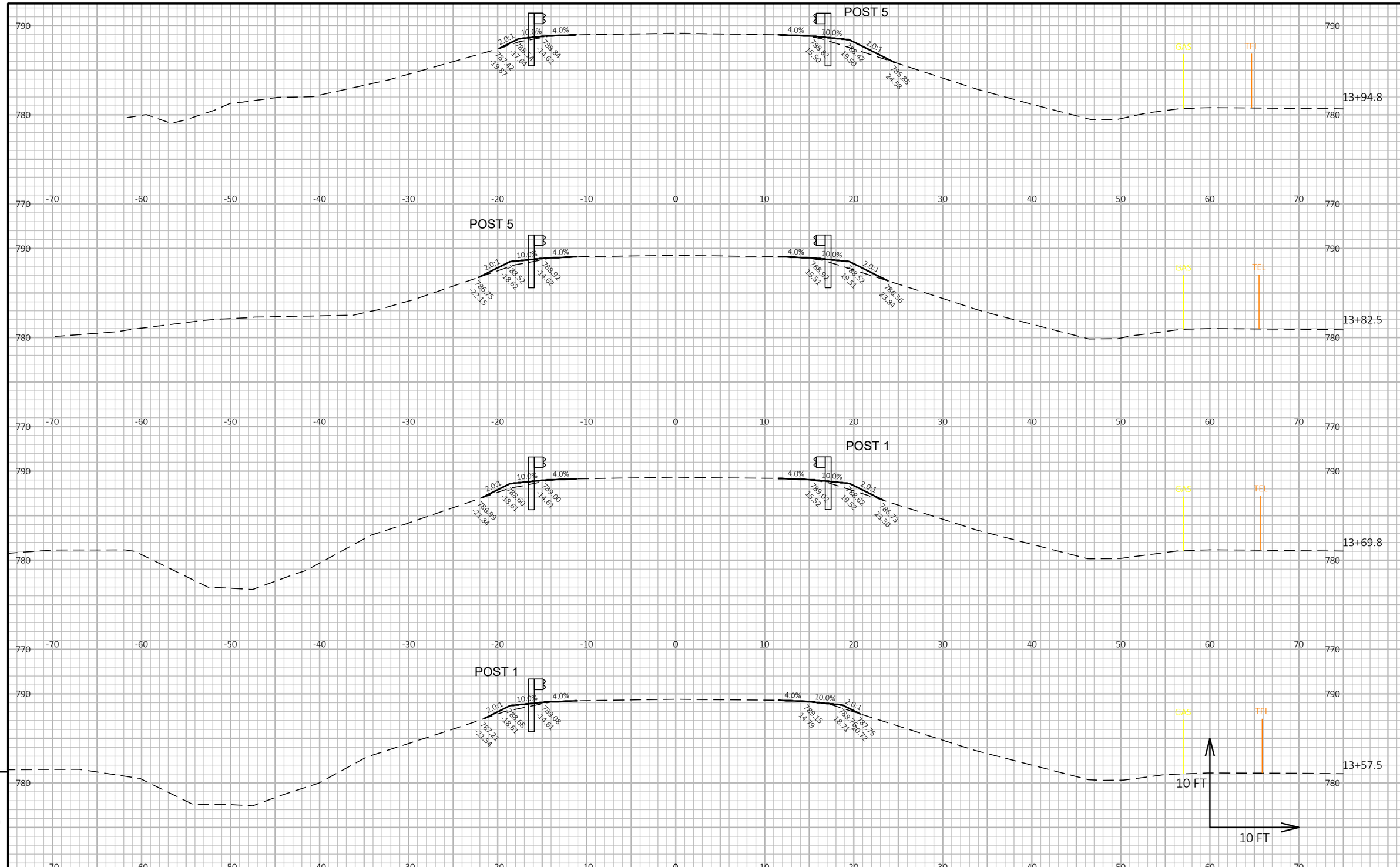

9

9

PROJECT NO: 1227-12-71	HWY: IH 43	COUNTY: MANITOWOC	CROSS SECTIONS: POLIFKA ROAD	SHEET	E

FILE NAME : I:\45\450504 IH 43 WISDOT GUARDRAIL\C3D\SHEETSPLAN\12271271 PLAN\090202_XS.DWG
LAYOUT NAME - Polifka WB 2

PLOT DATE : 1/27/2021 10:38 AM PLOT BY : GARNICA, BRANDON PLOT NAME : **PLOT SCALE :** 1 IN:10 FT HORZ. / 1 IN:10 FT VERT.

WISDOT/CADDS SHEET 49

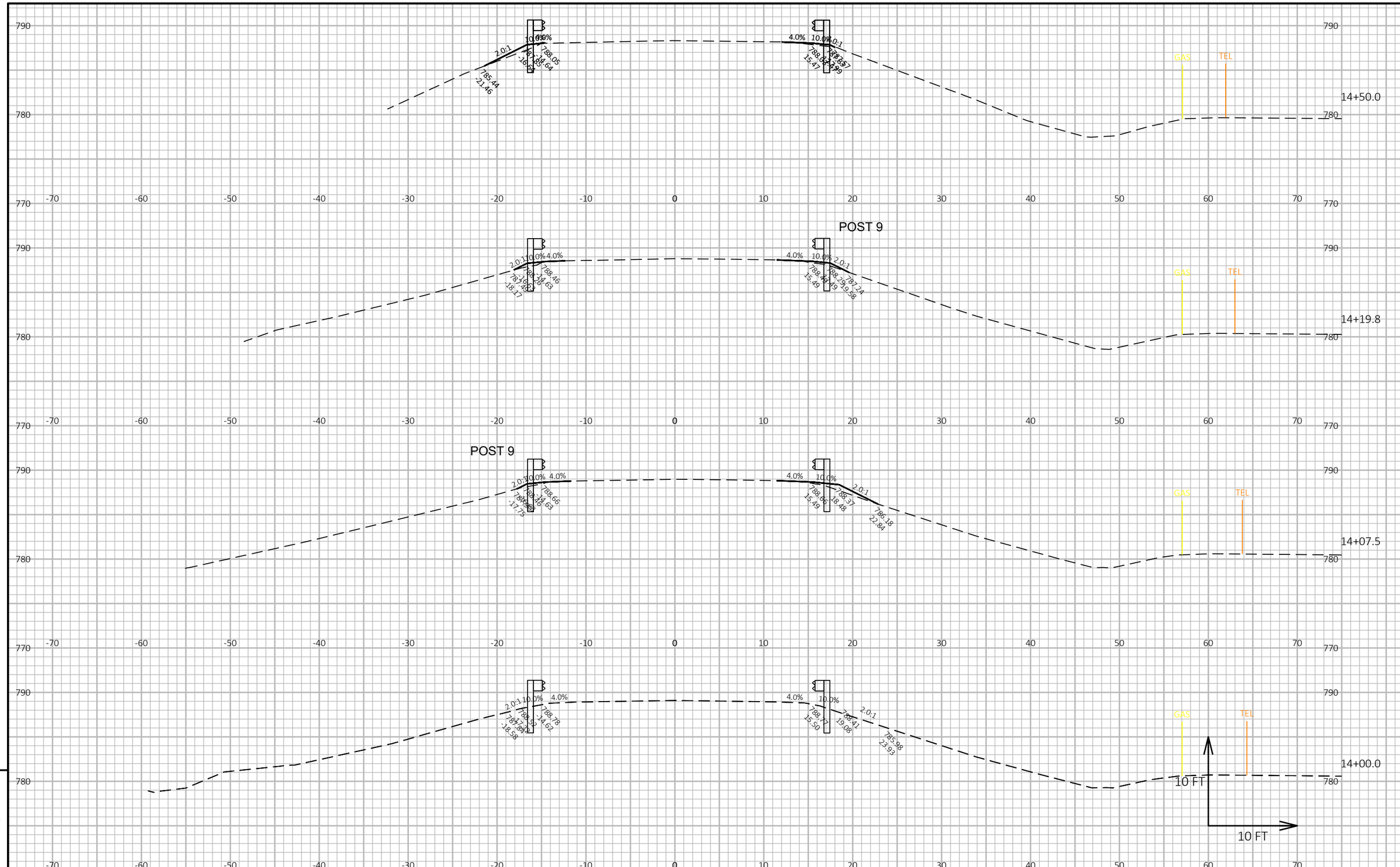

9

9

PROJECT NO: 1227-12-71	HWY: IH 43	COUNTY: MANITOWOC	CROSS SECTIONS: POLIFKA ROAD	SHEET	E

FILE NAME : I:\45\450504 IH 43 WISDOT GUARDRAIL\C3D\SHEETSPLAN\12271271 PLAN\090202_XS.DWG
LAYOUT NAME - Polifka WB 3

PLOT DATE : 1/27/2021 10:38 AM PLOT BY : GARNICA, BRANDON PLOT NAME : **PLOT SCALE :** 1 IN:10 FT HORZ. / 1 IN:10 FT VERT.

WISDOT/CADDS SHEET 49

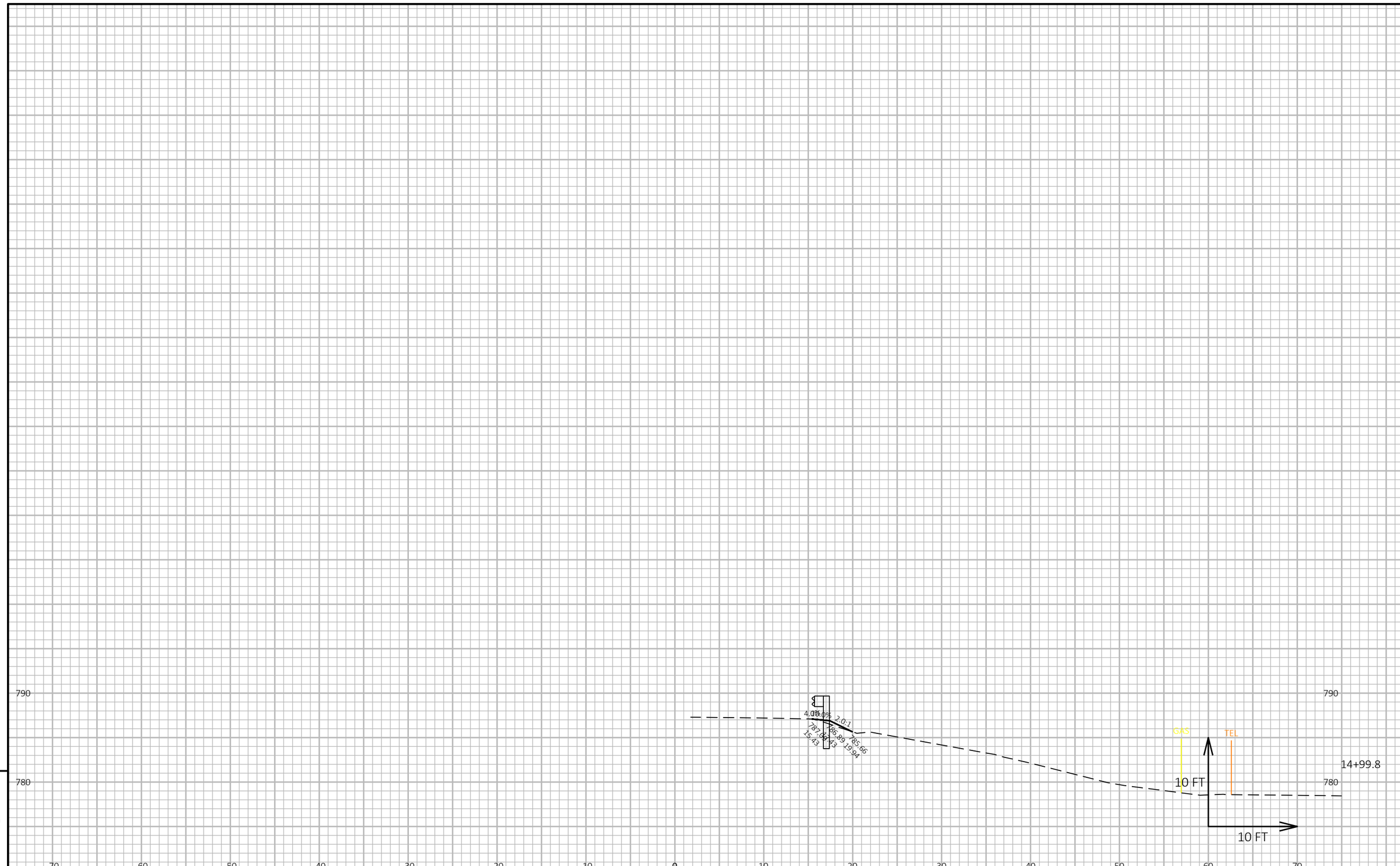

9

9

PROJECT NO: 1227-12-71	HWY: IH 43	COUNTY: MANITOWOC	CROSS SECTIONS: POLIFKA ROAD	SHEET	E

FILE NAME : I:\45\450504 IH 43 WISDOT GUARDRAIL\C3D\SHEETSPLAN\12271271 PLAN\090202_XS.DWG
LAYOUT NAME - Polifka WB 4

PLOT DATE : 1/27/2021 10:38 AM PLOT BY : GARNICA, BRANDON PLOT NAME : **PLOT SCALE :** 1 IN:10 FT HORZ. / 1 IN:10 FT VERT.

WISDOT/CADDS SHEET 49

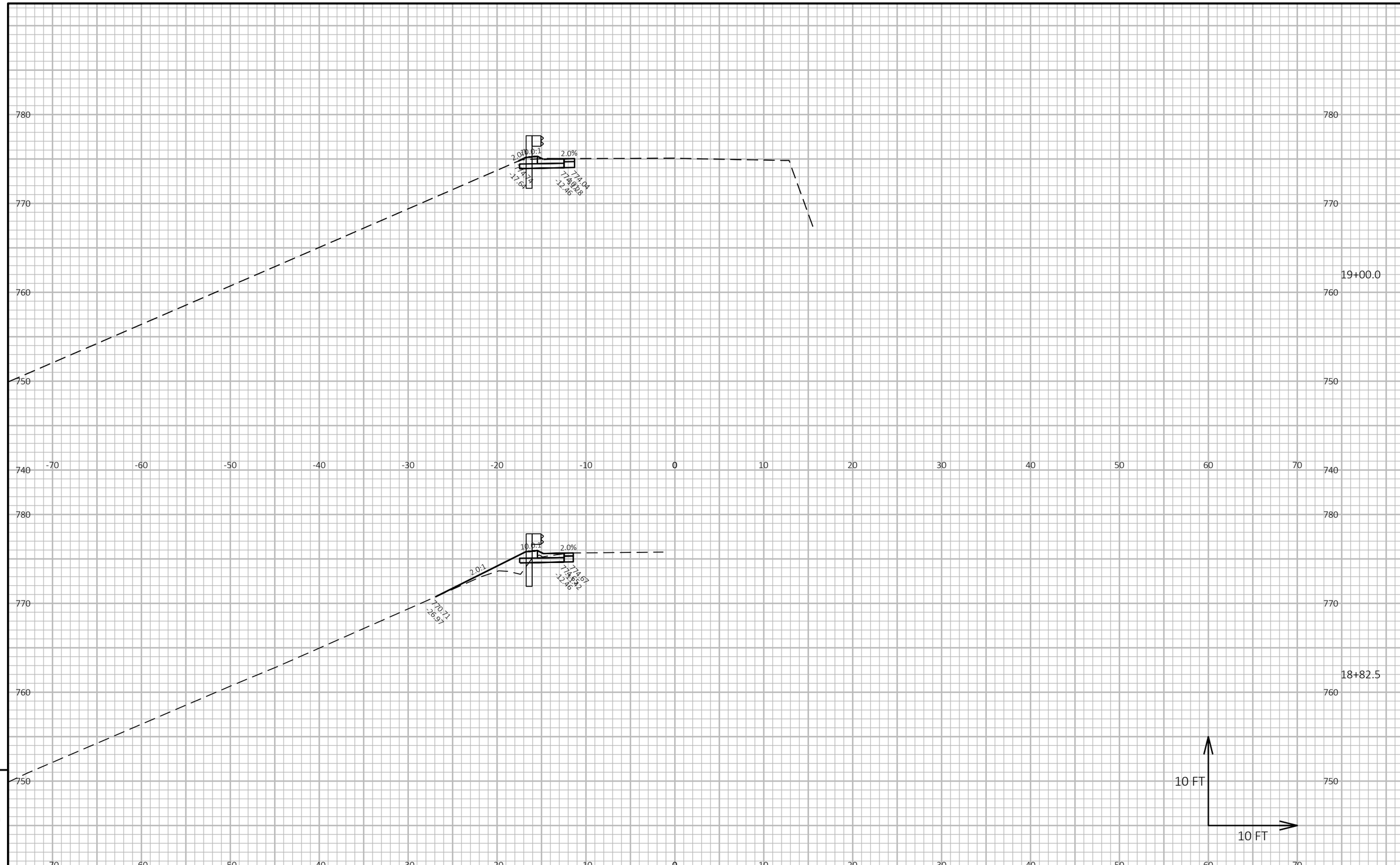

PROJECT NO: 1227-12-71	HWY: IH 43	COUNTY: MANITOWOC	CROSS SECTIONS: POLIFKA ROAD	SHEET	E

FILE NAME : I:\45\450504 IH 43 WISDOT GUARDRAIL\C3D\SHEETSPLAN\12271271 PLAN\090202_XS.DWG
LAYOUT NAME - Polifka EB 1
PLOT DATE : 1/27/2021 12:27 PM
PLOT BY : GARNICA, BRANDON
PLOT NAME :
PLOT SCALE : 1 IN:10 FT HORZ. / 1 IN:10 FT VERT.
WISDOT/CADDS SHEET 49

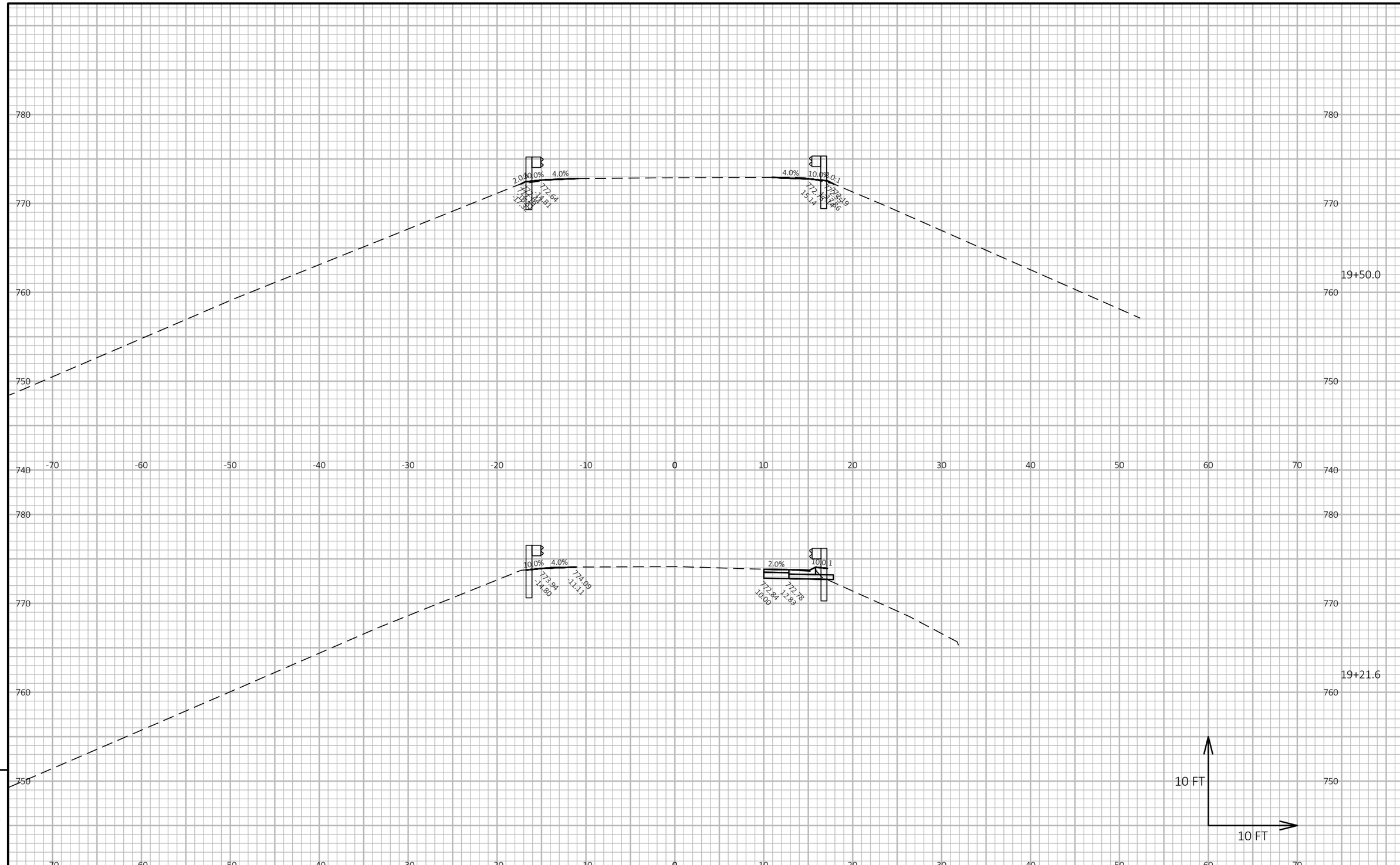

9

PROJECT NO: 1227-12-71	HWY: IH 43	COUNTY: MANITOWOC	CROSS SECTIONS: POLIFKA ROAD	SHEET	E

FILE NAME : I:\45\450504 IH 43 WISDOT GUARDRAIL\C3D\SHEETSPLAN\12271271 PLAN\090202_XS.DWG
LAYOUT NAME - Polifka EB 2
PLOT DATE : 1/27/2021 10:39 AM
PLOT BY : GARNICA, BRANDON
PLOT NAME :
PLOT SCALE : 1 IN:10 FT HORZ. / 1 IN:10 FT VERT.
WISDOT/CADDS SHEET 49

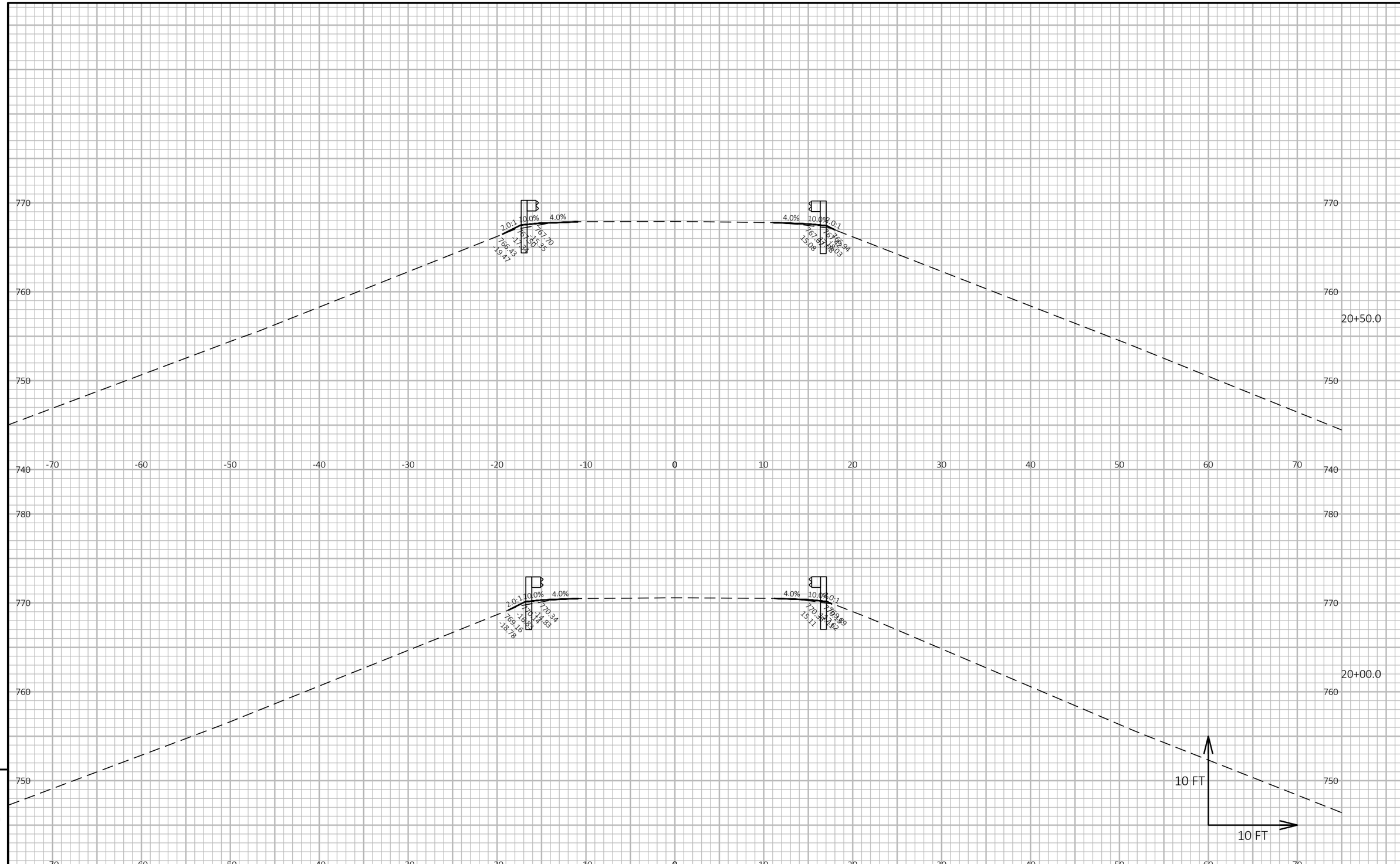

PROJECT NO: 1227-12-71	HWY: IH 43	COUNTY: MANITOWOC	CROSS SECTIONS: POLIFKA ROAD	SHEET	E

FILE NAME : I:\45\450504 IH 43 WISDOT GUARDRAIL\C3D\SHEETSPLAN\12271271 PLAN\090202_XS.DWG
LAYOUT NAME - Polifka EB 3
PLOT DATE : 1/27/2021 10:39 AM
PLOT BY : GARNICA, BRANDON
PLOT NAME :
PLOT SCALE : 1 IN:10 FT HORZ. / 1 IN:10 FT VERT.
WISDOT/CADDS SHEET 49

9

9

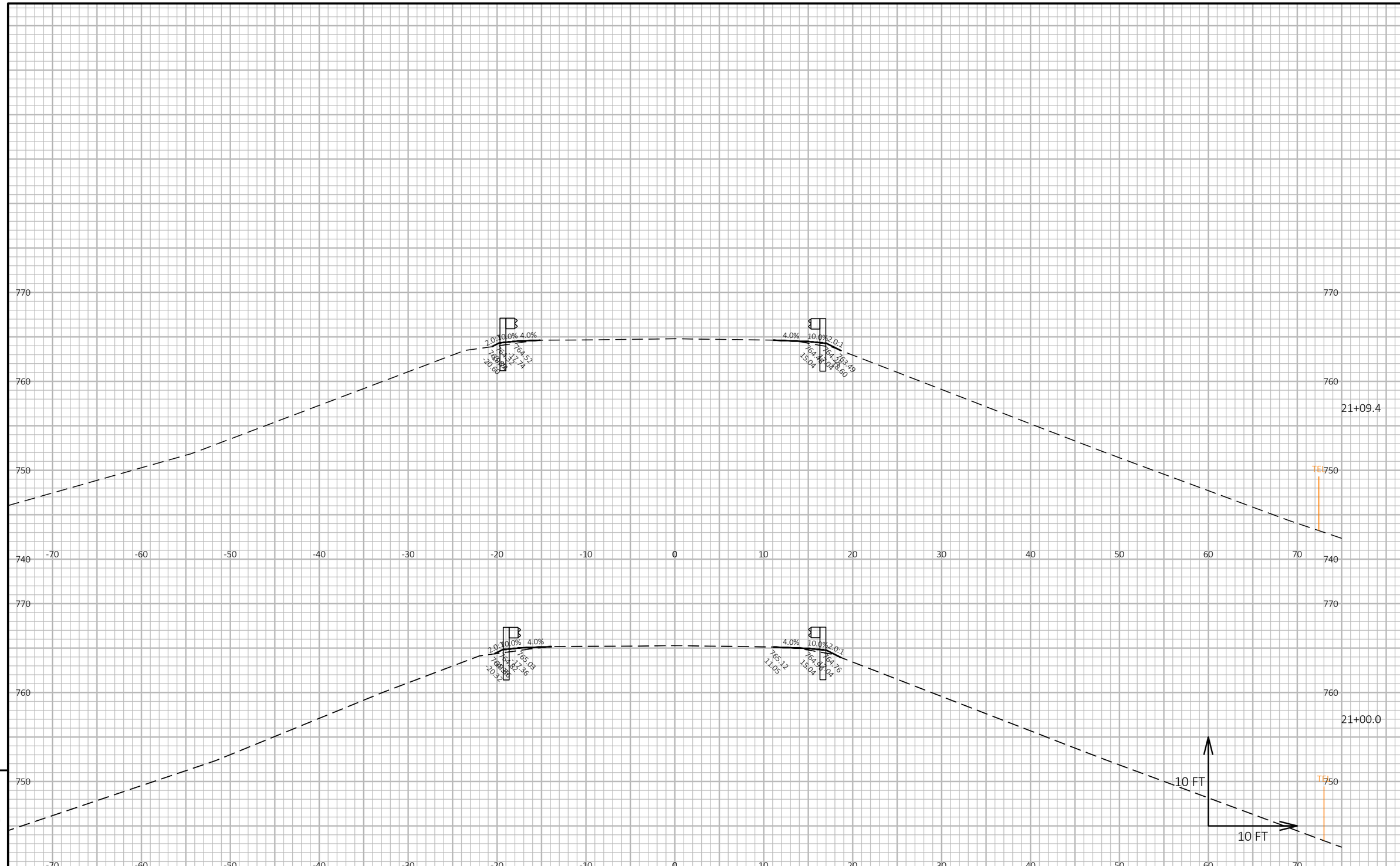

PROJECT NO: 1227-12-71	HWY: IH 43	COUNTY: MANITOWOC	CROSS SECTIONS: POLIFKA ROAD	SHEET E

FILE NAME : I:\45\450504 IH 43 WISDOT GUARDRAIL\C3D\SHEETSPLAN\12271271 PLAN\090202_XS.DWG
LAYOUT NAME - Polifka EB 4
PLOT DATE : 1/27/2021 10:39 AM
PLOT BY : GARNICA, BRANDON
PLOT NAME :
PLOT SCALE : 1 IN:10 FT HORZ. / 1 IN:10 FT VERT.

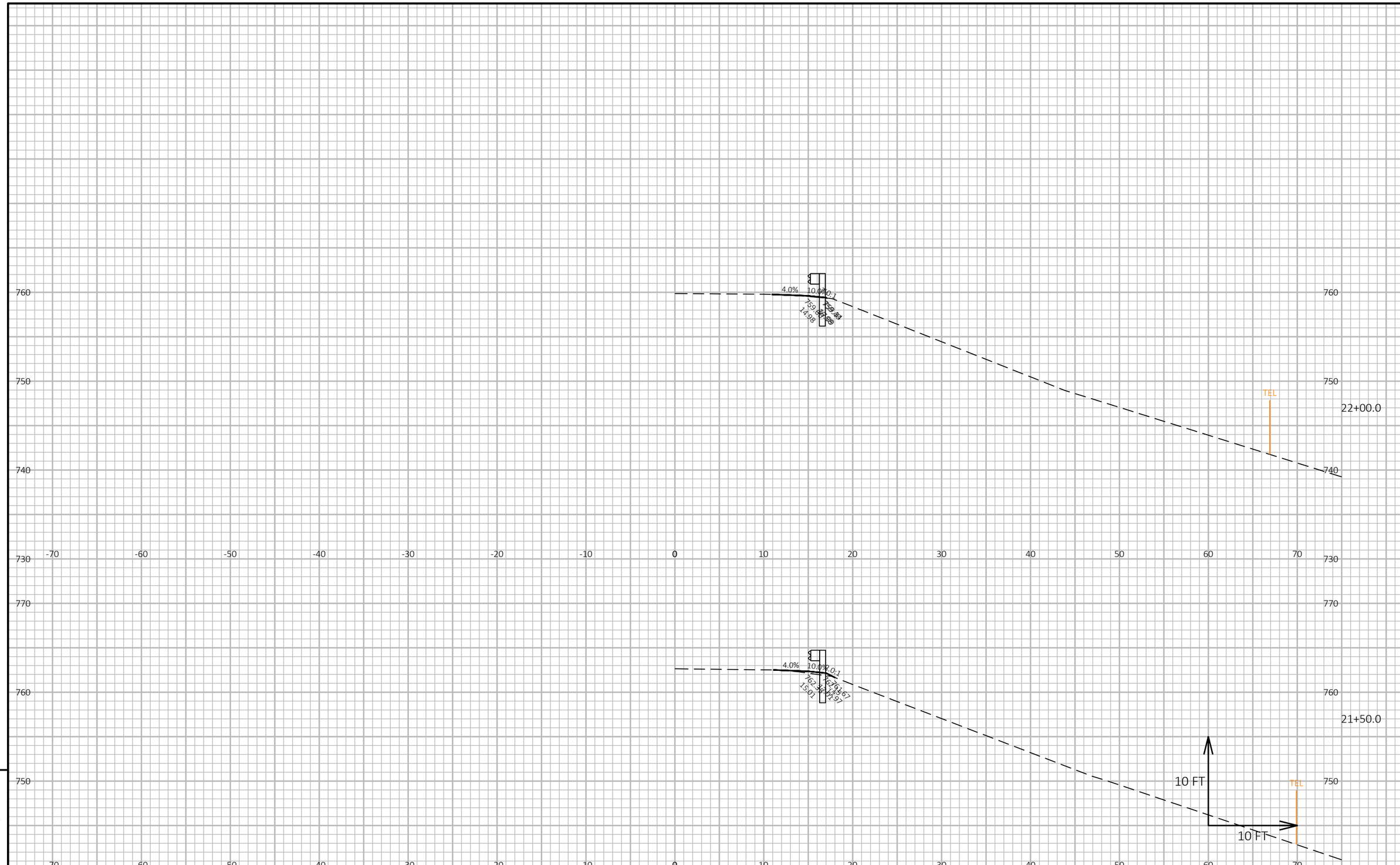

9

9

PROJECT NO: 1227-12-71	HWY: IH 43	COUNTY: MANITOWOC	CROSS SECTIONS: POLIFKA ROAD	SHEET	E

FILE NAME : I:\45\450504 IH 43 WISDOT GUARDRAIL\C3D\SHEETSPLAN\12271271 PLAN\090202_XS.DWG
LAYOUT NAME - Polifka EB 5

PLOT DATE : 1/27/2021 10:39 AM PLOT BY : GARNICA, BRANDON PLOT NAME : **PLOT SCALE :** 1 IN:10 FT HORZ. / 1 IN:10 FT VERT.

WISDOT/CADDS SHEET 49

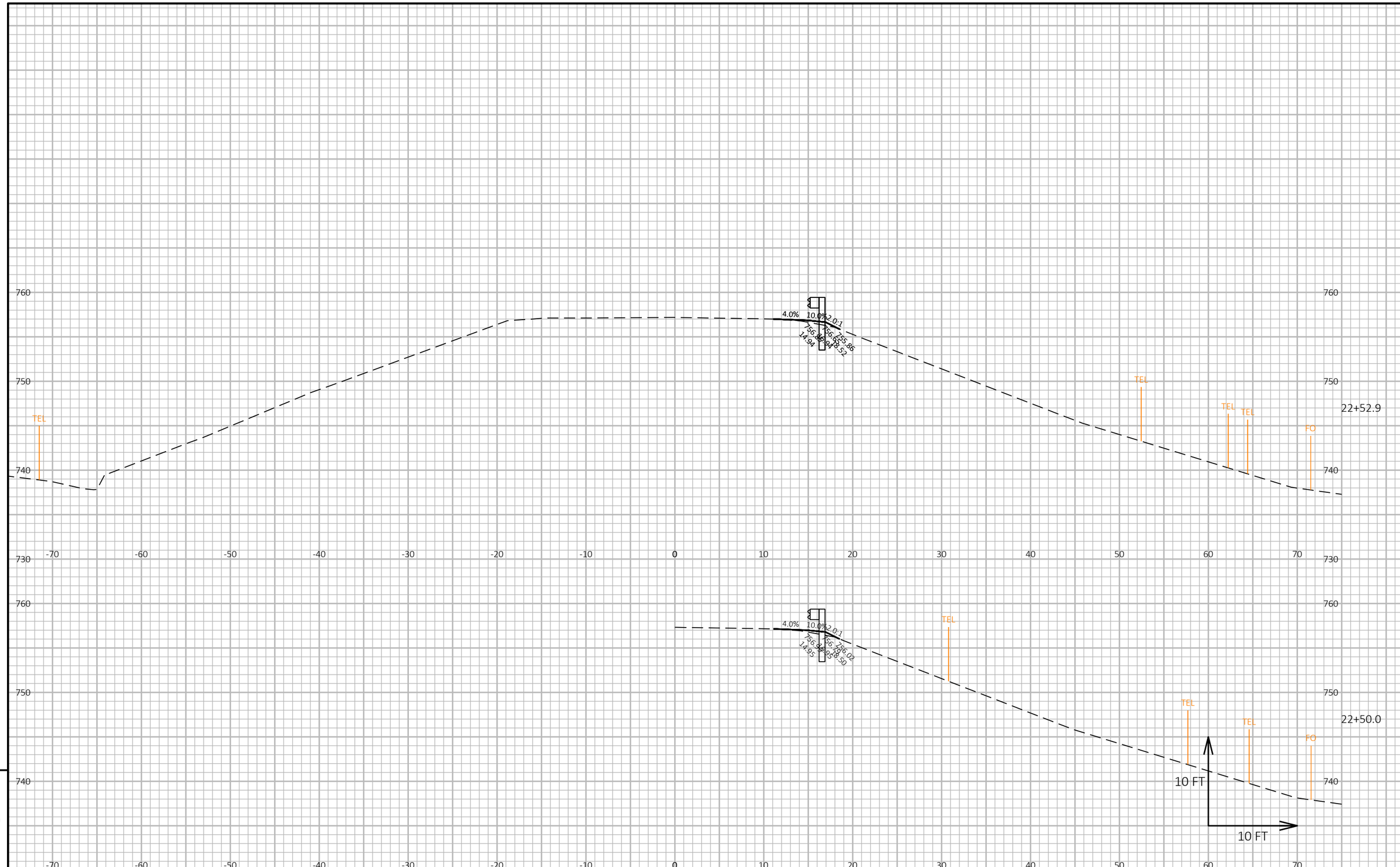

9

9

PROJECT NO: 1227-12-71	HWY: IH 43	COUNTY: MANITOWOC	CROSS SECTIONS: POLIFKA ROAD	SHEET	E

FILE NAME : I:\45\450504 IH 43 WISDOT GUARDRAIL\C3D\SHEETSPLAN\12271271 PLAN\090202_XS.DWG
LAYOUT NAME - Polifka EB 6

PLOT DATE : 1/27/2021 10:40 AM PLOT BY : GARNICA, BRANDON PLOT NAME : **PLOT SCALE :** 1 IN:10 FT HORZ. / 1 IN:10 FT VERT.

WISDOT/CADDS SHEET 49

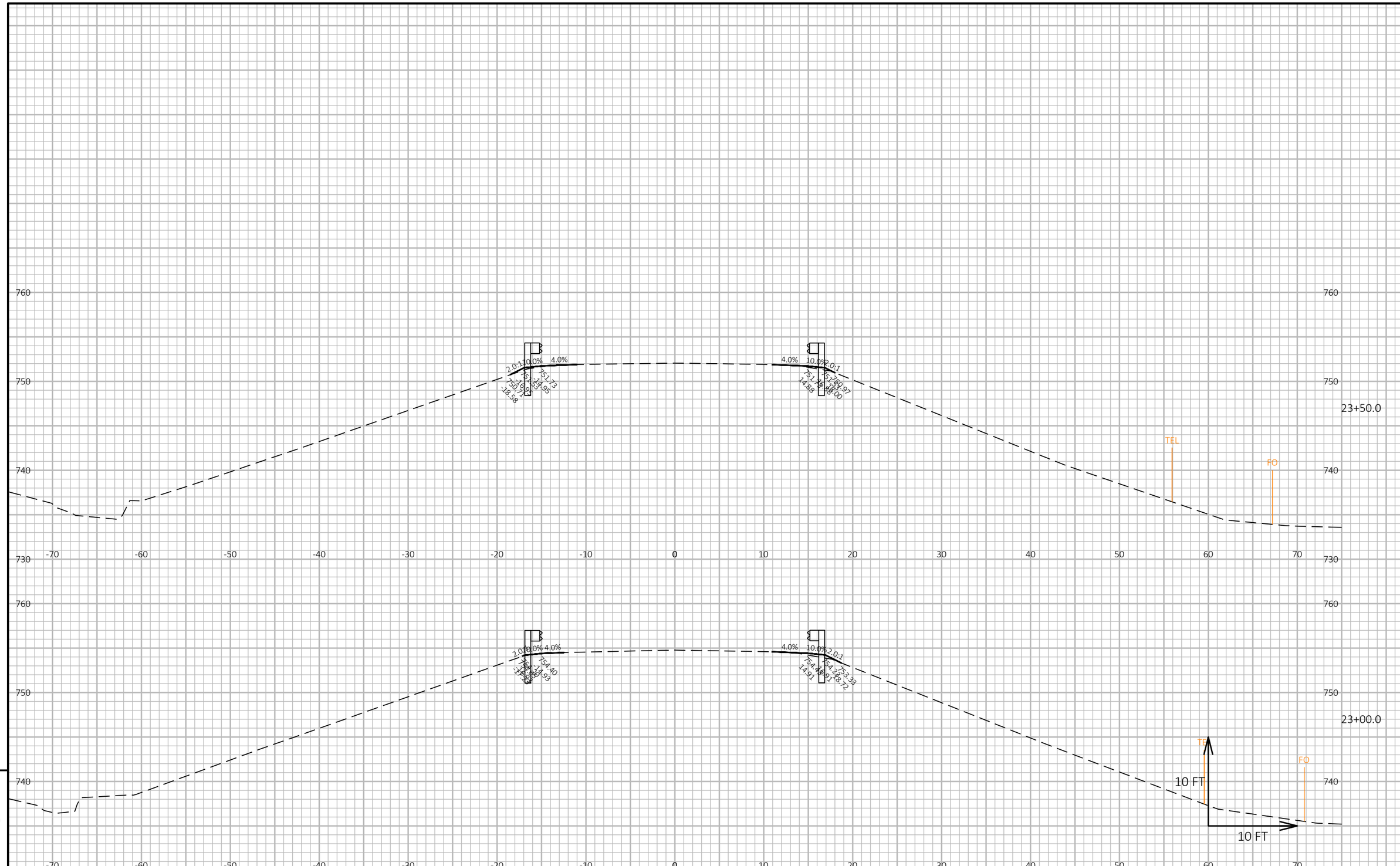

9

9

PROJECT NO: 1227-12-71	HWY: IH 43	COUNTY: MANITOWOC	CROSS SECTIONS: POLIFKA ROAD	SHEET	E

FILE NAME : I:\45\450504 IH 43 WISDOT GUARDRAIL\C3D\SHEETSPLAN\12271271 PLAN\090202_XS.DWG
LAYOUT NAME - Polifka EB 7

PLOT DATE : 1/27/2021 10:40 AM

PLOT BY : GARNICA, BRANDON

PLOT NAME :

PLOT SCALE : 1 IN:10 FT HORZ. / 1 IN:10 FT VERT.

WISDOT/CADDS SHEET 49

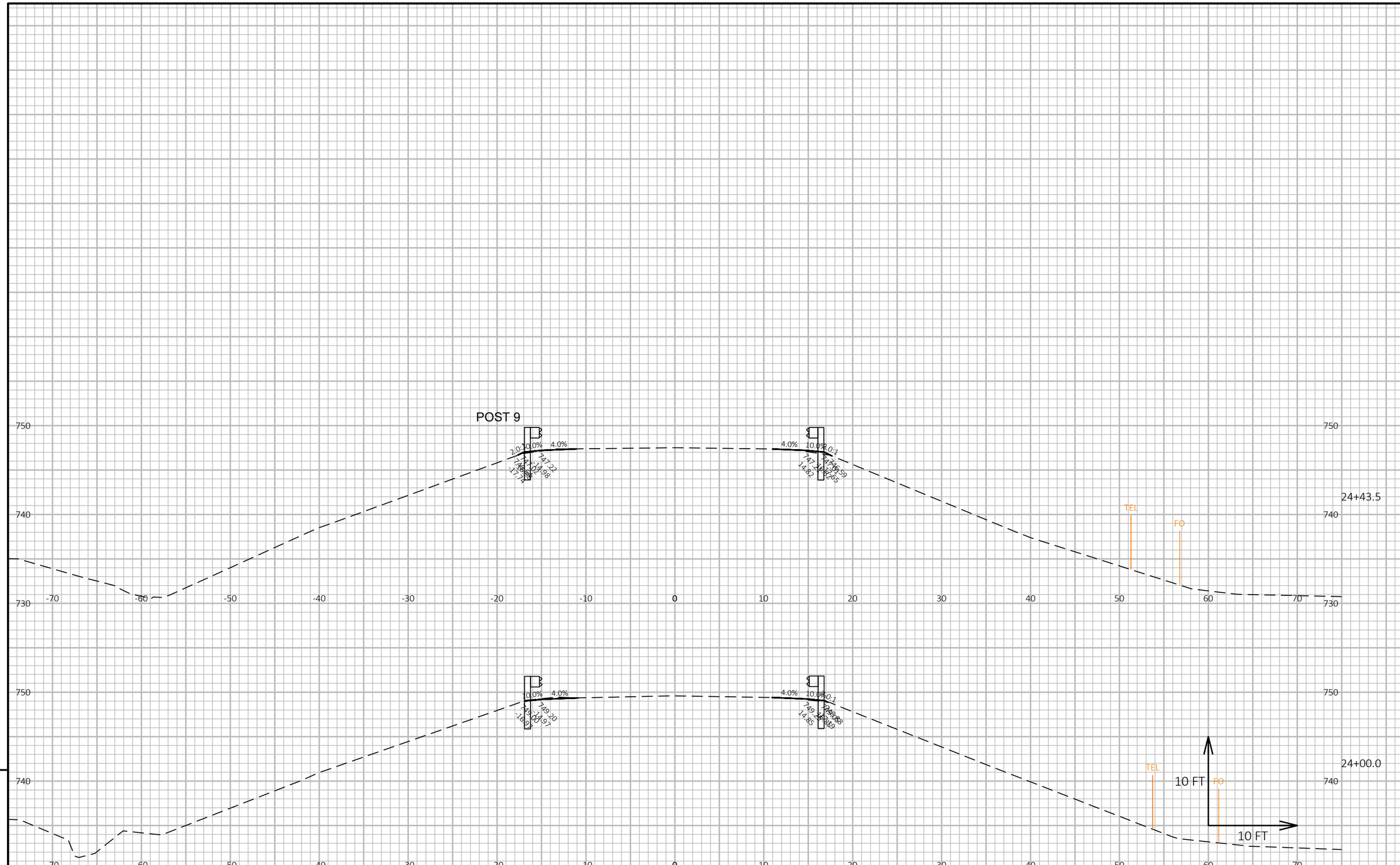

PROJECT NO: 1227-12-71	HWY: IH 43	COUNTY: MANITOWOC	CROSS SECTIONS: POLIFKA ROAD	SHEET	E

FILE NAME : I:\45\450504 IH 43 WISDOT GUARDRAIL\C3D\SHEETSPLAN\12271271 PLAN\090202_XS.DWG
LAYOUT NAME - Polifka EB 8
PLOT DATE : 1/27/2021 10:40 AM
PLOT BY : GARNICA, BRANDON
PLOT NAME :
PLOT SCALE : 1 IN:10 FT HORZ. / 1 IN:10 FT VERT.

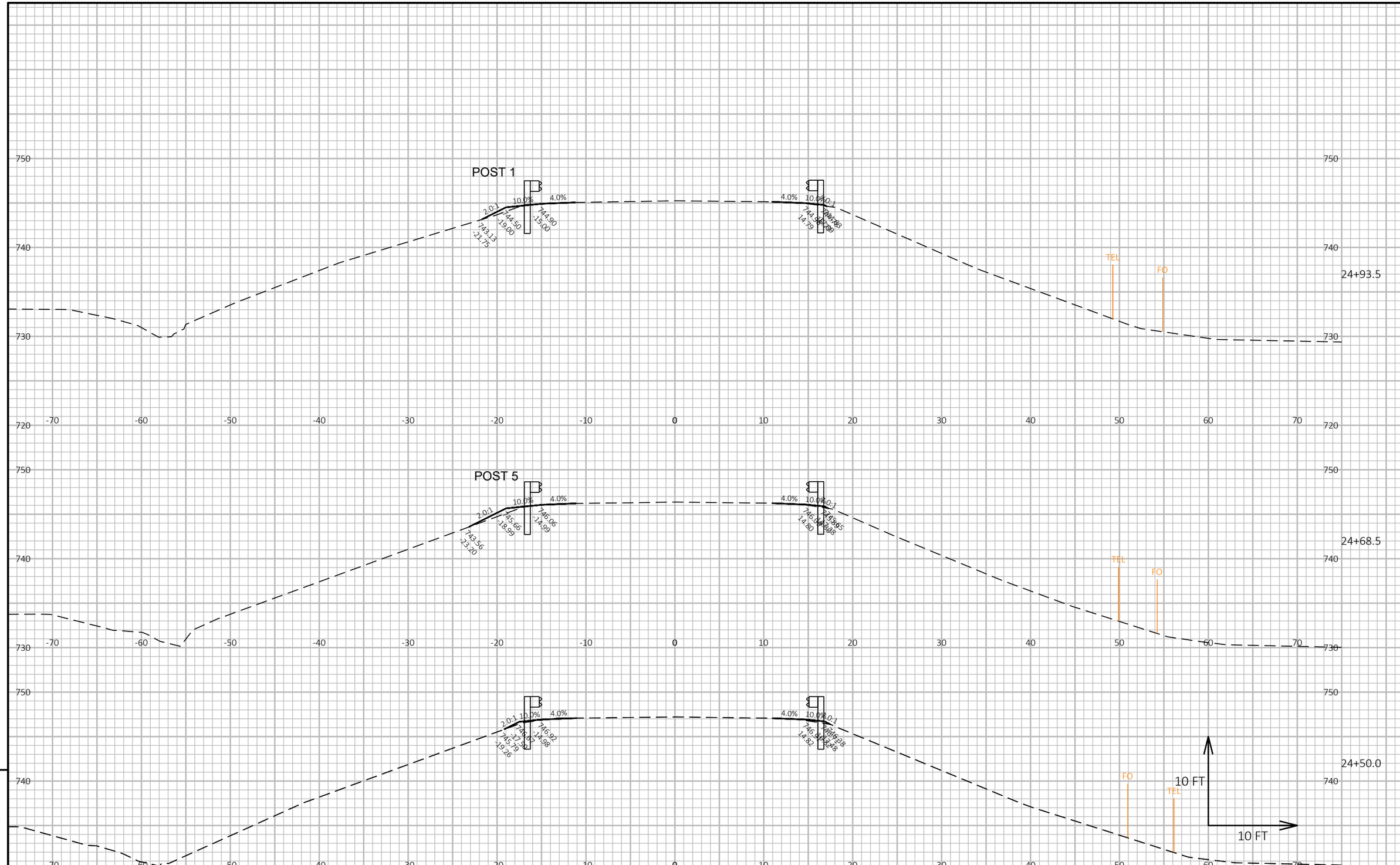

9

9

PROJECT NO: 1227-12-71	HWY: IH 43	COUNTY: MANITOWOC	CROSS SECTIONS: POLIFKA ROAD	SHEET	E

FILE NAME : I:\45\450504 IH 43 WISDOT GUARDRAIL\C3D\SHEETSPLAN\12271271 PLAN\090202_XS.DWG
LAYOUT NAME - Polifka EB 9

PLOT DATE : 1/27/2021 10:40 AM PLOT BY : GARNICA, BRANDON PLOT NAME : **PLOT SCALE :** 1 IN:10 FT HORZ. / 1 IN:10 FT VERT.

WISDOT/CADDS SHEET 49

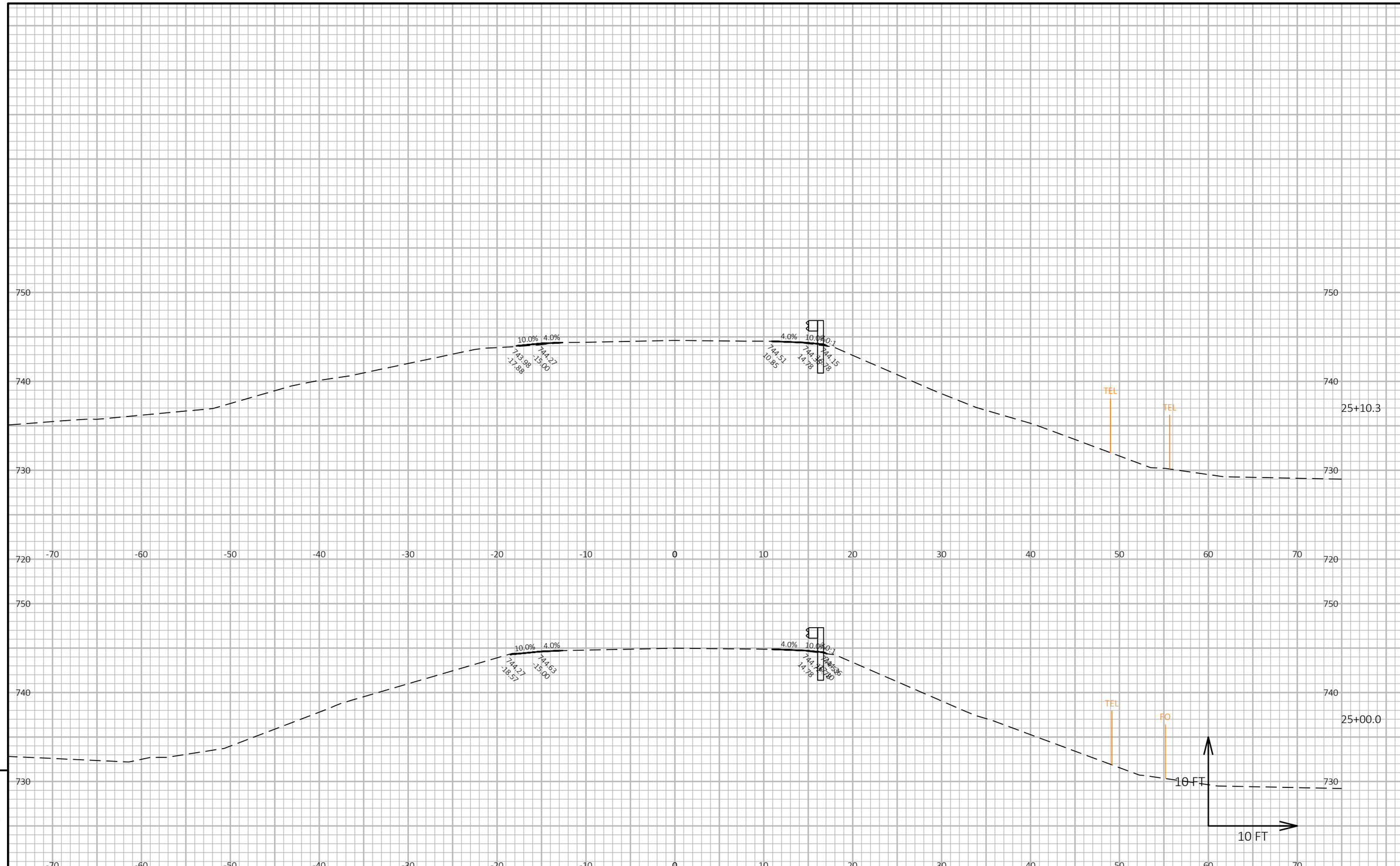

9

9

PROJECT NO: 1227-12-71	HWY: IH 43	COUNTY: MANITOWOC	CROSS SECTIONS: POLIFKA ROAD	SHEET	E

FILE NAME : I:\45\450504 IH 43 WISDOT GUARDRAIL\C3D\SHEETSPLAN\12271271 PLAN\090202_XS.DWG
LAYOUT NAME - Polifka EB 10

PLOT DATE : 1/27/2021 10:40 AM PLOT BY : GARNICA, BRANDON PLOT NAME : **PLOT SCALE :** 1 IN:10 FT HORZ. / 1 IN:10 FT VERT.

WISDOT/CADDS SHEET 49

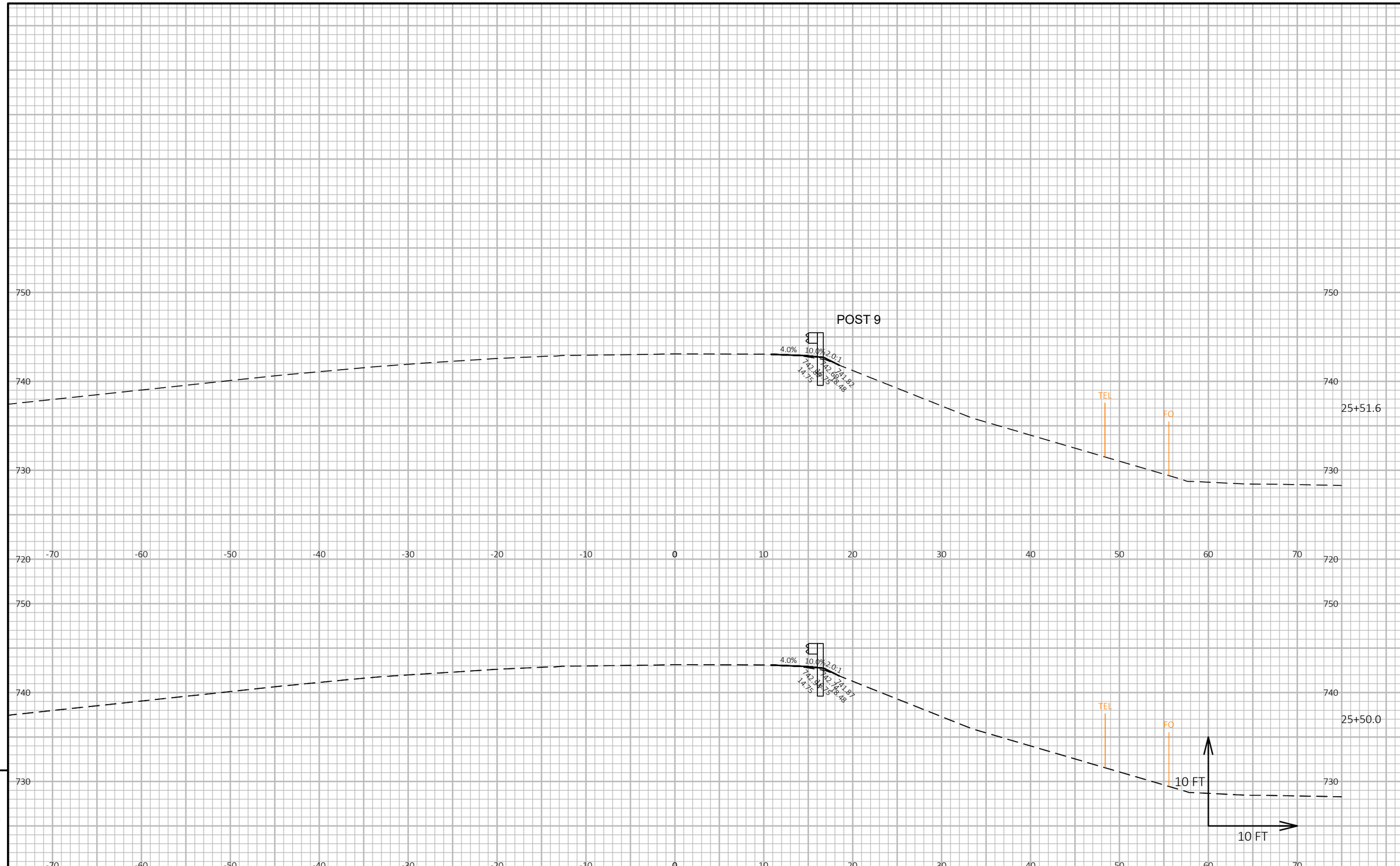

9

9

PROJECT NO: 1227-12-71	HWY: IH 43	COUNTY: MANITOWOC	CROSS SECTIONS: POLIFKA ROAD	SHEET	E

FILE NAME : I:\45\450504 IH 43 WISDOT GUARDRAIL\C3D\SHEETSPLAN\12271271 PLAN\090202_XS.DWG
LAYOUT NAME - Polifka EB 11

PLOT DATE : 1/27/2021 10:41 AM PLOT BY : GARNICA, BRANDON PLOT NAME :

PLOT SCALE : 1 IN:10 FT HORZ. / 1 IN:10 FT VERT.

WISDOT/CADDS SHEET 49

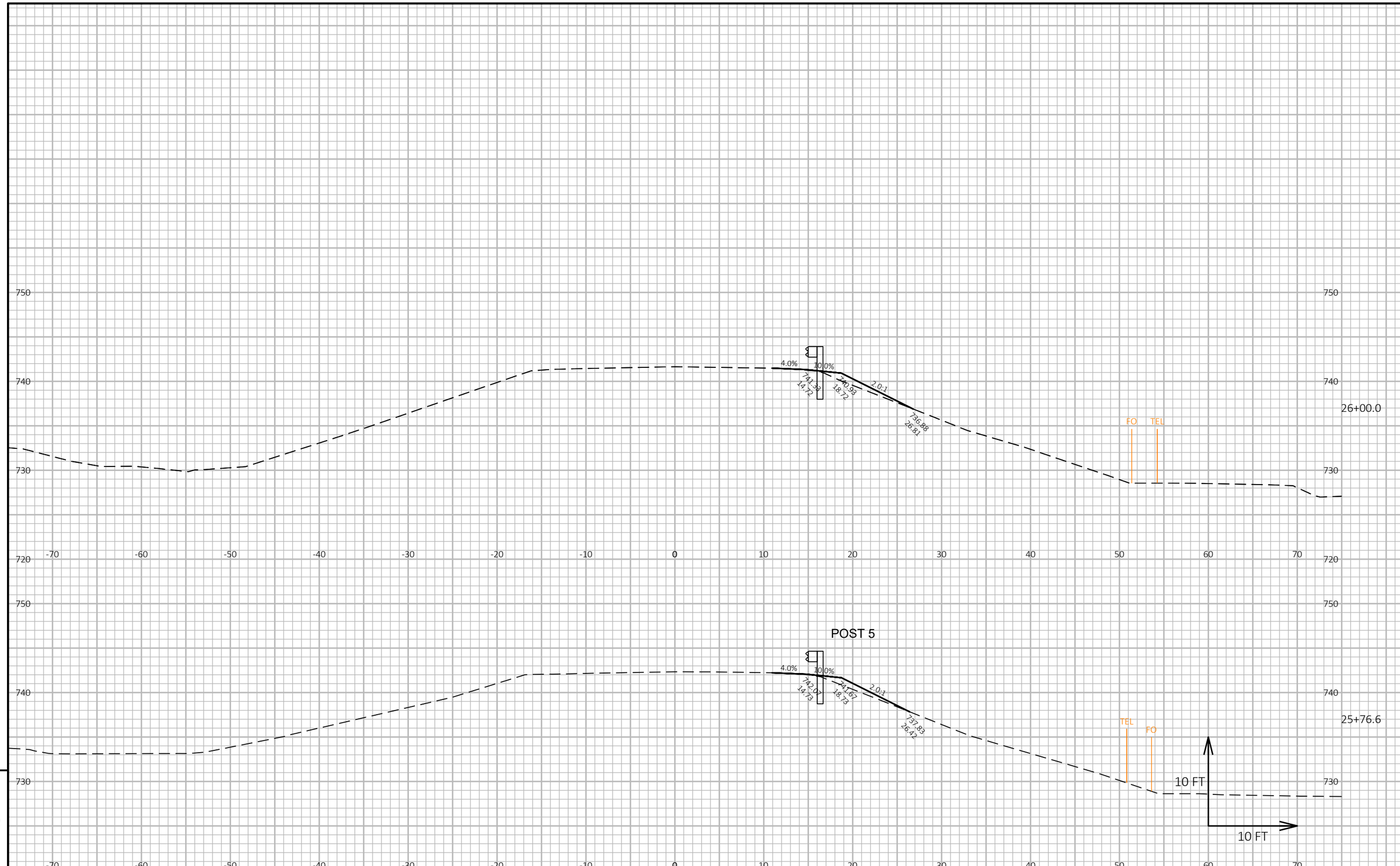

9

9

PROJECT NO: 1227-12-71	HWY: IH 43	COUNTY: MANITOWOC	CROSS SECTIONS: POLIFKA ROAD	SHEET	E

FILE NAME : I:\45\450504 IH 43 WISDOT GUARDRAIL\C3D\SHEETSPLAN\12271271 PLAN\090202_XS.DWG
LAYOUT NAME - Polifka EB 12

PLOT DATE : 1/27/2021 10:41 AM PLOT BY : GARNICA, BRANDON PLOT NAME : **PLOT SCALE :** 1 IN:10 FT HORZ. / 1 IN:10 FT VERT.

WISDOT/CADDS SHEET 49

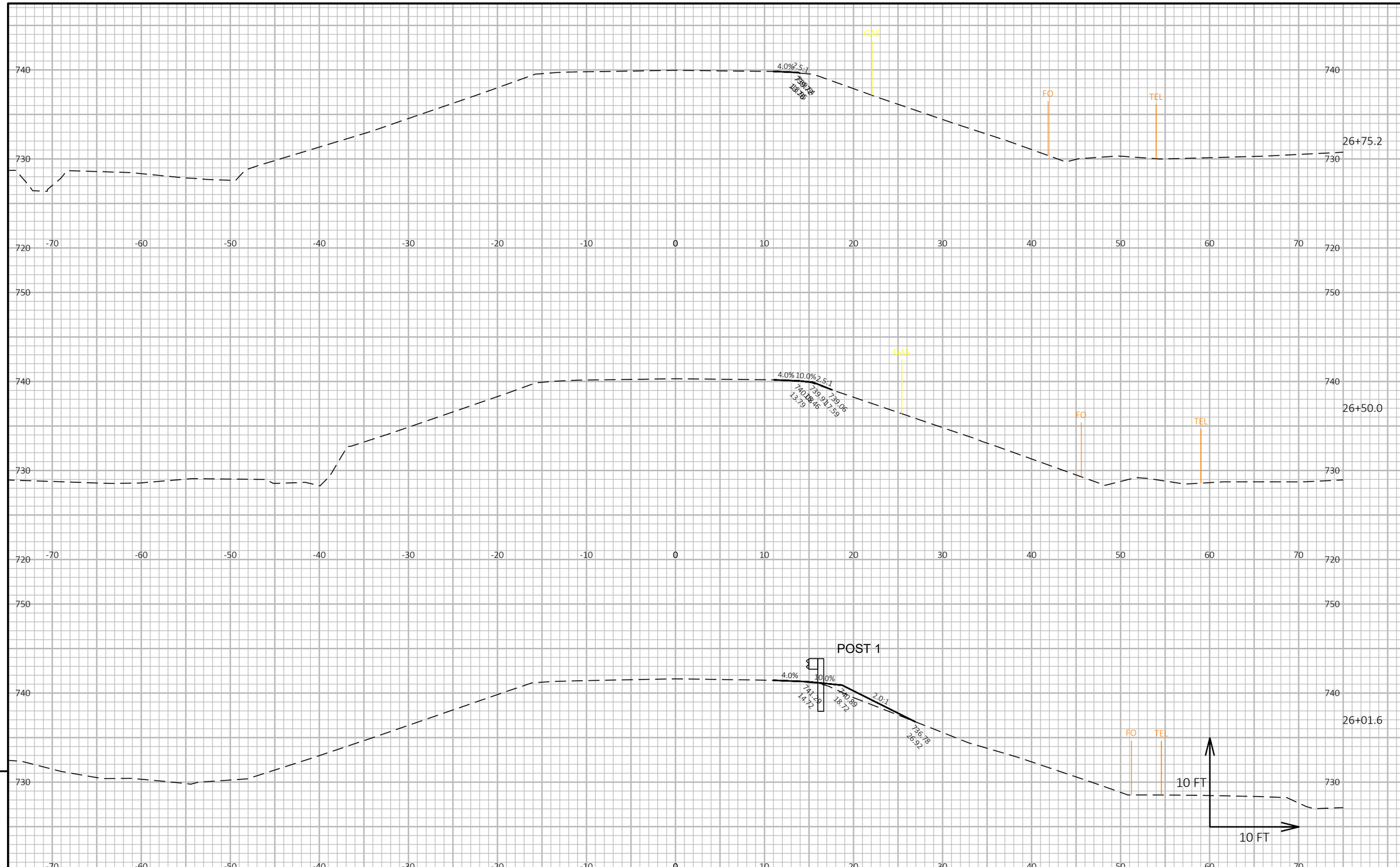

9

9

PROJECT NO: 1227-12-71	HWY: IH 43	COUNTY: MANITOWOC	CROSS SECTIONS: POLIFKA ROAD	SHEET	E

FILE NAME : I:\45\450504 IH 43 WISDOT GUARDRAIL\C3D\SHEETSPLAN\12271271 PLAN\090202_XS.DWG
LAYOUT NAME - Polifka EB 13

PLOT DATE : 1/27/2021 10:41 AM PLOT BY : GARNICA, BRANDON PLOT NAME : **PLOT SCALE :** 1 IN:10 FT HORZ. / 1 IN:10 FT VERT.

WISDOT/CADDS SHEET 49

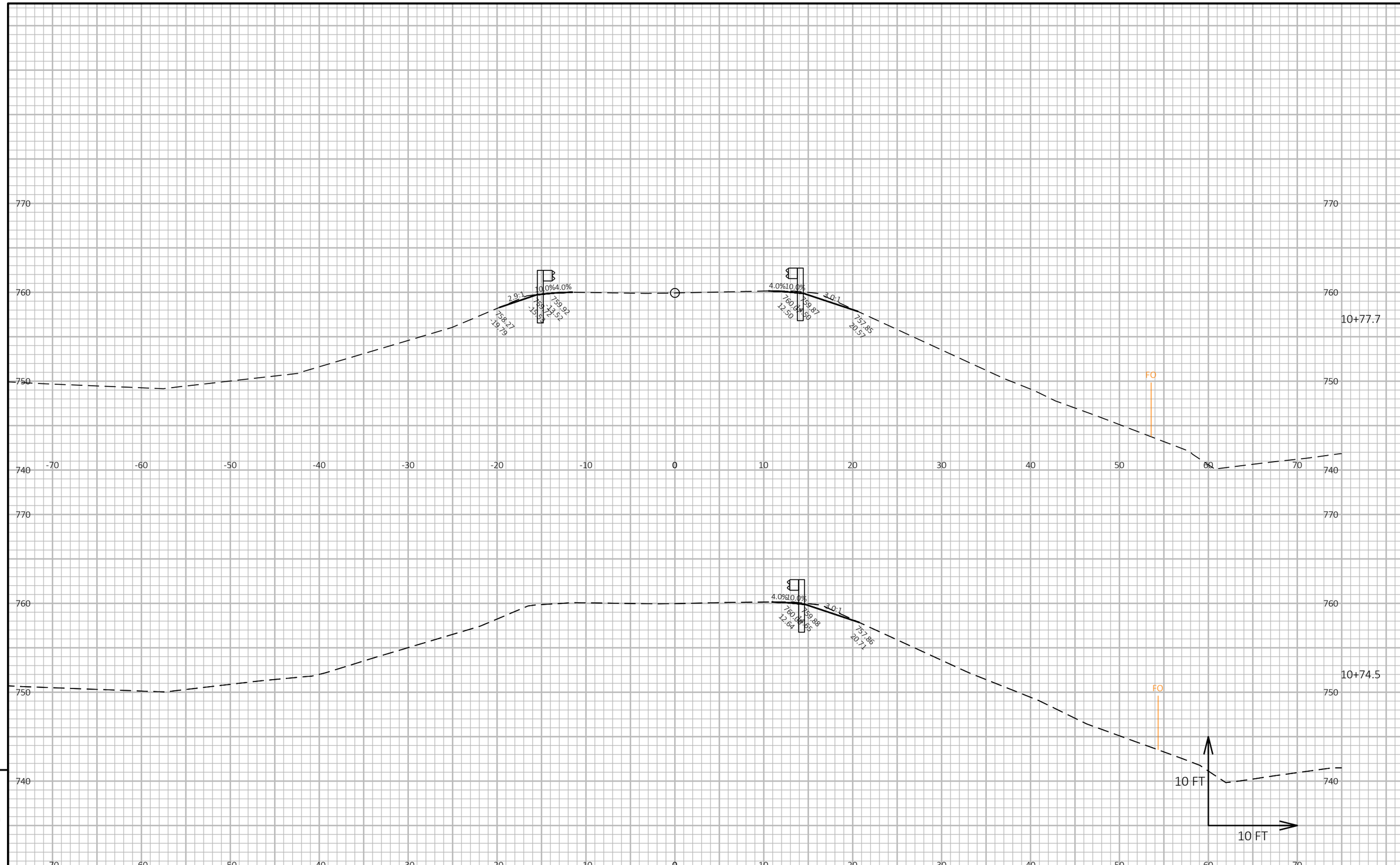

PROJECT NO: 1227-12-71	HWY: IH 43	COUNTY: MANITOWOC	CROSS SECTIONS: HILLSIDE LANE	SHEET	E

FILE NAME : I:\45\450504 IH 43 WISDOT GUARDRAIL\C3D\SHEETSPLAN\12271271 PLAN\090202_XS.DWG
LAYOUT NAME - Hillside NB 1
PLOT DATE : 1/27/2021 10:41 AM
PLOT BY : GARNICA, BRANDON
PLOT NAME :
PLOT SCALE : 1 IN:10 FT HORZ. / 1 IN:10 FT VERT.
WISDOT/CADDS SHEET 49

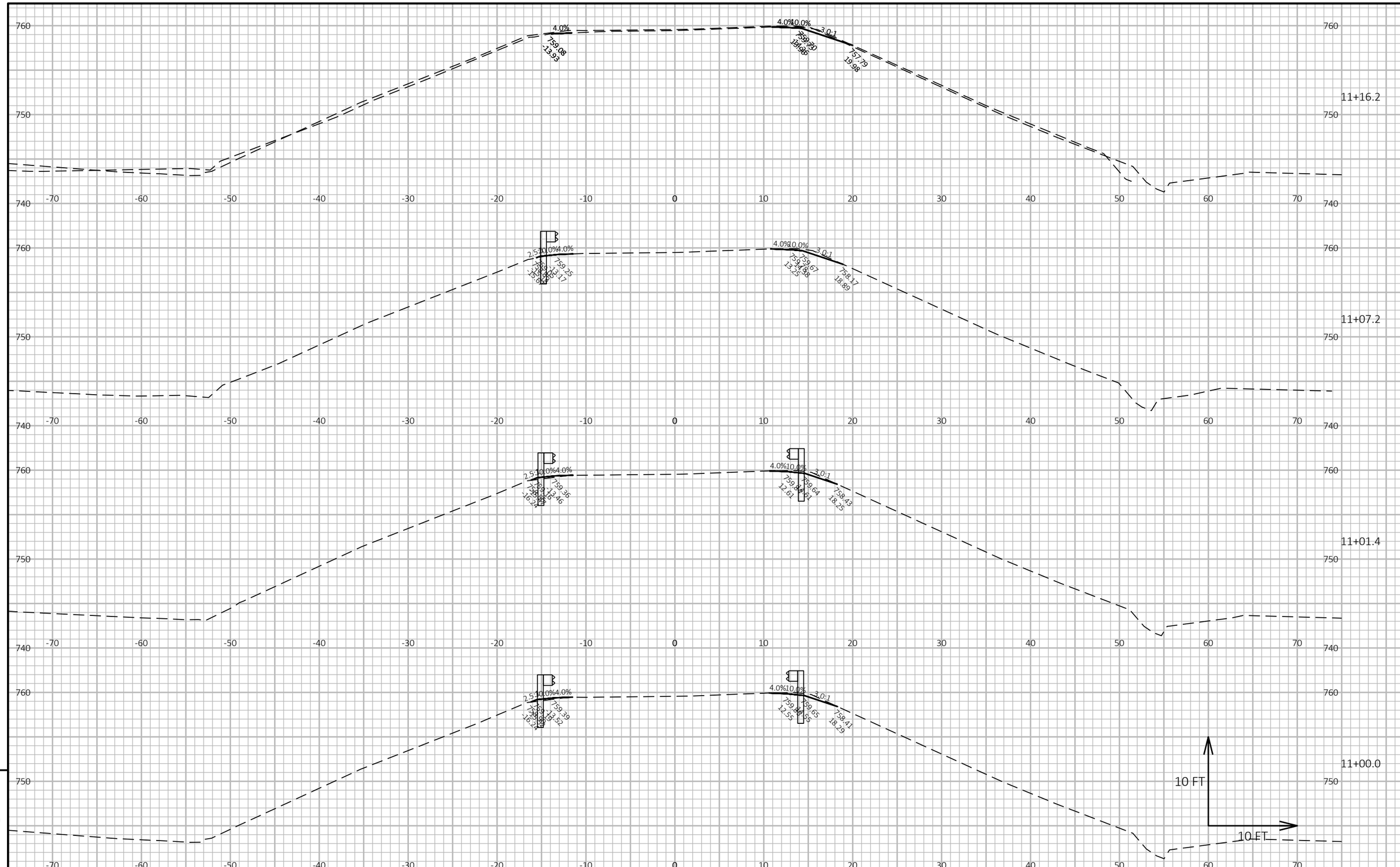

9

9

PROJECT NO: 1227-12-71	HWY: IH 43	COUNTY: MANITOWOC	CROSS SECTIONS: HILLSIDE LANE	SHEET	E

FILE NAME : I:\45\450504 IH 43 WISDOT GUARDRAIL\C3D\SHEETSPLAN\12271271 PLAN\090202_XS.DWG
LAYOUT NAME - Hillside NB 2

PLOT DATE : 1/27/2021 10:41 AM PLOT BY : GARNICA, BRANDON PLOT NAME : **PLOT SCALE :** 1 IN:10 FT HORZ. / 1 IN:10 FT VERT.

WISDOT/CADDS SHEET 49

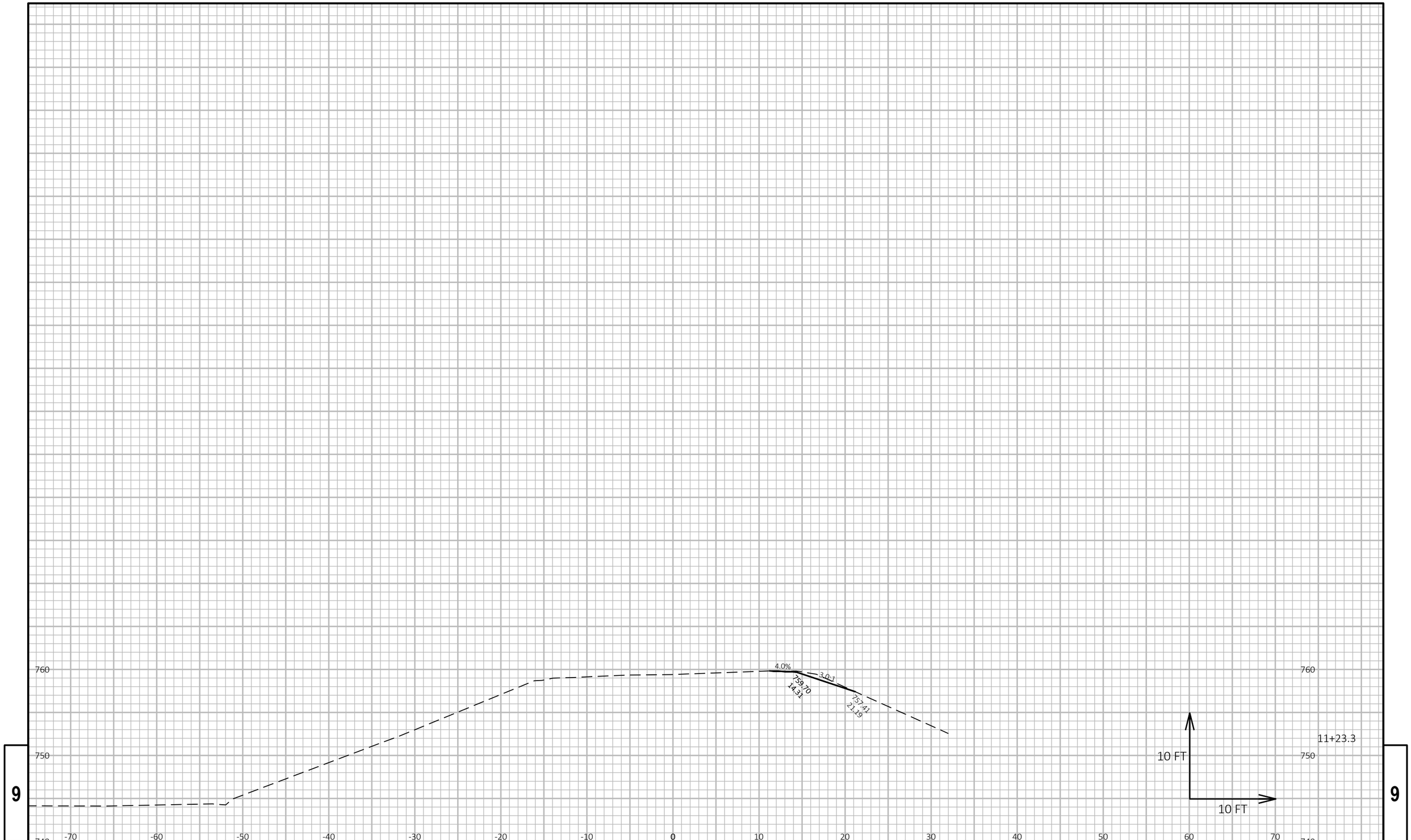

PROJECT NO: 1227-12-71	HWY: IH 43	COUNTY: MANITOWOC	CROSS SECTIONS: HILLSIDE LANE	SHEET	E

FILE NAME : I:\45\450504 IH 43 WISDOT GUARDRAIL\C3D\SHEETSPLAN\12271271 PLAN\090202_XS.DWG
LAYOUT NAME - Hillside NB 3

PLOT DATE : 1/27/2021 10:42 AM PLOT BY : GARNICA, BRANDON PLOT NAME : **PLOT SCALE :** 1 IN:10 FT HORZ. / 1 IN:10 FT VERT.

WISDOT/CADDS SHEET 49

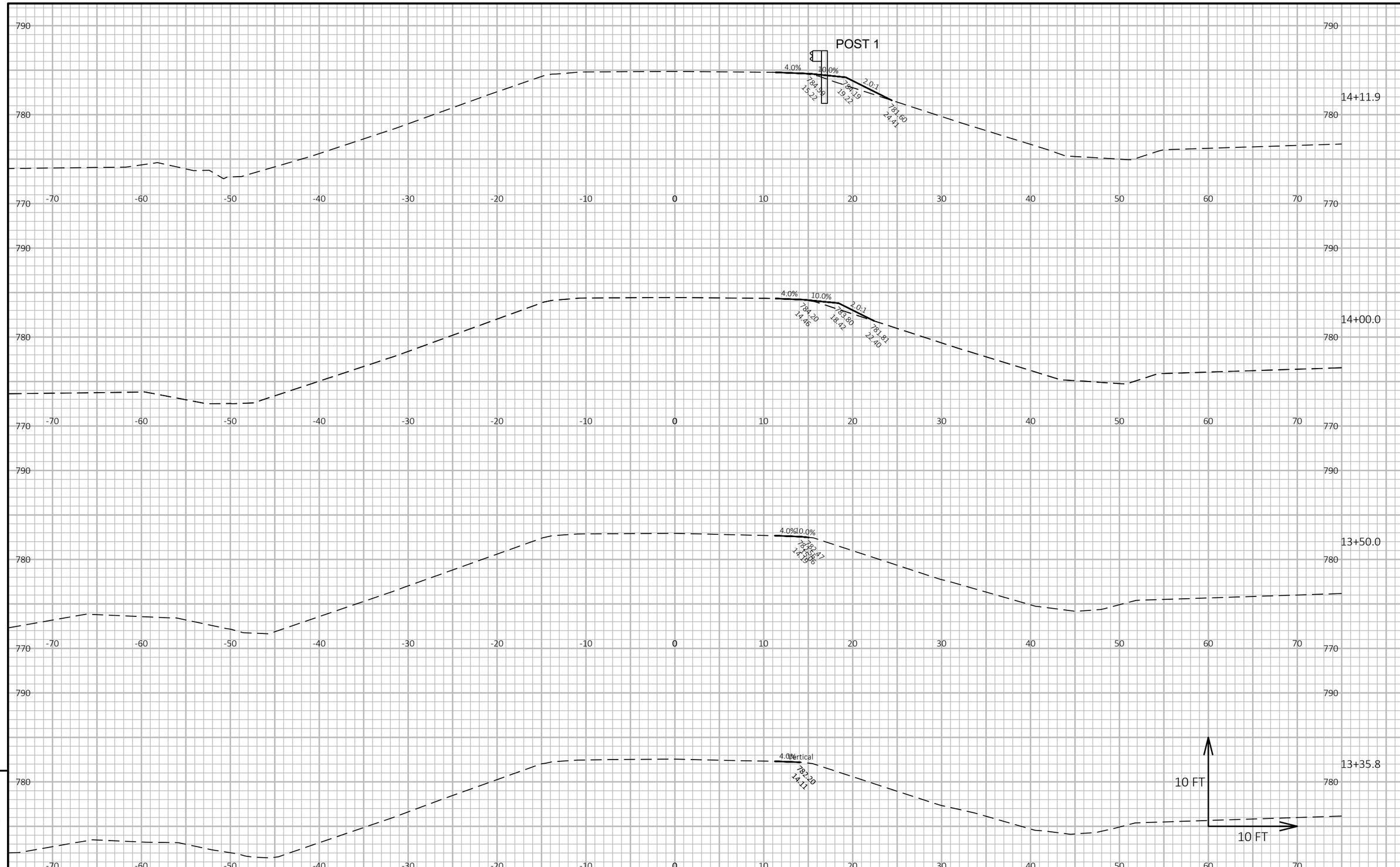

9

9

PROJECT NO: 1227-12-71	HWY: IH 43	COUNTY: MANITOWOC	CROSS SECTIONS: FISHERVILLE ROAD	SHEET	E

FILE NAME : I:\45\450504 IH 43 WISDOT GUARDRAIL\C3D\SHEETSPLAN\12271271 PLAN\090202_XS.DWG
LAYOUT NAME - Fisherville WB 1
PLOT DATE : 1/27/2021 10:42 AM
PLOT BY : GARNICA, BRANDON
PLOT NAME :
PLOT SCALE : 1 IN:10 FT HORZ. / 1 IN:10 FT VERT.

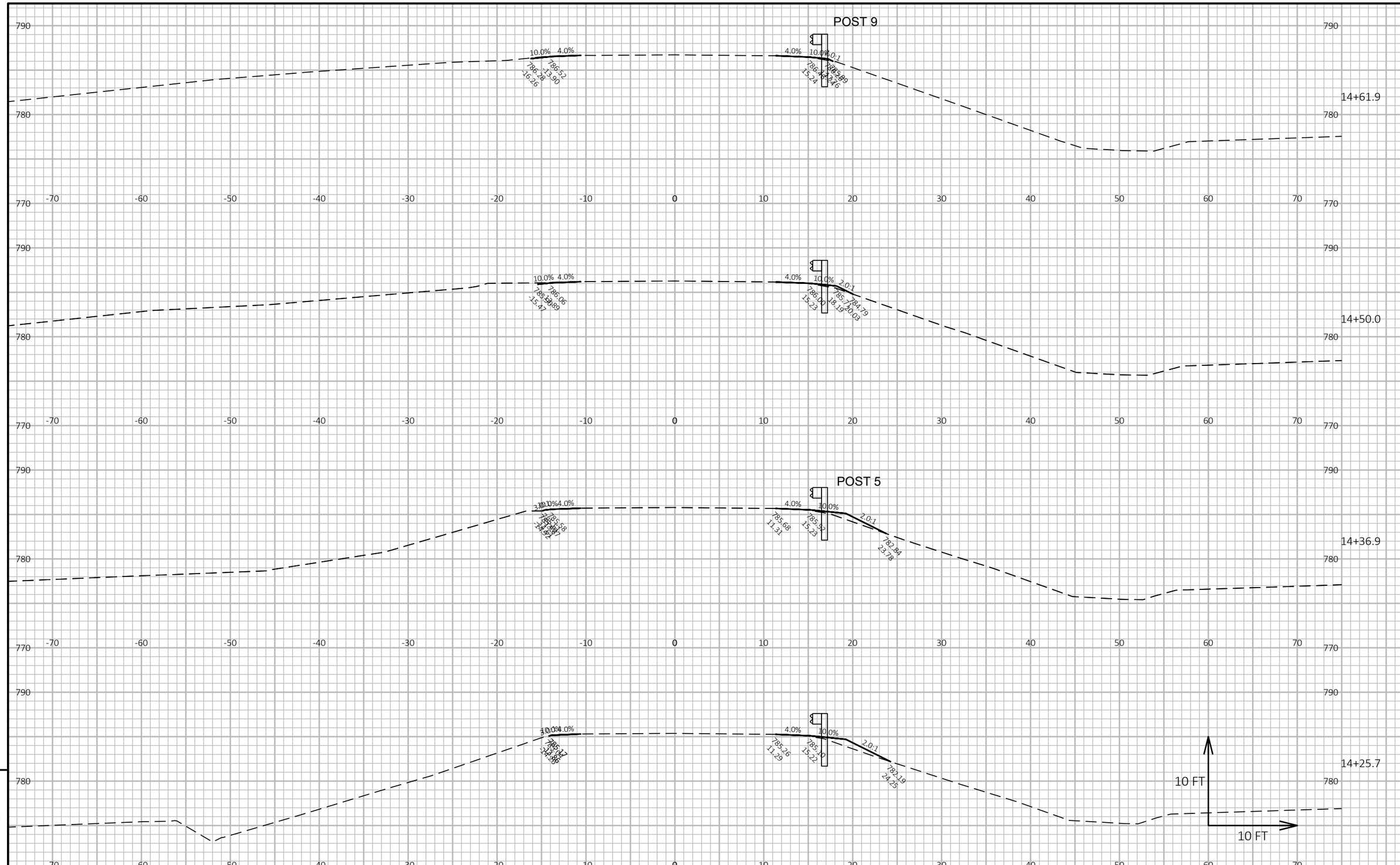

9

9

PROJECT NO: 1227-12-71	HWY: IH 43	COUNTY: MANITOWOC	CROSS SECTIONS: FISHERVILLE ROAD	SHEET	E

FILE NAME : I:\45\450504 IH 43 WISDOT GUARDRAIL\C3D\SHEETSPLAN\12271271 PLAN\090202_XS.DWG
LAYOUT NAME - Fisherville WB 2

PLOT DATE : 1/27/2021 10:42 AM PLOT BY : GARNICA, BRANDON PLOT NAME : **PLOT SCALE :** 1 IN:10 FT HORZ. / 1 IN:10 FT VERT.

WISDOT/CADDS SHEET 49

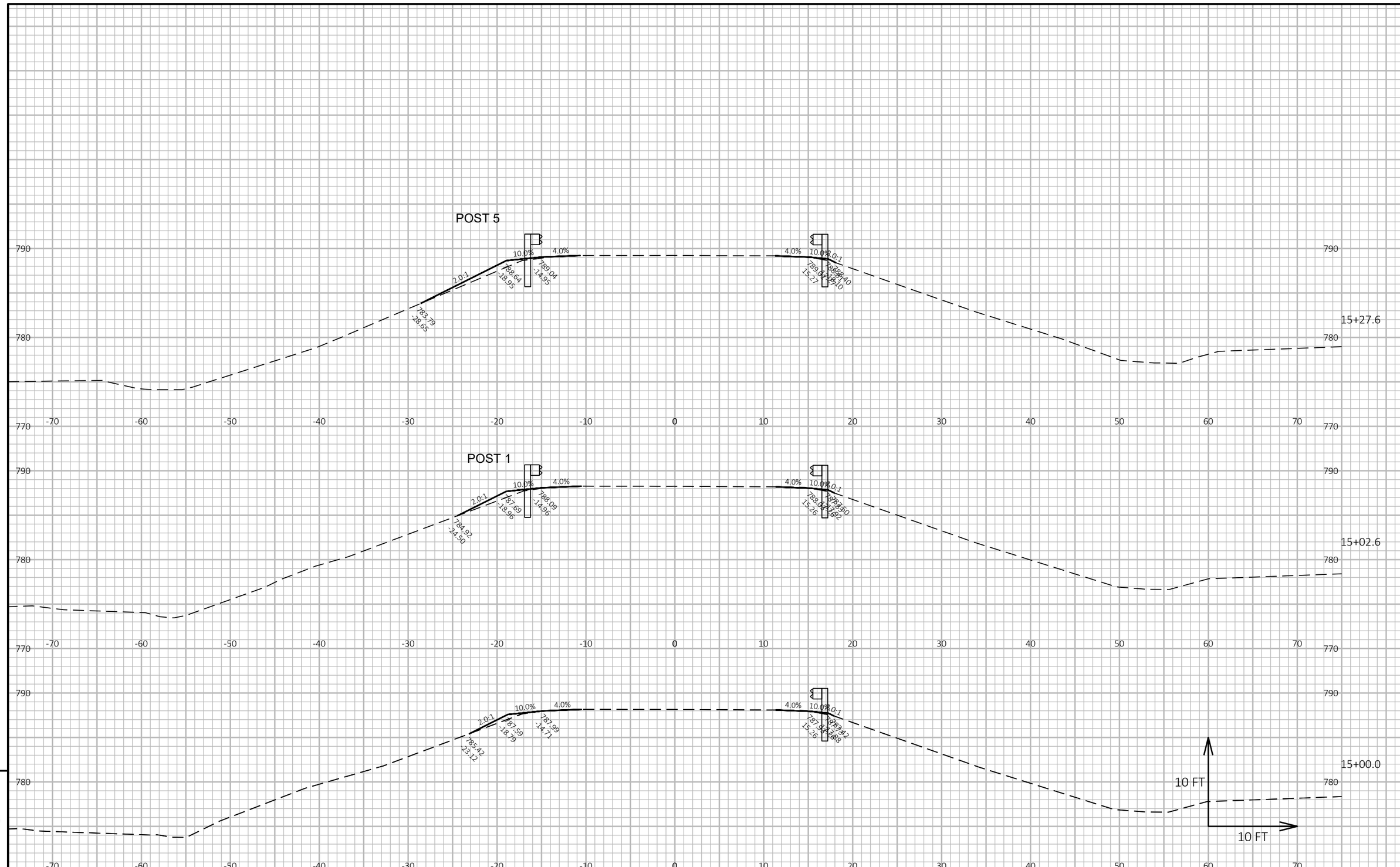

9

9

PROJECT NO: 1227-12-71	HWY: IH 43	COUNTY: MANITOWOC	CROSS SECTIONS: FISHERVILLE ROAD	SHEET	E

FILE NAME : I:\45\450504 IH 43 WISDOT GUARDRAIL\C3D\SHEETSPLAN\12271271 PLAN\090202_XS.DWG
LAYOUT NAME - Fisherville WB 3

PLOT DATE : 1/27/2021 10:42 AM PLOT BY : GARNICA, BRANDON PLOT NAME : **PLOT SCALE :** 1 IN:10 FT HORZ. / 1 IN:10 FT VERT.

WISDOT/CADDS SHEET 49

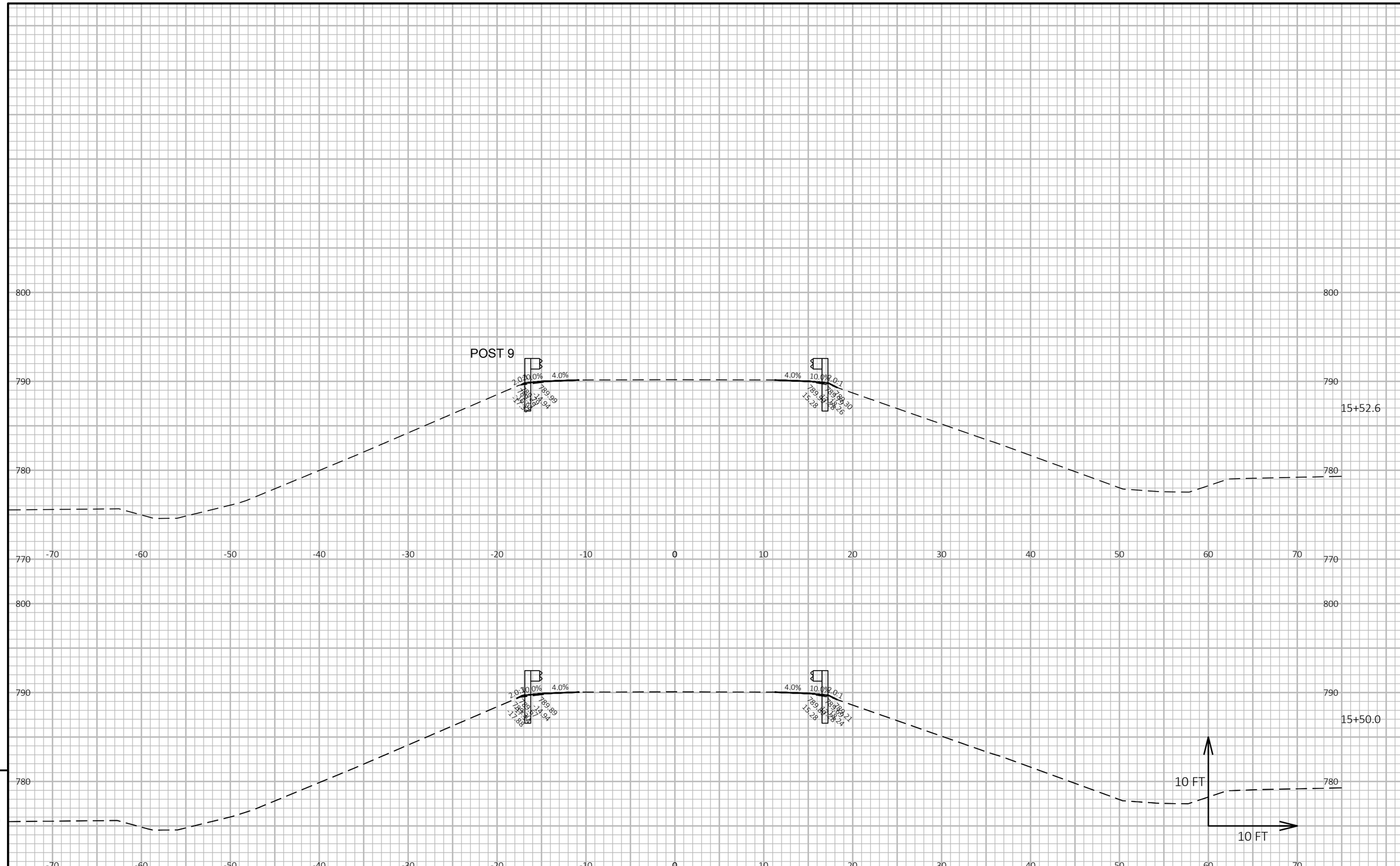

9

9

PROJECT NO: 1227-12-71	HWY: IH 43	COUNTY: MANITOWOC	CROSS SECTIONS: FISHERVILLE ROAD	SHEET	E

FILE NAME : I:\45\450504 IH 43 WISDOT GUARDRAIL\C3D\SHEETSPLAN\12271271 PLAN\090202_XS.DWG
LAYOUT NAME - Fisherville WB 4

PLOT DATE : 1/27/2021 10:43 AM PLOT BY : GARNICA, BRANDON PLOT NAME : PLOT SCALE : 1 IN:10 FT HORZ. / 1 IN:10 FT VERT.

WISDOT/CADDS SHEET 49

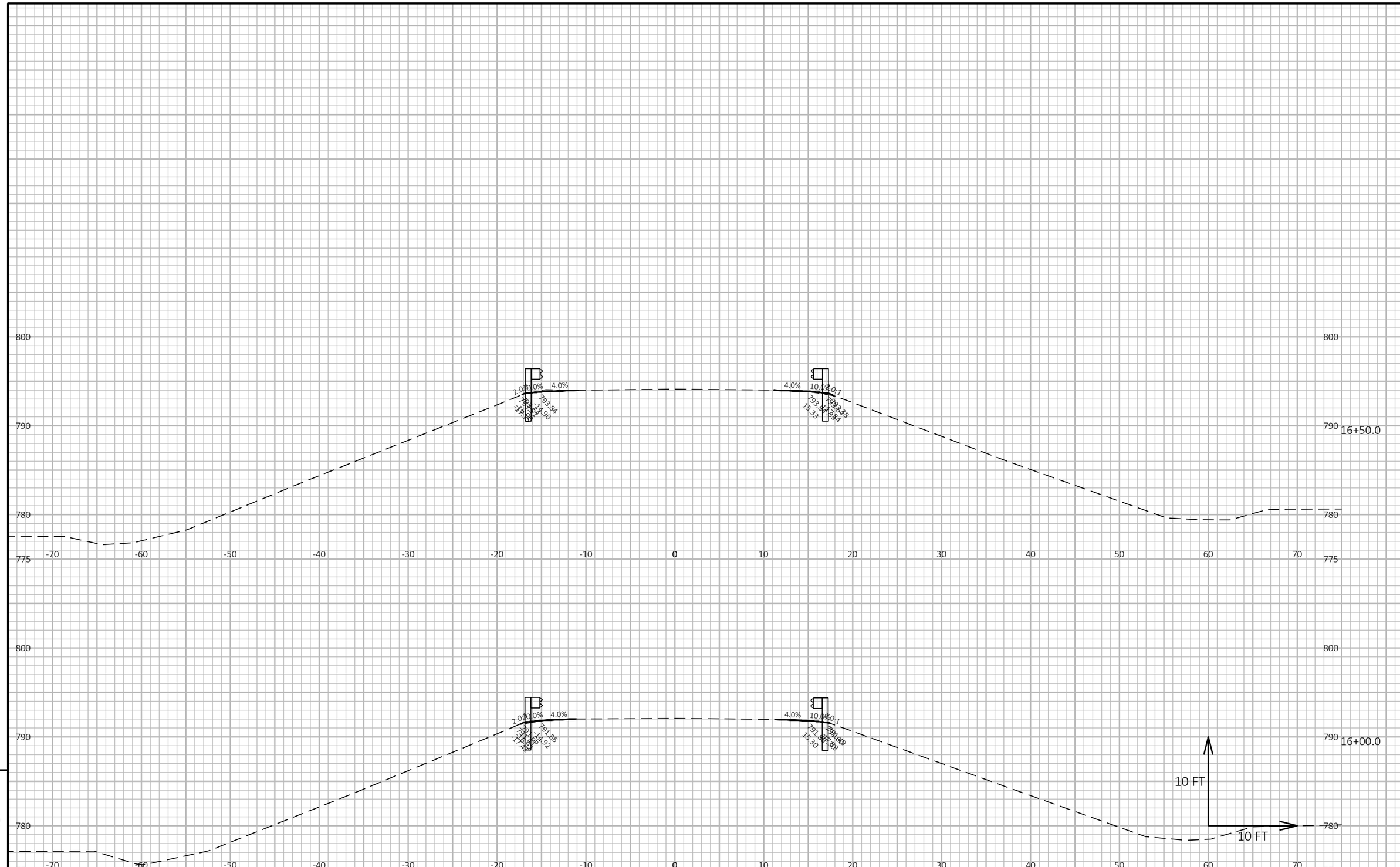

9

9

PROJECT NO: 1227-12-71	HWY: IH 43	COUNTY: MANITOWOC	CROSS SECTIONS: FISHERVILLE ROAD	SHEET	E

FILE NAME : I:\45\450504 IH 43 WISDOT GUARDRAIL\C3D\SHEETSPLAN\12271271 PLAN\090202_XS.DWG
LAYOUT NAME - Fisherville WB 5

PLOT DATE : 1/27/2021 10:43 AM PLOT BY : GARNICA, BRANDON PLOT NAME : **PLOT SCALE :** 1 IN:10 FT HORZ. / 1 IN:10 FT VERT.

WISDOT/CADDS SHEET 49

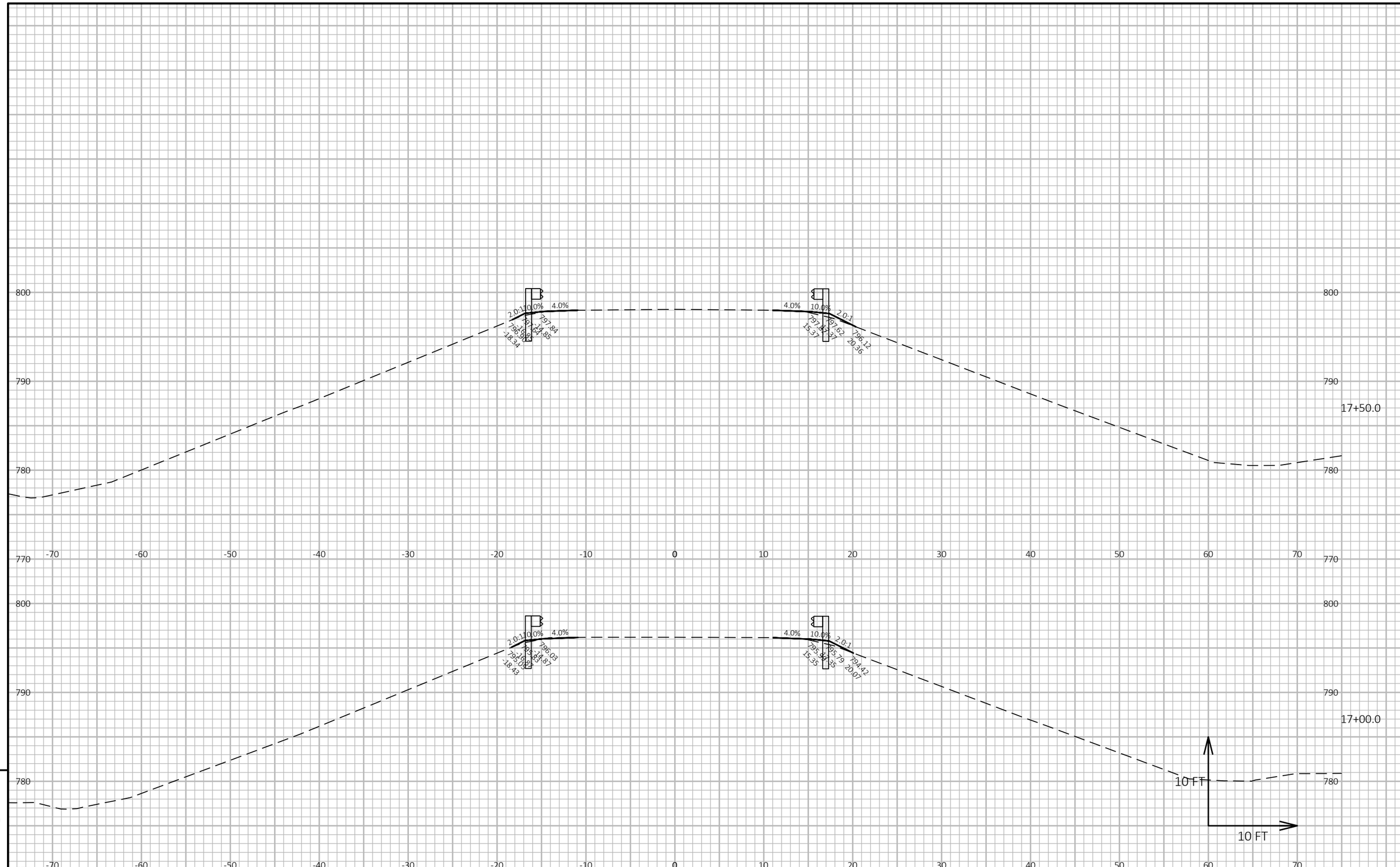

9

PROJECT NO: 1227-12-71	HWY: IH 43	COUNTY: MANITOWOC	CROSS SECTIONS: FISHERVILLE ROAD	SHEET	E

FILE NAME : I:\45\450504 IH 43 WISDOT GUARDRAIL\C3D\SHEETSPLAN\12271271 PLAN\090202_XS.DWG
LAYOUT NAME - Fisherville WB 6

PLOT DATE : 1/27/2021 10:43 AM PLOT BY : GARNICA, BRANDON PLOT NAME : **PLOT SCALE :** 1 IN:10 FT HORZ. / 1 IN:10 FT VERT.

WISDOT/CADDS SHEET 49

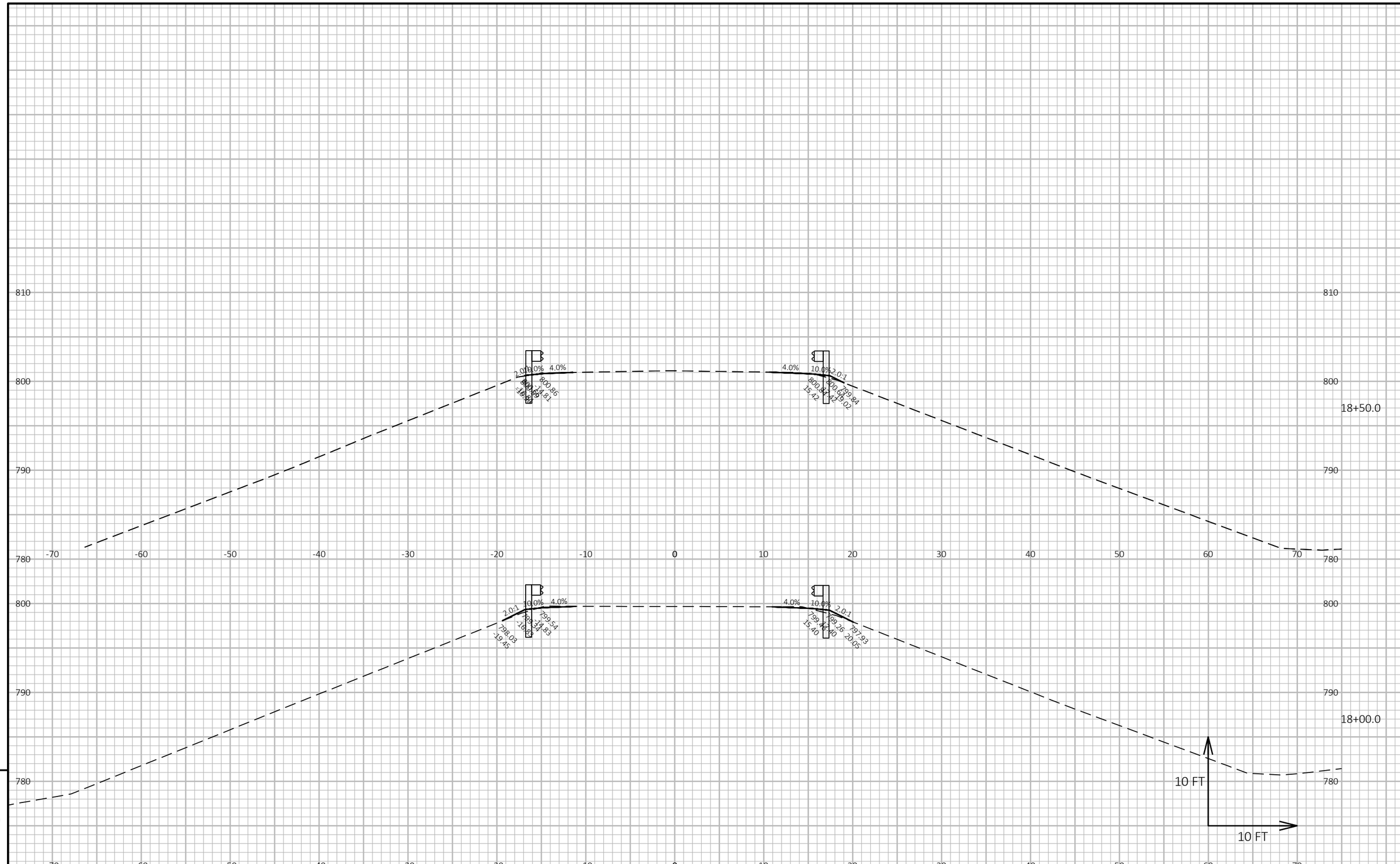

9

9

PROJECT NO: 1227-12-71	HWY: IH 43	COUNTY: MANITOWOC	CROSS SECTIONS: FISHERVILLE ROAD	SHEET	E

FILE NAME : I:\45\450504 IH 43 WISDOT GUARDRAIL\C3D\SHEETSPLAN\12271271 PLAN\090202_XS.DWG
LAYOUT NAME - Fisherville WB 7

PLOT DATE : 1/27/2021 12:42 PM PLOT BY : GARNICA, BRANDON PLOT NAME : PLOT SCALE : 1 IN:10 FT HORZ. / 1 IN:10 FT VERT.

WISDOT/CADDS SHEET 49

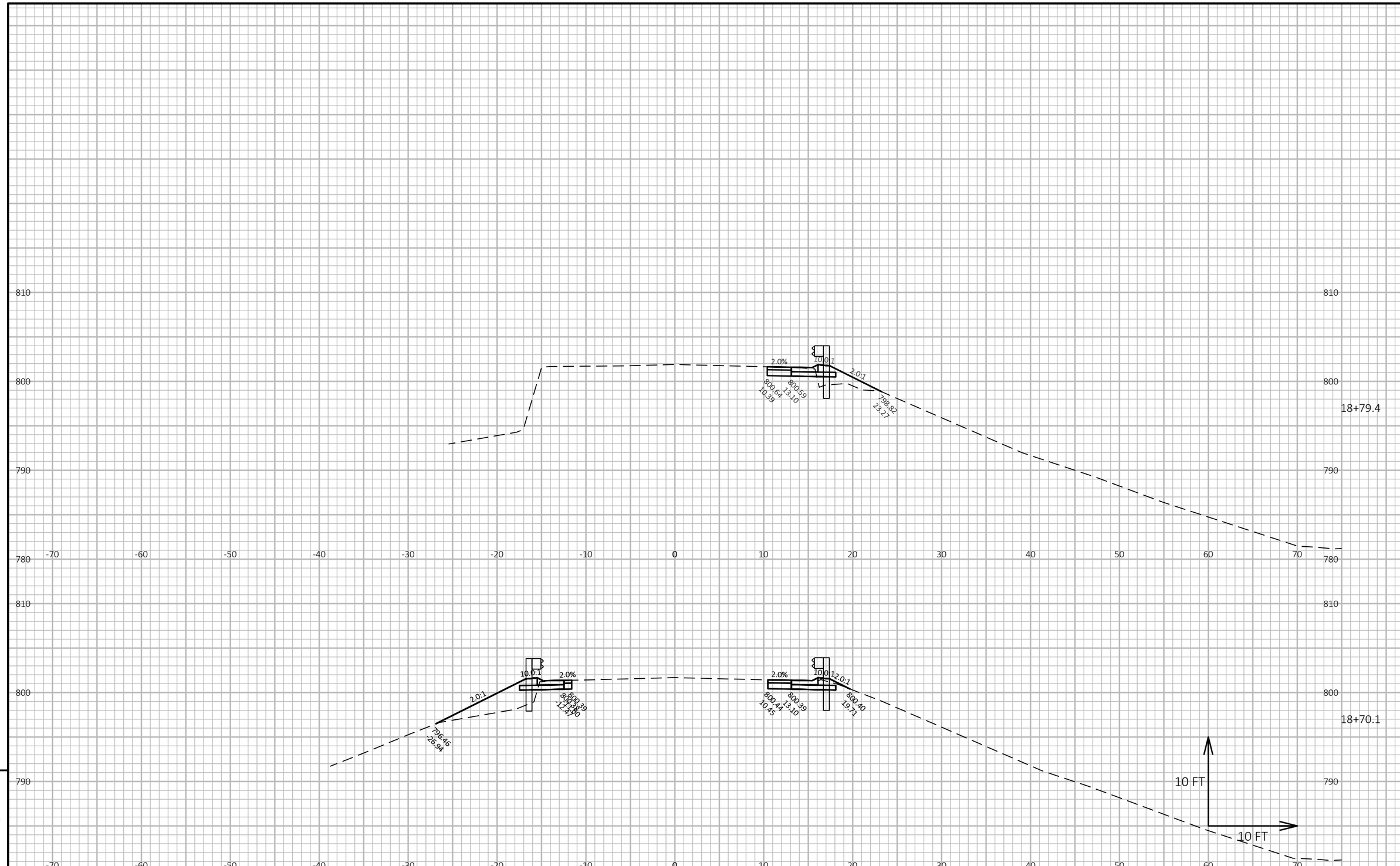

9

9

PROJECT NO: 1227-12-71	HWY: IH 43	COUNTY: MANITOWOC	CROSS SECTIONS: FISHERVILLE ROAD	SHEET	E

FILE NAME : I:\45\450504 IH 43 WISDOT GUARDRAIL\C3D\SHEETSPLAN\12271271 PLAN\090202_XS.DWG
LAYOUT NAME - Fisherville WB 8

PLOT DATE : 1/27/2021 10:43 AM PLOT BY : GARNICA, BRANDON PLOT NAME : **PLOT SCALE :** 1 IN:10 FT HORZ. / 1 IN:10 FT VERT.

WISDOT/CADDS SHEET 49

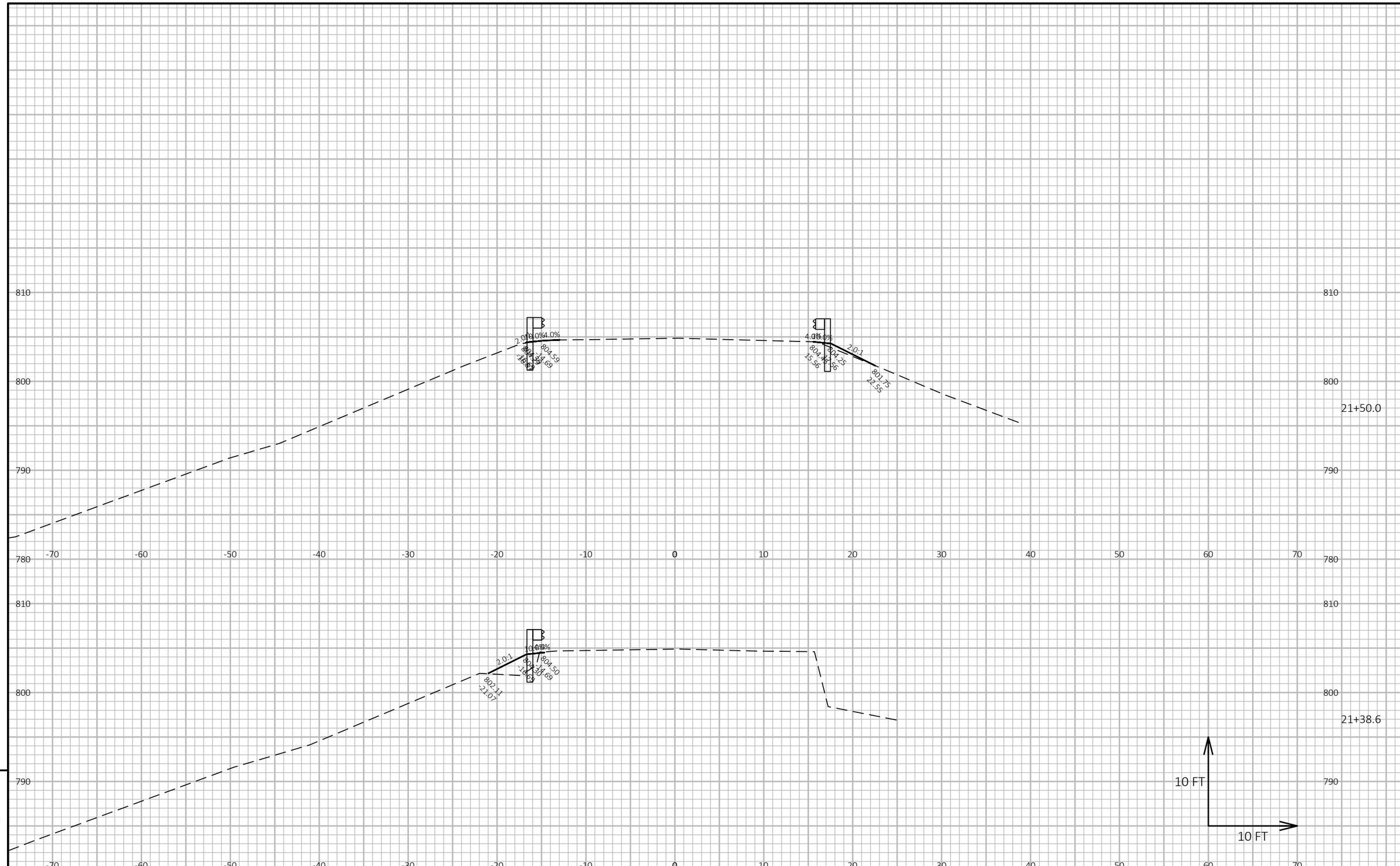

9

PROJECT NO: 1227-12-71	HWY: IH 43	COUNTY: MANITOWOC	CROSS SECTIONS: FISHERVILLE ROAD	SHEET	E

FILE NAME : I:\45\450504 IH 43 WISDOT GUARDRAIL\C3D\SHEETSPLAN\12271271 PLAN\090202_XS.DWG
LAYOUT NAME - Fisherville EB 1
PLOT DATE : 1/27/2021 10:44 AM
PLOT BY : GARNICA, BRANDON
PLOT NAME :
PLOT SCALE : 1 IN:10 FT HORZ. / 1 IN:10 FT VERT.
WISDOT/CADDS SHEET 49

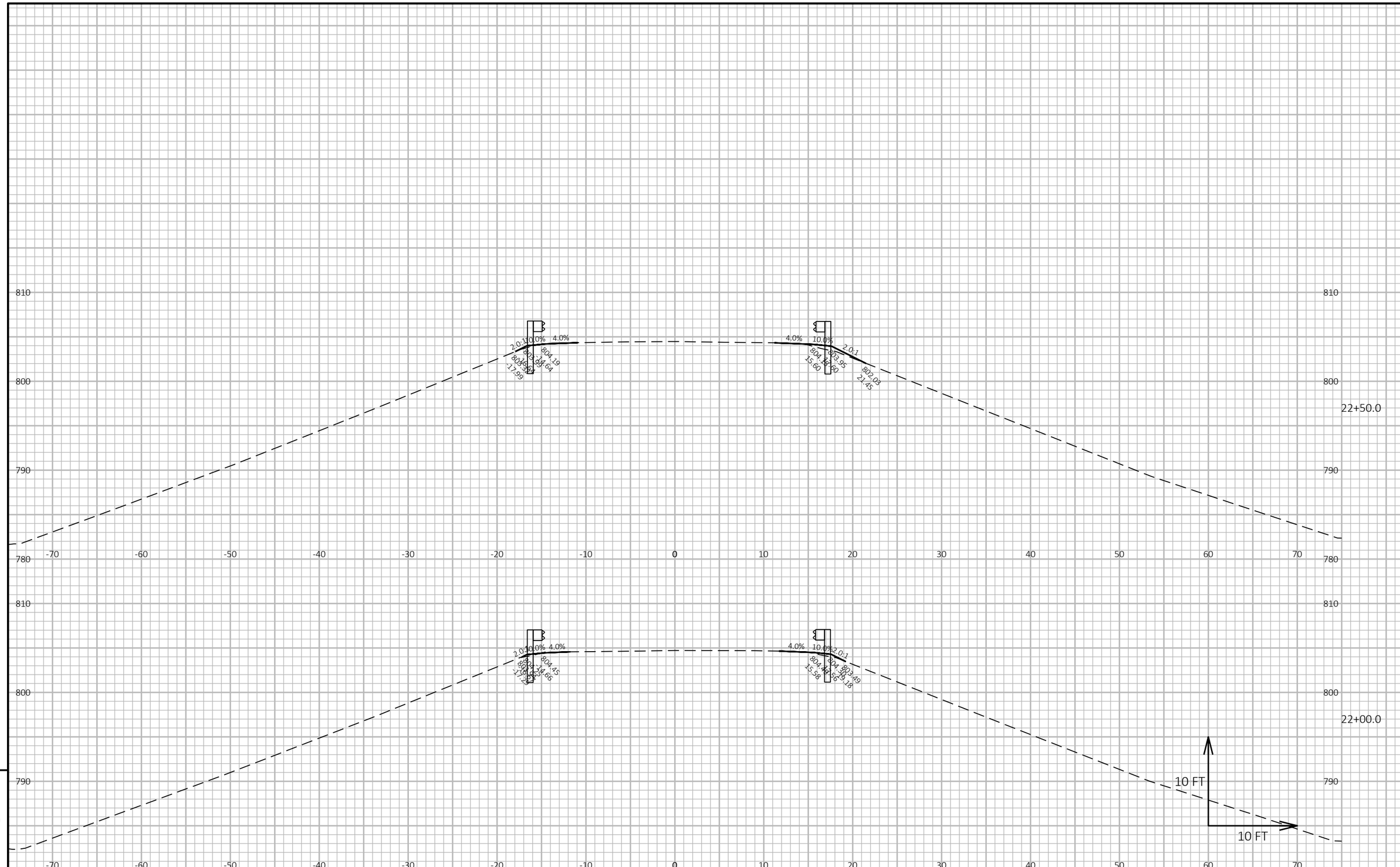

9

9

PROJECT NO: 1227-12-71	HWY: IH 43	COUNTY: MANITOWOC	CROSS SECTIONS: FISHERVILLE ROAD	SHEET	E

FILE NAME : I:\45\450504 IH 43 WISDOT GUARDRAIL\C3D\SHEETSPLAN\12271271 PLAN\090202_XS.DWG
LAYOUT NAME - Fisherville EB 2

PLOT DATE : 1/27/2021 10:44 AM PLOT BY : GARNICA, BRANDON PLOT NAME : **PLOT SCALE :** 1 IN:10 FT HORZ. / 1 IN:10 FT VERT.

WISDOT/CADDS SHEET 49

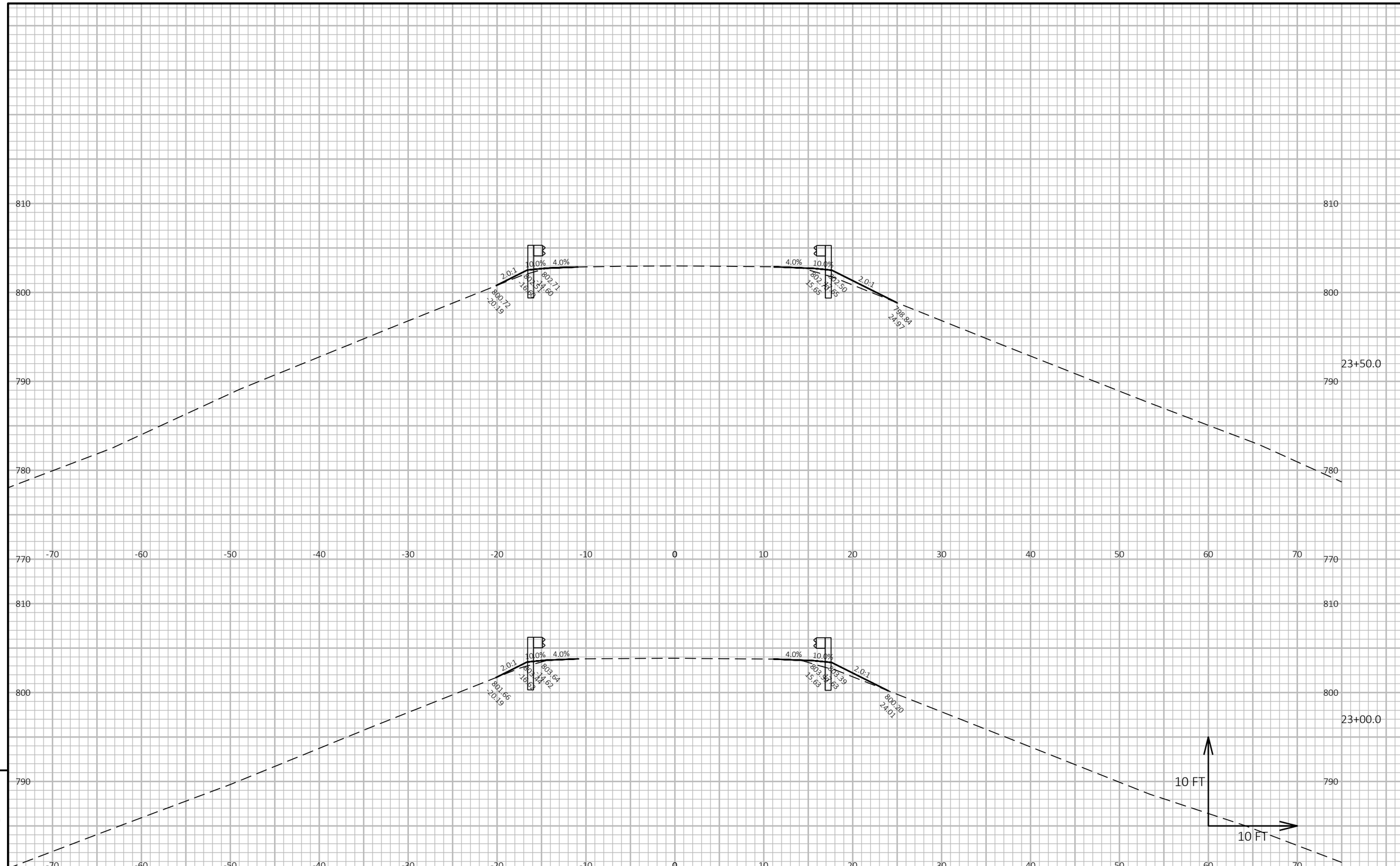

9

9

PROJECT NO: 1227-12-71	HWY: IH 43	COUNTY: MANITOWOC	CROSS SECTIONS: FISHERVILLE ROAD	SHEET	E

FILE NAME : I:\45\450504 IH 43 WISDOT GUARDRAIL\C3D\SHEETSPLAN\12271271 PLAN\090202_XS.DWG
LAYOUT NAME - Fisherville EB 3

PLOT DATE : 1/27/2021 10:44 AM PLOT BY : GARNICA, BRANDON PLOT NAME : **PLOT SCALE :** 1 IN:10 FT HORZ. / 1 IN:10 FT VERT.

WISDOT/CADDS SHEET 49

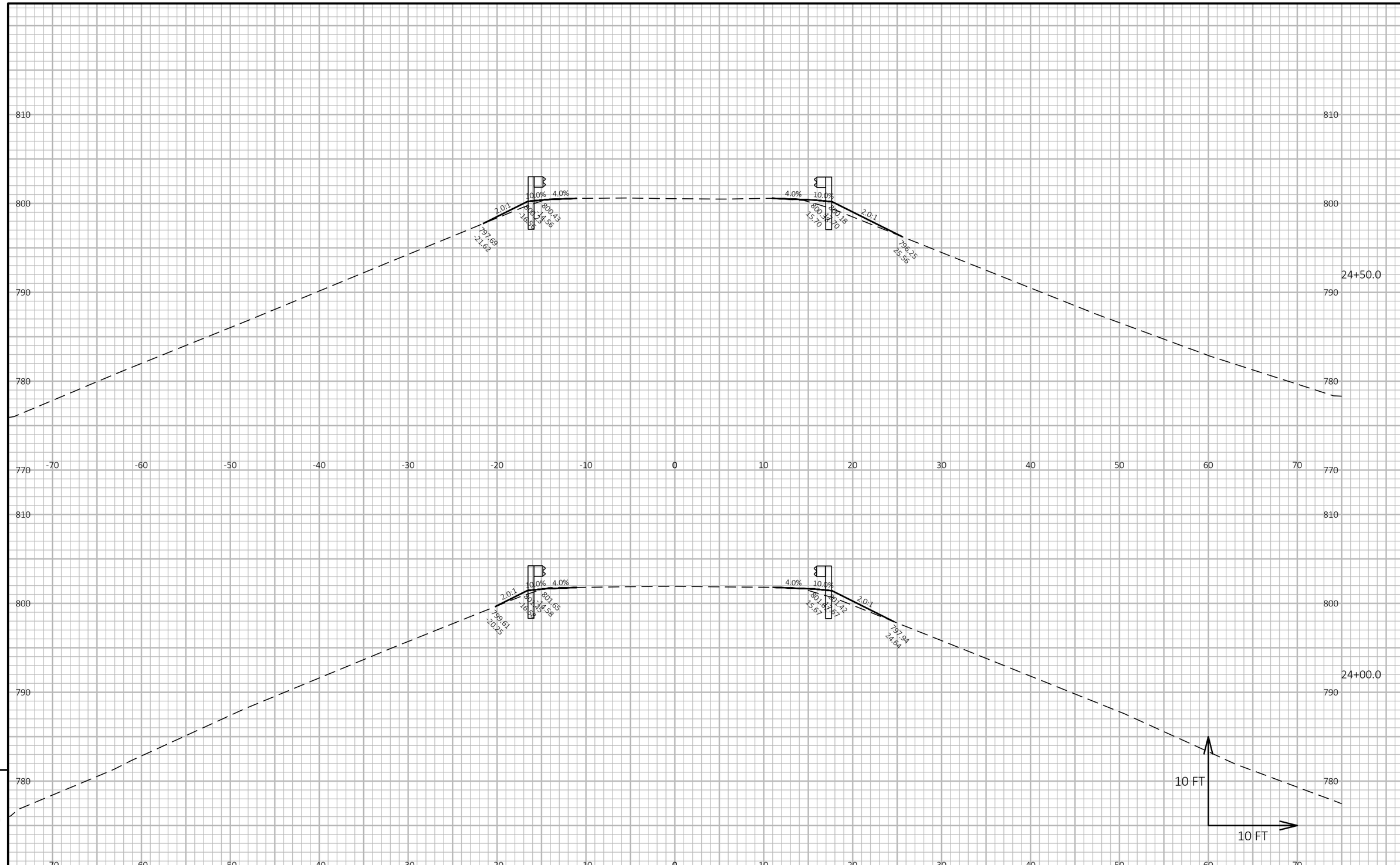

PROJECT NO: 1227-12-71	HWY: IH 43	COUNTY: MANITOWOC	CROSS SECTIONS: FISHERVILLE ROAD	SHEET	E

FILE NAME : I:\45\450504 IH 43 WISDOT GUARDRAIL\C3D\SHEETSPLAN\12271271 PLAN\090202_XS.DWG
LAYOUT NAME - Fisherville EB 4
PLOT DATE : 1/27/2021 10:44 AM
PLOT BY : GARNICA, BRANDON
PLOT NAME :
PLOT SCALE : 1 IN:10 FT HORZ. / 1 IN:10 FT VERT.
WISDOT/CADDS SHEET 49

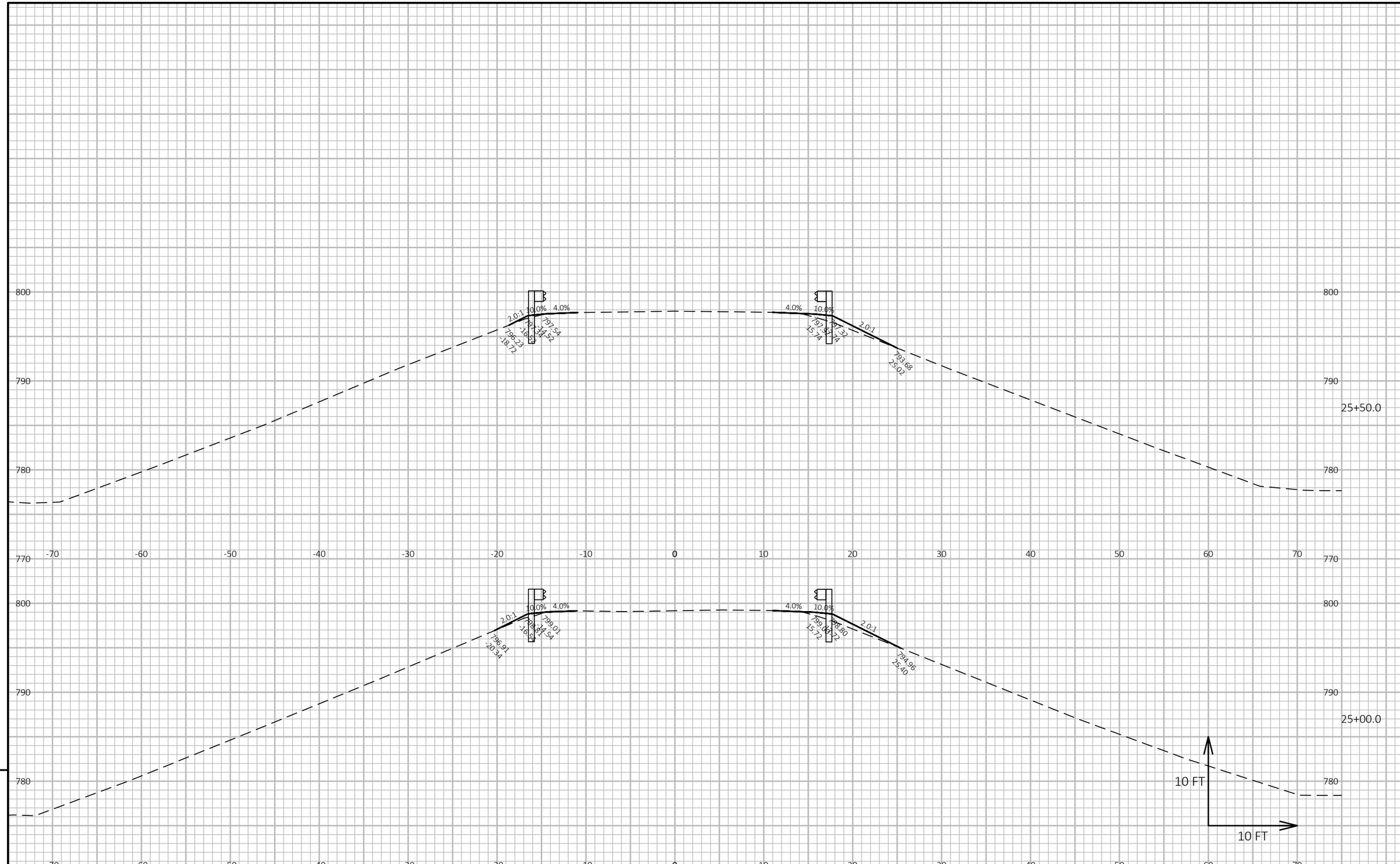

PROJECT NO: 1227-12-71	HWY: IH 43	COUNTY: MANITOWOC	CROSS SECTIONS: FISHERVILLE ROAD	SHEET	E

FILE NAME : I:\45\450504 IH 43 WISDOT GUARDRAIL\C3D\SHEETSPLAN\12271271 PLAN\090202_XS.DWG
LAYOUT NAME - Fisherville EB 5

PLOT DATE : 1/27/2021 10:44 AM PLOT BY : GARNICA, BRANDON PLOT NAME : **PLOT SCALE :** 1 IN:10 FT HORZ. / 1 IN:10 FT VERT.

WISDOT/CADDS SHEET 49

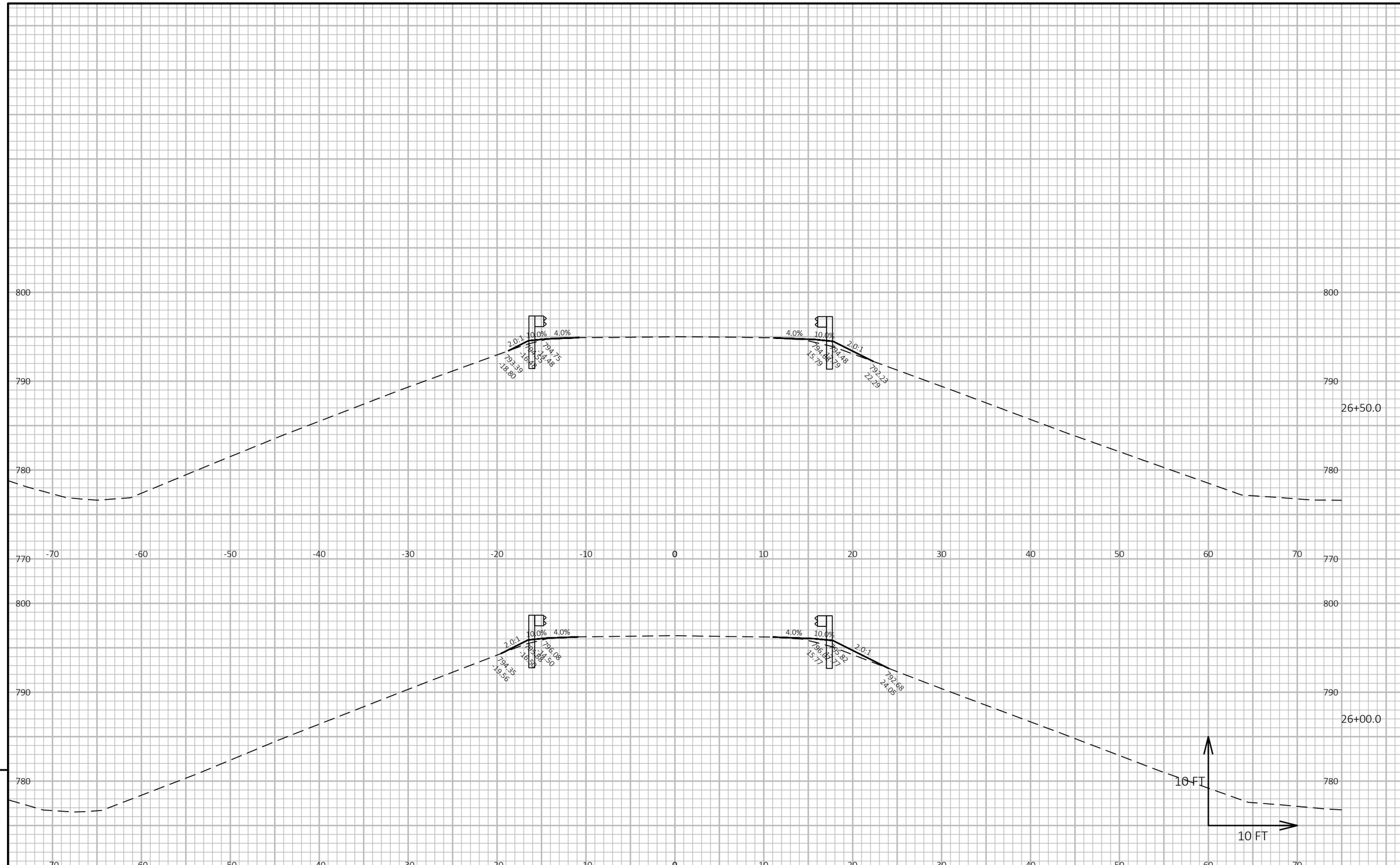

PROJECT NO: 1227-12-71	HWY: IH 43	COUNTY: MANITOWOC	CROSS SECTIONS: FISHERVILLE ROAD	SHEET	E

FILE NAME : I:\45\450504 IH 43 WISDOT GUARDRAIL\C3D\SHEETSPLAN\12271271 PLAN\090202_XS.DWG
LAYOUT NAME - Fisherville EB 6
PLOT DATE : 1/27/2021 10:45 AM
PLOT BY : GARNICA, BRANDON
PLOT NAME :
PLOT SCALE : 1 IN:10 FT HORZ. / 1 IN:10 FT VERT.
WISDOT/CADDS SHEET 49

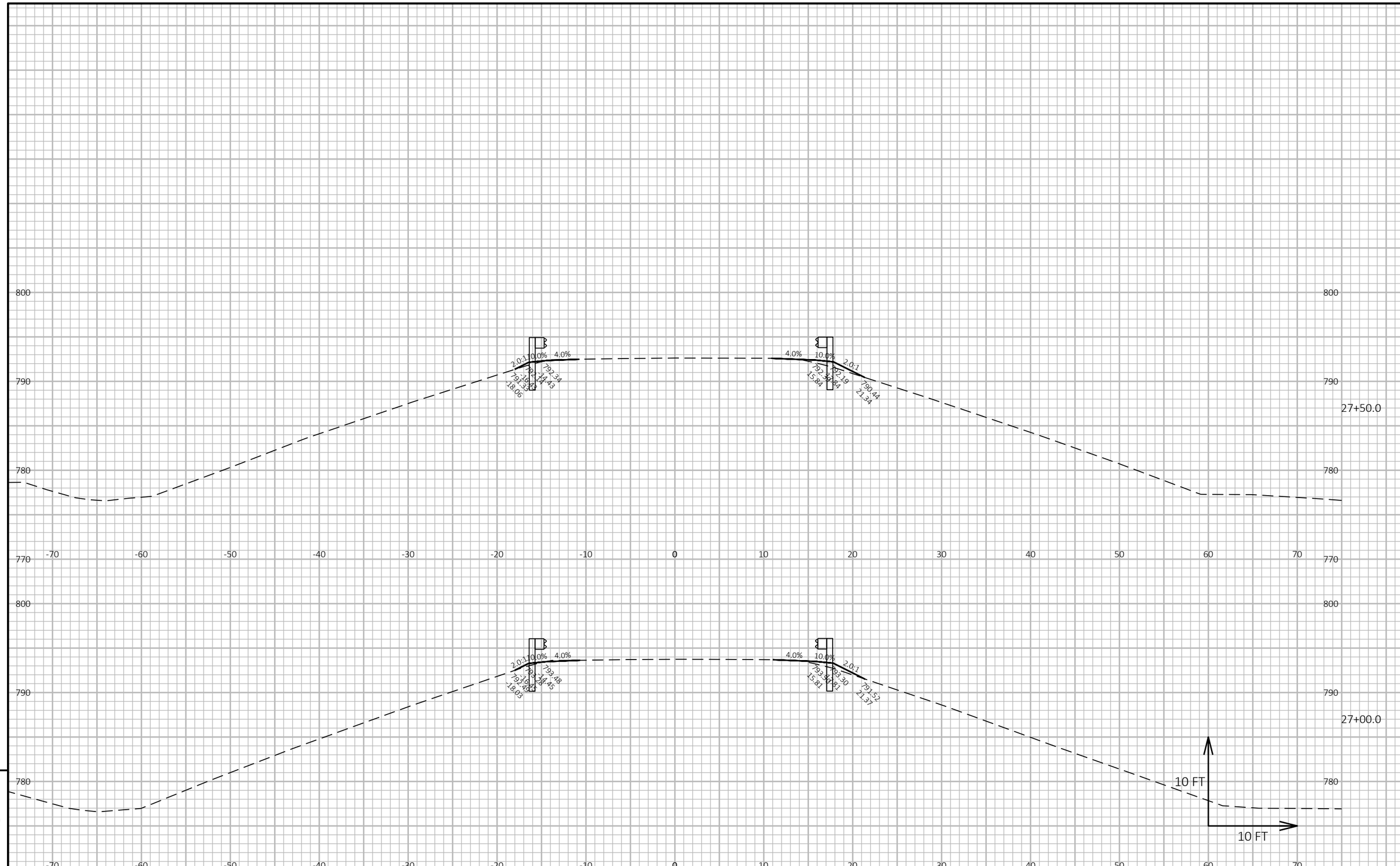

PROJECT NO: 1227-12-71	HWY: IH 43	COUNTY: MANITOWOC	CROSS SECTIONS: FISHERVILLE ROAD	SHEET	E

FILE NAME : I:\45\450504 IH 43 WISDOT GUARDRAIL\C3D\SHEETSPLAN\12271271 PLAN\090202_XS.DWG
LAYOUT NAME - Fisherville EB 7

PLOT DATE : 1/27/2021 10:45 AM PLOT BY : GARNICA, BRANDON PLOT NAME : **PLOT SCALE :** 1 IN:10 FT HORZ. / 1 IN:10 FT VERT.

WISDOT/CADDS SHEET 49

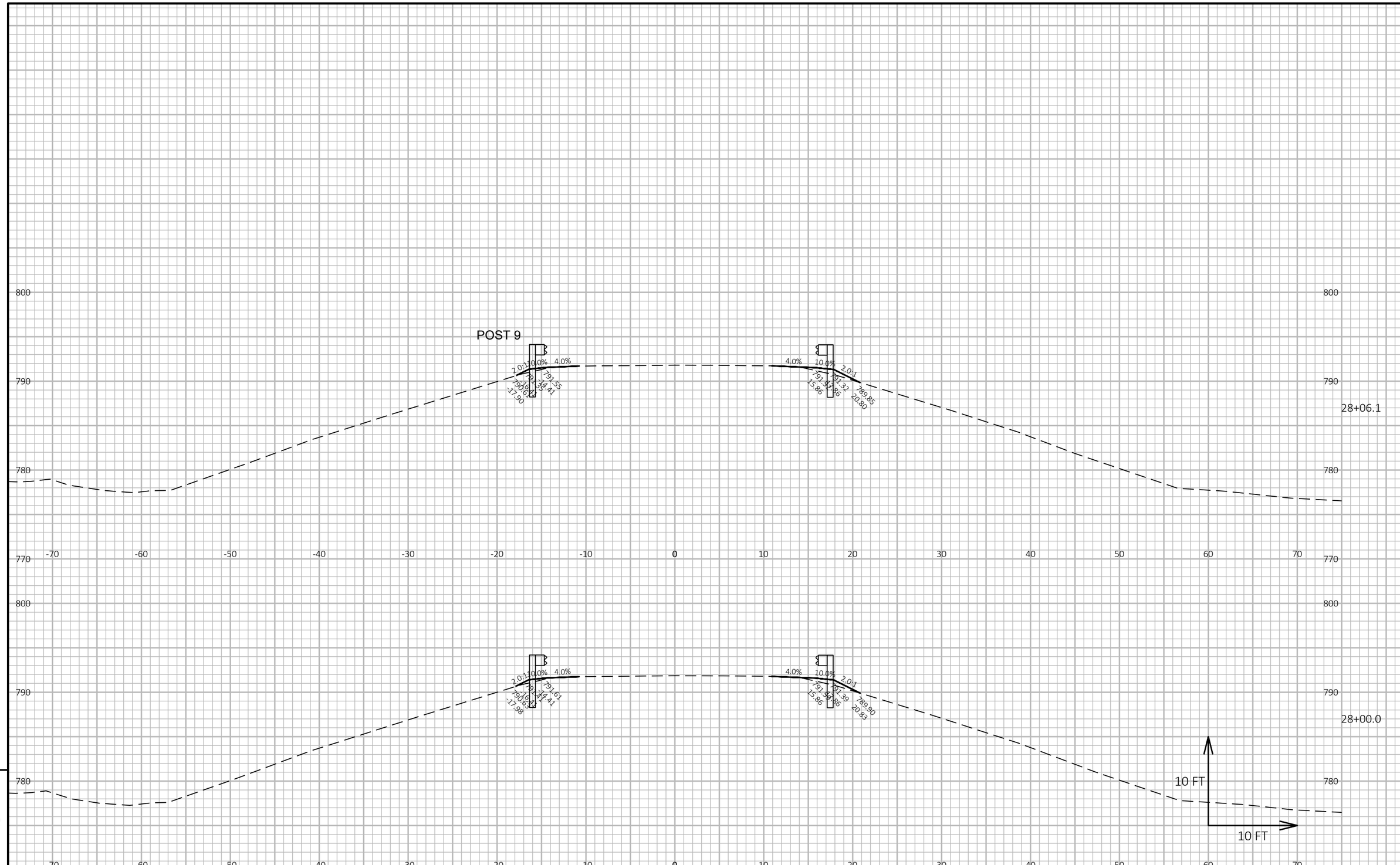

PROJECT NO: 1227-12-71	HWY: IH 43	COUNTY: MANITOWOC	CROSS SECTIONS: FISHERVILLE ROAD	SHEET	E

FILE NAME : I:\45\450504 IH 43 WISDOT GUARDRAIL\C3D\SHEETSPLAN\12271271 PLAN\090202_XS.DWG
LAYOUT NAME - Fisherville EB 8
PLOT DATE : 1/27/2021 10:45 AM
PLOT BY : GARNICA, BRANDON
PLOT NAME :
PLOT SCALE : 1 IN:10 FT HORZ. / 1 IN:10 FT VERT.

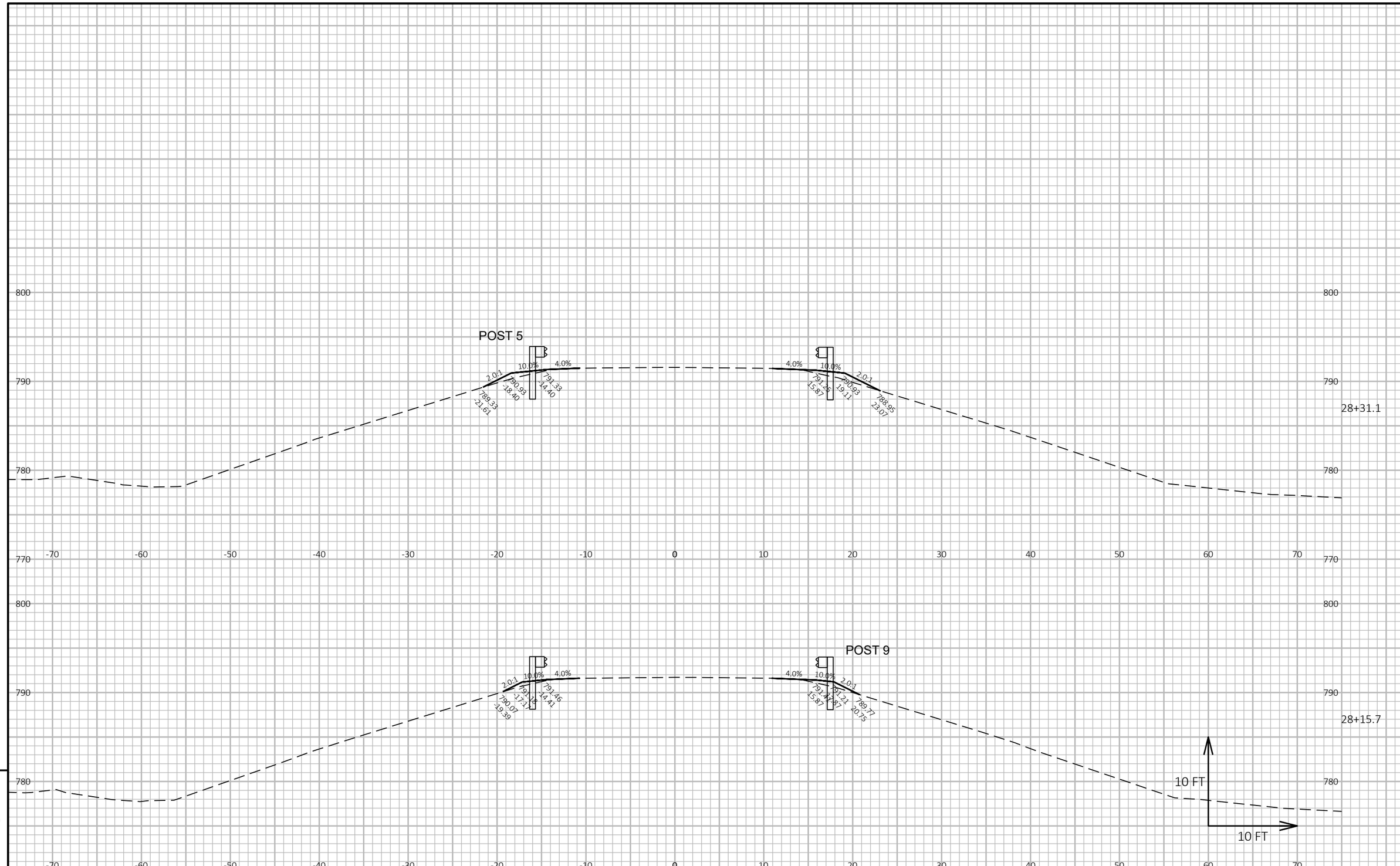

PROJECT NO: 1227-12-71	HWY: IH 43	COUNTY: MANITOWOC	CROSS SECTIONS: FISHERVILLE ROAD	SHEET	E

FILE NAME : I:\45\450504 IH 43 WISDOT GUARDRAIL\C3D\SHEETSPLAN\12271271 PLAN\090202_XS.DWG
LAYOUT NAME - Fisherville EB 9

PLOT DATE : 1/27/2021 10:45 AM PLOT BY : GARNICA, BRANDON PLOT NAME : PLOT SCALE : 1 IN:10 FT HORZ. / 1 IN:10 FT VERT.

WISDOT/CADDS SHEET 49

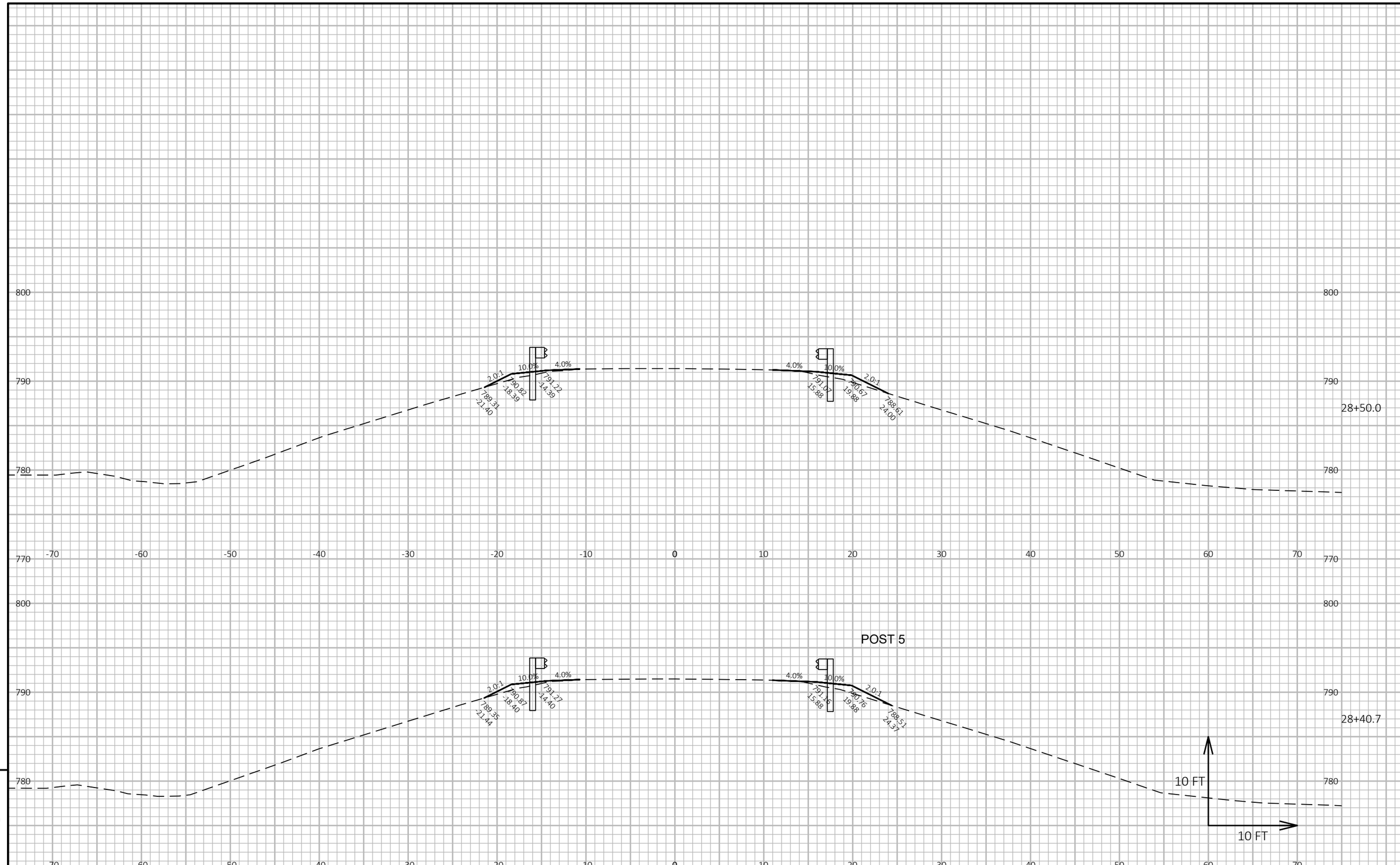

PROJECT NO: 1227-12-71	HWY: IH 43	COUNTY: MANITOWOC	CROSS SECTIONS: FISHERVILLE ROAD	SHEET	E

FILE NAME : I:\45\450504 IH 43 WISDOT GUARDRAIL\C3D\SHEETSPLAN\12271271 PLAN\090202_XS.DWG
LAYOUT NAME - Fisherville EB 10
PLOT DATE : 1/27/2021 10:45 AM
PLOT BY : GARNICA, BRANDON
PLOT NAME :
PLOT SCALE : 1 IN:10 FT HORZ. / 1 IN:10 FT VERT.
WISDOT/CADDS SHEET 49

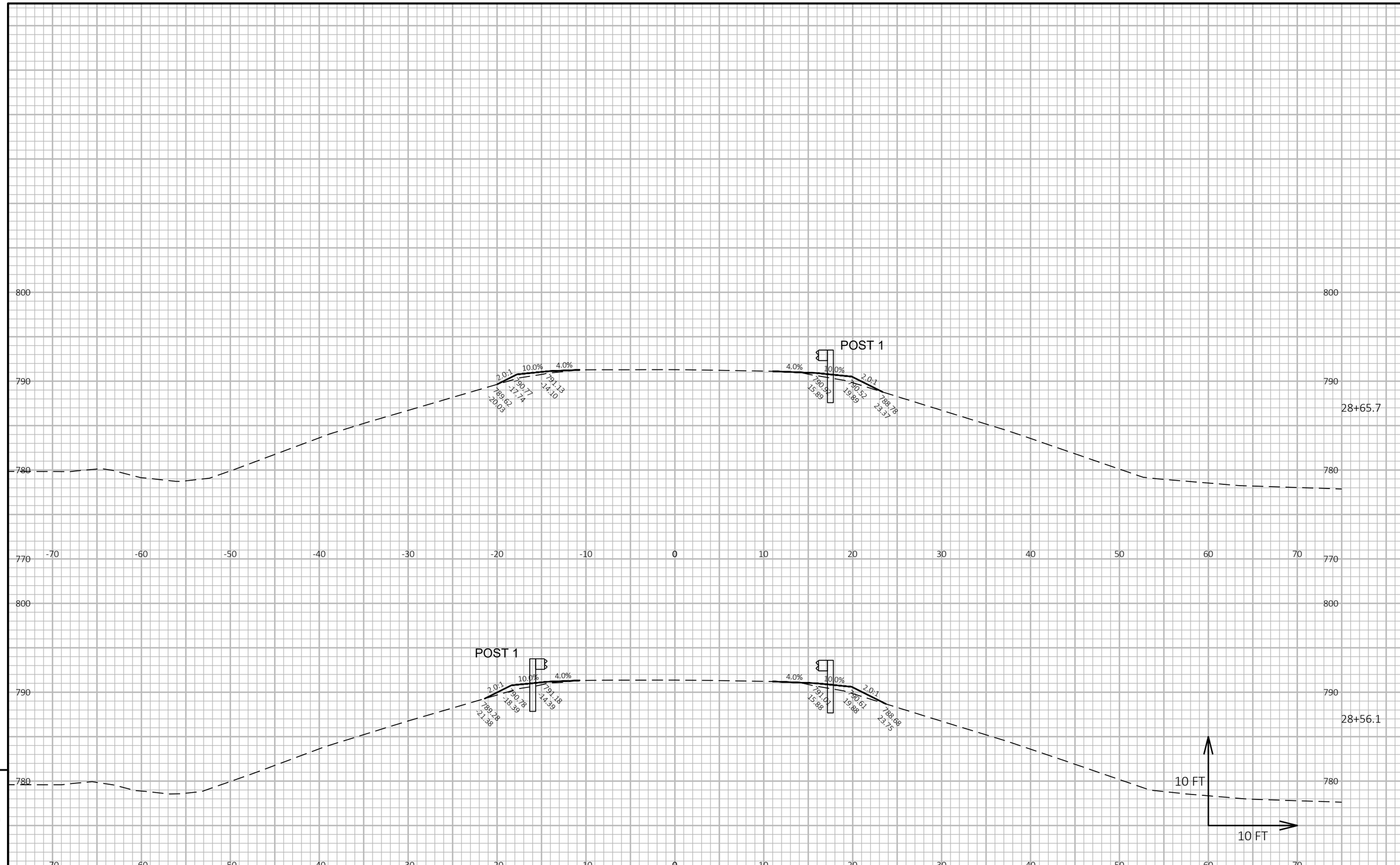

9

9

PROJECT NO: 1227-12-71	HWY: IH 43	COUNTY: MANITOWOC	CROSS SECTIONS: FISHERVILLE ROAD	SHEET	E

FILE NAME : I:\45\450504 IH 43 WISDOT GUARDRAIL\C3D\SHEETSPLAN\12271271 PLAN\090202_XS.DWG
LAYOUT NAME - Fisherville EB 11

PLOT DATE : 1/27/2021 10:46 AM PLOT BY : GARNICA, BRANDON PLOT NAME : **PLOT SCALE :** 1 IN:10 FT HORZ. / 1 IN:10 FT VERT.

WISDOT/CADDS SHEET 49

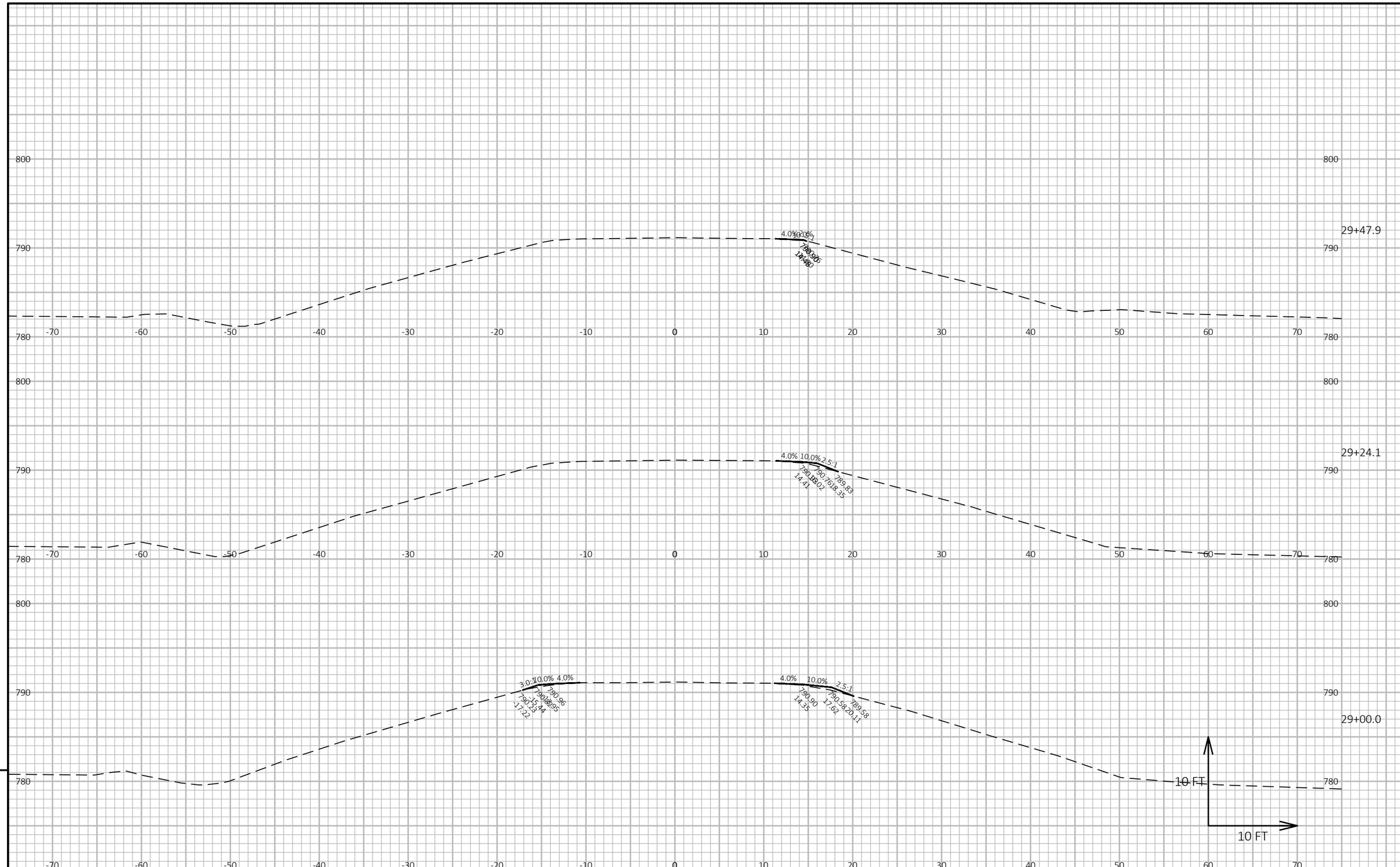

9

9

PROJECT NO: 1227-12-71	HWY: IH 43	COUNTY: MANITOWOC	CROSS SECTIONS: FISHERVILLE ROAD	SHEET	E

FILE NAME : I:\45\450504 IH 43 WISDOT GUARDRAIL\C3D\SHEETSPLAN\12271271 PLAN\090202_XS.DWG
LAYOUT NAME - Fisherville EB 12

PLOT DATE : 1/27/2021 10:46 AM PLOT BY : GARNICA, BRANDON PLOT NAME : **PLOT SCALE :** 1 IN:10 FT HORZ. / 1 IN:10 FT VERT.

WISDOT/CADDS SHEET 49

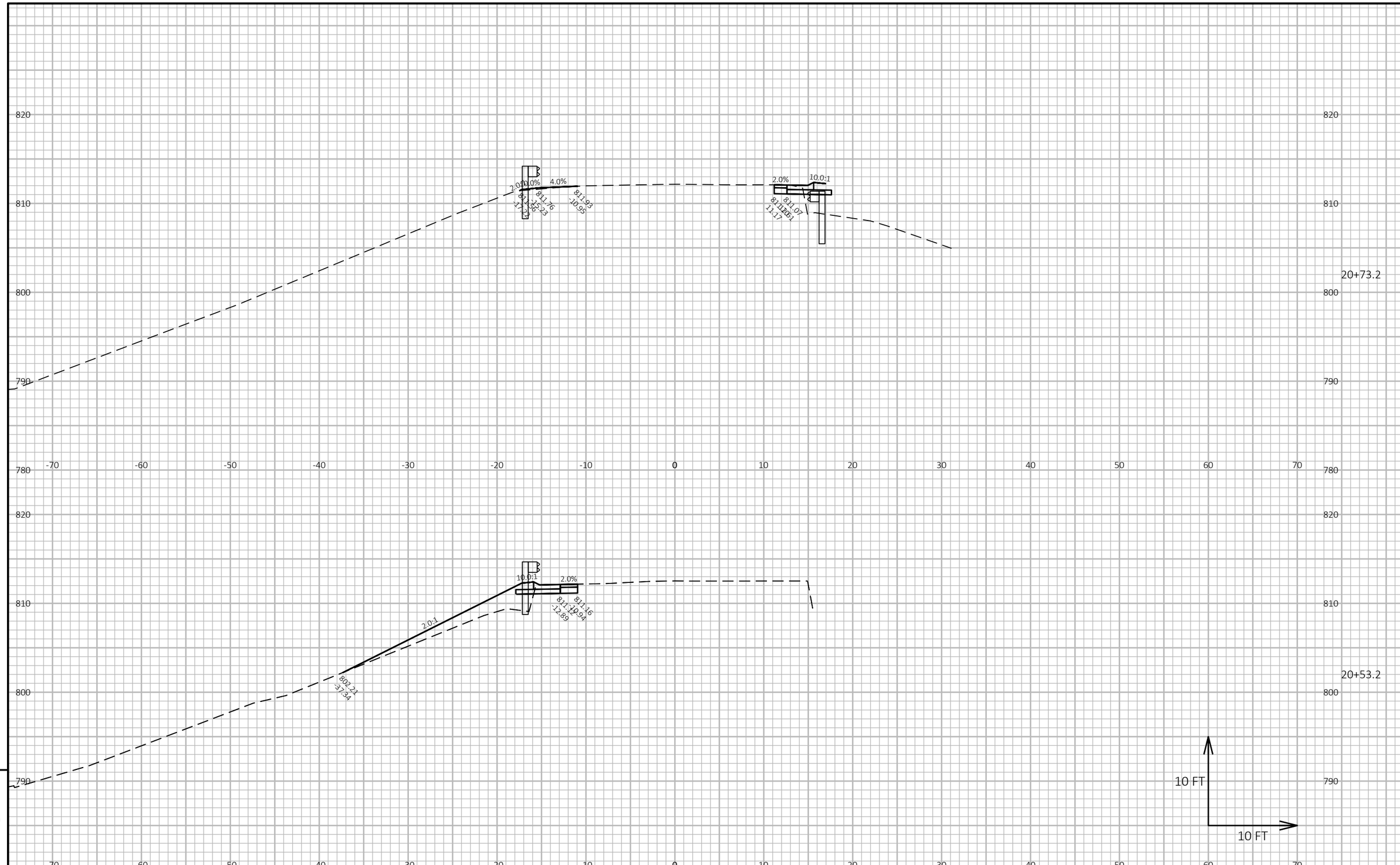

9

9

PROJECT NO: 1227-12-71	HWY: IH 43	COUNTY: MANITOWOC	CROSS SECTIONS: GREENSTREET ROAD	SHEET	E

FILE NAME : I:\45\450504 IH 43 WISDOT GUARDRAIL\C3D\SHEETSPLAN\12271271 PLAN\090202_XS.DWG
LAYOUT NAME - Greenstreet EB 1

PLOT DATE : 1/27/2021 10:46 AM PLOT BY : GARNICA, BRANDON PLOT NAME : **PLOT SCALE :** 1 IN:10 FT HORZ. / 1 IN:10 FT VERT.

WISDOT/CADDS SHEET 49

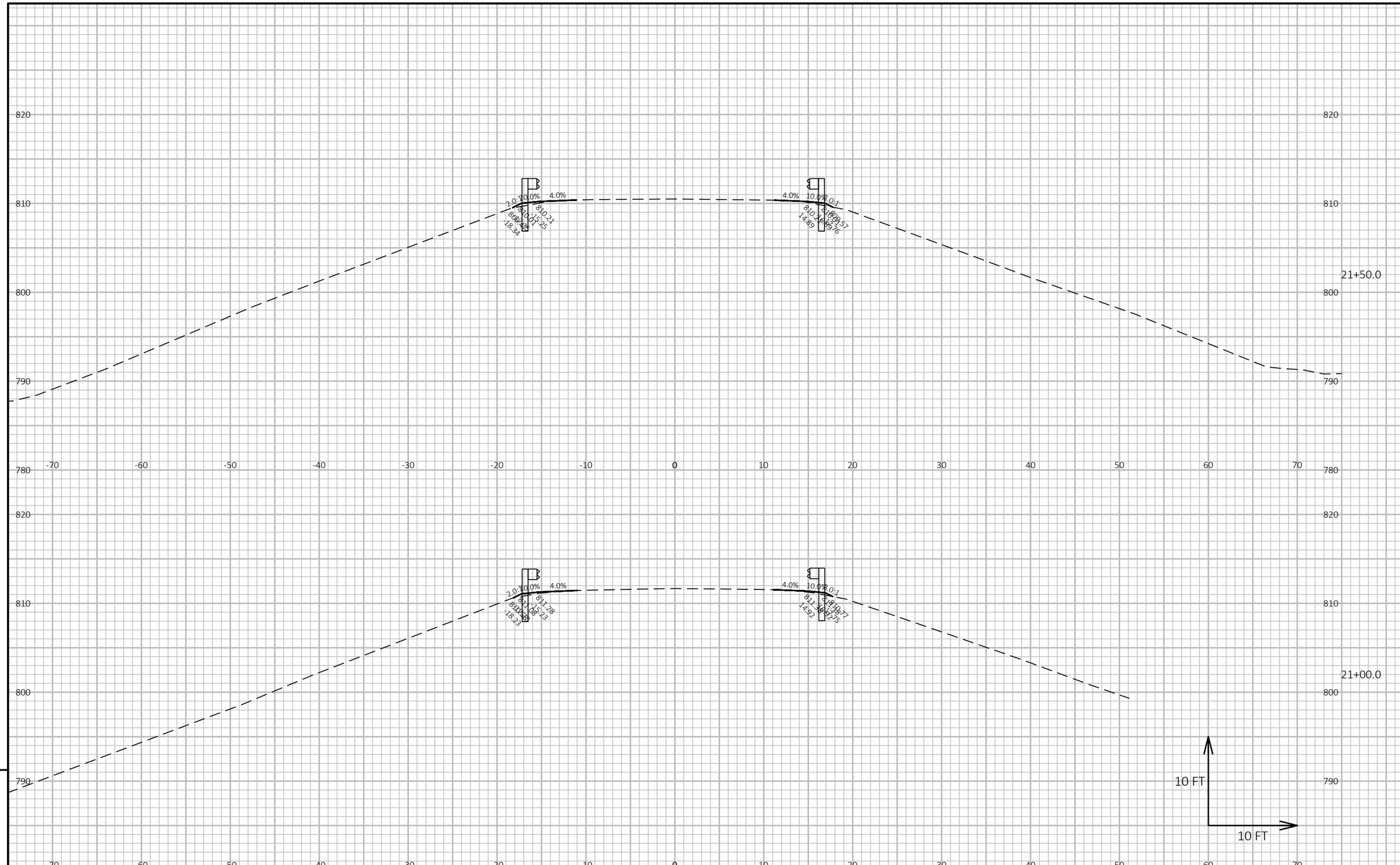

9

9

PROJECT NO: 1227-12-71	HWY: IH 43	COUNTY: MANITOWOC	CROSS SECTIONS: GREENSTREET ROAD	SHEET	E

FILE NAME : I:\45\450504 IH 43 WISDOT GUARDRAIL\C3D\SHEETSPLAN\12271271 PLAN\090202_XS.DWG
LAYOUT NAME - Greenstreet EB 2

PLOT DATE : 1/27/2021 10:46 AM PLOT BY : GARNICA, BRANDON PLOT NAME : **PLOT SCALE :** 1 IN:10 FT HORZ. / 1 IN:10 FT VERT.

WISDOT/CADDS SHEET 49

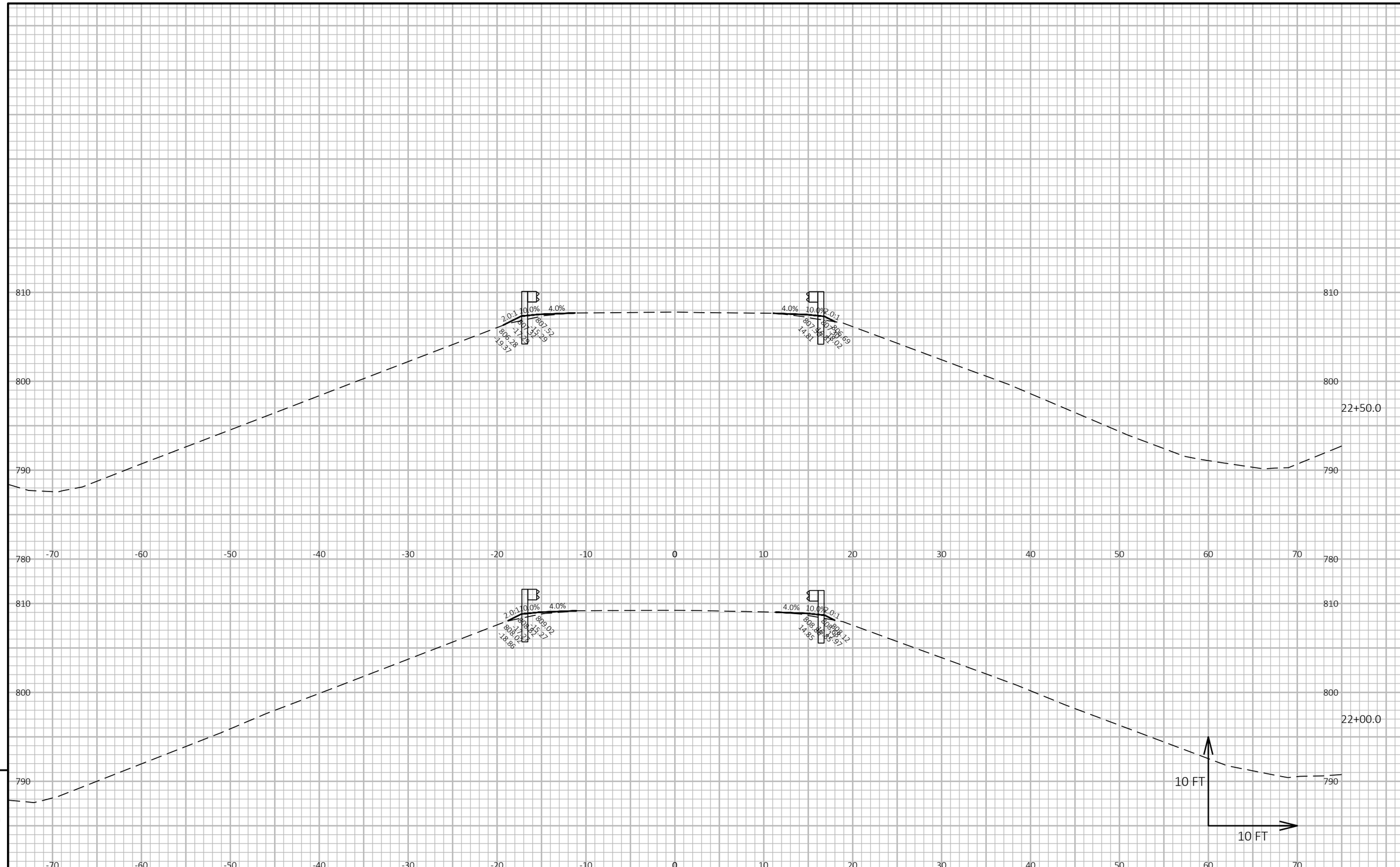

9

9

PROJECT NO: 1227-12-71	HWY: IH 43	COUNTY: MANITOWOC	CROSS SECTIONS: GREENSTREET ROAD	SHEET	E

FILE NAME : I:\45\450504 IH 43 WISDOT GUARDRAIL\C3D\SHEETSPLAN\12271271 PLAN\090202_XS.DWG
LAYOUT NAME - Greenstreet EB 3

PLOT DATE : 1/27/2021 10:46 AM PLOT BY : GARNICA, BRANDON PLOT NAME : PLOT SCALE : 1 IN:10 FT HORZ. / 1 IN:10 FT VERT.

WISDOT/CADDS SHEET 49

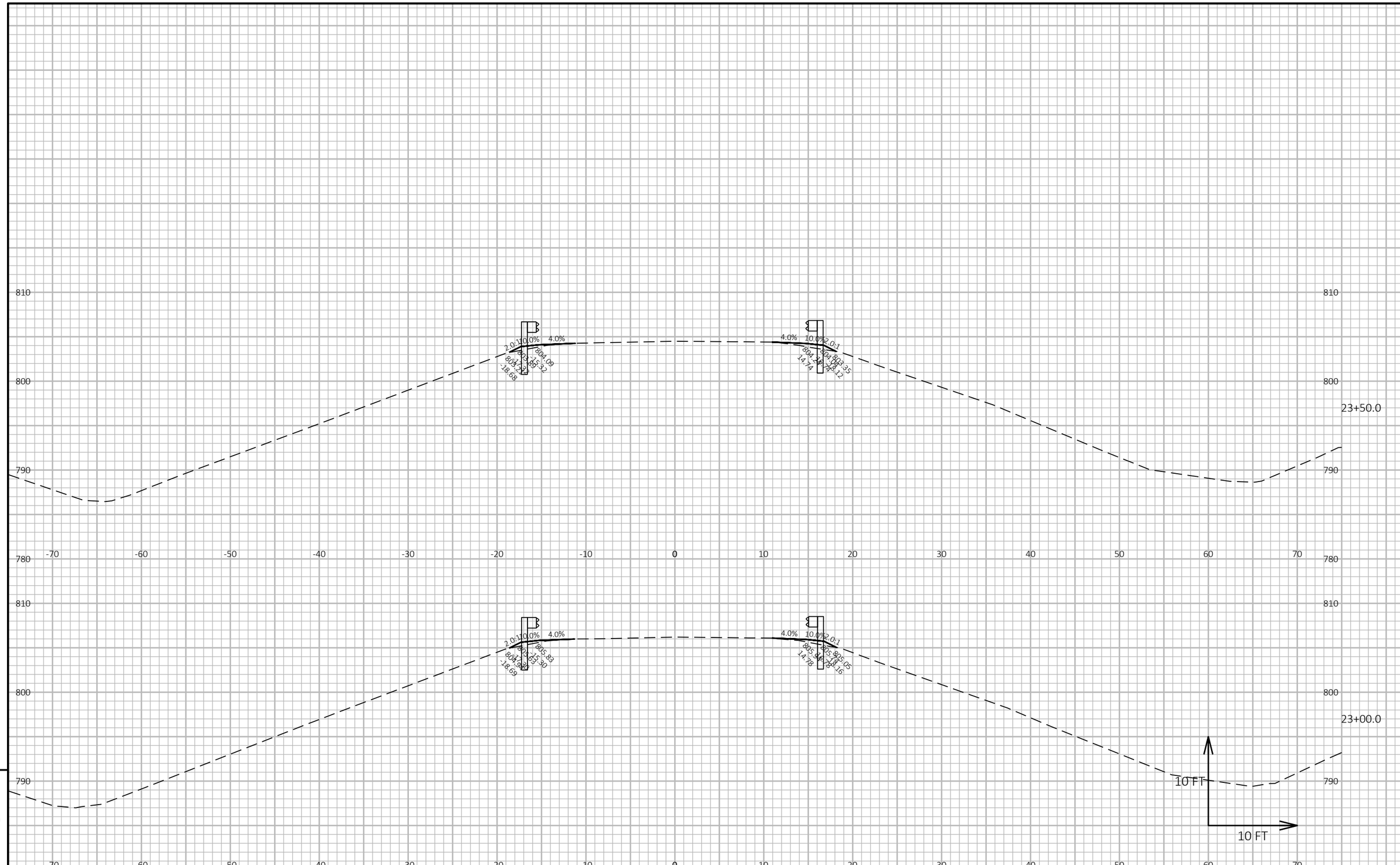

9

9

PROJECT NO: 1227-12-71	HWY: IH 43	COUNTY: MANITOWOC	CROSS SECTIONS: GREENSTREET ROAD	SHEET	E

FILE NAME : I:\45\450504 IH 43 WISDOT GUARDRAIL\C3D\SHEETSPLAN\12271271 PLAN\090202_XS.DWG
LAYOUT NAME - Greenstreet EB 4

PLOT DATE : 1/27/2021 10:47 AM PLOT BY : GARNICA, BRANDON PLOT NAME : **PLOT SCALE :** 1 IN:10 FT HORZ. / 1 IN:10 FT VERT.

WISDOT/CADDS SHEET 49

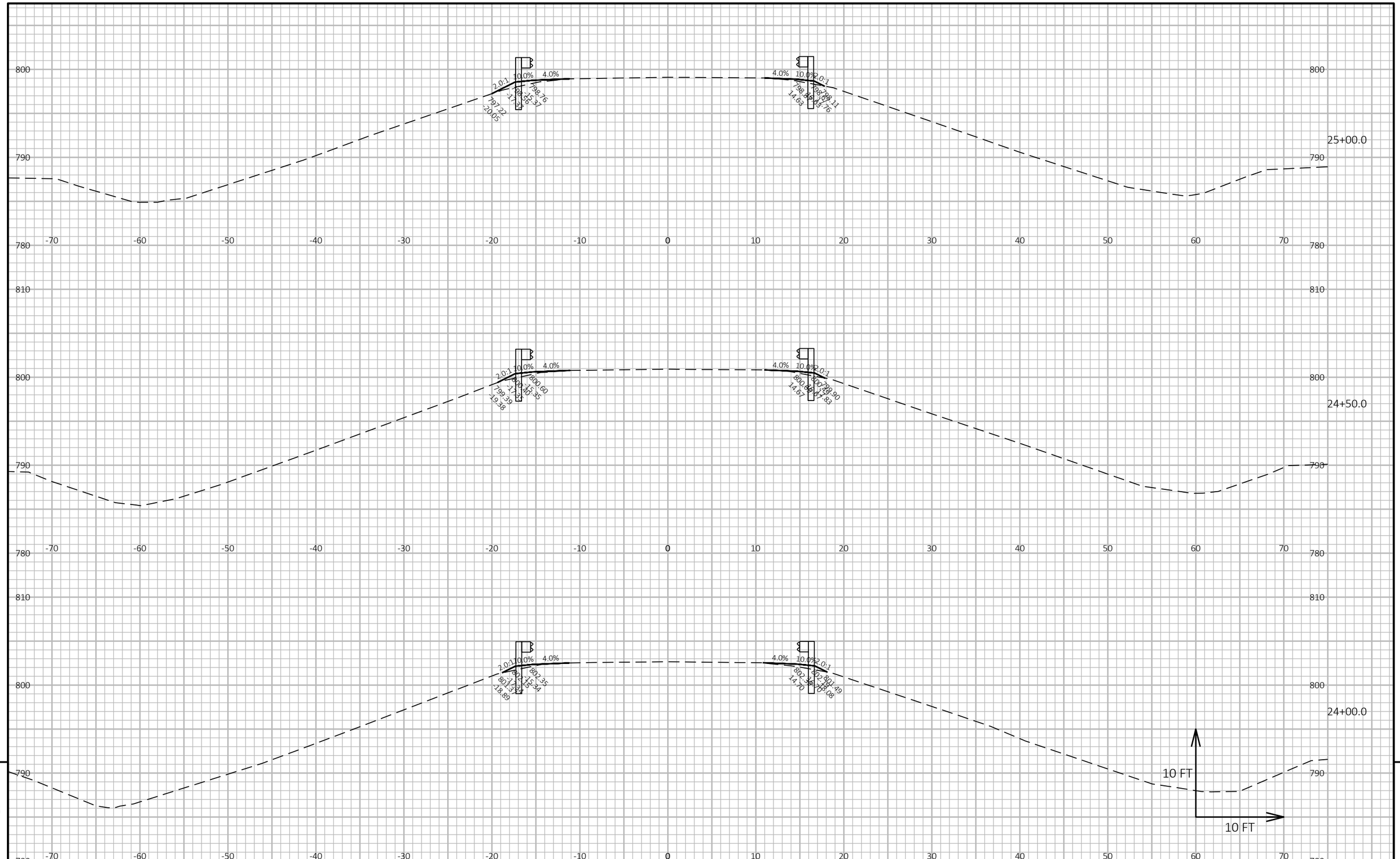

9

9

PROJECT NO: 1227-12-71	HWY: IH 43	COUNTY: MANITOWOC	CROSS SECTIONS: GREENSTREET ROAD	SHEET	E

FILE NAME : I:\45\450504 IH 43 WISDOT GUARDRAIL\C3D\SHEETSPLAN\12271271 PLAN\090202_XS.DWG
LAYOUT NAME - Greenstreet EB 5

PLOT DATE : 1/27/2021 10:47 AM PLOT BY : GARNICA, BRANDON PLOT NAME : PLOT SCALE : 1 IN:10 FT HORZ. / 1 IN:10 FT VERT.

WISDOT/CADDS SHEET 49

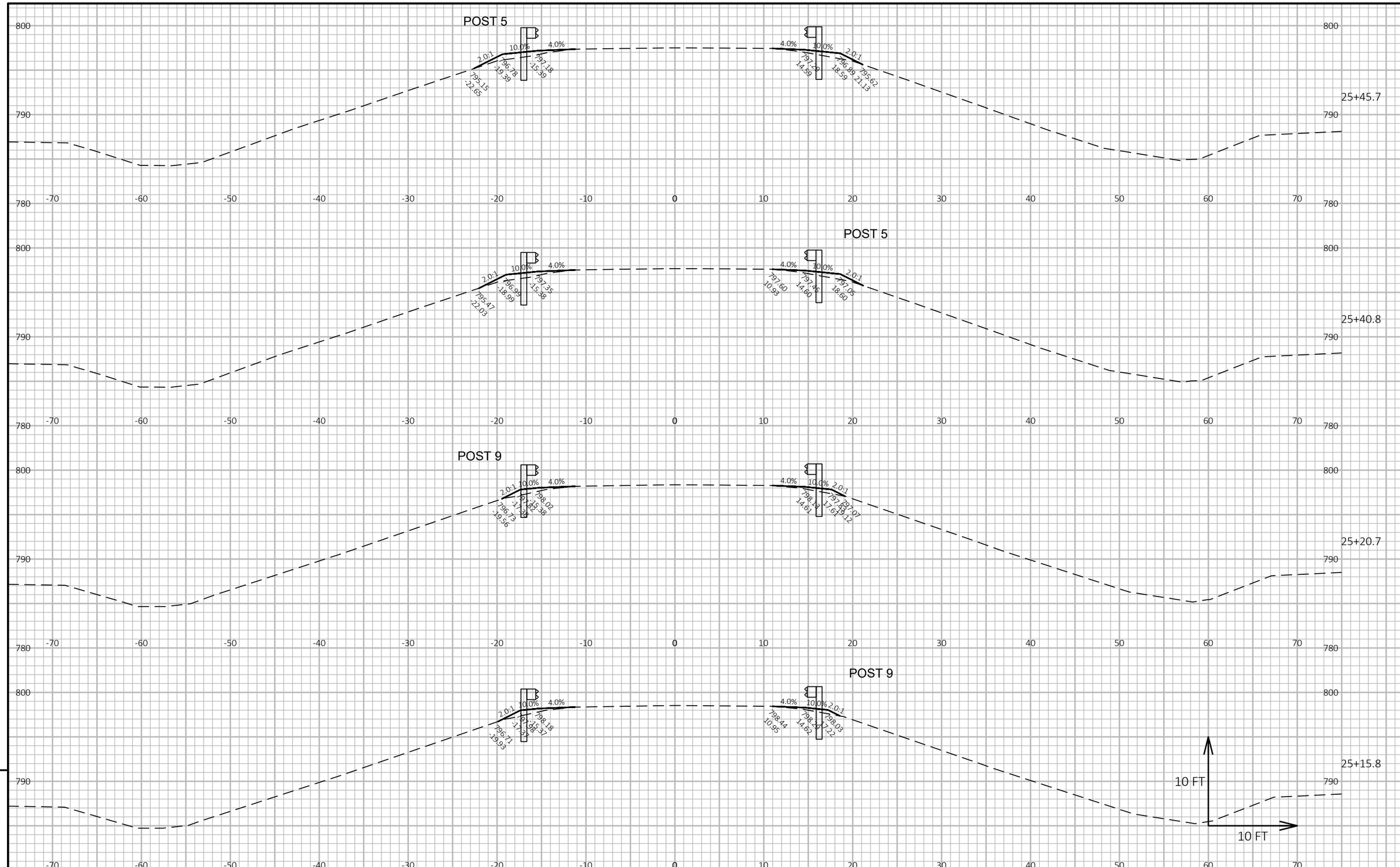

PROJECT NO: 1227-12-71	HWY: IH 43	COUNTY: MANITOWOC	CROSS SECTIONS: GREENSTREET ROAD	SHEET	E

FILE NAME : I:\45\450504 IH 43 WISDOT GUARDRAIL\C3D\SHEETSPLAN\12271271 PLAN\090202_XS.DWG
LAYOUT NAME - Greenstreet EB 6

PLOT DATE : 1/27/2021 10:47 AM PLOT BY : GARNICA, BRANDON PLOT NAME : **PLOT SCALE :** 1 IN:10 FT HORZ. / 1 IN:10 FT VERT.

WISDOT/CADDS SHEET 49

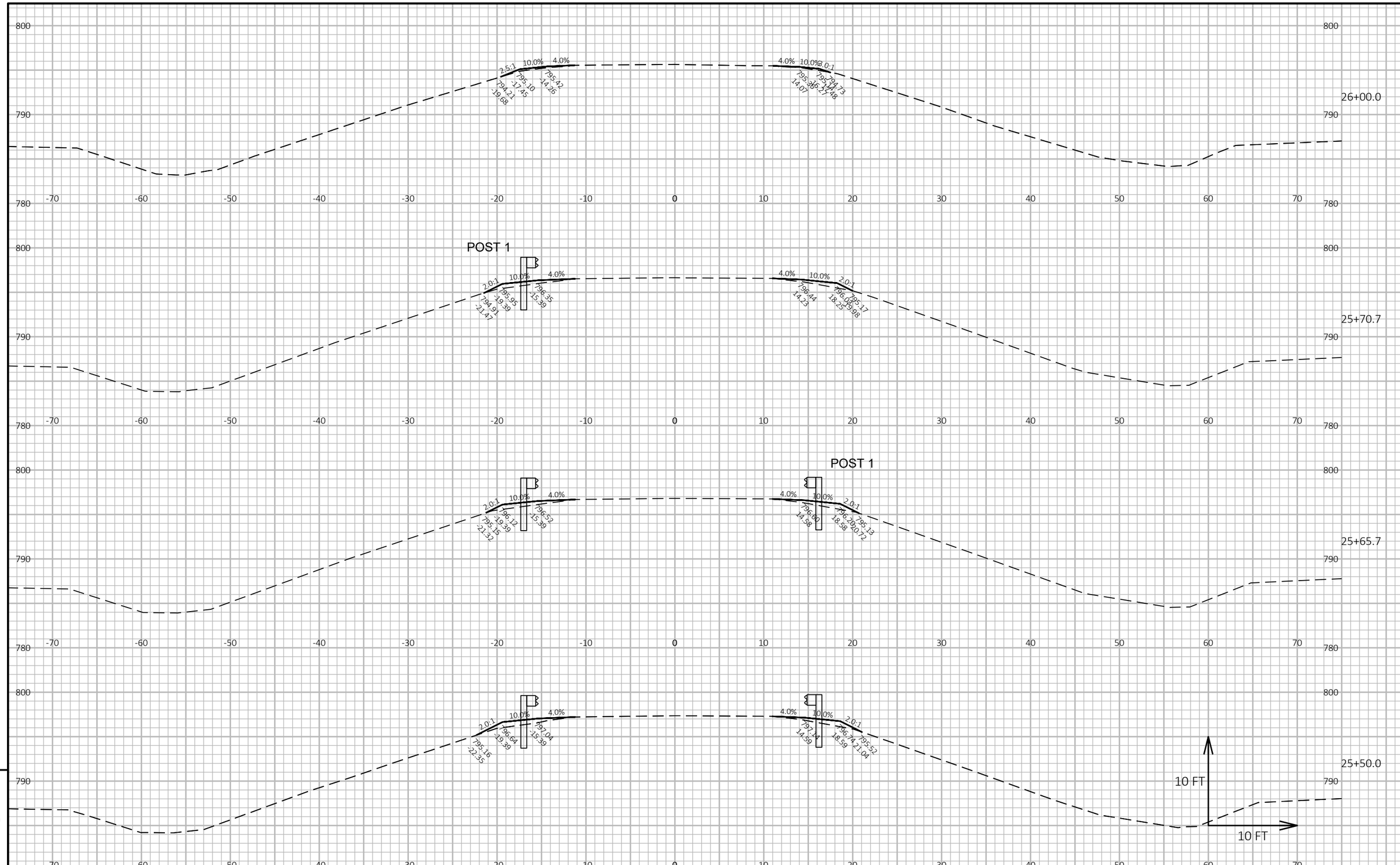

PROJECT NO: 1227-12-71	HWY: IH 43	COUNTY: MANITOWOC	CROSS SECTIONS: GREENSTREET ROAD	SHEET	E

FILE NAME : I:\45\450504 IH 43 WISDOT GUARDRAIL\C3D\SHEETSPLAN\12271271 PLAN\090202_XS.DWG
LAYOUT NAME - Greenstreet EB 7
PLOT DATE : 1/27/2021 10:47 AM
PLOT BY : GARNICA, BRANDON
PLOT NAME :
PLOT SCALE : 1 IN:10 FT HORZ. / 1 IN:10 FT VERT.
WISDOT/CADDS SHEET 49

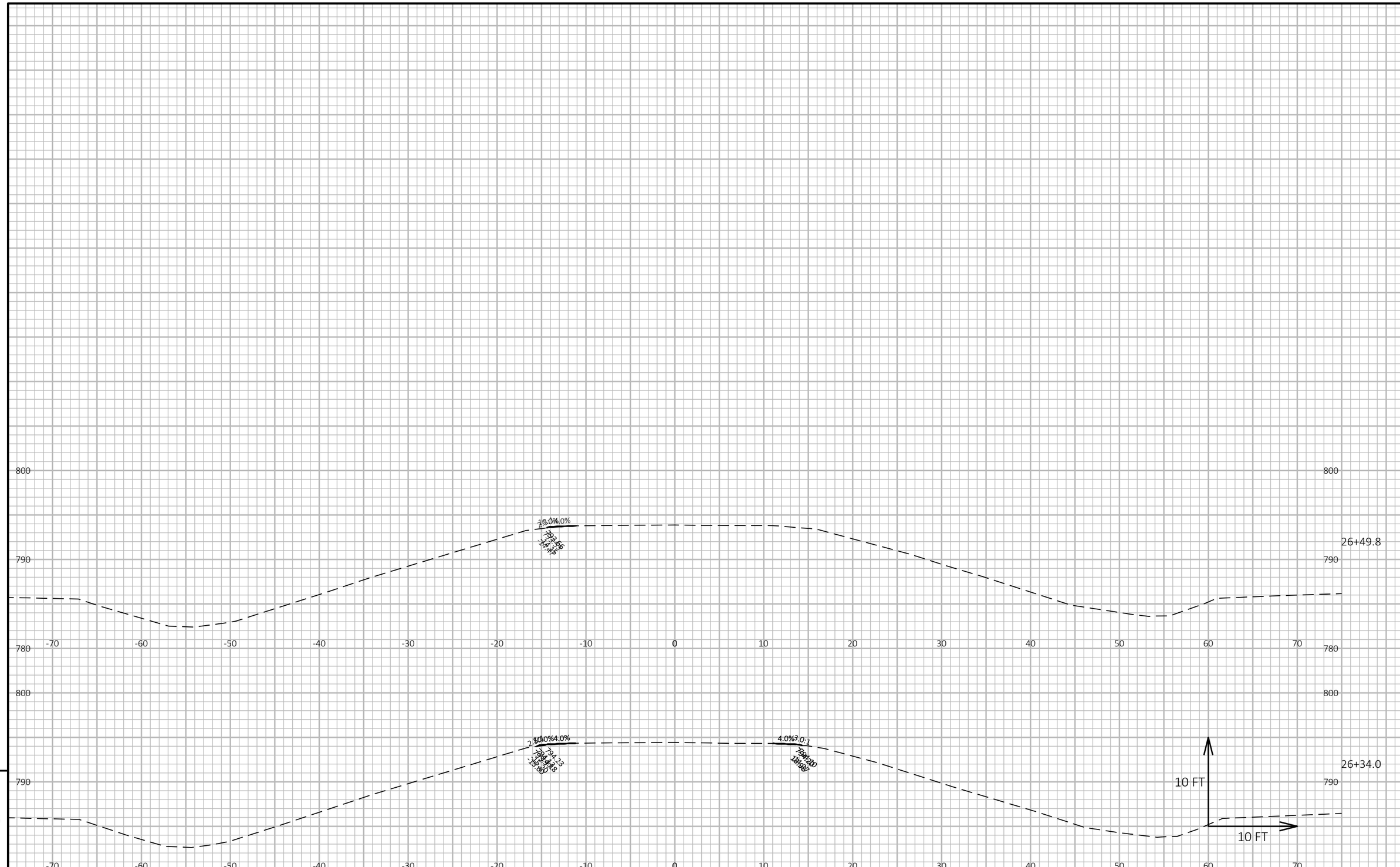

9

9

PROJECT NO: 1227-12-71	HWY: IH 43	COUNTY: MANITOWOC	CROSS SECTIONS: GREENSTREET ROAD	SHEET	E

FILE NAME : I:\45\450504 IH 43 WISDOT GUARDRAIL\C3D\SHEETSPLAN\12271271 PLAN\090202_XS.DWG
LAYOUT NAME - Greenstreet EB 8

PLOT DATE : 1/27/2021 10:47 AM PLOT BY : GARNICA, BRANDON PLOT NAME : **PLOT SCALE :** 1 IN:10 FT HORZ. / 1 IN:10 FT VERT.

WISDOT/CADDS SHEET 49

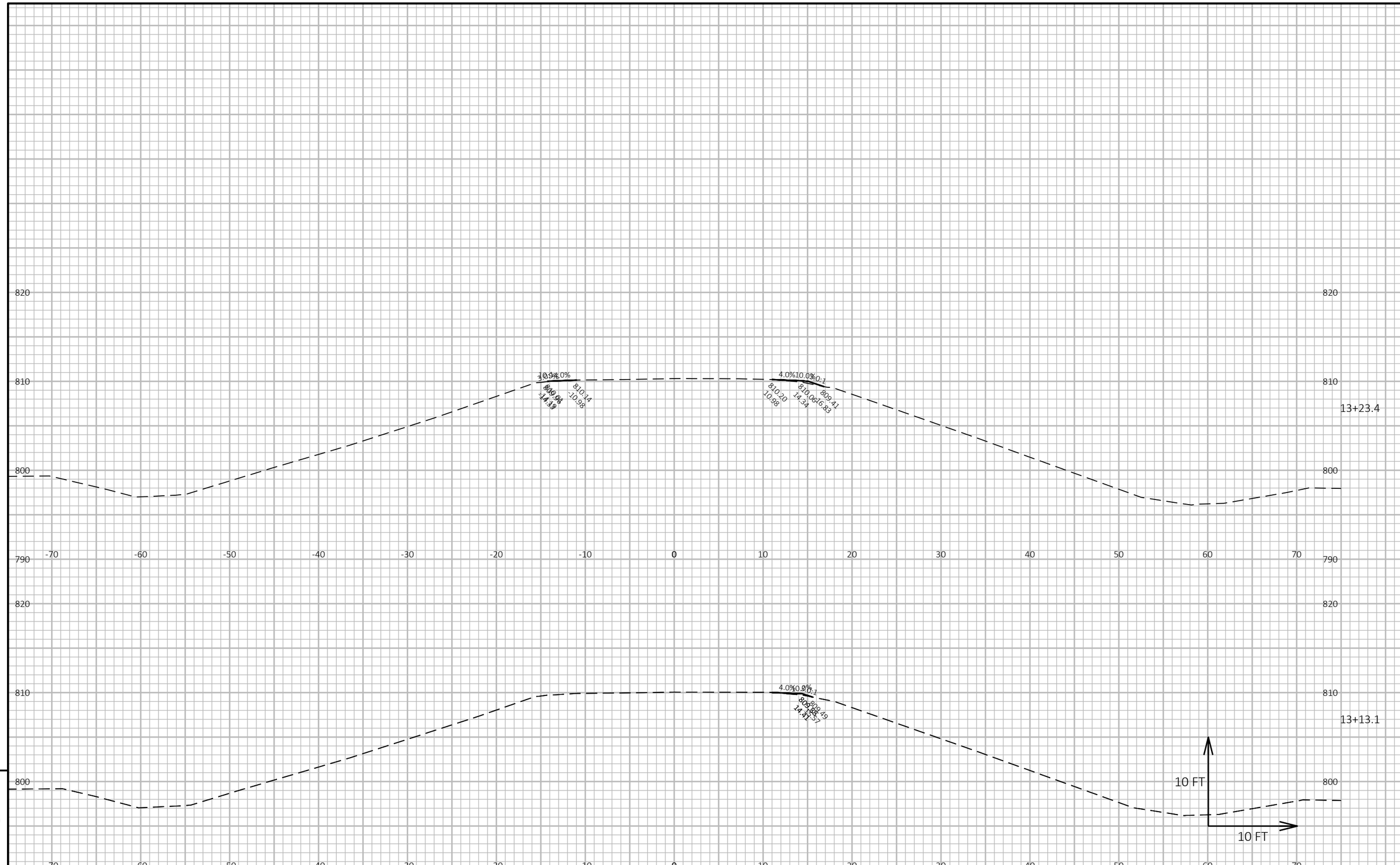

9

9

PROJECT NO: 1227-12-71	HWY: IH 43	COUNTY: MANITOWOC	CROSS SECTIONS: GREENSTREET ROAD	SHEET	E

FILE NAME : I:\45\450504 IH 43 WISDOT GUARDRAIL\C3D\SHEETSPLAN\12271271 PLAN\090202_XS.DWG
LAYOUT NAME - Greenstreet WB 1

PLOT DATE : 1/27/2021 12:49 PM PLOT BY : GARNICA, BRANDON PLOT NAME : PLOT SCALE : 1 IN:10 FT HORZ. / 1 IN:10 FT VERT.

WISDOT/CADDS SHEET 49

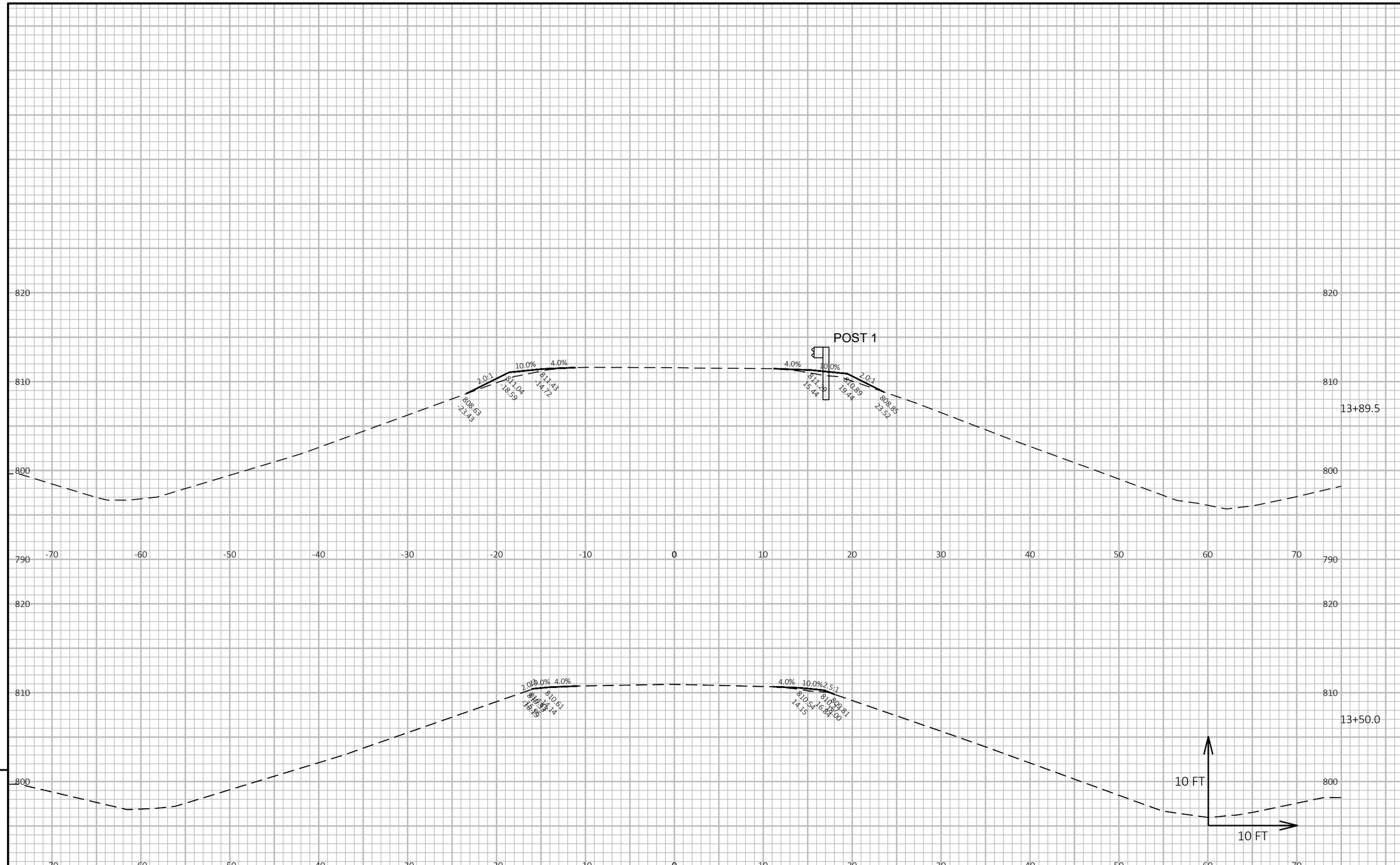

9

9

PROJECT NO: 1227-12-71	HWY: IH 43	COUNTY: MANITOWOC	CROSS SECTIONS: GREENSTREET ROAD	SHEET	E

FILE NAME : I:\45\450504 IH 43 WISDOT GUARDRAIL\C3D\SHEETSPLAN\12271271 PLAN\090202_XS.DWG
LAYOUT NAME - Greenstreet WB 2

PLOT DATE : 1/27/2021 12:49 PM PLOT BY : GARNICA, BRANDON PLOT NAME : **PLOT SCALE :** 1 IN:10 FT HORZ. / 1 IN:10 FT VERT.

WISDOT/CADDS SHEET 49

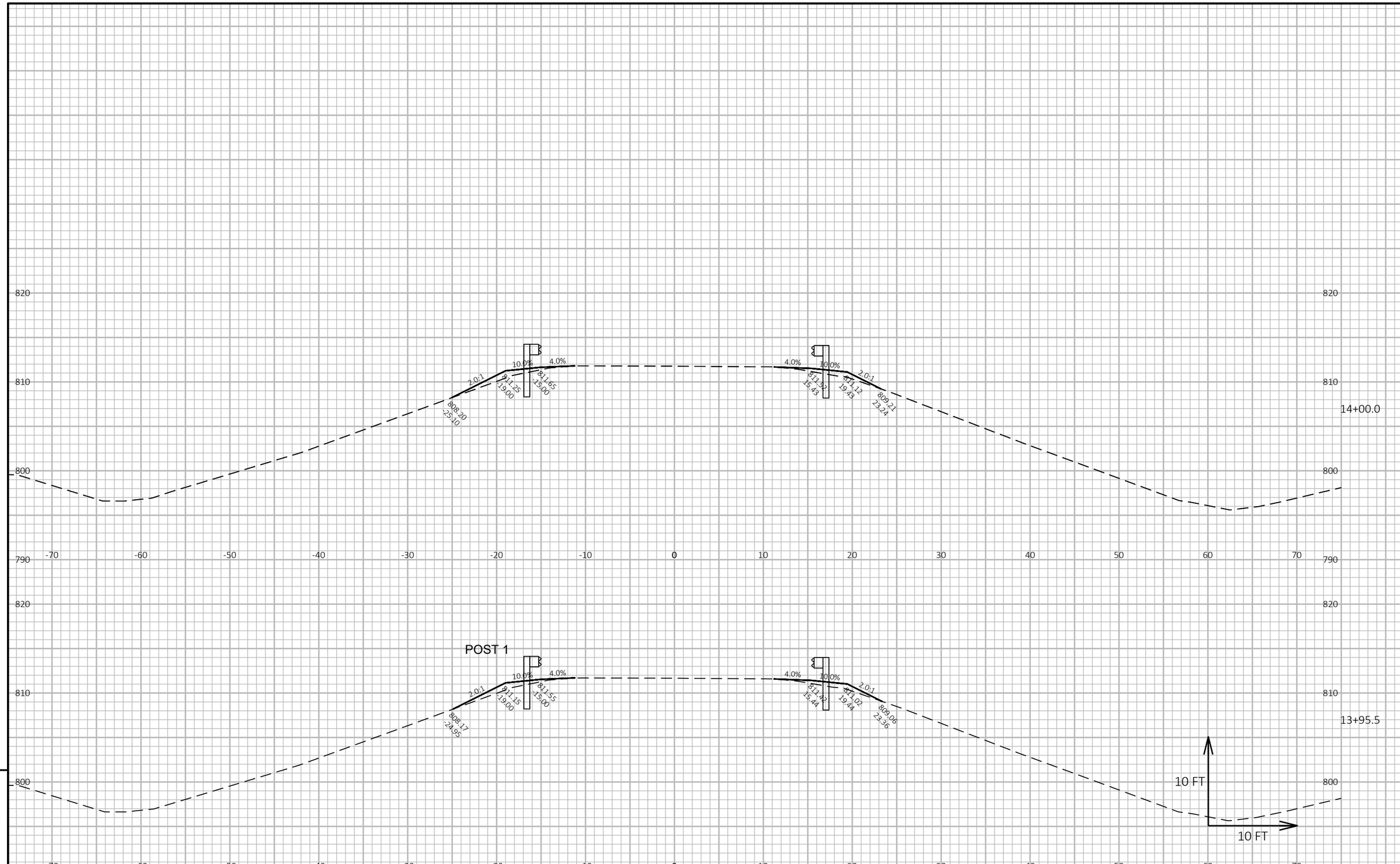

9

9

PROJECT NO: 1227-12-71	HWY: IH 43	COUNTY: MANITOWOC	CROSS SECTIONS: GREENSTREET ROAD	SHEET	E

FILE NAME : I:\45\450504 IH 43 WISDOT GUARDRAIL\C3D\SHEETSPLAN\12271271 PLAN\090202_XS.DWG
LAYOUT NAME - Greenstreet WB 3

PLOT DATE : 1/27/2021 12:49 PM PLOT BY : GARNICA, BRANDON PLOT NAME : PLOT SCALE : 1 IN:10 FT HORZ. / 1 IN:10 FT VERT.

WISDOT/CADDS SHEET 49

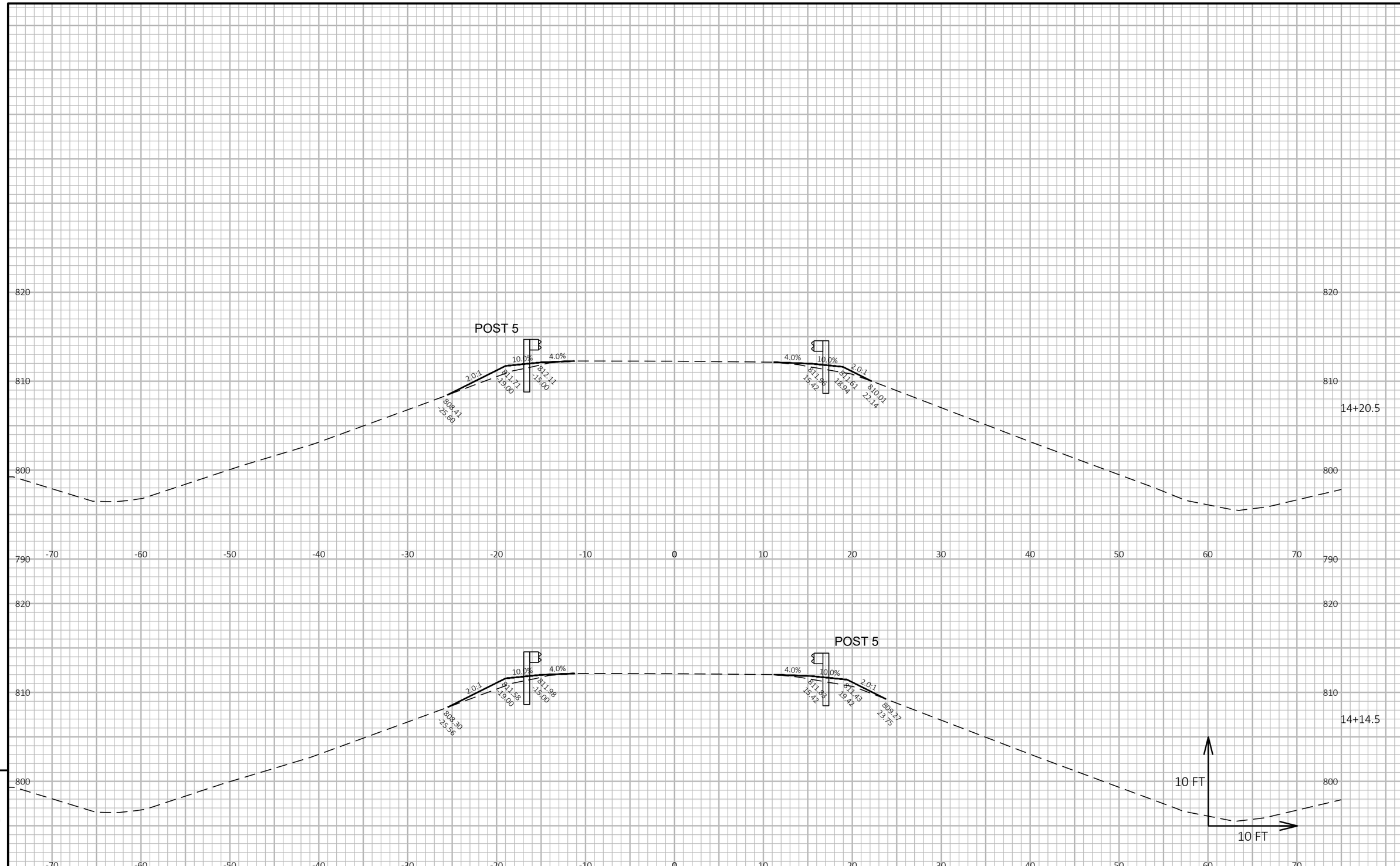

9

9

PROJECT NO: 1227-12-71	HWY: IH 43	COUNTY: MANITOWOC	CROSS SECTIONS: GREENSTREET ROAD	SHEET	E

FILE NAME : I:\45\450504 IH 43 WISDOT GUARDRAIL\C3D\SHEETSPLAN\12271271 PLAN\090202_XS.DWG
LAYOUT NAME - Greenstreet WB 4

PLOT DATE : 1/27/2021 12:50 PM PLOT BY : GARNICA, BRANDON PLOT NAME : PLOT SCALE : 1 IN:10 FT HORZ. / 1 IN:10 FT VERT.

WISDOT/CADDS SHEET 49

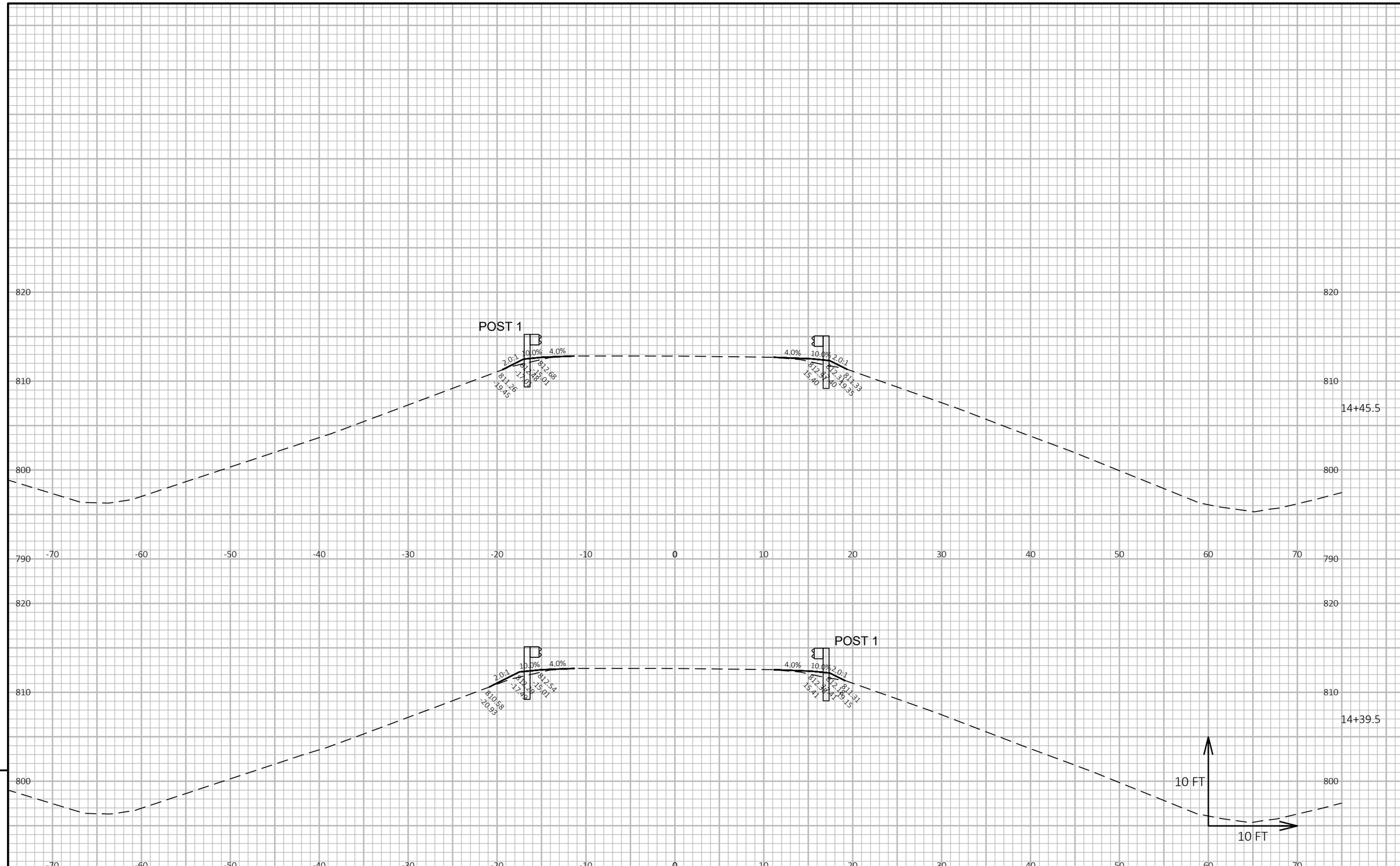

PROJECT NO: 1227-12-71	HWY: IH 43	COUNTY: MANITOWOC	CROSS SECTIONS: GREENSTREET ROAD	SHEET	E

FILE NAME : I:\45\450504 IH 43 WISDOT GUARDRAIL\C3D\SHEETSPLAN\12271271 PLAN\090202_XS.DWG
LAYOUT NAME - Greenstreet WB 5

PLOT DATE : 1/27/2021 12:50 PM PLOT BY : GARNICA, BRANDON PLOT NAME : **PLOT SCALE :** 1 IN:10 FT HORZ. / 1 IN:10 FT VERT.

WISDOT/CADDS SHEET 49

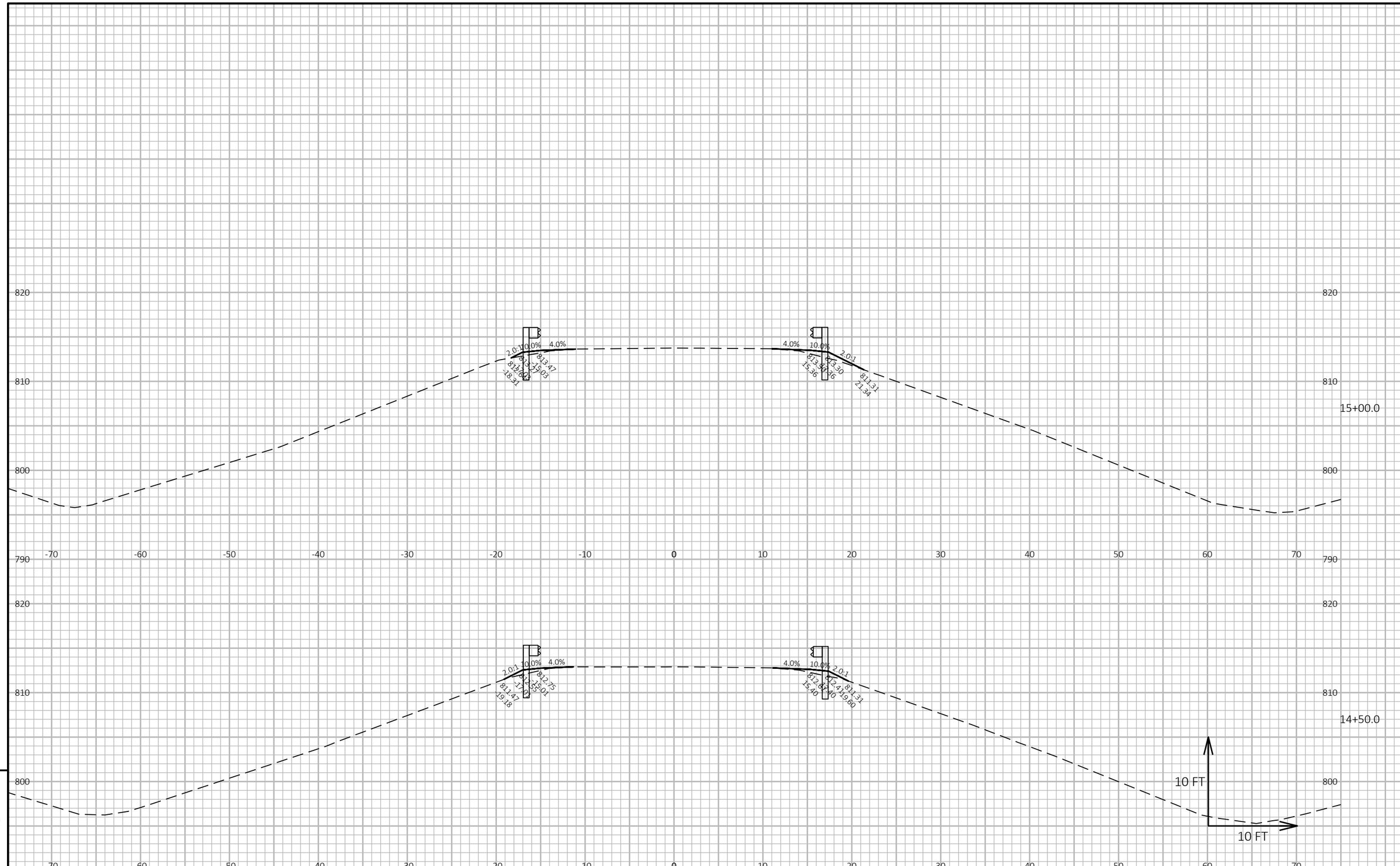

9

9

PROJECT NO: 1227-12-71	HWY: IH 43	COUNTY: MANITOWOC	CROSS SECTIONS: GREENSTREET ROAD	SHEET	E

FILE NAME : I:\45\450504 IH 43 WISDOT GUARDRAIL\C3D\SHEETSPLAN\12271271 PLAN\090202_XS.DWG
LAYOUT NAME - Greenstreet WB 6

PLOT DATE : 1/27/2021 12:50 PM PLOT BY : GARNICA, BRANDON PLOT NAME : **PLOT SCALE :** 1 IN:10 FT HORZ. / 1 IN:10 FT VERT.

WISDOT/CADDS SHEET 49

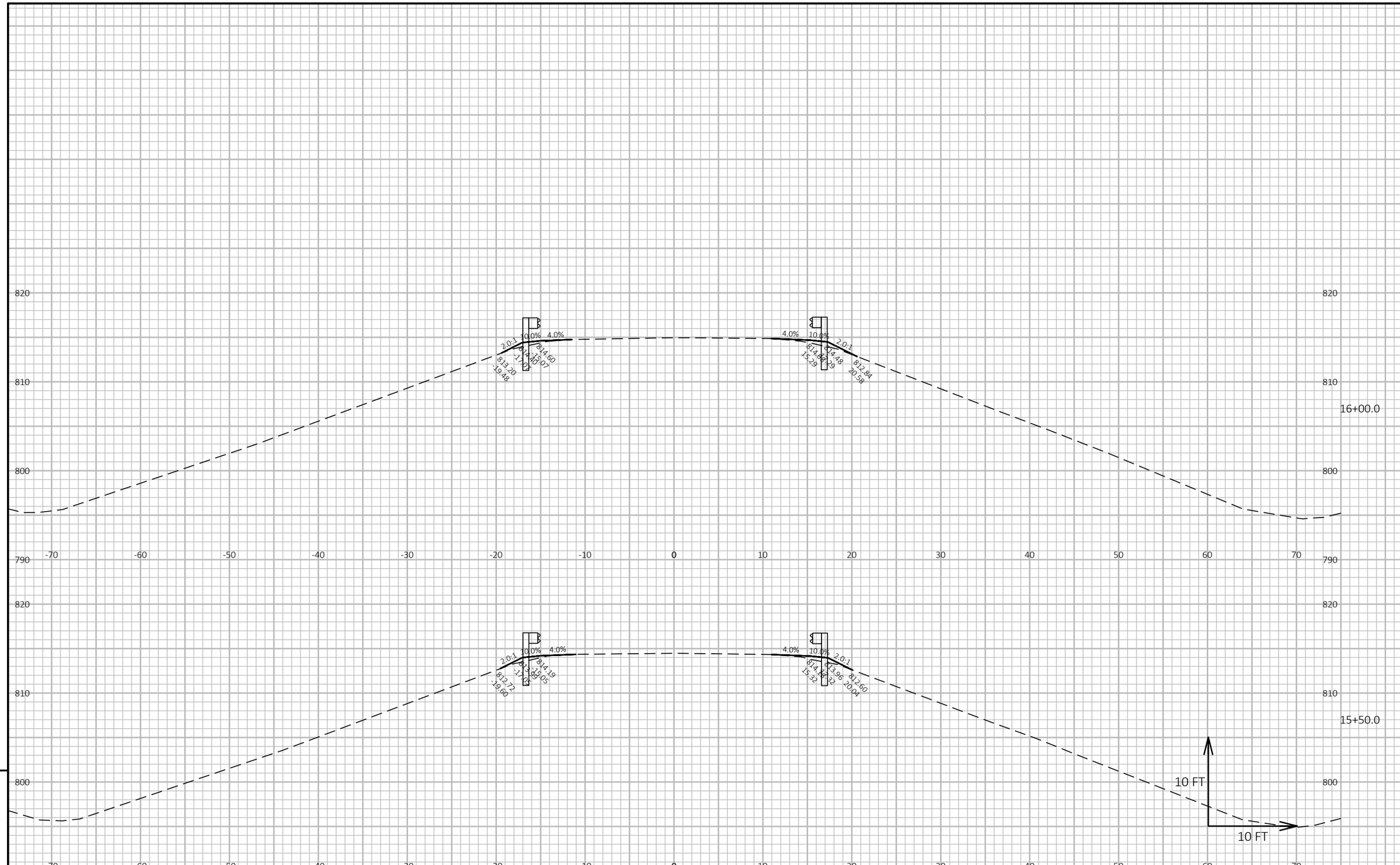

9

9

PROJECT NO: 1227-12-71	HWY: IH 43	COUNTY: MANITOWOC	CROSS SECTIONS: GREENSTREET ROAD	SHEET	E

FILE NAME : I:\45\450504 IH 43 WISDOT GUARDRAIL\C3D\SHEETSPLAN\12271271 PLAN\090202_XS.DWG
LAYOUT NAME - Greenstreet WB 7

PLOT DATE : 1/27/2021 12:50 PM PLOT BY : GARNICA, BRANDON PLOT NAME : **PLOT SCALE :** 1 IN:10 FT HORZ. / 1 IN:10 FT VERT.

WISDOT/CADDS SHEET 49

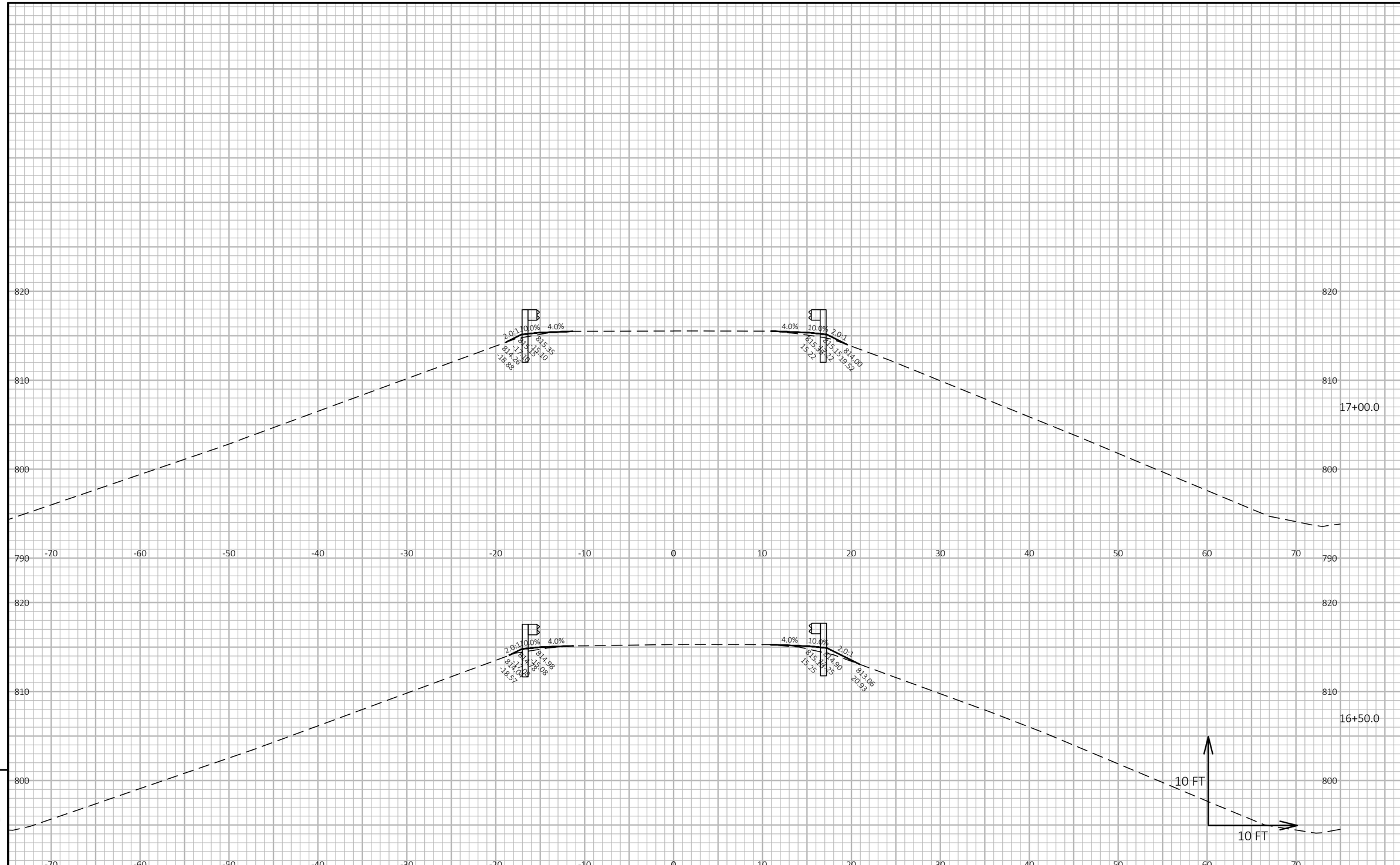

9

9

PROJECT NO: 1227-12-71	HWY: IH 43	COUNTY: MANITOWOC	CROSS SECTIONS: GREENSTREET ROAD	SHEET	E

FILE NAME : I:\45\450504 IH 43 WISDOT GUARDRAIL\C3D\SHEETSPLAN\12271271 PLAN\090202_XS.DWG
LAYOUT NAME - Greenstreet WB 8

PLOT DATE : 1/27/2021 12:50 PM PLOT BY : GARNICA, BRANDON PLOT NAME : **PLOT SCALE :** 1 IN:10 FT HORZ. / 1 IN:10 FT VERT.

WISDOT/CADDS SHEET 49

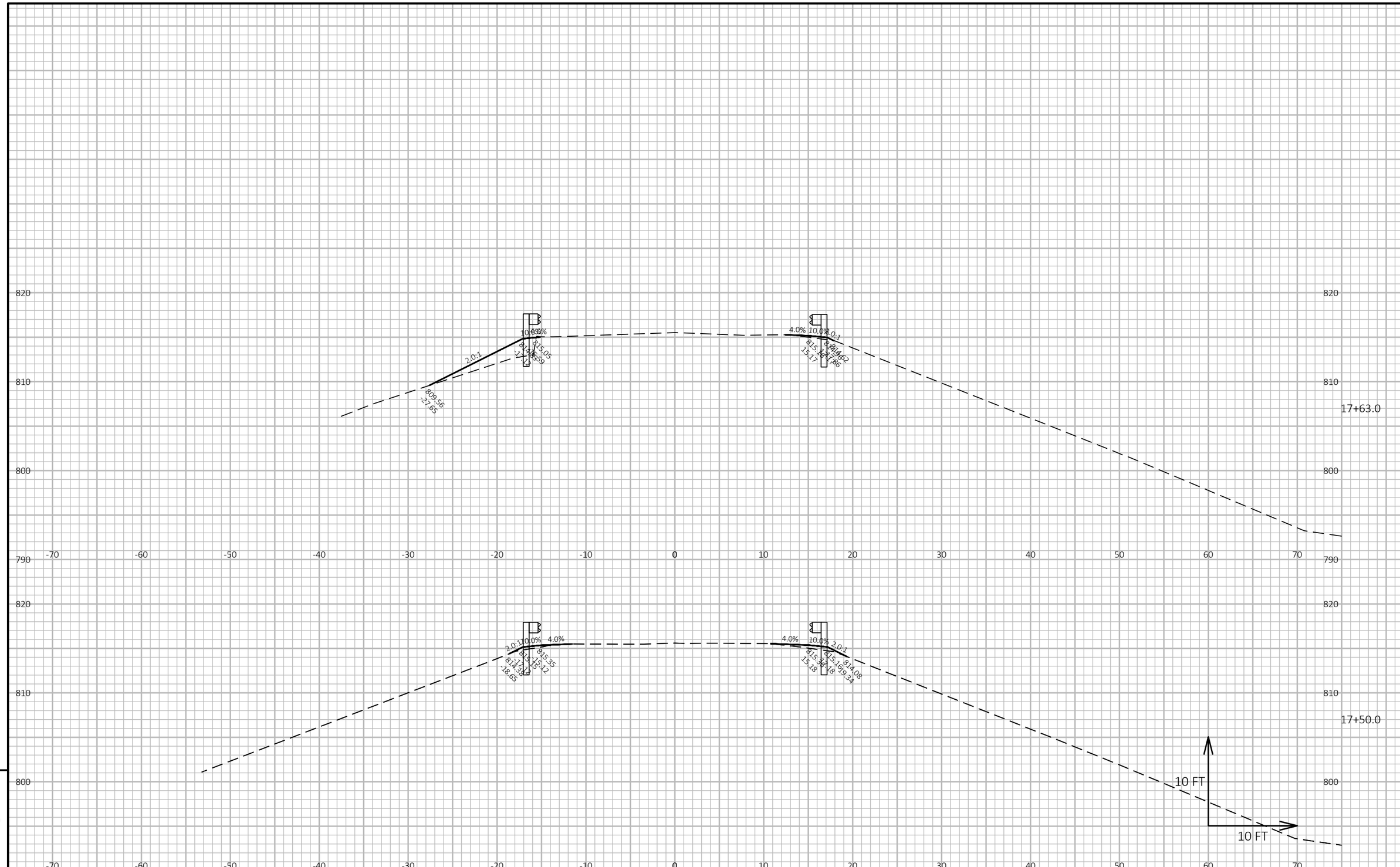

9

9

PROJECT NO: 1227-12-71	HWY: IH 43	COUNTY: MANITOWOC	CROSS SECTIONS: GREENSTREET ROAD	SHEET	E

FILE NAME : I:\45\450504 IH 43 WISDOT GUARDRAIL\C3D\SHEETSPLAN\12271271 PLAN\090202_XS.DWG
LAYOUT NAME - Greenstreet WB 9

PLOT DATE : 1/27/2021 12:51 PM PLOT BY : GARNICA, BRANDON PLOT NAME : **PLOT SCALE :** 1 IN:10 FT HORZ. / 1 IN:10 FT VERT.

WISDOT/CADDS SHEET 49

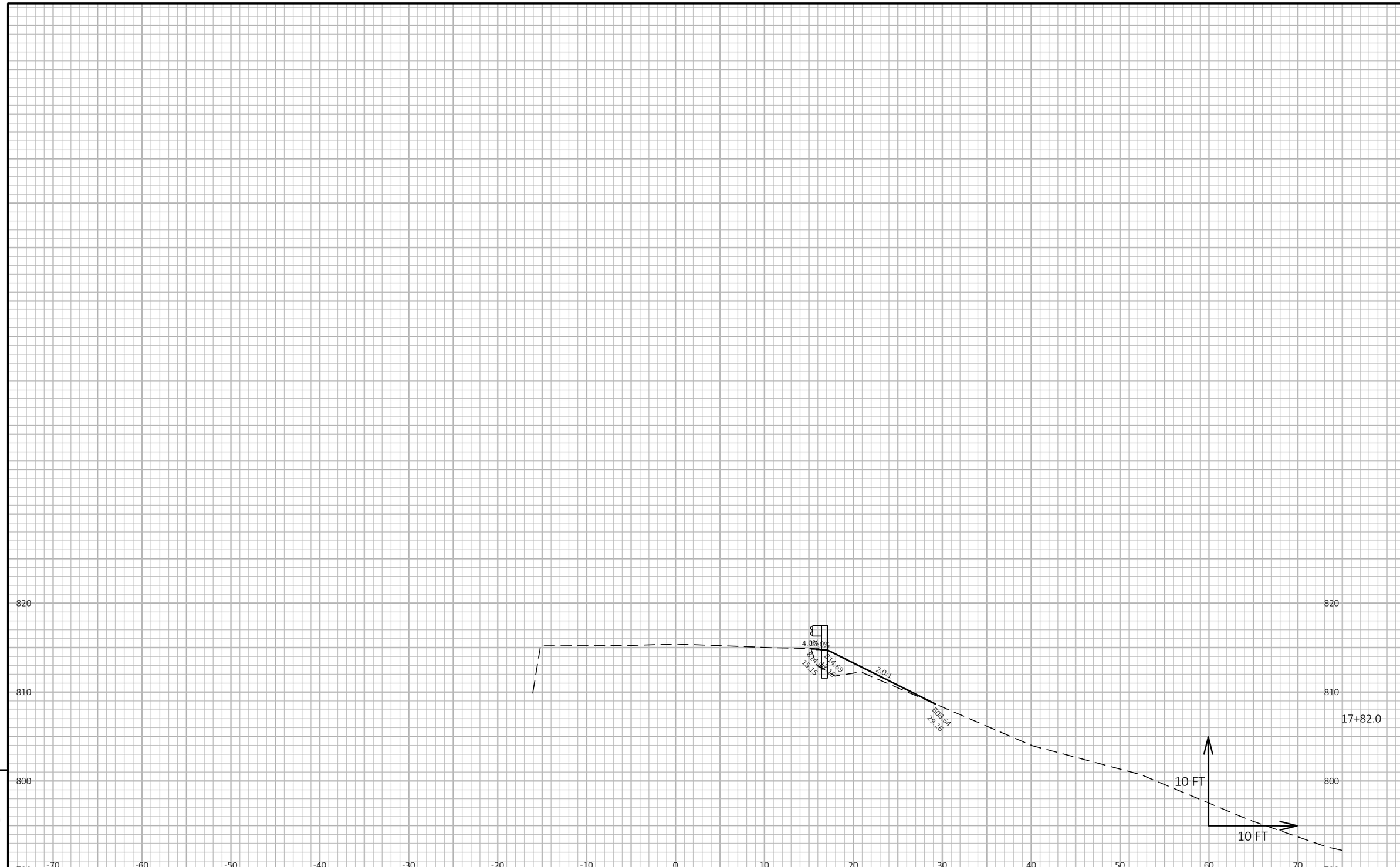

9

9

PROJECT NO: 1227-12-71	HWY: IH 43	COUNTY: MANITOWOC	CROSS SECTIONS: GREENSTREET ROAD	SHEET	E

FILE NAME : I:\45\450504 IH 43 WISDOT GUARDRAIL\C3D\SHEETSPLAN\12271271 PLAN\090202_XS.DWG
LAYOUT NAME - Greenstreet WB 10

PLOT DATE : 1/27/2021 12:51 PM PLOT BY : GARNICA, BRANDON PLOT NAME : **PLOT SCALE :** 1 IN:10 FT HORZ. / 1 IN:10 FT VERT.

WISDOT/CADDS SHEET 49