GRE MAY 2015

PROJECT ID: 4085-43-71
WITH: N/A

COUNTY: BROWN

35

STATE PROJECT	FEDERAL PROJECT	
	PROJECT	CONTRACT
4085-43-71	WISC 2015292	1

STATE OF WISCONSIN
DEPARTMENT OF TRANSPORTATION

PLAN OF PROPOSED IMPROVEMENT

CITY OF DE PERE, STH 32/57

CTH X INTERSECTION

STH 32
BROWN COUNTY

STATE PROJECT NUMBER
4085-43-71

AS-BUILT PLAN

SUPERVISOR: Dan Segerstrom
PROJECT MANAGER: Andy Fulcer
PROJECT LEADER: Ken Baierl
CONTRACTOR: Vinton Construction Company
WORK STARTED 7/6/15
WORK COMPLETED 11/9/15

ORDER OF SHEETS

Section No.	1	Title
Section No.	2	Typical Sections and Details
Section No.	3	Estimate of Quantities
Section No.	3	Miscellaneous Quantities
Section No.	4	Right of Way Plat
Section No.	5	Plan and Profile
Section No.	6	Standard Detail Drawings
Section No.	7	Sign Plates
~~Section No.~~	~~8~~	~~Structure Plans~~
Section No.	9	Computer Earthwork Data
Section No.	9	Cross Sections

TOTAL SHEETS = 224

Section No. 2 Sheet 43 is replaced with Sheet 43A.
Section 7 added Sheets 138a & 138b
Section 9 Sheets 196-198 are replaced with Sheets 196A-198A

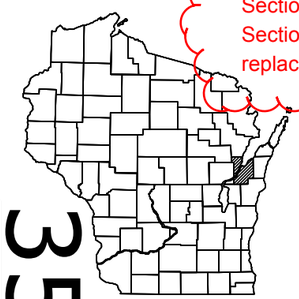

N

Subcontractor List
Arbor Green
Bodart Electric Service
Century Fence
De Keyser Construction
Double D Landscape
Four-Way Construction
Hard Rock Sawing & Drilling
Kuzisaso Construction
Northeast Asphalt
Sommers Construction
Storm Companies
Wisconsin Land Surveying

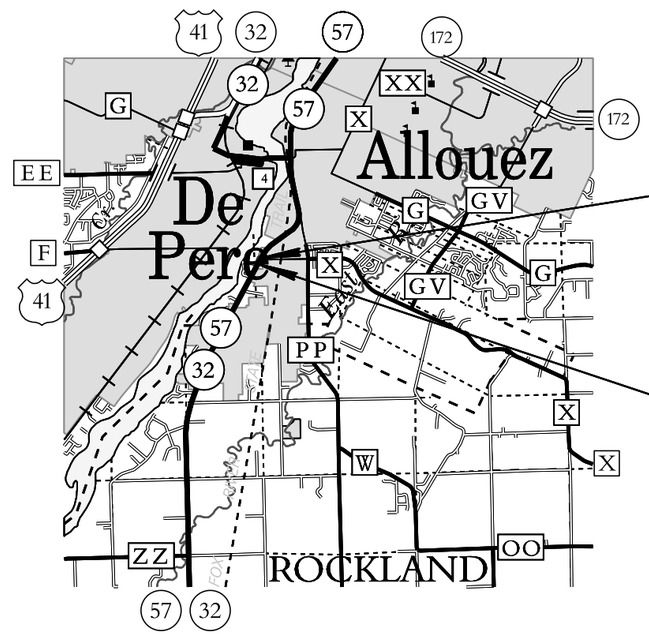

END PROJECT 4085-43-71
STA 27+44

BEGIN PROJECT 4085-43-71
STA 9+20.00
Y = 534,966.385
X = 85,143.770

DESIGN DESIGNATION

A.A.D.T. 2015	=	8,400
A.A.D.T. 2035	=	11,300
D.H.V.	=	4.9
D.D.	=	59/41
T.	=	5.8%
DESIGN SPEED	=	60 MPH
ESALS	=	2,197,300

CONVENTIONAL SYMBOLS

PLAN
CORPORATE LIMITS
PROPERTY LINE
LOT LINE
LIMITED HIGHWAY EASEMENT
EXISTING RIGHT OF WAY
PROPOSED OR NEW R/W LINE
SLOPE INTERCEPT
REFERENCE LINE
EXISTING CULVERT
PROPOSED CULVERT (Box or Pipe)
COMBUSTIBLE FLUIDS — CAUTION
MARSH AREA
WOODED OR SHRUB AREA

PROFILE
GRADE LINE
ORIGINAL GROUND
MARSH OR ROCK PROFILE (To be noted as such) — ROCK
SPECIAL DITCH — LABEL
GRADE ELEVATION — 95.36
CULVERT (Profile View)

UTILITIES
ELECTRIC — E
FIBER OPTIC — FO
GAS — G
SANITARY SEWER — SAN
STORM SEWER — SS
TELEPHONE — T
WATER — W
UTILITY PEDESTAL
POWER POLE
TELEPHONE POLE

LAYOUT
SCALE 0 — 1 MI.

TOTAL NET LENGTH OF CENTERLINE = 0.35 MI.

HORIZONTAL = NAD83 (2007)
VERTICAL = NAVD88 (2007)

STATE OF WISCONSIN
DEPARTMENT OF TRANSPORTATION

PREPARED BY

Surveyor	NE REGION
Designer	B FECHHELM
Project Manager	A FULCER
Regional Examiner	
Regional Supervisor	D SEGERSTROM
C.O. Examiner	

APPROVED FOR THE DEPARTMENT
DATE: 1/29/15 (Signature)

E

UTILITIES

JOSEPH KASSAB
AT&T WISCONSIN
221 WEST WASHINGTON ST
APPLETON WI 54911-4742
(920) 735-3206
JK572K@ATT.COM

SCOTT THORESEN
CITY OF DE PERE
925 S 6TH ST
DE PERE WI 54115
(920) 339-4060
STHORESEN@MAIL.DE-PERE.ORG

JIM KOSTUCH
MCLEOD USA TELCOMMUNICATION SERVICES INC
13935 BISHOPS DRIVE
BROOKFIELD WI 53005
(262) 792-7938
JAMES.KOSTUCH@WINDSTREAM.COM

ROB REINHART
GREEN BAY METROPOLITAN SEWERAGE DISTRICT
2231 NORTH QUINCY ST
GREEN BAY WI 54307-1248
(920) 438-1035
RREINHART@NEWWATER.US

KURT LITTLE
TIME WARNER CABLE
3520 E DESTINATION DR
APPLETON WI 54915
(920) 831-9227
KURT.LITTLE@TWCABLE.COM

LORI BUTRY
WISCONSIN PUBLIC SERVICE CORPORATION
700 N ADAMS ST
PO BOX 19001
GREEN BAY WI 54307-9001
(920) 433-1703
LABUTRY@INTEGRYSGROUP.COM

GENERAL NOTES

DISTURBED AREAS WITHIN THE RIGHT OF WAY, EXCEPT THE AREAS WITHIN THE FINISHED SHOULDER POINTS, WILL BE FERTILIZED, SEEDED, AND MULCHED.

LOCATIONS OF UNDERGROUND UTILITIES AS SHOWN ON THE PLANS ARE APPROXIMATE. THERE MAY BE OTHER UTILITY INSTALLATIONS WITHIN THE PROJECT AREA THAT ARE NOT SHOWN.

PRIOR TO ORDERING DRAINAGE PIPE AND STRUCTURES THE CONTRACTOR WILL VERIFY RELATED DRAINAGE INFORMATION IN THE PLAN WITH THE ENGINEER.

CURB RADII ARE SHOWN TO THE FLANGE LINE UNLESS OTHERWISE NOTED.

CURB AND GUTTER ELEVATIONS ARE ALONG THE FLANGE LINE UNLESS OTHERWISE NOTED.

ALL MEDIAN ENDS AND ISLAND CORNERS ARE TO BE CONSTRUCTED WITH SLOPED NOSE, PER THE DETAIL, NULESS OTHERWISE NOTED.

NO TREES OR SHRUBS ARE TO BE REMOVED WITHOUT PRIOR APPROVAL OF THE ENGINEER.

THE EROSION CONTROL FEATURES AS SHOWN IN THE PLANS ARE SUGGESTED LOCATIONS. EXACT LOCATIONS WILL BE DETERMINED BY THE ENGINEER IN THE FIELD.

DRIVEWAYS WILL BE REPLACED IN KIND. BASE AGGREGAT DENSE WILL BE USED UNDER ALL DRIVEWAYS. THE EXACT LOCATION AND WIDETHS OF PRIVATE AND COMMERCAIL DRIVEWAYS ARE TO BE DETERMINED BY THE ENGINEER IN THE FIELD.

AFTER CONSTRUCTION OF ANY INLET, CONTRACTOR SHALL CONSTRUCT THE EROSION CONTROL PROTECTIONS IN ACCRODANCE WITH THE DETAILS SHOWN IN THE PLANS TO MINIMIZE SEDIMENTATION IN TH EINLET AND STORM SEWER.

BOXOUTS SHALL BE PROVIDED IN THE CONCRETE SIDEWALK BY THE CONTRACTOR FOR SIGN PLACEMENT. THE COST OF THE BOXOUTS SHALL BE INCIDENTAL TO CONCRETE SIDEWALK. LOCATIONS SHALL BE DETERMINED BY THE ENGINEER. SEE CONSTRUCTION DETAILS FOR THE SIZE OF THE BOXOUTS.

EXCAVATION BELOW THE SUBGRADE (EBS) LOCATIONS ARE NOT SHOWN ON THE CROSS SECTIONS. IF EBS IS REQUIRED, IT SHALL BE MEASURED AND PAID FOR AS UNCLASSIFIED EXCAVATION. EXACT LOCATIONS WILL BE DETERMINED BY THE ENGINEER IN THE FIELD.

ALL ASPHALTIC SIDEROADS AND PRIVATE AND COMMERCIAL ENTRANCES SHALL BE MATCHED WITH A SAWED JOINT.

CITY OF DE PERE ENGINEER

ERIC RAKERS - CITY OF DE PERE
925 SOUTH SIXTH STREET
DE PERE, WI 54115
920-339-8304

BROWN COUNTY SURVEYOR

PAT FORD - BROWN COUNTY
305 EAST WALNUT STREET
GREEN BAY, WI 54301
920-448-4493
FORD_PJ@CO.BROWN.WI.US

DNR AREA LIAISON

JAMES DOPERALSKI JR
DEPARTMENT OF NATURAL RESOURCES
NORTHEAST REGION
2984 SHAWANO AVE
GREEN BAY, WI 54313
920-662-5119
JAMES.DOPERALSKI@WISCONSIN.GOV

DIGGERS HOTLINE
Dial 811 or (800)242-8511
www.DiggersHotline.com

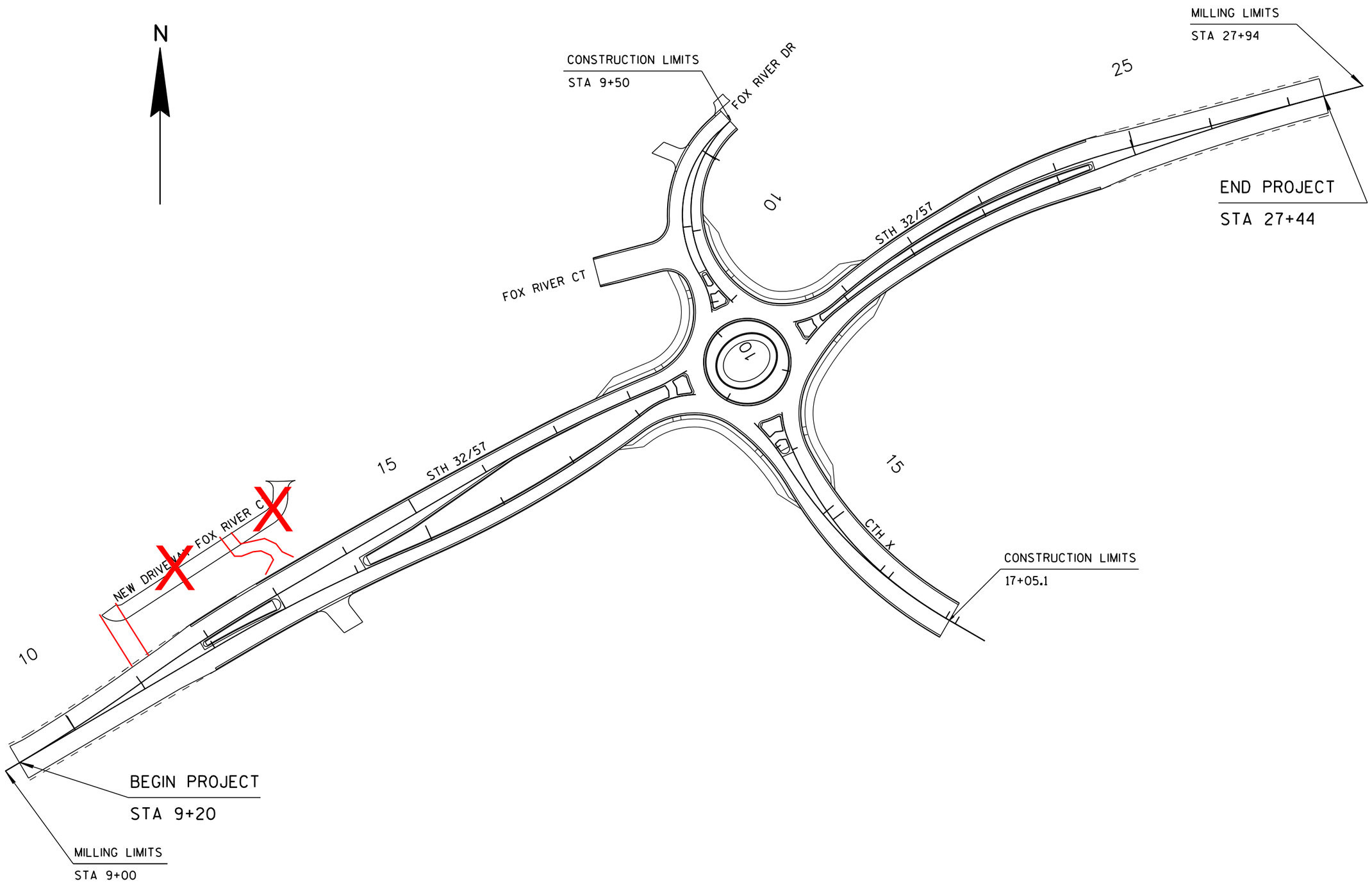

PROJECT NO:4085-43-71	HWY:STH 32	COUNTY:BROWN	PROJECT OVERVIEW	SHEET	E

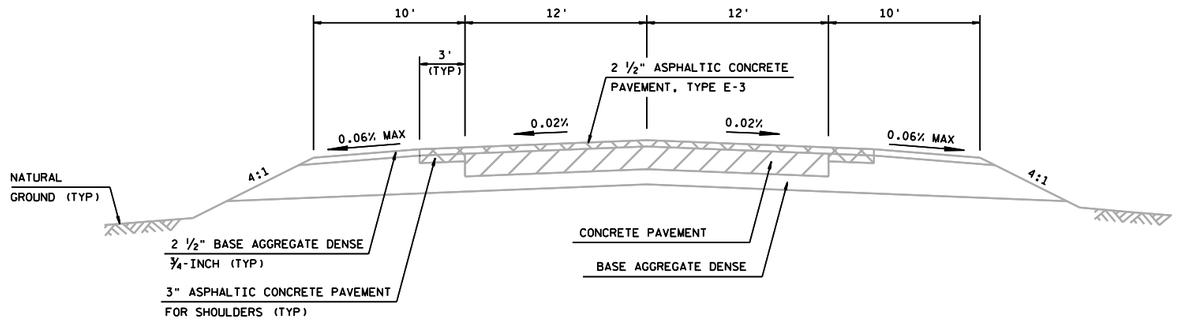

TYPICAL EXISTING CROSS SECTION FOR STH 32/STH 57

STA 9+00 - 18+50

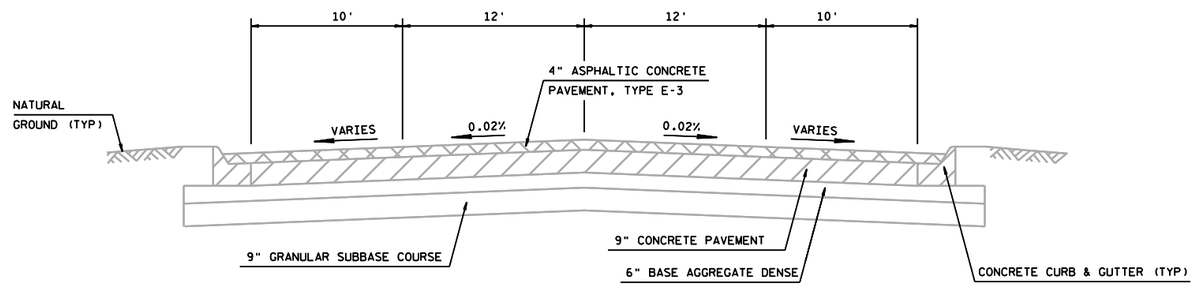

TYPICAL EXISTING CROSS SECTION FOR STH 32/57

STA 18+50 - 20+20

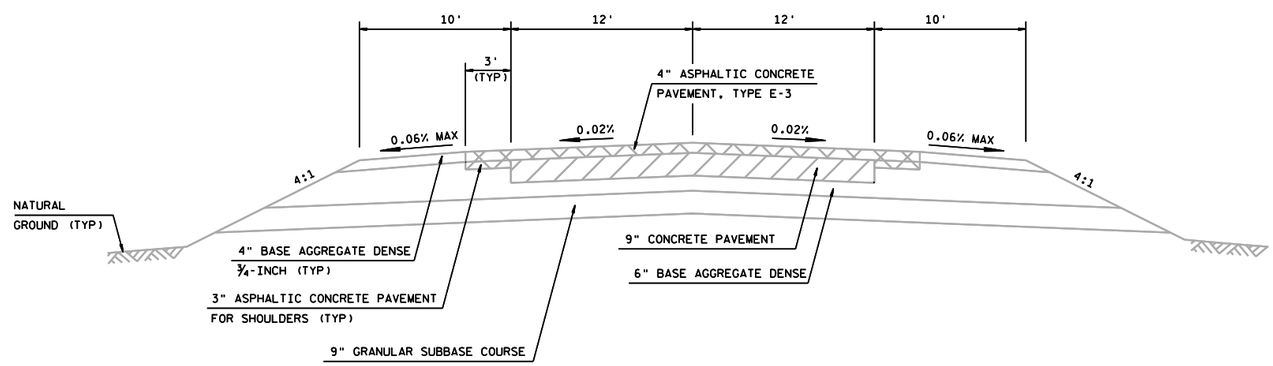

TYPICAL EXISTING CROSS SECTION FOR STH 32/STH 57

STA 20+20 - 27+94

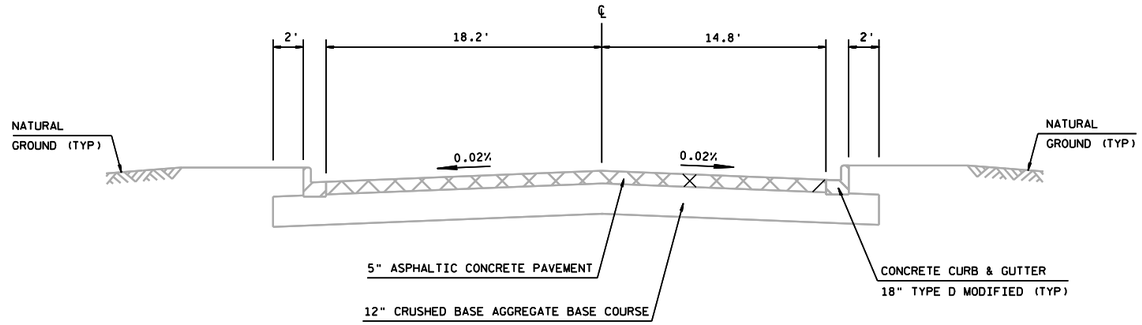

TYPICAL EXISTING CROSS SECTION FOR FOX RIVER DR

STA 10+00 - 12+28

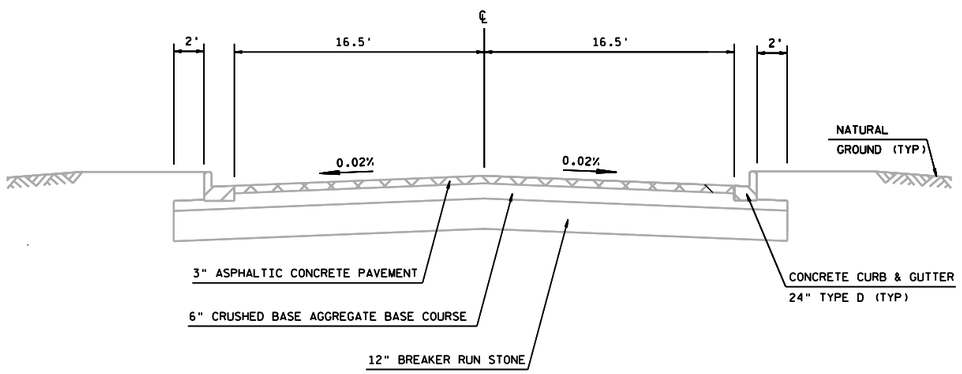

TYPICAL EXISTING CROSS SECTION FOR FOX RIVER CT

STA 10+00 10+72

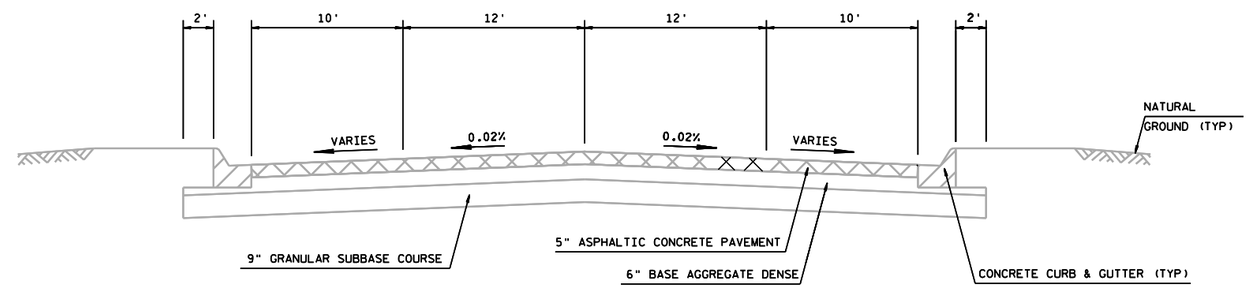

TYPICAL EXISTING CROSS SECTION FOR CTH X

STA 12+77 - 13+62

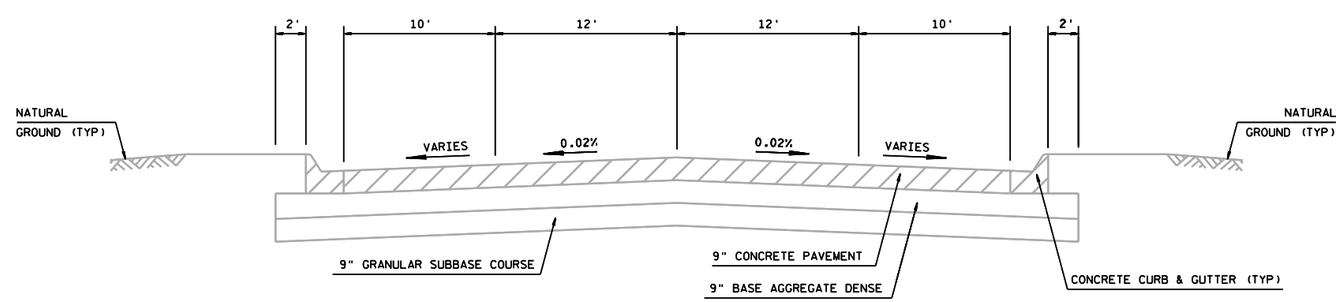

TYPICAL EXISTING CROSS SECTION FOR CTH X

STA 13+62 - 17+05

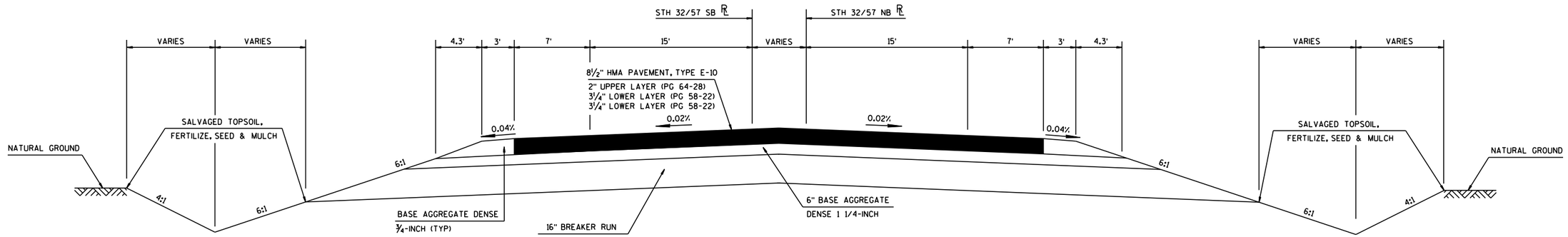

FINISHED TYPICAL CROSS SECTION FOR STH 32/57

STA 9+20 - 11+90 (NB & SB)
STA 24+47 - 27+50 NB & SB)

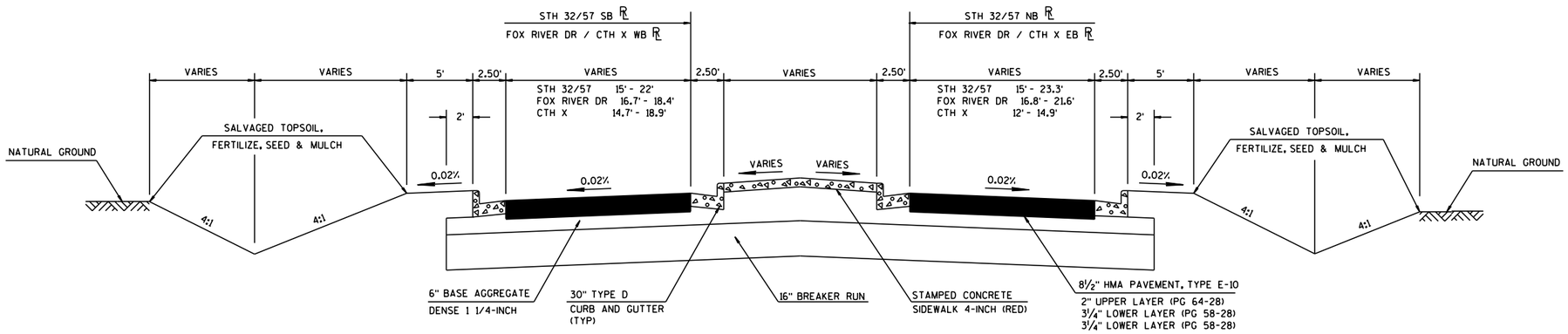

FINISHED TYPICAL CROSS SECTION FOR STH 32/57

STA 11+90 - 14+00 (STH 32/57 NB)
STA 11+90 - 17+50 (STH 32/57 SB)
STA 21+50 - 24+50 (STH 32/57 NB/SB)

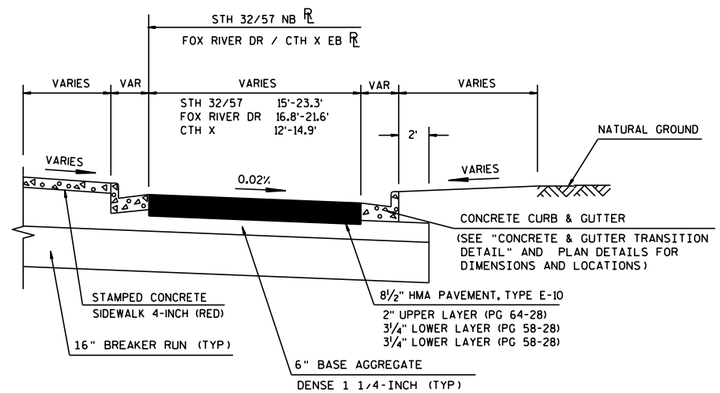

½ FINISHED TYPICAL CROSS SECTION FOR STH 32/57

STA 14+00 - 17+00 (STH 32/57 NB)

PROJECT NO:4085-43-71	HWY:STH 32	COUNTY:BROWN	FINISHED TYPICAL CROSS SECTIONS	SHEET 6	E

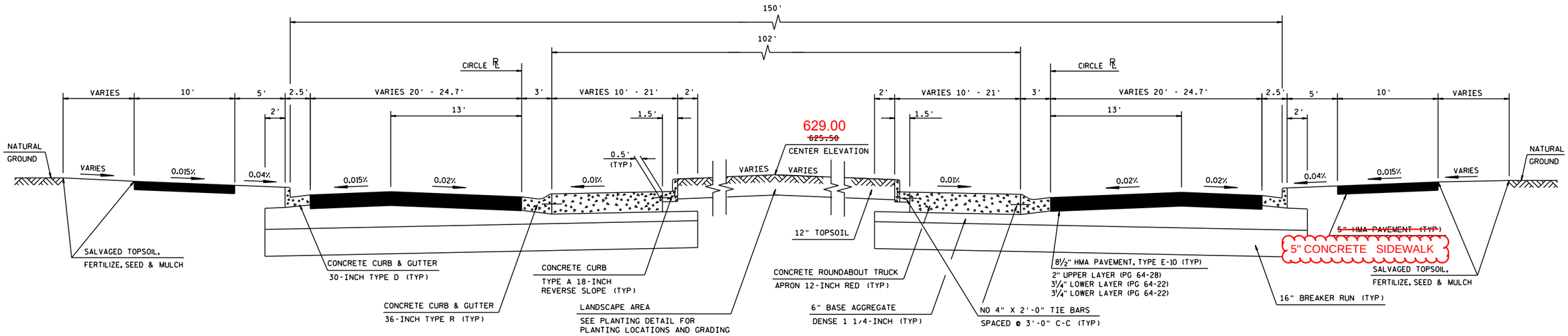

FINISHED TYPICAL CROSS SECTION FOR ROUNDABOUT

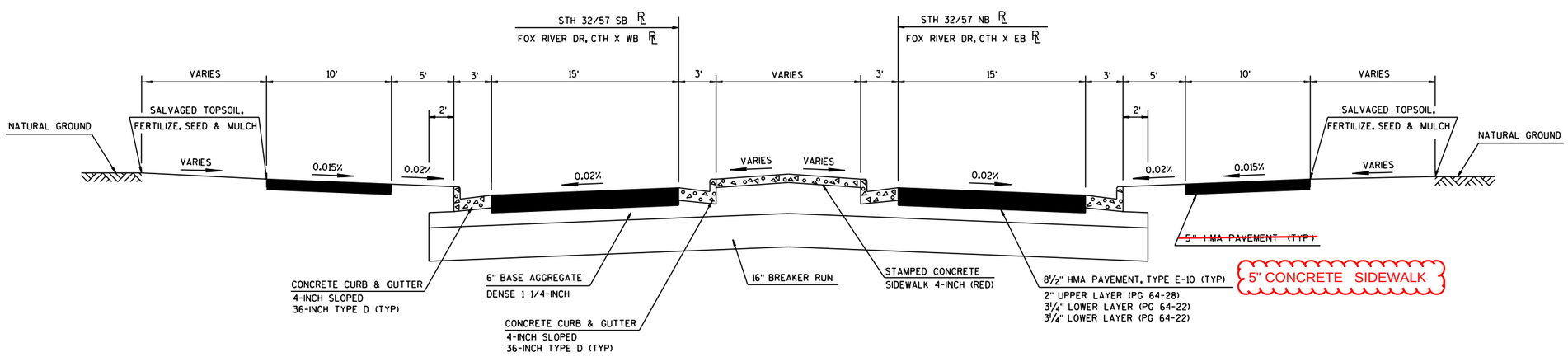

FINISHED TYPICAL CROSS SECTION FOR STH 32/57, FOX RIVER DR, CTH X

STA 17+50 - 18+75 (STH 32/57 NB/SB)
STA 11+50 - 12+04 (FOX RIVER DR)
STA 13+50 - 14+25 (CTH X)

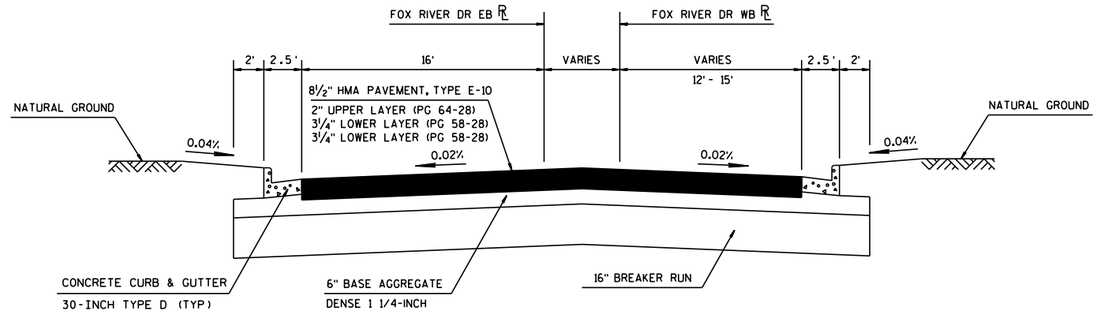

FINISHED TYPICAL CROSS SECTION FOR FOX RIVER DR

STA 9+50 - 11+50

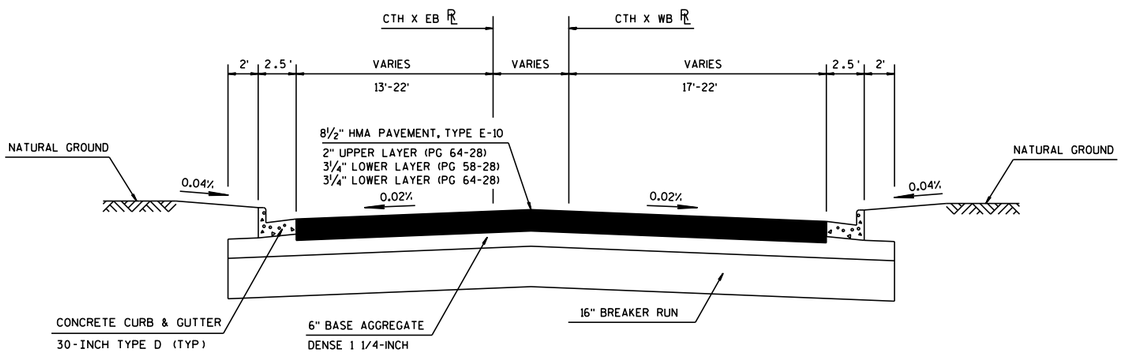

FINISHED TYPICAL CROSS SECTION FOR CTH X

STA 14+25 - 14+50

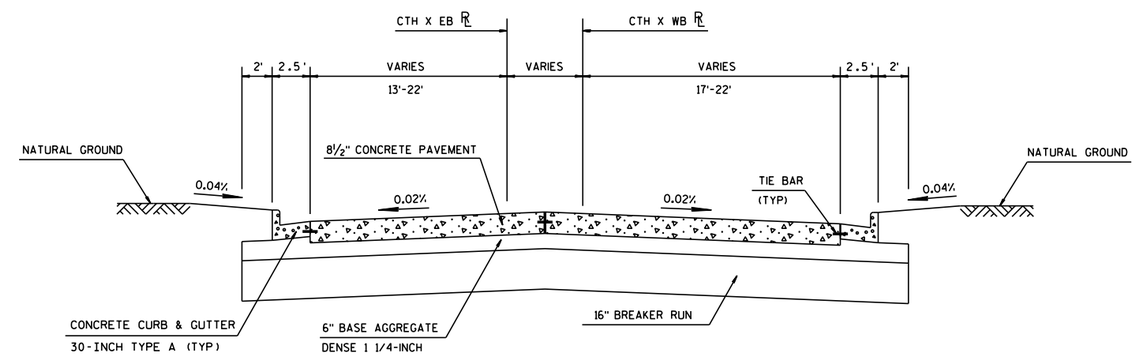

FINISHED TYPICAL CROSS SECTION FOR CTH X

STA 14+50 - 17+05

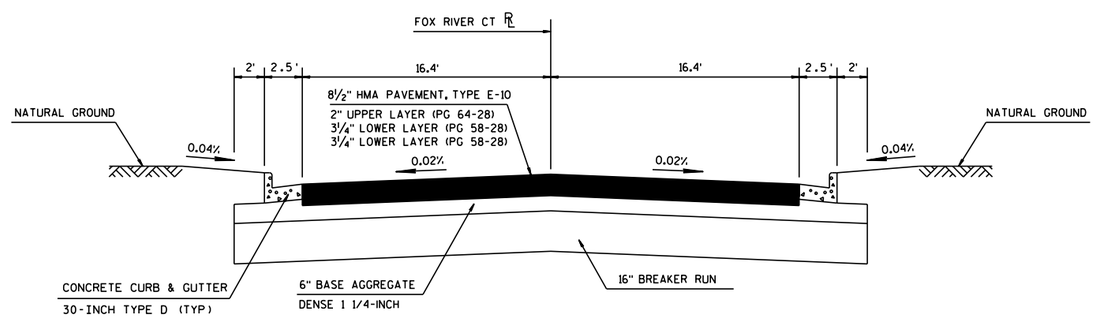

FINISHED TYPICAL CROSS SECTION FOR FOX RIVER CT

STA 10+00 - 11+00

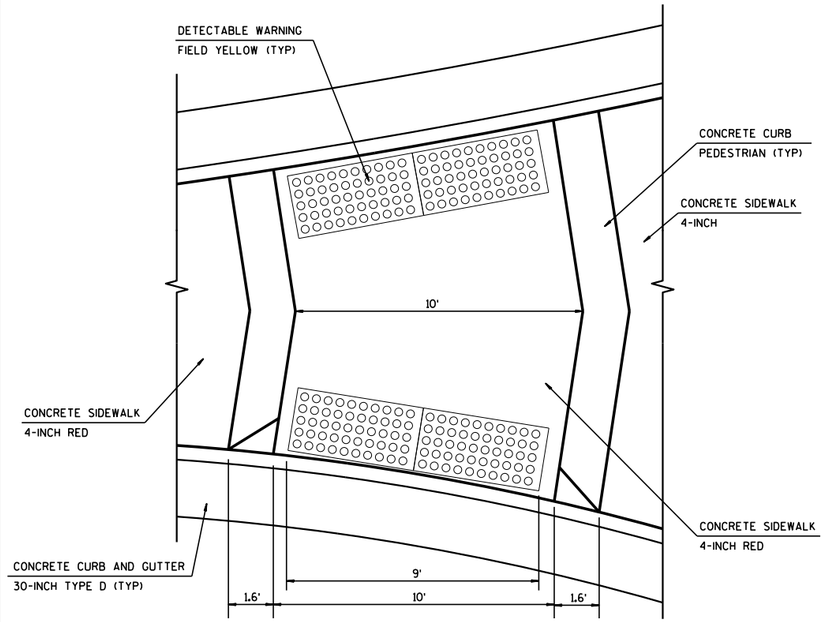

SECTION A-A

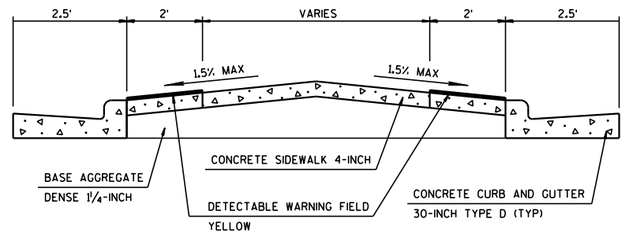

SECTION B-B

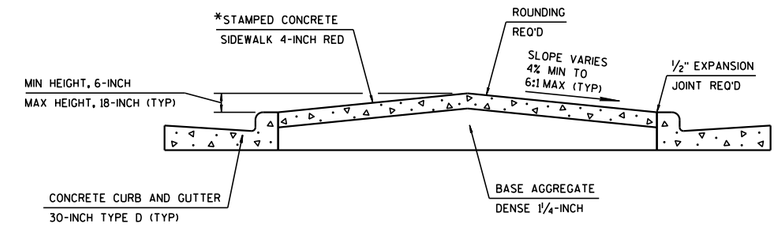

* STAMP PATTERN TO BE PROVIDE BY THE CITY OF DE PERE.

SECTION C-C

PROPOSED MEDIAN HEIGHT (ABOVE TOP OF CURB)
0.5 FT MINIMUM OF 1.5 FT MAXIMUM

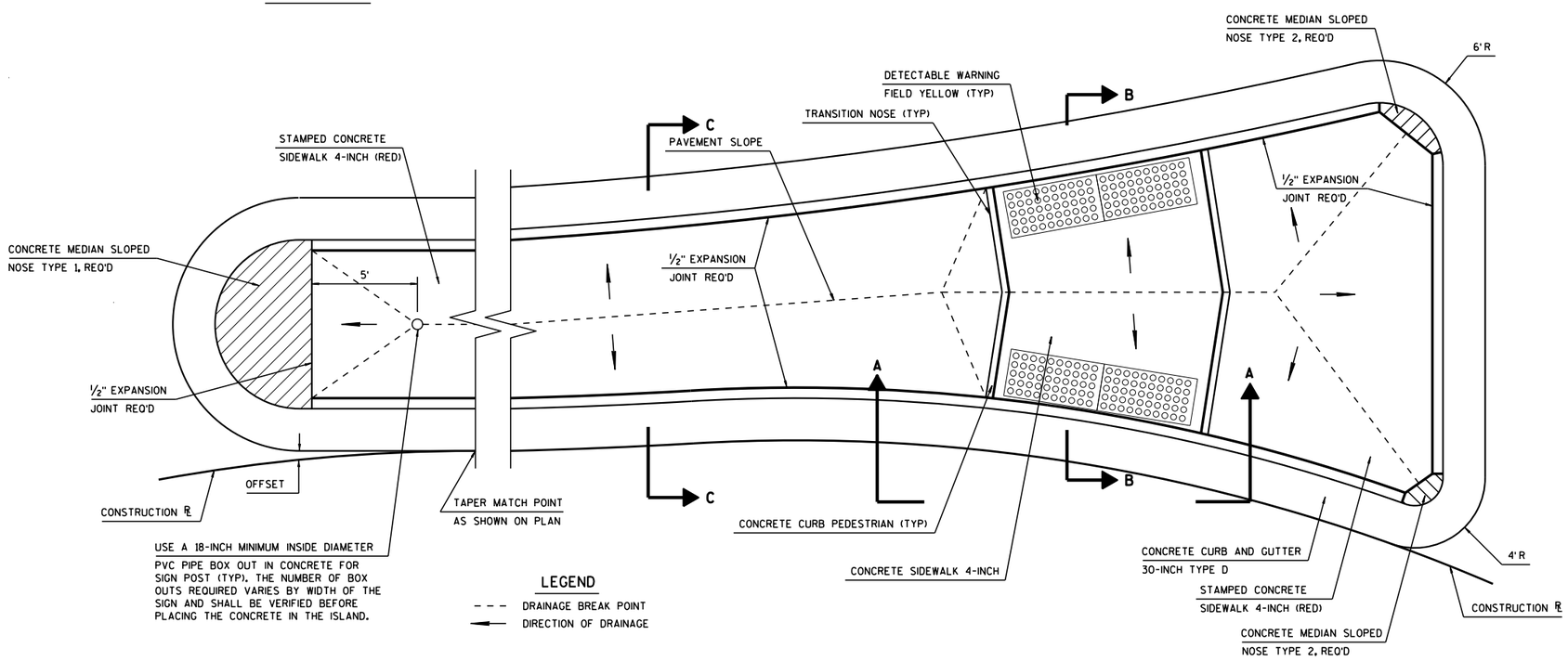

SPLITTER ISLAND DETAIL

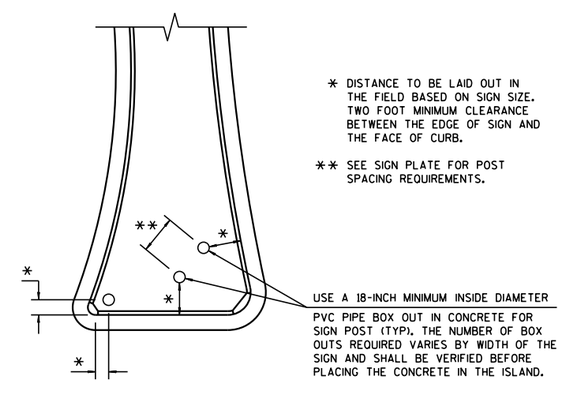

* DISTANCE TO BE LAID OUT IN THE FIELD BASED ON SIGN SIZE. TWO FOOT MINIMUM CLEARANCE BETWEEN THE EDGE OF SIGN AND THE FACE OF CURB.

** SEE SIGN PLATE FOR POST SPACING REQUIREMENTS.

ISLAND SIGN LOCATION DETAIL

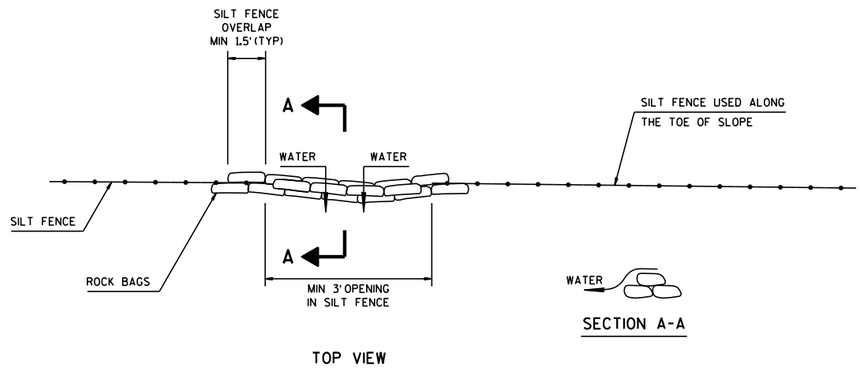

ROCK BAGS USED FOR SILT FENCE RELIEF DETAIL

PAID AS ROCK BAGS

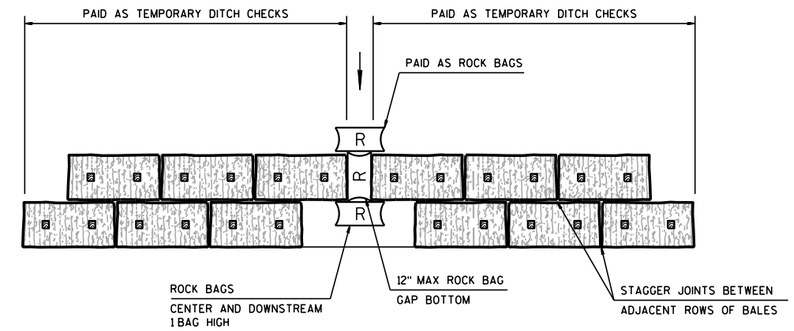

PLAN VIEW

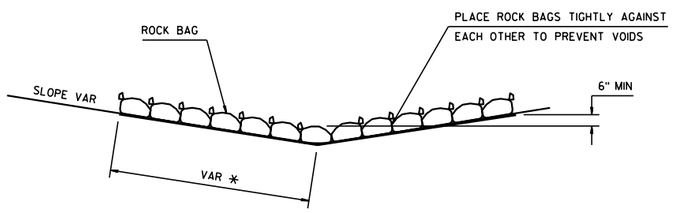

SIDE VIEW (SINGLE LAYER)

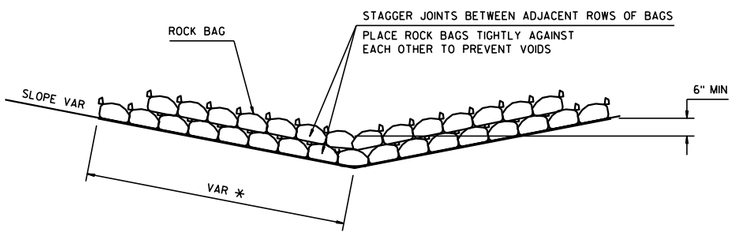

* LENGTH AND NUMBER OF BAGS MAY VARY
DEPENDING ON DESIRED DEPTH OF WATER POOL

SIDE VIEW (MULTIPLE LAYER)

ROCK BAGS DITCH CHECK

PAID AS ROCK BAGS

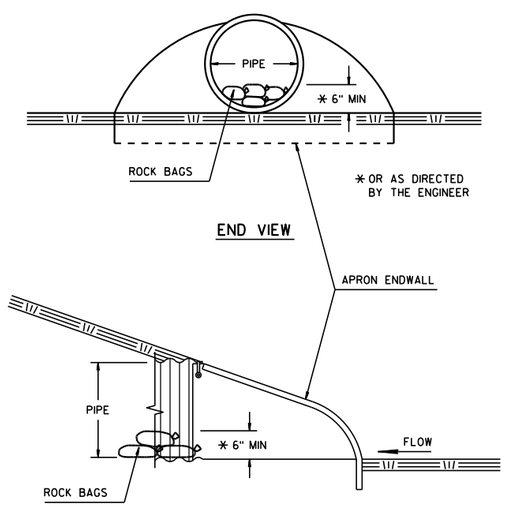

CULVERT PIPE CHECKS

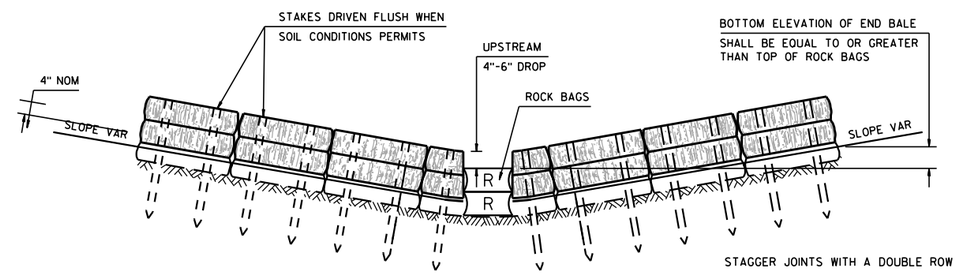

FRONT ELEVATION

NOTE

DETAILS OF CONSTRUCTION, MATERIALS AND WORKMANSHIP NOT SHOWN ON THIS DRAWING SHALL CONFORM TO THE PERTINENT REQUIREMENTS OF THE STANDARD SPECIFICATIONS AND THE APPLICABLE SPECIAL PROVISIONS.

TEMPORARY DITCH CHECKS WITH ROCK BAG RELIEF

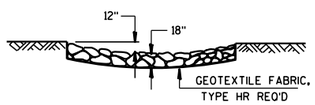

SECTION A-A

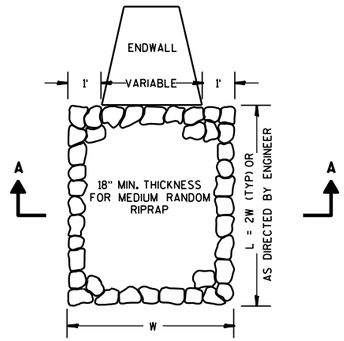

MEDIUM RANDOM RIPRAP TREATMENT AT CULVERTS

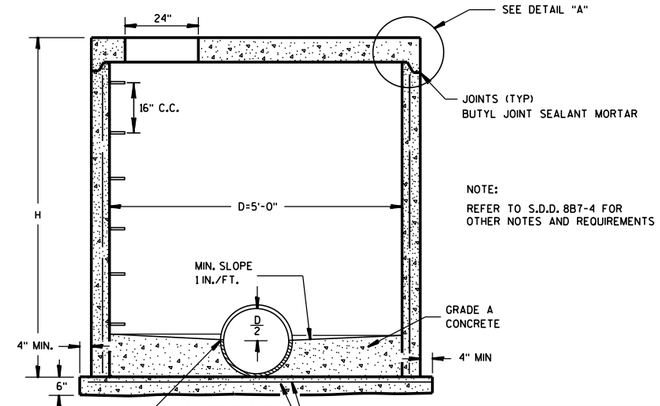

NOTE:

REFER TO S.D.D. 8B7-4 FOR OTHER NOTES AND REQUIREMENTS

NAME	LOCATION	"H"
1E	STA 22+37NB - 16.5' RT	4.84'
2C	STA 9+66EB - 18' RT	3.88'

MANHOLE, 5-FT DIAMETER

FLAT TOP WITH INLET OPENING

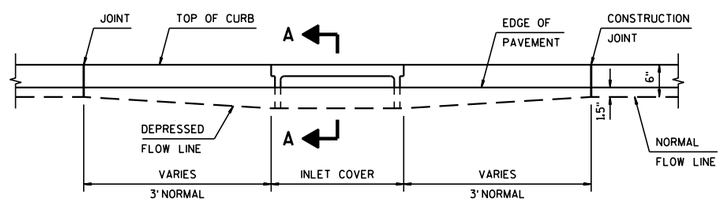

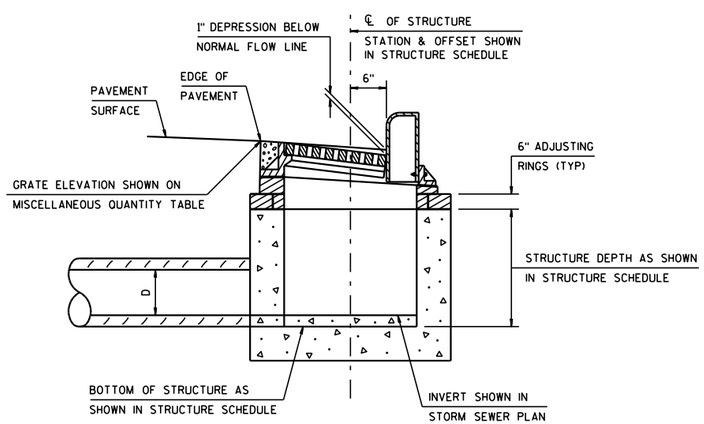

SECTION A-A

DETAIL OF CURB AND GUTTER AT INLETS

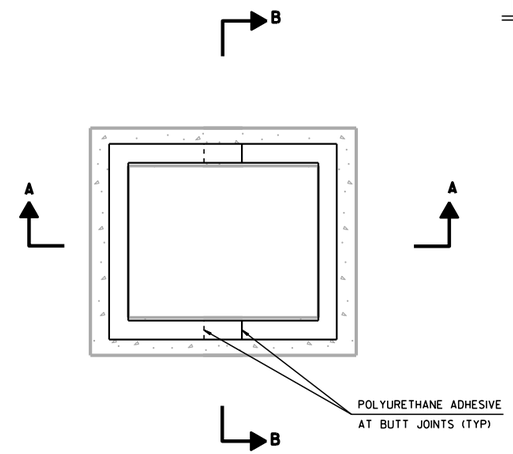

PLAN VIEW

NOTE: ALL CUTS MADE TO RUBBER ADJUSTMENT RINGS WILL BE PERPENDICULAR AND PROVIDE A TIGHT JOINT.

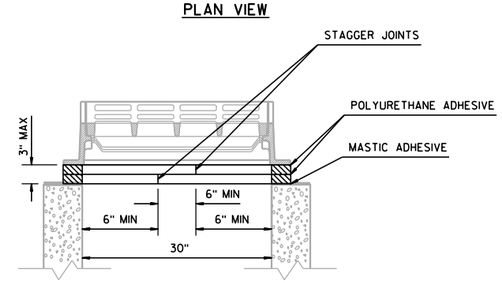

SECTION A-A

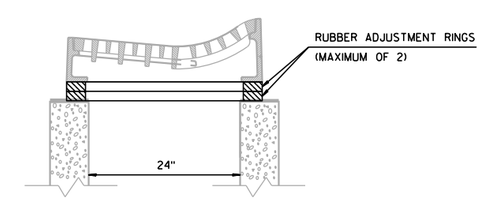

SECTION B-B

RUBBER RING CUTTING DETAIL FOR INLETS 2X2.5-FT SPECIAL

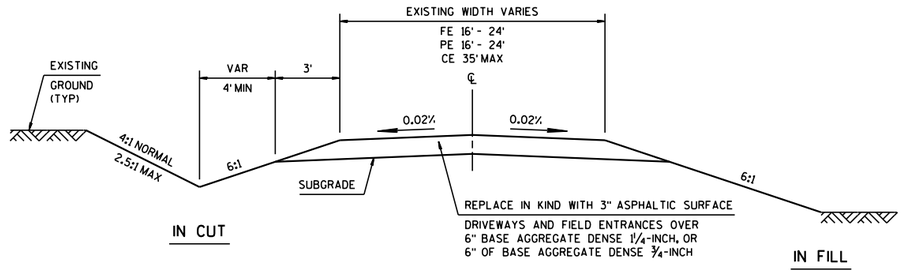

TYPICAL CROSS SECTION FOR PRIVATE DRIVE OR FIELD ENTRANCE

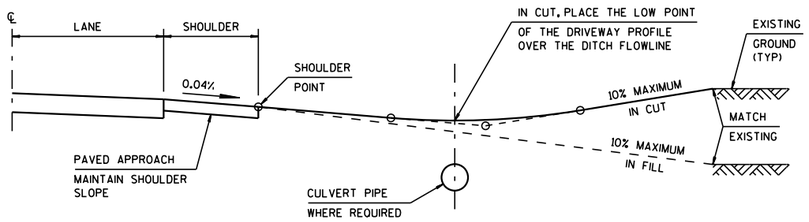

TYPICAL DRIVEWAY PROFILES

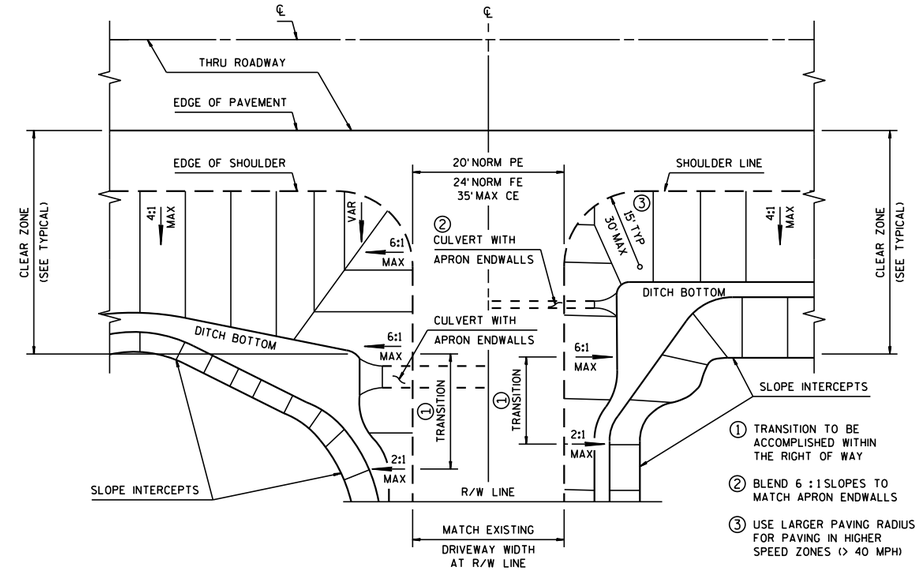

FOR CULVERTS OVER 24" DIAMETER

FOR CULVERTS 24" DIAMETER & LESS

PLAN VIEW

RURAL DRIVEWAY GRADING AND/OR PAVING DETAIL

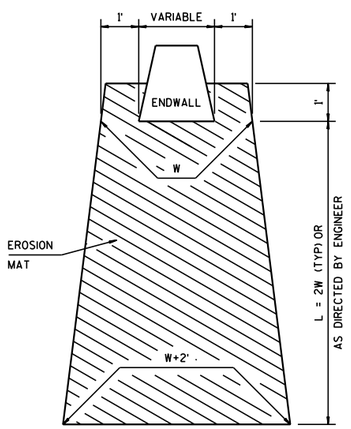

EROSION MAT TREATMENT AT CULVERTS

NOTES

WHEN A STORM SEWER PIPE IS PLACED ABOVE THE SUBGRADE LINE NO BREAKER RUN SHALL BE USED TO BACKFILL AROUND THE PIPE. BASE AGGREGATE DENSE 1¼-INCH SHALL BE USED IN PLACE OF BREAKER RUN FOR THE WIDTH OF THE TRENCH.

ALL REQUIREMENTS OF SECTION 607 OF THE STANDARD SPECIFICATIONS STILL APPLY.

SEE STORM SEWER PIPE QUANTITY TABLE FOR LOCATIONS.

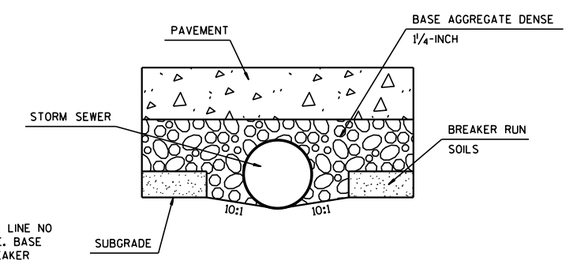

STORM SEWER PIPE WITH MINIMAL COVER

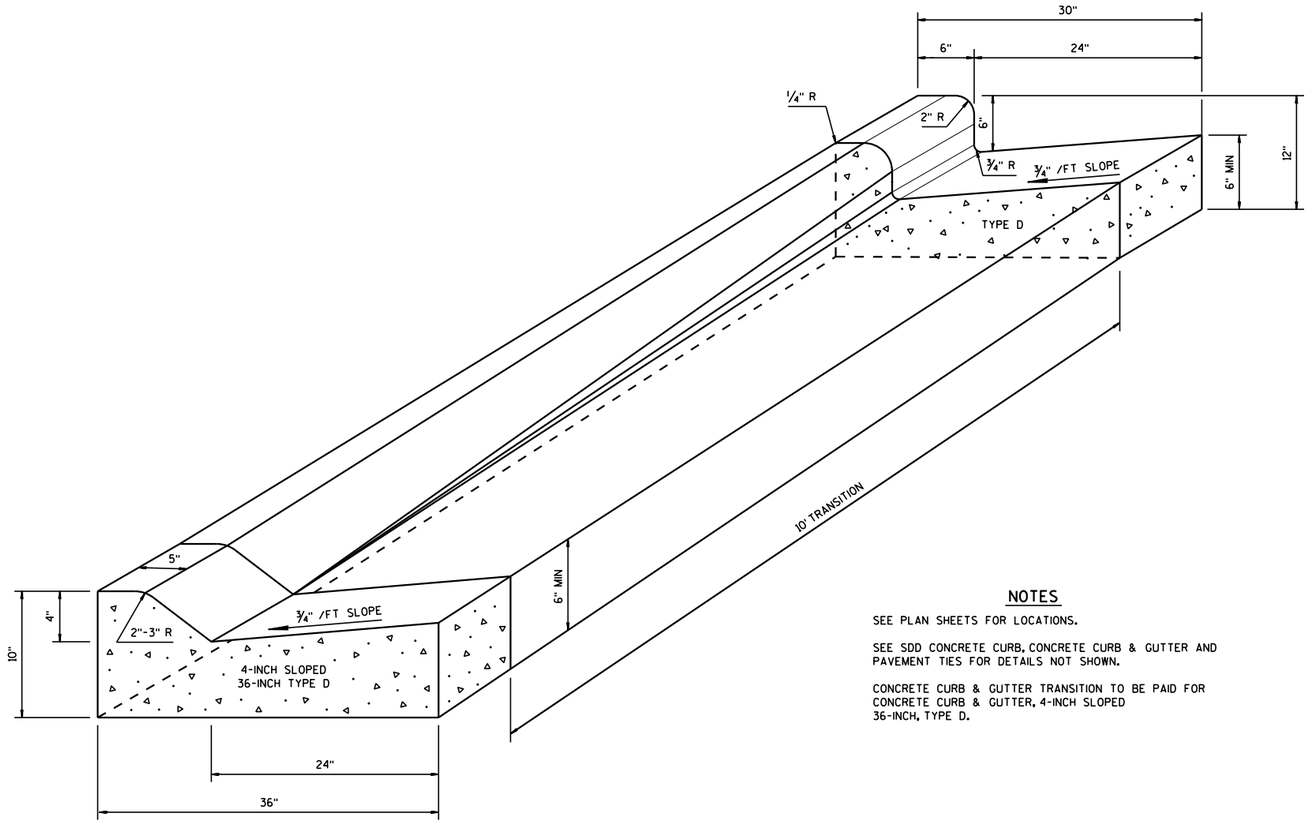

CONCRETE CURB & GUTTER TRANSITION DETAIL

NOTES

SEE PLAN SHEETS FOR LOCATIONS.

SEE SDD CONCRETE CURB, CONCRETE CURB & GUTTER AND PAVEMENT TIES FOR DETAILS NOT SHOWN.

CONCRETE CURB & GUTTER TRANSITION TO BE PAID FOR CONCRETE CURB & GUTTER, 4-INCH SLOPED 36-INCH, TYPE D.

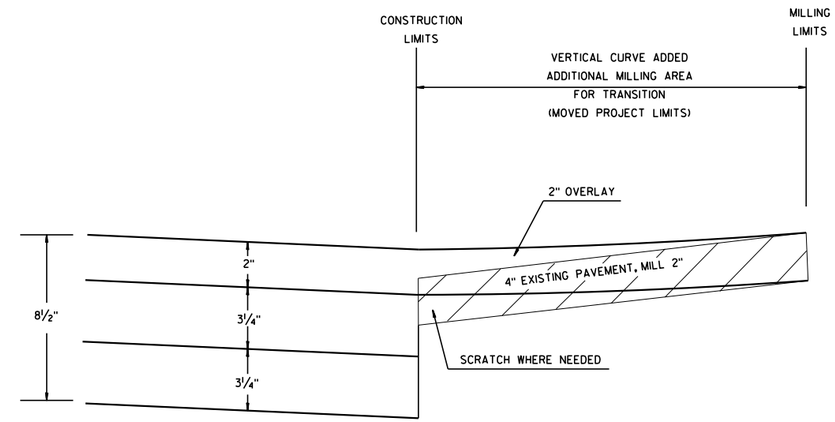

ASPHALT PAVING LAYERS

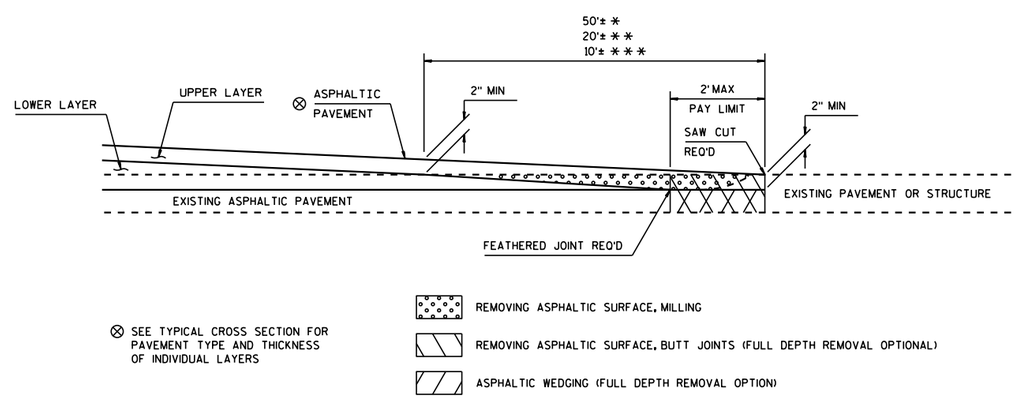

BUTT JOINT DETAIL FOR MILLED ASPHALTIC PAVEMENTS

* MAINLINE
** SIDEROADS
*** PRIVATE ENTRANCES

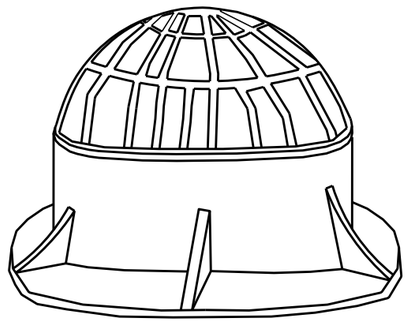

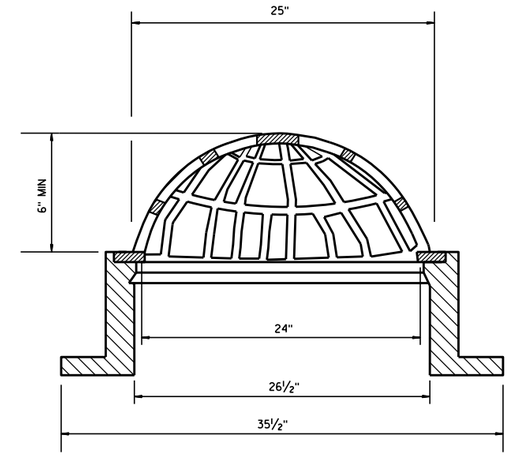

STRUCTURE NAME	LOCATION
6B	STA 14+46NB

INLET COVER BEEHIVE

WT 350 LBS

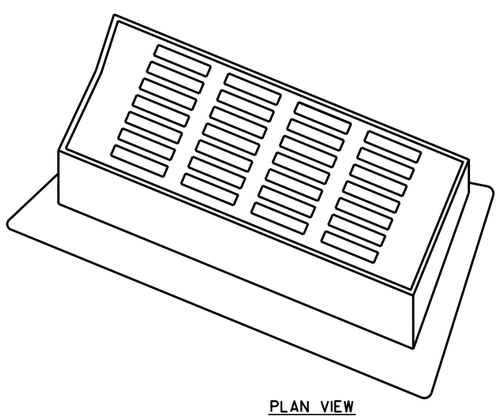

PLAN VIEW

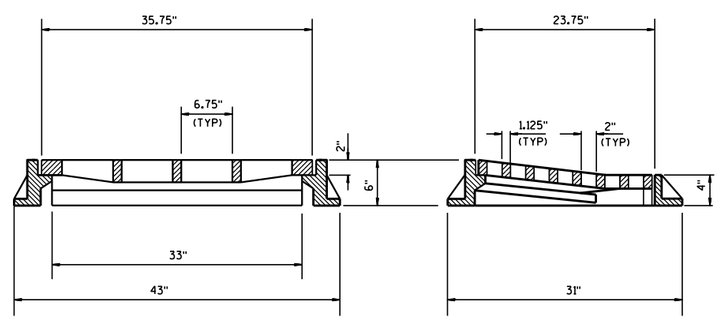

SIDE VIEW

STRUCTURE NAME	LOCATION
2B	STA 1+56EB

INLET COVER DRIVEWAY SPECIAL DETAIL

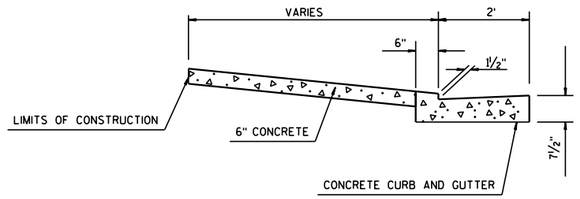

SECTION A-A

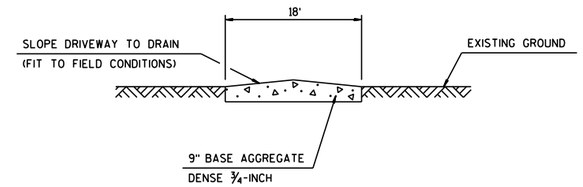

NEW FOX RIVER COURT DRIVEWAY LOCATION

~~STA 11+08 - 13+92 LT~~

12+75 - 13+50 'SB' LT

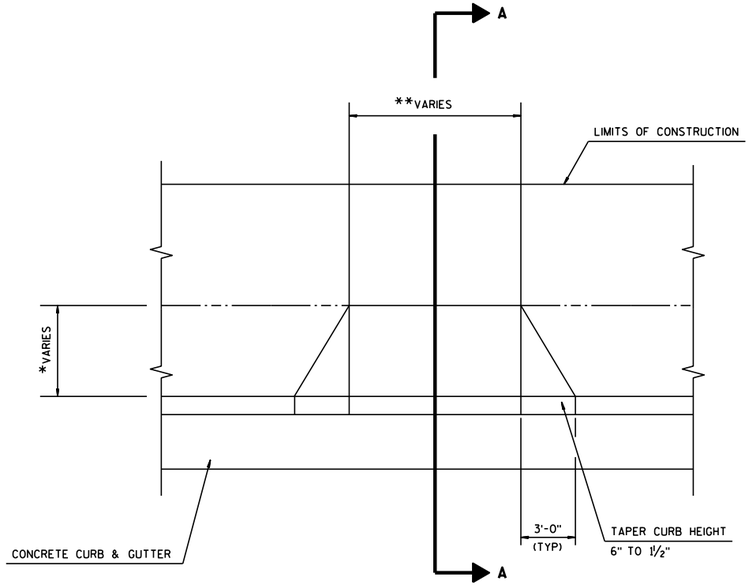

PRIVATE AND COMMERCIAL ENTRANCES

NOTES

* PAVEMENT SHOULDER WIDTH SHALL BE 6' WHEN NO SIDEWALK IS PRESENT AND 5' WHEN SIDEWALK IS PRESENT OR MATCH TO EXISTING TERRACE.

** COMMERCIAL ENTRANCES SHALL BE 35' NORMAL. PRIVATE ENTRANCES SHALL BE 12' MINIMUM OR FIT TO EXISTING DRIVE AT THE BACK OF WALK.

2

2

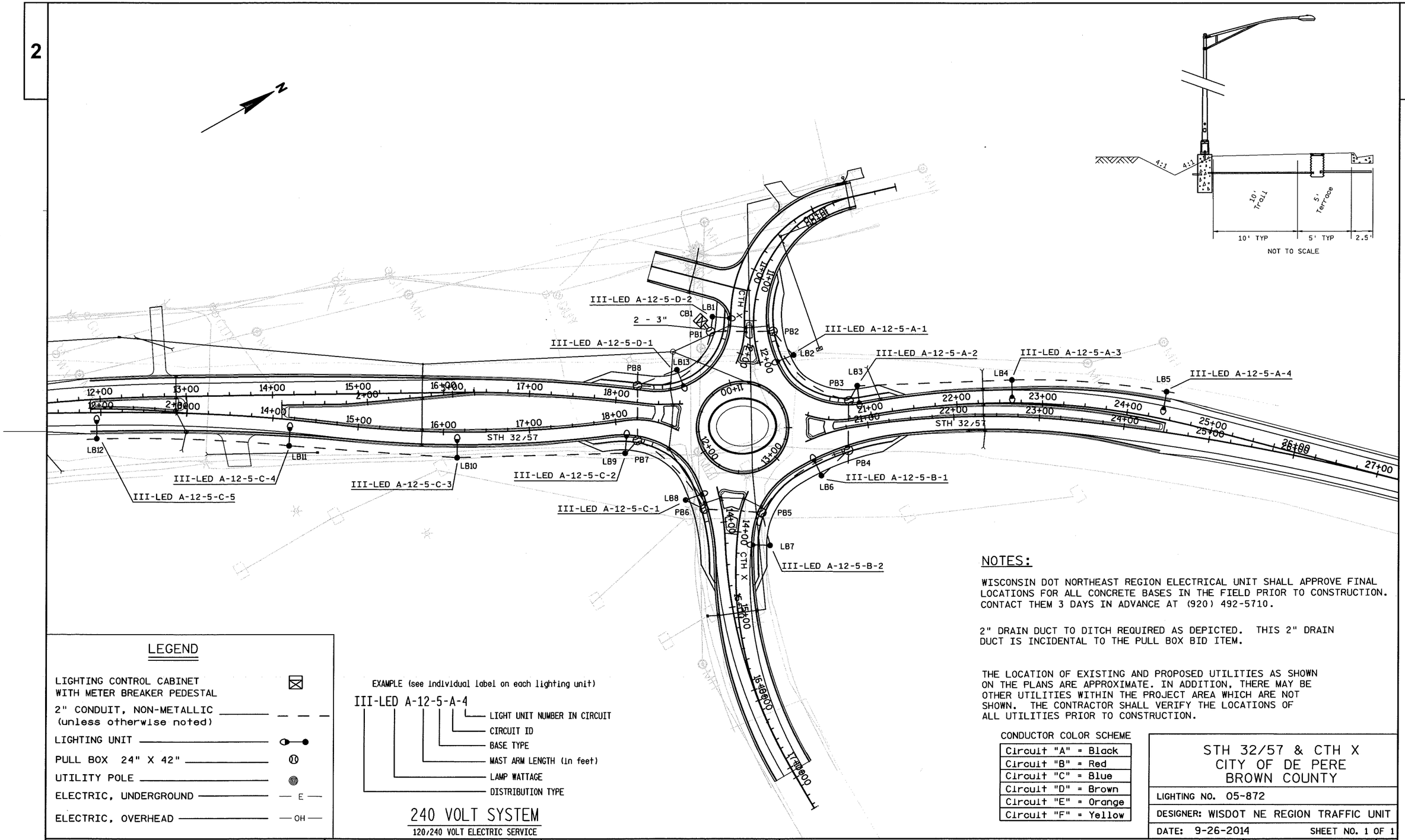

NOTES:

WISCONSIN DOT NORTHEAST REGION ELECTRICAL UNIT SHALL APPROVE FINAL LOCATIONS FOR ALL CONCRETE BASES IN THE FIELD PRIOR TO CONSTRUCTION. CONTACT THEM 3 DAYS IN ADVANCE AT (920) 492-5710.

2" DRAIN DUCT TO DITCH REQUIRED AS DEPICTED. THIS 2" DRAIN DUCT IS INCIDENTAL TO THE PULL BOX BID ITEM.

THE LOCATION OF EXISTING AND PROPOSED UTILITIES AS SHOWN ON THE PLANS ARE APPROXIMATE. IN ADDITION, THERE MAY BE OTHER UTILITIES WITHIN THE PROJECT AREA WHICH ARE NOT SHOWN. THE CONTRACTOR SHALL VERIFY THE LOCATIONS OF ALL UTILITIES PRIOR TO CONSTRUCTION.

LEGEND

- LIGHTING CONTROL CABINET WITH METER BREAKER PEDESTAL
- 2" CONDUIT, NON-METALLIC (unless otherwise noted)
- LIGHTING UNIT
- PULL BOX 24" X 42"
- UTILITY POLE
- ELECTRIC, UNDERGROUND — E —
- ELECTRIC, OVERHEAD — OH —

EXAMPLE (see individual label on each lighting unit)

III-LED A-12-5-A-4

- LIGHT UNIT NUMBER IN CIRCUIT
- CIRCUIT ID
- BASE TYPE
- MAST ARM LENGTH (in feet)
- LAMP WATTAGE
- DISTRIBUTION TYPE

240 VOLT SYSTEM

120/240 VOLT ELECTRIC SERVICE

CONDUCTOR COLOR SCHEME

Circuit "A" = Black
Circuit "B" = Red
Circuit "C" = Blue
Circuit "D" = Brown
Circuit "E" = Orange
Circuit "F" = Yellow

STH 32/57 & CTH X
CITY OF DE PERE
BROWN COUNTY

LIGHTING NO. 05-872

DESIGNER: WISDOT NE REGION TRAFFIC UNIT

DATE: 9-26-2014 SHEET NO. 1 OF 1

PROJECT NO: 4085-43-71	HWY: STH 32/57	COUNTY: BROWN	CONSTRUCTION DETAILS - ROUNDABOUT LIGHTING	SHEET -----	E

FILE NAME : N:\PDS\C3D\40854300\DESIGN\LIGHTING PLAN\TALCOTT LIGHTING PLAN\LIGHTING.DWG PLOT DATE : Oct 07, 2014 - 12:03pm PLOT BY : TALCOTT, MATTHEW J PLOT NAME : L872 PLOT SCALE : 100:1

WISDOT/CADDS SHEET 42

2

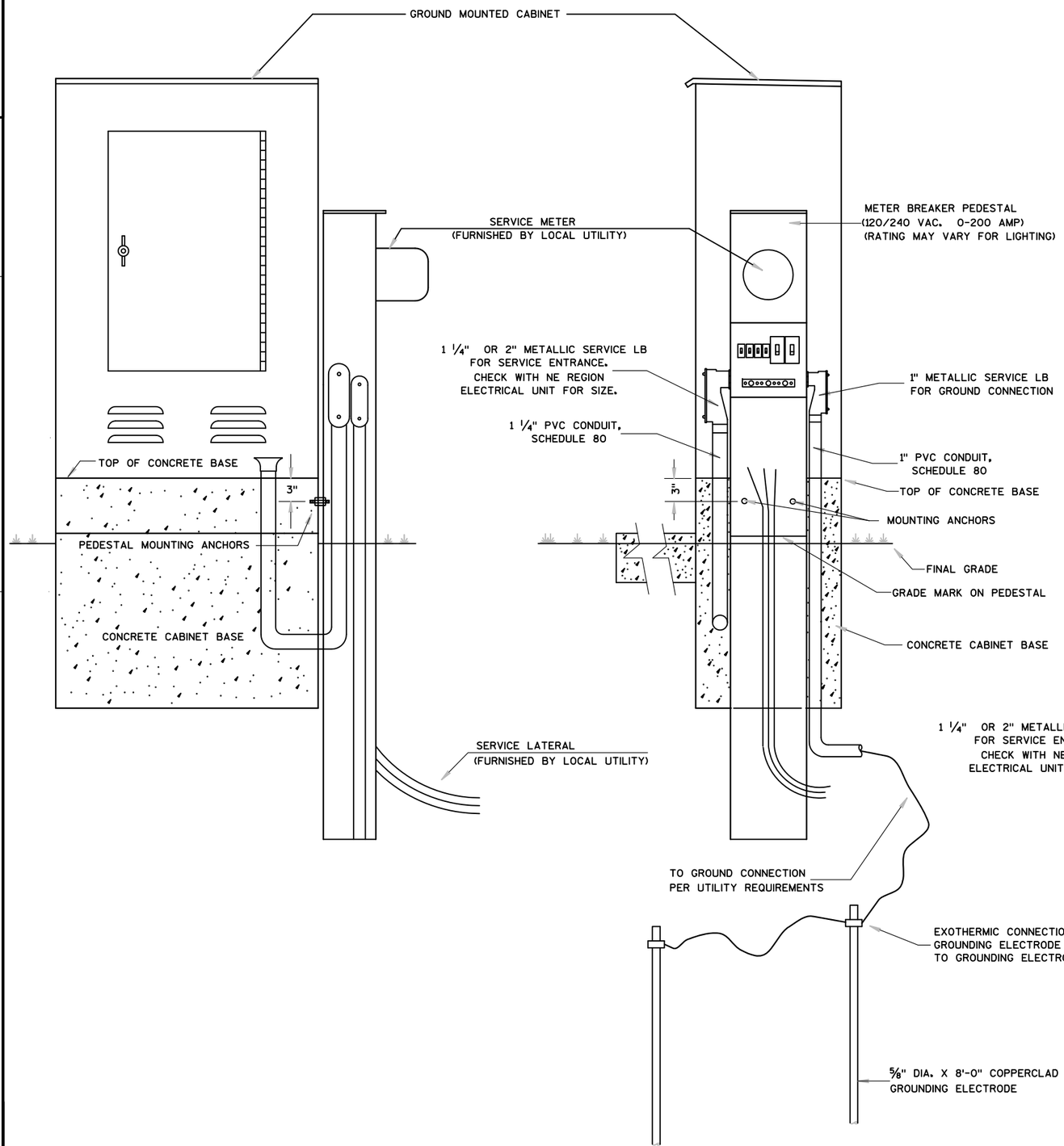

GENERAL NOTES

DETAILS OF CONSTRUCTION, MATERIALS AND WORKMANSHIP NOT SHOWN ON THIS DRAWING SHALL CONFORM TO THE PERTINENT REQUIREMENTS OF THE CONTRACT.

THE EXACT LOCATION OF THE METER BREAKER PEDESTAL SHALL BE DETERMINED BY THE ENGINEER IN THE FIELD.

THE TYPE OF CONCRETE CABINET BASE TO BE INSTALLED SHALL BE AS CALLED FOR IN THE PLANS.

TO FACILITATE FLUSH MOUNTING OF THE METER BREAKER PEDESTAL AGAINST THE SIDE OF THE CABINET BASE (IF FLUSH MOUNTING POSSIBLE. CONFER WITH THE LOCAL UTILITY TO DETERMINE WHICH SIDE OF THE CONCRETE BASE THE ELECTRICAL SERVICE LATERAL WILL APPROACH. THEN FORM THAT INDICATED SIDE FOR FULL SIDE DEPTH.

WHILE FLUSH MOUNTING IS THE MOST DESIRABLE MOUNTING CONFIGURATION UTILITY REQUIREMENTS MAY PRECLUDE THIS OPTION. CONTRACTOR MUST PROVIDE UTILITY APPROVED PEDESTAL AND INSTALL PER UTILITY AND MANUFACTURERS REQUIREMENTS.

SERVICE CONDUCTOR ENTRANCES SHALL BE RIGID METALLIC CONDUIT OR SCHEDULE 80 PVC, NIPPLES AND/OR CONDULETS AS REQUIRED. CONDUIT LB SHALL BE OF METALLIC SERVICE ENTRANCE TYPE.

SERVICE CONDUCTOR ENTRANCES SHALL BE SIZED AND LOCATED AS REQUIRED BY THE LOCAL UTILITY AND IN ACCORDANCE WITH APPROPRIATE ARTICLES OF THE LATEST ACCEPTED NATIONAL ELECTRICAL CODE.

IF MORE THAN ONE GROUNDING ELECTRODE IS REQUIRED, THE DISTANCE APART SHALL BE 6 FEET OR PER NEC.

* SOME PEDESTAL LIGHTING PLANS SHOW MAIN LUGS ONLY.

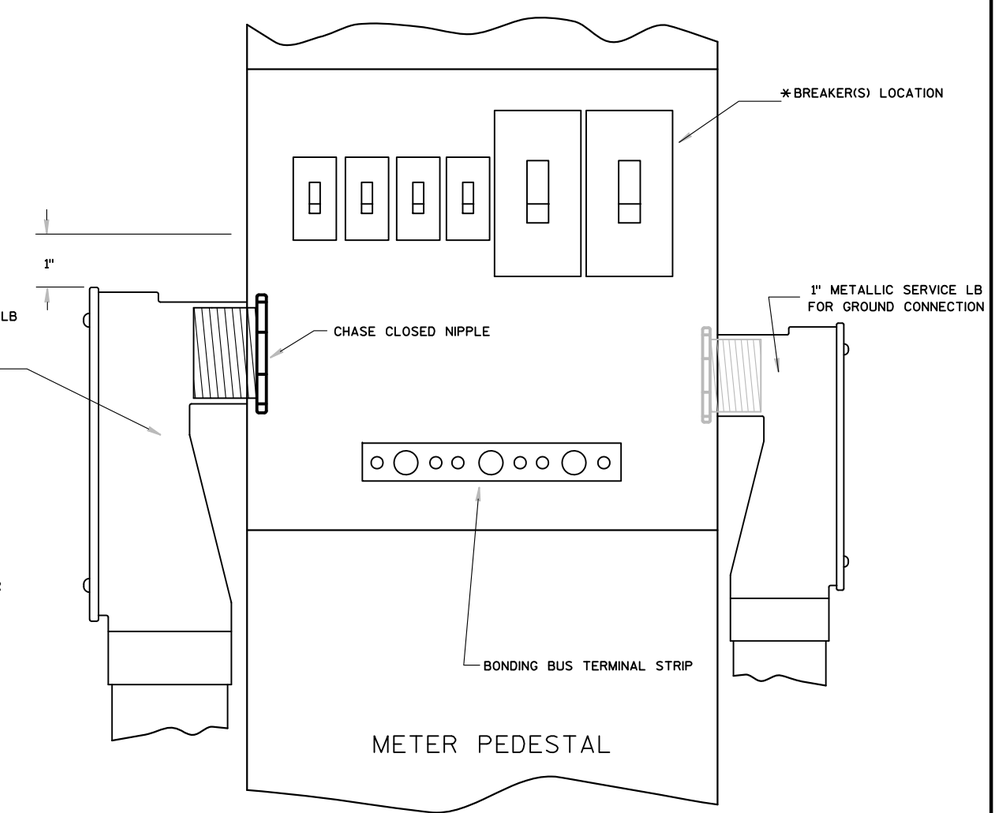

2

PROJECT NO: 4085-43-71	HWY: STH 32/57	COUNTY: BROWN	CONSTRUCTION DETAIL- NER METER PEDESTAL INSTALLATION	SHEET 17	E

2

Not to scale

LEFT SIDE VIEW

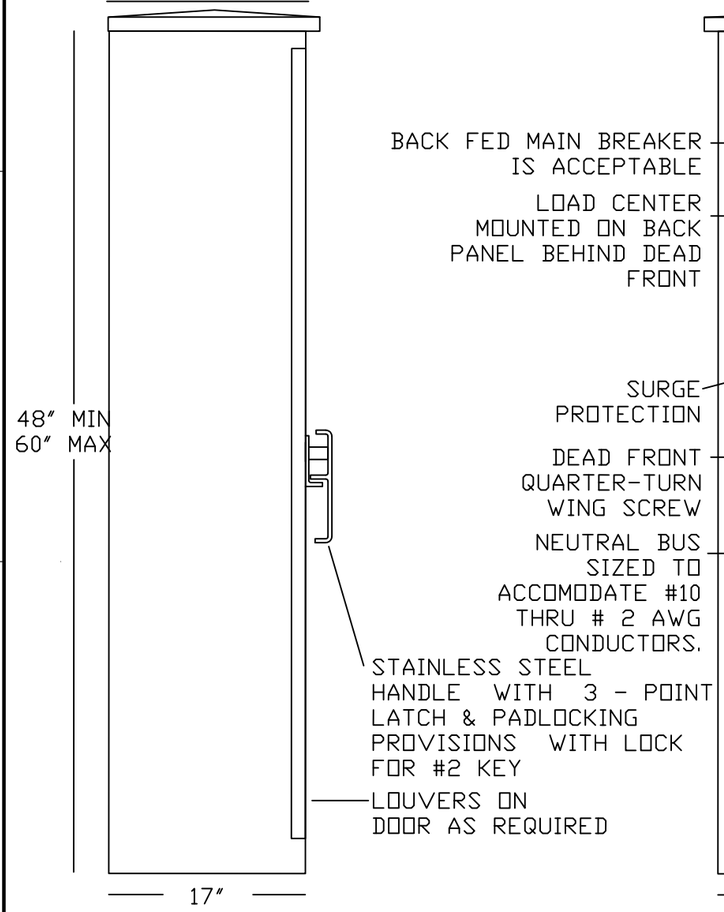

FRONT INTERIOR ELEVATION

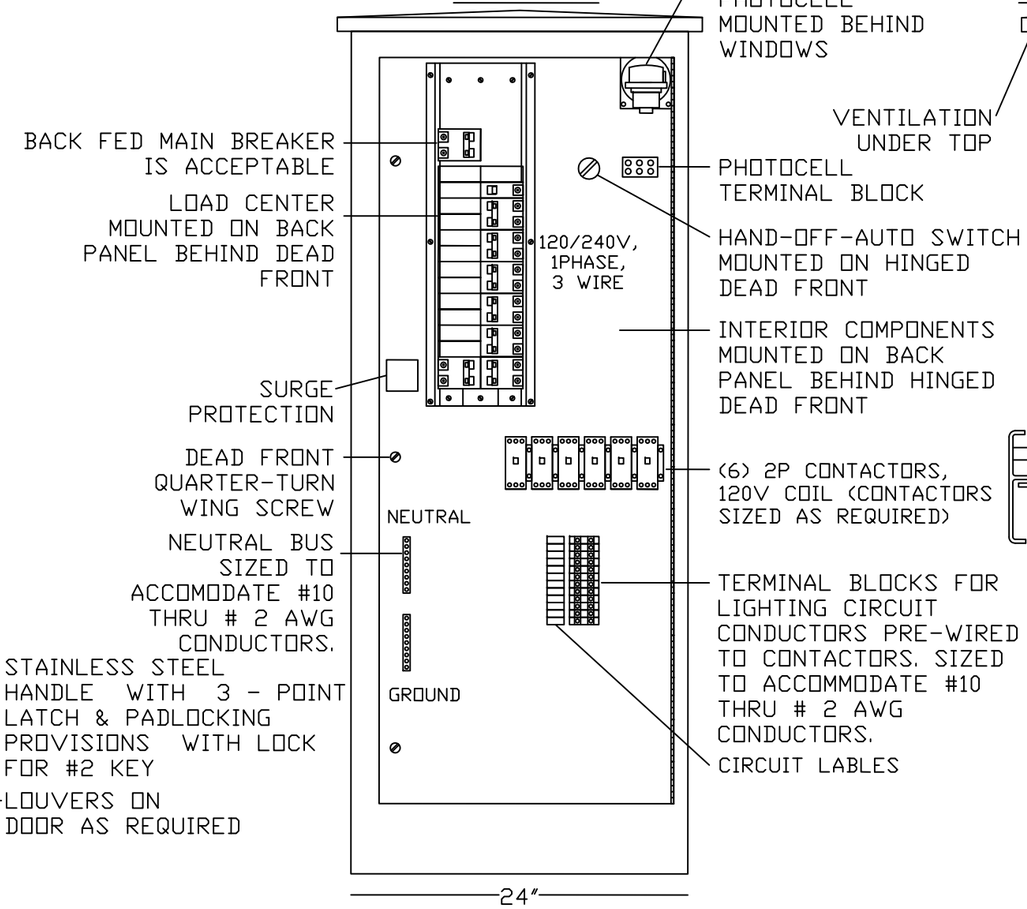

RIGHT SIDE VIEW

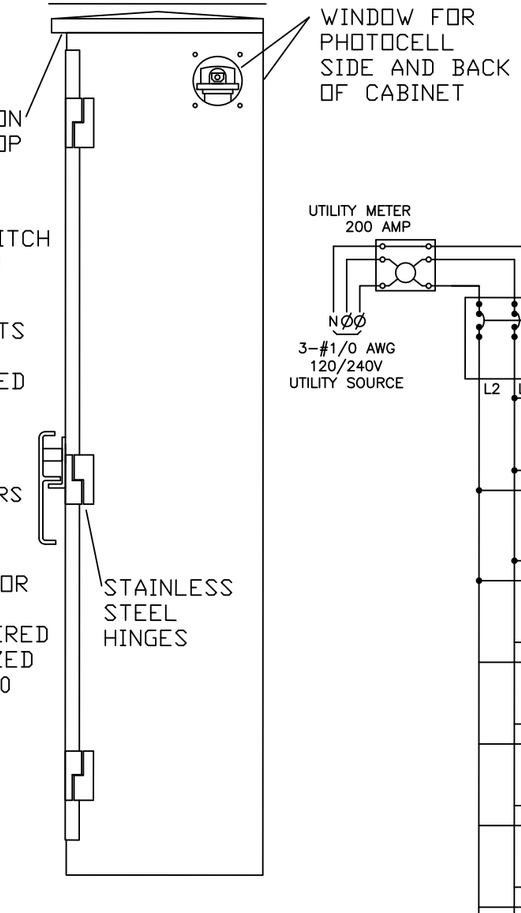

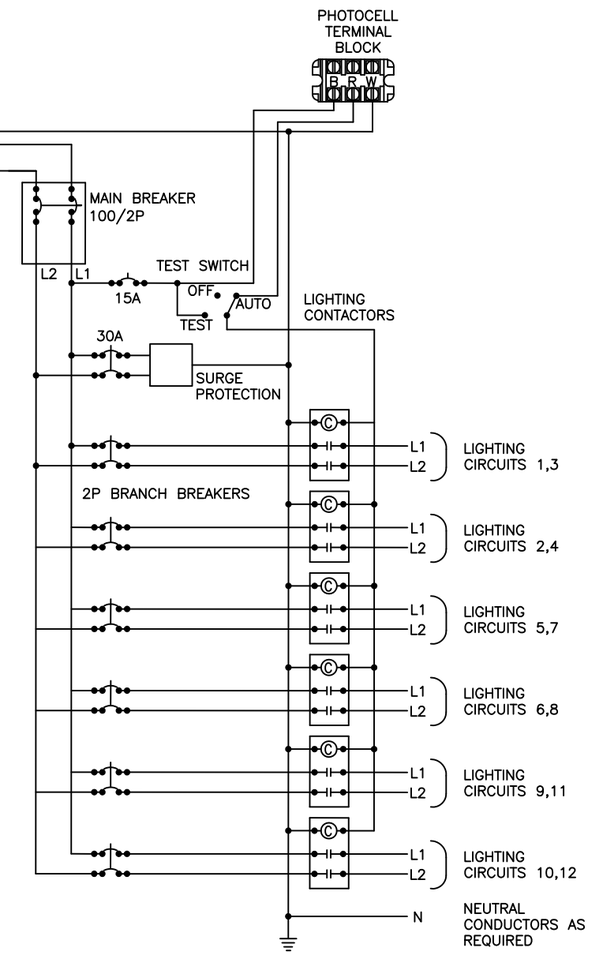

CONTROL CABINET SCHEMATIC

120/240 VOLT LIGHTING CONTROL CABINET WISDOT 120/240

BOX CONSTRUCTION:

- NEMA3R
- UL LISTED
- -1/8" ALUMINUM 5052-H32 ANODIZED CLEAR
- BENT CONSTRUCTION - ONE PIECE SIDES AND BACK
- NEOPRENE GASKETED DOORS
- STAINLESS STEEL HARDWARE
- ETL LISTED IN ACCORDANCE W/ UL508A

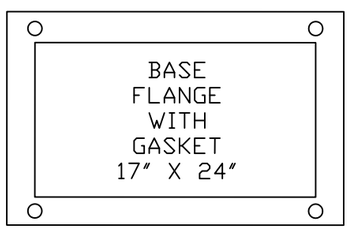

LOAD CENTER:

- 30 CIRCUIT MIN.
- 100AMP MAIN CIRCUIT BREAKER
- COPPER BUS
- 22K AIC
- (1) 15A/1P CONTROL BREAKER
- (1) 30A/2P BREAKER FOR SURGE PROTECTION DEVICE
- (6) 2P BRANCH BREAKERS (BREAKERS SIZED AS REQUIRED)

PROJECT NO: 4085-43-71	HWY: STH 32/57	COUNTY: BROWN	CONSTRUCTION DETAIL- NER LIGHTING CABINET INSTALLATION	SHEET 18	E

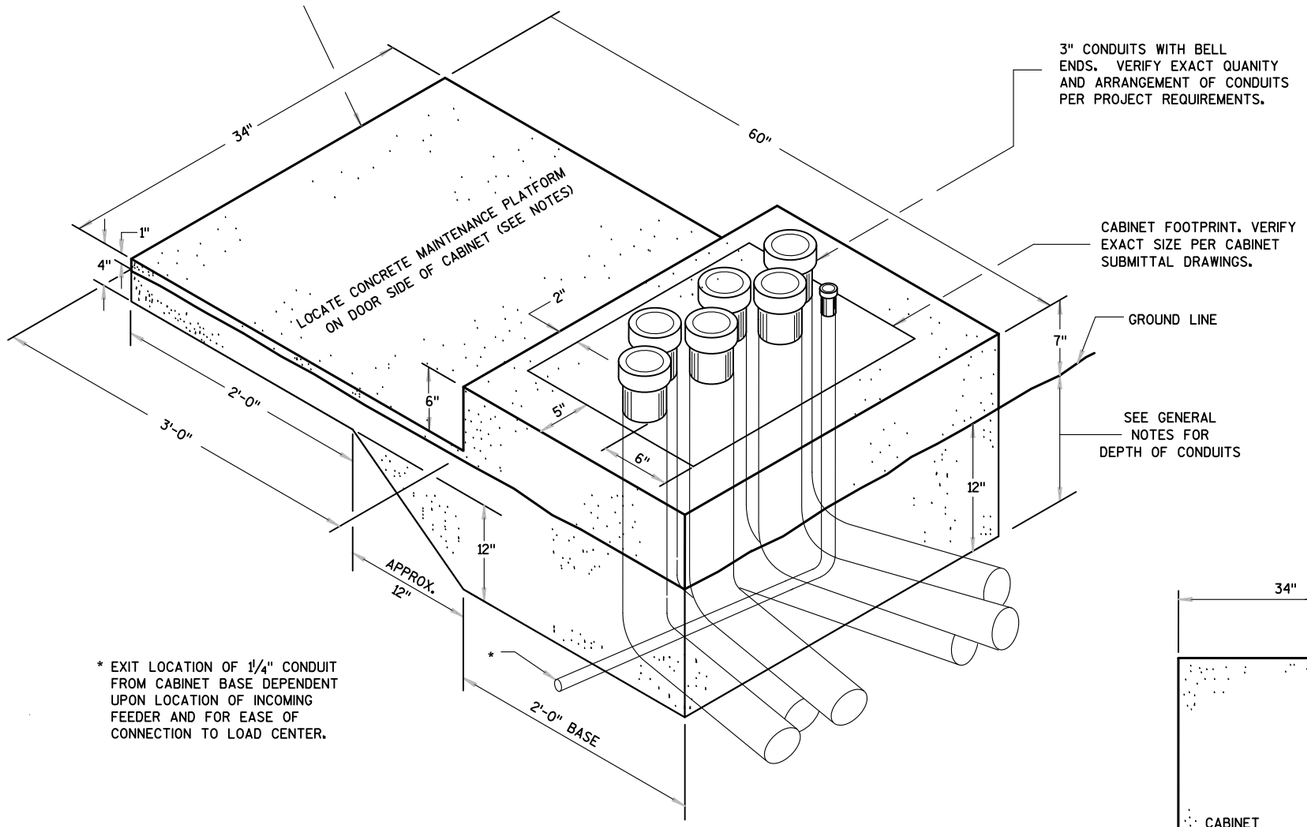

* EXIT LOCATION OF 1¼" CONDUIT FROM CABINET BASE DEPENDENT UPON LOCATION OF INCOMING FEEDER AND FOR EASE OF CONNECTION TO LOAD CENTER.

ISOMETRIC VIEW

CONCRETE CONTROL CABINET BASE, TYPE SPECIAL

(C.Y. CONCRETE = APPROX. 0.4)

DETAILS OF CONSTRUCTION, MATERIALS AND WORKMANSHIP NOT SHOWN ON THIS DRAWING SHALL CONFORM TO THE PERTINENT REQUIREMENTS OF THE CONTRACT.

INSTALL FOUR STAINLESS STEEL APPROVED CONCRETE MASONRY ANCHORS TO ANCHOR THE CABINET BASES. THE ANCHORS SHALL BE LOCATED AS DIRECTED BY THE ENGINEER TO PROPERLY ANCHOR THE CONTROL CABINET TO THE BASE.

WHEN REQUIRED TO CONNECT NONMETALLIC CONDUIT TO METALLIC CONDUIT, ONLY ADAPTER FITTINGS, U.L. LISTED FOR ELECTRICAL USE, SHALL BE USED.

CONDUIT HEIGHT ABOVE THE CONCRETE BASE SHALL BE 1 INCH.

DEPTH OF CONDUIT INSTALLED BELOW THE TRAVELED WAY SHALL BE 24 INCHES MINIMUM AND 36 INCHES MAXIMUM.

DEPTH OF CONDUIT INSTALLED THAT IS NOT BELOW THE TRAVELED WAY SHALL BE 18 INCHES MINIMUM AND 36 INCHES MAXIMUM.

ANY EXCEPTION TO THE MAXIMUM DEPTH SHALL BE ONLY WITH THE WRITTEN APPROVAL OF THE ENGINEER.

CONTROL CABINET BASE TOP SURFACE SHALL BE TROWEL FINISHED SMOOTH AND LEVEL.

MAINTENANCE PLATFORM SHALL BE FLOAT OR BROOM FINISHED AND BE LEVEL.

MAINTENANCE PLATFORMS ARE NOT REQUIRED WHEN THE SURROUNDING AREA IS PAVED.

MINIMUM BENDING RADIUS OF CONDUIT = 6 X THE DIAMETER.

ALL METALLIC CONDUIT ENDS SHALL BE REAMED AND THREADED.

CAP ALL BELOW GRADE METALLIC CONDUIT ENDS IN WHICH WIRE OR CABLE IS NOT BEING INSTALLED.

PLUG ALL BELOW GRADE NONMETALLIC CONDUIT ENDS IN WHICH WIRE OR CABLE IS NOT BEING INSTALLED.

ALL CONDUIT ENDS AT THE TOP OF CONCRETE BASES SHALL BE CAPPED IF METALLIC OR PLUGGED IF NONMETALLIC IMMEDIATELY AFTER PLACEMENT AND BEFORE CONCRETE IS POURED. CONDUITS IN WHICH WIRE OR CABLE IS NOT BEING INSTALLED SHALL REMAIN CAPPED OR PLUGGED.

CONDUIT EXITING THE CONCRETE BASE (SIX THREE INCH) SHALL TERMINATE IN PULL BOXES AS SHOWN ON THE PLANS.

CONCRETE FORM DEPTH BELOW FINISHED GRADE SHALL BE 6" MAXIMUM. CONCRETE FORMS SHALL BE REMOVED AFTER CONCRETE HAS SET.

BELL ENDS SHALL BE INSTALLED ON ALL PVC CONDUIT EXPOSED AT THE TOP OF THE CONCRETE BASE BEFORE INSTALLATION OF CABLE OR WIRE.

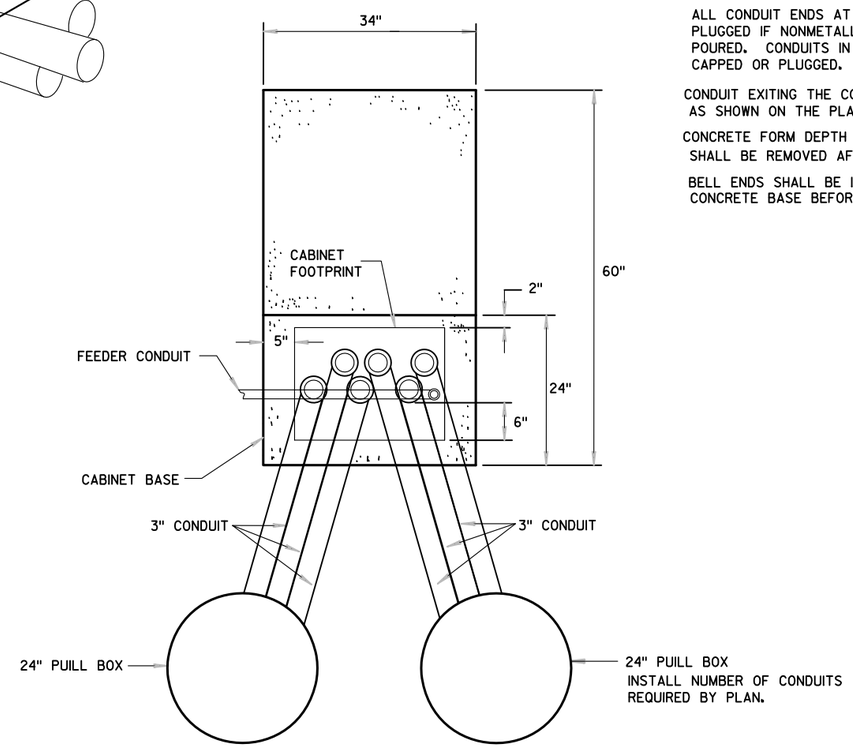

PLAN VIEW

CONCRETE CONTROL CABINET BASE, TYPE SPECIAL

PROJECT NO: 4085-43-71	HWY: STH 32/57	COUNTY: BROWN	CONSTRUCTION DETAIL- NER CABINET BASE INSTALLATION	SHEET 19	E

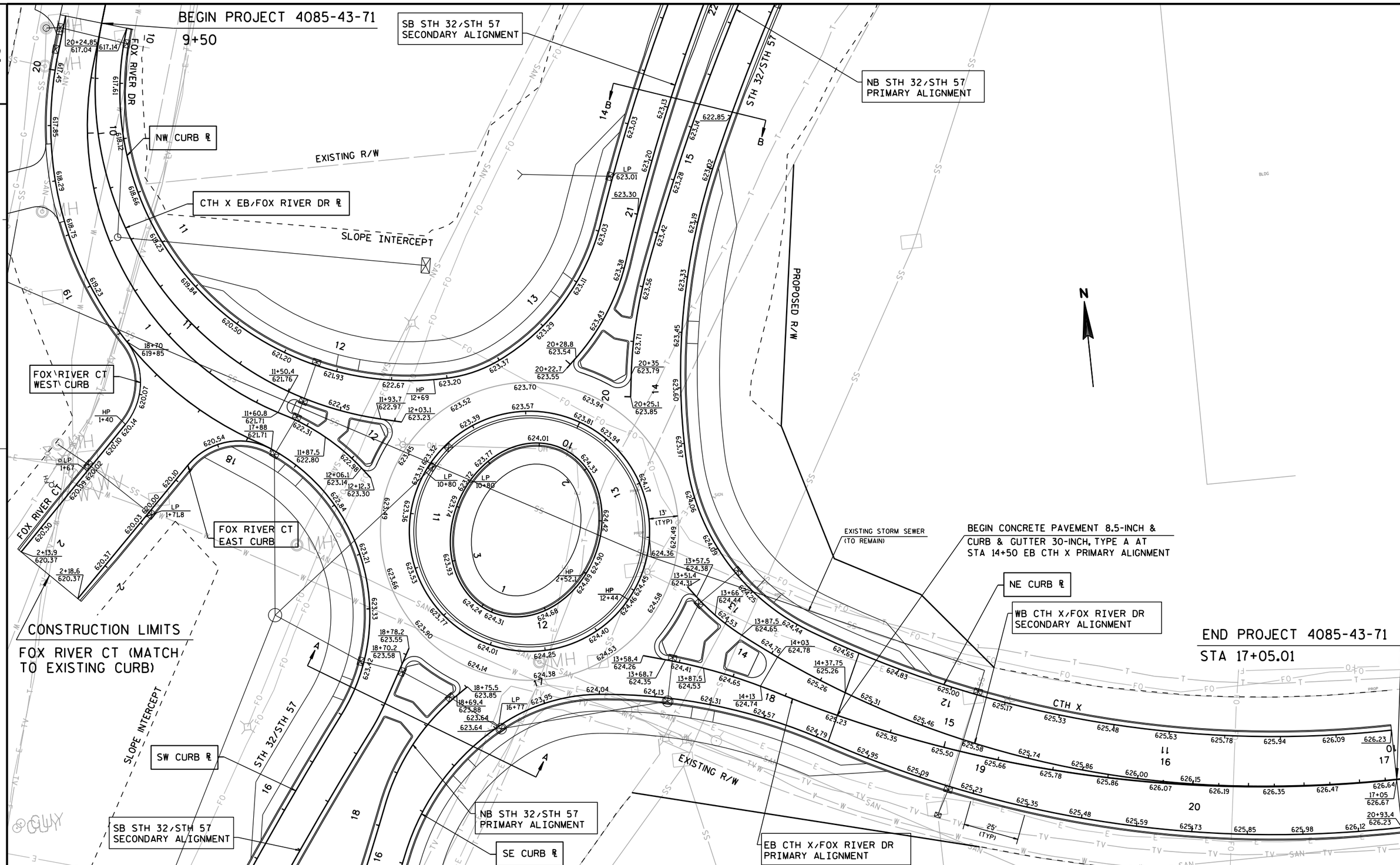

PROJECT NO:4085-43-71	HWY:STH 32	COUNTY:BROWN	CONSTRUCTION DETAIL - PAVEMENT GRADES	SHEET 20	E

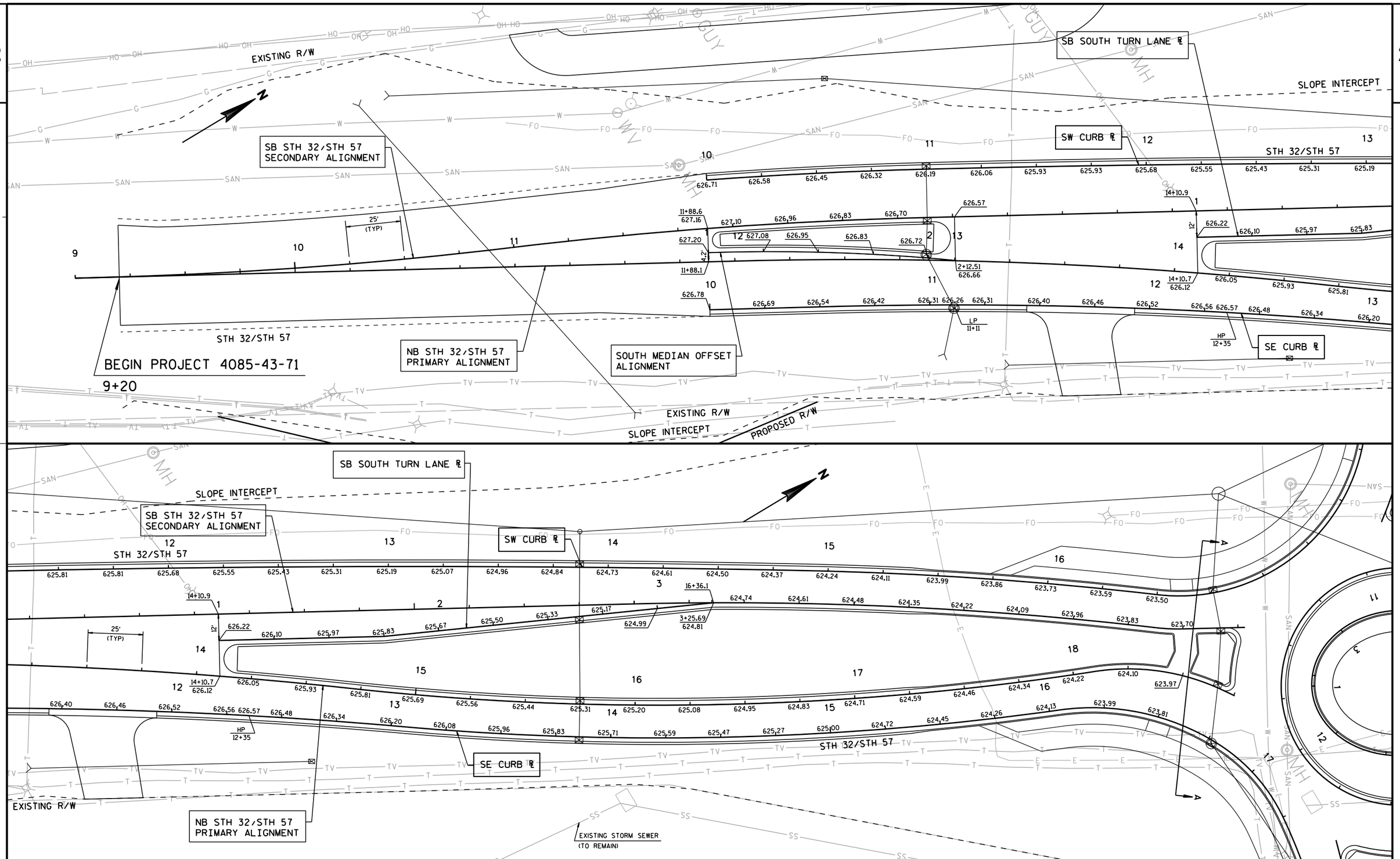

PROJECT NO:4085-43-71	HWY:STH 32	COUNTY:BROWN	COSTRUCTION DETAIL - PAVEMENT GRADES	SHEET 21	E

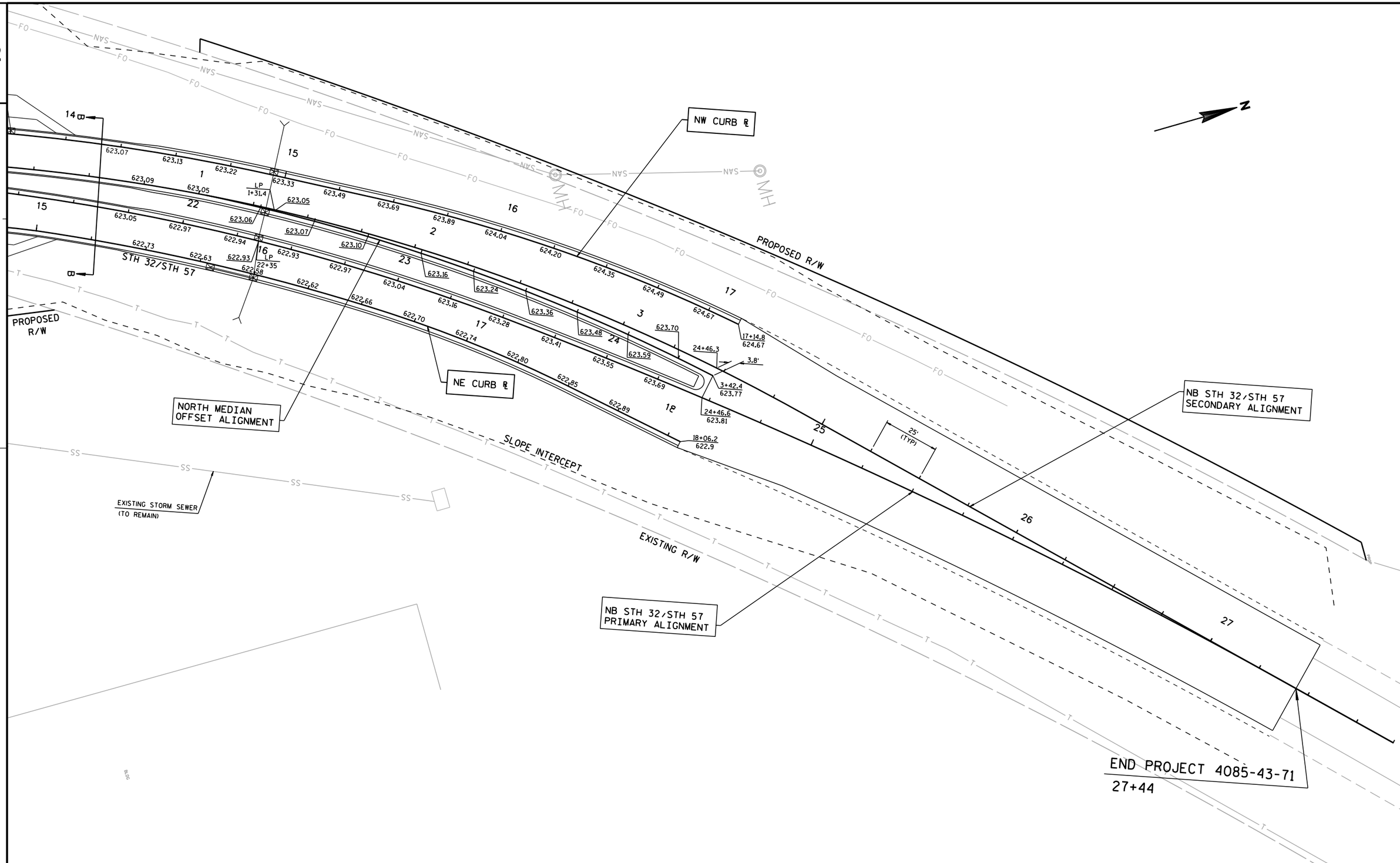

PROJECT NO:4085-43-71	HWY:STH 32	COUNTY:BROWN	CONSTRUCTION DETAIL - PAVEMENT GRADES	SHEET	E

FILE NAME : F:\d3_408543\021007_cd.dgn PLOT DATE : 30-JAN-2015 13:21 PLOT BY : ditjbs PLOT NAME : 021007 CD.I PLOT SCALE : 40:1 WISDOT/CADDS SHEET 42

NOTE: THE HOMEOWNER PAID THE CONTRACTOR TO REMOVE AND POUR THE BACK 7' OF THE APRON (THE PROJECT WAS ONLY GOING TO DO THE FIRST 7' OF THE APRON)

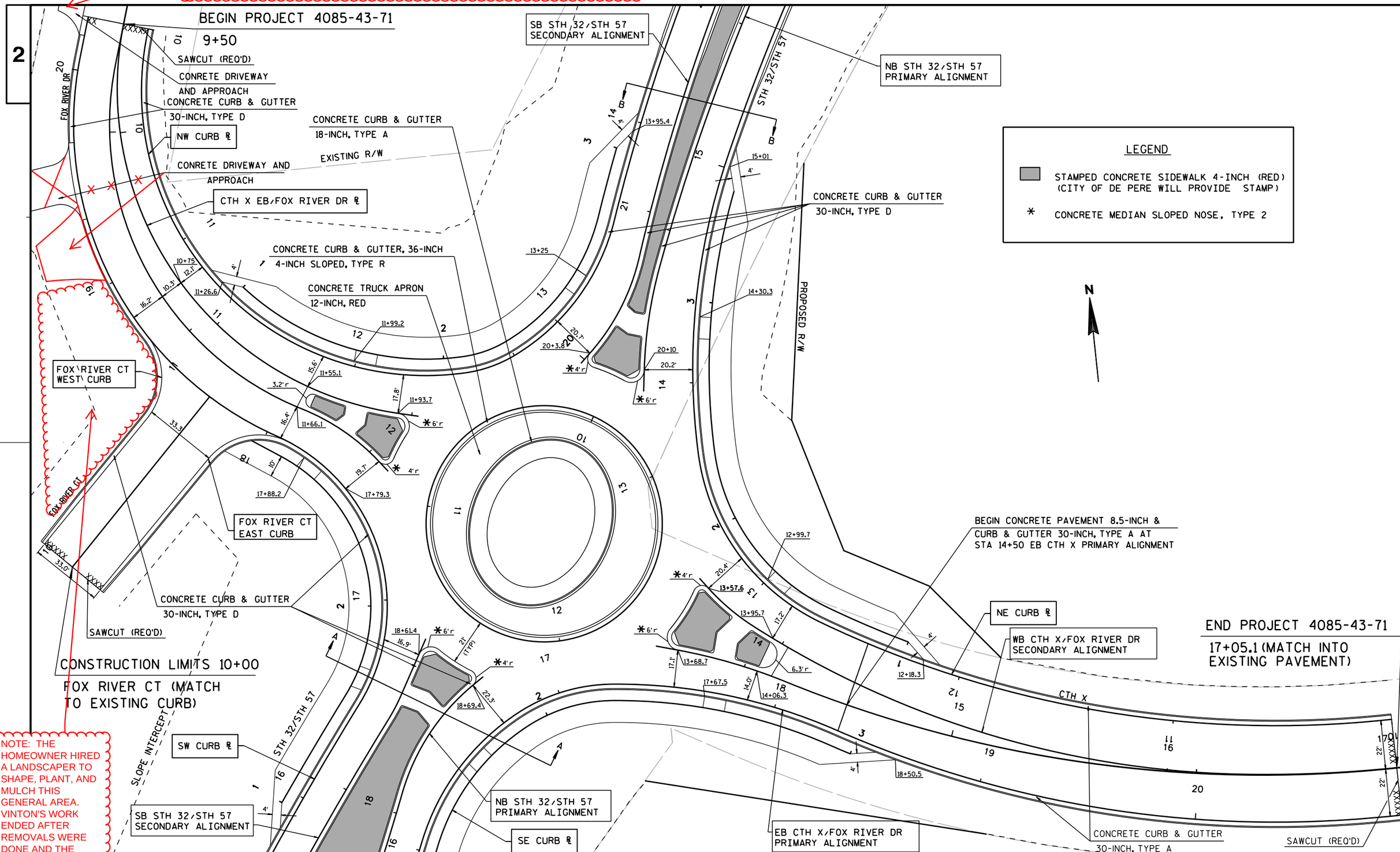

NOTE: THE HOMEOWNER HIRED A LANDSCAPER TO SHAPE, PLANT, AND MULCH THIS GENERAL AREA. VINTON'S WORK ENDED AFTER REMOVALS WERE DONE AND THE CURB WAS POURED.

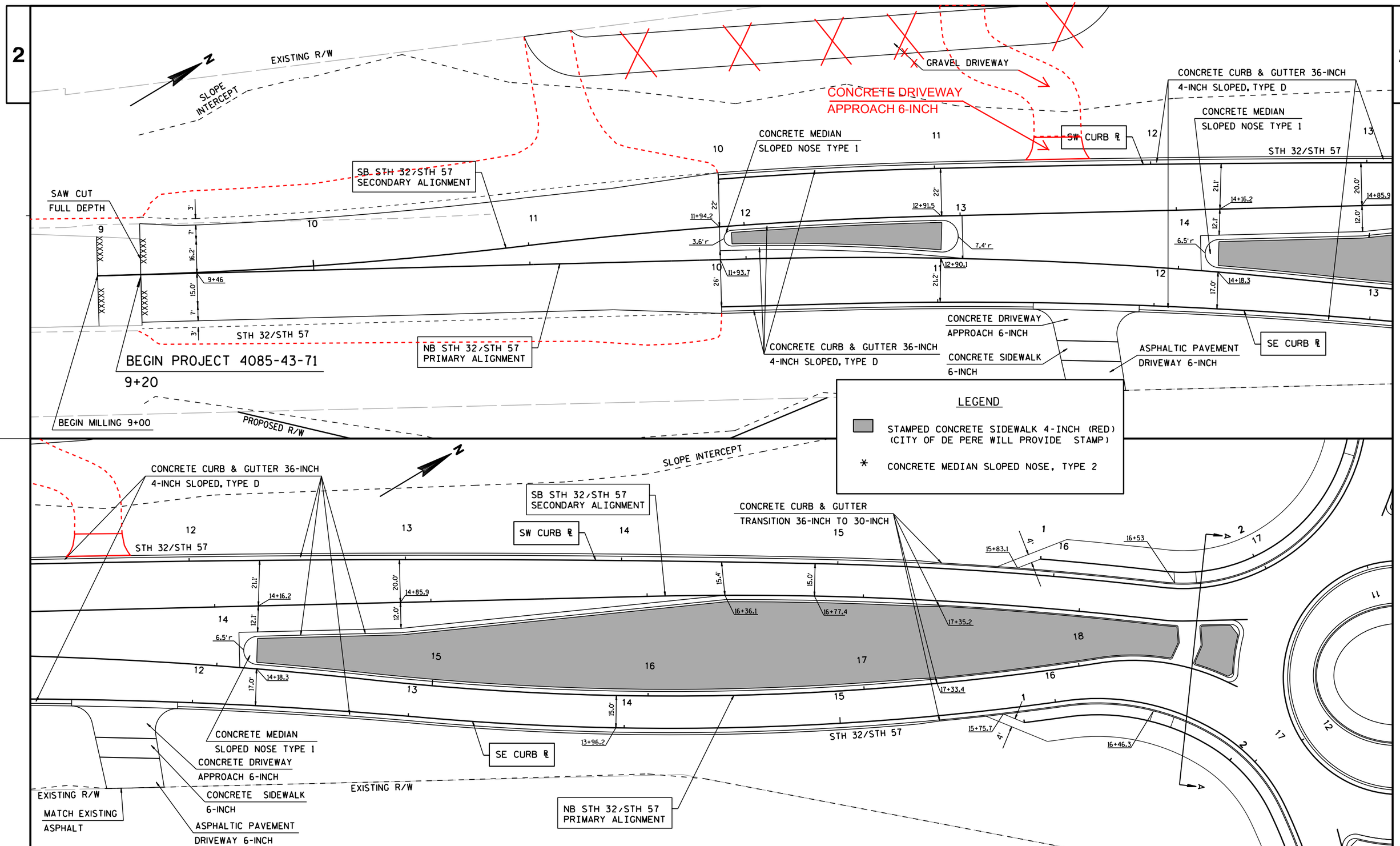

PROJECT NO:4085-43-71	HWY:STH 32	COUNTY:BROWN	PLAN DETAIL	SHEET	E

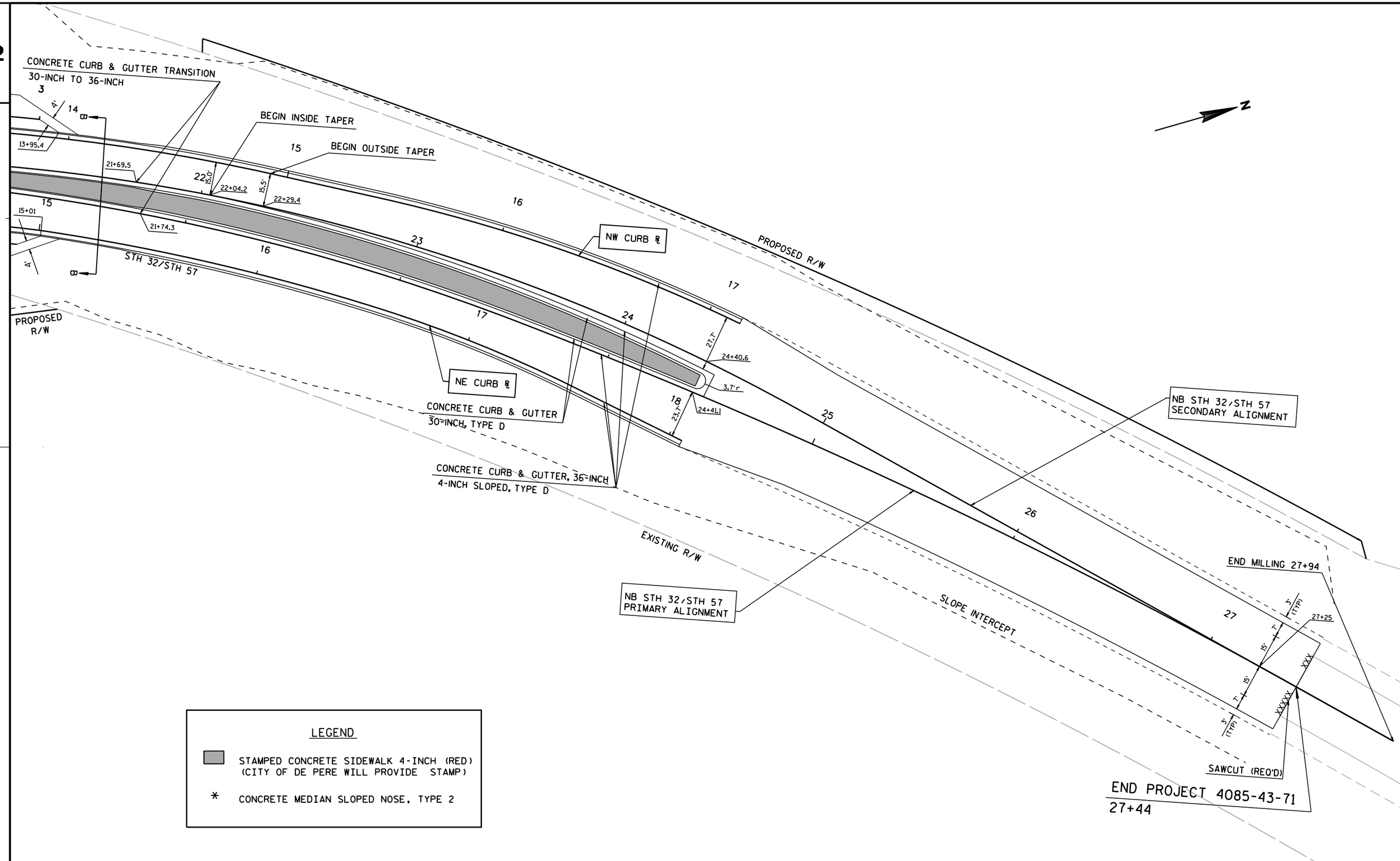

PROJECT NO:4085-43-71	HWY:STH 32	COUNTY:BROWN	PLAN DETAIL	SHEET	E

2

2

N

EXISTING R/W

CULVERT PIPE CORRUGATED STEEL 15-INCH

10

11

12

13

14

15

STH 32/STH 57

STH 32/STH 57

PROPOSED R/W

EROSION CONTROL LEGEND

###	EROSION MAT CLASS I, TYPE B
IIII	EROSION MAT URBAN CLASS I, TYPE B
—•—	SILT FENCE
	RIPRAP, MEDIUM
- - -	SLOPE INTERCEPT
	INLET PROTECTION
△△△	TEMPORARY DITCH CHECK
○○○	CULVERT PIPE DITCH CHECK
	ROCK BAGS
	SURFACE WATER FLOW

PROJECT NO:4085-43-71	HWY:STH 32	COUNTY:BROWN	EROSION CONTROL DETAIL	SHEET 26	E

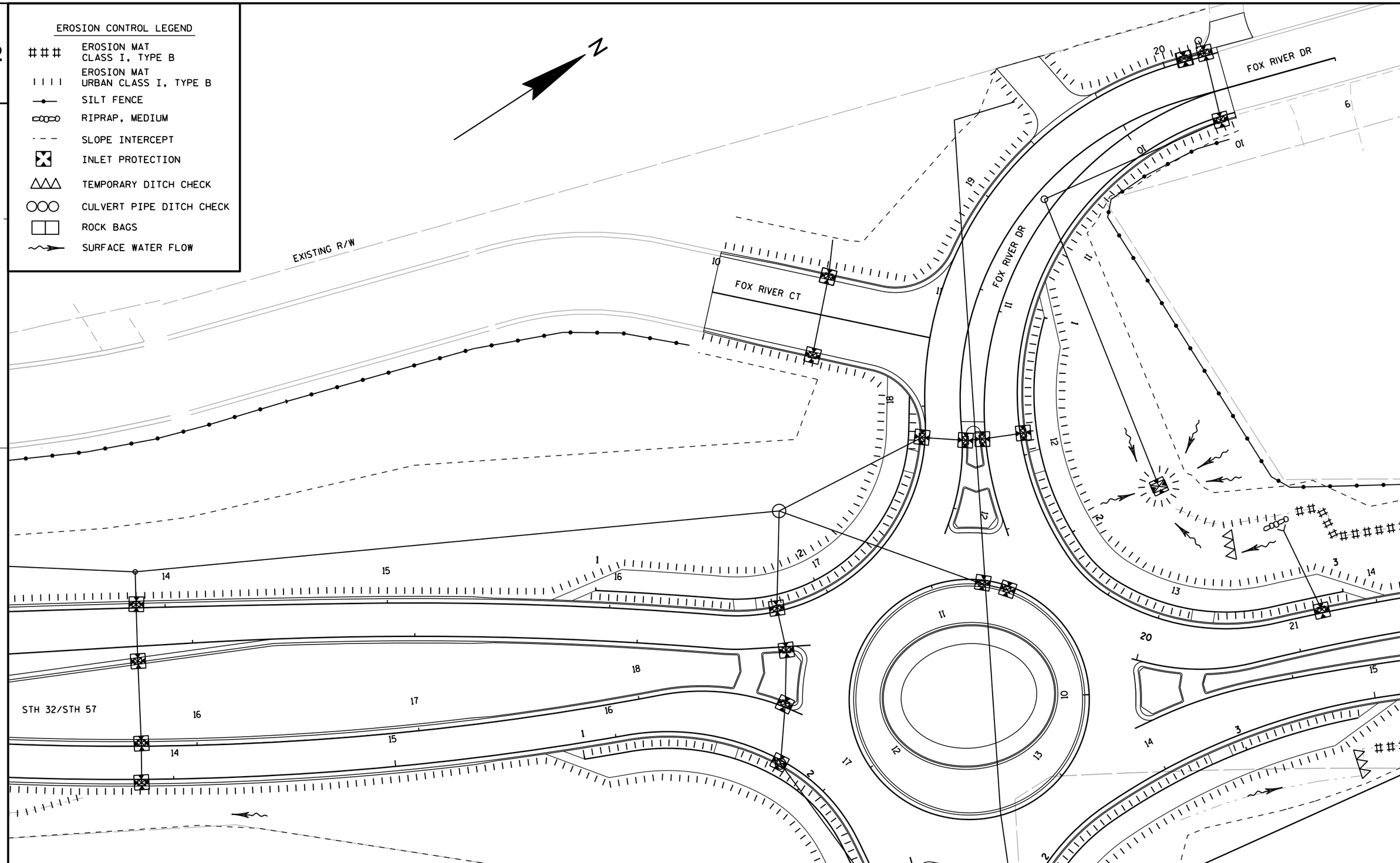

PROJECT NO:4085-43-71	HWY:STH 32	COUNTY:BROWN	EROSION CONTROL DETAIL	SHEET 27	E

FILE NAME : F:\d3_408543\022002_ec.dgn PLOT DATE : 09-DEC-2014 13:20 PLOT BY : ditjbs PLOT NAME : 022002 EC PLOT SCALE : 40:1

WISDOT/CADDS SHEET 42

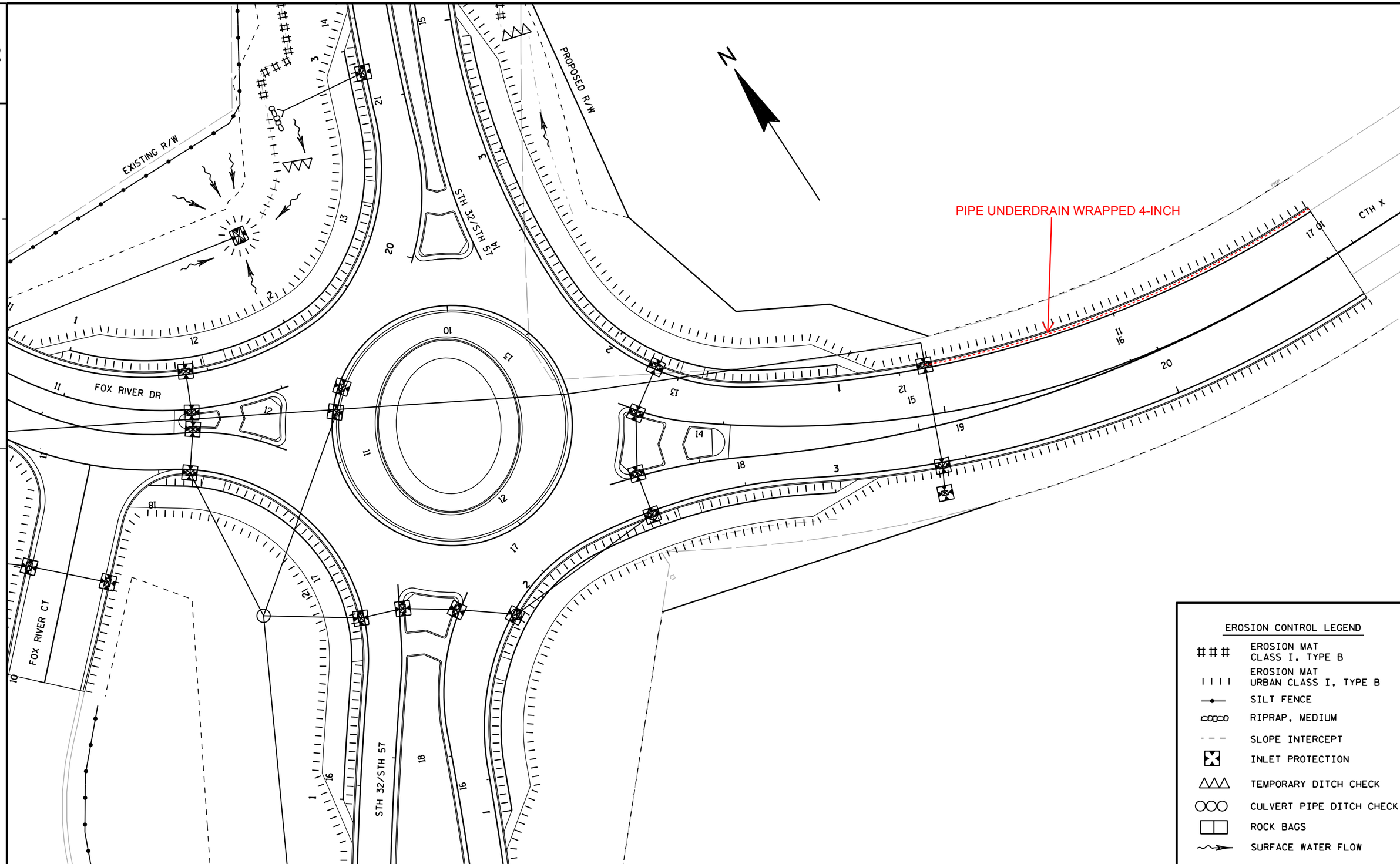

PROJECT NO:4085-43-71	HWY:STH 32	COUNTY:BROWN	EROSION CONTROL DETAIL	SHEET 28	E

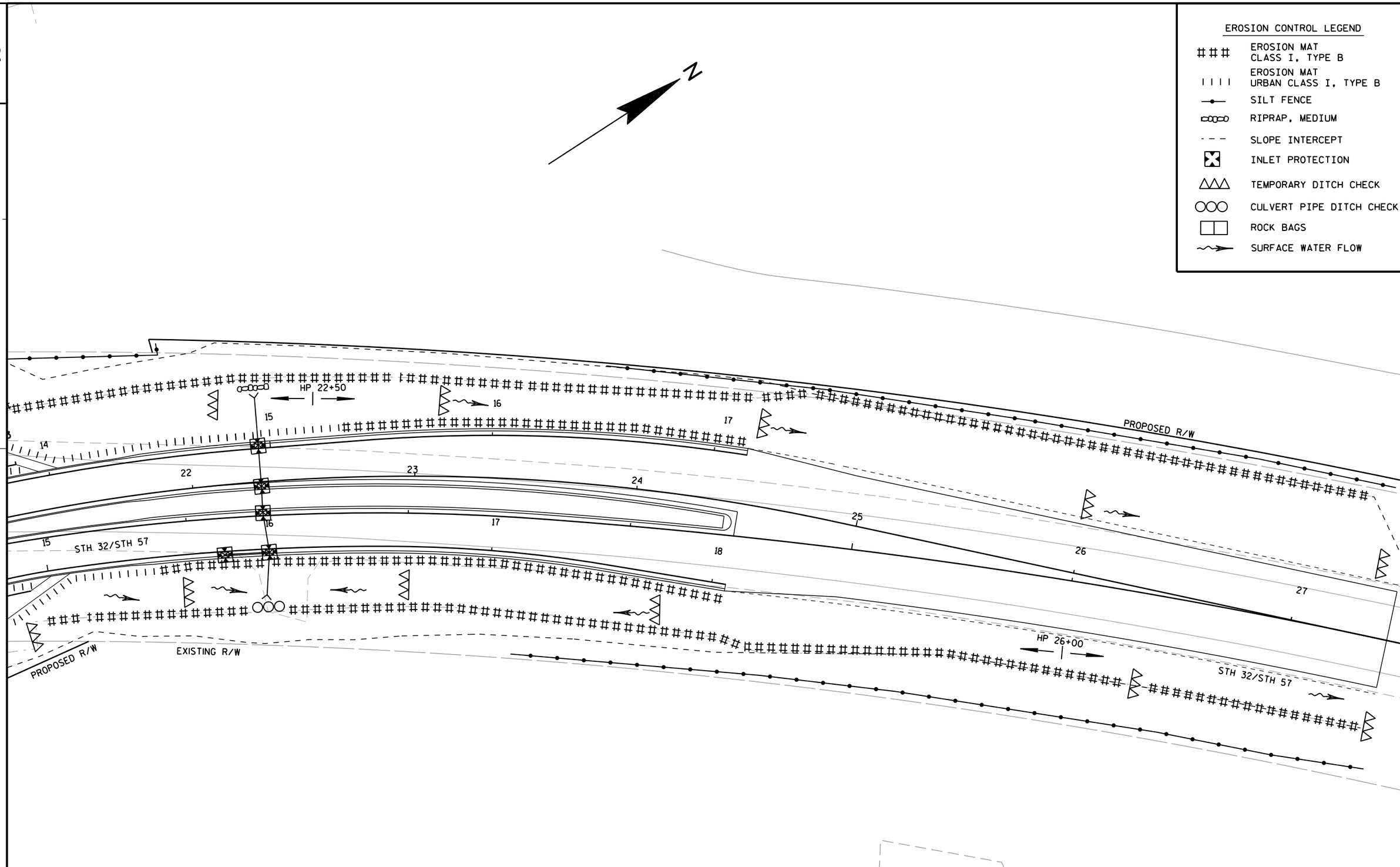

2

PROJECT NO:4085-43-71	HWY:STH 32	COUNTY:BROWN	EROSION CONTROL DETAIL	SHEET 29	E

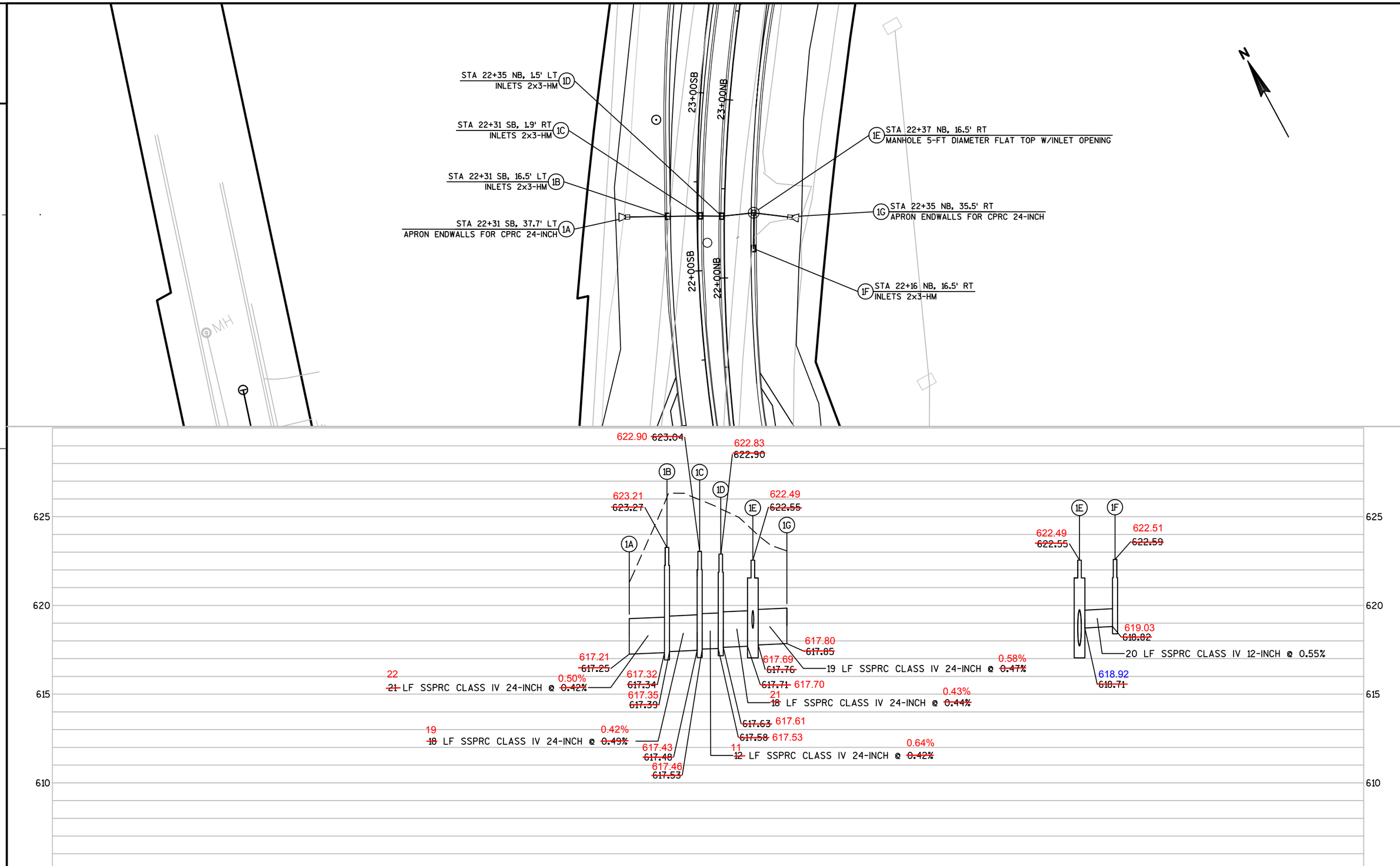

PROJECT NO:4085-43-71	HWY:STH 57	COUNTY:BROWN	STORM SEWER	SHEET 30	E

FILE NAME : N:\PDS\C3D\40854300\DESIGN\STORM SEWER\SS WITH CORRECTIONS 11-5-14.DWG
STORM SEWER - SYSTEM 1
PLOT DATE : 11/5/2014 10:18 AM PLOT BY : RICKERT, BRIAN J PLOT NAME : PLOT SCALE : 1" = 50'_XREF
WISDOT/CADDS SHEET 41

2

2D STA 9+58 WB, 12.8' LT
MANHOLE 5-FT DIAMETER FLAT TOP W/INLET OPENING

STA 21+04 SB, 54.6' LT 8A
APRON ENDWALLS FOR CPRC 12-INCH

STA 9+56 EB, 18.0' RT 2B
INLETS 2X3- INLET COVER SPECIAL DRIVEWAY

STA 9+57 EB, 24.0' RT 2A
CULVERT PIPE CONCRETE COLLAR

STA 9+66 EB, 18.0' RT 2C
INLETS 2x3-H

STA 10+47 RAB, 79.1' RT 2F
INLETS MEDIAN 1G-MS

2E STA 10+46 WB, 5.0' RT
MANHOLES 5-J

STA 21+13 SB, 16.5' LT 8B
INLETS 2x3-H

MODIFIED FRAME AND GRATE TO FLAT CIRCULAR FRAME AND OPEN GRATE

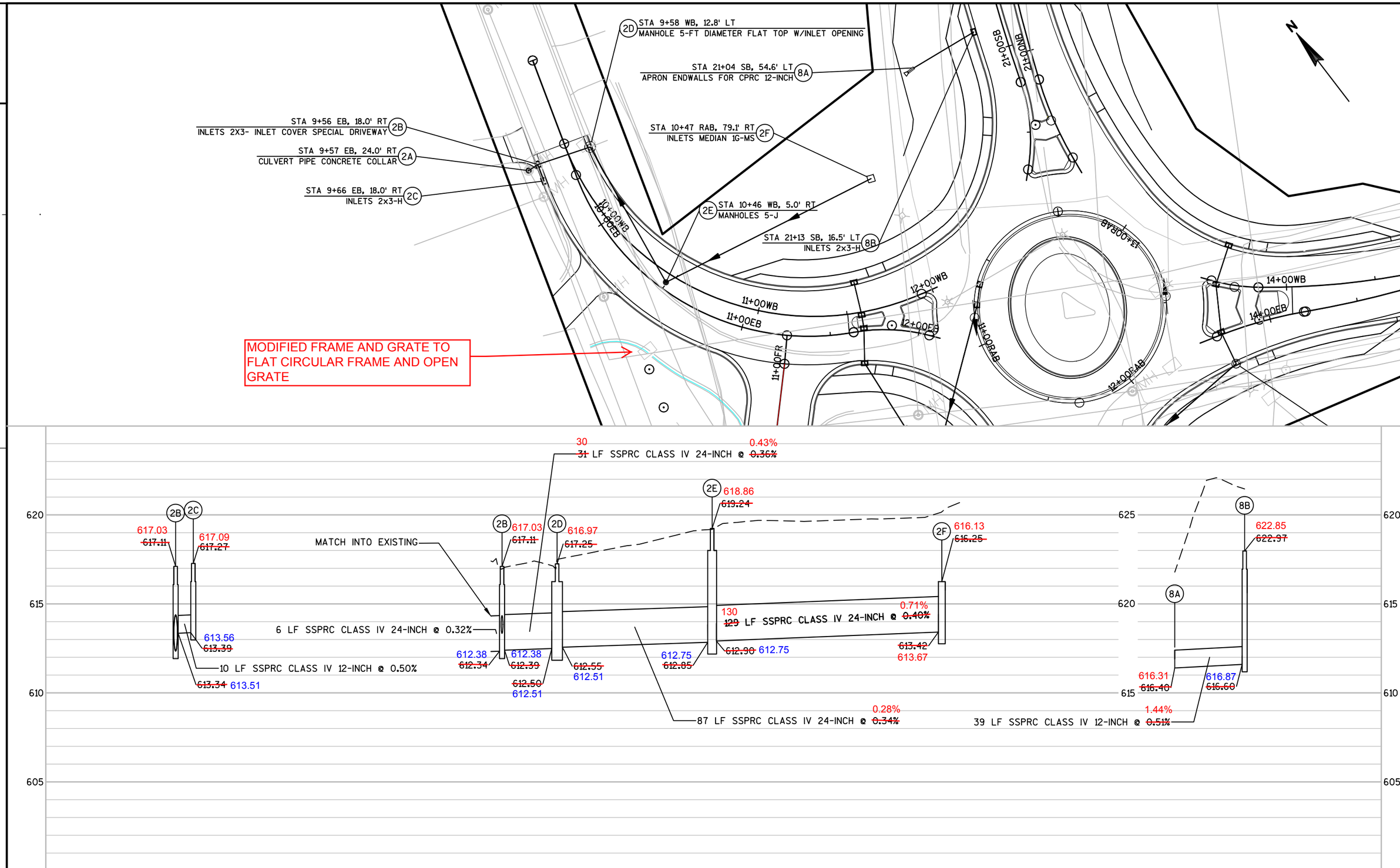

2

PROJECT NO:4085-43-71	HWY:STH 57	COUNTY:BROWN	STORM SEWER	SHEET 31	E

FILE NAME : N:\PDS\C3D\40854300\DESIGN\STORM SEWER\SS WITH CORRECTIONS 11-5-14.DWG
STORM SEWER - SYSTEM 2
PLOT DATE : 11/5/2014 10:52 AM PLOT BY : RICKERT, BRIAN J PLOT NAME : PLOT SCALE : 1" = 50'_XREF
WISDOT/CADDS SHEET 41

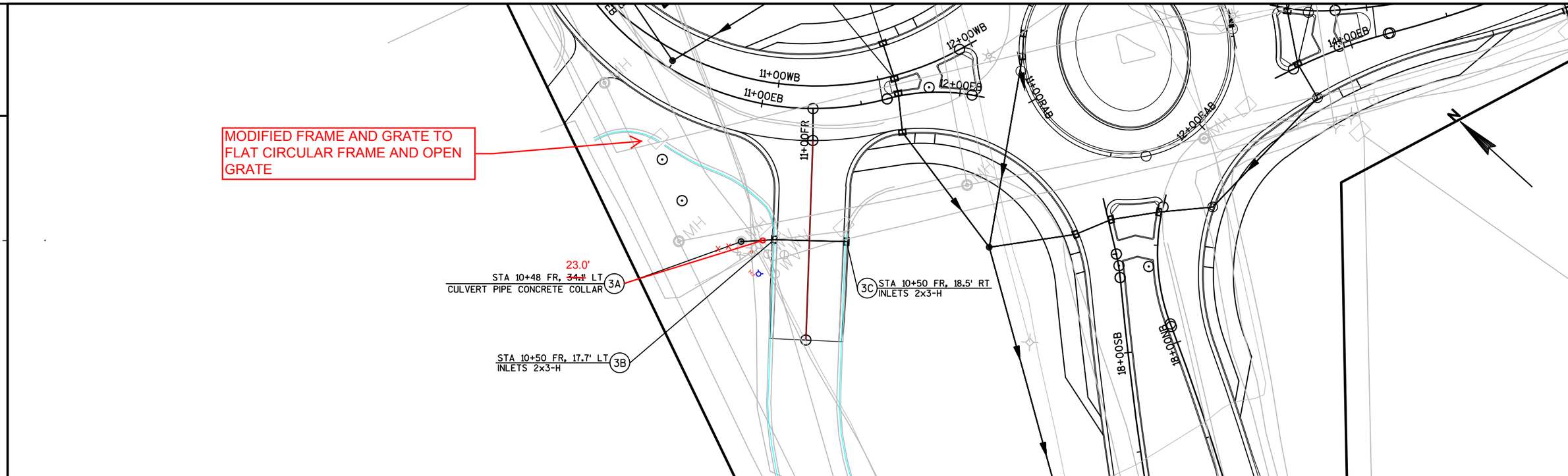

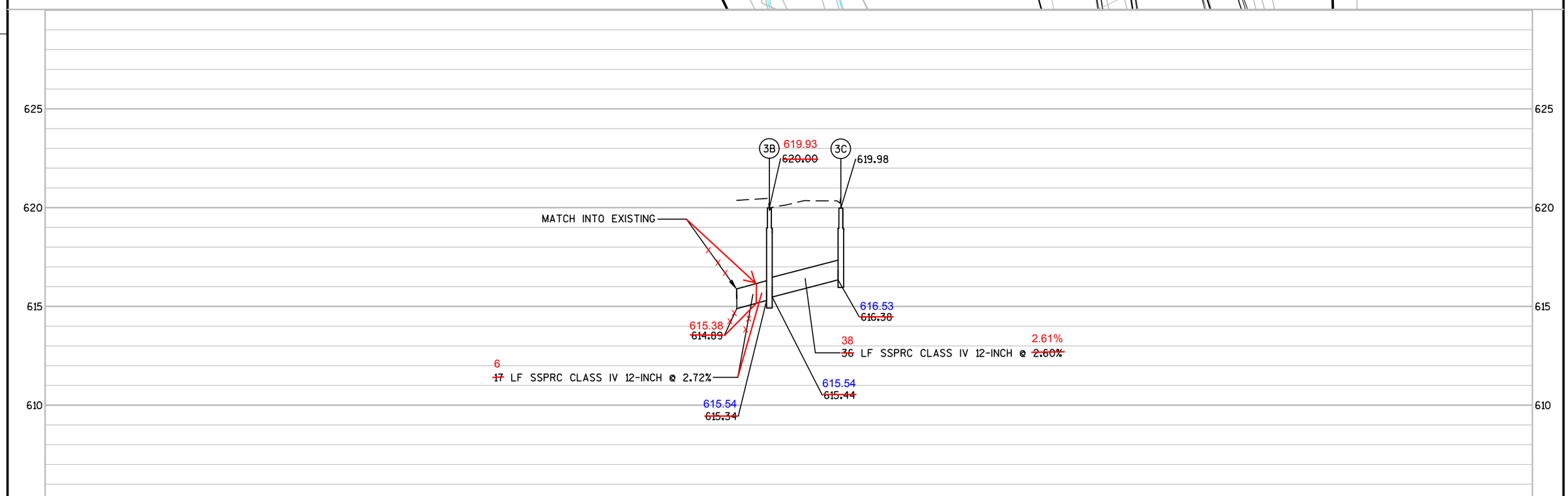

PROJECT NO:4085-43-71	HWY:STH 57	COUNTY:BROWN	STORM SEWER	SHEET 32	E

FILE NAME : N:\PDS\C3D\40854300\DESIGN\STORM SEWER\SS WITH CORRECTIONS 11-5-14.DWG
STORM SEWER - SYSTEM 3
PLOT DATE : 11/5/2014 10:46 AM PLOT BY : RICKERT, BRIAN J PLOT NAME : PLOT SCALE : 1" = 50'_XREF

WISDOT/CADDS SHEET 41

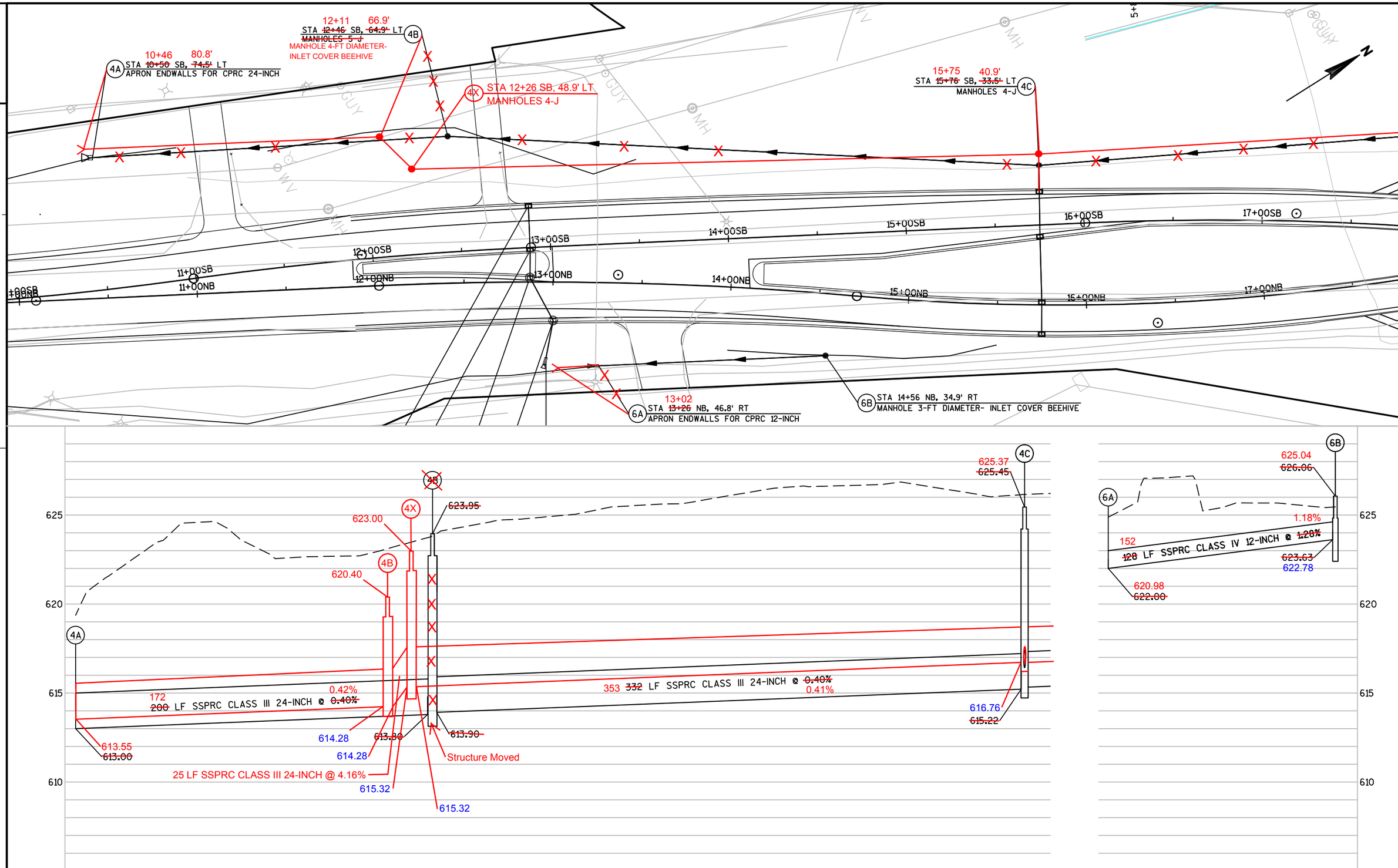

PROJECT NO: 4085-43-71	HWY: STH 57	COUNTY: BROWN	STORM SEWER	SHEET 33	E

FILE NAME : N:\PDS\C3D\40854300\DESIGN\STORM SEWER\SS WITH DRIVEWAY REMOVAL MODIFICATIONS 1-15-14.DWG
STORM SEWER - SYSTEM 4
PLOT DATE : 1/15/2015 8:33 AM PLOT BY : RICKERT, BRIAN J PLOT NAME : PLOT SCALE : 1" = 50'_XREF

WISDOT/CADDS SHEET 41

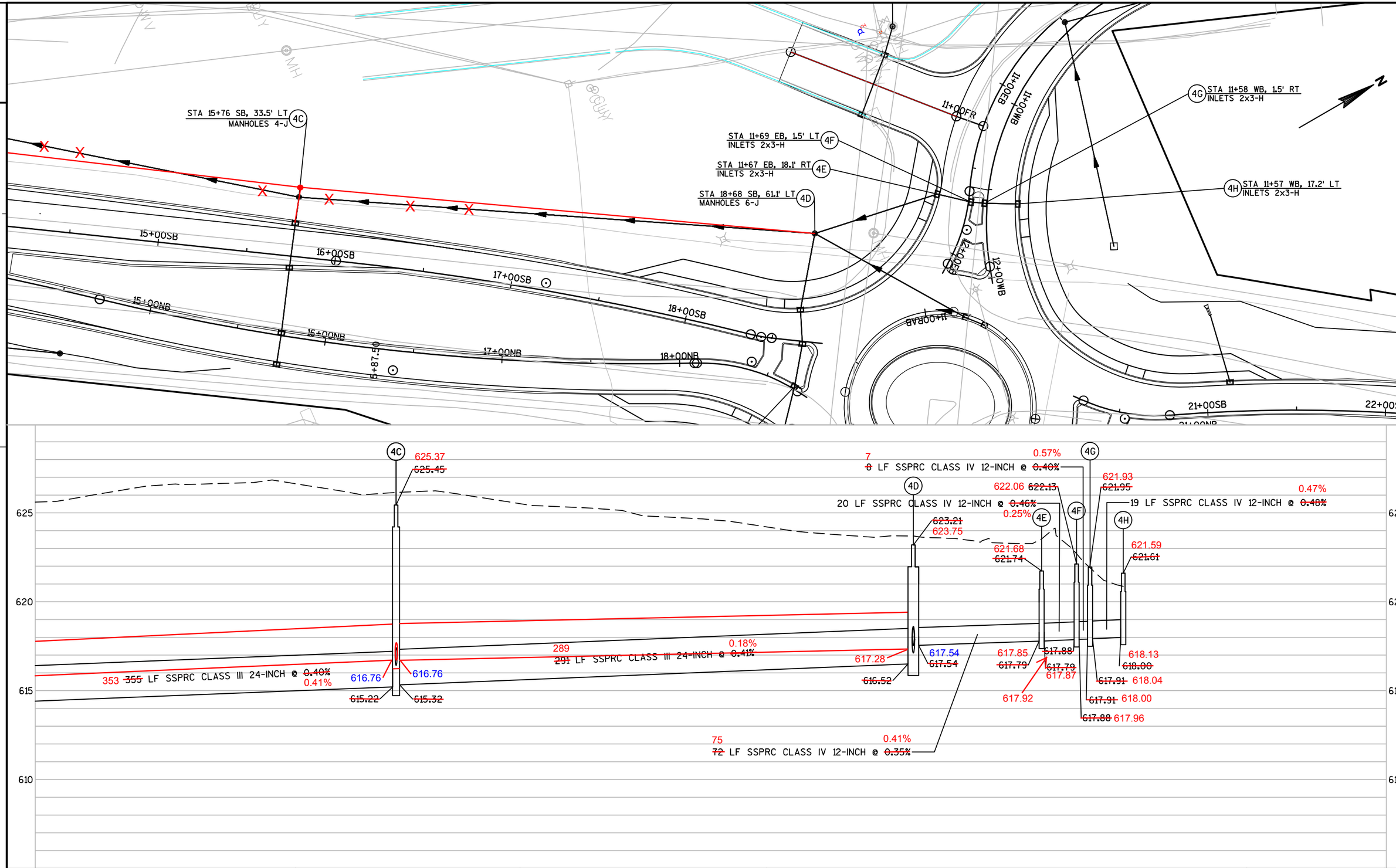

PROJECT NO:4085-43-71	HWY:STH 57	COUNTY:BROWN	STORM SEWER	SHEET 34	E

FILE NAME : N:\PDS\C3D\40854300\DESIGN\STORM SEWER\SS WITH DRIVEWAY REMOVAL MODIFICATIONS 1-15-14.DWG
STORM SEWER - SYSTEM 4 (1)
PLOT DATE : 1/15/2015 9:11 AM PLOT BY : RICKERT, BRIAN J PLOT NAME : PLOT SCALE : 1:50_XREF

WISDOT/CADDS SHEET 41

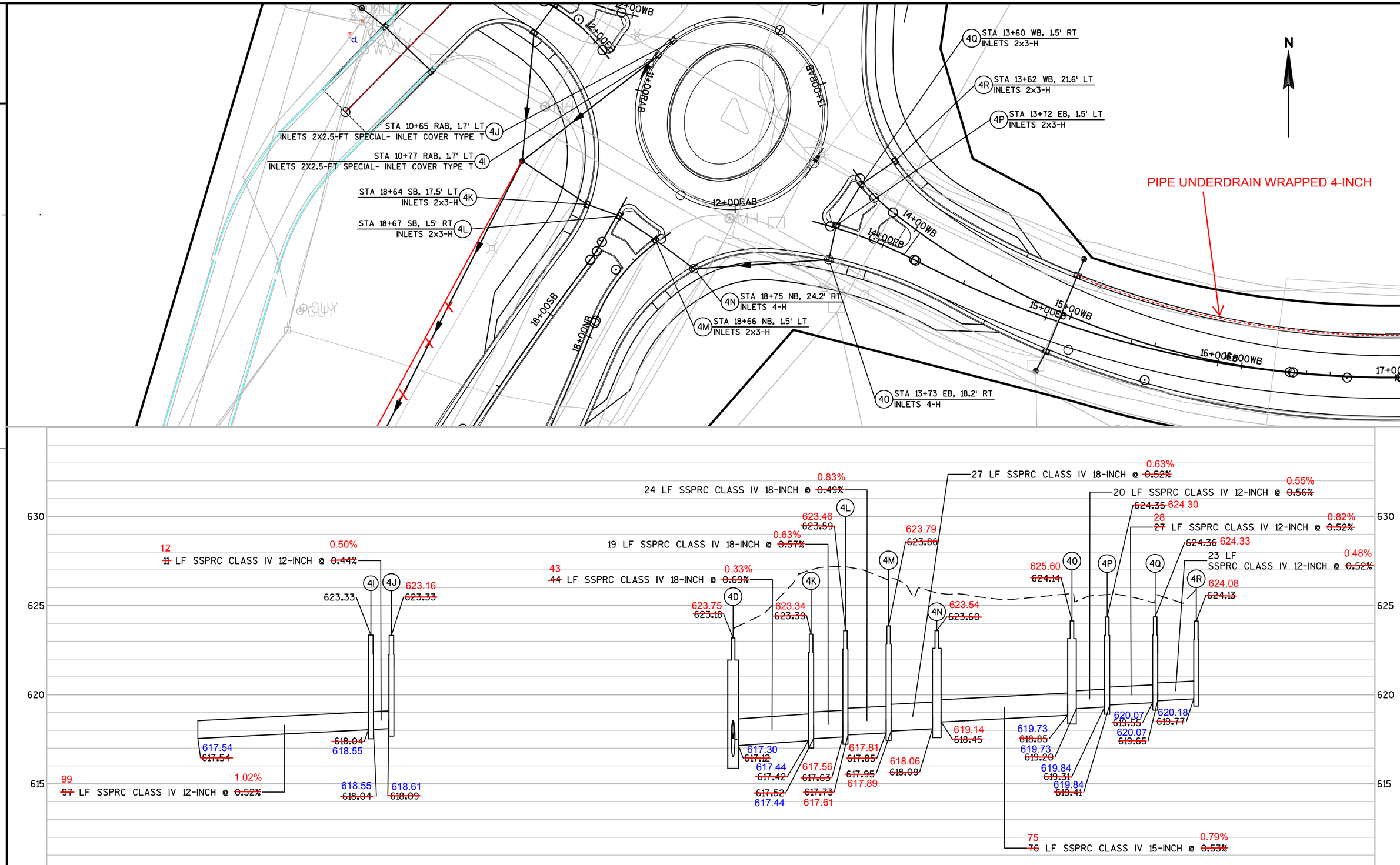

PROJECT NO: 4085-43-71	HWY: STH 57	COUNTY: BROWN	STORM SEWER	SHEET 35	E

FILE NAME : N:\PDS\C3D\40854300\DESIGN\STORM SEWER\SS WITH CORRECTIONS 11-5-14.DWG
STORM SEWER - SYSTEM 4D-4U

PLOT DATE : 11/5/2014 11:14 AM PLOT BY : RICKERT, BRIAN J PLOT NAME : PLOT SCALE : 1" = 50'_XREF

WISDOT/CADDS SHEET 41

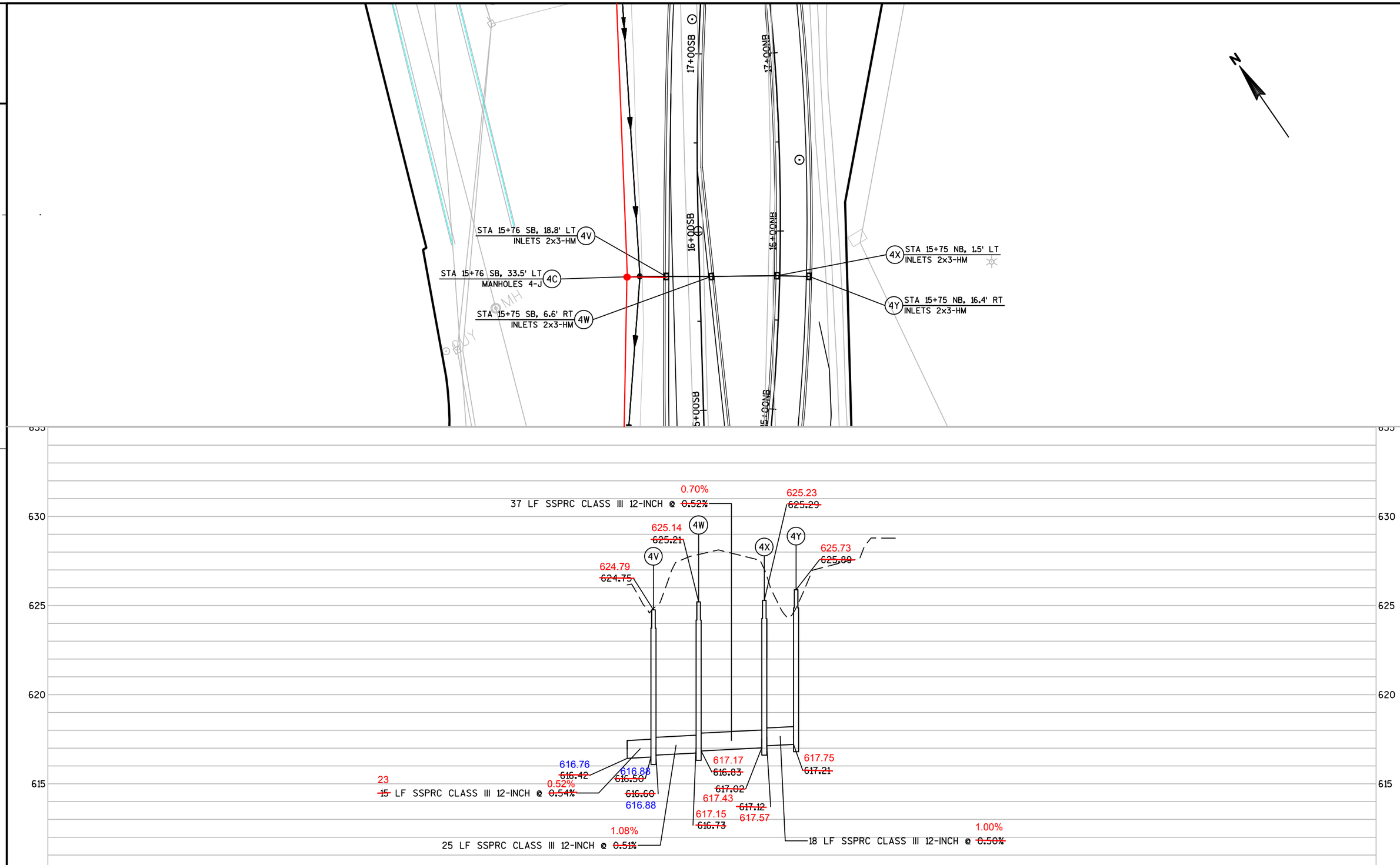

PROJECT NO:4085-43-71	HWY:STH 57	COUNTY:BROWN	STORM SEWER	SHEET 36	E

FILE NAME : N:\PDS\C3D\40854300\DESIGN\STORM SEWER\SS WITH CORRECTIONS 11-5-14.DWG
STORM SEWER - SYSTEM 4D
PLOT DATE : 11/5/2014 10:20 AM PLOT BY : RICKERT, BRIAN J PLOT NAME : PLOT SCALE : 1" = 50'_XREF
WISDOT/CADDS SHEET 41

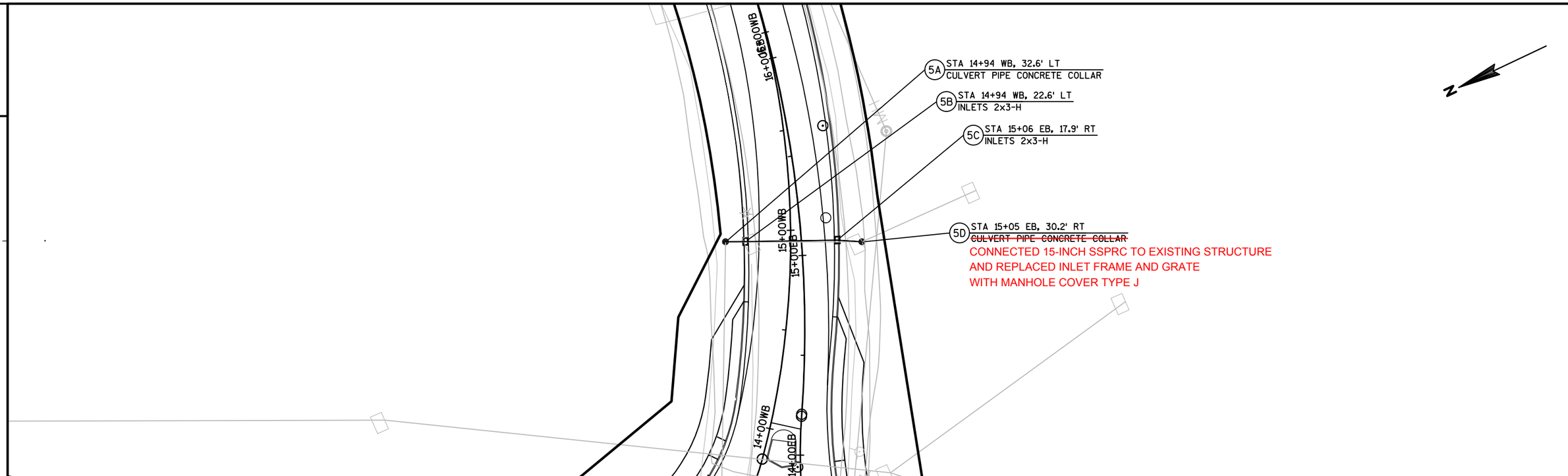

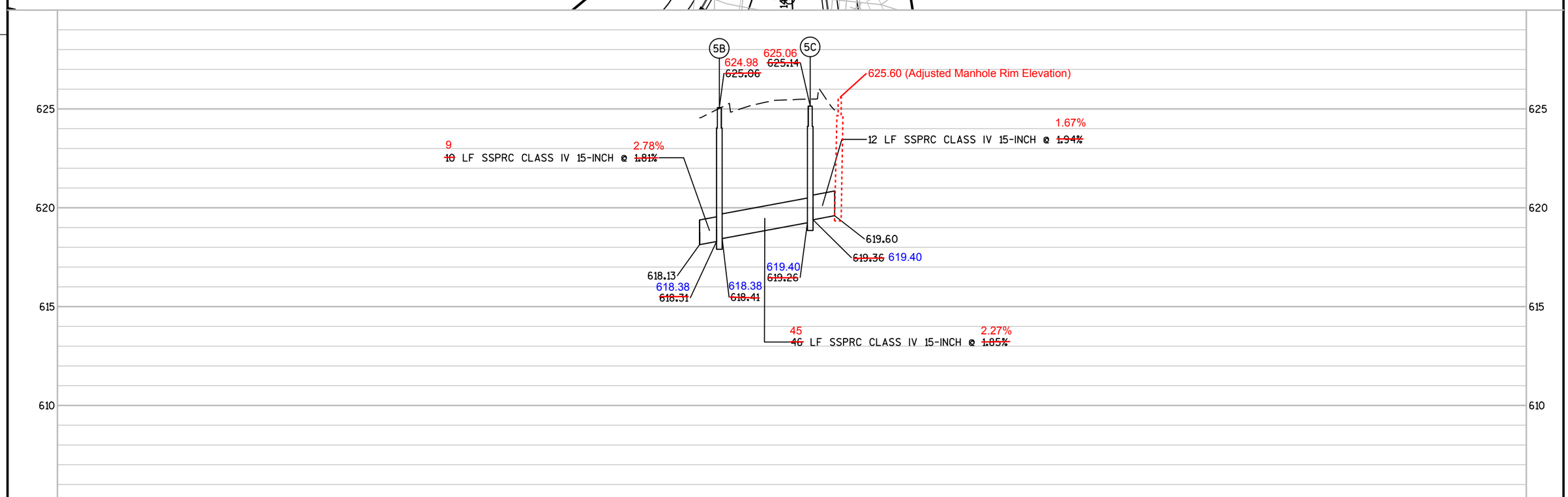

PROJECT NO:4085-43-71	HWY:STH 57	COUNTY:BROWN	STORM SEWER	SHEET 37	E

FILE NAME : N:\PDS\C3D\40854300\DESIGN\STORM SEWER\SS WITH CORRECTIONS 11-5-14.DWG
STORM SEWER - SYSTEM 5
PLOT DATE : 11/5/2014 11:16 AM PLOT BY : RICKERT, BRIAN J PLOT NAME : PLOT SCALE : 1" = 50'_XREF

WISDOT/CADDS SHEET 41

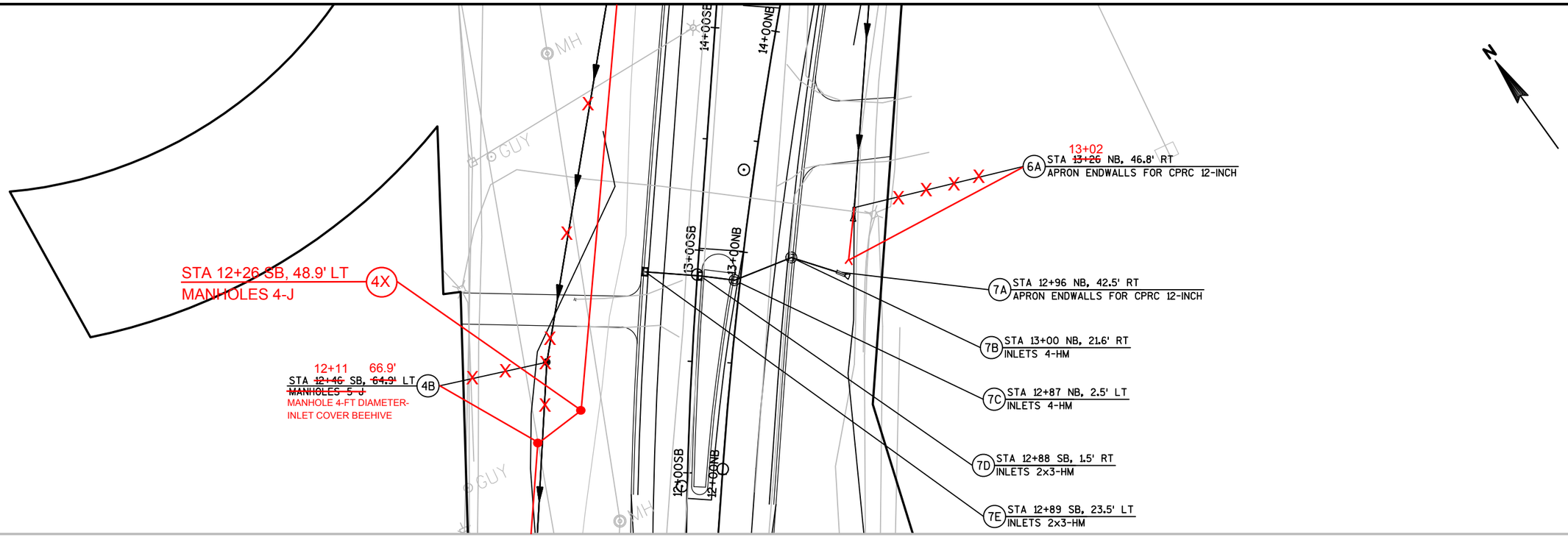

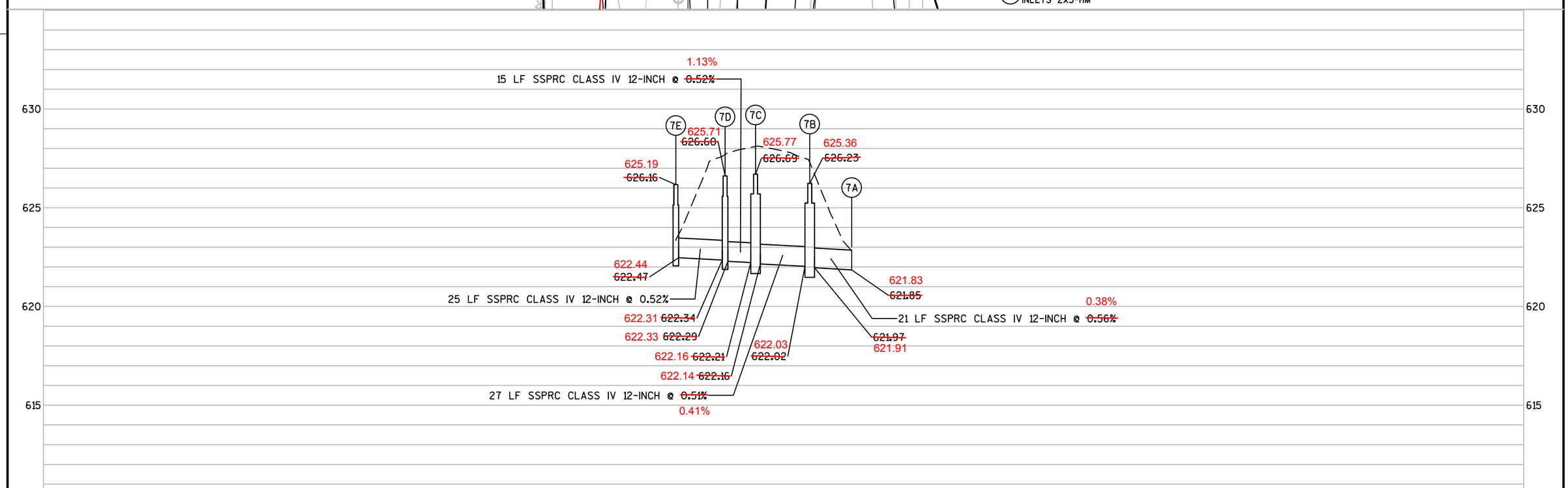

PROJECT NO:4085-43-71	HWY:STH 57	COUNTY:BROWN	STORM SEWER	SHEET 38	E

FILE NAME : N:\PDS\C3D\40854300\DESIGN\STORM SEWER\SS WITH DRIVEWAY REMOVAL MODIFICATIONS 1-15-14.DWG
STORM SEWER - SYSTEM 7
PLOT DATE : 1/15/2015 8:28 AM PLOT BY : RICKERT, BRIAN J PLOT NAME : PLOT SCALE : 1" = 50'_XREF

WISDOT/CADDS SHEET 41

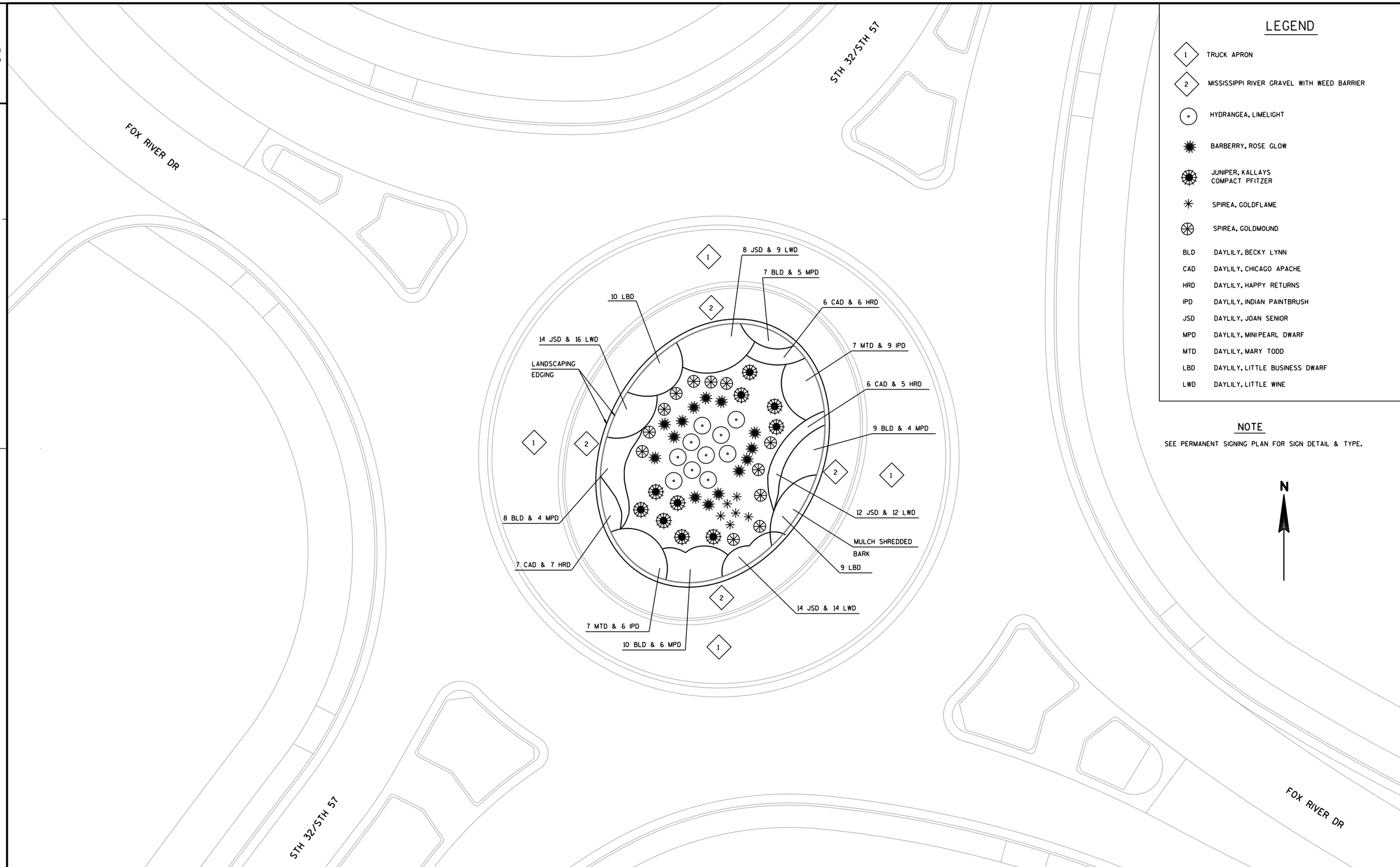

LEGEND

1	TRUCK APRON
2	MISSISSIPPI RIVER GRAVEL WITH WEED BARRIER
	HYDRANGEA, LIMELIGHT
	BARBERRY, ROSE GLOW
	JUNIPER, KALLAYS COMPACT PFITZER
	SPIREA, GOLDFLAME
	SPIREA, GOLDMOUND
BLD	DAYLILY, BECKY LYNN
CAD	DAYLILY, CHICAGO APACHE
HRD	DAYLILY, HAPPY RETURNS
IPD	DAYLILY, INDIAN PAINTBRUSH
JSD	DAYLILY, JOAN SENIOR
MPD	DAYLILY, MINI PEARL DWARF
MTD	DAYLILY, MARY TODD
LBD	DAYLILY, LITTLE BUSINESS DWARF
LWD	DAYLILY, LITTLE WINE

NOTE

SEE PERMANENT SIGNING PLAN FOR SIGN DETAIL & TYPE.

2

FOX RIVER DR

STH 32/STH 57

LEGEND

- 180 SPRINKLER HEAD
- 360 SPRINKLER HEAD
- PIPING
- BACK FLOW PREVENTER (13" X 24" VAULT)
- CONTROL VAULT
- ELECTRICAL OUTLET
- CITY METER (13" X 24" VAULT)
- CURB STOP
- PULL BOX

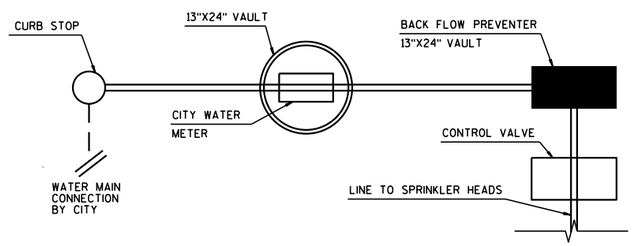

TYPICAL POINT OF CONNECTION

SCHEMATIC PLAN
NOT TO SCALE

ONLY ONE
RECEPTACLE
STAND BUILT

6'

E

ELECTRIC SERVICE AT STA 15+10 LT

UTILIZE FORMER LIGHT POLE LOCATION FOR ROUNDABOUT ELECTRIC SERVICE. POLE AND BASE TO BE REMOVED DURING CONSTRUCTION.

N

2" WATER SERVICE BY CITY

TO BE COMPLETED DURING ROUNDABOUT CONSTRUCTION

W

STH 32/STH 57

CTH X

NOTES

WATER SERVICE UP TO THE CURB STOP IS TO BE PROVIDED BY THE CITY. WORK IS TO BE COMPLETED DURING ROUNDABOUT CONSTRUCTION.

POINT OF CONNECTION FOR IRRIGATION TO BE IN CENTER OF ROUNDABOUT AS DETERMINED BY ENGINEER.

POINT OF ELECTRICAL CONNECTION (BREAKER PANEL AND METER) TO BE DETERMINED BY ENGINEER.

2

PROJECT NO:4085-43-71	HWY:STH 32	COUNTY:BROWN	SCHEMATIC IRRIGATION PLAN	SHEET 40	E

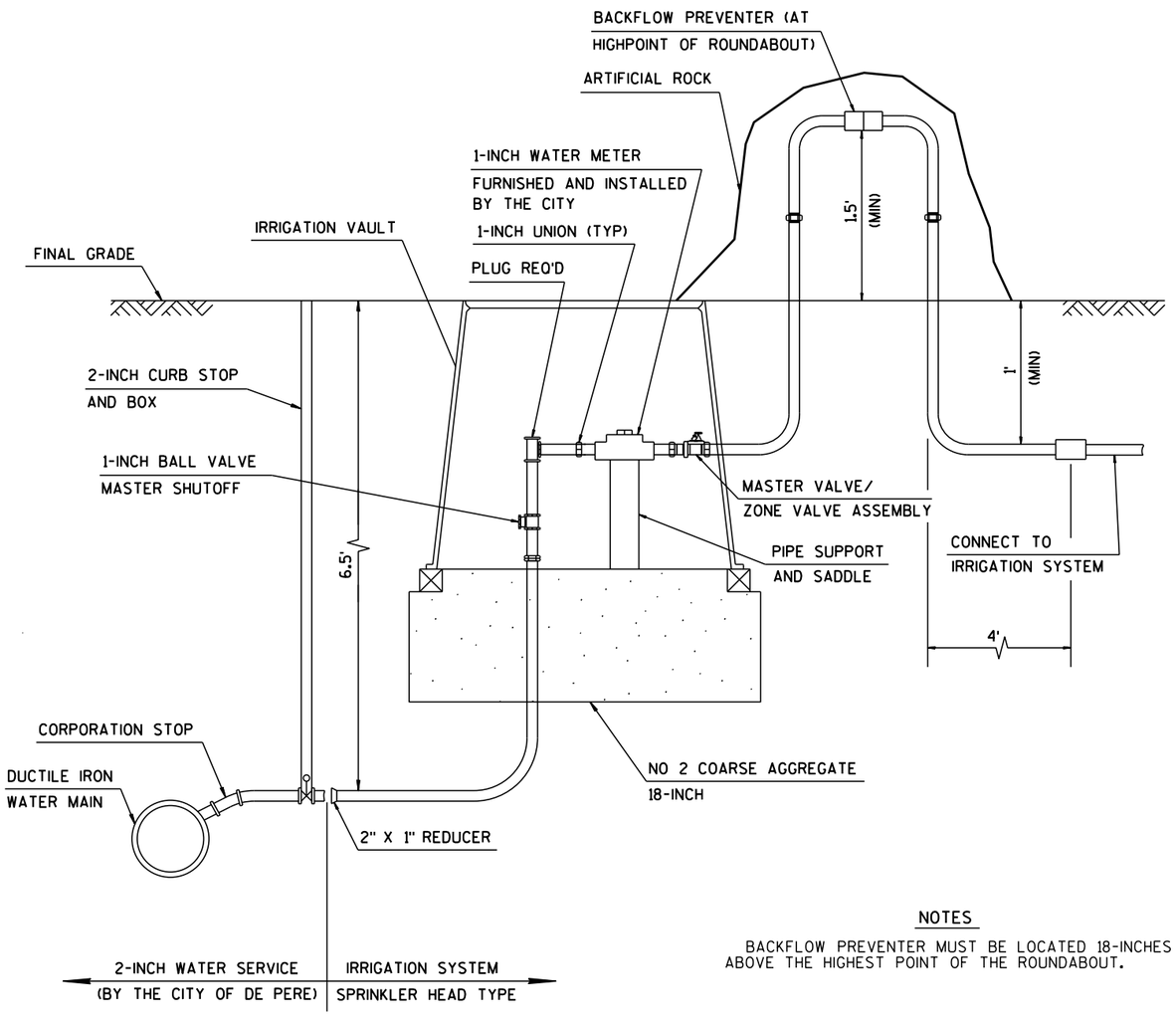

NOTES

BACKFLOW PREVENTER MUST BE LOCATED 18-INCHES ABOVE THE HIGHEST POINT OF THE ROUNDABOUT.

IRRIGATION POINT OF CONNECTION DETAIL

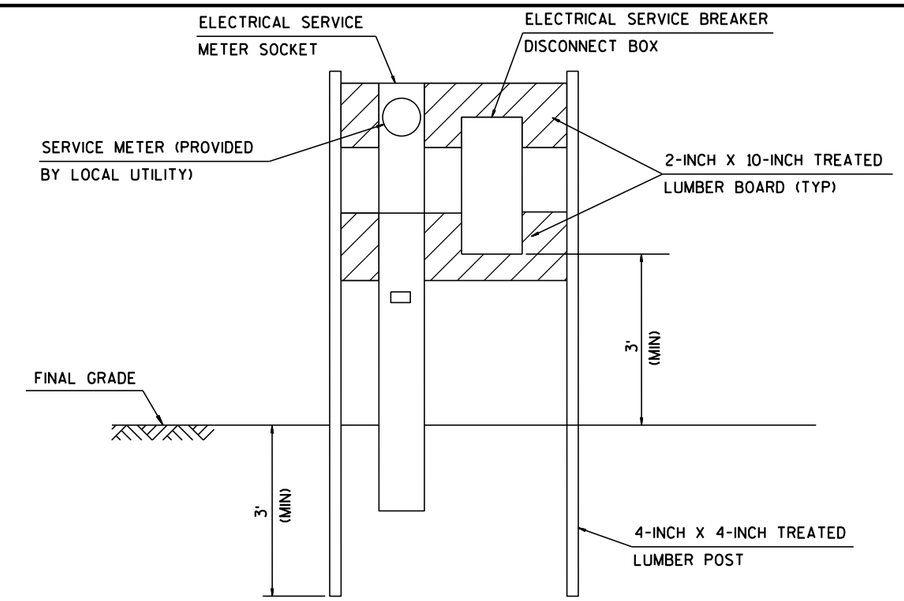

NOTES

ALL MOUNTING HARDWARE SHALL BE STAINLESS STEEL.

ALL ABOVE GROUND CONDUITS SHALL BE GALVANIZED RIGID STEEL. CONDUIT SHALL TRANSITION TO PVC 24-INCHES BELOW FINISHED GRADE.

ELECTRICAL SERVICE DETAIL

NOT TO SCALE

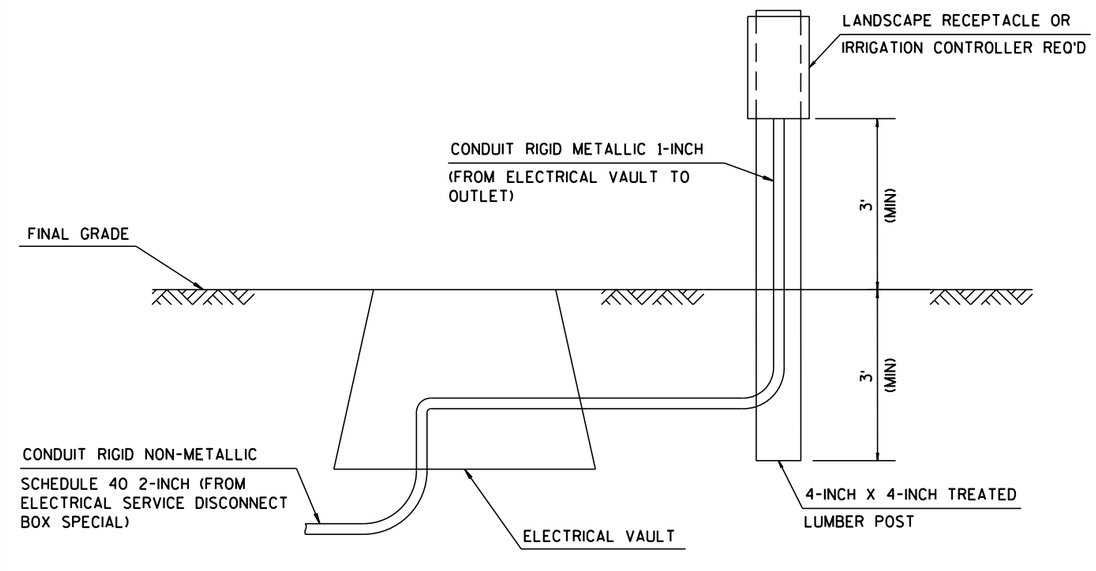

LANDSCAPE RECEPTACLE & IRRIGATION CONTROLLER STAND DETAIL

NOT TO SCALE

SIGNING NOTES

TYPE II SIGNS AND SUPPORTS REMOVED UNDER THE CONTRACT SHALL BE DELIVERED TO THE REGIONAL TRAFFIC UNIT. SIGNS SHALL BE CAREFULLY REMOVED FROM THEIR SUPPORTS, SORTED BY BASE MATERIAL AND PALLETIZED BY MATERIAL TYPE. SUPPORTS SHALL BE SORTED BY LENGTH AND TYPE. THE REGIONAL TRAFFIC UNIT, 920-492-5653, SHALL BE NOTIFIED THREE WORKING DAYS PRIOR TO DELIVERY OF SIGNS AND SUPPORTS.

WHEN AN EXISTING STOP SIGN AND SUPPORT IS TO BE REMOVED AND A NEW STOP SIGN AND SUPPORT ERECTED THE WORK SHALL BE DONE CONCURRENTLY. FOR OTHER SIGNS AND SUPPORTS THAT ARE TO BE REMOVED AND NEW SIGNS AND SUPPORTS ERECTED, THE REMOVAL OF THE EXISTING SIGN/SUPPORT AND ERECTION OF THE NEW SIGN/SUPPORT SHOULD BE DONE AS CONCURRENTLY AS POSSIBLE. IN NO CASE SHALL A SIGN/SUPPORT BE DOWN FOR MORE THAN 24 HOURS AND THERE SHALL NOT BE MORE THAN ONE SIGN OF THE SAME LEGEND MISSING IN A ROW.

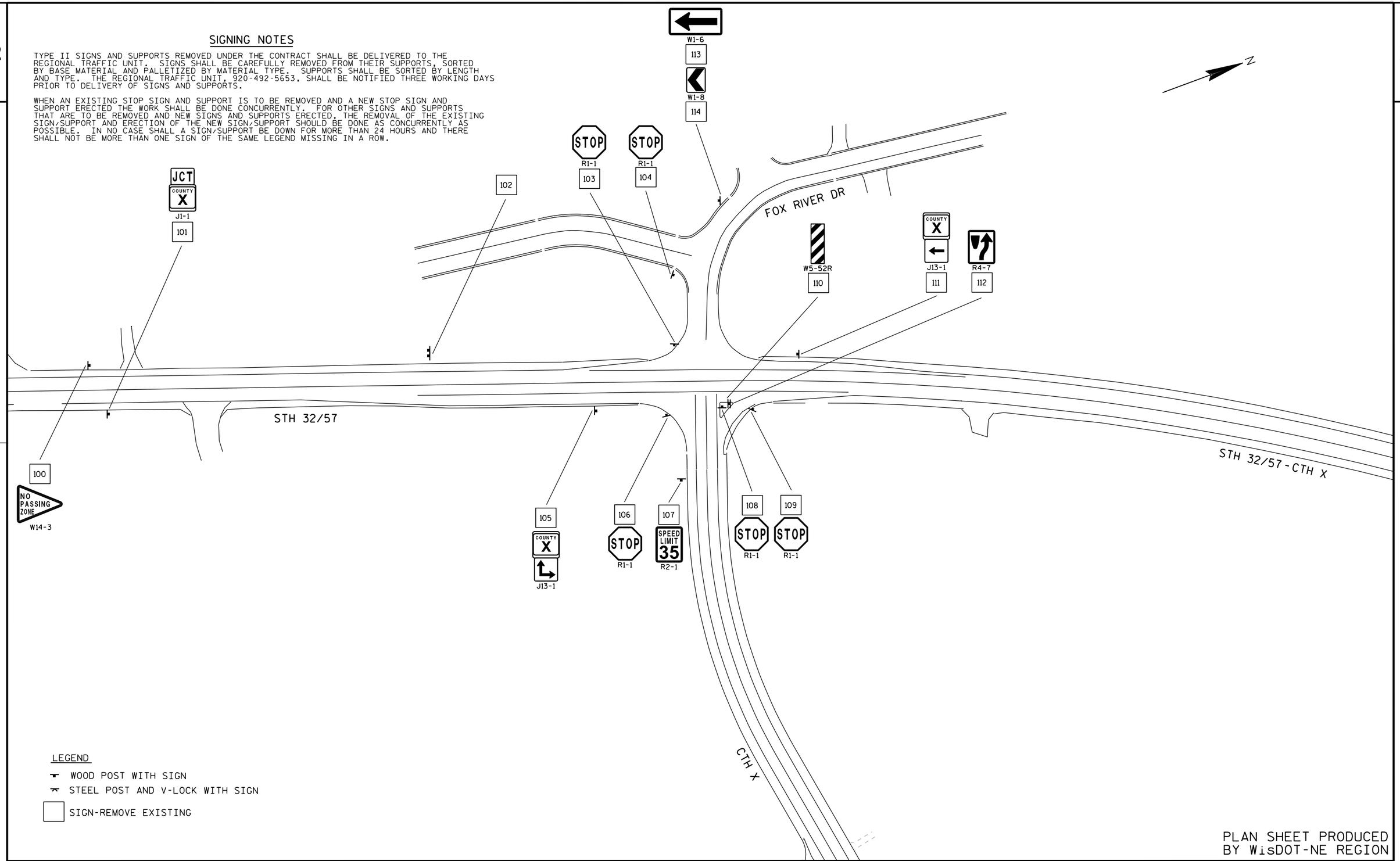

LEGEND

- WOOD POST WITH SIGN
- STEEL POST AND V-LOCK WITH SIGN
- SIGN-REMOVE EXISTING

PLAN SHEET PRODUCED BY WisDOT-NE REGION

PROJECT NO:4085-43-71	HWY:STH 32	COUNTY:BROWN	SIGN REMOVALS	SHEET 42	E

SIGNING NOTES

WHEN AN EXISTING STOP SIGN AND SUPPORT IS TO BE REMOVED AND A NEW STOP SIGN AND SUPPORT ERECTED THE WORK SHALL BE DONE CONCURRENTLY. FOR OTHER SIGNS AND SUPPORTS THAT ARE TO BE REMOVED AND NEW SIGNS AND SUPPORTS ERECTED, THE REMOVAL OF THE EXISTING SIGN/SUPPORT AND ERECTION OF THE NEW SIGN/SUPPORT SHOULD BE DONE AS CONCURRENTLY AS POSSIBLE. IN NO CASE SHALL A SIGN/SUPPORT BE DOWN FOR MORE THAN 24 HOURS AND THERE SHALL NOT BE MORE THAN ONE SIGN OF THE SAME LEGEND MISSING IN A ROW.

WOOD POSTS SIZES, FOR TYPE II SIGNING, ARE ESTIMATED LENGTHS AND THE ACTUAL LENGTH WILL BE DETERMINED IN THE FIELD.

INSTALL 18" X 18" ORANGE FLAGS ON TOP OF THE YIELD SIGNS FOR THE FIRST SIX MONTHS OF OPERATION OF THE ROUNDABOUT TO EMPHASIZE THE YIELD MOVEMENT.

NEW YIELD SIGNS (R1-2) SHALL HAVE A MINIMUM OF 7' 3" OF CLEARANCE ABOVE THE ROADWAY. THIS WILL ALLOW FOR THE PLACEMENT OF SIGNS BENEATH THE YIELD SIGN.

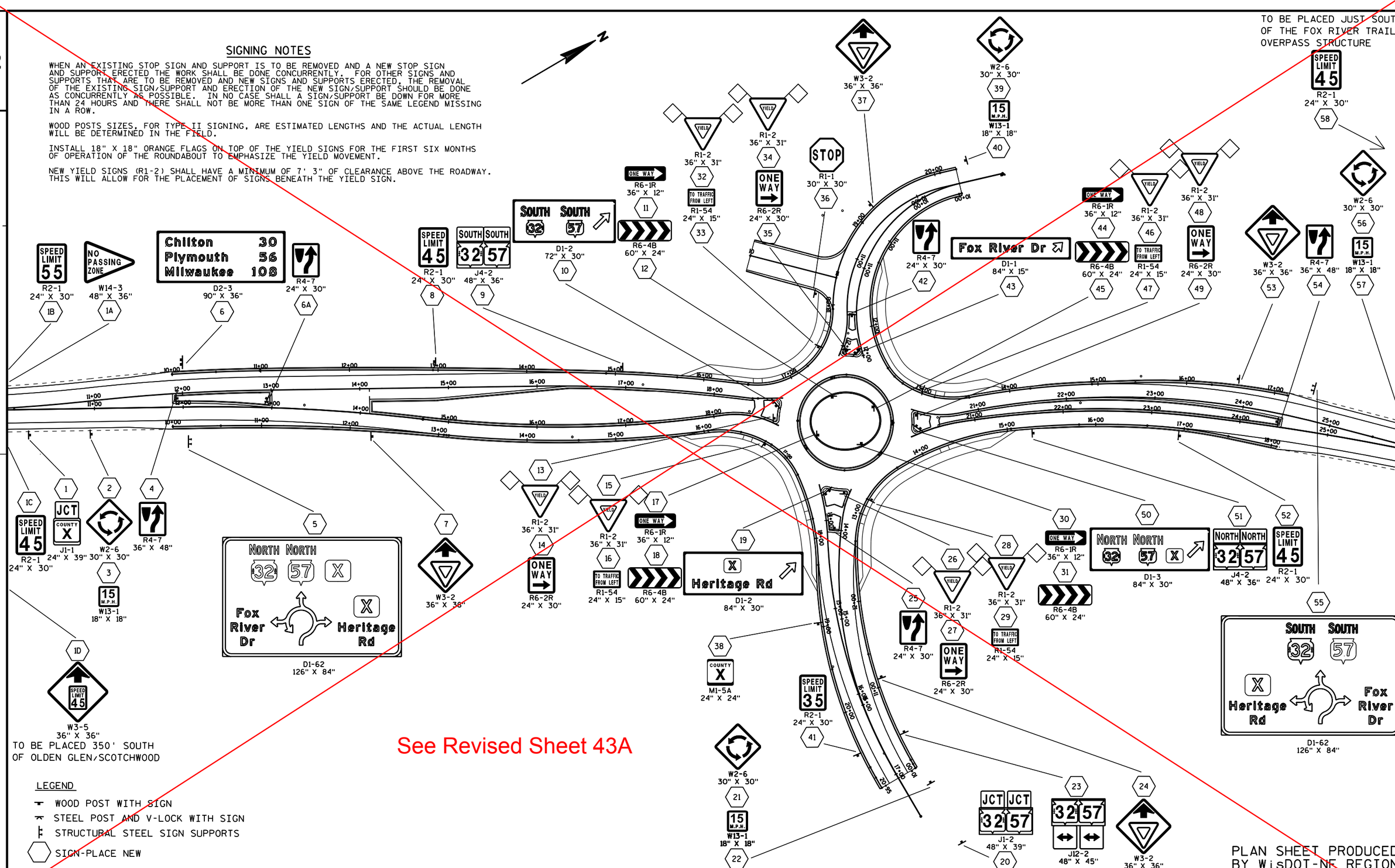

PLAN SHEET PRODUCED BY WisDOT-NE REGION

PROJECT NO:4085-43-71	HWY:STH 32	COUNTY:BROWN	PERMANENT SIGNING	SHEET 43	E

FILE NAME : N:\spo\traffic\SIGNING\Projects\4085-43-71 CTH X Roundabout\023201_ps.DGN PLOT DATE : 03-NOV-2014 09:45 PLOT BY : dotjlf PLOT NAME : PLOT SCALE : 100:1

SIGNING NOTES

WHEN AN EXISTING STOP SIGN AND SUPPORT IS TO BE REMOVED AND A NEW STOP SIGN AND SUPPORT ERECTED THE WORK SHALL BE DONE CONCURRENTLY. FOR OTHER SIGNS AND SUPPORTS THAT ARE TO BE REMOVED AND NEW SIGNS AND SUPPORTS ERECTED, THE REMOVAL OF THE EXISTING SIGN/SUPPORT AND ERECTION OF THE NEW SIGN/SUPPORT SHOULD BE DONE AS CONCURRENTLY AS POSSIBLE. IN NO CASE SHALL A SIGN/SUPPORT BE DOWN FOR MORE THAN 24 HOURS AND THERE SHALL NOT BE MORE THAN ONE SIGN OF THE SAME LEGEND MISSING IN A ROW.

WOOD POSTS SIZES, FOR TYPE II SIGNING, ARE ESTIMATED LENGTHS AND THE ACTUAL LENGTH WILL BE DETERMINED IN THE FIELD.

INSTALL 18" X 18" ORANGE FLAGS ON TOP OF THE YIELD SIGNS FOR THE FIRST SIX MONTHS OF OPERATION OF THE ROUNDABOUT TO EMPHASIZE THE YIELD MOVEMENT.

NEW YIELD SIGNS (R1-2) SHALL HAVE A MINIMUM OF 7' 3" OF CLEARANCE ABOVE THE ROADWAY. THIS WILL ALLOW FOR THE PLACEMENT OF SIGNS BENEATH THE YIELD SIGN.

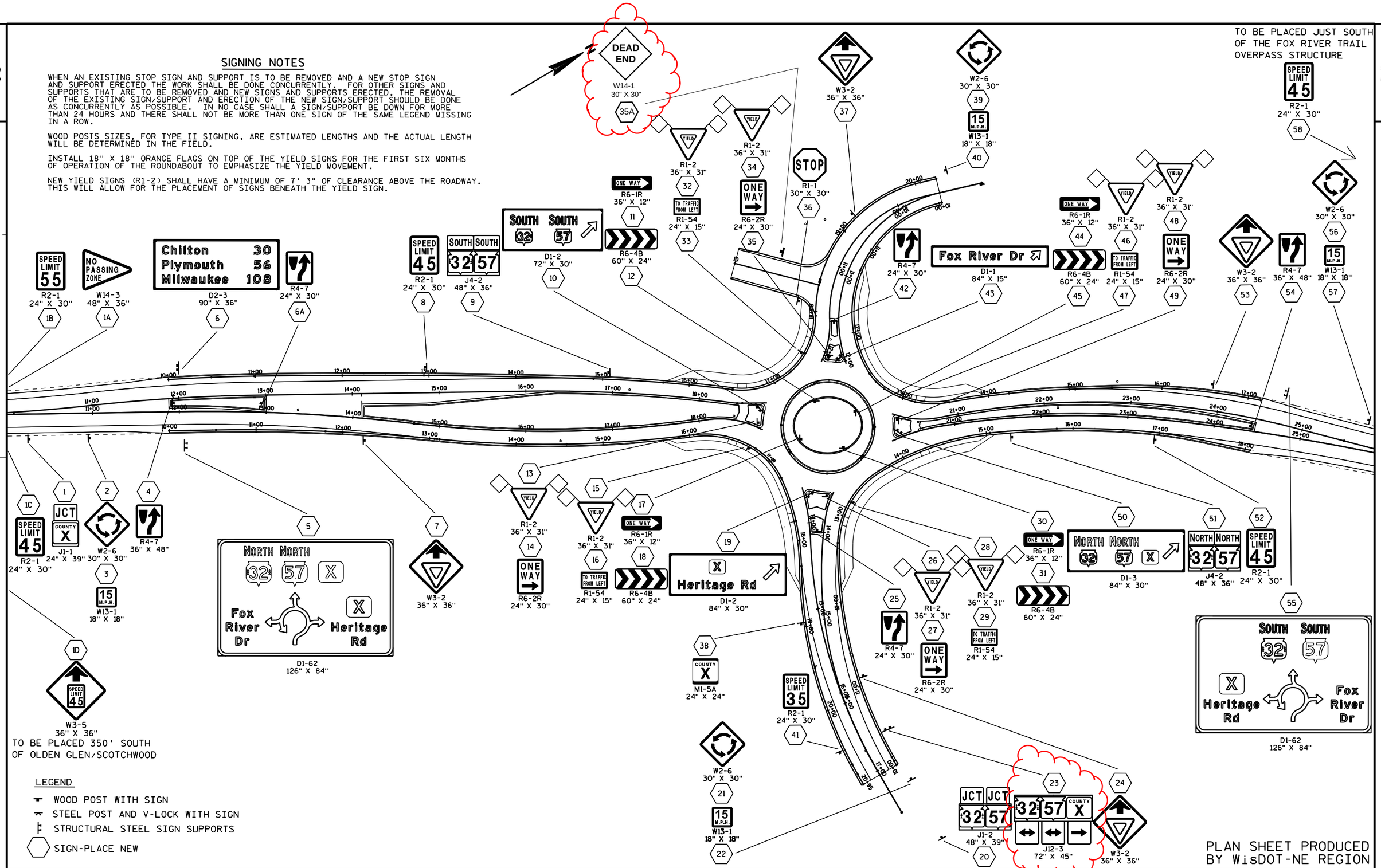

LEGEND

- WOOD POST WITH SIGN
- STEEL POST AND V-LOCK WITH SIGN
- STRUCTURAL STEEL SIGN SUPPORTS
- SIGN-PLACE NEW

PLAN SHEET PRODUCED BY WisDOT-NE REGION

PROJECT NO:4085-43-71	HWY:STH 32	COUNTY:BROWN	PERMANENT SIGNING	REVISED	SHEET 43A	E

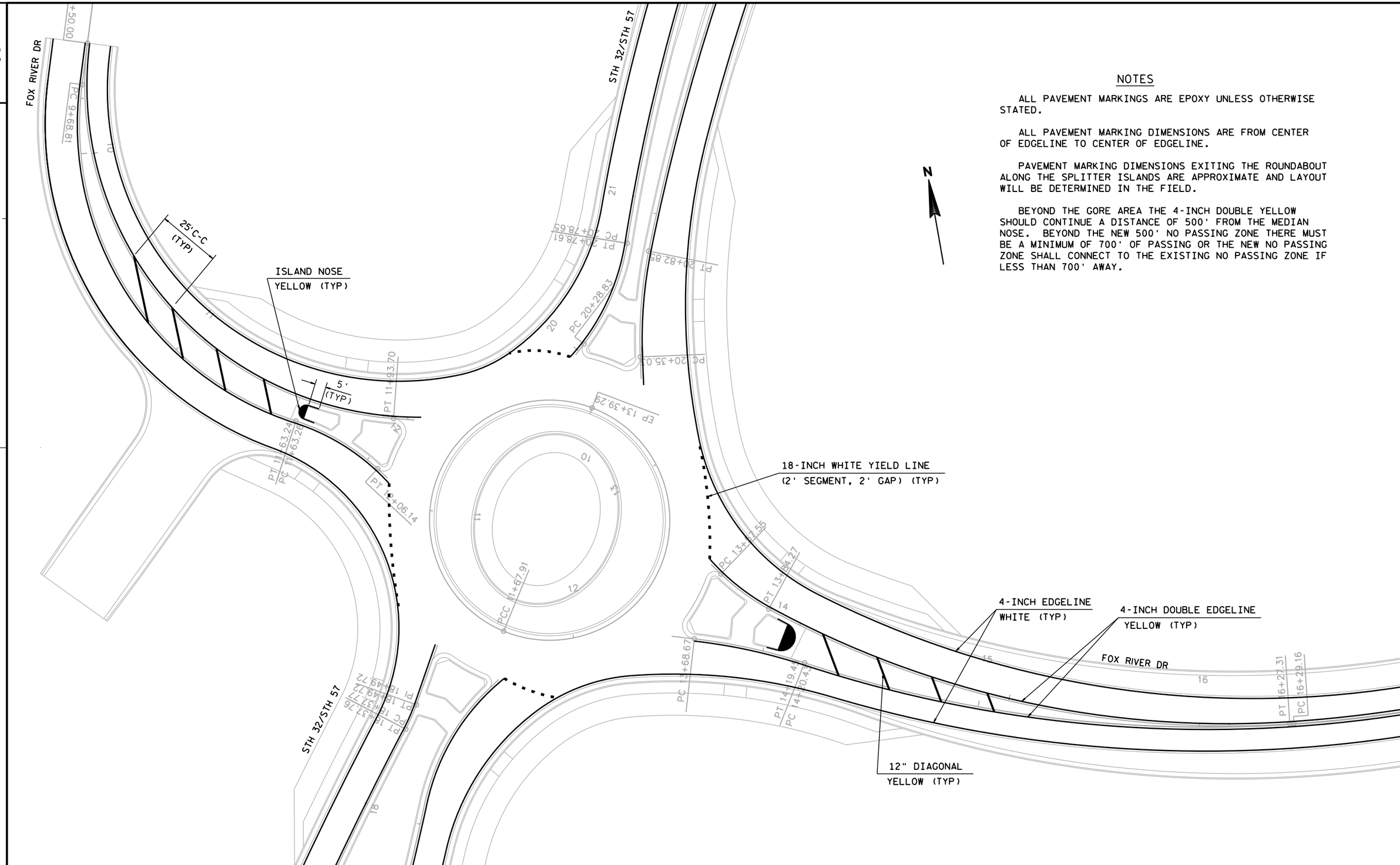

NOTES

ALL PAVEMENT MARKINGS ARE EPOXY UNLESS OTHERWISE STATED.

ALL PAVEMENT MARKING DIMENSIONS ARE FROM CENTER OF EDGELINE TO CENTER OF EDGELINE.

PAVEMENT MARKING DIMENSIONS EXITING THE ROUNDABOUT ALONG THE SPLITTER ISLANDS ARE APPROXIMATE AND LAYOUT WILL BE DETERMINED IN THE FIELD.

BEYOND THE GORE AREA THE 4-INCH DOUBLE YELLOW SHOULD CONTINUE A DISTANCE OF 500' FROM THE MEDIAN NOSE. BEYOND THE NEW 500' NO PASSING ZONE THERE MUST BE A MINIMUM OF 700' OF PASSING OR THE NEW NO PASSING ZONE SHALL CONNECT TO THE EXISTING NO PASSING ZONE IF LESS THAN 700' AWAY.

2

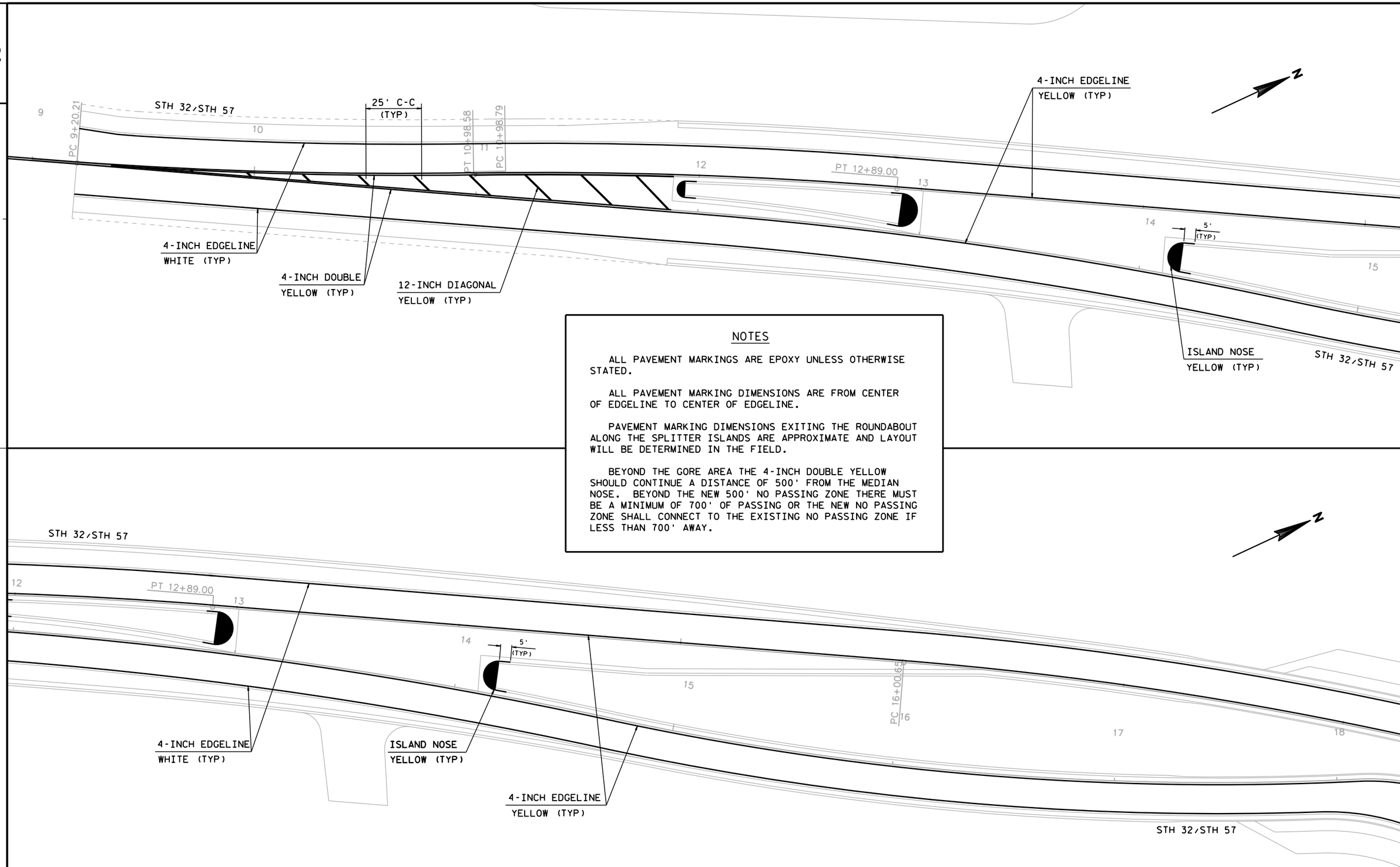

NOTES

ALL PAVEMENT MARKINGS ARE EPOXY UNLESS OTHERWISE STATED.

ALL PAVEMENT MARKING DIMENSIONS ARE FROM CENTER OF EDGELINE TO CENTER OF EDGELINE.

PAVEMENT MARKING DIMENSIONS EXITING THE ROUNDABOUT ALONG THE SPLITTER ISLANDS ARE APPROXIMATE AND LAYOUT WILL BE DETERMINED IN THE FIELD.

BEYOND THE GORE AREA THE 4-INCH DOUBLE YELLOW SHOULD CONTINUE A DISTANCE OF 500' FROM THE MEDIAN NOSE. BEYOND THE NEW 500' NO PASSING ZONE THERE MUST BE A MINIMUM OF 700' OF PASSING OR THE NEW NO PASSING ZONE SHALL CONNECT TO THE EXISTING NO PASSING ZONE IF LESS THAN 700' AWAY.

PROJECT NO:4085-43-71	HWY:STH 32	COUNTY:BROWN	PAVEMENT MARKING DETAIL	SHEET	E

2

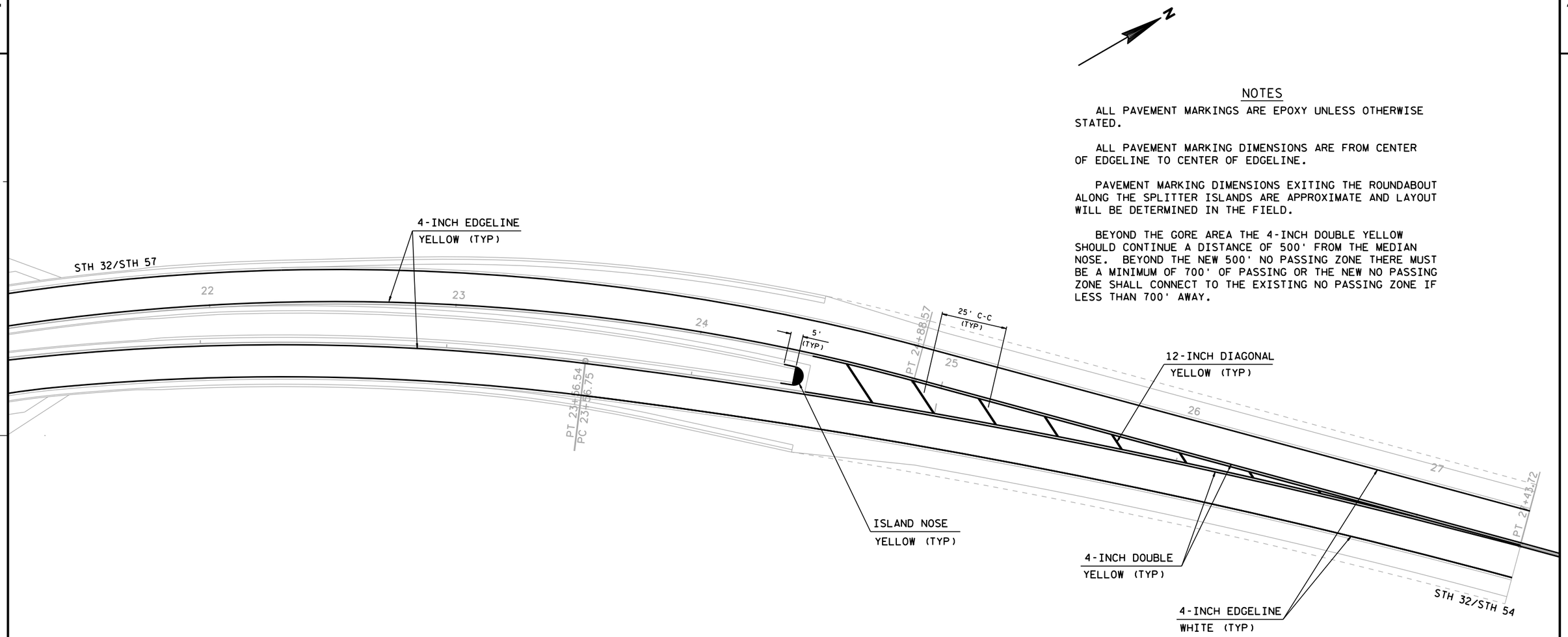

NOTES

ALL PAVEMENT MARKINGS ARE EPOXY UNLESS OTHERWISE STATED.

ALL PAVEMENT MARKING DIMENSIONS ARE FROM CENTER OF EDGELINE TO CENTER OF EDGELINE.

PAVEMENT MARKING DIMENSIONS EXITING THE ROUNDABOUT ALONG THE SPLITTER ISLANDS ARE APPROXIMATE AND LAYOUT WILL BE DETERMINED IN THE FIELD.

BEYOND THE GORE AREA THE 4-INCH DOUBLE YELLOW SHOULD CONTINUE A DISTANCE OF 500' FROM THE MEDIAN NOSE. BEYOND THE NEW 500' NO PASSING ZONE THERE MUST BE A MINIMUM OF 700' OF PASSING OR THE NEW NO PASSING ZONE SHALL CONNECT TO THE EXISTING NO PASSING ZONE IF LESS THAN 700' AWAY.

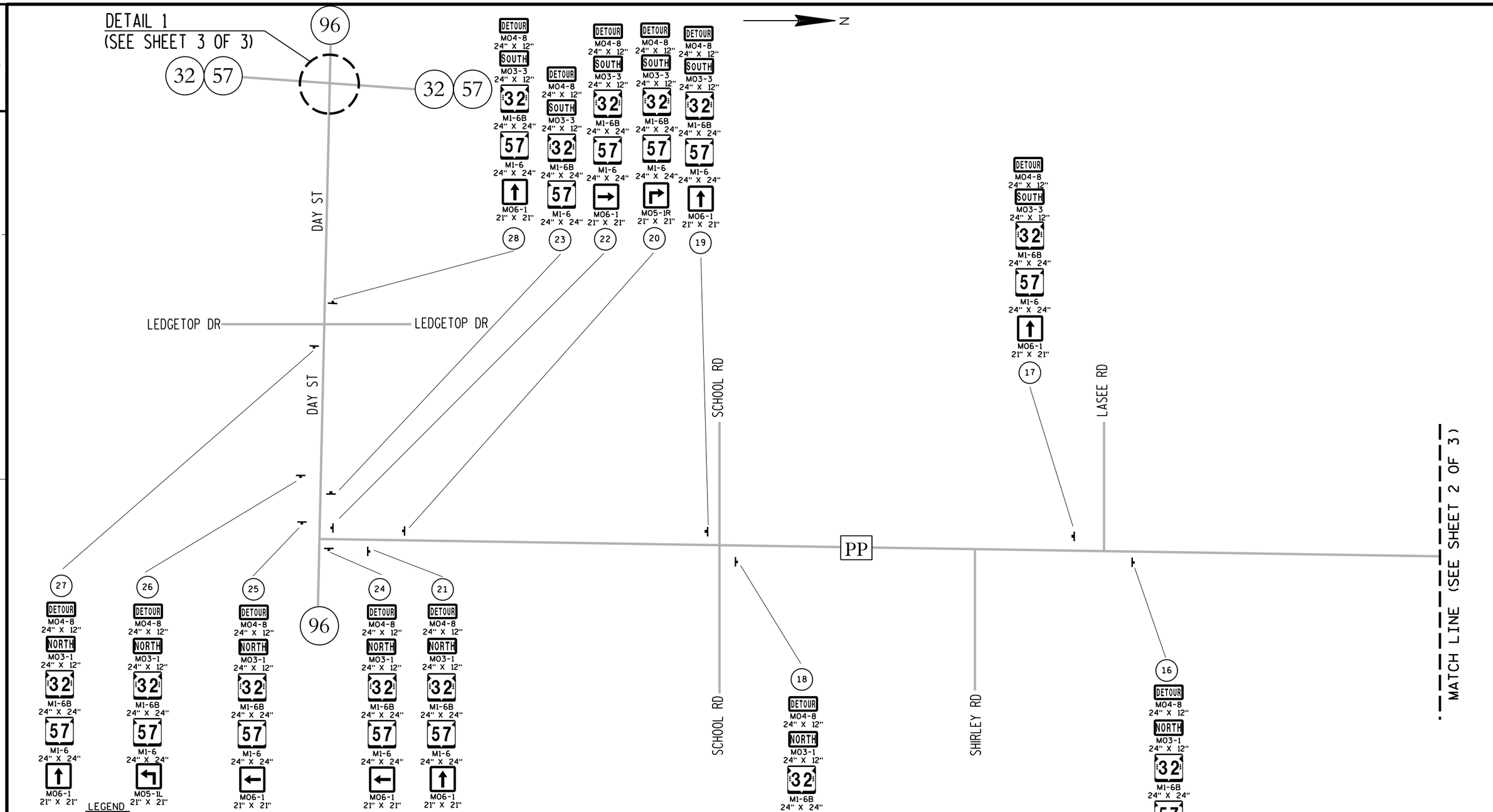

SHEET 1 OF 3
PLAN SHEET PRODUCED
BY WisDOT-NE REGION

PROJECT NO:4085-43-71	HWY:STH 32	COUNTY:BROWN	DETOUR SIGNING DETAIL	SHEET 47	E

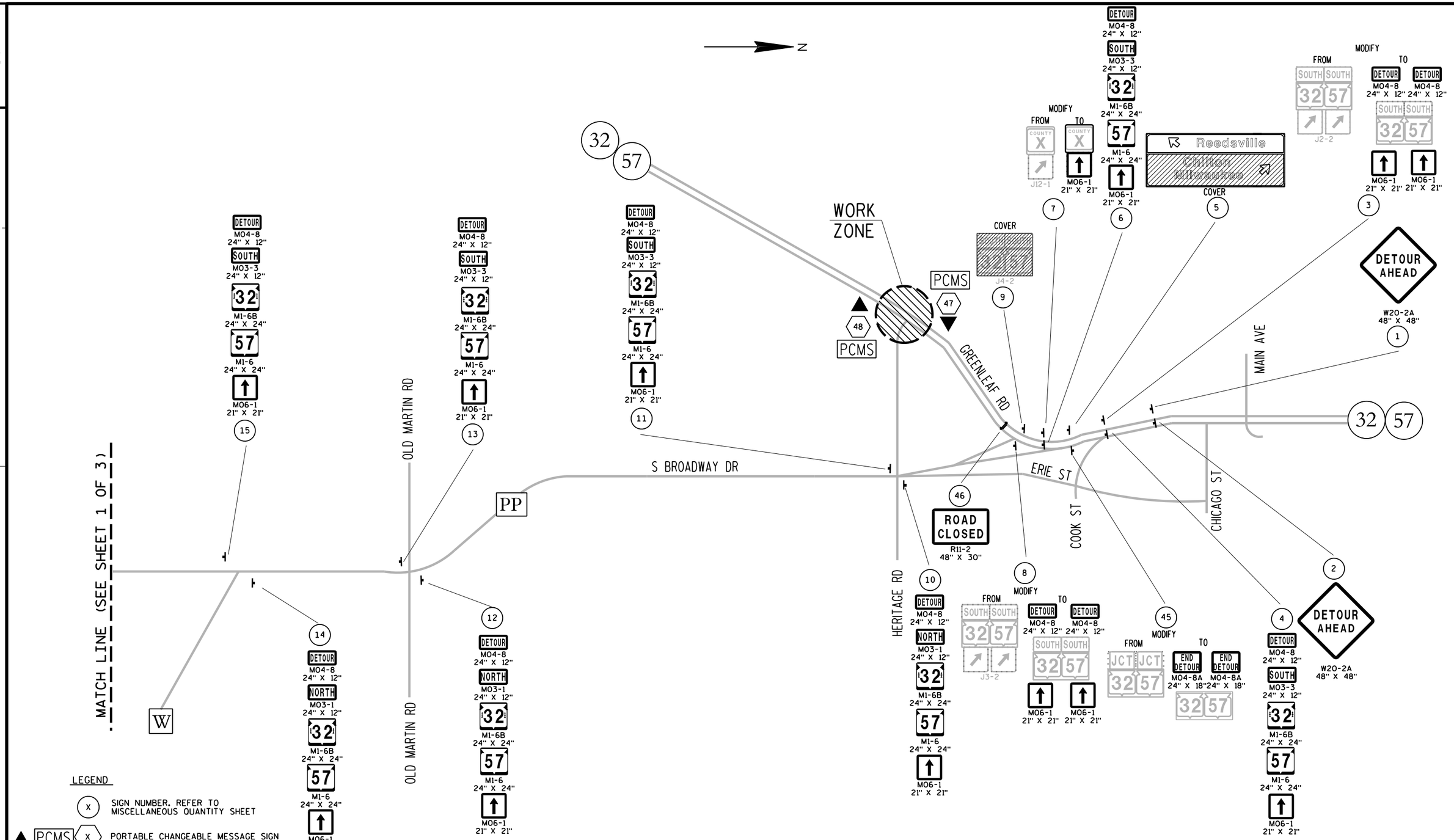

SHEET 2 OF 3
PLAN SHEET PRODUCED
BY WisDOT-NE REGION

PROJECT NO:4085-43-71	HWY:STH 32	COUNTY:BROWN	DETOUR SIGNING DETAIL	SHEET 48	E

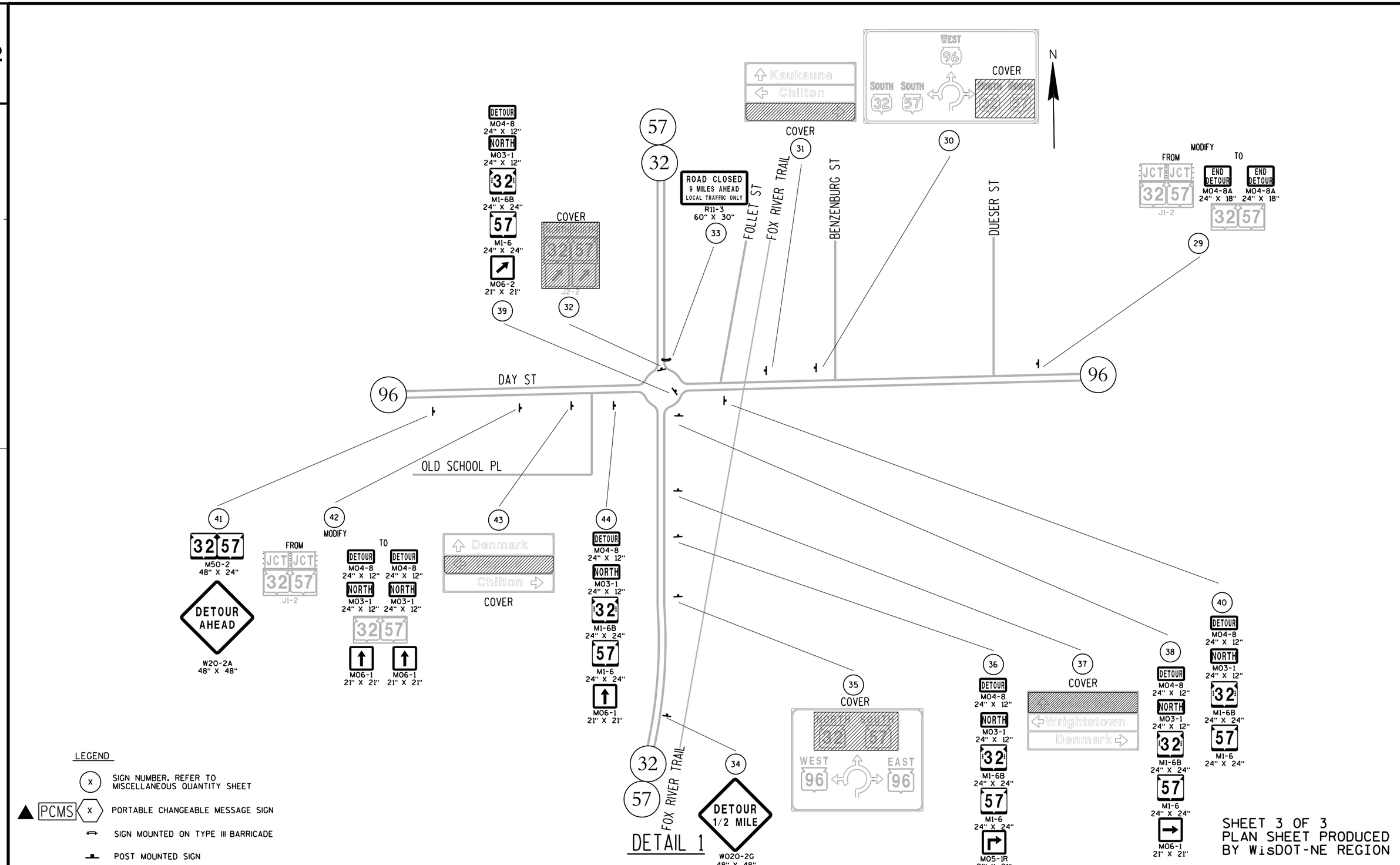

SHEET 3 OF 3
PLAN SHEET PRODUCED
BY WisDOT-NE REGION

PROJECT NO:4085-43-71	HWY:STH 32	COUNTY:BROWN	DETOUR SIGNING DETAIL	SHEET 49	E

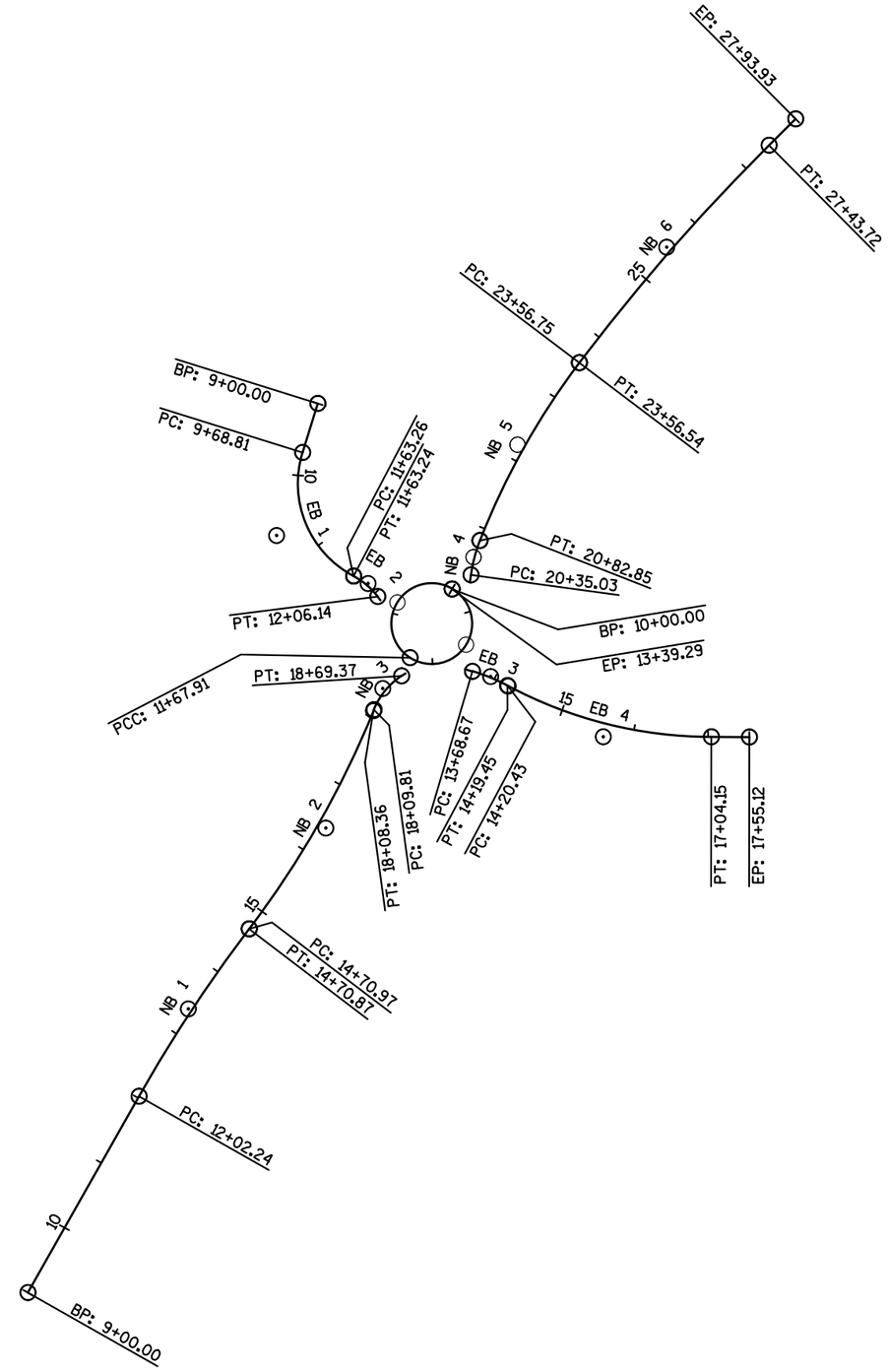

N

EASTBOUND ALIGNMENT

EB 1
CURVE NOTES
PI STA = 10+85.40
Y = 535963.295
X = 85467.412
DELTA = 79°34'25"
D = 40°55'32"
T = 116.59'
L = 194.44'
R = 140.00'
PC STA = 9+68.81
PT STA = 11+63.24

EB 2
CURVE NOTES
PI STA = 11+85.05
Y = 535898.785
X = 85589.855
DELTA = 25°05'27"
D = 58°31'29"
T = 21.79'
L = 42.87'
R = 97.90'
PC STA = 11+63.26
PT STA = 12+06.14

EB 3
CURVE NOTES
PI STA = 13+94.15
Y = 535774.166
X = 85754.339
DELTA = 11°38'22"
D = 22°55'06"
T = 25.48'
L = 50.79'
R = 250.00'
PC STA = 13+68.67
PT STA = 14+19.45

EB4
CURVE NOTES
PI STA = 15+65.20
Y = 535693.503
X = 85905.372
DELTA = 28°04'32"
D = 9°53'44"
T = 144.77'
L = 283.72'
R = 579.00'
PC STA = 14+20.43
PT STA = 17+04.15

CENTER ALIGNMENT

PI STA = 43+67.75
Y = 537610.854
X = 82806.833
DELTA = 178°09'46"
D = 106°06'12"
T = 3367.75'
L = 167.91'
R = 54.00'
PC STA = 10+00.00
PT STA = 11+67.91

PI STA = -21+99.83
Y = 537610.854
X = 82806.833
DELTA = 181°50'14"
D = 106°06'12"
T = 3367.75'
L = 171.38'
R = 54.00'
PC STA = 11+67.91
PT STA = 13+39.29

NORTHBOUND ALIGNMENT

NB 1
CURVE NOTES
PI STA = 13+36.76
Y = 535329.046
X = 85349.110
DELTA = 7°41'44"
D = 2°51'53"
T = 134.52'
L = 268.63'
R = 2000.00'
PC STA = 12+02.24
PT STA = 14+70.87
S.E. = 3.10%

NB 2
CURVE NOTES
PI STA = 16+40.63
Y = 535571.373
X = 85533.130
DELTA = 14°59'49"
D = 4°26'42"
T = 169.66'
L = 337.39'
R = 1289.00'
PC STA = 14+70.97
PT STA = 18+08.36

NB 3
CURVE NOTES
PI STA = 18+40.50
Y = 535758.198
X = 85609.432
DELTA = 34°07'36"
D = 57°17'45"
T = 30.69'
L = 59.56'
R = 100.00'
PC STA = 18+09.81
PT STA = 18+69.37

NB 4
CURVE NOTES
PI STA = 20+59.06
Y = 535934.254
X = 85731.209
DELTA = 13°42'03"
D = 28°38'52"
T = 24.03'
L = 47.82'
R = 200.00'
PC STA = 20+35.03
PT STA = 20+82.85

NB 5
CURVE NOTES
PI STA = 22+20.56
Y = 536084.851
X = 85790.176
DELTA = 15°40'51"
D = 5°43'46"
T = 137.70'
L = 273.68'
R = 1000.00'
PC STA = 20+82.85
PT STA = 23+56.54

NB 6
CURVE NOTES
PI STA = 25+50.56
Y = 536349.555
X = 85990.108
DELTA = 8°08'11"
D = 2°06'09"
T = 193.81'
L = 386.96'
R = 2725.00'
PC STA = 23+56.75
PT STA = 27+43.72
S.E. = 4.60%

PROJECT NO: 4085-43-71	HWY: STH 32/57	COUNTY: BROWN	ALIGNMENT DIAGRAM (NORTHBOUND-EASTBOUND)	SHEET 50	E

NW PATH ALIGNMENT

NW 1	NW 2	NW 3	NW 4
CURVE NOTES	CURVE NOTES	CURVE NOTES	CURVE NOTES
PI STA = 1+58.37	PI STA = 2+19.65	PI STA = 2+68.48	PI STA = 3+19.10
Y = 535923.070	Y = 535925.460	Y = 535946.234	Y = 535997.612
X = 85587.886	X = 85656.917	X = 85701.430	X = 85719.994
DELTA = 50°57'28"	DELTA = 23°02'08"	DELTA = 45°06'56"	DELTA = 2°00'46"
D = 46°46'19"	D = 109°08'05"	D = 61°56'29"	D = 6°12'39"
T = 58.37'	T = 10.70'	T = 38.42'	T = 16.20'
L = 108.95'	L = 21.11'	L = 72.84'	L = 32.41'
R = 122.50'	R = 52.50'	R = 92.50'	R = 922.50'
PC STA = 1+00.00	PC STA = 2+08.95	PC STA = 2+30.06	PC STA = 3+02.89
PT STA = 2+08.95	PT STA = 2+30.06	PT STA = 3+02.89	PT STA = 3+35.30

WESTBOUND ALIGNMENT

WB 1	WB 2
CURVE NOTES	CURVE NOTES
PI STA = 11+08.30	PI STA = 13+70.99
Y = 535941.433	Y = 535797.170
X = 85460.579	X = 85754.675
DELTA = 93°05'05"	DELTA = 15°18'25"
D = 38°11'50"	D = 57°17'45"
T = 158.30'	T = 13.44'
L = 243.70'	L = 26.72'
R = 150.00'	R = 100.00'
PC STA = 9+50.00	PC STA = 13+57.55
PT STA = 11+93.70	PT STA = 13+84.27

WB 3	WB 4
CURVE NOTES	CURVE NOTES
PI STA = 15+09.13	PI STA = 16+59.54
Y = 535710.831	Y = 535693.742
X = 85862.716	X = 86018.880
DELTA = 32°23'04"	DELTA = 6°00'30"
D = 13°19'29"	D = 9°53'44"
T = 124.86'	T = 30.39'
L = 243.04'	L = 60.72'
R = 430.00'	R = 579.00'
PC STA = 13+84.27	PC STA = 16+29.16
PT STA = 16+27.31	PT STA = 16+89.87

SW PATH ALIGNMENT

SW 1	SW 2
CURVE NOTES	CURVE NOTES
PI STA = 2+39.50	PI STA = 1+28.60
Y = 535842.062	Y = 535754.221
X = 85626.942	X = 85559.241
DELTA = 93°26'33"	DELTA = 1°55'09"
D = 73°55'48"	D = 3°21'20"
T = 82.30'	T = 28.60'
L = 126.39'	L = 57.20'
R = 77.50'	R = 1707.50'
PC STA = 1+57.20	PC STA = 1+00.00
PT STA = 2+83.59	PT STA = 1+57.20

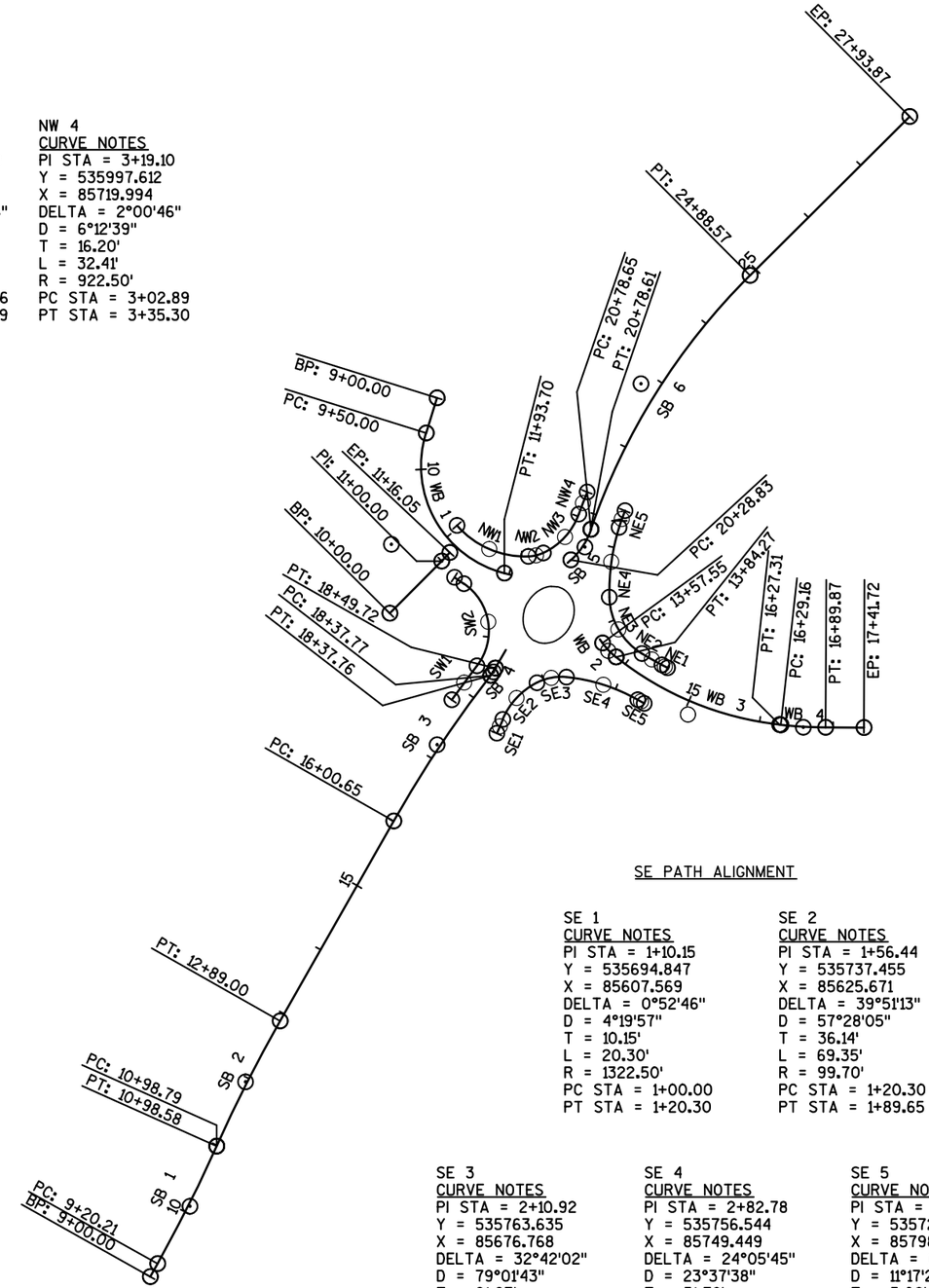

NE PATH ALIGNMENT

NE 1	NE 2
CURVE NOTES	CURVE NOTES
PI STA = 1+04.37	PI STA = 1+24.36
Y = 535776.042	Y = 535785.364
X = 85831.122	X = 85813.433
DELTA = 1°03'16"	DELTA = 3°46'11"
D = 12°04'01"	D = 12°04'01"
T = 4.37'	T = 15.63'
L = 8.74'	L = 31.24'
R = 474.81'	R = 474.81'
PC STA = 1+00.00	PC STA = 1+08.74
PT STA = 1+08.74	PT STA = 1+39.98

NE 3	NE 4	NE 5
CURVE NOTES	CURVE NOTES	CURVE NOTES
PI STA = 1+90.16	PI STA = 2+80.27	PI STA = 3+39.87
Y = 535819.807	Y = 535918.284	Y = 535976.019
X = 85757.356	X = 85754.814	X = 85772.779
DELTA = 56°57'46"	DELTA = 18°45'45"	DELTA = 4°45'13"
D = 61°56'29"	D = 19°35'18"	D = 19°35'18"
T = 50.18'	T = 48.32'	T = 12.14'
L = 91.96'	L = 95.78'	L = 24.27'
R = 92.50'	R = 292.50'	R = 292.50'
PC STA = 1+39.98	PC STA = 2+31.94	PC STA = 3+27.73
PT STA = 2+31.94	PT STA = 3+27.73	PT STA = 3+51.99

SE PATH ALIGNMENT

SE 1	SE 2
CURVE NOTES	CURVE NOTES
PI STA = 1+10.15	PI STA = 1+56.44
Y = 535694.847	Y = 535737.455
X = 85607.569	X = 85625.671
DELTA = 0°52'46"	DELTA = 39°51'13"
D = 4°19'57"	D = 57°28'05"
T = 10.15'	T = 36.14'
L = 20.30'	L = 69.35'
R = 1322.50'	R = 99.70'
PC STA = 1+00.00	PC STA = 1+20.30
PT STA = 1+20.30	PT STA = 1+89.65

SE 3	SE 4	SE 5
CURVE NOTES	CURVE NOTES	CURVE NOTES
PI STA = 2+10.92	PI STA = 2+82.78	PI STA = 3+38.07
Y = 535763.635	Y = 535756.544	Y = 535728.423
X = 85676.768	X = 85749.449	X = 85798.815
DELTA = 32°42'02"	DELTA = 24°05'45"	DELTA = 1°08'30"
D = 79°01'43"	D = 23°37'38"	D = 11°17'23"
T = 21.27'	T = 51.76'	T = 5.06'
L = 41.38'	L = 101.98'	L = 10.11'
R = 72.50'	R = 242.50'	R = 507.50'
PC STA = 1+89.65	PC STA = 2+31.03	PC STA = 3+33.01
PT STA = 2+31.03	PT STA = 3+33.01	PT STA = 3+43.12

SOUTHBOUND ALIGNMENT

SB 1	SB 2	SB 3
CURVE NOTES	CURVE NOTES	CURVE NOTES
PI STA = 10+09.46	PI STA = 11+93.97	PI STA = 17+19.40
Y = 535044.422	Y = 535212.902	Y = 535669.918
X = 85187.504	X = 85263.027	X = 85522.584
DELTA = 5°09'42"	DELTA = 5°26'57"	DELTA = 8°03'45"
D = 2°53'37"	D = 2°51'53"	D = 3°24'01"
T = 89.25'	T = 95.18'	T = 118.75'
L = 178.37'	L = 190.21'	L = 237.11'
R = 1980.00'	R = 2000.00'	R = 1685.00'
PC STA = 9+20.21	PC STA = 10+98.79	PC STA = 16+00.65
PT STA = 10+98.58	PT STA = 12+89.00	PT STA = 18+37.76

SB 4	SB 5	SB 6
CURVE NOTES	CURVE NOTES	CURVE NOTES
PI STA = 18+43.75	PI STA = 20+54.25	PI STA = 22+87.25
Y = 535678.674	Y = 535937.722	Y = 536159.038
X = 85598.792	X = 85722.803	X = 85798.965
DELTA = 8°03'45"	DELTA = 28°31'05"	DELTA = 26°09'15"
D = 67°29'10"	D = 57°17'45"	D = 6°22'49"
T = 5.98'	T = 25.41'	T = 208.59'
L = 11.95'	L = 49.77'	L = 409.92'
R = 84.90'	R = 100.00'	R = 898.00'
PC STA = 18+37.77	PC STA = 20+28.83	PC STA = 20+78.65
PT STA = 18+49.72	PT STA = 20+78.61	PT STA = 24+88.57
		S.E. = 4.60%

PROJECT NO: 4085-43-71	HWY: STH 32/57	COUNTY: BROWN	ALIGNMENT DIAGRAM (SOUTHBOUND-WESTBOUND)	SHEET 51	E

2

NW CURB AND GUTTER

PI STA = 11+86.33
Y = 535911.248
X = 85463.194
DELTA = 109°20'23"
D = 44°04'25"
T = 183.40'
L = 248.08'
R = 130.00'
PC STA = 10+02.93
PT STA = 12+51.01

PI STA = 12+63.24
Y = 535918.017
X = 85658.704
DELTA = 23°02'08"
D = 95°29'35"
T = 12.23'
L = 24.12'
R = 60.00'
PC STA = 12+51.01
PT STA = 12+75.14

PI STA = 13+16.68
Y = 535940.756
X = 85707.425
DELTA = 45°06'56"
D = 57°17'45"
T = 41.54'
L = 78.74'
R = 100.00'
PC STA = 12+75.14
PT STA = 13+53.88

PI STA = 14+23.68
Y = 536045.473
X = 85745.261
DELTA = 8°43'30"
D = 6°15'43"
T = 69.80'
L = 139.34'
R = 915.00'
PC STA = 13+53.88
PT STA = 14+93.22

PI STA = 16+28.90
Y = 536225.900
X = 85843.596
DELTA = 13°14'16"
D = 7°40'12"
T = 86.68'
L = 172.59'
R = 747.00'
PC STA = 15+42.22
PT STA = 17+14.81

NORTH MEDIAN OFFSET

PI STA = 1+21.94
Y = 536184.306
X = 85836.873
DELTA = 15°19'38"
D = 6°19'22"
T = 121.94'
L = 242.42'
R = 906.20'
PC STA = 0+00.00
PT STA = 2+42.42

N

NE CURB AND GUTTER

PI STA = 17+04.46
Y = 536175.475
X = 85876.180
DELTA = 8°46'16"
D = 9°30'06"
T = 46.25'
L = 92.31'
R = 603.00'
PC STA = 16+58.22
PT STA = 17+50.53

PI STA = 15+81.38
Y = 536072.684
X = 85807.916
DELTA = 8°57'25"
D = 5°49'01"
T = 77.15'
L = 153.98'
R = 985.00'
PC STA = 15+04.24
PT STA = 16+58.22

PI STA = 14+37.09
Y = 535939.322
X = 85746.769
DELTA = 26°06'36"
D = 19°05'55"
T = 69.56'
L = 136.71'
R = 300.00'
PC STA = 13+67.52
PT STA = 15+04.24

FOX RIVER CT WEST CURB

PI STA = 1+23.62
Y = 535928.653
X = 85516.334
DELTA = 76°23'26"
D = 190°51'12"
T = 23.62'
L = 40.03'
R = 30.02'
PC STA = 1+00.00
PT STA = 1+40.03

FOX RIVER CT EAST CURB

PI STA = 1+24.80
Y = 535908.204
X = 85543.258
DELTA = 79°09'09"
D = 190°59'09"
T = 24.80'
L = 41.44'
R = 30.00'
PC STA = 1+00.00
PT STA = 1+41.44

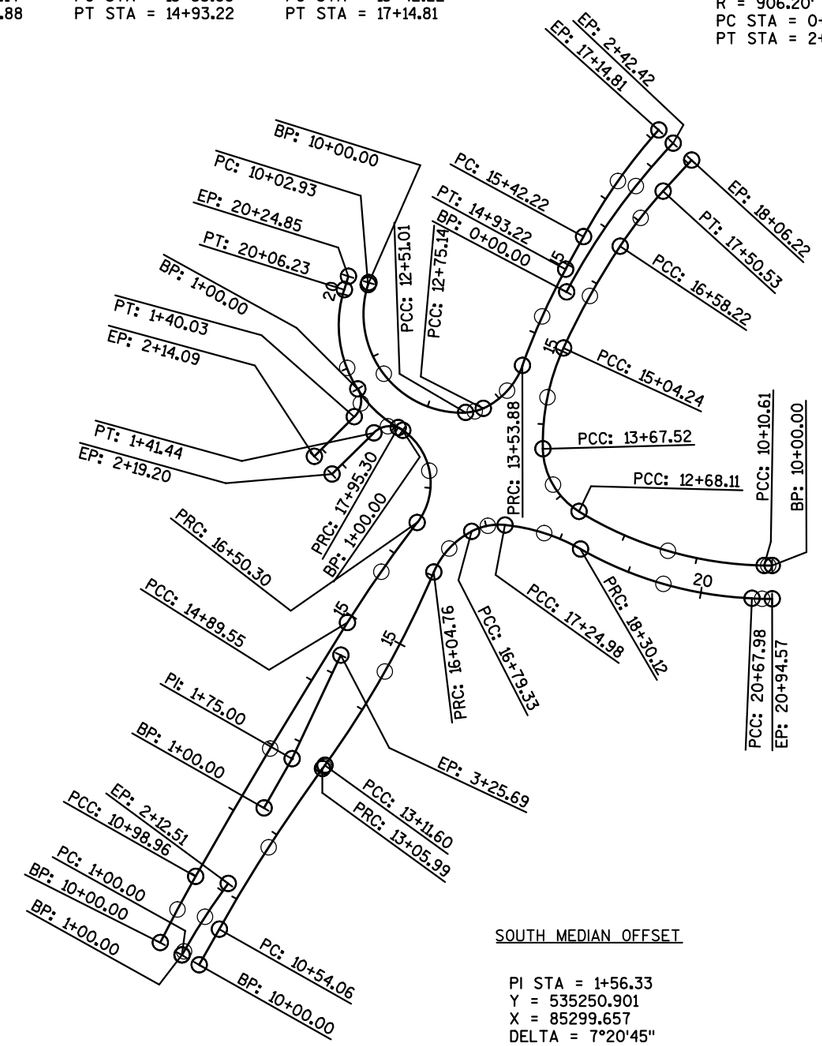

SW CURB AND GUTTER

PI STA = 10+49.49
Y = 535262.282
X = 85265.810
DELTA = 2°48'15"
D = 2°50'01"
T = 49.49'
L = 98.96'
R = 2022.00'
PC STA = 10+00.00
PT STA = 10+98.96

PI STA = 12+94.29
Y = 535475.245
X = 85386.569
DELTA = 2°38'58"
D = 0°40'42"
T = 195.33'
L = 390.58'
R = 8447.00'
PC STA = 10+98.96
PT STA = 14+89.55

PI STA = 15+69.98
Y = 535708.584
X = 85533.536
DELTA = 5°25'05"
D = 3°22'13"
T = 80.44'
L = 160.76'
R = 1700.00'
PC STA = 14+89.55
PT STA = 16+50.30

PI STA = 17+47.63
Y = 535849.387
X = 85642.057
DELTA = 97°44'16"
D = 67°24'24"
T = 97.33'
L = 145.00'
R = 85.00'
PC STA = 16+50.30
PT STA = 17+95.30

PI STA = 19+20.44
Y = 535960.234
X = 85449.168
DELTA = 77°28'18"
D = 36°43'41"
T = 125.14'
L = 210.93'
R = 156.00'
PC STA = 17+95.30
PT STA = 20+06.23

SOUTH MEDIAN OFFSET

PI STA = 1+56.33
Y = 535250.901
X = 85299.657
DELTA = 7°20'45"
D = 6°31'46"
T = 56.33'
L = 112.51'
R = 877.50'
PC STA = 1+00.00
PT STA = 2+12.51

PI STA = 13+22.36
Y = 535815.546
X = 85749.963
DELTA = 56°57'46"
D = 57°17'45"
T = 54.25'
L = 99.42'
R = 100.00'
PC STA = 12+68.11
PT STA = 13+67.52

PI STA = 11+42.50
Y = 535718.120
X = 85908.582
DELTA = 30°35'21"
D = 11°52'46"
T = 131.90'
L = 257.50'
R = 482.31'
PC STA = 10+10.61
PT STA = 12+68.11

PI STA = 10+05.30
Y = 535715.798
X = 86045.764
DELTA = 1°05'24"
D = 10°16'27"
T = 5.30'
L = 10.61'
R = 557.67'
PC STA = 10+00.00
PT STA = 10+10.61

SE CURB AND GUTTER

PI STA = 11+80.16
Y = 535345.740
X = 85383.526
DELTA = 6°33'08"
D = 2°36'03"
T = 126.10'
L = 251.93'
R = 2203.00'
PC STA = 10+54.06
PT STA = 13+05.99

PI STA = 13+08.79
Y = 535449.979
X = 85459.359
DELTA = 0°14'40"
D = 4°21'26"
T = 2.80'
L = 5.61'
R = 1315.00'
PC STA = 13+05.99
PT STA = 13+11.60

PI STA = 14+58.79
Y = 535571.649
X = 85547.081
DELTA = 12°46'24"
D = 4°21'26"
T = 147.19'
L = 293.16'
R = 1315.00'
PC STA = 13+11.60
PT STA = 16+04.76

PI STA = 16+43.62
Y = 535742.890
X = 85619.831
DELTA = 39°51'13"
D = 53°26'51"
T = 38.86'
L = 74.57'
R = 107.20'
PC STA = 16+04.76
PT STA = 16+79.33

PI STA = 17+02.80
Y = 535771.313
X = 85675.306
DELTA = 32°42'02"
D = 71°37'11"
T = 23.47'
L = 45.66'
R = 80.00'
PC STA = 16+79.33
PT STA = 17+24.98

PI STA = 17+78.34
Y = 535763.853
X = 85751.771
DELTA = 24°05'45"
D = 22°55'06"
T = 53.36'
L = 105.14'
R = 250.00'
PC STA = 17+24.98
PT STA = 18+30.12

PI STA = 19+51.34
Y = 535677.442
X = 85903.464
DELTA = 27°15'21"
D = 11°27'33"
T = 121.22'
L = 237.85'
R = 500.00'
PC STA = 18+30.12
PT STA = 20+67.98

PI STA = 20+81.27
Y = 535671.781
X = 86037.863
DELTA = 2°31'55"
D = 9°31'22"
T = 13.30'
L = 26.59'
R = 601.67'
PC STA = 20+67.98
PT STA = 20+94.57

2

PROJECT NO:4085-43-71	HWY:STH 32/57	COUNTY:BROWN	ALIGNMENT DIAGRAM - CURB AND GUTTER	SHEET 52	E

3

DATE 19MAR15 E S T I M A T E O F Q U A N T I T I E S

LINE NUMBER	ITEM	ITEM DESCRIPTION	UNIT	TOTAL	4085-43-71 QUANTITY
0010	201.0105	Clearing	STA	3.000	3.000
0020	201.0120	Clearing	ID	18.000	18.000
0030	201.0205	Grubbing	STA	3.000	3.000
0040	201.0220	Grubbing	ID	18.000	18.000
0050	203.0100	Removing Small Pipe Culverts	EACH	6.000	6.000
0060	203.0200	Removing Old Structure (station) 01. STA 13+17 LT	LS	1.000	1.000
0070	204.0100	Removing Pavement	SY	6,950.000	6,950.000
0080	204.0115	Removing Asphaltic Surface Butt Joints	SY	18.000	18.000
0090	204.0120	Removing Asphaltic Surface Milling	SY	275.000	275.000
0100	204.0150	Removing Curb & Gutter	LF	1,840.000	1,840.000
0110	204.0195	Removing Concrete Bases	EACH	2.000	2.000
0120	204.0220	Removing Inlets	EACH	8.000	8.000
0130	204.0245	Removing Storm Sewer (size) 01. 12-Inch	LF	203.000	203.000
0140	204.0245	Removing Storm Sewer (size) 02. 24-Inch	LF	6.000	6.000
0150	204.0245	Removing Storm Sewer (size) 03. 48-Inch	LF	8.000	8.000
0160	205.0100	Excavation Common	CY	23,675.000	23,675.000
0170	211.0100	Prepare Foundation for Asphaltic Paving (project) 01. 4085-43-71	LS	1.000	1.000
0180	213.0100	Finishing Roadway (project) 01. 4085-43-71	EACH	1.000	1.000
0190	305.0110	Base Aggregate Dense 3/4-Inch	TON	540.000	540.000
0200	305.0120	Base Aggregate Dense 1 1/4-Inch	TON	7,556.000	7,556.000
0210	305.0500	Shaping Shoulders	STA	13.000	13.000
0220	311.0110	Breaker Run	TON	17,985.000	17,985.000
0230	405.0100	Coloring Concrete Red	CY	365.000	365.000
0240	415.0085	Concrete Pavement 8 1/2-Inch	SY	1,230.000	1,230.000
0250	416.0160	Concrete Driveway 6-Inch	SY	121.000	121.000
0260	416.0512	Concrete Roundabout Truck Apron 12-Inch	SY	447.000	447.000
0270	416.0610	Drilled Tie Bars	EACH	6.000	6.000
0280	416.0620	Drilled Dowel Bars	EACH	24.000	24.000
0290	455.0105	Asphaltic Material PG58-28	TON	268.000	268.000
0300	455.0120	Asphaltic Material PG64-28	TON	85.000	85.000
0310	455.0605	Tack Coat	GAL	1,653.000	1,653.000
0320	460.1110	HMA Pavement Type E-10	TON	6,413.000	6,413.000
0330	460.2000	Incentive Density HMA Pavement	DOL	4,100.000	4,100.000
0340	465.0120	Asphaltic Surface Driveways and Field Entrances	TON	42.000	42.000
0350	520.8000	Concrete Collars for Pipe	EACH	6.000	6.000
0360	522.0336	Culvert Pipe Reinforced Concrete Class IV 36-Inch	LF	189.000	189.000
0370	522.1012	Apron Endwalls for Culvert Pipe Reinforced Concrete 12-Inch	EACH	3.000	3.000
0380	522.1024	Apron Endwalls for Culvert Pipe Reinforced Concrete 24-Inch	EACH	3.000	3.000
0390	522.1036	Apron Endwalls for Culvert Pipe Reinforced Concrete 36-Inch	EACH	2.000	2.000
0400	601.0405	Concrete Curb & Gutter 18-Inch Type A	LF	230.000	230.000
0410	601.0409	Concrete Curb & Gutter 30-Inch Type A	LF	509.000	509.000
0420	601.0411	Concrete Curb & Gutter 30-Inch Type D	LF	3,158.000	3,158.000
0430	601.0553	Concrete Curb & Gutter 4-Inch Sloped 36-Inch Type D	LF	2,420.000	2,420.000
0440	601.0580	Concrete Curb & Gutter 4-Inch Sloped 36-Inch Type R	LF	394.000	394.000
0450	601.0600	Concrete Curb Pedestrian	LF	102.000	102.000

3

DATE 19MAR15 E S T I M A T E O F Q U A N T I T I E S

LINE NUMBER	ITEM	ITEM DESCRIPTION	UNIT	TOTAL	4085-43-71 QUANTITY
0460	602.0405	Concrete Sidewalk 4-Inch	SF	17,438.000	17,438.000
0470	602.0410	Concrete Sidewalk 5-Inch	SF	10,155.000	10,155.000
0480	602.0415	Concrete Sidewalk 6-Inch	SF	140.000	140.000
0490	602.0505	Curb Ramp Detectable Warning Field Yellow	SF	288.000	288.000
0500	606.0200	Riprap Medium	CY	20.000	20.000
0510	608.0312	Storm Sewer Pipe Reinforced Concrete Class III 12-Inch	LF	96.000	96.000
0520	608.0324	Storm Sewer Pipe Reinforced Concrete Class III 24-Inch	LF	823.000	823.000
0530	608.0412	Storm Sewer Pipe Reinforced Concrete Class IV 12-Inch	LF	644.000	644.000
0540	608.0415	Storm Sewer Pipe Reinforced Concrete Class IV 15-Inch	LF	146.000	146.000
0550	608.0418	Storm Sewer Pipe Reinforced Concrete Class IV 18-Inch	LF	117.000	117.000
0560	608.0424	Storm Sewer Pipe Reinforced Concrete Class IV 24-Inch	LF	347.000	347.000
0570	611.0530	Manhole Covers Type J	EACH	4.000	4.000
0580	611.0624	Inlet Covers Type H	EACH	23.000	23.000
0590	611.0627	Inlet Covers Type HM	EACH	9.000	9.000
0600	611.0642	Inlet Covers Type MS	EACH	1.000	1.000
0610	611.0652	Inlet Covers Type T	EACH	2.000	2.000
0620	611.2003	Manholes 3-FT Diameter	EACH	1.000	1.000
0630	611.2004	Manholes 4-FT Diameter	EACH	1.000	1.000
0640	611.2005	Manholes 5-FT Diameter	EACH	2.000	2.000
0650	611.2006	Manholes 6-FT Diameter	EACH	1.000	1.000
0660	611.3004	Inlets 4-FT Diameter	EACH	4.000	4.000
0670	611.3230	Inlets 2x3-FT	EACH	27.000	27.000
0680	611.3901	Inlets Median 1 Grate	EACH	1.000	1.000
0690	618.0100	Maintenance And Repair of Haul Roads (project) 01. 4085-43-71	EACH	1.000	1.000
0700	619.1000	Mobilization	EACH	1.000	1.000
0710	620.0300	Concrete Median Sloped Nose	SF	264.000	264.000
0720	624.0100	Water	MGAL	89.000	89.000
0730	625.0500	Salvaged Topsoil	SY	18,700.000	18,700.000
0740	627.0200	Mulching	SY	15,571.000	15,571.000
0750	628.1504	Silt Fence	LF	2,179.000	2,179.000
0760	628.1520	Silt Fence Maintenance	LF	545.000	545.000
0770	628.1905	Mobilizations Erosion Control	EACH	6.000	6.000
0780	628.1910	Mobilizations Emergency Erosion Control	EACH	3.000	3.000
0790	628.2004	Erosion Mat Class I Type B	SY	914.000	914.000
0800	628.2008	Erosion Mat Urban Class I Type B	SY	2,271.000	2,271.000
0810	628.6510	Soil Stabilizer Type B	ACRE	1.500	1.500
0820	628.7005	Inlet Protection Type A	EACH	4.000	4.000
0830	628.7010	Inlet Protection Type B	EACH	8.000	8.000
0840	628.7015	Inlet Protection Type C	EACH	42.000	42.000
0850	628.7504	Temporary Ditch Checks	LF	240.000	240.000
0860	628.7555	Culvert Pipe Checks	EACH	10.000	10.000
0870	628.7570	Rock Bags	EACH	70.000	70.000
0880	629.0210	Fertilizer Type B	CWT	12.000	12.000
0890	630.0130	Seeding Mixture No. 30	LB	158.000	158.000
0900	630.0140	Seeding Mixture No. 40	LB	179.000	179.000
0910	630.0200	Seeding Temporary	LB	252.000	252.000

3

DATE 19MAR15 E S T I M A T E O F Q U A N T I T I E S

LINE NUMBER	ITEM	ITEM DESCRIPTION	UNIT	TOTAL	4085-43-71 QUANTITY
0920	632.9101	Landscape Planting Surveillance and Care Cycles	EACH	15.000	15.000
0930	633.5200	Markers Culvert End	EACH	10.000	10.000
0940	634.0614	Posts Wood 4x6-Inch X 14-FT	EACH	35.000	35.000
0950	634.0616	Posts Wood 4x6-Inch X 16-FT	EACH	10.000	10.000
0960	634.0618	Posts Wood 4x6-Inch X 18-FT	EACH	2.000	2.000
0970	635.0200	Sign Supports Structural Steel HS	LB	1,089.000	1,089.000
0980	636.0100	Sign Supports Concrete Masonry	CY	2.400	2.400
0990	636.0500	Sign Supports Steel Reinforcement	LB	136.000	136.000
1000	637.1220	Signs Type I Reflective SH	SF	147.000	147.000
1010	637.2210	Signs Type II Reflective H	SF	311.970	311.970
1020	637.2230	Signs Type II Reflective F	SF	85.000	85.000
1030	638.2602	Removing Signs Type II	EACH	13.000	13.000
1040	638.3000	Removing Small Sign Supports	EACH	14.000	14.000
1050	642.5001	Field Office Type B	EACH	1.000	1.000
1060	643.0100	Traffic Control (project) 01. 4085-43-71	EACH	1.000	1.000
1070	643.0300	Traffic Control Drums	DAY	2,487.000	2,487.000
1080	643.0420	Traffic Control Barricades Type III	DAY	3,241.000	3,241.000
1090	643.0705	Traffic Control Warning Lights Type A	DAY	2,650.000	2,650.000
1100	643.0900	Traffic Control Signs	DAY	1,995.000	1,995.000
1110	643.0920	Traffic Control Covering Signs Type II	EACH	8.000	8.000
1120	643.1050	Traffic Control Signs PCMS	DAY	28.000	28.000
1130	643.2000	Traffic Control Detour (project) 01. 4085-43-71	EACH	1.000	1.000
1140	643.3000	Traffic Control Detour Signs	DAY	28,246.000	28,246.000
1150	645.0120	Geotextile Fabric Type HR	SY	39.000	39.000
1160	646.0106	Pavement Marking Epoxy 4-Inch	LF	10,386.000	10,386.000
1170	647.0526	Pavement Marking Yield Line Symbols Epoxy 18-Inch	EACH	38.000	38.000
1180	647.0606	Pavement Marking Island Nose Epoxy	EACH	6.000	6.000
1190	647.0726	Pavement Marking Diagonal Epoxy 12-Inch	LF	293.000	293.000
1200	650.4000	Construction Staking Storm Sewer	EACH	47.000	47.000
1210	650.4500	Construction Staking Subgrade	LF	4,651.000	4,651.000
1220	650.5000	Construction Staking Base	LF	4,651.000	4,651.000
1230	650.5500	Construction Staking Curb Gutter and Curb & Gutter	LF	6,673.000	6,673.000
1240	650.8000	Construction Staking Resurfacing Reference	LF	70.000	70.000
1250	650.8500	Construction Staking Electrical Installations (project) 01. 4085-43-71	LS	1.000	1.000
1260	650.9910	Construction Staking Supplemental Control (project) 01. 4085-43-71	LS	1.000	1.000
1270	650.9920	Construction Staking Slope Stakes	LF	4,543.000	4,543.000
1280	652.0225	Conduit Rigid Nonmetallic Schedule 40 2-Inch	LF	2,060.000	2,060.000
1290	652.0235	Conduit Rigid Nonmetallic Schedule 40 3-Inch	LF	20.000	20.000
1300	653.0140	Pull Boxes Steel 24x42-Inch	EACH	8.000	8.000
1310	654.0105	Concrete Bases Type 5	EACH	13.000	13.000
1320	654.0224	Concrete Control Cabinet Bases Type L24	EACH	1.000	1.000
1330	655.0610	Electrical Wire Lighting 12 AWG	LF	1,950.000	1,950.000
1340	655.0615	Electrical Wire Lighting 10 AWG	LF	8,625.000	8,625.000
1350	656.0200	Electrical Service Meter Breaker Pedestal (location) 01. Roundabout Lighting	LS	1.000	1.000

3

DATE 19MAR15 E S T I M A T E O F Q U A N T I T I E S

LINE NUMBER	ITEM	ITEM DESCRIPTION	UNIT	TOTAL	4085-43-71 QUANTITY
1360	657.0255	Transformer Bases Breakaway 11 1/2-Inch Bolt Circle	EACH	13.000	13.000
1370	657.0322	Poles Type 5-Aluminum	EACH	13.000	13.000
1380	657.0710	Luminaire Arms Truss Type 4 1/2-Inch Clamp 12-FT	EACH	13.000	13.000
1390	659.1115	Luminaires Utility LED A	EACH	13.000	13.000
1400	659.2124	Lighting Control Cabinets 120/240 24-Inch	EACH	1.000	1.000
1410	690.0150	Sawing Asphalt	LF	188.000	188.000
1420	690.0250	Sawing Concrete	LF	151.000	151.000
1430	715.0415	Incentive Strength Concrete Pavement	DOL	369.000	369.000
1440	ASP.1T0A	On-the-Job Training Apprentice at $5.00/HR	HRS	1,200.000	1,200.000
1450	ASP.1T0G	On-the-Job Training Graduate at $5.00/HR	HRS	600.000	600.000
1460	SPV.0035	Special 01. Planting Mix	CY	84.000	84.000
1470	SPV.0060	Special 01. Inlets 2x2.5-Ft Special	EACH	2.000	2.000
1480	SPV.0060	Special 02. Manhole 5-Ft Diameter Flat Top W/ Inlet Opening	EACH	2.000	2.000
1490	SPV.0060	Special 03. Inlet Cover Special Driveway	EACH	1.000	1.000
1500	SPV.0060	Special 04. Inlet Cover Beehive	EACH	1.000	1.000
1510	SPV.0060	Special 05. Barberry, Rose Glow, Container 15-Inch Ht	EACH	14.000	14.000
1520	SPV.0060	Special 06. Hydrangea, Limelight, Container 10-Inch Ht	EACH	10.000	10.000
1530	SPV.0060	Special 07. Juniper, Kallays Compact Pfitzer Container 18-Inch Sp	EACH	10.000	10.000
1540	SPV.0060	Special 08. Spirea Goldflame, Container 18-Inch Ht	EACH	6.000	6.000
1550	SPV.0060	Special 09. Sprea Goldmound, Container 18-Inch Ht	EACH	11.000	11.000
1560	SPV.0060	Special 10. Daylilly Beckylynn, Container 6-Inch Pot	EACH	34.000	34.000
1570	SPV.0060	Special 11. Daylilly Chicago Apache, Container 6-Inch Pot	EACH	19.000	19.000
1580	SPV.0060	Special 12. Daylilly Happy Returns, Container 6-Inch Pot	EACH	18.000	18.000
1590	SPV.0060	Special 13.Daylilly Indian Paintbrush, Container 6-Inch Pot	EACH	15.000	15.000
1600	SPV.0060	Special 14. Daylilly Joan Senior, Container 6-Inch Pot	EACH	48.000	48.000
1610	SPV.0060	Special 15. Daylilly Little Business Dwarf, Container 6-Inch Pot	EACH	19.000	19.000
1620	SPV.0060	Special 16. Daylilly Little Wine, Containter 6-Inch Pot	EACH	51.000	51.000
1630	SPV.0060	Special 17. Daylilly Mary Todd, Container 6-Inch Pot	EACH	14.000	14.000
1640	SPV.0060	Special 18. Daylilly Mini Pearl Dwarf, Container 6-Inch Pot	EACH	19.000	19.000
1650	SPV.0060	Special 19. Adjusting Water Servie Curb Stop	EACH	3.000	3.000
1660	SPV.0060	Special 20. Adjusting Water Valve Box	EACH	3.000	3.000
1670	SPV.0090	Special 01. Landscape Edging	LF	340.000	340.000
1680	SPV.0105	Special 01. Irrigation System	LS	1.000	1.000
1690	SPV.0105	Special 02. Electric Service Meter Socket	LS	1.000	1.000
1700	SPV.0105	Special 03. Breaker Disconnect Box Service	LS	1.000	1.000

3

DATE 19MAR15 E S T I M A T E O F Q U A N T I T I E S

LINE NUMBER	ITEM	ITEM DESCRIPTION	UNIT	TOTAL	4085-43-71 QUANTITY
1710	SPV.0105	Special 04. Concrete Joint Layout	LS	1.000	1.000
1720	SPV.0165	Special 01. Mulch Mississippi River Gravel	SF	1,559.000	1,559.000
1730	SPV.0165	Special 02. Mulch Shredded Bark	SF	2,254.000	2,254.000
1740	SPV.0165	Special 03. Stamping Concrete Sidewalk	SF	17,438.000	17,438.000

3

3

3

CLEARING AND GRUBBING

CATEGORY	STATION	TO	STATION	LOCATION	CLEARING 201.0105 STA	CLEARING 201.0120 ID	GRUBBING 201.0205 STA	GRUBBING 201.0220 ID	REMARKS
0010	10+00	-	12+00	STH 32/57 NB RT	2	-	2	-	SEE REAL ESTATE COMMITMENTS
0010	10+00	-	11+00	STH 32/57 NB LT	1	-	1	-	
0010		20+40		STH 32/57 NB LT	-	8	-	8	
0010		21+00		STH 32/57 NB LT	-	10	-	10	
				TOTAL	3	18	3	18	

REMOVING SMALL PIPE CULVERTS

CATEGORY	STATION	LOCATION	REMOING SMALL PIPE CULVERTS 203.0100 EACH	REMARKS
0010	10+90	STH 32/57 NB	1	CROSS CULVERT STH 32/57 - 36-Inch Concrete
0010	11+20	STH 32/57 NB LT	1	DRIVEWAY - 15-Inch Steel
0010	12+75	STH 32/57 NB LT	1	DRIVEWAY - 15-Inch Steel
0010	13+55	STH 32/57 NB RT	1	DRIVEWAY - 15-Inch Steel
0010	19+30	STH 32/57 NB LT	1	CROSS CULVURT CTH X - 12-Inch Concrete
0010	21+37	STH 32/57 NB LT	1	CROSS CULVERT STH 32/57 - 24-Inch Concrete
		TOTAL	6	

REMOVING OLD STRUCTURES (STATION) 01. 13+17

CATEGORY	STATION	LOCATION	REMOVING OLD STRUCTURES (STATION) 01. 13+17 203.0100 LS	REMARKS
0010	13+17	CTH X LT	1	OLD DE PERE INDUSTRIAL PARK SIGN STRUCTURE LOCATED IN THE NE QUADRANDT OF STH 32/57 & CTH X
		TOTAL	1	

REMOVING PAVEMENT

CATEGORY	STATION	TO	STATION	LOCATION	REMOVING PAVEMENT 204.0100 SY
0010	9+20	-	18+50	STH 32/57	2480
0010	18+50	-	20+05	STH 32/57	785
0010	20+05	-	27+44	STH 32/57	1970
0010	13+62	-	17+05	CTH X	1715
				TOTAL	6950

REMOVING CURB AND GUTTER

CATEGORY	STATION	TO	STATION	LOCATION	REMOVING CURB AND GUTTER 204.0150 LF	REMARKS
0010	10+00	-	13+75	CTH X EB	429	
0010	17+50	-	20+95	CTH X WB	456	
0010	-	-	-	CTH X	53	PORKCHOP ISLAND
0010	17+25	-	20+25	FOX RIVER DRIVE EB	417	
0010	9+32	-	11+10	FOX RIVER DRIVE WB	196	
0010	11+40	-	12+20	FOX RIVER DRIVE WB	135	
0010	10+00	-	10+62	FOX RIVER COURT SB	62	
0010	10+00	-	10+54	FOX RIVER COURT NB	54	
0010	NEW DRIVEWAY FOX RIVER COURT			FOX RIVER COURT	38	
				TOTAL	1840	

3

REMOVING ASPHALTIC SURFACE BUTT JOINTS

CATEGORY	STATION	LOCATION	REMOVING ASPHALTIC SURFACE BUTT JOINTS 204.0115 SY	REMARKS
0010	9+00	STH 32/57	11	MILLING LIMITS
0010	27+94	STH 32/57	7	MILLING LIMITS
		TOTAL	18	

REMOVING ASPHALTIC SURFACE MILLING

CATEGORY	STATION	TO	STATION	LOCATION	REMOVING ASPHALTIC SURFACE MILLING 204.0120 SY	REMARKS
0010	9+00	-	9+20	STH 32/57 SOUTH LIMIT	105	TIE IN - MILL 2 INCHES
0010	27+44	-	27+94	STH 32/57 NORTH LIMIT	170	TIE IN - MILL 2 INCHES
				TOTAL	275	

3

REMOVING CONCRETE BASES

CATEGORY	STATION	LOCATION	REMOVING CONCRETE BASES 204.0120 EACH	REMARKS*
0010	13+33	CTH X LT	1	EXISTING LIGHT POLE
0010	15+10	CTH X LT	1	EXISTING LIGHT POLE
		TOTAL	2	

*CITY OF DE PERE TO REMOVE AND SALVAGE LIGHT POLE PRIOR TO REMOVAL

REMOVING INLETS

CATEGORY	STATION	LOCATION	REMOVING INLETS 204.0220 EACH	REMARKS
0010	10+54	FOX RIVER COURT	2	LT & RT
0010	9+56	FOX RIVER DRIVE	2	LT & RT
0010	10+68	FOX RIVER DRIVE	1	LOCATED OVER EXISTING 48-INCH STORM SEWER PIPE TO REMAIN IN PLACE. SECTION OF 48-INCH PIPE TO BE REPLACED; SEE STORM SEWER PIPE SUMMARY
0010	13+45	CTH X	2	LT & RT
0010	14+95	CTH X	2	LT & RT
0010	14+95	CTH X	1	FIELD INLET RT
		TOTAL	8	

REMOVING STORM SEWER

CATEGORY	STATION	LOCATION	REMOVING STORM SEWER PIPE (12-INCH) 204.0245.01 LF	REMOVING STORM SEWER PIPE (24-INCH) 204.0245.02 LF	REMOVING STORM SEWER PIPE (48-INCH) 204.0245.03 LF	REMARKS
0010	9+56	FOX RIVER DRIVE	32	-	-	
0010	9+56	FOX RIVER DRIVE	-	6	-	OFFSET RT
0010	10+50	FOX RIVER COURT	37	-	-	
0010	10+50	FOX RIVER COURT	16	-	-	OFFSET LT
0010	10+70	FOX RIVER DRIVE	-	-	8	OFFSET RT; UNDER EXISTING INLET REMOVE & REPLACE
0010	13+45	CTH X	48	-	-	
0010	15+07	CTH X	70	-	-	
		TOTAL	203	6	8	

3

EARTHWORK QUANTITY SUMMARY

CATEGORY	STATION	TO	STATION	LOCATION	COMMON EXCAVATION (1) 205.0100 CUT (2) CY	EBS CY	**** UNUSABLE MATERIAL INCLUDED IN COMMON CY	**** AVAILABLE MATERIAL FROM COMMON CY	**** REQUIRED FILL (EXPANDED) CY	BORROW 208.0100 CY	REMARKS
0010	10+00	-	23+83	CIRCLE	3757	-	625	3132	23	-	CIRCLE
0010	22+14	-	35+24	CTH X	1834	-	1220	614	176	-	EAST LEG
0010	10+00	-	18+88	STH 32/57	6620	-	3205	3415	1562	-	NORTH LEG
0010	20+28	-	25+49	STH 32/57	9641	-	4280	5361	2967	-	SOUTH LEG
0010	10+00	-	13+27	FOX RIVER DRIVE	1455	-	735	720	242	-	WEST LEG
0010	NEW DRIVEWAY FOX RIVER COURT			STH 32/57 LT	168	-	-	168	-	-	
0010				UNDISTRIBUTED	-	200	-	-	-	-	
				TOTAL	23675		10065	13410	4970	0	

**** FOR INFORMATION ONLY

NOTES:

(1) COMMON EXCAVATION IS THE SUM OF THE CUT AND EBS EXCAVATION COLUMNS

(2) SALVAGED/ UNUSABLE PAVEMENT MATERIAL (WITHIN CUT) IS INCLUDED IN THE CUT

NOTE: EXPANSION FACTOR FOR FILL USED: 1.54

SEE SECTION 9 FOR DETAILED CALCULATIONS

PREPARE FOUNDATION FOR ASPHALTIC PAVING (PROJECT) 01. 4085-43-71

CATEGORY	LOCATION	PREPARE FOUNDATION FOR ASPHALTIC PAVING 211.0100 LS	REMARKS
0010	PROJECT 4085-43-71	1	STA 9+00 - 9+20 STH 32/57
			STA 27+44 - 27+94 STH 32/57
	TOTAL	1	

3/4" BASE AGGREGATE DENSE SUMMARY

CATEGORY	STATION	TO	STATION	LOCATION	BASE AGGREGATE DENSE 3/4-INCH 305.0110 TON	WATER * 624.0100 MGAL
0010	9+20	-	11+87	STH 32/57 NB	80	1
0010	9+20	-	11+87	STH 32/57 SB	80	1
0010	24+47	-	27+44	STH 32/57 NB	90	1
0010	24+47	-	27+44	STH 32/57 SB	90	1
0010		-		DRIVEWAYS	150	2
0010		-		UNDISTRIBUTED	50	1
				TOTAL	540	7 *

* ADDITIONAL QUANTITY SHOWN ELSEWHERE

FINISHING ROADWAY (PROJECT) 01. 4085-43-71

CATEGORY	LOCATION	FINISHING ROADWAY 213.0100 EACH
0010	PROJECT 01. 4085-43-71	1
	TOTAL	1

3

3

1-1/4" BASE AGGREGATE DENSE AND BREAKER RUN SUMMARY

CATEGORY	STATION	TO	STATION	LOCATION	BASE AGGREGATE DENSE 1 1/4-INCH 305.0120 TON	BREAKER RUN 311.0110 TON	WATER * 624.0100 MGAL	REMARKS
0010	9+20	-	11+90	STH 32/57	681	1820	7	
0010	11+90	-	18+70	STH 32/57	1988	4638	20	
0010	20+30	-	24+45	STH 32/57	890	2077	9	
0010	24+45	-	27+50	STH 32/57	742	1988	7	
0010	9+50	-	12+90	FOX RIVER DRIVE	578	1348	6	
0010	10+00	-	10+85	FOX RIVER COURT	126	295	2	
0010	14+30	-	16+92	CTH X	676	1577	7	
0010		-		ROUNDABOUT	729	1701	7	
0010	11+90	-	13+00	STH 32/57	46	107	1	SPLITTER ISLAND
0010	14+10	-	18+45	STH 32/57	750	1750	8	SPLITTER ISLAND
0010	18+50	-	18+75	STH 32/57	17	40	1	SPLITTER ISLAND
0010	14+00	-	14+20	CTH X	11	26	1	SPLITTER ISLAND
0010	14+25	-	14+45	CTH X	10	23	1	SPLITTER ISLAND
0010	11+50	-	11+70	FOX RIVER DRIVE	5	12	1	SPLITTER ISLAND
0010	11+80		12+00	FOX RIVER DRIVE	12	28	1	SPLITTER ISLAND
0010	20+25		20+50	STH 32/57	15	35	1	SPLITTER ISLAND
0010	20+60	-	24+50	STH 32/57	180	420	2	SPLITTER ISLAND
0010		-		UNDISTRIBUTED	100	100	-	
				TOTAL	7556	17985	82 *	

* ADDITIONAL QUANTITY SHOWN ELSEWHERE

SHAPING SHOULDERS

CATEGORY	STATION	TO	STATION	LOCATION	SHAPING SHOULDERS 305.0500 STA
0010	9+00	-	11+87	STH 32/57 RT	3
0010	9+00	-	11+87	STH 32/57 LT	3
0010	24+47	-	27+94	STH 32/57 RT	4
0010	24+47	-	27+94	STH 32/57 LT	4
				TOTAL	13

3

CONCRETE MEDIAN SLOPED NOSE

STATION	LOCATION	CONCRETE MEDIAN SLOPE NOSE 620.0300 SF
11+90	STH 32/57	20
13+00	STH 32/57	91
14+10	STH 32/57	62
14+00	CTH X	54
11+50	FOX RIVER DRIVE	16
24+50	STH 32/57	21
	TOTAL	264

HMA SUMMARY

CATEGORY	STATION	TO	STATION	LOCATION	ASPHALTIC MATERIAL PG 58-28 455.0205 TON	ASPHALTIC MATERIAL PG 64-28 455.0120 TON	TACK COAT 455.0605 GAL	HMA PAVEMENT TYPE E-10 460.1110 TON	ASPHALTIC SURFACE FIELD ENTRANCE & DRIVEWAYS 465.0120 TON	REMARKS
0010	9+20	-	18+90	STH 32/57	112	36	674	2686	-	
0010	9+50	-	12+25	FOX RIVER DRIVE	35	11	209	832	-	
0010	13+60	-	14+50	CTH X	13	4	127	324	-	
0010	21+10	-	27+50	STH 32/57	76	24	458	1823	-	
0010	10+00	-	13+30	CIRCLE	24	8	142	568	-	
0010	10+00	-	10+95	FOX RIVER COURT	7	2	43	175	-	
0010	NEW FOX RIVER COURT DRIVEWAY			FOX RIVER COURT	1	-	-	5	-	PATCH FOR CURB & GUTTER REMOVAL
0010	13+58 RT			STH 32/57	-	-	-	-	42	DRIVEWAY: 6-INCHES THICK
				TOTALS	268	85	1653	6413	42	

3

CURB AND GUTTER

CATEGORY	STATION	TO	STATION	LOCATION		CONCRETE CURB PEDESTRIAN 601.0600 LF	CONCCRETE CURB & GUTTER 18-INCH TYPE A 601.0405 LF	CONCRETE CURB & GUTTER 30-INCH TYPE D 601.0411 LF	CONCRETE CURB & GUTTER 30-INCH TYPE A 601.0409 LF	CONCRETE CURB & GUTTER 4-INCH SLOPED TYPE D 601.0553 LF	CONCRETE CURB & GUTTER 4-INCH SLOPED TYPR R 601.0580 LF	CONSTRUCTION STAKING CURB & GUTTER 650.5500 LF	REMARKS
0010	9+20	-	11+40	STH 32/57	NB	-	-	-	-	136	-	136	CURB & GUTTER
0010	11+40	-	12+00	STH 32/57	NB	-	-	-	-	-	55	55	DRIVEWAY CROSSING
0010	11+40	-	12+00	STH 32/57	NB	-	-	-	-	91	-	91	DRIVEWAY OPENING
0010	12+00	-	15+40	STH 32/57	NB	-	-	-	-	337	-	337	CURB & GUTTER
0010	15+40	-	17+25	STH 32/57	NB	-	-	186	-	-	-	186	CURB & GUTTER
0010	10+00	-	15+40	STH 32/57	SB	-	-	-	-	538	-	538	CURB & GUTTER
0010	15+40	-	16+50	STH 32/57	SB	-	-	113	-	-	-	113	CURB & GUTTER
0010	11+90	-	13+00	STH 32/57		-	-	-	-	148	-	148	SPLITTER ISLAND
0010	14+10	-	17+25	STH 32/57		-	-	-	-	635	-	635	SPLITTER ISLAND
0010	17+25	-	18+45	STH 32/57		-	-	257	-	-	-	257	SPLITTER ISLAND
0010	18+50	-	18+75	STH 32/57		-	-	78	-	-	-	78	SPLITTER ISLAND
0010	17+25	-	18+31	CTH X	EB	-	-	106	-	-	-	106	CURB & GUTTER
0010	18+31	-	20+95	CTH X	EB	-	-	-	264	-	-	264	CONCRETE PAVEMENT SECTION
0010	10+00	-	12+45	CTH X	WB	-	-	-	245	-	-	245	CONCRETE PAVEMENT SECTION
0010	12+45	-	13+70	CTH X	WB	-	-	125	-	-	-	125	CURB & GUTTER
0010	14+00	-	14+20	CTH X		-	-	60	-	-	-	60	SPLITTER ISLAND
0010	14+25	-	14+45	CTH X		-	-	86	-	-	-	86	SPLITTER ISLAND
0010	16+50	-	20+25	FOX RIVER DRIVE	EB	-	-	518	-	-	-	518	CURB & GUTTER
0010	10+00	-	12+50	FOX RIVER DRIVE	WB	-	-	246	-	-	-	246	CURB & GUTTER
0010	11+50	-	11+70	FOX RIVER DRIVE		-	-	49	-	-	-	49	SPLITTER ISLAND
0010	11+80	-	12+00	FOX RIVER DRIVE		-	-	68	-	-	-	68	SPLITTER ISLAND
0010	13+70	-	15+40	STH 32/57	NB	-	-	179	-	-	-	179	CURB & GUTTER
0010	15+40	-	18+06	STH 32/57	NB	-	-	-	-	250	-	250	CURB & GUTTER
0010	12+50	-	14+30	STH 32/57	SB	-	-	188	-	-	-	188	CURB & GUTTER
0010	14+30	-	17+15	STH 32/57	SB	-	-	-	-	284	-	284	CURB & GUTTER
0010	20+25	-	20+50	STH 32/57		-	-	73	-	-	-	73	SPLITTER ISLAND
0010	20+60		21+75	STH 32/57		-	-	257	-	-	-	257	SPLITTER ISLAND
0010	21+75	-	24+50	STH 32/57		-	-	532	-	-	-	532	SPLITTER ISLAND
0010	10+00	-	13+39	ROUNDABOUT		-	-	-	-	-	339	339	CIRCLE
0010	1+00	-	3+30	ROUNDABOUT		-	230	-	-	-	-	230	CIRCLE
0010		11+85		FOX RIVER DRIVE		18	-	-	-	-	-	-	SPLITTER ISLAND RAMP
0010		18+48		STH 32/57		32	-	-	-	-	-	-	SPLITTER ISLAND RAMP
0010		20+55		STH 32/57		20	-	-	-	-	-	-	SPLITTER ISLAND RAMP
0010		13+90		CTH X		32	-	-	-	-	-	-	SPLITTER ISALND RAMP
0010	-	-	-	FOX RIVER COURT				38	-	-	-	-	MATCH EXISTING CURB & GUTTER
					TOTAL	102	230	3158	509	2420	394	6673	

3

3

CONCRETE SUMMARY

CATEGORY	STATION	TO	STATION	LOCATION	CONCRETE SIDEWALK 4-INCH 602.0405 SF	CONCRETE ROUNDABOUT TRUCK APRON 12-INCH 416.0512 SY	**** COLORING CONCRETE RED 405.0100 CY	** STAMPING CONCRETE SIDEWALK SPV.0165.03 SF	CURB RAMP DETECTABLE WARNING FIELD YELLOW 602.0505 SF	CONCRETE SIDEWALK 5-INCH 602.0410 SF	CONCRETE SIDEWALK 6-INCH 602.0415 SF	REMARKS
0010	11+90	-	13+00	STH 32/57	924	-	11	924	-	-	-	SPlTTER
0010	14+10	-	18+45	STH 32/57	11893	-	147	11893	-	-	-	SPlTTER
0010	18+50	-	18+75	STH 32/57	337	-	4	337	-	-	-	SPlTTER
0010	14+00	-	14+20	CTH X	207	-	3	207	-	-	-	SPlTTER
0010	14+25	-	14+45	CTH X	388	-	5	388	-	-	-	SPlTTER
0010	11+50	-	11+70	FOX RIVER DRIVE	102	-	1	102	-	-	-	SPlTTER
0010	11+80	-	12+00	FOX RIVER DRIVE	249	-	3	249	-	-	-	SPlTTER
0010	20+25	-	20+50	STH 32/57	299	-	4	299	-	-	-	SPlTTER
0010	20+60	-	24+50	STH 32/57	3040	-	38	3040	-	-	-	SPlTTER
0010	1+00	-	3+51	NORTHEAST QUAD	-	-	-	-	-	2600	-	PATH
0010	1+00	-	2+98	SOUTHWEST QUAD	-	-	-	-	-	2095	-	PATH
0010	1+00	-	3+43	SOUTHEAST QUAD	-	-	-	-	-	2520	-	PATH
0010	1+00	-	3+35	NORTHWEST QUAD	-	-	-	-	-	2412	-	PATH
0010	10+00	-	13+30	ROUNDABOUT	-	447	149	-	-	-	-	TRUCK APRON
0010	11+85			FOX RIVER DRIVE	-	-	-	-	32	100	-	SPLITTER ISLAND RAMP
0010	11+85 RT			FOX RIVER DRIVE	-	-	-	-	20	-	-	PATH RAMP
0010	11+85 LT			FOX RIVER DRIVE	-	-	-	-	20	-	-	PATH RAMP
0010	18+48			STH 32/57	-	-	-	-	32	168	-	SPLITTER ISLAND RAMP
0010	18+48 RT			STH 32/57	-	-	-	-	20	-	-	PATH RAMP
0010	18+48 LT			STH 32/57	-	-	-	-	20	-	-	PATH RAMP
0010	20+55			STH 32/57	-	-	-	-	32	100	-	SPLITTER ISLAND RAMP
0010	20+55 RT			STH 32/57	-	-	-	-	20	-	-	PATH RAMP
0010	20+55 LT			STH 32/57	-	-	-	-	20	-	-	PATH RAMP
0010	13+90			CTH X	-	-	-	-	32	160	-	SPLITTER ISLAND RAMP
0010	13+90 RT			CTH X	-	-	-	-	20	-	-	PATH RAMP
0010	13+90 LT			CTH X	-	-	-	-	20	-	-	PATH RAMP
0040	13+56 RT			STH 32/57	-	-	-	-	-	-	140	ACROSS DRIVEWAY ONLY
				TOTAL	17438	447	365	17438	288	10155	140	

** STAMPING ITEM IS CATEGORY 0020; ALL OTHER ITEMS ARE CATEGORY 0010

**** RED COLOR WILL BE WISDOT RED

3

3

CONCRETE DRIVEWAY

CATEGORY	STATION	LOCATION	CONCRETE DRIVEWAY 6-INCH 416.0160 SY	REMARKS
0010	9+50	FOX RIVER DRIVE RT	25	
0010	10+19	FOX RIVER DRIVE RT	66	
0010	NEW FOX RIVER COURT DRIVEWAY		10	APRON ONLY
0040	13+56	STH 32/ 57 RT	20	APRON ONLY
		TOTAL CATEGORY 0010	101	
		TOTAL CATEGORY 0040	20	
		PROJECT TOTAL	121	

CONCRETE JOINT LAYOUT

CATEGORY	STATION	LOCATION	CONCRETE JOINT LAYOUT SPV.0105.04 LS
0010	17+05 LT & RT	CTH X	1
		TOTAL	1

SAWING SUMMARY

CATEGORY	STATION	LOCATION	SAWING ASPHALT 690.0150 LF	SAWING CONCRETE 690.0250 LF	REMARKS
0010	10+00	FOX RIVER DRIVE	28	4	RECONSTRUCT LIMITS
0010	10+00	FOX RIVER DRIVE	-	12	DRIVEWAY RT
0010	10+18	FOX RIVER DRIVE	-	20	DRIVEWAY RT
0010	10+00	FOX RIVER COURT	33	4	RECONSTRUCT LIMITS
0010	17+05	CTH X	-	45	RECONSTRUCT LIMITS
0010	27+43	STH 32/57	-	31	RECONSTRUCT LIMITS
0010	27+93	STH 32/57	31	-	MILLING LIMITS
0010	13+58	STH 32/57	27	-	DRIVEWAY RT
0010	9+20	STH 32/57	-	31	RECONSTRUCT LIMITS
0010	9+00	STH 32/57	31	-	MILLING LIMITS
0010	NEW FOX RIVER COURT DRIVEWAY		-	4	CURB & GUTTER
0010	NEW FOX RIVER COURT DRIVEWAY		38	-	ASPHALT PATCH
		TOTAL	188	151	

DRILLED TIE BARS & DOWEL BARS

CATEGORY	STATION	LOCATION	DRILLED TIE BARS 416.061 EACH	DRILLED DOWEL BARS 416.062 EACH
0010	17+05 LT & RT	CTH X	6	-
0010	17+05	CTH X	-	24
		TOTAL	6	24

CONCRETE PAVEMENT

CATEGORY	STATION	LOCATION	CONCRETE PAVEMENT 8.5-INCH 415.0085 SY
0010	14+50 - 17+05	CTH X	1230
		TOTAL	1230

ADJUSTING WATER VALVE BOXES & CURB STOPS

CATEGORY	LOCATION	ADJSUTING WATER SERVICE CURB STOP SPV.0060.19 EACH	ADJUSTING WATER VALVE BOX SPV.0060.20 EACH
0010	FOX RIVER COURT	1	1
0010	STH 32/57	1	1
0010	FOX RIVER DRIVE	1	1
	TOTAL	3	3

3

3

PAVEMENT MARKING

CATEGORY	STATION	TO	STATION	LOCATION		**** EPOXY 4-INCH yellow LF	**** EPOXY 4-INCH white LF	PAVEMENT MARKING EPOXY 4-INCH 646.0106 LF	PAVEMENT MARKING YEILD LINE SYMBOLS EPOXY 18-INCH 647.0526 EACH	PAVEMENT MARKING DIAGONAL EPOXY 12-INCH 647.0726 LF	REMARKS
0010	18+00	-	20+25	FOX RIVER DRIVE	EB	-	228	228	-	-	EDGELINE
0010	9+50	-	12+00	FOX RIVER DRIVE	EB	265	-	265	-	-	
0010	10+00	-	12+75	FOX RIVER DRIVE	WB	-	277	277	-	-	EDGELINE
0010	9+50	-	12+00	FOX RIVER DRIVE	WB	237	-	237	-	-	
0010	9+75	-	11+60	FOX RIVER DRIVE	-	-	-	-	-	42	TAPER AREA
	WEST LEG TOTALS					**503**	**506**	**1008**	**0**	**0**	
0010	17+25	-	20+95	CTH X	EB	-	366	366	-	-	EDGELINE
0010	13+58	-	17+05	CTH X	EB	331	-	331	-	-	
0010	10+00	-	13+70	CTH X	WB	-	373	373	-	-	EDGELINE
0010	13+50	-	16+92	CTH X	WB	342	-	342	-	-	
0010	14+14	-	16+00	CTH X	-	-	-	-	-	51	TAPER AREA
	EAST LEG TOTALS					**672**	**739**	**1412**	**0**	**0**	
0010	10+00	-	17+25	STH 32/57	NB	-	995	995	-	-	EDGELINE
0010	9+36	-	12+00	STH 32/57	NB	506	-	506	-	-	
0010	12+00	-	18+75	STH 32/57	NB	689	-	689	-	-	
0010	10+00	-	18+00	STH 32/57	SB	-	1015	1015	-	-	EDGELINE
0010	9+36	-	12+00	STH 32/57	SB	506	-	506	-	-	
0010	12+00	-	18+75	STH 32/57	SB	678	-	678	-	-	
0010	9+00	-	9+36	STH 32/57	NB/SB	72	-	72	-	-	
0010	9+50	-	12+00	STH 32/57	NB/SB	-	-	-	-	96	TAPER AREA
	SOUTH LEG TOTALS					**2451**	**2009**	**4460**	**0**	**96**	
0010	13+70	-	18+06	STH 32/57	NB	-	737	737	-	-	EDGELINE
0010	24+47	-	27+00	STH 32/57	NB	506	-	506	-	-	
0010	20+43	-	24+47	STH 32/57	NB	407	-	407	-	-	
0010	12+75	-	17+15	STH 32/57	SB	-	737	737	-	-	EDGELINE
0010	24+47	-	27+00	STH 32/57	SB	506	-	506	-	-	
0010	20+25		27+00	STH 32/57	SB	425	-	425	-	-	
0010	27+00	-	27+94	STH 32/57	NB/SB	188	-	188	-	-	
0010	24+47		26+80	STH 32/57	NB/SB	-	-	-	-	74	TAPER AREA
	NORTH LEG TOTALS					**2032**	**1474**	**3506**	**0**	**74**	
0010	-	-	-	ROUNDABOUT	NB	-	-	-	6	-	
0010	-	-	-	ROUNDABOUT	EB	-	-	-	13	-	
0010	-	-	-	ROUNDABOUT	SB	-	-	-	7	-	
0010	-	-	-	ROUNDABOUT	WB	-	-	-	12	-	
	ROUNDABOUT TOTALS					**0**	**0**	0	**38**	**0**	
					TOTAL	5658	4728	10386	38	293	

**** FOR INFORMATION ONLY.

MAINTAINENCE AND REPAIR OF HAUL ROADS (PROFJECT) 4085-43-71

CATEGORY	LOCATION	618.0100 EACH
0010	PROJECT	1
	TOTAL	1

FIELD OFFICE TYPE B (PROJECT) 4085-43-71

CATEGORY	LOCATION	FIELD OFFICE TYPE B 642.5001 EACH
0010	PROJECT 4085-43-71	1
	TOTAL	1

MOBILIZATION

CATEGORY	LOCATION	619.1000 EACH
0010	PROJECT	1
	TOTAL	1

PAVEMENT MARKING NOSE EPOXY

CATEGORY	STATION	LOCATION	PAVEMENT MARKING NOSE EPOXY 647.0606 EACH
0010	11+67	FOX RIVER DRIVE	1
0010	14+07	CTH X	1
0010	11+94	STH 32/57	1
0010	12+91	STH 32/57	1
0010	14+18	STH 32/57	1
0010	24+42	STH 32/57	1
		TOTAL	6

3

3

STORM SEWER PIPE REINFORCED CONCRETE

CATEGORY	FROM	TO	CLASS III 12-INCH 608.0312 LF	CLASS IV 12-INCH 608.0412 LF	CLASS IV 15-INCH 608.0415 LF	CLASS IV 18-INCH 608.0418 LF	CLASS III 24-INCH 608.0324 LF	CLASS IV 24-INCH 608.0424 LF
0010	1A	1B	-	-	-	-	-	22
0010	1B	1C	-	-	-	-	-	19
0010	1C	1D	-	-	-	-	-	12
0010	1D	1E	-	-	-	-	-	19
0010	1E	1F	-	20	-	-	-	-
0010	1E	1G	-	-	-	-	-	20
0010	2A (EXISTING)	2B	-	-	-	-	-	7
0010	2B	2C	-	10	-	-	-	-
0010	2B	2D	-	-	-	-	-	31
0010	2D	2E	-	-	-	-	-	88
0010	2E	2F	-	-	-	-	-	129
0010	3A (EXISTING)	3B	-	17	-	-	-	-
0010	3B	3C	-	37	-	-	-	-
		SECTION TOTAL*	0	84	0	0	0	347

* ADDITIONAL QUANTITIES SHOWN ELSEWHERE

CONCRETE COLLARS

CATEGORY	LOCATION	STATION	OFFSET	CONCRETE COLLARS FOR PIPE 520.8000 EACH
0010	2A	9+57 EB	24.0' RT	1
0010	3A	10+48 FR	34.1' LT	1
0010	5A	14+94 WB	32.6' LT	1
0010	5D	15.05 EB	30.2' RT	1
0010	EXISTING	10+70 EB	35.0' RT	2
			TOTAL	6

CATEGORY	FROM	TO	CLASS III 12-INCH 608.0312 LF	CLASS IV 12-INCH 608.0412 LF	CLASS IV 15-INCH 608.0415 LF	CLASS IV 18-INCH 608.0418 LF	CLASS III 24-INCH 608.0324 LF	CLASS IV 24-INCH 608.0424 LF
0010	4A	4B	-	-	-	-	200	-
0010	4B	4C	-	-	-	-	332	-
0010	4C	4V	15	-	-	-	-	-
0010	4V	4W	26	-	-	-	-	-
0010	4W	4X	37	-	-	-	-	-
0010	4X	4Y	18	-	-	-	-	-
0010	4C	4D	-	-	-	-	291	-
0010	4D	4E	-	73	-	-	-	-
0010	4E	4F	-	20	-	-	-	-
0010	4F	4G	-	8	-	-	-	-
0010	4G	4H	-	19	-	-	-	-
0010	4D	4I	-	98	-	-	-	-
0010	4I	4J	-	12	-	-	-	-
0010	4D	4K	-	-	-	44	-	-
0010	4K	4L	-	-	-	20	-	-
0010	4L	4M	-	-	-	25	-	-
0010	4M	4N	-	-	-	28	-	-
0010	4N	4O	-	-	76	-	-	-
0010	4O	4P	-	20	-	-	-	-
0010	4P	4Q	-	27	-	-	-	-
0010	4Q	4U	-	24	-	-	-	-
0010	5A (EXISTING)	5B	-	-	10	-	-	-
0010	5B	5C	-	-	47	-	-	-
0010	5C	5D (EXISTING)	-	-	13	-	-	-
0010	6A	6B	-	128	-	-	-	-
0010	7A	7B	-	22	-	-	-	-
0010	7B	7C	-	28	-	-	-	-
0010	7C	7D	-	16	-	-	-	-
0010	7D	7E	-	25	-	-	-	-
0010	8A	8B	-	40	-	-	-	-
		SECTION TOTALS	96	560	146	117	823	0
		GRAND TOTAL	96	644	146	117	823	347

3

3

STORM SEWER STRUCTURES

STRUCTURE	STATION	OFFSET	APRON ENDWALLS FOR CULVERT PIPE REINFORCED CONCRETE 12-INCH 522.1012 EACH	APRON ENDWALLS FOR CULVERT PIPE REINFORCED CONCRETE 24-INCH 522.1024 EACH	MANHOLE COVERS TYPE J 611.0530 EACH	INLET COVERS TYPE H 611.0624 EACH	INLET COVERS TYPE HM 611.0627 EACH	INLET COVERS TYPE MS 611.0642 EACH	INLET COVERS TYPE T 611.0652 EACH	MANHOLES 3-FT DIAMETER 611.2003 EACH	MANHOLES 4-FT DIAMETER 611.2004 EACH	MANHOLES 5-FT DIAMETER 611.2005 EACH	MANHOLES 6-FT DIAMETER 611.2006 EACH	INLETS 2X2.5-FT SPECIAL SPV.0060.01 EACH	INLETS 2X3-FT 611.3230 EACH	INLETS 4-FT DIAMETER 611.3004 EACH	INLETS MEDIAN 1 GRATE 611.3901 EACH	MANHOLE 5-FT DIAMETER FLAT TOP W/ INLET OPENING SPV.0060.02 EACH	INLET COVER SPECIAL DRIVEWAY SPV.0060.03 EACH	INLET COVER BEEHIVE SPV.0060.04 EACH	CONSTRUCTION STAKING STORM SEWER 650.4000 EACH	OR RIM ELEVATION	INVERT	DEPTH FEET	REMARKS
1A	22+31 SB	37.7' LT	-	1	-	-	-	-	-	-	-	-	-	-	-	-	-	-	-	-	1		617.25		
1B	22+31 SB	16.5' LT	-	-	-	-	1	-	-	-	-	-	-	-	1	-	-	-	-	-	1	623.27	617.34	5.93	
1C	22+31 SB	1.9' RT	-	-	-	-	1	-	-	-	-	-	-	-	1	-	-	-	-	-	1	623.04	617.48	5.56	
1D	22+35 NB	1.5' LT	-	-	-	-	1	-	-	-	-	-	-	-	1	-	-	-	-	-	1	622.90	617.58	5.32	
1E	22+37 NB	16.5' RT	-	-	-	-	1	-	-	-	-	-	-	-	-	-	-	1	-	-	1	622.55	617.71	4.84	
1F	22+16 NB	16.5' RT	-	-	-	-	1	-	-	-	-	-	-	-	1	-	-	-	-	-	1	622.59	618.82	3.77	
1G	22+35 NB	35.5' RT	-	1	-	-	-	-	-	-	-	-	-	-		-	-	-	-	-	1		617.85		
2B	9+56 EB	18.0' RT	-	-	-	-	-	-	-	-	-	-	-	-	1	-	-	-	1	-	1	617.11	612.34	4.77	
2C	9+66 EB	18.0' RT	-	-	-	1	-	-	-	-	-	-	-	-	1	-	-	-	-	-	1	617.27	613.39	3.88	
2D	9+58 WB	12.8' LT	-	-	-	1	-	-	-	-	-	-	-	-	-	-	-	1	-	-	1	617.25	612.50	4.75	
2E	10+46 WB	5.0' RT	-	-	1	-	-	-	-	-	-	1	-	-	-	-	-	-	-	-	1	619.24	612.85	6.39	
2F	10+47 RAB	79.1' RT	-	-	-	-	-	1	-	-	-	-	-	-	-	-	1	-	-	-	1	616.25	613.42	2.83	
3B	10+50 FR	17.7' LT	-	-	-	1	-	-	-	-	-	-	-	-	1	-	-	-	-	-	1	620.00	615.34	4.66	
3C	10+50 FR	18.5' RT	-	-	-	1	-	-	-	-	-	-	-	-	1	-	-	-	-	-	1	619.98	616.38	3.60	
4A	10+50 SB	64.9' LT	-	1	-	-	-	-	-	-	-	-	-	-	-	-	-	-	-	-	1		613.00		
4B	12+46 SB	70.9' LT	-	-	1	-	-	-	-	-	-	1	-	-	-	-	-	-	-	-	1	618.78	613.71	5.07	
4C	15+76 SB	33.5' LT	-	-	1	-	-	-	-	-	1	-	-	-	-	-	-	-	-	-	1	625.45	615.22	10.23	
4V	15+76 SB	18.8' LT	-	-	-	-	1	-	-	-	-	-	-	-	1	-	-	-	-	-	1	624.75	616.50	8.25	
4W	15+75 SB	6.6' RT	-	-	-	-	1	-	-	-	-	-	-	-	1	-	-	-	-	-	1	625.21	616.73	8.48	
4X	15+75 NB	1.5' LT	-	-	-	-	1	-	-	-	-	-	-	-	1	-	-	-	-	-	1	625.29	617.02	8.27	
4Y	15+75 NB	16.4' LT	-	-	-	-	1	-	-	-	-	-	-	-	1	-	-	-	-	-	1	625.89	617.21	8.68	
4D	18+68 SB	61.1' LT	-	-	1	-	-	-	-	-	-	-	1	-	-	-	-	-	-	-	1	623.18	616.52	6.66	
4E	11+67 EB	18.1' RT	-	-	-	1	-	-	-	-	-	-	-	-	1	-	-	-	-	-	1	621.74	617.79	3.95	
4F	11+69 EB	1.5' LT	-	-	-	1	-	-	-	-	-	-	-	-	1	-	-	-	-	-	1	622.13	617.88	4.25	
4G	11+58 WB	1.5' RT	-	-	-	1	-	-	-	-	-	-	-	-	1	-	-	-	-	-	1	621.95	617.91	4.04	
4H	11+57 WB	17.2' LT	-	-	-	1	-	-	-	-	-	-	-	-	1	-	-	-	-	-	1	621.61	618.00	3.61	
4I	10+77 RAB	1.7' LT	-	-	-	-	-	-	1	-	-	-	-	1	-	-	-	-	-	-	1	623.33	617.94	5.39	
4J	10+65 RAB	1.7' LT	-	-	-	-	-	-	1	-	-	-	-	1	-	-	-	-	-	-	1	623.33	618.09	5.24	
4K	18+64 SB	17.5' LT	-	-	-	1	-	-	-	-	-	-	-	-	1	-	-	-	-	-	1	623.39	617.42	5.97	
4L	18+67 SB	1.5' RT	-	-	-	1	-	-	-	-	-	-	-	-	1	-	-	-	-	-	1	623.59	617.63	5.96	
4M	18+66 NB	1.5' LT	-	-	-	1	-	-	-	-	-	-	-	-	1	-	-	-	-	-	1	623.86	617.85	6.01	
4N	18+75 NB	24.2' RT	-	-	-	1	-	-	-	-	-	-	-	-	-	1	-	-	-	-	1	623.3	618.09	5.21	
4O	13+73 EB	18.2' RT	-	-	-	1	-	-	-	-	-	-	-	-	-	1	-	-	-	-	1	624.14	618.85	5.29	
4P	13+72 EB	1.5' LT	-	-	-	1	-	-	-	-	-	-	-	-	1	-	-	-	-	-	1	624.35	619.31	5.04	
4Q	13+60 WB	1.5' RT	-	-	-	1	-	-	-	-	-	-	-	-	1	-	-	-	-	-	1	624.36	619.55	4.81	
4R	13+62 WB	21.6' LT	-	-	-	1	-	-	-	-	-	-	-	-	1	-	-	-	-	-	1	624.13	619.77	4.36	
5B	14+94 WB	22.6' LT	-	-	-	1	-	-	-	-	-	-	-	-	1	-	-	-	-	-	1	625.06	618.31	6.75	
5C	15+06 EB	17.9' RT	-	-	-	1	-	-	-	-	-	-	-	-	1	-	-	-	-	-	1	625.14	619.26	5.88	SEE NOTE 1
6A	13+26 NB	46.8' RT	1	-	-	-	-	-	-	-	-	-	-	-	-	-	-	-	-	-	1		622.00		
6B	14+56 NB	34.9' RT	-	-	-	-	-	-	-	1	-	-	-	-	-	-	-	-	-	1	1	626.06	623.63	2.43	
7A	12+96 NB	42.5' RT	1	-	-	-	-	-	-	-	-	-	-	-	-	-	-	-	-	-	1		621.85		SEE NOTE 1
7B	13+00 NB	21.6' RT	-	-	-	1	-	-	-	-	-	-	-	-	-	1	-	-	-	-	1	626.23	621.97	4.26	
7C	12+87 NB	2.5' LT	-	-	-	1	-	-	-	-	-	-	-	-	-	1	-	-	-	-	1	626.69	622.16	4.53	
7D	12+88 SB	1.5' RT	-	-	-	1	-	-	-	-	-	-	-	-	1	-	-	-	-	-	1	626.60	622.29	4.31	
7E	12+89 SB	23.5' LT	-	-	-	1	-	-	-	-	-	-	-	-	1	-	-	-	-	-	1	626.16	622.47	3.69	
8A	21+04 SB	54.6' LT	1	-	-	-	-	-	-	-	-	-	-	-	-	-	-	-	-	-	1		616.40		SEE NOTE 1
8B	21+13 SB	16.5' LT	-	-	-	1	-	-	-	-	-	-	-	-	1	-	-	-	-	-	1	622.97	616.60	6.37	
		TOTAL	3	3	4	23	9	1	2	1	1	2	1	2	27	4	1	2	1	1	47				

NOTES:

1) JOINT TIES ARE REQUIRED FOR ENDWALLS. TIE LAST THREE PIPE JOINTS (6 TIES PER ENDWALL)

3

3

CULVERT PIPES AND ENDWALLS

CATEGORY	STATION	OFFSET	CULVERT PIPE REINFORCED CONCRETE CLASS IV 36-INCH 522.0336 LF	APRON ENDWALLS CULVERT PIPE REINFORCED CONCRETE 36-INCH 522.1036 EACH	STEEL THICKNESS INCH	ELEVATION INLET	ELEVATION OUTLET	END OF PIPE OFFSETS	
0010	10+95 NB	0.0'	189	2		615.09	612.72	11+55.9 NB, 67.7' RT (IN)	10+35.4 SB, 71.3' LT (OUT)
		TOTAL	189	2					

RIPRAP AND FABRIC SUMMARY

CATEGORY	STATION	LOCATION	606.0200 RIP RAP MEDIUM 606.0200 CY	GEOTEXTILE FABRIC TYPE HR 645.0120 SY	REMARKS
0010	11+45	STH 32/57 RT	2	5	30-INCH RCCP ENDWALL
0010	10+40	STH 32/57 LT	6	12	24-INCH & 30-INCH RCSSP ENDWALLS
0010	13+07	STH 32/57 RT	8	17	2- 12-INCH RCSSP ENDWALLS
0010	21+20	STH 32/57 LT	1	2	12-INCH RCSSP ENDWALL
0010	22+35	STH 32/57 LT	2	4	24-INCH RCSSP ENDWALL
		TOTALS	20	39	

MOBILIZATIONS EROSION CONTROL AND MOBILIZATIONS EMERGENCY EROSION CONTROL

CATEGORY	STATION	TO	STATION	LOCATION	MOBILIZATIONS EROSION CONTROL 628.1905 EACH	MOBILIZATIONS EMERGENCY EROSION CONTROL 628.1910 EACH
0010	9+55	-	36+04	PROJECT	6	3
				TOTAL	6	3

ROUNDABOUT LANDSCAPING SUMMARY

CATEGORY	LOCATION	PLANTING MIX SPV.0035.01 CY	LANDSCAPE EDGING SPV.0090.01 LF	MULCH MISSISSIPPI RIVER GRAVEL SPV.0165.01 SF	MULCH SHREDDED BARK SPV.0165.02 SF	*** IRRIGATION SYSTEM SPV.0105.01 LS	*** ELECTRIC SERVICE METER SOCKET SPV.0105.02 LS	*** BREAKER DISCONNECT BOX SERVICE SPV.0105.03 LS
0020	ROUNDABOUT CIRCLE	84	340	1559	2254	1	1	1
	TOTAL	84	340	1559	2254	1	1	1

*** CATEGORY 0030

ROCK BAGS

CATEGORY	STATION	LOCATION	ROCK BAGS 628.7570 EACH
0010	10+50	STH 32/57 LT	30
0010	27+40	STH 32/57 RT	20
0010		UNDISTRIBUTED	20
		TOTAL	70

3

TOPSOIL, MULCHING, FERTILIZER, AND SEED SUMMARY

CATEGORY	STATION	TO	STATION	LOCATION	SALVAGED TOPSOIL 625.0500 SY	SOIL STABILIZER TYPE B 628.6510 ACRE	FERTILIZER TYPE B 629.0210 CWT	SEEDING TEMPORARY 630.0200 LB	SEEDING MIXTURE NO. 30 630.0130 LB	SEEDING MIXTURE NO. 40 630.0140 LB	MULCHING 627.0200 SY
0010	9+20	-	11+10	STH 32/ 57 LT	1222	-	0.8	17	22	-	822
0010	11+35	-	12+70	STH 32/ 57 LT	1000	-	0.6	14	-	18	700
0010	12+85	-	18+75	STH 32/ 57 LT	3111	-	2.0	42	-	56	2750
0010	9+50	-	10+95	FOX RIVER DRIVE RT	333	-	0.2	5	-	6	250
0010	11+50	-	12+13	FOX RIVER DRIVE RT	100	-	0.1	1	-	2	50
0010	10+00	-	10+84	FOX RIVER COURT RT	167	-	0.1	2	-	3	127
0010	10+00	-	10+84	FOX RIVER COURT LT	433	-	0.3	6	-	8	390
0010	9+50	-	12+03	FOX RIVER DRIVE LT	667	-	0.4	9	-	12	532
0010	12+35	-	27+44	STH 32/ 57 LT	3111	-	2.0	42	56	-	2800
0010	9+20	-	13+34	STH 32/ 57 RT	2556	-	1.6	35	46	-	2300
0010	13+72	-	18+75	STH 32/ 57 RT	2000	-	1.3	27	-	36	1700
0010	13+56	-	17+05	CTH X RT	1000	-	0.6	14	-	18	700
0010	13+57	-	17+05	CTH X LT	778	-	0.5	11	-	14	575
0010	20+25	-	21+50	STH 32/ 57 RT	333	-	0.2	5	-	6	300
0010	21+50	-	27+44	STH 32/ 57 RT	1889	-	1.2	26	34	-	1575
0010		-		UNDISTRIBUTED	-	1.5	-	-	-	-	-
				TOTAL	18700	1.5	12	252	158	179	15571

CULVERT PIPE CHECKS

CATEGORY	STATION	LOCATION	CULVERT PIPE CHECKS 628.7555 EACH	REMARKS
0010	11+45	STH 32/57 RT	2	CROSS CULVERT
0010	11+25	STH 32/57 LT	1	PE
0010	12+72	STH 32/57 LT	2	PE
0010		UNDISTRIBUTED	5	
		TOTAL	10	

TEMPORARY DITCH CHECKS

CATEGORY	STATION	LOCATION	TEMPORARY DITCH CHECKS 628.7504 LF
0010	9+75	STH 32/ 57 LT	12
0010	10+40	STH 32/ 57 LT & RT	24
0010	11+10	STH 32/ 57 RT	12
0010	12+00	STH 32/ 57 RT	12
0010	12+75	STH 32/ 57 RT	12
0010	20+75	STH 32/ 57 LT	12
0010	21+00	STH 32/ 57 RT	12
0010	22+00	STH 32/ 57 RT	12
0010	22+10	STH 32/ 57 LT	12
0010	23+00	STH 32/ 57 LT & RT	24
0010	24+00	STH 32/ 57 RT	12
0010	24+50	STH 32/ 57 LT	12
0010	26+00	STH 32/ 57 LT	12
0010	26+50	STH 32/ 57 RT	12
0010	27+44	STH 32/ 57 LT & RT	24
0010		UNDISTRIBUTED	24
		TOTAL	240

SILT FENCE SUMMARY

CATEGORY	STATION	TO	STATION	LOCATION	SILT FENCE 628.1504 LF	SILT FENCE MAINTENANCE 628.1520 LF	REMARKS
0010	9+20	-	10+20	STH 32/ 57 LT	100	25	
0010	10+56	-	11+08	STH 32/ 57 LT	52	13	
0010	11+35	-	12+65	STH 32/ 57 LT	130	33	
0010	13+88	-	18+35	STH 32/ 57 LT	510	128	ALONG FOX RIVER COURT
0010	10+62	-	12+10	FOX RIVER DRIVE	131	33	
0010	20+90	-	27+44	STH 32/ 57 LT	670	168	
0010	23+50	-	27+44	STH 32/ 57 RT	386	97	
0010		-		UNDISTRIBUTED	200	50	
				TOTAL	2179	545	

3

3

PLANT DATA SUMMARY

CATEGORY	LOCATION	COMMON NAME	SCIENTIFIC NAME	TYPE	AVERAGE MATURE HEIGHT	SIZE WHEN PLANTED	ROOT ZONE MODE	MINIMUM BALL OR POT SIZE		MINIMUM HOLE SIZE		WRAPPING REQ'D	FERTILIZER UNITS REQUIRED	RODENT PROTECTION REQUIRED	MULCH RING DIAMETER	LANDSCAPING PLANTING SURVEILLANCE AND CARE CYCLES 632.9101 EACH
								DIAM.	DEPTH	DIAM.	DEPTH					
0010	PROJECT 4085-43-00															15
	CIRCLE	BARBERRY, ROSE GLOW	BERBERIS THUNDBERGII "ROSE GLOW"	1S	2'	15-INCH HT	CONTAINER	9"	6"	33"	6"	N/A	N/A	NO	BED LIMITS	-
	CIRLCE	HYDRANGEA, LIMELIGHT	HYDRANGEA PANICULATA "LIMELIGHT"	2S	7'	30-INCH HT	CONTAINER	12"	8"	36"	8"	N/A	N/A	NO	BED LIMITS	-
	CIRCLE	JUNIPER, KALLAYS COMPACT PFITZER	JUNIPERUS CHINENSIS "KALLAY"	3C	3'	18-INCH SP	CONTAINER	9"	6"	33"	6"	N/A	N/A	NO	BED LIMITS	
	CIRLCE	SPIREA, GOLDFLAME	SPIREA X BUMALDA "GOLDFLAME"	1S	3'	18-INCH HT	CONTAINER	9"	6"	33"	6"	N/A	N/A	NO	BED LIMITS	-
	CIRLCE	SPIREA, GOLDMOUND	SPIREA JAPONICA "GOLDMOUND"	1S	3'	18-INCH HT	CONTAINER	9"	6"	33"	6"	N/A	N/A	NO	BED LIMITS	-
	CIRCLE	DAYLILLY, BECKY LYNN	HEMERCOLALLIS "BECKY LYNN"	N/A	1'-5"	6" POT	CONTAINER	9"	6"	18"	6"	N/A	N/A	NO	BED LIMITS	-
	CIRLCE	DAYLILLY, CHICAGO APACHE	HEMERCOLALLIS "CHICAGO APACHE"	N/A	2'-4"	6" POT	CONTAINER	9"	6"	18"	6"	N/A	N/A	NO	BED LIMITS	-
	CIRLCE	DAYLILLY, HAPPY RETURNS	HEMERCOLALLIS "HAPPY RETURNS"	N/A	2'	6" POT	CONTAINER	9"	6"	18"	6"	N/A	N/A	NO	BED LIMITS	-
	CIRLCE	DAYLILLY, INDIAN PAINTBRUSH	HEMERCOLALLIS "INDIAN PAINTBRUSH"	N/A	2'-4"	6" POT	CONTAINER	9"	6"	18"	6"	N/A	N/A	NO	BED LIMITS	-
	CIRCLE	DAYLILLY, JOAN SENIOR	HEMERCOLALLIS "JOAN SENIOR"	N/A	2'	6" POT	CONTAINER	9"	6"	18"	6"	N/A	N/A	NO	BED LIMITS	-
	CIRLCE	DAYLILLY, LITTLE BUSINESS DWARF	HEMERCOLALLIS "LITTLE BUSINESS"	N/A	1'-5"	6" POT	CONTAINER	9"	6"	18"	6"	N/A	N/A	NO	BED LIMITS	-
	CIRLCE	DAYLILLY, LITTLE WINE	HEMERCOLALLIS "LITTLE WINE"	N/A	2'	6" POT	CONTAINER	9"	6"	18"	6"	N/A	N/A	NO	BED LIMITS	-
	CIRCLE	DAYLILLY, MARY TODD	HEMERCOLALLIS "MARY TODD"	N/A	2'-2"	6" POT	CONTAINER	9"	6"	18"	6"	N/A	N/A	NO	BED LIMITS	-
	CIRLCE	DAYLILLY, MINI PEARL DWARF	HEMERCOLALLIS "MINI PEARL"	N/A	1'-5"	6" POT	CONTAINER	9"	6"	18"	6"	N/A	N/A	NO	BED LIMITS	-
				TOTALS												15

3

PLANTING SUMMARY

CATEGORY	SYMBOL	BID ITEM	NAME	TOTAL EACH
0020	-	SPV.0060.05	BARBERRY, ROSE GLOW	14
0020	-	SPV.0060.06	HYDRANGEA, LIMELIGHT	10
0020	-	SPV.0060.07	JUNIPER, KALLAYS COMPACT PFITZER	10
0020	-	SPV.0060.08	SPIREA, GOLDFLAME	6
0020	-	SPV.0060.09	SPIREA, GOLDMOUND	11
0020	BLD	SPV.0060.10	DAYLILLY, BECKY LYNN	34
0020	CAD	SPV.0060.11	DAYLILLY, CHICAGO APACHE	19
0020	HRD	SPV.0060.12	DAYLILLY, HAPPY RETURNS	18
0020	IPD	SPV.0060.13	DAYLILLY, INDIAN PAINTBRUSH	15
0020	JSD	SPV.0060.14	DAYLILLY, JOAN SENIOR	48
0020	MPD	SPV.0060.15	DAYLILLY, LITTLE BUSINESS DWARF	19
0020	MTD	SPV.0060.16	DAYLILLY, LITTLE WINE	51
0020	LBD	SPV.0060.17	DAYLILLY, MARY TODD	14
0020	LWD	SPV.0060.18	DAYLILLY, MINI PEARL DWARF	19

MARKERS CULVERT END

CATEGORY	STATION	LOCATION	MARKERS CULVERT END 633.5200 EACH
0010	10+40	STH 32/57 LT	2
0010	11+45	STH 32/57 RT	1
0010	12+89	STH 32/57 LT	2
0010	12+90	STH 32/57 RT	1
0010	13+15	STH 32/57 RT	1
0010	21+20	STH 32/57 LT	1
0010	22+35	STH 32/57 RT	2
		TOTAL	10

3

EROSION MAT SUMMARY

CATEGORY	STATION	TO	STATION	LOCATION	EROSION MAT CLASS I TYPE B 628.2004 SY	EROSION MAT URBAN CLASS I TYPE B 628.2008 SY	REMARKS *
0010	9+20	-	10+39	STH 32/ 57 LT	48	-	DITCH BOTTOM
0010	10+50	-	11+00	STH 32/ 57 LT	354	-	DRIVEWAY SLOPES
0010	11+00	-	11+38	STH 32/ 57 LT	-	89	ALONG DRIVEWAY
0010	11+50	-	12+45	STH 32/ 57 LT	-	53	SWAIL BOTTOM
0010	11+38	-	12+65	STH 32/ 57 LT	-	51	TERRACE
0010	12+65	-	12+86	STH 32/ 57 LT	-	94	ALONG DRIVEWAY
0010	12+96	-	13+59	STH 32/ 57 LT	-	37	SWAIL BOTTOM
0010	12+86	-	17+65	STH 32/ 57 LT	-	214	TERRACE
0010	STH 32/57 LT & FOX RIVER DR RT			SW QUADRANT	-	101	TERRACE - 5 FT
0010	STH 32/57 LT & FOX RIVER DR RT			SW DUADRANT	-	96	ALONG PATH
0010	10+00	-	10+96	FOX RIVER COURT LT & RT	-	85	TERRACE
0010	9+50	-	11+00	FOX RIVER DRIVE RT	-	89	TERRACE
0010	9+50	-	10+80	FOX RIVER DRIVE LT	-	49	TERRACE
0010	FOX RIVER DR LT & STH 32/57 LT			NW QUADRANT	-	127	TERRACE - 5 FT
0010	FOX RIVER DR LT & STH 32/57 LT			NW QUADRANT	-	109	ALONG PATH
0010	20+60			STH 32/ 57 LT	-	28	AROUND FIELD DRAIN & DITCH BOTTOM
0010	20+90	-	27+44	STH 32/ 57 LT	291	-	DITCH BOTTOM
0010	9+20	-	13+20	STH 32/ 57 RT	178	-	DITCH BOTTOM
0010	11+90	-	13+25	STH 32/ 57 RT	63	-	TERRACE
0010	13+25	-	13+78	STH 32/ 57 RT	-	36	DRIVEWAY
0010	13+96	-	15+48	STH 32/ 57 RT	-	68	SWAIL BOTTOM
0010	13+78	-	17+50	STH 32/ 57 RT	-	166	TERRACE
0010	STH 32/57 RT & CTH X RT			SE QUADRANT	-	132	TERRACE - 5 FT
0010	STH 32/57 RT & CTH X RT			SE QUADRANT	-	122	ALONG PATH
0010	14+78	-	17+05	CTH X RT	-	108	TERRACE
0010	14+85	-	17+05	CTH X LT	-	92	TERRACE
0010	CTH X LT & STH 32/57 RT			NE QUADRANT	-	135	TERRACE - 5 FT
0010	CTH X LT & STH 32/57 RT			NE QUADRANT	-	125	ALONG PATH
0010	21+35	-	21+60	STH 32/ 57 RT	-	11	TERRACE
0010	21+60	-	24+45	STH 32/ 57 RT	124	-	TERRACE
0010	20+35	-	21+55	STH 32/ 57 RT	-	54	DITCH BOTTOM
0010	21+55	-	27+44	STH 32/ 57 RT	258	-	DITCH BOTTOM
				TOTAL	914	2271	

* DITCH BOTTOM, ALONG PATH, DRIVEWAY & TERRACE EMAT 4-FT WIDE UNLESS STATED OTHERWISE

TRAFFIC CONTROL DETOUR (PROJECT) 4085-43-71

CATEGORY	LOCATION	TRAFFIC CONTROL DETOUR PROJECT 643.2000 EACH
0010	PROJECT 4085-43-71	1
	TOTAL	1

TRAFFIC CONTROL (PROJECT) 4085-43-71

CATEGORY	LOCATION	TRAFFIC CONTROL PROJECT 643.0100 EACH
0010	PROJECT 4085-43-71	1
	TOTAL	1

3

INLET PROTECTION SUMMARY

CATEGORY	STRUCTURE ID	STATION	INLET PROTECTION TYPE A 628.7005 EACH	INLET PROTECTION TYPE B 628.7010 EACH	INLET PROTECTION TYPE C 628.7015 EACH	REMARKS
0010	1B	22+31 SB LT	-	-	1	
0010	1C	22+31 SB RT	-	-	1	
0010	1D	22+35 NB LT	-	-	1	
0010	1F	22+16 NB RT	-	-	1	
0010	2B	9+56 EB RT	-	1	-	
0010	2C	9+66 EB RT	-	-	1	
0010	2D	9+58 WB LT	-	-	1	
0010	2F	10+43 RAB RT	1	1	-	FIELD INLET
0010	3B	10+50 FRC LT	-	-	1	
0010	3C	10+50 FRC RT	-	-'	1	
0010	4B	12+25 SB LT	1	1	-	FIELD INLET
0010	4E	11+67 EB RT	-	-	1	
0010	4F	11+69 EB LT	-	-	1	
0010	4G	11+58 WB RT	-	-	1	
0010	4H	11+57 WB LT	-	-	1	
0010	4I	10+77 RAB LT	-	1	-	CIRCLE
0010	4J	10+65 RAB LT	-	1	-	CIRLCE
0010	4K	18+64 SB LT	-	-	1	
0010	4L	18+67 SB RT	-	-	1	
0010	4M	18+66 NB LT	-	-	1	
0010	4N	18+75 NB RT	-	-	1	
0010	4O	13+73 EB RT	-	-	1	
0010	4P	13+72 EB LT	-	-	1	
0010	4Q	13+60 WB RT	-	-	1	
0010	4V	14+76 SB LT	-	-	1	
0010	4W	15+75 SB RT	-	-	1	
0010	4X	15+75 NB LT	-	-	1	
0010	4Y	15+75 NB LT	-	-	1	
0010	4R	13+62 WB LT	-	-	1	
0010	5B	14+94 NB LT	-	-	1	
0010	5C	15+06 EB RT	-	-	1	
0010	6A	13+26 NB RT	1	1	-	FIELD INLET
0010	7B	13+00 NB RT	-	-	1	
0010	7C	12+87 NB LT	-	-	1	
0010	7D	12+88 SB RT	-	-	1	
0010	7E	12+89 SB LT	-	-	1	
0010	-	FOX RIVER DRIVE	-	1	4	EXISTING
0010	-	FOX RIVER COURT	-	-	4	EXISTING
0010	-	CTH X	1	1	4	EXISTING
		TOTAL	4	8	42	

Conduit Rigid Nonmetallic Schedule 40

LOCATION		CONDUIT NONMETALIC SCHEDULE 40 2-INCH 652.0225	CONDUIT NONMETALIC SCHEDULE 40 3-INCH 652.0235
FROM	TO	LF	LF
CB1	PB1	-	10
CB1	PB1	-	10
PB1	LB1	20	-
PB1	PB2	65	-
PB2	LB2	40	-
PB2	PB3	130	-
PB3	LB3	20	-
LB3	LB4	190	-
LB4	LB5	190	-
		-	-
PB3	PB4	50	-
PB4	LB6	40	-
PB4	PB5	120	-
PB5	LB7	50	-
PB5	PB6	70	-
PB6	LB8	30	-
PB6	PB7	115	-
PB7	LB9	20	-
LB9	LB10	200	-
LB10	LB11	200	-
LB11	LB12	240	-
		-	-
PB7	PB8	60	-
PB8	LB13	50	-
PB8	PB1	120	-
PB8	Drain	20	-
PB4	Drain	20	-
	TOTAL	2,060	20

Pull Boxes Steel

LOCATION	PULL BOX STEEL 24X42-INCH 653.0140 EACH
STH 32/57 & CTH X	8
TOTAL	8

Concrete Bases

LOCATION	CONCRETE BASES TYPE 5 654.0105 EACH	LIGHTING CONTROL CABINET BASES TYPE L24 654.0224 EACH
STH 32/57 & CTH X	13	1
TOTAL	13	1

3

3

Electrical Wire Lighting

LOCATION (240 VOLT SYSTEM)			ELECTRICAL WIRE LIGHTING 10 AWG 655.0615 LF Ungrounded Conductor (see Circuit Color)	ELECTRICAL WIRE LIGHTING 12AWG 655.0610 LF Ungrounded Conductor (Black)/(Red)	Equipment Grounding Conductor (Green)
Circuit	FROM	TO	LF	LF	LF
A	CB1	LB2	155	-	-
(Black)	LB2	Luminaires	-	100	50
	CB1	LB3	275		
	LB3	Luminaires	-	100	50
	CB1	LB4	475		
	LB4	Luminaires	-	100	50
	CB1	LB5	675		
	LB5	Luminaires	-	100	50
			-	-	-
B	CB1	LB6	355	-	-
(Red)	LB6	Luminaires	-	100	50
	CB1	LB7	495	-	-
	LB7	Luminaires	-	100	50
			-	-	-
C	CB1	LB8	395	-	-
(Blue)	LB8	Luminaire	-	100	50
	CB1	LB9	260	-	-
	LB9	Luminaire	-	100	50
	CB1	LB10	470	-	-
	LB10	Luminaire	-	100	50
	CB1	LB11	680	-	-
	LB11	Luminaire	-	100	50
	CB1	LB12	930	-	-
	LB12	Luminaire	-	100	50
			-	-	-
D	CB1	LB1	60	-	-
(Brown)	LB1	Luminaire	-	100	50
	CB1	LB13	220	-	-
	LB13	Luminaire	-	100	50
			-	-	-
			-	-	-
		SUB-TOTALS	5,445	1,300	650
		TOTAL*	5,445	1,950	

* Additional Quantity Shown Elsewhere

Electrical Wire Lighting

LOCATION STH 32/57 & CTH X (240 VOLT SYSTEM)		ELECTRICAL WIRE LIGHTING 10 AWG 655.0615 LF Equipment Grounding Conductor (Green)
FROM	TO	LF
CB1	LB1	60
CB1	PB1	30
LB1	LB2	165
LB2	PB2	60
LB2	LB3	230
LB3	PB3	40
LB3	LB4	210
LB4	LB5	210
LB3	LB6	150
LB6	PB4	60
LB6	LB7	250
LB7	PB5	70
LB7	LB8	190
LB8	PB6	50
LB8	LB9	205
LB9	PB7	40
LB9	LB10	220
LB10	LB11	220
LB11	LB12	260
LB9	LB13	170
LB13	PB8	70
LB13	CB1	220
	TOTAL*	3,180

* Additional Quantity Shown Elsewhere

Electric Service

LOCATION	ELECTRICAL SERVICE METER BREAKER PEDESTAL (STH 32/ 57 & CTH X) 656.0200 LS	LIGHTING CONTROL CABINET 120/ 240 24-INCH 659.2124 EACH
STH 32/57	1	1
TOTAL	1	1

Lighting Summary

LOCATION	Transformer Bases Breakaway 11 1/2-Inch Bolt Circle 657.0255 EACH	Poles Type 5 (Aluminum) 657.0322 EACH	Luminaire Arms Truss Type 4 1/2-Inch Clamp 12-FT 657.0710 EACH	Luminaires Utility LED-A 659.1115 EACH
STH 32/57 & CTH X	13	13	13	13
TOTAL	13	13	13	13

3

ERECTION OF TYPE II SIGNS AND SUPPORTS

SIGN NO.	LOCATION	SIGN CODE	W X H	SIGNS TYPE II REFLECTIVE H 637.2210 S.F.	SIGNS TYPE II REFLECTIVE F 637.2230 S.F.	POSTS WOOD 4x6x14 634.0614 EACH	POSTS WOOD 4x6x16 634.0616 EACH	POSTS WOOD 4x6x18 634.0618 EACH	REMARKS
1	STH 32/57, S. OF CTH X	J1-1	24" X 39"	6.50	---	1	---	---	JCT CTH X
1A	"	W14-3	48" X 36"	---	6.00	1	---	---	TO BE MOUNTED ON SOUTHBOUND 32/57 FOR THE BARRIER NO PASSING INTO THE GORE
1B	STH 32/57, N. OF OLDEN GLEN RD	R2-1	24" X 30"	5.00	---	1	---	---	55 MPH, TO BE PLACED IMMEDIATELY ACROSS FROM SIGN #1C FOR SOUTHBOUND
1C	"	R2-1	24" X 30"	5.00	---	1	---	---	45 MPH, TO BE PLACED 150' NORTH OF NORTH OLDEN GLEN/SCOTCHWOOD
1D	STH 32/57, S. OF OLDEN GLEN RD	W3-5	36" X 36"	---	9.00	---	1	---	45 MPH, TO BE PLACED 350' SOUTH OF NORTH OLDEN GLEN/SCOTCHWOOD
2	STH 32/57, S. OF CTH X	W2-6	30" X 30"	---	6.25	---	---	1	
3	"	W13-1	18" X 18"	---	2.25	---	---	---	15 MPH, MOUNT BELOW SIGN #2
4	"	R4-7	24" X 30"	5.00	---	1	---	---	
5	"	D1-62	---	---	---	---	---	---	SEE TYPE I MISC QUANTITIES
6	"	D2-3	90" X 36"	22.50	---	---	2	---	CHILTON 30, PLYMOUTH 56, MILWAUKEE 108, SEE SIGN DETAIL SHEET
6A	"	R4-7	24" X 30"	5.00	---	1	---	---	
7	"	W3-2	36" X 36"	---	9.00	1	---	---	
8	"	R2-1	24" X 30"	5.00	---	1	---	---	55 MPH
9	"	J4-2	48" X 36"	12.00	---	1	---	---	SOUTH STH 32, SOUTH STH 57
10	STH 32/57 & CTH X INTERSECTION	D1-2	72" X 30"	15.00	---	2	---	---	SOUTH STH 32, SOUTH STH 57, SEE SIGN DETAIL SHEET
11	"	R6-1R	36" X 12"	3.00	---	1	---	---	
12	"	R6-4B	60" X 24"	10.00	---	---	---	---	MOUNT BELOW SIGN #11
13	"	R1-2	36" X 31"	3.88	---	---	1	---	
14	"	R6-2R	24" X 30"	5.00	---	---	---	---	MOUNT BELOW SIGN #13
15	"	R1-2	36" X 31"	3.88	---	---	1	---	
16	"	R1-54	24" X 15"	2.50	---	---	---	---	MOUNT BELOW SIGN #15
17	"	R6-1R	36" X 12"	3.00	---	1	---	---	
18	"	R6-4B	60" X 24"	10.00	---	---	---	---	MOUNT BELOW SIGN #17
19	"	D1-2	84" X 30"	17.50	---	1	---	---	CTH X, HERITAGE RD, SEE SIGN DETAIL SHEET
20	CTH X, E. OF STH 32/57	J1-2	48" X 39"	13.00	---	1	---	---	
21	"	W2-6	30" X 30"	---	6.25	---	---	1	
22	"	W13-1	18" X 18"	---	2.25	---	---	---	15 MPH, MOUNT BELOW SIGN #21
23	"	J12-2	48" X 45"	15.00	---	1	---	---	STH 32, STH 57, SEE PLAN SHEET
24	"	W3-2	36" X 36"	---	9.00	1	---	---	
25	"	R4-7	24" X 30"	5.00	---	1	---	---	
26	STH 32/57 & CTH X INTERSECTION	R1-2	36" X 31"	3.88	---	---	1	---	
27	"	R6-2R	24" X 30"	5.00	---	---	---	---	MOUNT BELOW SIGN #26
28	"	R1-2	36" X 31"	3.88	---	---	1	---	
29	"	R1-54	24" X 15"	2.50	---	---	---	---	MOUNT BELOW SIGN #28
30	"	R6-1R	36" X 12"	3.00	---	1	---	---	
31	"	R6-4B	60" X 24"	10.00	---	---	---	---	MOUNT BELOW SIGN #30
32	"	R1-2	36" X 31"	3.88	---	1	---	---	
33	"	R1-54	24" X 15"	2.50	---	---	---	---	MOUNT BELOW SIGN #32
34	"	R1-2	36" X 31"	3.88	---	1	---	---	
35	"	R6-2R	24" X 30"	5.00	---	---	---	---	MOUNT BELOW SIGN #34
36	FOX RIVER DR	R1-1	30" X 30"	5.18	---	1	---	---	
37	"	W3-2	36" X 36"	---	9.00	1	---	---	
38	CTH X	M1-5A	24" X 24"	4.00	---	1	---	---	CTH X, SEE PLAN SHEET
39	FOX RIVER DR	W2-6	30" X 30"	---	6.25	---	1	---	
40	"	W13-1	18" X 18"	---	2.25	---	---	---	15 MPH, MOUNT BELOW SIGN #39
	PAGE 1 OF 2 SUBTOTALS			225.46	67.50	24	8	2	

3

3

ERECTION OF TYPE II SIGNS AND SUPPORTS

SIGN NO.	LOCATION	SIGN CODE	W X H	SIGNS TYPE II REFLECTIVE H 637.2210 S.F.	SIGNS TYPE II REFLECTIVE F 637.2230 S.F.	POSTS WOOD 4x6x14 634.0614 EACH	POSTS WOOD 4x6x16 634.0616 EACH	POSTS WOOD 4x6x18 634.0618 EACH	REMARKS
41	CTH X	R2-1	24" X 30"	5.00	---	1	---	---	35 MPH
42	FOX RIVER DR	R4-7	24" X 30"	5.00	---	1	---	---	
43	STH 32/57 & CTH X INTERSECTION	D1-1	84" X 15"	8.75	---	1	---	---	FOX RIVER DR, SEE SIGN DETAIL SHEET
44	"	R6-1R	36" X 12"	3.00	---	1	---	---	
45	"	R6-4B	60" X 24"	10.00	---	---	---	---	MOUNT BELOW SIGN #44
46	"	R1-2	36" X 31"	3.88	---	1	---	---	
47	"	R1-54	24" X 15"	2.50	---	---	---	---	MOUNT BELOW SIGN #46
48	"	R1-2	36" X 31"	3.88	---	---	1	---	
49	"	R6-2R	24" X 30"	5.00	---	---	---	---	MOUNT BELOW SIGN #48
50	"	D1-3	84" X 30"	17.50	---	2	---	---	NORTH STH 32, NORTH STH 57, CTH X, SEE SIGN DETAIL SHEET
51	STH 32/57, N. OF CTH X	J4-2	48" X 36"	12.00	---	1	---	---	NORTH STH 32, NORTH STH 57
52	"	R2-1	24" X 30"	5.00	---	1	---	---	55 MPH
53	"	W3-2	36" X 36"	---	9.00	1	---	---	
54	"	R4-7	24" X 30"	5.00	---	1	---	---	
55	"	D1-62	---	---	---	---	---	---	SEE TYPE I MISC QUANTITIES
56	"	W2-6	30" X 30"	---	6.25	---	1	---	
57	"	W13-1	18" X 18"	---	2.25	---	---	---	15 MPH, MOUNT BELOW SIGN #56
	PAGE SUBTOTALS			86.51	17.50	11	2	0	
	PROJECT TOTALS			311.97	85.00	35	10	2	

REMOVING, TYPE II SIGNS AND REMOVING SMALL SIGN SUPPORTS

SIGN	LOCATION	SIGN CODE	REMOVING SIGNS TYPE II 638.2602 EACH	REMOVING SMALL SIGN SUPPORTS 638.3000 EACH	REMARKS
100	STH 32/57, S. OF CTH X	W14-3	1	1	
101	"	J1-1	1	1	
102	"	D2-3	1	2	
103	FOX RIVER DR	R1-1	1	1	
104	"	R1-1	1	1	
105	STH 32/57, S. OF CTH X	J13-1	1	1	
106	CTH X	R1-1	1	1	
107	"	R2-1	1	1	
108	"	R1-1	1	1	
109	"	R1-1	1	1	
110	"	W5-52R	---	1	PART OF REMOVAL FOR SIGN #112
111	STH 32/57, N. OF CTH X	J13-1	1	1	
112	CTH X	R4-7	1	---	MOUNTED ON BACK OF SIGN #110
113	FOX RIVER DR	W1-6	---	1	PART OF REMOVAL FOR SIGN #114
114	"	W1-8	1	---	MOUNTED ON BACK OF SIGN #113
	PROJECT TOTALS		13	14	

3

ERECTION OF TYPE I SIGNS AND STRUCTURAL STEEL SUPPORTS

SIGN NO.	LOCATION	SIGN CODE	W X H	SIGNS TYPE I REFLECTIVE SH 637.1220 S.F.	SIGN SUPPORTS STRUCT. STEEL HIGH-STRENGTH 635.0200 LB	SIGN SUPPORTS CONCRETE MASONRY 636.0100 CY	SIGN SUPPORTS STEEL REINFORCEMENT 636.0500 LB	TYPE/SIZE OF STEEL	FOR INFORMATION USE ONLY - CONTRACTOR TO VERFIY LENGTH IN THE FIELD: POST NO. 1 LENGTH FT	POST NO. 2 LENGTH FT	OFFSET DISTANCE FROM TRAVEL WAY FT	DIST. BETWEEN POSTS (S) FT	REMARKS
5	STH 32/57, S. OF CTH X	D1-62	126" X 84"	73.50	578	1.2	68	2-TYPE A	17.0	18.5	17.5	9.0	SEE SIGN DETAIL SHEET
55	STH 32/57, N. OF CTH X	D1-62	126" X 84"	73.50	511	1.2	68	2-TYPE A	15.2	14.7	17.5	9.0	SEE SIGN DETAIL SHEET
PROJECT TOTALS				147.00	1089	2.4	136						

3

REMOVING, TYPE II SIGNS AND REMOVING SMALL SIGN SUPPORTS

SIGN	LOCATION	SIGN CODE	REMOVING SIGNS TYPE II 638.2602 EACH	REMOVING SMALL SIGN SUPPORTS 638.3000 EACH	REMARKS
100	STH 32/57, S. OF CTH X	W14-3	1	1	
101	"	J1-1	1	1	
102	"	D2-3	1	2	
103	FOX RIVER DR	R1-1	1	1	
104	"	R1-1	1	1	
105	STH 32/57, S. OF CTH X	J13-1	1	1	
106	CTH X	R1-1	1	1	
107	"	R2-1	1	1	
108	"	R1-1	1	1	
109	"	R1-1	1	1	
110	"	W5-52R	---	1	PART OF REMOVAL FOR SIGN #112
111	STH 32/57, N. OF CTH X	J13-1	1	1	
112	CTH X	R4-7	1	---	MOUNTED ON BACK OF SIGN #110
113	FOX RIVER DR	W1-6	---	1	PART OF REMOVAL FOR SIGN #114
114	"	W1-8	1	---	MOUNTED ON BACK OF SIGN #113
PROJECT TOTALS			13	14	

3

TRAFFIC CONTROL SUMMARY

CATEGORY	LOCATION	APPROX. SERVICE PERIOD DAYS	DRUMS 643.0300 NO. IN SERVICE	DRUMS DAYS	BARRICADES TYPE III 643.0420 NO. IN SERVICE	BARRICADES DAYS	WARNING LIGHTS TYPE A 643.0705 NO. IN SERVICE	WARNING LIGHTS DAYS	SIGNS 643.0900 NO. IN SERVICE	SIGNS DAYS	SIGNS PORTABLE CHANGEABLE MESSAGE 643.1050.S NO. IN SERVICE	SIGNS PORTABLE CHANGEABLE MESSAGE DAYS	REMARKS
0010	FOX RIVER DRIVE EB (WEST APPROACH)	95	-	-	2	190	4	380	4	380	-	-	
0010	FOX RIVER DRIVE EB (WEST LEG)	95	-	-	5	475	6	570	1	95	-	-	
0010	CTH X WB (EAST APPROACH)	95	-	-	2	190	4	380	4	380	-	-	
0010	CTH X WB (EAST LEG)	95	-	-	5	475	6	570	1	95	-	-	
0010	STH 32/ 57 NB (SOUTH APPROACH)	95	-	-	2	190	4	380	4	380	-	-	
0010	STH 32/ 57 NB (SOUTH LEG)	95	-	-	5	475	6	570	1	95	-	-	
0010	STH 32/ 57 SB (NORTH APPROACH)	95	-	-	2	190	4	380	4	380	-	-	
0010	STH 32/ 57 SB (NORTH LEG)	95	-	-	5	475	6	570	1	95	-	-	
0010	FOX RIVER COURT	95	-	-	5	475	6	570	1	95	-	-	
0010	STH 32/ 57 SB (NORTH APPROACH)	7	4	28	-	-	-	-	-	-	1	7	
0010	STH 32/ 57 NB (SOUTH APPROACH)	7	4	28	-	-	-	-	-	-	1	7	
0010	CTH X WB (EAST APPROACH)	7	4	28	-	-	-	-	-	-	1	7	
0010	FOX RIVER DRIVE EB (WEST APPROACH)	7	4	28	-	-	-	-	-	-	1	7	
0010	STH 32/ 57 ROUNDABOUT	95	25	2375	-	-	-	-	-	-	-	-	UNDISTRIBUTED
		TOTAL		2487		3135 *		2438 *		1995		28	

* ADDITIONAL QUANTITIES ARE SHOWN ELSEWHERE

CONSTRUCTION STAKING SUMMARY

CATEGORY	STATION	TO	STATION	LOCATION	CONSTRUCTION STAKING SUBGRADE 650.4500 LF	CONSTRUCTION STAKING BASE 650.5000 LF	CONSTRUCTION STAKING RESURFACING REFERENCE 650.8000 LF	CONSTRUCTION STAKING ELECTRICAL INSTALLATIONS 650.8500 LS	CONSTRUCTION STAKING SUPPLEMENTAL CONTROL 650.9910 LS	CONSTRUCTION STAKING SLOPE STAKES 650.9920 LF	REMARKS
0010				PROJECT	-	-	-	1	1	-	PROJECT
0010	9+00	-	9+20	STH 32/ 57			20	-	-	-	BOTH LANES
0010	9+20	-	11+88	STH 32/ 57	536	536	-	-	-	536	BOTH LANES
0010	11+88	-	18+75	STH 32/ 57 NB	687	687	-	-	-	687	NB LANE
0010	11+88	-	18+78	STH 32/ 57 SB	690	690	-	-	-	690	SB LANE
0010	20+25	-	24+47	STH 32/ 57 NB	422	422	-	-	-	422	NB LANE
0010	20+22	-	24+46	STH 32/ 57 SB	424	424	-	-	-	424	SB LANE
0010	24+47	-	27+44	STH 32/ 57	594	594	-	-	-	594	BOTH LANES
0010	27+44	-	27+94	STH 32/ 57	-	-	50	-	-	-	BOTH LANES
0010	9+50	-	11+60	FOX RIVER DRIVE	420	420	-	-	-	420	BOTH LANES
0010	11+60	-	12+12	FOX RIVER DRIVE EB	52	52	-	-	-	52	EB LANE
0010	11+60	-	12+03	FOX RIVER DRIVE WB	43	43	-	-	-	43	WB LANE
0010	13+59	-	14+15	CTH X EB	56	56	-	-	-	-	EB LANE
0010	13+51	-	14+03	CTH X WB	52	52	-	-	-	-	WB LANE
0010	14+15	-	17+05	CTH X	580	580	-	-	-	580	BOTH LANES
0010	10+00	-	10+95	FOX RIVER COURT	95	95	-	-	-	95	
				TOTALS	4651	4651	70	1	1	4543	

3

3

TRAFFIC CONTROL DETOUR SIGN SUMMARY

SIGN NO.	LOCATION	SIGN CODE	SIZE W X H	NUMBER IN SERVICE	APPROX. SERVICE PERIOD 95 DAYS	DETOUR SIGNS 643.3000 DAYS	BARRICADES TYPE III 643.0420 DAYS	WARNING LIGHTS TYPE A 643.0705 DAYS	COVERING SIGNS TYPE II 643.0920 EACH	REMARKS
1	200' E OF MICHIGAN ST ON STH 32/57	WO 20-2-A	48"x48"	1	95	95	-	-	-	
2	ACROSS FROM SIGN # 1 (MEDIAN SIDE)	WO 20-2-A	48"x48"	1	95	95	-	-	-	
3	MODIFY J 3-2 (S-32-TILT RT, S-57-TILT RT	MO 4-8	24"x12"	2	95	190	-	-	-	
	" "	MO 3-3	EXISTING	-	-	-	-	-	-	
	" "	M 50-2	EXISTING	-	-	-	-	-	-	32/57
	" "	MO 6-1	21"x21"	2	95	190	-	-	-	AHEAD
4	RT OF J 1-1 (JCT PP) (MEDIAN SIDE)	MO 4-8	24"x12"	1	95	95	-	-	-	
	" "	MO 3-3	24"x12"	1	95	95	-	-	-	
		M 1-6B	24"x24"	1	95	95	-	-	-	32
	" "	M 1-6	24"x24"	1	95	95	-	-	-	57
	" "	MO 6-1	21"x21"	1	95	95	-	-	-	AHEAD
5	D1-3 (TILT LT-REEDSVILLE; CHILTON/MILWAUKEE-TILT RT			-	-	-	-	-	1	TILT LT-REEDSVILLE (1 CYCLE)
6	RT OF J 13-1 (S-PP-AH)	MO 4-8	24"x12"	1	95	95	-	-	-	
	" "	MO 3-3	24"x12"	1	95	95	-	-	-	
	" "	M 1-6B	24"x24"	1	95	95	-	-	-	32
	" "	M 1-6	24"x24"	1	95	95	-	-	-	57
	" "	MO 6-1	21"x21"	1	95	95	-	-	-	AHEAD
7	MODIFY J 13-1 (X-TILT RT)	M 1-5-A	EXISTING	-	-	-	-	-	-	CTY X
	" "	MO 6-1	21"x21"	1	95	95	-	-	-	AHEAD
8	MODIFY J 3-2 (S-32-TILT RT, S-57-TILT RT	MO 4-8	24"x12"	2	95	190	-	-	-	
	" "	MO 3-3	EXISTING	-	-	-	-	-	-	
	" "	M 50-2	EXISTING	-	-	-	-	-	-	32/57
	" "	MO 6-1	21"x21"	2	95	190	-	-	-	AHEAD
9	J4-2 (S-32, S-57)			-	-	-	-	-	1	S-32, S-57 (1 CYCLE)
10	200' N OF CTY X INTERSECTION ON CTH PP	MO 4-8	24"x12"	1	95	95	-	-	-	
	" "	MO 3-1	24"x12"	1	95	95	-	-	-	
	" "	M 1-6B	24"x24"	1	95	95	-	-	-	32
	" "	M 1-6	24"x24"	1	95	95	-	-	-	57
	" "	MO 6-1	21"x21"	1	95	95	-	-	-	AHEAD
11	200' S OF CTY X INTERSECTION ON CTH PP	MO 4-8	24"x12"	1	95	95	-	-	-	
	" "	MO 3-3	24"x12"	1	95	95	-	-	-	
	" "	M 1-6B	24"x24"	1	95	95	-	-	-	32
	" "	M 1-6	24"x24"	1	95	95	-	-	-	57
	" "	MO 6-1	21"x21"	1	95	95	-	-	-	AHEAD
12	200' N OF OLD MARTIN RD INTERSECTION ON CTH PP	MO 4-8	24"x12"	1	95	95	-	-	-	
	" "	MO 3-1	24"x12"	1	95	95	-	-	-	
	" "	M 1-6B	24"x24"	1	95	95	-	-	-	32
	" "	M 1-6	24"x24"	1	95	95	-	-	-	57
	" "	MO 6-1	21"x21"	1	95	95	-	-	-	AHEAD
13	200' S OF OLD MARTIN RD INTERSECTION ON CTH PP	MO 4-8	24"x12"	1	95	95	-	-	-	
	" "	MO 3-3	24"x12"	1	95	95	-	-	-	
	" "	M 1-6B	24"x24"	1	95	95	-	-	-	32
	" "	M 1-6	24"x24"	1	95	95	-	-	-	57
	" "	MO 6-1	21"x21"	1	95	95	-	-	-	AHEAD
	SHEET 1 OF 4 TOTAL			41		3,895	0	0	2	

3

TRAFFIC CONTROL DETOUR SIGN SUMMARY

SIGN NO.	LOCATION	SIGN CODE	SIZE W X H	NUMBER IN SERVICE	APPROX. SERVICE PERIOD 95 DAYS	DETOUR SIGNS 643.3000 DAYS	BARRICADES TYPE III 643.0420 DAYS	WARNING LIGHTS TYPE A 643.0705 DAYS	COVERING SIGNS TYPE II 643.0920 EACH	REMARKS
14	200' N OF CTY W INTERSECTION ON CTH PP	MO 4-8	24"x12"	1	95	95	-	-	-	
	" "	MO 3-1	24"x12"	1	95	95	-	-	-	
	" "	M 1-6B	24"x24"	1	95	95	-	-	-	32
	" "	M 1-6	24"x24"	1	95	95	-	-	-	57
	" "	MO 6-1	21"x21"	1	95	95	-	-	-	AHEAD
15	200' S OF CTY W INTERSECTION ON CTH PP	MO 4-8	24"x12"	1	95	95	-	-	-	
	" "	MO 3-3	24"x12"	1	95	95	-	-	-	
	" "	M 1-6B	24"x24"	1	95	95	-	-	-	32
	" "	M 1-6	24"x24"	1	95	95	-	-	-	57
	" "	MO 6-1	21"x21"	1	95	95	-	-	-	AHEAD
16	200' N OF LASEE RD INTERSECTION ON CTH PP	MO 4-8	24"x12"	1	95	95	-	-	-	
	" "	MO 3-1	24"x12"	1	95	95	-	-	-	
	" "	M 1-6B	24"x24"	1	95	95	-	-	-	32
	" "	M 1-6	24"x24"	1	95	95	-	-	-	57
	" "	MO 6-1	21"x21"	1	95	95	-	-	-	AHEAD
17	200' S OF LASEE RD INTERSECTION ON CTH PP	MO 4-8	24"x12"	1	95	95	-	-	-	
	" "	MO 3-3	24"x12"	1	95	95	-	-	-	
	" "	M 1-6B	24"x24"	1	95	95	-	-	-	32
	" "	M 1-6	24"x24"	1	95	95	-	-	-	57
	" "	MO 6-1	21"x21"	1	95	95	-	-	-	AHEAD
18	200' N OF SCHOOL RD INTERSECTION ON CTH PP	MO 4-8	24"x12"	1	95	95	-	-	-	
	" "	MO 3-1	24"x12"	1	95	95	-	-	-	
	" "	M 1-6B	24"x24"	1	95	95	-	-	-	32
	" "	M 1-6	24"x24"	1	95	95	-	-	-	57
	" "	MO 6-1	21"x21"	1	95	95	-	-	-	AHEAD
19	200' S OF SCHOOL RD INTERSECTION ON CTH PP	MO 4-8	24"x12"	1	95	95	-	-	-	
	" "	MO 3-3	24"x12"	1	95	95	-	-	-	
	" "	M 1-6B	24"x24"	1	95	95	-	-	-	32
	" "	M 1-6	24"x24"	1	95	95	-	-	-	57
	" "	MO 6-1	21"x21"	1	95	95	-	-	-	AHEAD
20	RT OF J 1-1 (JCT 96) ON CTY PP SB	MO 4-8	24"x12"	1	95	95	-	-	-	
	" "	MO 3-3	24"x12"	1	95	95	-	-	-	
	" "	M 1-6B	24"x24"	1	95	95	-	-	-	32
	" "	M 1-6	24"x24"	1	95	95	-	-	-	57
	" "	MO 5-1-R	21"x21"	1	95	95	-	-	-	
21	200' N OF HWY 96 INTERSECTION ON CTH PP	MO 4-8	24"x12"	1	95	95	-	-	-	
	" "	MO 3-1	24"x12"	1	95	95	-	-	-	
	" "	M 1-6B	24"x24"	1	95	95	-	-	-	32
	" "	M 1-6	24"x24"	1	95	95	-	-	-	57
	" "	MO 6-1	21"x21"	1	95	95	-	-	-	AHEAD
22	200' N OF J4-2 (HWY 96-LT & RT, CTY PP-RT)	MO 4-8	24"x12"	1	95	95	-	-	-	
	" "	MO 3-3	24"x12"	1	95	95	-	-	-	
	" "	M 1-6B	24"x24"	1	95	95	-	-	-	32
	" "	M 1-6	24"x24"	1	95	95	-	-	-	57
	" "	MO 6-1	21"x21"	1	95	95	-	-	-	RIGHT
	SHEET 2 OF 4 TOTAL			45		4,275	0	0	0	

3

3

TRAFFIC CONTROL DETOUR SIGN SUMMARY

SIGN NO.	LOCATION	SIGN CODE	SIZE W X H	NUMBER IN SERVICE	APPROX. SERVICE PERIOD 95 DAYS	DETOUR SIGNS 643.3000 DAYS	BARRICADES TYPE III 643.0420 DAYS	WARNING LIGHTS TYPE A 643.0705 DAYS	COVERING SIGNS TYPE II 643.0920 EACH	REMARKS
23	ABOVE J 4-2 (W-96, S-PP)	MO 4-8	24"x12"	1	95	95	-	-	-	
	" "	MO 3-3	24"x12"	1	95	95	-	-	-	
	" "	M 1-6B	24"x24"	1	95	95	-	-	-	32
	" "	M 1-6	24"x24"	1	95	95	-	-	-	57
24	ON BACK OF J 13-1 (CTH PP AH & RT)	MO 4-8	24"x12"	1	95	95	-	-	-	
	" "	MO 3-1	24"x12"	1	95	95	-	-	-	
	" "	M 1-6B	24"x24"	1	95	95	-	-	-	32
	" "	M 1-6	24"x24"	1	95	95	-	-	-	57
	" "	MO 6-1	21"x21"	1	95	95	-	-	-	LEFT
25	RT OF J 13-1 (CTY PP-RT) ON HWY 96 EB	MO 4-8	24"x12"	1	95	95	-	-	-	
	" "	MO 3-1	24"x12"	1	95	95	-	-	-	
	" "	M 1-6B	24"x24"	1	95	95	-	-	-	32
	" "	M 1-6	24"x24"	1	95	95	-	-	-	57
	" "	MO 6-1	21"x21"	1	95	95	-	-	-	LEFT
26	500' W OF SIGN # 25 ON HWY 96 EB	MO 4-8	24"x12"	1	95	95	-	-	-	
	" "	MO 3-1	24"x12"	1	95	95	-	-	-	
	" "	M 1-6B	24"x24"	1	95	95	-	-	-	32
	" "	M 1-6	24"x24"	1	95	95	-	-	-	57
	" "	MO 5-1-L	21"x21"	1	95	95	-	-	-	
27	200' E OF CTY PP (S-LEG) ON HWY 96 WB	MO 4-8	24"x12"	1	95	95	-	-	-	
	" "	MO 3-1	24"x12"	1	95	95	-	-	-	
	" "	M 1-6B	24"x24"	1	95	95	-	-	-	32
	" "	M 1-6	24"x24"	1	95	95	-	-	-	57
	" "	MO 6-1	21"x21"	1	95	95	-	-	-	AHEAD
28	200' W OF CTY PP (S-LEG) ON HWY 96 WB	MO 4-8	24"x12"	1	95	95	-	-	-	
	" "	MO 3-3	24"x12"	1	95	95	-	-	-	
	" "	M 1-6B	24"x24"	1	95	95	-	-	-	32
	" "	M 1-6	24"x24"	1	95	95	-	-	-	57
	" "	MO 6-1	21"x21"	1	95	95	-	-	-	AHEAD
29	MODIFY J 1-1 (JCT 32, JCT 57)	MO 4-8-A	24"x18"	2	95	190	-	-	-	
	" "	M 50-2	EXISTING	-	-	-	-	-	-	32/57
30	RAB DIAGRAMATIC (LT-S-32/57, W-96-AH, N-32/57-RT)			-	-	-	-	-	1	NORTH-32/57-RIGHT (1 CYCLE)
31	D1-3 (AH-KAUKAUNA, LT-CHILTON, GREEN BAY-RT)			-	-	-	-	-	1	GREEN BAY-RIGHT (1 CYCLE)
32	J3-2 (N-32-TILT RT; N-57-TILT RT) IN NORTH SPLITTER ISLAND			-	-	-	-	-	1	N-32-TILT RT, N-57-TILT RT (1 CYCLE)
33	RT SHOULDER OF NB LEG OF ROUNDABOUT	R 11-3	60"x30"	1	95	95	95	190	-	9 MILES
34	500' S OF J1-1 (JCT 96)	WO 20-2-G	48"x48"	1	95	95	-	-	-	
35	RAB DIAGRAMATIC (LT-W-96, AH-N-32/57, E-96-RT)			-	-	-	-	-	1	AHEAD-NORTH-32/57 (1 CYCLE)
36	150' N OF SIGN # 35 ON HWY 32/57 NB	MO 4-8	24"x12"	1	95	95	-	-	-	
	" "	MO 3-1	24"x12"	1	95	95	-	-	-	
	" "	M 1-6B	24"x24"	1	95	95	-	-	-	32
	" "	M 1-6	24"x24"	1	95	95	-	-	-	57
	" "	MO 5-1-R	21"x21"	1	95	95	-	-	-	
37	D1-3 (AH-GREEN BAY, LT-WRIGHTSTOWN, DENMARK-RT)			-	-	-	-	-	1	AHEAD-GREEN BAY (1 CYCLE)
	SHEET 3 OF 4 TOTAL			38		3,610	95	190	5	

3

3

TRAFFIC CONTROL DETOUR SIGN SUMMARY

SIGN NO.	LOCATION	SIGN CODE	SIZE W X H	NUMBER IN SERVICE	APPROX. SERVICE PERIOD 95 DAYS	DETOUR SIGNS 643.3000 DAYS	BARRICADES TYPE III 643.0420 DAYS	WARNING LIGHTS TYPE A 643.0705 DAYS	COVERING SIGNS TYPE II 643.0920 EACH	REMARKS
38	150' N OF SIGN # 37 ON HWY 32/57 NB	MO 4-8	24"x12"	1	95	95	-	-	-	
	" "	MO 3-1	24"x12"	1	95	95	-	-	-	
	" "	M 1-6B	24"x24"	1	95	95	-	-	-	32
	" "	M 1-6	24"x24"	1	95	95	-	-	-	57
	" "	MO 6-1	21"x21"	1	95	95	-	-	-	RIGHT
39	ABOVE J 3-1 (96-TILT RT) IN SPLITTER ISLAND OF THE R-A-B EAST LEG	MO 4-8	24"x12"	1	95	95	-	-	-	
	" "	MO 3-1	24"x12"	1	95	95	-	-	-	
	" "	M 1-6B	24"x24"	1	95	95	-	-	-	32
	" "	M 1-6	24"x24"	1	95	95	-	-	-	57
	" "	MO 6-2	21"x21"	1	95	95	-	-	-	RIGHT
40	250' E OF HWT 32/57 INTERSECTION ON HWY 96 EB	MO 4-8	24"x12"	1	95	95	-	-	-	
	" "	MO 3-1	24"x12"	1	95	95	-	-	-	
	" "	M 1-6B	24"x24"	1	95	95	-	-	-	32
	" "	M 1-6	24"x24"	1	95	95	-	-	-	57
41	500' W OF J1-2 (JCT 32; JCT 57)	M 50-2	24"x24"	1	95	95	-	-	-	32/57
	" "	WO 20-2-A	48"x48"	1	95	95	-	-	-	
42	MODIFY J1-1 (JCT 32; JCT 57)	MO 4-8	24"x12"	2	95	190	-	-	-	
	" "	MO 3-1	24"x12"	2	95	190	-	-	-	
	" "	M 50-2	EXISTING	-	-	-	-	-	-	32/57
	" "	MO 6-1	21"x21"	2	95	190	-	-	-	AHEAD
43	D1-3 (AH-DENMARK, LT-DE PERE, CHILTON-RT)			-	-	-	-	-	1	LEFT-DE PERE (1 CYCLE)
44	150' W OF R1-2 (YIELD - TO TRAFFIC FROM LEFT)	MO 4-8	24"x12"	1	95	95	-	-	-	
	" "	MO 3-1	24"x12"	1	95	95	-	-	-	
	" "	M 1-6B	24"x24"	1	95	95	-	-	-	32
	" "	M 1-6	24"x24"	1	95	95	-	-	-	57
	" "	MO 6-1	21"x21"	1	95	95	-	-	-	AHEAD
45	MODIFY J 1-1 (JCT 32, JCT 57)	MO 4-8-A	24"x18"	2	95	190	-	-	-	
	" "	MO 50-2	EXISTING	-	-	-	-	-	-	32/57
46	@ 32/57 SPLIT TO CLOSE SOUTH ROUTE	R 11-2	48"x30"	1	95	1	95	190	-	
	SHEET 4 0 4 TOTAL			30		2,756	95	190	1	
	PROJECT TOTAL					28,246	106 **	212 **	8	

3

The most current Right of Way information should be viewed in DOTView using the Real Estate Project ID. The Plat information contained in this AsBuilt Plan may not be the final records.

TRANSPORTATION PROJECT PLAT NO: 4085-43-21-4.01

ALL OF OUTLOT 1, AND PART OF LOT 1, CSM#6260, PART OF LOT 1, CSM #2549, AND PART OF FOXBOROUGH COURT CONDOMINIUM, WITHIN THE NORTHWEST 1/4 OF THE NORTHWEST 1/4 OF SECTION 34; PART OF LOT 1, CSM #4016, AND PART OF FOXBOROUGH COURT CONDOMINIUM, IN GOVERNMENT LOT 1, AND PART OF LOTS 5 & 6, BRIARWOOD ESTATES, IN GOVERNMENT LOT 2 OF SECTION 33; ALL LOCATED WITHIN T23N-R20E, CITY OF DE PERE, BROWN COUNTY, WISCONSIN.

RELOCATION ORDER STH 32/57 BROWN COUNTY
CITY OF DE PERE, STH 32/57

TO PROPERLY ESTABLISH, LAY OUT, WIDEN, ENLARGE, EXTEND, CONSTRUCT, RECONSTRUCT, IMPROVE, OR MAINTAIN A PORTION OF THE HIGHWAY DESIGNATED ABOVE, THE STATE OF WISCONSIN DEPARTMENT OF TRANSPORTATION DEEMS IT NECESSARY TO RELOCATE OR CHANGE SAID HIGHWAY AND ACQUIRE CERTAIN LANDS AND INTERESTS OR RIGHTS IN LANDS FOR THE ABOVE PROJECT.

TO EFFECT THIS CHANGE, PURSUANT TO AUTHORITY GRANTED UNDER SECTION 84.02 (3) AND 84.09, WISCONSIN STATUTES, THE DEPARTMENT OF TRANSPORTATION HEREBY ORDERS THAT:
1. THAT PORTION OF SAID HIGHWAY AS SHOWN ON THIS PLAT IS LAID OUT AND ESTABLISHED TO THE LINES AND WIDTHS AS SO SHOWN FOR THE ABOVE PROJECT.
2. THE LANDS OR INTERESTS OR RIGHTS IN LANDS AS SHOWN ON THIS PLAT ARE REQUIRED BY THE DEPARTMENT FOR THE ABOVE PROJECT AND SHALL BE ACQUIRED IN THE NAME OF THE STATE OF WISCONSIN, PURSUANT TO THE PROVISIONS OF SECTION 84.09 (1) OR (2), WISCONSIN STATUTES.

CONVENTIONAL ABBREVIATIONS AND SYMBOLS

ACCESS POINT	AP	SECTION CORNER (MATERIAL AS NOTED)	
ACCESS RIGHTS	AR	SET R/W MONUMENT W/CAP (1-¼" OUTSIDE DIA.x18" IRON PIPE 1.13 LBS/FT)	
ACRES	AC	SET P.K. NAIL	
CHORD BEARING	CH BRG	PROPOSED R/W	
CHORD DISTANCE	CH DIS	BOUNDARY POINT	PRW000
DEED	(D)	CORPORATE LIMITS	
DOCUMENT	DOC	EXISTING R/W	
EAST BOUND	EB	SECTION LINE	
GAS VALVE	GV	QUARTER LINE	
INLET	IL	SIXTEENTH LINE	
LENGTH OF CURVE	L	PROPOSED OR NEW R/W LINE	
MANHOLE	MH	PROPOSED EASEMENT LINE	
MONUMENT	MON	PARCEL NUMBER	00
NORTH BOUND	NB	UTILITY NUMBER	100
PAGE	PG	SIGN NUMBER	3-1
PERMANENT	PERM	PROPERTY LINE	PL
PERMANENT LIMITED EASEMENT	PLE	LOT, TIE AND OTHER MINOR DASHED LINES	
PRIVATE DRIVEWAY	PD	ACCESS RESTRICTED (By Previous Project Control)	
PROPERTY LINE	PL	ACCESS RESTRICTED (By Acquisition)	
RADIUS	RAD	NO ACCESS (By Statutory Authority)	
REFERENCE LINE	℄	LIMITED EASEMENT (Temporary)	
REMAINING	REM	LIMITED EASEMENT (Permanent)	
RIGHT OF WAY	R/W		
SECTION	SEC		
SECTION LINE	SL		
FOUND IRON PIPE	IP		
STATION	STA		
TEMPORARY LIMITED EASEMENT	TLE		
TIE POINT	DB1		
VOLUME	VOL		
ADJOINING LANDS WITH SAME OWNER			
PARALLEL TO LINE	00'		
BUILDING TO BE RAZED			
FEE ACQUISITION	VARIOUS HATCHING		
BEGIN POINT	BP		
END POINT	EP		

CONVENTIONAL UTILITY SYMBOLS

WATER	W
GAS	G
TELEPHONE	T
OVERHEAD TRANSMISSION LINES	OH
ELECTRIC	E
CABLE TELEVISION	TV
FIBER OPTIC	FO
SANITARY SEWER	SAN
STORM SEWER	SS
NON COMPENSABLE	
POWER POLE	
TELEPHONE POLE	
TELEPHONE PEDESTAL	
ELECTRIC TOWER	

SCHEDULE OF LANDS & INTERESTS REQUIRED

PARCEL NUMBER	OWNER	INTEREST REQUIRED	FEE ACRES	T.L.E. ACRES	EXISTING ACRES
1	CITY OF DEPERE	FEE	0.121	-	-
2	FLEX, LLC	FEE	0.102	-	-
3	BC DEVELOPMENT, LLC	FEE	0.032	-	-
4	MASK, LLC	FEE	0.003	-	-
5	MARVEL J. DITTRICH	FEE	0.109	-	-
6	JANICE M. CRESS & INGRID E. FISCHER	FEE	0.008	-	-
7	SAUTER DEVELOPMENT, LLC, & ETAL	FEE	0.078	-	-

RESERVE FOR CLAUSES AND NOTE INFORMATION

RIGHT OF WAY BOUNDARIES ARE DEFINED WITH COURSES OF THE PERIMETER OF THE HIGHWAY LANDS AND ARE REFERENCED TO THE US PUBLIC LAND SURVEY OR OTHER SURVEYS OF PUBLIC RECORD.

RIGHT OF WAY MONUMENTS ARE TYPE 2 AND WILL BE PLACED PRIOR TO THE COMPLETION OF THE PROJECT.

AREAS SHOWN IN THE TOTAL ACRES COLUMN OF THE SCHEDULE OF LANDS & INTEREST TABLE MAY BE APPROXIMATE AND ARE DERIVED FROM TAX ROLLS OR OTHER AVAILABLE SOURCES AND MAY NOT INCLUDE LANDS OF THE OWNER WHICH ARE NOT CONTIGUOUS TO THE AREA TO BE ACQUIRED.

COORDINATES AS SHOWN ARE NOT INTENDED TO BE USED FOR RETRACEMENT PURPOSES AND MUST BE VERIFIED WITH THE COUNTY SURVEY DEPARTMENT.

POSITIONS SHOWN ON THIS PLAT ARE WISCONSIN COUNTY COORDINATE, BROWN COUNTY, NAD OF 1983 (1991) IN U.S. SURVEY FEET. VALUES SHOWN ARE GRID COORDINATES, GRID BEARINGS AND GRID DISTANCES. GRID DISTANCES MAY BE USED AS GROUND DISTANCES.

PROPERTY LINES SHOWN ON THIS PLAT ARE DRAWN FROM DATA DERIVED FROM MAPS AND DOCUMENTS OF PUBLIC RECORD AND/OR EXISTING OCCUPATIONAL LINES. THIS PLAT MAY NOT BE A TRUE REPRESENTATION OF EXISTING PROPERTY LINES AND SHOULD NOT BE USED AS A SUBSTITUTE FOR AN ACCURATE FIELD SURVEY.

EXISTING RIGHT OF WAY WAS ACQUIRED FROM PROJECT(S): T 02-4(6) & RECORDED CSMs/SUBDIVISIONS

EXISTING ACCESS CONTROL WAS ACQUIRED UNDER PROJECT(S)/DOC.#: T 02-4(6)

RIGHT OF WAY REFERENCE LINE MAY NOT BE THE SAME AS THE CONSTRUCTION REFERENCE LINE.

A TEMPORARY LIMITED EASEMENT (TLE) IS A RIGHT FOR CONSTRUCTION PURPOSES, AS DEFINED HEREIN, INCLUDING THE RIGHT TO OPERATE NECESSARY EQUIPMENT THEREON AND THE RIGHT OF INGRESS AND EGRESS AS LONG AS REQUIRED FOR SUCH PUBLIC PURPOSE, INCLUDING THE RIGHT TO PRESERVE, PROTECT, REMOVE OR PLANT THEREON ANY VEGETATION THAT THE HIGHWAY AUTHORITIES MAY DEEM NECESSARY OR DESIRABLE TO PREVENT EROSION OF THE SOIL. ALL TLEs ON THIS PLAT EXPIRE AT THE COMPLETION OF THE CONSTRUCTION PROJECT FOR WHICH THIS INSTRUMENT IS GIVEN.

A PERMANENT LIMITED EASEMENT (PLE) IS A RIGHT FOR CONSTRUCTION AND MAINTENANCE PURPOSES, AS DEFINED HEREIN, INCLUDING THE RIGHT TO OPERATE NECESSARY EQUIPMENT THEREON AND THE RIGHT OF INGRESS AND EGRESS AS LONG AS REQUIRED FOR SUCH PUBLIC PURPOSE, INCLUDING THE RIGHT TO PRESERVE, PROTECT, REMOVE OR PLANT THEREON ANY VEGETATION THAT THE HIGHWAY AUTHORITIES MAY DEEM NECESSARY OR DESIRABLE TO PREVENT EROSION OF THE SOIL, BUT WITHOUT PREJUDICE TO THE OWNER'S RIGHT TO MAKE OR CONSTRUCT IMPROVEMENTS ON SAID LANDS OR TO FLATTEN SLOPES, PROVIDING SAID ACTIVITIES WILL NOT IMPAIR OR OTHERWISE ADVERSELY AFFECT THE HIGHWAY FACILITES.

OWNER'S NAMES ARE SHOWN FOR REFERENCE PURPOESES ONLY, AND ARE SUBJECT TO CHANGE PRIOR TO TRANSFER OF LAND INTERESTS TO DEPARTMENT OF TRANSPORTATION.

FEE SIMPLE TO ALL THOSE EXISTING LANDS OF THE GRANTOR CURRENTLY USED FOR HIGHWAY PURPOSES, DESIGNATED AS EXISTING RIGHT OF WAY, WHETHER ACQUIRED BY SEPARATE CONVEYANCE OR OTHERWISE, BOUND BY THE TRAVERSE OF THE COURSE TABLE OF NEW RIGHT OF WAY AS SHOWN ON THE SAID TRANSPORTATION PROJECT PLAT.

I HEREBY CERTIFY THAT THIS PLAT MEETS ALL REQUIREMENTS OF SECTION 84.095, WISCONSIN STATUTES. THIS PLAT WAS PREPARED BY OR UNDER THE DIRECTION OF

JON L. HERBEL	Jon L. Herbel	04/04/2014
PRINTED NAME	SIGNATURE	DATE

THIS PLAT AND RELOCATION ORDER ARE APPROVED FOR THE WISCONSIN DEPARTMENT OF TRANSPORTATION

CURT VAN EREM	Curt Van Erem	04/04/2014
PRINTED NAME	SIGNATURE	DATE

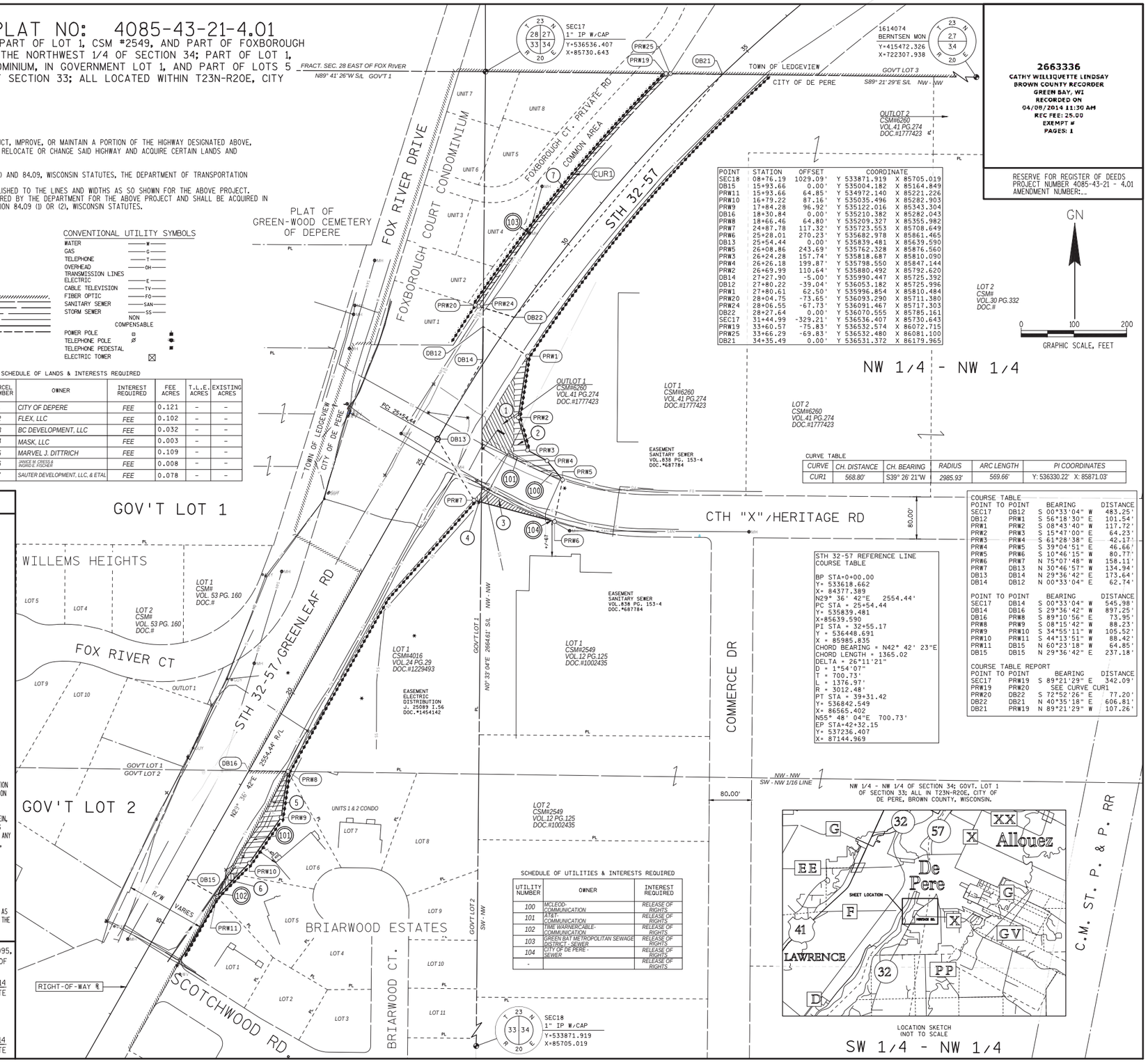

2663336
CATHY WILLIQUETTE LINDSAY
BROWN COUNTY RECORDER
GREEN BAY, WI
RECORDED ON
04/08/2014 11:30 AM
REC FEE: 25.00
EXEMPT #
PAGES: 1

RESERVE FOR REGISTER OF DEEDS
PROJECT NUMBER 4085-43-21 - 4.01
AMENDMENT NUMBER:__

POINT	STATION	OFFSET	COORDINATE	
SEC18	08+76.19	1029.09'	Y 533871.919	X 85705.019
DB15	15+93.66	0.00'	Y 535004.182	X 85164.849
PRW11	15+93.66	64.85'	Y 534972.140	X 85221.226
PRW10	16+79.22	87.16'	Y 535035.496	X 85282.903
PRW9	17+84.28	96.92'	Y 535122.016	X 85343.304
DB16	18+30.84	0.00'	Y 535210.382	X 85282.043
PRW8	18+66.46	64.80'	Y 535209.327	X 85355.982
PRW7	24+87.78	117.32'	Y 535723.553	X 85708.649
PRW6	25+28.01	270.23'	Y 535682.978	X 85861.465
DB13	25+54.44	0.00'	Y 535839.481	X 85639.590
PRW5	26+08.86	243.69'	Y 535762.328	X 85876.560
PRW3	26+24.28	157.74'	Y 535818.687	X 85810.090
PRW4	26+26.18	199.87'	Y 535798.550	X 85847.144
PRW2	26+69.99	110.64'	Y 535880.492	X 85792.620
DB14	27+27.90	-5.00'	Y 535990.447	X 85725.392
DB12	27+80.22	-39.04'	Y 536053.182	X 85725.996
PRW1	27+80.61	62.50'	Y 535996.854	X 85810.484
PRW20	28+04.75	-73.65'	Y 536093.290	X 85711.380
PRW24	28+06.55	-67.73'	Y 536091.467	X 85717.303
DB22	28+27.64	0.00'	Y 536070.555	X 85785.161
SEC17	31+44.99	-329.21'	Y 536536.407	X 85730.643
PRW19	33+60.57	-75.83'	Y 536532.574	X 86072.715
PRW25	33+66.29	-69.83'	Y 536532.480	X 86081.100
DB21	34+35.49	0.00'	Y 536531.372	X 86179.965

CURVE TABLE

CURVE	CH. DISTANCE	CH. BEARING	RADIUS	ARC LENGTH	PI COORDINATES
CUR1	568.80'	S39° 26' 21"W	2985.93'	569.66'	Y: 536330.22' X: 85871.03'

COURSE TABLE

POINT TO POINT		BEARING	DISTANCE
SEC17	DB12	S 00°33'04" W	483.25'
DB12	PRW1	S 56°18'30" E	101.54'
PRW1	PRW2	S 08°43'40" W	117.72'
PRW2	PRW3	S 15°47'00" E	64.23'
PRW3	PRW4	S 61°28'38" E	42.17'
PRW4	PRW5	S 39°04'51" E	46.66'
PRW5	PRW6	S 10°46'15" W	80.77'
PRW6	PRW7	N 75°07'48" W	158.11'
PRW7	DB13	N 30°46'57" W	134.94'
DB13	DB14	N 29°36'42" E	173.64'
DB14	DB12	N 00°33'04" E	62.74'

POINT TO POINT		BEARING	DISTANCE
SEC17	DB14	S 00°33'04" W	545.98'
DB14	DB16	S 29°36'42" W	897.25'
DB16	PRW8	S 89°10'56" E	73.95'
PRW8	PRW9	S 08°15'42" W	88.23'
PRW9	PRW10	S 34°55'11" W	105.52'
PRW10	PRW11	S 44°13'51" W	88.42'
PRW11	DB15	N 60°23'18" W	64.85'
DB15	DB15	N 29°36'42" E	237.18'

COURSE TABLE REPORT

POINT TO POINT		BEARING	DISTANCE
SEC17	PRW19	S 89°21'29" E	342.09'
PRW19	PRW20	SEE CURVE CUR1	
PRW20	DB22	S 72°52'26" E	77.20'
DB22	DB21	N 40°35'18" E	606.81'
DB21	PRW19	N 89°21'29" W	107.26'

STH 32-57 REFERENCE LINE COURSE TABLE

BP STA=0+00.00
Y= 533618.662
X= 84377.389
N29° 36' 42"E 2554.44'
PC STA = 25+54.44
Y= 535839.481
X=85639.590
PI STA = 32+55.17
Y = 536448.691
X = 85985.835
CHORD BEARING = N42° 42' 23"E
CHORD LENGTH = 1365.02
DELTA = 26°11'21"
D = 1°54'07"
T = 700.73'
L = 1376.97'
R = 3012.48'
PT STA = 39+31.42
Y= 536842.549
X= 86565.402
N55° 48' 04"E 700.73'
EP STA=42+32.15
Y= 537236.407
X= 87144.969

SCHEDULE OF UTILITIES & INTERESTS REQUIRED

UTILITY NUMBER	OWNER	INTEREST REQUIRED
100	MCLEOD-COMMUNICATION	RELEASE OF RIGHTS
101	AT&T COMMUNICATION	RELEASE OF RIGHTS
102	TIME WARNER CABLE-COMMUNICATION	RELEASE OF RIGHTS
103	GREEN BAY METROPOLITAN SEWAGE DISTRICT - SEWER	RELEASE OF RIGHTS
104	CITY OF DE PERE - SEWER	RELEASE OF RIGHTS
-		RELEASE OF RIGHTS

C:\WisDOT\rw\40854300\RW\dwg\040401_rw.dwg, 4/3/2014 1:46:32 PM, 1:100

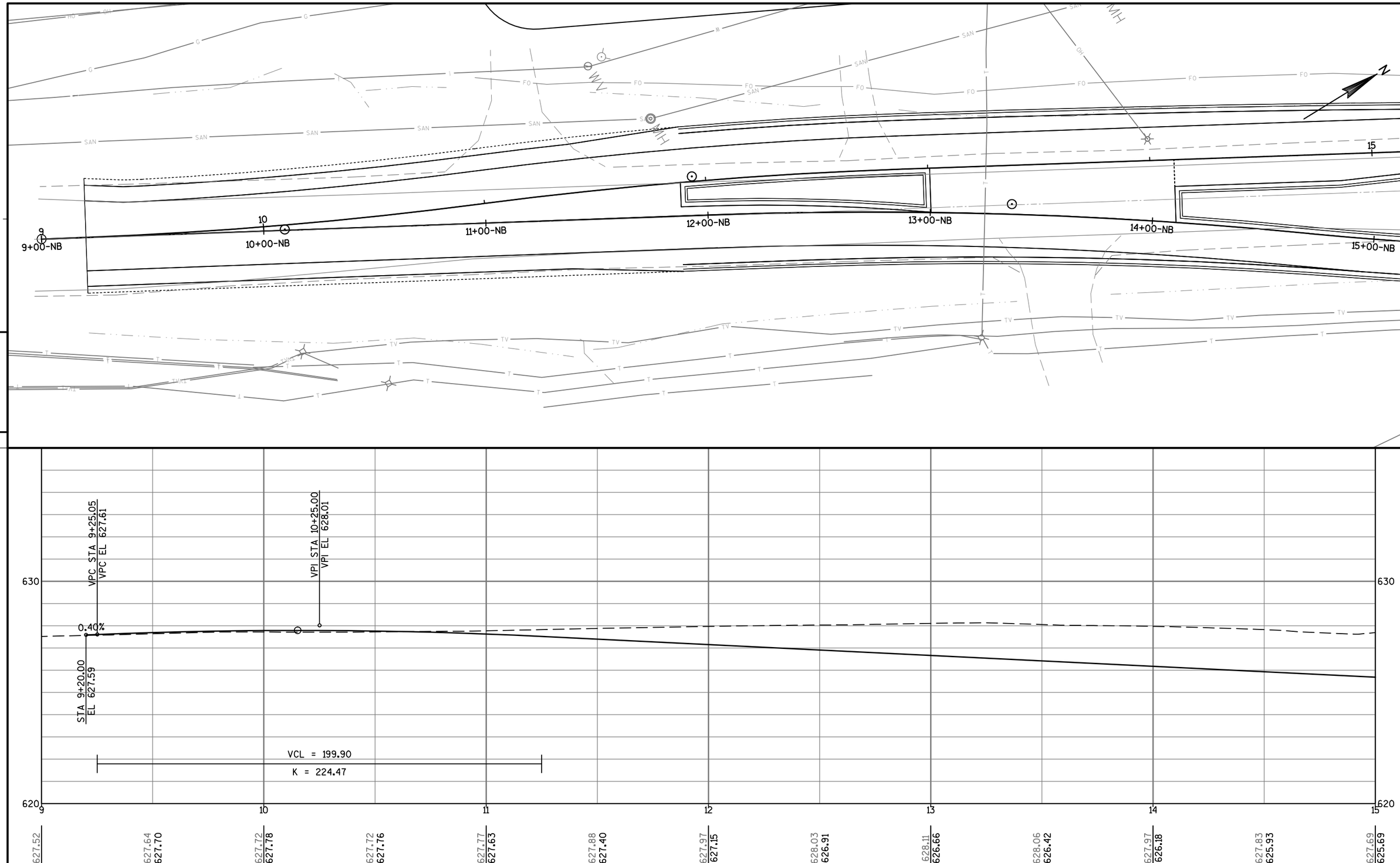

PROJECT NO: 4085-43-71	HWY: STH 32/57	COUNTY: BROWN	PLAN AND PROFILE: STH 32/57 NB	SHEET 83	E

FILE NAME : N:\PDS\C3D\40854300\SHEETSPLAN\9-24-13 PLAN PROFILE.DWG PLOT DATE : 1/27/2015 3:35 PM PLOT BY : MAY, MATTHEW J PLOT NAME : PLOT SCALE : 1" = 40'_XREF

WISDOT/CADDS SHEET 44

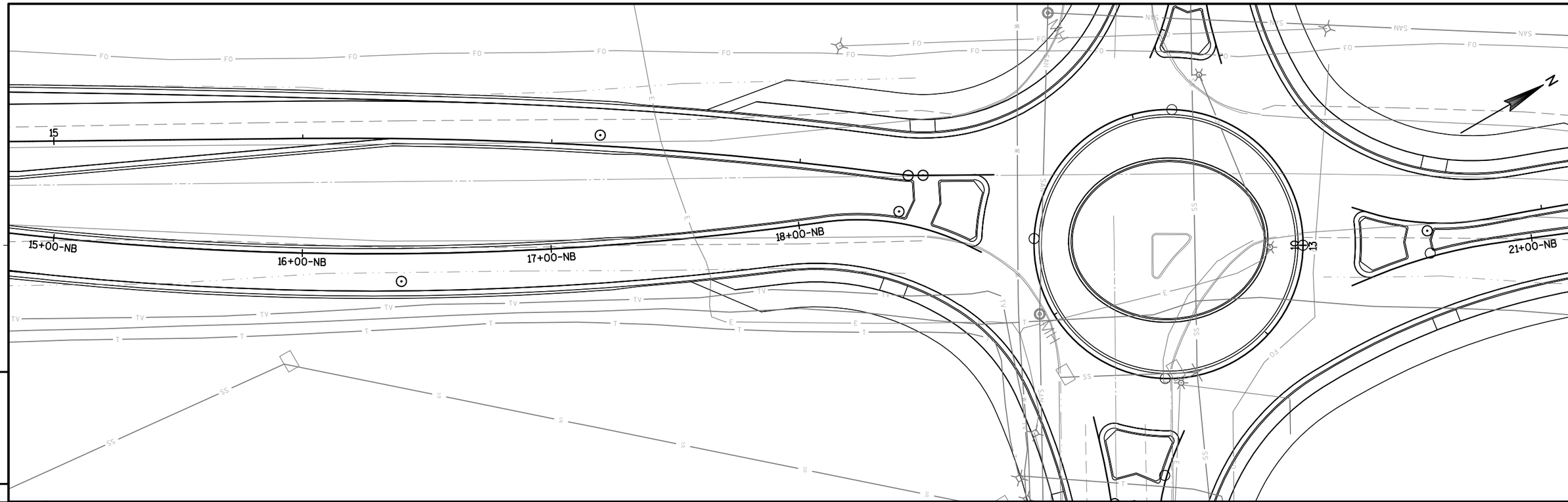

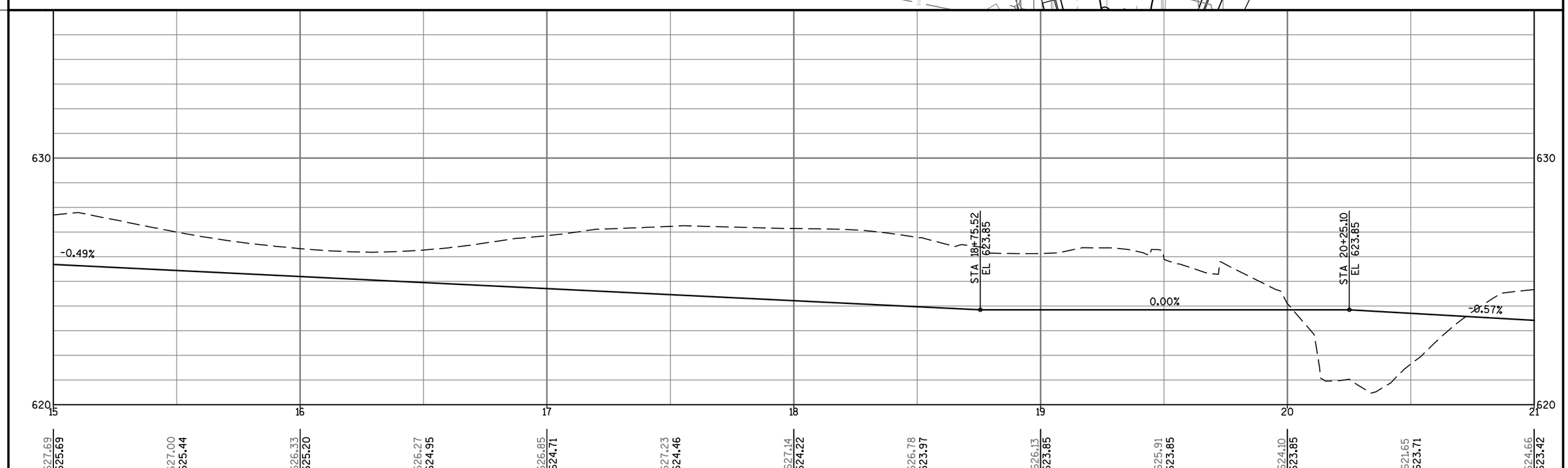

PROJECT NO: 4085-43-71	HWY: STH 32/57	COUNTY: BROWN	PLAN AND PROFILE: STH 32/57 NB	SHEET	E

FILE NAME : N:\PDS\C3D\40854300\SHEETSPLAN\9-24-13 PLAN PROFILE.DWG PLOT DATE : 1/27/2015 3:35 PM PLOT BY : MAY, MATTHEW J PLOT NAME : PLOT SCALE : 1" = 40'_XREF

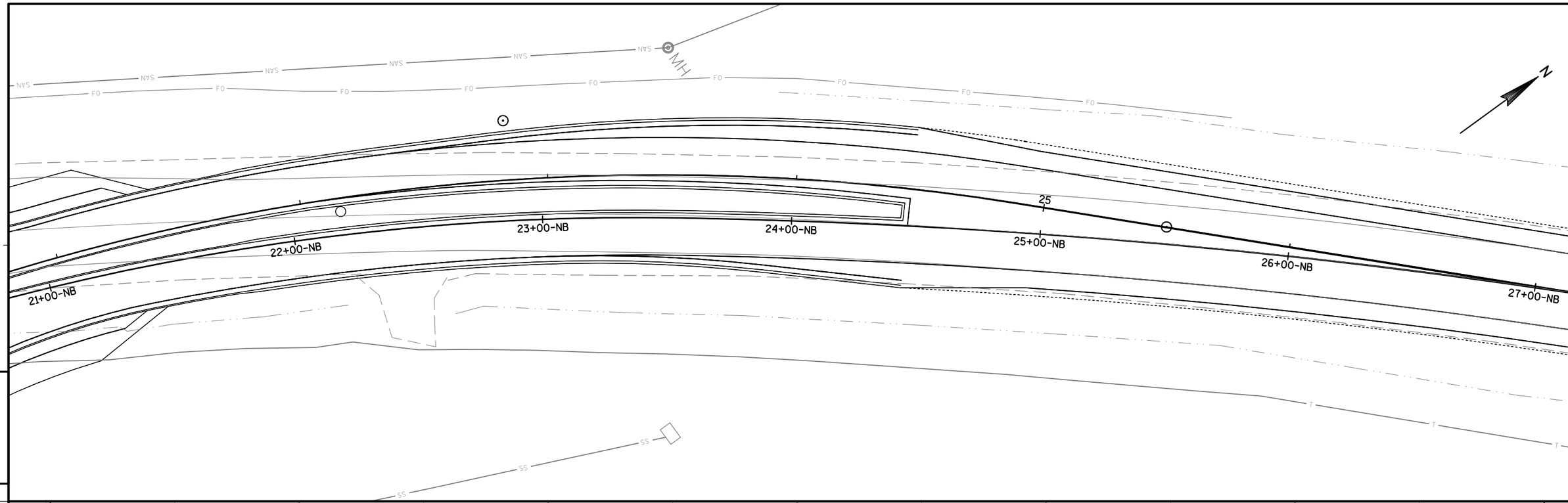

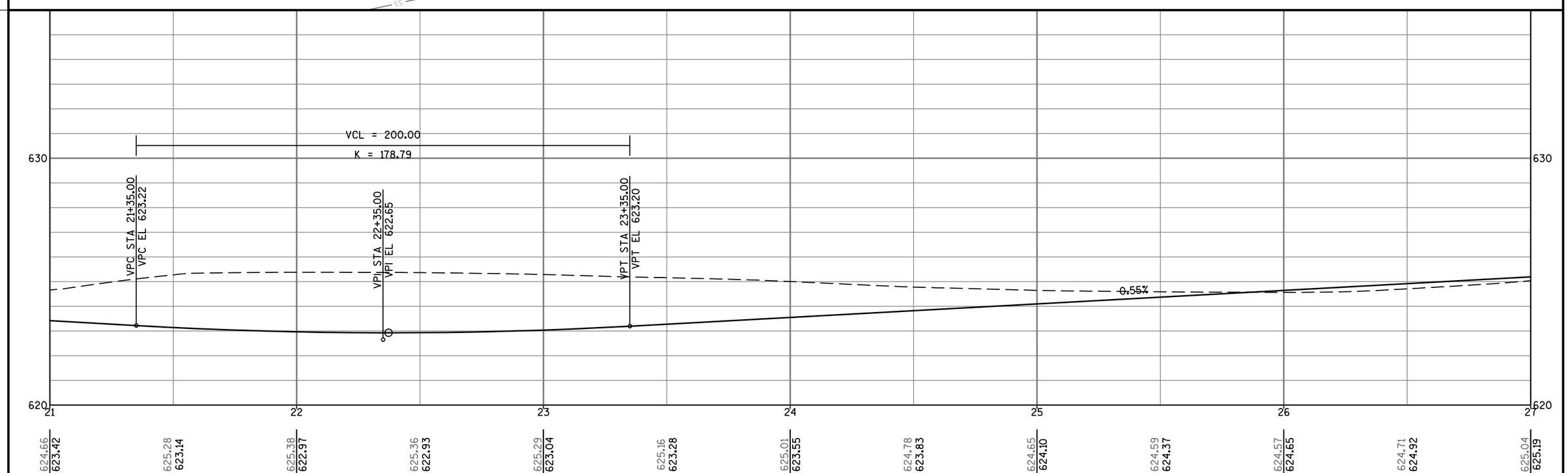

PROJECT NO: 4085-43-71	HWY: STH 32/57	COUNTY: BROWN	PLAN AND PROFILE: STH 32/57 NB	SHEET 85	E

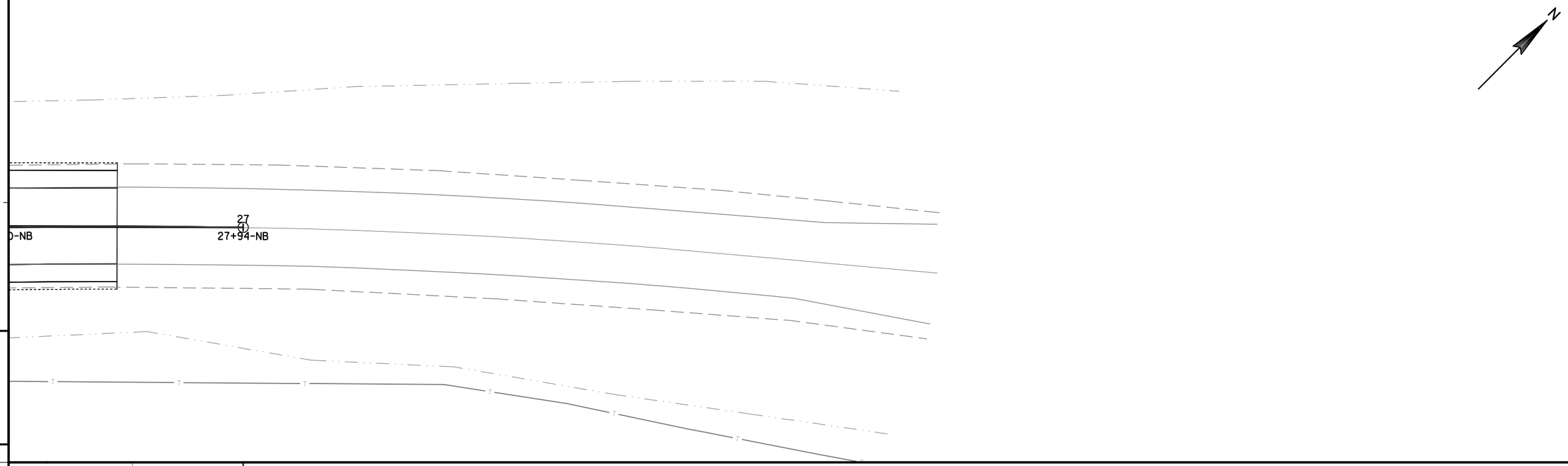

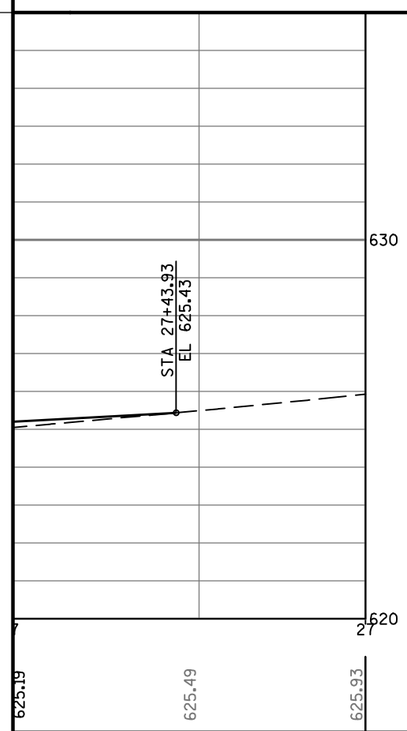

PROJECT NO: 4085-43-71	HWY: STH 32/57	COUNTY: BROWN	PLAN AND PROFILE: STH 32/57 NB	SHEET 86	E

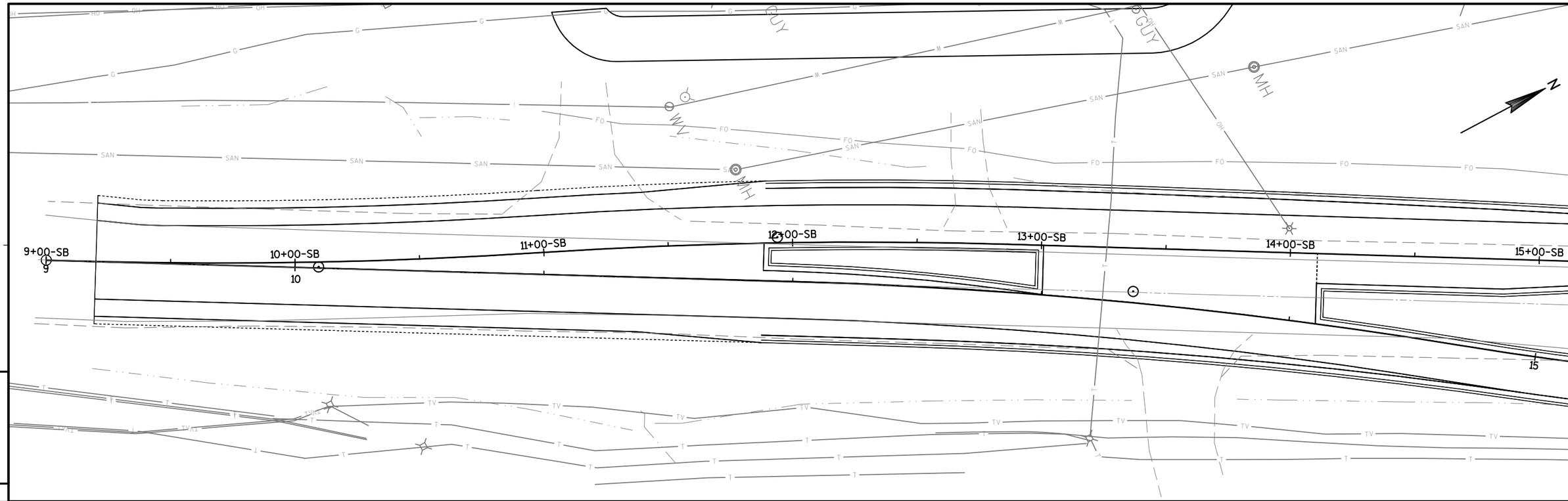

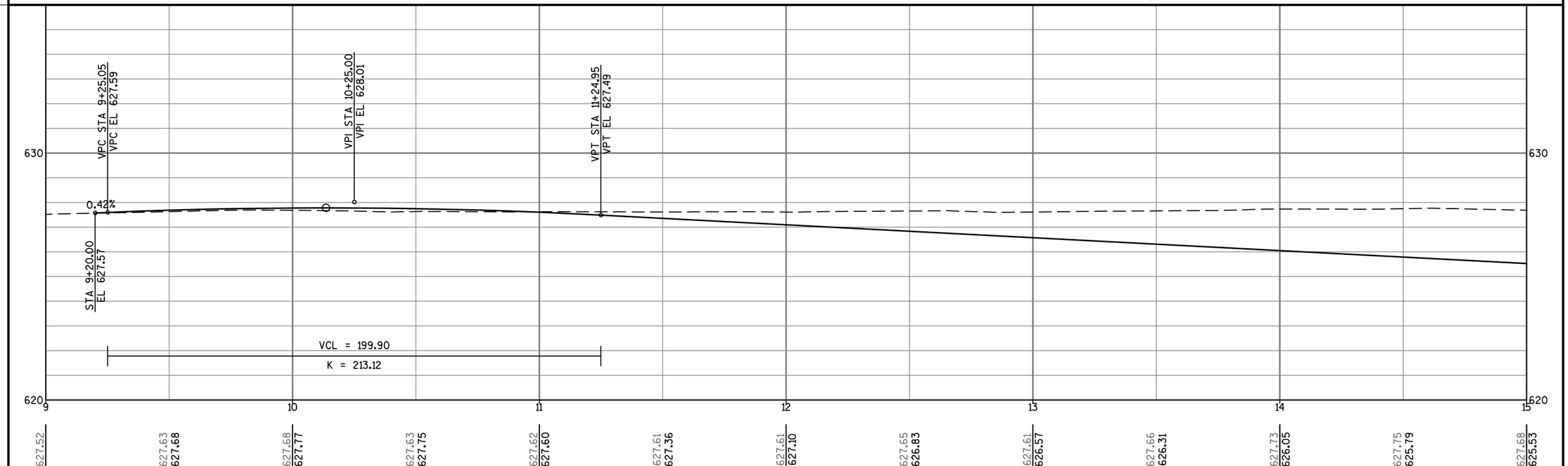

PROJECT NO: 4085-43-71	HWY: STH 32/57	COUNTY: BROWN	PLAN AND PROFILE: STH 32/57 SB	SHEET 87	E

FILE NAME : N:\PDS\C3D\40854300\SHEETSPLAN\9-24-13 SB PLAN PROFILE.DWG PLOT DATE : 1/27/2015 3:37 PM PLOT BY : MAY, MATTHEW J PLOT NAME : PLOT SCALE : 1:40_XREF

WISDOT/CADDS SHEET 44

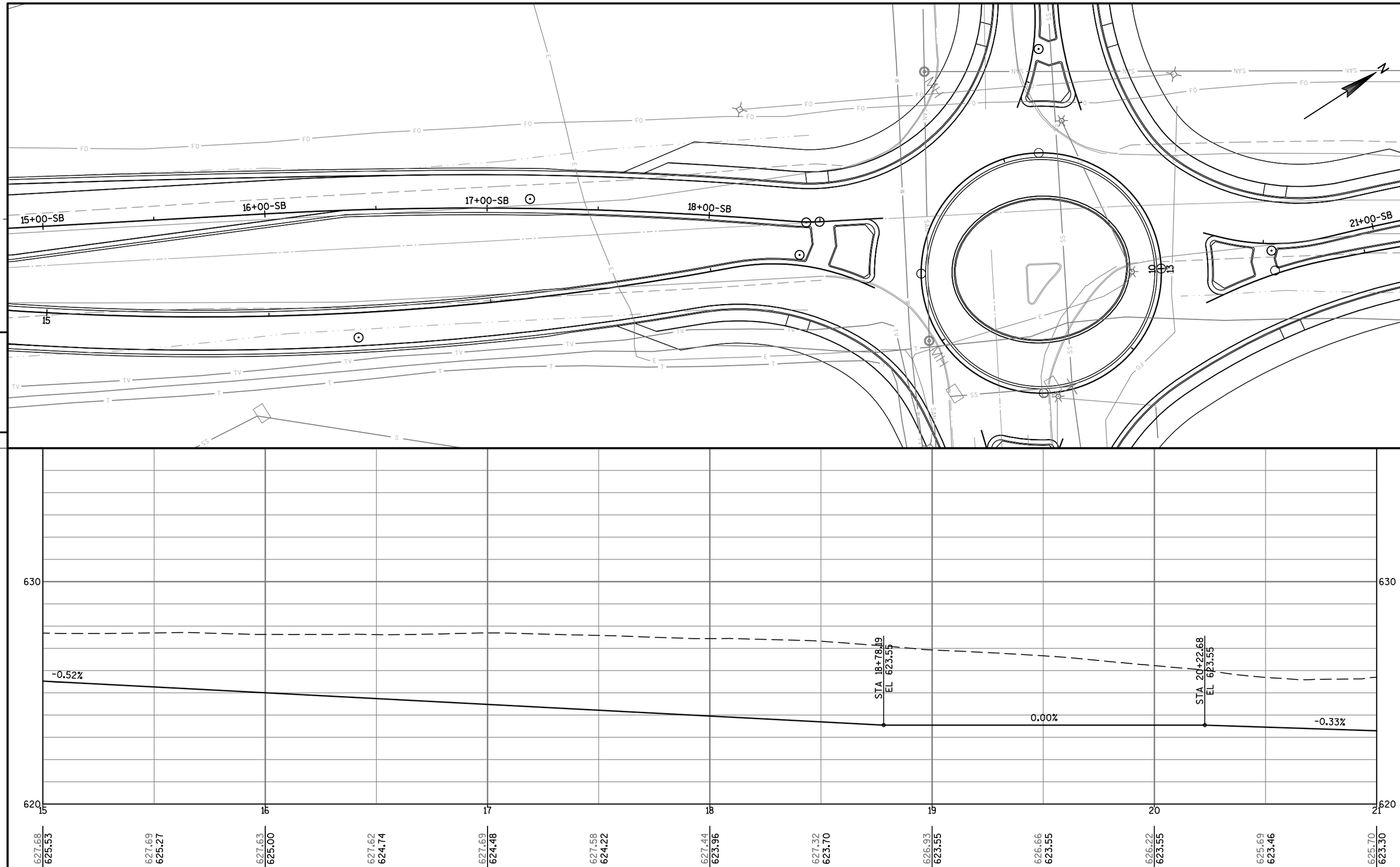

PROJECT NO:4085-43-71	HWY:STH 32/57	COUNTY:BROWN	PLAN AND PROFILE: STH 32/57 SB	SHEET 88	E

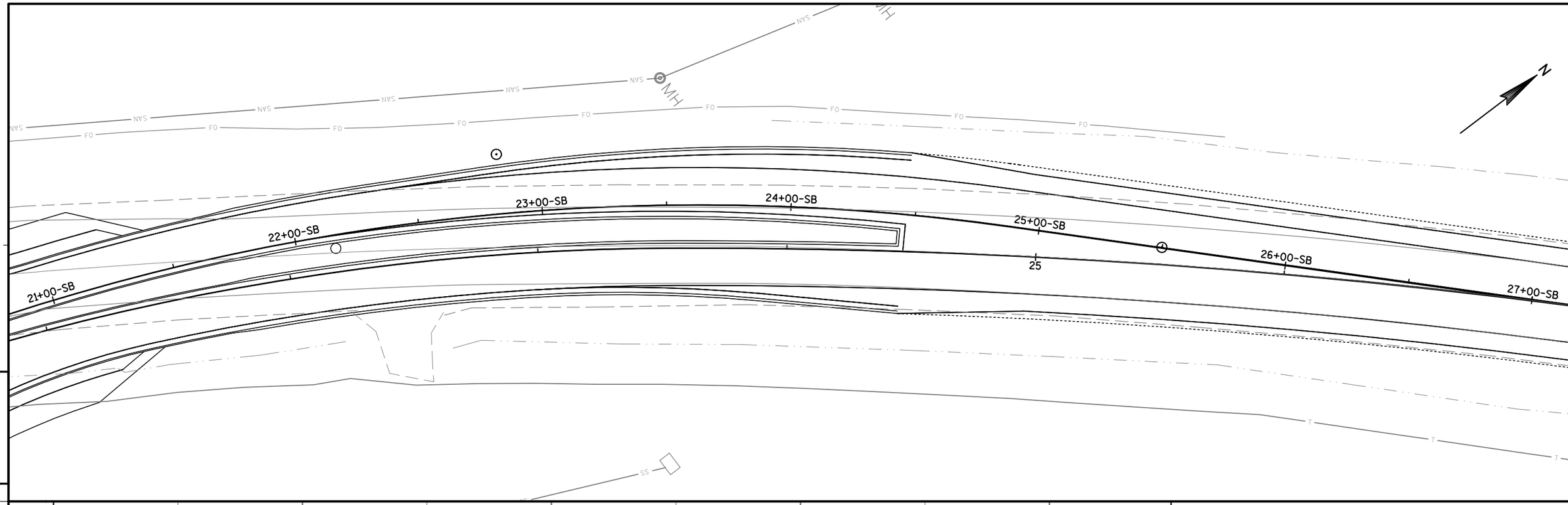

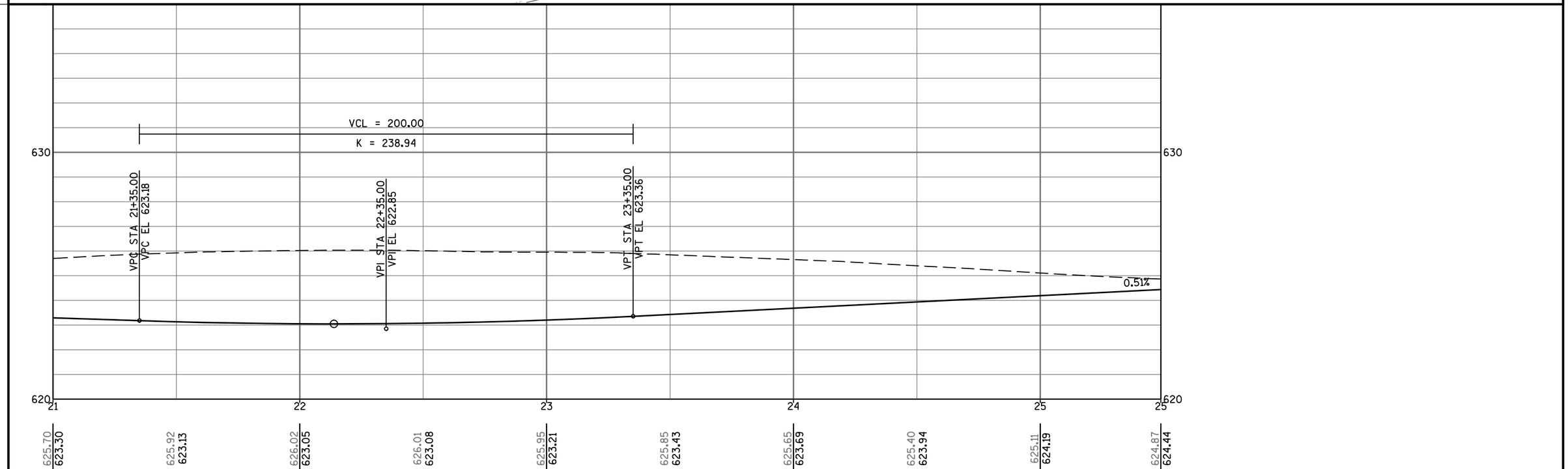

PROJECT NO: 4085-43-71	HWY: STH 32/57	COUNTY: BROWN	PLAN AND PROFILE: STH 32/57 SB	SHEET 89	E

FILE NAME : N:\PDS\C3D\40854300\SHEETSPLAN\9-24-13 SB PLAN PROFILE.DWG PLOT DATE : 1/27/2015 3:37 PM PLOT BY : MAY, MATTHEW J PLOT NAME : PLOT SCALE : 1:40_XREF

WISDOT/CADDS SHEET 44

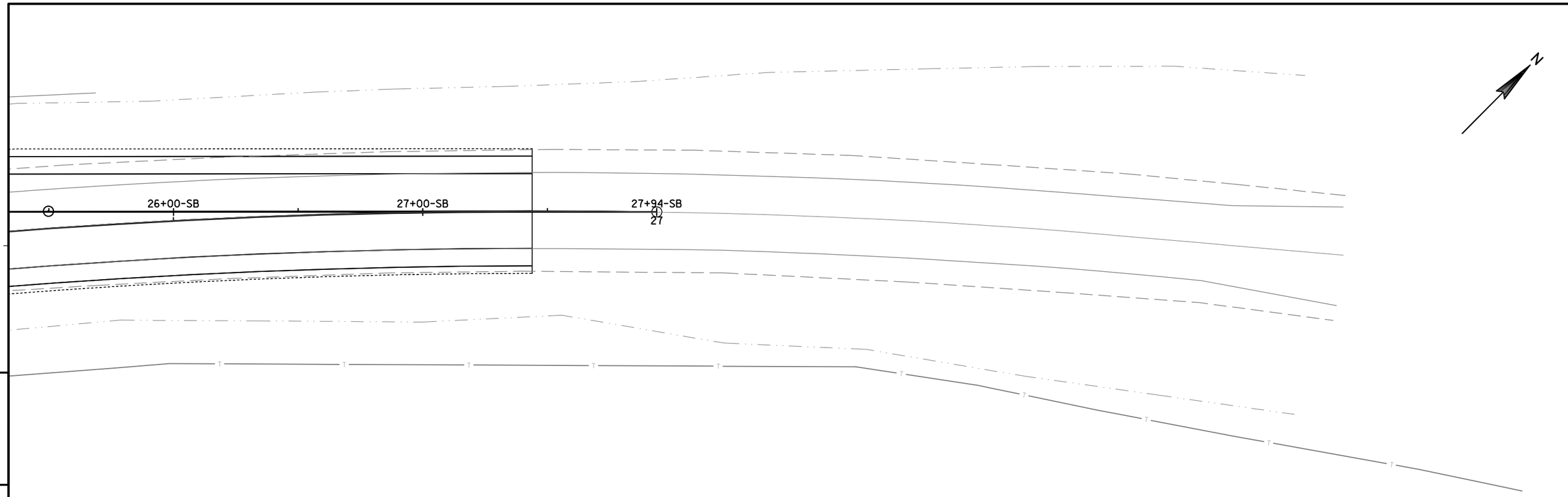

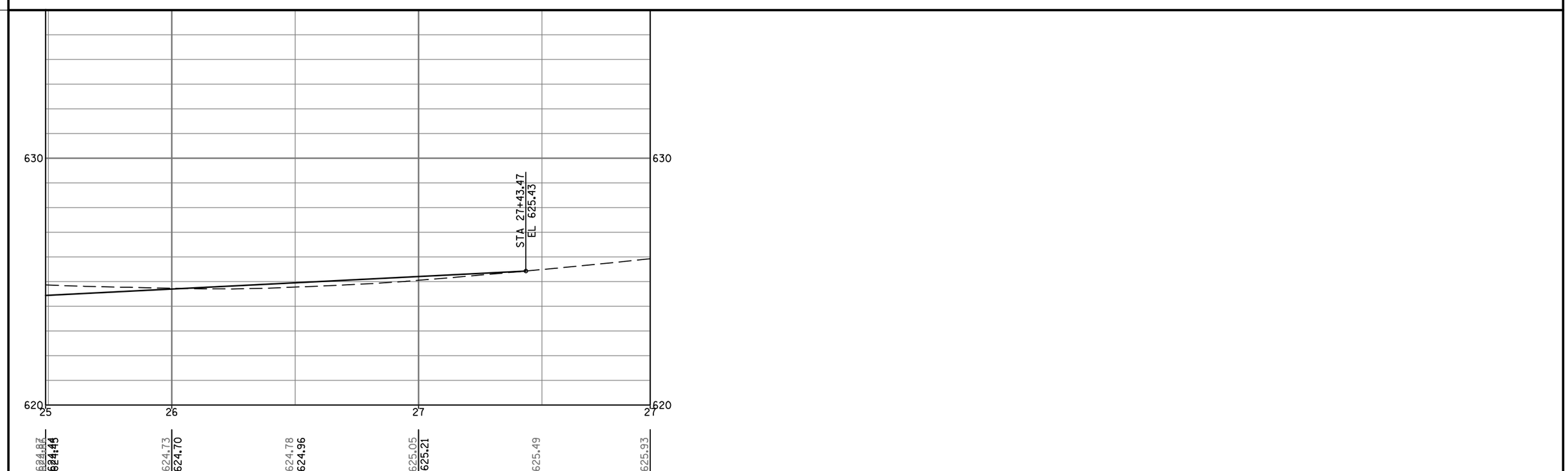

PROJECT NO: 4085-43-71	HWY: STH 32/57	COUNTY: BROWN	PLAN AND PROFILE: STH 32/57 SB	SHEET 90	E

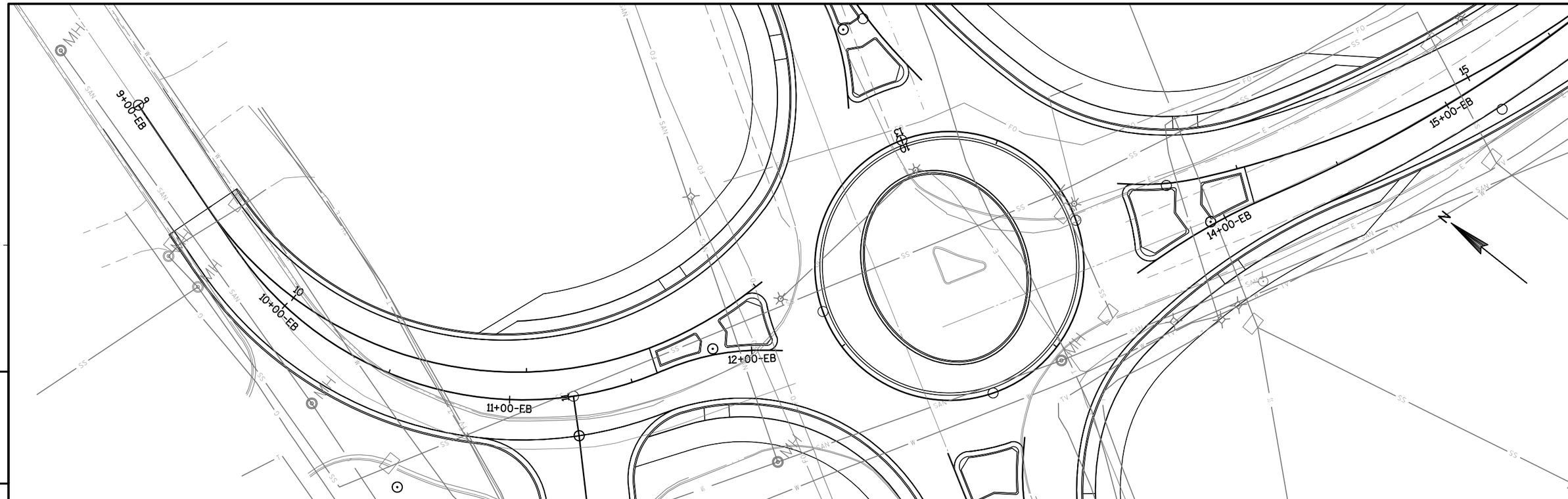

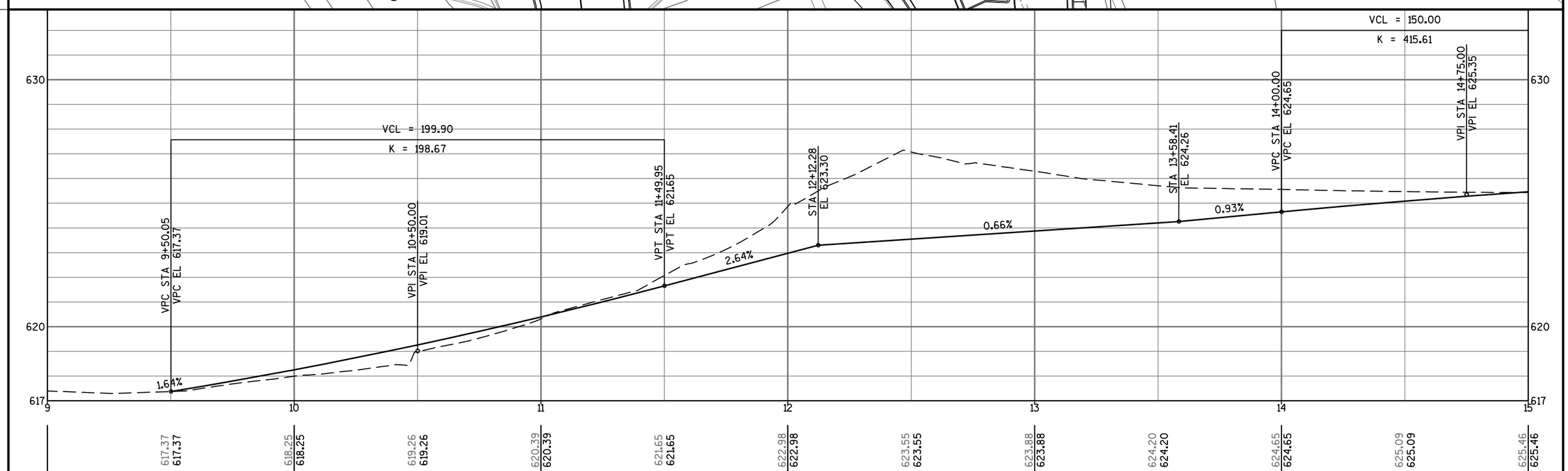

PROJECT NO: 4085-43-71	HWY: STH 32/57	COUNTY: BROWN	PLAN AND PROFILE: CTH X EB	SHEET 91	E

FILE NAME : N:\PDS\C3D\40854300\SHEETSPLAN\9-25-13 PLAN PROFILE EB.DWG PLOT DATE : 1/27/2015 3:39 PM PLOT BY : MAY, MATTHEW J PLOT NAME : PLOT SCALE : 1:40_XREF

WISDOT/CADDS SHEET 44

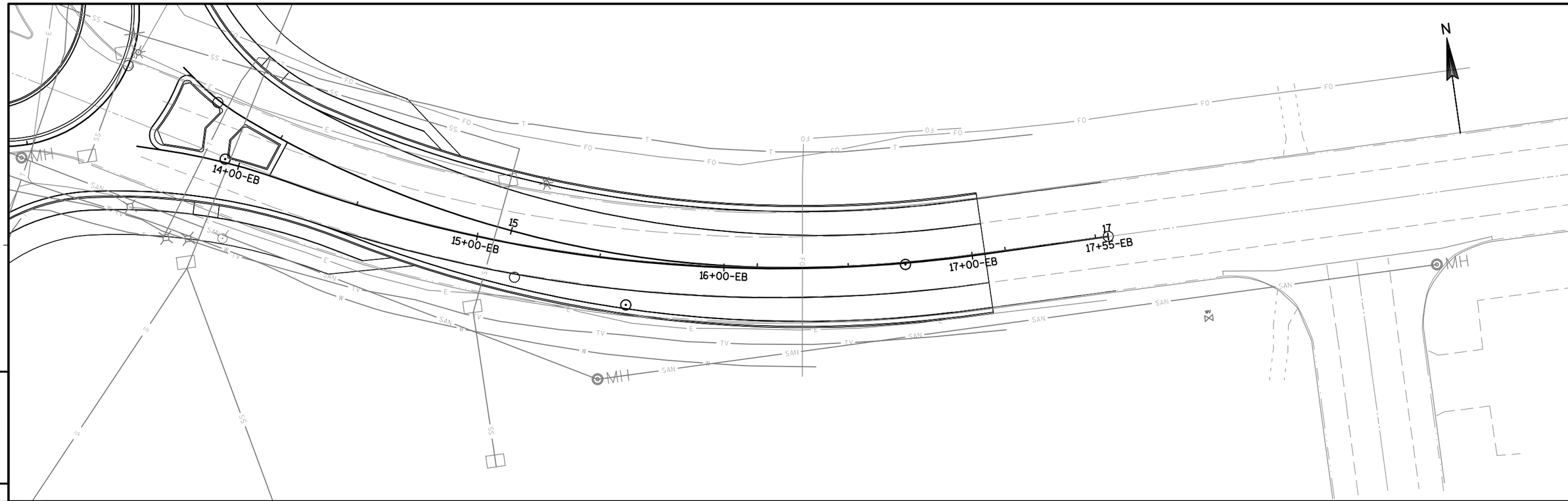

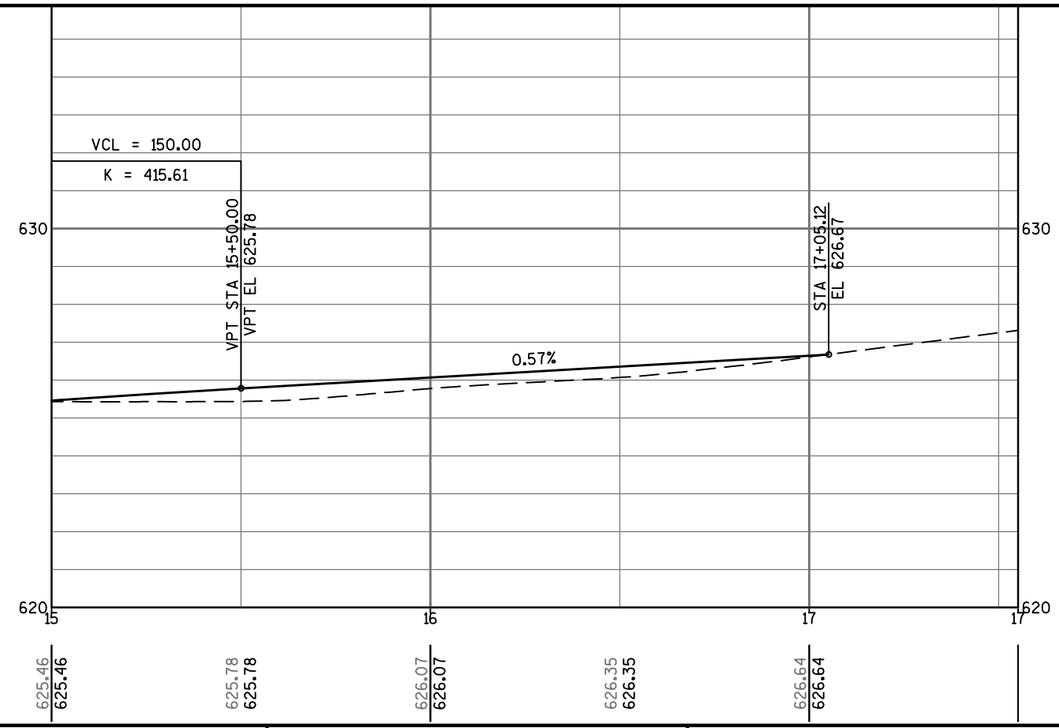

PROJECT NO: 4085-43-71	HWY: STH 32/57	COUNTY: BROWN	PLAN AND PROFILE: CTH X EB	SHEET 92	E

FILE NAME : N:\PDS\C3D\40854300\SHEETSPLAN\9-25-13 PLAN PROFILE EB.DWG PLOT DATE : 1/27/2015 3:39 PM PLOT BY : MAY, MATTHEW J PLOT NAME : PLOT SCALE : 1:40_XREF

WISDOT/CADDS SHEET 44

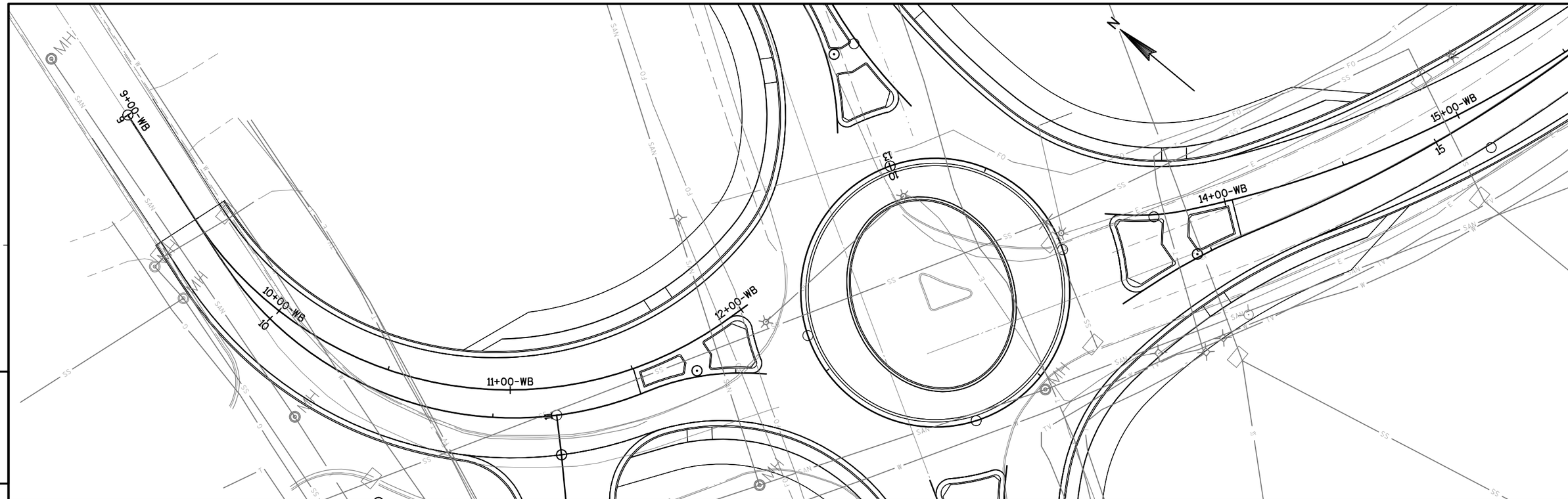

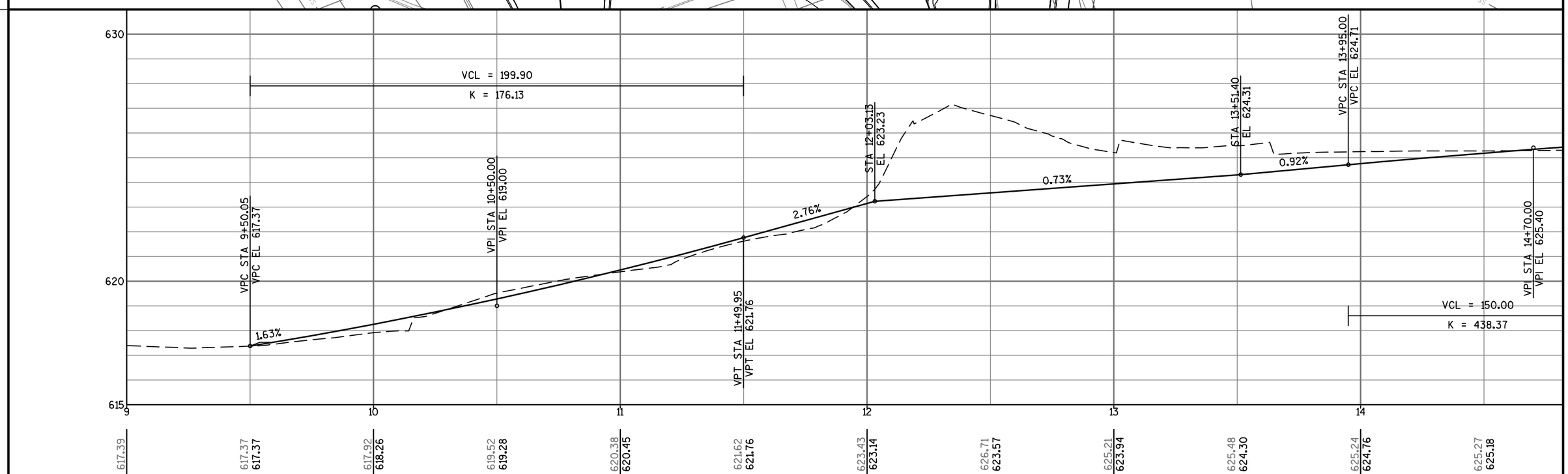

PROJECT NO: 4085-43-71	HWY: STH 32/57	COUNTY: BROWN	PLAN AND PROFILE: CTH X WB	SHEET 93	E

FILE NAME : N:\PDS\C3D\40854300\SHEETSPLAN\9-26-13 PLAN PROFILE WB.DWG PLOT DATE : 1/27/2015 3:40 PM PLOT BY : MAY, MATTHEW J PLOT NAME : PLOT SCALE : 1" = 40'_XREF

WISDOT/CADDS SHEET 44

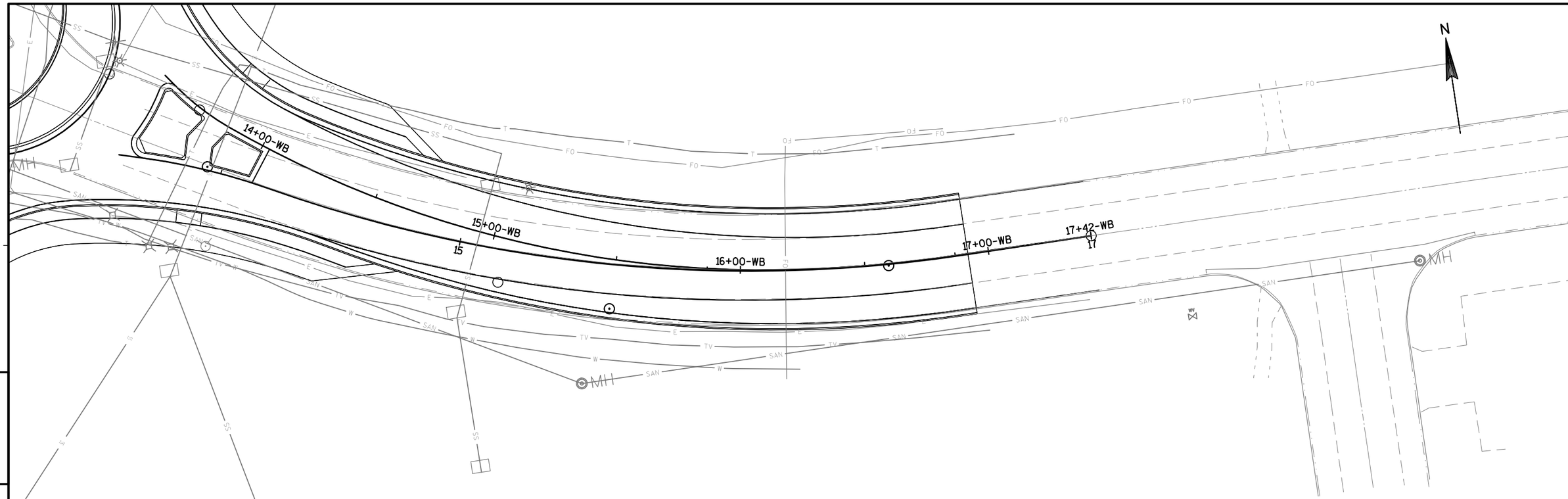

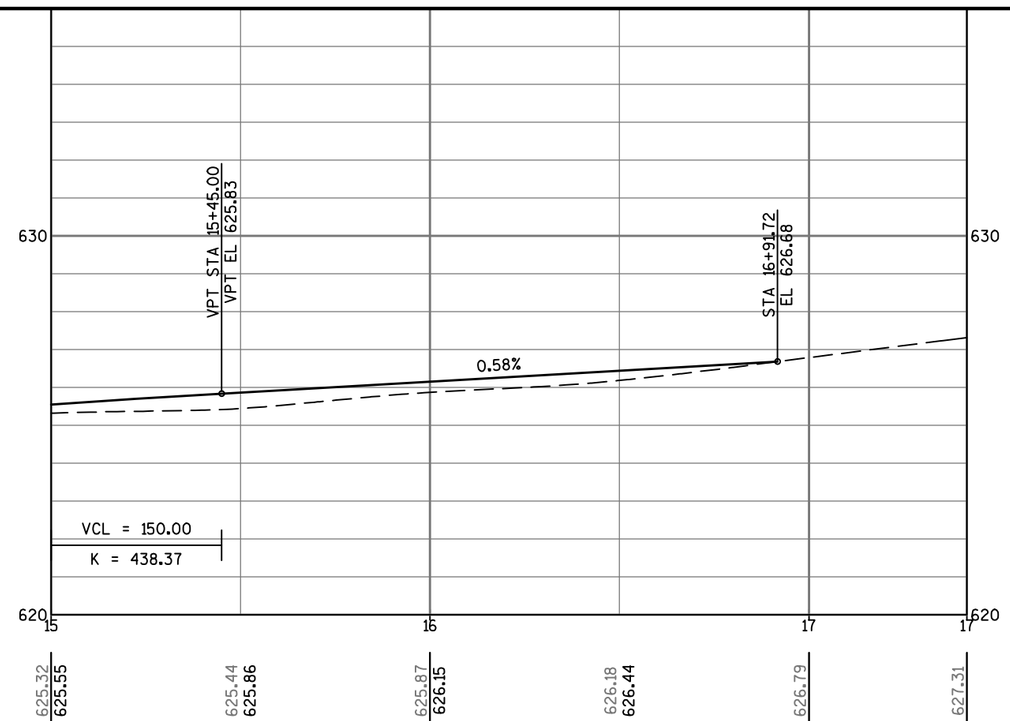

PROJECT NO: 4085-43-71	HWY: STH 32/57	COUNTY: BROWN	PLAN AND PROFILE: CTH X WB	SHEET 94	E

FILE NAME : N:\PDS\C3D\40854300\SHEETSPLAN\9-26-13 PLAN PROFILE WB.DWG PLOT DATE : 1/27/2015 3:41 PM PLOT BY : MAY, MATTHEW J PLOT NAME : PLOT SCALE : 1" = 40'_XREF

WISDOT/CADDS SHEET 44

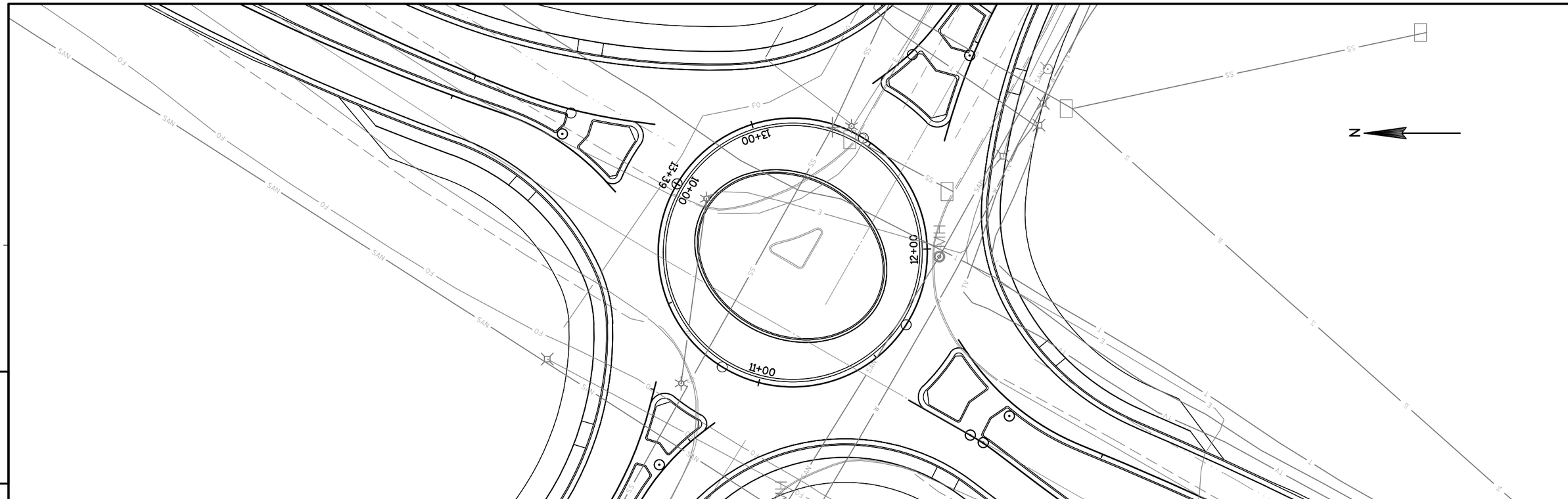

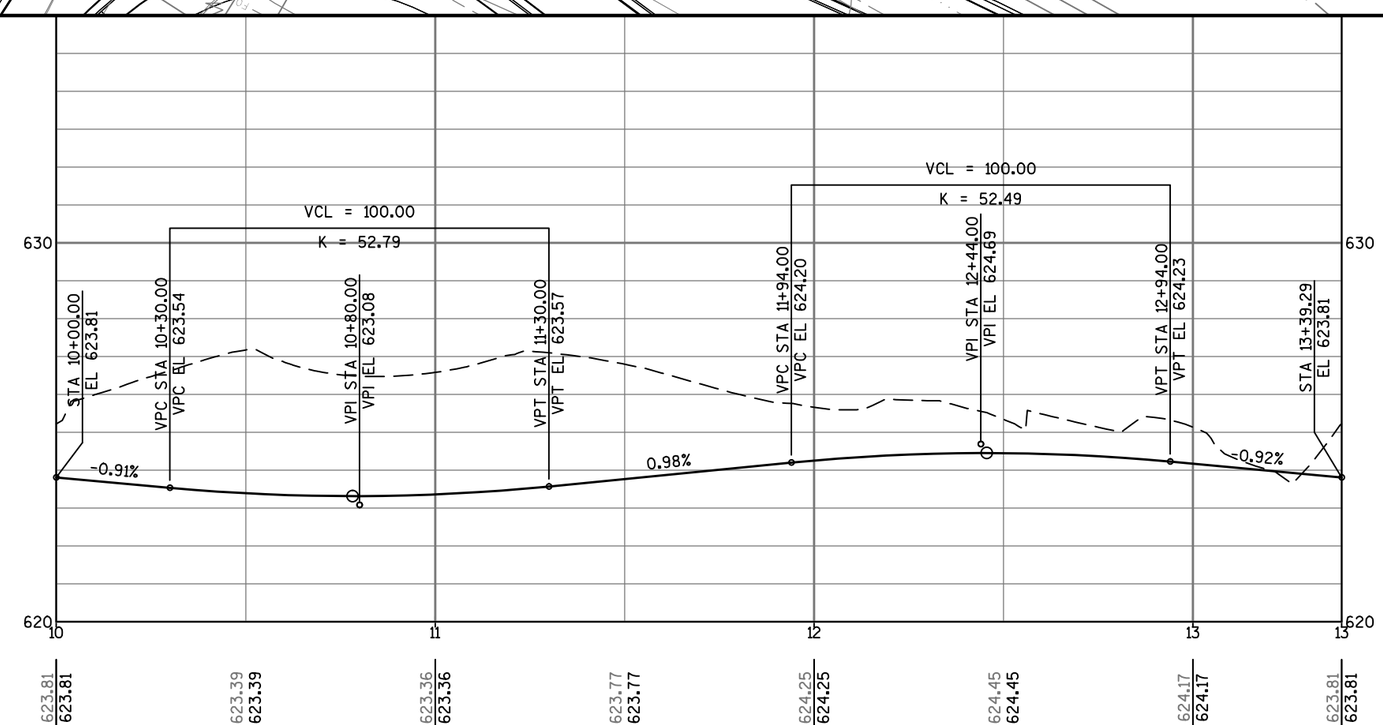

PROJECT NO:4085-43-71	HWY:STH 32/57	COUNTY:BROWN	PLAN AND PROFILE: STH 32/57 RAB CIRCLE	SHEET 95	E

Standard Detail Drawing List

08A05-19A	INLET COVERS TYPE A, H, A-S, H-S & Z
08A05-19B	INLET COVERS TYPE B, B-A, C, MS, MS-A, & WM
08A05-19C	INLET COVERS TYPE F, HM, HM-S, S, T, V, HM-GJ, & HM-GJ-S
08A05-19D	INLET COVER TYPE BW, MANHOLE COVERS, TYPE K, J, J-S, L & M
08B09-01	MANHOLES 3-FT, 4-FT, 5-FT, 6-FT, 7-FT AND 8-FT DIAMETER
08C06-01	INLETS 3-FT AND 4-FT DIAMETER
08C07-01	INLETS 2X2-FT, 2X2.5-FT, 2X3-FT AND 2.5X3-FT
08C08-01	INLETS MEDIAN 1 AND 2 GRATE
08D01-17	CONCRETE CURB, CONCRETE CURB AND GUTTER AND TIES
08D05-15A	CURB RAMPS TYPES 1 AND 1-A
08D05-15B	CURB RAMPS TYPES 2 AND 3
08D05-15C	CURB RAMPS TYPES 4A AND 4A1
08D05-15D	CURB RAMPS TYPE 4B AND 4B1
08D05-15E	CURB RAMPS TYPES 5, 6, 7A, 7B & 8
08E08-03	TYPICAL INSTALLATIONS OF EROSION BALES / TEMPORARY DITCH CHECKS
08E09-06	SILT FENCE
08E10-02	INLET PROTECTION TYPE A, B, C AND D
08F01-11	APRON ENDWALLS FOR CULVERT PIPE
08F04-07	JOINT TIES FOR CONCRETE PIPE AND CONCRETE COLLAR DETAIL
09B02-08	CONDUIT UNDER PAVED HIGHWAYS
09B04-11	PULL BOX
09C02-07	CONCRETE BASES, TYPES 1, 2, 5, & 6
09C03-04	TRANSFORMER/PEDESTAL BASES
09C14-02	CONCRETE CONTROL CABINET BASE, TYPE L
09E01-13D	POLE MOUNTINGS FOR LIGHTING UNITS, TYPE 5 (30 FEET)
09E01-13G	HARDWARE DETAILS FOR POLE MOUNTINGS
09E03-05	NON-FREEWAY LIGHTING UNIT POLE WIRING
11B02-02	CONCRETE MEDIAN NOSE
13C13-08	URBAN DOWELED CONCRETE PAVEMENT
13C18-02A	CONCRETE PAVEMENT JOINTING
13C18-02C	CONCRETE PAVEMENT JOINT TIES
14A02-01	TREE PLANTING DETAIL
15A03-02A	FLEXIBLE MARKER POST FOR CULVERT END
15A03-02B	FLEXIBLE MARKER POST FOR CULVERT END
15C02-05A	BARRICADES AND SIGNS FOR MAINLINE CLOSURES
15C02-05B	BARRICADES AND SIGNS FOR MAINLINE CLOSURES
15C03-02	BARRICADES AND SIGNS FOR SIDEROAD CLOSURES
15C04-02	TRAFFIC CONTROL, ADVANCE WARNING SIGNS 45 M.P.H. OR GREATER TWO-WAY UNDIVIDED ROAD OPEN TO TRAFFIC
15C05-02	TRAFFIC CONTROL, ADVANCE WARNING SIGNS 40 M.P.H. OR LESS
15C08-16A	PAVEMENT MARKING (MAINLINE)
15C08-16F	PAVEMENT MARKING (ISLANDS)
15C18-03	MEDIAN ISLAND MARKING
15C20-01	YIELD MARKING

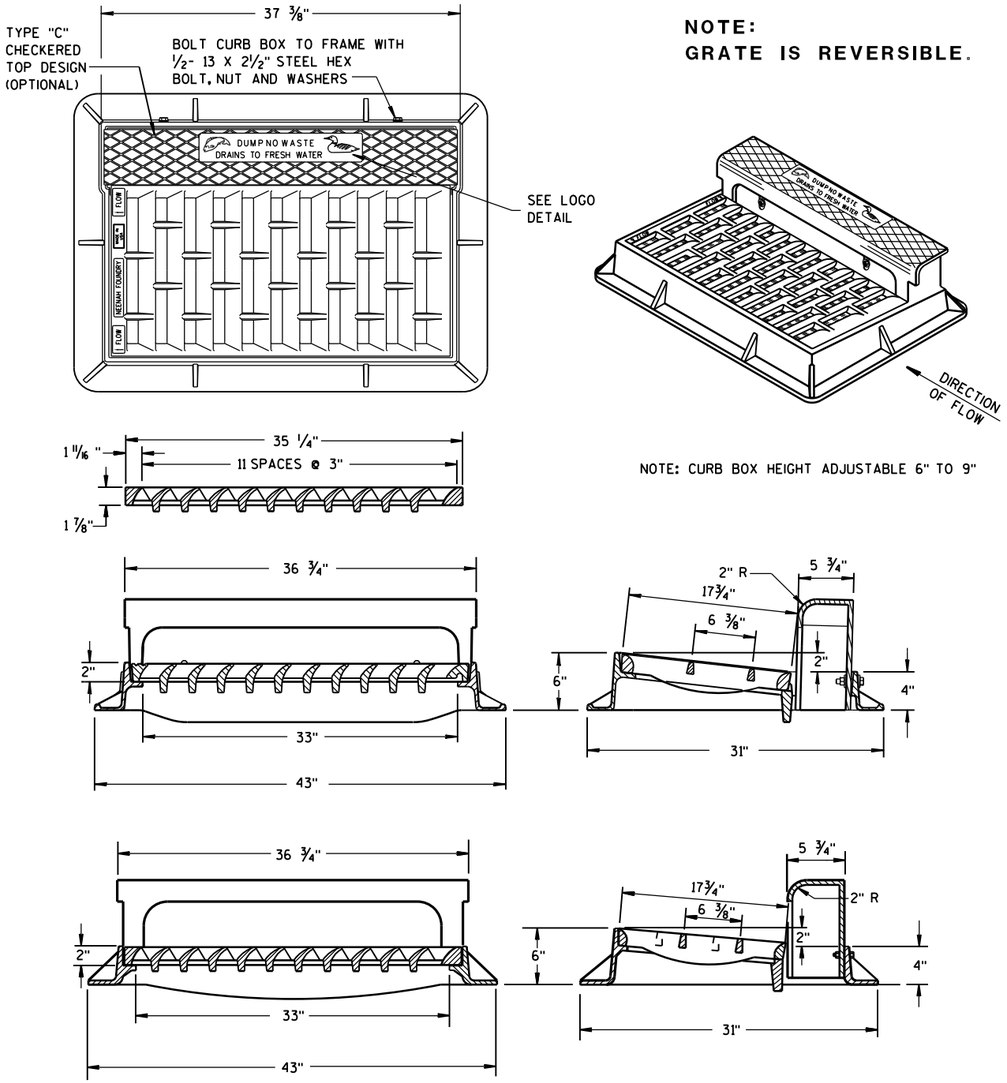

NOTE:
GRATE IS REVERSIBLE.

NOTE: CURB BOX HEIGHT ADJUSTABLE 6" TO 9"

TYPE "H"

NOTE: EITHER CASTING IS ACCEPTABLE

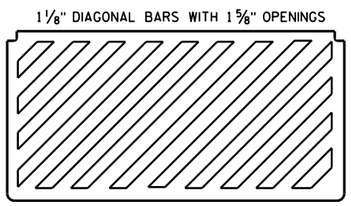

SPECIAL GRATE FOR TYPE "H" COVER

(MEASURES 35 1/4" X 17 3/4" X 2")

(NOTED AS TYPE H-S ON DRAINAGE TABLE)

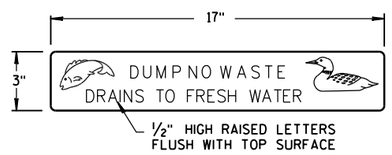

LOGO DETAIL

GENERAL NOTES

DETAILS OF CONSTRUCTION, MATERIALS AND WORKMANSHIP NOT SHOWN ON THIS DRAWING SHALL CONFORM TO THE PERTINENT REQUIREMENTS OF THE STANDARD SPECIFICATIONS AND THE APPLICABLE SPECIAL PROVISIONS.

DETAIL DRAWINGS FOR PROPOSED ALTERNATE DESIGNS FOR CATCH BASIN, MANHOLE AND INLET COVERS SHALL BE SUBMITTED TO THE ENGINEER FOR APPROVAL PROVIDING THAT SUCH ALTERNATE DESIGNS MAKE PROVISION FOR EQUIVALENT CAPACITY AND STRENGTH.

ROUND FRAMES AND COVERS SHALL HAVE CONTINUOUSLY MACHINED BEARING SURFACES TO PREVENT ROCKING AND RATTLING.

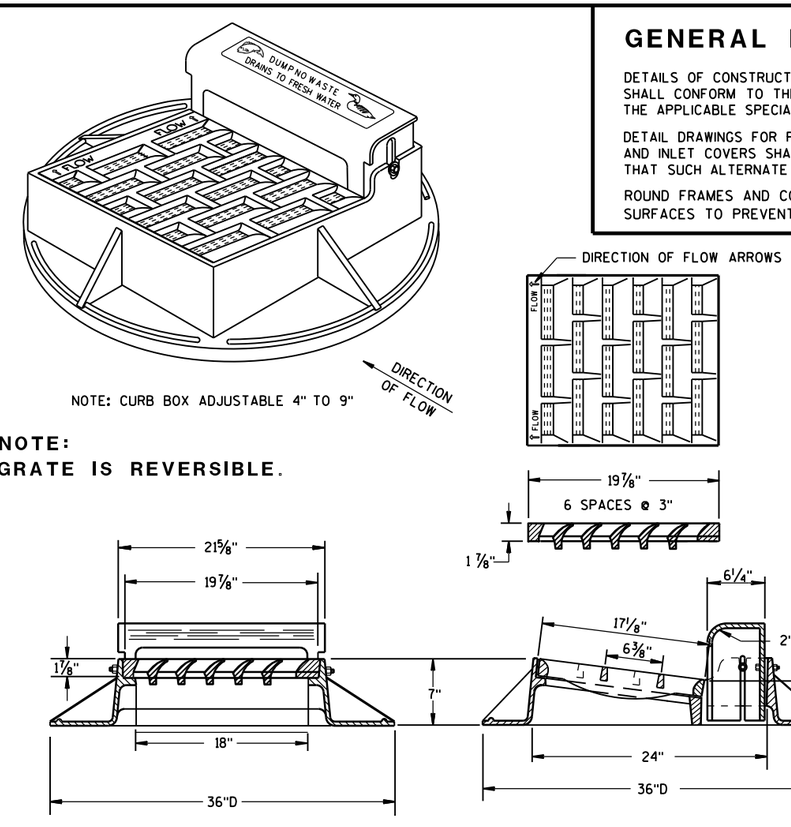

NOTE: CURB BOX ADJUSTABLE 4" TO 9"

NOTE:
GRATE IS REVERSIBLE.

TYPE "A"

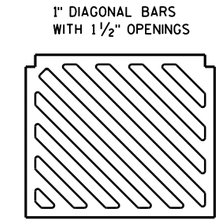

SPECIAL GRATE FOR TYPE "A" COVER

(MEASURES 19 3/4" X 17" X 1 7/8")

(NOTED AS TYPE A-S ON DRAINAGE TABLE)

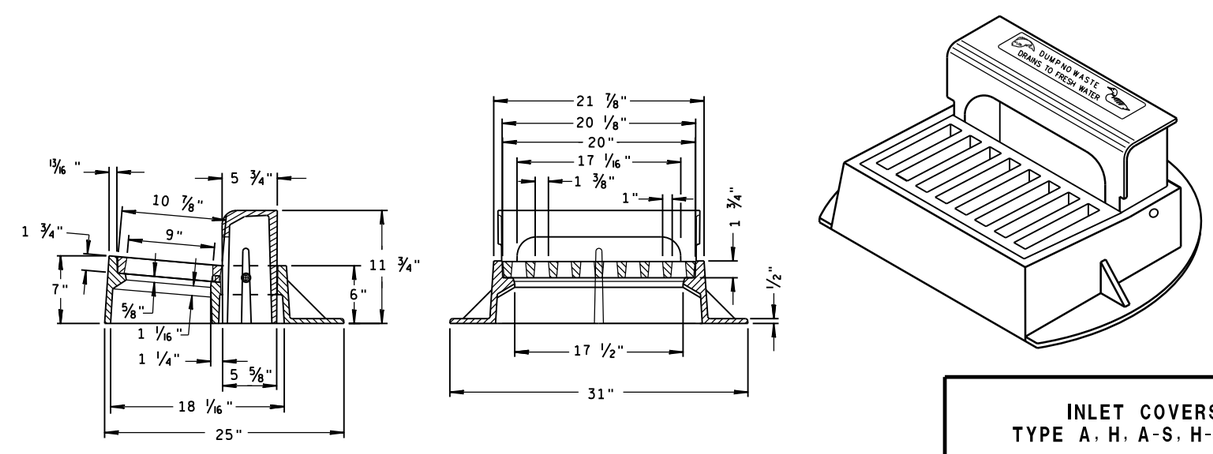

TYPE "Z"

INLET COVERS
TYPE A, H, A-S, H-S & Z

STATE OF WISCONSIN
DEPARTMENT OF TRANSPORTATION

APPROVED
11-27-13 /S/ Jerry H. Zogg
DATE ROADWAY STANDARDS DEVELOPMENT ENGINEER
FHWA

6

6

S.D.D. 8 A 5-19a

S.D.D. 8 A 5-19a

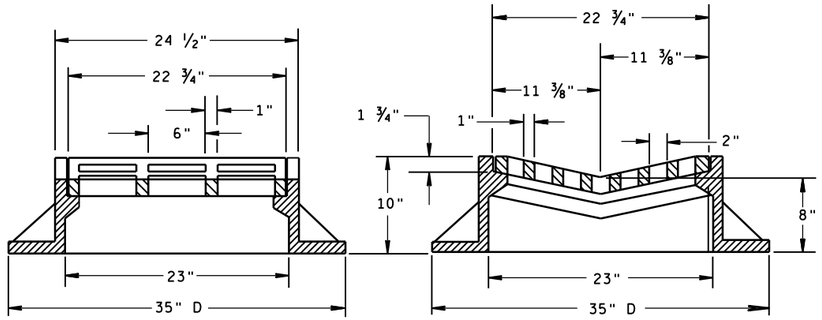

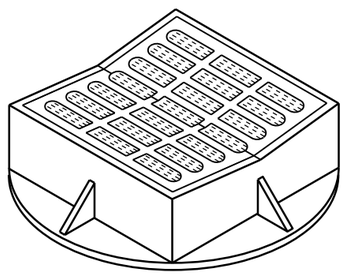

TYPE "B"

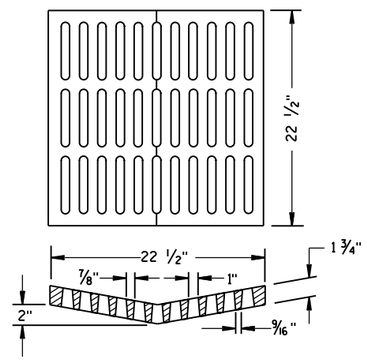

ALTERNATIVE GRATE FOR TYPE "B" COVER

USE WHERE PEDESTRIAN OR BICYCLE TRAFFIC IS POSSIBLE.

NOTED AS TYPE B-A ON THE DRAINAGE TABLE

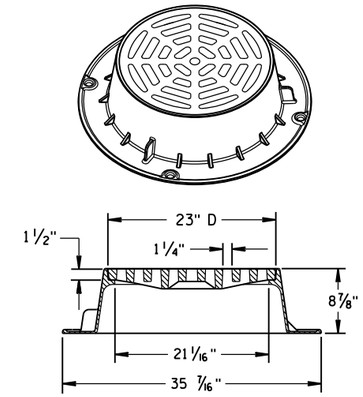

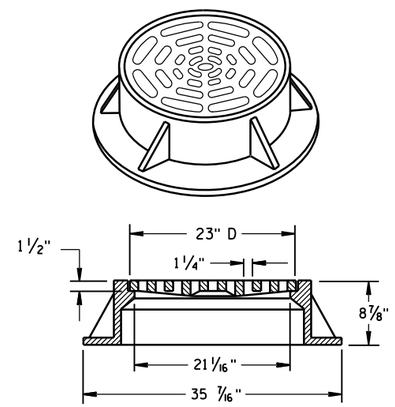

TYPE "C"

NOTE: EITHER CASTING IS ACCEPTABLE

GENERAL NOTES

DETAILS OF CONSTRUCTION, MATERIALS AND WORKMANSHIP NOT SHOWN ON THIS DRAWING SHALL CONFORM TO THE PERTINENT REQUIREMENTS OF THE STANDARD SPECIFICATIONS AND THE APPLICABLE SPECIAL PROVISIONS.

DETAIL DRAWINGS FOR PROPOSED ALTERNATE DESIGNS FOR CATCH BASIN, MANHOLE AND INLET COVERS SHALL BE SUBMITTED TO THE ENGINEER FOR APPROVAL PROVIDING THAT SUCH ALTERNATE DESIGNS MAKE PROVISION FOR EQUIVALENT CAPACITY AND STRENGTH.

ROUND FRAMES AND COVERS SHALL HAVE CONTINUOUSLY MACHINED BEARING SURFACES TO PREVENT ROCKING AND RATTLING.

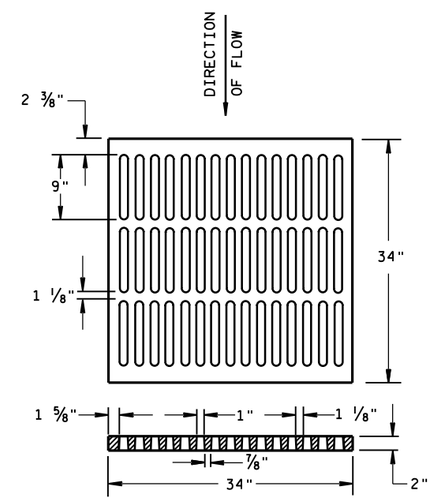

ALTERNATIVE TYPE "MS"

USE WHERE PEDESTRIAN OR BICYCLE TRAFFIC IS PERMITTED

NOTED AS TYPE MS-A ON THE DRAINAGE TABLE

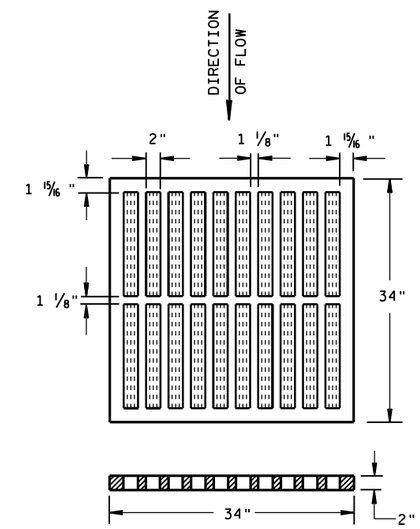

TYPE "MS"

USE ON FREEWAYS AND EXPRESSWAYS

NOTED AS TYPE MS ON DRAINAGE TABLE

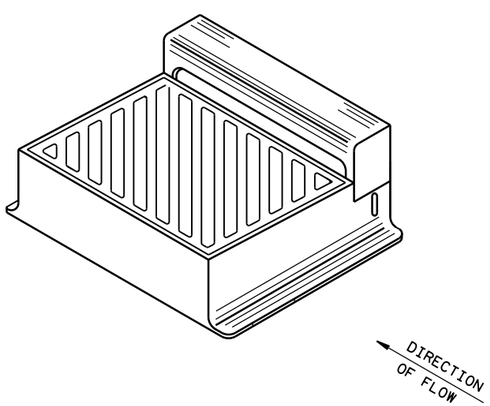

DIAGONAL SLOTS, SHALL BE ORIENTED TO THE DIRECTION OF FLOW AS ILLUSTRATED. GRATES ARE MANUFACTURED TO BE REVERSIBLE.

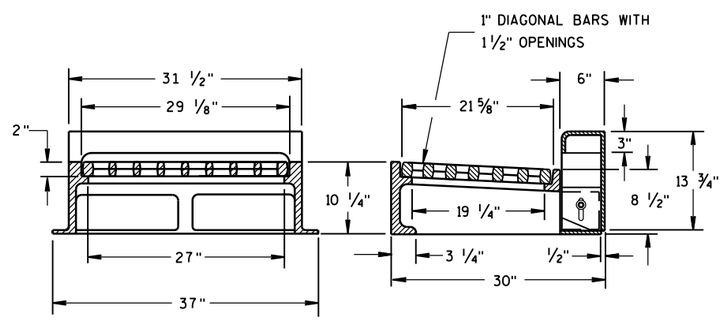

NOTE: CURB BOX HEIGHT ADJUSTABLE 6" TO 9"

TYPE "WM"

6

6

S.D.D. 8 A 5-19b

S.D.D. 8 A 5-19b

INLET COVERS
TYPE B, B-A, C,
MS, MS-A, & WM

STATE OF WISCONSIN
DEPARTMENT OF TRANSPORTATION

APPROVED

11/27/2013 — DATE

/S/ Jerry H. Zogg — ROADWAY STANDARDS DEVELOPMENT ENGINEER

FHWA

GENERAL NOTES

DETAILS OF CONSTRUCTION, MATERIALS AND WORKMANSHIP NOT SHOWN ON THIS DRAWING SHALL CONFORM TO THE PERTINENT REQUIREMENTS OF THE STANDARD SPECIFICATIONS AND THE APPLICABLE SPECIAL PROVISIONS.

DETAIL DRAWINGS FOR PROPOSED ALTERNATE DESIGNS FOR INLET COVERS SHALL BE SUBMITTED TO THE ENGINEER FOR APPROVAL PROVIDING THAT SUCH ALTERNATE DESIGNS MAKE PROVISION FOR EQUIVALENT CAPACITY AND STRENGTH.

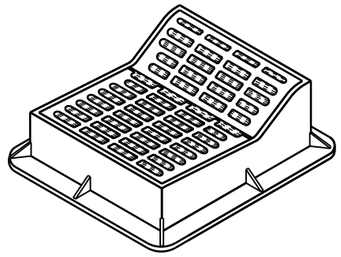

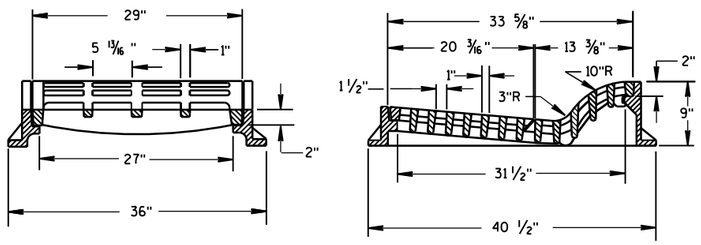

TYPE "F"

USE WITH TYPES A & D CONCRETE CURB & GUTTER, 36 INCH.

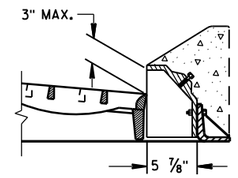

ALTERNATIVE CURB BOX FOR TYPE "HM" COVER

USE WITH TYPES G & J CONCRETE CURB & GUTTER, 30 INCH
NOTED AS TYPE HM-GJ ON DRAINAGE TABLE

NOTE:
SPECIAL GRATE FOR THE
TYPE "H" COVER MAY ALSO BE
USED FOR THE TYPE "HM-GJ" COVER
NOTED AS TYPE HM-GJ-S ON DRAINAGE TABLE

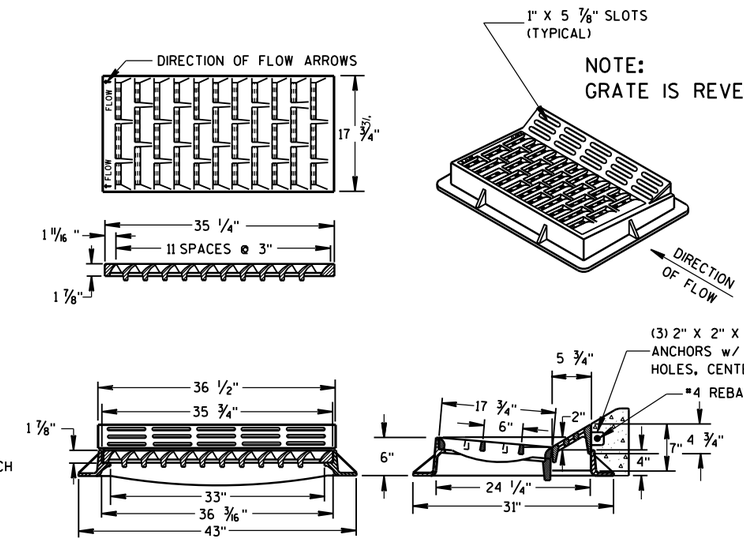

NOTE:
GRATE IS REVERSIBLE.

TYPE "HM"

USE WITH TYPES A & D CONCRETE CURB & GUTTER, 36 INCH.

NOTE:
SPECIAL GRATE FOR THE
TYPE "H" COVER MAY ALSO BE
USED FOR THE TYPE "HM" COVER
NOTED AS TYPE HM-S ON DRAINAGE TABLE

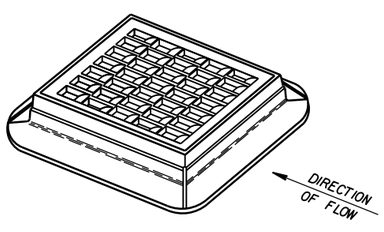

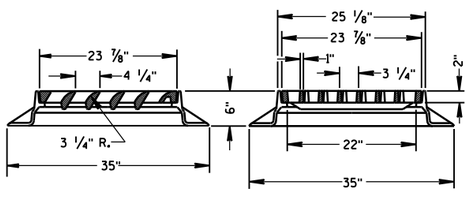

TYPE "S"

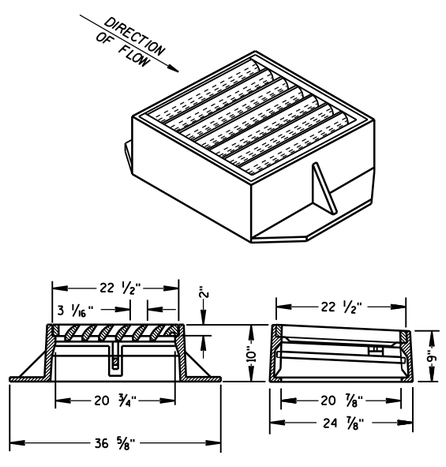

TYPE "V"

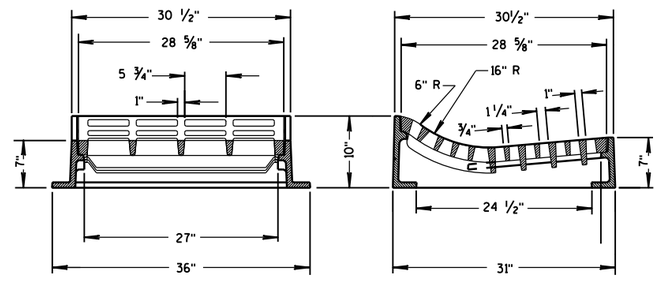

TYPE "T"

USE WITH TYPES R & T CONCRETE CURB & GUTTER, 36 INCH.

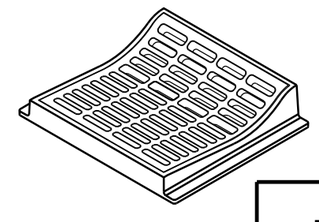

INLET COVERS
TYPE F, HM, HM-S, S, T, V, HM-GJ, & HM-GJ-S

STATE OF WISCONSIN
DEPARTMENT OF TRANSPORTATION

APPROVED
11/27/2013 — DATE
/S/ Jerry H. Zogg — ROADWAY STANDARDS DEVELOPMENT ENGINEER
FHWA

6

S.D.D. 8 A 5-19c

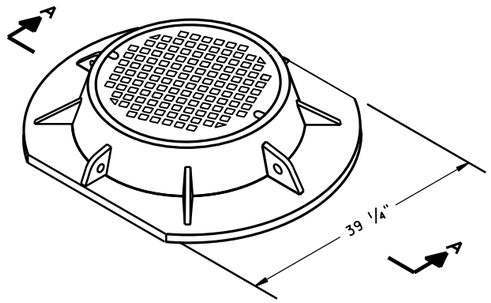

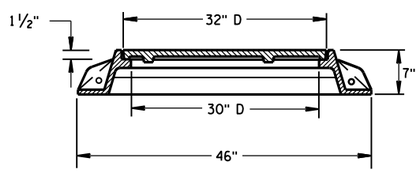

SECTION A-A
TYPE "K"

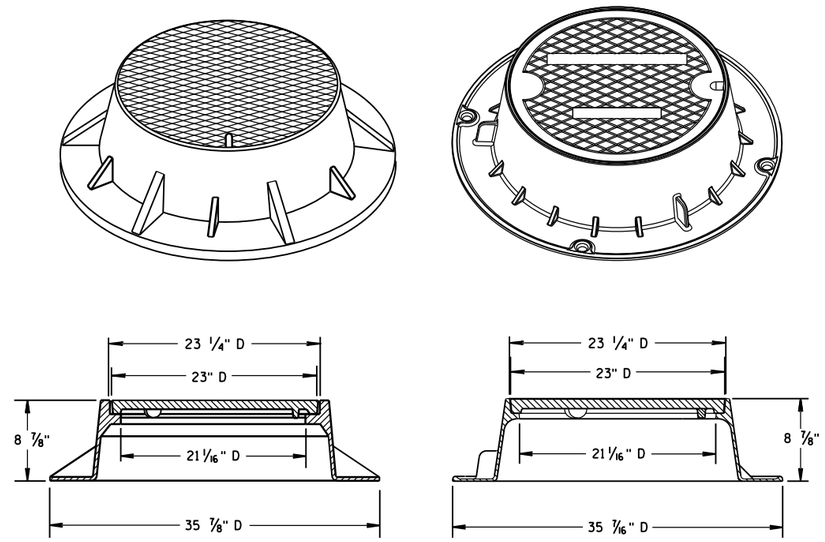

TYPE "J"
NOTE: EITHER CASTING IS ACCEPTABLE

GENERAL NOTES

DETAILS OF CONSTRUCTION, MATERIALS AND WORKMANSHIP NOT SHOWN ON THIS DRAWING SHALL CONFORM TO THE PERTINENT REQUIREMENTS OF THE STANDARD SPECIFICATIONS AND THE APPLICABLE SPECIAL PROVISIONS.

DETAIL DRAWINGS FOR PROPOSED ALTERNATE DESIGNS FOR MANHOLE COVERS SHALL BE SUBMITTED TO THE ENGINEER FOR APPROVAL PROVIDING THAT SUCH ALTERNATE DESIGNS MAKE PROVISION FOR EQUIVALENT CAPACITY AND STRENGTH.

ROUND FRAMES AND COVERS SHALL HAVE CONTINUOUSLY MACHINED BEARING SURFACES TO PREVENT ROCKING AND RATTLING.

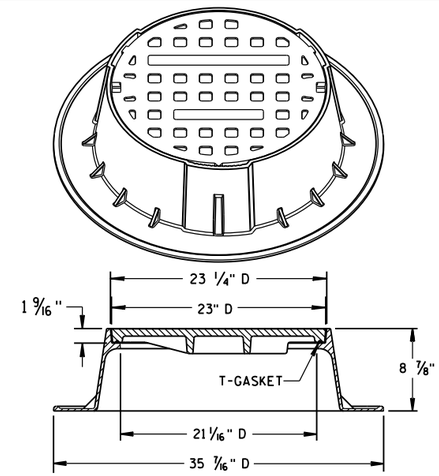

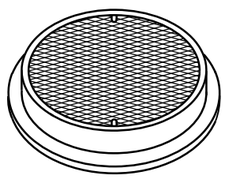

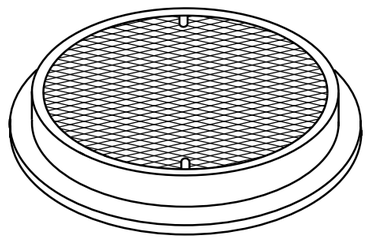

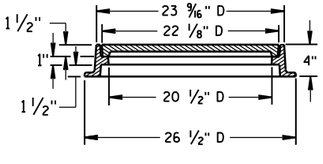

TYPE "L"

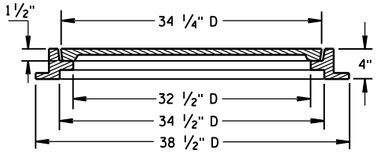

TYPE "M"

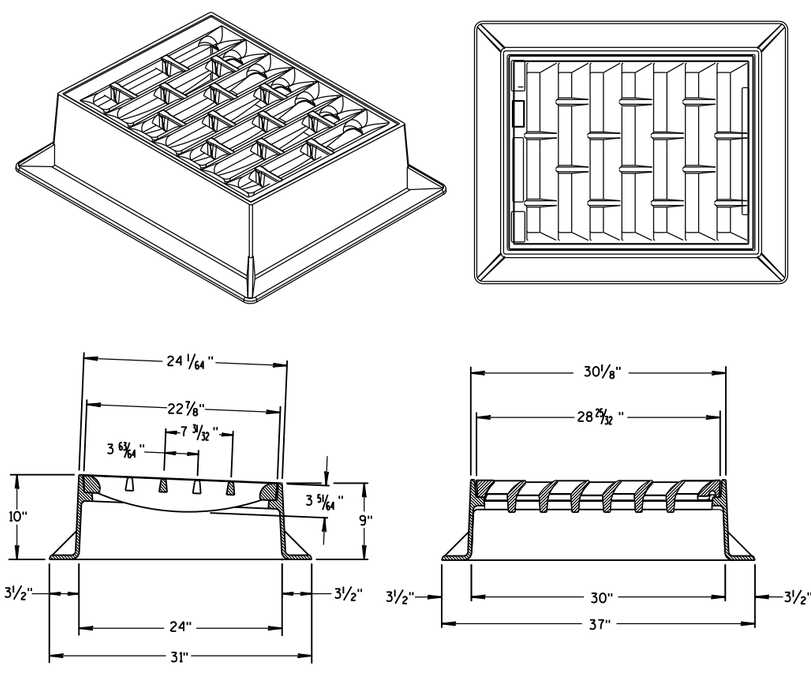

INLET COVER TYPE "BW"

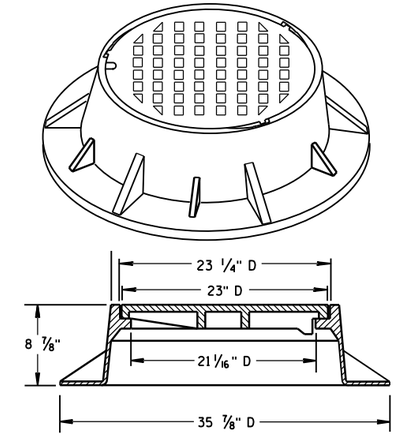

TYPE "J" SPECIAL
TYPE "B" NON-ROCKING SELF-SEAL LID
(NOTED AS TYPE J-S ON THE DRAINAGE TABLE)
NOTE: EITHER CASTING IS ACCEPTABLE

INLET COVER TYPE BW
MANHOLE COVERS, TYPE K, J, J-S, L & M

STATE OF WISCONSIN
DEPARTMENT OF TRANSPORTATION

APPROVED
11/27/2013 — DATE
/S/ Jerry H. Zogg — ROADWAY STANDARDS DEVELOPMENT ENGINEER
FHWA

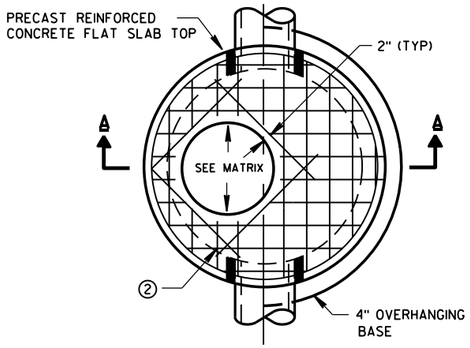

PLAN VIEW CIRCULAR OPENING

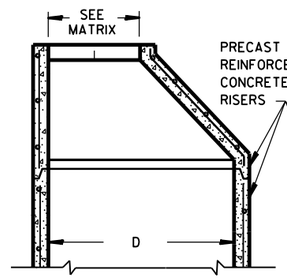

OPTIONAL PRECAST REINFORCED CONCRETE ECCENTRIC TOP

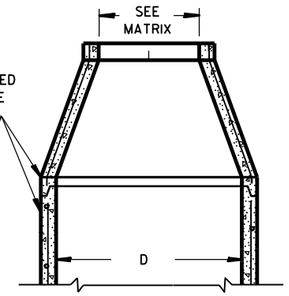

OPTIONAL PRECAST REINFORCED CONCRETE CONCENTRIC TOP

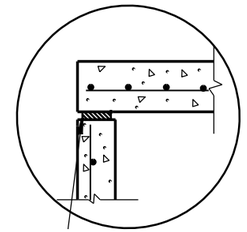

TOP WITH PLAIN END JOINT

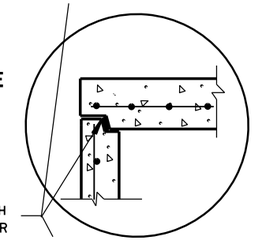

JOINTS TO BE SEALED WITH A BUTYL RUBBER SEAL PER SEALANT MANUFACTURERS RECOMMENDATIONS CONFORMING TO ASTM C990 (TYP)

TOP WITH TONGUE AND GROOVE JOINT

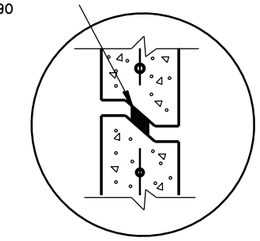

RISER WITH TONGUE AND GROOVE JOINT

DETAIL "B"

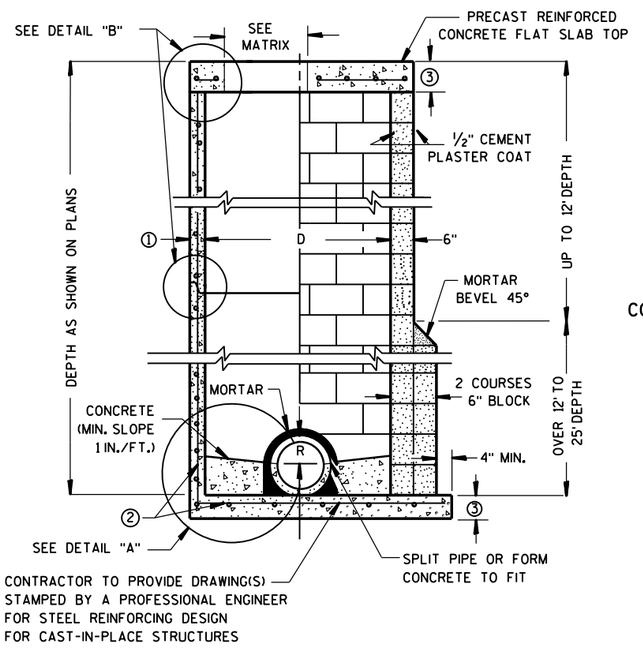

PRECAST REINFORCED CONCRETE WITH MONOLITHIC BASE

CONCRETE BLOCK WITH CAST-IN-PLACE OR PRECAST REINFORCED CONCRETE BASE ②

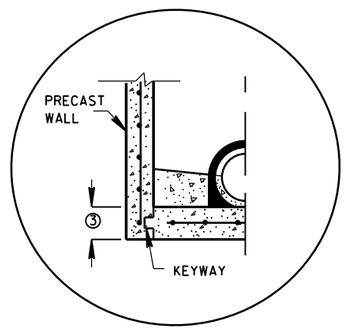

PRECAST REINFORCED CONCRETE WITH INTEGRAL BASE OPTION

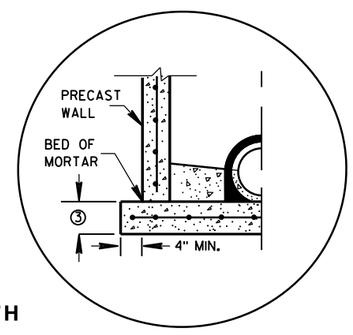

SEPARATE PRECAST REINFORCED CONCRETE BASE OPTION

DETAIL "A"

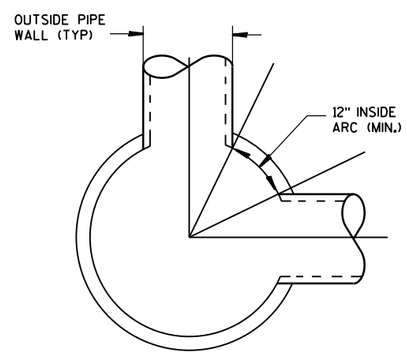

DETAIL "C"

GENERAL NOTES

DETAILS OF CONSTRUCTION, MATERIALS AND WORKMANSHIP NOT SHOWN ON THIS DRAWING SHALL CONFORM TO THE PERTINENT REQUIREMENTS OF THE STANDARD SPECIFICATIONS AND THE APPLICABLE SPECIAL PROVISIONS.

UNLESS OTHERWISE AUTHORIZED IN WRITING BY THE ENGINEER, THE CONTRACTOR SHALL NOT ORDER AND DELIVER PRECAST MANHOLE UNITS REQUIRED FOR THE PROJECT UNTIL A LIST OF SIZES IS FURNISHED BY THE ENGINEER.

DETAILED DRAWINGS FOR PROPOSED ALTERNATE DESIGNS FOR UNDERGROUND DRAINAGE STRUCTURES SHALL BE SUBMITTED TO THE ENGINEER FOR APPROVAL PROVIDING THAT SUCH ALTERNATE DESIGNS MAKE PROVISION FOR EQUIVALENT CAPACITY AND STRENGTH.

ALL DRAINAGE STRUCTURES ARE DESIGNATED ON THE PLANS AS "MANHOLES 3X3-L", "CATCH BASINS 4-B", "INLETS 2X3-H", ETC. THE FIRST NUMBERS DESIGNATE THE SIZE OF THE STRUCTURE, AND THE FOLLOWING LETTER DESIGNATES THE TYPE OF COVER TO BE USED TO COMPRISE THE COMPLETE UNIT.

BASES SHALL BE PLACED ON A BED OF MATERIAL AT LEAST 6 INCHES IN DEPTH, WHICH MEETS THE REQUIREMENTS OF GRANULAR BACKFILL. THIS BEDDING SHALL BE COMPACTED AND PROVIDE UNIFORM SUPPORT FOR THE ENTIRE AREA OF THE BASE.

PRECAST REINFORCED CONE TOPS (ECCENTRIC OR CONCENTRIC) OR PRECAST REINFORCED FLAT SLAB TOPS MAY BE USED ON CONCRETE BLOCK STRUCTURES. THE CONE TOPS SHALL BE INSTALLED ON A BED OF MORTAR.

ECCENTRIC CONE TOPS MAY BE USED ON ALL STRUCTURES, AND CONCENTRIC CONE TOPS SHALL BE USED ONLY ON STRUCTURES 5 FEET OR LESS IN DEPTH, UNLESS OTHERWISE DIRECTED BY THE ENGINEER.

STEPS MEETING AASHTO M199 AND THE FOLLOWING REQUIREMENTS SHALL BE INSTALLED IN ALL STRUCTURES OVER 5 FEET IN DEPTH: 16 INCH C-C MAXIMUM SPACING; PROJECT A MINIMUM CLEAR DISTANCE OF 4 INCHES FROM THE WALL AT THE POINT OF EMBEDMENT; MINIMUM LENGTH OF 10 INCHES; MINIMUM WALL EMBEDMENT OF 3 INCHES. FERROUS METAL STEPS NOT PAINTED OR TREATED TO RESIST CORROSION SHALL HAVE A MINIMUM CROSS SECTIONAL DIMENSION OF 1 INCH.

STEPS OF APPROVED POLYPROPYLENE PLASTIC COATED REINFORCEMENT BAR ARE ACCEPTABLE. REINFORCING BAR MUST BE A MINIMUM OF ½" AND MEET THE REQUIREMENTS OF ASTM A615.

CERTIFICATION SHALL BE PROVIDED THAT INSTALLED STEPS WHEN TESTED IN ACCORDANCE WITH SECTION 10 OF AASHTO T280 CAN WITHSTAND A VERTICAL LOAD OF 800 LBS. AND A HORIZONTAL LOAD OF 400 LBS.

ALL BAR STEEL REINFORCEMENT SHALL BE EMBEDDED 2 INCHES CLEAR UNLESS OTHERWISE SHOWN OR NOTED.

CONCRETE BLOCK WILL NOT BE PERMITED FOR STRUCTURES GREATER THAN 4 FEET IN DIAMETER.

PRECAST REINFORCED RISERS SHALL HAVE A TONGUE AND GROOVE JOINT WITH TONGUE UP OR DOWN.

ALL PRECAST MANHOLE UNITS SHALL CONFORM TO THE PERTINENT REQUIREMENTS OF AASHTO DESIGNATION M 199.

4" OVERHANGING BASES ARE REQUIRED FOR ALL CONCRETE BLOCK INSTALLATIONS. 4" OVERHANG IS REQUIRED WHEN SEPARATE PRECAST BASE IS PROVIDED. OVERHANG IS NOT REQUIRED ON PRECAST STRUCTURES WITH AN INTEGRAL OR MONOLITHIC BASE.

FOR ADDITIONAL CONFIGURATIONS, MAINTAIN A MINIMUM OF 12 INCHES AS MEASURED FROM THE INSIDE OF THE STRUCTURE WALL BETWEEN THE OUTSIDE PIPE WALLS OF ADJACENT PIPES. SEE DETAIL "C".

① MINIMUM WALL THICKNESS SHALL BE 4 INCHES FOR 3-FT, 5 INCHES FOR 4-FT, 6 INCHES FOR 5-FT, 7 INCHES FOR 6-FT, 8 INCHES FOR 7-FT AND 9 INCHES FOR 8-FT DIAMETER PRECAST MANHOLES.

② FOR PRECAST MANHOLES PROVIDE REINFORCING STEEL IN ACCORDANCE TO AASHTO M199.

③ PRECAST FLAT SLAB TOPS AND BASES WITH A DIAMETER OF 48" AND LESS SHALL HAVE A MINIMUM THICKNESS OF 6". PRECAST FLAT SLAB TOPS AND BASES WITH A DIAMETER LARGER THAN 48" SHALL HAVE A MINIMUM THICKNESS OF 8".

MANHOLE COVER OPENING MATRIX

MANHOLE COVER TYPE	C	ALL J'S	K	L	M
OPENING SIZE (FT)					
2 DIA.	X	X		X	
3 DIA.			X		X

PIPE MATRIX

MANHOLE SIZE	MAXIMUM INSIDE PIPE DIAMETER FOR TWO PIPES	
	180° SEPARATION (IN)	90° SEPARATION (IN)
3-FT	15	12
4-FT	24	18
5-FT	36	24
6-FT	42	36
7-FT	48	36
8-FT	60	42

MANHOLES 3-FT, 4-FT, 5-FT, 6-FT, 7-FT AND 8-FT DIAMETER

STATE OF WISCONSIN
DEPARTMENT OF TRANSPORTATION

APPROVED
6/5/2012 — DATE
/S/ Jerry H. Zogg
ROADWAY STANDARDS DEVELOPMENT ENGINEER
FHWA

MANHOLES 3-FT, 4-FT, 5-FT, 6-FT, 7-FT AND 8-FT DIAMETER

6

S.D.D. 8 B 9-1

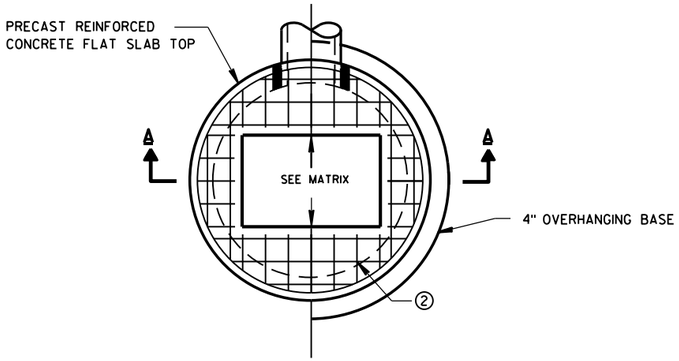

PLAN VIEW RECTANGULAR OPENING

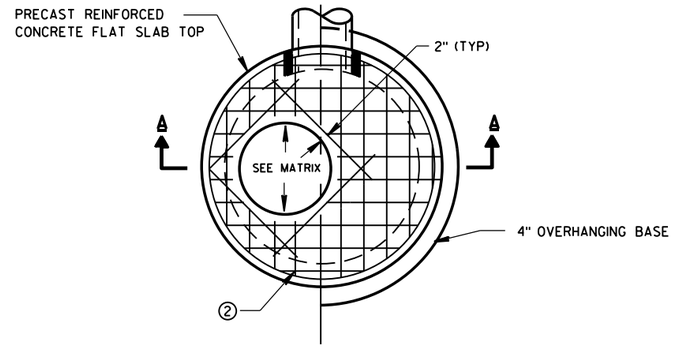

PLAN VIEW CIRCULAR OPENING

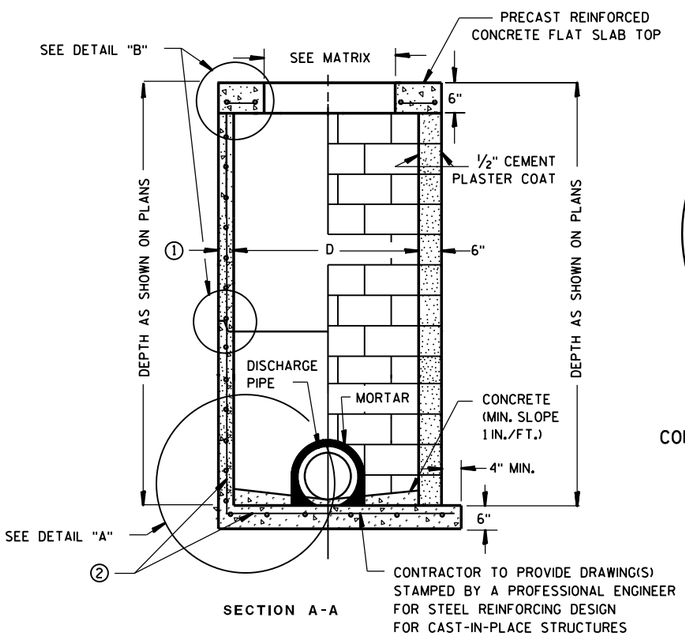

SECTION A-A

PRECAST REINFORCED CONCRETE WITH MONOLITHIC BASE

CONCRETE BLOCK WITH CAST-IN-PLACE OR PRECAST REINFORCED CONCRETE BASE 2

CIRCULAR INLETS W/ FLAT TOP

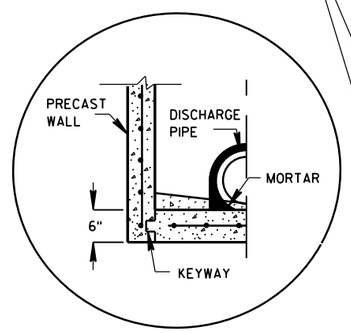

PRECAST REINFORCED CONCRETE WITH INTEGRAL BASE OPTION

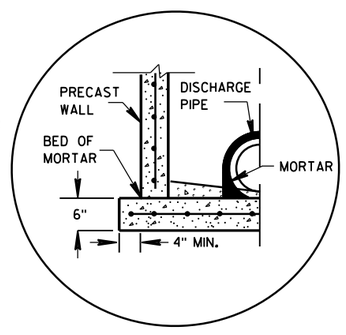

SEPARATE PRECAST REINFORCED CONCRETE BASE OPTION

DETAIL "A"

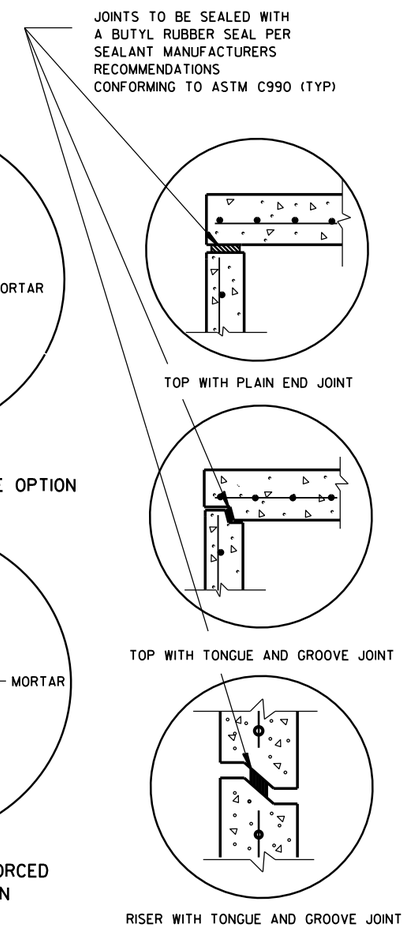

DETAIL "B"

GENERAL NOTES

DETAILS OF CONSTRUCTION, MATERIALS AND WORKMANSHIP NOT SHOWN ON THIS DRAWING SHALL CONFORM TO THE PERTINENT REQUIREMENTS OF THE STANDARD SPECIFICATIONS AND THE APPLICABLE SPECIAL PROVISIONS.

UNLESS OTHERWISE AUTHORIZED IN WRITING BY THE ENGINEER, THE CONTRACTOR SHALL NOT ORDER AND DELIVER PRECAST INLET UNITS REQUIRED FOR THE PROJECT UNTIL A LIST OF SIZES IS FURNISHED BY THE ENGINEER.

DETAILED DRAWINGS FOR PROPOSED ALTERNATE DESIGNS FOR UNDERGROUND DRAINAGE STRUCTURES SHALL BE SUBMITTED TO THE ENGINEER FOR APPROVAL PROVIDING THAT SUCH ALTERNATE DESIGNS MAKE PROVISION FOR EQUIVALENT CAPACITY AND STRENGTH.

ALL DRAINAGE STRUCTURES ARE DESIGNATED ON THE PLANS AS "MANHOLES 3X3-L", "CATCH BASINS 4-B", "INLETS 2X3-H", ETC. THE FIRST NUMBERS DESIGNATE THE SIZE OF THE STRUCTURE, AND THE FOLLOWING LETTER DESIGNATES THE TYPE OF COVER TO BE USED TO COMPRISE THE COMPLETE UNIT.

BASES SHALL BE PLACED ON A BED OF MATERIAL AT LEAST 6 INCHES IN DEPTH, WHICH MEETS THE REQUIREMENTS OF GRANULAR BACKFILL. THIS BEDDING SHALL BE COMPACTED AND PROVIDE UNIFORM SUPPORT FOR THE ENTIRE AREA OF THE BASE.

ALL BAR STEEL REINFORCEMENT SHALL BE EMBEDDED 2 INCHES CLEAR UNLESS OTHERWISE SHOWN OR NOTED.

ALL PRECAST INLET UNITS SHALL CONFORM TO THE PERTINENT REQUIREMENTS OF AASHTO DESIGNATION M199.

PRECAST REINFORCED RISERS SHALL HAVE A TONGUE AND GROOVE JOINT WITH TONGUE UP OR DOWN.

4" OVERHANGING BASES ARE REQUIRED FOR ALL CONCRETE BLOCK INSTALLATIONS. 4" OVERHANG IS REQUIRED WHEN SEPARATE PRECAST BASE IS PROVIDED. OVERHANG IS NOT REQUIRED ON PRECAST STRUCTURES WITH AN INTEGRAL OR MONOLITHIC BASE.

FOR ADDITIONAL CONFIGURATIONS, MAINTAIN A MINIMUM OF 12 INCHES AS MEASURED FROM THE INSIDE OF THE STRUCTURE WALL BETWEEN THE OUTSIDE PIPE WALLS OF ADJACENT PIPES. SEE DETAIL "C".

1 MINIMUM WALL THICKNESS SHALL BE 4-IN FOR 3-FT DIAMETER AND 5-IN FOR 4-FT DIAMETER PRECAST INLETS.

2 FOR PRECAST CATCH BASINS PROVIDE REINFORCING STEEL IN ACCORDANCE TO AASHTO M199.

INLET COVER OPENING MATRIX

	INLET COVER TYPE	ALL A'S	ALL B'S	BW	C	F	ALL H'S	S	T	V	WM	Z
INLET SIZE	OPENING SIZE (FT)											
3-FT	2 DIA.				X							X
	2X2	X	X					X		X		
4-FT	2 DIA.				X							X
	2X2	X	X					X		X		
	2X2.5			X				X	X	X	X	
	2X3						X					
	2.5X3					X						

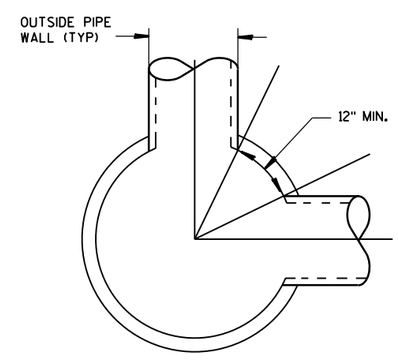

DETAIL "C"

PIPE MATRIX

INLET SIZE	MAXIMUM INSIDE PIPE DIAMETER FOR TWO PIPES	
	180° SEPARATION (IN)	90° SEPARATION (IN)
3-FT	15	12
4-FT	24	18

INLETS 3-FT AND 4-FT DIAMETER

STATE OF WISCONSIN
DEPARTMENT OF TRANSPORTATION

APPROVED
6/5/2012 — DATE
/S/ Jerry H. Zogg — ROADWAY STANDARDS DEVELOPMENT ENGINEER
FHWA

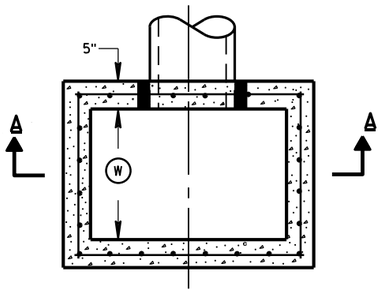

PLAN VIEW

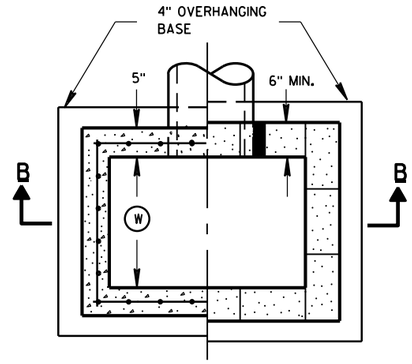

PLAN VIEW

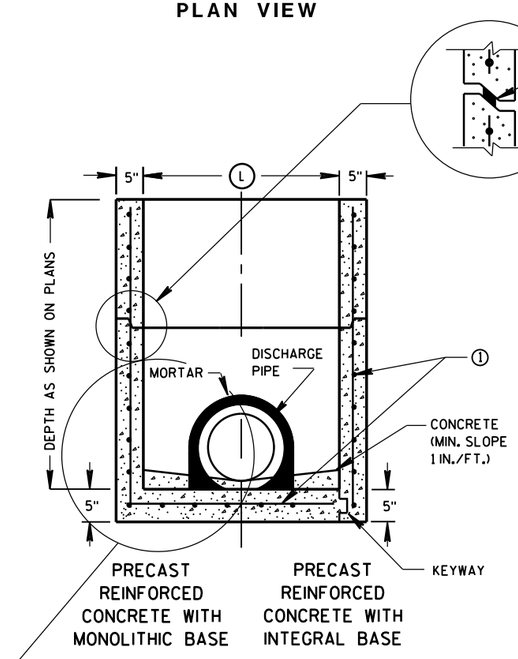

SECTION A-A

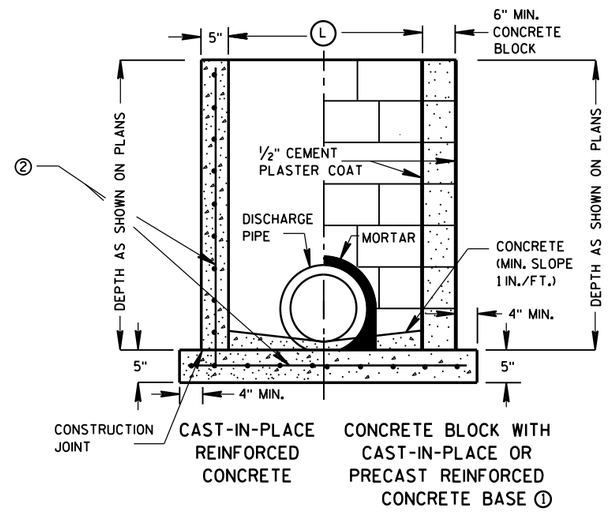

SECTION B-B

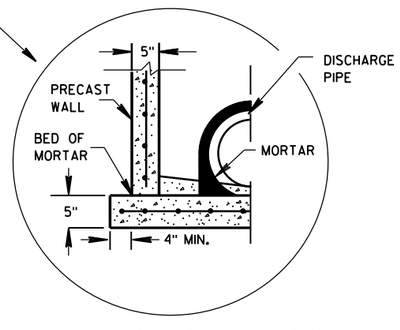

SEPARATE PRECAST REINFORCED CONCRETE BASE OPTION

GENERAL NOTES

DETAILS OF CONSTRUCTION, MATERIALS AND WORKMANSHIP NOT SHOWN ON THIS DRAWING SHALL CONFORM TO THE PERTINENT REQUIREMENTS OF THE STANDARD SPECIFICATIONS AND THE APPLICABLE SPECIAL PROVISIONS.

UNLESS OTHERWISE AUTHORIZED IN WRITING BY THE ENGINEER, THE CONTRACTOR SHALL NOT ORDER AND DELIVER PRECAST INLET UNITS REQUIRED FOR THE PROJECT UNTIL A LIST OF SIZES IS FURNISHED BY THE ENGINEER.

DETAILED DRAWINGS FOR PROPOSED ALTERNATE DESIGNS FOR UNDERGROUND DRAINAGE STRUCTURES SHALL BE SUBMITTED TO THE ENGINEER FOR APPROVAL PROVIDING THAT SUCH ALTERNATE DESIGNS MAKE PROVISION FOR EQUIVALENT CAPACITY AND STRENGTH.

ALL PRECAST INLET UNITS SHALL CONFORM TO THE PERTINENT REQUIREMENTS OF ASTM C 913.

ALL DRAINAGE STRUCTURES ARE DESIGNATED ON THE PLANS AS "MANHOLES 3X3-L", "CATCH BASINS 4-B", "INLETS 2X3-H", ETC. THE FIRST NUMBERS DESIGNATES THE SIZE OF THE STRUCTURE, AND THE FOLLOWING LETTER DESIGNATES THE TYPE OF COVER TO BE USED TO COMPRISE THE COMPLETE UNIT.

BASES SHALL BE PLACED ON A BED OF MATERIAL AT LEAST 6 INCHES IN DEPTH, WHICH MEETS THE REQUIREMENTS OF GRANULAR BACKFILL. THIS BEDDING SHALL BE COMPACTED AND PROVIDE UNIFORM SUPPORT FOR THE ENTIRE AREA OF THE BASE.

ALL BAR STEEL REINFORCEMENT SHALL BE EMBEDDED 2 INCHES CLEAR UNLESS OTHERWISE SHOWN OR NOTED.

PRECAST REINFORCED RISERS SHALL HAVE A TONGUE AND GROOVE JOINT WITH TONGUE UP OR DOWN.

4" OVERHANGING BASES ARE REQUIRED FOR CAST-IN-PLACE REINFORCED CONCRETE AND CONCRETE BLOCK INSTALLATIONS.
4" OVERHANG IS REQUIRED WHEN SEPARATE PRECAST BASE IS PROVIDED.
OVERHANG IS NOT REQUIRED ON PRECAST STRUCTURES WITH AN INTEGRAL OR MONOLITHIC BASE.

MAXIMUM INSIDE PIPE DIAMETER DETERMINED BY 3 INCH CLEARANCE ON EACH SIDE OF THE OUTSIDE WALL OF THE PIPE. SEE DETAIL "A". ASSUMES PIPE ENTERS PERPENDICULAR TO THE STRUCTURE.

① FOR PRECAST INLETS PROVIDE REINFORCING STEEL IN ACCORDANCE TO ASTM C 913.

② CONTRACTOR TO PROVIDE DRAWING(S) STAMPED BY A PROFESSIONAL ENGINEER FOR STEEL REINFORCING DESIGN FOR CAST-IN-PLACE STRUCTURES.

INLET COVER MATRIX

INLET SIZE		INLET COVER TYPE	ALL A'S	ALL B'S	BW	F	ALL H'S	S	T	V	WM
	WIDTH (W) (FT)	LENGTH (L) (FT)									
2X2-FT	2	2	X	X				X		X	
2X2.5-FT	2	2.5			X			X	X	X	X
2X3-FT	2	3					X				
2.5X3-FT	2.5	3				X					

PIPE MATRIX

INLET SIZE	MAXIMUM INSIDE PIPE DIAMETER	
	WIDTH (IN)	LENGTH (IN)
2X2-FT	12	12
2X2.5-FT	12	18
2X3-FT	12	24
2.5X3-FT	18	24

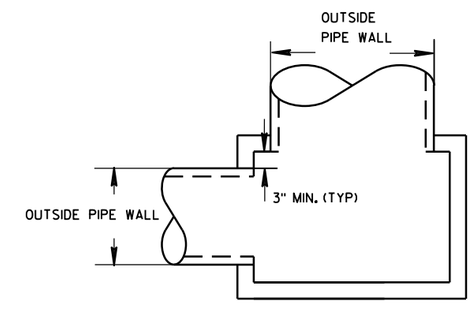

DETAIL "A"

INLETS 2X2-FT, 2X2.5-FT, 2X3-FT AND 2.5X3-FT

STATE OF WISCONSIN
DEPARTMENT OF TRANSPORTATION

APPROVED
6/5/2012 — DATE
/S/ Jerry H. Zogg — ROADWAY STANDARDS DE ENGINEER
FHWA

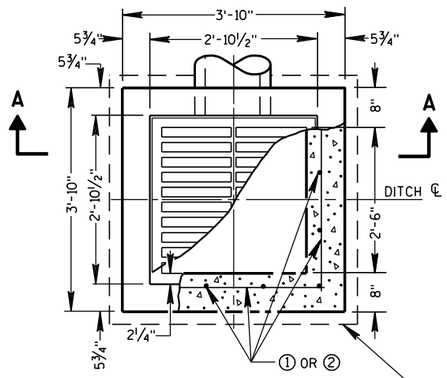

PLAN VIEW

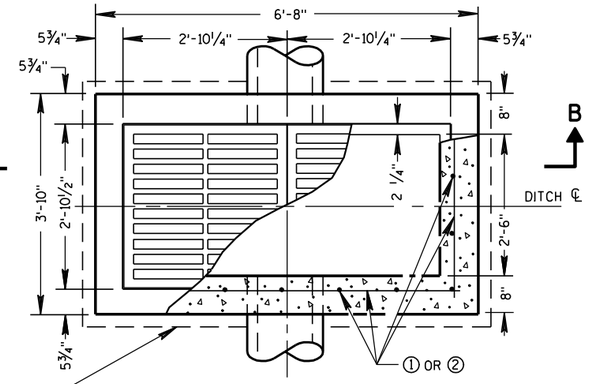

PLAN VIEW

4" OVERHANGING BASE ON REINFORCED CAST-IN-PLACE CONCRETE INLETS

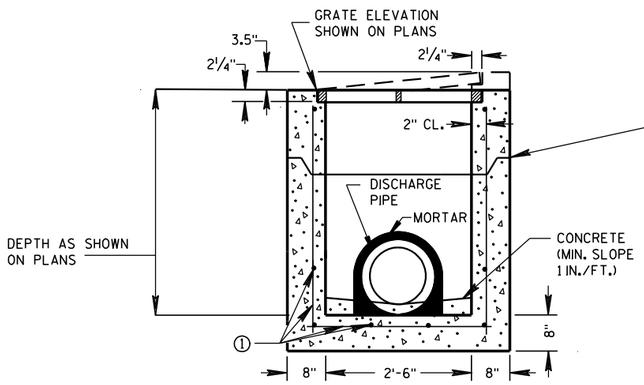

PRECAST REINFORCED CONCRETE SECTION A-A

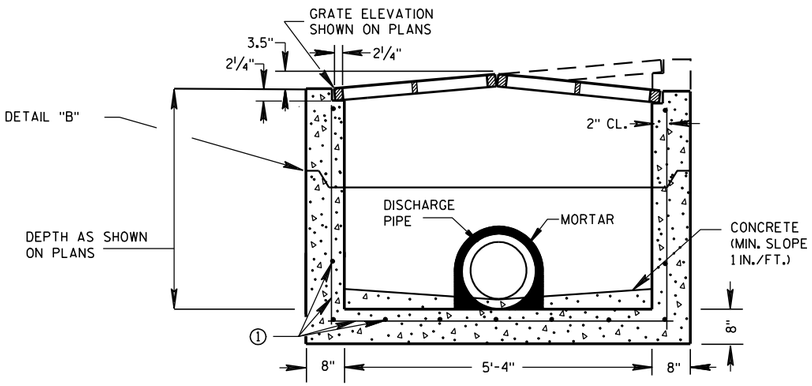

PRECAST REINFORCED CONCRETE SECTION B-B

GENERAL NOTES

DETAILS OF CONSTRUCTION, MATERIALS AND WORKMANSHIP NOT SHOWN ON THIS DRAWING SHALL CONFORM TO THE PERTINENT REQUIREMENTS OF THE STANDARD SPECIFICATIONS AND THE APPLICABLE SPECIAL PROVISIONS.

UNLESS OTHERWISE AUTHORIZED IN WRITING BY THE ENGINEER, THE CONTRACTOR SHALL NOT ORDER AND DELIVER PRECAST INLET UNITS REQUIRED FOR THE PROJECT UNTIL A LIST OF SIZES IS FURNISHED BY THE ENGINEER.

DETAILED DRAWINGS FOR PROPOSED ALTERNATE DESIGNS FOR INLETS WHICH MAY INCLUDE PRECAST REINFORCED CONCRETE INLETS, SHALL BE SUBMITTED TO THE ENGINEER FOR APPROVAL PROVIDING THAT SUCH ALTERNATE DESIGNS MAKE PROVISION FOR EQUIVALENT CAPACITY AND STRENGTH.

ALL MEDIAN INLETS ARE DESIGNATED ON THE PLANS AS "INLETS, 1G-MS", ETC. THE FIRST NUMBER AND LETTER DESIGNATE THE TYPE OF STRUCTURE, AND THE FOLLOWING LETTERS DESIGNATE THE TYPE OF COVER TO BE USED TO COMPRISE THE COMPLETE UNIT.

ALL BAR STEEL REINFORCEMENT SHALL BE EMBEDDED 2 INCHES CLEAR UNLESS OTHERWISE SHOWN OR NOTED.

PRECAST REINFORCED RISERS SHALL HAVE A TONGUE AND GROOVE JOINT WITH TONGUE UP OR DOWN.

ALL PRECAST INLET UNITS SHALL CONFORM TO THE PERTINENT REQUIREMENTS OF ASTM C 913.

MAXIMUM INSIDE PIPE DIAMETER DETERMINED BY 3" CLEARANCE ON EACH SIDE OF THE OUTSIDE WALL OF THE PIPE. SEE DETAIL "A". ASSUMES PIPE ENTERS PERPENDICULAR TO THE STRUCTURE.

① FOR PRECAST INLETS PROVIDE REINFORCING STEEL IN ACCORDANCE TO ASTM C 913.

② CONTRACTOR TO PROVIDE DRAWING(S) STAMPED BY A PROFESSIONAL ENGINEER FOR STEEL REINFORCING DESIGN FOR CAST-IN-PLACE STRUCTURES.

PIPE MATRIX

	MAXIMUM INSIDE PIPE DIAMETER	
INLET SIZE	WIDTH (IN)	LENGTH (IN)
1 GRATE	18	18
2 GRATE	18	42

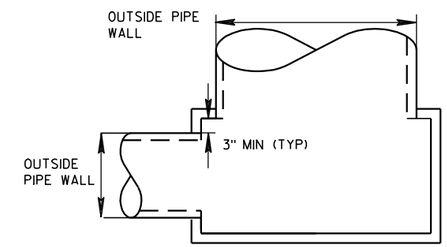

DETAIL "A"

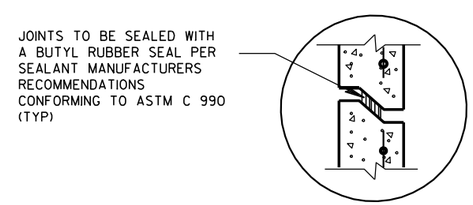

DETAIL "B"

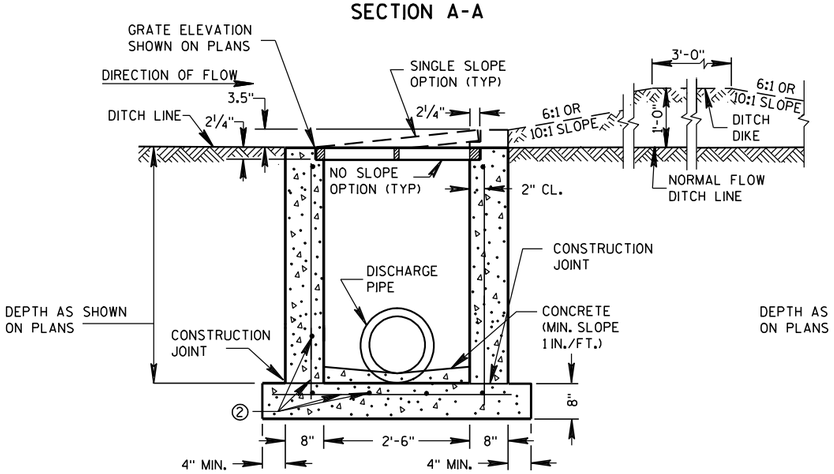

REINFORCED CAST-IN-PLACE CONCRETE SECTION A-A

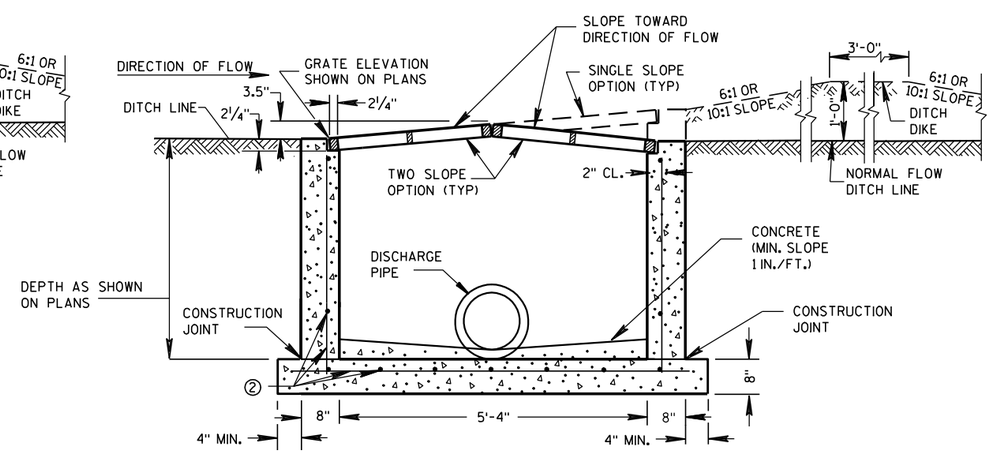

REINFORCED CAST-IN-PLACE CONCRETE SECTION B-B

INLETS MEDIAN 1 GRATE

INLETS MEDIAN 2 GRATE

INLETS MEDIAN 1 AND 2 GRATE

STATE OF WISCONSIN
DEPARTMENT OF TRANSPORTATION

APPROVED

6/5/2012	/S/ Jerry H. Zogg
DATE	ROADWAY STANDARDS DEVELOPMENT ENGINEER

FHWA

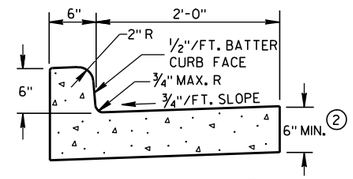

TYPES A & D ①

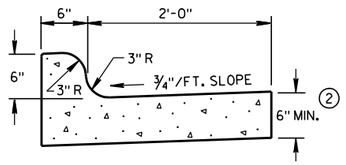

TYPES K & L ①

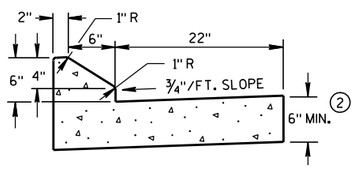

6" SLOPED CURB TYPES G & J ①

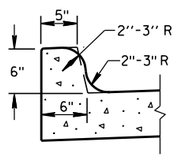

OPTIONAL CURB SHAPE FOR TYPES K & L ①

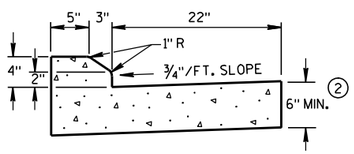

4" SLOPED CURB TYPES G & J ①

CONCRETE CURB & GUTTER 30"

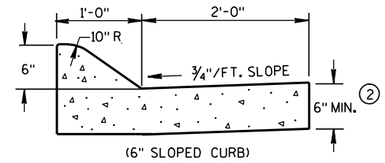

(6" SLOPED CURB)

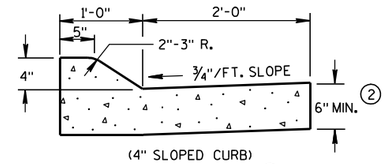

(4" SLOPED CURB)

TYPES A & D ①

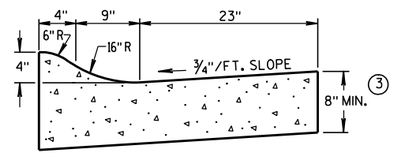

4" SLOPED CURB TYPES R & T ① ④

CONCRETE CURB & GUTTER 36"

GENERAL NOTES

DETAILS OF CONSTRUCTION, MATERIALS AND WORKMANSHIP NOT SHOWN ON THIS DRAWING SHALL CONFORM TO THE PERTINENT REQUIREMENTS OF THE CONTRACT.

PAVEMENT TIES AND TIE BARS SHALL BE EPOXY COATED IN CONFORMANCE WITH SUBSECTION 505.2.6.2 OF THE STANDARD SPECIFICATIONS.

INTEGRAL CURB & GUTTER SHALL CONFORM TO THE DETAILS SHOWN FOR CONCRETE CURB & GUTTER INCLUDING THE TRANSVERSE GUTTER SLOPE. A LONGITUDINAL CONSTRUCTION JOINT IS NOT REQUIRED WITH INTEGRAL CURB AND GUTTER.

WHERE THE TRANSVERSE JOINTS IN THE PAVEMENT ARE REQUIRED TO BE SEALED, THE JOINTS IN THE INTEGRAL CURB AND GUTTER SHALL BE SEALED TO THE FACE OF CURB WITH THE SAME TYPE OF SEALANT. THE COST OF FURNISHING AND INSTALLING THIS SEALANT SHALL BE INCIDENTAL TO THE ITEM CONCRETE CURB AND GUTTER.

UNLESS OTHERWISE SHOWN ON THE TYPICAL CROSS SECTIONS, THE BASE AGGREGATE AND COMMON EXCAVATION LIMITS ARE 2'-0" BEHIND THE BACK OF CURBS.

① TIE BARS ARE REQUIRED FOR CURB AND GUTTER TYPES A, G, K AND R.

② THE BOTTOM OF CURB AND GUTTER MAY BE CONSTRUCTED EITHER LEVEL OR PARALLEL TO THE SLOPE OF THE SUBGRADE OR BASE AGGREGATE PROVIDED A 6" MINIMUM GUTTER THICKNESS IS MAINTAINED.

③ THE BOTTOM OF CURB AND GUTTER MAY BE CONSTRUCTED EITHER LEVEL OR PARALLEL TO THE SLOPE OF THE SUBGRADE OR BASE AGGREGATE PROVIDED A 8" MINIMUM GUTTER THICKNESS IS MAINTAINED.

④ THE FACE OF CURB IS 6" FROM THE BACK OF CURB.

⑤ WHEN REVERSE SLOPE GUTTER IS REQUIRED, THE LOCATION(S) WILL BE SHOWN ELSEWHERE IN THE PLAN.

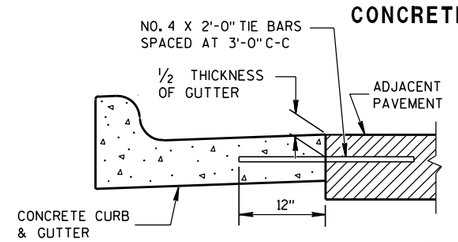

TYPICAL TIE BAR LOCATION ①

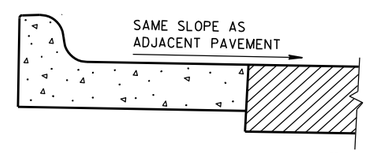

REVERSE SLOPE GUTTER ⑤
(TYPICAL FOR ALL CURB & GUTTER TYPES)

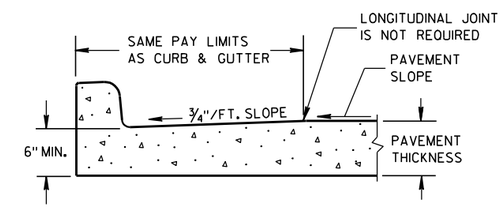

PARTIAL SECTION OF PAVEMENT WITH INTEGRAL CURB & GUTTER

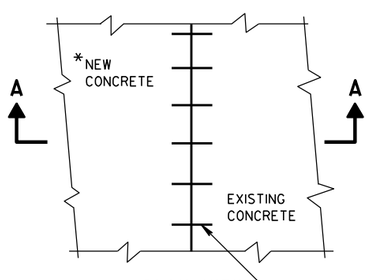

*NEW CURB & GUTTER, SURFACE DRAINS, CONCRETE PAVEMENT OR OTHER NEW CONCRETE.

PLAN VIEW

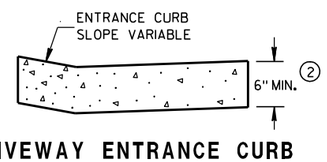

DRIVEWAY ENTRANCE CURB
(WHEN DIRECTED BY THE ENGINEER)

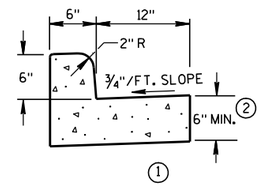

① TYPES A & D

CONCRETE CURB & GUTTER 18"

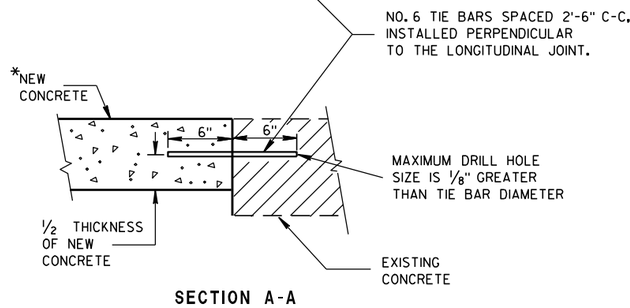

SECTION A-A

TIE BARS DRILLED INTO EXISTING PAVEMENT

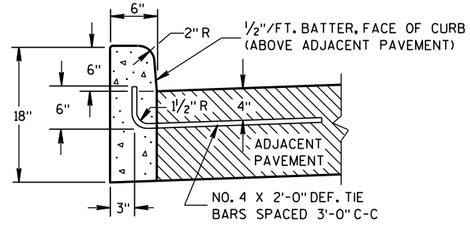

① TYPES A & D

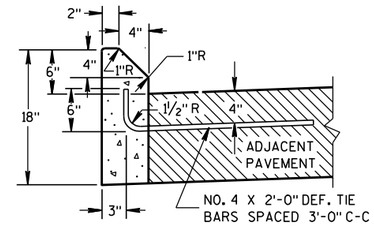

① TYPES G & J

CONCRETE CURB

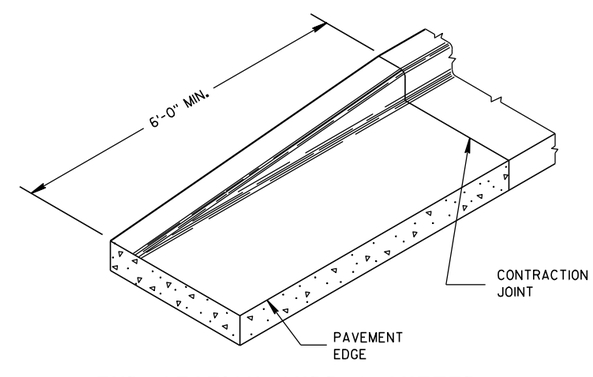

END SECTION CURB & GUTTER

CONCRETE CURB, CONCRETE CURB & GUTTER AND TIES

STATE OF WISCONSIN
DEPARTMENT OF TRANSPORTATION

APPROVED
9/4/08 — DATE
/S/ Jerry H. ---- — ROADWAY STANDARDS ENGINEER
FHWA

6

S.D.D. 8 D 1-17

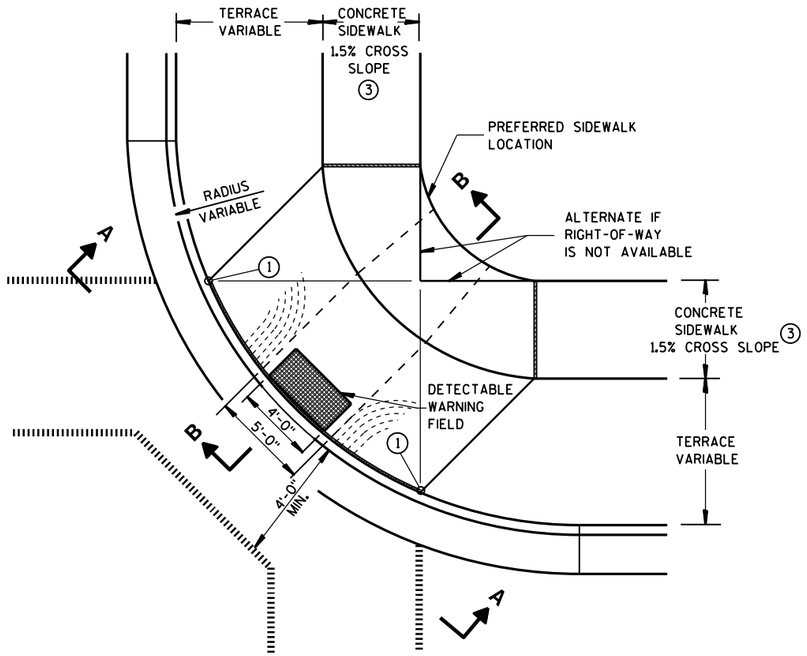

PLAN VIEW

TYPE 1 RAMP

(CENTER OF CORNER RADIUS)

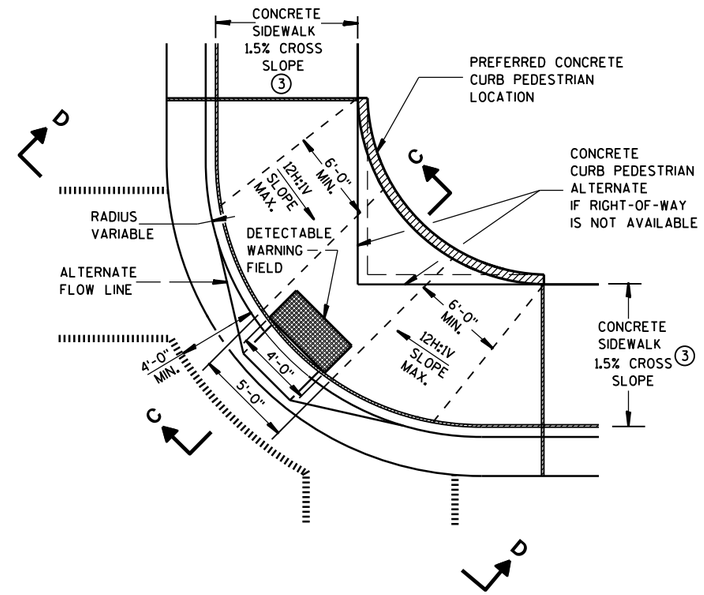

PLAN VIEW

TYPE 1-A RAMP

(NO TERRACE)

GENERAL NOTES

DETAILS OF CONSTRUCTION, MATERIALS AND WORKMANSHIP NOT SHOWN ON THIS DRAWING SHALL CONFORM TO THE PERTINENT REQUIREMENTS OF THE STANDARD SPECIFICATIONS AND THE APPLICABLE SPECIAL PROVISIONS.

RAMPS SHALL BE BUILT AT 12H:1V OR FLATTER. WHEN NECESSARY, THE SIDEWALK ELEVATION MAY BE LOWERED TO MEET THE HIGH POINT ON THE RAMP.

TYPE 1 RAMPS SHALL HAVE A NORMAL SIDEWALK APRON AND CURB ON BOTH SIDES OF RAMP.

DETECTABLE WARNING FIELD SHALL BE MEASURED AND PAID BY THE SQUARE FOOT AS "CURB RAMP DETECTABLE WARNING FIELD". THE CONCRETE PEDESTRIAN CURB, IF NEEDED, SHALL BE MEASURED AND PAID BY THE LINEAL FOOT AS "CONCRETE CURB PEDESTRIAN". CONCRETE SIDEWALK IN THE CURB RAMP AREA SHALL BE MEASURED AND PAID BY THE SQUARE FOOT AS CONCRETE SIDEWALK, INCLUDING THE AREA UNDER THE DETECTABLE WARNING FIELD.

SELECT CURB RAMP DETECTABLE WARNING FIELD MATERIALS AND DEVICES FROM THE DEPARTMENT'S APPROVED MATERIALS LIST. THE COLOR OF THE DETECTABLE WARNING FIELD IS SPECIFIED ELSEWHERE AND IS INCIDENTAL TO THE BID ITEM OF "CURB RAMP DETECTABLE WARNING FIELD".

DETECTABLE WARNING FIELDS THAT ARE INSTALLED AS A GROUP OR SIDE BY SIDE, SHALL BE FROM THE SAME MANUFACTURER.

SURFACE TEXTURE OF THE RAMP SHALL BE OBTAINED BY COARSE BROOMING TRANSVERSE TO THE SLOPE OF THE RAMP.

1. THIS POINT IS AN EXTENSION OF OUTSIDE EDGE OF APPROACHING SIDEWALK WHERE IT MEETS THE BACK OF CONCRETE CURB.
2. GRADE CHANGE BETWEEN GUTTER FLAG SLOPE AND THE CURB RAMP SLOPE SHALL NOT EXCEED 11%. PROVIDE DRAINAGE AWAY FROM CURB RAMP AT GUTTER FLAG INTERFACE.
3. ±0.5% CONSTRUCTION TOLERANCE IN SIDEWALK CROSS SLOPE. THE SIDEWALK CROSS SLOPE SHALL NOT EXCEED 2% WITHOUT PRIOR APPROVAL FROM THE ENGINEER.

LEGEND

- ½" EXPANSION JOINT-SIDEWALK
- CONTRACTION JOINT FIELD LOCATED
- PAVEMENT MARKING CROSSWALK (WHITE)
- ALTERNATIVE LAYOUT

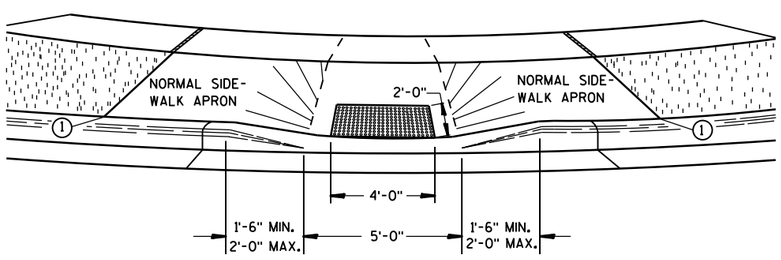

VIEW A-A

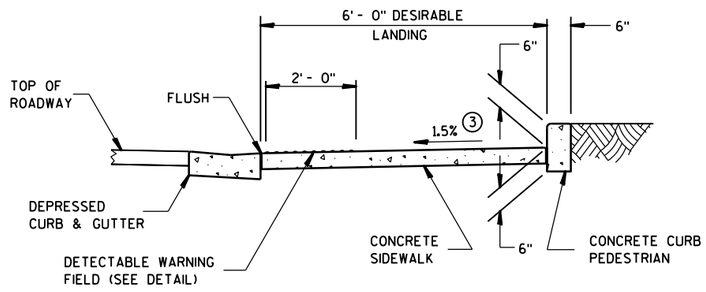

SECTION C-C

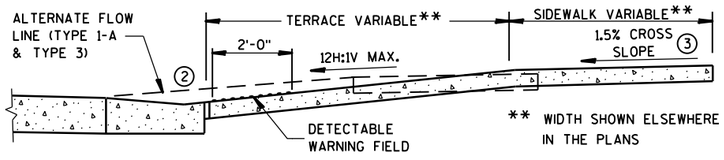

SECTION B-B

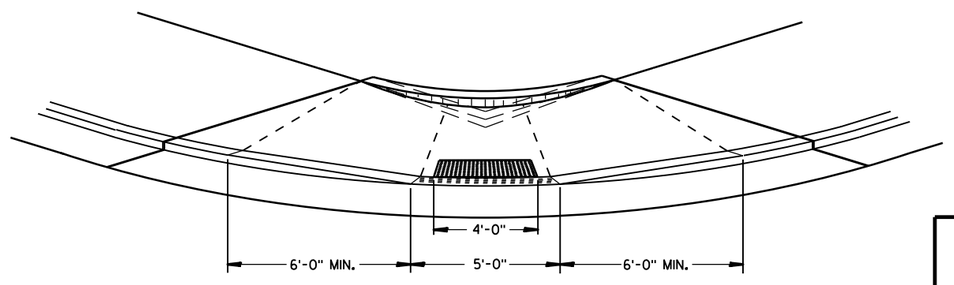

VIEW D-D

CURB RAMPS
TYPES 1 AND 1-A

STATE OF WISCONSIN
DEPARTMENT OF TRANSPORTATION

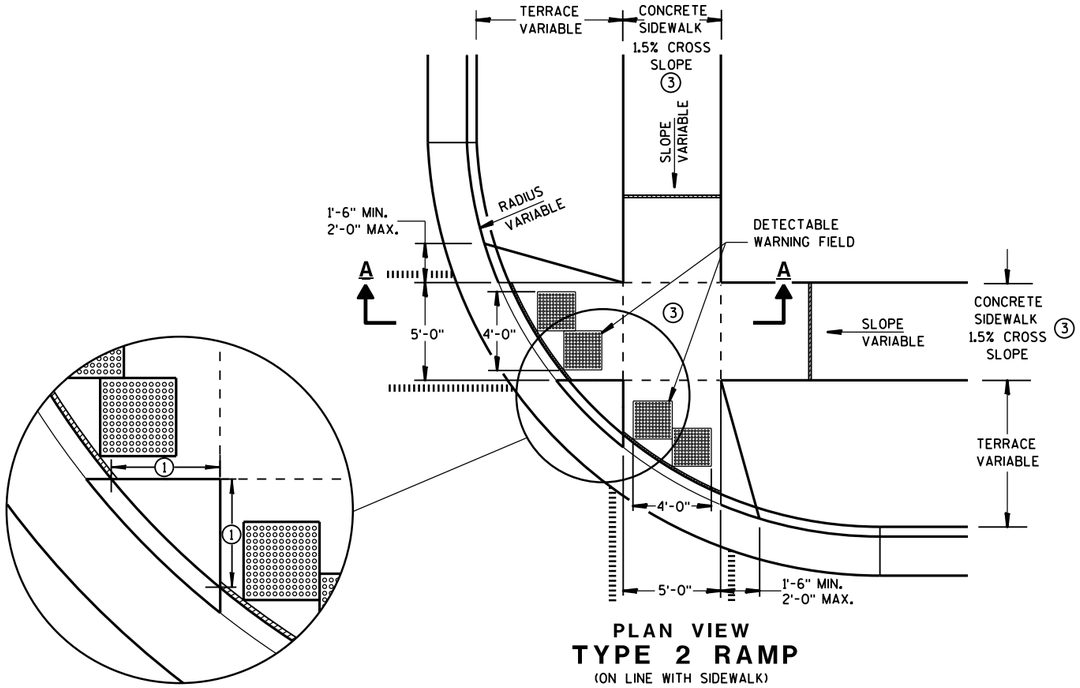

PLAN VIEW
TYPE 2 RAMP
(ON LINE WITH SIDEWALK)

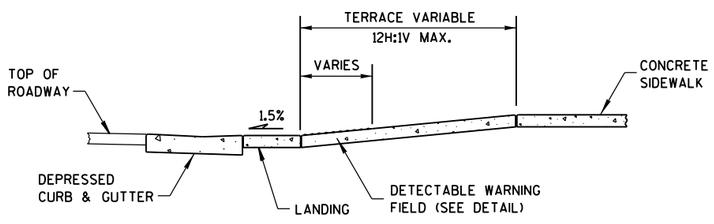

SECTION A-A

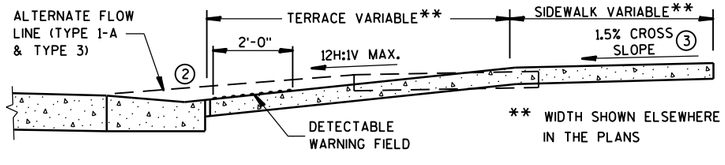

SECTION B-B

GENERAL NOTES

USE THE TYPE 3 RAMP ONLY WHEN A TYPE 1 OR TYPE 2 CANNOT BE ACHIEVED BECAUSE OF FIELD CONDITIONS.

DETECTABLE WARNING FIELDS THAT ARE INSTALLED AS A GROUP OR SIDE BY SIDE, SHALL BE FROM THE SAME MANUFACTURER.

① WHEN THIS DISTANCE IS LESS THAN 6'-0" IT MAY BE DIFFICULT TO ACHIEVE A 12H:1V SLOPE, OR FLATTER, ON THE RAMP. REDUCE CURB HEIGHT IN TRIANGLE AREA TO ACHIEVE 12H:1V SLOPE, OR FLATTER, ON RAMP. 2" MINIMUM CURB HEIGHT.

② GRADE CHANGE BETWEEN GUTTER FLAG SLOPE AND THE CURB RAMP SLOPE SHALL NOT EXCEED 11%. PROVIDE DRAINAGE AWAY FROM CURB RAMP AT GUTTER FLAG INTERFACE.

③ ±0.5% CONSTRUCTION TOLERANCE IN SIDEWALK CROSS SLOPE. THE SIDEWALK CROSS SLOPE SHALL NOT EXCEED 2% WITHOUT PRIOR APPROVAL FROM THE ENGINEER.

LEGEND

- ½" EXPANSION JOINT-SIDEWALK
- CONTRACTION JOINT FIELD LOCATED
- PAVEMENT MARKING CROSSWALK (WHITE)
- ALTERNATIVE LAYOUT

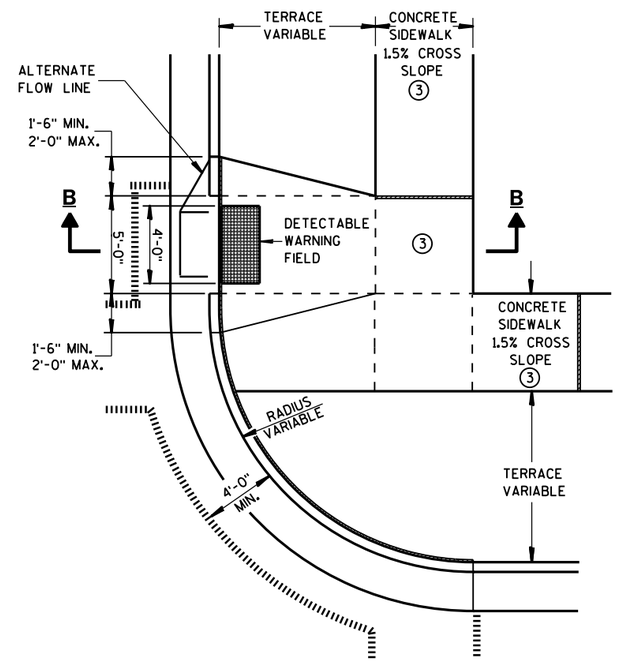

PLAN VIEW
TYPE 3 RAMP
(OUTSIDE OF CROSSWALK AREA)

6

6

CURB RAMPS
TYPES 2 AND 3

STATE OF WISCONSIN
DEPARTMENT OF TRANSPO

S.D.D. 8 D 5-15b

S.D.D. 8 D 5-15b

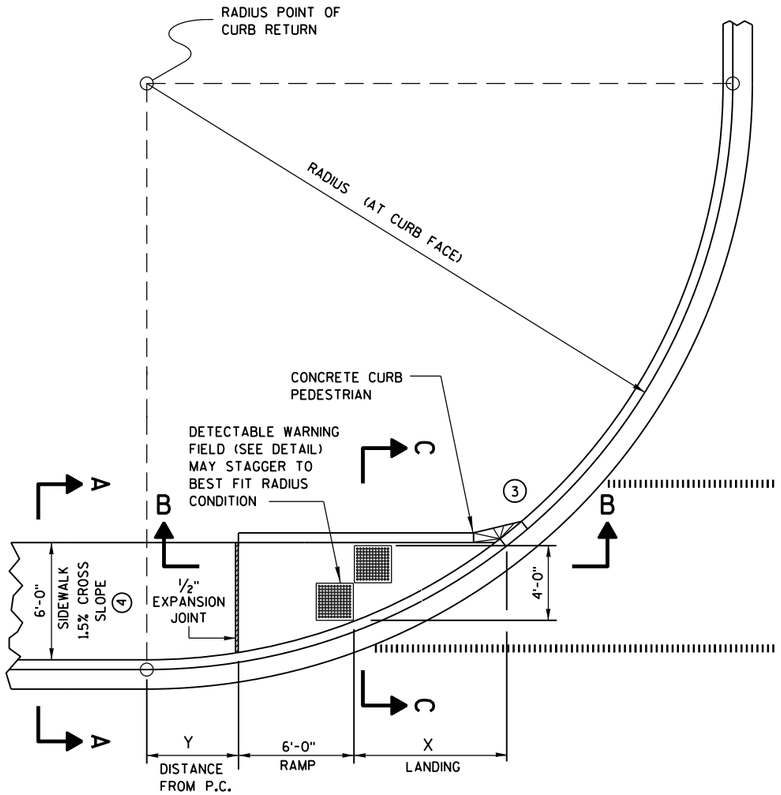

CURB RAMP TYPE 4A
PLAN VIEW

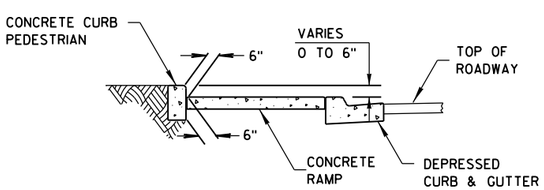

SECTION C-C FOR TYPE 4A

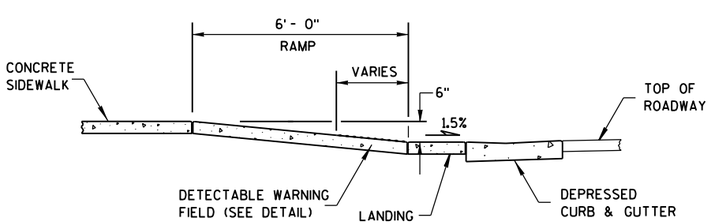

SECTION B-B FOR TYPE 4A

RADIUS (AT CURB FACE)	X	Y
20 FEET	6'-1¾"	2'-7¼"
30 FEET	7'-11¾"	4'-8¼"
40 FEET	9'-5¼"	6'-5"
50 FEET	10'-8¾"	7'-11¼"
60 FEET	11'-10¼"	9'-3½"

INTERMEDIATE RADII CAN BE INTERPOLATED

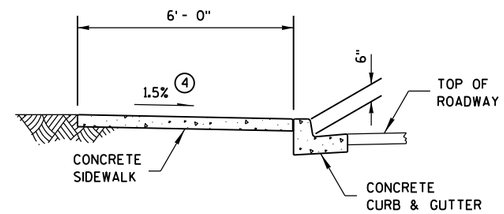

SECTION A-A FOR TYPE 4A

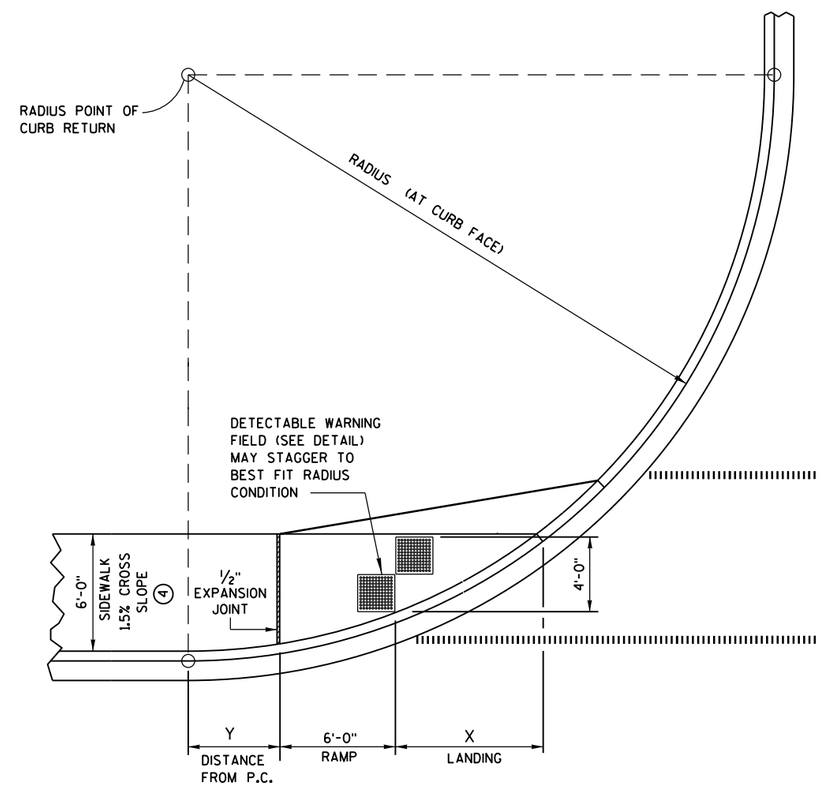

CURB RAMP TYPE 4A1
PLAN VIEW

GENERAL NOTES

AVOID PLACING DRAINAGE STRUCTURES, JUNCTION BOXES OR OTHER OBSTRUCTIONS IN FRONT OF RAMP ACCESS AREAS.

RAMP SLOPES SHALL NOT BE STEEPER THAN 12:1.

DETECTABLE WARNING FIELDS THAT ARE INSTALLED AS A GROUP OR SIDE BY SIDE, SHALL BE FROM THE SAME MANUFACTURER.

(3) INSTALL TRANSITION NOSE. (INCIDENTAL TO OTHER PAY ITEMS.) DO NOT MARK TRANSITION NOSE.

(4) ±0.5% CONSTRUCTION TOLERANCE IN SIDEWALK CROSS SLOPE. THE SIDEWALK CROSS SLOPE SHALL NOT EXCEED 2% WITHOUT PRIOR APPROVAL FROM THE ENGINEER.

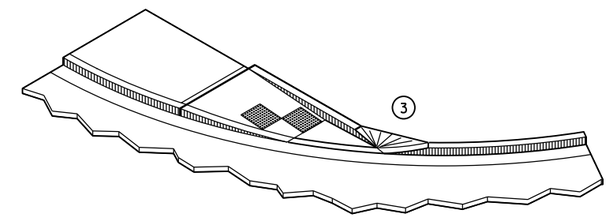

ISOMETRIC VIEW FOR TYPE 4A

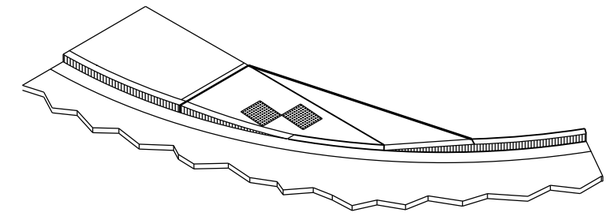

ISOMETRIC VIEW FOR TYPE 4A1

LEGEND

- ½" EXPANSION JOINT-SIDEWALK
- CONTRACTION JOINT FIELD LOCATED
- PAVEMENT MARKING CROSSWALK (WHITE)

CURB RAMPS
TYPES 4A AND 4A1

STATE OF WISCONSIN
DEPARTMENT OF TRANSPOR

6

6

S.D.D. 8 D 5-15c

S.D.D. 8 D 5-15c

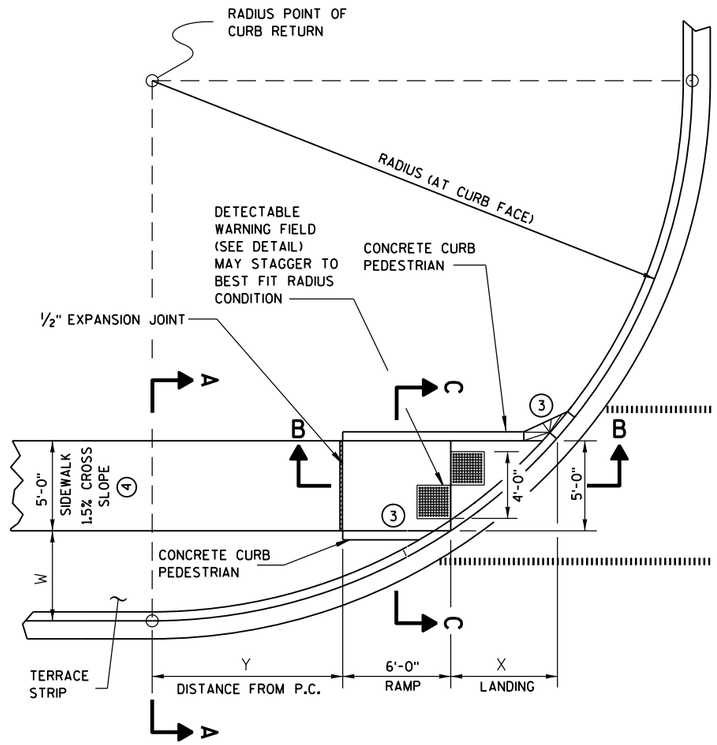

CURB RAMP TYPE 4B
PLAN VIEW

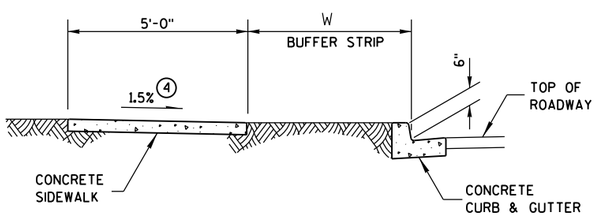

SECTION A-A FOR TYPE 4B

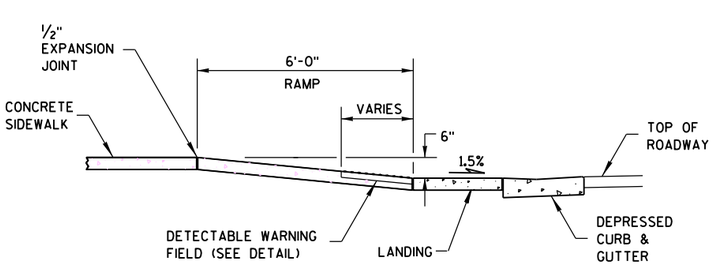

SECTION B-B FOR TYPE 4B

LEGEND

- ½" EXPANSION JOINT-SIDEWALK
- CONTRACTION JOINT FIELD LOCATED
- PAVEMENT MARKING CROSSWALK (WHITE)

RADIUS (AT CURB FACE)	W = 3' - 0"		W = 4' - 0"		W = 5' - 0"		W = 6' - 0"		W = 7' - 0"	
	X	Y	X	Y	X	Y	X	Y	X	Y
20 FEET	5'-5½"	4'-6½"	4'-8½"	6'-0"	4'-1"	7'-2¾"	3'-7"	8'-3½"	3'-1½"	9'-2½"
30 FEET	7'-3¾"	7'-1"	6'-5½"	8'-11½"	5'-9¼"	10'-7"	5'-2½"	12'-0"	4'-8¾"	13'-3¼"
40 FEET	8'-9½"	9'-2½"	7'-10"	11'-5¼"	7'-1"	13'-4½"	6'-5¾"	15'-¾"	5'-11½"	16'-7¼"
50 FEET	10'-¾"	11'-¾"	9'-¼"	13'-7¼"	8'-2½"	15'-9½"	7'-6½"	17'-9"	6'-11¾"	19'-6¼"
60 FEET	11'-2½"	12'-8¾"	10'-¾"	15'-6½"	9'-2¼"	17'-11¾"	8'-5¾"	20'-1¾"	7'-10½"	22'-1½"

INTERMEDIATE RADII CAN BE INTERPOLATED

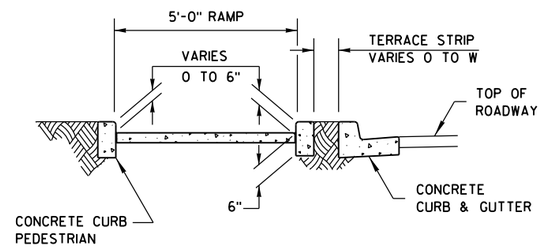

SECTION C-C FOR TYPE 4B

GENERAL NOTES

AVOID PLACING DRAINAGE STRUCTURES, JUNCTION BOXES OR OTHER OBSTRUCTIONS IN FRONT OF RAMP ACCESS AREAS.

RAMP SLOPES SHALL NOT BE STEEPER THAN 12:1.

DETECTABLE WARNING FIELDS THAT ARE INSTALLED AS A GROUP OR SIDE BY SIDE, SHALL BE FROM THE SAME MANUFACTURER.

(3) INSTALL TRANSITION NOSE. (INCIDENTAL TO OTHER PAY ITEMS.) DO NOT MARK TRANSITION NOSE.

(4) ±0.5% CONSTRUCTION TOLERANCE IN SIDEWALK CROSS SLOPE. THE SIDEWALK CROSS SLOPE SHALL NOT EXCEED 2% WITHOUT PRIOR APPROVAL FROM THE ENGINEER.

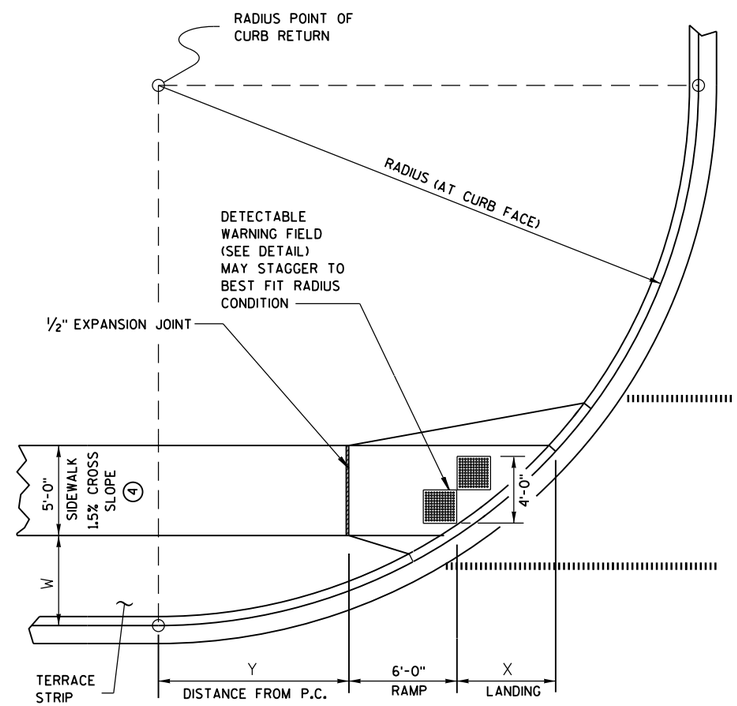

CURB RAMP TYPE 4B1
PLAN VIEW

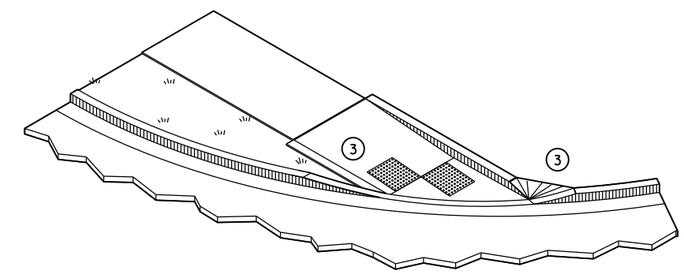

ISOMETRIC VIEW FOR TYPE 4B

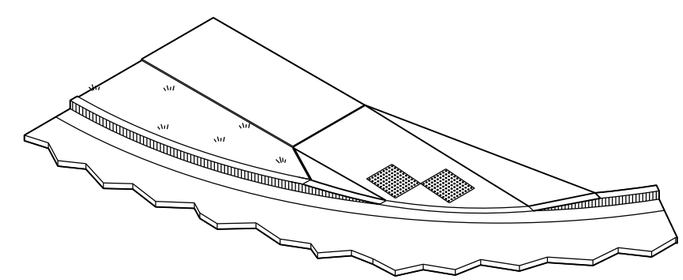

ISOMETRIC VIEW FOR TYPE 4B1

CURB RAMPS
TYPE 4B AND 4B1

STATE OF WISCONSIN
DEPARTMENT OF TRANSPOR

6

S.D.D. 8 D 5-15d

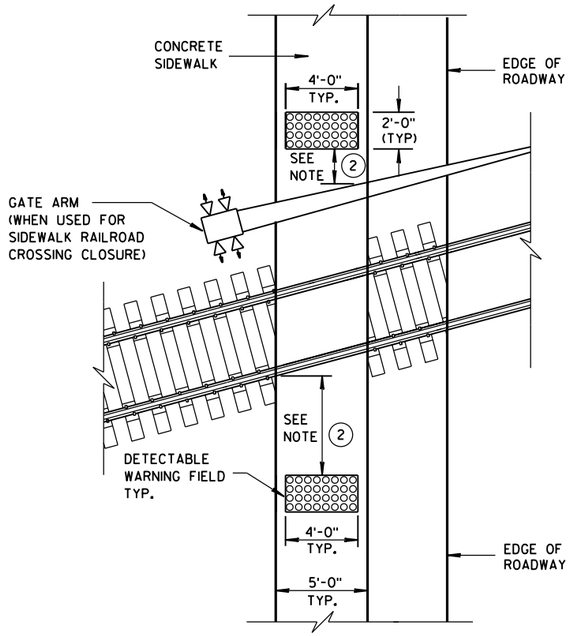

TYPE 8
DETECTABLE WARNINGS AT RAILROAD CROSSING

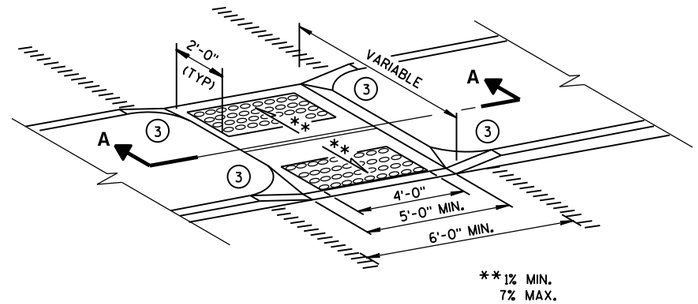

MEDIAN ISLAND
NON-ELEVATED CROSSING
TYPE 5

GENERAL NOTES

SIDEWALK CROSS SLOPE SHALL NOT EXCEED 2%.

DETECTABLE WARNING FIELDS THAT ARE INSTALLED AS A GROUP OR SIDE BY SIDE, SHALL BE FROM THE SAME MANUFACTURER.

1. SLOPE SIDEWALK TOWARD LANDING AS SHOWN WHERE THERE IS NO TERRACE OR WHERE THE TERRACE WIDTH IS LESS THAN 6 FEET WIDE.
2. THE EDGE OF THE DETECTABLE WARNING FIELD NEAREST TO A RAILROAD CROSSING SHALL BE 1.5 FEET ± 0.1' FROM THE FACE OF THE GATE ARM IF THE GATE ARM EXTENDS ACROSS THE SIDEWALK. WHERE THERE IS NO PEDESTRIAN GATE, THE EDGE OF THE DETECTABLE WARNING FIELD NEAREST TO THE RAILROAD CROSSING SHALL BE 15 FEET FROM THE NEAREST RAIL.
3. INSTALL TRANSITION NOSE. (INCIDENTAL TO OTHER PAY ITEMS.) DO NOT MARK TRANSITION NOSE.
4. ±0.5% CONSTRUCTION TOLERANCE IN SIDEWALK CROSS SLOPE. THE SIDEWALK CROSS SLOPE SHALL NOT EXCEED 2% WITHOUT PRIOR APPROVAL FROM THE ENGINEER.

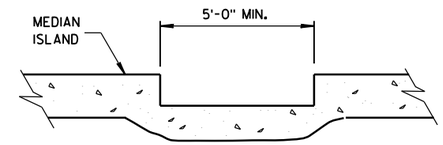

SECTION A-A

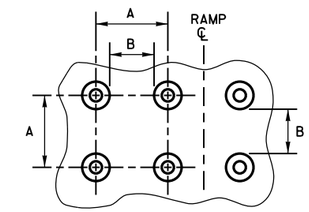

PLAN VIEW

	MIN.	MAX.
A	1.6"	2.4"
B	0.65"	1.5"
C	*	*
D	0.9"	1.4"

* THE C DIMENSION IS 50% TO 65% OF THE D DIMENSION.

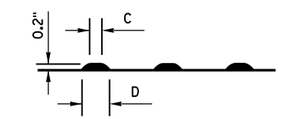

ELEVATION VIEW

TRUNCATED DOMES
DETECTABLE WARNING PATTERN DETAIL

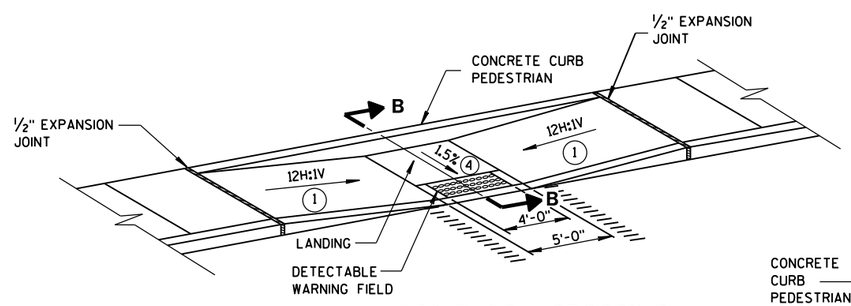

MID-BLOCK CROSSING
TYPE 7A

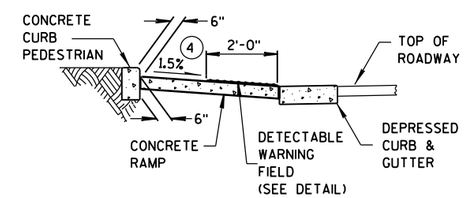

SECTION B-B

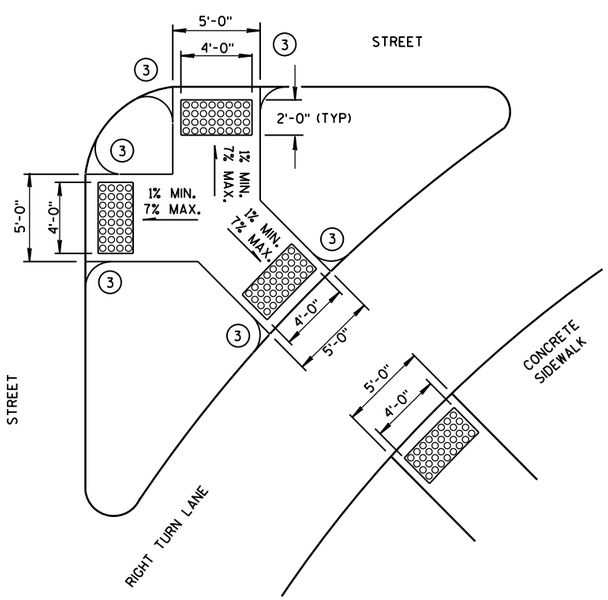

TYPE 6
DETECTABLE WARNING AT ISLANDS

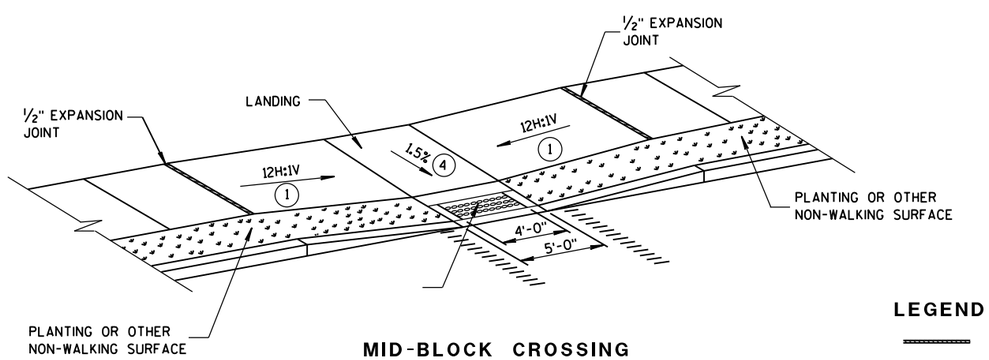

MID-BLOCK CROSSING
TYPE 7B

NOTE: THESE PARALLEL AND PARALLEL/PERPENDICULAR CURB RAMPS MAY BE USED AT INTERSECTIONS AND MID BLOCK LOCATIONS.

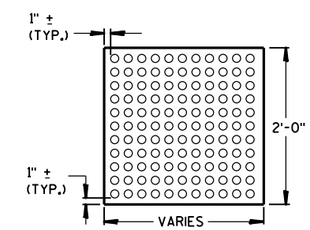

PLAN VIEW
DETECTABLE WARNING FIELD (TYPICAL)

LEGEND

- ½" EXPANSION JOINT-SIDEWALK
- CONTRACTION JOINT FIELD LOCATED
- PAVEMENT MARKING CROSSWALK (WHITE)

CURB RAMPS
TYPES 5, 6, 7A, 7B & 8

STATE OF WISCONSIN
DEPARTMENT OF TRANSPORTATION

APPROVED
2-6-2013 — DATE
/S/ Jerry H. Zogg — ROADWAY STANDARDS DEVELOPMENT ENGINEER
FHWA

6

6

S.D.D. 8 D 5-15e

S.D.D. 8 D 5-15e

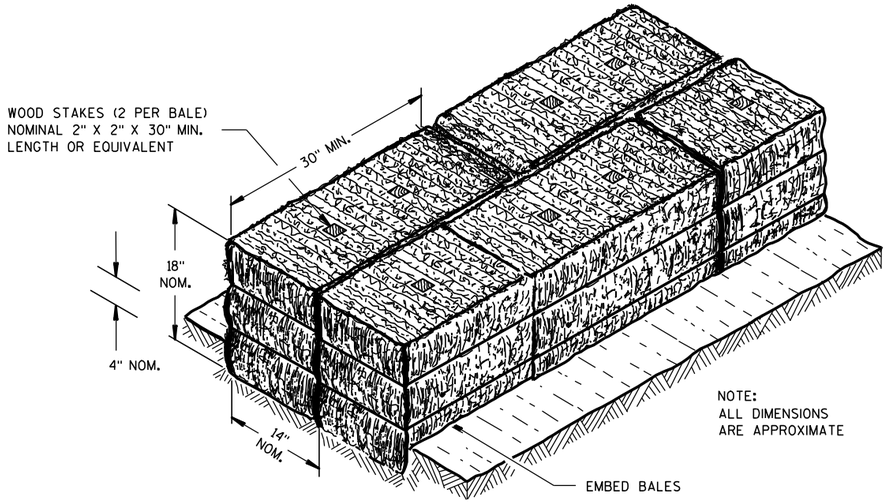

SECTION A-A

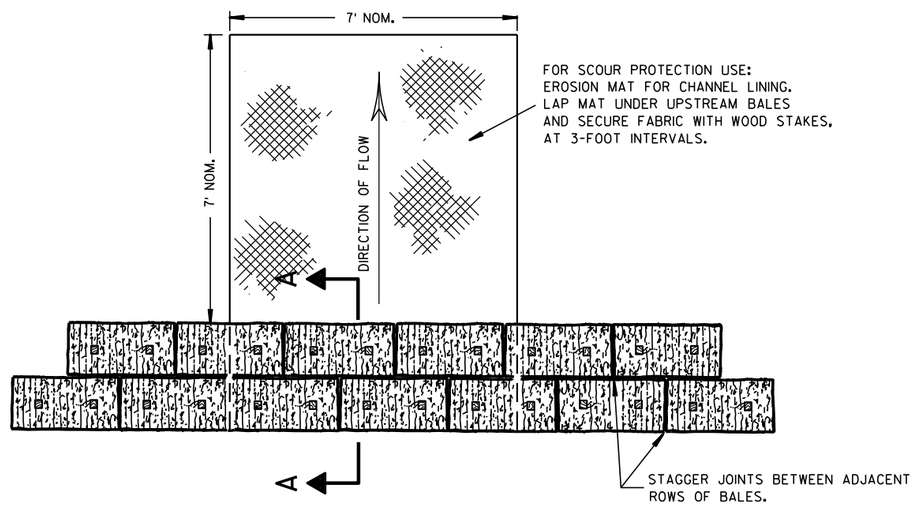

PLAN VIEW

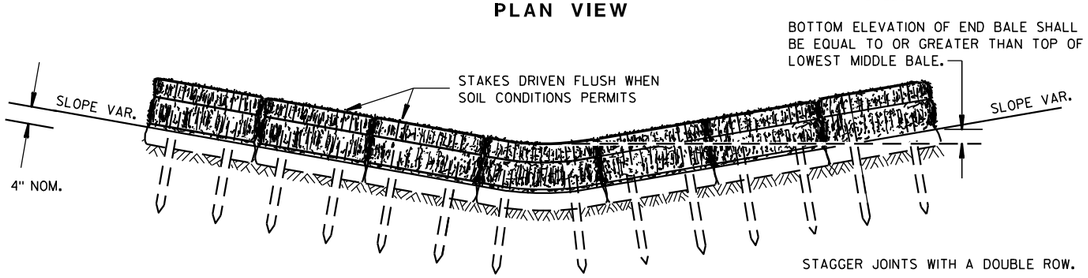

FRONT ELEVATION

TEMPORARY DITCH CHECK USING EROSION BALES ①

GENERAL NOTES

DETAILS OF CONSTRUCTION, MATERIALS AND WORKMANSHIP NOT SHOWN ON THIS DRAWING SHALL CONFORM TO THE PERTINENT REQUIREMENTS OF THE STANDARD SPECIFICATIONS AND THE APPLICABLE SPECIAL PROVISIONS.

① TEMPORARY DITCH CHECKS EITHER EROSION BALES OR MANUFACTURED SHALL BE PAID FOR UNDER THE BID ITEM OF TEMPORARY DITCH CHECK. THE DEPARTMENT WILL NOT PAY FOR TEMPORARY DITCH CHECKS CONSTRUCTED OF A SINGLE ROW OF EROSION BALES.

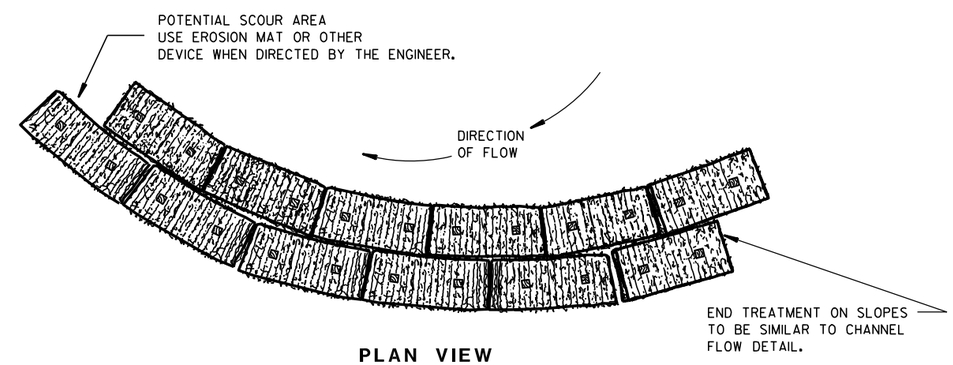

PLAN VIEW

WHEN ALTERING THE DIRECTION OF FLOW

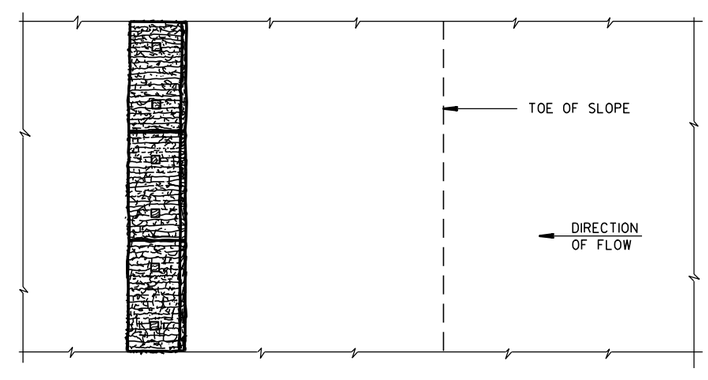

PLAN VIEW

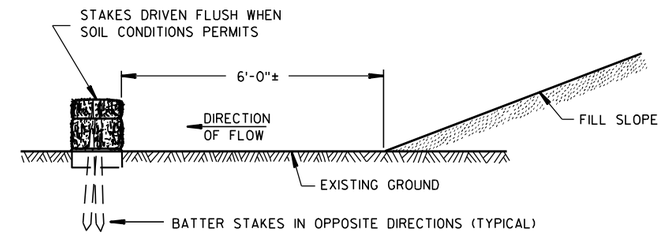

FRONT ELEVATION

WHEN EXISTING GROUND SLOPES AWAY FROM FILL SLOPE

EROSION BALES FOR SHEET FLOW

TYPICAL INSTALLATIONS OF EROSION BALES / TEMPORARY DITCH CHECKS

STATE OF WISCONSIN
DEPARTMENT OF TRANSPORTATION

APPROVED
6/04/02 — DATE
/S/ Beth Cann — CHIEF ROADWAY DEVELOPMENT ENGINEER
FHWA

6

6

S.D.D. 8 E 8-3

S.D.D. 8 E 8-3

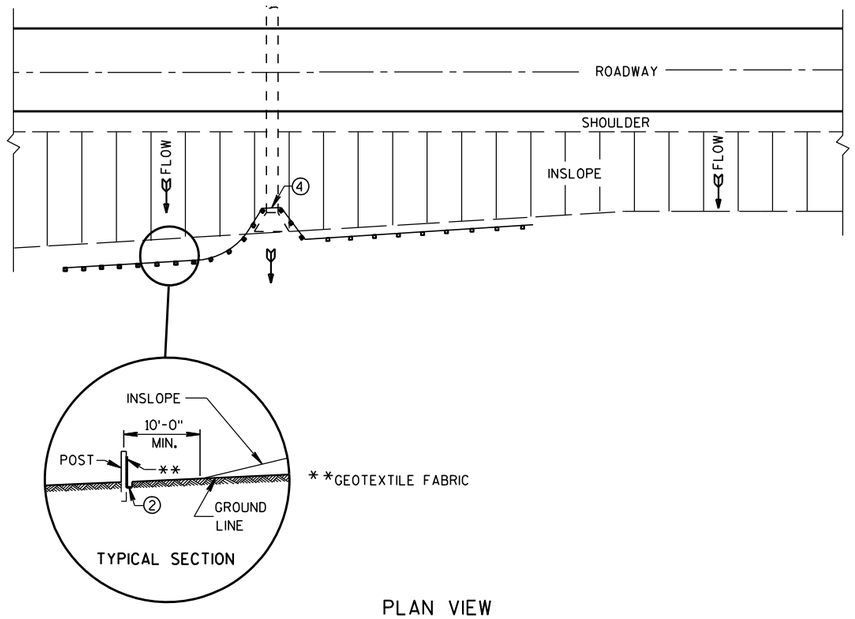

PLAN VIEW

TYPICAL APPLICATION OF SILT FENCE

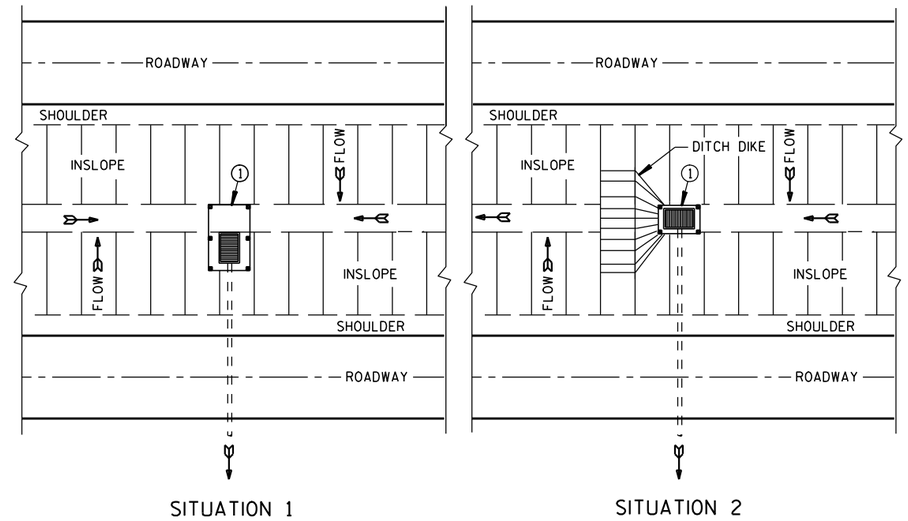

PLAN VIEW

SILT FENCE AT MEDIAN SURFACE DRAINS

GENERAL NOTES

DETAILS OF CONSTRUCTION NOT SHOWN ON THIS DRAWING SHALL CONFORM TO THE PERTINENT REQUIREMENTS OF THE STANDARD SPECIFICATIONS AND APPLICABLE SPECIAL PROVISIONS.

① HORIZONTAL BRACE REQUIRED WITH 2" X 4" WOODEN FRAME OR EQUIVALENT AT TOP OF POSTS.

② FOR MANUAL INSTALLATIONS THE TRENCH SHALL BE A MINIMUM OF 4" WIDE & 6" DEEP TO BURY AND ANCHOR THE GEOTEXTILE FABRIC. FOLD MATERIAL TO FIT TRENCH AND BACKFILL & COMPACT TRENCH WITH EXCAVATED SOIL.

③ WOOD POSTS SHALL BE A MINIMUM SIZE OF 1⅛" X 1⅛" OF OAK OR HICKORY.

④ SILT FENCE TO EXTEND ACROSS THE TOP OF THE PIPE.

⑤ CONSTRUCT SILT FENCE FROM A CONTINUOUS ROLL IF POSSIBLE BY CUTTING LENGTHS TO AVOID JOINTS. IF A JOINT IS NECESSARY USE ONE OF THE FOLLOWING TWO METHODS; A) OVERLAP THE END POSTS AND TWIST, OR ROTATE, AT LEAST 180 DEGREES. B) HOOK THE END OF EACH SILT FENCE LENGTH.

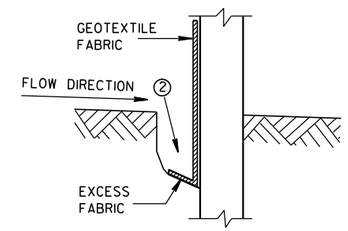

TRENCH DETAIL

NOTE: ADDITIONAL POST DEPTH OR TIE BACKS MAY BE REQUIRED IN UNSTABLE SOILS

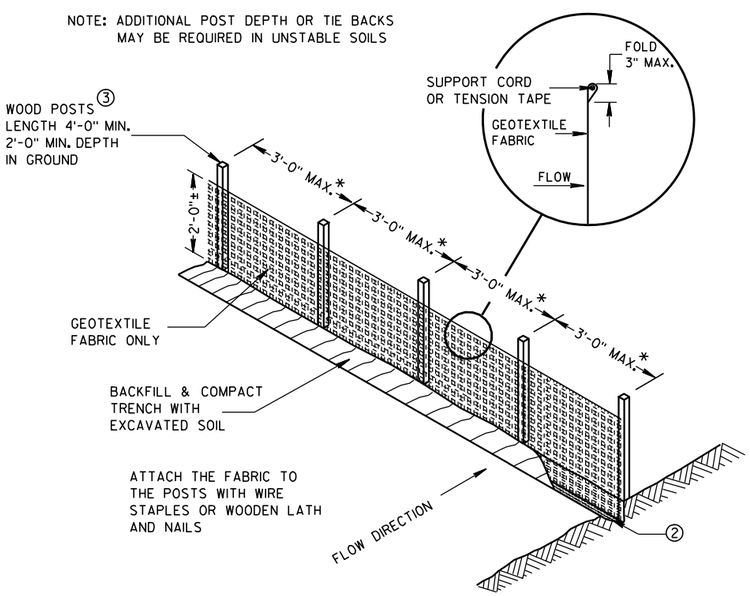

*NOTE: 8'-0" POST SPACING ALLOWED IF A WOVEN GEOTEXTILE FABRIC IS USED.

SILT FENCE

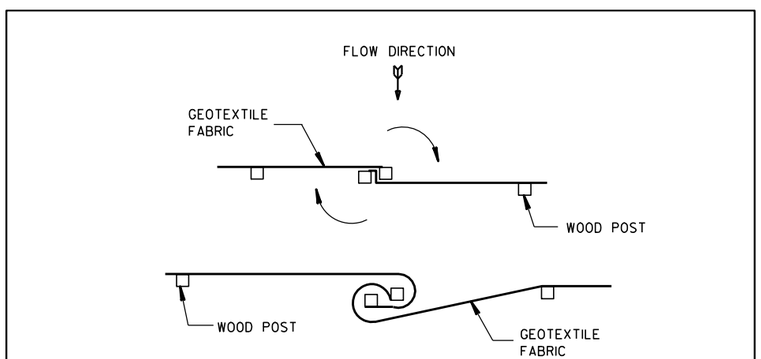

TWIST METHOD

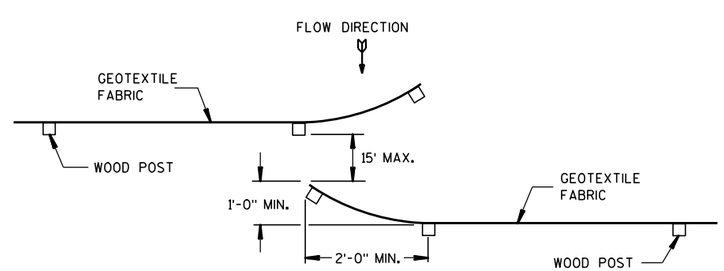

HOOK METHOD

JOINING TWO LENGTHS OF SILT FENCE ⑤

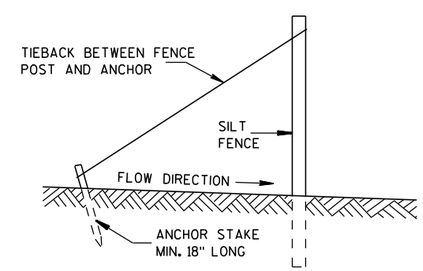

SILT FENCE TIE BACK

(WHEN REQUIRED BY THE ENGINEER)

SILT FENCE	
STATE OF WISCONSIN DEPARTMENT OF TRANSPORTATION	
APPROVED 4-29-05 DATE	/S/ Beth Cann-- CHIEF ROADWAY DEVELOP ENGINEER
FHWA	

6

6

S.D.D. 8 E 9-6

S.D.D. 8 E 9-6

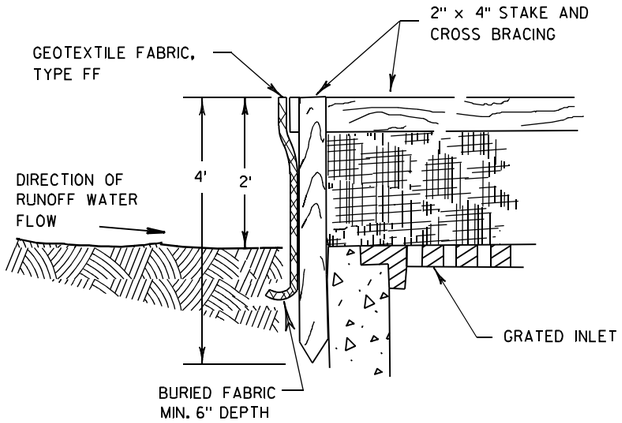

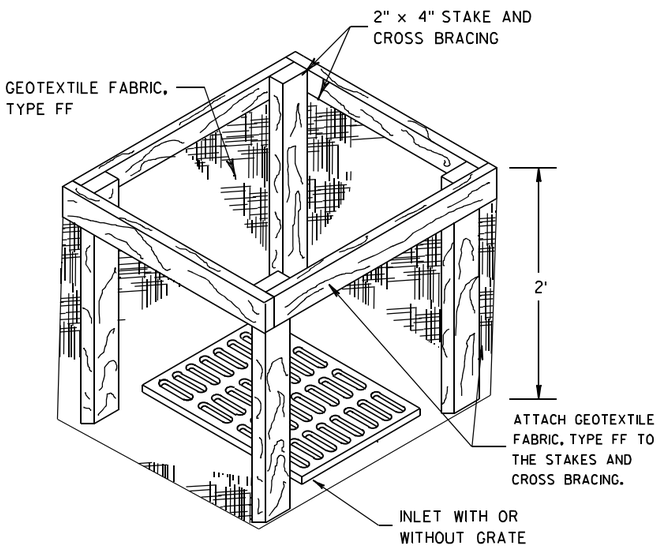

INLET PROTECTION, TYPE A

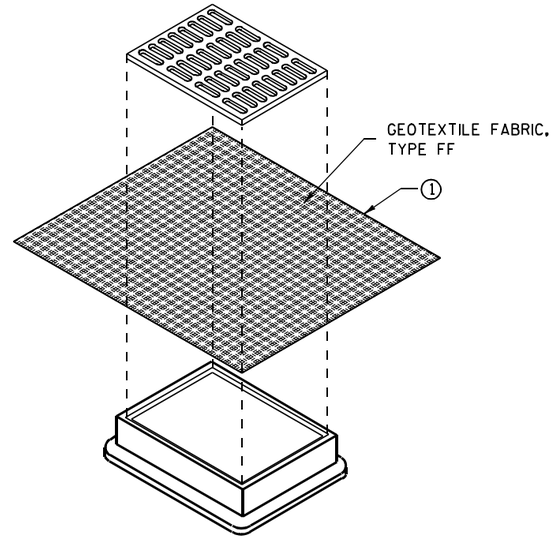

INLET PROTECTION, TYPE B
(WITHOUT CURB BOX)

(CAN BE INSTALLED IN ANY INLET WITHOUT A CURB BOX)

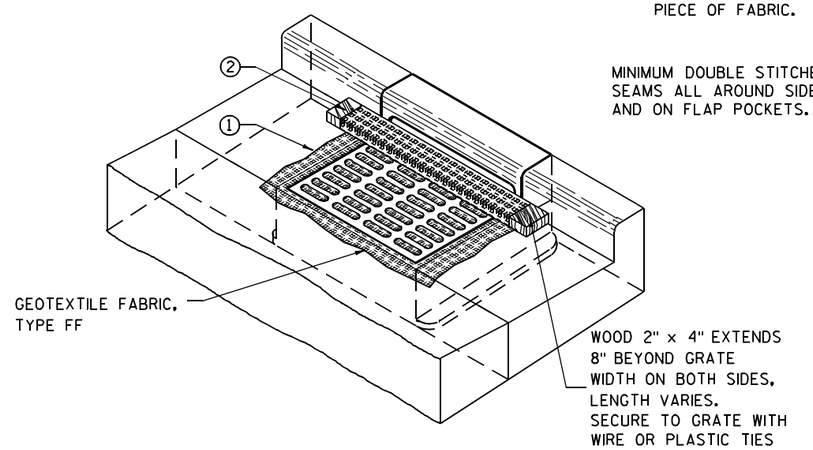

INLET PROTECTION, TYPE C (WITH CURB BOX)

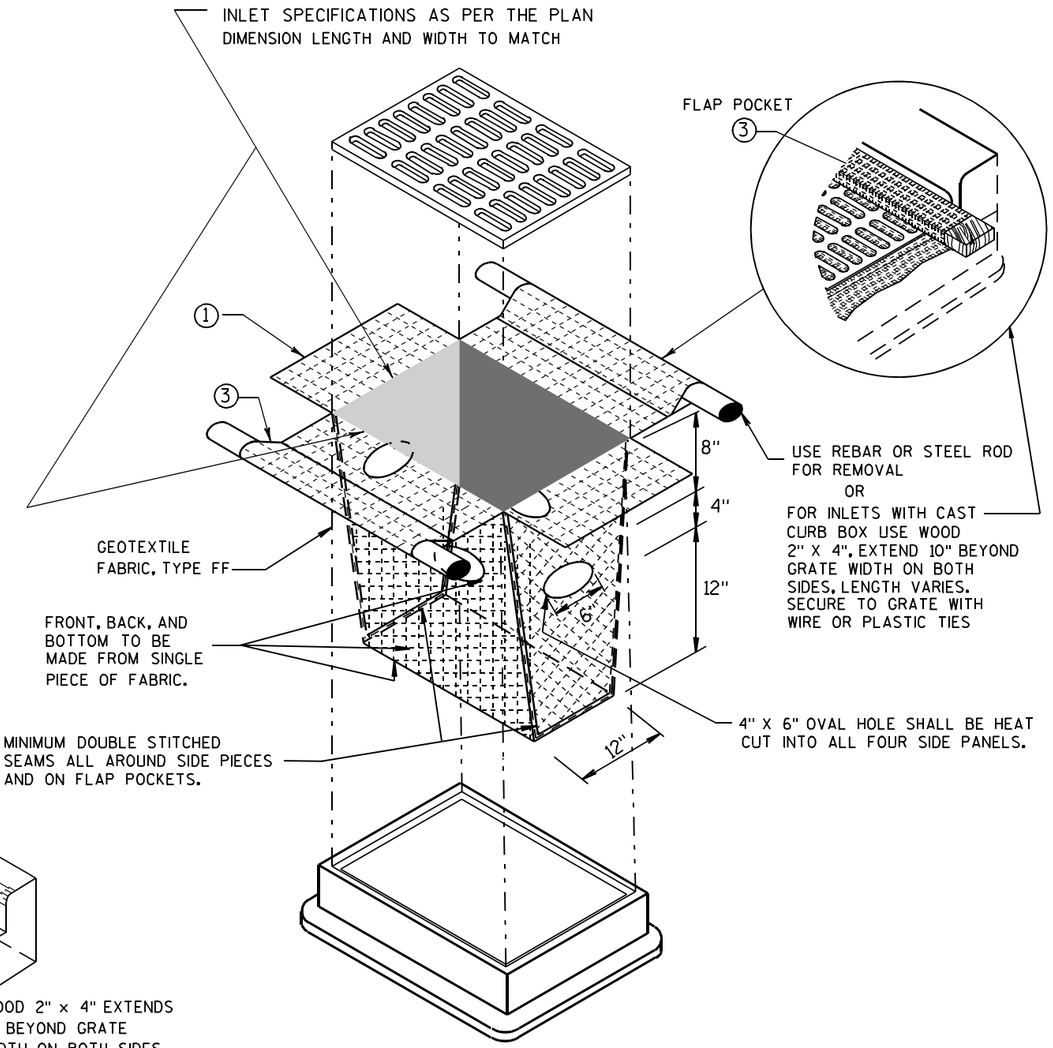

INLET PROTECTION, TYPE D

(CAN BE INSTALLED IN ANY INLET TYPE WITH
OR WITHOUT A CURB BOX AS PER NOTE ②)

GENERAL NOTES

INLET PROTECTION DEVICES SHALL BE MAINTAINED OR REPLACED AT THE DIRECTION OF THE ENGINEER.

MANUFACTURED ALTERNATIVES APPROVED AND LISTED ON THE DEPARTMENT'S EROSION CONTROL PRODUCT ACCEPTABILITY LIST MAY BE SUBSTITUTED.

WHEN REMOVING OR MAINTAINING INLET PROTECTION, CARE SHALL BE TAKEN SO THAT THE SEDIMENT TRAPPED ON THE GEOTEXTILE FABRIC DOES NOT FALL INTO THE INLET. ANY MATERIAL FALLING INTO THE INLET SHALL BE REMOVED IMMEDIATELY.

① FINISHED SIZE, INCLUDING FLAP POCKETS WHERE REQUIRED, SHALL EXTEND A MINIMUM OF 10" AROUND THE PERIMETER TO FACILITATE MAINTENANCE OR REMOVAL.

② FOR INLET PROTECTION, TYPE C (WITH CURB BOX), AN ADDITIONAL 18" OF FABRIC IS WRAPPED AROUND THE WOOD AND SECURED WITH STAPLES. THE WOOD SHALL NOT BLOCK THE ENTIRE HEIGHT OF THE CURB BOX OPENING.

③ FLAP POCKETS SHALL BE LARGE ENOUGH TO ACCEPT WOOD 2X4.

INSTALLATION NOTES

TYPE B & C

TRIM EXCESS FABRIC IN THE FLOW LINE TO WITHIN 3" OF THE GRATE.

THE CONTRACTOR SHALL DEMONSTRATE A METHOD OF MAINTENANCE, USING A SEWN FLAP, HAND HOLDS OR OTHER METHOD TO PREVENT ACCUMULATED SEDIMENT FROM ENTERING THE INLET.

TYPE D

DO NOT INSTALL INLET PROTECTION TYPE D IN INLETS SHALLOWER THAN 30", MEASURED FROM THE BOTTOM OF THE INLET TO THE TOP OF THE GRATE.

TRIM EXCESS FABRIC IN THE FLOW LINE TO WITHIN 3" OF THE GRATE.

THE INSTALLED BAG SHALL HAVE A MINIMUM SIDE CLEARANCE, BETWEEN THE INLET WALLS AND THE BAG, MEASURED AT THE BOTTOM OF THE OVERFLOW HOLES, OF 3". WHERE NECESSARY THE CONTRACTOR SHALL CINCH THE BAG, USING PLASTIC ZIP TIES, TO ACHIEVE THE 3" CLEARANCE. THE TIES SHALL BE PLACED AT A MAXIMUM OF 4" FROM THE BOTTOM OF THE BAG.

INLET PROTECTION
TYPE A, B, C, AND D

STATE OF WISCONSIN
DEPARTMENT OF TRANSPORTATION

APPROVED
10/16/02 — DATE
/S/ Beth Cannatine
CHIEF ROADWAY DEVELOPMENT ENGINEER
FHWA

6

S.D.D. 8 E 10-2

METAL APRON ENDWALLS

PIPE DIA. (IN.)	MIN. THICK. (Inches) STEEL	MIN. THICK. (Inches) ALUM.	DIMENSIONS (Inches) A (±1")	B (MAX.)	H (±1")	L (±1 1/2")	L1 ①	L2 ①	W (±2")	APPROX. SLOPE	BODY
12	.064	.060	6	6	6	21	12	17 1/2	24	2 1/2 to 1	1 Pc.
15	.064	.060	7	8	6	26	14	21 3/4	30	2 1/2 to 1	1 Pc.
18	.064	.060	8	10	6	31	15	28 1/4	36	2 1/2 to 1	1 Pc.
21	.064	.060	9	12	6	36	18	29 5/8	42	2 1/2 to 1	1 Pc.
24	.064	.075	10	13	6	41	18	37 1/4	48	2 1/2 to 1	1 Pc.
30	.079	.075	12	16	8	51	18	52 1/4	60	2 1/2 to 1	1 Pc.
36	.079	.105	14	19	9	60	24	59 3/4	72	2 1/2 to 1	2 Pc.
42	.109	.105	16	22	11	69	24	75 5/8	84	2 1/2 to 1	2 Pc.
48	.109	.105	18	27	12	78	24	81	90	2 1/4 to 1	3 Pc.
54	.109	.105	18	30	12	84	30	85 1/2	102	2 1/4 to 1	3 Pc.
60	.109×	.105×	18	33	12	87	—	—	114	2 to 1	3 Pc.
66	.109×	.105×	18	36	12	87	—	—	120	2 to 1	3 Pc.
72	.109×	.105×	18	39	12	87	—	—	126	2 to 1	3 Pc.
78	.109×	.105×	18	42	12	87	—	—	132	1 1/2 to 1	3 Pc.
84	.109×	.105×	18	45	12	87	—	—	138	1 1/2 to 1	3 Pc.
90	.109×	.105×	18	37	12	87	—	—	144	1 1/2 to 1	3 Pc.
96	.109×	.105×	18	35	12	87	—	—	150	1 1/2 to 1	3 Pc.

× EXCEPT CENTER PANEL
SEE GENERAL NOTES

REINFORCED CONCRETE APRON ENDWALLS

PIPE DIA. (IN.)	DIMENSIONS (Inches) T	A	B	C	D	E	G	APPROX. SLOPE
12	2	4	24	48 7/8	72 7/8	24	2	3 to 1
15	2 1/4	6	27	46	73	30	2 1/4	3 to 1
18	2 1/2	9	27	46	73	36	2 1/2	3 to 1
21	2 3/4	9	36	37 1/2	73 1/2	42	2 3/4	3 to 1
24	3	9 1/2	43 1/2	30	73 1/2	48	3	3 to 1
27	3 1/4	10 1/2	49 1/2	24	73 1/2	54	3 1/4	3 to 1
30	3 1/2	12	54	19 3/4	73 1/2	60	3 1/2	3 to 1
36	4	15	63	34 3/4	97 3/4	72	4	3 to 1
42	4 1/2	21	63	35	98	78	4 1/2	3 to 1
48	5	24	72	26	98	84	5	3 to 1
54	5 1/2	27	65	*33 1/4-**35	*98 1/4-**100	90	5 1/2	2 2/5 to 1
60	6	*30-**35	60	39	99	96	5	2 to 1
66	6 1/2	*24-**30	*72-**78	*21-**27	99	102	5 1/2	2 to 1
72	7	*24-**36	78	21	99	108	6	2 to 1
78	7 1/2	*24-**36	78	21	99	114	6 1/2	2 to 1
84	8	36	90 1/2	21	111 1/2	120	6 1/2	1 1/2 to 1
90	8 1/2	41	87 1/2	24	111 1/2	132	6 1/2	1 1/2 to 1

*MINIMUM
**MAXIMUM

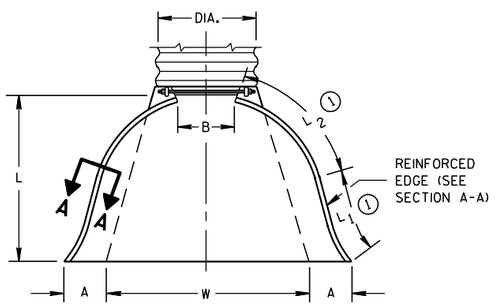

PLAN VIEW

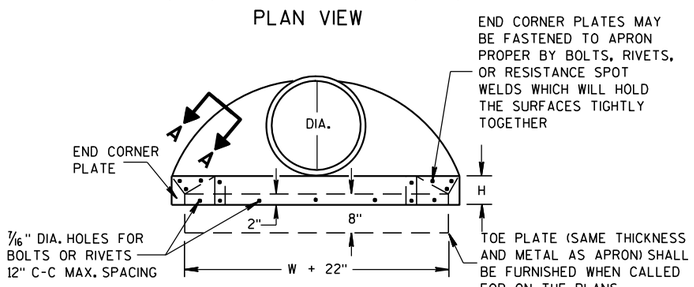

END VIEW

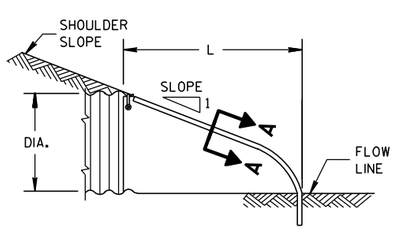

SIDE ELEVATION

METAL ENDWALLS

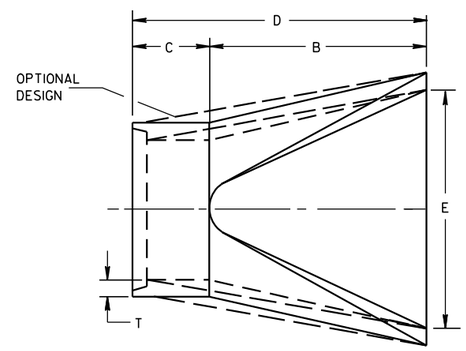

PLAN

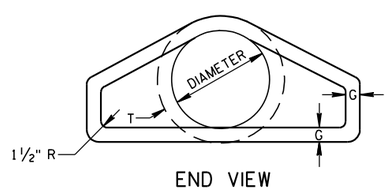

END VIEW

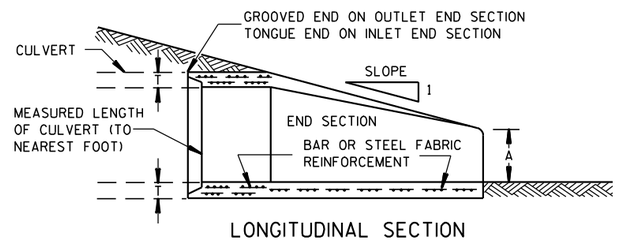

LONGITUDINAL SECTION

CONCRETE ENDWALLS

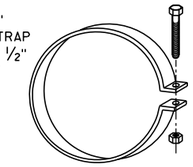

ALTERNATE FOR TYPE 1 CONNECTION

END SECTION CONNECTOR STRAP

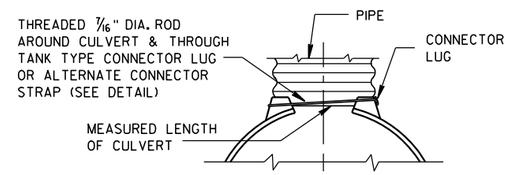

TYPE 1
FOR 12" THRU 24" CORR. PIPE

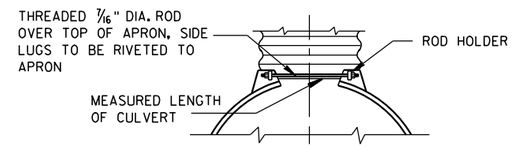

TYPE 2
FOR 30" THRU 96" CORR. PIPE

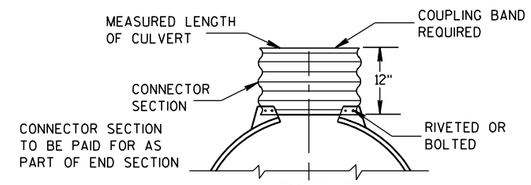

TYPE 3
FOR 42" THRU 96" CORR. PIPE

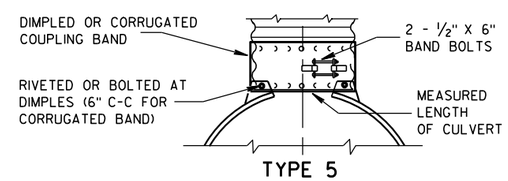

TYPE 5
ALTERNATE FOR:
ALL SIZES CORRUGATED CIRCULAR PIPE

NOTE: DIMPLED BAND FITS OVER OUTSIDE OF ENDWALL, AND CORRUGATED BAND FITS INSIDE ENDWALL. DIMPLED BAND MAY BE USED WITH HELICALLY CORRUGATED PIPE.

FOR CIRCUMFERENTIALLY CORRUGATED PIPE USE ENDWALL CONNECTION DETAILS 1, 2, 3 OR 5 AS APPLICABLE.

FOR HELICALLY CORRUGATED PIPE USE ENDWALL CONNECTION DETAILS 1, 2 OR 5.

FOR HELICALLY CORRUGATED PIPES WITH TWO CIRCUMFERENTIAL CORRUGATIONS AT EACH END USE ENDWALL CONNECTION DETAILS 1, 2 OR 3.

CONNECTION DETAILS

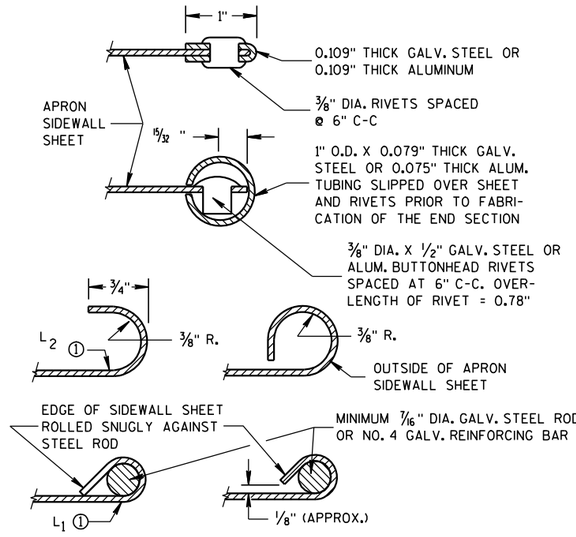

SECTION A-A

GENERAL NOTES

DETAILS OF CONSTRUCTION, MATERIALS AND WORKMANSHIP NOT SHOWN ON THIS DRAWING SHALL CONFORM TO THE PERTINENT REQUIREMENTS OF THE STANDARD SPECIFICATIONS AND THE APPLICABLE SPECIAL PROVISIONS.

CONCRETE CULVERT ENDWALLS MAY NOT BE USED WITH GALVANIZED STEEL OR ALUMINUM CULVERT PIPE OR VISE VERSA. GALVANIZED STEEL OR ALUMINUM ENDWALLS SHALL NORMALLY BE INSTALLED ON CULVERT PIPE OF THE SAME METAL.

ALL THREE PIECE STEEL APRON ENDWALLS FOR 60" DIAMETER PIPE AND LARGER SHALL HAVE 0.109" SIDES AND 0.138" CENTER PANELS. ALL THREE PIECE ALUMINUM APRON ENDWALLS FOR 60" DIAMETER PIPE AND LARGER SHALL HAVE 0.105" SIDES AND 0.134" CENTER PANELS. THE WIDTH OF CENTER PANELS SHALL BE GREATER THAN 20 PERCENT OF THE PIPE PERIMETER.

LAP SEAMS SHALL BE TIGHTLY JOINED BY GALVANIZED RIVETS OR BOLTS FOR STEEL UNITS AND ALUMINUM RIVETS AND BOLTS FOR ALUMINUM UNITS. FOR THE 60" THROUGH 96" DIAMETER APRON ENDWALL SIZES, THE REINFORCED EDGES AND CENTER PANEL SEAMS SHALL BE FURTHER REINFORCED WITH GALVANIZED STEEL OR ALUMINUM STIFFENER ANGLES. THE ANGLES SHALL BE ATTACHED BY GALVANIZED NUTS AND BOLTS FOR STEEL UNITS AND ALUMINUM NUTS AND BOLTS FOR ALUMINUM UNITS.

WHERE TWO OR MORE PIPES WITH APRON ENDWALLS ARE LAID ADJACENT TO EACH OTHER, THEY SHALL BE SEPARATED BY A DISTANCE SUFFICIENT TO PROVIDE A MINIMUM CLEARANCE OF 6 INCHES BETWEEN APRON ENDWALLS.

① FOR PIPE SIZES UP TO 60" DIAMETER, A 180° ROLLED EDGE MAY BE USED INSTEAD OF STEEL ROD REINFORCEMENT. SEE SECTION A-A.

APRON ENDWALLS FOR CULVERT PIPE

STATE OF WISCONSIN
DEPARTMENT OF TRANSPORTATION

APPROVED
11/30/94 — DATE
/S/ Rory L. Rhinesmith — CHIEF ROADWAY DEVELOPMENT ENGINEER
FHWA

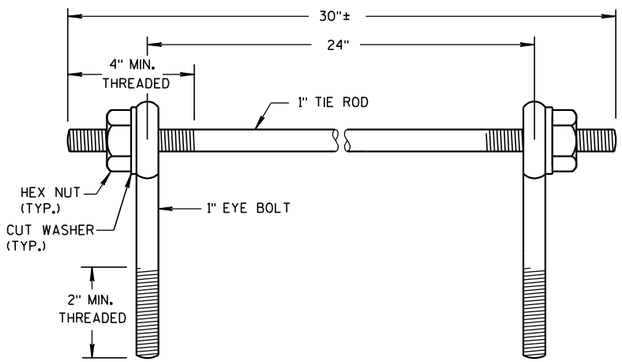

EYE BOLTS AND TIE ROD

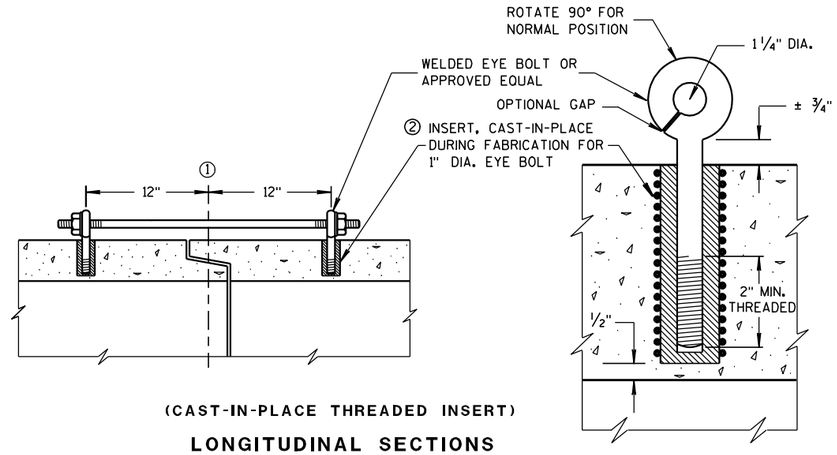

(CAST-IN-PLACE THREADED INSERT)

LONGITUDINAL SECTIONS

EYE BOLT AND TIE ROD ASSEMBLY (ALTERNATE NO. 1)

GENERAL NOTES

DETAILS OF CONSTRUCTION, MATERIALS, AND WORKMANSHIP NOT SHOWN ON THIS DRAWING SHALL CONFORM TO THE PERTINENT REQUIREMENTS OF THE STANDARD SPECIFICATIONS AND APPLICABLE SPECIAL PROVISIONS.

CONCRETE CULVERT AND STORM SEWER PIPE SHALL BE TIED TOGETHER IN THE MANNER ILLUSTRATED BY THIS DETAIL AT LOCATIONS DESIGNATED IN THE STANDARD SPECIFICATIONS AND THE PLAN. THE CONTRACTOR MAY USE EITHER ALTERNATE 1, 2 OR 3 FOR DRAINAGE STRUCTURES. ONLY ALTERNATE 1 AND 3 MAY BE USED FOR CATTLE PASSES, UNLESS OTHERWISE STATED IN THE CONTRACT. THE MATERIALS, FABRICATION AND WORK NECESSARY TO TIE THE PIPE BY THIS DETAIL WILL BE CONSIDERED INCIDENTAL TO THE PIPE AND APRON ENDWALLS IF REQUIRED.

DETAILED DRAWINGS FOR PROPOSED ALTERNATE DESIGNS FOR JOINT TIES SHALL BE SUBMITTED TO THE ENGINEER FOR APPROVAL.

JOINT TIES TO BE HOT-DIP GALVANIZED PER ASTM A 153.

① ℄ OF TONGUE AND GROOVE OR BELL AND SPIGOT JOINTS.

② THE INSIDE OF THE THREADED INSERTS SHALL BE CLEAN TO ALLOW THE INSERTION OF THREADED EYE BOLTS.

③ HOLES SHALL BE CAST-IN-PLACE OR DRILLED 12 INCHES FROM ℄ OF TONGUE AND GROOVE.

④ BOLT PROJECTION INSIDE OF PIPE SHALL NOT EXCEED 2 INCHES.

⑤ OPENING TO BE ROD DIAMETER PLUS 1 INCH.

⑥ LENGTH ADEQUATE TO EXTEND TO WITHIN 1/2 INCH OF THE INNER SURFACE OF THE PIPE.

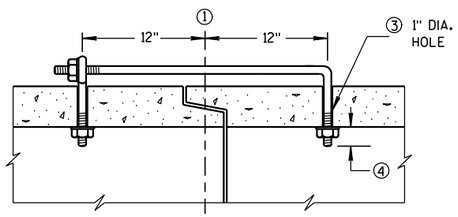

(TONGUE & GROOVE PIPE)

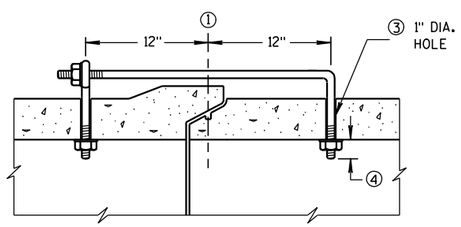

(MODIFIED BELL PIPE)

LONGITUDINAL SECTION

EYE BOLT DIMENSION TABLE

PIPE SIZE	L = LENGTH	
	TONGUE & GROOVE PIPE	MODIFIED BELL PIPE
18" TO 24"	4 1/2"	6 1/4"
30"	5"	7"
36"	5 1/2"	7"
42"	6"	
48"	6 1/2"	
60"	7 1/2"	
66"	8"	

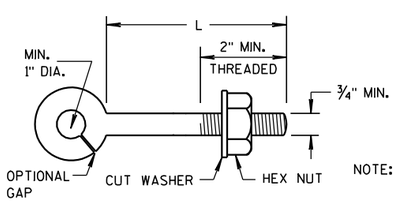

EYE BOLT

NOTE:

NOTE: TWO EYE BOLTS MAY BE USED WITH A 30" LONG THREADED ROD IN LIEU OF THE 90° BENT TIE ROD.

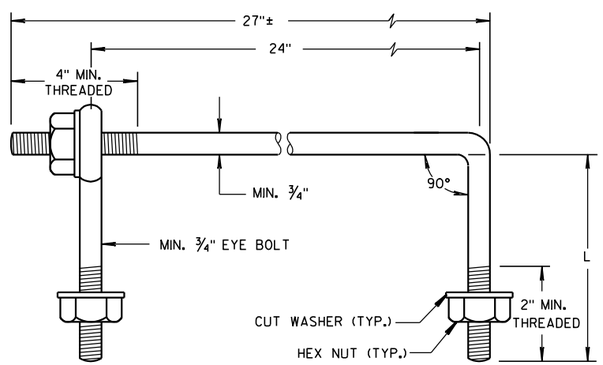

EYE BOLT AND TIE ROD

(JOINT TIES FOR 18" TO 66" DIA. CONCRETE PIPE)

EYE BOLT AND TIE ROD ASSEMBLY (ALTERNATE NO. 2)

ADJUSTABLE TIE ROD TABLE

PIPE DIAMETER	TIE ROD DIAMETER	D	L_1	N
12-60	5/8	5/8	5	1/2
66-84	3/4	3/4	5	1/2
90-108	1	1	7	1 7/16

DIMENSIONS SHOWN ARE IN INCHES

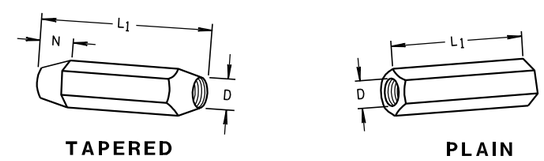

TAPERED PLAIN

RIGHT AND LEFT THREADS

SLEEVE NUTS

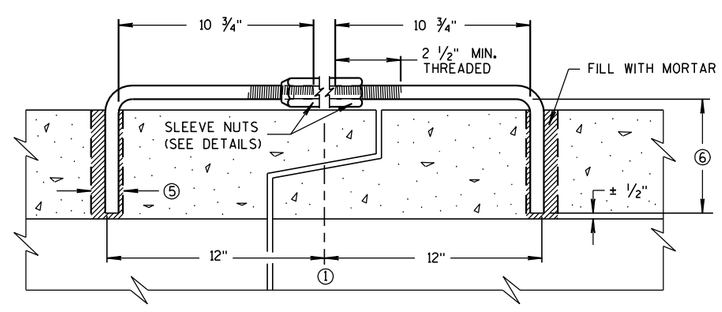

LONGITUDINAL SECTION

(JOINT TIES FOR 12" TO 108" DIA. CONCRETE PIPE)

ADJUSTABLE TIE ROD (ALTERNATE NO. 3)

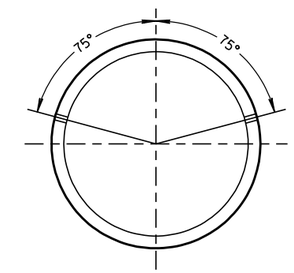

PLACEMENT OF (2) CAST-IN-PLACE INSERTS OR HOLES DURING FABRICATION FOR PIPE SECTIONS REQUIRING TIE RODS

TRANSVERSE SECTION

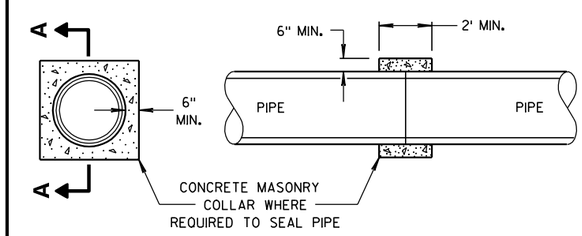

SECTION A-A

CONCRETE COLLAR DETAIL

JOINT TIES FOR CONCRETE PIPE AND CONCRETE COLLAR DETAIL

STATE OF WISCONSIN
DEPARTMENT OF TRANSPORTATION

APPROVED
6/5/2012 /S/ Jerry H. Zogg
DATE ROADWAY STANDARDS DEVELOPMENT ENGINEER
FHWA

6

6

S.D.D. 8 F 4-7

S.D.D. 8 F 4-7

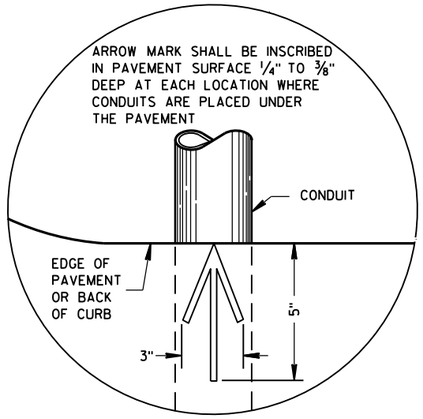

PLAN VIEW

ARROW MARK

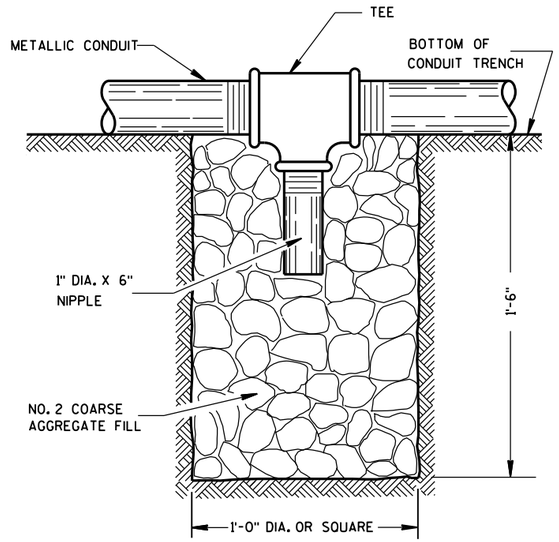

NOTE: INSTALL AT LOCATIONS WHERE METALLIC CONDUITS CANNOT BE PITCHED TO DRAIN INTO A PULL BOX.

DRAIN SUMP FOR METALLIC CONDUIT

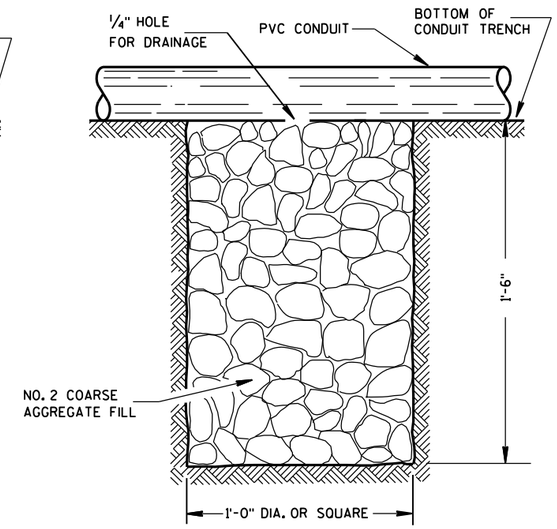

NOTE: INSTALL AT LOCATIONS WHERE PVC CONDUITS CANNOT BE PITCHED TO DRAIN INTO A PULL BOX.

DRAIN SUMP FOR PVC CONDUIT

GENERAL NOTES

DETAILS OF CONSTRUCTION, MATERIALS AND WORKMANSHIP NOT SHOWN ON THIS DRAWING SHALL CONFORM TO THE PERTINENT REQUIREMENTS OF THE CONTRACT.

METALLIC (STANDARD SPECIFICATION 652.2.2) OR NONMETALLIC (STANDARD SPECIFICATION 652.2.3) CONDUIT SHALL BE FURNISHED AND PLACED AS SHOWN.

DEPTH OF CONDUIT INSTALLED BELOW THE TRAVELED WAY SHALL BE 24 INCHES MINIMUM AND 36 INCHES MAXIMUM.

DEPTH OF CONDUIT INSTALLED THAT IS NOT BELOW THE TRAVELED WAY SHALL BE 18 INCHES MINIMUM AND 36 INCHES MAXIMUM.

ANY EXCEPTION TO THE MAXIMUM DEPTH SHALL BE ONLY WITH THE WRITTEN APPROVAL OF THE ENGINEER.

THE TRENCH SHALL NOT BE BACKFILLED PRIOR TO INSPECTION OF THE CONDUIT.

ALL METALLIC CONDUIT RACEWAY ENDS SHALL BE REAMED AND THREADED.

ALL METALLIC CONDUIT IN WHICH WIRE OR CABLE IS TO BE INSTALLED SHALL BE BUSHED WITH APPROVED THREADED BUSHINGS BEFORE INSTALLATION OF THE WIRE OR CABLE.

ALL METALLIC CONDUITS IN WHICH WIRE OR CABLE IS NOT TO BE INSTALLED SHALL BE CAPPED WITH THREADED PROTECTIVE CAPS, AS APPROVED BY THE ENGINEER.

ALL NONMETALLIC CONDUIT SHALL BE CAPPED OR PLUGGED IMMEDIATELY AFTER INSTALLATION AND SHALL REMAIN CAPPED OR PLUGGED UNTIL WIRE/CABLES ARE INSTALLED.

NONMETALLIC CONDUITS IN WHICH WIRE OR CABLE IS NOT BEING INSTALLED SHALL REMAIN CAPPED OR PLUGGED.

BENDING OF PVC ELECTRICAL CONDUIT SHALL BE ACCOMPLISHED BY USING A BLANKET OR EMERSION TYPE TANK DESIGNED FOR THE PURPOSE OF BENDING PVC ELECTRICAL CONDUIT.

ALL CUT ENDS SHALL BE TRIMMED INSIDE AND OUTSIDE TO REMOVE ALL ROUGH EDGES ON NONMETALLIC CONDUIT. (SEE NEC 347.5)

WHEN REQUIRED TO CONNECT NONMETALLIC CONDUIT TO METALLIC CONDUIT, ONLY U.L. LISTED ADAPTER FITTINGS SHALL BE USED.

PRIOR TO CONDUIT ACCEPTANCE, CONDUIT CAPS OR PLUGS SHALL BE REMOVED, AND THE CAPS, PLUGS AND CONDUIT ENDS SHALL BE THOROUGHLY CLEANED AND THEN THE CAPS OR PLUGS REINSTALLED TO ENSURE THAT THE CAPS OR PLUGS CAN BE EASILY REMOVED IN THE FUTURE.

ALL CONDUIT BEING FURNISHED AND INSTALLED SHALL HAVE THE U.L. LABEL FIRMLY ATTACHED.

CONDUIT RUNS SHALL BE THE SAME SIZE OF CONDUIT FROM ONE END TO THE OTHER (FROM PULL BOX TO PULL BOX-OR-JUNCTION BOX TO JUNCTION BOX-OR-BASE TO BASE, ETC.).

POLY ROPE OR A PULL WIRE SHALL BE INSTALLED AS STATED IN THE STANDARD SPECIFICATION, ITEM 652.3.1.1.

ALL CONDUIT RUNS SHALL BE STRAIGHT (WITHOUT BENDS) FROM PULL BOX TO PULL BOX, PULL BOX TO BASE AND BASE TO BASE AS SHOWN ON THE PLANS.

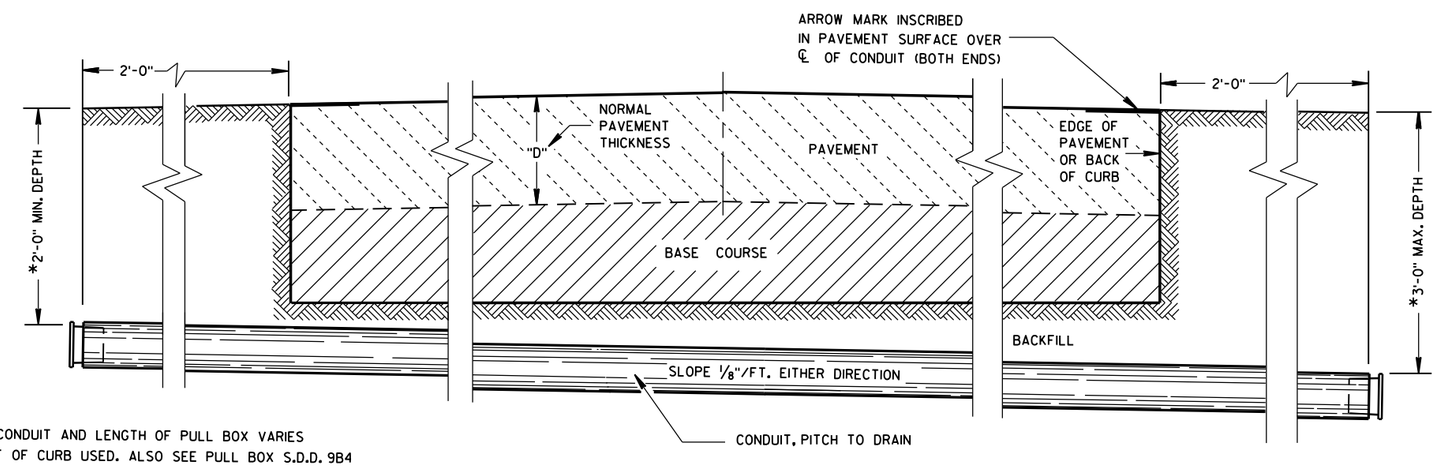

*DEPTH OF CONDUIT AND LENGTH OF PULL BOX VARIES WITH HEIGHT OF CURB USED. ALSO SEE PULL BOX S.D.D. 9B4

SIDE ELEVATION

DETAIL FOR CONDUIT UNDER PAVED HIGHWAYS

6

6

S.D.D. 9 B 2-8

S.D.D. 9 B 2-8

CONDUIT UNDER PAVED HIGHWAYS

STATE OF WISCONSIN
DEPARTMENT OF TRANSPORTATION

APPROVED

Sept. 2014 — DATE

/S/ Ahmet Demirbilek — STATE ELECTRICAL

FHWA

TABLE OF NOMINAL DIMENSIONS AND WEIGHTS

DIMENSION IN INCHES		CORRUGATED STEEL PIPE								
PIPE DIAMETER (INSIDE)	A	12	12	12	18	18	18	24	24	24
PIPE LENGTH **	B	24	30	36	24	30	36	36	42	48
WALL THICKNESS	C	0.064	0.064	0.064	0.064	0.064	0.064	0.064	0.064	0.064
COVER	D	10 1/4	10 1/4	10 1/4	16 1/4	16 1/4	16 1/4	22 1/4	22 1/4	22 1/4
FRAME	E	14 1/2	14 1/2	14 1/2	20 1/2	20 1/2	20 1/2	26 1/2	26 1/2	26 1/2
FRAME	F	8 1/2	8 1/2	8 1/2	14 1/2	14 1/2	14 1/2	20 1/2	20 1/2	20 1/2
FRAME	G	11 1/2	11 1/2	11 1/2	17 1/2	17 1/2	17 1/2	23 1/2	23 1/2	23 1/2
WEIGHT IN POUNDS *										
FRAME AND COVER		60	60	60	110	110	110	155	155	155

* THE ACTUAL WEIGHT OF THE MANHOLE FRAME AND COVER MAY VARY WITHIN 5 PERCENT PLUS OR MINUS OF THE WEIGHTS SHOWN.

** NORMALLY USED LENGTHS. THE PROJECT ENGINEER SHALL DETERMINE IF PIPE LENGTHS, OTHER THAN THOSE SPECIFIED, SHALL BE USED, TO A MAXIMUM OF 48" (CONTINUOUS LENGTH, NON-SPLICED). THE ADDITIONAL LENGTH SHALL BE INCIDENTAL TO THE PULL BOX BID PRICE.

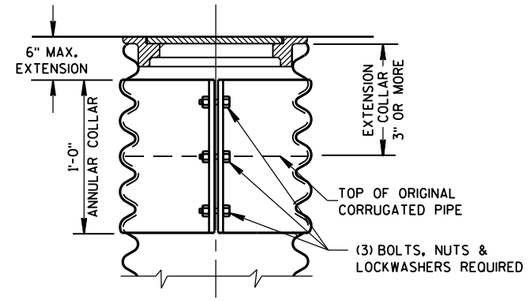

CORRUGATED PIPE EXTENDER

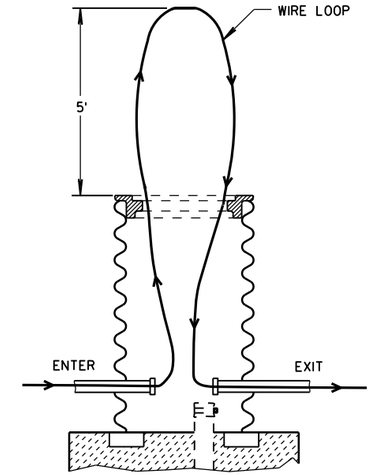

MEASUREMENT DETAIL FOR WIRE/CABLE IN THE PULL BOX

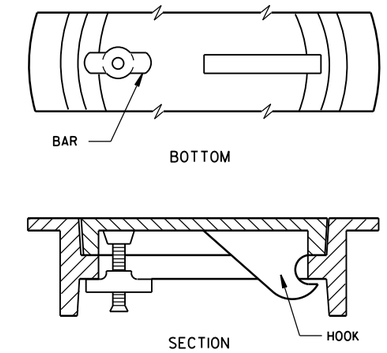

ALTERNATE COVER (LOCKING)

TIGHTENING BAR TYPE

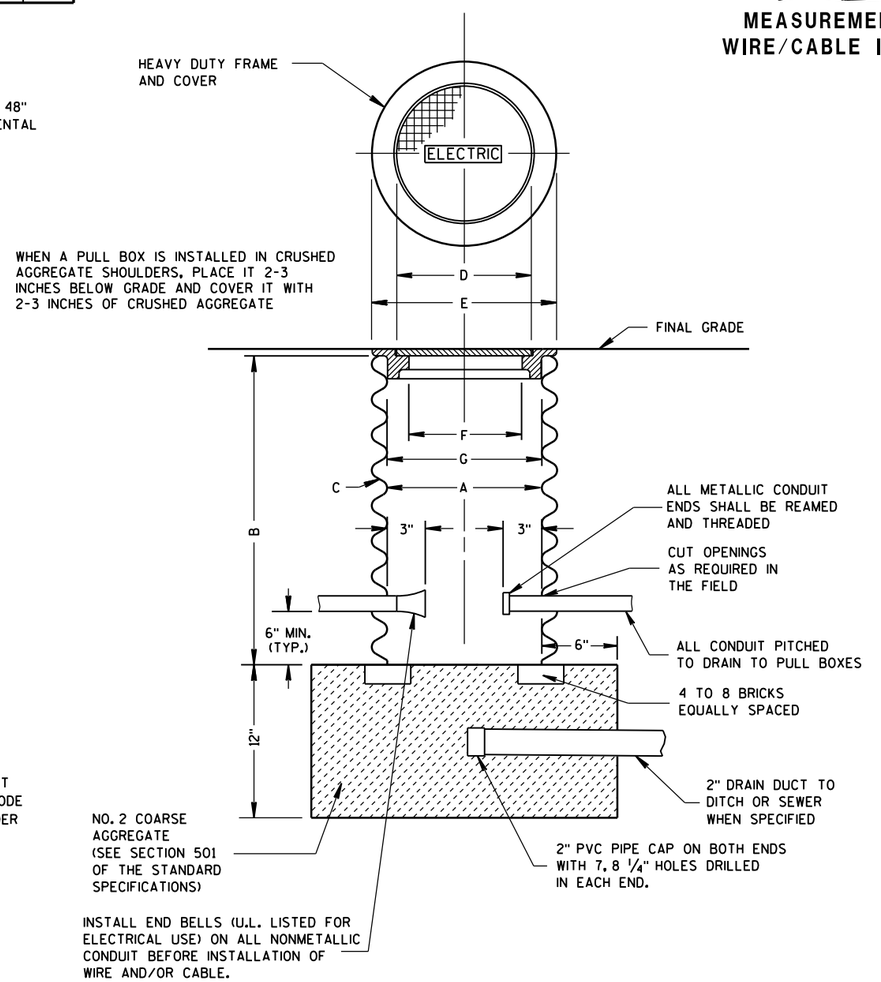

PULL BOX

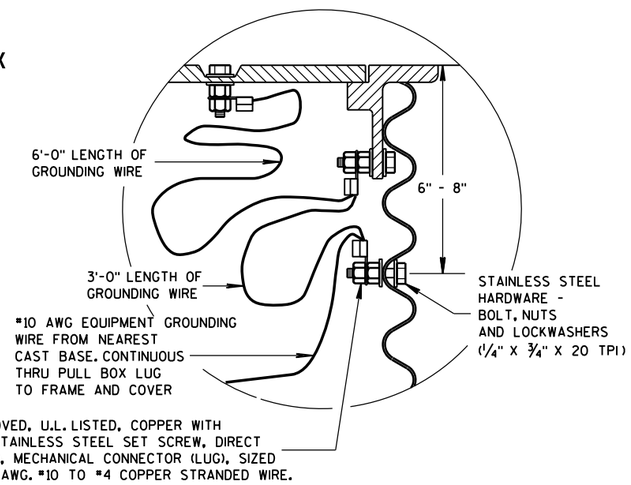

EQUIPMENT GROUNDING LUG AND LOCATION IN STEEL PULL BOXES

GENERAL NOTES

DETAILS OF CONSTRUCTION, MATERIALS AND WORKMANSHIP NOT SHOWN ON THIS DRAWING SHALL CONFORM TO THE PERTINENT REQUIREMENTS OF THE CONTRACT.

ALL FRAMES AND COVERS SHALL BE HEAVY DUTY TYPE, SUITABLE FOR VEHICULAR TRAFFIC LOADS.

PULL BOXES LOCATED IN THE ROADWAYS SHALL HAVE LOCKING COVERS.

ENTRANCE HOLES INTO PULL BOXES SHALL BE CUT WITH A CIRCULAR HOLE SAW OR HYDRAULIC CONDUIT PUNCH. HOLE SIZE SHALL BE THE OUTSIDE DIAMETER OF THE CONDUIT THAT IS TO FIT IN THE OPENING PLUS NO MORE THAN 1/4".

THE CONTRACTOR SHALL NOT INSTALL WIRE IN ANY PULL BOX UNTIL ITS INSTALLATION HAS BEEN INSPECTED AND ACCEPTED BY THE ENGINEER.

GROUNDING LUGS (MECHANICAL CONNECTORS) SHALL BE U.L. LISTED AND APPROVED FOR USE WITH COPPER WIRE.

ALL METALLIC CONDUIT IN WHICH WIRE AND/OR CABLE IS TO BE INSTALLED, SHALL BE BUSHED BEFORE INSTALLATION OF THE WIRE AND/OR CABLE.

WHEN PULL BOXES ARE INSTALLED FOR FUTURE USE, DO NOT INSTALL THE EQUIPMENT GROUNDING LUG. THE EQUIPMENT GROUNDING LUG, THE EQUIPMENT GROUNDING ELECTRODE AND THE EQUIPMENT GROUNDING CONDUCTOR SHALL BE REQUIRED AND INSTALLED UNDER A FUTURE WIRING CONTRACT.

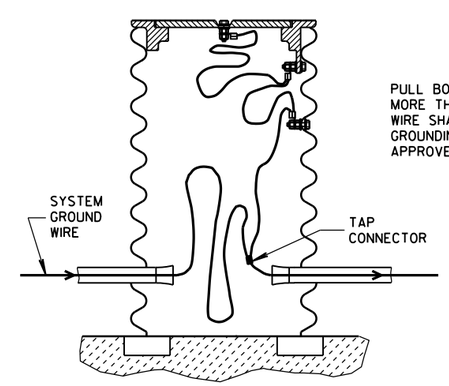

EQUIPMENT GROUNDING LUG AND LOCATION IN STEEL PULL BOXES

PULL BOX

STATE OF WISCONSIN
DEPARTMENT OF TRANSPORTATION

APPROVED
Sept. 2014 — DATE
/S/ Ahmet Demirbilek — STATE ELECTRICAL
FHWA

6

S.D.D. 9 B 4-11

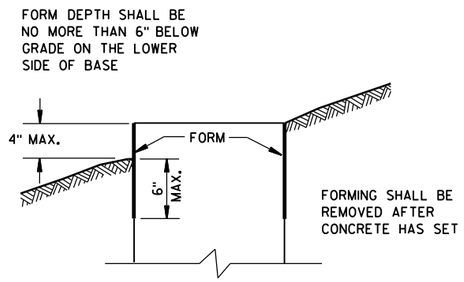

FORMING DETAIL

QUANTITY REQUIREMENTS	CONCRETE BASE TYPE		
	1	2	5 & 6
APPROX. CUBIC YARDS OF CONCRETE	0.40	0.57	0.40
LBS. OF HOOP BAR STEEL	NONE	23	16
LBS. OF VERTICAL BAR STEEL	NONE	60	18

GENERAL NOTES

DETAILS OF CONSTRUCTION, MATERIALS AND WORKMANSHIP NOT SHOWN ON THIS DRAWING SHALL CONFORM TO THE PERTINENT REQUIREMENTS OF THE CONTRACT.

BASES SHALL BE EXCAVATED BY USE OF A CIRCULAR AUGER.

TOP SURFACES OF CONCRETE BASES SHALL BE TROWEL FINISHED SMOOTH AND LEVEL.

CONDUIT SIZES AND LOCATIONS SHALL BE AS SHOWN ON THE PLANS.

THE FINAL OR TERMINATING CONCRETE BASE IN A CONDUIT RUN SHALL HAVE A 6" EXIT STUB INSTALLED FOR FUTURE CABLING USE. THE EXIT STUB SHALL BE SIZED AS USED THROUGHOUT THE CONDUIT RUN AS SHOWN AT THE ENTRANCE OF THE BASE.

MINIMUM BENDING RADIUS OF CONDUIT IS EQUAL TO 6 X THE DIAMETER.

CONDUIT HEIGHT ABOVE CONCRETE BASES SHALL BE 1 INCH. ALL METALLIC CONDUIT ENDS SHALL BE REAMED AND THREADED.

ALL CONDUIT ENDS AT THE TOP OF CONCRETE BASES SHALL BE CAPPED IF METALLIC OR PLUGGED IF NONMETALLIC IMMEDIATELY AFTER PLACEMENT AND BEFORE CONCRETE IS POURED. CONDUITS IN WHICH WIRE OR CABLE IS NOT INSTALLED SHALL REMAIN CAPPED OR PLUGGED.

GENERAL NOTES (CONTINUED)

BELL ENDS SHALL BE INSTALLED ON ALL PVC CONDUIT EXPOSED AT THE TOP OF CONCRETE BASES BEFORE INSTALLATION OF CABLE OR WIRE.

ENDS OF CONDUIT INSTALLED BELOW GRADE FOR FUTURE USE SHALL BE CAPPED IF METALLIC OR PLUGGED IF NONMETALLIC.

WHEN REQUIRED TO CONNECT NONMETALLIC CONDUIT TO METALLIC CONDUIT, ONLY ADAPTER FITTINGS, U.L. LISTED FOR ELECTRICAL USE, SHALL BE USED.

IF A BASE REQUIRES A DEEP FORM BECAUSE OF LOOSE DIRT OR FILL, THE FORM SHALL BE REMOVED BEFORE BACKFILLING AROUND THE BASE. BACKFILL SHALL BE TAMPED TIGHT AGAINST THE BARE CONCRETE BASE IN LAYERS OF 1 FOOT OR LESS.

A NO. 4 AWG, STRANDED COPPER EQUIPMENT GROUNDING CONDUCTOR SHALL BE EXOTHERMICALLY WELDED TO THE EQUIPMENT GROUNDING ELECTRODE (GROUND ROD) FOR TYPE 1, TYPE 2, TYPE 5, AND TYPE 6 BASES.

THE EQUIPMENT GROUNDING CONDUCTOR SHALL BE FURNISHED AND INSTALLED TO ENTER THE BASE OF THE TYPE 2 AND TYPE 5 BASES THROUGH A 1 INCH CONDUIT INSTALLED FOR GROUNDING PURPOSES, LEAVING A 4 FOOT COIL OF WIRE ABOVE THE CONCRETE BASE. THE EQUIPMENT GROUNDING CONDUCTOR SHALL BE NEATLY COILED AND THE COILS TIED TOGETHER.

ANCHOR RODS SHALL BE THREADED 12" IN LENGTH ON EACH END OF THE ROD. ANCHOR RODS SHALL BE MANUFACTURED IN ACCORDANCE WITH SECTION 654.2.1 OF THE STANDARD SPECIFICATIONS.

WASHERS AND LOCK WASHERS ARE REQUIRED ON ALL ANCHOR RODS.

WHEN ANCHOR RODS USING THE ALTERNATE "L" BEND ARE FURNISHED, THE 4" "L" BEND SHALL BE IN ADDITION TO THE SPECIFIED ANCHOR ROD BAR LENGTH. THE "L" BEND END SHALL NOT BE THREADED.

ANCHOR RODS SHALL BE INSTALLED WITH MISALIGNMENTS OF LESS THAN 1:40 FROM VERTICAL.

WELDING OF THE ANCHOR RODS TO THE CAGE IS UNACCEPTABLE. TIE WIRES SHALL BE USED.

BAR STEEL REINFORCEMENT SHALL BE COATED WITH POWDERED EPOXY RESIN IN ACCORDANCE WITH SECTION 505 OF THE STANDARD SPECIFICATIONS (LATEST EDITION).

(1) THE MINIMUM DEPTH OF CONDUIT EXITING THE CONCRETE BASE AND INSTALLED BELOW THE TRAVELED WAY SHALL BE 24 INCHES. THE MINIMUM DEPTH OF CONDUIT EXITING THE CONCRETE BASE THAT IS NOT INSTALLED BELOW THE TRAVELED WAY SHALL BE 18 INCHES. THE MAXIMUM DEPTH OF ALL CONDUIT SHALL BE 36 INCHES EXCEPT WITH WRITTEN APPROVAL BY THE ENGINEER.

(2) (4) 1" DIA. X 3'-6" ANCHOR RODS.

(3) (4) 1" DIA. X 5'-0" ANCHOR RODS.

(4) (6) NO. 6 X 6'-8" BAR STEEL REINFORCEMENT.

(5) (7) NO. 4 X 5'-1" BAR STEEL REINFORCEMENT @ 1'-0" C-C.

(6) (4) 1" DIA. X 3'-6" ANCHOR RODS.

(7) (6) NO.4 X 4'-8" BAR STEEL REINFORCEMENT.

(8) (5) NO. 4 X 5'-1" BAR STEEL REINFORCEMENT @ 1'-0" C-C.

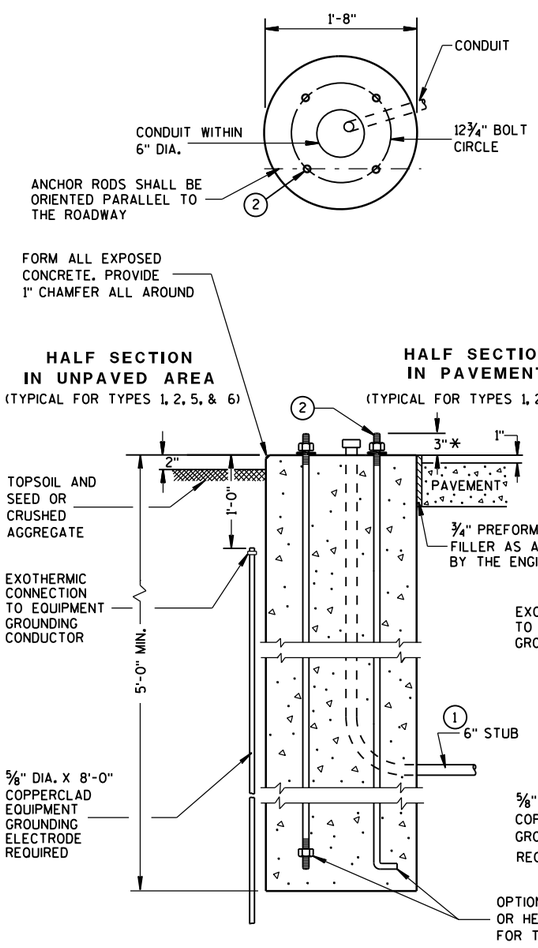

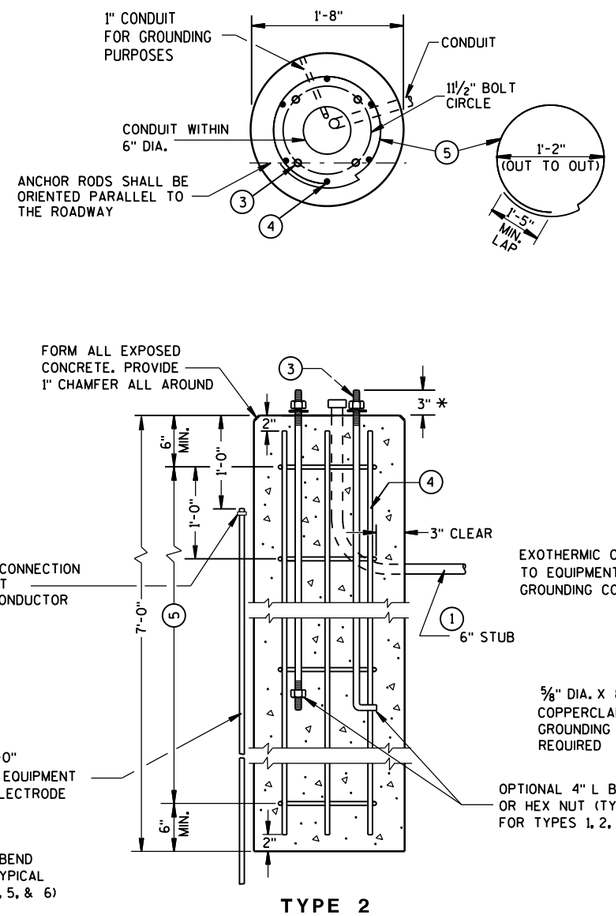

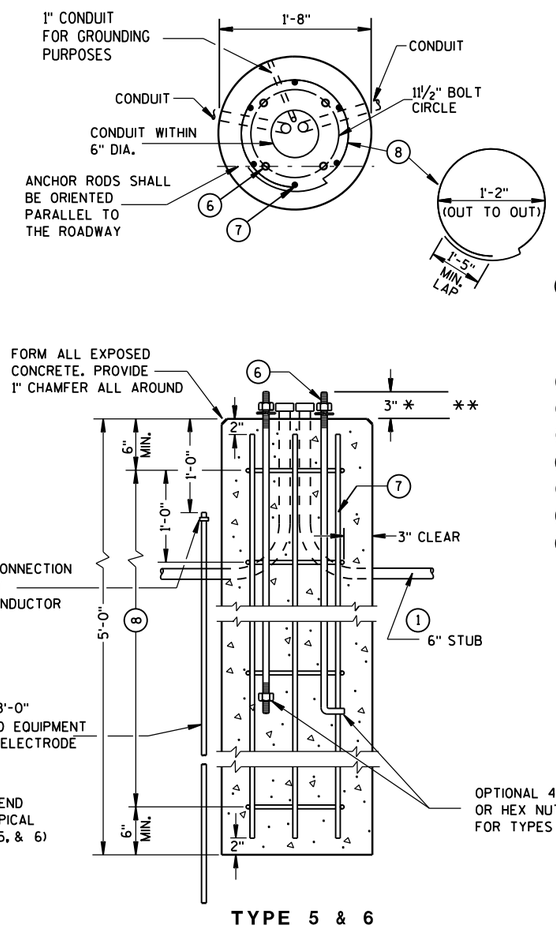

CONCRETE BASES

* ANY ANCHOR ROD PROJECTION SHORTER THAN 2¾" OR LONGER THAN 3¼" SHALL REQUIRE THE BASE TO BE REMOVED AND REPLACED AT THE CONTRACTORS EXPENSE.

** FOR NONBREAKAWAY INSTALLATIONS, 4½" ± ANCHOR ROD PROJECTION WITH THE USE OF LEVELING NUTS. RODENT SCREEN REQUIRED.

CONCRETE BASES, TYPES 1, 2, 5, & 6

STATE OF WISCONSIN
DEPARTMENT OF TRANSPORTATION

APPROVED
Sept. 2014 — DATE
/S/ Ahmet Demirbilek — STATE ELECTRICAL
FHWA

6

S.D.D. 9 C 2-7

GENERAL NOTES

DETAILS OF CONSTRUCTION, MATERIALS AND WORKMANSHIP NOT SHOWN ON THIS DRAWING SHALL CONFORM TO THE PERTINENT REQUIREMENTS OF THE CONTRACT.

FOUR (4) BOLTS SHALL BE FURNISHED WITH EACH TRANSFORMER BASE. BOLTS SHALL BE 1" DIAMETER, 4" IN LENGTH, WITH WASHERS, LOCK WASHERS AND NUTS. BOLTS, NUTS AND WASHERS SHALL BE MANUFACTURED IN ACCORDANCE WITH SECTION 641.2.2 OF THE STANDARD SPECIFICATIONS.

LEVELING SHIMS, IF NEEDED, SHALL BE DESIGNED FOR THE PURPOSE AND USED UNDER CAST BASES WHEN PLUMBING POLES OR STANDARDS DURING INSTALLATION. THE USE OF WASHERS IN LIEU OF PROPER LEVELING SHIMS IS NOT ACCEPTABLE.

SHIM LENGTH SHALL BE LONG ENOUGH TO COMPLETELY COVER THE AREA UNDER THE LENGTH AND WIDTH OF THE BASE MOUNTING FLANGE.

DOUBLE NUTTING IS NOT ACCEPTABLE FOR LEVELING OR MOUNTING PURPOSES.

A NEMA APPROVED, U.L. LISTED, COPPER WITH BRASS OR STAINLESS STEEL SET SCREW, DIRECT BURY RATED, MECHANICAL CONNECTOR (LUG), SIZED TO ACCEPT AWG. #10 TO #4 COPPER STRANDED WIRE SHALL BE FURNISHED AND INSTALLED IN THE PEDESTAL AND TRANSFORMER BASES.

THE MECHANICAL CONNECTOR SHALL BE INSTALLED USING A 1/4" - 20 (TPI) STAINLESS STEEL HEX HEAD BOLT OF SUFFICIENT LENGTH TO FIRMLY ATTACH THE LUG TO THE BASE.

SHOULD THE MANNER OF ATTACHMENT OF THE LUG REQUIRE WASHERS, HEX NUTS, LOCK WASHER - THEY SHALL BE STAINLESS STEEL AS IS THE BOLT. THE MANNER OF ATTACHMENT SHALL NOT BLOCK ACCESSIBILITY TO WIRE PLACEMENT IN THE CONNECTOR.

PEDESTAL BASE COLLAR THREADING SHALL BE TAPERED AND IN ACCORDANCE WITH NATIONAL PIPE THREADING DIMENSIONS.

BASE COLLAR THREADING SHALL EXTEND INTO THE BASE COLLAR WITH SUFFICIENT DEPTH TO ACCEPT THE INSTALLATION OF TRAFFIC SIGNAL STANDARDS TO A DEPTH OF 1 1/2", THEN TIGHTENING TO A POINT OF BEING IMMOVABLE.

THE ACCESS DOOR SHALL BE OF THE SAME MATERIAL AS THE BASE.

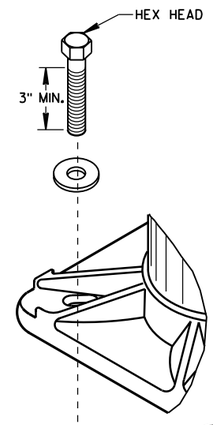

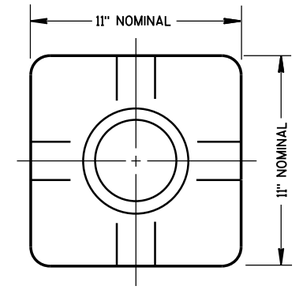

TOP VIEW
(PEDESTAL BASE)

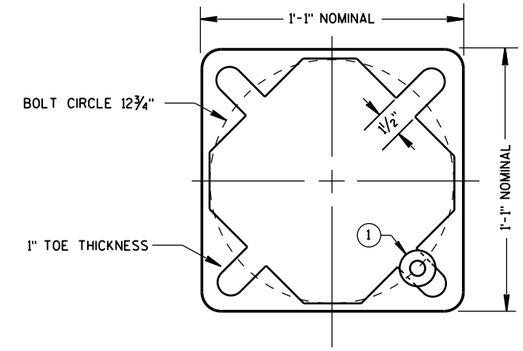

BOTTOM VIEW
(PEDESTAL BASE)

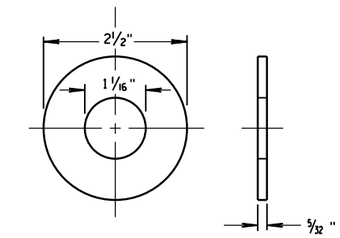

ZINC COATED STEEL WASHER
TO BE PROVIDED BY THE CONTRACTOR

PEDESTAL BASE WASHER (1)

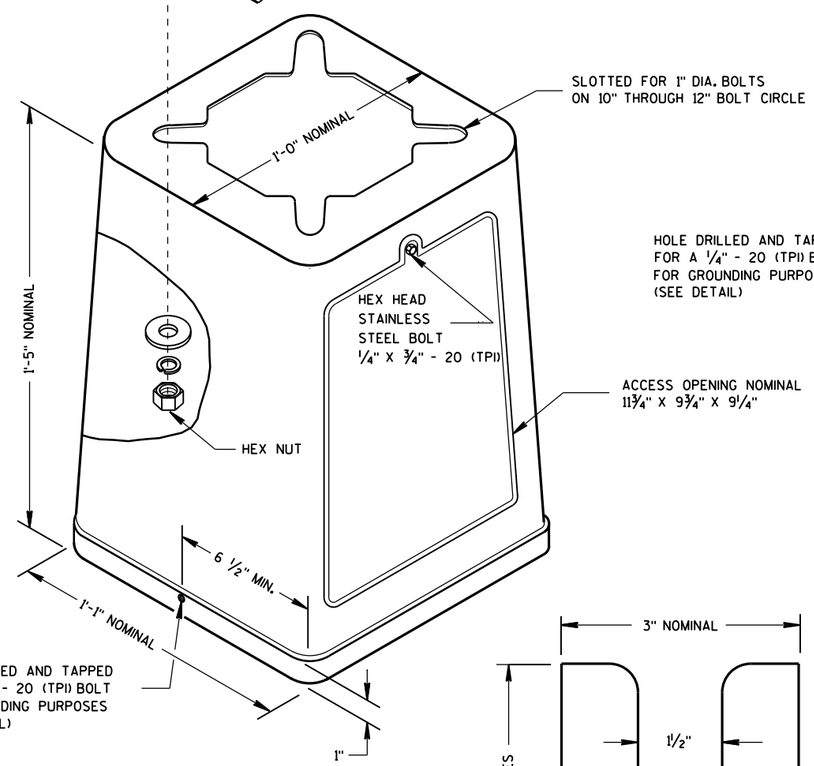

ISOMETRIC VIEW

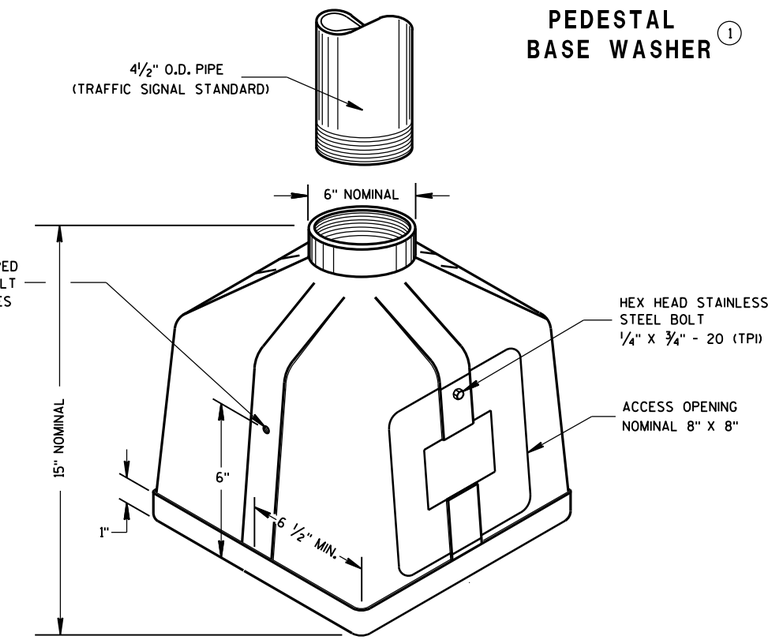

ISOMETRIC VIEW
PEDESTAL BASE

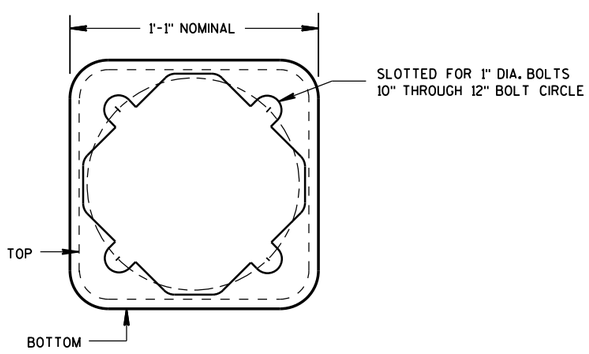

BOTTOM VIEW
(TRANSFORMER BASE)

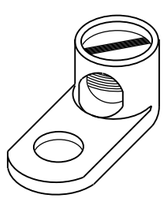

TYPICAL MECHANICAL CONNECTOR LUG

TO BE FURNISHED WITH EACH BASE

TRANSFORMER BASE

INTENDED FOR USE WITH TYPE 2, 3, 4, 5 & 6 POLES

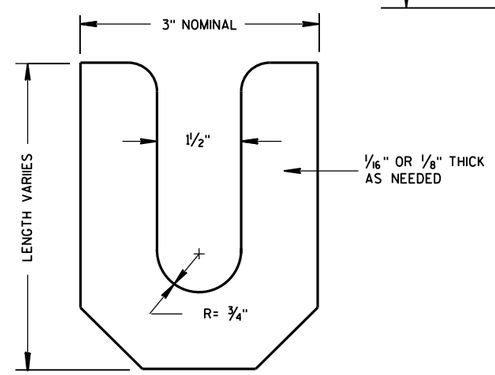

LEVELING SHIM

TRANSFORMER/PEDESTAL BASES	
STATE OF WISCONSIN DEPARTMENT OF TRANSPORTATION	
APPROVED Sept. 2014 DATE FHWA	/S/ Ahmet Demirbilek STATE ELECTRICAL

6

6

S.D.D. 9 C 3-4

S.D.D. 9 C 3-4

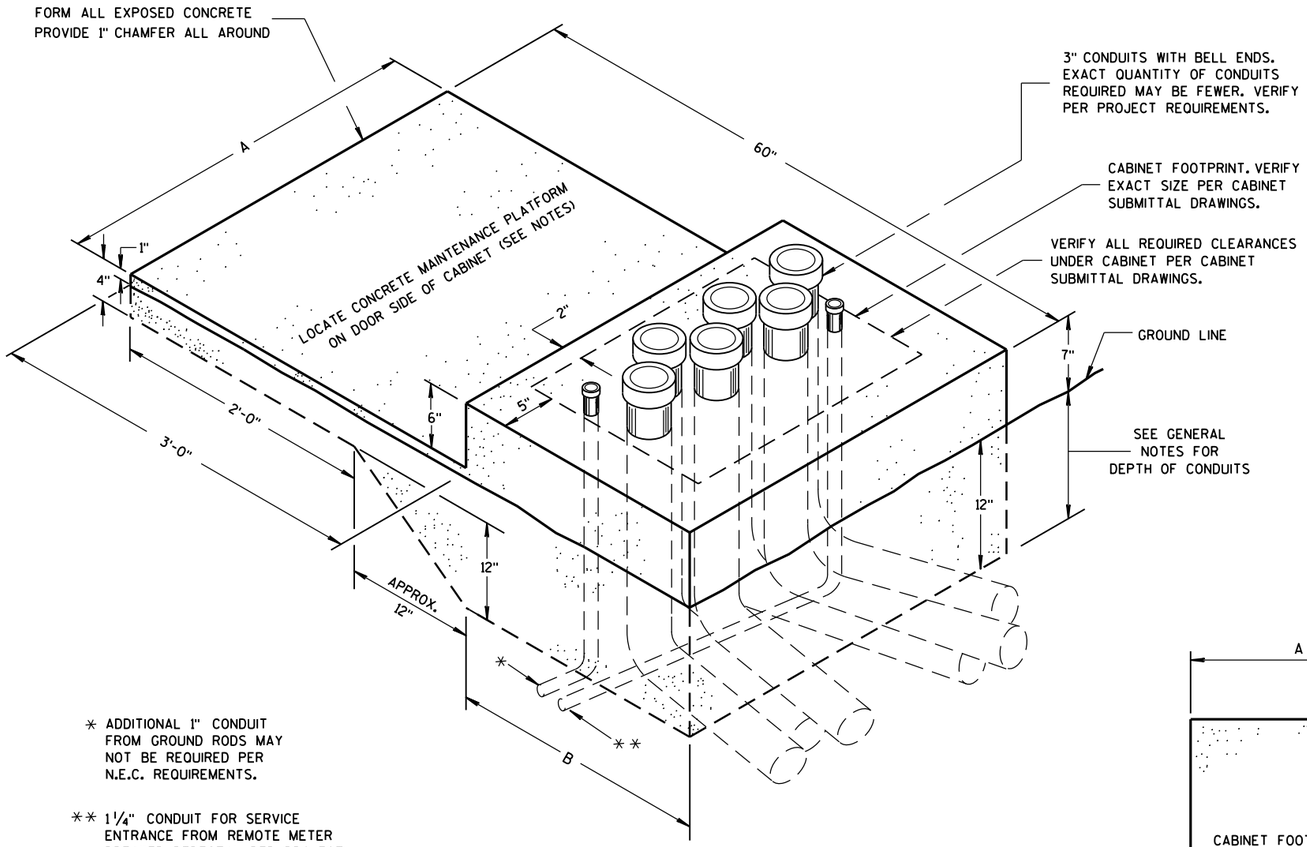

* ADDITIONAL 1" CONDUIT FROM GROUND RODS MAY NOT BE REQUIRED PER N.E.C. REQUIREMENTS.

** 1¼" CONDUIT FOR SERVICE ENTRANCE FROM REMOTE METER BREAKER PEDESTAL PER PROJECT REQUIREMENTS. VERIFY LOCATION OF CONDUIT DEPENDENT UPON LOCATION OF INCOMING FEEDER AND FOR EASE OF CONNECTION TO LOAD CENTER.

ISOMETRIC VIEW

CONCRETE CONTROL CABINET BASE, TYPE L

(C.Y. CONCRETE = APPROX. 0.4)

CONCRETE BASE TYPE	CABINET WIDTH	DIMENSIONS		MAXIMUM 3" CONDUITS
		A	B	
L24	24"	34"	24"	4
L30	30"	40"	24"	6

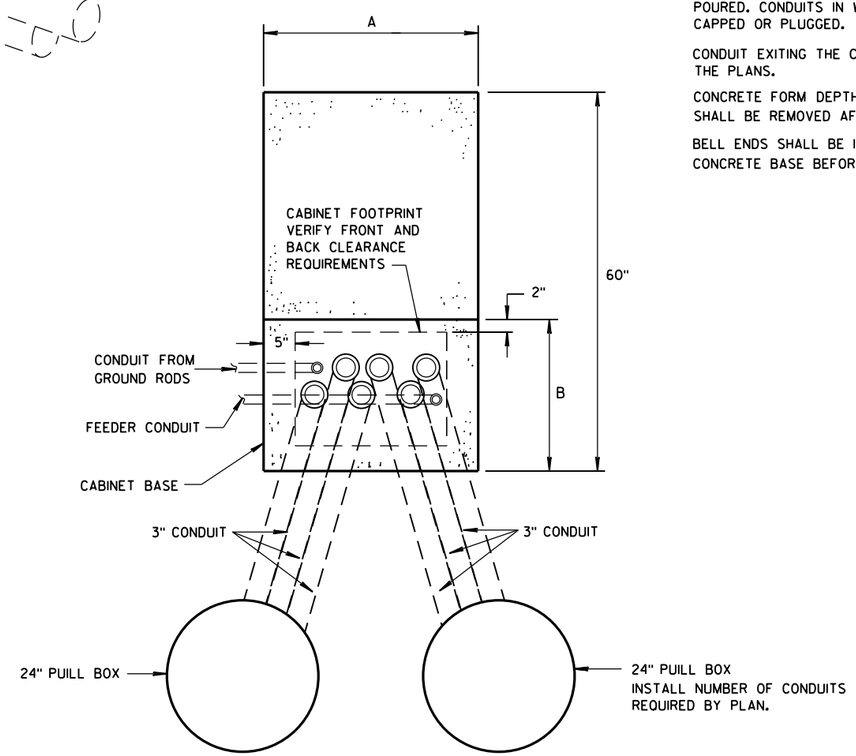

PLAN VIEW

CONCRETE CONTROL CABINET BASE, TYPE L

GENERAL NOTES

DETAILS OF CONSTRUCTION, MATERIALS AND WORKMANSHIP NOT SHOWN ON THIS DRAWING SHALL CONFORM TO THE PERTINENT REQUIREMENTS OF THE CONTRACT.

INSTALL FOUR STAINLESS STEEL APPROVED CONCRETE MASONRY ANCHORS TO ANCHOR THE CABINET BASES. THE ANCHORS SHALL BE LOCATED AS DIRECTED BY THE ENGINEER TO PROPERLY ANCHOR THE CONTROL CABINET TO THE BASE.

WHEN REQUIRED TO CONNECT NONMETALLIC CONDUIT TO METALLIC CONDUIT, ONLY ADAPTER FITTINGS, U.L. LISTED FOR ELECTRICAL USE, SHALL BE USED.

CONDUIT HEIGHT ABOVE THE CONCRETE BASE SHALL BE 1 INCH.

DEPTH OF CONDUIT INSTALLED BELOW THE TRAVELED WAY SHALL BE 24 INCHES MINIMUM AND 36 INCHES MAXIMUM.

DEPTH OF CONDUIT INSTALLED THAT IS NOT BELOW THE TRAVELED WAY SHALL BE 18 INCHES MINIMUM AND 36 INCHES MAXIMUM.

ANY EXCEPTION TO THE MAXIMUM DEPTH SHALL BE ONLY WITH THE WRITTEN APPROVAL OF THE ENGINEER.

CONTROL CABINET BASE TOP SURFACE SHALL BE TROWEL FINISHED SMOOTH AND LEVEL.

MAINTENANCE PLATFORM SHALL BE FLOAT OR BROOM FINISHED AND BE LEVEL.

MAINTENANCE PLATFORMS ARE NOT REQUIRED WHEN THE SURROUNDING AREA IS PAVED.

MINIMUM BENDING RADIUS OF CONDUIT = 6 X THE DIAMETER.

ALL METALLIC CONDUIT ENDS SHALL BE REAMED AND THREADED.

CAP ALL BELOW GRADE METALLIC CONDUIT ENDS IN WHICH WIRE OR CABLE IS NOT BEING INSTALLED.

PLUG ALL BELOW GRADE NONMETALLIC CONDUIT ENDS IN WHICH WIRE OR CABLE IS NOT BEING INSTALLED.

ALL CONDUIT ENDS AT THE TOP OF CONCRETE BASES SHALL BE CAPPED IF METALLIC OR PLUGGED IF NONMETALLIC IMMEDIATELY AFTER PLACEMENT AND BEFORE CONCRETE IS POURED. CONDUITS IN WHICH WIRE OR CABLE IS NOT BEING INSTALLED SHALL REMAIN CAPPED OR PLUGGED.

CONDUIT EXITING THE CONCRETE BASE SHALL TERMINATE IN PULL BOXES AS SHOWN ON THE PLANS.

CONCRETE FORM DEPTH BELOW FINISHED GRADE SHALL BE 6" MAXIMUM. CONCRETE FORMS SHALL BE REMOVED AFTER CONCRETE HAS SET.

BELL ENDS SHALL BE INSTALLED ON ALL PVC CONDUIT EXPOSED AT THE TOP OF THE CONCRETE BASE BEFORE INSTALLATION OF CABLE OR WIRE.

6

6

CONCRETE CONTROL
CABINET BASE, TYPE L

STATE OF WISCONSIN
DEPARTMENT OF TRANSPORTATION

APPROVED
Nov. 2014 — DATE
/S/ Thomas Gonring — STATE LIGHTING ENGINE
FHWA — WYS

S.D.D. 9 C 14-2

S.D.D. 9 C 14-2

*RISE FOR 4' ARM SHALL BE 2'-0".

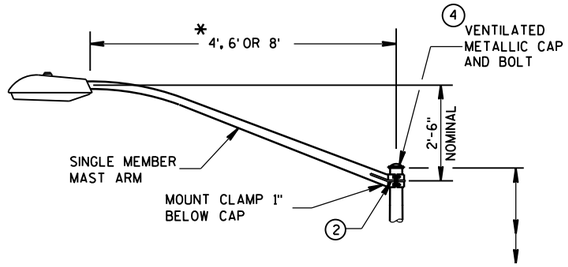

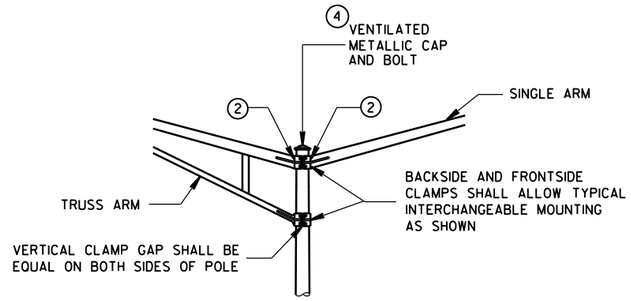

INTERCHANGEABLE MOUNTING DETAIL

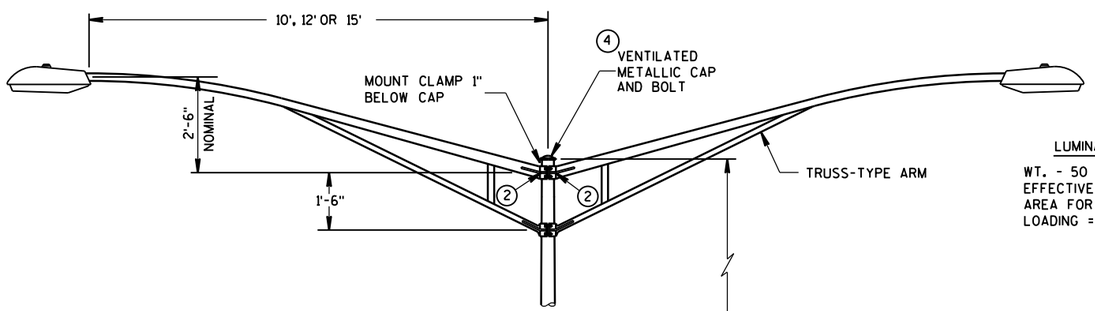

LUMINAIRE

WT. - 50 LBS.
EFFECTIVE PROJECTED
AREA FOR WIND
LOADING = 1.5 SQ. FT.

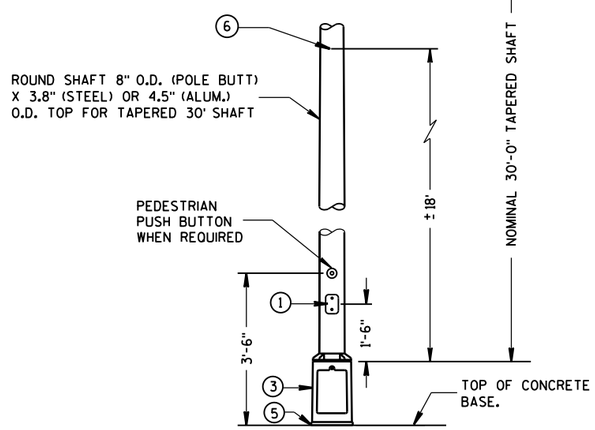

TYPE 5 POLE MOUNTING CONFIGURATION

(MAXIMUM LOAD)

LIGHTING ONLY

GENERAL NOTES

DETAILS OF CONSTRUCTION, MATERIALS AND WORKMANSHIP NOT SHOWN ON THIS DRAWING SHALL CONFORM TO THE PERTINENT REQUIREMENTS OF THE CONTRACT.

ALL TYPE 5 POLE MOUNTINGS SHALL BE DESIGNED TO INCLUDE TWIN 15' ARMS WITH LUMINAIRES.

POLES SHALL BE GALVANIZED STEEL OR ALUMINUM, AS CALLED FOR IN THE CONTRACT.

TYPE 5 ALUMINUM POLES SHALL BE CONSTRUCTED OF 6063-T6 ALUMINUM ALLOY. SLEEVING INSIDE THE POLE IS NOT ACCEPTABLE.

THE TYPE 5 ALUMINUM POLES SHALL HAVE A MINIMUM WALL THICKNESS OF 0.188".

TYPE 5 STEEL POLES SHALL HAVE A MINIMUM WALL THICKNESS OF U.S. STANDARD 11 GAGE (.1196").

THE SLIPFITTER END OF THE LUMINAIRE MAST ARM SHALL BE A NOMINAL 2⅜ INCHES IN OUTSIDE DIAMETER. THE STRAIGHT PORTION OF THE SLIPFITTER END OF THE LUMINAIRE ARM SHALL BE A NOMINAL 12 INCHES IN LENGTH.

WHEN TRANSFORMER BASES ARE USED, WIRE CONEECTIONS SHALL BE MADE IN THE TRANSFORMER BASE.

1. 4" x 6" REINFORCED HANDHOLE & COVER ASSEMBLY WITH 2 (TWO) ¼" X ¾" - 20 TPI HEX HEAD STAINLESS STEEL BOLTS.
2. GROMMETS, 1" CHASE NIPPLES OR 1" CLOSE CONDUIT NIPPLES WITH BUSHINGS SHALL BE PROVIDED FOR 1⅜" HOLE IN POLE SHAFT FOR WIRING.
3. CAST ALUMINUM TRANSFORMER BASE, WHEN REQUIRED.
4. FURNISH AND INSTALL VENTILATED, CAST, METALLIC (ALUMINUM ALLOY) CAPS. FASTEN CAPS WITH ONE (1) ¼" X ¾" - 20 TPI STAINLESS STEEL, HEX HEAD BOLT.
5. SHIMMING, IF NEEDED, SHALL BE LOCATED BETWEEN THE CONCRETE FOUNDATION AND THE TRANSFORMER BASE.
6. INTERNAL DUMBBELL-TYPE VIBRATION DAMPER.

POLE MONTINGS FOR
LIGHTING UNITS, TYPE 5
(30 FEET)

STATE OF WISCONSIN
DEPARTMENT OF TRANSPO

6

S.D.D. 9 E 1-13d

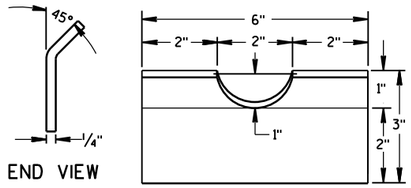

FRONT VIEW

RECTANGULAR CLAMP SHIM

(4 TO A SET)

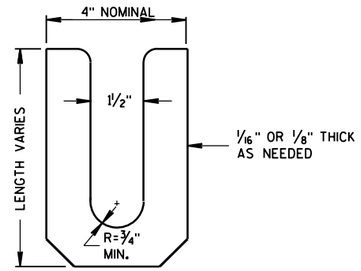

LEVELING SHIM (15)

SHALL BE ALUMINUM

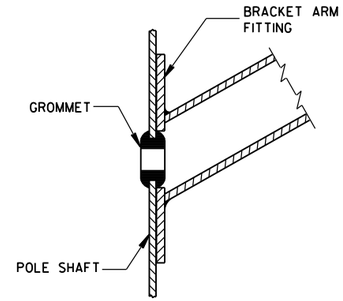

TYPICAL APPLICATION OF GROMMET IN POLE SHAFT

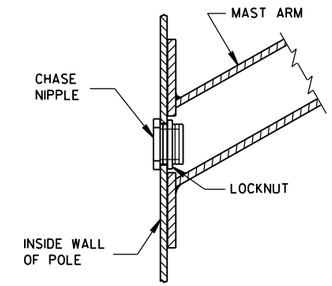

TYPICAL APPLICATION OF CHASE NIPPLE IN POLE SHAFT

GENERAL NOTES

CLAMP BOLT-NUT TIGHTENING TORQUE SHALL BE INDICATED BY INDENT STAMPING (1/2 INCH NUMERALS AND LETTERS) OR WEATHERPROOF PRINTING ON THE INSIDE OF THE CLAMP THAT IS WELDED TO THE ARM MEMBER.

(10) 4.5" I.D. FOR LUMINAIRE MAST ARM CLAMP.
6.625" I.D. FOR TROMBONE MAST ARM CLAMP.

(11) INDIVIDUAL BASE PLATE ANCHOR ROD COVERS. (4 REQUIRED)

(12) BASE PLATE SLOTTED TO ACCEPT 11" THROUGH 12" BOLT CIRCLE USING 1" DIAMETER ANCHOR RODS.

(13) OUTSIDE SHIM DIAMETER - (4.5" O.D. FOR LUMINAIRE MAST ARM)
(6.625" O.D. FOR TROMBONE MAST ARM)

(14) VARIABLE SHIM THICKNESS - (0.10", 0.25", 0.35", 0.53" OR 0.70")

SHIM THICKNESS FOR TROMBONE MAST ARMS MAY BE TYPICALLY 0.25", 0.35", 0.53" OR 0.70".

SHIM THICKNESS FOR LUMINAIRE MAST ARMS MAY BE TYPICALLY 0.10", 0.25" OR 0.35".

SHIM MATERIAL SHALL BE ALUMINUM ALLOY.

SHIM THICKNESS SHALL BE IMPRESSED INTO EACH SHIM. NUMERALS SHALL BE 1/4" HIGH AND LEGIBLE.

THE CONTRACTOR SHALL SUBMIT TWO COPIES OF ALL SHIM SHOP DRAWINGS TO THE ENGINEER FOR APPROVAL.

(15) LEVELING SHIMS, DESIGNED FOR THE PURPOSE, SHALL BE USED WHEN PLUMBING POLES. THE USE OF WASHERS IN LIEU OF PROPER LEVELING SHIMS IS NOT ACCEPTABLE. LEVELING SHIMS SHALL BE USED ONLY BETWEEN THE TOP OF THE CONCRETE BASE AND A METALLIC BASE PLATE.

SHIMS SHALL BE LONG ENOUGH AND WIDE ENOUGH TO COMPLETELY COVER THE AREA UNDER THE LENGTH AND WIDTH OF THE BASE MOUNTING FLANGE.

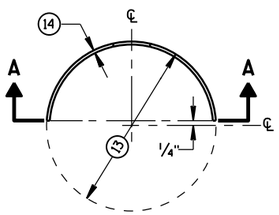

PLAN VIEW

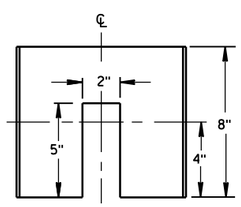

SECTION A-A

CIRCULAR CLAMP SHIM

(2 TO A SET)

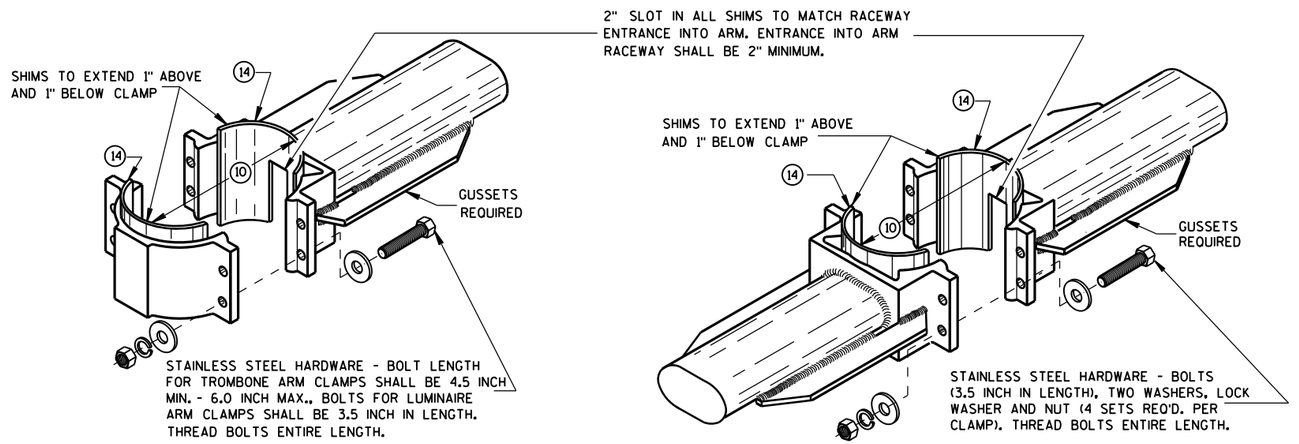

TYPICAL TROMBONE MAST ARM AND SINGLE LUMINAIRE MAST ARM MOUNTING CLAMP

TYPICAL LUMINAIRE MAST ARM (DOUBLE) MOUNTING BRACKETS

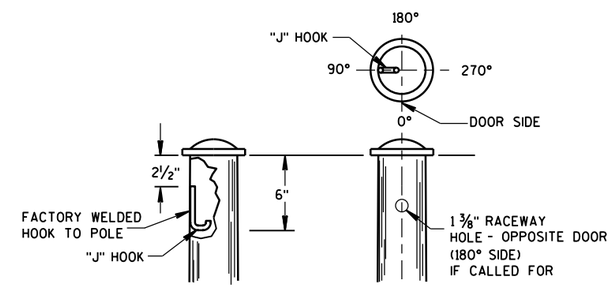

TYPICAL "J" HOOK LOCATION

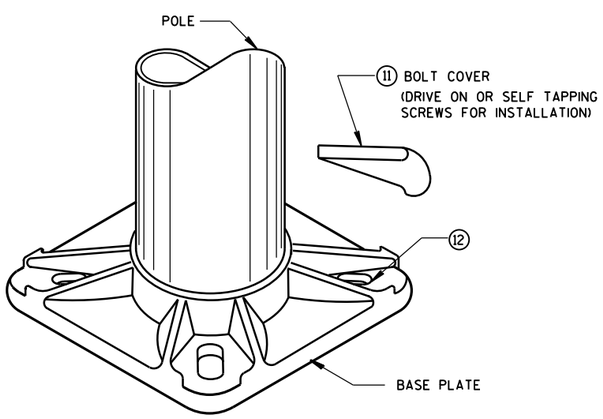

BASE PLATE

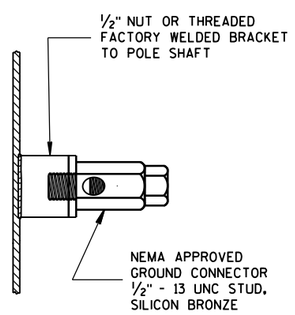

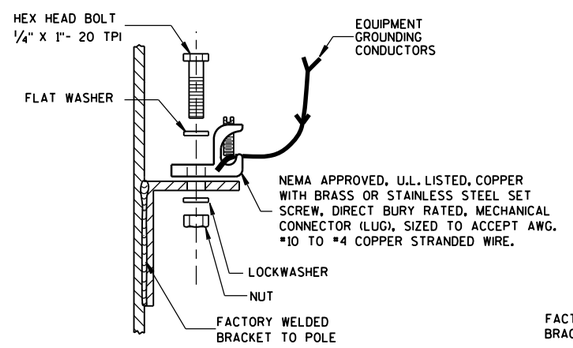

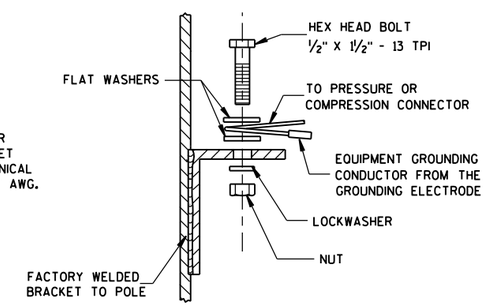

TYPICAL GROUNDING CONNECTIONS

NUT, BOLT AND WASHERS SHALL BE STAINLESS STEEL

HARDWARE DETAILS FOR POLE MOUNTINGS	
STATE OF WISCONSIN DEPARTMENT OF TRANSPORTATION	
APPROVED Sept. 2014 DATE FHWA	/S/ Ahmet Demirbilek STATE ELECTRICAL

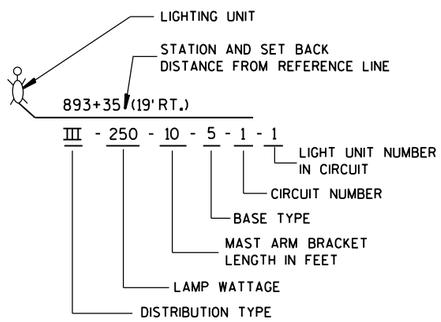

LIGHTING UNIT CODE
(TYPICAL)

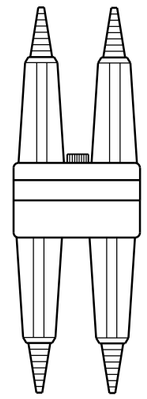

DETAIL "A"
BREAKAWY DOUBLE POLE WITH WATERPROOF INSULATING BOOT

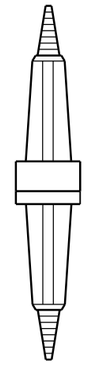

DETAIL "B"
BREAKAWY SINGLE POLE WITH WATERPROOF INSULATING BOOT

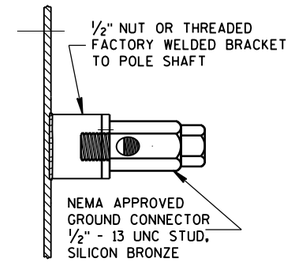

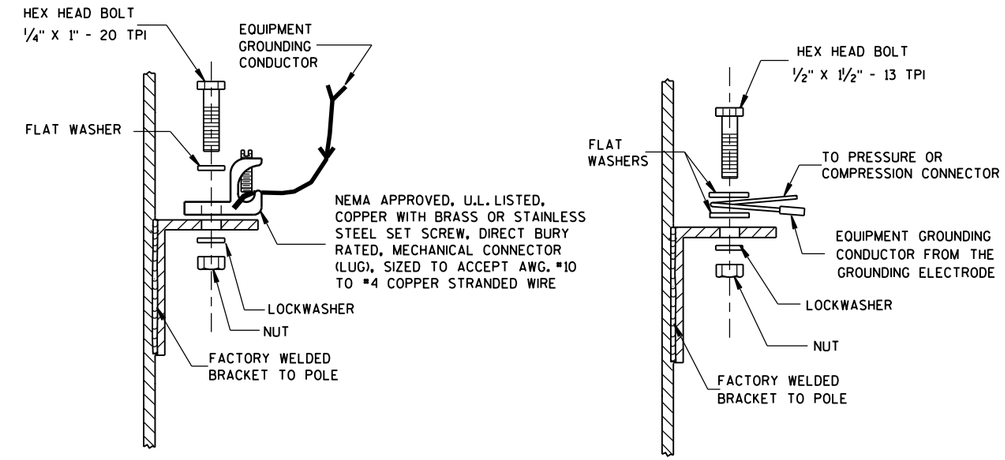

TYPICAL GROUNDING CONNECTIONS
NUT, BOLT, WASHERS AND LOCKWASHERS SHALL BE STAINLESS STEEL

GENERAL NOTES
DETAILS OF CONSTRUCTION, MATERIALS AND WORKMANSHIP NOT SHOWN ON THIS DRAWING SHALL CONFORM TO THE PERTINENT REQUIREMENTS OF THE CONTRACT.

THE EQUIPMENT GROUNDING CONNECTOR SHALL BE TAPED WITH 3 WRAPS (MINIMUM) OF APPROVED RUBBER TAPE AND THEN 3 WRAPS (MINIMUM) OF APPROVED VINYL TAPE TO COVER SHARP WIRE ENDS AFTER THE CONNECTION IS COMPLETED.

WHEN TRANSFORMER BASES ARE USED, ALL WIRING CONNECTIONS SHALL OCCUR WITHIN THE TRANSFORMER BASES.

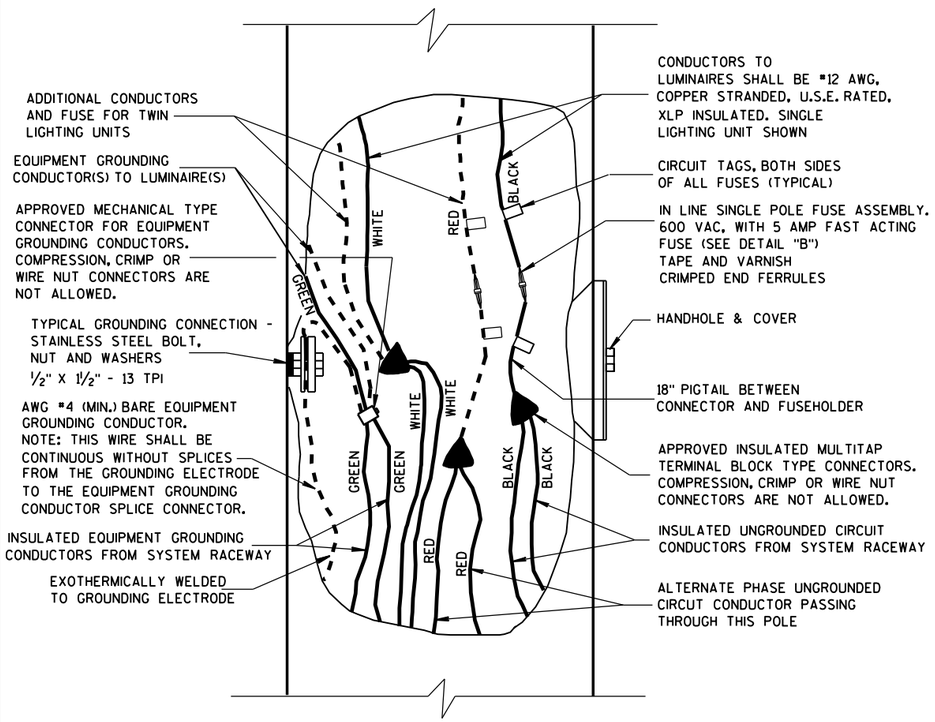

3 WIRE - 120, 240 OR 480 VAC (UNGROUNDED CONDUCTOR) WITH GROUNDED CONDUCTOR AND WITH EQUIPMENT GROUNDING CONDUCTOR

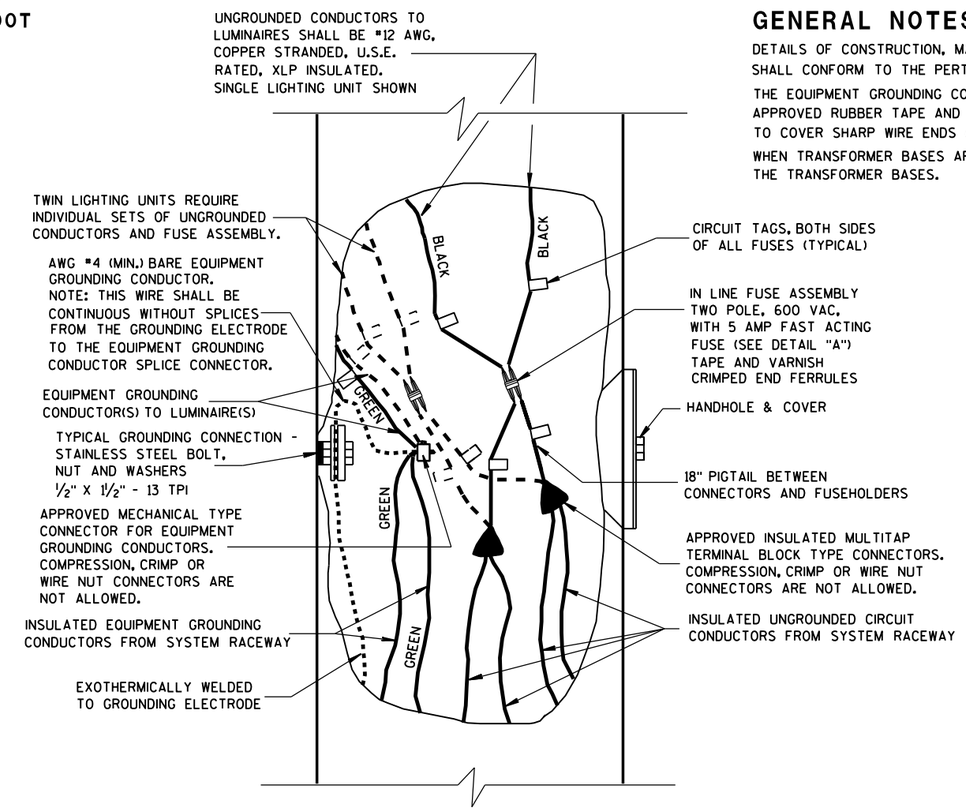

2 WIRE - 240 OR 480 VAC (UNGROUNDED CONDUCTORS) WITH EQUIPMENT GROUNDING CONDUCTOR

NON-FREEWAY LIGHTING UNIT POLE WIRING	
STATE OF WISCONSIN DEPARTMENT OF TRANSPORTATION	
APPROVED Sept. 2014 DATE	/S/ Ahmet Demirbilek STATE ELECTRICAL
FHWA	

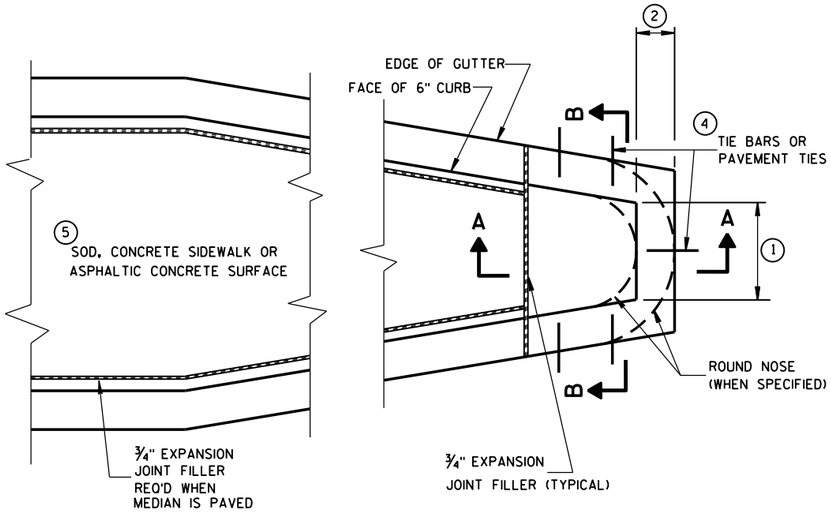

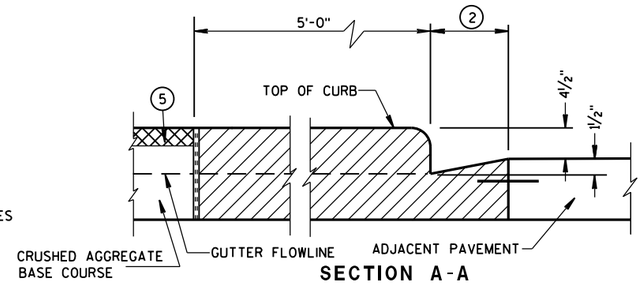

SECTION A-A

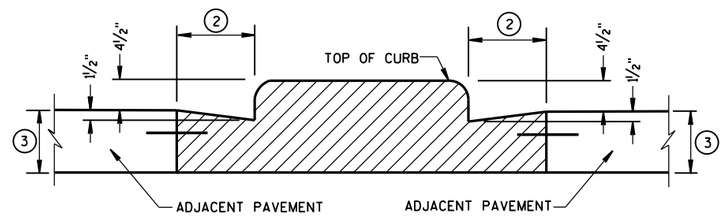

SECTION B-B

CONCRETE MEDIAN BLUNT NOSE DETAIL

GENERAL NOTES

DETAILS OF CONSTRUCTION, MATERIALS AND WORKMANSHIP NOT SHOWN ON THIS DRAWING SHALL CONFORM TO THE PERTINENT REQUIREMENTS OF THE STANDARD SPECIFICATIONS AND THE APPLICABLE SPECIAL PROVISIONS.

1. SEE PLAN FOR MEDIAN NOSE WIDTH AND RADIUS (FOR ROUND NOSE ALTERNATE).
2. WIDTH OF GUTTER TO MATCH EXISTING ADJACENT GUTTER OR AS SPECIFIED ELSEWHERE IN THE PLAN.
3. DEPTH EQUAL TO ADJACENT PAVEMENT. ADJACENT PAVEMENT STRUCTURE DETAILS ARE SHOWN ON THE PLAN. TYPICAL OPTIONS ARE:
   (1) NEW OR EXISTING CONCRETE PAVEMENT.
   (2) ASPHALTIC CONCRETE PAVEMENT OVER NEW OR EXISTING CONCRETE BASE COURSE.
   (3) ASPHALTIC CONCRETE PAVEMENT OVER CRUSHED AGGREGATE BASE COURSE.
4. TIE BARS OR PAVEMENT TIES REQUIRED IN NEW CONCRETE PAVEMENT OR CONCRETE BASE COURSE. TIE BARS SHALL BE NO. 4 X 2'-0" SPACED AT 2'-0" C-C.

   PAVEMENT TIES REQUIRED IN EXISTING CONCRETE BASE COURSE. PAVEMENT TIES SHALL BE NO. 6 X 1'-0" SPACED AT 3'-0" C-C INSTALLED ON A HORIZONTAL SKEW OF 6:1. THE DIRECTION OF SKEW SHALL ALTERNATE AFTER EVERY ONE OR TWO BARS.
5. SURFACE TYPE AND DETAILS ARE SHOWN ELSEWHERE IN THE PLAN.

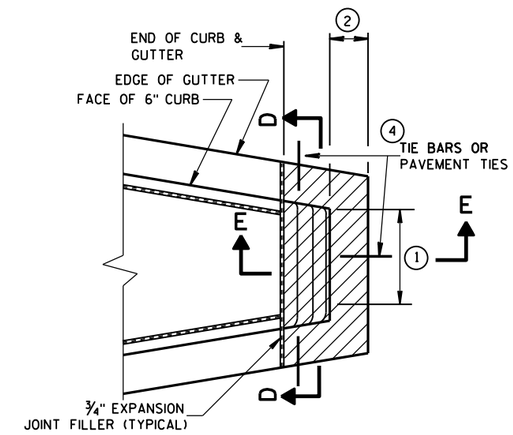

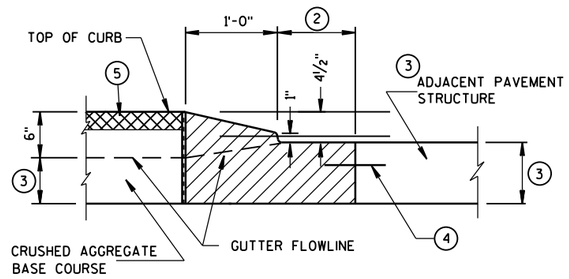

SECTION E-E

CONCRETE MEDIAN SLOPED NOSE TYPE 2

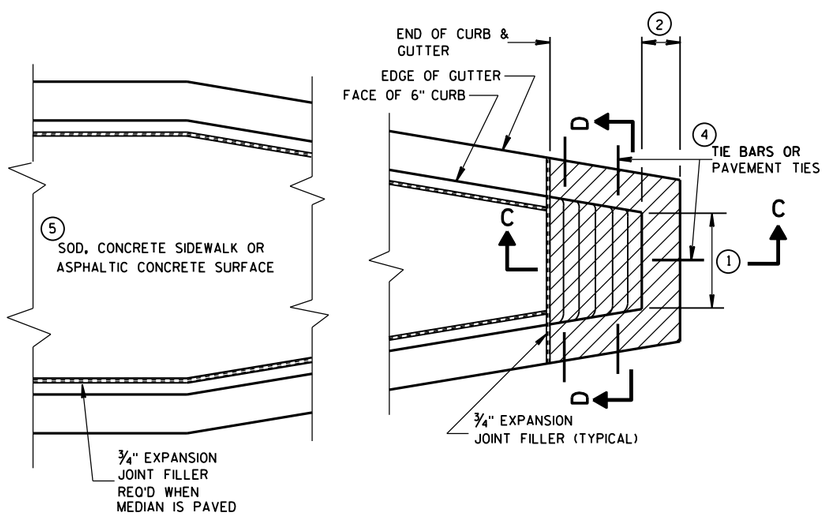

CONCRETE MEDIAN SLOPED NOSE TYPE 1

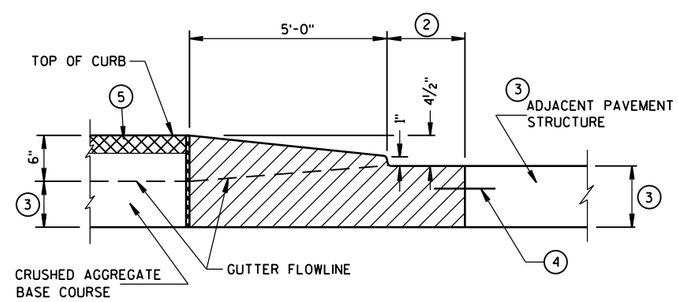

SECTION C-C

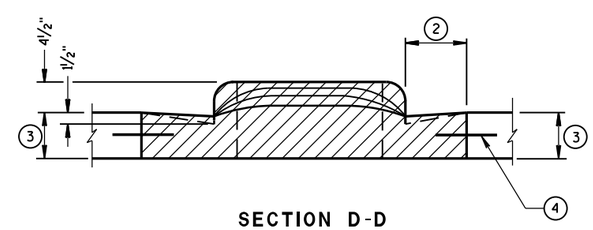

SECTION D-D

CONCRETE MEDIAN NOSE

STATE OF WISCONSIN
DEPARTMENT OF TRANSPORTATION

APPROVED
6/8/2006 — DATE
/S/ Jerry H. Zogg — ROADWAY STANDARDS DEVELOPMENT ENGINEER
FHWA

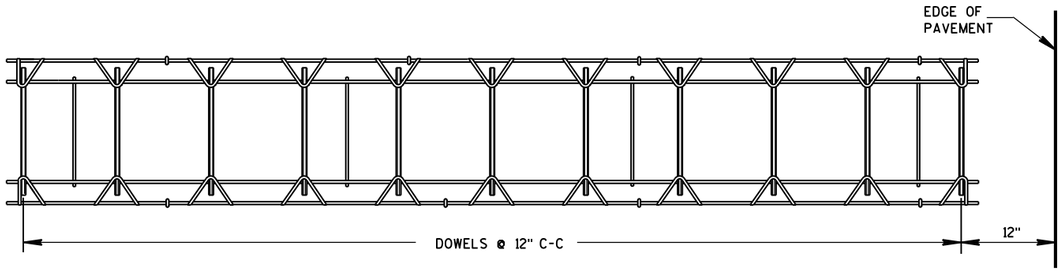

PLAN VIEW

SIDE VIEW

CONTRACTION JOINT DOWEL ASSEMBLY ①

PAVEMENT DEPTH, DOWEL BAR SIZE AND JOINT SPACING TABLE

PAVEMENT DEPTH (D)	DOWEL BAR DIAMETER	CONTRACTION JOINT SPACING
5 ½", 6", 6 ½"	NONE	12'
7", 7 ½"	1"	14'
8", 8 ½"	1 ¼"	15'
9", 9 ½"	1 ¼"	15'
10" & ABOVE	1 ½"	15'

GENERAL NOTES

CONTRACTION JOINTS

CONSTRUCT TRANSVERSE CONTRACTION JOINTS NORMAL TO THE CENTERLINE. SHOW THE LOCATION OF CONTRACTION JOINTS THROUGH INTERSECTIONS ON THE PLANS OR AS DIRECTED BY THE ENGINEER.

DO NOT SEAL OR FILL CONTRACTION JOINTS.

INSTALL DOWEL BARS PARALLEL TO THE PAVEMENT CENTERLINE AND PAVEMENT SURFACE.

FOR PAVEMENT SLABS OF VARYING WIDTHS, LOCATE THE OUTER MOST DOWEL BAR SO THAT THE CENTER OF THE BAR IS A MINIMUM OF 6 INCHES AND A MAXIMUM OF 18 INCHES FROM THE LONGITUDINAL JOINT AND THE FREE EDGE OF PAVEMENT.

CONSTRUCTION JOINTS

LOCATE CONSTRUCTION JOINTS A MINIMUM OF 6 FEET FROM THE NEAREST CONTRACTION JOINT AND ALIGN PARALLEL TO CONTRACTION JOINTS.

① OBTAIN THE ENGINEER'S APPROVAL FOR THE USE OF ALTERNATIVE DESIGNS OF THE DOWEL ASSEMBLY. USE MECHANICAL DOWEL BAR INSERTERS OR DOWEL ASSEMBLIES WHEN CONSTRUCTING CONTRACTION JOINTS.

② SECURE BASKETS WITH ANCHORS TO HOLD DOWEL BARS IN THE CORRECT POSITION AND ALIGNMENT. TYPE, LOCATION, NUMBER AND LENGTH OF ANCHORS ARE DEPENDENT UPON FIELD CONDITIONS.

③ FORM OR SAW CONSTRUCTION JOINTS. PROVIDE A ¼-INCH RADIUS AT FORMED JOINTS.

④ PROVIDE A SMOOTH VERTICAL FACE FOR THE ENTIRE DEPTH OF THE PAVEMENT WHEN FORMING CONSTRUCTION JOINTS.

⑤ INSTALL DOWEL BARS AT CONSTRUCTION JOINTS BY FORMING OR DRILLING. INSTALL FORMED DOWEL BARS 12 INCHES C-C AND 12 INCHES FROM PAVEMENT EDGE. REMOVE EXCESS CONCRETE FROM THE FREE END OF THE DOWEL BAR IF DOWEL BARS ARE FORMED THROUGH A HEADER BOARD. INSTALL DRILLED DOWEL BARS ACCORDING TO *DRILLED DOWEL BAR CONSTRUCTION JOINT* DETAIL.

⑥ APPLY A THIN UNIFORM COATING OF SURFACE TREATMENT TO THE FREE END OF DOWEL BARS TO PREVENT BONDING.

⑦ ANCHOR DOWEL BARS INTO DRILLED HOLES WITH AN EPOXY. MAXIMUM DRILLED HOLE SIZE IS ⅛-INCH GREATER THAN DOWEL BAR DIAMETER, 9 INCHES IN LENGTH.

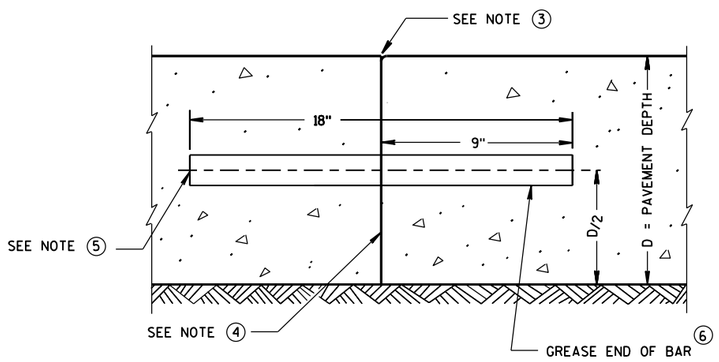

TRANSVERSE CONSTRUCTION JOINT

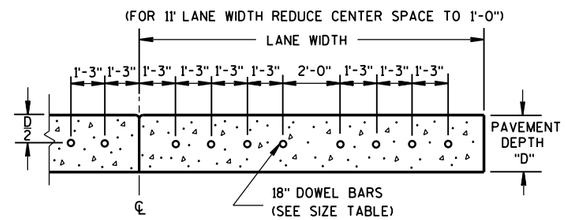

DRILLED DOWEL BAR CONSTRUCTION JOINT ⑦

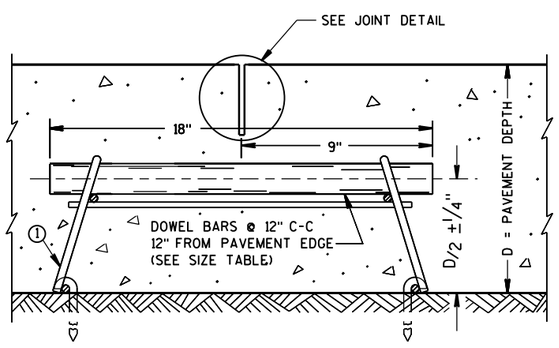

DOWELED CONTRACTION JOINT

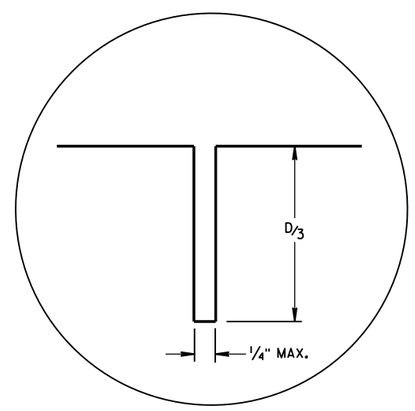

JOINT DETAIL

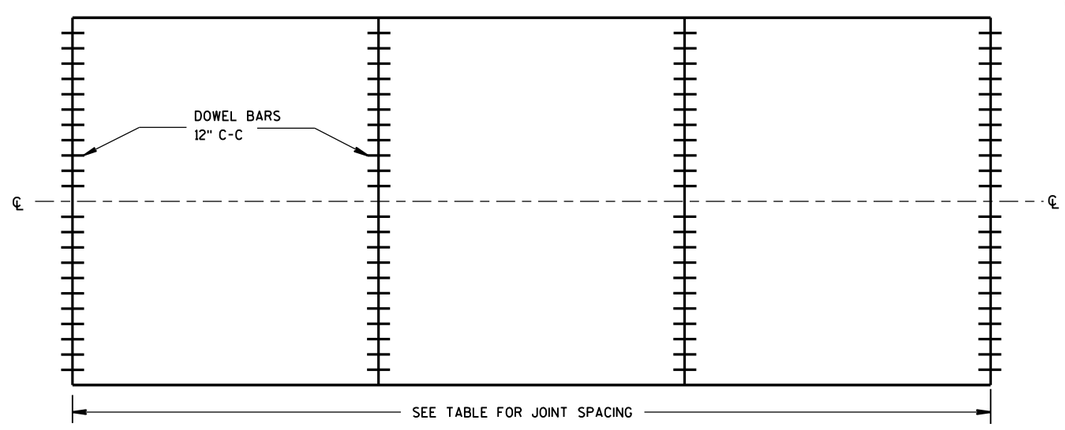

CONTRACTION JOINT LOCATIONS

URBAN DOWELED CONCRETE PAVEMENT

STATE OF WISCONSIN
DEPARTMENT OF TRANSPORTATION

APPROVED
5/3/2013 — DATE
/S/ Deb Bischoff — PAVEMENT POLICY & DE ... NEER
FHWA

6

S.D.D. 13 C 13-8

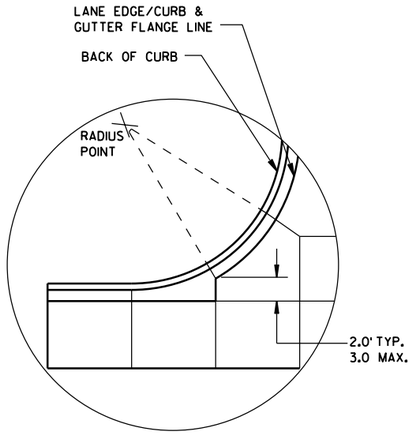

DETAIL "A"

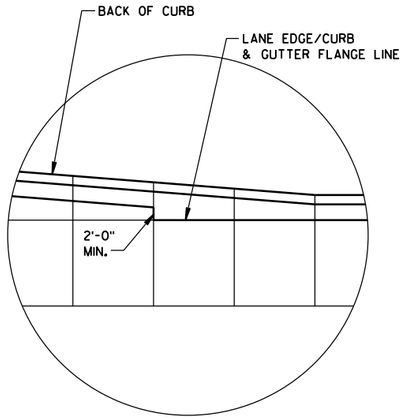

DETAIL "B"

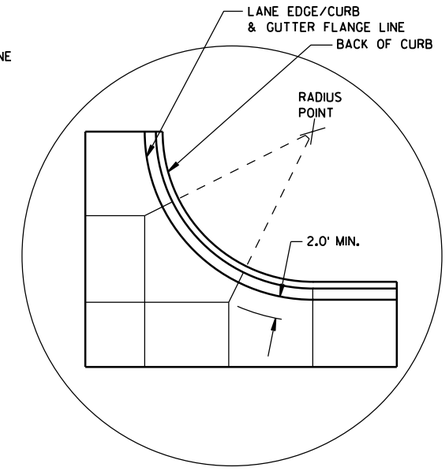

DETAIL "C"

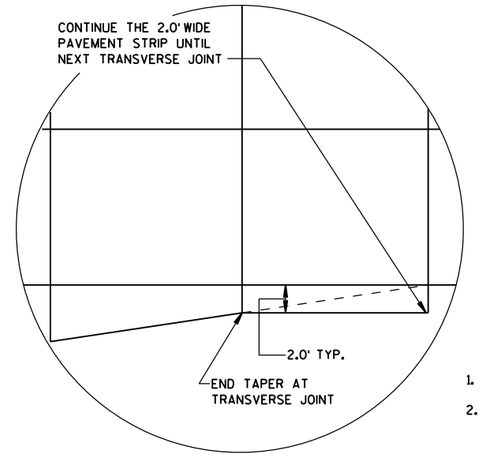

DETAIL "D"

GENERAL NOTES

THE PRIMARY ROADWAY CONTROLS THE TRANSVERSE JOINT PATTERN.

ALIGN NEW JOINTS WITH EXISTING JOINTS OR CRACKS.

CONSTRUCT TRANSVERSE JOINTS PERPENDICULAR TO THE ROADWAY.

ADJUST TRANSVERSE JOINTS TO ALIGN WITH UTILITY FIXTURES (E.G. MANHOLES AND INLETS) IN THE PAVEMENT STRUCTURE WHEN POSSIBLE. WATER VALVES DO NOT REQUIRE JOINT ADJUSTMENT.

AVOID SLABS LESS THAN 2 FEET WIDE OR GREATER THAN 15 FEET WIDE.

SEE TABLE FOR TRANSVERSE JOINT SPACING. JOINT SPACING SPECIFIED IS MAXIMUM AND ACTUAL SPACING CAN BE ADJUSTED TO ACCOMMODATE INTERSECTIONS.

AVOID ANGLES LESS THAN 60° BY DOGLEGGING JOINTS THROUGH CURVE RADIUS POINTS. USE 90° ANGLES WHEN POSSIBLE.

CORRELATE LONGITUDINAL JOINTS WITH LANE LINES WHEN POSSIBLE.

1. PROVIDE TRANSVERSE JOINTS AT ALL PAVEMENT WIDTH CHANGES.
2. CONSTRUCT DOWELED EXPANSION JOINT ON THE SIDE ROAD OF AN INTERSECTION IF THE SIDE ROAD IS CONCRETE PAVEMENT AND GREATER THAN 300 FEET IN LENGTH. ALIGN EXPANSION JOINT WITH EDGE OF RADIUS.
3. THE ENGINEER MAY APPROVE SLIGHT VARIATIONS FROM THESE JOINTING DETAILS.

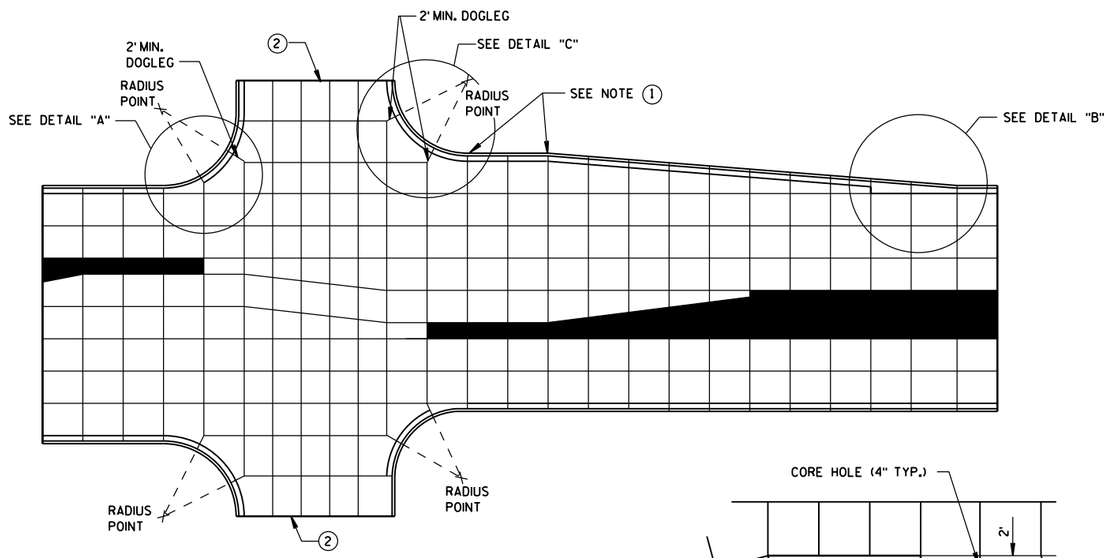

STANDARD INTERSECTION

PAVEMENT DEPTH AND JOINT SPACING TABLE

PAVEMENT DEPTH (D)	CONTRACTION JOINT SPACING
6", 6½"	12'
7", 7½"	14'
8" & ABOVE	15'

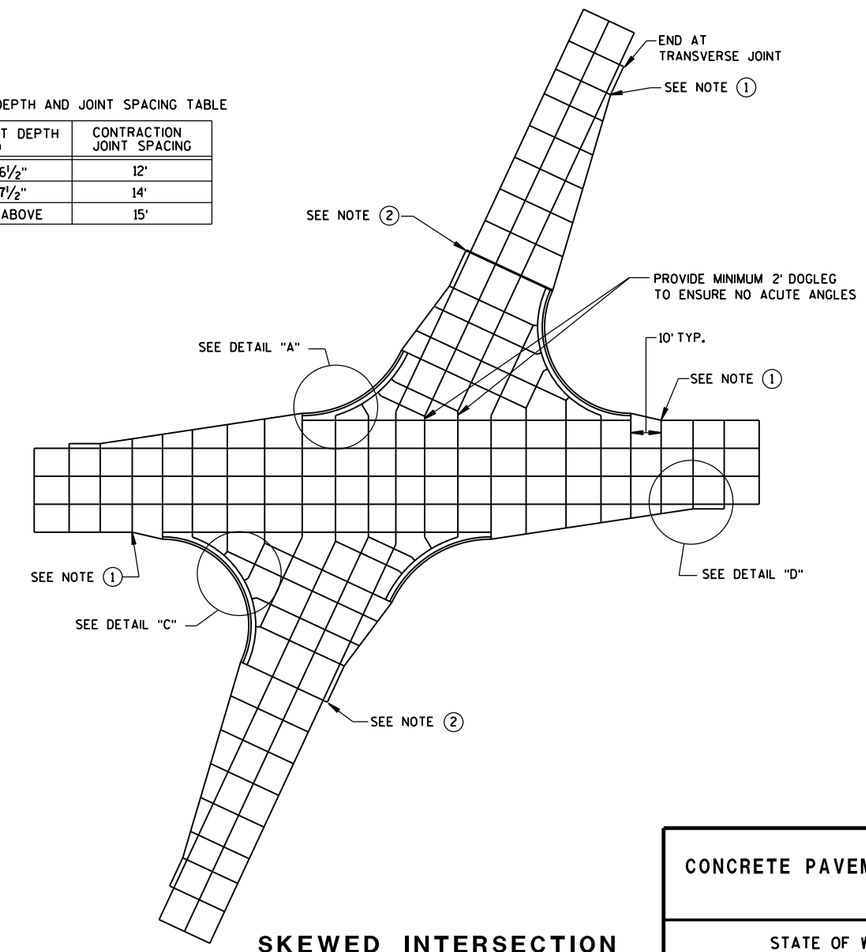

SKEWED INTERSECTION

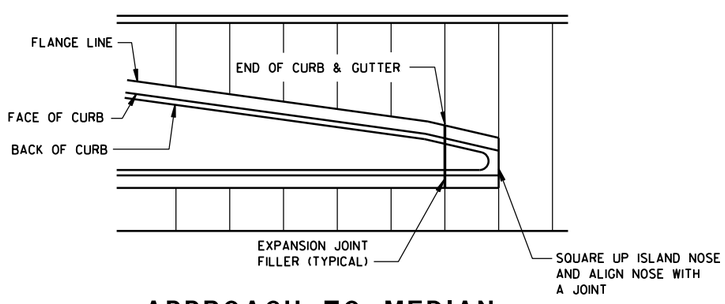

APPROACH TO MEDIAN

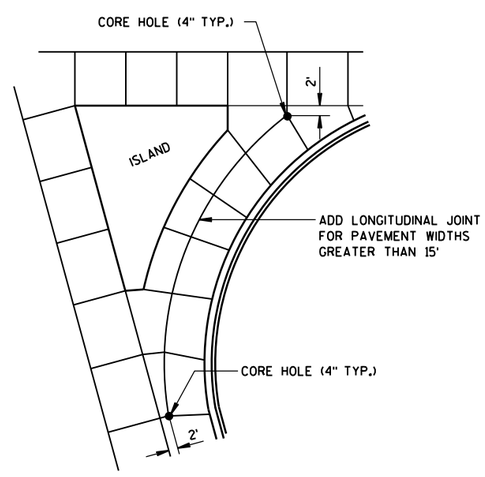

LARGE RIGHT TURN

CONCRETE PAVEMENT JOINTING

STATE OF WISCONSIN
DEPARTMENT OF TRANSPOR

6

S.D.D. 13 C 18-2a

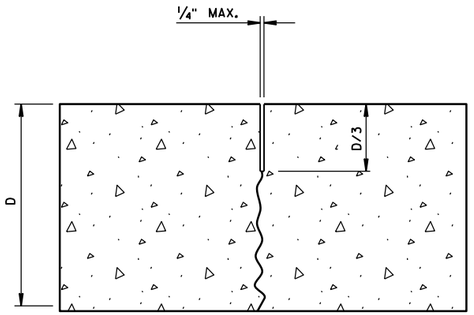

UNDOWELED-TRANSVERSE

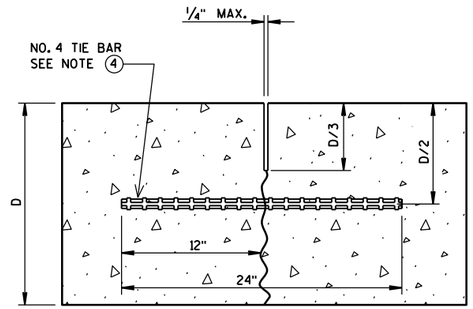

TIED LONGITUDINAL

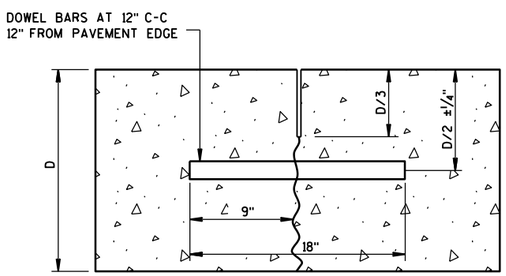

DOWELED-TRANSVERSE

CONTRACTION JOINTS

SEE NOTE 2

GENERAL NOTES

1. USE DOWELED EXPANSION JOINTS ON SIDE ROADS AT INTERSECTIONS (TO ISOLATE THE SIDE ROAD FROM THE THROUGH STREET) IF THE SIDE ROAD IS CONCRETE PAVEMENT AND GREATER THAN 300 FEET IN LENGTH.
2. SPACE CONTRACTION JOINTS IN ACCORDANCE WITH 13C4, 13C11 OR 13C13.
3. LOCATE CONSTRUCTION JOINTS A MINIMUM OF 6 FEET FROM THE NEAREST CONTRACTION JOINT AND ALIGN PARALLEL TO CONTRACTION JOINTS.
4. SPACE TIE BARS AT LONGITUDINAL CONSTRUCTION OR CONTRACTION JOINTS IN ACCORDANCE WITH SDD 13C1.
5. CONSTRUCTION JOINTS CAN BE FORMED OR SAWED.
6. IF JOINT IS FORMED, PROVIDE A 1/4-INCH RADIUS.

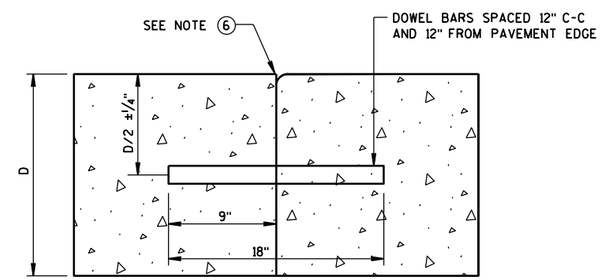

DOWELED TRANSVERSE

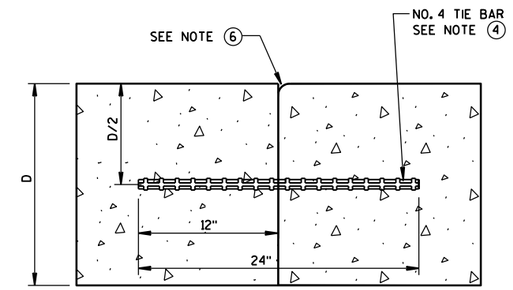

TIED LONGITUDINAL

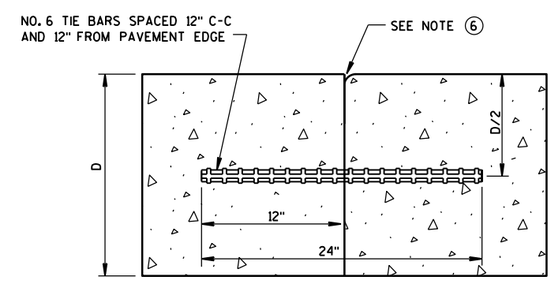

TIED TRANSVERSE

(FOR USE ON NON-DOWELED PAVEMENTS ONLY)

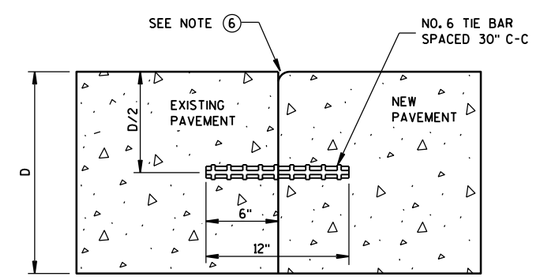

TIED LONGITUDINAL TO EXISTING

CONSTRUCTION JOINTS

SEE NOTE 5

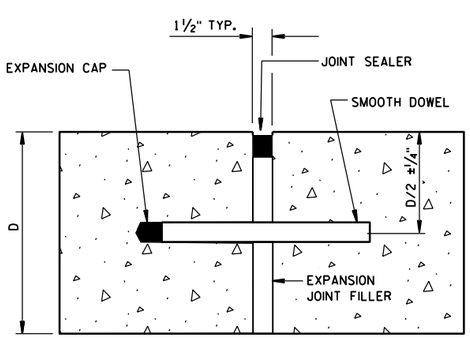

DOWELED-TRANSVERSE

SEE NOTE 1

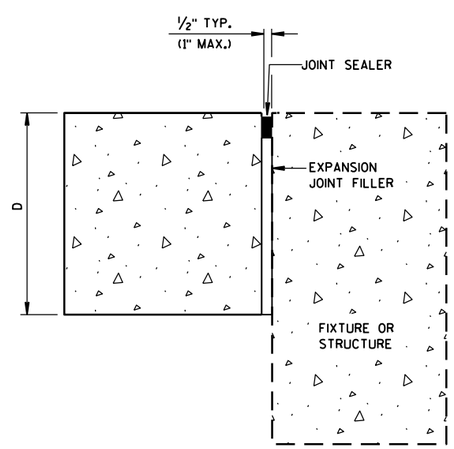

UNTIED-LONGITUDINAL

EXPANSION JOINTS

CONCRETE PAVEMENT
JOINT TYPES

STATE OF WISCONSIN
DEPARTMENT OF TRANSPOR

6

S.D.D. 13 C 18-2c

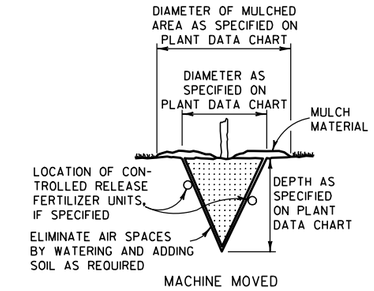

MACHINE MOVED

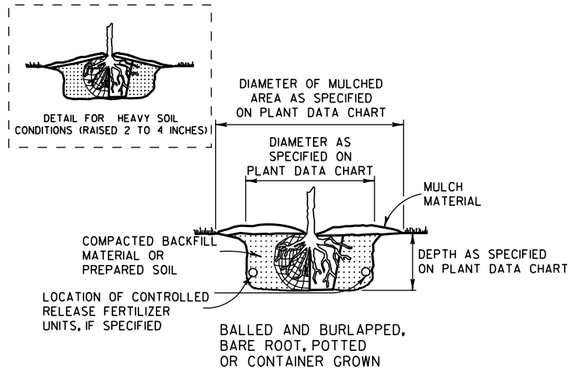

BALLED AND BURLAPPED, BARE ROOT, POTTED OR CONTAINER GROWN

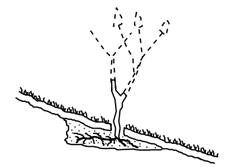

ACCOMMODATE ROOTS (SMOOTH AND STAGHORN SUMAC)

NOTE:
1) ENGINEER SHALL REQUIRE 3 SLITS IN POT TO SPEED DETERIORATION
2) METAL, PLASTIC OR OTHER NONDEGRADABLE POTS SHALL BE REMOVED PRIOR TO PLANTING

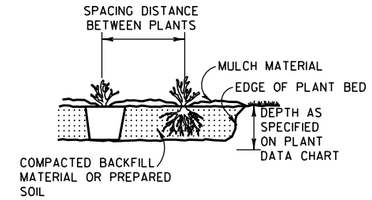

PREPARED BED (BARE ROOT AND POTTED)

PLANTING

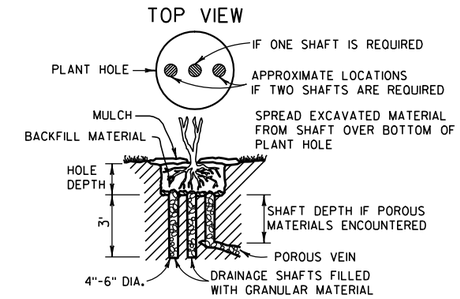

NOTE:
DRAINAGE SHAFT AS SPECIFIED ON PLANT DATA CHART

DRAINING

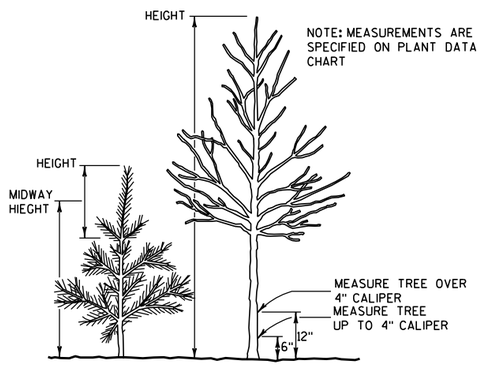

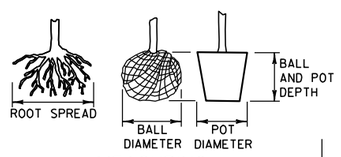

MEASURING

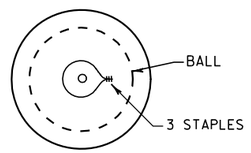

TOP VIEW

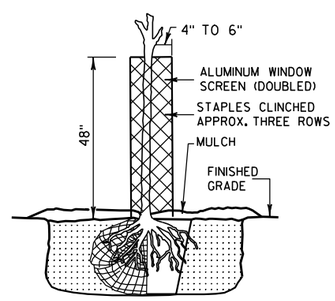

RODENT PROTECTION

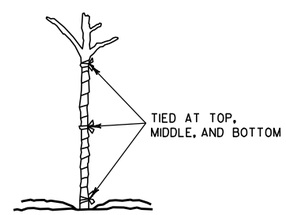

WRAPPING

NOTE: WHEN PRUNING, PRESERVE CHARACTER AND SHAPE OF TREE. AVOID LEAVING STUBS - REMOVE BRANCH OR TWIG BACK TO THE NEAREST CROTCH
1) PRUNE TO REMOVE DEAD AND BROKEN BRANCHES
2) PRUNE TO REMOVE BRANCHES THAT TOUCH OR ARE TOO CLOSE TO OTHER BRANCHES

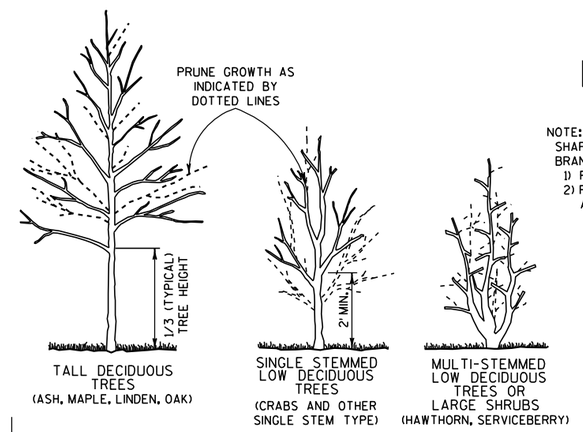

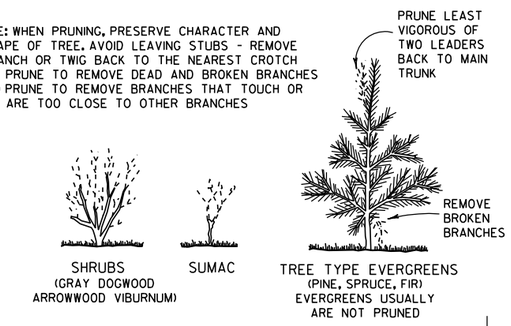

PRUNING

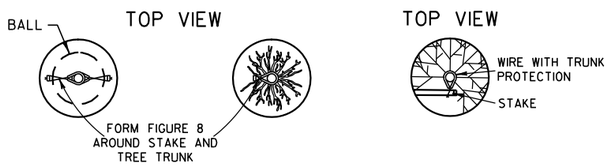

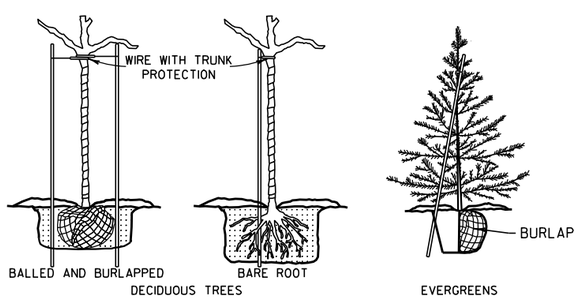

NOTE: BRACING STAKE
1) SHALL BE DRIVEN INTO THE GROUND AS CLOSE TO THE TREE AS POSSIBLE WITHOUT DAMAGING THE BRANCHES.
2) MAY BE DRIVEN AT SUCH AN ANGLE THAT IT DOES NOT PENETRATE THE BALL OR POT.
3) SHALL NOT PROTRUDE ABOVE THE TOP OF THE TREE; AND
4) SHALL HAVE A HOLE NEAR THE TOP TO HOLD THE WIRE IN PLACE.

BRACING

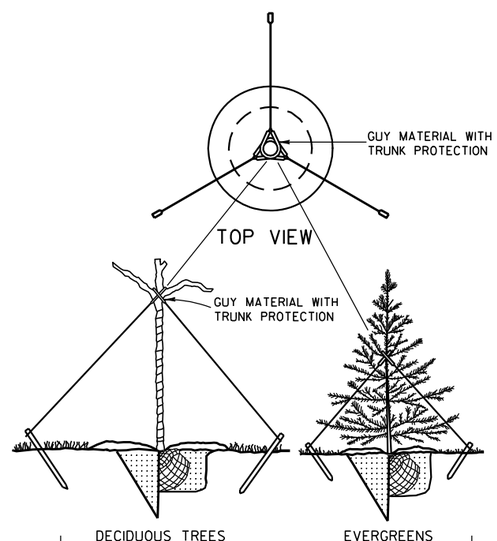

GUYING

PRUNE LARGER SHRUBS BY REMOVING FROM ONE-THIRD TO ONE-HALF TOP GROWTH AS INDICATED BY DOTTED LINE

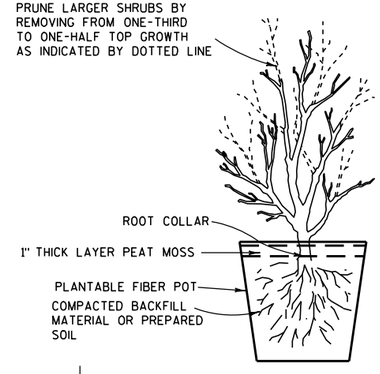

POTTING

NOTES

DETAILS OF CONSTRUCTION NOT SHOWN ON THIS DRAWING SHALL CONFORM TO THE PERTINENT REQUIREMENTS OF THE STANDARD SPECIFICATIONS AND THE APPLICABLE SPECIAL PROVISIONS.

BRACING, WRAPPING, GUYING, RODENT PROTECTION, FERTILIZER AND MULCH SHALL BE USED ONLY WHEN SPECIFIED ON THE PLANT DATA CHART (PART OF PLAN) OR SPECIAL PROVISIONS.

TREE PLANTING DETAIL

STATE OF WISCONSIN
DEPARTMENT OF TRANSPORTATION

APPROVED
4/11/94 — DATE
/S/ Rory L. Rhinesmith — CHIEF METHODS DEVELOPMENT ENGINEER
FHWA

6

S.D.D. 14 A 2-1

GENERAL NOTES

DETAILS OF CONSTRUCTION, MATERIALS AND WORKMANSHIP NOT SHOWN ON THIS DRAWING SHALL CONFORM TO THE PERTINENT REQUIREMENTS OF THE STANDARD SPECIFICATIONS AND THE APPLICABLE SPECIAL PROVISIONS.

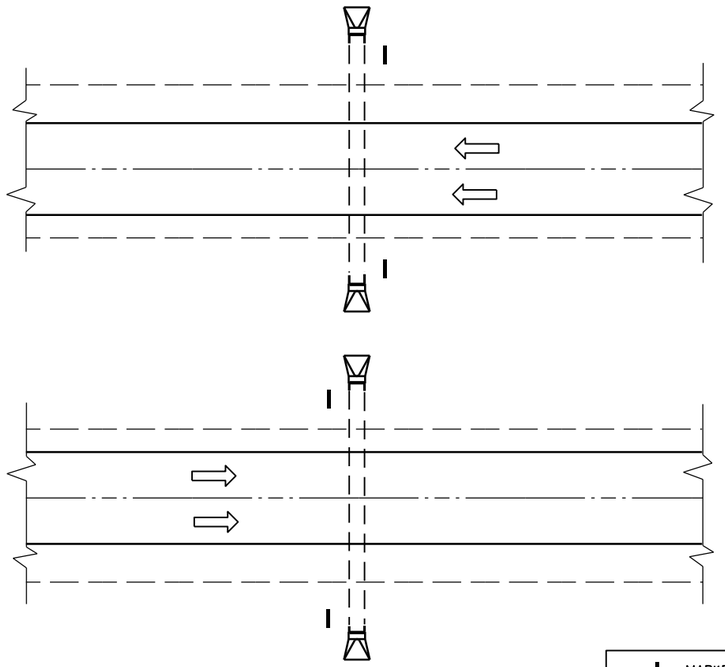

PLAN VIEW

DIVIDED HIGHWAY

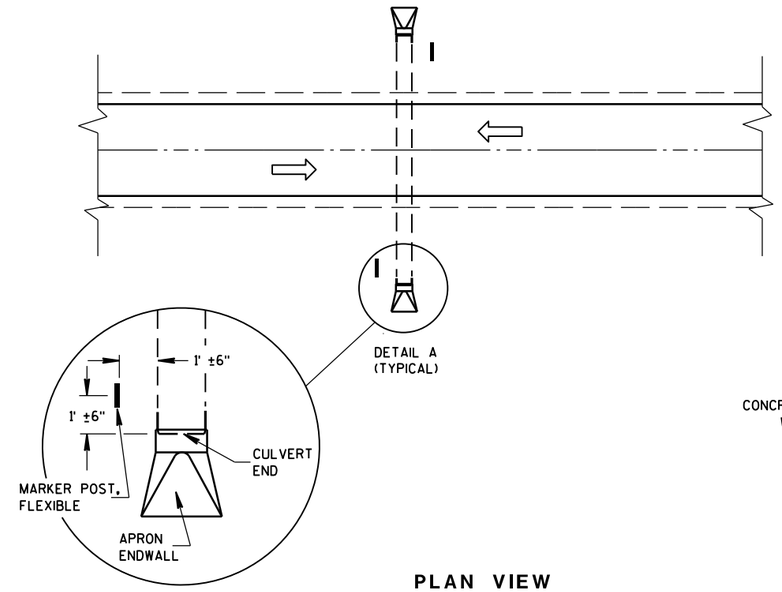

DETAIL A
(TYPICAL)

PLAN VIEW

UNDIVIDED HIGHWAY

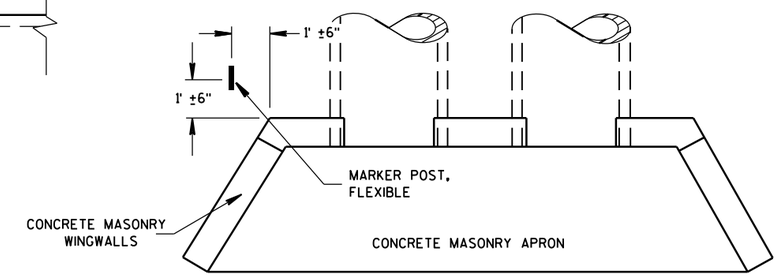

PLAN VIEW

CONCRETE MASONRY ENDWALLS FOR CULVERT PIPE AND PIPE ARCH

MARKER POST, FLEXIBLE

DIRECTION OF TRAFFIC FLOW

FLEXIBLE MARKER POST LOCATION

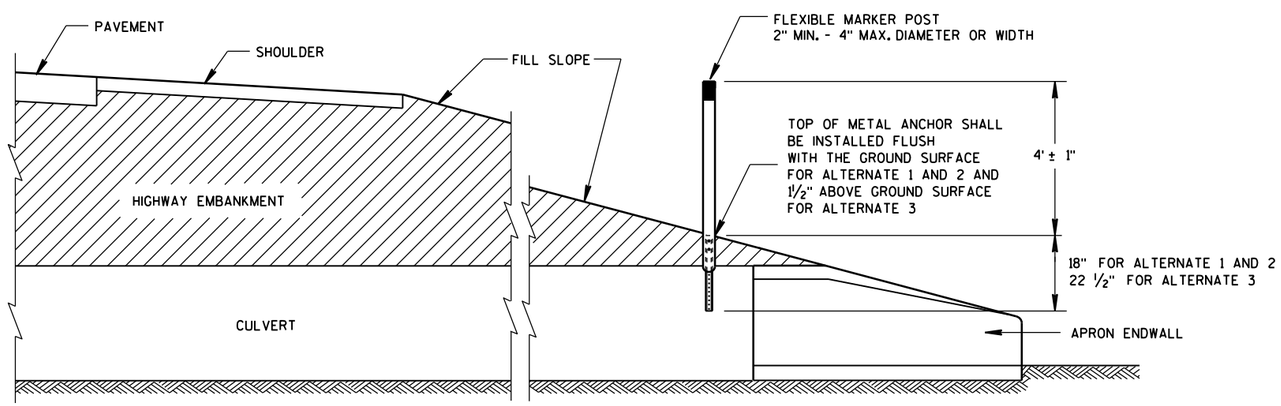

CROSS SECTION

FLEXIBLE MARKER POST

FLEXIBLE MARKER POST FOR CULVERT END

STATE OF WISCONSIN
DEPARTMENT OF TRANSPOR

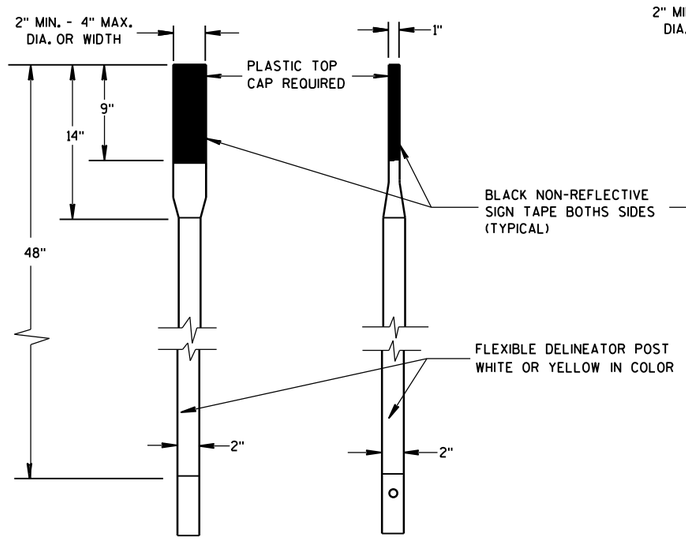

FRONT VIEW SIDE VIEW

ALTERNATE 1

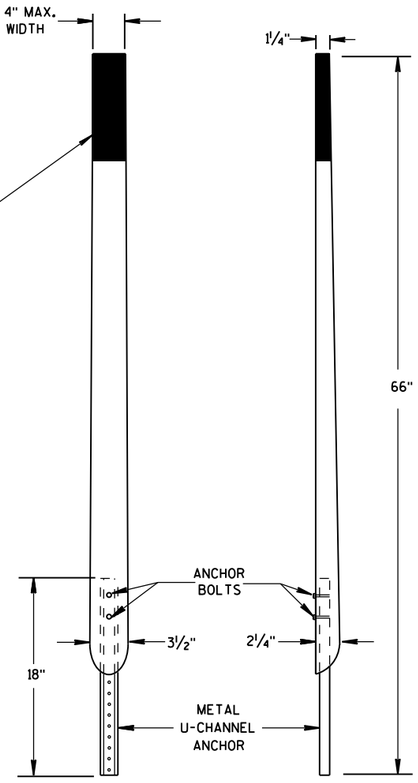

FRONT VIEW SIDE VIEW

ALTERNATE 2

FLEXIBLE MARKER POSTS

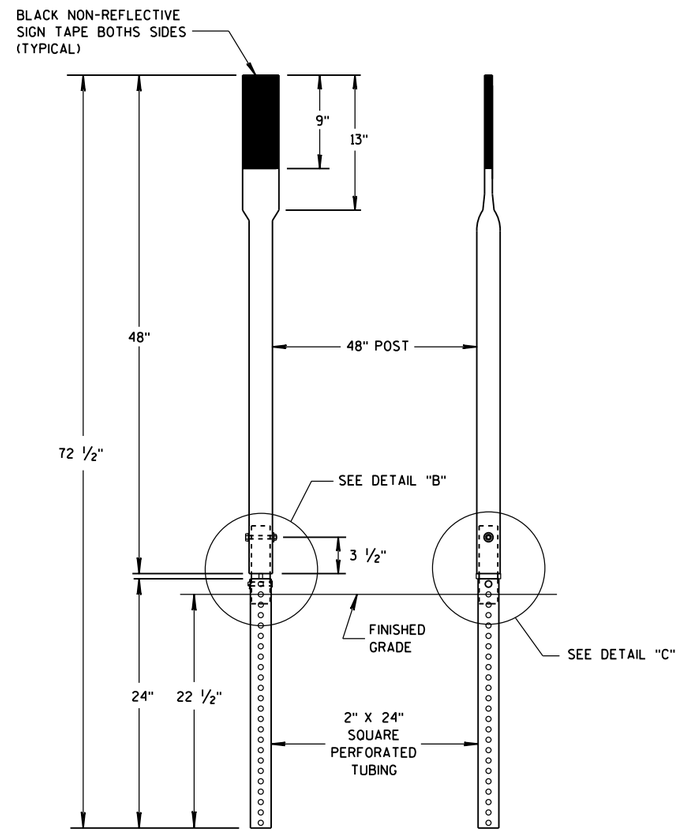

FRONT VIEW SIDE VIEW

ALTERNATE 3

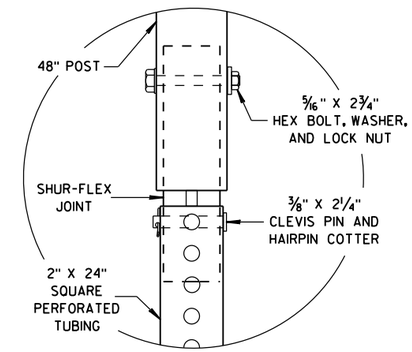

DETAIL B

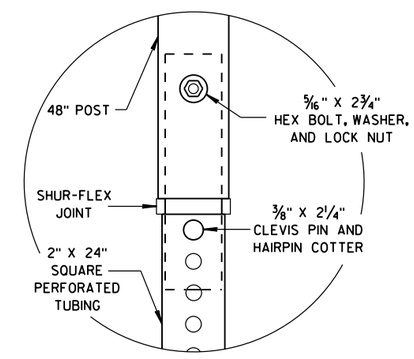

DETAIL C

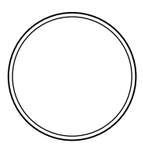

SECTION A-A

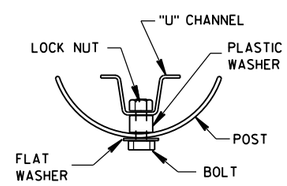

SECTION B-B

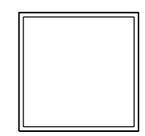

SECTION C-C

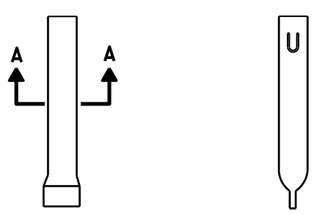

FRONT VIEW SIDE VIEW

ALTERNATE 1

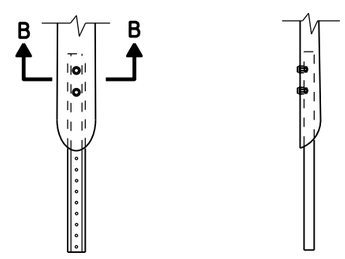

FRONT VIEW SIDE VIEW

ALTERNATE 2

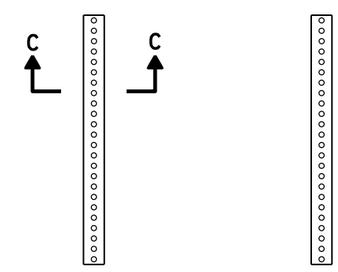

FRONT VIEW SIDE VIEW

ALTERNATE 3

FLEXIBLE MARKER POST ANCHORS

FLEXIBLE MARKER POST
FOR CULVERT END

STATE OF WISCONSIN
DEPARTMENT OF TRANSPORTATION

APPROVED
10/1/2012 /S/ Travis Feltes
DATE STATE TRAFFIC ENGINEER
FHWA

6

6

S.D.D. 15 A 3-2b

S.D.D. 15 A 3-2b

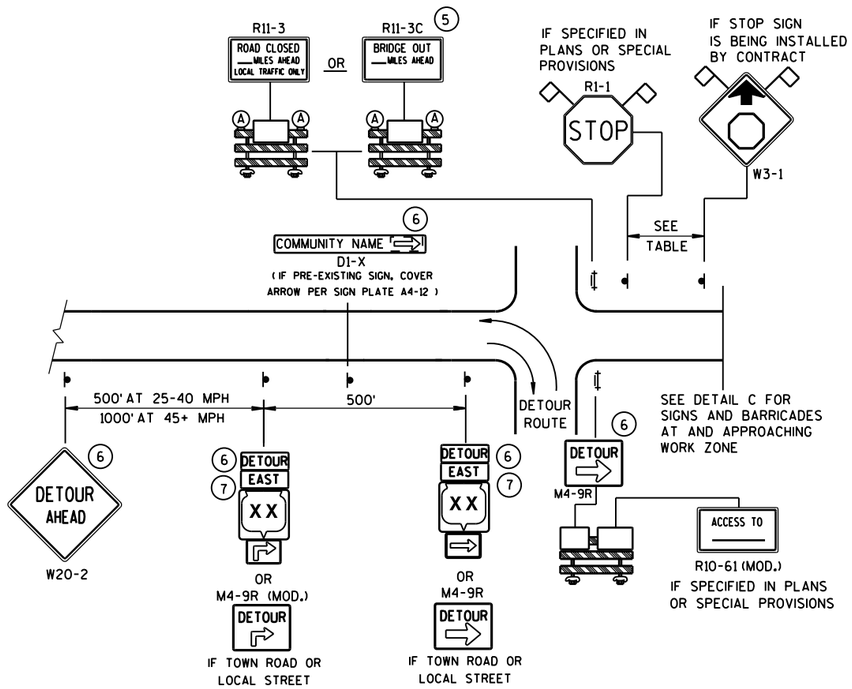

DETAIL A
MAINLINE CLOSURE WITH POSTED DETOUR

WORK ZONE GREATER THAN ½ MILE FROM DETOUR ROUTE (1000 FEET IF URBAN)

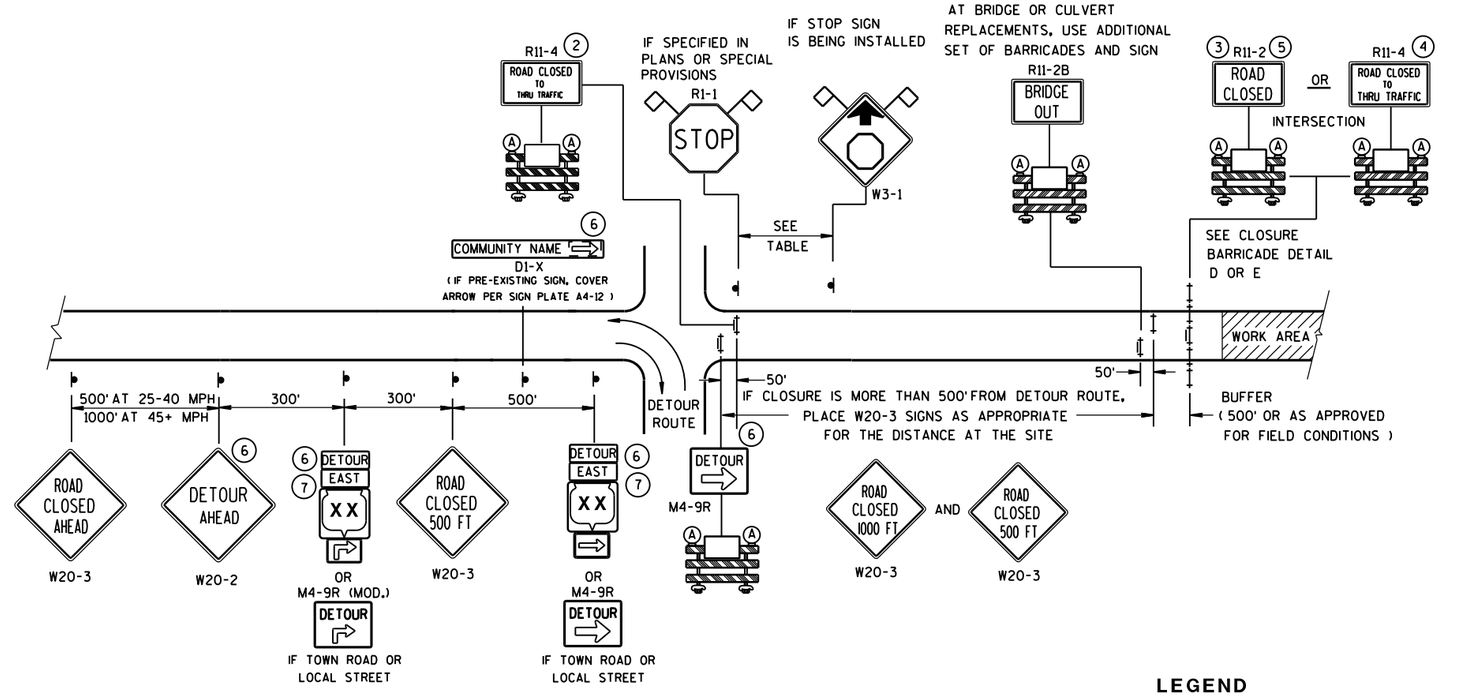

DETAIL B
MAINLINE CLOSURE WITH POSTED DETOUR

WORK ZONE LESS THAN ½ MILE FROM DETOUR ROUTE (1000 FEET IF URBAN)

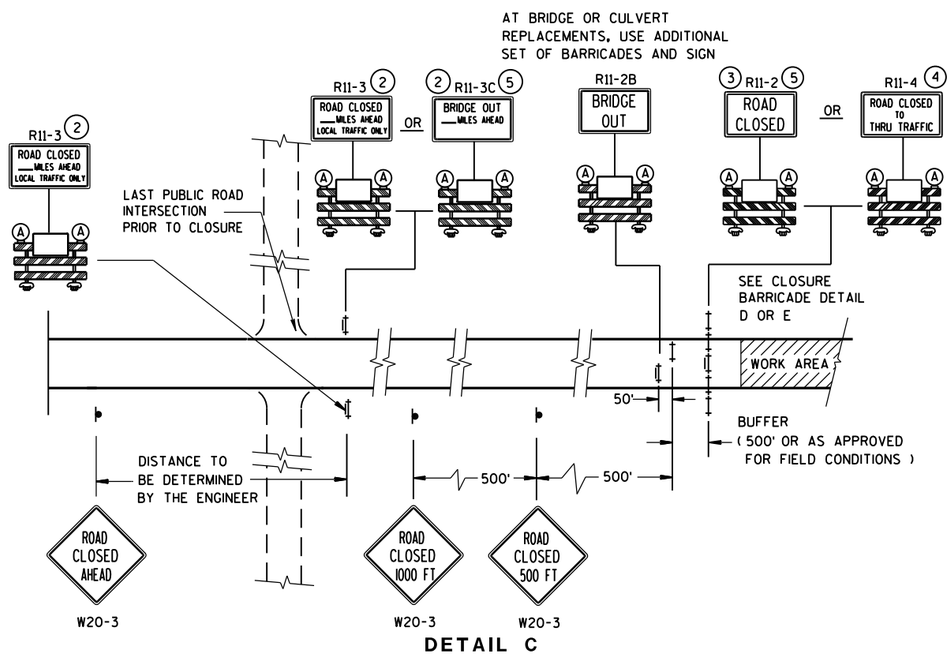

DETAIL C
MAINLINE CLOSURE, NO POSTED DETOUR

SPEED LIMIT (MPH)	"STOP AHEAD" ADVANCE WARNING DISTANCE (FT)
25	200
30	200
35	350
40	350
45	500
50	550
55	750

LEGEND

- SIGN ON PERMANENT SUPPORT
- TYPE III BARRICADE
- TYPE III BARRICADE WITH ATTACHED SIGN
- (A) TYPE "A" WARNING LIGHT (FLASHING)
- WORK AREA
- DETOUR EAST — M4-8 / M3-X
- XX (M1-4) OR COUNTY XX (M1-5A) OR XX (M1-6)
- M05-1 OR M06-1
- FLAGS, 16" X 16" MIN., (ORANGE)

SEE SDD 15C2-SHEET "**b**" FOR GENERAL NOTES AND FOOTNOTES (1) THROUGH (7)

BARRICADES AND SIGNS FOR MAINLINE CLOSURES

STATE OF WISCONSIN
DEPARTMENT OF TRANSPORTATION

8/2013 — DATE
/S/ Travis Feltes — STATE TRAFFIC ENGINEER
FHWA

6

S.D.D. 15 C 2-5a

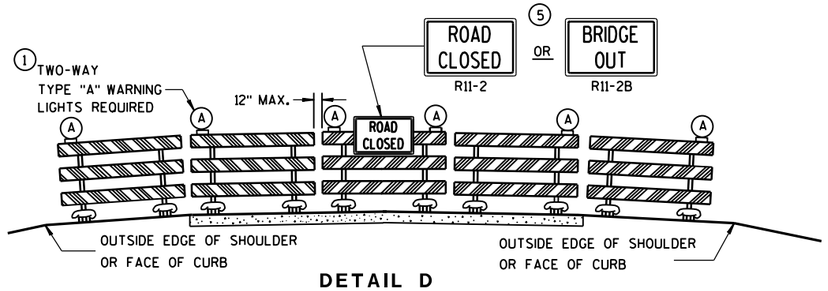

DETAIL D

ROAD CLOSURE BARRICADE DETAIL

APPROACH VIEW

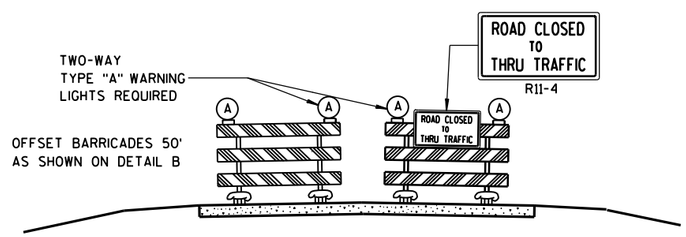

DETAIL E

LANE CLOSURE BARRICADE DETAIL

APPROACH VIEW

SEE SDD 15C2-SHEET "**a**" FOR LEGEND

GENERAL NOTES

THE EXACT NUMBER, LOCATION, AND SPACING OF ALL SIGNS AND BARRICADES SHALL BE ADJUSTED TO FIT FIELD CONDITIONS AS APPROVED BY THE ENGINEER.

ANY SIGNS TEMPORARY OR EXISTING, WHICH CONFLICT WITH TRAFFIC CONTROL "IN USE" SHALL BE REMOVED OR COVERED AS NEEDED AND AS APPROVED BY THE ENGINEER.

THE SPACING BETWEEN TRAFFIC CONTROL SIGNS SHOULD BE ADJUSTED TO NOT CONFLICT WITH AND SHOULD PROVIDE A DESIRABLE MINIMUM OF 200 FEET CLEARANCE TO EXISTING SIGNS THAT WILL REMAIN IN PLACE.

BARRICADES THAT MUST BE MOVED FOR A WORK OPERATION SHALL BE IMMEDIATELY RE-ESTABLISHED UPON COMPLETION OF THE OPERATION OR, FOR CONTINUING OPERATIONS, AT THE END OF EACH WORKING DAY.

SIGNS THAT WILL BE IN PLACE LESS THAN 7 CONTINUOUS DAYS AND NIGHTS MAY BE MOUNTED ON PORTABLE SUPPORTS.

ALL TYPE III BARRICADES SHALL HAVE RAILS REFLECTORIZED ON BOTH FACES. STRIPES SHALL BE PROPERLY SLOPED DOWN TOWARD THE TRAFFIC SIDE OR AS SHOWN IN THE ROAD CLOSURE BARRICADE DETAIL D FOR FULL ROAD CLOSURES.

TYPE "A" LOW-INTENSITY FLASHING WARNING LIGHTS SHALL BE VISIBLE ON BOTH SIDES OF THE BARRICADE.

THE R11-2, R11-3, M4-9, R11-4 AND R10-61 SIGNS PLACED ON BARRICADES SHALL COVER NO MORE THAN THE TOP RAIL. THE SIGNS SHALL NOT COVER ANY PORTION OF THE MIDDLE OR BOTTOM RAILS.

"WO AND "MO" SIGNS ARE THE SAME AS "W" AND "M" SIGNS EXCEPT THE BACKGROUND IS ORANGE.

ALL SIGNS SHALL BE 48" X 48" UNLESS OTHERWISE NOTED BELOW:

R11-2 SHALL BE 48" X 30".
R11-3, R11-4 AND R10-61 SHALL BE 60" X 30".
M4-9 SHALL BE 30" X 24".
M3-X SHALL BE 24" X 12". (36" X 18" IF NEEDED TO MATCH EXISTING SIGNS.)
M4-8 SHALL BE 24" X 12". (30" X 15" IF NEEDED TO MATCH EXISTING SIGNS.)
M1-4, M1-5A, AND M1-6 SHALL BE 24" X 24". (36" X 36" IF NEEDED TO MATCH EXISTING SIGNS.)
M05-1 AND M06-1 SHALL BE 21" X 21". (30" X 30" IF NEEDED TO MATCH EXISTING SIGNS.)
D1-X SHALL BE AS SHOWN ON SPECIFIC PROJECT SIGNING DETAIL SHEETS.
R1-1 SHALL BE 36" X 36".

1. TWO WARNING LIGHTS SHALL BE PROVIDED ON THE CENTER BARRICADE AND A MINIMUM OF ONE WARNING LIGHT SHALL BE PROVIDED ON EACH OF THE OTHER BARRICADES WITHIN THE ROADWAY LIMITS. SPACING OF THE WARNING LIGHTS SHALL BE UNIFORM TO THE EDGE OF ROADWAY AS SHOWN (APPROX. 8-FOOT LIGHT SPACING).
2. THESE SIGNS AND BARRICADES ARE NOT REQUIRED IF ROAD CLOSURE BEGINS AT INTERSECTION.
3. FOR ROAD CLOSURE WITHOUT LOCAL ACCESS TO PROJECT, SEE ROAD CLOSURE BARRICADE DETAIL D.
4. FOR ROAD CLOSURE WITH LOCAL ACCESS TO PROJECT, SEE LANE CLOSURE BARRICADE DETAIL E.
5. FOR BRIDGE OR CULVERT REPLACEMENTS, SUBSTITUTE "BRIDGE OUT" INSTEAD OF "ROAD CLOSED" ON R11-2 AND R11-3 SIGNS.
6. INSTALL DETOUR AND COMMUNITY GUIDE SIGNS AND ARROWS ONLY IF SPECIFIED IN THE CONTRACT. IF THERE ARE EXISTING ROUTE MARKER ASSEMBLIES THAT WILL REMAIN IN PLACE, ADJUST THE LOCATION OF THE DETOUR ROUTE SIGNS TO CORRESPOND WITH THE EXISTING ASSEMBLIES. MODIFY EXISTING SIGNS WHERE POSSIBLE. SEE SPECIFIC PROJECT DETOUR SIGNING DETAIL SHEETS. IF DETOUR SIGNS ARE BEING INSTALLED BY OTHERS, PLACE THE CONTRACTED TRAFFIC CONTROL SIGNS TO ALLOW FOR PLACEMENT OF ALL WARNING, DETOUR AND GUIDE SIGNS AS SHOWN.
7. "EAST" CARDINAL DIRECTION MARKERS AND RIGHT TURN ARROWS ARE SHOWN. USE OTHER CARDINAL DIRECTIONS AND ARROWS AS APPROPRIATE.

BARRICADES AND SIGNS FOR MAINLINE CLOSURES

STATE OF WISCONSIN
DEPARTMENT OF TRANSPORTATION

8/2013 — DATE
/S/ Travis Feltes — STATE TRAFFIC ENGINEER
FHWA

6

S.D.D. 15 C 2-5b

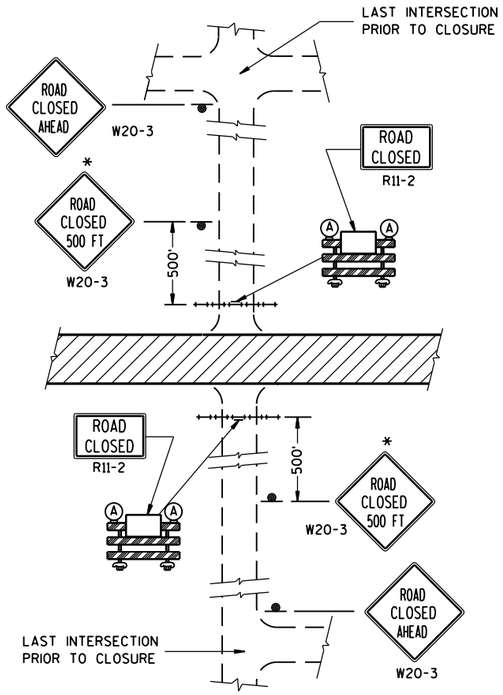

DETAIL 1

(NO ACCESS TO PROJECT)

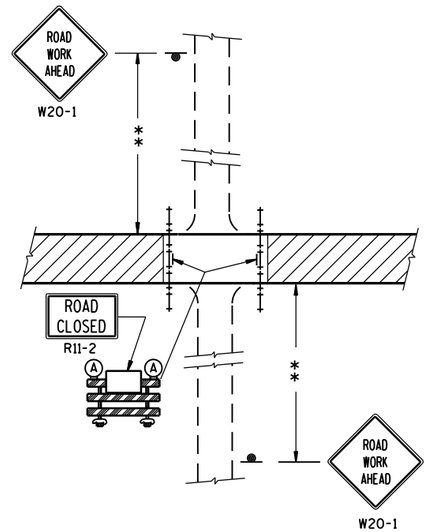

DETAIL 2

(PUBLIC CROSS-TRAFFIC MAINTAINED.
NO ACCESS TO PROJECT).

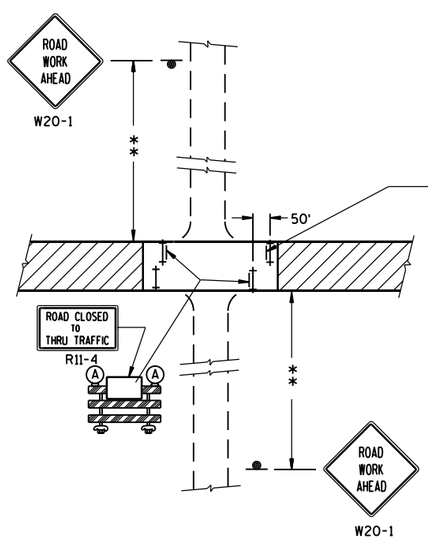

DETAIL 3

(PUBLIC CROSS-TRAFFIC MAINTAINED. CONTRACTOR,
LOCAL BUSINESS AND RESIDENT ACCESS).

FOR BRIDGE OR CULVERT
REPLACEMENT, USE ADDITIONAL
SIGN ON BARRICADE

BRIDGE OUT
XX MILES AHEAD
R11-3C

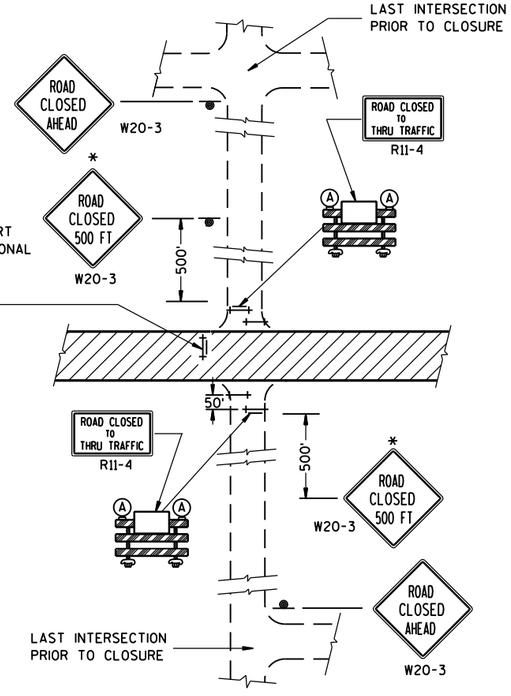

DETAIL 4

(CONTRACTOR, LOCAL BUSINESS AND
RESIDENT ACCESS TO PROJECT)

GENERAL NOTES

THE EXACT NUMBER, LOCATION, AND SPACING OF ALL SIGNS AND BARRICADES SHALL BE ADJUSTED TO FIT FIELD CONDITIONS AS APPROVED BY THE ENGINEER.

ANY SIGNS TEMPORARY OR EXISTING, WHICH CONFLICT WITH TRAFFIC CONTROL "IN USE" SHALL BE REMOVED OR COVERED AS NEEDED AND AS APPROVED BY THE ENGINEER.

THE SPACING BETWEEN TRAFFIC CONTROL SIGNS SHOULD BE ADJUSTED TO NOT CONFLICT WITH AND SHOULD PROVIDE A DESIRABLE MINIMUM OF 200 FEET CLEARANCE TO EXISTING SIGNS THAT WILL REMAIN IN PLACE.

IF A "STOP" SIGN MUST BE REMOVED FOR A WORK OPERATION, A TEMPORARY "STOP" SIGN SHALL BE PLACED PRIOR TO THE SIGN REMOVAL, OR A FLAGGER SHALL BE PROVIDED UNTIL THE SIGN IS RE-ESTABLISHED.

BARRICADES THAT MUST BE MOVED FOR A WORK OPERATION SHALL BE IMMEDIATELY RE-ESTABLISHED UPON COMPLETION OF THE OPERATION OR, FOR CONTINUING OPERATIONS, AT THE END OF EACH WORKING DAY.

SIGNS THAT WILL BE IN PLACE LESS THAN 7 CONTINUOUS DAYS AND NIGHTS MAY BE MOUNTED ON PORTABLE SUPPORTS.

ALL TYPE III BARRICADES SHALL HAVE RAILS REFLECTORIZED ON BOTH FACES. STRIPES SHALL BE PROPERLY SLOPED DOWN TOWARD THE TRAFFIC SIDE OR AS SHOWN IN THE ROAD CLOSURE BARRICADE DETAIL D FOR FULL ROAD CLOSURES.

TYPE "A" LOW-INTENSITY FLASHING WARNING LIGHTS SHALL BE VISIBLE ON BOTH SIDES OF THE BARRICADE.

THE R11-2, R11-3 AND R11-4 SIGNS PLACED ON BARRICADES SHALL COVER NO MORE THAN THE TOP RAIL. THE SIGNS SHALL NOT COVER ANY PORTION OF THE MIDDLE OR BOTTOM RAILS.

ALL SIGNS SHALL BE 48" X 48" UNLESS OTHERWISE NOTED BELOW:
R11-2 SHALL BE 48" X 30".
R11-4 AND R11-3 SHALL BE 60" X 30".

*OMIT THE "ROAD CLOSED 500 FT." SIGN IF THE LAST INTERSECTION IS 500 FT. OR LESS FROM THE WORK ZONE.

**500' MAX. OR AT LAST INTERSECTION WHICHEVER IS CLOSER.

LEGEND

- SIGN ON PERMANENT SUPPORT
- TYPE III BARRICADE
- TYPE III BARRICADE WITH ATTACHED SIGN
- (A) TYPE "A" WARNING LIGHT (FLASHING)
- WORK AREA

BARRICADES AND SIGNS FOR SIDEROAD CLOSURES

STATE OF WISCONSIN
DEPARTMENT OF TRANSPORTATION

APPROVED
8/2013 — DATE
/S/ Travis Feltes — STATE TRAFFIC ENGINEER
FHWA

6

S.D.D. 15 C 3-2

TYPICAL SIDEROAD APPROACH WARNING SIGN DETAIL

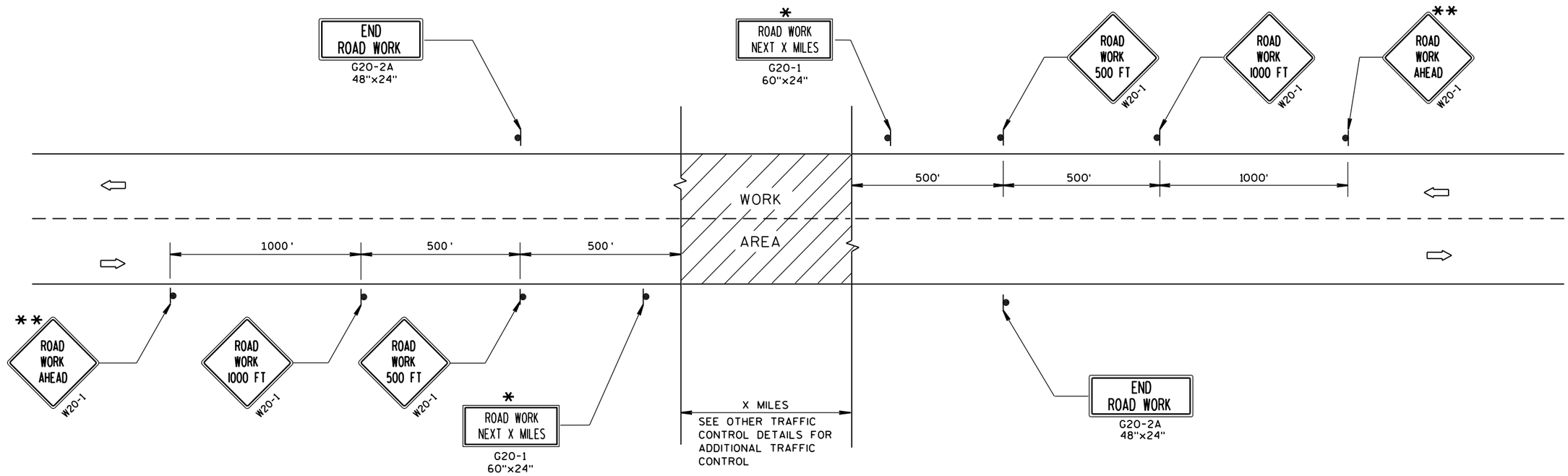

GENERAL NOTES

THE EXACT NUMBER, LOCATION, AND SPACING OF ALL SIGNS AND DEVICES SHALL BE ADJUSTED TO FIT FIELD CONDITIONS.

THE SPACING BETWEEN TRAFFIC CONTROL SIGNS SHOULD BE ADJUSTED TO NOT CONFLICT WITH AND SHOULD PROVIDE A MINIMUM OF 200 FEET (500 FEET DESIRABLE) CLEARANCE TO EXISTING SIGNS THAT WILL REMAIN IN PLACE.

ALL SIGNS ARE 48"x48" UNLESS OTHERWISE NOTED.

SIGNS THAT WILL BE IN PLACE LESS THAN 7 CONTINUOUS DAYS AND NIGHTS MAY BE MOUNTED ON PORTABLE SUPPORTS.

IF A "STOP" SIGN MUST BE REMOVED FOR A WORK OPERATION, A TEMPORARY "STOP" SIGN SHALL BE PLACED PRIOR TO THE SIGN REMOVAL, OR A FLAGGER SHALL BE PROVIDED UNTIL THE SIGN IS RE-ESTABLISHED.

* OMIT G20-1 SIGNS IF LENGTH OF WORK AREA IS 2 MILES OR LESS.

** PLACE ADDITIONAL W20-1 "ROAD WORK AHEAD" SIGN IF WORK AREA WITHIN THE PROJECT IS SEPARATED BY MORE THAN 2 MILES FROM PREVIOUS WORK AREA.

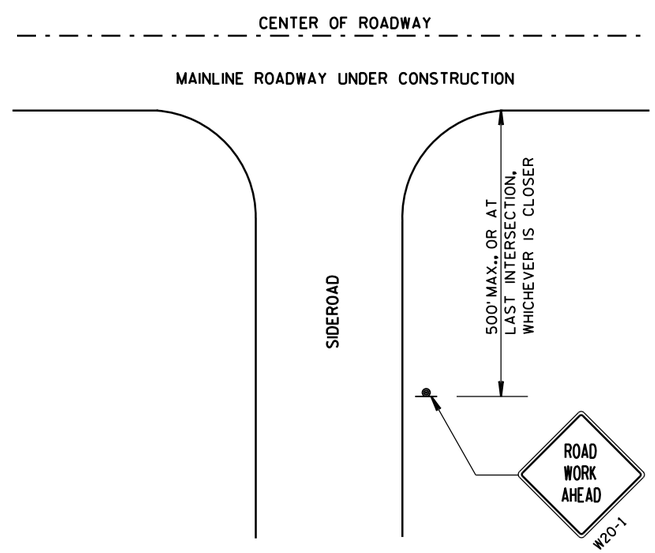

LEGEND

- SIGN ON PERMANENT SUPPORT
- DIRECTION OF TRAFFIC
- WORK AREA

TRAFFIC CONTROL, ADVANCE WARNING SIGNS 45 M.P.H. OR GREATER TWO-WAY UNDIVIDED ROAD OPEN TO TRAFFIC

STATE OF WISCONSIN
DEPARTMENT OF TRANSPORTATION

APPROVED
8/2013 — DATE
/S/ Travis Feltes — STATE TRAFFIC ENGINEER
FHWA

S.D.D. 15 C 4-2
6

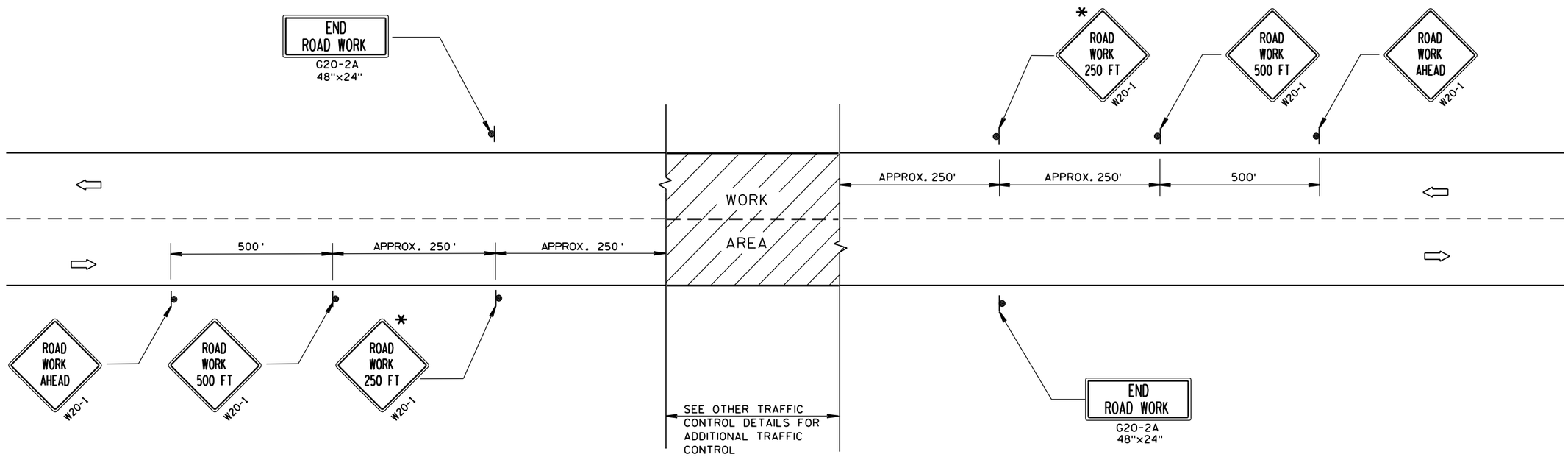

TYPICAL SIDEROAD APPROACH WARNING SIGN DETAIL

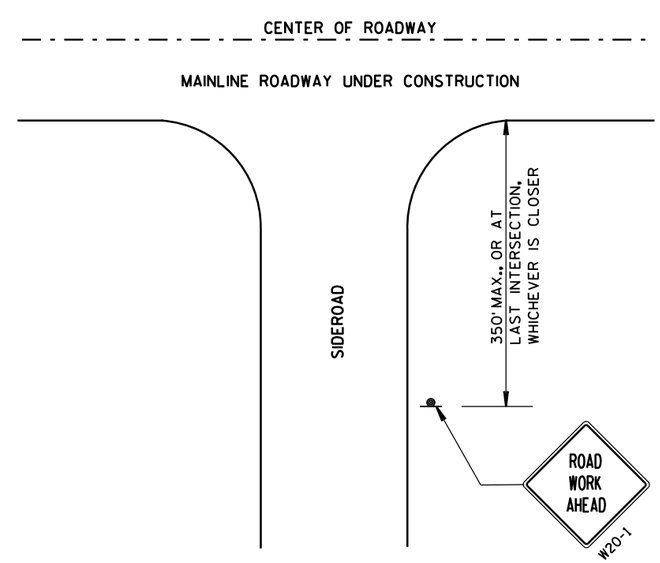

LEGEND

- SIGN ON PERMANENT SUPPORT
- DIRECTION OF TRAFFIC
- WORK AREA

GENERAL NOTES

THE EXACT NUMBER, LOCATION, AND SPACING OF ALL SIGNS AND DEVICES SHALL BE ADJUSTED TO FIT FIELD CONDITIONS.

THE SPACING BETWEEN TRAFFIC CONTROL SIGNS SHOULD BE ADJUSTED TO NOT CONFLICT WITH AND SHOULD PROVIDE A DESIRABLE MINIMUM OF 200 FEET CLEARANCE TO EXISTING SIGNS THAT WILL REMAIN IN PLACE.

ALL SIGNS ARE 48"x48" UNLESS OTHERWISE NOTED. IF NECESSARY DUE TO SPACE CONSTRAINTS, 36"x36" SIGNS MAY BE USED INSTEAD OF 48"x48" SIGNS.

SIGNS THAT WILL BE IN PLACE LESS THAN 7 CONTINUOUS DAYS AND NIGHTS MAY BE MOUNTED ON PORTABLE SUPPORTS.

IF A "STOP" SIGN MUST BE REMOVED FOR A WORK OPERATION, A TEMPORARY "STOP" SIGN SHALL BE PLACED PRIOR TO THE SIGN REMOVAL, OR A FLAGGER SHALL BE PROVIDED UNTIL THE SIGN IS RE-ESTABLISHED.

* THE THIRD W20-1 SIGN IS REQUIRED ONLY IF THERE IS AN INTERSECTION BETWEEN THE "ROAD WORK 500 FT" SIGN AND THE WORK ZONE. ADJUST THE PLACEMENT OF THIS SIGN BASED ON INTERSECTION LOCATION AND OTHER FIELD CONDITIONS.

TRAFFIC CONTROL, ADVANCE WARNING SIGNS 40 M.P.H. OR LESS TWO-WAY UNDIVIDED ROAD OPEN TO TRAFFIC

STATE OF WISCONSIN
DEPARTMENT OF TRANSPORTATION

APPROVED
8/2013 — DATE
/S/ Travis Feltes — STATE TRAFFIC ENGINEER
FHWA

6

S.D.D. 15 C 5-2

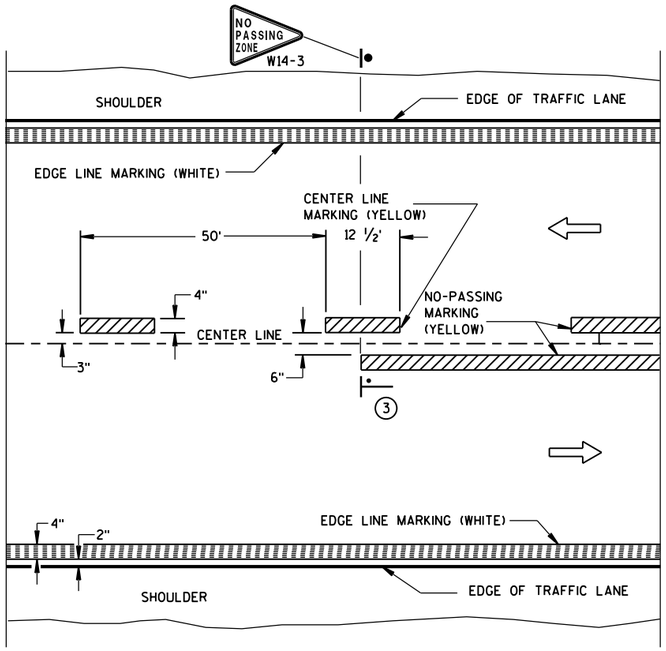

TWO WAY TRAFFIC

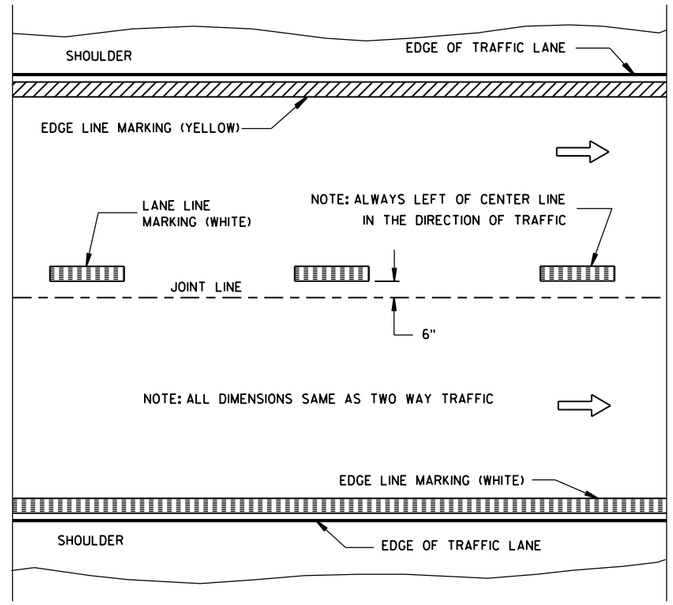

ONE WAY TRAFFIC

PERMANENT PAVEMENT MARKING

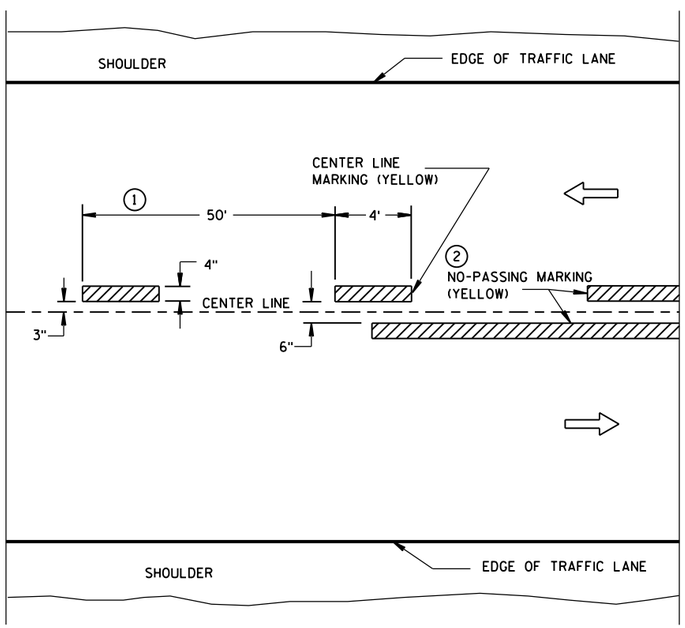

TWO WAY TRAFFIC

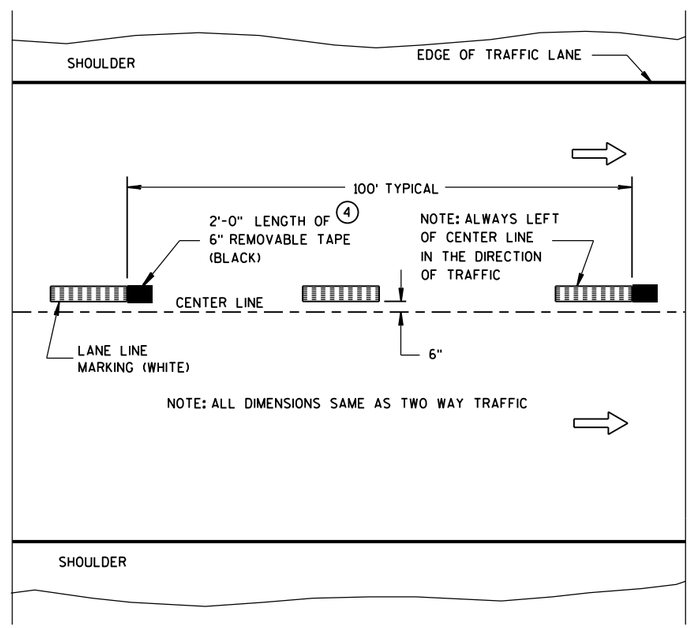

ONE WAY TRAFFIC

TEMPORARY (INTERMEDIATE) PAVEMENT MARKING

(SHOWS CYCLE FOR TEMPORARY CENTER LINE OR TEMPORARY LANE LINE MARKING)

GENERAL NOTES

DETAILS OF CONSTRUCTION NOT SHOWN ON THIS DRAWING SHALL CONFORM TO STANDARD SPECIFICATIONS AND SPECIAL PROVISIONS.

1. HALF CYCLE LENGTHS (25'±) WITH 2' MINIMUM STRIPE LENGTHS SHALL BE PROVIDED ON ROADWAYS (INCLUDING TEMPORARY TRAVELED WAYS) WITH REVERSE CURVATURE, CURVATURE OF OVER 5 DEGREES OR WHEN DIRECTED BY THE ENGINEER TO MARK UNUSUAL ALIGNMENT OF THE TRAVELED WAY.
2. NO PASSING ZONE TEMPORARY PAVEMENT MARKING IS REQUIRED TO BE PLACED, WHERE APPROPRIATE, ALONG WITH CENTERLINE TEMPORARY PAVEMENT MARKING WHEN A SAME DAY PERMANENT PAVEMENT MARKING ITEM IS INCLUDED IN THE CONTRACT.
3. NO PASSING ZONE MARKINGS ARE PLACED ACCORDING TO "T" MARKINGS. IF EXISTING NO PASSING ZONE W14-3 SIGNS ARE BEYOND 50 FEET IN EITHER DIRECTION, THE SIGNS SHALL BE MOVED TO THE "T" MARKINGS.
4. CONCRETE ONLY.

NOTE

ARROW SYMBOL (⇨) SHOWS DIRECTION OF TRAVEL

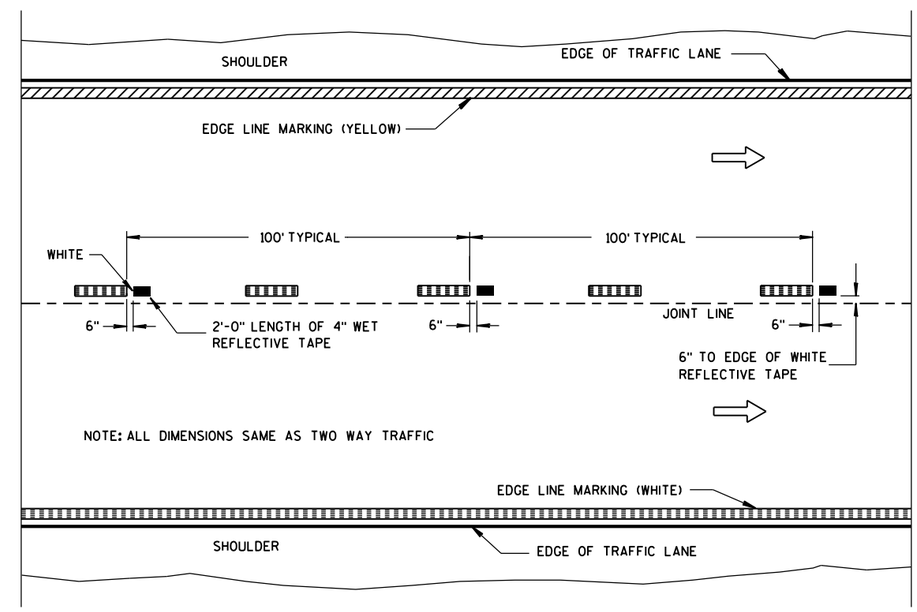

WET REFLECTIVE TAPE SUPPLEMENT TO SPRAYED OR NON WET REFLECTIVE TAPE LANE LINE

LEGEND

"T" MARKING

POST MOUNTED SIGN

PAVEMENT MARKING (MAINLINE)

STATE OF WISCONSIN
DEPARTMENT OF TRANSPORTATION

APPROVED
5-13-2013 DATE
/S/ Travis Feltes STATE TRAFFIC E
FHWA

6

S.D.D. 15 C 8-16a

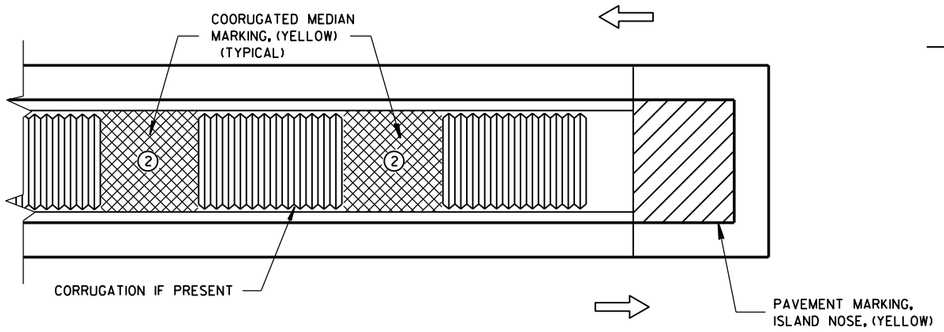

MEDIAN ISLAND WITH SQUARE BLUNT NOSE

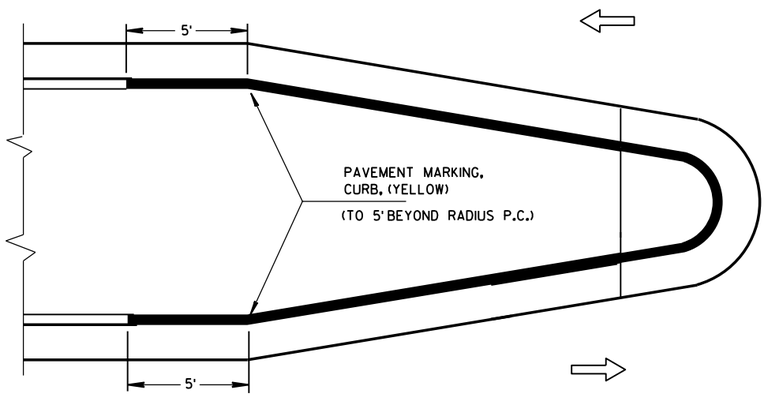

MEDIAN ISLAND WITH ROUND BLUNT NOSE

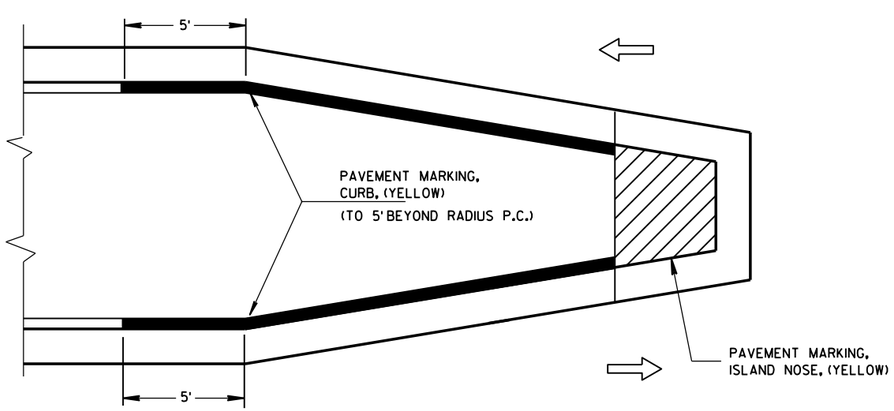

MEDIAN ISLAND WITH SLOPED NOSE

TYPICAL PLACEMENT OF PAVEMENT MARKING ON MEDIAN ISLANDS

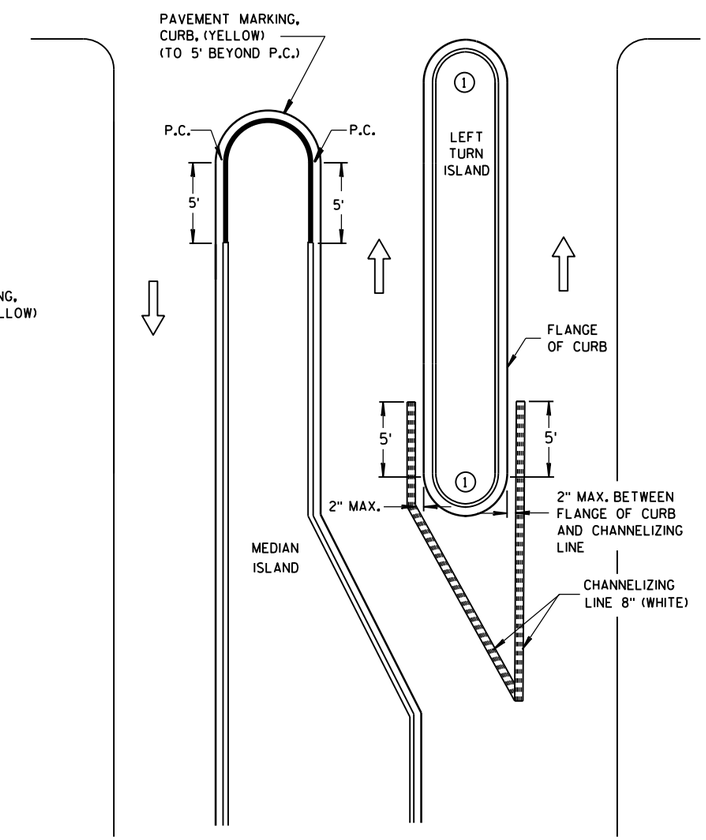

LEFT TURN & MEDIAN ISLAND

GENERAL NOTES

1. DO NOT MARK CURB NOSES THAT SEPARATE LANES OF TRAFFIC TRAVELING IN THE SAME DIRECTION.

2. WHEN CONCRETE CORRUGATED MEDIAN IS CONSTRUCTED TO SEPARATE TRAFFIC OPERATING IN THE OPPOSING DIRECTION YELLOW PAVEMENT MARKING SHALL BE APPLIED TO THE FLAT PORTION OF THE CONCRETE CORRUGATED MEDIAN. THE ITEM OF PAVEMENT MARKING, CONCRETE CORRUGATED MEDIAN, WILL BE MEASURED IN PLACE AND AND ACCEPTED IN ACCORDANCE WITH THE CONTRACT AND PAID FOR AT THE CONTRACT UNIT PRICE PER SQUARE FOOT.

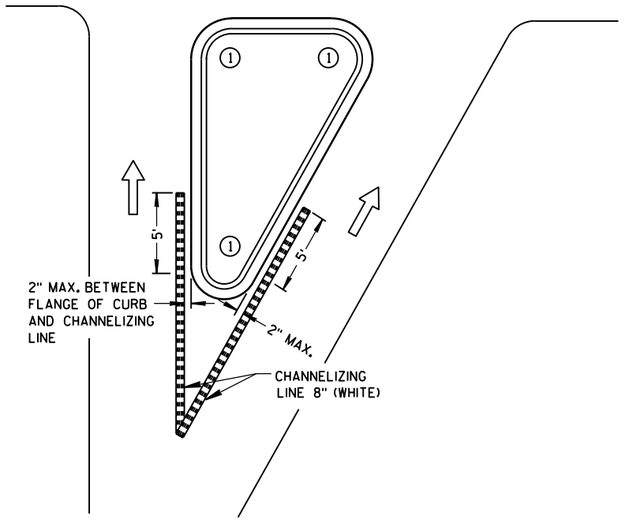

RIGHT TURN ISLAND

LEGEND

- ISLAND NOSE MARKING
- CURB MARKING
- CORRUGATED MEDIAN MARKING
- DIRECTION OF TRAVEL

PAVEMENT MARKING (ISLANDS)

STATE OF WISCONSIN
DEPARTMENT OF TRANSPOI

6

S.D.D. 15 C 8-16f

6

S.D.D. 15 C 8-16f

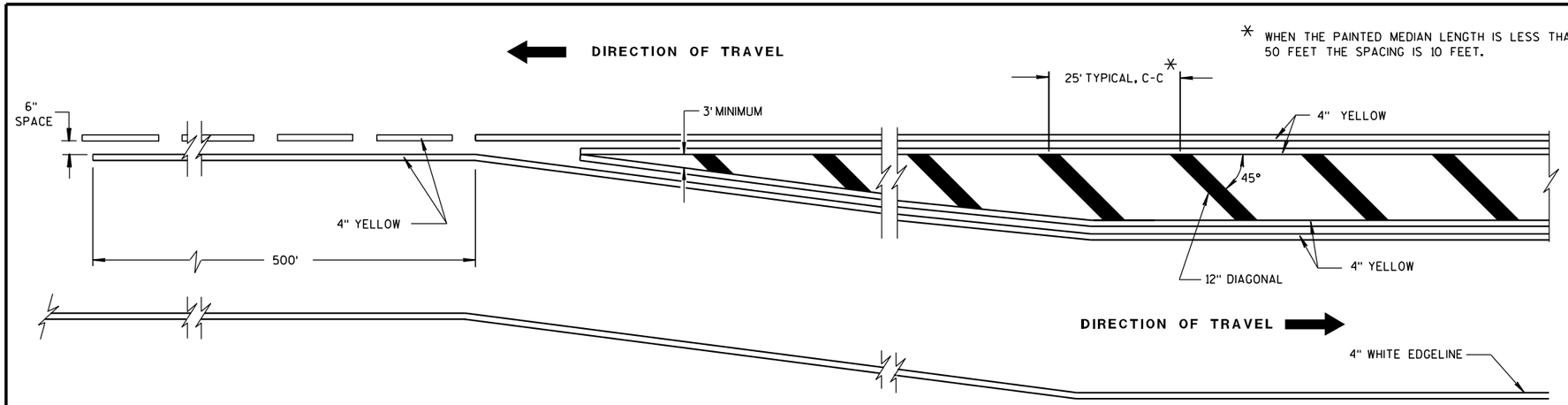

MEDIAN ISLAND DETAIL

GENERAL NOTE

DIAGONALS ARE OPTIONAL WHEN PAINTED ISLAND IS LESS THAN 6 FEET AT WIDEST POINT.

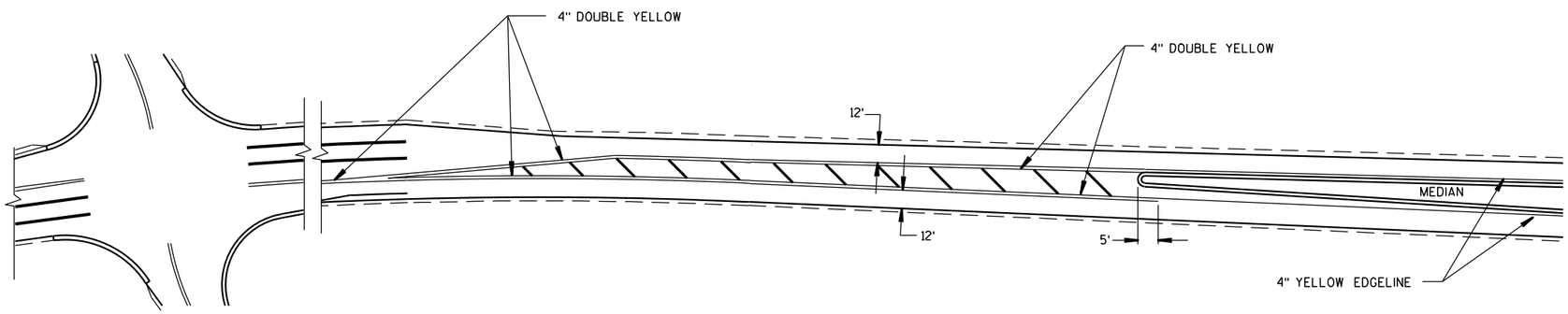

APPROACH MARKINGS FOR OTHER MEDIAN TYPES

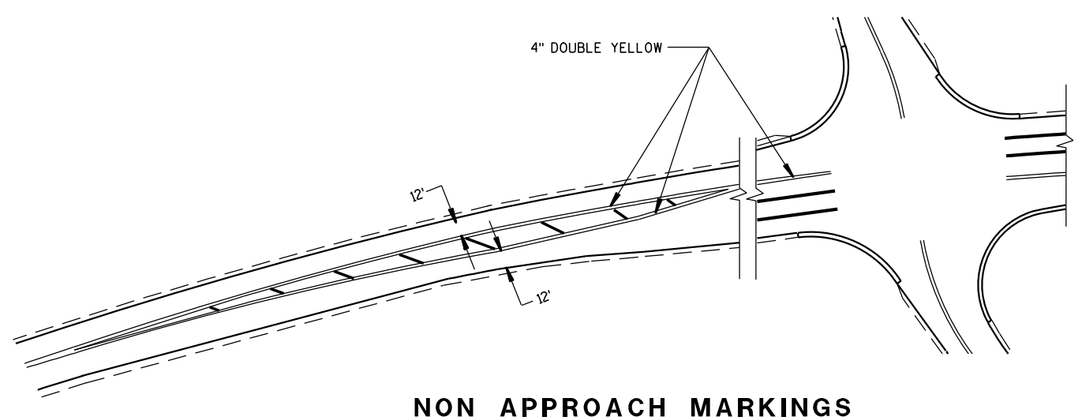

NON APPROACH MARKINGS

6

6

S.D.D. 15 C 18-3

S.D.D. 15 C 18-3

MEDIAN ISLAND MARKING

STATE OF WISCONSIN
DEPARTMENT OF TRANSPORTATION

APPROVED

2-5-09	/S/ Thomas N. Nothohm
DATE	STATE TRAFFIC ENGINEER

FHWA

IGN

NOTES

1. All Signs Type I - Type SH Reflective - reference WIS DOT Standard Specification for HIGHWAY and STRUCTURE CONSTRUCTION latest edition.
2. Color:
   Background - Green
   Message - White
3. Message Series - E Modified except all cap WORDS are Series E

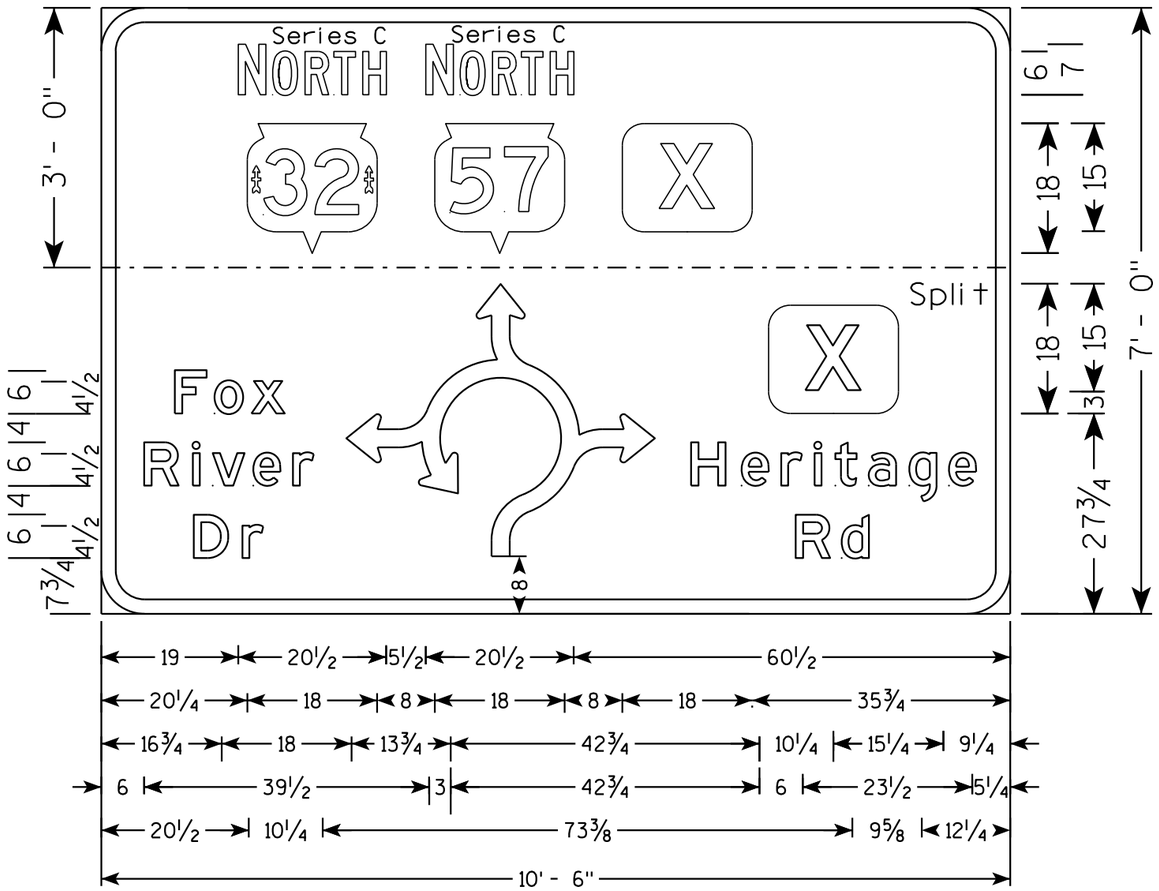

D1-62

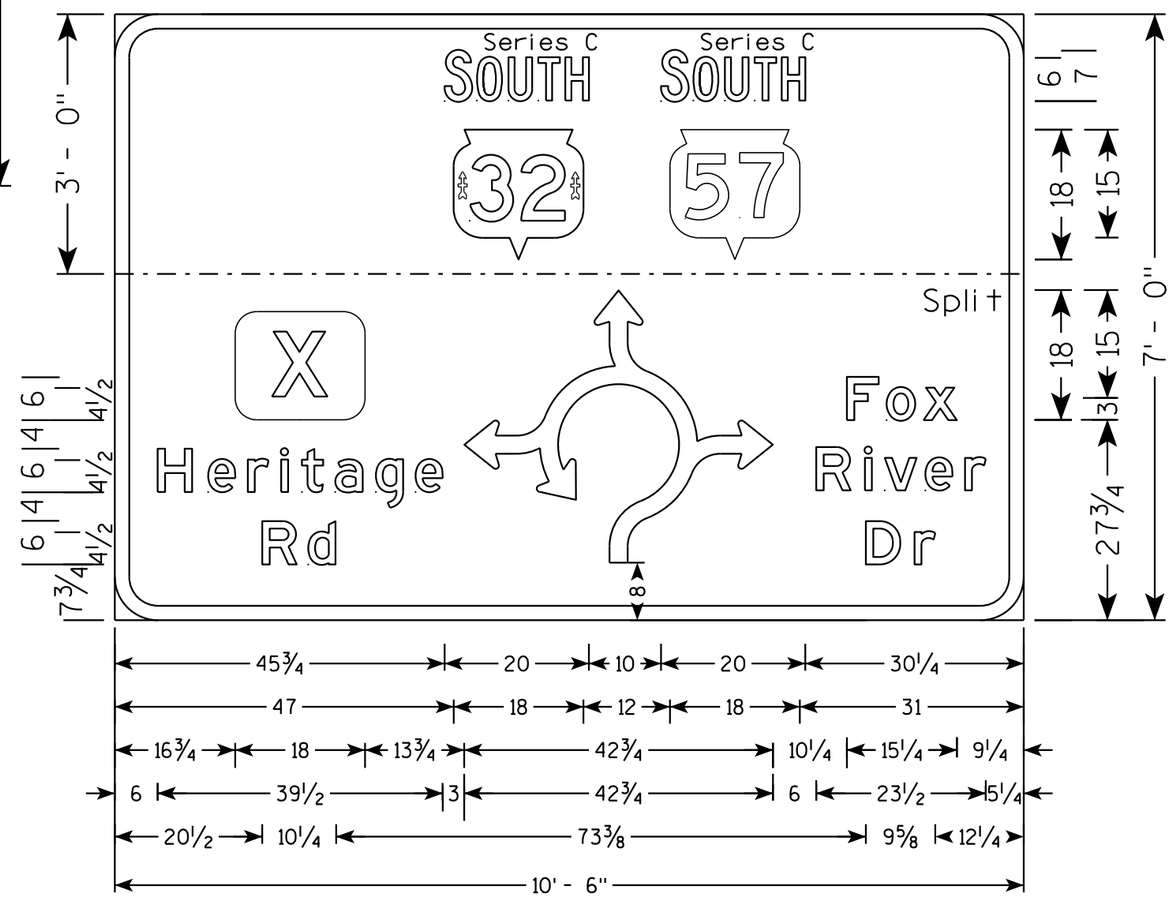

D1-62

7

7

PROJECT NO: 4085-43-71	HWY: STH 32	COUNTY: BROWN	PERMANENT SIGNING	SHEET NO: 138a E

FILE NAME : N:\spo\traffic\SIGNING\Projects\4085-43-71 CTH X Roundabout\070101_sd.dgn PLOT DATE : 29-SEP-2014 15:15 PLOT BY : dotjlf PLOT NAME : PLOT SCALE : 21:1

WISDOT/CADDS SHEET 42

NOTES

1. All Signs Type II - Type H Reflective - reference WIS DOT Standard Specification for HIGHWAY and STRUCTURE CONSTRUCTION latest edition.
2. Color:
   Background - Green
   Message - White
3. Message Series - E except as noted

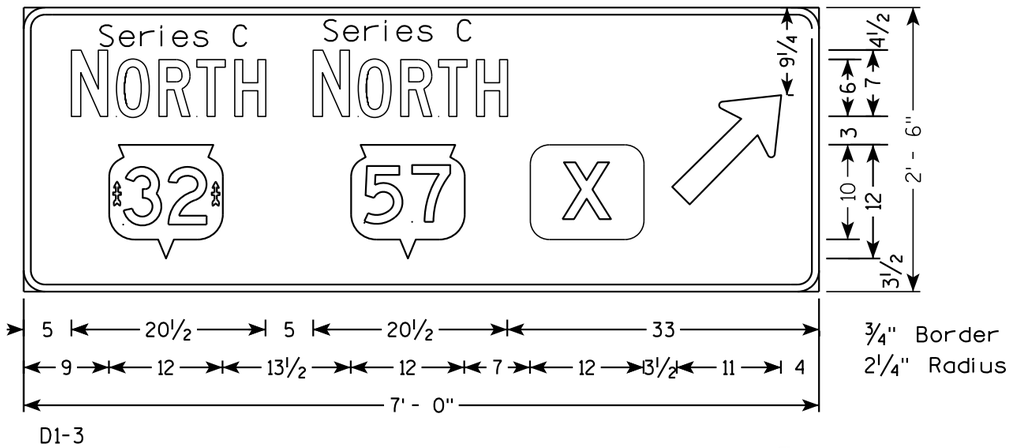

D1-3

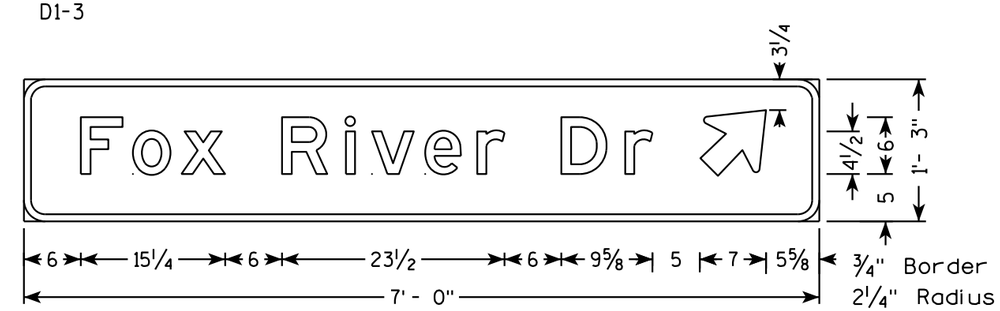

D1-1

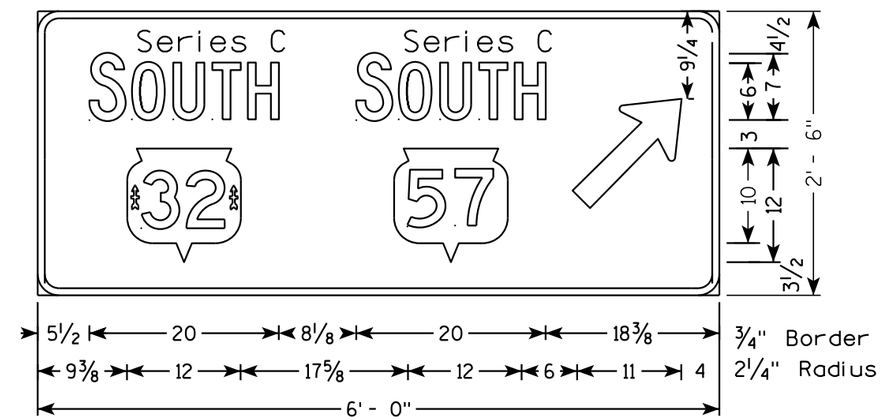

D1-2

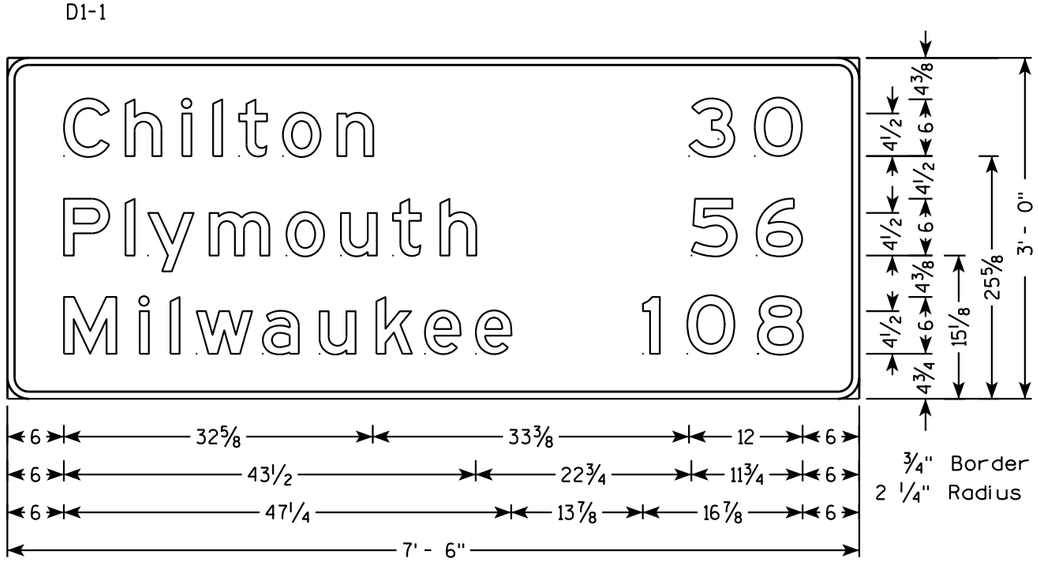

D2-3

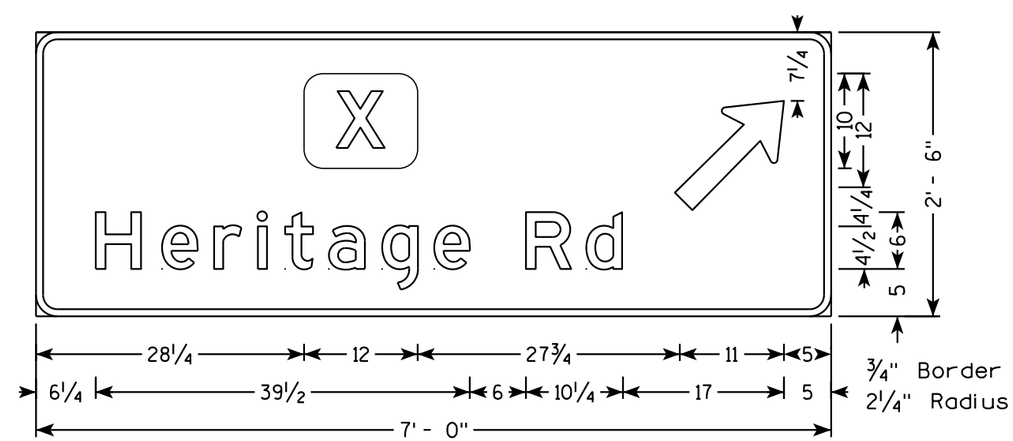

D1-2

7

7

PROJECT NO: 4085-43-71	HWY: STH 32	COUNTY: BROWN	PERMANENT SIGNING	SHEET NO: 138b E

TYPICAL ASSEMBLIES

J1-1

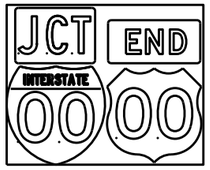

J1-2

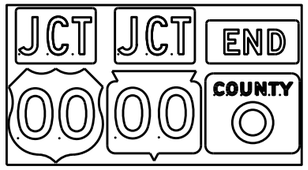

J1-3

J2-1

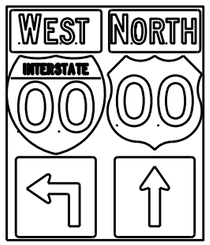

J2-2

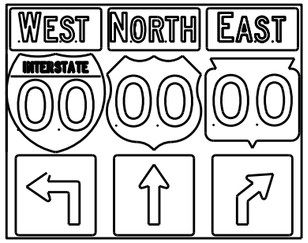

J2-3

JV

(Typical Vertical J-Assembly
See Note 10 and 11)

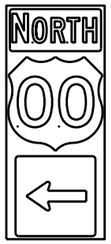

J3-1

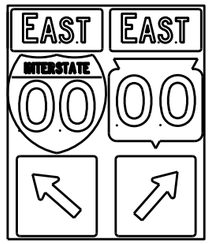

J3-2

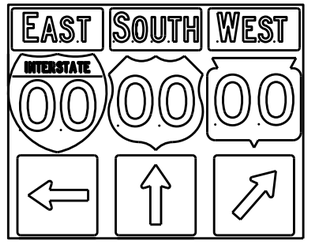

J3-3

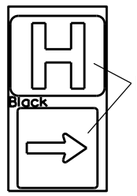

Blue Background

JH-1

J4-1

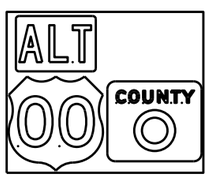

J4-2

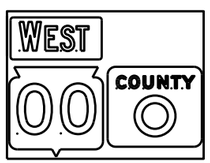

J4-2

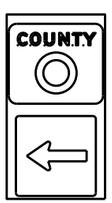

J13-1

J12-1

J32-1

J33-1

J23-1

J22-1

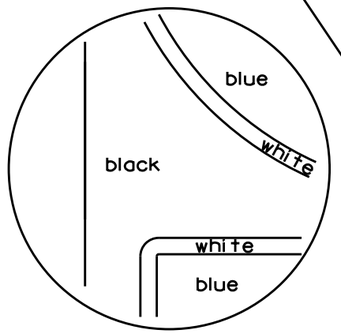

blue background
with interstate

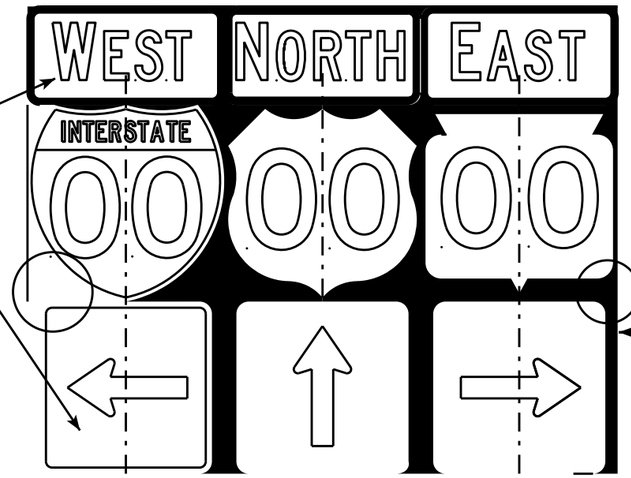

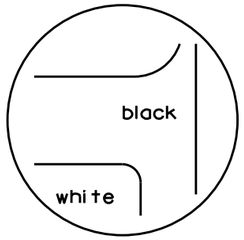

black background

NOTES

1. Signs are Type II - Type H Reflective - reference WIS DOT Standard Specification for HIGHWAY and STRUCTURE CONSTRUCTION latest edition.
2. Color:
   Background - Black Non-reflective
   Message - see Note 5
3. Message Series - See Note 5
4. Corners shall be square or rounded if base material is plywood. If base material is metal the corners shall be rounded.
5. The colors and message spacing on each marker shall be according to the applicable route marker panel specifications.
6. Certain marker heads require the component pieces to be the same color. As an example, all the components used with an M1-1 Interstate marker shall be blue.
7. Single panel j-assemblies shall only be used with route marker shields that are same size. If the route marker shields are different size use multiple piece component.
8. Route assemblies that have 24 inch route shields and have dimensions greater than 48 inches (both vertical and horizontal) shall have one horizontal splice between the arrows and route shields. Vertical splices shall not be used on route assemblies with a horizontal dimension of 144 inches or less. The contractor shall not use more than one vertical joint per sign and the joint shall be between route shields.
9. Route assemblies that have 36 inch shields and have dimensions greater than 48 inchs (both vertical and horizontal) shall have two horizontal splices. One horizontal splice shall be between the cardinal direction and route shields and the other horizontal splice shall be between the arrows and route shields. Vertical splices shall not be used on route assemblies with a horizontal dimension of 144 or less. The contractor shall not use more than one vertical joint per sign and the joint shall be between route shields.
10. All Vertical J Assemblies are given a Sign Code of JV
11. For JV Assemblies that have a mixture of Interstate and non Interstate shields, arrows and cardinals shall be white on blue.

ROUTE MARKERS & COMPONENTS
IN TYPICAL ASSEMBLIES

WISCONSIN DEPT OF TRANSPORTATION

APPROVED Matthew R Rauch
for State Traffic Engineer

DATE 2/06/14 PLATE A2-1S.8

PROJECT NO:

SHEET NO: E

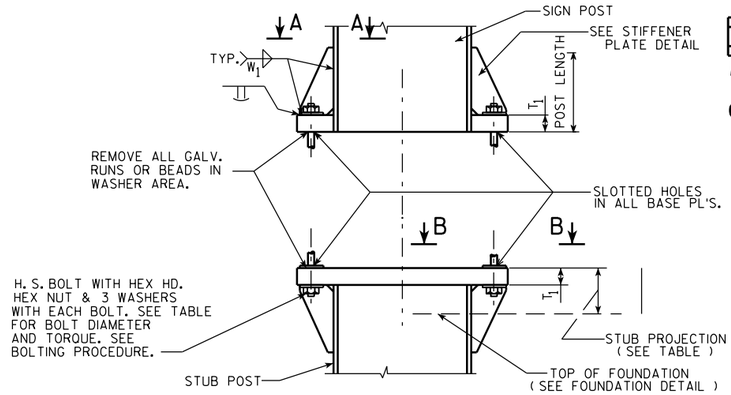

SIGN POST AND STUB POST ELEVATION

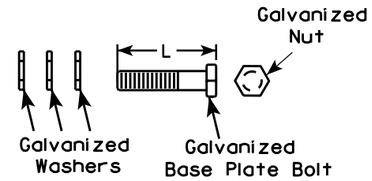

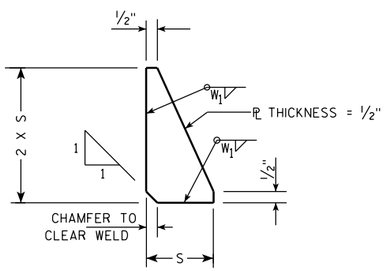

STIFFENER PLATE DETAIL

(SEE TABLE FOR DIMENSIONS)

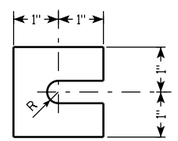

FURNISH 2 @ .012" ± THICK AND 2 @ .032" ± THICK SHIMS PER POST. SHIMS SHALL BE FABRICATED FROM BRASS SHIM STOCK OR STRIP CONFORMING TO A.S.T.M.- B36.

SHIM DETAIL

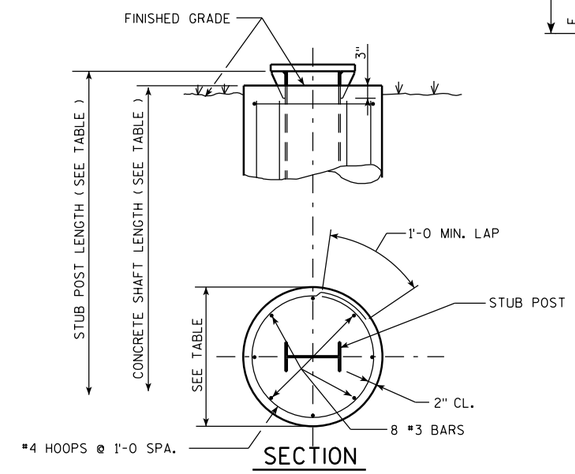

SECTION

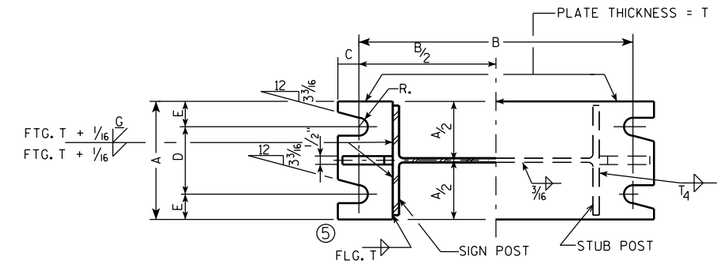

SECTION A-A

SECTION B-B

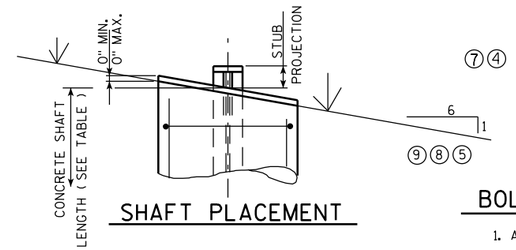

SHAFT PLACEMENT

DESIGN DATA

WIND PRESSURE = 75 M.P.H.
WIND COMPONENTS - NORMAL = 1.0 TRANSVERSE = 0.0
ICE LOAD = 3 P.S.F.

GROUP LOADS	PERCENT OF ALLOWABLE STRESS
1. DEAD	100
2. DEAD & WIND	140
3. DEAD, ICE & 1/2 WIND△	140 △25 P.S.F. MIN.

ALLOWABLE SOIL PRESSURE = 1 1/2 T / SQ. FT.
WIND LOAD WAS APPLIED TO THE AREA OF THE SIGN AND TO THE SUPPORTING MEMBERS.
ICE LOAD WAS APPLIED TO ONE FACE OF THE SIGN AND AROUND THE SURFACE OF THE SUPPORTING MEMBERS.

GENERAL NOTES

DRAWINGS SHALL NOT BE SCALED.
DESIGN CONFORMS WITH A.A.S.H.T.O. SPECIFICATIONS 1985.
ALL POSTS, POST STUBS & ATTACHMENTS SHALL BE A.S.T.M. A709 GRADE 50.
9 THE POST, BASE PLATES, UPPER SIX INCHES OF STUB POST FLANGE SPLICE PLATE AND FUSE PLATE SHALL BE GALVANIZED AFTER FABRICATION.
H.S. BOLTS, WASHERS & NUTS SHALL BE A325 GALVANIZED WHEN POSTS, POST STUBS AND ATTACHMENTS ARE A709 GRADE 50 AND GALVANIZED.

7 4

9 8 5

BOLTING PROCEDURE - BASE CONNECTION

1. ASSEMBLE SIGN POST TO STUB POST WITH BOLTS AND ONE OF THE FLAT WASHERS ON EACH BOLT BETW. PLATES.
2. SHIM AS REQ'D. TO PLUMB POST.
3. PRIOR TO BOLT TIGHTENING LUBRICATE BASE CONNECTION BOLTS WITH BEESWAX OR OTHER HIGH-WAX LUBRICANT.
4. TIGHTEN ALL BOLTS THE MAXIMUM POSSIBLE WITH 12" OR 15" WRENCH TO BED WASHERS & SHIMS AND TO CLEAN BOLT THREADS, THEN LOOSEN EACH BOLT IN TURN AND RETIGHTEN IN A SYSTEMATIC ORDER TO THE PRESCRIBED TORQUE. (SEE TABLE)
5. BURR THREADS AT JUNCTION WITH NUT USING A CENTER PUNCH TO PREVENT NUT LOOSENING.

NOTE:
TIGHTEN THE HIGH STRENGTH BOLTS TO THE TORQUE SHOWN. DO NOT OVERTIGHTEN.

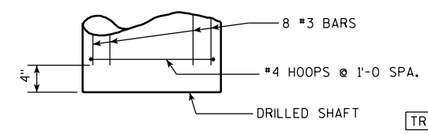

FOUNDATION DETAIL

QUANTITIES FOR 1 FOOTING		
	CONC. MASONRY C.Y.	REINF. STEEL LBS.
A	0.6	34
B	0.8	49
C	0.9	50
D	0.9	56
E	1.0	62

7

	TYPE	#3	#4
REINF.	A	8 @ 4'-5	5 @ 6'-3
	B	8 @ 6'-5	7 @ 6'-3
	C	8 @ 6'-11	7 @ 6'-3
	D	8 @ 7'-5	8 @ 6'-3
	E	8 @ 7'-11	9 @ 6'-3

7

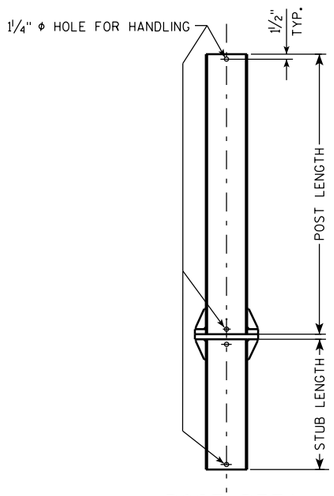

POST DETAIL

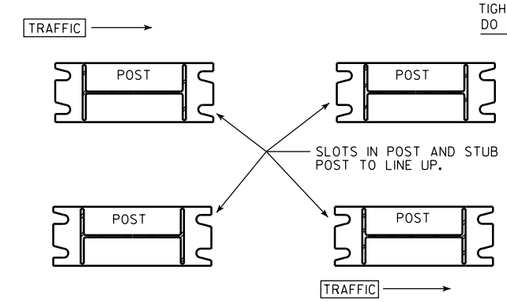

POST SLOT ORIENTATION 7

	BASE CONNECTION DATA TABLE													FOUNDATION DATA				
L	X	TYPE	DIMENSION / POST SIZE	BOLT SIZE & TORQUE	A	B	C	D	E	T_1	T_4	W_1	R	S	STUB LENGTH	STUB PROJECTION	SHAFT DIAMETER	SHAFT LENGTH	K
3 3/4	4	A	W10"X12.0 #/FT.	3/4" Φ @ 75#-FT.	5 1/4"	1'-0 3/8	7/8"	3 1/2"	7/8'	1"	3/16"	5/16"	13/32"	2 1/8"	3'-6	3"	2'-0 Φ	5'-0	76.0# 4
4 3/4	4	B	W12"X16.0 #/FT.	7/8" Φ @ 85#-FT.	5 1/2"	1'-4 1/4	1"	3 1/2"	1"	1 1/4"	1/4"	5/16"	15/32"	3"	5'-6	3"	2'-0 Φ	7'-0	146.5# 4
5		C	W12"X19.0 #/FT.	7/8" Φ @ 85#-FT.	5 1/2"	1'-4 1/4	1"	3 1/2"	1"	1 1/2"	5/16"	5/16"	15/32"	3"	6'-0	3"	2'-0 Φ	7'-6	182.1#
5		D	W12"X22.0 #/FT.	7/8" Φ @ 85#-FT.	5 1/2"	1'-4 1/4	1"	3 1/2"	1"	1 1/2"	3/8"	5/16"	15/32"	3"	6'-6	3"	2'-0 Φ	8'-0	210.5#
5	3	E	W12"X26.0 #/FT.	1" Φ @ 90#-FT.	7"	1'-4 1/4	1 1/4"	4"	1 1/2"	1 1/2"	3/8"	5/16"	17/32"	3"	7'-0	3"	2'-0 Φ	8'-6	293.0# 3

2

1 6 1

STRUCTURAL CARBON STEEL PAY WTS. (1 POST) = K+ (POST LENGTH X POST WT.)
" K " INCLUDES STUB, BASE PLATES, STIFFS., BOLTS, AND WASHERS.

WISCONSIN DEPT OF TRANSPORTATION

APPROVED Matthew R Rauch for State Traffic Engineer

DATE 6/30/14 PLATE NO. A3-1.15

NO.	DATE	REVISION
10	1-21-14	LUBRICATION OF BASE BOLTS
9	4-26-11	REMOVE NON-GALVANIZED
8	10-30-96	NOT GALVANIZED/GALVANIZED
7	10-30-92	QUANT., A588 EXCEPT., ADD SLOT VIEW
6	8-24-87	BASE CONN. WELD
5	10-13-81	BASE CONN. WELD & FUSE PL WASHERS
4	10-19-79	POST A & B, A572 GR. 50, & K
2	11-28-78	"K" 3 4-23-79 TYPE "E"
1	5-4-78	T_1 , T_2 & W_1

STATE OF WISCONSIN
DEPARTMENT OF TRANSPORTATION
DIVISION OF HIGHWAYS

TYPE A, B, C, D, & E

CONST. SPEC. 2011 | DRAWN BY JPH | PLANS CK'D.

FTG. & SIGN SUPPORT DETAILS GROUND MOUNT BREAK-AWAY SIGNS

SHEET 140

PROJECT NO: | HWY: | COUNTY: | SHEET NO: E

STUB AND MASONRY ANCHOR DETAILS

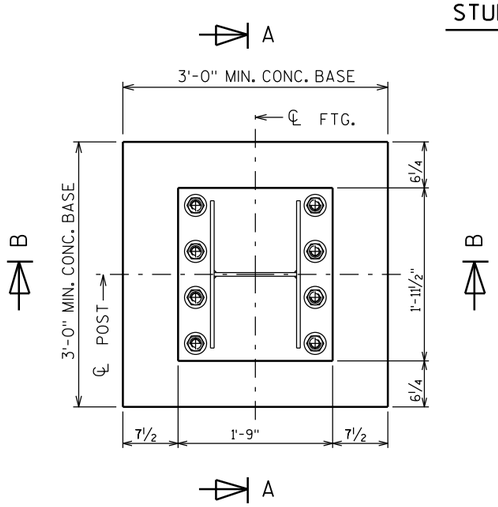

STUB SECTION

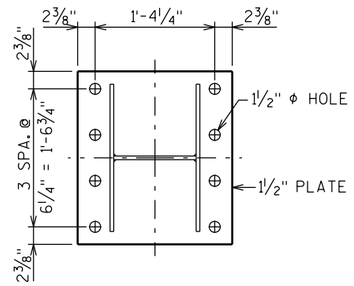

BASE PLATE

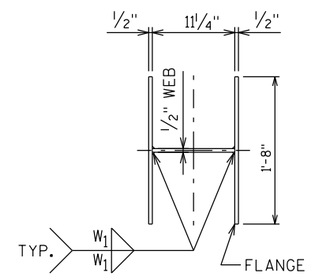

STUB

◐ SEE PLATE NO. A3-1 FOR DETAILS

◕ MASONRY ANCHORS TYPE S 1¼-INCHES (ADHESIVE). ALLOWABLE PULL OUT CAPACITY 14,995 KIPS. EMBED 1'-3" IN ROCK.

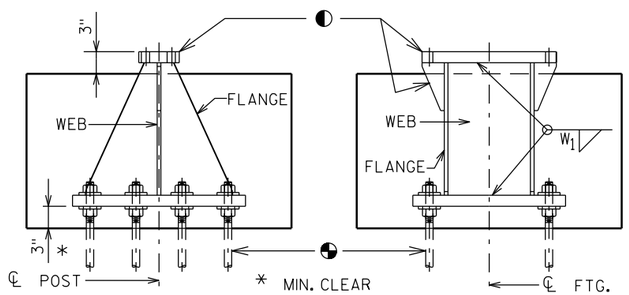

SECTION A

SECTION B

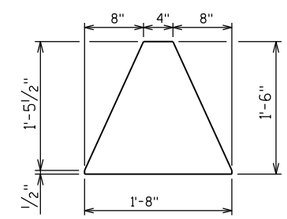

FLANGE

GENERAL NOTES

1. Quantities per Base:
   - REINFORCING BAR STEEL = 62 LBS
   - CONCRETE = 0.6 C.Y.
   - STEEL WEIGHT = 335 LBS
2. All materials, except anchor rod, nuts and washers, are to be A.S.T.M. A709 grade 50. All materials to be galvanized after fabrication.
3. If the contractor encounters rock before reaching the footing depth, per the A3-1 Sign Detail, determine the pull-out capacity of a test adhesive anchor installed in the rock. If the test result equals or exceeds the pull-out capacity of 14,995 KIPS, the contractor may install the breakaway stub for rock, according to this detail.

CONCRETE BASE AND REINFORCING STEEL DETAILS

CONCRETE BASE SECTION

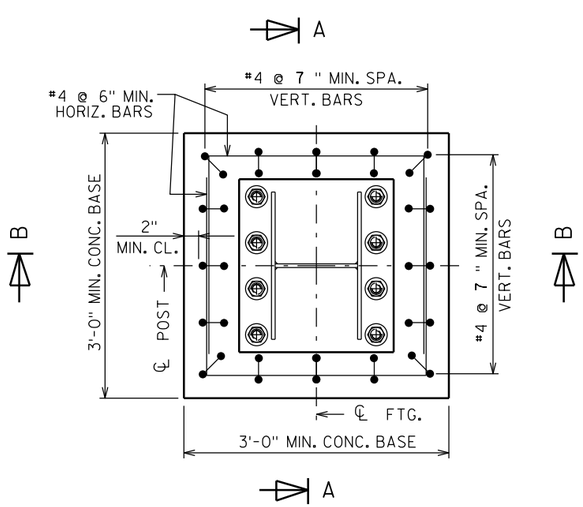

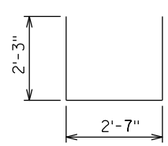

HORIZONTAL BAR

8 BARS @ 6'-11" LENGTH

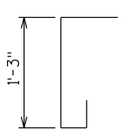

VERTICAL BARS

16 BARS @ 2'-4" LENGTH
MAY BE PLACED IN SKEW
FOR CLEARANCE NEED

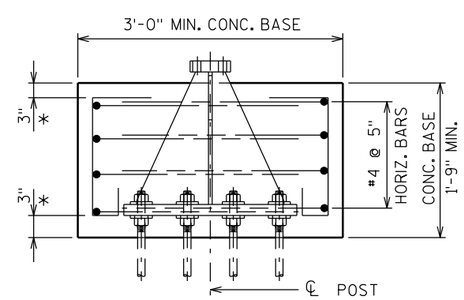

SECTION A

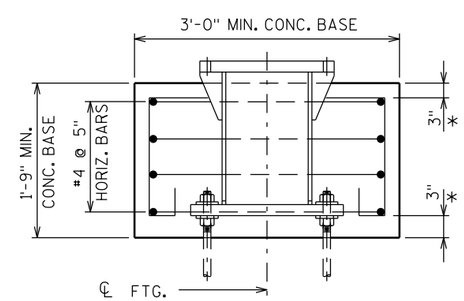

SECTION B

* MIN. CLEAR

ALTERNATE BREAK-AWAY BASE ON ROCK
A3-1M

WISCONSIN DEPT OF TRANSPORTATION

APPROVED Matthew R Rauch for State Traffic Engineer

DATE 2/06/2014 PLAN A3-1M.1

PROJECT NO:	HWY:	COUNTY:		SHEET NO:	E

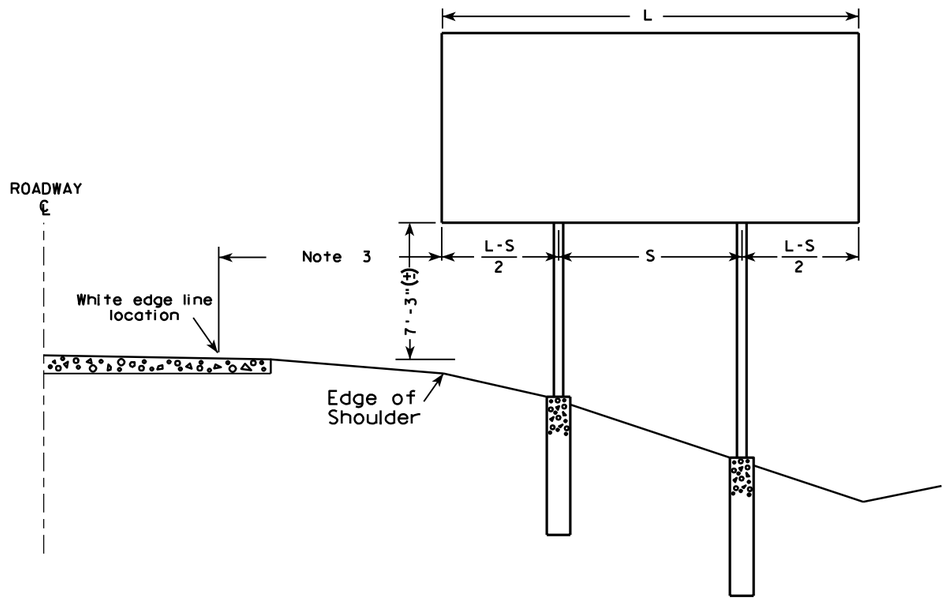

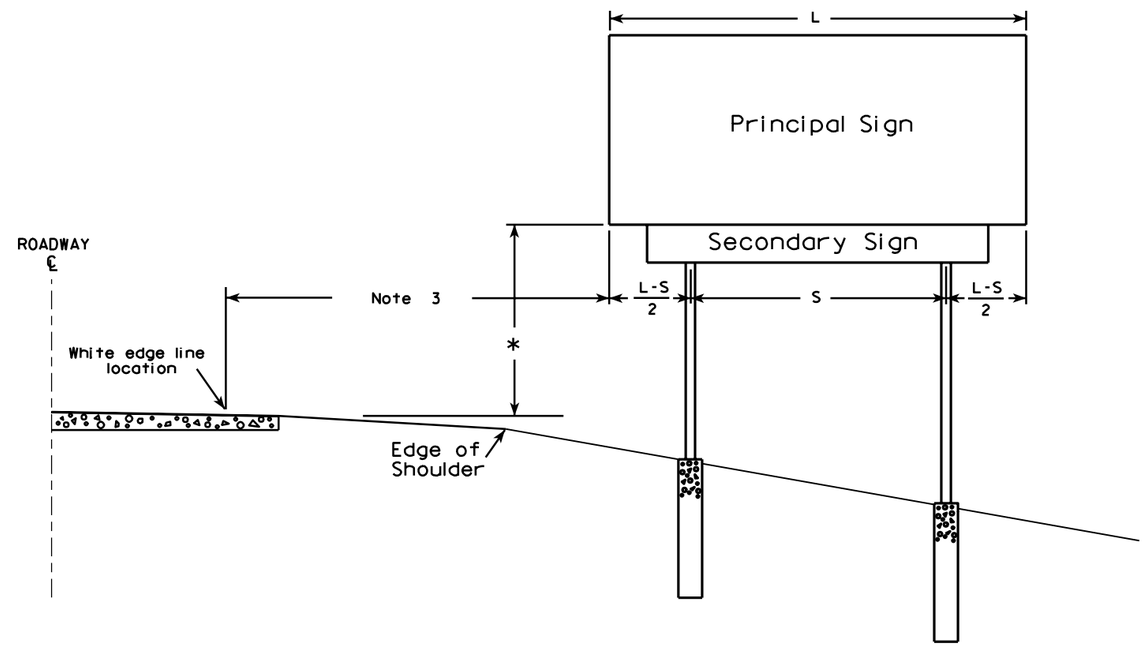

GENERAL NOTES

1. For a 2 post installation, S equals 3L/5, but shall not be less than 9 ft.
2. For a 3 post installation, S equals 5L/7, but shall not be less than 18 ft., and the space between any two posts shall not be less than 9 ft.
3. Unless noted in the plan, the sign offset distance shall be a minimum of 17'-6", desirable 30'-0".
4. The (±) tolerance shown on this sheet is 3 in.
5. The vertical sign height clearance detailed is measured from the bottom of the sign to the near edge of pavement.
6. Post lengths shown in the miscellaneous quantities are estimated lengths. The contractor shall verify post lengths at the time of final grading.
7. Refer to the Traffic Guidelines Manual for further guidance on minimum vertical clearance requirements.

* Clearance is 8'-3"(±) when the secondary sign is 3 ft. or less in height. For secondary signs larger than 3 ft., the clearance to the bottom of the secondary sign shall be 5'-3"(±).

7

7

TYPICAL INSTALLATION OF TYPE I SIGNS

WISCONSIN DEPT OF TRANSPORTATION

APPROVED Matthew R Rauch
for State Traffic Engineer

DATE 4/02/08 PLATE NO. A4-1.9

PROJECT NO:				SHEET NO: 142	E

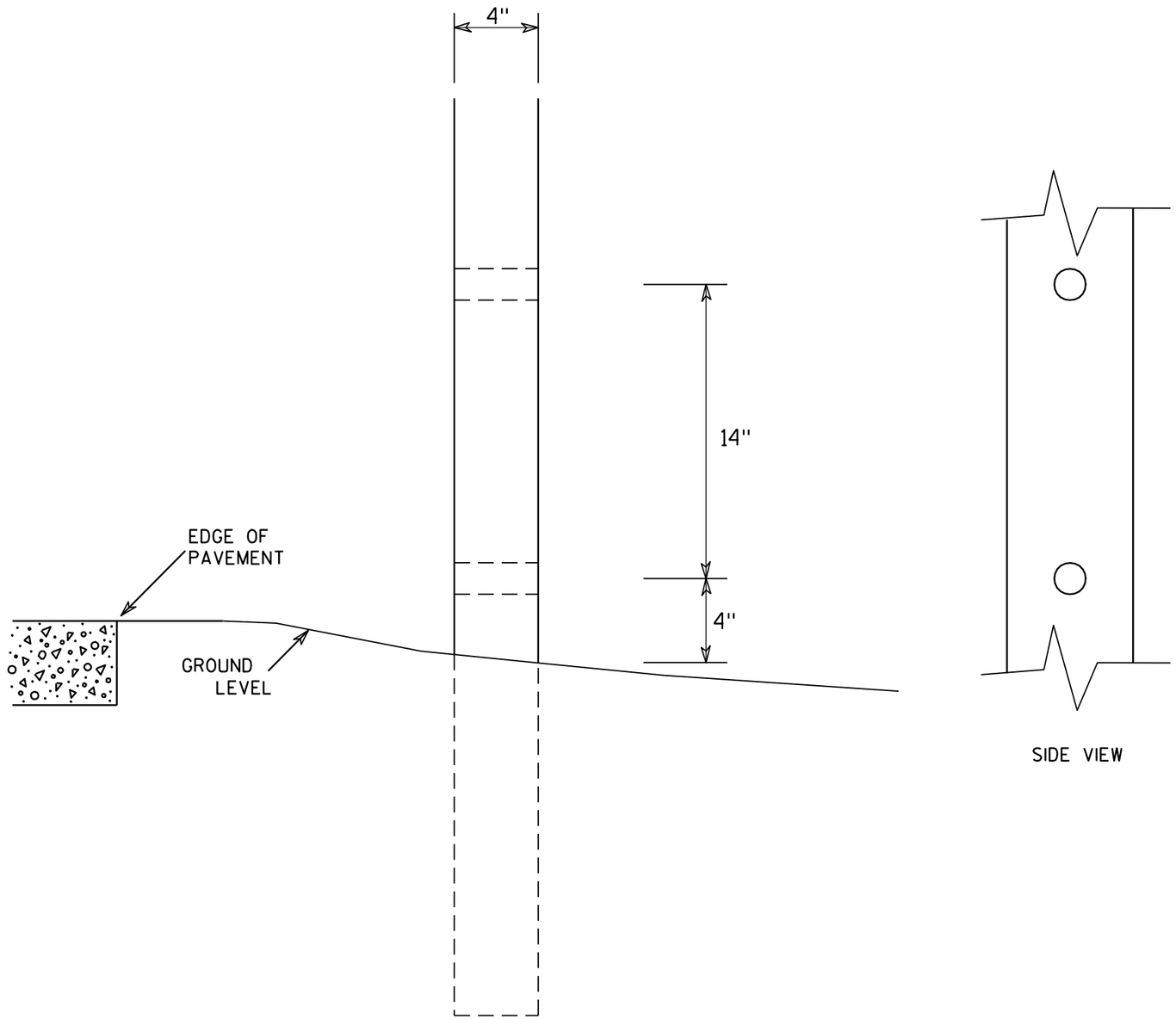

GENERAL NOTES

1. All 4 x 6 Wood Posts shall be modified by having two 1½" diameter holes drilled perpendicular to the roadway centerline.

4 X 6 WOOD POST MODIFICATIONS

WISCONSIN DEPT OF TRANSPORTATION

APPROVED Chester J Spang for State Traffic Engineer

DATE 3/27/97 PLATE NO. A4-11.2

PROJECT NO:	HWY:	COUNTY:		SHEET NO: 143	E

URBAN AREA

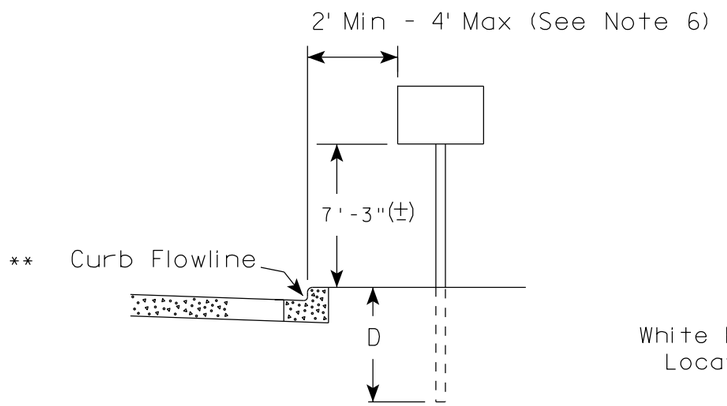

RURAL AREA (See Note 2)

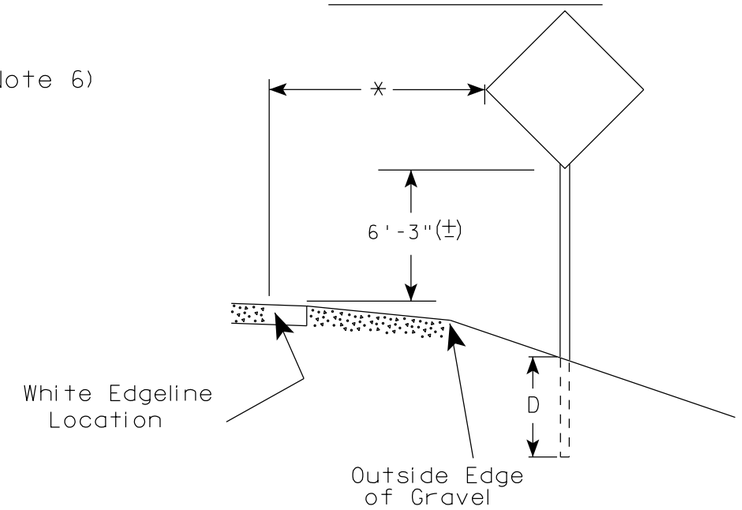

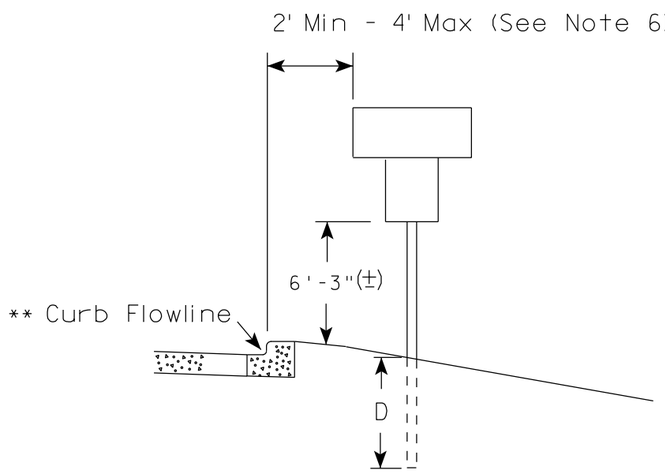

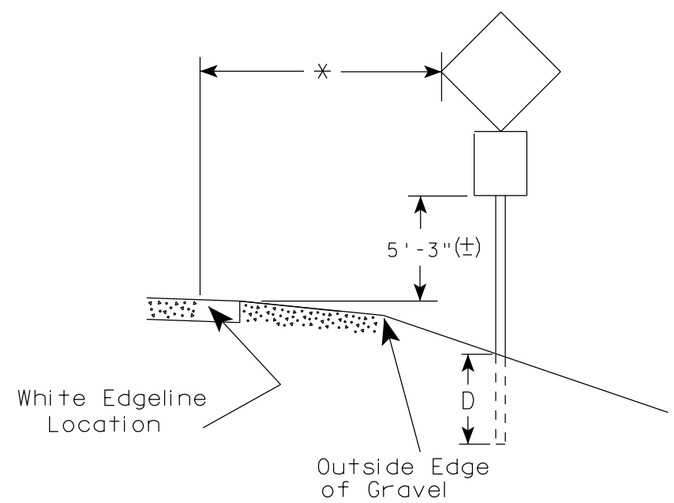

** The existence of curb and gutter does not in itself mandate the vertical clearance illustrated. That height is typically measured where there is sidewalk adjacent to the roadway or parking is permitted. In the absence of sidewalk vertical clearance is measured from the top of the curb. Offset of signs is measured from the flow line.

* 6 feet from edge of a paved shoulder or 12 feet from the edge of pavement (edge line location) or 2 feet from outside edge of gravel, whichever is greater unless directed by project engineer.

GENERAL NOTES

1. Signs wider than 4 feet, 20 sq.ft or larger, shall be mounted on multiple posts. Refer to plate A4-4.
2. If signs are mounted on barrier wall, see A4-10 sign plate.
3. For expressways and freeways, mounting height is 7'- 3" (±) or 6'-3" (±) depending upon existence of a sub-sign.
4. Minimum mounting height for J assemblies (A2-1S) is 7'-3" (±) or 6'-3" (±) per urban or rural detail respectively.
5. Minimum mounting height for signs mounted on traffic signal poles is 5'- 3" (±).
6. Offset distance shall be consistent with existing signs or consistent throughout length of project.
7. The (±) tolerance for mounting height is 3 inches.
8. Folding signs shall be mounted at a height of 5'-3" (±) or as directd by the Engineer.
9. The Double Arrow sign (W12-1) shall be mounted at a height of 2'-3" (±). The Chevron sign (W1-8), Roundabout Chevron panel (R6-4B), Enhanced Reference Markers, Clearance Markers (W5-52), Mile Markers (D10 series), In Road Object Markers (W5-54) & End of Road Markers (W5-56) shall be mounted at a height of 4'-3" (±).

POST EMBEDMENT DEPTH

Area of Sign Installation (Sq. Ft.)	D (Min)
20 or Less	4'
Greater than 20	5'

TYPICAL INSTALLATION OF PERMANENT TYPE II SIGNS ON SINGLE POSTS

WISCONSIN DEPT OF TRANSPORTATION

APPROVED Matthew R Rauch for State Traffic Engineer

DATE 11/12/14 PLATE NO. A4-3.19

PROJECT NO:	HWY:	COUNTY:		SHEET NO:	E

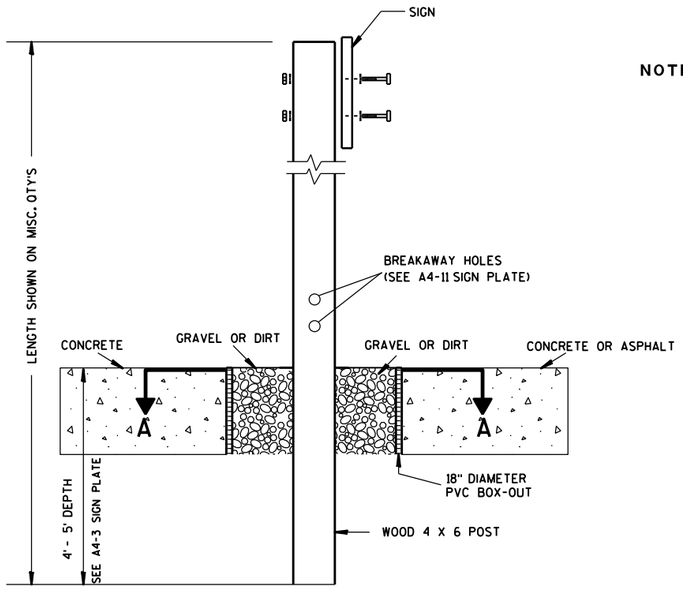

ELEVATION VIEW

DETAIL OF WOOD 4 X 6 SIGN POST IN BOX-OUT

NOTES:
1. ALL MATERIAL TO BE APPROVED BY ENGINEER PRIOR TO INSTALLATION
2. SEE SIGN PLATE A4-8 FOR SIGN HARDWARE REQUIREMENTS
3. 18 INCH X 18 INCH SQUARE BOX-OUTS MAY BE USED FOR INSTALLATIONS IN EXISTING CONCRETE OR ASPHALT LOCATIONS.

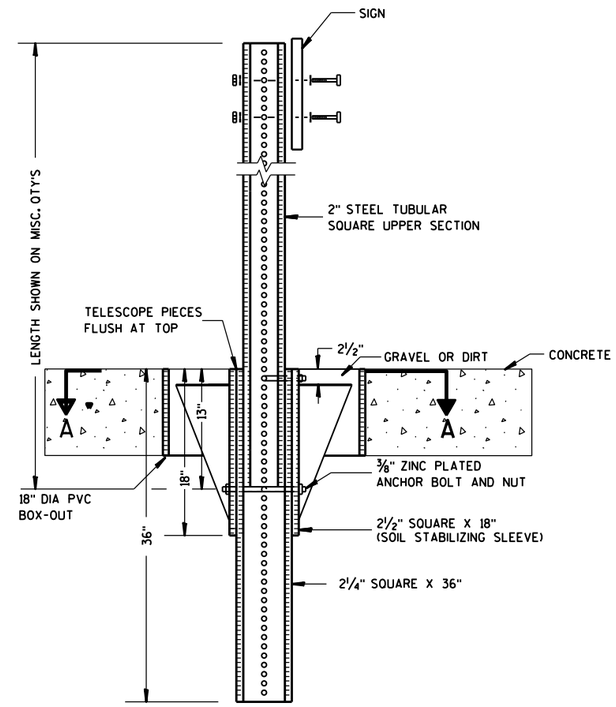

ELEVATION VIEW

DETAIL OF STEEL 2 X 2 SIGN POST IN BOX-OUT

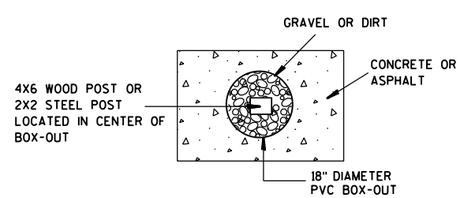

PLAN VIEW

FOR NEW CONCRETE/ASPHALT INSTALLATIONS

SIGN POST
BOX-OUTS
A4-3B

WISCONSIN DEPT OF TRANSPORTATION

APPROVED Matthew R Rauch
for State Traffic Engineer

DATE 1/27/14 PLATE NO. A4-3B.1

PROJECT NO:	HWY:	COUNTY:		SHEET NO:	E

URBAN AREA

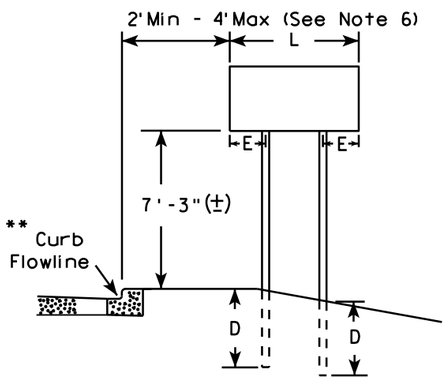

RURAL AREA (See Note 3)

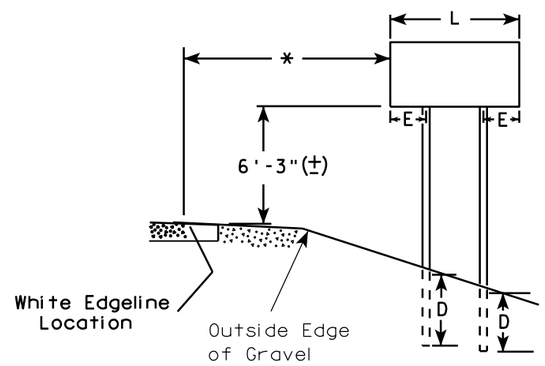

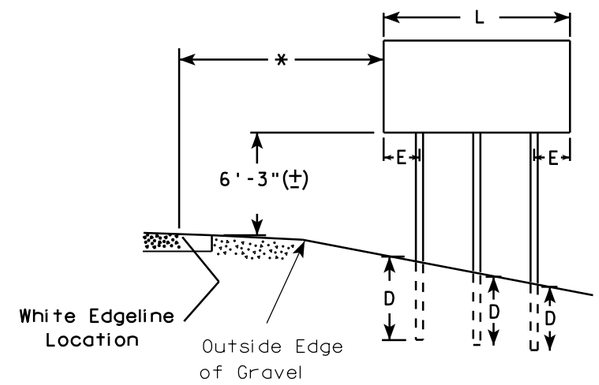

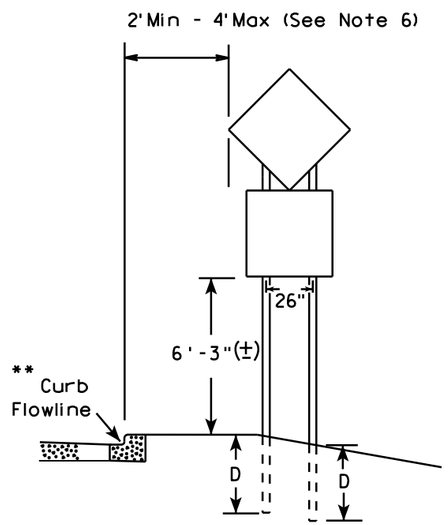

48" DIAMOND WARNING SIGN

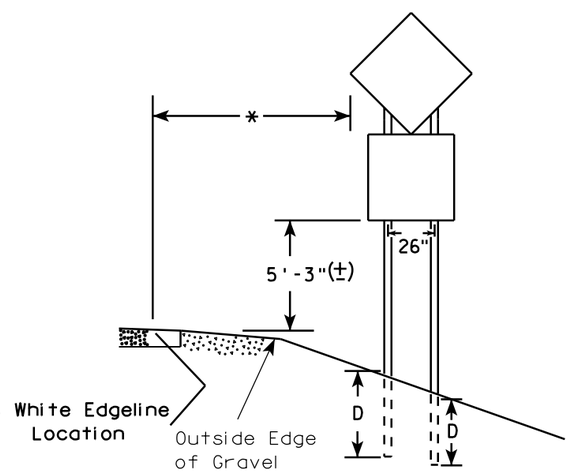

48" DIAMOND WARNING SIGN

GENERAL NOTES

1. For 3 or 4 post installations, individual post spacing shall be greater than 3'-6".
2. See tables below for required number of posts.
3. For expressways and freeways, mounting height is 7'-3" (±) or 6'-3" (±) depending upon existence of sub-sign.
4. The (±) tolerance for mounting height is 3 inches.
5. Minimum mounting height for J assemblies (A2-1S) is 7'-3" (±) or 6'-3" (±) per urban or rural detail respectively.
6. Offset distance shall be consistent with existing signs or consistent throughout length of project.
7. Folding signs shall be mounted at a height of 5'-3" (±) or as directed by the engineer.
8. The Double Arrow sign (W12-1) shall be mounted at a height of 2'-3" (±). The Chevron sign (W1-8), Roundabout Chevron panel (R6-4B), Clearance Markers (W5-52), Mile Markers (D10 series), In Road Object Markers (W5-54) & End of Road Markers (W5-56) shall be mounted at a height of 4"-3" (±).

* 6 feet from edge of a paved shoulder or 12 feet from the edge of pavement (edge line location) or 2 feet from outside edge of gravel, whichever is greater unless directed by project engineer.

** The existence of curb and gutter does not in itself mandate the vertical clearance illustrated. That height is typically measured where there is sidewalk adjacent to the roadway or parking is permitted. In the absence of sidewalk vertical clearance is measured from the top of the curb. Offset of signs is measured from the flow line.

*** See A4-3 sign plate for signs 4' or less in width or less than 20 S.F. in area.

SIGN SHAPE OTHER THAN DIAMOND (TWO POSTS REQUIRED)	
L	E
*** Greater than 48" Less than 60"	12"
60" to 120"	L/5

SIGN SHAPE OTHER THAN DIAMOND (THREE POSTS REQUIRED)	
L	E
Greater than 120" less than 168"	12"

SIGN SHAPE OTHER THAN DIAMOND (FOUR POSTS REQUIRED)	
L	E
168" and greater	12"

POST EMBEDMENT DEPTH

Area of Sign Installation (Sq. Ft.)	D (Min)
20 or Less	4'
Greater than 20	5'

TYPICAL INSTALLATION OF TYPE II SIGNS ON MULTIPLE POSTS

WISCONSIN DEPT OF TRANSPORTATION

APPROVED Matthew R Rauch
for State Traffic Engineer

DATE 11/12/14 PLATE NO. A4-4 13

PROJECT NO:	HWY:	COUNTY:		SHEET NO:	E

GROUND MOUNTED SIGN

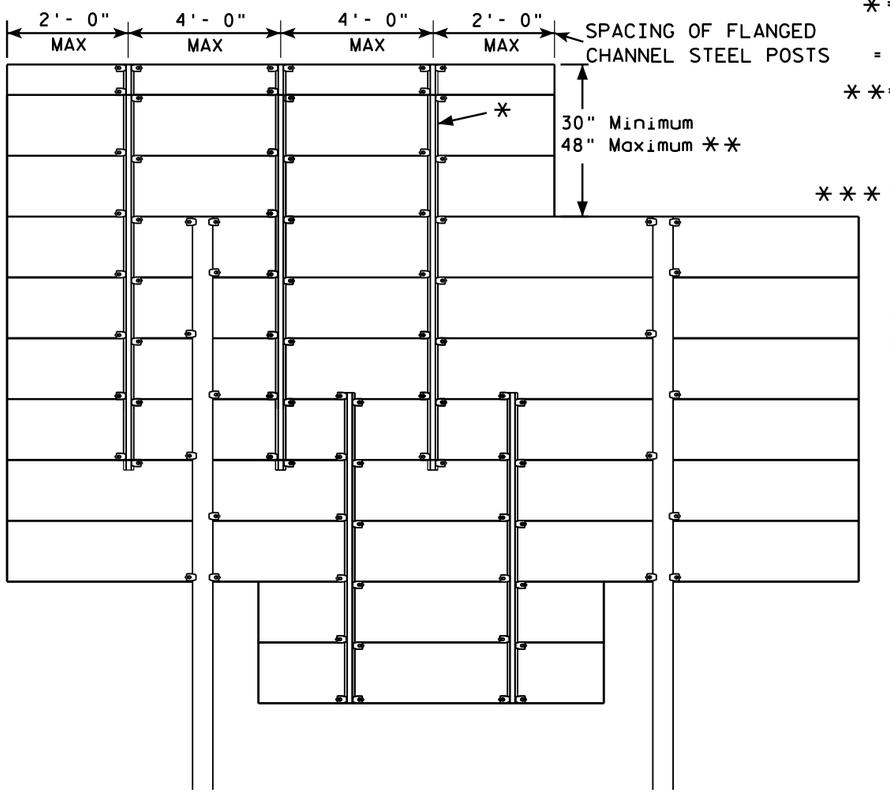

* =2.00 lb/ft FLANGED CHANNEL, MIN. YIELD STRENGTH = 60,000 PSI (GRADE 60) GALVANIZED

** =FOR 48" HEIGHT PANELS ON OVERHEAD STRUCTURES, ENTIRE SIGN SHALL BE CENTERED VERTICALLY ABOUT THE DEPTH OF THE TRUSS.

*** THESE SPACING DISTANCES SHALL ONLY BE USED WHEN THE MAIN SIGN HAS A MAXIMUM HEIGHT (DIMENSION H) OF 16 FT OR LESS. FOR SIGNS WITH A HEIGHT OF GREATER THAN 16 FT, STRUCTURAL CALCULATIONS SHALL BE PERFORMED.

FLANGE CHANNEL DETAIL

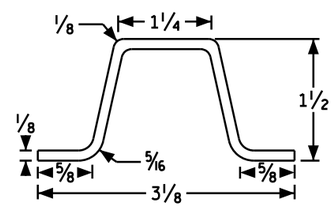

NOT TO SCALE

SIGN BRIDGE MOUNTED SIGN

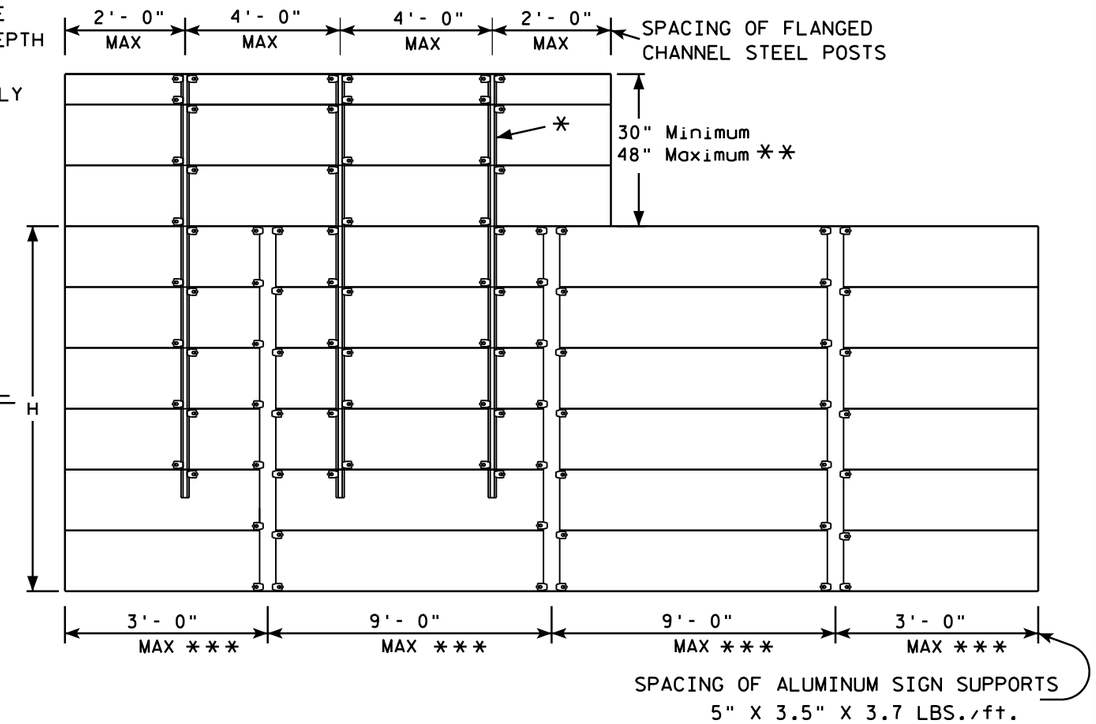

GENERAL NOTES

1. Flanged channel steel posts shall conform to size and material above, and shall be considered as incidental to other items in the contract.

2. Number of Flanged channel steel supports varies with length of panel and shall be spaced as shown:

   PANEL LENGTH 8'-0" OR LESS = 2 CHANNELS
   PANEL LENGTH 9'- 0" - 12'- 0" = 3 CHANNELS
   PANEL LENGTH 13'- 0" OR MORE = 4 CHANNELS

   If the flanged channel steel posts can not be horizontally spaced as shown, they can be moved so as to securely hold the sign.

3. The EXIT NUMBER PANEL shall normally be positioned above the guide sign aligned with the right edge of the guide sign. If the guide sign indicates a left exit, the EXIT NUMBER PANEL shall be aligned with the left edge of the guide sign.

4. If the bolt holes in the top panel (EXIT NUMBER), or sub panel (NEXT EXIT) line up with holes in main sign panel, stitch bolts shall be used in addition to the channels.

5. Provide post clips for each sign as shown. (Please note the differences between a ground mounted versus Sign bridge mounted sign as far as number of clips required on the main supports or beams)

6. Structural steel sign supports shall extend to the top of the main signs, as shown on the above details.

ATTACHMENT OF GUIDE SIGNS TO SUPPORTS

WISCONSIN DEPT OF TRANSPORTATION

APPROVED Matthew R Rauch
for State Traffic Engineer

DATE 12/05/13 PLAT A4-6.12

PROJECT NO:				SHEET NO:	E

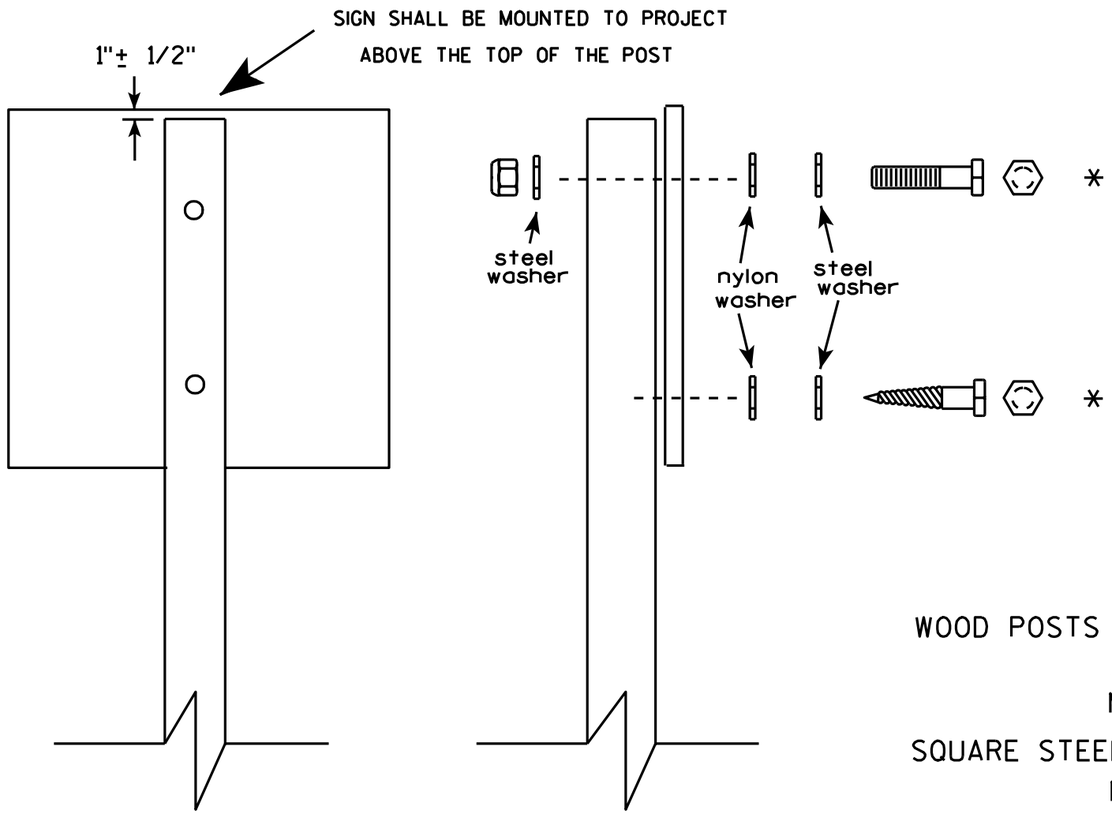

Nuts, bolts and lags used for mounting signs shall have hexagonal heads and shall be either :

a. Hot dip galvanized in accordance with ASTM Designation: A 153, Class D, or SC 3

b. Electro-galvanized in accordance with ASTM Designation : B 633, TYPE III, SC 3.

Threads on bolts and nuts shall be manufactured with sufficient allowance for the cadmium plate or galvanized coating to permit the nuts to run freely on the bolts.

WOOD POSTS (4" x 4" or 4" x 6")

LAG SCREWS - 3/8" X 3"

MACHINE BOLTS - 5/16" X 6-1/2" or 7" Length w/ nuts

SQUARE STEEL POSTS (2" x 2")

MACHINE BOLTS - 3/8" X 3-1/4" Length w/ nuts

RIVETS - 9/32" (6605-9-6) BULB-TITE, TRI-FOLD, ALUMINUM BODY/MANDREL O.D. FLANGE .720-.765 INCH, GRIP RANGE .042-.375 INCH

WASHERS (ALL POSTS) -

1-1/4" O.D. X 3/8" I.D. X 1/16" STEEL

1-1/4" O.D. X 3/8" I.D. X .080 NYLON for all Type H signs.

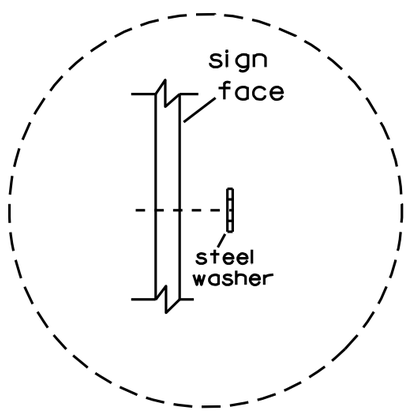

Washer Placement when Sign Has Other Than Type H or Type F Face

* Two different fastening systems are shown for illustration purposes. On any individual sign, either one or the other system shall be used. Actual number of fasteners per sign varies with the sign area, but normally there are two. For a single post installation, all signs greater than 9 sq. ft. require the use of 3 fasteners.

ATTACHMENT OF SIGNS TO POSTS

WISCONSIN DEPT OF TRANSPORTATION

APPROVED Matthew R Rauch
for State Traffic Engineer

DATE 3/23/10 PLATE NO. A4-8.7

TELESCOPIC TUBING ANCHORS
TWO PIECE SYSTEM

2 1/4" SQUARE
12 GAUGE
PERFORATED
GALVANIZED FINISH

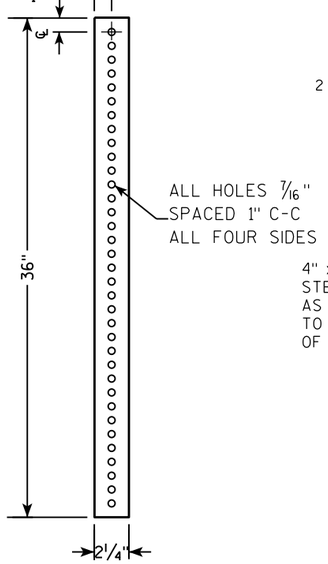

2 1/2" SQUARE
12 GAUGE
OMNI-DIRECTIONAL
PERFORATED
SOIL STABILIZING SLEEVE
GALVANIZED FINISH

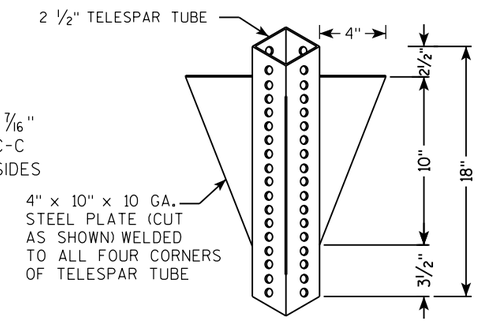

DETAIL OF TUBULAR STEEL SIGN POST
(IN POURED CONCRETE OR ASPHALT)

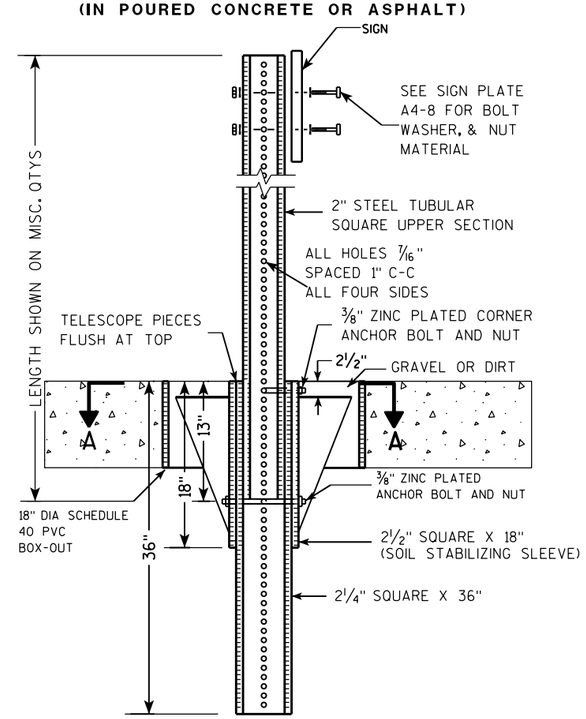

DETAIL OF TUBULAR STEEL SIGN POST
(IN LOCATIONS OTHER THAN POURED CONCRETE OR ASPHALT)

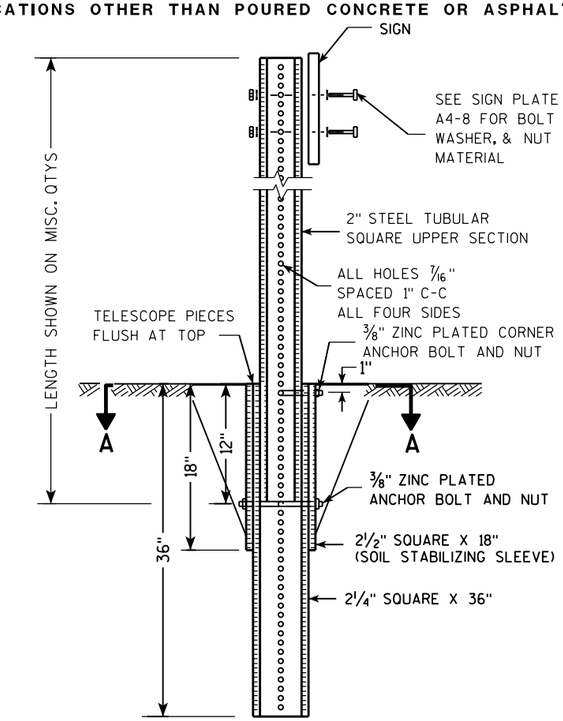

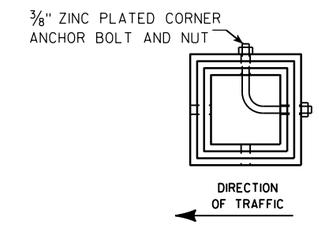

SECTION A-A

Area of Sign Installation (Sq. Ft.)	Number of Required Posts
9 or less	1
Greater than 9 less than or equal to 18	2
Greater than 18 less than or equal to 27	3

Signs wider than 3 feet or larger than 9 sq. ft shall be mounted on multiple posts (see above table).

TUBULAR STEEL
SIGN POST
A4-9

WISCONSIN DEPT OF TRANSPORTATION

APPROVED Matthew R Rauch
for State Traffic Engineer

DATE 2/05/15 PLATE A4-9.9

7 7

PROJECT NO:	HWY:	COUNTY:		SHEET NO:	E

Extruded Shape

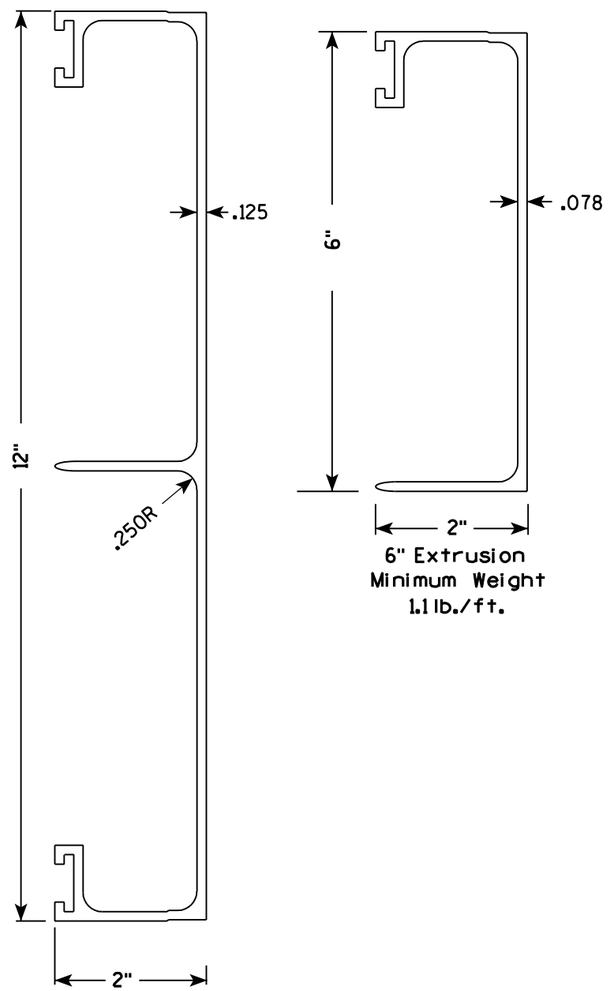

Hardware

STITCH BOLT, WASHER & NUT

The hardware includes:

- 3/8 " - 16 X 3/4 " Economy Bolt 2024-T4 alloy
- 3/8 " - Stainless steel stop nut
- 3/8" X .064 Flat Washers, Alclad 2024-T4 alloy

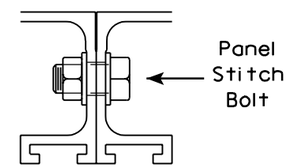

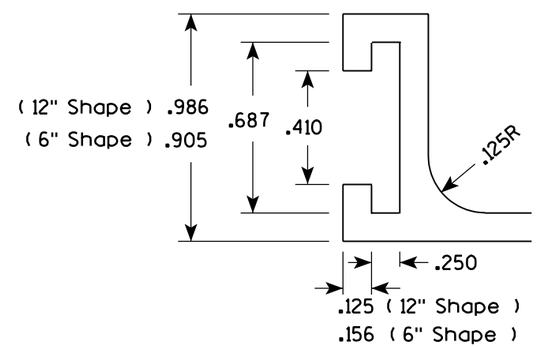

POST CLIP, POST CLIP BOLT, WASHER & NUT

Post Clip shall be Alum. Alloy 356-T6
Post Clip Bolt shall be Stainless Steel.
Flat washer shall be 3/8" X .091, Stainless Steel.
Stop nut shall be stainless steel.

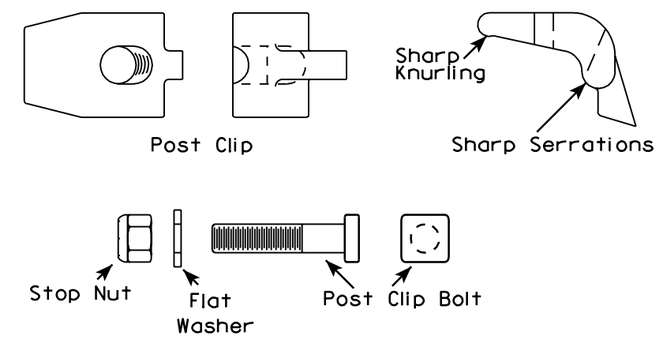

NOTES

1. The contractor may select any brand of extrusion that conforms to the illustrations or meets with the approval of the engineer, but all extrusions used on this contract shall be of the same brand.
2. Panel Stitch Bolts shall be used to assemble adjacent panels. Maximum stitch bolt spacing shall be 24" C-C, and a minimum of 4 bolts shall be used to connect any two extrusions.
3. Post Clips shall be used to attach the sign panel to the sign support.

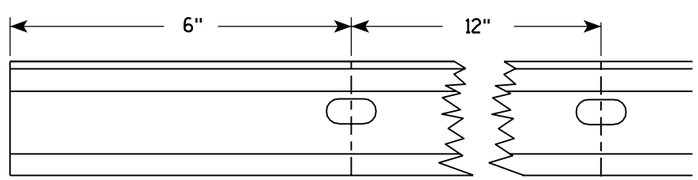

Punch 7/16" x 7/8" oval holes beginning 6" in from end of extrusion 12" CC on both edges of 6" and 12" panels.

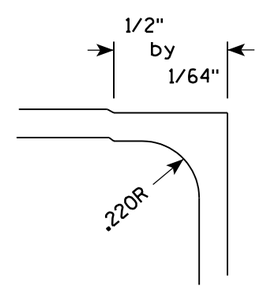

ALUMINUM EXTRUSIONS FOR TYPE I SIGNS

WISCONSIN DEPT OF TRANSPORTATION

APPROVED Chester J Spang for State Traffic Engineer

DATE 11/18/99 PLATE NO. A5-2.9

PROJECT NO:

SHEET NO: 150 E

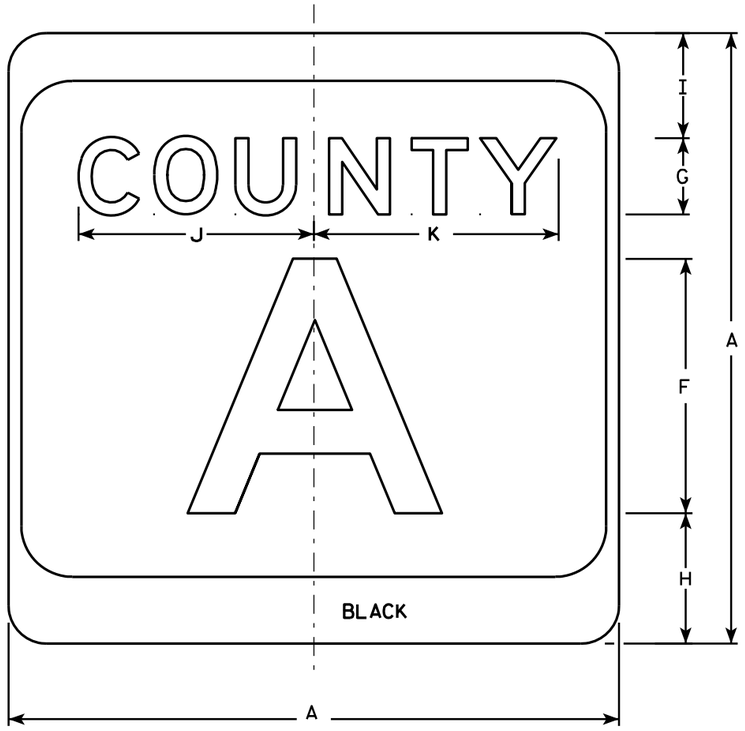

M1-5A

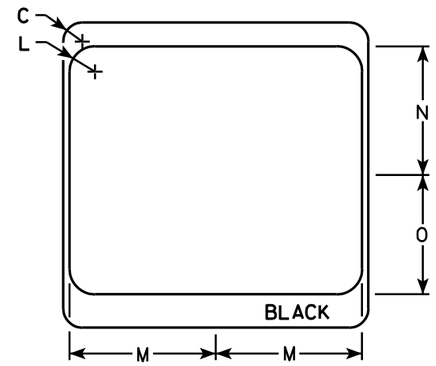

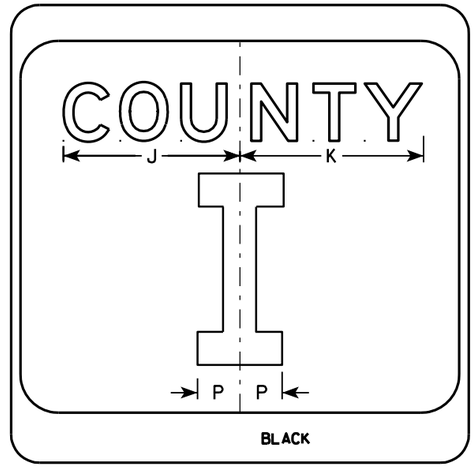

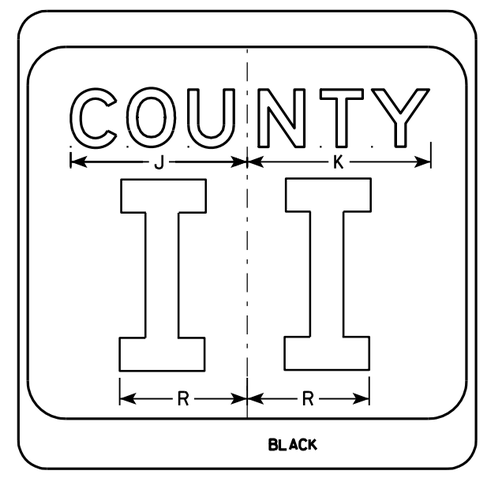

NOTES

1. Sign is Type II - see Note 7 - reference WIS DOT Standard Specification for HIGHWAY and STRUCTURE CONSTRUCTION latest edition.
2. Color:
   Background - White & Black - See Note 7
   Message - Black
3. Message Series - see Note 5
4. Corners may be square or rounded when base material is plywood but borders shall be rounded as shown. When base material is metal, the corners and borders shall be rounded.
5. Message Series E for 1 letter.
   Message Series D for 2 letters unless message is too big then Series C.
   Message Series C for 3 letters unless message is too big then Series B.
6. Substitute appropriate letters & optically center to achieve proper balance.
7. Permanent Signs
   Background - Type H Reflective
   Detour or temporary Signs
   Background - Reflective

SIZE	A	B	C	D	E	F	G	H	I	J	K	L	M	N	O	P	Q	R	S	T	U	V	W	X	Y	Z	Area sq. ft.
1																											
2	24		1 1/2			10	3	5 1/8	4 1/8	9 1/4	9 5/8	2	11 1/2	10 1/8	9 3/8	2 1/4		6 5/8									4.0
3	36		2 1/4			16	4	7 5/8	5 5/8	12 1/4	12 7/8	3	17 1/8	15 1/4	14	3 3/8		10									9.0
4	36		2 1/4			16	4	7 5/8	5 5/8	12 1/4	12 7/8	3	17 1/8	15 1/4	14	3 3/8		10									9.0
5	36		2 1/4			16	4	7 5/8	5 5/8	12 1/4	12 7/8	3	17 1/8	15 1/4	14	3 3/8		10									9.0

CTH MARKER
M1-5A FOR ASSEMBLIES

WISCONSIN DEPT OF TRANSPORTATION

APPROVED Matthew R Rauch
for State Traffic Engineer

DATE 9/27/11 PLATE NO. M1-5A.8

PROJECT NO: | HWY: | COUNTY: | SHEET NO: 151 | E

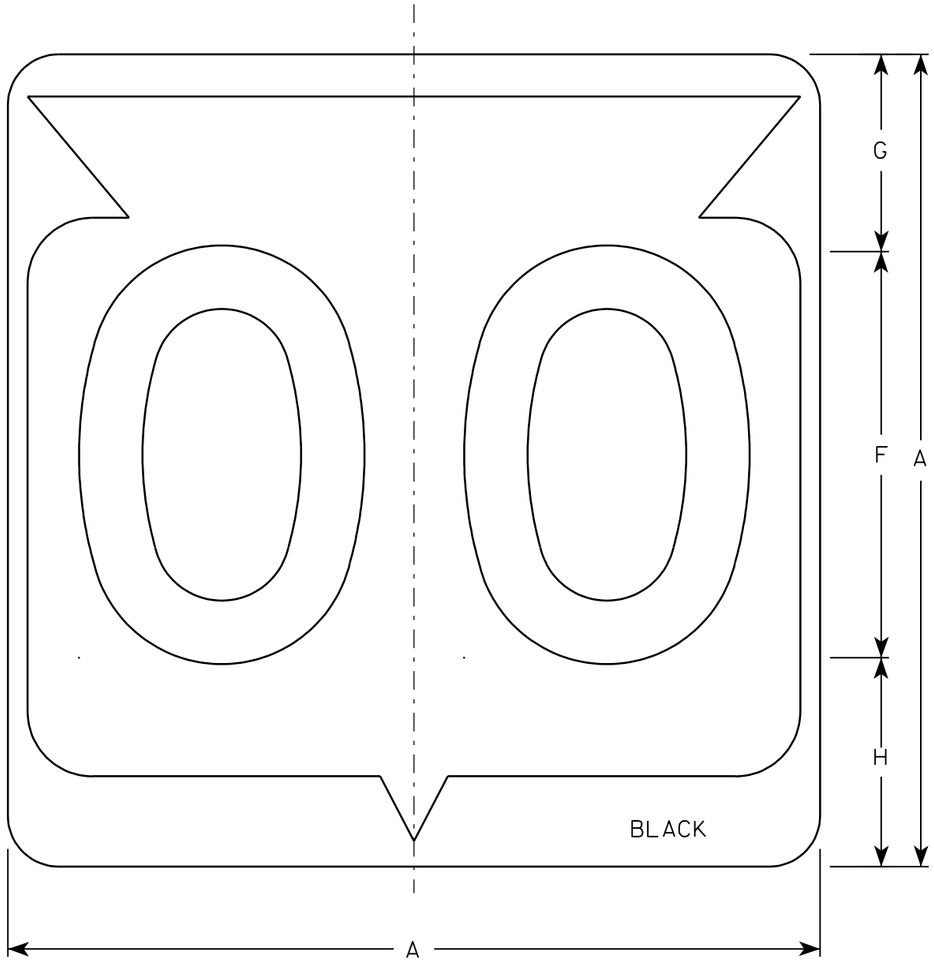

M1-6

NOTES

1. Sign is Type II - See Note 6 - reference WIS DOT Standard Specification for HIGHWAY and STRUCTURE CONSTRUCTION latest edition.
2. Color:
   Background - White & Black - See Note 6
   Message - Black
3. Message Series - See note 5
4. Corners may be square or rounded when base material is plywood but borders shall be rounded as shown. When base material is metal, the corners and borders shall be rounded.
5. Substitute appropriate Series numerals and adjust spacing as per plate A10-1.
6. Permanent Signs
   Background - Type H Reflective
   Detour or temporary Signs
   Background - Reflective

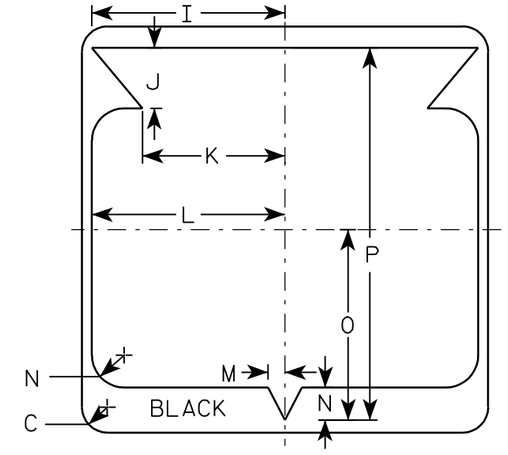

Metric equivalent for this sign is:

SIZE	
1	
2	600 mm X 600 mm
3	900 mm X 900 mm
4	900 mm X 900 mm
5	900 mm X 900 mm

SIZE	A	B	C	D	E	F	G	H	I	J	K	L	M	N	O	P	Q	R	S	T	U	V	W	X	Y	Z	Area sq. ft.	Area m2
1																												
2	24		1 1/2			12	5 1/2	6 1/2	10 1/4	2 1/2	8 7/8	11 1/2	1	1 7/8	11 1/4	21 7/8											4.0	.36
3	36		2 1/4			18	8 3/4	9 1/4	15 3/8	5 3/8	12 5/8	17 1/8	1 1/2	2 7/8	16 7/8	33											9.0	.81
4	36		2 1/4			18	8 3/4	9 1/4	15 3/8	5 3/8	12 5/8	17 1/8	1 1/2	2 7/8	16 7/8	33											9.0	.81
5	36		2 1/4			18	8 3/4	9 1/4	15 3/8	5 3/8	12 5/8	17 1/8	1 1/2	2 7/8	16 7/8	33											9.0	.81

STATE ROUTE MARKER
M1-6 FOR ASSEMBLIES

WISCONSIN DEPT OF TRANSPORTATION

APPROVED Chester J Spang
for State Traffic Engineer

DATE 3/20/02 PLATE NO. M1-6.9

PROJECT NO: | HWY: | COUNTY: | SHEET NO: 152 | E

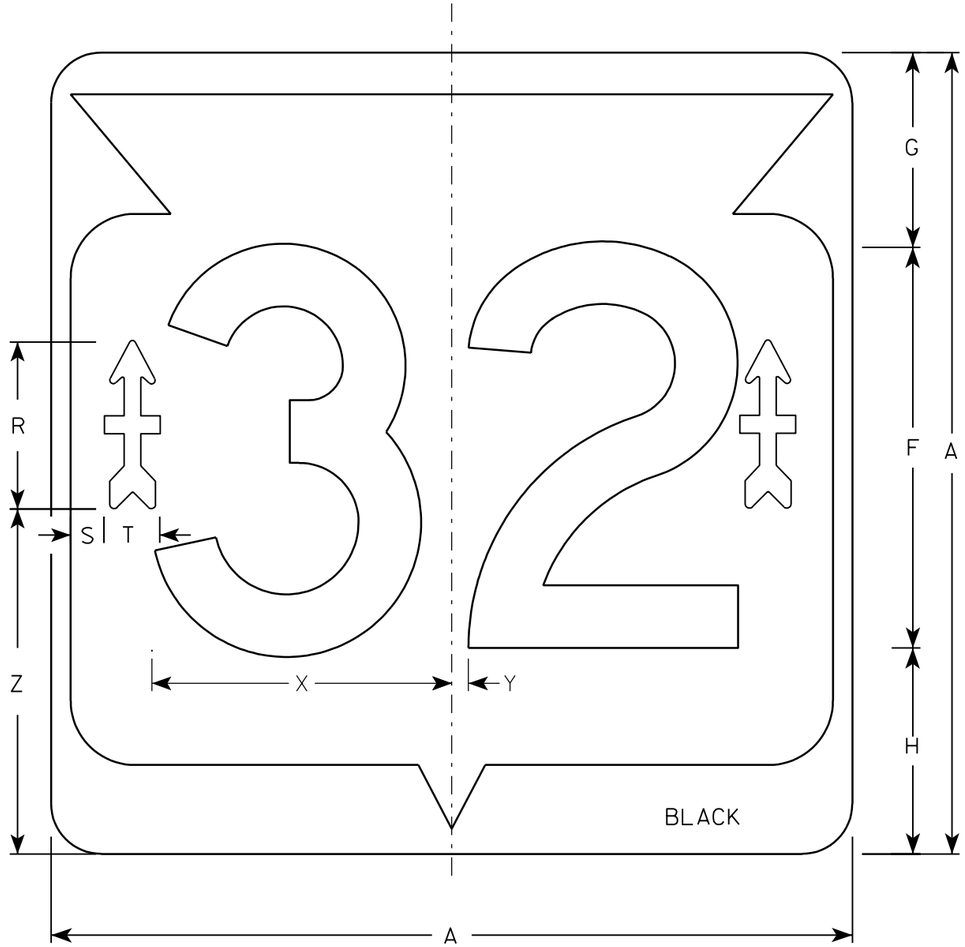

M1-6B

NOTES

1. Sign is Type II - Type H - reference WIS DOT Standard Specification for HIGHWAY and STRUCTURE CONSTRUCTION latest edition.
2. Color:
   Background - White & Black
   Message - Black
   Arrow - Type H Reflective Red
3. Message Series - D
4. Corners may be square or rounded when base material is plywood but borders shall be rounded as shown. When base material is metal, the corners and borders shall be rounded.

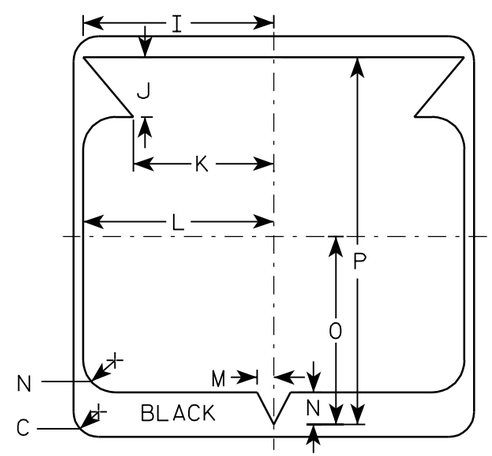

32nd DIVISION ARROW
ACTUAL SIZE

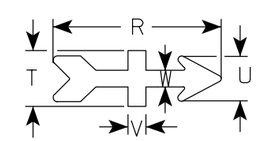

Metric equivalent for this sign is:

SIZE	
1	
2	600 mm X 600 mm
3	900 mm X 900 mm
4	900 mm X 900 mm
5	900 mm X 900 mm

SIZE	A	B	C	D	E	F	G	H	I	J	K	L	M	N	O	P	Q	R	S	T	U	V	W	X	Y	Z	Area sq. ft.	Area m2
1																												
2	24		1 1/2			12	5 1/2	6 1/2	10 1/4	2 1/2	8 7/8	11 1/2	1	1 7/8	11 1/4	21 7/8		5 1/8	3/4	1 7/8	1 1/2	5/8	5/8	9	1/2	10 1/2	4.0	.36
3	36		2 1/4			18	8 3/4	9 1/4	15 3/8	5 3/8	12 5/8	17 1/8	1 1/2	2 7/8	16 7/8	33		7 1/2	1 1/2	2 1/2	2	7/8	3/4	13 1/2	3/4	15 1/2	9.0	.81
4	36		2 1/4			18	8 3/4	9 1/4	15 3/8	5 3/8	12 5/8	17 1/8	1 1/2	2 7/8	16 7/8	33		7 1/2	1 1/2	2 1/2	2	7/8	3/4	13 1/2	3/4	15 1/2	9.0	.81
5	36		2 1/4			18	8 3/4	9 1/4	15 3/8	5 3/8	12 5/8	17 1/8	1 1/2	2 7/8	16 7/8	33		7 1/2	1 1/2	2 1/2	2	7/8	3/4	13 1/2	3/4	15 1/2	9.0	.81

STATE ROUTE MARKER "32"
M1-6B FOR ASSEMBLIES

WISCONSIN DEPT OF TRANSPORTATION

APPROVED Matthew R Rauch
for State Traffic Engineer

DATE 12/5/05 PLATE NO. M1-6B.2

PROJECT NO: | HWY: | COUNTY: | SHEET NO: 153 | E

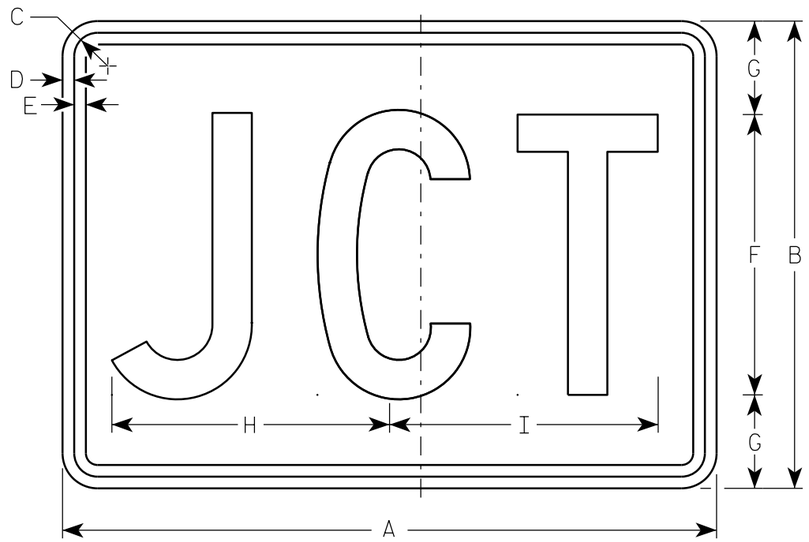

M2-1
MK2-1
MM2-1
MN2-1
MR2-1

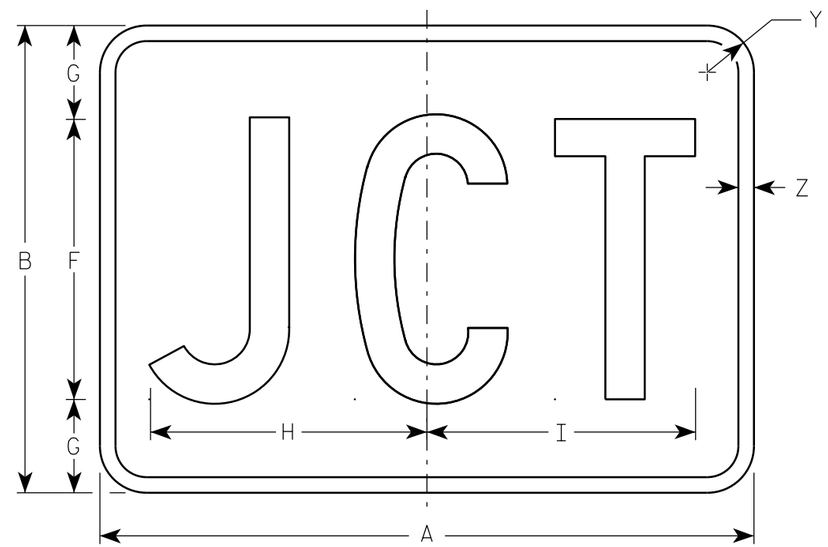

MB2-1

NOTES

1. Sign is Type II - Type H
2. Color:
   Background - See note 5
   Message - See note 5
3. Message Series - C
4. Corners may be square or rounded when base material is plywood but borders shall be rounded as shown. When base material is metal, the corners and borders shall be rounded.
5. M2-1 Background - White
   Message - Black
   MB2-1 Background - Blue
   Message - White
   MK2-1 Background - Green
   Message - White
   MM2-1 Background - White
   Message - Green
   MN2-1 Background - Brown
   Message - White
   MR2-1 Background - Brown
   Message - Yellow

SIZE	A	B	C	D	E	F	G	H	I	J	K	L	M	N	O	P	Q	R	S	T	U	V	W	X	Y	Z	Area sq. ft.
1																											
2	21	15	1 1/8	3/8	3/8	9	3	8 7/8	8 5/8																1 1/2	1/2	2.20
3	30	21	1 1/8	3/8	3/8	13	4	12 7/8	12 3/8																1 1/2	1/2	4.40
4	30	21	1 1/8	3/8	3/8	13	4	12 7/8	12 3/8																1 1/2	1/2	4.40
5	30	21	1 1/8	3/8	3/8	13	4	12 7/8	12 3/8																1 1/2	1/2	4.40

STANDARD SIGN
M2-1

WISCONSIN DEPT OF TRANSPORTATION

APPROVED Matthew R Rauch
For State Traffic Engineer

DATE 6/30/14 PLATE 154 "2-1.11

PROJECT NO: | HWY: | COUNTY: | SHEET NO: | E

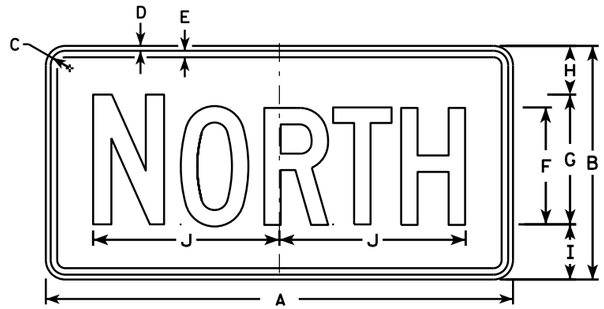

M3-1
MK3-1
MM3-1
MN3-1

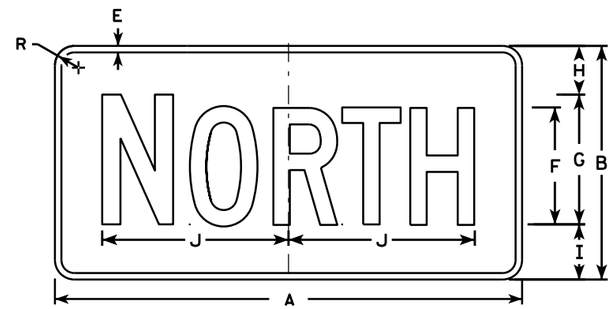

MB3-1

M3-2
MK3-2
MM3-2
MN3-2

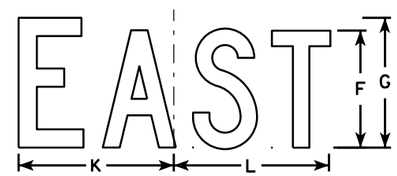

MB3-2

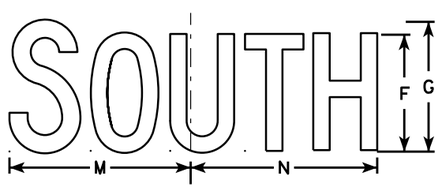

M3-3
MK3-3
MM3-3
MN3-3

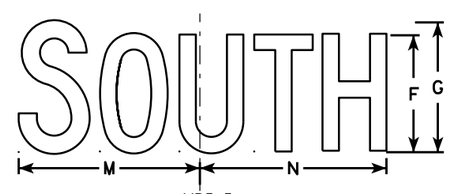

MB3-3

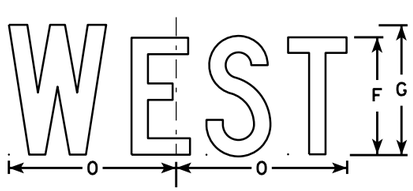

M3-4
MK3-4
MM3-4
MN3-4

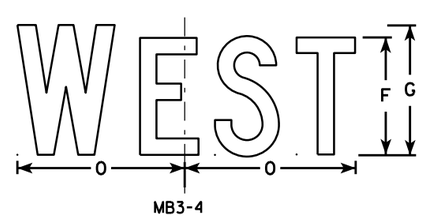

MB3-4

NOTES

1. All Signs Type II - Type H
2. Color:
   Background - See note 5
   Message - See note 5
3. Message Series - C
4. Corners may be square or rounded when base material is plywood but borders shall be rounded as shown. When base material is metal, the corners and borders shall be rounded.
5. M3-1 thru M3-4 Background - White
   Message - Black
   MB3-1 thru MB3-4 Background - Blue
   Message - White
   MK3-1 thru MK3-4 Background - Green
   Message - White
   MM3-1 thru MM3-4 Background - White
   Message - Green
   MN3-1 thru MN3-4 Background - Brown
   Message - White
6. Note the first letter of each direction is larger than the remainder of the message.

SIZE	A	B	C	D	E	F	G	H	I	J	K	L	M	N	O	P	Q	R	S	T	U	V	W	X	Y	Z	Area sq. ft.
1																											
2	24	12	1 1/8	3/8	3/8	6	7	2 1/4	2 3/4	10 1/4	7 7/8	8 3/8	10 1/4	9 3/4	8 3/4			1 1/2									2.00
3	36	18	1 1/8	3/8	1/2	9	10	3 3/4	4 1/4	14 3/8	12	12 1/8	14	14 1/8	13			1 1/2									4.5
4	36	18	1 1/8	3/8	1/2	9	10	3 3/4	4 1/4	14 3/8	12	12 1/8	14	14 1/8	13			1 1/2									4.5
5	36	18	1 1/8	3/8	1/2	9	10	3 3/4	4 1/4	14 3/8	12	12 1/8	14	14 1/8	13			1 1/2									4.5

STANDARD SIGNS
M3-1 thur M3-4
SERIES

WISCONSIN DEPT OF TRANSPORTATION

APPROVED Matthew R Rauch
for State Traffic Engineer

DATE 6/30/14 PLATE NO M3-1.13

PROJECT NO: | HWY: | COUNTY: | SHEET NO: | E

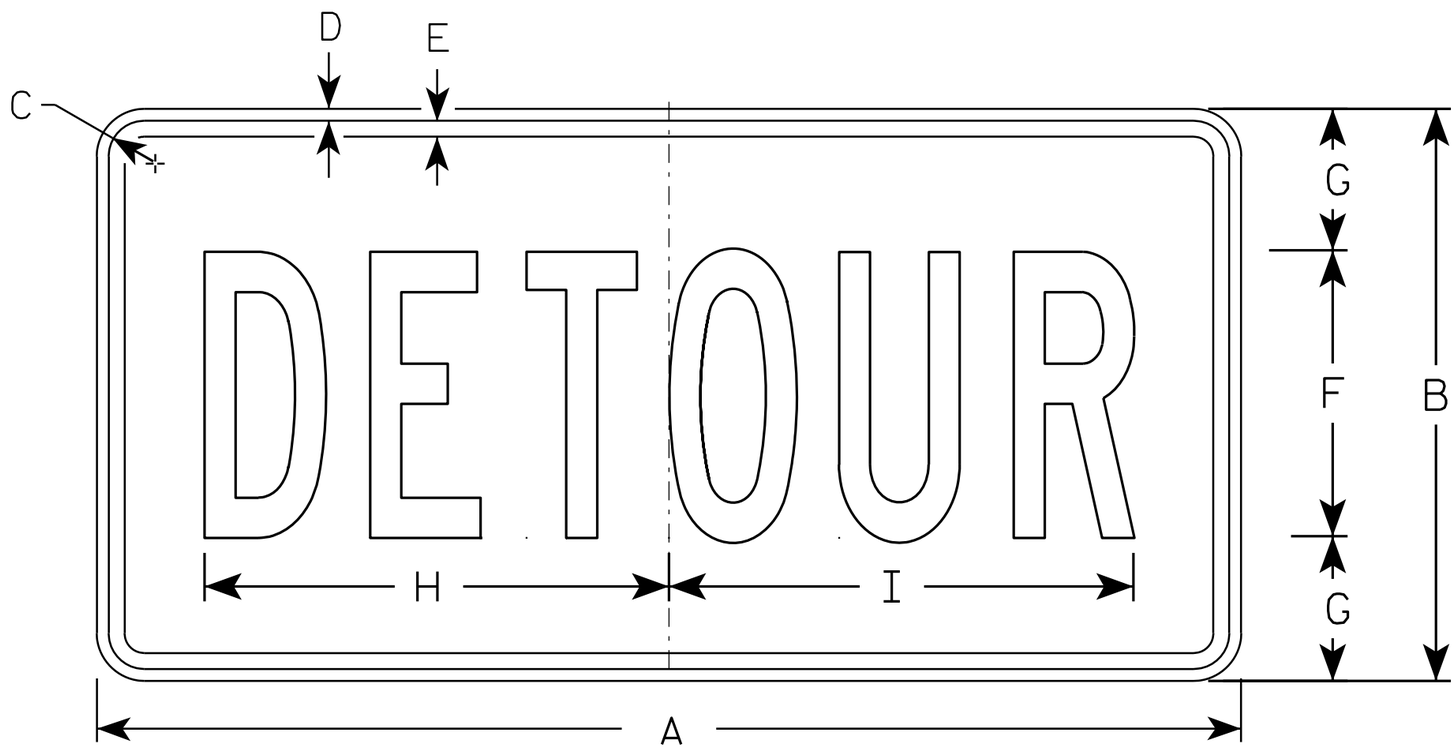

M4-8

NOTES

1. Sign is Type II - Type F Reflective - reference WIS DOT Standard Specification for HIGHWAY and STRUCTURE CONSTRUCTION latest edition.
2. Color:
   Background - Orange
   Message - Black
3. Message Series - B
4. Corners may be square or rounded when base material is plywood but borders shall be rounded as shown. When base material is metal, the corners and borders shall be rounded.

SIZE	A	B	C	D	E	F	G	H	I	J	K	L	M	N	O	P	Q	R	S	T	U	V	W	X	Y	Z	Area sq. ft.
1																											
2	24	12	1 1/8	3/8	3/8	6	3	10	10 1/4																		2.0
3	36	18	1 1/8	3/8	1/2	9	4 1/2	14 5/8	14 1/2																		4.5
4																											
5																											

STANDARD SIGN
M4-8

WISCONSIN DEPT OF TRANSPORTATION

APPROVED Matthew R Rauch
for State Traffic Engineer

DATE 11/10/10 PLATE NO. M4-8.2

PROJECT NO: | HWY: | COUNTY: | SHEET NO: 156 | E

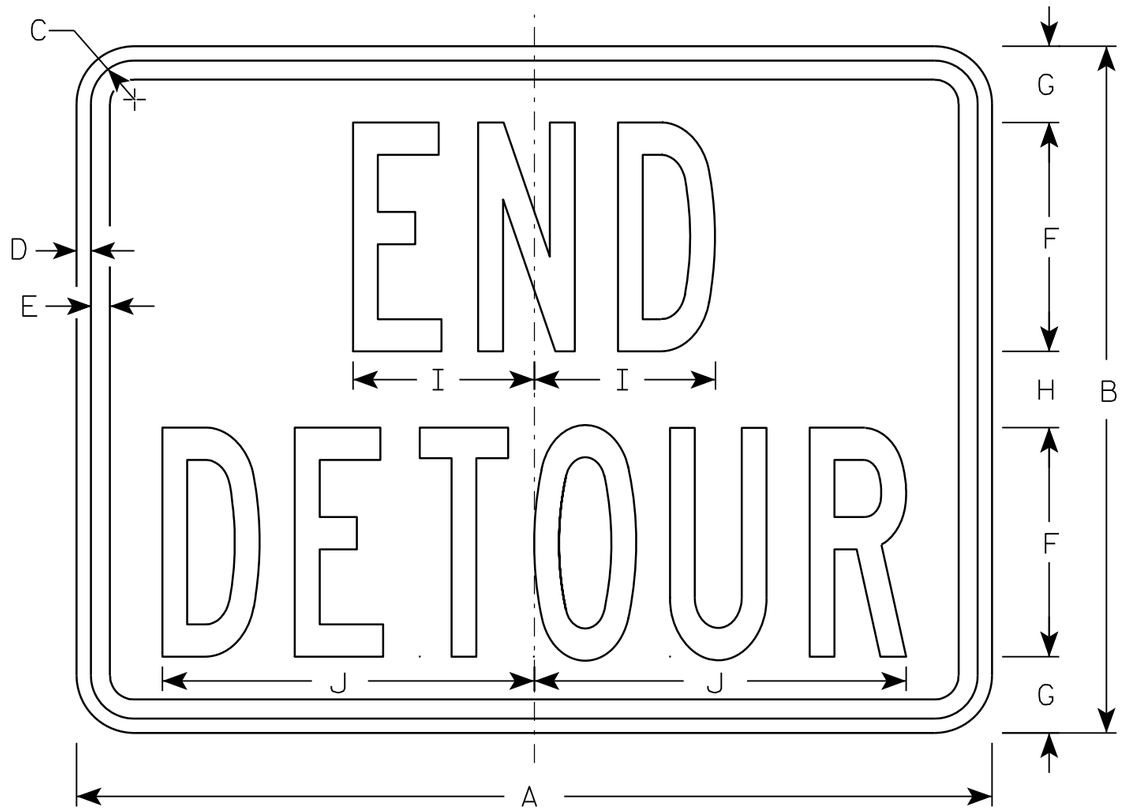

M4-8A

NOTES

1. Sign is Type II - Type F Reflective - reference WIS DOT Standard Specification for HIGHWAY and STRUCTURE CONSTRUCTION latest edition.
2. Color:
   Background - Orange
   Message - Black
3. Message Series - B
4. Corners may be square or rounded when base material is plywood but borders shall be rounded as shown. When base material is metal, the corners and borders shall be rounded.

SIZE	A	B	C	D	E	F	G	H	I	J	K	L	M	N	O	P	Q	R	S	T	U	V	W	X	Y	Z	Area sq. ft.
1																											
2	24	18	1 1/8	3/8	1/2	6	2	2	4 3/4	9 3/4																	3.0
3	30	24	1 1/8	3/8	1/2	8	2 1/2	3	6 3/4	13																	5.0
4																											
5																											

STANDARD SIGN
M4-8A

WISCONSIN DEPT OF TRANSPORTATION

APPROVED Matthew R Rauch
for State Traffic Engineer

DATE 3/9/11 PLATE NO. M4-8A.2

PROJECT NO: | HWY: | COUNTY: | SHEET NO: 157 | E

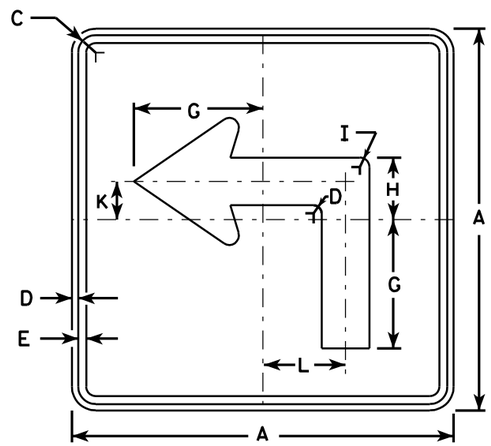

M5-1L
MK5-1L
MM5-1L
MO5-1L
MP5-1L
MR5-1L

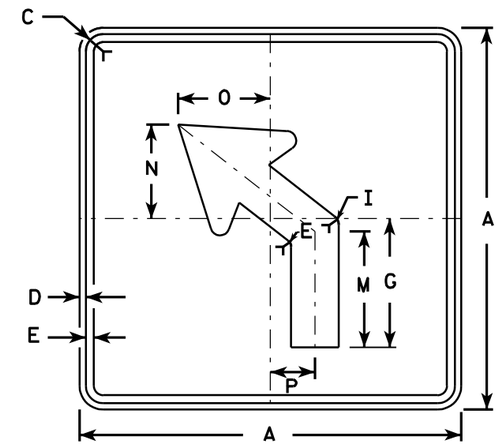

M5-2L
MK5-2L
MM5-2L
MO5-2L
MP5-2L
MR5-2L

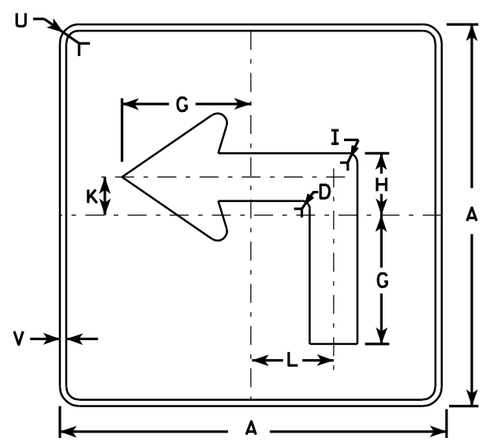

MB5-1L
MG5-1L
MN5-1L

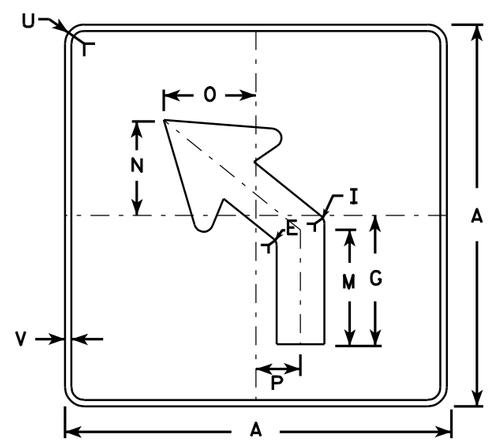

MB5-2L
MG5-2L
MN5-2L

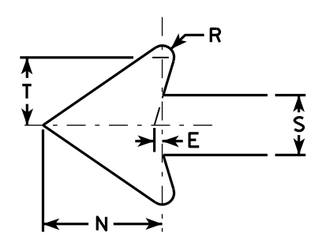

NOTES

1. Signs are Type II - See Note 4 - reference WIS DOT Standard Specification for HIGHWAY and STRUCTURE CONSTRUCTION latest edition.
2. Color:
   Background - See note 4
   Message - See note 4
3. Corners may be square or rounded when base material is plywood but borders shall be rounded as shown. When base material is metal, the corners and borders shall be rounded.
4. M5-1 and M5-2 Background - White - Type H Reflective
   Message - Black
   MB5-1 and MB5-2 Background - Blue
   Message - White - Type H Reflective
   MG5-1 and MG5-2 Background - Green
   Message - White - Type H Reflective
   MK5-1 and MK5-2 Background - Green
   Message - White Type H Reflective
   MM5-1 and MM5-2 Background - White - Type H Reflective
   Message - Green
   MN5-1 and MN5-2 Background - Brown
   Message - White - Type H Reflective
   MO5-1 and MO5-2 Background - Orange - Type F Reflective
   Message - Black
   MP5-1 and MP5-2 Background - White - Type H Reflective
   Message - Blue
   MR5-1 and MR5-2 Background - Brown
   Message - Yellow - Type H Reflective
5. M5-1R same as M5-1L except arrow points right.
6. M5-2R same as M5-2L except arrow tilts right.

SIZE	A	B	C	D	E	F	G	H	I	J	K	L	M	N	O	P	Q	R	S	T	U	V	W	X	Y	Z	Area sq. ft.
1																											
2	21		1 1/8	3/8	3/8		7	3 3/8	5/8		2 1/8	4 1/2	6 3/8	5 1/4	5	2 1/2		1/2	2 5/8	3	1 1/2	1/2					3.06
3	30		1 3/8	1/2	5/8		10 1/8	4 7/8	7/8		3	6 1/2	9 1/8	7 1/2	7 1/4	3 1/2		3/4	3 3/4	4 1/4	1 7/8	1/2					6.25
4	30		1 3/8	1/2	5/8		10 1/8	4 7/8	7/8		3	6 1/2	9 1/8	7 1/2	7 1/4	3 1/2		3/4	3 3/4	4 1/4	1 7/8	1/2					6.25
5	30		1 3/8	1/2	5/8		10 1/8	4 7/8	7/8		3	6 1/2	9 1/8	7 1/2	7 1/4	3 1/2		3/4	3 3/4	4 1/4	1 7/8	1/2					6.25

STANDARD SIGN
M5-1 & M5-2

WISCONSIN DEPT OF TRANSPORTATION

APPROVED Matthew R Rauch
for State Traffic Engineer

DATE 7/29/13 PLATE NO. M5-1.12

PROJECT NO:	HWY:	COUNTY:		SHEET NO: 158	E

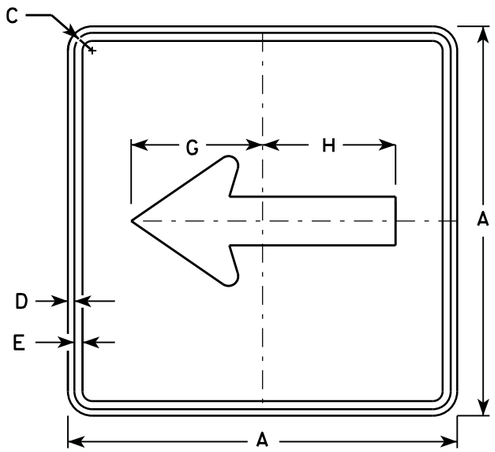

M6-1
MK6-1
MM6-1
MN6-1
MO6-1
MP6-1
MR6-1

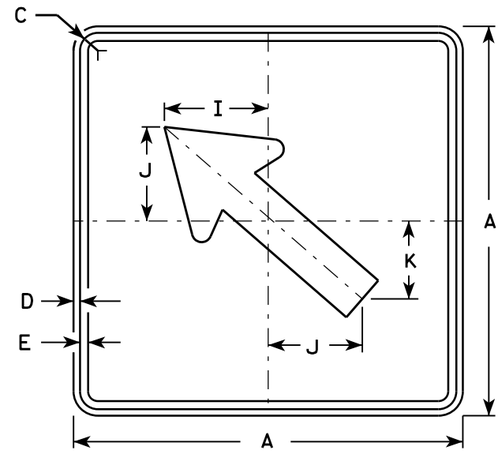

M6-2
MK6-2
MM6-2
MN6-2
MO6-2
MP6-2
MR6-2

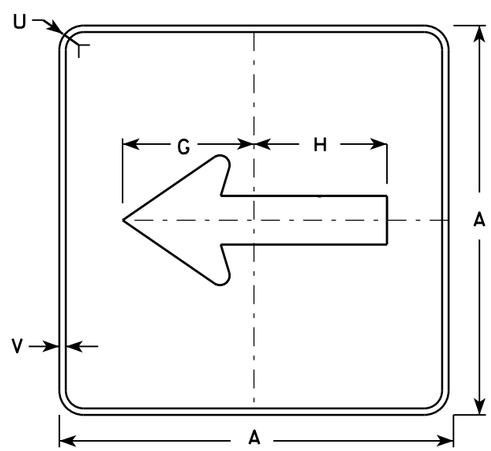

MB6-1

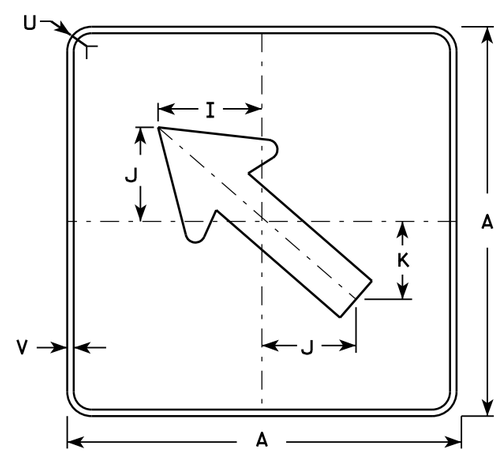

MB6-2

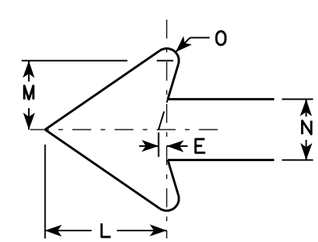

NOTES

1. Signs are Type II - Type H except as Shown
2. Color:
   Background - See note 4
   Message - See note 4
3. Corners may be square or rounded when base material is plywood but borders shall be rounded as shown. When base material is metal, the corners and borders shall be rounded.
4. M6-1 and M6-2 Background - White
   Message - Black
   MB6-1 and MB6-2 Background - Blue
   Message - White
   MG6-1 and MG6-2 Background - Green
   Message - White
   MK6-1 and MK6-2 Background - Green
   Message - White
   MM6-1 and MM6-2 Background - White
   Message - Green
   MN6-1 and MN6-2 Background - Brown
   Message - White
   MO6-1 and MO6-2 Background - Orange - Type F Reflective
   Message - Black
   MP6-1 and MP6-2 Background - White
   Message - Blue
   MR6-1 and MR6-2 Background - Brown
   Message - Yellow

SIZE	A	B	C	D	E	F	G	H	I	J	K	L	M	N	O	P	Q	R	S	T	U	V	W	X	Y	Z	Area sq. ft.
1																											
2	21		1 1/8	3/8	3/8		7 1/2	7 1/8	5 5/8	5	4 1/4	5 1/4	3	2 5/8	1/2						1 1/2	1/2					3.06
3	30		1 3/8	1/2	5/8		10 3/4	10 1/4	8	7 1/4	6	7 1/2	4 1/4	3 3/4	3/4						1 7/8	1/2					6.25
4	30		1 3/8	1/2	5/8		10 3/4	10 1/4	8	7 1/4	6	7 1/2	4 1/4	3 3/4	3/4						1 7/8	1/2					6.25
5	30		1 3/8	1/2	5/8		10 3/4	10 1/4	8	7 1/4	6	7 1/2	4 1/4	3 3/4	3/4						1 7/8	1/2					6.25

STANDARD SIGN
M6-1 & M6-2
SERIES

WISCONSIN DEPT OF TRANSPORTATION

APPROVED Matthew R Rauch
for State Traffic Engineer

DATE 7/03/14 PLATE M6-1.14

PROJECT NO: | HWY: | COUNTY: | SHEET NO: | E

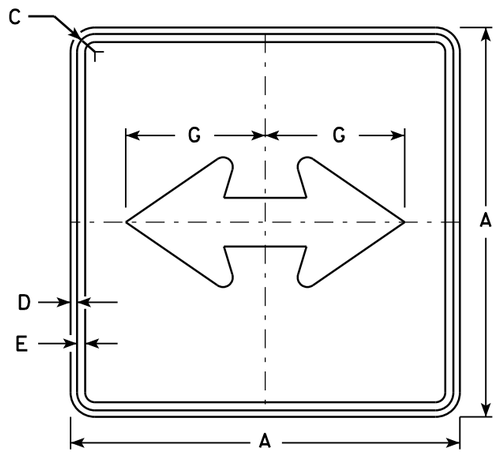

M6-4
MK6-4
MM6-4
MN6-4
MO6-4
MP6-4
MR6-4

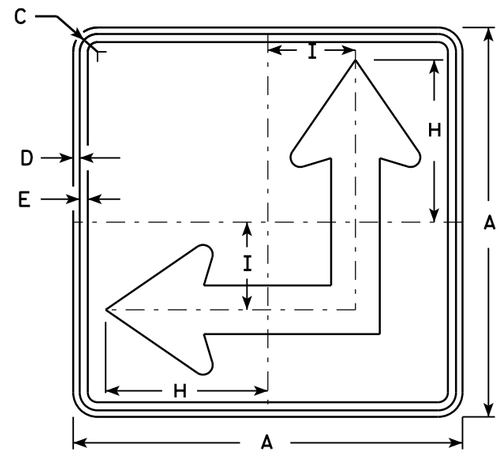

M6-6
MK6-6
MM6-6
MN6-6
MO6-6
MP6-6
MR6-6

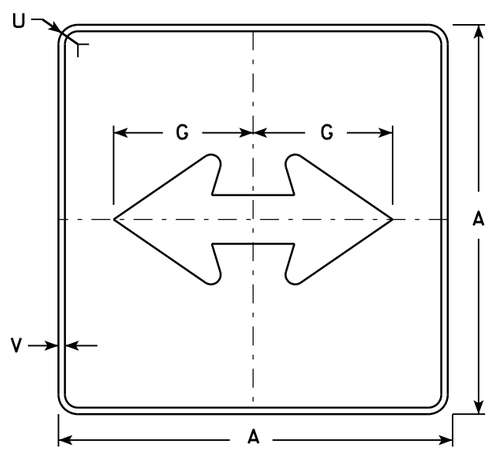

MB6-4

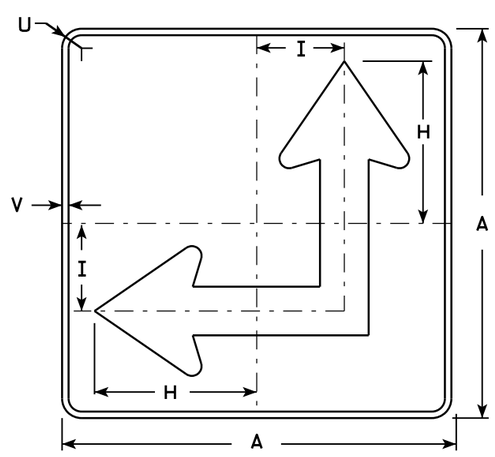

MB6-6

NOTES

1. Signs are Type II - Type H except as Shown
2. Color:
   Background - See Note 4
   Message - See Note 4
3. Corners may be square or rounded when base material is plywood but borders shall be rounded as shown. When base material is metal, the corners and borders shall be rounded.
4. M6-4 and M6-6 Background - White
   Message - Black
   MB6-4 and MB6-6 Background - Blue
   Message - White
   MK6-4 and MK6-6 Background - Green
   Message - White
   MM6-4 and MM6-6 Background - White
   Message - Green
   MN6-4 and MN6-6 Background - Brown
   Message - White
   MO6-4 and MO6-6 Background - Orange - Type F Reflective
   Message - Black
   MP6-4 and MP6-6 Background - White
   Message - Blue
   MR6-4 and MR6-6 Background - Brown
   Message - Yellow
5. M6-6R same as M6-6L except arrow points ahead and right.

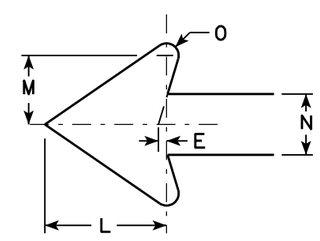

SIZE	A	B	C	D	E	F	G	H	I	J	K	L	M	N	O	P	Q	R	S	T	U	V	W	X	Y	Z	Area sq. ft.
1																											
2	21		1 1/8	3/8	3/8		7 1/2	8 3/4	4 1/4			5 1/4	3	2 5/8	1/2						1 1/2	1/2					3.06
3	30		1 3/8	1/2	5/8		10 3/4	12 1/2	6 3/4			7 1/2	4 1/4	3 3/4	3/4						1 7/8	1/2					6.25
4	30		1 3/8	1/2	5/8		10 3/4	12 1/2	6 3/4			7 1/2	4 1/4	3 3/4	3/4						1 7/8	1/2					6.25
5	30		1 3/8	1/2	5/8		10 3/4	12 1/2	6 3/4			7 1/2	4 1/4	3 3/4	3/4						1 7/8	1/2					6.25

STANDARD SIGN
M6-4 & M6-6
SERIES

WISCONSIN DEPT OF TRANSPORTATION

APPROVED Matthew R Rauch
for State Traffic Engineer

DATE 7/03/14 PLATE M6-4.9

PROJECT NO: | HWY: | COUNTY: | SHEET NO: | E

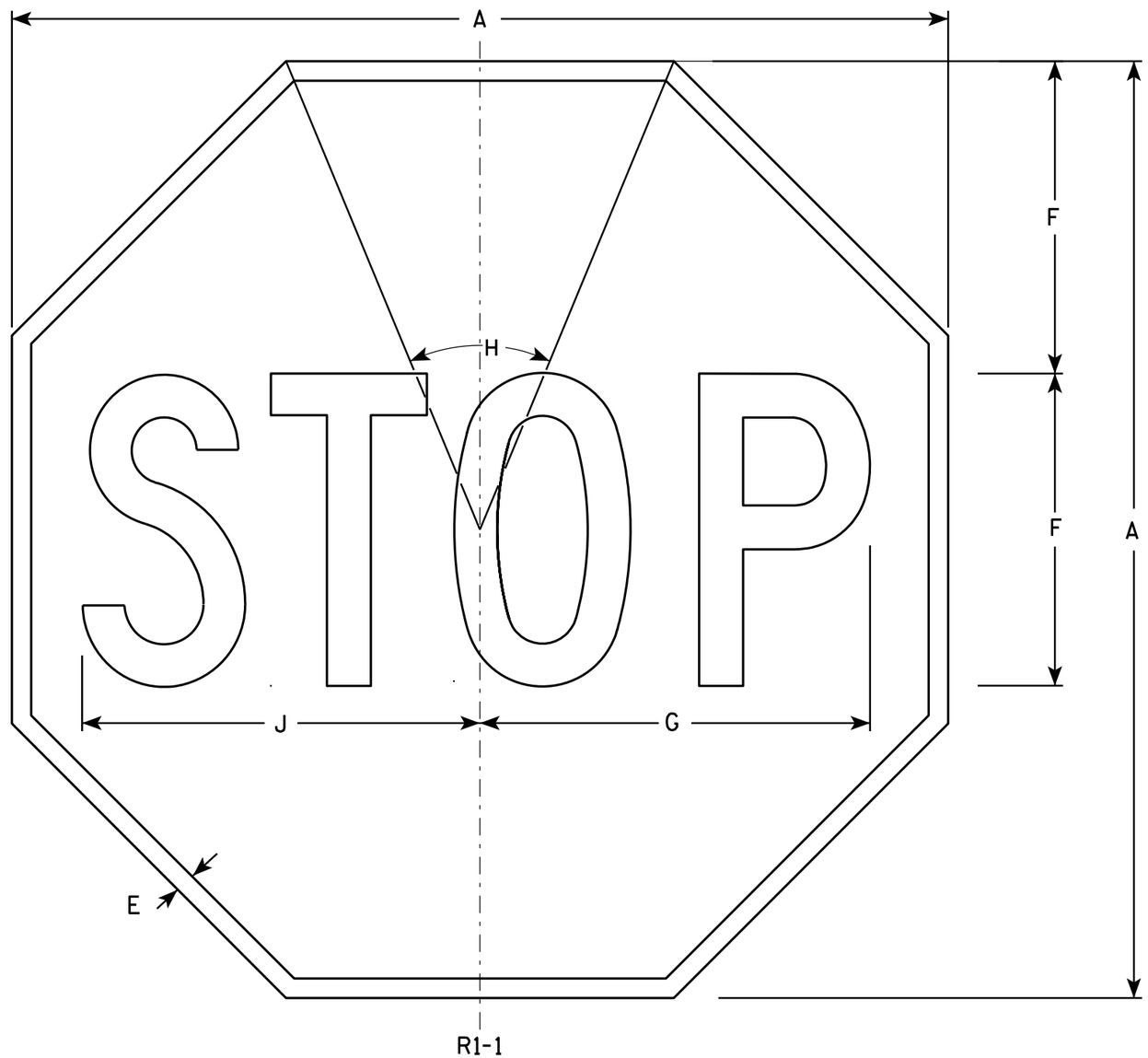

NOTES

1. Sign is Type II - Type H Reflective - reference WIS DOT Standard Specification for HIGHWAY and STRUCTURE CONSTRUCTION latest edition.
2. Color:
   Background - Red
   Message - White
3. Message Series - C

SIZE	A	B	C	D	E	F	G	H	I	J	K	L	M	N	O	P	Q	R	S	T	U	V	W	X	Y	Z	Area sq. ft.
1	24				3/8	8	10	45°		10 1/4																	3.31
2S	30				5/8	10	12 1/2	45°		12 3/4																	5.18
2M	36				3/4	12	15	45°		15 3/8																	7.46
3	36				3/4	12	15	45°		15 3/8																	7.46
4	48				1	16	20	45°		20 1/2																	13.25
5	48				1	16	20	45°		20 1/2																	13.25
6	18				3/8	6	7 3/4	45°		7 3/4																	1.86
7	12				1/4	4	5	45°		5 1/8																	0.78

STANDARD SIGN
R1-1

WISCONSIN DEPT OF TRANSPORTATION

APPROVED Matthew R Rauch
for State Traffic Engineer

DATE 12/03/10 PLATE NO. R1-1.12

PROJECT NO: | HWY: | COUNTY: | SHEET NO: 161 | E

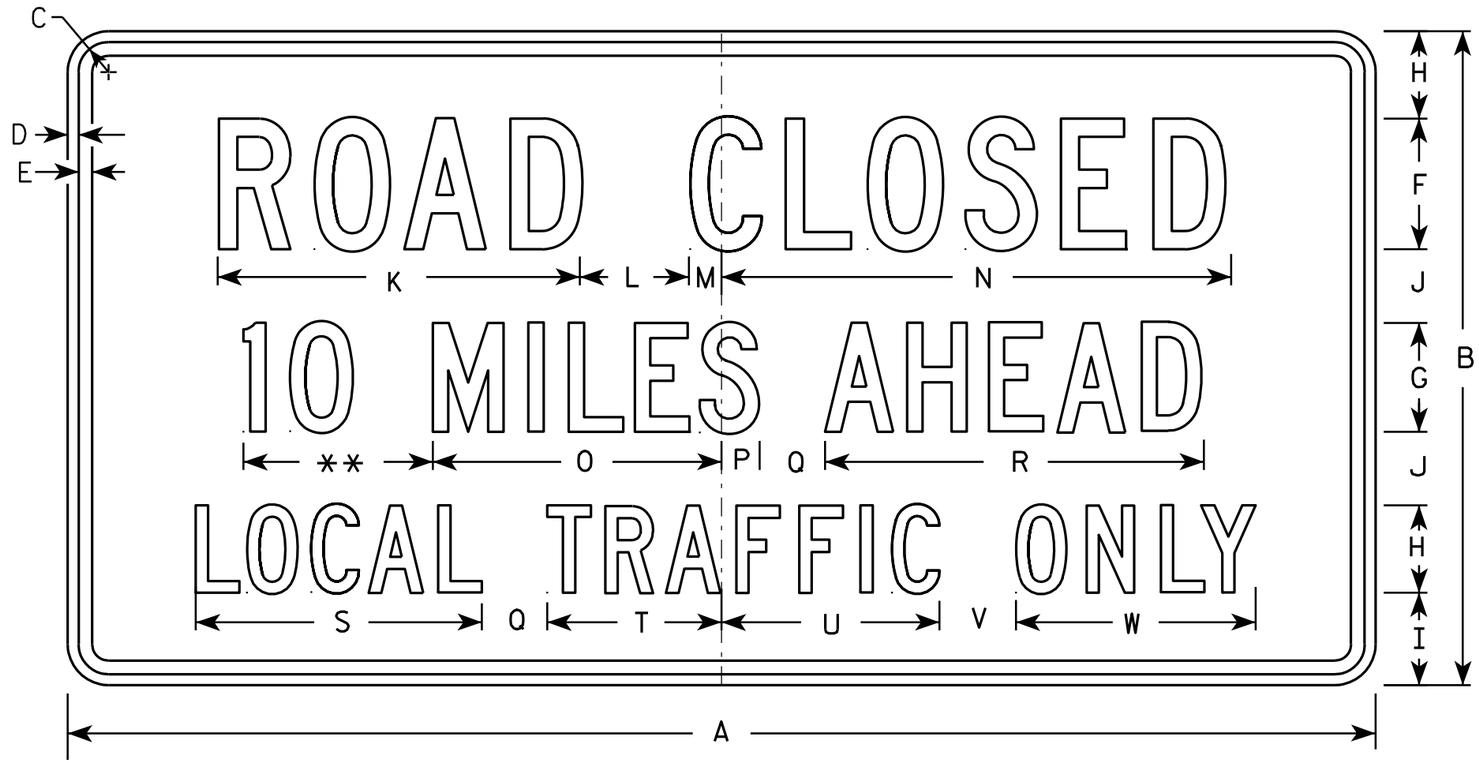

R11-3

NOTES

1. Sign is Type II - Type H Reflective - reference WIS DOT Standard Specification for HIGHWAY and STRUCTURE CONSTRUCTION latest edition.
2. Color:
   Background - White
   Message - Black
3. Message Series - C
4. Corners may be square or rounded when base material is plywood but borders shall be rounded as shown. When base material is metal, the corners and borders shall be rounded.
5. Substitute appropriate numerals and optically adjust spacing to achieve proper balance.

** See Note 5

SIZE	A	B	C	D	E	F	G	H	I	J	K	L	M	N	O	P	Q	R	S	T	U	V	W	X	Y	Z	Area sq. ft.
1	36	18	1 3/8	1/2	5/8	4	3	2 1/2	2	2	11 1/8	3	1 1/8	15 1/4	8	1 1/2	2	10 3/4	8 3/8	4 3/4	6 1/2	2	6 3/4				4.5
2S	60	30	1 3/8	1/2	5/8	6	5	4	4 1/4	3 3/8	16 5/8	5	1 1/2	23	13 1/4	1 3/4	3	17 3/8	13 1/8	8	10	3 1/2	11				12.5
2M	60	30	1 3/8	1/2	5/8	6	5	4	4 1/4	3 3/8	16 5/8	5	1 1/2	23	13 1/4	1 3/4	3	17 3/8	13 1/8	8	10	3 1/2	11				12.5
3																											
4																											
5																											

STANDARD SIGN
R11-3

WISCONSIN DEPT OF TRANSPORTATION

APPROVED Matthew R Rauch
for State Traffic Engineer

DATE 4/1/11 PLATE NO. R11-3.6

PROJECT NO: | HWY: | COUNTY: | SHEET NO: 162 | E

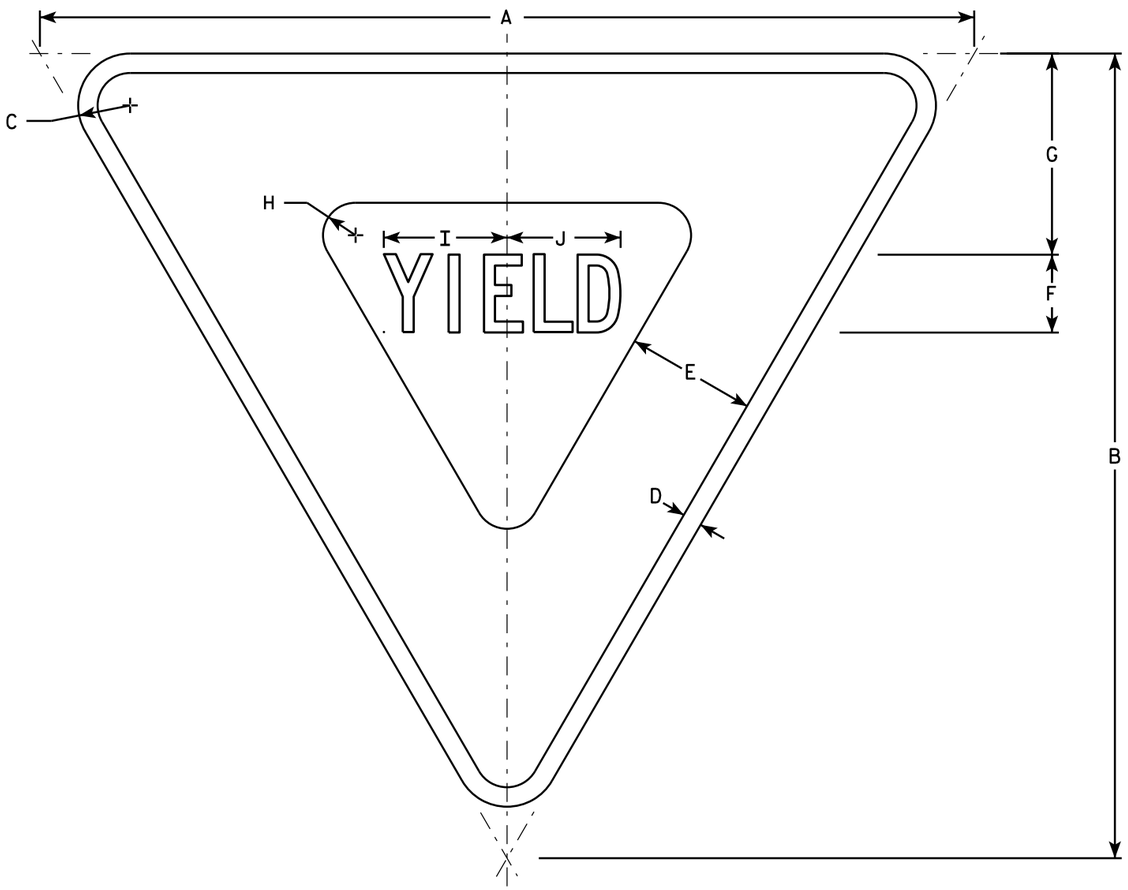

R1-2

NOTES

1. Sign is Type II - Type H Reflective - reference WIS DOT Standard Specification for HIGHWAY and STRUCTURE CONSTRUCTION latest edition.
2. Color:
   Background - White
   Message - See note 5
3. Message Series - C
4. Corners may be square or rounded when base material is plywood but borders shall be rounded as shown. When base material is metal, the corners and borders shall be rounded.
5. The border strip and word message are reflectorized red.

SIZE	A	B	C	D	E	F	G	H	I	J	K	L	M	N	O	P	Q	R	S	T	U	V	W	X	Y	Z	Area sq. ft.
1	30	26	1 1/2	5/8	4	2 1/2	6 3/8	7/8	4	3 5/8																	2.71
2S	36	31	2	3/4	5	3	7 3/4	1 1/4	4 3/4	4 3/8																	3.88
2M	48	42	3	1	6	4	9 3/4	2	6 1/4	5 7/8																	7.00
3	48	42	3	1	6	4	9 3/4	2	6 1/4	5 7/8																	7.00
4	48	42	3	1	6	4	9 3/4	2	6 1/4	5 7/8																	7.00
5	60	52	3	1 1/2	8	5	13	2 1/2	7 7/8	7 1/4																	10.83
6																											
7	18	15 1/2	1	3/8	2 1/2	1 1/2	3 7/8	5/8	2 3/8	2 1/4																	0.97

STANDARD SIGN
R1-2

WISCONSIN DEPT OF TRANSPORTATION

APPROVED Matthew R Rauch
for State Traffic Engineer

DATE 10/13/14 PLATE R1-2.12

PROJECT NO: | HWY: | COUNTY: | SHEET NO: | E

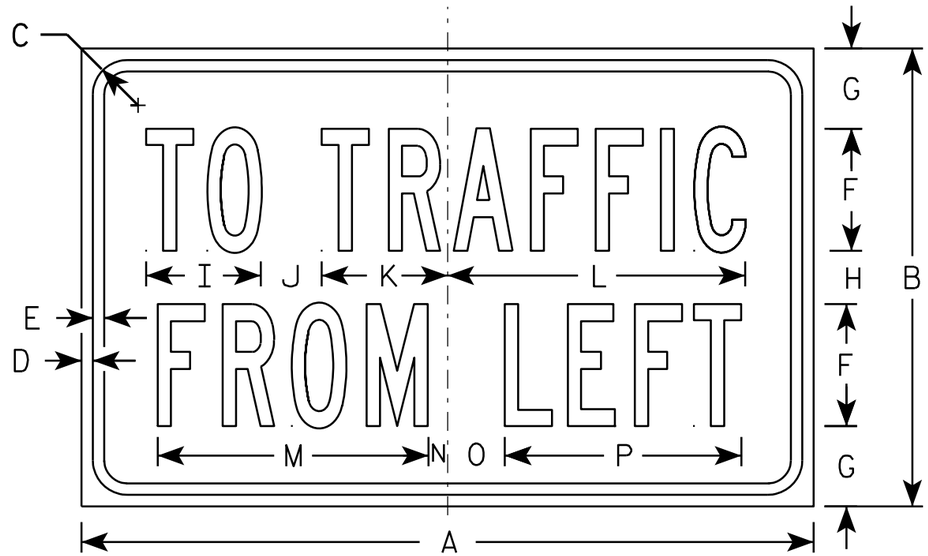

R1-54

NOTES

1. Sign is Type II - Type H Reflective - reference WIS DOT Standard Specification for HIGHWAY and STRUCTURE CONSTRUCTION latest edition.
2. Color:
   Background - White
   Message - Black
3. Message Series - B

SIZE	A	B	C	D	E	F	G	H	I	J	K	L	M	N	O	P	Q	R	S	T	U	V	W	X	Y	Z	Area sq. ft.
1																											
2S	24	15	1 1/8	3/8	3/8	4	2 5/8	1 3/4	3 3/4	2	4 1/8	9 3/4	8 7/8	5/8	1 7/8	7 3/4											2.5
2M	24	15	1 1/8	3/8	3/8	4	2 5/8	1 3/4	3 3/4	2	4 1/8	9 3/4	8 7/8	5/8	1 7/8	7 3/4											2.5
3																											
4																											
5																											

STANDARD SIGN
R1-54

WISCONSIN DEPT OF TRANSPORTATION

APPROVED Matthew R Rauch
for State Traffic Engineer

DATE 12/03/10 PLATE NO. R1-54.2

PROJECT NO:	HWY:	COUNTY:		SHEET NO: 164	E

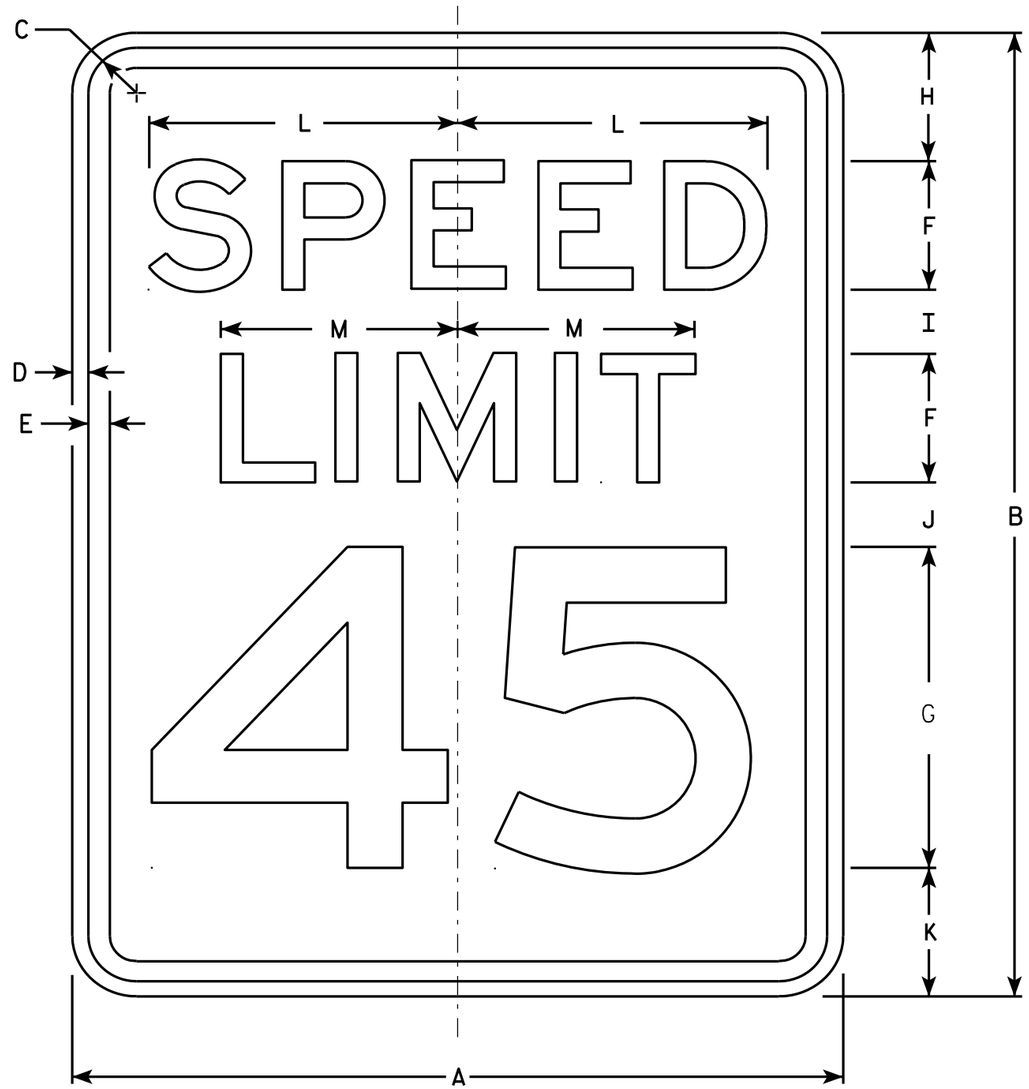

R2-1

NOTES

1. Sign is Type II - Type H Reflective - reference WIS DOT Standard Specification for HIGHWAY and STRUCTURE CONSTRUCTION latest edition.
2. Color:
   Background - White
   Message - Black
3. Message Series - E
4. Corners may be square or rounded when base material is plywood but borders shall be rounded as shown. When base material is metal, the corners and borders shall be rounded.
5. Substitute appropriate numerals and optically adjust spacing to achieve proper balance.

SIZE	A	B	C	D	E	F	G	H	I	J	K	L	M	N	O	P	Q	R	S	T	U	V	W	X	Y	Z	Area sq. ft.
1	18	24	1 1/8	3/8	1/2	3	8	3	2	2	3	7 1/4	5 1/2														3.0
2S	24	30	1 1/8	3/8	1/2	4	10	3	2 1/4	3 3/8	3 3/8	9 5/8	7 3/8														5.0
2M	30	36	1 3/8	1/2	5/8	5	12	5	2 1/2	2 1/2	4	12	9 1/4														7.5
3	36	48	1 3/8	1/2	5/8	6	14	6	5	5	6	14 3/8	11														12.0
4	36	48	1 3/8	1/2	5/8	6	14	6	5	5	6	14 3/8	11														12.0
5	48	60	2 1/4	3/4	1	8	20	6	4 1/2	6 3/4	6 3/4	19 1/4	14 5/8														20.0

STANDARD SIGN
R2-1

WISCONSIN DEPT OF TRANSPORTATION

APPROVED Matthew R Rauch
for State Traffic Engineer

DATE 5/26/10 PLATE NO. R2-1.13

PROJECT NO: | HWY: | COUNTY: | SHEET NO: 165 | E

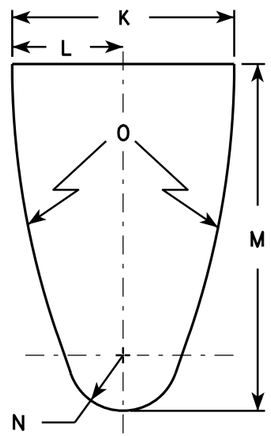

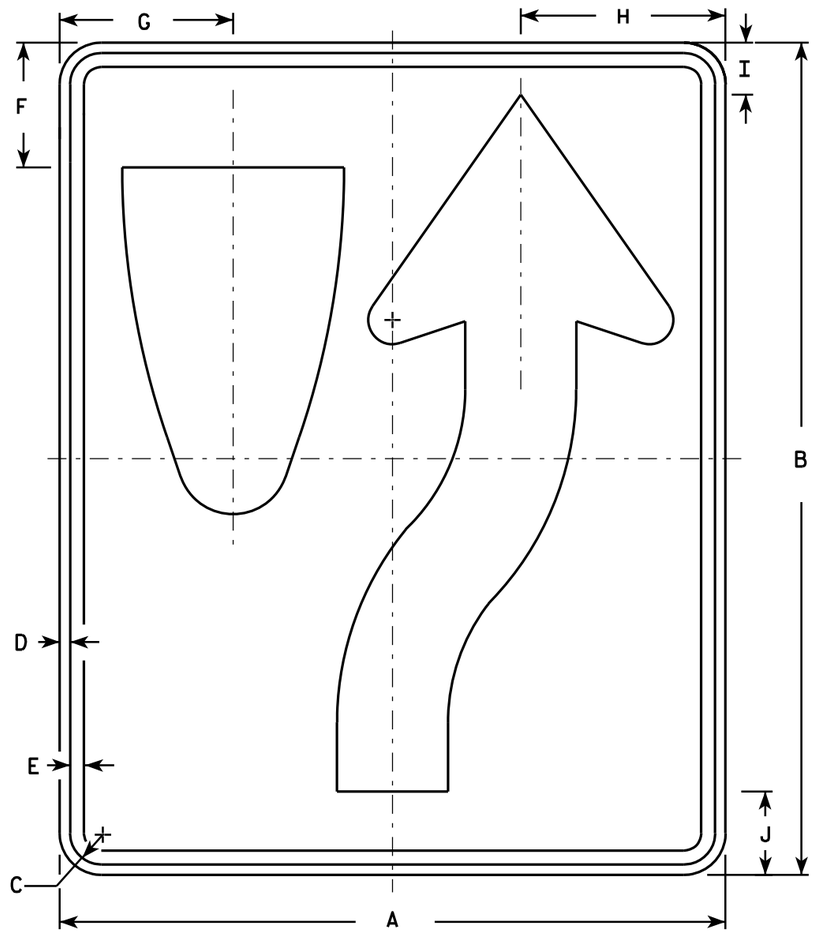

R4-7

NOTES

1. Sign is Type II - Type H Reflective - reference WIS DOT Standard Specification for HIGHWAY and STRUCTURE CONSTRUCTION latest edition. material is plywood but borders shall be rounded
2. Color:
   Background - White
   Message - Black
3. Corners may be square or rounded when base as shown. When base material is metal, the corners and borders shall be rounded.
4. R4-8 is the same as R4-7 except Legend is reversed.

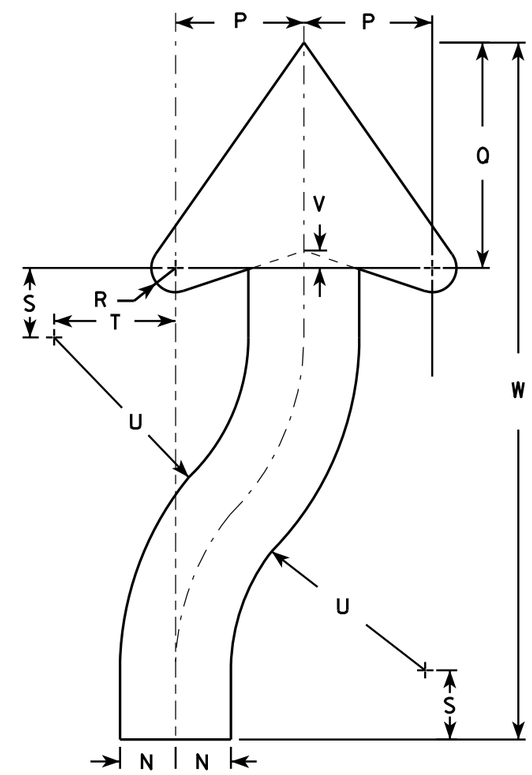

ARROW DETAIL

SIZE	A	B	C	D	E	F	G	H	I	J	K	L	M	N	O	P	Q	R	S	T	U	V	W	X	Y	Z	Area sq. ft.
1	18	24	1 1/8	3/8	1/2	3 3/8	4 3/4	5 1/2	1 3/8	2 1/4	6	3	9 3/8	1 1/2	22 1/2	3 1/2	6 1/8	5/8	1 7/8	3 1/4	6 3/4	1/2	20 3/8				3.0
2S	24	30	1 1/8	3/8	1/2	4 1/2	6 1/4	7 3/8	1 7/8	3	8	4	12 1/2	2	30	4 5/8	8 1/8	7/8	2 1/2	4 3/8	9	5/8	25 1/8				5.0
2M	24	30	1 1/8	3/8	1/2	4 1/2	6 1/4	7 3/8	1 7/8	3	8	4	12 1/2	2	30	4 5/8	8 1/8	7/8	2 1/2	4 3/8	9	5/8	25 1/8				5.0
3	36	48	1 3/4	1/2	5/8	6 3/4	9 3/8	11 1/8	2 7/8	4 1/2	12	6	18 3/4	3	45	6 7/8	12 1/4	1 1/4	3 3/4	6 5/8	13 1/2	1	40 3/4				12.0
4	36	48	1 3/4	1/2	5/8	6 3/4	9 3/8	11 1/8	2 7/8	4 1/2	12	6	18 3/4	3	45	6 7/8	12 1/4	1 1/4	3 3/4	6 5/8	13 1/2	1	40 3/4				12.0
5	48	60	2 1/4	3/4	1	9	12 1/2	14 3/4	3 3/4	6	16	8	25	4	60	9 1/4	16 1/4	1 5/8	5	8 3/4	18	1 1/4	50 1/4				20.0

STANDARD SIGN
R4-7 & R4-8

WISCONSIN DEPT OF TRANSPORTATION

APPROVED Matthew R Rauch for State Traffic Engineer

DATE 3/25/2011 PLATE NO. R4-7.8

PROJECT NO:	HWY:	COUNTY:		SHEET NO: 166	E

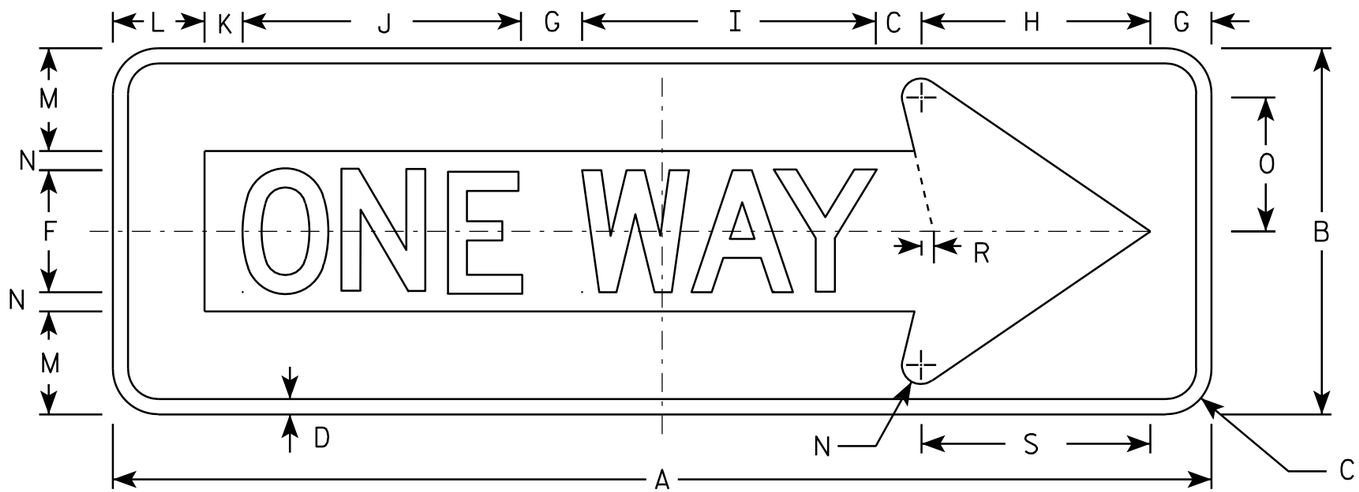

R6-1 R

NOTES

1. Sign is Type II - Type H Reflective - reference WIS DOT Standard Specification for HIGHWAY and STRUCTURE CONSTRUCTION latest edition.
2. Color:
   Background - BLACK
   Message - BLACK LEGEND & WHITE ARROW & BORDER
3. Message Series - D
4. Corners may be square or rounded when base material is plywood but borders shall be rounded as shown. When base material is metal, the corners and borders shall be rounded.

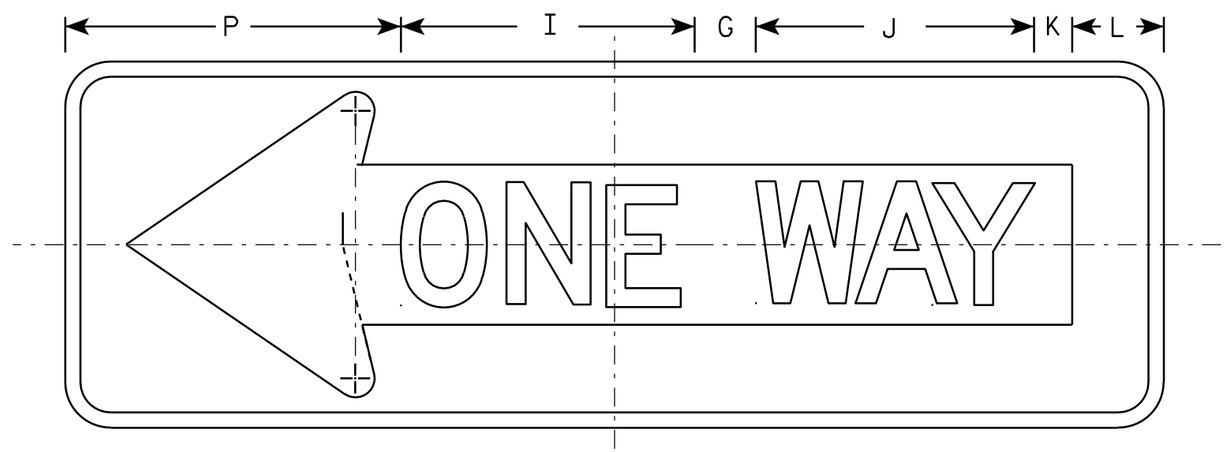

R6-1 L

SIZE	A	B	C	D	E	F	G	H	I	J	K	L	M	N	O	P	Q	R	S	T	U	V	W	X	Y	Z	Area sq. ft.
1																											
2S	36	12	1 1/2	1/2		4	2	7 1/2	9 5/8	9 1/8	1 1/4	3	3 3/8	5/8	4 3/8	11		3/8	7 1/2								3.0
2M	54	18	2 1/4	3/4		6	3	11 1/4	14 1/2	13 5/8	1 7/8	4 1/2	5	1	6 1/2	16 1/2		5/8	11 1/4								6.75
3	54	18	2 1/4	3/4		6	3	11 1/4	14 1/2	13 5/8	1 7/8	4 1/2	5	1	6 1/2	16 1/2		5/8	11 1/4								6.75
4	54	18	2 1/4	3/4		6	3	11 1/4	14 1/2	13 5/8	1 7/8	4 1/2	5	1	6 1/2	16 1/2		5/8	11 1/4								6.75
5																											

STANDARD SIGN
R6-1 L & R

WISCONSIN DEPT OF TRANSPORTATION

APPROVED Matthew R Rauch
for State Traffic Engineer

DATE 12/17/10 PLATE NO. R6-1.2

PROJECT NO:

SHEET NO: 167 E

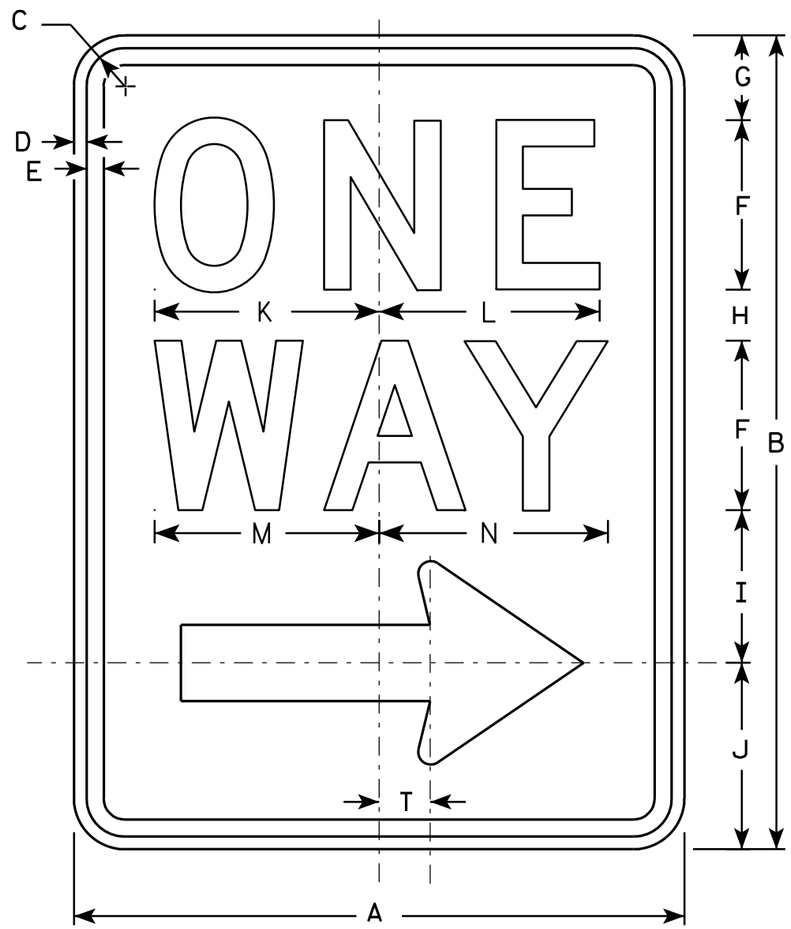

R6-2R

NOTES

1. Sign is Type II - Type H Reflective - reference WIS DOT Standard Specification for HIGHWAY and STRUCTURE CONSTRUCTION latest edition.
2. Color:
   Background - White
   Message - Black
3. Message Series - D
4. Corners may be square or rounded when base material is plywood but borders shall be rounded as shown. When base material is metal, the corners and borders shall be rounded.
5. R6-2L same as R6-2R except arrow points to the left.

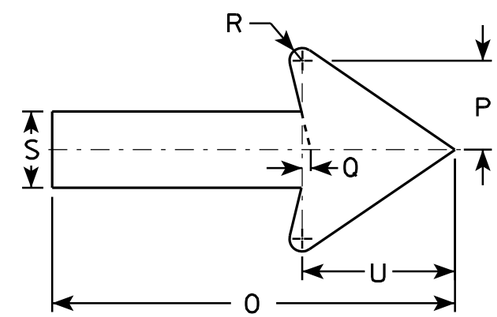

SIZE	A	B	C	D	E	F	G	H	I	J	K	L	M	N	O	P	Q	R	S	T	U	V	W	X	Y	Z
1	18	24	1 1/8	3/8	1/2	5	2 1/2	1 1/2	4 1/2	5 1/2	6 5/8	6 1/2	6 5/8	6 3/4	11 7/8	2 5/8	1/4	3/8	2 1/4	1 1/2	4 1/2					
2S	24	30	1 1/8	3/8	1/2	6	3	2 1/2	5 1/2	7	8 1/8	8 1/8	8 1/2	8 5/8	16	3 1/2	3/8	1/2	3	2	6					
2M	30	36	1 3/8	1/2	5/8	8	2 1/2	2 5/8	6 7/8	8	10 1/2	10 1/2	11 1/4	11 1/4	20	4 3/8	1/2	5/8	3 3/4	2 1/2	7 1/2					
3	36	48	1 7/8	1/2	5/8	10	5 1/4	3 1/4	9	10 1/2	12 3/4	12 3/4	13 1/4	13 1/2	24	5 5/8	1/2	3/4	4 3/4	3	9					
4	36	48	1 7/8	1/2	5/8	10	5 1/4	3 1/4	9	10 1/2	12 3/4	12 3/4	13 1/4	13 1/2	24	5 5/8	1/2	3/4	4 3/4	3	9					
5																										

STANDARD SIGN
R6-2 R&L

WISCONSIN DEPT OF TRANSPORTATION

APPROVED Matthew R Rauch
for State Traffic Engineer

DATE 11/2/10 PLATE NO. R6-2.8

PROJECT NO:	HWY:	COUNTY:		SHEET NO: 168	E

NOTES

1. Sign is Type II - Type H Reflective
2. Color:
   Background - WHITE
   Message - BLACK
3. Corners may be square or rounded when base material is plywood but borders shall be rounded as shown. When base material is metal, the corners and borders shall be rounded.

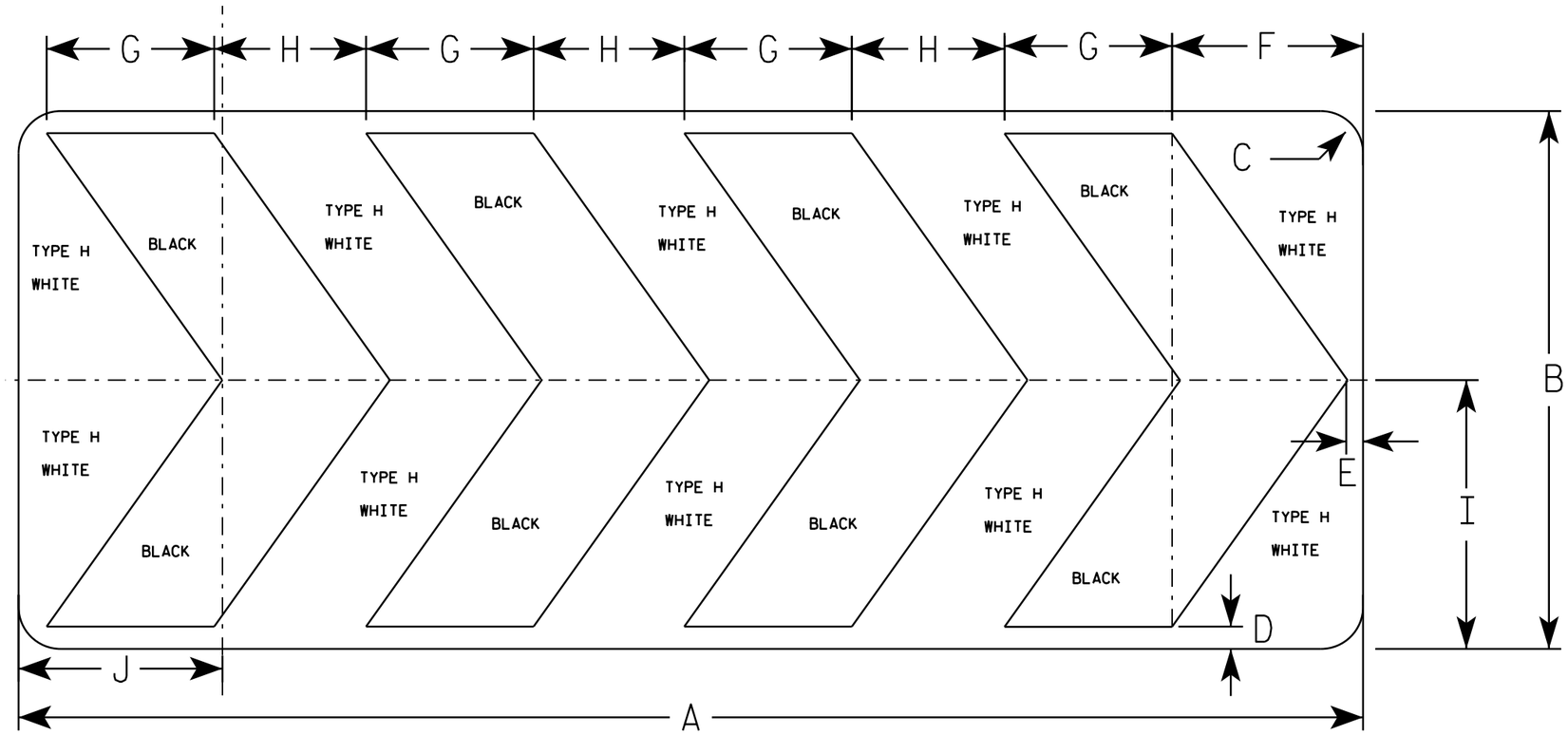

R6-4B

SIZE	A	B	C	D	E	F	G	H	I	J	K	L	M	N	O	P	Q	R	S	T	U	V	W	X	Y	Z	Area sq. ft.
1																											
2S	60	24	1 7/8	1	3/4	8 1/2	7 1/2	6 3/4	12	9 1/8																	10.0
2M	60	24	1 7/8	1	3/4	8 1/2	7 1/2	6 3/4	12	9 1/8																	10.0
3																											
4																											
5																											

STANDARD SIGN
R6-4B

WISCONSIN DEPT OF TRANSPORTATION

APPROVED Matthew R Rauch
for State Traffic Engineer

DATE 8/21/14 PLATE NO. R6-4.3

PROJECT NO: SHEET NO: E

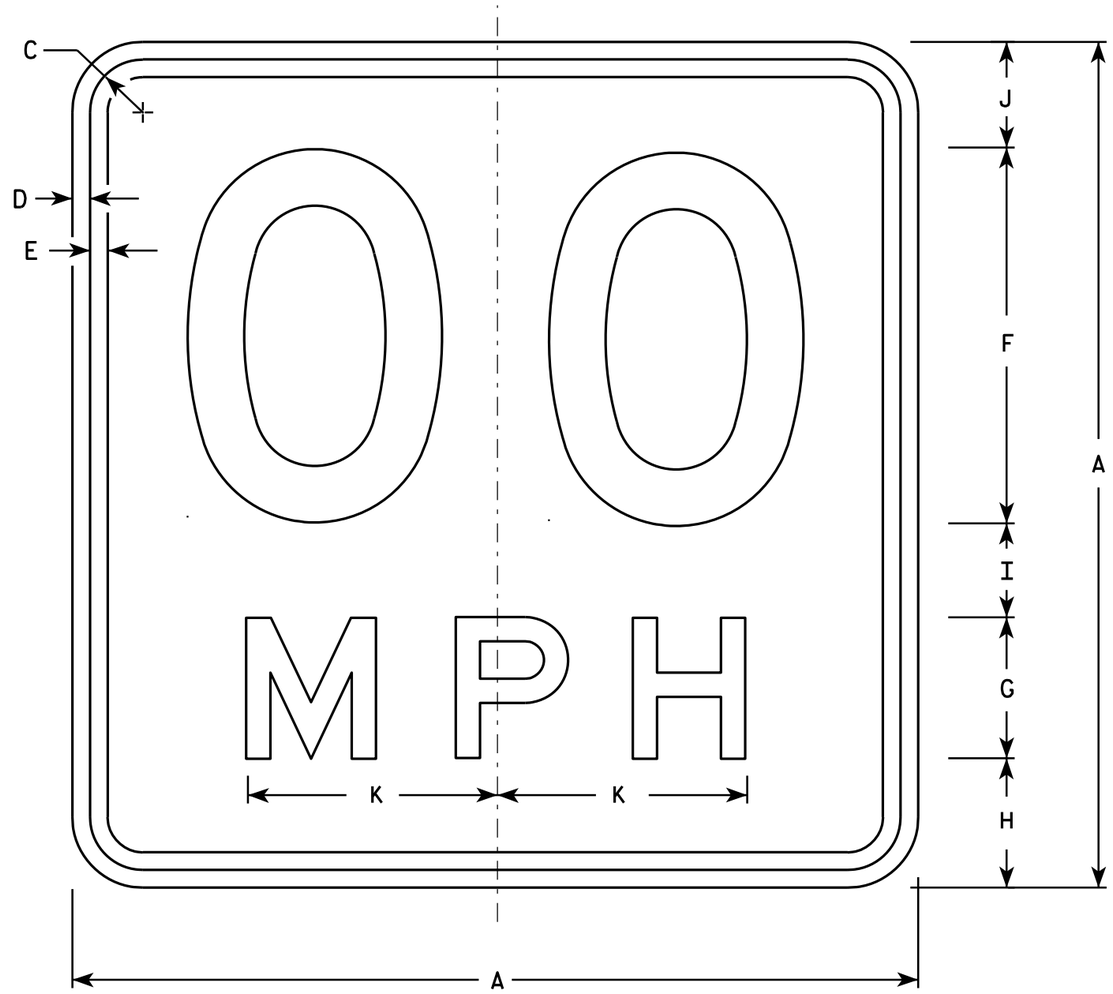

W13-1

* For 30" x 30" Warning Signs, use 18" x 18" W13-1 signs.
For 36" x 36" Warning Signs, use 24" x 24" W13-1 signs.

NOTES

1. Sign is Type II - Type F Reflective - reference WIS DOT Standard Specification for HIGHWAY and STRUCTURE CONSTRUCTION latest edition.
2. Color:
   Background - Yellow
   Message - Black
3. Message Series - See Note 6
4. Corners may be square or rounded when base material is plywood but borders shall be rounded as shown. When base material is metal, the corners and borders shall be rounded.
5. Substitute appropriate numerals and optically space about centerline to achieve proper balance.
6. Line 1 is Series D
   Line 2 is Series E

SIZE	A	B	C	D	E	F	G	H	I	J	K	L	M	N	O	P	Q	R	S	T	U	V	W	X	Y	Z	Area sq. ft.
1	18		1 1/8	3/8	3/8	8	3	2 3/4	2	2 1/4	5 3/8																2.25
* 2S	18		1 1/8	3/8	3/8	8	3	2 3/4	2	2 1/4	5 3/8																2.25
* 2M	18		1 1/8	3/8	3/8	8	3	2 3/4	2	2 1/4	5 3/8																2.25
3	24		1 1/8	3/8	1/2	10	4	4	2 3/4	3 1/4	6 5/8																4.00
4	36		1 5/8	5/8	3/4	16	6	5 1/2	4	4 1/2	10 5/8																9.00
5	36		1 5/8	5/8	3/4	16	6	5 1/2	4	4 1/2	10 5/8																9.00

STANDARD SIGN
W13-1

WISCONSIN DEPT OF TRANSPORTATION

APPROVED Matthew R Rauch
For State Traffic Engineer

DATE 5/31/12 PLATE NO. W13-1.16

PROJECT NO:	HWY:	COUNTY:		SHEET NO: 170	E

NOTES

1. Sign is Type II - Type F Reflective - reference WIS DOT Standard Specification for HIGHWAY and STRUCTURE CONSTRUCTION latest edition.
2. Color:
   Background - Yellow
   Message - Black
3. Message Series - See note 5
4. Corners and borders shall be rounded on all base materials for this sign.
5. Lines 1 and 2 are Series D.
   Line 3 is series C.

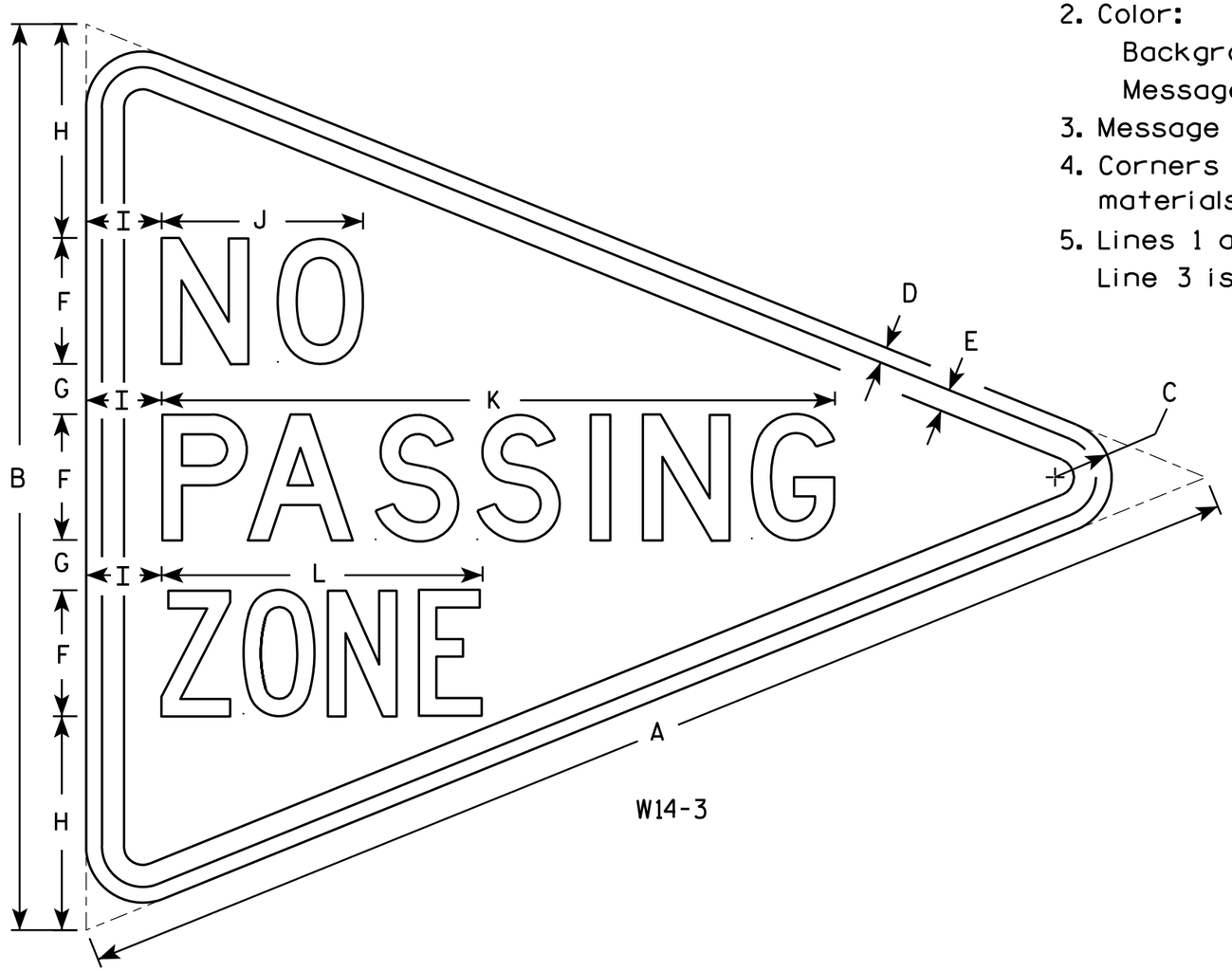

W14-3

SIZE	A	B	C	D	E	F	G	H	I	J	K	L	M	N	O	P	Q	R	S	T	U	V	W	X	Y	Z	Area sq. ft.
1																											
2S	48	36	2 1/4	5/8	7/8	5	2	8 1/2	3	8	26 3/4	12 3/4															6.0
2M	48	36	2 1/4	5/8	7/8	5	2	8 1/2	3	8	26 3/4	12 3/4															6.0
3	64	48	3	3/4	1 1/4	6	3	12	4	10 3/4	33 5/8	16 1/2															10.7
4																											
5																											

STANDARD SIGN
W14-3

WISCONSIN DEPT OF TRANSPORTATION

APPROVED Matthew R Rauch
for State Traffic Engineer
DATE 6/7/10 PLATE NO. W14-3.9

PROJECT NO: | HWY: | COUNTY: | SHEET NO: 171 | E

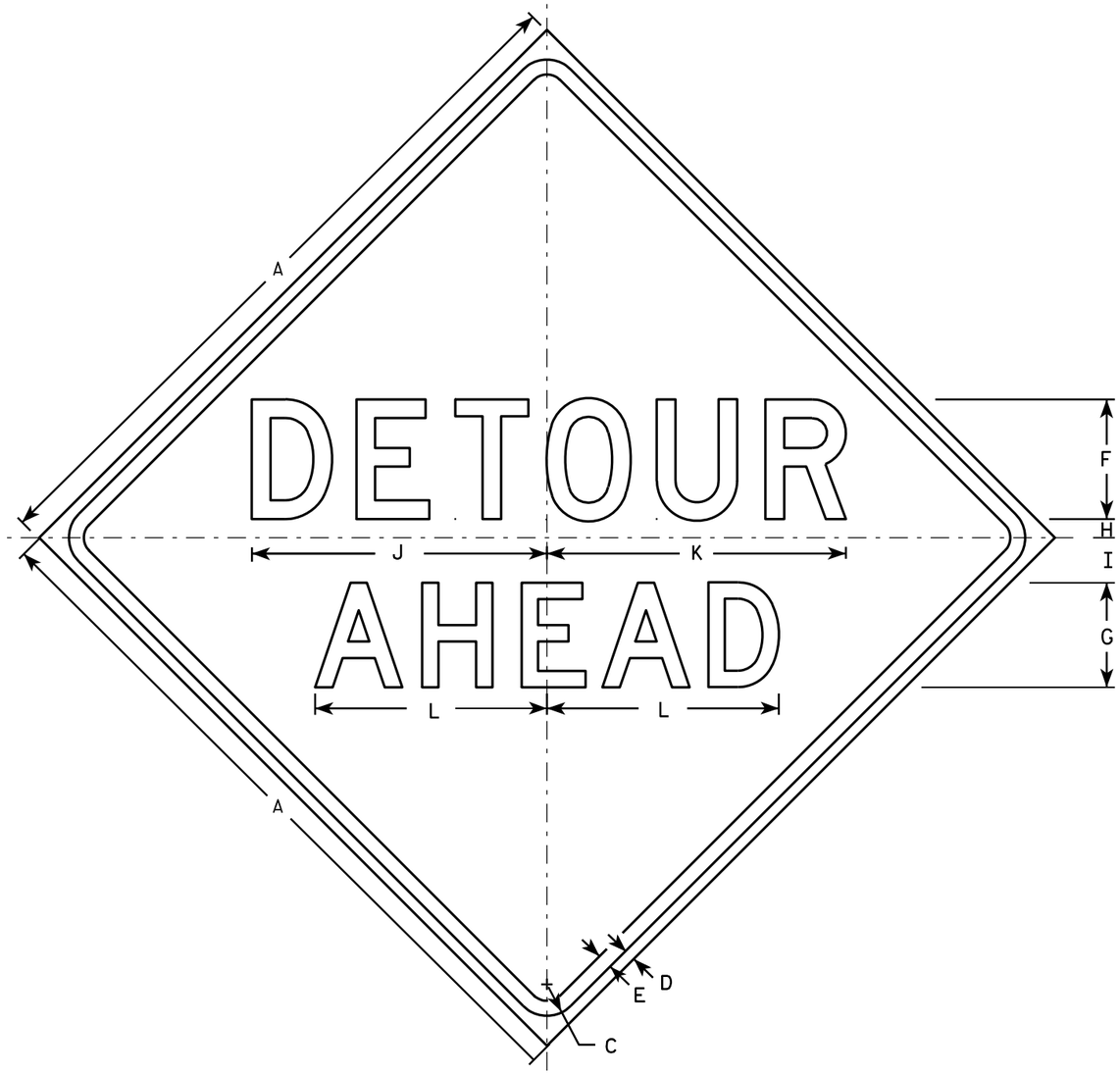

W20-2A

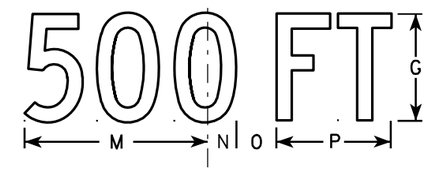

W20-2D

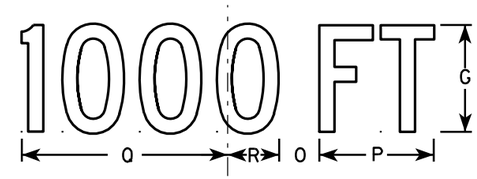

W20-2C

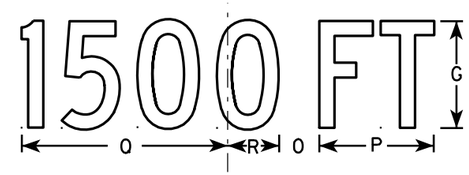

W20-2B

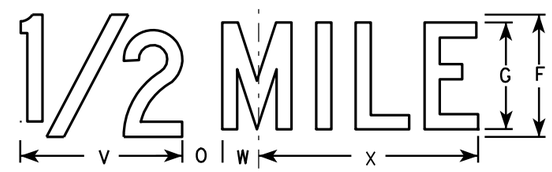

W20-2G

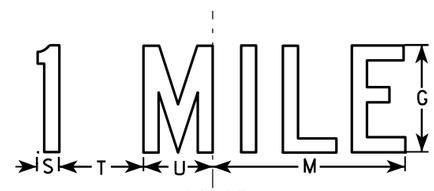

W20-2F

NOTES

1. Sign is Type II - Type F Reflective - reference WIS DOT Standard Specification for HIGHWAY and STRUCTURE CONSTRUCTION latest edition.
2. Color:
   Background - Orange
   Message - Black
3. Message Series - See note 5
4. Corners may be square or rounded when base material is plywood but borders shall be rounded as shown. When base material is metal, the corners and borders shall be rounded.
5. Line 1 is Series D.
   Line 2 is Series D for AHEAD and Series C for all other distances.

SIZE	A	B	C	D	E	F	G	H	I	J	K	L	M	N	O	P	Q	R	S	T	U	V	W	X	Y	Z	Area sq. ft.
1	36		1 5/8	5/8	3/4	6	5	1	2 1/4	14 3/4	15	11 5/8	9	1 3/8	1 7/8	5 5/8	10 1/8	2 1/2	1 1/8	4 1/2	3 1/2	8	1 3/4	10 3/4			9.0
2S	48		2 1/4	3/4	1	8	7	1 1/4	3	19 3/4	20	15 1/2	12	1 7/8	2 5/8	7 1/2	13 1/2	3 3/8	1 1/2	6	4 5/8	10 5/8	2 3/8	14 3/8			16.0
2M	48		2 1/4	3/4	1	8	7	1 1/4	3	19 3/4	20	15 1/2	12	1 7/8	2 5/8	7 1/2	13 1/2	3 3/8	1 1/2	6	4 5/8	10 5/8	2 3/8	14 3/8			16.0
3	48		2 1/4	3/4	1	8	7	1 1/4	3	19 3/4	20	15 1/2	12	1 7/8	2 5/8	7 1/2	13 1/2	3 3/8	1 1/2	6	4 5/8	10 5/8	2 3/8	14 3/8			16.0
4	48		2 1/4	3/4	1	8	7	1 1/4	3	19 3/4	20	15 1/2	12	1 7/8	2 5/8	7 1/2	13 1/2	3 3/8	1 1/2	6	4 5/8	10 5/8	2 3/8	14 3/8			16.0
5	48		2 1/4	3/4	1	8	7	1 1/4	3	19 3/4	20	15 1/2	12	1 7/8	2 5/8	7 1/2	13 1/2	3 3/8	1 1/2	6	4 5/8	10 5/8	2 3/8	14 3/8			16.0

STANDARD SIGN
W20-2A,B,C,D,F & G

WISCONSIN DEPT OF TRANSPORTATION

APPROVED Matthew R Rauch
for State Traffic Engineer
DATE 3/18/11 PLATE NO. W20-2.6

7

7

PROJECT NO: | HWY: | COUNTY: | SHEET NO: 172 | E

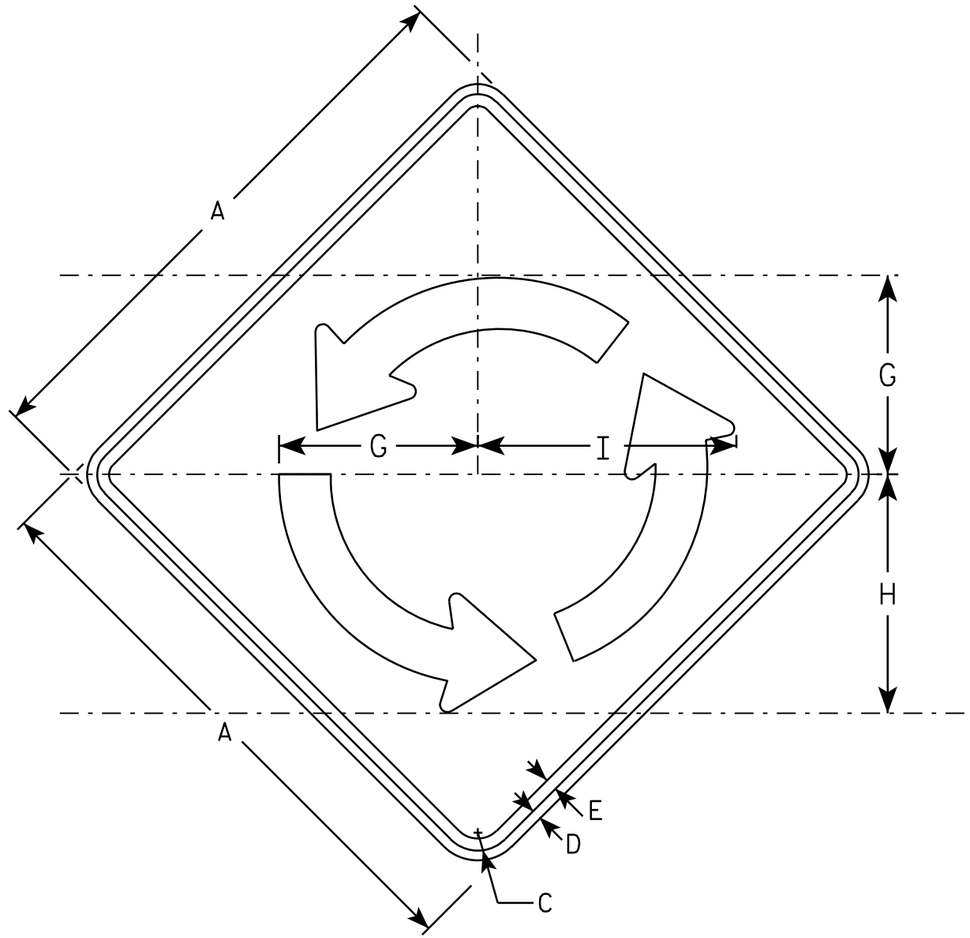

W2-6

NOTES

1. Sign is Type II - Type F Reflective - reference WIS DOT Standard Specification for HIGHWAY and STRUCTURE CONSTRUCTION latest edition.
2. Color:
   Background - YELLOW
   Message - BLACK
3. Message Series - B
4. Corners may be square or rounded when base material is plywood but borders shall be rounded as shown. When base material is metal, the corners and borders shall be rounded.

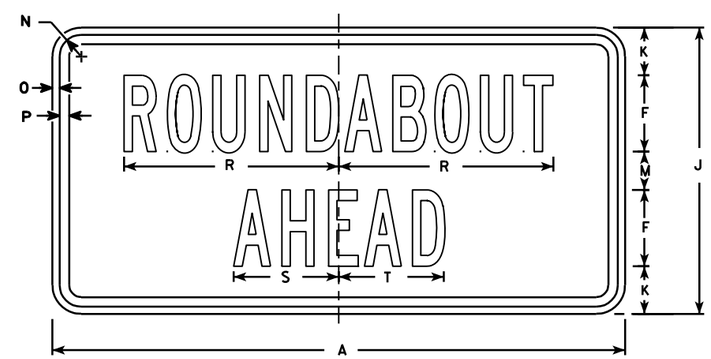

W2-6P

SIZE	A	B	C	D	E	F	G	H	I	J	K	L	M	N	O	P	Q	R	S	T	U	V	W	X	W2-6 Area sq. ft.	W2-6P Area sq. ft.
1																										
2S	30		1 3/8	1/2	5/8	4	10 3/8	12 1/2	13 1/2	15	2 1/2		2	1 1/8	3/8	1/2		11 1/4	5 1/2	5 1/2					6.25	3.12
2M	30		1 3/8	1/2	5/8	4	10 3/8	12 1/2	13 1/2	15	2 1/2		2	1 1/8	3/8	1/2		11 1/4	5 1/2	5 1/2					6.25	3.12
3	36		1 5/8	5/8	3/4	5	12 1/2	15	16 1/4	18	2 5/8		2 3/4	1 1/8	3/8	1/2		14	7	6 3/4					9.00	4.50
4	48		2 1/4	3/4	1	6	16 5/8	20	16 1/4	24	4 3/8		3 5/8	1 3/8	1/2	5/8		17	8 1/4	8 1/4					16.0	8.0
5																										

STANDARD SIGN
W2-6

WISCONSIN DEPT OF TRANSPORTATION

APPROVED Matthew R Rauch
for State Traffic Engineer

DATE 6/29/12 PLATE NO. W2-6.5

PROJECT NO:

SHEET NO: 173 E

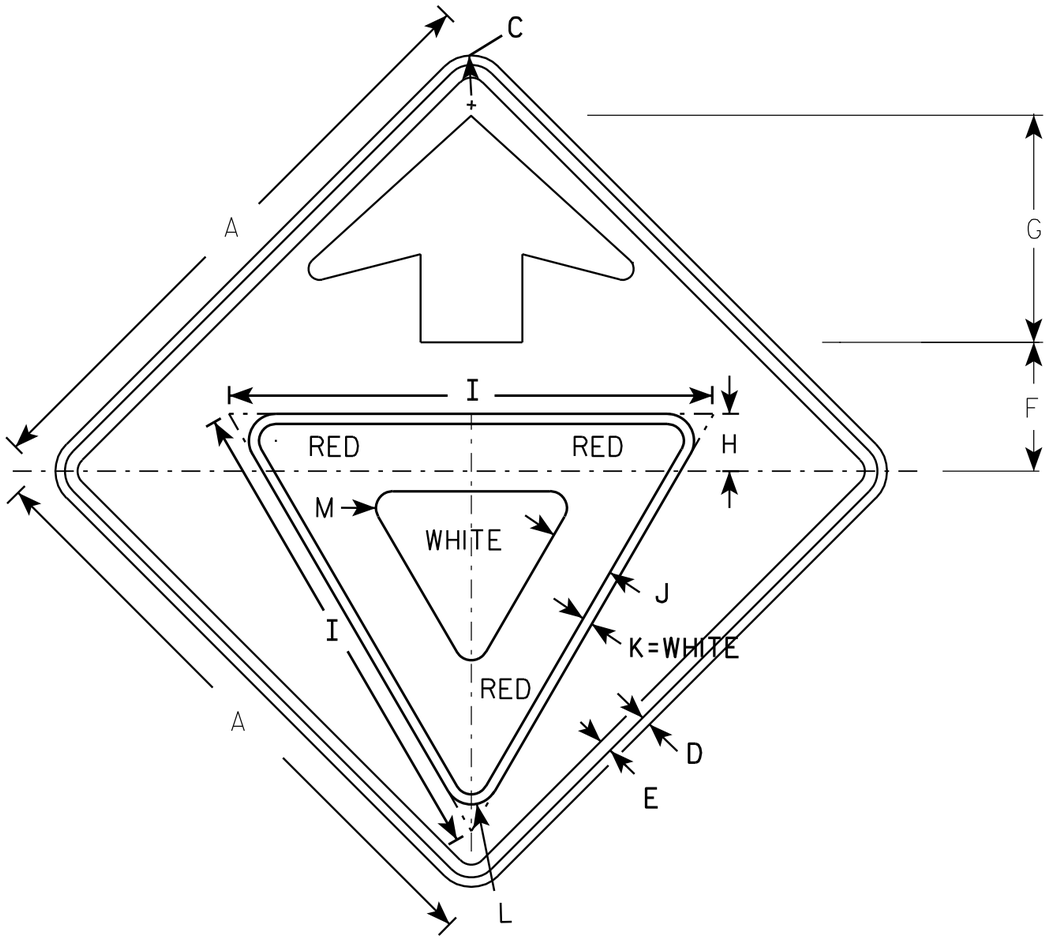

W3-2

NOTES

1. All Signs Type II - Type F Reflective - reference WIS DOT Standard Specification for HIGHWAY and STRUCTURE CONSTRUCTION latest edition.
2. Color:
   - Background - YELLOW
   - Arrow & Border - BLACK
   - Yield Symbol - WHITE BORDER ON RED BACKGROUND

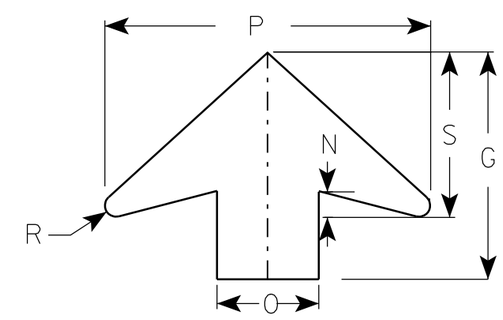

ARROW DETAIL

SIZE	A	B	C	D	E	F	G	H	I	J	K	L	M	N	O	P	Q	R	S	T	U	V	W	X	Y	Z	Area sq. ft.
1	30		1 3/8	1/2	5/8	6 1/4	11 1/4	3	25	3 3/8	1/2	1 3/8	7/8	1 1/4	5	16		1/2	8								6.25
2S	36		1 5/8	5/8	3/4	7 1/2	13 1/2	3 3/8	28	3 3/4	5/8	1 1/2	1	1 5/8	6	19 1/4		5/8	9 3/4								9.0
2M	36		1 5/8	5/8	3/4	7 1/2	13 1/2	3 3/8	28	3 3/4	5/8	1 1/2	1	1 5/8	6	19 1/4		5/8	9 3/4								9.0
3	36		1 5/8	5/8	3/4	7 1/2	13 1/2	3 3/8	28	3 3/4	5/8	1 1/2	1	1 5/8	6	19 1/4		5/8	9 3/4								9.0
4	48		2 1/4	3/4	1	10	17 7/8	4 1/2	38	5	3/4	2 1/8	1 3/8	2	8	25 5/8		7/8	13								16.0
5	48		2 1/4	3/4	1	10	17 7/8	4 1/2	38	5	3/4	2 1/8	1 3/8	2	8	25 5/8		7/8	13								16.0

STANDARD SIGN
W3-2

WISCONSIN DEPT OF TRANSPORTATION

APPROVED Matthew R Rauch
for State Traffic Engineer

DATE 6/7/10 PLATE NO. W3-2..9

PROJECT NO:

SHEET NO: 174 E

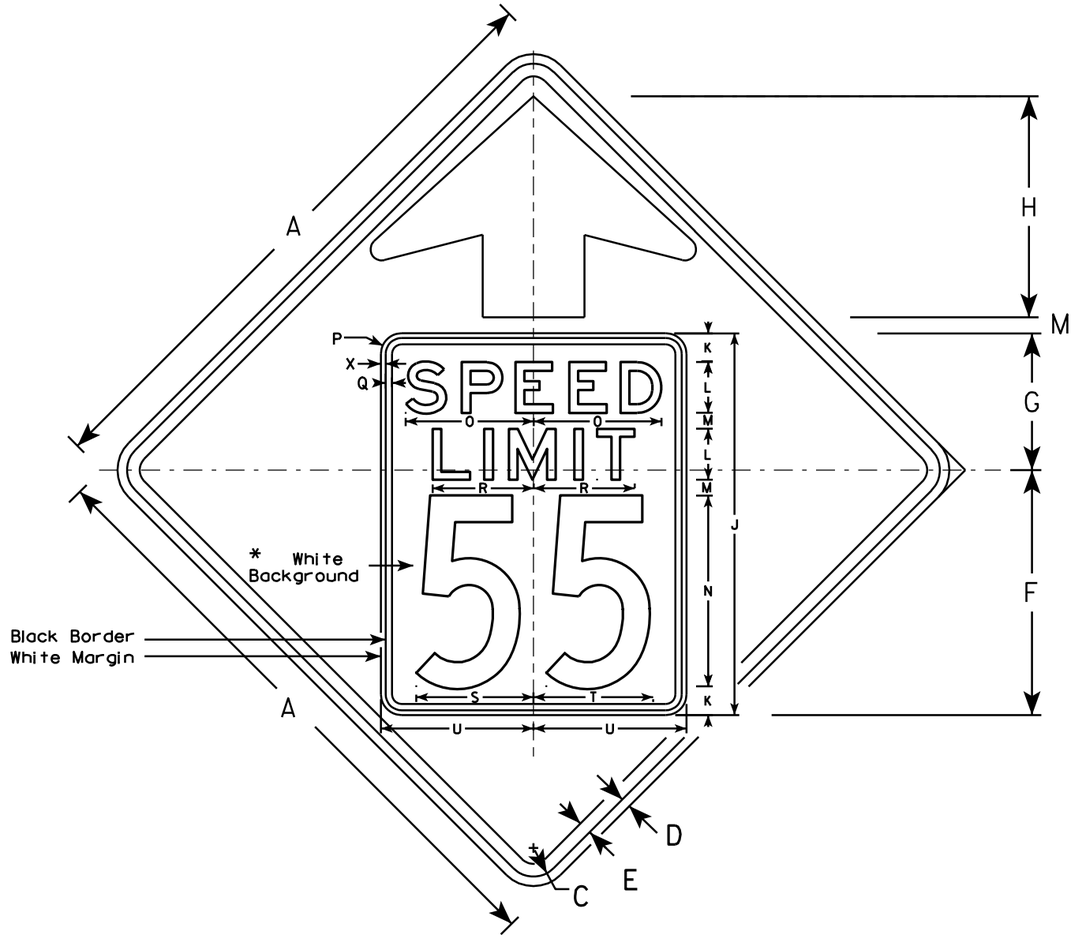

W3-5

NOTES

1. Sign is Type II - Type F Reflective - reference WIS DOT Standard Specification for HIGHWAY and STRUCTURE CONSTRUCTION latest edition.
2. Color: *
   Background - YELLOW*
   Message - BLACK
3. Message Series - C for numbers Series E for wording
4. Substitute appropriate numerals and optically adjust spacing to achieve proper balance

*Speed Limit Sign shall have a White Background

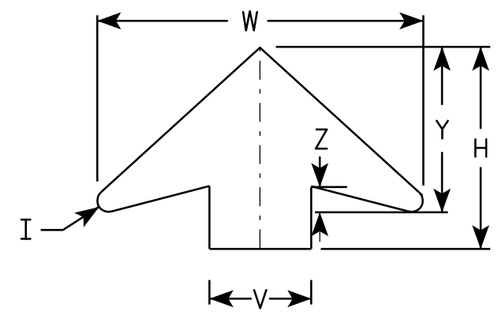

ARROW DETAIL

SIZE	A	B	C	D	E	F	G	H	I	J	K	L	M	N	O	P	Q	R	S	T	U	V	W	X	Y	Z	Area sq. ft.
1																											
2S	36		1 5/8	5/8	3/4	14 1/2	9 1/2	11 1/2	5/8	24	2	3	1	12	7 1/8	1 1/2	3/8	5 3/4	7 1/4	7 1/8	9	6	19 1/4	3/8	9 3/4	1 5/8	9.0
2M	36		1 5/8	5/8	3/4	14 1/2	9 1/2	11 1/2	5/8	24	2	3	1	12	7 1/8	1 1/2	3/8	5 3/4	7 1/4	7 1/8	9	6	19 1/4	3/8	9 3/4	1 5/8	9.0
3	36		1 5/8	5/8	3/4	14 1/2	9 1/2	11 1/2	5/8	24	2	3	1	12	7 1/8	1 1/2	3/8	5 3/4	7 1/4	7 1/8	9	6	19 1/4	3/8	9 3/4	1 5/8	9.0
4	48		2 1/4	3/4	1	19 1/4	10 3/4	17 3/8	7/8	30	2 1/4	4	1 1/4	15	10	1 5/8	1/2	8	9 1/4	9 3/8	12	8	25 5/8	3/8	13	2	16.0
5	48		2 1/4	3/4	1	19 1/4	10 3/4	17 3/8	7/8	30	2 1/4	4	1 1/4	15	10	1 5/8	1/2	8	9 1/4	9 3/8	12	8	25 5/8	3/8	13	2	16.0

STANDARD SIGN
W3-5

WISCONSIN DEPT OF TRANSPORTATION

APPROVED Matthew R Rauch
for State Traffic Engineer

DATE 5/29/12 PLATE NO. W3-5.5

PROJECT NO:

SHEET NO: 175 E

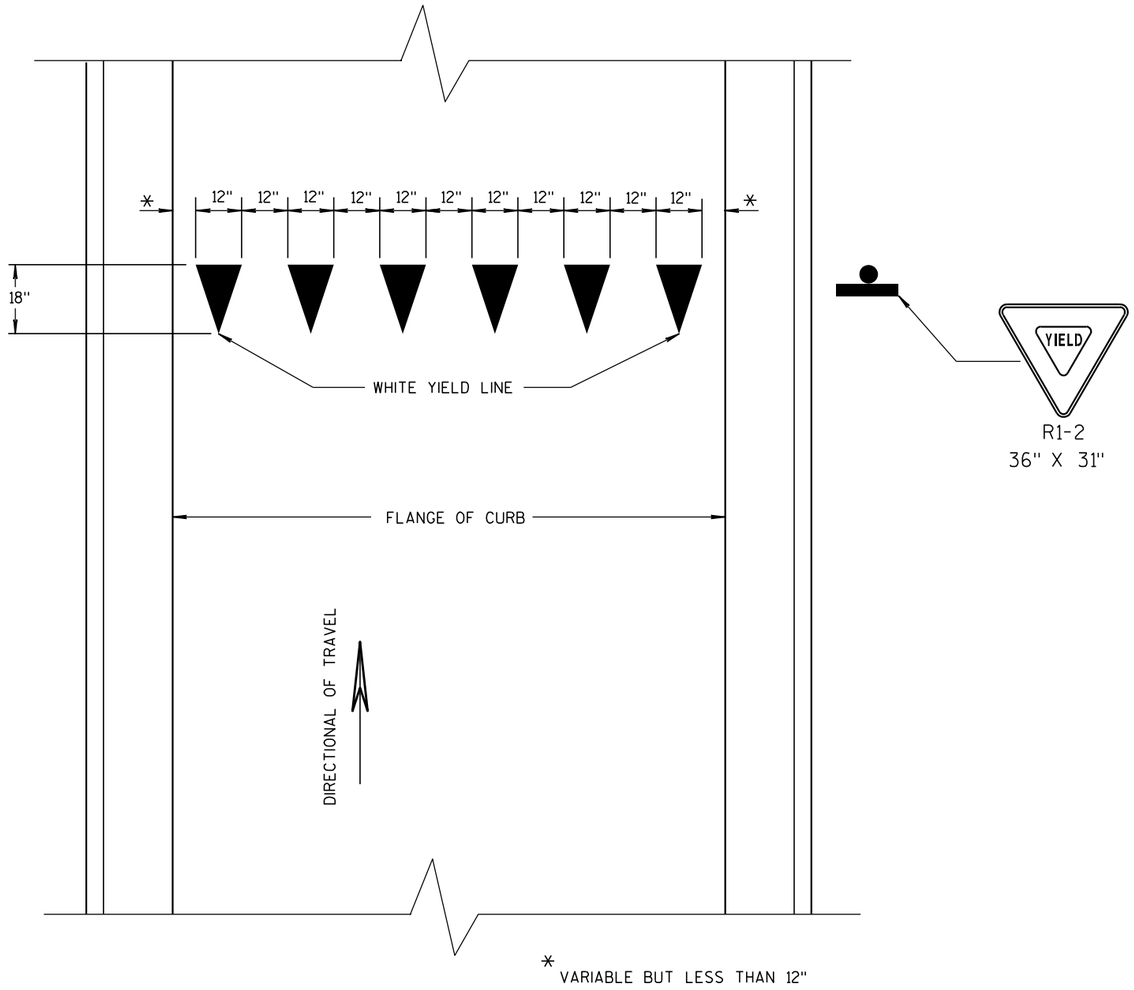

YIELD LINE

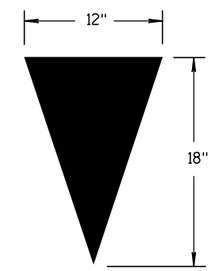

YIELD TRIANGLE

6

6

S.D.D. 15 C 20-1

S.D.D. 15 C 20-1

YIELD MARKINGS

STATE OF WISCONSIN
DEPARTMENT OF TRANSPORTATION

APPROVED

1/28/05 — DATE

/S/ Thomas N. Nothohm — STATE TRAFFIC ENGINEER

FHWA

3

EARTHWORK SUMMARY

Division (8)	From / To Station	Location	Common Excavation (1)	(item # 205.0100)	Salvaged / Unusable Pavement Material (4)	Available Material (5)	Unexpanded Fill	Expanded Fill (6)	Mass Ordinate + / - (7)	Waste
Division 1			Cut (2)	EBS Excavation (3)				Factor 1.54		
CIRCLE	10+00 - 13+39	CIRCLE	3757	0	625	3132	15	23	3109	3109
EAST LEG	13+60 - 16+92	CTH X	1834	0	1220	614	115	176	438	438
NORTH LEG	20+25 - 27+40	STH 32/ 57	6620	0	3205	3415	1015	1562	1853	1853
SOUTH LEG	9+20 - 18+75	STH 32/ 57	9641	0	4280	5361	1926	2967	2394	2394
WEST LEG	9+50 - 12+12	FOX RIVER DRIVE	1455	0	735	720	156	242	478	478
NEW DRIVEWAY FOX RIVER COURT	11+08 - 13+92	STH 32/ 57	168	0	0	168	-	-	-	-
Subtotal			23475	0	10065	13410	3227	4970	8272	8272
Grand Total			23475	0	10065	13410	3227	4970	8272	8272
Total Common Exc				23475						

1) Common Excavation is the sum of the Cut and EBS Excavation columns. Item number 205.0100
2) Salvaged/Unsuable Pavement Material is included in Cut.
3) EBS Excavation to be backfilled with Select Borrow material. Note: this is designers choice, can be backfilled with Borrow, or Cut as well.
4) Salvaged/Unusable Pavement Material (Including Concrete, Asphalt, and Base Aggregate)
5) Available Material = Cut - Salvaged/Unusuable Pavement Material
6) Expanded Fill. Factor = 1.54
7) The Mass Ordinate + or - Qty calculated for the Division. Plus quantity indicates an excess of material within the Division. Minus indicates a shortage of material within the Division.
8) Fox River Court quantity is included in the west leg total.

3

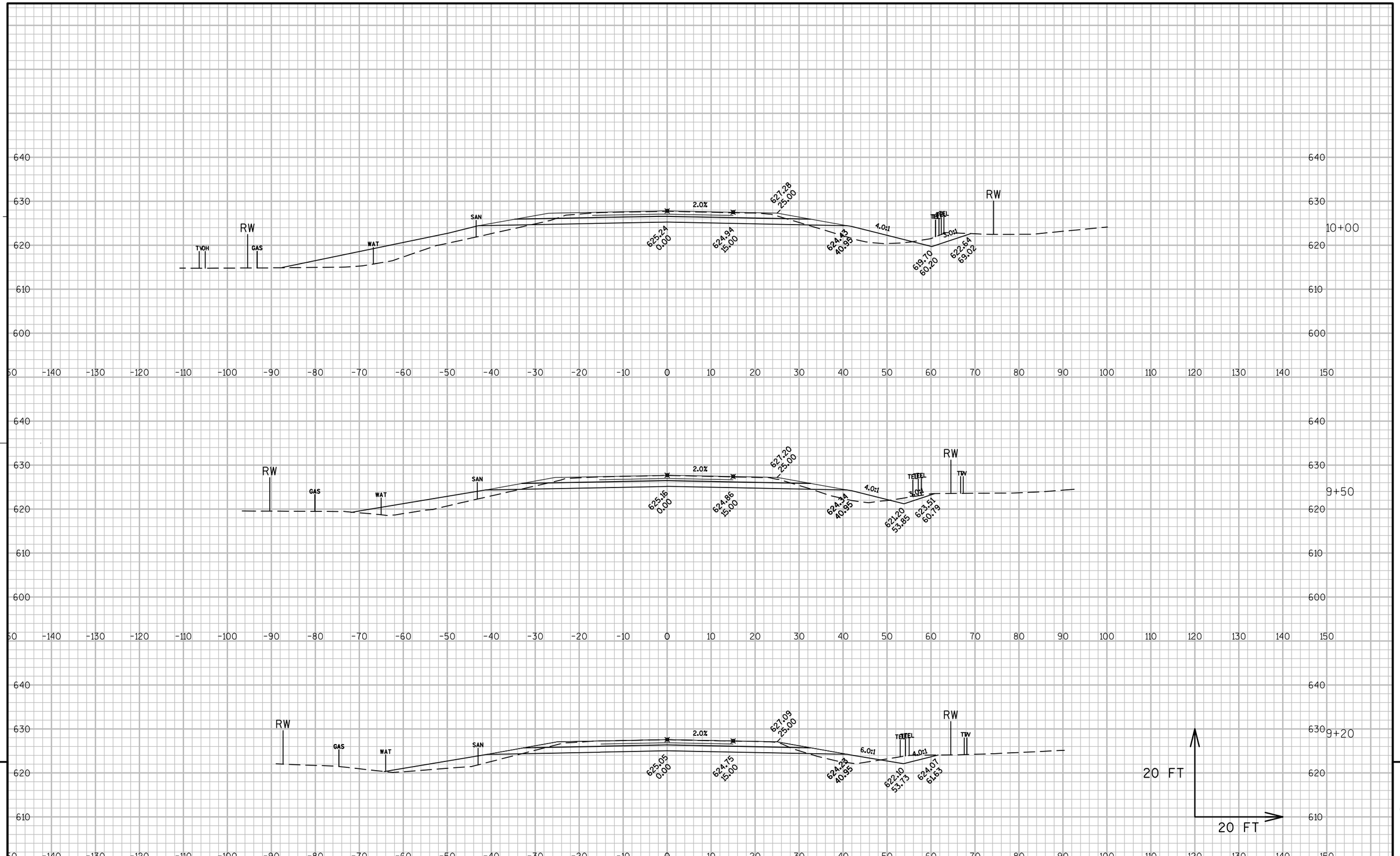

PROJECT NO:4085-43-71	HWY:STH32/57	COUNTY:BROWN	CROSS SECTIONS:STH 32/57 NB	SHEET 178	E

FILE NAME : N:\PDS\C3D\40854300\SHEETSPLAN\FINAL CROSS SECTIONS\STH3257 - FINAL X-SECTIONS.DWG PLOT DATE : 1/27/2015 2:18 PM PLOT BY : MAY, MATTHEW J PLOT NAME : PLOT SCALE : 1" = 20'_XREF

WISDOT/CADDS SHEET 49

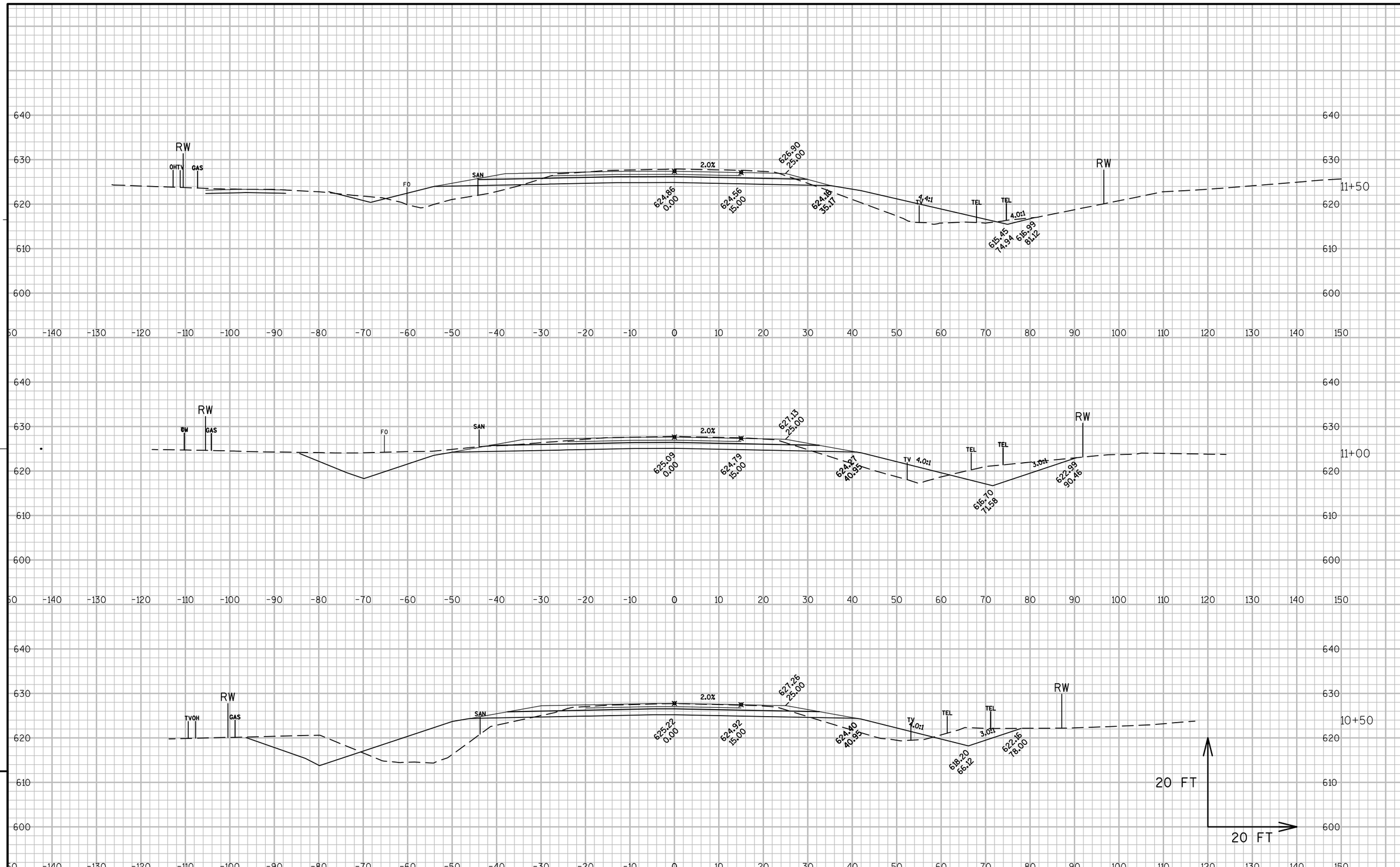

9

9

PROJECT NO:4085-43-71	HWY:STH32/57	COUNTY:BROWN	CROSS SECTIONS:STH 32/57 NB	SHEET 179	E

FILE NAME : N:\PDS\C3D\40854300\SHEETSPLAN\FINAL CROSS SECTIONS\STH3257 - FINAL X-SECTIONS.DWG PLOT DATE : 1/27/2015 2:19 PM PLOT BY : MAY, MATTHEW J PLOT NAME : PLOT SCALE : 1" = 20'_XREF

WISDOT/CADDS SHEET 49

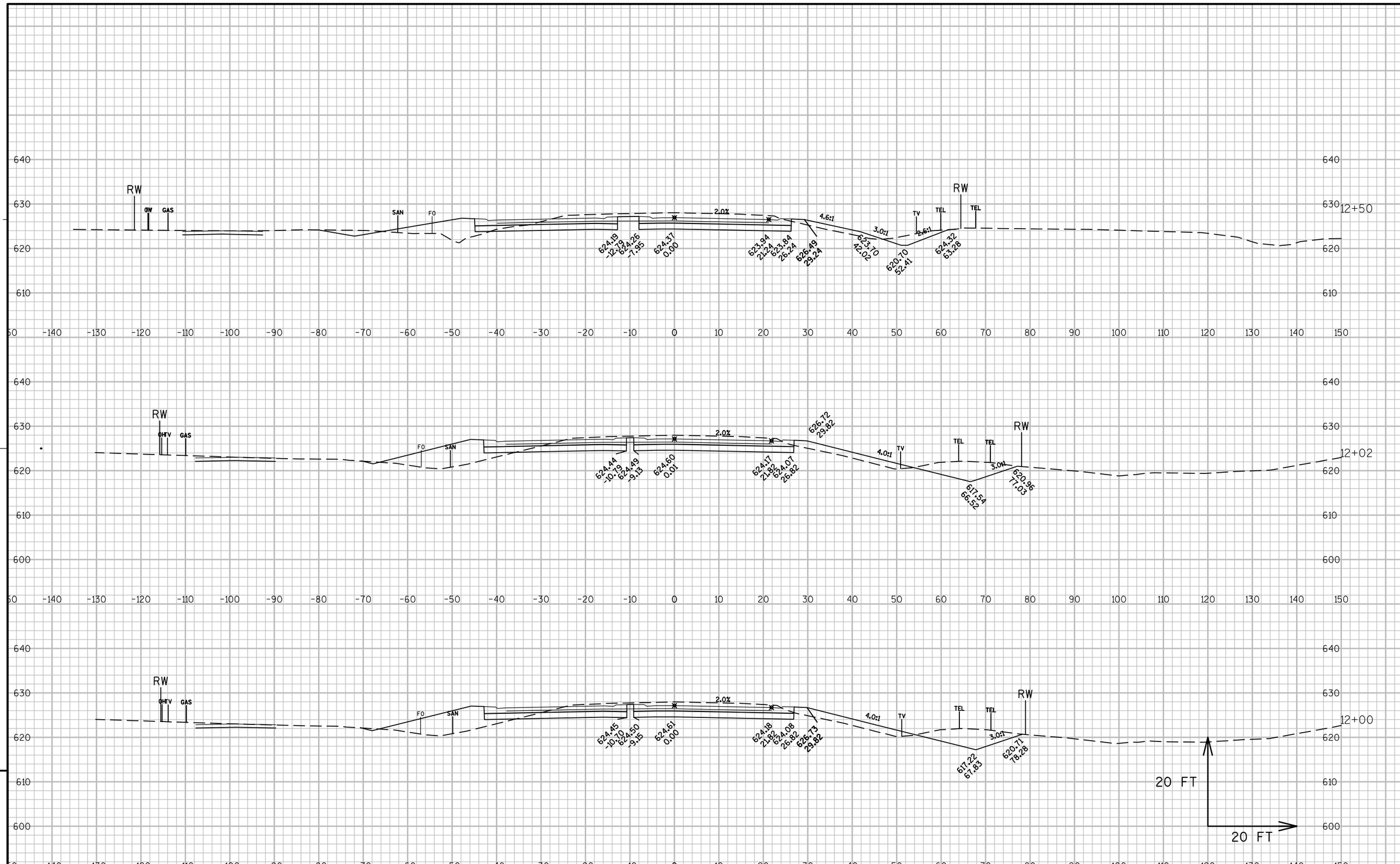

PROJECT NO:4085-43-71	HWY:STH32/57	COUNTY:BROWN	CROSS SECTIONS: STH 32/57 NB	SHEET 180	E

FILE NAME : N:\PDS\C3D\40854300\SHEETSPLAN\FINAL CROSS SECTIONS\STH3257 - FINAL X-SECTIONS.DWG PLOT DATE : 1/27/2015 2:19 PM PLOT BY : MAY, MATTHEW J PLOT NAME : PLOT SCALE : 1" = 20'_XREF

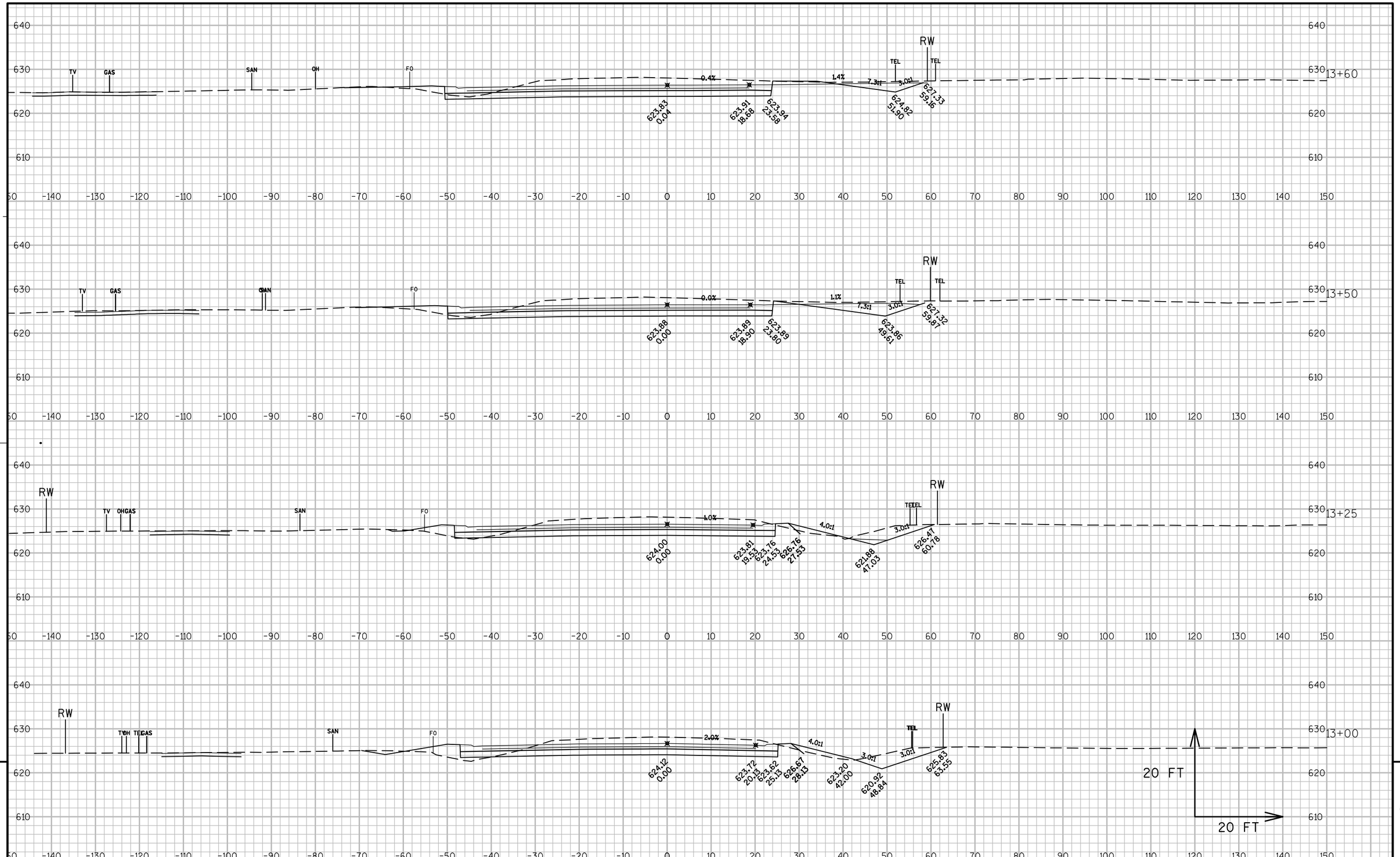

9

9

PROJECT NO:4085-43-71	HWY:STH32/57	COUNTY:BROWN	CROSS SECTIONS:STH 32/57 NB	SHEET	E

FILE NAME : N:\PDS\C3D\40854300\SHEETSPLAN\FINAL CROSS SECTIONS\STH3257 - FINAL X-SECTIONS.DWG PLOT DATE : 1/27/2015 2:19 PM PLOT BY : MAY, MATTHEW J PLOT NAME : PLOT SCALE : 1" = 20'_XREF

WISDOT/CADDS SHEET 49

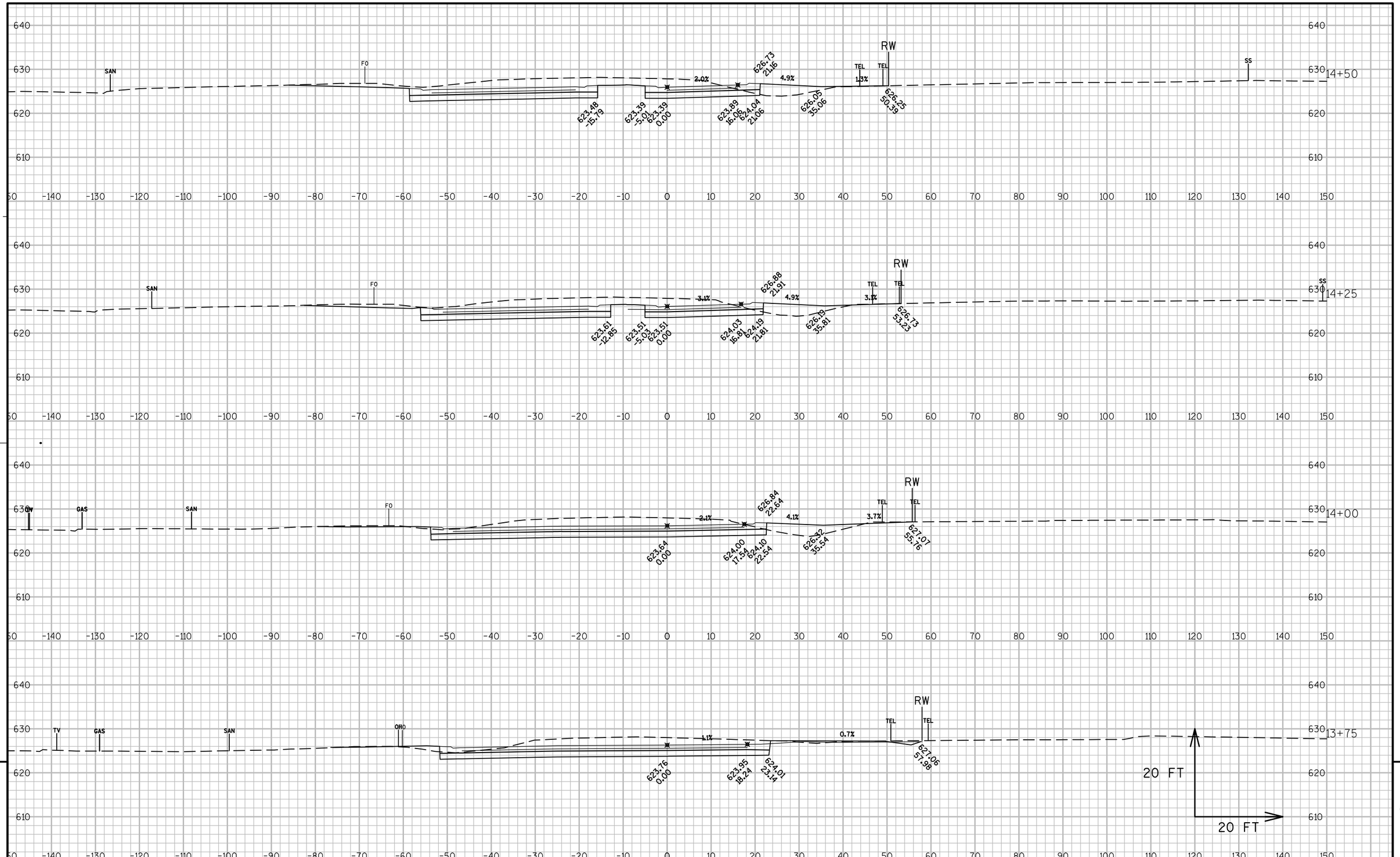

PROJECT NO: 4085-43-71	HWY: STH32/57	COUNTY: BROWN	CROSS SECTIONS: STH 32/57 NB	SHEET 182	E

FILE NAME : N:\PDS\C3D\40854300\SHEETSPLAN\FINAL CROSS SECTIONS\STH3257 - FINAL X-SECTIONS.DWG PLOT DATE : 1/27/2015 2:19 PM PLOT BY : MAY, MATTHEW J PLOT NAME : PLOT SCALE : 1" = 20'_XREF

WISDOT/CADDS SHEET 49

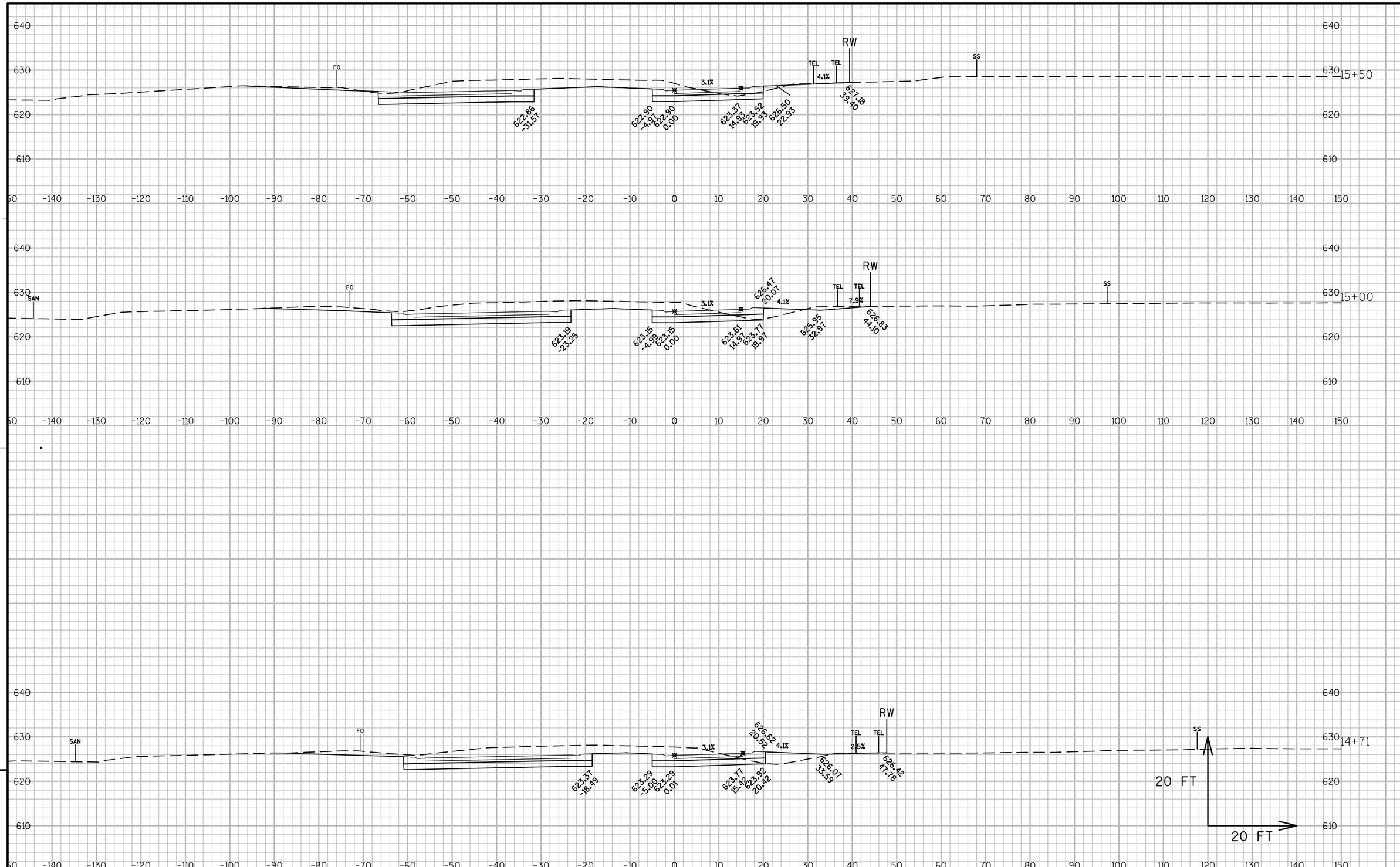

9

9

PROJECT NO: 4085-43-71	HWY: STH32/57	COUNTY: BROWN	CROSS SECTIONS: STH 32/57 NB	SHEET	E

FILE NAME : N:\PDS\C3D\40854300\SHEETSPLAN\FINAL CROSS SECTIONS\STH3257 - FINAL X-SECTIONS.DWG PLOT DATE : 1/27/2015 2:19 PM PLOT BY : MAY, MATTHEW J PLOT NAME : PLOT SCALE : 1" = 20'_XREF

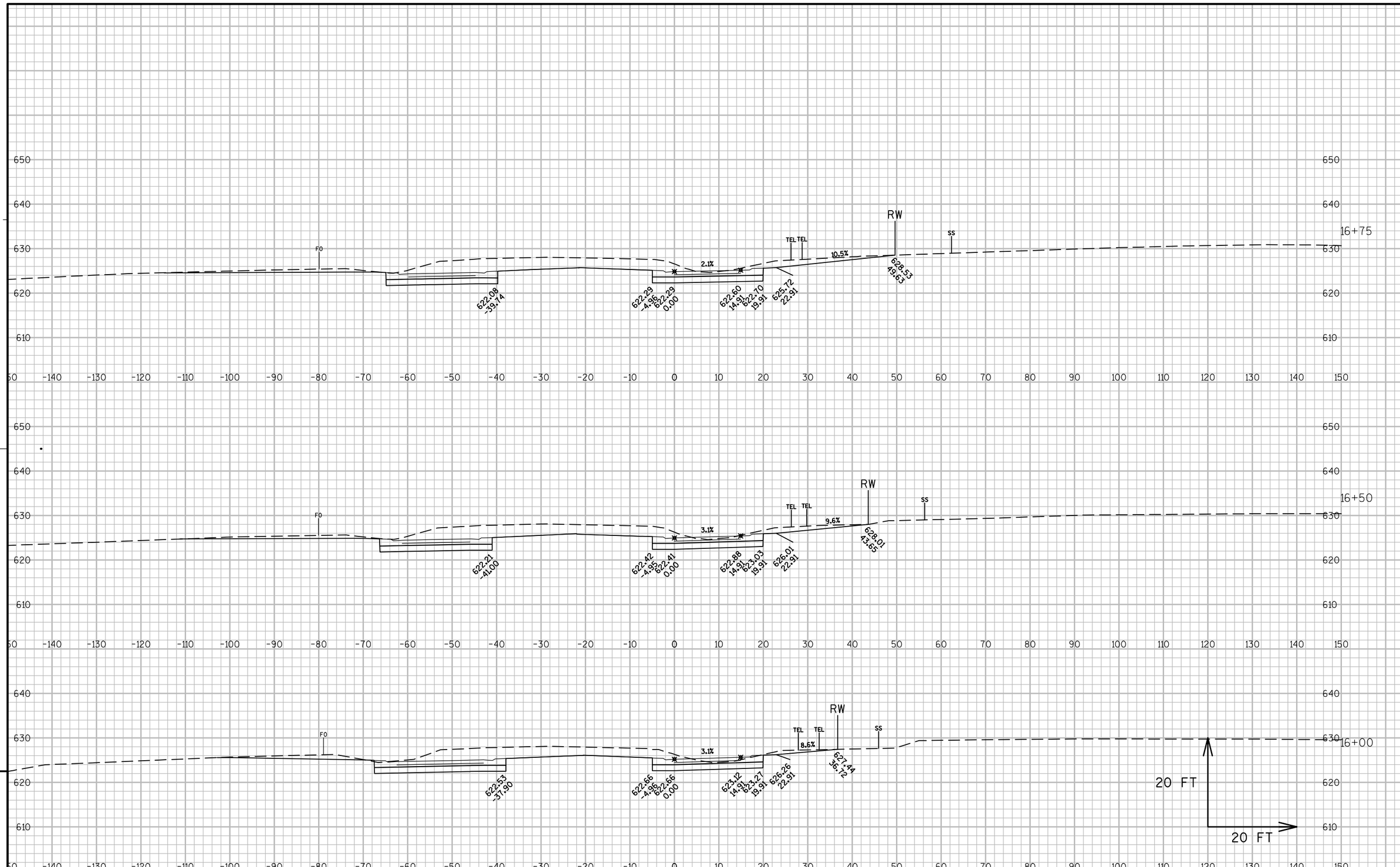

PROJECT NO: 4085-43-71	HWY: STH32/57	COUNTY: BROWN	CROSS SECTIONS: STH 32/57 NB	SHEET 184	E

FILE NAME : N:\PDS\C3D\40854300\SHEETSPLAN\FINAL CROSS SECTIONS\STH3257 - FINAL X-SECTIONS.DWG PLOT DATE : 1/27/2015 2:20 PM PLOT BY : MAY, MATTHEW J PLOT NAME : PLOT SCALE : 1" = 20'_XREF

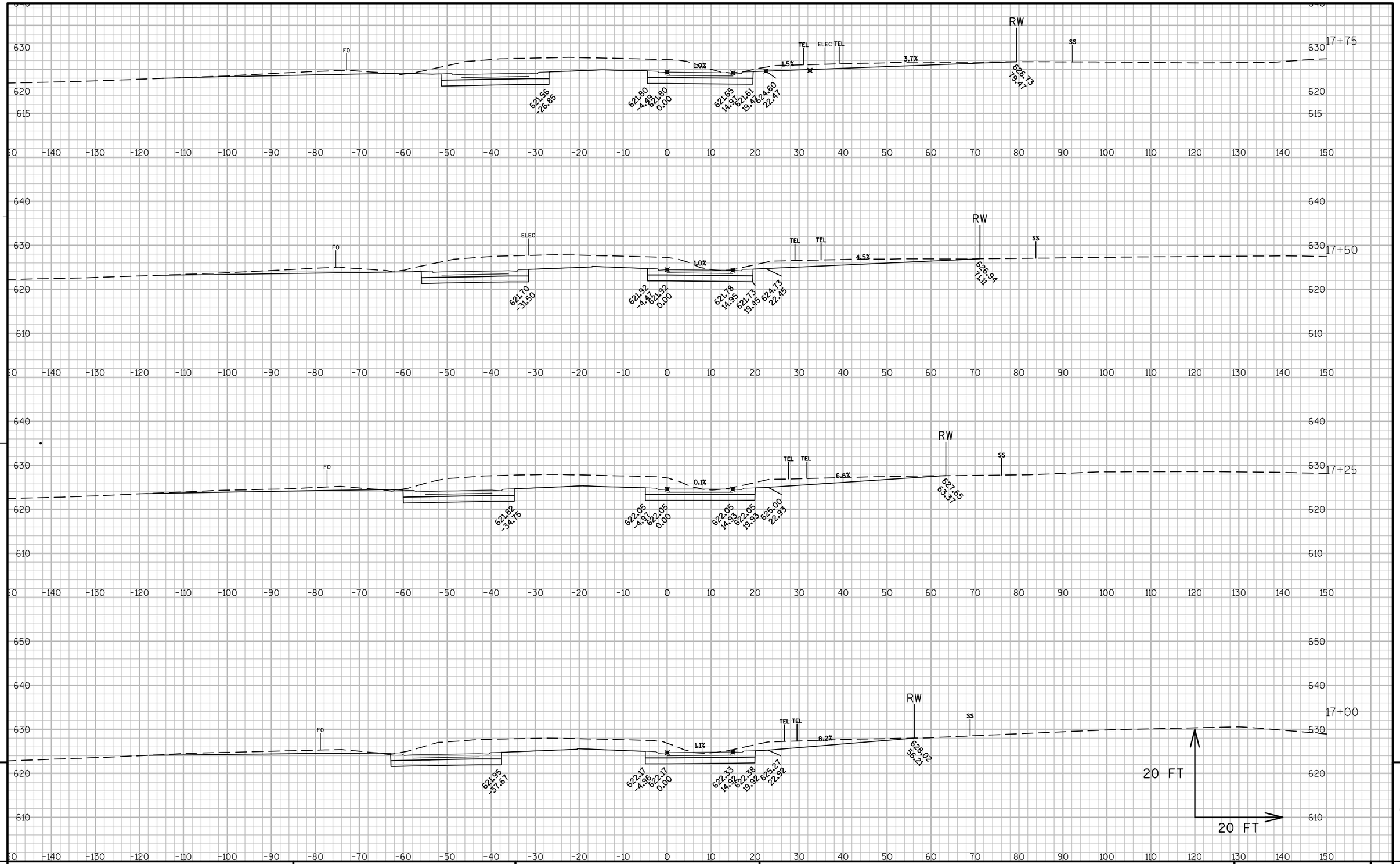

PROJECT NO:4085-43-71	HWY:STH32/57	COUNTY:BROWN	CROSS SECTIONS:STH 32/57 NB	SHEET 185	E

FILE NAME : N:\PDS\C3D\40854300\SHEETSPLAN\FINAL CROSS SECTIONS\STH3257 - FINAL X-SECTIONS.DWG PLOT DATE : 1/27/2015 2:20 PM PLOT BY : MAY, MATTHEW J PLOT NAME : PLOT SCALE : 1" = 20'_XREF

WISDOT/CADDS SHEET 49

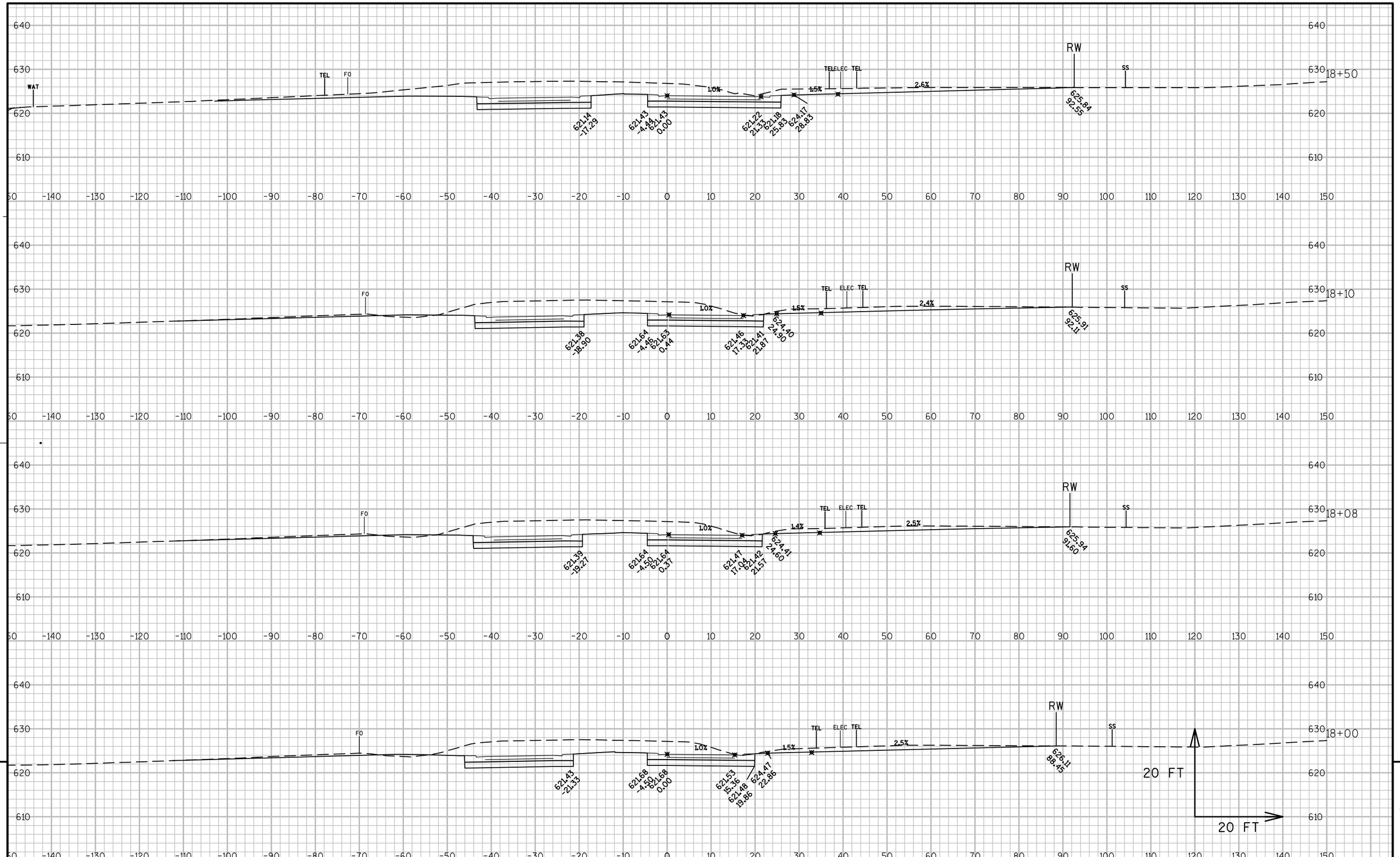

PROJECT NO:4085-43-71	HWY:STH32/57	COUNTY:BROWN	CROSS SECTIONS:STH 32/57 NB	SHEET 186	E

FILE NAME : N:\PDS\C3D\40854300\SHEETSPLAN\FINAL CROSS SECTIONS\STH3257 - FINAL X-SECTIONS.DWG PLOT DATE : 1/27/2015 2:20 PM PLOT BY : MAY, MATTHEW J PLOT NAME : PLOT SCALE : 1" = 20'_XREF

WISDOT/CADDS SHEET 49

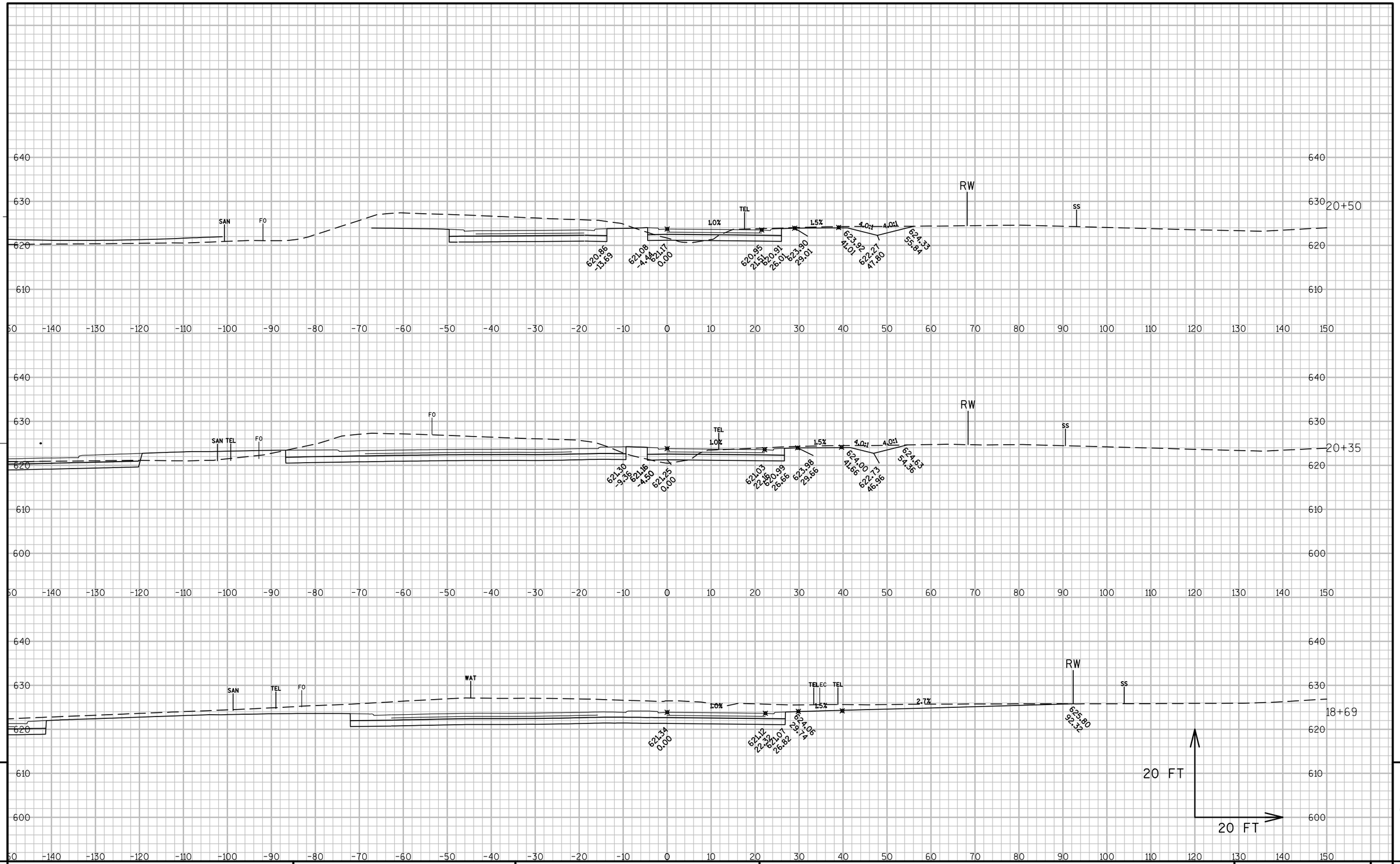

PROJECT NO:4085-43-71	HWY:STH32/57	COUNTY:BROWN	CROSS SECTIONS:STH 32/57 NB	SHEET 187	E

FILE NAME : N:\PDS\C3D\40854300\SHEETSPLAN\FINAL CROSS SECTIONS\STH3257 - FINAL X-SECTIONS.DWG PLOT DATE : 1/27/2015 2:20 PM PLOT BY : MAY, MATTHEW J PLOT NAME : PLOT SCALE : 1" = 20'_XREF

WISDOT/CADDS SHEET 49

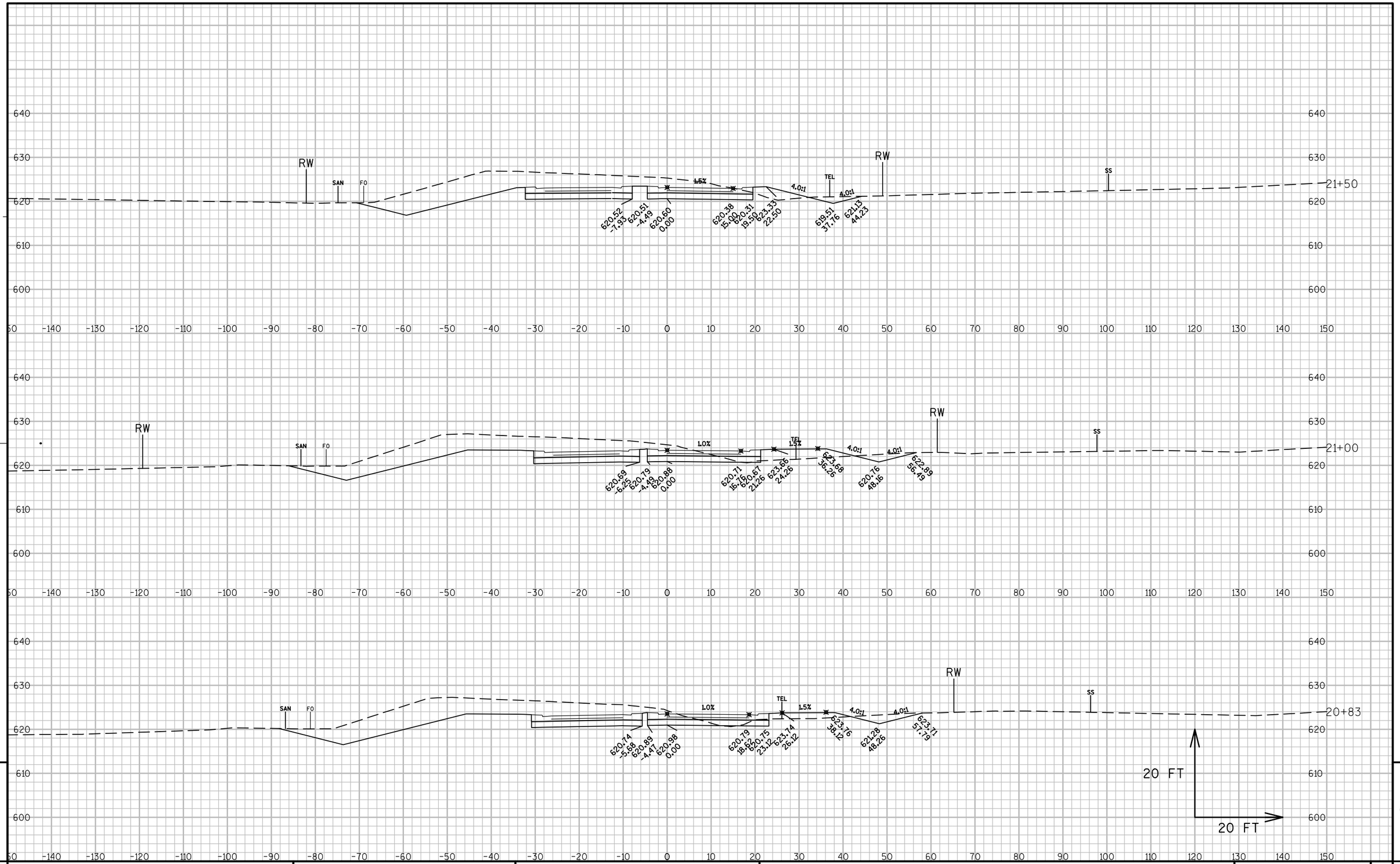

PROJECT NO: 4085-43-71	HWY: STH32/57	COUNTY: BROWN	CROSS SECTIONS: STH 32/57 NB	SHEET 188	E

FILE NAME : N:\PDS\C3D\40854300\SHEETSPLAN\FINAL CROSS SECTIONS\STH3257 - FINAL X-SECTIONS.DWG PLOT DATE : 1/27/2015 2:20 PM PLOT BY : MAY, MATTHEW J PLOT NAME : PLOT SCALE : 1" = 20'_XREF

WISDOT/CADDS SHEET 49

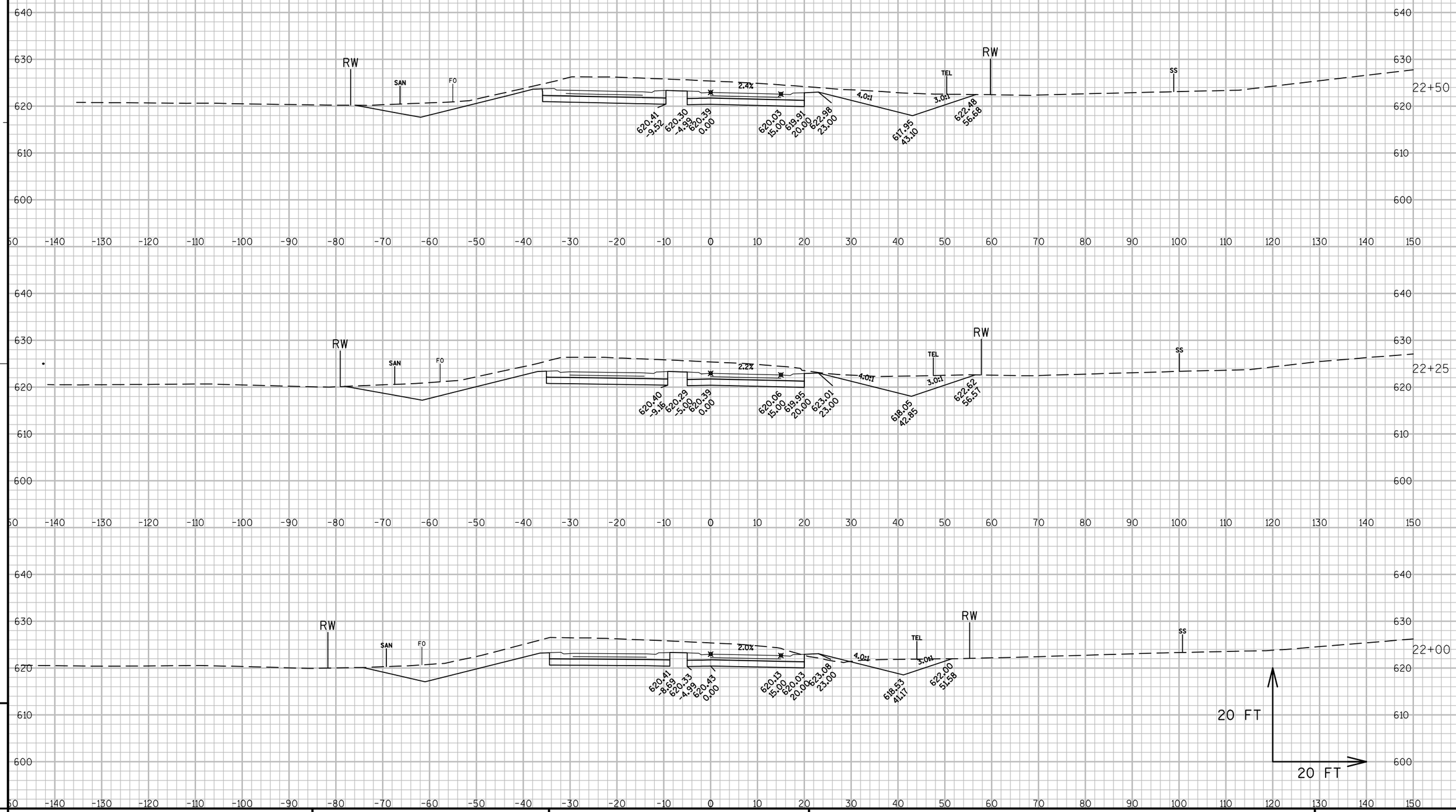

PROJECT NO:4085-43-71	HWY:STH32/57	COUNTY:BROWN	CROSS SECTIONS:STH 32/57 NB	SHEET	E

FILE NAME : N:\PDS\C3D\40854300\SHEETSPLAN\FINAL CROSS SECTIONS\STH3257 - FINAL X-SECTIONS.DWG PLOT DATE : 1/27/2015 2:21 PM PLOT BY : MAY, MATTHEW J PLOT NAME : PLOT SCALE : 1" = 20'_XREF

WISDOT/CADDS SHEET 49

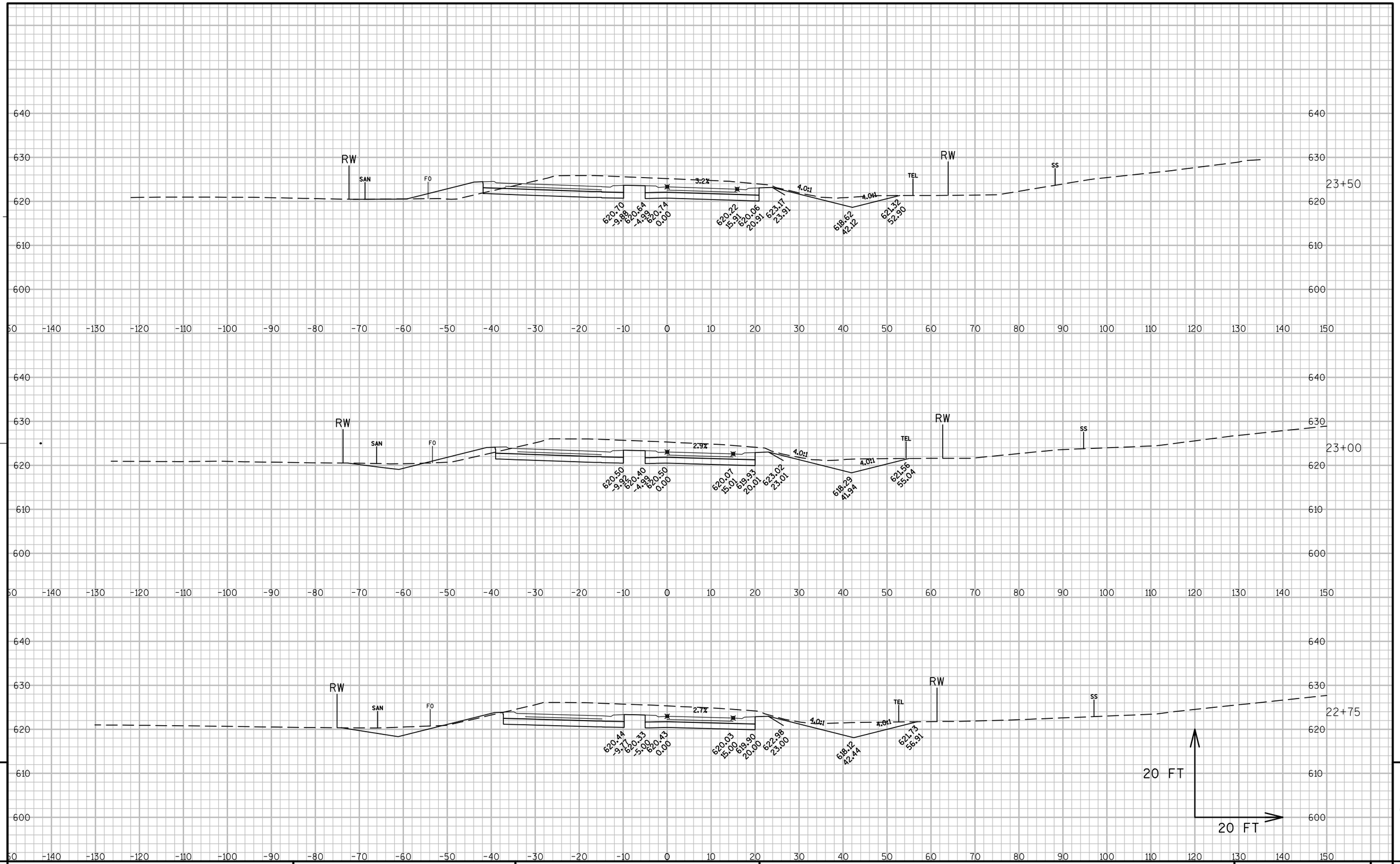

PROJECT NO:4085-43-71	HWY:STH32/57	COUNTY:BROWN	CROSS SECTIONS:STH 32/57 NB	SHEET 190	E

FILE NAME : N:\PDS\C3D\40854300\SHEETSPLAN\FINAL CROSS SECTIONS\STH3257 - FINAL X-SECTIONS.DWG PLOT DATE : 1/27/2015 2:21 PM PLOT BY : MAY, MATTHEW J PLOT NAME : PLOT SCALE : 1" = 20'_XREF

WISDOT/CADDS SHEET 49

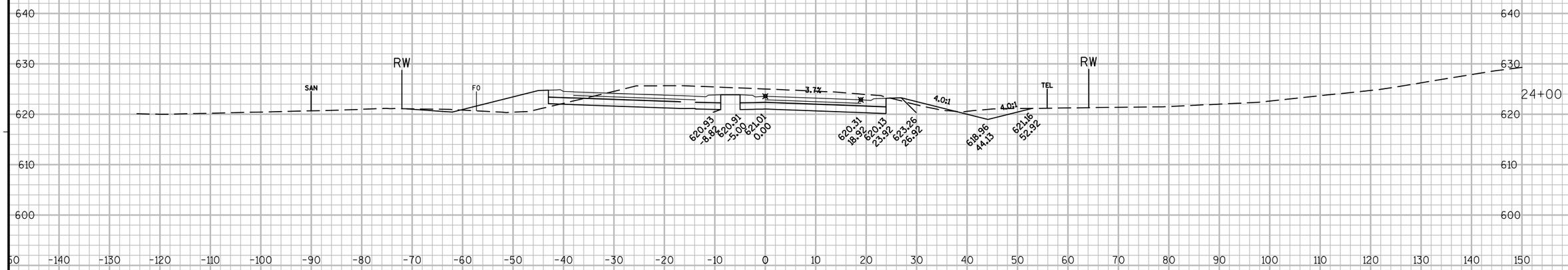

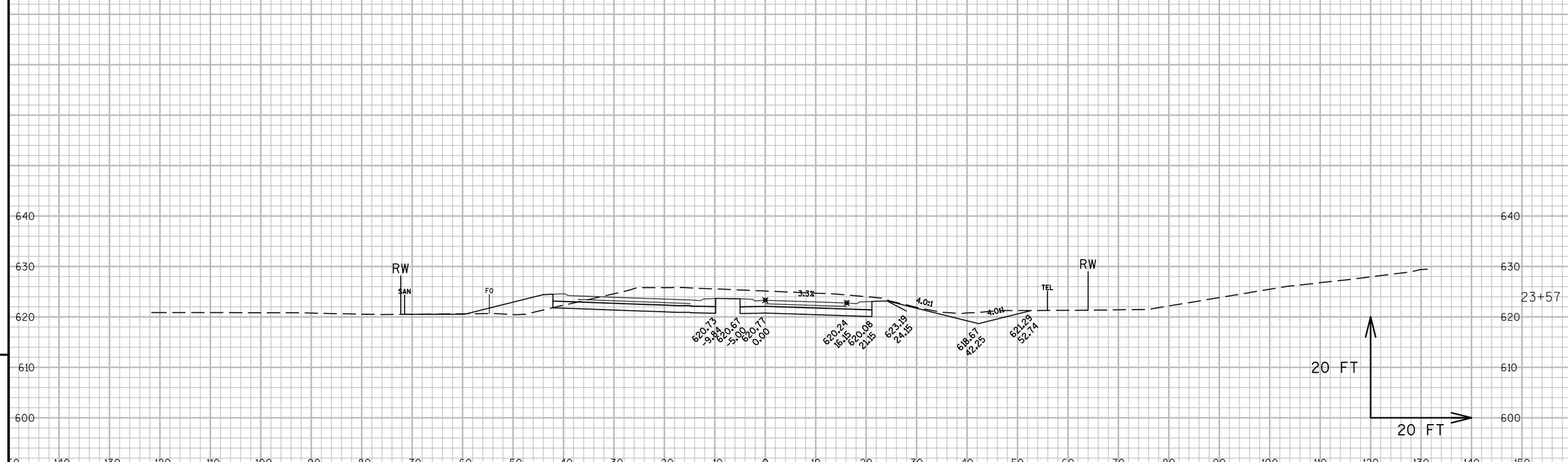

9

9

PROJECT NO:4085-43-71	HWY:STH32/57	COUNTY:BROWN	CROSS SECTIONS:STH 32/57 NB	SHEET	E

FILE NAME : N:\PDS\C3D\40854300\SHEETSPLAN\FINAL CROSS SECTIONS\STH3257 - FINAL X-SECTIONS.DWG PLOT DATE : 1/27/2015 2:21 PM PLOT BY : MAY, MATTHEW J PLOT NAME : PLOT SCALE : 1" = 20'_XREF

WISDOT/CADDS SHEET 49

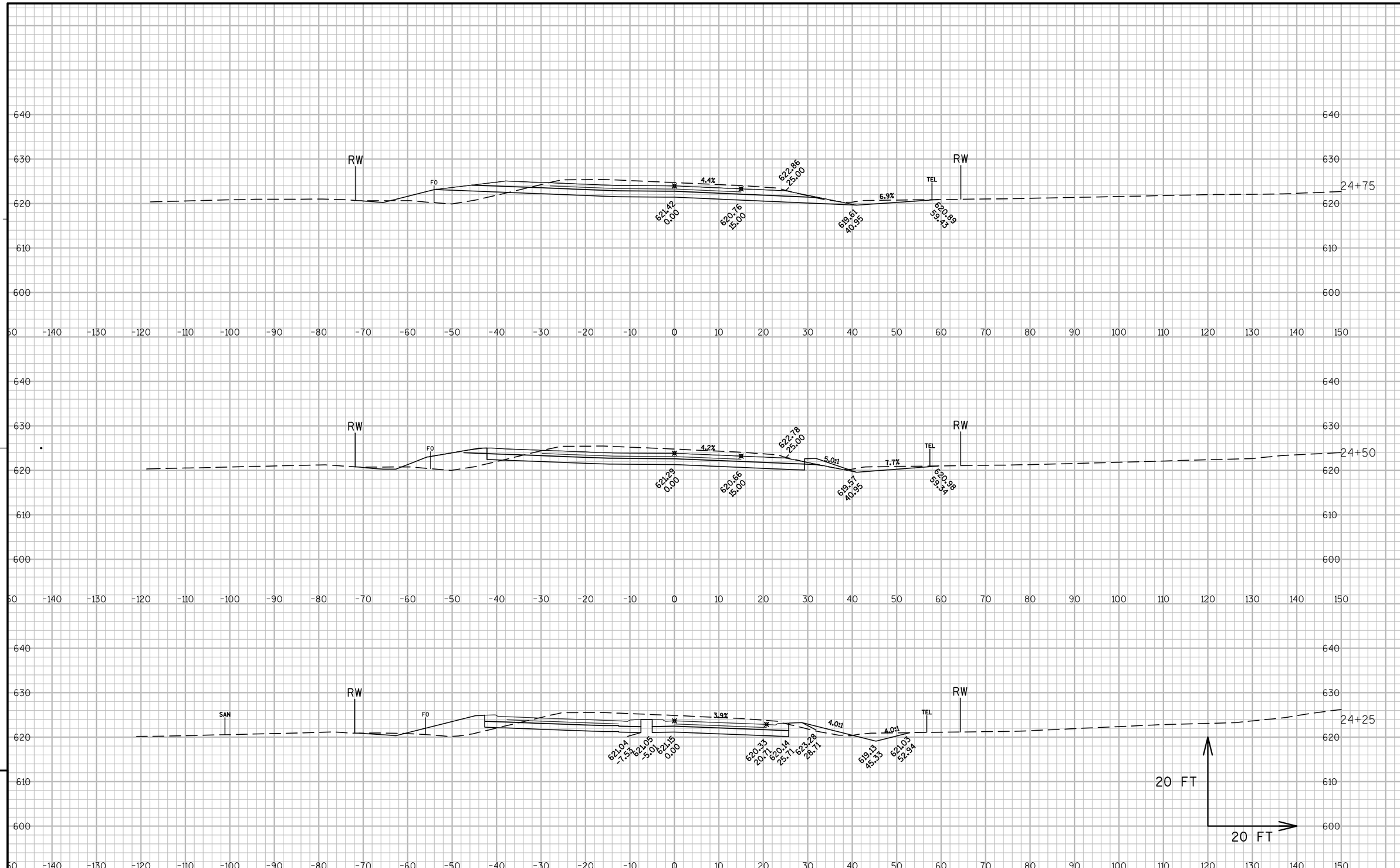

PROJECT NO:4085-43-71	HWY:STH32/57	COUNTY:BROWN	CROSS SECTIONS:STH 32/57 NB	SHEET	E

FILE NAME : N:\PDS\C3D\40854300\SHEETSPLAN\FINAL CROSS SECTIONS\STH3257 - FINAL X-SECTIONS.DWG PLOT DATE : 1/27/2015 2:21 PM PLOT BY : MAY, MATTHEW J PLOT NAME : PLOT SCALE : 1" = 20'_XREF

WISDOT/CADDS SHEET 49

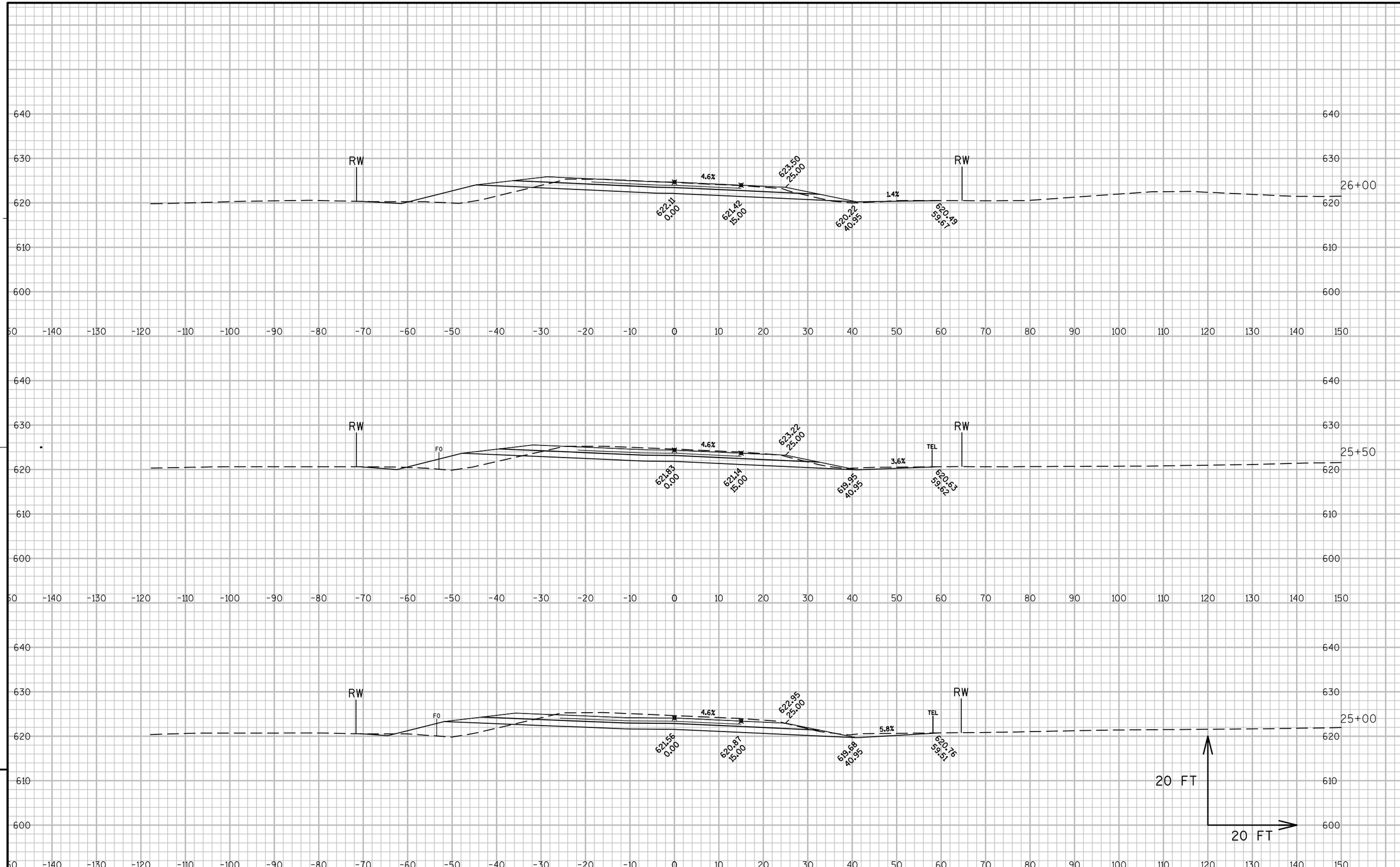

PROJECT NO:4085-43-71	HWY:STH32/57	COUNTY:BROWN	CROSS SECTIONS:STH 32/57 NB	SHEET 193	E

FILE NAME : N:\PDS\C3D\40854300\SHEETSPLAN\FINAL CROSS SECTIONS\STH3257 - FINAL X-SECTIONS.DWG PLOT DATE : 1/27/2015 2:21 PM PLOT BY : MAY, MATTHEW J PLOT NAME : PLOT SCALE : 1" = 20'_XREF

WISDOT/CADDS SHEET 49

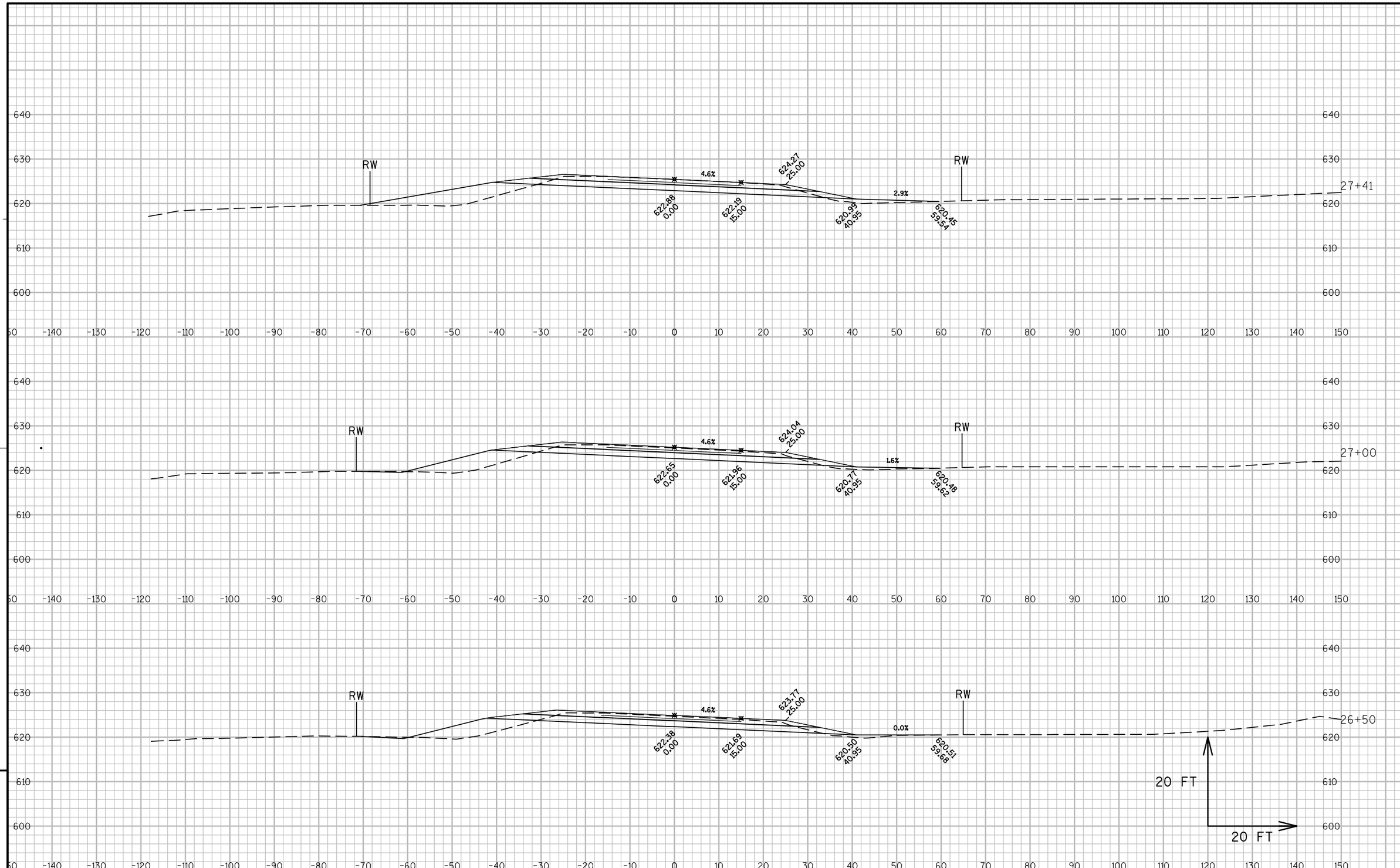

PROJECT NO:4085-43-71	HWY:STH32/57	COUNTY:BROWN	CROSS SECTIONS:STH 32/57 NB	SHEET	E

FILE NAME : N:\PDS\C3D\40854300\SHEETSPLAN\FINAL CROSS SECTIONS\STH3257 - FINAL X-SECTIONS.DWG PLOT DATE : 1/27/2015 2:21 PM PLOT BY : MAY, MATTHEW J PLOT NAME : PLOT SCALE : 1" = 20'_XREF

WISDOT/CADDS SHEET 49

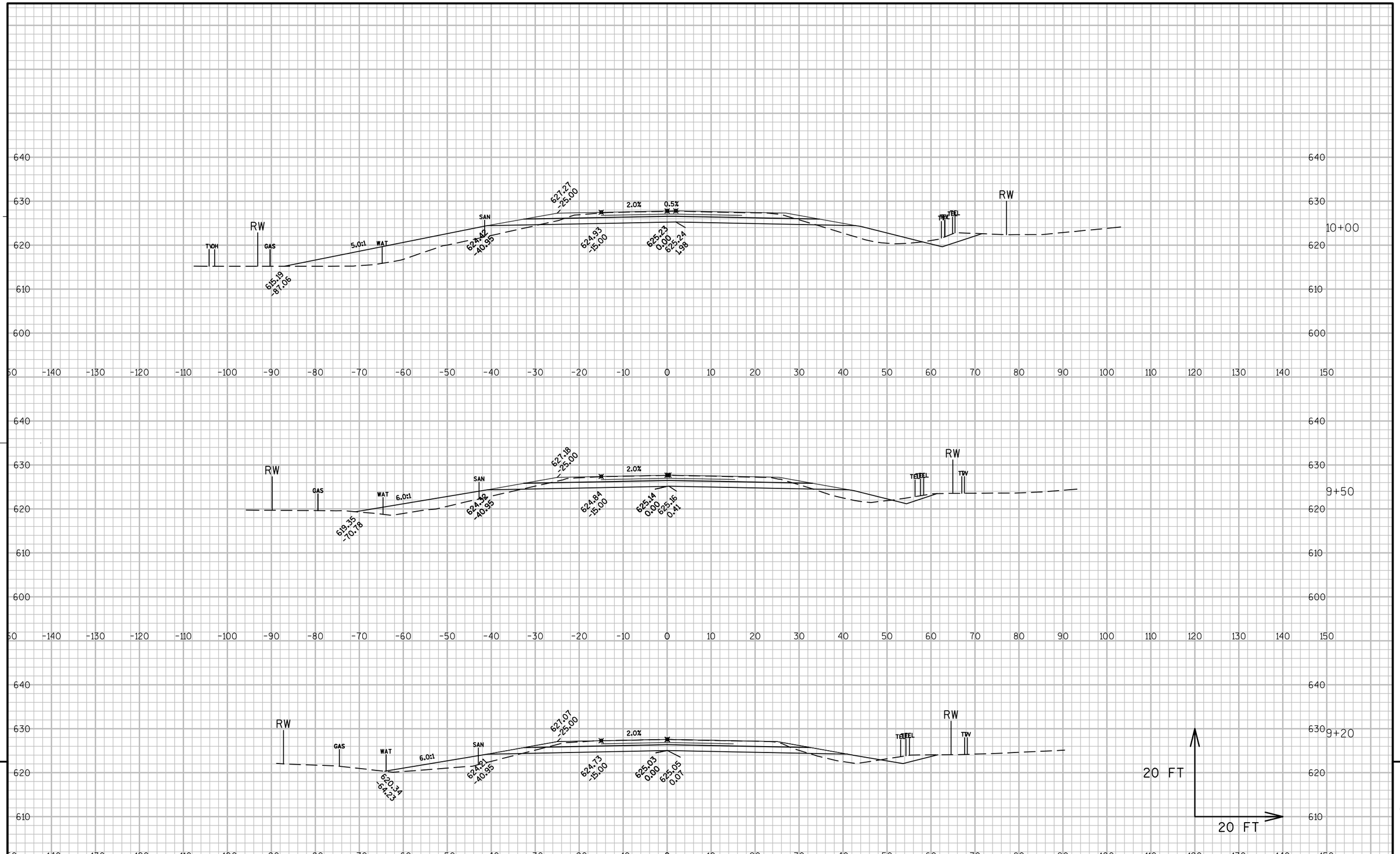

PROJECT NO:4085-43-71	HWY:STH 32/57	COUNTY:BROWN	CROSS SECTIONS:STH 32/57 SB	SHEET 195	E

FILE NAME : N:\PDS\C3D\40854300\SHEETSPLAN\FINAL CROSS SECTIONS\STH3257 - FINAL X-SECTIONS.DWG PLOT DATE : 1/27/2015 2:25 PM PLOT BY : MAY, MATTHEW J PLOT NAME : PLOT SCALE : 1" = 20'_XREF

WISDOT/CADDS SHEET 49

SEE REVISED SHEET 196

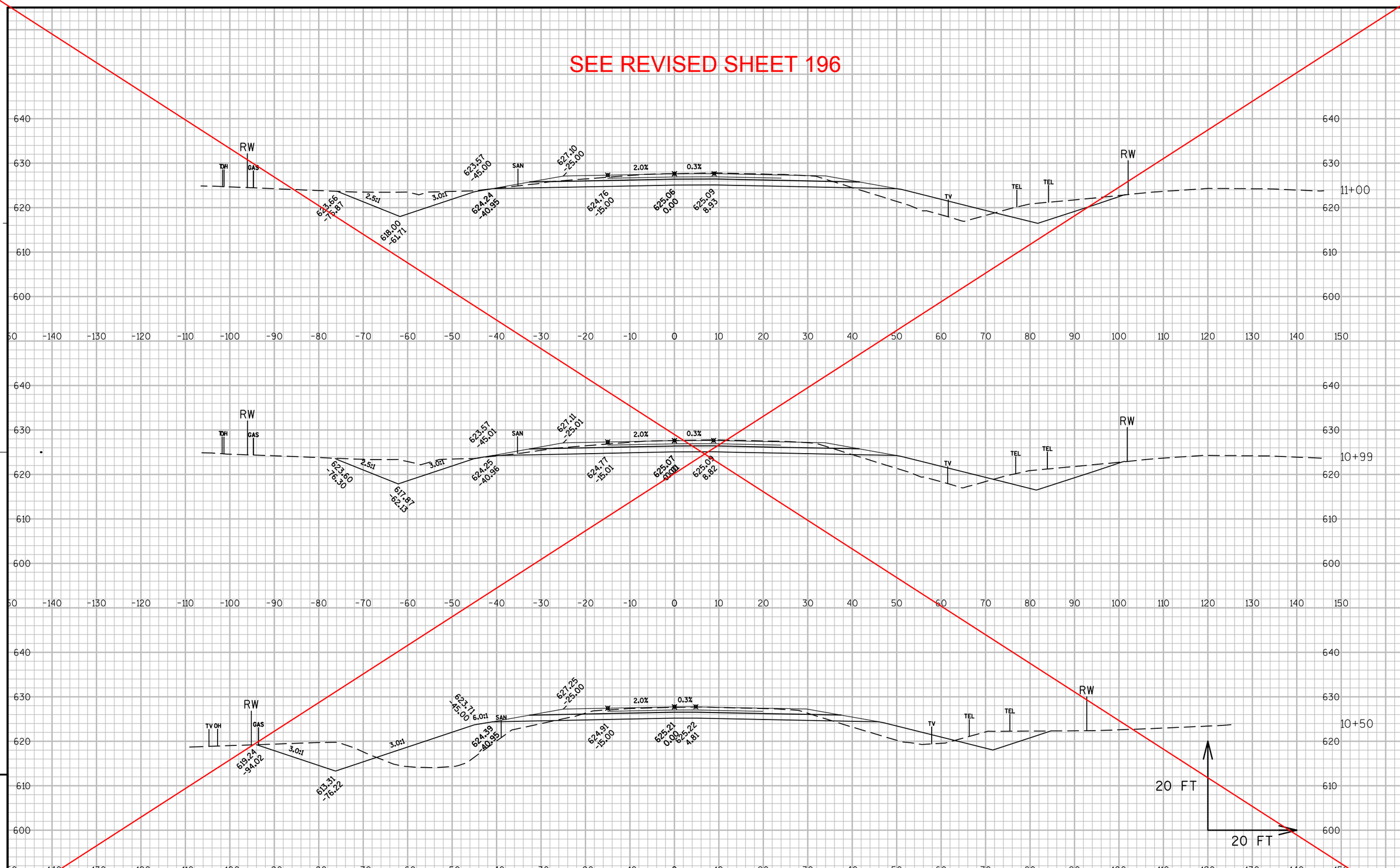

9

9

PROJECT NO:4085-43-71	HWY:STH 32/57	COUNTY:BROWN	CROSS SECTIONS:STH 32/57 SB	SHEET 196A	E

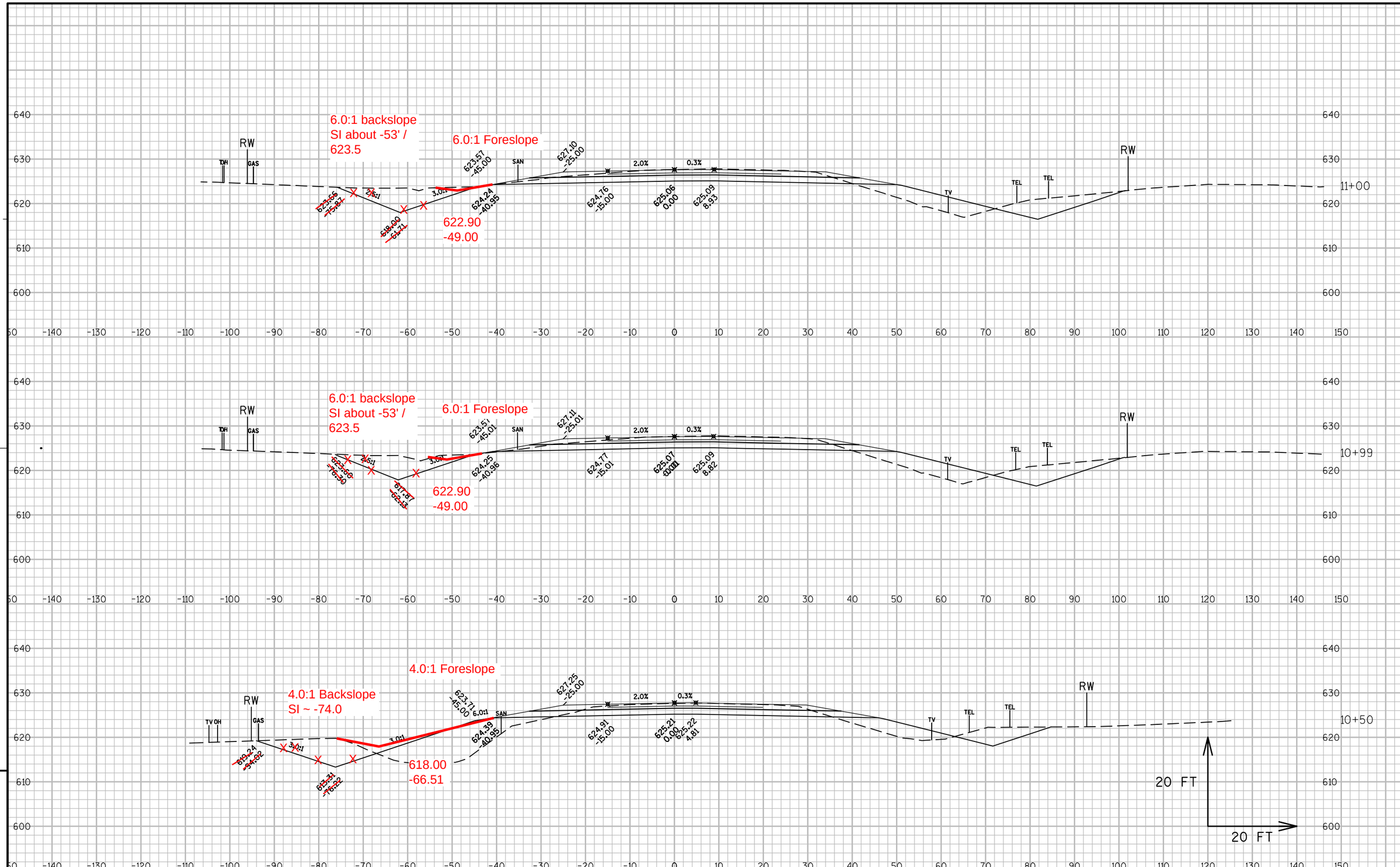

PROJECT NO:4085-43-71	HWY:STH 32/57	COUNTY:BROWN	CROSS SECTIONS:STH 32/57 SB	REVISED	SHEET 196A	E

FILE NAME : N:\PDS\C3D\40854300\SHEETSPLAN\FINAL CROSS SECTIONS\STH3257 - FINAL X-SECTIONS.DWG PLOT DATE : 1/27/2015 2:25 PM PLOT BY : MAY, MATTHEW J PLOT NAME : PLOT SCALE : 1" = 20'_XREF

WISDOT/CADDS SHEET 49

SEE REVISED SHEET 197

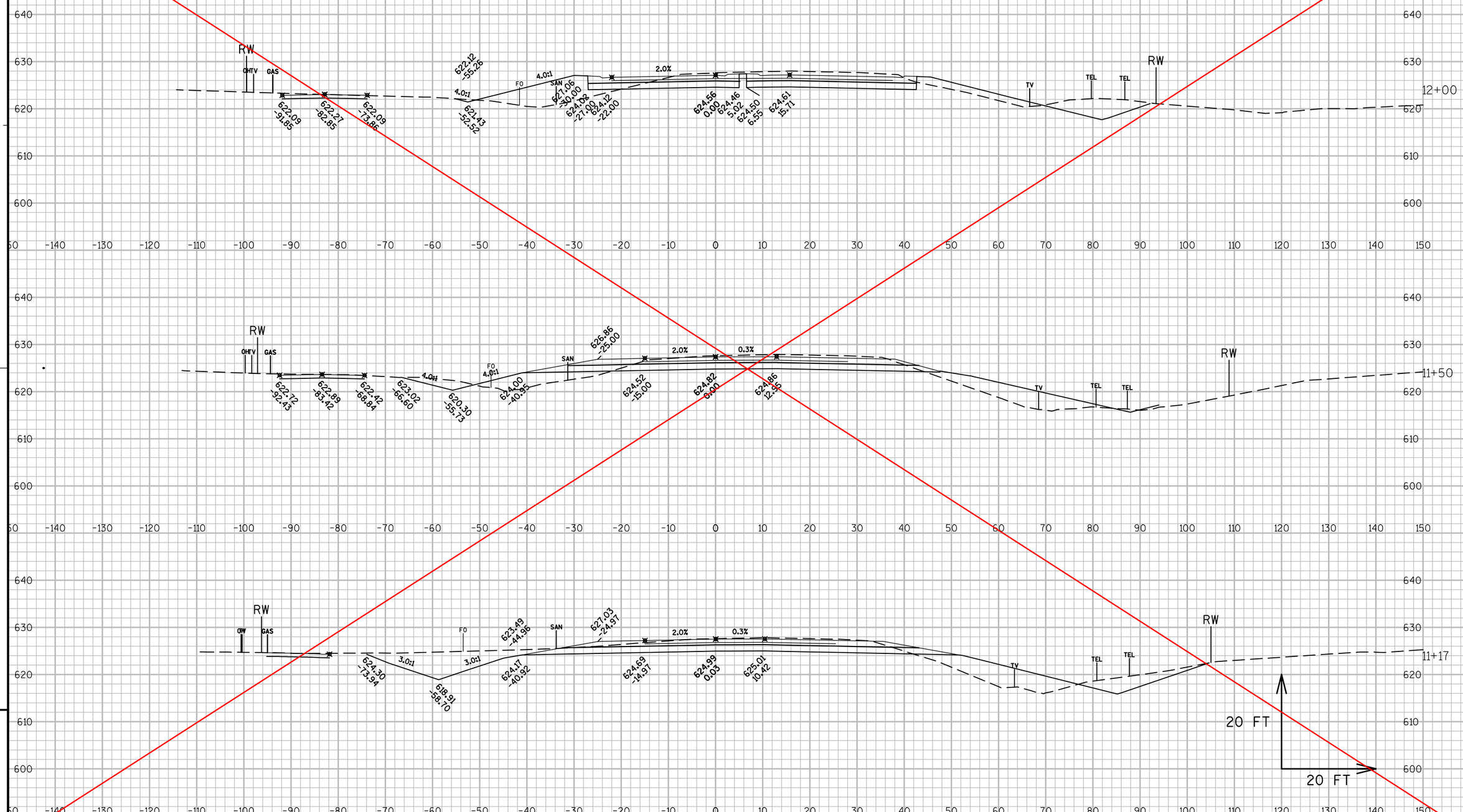

9

9

PROJECT NO:4085-43-71	HWY:STH 32/57	COUNTY:BROWN	CROSS SECTIONS:STH 32/57 SB	SHEET 197A	E

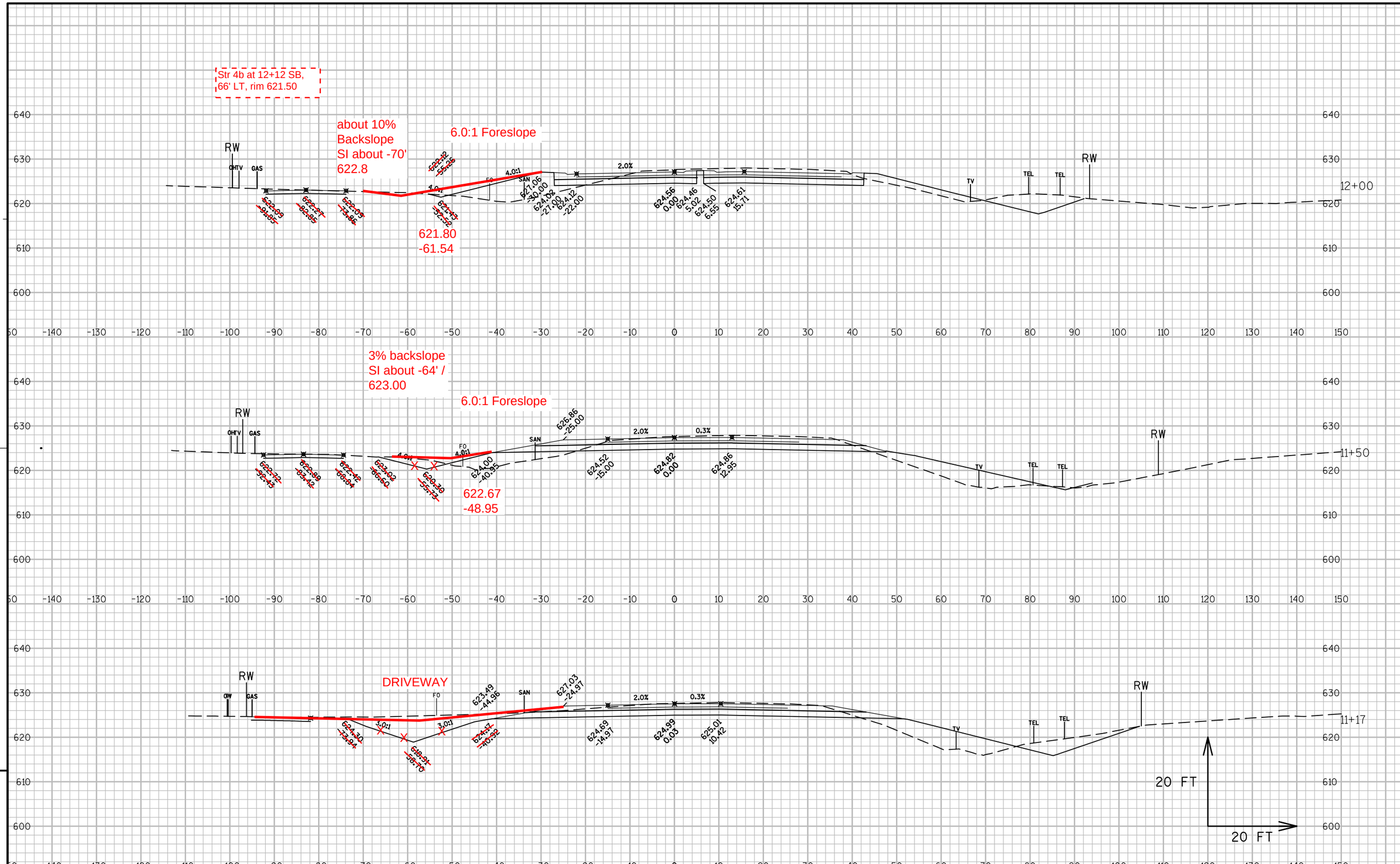

PROJECT NO:4085-43-71	HWY:STH 32/57	COUNTY:BROWN	CROSS SECTIONS:STH 32/57 SB	REVISED	SHEET 197A	E

FILE NAME : N:\PDS\C3D\40854300\SHEETSPLAN\FINAL CROSS SECTIONS\STH3257 - FINAL X-SECTIONS.DWG PLOT DATE : 1/27/2015 2:25 PM PLOT BY : MAY, MATTHEW J PLOT NAME : PLOT SCALE : 1" = 20'_XREF

WISDOT/CADDS SHEET 49

SEE REVISED SHEET 198

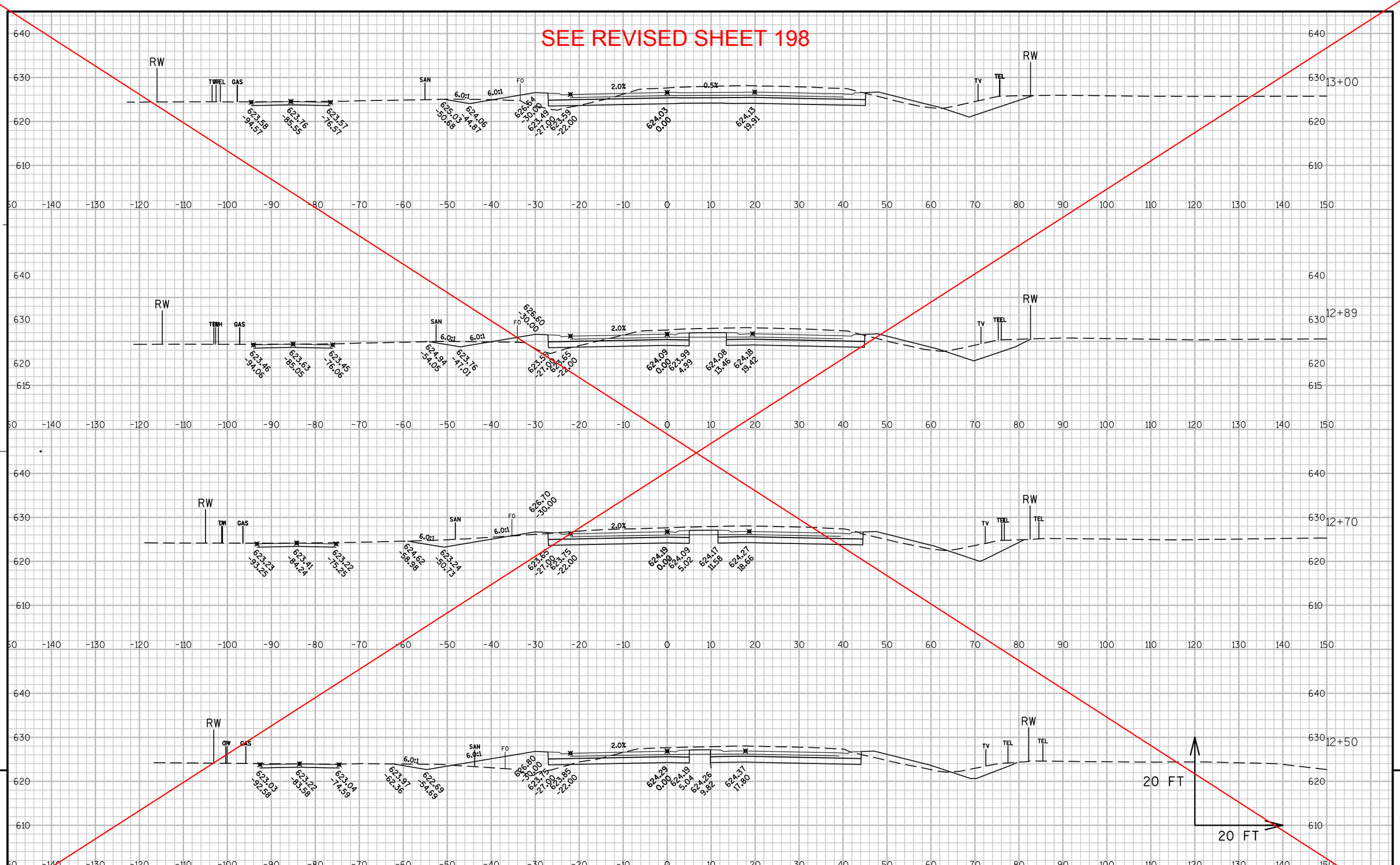

9

9

PROJECT NO: 4085-43-71	HWY: STH 32/57	COUNTY: BROWN	CROSS SECTIONS: STH 32/57 SB	SHEET 198A	E

FILE NAME : N:\PDS\C3D\40854300\SHEETSPLAN\FINAL CROSS SECTIONS\STH3257 - FINAL X-SECTIONS.DWG PLOT DATE : 1/27/2015 2:25 PM PLOT BY : MAY, MATTHEW J PLOT NAME : PLOT SCALE : 1" = 20'_XREF

WISDOT/CADDS SHEET 49

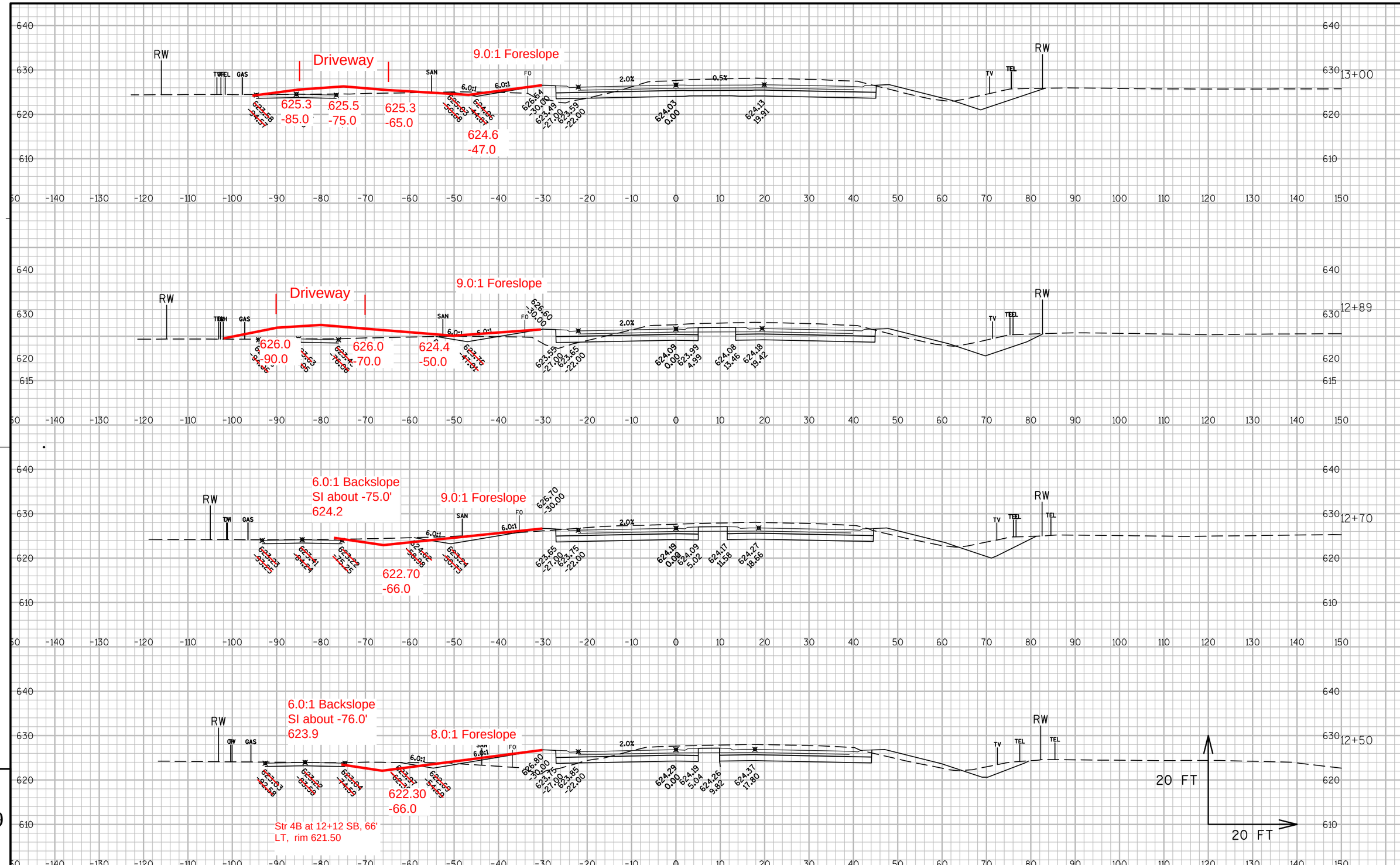

PROJECT NO:4085-43-71	HWY:STH 32/57	COUNTY:BROWN	CROSS SECTIONS:STH 32/57 SB	REVISED	SHEET 198A	E

FILE NAME : N:\PDS\C3D\40854300\SHEETSPLAN\FINAL CROSS SECTIONS\STH3257 - FINAL X-SECTIONS.DWG PLOT DATE : 1/27/2015 2:25 PM PLOT BY : MAY, MATTHEW J PLOT NAME : PLOT SCALE : 1" = 20'_XREF

WISDOT/CADDS SHEET 49

9 9

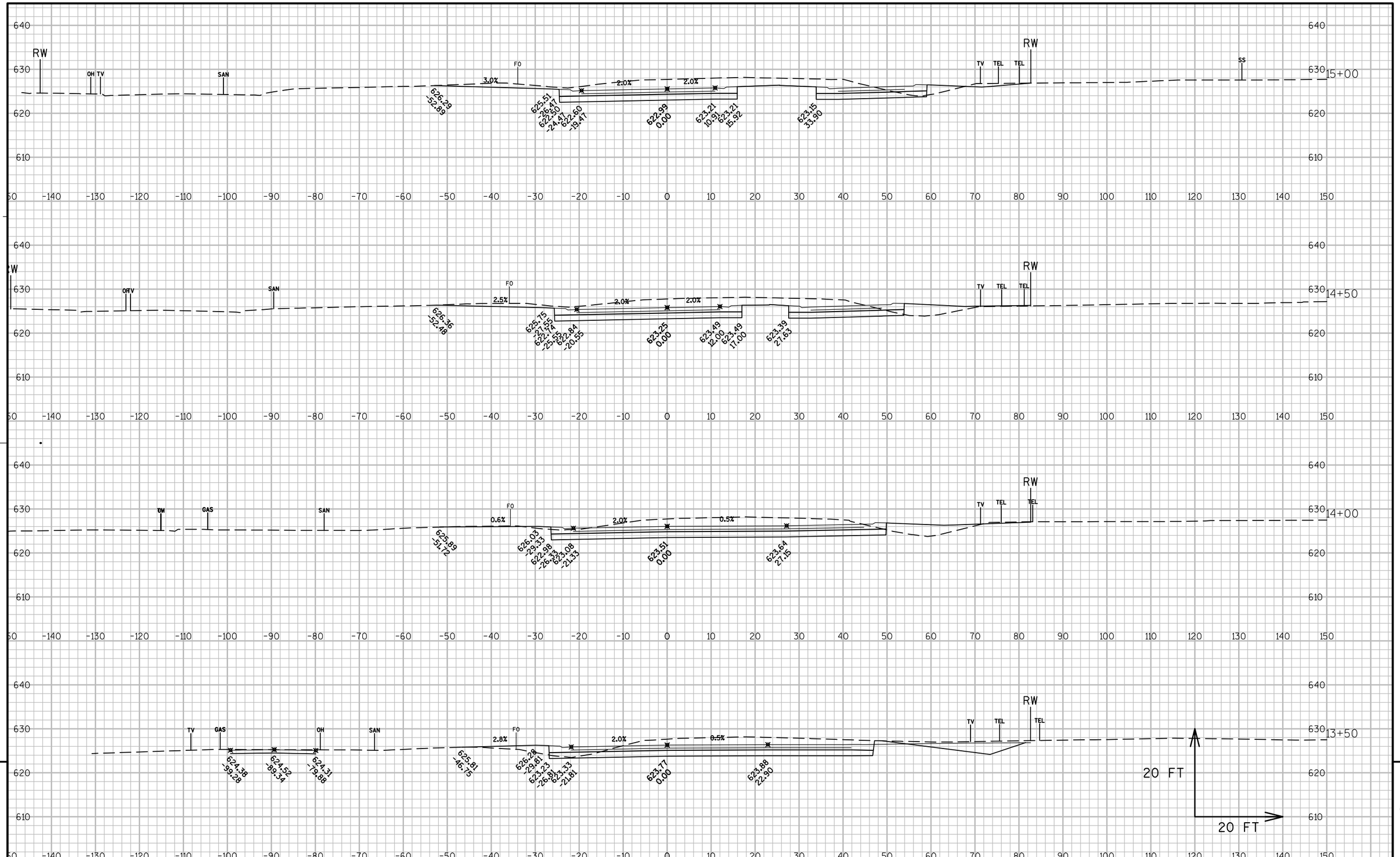

PROJECT NO: 4085-43-71	HWY: STH 32/57	COUNTY: BROWN	CROSS SECTIONS: STH 32/57 SB	SHEET 199	E

FILE NAME : N:\PDS\C3D\40854300\SHEETSPLAN\FINAL CROSS SECTIONS\STH3257 - FINAL X-SECTIONS.DWG PLOT DATE : 1/27/2015 2:25 PM PLOT BY : MAY, MATTHEW J PLOT NAME : PLOT SCALE : 1" = 20'_XREF

WISDOT/CADDS SHEET 49

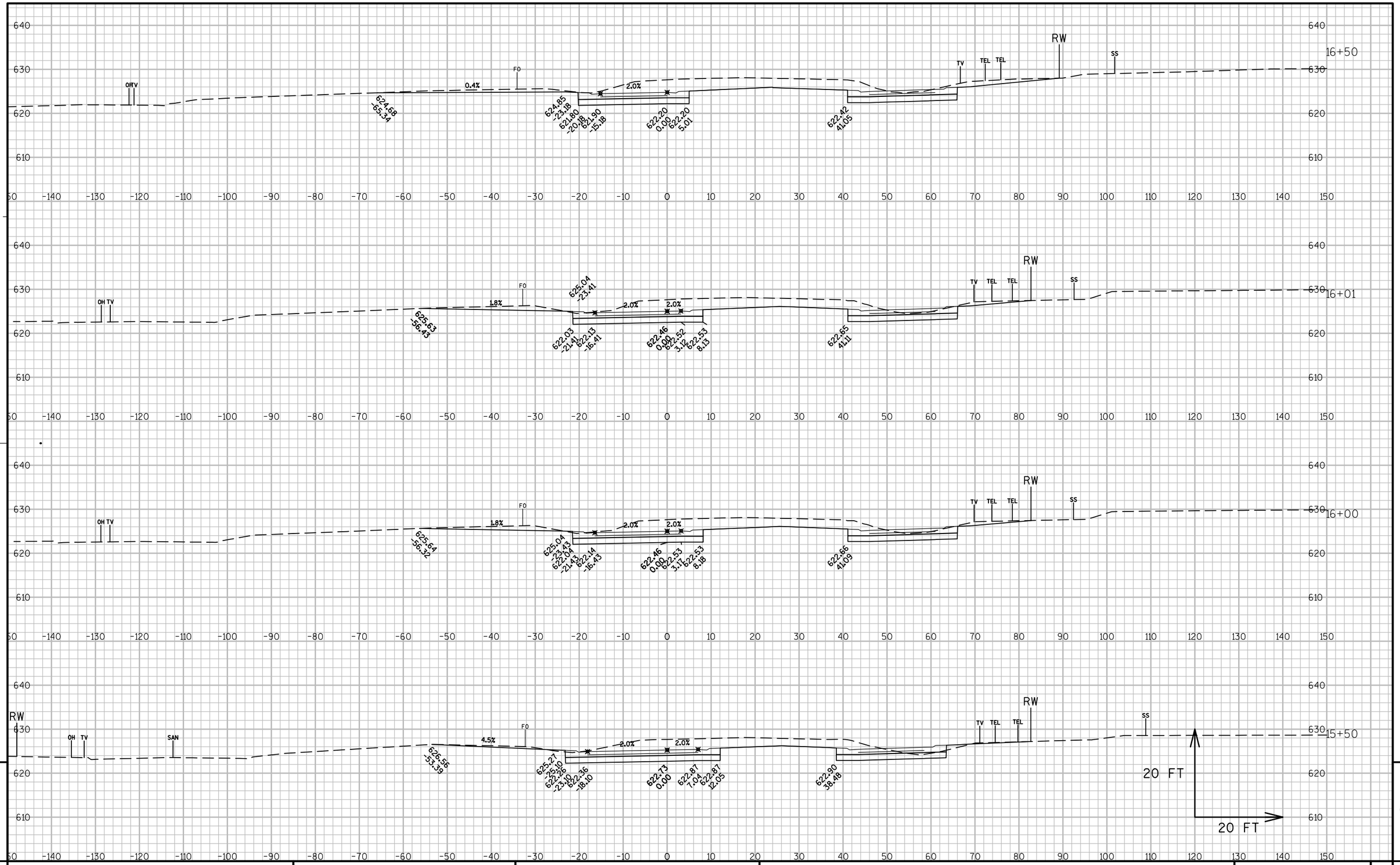

9

9

PROJECT NO:4085-43-71	HWY:STH 32/57	COUNTY:BROWN	CROSS SECTIONS:STH 32/57 SB	SHEET 200	E

FILE NAME : N:\PDS\C3D\40854300\SHEETSPLAN\FINAL CROSS SECTIONS\STH3257 - FINAL X-SECTIONS.DWG PLOT DATE : 1/27/2015 2:26 PM PLOT BY : MAY, MATTHEW J PLOT NAME : PLOT SCALE : 1" = 20'_XREF

WISDOT/CADDS SHEET 49

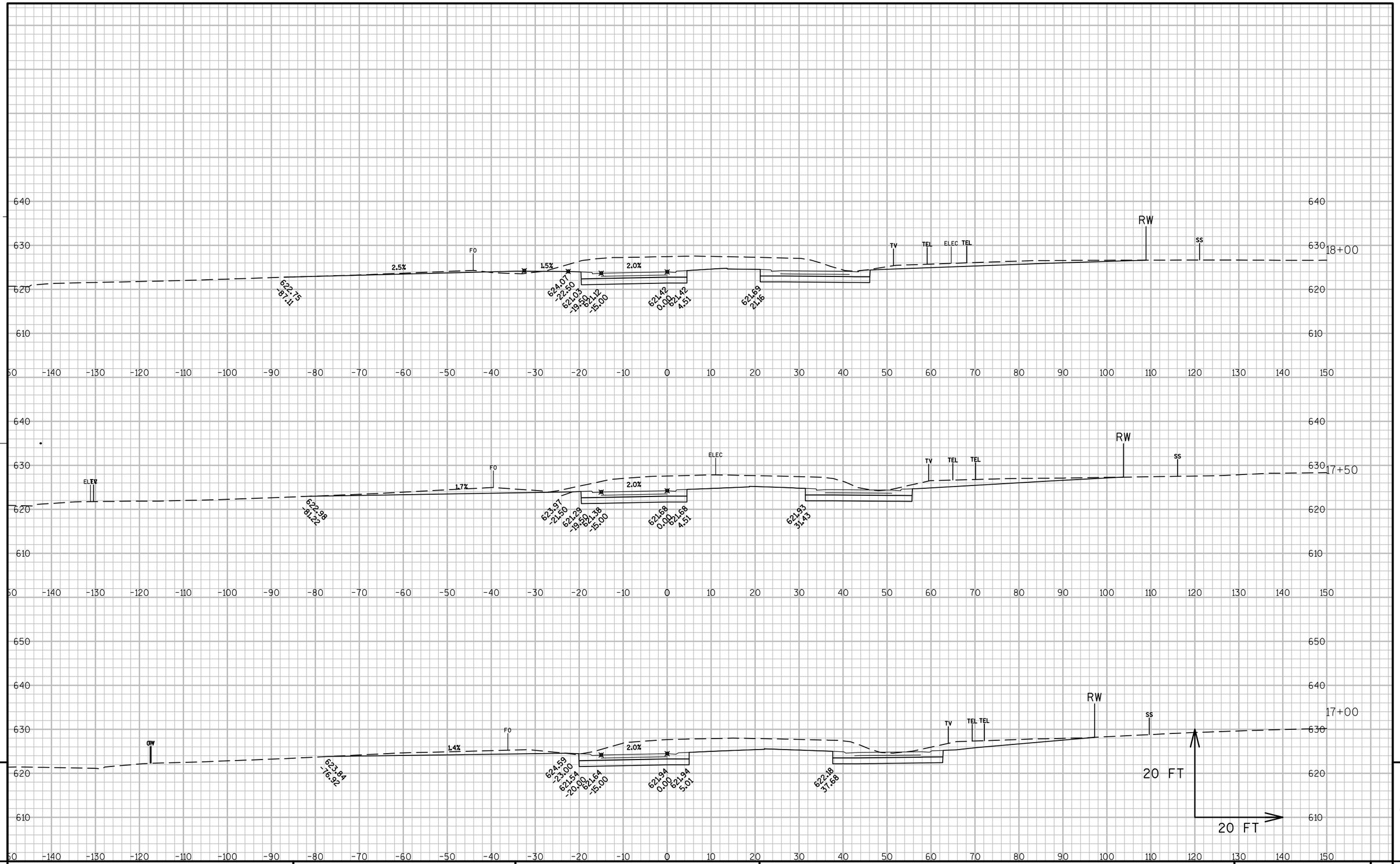

PROJECT NO:4085-43-71	HWY:STH 32/57	COUNTY:BROWN	CROSS SECTIONS:STH 32/57 SB	SHEET 201	E

FILE NAME : N:\PDS\C3D\40854300\SHEETSPLAN\FINAL CROSS SECTIONS\STH3257 - FINAL X-SECTIONS.DWG PLOT DATE : 1/27/2015 2:26 PM PLOT BY : MAY, MATTHEW J PLOT NAME : PLOT SCALE : 1" = 20'_XREF

WISDOT/CADDS SHEET 49

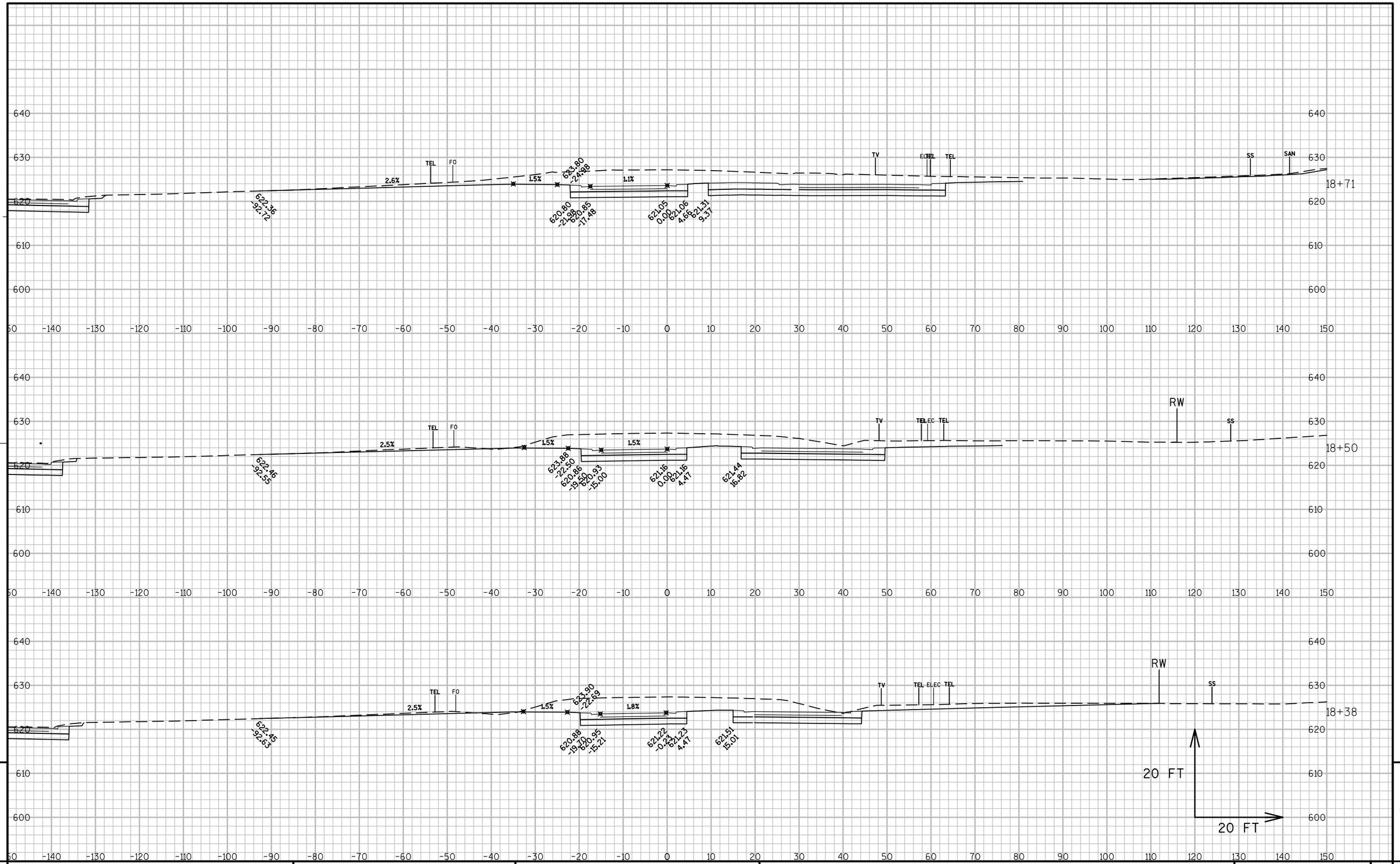

PROJECT NO:4085-43-71	HWY:STH 32/57	COUNTY:BROWN	CROSS SECTIONS:STH 32/57 SB	SHEET 202	E

FILE NAME : N:\PDS\C3D\40854300\SHEETSPLAN\FINAL CROSS SECTIONS\STH3257 - FINAL X-SECTIONS.DWG PLOT DATE : 1/27/2015 2:26 PM PLOT BY : MAY, MATTHEW J PLOT NAME : PLOT SCALE : 1" = 20'_XREF

WISDOT/CADDS SHEET 49

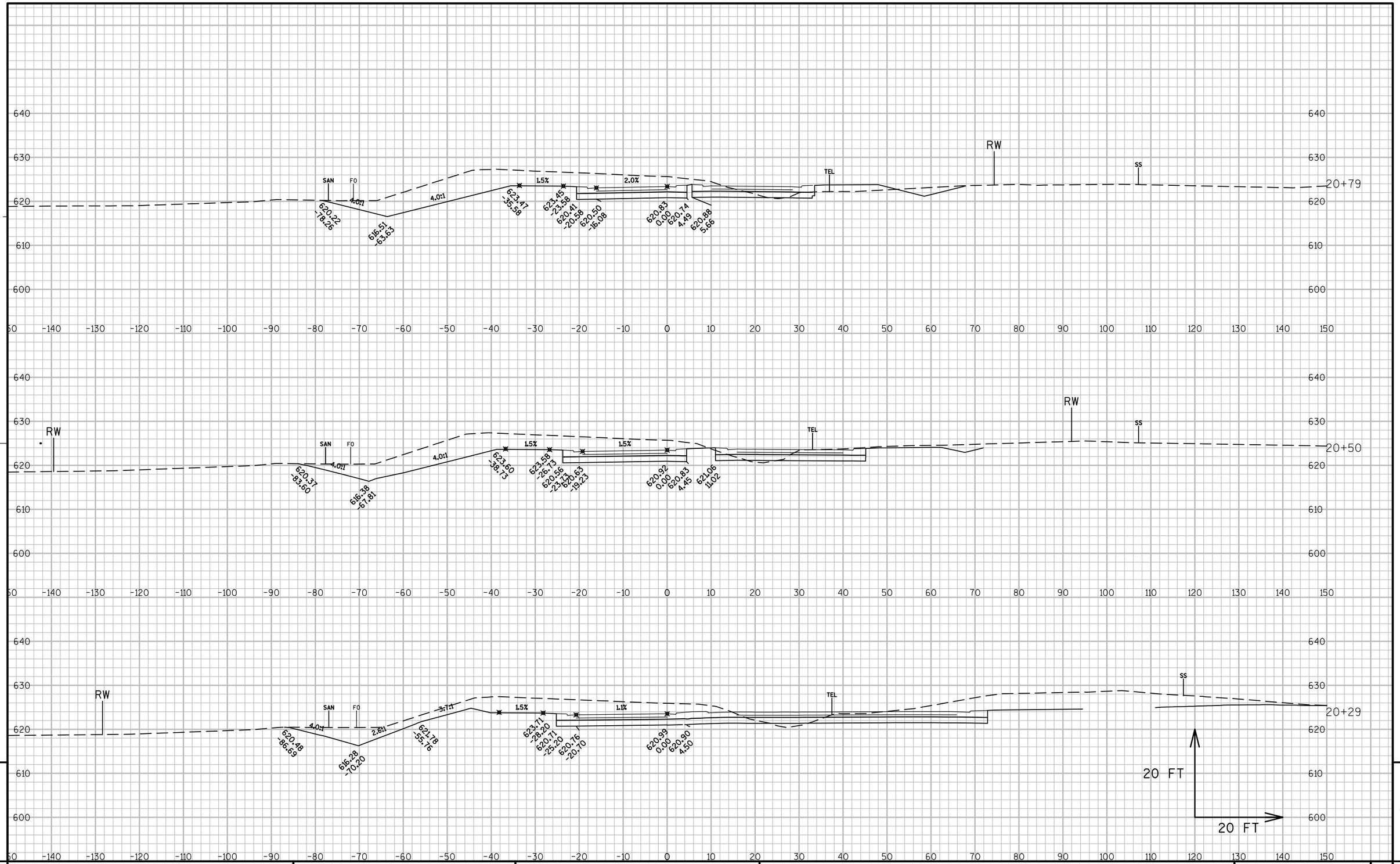

PROJECT NO:4085-43-71	HWY:STH 32/57	COUNTY:BROWN	CROSS SECTIONS:STH 32/57 SB	SHEET 203	E

FILE NAME : N:\PDS\C3D\40854300\SHEETSPLAN\FINAL CROSS SECTIONS\STH3257 - FINAL X-SECTIONS.DWG PLOT DATE : 1/27/2015 2:26 PM PLOT BY : MAY, MATTHEW J PLOT NAME : PLOT SCALE : 1" = 20'_XREF

WISDOT/CADDS SHEET 49

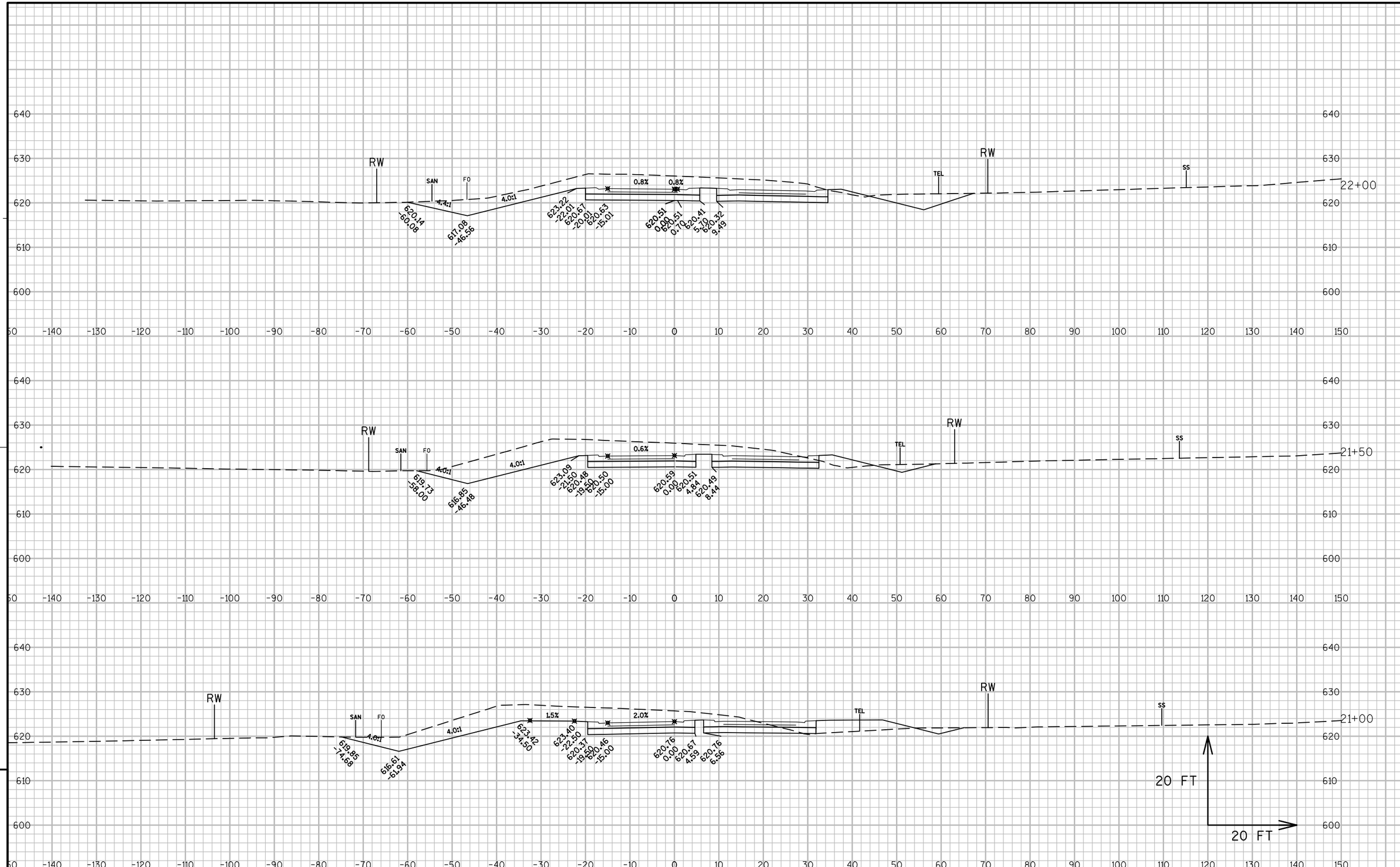

PROJECT NO:4085-43-71	HWY:STH 32/57	COUNTY:BROWN	CROSS SECTIONS:STH 32/57 SB	SHEET 204	E

FILE NAME : N:\PDS\C3D\40854300\SHEETSPLAN\FINAL CROSS SECTIONS\STH3257 - FINAL X-SECTIONS.DWG PLOT DATE : 1/27/2015 2:26 PM PLOT BY : MAY, MATTHEW J PLOT NAME : PLOT SCALE : 1" = 20'_XREF

WISDOT/CADDS SHEET 49

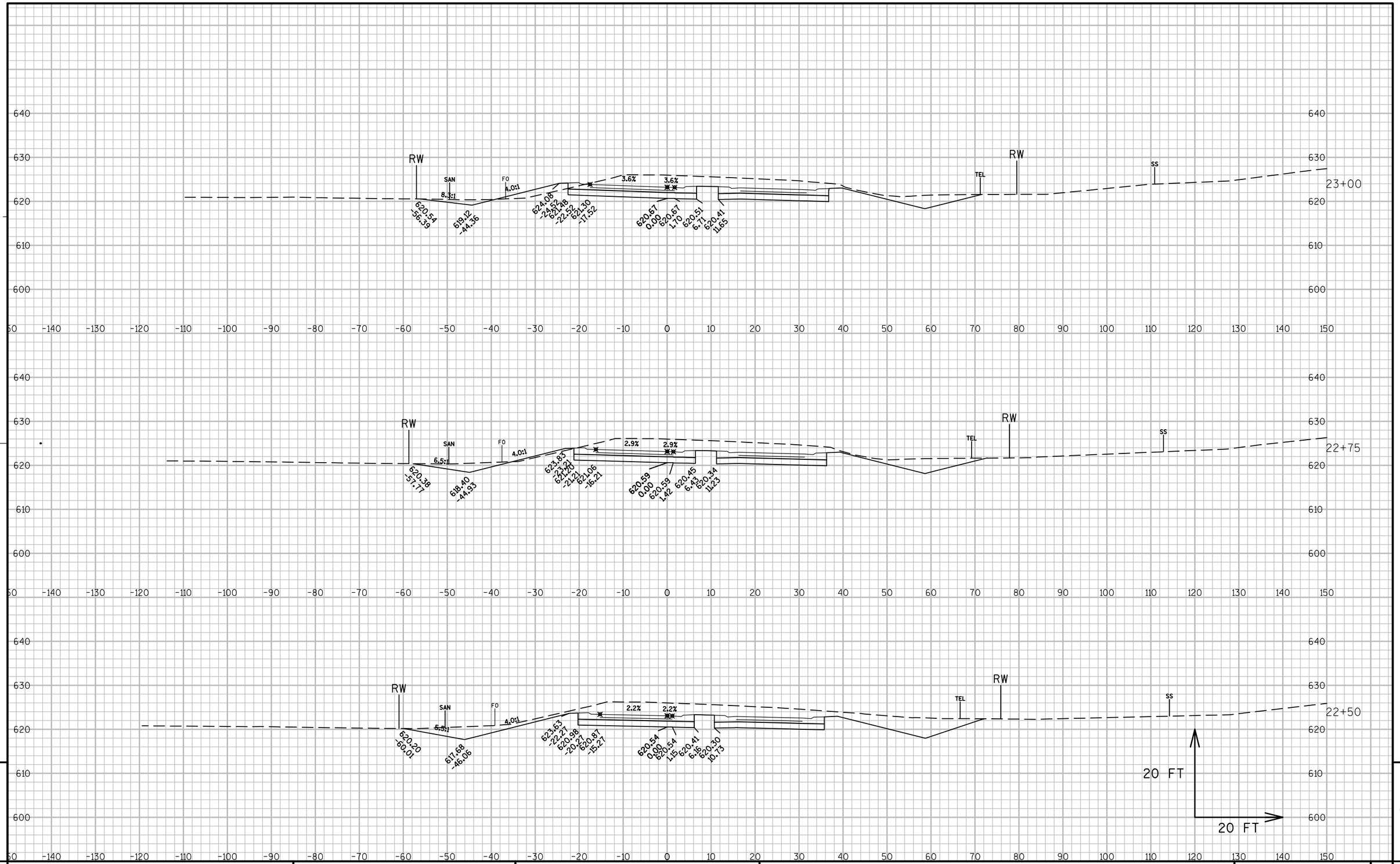

9

9

PROJECT NO:4085-43-71	HWY:STH 32/57	COUNTY:BROWN	CROSS SECTIONS:STH 32/57 SB	SHEET 205	E

FILE NAME : N:\PDS\C3D\40854300\SHEETSPLAN\FINAL CROSS SECTIONS\STH3257 - FINAL X-SECTIONS.DWG PLOT DATE : 1/27/2015 2:27 PM PLOT BY : MAY, MATTHEW J PLOT NAME : PLOT SCALE : 1" = 20'_XREF

WISDOT/CADDS SHEET 49

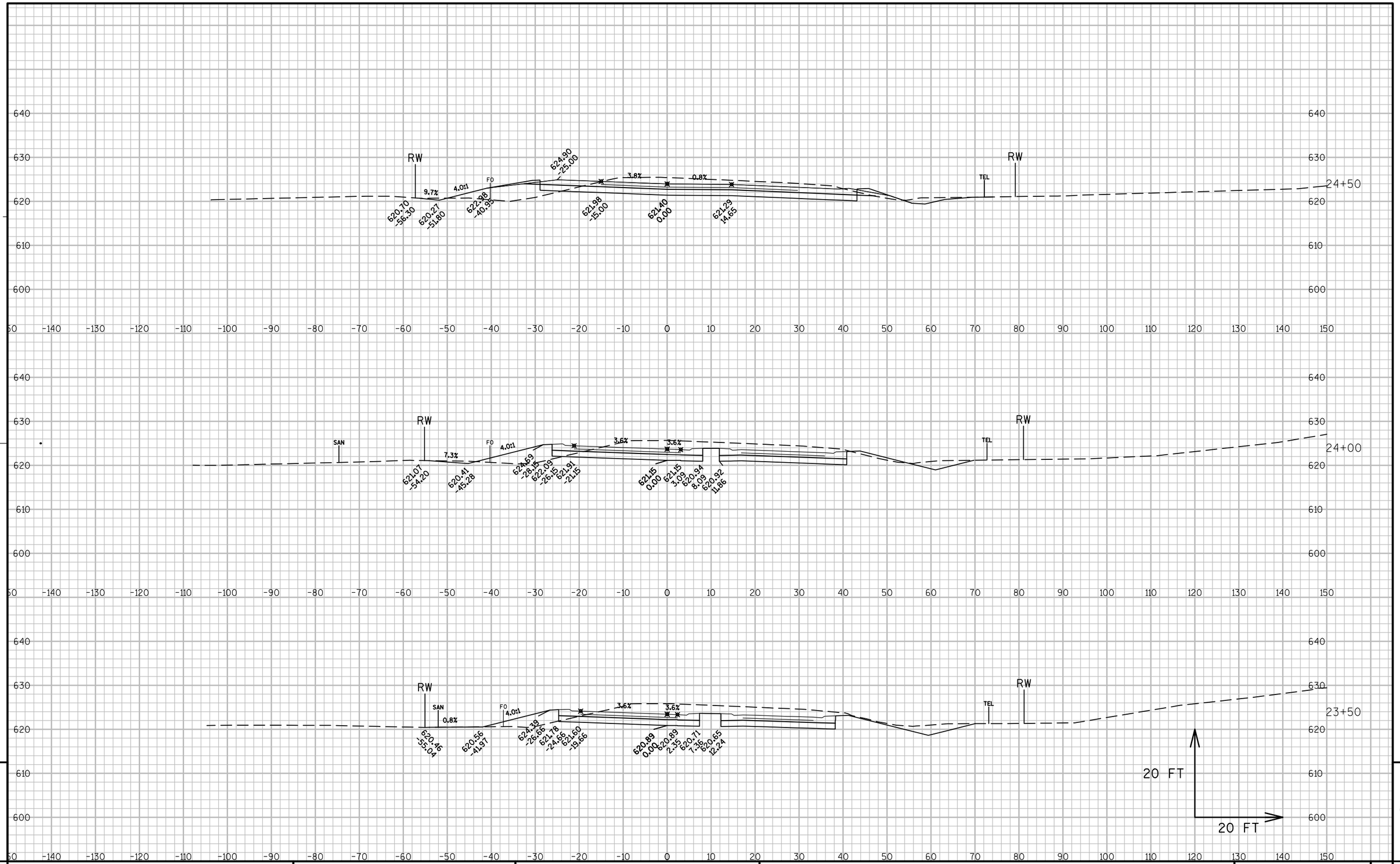

PROJECT NO:4085-43-71	HWY:STH 32/57	COUNTY:BROWN	CROSS SECTIONS:STH 32/57 SB	SHEET 206	E

FILE NAME : N:\PDS\C3D\40854300\SHEETSPLAN\FINAL CROSS SECTIONS\STH3257 - FINAL X-SECTIONS.DWG PLOT DATE : 1/27/2015 2:27 PM PLOT BY : MAY, MATTHEW J PLOT NAME : PLOT SCALE : 1" = 20'_XREF

WISDOT/CADDS SHEET 49

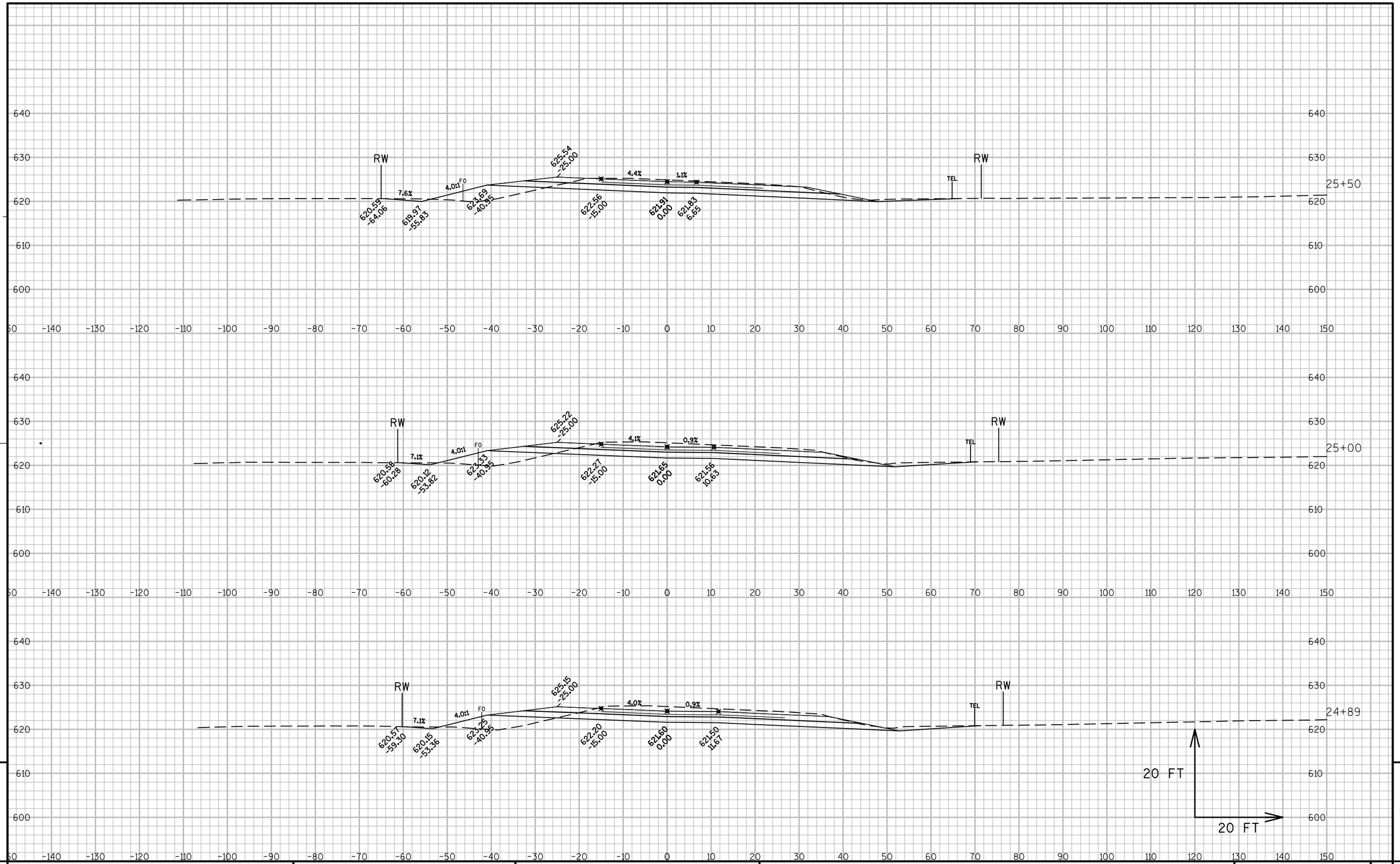

PROJECT NO:4085-43-71	HWY:STH 32/57	COUNTY:BROWN	CROSS SECTIONS:STH 32/57 SB	SHEET 207	E

FILE NAME : N:\PDS\C3D\40854300\SHEETSPLAN\FINAL CROSS SECTIONS\STH3257 - FINAL X-SECTIONS.DWG PLOT DATE : 1/27/2015 2:27 PM PLOT BY : MAY, MATTHEW J PLOT NAME : PLOT SCALE : 1" = 20'_XREF

WISDOT/CADDS SHEET 49

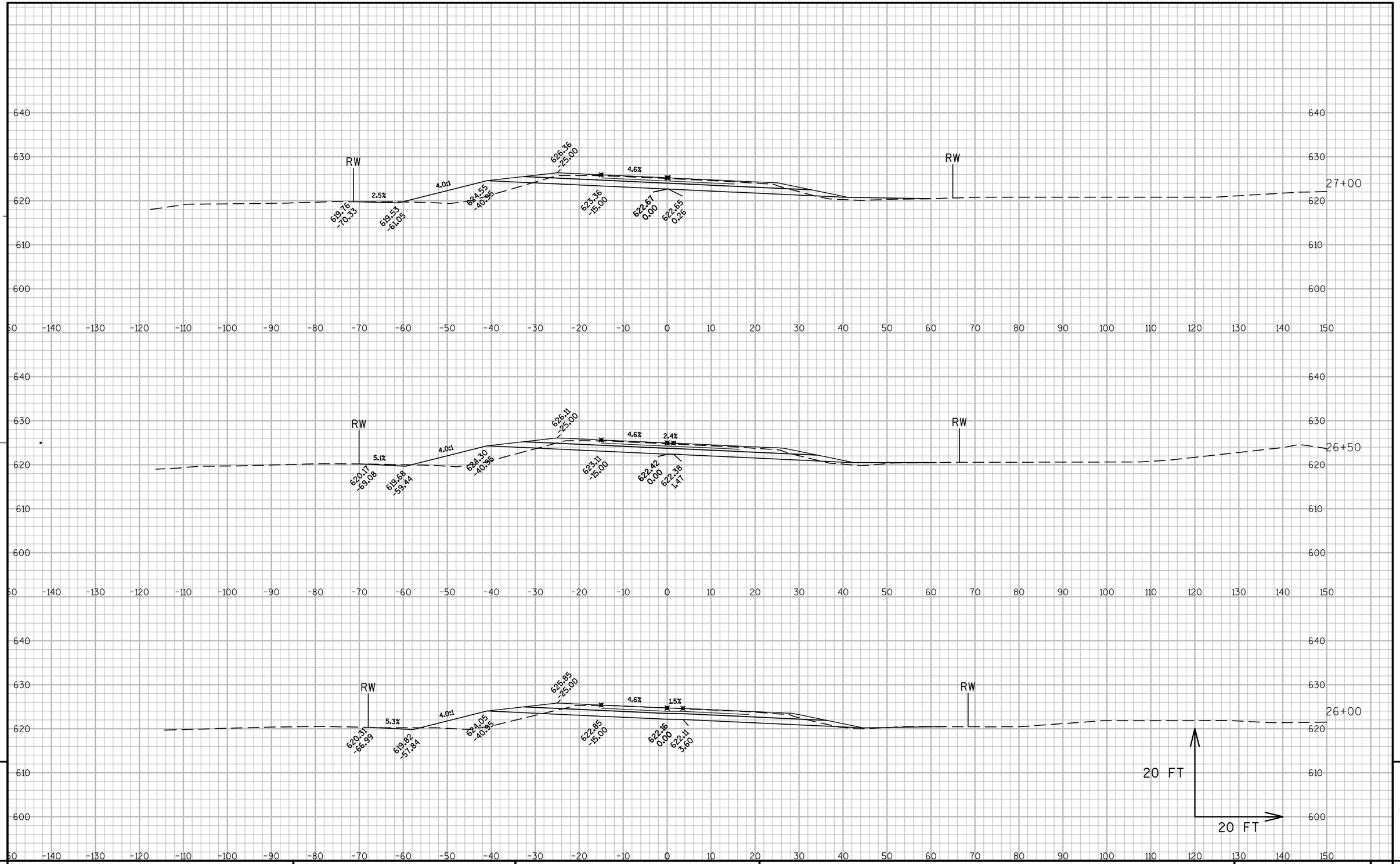

PROJECT NO:4085-43-71	HWY:STH 32/57	COUNTY:BROWN	CROSS SECTIONS:STH 32/57 SB	SHEET 208	E

FILE NAME : N:\PDS\C3D\40854300\SHEETSPLAN\FINAL CROSS SECTIONS\STH3257 - FINAL X-SECTIONS.DWG PLOT DATE : 1/27/2015 2:27 PM PLOT BY : MAY, MATTHEW J PLOT NAME : PLOT SCALE : 1" = 20'_XREF

WISDOT/CADDS SHEET 49

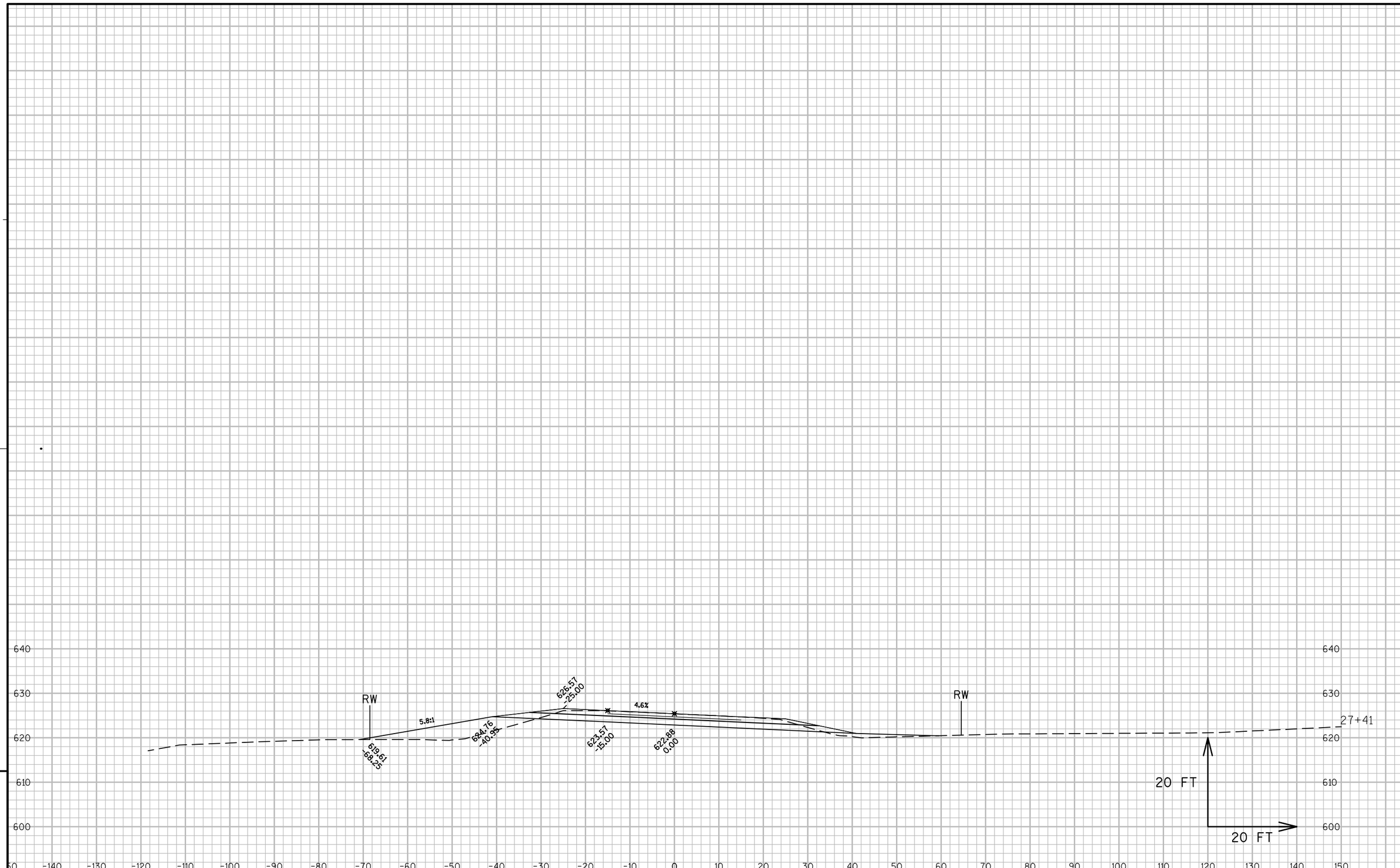

9

9

PROJECT NO:4085-43-71	HWY:STH 32/57	COUNTY:BROWN	CROSS SECTIONS:STH 32/57 SB	SHEET 209	E

FILE NAME : N:\PDS\C3D\40854300\SHEETSPLAN\FINAL CROSS SECTIONS\STH3257 - FINAL X-SECTIONS.DWG PLOT DATE : 1/27/2015 2:27 PM PLOT BY : MAY, MATTHEW J PLOT NAME : PLOT SCALE : 1" = 20'_XREF

WISDOT/CADDS SHEET 49

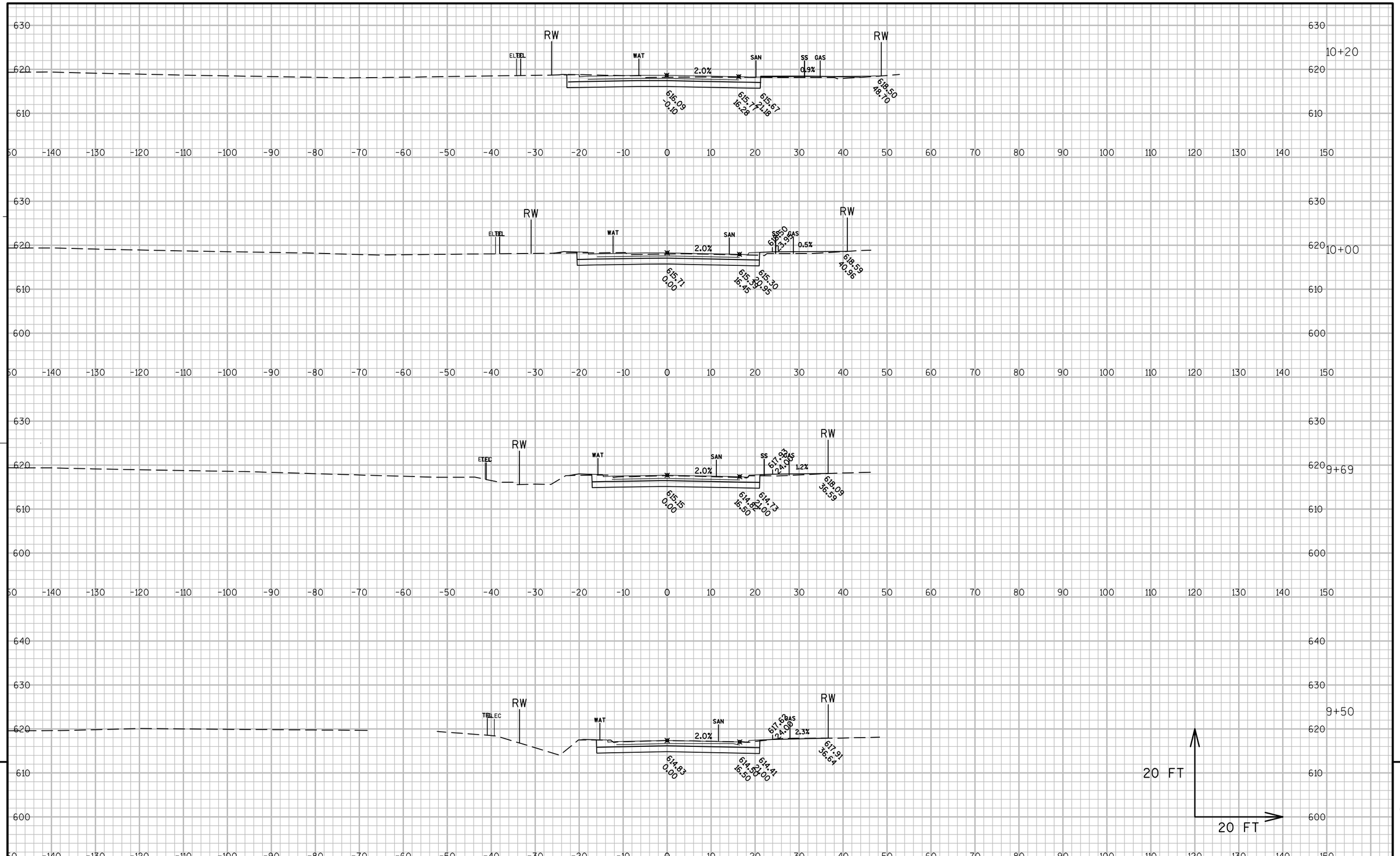

PROJECT NO:4085-43-71	HWY:STH 32/57	COUNTY:BROWN	CROSS SECTIONS:CTH X - EB	SHEET 210	E

FILE NAME : N:\PDS\C3D\40854300\SHEETSPLAN\FINAL CROSS SECTIONS\CTH X - FINAL X-SECTIONS.DWG PLOT DATE : 1/9/2015 2:03 PM PLOT BY : MAY, MATTHEW J PLOT NAME : PLOT SCALE : 1:20_XREF

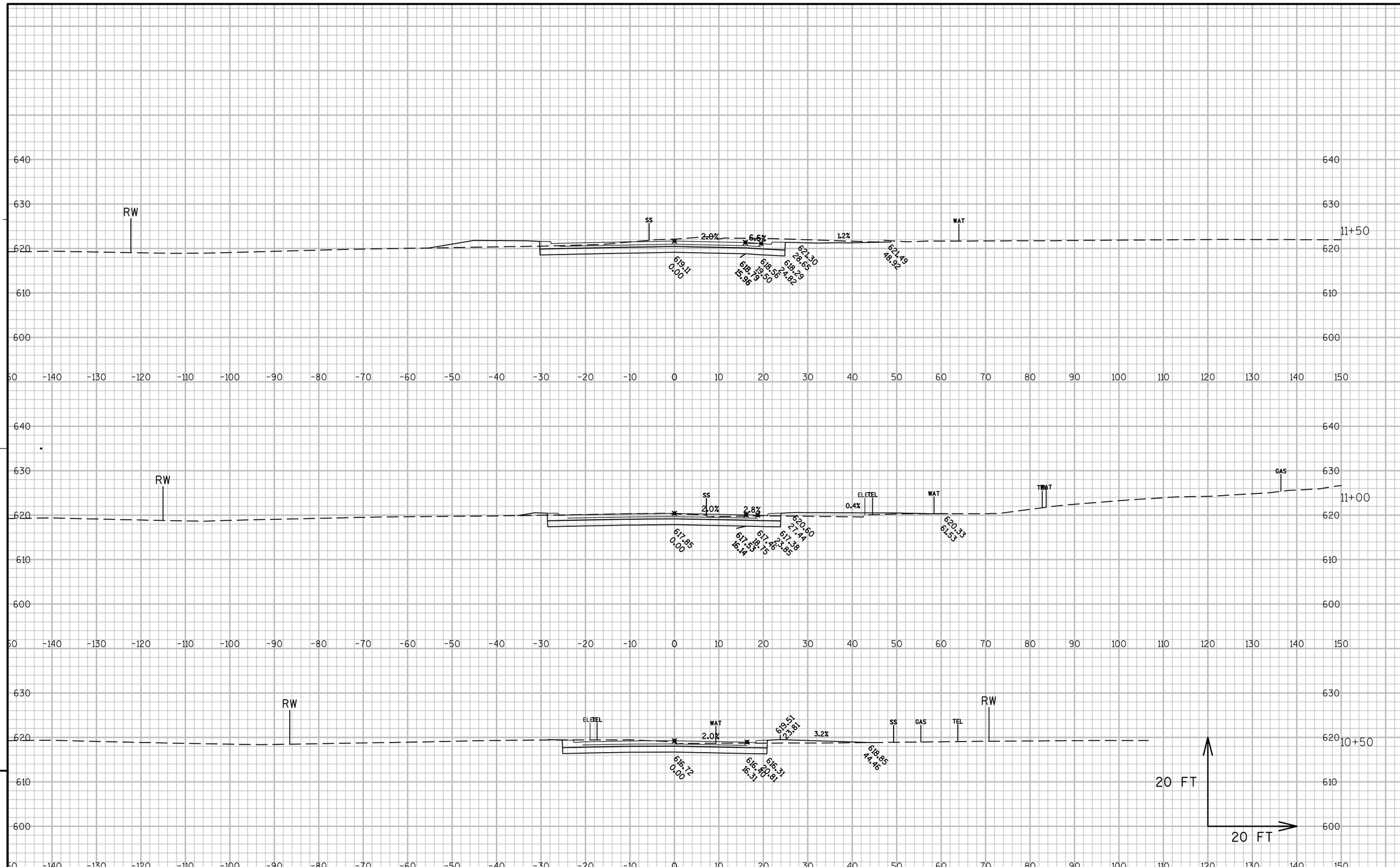

PROJECT NO: 4085-43-71	HWY: STH 32/57	COUNTY: BROWN	CROSS SECTIONS: CTH X - EB	SHEET 211	E

FILE NAME : N:\PDS\C3D\40854300\SHEETSPLAN\FINAL CROSS SECTIONS\CTH X - FINAL X-SECTIONS.DWG PLOT DATE : 1/9/2015 2:03 PM PLOT BY : MAY, MATTHEW J PLOT NAME : PLOT SCALE : 1:20_XREF

WISDOT/CADDS SHEET 49

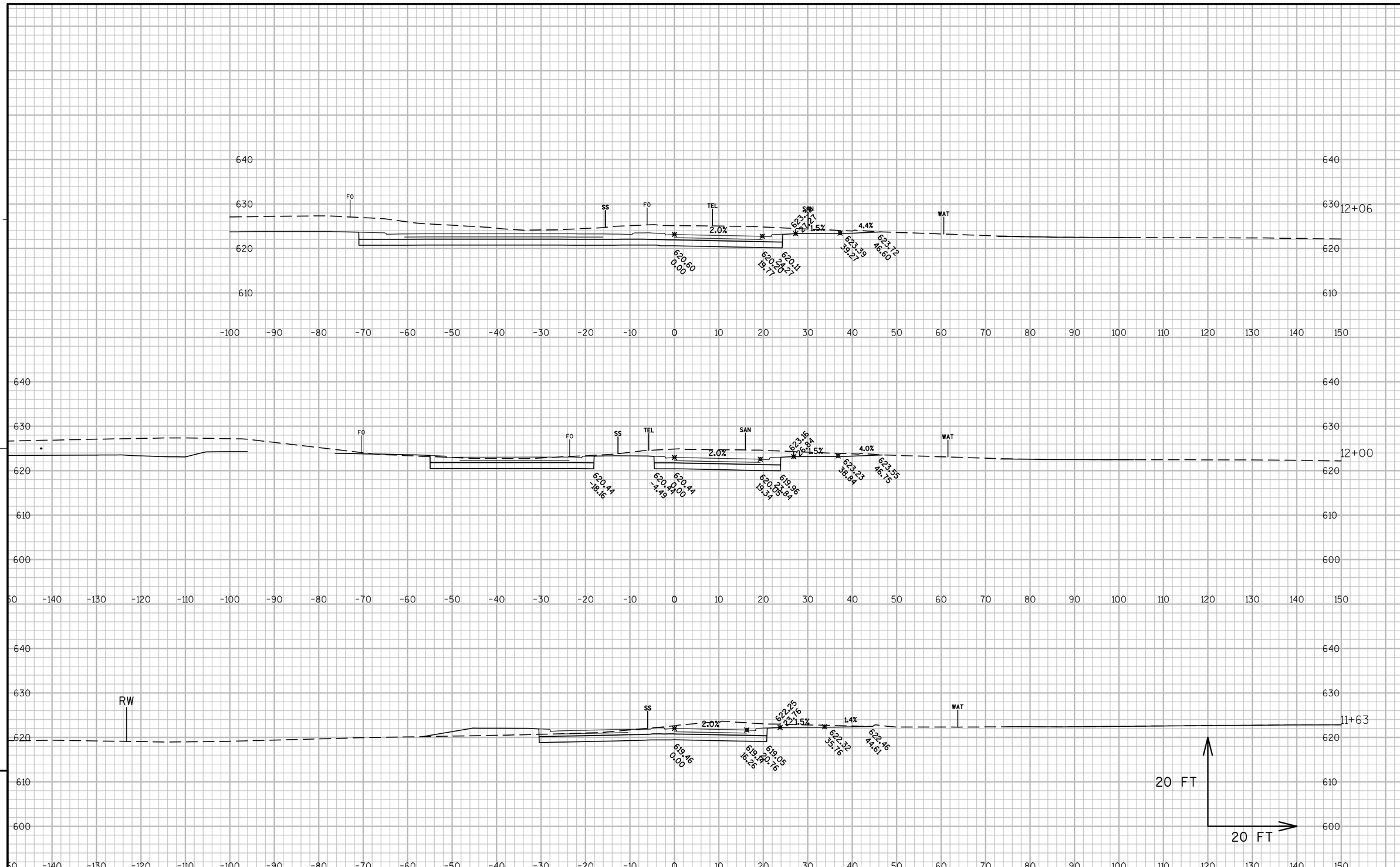

PROJECT NO:4085-43-71	HWY:STH 32/57	COUNTY:BROWN	CROSS SECTIONS:CTH X - EB	SHEET 212	E

FILE NAME : N:\PDS\C3D\40854300\SHEETSPLAN\FINAL CROSS SECTIONS\CTH X - FINAL X-SECTIONS.DWG PLOT DATE : 1/9/2015 2:03 PM PLOT BY : MAY, MATTHEW J PLOT NAME : PLOT SCALE : 1:20_XREF

WISDOT/CADDS SHEET 49

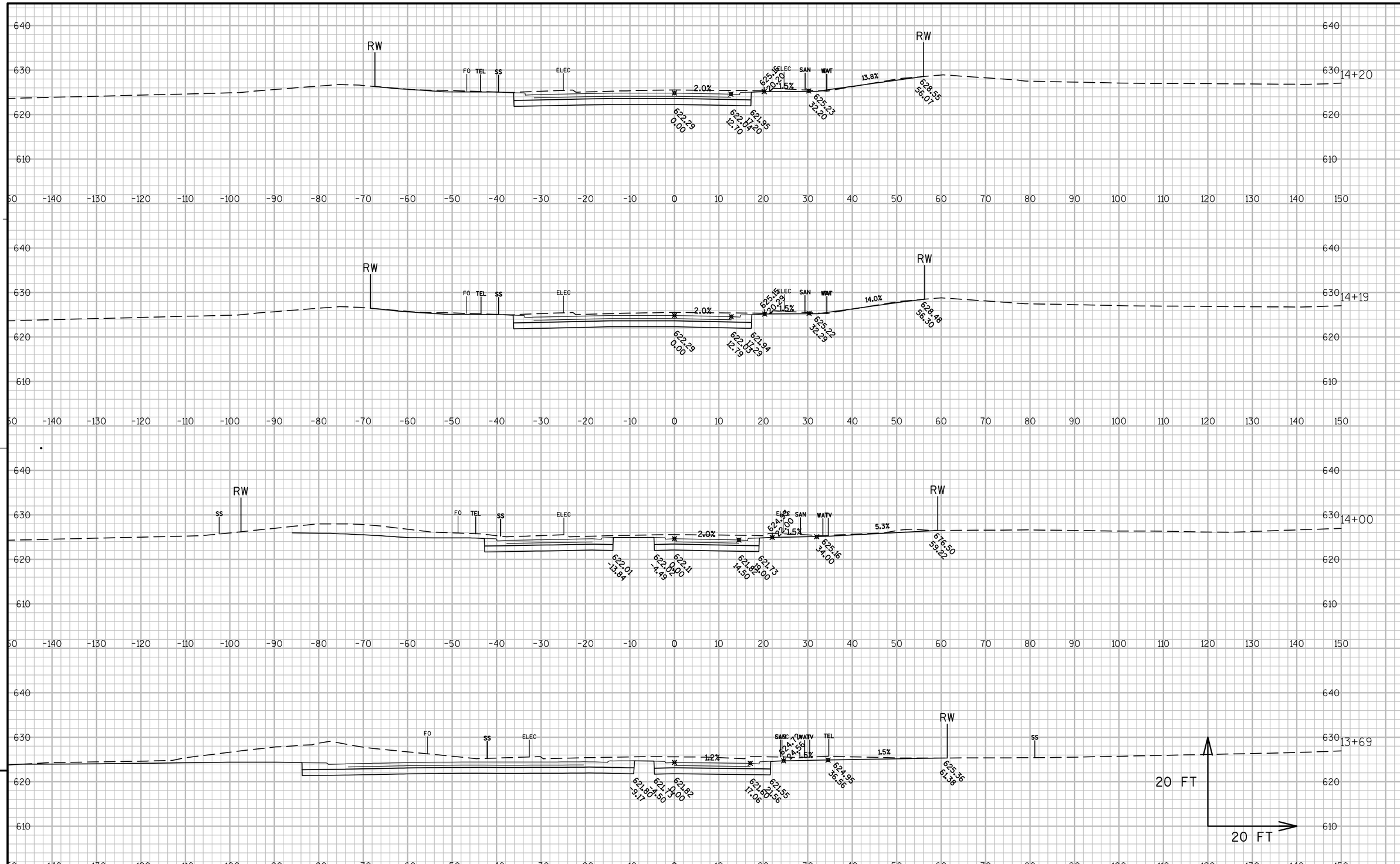

9

9

PROJECT NO:4085-43-71	HWY:STH 32/57	COUNTY:BROWN	CROSS SECTIONS:CTH X - EB	SHEET 213	E

FILE NAME : N:\PDS\C3D\40854300\SHEETSPLAN\FINAL CROSS SECTIONS\CTH X - FINAL X-SECTIONS.DWG PLOT DATE : 1/9/2015 2:03 PM PLOT BY : MAY, MATTHEW J PLOT NAME : PLOT SCALE : 1:20_XREF

WISDOT/CADDS SHEET 49

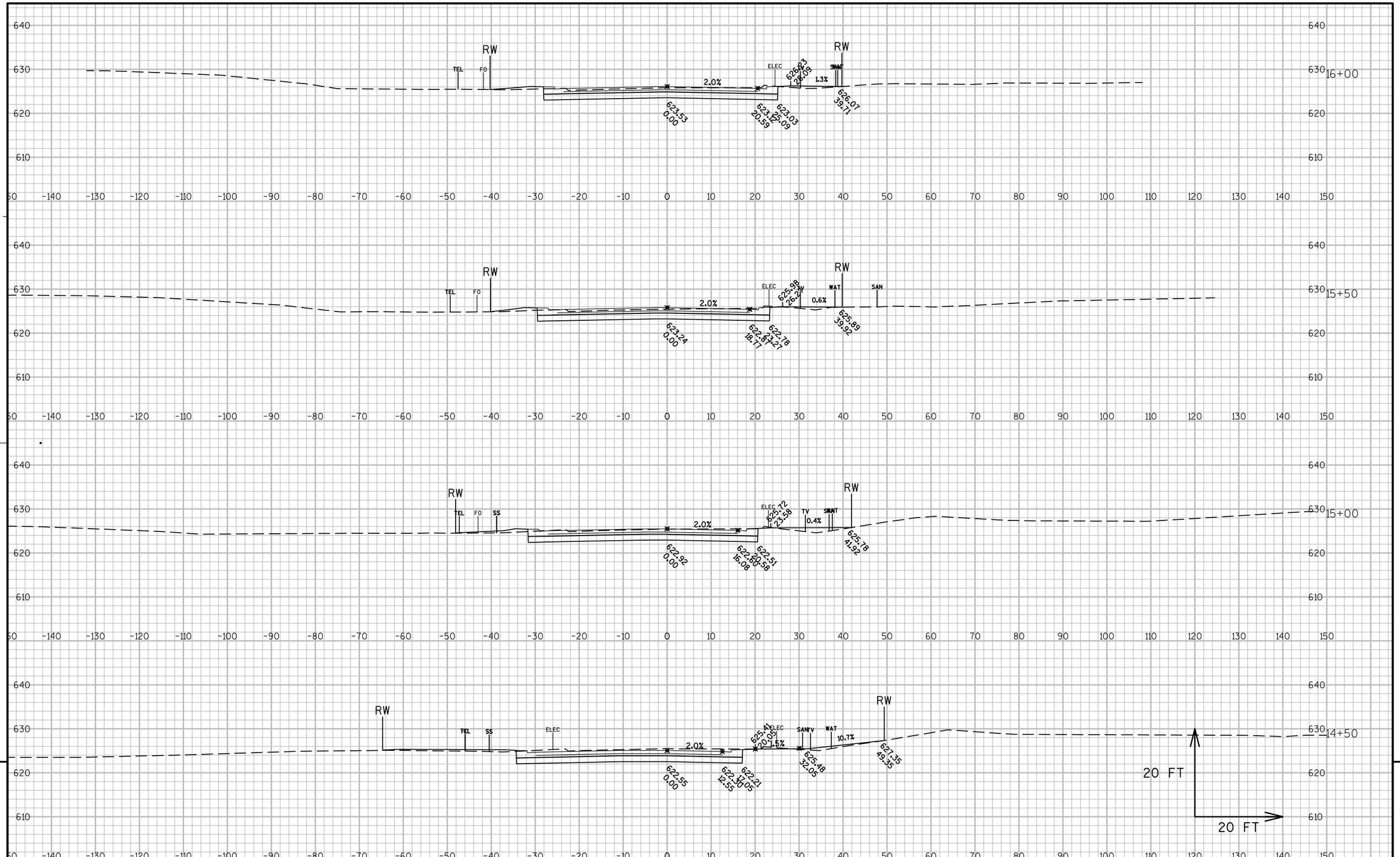

9

9

PROJECT NO:4085-43-71	HWY:STH 32/57	COUNTY:BROWN	CROSS SECTIONS:CTH X - EB	SHEET 214	E

FILE NAME : N:\PDS\C3D\40854300\SHEETSPLAN\FINAL CROSS SECTIONS\CTH X - FINAL X-SECTIONS.DWG PLOT DATE : 1/9/2015 2:03 PM PLOT BY : MAY, MATTHEW J PLOT NAME : PLOT SCALE : 1:20_XREF

WISDOT/CADDS SHEET 49

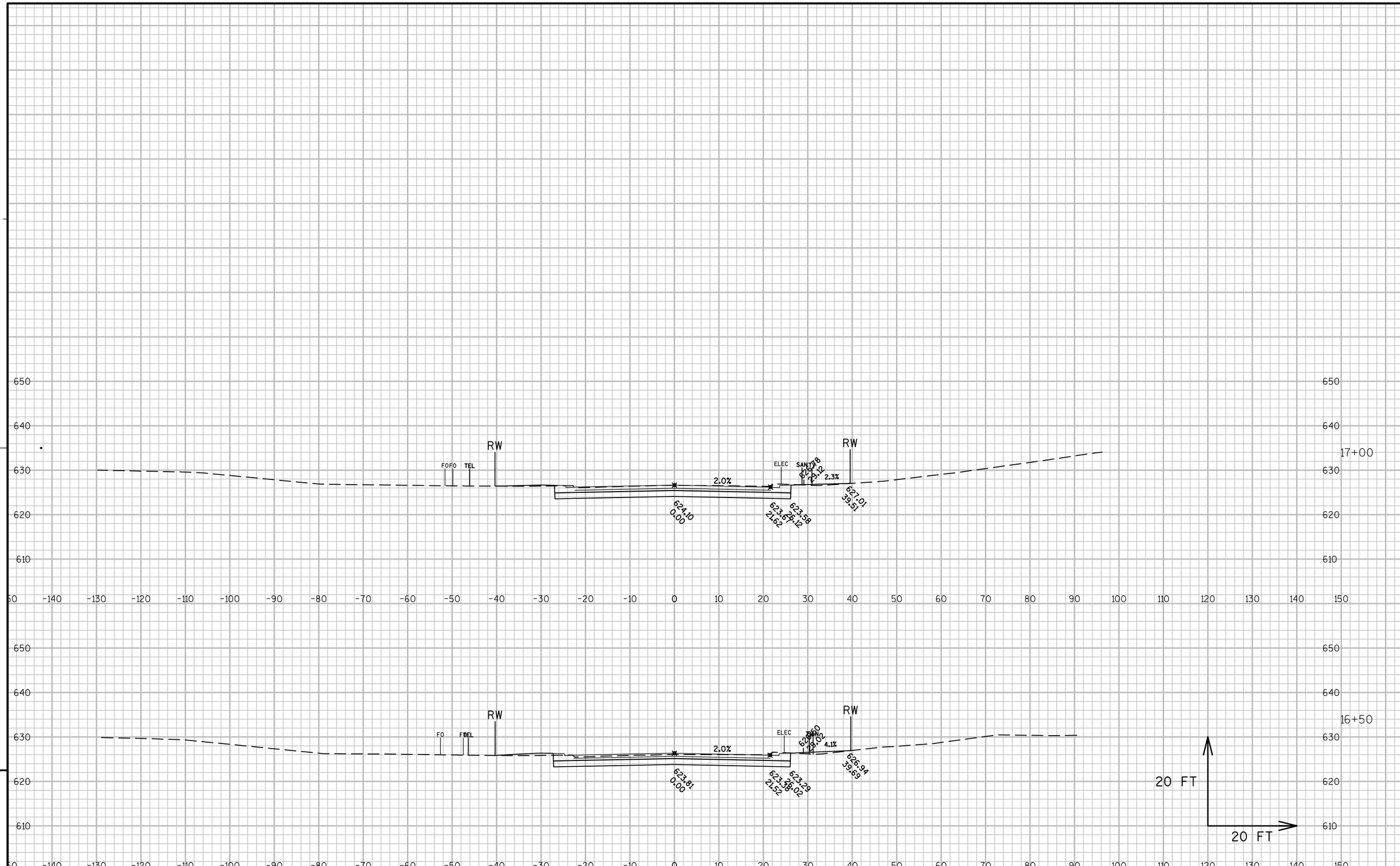

PROJECT NO:4085-43-71	HWY:STH 32/57	COUNTY:BROWN	CROSS SECTIONS:CTH X - EB	SHEET 215	E

FILE NAME : N:\PDS\C3D\40854300\SHEETSPLAN\FINAL CROSS SECTIONS\CTH X - FINAL X-SECTIONS.DWG PLOT DATE : 1/9/2015 2:03 PM PLOT BY : MAY, MATTHEW J PLOT NAME : PLOT SCALE : 1:20_XREF

WISDOT/CADDS SHEET 49

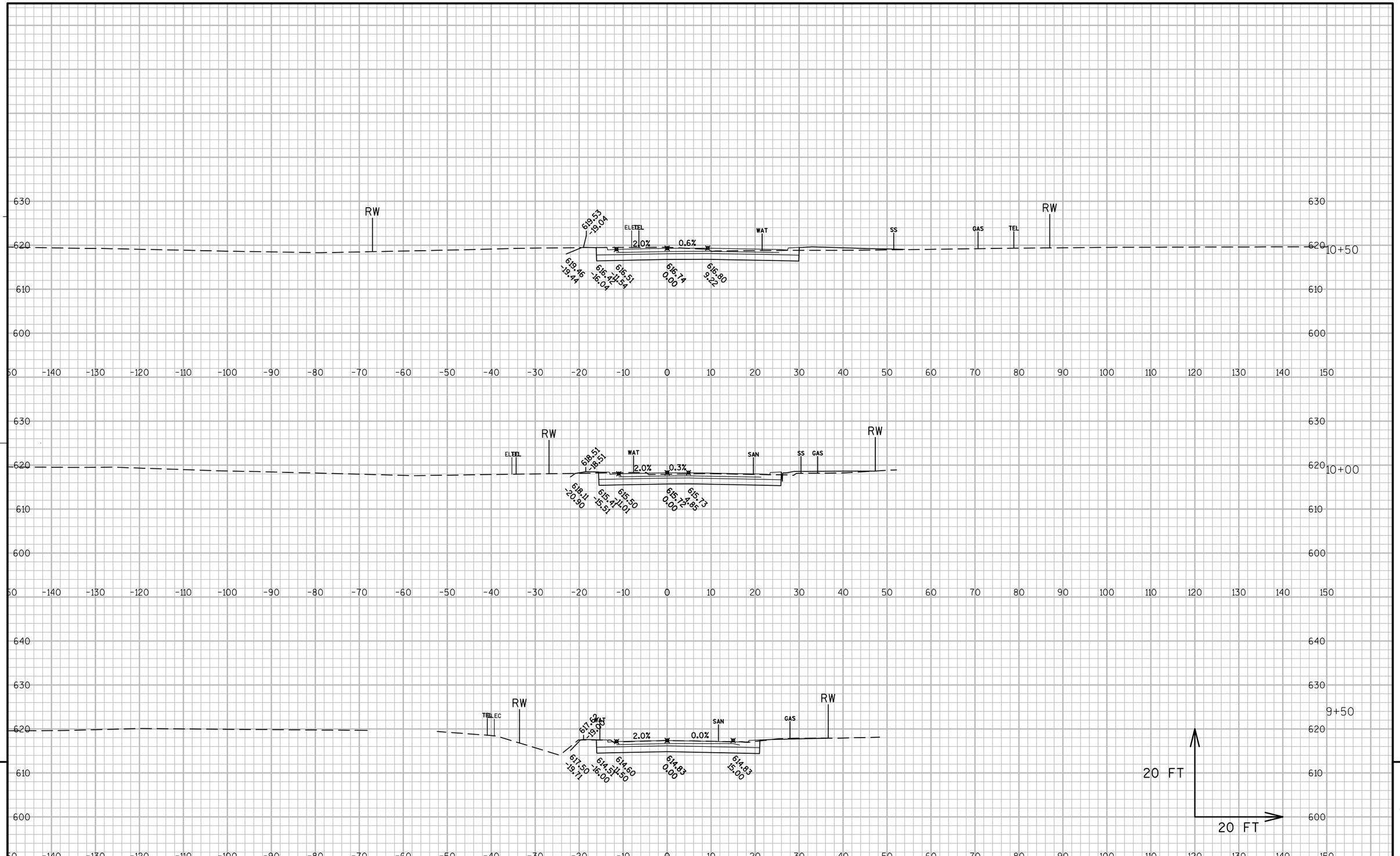

PROJECT NO:4085-43-71	HWY:STH 32/57	COUNTY:BROWN	CROSS SECTIONS:CTH X - WB	SHEET 216	E

FILE NAME : N:\PDS\C3D\40854300\SHEETSPLAN\FINAL CROSS SECTIONS\CTH X - FINAL X-SECTIONS.DWG PLOT DATE : 1/9/2015 2:01 PM PLOT BY : MAY, MATTHEW J PLOT NAME : PLOT SCALE : 1:20_XREF

WISDOT/CADDS SHEET 49

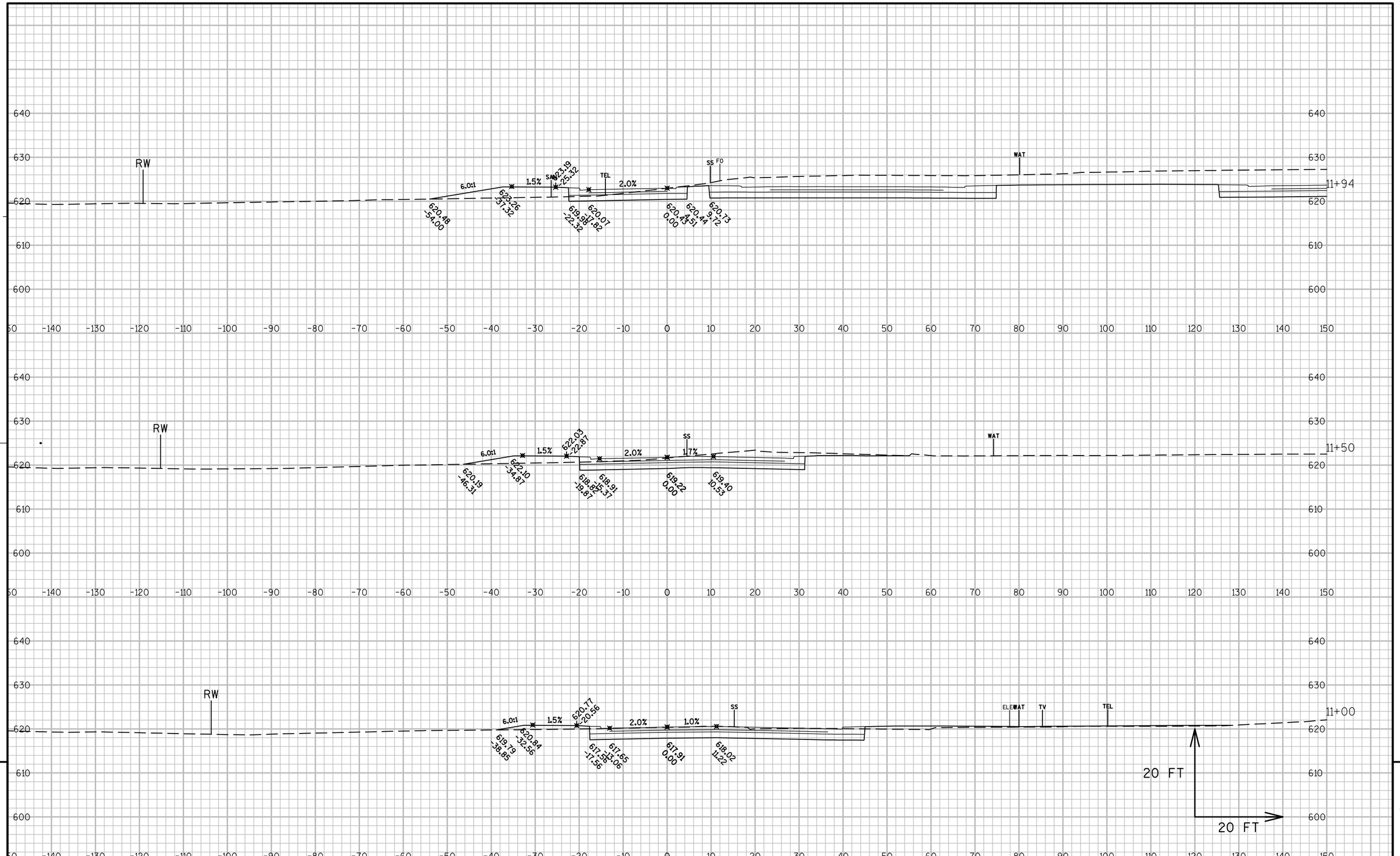

PROJECT NO:4085-43-71	HWY:STH 32/57	COUNTY:BROWN	CROSS SECTIONS:CTH X - WB	SHEET 217	E

FILE NAME : N:\PDS\C3D\40854300\SHEETSPLAN\FINAL CROSS SECTIONS\CTH X - FINAL X-SECTIONS.DWG PLOT DATE : 1/9/2015 2:01 PM PLOT BY : MAY, MATTHEW J PLOT NAME : PLOT SCALE : 1:20_XREF

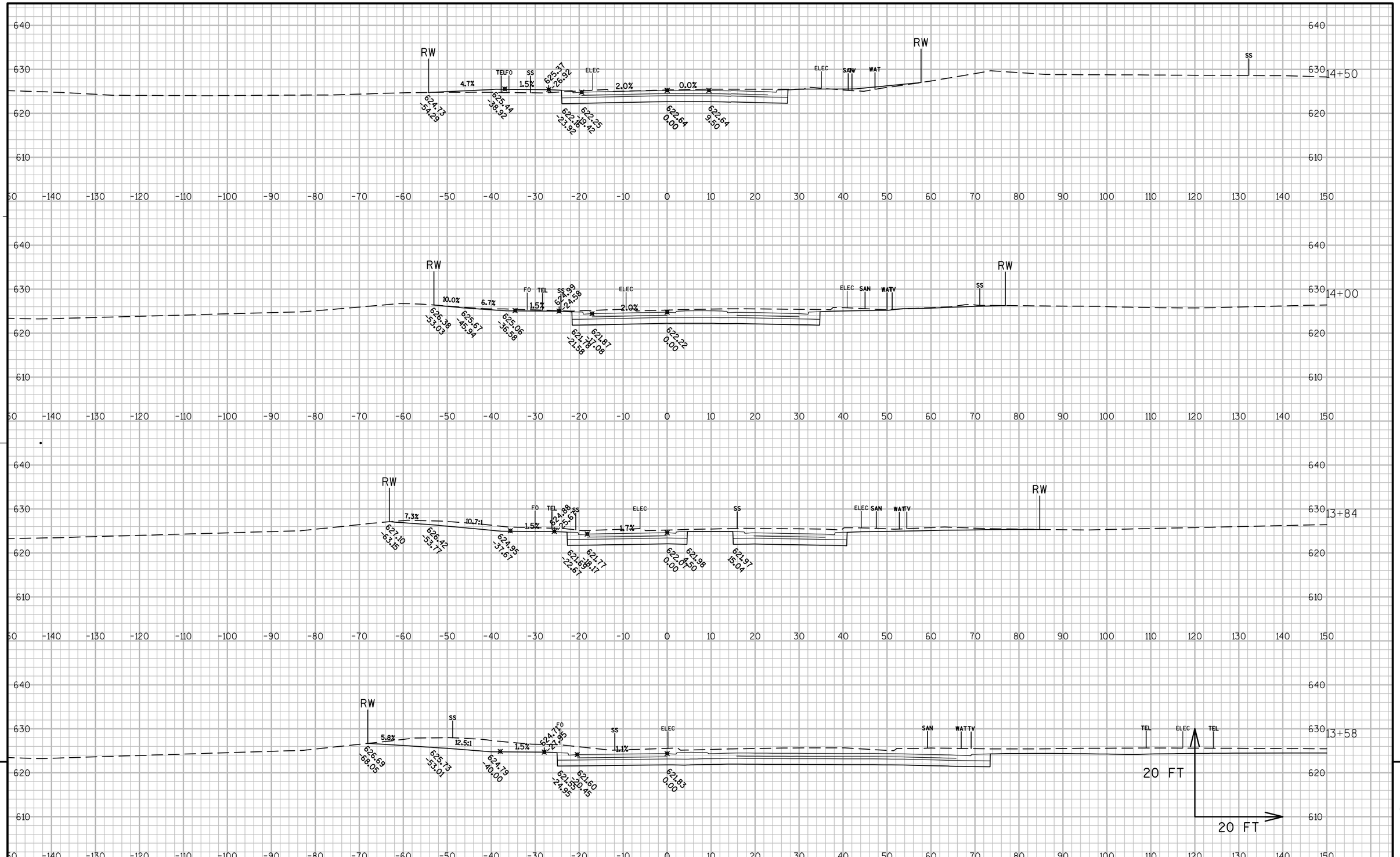

PROJECT NO:4085-43-71	HWY:STH 32/57	COUNTY:BROWN	CROSS SECTIONS:CTH X - WB	SHEET 218	E

FILE NAME : N:\PDS\C3D\40854300\SHEETSPLAN\FINAL CROSS SECTIONS\CTH X - FINAL X-SECTIONS.DWG PLOT DATE : 1/9/2015 2:02 PM PLOT BY : MAY, MATTHEW J PLOT NAME : PLOT SCALE : 1:20_XREF

WISDOT/CADDS SHEET 49

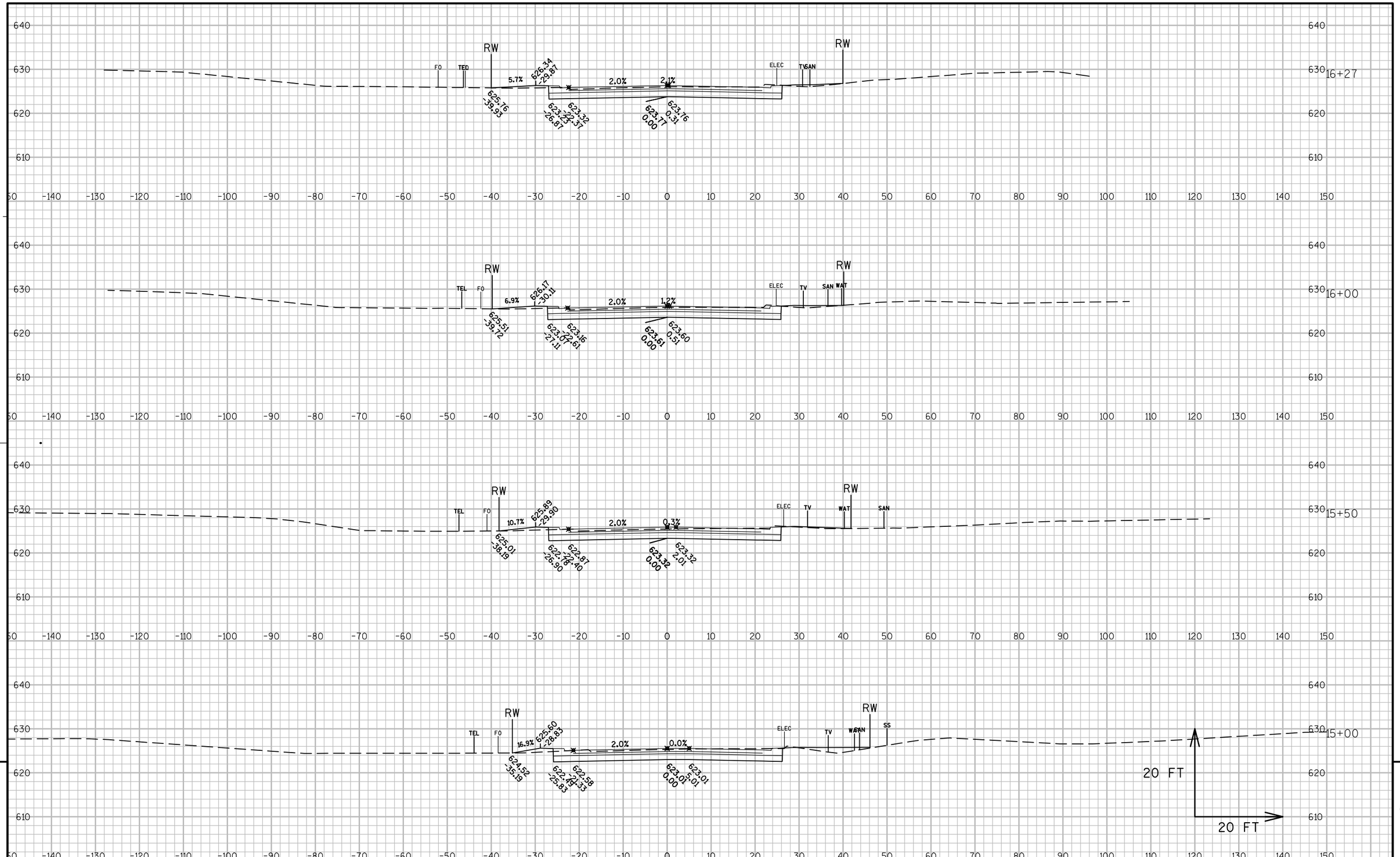

9

9

PROJECT NO:4085-43-71	HWY:STH 32/57	COUNTY:BROWN	CROSS SECTIONS:CTH X - WB	SHEET	E

FILE NAME : N:\PDS\C3D\40854300\SHEETSPLAN\FINAL CROSS SECTIONS\CTH X - FINAL X-SECTIONS.DWG PLOT DATE : 1/9/2015 2:02 PM PLOT BY : MAY, MATTHEW J PLOT NAME : PLOT SCALE : 1:20_XREF

WISDOT/CADDS SHEET 49

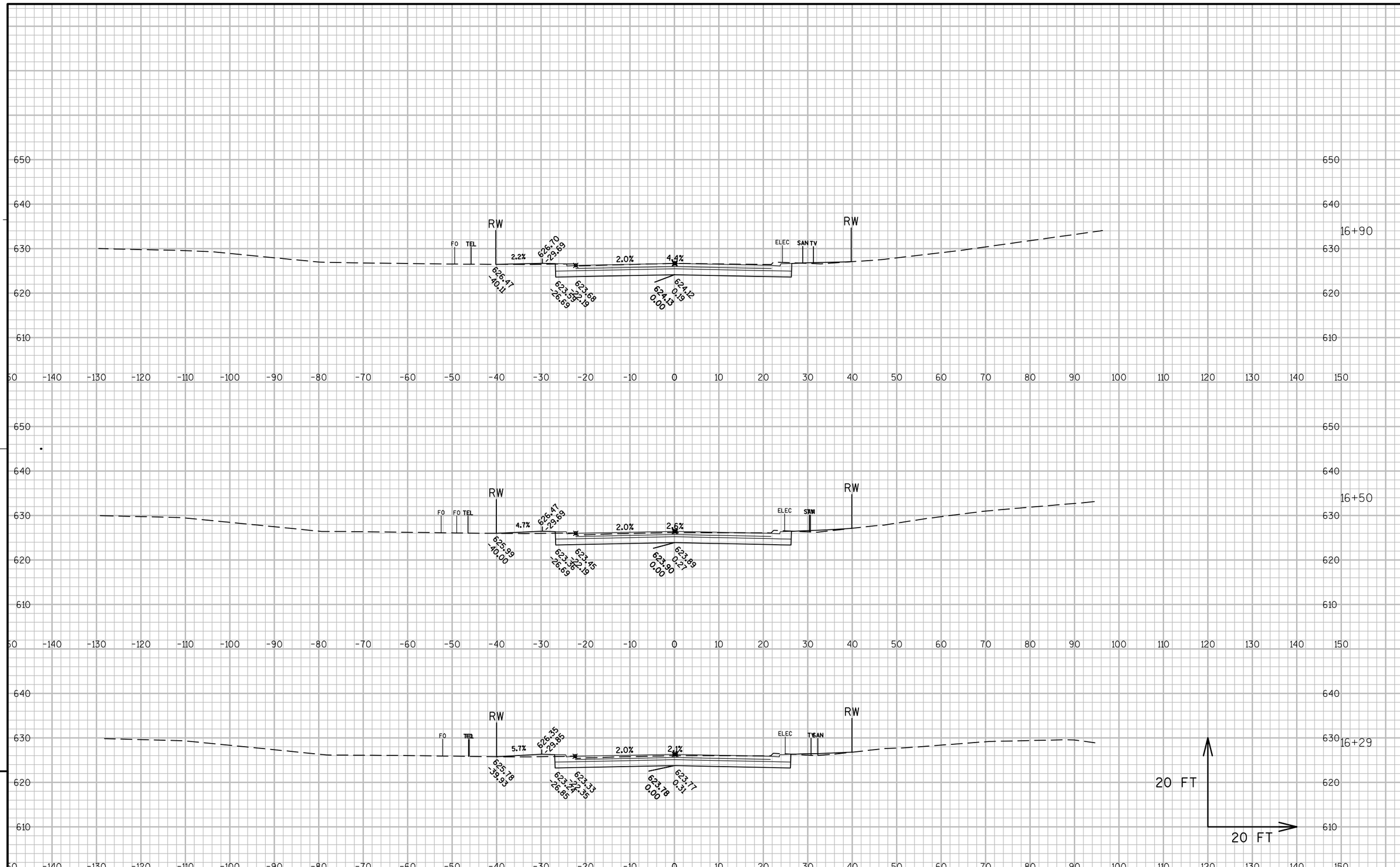

PROJECT NO:4085-43-71	HWY:STH 32/57	COUNTY:BROWN	CROSS SECTIONS:CTH X - WB	SHEET 220	E

FILE NAME : N:\PDS\C3D\40854300\SHEETSPLAN\FINAL CROSS SECTIONS\CTH X - FINAL X-SECTIONS.DWG PLOT DATE : 1/9/2015 2:02 PM PLOT BY : MAY, MATTHEW J PLOT NAME : PLOT SCALE : 1:20_XREF

WISDOT/CADDS SHEET 49

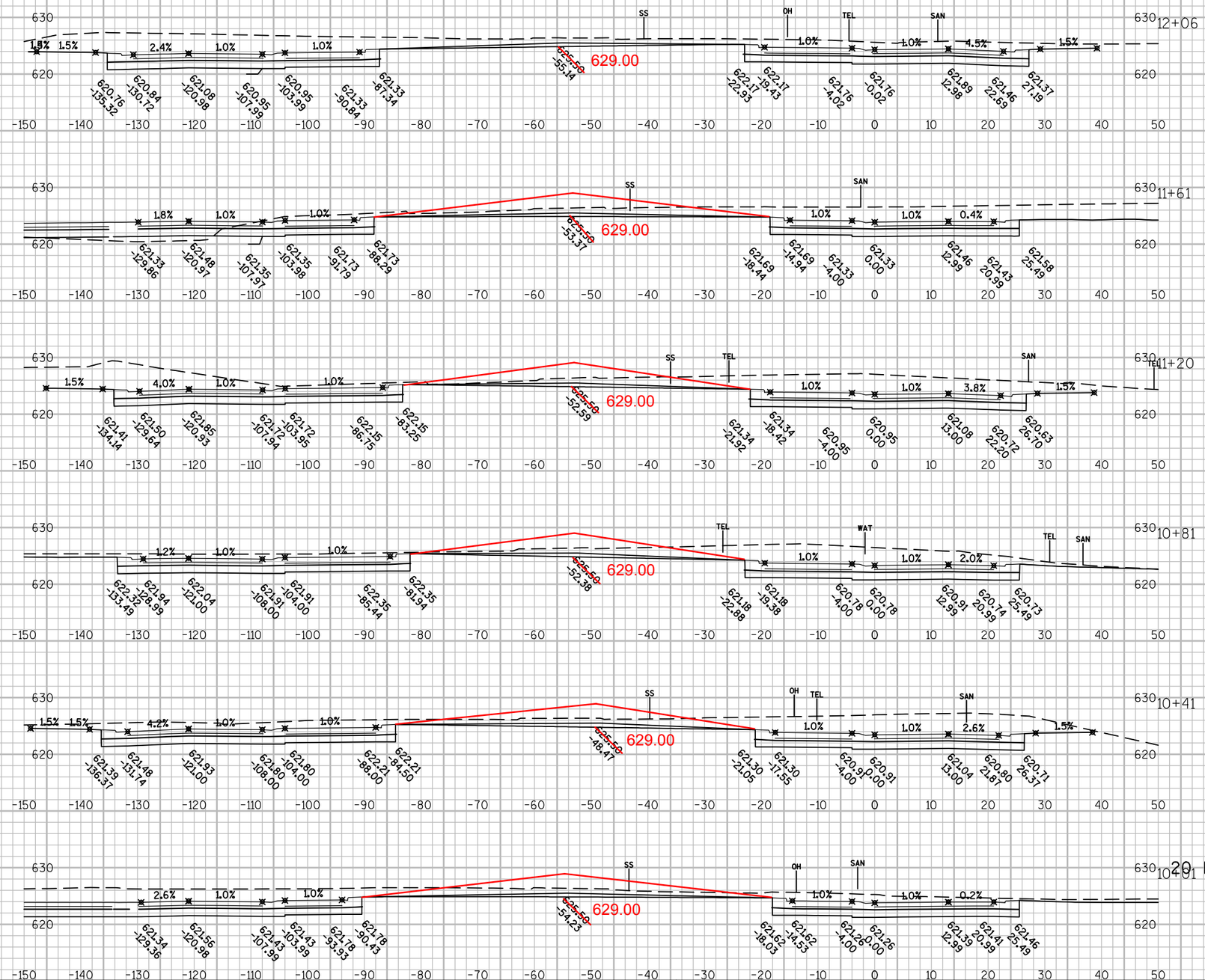

9

9

PROJECT NO:4085-43-71	HWY:STH 32/57	COUNTY:BROWN	CROSS SECTIONS:ROUNDABOUT CENTER	SHEET 221	E

FILE NAME : N:\PDS\C3D\40854300\SHEETSPLAN\FINAL CROSS SECTIONS\CENTER - FINAL X -SECTIONS.DWG PLOT DATE : 1/9/2015 2:06 PM PLOT BY : MAY, MATTHEW J PLOT NAME : PLOT SCALE : 1 IN:20 FT

WISDOT/CADDS SHEET 49

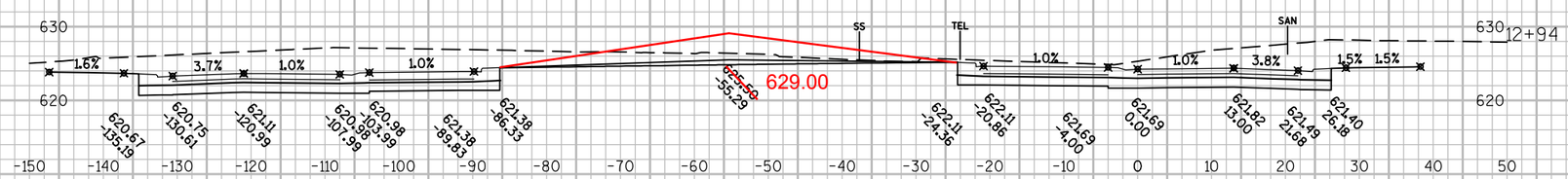

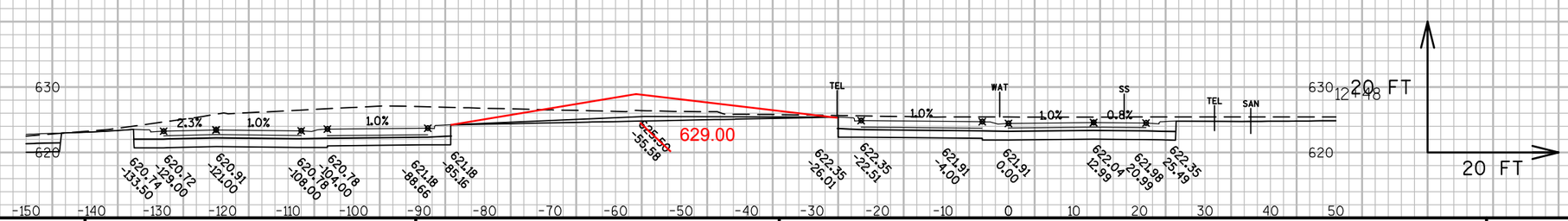

9

9

PROJECT NO:4085-43-71	HWY:STH 32/57	COUNTY:BROWN	CROSS SECTIONS:ROUNDABOUT CENTER	SHEET 222	E

FILE NAME : N:\PDS\C3D\40854300\SHEETSPLAN\FINAL CROSS SECTIONS\CENTER - FINAL X -SECTIONS.DWG PLOT DATE : 1/9/2015 2:06 PM PLOT BY : MAY, MATTHEW J PLOT NAME : PLOT SCALE : 1 IN:20 FT

WISDOT/CADDS SHEET 49

Notes

Wisconsin Department of Transportation

Dedicated people creating transportation solutions through innovation and exceptional service.

http://www.dot.wisconsin.gov