GRE FEBRUARY 2022

PROJECT ID: 4580-10-71
WITH: 4670-10-71

COUNTY: CALUMET

STATE OF WISCONSIN
DEPARTMENT OF TRANSPORTATION

PLAN OF PROPOSED IMPROVEMENT

MENASHA - HILBERT

USH 10 - VILLAGE OF SHERWOOD

STH 114

CALUMET COUNTY

STATE PROJECT NUMBER
4580-10-71

STATE PROJECT	FEDERAL PROJECT	
	PROJECT	CONTRACT
4580-10-71	WISC 2022176	1

AS-BUILT PLAN
SUPERVISOR: Dan Segerstrom
PROJECT MANAGER: Brian Haen
PROJECT LEADER: Josh Frewerd - McMAHON
CONTRACTOR: Northeast Asphalt, Inc.
CONSTRUCTION STARTED 6/6/2022
SUBSTANTIALLY COMPLETE 10/17/2022

Subcontractor List:
Antigo Construction
Con Cor
Double D Landscape
Mega Rentals
Michels Road & Stone
Trierweiler Construction
Twin Lakes Transit
Warning Lites of Appleton
Wisconsin Land Surveying

ORDER OF SHEETS

Section No.	1	Title
Section No.	2	Typical Sections and Details
Section No.	3	Estimate of Quantities
Section No.	3	Miscellaneous Quantities
Section No.	4	Right of Way Plat
Section No.	5	Plan and Profile
Section No.	6	Standard Detail Drawings
Section No.	7	Sign Plates
~~Section No.~~	~~8~~	~~Structure Plans~~
Section No.	9	Computer Earthwork Data
Section No.	9	Cross Sections

TOTAL SHEETS = ~~250~~ 253

Sheets revised: 1, 14, 17-18, 49, 107-123, 131-134

Sheets replaced: 98, 99, 100

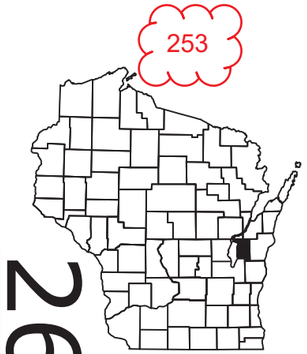

BEGIN PROJECT 4580-10-71
STA 203+75.02
Y=541,159.693
X=847,816.343

END PROJECT 4580-10-71
STA 397+36.66
Y=532,068.473
X=864,118.538

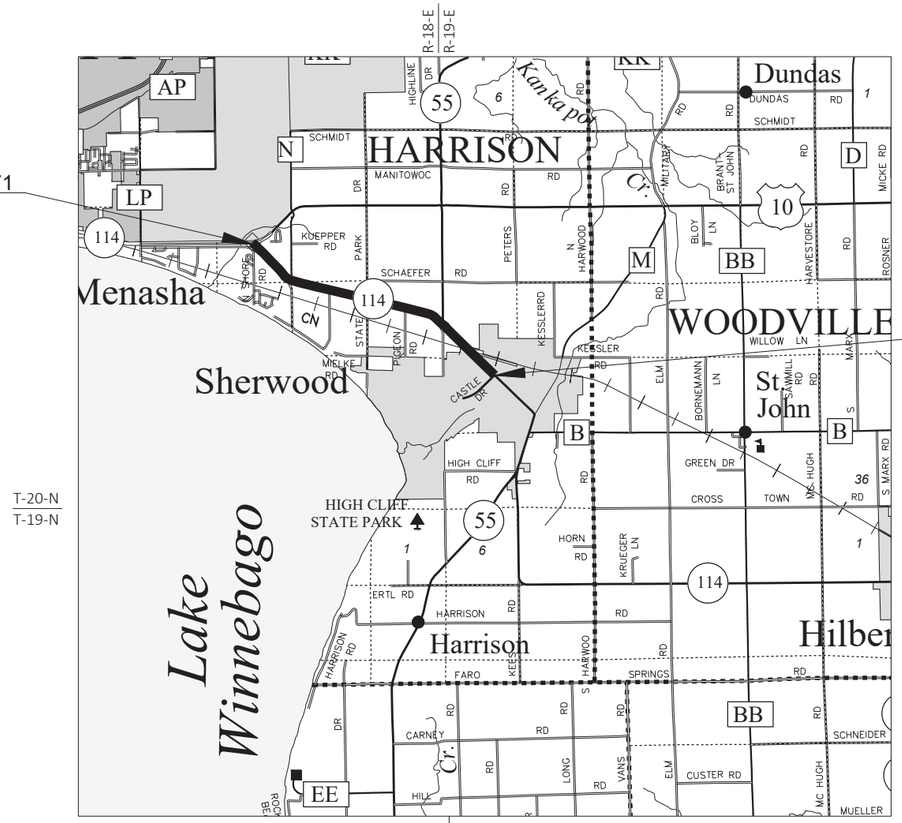

TOTAL NET LENGTH OF CENTERLINE = 3.667 MI

HORIZONTAL POSITIONS SHOWN ON THIS PLAN ARE WISCONSIN COUNTY COORDINATES, CALUMET COUNTY, NAD83 (2011), IN U.S. SURVEY FEET. VALUES ARE GRID COORDINATES, GRID BEARINGS, AND GRID DISTANCES. GRID DISTANCES MAY BE USED AS GROUND DISTANCES.

ELEVATIONS SHOWN ON THIS PLAN ARE REFERENCED TO THE NATIONAL AMERICAN VERTICAL DATUM OF NAV88 (2012).

DESIGN DESIGNATION

A.A.D.T.	2021	=	12,000
A.A.D.T.	2041	=	14,700
D.H.V.		=	1691
D.D.		=	59/41
T (A.A.D.T.)		=	7.3%
DESIGN SPEED		=	55 MPH
ESALS		=	2,100,000

CONVENTIONAL SYMBOLS

PLAN
- CORPORATE LIMITS
- PROPERTY LINE
- LOT LINE
- LIMITED HIGHWAY EASEMENT
- EXISTING RIGHT OF WAY
- PROPOSED OR NEW R/W LINE
- SLOPE INTERCEPT
- REFERENCE LINE (300'EB')
- EXISTING CULVERT
- PROPOSED CULVERT (Box or Pipe)
- COMBUSTIBLE FLUIDS (CAUTION)
- MARSH AREA
- WOODED OR SHRUB AREA

PROFILE
- GRADE LINE
- ORIGINAL GROUND
- MARSH OR ROCK PROFILE (To be noted as such) (ROCK)
- SPECIAL DITCH (LABEL)
- GRADE ELEVATION (95.36)
- CULVERT (Profile View)

UTILITIES
- ELECTRIC (E)
- FIBER OPTIC (FO)
- GAS (G)
- SANITARY SEWER (SAN)
- STORM SEWER (SS)
- TELEPHONE (T)
- WATER (W)
- UTILITY PEDESTAL
- POWER POLE
- TELEPHONE POLE

STATE OF WISCONSIN
DEPARTMENT OF TRANSPORTATION

PREPARED BY

Surveyor	SURVEYOR
Designer	JOSH LANG
Project Manager	T. G. VERHAGEN
Regional Examiner	
Regional Supervisor	DAN SEGERSTROM

APPROVED FOR THE DEPARTMENT
DATE: 11/1/2021 Tim Verhagen (Signature)

E

FILE NAME : N:\PDS\C3D\45801000\SHEETSPLAN\010101-TI.DWG PLOT DATE : 8/24/2021 2:22 PM PLOT BY : CAMPSHURE, MICHAEL R PLOT NAME :

GENERAL NOTES

THE LOCATIONS OF EXISTING AND PROPOSED UTILITY INSTALLATIONS AS SHOWN ON THE PLANS ARE APPROXIMATE. THERE MAY BE OTHER UTILITY INSTALLATIONS WITHIN THE PROJECT AREA THAT ARE NOT SHOWN.

THE CONTRACTOR SHALL COORDINATE THEIR CONSTRUCTION ACTIVITIES WITH A CALL TO DIGGERS HOTLINE AND/OR A DIRECT CALL TO THE UTILITIES THAT HAVE FACILITIES IN THE AREA. NOT ALL UTILITIES ARE MEMBERS OF DIGGERS HOTLINE.

NO TREES OR SHRUBS ARE TO BE REMOVED WITHOUT APPROVAL OF THE ENGINEER.

EROSION CONTROL FEATURES ARE AT SUGGESTED LOCATIONS AND THE EXACT LOCATION WILL BE DETERMINED BY THE ENGINEER.

PROTECT ALL DISTURBED SLOPES 3:1 OR STEEPER WITH EROSION MAT AFTER SEEDING AND FERTILIZING.

STATIONING, DISTANCES AND OFFSETS FOR SIGNS ARE APPROXIMATE AND THE EXACT LOCATIONS OF SIGNS ARE TO BE DETERMINED IN THE FIELD BY THE ENGINEER.

THE GUTTER SLOPE OF CURB & GUTTER CONSTRUCTED WITH THE PROJECT SHALL MATCH THAT OF ADJACENT CURB & GUTTER EXCEPT AS SHOWN OR APPROVED BY THE ENGINEER AND PROVIDE A POSITIVE DRAINAGE.

TRAFFIC CONTROL DEVICES SHALL BE ADJUSTED TO FIT FIELD CONDITIONS AS DIRECTED BY THE ENGINEER.

BASE AGGREGATE DENSE 3/4-INCH OR 1 1/4-INCH INCLUDED IN THE CONTRACT FOR CURB, CURB & GUTTER, AND SIDEWALK CONSTRUCTION IS INTENDED FOR LEVELING THE EXISTING GRADE FOR ANCILLARY CONCRETE CONSTRUCTION. EXISTING BASE COURSE MATERIALS DO NOT NEED TO BE REMOVED WITH THE APPROVAL OF THE ENGINEER.

SECTION 2 ORDER OF SHEETS

GENERAL NOTES
PROJECT OVERVIEW
TYPICAL SECTIONS
CONSTRUCTION DETAILS
INTERSECTION DETAILS
PLAN DETAILS
EROSION CONTROL DETAILS
PERMANENT SIGNING
TRAFFIC CONTROL
DETOUR PLANS
ALIGNMENT DETAILS

UTILITY CONTACTS

JOSEPH KASSAB
AT&T WISCONSIN - COMMUNICATION
205 S JEFFERSON ST
GREEN BAY, WI 54301
(920) 433-4200, (920) 202-4002
jk572k@att.com

CHRIS DAILEY
ATC MANAGEMENT INC - ELECTRIC TRANSMISSION
PO BOX 47
WAUKESHA, WI 53187
(262) 506-6884
cdailey@atcllc.com

JEFF OLSON
TDS TELECOM - COMMUNICATION
171 PAOLI ST
VERONA, WI 53594
(608) 845-2219, (608) 444-6208
jeffrey.olson@tdstelecom.com

RICK VINCENT
NET LEC LLC - COMMUNICATION
450 SECURITY BLVD
GREEN BAY, WI 54313
(920) 617-7316
rick.vincent@nsight.com

BRUCE GENSKOW
VILLAGE OF SHERWOOD - WATER
W482 CLIFTON RD
SHERWOOD, WI 54169
(920) 989-1589, (920) 858-2591
sherwoodutility@tds.net

VINCE ALBIN
SPECTRUM - COMMUNICATION LINE
3520 E DESTINATION DR
APPLETON, WI 54915
(920) 831-9249, (920) 378-0444
vince.albin@charter.com

EDDIE HEDLUND
WE ENERGIES - GAS
800 S LYNNDALE DR
APPLETON, WI 54912
(920) 380-3240, (920) 470-0418
eddie.hudlund@we-energies.com

KEN VAN OSS
WE ENERGIES - ELECTRIC
800 S LYNNDALE DR
APPLETON, WI 54914
(920) 380-3318, (920) 858-8478
kenneth.van-oss@we-energies.com

DIGGERS HOTLINE
Dial 811 or (800)242-8511
www.DiggersHotline.com

DNR LIAISON

MATT SCHAEVE
DEPARTMENT OF NATURAL RESOURCES
NORTHEAST REGION
2984 SHAWANO AVE
GREEN BAY, WI 54313
(920)366-1544
matthew.schaeve@wisconsin.gov

CALUMET COUNTY COMMISSIONER

BRIAN GLAESER
HIGHWAY COMMISSIONER
241 E. CHESTNUT ST.
CHILTON, WI 53014
(920)849-1434
glaeser.brian@co.calumet.wi.us

NE REGION SURVEY COORDINATOR

CORMAC MCINNIS, RLS
944 VANDERPERREN WAY
GREEN BAY, WI 54304
(920)492-5638
cormac.mcinnis@dot.wi.gov

2

2

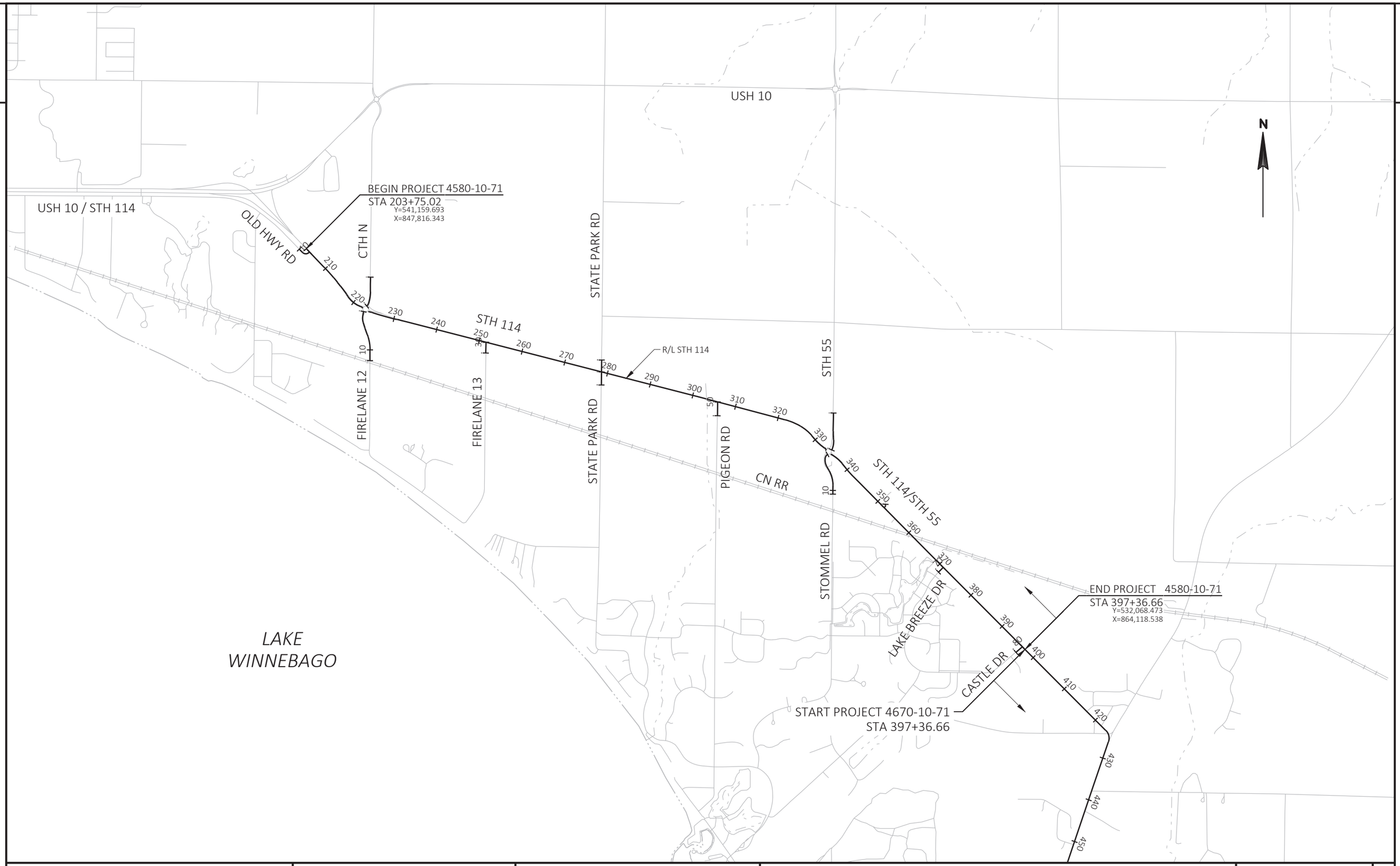

PROJECT NO: 4580-10-71	HWY: STH 114	COUNTY: CALUMET	PROJECT OVERVIEW	SHEET 3	E

FILE NAME : N:\PDS\C3D\45801000\SHEETSPLAN\020201-PO.DWG
LAYOUT NAME - 020201-po

PLOT DATE : 8/24/2021 2:27 PM PLOT BY : CAMPSHURE, MICHAEL R PLOT NAME : PLOT SCALE : 1IN:2000 FT

CORE NO.	STATION	OFFSET FROM CL (FT)		ASPHALT DEPTH IN INCHES	UNDERLYING MATERIAL
1	203+81	5.3	LT	5.25	BASE
2	207+67	6	RT	6	N/A
3	210+72	7.6	RT	6.25	BASE
4	217+30	12.5	LT	8	BASE
5	231+38	8.1	RT	6.5	BASE
6	234+92	6	RT	9	N/A
7	241+72	3.8	LT	9.25	PCC
8	248+15	7	RT	9	N/A
9	251+54	7.8	RT	9.5	PCC
10	261+09	6	RT	7	N/A
11	261+14	10.2	LT	6.5	PCC/BASE
12	271+34	8	RT	6.5	PCC
13	274+27	6	RT	9	N/A
14	281+25	8	LT	7.75	PCC
15	287+69	7	RT	8.25	N/A
16	291+53	3	RT	12.25	PCC
17	301+03	9.2	LT	5	BASE
18	301+63	7	RT	4.5	N/A
19	311+19	5.3	RT	8.25	PCC
20	314+12	6	RT	6.75	N/A
21	321+22	2.3	LT	10	PCC
22	329+11	11.8	RT	6.75	BASE
23	340+88	5.9	LT	7	BASE
24	350+94	4	RT	8.5	BASE
25	351+01	6	RT	9.25	N/A
26	360+03	8.6	LT	12.75	PCC
27	365+53	6	RT	9.5	N/A
28	371+31	4.8	RT	9.5	BASE
29	379+45	5	RT	9.25	N/A
30	381+62	7.2	LT	8.75	BASE
31	391+51	6.9	RT	8	BASE
32	392+77	6	RT	8.125	N/A

2

STH 114
R/L

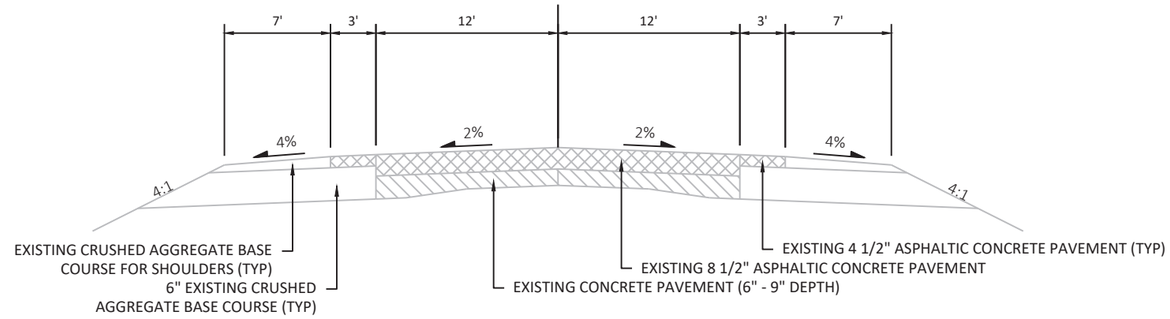

EXISTING TYPICAL SECTION FOR STH 114

STA 203+75 TO STA 208+62

STH 114
R/L

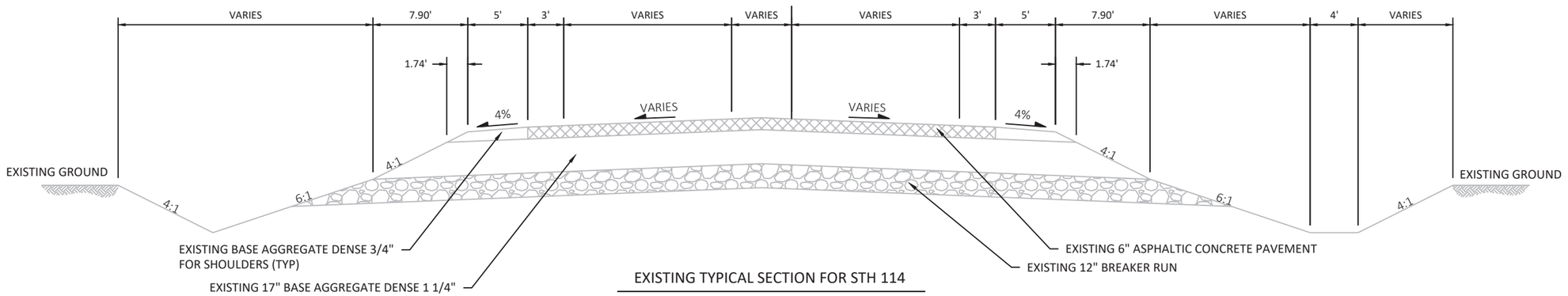

EXISTING TYPICAL SECTION FOR STH 114

STA 206+62 TO STA 217+61
STA 231+02 TO STA 232+09

R/L STH 114

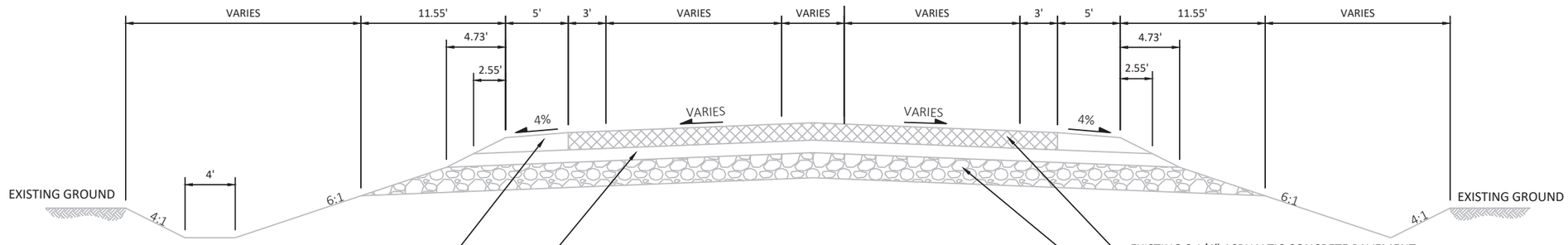

EXISTING TYPICAL SECTION FOR STH 114

STA 217+61 TO STA 217+74
STA 229+77 TO STA 231+02

PROJECT NO: 4580-10-71	HWY: 114	COUNTY: CALUMET	TYPICAL SECTIONS	SHEET 5	E

FILE NAME : C:\CIVIL 3D PROJECTS\45801000\SHEETSPLAN\020301-TS.DWG
LAYOUT NAME - 020301-ts
PLOT DATE : 10/13/2021 1:19 PM
PLOT BY : SMITH, JENNIFER B
PLOT NAME :
PLOT SCALE : 1IN:10 FT
WISDOT/CADDS SHEET 42

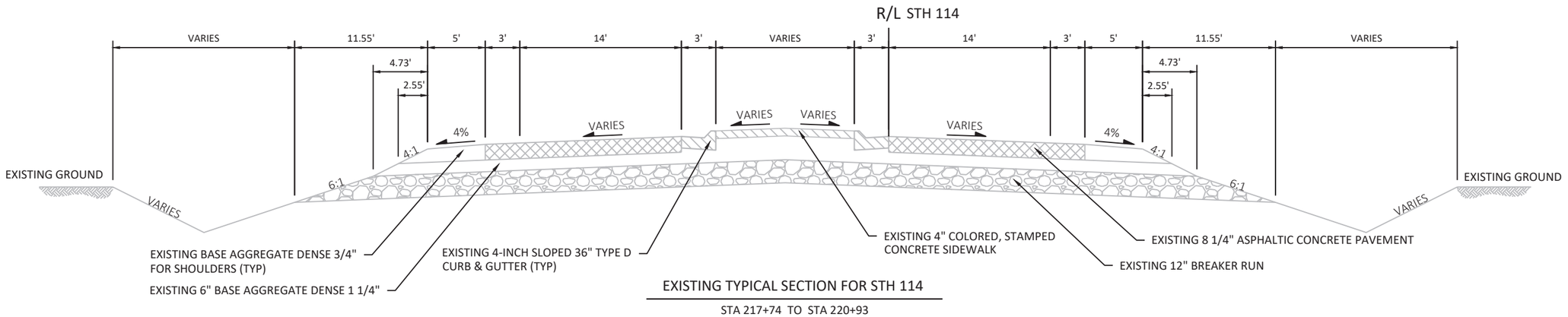

EXISTING TYPICAL SECTION FOR STH 114

STA 217+74 TO STA 220+93

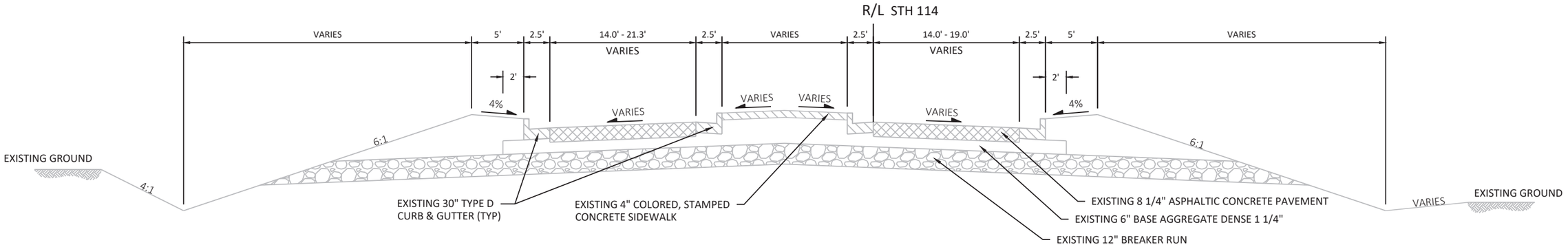

EXISTING TYPICAL SECTION FOR STH 114

STA 220+93 TO STA 222+50

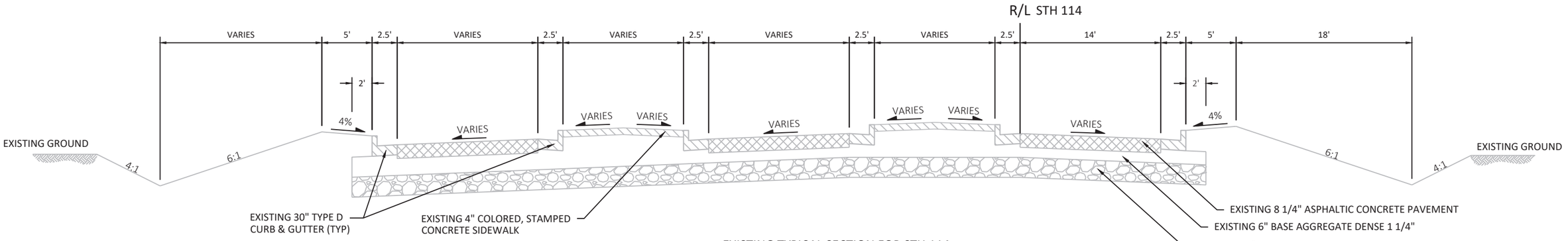

EXISTING TYPICAL SECTION FOR STH 114

STA 223+96 TO STA 225+48

PROJECT NO: 4580-10-71	HWY: 114	COUNTY: CALUMET	TYPICAL SECTIONS	SHEET 6	E

FILE NAME : C:\CIVIL 3D PROJECTS\45801000\SHEETSPLAN\020301-TS.DWG
LAYOUT NAME - 020302-ts

PLOT DATE : 10/13/2021 1:19 PM PLOT BY : SMITH, JENNIFER B PLOT NAME : PLOT SCALE : 1IN:10 FT

2

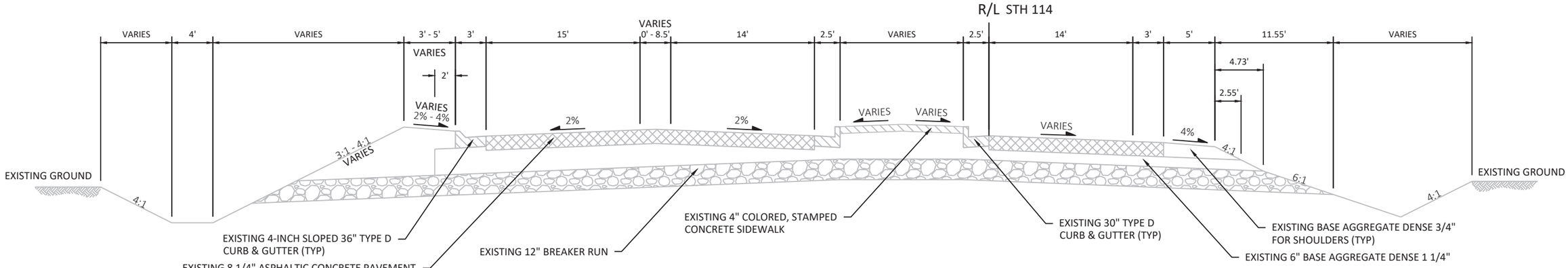

EXISTING TYPICAL SECTION FOR STH 114

STA 225+48 TO STA 226+86

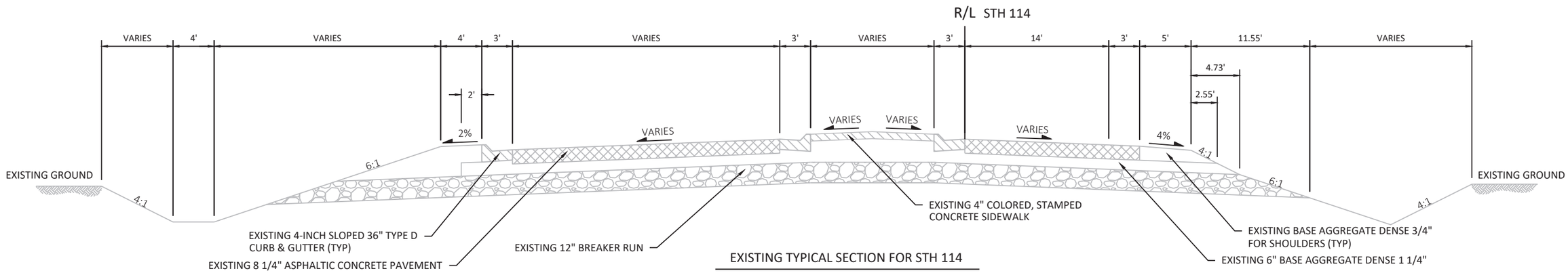

EXISTING TYPICAL SECTION FOR STH 114

STA 226+86 TO STA 229+77

PROJECT NO: 4580-10-71	HWY: 114	COUNTY: CALUMET	TYPICAL SECTIONS	SHEET 7	E

2

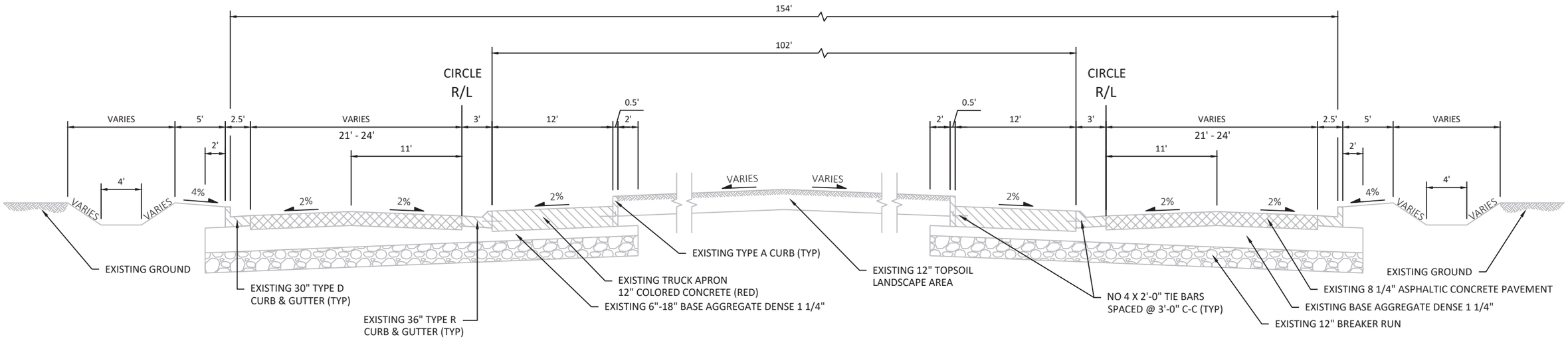

EXISTING TYPICAL SECTION FOR CENTER CIRCLE

CTH N / STH 114 / FIRELANE 12 ROUNDABOUT
STA 222+50 TO STA 223+96

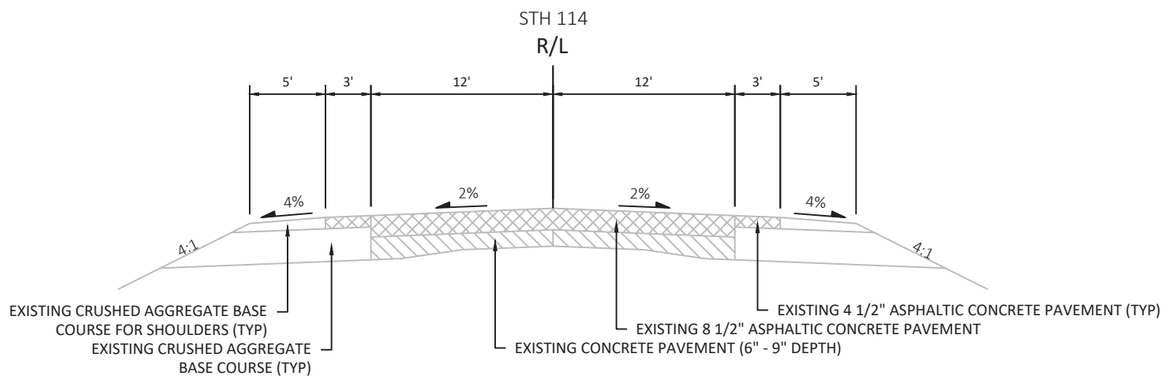

EXISTING TYPICAL SECTION FOR STH 114

STA 232+09 TO STA 290+30
STA 310+30 TO STA 322+26

PROJECT NO: 4580-10-71	HWY: 114	COUNTY: CALUMET	TYPICAL SECTIONS	SHEET 8	E

2

STH 114

R/L

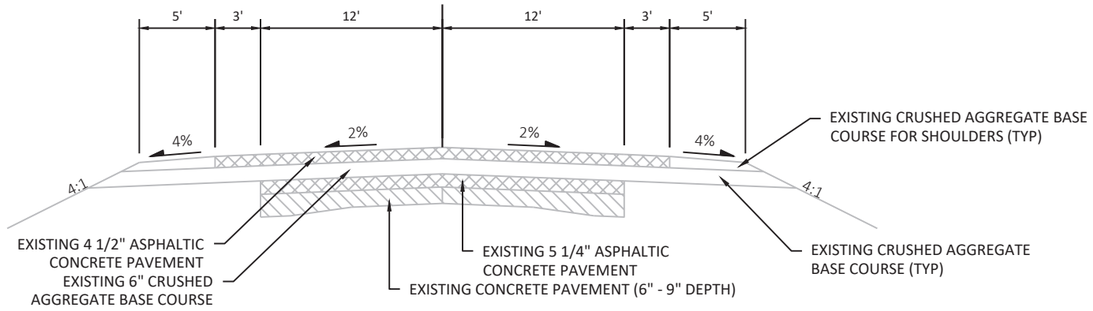

EXISTING TYPICAL SECTION FOR STH 114

STA 290+30 TO STA 310+30

R/L STH 114

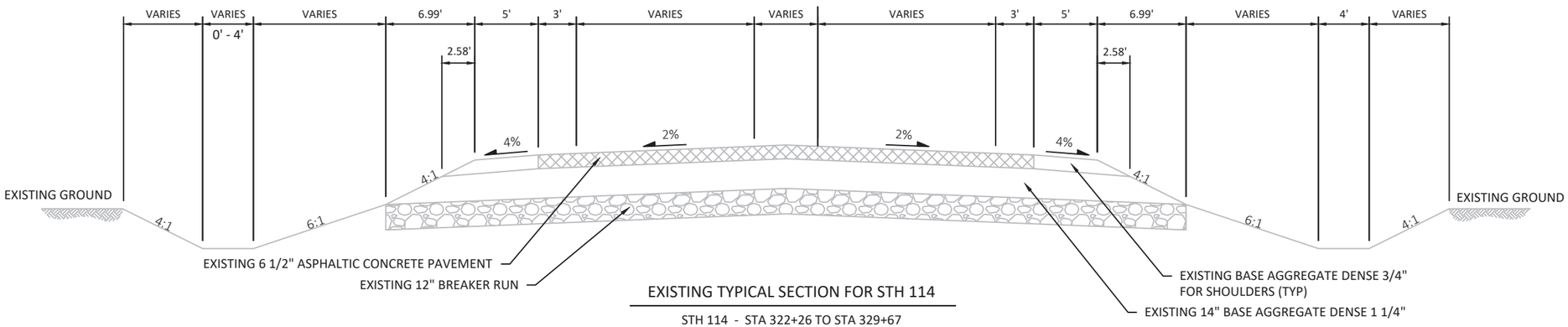

EXISTING TYPICAL SECTION FOR STH 114

STH 114 - STA 322+26 TO STA 329+67
STH 55/114 - STA 340+26 TO STA 348+76

R/L STH 114

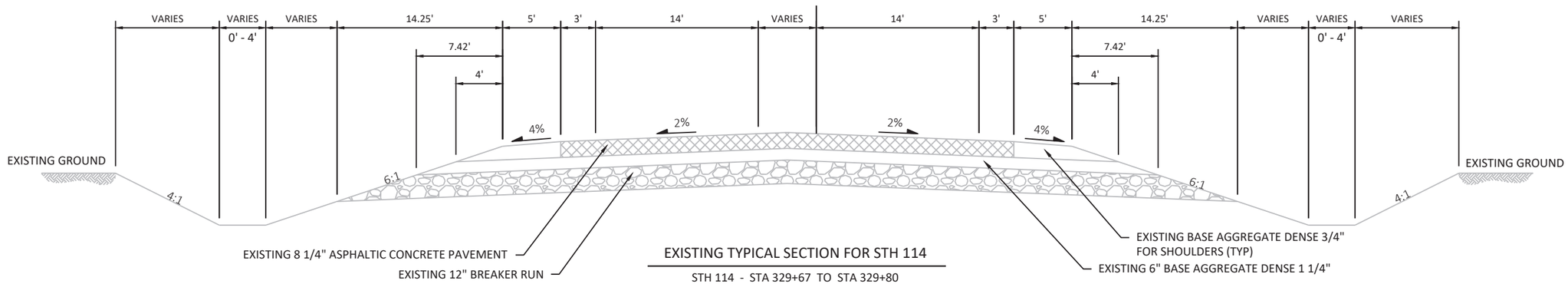

EXISTING TYPICAL SECTION FOR STH 114

STH 114 - STA 329+67 TO STA 329+80
STH 55/114 - STA 340+12 TO STA 340+26

PROJECT NO: 4580-10-71	HWY: 114	COUNTY: CALUMET	TYPICAL SECTIONS	SHEET 9	E

2

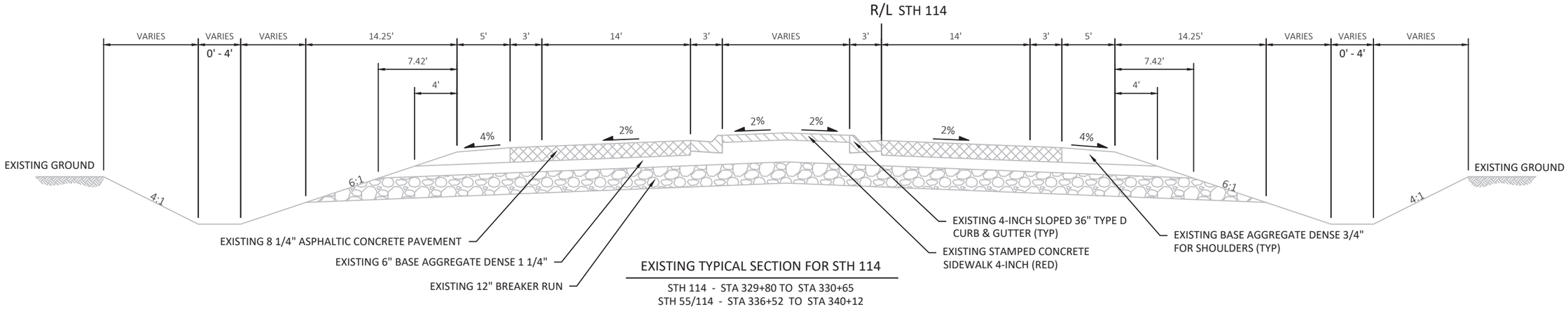

EXISTING TYPICAL SECTION FOR STH 114

STH 114 - STA 329+80 TO STA 330+65
STH 55/114 - STA 336+52 TO STA 340+12

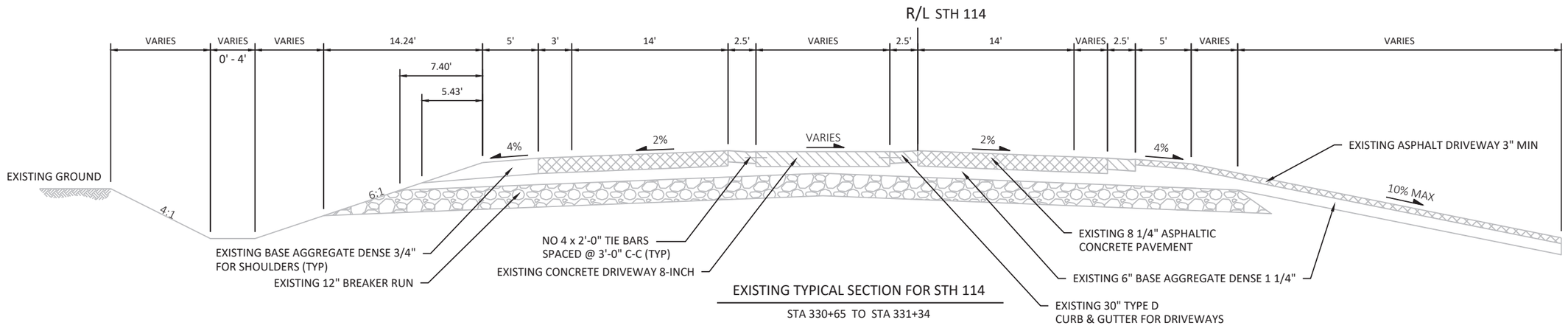

EXISTING TYPICAL SECTION FOR STH 114

STA 330+65 TO STA 331+34

PROJECT NO: 4580-10-71	HWY: 114	COUNTY: CALUMET	TYPICAL SECTIONS	SHEET 10	E

2

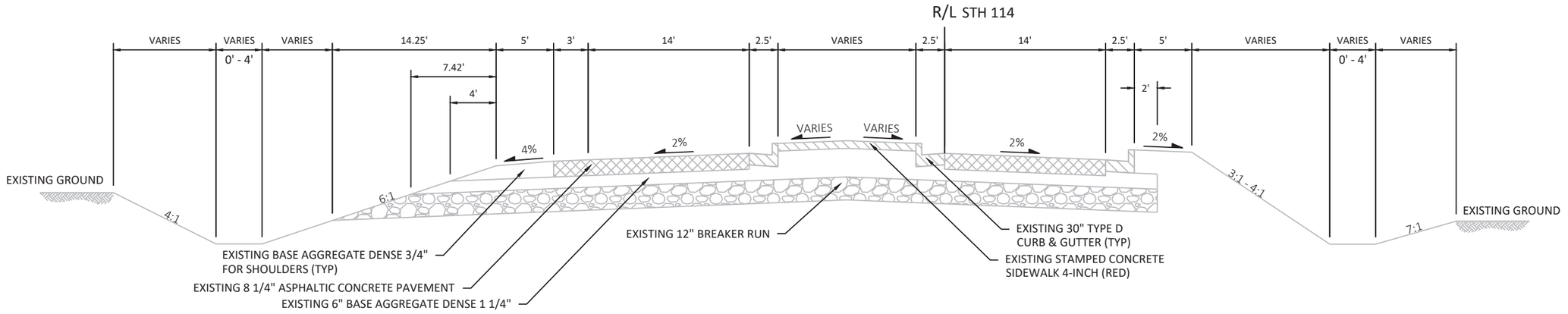

EXISTING TYPICAL SECTION FOR STH 114

STH 114 - STA 331+34 TO STA 332+37

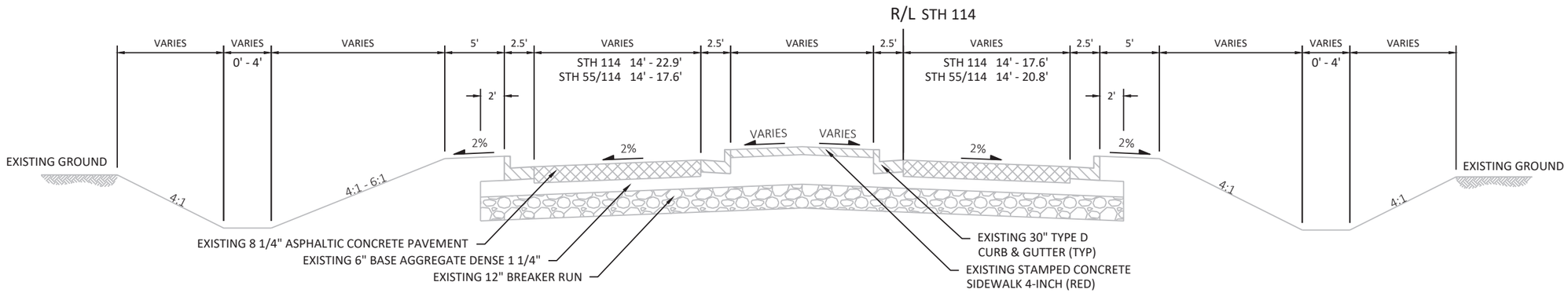

EXISTING TYPICAL SECTION FOR STH 114

STH 114 - STA 332+37 TO STA 333+44
STH 55/114 - STA 334+85 TO STA 336+52

2

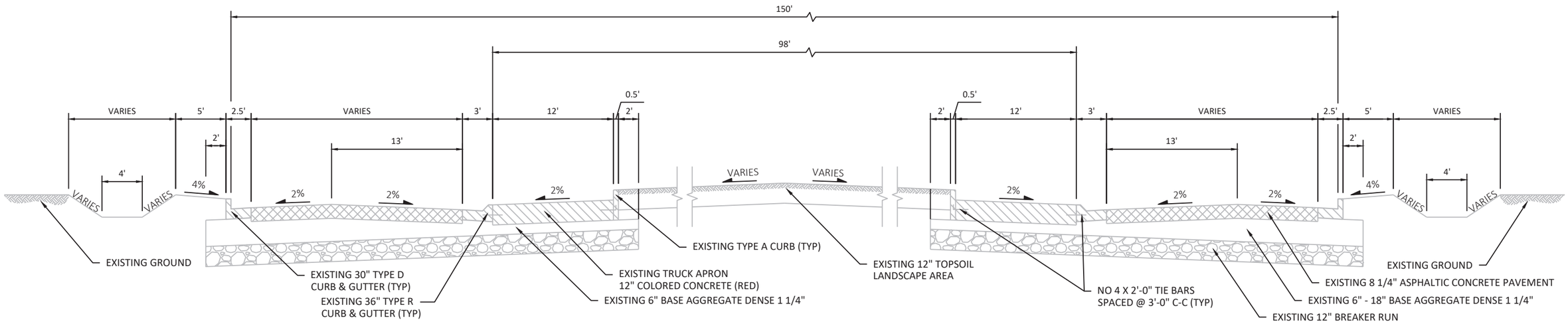

EXISTING TYPICAL SECTION FOR ROUNDABOUT

STH 55/114/STOMMEL RD ROUNDABOUT
STA 333+44 TO STA 334+85

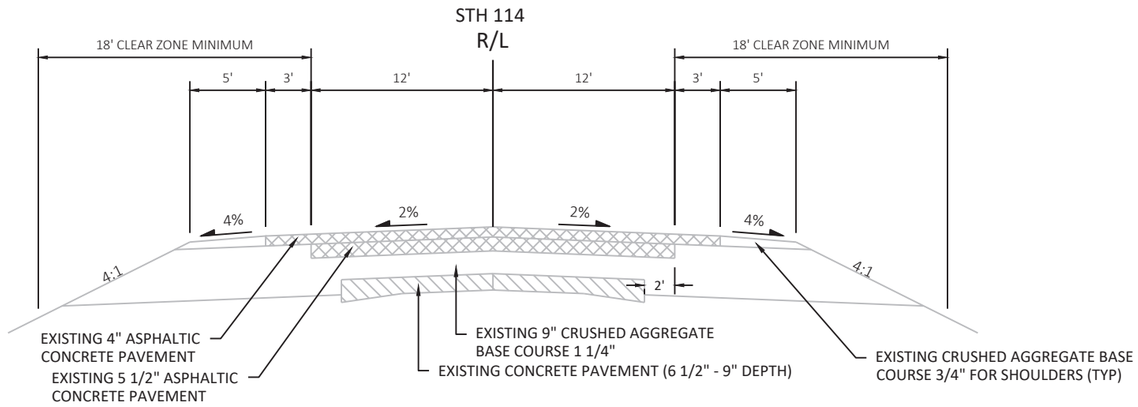

EXISTING TYPICAL SECTION FOR STH 55/114

STH55/114 - STA 348+76 TO STA 392+40

PROJECT NO: 4580-10-71	HWY: 114	COUNTY: CALUMET	TYPICAL SECTIONS	SHEET 12	E

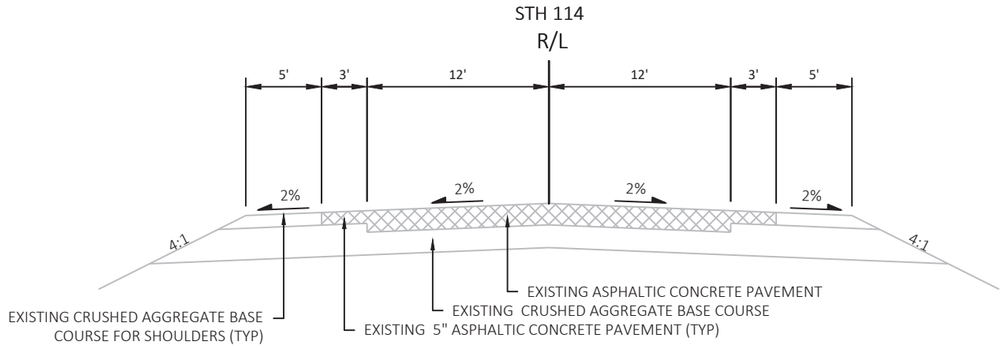

EXISTING TYPICAL SECTION FOR STH 114

STA 392+40 TO STA 396+40

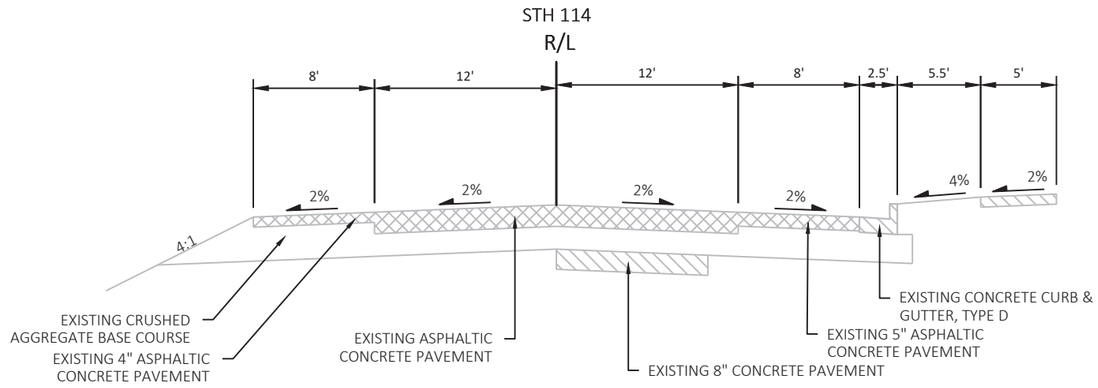

EXISTING TYPICAL SECTION FOR STH 114

STA 396+40 TO STA 397+37

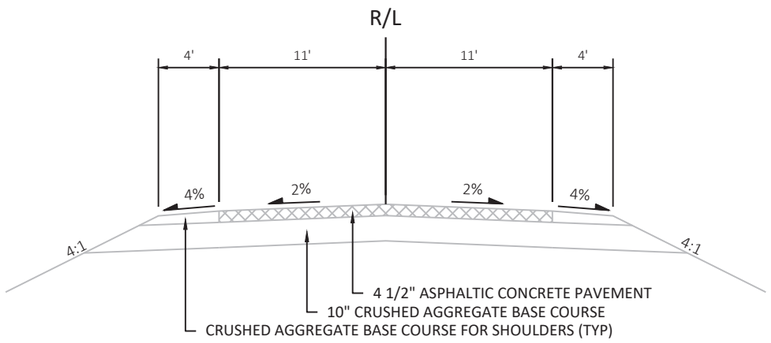

EXISTING TYPICAL SECTION FOR SIDE ROADS

OLD HIGHWAY ROAD
FIRELANE 13
STATE PARK ROAD
PIGEON ROAD
LAKE BREEZE DRIVE

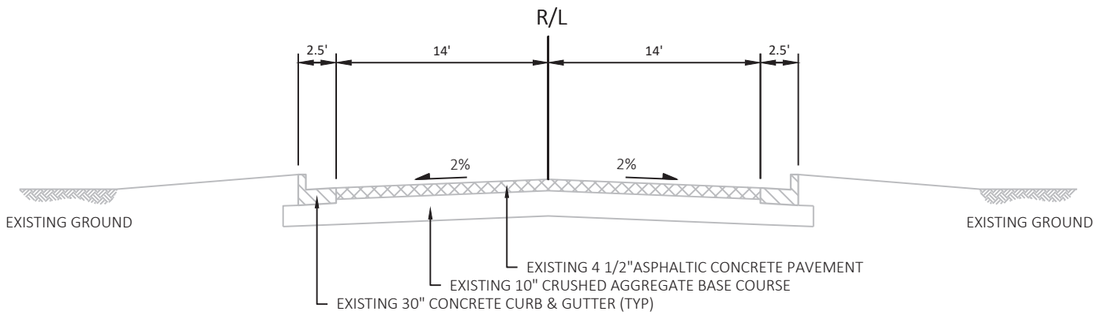

EXISTING TYPICAL SECTION FOR SIDE ROADS

CASTLE DRIVE

PROJECT NO: 4580-10-71	HWY: 114	COUNTY: CALUMET	TYPICAL SECTIONS	SHEET 13	E

2

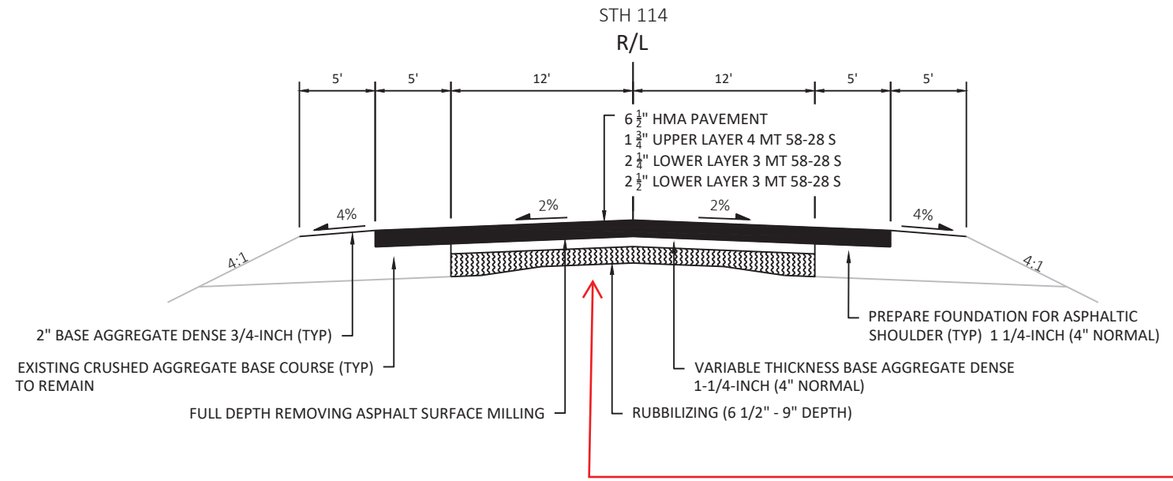

FINISHED TYPICAL SECTION FOR STH 114

STA 203+75 TO STA 208+62.41

After Concrete was Rubblized, it was removed along with about 1' of unstable/wet organics below it.
Select Crushed Material placed over SAS fabric.

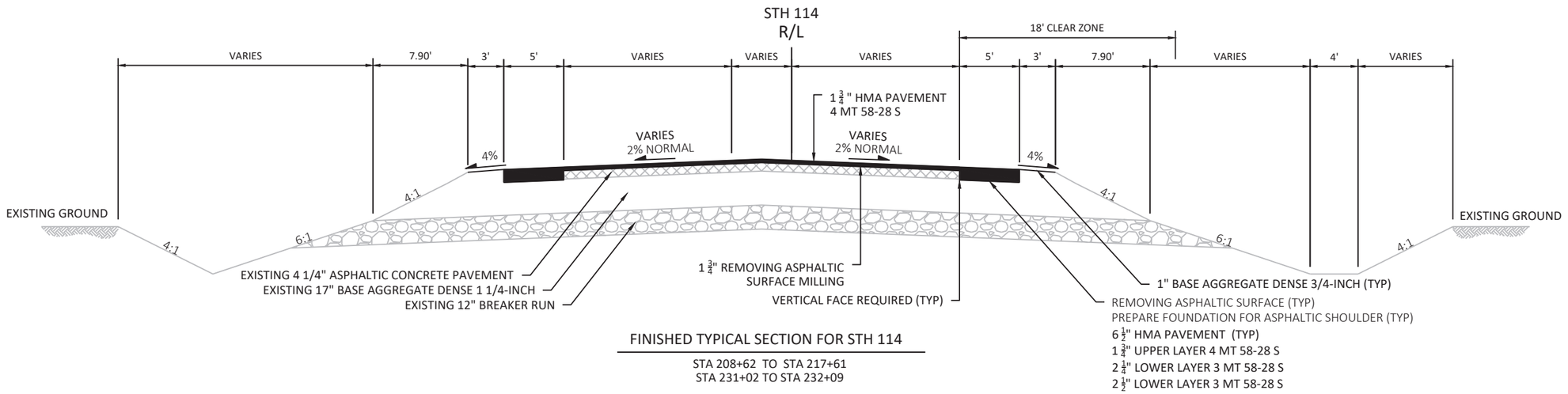

FINISHED TYPICAL SECTION FOR STH 114

STA 208+62 TO STA 217+61
STA 231+02 TO STA 232+09

PROJECT NO: 4580-10-71	HWY: 114	COUNTY: CALUMET	TYPICAL SECTIONS	SHEET 14	E

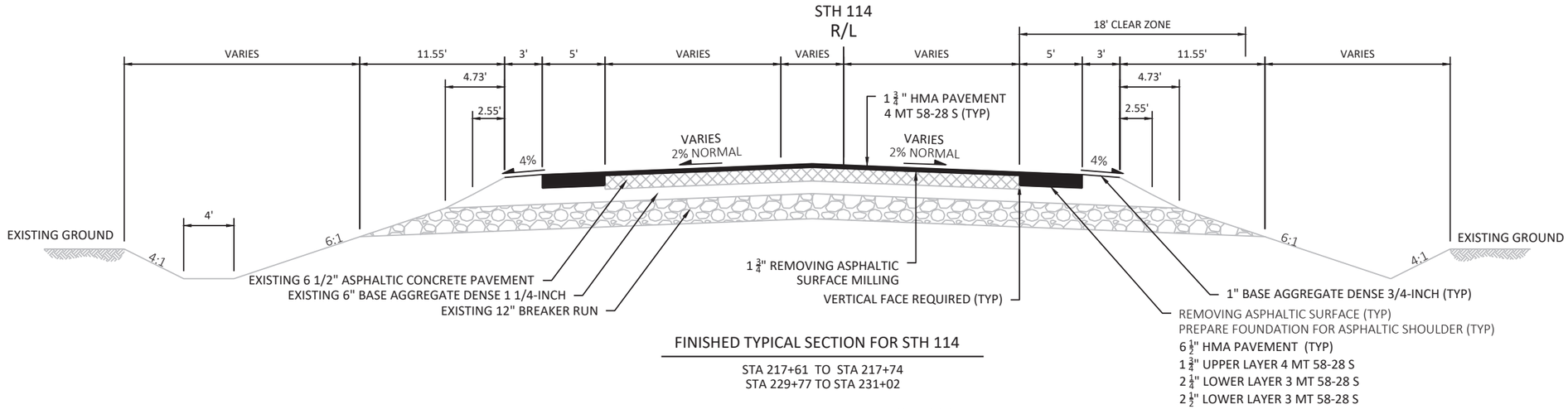

FINISHED TYPICAL SECTION FOR STH 114

STA 217+61 TO STA 217+74
STA 229+77 TO STA 231+02

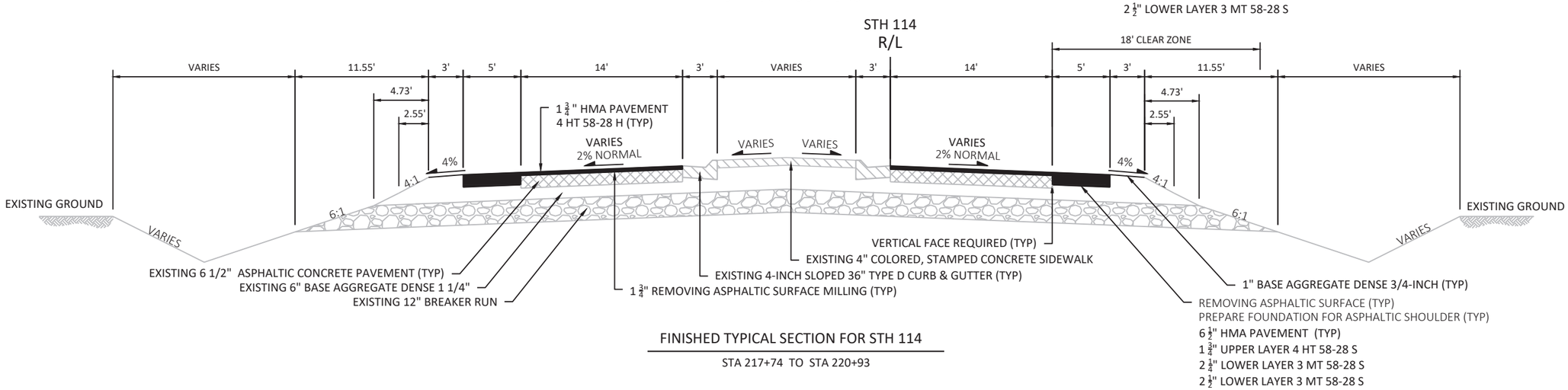

FINISHED TYPICAL SECTION FOR STH 114

STA 217+74 TO STA 220+93

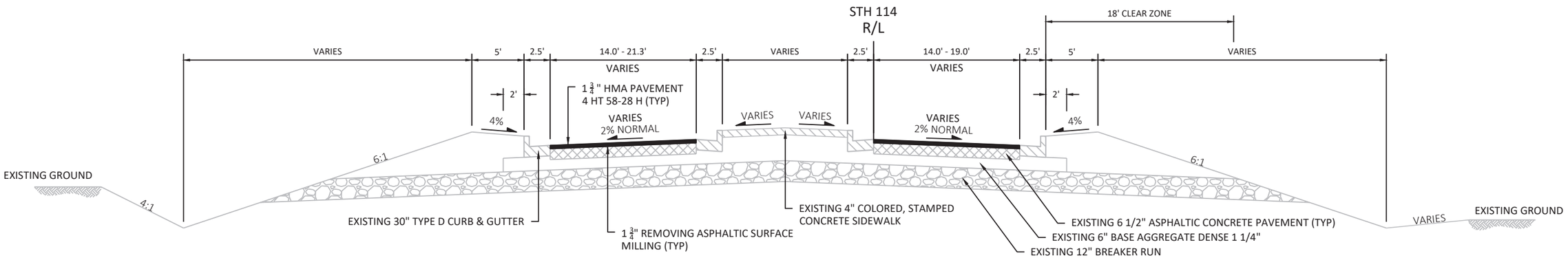

FINISHED TYPICAL SECTION FOR STH 114

STA 220+93 TO STA 222+50

PROJECT NO: 4580-10-71	HWY: 114	COUNTY: CALUMET	TYPICAL SECTIONS	SHEET 15	E

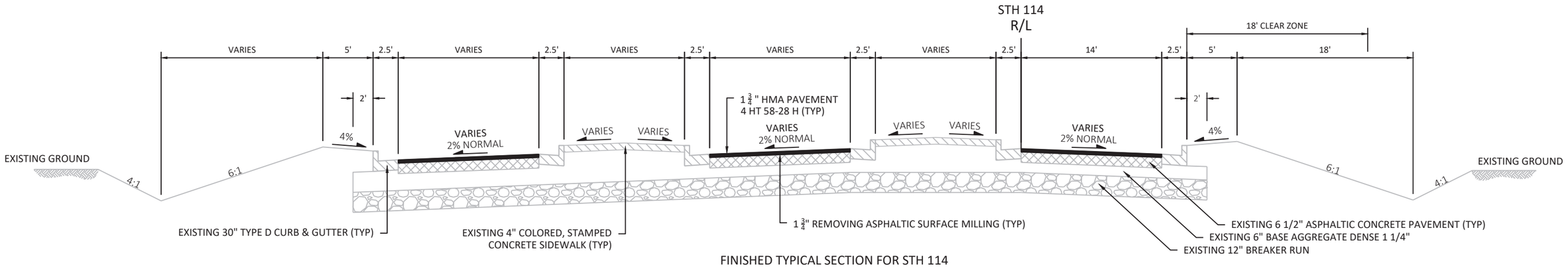

FINISHED TYPICAL SECTION FOR STH 114

STA 223+96 TO STA 225+48

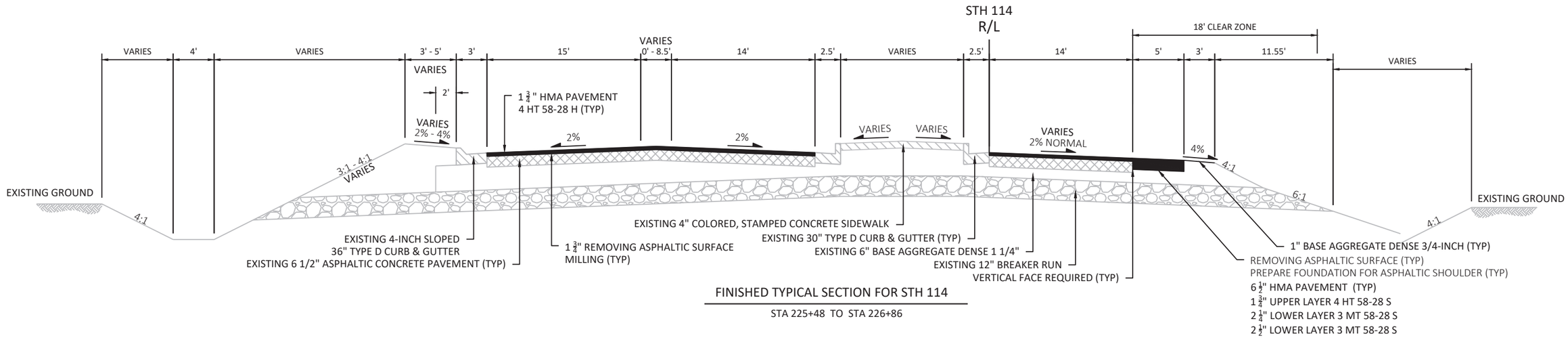

FINISHED TYPICAL SECTION FOR STH 114

STA 225+48 TO STA 226+86

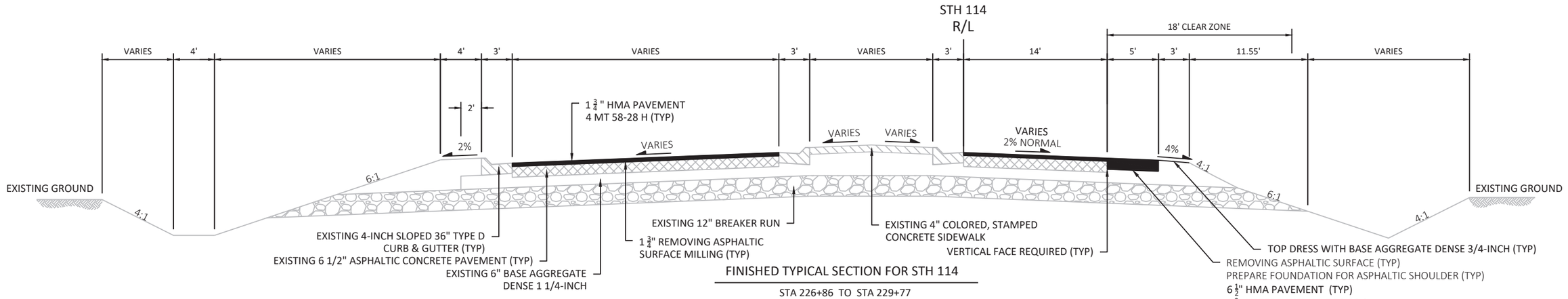

FINISHED TYPICAL SECTION FOR STH 114

STA 226+86 TO STA 229+77

PROJECT NO: 4580-10-71	HWY: 114	COUNTY: CALUMET	TYPICAL SECTIONS	SHEET 16	E

2

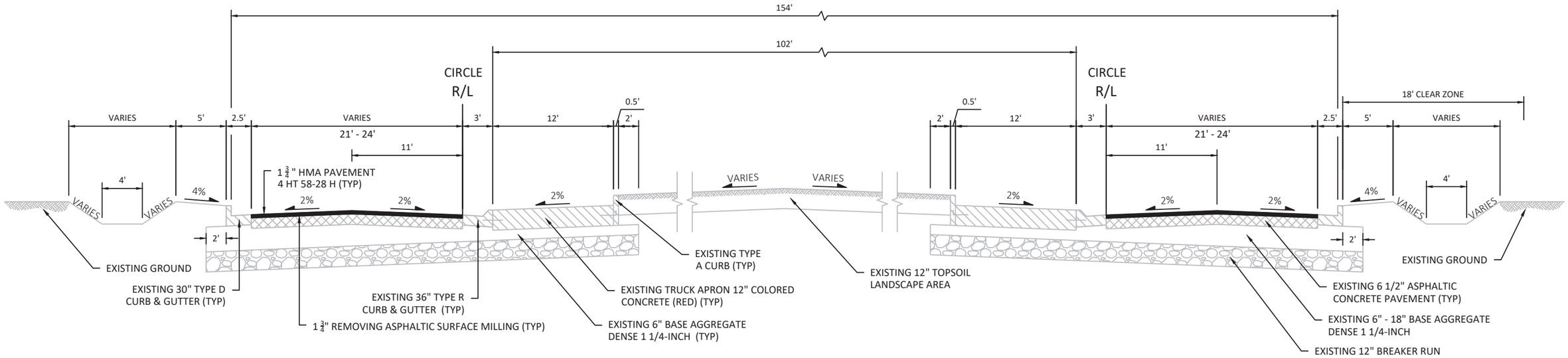

FINISHED TYPICAL SECTION FOR CENTER CIRCLE

CTH N / STH 114 / FIRELANE 12 ROUNDABOUT
STA 222+50 TO STA 223+96

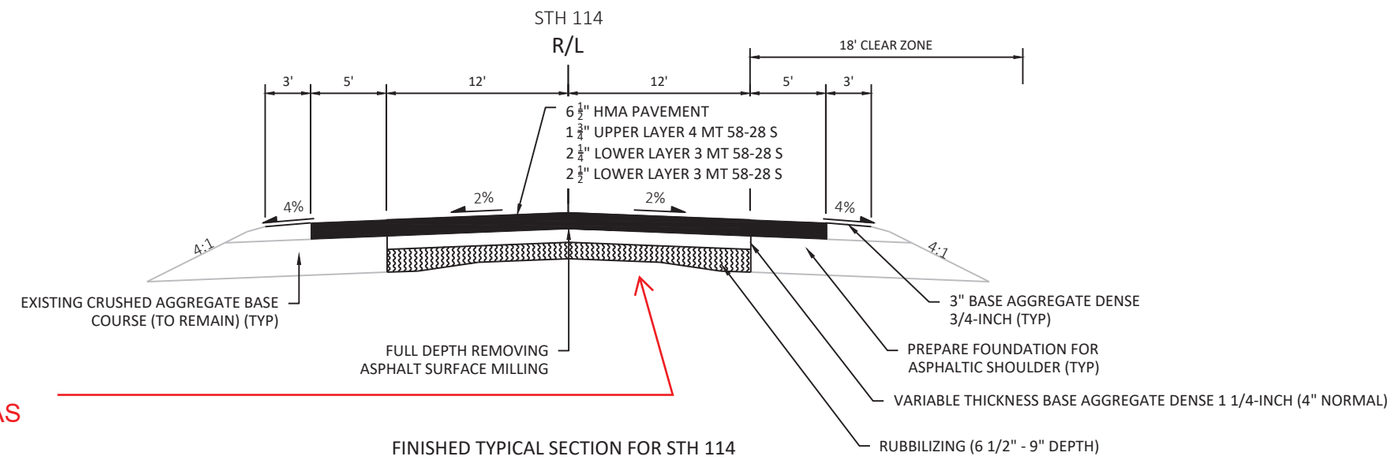

FINISHED TYPICAL SECTION FOR STH 114

STA 232+09 TO STA 273+04
STA 276+80 TO STA 279+27
STA 283+78 TO STA 290+30
STA 310+30 TO STA 322+26

After Concrete was Rubblized, it was removed along with about 1' of unstable/wet organics below it.
Select Crushed Material placed over SAS fabric.
See P&P sheets for exact locations.

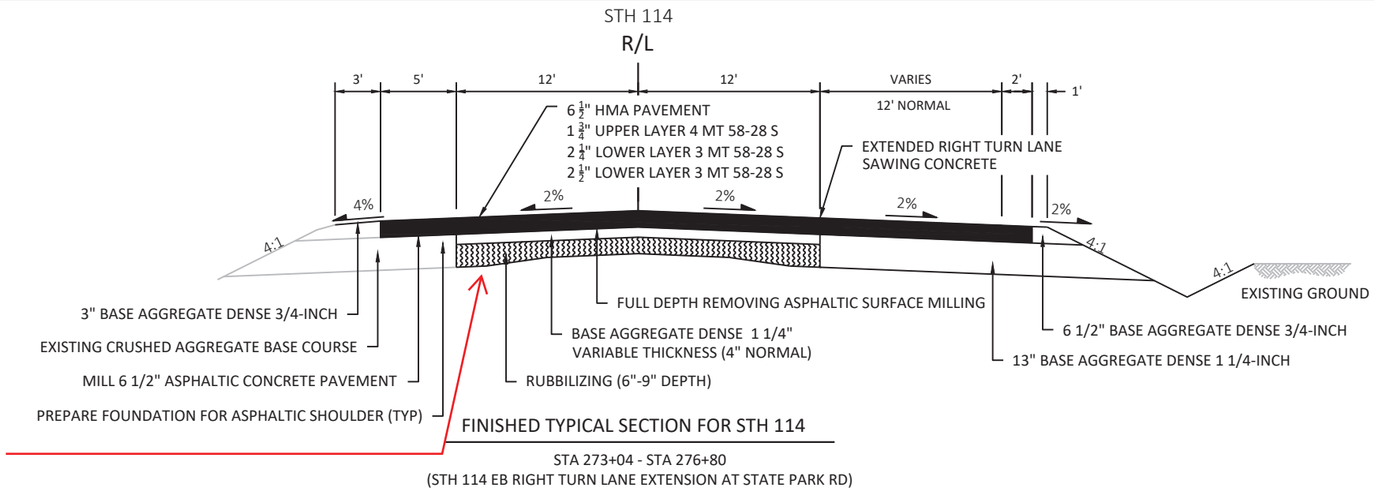

FINISHED TYPICAL SECTION FOR STH 114

STA 273+04 - STA 276+80
(STH 114 EB RIGHT TURN LANE EXTENSION AT STATE PARK RD)

After Concrete was Rubblized, it was removed along with about 1' of unstable/wet organics below it.
Select Crushed Material placed over SAS fabric.

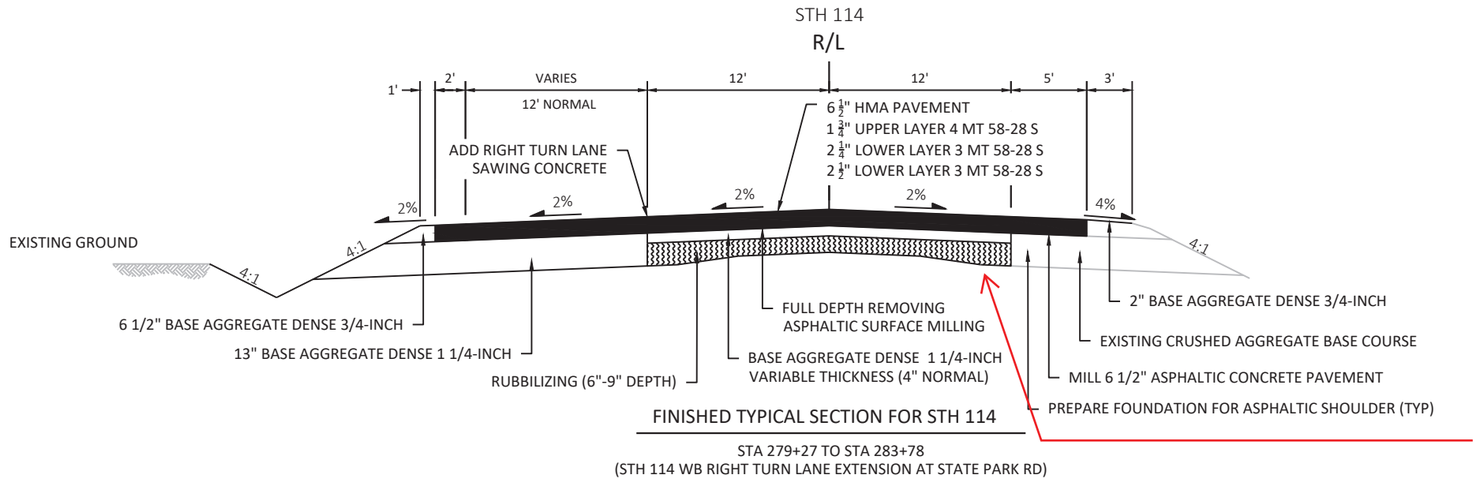

FINISHED TYPICAL SECTION FOR STH 114

STA 279+27 TO STA 283+78
(STH 114 WB RIGHT TURN LANE EXTENSION AT STATE PARK RD)

After Concrete was Rubblized, it was removed along with about 1' of unstable/wet organics below it.
Select Crushed Material placed over SAS fabric.

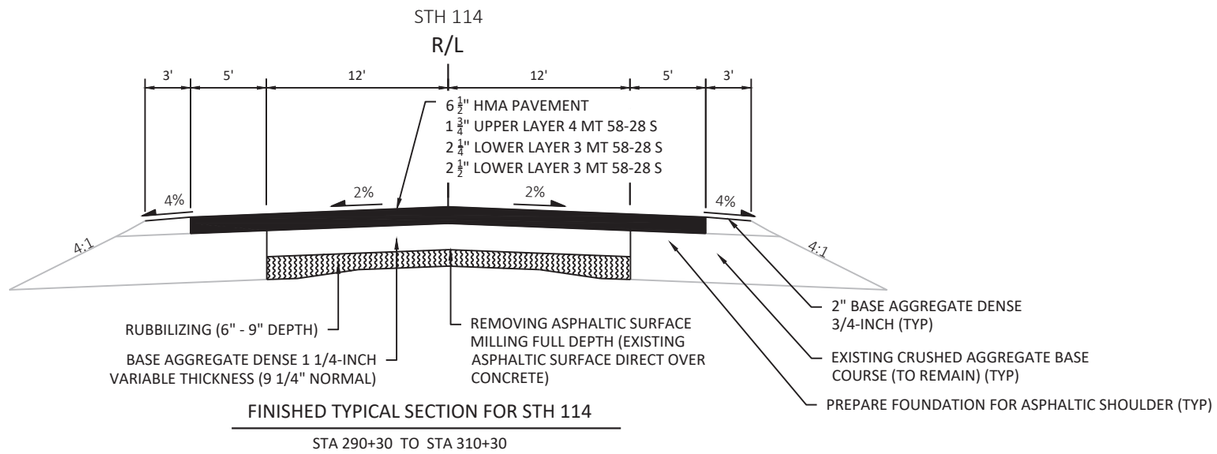

FINISHED TYPICAL SECTION FOR STH 114

STA 290+30 TO STA 310+30

PROJECT NO: 4580-10-71	HWY: 114	COUNTY: CALUMET	TYPICAL SECTIONS	SHEET 18	E

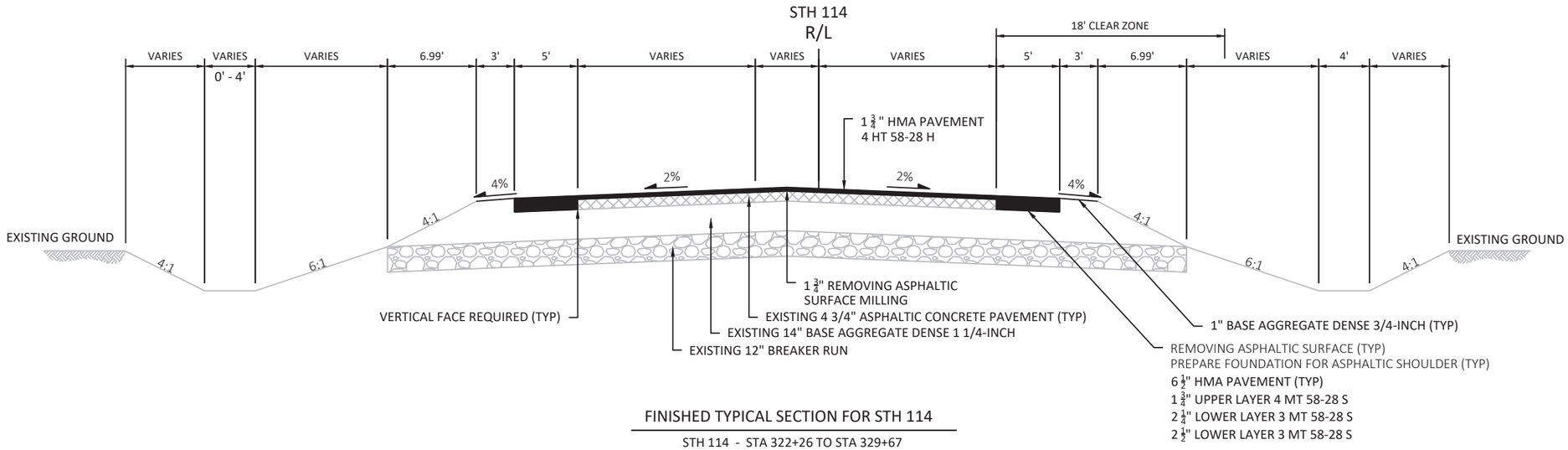

FINISHED TYPICAL SECTION FOR STH 114

STH 114 - STA 322+26 TO STA 329+67
STH 55/114 - STA 340+26 TO STA 348+76

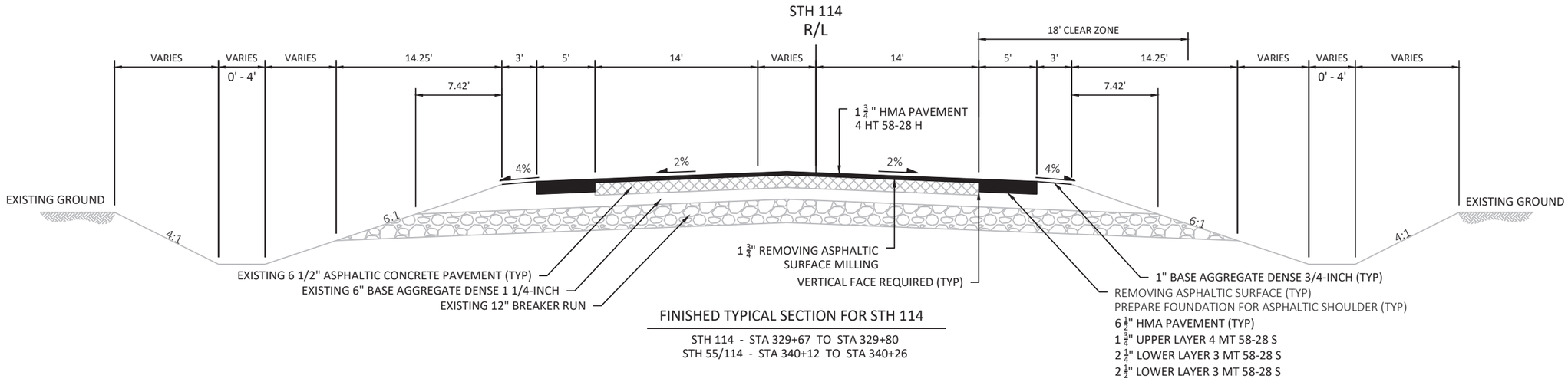

FINISHED TYPICAL SECTION FOR STH 114

STH 114 - STA 329+67 TO STA 329+80
STH 55/114 - STA 340+12 TO STA 340+26

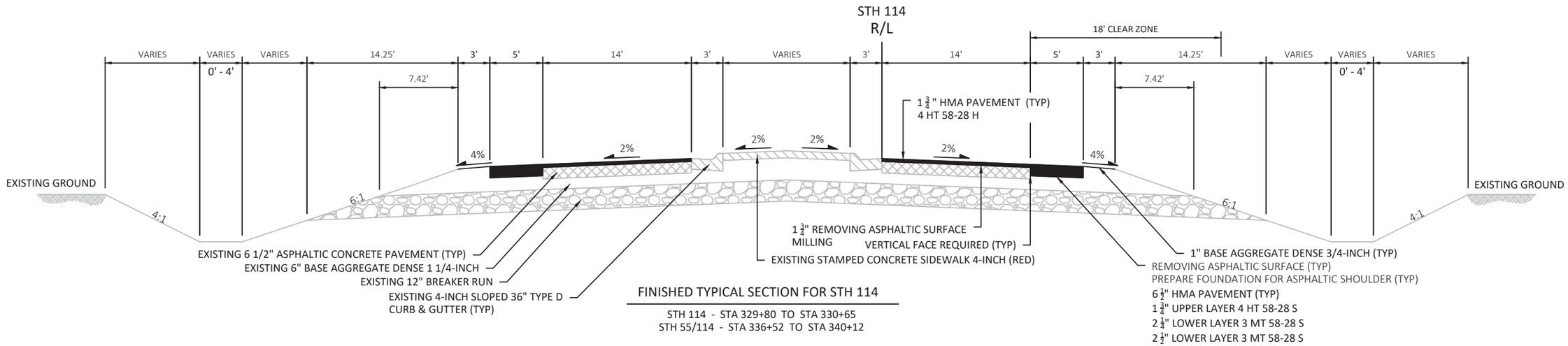

FINISHED TYPICAL SECTION FOR STH 114

STH 114 - STA 329+80 TO STA 330+65
STH 55/114 - STA 336+52 TO STA 340+12

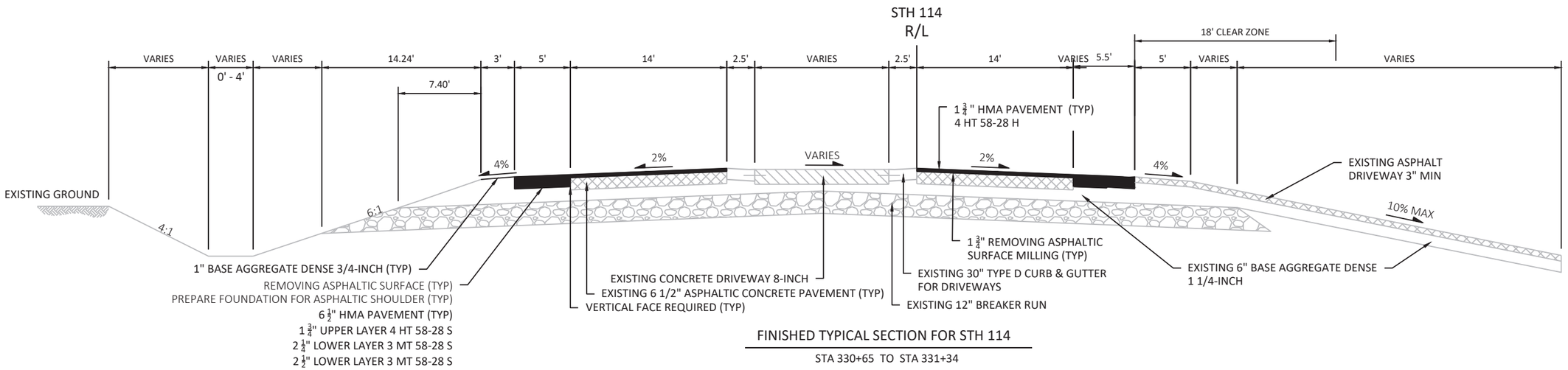

FINISHED TYPICAL SECTION FOR STH 114

STA 330+65 TO STA 331+34

PROJECT NO: 4580-10-71	HWY: 114	COUNTY: CALUMET	TYPICAL SECTIONS	SHEET 20	E

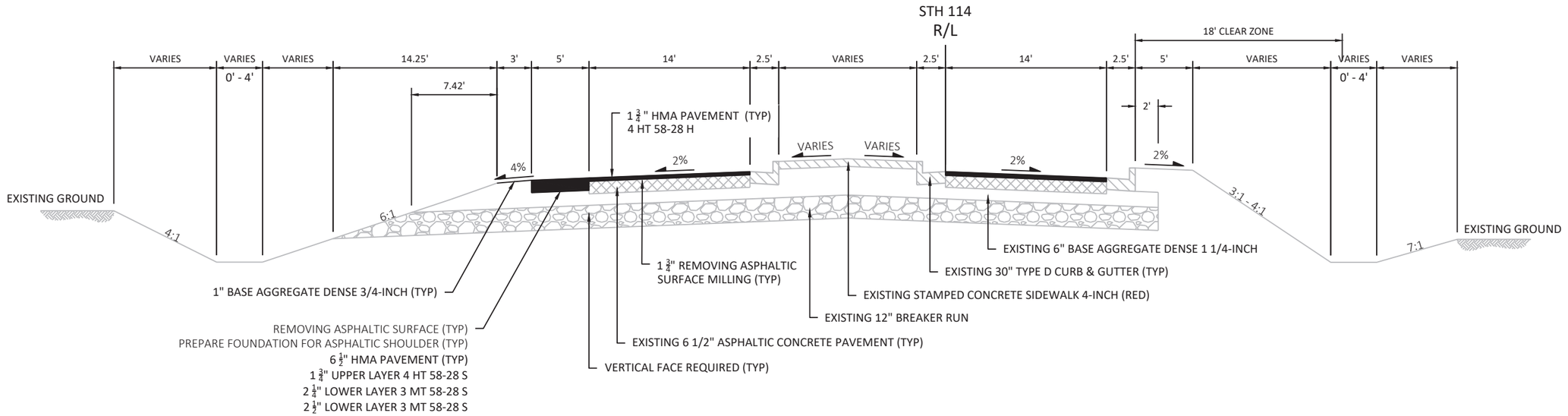

FINISHED TYPICAL SECTION FOR STH 114

STH 114 - STA 331+34 TO STA 332+37

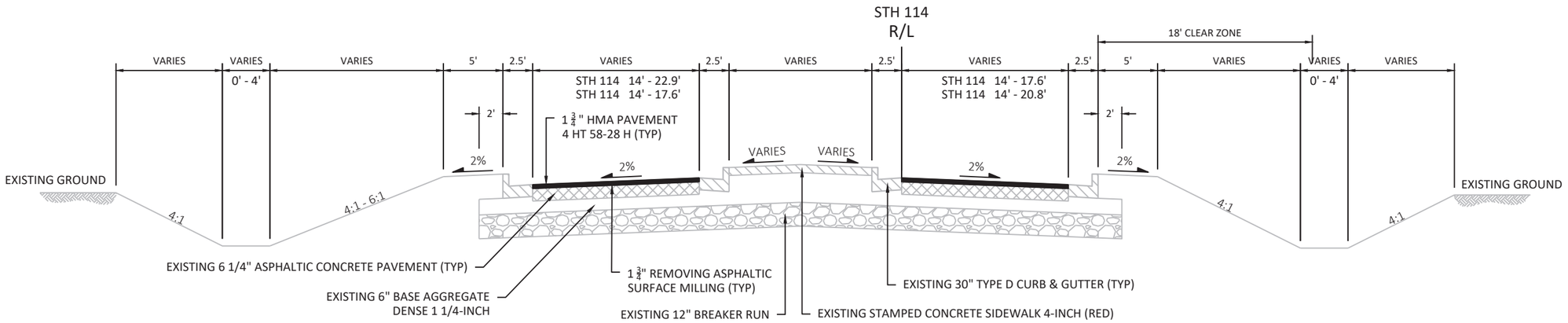

FINISHED TYPICAL SECTION FOR STH 114

STH 114 - STA 332+37 TO STA 333+44
STH 114 - STA 334+85 TO STA 336+52

PROJECT NO: 4580-10-71	HWY: 114	COUNTY: CALUMET	TYPICAL SECTIONS	SHEET 21	E

2

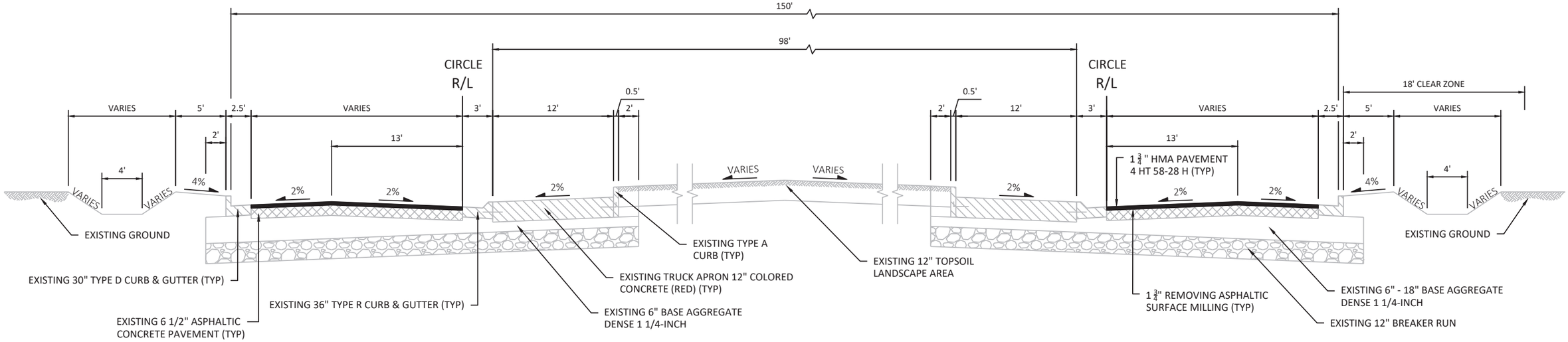

FINISHED TYPICAL SECTION FOR ROUNDABOUT

STH 55/114/STOMMEL RD ROUNDABOUT
STA 333+44 TO STA 334+85

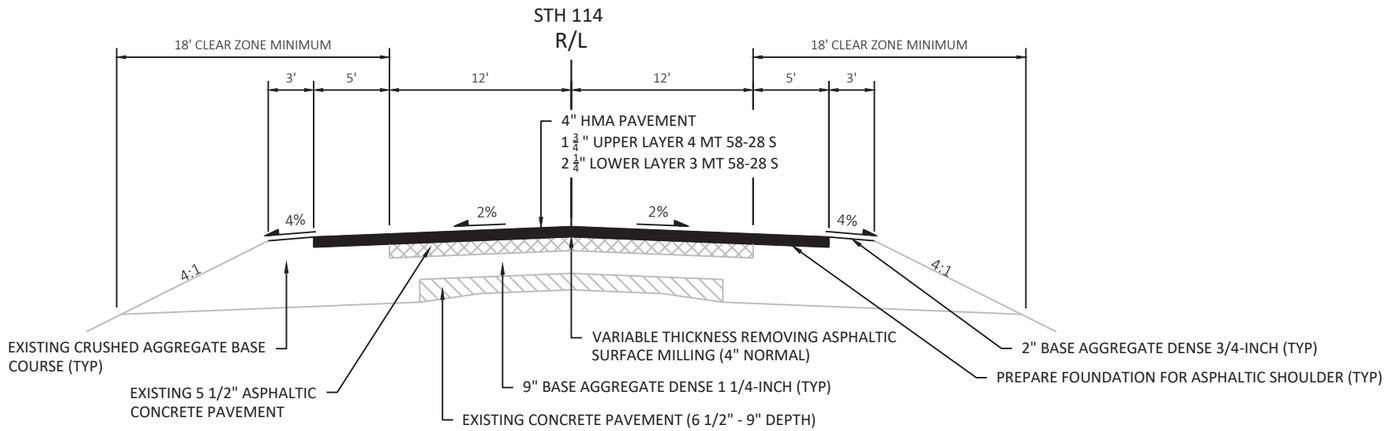

FINISHED TYPICAL SECTION FOR STH 55/114

STH 55/114 - STA 348+76 TO STA 390+82

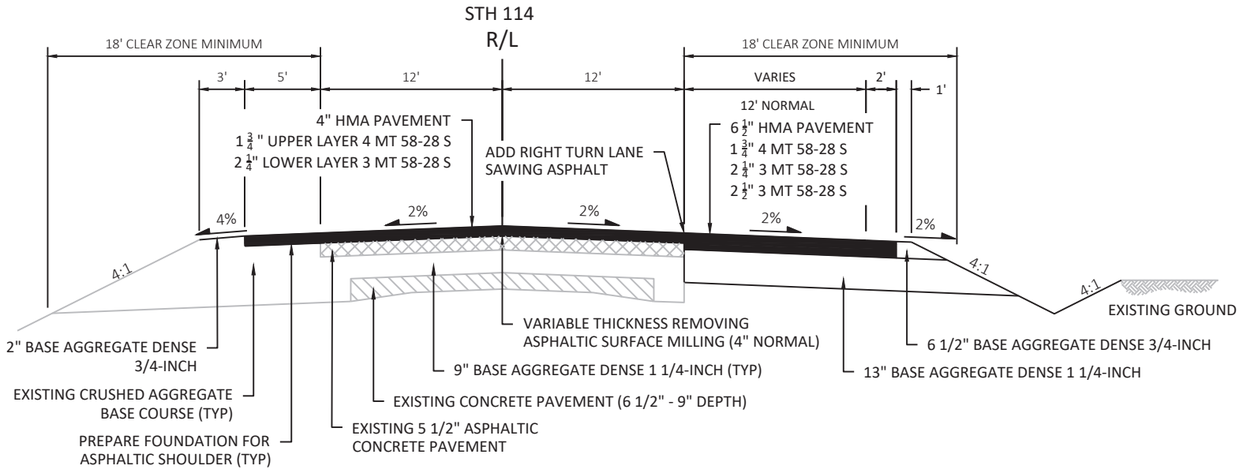

FINISHED TYPICAL SECTION FOR STH 55/114

STH55/114 - STA 390+82 TO STA 392+40
(CASTLE DRIVE RIGHT TURN LANE)

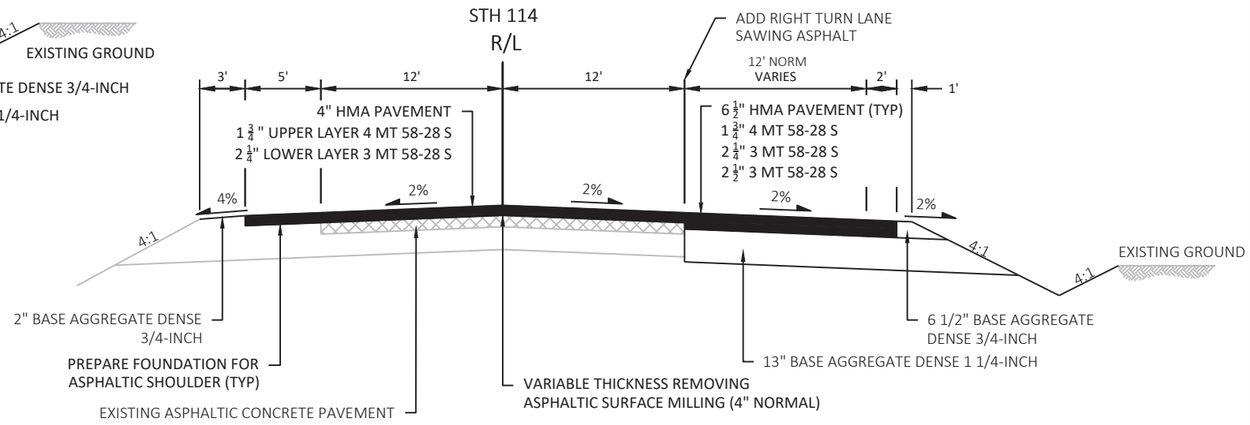

FINISHED TYPICAL SECTION FOR STH 114

STA 392+40 TO STA 395+82

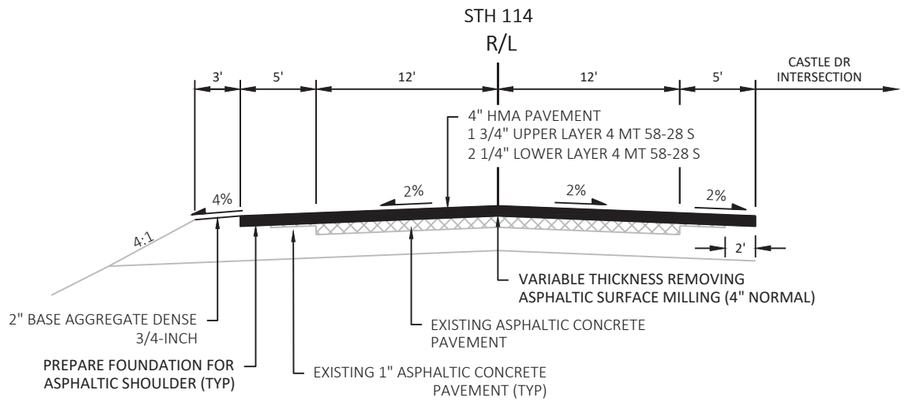

FINISHED TYPICAL SECTION FOR STH 114

STA 395+82 TO STA 397+09

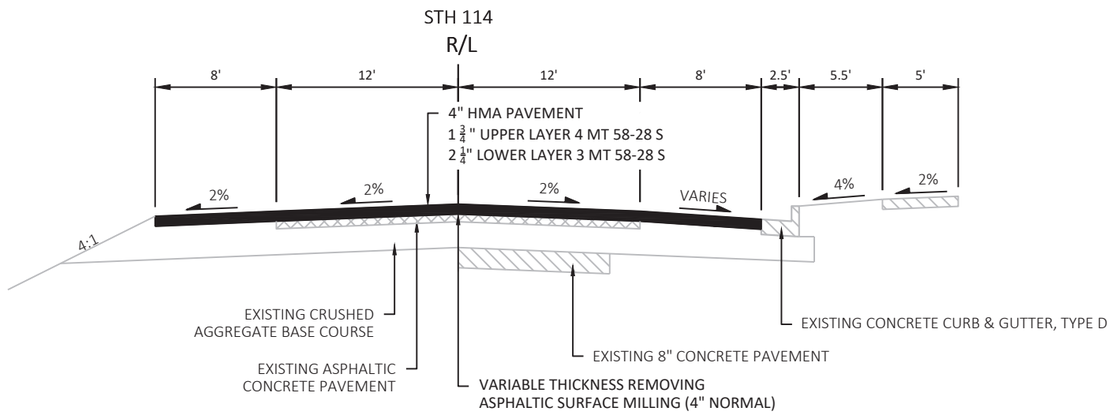

FINISHED TYPICAL SECTION FOR STH 114

STA 397+09 TO STA 397+36.66

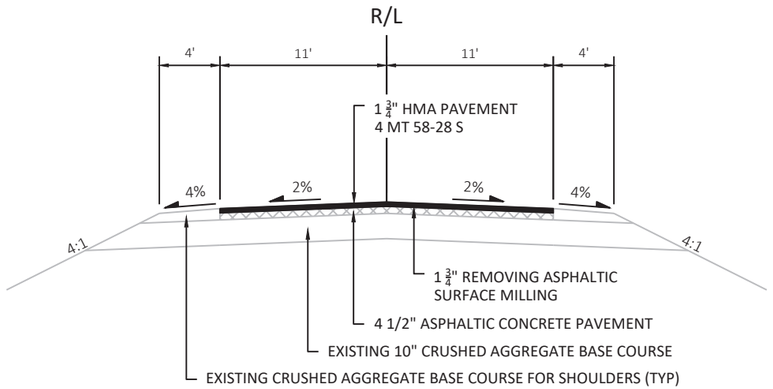

FINISHED TYPICAL SECTION FOR SIDE ROADS

OLD HIGHWAY ROAD
FIRELANE 13
LAKE BREEZE DRIVE
STATE PARK ROAD SOUTH

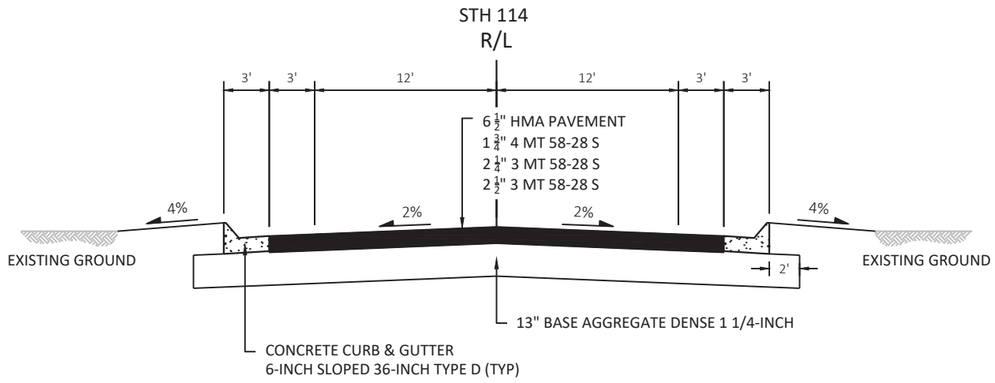

FINISHED TYPICAL SECTION FOR SIDE ROAD

STATE PARK ROAD NORTH

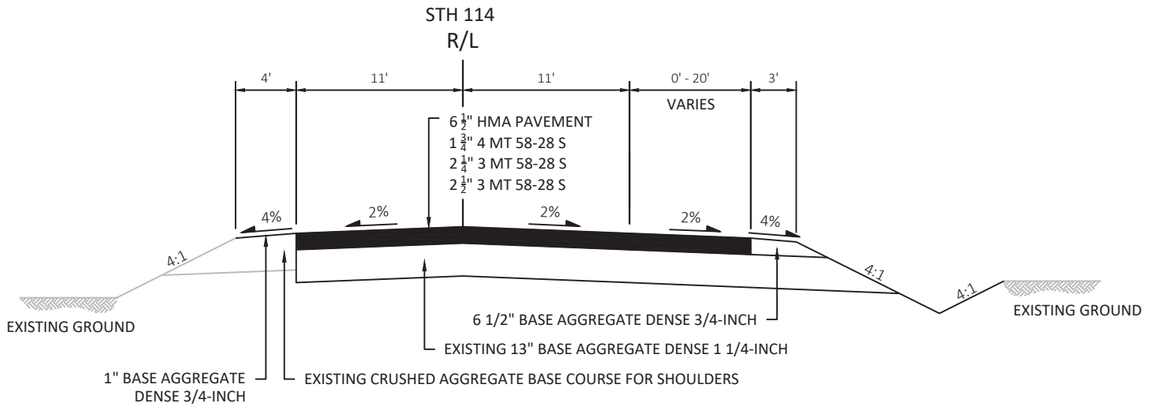

FINISHED TYPICAL SECTION FOR SIDE ROAD

PIGEON ROAD

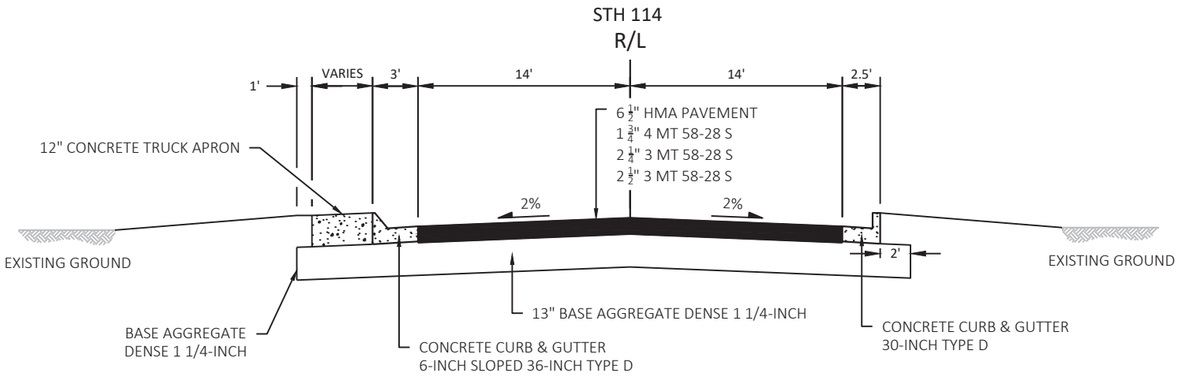

FINISHED TYPICAL SECTION FOR SIDE ROAD

CASTLE DRIVE

PROJECT NO: 4580-10-71	HWY: 114	COUNTY: CALUMET	TYPICAL SECTIONS	SHEET 24	E

2

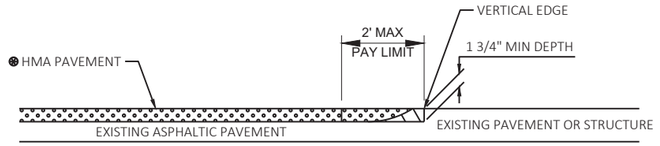

⊛ SEE TYPICAL CROSS SECTION FOR PAVEMENT TYPE AND THICKNESS OF INDIVIDUAL LAYERS

REMOVING ASPHALTIC SURFACE, MILLING

REMOVE ASPHALTIC SURFACE WEDGE AT BUTT JOINT TO CREATE VERTICAL EDGE

BUTT JOINT DETAIL FOR ASPHALTIC PAVEMENTS (NO PROFILE CHANGE)

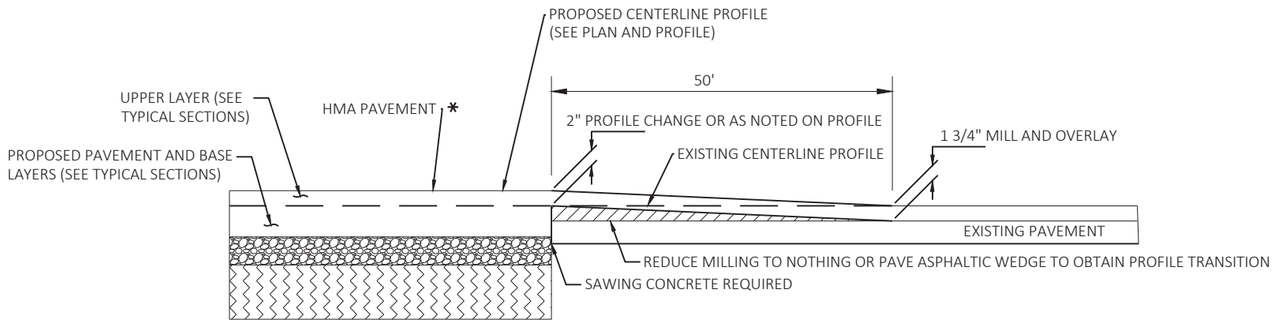

*SEE TYPICAL CROSS SECTION FOR PAVEMENT TYPE AND THICKNESS OF INDIVIDUAL LAYERS

ASPHALTIC WEDGING

BASE AGGREGATE DENSE 1 1/4-INCH (SEE TYPICAL SECTIONS)

RUBBLIZE EXISTING CONCRETE PAVEMENT (SEE TYPICAL SECTIONS)

DETAIL FOR PROFILE TRANSITION FROM MILL AND OVERLAY TO RUBBLIZING SECTION WITH PROFILE CHANGE

STATION 322+26 TO 322+76

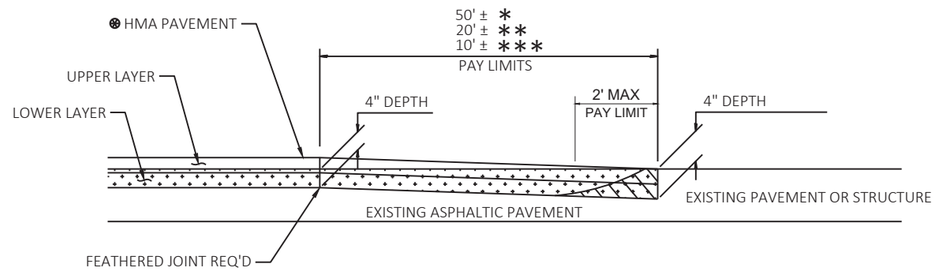

⊛ SEE TYPICAL CROSS SECTION FOR PAVEMENT TYPE AND THICKNESS OF INDIVIDUAL LAYERS

REMOVING ASPHALTIC SURFACE, MILLING

REMOVE ASPHALTIC SURFACE WEDGE AT BUTT JOINT TO CREATE VERTICAL EDGE

BUTT JOINT DETAIL FOR MILLED ASPHALTIC PAVEMENTS (PROFILE CHANGE)

* MAINLINE
** SIDEROADS
*** PRIVATE ENTRANCES

2

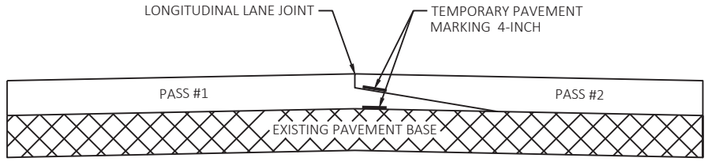

PAVEMENT MARKING DETAIL FOR TAPERED OVERLAPPING JOINTS IN HMA PAVEMENTS 1 LAYER

STATION 208+62 TO 232+10
STATION 322+26 TO 348+76

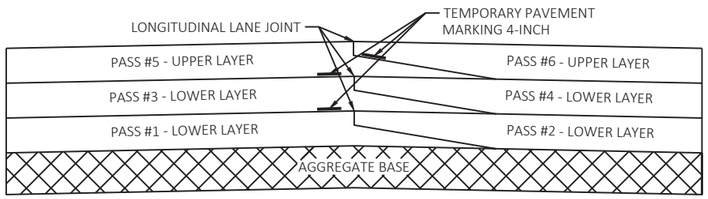

PAVEMENT MARKING DETAIL FOR TAPERED OVERLAPPING JOINTS IN HMA PAVEMENTS 3 LAYERS WITH AGGREGATE BASE

STATION 203+75 TO 208+62
STATION 232+10 TO 322+26

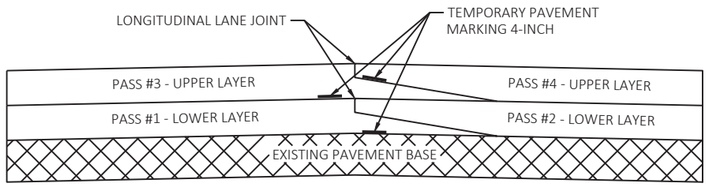

PAVEMENT MARKING DETAIL FOR TAPERED OVERLAPPING JOINTS IN HMA PAVEMENTS 2 LAYERS

STATION 348+76 TO 397+37

PAVEMENT DETAILS FOR RAILROAD APPROACH

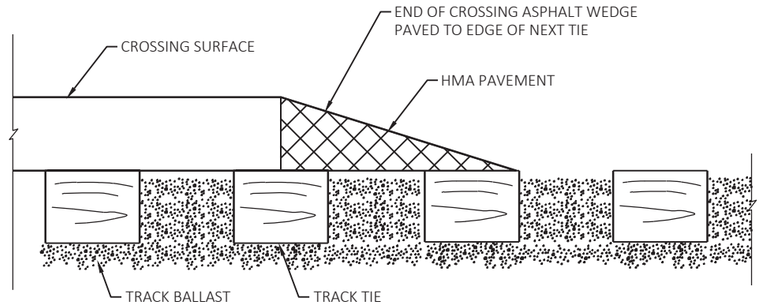

END OF CROSSING ASPHALT WEDGE DETAIL

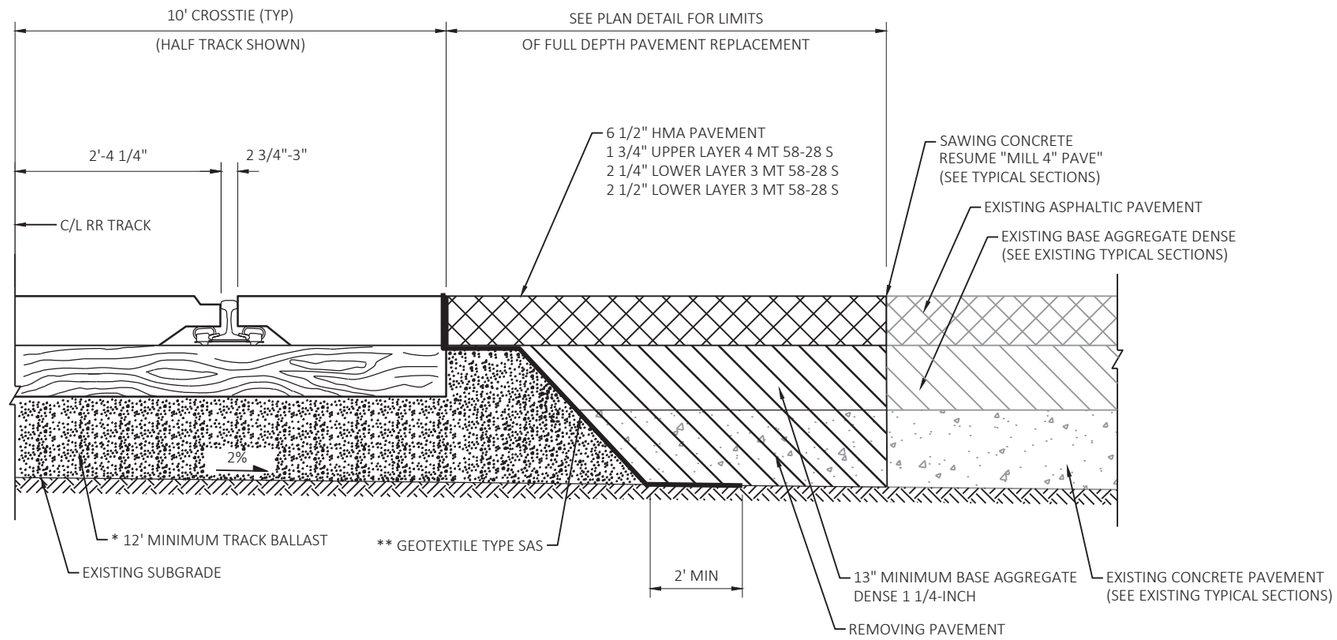

END OF CROSSING ASPHALT WEDGE DETAIL

NOTES

SEE RAILROAD CROSSING PLAN DETAIL FOR MORE DETAILS OF CROSSING CONSTRUCTION.

PLANS AND SECTIONS ARE TYPICAL. DIMENSIONS VARY PER PROJECT.

DETAILS OF CONSTRUCTION, MATERIALS AND WORKMANSHIP NOT SHOWN ON THIS DRAWING SHALL CONFORM TO THE PERTINENT REQUIREMENTS OF THE STANDARD SPECIFICATIONS AND THE APPLICABLE SPECIAL PROVISIONS.

TIMBER, CONCRETE OR RUBBER CROSSING SURFACE MATERIAL, RAILS, TIES, BALLAST AND CROSS DRAINAGE SYSTEM BY OTHERS UNLESS DIRECTED OTHERWISE.

HMA PAVEMENT APPROACHES AND THE HMA PAVEMENT CROSSING SURFACES TO BE REPLACED BY ROADWAY CONTRACTOR UNLESS DIRECTED OTHERWISE.

HMA PAVEMENT SHALL BE ROLLED PARALLEL TO THE TRACK.

THE CROSSING SHALL NOT BE OPENED TO ANY TYPE OF TRAFFIC UNTIL IT IS FULLY PAVED AND COOLED SUFFICIENTLY UNLESS OTHERWISE APPROVED BY THE RAILROAD ENGINEER AND THE PROJECT ENGINEER.

NO NON-RUBBER TIRED OR TRACKED EQUIPMENT SHALL CROSS OR SIT ON THE CROSSING SURFACE WITHOUT PROTECTING THE CROSSING SURFACE WITH A METHOD APPROVED BY THE RAILROAD ENGINEER AND PROJECT ENGINEER.

* BALLAST REQUIRED 12" DEPTH, DIMENSION FROM BOTTOM OF TRACK TIE TO HIGH SIDE OF 2% SLOPE. 2% SLOPE REQUIRED ON RAILROAD BALLAST. SEE PLAN FOR CROWN OR SLOPE DIRECTION.

** GEOTEXTILE TYPE SAS PLACED IN ORDER TO PROVIDE STABILIZATION AND SEPARATION ON TOP OF THE TRACK BALLAST WHERE IT IS UNDER OR ADJACENT TO HMA PAVEMENT AND BASE AGGREGATE DENSE AND THE FIELD SIDE BALLAST CRIBS. GEOTEXTILE TYPE SAS SHALL EXTEND FROM THE TOP OF THE PAVEMENT SURFACE TO 2 FEET BEYOND THE LIMITS OF THE TRACK BALLAST.

2

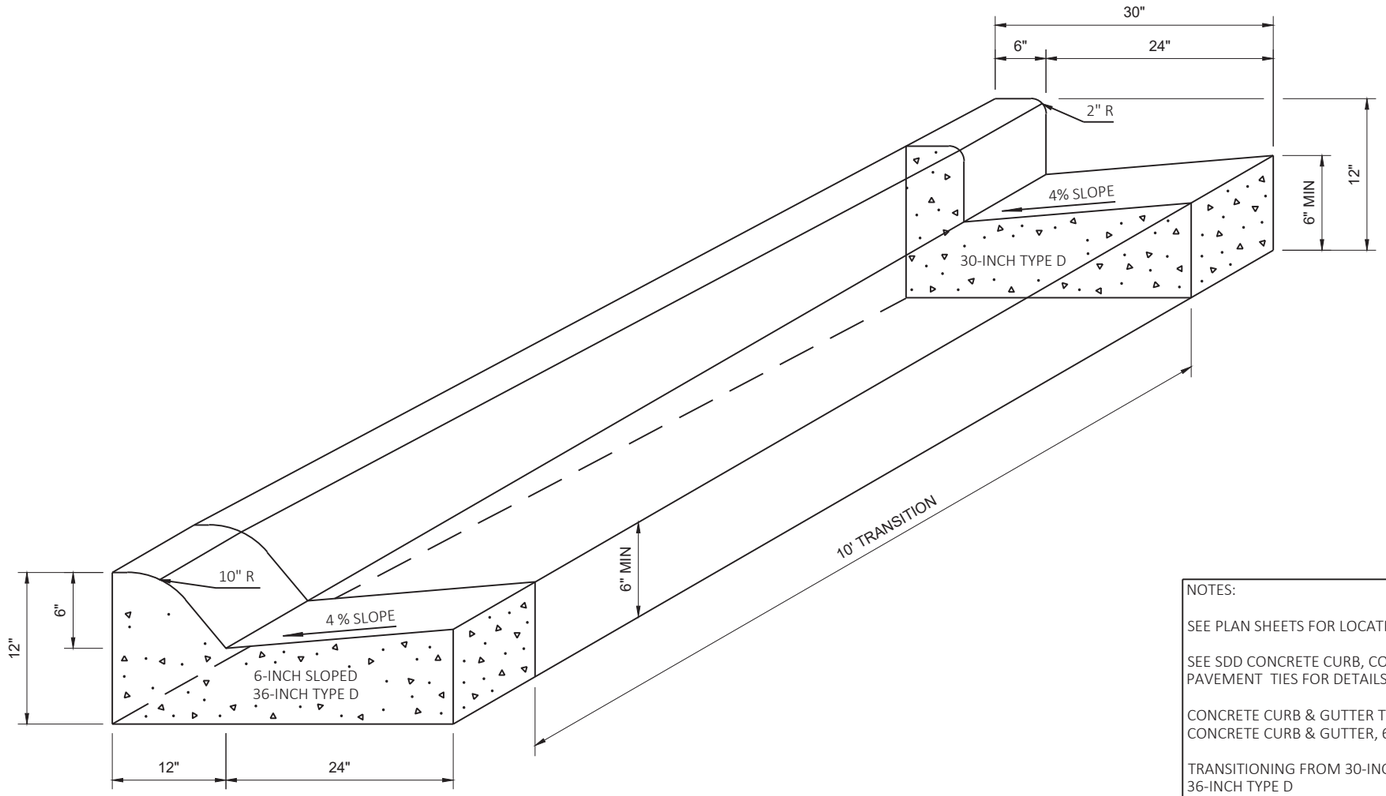

NOTES:

SEE PLAN SHEETS FOR LOCATIONS.

SEE SDD CONCRETE CURB, CONCRETE CURB & GUTTER AND PAVEMENT TIES FOR DETAILS NOT SHOWN.

CONCRETE CURB & GUTTER TRANSITION TO BE PAID FOR AS CONCRETE CURB & GUTTER, 6-INCH SLOPED 36-INCH, TYPE D.

TRANSITIONING FROM 30-INCH TYPE D TO 6-INCH SLOPED 36-INCH TYPE D

CONCRETE CURB & GUTTER TRANSITION DETAIL

STATE PARK RD

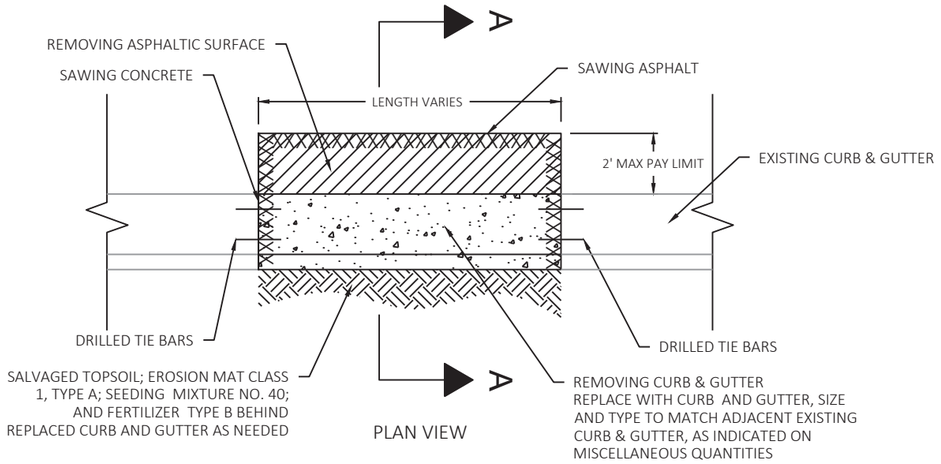

PLAN VIEW

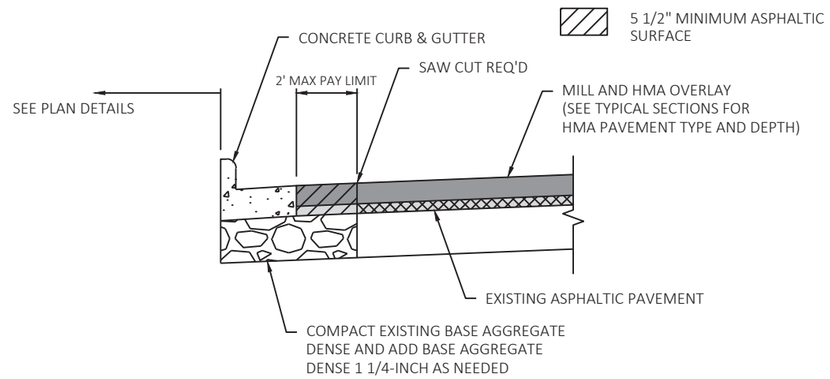

SECTION A-A

NOTES:
NOT TO SCALE

LOCATIONS AND LENGTHS OF CURB AND GUTTER REPAIR/REPLACEMENT ARE INDICATED ON THE PLAN, MISCELLANEOUS QUANTITIES AND AS DIRECTED BY THE ENGINEER

COMPLETE CURB & GUTTER REPLACEMENTS AND ASPHALTIC SURFACE PATCHING TO MATCH THE EXISTING SURFACE PRIOR TO THE MILL AND OVERLAY OF STH 55/114.

FOR DETAILS NOT SHOWN, SEE SDD "CONCRETE CURB, CONCRETE CURB & GUTTER AND TIES" FOR ADDITIONAL INFORMATION.

CONCRETE CURB & GUTTER REPLACEMENT DETAIL

VARIOUS LOCATIONS

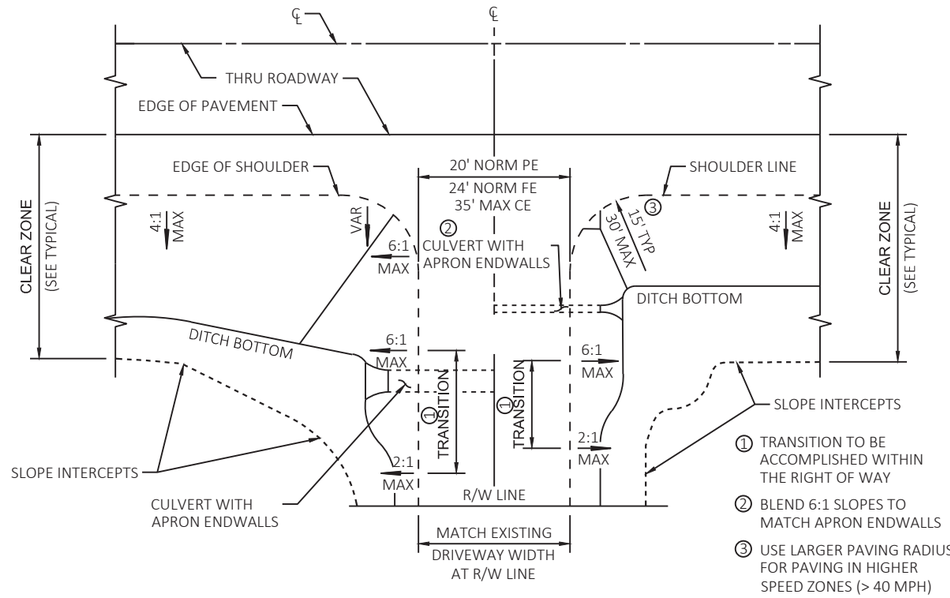

FOR CULVERTS OVER 24" DIAMETER

FOR CULVERTS 24" DIAMETER & LESS

PLAN VIEW

RURAL DRIVEWAY GRADING AND/OR PAVING DETAIL

2

DANIEL L. HARRELL

BERM

SEPC

SEPC

DANIEL L. HARRELL

N

FLAG

EXISTING R/W

SAWING ASPHALT

SLOPE INTERCEPT

SIGN

XXXX XXXX XXXX XXXX

800.98

801.08

276+90.97
-12.00'LT

272+00 273+00 STH 114 274+00 R/L STH 114 275+00 276+00 277+00

273+04.40
12.00'RT

801.25 801.24 801.23 801.22 801.21 801.20 801.19 801.18 801.17 801.16 801.15 801.14 801.13 801.12 801.11 801.10

801.22 801.16 801.11 801.06 801.01 800.95 800.94 800.93 800.92 800.91 800.90 800.89 800.88 800.87 800.86

274+54.40
24.00'RT

SAWING CONCRETE REQ'D

276+79.45
12.00'RT

12"

1'

2"

EXISTING R/W

TLE

PROPOSED R/W

SLOPE INTERCEPT

ANDREW STUMPF

GOLF COURSE

PROJECT NO: 4580-10-71	HWY: STH 114	COUNTY: CALUMET	INTERSECTION DETAILS	SHEET 30	E

FILE NAME : N:\PDS\C3D\45801000\SHEETSPLAN\021101-ID.DWG
LAYOUT NAME - 021101-id

PLOT DATE : 12/8/2021 11:00 AM PLOT BY : VOGEL, KURT MICHAEL PLOT NAME : PLOT SCALE : 1 IN:40 FT

WISDOT/CADDS SHEET 42

2

2

TOWN OF HARRISON
TOWN HALL

STATE PARK RD

R/L STATE PARK RD

TLE

10' TRANSITION TO CONCRETE CURB & GUTTER 30-INCH TYPE D (SEE CONSTRUCTION DETAIL)

END CONSTRUCTION STA 45+82.84

SAWING ASPHALT REQ'D

45+79.08 -15.00' L 800.61

68 FT OF CPRCHE CLASS HE-IV 14"X23"

REMOVING SMALL PIPE CULVERTS

2 APRON ENDWALLS FOR CPRCHE 14X23-INCH

277+90.97 -64.00'LT RAD TO FLANGE

ASPHALTIC FLUME

45+80.19 28.10' R 800.69

45+82.84 14.00'RT

45+81.74 38.09'RT

45+79.74 38.09' R 800.64

279+27.75 -94.00'LT RAD TO FLANGE

SAWING CONCRETE DRILLED TIE BARS

278+73.78 -72.76'LT RAD TO FLANGE

CONCRETE CURB & GUTTER 6-INCH SLOPED 36-INCH TYPE D

45+63.80 16.04' R 800.69

R12.00'

R40.00'

R70.00'

46+00

39+00

S-6.00%

800.93

800.41

800.24

800.40

800.81

800.07

CLEARING AND GRUBBING

SIGN

FLAG

TANKS

ASPHALTIC SURFACE

CONCRETE CURB & GUTTER 30-INCH TYPE D

SAWING ASPHALT

SAWING CONCRETE DRILLED TIE BARS

SAWING CONCRETE DRILLED TIE BARS

TLE

REMOVING ASPHALTIC SURFACE PAID AS COMMON EXCAVATION

SLOPE INTERCEPT

TOWN OF HARRISON

SIGN

REMOVING CURB & GUTTER

REMOVING SMALL PIPE CULVERTS

PROPOSED R/W

SLOPE INTERCEPT

EXISTING R/W

279+37.75 -24.00' L 800.71

282+27.75 -24.00'LT

1'

2'

12'

800.69 800.65 800.60 800.54 800.48 800.41 800.34 800.26 800.17 800.08 799.99 799.89 799.84 799.79 799.74 799.68 799.63

801.06 801.05 801.03 801.02 801.01 800.99 800.96 800.93 800.89 800.84 800.78 800.72 800.65 800.58 800.50 800.41 800.32 800.23 800.14 800.04 799.95 799.86 799.77 799.68

277+90.97 -24.00' L 800.81

279+27.75 -24.00' L 800.58

283+77.75 -12.00'LT

278+00 279+00 280+00 281+00 282+00 283+00

SAWING CONCRETE REQ'D

STH 114

R/L STH 114

STA 278+62.96 R/L STH 114 (45801000) =
STA 45+00.00 R/L State Park Rd CL North Existing
Y=538,362.804
X=854,513.617

EXISTING R/W

CLEAN DITCH TO DRAIN

END CONSTRUCTION STA 39+28.40

BUTT JOINT REQ'D

STATE PARK RD

39+00

ANDREW STUMPF

TODD WITTMANN

PAMELA A. WITTMANN

PROJECT NO: 4580-10-71	HWY: STH 114	COUNTY: CALUMET	INTERSECTION DETAILS	SHEET 31	E

FILE NAME : N:\PDS\C3D\45801000\SHEETSPLAN\021101-ID.DWG
LAYOUT NAME - 021102-id

PLOT DATE : 12/8/2021 11:00 AM PLOT BY : VOGEL, KURT MICHAEL PLOT NAME : PLOT SCALE : 1 IN:40 FT

WISDOT/CADDS SHEET 42

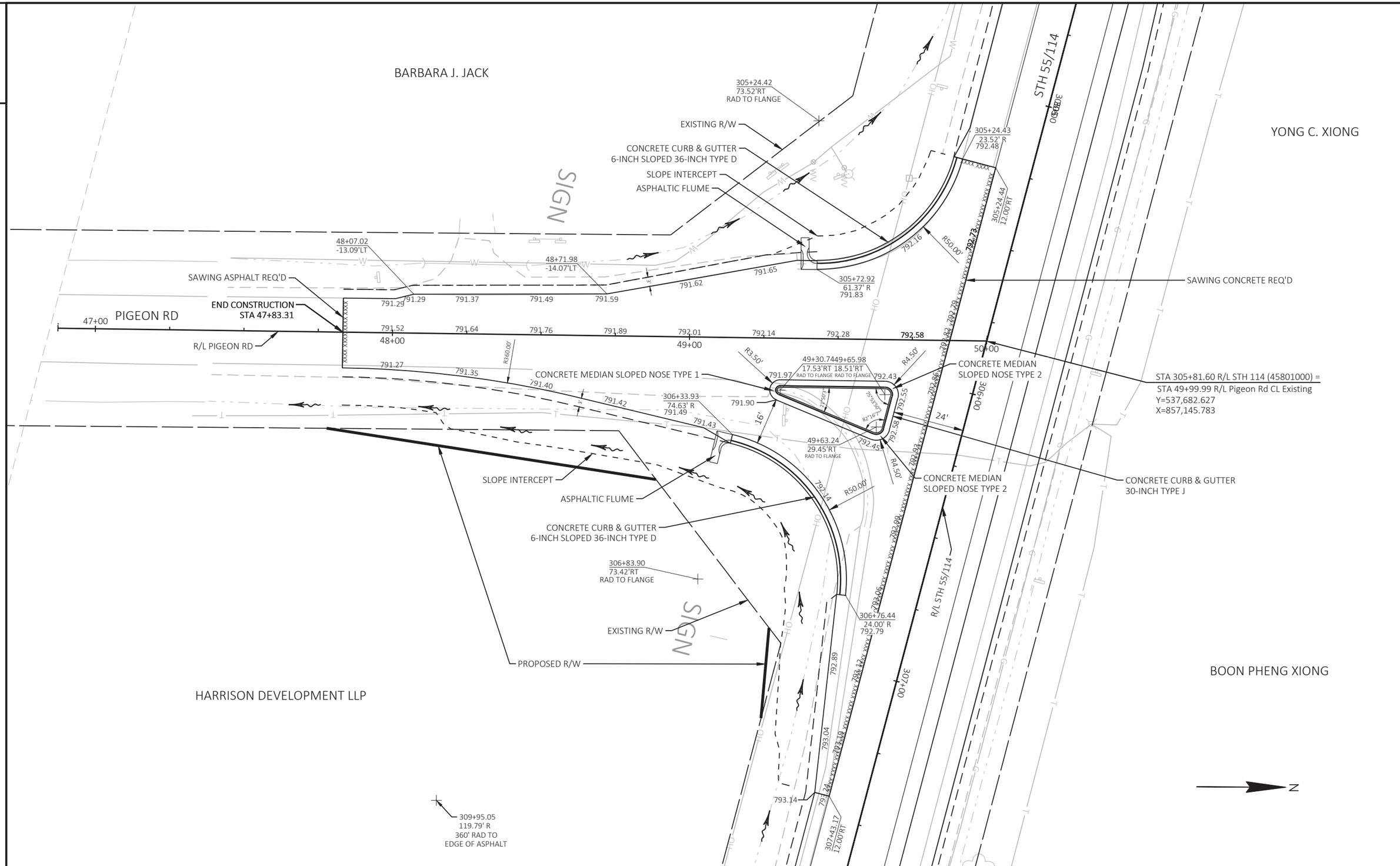

PROJECT NO: 4580-10-71	HWY: STH 114	COUNTY: CALUMET	INTERSECTION DETAILS	SHEET 32	E

FILE NAME : N:\PDS\C3D\45801000\SHEETSPLAN\021101-ID.DWG
LAYOUT NAME - 021103-id
PLOT DATE : 12/8/2021 11:00 AM
PLOT BY : VOGEL, KURT MICHAEL
PLOT NAME :
PLOT SCALE : 1 IN:30 FT
WISDOT/CADDS SHEET 42

KRESS KLAIR

EXISTING R/W

STH 55/114

R/L STH 55/114

390+00 391+00 392+00 393+00 394+00

390+82.50
12.00' R
813.35

813.32 813.25 813.16 813.06 812.97 812.87 812.81 812.80 812.78 812.76 812.75 812.71 812.66 812.60
813.29 813.18 813.05 812.91 812.78 812.64 812.57 812.56 812.54 812.52 812.51 812.47 812.42 812.36

SAWING CONCRETE REQ'D

SAWING ASPHALT REQ'D

392+31.60
26.00'RT

12'
1'
2'

EXISTING R/W

SLOPE INTERCEPT

TLE

PROPOSED R/W

ADJUST WATER VALVE BOX

SLOPE INTERCEPT

JOSEPH G.
SMET

OP THE PLACE TO BE LLC

PROJECT NO: 4580-10-71	HWY: STH 114	COUNTY: CALUMET	INTERSECTION DETAILS	SHEET 33	E

FILE NAME : N:\PDS\C3D\45801000\SHEETSPLAN\021101-ID.DWG
LAYOUT NAME - 021104-id

PLOT DATE : 12/8/2021 11:01 AM PLOT BY : VOGEL, KURT MICHAEL PLOT NAME : PLOT SCALE : 1 IN:30 FT

2

KRESS KLAIR

EXISTING R/W

STA 396+52.76 R/L STH 114 (45801000) =
STA 80+00.00 R/L Castle Dr CL Existing
Y=532,127.914
X=864,059.321

END PROJECT 4580-10-00
STA 397+36.66

R/L STH 55/114

STH 55/114

394+00 | 395+00 | 396+00 | 80+00 | 397+00 | 398+00

SAWING ASPHALT REQ'D

812.71 812.66 812.60 812.53 812.45 812.36 812.27 812.20 812.12 812.02 811.92 811.83 811.74 811.65 811.58 811.53 811.50

812.47 812.42 812.36 812.29 812.21 812.12 812.03 811.96 811.88

REMOVING CURB & GUTTER

MATCH POINT
SEE PROJECT 4670-10-00

SAWING ASPHALT REQ'D

79+71.06
-69.31' L
811.76

79+83.09
59.11' R
811.35

79+85.09
85.22' R
811.27

395+71.58
23.99' R
811.79

79+67.37
-57.06' L
811.96

CONCRETE TRUCK
APRON 12-INCH

ADJUST WATER
VALVE BOX

SAWING CONCRETE
DRILLED TIE BARS

SLOPE INTERCEPT

79+64.42
-57.62' L
811.90

79+59.87
-44.83' L
811.64

811.51

R46.50'

811.02

SEE PLAN DETAIL

79+38.43
-30.24' L
811.03

R50.00'

79+50

811.09

79+38.57
16.21' R
810.52

EXISTING R/W

SLOPE INTERCEPT

TLE

PROPOSED R/W

8 FT OF CPRC CLASS IV 36-INCH
APRON ENDWALLS FOR CULVERT
PIPE SALVAGED 36-INCH

79+21.19
-65.80'LT
RAD TO FLANGE

79+14.02
-21.48' L
810.63

79+21.19
-15.80' L
810.39

79+36.73
62.67'RT
RAD TO FLANGE

8 FT OF CPRC CLASS IV 30-INCH
APRON ENDWALLS FOR CULVERT
PIPE SALVAGED 30-INCH

TLE

810.45 810.66 810.33

STORM SEWER AND INLET
TO BE LEFT IN PLACE

CONCRETE CURB & GUTTER
30-INCH TYPE D

78+93.02
-20.54' L
810.28

78+93.16
-17.54' L
810.34

810.03 79+00 810.24 809.96

CONCRETE CURB & GUTTER
6-INCH SLOPED 36-INCH TYPE D

CASTLE DR. S.E. INTERSECTION

809.75 809.72

10' TRANSITION TO
CONCRETE CURB & GUTTER
30-INCH TYPE D

SAWING CONCRETE
DRILLED TIE BARS

SAWING CONCRETE
DRILLED TIE BARS

SAWING ASPHALT REQ'D

CASTLE DR

CASTLE SQUARE
CONDO-REFERENCE

VERVE CREDIT UNION

END CONSTRUCTION
STA 78+83.16

78+50

EXISTING R/W

R/L CASTLE DR

H&D VENTURES

PROJECT NO: 4580-10-71	HWY: STH 114	COUNTY: CALUMET	INTERSECTION DETAILS	SHEET 34	E

FILE NAME : N:\PDS\C3D\45801000\SHEETSPLAN\021101-ID.DWG
LAYOUT NAME - 021105-id

PLOT DATE : 12/8/2021 11:01 AM PLOT BY : VOGEL, KURT MICHAEL PLOT NAME : PLOT SCALE : 1 IN:30 FT

WISDOT/CADDS SHEET 42

NOTE: CROSSING CENTER LINE: STA 361+21
RAILROAD CROSSING REPLACEMENT WORK BY
RAILROAD, CROSSING LENGTH: 105'
SEE CONSTRUCTION DETAILS - PAVEMENT DETAILS
FOR RAILROAD APPROACH FOR MORE DETAILS.

TRANSITION ROADWAY AND SHOULDER SLOPE BEFORE
AND AFTER CROSSING; SEE ALIGNMENT DETAIL FOR
SUPERELEVATION TRANSITION DATA

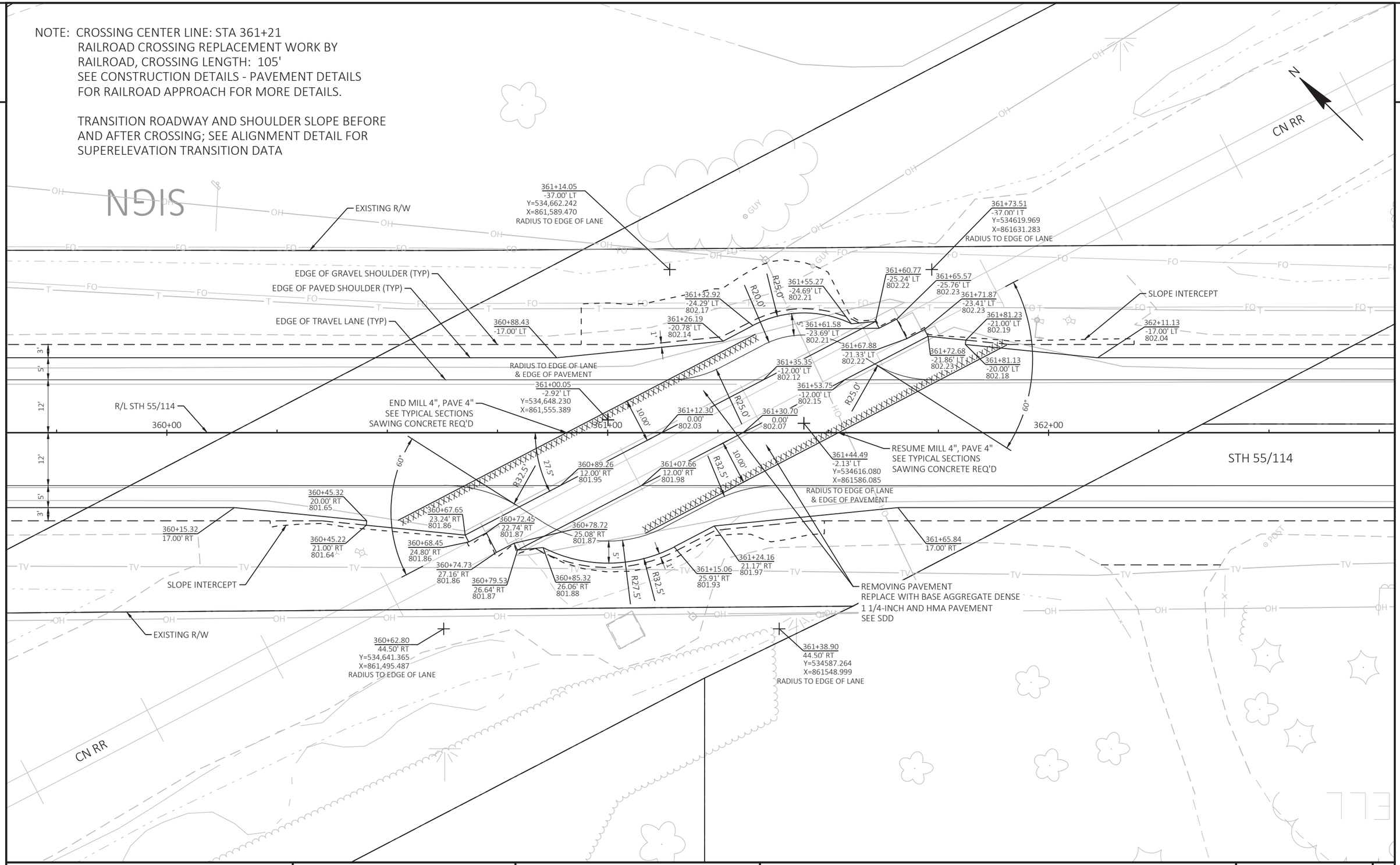

PROJECT NO: 4580-10-71	HWY: STH 114	COUNTY: CALUMET	PLAN DETAIL - RAILROAD CROSSING AT STA 361+21	SHEET 35	E

FILE NAME : C:\CIVIL 3D PROJECTS\45801000\SHEETSPLAN\021201-PD.DWG
LAYOUT NAME - 021201-pd
PLOT DATE : 10/20/2021 2:27 PM
PLOT BY : SMITH, JENNIFER B
PLOT NAME :
PLOT SCALE : 1 IN:20 FT

CASTLE DRIVE INTERSECTION
SE CURB RAMP

STH 55/114

CASTLE DR

79+75

N

NOTE:
STATIONING & OFFSETS ARE REFERENCED
TO STH 55/114 REFERENCE LINE

LEGEND

CG	CONCRETE CURB & GUTTER 30-INCH, TYPE D
SW	CONCRETE SIDEWALK 4-INCH
RSW	REMOVING CONCRETE SIDEWALK
RGG	REMOVING CURB & GUTTER
DW	CURB RAMP DETECTABLE WARNING FIELD (COLOR)
XA	SAWING ASPHALT
XC	SAWING CONCRETE
LS	SALVAGED TOPSOIL, EROSION MAT URBAN CLASS I TYPE A OR MULCHING, SEEDING MIXTURE NO. 40, FERTILIZER TYPE B

397+01.49
21.97'RT
811.33

397+08.35
21.09'RT
HP 811.36

397+10.11
21.03'RT
811.35

396+92.30
24.87'RT
811.23

396+89.11
26.40'RT
811.18

397+10.15
23.53'RT
811.68

TYPE 4B1

R45.56'

DETECTABLE WARNING FIELD
RADIAL R = 45.56'

396+90.28
28.61'RT
811.11

396+94.99
28.62'RT
811.18

397+00.99
28.63'RT
811.31

397+06.08
28.64'RT
811.38

397+15.99
28.66'RT
811.84

396+81.21
31.68'RT
811.04

397+15.98
33.66'RT
811.94

396+86.05
33.61'RT
811.02

396+82.81
33.59'RT
810.97

396+94.98
33.62'RT
811.16

397+00.98
33.63'RT
811.26

397+05.98
33.64'RT
811.33

5.0'

10:1

SLOPE INTERCEPT

R46.50'

EXISTING R/W

START CURB & GUTTER REMOVAL

79+39.54
16.25'RT
810.54

396+67.20
61.78'RT
810.71

397+10.82
67.52'RT
X=864052.470
Y=532039.121
R=47.00' TO FLANGE

PROJECT NO: 4580-10-71	HWY: STH 114	COUNTY: CALUMET	PLAN DETAILS	SHEET 36	E

2

2

N

R/L STH 114

STH 114

272+00

273+00

274+00

LEGEND

SLOPE INTERCEPT	INLET PROTECTION
SILT FENCE	EROSION MAT CLASS I TYPE B
SURFACE WATER FLOW	EROSION MAT URBAN CLASS I TYPE A
TEMPORARY DITCH CHECK	EROSION MAT URBAN CLASS I TYPE B
CULVER PIPE DITCH CHECK	WETLAND

PROJECT NO: 4580-10-71	HWY: STH 114	COUNTY: CALUMET	EROSION CONTROL	SHEET 37 E

FILE NAME : N:\PDS\C3D\45801000\SHEETSPLAN\022001-EC.DWG
LAYOUT NAME - 022001-ec

PLOT DATE : 10/30/2021 3:22 PM PLOT BY : LANG, JOSHUA J PLOT NAME : PLOT SCALE : 1 IN:20 FT

2

2

N

SIGN

POST

R/L STH 114

STH 114

275+00

276+00

277+00

278+00

GUY

OH

FO

T

G

W

LEGEND

SLOPE INTERCEPT	INLET PROTECTION
SILT FENCE	EROSION MAT CLASS I TYPE B
SURFACE WATER FLOW	EROSION MAT URBAN CLASS I TYPE A
TEMPORARY DITCH CHECK	EROSION MAT URBAN CLASS I TYPE B
CULVER PIPE DITCH CHECK	WETLAND

PROJECT NO: 4580-10-71	HWY: STH 114	COUNTY: CALUMET	EROSION CONTROL	SHEET 38	E

FILE NAME : N:\PDS\C3D\45801000\SHEETSPLAN\022001-EC.DWG
LAYOUT NAME - 022002-ec

PLOT DATE : 10/30/2021 3:22 PM PLOT BY : LANG, JOSHUA J PLOT NAME : PLOT SCALE : 1 IN:20 FT

2

2

SIGN

STH 114

279+00

280+00

281+00

R/L STH 114

POST

LEGEND

SLOPE INTERCEPT	INLET PROTECTION
SILT FENCE	EROSION MAT CLASS I TYPE B
SURFACE WATER FLOW	EROSION MAT URBAN CLASS I TYPE A
TEMPORARY DITCH CHECK	EROSION MAT URBAN CLASS I TYPE B
CULVER PIPE DITCH CHECK	WETLAND

PROJECT NO: 4580-10-71	HWY: STH 114	COUNTY: CALUMET	EROSION CONTROL	SHEET 39	E

FILE NAME : N:\PDS\C3D\45801000\SHEETSPLAN\022001-EC.DWG
LAYOUT NAME - 022003-ec

PLOT DATE : 10/30/2021 3:23 PM PLOT BY : LANG, JOSHUA J PLOT NAME : PLOT SCALE : 1 IN:20 FT

2

2

N

STH 114

282+00

283+00

284+00

R/L STH 114

LEGEND

	SLOPE INTERCEPT		INLET PROTECTION
	SILT FENCE		EROSION MAT CLASS I TYPE B
	SURFACE WATER FLOW		EROSION MAT URBAN CLASS I TYPE A
	TEMPORARY DITCH CHECK		EROSION MAT URBAN CLASS I TYPE B
	CULVER PIPE DITCH CHECK		WETLAND

PROJECT NO: 4580-10-71	HWY: STH 114	COUNTY: CALUMET	EROSION CONTROL	SHEET 40 E

FILE NAME : N:\PDS\C3D\45801000\SHEETSPLAN\022001-EC.DWG
LAYOUT NAME - 022004-ec

PLOT DATE : 10/30/2021 3:23 PM PLOT BY : LANG, JOSHUA J PLOT NAME : PLOT SCALE : 1 IN:20 FT

2

2

N

STH 114

284+00

285+00

286+00

R/L STH 114

R/L STH 114

POST

POST

LEGEND

	SLOPE INTERCEPT		INLET PROTECTION
	SILT FENCE		EROSION MAT CLASS I TYPE B
	SURFACE WATER FLOW		EROSION MAT URBAN CLASS I TYPE A
	TEMPORARY DITCH CHECK		EROSION MAT URBAN CLASS I TYPE B
	CULVER PIPE DITCH CHECK		WETLAND

PROJECT NO: 4580-10-71	HWY: STH 114	COUNTY: CALUMET	EROSION CONTROL	SHEET 41 E

FILE NAME : N:\PDS\C3D\45801000\SHEETSPLAN\022001-EC.DWG
LAYOUT NAME - 022004-ec

PLOT DATE : 10/30/2021 3:23 PM PLOT BY : LANG, JOSHUA J PLOT NAME : PLOT SCALE : 1 IN:20 FT

2

LEGEND

	SLOPE INTERCEPT		INLET PROTECTION
	SILT FENCE		EROSION MAT CLASS I TYPE B
	SURFACE WATER FLOW		EROSION MAT URBAN CLASS I TYPE A
	TEMPORARY DITCH CHECK		EROSION MAT URBAN CLASS I TYPE B
	CULVER PIPE DITCH CHECK		WETLAND

N

2

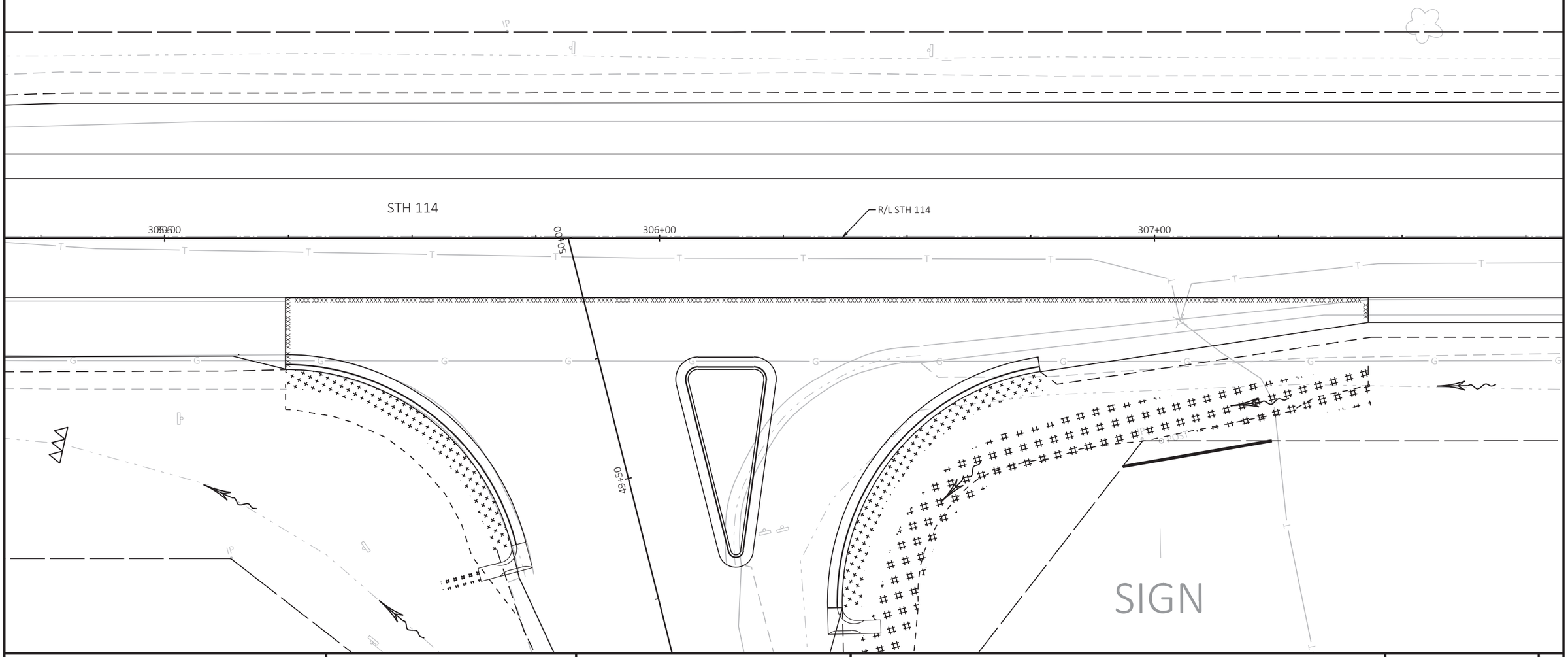

PROJECT NO: 4580-10-71	HWY: STH 114	COUNTY: CALUMET	EROSION CONTROL	SHEET 42	E

FILE NAME : N:\PDS\C3D\45801000\SHEETSPLAN\022001-EC.DWG
LAYOUT NAME - 022006-ec

PLOT DATE : 10/30/2021 3:23 PM PLOT BY : LANG, JOSHUA J PLOT NAME : PLOT SCALE : 1 IN:20 FT

2

2

N

SIGN

POST

PIGEON RD

47+00 47+50 48+00 48+50 49+00 49+50

R/L PIGEON RD

LEGEND

SLOPE INTERCEPT	INLET PROTECTION
SILT FENCE	EROSION MAT CLASS I TYPE B
SURFACE WATER FLOW	EROSION MAT URBAN CLASS I TYPE A
TEMPORARY DITCH CHECK	EROSION MAT URBAN CLASS I TYPE B
CULVER PIPE DITCH CHECK	WETLAND

PROJECT NO: 4580-10-71	HWY: STH 114	COUNTY: CALUMET	EROSION CONTROL	SHEET 43 E

FILE NAME : N:\PDS\C3D\45801000\SHEETSPLAN\022001-EC.DWG
LAYOUT NAME - 022007-ec

PLOT DATE : 10/30/2021 3:23 PM PLOT BY : LANG, JOSHUA J PLOT NAME : PLOT SCALE : 1 IN:20 FT

WISDOT/CADDS SHEET 44

LEGEND

- SLOPE INTERCEPT
- SILT FENCE
- SURFACE WATER FLOW
- TEMPORARY DITCH CHECK
- CULVER PIPE DITCH CHECK
- INLET PROTECTION
- EROSION MAT CLASS I TYPE B
- EROSION MAT URBAN CLASS I TYPE A
- EROSION MAT URBAN CLASS I TYPE B
- WETLAND

R/L STH 55/114

STH 55/114

360+00 361+00 362+00 363+00

PROJECT NO: 4580-10-71	HWY: STH 114	COUNTY: CALUMET	EROSION CONTROL	SHEET 44	E

FILE NAME : N:\PDS\C3D\45801000\SHEETSPLAN\022001-EC.DWG
LAYOUT NAME - 022008-ec

PLOT DATE : 10/30/2021 3:24 PM PLOT BY : LANG, JOSHUA J PLOT NAME : PLOT SCALE : 1 IN:20 FT

2

LEGEND

	SLOPE INTERCEPT		INLET PROTECTION
	SILT FENCE		EROSION MAT CLASS I TYPE B
	SURFACE WATER FLOW		EROSION MAT URBAN CLASS I TYPE A
	TEMPORARY DITCH CHECK		EROSION MAT URBAN CLASS I TYPE B
	CULVER PIPE DITCH CHECK		WETLAND

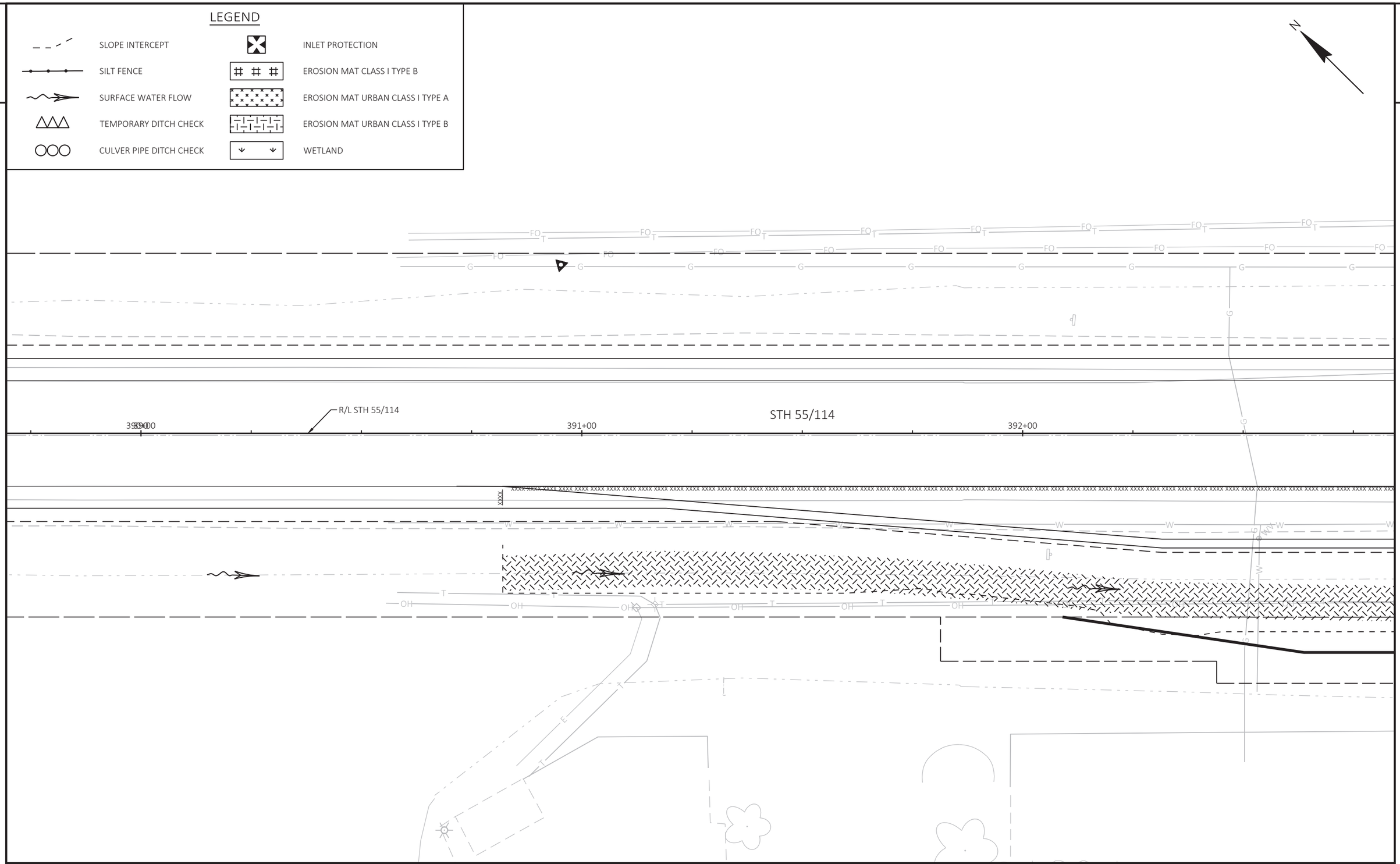

PROJECT NO: 4580-10-71	HWY: STH 114	COUNTY: CALUMET	EROSION CONTROL	SHEET 45	E

2

LEGEND

	SLOPE INTERCEPT		INLET PROTECTION
	SILT FENCE		EROSION MAT CLASS I TYPE B
	SURFACE WATER FLOW		EROSION MAT URBAN CLASS I TYPE A
	TEMPORARY DITCH CHECK		EROSION MAT URBAN CLASS I TYPE B
	CULVERT PIPE DITCH CHECK		WETLAND

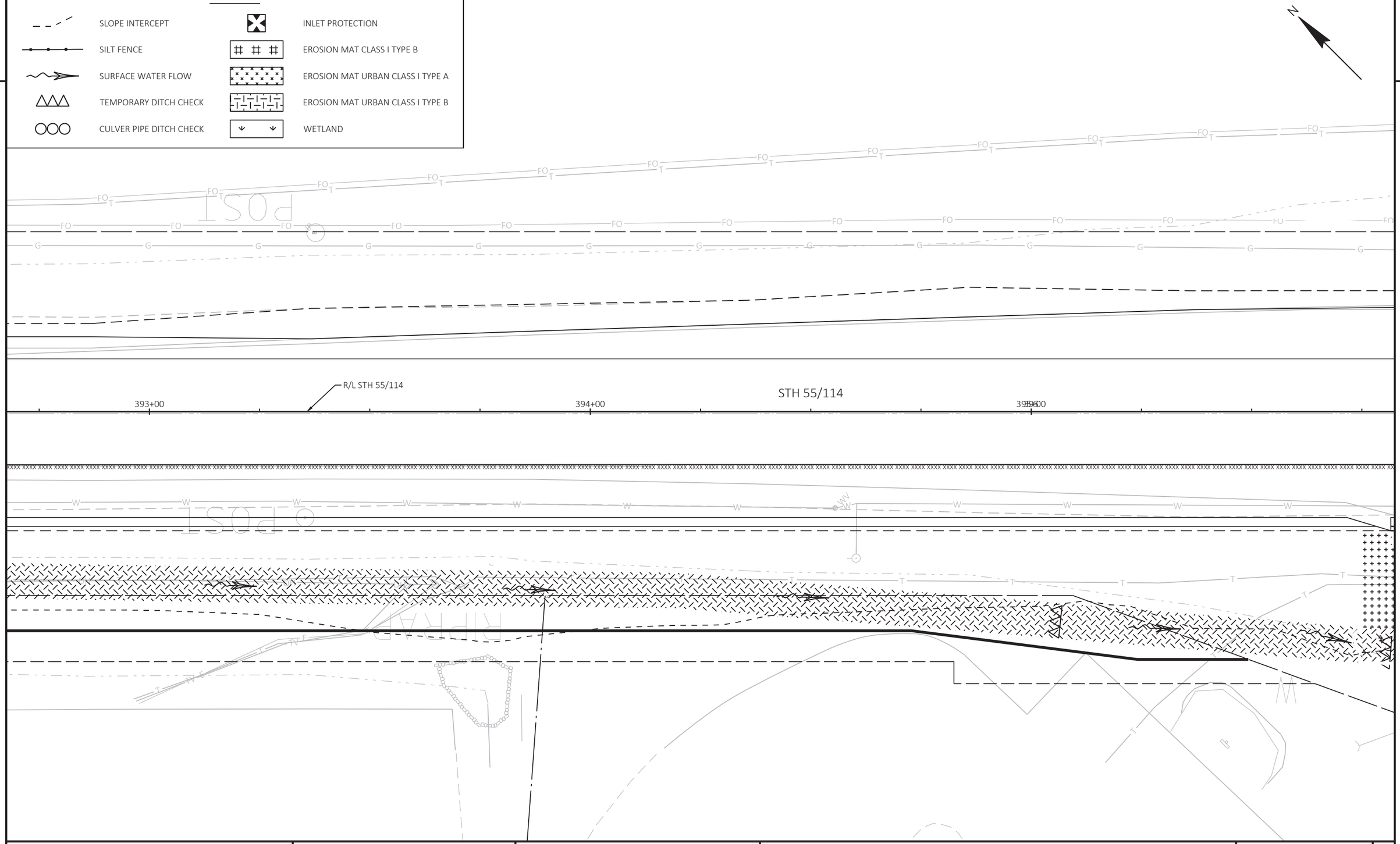

2

PROJECT NO: 4580-10-71	HWY: STH 114	COUNTY: CALUMET	EROSION CONTROL	SHEET 46	E

FILE NAME : N:\PDS\C3D\45801000\SHEETSPLAN\022001-EC.DWG
LAYOUT NAME - 022010-ec

PLOT DATE : 10/30/2021 3:24 PM PLOT BY : LANG, JOSHUA J PLOT NAME : PLOT SCALE : 1 IN:20 FT

2

2

396+00

397+00

398+00

STH 55/114

R/L STH 55/114

80+00

R/L CASTLE DR

N

LEGEND

	SLOPE INTERCEPT		INLET PROTECTION
	SILT FENCE		EROSION MAT CLASS I TYPE B
	SURFACE WATER FLOW		EROSION MAT URBAN CLASS I TYPE A
	TEMPORARY DITCH CHECK		EROSION MAT URBAN CLASS I TYPE B
	CULVER PIPE DITCH CHECK		WETLAND

PROJECT NO: 4580-10-71	HWY: STH 114	COUNTY: CALUMET	EROSION CONTROL	SHEET 47	E

FILE NAME : N:\PDS\C3D\45801000\SHEETSPLAN\022001-EC.DWG
LAYOUT NAME - 022011-ec

PLOT DATE : 10/30/2021 3:24 PM PLOT BY : LANG, JOSHUA J PLOT NAME : PLOT SCALE : 1 IN:20 FT

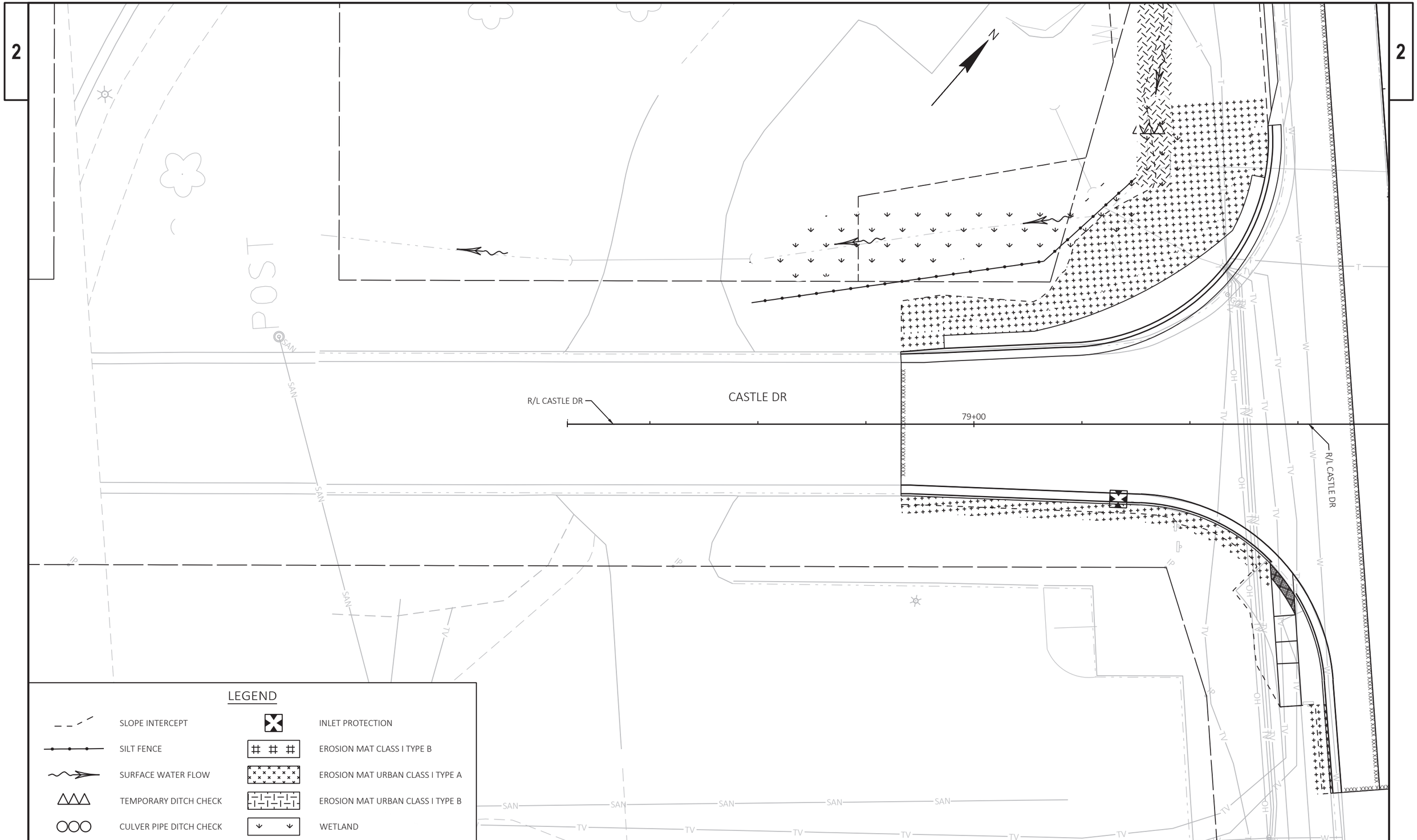

PROJECT NO: 4580-10-71	HWY: STH 114	COUNTY: CALUMET	EROSION CONTROL	SHEET 48	E

FILE NAME : N:\PDS\C3D\45801000\SHEETSPLAN\022001-EC.DWG
LAYOUT NAME - 022012-ec
PLOT DATE : 10/30/2021 3:24 PM
PLOT BY : LANG, JOSHUA J
PLOT NAME :
PLOT SCALE : 1 IN:20 FT
WISDOT/CADDS SHEET 44

2

SIGNING NOTES

WHEN AN EXISTING STOP SIGN AND SUPPORT IS TO BE REMOVED AND A NEW STOP SIGN AND SUPPORT ERECTED THE WORK SHALL BE DONE CONCURRENTLY. FOR OTHER SIGNS AND SUPPORTS THAT ARE TO BE REMOVED AND NEW SIGNS AND SUPPORTS ERECTED, THE REMOVAL OF THE EXISTING SIGN/SUPPORT AND ERECTION OF THE NEW SIGN/SUPPORT SHOULD BE DONE AS CONCURRENTLY AS POSSIBLE. IN NO CASE SHALL A NEW SIGN/SUPPORT BE DOWN FOR MORE THAN 24 HOURS AND THERE SHALL NOT BE MORE THAN ONE SIGN OF THE SAME LEGEND MISSING IN A ROW.

WOOD POSTS SIZES, FOR TYPE II SIGNING, ARE ESTIMATED LENGTHS AND THE ACTUAL LENGTH WILL BE DETERMINED IN THE FIELD.

THE NUMBER OF "NO PASSING ZONE" SIGNS (W-14-3) ARE ESTIMATED AND THE ACTUAL NUMBER WILL BE DETERMINED AFTER THE ROADWAYS HAVE BEEN SPOTTED.

MULTIPLE TYPE II SIGNS MOUNTED TOGETHER, STACKED OR BACK TO BACK, WILL BE PAID AS ONE(1) SIGN REMOVAL.

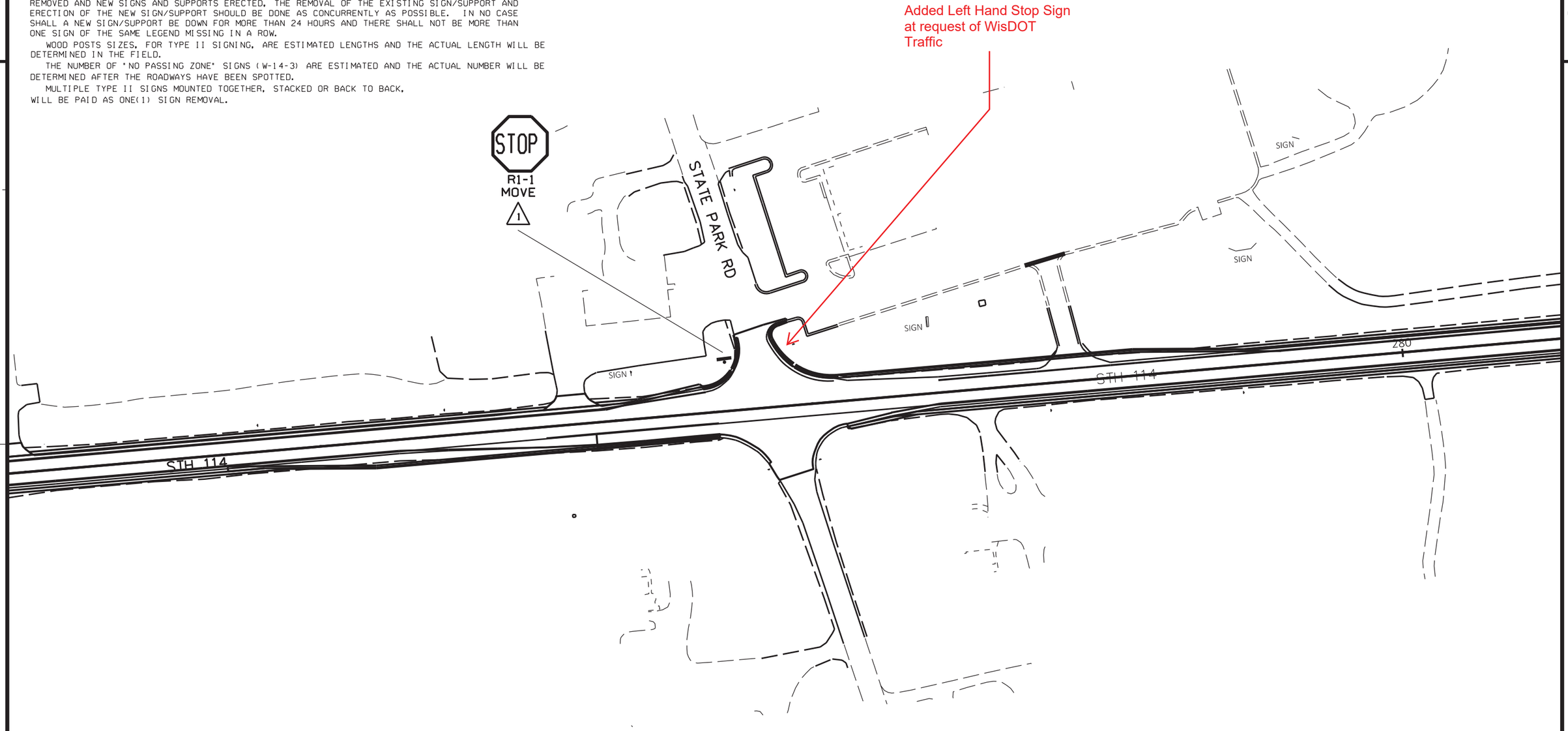

△ SIGN-MOVE

PROJECT NO: 4580-10-71	HWY: STH 114	COUNTY: CALUMET	PERMANENT SIGNING	SHEET	E

FILE NAME :$$....designfile....$$ PLOT DATE : $$...plottingdate...$$ PLOT BY : $$...plotuser...$$ PLOT NAME : PLOT SCALE : $$.....plotscale.....$$

WISDOT/CADDS SHEET 42

2

SIGNING NOTES

WHEN AN EXISTING STOP SIGN AND SUPPORT IS TO BE REMOVED AND A NEW STOP SIGN AND SUPPORT ERECTED THE WORK SHALL BE DONE CONCURRENTLY. FOR OTHER SIGNS AND SUPPORTS THAT ARE TO BE REMOVED AND NEW SIGNS AND SUPPORTS ERECTED, THE REMOVAL OF THE EXISTING SIGN/SUPPORT AND ERECTION OF THE NEW SIGN/SUPPORT SHOULD BE DONE AS CONCURRENTLY AS POSSIBLE. IN NO CASE SHALL A NEW SIGN/SUPPORT BE DOWN FOR MORE THAN 24 HOURS AND THERE SHALL NOT BE MORE THAN ONE SIGN OF THE SAME LEGEND MISSING IN A ROW.

WOOD POSTS SIZES, FOR TYPE II SIGNING, ARE ESTIMATED LENGTHS AND THE ACTUAL LENGTH WILL BE DETERMINED IN THE FIELD.

THE NUMBER OF "NO PASSING ZONE" SIGNS (W-14-3) ARE ESTIMATED AND THE ACTUAL NUMBER WILL BE DETERMINED AFTER THE ROADWAYS HAVE BEEN SPOTTED.

MULTIPLE TYPE II SIGNS MOUNTED TOGETHER, STACKED OR BACK TO BACK, WILL BE PAID AS ONE(1) SIGN REMOVAL.

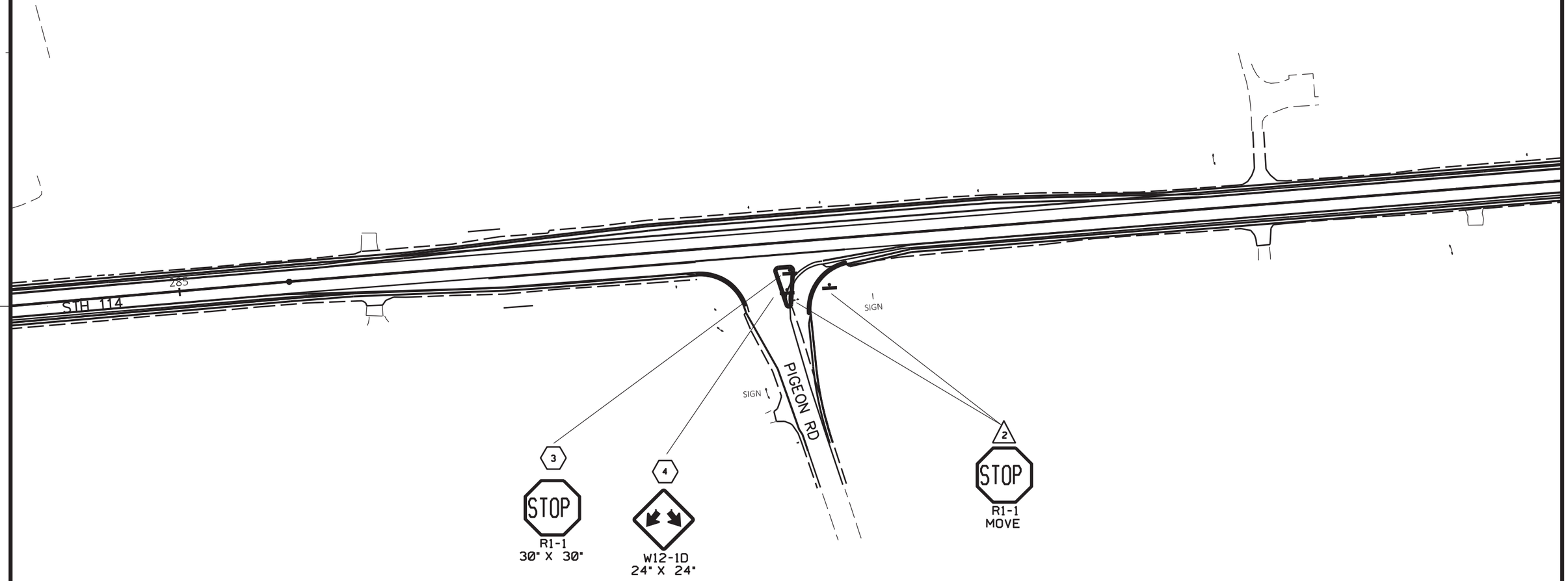

SIGN-PLACE NEW

SIGN-MOVE

PROJECT NO: 4580-10-71	HWY: STH 114	COUNTY: CALUMET	PERMANENT SIGNING	SHEET	E

FILE NAME :$$....designfile....$$ PLOT DATE : $$...plottingdate...$$ PLOT BY : $$...plotuser...$$ PLOT NAME : PLOT SCALE : $$.....plotscale.....$$

WISDOT/CADDS SHEET 42

SIGNING NOTES

WHEN AN EXISTING STOP SIGN AND SUPPORT IS TO BE REMOVED AND A NEW STOP SIGN AND SUPPORT ERECTED THE WORK SHALL BE DONE CONCURRENTLY. FOR OTHER SIGNS AND SUPPORTS THAT ARE TO BE REMOVED AND NEW SIGNS AND SUPPORTS ERECTED, THE REMOVAL OF THE EXISTING SIGN/SUPPORT AND ERECTION OF THE NEW SIGN/SUPPORT SHOULD BE DONE AS CONCURRENTLY AS POSSIBLE. IN NO CASE SHALL A NEW SIGN/SUPPORT BE DOWN FOR MORE THAN 24 HOURS AND THERE SHALL NOT BE MORE THAN ONE SIGN OF THE SAME LEGEND MISSING IN A ROW.

WOOD POSTS SIZES, FOR TYPE II SIGNING, ARE ESTIMATED LENGTHS AND THE ACTUAL LENGTH WILL BE DETERMINED IN THE FIELD.

THE NUMBER OF "NO PASSING ZONE" SIGNS (W-14-3) ARE ESTIMATED AND THE ACTUAL NUMBER WILL BE DETERMINED AFTER THE ROADWAYS HAVE BEEN SPOTTED.

MULTIPLE TYPE II SIGNS MOUNTED TOGETHER, STACKED OR BACK TO BACK, WILL BE PAID AS ONE(1) SIGN REMOVAL.

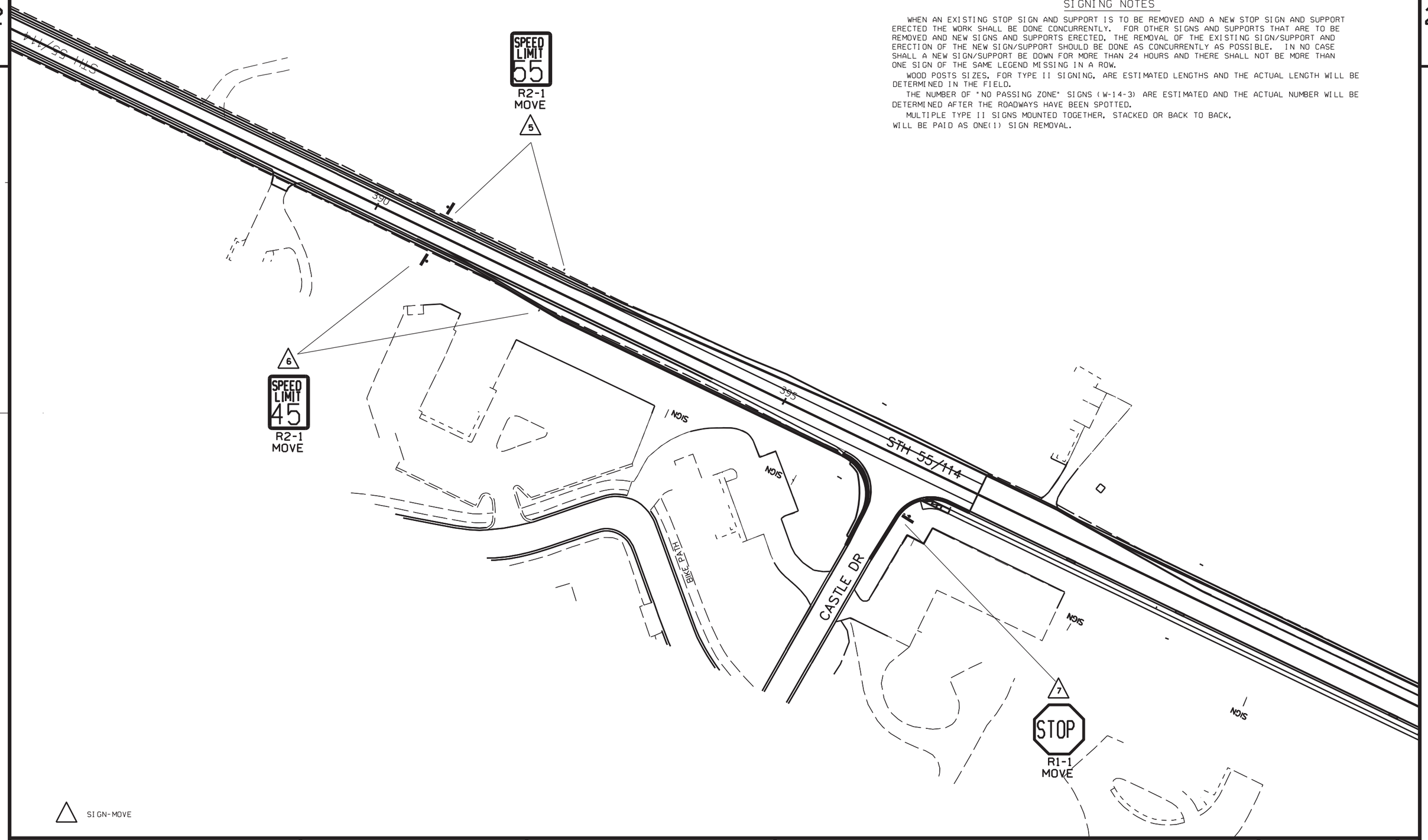

△ SIGN-MOVE

PROJECT NO: 4580-10-71	HWY: STH 114	COUNTY: CALUMET	PERMANENT SIGNING	SHEET	E

FILE NAME :$$....designfile....$$ PLOT DATE : $$...plottingdate...$$ PLOT BY : $$...plotuser...$$ PLOT NAME : PLOT SCALE : $$.....plotscale.....$$

WISDOT/CADDS SHEET 42

NOTE: SEE PROJECT 4670-10-00 FOR TRAFFIC CONTROL QUANTITIES AND DETOUR

SIDEROAD INTERSECTION	4580-10-00 & 4670-10-00 TRAFFIC CONTROL STAGES				
	STAGE 1A/2	STAGE 1B	STAGE 2 - RAILROAD	STAGE 2 - ROUNDABOUT	STAGE 3
OLD HIGHWAY RD	OPEN	OPEN	OPEN	OPEN	CLOSED*
COUNTY N/ FIRE LANE 12	OPEN	OPEN	OPEN	OPEN	CLOSED*
FIRELANE 13	OPEN	OPEN	OPEN	OPEN	CLOSED*
STATE PARK RD	OPEN	OPEN	OPEN	OPEN	CLOSED
PIGEON RD	OPEN	OPEN	OPEN	OPEN	CLOSED
WIS 55/ STOMMEL RD	OPEN	OPEN	OPEN	CLOSED	OPEN
LAKE BREEZE DR	OPEN	OPEN	OPEN	OPEN	OPEN
CASTLE DR	OPEN	OPEN	CLOSED	CLOSED	OPEN
CONDON DR	OPEN	OPEN	OPEN	OPEN	OPEN
STUMPF AVE	OPEN	OPEN	OPEN	OPEN	OPEN
HARRISON STREET	OPEN	CLOSED*	OPEN	OPEN	OPEN
MEEHL STREET	OPEN	CLOSED*	OPEN	OPEN	OPEN
COUNTY M	OPEN	CLOSED*	OPEN	OPEN	OPEN
COUNTY B	OPEN	CLOSED*	OPEN	OPEN	OPEN
FOREST AVE	OPEN	CLOSED*	OPEN	OPEN	OPEN
HIGH CLIFF RD	OPEN	CLOSED*	OPEN	OPEN	OPEN
WIS 55	OPEN	CLOSED*	OPEN	OPEN	OPEN

*CLOSED TO THRU TRAFFIC

N

USH 10
USH 10 / STH 114
OLD HWY RD
CTH N
STATE PARK RD
ACCESS TO HIGH CLIFF STATE PARK
EXISTING PARK SIGNS TO REMAIN
STH 55
STH 114
FIRELANE 12
FIRELANE 13
LAKE WINNEBAGO
CN RR
STATE PARK RD
PIGEON RD
STOMMEL RD
LAKE BREEZE DR
STH 114/STH 55
CTH M
CTH BB
CTH B
FOLLOW SDD 15C-04 "TRAFFIC CONTROL, ADVANCED WARNING SIGNS 45 MPH OR GREATER DETAIL"
WORK ZONE
HIGH CLIFF STATE PARK ENTRANCE
HIGH CLIFF RD
FOLLOW SDD 15C-04, "TRAFFIC CONTROL, ADVANCED WARNING SIGNS 45 MPH OR GREATER DETAIL"
STH 55
STH 114
FOLLOW SDD 15C-04,"TYPICAL SIDE ROAD APPROACH WARNING SIGN DETAIL"
- STUMPF AVE
- HARRISON ST
- MEEHL ST
- CTH M/MILITARY RD
- CTH B
- FOREST AVE
- HIGH CLIFF RD

LEGEND

TYPE III BARRICADE WITH ATTACHED SIGN

WORK ZONE

PROJECT NO: 4580-10-71	HWY: STH 114	COUNTY: CALUMET	TRAFFIC CONTROL OVERVIEW STAGE 1A	SHEET 52	E

FILE NAME : C:\CIVIL 3D PROJECTS\45801000\SHEETSPLAN\025001-TC.DWG
LAYOUT NAME - 025001-tcA

PLOT DATE : 10/13/2021 4:59 PM PLOT BY : SMITH, JENNIFER B PLOT NAME : PLOT SCALE : 1IN:2000 FT

WISDOT/CADDS SHEET 42

2

NOTE

APPLY TEMPORARY PAVEMENT MARKING TO MAINLINE CENTERLINE ON MILLED AND PAVED SURFACES ACCORDING TO THE CONSTRUCTION DETAIL REGARDLESS OF BEING CLOSED TO THROUGH TRAFFIC.

SEE PROJECT 4670-10-00 DETOUR PLAN SHEETS - STAGE 1B DETOUR FOR DETAILS OF DETOUR

DETOUR - STAGE 1B
STH 55 - US 10 - WIS 32/57 - WIS 114
(SEE DETOUR STAGE 1 - WIS 114
AND STAGE 1 - WIS 55)

NOTE:
STH 55/114 DETOUR:
USH 10 TO STH 32/57 TO STH 114

FIXED MESSAGE SIGN
HWY 55 ACCESS OPEN TO HIGH CLIFF STATE PARK

FIXED MESSAGE SIGN
HWY 55 ACCESS OPEN TO SHERWOOD

FMS

USH 10

R11-3
60" X 30"
ROAD CLOSED
3.2 MILES AHEAD
LOCAL TRAFFIC ONLY
TYPE III BARRICADE WITH TYPE A WARNING LIGHTS

R11-3
60" X 30"
ROAD CLOSED
3.3 MILES AHEAD
LOCAL TRAFFIC ONLY
TYPE III BARRICADE WITH TYPE A WARNING LIGHTS

N

USH 10 / STH 114

OLD HWY RD

CTH N

STATE PARK RD

STH 114

STH 55

FIRELANE 12

FIRELANE 13

STATE PARK RD

FIXED MESSAGE SIGN
HWY 114 ACCESS OPEN TO SHERWOOD

FMS

LAKE WINNEBAGO

CN RR

NOTE: SEE PROJECT 4670-10-00 FOR TRAFFIC CONTROL QUANTITIES AND DETOUR

ACCESS TO HIGH CLIFF STATE PARK
EXISTING PARK SIGNS TO REMAIN

PIGEON RD

STOMMEL RD

LAKE BREEZE DR

CASTLE DR

CONDON RD

STH 114/STH 55

CTH M

R11-3
60" X 30"
ROAD CLOSED
4.8 MILES AHEAD
LOCAL TRAFFIC ONLY
TYPE III BARRICADE WITH TYPE A WARNING LIGHTS

CTH BB

FOLLOW SDD 15C-04 "TYPICAL SIDE ROAD APPROACH WARNING SIGN DETAIL"
- STUMPF AVE

HIGH CLIFF STATE PARK ENTRANCE

FOLLOW SDD 15C-02 DETAILS A & C

CTH B

FOLLOW SDD 15C-03 DETAIL 4
- HARRISON ST
- MEEHL ST
- CTH M/MILITARY RD
- CTH B
- FOREST AVE
- HIGH CLIFF RD

CLOSURE/WORK ZONE

FIXED MESSAGE SIGN
ACCESS TO HIGH CLIFF STATE PARK FOLLOW DETOUR

HIGH CLIFF RD

FMS

FOLLOW SDD 15C-02 DETAIL B, "MAINLINE CLOSURE WITH POSTED DETOUR, WORK ZONE LESS THAN 1/2 MILE FROM DETOUR ROUTE"

STH 55

STH 114

NOTE:
STH 55/114 DETOUR:
USH 10 TO STH 32/57 TO STH 114

LEGEND
- TYPE III BARRICADE WITH ATTACHED SIGN
- CLOSURE/WORK ZONE
- DETOUR

SIDEROAD INTERSECTION	4580-10-00 & 4670-10-00 TRAFFIC CONTROL STAGES				
	STAGE 1A/2	STAGE 1B	STAGE 2 - RAILROAD	STAGE 2 - ROUNDABOUT	STAGE 3
OLD HIGHWAY RD	OPEN	OPEN	OPEN	OPEN	CLOSED*
COUNTY N/ FIRE LANE 12	OPEN	OPEN	OPEN	OPEN	CLOSED*
FIRELANE 13	OPEN	OPEN	OPEN	OPEN	CLOSED*
STATE PARK RD	OPEN	OPEN	OPEN	OPEN	CLOSED
PIGEON RD	OPEN	OPEN	OPEN	OPEN	CLOSED
WIS 55/ STOMMEL RD	OPEN	OPEN	OPEN	CLOSED	OPEN
LAKE BREEZE DR	OPEN	OPEN	OPEN	OPEN	OPEN
CASTLE DR	OPEN	OPEN	CLOSED	CLOSED	OPEN
CONDON DR	OPEN	OPEN	OPEN	OPEN	OPEN
STUMPF AVE	OPEN	OPEN	OPEN	OPEN	OPEN
HARRISON STREET	OPEN	CLOSED*	OPEN	OPEN	OPEN
MEEHL STREET	OPEN	CLOSED*	OPEN	OPEN	OPEN
COUNTY M	OPEN	CLOSED*	OPEN	OPEN	OPEN
COUNTY B	OPEN	CLOSED*	OPEN	OPEN	OPEN
FOREST AVE	OPEN	CLOSED*	OPEN	OPEN	OPEN
HIGH CLIFF RD	OPEN	CLOSED*	OPEN	OPEN	OPEN
WIS 55	OPEN	CLOSED*	OPEN	OPEN	OPEN

*CLOSED TO THRU TRAFFIC

PROJECT NO: 4580-10-71	HWY: STH 114	COUNTY: CALUMET	TRAFFIC CONTROL OVERVIEW STAGE 1B	SHEET 53 E

FILE NAME : C:\CIVIL 3D PROJECTS\45801000\SHEETSPLAN\025001-TCB.DWG
LAYOUT NAME - 025001-tcB

PLOT DATE : 10/13/2021 4:59 PM PLOT BY : SMITH, JENNIFER B PLOT NAME : PLOT SCALE : 1IN:2000 FT

WISDOT/CADDS SHEET 42

2

NOTES

THIS DETAIL APPLIES TO STAGE 2 WITH AND WITHOUT THE RAILROAD CLOSURE.

APPLY TEMPORARY PAVEMENT MARKING TO MAINLINE CENTERLINE ON MILLED AND PAVED SURFACES ACCORDING TO THE CONSTRUCTION DETAIL REGARDLESS OF BEING CLOSED TO THROUGH TRAFFIC.

* ONLY USE TRAFFIC CONTROL WHEN RAILROAD CLOSURE IS ALLOWED PER SPECIAL PROVISIONS.

SIDEROAD INTERSECTION	4580-10-00 & 4670-10-00 TRAFFIC CONTROL STAGES				
	STAGE 1A/2	STAGE 1B	STAGE 2 - RAILROAD	STAGE 2 - ROUNDABOUT	STAGE 3
OLD HIGHWAY RD	OPEN	OPEN	OPEN	OPEN	CLOSED*
COUNTY N/ FIRE LANE 12	OPEN	OPEN	OPEN	OPEN	CLOSED*
FIRELANE 13	OPEN	OPEN	OPEN	OPEN	CLOSED*
STATE PARK RD	OPEN	OPEN	OPEN	OPEN	CLOSED
PIGEON RD	OPEN	OPEN	OPEN	OPEN	CLOSED
WIS 55/ STOMMEL RD	OPEN	OPEN	OPEN	CLOSED	OPEN
LAKE BREEZE DR	OPEN	OPEN	OPEN	OPEN	OPEN
CASTLE DR	CLOSED	OPEN	CLOSED	CLOSED	OPEN
CONDON DR	OPEN	OPEN	OPEN	OPEN	OPEN
STUMPF AVE	OPEN	OPEN	OPEN	OPEN	OPEN
HARRISON STREET	OPEN	CLOSED*	OPEN	OPEN	OPEN
MEEHL STREET	OPEN	CLOSED*	OPEN	OPEN	OPEN
COUNTY M	OPEN	CLOSED*	OPEN	OPEN	OPEN
COUNTY B	OPEN	CLOSED*	OPEN	OPEN	OPEN
FOREST AVE	OPEN	CLOSED*	OPEN	OPEN	OPEN
HIGH CLIFF RD	OPEN	CLOSED*	OPEN	OPEN	OPEN
WIS 55	OPEN	CLOSED*	OPEN	OPEN	OPEN

*CLOSED TO THRU TRAFFIC

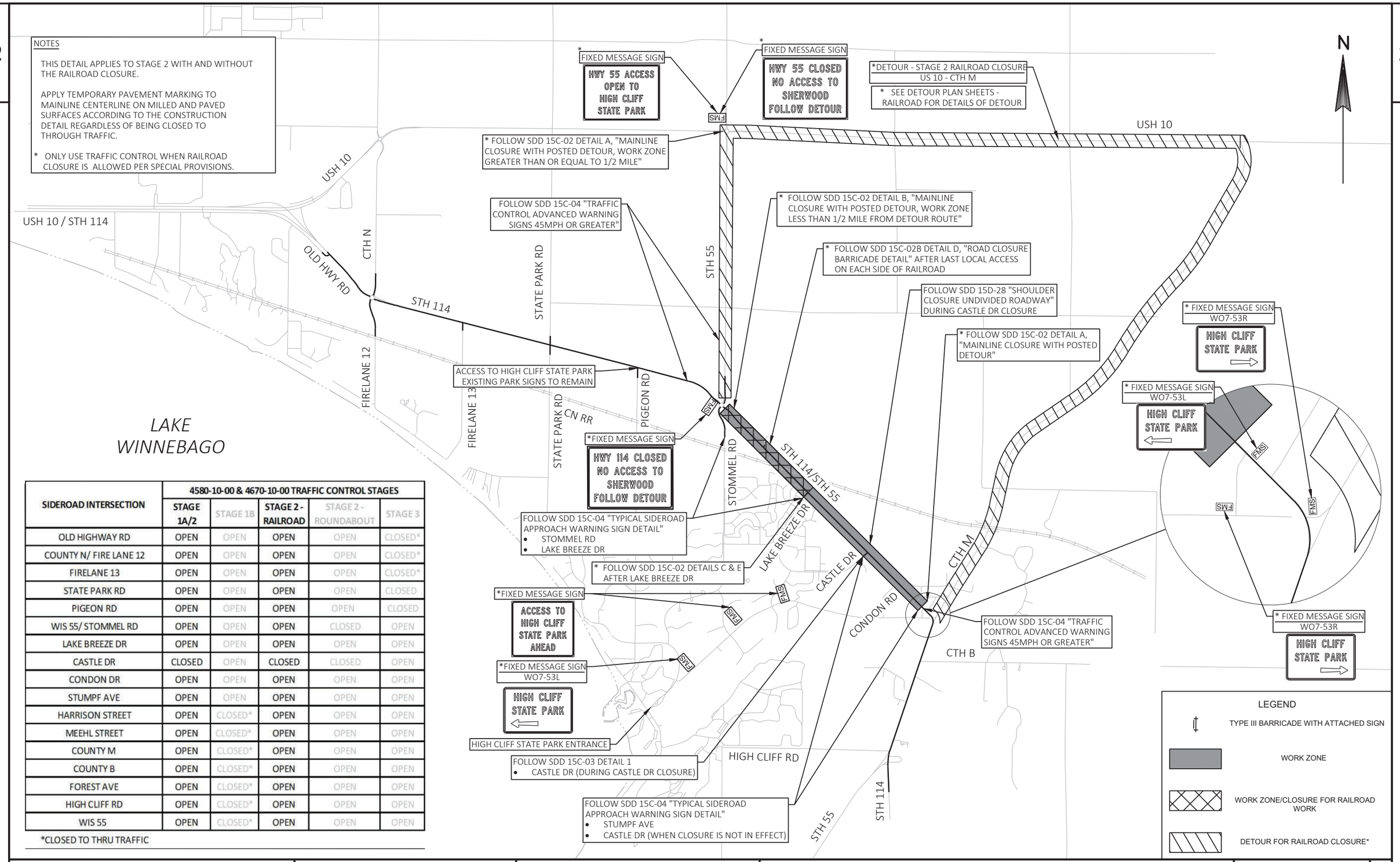

PROJECT NO: 4580-10-71	HWY: STH 114	COUNTY: CALUMET	TRAFFIC CONTROL OVERVIEW STAGE 2 WITH RAILROAD CLOSURE	SHEET 54	E

2

DETOUR - STAGE 2 - ROUNDABOUT CLOSURE
US 10 - CTH M
(SEE DETOUR STAGE 2)

SEE DETOUR PLAN SHEETS - STH 114/STH 55/STOMMEL RD ROUNDABOUT DETOUR FOR DETAILS OF DETOUR

FIXED MESSAGE SIGN
ACCESS TO HIGH CLIFF STATE PARK FOLLOW DETOUR

FIXED MESSAGE SIGN
HWY 55 CLOSED NO ACCESS TO SHERWOOD FOLLOW DETOUR

FMS

USH 10

USH 10 / STH 114

R11-3
60" X 30"
ROAD CLOSED
1.9 MILES AHEAD
LOCAL TRAFFIC ONLY

TYPE III BARRICADE WITH TYPE A WARNING LIGHTS

R11-3
60" X 30"
ROAD CLOSED
0.9 MILES AHEAD
LOCAL TRAFFIC ONLY

TYPE III BARRICADE WITH TYPE A WARNING LIGHTS

CTH N

STATE PARK RD

STH 55

OLD HWY RD

FIXED MESSAGE SIGN
HWY 114 CLOSED NO ACCESS TO SHERWOOD FOLLOW DETOUR

FIXED MESSAGE SIGN
HWY 114 ACCESS OPEN TO HIGH CLIFF STATE PARK

R11-3
60" X 30"
ROAD CLOSED
2.4 MILES AHEAD
LOCAL TRAFFIC ONLY

TYPE III BARRICADE WITH TYPE A WARNING LIGHTS

FIRELANE 12

FIRELANE 13

STH 114

CN RR

LAKE WINNEBAGO

FOLLOW SDD 15C-02 DETAILS A & C

FOLLOW SDD 15C-04 "TYPICAL SIDEROAD APPROACH WARNING SIGN DETAIL"
- LAKE BREEZE

FOLLOW SDD 15D28 "SHOULDER CLOSURE UNDIVIDED ROADWAY" DURING CASTLE DR CLOSURE

FIXED MESSAGE SIGN
WO7-53R
HIGH CLIFF STATE PARK

FIXED MESSAGE SIGN
WO7-53R
HIGH CLIFF STATE PARK

FIXED MESSAGE SIGN
WO7-53L
HIGH CLIFF STATE PARK

ACCESS TO HIGH CLIFF STATE PARK
EXISTING PARK SIGNS TO REMAIN

PIGEON RD

STOMMEL RD

FOLLOW SDD 15C-03 DETAIL 4
- STOMMEL RD
- CASTLE DR (DURING CASTLE DR CLOSURE)

LAKE BREEZE DR

STH 114/STH 55

CTH M

FIXED MESSAGE SIGN
ACCESS TO HIGH CLIFF STATE PARK AHEAD

CASTLE DR

CONDON RD

FIXED MESSAGE SIGN
WO7-53L
HIGH CLIFF STATE PARK

FIXED MESSAGE SIGN
WO7-53R
HIGH CLIFF STATE PARK

CTH B

FOLLOW SDD 15C-04 "TYPICAL SIDEROAD APPROACH WARNING SIGN DETAIL"
- CONDON RD
- STUMPF AVE
- CASTLE DR (WHEN CLOSURE IS NOT IN EFFECT)

HIGH CLIFF RD

HIGH CLIFF STATE PARK ENTRANCE

STH 55

STH 114

OVERVIEW - STAGE 2A
(WIS 114/55/STOMMEL ROAD ROUNDABOUT CLOSURE)

LEGEND
- TYPE III BARRICADE WITH ATTACHED SIGN
- WORK ZONE
- WORK ZONE/CLOSURE FOR ROUNDABOUT
- DETOUR

SIDEROAD INTERSECTION	4580-10-00 & 4670-10-00 TRAFFIC CONTROL STAGES				
	STAGE 1A/2	STAGE 1B	STAGE 2 - RAILROAD	STAGE 2 - ROUNDABOUT	STAGE 3
OLD HIGHWAY RD	OPEN	OPEN	OPEN	OPEN	CLOSED*
COUNTY N/ FIRE LANE 12	OPEN	OPEN	OPEN	OPEN	CLOSED*
FIRELANE 13	OPEN	OPEN	OPEN	OPEN	CLOSED*
STATE PARK RD	OPEN	OPEN	OPEN	OPEN	CLOSED
PIGEON RD	OPEN	OPEN	OPEN	OPEN	CLOSED
WIS 55/ STOMMEL RD	OPEN	OPEN	OPEN	CLOSED	OPEN
LAKE BREEZE DR	OPEN	OPEN	OPEN	OPEN	OPEN
CASTLE DR	OPEN	OPEN	CLOSED	CLOSED	OPEN
CONDON DR	OPEN	OPEN	OPEN	OPEN	OPEN
STUMPF AVE	OPEN	OPEN	OPEN	OPEN	OPEN
HARRISON STREET	OPEN	CLOSED*	OPEN	OPEN	OPEN
MEEHL STREET	OPEN	CLOSED*	OPEN	OPEN	OPEN
COUNTY M	OPEN	CLOSED*	OPEN	OPEN	OPEN
COUNTY B	OPEN	CLOSED*	OPEN	OPEN	OPEN
FOREST AVE	OPEN	CLOSED*	OPEN	OPEN	OPEN
HIGH CLIFF RD	OPEN	CLOSED*	OPEN	OPEN	OPEN
WIS 55	OPEN	CLOSED*	OPEN	OPEN	OPEN

*CLOSED TO THRU TRAFFIC

PROJECT NO: 4580-10-71	HWY: STH 114	COUNTY: CALUMET	TRAFFIC CONTROL OVERVIEW STAGE 2 - STH 114-STH 55-STOMMEL RD-RAB CLOSURE	SHEET 55	E

FILE NAME : C:\CIVIL 3D PROJECTS\45801000\SHEETSPLAN\025003-TC.DWG
LAYOUT NAME - 025003-tc
PLOT DATE : 10/13/2021 4:59 PM
PLOT BY : SMITH, JENNIFER B
PLOT NAME :
PLOT SCALE : 1IN:2000 FT
WISDOT/CADDS SHEET 42

NOTES

WHEN ALL LANES ARE PAVED AND ON A FINISHED SURFACE, PAVEMENT MARKING. (TEMPORARY OR PERMANENT) IS IN PLACE, AND ALL PERMANENT SIGNING INSTALLED OPEN STAGE TO THROUGH TRAFFIC AND FINISH REMAINING WORK UNDER SHOULDER AND SINGLE LANE CLOSURES WITH FLAGGING.

APPLY TEMPORARY PAVEMENT MARKING TO MAINLINE CENTERLINE ON MILLED AND PAVED SURFACES ACCORDING TO THE CONSTRUCTION DETAIL REGARDLESS OF BEING CLOSED TO THROUGH TRAFFIC.

N

DETOUR - STAGE 3
US 10 - WIS 55 (WIS 114 ONLY)
(SEE DETOUR STAGE 3)

SEE DETOUR PLAN SHEETS - STAGE 3
DETOUR FOR DETAILS OF DETOUR

USH 10

FOLLOW SDD 15C-02, "DETAIL B, MAINLINE CLOSURE WITH POSTED DETOUR, WORK ZONE LESS THAN 1/2 MILE FROM DETOUR ROUTE"

FIXED MESSAGE SIGN
WO7-53R
HIGH CLIFF STATE PARK

FOLLOW SDD 15C-03 DETAIL 1
- STATE PARK RD NORTH
- PIGEON RD

USH 10 / STH 114

CLOSURE/WORK ZONE

FIXED MESSAGE SIGN
HWY 114 CLOSED NO ACCESS TO SHERWOOD FOLLOW DETOUR

FIXED MESSAGE SIGN
ACCESS TO HIGH CLIFF STATE PARK FOLLOW DETOUR

FIXED MESSAGE SIGN
WO7-53L
HIGH CLIFF STATE PARK

NO WORK ALLOWED
STH 114/STH 55/STOMMEL RD
ROUNDABOUT - CASTLE DRIVE

FOLLOW SDD 15C-03 DETAIL 4
- OLD HWY RD
- CTH N
- FIRELANE 12
- FIRELANE 13
- STATE PARK RD SOUTH

FIXED MESSAGE SIGN
ACCESS TO HIGH CLIFF STATE PARK AHEAD

FIXED MESSAGE SIGN
W07-53L
HIGH CLIFF STATE PARK

HIGH CLIFF STATE PARK ENTRANCE

LAKE WINNEBAGO

USH 10, CTH N, OLD HWY RD, STH 114, STATE PARK RD, FIRELANE 12, FIRELANE 13, CN RR, STH 55, PIGEON RD, STOMMEL RD, LAKE BREEZE DR, STH 114/STH 55, CASTLE DR, CONDON RD, CTH M, CTH B, HIGH CLIFF RD, STH 55, STH 114

SIDEROAD INTERSECTION	4580-10-00 & 4670-10-00 TRAFFIC CONTROL STAGES				
	STAGE 1A/2	STAGE 1B	STAGE 2 - RAILROAD	STAGE 2 - ROUNDABOUT	STAGE 3
OLD HIGHWAY RD	OPEN	OPEN	OPEN	OPEN	CLOSED*
COUNTY N/ FIRE LANE 12	OPEN	OPEN	OPEN	OPEN	CLOSED*
FIRELANE 13	OPEN	OPEN	OPEN	OPEN	CLOSED*
STATE PARK RD	OPEN	OPEN	OPEN	OPEN	CLOSED
PIGEON RD	OPEN	OPEN	OPEN	OPEN	CLOSED
WIS 55/ STOMMEL RD	OPEN	OPEN	OPEN	CLOSED	OPEN
LAKE BREEZE DR	OPEN	OPEN	OPEN	OPEN	OPEN
CASTLE DR	OPEN	OPEN	CLOSED	CLOSED	OPEN
CONDON DR	OPEN	OPEN	OPEN	OPEN	OPEN
STUMPF AVE	OPEN	OPEN	OPEN	OPEN	OPEN
HARRISON STREET	OPEN	CLOSED*	OPEN	OPEN	OPEN
MEEHL STREET	OPEN	CLOSED*	OPEN	OPEN	OPEN
COUNTY M	OPEN	CLOSED*	OPEN	OPEN	OPEN
COUNTY B	OPEN	CLOSED*	OPEN	OPEN	OPEN
FOREST AVE	OPEN	CLOSED*	OPEN	OPEN	OPEN
HIGH CLIFF RD	OPEN	CLOSED*	OPEN	OPEN	OPEN
WIS 55	OPEN	CLOSED*	OPEN	OPEN	OPEN

*CLOSED TO THRU TRAFFIC

LEGEND

TYPE III BARRICADE WITH ATTACHED SIGN

CLOSURE/WORK ZONE

DETOUR

PROJECT NO: 4580-10-71	HWY: STH 114	COUNTY: CALUMET	TRAFFIC CONTROL OVERVIEW STAGE 3	SHEET 56	E

FILE NAME : C:\CIVIL 3D PROJECTS\45801000\SHEETSPLAN\025004-TC.DWG
LAYOUT NAME - 025004-tc

PLOT DATE : 10/13/2021 5:00 PM PLOT BY : SMITH, JENNIFER B PLOT NAME : PLOT SCALE : 1IN:2000 FT

WISDOT/CADDS SHEET 42

2

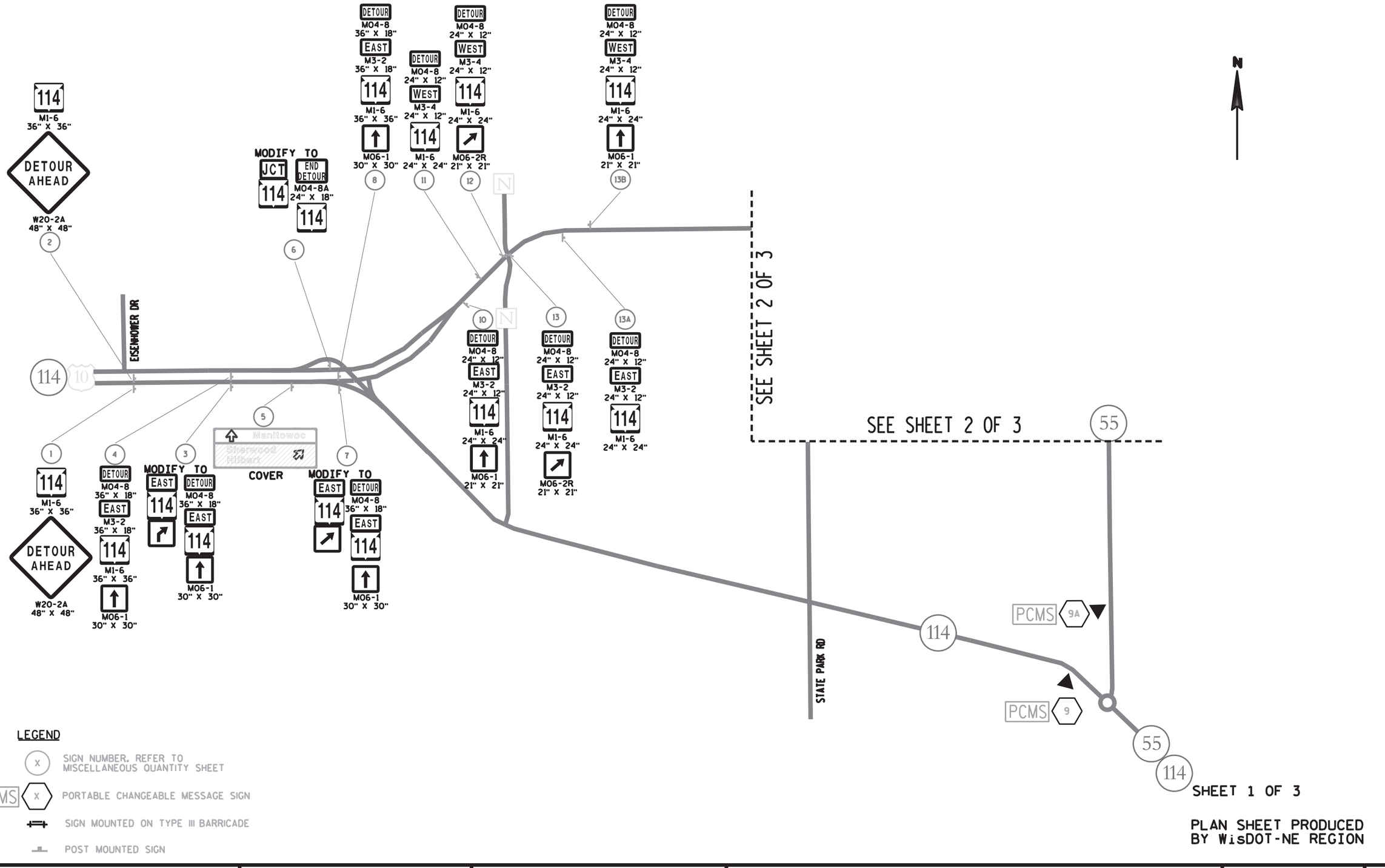

PROJECT NO: 4580-10-71/4670-10-71	HWY: STH 114/STH 55	COUNTY: CALUMET	DETOUR SIGNING DETAIL - STAGE 2 ROUNDABOUT CLOSURE DETOUR	SHEET 57	E

2

SEE SHEET 10F 3

STATE PARK RD

55

SOUTH 55 — EAST 10 — WEST 10 — COVER — 22

DETOUR M04-8 24" X 12" / SOUTH M3-3 24" X 12" / 55 M1-6 24" X 24" / M05-1L 21" X 21" — 23

DETOUR AHEAD W20-2A 48" X 48" — 21

N

DETOUR M04-8 24" X 12" / WEST M3-4 24" X 12" / 114 M1-6 24" X 24" / M06-1 21" X 21" — 26

WEST 10 — SOUTH 55 — NORTH 55 — COVER — 30

MODIFY JCT 55 — TO END DETOUR M04-8A 24" X 18" 55 — 31

DETOUR M04-8 24" X 12" / WEST M3-4 24" X 12" / 114 M1-6 24" X 24" / M06-1 21" X 21" — 27

Appleton / Fond du Lac / Kaukauna — COVER — 29

DETOUR M04-8 24" X 12" / SOUTH M3-3 24" X 12" / 55 M1-6 24" X 24" / M06-1 21" X 21" — 25

COVER: Fond du Lac / Manitowoc / Appleton — 24

DETOUR M04-8 24" X 12" / WEST M3-4 24" X 12" / 114 M1-6 24" X 24" / M06-2R 21" X 21" — 18

DETOUR M04-8 24" X 12" / WEST M3-4 24" X 12" / 114 M1-6 24" X 24" / M06-1 21" X 21" — 17

10

10

STATE PARK RD

14 — SOUTH M3-3 24" X 12" / 55 M1-6 24" X 24" / DETOUR AHEAD W20-2A 48" X 48"

14A — MODIFY JCT 55 — DETOUR M04-8 24" X 12" / EAST M3-2 24" X 12" / 114 M1-6 24" X 24" / M06-1 21" X 21" — TO DETOUR M04-8 24" X 12" / SOUTH M3-3 24" X 12" / 55 M1-6 24" X 24" / M06-1 21" X 21"

15 — DETOUR M04-8 24" X 12" / EAST M3-2 24" X 12" / 114 M1-6 24" X 24" / M06-1 21" X 21" — DETOUR M04-8 24" X 12" / SOUTH M3-3 24" X 12" / 55 M1-6 24" X 24" / M06-1 21" X 21"

16 — Manitowoc / Kaukauna / Fond du Lac — COVER

19 — ROAD CLOSED 1 ½ MILES AHEAD LOCAL TRAFFIC ONLY R11-3 60" X 30"

20 — SOUTH 55 — COVER

26 — DETOUR M04-8 24" X 12" / EAST M3-2 24" X 12" / 114 M1-6 24" X 24" / M06-2R 21" X 21" — DETOUR M04-8 24" X 12" / SOUTH M3-3 24" X 12" / 55 M1-6 24" X 24" / M06-2R 21" X 21"

28 — DETOUR M04-8 24" X 12" / EAST M3-2 24" X 12" / 114 M1-6 24" X 24" — DETOUR M04-8 24" X 12" / SOUTH M3-3 24" X 12" / 55 M1-6 24" X 24"

EAST 10 — NORTH 55 — SOUTH 55 — COVER

55

LEGEND

(X) SIGN NUMBER. REFER TO MISCELLANEOUS QUANTITY SHEET

SIGN MOUNTED ON TYPE III BARRICADE

POST MOUNTED SIGN

SHEET 2 OF 3

PLAN SHEET PRODUCED BY WisDOT-NE REGION

PROJECT NO: 4580-10-71/4670-10-71	HWY: STH 114/STH 55	COUNTY: CALUMET	DETOUR SIGNING DETAIL - STAGE 2 ROUNDABOUT CLOSURE DETOUR	SHEET	E

FILE NAME : $$....designfile....$$ PLOT DATE : $$...plottingdate...$$ PLOT BY : $$...plotuser...$$ PLOT NAME : PLOT SCALE : $$.....plotscale.....$$ WISDOT/CADDS SHEET 42

2

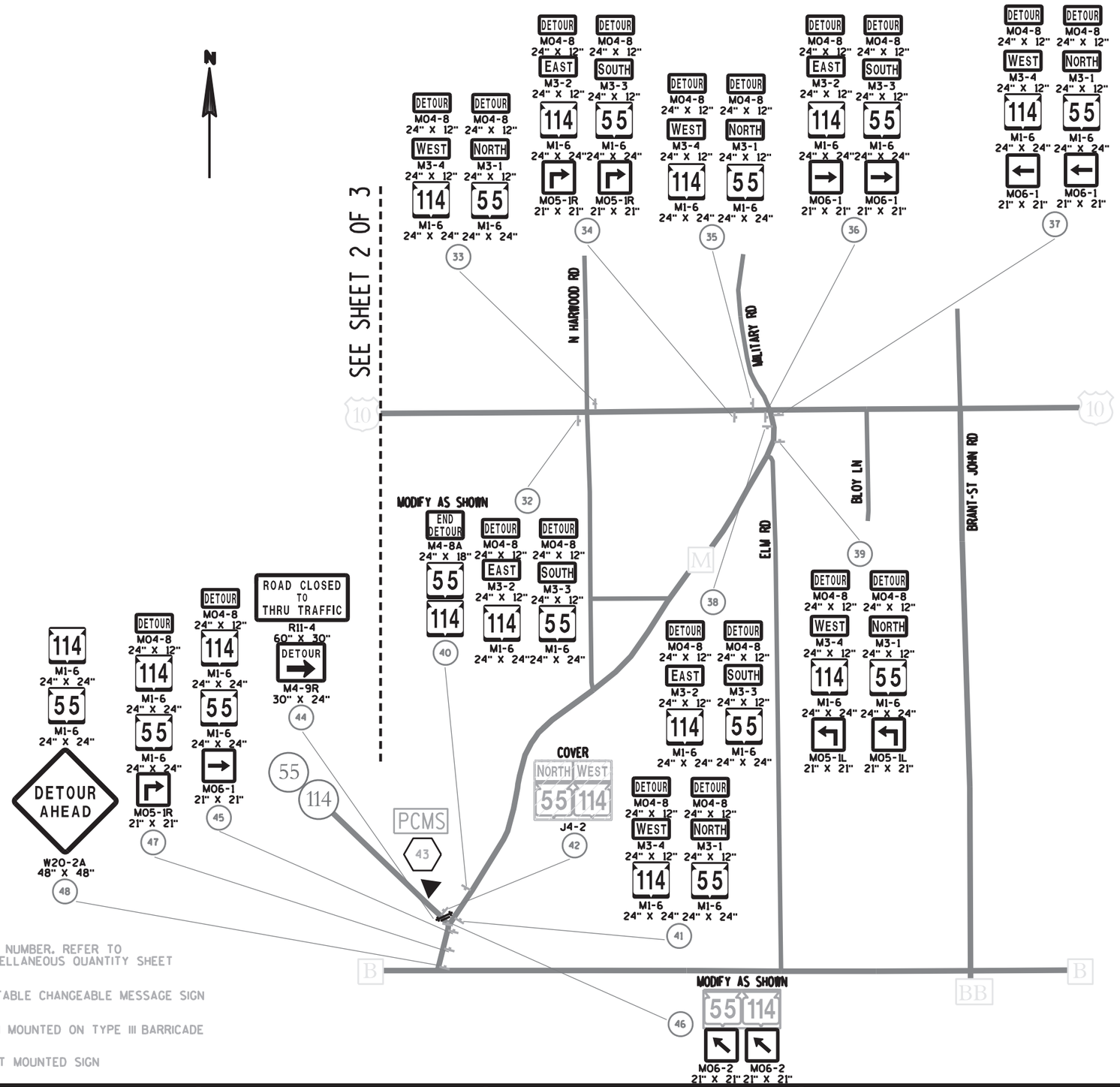

SHEET 3 OF 3

PLAN SHEET PRODUCED BY WisDOT-NE REGION

PROJECT NO: 4580-10-71/4670-10-71	HWY: STH 114/STH 55	COUNTY: CALUMET	DETOUR SIGNING DETAIL - STAGE 2 ROUNDABOUT CLOSURE DETOUR	SHEET 59	E

2

N

N

114

10

SEE SHEET 2 OF 3

114
M1-6
24" X 24"
55
M1-6
24" X 24"
DETOUR AHEAD
W20-2A
48" X 48"
1

SEE SHEET 2 OF 3

STATE PARK RD

Hilbert
Fond du Lac
Kaukauna
COVER
2

MODIFY
JCT
114

TO
END
DETOUR
M04-8A
24" X 18"
114
12

55

STOMMEL
RD
SOUTH
55
EAST
114
WEST
114
COVER
11

DETOUR
M04-8
24" X 12"
EAST
M3-2
24" X 12"
114
M1-6
24" X 24"
M06-2R
21" X 21"

DETOUR
M04-8
24" X 12"
SOUTH
M3-3
24" X 12"
55
M1-6
24" X 24"
M06-2R
21" X 21"

9

DETOUR
M04-8
24" X 12"
EAST
M3-2
24" X 12"
114
M1-6
24" X 24"

DETOUR
M04-8
24" X 12"
SOUTH
M3-3
24" X 12"
55
M1-6
24" X 24"

10

6

SOUTH EAST
55
114
COVER

114

STATE PARK RD

3
COVER
SOUTH EAST
55
114
NORTH
55
STOMMEL
RD

4
DETOUR
M04-8
24" X 12"
EAST
M3-2
24" X 12"
114
M1-6
24" X 24"
M06-1
21" X 21"

DETOUR
M04-8
24" X 12"
SOUTH
M3-3
24" X 12"
55
M1-6
24" X 24"
M06-1
21" X 21"

5
ROAD CLOSED
TO
THRU TRAFFIC
R11-4
60" X 30"
DETOUR
M4-9L
30" X 24"

PCMS
8

55

114

7
COVER
SOUTH
55
EAST
114
J4-2

LEGEND

- (X) SIGN NUMBER. REFER TO MISCELLANEOUS QUANTITY SHEET
- ▲ PCMS (X) PORTABLE CHANGEABLE MESSAGE SIGN
- SIGN MOUNTED ON TYPE III BARRICADE
- POST MOUNTED SIGN

SHEET 1 OF 3

PLAN SHEET PRODUCED
BY WisDOT-NE REGION

PROJECT NO: 4580-10-71/4670-10-71	HWY: STH 114/STH 55	COUNTY: CALUMET	DETOUR SIGNING DETAIL - STAGE 2 RAILROAD CLOSURE DETOUR	SHEET 60	E

2

2

SEE SHEET 1OF 3

STATE PARK RD

55

10

10

55

N

SOUTH 55 / EAST 10 / WEST 10
COVER
22

DETOUR M04-8 24" X 12" / SOUTH M3-3 24" X 12" / 55 M1-6 24" X 24" / M05-1L 21" X 21"
23

DETOUR AHEAD
W20-2A 48" X 48"
21

DETOUR M04-8 24" X 12" / SOUTH M3-3 24" X 12" / 55 M1-6 24" X 24" / M06-1 21" X 21"
COVER
Fond du Lac / Manitowoc / Appleton
24
25

DETOUR M04-8 24" X 12" / WEST M3-4 24" X 12" / 114 M1-6 24" X 24" / M06-1 21" X 21"
27

Appleton / Fond du Lac / Kaukauna
COVER
29

DETOUR M04-8 24" X 12" / WEST M3-4 24" X 12" / 114 M1-6 24" X 24" / M05-1L 21" X 21"
WEST 10 / SOUTH 55 / NORTH 55
COVER
30

MODIFY JCT 55
TO DETOUR M04-8A 24" X 18" / END 55
31

13
SOUTH M3-3 24" X 12" / 55 M1-6 24" X 24" / DETOUR AHEAD W20-2A 48" X 48"

14
MODIFY JCT 55
DETOUR M04-8 24" X 12" / EAST M3-2 24" X 12" / 114 M1-6 24" X 24" / M06-1 21" X 21"
TO DETOUR M04-8 24" X 12" / SOUTH M3-3 24" X 12" / 55 M1-6 24" X 24" / M06-1 21" X 21"

15
DETOUR M04-8 24" X 12" / EAST M3-2 24" X 12" / 114 M1-6 24" X 24" / M06-1 21" X 21"
DETOUR M04-8 24" X 12" / SOUTH M3-3 24" X 12" / 55 M1-6 24" X 24" / M06-1 21" X 21"

16
Manitowoc / Kaukauna / Fond du Lac
COVER

19
ROAD CLOSED 1 ½ MILES AHEAD LOCAL TRAFFIC ONLY
R11-3 60" X 30"

EAST 10 / NORTH 55 / SOUTH 55
COVER

18A
DETOUR M04-8 24" X 12" / EAST M3-2 24" X 12" / 114 M1-6 24" X 24" / M05-1R 21" X 21"

18
DETOUR M04-8 24" X 12" / WEST M3-4 24" X 12" / 114 M1-6 24" X 24"

17
DETOUR M04-8 24" X 12" / EAST M3-2 24" X 12" / 114 M1-6 24" X 24" / M06-1 21" X 21"

20
DETOUR M04-8 24" X 12" / WEST M3-4 24" X 12" / 114 M1-6 24" X 24" / M06-2R 21" X 21"
SOUTH 55
COVER

26
DETOUR M04-8 24" X 12" / EAST M3-2 24" X 12" / 114 M1-6 24" X 24" / M06-2R 21" X 21"
DETOUR M04-8 24" X 12" / SOUTH M3-3 24" X 12" / 55 M1-6 24" X 24" / M06-2R 21" X 21"

28
DETOUR M04-8 24" X 12" / EAST M3-2 24" X 12" / 114 M1-6 24" X 24"
DETOUR M04-8 24" X 12" / SOUTH M3-3 24" X 12" / 55 M1-6 24" X 24"

LEGEND

(X) SIGN NUMBER. REFER TO MISCELLANEOUS QUANTITY SHEET

SIGN MOUNTED ON TYPE III BARRICADE

POST MOUNTED SIGN

SHEET 2 OF 3

PLAN SHEET PRODUCED BY WisDOT-NE REGION

PROJECT NO: 4580-10-71/4670-10-71	HWY: STH 114/STH 55	COUNTY: CALUMET	DETOUR SIGNING DETAIL - STAGE 2 RAILROAD CLOSURE DETOUR	SHEET E

FILE NAME : $$....designfile....$$ PLOT DATE : $$...plottingdate...$$ PLOT BY : $$...plotuser...$$ PLOT NAME : PLOT SCALE : $$.....plotscale.....$$ WISDOT/CADDS SHEET 42

2

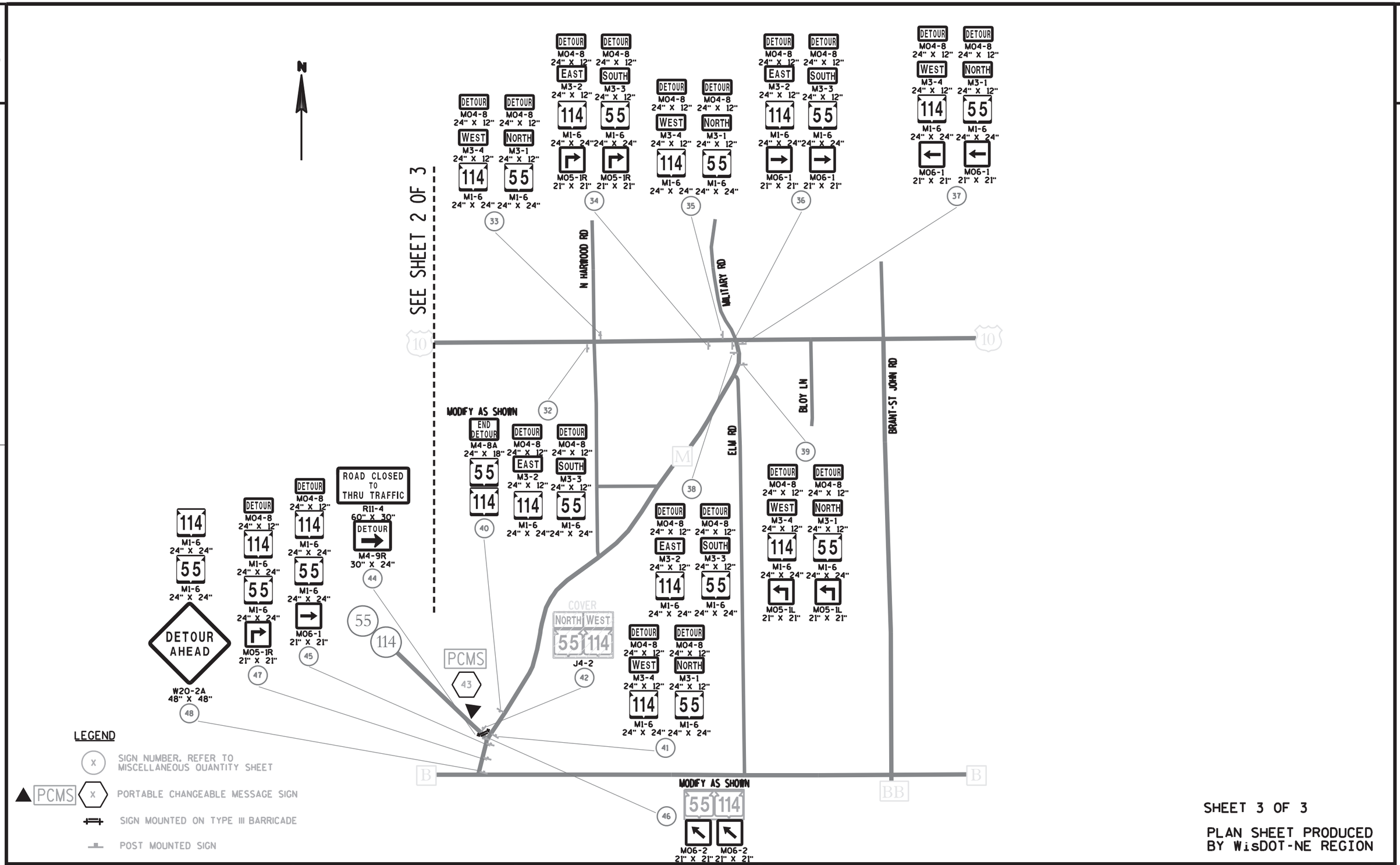

SHEET 3 OF 3

PLAN SHEET PRODUCED BY WisDOT-NE REGION

PROJECT NO: 4580-10-71/4670-10-71	HWY: STH 114/STH 55	COUNTY: CALUMET	DETOUR SIGNING DETAIL - STAGE 2 RAILROAD CLOSURE DETOUR	SHEET 62	E

2

114
M1-6
36" x 36"

DETOUR AHEAD
W20-2A
48" x 48"

EISENHOWER DR

114 10

PCMS

MODIFY TO
JCT 114
END DETOUR
M04-8A
24" x 18"
114

DETOUR
M04-8
36" x 18"
EAST
M3-2
36" x 18"
114
M1-6
36" x 36"
M06-1
30" x 30"

DETOUR
M04-8
24" x 12"
WEST
M3-4
24" x 12"
114
M1-6
24" x 24"
M06-2R
21" x 21"

DETOUR
M04-8
24" x 12"
WEST
M3-4
24" x 12"
114
M1-6
24" x 24"
M06-1
21" x 21"

DETOUR
M04-8
24" x 12"
EAST
M3-2
24" x 12"
114
M1-6
24" x 24"
M06-1
21" x 21"

DETOUR
M04-8
24" x 12"
EAST
M3-2
24" x 12"
114
M1-6
24" x 24"
M06-2R
21" x 21"

DETOUR
M04-8
24" x 12"
EAST
M3-2
24" x 12"
114
M1-6
24" x 24"

Manitowoc
Sherwood
Hilbert
COVER

DETOUR
M04-8
36" x 18"
EAST
M3-2
36" x 18"
114
M1-6
36" x 36"
M06-1
30" x 30"

MODIFY TO
EAST
114
DETOUR
M04-8
36" x 18"
EAST
114
M06-1
30" x 30"

MODIFY TO
EAST
114
DETOUR
M04-8
36" x 18"
EAST
114
M06-1
30" x 30"

ROAD CLOSED
TO
THRU TRAFFIC
R11-4
60" x 30"

ROAD CLOSED
TO
THRU TRAFFIC
R11-4
60" x 30"

ROAD CLOSED
TO
THRU TRAFFIC
R11-4
60" x 30"

COVER
FIRELANE 12
EAST 114
WEST 114

SEE SHEET 2 OF 2

SEE SHEET 2 OF 2

STATE PARK RD

55

Sherwood
Hilbert
Menasha
COVER

MODIFY TO
JCT 114
END DETOUR
M04-8A
24" x 18"
114

DETOUR
M04-8
24" x 12"
WEST
M3-4
24" x 12"
114
M1-6
24" x 24"
M06-1
21" x 21"

DETOUR
M04-8
24" x 12"
WEST
M3-4
24" x 12"
114
M1-6
24" x 24"
M05-1R
21" x 21"

STOMMEL RD
SOUTH EAST
55
114
WEST 114
COVER

114

PCMS

COVER
WEST
114
J4-2

COVER
WEST
114

ROAD CLOSED
R11-2
48" x 30"
DETOUR
M4-9R
30" x 24"

DETOUR
M04-8
24" x 12"
WEST
M3-4
24" x 12"
114
M1-6
24" x 24"

114
M1-6
36" x 36"

DETOUR AHEAD
W20-2A
48" x 48"

55
114

WEST 114
STOMMEL RD
NORTH 55
COVER

COVER
Menasha
Neenah
Kaukauna

SHEET 1 OF 2

PLAN SHEET PRODUCED
BY WisDOT-NE REGION

LEGEND

(X) SIGN NUMBER. REFER TO MISCELLANEOUS QUANTITY SHEET

PCMS (X) PORTABLE CHANGEABLE MESSAGE SIGN

SIGN MOUNTED ON TYPE III BARRICADE

POST MOUNTED SIGN

PROJECT NO: 4580-10-71/4670-10-71	HWY: STH 114/STH 55	COUNTY: CALUMET	DETOUR SIGNING DETAIL - STH 114 - STAGE 3	SHEET	E

FILE NAME : $$....designfile....$$ PLOT DATE : $$...plottingdate...$$ PLOT BY : $$...plotuser...$$ PLOT NAME : PLOT SCALE : $$.....plotscale.....$$ WISDOT/CADDS SHEET 42

2

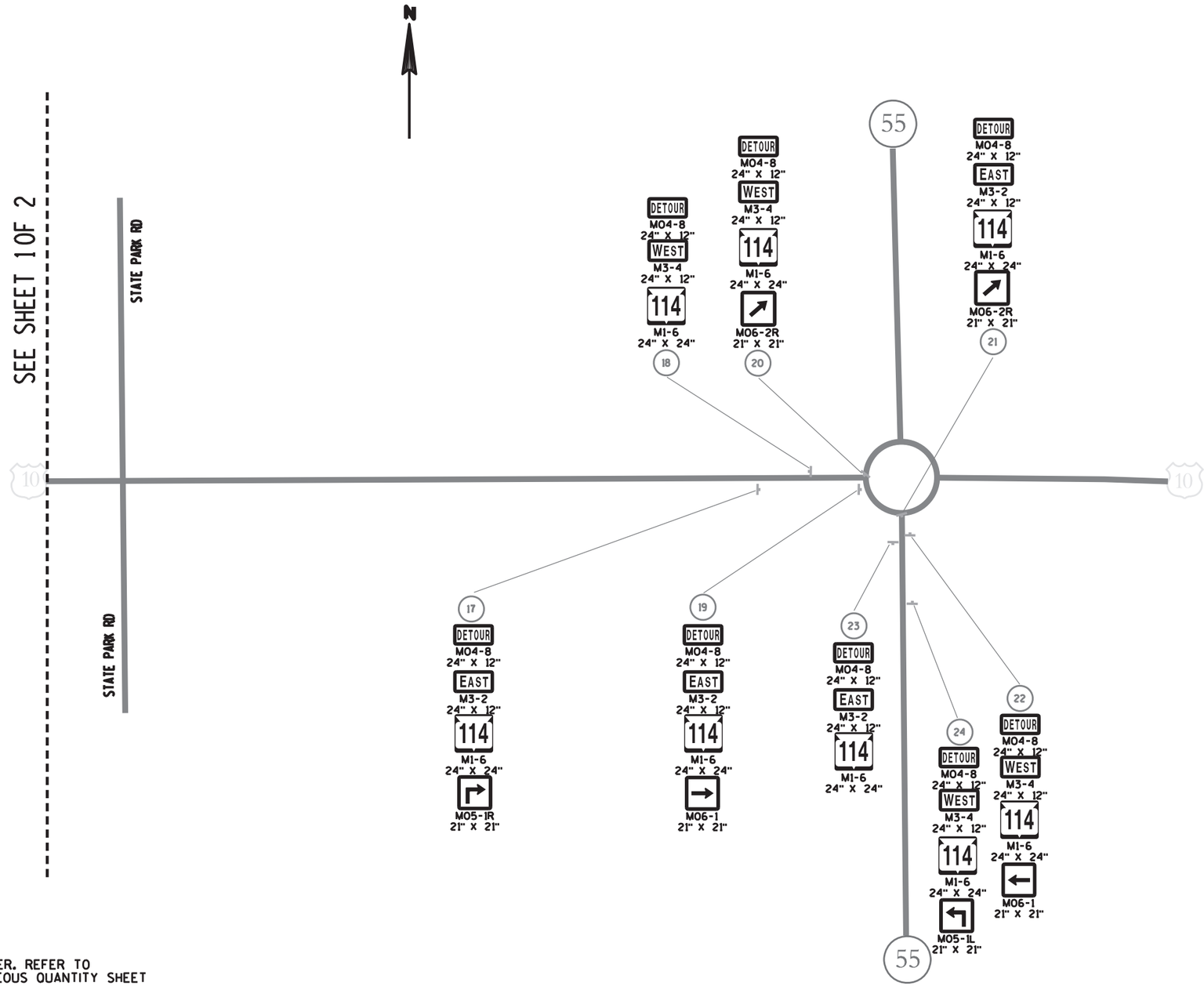

LEGEND

(X) SIGN NUMBER. REFER TO MISCELLANEOUS QUANTITY SHEET

SIGN MOUNTED ON TYPE III BARRICADE

POST MOUNTED SIGN

SHEET 2 OF 2

PLAN SHEET PRODUCED BY WisDOT-NE REGION

PROJECT NO: 4580-10-71/4670-10-71	HWY: STH 114/STH 55	COUNTY: CALUMET	DETOUR SIGNING DETAIL - STH 114 - STAGE 3	SHEET	E

FILE NAME : $$....designfile....$$ PLOT DATE : $$...plottingdate...$$ PLOT BY : $$...plotuser...$$ PLOT NAME : PLOT SCALE : $$.....plotscale.....$$ WISDOT/CADDS SHEET 42

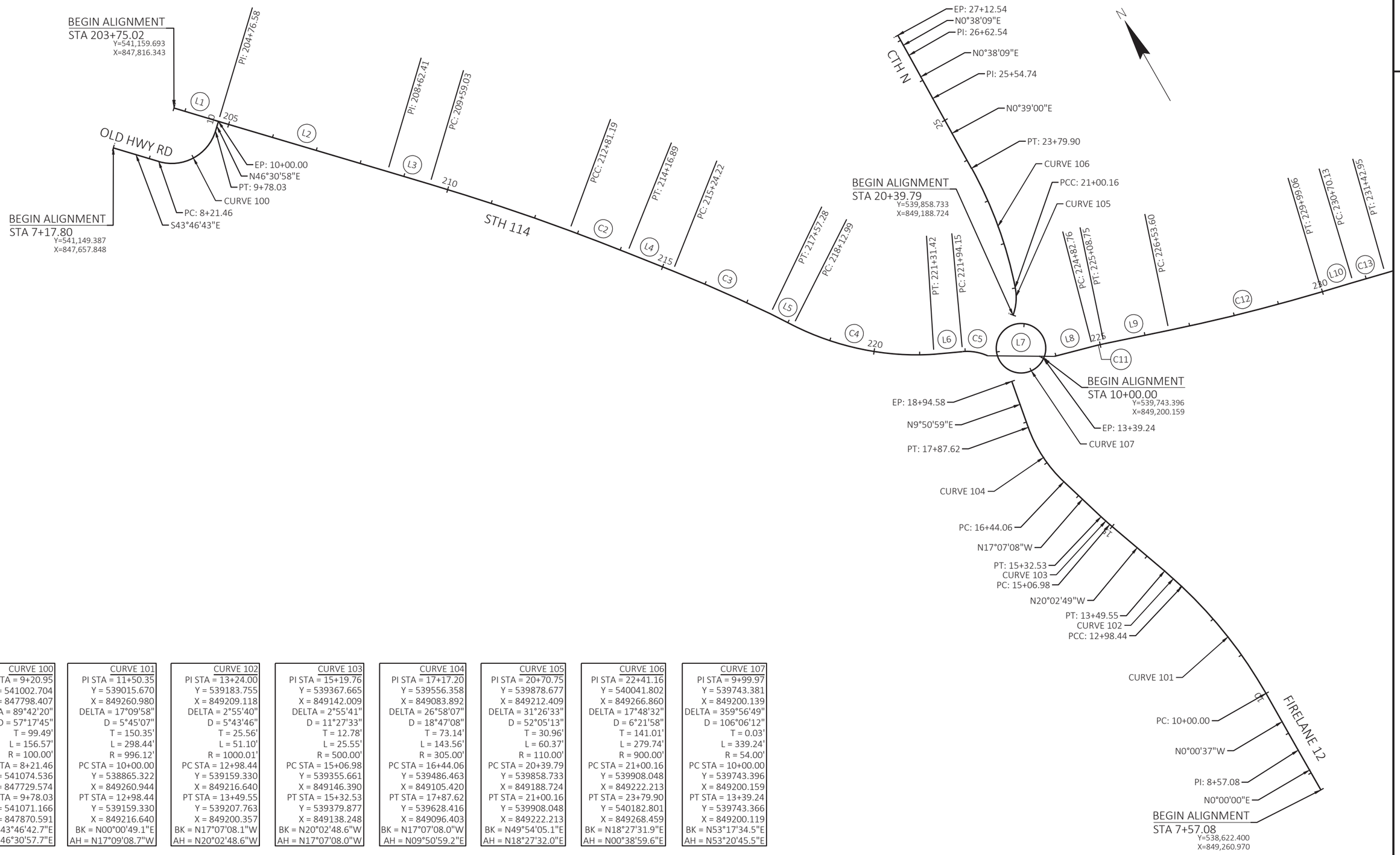

CURVE 100	CURVE 101	CURVE 102	CURVE 103	CURVE 104	CURVE 105	CURVE 106	CURVE 107
PI STA = 9+20.95	PI STA = 11+50.35	PI STA = 13+24.00	PI STA = 15+19.76	PI STA = 17+17.20	PI STA = 20+70.75	PI STA = 22+41.16	PI STA = 9+99.97
Y = 541002.704	Y = 539015.670	Y = 539183.755	Y = 539367.665	Y = 539556.358	Y = 539878.677	Y = 540041.802	Y = 539743.381
X = 847798.407	X = 849260.980	X = 849209.118	X = 849142.009	X = 849083.892	X = 849212.409	X = 849266.860	X = 849200.139
DELTA = 89°42'20"	DELTA = 17°09'58"	DELTA = 2°55'40"	DELTA = 2°55'41"	DELTA = 26°58'07"	DELTA = 31°26'33"	DELTA = 17°48'32"	DELTA = 359°56'49"
D = 57°17'45"	D = 5°45'07"	D = 5°43'46"	D = 11°27'33"	D = 18°47'08"	D = 52°05'13"	D = 6°21'58"	D = 106°06'12"
T = 99.49'	T = 150.35'	T = 25.56'	T = 12.78'	T = 73.14'	T = 30.96'	T = 141.01'	T = 0.03'
L = 156.57'	L = 298.44'	L = 51.10'	L = 25.55'	L = 143.56'	L = 60.37'	L = 279.74'	L = 339.24'
R = 100.00'	R = 996.12'	R = 1000.01'	R = 500.00'	R = 305.00'	R = 110.00'	R = 900.00'	R = 54.00'
PC STA = 8+21.46	PC STA = 10+00.00	PC STA = 12+98.44	PC STA = 15+06.98	PC STA = 16+44.06	PC STA = 20+39.79	PC STA = 21+00.16	PC STA = 10+00.00
Y = 541074.536	Y = 538865.322	Y = 539159.330	Y = 539355.661	Y = 539486.463	Y = 539858.733	Y = 539908.048	Y = 539743.396
X = 847729.574	X = 849260.944	X = 849216.640	X = 849146.390	X = 849105.420	X = 849188.724	X = 849222.213	X = 849200.159
PT STA = 9+78.03	PT STA = 12+98.44	PT STA = 13+49.55	PT STA = 15+32.53	PT STA = 17+87.62	PT STA = 21+00.16	PT STA = 23+79.90	PT STA = 13+39.24
Y = 541071.166	Y = 539159.330	Y = 539207.763	Y = 539379.877	Y = 539628.416	Y = 539908.048	Y = 540182.801	Y = 539743.366
X = 847870.591	X = 849216.640	X = 849200.357	X = 849138.248	X = 849096.403	X = 849222.213	X = 849268.459	X = 849200.119
BK = S43°46'42.7"E	BK = N00°00'49.1"E	BK = N17°07'08.1"W	BK = N20°02'48.6"W	BK = N17°07'08.0"W	BK = N49°54'05.1"E	BK = N18°27'31.9"E	BK = N53°17'34.5"E
AH = N46°30'57.7"E	AH = N17°09'08.7"W	AH = N20°02'48.6"W	AH = N17°07'08.0"W	AH = N09°50'59.2"E	AH = N18°27'32.0"E	AH = N00°38'59.6"E	AH = N53°20'45.5"E

PROJECT NO: 4580-10-71	HWY: STH 114	COUNTY: CALUMET	ALIGNMENT DETAIL	SHEET 65	E

FILE NAME : N:\PDS\C3D\45801000\SHEETSPLAN\027201-AD.DWG
LAYOUT NAME - 027201-ad

PLOT DATE : 8/24/2021 3:26 PM PLOT BY : CAMPSHURE, MICHAEL R PLOT NAME : PLOT SCALE : 1 IN:200 FT

WISDOT/CADDS SHEET 42

2

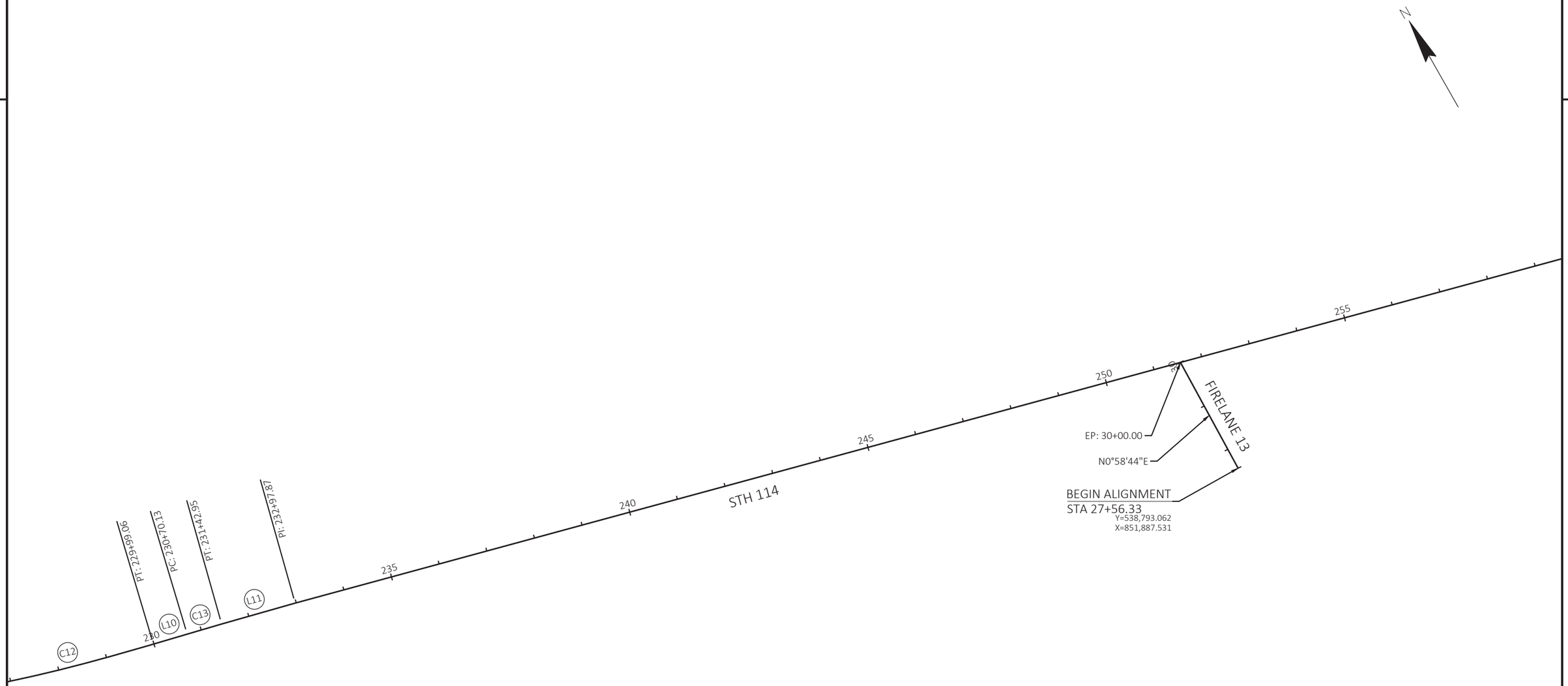

PROJECT NO: 4580-10-71	HWY: STH 114	COUNTY: CALUMET	ALIGNMENT DETAIL	SHEET 66	E

FILE NAME : N:\PDS\C3D\45801000\SHEETSPLAN\027201-AD.DWG
LAYOUT NAME - 027202-ad
PLOT DATE : 8/24/2021 3:26 PM
PLOT BY : CAMPSHURE, MICHAEL R
PLOT NAME :
PLOT SCALE : 1 IN:200 FT
WISDOT/CADDS SHEET 42

2

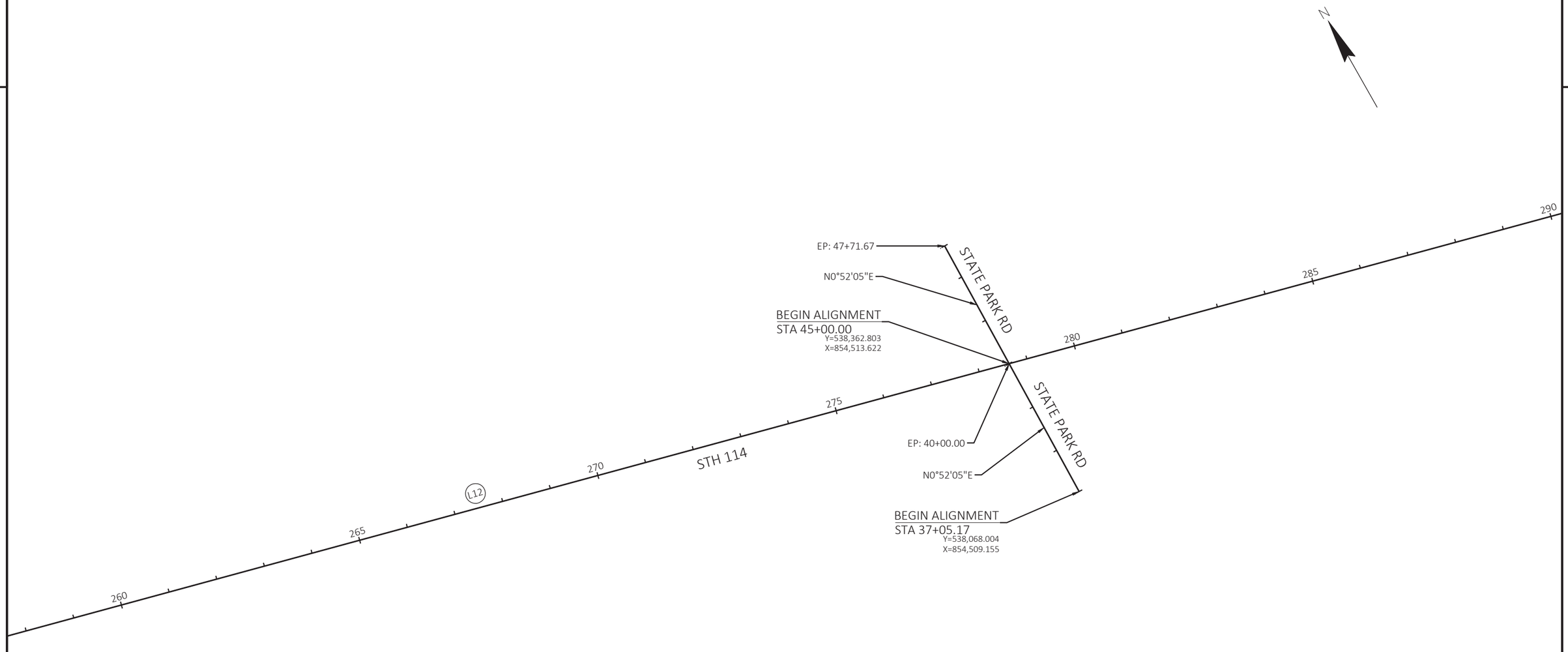

PROJECT NO: 4580-10-71	HWY: STH 114	COUNTY: CALUMET	ALIGNMENT DETAIL	SHEET 67	E

FILE NAME : N:\PDS\C3D\45801000\SHEETSPLAN\027201-AD.DWG
LAYOUT NAME - 027203-ad

PLOT DATE : 8/24/2021 3:26 PM PLOT BY : CAMPSHURE, MICHAEL R PLOT NAME : PLOT SCALE : 1 IN:200 FT

2

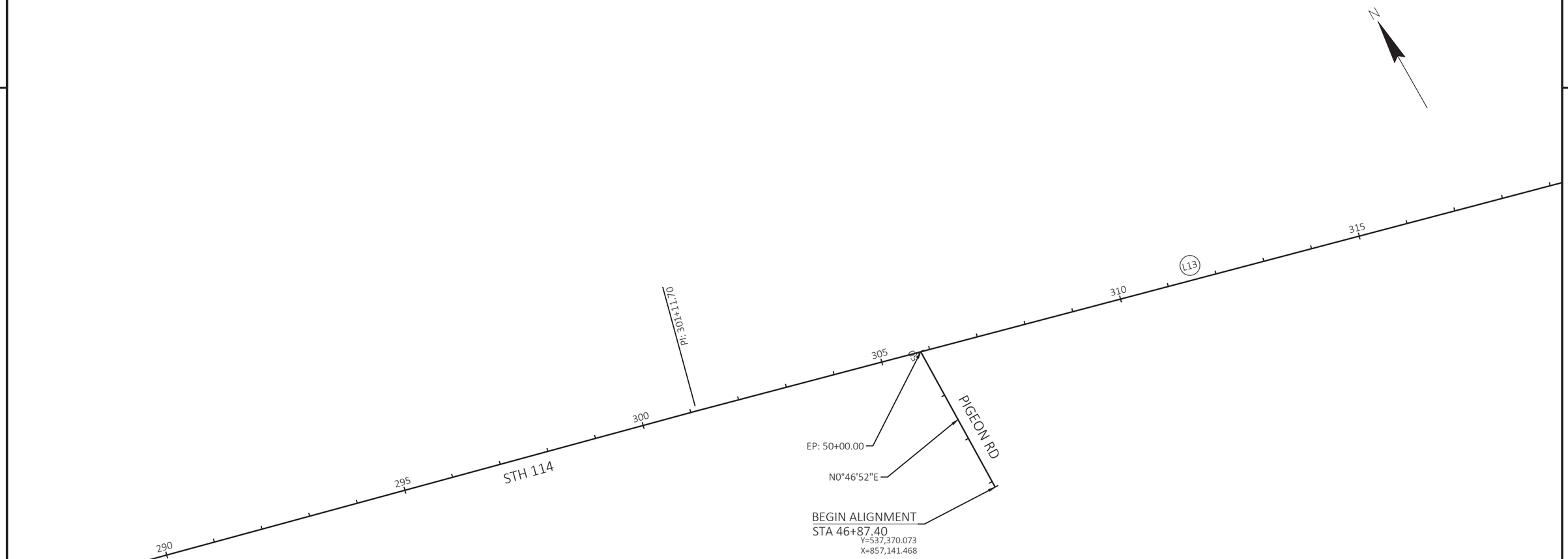

PROJECT NO: 4580-10-71	HWY: STH 114	COUNTY: CALUMET	ALIGNMENT DETAIL	SHEET 68	E

2

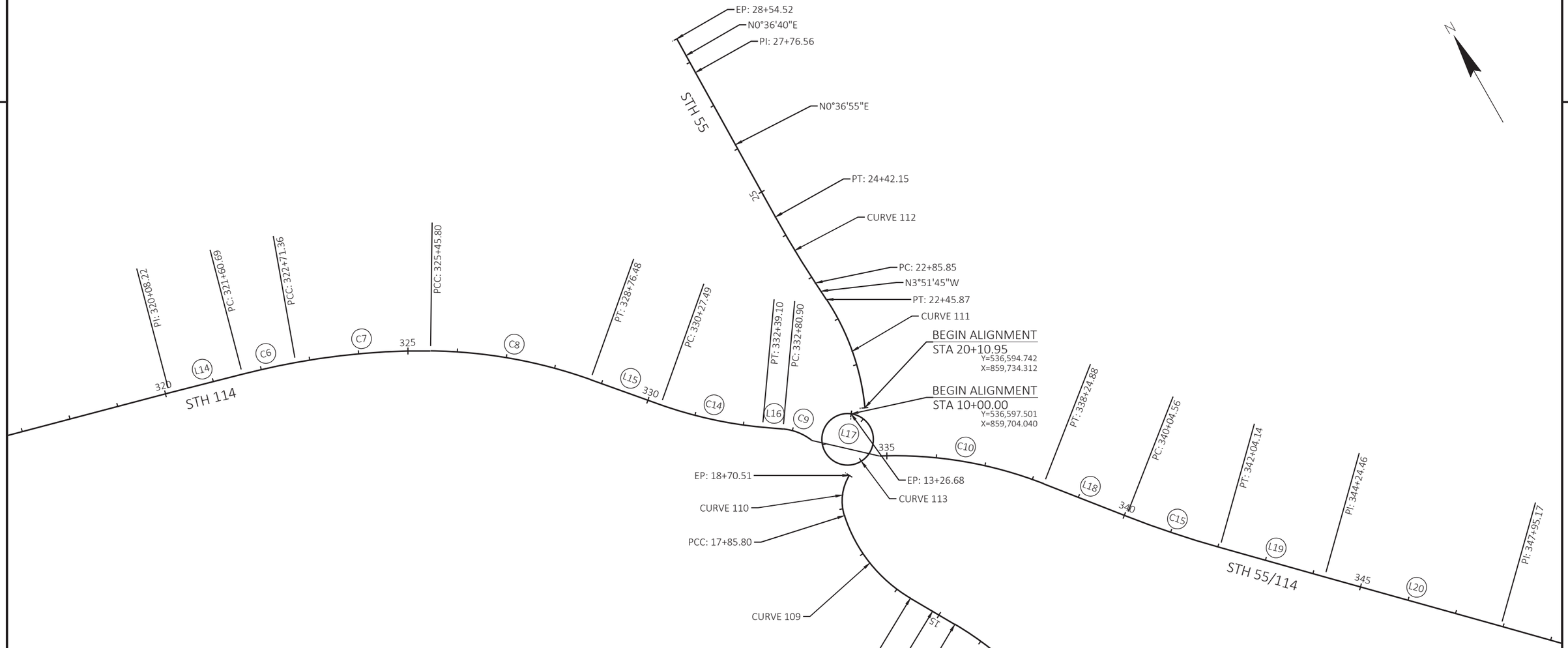

CURVE 108	CURVE 109	CURVE 110	CURVE 111	CURVE 112	CURVE 113
PI STA = 12+93.04	PI STA = 16+81.58	PI STA = 18+31.00	PI STA = 21+30.77	PI STA = 23+64.04	PI STA = 9+99.97
Y = 535969.000	Y = 536313.256	Y = 536469.481	Y = 536704.250	Y = 536941.702	Y = 536597.486
X = 859764.688	X = 859566.943	X = 859599.835	X = 859782.948	X = 859766.916	X = 859704.060
DELTA = 30°32'15"	DELTA = 41°45'47"	DELTA = 49°31'20"	DELTA = 27°48'36"	DELTA = 4°28'40"	DELTA = 359°56'40"
D = 8°47'16"	D = 19°05'55"	D = 58°27'54"	D = 11°50'17"	D = 2°51'53"	D = 110°11'03"
T = 177.99'	T = 114.45'	T = 45.20'	T = 119.82'	T = 78.19'	T = 0.03'
L = 347.50'	L = 218.67'	L = 84.70'	L = 234.92'	L = 156.30'	L = 326.68'
R = 652.00'	R = 300.00'	R = 98.00'	R = 484.00'	R = 1999.98'	R = 52.00'
PC STA = 11+15.05	PC STA = 15+67.13	PC STA = 17+85.80	PC STA = 20+10.95	PC STA = 22+85.85	PC STA = 10+00.00
Y = 535791.027	Y = 536214.015	Y = 536425.249	Y = 536594.742	Y = 536863.690	Y = 536597.501
X = 859762.626	X = 859623.949	X = 859590.523	X = 859734.312	X = 859772.183	X = 859704.040
PT STA = 14+62.56	PT STA = 17+85.80	PT STA = 18+70.51	PT STA = 22+45.87	PT STA = 24+42.15	PT STA = 13+26.68
Y = 536123.336	Y = 536425.249	Y = 536491.111	Y = 536823.800	Y = 537019.887	Y = 536597.471
X = 859676.036	X = 859590.523	X = 859639.526	X = 859774.876	X = 859767.755	X = 859704.080
BK = N00°39'50.2"E	BK = N29°52'25.1"W	BK = N11°53'22.5"E	BK = N23°56'50.6"E	BK = N03°51'45.0"W	BK = N52°14'21.8"W
AH = N29°52'25.1"W	AH = N11°53'22.3"E	AH = N61°24'42.9"E	AH = N03°51'45.0"W	AH = N00°36'54.8"E	AH = N52°11'02.0"W

PROJECT NO: 4580-10-71	HWY: STH 114	COUNTY: CALUMET	ALIGNMENT DETAIL	SHEET 69	E

FILE NAME : N:\PDS\C3D\45801000\SHEETSPLAN\027201-AD.DWG
LAYOUT NAME - 027205-ad
PLOT DATE : 8/24/2021 3:26 PM
PLOT BY : CAMPSHURE, MICHAEL R
PLOT NAME :
PLOT SCALE : 1 IN:200 FT
WISDOT/CADDS SHEET 42

2

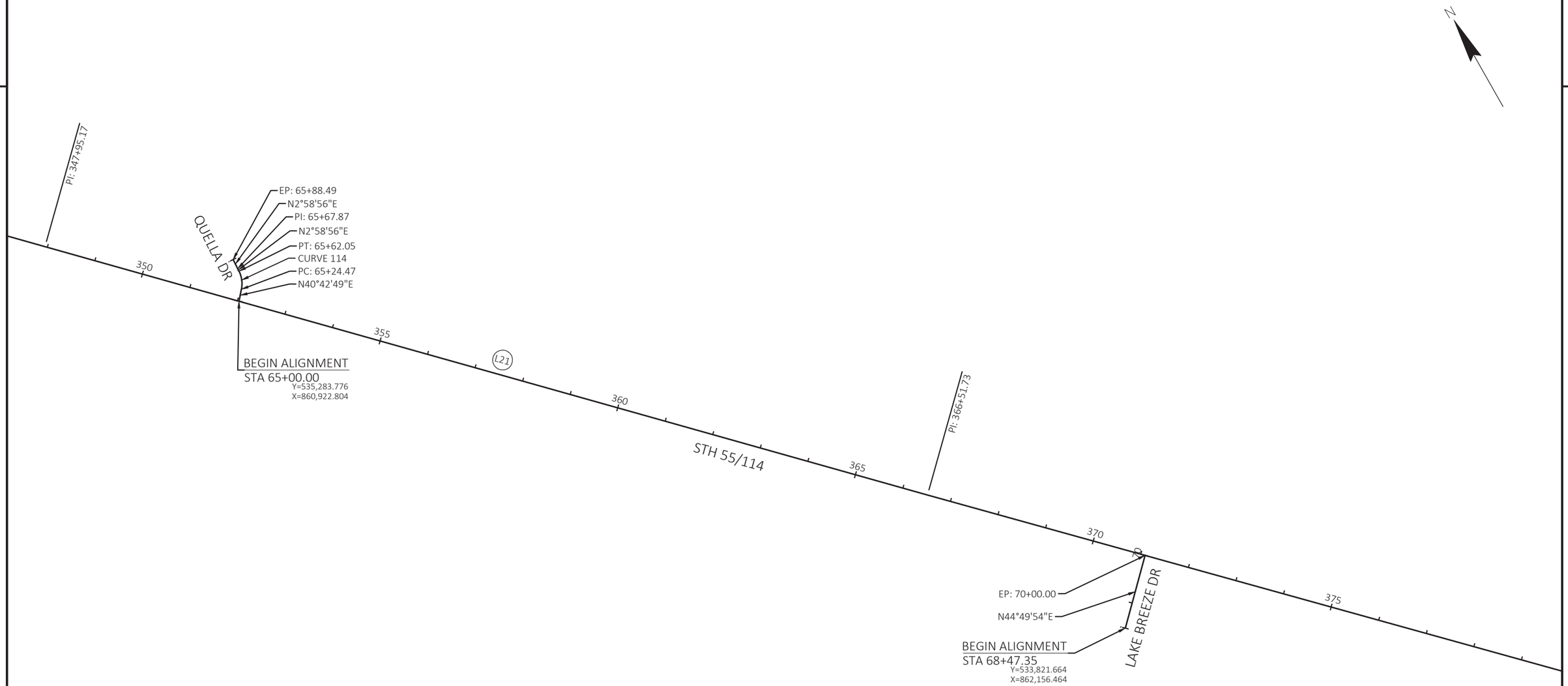

CURVE 114	
PI STA =	65+43.97
Y =	535317.103
X =	860951.484
DELTA =	37°43'53"
D =	100°24'21"
T =	19.50'
L =	37.58'
R =	57.06'
PC STA =	65+24.47
Y =	535302.323
X =	860938.765
PT STA =	65+62.05
Y =	535336.576
X =	860952.498
BK =	N40°42'48.8"E
AH =	N02°58'56.2"E

PROJECT NO: 4580-10-71	HWY: STH 114	COUNTY: CALUMET	ALIGNMENT DETAIL	SHEET 70	E

2

N

380

385

STH 55/114

390

L22

395

80

400

405

CASTLE DR

EP: 80+00.00

N49°08'10"E

BEGIN ALIGNMENT
STA 78+05.92
Y=532,000.931
X=863,912.540

PROJECT NO: 4580-10-71	HWY: STH 114	COUNTY: CALUMET	ALIGNMENT DETAIL	SHEET 71	E

FILE NAME : N:\PDS\C3D\45801000\SHEETSPLAN\027201-AD.DWG
LAYOUT NAME - 027207-ad

PLOT DATE : 8/24/2021 3:26 PM PLOT BY : CAMPSHURE, MICHAEL R PLOT NAME : PLOT SCALE : 1 IN:200 FT

2

GEOMETRY TABLE						
Number	Radius	Length	Line/Chord Direction	Start Station	Northing	Easting
L1		101.56	S43°42'57"E	203+75.02	541159.693	847816.343
L2		385.83	S43°50'50"E	204+76.58	541086.285	847886.532
L3		96.62	S43°50'19"E	208+62.41	540808.030	848153.810
C2	5007.89	135.70	S39°22'07"E	212+81.19	540498.945	848436.229
L4		107.33	S38°39'00"E	214+16.89	540394.041	848522.302
C3	3400.00	233.06	S36°41'11"E	215+24.22	540310.218	848589.337
L5		55.72	S33°33'31"E	217+57.28	540123.361	848728.546
C4	600.00	318.42	S48°45'44"E	218+12.99	540076.932	848759.346
L6		62.73	S65°34'35"E	221+31.42	539869.486	848995.993
C5	110.00	56.03	S50°59'07"E	221+94.15	539843.549	849053.109
L7		146.10	S59°52'30"E	222+50.17	539808.658	849096.172
L8		86.49	S74°58'13"E	223+96.27	539735.331	849222.540
C11	515.71	25.99	S73°31'36"E	224+82.76	539712.903	849306.070
L9		144.85	S72°04'58"E	225+08.75	539705.534	849330.991
C12	4005.00	345.46	S74°33'14"E	226+53.60	539660.974	849468.811
L10		71.07	S77°01'30"E	229+99.06	539568.995	849801.692
C13	5000.00	72.82	S76°36'28"E	230+70.13	539553.038	849870.946
L11		154.92	S76°11'26"E	231+42.95	539536.172	849941.783
L12		6813.83	S75°35'09"E	232+97.87	539499.193	850092.229
L13		1896.52	S75°09'15"E	301+11.70	537803.026	856691.567
L14		152.46	S74°36'58"E	320+08.22	537317.098	858524.781
C6	1400.00	110.68	S72°42'25"E	321+60.69	537276.651	858671.783
C7	1400.00	274.44	S65°18'15"E	322+71.36	537243.761	858777.428
C8	1000.00	330.68	S50°12'55"E	325+45.80	537129.285	859026.365
L15		151.01	S40°44'31"E	328+76.48	536918.643	859279.323
C14	839.00	211.61	S47°58'03"E	330+27.49	536804.227	859377.882
L16		41.80	S55°11'35"E	332+39.10	536662.917	859534.644
C9	110.00	62.80	S38°50'13"E	332+80.90	536639.059	859568.964
L17		141.33	S47°20'31"E	333+43.71	536590.800	859607.815
C10	827.00	339.85	S50°48'07"E	334+85.03	536495.034	859711.748
L18		179.67	S39°01'47"E	338+24.88	536281.757	859973.271
C15	2000.03	199.58	S41°53'18"E	340+04.56	536142.182	860086.416
L19		220.32	S44°44'49"E	342+04.14	535993.668	860219.616
L20		370.71	S44°44'49"E	344+24.46	535837.189	860374.719
L21		1856.56	S44°41'11"E	347+95.17	535573.900	860635.693
L22		5679.59	S44°53'32"E	366+51.73	534253.949	861941.277

SUPERELEVATION DATA FOR CURVE 6 @ START STATION 321+60.69					
STA	LT SHOULDER	LT LANE AND PAVED SHOULDER	DESCRIPTION	RT LANE AND PAVED SHOULDER	RT SHOULDER
319+47	-4.0%	-2.0%	END NORMAL SHOULDER	-2.0%	-4.0%
320+01	-2.0%	-2.0%	END NORMAL CROWN	-2.0%	-4.0%
320+54	0.0%	0.0%	LEVEL CROWN	-2.0%	-4.0%
321+07	2.0%	2.0%	REVERSE CROWN	-2.0%	-4.0%
321+61	4.0%	4.0%	LOW SHOULDER MATCH	-4.0%	-4.0%
322+14	6.0%	6.0%	BEGIN FULL SUPER	-6.0%	-6.0%
322+26	6.0%	6.0%	BEGIN MILL AND OVERLAY	-6.0%	-6.0%

CROWN TRANSITION DATA FOR RAILROAD CROSSING @ STATION 361+21					
STA	LT SHOULDER	LT LANE AND PAVED SHOULDER	DESCRIPTION	RT LANE AND PAVED SHOULDER	RT SHOULDER
360+25	-4.0%	-2.0%	BEGIN CROWN TRANSITION EB LANES	-2.0%	-4.0%
360+42	-4.0%	-2.0%	BEGIN CROWN TRANSITION WB LANES	-1.4%	-1.4%
360+68	-1.0%	-1.0%	BEGIN TRACK FULL SUPELEVATION 0.4% EB LANES	-0.4%	-0.4%
361+06	0.4%	0.4%	BEGIN TRACK FULL SUPELEVATION 0.4% WB LANES	-0.4%	-0.4%
361+21	0.4%	0.4%	RAILROAD CROSSING CENTERLINE	-0.4%	-0.4%
361+37	0.4%	0.4%	END TRACK FULL SUPELEVATION 0.4% EB LANES	-0.4%	-0.4%
361+75	0.4%	0.4%	END FULL FULL SUPELEVATION 0.4% WB LANES	-1.8%	-1.8%
361+80	0.2%	0.2%	END CROWN TRANSITION EB LANES	-2.0%	-4.0%
362+39	-4.0%	-2.0%	END CROWN TRANSITION WB LANES	-2.0%	-4.0%

4580-10-71

Line	Item	Item Description	Unit	Total	Qty
0002	201.0120	Clearing	ID	8.000	8.000
0004	201.0220	Grubbing	ID	8.000	8.000
0006	203.0100	Removing Small Pipe Culverts	EACH	2.000	2.000
0008	204.0100	Removing Concrete Pavement	SY	50.000	50.000
0010	204.0110	Removing Asphaltic Surface	SY	2,650.000	2,650.000
0012	204.0115	Removing Asphaltic Surface Butt Joints	SY	182.000	182.000
0014	204.0120	Removing Asphaltic Surface Milling	SY	73,580.000	73,580.000
0016	204.0150	Removing Curb & Gutter	LF	971.000	971.000
0018	204.0155	Removing Concrete Sidewalk	SY	9.000	9.000
0020	205.0100	Excavation Common	CY	5,454.000	5,454.000
0024	211.0400	Prepare Foundation for Asphaltic Shoulders	STA	358.000	358.000
0026	213.0100	Finishing Roadway (project) 01. 4580-10-71	EACH	1.000	1.000
0030	305.0110	Base Aggregate Dense 3/4-Inch	TON	1,761.000	1,761.000
0032	305.0120	Base Aggregate Dense 1 1/4-Inch	TON	9,740.000	9,740.000
0034	312.0110	Select Crushed Material	TON	1,590.000	1,590.000
0036	335.0100	Rubblizing	SY	25,341.000	25,341.000
0040	416.0512	Concrete Truck Apron 12-Inch	SY	48.000	48.000
0042	416.0610	Drilled Tie Bars	EACH	76.000	76.000
0044	455.0605	Tack Coat	GAL	8,427.000	8,427.000
0046	460.0105.S	HMA Percent Within Limits (PWL) Test Strip Volumetrics	EACH	2.000	2.000
0048	460.0110.S	HMA Percent Within Limits (PWL) Test Strip Density	EACH	3.000	3.000
0050	460.2000	Incentive Density HMA Pavement	DOL	1,070.000	1,070.000
0052	460.2005	Incentive Density PWL HMA Pavement	DOL	15,490.000	15,490.000
0054	460.2007	Incentive Density HMA Pavement Longitudinal Joints	DOL	24,930.000	24,930.000
0056	460.2010	Incentive Air Voids HMA Pavement	DOL	21,970.000	21,970.000
0058	460.6223	HMA Pavement 3 MT 58-28 S	TON	14,540.000	14,540.000
0060	460.6224	HMA Pavement 4 MT 58-28 S	TON	7,430.000	7,430.000
0062	460.7424	HMA Pavement 4 HT 58-28 H	TON	1,600.000	1,600.000
0064	465.0105	Asphaltic Surface	TON	27.000	27.000
0066	465.0110	Asphaltic Surface Patching	TON	50.000	50.000
0068	465.0120	Asphaltic Surface Driveways and Field Entrances	TON	115.000	115.000
0070	465.0315	Asphaltic Flumes	SY	22.000	22.000
0072	465.0425	Asphaltic Shoulder Rumble Strips 2-Lane Rural	LF	28,880.000	28,880.000
0074	465.0475	Asphalt Centerline Rumble Strips 2-Lane Rural	LF	11,763.000	11,763.000
0076	520.8700	Cleaning Culvert Pipes	EACH	2.000	2.000
0078	521.1518	Apron Endwalls for Culvert Pipe Sloped Side Drains Steel 18-Inch 6 to 1	EACH	2.000	2.000
0080	521.3118	Culvert Pipe Corrugated Steel 18-Inch	LF	42.000	42.000
0082	522.0430	Culvert Pipe Reinforced Concrete Class IV 30-Inch	LF	8.000	8.000
0084	522.0436	Culvert Pipe Reinforced Concrete Class IV 36-Inch	LF	8.000	8.000
0086	522.2414	Culvert Pipe Reinforced Concrete Horizontal Elliptical Class HE-IV 14x23-Inch	LF	68.000	68.000
0088	522.2614	Apron Endwalls for Culvert Pipe Reinforced Concrete Horizontal Elliptical 14x23-Inch	EACH	2.000	2.000
0090	524.0630	Apron Endwalls for Culvert Pipe Salvaged 30-Inch	EACH	1.000	1.000
0092	524.0636	Apron Endwalls for Culvert Pipe Salvaged 36-Inch	EACH	1.000	1.000
0094	601.0411	Concrete Curb & Gutter 30-Inch Type D	LF	332.000	332.000
0096	601.0415	Concrete Curb & Gutter 6-Inch Sloped 30-Inch Type J	LF	94.000	94.000
0098	601.0553	Concrete Curb & Gutter 4-Inch Sloped 36-Inch Type D	LF	40.000	40.000
0100	601.0557	Concrete Curb & Gutter 6-Inch Sloped 36-Inch Type D	LF	434.000	434.000
0102	601.0580	Concrete Curb & Gutter 4-Inch Sloped 36-Inch Type R	LF	24.000	24.000
0106	602.0405	Concrete Sidewalk 4-Inch	SF	148.000	148.000

Line	Item	Item Description	Unit	Total	Qty
0110	602.0615	Curb Ramp Detectable Warning Field Radial Natural Patina	SF	19.000	19.000
0114	611.8115	Adjusting Inlet Covers	EACH	11.000	11.000
0116	618.0100	Maintenance And Repair of Haul Roads (project) 01. 4580-10-71	EACH	1.000	1.000
0120	619.1000	Mobilization	EACH	0.500	0.500
0122	620.0300	Concrete Median Sloped Nose	SF	49.000	49.000
0124	624.0100	Water	MGAL	154.004	154.004
0126	625.0500	Salvaged Topsoil	SY	6,488.000	6,488.000
0128	627.0200	Mulching	SY	3,739.000	3,739.000
0130	628.1504	Silt Fence	LF	450.000	450.000
0132	628.1520	Silt Fence Maintenance	LF	450.000	450.000
0134	628.1905	Mobilizations Erosion Control	EACH	8.000	8.000
0136	628.1910	Mobilizations Emergency Erosion Control	EACH	3.000	3.000
0138	628.2004	Erosion Mat Class I Type B	SY	970.000	970.000
0140	628.2006	Erosion Mat Urban Class I Type A	SY	480.000	480.000
0142	628.2008	Erosion Mat Urban Class I Type B	SY	1,347.000	1,347.000
0144	628.7015	Inlet Protection Type C	EACH	49.000	49.000
0146	628.7504	Temporary Ditch Checks	LF	30.000	30.000
0148	628.7555	Culvert Pipe Checks	EACH	12.000	12.000
0150	629.0210	Fertilizer Type B	CWT	4.800	4.800
0152	630.0130	Seeding Mixture No. 30	LB	40.000	40.000
0154	630.0140	Seeding Mixture No. 40	LB	82.000	82.000
0156	630.0200	Seeding Temporary	LB	44.000	44.000
0158	630.0500	Seed Water	MGAL	146.000	146.000
0160	633.5200	Markers Culvert End	EACH	8.000	8.000
0162	634.0614	Posts Wood 4x6-Inch X 14-FT	EACH	4.000	4.000
0164	634.0616	Posts Wood 4x6-Inch X 16-FT	EACH	1.000	1.000
0166	637.2210	Signs Type II Reflective H	SF	5.180	5.180
0168	637.2230	Signs Type II Reflective F	SF	4.000	4.000
0170	638.2102	Moving Signs Type II	EACH	13.000	13.000
0174	638.3000	Removing Small Sign Supports	EACH	3.000	3.000
0176	642.5401	Field Office Type D	EACH	1.000	1.000
0178	643.0300	Traffic Control Drums	DAY	3,150.000	3,150.000
0182	643.0420	Traffic Control Barricades Type III	DAY	3,183.000	3,183.000
0184	643.0705	Traffic Control Warning Lights Type A	DAY	5,384.000	5,384.000
0186	643.0900	Traffic Control Signs	DAY	12,519.000	12,519.000
0188	643.0920	Traffic Control Covering Signs Type II	EACH	32.000	32.000
0190	643.1000	Traffic Control Signs Fixed Message	SF	187.500	187.500
0192	643.1050	Traffic Control Signs PCMS	DAY	63.000	63.000
0194	643.5000	Traffic Control	EACH	0.500	0.500
0202	645.0140	Geotextile Type SAS	SY	2,203.000	2,203.000
0206	646.1020	Marking Line Epoxy 4-Inch	LF	21,628.000	21,628.000
0208	646.1040	Marking Line Grooved Wet Ref Epoxy 4-Inch	LF	36,168.000	36,168.000
0210	646.3040	Marking Line Grooved Wet Ref Epoxy 8-Inch	LF	1,719.000	1,719.000
0212	646.4520	Marking Line Same Day Epoxy 4-Inch	LF	5,684.000	5,684.000
0214	646.5020	Marking Arrow Epoxy	EACH	1.000	1.000
0216	646.5120	Marking Word Epoxy	EACH	1.000	1.000
0218	646.5320	Marking Railroad Crossings Epoxy	EACH	2.000	2.000
0220	646.6120	Marking Stop Line Epoxy 18-Inch	LF	50.000	50.000
0222	646.6320	Marking Dotted Extension Epoxy 18-Inch	LF	428.000	428.000

4580-10-71

Line	Item	Item Description	Unit	Total	Qty
0224	646.7120	Marking Diagonal Epoxy 12-Inch	LF	437.000	437.000
0230	646.8220	Marking Island Nose Epoxy	EACH	5.000	5.000
0232	648.0100	Locating No-Passing Zones	MI	3.670	3.670
0234	649.0105	Temporary Marking Line Paint 4-Inch	LF	74,304.000	74,304.000
0236	649.0120	Temporary Marking Line Epoxy 4-Inch	LF	13,588.000	13,588.000
0240	650.4500	Construction Staking Subgrade	LF	2,183.000	2,183.000
0242	650.5000	Construction Staking Base	LF	10,405.000	10,405.000
0244	650.5500	Construction Staking Curb Gutter and Curb & Gutter	LF	676.000	676.000
0246	650.6000	Construction Staking Pipe Culverts	EACH	1.000	1.000
0248	650.8000	Construction Staking Resurfacing Reference	LF	19,362.000	19,362.000
0250	650.9000	Construction Staking Curb Ramps	EACH	1.000	1.000
0252	650.9910	Construction Staking Supplemental Control (project) 01. 4580-10-71	LS	1.000	1.000
0256	650.9920	Construction Staking Slope Stakes	LF	2,183.000	2,183.000
0258	690.0150	Sawing Asphalt	LF	8,310.000	8,310.000
0260	690.0250	Sawing Concrete	LF	3,090.000	3,090.000
0262	740.0440	Incentive IRI Ride	DOL	12,980.000	12,980.000
0264	ASP.1T0A	On-the-Job Training Apprentice at $5.00/HR	HRS	2,000.000	2,000.000
0266	ASP.1T0G	On-the-Job Training Graduate at $5.00/HR	HRS	1,320.000	1,320.000
0268	SPV.0060	Special 01. Reconditioning Inlets	EACH	5.000	5.000

CLEARING & GRUBBING

CATEGORY	APROXIMATE STATION	OFFSET	LOCATION	201.0120 CLEARING ID	201.0220 GRUBBING ID	REMARKS
0010	280+50	LT	STH 114	8	8	
	PROJECT 4580-10-71 TOTALS			**8**	**8**	

REMOVING SMALL PIPE CULVERTS

CATEGORY	STATION	LOCATION	203.0100 REMOVING SMALL PIPE CULVERTS EACH	REMARKS
0010	45+57	STATE PARK RD.	1	EXISTING CPCS HE 24-INCH x18-INCH
0010	281+75	STH 114	1	EXISTING CPCS 18-INCH
	PROJECT 4580-10-71 TOTAL		**2**	

REMOVING CURB & GUTTER & SIDEWALK SUMMARY

CATEGORY	STATION	TO	STATION	OFFSET	LOCATION	204.0150 REMOVING CURB & GUTTER LF	204.0155 REMOVING CONCRETE SIDEWALK SY	* 690.0150 SAWING ASPHALT LF	* 6900250 SAWING CONCRETE LF	REMARKS
0010	222+24	-	222+30	LT	STH 114/CTH N RAB	10	-	14	5	STH 114/CTH N RAB INLET
0010	222+35	-	222+45	LT	STH 114/CTH N RAB	10	-	14	5	STH 114/CTH N RAB INLET
0010	223+56	-	223+66	RT	STH 114/RAB CIRCLE	14	-	18	6	STH 114/CTH N RAB INLET
0010	223+63	-	223+71	LT	STH 114/CTH N RAB	10	-	14	5	STH 114/CTH N RAB INLET
0010	225+34	-	225+44	LT	STH 114/CTH N RAB	10	-	14	5	STH 114/CTH N RAB INLET
0010	225+32	-	225+42	LT	STH 114/CTH N RAB	10		14	5	STH 114/CTH N RAB INLET
0010	225+32	-	225+42	LT	STH 114/CTH N RAB	10		14	5	STH 114/CTH N RAB INLET
0010	226+57	-	226+67	LT	STH 114/CTH N RAB	10		14	5	STH 114/CTH N RAB INLET
0010	227+91	-	278+30	LT	STH 114	68	-	*	*	STATE PARK RD NW QUAD
0010	278+82	-	279+28	LT	STH 114	112	-	*	*	STATE PARK RD NE QUAD
0010	281+26	-	281+68	LT	TOWN OF HARRISON LOT	190	-	*	*	DRIVEWAY CLOSURE
0010	305+24	-	305+75	RT	STH 114	66	-	*	*	PIGEON RD SW QUAD
0010	306+34	-	306+76	RT	STH 114	65	-	*	*	PIGEON RD SE QUAD
0010	334+14	-	334+19	RT	STH 114/STH 55 RAB	10	-	14	5	STH 114/STH 55 RAB INLET
0010	334+25	-	334+30	RT	STH 114/STH 55 RAB	10	-	14	5	STH 114/STH 55 RAB INLET
0010	336+66	-	336+76	RT	STH 114/STH 55 RAB	10	-	14	6	STH 114/STH 55 RAB INLET
0010	336+67	-	336+77	RT	STH 114/STH 55 RAB	10	-	14	6	STH 114/STH 55 RAB INLET
0010	395+82	-	396+30	RT	STH 114/55	118	-	*	*	CASTLE DR SW QUAD
0010	396+61	-	397+37	RT	STH 114/55	148	9	*	*	CASTLE DR SE QUAD
0010	PROJECT			LT/RT	VARIES	80	-	96	45	UNDISTRIBUTED C&G REPLACEMENT
					PROJECT SUBTOTALS	971	9	268	108	
					PROJECT 4580-10-71 TOTAL	**971**	**9**	*****	*****	

*ADDITIONAL QUANTITY SHOWN ELSEWHERE

204-REMOVING ASPHALTIC SURFACE SUMMARY

CATEGORY	STATION	TO	STATION	OFFSET	LOCATION	204.0100 REMOVING CONCRETE PAVEMENT SY	204.0110 REMOVING ASPHALTIC SURFACE SY	204.0115 REMOVING ASPHALTIC SURFACE BUTT JOINTS SY	204.0120 REMOVING ASPHALTIC SURFACE MILLING SY	REMARKS
0010	203+75	-	208+62	LT/RT	STH 114	-	-	7	1300	TRAVEL LANES OVER CONCRETE, MILL FULL DEPTH; BUTT JOINT AT NORTH PROJECT LIMITS
0010	203+75	-	208+62	LT/RT	STH 114	-	-	-	330	MILL FULL DEPTH FOR PAVED SHOULDERS
0010	208+62	-	222+50	LT/RT	STH 114	-	-	7	4510	MILL 1.75" CTH N RBT WEST LEG (STH 114)*; BUTT JOINT AT STA 232+10
0010	208+62	-	220+93	RT	STH 114	-	420	-	-	REMOVING 3' PAVED SHOULDERS CTH N RBT WEST LEG
0010	208+62	-	221+20	LT	STH 114	-	420	-	-	REMOVING 3' PAVED SHOULDERS CTH N RBT WEST LEG
0010	10+00	-	13+39	RT	CTH N RBT CIRCLE	-	-	-	1080	MILL 1.75" CTH N RBT CIRCLE
0010	20+40	-	21+80	LT/RT	CTH N	-	-	11	630	MILL 1.75" CTH N RBT NORTH LEG; BUTT JOINT AT STA 21+80
0010	15+32	-	18+95	LT/RT	FIRELANE 13	-	-	8	1230	MILL 1.75" CTH N RBT SOUTH LEG; BUTT JOINT AT STA 17+52
0010	223+96	-	232+10	LT/RT	STH 114	-	-	7	3320	MILL 1.75" CTH N RBT EAST LEG (STH 114)*; BUTT JOINT AT STA 232+10
0010	229+05	-	232+10	RT	STH 114	-	110	-	-	REMOVING 3' PAVED SHOULDERS CTH N RBT EAST LEG
0010	225+54	-	232+10	LT	STH 114	-	220	-	-	REMOVING 3' PAVED SHOULDERS CTH N RBT EAST LEG
0010	232+10	-	290+30	LT/RT	STH 114	-	-	-	15520	TRAVEL LANES OVER CONCRETE, MILL FULL DEPTH, SEE CORING LOG FOR MILLING DEPTH
0010	232+10	-	290+30	LT/RT	STH 114	-	-	-	3880	PAVED SHOULDERS; MILL FULL DEPTH
0010	290+30	-	310+30	LT/RT	STH 114	-	-	-	5340	MILL FULL DEPTH ASPHALT OVER CONCRETE THAT IS UNDER GRAVEL LIFT, VARIABLE DEPTH; SURFACE LAYER OF EXISTING ASHPALT PAID AS COMMON EXCAVATION REMOVED WITH EXISTING GRAVEL LIFT
0010	310+30	-	322+26	LT/RT	STH 114	-	-	-	3190	TRAVEL LANES OVER CONCRETE, MILL FULL DEPTH, SEE CORING LOG FOR MILLING DEPTH
0010	310+30	-	322+26	LT/RT	STH 114	-	-	-	800	PAVED SHOULDERS; MILL FULL DEPTH
0010	322+26	-	333+44	LT/RT	STH 114	-	-	7	3750	MILL 1.75" CTH N RBT WEST LEG (STH 114)*; BUTT JOINT AT STA 322+26
0010	322+26	-	330+68	RT	STH 114	-	290	-	-	REMOVING 3' PAVED SHOULDERS CTH N RBT WEST LEG
0010	322+26	-	332+02	LT	STH 114	-	330	-	-	REMOVING 3' PAVED SHOULDERS CTH N RBT WEST LEG
0010	10+00	-	13+27	RT	STH 55 RBT CIRCLE	-	-	-	1070	MILL 1.75" CTH N RBT CIRCLE
0010	20+11	-	22+91	LT/RT	STH 55	-	-	9	1040	MILL 1.75" CTH N RBT NORTH LEG; BUTT JOINT AT STA 22+91
0010	15+99	-	18+71	LT/RT	STOMMEL RD.	-	-	7	990	MILL 1.75" CTH N RBT SOUTH LEG; BUTT JOINT AT STA 15+99
0010	334+85	-	348+76	LT/RT	STH 55/114	-	-	7	4520	MILL 1.75" CTH N RBT EAST LEG (STH 114/55)*; BUTT JOINT AT STA 348+76
0010	336+28	-	348+76	RT	STH 55/114	-	420	-	-	REMOVING 3' PAVED SHOULDERS CTH N RBT EAST LEG
0010	336+54	-	348+76	LT	STH 55/114	-	410	-	-	REMOVING 3' PAVED SHOULDERS CTH N RBT EAST LEG
0010	348+76	-	360+91	LT/RT	STH 55/114	-	-	-	3240	MILL VARIABLE DEPTH (4" NORMAL) FOR TRAVEL LANES
0010	348+76	-	360+91	LT/RT	STH 55/114	-	-	-	810	MILL VARIABLE DEPTH (4" NORMAL) FOR 3' PAVED SHOULDERS
0010	360+91	-	361+52	LT/RT	STH 55/114	50	30	-	-	RAILROAD TAPERS AND FULL DEPTH REMOVAL BETWEEN SAW CUTS
0010	361+52	-	397+37	LT/RT	STH 55/114	-	-	6	9560	MILL VARIABLE DEPTH (4" NORMAL) FOR TRAVEL LANES; BUTT JOINT AT STA 392+40
0010	361+52	-	397+37	LT/RT	STH 55/114	-	-	-	2390	MILL VARIABLE DEPTH (4" NORMAL) FOR 3' PAVED SHOULDERS
0010	8+74	-	9+85	LT/RT	OLD HIGHWAY RD.	-	-	9	760	MILL 1.75", OLD HIGHWAY RD.
0010	203+75	-	207+65	LT	STH 114	-	-	2	330	MILL 1.75", OLD HIGHWAY RD. BYPASS LANE
0010	29+30	-	29+85	LT/RT	FIRELANE 13	-	-	7	390	MILL 1.75", FIRELANE 13
0010	39+28	-	39+85	LT/RT	STATE PARK RD.	-	-	8	600	MILL 1.75", STATE PARK RD. SOUTH
0010	300+92	-	305+24	RT	STH 114	-	-	4	290	PIGEON RD. TURN LANE
0010	301+54	-	310+38	LT	STH 114	-	-	-	860	PIGEON RD. BYPASS LANE
0010	69+25	-	69+85	LT/RT	LAKE BREEZE RD.	-	-	10	860	MILL 1.75", LAKE BREEZE RD.
0010	393+00	-	397+37	LT	STH 114	-	-	2	310	MILL 2.5", CASTLE DR. BYPASS LANE
0010	203+75	-	397+37	LT/RT	STH 114	-	-	64	680	MILL 1.75", DRIVEWAYS
					PROJECT 4580-10-71 TOTAL	**50**	**2,650**	**182**	**73,580**	

NOTE: SAW CUT MAY BE USED WHERE VERTICAL EDGES ARE REQUIRED BUT IS INCEDENTAL TO OTHER REMOVAL ITEMS

DIVISION	FROM/TO STATION	LOCATION	205.0100 COMMON EXCAVATION (1) CUT (2)	205.0100 COMMON EXCAVATION (1) EBS EXCAVATION (3)	SALVAGED/UNUSABLE PAVEMENT MATERIAL (4)	AVAILABLE MATERIAL (5)	EXPANDED EBS BACKFILL (3) FACTOR 1.00	UNEXPANDED FILL	EXPANDED FILL (13) FACTOR 1.43	MASS ORDINATE +/- (14)	WASTE	COMMENT
DIVISION 1 - STATE PARK RD												
114@STATEPARKSOUTH	272+27.484/277+27.06	STH 114	344	139	40	304	139	34	49	256	256	USE EXCESS MATERIAL FROM 114@STATEPARKNORTH FOR FILL AT STATE PARK RD DRIVEWAY REMOVAL AND NEW DRIVEWAY
STATEPARKNORTH	45+51.431/45+82.842	STATE PARK RD.	110	0	32	78	0	0	0	78	78	
114@STATEPARKNORTH	276+90.973/283+77.751	STH 114	974	213	184	790	213	50	72	719	473	
STATE PARK RD DRIVEWAY REMOVAL	0+54/1+28	HARRISON DRIVEWAY	106	0	67	39	0	102	146	-107	0	
NEW DRIVEWAY	284+14/284+86	STH 114	0	0	0	0	0	97	139	-139	0	
DIVISION 1 SUBTOTAL			1,534	352	322	1,212	352	283	405	807	807	
DIVISION 2 - PIGEON RD												
114@PIGEONRD	305+24.436/307+43.169	STH 114	344	42	106	238	42	33	47	191	191	
PIGEONRD	47+83.308/49+48.455	PIGEON RD.	393	109	125	268	109	6	9	260	260	
DIVISION 2 SUBTOTAL			737	151	230	507	151	39	56	451	451	
DIVISION 3 - CASTLE DR												
114@CASTLEDR	390+82.094/397+36.663	STH 114	681	285	142	539	285	83	119	420	420	
CASTLEDR	78+83.196/79+49.876	CASTLE DR.	150	0	60	90	0	13	19	71	71	
DIVISION 3 SUBTOTAL			831	285	202	629	285	96	137	491	491	
DIVISION 4 - RAILROAD												
RAILROAD CROSSING WIDENING	360+23.43/362+19.392	STH 114	0	0	0	0	0	42	60	-60	0	USE EXCESS MATEIRAL FROM RIALROAD CROSSING EXCAVATION FOR FILL FOR RAILROAD CROSSING WIDENING
RAILROAD CROSSING EXCAVATION	360+52.44/361+91.77	STH 114	115	0	38	77	0	0	0	77	17	
DIVISION 4 SUBTOTAL			115	0	38	77	0	42	60	17	17	
DIVISION 5 - RUBBILIZING												
EXCAVATION OVER CONCRETE RUBBILIZING	290+30/310+30	STH 114	1,556	0	1,074	481		0	0	481	481	(16)
DIVISION 5 SUBTOTAL												
GRAND TOTAL			4,666	788	1,800	2,866	788	261	373	2,493	2,248	
TOTAL COMMON EXC			5,454									

NOTES:

(1) COMMON EXCAVATION IS THE SUM OF THE CUT AND EBS EXCAVATION COLUMNS. ITEM NUMBER 205.0100

(2) SALVAGED/UNSUABLE PAVEMENT MATERIAL IS INCLUDED IN CUT.

(3) EBS EXCAVATION TO BE BACKFILLED WITH SELECT CRUSHED MATERIAL, ITEM 312.0110 (QUANTITY SHOWN ELSE WHERE); EBS IS NOT TO BE USED IN FILL; NOT INLCUDED IN WASTE TOTAL

(4) SALVAGED/UNUSABLE PAVEMENT MATERIAL NOT INCLUDED IN WASTE TOTAL

(5) AVAILABLE MATERIAL = CUT - SALVAGED/UNUSUABLE PAVEMENT MATERIAL

(13) EXPANDED FILL FACTOR = 1.43

(14) THE MASS ORDINATE + OR - QTY CALCULATED FOR THE DIVISION. PLUS QUANTITY INDICATES AN EXCESS OF MATERIAL WITHIN THE DIVISION. MINUS INDICATES A SHORTAGE OF MATERIAL WITHIN THE DIVISION.

(15) FACTORS USED TO COMPUTE ANTICIPATED WASTE AND THE COMPUTED WASTE VOLUME IDENTIFIED ARE FOR GENERAL INFORMATION ONLY.

(16) ESTIMATED DEPTH OF EXCAVATION SHOWN ON TYPICAL SECTIONS AND CORING LOG

BASE AGGREAGATE 3/4-INCH AND SHOULDER SUMMARY

CATEGORY	STATION	TO	STATION	LENGTH	OFFSET	LOCATION	211.0400 PREPARE FOUNDATION FOR ASPHALTIC SHOULDERS STA	305.0110 BASE AGGREGATE DENSE 3/4-INCH TON	624.0100 WATER* MGAL	REMARKS
0010	203+75	-	208+62	487	RT	STH 114	5	32	0.4	
0010	208+62	-	220+93	1231	RT	STH 114	13	24	0.3	
0010	225+48	-	232+09	661	RT	STH 114	7	13	0.2	
0010	232+09	-	273+04	4095	RT	STH 114	41	239	2.4	
0010	273+04	-	276+80	376	RT	STH 114	-	34	0.4	
0010	276+80	-	290+30	1350	RT	STH 114	14	79	0.8	
0010	290+30	-	310+30	2000	RT	STH 114	20	78	0.8	
0010	310+30	-	322+26	1196	RT	STH 114	12	70	0.7	
0010	322+26	-	330+65	839	RT	STH 114	9	17	0.2	
0010	336+52	-	348+76	1224	RT	STH 114	13	24	0.3	
0010	348+76	-	390+82	4206	RT	STH 114	43	164	1.7	
0010	390+82	-	395+82	500	RT	STH 114	-	45	0.5	
0010	203+75	-	208+62	487	LT	STH 114	5	32	0.4	
0010	208+62	-	220+93	1231	LT	STH 114	13	24	0.3	
0010	229+77	-	232+09	232	LT	STH 114	3	5	0.1	
0010	232+09	-	279+27	4718	LT	STH 114	48	276	2.8	
0010	279+27	-	283+78	451	LT	STH 114	-	40	0.4	
0010	283+78	-	290+30	652	LT	STH 114	7	39	0.4	
0010	290+30	-	310+30	2000	LT	STH 114	20	78	0.8	
0010	310+30	-	322+26	1196	LT	STH 114	12	70	0.7	
0010	322+26	-	332+37	1011	LT	STH 114	11	20	0.2	
0010	336+52	-	348+76	1224	LT	STH 114	13	24	0.3	
0010	348+76	-	397+09	4833	LT	STH 114	49	188	1.9	
0010	8+74	-	9+48	74	RT	OLD HWY RD	-	2	0.1	
0010	47+83	-	49+15	132	RT	PIGEON RD	-	23	0.3	
0010	47+83	-	49+36	153	LT	PIGEON RD	-	4	0.1	
0010	15+99	-	17+37	138	RT	STOMMEL RD	-	3	0.1	
0010	21+57	-	22+91	134	RT	STH 55	-	3	0.1	
0010	21+92	-	22+93	101	LT	STH 55	-	2	0.1	
0010	PROJECT			10	LT	STH 114	-	109	1.1	MATCH IN GRAVEL DRIVEWAYS
				PROJECT 4580-10-71 TOTAL			**358**	**1,761**	**19 ***	

*NOTE: WATER IS FOR COMPACTION, IF NEEDED; ADDITIONAL QUANTITY SHOWN ELSEWHERE

3

3

BASE AGGREGATE DENSE 1 1/4-INCH SUMMARY

CATEGORY	STATION	TO	STATION	OFFSET	LOCATION	305.0120 BASE AGGREGATE DENSE 1 1/4-INCH TON	* 624.0100 WATER* MGAL	REMARKS
0010	203+75	-	208+62	LT/RT	STH 114	15	1	VARIABLE DEPTH OVER RUBBILIZING; AVERAGE DEPTH BASED ON CORES 0.2"
0010	232+09	-	290+30	LT/RT	STH 114	3278	33	VARIABLE DEPTH OVER RUBBILIZING; AVERAGE DEPTH BASED ON CORES 3.8"
0010	290+30	-	310+30	LT/RT	STH 114	2282	23	VARIABLE DEPTH OVER RUBBILIZING; AVERAGE DEPTH BASED ON CORES 7.7"
0010	310+30	-	322+26	LT/RT	STH 114	638	7	VARIABLE DEPTH OVER RUBBILIZING; AVERAGE DEPTH BASED ON CORES 3.6"
0010	208+62	-	220+93	RT	STH 114	40	1	CTH N RBT BASE AGG FILL UNDER 5' PAVED SHOULDER
0010	208+62	-	221+20	LT	STH 114	41	1	CTH N RBT BASE AGG FILL UNDER 5' PAVED SHOULDER
0010	229+05	-	232+10	RT	STH 114	10	1	CTH N RBT BASE AGG FILL UNDER 5' PAVED SHOULDER
0010	225+54	-	232+10	LT	STH 114	22	1	CTH N RBT BASE AGG FILL UNDER 5' PAVED SHOULDER
0010	322+26	-	330+68	RT	STH 114	28	1	STH 55/114 RBT BASE AGG FILL UNDER 5' PAVED SHOULDER
0010	322+26	-	332+02	LT	STH 114	32	1	STH 55/114 RBT BASE AGG FILL UNDER 5' PAVED SHOULDER
0010	336+28	-	348+76	RT	STH 114	41	1	STH 55/114 RBT BASE AGG FILL UNDER 5' PAVED SHOULDER
0010	336+54	-	348+76	LT	STH 114	40	1	STH 55/114 RBT BASE AGG FILL UNDER 5' PAVED SHOULDER
0010	360+91	-	361+52	LT/RT	STH 114	154	2	ROADWAY BASE AT RAILROAD RECONSTRUCTION
0010	273+04	-	276+32	RT	STH 114	319	4	STATE PARK RD SOUTH TURN LANE EXTENSION
0010	284+50			LT	STH 114	38	1	NEW DRIVEWAY, DEPTH OF 6"
0010	45+12	-	45+83	LT/RT	STATE PARK RD	852	9	ADD RIGHT TURN LANE AND INTERSECTION RECONSTRUCTION
0010	47+83	-	49+88	LT/RT	PIGEON RD	939	10	INTERSECTION RECONSTRUCTION
0010	78+83	-	79+88	LT/RT	CASTLE DR	971	10	ADD RIGHT TURN LANE AND INTERSECTION RECONSTRUCTION
					SUBTOTAL	9,740	108	
					PROJECT 4580-10-71 TOTAL	**9,740**	*	

*NOTE: WATER IS FOR COMPACTION AS DETERMIED BY THE ENGINEER; ADDITIONAL QUANTITY SHOWN ELSEWHERE

SELECT CRUSHED MATERIAL & GEOTEXTILE SUMMARY

CATEGORY	STATION	TO	STATION	OFFSET	LOCATION	312.0110 SELECT CRUSHED MATERIAL TON	645.0140 GEOTEXTILE TYPE SAS SY	REMARKS
0010	272+28	-	277+27	RT	STH 114	251	351	EBS BACKFILL STATE PARK RD. SOUTH TURN LANE EXTENSION
0010	276+91	-	283+78	LT	STH 114	384	503	EBS BACKFILL START PARK RD. NORTH
0010	305+25	-	307+43	RT	STH 114	76	-	EBS BACKFILL PIGEON RD.
0010	47+83	-	49+49	RT	PIGEON RD	197	421	EBS BACKFILL, SAS FABRIC COMBINED FOR PIGEON RD.
0010	390+82	-	397+37	RT	STH 114	513	503	EBS BACKFILL CASTLE DR.
0010	360+52	-	361+92	LT/RT	STH 114	-	224	RAILROAD CROSSING
0010	272+28	-	397+37	LT/RT	PROJECT	169	201	UNDISTRIBUTED
					PROJECT 4580-10-71 TOTAL	**1,590**	**2,203**	

NOTE: EXPANSION FACTOR = 1.8 TONS/CY; SEE EARTHWORK TABLE FOR DETAILS OF EBS

RUBBLIZING

CATEGORY	STATION	TO	STATION	OFFSET	335.0100 RUBBLIZING SY	REMARKS
0010	203+75	-	208+62	LT/RT	1299	REMOVE OVERLYING EXISTING ASPHALT AND GRAVEL
0010	232+10	-	322+26	LT/RT	24043	REMOVE OVERLYING EXISTING ASPHALT AND GRAVEL
				PROJECT 4580-10-71 TOTAL	**25,341**	

CONCRETE TRUCK APRON

CATEGORY	APPROXIMATE STATION	OFFSET	LOCATION	416.0512 CONCRETE TRUCK APRON 12-INCH SY	REMARKS
0010	396+25	RT	CASTLE DR	48	
			PROJECT 4580-10-71 TOTAL	**48**	

HMA SUMMARY

CATEGORY	STATION	TO	STATION	OFFSET		455.0605 TACK COAT GAL	HMA PAVEMENT 3 MT 58-28 S				HMA PAVEMENT 4 MT 58-28 S				HMA PAVEMENT 4 HT 58-28 H		REMARKS
							460.6223 TON	PWL DENSITY INCENTIVE TON*	PWL AIR VOIDS TON**	INCENTIVE DENSITY HMA PAVEMENT LONGITUDINAL JOINTS LF****	460.6224 TON	PWL DENSITY INCENTIVE TON*	PWL AIR VOIDS TON**	INCENTIVE DENSITY HMA PAVEMENT LONGITUDINAL JOINTS LF****	460.7424 TON	INCENTIVE DENSITY HMA PAVEMENT DOL***	
0010	203+75	-	208+62	LT/RT	STH 114	184	510	360	510	490	190	150	190	250	-	-	MAINLINE AND PAVED SHOULDER
0010	208+62	-	217+74	LT/RT	STH 114	280	-	-	-	-	440	270	440	460	-	-	MAINLINE AND UPPER PAVED SHOULDER
0010	217+74	-	222+50	LT/RT	STH 114	135	-	-	-	-	-	-	-	-	210	140	MAINLINE AND UPPER PAVED SHOULDER
0010	208+62	-	220+93	RT	STH 114	35	190	-	190	-	-	-	-	-	-	-	LOWER PAVED SHOULDER
0010	208+62	-	221+20	LT	STH 114	35	200	-	200	-	-	-	-	-	-	-	LOWER PAVED SHOULDER
0010	10+00	-	13+39	RT	CTH N RBT CIRCLE	76	-	-	-	-	-	-	-	-	120	80	ROUNDABOUT CIRCLE
0010	20+40	-	21+80	LT/RT	CTH N	44	-	-	-	-	-	-	-	-	70	50	
0010	15+32	-	18+95	LT/RT	FIRELANE 12	86	-	-	-	-	-	-	-	-	140	90	
0010	223+96	-	229+77	LT/RT	STH 114	196	-	-	-	-	-	-	-	-	310	200	MAINLINE AND UPPER PAVED SHOULDER
0010	229+77	-	232+10	LT/RT	STH 114	74	-	-	-	-	120	70	120	120	-	-	MAINLINE AND UPPER PAVED SHOULDER
0010	229+05	-	232+10	RT	STH 114	9	50	-	50	-	-	-	-	-	-	-	LOWER PAVED SHOULDER
0010	225+54	-	232+10	LT	STH 114	19	110	-	110	-	-	-	-	-	-	-	LOWER PAVED SHOULDER
0010	232+10	-	322+26	LT/RT	STH 114	3407	9410	6640	9410	9020	3340	2600	3340	4510	-	-	MAINLINE AND PAVED SHOULDER
0010	322+26	-	329+81	LT/RT	STH 114	237	-	-	-	-	370	220	370	380	-	-	MAINLINE AND UPPER PAVED SHOULDER
0010	329+81	-	333+44	LT/RT	STH 114	98	-	-	-	-	-	-	-	-	160	110	MAINLINE AND UPPER PAVED SHOULDER
0010	322+26	-	330+68	RT	STH 114	24	130	-	130	-	-	-	-	-	-	-	LOWER PAVED SHOULDER
0010	322+26	-	332+02	LT	STH 114	28	150	-	150	-	-	-	-	-	-	-	LOWER PAVED SHOULDER
0010	10+00	-	13+27	RT	STH 55 RBT CIRCLE	75	-	-	-	-	-	-	-	-	120	80	ROUNDABOUT CIRCLE
0010	20+11	-	22+91	LT/RT	STH 55	73	-	-	-	-	-	-	-	-	120	80	
0010	15+99	-	18+71	LT/RT	STOMMEL RD.	70	-	-	-	-	-	-	-	-	110	80	
0010	334+85	-	340+12	LT/RT	STH 55/114	150	-	-	-	-	-	-	-	-	240	160	MAINLINE AND UPPER PAVED SHOULDER
0010	340+12		348+76	LT/RT	STH 55/114	263	-	-	-	-	410	250	410	440	-	-	MAINLINE AND UPPER PAVED SHOULDER
0010	336+28	-	348+76	RT	STH 55/114	35	200	-	200	-	-	-	-	-	-	-	LOWER PAVED SHOULDER
0010	336+54	-	348+76	LT	STH 55/114	34	190	-	190	-	-	-	-	-	-	-	LOWER PAVED SHOULDER
0010	348+76	-	360+91	LT/RT	STH 55/114	551	630	900	630	1220	450	350	450	610	-	-	MAINLINE AND PAVED SHOULDER
0010	360+91	-	361+52	LT/RT	STH 55/114	4	10	-	10	-	10	-	10	-	-	-	FULL DEPTH REPLACEMENT AT RAILROAD
0010	361+52	-	397+37	LT/RT	STH 55/114	1626	1850	2640	1850	3590	1330	1040	1330	1800	-	-	MAINLINE AND PAVED SHOULDER
0010	8+74	-	9+85	LT/RT	OLD HIGHWAY RD.	49	-	-	-	-	80	-	80	60	-	-	INTERSECTION
0010	203+75	-	207+65	LT	STH 114	18	-	-	-	-	30	-	30	200	-	-	BYPASS LANE
0010	29+30	-	29+85	LT/RT	FIRELANE 13	24	-	-	-	-	40	-	40	30	-	-	INTERSECTION AND RIGHT TURN LANE
0010	273+04	-	276+79	RT	STH 114	29	80	-	80	-	30	-	30	190	-	-	STATE PARK RD. SOUTH TURN LANE EXTENSION
0010	39+28	-	39+85	LT/RT	STATE PARK RD.SOUTH	40	-	-	-	-	70	-	70	30	-	-	INTERSECTION AND EXISTING RIGHT TURN LANE
0010	45+12	-	45+83	LT/RT	STATE PARK RD.NORTH	84	240	-	240	80	90	-	90	40	-	-	INTERSECTION AND RIGHT TURN LANE
0010	300+92	-	305+24	RT	STH 114	15	-	-	-	-	30	-	30	220	-	-	PIGEON ROAD EXISTING RIGHT TURN LANE
0010	301+54	-	310+38	LT	STH 114	47	-	-	-	-	80	-	80	450	-	-	BYPASS LANE
0010	47+83	-	49+85	LT/RT	PIGEON RD.	109	310	-	310	210	110	-	110	110	-	-	INTERSECTION
0010	69+25	-	69+85	LT/RT	LAKE BREEZE RD.	50	-	-	-	-	80	-	80	30	-	-	INTERSECTION AND EXISTING RIGHT TURN LANE
0010	393+00	-	397+37	LT	STH 114	15	-	-	-	-	30	-	30	220	-	-	BYPASS LANE
0010	78+83	-	79+88	LT/RT	CASTLE DR.	99	280	-	280	110	100	-	100	60	-	-	INTERSECTION AND RIGHT TURN LANE
					SUBTOTALS	8427	14540	10540	14540	14720	7430	4950	7430	10210	1600	1070	
					PROJECT 4580-10-71 TOTALS	**8427**	**14540**	**10540**	**14540**	**14720**	**7430**	**4950**	**7430**	**10210**	**1600**	**1070**	

* Tonnage is eligible for Incentive Density PWL 460.2005 and Incentive Air Voids 460.2010.

** Tonnage is eligible for Incentive Air Voids 460.2010.

*** Tonnage is eligible for QMP Density Incentive 460.2000. Wedging & leveling layers are excluded from density testing and density incentive.

**** LF is eligible for Incentive Density HMA Pavement Longitudinal Joints 460.2007 for each layer

3

MISC ASPHALTIC ITEMS SUMMARY

CATEGORY	APPROXIMATE STATION	OFFSET	LOCATION	465.0105 ASPHALTIC SURFACE TON	465.0110 ASPHALTIC SURFACE PATCHING TON	465.0120 ASPHALTIC SURF. DWS & FES TON	465.0315 ASPHALTIC FLUMES SY	REMARKS
0010	278+21	LT	STH 114	-	-	-	6	STATE PARK RD
0010	278+85	LT	STH 114	-	-	-	6	STATE PARK RD
0010	284+50	LT	STH 114	-	-	20	-	NEW DRIVEWAY
0010	305+75	RT	STH 114	-	-	-	5	PIGEON RD
0010	49+50	RT	PIGEON RD	7	-	-	-	PIGEON RD SPLITTER ISLAND
0010	306+33	RT	STH 114	-	-	-	5	PIGEON RD
0010	PROJECT	RT/LT	VARIES	20	-	-	-	FULL DEPTH CURB & GUTTER REPAIRS; SEE CONCRETE CURB & GUTTER, SIDEWALK, INLET AND MEDIAN SLOPED NOSE SUMMARY FOR LOCATIONS
0010	XISTING PROJECT DRIVEWAY	RT/LT	VARIES	-	-	95	-	RESURFACING DRIVEWAYS; CALCULATED DEPTH OF 2.5"
0010	PROJECT	-	VARIES	-	50	-	-	UNDISTRIBUTED QUANTITY FOR MAKING MINOR REPAIRS TO MILLED SURFACE AND RAMPING AS DIRECTED BY THE ENGINEER WHEN ROADWAY IS OPEN TO TRAFFIC
			PROJECT 4580-10-71 TOTALS	**27**	**50**	**115**	**22**	

ASPHALTIC SHOULDER RUMBLE STRIPS 2-LANE RURAL

CATEGORY	STATION	TO	STATION	OFFSET	LOCATION	465.0425 ASPHALTIC SHOULDER RUMBLE STRIPS 2-LANE RURAL* LF	REMARKS
0010	203+75	-	221+04	LT	STH 114	1730	BEGIN PROJECT TO COUNTY N ROUNDABOUT
0010	229+05	-	275+89	LT	STH 114	3570	COUNTY N ROUNDABOUT TO STATE PARK RD, FIVE GAPS FOR RESIDENTIAL DRIEWAYS AND FOUR GAPS FOR COMMERCIAL DRIVEWAYS DEDUCTED FROM LENGTH
0010	283+40	-	331+91	LT	STH 114	4100	STATE PARK RD. TO STH 114/55/STOMMEL RD ROUNDABOUT, THREE GAPS FOR RESIDENTIAL DRIEWAYS AND TWO GAPS FOR COMMERCIAL DRIVEWAYS DEDUCTED FROM LENGTH (TWO COMMERICAL DRIVEWAYS COMBINED FOR ONE LONGER GAP)
0010	336+63	-	360+43	LT	STH 114	2050	STH 114/55/STOMMEL RD ROUNDABOUT TO RAILROAD, TWO GAPS FOR RESIDENTIAL DRIEWAYS AND ONE GAP FOR COMMERCIAL DRIVEWAY DEDUCTED FROM LENGTH, QUELLA DRIVE IS BEING CONSIDERED A RESIDENTIAL DRIVEWAY
0010	362+65	-	397+37	LT	STH 114	3400	RAILROAD TO END PROJECT, ONE GAP FOR RESIDENTIAL DRIEWAY DEDUCTED FROM LENGTH
0010	206+76	-	220+75	RT	STH 114	1330	OLD HIGHWAY RD TO CTH N ROUNDABOUT, ONE GAP FOR RESIDENTIAL DRIEWAY DEDUCTED FROM LENGTH
0010	225+57	-	249+99	RT	STH 114	2150	CTH ROUNDABOUT TO FIRELANE 13, FOUR GAPS FOR RESIDENTIALS DRIEWAY DEDUCTED FROM LENGTH
0010	253+24	-	273+41	RT	STH 114	1950	FIRELANE 13 TO STATE PARK RD, ONE GAP FOR RESIDENTIAL DRIEWAY DEDUCTED FROM LENGTH
0010	281+08	-	301+76	RT	STH 114	2070	STARK PARK RD TO PIGEON RD
0010	307+93	-	330+58	RT	STH 114	2190	PIGEON RD. TO STH 114/55/STOMMEL RD ROUNDABOUT, ONE GAP FOR RESIDENTIAL DRIEWAY DEDUCTED FROM LENGTH
0010	336+42	-	359+78	RT	STH 114	2270	STH 114/55/STOMMEL RD ROUNDABOUT TO RAILROAD, ONE GAP FOR RESIDENTIAL DRIEWAY DEDUCTED FROM LENGTH
0010	362+66	-	366+71	RT	STH 114	410	RAILROAD TO LAKE BREEZE DR
0010	373+12	-	391+19	RT	STH 114	1660	LAKE BREEZE DR TO CASTLE DR, TWO GAPS FOR RESIDENTIAL DRIEWAYS DEDUCTED FROM LENGTH
			PROJECT 4580-10-71 TOTAL			**28880**	

*NOTE: TYPE 1

ASHPHALTIC CENTERLINE RUMBLE STRIPS 2-LANE RURAL

CATEGORY	STATION	TO	STATION	LOCATION	465.0475 ASPHALT CENTERLINE RUMBLE STRIPS 2-LANE RURAL LF	REMARKS
0010	206+77	-	212+63	STH 114	586	OLD HIGHWAY RD TO CTH N ROUNDABOUT
0010	232+16	-	233+54	STH 114	138	CTH N ROUNDABOUT TO COMMERCIAL DRIVEWAY
0010	235+54	-	237+43	STH 114	189	COMMERCIAL DRIVEWAY TO COMMERCIAL DRIVEWAY
0010	239+43	-	244+30	STH 114	487	COMMERCIAL DRIVEWAY TO COMMERCIAL DRIVEWAY
0010	246+30	-	249+56	STH 114	326	COMMERCIAL DRIVEWAY TO FIRELANE 13
0010	253+56	-	275+57	STH 114	2201	FIRELANE 13 TO COMMERCIAL DRIVEWAY/STATE PARK RD
0010	280+63	-	289+64	STH 114	901	STATEPARK RD TO COMMERCIAL DRIVEWAY
0010	293+30	-	296+64	STH 114	334	COMMERCIAL DRIVEWAY TO COMMERCIAL DRIVEWAY
0010	298+64	-	303+82	STH 114	518	COMMERCIAL DRIVEWAY TO PIGEON RD
0010	307+82	-	326+16	STH 114	1834	PIGEON RD TO STH 114/55/STOMMEL RD ROUNDABOUT
0010	343+93	-	357+36	STH 114	1343	STH 114/55/STOMMEL RD ROUNDABOUT TO COMMERCIAL DRIVEWAY
0010	359+36	-	360+16	STH 114	80	COMMERCIAL DRIVEWAY TO RAILROAD
0010	362+27	-	369+09	STH 114	682	RAILROAD TO LAKE BREEZE DR
0010	373+09	-	394+53	STH 114	2144	LAKE BREEZE DR TO CASTLE DR
			PROJECT 4580-10-71 TOTAL		11,763	

524-CULVERT PIPE SUMMARY

CATEGORY	FROM STRUCT.	TO STRUCT.	INLET END STATION	INLET END OFFSET	INLET END INVERT ELEV.	OUTLET END STATION	OUTLET END OFFSET	OUTLET END INVERT ELEV.	LOCATION	LOCATION	520.8700 CLEANING CULVERT PIPES EACH	521.1518 APRON ENDWALLS FOR CULVERT PIPE SLOPED SIDE DRAINS STEEL 18-INCH 6 TO 1 EACH	521.3118 CULVERT PIPE CORRUGATED STEEL 18-INCH LF	522.0430 CULVERT PIPE REINFORCED CONCRETE CLASS IV 30-INCH LF	522.0436 CULVERT PIPE REINFORCED CONCRETE CLASS IV 36-INCH LF	522.2414 CULVERT PIPE REINFORCED CONCRETE HORIZONTAL ELLIPTICAL CLASS HE-IV 14X23-INCH LF	522.2614 APRON ENDWALLS FOR CULVERT PIPE REINFORCED CONCRETE HORIZONTAL ELLIPTICAL EACH	524.0630 APRON ENDWALLS FOR CULVERT PIPE SALVAGED 30-INCH EACH	524.0636 APRON ENDWALLS FOR CULVERT PIPE SALVAGED 36-INCH EACH	633.5200 MARKERS CULVERT END EACH	650.6000 CONSTRUCTION STAKING PIPE CULVERTS EACH	STEEL THICKNESS (IN)	REMARKS
0010	AEW	AEW	45+66	29.7' LT	797.53'	45+49	36' RT	797.45'	STATE PARK RD.	STATE PARK RD.	-	-	-	-	-	68	2	-	-	2	1	-	
0010	AEW	AEW	284+29	34' LT	796.03'	284+71	34' LT	795.95'	STH 114	STH 114	-	2	42	-	-	-	-	-	-	-	-	0.064	NEW DRIVEWAY
0010	EXISTING	AEW	395+90	37.4' RT	MATCH	395+90	45.3' RT	804.53'	STH 114	STH 114	-	-	-	-	8	-	-	-	1	1	-	-	AT CASLTE DR.
0010	EXISTING	AEW	79+34	31.9' LT	MATCH	79+33	39.9' LT	805.06'	CASTLE DR.	CASTLE DR.	-	-	-	8	-	-	-	1	-	1	-	-	
0010	-	-	-	-	-	-	-	-	PROJECT	PROJECT	2	-	-	-	-	-	-	-	-	4	-	-	VERIFY LOCATIONS WITH ENGINEER
								PROJECT 4580-10-71 TOTALS		2	2	42	8	8	68	2	1	1	8	1 *		

NOTE: *QUANTITY FOR INFORMATION ONLY, SEE CONSTRUCTION STAKING TABLE FOR ADDITIONAL QUANTITIES

CONCRETE CURB & GUTTER, SIDEWALK, INLET AND MEDIAN SLOPED NOSE SUMMARY

CATEGORY	STATION	TO	STATION	OFFSET	LOCATION	* 465.0105 ASPHALTIC SURFACE TON	416.0610 DRILLED TIE BARS EACH	601.0411 CONCRETE CURB & GUTTER 30-INCH TYPE D LF	601.0415 CONCRETE CURB & GUTTER 6-INCH SLOPED 30-INCH TYPE J LF	601.0553 CONCRETE CURB & GUTTER 4-INCH SLOPED 36-INCH TYPE D LF	601.0557 CONCRETE CURB & GUTTER 6-INCH SLOPED 36-INCH TYPE D LF	601.0580 CONCRETE CURB & GUTTER 4-INCH SLOPED 36-INCH TYPE R	602.0405 CONCRETE SIDEWALK 4-INCH SF	602.0615 CURB RAMP DETECTABLE WARNING FIELD RADIAL NATURAL PATINA SF	NOTE 1 611.8115 ADJUSTING INLET COVERS EACH	620.0300 CONCRETE MEDIAN SLOPED NOSE SF	NOTE 2 650.5500 CONSTRUCTION STAKING CURB GUTTER AND CURB & GUTTER LF	NOTE 3 SPV.0060.01 RECONDITIONING INLETS EACH	REMARKS
0010	222+24	-	222+30	LT	STH 114	1	4	10	-	-	-	-	-	-	-	-	-	-	STH 114/CTH N RAB INLET
0010	222+35	-	222+45	LT	STH 114	1	4	10	-	-	-	-	-	-	-	-	-	-	STH 114/CTH N RAB INLET
0010	223+56	-	223+66	RT	STH 114	1	4	-	-	-	-	14	-	-	1	-	-	-	STH 114/CTH N RAB INLET
0010	223+63	-	223+71	LT	STH 114	1	4	10	-	-	-	-	-	-	-	-	-	-	STH 114/CTH N RAB INLET
0010	225+34	-	225+44	LT	STH 114	1	4	10	-	-	-	-	-	-	-	-	-	-	STH 114/CTH N RAB INLET
0010	225+32	-	225+42	LT	STH 114	1	4	10	-	-	-	-	-	-	-	-	-	-	STH 114/CTH N RAB INLET
0010	225+32	-	225+42	LT	STH 114	1	4	10	-	-	-	-	-	-	-	-	-	-	STH 114/CTH N RAB INLET
0010	226+57	-	226+67	LT	STH 114	1	4	10	-	-	-	-	-	-	-	-	-	-	STH 114/CTH N RAB INLET
0010	227+91	-	278+30	LT	STH 114	-	-	-	-	-	68	-	-	-	-	-	68	-	STATE PARK RD SW QUADRANT
0010	278+82	-	279+28	LT	STH 114	-	2	-	-	-	110	-	-	-	-	-	110	-	STATE PARK RD NE QUADRANT
0010	281+26	-	281+68	LT	STH 114	3	4	44	-	-	-	-	-	-	-	-	**	-	VILLAGE OF HARRISON LOT DRIVEWAY CLOSURE
0010	305+24	-	305+75	RT	STH 114	-	-	-	-	-	66	-	-	-	-	-	66	-	PIGEON RD SW QUADRANT
0010	306+05	-	306+23	RT	STH 114	-	-	-	94	-	-	-	-	-	-	49	94	-	PIGEON RD SPLITTER ISLAND
0010	306+34	-	306+76	RT	STH 114	-	-	-	-	-	72	-	-	-	-	-	72	-	PIGEON RD SE QUADRANT
0010	334+14	-	334+19	RT	STOMMEL RD	1	4	10	-	-	-	-	-	-	-	-	-	-	STH 114/STH 55 RAB INLET
0010	334+25	-	334+30	RT	STOMMEL RD	1	4	10	-	-	-	-	-	-	-	-	-	-	STH 114/STH 55 RAB INLET
0010	336+66	-	336+76	RT	STH 114	1	4	-	-	10	-	-	-	-	-	-	-	-	STH 114/STH 55 RAB INLET
0010	336+67	-	336+77	RT	STH 114	1	4	-	-	10	-	-	-	-	-	-	-	-	STH 114/STH 55 RAB INLET
0010	395+82	-	396+30	RT	STH 114	-	2	-	-	-	118	-	-	-	-	-	118	-	CASTLE DR SW QUADRANT
0010	396+61	-	397+37	RT	STH 114	-	4	148	-	-	-	-	148	19	-	-	148	-	CASTLE DR SE QUADRANT
0010	PROJECT			LT/RT	VARIES	5	16	50	-	20	-	10	-	-	10	-	-	5	UNDISTRIBUTED; NOTE 4
	PROJECT 4580-10-71 TOTALS					*	**76**	**332**	**94**	**40**	**434**	**24**	**148**	**19**	**11**	**49**	**676 ***	**5**	

*QUANTITY SHOWN ELSEWHERE

**STRAIGHT GRADE FROM EXISTING C&G AT LOCATION

NOTE 1: ADJUST INLET COVERS TO BE TRUE WITH EXISTING CURB & GUTTER ALIGNMENT AND ELEVATION; REPLACE ANY DAMAGED SHIMING OR GRADE ADJUSTMENT DEVICES

NOTE 2: QUANTITY FOR INFORMATION ONLY, SEE CONSTRUCTION STAKING TABLE FOR ADDITIONAL QUANTITIES

NOTE 3: USE RECONDITIONING INLETS IF MORE EXTENSIVE REPAIR IS NEEDED THAN DESCRIBED FOR ADJUSTING INLET COVERS FOR THE INLET AS DIRECTED BY THE ENGINEER

NOTE 4: TO BE USED FOR ADDITIONAL AREAS OF CURB & GUTTER REPAIR AS DETERMINED BY THE ENGINEER

WATER

CATEGORY	STATION	TO	STATION	LOCATION	624.0100 WATER MGAL	REMARKS
0010	PROJECT			COMPACTION FOR AGGREGATE SHOULDERS	19	SEE BASE AGGREAGATE 3/4-INCH AND SHOULDER SUMMARY FOR DETAILS
0010	PROJECT			COMPACTION FOR BASE AGGREGATE	108	SEE BASE AGGREGATE DENSE 1 1/4-INCH SUMMARY FOR DETAILS
0010	PROJECT			PROJECT	46	DUST CONTROL
				PROJECT 4580-10-71 TOTAL	**154**	

LANDSCAPING SUMMARY

CATEGORY	STATION	TO	STATION	OFFSET	LOCATION	625.0500 SALVAGED TOPSOIL SY	627.0200 MULCHING * SY	628.2004 EROSION MAT CLASS 1 TYPE B SY	628.2002 EROSION MAT URBAN CLASS I TYPE A SY	628.2004 EROSION MAT URBAN CLASS I TYPE B SY	629.0210 FERTILIZER TYPE B CWT	630.0130 SEED MIXTURE NO. 30 LB	630.0140 SEED MIXTURE NO. 40 LB	630.0200 SEEDING TEMPORARY ** LB	630.0500 SEED WATER *** MGAL	REMARKS
0010	272+27	-	277+27	RT	STH 114	1110	660	450	0	0	0.7	20	-	-	25	STATE PARK RD SW QUADRANT
0010	276+91	-	278+30	LT	STH 114	250	80	0	40	130	0.2	-	5	-	6	STATE PARK RD NW QUADRANT
0010	278+64	-	283+78	LT	STH 114	1760	1250	0	50	460	1.2	-	32	-	40	STATE PARK RD NE QUADRANT; INCLUDES DRIVEWAY REMOVAL
0010	284+14	-	284+86	LT	STH 114	88	61	-	-	27	0.1	-	2	-	2	NEW DRIVEWAY
0010	305+24	-	305+75	RT	STH 114	80	40	10	30	0	0.1	2	-	-	2	PIGEON RD SW QUADARNT
0010	306+34	-	307+43	RT	STH 114	390	120	230	40	0	0.3	8	-	-	9	PIGEON RD SE QUADRANT
0010	360+23	-	361+49	RT	STH 114	30	30	0	0	0	0.1	-	-	-	1	RAILROAD
0010	360+94	-	362+19	LT	STH 114	80	0	80	0	0	0.1	2	-	-	2	RAILROAD
0010	390+82	-	396+53	RT	STH 114	1350	750	0	140	460	0.9	-	25	-	31	CASTLE DR SW QUADRANT
0010	396+53	-	397+37	RT	STH 114	50	0	0	80	0	0.1	-	1	-	2	CASTLE DR SE QUADRANT
0010	PROJECT			LT/RT	STH 114	1300	748	200	100	270	1.0	8	17	44	30	UNDISTRIBUTED
			PROJECT 4580-10-71 TOTALS			6,488	3,739	970	480	1,347	4.8	40	82	44	146	

*NOTE 1: USE MULCHING ON ALL DISTURED AREAS WITH TOPSOIL NOT RECEIVING EROSION MAT
**NOTE 2: USE TEMPORARY SEEDING ONLY IF RESTORING TEMPORARY STOCKPILES OR AS DIRECTED BY THE ENGINEER
***NOTE 3: WATER APPLICATION RATE BASED ON 5.6 GAL/SY/WEEK FOR A MINIMUM OF 4 WEEKS

MOBILIZATIONS EROSION CONTROL

CATEGORY	STATION	TO	STATION	LOCATION	628.1905 MOBILIZATIONS EROSION CONTROL EACH	628.1910 MOBILIZATIONS EMERGENCY EROSION CONTROL EACH	REMARKS
0010	322+26	-	367+37	STH 55	3	1	STAGE 2 TEMPORARY & PERMANENT
0010	322+26	-	367+37	STH 55	1	-	STAGE 2 RAB TEMPORARY
0010	203+75	-	322+26	STH 55	3	1	STAGE 3 TEMPORARY & PERMANENT
0010		-		STH 55	1	1	UNDISTRIBUTED
			PROJECT 4580-10-71 TOTAL		8	3	

TEMPORARY EROSION CONTROL SUMMARY

CATEGORY	APROXIMATE STATION	OFFSET	LOCATION	628.7015 INLET PROTECTION TYPE C EACH	628.1504 SILT FENCE LF	628.1520 SILT FENCE MAINTENANCE LF	628.7504 TEMPORARY DITCH CHECKS LF	628.7555 CULVERT PIPE CHECKS EACH	REMARKS
0010	224+00	LT/RT	STH 114	19	-	-	-	-	STH 114/CTH N RAB
0010	278+00	LT/RT	STH 114	-	-	-	-	3	STATE PARK RD
0010	284+50	LT	STH 114	-	-	-	-	3	NEW DRIVEWAY
0010	305+00	RT	STH 114	-	-	-	8	3	PIGEON RD
0010	334+00	LT/RT	STH 114	19	-	-	-	-	STH 114/STH 55 RAB
0010	361+00	LT/RT	STH 114	-	275	275	-	-	RAILROAD CROSSING WIDENING
0010	396+61	RT	STH 114	1	75	75	16	-	CASTLE DR
0010	VARIES	LT/RT	PROJECT	10	100	100	6	3	UNDISTRIBUTED
			PROJECT 4580-10-71 TOTALS	49	450	450	30	12	

ERECTION & REMOVAL OF PERMANENT SIGNING, TYPE II

SIGN NO.	LOCATION	SIGN CODE	W X H	637.2210 SIGNS TYPE II REFLECTIVE TYPE H S.F.	637.2230 SIGNS TYPE II REFLECTIVE TYPE F S.F.	634.0614 POSTS WOOD 4x6x14 EACH	634.0616 POSTS WOOD 4x6x16 EACH	638.3000 REMOVING SMALL SIGN SUPPORTS EACH	638.2210 MOVING SIGNS TYPE II EACH	REMARKS
1	STATE PARK RD	R1-1	---	---	---	---	---	---	1	
2	"	R1-1	---	---	---	---	---	---	1	
3	"	R1-1	30" X 30"	5.18	---	---	1	---	---	
4	"	W12-1D	24" X 24"	---	4.00	1	---	---	---	
5	STH 114, N. OF CASTLE DR	R2-1	---	---	---	1	---	1	1	
6	"	R2-1	---	---	---	1	---	1	1	
7	CASTLE DR	R1-1	---	---	---	1	---	1	1	
---	VARIES	-	---	---	---	---	---	---	8	FIXED MESSAGE SIGNS; SEE TRAFFIC CONTROL SUMMARY FOR LOCATIONS
		TOTALS		5.18	4.00	4	1	3	13	

TRAFFIC CONTROL DETOUR SIGN SUMMARY - STH 55/114 - STAGE 2 RAILROAD DETOUR

SIGN NO.	LOCATION	SIGN CODE	SIZE W X H	NUMBER IN SERVICE	APPROX. SERVICE PERIOD 9 DAYS	643.0900 SIGNS DAYS	643.0420 BARRICADES TYPE III DAYS	643.0705 WARNING LIGHTS TYPE A DAYS	643.1050 SIGNS PORTABLE CHANGEABLE MESSAGE DAYS	NO OF CYCLES	643.0920 COVERING SIGNS TYPE II EACH	REMARKS
1	STH 114, W. OF STH 55, PLACE 1/4 MILE W. OF STH 55	M 1-6	24"X24"	1	9	9						
	"	M 1-6	24"X24"	1	9	9						
	"	W 20-2A	48"X48"	1	9	9						
2	STH 114, W. OF STH 55, COVER EXISTING D1-3 SIGN AS SHOWN									1	1	COVER "HILBERT-FOND DU LAC"
3	STH 114, W. OF STH 55, COVER EXISTING D1-62 SIGN AS SHOWN									1	1	COVER "SOUTH 55-EAST 114"
4	STH 114, W. OF STH 55, PLACE RIGHT OF SIGN #3	MO 4-8	24"X12"	1	9	9						
	"	M 3-2	24"X12"	1	9	9						
	"	M 1-6	24"X24"	1	9	9						114
	"	MO 6-1	21"X21"	1	9	9						LEFT
	"	MO 4-8	24"X12"	1	9	9						
	"	M 3-3	24"X12"	1	9	9						
	"	M 1-6	24"X24"	1	9	9						55
	"	MO 6-1	21"X21"	1	9	9						LEFT
5	STH 114/STH 55, AT SOUTH LEG EXIT OF RAB, PLACE ON RIGHT SHOULDER	R 11-4	60"X30"	1	9	9	9	18				
	"	M 4-9L	30"X24"	1	9	9						
6	STH 114/STH 55, AT SOUTH LEG EXIT OF RAB, COVER EXISTING SPLITTER ISLAND SIGN									1	1	COVER ENTIRE SIGN
7	STH 114/STH 55, E. OF STH 55 RAB, COVER EXISTING J4-2 SIGN AS SHOWN									1	1	COVER ENTIRE SIGN
8	STH 114/STH 55, E. OF STH 55 RAB, PLACE ON RIGHT SHOULDER, FIELD DETERMINE LOCATION	PCMS		1					7			PLACE IN ADVANCE OF CLOSURE
9	STH 114/STH 55, AT NORTH LEG EXIT OF RAB, PLACE AT SPLITTER ISLAND SIGN	MO 4-8	24"X12"	1	9	9						
	"	M 3-2	24"X12"	1	9	9						
	"	M 1-6	24"X24"	1	9	9						114
	"	MO 6-2R	21"X21"	1	9	9						TILT RIGHT
	"	MO 4-8	24"X12"	1	9	9						
	"	M 3-3	24"X12"	1	9	9						
	"	M 1-6	24"X24"	1	9	9						55
	"	MO 6-2R	21"X21"	1	9	9						TILT RIGHT
10	STH 55, N. OF STH 114 RAB, PLACE RIGHT OF EXISTING J4-1 SIGN	MO 4-8	24"X12"	1	9	9						
	"	M 3-2	24"X12"	1	9	9						
	"	M 1-6	24"X24"	1	9	9						114
	"	MO 4-8	24"X12"	1	9	9						
	"	M 3-3	24"X12"	1	9	9						
	"	M 1-6	24"X24"	1	9	9						55
11	STH 55, N. OF STH 114 RAB, COVER EXISTING D1-62 SIGN AS SHOWN									1	1	COVER "SOUTH 55-EAST 114"
12	STH 55, N. OF STH 114 RAB, MODIFY EXISTING J1-1 SIGN AS SHOWN	MO 4-8A	24"X18"	1	9	9						
13	US 10, W. OF STH 55, PLACE 1000' W. OF STH 55 INTERCHANGE	M 3-3	24"X12"	1	9	9						
	"	M 1-6	24"X24"	1	9	9						55
	"	W 20-2A	48"X48"	1	9	9						
14	US 10, W. OF STH 55, MODIFY EXISTING J1-1 SIGN AND PLACE ASSEMBLY NEXT TO EXISTING J1-1 SIGN	MO 4-8	24"X12"	1	9	9						
	"	M 3-2	24"X12"	1	9	9						
	"	M 1-6	24"X24"	1	9	9						114
	"	MO 6-1	21"X21"	1	9	9						AHEAD
	"	MO 4-8	24"X12"	1	9	9						
	"	M 3-3	24"X12"	1	9	9						
	"	MO 6-1	21"X21"	1	9	9						AHEAD
	PAGE SUBTOTALS			39		342	9	18	7		5	

TRAFFIC CONTROL DETOUR SIGN SUMMARY - STH 55/114 - STAGE 2 RAILROAD DETOUR

SIGN NO.	LOCATION	SIGN CODE	SIZE W X H	NUMBER IN SERVICE	APPROX. SERVICE PERIOD 9 DAYS	643.0900 SIGNS DAYS	643.0420 BARRICADES TYPE III DAYS	643.0705 WARNING LIGHTS TYPE A DAYS	643.1050 SIGNS PORTABLE CHANGEABLE MESSAGE DAYS	NO OF CYCLES	643.0920 COVERING SIGNS TYPE II EACH	REMARKS
15	US 10, W. OF STH 55, PLACE NEXT TO EXISTING D1-62 SIGN	MO 4-8	24"X12"	1	9	9						
	"	M 3-2	24"X12"	1	9	9						
	"	M 1-6	24"X24"	1	9	9						114
	"	MO 6-1	21"X21"	1	9	9						AHEAD
	"	MO 4-8	24"X12"	1	9	9						
	"	M 3-3	24"X12"	1	9	9						
	"	M 1-6	24"X24"	1	9	9						55
	"	MO 6-1	21"X21"	1	9	9						AHEAD
	"									1	1	COVER "SOUTH 55"
16	US 10, W. OF STH 55, COVER EXISTING D1-3 SIGN AS SHOWN									1	1	COVER "FOND DU LAC"
17	STH 55, S. OF US 10, PLACE 150' S. OF US 10 INTERSECTION	MO 4-8	24"X12"	1	9	9						
	"	M 3-2	24"X12"	1	9	9						
	"	M 1-6	24"X24"	1	9	9						114
	"	MO 6-1	21"X21"	1	9	9						RIGHT
18	STH 55, S. OF US 10, PLACE NEXT TO EXISTING J4-1 SIGN S. OF US 10 INTERSECTION	MO 4-8	24"X12"	1	9	9						
	"	M 3-4	24"X12"	1	9	9						
	"	M 1-6	24"X24"	1	9	9						114
18A	STH 55, S. OF US 10, PLACE RIGHT OF EXISTING D1-62 SIGN S. OF US 10 INTERSECTION	MO 4-8	24"X12"	1	9	9						
	"	M 3-2	24"X12"	1	9	9						
	"	M 1-6	24"X24"	1	9	9						114
	"	MO 5-1R	21"X21"	1	9	9						
19	STH 55, AT US 10, PLACE ON RIGHT SHOULDER ON SOUTH LEG OF INTERSECTION	R 11-3	60"X30"	1	9	9	9	18				1 1/2 MILES AHEAD
20	STH 55, AT US 10, PLACE ABOVE AND COVER ENTIRE SPLITTER ISLAND SIGN									1	1	COVER ENTIRE SIGN
	"	MO 4-8	24"X12"	1	9	9						
	"	M 3-4	24"X12"	1	9	9						
	"	M 1-6	24"X24"	1	9	9						114
	"	MO 6-2R	21"X21"	1	9	9						TILT RIGHT
21	STH 55, N. OF US 10, PLACE 1000' N. OF US 10 INTERSECTION	W 20-2A	48"X48"	1	9	9						
22	STH 55, N. OF US 10, COVER EXISTING D1-62 SIGN AS SHOWN									1	1	COVER "SOUTH 55"
23	STH 55, N. OF US 10, PLACE LEFT OF EXISTING D1-62 SIGN	MO 4-8	24"X12"	1	9	9						
	"	M 3-3	24"X12"	1	9	9						
	"	M 1-6	24"X24"	1	9	9						55
	"	MO 5-1L	21"X21"	1	9	9						
24	STH 55, N. OF US 10, COVER EXISTING D1-3 SIGN AS SHOWN									1	1	
25	STH 55, N. OF US 10, PLACE 250' N. OF US 10 INTERCHANGE	MO 4-8	24"X12"	1	9	9						
	"	M 3-3	24"X12"	1	9	9						
	"	M 1-6	24"X24"	1	9	9						55
	"	MO 6-1	21"X21"	1	9	9						LEFT
26	US 10, AT STH 55, PLACE NEXT TO SPLITTER ISLAND ON EAST LEG	MO 4-8	24"X12"	1	9	9						
	"	M 3-2	24"X12"	1	9	9						
	"	M 1-6	24"X24"	1	9	9						114
	"	MO 6-2R	21"X21"	1	9	9						TILT RIGHT
	"	MO 4-8	24"X12"	1	9	9						
	"	M 3-3	24"X12"	1	9	9						
	"	M 1-6	24"X24"	1	9	9						55
	"	MO 6-2R	21"X21"	1	9	9						TILT RIGHT
27	US 10, E. OF STH 55, PLACE 150' E. OF STH 55 INTERSECTION	MO 4-8	24"X12"	1	9	9						
	"	M 3-4	24"X12"	1	9	9						
	"	M 1-6	24"X24"	1	9	9						114
	"	MO 6-1	21"X21"	1	9	9						LEFT
	PAGE SUBTOTALS			45		405	9	18	0		5	

TRAFFIC CONTROL DETOUR SIGN SUMMARY - STH 55/114 - STAGE 2 RAILROAD DETOUR

SIGN NO.	LOCATION	SIGN CODE	SIZE W X H	NUMBER IN SERVICE	APPROX. SERVICE PERIOD 9 DAYS	643.0900 SIGNS DAYS	643.0420 BARRICADES TYPE III DAYS	643.0705 WARNING LIGHTS TYPE A DAYS	643.1050 SIGNS PORTABLE CHANGEABLE MESSAGE DAYS	NO OF CYCLES	643.0920 COVERING SIGNS TYPE II EACH	REMARKS
28	US 10, E. OF STH 55, PLACE RIGHT OF EXISTING J4-1 SIGN	MO 4-8	24"X12"	1	9	9						
	"	M 3-2	24"X12"	1	9	9						
	"	M 1-6	24"X24"	1	9	9						114
	"	MO 4-8	24"X12"	1	9	9						
	"	M 3-3	24"X12"	1	9	9						
	"	M 1-6	24"X24"	1	9	9						55
29	US 10, E. OF STH 55, COVER EXISTING D1-3 SIGN AS SHOWN									1	1	COVER "FOND DU LAC"
30	US 10, E. OF STH 55, PLACE NEXT TO EXISTING D1-62 SIGN	MO 4-8	24"X12"	1	9	9						
	"	M 3-4	24"X12"	1	9	9						
	"	M 1-6	24"X24"	1	9	9						
	"	MO 5-1L	21"X21"	1	9	9						
	"									1	1	COVER "SOUTH 55"
31	US 10, E. OF STH 55, MODIFY EXISTING J1-1 SIGN AS SHOWN	MO 4-8A	24"X18"	3	9	27						
32	US 10, W. OF HARWOOD RD, PLACE 150' W. OF HARWOOD RD INTERSECTION	MO 4-8	24"X12"	1	9	9						
	"	M 3-2	24"X12"	1	9	9						
	"	M 1-6	24"X24"	1	9	9						114
	"	MO 4-8	24"X12"	1	9	9						
	"	M 3-3	24"X12"	1	9	9						
	"	M 1-6	24"X24"	1	9	9						55
33	US 10, E. OF HARWOOD RD, PLACE 150' E. OF HARWOOD RD INTERSECTION	MO 4-8	24"X12"	1	9	9						
	"	M 3-4	24"X12"	1	9	9						
	"	M 1-6	24"X24"	1	9	9						114
	"	MO 4-8	24"X12"	1	9	9						
	"	M 3-1	24"X12"	1	9	9						
	"	M 1-6	24"X24"	1	9	9						55
34	US 10, W. OF CTH M, PLACE 750' W. OF CTH M INTERSECTION	MO 4-8	24"X12"	1	9	9						
	"	M 3-2	24"X12"	1	9	9						
	"	M 1-6	24"X24"	1	9	9						114
	"	MO 5-1R	21"X21"	1	9	9						
	"	MO 4-8	24"X12"	1	9	9						
	"	M 3-3	24"X12"	1	9	9						
	"	M 1-6	24"X24"	1	9	9						55
	"	MO 5-1R	21"X21"	1	9	9						
35	US 10, W. OF CTH M, PLACE RIGHT OF EXISTING J4-1 SIGN	MO 4-8	24"X12"	1	9	9						
	"	M 3-4	24"X12"	1	9	9						
	"	M 1-6	24"X24"	1	9	9						114
	"	MO 4-8	24"X12"	1	9	9						
	"	M 3-1	24"X12"	1	9	9						
	"	M 1-6	24"X24"	1	9	9						55
36	US 10, W. OF CTH M, PLACE RIGHT OF EXISTING J13-1 SIGN	MO 4-8	24"X12"	1	9	9						
	"	M 3-2	24"X12"	1	9	9						
	"	M 1-6	24"X24"	1	9	9						114
	"	MO 6-1	21"X21"	1	9	9						RIGHT
	"	MO 4-8	24"X12"	1	9	9						
	"	M 3-3	24"X12"	1	9	9						
	"	M 1-6	24"X24"	1	9	9						55
	"	MO 6-1	21"X21"	1	9	9						RIGHT
	PAGE SUBTOTALS			47		423	0	0	0		2	

TRAFFIC CONTROL DETOUR SIGN SUMMARY - STH 55/114 - STAGE 2 RAILROAD DETOUR

SIGN NO.	LOCATION	SIGN CODE	SIZE W X H	NUMBER IN SERVICE	APPROX. SERVICE PERIOD 9 DAYS	643.0900 SIGNS DAYS	643.0420 BARRICADES TYPE III DAYS	643.0705 WARNING LIGHTS TYPE A DAYS	643.1050 SIGNS PORTABLE CHANGEABLE MESSAGE DAYS	NO OF CYCLES	643.0920 COVERING SIGNS TYPE II EACH	REMARKS
37	CTH M, S. OF US 10, PLACE RIGHT OF EXISTING J13-1 SIGN	MO 4-8	24"X12"	1	9	9						
	"	M 3-4	24"X12"	1	9	9						
	"	M 1-6	24"X24"	1	9	9						114
	"	MO 6-1	21"X21"	1	9	9						LEFT
	"	MO 4-8	24"X12"	1	9	9						
	"	M 3-1	24"X12"	1	9	9						
	"	M 1-6	24"X24"	1	9	9						55
	"	MO 6-1	21"X21"	1	9	9						LEFT
38	CTH M, S. OF US 10, PLACE 150' S. OF US 10 INTERSECTION	MO 4-8	24"X12"	1	9	9						
	"	M 3-2	24"X12"	1	9	9						
	"	M 1-6	24"X24"	1	9	9						114
	"	MO 4-8	24"X12"	1	9	9						
	"	M 3-3	24"X12"	1	9	9						
	"	M 1-6	24"X24"	1	9	9						55
39	CTH M, S. OF US 10, PLACE 150' S. OF US 10 INTERSECTION	MO 4-8	24"X12"	1	9	9						
	"	M 3-4	24"X12"	1	9	9						
	"	M 1-6	24"X24"	1	9	9						114
	"	MO 5-1L	21"X21"	1	9	9						
	"	MO 4-8	24"X12"	1	9	9						
	"	M 3-1	24"X12"	1	9	9						
	"	M 1-6	24"X24"	1	9	9						55
	"	MO 5-1L	21"X21"	1	9	9						
40	CTH M, N. OF STH 55/STH 114, MODIFY EXISTING J1-1 SIGN AS SHOWN	M 4-8A	24"X18"	1	9	9						
41	CTH M, N. OF STH 55/STH 114, PLACE 250' N. OF STH 55/STH 114 INTERSECTION	MO 4-8	24"X12"	1	9	9						
	"	M 3-4	24"X12"	1	9	9						
	"	M 1-6	24"X24"	1	9	9						114
	"	MO 4-8	24"X12"	1	9	9						
	"	M 3-1	24"X12"	1	9	9						
	"	M 1-6	24"X24"	1	9	9						55
42	STH 55/STH 114, W. OF CTH M, COVER EXISTING J4-2 SIGN AS SHOWN									1	1	COVER ENTIRE SIGN
43	STH 55/STH 114, N. OF CTH M, PLACE ON RIGHT SHOULDER, FIELD DETERMINE LOCATION	PCMS		1					7			PLACE IN ADVANCE OF CLOSURE
44	STH 55/STH 114, AT CTH M, PLACE ON RIGHT SHOULDER IN NW QUADRANT OF INTERSECTION	R 11-4	60"X30"	1	9	9	9	18				
	"	M 4-9R	30"X24"	1	9	9						
45	STH 55/STH 114, S. OF CTH M, PLACE 150' S. OF CTH M INTERSECTION	MO 4-8	24"X12"	1	9	9						
	"	M 1-6	24"X12"	1	9	9						114
	"	M 1-6	24"X24"	1	9	9						55
	"	MO 6-1	21"X21"	1	9	9						RIGHT
46	STH 55/STH 114, AT CTH M, MODIFY EXISTING J13-2 SIGN AS SHOWN	MO 6-2	21"X21"	1	9	9						TILT RIGHT
	"	MO 6-2	21"X21"	1	9	9						TILT RIGHT
47	STH 55/STH 114, S. OF CTH M, PLACE 750' S. OF CTH M INTERSECTION	MO 4-8	24"X12"	1	9	9						
	"	M 1-6	24"X12"	1	9	9						114
	"	M 1-6	24"X24"	1	9	9						55
	"	MO 5-1R	21"X21"	1	9	9						
48	STH 55/STH 114, S. OF CTH M, PLACE 1500' S. OF CTH M INTERSECTION	M 1-6	24"X24"	1	9	9						114
	"	M 1-6	24"X24"	1	9	9						55
	"	W 20-2A	48"X48"	1	9	9						
	PAGE SUBTOTALS			45		396	9	18	7		1	
	STAGE 2 RAILROAD DETOUR PROJECT TOTALS			**176**		**1,566**	**27**	**54**	**14**		**13**	

TRAFFIC CONTROL DETOUR SIGN SUMMARY - STH 55/114 - STAGE 2 ROUNDABOUT DETOUR

SIGN NO.	LOCATION	SIGN CODE	SIZE W X H	NUMBER IN SERVICE	APPROX. SERVICE PERIOD 9 DAYS	643.0900 SIGNS DAYS	643.0420 BARRICADES TYPE III DAYS	643.0705 WARNING LIGHTS TYPE A DAYS	643.1050 SIGNS PORTABLE CHANGEABLE MESSAGE DAYS	NO OF CYCLES	643.0920 COVERING SIGNS TYPE II EACH	REMARKS
1	US 10/STH 114, W. OF STH 114 SPLIT, PLACE 1000' W. OF STH 114 INTERCHANGE IN MEDIAN	M 1-6	36"X36"	1	9	9						114
	"	W 20-2A	48"X48"	1	9	9						
2	US 10/STH 114, W. OF STH 114 SPLIT, PLACE 1000' W. OF STH 114 INTERCHANGE ON RIGHT SHOULDER	M 1-6	36"X36"	1	9	9						114
	"	W 20-2A	48"X48"	1	9	9						
3	US 10/STH 114, W. OF STH 114 SPLIT, MODIFY EXISTING J2-1 SIGN AS SHOWN	MO 4-8	36"X18"	1	9	9						
	"	MO 6-1	30"X30"	1	9	9						AHEAD
4	US 10/STH 114, W. OF STH 114 SPLIT, PLACE ACROSS FROM SIGN #3 IN MEDIAN	MO 4-8	36"X18"	1	9	9						
	"	M 3-2	36"X18"	1	9	9						
	"	M 1-6	36"X36"	1	9	9						114
	"	MO 6-1	30"X30"	1	9	9						AHEAD
5	US 10/STH 114, W. OF STH 114 SPLIT, COVER EXISTING D1-3 SIGN AS SHOWN									1	1	COVER "SHERWOOD-HILBERT"
6	US 10, AT STH 114 SPLIT, MODIFY EXISTING J1-1 SIGN AS SHOWN	MO 4-8A	24"X18"	1	9	9						
7	US 10/STH 114, AT STH 114 SPLIT, MODIFY EXISTING J3-1 SIGN AS SHOWN	MO 4-8	36"X18"	1	9	9						
	"	MO 6-1	30"X30"	1	9	9						AHEAD
8	US 10/STH 114, AT STH 114 SPLIT, PLACE ACROSS FROM SIGN #7 IN MEDIAN	MO 4-8	36"X18"	1	9	9						
	"	M 3-2	36"X18"	1	9	9						
	"	M 1-6	36"X36"	1	9	9						114
	"	MO 6-1	30"X30"	1	9	9						AHEAD
9	STH 114, W. OF STH 55, PLACE ON RIGHT SHOULDER, FIELD DETERMINE LOCATION	PCMS		1					7			PLACE IN ADVANCE OF CLOSURE
9A	STH 55, N. OF STH 114, PLACE ON RIGHT SHOULDER, FIELD DETERMINE LOCATION	PCMS		1					7			PLACE IN ADVANCE OF CLOSURE
10	US 10, W. OF CTH N, PLACE 500' W. OF CTH N RAB INTERSECTION	MO 4-8	24"X12"	1	9	9						
	"	M 3-2	24"X12"	1	9	9						
	"	M 1-6	24"X24"	1	9	9						114
	"	MO 6-1	21"X21"	1	9	9						AHEAD
11	US 10, W. OF CTH N, PLACE 250' W. OF CTH N RAB INTERSECTION	MO 4-8	24"X12"	1	9	9						
	"	M 3-4	24"X12"	1	9	9						
	"	M 1-6	24"X24"	1	9	9						114
12	US 10, AT CTH N, PLACE NEXT TO RAB SPLITTER ISLAND SIGN	MO 4-8	24"X12"	1	9	9						
	"	M 3-4	24"X12"	1	9	9						
	"	M 1-6	24"X24"	1	9	9						114
	"	MO 6-2R	21"X21"	1	9	9						TILT RIGHT
13	US 10, AT CTH N, PLACE NEXT TO RAB SPLITTER ISLAND SIGN	MO 4-8	24"X12"	1	9	9						
	"	M 3-2	24"X12"	1	9	9						
	"	M 1-6	24"X24"	1	9	9						114
	"	MO 6-2R	21"X21"	1	9	9						TILT RIGHT
13A	US 10, E. OF CTH N, PLACE 250' E. OF CTH N RAB INTERSECTION	MO 4-8	24"X12"	1	9	9						
	"	M 3-2	24"X12"	1	9	9						
	"	M 1-6	24"X24"	1	9	9						114
13B	US 10, E. OF CTH N, PLACE 500' E. OF CTH N RAB INTERSECTION	MO 4-8	24"X12"	1	9	9						
	"	M 3-4	24"X12"	1	9	9						
	"	M 1-6	24"X24"	1	9	9						114
	"	MO 6-1	21"X21"	1	9	9						AHEAD
14	US 10, W. OF STH 55, PLACE 1/4 MILE W. OF STH 55 RAB INTERSECTION	M 3-3	24"X12"	1	9	9						
	"	M 1-6	24"X24"	1	9	9						55
	"	W 20-2A	48"X48"	1	9	9						
	PAGE SUBTOTALS			44		378	0	0	14		1	

TRAFFIC CONTROL DETOUR SIGN SUMMARY - STH 55/114 - STAGE 2 ROUNDABOUT DETOUR

SIGN NO.	LOCATION	SIGN CODE	SIZE W X H	NUMBER IN SERVICE	APPROX. SERVICE PERIOD 9 DAYS	643.0900 SIGNS DAYS	643.0420 BARRICADES TYPE III DAYS	643.0705 WARNING LIGHTS TYPE A DAYS	643.1050 SIGNS PORTABLE CHANGEABLE MESSAGE DAYS	NO OF CYCLES	643.0920 COVERING SIGNS TYPE II EACH	REMARKS
14A	US 10, W. OF STH 55, MODIFY EXISTING J1-1 SIGN AS SHOWN	MO 4-8	24"X12"	1	9	9						
	"	M 3-2	24"X12"	1	9	9						
	"	M 1-6	24"X24"	1	9	9						114
	"	MO 6-1	21"X21"	1	9	9						AHEAD
	"	MO 4-8	24"X12"	1	9	9						
	"	M 3-3	24"X12"	1	9	9						
	"	MO 6-1	21"X21"	1	9	9						AHEAD
15	US 10, W. OF STH 55, PLACE NEXT TO EXISTING D1-62 SIGN	MO 4-8	24"X12"	1	9	9						
	"	M 3-2	24"X12"	1	9	9						
	"	M 1-6	24"X24"	1	9	9						114
	"	MO 6-1	21"X21"	1	9	9						AHEAD
	"	MO 4-8	24"X12"	1	9	9						
	"	M 3-3	24"X12"	1	9	9						
	"	M 1-6	24"X24"	1	9	9						55
	"	MO 6-1	21"X21"	1	9	9						AHEAD
	"									1	1	COVER "SOUTH 55"
16	US 10, W. OF STH 55, COVER EXISTING D1-3 SIGN AS SHOWN									1	1	COVER "FOND DU LAC"
17	US 10, W. OF STH 55, PLACE RIGHT OF EXISTING J4-1 SIGN	MO 4-8	24"X12"	1	9	9						
	"	M 3-4	24"X12"	1	9	9						
	"	M 1-6	24"X24"	1	9	9						114
18	US 10, AT STH 55, PLACE NEXT TO SPLITTER ISLAND ON WEST LEG	MO 4-8	24"X12"	1	9	9						
	"	M 3-4	24"X12"	1	9	9						
	"	M 1-6	24"X24"	1	9	9						114
	"	MO 6-2R	21"X21"	1	9	9						TILT RIGHT
19	STH 55, AT US 10, PLACE ON RIGHT SHOULDER ON SOUTH LEG OF INTERSECTION	R 11-3	60"X30"	1	9	9	9	18				1 1/2 MILES AHEAD
20	STH 55, AT US 10, COVER ENTIRE SPLITTER ISLAND SIGN									1	1	COVER ENTIRE SIGN
21	STH 55, N. OF US 10, PLACE 1000' N. OF US 10 INTERSECTION	W 20-2A	48"X48"	1	9	9						
22	STH 55, N. OF US 10, COVER EXISTING D1-62 SIGN AS SHOWN									1	1	COVER "SOUTH 55"
23	STH 55, N. OF US 10, PLACE LEFT OF EXISTING D1-62 SIGN	MO 4-8	24"X12"	1	9	9						
	"	M 3-3	24"X12"	1	9	9						
	"	M 1-6	24"X24"	1	9	9						55
	"	MO 5-1L	21"X21"	1	9	9						
24	STH 55, N. OF US 10, COVER EXISTING D1-3 SIGN AS SHOWN									1	1	
25	STH 55, N. OF US 10, PLACE 250' N. OF US 10 INTERCHANGE	MO 4-8	24"X12"	1	9	9						
	"	M 3-3	24"X12"	1	9	9						
	"	M 1-6	24"X24"	1	9	9						55
	"	MO 6-1	21"X21"	1	9	9						LEFT
26	US 10, AT STH 55, PLACE NEXT TO SPLITTER ISLAND ON EAST LEG	MO 4-8	24"X12"	1	9	9						
	"	M 3-2	24"X12"	1	9	9						
	"	M 1-6	24"X24"	1	9	9						114
	"	MO 6-2R	21"X21"	1	9	9						TILT RIGHT
	"	MO 4-8	24"X12"	1	9	9						
	"	M 3-3	24"X12"	1	9	9						
	"	M 1-6	24"X24"	1	9	9						55
	"	MO 6-2R	21"X21"	1	9	9						TILT RIGHT
27	US 10, E. OF STH 55, PLACE 150' E. OF STH 55 INTERSECTION	MO 4-8	24"X12"	1	9	9						
	"	M 3-4	24"X12"	1	9	9						
	"	M 1-6	24"X24"	1	9	9						114
	"	MO 6-1	21"X21"	1	9	9						AHEAD
	PAGE SUBTOTALS			44		396	9	18	0		5	

TRAFFIC CONTROL DETOUR SIGN SUMMARY - STH 55/114 - STAGE 2 ROUNDABOUT DETOUR

SIGN NO.	LOCATION	SIGN CODE	SIZE W X H	NUMBER IN SERVICE	APPROX. SERVICE PERIOD 9 DAYS	643.0900 SIGNS DAYS	643.0420 BARRICADES TYPE III DAYS	643.0705 WARNING LIGHTS TYPE A DAYS	643.1050 SIGNS PORTABLE CHANGEABLE MESSAGE DAYS	NO OF CYCLES	643.0920 COVERING SIGNS TYPE II EACH	REMARKS
28	US 10, E. OF STH 55, PLACE RIGHT OF EXISTING J4-1 SIGN	MO 4-8	24"X12"	1	9	9						
	"	M 3-2	24"X12"	1	9	9						
	"	M 1-6	24"X24"	1	9	9						114
	"	MO 4-8	24"X12"	1	9	9						
	"	M 3-3	24"X12"	1	9	9						
	"	M 1-6	24"X24"	1	9	9						55
29	US 10, E. OF STH 55, COVER EXISTING D1-3 SIGN AS SHOWN									1	1	COVER "FOND DU LAC"
30	US 10, E. OF STH 55, PLACE NEXT TO EXISTING D1-62 SIGN	MO 4-8	24"X12"	1	9	9						
	"	M 3-4	24"X12"	1	9	9						
	"	M 1-6	24"X24"	1	9	9						
	"	MO 6-1	21"X21"	1	9	9						
	"									1	1	COVER "SOUTH 55"
31	US 10, E. OF STH 55, MODIFY EXISTING J1-1 SIGN AS SHOWN	MO 4-8A	24"X18"	3	9	27						
32	US 10, W. OF HARWOOD RD, PLACE 150' W. OF HARWOOD RD INTERSECTION	MO 4-8	24"X12"	1	9	9						
	"	M 3-2	24"X12"	1	9	9						
	"	M 1-6	24"X24"	1	9	9						114
	"	MO 4-8	24"X12"	1	9	9						
	"	M 3-3	24"X12"	1	9	9						
	"	M 1-6	24"X24"	1	9	9						55
33	US 10, E. OF HARWOOD RD, PLACE 150' E. OF HARWOOD RD INTERSECTION	MO 4-8	24"X12"	1	9	9						
	"	M 3-4	24"X12"	1	9	9						
	"	M 1-6	24"X24"	1	9	9						114
	"	MO 4-8	24"X12"	1	9	9						
	"	M 3-1	24"X12"	1	9	9						
	"	M 1-6	24"X24"	1	9	9						55
34	US 10, W. OF CTH M, PLACE 750' W. OF CTH M INTERSECTION	MO 4-8	24"X12"	1	9	9						
	"	M 3-2	24"X12"	1	9	9						
	"	M 1-6	24"X24"	1	9	9						114
	"	MO 5-1R	21"X21"	1	9	9						
	"	MO 4-8	24"X12"	1	9	9						
	"	M 3-3	24"X12"	1	9	9						
	"	M 1-6	24"X24"	1	9	9						55
	"	MO 5-1R	21"X21"	1	9	9						
35	US 10, W. OF CTH M, PLACE RIGHT OF EXISTING J4-1 SIGN	MO 4-8	24"X12"	1	9	9						
	"	M 3-4	24"X12"	1	9	9						
	"	M 1-6	24"X24"	1	9	9						114
	"	MO 4-8	24"X12"	1	9	9						
	"	M 3-1	24"X12"	1	9	9						
	"	M 1-6	24"X24"	1	9	9						55
36	US 10, W. OF CTH M, PLACE RIGHT OF EXISTING J13-1 SIGN	MO 4-8	24"X12"	1	9	9						
	"	M 3-2	24"X12"	1	9	9						
	"	M 1-6	24"X24"	1	9	9						114
	"	MO 6-1	21"X21"	1	9	9						RIGHT
	"	MO 4-8	24"X12"	1	9	9						
	"	M 3-3	24"X12"	1	9	9						
	"	M 1-6	24"X24"	1	9	9						55
	"	MO 6-1	21"X21"	1	9	9						RIGHT
	PAGE SUBTOTALS			47		423	0	0	0		2	

TRAFFIC CONTROL DETOUR SIGN SUMMARY - STH 55/114 - STAGE 2 ROUNDABOUT DETOUR

SIGN NO.	LOCATION	SIGN CODE	SIZE W X H	NUMBER IN SERVICE	APPROX. SERVICE PERIOD 9 DAYS	643.0900 SIGNS DAYS	643.0420 BARRICADES TYPE III DAYS	643.0705 WARNING LIGHTS TYPE A DAYS	643.1050 SIGNS PORTABLE CHANGEABLE MESSAGE DAYS	NO OF CYCLES	643.0920 COVERING SIGNS TYPE II EACH	REMARKS
37	CTH M, S. OF US 10, PLACE RIGHT OF EXISTING J13-1 SIGN	MO 4-8	24"X12"	1	9	9						
	"	M 3-4	24"X12"	1	9	9						
	"	M 1-6	24"X24"	1	9	9						114
	"	MO 6-1	21"X21"	1	9	9						LEFT
	"	MO 4-8	24"X12"	1	9	9						
	"	M 3-1	24"X12"	1	9	9						
	"	M 1-6	24"X24"	1	9	9						55
	"	MO 6-1	21"X21"	1	9	9						LEFT
38	CTH M, S. OF US 10, PLACE 150' S. OF US 10 INTERSECTION	MO 4-8	24"X12"	1	9	9						
	"	M 3-2	24"X12"	1	9	9						
	"	M 1-6	24"X24"	1	9	9						114
	"	MO 4-8	24"X12"	1	9	9						
	"	M 3-3	24"X12"	1	9	9						
	"	M 1-6	24"X24"	1	9	9						55
39	CTH M, S. OF US 10, PLACE 150' S. OF US 10 INTERSECTION	MO 4-8	24"X12"	1	9	9						
	"	M 3-4	24"X12"	1	9	9						
	"	M 1-6	24"X24"	1	9	9						114
	"	MO 5-1L	21"X21"	1	9	9						
	"	MO 4-8	24"X12"	1	9	9						
	"	M 3-1	24"X12"	1	9	9						
	"	M 1-6	24"X24"	1	9	9						55
	"	MO 5-1L	21"X21"	1	9	9						
40	CTH M, N. OF STH 55/STH 114, MODIFY EXISTING J1-1 SIGN AS SHOWN	M 4-8A	24"X18"	1	9	9						
41	CTH M, N. OF STH 55/STH 114, PLACE 250' N. OF STH 55/STH 114 INTERSECTION	MO 4-8	24"X12"	1	9	9						
	"	M 3-4	24"X12"	1	9	9						
	"	M 1-6	24"X24"	1	9	9						114
	"	MO 4-8	24"X12"	1	9	9						
	"	M 3-1	24"X12"	1	9	9						
	"	M 1-6	24"X24"	1	9	9						55
42	STH 55/STH 114, W. OF CTH M, COVER EXISTING J4-2 SIGN AS SHOWN									1	1	COVER ENTIRE SIGN
43	STH 55/STH 114, N. OF CTH M, PLACE ON RIGHT SHOULDER, FIELD DETERMINE LOCATION	PCMS		1					7			PLACE IN ADVANCE OF CLOSURE
44	STH 55/STH 114, AT CTH M, PLACE ON RIGHT SHOULDER IN NW QUADRANT OF INTERSECTION	R 11-4	60"X30"	1	9	9	9	18				
	"	M 4-9R	30"X24"	1	9	9						
45	STH 55/STH 114, S. OF CTH M, PLACE 150' S. OF CTH M INTERSECTION	MO 4-8	24"X12"	1	9	9						
	"	M 1-6	24"X12"	1	9	9						114
	"	M 1-6	24"X24"	1	9	9						55
	"	MO 6-1	21"X21"	1	9	9						RIGHT
46	STH 55/STH 114, AT CTH M, MODIFY EXISTING J13-2 SIGN AS SHOWN	MO 6-2	21"X21"	1	9	9						TILT RIGHT
	"	MO 6-2	21"X21"	1	9	9						TILT RIGHT
47	STH 55/STH 114, S. OF CTH M, PLACE 750' S. OF CTH M INTERSECTION	MO 4-8	24"X12"	1	9	9						
	"	M 1-6	24"X12"	1	9	9						114
	"	M 1-6	24"X24"	1	9	9						55
	"	MO 5-1R	21"X21"	1	9	9						
48	STH 55/STH 114, S. OF CTH M, PLACE 1500' S. OF CTH M INTERSECTION	M 1-6	24"X24"	1	9	9						114
	"	M 1-6	24"X24"	1	9	9						55
	"	W 20-2A	48"X48"	1	9	9						
	PAGE SUBTOTALS			45		396	9	18	7		1	
	STAGE 2 ROUNDABOUT DETOUR PROJECT TOTALS			**180**		**1,593**	**18**	**36**	**21**		**9**	

3

TRAFFIC CONTROL DETOUR SIGN SUMMARY - STAGE 3

SIGN NO.	LOCATION	SIGN CODE	SIZE W X H	NUMBER IN SERVICE	APPROX. SERVICE PERIOD 60 DAYS	643.0900 SIGNS DAYS	643.0420 BARRICADES TYPE III DAYS	643.0705 WARNING LIGHTS TYPE A DAYS	643.1050 SIGNS PORTABLE CHANGEABLE MESSAGE DAYS	NO OF CYCLES	643.0920 COVERING SIGNS TYPE II EACH	REMARKS
1	US 10/STH 114, W. OF STH 114 INTERCHANGE, PLACE 1500' W. OF STH 114 EXIT ON RIGHT SHOULDER	M 1-6	24"X24"	1	60	60						114
	"	W 20-2A	48"X48"	1	60	60						
2	US 10/STH 114, W. OF STH 114 INTERCHANGE, PLACE ACROSS FROM SIGN #1 IN MEDIAN	M 1-6	24"X24"	1	60	60						114
	"	W 20-2A	48"X48"	1	60	60						
3	US 10/STH 114, W. OF STH 114 INTERCHANGE, MODIFY EXISTING J2-1 SIGN AS SHOWN	MO 4-8	36"X18"	1	60	60						
	"	MO 6-1	30"X30"	1	60	60						AHEAD
4	US 10/STH 114, W. OF STH 114 INTERCHANGE, PLACE ACROSS FROM SIGN #3 IN MEDIAN	MO 4-8	36"X18"	1	60	60						
	"	M 3-2	36"X18"	1	60	60						
	"	M 1-6	36"X36"	1	60	60						114
	"	MO 6-1	30"X30"	1	60	60						AHEAD
5	US 10/STH 114, W. OF STH 114 INTERCHANGE, COVER EXISTING D1-3 SIGN AS SHOWN									1	1	COVER "SHERWOOD-HILBERT"
6	US 10, AT STH 114 INTERCHANGE, MODIFY EXISTING J1-1 SIGN AS SHOWN	MO 4-8A	24"X18"	1	60	60						
7	US 10/STH 114, AT STH 114 INTERCHANGE, PLACE ON RIGHT SHOULDER	R 11-4	60"X30"	1	60	60	60	120				
8	US 10/STH 114, AT STH 114 INTERCHANGE, MODIFY EXISTING J3-1 SIGN AS SHOWN	MO 4-8	36"X18"	1	60	60						
	"	MO 6-1	30"X30"	1	60	60						AHEAD
9	US 10/STH 114, AT STH 114 INTERCHANGE, PLACE ACROSS FROM SIGN #8 IN MEDIAN	MO 4-8	36"X18"	1	60	60						
	"	M 3-2	36"X18"	1	60	60						
	"	M 1-6	36"X36"	1	60	60						114
	"	MO 6-1	30"X30"	1	60	60						AHEAD
10	STH 114, E. OF US 10 INTERCHANGE, PLACE ON RIGHT SHOULDER, FIELD DETERMINE LOCATION	PCMS		1					7			PLACE IN ADVANCE OF CLOSURE
11	US 10, E. OF STH 114, PLACE 1000' W. OF CTH N INTERSECTION	MO 4-8	24"X12"	1	60	60						
	"	M 3-2	24"X12"	1	60	60						
	"	M 1-6	24"X24"	1	60	60						114
	"	MO 6-1	21"X21"	1	60	60						AHEAD
12	US 10, E. OF STH 114, PLACE RIGHT OF EXISTING J4-1 SIGN	MO 4-8	24"X12"	1	60	60						
	"	M 3-4	24"X12"	1	60	60						
	"	M 1-6	24"X24"	1	60	60						114
13	US 10, AT CTH N RAB, PLACE NEXT TO SPLITTER ISLAND SIGN ON WEST LEG	MO 4-8	24"X12"	1	60	60						
	"	M 3-4	24"X12"	1	60	60						
	"	M 1-6	24"X24"	1	60	60						114
	"	MO 6-2R	21"X21"	1	60	60						TILT RIGHT
14	US 10, AT CTH N RAB, PLACE NEXT TO SPLITTER ISLAND SIGN ON EAST LEG	MO 4-8	24"X12"	1	60	60						
	"	M 3-2	24"X12"	1	60	60						
	"	M 1-6	24"X24"	1	60	60						114
	"	MO 6-2R	21"X21"	1	60	60						TILT RIGHT
15	US 10, E. OF CTH N, PLACE 500' E. OF CTH N INTERSECTION	MO 4-8	24"X12"	1	60	60						
	"	M 3-4	24"X12"	1	60	60						
	"	M 1-6	24"X24"	1	60	60						114
	"	MO 6-1	21"X21"	1	60	60						AHEAD
16	US 10, W. OF CTH N, PLACE RIGHT OF EXISTING J4-1 SIGN	MO 4-8	24"X12"	1	60	60						
	"	M 3-2	24"X12"	1	60	60						
	"	M 1-6	24"X24"	1	60	60						114
17	US 10, W. OF STH 55, PLACE RIGHT OF EXISTING D1-62 SIGN	MO 4-8	24"X12"	1	60	60						
	"	M 3-2	24"X12"	1	60	60						
	"	M 1-6	24"X24"	1	60	60						114
	"	MO 5-1R	21"X21"	1	60	60						
	PAGE SUBTOTALS			45		2,640	60	120	7		1	

3

TRAFFIC CONTROL DETOUR SIGN SUMMARY - STAGE 3

SIGN NO.	LOCATION	SIGN CODE	SIZE W X H	NUMBER IN SERVICE	APPROX. SERVICE PERIOD 60 DAYS	643.0900 SIGNS DAYS	643.0420 BARRICADES TYPE III DAYS	643.0705 WARNING LIGHTS TYPE A DAYS	643.1050 SIGNS PORTABLE CHANGEABLE MESSAGE DAYS	NO OF CYCLES	643.0920 COVERING SIGNS TYPE II EACH	REMARKS
18	US 10, W. OF STH 55, PLACE RIGHT OF EXISTING J4-1 SIGN	MO 4-8	24"X12"	1	60	60						
	"	M 3-4	24"X12"	1	60	60						
	"	M 1-6	24"X24"	1	60	60						114
19	US 10, W. OF STH 55, PLACE 500' W. OF STH 55 INTERSECTION	MO 4-8	24"X12"	1	60	60						
	"	M 3-2	24"X12"	1	60	60						
	"	M 1-6	24"X24"	1	60	60						114
	"	MO 6-1	21"X21"	1	60	60						RIGHT
20	US 10, AT STH 55, PLACE NEXT TO SPLITTER ISLAND SIGN ON WEST LEG	MO 4-8	24"X12"	1	60	60						
	"	M 3-4	24"X12"	1	60	60						
	"	M 1-6	24"X24"	1	60	60						114
	"	MO 6-2R	21"X21"	1	60	60						TILT RIGHT
21	STH 55, AT US 10, PLACE NEXT TO SPLITTER ISLAND SIGN ON SOUTH LEG	MO 4-8	24"X12"	1	60	60						
	"	M 3-2	24"X12"	1	60	60						
	"	M 1-6	24"X24"	1	60	60						114
	"	MO 6-2R	21"X21"	1	60	60						TILT RIGHT
22	STH 55, S. OF US 10, PLACE 500' S. OF US 10 INTERSECTION	MO 4-8	24"X12"	1	60	60						
	"	M 3-4	24"X12"	1	60	60						
	"	M 1-6	24"X24"	1	60	60						114
	"	MO 6-1	21"X21"	1	60	60						LEFT
23	STH 55, S. OF US 10, PLACE RIGHT OF EXISTING J4-1 SIGN S. OF US 10 INTERSECTION	MO 4-8	24"X12"	1	60	60						
	"	M 3-2	24"X12"	1	60	60						
	"	M 1-6	24"X24"	1	60	60						114
24	STH 55, S. OF US 10, PLACE LEFT OF EXISTING D1-62 SIGN	MO 4-8	24"X12"	1	60	60						
	"	M 3-4	24"X12"	1	60	60						
	"	M 1-6	24"X24"	1	60	60						114
	"	MO 5-1L	21"X21"	1	60	60						
25	STH 55, N. OF STH 114, MODIFY EXISTING J1-1 SIGN AS SHOWN	MO 4-8A	24"X18"	1	60	60						
26	STH 55, N. OF STH 114, COVER EXISTING D1-3 SIGN AS SHOWN									1	1	COVER "MENASHA"
27	STH 55, N. OF STH 114, COVER EXISTING D1-62 SIGN AS SHOWN									1	1	COVER "WEST 114"
28	STH 55, N. OF STH 114, PLACE RIGHT OF EXISTING J4-1 SIGN	MO 4-8	24"X12"	1	60	60						
	"	M 3-4	24"X12"	1	60	60						
	"	M 1-6	24"X24"	1	60	60						114
29	STH 114, AT STH 55, PLACE ON RIGHT SHOULDER IN NW QUADRANT OF INTERSECTION	R 11-2	48"X30"	1	60	60	60	120				
	"	M 4-9R	30"X24"	1	60	60						
30	STH 114, AT STH 55, COVER EXISTING SPLITTER ISLAND SIGN AS SHOWN									1	1	COVER ENTIRE SIGN
31	STH 114, W. OF STH 55, COVER EXISTING J4-1 SIGN AS SHOWN									1	1	COVER ENTIRE SIGN
32	STH 114, W. OF STH 55, PLACE ON RIGHT SHOULDER, FIELD DETERMINE LOCATION	PCMS		1					7			PLACE IN ADVANCE OF CLOSURE
33	STH 55/STH 114, E. OF STH 55, PLACE 250' E. OF STH 55 INTERSECTION	MO 4-8	24"X12"	1	60	60						
	"	M 3-4	24"X12"	1	60	60						
	"	M 1-6	24"X24"	1	60	60						114
	"	MO 6-1	21"X21"	1	60	60						RIGHT
34	STH 55/STH 114, E. OF STH 55, PLACE RIGHT OF EXISTING D1-62 SIGN	MO 4-8	24"X12"	1	60	60						
	"	M 3-4	24"X12"	1	60	60						
	"	M 1-6	24"X24"	1	60	60						114
	"	MO 5-1R	21"X21"	1	60	60						
	PAGE SUBTOTALS			41		2,400	60	120	7		4	

TRAFFIC CONTROL DETOUR SIGN SUMMARY - STAGE 3

SIGN NO.	LOCATION	SIGN CODE	SIZE W X H	NUMBER IN SERVICE	APPROX. SERVICE PERIOD 60 DAYS	643.0900 SIGNS DAYS	643.0420 BARRICADES TYPE III DAYS	643.0705 WARNING LIGHTS TYPE A DAYS	643.1050 SIGNS PORTABLE CHANGEABLE MESSAGE DAYS	NO OF CYCLES	643.0920 COVERING SIGNS TYPE II EACH	REMARKS
35	STH 55/STH 114, E. OF STH 55, COVER EXISTING D1-62 SIGN AS SHOWN									1	1	COVER "WEST 114"
36	STH 55/STH 114, E. OF STH 55, COVER EXISTING D1-3 SIGN AS SHOWN									1	1	COVER "MENASHA-NEENAH"
37	STH 55/STH 114, E. OF STH 55, PLACE 1/4 MILE E. OF STH 55 RAB INTERSECTION	M 1-6	36"X36"	1	60	60						114
	"	W 20-2A	48"X48"	1	60	60						
38	CTH N, N. OF STH 114, COVER EXISTING D1-62 SIGN AS SHOWN									1	1	COVER "EAST 114-WEST 114"
39	STH 114, W. OF CTH N, PLACE ON RIGHT SHOULDER IN NW QUADRANT OF INTERSECTION	R 11-4	60"X30"	1	60	60	60	120				
40	STH 114, W. OF CTH N, PLACE ON RIGHT SHOULDER IN SE QUADRANT OF INTERSECTION	R 11-4	60"X30"	1	60	60	60	120				
	PAGE SUBTOTALS			4		240	120	240	0		3	
	STAGE 3 PROJECT TOTALS			**90**		**5,280**	**240**	**480**	**14**		**8**	

3

TRAFFIC CONTROL SUMMARY

STAGE	LOCATION	APPROX. SERVICE DAYS	638.2210 MOVING SIGNS TYPE II* EACH	643.0300 TRAFFIC CONTROL DRUMS EACH	643.0300 TRAFFIC CONTROL DRUMS DAYS	643.0420 TRAFFIC CONTROL BARRICADES TYPE III EACH	643.0420 TRAFFIC CONTROL BARRICADES TYPE III DAYS	643.0705 TRAFFIC CONTROL WARNING LIGHTS TYPE A EACH	643.0705 TRAFFIC CONTROL WARNING LIGHTS TYPE A DAYS	643.0900 TRAFFIC CONTROL SIGNS EACH	643.0900 TRAFFIC CONTROL SIGNS DAYS	643.0920 COVERING SIGNS TYPE II EACH	643.1000 SIGNS FIXED MESSAGE SF	643.1050 SIGNS PCMS DAY	REMARKS
STAGE 2; NOTE 1	MAINLINE WORKZONE LIMITS	30	-	0	0	0	0	0	0	12	360	-	-	-	FOLLOW SDD 15C-04, "TRAFFIC CONTROL, ADVANCED WARNING SIGNS 45 MPH OR GREATER"; 3 W20-1A, 3 W20-1C, 3 W20-1D, 3 G20-2A
	SIDEROAD WORKZONE LIMITS	30	-	0	0	0	0	0	0	4	120	-	-	-	FOLLOW SDD 15C-04, "TYPICAL SIDE ROAD APPROACH WARNING SIGN DETAIL"; 9 W20-1A; SEE TRAFFIC CONTROL STAGE 2 PLANS FOR A LIST OF SIDEROADS
	CASTLE DR. CURB RAMP	15	-	5	75	2	30	2	30	1	15	-	-	-	1 R9-9
	CASTLE DR. CLOSURE	23	-	25	575	8	184	12	276	6	138	-	-	-	FOLLOW SDD 15C-03, DETAIL 1 AS WELL AS SDD 15D28 ON STH 114; USE ADDITIONAL TYPE III BARRICADES WITH TYPE A LIGHTS, R11-2L IN TURN LANE, AND R11-2 AS DIRECTED BY ENGINEEER
STAGE 2 RR CLOSURE	DETOUR	9	-	0	0	3	27	6	54	174	1566	13	-	14	SEE STAGE 2 RR CLOSURE DETOUR SIGN SUMMARY FOR DETAILS
	MAINLINE CLOSURE LIMITS	9	-	0	0	14	126	20	180	15	135	-	-	-	FOLLOW SDD 15C-02, DETAIL A OR B, ADJUST TO MEET FIELD CONDITIONS, PLACE ADVANCE CLOSURE SIGNAGE ON STH 114 AND STH 55 LEGS AT STH 114/55/STOMMEL RD ROUNDABOUT
	SIDEROADS CLOSURE LIMITS	9	-	0	0	8	72	16	144	12	108	-	-	-	FOLLOW SDD 15C-03, DETAIL 4 AT SIDEROADS, ADJUST TO MEET FIELD CONDITIONS; SEE TRAFFIC CONTROL STAGE 2A PLANS FOR A LIST OF SIDEROADS
	VARIOUS	30	-	0	0	0	0	0	0	0	0	-	134	-	SEE CONSTRUCTION STAGING OVERVIEW STAGE 2 RR CLSOURE FOR LOCATIONS; 9 FIXED MESSAGE SIGNS; NOTE 2
STAGE 2 ROUNDABOUT CLOSURE	DETOUR	9	-	0	0	2	18	4	36	177	1593	9	-	21	SEE STAGE 2 ROUNDABOUT CLOSURE DETOUR SIGN SUMMARY FOR DETAILS
	MAINLINE CLOSURE LIMITS	9	-	0	0	21	189	30	270	18	162	-	-	-	FOLLOW SDD 15C-02, DETAIL A OR B, ADJUST TO MEET FIELD CONDITIONS, PLACE ADVANCE CLOSURE SIGNAGE ON STH 114 AND STH 55 LEGS AT STH 114/55/STOMMEL RD ROUNDABOUT
	SIDEROAD CLOSURE LIMITS	9	-	0	0	10	90	20	180	15	135	-	-	-	FOLLOW SDD 15C-03, DETAIL 4 AT SIDEROADS, ADJUST TO MEET FIELD CONDITIONS; SEE TRAFFIC CONTROL STAGE 2 ROUNDABOUT CLOSURE PLANS FOR A LIST OF SIDEROADS
	VARIOUS	9	2	0	0	3	27	6	54	3	27	-	35.5	-	SEE CONSTRUCTION STAGING OVERVIEW STAGE 2 ROUNDABOUT CLOSURE FOR LOCATIONS; 11 FIXED MESSAGE SIGNS; NOTE 3
STAGE 3 CLOSURE	DETOUR	60	-	0	0	4	240	8	480	88	5280	8	-	14	SEE STAGE 3 DETOUR SIGN SUMMARY FOR DETAILS
	MAINLINE CLOSURE LIMITS	60	-	0	0	14	840	20	1,200	12	720	-	-	-	FOLLOW SDD 15C-02, DETAIL B, ADJUST TO MEET FIELD CONDITIONS
	SIDEROAD CLOSURE LIMITS	35	-	0	0	14	490	28	980	21	735	-	-	-	FOLLOW SDD 15C-03, DETAIL 4 AT SIDEROADS (EXCEPT FOR PIGEON RD AND STATE PARK RD WHEN THOSE INTERSECTIONS ARE BEING CONSTRUCTED), ADJUST TO MEET FIELD CONDITIONS; SEE TRAFFIC CONTROL STAGE 3 PLANS FOR A LIST OF SIDEROADS
		25	-	0	0	10	250	20	500	15	375	-	-	-	
	STATE PARK RD NORTH AND PIGEON RD FULL CLOSURE; STATE PARK SOUTH TURN LANE EXTENSION	25	-	40	1,000	16	400	24	600	14	350	2	-	-	FOLLOW SDD 15C-03, DETAIL 1 WHEN THOSE INTERSECTIONS ARE CLOSED AND BEING CONSTRUCTED AS WELL AS APPLICABLE PORTIONS OF SDD 15D28 ON STH 114; USE ADDITIONAL TYPE III BARRICADES WITH TYPE A LIGHTS, R11-2L IN TURN LANE, AND R11-2 AS DIRECTED BY ENGINEEER; COVER SIGN TO HIGH CLIFF STATE PARK.
	VARIOUS	60	6	0	0	0	0	0	0	0	0	-	18	-	SEE CONSTRUCTION STAGING OVERVIEW STAGE 3 FOR LOCATIONS; 8 FIXED MESSAGE SIGNS; NOTE 4
STAGE 3 OPEN/WORK ZONE	MAINLINE WORKZONE LIMITS	10	-	0	0	0	0	0	0	12	120	-	-	-	FOLLOW SDD 15C-04, "TRAFFIC CONTROL, ADVANCED WARNING SIGNS 45 MPH OR GREATER"; 2 W20-1A, 2 W20-1C, 2 W20-1D, 2 G20-2A AT BOTH ENDS OF WORKZONE, ADD 114 PLAQUE ABOVE SIGNS ON ROADS COSIGNED WITH USH 10 AND STH 55
	SIDEROAD WORKZONE LIMITS	10	-	0	0	0	0	0	0	8	80	-	-	-	FOLLOW SDD 15C-04, "TYPICAL SIDE ROAD APPROACH WARNING SIGN DETAIL"; 9 W20-1A; PLACE AT SIDEROADS PREVIOUSLY CLOSED BY STAGE 3 AND STOMMEL RD
PROJECT	VARIOUS	100	-	15	1,500	2	200	4	400	5	500	-	-	14	UNDISTRIBUTED; NOTE 5
SUBTOTALS			8		3,150		3,183		5,384		12,519	32	188	63	
PROJECT 4580-10-71 TOTALS			*		**3,150**		**3,183**		**5,384**		**12,519**	**32**	**188**	**63**	

NOTE 1: SHOULDER/PARKING LANE CLOSURES WITHIN THE 4670-10-71 LIMITS QUANTIFIED IN THE 4670-10-71 PROJECT

NOTE 2: FIXED MESSAGE SIGN "HWY 55 ACCESS OPEN TO HIGH CLIFF STATE PARK"IS TO BE USED FROM STAGE 1B AT SAME LOCATION; FIXED MESSAGE SIGNS "HWY 55 CLOSED NO ACCESS TO SHERWOOD FOLLOW DETOUR", "ACCESS TO HIGH CLIFF STATE PARK AHEAD", WO7-53R, AND WO7-53L ARE TO BE USED IN OTHER STAGES

NOTE 3: FIXED MESSAGE SIGN "ACCESS TO HIGH CLIFF STATE PARK FOLLOW DETOUR" AND "HWY 114 CLOSED NO ACCESS TO SHERWOOD FOLLOW DETOUR" IS TO BE USED FROM PREVIOUS STAGES MOVED FROM PREVIOUS LOCATIONS;
FIXED MESSAGE SIGNS "HWY 55 CLOSED NO ACCESS TO SHERWOOD FOLLOW DETOUR", "ACCESS TO HIGH CLIFF STATE PARK AHEAD", WO7-53R, AND WO7-53L ARE TO BE USED FROM STAGE 2 RR CLOSURE AT SAME LOCATION;
FIXED MESSAGE SIGNS "ACCESS TO HIGH CLIFF STATE PARK FOLLOW DETOUR", "HWY 55 CLOSED NO ACCESS TO SHERWOOD FOLLOW DETOUR", "ACCESS TO HIGH CLIFF STATE PARK AHEAD", WO7-53R, AND WO7-53L ARE TO BE USED IN OTHER STAGES

NOTE 4: FIXED MESSAGE SIGN "HWY 114 CLOSED NO ACCESS TO SHERWOOD FOLLOW DETOUR" IS TO BE USED FROM STAGE 2 RBT CLOSURE AT SAME LOCATION;
FIXED MESSAGE SIGNS "ACCESS TO HIGH CLIFF STATE PARK FOLLOW DETOUR", "ACCESS TO HIGH CLIFF STATE PARK AHEAD", WO7-53R, AND WO7-53L ARE TO BE USED FROM PREVIOUS STAGES AND MOVED FROM PREVIOUS LOCATIONS

NOTE 5: UNDISTRUBED TRAFFIC CONTROL QUANTITIES ARE TO BE USED FOR TRAFFIC CONTROL AS DIRECTED BY THE ENGINEER

TRAFFIC CONTROL NOTE: TRAFFIC CONTROL QUANTITIES BASED ON FOLLOWING STAGING PLAN SEQUENTIALLY AND QUANTITIES MAY VARY IF DONE OUT OF THAT ORDER; EACH INDIVIDUAL FIXED MESSAGE SIGN ONLY PAID ONCE PER PROJECT, MOVING SIGN WILL BE PAID IF NEEDED TO BE MOVED TO ANOTHER LOCATION.

*TOTAL PROJECT QUANTITY SHOWN IN ERECTION & REMOVAL OF PERMANENT SIGNING, TYPE II SUMMARY TABLE

3

PAVEMENT MARKING 4-INCH EDGELINE SUMMARY

CATERGORY	STATION	TO	STATION	OFFSET	646.1040 MARKING LINE GROOVED WET REF EPOXY 4-INCH SOLID WHITE	646.1040 MARKING LINE GROOVED WET REF EPOXY 4-INCH DASHED WHITE	* 649.0150 TEMPORARY MARKING LINE PAINT 4-INCH SOLID WHITE LF	* 649.0150 TEMPORARY MARKING LINE PAINT 4-INCH DASHED WHITE LF	REMARKS
0010	203+75	-	221+38	LT	1763	-	1763	-	EDGELINE LT
0010	228+40	-	277+91	LT	4951	-	4951	-	EDGELINE LT
0010	280+29	-	332+35	LT	5206	-	5206	-	EDGELINE LT
0010	335+98	-	397+37	LT	6139	-	6139	-	EDGELINE LT
0010	203+75	-	203+87	RT	12	-	12	-	EDGELINE RT
0010	205+24	-	221+31	RT	1607	-	1607	-	EDGELINE RT
0010	225+30	-	278+40	RT	5310	-	5310	-	EDGELINE RT
0010	279+34	-	305+25	RT	2591	-	2591	-	EDGELINE RT
0010	306+77	-	331+36	RT	2459	-	2459	-	EDGELINE RT
0010	335+96	-	370+42	RT	3446	-	3446	-	EDGELINE RT
0010	371+35	-	395+82	RT	2447	-	2447	-	EDGELINE RT
0010	203+75	-	203+87	RT	-	3	-	3	OLD HWY RD INTERSECTION
0010	203+75	-	207+65	LT	-	63	-	63	BYPASS LANE OLD HWY RD
0010	250+19	-	250+99	RT	-	21	-	21	FIRELANE 13 INTERSECTION
0010	304+92	-	308+18	LT	-	88	-	88	BYPASS LANE PIGEON RD
0010	368+47	-	373+69	LT	-	63	-	63	BYPASS LANE LAKE BREEZE DR
0010	392+91	-	397+37	LT	-	50	-	50	BYPASS LANE CASTLE DR; NOTE 1
				SUBTOTAL	35931	237	35931	237	
				TOTALS	**36168**		**36168 ***		

*ADDITIONAL QUANTITIES SHOWN ELSEWHERE

NOTE 1: BYPASS LANE SPLIT UP BETWEEN PROJECT IDS 4580-10-71 and 4670-10-71

PAVEMENT MARKING 4-INCH EDGELINE SUMMARY

CATERGORY	STATION	TO	STATION	OFFSET	646.1040 MARKING LINE GROOVED WET REF EPOXY 4-INCH SOLID WHITE	646.1040 MARKING LINE GROOVED WET REF EPOXY 4-INCH DASHED WHITE	* 649.0105 TEMPORARY MARKING LINE PAINT 4-INCH SOLID WHITE LF	649.0105 TEMPORARY MARKING LINE PAINT 4-INCH DASHED WHITE LF	REMARKS
0010	203+75	-	221+38	LT	1763	-	1763	-	EDGELINE LT
0010	228+40	-	277+91	LT	4951	-	4951	-	EDGELINE LT
0010	280+29	-	332+35	LT	5206	-	5206	-	EDGELINE LT
0010	335+98	-	397+37	LT	6139	-	6139	-	EDGELINE LT
0010	203+75	-	203+87	RT	12	-	12	-	EDGELINE RT
0010	205+24	-	221+31	RT	1607	-	1607	-	EDGELINE RT
0010	225+30	-	278+40	RT	5310	-	5310	-	EDGELINE RT
0010	279+34	-	305+25	RT	2591	-	2591	-	EDGELINE RT
0010	306+77	-	331+36	RT	2459	-	2459	-	EDGELINE RT
0010	335+96	-	370+42	RT	3446	-	3446	-	EDGELINE RT
0010	371+35	-	395+82	RT	2447	-	2447	-	EDGELINE RT
0010	203+75	-	203+87	RT	-	3	-	3	OLD HWY RD INTERSECTION
0010	203+75	-	207+65	LT	-	63	-	63	BYPASS LANE OLD HWY RD
0010	250+19	-	250+99	RT	-	21	-	21	FIRELANE 13 INTERSECTION
0010	304+92	-	308+18	LT	-	88	-	88	BYPASS LANE PIGEON RD
0010	368+47	-	373+69	LT	-	63	-	63	BYPASS LANE LAKE BREEZE DR
0010	392+91	-	397+37	LT	-	50	-	50	BYPASS LANE CASTLE DR; NOTE 1
				SUBTOTAL	35931	237	35931	237	
				TOTALS	**36168**		**36168 ***		

*ADDITIONAL QUANTITIES SHOWN ELSEWHERE

NOTE 1: BYPASS LANE SPLIT UP BETWEEN PROJECT IDS 4580-10-71 and 4670-10-71

Addendum No. 01
ID 4580-10-71
Revised Sheet 98
January 31, 2022

PAVEMENT MARKING 4-INCH CENTERLINE SUMMARY

CATEGORY	STATION	TO	STATION	OFFSET	LOCATION	LENGTH (FT)	646.1020 MARKING LINE EPOXY 4-INCH SOLID YELLOW LF	646.1020 MARKING LINE EPOXY 4-INCH DASHED YELLOW LF	646.4520 MARKING LINE SAME DAY EPOXY 4-INCH SOLID YELLOW LF	646.4520 MARKING LINE SAME DAY EPOXY 4-INCH DASHED YELLOW LF	NOTE 3 649.0120 TEMPORARY MARKING LINE EPOXY 4-INCH SOLID YELLOW LF	NOTE 3 649.0120 TEMPORARY MARKING LINE EPOXY 4-INCH DASHED YELLOW LF	NOTE 3 649.0150 TEMPORARY MARKING LINE PAINT 4-INCH SOLID YELLOW LF	NOTE 3 649.0150 TEMPORARY MARKING LINE PAINT 4-INCH DASHED YELLOW LF	REMARKS
0010	203+75	-	208+62	CL	STH 114	487	974	-	-	-	974	-	2922	-	DOUBLE SOLID CENTERLINE; NOTE 2
0010	208+62	-	212+63	CL	STH 114	401	802	-	-	-	802	-	1604	-	DOUBLE SOLID CENTERLINE; NOTE 2
0011	212+63	-	217+74	CL	STH 114	511	-	-	1994	-	-	-	2044	-	DOUBLE SOLID CENTERLINE AND CHANNELIZING
0010	217+74	-	222+50	CL	STH 114	476	952	-	-	-	-	-	-	-	STH 114/CTH N/FIRELANE 12 RAB EAST APPROACH; NOTE 1
0010	223+96	-	229+77	CL	STH 114	581	1162	-	-	-	-	-	-	-	STH 114/CTH N/FIRELANE 12 RAB WEST APPROACH; NOTE 1
0010	15+32	-	18+93	CL	FIRELANE 12	361	722	-	-	-	-	-	-	-	STH 114/CTH N/FIRELANE 12 RAB SOUTH APPROACH; NOTE 1
0010	20+41	-	21+80	CL	CTH N	139	278	-	-	-	-	-	-	-	STH 114/CTH N/FIRELANE 12 RAB NORTH APPROACH; NOTE 1
0010	222+50	-	223+96	CL	STH 114	146	-	-	-	-	-	-	-	-	STH 114/CTH N/FIRELANE 12 RAB CIRCLE
0010	229+77	-	232+16	CL	STH 114	239	-	-	906	-	-	-	956	-	DOUBLE SOLID CENTERLINE AND CHANNELIZING
0010	232+16	-	237+17	CL	STH 114	501	471	126	-	-	471	126	1413	123	SOLID/DASHED CENTERLINE; NOTE 2
0010	237+17	-	306+17	CL	STH 114	6900	-	1,725	-	-	-	1725	-	1656	DASHED CENTERLINE; NOTE 2
0010	306+17	-	313+74	CL	STH 114	757	764	190	-	-	764	190	2292	183	SOLID/DASHED CENTERLINE; NOTE 2
0010	313+74	-	315+03	CL	STH 114	129	258	-		-	258	-	774	-	DOUBLE SOLID CENTERLINE; NOTE 2
0010	315+03	-	322+26	CL	STH 114	723	1,137	181	-	-	1137	181	3411	174	SOLID/DASHED CENTERLINE; NOTE 2
0010	322+26	-	326+41	CL	STH 114	415	1,138	104			1,138	104	2276	68	SOLID/DASHED CENTERLINE; NOTE 2
0010	326+41	-	329+81	CL	STH 114	340	-	-	1310	-	-	-	1360	-	DOUBLE SOLID CENTERLINE AND CHANNELIZING
0010	326+41	-	333+44	CL	STH 114	703	1406	-	-	-	-	-	-	-	STH 114/55/STOMMEL RD RAB EAST APPROACH; NOTE 1
0010	334+85	-	340+12	CL	STH 114	527	1054	-	-	-	-	-	-	-	STH 114/55/STOMMEL RD RAB WEST APPROACH; NOTE 1
0010	15+98	-	18+71	CL	STOMMEL RD	273	546	-	-	-	-	-	-	-	STH 114/55/STOMMEL RD RAB SOUTH APPROACH; NOTE 1
0010	20+10	-	24+04	CL	STH 55	394	788	-	-	-	-	-	-	-	STH 114/55/STOMMEL RD RAB NORTH APPROACH; NOTE 1
0010	333+44	-	334+85	CL	STH 114	141	-	-	-	-	-	-	-	-	STH 114/55/STOMMEL RD RAB CIRCLE
0010	340+12	-	343+93	CL	STH 114	381	-	-	1474	-	-	-	1524	-	DOUBLE SOLID CENTERLINE AND CHANNELIZING
0010	343+93	-	348+48	CL	STH 114	455	455	114	-	-	455	114	910	74	SOLID/DASHED CENTERLINE; NOTE 2
0010	348+48	-	348+76	CL	STH 114	28	28	7	-	-	28	7	84	9	SOLID/DASHED CENTERLINE; NOTE 2
0010	348+76	-	352+93	CL	STH 114	417	-	105	-	-	-	105	-	102	DASHED CENTERLINE; NOTE 2
0010	352+93	-	379+27	CL	STH 114	2634	2,634	659	-	-	2634	659	7902	633	SOLID/DASHED CENTERLINE; NOTE 2
0010	379+60	-	385+60	CL	STH 114	600	600	150	-	-	600	150	1800	144	SOLID/DASHED CENTERLINE; NOTE 2
0010	385+60	-	390+66	CL	STH 114	506	-	127	-	-	-	127	-	123	DASHED CENTERLINE; NOTE 2
0010	390+66	-	397+37	CL	STH 114	671	671	168	-	-	671	168	2013	162	SOLID/DASHED CENTERLINE; NOTE 2
0010	204+77			RT	STH 114	97	194	-	-	-	-	-	-	-	OLD HIGHWAY RD SOLID DOUBLE CENTERLINE
0010	251+56			RT	STH 114	46	92	-	-	-	-	-	-	-	FIRELANE 13 SOLID DOUBLE CENTERLINE
0010	278+63			RT	STH 114	44	88	-	-	-	-	-	-	-	STATE PARK RD SOUTH SOLID DOUBLE CENTERLINE
0010	278+63			LT	STH 114	55	110	-	-	-	-	-	-	-	STATE PARK RD NORTH SOLID DOUBLE CENTERLINE
0010	305+82			RT	STH 114	189	378	-	-	-	-	-	-	-	PIGEON RD SOLID DOUBLE CENTERLINE
0010	371+09			RT	STH 114	46	92	-	-	-	-	-	-	-	LAKE BREEZE DR SOLID DOUBLE CENTERLINE
0010	396+53			RT	STH 114	89	178	-	-	-	-	-	-	-	CASTLE DR SOLID DOUBLE CENTERLINE
						SUB-TOTALS	17972	3656	5684	0	9932	3656	33285	3451	
						TOTALS	**21628**		**5684**		**13588**		**36736 ***		

NOTE 1: TRAFFIC SEPERATED BY A CONCRETE SPLITTER ISLAND OR MEDAIN DOES NOT NEED TEMPORARY MARKING OR SAME DAY PERMANENT MARKING IN CENTERLINE
NOTE 2: APPLY TEMPORARY EPOXY MARKING BEFORE INSTALLING CENTERLINE RUMBLES
NOTE 3: PROVIDE TEMPORARY MARKING ON CENTERLINE REGARDLES IF ROADWAY IS OPEN OR CLOSED TO THRU TRAFFIC
*QUANTITY SHOWN ELSEWHERE

PAVEMENT MARKING 4-INCH CENTERLINE SUMMARY

CATEGORY	STATION	TO	STATION	OFFSET	LOCATION	LENGTH (FT)	646.1020 MARKING LINE EPOXY 4-INCH		646.4520 MARKING LINE SAME DAY EPOXY 4-INCH		NOTE 3 649.0120 TEMPORARY MARKING LINE EPOXY 4-INCH		NOTE 3 649.0105 TEMPORARY MARKING LINE PAINT 4-INCH		REMARKS
							SOLID YELLOW LF	DASHED YELLOW LF	SOLID YELLOW LF	DASHED YELLOW LF	SOLID YELLOW LF	DASHED YELLOW LF	SOLID YELLOW LF	DASHED YELLOW LF	
0010	203+75	-	208+62	CL	STH 114	487	974	-	-	-	974	-	2922	-	DOUBLE SOLID CENTERLINE; NOTE 2
0010	208+62	-	212+63	CL	STH 114	401	802	-	-	-	802	-	1604	-	DOUBLE SOLID CENTERLINE; NOTE 2
0011	212+63	-	217+74	CL	STH 114	511	-	-	1994	-	-	-	2044	-	DOUBLE SOLID CENTERLINE AND CHANNELIZING
0010	217+74	-	222+50	CL	STH 114	476	952	-	-	-	-	-	-	-	STH 114/CTH N/FIRELANE 12 RAB EAST APPROACH; NOTE 1
0010	223+96	-	229+77	CL	STH 114	581	1162	-	-	-	-	-	-	-	STH 114/CTH N/FIRELANE 12 RAB WEST APPROACH; NOTE 1
0010	15+32	-	18+93	CL	FIRELANE 12	361	722	-	-	-	-	-	-	-	STH 114/CTH N/FIRELANE 12 RAB SOUTH APPROACH; NOTE 1
0010	20+41	-	21+80	CL	CTH N	139	278	-	-	-	-	-	-	-	STH 114/CTH N/FIRELANE 12 RAB NORTH APPROACH; NOTE 1
0010	222+50	-	223+96	CL	STH 114	146	-	-	-	-	-	-	-	-	STH 114/CTH N/FIRELANE 12 RAB CIRCLE
0010	229+77	-	232+16	CL	STH 114	239	-	-	906	-	-	-	956	-	DOUBLE SOLID CENTERLINE AND CHANNELIZING
0010	232+16	-	237+17	CL	STH 114	501	471	126	-	-	471	126	1413	123	SOLID/DASHED CENTERLINE; NOTE 2
0010	237+17	-	306+17	CL	STH 114	6900	-	1,725	-	-	-	1725	-	1656	DASHED CENTERLINE; NOTE 2
0010	306+17	-	313+74	CL	STH 114	757	764	190	-	-	764	190	2292	183	SOLID/DASHED CENTERLINE; NOTE 2
0010	313+74	-	315+03	CL	STH 114	129	258	-	-	-	258	-	774	-	DOUBLE SOLID CENTERLINE; NOTE 2
0010	315+03	-	322+26	CL	STH 114	723	1,137	181	-	-	1137	181	3411	174	SOLID/DASHED CENTERLINE; NOTE 2
0010	322+26	-	326+41	CL	STH 114	415	1,138	104			1,138	104	2276	68	SOLID/DASHED CENTERLINE; NOTE 2
0010	326+41	-	329+81	CL	STH 114	340	-	-	1310	-	-	-	1360	-	DOUBLE SOLID CENTERLINE AND CHANNELIZING
0010	326+41	-	333+44	CL	STH 114	703	1406	-	-	-	-	-	-	-	STH 114/55/STOMMEL RD RAB EAST APPROACH; NOTE 1
0010	334+85	-	340+12	CL	STH 114	527	1054	-	-	-	-	-	-	-	STH 114/55/STOMMEL RD RAB WEST APPROACH; NOTE 1
0010	15+98	-	18+71	CL	STOMMEL RD	273	546	-	-	-	-	-	-	-	STH 114/55/STOMMEL RD RAB SOUTH APPROACH; NOTE 1
0010	20+10	-	24+04	CL	STH 55	394	788	-	-	-	-	-	-	-	STH 114/55/STOMMEL RD RAB NORTH APPROACH; NOTE 1
0010	333+44	-	334+85	CL	STH 114	141	-	-	-	-	-	-	-	-	STH 114/55/STOMMEL RD RAB CIRCLE
0010	340+12	-	343+93	CL	STH 114	381	-	-	1474	-	-	-	1524	-	DOUBLE SOLID CENTERLINE AND CHANNELIZING
0010	343+93	-	348+48	CL	STH 114	455	455	114	-	-	455	114	910	74	SOLID/DASHED CENTERLINE; NOTE 2
0010	348+48	-	348+76	CL	STH 114	28	28	7	-	-	28	7	84	9	SOLID/DASHED CENTERLINE; NOTE 2
0010	348+76	-	352+93	CL	STH 114	417	-	105	-	-	-	105	-	102	DASHED CENTERLINE; NOTE 2
0010	352+93	-	379+27	CL	STH 114	2634	2,634	659	-	-	2634	659	7902	633	SOLID/DASHED CENTERLINE; NOTE 2
0010	379+60	-	385+60	CL	STH 114	600	600	150	-	-	600	150	1800	144	SOLID/DASHED CENTERLINE; NOTE 2
0010	385+60	-	390+66	CL	STH 114	506	-	127	-	-	-	127	-	123	DASHED CENTERLINE; NOTE 2
0010	390+66	-	397+37	CL	STH 114	671	671	168	-	-	671	168	2013	162	SOLID/DASHED CENTERLINE; NOTE 2
0010	204+77			RT	STH 114	97	194	-	-	-	-	-	-	-	OLD HIGHWAY RD SOLID DOUBLE CENTERLINE
0010	251+56			RT	STH 114	46	92	-	-	-	-	-	-	-	FIRELANE 13 SOLID DOUBLE CENTERLINE
0010	278+63			RT	STH 114	44	88	-	-	-	-	-	-	-	STATE PARK RD SOUTH SOLID DOUBLE CENTERLINE
0010	278+63			LT	STH 114	55	110	-	-	-	-	-	-	-	STATE PARK RD NORTH SOLID DOUBLE CENTERLINE
0010	305+82			RT	STH 114	189	378	-	-	-	-	-	-	-	PIGEON RD SOLID DOUBLE CENTERLINE
0010	371+09			RT	STH 114	46	92	-	-	-	-	-	-	-	LAKE BREEZE DR SOLID DOUBLE CENTERLINE
0010	396+53			RT	STH 114	89	178	-	-	-	-	-	-	-	CASTLE DR SOLID DOUBLE CENTERLINE
						SUB-TOTALS	17972	3656	5684	0	9932	3656	33285	3451	
						TOTALS	**21628**		**5684**		**13588**		**36736 ***		

NOTE 1: TRAFFIC SEPERATED BY A CONCRETE SPLITTER ISLAND OR MEDAIN DOES NOT NEED TEMPORARY MARKING OR SAME DAY PERMANENT MARKING IN CENTERLINE
NOTE 2: APPLY TEMPORARY EPOXY MARKING BEFORE INSTALLING CENTERLINE RUMBLES
NOTE 3: PROVIDE TEMPORARY MARKING ON CENTERLINE REGARDLES IF ROADWAY IS OPEN OR CLOSED TO THRU TRAFFIC
*QUANTITY SHOWN ELSEWHERE

Addendum No. 01
ID 4580-10-71
Revised Sheet 99
January 31, 2022

PAVEMENT MARKING MISCELLANIOUS SUMMARY

CATEGORY	STATION	TO	STATION	OFFSET	LOCATION	LENGTH (FT)	646.3040 MARKING LINE GROOVED WET REF EPOXY 8-INCH LF	646.5020 MARKING ARROW EPOXY EACH	646.5120 MARKING WORD EPOXY EACH	646.612 MARKING STOP LINE EPOXY 18-INCH LF	646.5320 MARKING RAILROAD CROSSINGS EPOXY EACH	646.6320 MARKING DOTTED EXTENSION EPOXY 18-INCH LF	646.7120 MARKING DIAGONAL EPOXY 12-INCH LF	646.8220 MARKING ISLAND NOSE EPOXY EACH	* 649.0150 TEMPORARY MARKING LINE PAINT 4-INCH SOLID WHITE	REMARKS
0010	212+88	-	222+50	CL	STH 114	962	-	-	-	-	-	-	163	1	-	STH 114/CTH N/FIRELANE 12 RAB EAST APPROACH
0010	223+96		231+91	LT/RT	STH 114	795	283	1	1	-	-	-	55	1	-	STH 114/CTH N/FIRELANE 12 RAB WEST APPROACH; WORD IS "ONLY"
0010	17+52	-	18+93	-	FIRELANE 12	141	-	-	-	-	-	-	-	-	-	STH 114/CTH N/FIRELANE 12 RAB SOUTH APPROACH
0010	20+41	-	21+80	-	CTH N	139	-	-	-	-	-	-	-	-	-	STH 114/CTH N/FIRELANE 12 RAB NORTH APPROACH
0010	222+50		223+96	RT	STH 114	146	-	-	-	-	-	250	-	-	-	STH 114/CTH N/FIRELANE 12 RAB CIRCLE
0010	326+41	-	333+44	CL	STH 114	703	-	-	-	-	-	-	110	1	-	STH 114/55/STOMMEL RD RAB EAST APPROACH
0010	334+85		343+68	CL	STH 114	883	-	-	-	-	-	-	82	1	-	STH 114/55/STOMMEL RD RAB WEST APPROACH
0010	15+98	-	18+71	-	STOMMEL RD	273	-	-	-	-	-	-	-	-	-	STH 114/55/STOMMEL RD RAB SOUTH APPROACH
0010	20+10	-	24+04	CL	STH 55	394	-	-	-	-	-	-	27	1	-	STH 114/55/STOMMEL RD RAB NORTH APPROACH
0010	333+44		334+85	RT	STH 114	141	-	-	-	-	-	178	-	-	-	STH 114/55/STOMMEL RD RAB CIRCLE
0010	361+21			RT/LT	STH 114	-	-	-	-	-	2	-	-	-	-	RAILROAD CROSSING EB AND WB
0010	204+77			RT	STH 114	97	-	-	-	-	-	-	-	-	-	OLD HIGHWAY RD
0010	251+56			RT	STH 114	46	-	-	-	-	-	-	-	-	-	FIRELANE 13
0010	278+63			RT	STH 114	44	350	-	-	-	-	-	-	-	350	STATE PARK RD SOUTH
0010	278+63			LT	STH 114	55	300	-	-	-	-	-	-	-	300	STATE PARK RD NORTH
0010	305+82			RT	STH 114	189	236	-	-	-	-	-	-	-	200	PIGEON RD ; 8-INCH GROOVED WET REF FOR TURN LANE AND RIGHT TURN ISLAND APPROACH
0010	371+09			RT	STH 114	46	200	-	-	25	-	-	-	-	200	LAKE BREEZE DR
0010	396+53			RT	STH 114	89	350	-	-	25	-	-	-	-	350	CASTLE DR
						SUB-TOTALS	1,719	1	1	50	2	428	437	5	1,400	
						PROJECT 4580-10-71 TOTALS	**1719**	**1**	**1**	**50**	**2**	**428**	**437**	**5**	**1400 ***	

*ADDITIONAL QUANTITIES SHOWN ELSEWHERE

650-STAKING SUMMARY

CATEGORY	STATION	TO	STATION	LOCATION	650.4500 CONSTRUCTION STAKING SUBGRADE LF	650.5000 CONSTRUCTION STAKING BASE LF	650.5500 CONSTRUCTION STAKING CURB GUTTER AND CURB & GUTTER LF	650.6000 CONSTRUCTION STAKING PIPE CULVERTS EACH	650.8000 CONSTRUCTION STAKING RESURFACING REFERENCE LF	650.9000 CONSTRUCTION STAKING CURB RAMPS EACH	650.9910.01 CONSTRUCTION STAKING SUPPLEMENTAL CONTROL (PROJECT) (01. TBD) LS	650.9920 CONSTRUCTION STAKING SLOPE STAKES LF	REMARKS
0010	203+75	-	208+62	STH 114	-	487	-	-	487	-	-	-	
0010	208+62	-	232+10	STH 114	-	-	-	-	2,348	-	-	-	STH 114/CTH N/FIRELANE 12 ROUNDABOUT
0010	232+10	-	322+26	STH 114	-	9,016	-	-	9,016	-	-	-	QUANTITY INCLUDES BASE STAKING FOR TURN LANES
0010	273+04	-	276+79	STH 114	375	*	-	-	-	-	-	375	STATE PARK RD SOUTH RIGHT TURN LANE EXTENSION
0010	276+91	-	283+78	STH 114	687	*	-	-	-	-	-	687	STATE PARK RD NORTH RIGHT TURN LANE
0010	305+24	-	307+43	STH 114	219	*	-	-	-	-	-	219	PIGEON RD. INTERSECTION RECONSTRUCTION
0010	322+26	-	397+37	STH 114	-	-	-	-	7,511	-	-	-	
0010	390+82	-	397+37	STH 114	655	655	-	-	-	-	-	655	CASTLE DR RIGHT TURN LANE
0010	45+51	-	45+83	STATE PARK RD	32	32	-	-	-	-	-	32	
0010	47+83	-	49+48	PIGEON RD	165	165	-	-	-	-	-	165	
0010	78+83	-	79+33	CASTLE DR	50	50	-	-	-	1	-	50	
0010	VARIOUS STATIONS			STH 114	-	-	676	-	-	-	-	-	SEE CURB & GUTTER SUMMERY FOR DETAILS
0010	VARIOUS STATIONS			STH 114	-	-	-	1	-	-	-	-	SEE CULVERT PIPE SUMMARY FOR DETAILS
0010	PROJECT			STH 114	-	-	-	-	-	-	1	-	
				PROJECT 4580-10-71 TOTALS	**2,183**	**10,405**	**676**	**1**	**19,362**	**1**	**1**	**2,183**	

*NOTE: CONSTRUCTION STAKING BASE FOR THIS AREA INCLUDED IN A SEPARATE QUANTITY ON TABLE

PAVEMENT MARKING MISCELLANIOUS SUMMARY

CATEGORY	STATION	TO	STATION	OFFSET	LOCATION	LENGTH (FT)	646.3040 MARKING LINE GROOVED WET REF EPOXY 8-INCH LF	646.5020 MARKING ARROW EPOXY EACH	646.5120 MARKING WORD EPOXY EACH	646.612 MARKING STOP LINE EPOXY 18-INCH LF	646.5320 MARKING RAILROAD CROSSINGS EPOXY EACH	646.6320 MARKING DOTTED EXTENSION EPOXY 18-INCH LF	646.7120 MARKING DIAGONAL EPOXY 12-INCH LF	646.8220 MARKING ISLAND NOSE EPOXY EACH	* 649.0105 TEMPORARY MARKING LINE PAINT 4-INCH SOLID WHITE	REMARKS
0010	212+88	-	222+50	CL	STH 114	962	-	-	-	-	-	-	163	1	-	STH 114/CTH N/FIRELANE 12 RAB EAST APPROACH
0010	223+96		231+91	LT/RT	STH 114	795	283	1	1	-	-	-	55	1	-	STH 114/CTH N/FIRELANE 12 RAB WEST APPROACH; WORD IS "ONLY"
0010	17+52	-	18+93	-	FIRELANE 12	141	-	-	-	-	-	-	-	-	-	STH 114/CTH N/FIRELANE 12 RAB SOUTH APPROACH
0010	20+41	-	21+80	-	CTH N	139	-	-	-	-	-	-	-	-	-	STH 114/CTH N/FIRELANE 12 RAB NORTH APPROACH
0010	222+50		223+96	RT	STH 114	146	-	-	-	-	-	250	-	-	-	STH 114/CTH N/FIRELANE 12 RAB CIRCLE
0010	326+41	-	333+44	CL	STH 114	703	-	-	-	-	-	-	110	1	-	STH 114/55/STOMMEL RD RAB EAST APPROACH
0010	334+85		343+68	CL	STH 114	883	-	-	-	-	-	-	82	1	-	STH 114/55/STOMMEL RD RAB WEST APPROACH
0010	15+98	-	18+71	-	STOMMEL RD	273	-	-	-	-	-	-	-	-	-	STH 114/55/STOMMEL RD RAB SOUTH APPROACH
0010	20+10	-	24+04	CL	STH 55	394	-	-	-	-	-	-	27	1	-	STH 114/55/STOMMEL RD RAB NORTH APPROACH
0010	333+44		334+85	RT	STH 114	141	-	-	-	-	-	178	-	-	-	STH 114/55/STOMMEL RD RAB CIRCLE
0010	361+21			RT/LT	STH 114	-	-	-	-	-	2	-	-	-	-	RAILROAD CROSSING EB AND WB
0010	204+77			RT	STH 114	97	-	-	-	-	-	-	-	-	-	OLD HIGHWAY RD
0010	251+56			RT	STH 114	46	-	-	-	-	-	-	-	-	-	FIRELANE 13
0010	278+63			RT	STH 114	44	350	-	-	-	-	-	-	-	350	STATE PARK RD SOUTH
0010	278+63			LT	STH 114	55	300	-	-	-	-	-	-	-	300	STATE PARK RD NORTH
0010	305+82			RT	STH 114	189	236	-	-	-	-	-	-	-	200	PIGEON RD ; 8-INCH GROOVED WET REF FOR TURN LANE AND RIGHT TURN ISLAND APPROACH
0010	371+09			RT	STH 114	46	200	-	-	25	-	-	-	-	200	LAKE BREEZE DR
0010	396+53			RT	STH 114	89	350	-	-	25	-	-	-	-	350	CASTLE DR
					SUB-TOTALS		1,719	1	1	50	2	428	437	5	1,400	
					PROJECT 4580-10-71 TOTALS		**1719**	**1**	**1**	**50**	**2**	**428**	**437**	**5**	**1400 ***	

*Additional quantities shown elsewhere

650-STAKING SUMMARY

CATEGORY	STATION	TO	STATION	LOCATION	650.4500 CONSTRUCTION STAKING SUBGRADE LF	650.5000 CONSTRUCTION STAKING BASE LF	650.5500 CONSTRUCTION STAKING CURB GUTTER AND CURB & GUTTER LF	650.6000 CONSTRUCTION STAKING PIPE CULVERTS EACH	650.8000 CONSTRUCTION STAKING RESURFACING REFERENCE LF	650.9000 CONSTRUCTION STAKING CURB RAMPS EACH	650.9910.01 CONSTRUCTION STAKING SUPPLEMENTAL CONTROL (PROJECT) (01. TBD) LS	650.9920 CONSTRUCTION STAKING SLOPE STAKES LF	REMARKS
0010	203+75	-	208+62	STH 114	-	487	-	-	487	-	-	-	
0010	208+62	-	232+10	STH 114	-	-	-	-	2,348	-	-	-	STH 114/CTH N/FIRELANE 12 ROUNDABOUT
0010	232+10	-	322+26	STH 114	-	9,016	-	-	9,016	-	-	-	QUANTITY INCLUDES BASE STAKING FOR TURN LANES
0010	273+04	-	276+79	STH 114	375	*	-	-	-	-	-	375	STATE PARK RD SOUTH RIGHT TURN LANE EXTENSION
0010	276+91	-	283+78	STH 114	687	*	-	-	-	-	-	687	STATE PARK RD NORTH RIGHT TURN LANE
0010	305+24	-	307+43	STH 114	219	*	-	-	-	-	-	219	PIGEON RD. INTERSECTION RECONSTRUCTION
0010	322+26	-	397+37	STH 114	-	-	-	-	7,511	-	-	-	
0010	390+82	-	397+37	STH 114	655	655	-	-	-	-	-	655	CASTLE DR RIGHT TURN LANE
0010	45+51	-	45+83	STATE PARK RD	32	32	-	-	-	-	-	32	
0010	47+83	-	49+48	PIGEON RD	165	165	-	-	-	-	-	165	
0010	78+83	-	79+33	CASTLE DR	50	50	-	-	-	1	-	50	
0010	VARIOUS STATIONS			STH 114	-	-	676	-	-	-	-	-	SEE CURB & GUTTER SUMMERY FOR DETAILS
0010	VARIOUS STATIONS			STH 114	-	-	-	1	-	-	-	-	SEE CULVERT PIPE SUMMARY FOR DETAILS
0010	PROJECT			STH 114	-	-	-	-	-	-	1	-	
			PROJECT 4580-10-71 TOTALS		**2,183**	**10,405**	**676**	**1**	**19,362**	**1**	**1**	**2,183**	

*NOTE: CONSTRUCTION STAKING BASE FOR THIS AREA INCLUDED IN A SEPARATE QUANTITY ON TABLE

Addendum No. 01
ID 4580-10-71
Revised Sheet 100
January 31, 2022

3

SAWING PAVEMENT SUMMARY

CATEGORY	STATION TO STATION	OFFSET	LOCATION	690.0150 SAWING ASPHALT LF	690.0250 SAWING CONCRETE LF	REMARKS
0010	203+75	LT/RT	STH 114	*	24	NORTH PROJECT LIMITS
0010	8+74	LT/RT	OLD HIGHWAY RD	*	-	PROJECT LIMITS
0010	208+62	LT/RT	STH 114	6	24	RUBBLE/MILL TRANSITION
0010	15+32	LT/RT	FIRELANE 12	*	-	PROJECT LIMITS
0010	21+80	LT/RT	CTH N	*	-	PROJECT LIMITS
0010	232+10	LT/RT	STH 114	*	24	RUBBLE/MILL TRANSITION
0010	17+52	LT/RT	FIRELANE 13	*	-	PROJECT LIMITS
0010	273+04 - 276+79	RT	STH 114	14	395	EB RIGHT TURN LANE AT STATE PARK RD SOUTH
0010	276+91 - 283+78	LT	STH 114	26	739	WB RIGHT TURN LANE AT STATE PARK RD NORTH
0010	45+83	LT/RT	STATE PARK RD NORTH	36	-	PROJECT LIMITS
0010	39+28	LT/Rt	STATE PARK RD SOUTH	*	-	PROJECT LIMITS
0010	281+27 - 281+68	LT	STH 114	48	5	DRIVEWAY REMOVAL
0010	47+83 - 49+88	RT	PIGEON RD	26	239	INTERSECTION/PROJECT LIMITS
0010	322+26	LT/RT	STH 114	6	24	RUBBLE/MILL TRANSITION
0010	15+99	LT/RT	STOMMEL RD	*	-	PROJECT LIMITS
0010	22+91	LT/RT	STH 55	*	-	PROJECT LIMITS
0010	348+75	LT/RT	STH 114/STH 55	*	24	RUBBLE/MILL TRANSITION
0010	360+91	LT/RT	STH 114/STH 55	40	48	RAILROAD CROSSING
0010	361+52	LT/RT	STH 114/STH 55	40	48	RAILROAD CROSSING
0010	69+25	LT/RT	LAKE BREEZE DR	*	-	PROJECT LIMITS
0010	392+40	LT/RT	STH 114/STH 55	5	24	RUBBLE/MILL TRANSITION
0010	390+82 - 397+37	RT	STH 114/STH 55	29	1359	EB RIGHT TURN LANE AT CASTLE DR
0010	78+83	LT/RT	CASTLE DR	28	5	PROJECT LIMITS
0010	397+37	LT/RT	STH 114/STH 55	*	-	SOUTH PROJECT LIMITS
0010	208+62 - 220+93	RT	STH 114	1231	-	REMOVE EXISTING SHOULDER
0010	208+62 - 221+20	LT	STH 114	1258	-	REMOVE EXISTING SHOULDER
0010	229+05 - 232+10	RT	STH 114	305	-	REMOVE EXISTING SHOULDER
0010	225+54 - 232+10	LT	STH 114	656	-	REMOVE EXISTING SHOULDER
0010	322+26 - 330+68	RT	STH 114	842	-	REMOVE EXISTING SHOULDER
0010	322+26 - 332+02	LT	STH 114	976	-	REMOVE EXISTING SHOULDER
0010	336+28 - 348+76	RT	STH 55/114	1248	-	REMOVE EXISTING SHOULDER
0010	336+54 - 348+76	LT	STH 55/114	1222	-	REMOVE EXISTING SHOULDER
0010	PROJECT	LT/RT	STH 55/114	*	-	DRIVEWAY PROJECT LIMITS
0010	PROJECT	LT/RT	STH 55/114	268	108	C&G REPLACEMENTS; SEE REMOVING CURB & GUTTER & SIDEWALK SUMMERY FOR DETAILS
			PROJECT 4580-10-71 TOTALS	**8310**	**3090**	

*NOTE 1: SAWCUT IS OPTIONAL TO ACHIEVE VERTICAL FACE; IF A SAW CUT USED AT THS LOCATION IT IS INCEDENTAL TO OTHER REMOVAL ITEMS

TRANSPORTATION PROJECT PLAT NO: 4580-10-21 - 4.01

THAT PART OF LOT 1, CALUMET COUNTY CERTIFIED SURVEY MAP 2197, LOCATED IN THE NORTHEAST QUARTER OF THE NORTHEAST QUARTER, SECTION 23, PART OF THE NORTHWEST QUARTER OF THE NORTHWEST QUARTER, AND PART OF THE SOUTHWEST QUARTER OF THE NORTHWEST QUARTER, SECTION 24, T20N, R18E, VILLAGE OF HARRISON, CALUMET COUNTY, WISCONSIN.

RELOCATION ORDER STH 114-55 MENASHA - HILBERT USH 10 - VILLAGE OF SHERWOOD, CALUMET COUNTY.

TO PROPERTY ESTABLISH, LAY OUT, WIDEN, ENLARGE, EXTEND, CONSTRUCT, RECONSTRUCT, IMPROVE, OR MAINTAIN A PORTION OF THE HIGHWAY DESIGNATED ABOVE, THE STATE OF WISCONSIN DEPARTMENT OF TRANSPORTATION DEEMS IT NECESSARY TO RELOCATE OR CHANGE SAID HIGHWAY AND ACQUIRE CERTAIN LANDS AND INTERESTS OR RIGHTS IN LANDS FOR THE ABOVE NAMED PROJECT.

TO EFFECT THIS CHANGE, PURSUANT TO AUTHORITY GRANTED UNDER SUBSECTIONS 84.02 (3), 84.09 AND 84.30, WISCONSIN STATUTES, THE DEPARTMENT OF TRANSPORTATION HEREBY ORDERS THAT:

1. THAT PORTION OF SAID HIGHWAY AS SHOWN ON THIS PLAT IS LAID OUT AND ESTABLISHED TO THE LINES AND WIDTHS AS SO SHOWN FOR THE ABOVE NAMED PROJECT.
2. THE LANDS OR INTERESTS OR RIGHTS IN LANDS AS SHOWN ON THIS PLAT ARE REQUIRED BY THE DEPARTMENT FOR THE ABOVE PROJECT AND SHALL BE ACQUIRED IN THE NAME OF THE STATE OF WISCONSIN, PURSUANT TO THE PROVISIONS OF SUBSECTION 84.09 (1) OR (2). WISCONSIN STATUTES.

RIGHT OF WAY TABLE

PT#	Y	X	STA	OFFSET
20	538463.370	854512.477	278+36.82	97.12'
21	538432.685	854545.093	278+75.95	75.58'
22	538399.562	854580.279	279+18.37	52.20'
23	538335.604	854828.807	281+75.00	52.12'
24	538305.306	854906.414	282+57.71	42.09'
25	538225.403	854885.877	282+57.71	40.41'
26	538295.153	854614.843	279+77.84	40.32'
27	538241.468	854544.685	279+23.25	109.78'
28	538259.425	854474.905	278+51.20	109.76'
29	538339.756	854413.436	277+71.67	47.26'
30	538420.121	854101.152	274+49.21	47.16'
31	538440.669	854049.392	273.93.97	40.15'
34	538589.508	853802.058	271+17.37	42.44'
35	538428.375	854428.192	277+63.90	42.24'
36	538449.595	854479.301	278+08.12	75.52'
37	538264.540	854895.936	282+57.71	0.00'
38	538250.447	854509.795	278+87.23	109.77'
39	538548.405	853791.493	271+17.37	0.00'
107	538509.605	853781.521	271+17.37	40.06'
108	538480.508	854545.696	278+64.73	121.98'

TLE STATION / OFFSET TABLE

PT#	STATION	OFFSET
103	277+81.71	55.15'
104	273+95.00	55.15'
105	273+95.00	45.12'
106	271+17.35	45.07'
109	278+97.26	75.77'
110	279+26.40	59.19'
111	281+22.84	59.13'
112	281+10.37	129.10'
113	281+82.43	143.20'
114	281+98.33	52.11'
181	278+84.16	126.72'
182	282+55.27	52.09'

CONVENTIONAL SYMBOLS

SECTION LINE
QUARTER LINE
SIXTEENTH LINE
NEW REFERENCE LINE
NEW R/W LINE
EXISTING R/W OR HE LINE
PROPERTY LINE
LOT, TIE & OTHER MINOR LINES
SLOPE INTERCEPT
CORPORATE LIMITS
UNDERGROUND FACILITY (COMMUNICATIONS, ELECTRIC, ETC)
NEW R/W (FEE OR HE) (HATCHING VARIES BY OWNER)
TEMPORARY LIMITED EASEMENT AREA
EASEMENT AREA (PERMANENT LIMITED OR RESTRICTED DEVELOPMENT)
TRANSMISSION STRUCTURES
BUILDING — TO BE REMOVED
BRIDGE

SECTION CORNER SYMBOL
SECTION CORNER MONUMENT
GEODETIC SURVEY MONUMENT
SIXTEENTH CORNER MONUMENT
SIGN
OFF-PREMISE SIGN

R/W MONUMENT (TO BE SET)
NON-MONUMENTED R/W POINT
FOUND IRON PIN (1-INCH UNLESS NOTED) IP

	COMPENSABLE	NON-COMPENSABLE
ELECTRIC POLE		
TELEPHONE POLE		
PEDESTAL (LABEL TYPE) (TV, TEL, ELEC, ETC.)		

ACCESS RESTRICTED BY ACQUISITION
NO ACCESS (BY STATUTORY AUTHORITY)
ACCESS RESTRICTED (BY PREVIOUS PROJECT OR CONTROL)
NO ACCESS (NEW HIGHWAY)

PARCEL NUMBER (25) UTILITY NUMBER (40)
PARALLEL OFFSETS
(25) R/W POINT NUMBER (30) TLE POINT NUMBER

CONVENTIONAL ABBREVIATIONS

ACCESS RIGHTS	AR	POINT OF INTERSECTION	PI
ACRES	AC	PROPERTY LINE	PL
AHEAD	AH	RECORDED AS	(100')
ALUMINUM	ALUM	REEL / IMAGE	R/I
AND OTHERS	ET AL	REFERENCE LINE	R/L
BACK	BK	REMAINING	REM
BLOCK	BLK	RESTRICTIVE DEVELOPMENT EASEMENT	RDE
CENTERLINE	C/L	RIGHT	RT
CERTIFIED SURVEY MAP	CSM	RIGHT OF WAY	R/W
CONCRETE	CONC	SECTION	SEC
COUNTY	CO	SEPTIC VENT	SEPV
COUNTY TRUNK HIGHWAY	CTH	SQUARE FEET	SF
DISTANCE	DIST	STATE TRUNK HIGHWAY	STH
CORNER	COR	STATION	STA
DOCUMENT NUMBER	DOC	TELEPHONE PEDESTAL	TP
EASEMENT	EASE	TEMPORARY LIMITED EASEMENT	TLE
EXISTING	EX	TRANSPORTATION PROJECT PLAT	TPP
GAS VALVE	GV	UNITED STATES HIGHWAY	USH
GRID NORTH	GN	VOLUME	V
HIGHWAY EASEMENT	HE		
IDENTIFICATION	ID		
LAND CONTRACT	LC		
LEFT	LT		
MONUMENT	MON		
NATIONAL GEODETIC SURVEY NUMBER	NGS NO		
OUTLOT	OL		
PAGE	P		
POINT OF TANGENCY	PT		
PERMANENT LIMITED EASEMENT	PLE		
POINT OF BEGINNING	POB		
POINT OF CURVATURE	PC		
POINT OF COMPOUND CURVE	PCC		

CURVE DATA

LONG CHORD	LCH
LONG CHORD BEARING	LCB
RADIUS	R
DEGREE OF CURVE	D
CENTRAL ANGLE	Δ/DELTA
LENGTH OF CURVE	L
TANGENT	T
DIRECTION AHEAD	DA
DIRECTION BACK	DB

CONVENTIONAL UTILITY SYMBOLS

WATER	W
GAS	G
TELEPHONE	T
OVERHEAD TRANSMISSION LINES	OH
ELECTRIC	E
CABLE TELEVISION	TV
FIBER OPTIC	FO
SANITARY SEWER	SAN
STORM SEWER	SS
ELECTRIC TOWER	

DOCUMENT # 551640
TAMARA ALTEN
REGISTER OF DEEDS
CALUMET COUNTY, WI
08/27/2020 01:37 PM
VOL: D PAGE: 134
RECORDING FEE: 25.00

RESERVED FOR REGISTER OF DEEDS
PROJECT NUMBER: 4580-10-21 - 4.01
AMENDMENT NO:

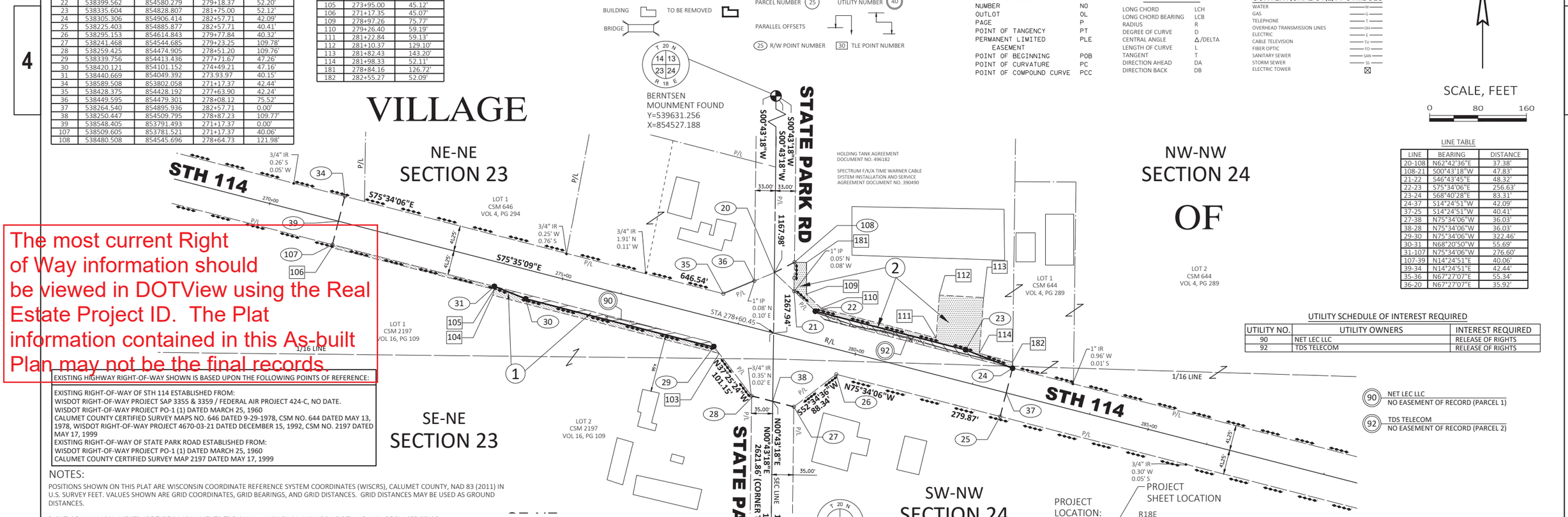

The most current Right of Way information should be viewed in DOTView using the Real Estate Project ID. The Plat information contained in this As-built Plan may not be the final records.

EXISTING HIGHWAY RIGHT-OF-WAY SHOWN IS BASED UPON THE FOLLOWING POINTS OF REFERENCE:

EXISTING RIGHT-OF-WAY OF STH 114 ESTABLISHED FROM:
WISDOT RIGHT-OF-WAY PROJECT SAP 3355 & 3359 / FEDERAL AIR PROJECT 424-C, NO DATE.
WISDOT RIGHT-OF-WAY PROJECT PO-1 (1) DATED MARCH 25, 1960
CALUMET COUNTY CERTIFIED SURVEY MAPS NO. 646 DATED 9-29-1978, CSM NO. 644 DATED MAY 13, 1978, WISDOT RIGHT-OF-WAY PROJECT 4670-03-21 DATED DECEMBER 15, 1992, CSM NO. 2197 DATED MAY 17, 1999
EXISTING RIGHT-OF-WAY OF STATE PARK ROAD ESTABLISHED FROM:
WISDOT RIGHT-OF-WAY PROJECT PO-1 (1) DATED MARCH 25, 1960
CALUMET COUNTY CERTIFIED SURVEY MAP 2197 DATED MAY 17, 1999

NOTES:

POSITIONS SHOWN ON THIS PLAT ARE WISCONSIN COORDINATE REFERENCE SYSTEM COORDINATES (WISCRS), CALUMET COUNTY, NAD 83 (2011) IN U.S. SURVEY FEET. VALUES SHOWN ARE GRID COORDINATES, GRID BEARINGS, AND GRID DISTANCES. GRID DISTANCES MAY BE USED AS GROUND DISTANCES.

RIGHT-OF-WAY MONUMENTS ARE TYPE 2 MONUMENTS (TYPICALLY 1-INCH BY 24-INCH IRON PIPE) AND WILL BE PLACED PRIOR TO THE COMPLETION OF THE PROJECT.

RIGHT-OF-WAY BOUNDARIES ARE DEFINED WITH COURSES OF THE PERIMETER OF THE HIGHWAY LANDS REFERENCED TO THE U.S. PUBLIC LAND SURVEY OR OTHER SURVEYS OF RECORD.

PROPERTY LINES SHOWN ON THIS PLAT ARE DRAWN FROM DATA DERIVED FROM MAPS AND DOCUMENTS OF PUBLIC RECORD AND/OR EXISTING OCCUPATIONAL LINES. EXCLUDING RIGHT-OF-WAY BOUNDARIES, THIS PLAT MAY NOT BE A TRUE REPRESENTATION OF EXISTING PROPERTY LINES AND SHOULD NOT BE USED AS A SUBSTITUTE FOR AN ACCURATE FIELD SURVEY.

DIMENSIONS FOR THE NEW RIGHT-OF-WAY IS MEASURED ALONG AND PERPENDICULAR TO THE NEW REFERENCE LINES.

ALL RIGHT-OF-WAY LINES DEPICTED IN THE NON-ACQUISITION AREAS ARE INTENDED TO RE-ESTABLISH EXISTING RIGHT-OF-WAY LINES AS DETERMINED FROM PREVIOUS PROJECTS, OTHER RECORDED DOCUMENTS, OR FROM CENTERLINE OF EXISTING PAVEMENTS.

FOR THE CURRENT ACCESS/DRIVEWAY INFORMATION, CONTACT THE PLANNING UNIT OF THE WISCONSIN DEPARTMENT OF TRANSPORTATION OFFICE IN GREEN BAY.

ACCESS CONTROL ON STH 114/55 PER DOCUMENT NO'S 335941, 350127, AND 350129.

A TEMPORARY LIMITED EASEMENT (TLE) IS A RIGHT FOR CONSTRUCTION PURPOSES, AS DEFINED HEREIN, INCLUDING THE RIGHT TO OPERATE NECESSARY EQUIPMENT THEREON AND THE RIGHT OF INGRESS AND EGRESS, AS LONG AS REQUIRED FOR SUCH PUBLIC PURPOSE, INCLUDING THE RIGHT TO PRESERVE, PROTECT, REMOVE, OR PLANT THEREON ANY VEGETATION THAT THE HIGHWAY AUTHORITIES MAY DEEM NECESSARY OR DESIRABLE. ALL TLE'S EXPIRE AT THE COMPLETION OF THE PROJECT FOR WHICH THIS INSTRUMENT IS GIVEN.

PARCEL IDENTIFICATION NUMBERS MAY NOT POINT TO ALL AREAS OF ACQUISITION, AS NOTED ON THE SCHEDULE OF LANDS & INTERESTS REQUIRED.

SCHEDULE OF LANDS AND INTERESTS REQUIRED

OWNERS NAMES ARE SHOWN FOR REFERENCE PURPOSES ONLY AND ARE SUBJECT TO CHANGE PRIOR TO TRANSFER OF LAND INTERESTS TO THE DEPARTMENT

PARCEL NO.	OWNER	INTEREST REQUIRED	AREA ACRES REQUIRED NEW	EXISTING	TOTAL	TLE AREA
1	ANDREW D. STUMPF, STEVEN P. STUMPF & FRANK H. STUMPF	FEE TLE	0.06 AC	---	0.06 AC	0.11 AC
2	TOWN OF HARRISON TOWN HALL	FEE TLE	0.07 AC	---	0.07 AC	0.22 AC

TLE NOTE: ALL TEMPORARY LIMITED EASEMENTS ON THIS TRANSPORTATION PROJECT PLAT ARE FOR SLOPING AND CONSTRUCTION PURPOSES

GN

SCALE, FEET
0 80 160

LINE TABLE

LINE	BEARING	DISTANCE
20-108	N62°42'36"E	37.38'
108-21	S00°43'18"W	47.83'
21-22	S46°43'45"E	48.32'
22-23	S75°34'06"E	256.63'
23-24	S68°40'28"E	83.31'
24-37	S14°24'51"W	42.09'
37-25	S14°24'51"W	40.41'
27-38	N75°34'06"W	36.03'
38-28	N75°34'06"W	36.03'
29-30	N75°34'06"W	322.46'
30-31	N68°20'50"W	55.69'
31-107	N75°34'06"W	276.60'
107-39	N14°24'51"E	40.06'
39-34	N14°24'51"E	42.44'
35-36	N67°27'07"E	55.34'
36-20	N67°27'07"E	35.92'

UTILITY SCHEDULE OF INTEREST REQUIRED

UTILITY NO.	UTILITY OWNERS	INTEREST REQUIRED
90	NET LEC LLC	RELEASE OF RIGHTS
92	TDS TELECOM	RELEASE OF RIGHTS

(90) NET LEC LLC
NO EASEMENT OF RECORD (PARCEL 1)

(92) TDS TELECOM
NO EASEMENT OF RECORD (PARCEL 2)

PROJECT LOCATION: T20N R18E

PROJECT SHEET LOCATION

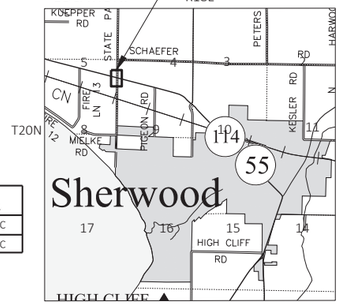

OMNNI ASSOCIATES
ONE SYSTEMS DRIVE APPLETON, WI 54914-1654
PHONE (920) 735-6900
FAX (920) 830-6100

I, DAVID A. YURK PROFESSIONAL LAND SURVEYOR, HEREBY CERTIFY THAT IN FULL COMPLIANCE WITH THE PROVISIONS OF SECTION 84.095 OF THE WISCONSIN STATUTES AND UNDER THE DIRECTION OF THE DEPARTMENT. I HAVE SURVEYED AND MAPPED THIS TRANSPORTATION PROJECT PLAT 4580-10-21-4.01 AND SUCH PLAT CORRECTLY REPRESENTS ALL EXTERIOR BOUNDARIES OF THE SURVEYED LAND.

SIGNATURE: David A. Yurk DATE: 08-14-20
PRINT NAME: DAVID A. YURK
REGISTRATION NUMBER: S-2648

WISCONSIN DAVID A. YURK S-2648 OMNNI ASSOCIATES WI LAND SURVEYOR

THIS PLAT AND RELOCATION ORDER ARE APPROVED FOR THE WISCONSIN DEPARTMENT OF TRANSPORTATION.

SIGNATURE: Curt Van Erem DATE: 08-19-20
PRINT NAME: CURT VAN EREM

FILE NAME : F:\TR\JOBS\E2370A19 STH 55-114 TPP\CIVIL 3D\RW\TPP.DWG
APPRAISAL PLAT DATE : 8-19-2020
PLOT DATE : 8/17/2020 2:17 PM PLOT BY : JAIRO MAZARIEGOS PLOT NAME : PLOT SCALE : 1 IN:80 FT

4580-10-21-4.01

TRANSPORTATION PROJECT PLAT NO: 4580-10-21 - 4.02

THAT PART OF LOT 1, CALUMET COUNTY CERTIFIED SURVEY MAP NO. 1223, LOCATED IN THE SOUTHWEST QUARTER OF THE NORTHEAST QUARTER, SECTION 24, T20N, R18E, VILLAGE OF HARRISON, CALUMET COUNTY, WISCONSIN

RELOCATION ORDER STH 114-55 MENASHA - HILBERT USH 10 - VILLAGE OF SHERWOOD, CALUMET COUNTY.

TO PROPERTY ESTABLISH, LAY OUT, WIDEN, ENLARGE, EXTEND, CONSTRUCT, RECONSTRUCT, IMPROVE, OR MAINTAIN A PORTION OF THE HIGHWAY DESIGNATED ABOVE, THE STATE OF WISCONSIN DEPARTMENT OF TRANSPORTATION DEEMS IT NECESSARY TO RELOCATE OR CHANGE SAID HIGHWAY AND ACQUIRE CERTAIN LANDS AND INTERESTS OR RIGHTS IN LANDS FOR THE ABOVE NAMED PROJECT.

TO EFFECT THIS CHANGE, PURSUANT TO AUTHORITY GRANTED UNDER SUBSECTIONS 84.02 (3), 84.09 AND 84.30, WISCONSIN STATUTES, THE DEPARTMENT OF TRANSPORTATION HEREBY ORDERS THAT:

1. THAT PORTION OF SAID HIGHWAY AS SHOWN ON THIS PLAT IS LAID OUT AND ESTABLISHED TO THE LINES AND WIDTHS AS SO SHOWN FOR THE ABOVE NAMED PROJECT.
2. THE LANDS OR INTERESTS OR RIGHTS IN LANDS AS SHOWN ON THIS PLAT ARE REQUIRED BY THE DEPARTMENT FOR THE ABOVE PROJECT AND SHALL BE ACQUIRED IN THE NAME OF THE STATE OF WISCONSIN, PURSUANT TO THE PROVISIONS OF SUBSECTION 84.09 (1) OR (2). WISCONSIN STATUTES.

SCHEDULE OF LANDS AND INTERESTS REQUIRED

OWNERS NAMES ARE SHOWN FOR REFERENCE PURPOSES ONLY AND ARE SUBJECT TO CHANGE PRIOR TO TRANSFER OF LAND INTERESTS TO THE DEPARTMENT

PARCEL NO.	OWNER	INTEREST REQUIRED	AREA SQUARE FEET REQUIRED			TLE AREA
			NEW	EXISTING	TOTAL	
3	HARRISON DEVELOPMENT LLP	FEE	870 SQ FT	2799 SQ FT	3669 SQ FT	---

EXISTING HIGHWAY RIGHT-OF-WAY SHOWN IS BASED UPON THE FOLLOWING POINTS OF REFERENCE:

EXISTING RIGHT-OF-WAY OF STH 114 ESTABLISHED FROM:
WISDOT RIGHT-OF-WAY PROJECT SAP 3355 & 3359 / FEDERAL AIR PROJECT 424-C, NO DATE.
PROJECT T 0410 (1) DATED 5-1-64, WISDOT RIGHT-OF-WAY PROJECT 4670-03-21 DATED 12-15-92
CALUMET COUNTY CERTIFIED SURVEY MAP NO. 1223 DATED 8-10-92, CSM 2970 DATED 12-11-06
EXISTING RIGHT-OF-WAY PIGEON ROAD ESTABLISHED FROM:
WISDOT RIGHT-OF-WAY PROJECT 4670-03-21 DATED 12-15-92
CALUMET COUNTY CERTIFIED SURVEY MAP NO. 1223 DATED 8-10-92

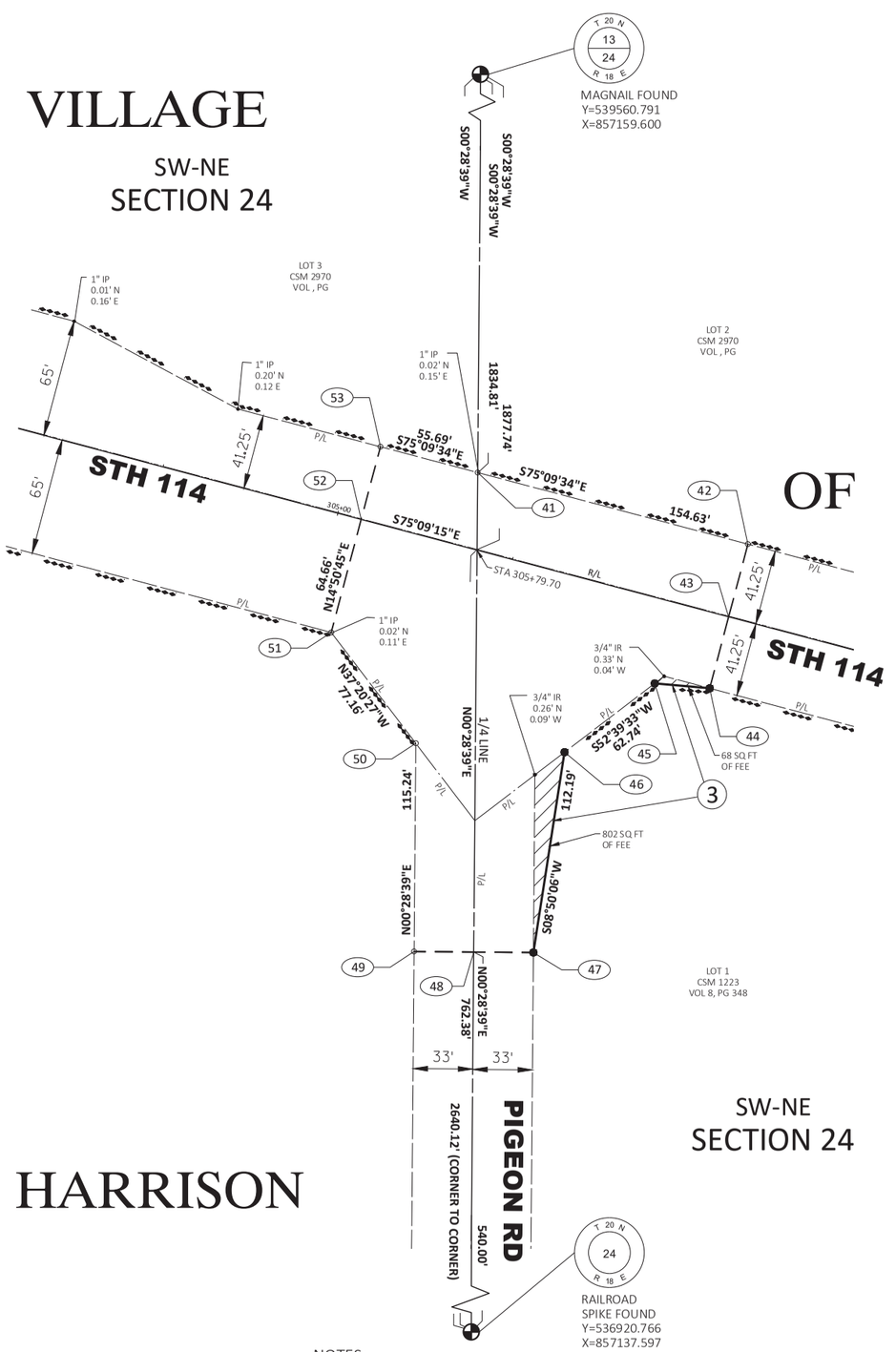

CONVENTIONAL SYMB

SECTION LINE
QUARTER LINE
SIXTEENTH LINE
NEW REFERENCE LINE
NEW R/W LINE
EXISTING R/W OR HE LINE
PROPERTY LINE
LOT, TIE & OTHER MINOR LINES
SLOPE INTERCEPT
CORPORATE LIMITS
UNDERGROUND FACILITY (COMMUNICATIONS, ELECTRIC, ETC)
NEW R/W (FEE OR HE) (HATCHING VARIES BY OWNER)
TEMPORARY LIMITED EASEMENT AREA
EASEMENT AREA (PERMANENT LIMITED OR RESTRICTED DEVELOPMENT)
TRANSMISSION STRUCTURES
BUILDING TO BE REMOVED
BRIDGE

SECTION CORNER SYMBOL
SECTION CORNER MONUMENT
GEODETIC SURVEY
SIXTEENTH CORNE
SIGN
R/W MONUMENT (TO BE SET)
NON-MONUMENTED R/W POINT
FOUND IRON PIN (1-INCH UNLESS NOTED)
OFF-PREMISE SIGN
COMPENSABLE
NON-COMPENSABLE
ELECTRIC POLE
TELEPHONE POLE
PEDESTAL (LABEL TYPE) (TV, TEL, ELEC, ETC.)
ACCESS RESTRICTED BY ACQUISITION
NO ACCESS (BY STATUTORY AUTHORITY)
ACCESS RESTRICTED (BY PREVIOUS PROJECT OR CONTROL)
NO ACCESS (NEW HIGHWAY)
PARCEL NUMBER 25
UTILITY NUMBER 40
PARALLEL OFFSETS
25 R/W POINT NUMBER
30 TLE POINT NUMBER

CONVENTIONAL ABBREVIATIONS

ACCESS RIGHTS	AR	POINT OF INTERSECTION	PI
ACRES	AC	PROPERTY LINE	PL
AHEAD	AH	RECORDED AS	(100')
ALUMINUM	ALUM	REEL / IMAGE	R/I
AND OTHERS	ET AL	REFERENCE LINE	R/L
BACK	BK	REMAINING	REM
BLOCK	BLK	RESTRICTIVE DEVELOPMENT EASEMENT	RDE
CENTERLINE	C/L	RIGHT	RT
CERTIFIED SURVEY MAP	CSM	RIGHT OF WAY	R/W
CONCRETE	CONC	SECTION	SEC
COUNTY	CO	SEPTIC VENT	SEPV
COUNTY TRUNK HIGHWAY	CTH	SQUARE FEET	SF
DISTANCE	DIST	STATE TRUNK HIGHWAY	STH
CORNER	COR	STATION	STA
DOCUMENT NUMBER	DOC	TELEPHONE PEDESTAL	TP
EASEMENT	EASE	TEMPORARY LIMITED EASEMENT	TLE
EXISTING	EX	TRANSPORTATION PROJECT PLAT	TPP
GAS VALVE	GV	UNITED STATES HIGHWAY	USH
GRID NORTH	GN	VOLUME	V
HIGHWAY EASEMENT	HE		
IDENTIFICATION	ID		
LAND CONTRACT	LC		
LEFT	LT		
MONUMENT	MON		
NATIONAL GEODETIC SURVEY NUMBER	NGS NO		
OUTLOT	OL		
PAGE	P		
POINT OF TANGENCY	PT		
PERMANENT LIMITED EASEMENT	PLE		
POINT OF BEGINNING	POB		
POINT OF CURVATURE	PC		
POINT OF COMPOUND CURVE	PCC		

CURVE DATA

LONG CHORD	LCH
LONG CHORD BEARING	LCB
RADIUS	R
DEGREE OF CURVE	D
CENTRAL ANGLE	Δ/DELTA
LENGTH OF CURVE	L
TANGENT	T
DIRECTION AHEAD	DA
DIRECTION BACK	DB

RIGHT OF WAY TABLE

PT#	Y	X	STA	OFFSET
41	537726.049	857144.309	305+69.05	41.59'
42	537686.444	857293.777	307+23.68	41.61'
43	537646.224	857283.118	307+23.68	0.00'
44	537606.697	857272.643	307+23.68	40.89'
45	537609.386	857242.205	306+93.57	46.09'
46	537571.334	857192.327	306+55.11	95.65'
47	537460.476	857175.096	306+66.85	207.23'
48	537460.751	857142.097	306+34.89	215.41'
49	537461.026	857109.099	306+02.92	223.60'
50	537576.263	857110.059	305+74.32	111.97'
51	537637.608	857063.257	305+13.36	64.66'
52	537700.111	857079.825	305+13.36	0.00'
53	537740.311	857090.481	305+13.36	41.59'

LINE TABLE

LINE	BEARING	DISTANCE
42-43	S14°50'36"W	41.61'
43-44	S14°50'36"W	40.89'
44-45	N84°57'01"W	30.56'
47-48	N89°31'21"W	33.00'
48-49	N89°31'21"W	33.00'
52-53	N14°50'45"E	41.59'

PROJECT LOCATION:

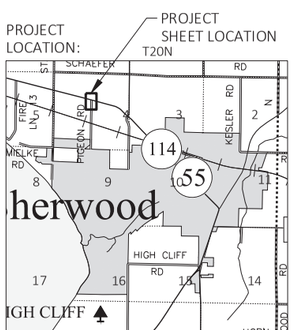

NOTES:

POSITIONS SHOWN ON THIS PLAT ARE WISCONSIN COORDINATE REFERENCE SYSTEM COORDINATES (WISCRS), CALUMET COUNTY, NAD 83 (2011) IN U.S. SURVEY FEET. VALUES SHOWN ARE GRID COORDINATES, GRID BEARINGS, AND GRID DISTANCES. GRID DISTANCES MAY BE USED AS GROUND DISTANCES.

RIGHT-OF-WAY MONUMENTS ARE TYPE 2 MONUMENTS (TYPICALLY 1-INCH BY 24-INCH IRON PIPE) AND WILL BE PLACED PRIOR TO THE COMPLETION OF THE PROJECT.

RIGHT-OF-WAY BOUNDARIES ARE DEFINED WITH COURSES OF THE PERIMETER OF THE HIGHWAY LANDS REFERENCED TO THE U.S. PUBLIC LAND SURVEY OR OTHER SURVEYS OF RECORD.

PROPERTY LINES SHOWN ON THIS PLAT ARE DRAWN FROM DATA DERIVED FROM MAPS AND DOCUMENTS OF PUBLIC RECORD AND/OR EXISTING OCCUPATIONAL LINES. EXCLUDING RIGHT-OF-WAY BOUNDARIES, THIS PLAT MAY NOT BE A TRUE REPRESENTATION OF EXISTING PROPERTY LINES AND SHOULD NOT BE USED AS A SUBSTITUTE FOR AN ACCURATE FIELD SURVEY.

DIMENSIONS FOR THE NEW RIGHT-OF-WAY IS MEASURED ALONG AND PERPENDICULAR TO THE NEW REFERENCE LINES.

ALL RIGHT-OF-WAY LINES DEPICTED IN THE NON-ACQUISTION AREAS ARE INTENDED TO RE-ESTABLISH EXISTING RIGHT-OF-WAY LINES AS DETERMINED FROM PREVIOUS PROJECTS, OTHER RECORDED DOCUMENTS, OR FROM CENTERLINE OF EXISTING PAVEMENTS.

FOR THE CURRENT ACCESS/DRIVEWAY INFORMATION, CONTACT THE PLANNING UNIT OF THE WISCONSIN DEPARTMENT OF TRANSPORTATION OFFICE IN GREEN BAY.

ACCESS CONTROL ON STH 55/114 PER DOCUMENT NO'S. 335941 AND 350141.

PARCEL IDENTIFICATION NUMBERS MAY NOT POINT TO ALL AREAS OF ACQUISITION, AS NOTED ON THE SCHEDULE OF LANDS & INTERESTS REQUIRED.

GN

SCALE, FEET
0 40 80

DOCUMENT # 551641
TAMARA ALTEN
REGISTER OF DEEDS
CALUMET COUNTY, WI
08/27/2020 01:37 PM
VOL: D PAGE: 135
RECORDING FEE: 25.00

RESERVED FOR REGISTER OF DEEDS
PROJECT NUMBER: 4580-10-21 - 4.02
AMENDMENT NO:

OMNNI ASSOCIATES
ONE SYSTEMS DRIVE APPLETON, WI 54914-1654
PHONE (920) 735-6900
FAX (920) 830-6100

I, DAVID A. YURK PROFESSIONAL LAND SURVEYOR, HEREBY CERTIFY THAT IN FULL COMPLIANCE WITH THE PROVISIONS OF SECTION 84.095 OF THE WISCONSIN STATUTES AND UNDER THE DIRECTION OF THE DEPARTMENT. I HAVE SURVEYED AND MAPPED THIS TRANSPORTATION PROJECT PLAT 4580-10-21-4.02 AND SUCH PLAT CORRECTLY REPRESENTS ALL EXTERIOR BOUNDARIES OF THE SURVEYED LAND.

SIGNATURE: David A. Yurk DATE: 08-14-20
PRINT NAME: DAVID A. YURK
REGISTRATION NUMBER: S-2648

WISCONSIN DAVID A. YURK S-2648 OMNNI, WI LAND SURVEYOR

THIS PLAT AND RELOCATION ORDER ARE APPROVED FOR THE WISCONSIN DEPARTMENT OF TRANSPORTATION.

SIGNATURE: Curt Van Erem DATE: 08-19-20
PRINT NAME: CURT VAN EREM

4580-10-21-4.02_
1 IN:40 FT
PLOT SCALE :
PLOT NAME :
103
PLOT BY : Jairo Mazariegos
PLOT DATE : 8/17/2020 9:01 AM
PLOT DATE :
PLOT DATE :
FILE NAME : F:\TR\OBS\E2370A19 STH 55-114 TPP\CIVIL 3D\RW\TPP.DWG
APPRAISAL PLAT DATE : 08-19-2020

TRANSPORTATION PROJECT PLAT NO: 4580-10-21 - 4.03

THAT PART OF LOT 1, CALUMET COUNTY CERTIFIED SURVEY MAP NO. 1898, THAT PART OF LOT 1 CALUMET COUNTY CERTIFIED SURVEY MAP NO. 2737, LOCATED IN THE SOUTHEAST QUARTER OF THE NORTHEAST QUARTER, SECTION 30, T20N, R19E, VILLAGE OF SHERWOOD, CALUMET COUNTY, WISCONSIN

RELOCATION ORDER STH 114-55 MENASHA - HILBERT USH 10 - VILLAGE OF SHERWOOD, CALUMET COUNTY.

TO PROPERTY ESTABLISH, LAY OUT, WIDEN, ENLARGE, EXTEND, CONSTRUCT, RECONSTRUCT, IMPROVE, OR MAINTAIN A PORTION OF THE HIGHWAY DESIGNATED ABOVE, THE STATE OF WISCONSIN DEPARTMENT OF TRANSPORTATION DEEMS IT NECESSARY TO RELOCATE OR CHANGE SAID HIGHWAY AND ACQUIRE CERTAIN LANDS AND INTERESTS OR RIGHTS IN LANDS FOR THE ABOVE NAMED PROJECT.

TO EFFECT THIS CHANGE, PURSUANT TO AUTHORITY GRANTED UNDER SUBSECTIONS 84.02 (3), 84.09 AND 84.30, WISCONSIN STATUTES, THE DEPARTMENT OF TRANSPORTATION HEREBY ORDERS THAT:

1. THAT PORTION OF SAID HIGHWAY AS SHOWN ON THIS PLAT IS LAID OUT AND ESTABLISHED TO THE LINES AND WIDTHS AS SO SHOWN FOR THE ABOVE NAMED PROJECT.
2. THE LANDS OR INTERESTS OR RIGHTS IN LANDS AS SHOWN ON THIS PLAT ARE REQUIRED BY THE DEPARTMENT FOR THE ABOVE PROJECT AND SHALL BE ACQUIRED IN THE NAME OF THE STATE OF WISCONSIN, PURSUANT TO THE PROVISIONS OF SUBSECTION 84.09 (1) OR (2), WISCONSIN STATUTES.

SCHEDULE OF LANDS AND INTEREST REQUIRED

OWNERS NAMES ARE SHOWN FOR REFERENCE PURPOSES ONLY AND ARE SUBJECT TO CHANGE PRIOR TO TRANSFER OF LAND INTERESTS TO THE DEPARTMENT.

PARCEL NO.	OWNER	INTEREST REQUIRED	AREA ACRES REQUIRED NEW	EXISTING	TOTAL	TLE AREA
4	OP THE PLACE TO BE, LLC	FEE TLE	0.03 AC	---	0.03 A C	0.03 AC
6	BEST ADVANTAGE CREDIT UNION	FEE TLE	0.03 AC	---	0.03 AC	0.06 AC

TLE NOTE: ALL TEMPORARY LIMITED EASEMENTS ON THIS TRANSPORTATION PROJECT PLAT ARE FOR SLOPING AND CONSTRUCTION PURPOSES

(92) TDS TELECOM
NO EASEMENT OF RECORD (PARCEL 6)

(93) SPECTRUM
NO EASEMENT OF RECORD (PARCEL 6)

(94) WE ENERGIES ELECTRIC
NO EASEMENT OF RECORD (PARCEL 4)

UTILITY SCHEDULE OF INTEREST REQUIRED

UTILITY NO.	UTILITY OWNERS	INTEREST REQUIRED
92	TDS TELECOM	RELEASE OF RIGHTS
93	CHARTER COMMUNICATIONS	RELEASE OF RIGHTS
94	WE ENERGIES (ELECTRIC)	RELEASE OF RIGHTS

EXISTING HIGHWAY RIGHT-OF-WAY SHOWN IS BASED UPON THE FOLLOWING POINTS OF REFERENCE:

EXISTING RIGHT-OF-WAY OF STH 114 ESTABLISHED FROM:
WISDOT RIGHT-OF-WAY PROJECT SAP 3355 & 3359 / FEDERAL AIR PROJECT 424-C, NO DATE.
WISDOT RIGHT-OF-WAY PROJECT 4050-02-21 DATED FEBRUARY 24, 1993
WISDOT RIGHT-OF-WAY PROJECT 4050-05-21 DATED AUGUST 26, 1994
CALUMET COUNTY CERTIFIED SURVEY MAPS NO. 644 DATED MAY 13, 1978, CSM NO. 1898 DATED 11-12-1991, CSM NO. 2197 DATED MAY 17, 1999
EXISTING RIGHT-OF-WAY CASTLE DRIVE ESTABLISHED FROM:
WISDOT RIGHT-OF-WAY PROJECT 4050-02-21 DATED FEBRUARY 24, 1993
WISDOT RIGHT-OF-WAY PROJECT 4050-05-21 DATED AUGUST 26, 1994
CALUMET COUNTY CERTIFIED SURVEY MAPS NO. 1896 DATED 11-12-1991, JAMES MAYER PLAT OF SURVEY DATED 11-11-1994

LINE TABLE

LINE	BEARING	DISTANCE
L1	N88°52'41"W	38.42'
56-57	S45°06'28"W	57.67'
57-58	S49°17'10"W	71.28'
58-59	N40°51'50"W	66.00'
59-183	N49°17'10"E	44.43'
183-62	N24°52'49"W	69.05'
62-63	N44°53'30"W	25.20'
63-66	N37°39'06"W	51.58'
66-72	N44°53'30"W	209.09'
72-73	N36°34'42"W	55.33'
73-123	N44°53'30"W	27.67'
123-74	N45°06'28"E	41.68'
74-75	N45°06'28"E	40.82'
175-176	S49°53'33"E	100.38'
176-177	S44°53'30"E	150.00'
177-178	S34°57'21"E	50.71'
178-76	S44°53'30"E	44.71'
76-56	S45°07'17"W	40.82'

GN

SCALE, FEET
0 60 120

DOCUMENT # 552045
TAMARA ALTEN
REGISTER OF DEEDS
CALUMET COUNTY, WI
09/09/2020 10:13 AM
VOL: D PAGE: 136
RECORDING FEE: 25.00

RESERVED FOR REGISTER OF DEEDS
PROJECT NUMBER: 4580-10-21 - 4.03
AMENDMENT NO:

DLS

CONVENTIONAL SYMBOLS

SECTION LINE
QUARTER LINE
SIXTEENTH LINE
NEW REFERENCE LINE
NEW R/W LINE
EXISTING R/W OR HE LINE
PROPERTY LINE
LOT, TIE & OTHER MINOR LINES
SLOPE INTERCEPT
CORPORATE LIMITS
UNDERGROUND FACILITY (COMMUNICATIONS, ELECTRIC, ETC)
NEW R/W (FEE OR HE) (HATCHING VARIES BY OWNER)
TEMPORARY LIMITED EASEMENT AREA
EASEMENT AREA (PERMANENT LIMITED OR RESTRICTED DEVELOPMENT)
TRANSMISSION STRUCTURES
BUILDING TO BE REMOVED
BRIDGE

SECTION CORNER SYMBOL
SECTION CORNER MONUMENT
GEODETIC SURVEY MON
SIXTEENTH CORNER MO
SIGN
ELECTRIC POLE
TELEPHONE POLE
PEDESTAL (LABEL TYPE) (TV, TEL, ELEC, ETC.)
PARCEL NUMBER (25)
UTILITY NUMBER (40)
PARALLEL OFFSETS
(25) R/W POINT NUMBER
(30) TLE POINT NUMBER

W MONUMENT (TO BE SET)
ON-MONUMENTED W POINT
XND IRON PIN (-INCH UNLESS NOTED)
F-PREMISE ON
PENSABLE
NON-COMPENSABLE

ACCESS RESTRICTED BY ACQUISITION
NO ACCESS (BY STATUTORY AUTHORITY)
ACCESS RESTRICTED (BY PREVIOUS PROJECT OR CONTROL)
NO ACCESS (NEW HIGHWAY)

CONVENTIONAL UTILITY SYMBOLS

WATER
GAS
TELEPHONE
OVERHEAD TRANSMISSION LINES
ELECTRIC
CABLE TELEVISION
FIBER OPTIC
SANITARY SEWER
STORM SEWER
ELECTRIC TOWER

CONVENTIONAL ABBREVIATIONS

ACCESS RIGHTS	AR	POINT OF INTERSECTION	PI
ACRES	AC	PROPERTY LINE	PL
AHEAD	AH	RECORDED AS	(100')
ALUMINUM	ALUM	REEL / IMAGE	R/I
AND OTHERS	ET AL	REFERENCE LINE	R/L
BACK	BK	REMAINING	REM
BLOCK	BLK	RESTRICTIVE DEVELOPMENT EASEMENT	RDE
CENTERLINE	C/L	RIGHT	RT
CERTIFIED SURVEY MAP	CSM	RIGHT OF WAY	R/W
CONCRETE	CONC	SECTION	SEC
COUNTY	CO	SEPTIC VENT	SEPV
COUNTY TRUNK HIGHWAY	CTH	SQUARE FEET	SF
DISTANCE	DIST	STATE TRUNK HIGHWAY	STH
CORNER	COR	STATION	STA
DOCUMENT NUMBER	DOC	TELEPHONE PEDESTAL	TP
EASEMENT	EASE	TEMPORARY LIMITED EASEMENT	TLE
EXISTING	EX	TRANSPORTATION PROJECT PLAT	TPP
GAS VALVE	GV	UNITED STATES HIGHWAY	USH
GRID NORTH	GN	VOLUME	V
HIGHWAY EASEMENT	HE		
IDENTIFICATION	ID		
LAND CONTRACT	LC		
LEFT	LT		
MONUMENT	MON		
NATIONAL GEODETIC SURVEY NUMBER	NGS		
OUTLOT	NO		
PAGE	OL		
POINT OF TANGENCY	P		
PERMANENT LIMITED EASEMENT	PT		
POINT OF BEGINNING	PLE		
POINT OF CURVATURE	POB		
POINT OF COMPOUND CURVE	PC		
	PCC		

CURVE DATA

LONG CHORD	LCH
LONG CHORD BEARING	LCB
RADIUS	R
DEGREE OF CURVE	D
CENTRAL ANGLE	Δ/DELTA
LENGTH OF CURVE	L
TANGENT	T
DIRECTION AHEAD	DA
DIRECTION BACK	DB

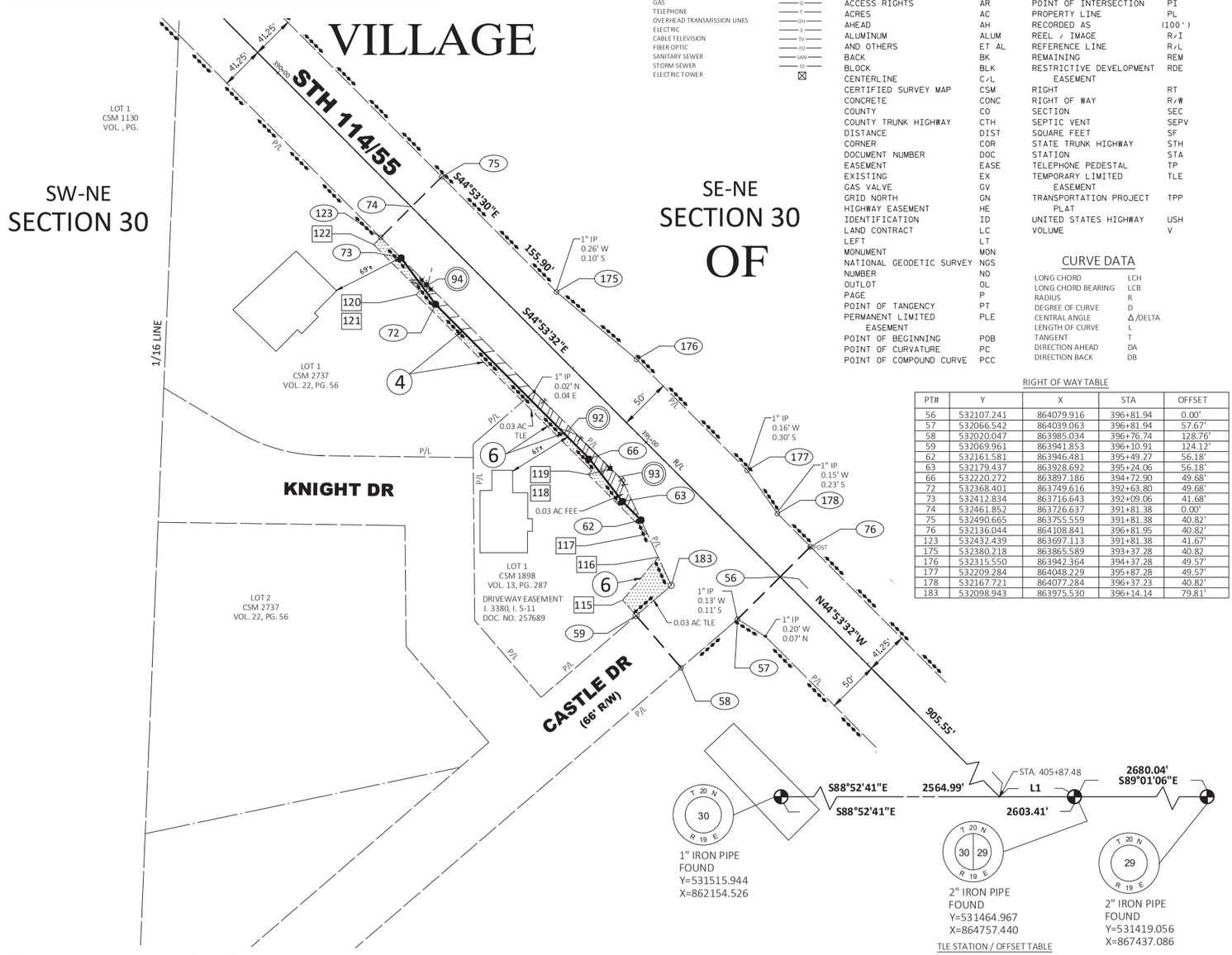

RIGHT OF WAY TABLE

PT#	Y	X	STA	OFFSET
56	532107.241	864079.916	396+81.94	0.00'
57	532066.542	864039.063	396+81.94	57.67'
58	532020.047	863985.034	396+76.74	128.76'
59	532069.961	863941.853	396+10.91	124.12'
62	532161.581	863946.481	395+49.27	56.18'
63	532179.437	863928.692	395+24.06	56.18'
66	532220.272	863897.186	394+72.90	49.68'
72	532368.401	863749.616	392+63.80	49.68'
73	532412.834	863716.643	392+09.06	41.68'
74	532461.852	863726.637	391+81.38	0.00'
75	532490.665	863755.559	391+81.38	40.82'
76	532136.044	864108.841	396+81.95	40.82'
123	532432.439	863697.113	391+81.38	41.67'
175	532380.218	863865.589	393+37.28	40.82
176	532315.550	863942.364	394+37.28	49.57'
177	532209.284	864048.229	395+87.28	49.57'
178	532167.721	864077.284	396+37.23	40.82'
183	532098.943	863975.530	396+14.14	79.81'

TLE STATION / OFFSET TABLE

PT#	STATION	OFFSET
117	395+63.19	61.25'
118	394+82.50	61.25'
119	394+82.50	56.25'
120	392+44.02	56.25'
122	392+44.02	51.25'
122	391+81.38	51.25'
115	395+91.27	122.74'
116	395+86.07	69.38'

PROJECT LOCATION:

PROJECT SHEET LOCATION

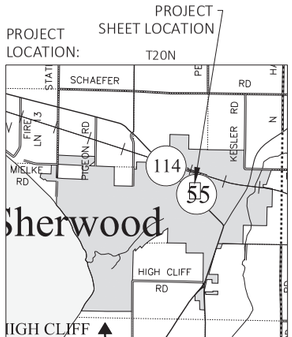

NOTES:

POSITIONS SHOWN ON THIS PLAT ARE WISCONSIN COORDINATE REFERENCE SYSTEM COORDINATES (WISCRS), CALUMET COUNTY, NAD 83 (2011) IN U.S. SURVEY FEET. VALUES SHOWN ARE GRID COORDINATES, GRID BEARINGS, AND GRID DISTANCES. GRID DISTANCES MAY BE USED AS GROUND DISTANCES.

RIGHT-OF-WAY MONUMENTS ARE TYPE 2 MONUMENTS (TYPICALLY 1-INCH BY 24-INCH IRON PIPE) AND WILL BE PLACED PRIOR TO THE COMPLETION OF THE PROJECT.

RIGHT-OF-WAY BOUNDARIES ARE DEFINED WITH COURSES OF THE PERIMETER OF THE HIGHWAY LANDS REFERENCED TO THE U.S. PUBLIC LAND SURVEY OR OTHER SURVEYS OF RECORD.

PROPERTY LINES SHOWN ON THIS PLAT ARE DRAWN FROM DATA DERIVED FROM MAPS AND DOCUMENTS OF PUBLIC RECORD AND/OR EXISTING OCCUPATIONAL LINES. EXCLUDING RIGHT-OF-WAY BOUNDARIES, THIS PLAT MAY NOT BE A TRUE REPRESENTATION OF EXISTING PROPERTY LINES AND SHOULD NOT BE USED AS A SUBSTITUTE FOR AN ACCURATE FIELD SURVEY.

DIMENSIONS FOR THE NEW RIGHT-OF-WAY IS MEASURED ALONG AND PERPENDICULAR TO THE NEW REFERENCE LINES.

ALL RIGHT-OF-WAY LINES DEPICTED IN THE NON-ACQUISITION AREAS ARE INTENDED TO RE-ESTABLISH EXISTING RIGHT-OF-WAY LINES AS DETERMINED FROM PREVIOUS PROJECTS, OTHER RECORDED DOCUMENTS, OR FROM CENTERLINE OF EXISTING PAVEMENTS.

FOR THE CURRENT ACCESS/DRIVEWAY INFORMATION, CONTACT THE PLANNING UNIT OF THE WISCONSIN DEPARTMENT OF TRANSPORTATION OFFICE IN GREEN BAY.

ACCESS CONTROL ON STH 114/55 PER DOCUMENT NO. 350158.

A TEMPORARY LIMITED EASEMENT (TLE) IS A RIGHT FOR CONSTRUCTION PURPOSES, AS DEFINED HEREIN, INCLUDING THE RIGHT TO OPERATE NECESSARY EQUIPMENT THEREON AND THE RIGHT OF INGRESS AND EGRESS, AS LONG AS REQUIRED FOR SUCH PUBLIC PURPOSE, INCLUDING THE RIGHT TO PRESERVE, PROTECT, REMOVE, OR PLANT THEREON ANY VEGETATION THAT THE HIGHWAY AUTHORITIES MAY DEEM NECESSARY OR DESIRABLE. ALL TLE'S EXPIRE AT THE COMPLETION OF THE PROJECT FOR WHICH THIS INSTRUMENT IS GIVEN.

PARCEL IDENTIFICATION NUMBERS MAY NOT POINT TO ALL AREAS OF ACQUISITION, AS NOTED ON THE SCHEDULE OF LANDS & INTERESTS REQUIRED.

OMNNI ASSOCIATES
ONE SYSTEMS DRIVE APPLETON, WI 54914-1654
PHONE (920) 735-6900
FAX (920) 830-6100

I, DAVID A. YURK PROFESSIONAL LAND SURVEYOR, HEREBY CERTIFY THAT IN FULL COMPLIANCE WITH THE PROVISIONS OF SECTION 84.095 OF THE WISCONSIN STATUTES AND UNDER THE DIRECTION OF THE DEPARTMENT. I HAVE SURVEYED AND MAPPED THIS TRANSPORTATION PROJECT PLAT 4580-10-21-4.03 AND SUCH PLAT CORRECTLY REPRESENTS ALL EXTERIOR BOUNDARIES OF THE SURVEYED LAND.

SIGNATURE: David A. Yurk DATE: 08-14-20
PRINT NAME: DAVID A. YURK
REGISTRATION NUMBER: S-2648

WISCONSIN DAVID A. YURK S-2648 OSHKOSH, WI LAND SURVEYOR

THIS PLAT AND RELOCATION ORDER ARE APPROVED FOR THE WISCONSIN DEPARTMENT OF TRANSPORTATION.

SIGNATURE: Curt Van Erem DATE: 08-31-20
PRINT NAME: CURT VAN EREM

4580-10-21-4.03
1 IN:60 FT
PLOT SCALE :
PLOT NAME :
104
PLOT BY : Jairo Mazariegos
8/31/2020 8:47 AM
PLOT DATE :
PLOT DATE :
PLOT DATE :
FILE NAME : F:\TR\OBS\E2370A19 STH 55-114 TPP\CIVIL 3D\RW\TPP.DWG
APPRAISAL PLAT DATE : 08-31-2020

TRANSPORTATION PROJECT PLAT NO: 4580-10-21 - 4.04

BEING A PART OF LOT 1, CSM NO. 3097, LOT 9, BLOCK 2, STUMPF MEEHL HIGHLAND ADDITION TO THE VILLAGE OF SHERWOOD LOTS 1, AND 6, BLOCK 1, HENRY'S STUHSER'S ADDITION TO THE VILLAGE OF SHERWOOD, LOCATED IN AND BEING A PART OF THE NORTHWEST QUARTER OF THE SOUTHWEST QUARTER, PART OF THE NORTHEAST QUARTER OF THE SOUTHWEST QUARTER AND PART OF THE SOUTHEAST QUARTER OF THE SOUTHWEST QUARTER, ALL IN SECTION 29, T20N, R19E, VILLAGE OF SHERWOOD, CALUMET COUNTY, WISCONSIN

RELOCATION ORDER STH 114-55 MENASHA - HILBERT USH 10 - VILLAGE OF SHERWOOD, CALUMET COUNTY.

TO PROPERTY ESTABLISH, LAY OUT, WIDEN, ENLARGE, EXTEND, CONSTRUCT, RECONSTRUCT, IMPROVE, OR MAINTAIN A PORTION OF THE HIGHWAY DESIGNATED ABOVE, THE STATE OF WISCONSIN DEPARTMENT OF TRANSPORTATION DEEMS IT NECESSARY TO RELOCATE OR CHANGE SAID HIGHWAY AND ACQUIRE CERTAIN LANDS AND INTERESTS OR RIGHTS IN LANDS FOR THE ABOVE NAMED PROJECT.

TO EFFECT THIS CHANGE, PURSUANT TO AUTHORITY GRANTED UNDER SUBSECTIONS 84.02 (3), 84.09 AND 84.30, WISCONSIN STATUTES, THE DEPARTMENT OF TRANSPORTATION HEREBY ORDERS THAT:

1. THAT PORTION OF SAID HIGHWAY AS SHOWN ON THIS PLAT IS LAID OUT AND ESTABLISHED TO THE LINES AND WIDTHS AS SO SHOWN FOR THE ABOVE NAMED PROJECT.
2. THE LANDS OR INTERESTS OR RIGHTS IN LANDS AS SHOWN ON THIS PLAT ARE REQUIRED BY THE DEPARTMENT FOR THE ABOVE PROJECT AND SHALL BE ACQUIRED IN THE NAME OF THE STATE OF WISCONSIN, PURSUANT TO THE PROVISIONS OF SUBSECTION 84.09 (1) OR (2). WISCONSIN STATUTES.

TLE NOTE: ALL TEMPORARY LIMITED EASEMENTS ON THIS TRANSPORTATION PROJECT PLAT ARE FOR SLOPING AND CONSTRUCTION PURPOSES

SCHEDULE OF LANDS AND INTEREST REQUIRED

OWNERS NAMES ARE SHOWN FOR REFERENCE PURPOSES ONLY AND ARE SUBJECT TO CHANGE PRIOR TO TRANSFER OF LAND INTERESTS TO THE DEPARTMENT.

PARCEL NO.	OWNER	INTEREST REQUIRED	AREA SQ FT REQUIRED			TLE AREA
			NEW	EXISTING	TOTAL	
7	BAUMAN REAL ESTATE LIMITED PARTNERSHIP, KARLA K. BLOCK, KRAIG D. BAUMAN AND KURT B. BAUMAN	TLE	---	---	---	215 SQ FT
8	ZERO TO 60 GARAGE LLC	TLE	---	---	---	82 SQ FT
9	CLARENCE MUELLER COMPANY	TLE	---	---	---	216 SQ FT
11	VILLAGE OF SHERWOOD	FEE, TLE	137 SQ FT	4005 SQ FT	4142 SQ FT	233 SQ FT
12	LAND CONTRACT HILLTOP, INVESTORS LLC VENDOR, JASON SONSTHAGEN AND ALLISON SONSTHAGEN PURCHASER	TLE	---	---	---	176 SQ FT

CONVENTIONAL SYMBOLS

SECTION LINE
QUARTER LINE
SIXTEENTH LINE
NEW REFERENCE LINE
NEW R/W LINE
EXISTING R/W OR HE LINE
PROPERTY LINE
LOT, TIE & OTHER MINOR LINES
SLOPE INTERCEPT
CORPORATE LIMITS
UNDERGROUND FACILITY (COMMUNICATIONS, ELECTRIC, ETC)
NEW R/W (FEE OR HE) (HATCHING VARIES BY OWNER)
TEMPORARY LIMITED EASEMENT AREA
EASEMENT AREA (PERMANENT LIMITED OR RESTRICTED DEVELOPMENT)
TRANSMISSION STRUCTURES
BUILDING TO BE REMOVED
BRIDGE

SECTION CORNER SYMBOL
SECTION CORNER MONUMENT
GEODETIC SURVEY MONUMENT
SIXTEENTH CORNER MONUMENT
SIGN
OFF-PREMISE SIGN
COMPENSABLE NON-COMPENSABLE
ELECTRIC POLE
TELEPHONE POLE
PEDESTAL (LABEL TYPE) (TV, TEL, ELEC, ETC.)
ACCESS RESTRICTED BY ACQUISITION
NO ACCESS (BY STATUTORY AUTHORITY)
ACCESS RESTRICTED (BY PREVIOUS PROJECT OR CONTROL)
NO ACCESS (NEW HIGHWAY)
PARCEL NUMBER 25 UTILITY NUMBER 40
PARALLEL OFFSETS
25 R/W POINT NUMBER 30 TLE POINT NUMBER

R/W MONUMENT (TO BE SET)
NON-MONUMENTED R/W POINT
FOUND IRON PIN (1-INCH UNLESS NOTED) IP

CONVENTIONAL ABBREVIATIONS

ACCESS RIGHTS	AR	POINT OF INTERSECTION	PI
ACRES	AC	PROPERTY LINE	PL
AHEAD	AH	RECORDED AS	(100')
ALUMINUM	ALUM	REEL / IMAGE	R/I
AND OTHERS	ET AL	REFERENCE LINE	R/L
BACK	BK	REMAINING	REM
BLOCK	BLK	RESTRICTIVE DEVELOPMENT EASEMENT	RDE
CENTERLINE	C/L	RIGHT	RT
CERTIFIED SURVEY MAP	CSM	RIGHT OF WAY	R/W
CONCRETE	CONC	SECTION	SEC
COUNTY	CO	SEPTIC VENT	SEPV
COUNTY TRUNK HIGHWAY	CTH	SQUARE FEET	SF
DISTANCE	DIST	STATE TRUNK HIGHWAY	STH
CORNER	COR	STATION	STA
DOCUMENT NUMBER	DOC	TELEPHONE PEDESTAL	TP
EASEMENT	EASE	TEMPORARY LIMITED EASEMENT	TLE
EXISTING	EX	TRANSPORTATION PROJECT PLAT	TPP
GAS VALVE	GV	UNITED STATES HIGHWAY	USH
GRID NORTH	GN	VOLUME	V
HIGHWAY EASEMENT	HE		
IDENTIFICATION	ID		
LAND CONTRACT	LC		
LEFT	LT		
MONUMENT	MON		
NATIONAL GEODETIC SURVEY	NGS		
NUMBER	NO		
OUTLOT	OL		
PAGE	P		
POINT OF TANGENCY	PT		
PERMANENT LIMITED EASEMENT	PLE		
POINT OF BEGINNING	POB		
POINT OF CURVATURE	PC		
POINT OF COMPOUND CURVE	PCC		

CONVENTIONAL UTILITY SYMBOLS

WATER (W)
GAS (G)
TELEPHONE (T)
OVERHEAD TRANSMISSION LINES (OH)
ELECTRIC (E)
CABLE TELEVISION (TV)
FIBER OPTIC (FO)
SANITARY SEWER (SAN)
STORM SEWER (SS)
ELECTRIC TOWER

CURVE DATA

LONG CHORD	LCH
LONG CHORD BEARING	LCB
RADIUS	R
DEGREE OF CURVE	D
CENTRAL ANGLE	Δ/DELTA
LENGTH OF CURVE	L
TANGENT	T
DIRECTION AHEAD	DA
DIRECTION BACK	DB

UTILITY SCHEDULE OF INTEREST REQUIRED

UTILITY NO.	UTILITY OWNERS	INTEREST REQUIRED
95	VILLAGE OF SHERWOOD	RELEASE OF RIGHTS

95 VILLAGE OF SHERWOOD
NO EASEMENT OF RECORD (PARCEL 11)

EXISTING HIGHWAY RIGHT-OF-WAY SHOWN IS BASED UPON THE FOLLOWING POINTS OF REFERENCE:

EXISTING RIGHT-OF-WAY OF STH 114 ESTABLISHED FROM:
WISDOT RIGHT-OF-WAY PROJECT SAP 3355, NO DATE
WISDOT PROJECT 4050-05-21, DATED 8-26-1994
HENRY'S STUHSER'S ADDITION TO THE VILLAGE OF SHERWOOD, DATED 10-31-1905
STUMPF MEEHL HIGHLAND ADDITION TO THE VILLAGE OF SHERWOOD, DATED 10-26-1944
CALUMET COUNTY CERTIFIED SURVEY MAP NO. 746, DATED 10-23-1979, CSM 1481, DATED 5-14-1991
CSM 3097 DATED 7-8-2018, CSM 3697, DATED 1-11-2018

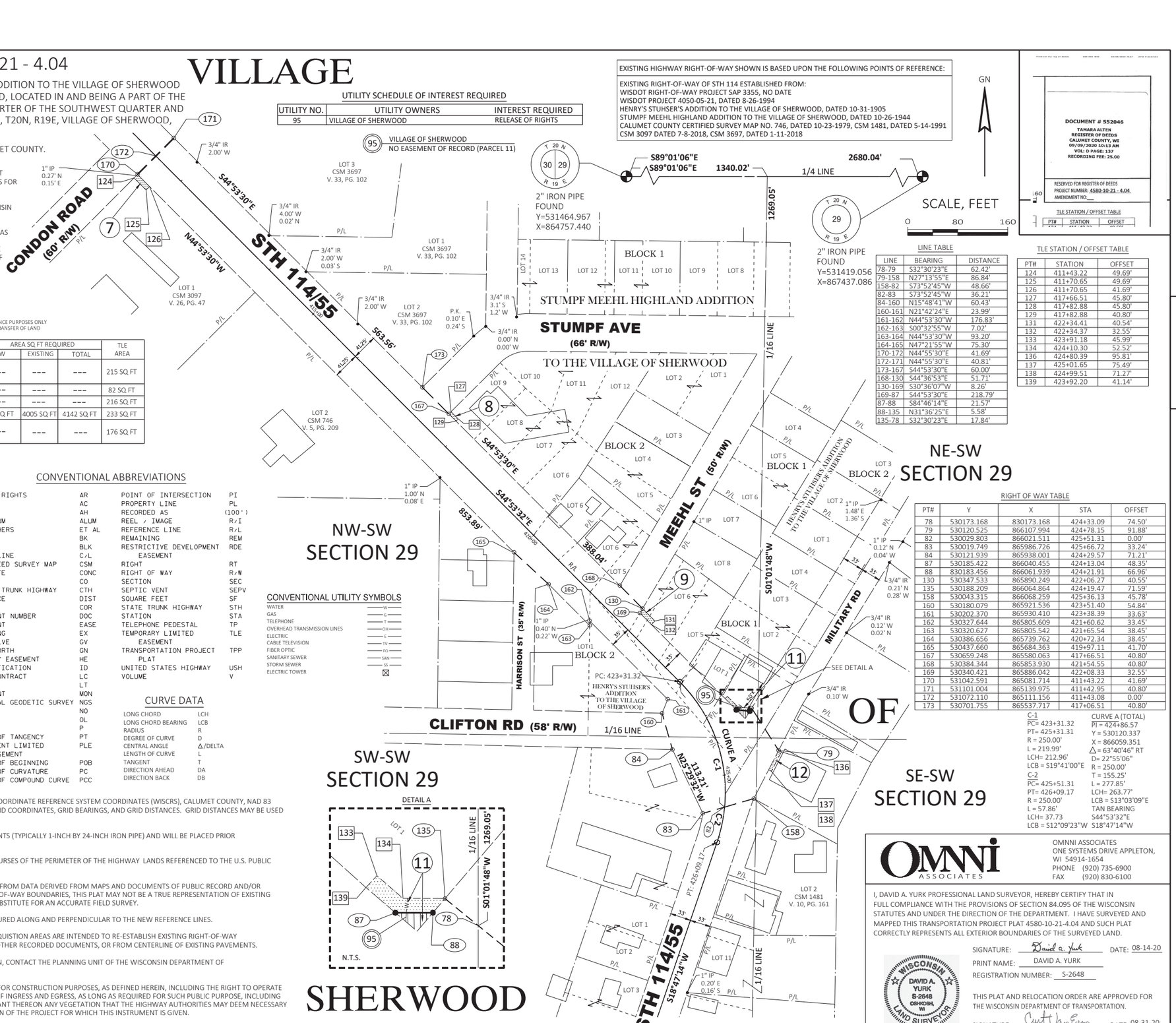

DETAIL A

LINE TABLE

LINE	BEARING	DISTANCE
78-79	S32°30'23"E	62.42'
79-158	N27°13'55"E	86.84'
158-82	S73°52'45"W	48.66'
82-83	S73°52'45"W	36.21'
84-160	N15°48'41"W	60.43'
160-161	N21°42'24"E	23.99'
161-162	N44°53'30"W	176.83'
162-163	S00°32'55"W	7.02'
163-164	N44°53'30"W	93.20'
164-165	N47°21'55"W	75.30'
170-172	N44°55'30"E	41.69'
172-171	N44°55'30"E	40.81'
173-167	S44°53'30"E	60.00'
168-130	S44°36'53"E	51.71'
130-169	S30°36'07"W	8.26'
169-87	S44°53'30"E	218.79'
87-88	S84°46'14"E	21.57'
88-135	N31°36'25"E	5.58'
135-78	S32°30'23"E	17.84'

TLE STATION / OFFSET TABLE

PT#	STATION	OFFSET
124	411+43.22	49.69'
125	411+70.65	49.69'
126	411+70.65	41.69'
127	417+66.51	45.80'
128	417+82.88	45.80'
129	417+82.88	40.80'
131	422+34.41	40.54'
132	422+34.37	32.55'
133	423+91.18	45.99'
134	424+10.30	52.52'
136	424+80.39	95.81'
137	425+01.65	75.49'
138	424+99.51	71.27'
139	423+92.20	41.14'

RIGHT OF WAY TABLE

PT#	Y	X	STA	OFFSET
78	530173.168	830173.168	424+33.09	74.50'
79	530120.525	866107.994	424+78.15	91.88'
82	530029.803	866021.511	425+51.31	0.00'
83	530019.749	865986.726	425+66.72	33.24'
84	530121.939	865938.001	424+29.57	71.21'
87	530185.422	866040.455	424+13.04	48.35'
88	830183.456	866061.939	424+21.91	66.96'
130	530347.533	865890.249	422+06.27	40.55'
135	530188.209	866064.864	424+19.47	71.59'
158	530043.315	866068.259	425+36.13	45.78'
160	530180.079	865921.536	423+51.40	54.84'
161	530202.370	865930.410	423+38.39	33.63'
162	530327.644	865805.609	421+60.62	33.45'
163	530320.627	865805.542	421+65.54	38.45'
164	530386.656	865739.762	420+72.34	38.45'
165	530437.660	865684.363	419+97.11	41.70'
167	530659.248	865580.063	417+66.51	40.80'
168	530384.344	865853.930	421+54.55	40.80'
169	530340.421	865886.042	422+08.33	32.55'
170	531042.591	865081.714	411+43.22	41.69'
171	531101.004	865139.975	411+42.95	40.80'
172	531072.110	865111.156	411+43.08	0.00'
173	530701.755	865537.717	417+06.51	40.80'

C-1
PC= 423+31.32
PT= 425+31.31
R = 250.00'
L = 219.99'
LCH= 212.96'
LCB = S19°41'00"E
C-2
PC= 425+51.31
PT= 426+09.17
R = 250.00'
L = 57.86'
LCH= 37.73
LCB = S12°09'23"W

CURVE A (TOTAL)
PI = 424+86.57
Y = 530120.337
X = 866059.351
△= 63°40'46" RT
D= 22°55'06"
R = 250.00'
T = 155.25'
L = 277.85'
LCH= 263.77'
LCB = S13°03'09"E
TAN BEARING
S44°53'32"E
S18°47'14"W

PROJECT SHEET LOCATION

PROJECT LOCATION: T20N

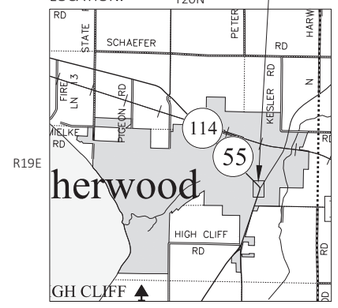

NOTES:

POSITIONS SHOWN ON THIS PLAT ARE WISCONSIN COORDINATE REFERENCE SYSTEM COORDINATES (WISCRS), CALUMET COUNTY, NAD 83 (2011) IN U.S. SURVEY FEET. VALUES SHOWN ARE GRID COORDINATES, GRID BEARINGS, AND GRID DISTANCES. GRID DISTANCES MAY BE USED AS GROUND DISTANCES.

RIGHT-OF-WAY MONUMENTS ARE TYPE 2 MONUMENTS (TYPICALLY 1-INCH BY 24-INCH IRON PIPE) AND WILL BE PLACED PRIOR TO THE COMPLETION OF THE PROJECT.

RIGHT-OF-WAY BOUNDARIES ARE DEFINED WITH COURSES OF THE PERIMETER OF THE HIGHWAY LANDS REFERENCED TO THE U.S. PUBLIC LAND SURVEY OR OTHER SURVEYS OF RECORD.

PROPERTY LINES SHOWN ON THIS PLAT ARE DRAWN FROM DATA DERIVED FROM MAPS AND DOCUMENTS OF PUBLIC RECORD AND/OR EXISTING OCCUPATIONAL LINES. EXCLUDING RIGHT-OF-WAY BOUNDARIES, THIS PLAT MAY NOT BE A TRUE REPRESENTATION OF EXISTING PROPERTY LINES AND SHOULD NOT BE USED AS A SUBSTITUTE FOR AN ACCURATE FIELD SURVEY.

DIMENSIONS FOR THE NEW RIGHT-OF-WAY IS MEASURED ALONG AND PERPENDICULAR TO THE NEW REFERENCE LINES.

ALL RIGHT-OF-WAY LINES DEPICTED IN THE NON-ACQUISTION AREAS ARE INTENDED TO RE-ESTABLISH EXISTING RIGHT-OF-WAY LINES AS DETERMINED FROM PREVIOUS PROJECTS, OTHER RECORDED DOCUMENTS, OR FROM CENTERLINE OF EXISTING PAVEMENTS.

FOR THE CURRENT ACCESS/DRIVEWAY INFORMATION, CONTACT THE PLANNING UNIT OF THE WISCONSIN DEPARTMENT OF TRANSPORTATION OFFICE IN GREEN BAY.

A TEMPORARY LIMITED EASEMENT (TLE) IS A RIGHT FOR CONSTRUCTION PURPOSES, AS DEFINED HEREIN, INCLUDING THE RIGHT TO OPERATE NECESSARY EQUIPMENT THEREON AND THE RIGHT OF INGRESS AND EGRESS, AS LONG AS REQUIRED FOR SUCH PUBLIC PURPOSE, INCLUDING THE RIGHT TO PRESERVE, PROTECT, REMOVE, OR PLANT THEREON ANY VEGETATION THAT THE HIGHWAY AUTHORITIES MAY DEEM NECESSARY OR DESIRABLE. ALL TLE'S EXPIRE AT THE COMPLETION OF THE PROJECT FOR WHICH THIS INSTRUMENT IS GIVEN.

PARCEL IDENTIFICATION NUMBERS MAY NOT POINT TO ALL AREAS OF ACQUISITION, AS NOTED ON THE SCHEDULE OF LANDS & INTERESTS REQUIRED.

DOCUMENT # 552046
TAMARA ALTEN
REGISTER OF DEEDS
CALUMET COUNTY, WI
09/09/2020 10:13 AM
VOL: D PAGE: 137
RECORDING FEE: 25.00

RESERVED FOR REGISTER OF DEEDS
PROJECT NUMBER: 4580-10-21 - 4.04
AMENDMENT NO:___

TLE STATION / OFFSET TABLE

PT#	STATION	OFFSET

OMNNI ASSOCIATES
ONE SYSTEMS DRIVE APPLETON, WI 54914-1654
PHONE (920) 735-6900
FAX (920) 830-6100

I, DAVID A. YURK PROFESSIONAL LAND SURVEYOR, HEREBY CERTIFY THAT IN FULL COMPLIANCE WITH THE PROVISIONS OF SECTION 84.095 OF THE WISCONSIN STATUTES AND UNDER THE DIRECTION OF THE DEPARTMENT. I HAVE SURVEYED AND MAPPED THIS TRANSPORTATION PROJECT PLAT 4580-10-21-4.04 AND SUCH PLAT CORRECTLY REPRESENTS ALL EXTERIOR BOUNDARIES OF THE SURVEYED LAND.

SIGNATURE: David A. Yurk DATE: 08-14-20
PRINT NAME: DAVID A. YURK
REGISTRATION NUMBER: S-2648

WISCONSIN DAVID A. YURK S-2648 OSHKOSH, WI LAND SURVEYOR

THIS PLAT AND RELOCATION ORDER ARE APPROVED FOR THE WISCONSIN DEPARTMENT OF TRANSPORTATION.

SIGNATURE: Curt Van Erem DATE: 08-31-20
PRINT NAME: CURT VAN EREM

TRANSPORTATION PROJECT PLAT NO: 4580-10-21 - 4.05

THAT PART OF LOT 6, BLOCK 1, ORIGINAL PLAT OF THE VILLAGE OF SHERWOOD, LOT 1, CALUMET COUNTY CERTIFIED SURVEY MAP NO. 2063, LOCATED IN AND INCLUDING A PART OF THE SOUTHWEST QUARTER OF THE SOUTHWEST QUARTER, SECTION 29 AND PART OF THE NORTHWEST QUARTER OF THE NORTHWEST QUARTER, SECTION 32, ALL IN T20N, R19E, VILLAGE OF SHERWOOD, CALUMET COUNTY, WISCONSIN

RELOCATION ORDER STH 114-55 MENASHA - HILBERT USH 10 - VILLAGE OF SHERWOOD, CALUMET COUNTY.

TO PROPERTY ESTABLISH, LAY OUT, WIDEN, ENLARGE, EXTEND, CONSTRUCT, RECONSTRUCT, IMPROVE, OR MAINTAIN A PORTION OF THE HIGHWAY DESIGNATED ABOVE, THE STATE OF WISCONSIN DEPARTMENT OF TRANSPORTATION DEEMS IT NECESSARY TO RELOCATE OR CHANGE SAID HIGHWAY AND ACQUIRE CERTAIN LANDS AND INTERESTS OR RIGHTS IN LANDS FOR THE ABOVE NAMED PROJECT.

TO EFFECT THIS CHANGE, PURSUANT TO AUTHORITY GRANTED UNDER SUBSECTIONS 84.02 (3), 84.09 AND 84.30, WISCONSIN STATUTES, THE DEPARTMENT OF TRANSPORTATION HEREBY ORDERS THAT:

1. THAT PORTION OF SAID HIGHWAY AS SHOWN ON THIS PLAT IS LAID OUT AND ESTABLISHED TO THE LINES AND WIDTHS AS SO SHOWN FOR THE ABOVE NAMED PROJECT.
2. THE LANDS OR INTERESTS OR RIGHTS IN LANDS AS SHOWN ON THIS PLAT ARE REQUIRED BY THE DEPARTMENT FOR THE ABOVE PROJECT AND SHALL BE ACQUIRED IN THE NAME OF THE STATE OF WISCONSIN, PURSUANT TO THE PROVISIONS OF SUBSECTION 84.09 (1) OR (2). WISCONSIN STATUTES.

SCHEDULE OF LANDS AND INTERESTS REQUIRED

OWNERS NAMES ARE SHOWN FOR REFERENCE PURPOSES ONLY AND ARE SUBJECT TO CHANGE PRIOR TO TRANSFER OF LAND INTERESTS TO THE DEPARTMENT.

PARCEL NO.	OWNER	INTEREST REQUIRED	AREA SQ FT REQUIRED			TLE AREA
			NEW	EXISTING	TOTAL	
13	SACRED HEART CONGREGATION OF SHERWOOD	TLE	---	---	---	250 SQ FT
14	JOSHUA D. STUEBS AND KRISTEN T. KONEN	TLE	---	---	---	171 SQ FT
16	JEAN M. SPRANGERS	FEE TLE	91 SQ FT	---	91 SQ FT	196 SQ FT
17	RONALD L. HAWKINSON & ANGELA F. HAWKENSON	TLE	---	---	---	64 SQ FT
18	MATTHEW R. DUNCAN	TLE	---	---	---	156 SQ FT

TLE NOTE: ALL TEMPORARY LIMITED EASEMENTS ON THIS TRANSPORTATION PROJECT PLAT ARE FOR SLOPING AND CONSTRUCTION PURPOSES

CONVENTIONAL SYMBOLS

SECTION LINE
QUARTER LINE
SIXTEENTH LINE
NEW REFERENCE LINE
NEW R/W LINE
EXISTING R/W OR HE LINE
PROPERTY LINE
LOT, TIE & OTHER MINOR LINES
SLOPE INTERCEPT
CORPORATE LIMITS
UNDERGROUND FACILITY (COMMUNICATIONS, ELECTRIC, ETC)
NEW R/W (FEE OR HE) (HATCHING VARIES BY OWNER)
TEMPORARY LIMITED EASEMENT AREA
EASEMENT AREA (PERMANENT LIMITED OR RESTRICTED DEVELOPMENT)
TRANSMISSION STRUCTURES
BUILDING TO BE REMOVED
BRIDGE

SECTION CORNER SYMBOL
SECTION CORNER MONUMENT
GEODETIC SURVEY MONUMENT
SIXTEENTH CORNER MONUMENT
SIGN
OFF-PREMISE SIGN

R/W MONUMENT (TO BE SET)
NON-MONUMENTED R/W POINT
FOUND IRON PIN (1-INCH UNLESS NOTED) IP

	COMPENSABLE	NON-COMPENSABLE
ELECTRIC POLE		
TELEPHONE POLE		
PEDESTAL (LABEL TYPE) (TV, TEL, ELEC, ETC.)		

ACCESS RESTRICTED BY ACQUISITION
NO ACCESS (BY STATUTORY AUTHORITY)
ACCESS RESTRICTED (BY PREVIOUS PROJECT OR CONTROL)
NO ACCESS (NEW HIGHWAY)

PARCEL NUMBER (25) UTILITY NUMBER (40)
PARALLEL OFFSETS
(25) R/W POINT NUMBER [30] TLE POINT NUMBER

CONVENTIONAL ABBREVIATIONS

ACCESS RIGHTS	AR	POINT OF INTERSECTION	PI
ACRES	AC	PROPERTY LINE	PL
AHEAD	AH	RECORDED AS	(100')
ALUMINUM	ALUM	REEL / IMAGE	R/I
AND OTHERS	ET AL	REFERENCE LINE	R/L
BACK	BK	REMAINING	REM
BLOCK	BLK	RESTRICTIVE DEVELOPMENT EASEMENT	RDE
CENTERLINE	C/L	RIGHT	RT
CERTIFIED SURVEY MAP	CSM	RIGHT OF WAY	R/W
CONCRETE	CONC	SECTION	SEC
COUNTY	CO	SEPTIC VENT	SEPV
COUNTY TRUNK HIGHWAY	CTH	SQUARE FEET	SF
DISTANCE	DIST	STATE TRUNK HIGHWAY	STH
CORNER	COR	STATION	STA
DOCUMENT NUMBER	DOC	TELEPHONE PEDESTAL	TP
EASEMENT	EASE	TEMPORARY LIMITED EASEMENT	TLE
EXISTING	EX	TRANSPORTATION PROJECT PLAT	TPP
GAS VALVE	GV	UNITED STATES HIGHWAY	USH
GRID NORTH	GN	VOLUME	V
HIGHWAY EASEMENT	HE		
IDENTIFICATION	ID		
LAND CONTRACT	LC		
LEFT	LT		
MONUMENT	MON		
NATIONAL GEODETIC SURVEY NUMBER	NGS NO		
OUTLOT	OL		
PAGE	P		
POINT OF TANGENCY	PT		
PERMANENT LIMITED EASEMENT	PLE		
POINT OF BEGINNING	POB		
POINT OF CURVATURE	PC		
POINT OF COMPOUND CURVE	PCC		

CURVE DATA

LONG CHORD	LCH
LONG CHORD BEARING	LCB
RADIUS	R
DEGREE OF CURVE	D
CENTRAL ANGLE	Δ/DELTA
LENGTH OF CURVE	L
TANGENT	T
DIRECTION AHEAD	DA
DIRECTION BACK	DB

DETAIL B

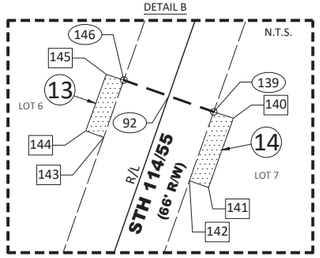

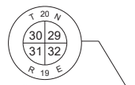

2" IRON PIPE FOUND
Y=528849.531
X=864727.771

N89°33'27"W
N89°33'27"W
N89°33'27"W

DETAIL A

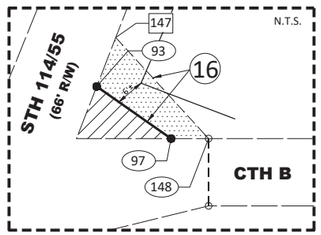

CONVENTIONAL UTILITY SYMBOLS

WATER	W
GAS	G
TELEPHONE	T
OVERHEAD TRANSMISSION LINES	OH
ELECTRIC	E
CABLE TELEVISION	TV
FIBER OPTIC	FO
SANITARY SEWER	SAN
STORM SEWER	SS
ELECTRIC TOWER	

EXISTING HIGHWAY RIGHT-OF-WAY SHOWN IS BASED UPON THE FOLLOWING POINTS OF REFERENCE:

EXISTING RIGHT-OF-WAY OF STH 114 ESTABLISHED FROM:
WISDOT PROJECT DS 0392(6) DATED AUGUST 4, 1958
WISDOT PROJECT 4050-05-21 DATED AUGUST 26, 1994
EXISTING RIGHT-OF-WAY OF CTH B IS ESTABLISHED FROM:
CALUMET COUNTY PROJECT 4482-3-00 DATED SEPTEMBER 20, 1989

VILLAGE OF SHERWOOD

SW-SW SECTION 29

NW-NW SECTION 32

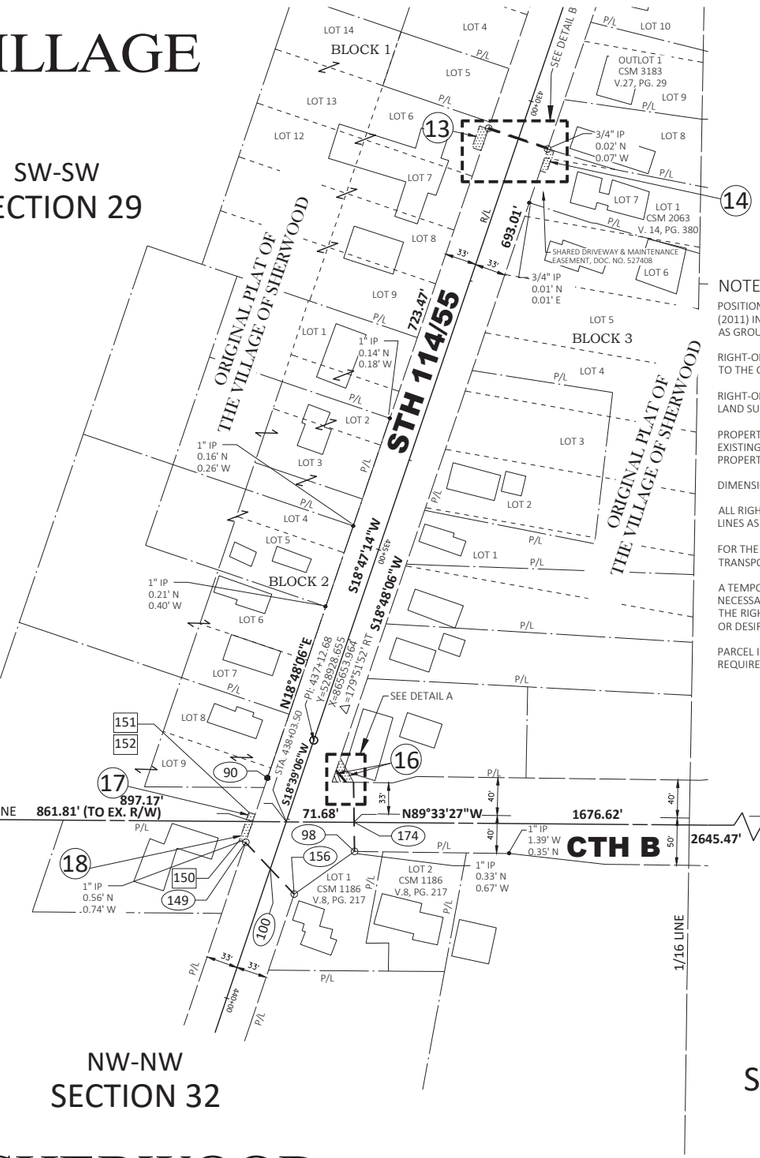

SE-SW SECTION 29

NE-NW SECTION 32

SHERWOOD

RIGHT OF WAY TABLE

PT#	Y	X	STA	OFFSET
90	528889.066	865605.148	437+65.80	33.59'
92	529563.379	865869.885	430+42.23	0.00'
93	528896.976	865677.561	437+35.14	32.49'
97	528884.452	865688.120	437+43.63	46.50'
98	528811.327	865697.061	438+10.06	78.36'
100	528792.940	865608.154	438+55.91	0.00'
139	529553.003	865900.842	430+42.06	32.72'
146	529573.930	865838.317	430+42.41	33.28'
148	528884.348	865695.963	437+41.22	53.96'
149	528820.651	865582.048	438+38.01	33.60'
156	528766.217	865633.330	438+73.18	32.40'
174	528842.049	865696.599	437+81.10	68.09'

TLE STATION / OFFSET TABLE

PT#	STATION	OFFSET
140	430+41.84	39.72'
141	430+66.42	39.71'
142	430+66.42	32.71'
143	430+66.41	33.29'
144	430+66.41	43.29'
145	430+42.41	43.28'
147	437+21.38	32.53'
150	438+38.01	40.60'
151	438+06.50	40.60'
152	438+06.50	33.59'

LINE TABLE

LINE	BEARING	DISTANCE
174-98	S00°51'39"E	30.73'
98-156	S54°42'30"W	78.08'
156-100	N43°17'32"W	36.71'
100-149	N43°17'32"W	38.07'
149-90	N18°39'25"E	72.21'
146-92	S71°31'07"E	33.28'
92-139	S71°31'07"E	32.72'
93-97	S40°07'59"E	16.38'
97-148	S89°14'25"E	7.84'
148-174	S00°51'39"E	42.30'

GN

SCALE, FEET
0 80 160

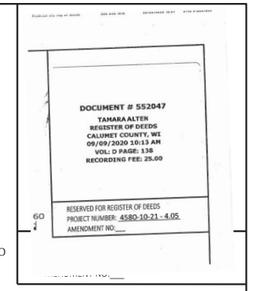

NOTES:

POSITIONS SHOWN ON THIS PLAT ARE WISCONSIN COORDINATE REFERENCE SYSTEM COORDINATES (WISCRS), CALUMET COUNTY, NAD 83 (2011) IN U.S. SURVEY FEET. VALUES SHOWN ARE GRID COORDINATES, GRID BEARINGS, AND GRID DISTANCES. GRID DISTANCES MAY BE USED AS GROUND DISTANCES.

RIGHT-OF-WAY MONUMENTS ARE TYPE 2 MONUMENTS (TYPICALLY 1-INCH BY 24-INCH IRON PIPE) AND WILL BE PLACED PRIOR TO THE COMPLETION OF THE PROJECT.

RIGHT-OF-WAY BOUNDARIES ARE DEFINED WITH COURSES OF THE PERIMETER OF THE HIGHWAY LANDS REFERENCED TO THE U.S. PUBLIC LAND SURVEY OR OTHER SURVEYS OF RECORD.

PROPERTY LINES SHOWN ON THIS PLAT ARE DRAWN FROM DATA DERIVED FROM MAPS AND DOCUMENTS OF PUBLIC RECORD AND/OR EXISTING OCCUPATIONAL LINES. EXCLUDING RIGHT-OF-WAY BOUNDARIES, THIS PLAT MAY NOT BE A TRUE REPRESENTATION OF EXISTING PROPERTY LINES AND SHOULD NOT BE USED AS A SUBSTITUTE FOR AN ACCURATE FIELD SURVEY.

DIMENSIONS FOR THE NEW RIGHT-OF-WAY IS MEASURED ALONG AND PERPENDICULAR TO THE NEW REFERENCE LINES.

ALL RIGHT-OF-WAY LINES DEPICTED IN THE NON-ACQUISITION AREAS ARE INTENDED TO RE-ESTABLISH EXISTING RIGHT-OF-WAY LINES AS DETERMINED FROM PREVIOUS PROJECTS, OTHER RECORDED DOCUMENTS, OR FROM CENTERLINE OF EXISTING PAVEMENTS.

FOR THE CURRENT ACCESS/DRIVEWAY INFORMATION, CONTACT THE PLANNING UNIT OF THE WISCONSIN DEPARTMENT OF TRANSPORTATION OFFICE IN GREEN BAY.

A TEMPORARY LIMITED EASEMENT (TLE) IS A RIGHT FOR CONSTRUCTION PURPOSES, AS DEFINED HEREIN, INCLUDING THE RIGHT TO OPERATE NECESSARY EQUIPMENT THEREON AND THE RIGHT OF INGRESS AND EGRESS, AS LONG AS REQUIRED FOR SUCH PUBLIC PURPOSE, INCLUDING THE RIGHT TO PRESERVE, PROTECT, REMOVE, OR PLANT THEREON ANY VEGETATION THAT THE HIGHWAY AUTHORITIES MAY DEEM NECESSARY OR DESIRABLE. ALL TLE'S EXPIRE AT THE COMPLETION OF THE PROJECT FOR WHICH THIS INSTRUMENT IS GIVEN.

PARCEL IDENTIFICATION NUMBERS MAY NOT POINT TO ALL AREAS OF ACQUISITION, AS NOTED ON THE SCHEDULE OF LANDS & INTERESTS REQUIRED.

PROJECT LOCATION:

PROJECT SHEET LOCATION

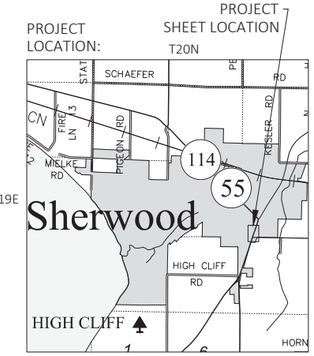

OMNNI ASSOCIATES
ONE SYSTEMS DRIVE APPLETON, WI 54914-1654
PHONE (920) 735-6900
FAX (920) 830-6100

I, DAVID A. YURK PROFESSIONAL LAND SURVEYOR, HEREBY CERTIFY THAT IN FULL COMPLIANCE WITH THE PROVISIONS OF SECTION 84.095 OF THE WISCONSIN STATUTES AND UNDER THE DIRECTION OF THE DEPARTMENT. I HAVE SURVEYED AND MAPPED THIS TRANSPORTATION PROJECT PLAT 4580-10-21-4.05 AND SUCH PLAT CORRECTLY REPRESENTS ALL EXTERIOR BOUNDARIES OF THE SURVEYED LAND.

WISCONSIN DAVID A. YURK S-2648 OSHKOSH, WI LAND SURVEYOR

SIGNATURE: David A. Yurk DATE: 08-14-20
PRINT NAME: DAVID A. YURK
REGISTRATION NUMBER: S-2648

THIS PLAT AND RELOCATION ORDER ARE APPROVED FOR THE WISCONSIN DEPARTMENT OF TRANSPORTATION.

SIGNATURE: Curt Van Erem DATE: 08-31-20
PRINT NAME: CURT VAN EREM

FILE NAME : F:\TR\JOBS\E2370A19 STH 55-114 TPP\CIVIL 3D\RW\TPP.DWG
APPRAISAL PLAT DATE : 08-31-2020

PLOT DATE : 8/31/2020 8:48 AM PLOT BY : JAIRO MAZARIEGOS PLOT NAME : PLOT SCALE : 1 IN:80 FT

Extended project limits to correct existing water ponding in bypass lane.

BEGIN PROJECT
STA ~~203+75.02~~
Y=541,159.693
X=847,816.343

203+35

BP: 203+75.02

STA 203+75
BEGIN ASPHALTIC SHOULDER RUMBLE STRIPS 2-LANE RURAL, TYPE 1 LT

GRAVEL DRIVEWAY
BASE AGGREGATE DENSE 3/4-INCH TO MATCH

PI: 204+76.58

STA 204+76.58 R/L STH 114 =
STA 10+00.00 R/L Old Hwy Rd CL Existing
Y=541,086.285
X=847,886.532

EBS STA 203+35 - 208+61, 25' WIDE

SIGN

END RUBBILIZING
BEGIN MILL 1 3/4-INCHES, PAVE 1 3/4-INCHES
SAWING CONCRETE REQ'D

PI: 208+62.41

208+62.41
0.00'

R/L STH 114

204+00 205+00 206+00 207+00 208+00 209+00

STH 114

PI: 208+62.41

BEGIN RUBBILIZING
SEE TYPICAL SECTIONS
SAWING CONCRETE REQ'D

R/L OLD HIGHWAY RD

OLD HIGHWAY RD

STA 206+77
BEGIN ASPHALTIC CENTERLINE RUMBLE STRIPS 2 LANE RURAL

STA 206+76
BEGIN ASPHALTIC SHOULDER RUMBLE STRIPS 2-LANE RURAL, TYPE 1 RT

ASPHALT DRIVEWAY
REMOVAL AND REPLACEMENT LIMITS DETERMINED BY ENGINEER
REMOVING ASPHALTIC SURFACE MILLING
ASPHALTIC SURFACE DRIVEWAYS AND FIELD ENTRANCES
BUTT JOINT REQ'D

BM639

BENCHMARK TABLE		
POINT NUMBER	ELEVATION	DESCRIPTION
BM639	802.20	RR SPIKE IN PPOL 11-02415 LOCATED AT THE INTERSECTION OF OLD HWY ROAD AND STH 114 LOCATED AND THE EXTENDED CENTERLINE OF OLD HWY ROAD ON THE SOUTH SIDE OF STH 114

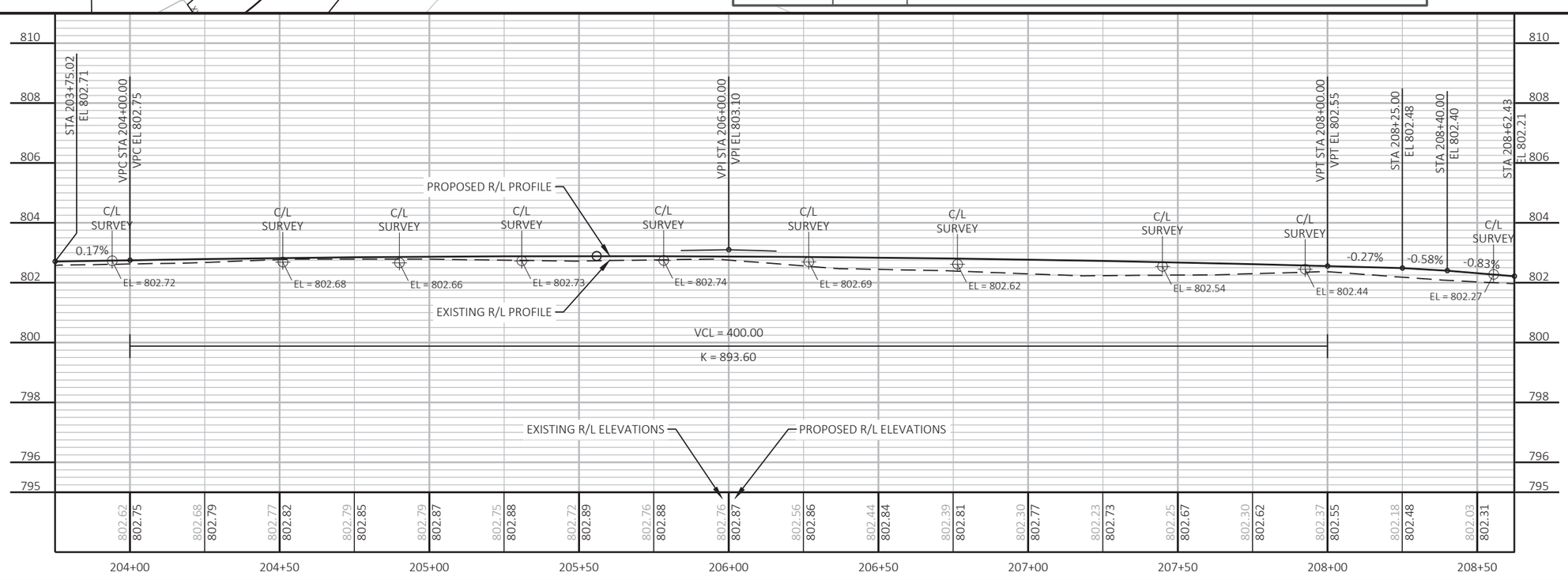

PROJECT NO: 4580-10-71	HWY: STH 114	COUNTY: CALUMET	PLAN AND PROFILE: STH 114	SHEET 107	E

FILE NAME : N:\PDS\C3D\45801000\SHEETSPLAN\050100-PP.DWG
LAYOUT NAME - 050101-pp

PLOT DATE : 12/7/2021 11:18 AM PLOT BY : VOGEL, KURT MICHAEL PLOT NAME : PLOT SCALE : 1 IN:40 FT

WISDOT/CADDS SHEET 44

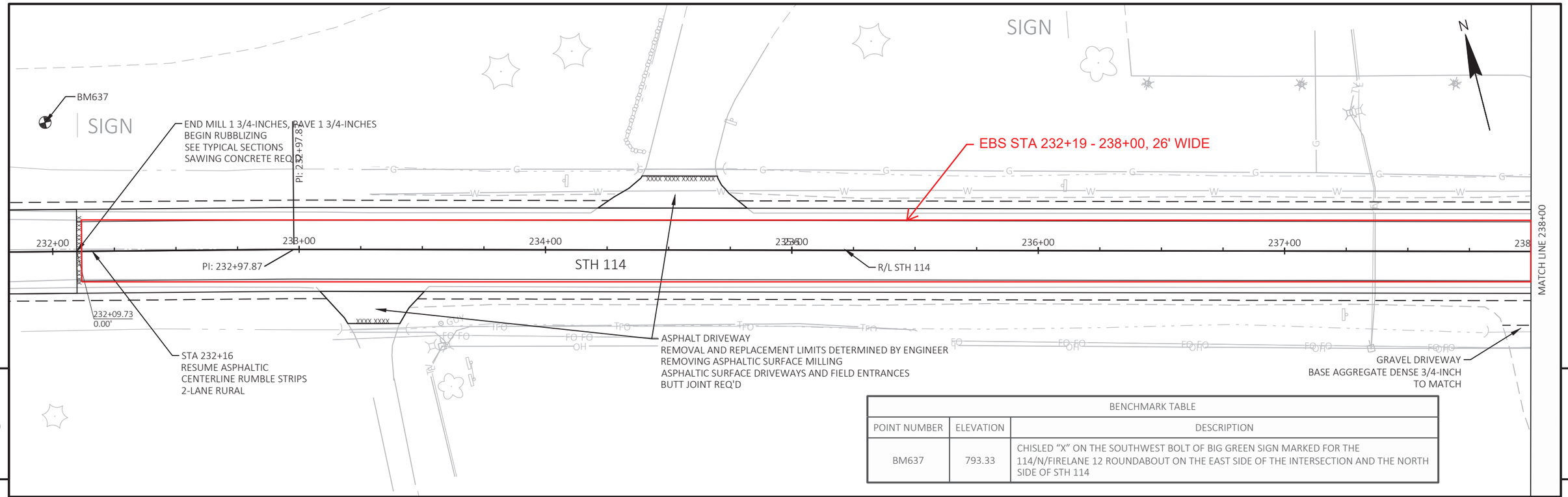

BENCHMARK TABLE		
POINT NUMBER	ELEVATION	DESCRIPTION
BM637	793.33	CHISLED "X" ON THE SOUTHWEST BOLT OF BIG GREEN SIGN MARKED FOR THE 114/N/FIRELANE 12 ROUNDABOUT ON THE EAST SIDE OF THE INTERSECTION AND THE NORTH SIDE OF STH 114

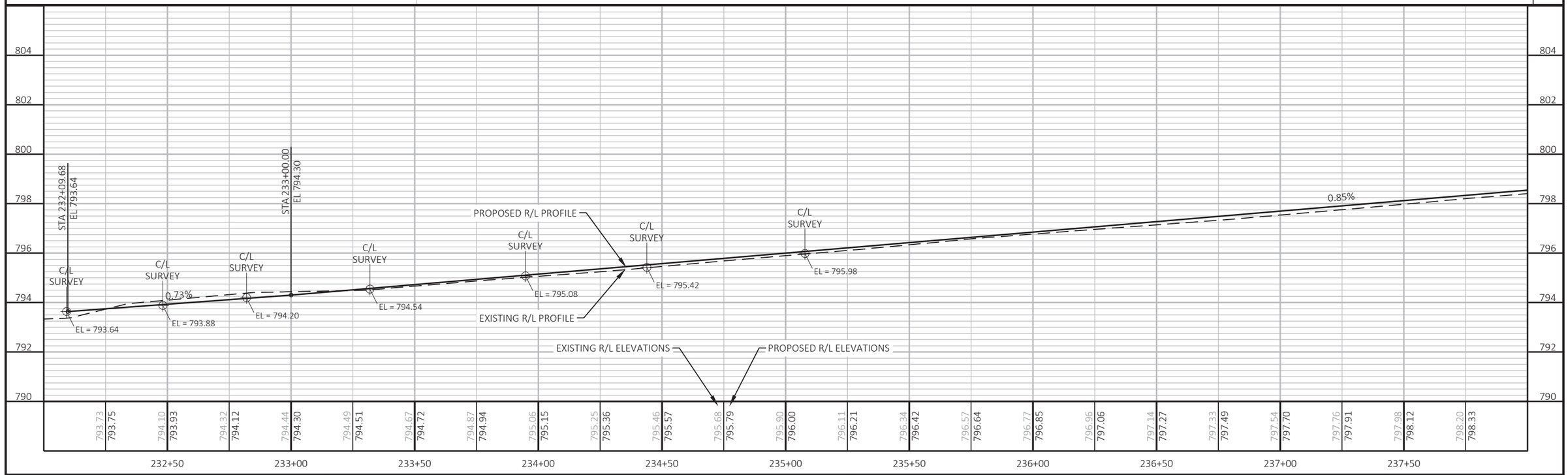

PROJECT NO: 4580-10-71	HWY: STH 114	COUNTY: CALUMET	PLAN AND PROFILE: STH 114	SHEET 108 E

FILE NAME : N:\PDS\C3D\45801000\SHEETSPLAN\050100-PP.DWG
LAYOUT NAME - 050102-pp
PLOT DATE : 12/7/2021 11:18 AM
PLOT BY : VOGEL, KURT MICHAEL
PLOT NAME :
PLOT SCALE : 1 IN:40 FT
WISDOT/CADDS SHEET 44

ASPHALT DRIVEWAY
REMOVAL AND REPLACEMENT LIMITS DETERMINED BY ENGINEER
REMOVING ASPHALTIC SURFACE MILLING
ASPHALTIC SURFACE DRIVEWAYS AND FIELD ENTRANCES
BUTT JOINT REQ'D

GRAVEL DRIVEWAY
BASE AGGREGATE DENSE 3/4-INCH
TO MATCH

EBS STA 238+00 - 244+00, 26' WIDE

MATCH LINE 238+00

MATCH LINE 244+00

239+00

241+00

242+00

243+00

STH 114

R/L STH 114

GRAVEL DRIVEWAY
BASE AGGREGATE DENSE 3/4-INCH
TO MATCH

N

5

5

806
804
802
800
798
796
794
792

VPC STA 241+50.00
VPC EL 801.52

VPI STA 243+25.00
VPI EL 803.01

PROPOSED R/L PROFILE

EXISTING R/L PROFILE

0.84%

VCL = 350.00

K = 401.34

EXISTING R/L ELEVATIONS

PROPOSED R/L ELEVATIONS

| | | |

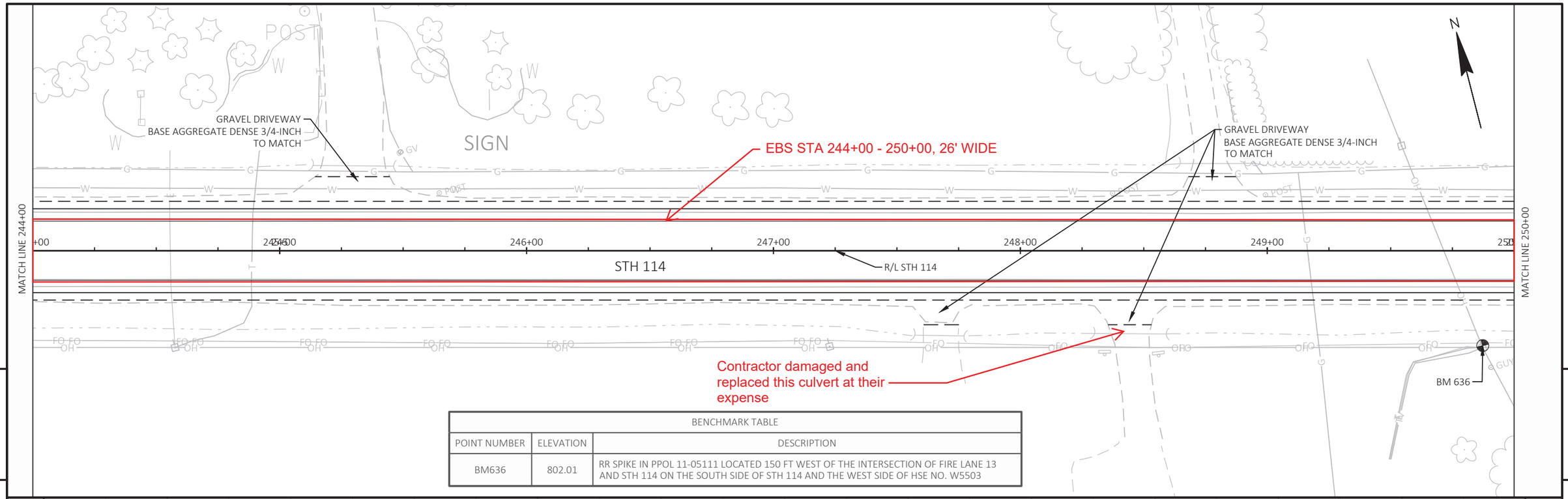

BENCHMARK TABLE		
POINT NUMBER	ELEVATION	DESCRIPTION
BM636	802.01	RR SPIKE IN PPOL 11-05111 LOCATED 150 FT WEST OF THE INTERSECTION OF FIRE LANE 13 AND STH 114 ON THE SOUTH SIDE OF STH 114 AND THE WEST SIDE OF HSE NO. W5503

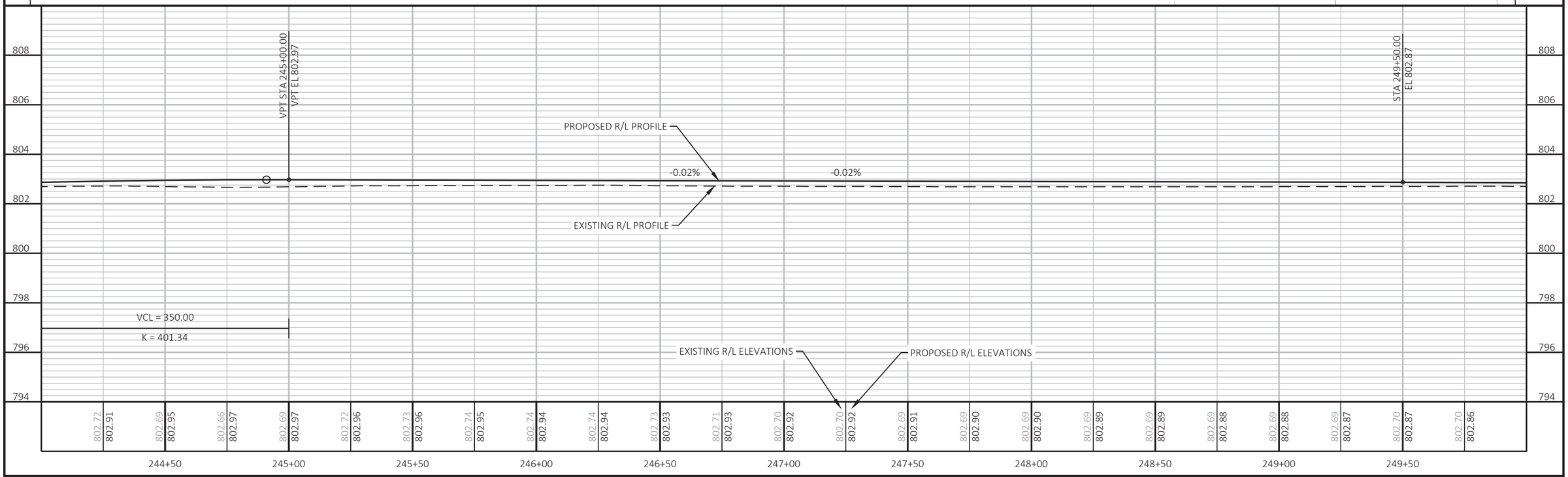

PROJECT NO: 4580-10-71	HWY: STH 114	COUNTY: CALUMET	PLAN AND PROFILE: STH 114	SHEET 110 E

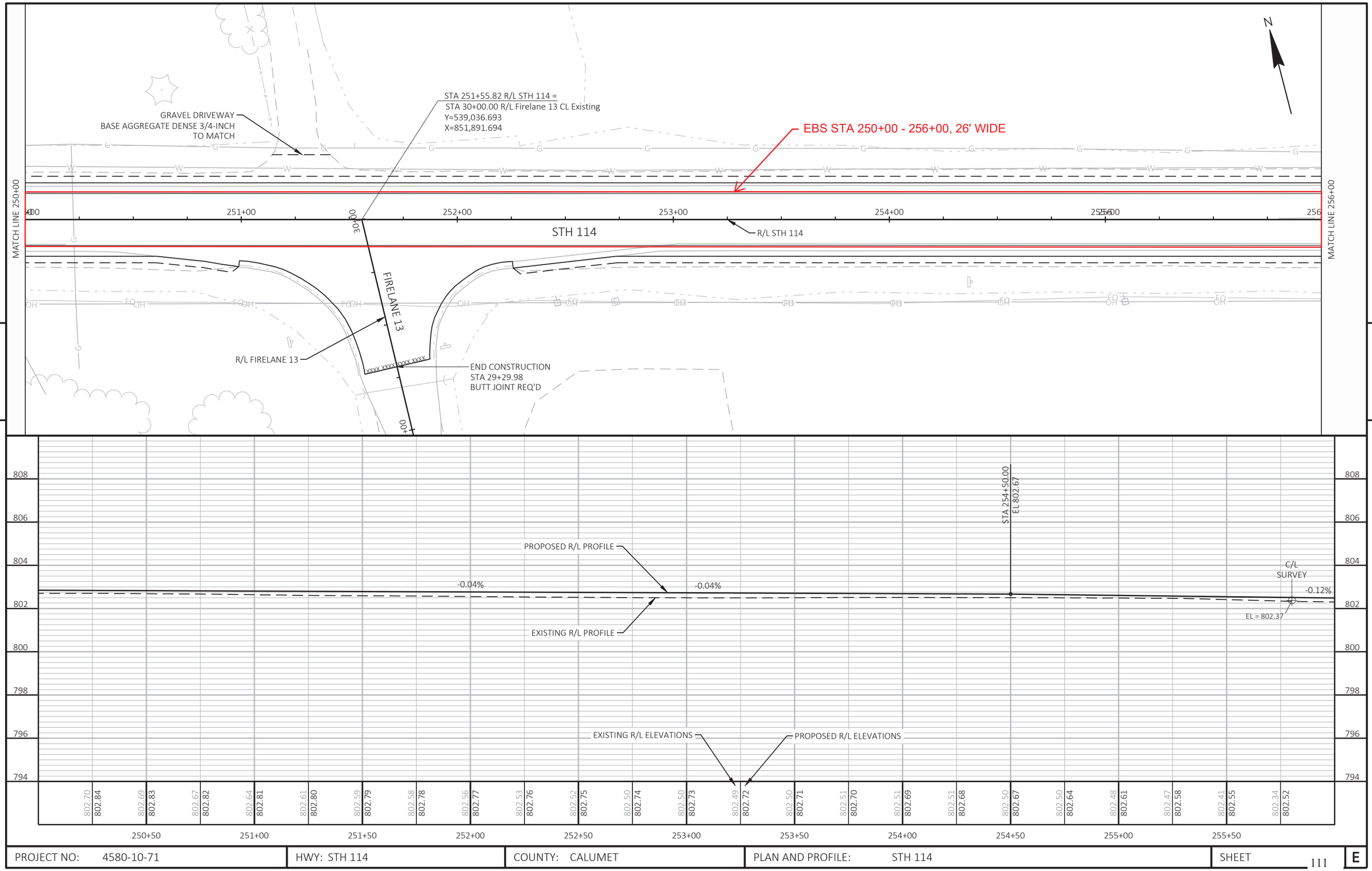

PROJECT NO: 4580-10-71	HWY: STH 114	COUNTY: CALUMET	PLAN AND PROFILE: STH 114	SHEET 111	E

FILE NAME : N:\PDS\C3D\45801000\SHEETSPLAN\050100-PP.DWG
LAYOUT NAME - 050105-pp

PLOT DATE : 12/7/2021 11:19 AM PLOT BY : VOGEL, KURT MICHAEL PLOT NAME : PLOT SCALE : 1 IN:40 FT

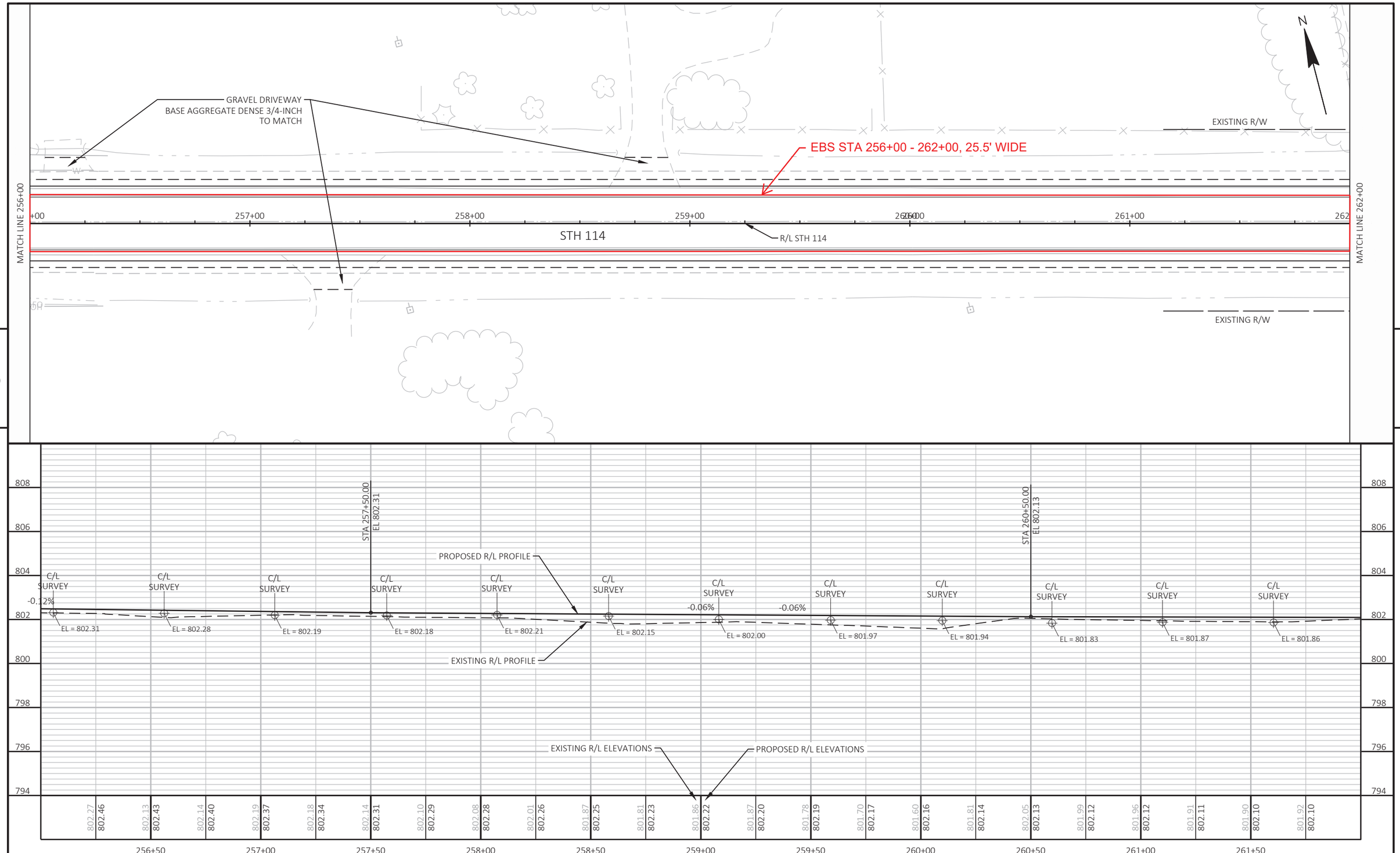

PROJECT NO: 4580-10-71	HWY: STH 114	COUNTY: CALUMET	PLAN AND PROFILE: STH 114	SHEET 112	E

FILE NAME : N:\PDS\C3D\45801000\SHEETSPLAN\050100-PP.DWG
LAYOUT NAME - 050106-pp

PLOT DATE : 12/7/2021 11:19 AM PLOT BY : VOGEL, KURT MICHAEL PLOT NAME : PLOT SCALE : 1 IN:40 FT

WISDOT/CADDS SHEET 44

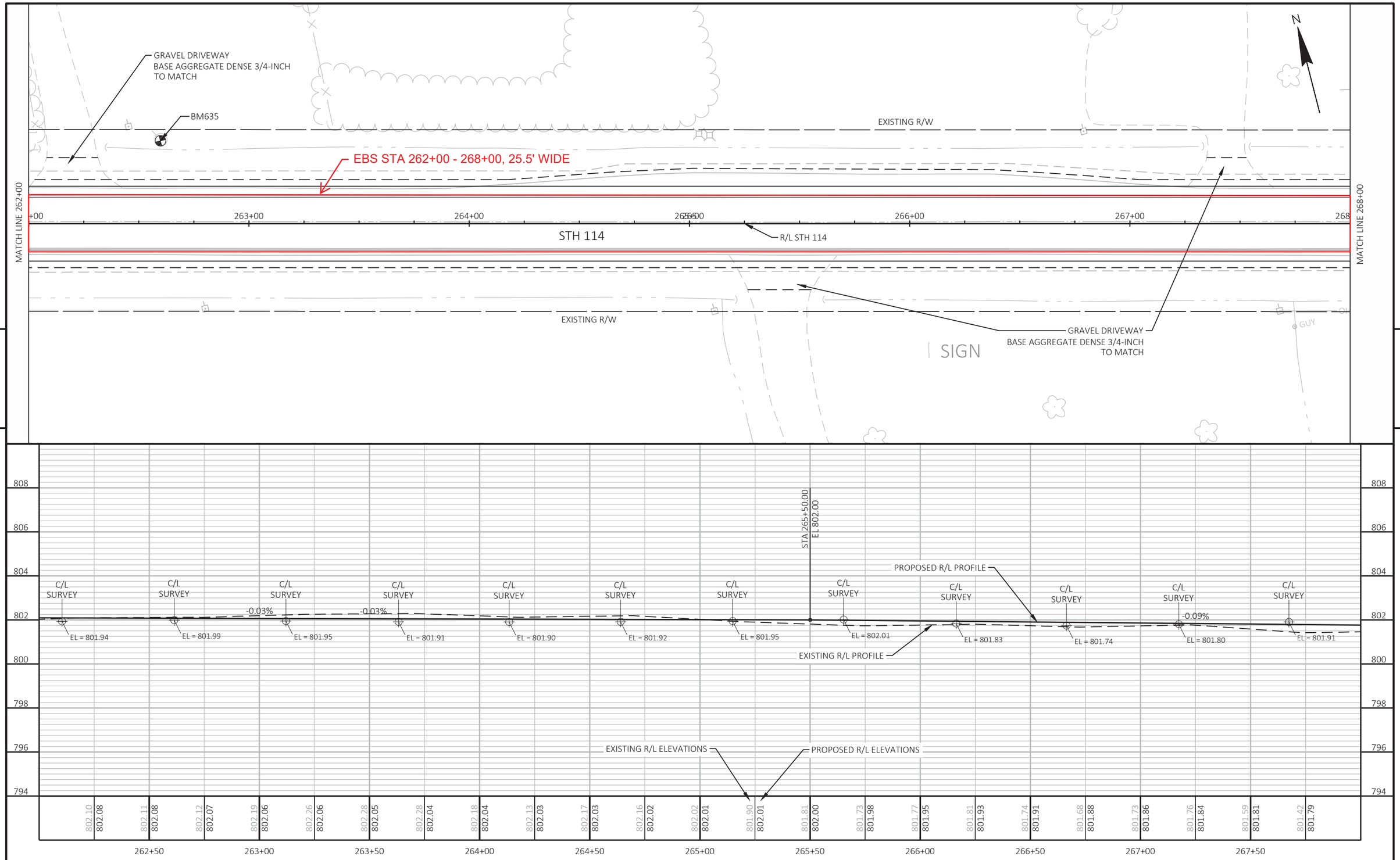

PROJECT NO: 4580-10-71	HWY: STH 114	COUNTY: CALUMET	PLAN AND PROFILE: STH 114	SHEET 113	E

FILE NAME : N:\PDS\C3D\45801000\SHEETSPLAN\050100-PP.DWG
LAYOUT NAME - 050107-pp

PLOT DATE : 12/7/2021 11:20 AM PLOT BY : VOGEL, KURT MICHAEL PLOT NAME : PLOT SCALE : 1 IN:40 FT

WISDOT/CADDS SHEET 44

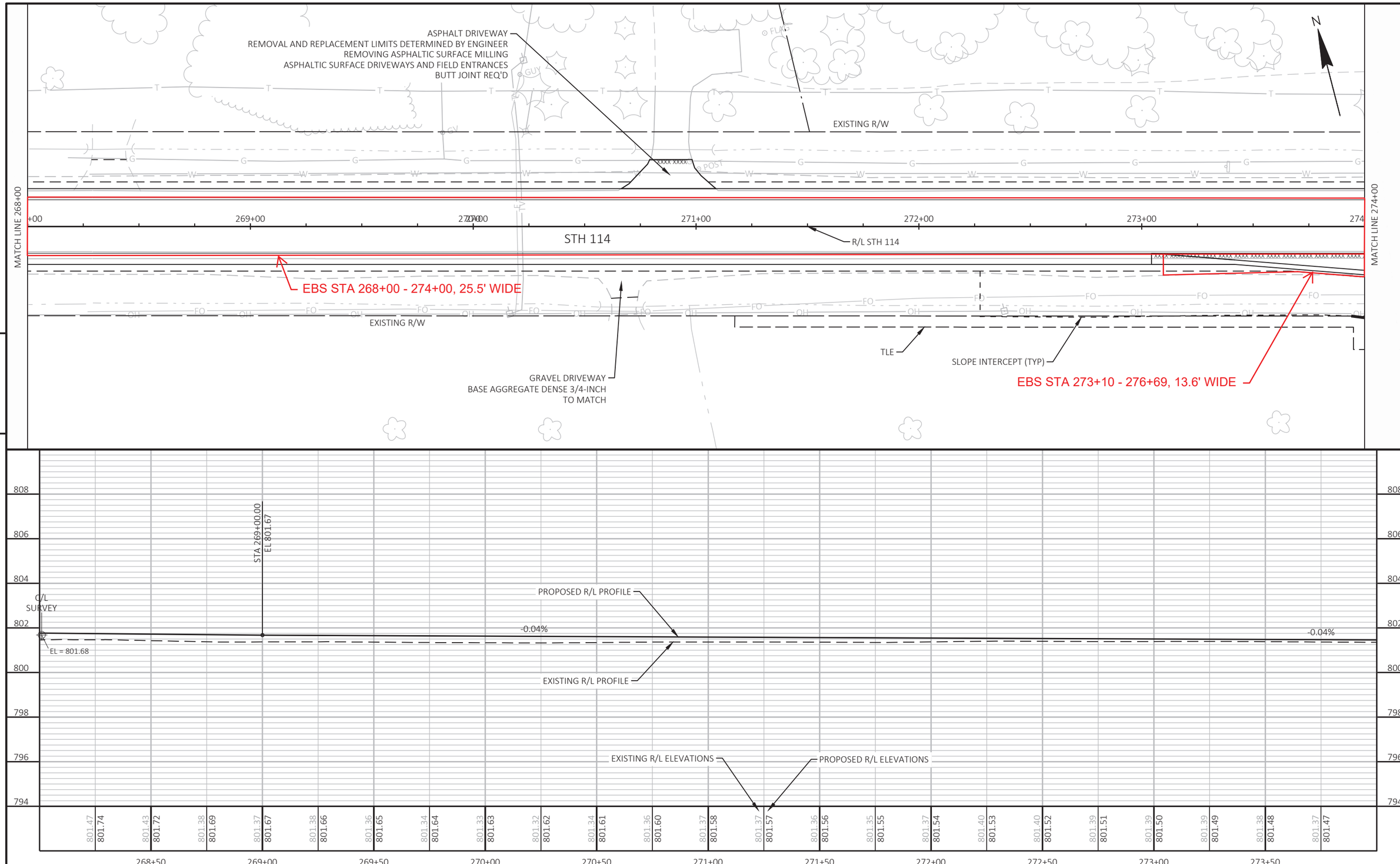

PROJECT NO: 4580-10-71	HWY: STH 114	COUNTY: CALUMET	PLAN AND PROFILE: STH 114	SHEET 114	E

FILE NAME : N:\PDS\C3D\45801000\SHEETSPLAN\050100-PP.DWG
LAYOUT NAME - 050108-pp
PLOT DATE : 12/7/2021 11:20 AM
PLOT BY : VOGEL, KURT MICHAEL
PLOT NAME :
PLOT SCALE : 1 IN:40 FT
WISDOT/CADDS SHEET 44

MATCH LINE 274+00

MATCH LINE 280+00

5

5

ASPHALT DRIVEWAY
REMOVAL AND REPLACEMENT LIMITS DETERMINED BY ENGINEER
REMOVING ASPHALTIC SURFACE MILLING
ASPHALTIC SURFACE DRIVEWAYS AND FIELD ENTRANCES
BUTT JOINT REQ'D

END CONSTRUCTION
STA 45+82.84
BUTT JOINT REQ'D

68FT OF CPRCHE CLASS HE-IV 14x23-INCH
2 APRON ENDWALLS FOR CPRCHE 14x23-INCH

REMOVING SMALL
PIPE CULVERTS

SLOPE INTERCEPT

STATE PARK ROAD
ADD RT TURN LANE AND
RECONSTRUCT INTERSECTION
SEE INTERSECTION DETAIL

N

SLOPE INTERCEPT

TLE

PRW

EXISTING R/W

EXISTING R/W

EBS STA 274+00 - 277+54, 25' WIDE

EBS

R/L STATE PARK RD (NORTH)

ASPHALTIC FLUME

R/L STH 114

STH 114

R/L STATE PARK RD (SOUTH)

STATE PARK RD

EBS STA 278+44 - 280+00, 24.7' WIDE

STA 278+62.97 R/L STH 114 =
STA 45+00.00 R/L State Park Rd CL North Existing
Y=538,362.803
X=854,513.622

EXISTING R/W

EBS STA 273+10 - 276+69, 13.6' WIDE

Existing concrete pavement left in place/ not rubblized over gas main STA 277+54 - 278+44. New gas main crosses STH 114 further west.

END CONSTRUCTION
STA 39+28.40
BUTT JOINT REQ'D

PROPOSED R/W

TLE

EXTEND RT TURN LANE SEE
INTERSECTION DETAIL

SLOPE INTERCEPT (TYP)

EXISTING R/W

PROPOSED R/L PROFILE

-0.04%

EXISTING R/L PROFILE

EXISTING R/L ELEVATIONS

PROPOSED R/L ELEVATIONS

| | | |

TDS relocated fiber optic line further north

CLEARING AND GRUBBING

REMOVE DRIVEWAY

REMOVING SMALL PIPE CULVERTS

EBS STA 279+28 - 282+68, 14.3' WIDE

SLOPE INTERCEPT (TYP)

ADD DRIVEWAY
SEE CONSTRUCTION DETAILS
3" ASPHALTIC SURFACE DRIVEWAYS AND FIELD ENTRANCES
OVER 6" BASE AGGREGATE DENSE 1 1/4-INCH

CULVERT PIPE CORRUGATED STEEL 18-INCH

APRON ENDWALLS FOR CULVERT PIPE SLOPED
SIDE DRAINS STEEL 18-INCH 6 to 1 (TYP)

N

SIGN

TLE

PRW

TLE

EXISTING R/W

MATCH LINE 280+00

MATCH LINE 286+00

281+00 282+00 283+00 284+00 285+00 286

STH 114

R/L STH 114

EBS STA 280+00 - 286+00, 25' WIDE

EXISTING R/W

State Park Rd. Crdr Drawing Only

GRAVEL DRIVEWAY
BASE AGGREGATE DENSE 3/4-INCH
TO MATCH

BM 634

GRAVEL DRIVEWAY
BASE AGGREGATE DENSE 3/4-INCH
TO MATCH

BENCHMARK TABLE		
POINT NUMBER	ELEVATION	DESCRIPTION
BM634	800.02	CHISLED "X" ON BURY BOLT OF FIRE HYDRANT LOCATED ON THE SOUTH SIDE OF STH 114 APPROXIMETLY 350 FT EAST OF THE INTERSECTION OF STATE PARK RD AND STH 114 ALSO JUST EAST OF THE ENTRANCE TO THE HAA TOWN OF HARRISON ATHLETIC PARK

808 806 804 802 800 798 796 794

VPI STA 280+00.00
VPI EL 801.20

VPT STA 281+50.00
VPT EL 800.65

PROPOSED R/L PROFILE

EXISTING R/L PROFILE

-0.37%

VCL = 300.00

K = 926.72

EXISTING R/L ELEVATIONS

PROPOSED R/L ELEVATIONS

280+50	281+00	281+50	282+00	282+50	283+00	283+50	284+00	284+50	285+00	285+50
800.90	801.02	800.83	800.96	800.75	800.89	800.66	800.82	800.56	800.74	800.45
800.65	800.35	800.56	800.23	800.47	800.11	800.38	800.02	800.28	799.94	800.19
799.85	800.10	799.76	800.01	799.67	799.92	799.58	799.83	799.50	799.73	799.42
799.64	799.36	799.55	799.31	799.46	799.24	799.37	799.16	799.28	799.07	799.18
798.99	799.09									

PROJECT NO: 4580-10-71	HWY: STH 114	COUNTY: CALUMET	PLAN AND PROFILE: STH 114	SHEET 116 E

FILE NAME : N:\PDS\C3D\45801000\SHEETSPLAN\050100-PP.DWG
LAYOUT NAME - 050110-pp

PLOT DATE : 12/7/2021 11:20 AM PLOT BY : VOGEL, KURT MICHAEL PLOT NAME : PLOT SCALE : 1 IN:40 FT

WISDOT/CADDS SHEET 44

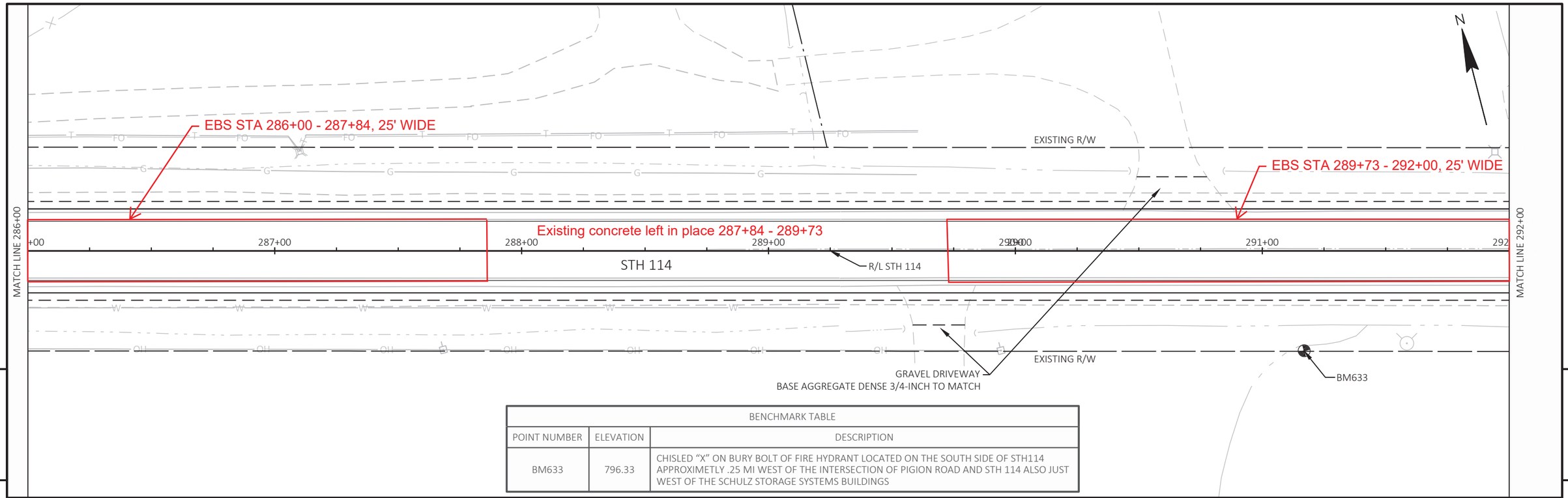

BENCHMARK TABLE		
POINT NUMBER	ELEVATION	DESCRIPTION
BM633	796.33	CHISLED "X" ON BURY BOLT OF FIRE HYDRANT LOCATED ON THE SOUTH SIDE OF STH114 APPROXIMETLY .25 MI WEST OF THE INTERSECTION OF PIGION ROAD AND STH 114 ALSO JUST WEST OF THE SCHULZ STORAGE SYSTEMS BUILDINGS

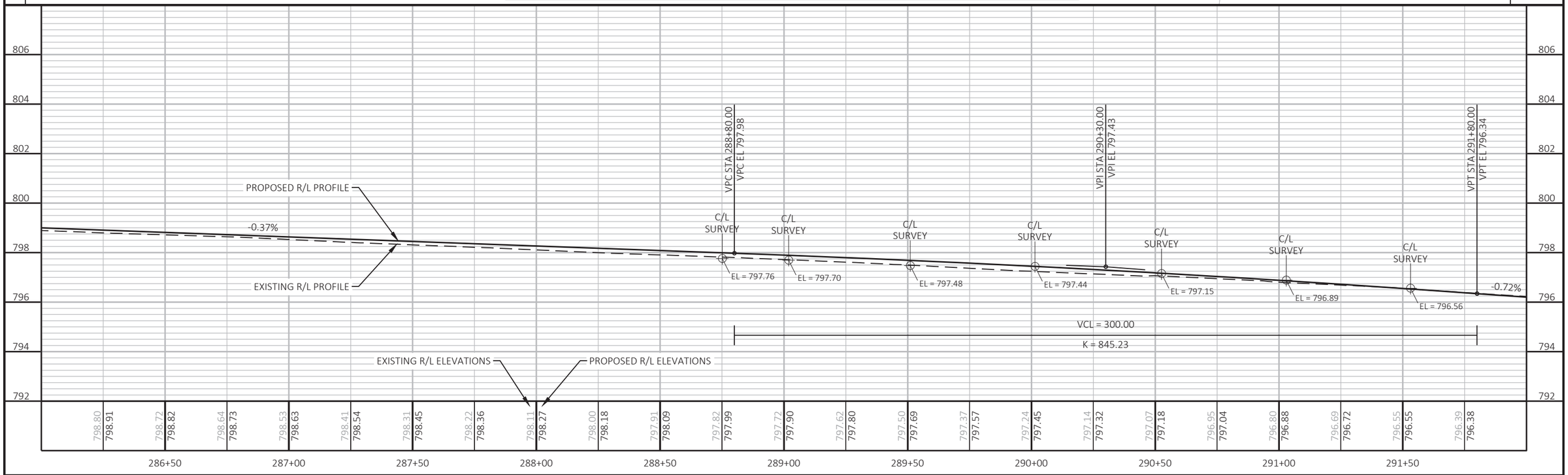

PROJECT NO: 4580-10-71	HWY: STH 114	COUNTY: CALUMET	PLAN AND PROFILE: STH 114	SHEET 117 E

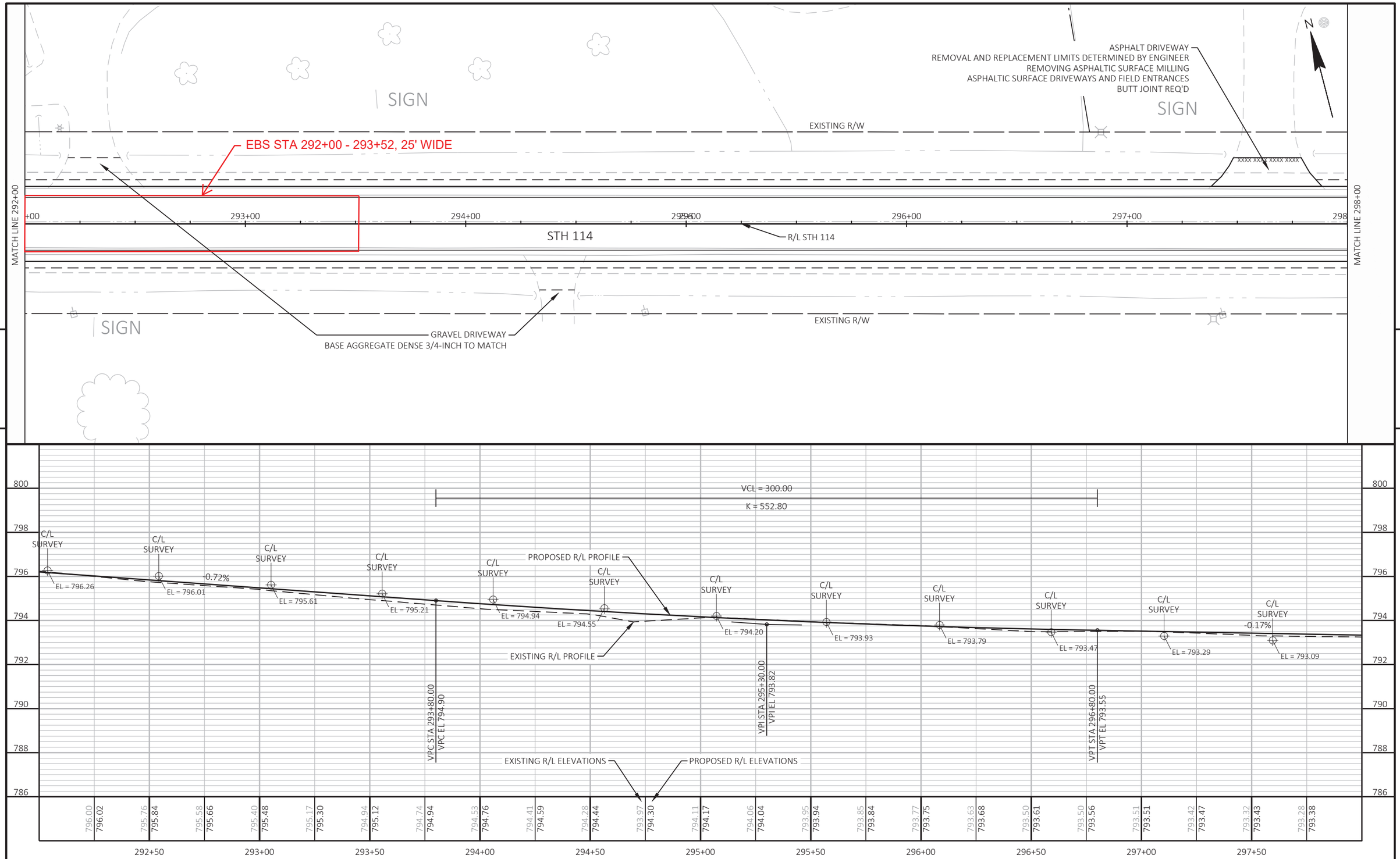

PROJECT NO: 4580-10-71	HWY: STH 114	COUNTY: CALUMET	PLAN AND PROFILE: STH 114	SHEET 118	E

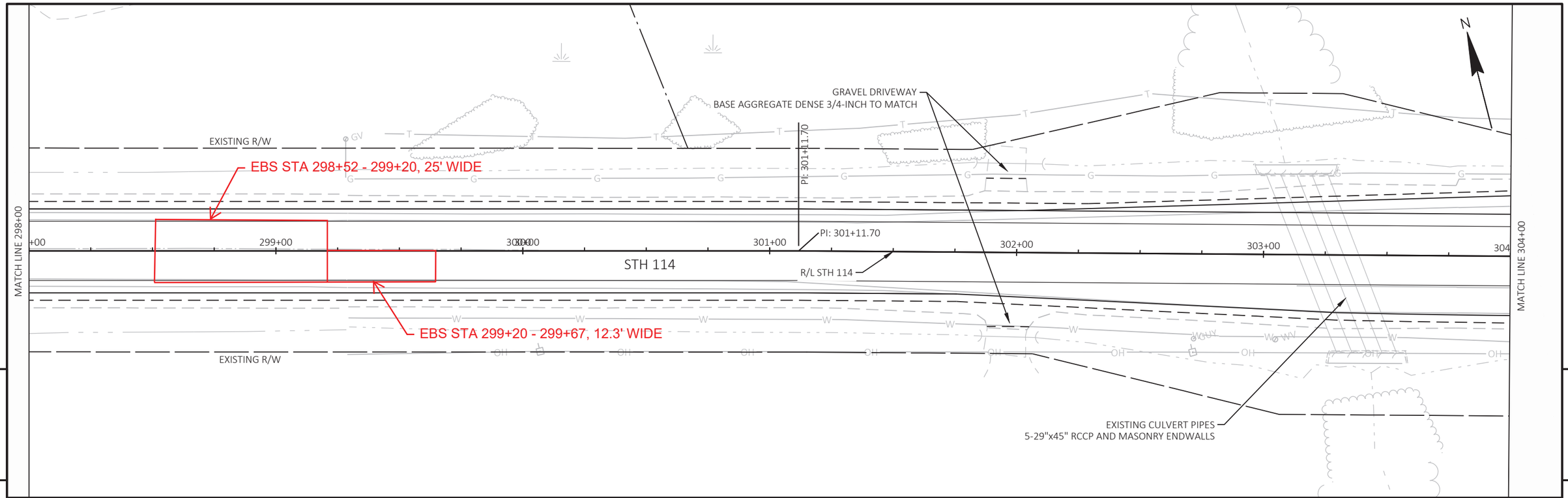

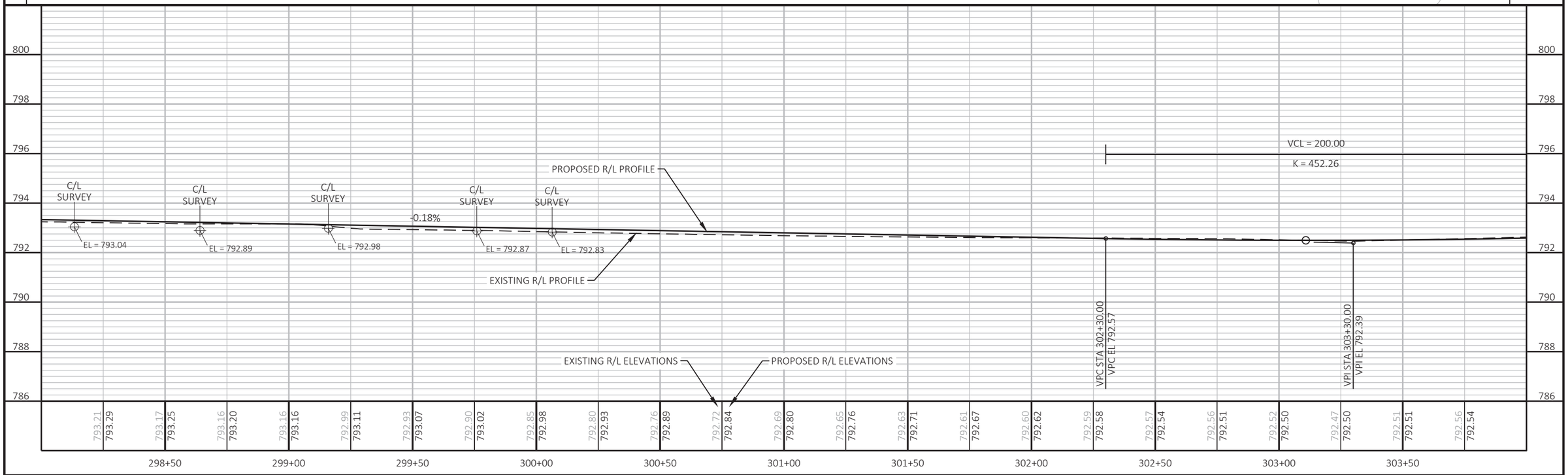

PROJECT NO: 4580-10-71	HWY: STH 114	COUNTY: CALUMET	PLAN AND PROFILE: STH 114	SHEET 119 E

STA 305+81.54 R/L STH 114 =
STA 50+00.00 R/L PIGEON RD
Y=537,682.642
X=857,145.729

EXISTING R/W

MATCH LINE 304+00

MATCH LINE 310+00

304+00 305+00 306+00 307+00 308+00 309+00 310+00

50+00

STH 114

R/L STH 114

R/L PIGEON RD

PIGEON RD

SLOPE INTERCEPT

SLOPE INTERCEPT (TYP)

PROPOSED R/W

EXISTING R/W

EXISTING R/W

BM 632

PIGEON RD EBS
SIGN

PIGEON RD
ADD RIGHT TURN LANE
SEE INTERSECTION DETAIL

BENCHMARK TABLE		
POINT NUMBER	ELEVATION	DESCRIPTION
BM632	793.37	CHISLED "X" ON BURY BOLT OF FIRE HYDRANT LOCATED IN THE SOUTHWEST QUAD OF PIGEON ROAD AND STH 114

VCL = 200.00
K = 452.26

VCL = 300.00
K = 522.31

EXISTING R/L PROFILE

0.26%

PROPOSED R/L PROFILE

VPT STA 304+30.00
VPT EL 792.65

VPC STA 307+45.00
VPC EL 793.48

VPI STA 308+95.00
VPI EL 793.88

EXISTING R/L ELEVATIONS

PROPOSED R/L ELEVATIONS

304+50	305+00	305+50	306+00	306+50	307+00	307+50	308+00	308+50	309+00	309+50
792.69	792.73	792.75	792.85	792.96	793.06	793.15	793.23	793.29	793.28	793.36	793.45	793.53	793.61	793.66	793.70	793.82	793.96	794.13	794.31	794.49	794.65
792.64	792.71	792.77	792.84	792.90	792.97	793.03	793.10	793.17	793.23	793.30	793.36	793.43	793.50	793.57	793.66	793.75	793.86	793.99	794.12	794.27	794.43	794.60

PROJECT NO: 4580-10-71	HWY: STH 114	COUNTY: CALUMET	PLAN AND PROFILE: STH 114	SHEET 120 E

FILE NAME : N:\PDS\C3D\45801000\SHEETSPLAN\050100-PP.DWG
LAYOUT NAME - 050114-pp

PLOT DATE : 12/7/2021 11:21 AM PLOT BY : VOGEL, KURT MICHAEL PLOT NAME : PLOT SCALE : 1 IN:40 FT

WISDOT/CADDS SHEET 44

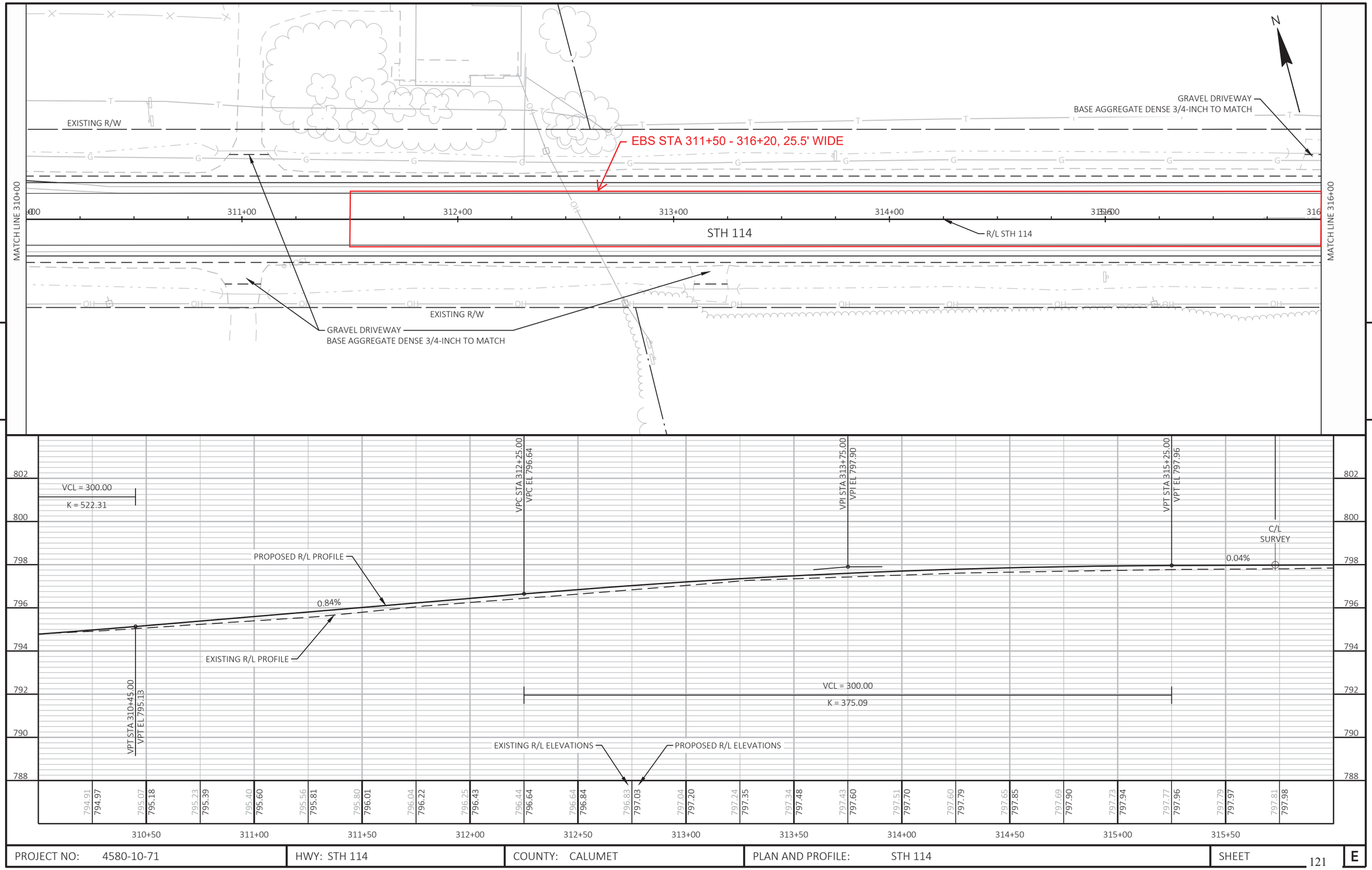

PROJECT NO: 4580-10-71	HWY: STH 114	COUNTY: CALUMET	PLAN AND PROFILE: STH 114	SHEET 121 E

FILE NAME : N:\PDS\C3D\45801000\SHEETSPLAN\050100-PP.DWG
LAYOUT NAME - 050115-pp

PLOT DATE : 12/7/2021 11:22 AM PLOT BY : VOGEL, KURT MICHAEL PLOT NAME : PLOT SCALE : 1 IN:40 FT

WISDOT/CADDS SHEET 44

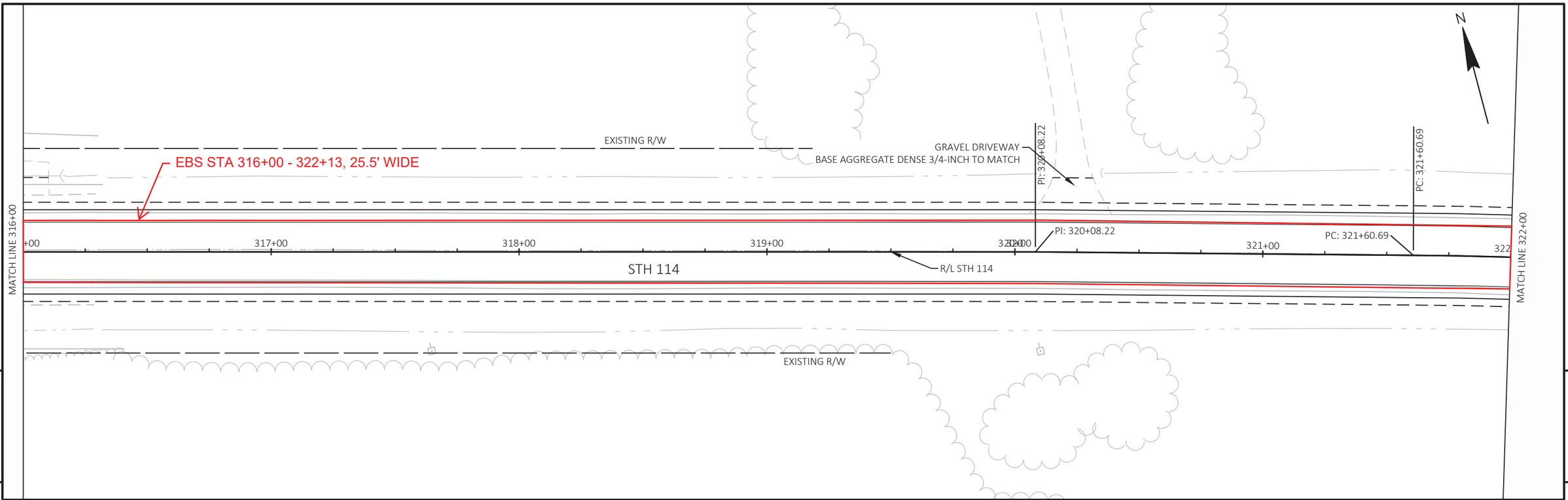

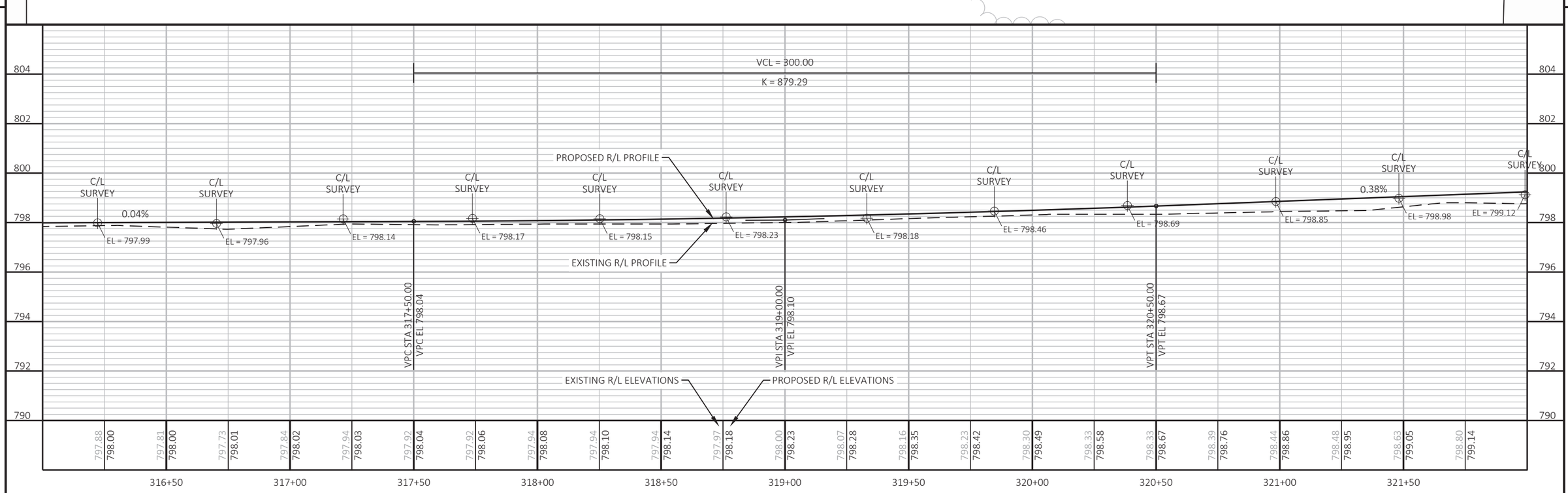

PROJECT NO: 4580-10-71	HWY: STH 114	COUNTY: CALUMET	PLAN AND PROFILE: STH 114	SHEET 122	E

FILE NAME : N:\PDS\C3D\45801000\SHEETSPLAN\050100-PP.DWG
LAYOUT NAME - 050116-pp
PLOT DATE : 12/7/2021 11:22 AM
PLOT BY : VOGEL, KURT MICHAEL
PLOT NAME :
PLOT SCALE : 1 IN:40 FT
WISDOT/CADDS SHEET 44

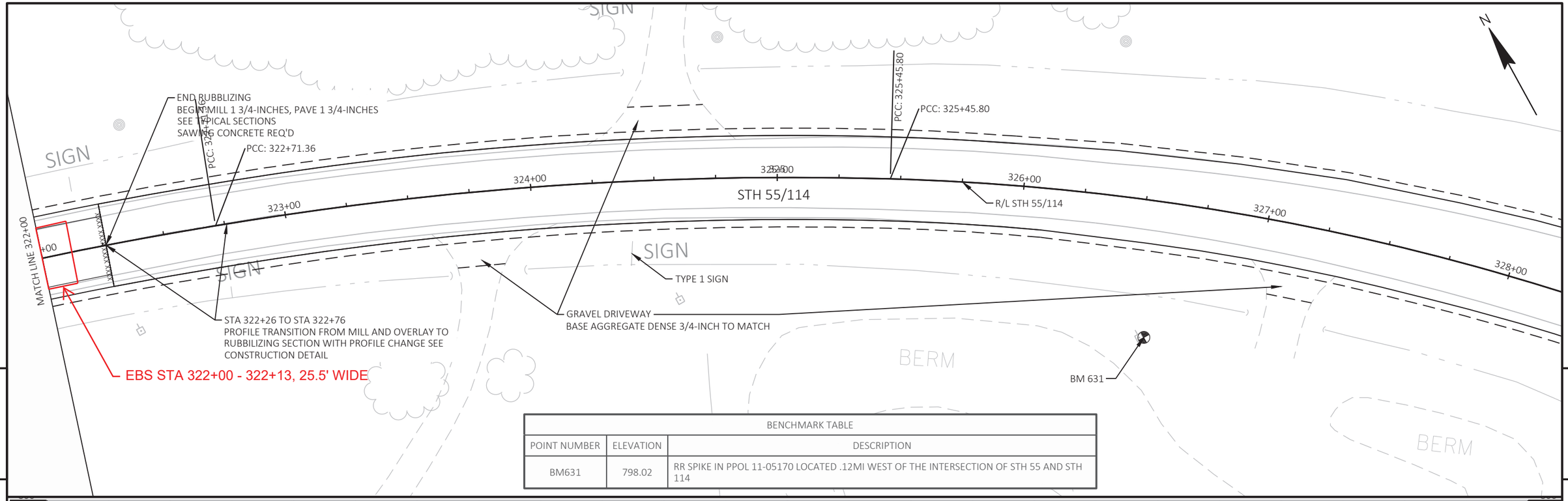

BENCHMARK TABLE		
POINT NUMBER	ELEVATION	DESCRIPTION
BM631	798.02	RR SPIKE IN PPOL 11-05170 LOCATED .12MI WEST OF THE INTERSECTION OF STH 55 AND STH 114

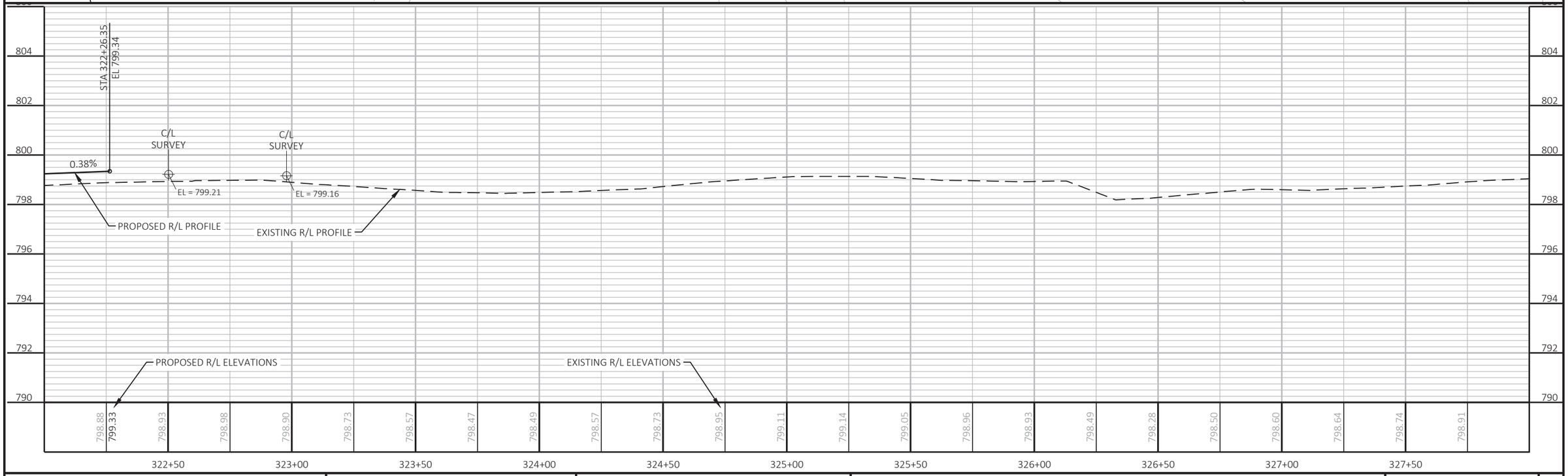

PROJECT NO: 4580-10-71	HWY: STH 114	COUNTY: CALUMET	PLAN AND PROFILE: STH 114	SHEET 123	E

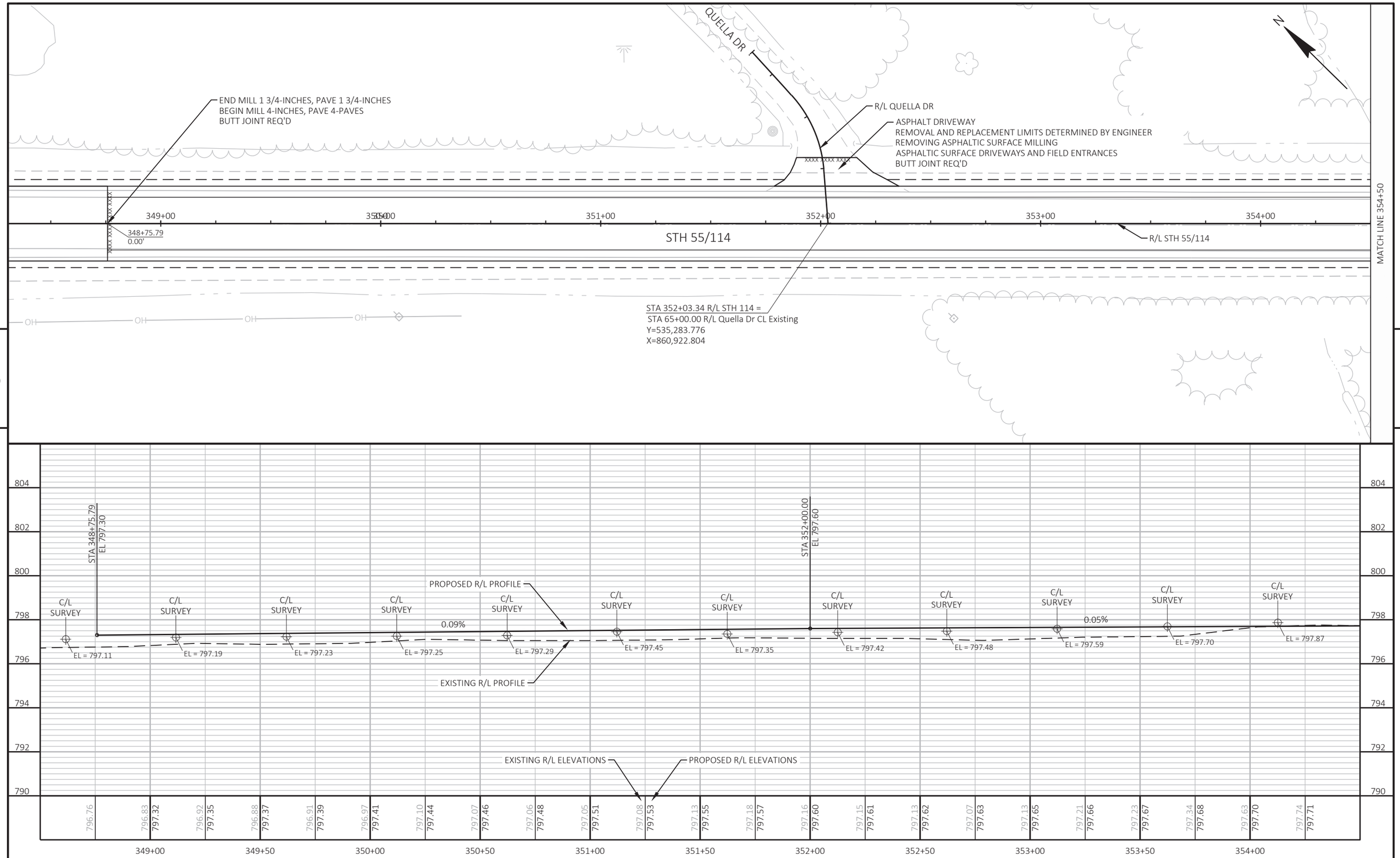

5

5

PROJECT NO: 4580-10-71	HWY: STH 114	COUNTY: CALUMET	PLAN AND PROFILE: STH 114	SHEET 124	E

FILE NAME : N:\PDS\C3D\45801000\SHEETSPLAN\050100-PP.DWG
LAYOUT NAME - 050118-pp

PLOT DATE : 12/7/2021 11:22 AM PLOT BY : VOGEL, KURT MICHAEL PLOT NAME : PLOT SCALE : 1 IN:40 FT

WISDOT/CADDS SHEET 44

MATCH LINE 354+50

MATCH LINE 360+50

5

5

ASPHALT DRIVEWAY
REMOVAL AND REPLACEMENT LIMITS DETERMINED BY ENGINEER
REMOVING ASPHALTIC SURFACE MILLING
ASPHALTIC SURFACE DRIVEWAYS AND FIELD ENTRANCES
BUTT JOINT REQ'D

GRAVEL DRIVEWAY
BASE AGGREGATE DENSE 3/4-INCH TO MATCH

N

SIGN

GUY
OH
FO
TV
CN RR

355+00 355+50 356+00 357+00 358+00 359+00 360+00

STH 55/114

R/L STH 55/114

808
806
804
802
800
798
796
794

VCL = 300.00
K = 248.22

VPC STA 354+60.00
VPC EL 797.73

VPI STA 356+10.00
VPI EL 797.80

VPT STA 357+60.00
VPT EL 799.69

VPC STA 357+70.00
VPC EL 799.81

VPI STA 359+20.00
VPI EL 801.70

0.13%

1.26%

C/L SURVEY

EL = 797.87
EL = 797.77
EL = 797.82
EL = 798.19
EL = 798.54
EL = 799.19
EL = 799.92
EL = 800.51
EL = 801.02
EL = 801.29
EL = 801.60
EL = 801.61

PROPOSED R/L PROFILE

EXISTING R/L PROFILE

VCL = 300.00
K = 276.59

EXISTING R/L ELEVATIONS

PROPOSED R/L ELEVATIONS

| | | |

END MILL 4-INCHES, PAVE 4-INCHES
SEE TYPICAL SECTIONS
SAWING CONCRETE REQ'D

STA 361+21
RAILROAD CROSSING REPLACEMENT
SEE PLAN DETAILS-RAILROAD CROSSING

CN RR

GRAVEL DRIVEWAY
BASE AGGREGATE DENSE 3/4-INCH TO MATCH

NGS /DE7640 WDOT 4K09

EXISTING R/W

MATCH LINE 360+50

361+00 362+00 363+00 364+00 365+00 366+00

R/L STH 55/114

STH 55/114

MATCH LINE 366+50

EXISTING R/W

RESUME MILL 4-INCHES, PAVE 4-INCHES
SEE TYPICAL SECTIONS
SAWING CONCRETE REQ'D

REMOVING PAVEMENT
REPLACE WITH BASE AGGREGATE DENSE
1 1/4-INCH AND HMA PAVEMENT
SEE SDD

5

5

VPT STA 360+70.00
VPT EL 801.96

VPC STA 362+00.00
VPC EL 802.19

VPI STA 363+50.00
VPI EL 802.45

VPT STA 365+00.00
VPT EL 801.83

PROPOSED R/L PROFILE

0.17%

-0.41%

EXISTING R/L PROFILE

VCL = 300.00
K = 276.59

VCL = 300.00
K = 514.56

EXISTING R/L ELEVATIONS

PROPOSED R/L ELEVATIONS

| | | |

BENCHMARK TABLE		
POINT NUMBER	ELEVATION	DESCRIPTION
BM629	801.01	CHISLED "X" ON THE BURY BOLT OF FIRE HYDRANT LOCATED IN THE SOUTHWEST QUAD OF LAKE BREEZE DRIVE AND STH 114 IN FRONT OF HSE NO. N8075

MATCH LINE 366+50

MATCH LINE 372+50

PI: 366+51.73

EXISTING R/W

EXISTING CULVERT PIPES
2 24-INCH RCCP

367+00 368+00 369+00 370+00 371+00 372+00

STH 55/114

R/L STH 55/114

R/L LAKE BREEZE DR

LAKE BREEZE DR

EXISTING R/W

END CONSTRUCTION
STA 69+28.32
BUTT JOINT REQ'D

BM 629

SIGN

BIKE PATH

VCL = 400.00

K = 514.21

PROPOSED R/L PROFILE

EXISTING R/L PROFILE

0.36%

VPC STA 367+30.00
VPC EL 800.89

VPI STA 369+30.00
VPI EL 800.07

VPT STA 371+30.00
VPT EL 800.81

EXISTING R/L ELEVATIONS

PROPOSED R/L ELEVATIONS

808 806 804 802 800 798 796 794

801.28 801.22 801.15 801.11 801.04 801.01 800.93 800.91 800.83 800.81 800.75 800.72 800.66 800.65 800.59 800.59 800.49 800.54 800.42 800.50 800.38 800.47 800.37 800.46 800.40 800.46 800.46 800.47 800.51 800.49 800.54 800.53 800.60 800.57 800.69 800.63 800.76 800.70 800.82 800.79 800.90 800.88 800.99 800.97 801.07 801.06 801.13 801.16

366+50 367+00 367+50 368+00 368+50 369+00 369+50 370+00 370+50 371+00 371+50 372+00

PROJECT NO: 4580-10-71	HWY: STH 114	COUNTY: CALUMET	PLAN AND PROFILE: STH 114	SHEET 127	E

FILE NAME : N:\PDS\C3D\45801000\SHEETSPLAN\050100-PP.DWG
LAYOUT NAME - 050121-pp

PLOT DATE : 12/7/2021 11:23 AM PLOT BY : VOGEL, KURT MICHAEL PLOT NAME : PLOT SCALE : 1 IN:40 FT

WISDOT/CADDS SHEET 44

MATCH LINE 372+50

MATCH LINE 378+50

EXISTING CULVERT PIPE
1 24-INCH RCCP

EXISTING R/W

373+00 374+00 375+00 376+00 377+00 378+00

STH 55/114

R/L STH 55/114

EXISTING R/W

GRAVEL DRIVEWAY
BASE AGGREGATE DENSE 3/4-INCH TO MATCH

BERM

5

5

PROPOSED R/L PROFILE

0.37%

EXISTING R/L PROFILE

EXISTING R/L ELEVATIONS

PROPOSED R/L ELEVATIONS

372+50	373+00	373+50	374+00	374+50	375+00	375+50	376+00	376+50	377+00	377+50	378+00
801.21	801.29	801.37	801.45	801.53	801.61	801.70	801.78	801.87	801.97	802.07	802.17
801.25	801.34	801.43	801.52	801.62	801.71	801.80	801.89	801.99	802.08	802.17	802.26
802.25	802.33	802.42	802.54	802.54	802.63	802.64	802.72	802.75	802.81	802.84	802.91
802.35	802.45	802.54	802.63	802.72	802.81	802.91	803.00	802.99	803.09	803.09	803.18
803.17	803.23	803.27	803.37								

PROJECT NO: 4580-10-71	HWY: STH 114	COUNTY: CALUMET	PLAN AND PROFILE: STH 114	SHEET 128	E

FILE NAME : N:\PDS\C3D\45801000\SHEETSPLAN\050100-PP.DWG
LAYOUT NAME - 050122-pp

PLOT DATE : 12/7/2021 11:23 AM PLOT BY : VOGEL, KURT MICHAEL PLOT NAME : PLOT SCALE : 1 IN:40 FT

WISDOT/CADDS SHEET 44

MATCH LINE 378+50

MATCH LINE 384+50

GRAVEL DRIVEWAY
BASE AGGREGATE DENSE 3/4-INCH TO MATCH

ASPHALT DRIVEWAY
REMOVAL AND REPLACEMENT LIMITS DETERMINED BY ENGINEER
REMOVING ASPHALTIC SURFACE MILLING
ASPHALTIC SURFACE DRIVEWAYS AND FIELD ENTRANCES
BUTT JOINT REQ'D

EXISTING R/W

379+00 380+00 381+00 382+00 383+00 384+00

STH 55/114

R/L STH 55/114

EXISTING R/W

BM 628

BENCHMARK TABLE		
POINT NUMBER	ELEVATION	DESCRIPTION
BM628	805.80	CHISLED "X" ON THE BOLT THAT THE ARROW POINTS TO ON THE WEST SIDE OF THE FIRE HYDRANT LOCATED 1250 FT EAST OF THE INTERSECTION OF LAKE BREEZE DRIVE AND STH 114

814 812 810 808 806 804 802 800

VCL = 300.00
K = 357.19

VPC STA 380+00.00
VPC EL 804.01

VPI STA 381+50.00
VPI EL 804.56

VPT STA 383+00.00
VPT EL 806.38

PROPOSED R/L PROFILE

EXISTING R/L PROFILE

0.36%

1.23%

C/L SURVEY

EL = 804.00
EL = 804.24
EL = 804.48
EL = 804.93
EL = 805.34
EL = 805.83
EL = 806.28
EL = 806.98
EL = 807.52

EXISTING R/L ELEVATIONS

PROPOSED R/L ELEVATIONS

| | | |

MATCH LINE 384+50

MATCH LINE 390+49

5

5

EXISTING R/W

EXISTING R/W

STH 55/114

R/L STH 55/114

GRAVEL DRIVEWAY
BASE AGGREGATE DENSE 3/4-INCH TO MATCH

ASPHALT DRIVEWAY
REMOVAL AND REPLACEMENT LIMITS DETERMINED BY ENGINEER
REMOVING ASPHALTIC SURFACE MILLING
ASPHALTIC SURFACE DRIVEWAYS AND FIELD ENTRANCES
BUTT JOINT REQ'D

386+00 387+00 388+00 389+00

STA 386+00.00
EL 810.00

VPC STA 387+40.00
VPC EL 811.73

VPI STA 389+40.00
VPI EL 814.21

EXISTING R/L PROFILE

PROPOSED R/L PROFILE

1.24%

1.21%

C/L SURVEY

EL = 808.15
EL = 808.66
EL = 809.34
EL = 809.97
EL = 810.62
EL = 811.17
EL = 811.79
EL = 812.31
EL = 812.79
EL = 813.14
EL = 813.46
EL = 813.59
EL = 813.63

VCL = 400.00

K = 246.60

EXISTING R/L ELEVATIONS

PROPOSED R/L ELEVATIONS

820 818 816 814 812 810 808 806

808.10 808.19 808.35 808.49 808.74 808.79 809.08 809.09 809.34 809.40 809.64 809.70 810.02 810.00 810.29 810.31 810.61 810.62 810.99 810.93 811.48 811.24 811.79 811.55 811.99 811.85 812.22 812.14 812.45 812.40 812.69 812.64 812.94 812.85 813.11 813.03 813.24 813.19 813.27 813.33 813.35 813.44 813.45 813.52 813.54 813.58 813.61 813.61

384+50 385+00 385+50 386+00 386+50 387+00 387+50 388+00 388+50 389+00 389+50 390+00

PROJECT NO: 4580-10-71	HWY: STH 114	COUNTY: CALUMET	PLAN AND PROFILE: STH 114	SHEET 130	E

FILE NAME : N:\PDS\C3D\45801000\SHEETSPLAN\050100-PP.DWG
LAYOUT NAME - 050124-pp

PLOT DATE : 12/7/2021 11:24 AM PLOT BY : VOGEL, KURT MICHAEL PLOT NAME : PLOT SCALE : 1 IN:40 FT

WISDOT/CADDS SHEET 44

BENCHMARK TABLE		
POINT NUMBER	ELEVATION	DESCRIPTION
BM627	812.19	CHISLED "X" ON THE BOLT THAT THE ARROW POINTS TO ON THE NORHT SIDE OF THE FIRE HYDRANT LOCATED APPROXIMETLY 300 FT WEST THE INTERSECTION OF CASTLE DRIVE AND STH 114

MATCH LINE 390+49

STA 319+19
END ASPHALTIC SHOULDER
RUMBLE STRIPS 2-LANE RURAL,
TYPE 1 RT

EXISTING R/W

STA 394+53
END ASPHALTIC CENTERLINE
RUMBLE STRIPS 2-LANE RURAL

STA 396+52.76 R/L STH 114 =
STA 80+00.00 R/L Castle Dr CL Existing
Y=532,127.914
X=864,059.321

EXISTING CULVERT PIPE
36-INCH RCCP
INSTALL NEW CULVERT MARKERS

NOTE: END OF STH 114 CONSTRUCTION SHOWN ON CASTLE DR PLAN & PROFILE

391+00 392+00 393+00 394+00 395+00 396+00 80+00

STH 55/114

R/L STH 114

R/L CASTLE DR

BM 627

EXISTING R/W

SLOPE INTERCEPT (TYP)

EBS

TLE

PROPOSED R/W

CASTLE DR
EXTEND RT TURN LANE SEE
INTERSECTION DETAIL

TDS RELOCATED
TELECOMMUNTIONCATIONS LINE
FURTHER WEST

79+50

CASTLE DR

5 5

820 818 816 814 812 810 808 806

VPT STA 391+40.00
VPT EL 813.44

STA 392+39.62
EL 813.05

PROPOSED R/L PROFILE

-0.38%

EXISTING R/L PROFILE

VCL = 400.00

K = 246.60

PROPOSED R/L ELEVATIONS

EXISTING R/L ELEVATIONS

| | | |

EXISTING R/W

STH 114

278+00

SLOPE INTERCEPT

ASPHALTIC FLUME

2 APRON ENDWALLS FOR CPRCHE 14X23-INCH

CONCRETE CURB & GUTTER 6-INCH SLOPED 36-INCH TYPE D

EXISTING R/W

68 FT OF CPRCHE CLASS HE-IV 14x23-INCH

R/L STATE PARK RD (NORTH)

STATE PARK ROAD
ADD RT TURN LANE AND
RECONSTRUCT INTERSECTION
SEE INTERSECTION DETAIL

REMOVING SMALL PIPE CULVERTS

46+00

N0° 52' 05"E

47+00

STATE PARK RD

EBS

END CONSTRUCTION
STA 45+82.84
SAWING ASPHALT REQ'D

279+00

TLE

EXISTING R/W

SLOPE INTERCEPT
ASPHALTIC FLUME

10' TRANSITION TO CONCRETE
CURB & GUTTER 30-INCH TYPE D

EXISTING R/W

STA 278+62.97 R/L STH 114 =
STA 45+00.00 R/L STATE PARK RD (NORTH)
Y=538,362.803
X=854,513.622

PROPOSED R/W

N

5

5

808
806
804
802
800
798
796
794

STA 45+12.00
EL 801.03

STA 45+24.00
EL 800.95

STA 45+53.89
EL 801.04

STA 45+82.84
EL 800.89

EXISTING R/L PROFILE

-0.65%

0.30%

-0.50%

PROPOSED R/L PROFILE

EXISTING R/L ELEVATIONS

PROPOSED R/L ELEVATIONS

801.10
800.85
800.95
800.97
801.03
800.92
800.93
800.83
800.73
800.63
800.58
800.55
800.47
800.40

43+50
44+00
44+50
45+00
45+50
46+00
46+50
47+00
47+50
48+00
48+50
49+00

PROJECT NO: 4580-10-71	HWY: STH 114	COUNTY: CALUMET	PLAN AND PROFILE: STATE PARK ROAD	SHEET 132	E

FILE NAME : N:\PDS\C3D\45801000\SHEETSPLAN\050101-PP.DWG
LAYOUT NAME - 050101-pp

PLOT DATE : 12/7/2021 11:32 AM

PLOT BY : VOGEL, KURT MICHAEL

PLOT NAME :

PLOT SCALE : 1 IN:40 FT

WISDOT/CADDS SHEET 44

BENCHMARK TABLE		
POINT NUMBER	ELEVATION	DESCRIPTION
BM632	793.37	CHISLED "X" ON BURY BOLT OF FIRE HYDRANT LOCATED IN THE SOUTHWEST QUAD OF PIGEON ROAD AND STH 114

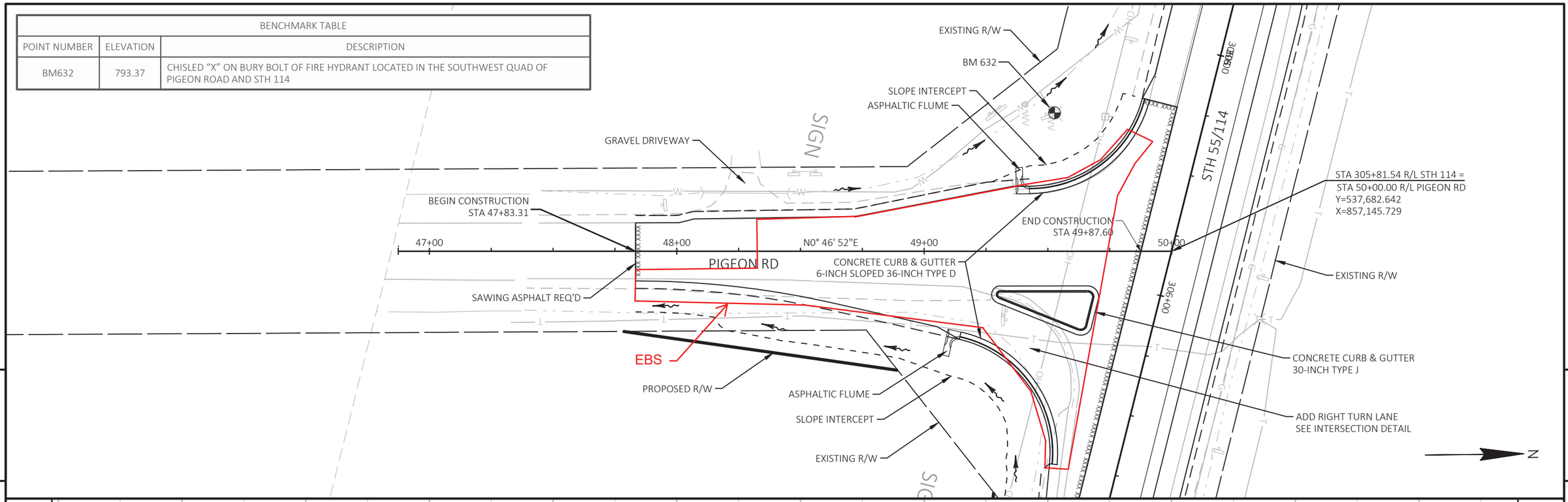

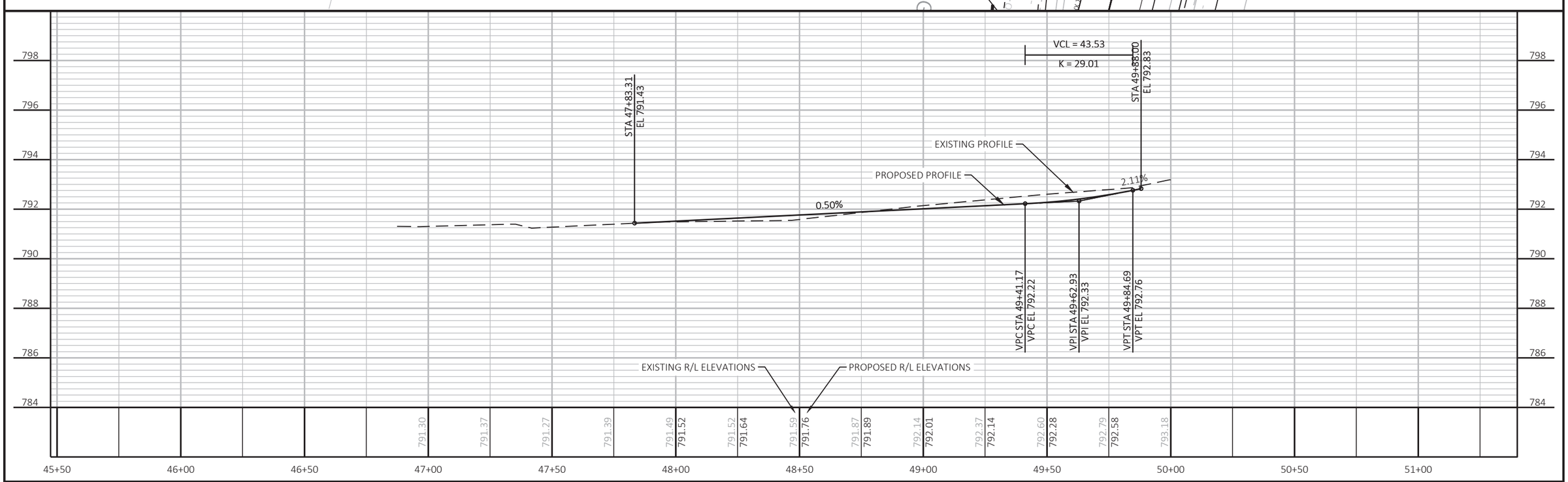

PROJECT NO: 4580-10-71	HWY: STH 114	COUNTY: CALUMET	PLAN AND PROFILE: PIGEON ROAD	SHEET 133	E

FILE NAME : N:\PDS\C3D\45801000\SHEETSPLAN\050101-PP.DWG
LAYOUT NAME - 050102-pp
PLOT DATE : 12/7/2021 11:32 AM
PLOT BY : VOGEL, KURT MICHAEL
PLOT NAME :
PLOT SCALE : 1 IN:40 FT
WISDOT/CADDS SHEET 44

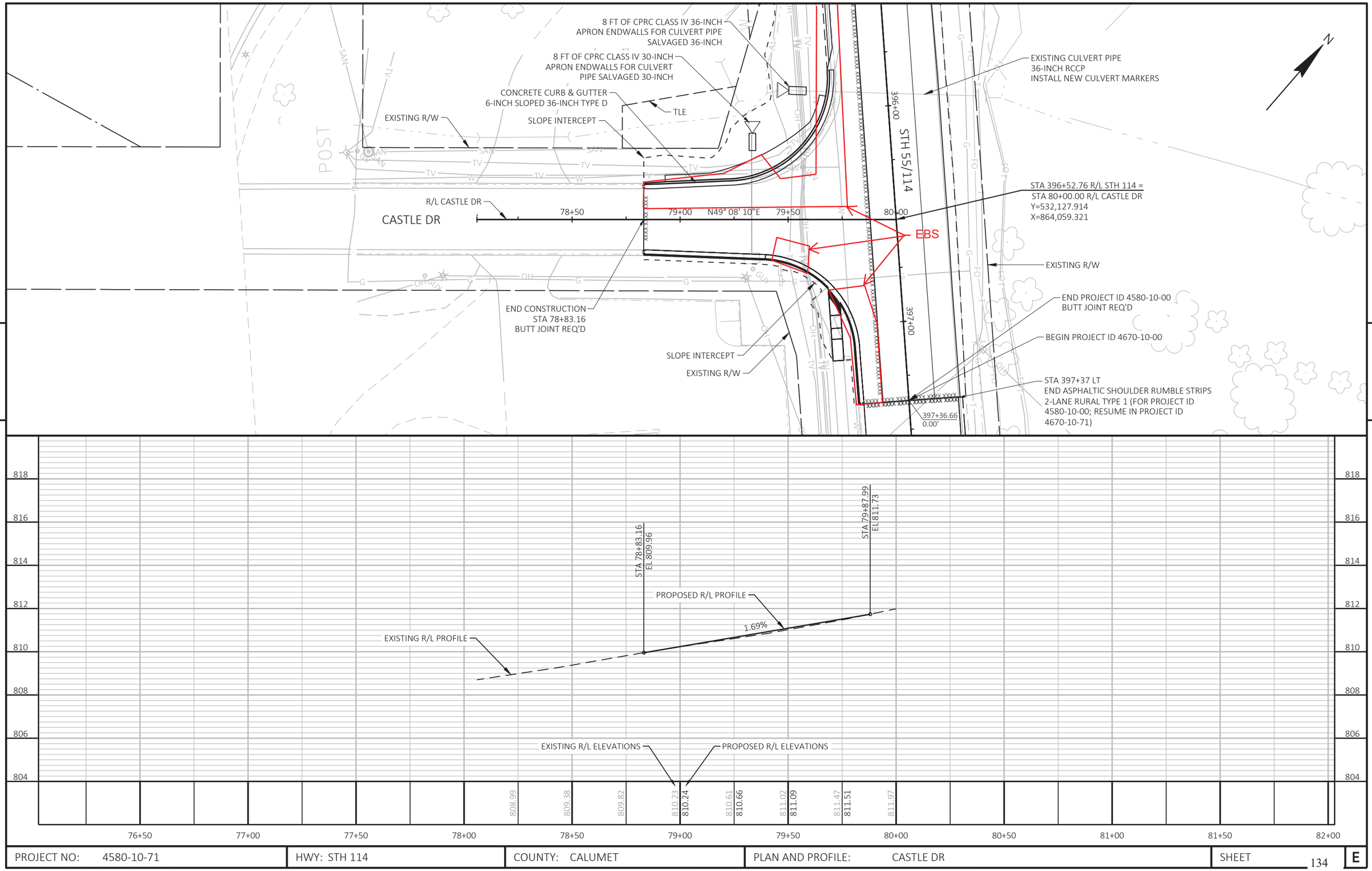

PROJECT NO: 4580-10-71	HWY: STH 114	COUNTY: CALUMET	PLAN AND PROFILE: CASTLE DR	SHEET 134	E

FILE NAME : N:\PDS\C3D\45801000\SHEETSPLAN\050101-PP.DWG
LAYOUT NAME - 050103-pp

PLOT DATE : 12/7/2021 11:32 AM PLOT BY : VOGEL, KURT MICHAEL PLOT NAME : PLOT SCALE : 1 IN:40 FT

BM TABLE		
POINT NUMBER	ELEVATION	DESCRIPTION
BM638	797.20	RR SPIKE IN PPOL 12-08457 LOCATED .2 MI WEST OF THE 114/N/FIRE LANE 13 ROUANDABOUT
BM639	802.20	RR SPIKE IN PPOL 11-02415 LOCATED AT THE INTERSECTION OF OLD HWY ROAD AND STH 114 LOCATED AND THE EXTENDED CENTERLINE OF OLD HWY ROAD ON THE SOUTH SIDE OF STH 114

GRAVEL DRIVEWAY
BASE AGGREGATE 3/4-INCH TO MATCH

BEGIN PROJECT
STA 203+75.02
Y=541,159.693
X=847,816.343

STA 204+76.58 R/L STH 114 =
STA 10+00.00 R/L Old Hwy Rd
Y=541,086.285
X=847,886.532

END RUBBILIZING
BEGIN MILL 1 3/4-INCHES, PAVE 1 3/4-INCHES
SAWING CONCRETE REQ'D

STA 212+63
END ASPHALTIC CENTERLINE
RUMBLE STRIPS 2-LANE RURAL

GRAVEL DRIVEWAY

SIGN
SIGN
SIGN

208+62.43
0.00'

205+00
210+00
215+00

R/L STH 114

STH 114

10

BEGIN RUBBILIZING
SEE TYPICAL SECTIONS
SAWING CONCRETE REQ'D

R/L OLD HWY RD

END CONSTRUCTION
STA 8+74.11
BUTT JOINT REQ'D

OLD HIGHWAY RD

BM639

BM638

ASPHALT DRIVEWAY
REMOVAL AND REPLACEMENT LIMITS DETERMINED BY ENGINEER
REMOVING ASPHALTIC SURFACE MILLING
ASPHALTIC SURFACE DRIVEWAYS AND FIELD ENTRANCES
BUTT JOINT REQ'D

217+8
-1.69'

5

5

BM TABLE		
POINT NUMBER	ELEVATION	DESCRIPTION
BM637	793.33	CHISLED "X" ON THE SOUTHWEST BOLT OF BIG GREEN SIGN MARKED FOR THE 114/N/FIRELANE 12 ROUNDABOUT ON THE EAST SIDE OF THE INTERSECTION AND THE NORTH SIDE OF STH 114

R/L CTH N
CTH N

END CONSTRUCTION
STA 21+79.66
BUTT JOINT REQ'D

217+80.14
-1.69'LT

STA 221+04 LT
END ASPHALTIC SHOULDER RUMBLE
STRIPS 2-LANE RURAL TYPE 1

220+00

INLETS
INLETS
INLETS
INLETS
INLETS

CURB & GUTTER REPAIR/REPLACEMENT
REMOVING CURB & GUTTER
CONCRETE CURB & GUTTER
30-INCH TYPE D

GRAVEL DRIVEWAY

STA 229+05 LT
RESUME ASPHALTIC SHOULDER RUMBLE
STRIPS 2-LANE RURAL TYPE 1

SEPTIC
SEPV

BM637

SIGN

232+09.68
0.00'

R/L STH 114

230+00

STH 114

225+00

229+72.81
0.24'RT

SIGN

STA 220+75 RT
END ASPHALTIC SHOULDER RUMBLE STRIPS
2-LANE RURAL TYPE 1

EXISTING CULVERT PIPE
34x53-INCH CPRCHE

CURB & GUTTER REPAIR/REPLACEMENT
SEE CONSTRUCTION DETAIL
REMOVING CURB & GUTTER
CONCRETE CURB & GUTTER
30-INCH TYPE D

FIRELANE 12

CURB & GUTTER REPAIR/REPLACEMENT
SEE CONSTRUCTION DETAIL
REMOVING CURB & GUTTER
CONCRETE CURB & GUTTER
4-INCH SLOPED 36-INCH TYPE R

R/L FIRELANE 12

STA 225+57 RT
RESUME ASPHALTIC SHOULDER RUMBLE STRIPS
2-LANE RURAL TYPE 1

EXISTING CULVERT PIPES
2-34x53-INCH CPRCHE WITH
MASONRY ENDWALL

END MILL 1 3/4-INCHES, PAVE 1 3/4-INCHES
BEGIN RUBBILIZING
SEE TYPICAL SECTIONS
SAWING CONCRETE REQ'D

PROJECT NO: 4580-10-70	HWY: STH 114	COUNTY: CALUMET	PLAN	SHEET 135	E

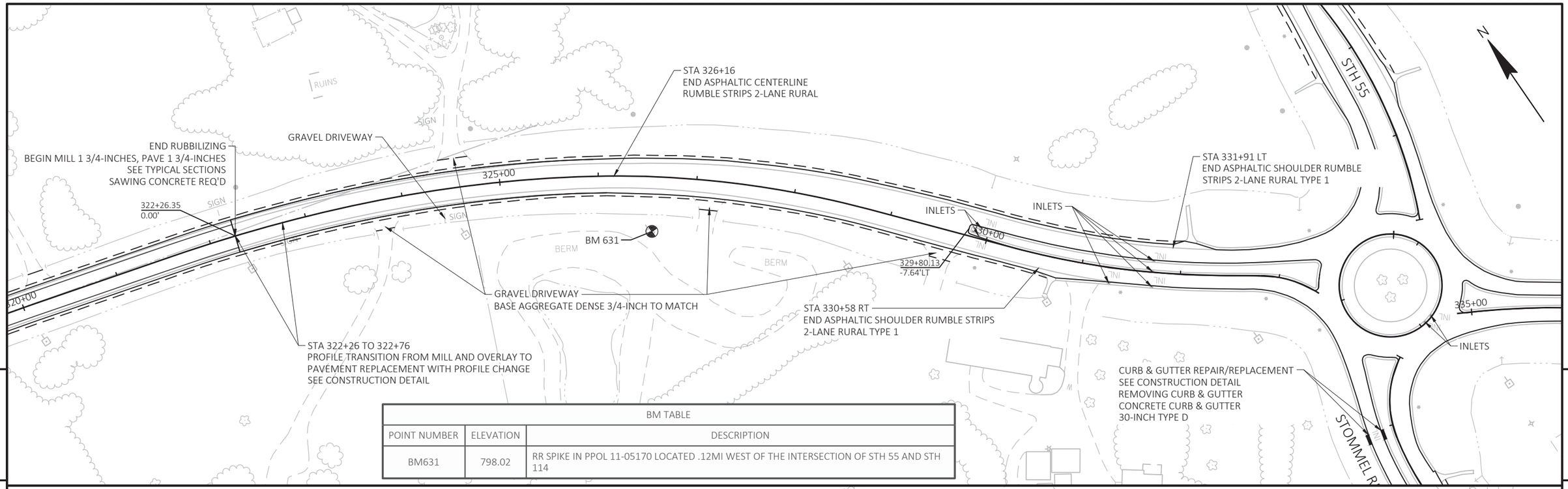

BM TABLE		
POINT NUMBER	ELEVATION	DESCRIPTION
BM631	798.02	RR SPIKE IN PPOL 11-05170 LOCATED .12MI WEST OF THE INTERSECTION OF STH 55 AND STH 114

BM TABLE		
POINT NUMBER	ELEVATION	DESCRIPTION
BM630	794.29	CHISLED SQUARE LOCATED ON THE NORTHWEST WINGWALL OF TWIN RCCPS LOCATED APPROXIMETLY

PROJECT NO: 4580-10-70	HWY: STH 114	COUNTY: CALUMET	PLAN	SHEET 136 E

FILE NAME : N:\PDS\C3D\45801000\SHEETSPLAN\050201-PN.DWG
LAYOUT NAME - 050209-pn

PLOT DATE : 12/6/2021 2:46 PM PLOT BY : VOGEL, KURT MICHAEL PLOT NAME : PLOT SCALE : 1 IN:100 FT

WISDOT/CADDS SHEET 44

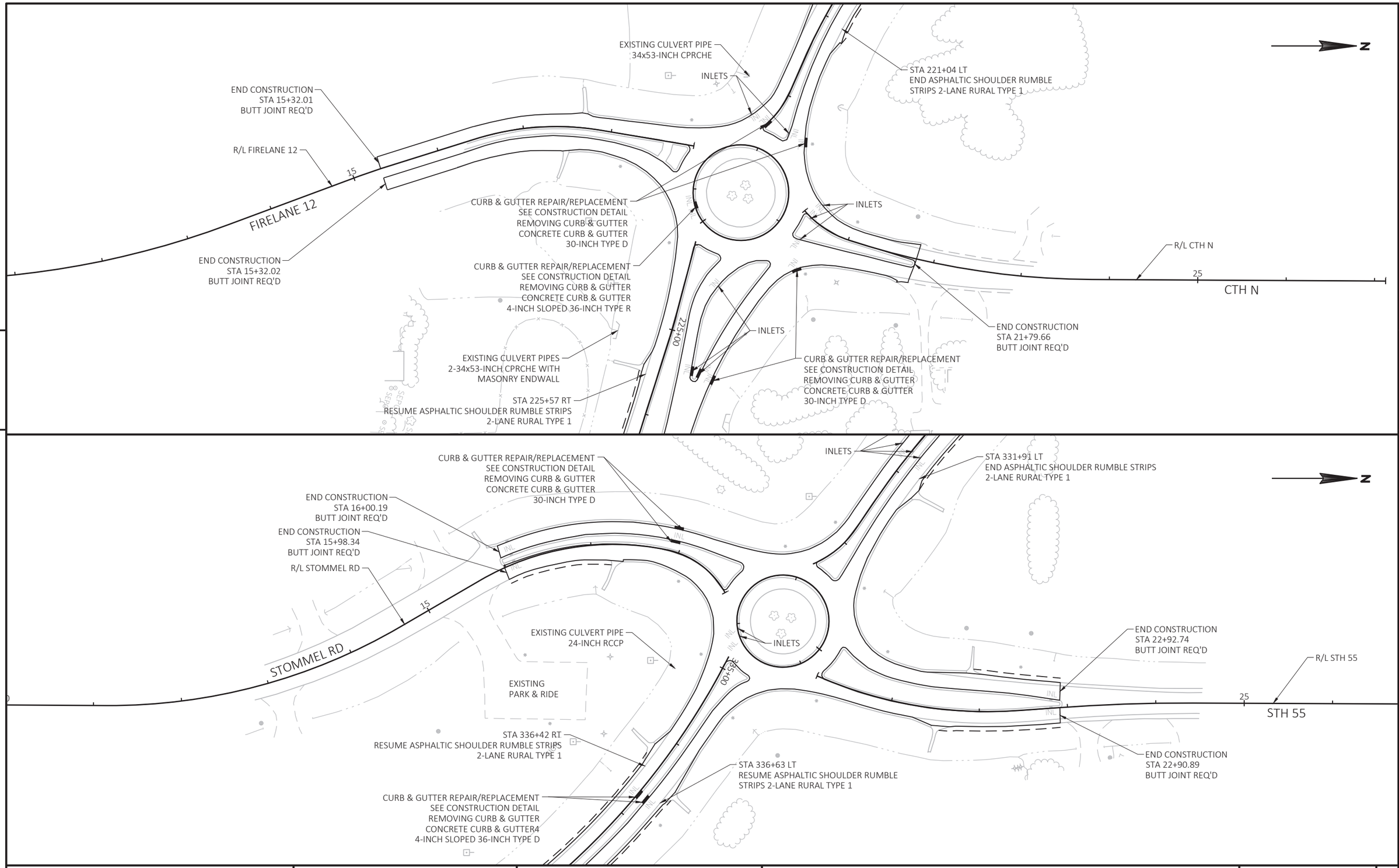

5

5

PROJECT NO: 4580-10-70	HWY: STH 114	COUNTY: CALUMET	PLAN	SHEET 137	E

FILE NAME : N:\PDS\C3D\45801000\SHEETSPLAN\050201-PN.DWG
LAYOUT NAME - 050208-pn

PLOT DATE : 12/6/2021 2:46 PM PLOT BY : VOGEL, KURT MICHAEL PLOT NAME : PLOT SCALE : 1 IN:100 FT

WISDOT/CADDS SHEET 44

Standard Detail Drawing List

08D01-22A	CONCRETE CURB & GUTTER
08D01-22B	CONCRETE CURB, TIES AND CURB AND GUTTER APPLICATIONS
08D04-05	CONCRETE SURFACE DRAINS & ASPHALTIC FLUMES
08D05-20A	CURB RAMPS TYPES 1 AND 1-A
08D05-20B	CURB RAMPS TYPES 2 AND 3
08D05-20C	CURB RAMPS TYPES 4A AND 4A1
08D05-20D	CURB RAMPS TYPE 4B AND 4B1
08D05-20E	CURB RAMPS TYPES 5, 6, 7A, 7B & 8
08D05-20F	CURB RAMPS RADIAL DETECTABLE WARNING FIELD APPLICATIONS
08D05-20G	CURB RAMPS RECTANGULAR AND RADIAL DETECTABLE WARNING PLATES
08D21-01	DRIVEWAYS WITHOUT CURB & GUTTER
08D22-01	DRIVEWAYS WITHOUT CURB & GUTTER RESURFACING PROJECTS RURAL
08E08-03	TYPICAL INSTALLATIONS OF EROSION BALES / TEMPORARY DITCH CHECKS
08E09-06	SILT FENCE
08E10-02	INLET PROTECTION TYPE A, B, C AND D
08E15-01	CULVERT PIPE CHECK
08F01-11	APRON ENDWALLS FOR CULVERT PIPE
08F02-01	APRON ENDWALLS FOR PIPE ARCH AND ELLIPTICAL PIPE
08F04-07	JOINT TIES FOR CONCRETE PIPE AND CONCRETE COLLAR DETAIL
08F07-05	STEEL APRON ENDWALLS FOR CULVERT PIPE AND PIPE ARCH SLOPED SIDE DRAINS
09A01-13A	AT-GRADE SIDE ROAD INTERSECTION, TYPES "B1", "B2", "C" AND D AND TEE INTERSECTION BYPASS LANE
09A01-13B	AT-GRADE SIDE ROAD INTERSECTION, TYPE "A1" & "A2"
11B02-02	CONCRETE MEDIAN NOSE
13A10-02A	2-LANE RURAL SHOULDER RUMBLE STRIP, MILLING
13A10-02C	2-LANE RURAL SHOULDER RUMBLE STRIP, MILLING
13A10-02D	2-LANE RURAL SHOULDER RUMBLE STRIP, MILLING
13A11-03A	2-LANE RURAL CENTER LINE RUMBLE STRIP, MILLING
13A11-03B	2-LANE RURAL CENTER LINE RUMBLE STRIP, MILLING
13B01-10	PAVEMENT DETAILS FOR RAILROAD APPROACH
13C19-03	HMA LONGITUDINAL JOINTS
15A03-02A	FLEXIBLE MARKER POST FOR CULVERT END
15A03-02B	FLEXIBLE MARKER POST FOR CULVERT END
15C02-08A	BARRICADES AND SIGNS FOR MAINLINE CLOSURES
15C02-08B	BARRICADES AND SIGNS FOR VARIOUS CLOSURES
15C02-08C	DETOUR SIGNING FOR MAINLINE CLOSURES
15C04-05	TRAFFIC CONTROL, ADVANCE WARNING SIGNS 45 M.P.H. OR GREATER TWO-WAY UNDIVIDED ROAD OPEN TO TRAFFIC
15C05-05	TRAFFIC CONTROL, ADVANCE WARNING SIGNS 40 M.P.H. OR LESS
15C07-15B	PAVEMENT MARKING WORDS
15C07-15C	PAVEMENT MARKING ARROWS
15C08-20A	LONGITUDINAL MARKING (MAINLINE)
15C09-12A	SIGNING AND PAVEMENT MARKING DETAILS FOR RAILROAD-HIGHWAY GRADE CROSSINGS
15C11-09B	CHANNELIZING DEVICES DRUMS, CONES, BARRICADES AND VERTICAL PANELS
15C12-07	TRAFFIC CONTROL FOR LANE CLOSURE WITH FLAGGING OPERATION
15C18-05B	MEDIAN ISLAND MARKING MEDIAN ISLAND NOSE
15C33-04	STOP LINE AND CROSSWALK PAVEMENT MARKING
15C35-04A	PAVEMENT MARKING (INTERSECTIONS)
15D28-04	TRAFFIC CONTROL, WORK ON SHOULDER OR PARKING LANE, UNDIVIDED ROADWAY
15D39-02	TRAFFIC CONTROL, DROP-OFF SIGNING
15D44-02	TRAFFIC CONTROL, SIGNING ON ROADWAYS WITH MILLED SURFACES

6

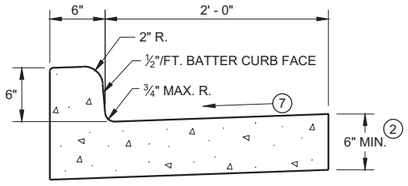

TYPES A[1] & D

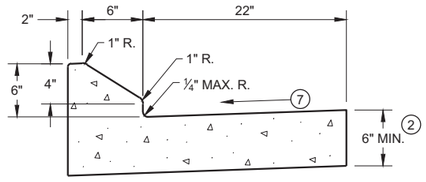

6" SLOPED CURB TYPES G[1] & J

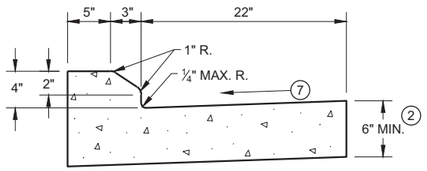

4" SLOPED CURB TYPES G[1] & J

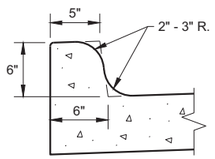

TYPES K[1] & L
(OPTIONAL CURB SHAPE)

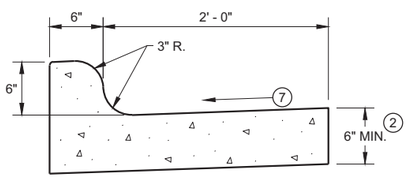

TYPES K[1] & L

CONCRETE CURB AND GUTTER 30"

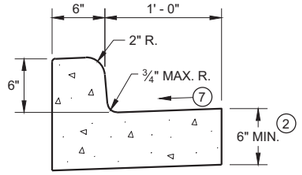

TYPES A[1] & D

CONCRETE CURB AND GUTTER 18"

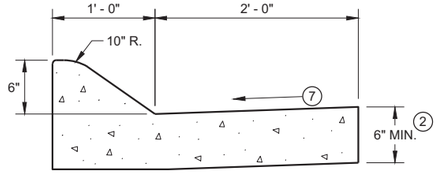

6" SLOPED CURB TYPES A[1] & D

4" SLOPED CURB TYPES A[1] & D

CONCRETE CURB AND GUTTER 36"

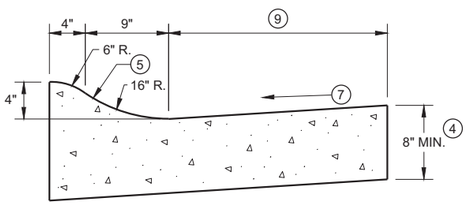

4" SLOPED CURB TYPES R[1] & T

TBT & TBTT	X
30"	22"
36"	28"

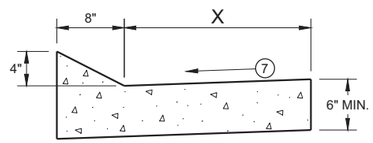

TYPES TBT & TBTT[1]

CONCRETE CURB AND GUTTER

PAVEMENT THICKNESS AND MAXIMUM CONCRETE PANEL WIDTH TABLE

PAVEMENT THICKNESS	MAXIMUM PANEL WIDTH
LESS THAN 10"	12'
10" & ABOVE	15'

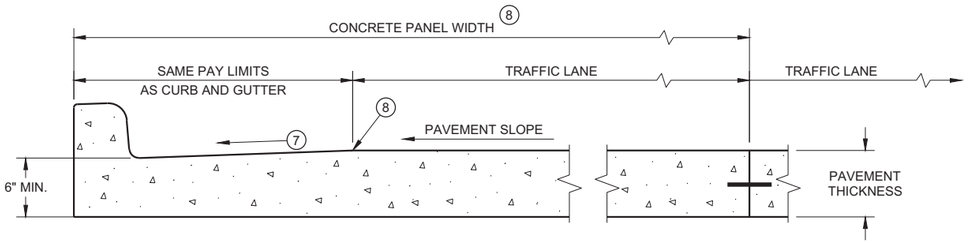

PARTIAL SECTION OF PAVEMENT * WITH INTEGRAL CURB AND GUTTER

* BIKE LANE IS NOT SHOWN

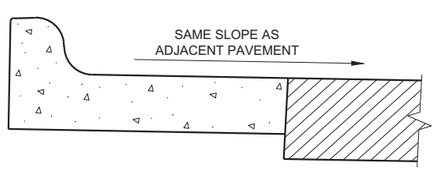

REVERSE SLOPE GUTTER[6]
(TYPICAL FOR ALL CURB & GUTTER TYPES)

GENERAL NOTES

DETAILS OF CONSTRUCTION AND WORKMANSHIP NOT SHOWN ON THIS DRAWING SHALL CONFORM TO THE PERTINENT REQUIREMENTS OF THE CONTRACT.

PAVEMENT TIES AND TIE BARS SHALL BE EPOXY COATED IN CONFORMANCE WITH SUBSECTION 505.2.6.2 OF THE STANDARD SPECIFICATIONS.

INTEGRAL CURB AND GUTTER SHALL CONFORM TO THE DETAILS SHOWN FOR CONCRETE CURB AND GUTTER INCLUDING THE TRANSVERSE GUTTER SLOPE.

UNLESS OTHERWISE SHOWN ON THE TYPICAL CROSS SECTIONS, THE BASE AGGREGATE AND COMMON EXCAVATION LIMITS ARE 2' - 0" BEHIND THE BACK OF CURBS.

1. TIE BARS ARE REQUIRED FOR CURB AND GUTTERS TYPES A, G, K, R, AND TBTT.
2. THE BOTTOM OF CURB AND GUTTER MAY BE CONSTRUCTED EITHER LEVEL OR PARALLEL TO THE SLOPE OF THE SUBGRADE OR BASE AGGREGATE PROVIDED A 6" MINIMUM GUTTER THICKNESS IS MAINTAINED.
3. USE 8" MINIMUM GUTTER THICKNESS WHEN USED WITH AN ADJACENT CONCRETE TRUCK APRON PLACED BEHIND BACK OF CURB.
4. THE BOTTOM OF CURB AND GUTTER MAY BE CONSTRUCTED EITHER LEVEL OR PARALLEL TO THE SLOPE OF THE SUBGRADE OR BASE AGGREGATE PROVIDED A 8" MINIMUM GUTTER THICKNESS IS MAINTAINED.
5. UNLESS OTHERWISE NOTED, FOR STAKING PURPOSES THE FACE OF CURB IS 6" FROM THE BACK OF CURB.
6. WHEN REVERSE SLOPE GUTTER IS REQUIRED, THE LOCATION(S) WILL BE SHOWN ELSEWHERE IN THE PLAN.
7. USE 4% GUTTER CROSS SLOPE UNLESS OTHERWISE NOTED IN THE PLANS.
8. INCLUDE LONGITUDINAL JOINT AND TIE BARS ALONG LANE EDGE WHEN CONCRETE PANEL WIDTH EXCEEDS THE MAXIMUM WIDTH PER TABLE BELOW. LONGITUDINAL JOINT(S) ARE NOT ALLOWED WITHIN TRAFFIC LANES AND BIKE LANES. LONGITUDINAL JOINT MAY BE SAWED.
9. CONCRETE CURB AND GUTTER 4-INCH SLOPED 30-INCH TYPE "R" AND "T" = 17 INCHES
   CONCRETE CURB AND GUTTER 4-INCH SLOPED 36-INCH TYPE "R" AND "T" = 23 INCHES

CONCRETE CURB AND GUTTER

STATE OF WISCONSIN
DEPARTMENT OF TRANSPORTATION

6
SDD 08D01 - 22a

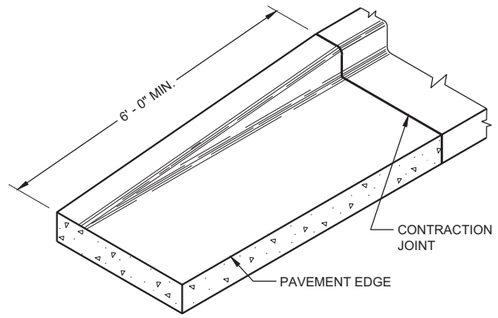

END SECTIONCURB AND GUTTER

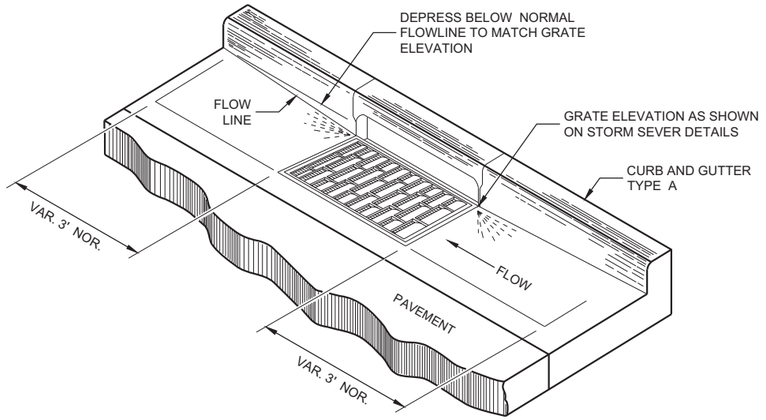

DETAIL OF CURB AND GUTTER AT INLETS
(TYPICAL H INLET COVER SHOWN)

GENERAL NOTES

DETAILS OF CONSTRUCTION AND WORKMANSHIP NOT SHOWN ON THIS DRAWING SHALL CONFORM TO THE PERTINENT REQUIREMENTS OF THE CONTRACT.

PAVEMENT TIES AND TIE BARS SHALL BE EPOXY COATED IN CONFORMANCE WITH SUBSECTION 505.2.6.2 OF THE STANDARD SPECIFICATIONS.

UNLESS OTHERWISE SHOWN ON THE TYPICAL CROSS SECTIONS, THE BASE AGGREGATE AND COMMON EXCAVATION LIMITS ARE 2' - 0" BEHIND THE BACK OF CURBS.

(1) TIE BARS ARE REQUIRED FOR CURB AND GUTTERS TYPES A, G, K, R, AND TBTT.

(2) THE BOTTOM OF CURB AND GUTTER MAY BE CONSTRUCTED EITHER LEVEL OR PARALLEL TO THE SLOPE OF THE SUBGRADE OR BASE AGGREGATE PROVIDED A 6" MINIMUM GUTTER THICKNESS IS MAINTAINED.

(9) REFER TO SDD 08D18 AND 08D19 FOR ADDITIONAL DRIVEWAY ENTRANCE CURB DETAILS.

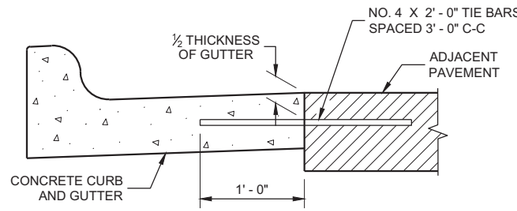

TYPICAL TIE BAR LOCATION (1)

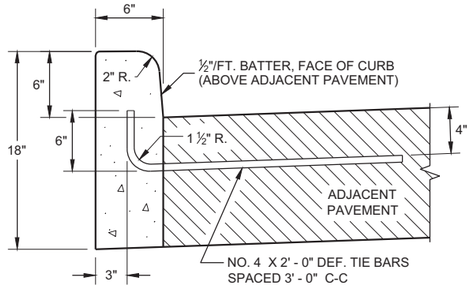

TYPES A (1) & D

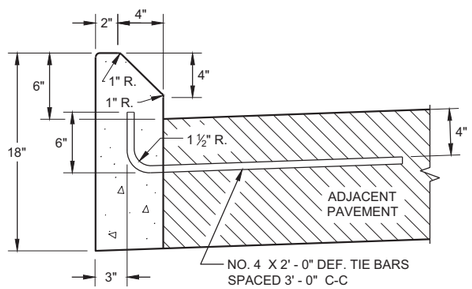

TYPES G (1) & J

CONCRETE CURB

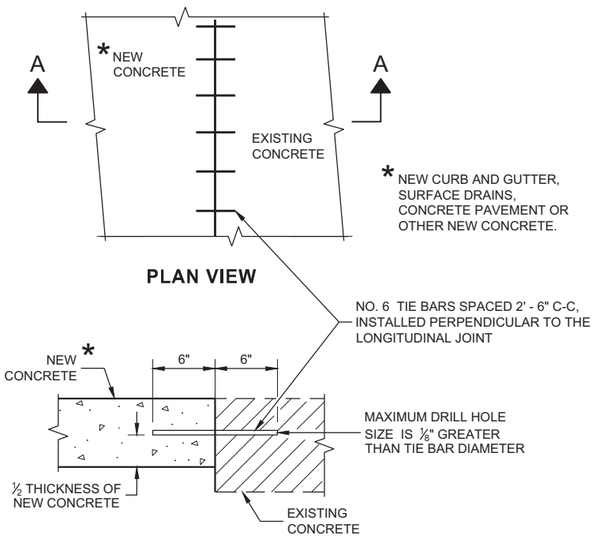

PLAN VIEW

SECTION A - A

TIE BARS DRILLED INTO EXISTING PAVEMENT

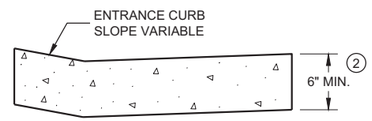

DRIVEWAY ENTRANCE CURB (9)
(WHEN DIRECTED BY THE ENGINEER)

CONCRETE CURB, TIES AND CURB AND GUTTER APPLICATIONS

STATE OF WISCONSIN
DEPARTMENT OF TRANSPORTATION

APPROVED
February 2021 — DATE
/S/ Rodnery Taylor — ROADWAY STANDARDS DEVE ENGINEER
FHWA

6

SDD08D01 - 22b

ASPHALTIC FLUME

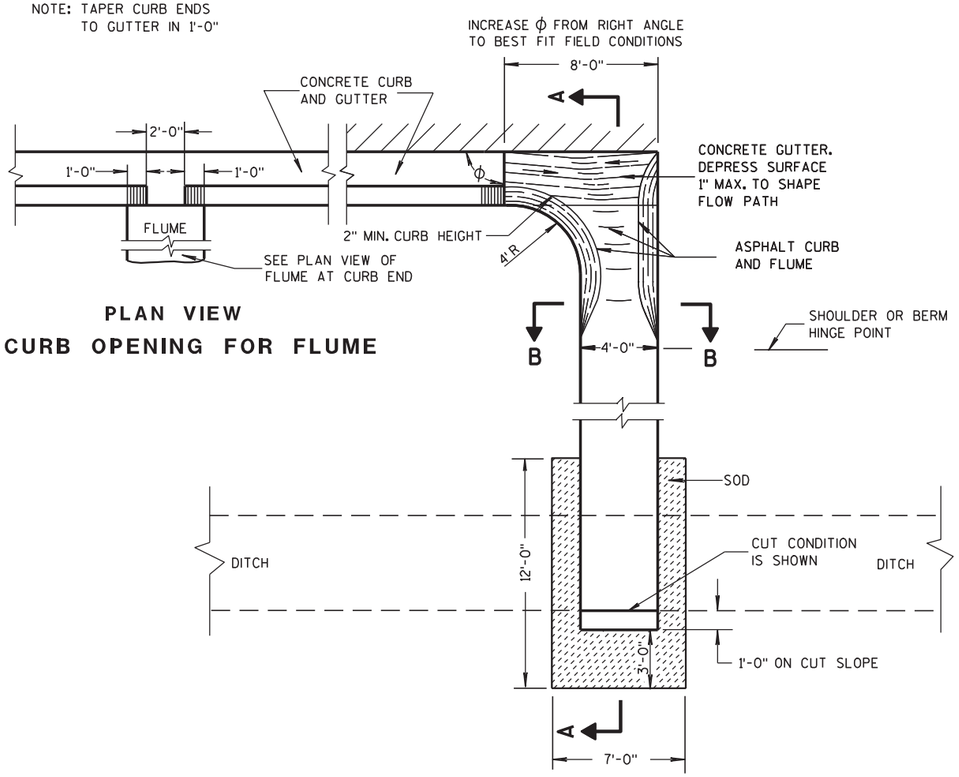

PLAN VIEW
CURB OPENING FOR FLUME

PLAN VIEW
FLUME AT CURB END

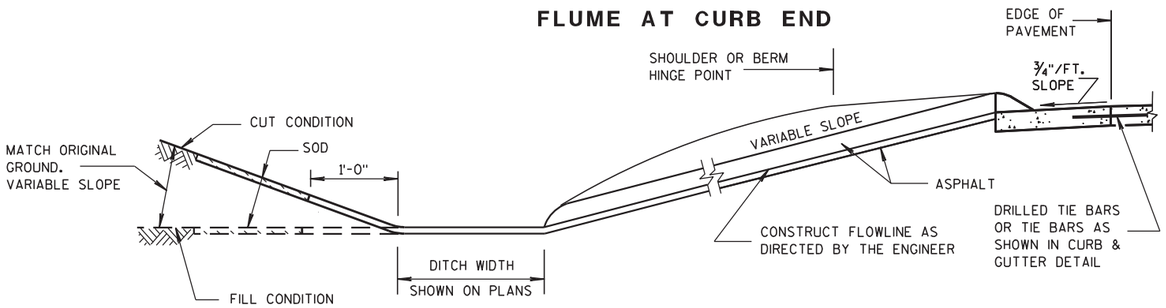

SECTION A-A

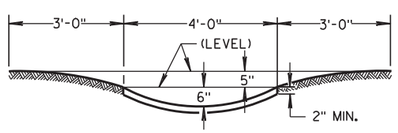

SECTION B-B

GENERAL NOTES

DETAILS OF CONSTRUCTION, MATERIALS AND WORKMANSHIP NOT SHOWN ON THIS DRAWING SHALL CONFORM TO PERTINENT REQUIREMENTS OF THE STANDARD SPECIFICATIONS AND APPLICABLE SPECIAL PROVISIONS.

WELDED STEEL WIRE FABRIC SHALL BE IN ACCORDANCE WITH AASHTO SPECIFICATION M55.

① JOINTS SHALL BE $\frac{1}{8}$ TO $\frac{1}{4}$ INCH WIDE BY $1\frac{1}{2}$ INCHES DEEP AND SPACED AT UNIFORM INTERVALS OF APPROXIMATELY 4 FEET.

② GEOTEXTILE FABRIC TYPE "R" SHALL UNDERLAY THE FULL LENGTH AND WIDTH OF THE CONCRETE SURFACE DRAIN AND RIPRAP.

③ CONCRETE SURFACE DRAIN WITHOUT CURB AND GUTTER MAY BE USED ON BACKSLOPES WHEN SPECIFIED

③ CONCRETE SURFACE DRAIN

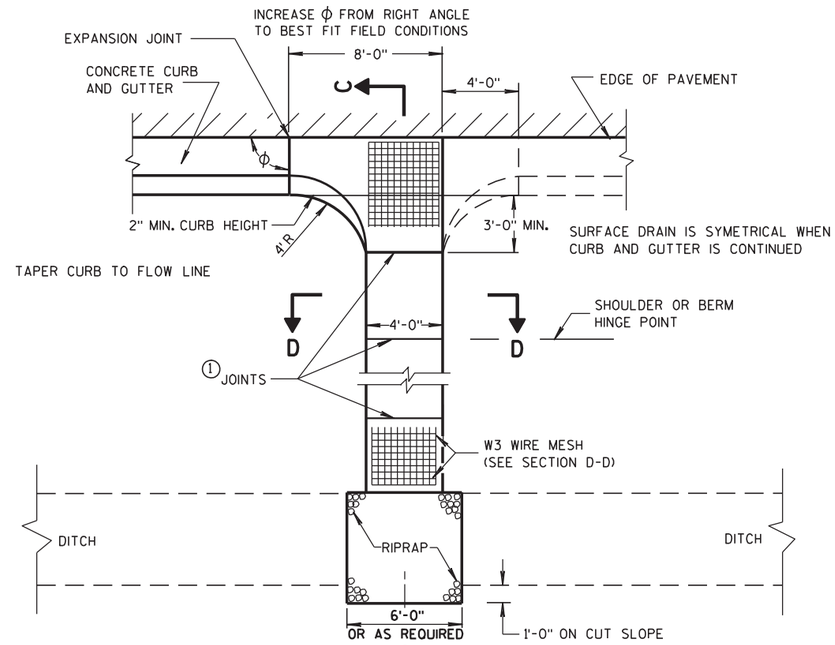

PLAN VIEW

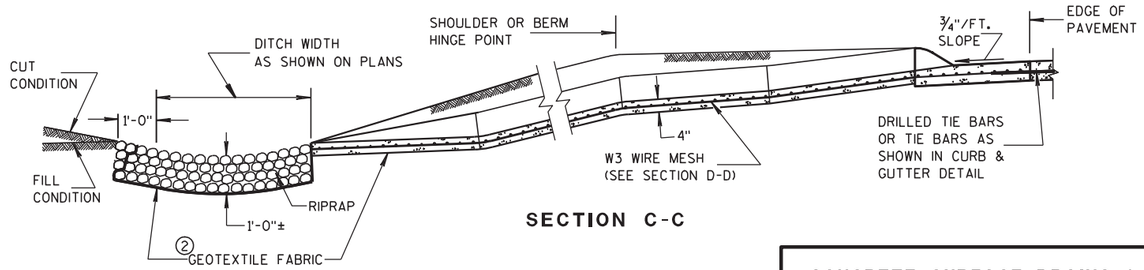

SECTION C-C

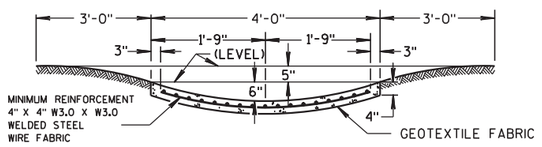

SECTION D-D

CONCRETE SURFACE DRAINS & ASPHALTIC FLUMES

STATE OF WISCONSIN
DEPARTMENT OF TRANSPORTATION

APPROVED
9-4-08 DATE
/S/ Jerry H. Zogg
ROADWAY STANDARDS ENGINEER
141
MENT
FHWA

6

S.D.D. 8 D 4-5

6

S.D.D. 8 D 4-5

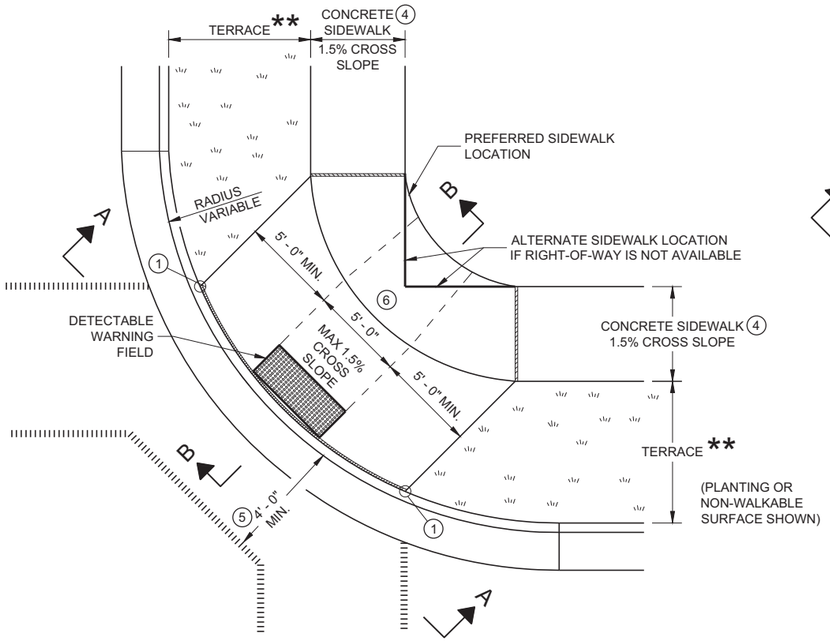

PLAN VIEW

CURB RAMP TYPE 1

(CENTER OF CORNER RADIUS)

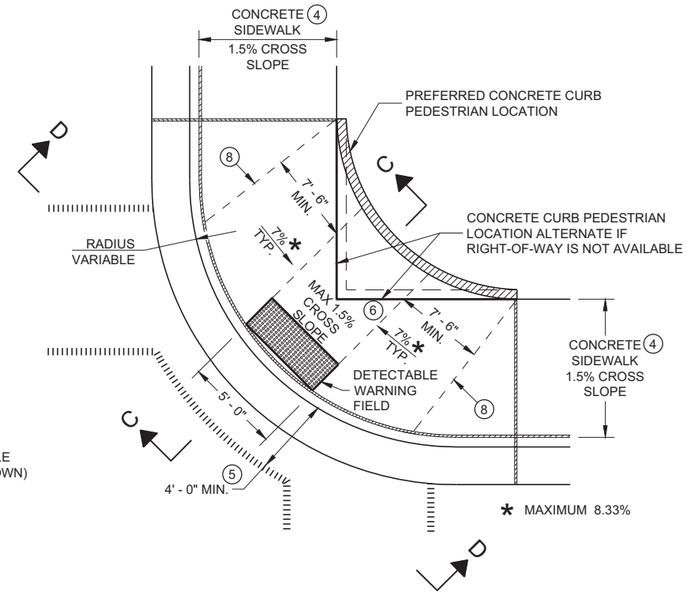

PLAN VIEW

CURB RAMP TYPE 1 - A

(NO TERRACE)

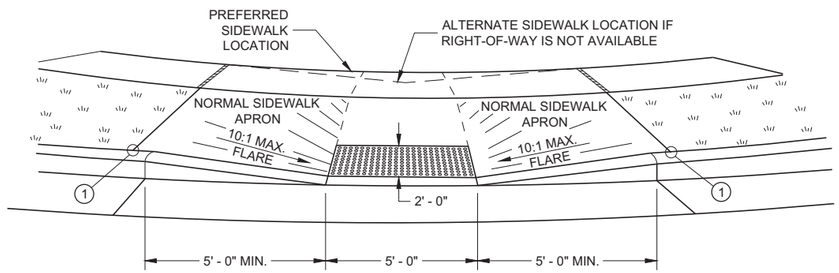

VIEW A - A FOR TYPE 1

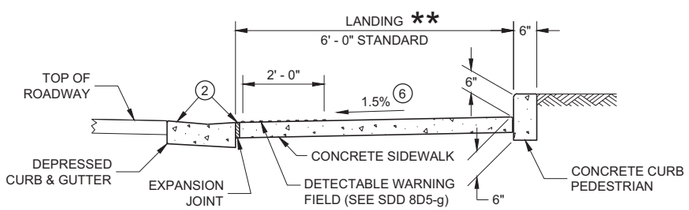

SECTION C - C FOR TYPE 1 - A

** WIDTH SHOWN ELSEWHERE IN THE PLANS

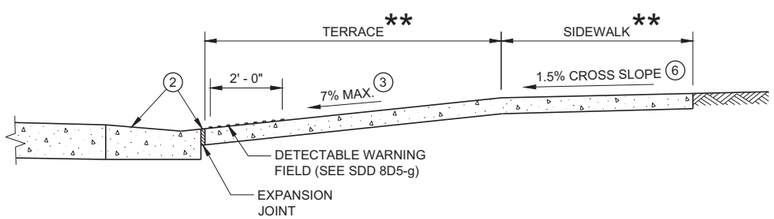

SECTION B - B FOR TYPE 1

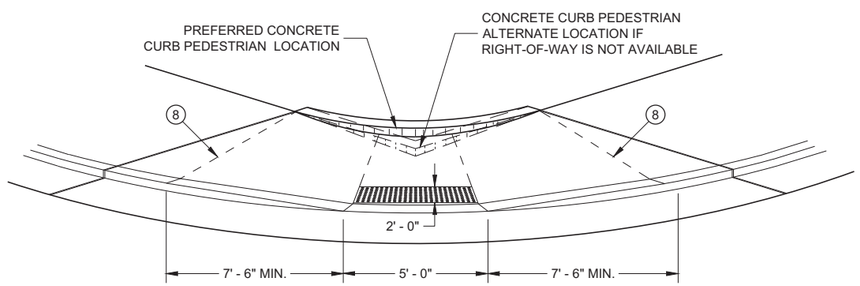

VIEW D - D FOR TYPE 1 - A

GENERAL NOTES

AVOID PLACING DRAINAGE STRUCTURES, JUNCTION BOXES OR OTHER OBSTRUCTIONS IN FRONT OF RAMP ACCESS AREAS.

DETAILS OF CONSTRUCTION, MATERIALS AND WORKMANSHIP NOT SHOWN ON THIS DRAWING SHALL CONFORM TO THE PERTINENT REQUIREMENTS OF THE STANDARD SPECIFICATIONS AND THE APPLICABLE SPECIAL PROVISIONS.

WHEN NECESSARY, THE SIDEWALK ELEVATION MAY BE LOWERED TO MEET THE HIGH POINT ON THE RAMP.

TYPE 1 CURB RAMPS SHALL HAVE A NORMAL SIDEWALK APRON AND CURB ON BOTH SIDES OF RAMP.

DETECTABLE WARNING FILED SHALL BE MEASURED AND PAID BY THE SQUARE FOOT AS "CURB RAMP DETECTABLE WARNING FIELD". THE CONCRETE PEDESTRIAN CURB, IF NEEDED, SHALL BE MEASURED AND PAID BY THE LINEAR FOOT AS "CONCRETE CURB PEDESTRIAN". CONCRETE SIDEWALK IN THE CURB RAMP AREA SHALL BE MEASURED AND PAID BY THE SQUARE FOOT AS CONCRETE SIDEWALK, INCLUDING THE AREA UNDER THE DETECTABLE WARNING FIELD.

SELECT CURB RAMP DETECTABLE WARNING FIELD MATERIALS AND DEVICES FROM THE DEPARTMENT'S APPROVED MATERIALS LIST. THE COLOR OF THE DETECTABLE WARNING FIELD IS SPECIFIED ELSEWHERE AND IS INCIDENTAL TO THE BID ITEM OF "CURB RAMP DETECTABLE WARNING FIELD"

DETECTABLE WARNING FIELDS THAT ARE INSTALLED AS A GROUP OR SIDE BY SIDE, SHALL BE FROM THE SAME MANUFACTURER.

SURFACE TEXTURE OF THE RAMP SHALL BE OBTAINED BY COARSE BROOMING TRANSVERSE TO THE SLOPE OF THE RAMP.

(1) THIS POINT IS AN EXTENSION OF OUTSIDE EDGE OF APPROACHING SIDEWALK WHERE IT MEETS THE BACK OF CONCRETE CURB. POINT LOCATION MAY BE ADJUSTED TO ALIGN WITH BEGINNING OF FULL-HEIGHT CURB IF THIS DISTANCE IS SHORT.

(2) GRADE CHANGE BETWEEN GUTTER FLAG SLOPE AND THE CURB RAMP SLOPE SHALL NOT EXCEED 11%. MAXIMUM GUTTER FLAG SLOPE IS 4%. PROVIDE LONGITUDINAL DRAINAGE AROUND CURB AND AWAY FROM CURB RAMP. NO VERTICAL LIPS OR DISCONTINUITIES GREATER THAN ¼ - INCH ARE ALLOWED. SLOPE OF CURB HEAD OPENING SHALL MATCH THE RAMP SLOPE, MINIMALLY 1.5% AND NOT TO EXCEED 7%. WHEN ADJACENT TO 1.5% LANDING, CONSTRUCT CURB HEAD OPENING AT 1.5% IN THE DIRECTION OF PEDESTRIAN TRAVEL.

(3) MAXIMUM 8.33% CURB RAMP SLOPE IS ALLOWABLE WITH FLATTENED GUTTER FLAG SLOPE AND NOT TO EXCEED 11% GRADE CHANGE.

(4) ±0.5% CONSTRUCTION TOLERANCE IN SIDEWALK CROSS SLOPE. THE SIDEWALK CROSS SLOPE SHALL NOT EXCEED 2% WITHOUT PRIOR APPROVAL FROM THE ENGINEER.

(5) PROVIDE A LEVEL LANDING IN THE STREET AND GUTTER AREA (2% MAXIMUM SLOPE IN ANY DIRECTION). WHEN THE GUTTER SLOPE EXCEEDS 2%, CONSTRUCT THE LEVEL LANDING IN THE STREET AREA.

(6) PROVIDE A LEVEL LANDING (MAXIMUM 2% SLOPE) IN ANY DIRECTION OF PEDESTRIAN TRAVEL. STANDARD LEVEL LANDING SIZE IS 5 FEET BY 5 FEET.

(8) PROVIDE GRADE BREAK PERPENDICULAR TO DIRECTION OF WHEELCHAIR TRAVEL.

LEGEND

- ½" EXPANSION JOINT SIDEWALK
- CONTRACTION JOINT FIELD LOCATED
- PAVEMENT MARKING CROSSWALK (WHITE)

CURB RAMPS
TYPE 1 AND 1-A

STATE OF WISCONSIN
DEPARTMENT OF TRANSPORTATION

6

SDD 08D05 - 20a

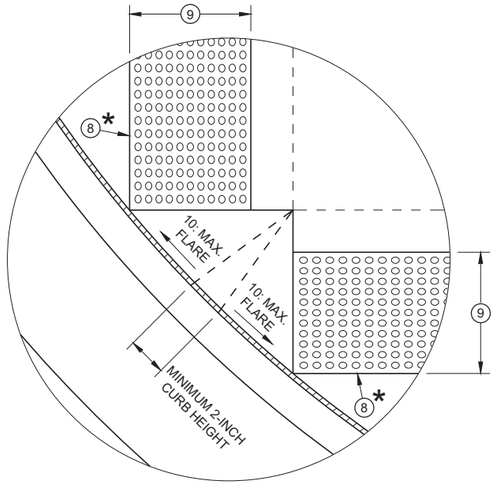

DETAIL A

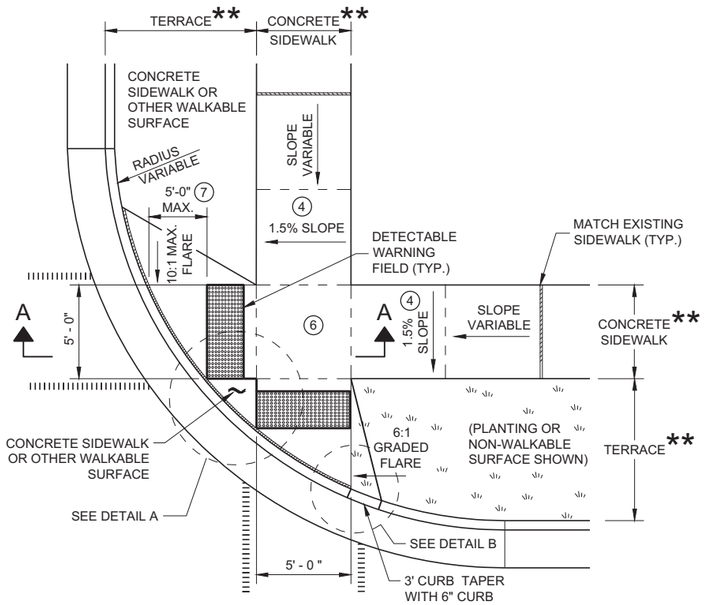

PLAN VIEW
CURB RAMP TYPE 2
(CENTER OF CORNER RADIUS)

GENERAL NOTES

AVOID PLACING DRAINAGE STRUCTURES, JUNCTION BOXES OR OTHER OBSTRUCTIONS IN FRONT OF RAMP ACCESS AREAS.

DETAILS OF CONSTRUCTION, MATERIALS AND WORKMANSHIP NOT SHOWN ON THIS DRAWING SHALL CONFORM TO THE PERTINENT REQUIREMENTS OF THE STANDARD SPECIFICATIONS AND THE APPLICABLE SPECIAL PROVISIONS.

DETECTABLE WARNING FIELDS THAT ARE INSTALLED AS A GROUP OR SIDE BY SIDE SHALL BE FROM THE SAME MANUFACTURER.

(2) GRADE CHANGE BETWEEN GUTTER FLAG SLOPE AND THE CURB RAMP SLOPE SHALL NOT EXCEED 11%. MAXIMUM GUTTER FLAG SLOPE IS 4%. PROVIDE LONGITUDINAL DRAINAGE AROUND CURB AND AWAY FROM CURB RAMP. NO VERTICAL LIPS OR DISCONTINUITIES GREATER THAN ¼ - INCH ARE ALLOWED. SLOPE OF CURB HEAD OPENING SHALL MATCH THE RAMP SLOPE, MINIMALLY 1.5% AND NOT TO EXCEED 7%. WHEN ADJACENT TO 1.5% LANDING, CONSTRUCT CURB HEAD OPENING AT 1.5% IN THE DIRECTION OF PEDESTRIAN TRAVEL.

(3) AN 8.33% CURB RAMP SLOPE IS ALLOWABLE WITH FLATTENED GUTTER FLAG SLOPE (2.67% OR LESS) AND NOT TO EXCEED 11% GRADE CHANGE.

(4) ±0.5% CONSTRUCTION TOLERANCE IN SIDEWALK CROSS SLOPE. THE SIDEWALK CROSS SLOPE SHALL NOT EXCEED 2% WITHOUT PRIOR APPROVAL FROM THE ENGINEER.

(6) PROVIDE A LEVEL LANDING (MAXIMUM 2% SLOPE) IN ANY DIRECTION OF PEDESTRIAN TRAVEL. STANDARD LEVEL LANDING SIZE IS 5 FEET X 5 FEET.

(7) WHEN GRADE BREAK DISTANCE EXCEEDS 5 FEET, USE RADIAL DETECTABLE WARNING FIELD PER SDD 8D5-f.

(8) PROVIDE GRADE BREAK PERPENDICULAR TO DIRECTION OF WHEELCHAIR TRAVEL.

(9) WHEN DISTANCE IS LESS THAN 6' - 0", IT MAY BE DIFFICULT TO ACHIEVE A 7% SLOPE OR FLATTER ALONG THE RAMP. REDUCE CURB HEIGHT IN TRIANGLE AREA TO ACHIEVE 7% SLOPE OR FLATTER ON RAMP. CONSTRUCT 2-INCH MINIMUM CURB HEIGHT BETWEEN 10:1 FLARES.

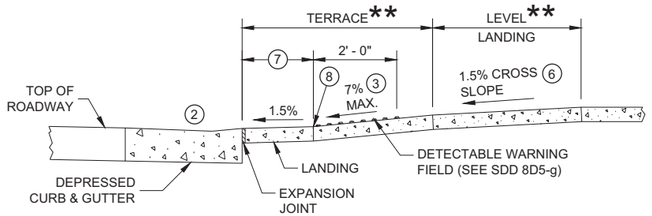

SECTION A - A FOR TYPE 2

* MAXIMUM 2.0% SLOPE IN ALL DIRECTIONS IN FRONT OF GRADE BREAK

** WIDTH SHOWN ELSEWHERE IN THE PLANS

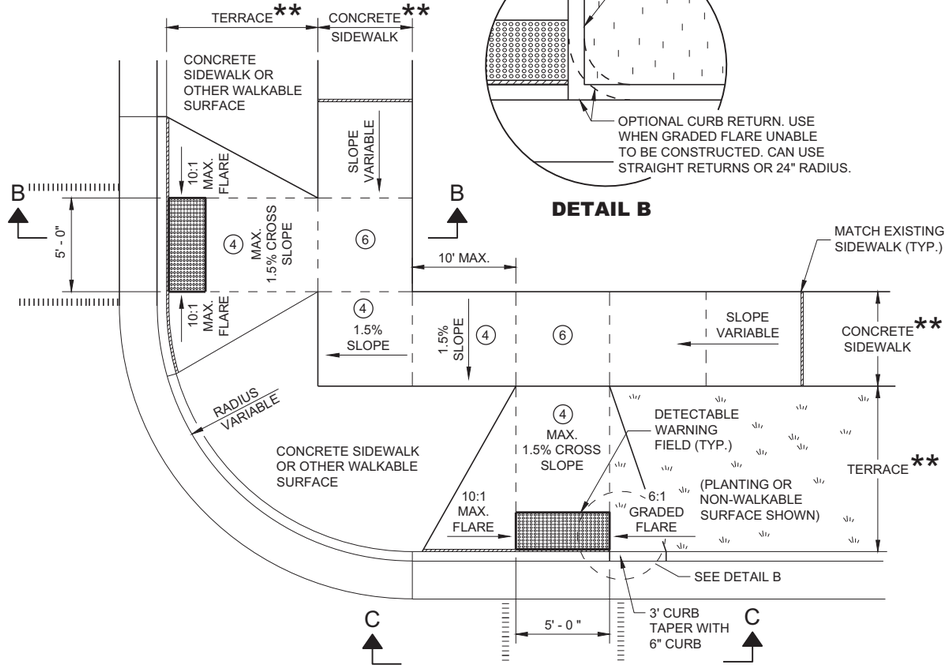

DETAIL B

PLAN VIEW
CURB RAMP TYPE 3
(OUTSIDE OF CROSSWALK AREA)

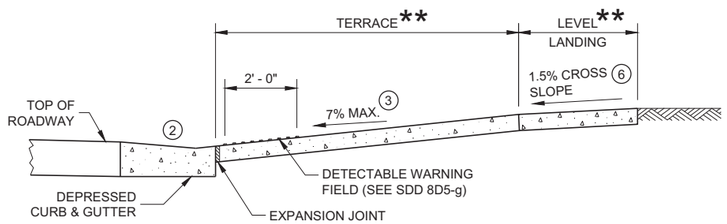

SECTION B - B FOR TYPE 3

LEGEND

- ½" EXPANSION JOINT SIDEWALK
- CONTRACTION JOINT SIDEWALK
- PAVEMENT MARKING CROSSWALK (WHITE)

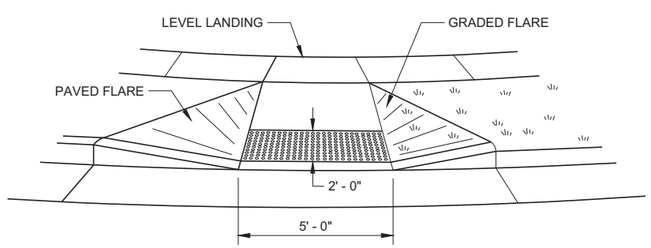

VIEW C - C FOR TYPE 3

CURB RAMPS TYPE 2 AND 3

STATE OF WISCONSIN
DEPARTMENT OF TRANSPORTATION

6

SDD 08D05 - 20b

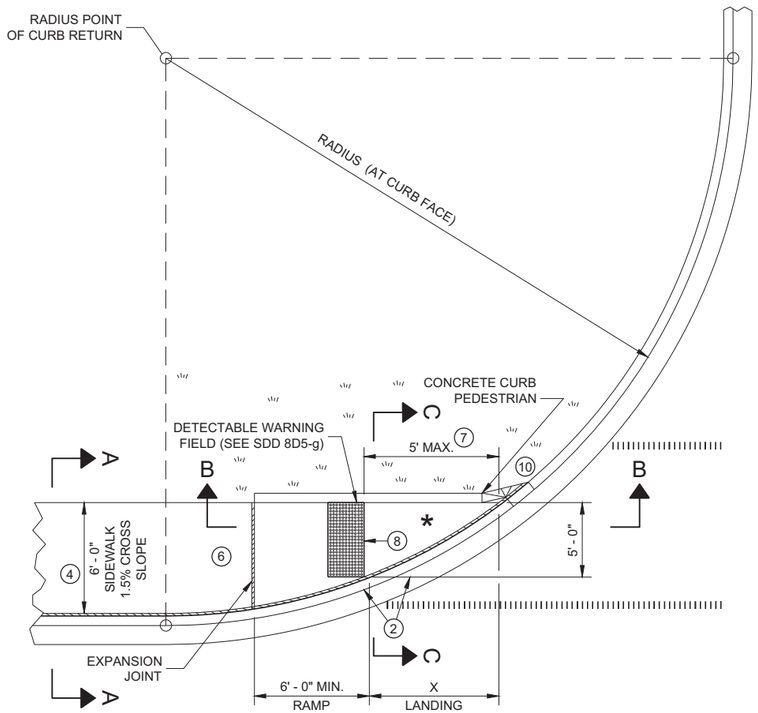

PLAN VIEW

CURB RAMP TYPE 4A

RADIUS (AT CURB FACE)	X
10 FEET	4' - 7"
15 FEET	6' - 5½"

INTERMEDIATE RADII CAN BE INTERPOLATED

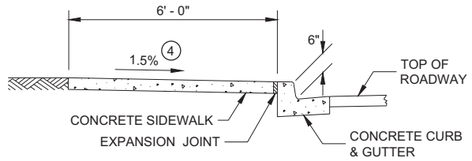

SECTION A - A FOR TYPE 4A

GENERAL NOTES

AVOID PLACING DRAINAGE STRUCTURES, JUNCTION BOXES OR OTHER OBSTRUCTIONS IN FRONT OF RAMP ACCESS AREAS.

DETAILS OF CONSTRUCTION, MATERIALS AND WORKMANSHIP NOT SHOWN ON THIS DRAWING SHALL CONFORM TO THE PERTINENT REQUIREMENTS OF THE STANDARD SPECIFICATIONS AND THE APPLICABLE SPECIAL PROVISIONS.

DETECTABLE WARNING FIELDS THAT ARE INSTALLED AS A GROUP OR SIDE BY SIDE, SHALL BE FROM THE SAME MANUFACTURER.

(2) GRADE CHANGE BETWEEN GUTTER FLAG SLOPE AND THE CURB RAMP SLOPE SHALL NOT EXCEED 11%. MAXIMUM GUTTER FLAG SLOPE IS 4%. PROVIDE LONGITUDINAL DRAINAGE AROUND CURB AND AWAY FROM CURB RAMP. NO VERTICAL LIPS OR DISCONTINUITIES GREATER THAN ¼ - INCH ARE ALLOWED. SLOPE OF CURB HEAD OPENING SHALL MATCH THE RAMP SLOPE, MINIMALLY 1.5% AND NOT TO EXCEED 7%. WHEN ADJACENT TO 1.5% LANDING, CONSTRUCT CURB HEAD OPENING AT 1.5% IN THE DIRECTION OF PEDESTRIAN TRAVEL.

(3) AN 8.33% CURB RAMP SLOPE IS ALLOWABLE WITH FLATTENED GUTTER FLAG SLOPE AND NOT TO EXCEED 11% GRADE CHANGE.

(4) ±0.5% CONSTRUCTION TOLERANCE IN SIDEWALK CROSS SLOPE. THE SIDEWALK CROSS SLOPE SHALL NOT EXCEED 2% WITHOUT PRIOR APPROVAL FROM THE ENGINEER.

(6) PROVIDE A LEVEL LANDING (MAXIMUM 2% SLOPE) IN ANY DIRECTION OF PEDESTRIAN TRAVEL. STANDARD LEVEL LANDING SIZE IS 5 FEET BY 5 FEET.

(7) WHEN THIS GRADE BREAK DISTANCE EXCEEDS 5 FEET, USE RADIAL DETECTABLE WARNING FIELD PER SDD 8D5-f.

(8) PROVIDE GRADE BREAK PERPENDICULAR TO DIRECTION OF WHEELCHAIR TRAVEL.

(10) INSTALL TRANSITION NOSE (INCIDENTAL TO OTHER PAY ITEMS). DO NOT MARK TRANSITION NOSE.

LEGEND

½" EXPANSION JOINT SIDEWALK

CONTRACTION JOINT SIDEWALK

PAVEMENT MARKING CROSSWALK (WHITE)

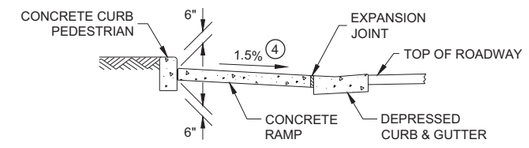

SECTION C - C FOR TYPE 4A

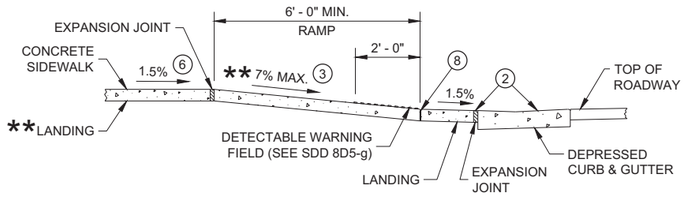

** IF RAMP SLOPE IS LESS THAN 5.0%, THEN NO ADJACENT UPHILL LANDING IS REQUIRED

SECTION B - B FOR TYPE 4A AND TYPE 4A1

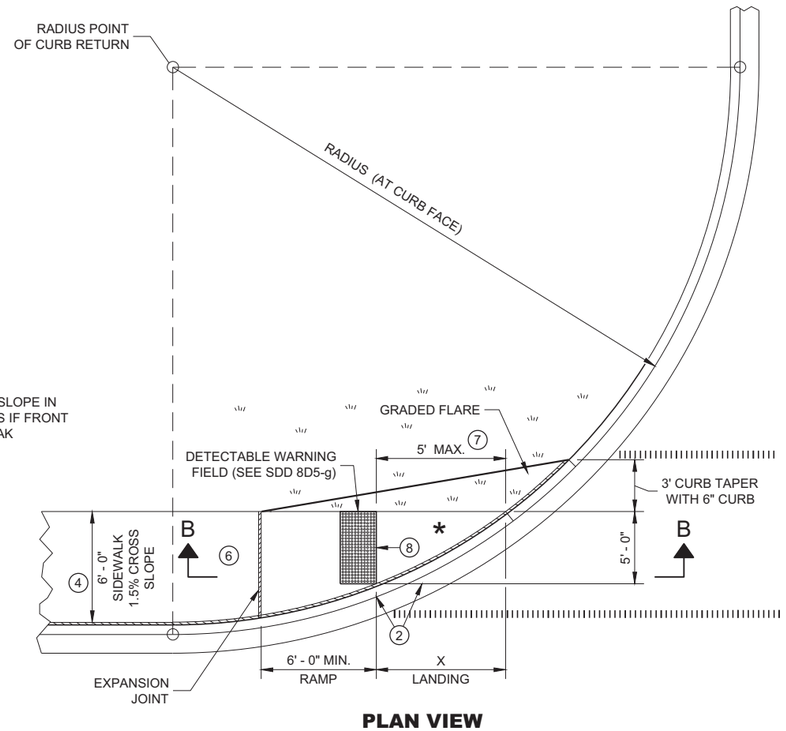

* MAXIMUM 2.0% SLOPE IN ALL DIRECTIONS IF FRONT OF GRADE BREAK

PLAN VIEW

CURB RAMP TYPE 4A1

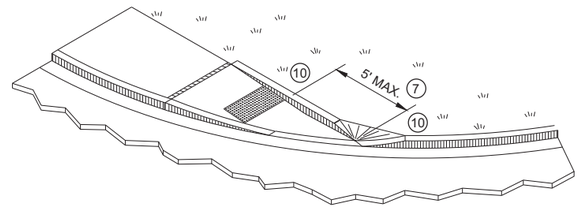

ISOMETRIC VIEW FOR TYPE 4A

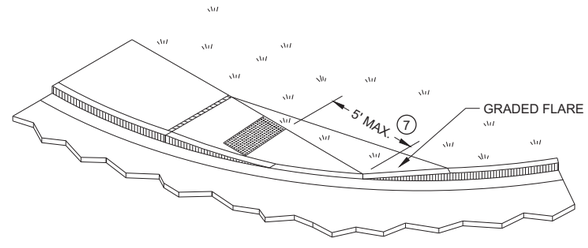

ISOMETRIC VIEW FOR TYPE 4A1

CURB RAMPS
TYPE 4A AND 4A1

STATE OF WISCONSIN
DEPARTMENT OF TRANSPORTATION

6

SDD 08D05 - 20c

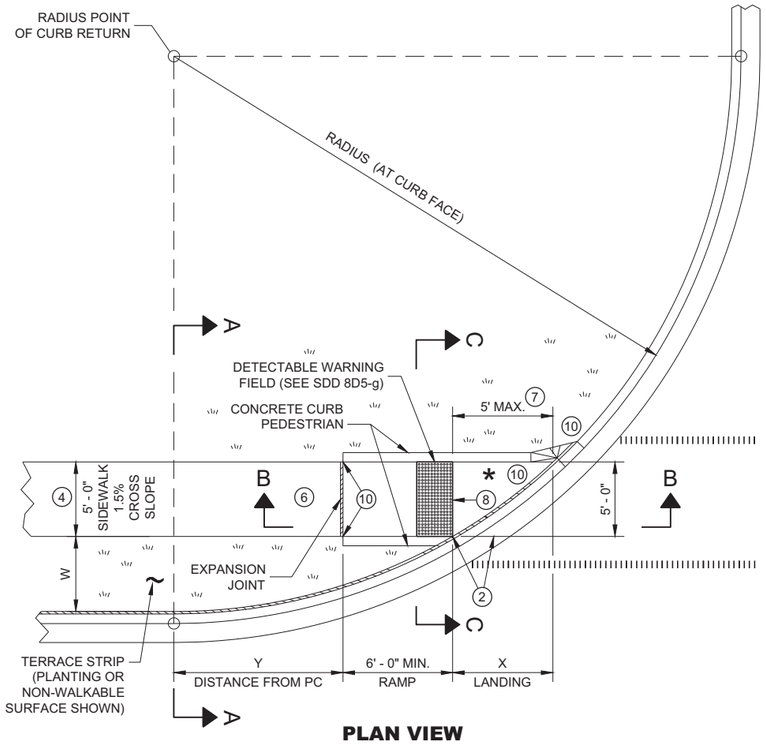

PLAN VIEW

CURB RAMP TYPE 4B

RADIUS (AT CURB FACE)	W = 3' - 0"		W = 4' - 0"		W = 5' - 0"		W = 6' - 0"		W = 7' - 0"		W = 8' - 0"		W = 9' - 0"		W = 10' - 0"	
	X	Y	X	Y	X	Y	X	Y	X	Y	X	Y	X	Y	X	Y
10 FEET	2' - 10 ¼"	0' - 5"	2' - 1"	1' - 4 ½"	1' - 5"	2' - 1"	0' - 10"	2' - 7 ½"	0' - 3 ¼"	3' - 0 ¼"						
15 FEET	4' - 6 ¾"	2' - 1 ¾"	3' - 9"	3' - 5 ¾"	3' - 1 ¼"	4' - 6"	2' - 6 ¾"	5' - 4 ½"	2' - 1"	6' - 1"	1' - 8"	6' - 8 ½"	1' - 3 ¼"	7' - 2 ½"	0' - 10 ¾"	7' - 7 ¼"
20 FEET	5' - 9 ¾"	3' - 6 ½"	4' - 11 ½"	5' - 1 ¾"	4' - 3 ¼"	6' - 5 ½"	3' - 8 ¾"	7' - 7"	3' - 3"	8' - 6 ½"	2' - 10"	9' - 4 ½"	2' - 5 ½"	10' - 1 ¼"	2' - 1 ¼"	10' - 9"
30 FEET			6' - 9 ¼"	7' - 11 ¼"	6' - 0 ¼"	9' - 8"	5' - 5"	11' - 1 ¾"	4' - 10 ¾"	12' - 5 ¾"	4' - 5 ½"	13' - 7 ¾"	4' - 0 ¾"	14' - 8 ½"	3' - 8 ½"	15' - 8 ¼"
40 FEET									6' - 1 ¾"	15' - 8 ½"	5' - 8"	17' - 2"	5' - 3"	18' - 5 ¾"	4' - 10 ¾"	19' - 8 ¼"
50 FEET															5' - 10 ¼"	23' - 2"

INTERMEDIATE RADII CAN BE INTERPOLATED
DIMENSION "Y" IS CALCULATED BASED ON 6'-0" RAMP LENGTH
DIMENSION "X" IS CALCULATED BASED ON 5'-0" SIDEWALK WIDTH

SECTION C - C FOR TYPE 4B

LEGEND

- ½" EXPANSION JOINT SIDEWALK
- CONTRACTION JOINT SIDEWALK
- PAVEMENT MARKING CROSSWALK (WHITE)

GENERAL NOTES

AVOID PLACING DRAINAGE STRUCTURES, JUNCTION BOXES OR OTHER OBSTRUCTIONS IN FRONT OF RAMP ACCESS AREAS.

DETAILS OF CONSTRUCTION, MATERIALS AND WORKMANSHIP NOT SHOWN ON THIS DRAWING SHALL CONFORM TO THE PERTINENT REQUIREMENTS OF THE STANDARD SPECIFICATIONS AND THE APPLICABLE SPECIAL PROVISIONS.

DETECTABLE WARNING FIELDS THAT ARE INSTALLED AS A GROUP OR SIDE BY SIDE, SHALL BE FROM THE SAME MANUFACTURER.

(2) GRADE CHANGE BETWEEN GUTTER FLAG SLOPE AND THE CURB RAMP SLOPE SHALL NOT EXCEED 11%. MAXIMUM GUTTER FLAG SLOPE IS 4%. PROVIDE LONGITUDINAL DRAINAGE AROUND CURB AND AWAY FROM CURB RAMP. NO VERTICAL LIPS OR DISCONTINUITIES GREATER THAN ¼ - INCH ARE ALLOWED. SLOPE OF CURB HEAD OPENING SHALL MATCH THE RAMP SLOPE, MINIMALLY 1.5% AND NOT TO EXCEED 7%. WHEN ADJACENT TO 1.5% LANDING, CONSTRUCT CURB HEAD OPENING AT 1.5% IN THE DIRECTION OF PEDESTRIAN TRAVEL.

(3) AN 8.33% CURB RAMP SLOPE IS ALLOWABLE WITH FLATTENED GUTTER FLAG SLOPE AND NOT TO EXCEED 11% GRADE CHANGE.

(4) ±0.5% CONSTRUCTION TOLERANCE IN SIDEWALK CROSS SLOPE. THE SIDEWALK CROSS SLOPE SHALL NOT EXCEED 2% WITHOUT PRIOR APPROVAL FROM THE ENGINEER.

(6) PROVIDE A LEVEL LANDING (MAXIMUM 2% SLOPE) IN ANY DIRECTION OF PEDESTRIAN TRAVEL. STANDARD LEVEL LANDING SIZE IS 5 FEET BY 5 FEET.

(7) WHEN THIS GRADE BREAK DISTANCE EXCEEDS 5 FEET, USE RADIAL DETECTABLE WARNING FIELD PER SDD 8D5-f.

(8) PROVIDE GRADE BREAK PERPENDICULAR TO DIRECTION OF WHEELCHAIR TRAVEL.

(10) INSTALL TRANSITION NOSE (INCIDENTAL TO OTHER PAY ITEMS). DO NOT MARK TRANSITION NOSE.

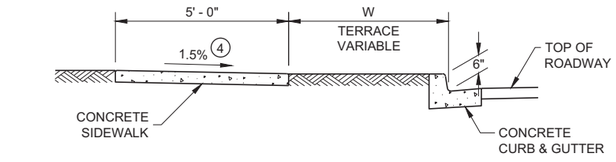

SECTION A - A FOR TYPE 4B

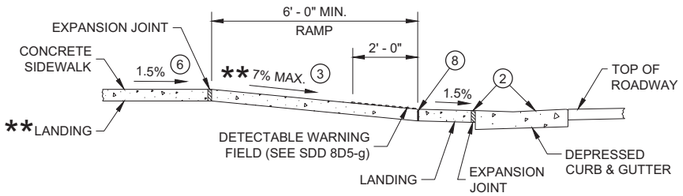

SECTION B - B FOR TYPE 4B AND TYPE 4B1

** IF RAMP SLOPE IS LESS THAN 5.0%, THEN NO ADJACENT UPHILL LANDING IS REQUIRED

* MAXIMUM 2.0% SLOPE IN ALL DIRECTIONS IF FRONT OF GRADE BREAK

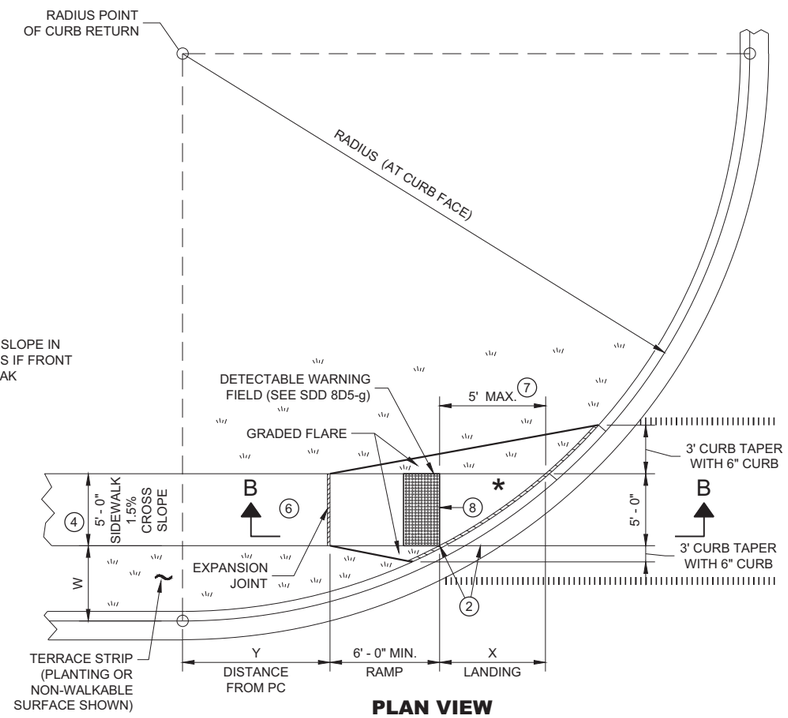

PLAN VIEW

CURB RAMP TYPE 4B1

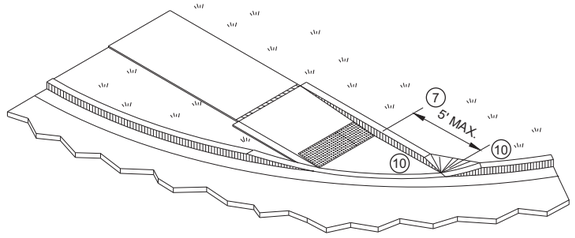

ISOMETRIC VIEW FOR TYPE 4B

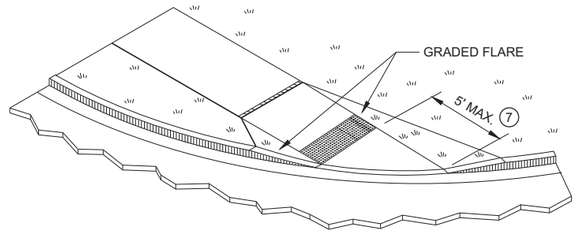

ISOMETRIC VIEW FOR TYPE 4B1

CURB RAMPS TYPE 4B AND 4B1

STATE OF WISCONSIN
DEPARTMENT OF TRANSPORTATION

6

SDD 08D05 - 20d

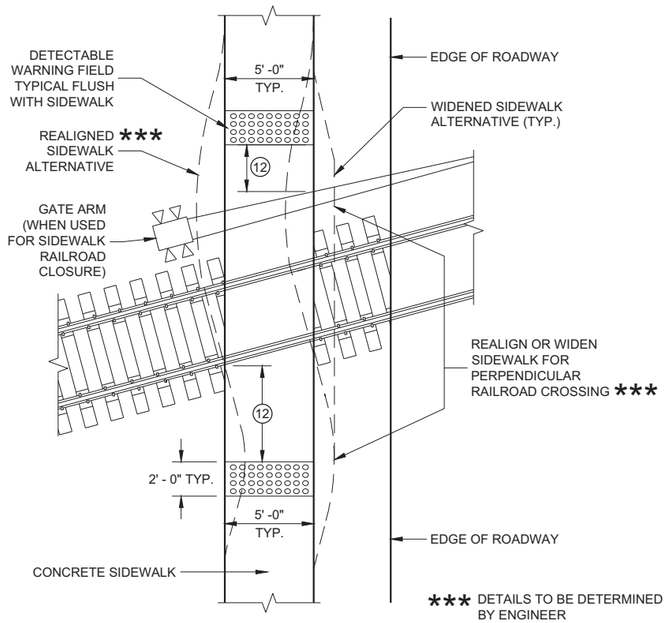

CURB RAMP TYPE 8

DETECTABLE WARNINGS AT RAILROAD CROSSING

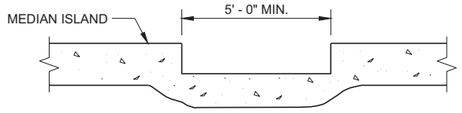

SECTION A - A FOR TYPE 5

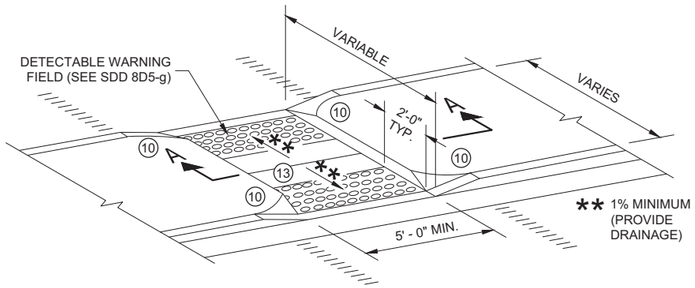

CURB RAMP TYPE 5

MEDIAN ISLAND NON-ELEVATED PEDESTRIAN CROSSING

GENERAL NOTES

AVOID PLACING DRAINAGE STRUCTURES, JUNCTION BOXES OR OTHER OBSTRUCTIONS IN FRONT OF RAMP ACCESS AREAS.

DETAILS OF CONSTRUCTION, MATERIALS AND WORKMANSHIP NOT SHOWN ON THIS DRAWING SHALL CONFORM TO THE PERTINENT REQUIREMENTS OF THE STANDARD SPECIFICATIONS AND THE APPLICABLE SPECIAL PROVISIONS.

SIDEWALK CROSS SLOPE SHALL NOT EXCEED 2%.

DETECTABLE WARNING FIELDS THAT ARE INSTALLED AS A GROUP OR SIDE BY SIDE, SHALL BE FROM THE SAME MANUFACTURER.

(2) GRADE CHANGE BETWEEN GUTTER FLAG SLOPE AND THE CURB RAMP SLOPE SHALL NOT EXCEED 11%. MAXIMUM GUTTER FLAG SLOPE IS 4%. PROVIDE LONGITUDINAL DRAINAGE AROUND CURB AND AWAY FROM CURB RAMP. NO VERTICAL LIPS OR DISCONTINUITIES GREATER THAN ¼ - INCH ARE ALLOWED. SLOPE OF CURB HEAD OPENING SHALL MATCH THE RAMP SLOPE, MINIMALLY 1.5% AND NOT TO EXCEED 7%. WHEN ADJACENT TO 1.5% LANDING, CONSTRUCT CURB HEAD OPENING AT 1.5% IN THE DIRECTION OF PEDESTRIAN TRAVEL.

(3) AN 8.33% CURB RAMP SLOPE IS ALLOWABLE WITH FLATTENED GUTTER FLAG SLOPE AND NOT TO EXCEED 11% GRADE CHANGE.

(4) ±0.5% CONSTRUCTION TOLERANCE IN SIDEWALK CROSS SLOPE. THE SIDEWALK CROSS SLOPE SHALL NOT EXCEED 2% WITHOUT PRIOR APPROVAL FROM THE ENGINEER.

(6) PROVIDE A LEVEL LANDING (MAXIMUM 2% SLOPE) IN ANY DIRECTION OF PEDESTRIAN TRAVEL. STANDARD LEVEL LANDING SIZE IS 5 FEET BY 5 FEET.

(10) INSTALL TRANSITION NOSE (INCIDENTAL TO OTHER PAY ITEMS). DO NOT MARK TRANSITION NOSE.

(11) SLOPE SIDEWALK TOWARD LANDING AS SHOWN WHERE THERE IS NO TERRACE OR WHERE THE TERRACE WIDTH IS LESS THAN 6 FEET WIDE.

(12) THE EDGE OF THE DETECTABLE WARNING FIELD NEAREST TO A RAILROAD CROSSING SHALL BE 1.5 FEET ±0.1' FROM THE FACE OF THE GATE ARM IF THE GATE ARM EXTENDS ACROSS THE SIDEWALK. WHERE THERE IS NO PEDESTRIAN GATE, THE EDGE OF THE DETECTABLE WARNING FIELD NEAREST TO THE RAILROAD CROSSING SHALL BE 15 FEET FROM THE NEAREST RAIL.

(13) DO NOT INSTALL DETECTABLE WARNING FIELDS AT THE EDGES OF STEET-LEVEL PEDESTRIAN REFUGE ISLANDS IF A MINIMUM 2 FOOT CONCRETE SURFACE WITHOUT DETECTABLE WARNINGS (MEASURED IN THE DIRECTION OF PEDESTRIAN TRAVEL) CANNOT BE ACHIEVED.

LEGEND

- ½" EXPANSION JOINT SIDEWALK
- CONTRACTION JOINT FIELD LOCATED
- PAVEMENT MARKING CROSSWALK (WHITE)

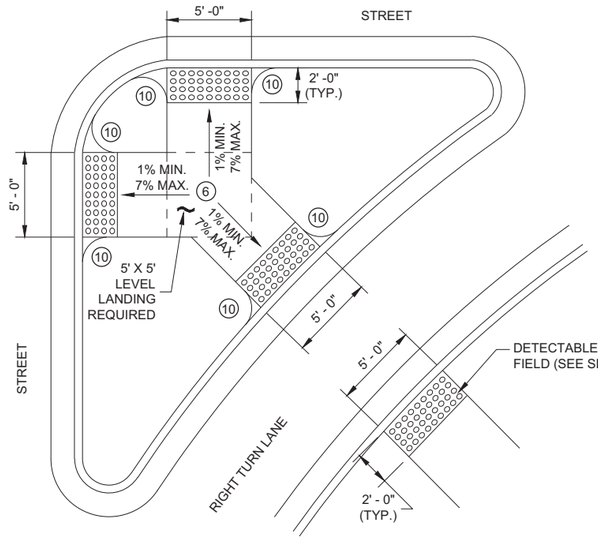

CURB RAMP TYPE 6

DETECTABLE WARNING AT ISLANDS

REFER TO GENERAL NOTES (2) AND (3) FOR ALL ISLAND CURB RAMPS

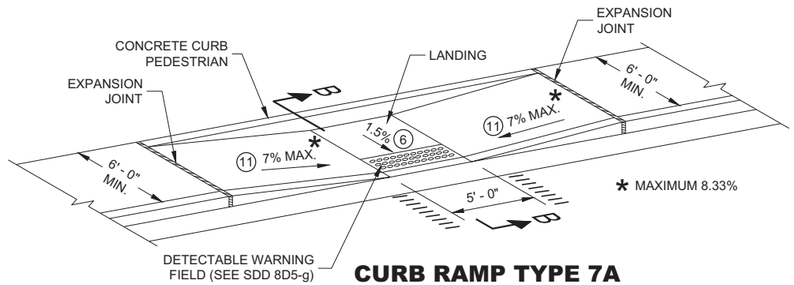

CURB RAMP TYPE 7A

MID BLOCK CROSSING

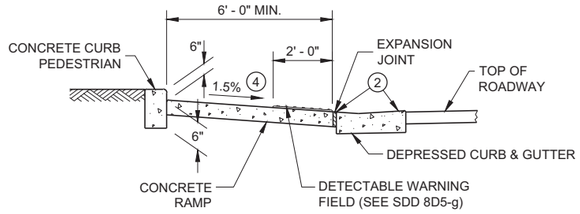

SECTION B - B FOR TYPE 7A

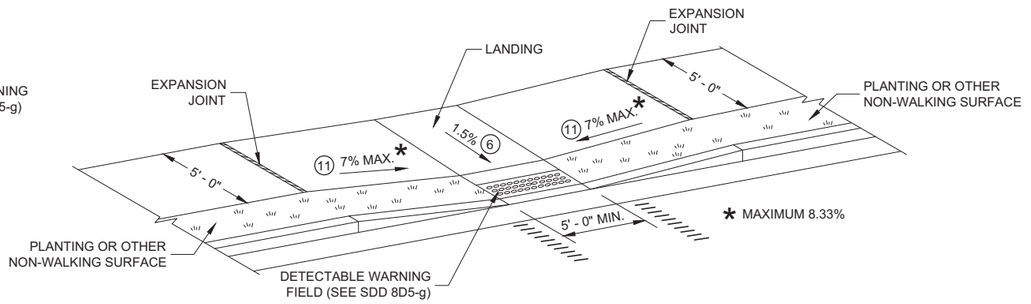

CURB RAMP TYPE 7B

MID BLOCK CROSSING

NOTE: THESE PARALLEL AND PARALLEL/PERPENDICULAR CURB RAMPS MAY BE USED AT INTERSECTIONS AND MID BLOCK LOCATIONS.

CURB RAMPS TYPE 5, 6, 7A, 7B & 8

STATE OF WISCONSIN
DEPARTMENT OF TRANSPORTATION

6

SDD 08D05 - 20e

RADIAL DETECTABLE WARNING FIELD PLACEMENT WHEN 5 FOOT GRADE BREAK DISTANCE PER SDD 8D5-c IS EXCEEDED

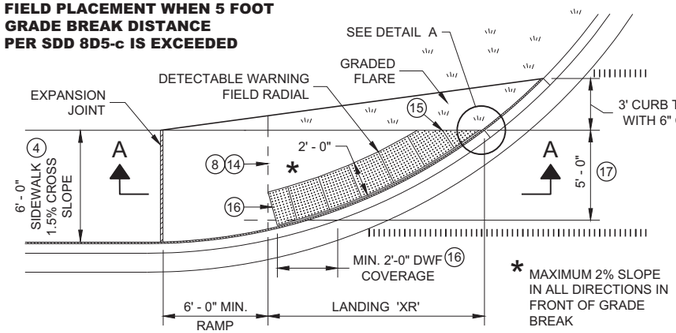

PLAN VIEW

CURB RAMP TYPE 4A1

(GRADE BREAK DISTANCE GREATER THAN 5 FEET)

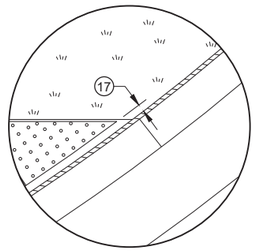

DETAIL A

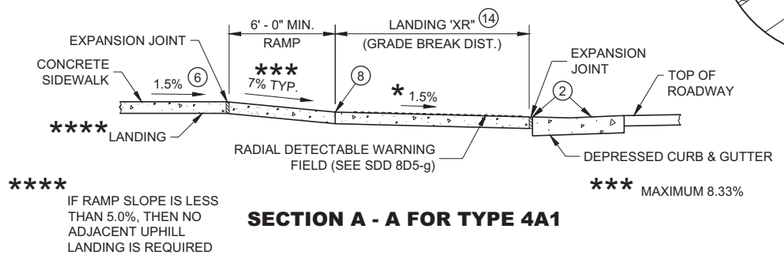

**** IF RAMP SLOPE IS LESS THAN 5.0%, THEN NO ADJACENT UPHILL LANDING IS REQUIRED

*** MAXIMUM 8.33%

SECTION A - A FOR TYPE 4A1

RADIAL DETECTABLE WARNING FIELD PLACEMENT WHEN 5 FOOT GRADE BREAK DISTANCE PER SDD 8D5-d IS EXCEEDED

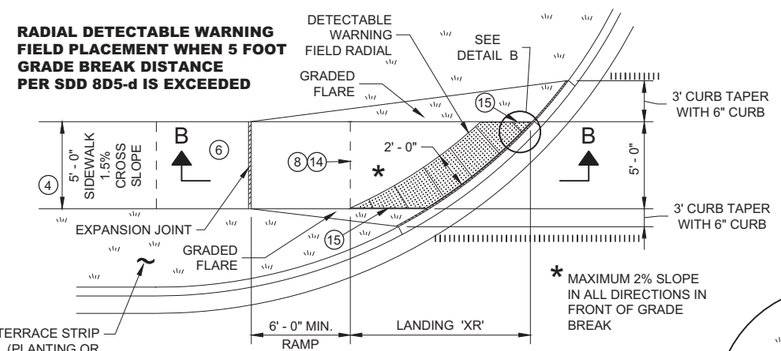

PLAN VIEW

CURB RAMP TYPE 4B1

(GRADE BREAK DISTANCE GREATER THAN 5 FEET)

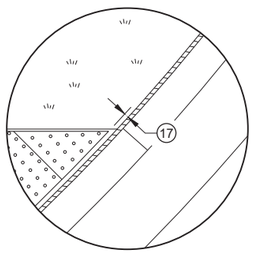

DETAIL B

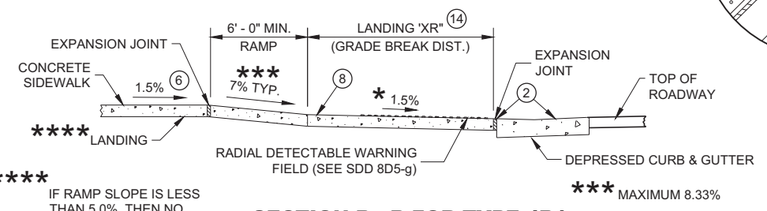

**** IF RAMP SLOPE IS LESS THAN 5.0%, THEN NO ADJACENT UPHILL LANDING IS REQUIRED

*** MAXIMUM 8.33%

SECTION B - B FOR TYPE 4B1

LEGEND

- ½" EXPANSION JOINT SIDEWALK
- CONTRACTION JOINT SIDEWALK
- PAVEMENT MARKING CROSSWALK (WHITE)

GENERAL NOTES

AVOID PLACING DRAINAGE STRUCTURES, JUNCTION BOXES OR OTHER OBSTRUCTIONS IN FRONT OF RAMP ACCESS AREAS.

DETAILS OF CONSTRUCTION, MATERIALS AND WORKMANSHIP NOT SHOWN ON THIS DRAWING SHALL CONFORM TO THE PERTINENT REQUIREMENTS OF THE STANDARD SPECIFICATIONS AND THE APPLICABLE SPECIAL PROVISIONS.

DETECTABLE WARNING FIELDS THAT ARE INSTALLED AS A GROUP OR SIDE BY SIDE, SHALL BE FROM THE SAME MANUFACTURER.

APPLY RADIAL DETECTABLE WARNING PLACEMENT SIMILARLY FOR TYPE 4A AND 4A1 CURB RAMPS AND SIMILARLY FOR TYPE 4B AND 4B1 CURB RAMPS. TYPE 4A AND 4B CURB RAMPS ARE NOT SHOWN.

REFER TO SDD 8D5-g FOR ADDITIONAL RADIAL PLATE REQUIREMENTS.

FIELD CUTS AT INTERMEDIATE JOINTS WITHIN THE RADIAL DETECTABLE WARNING FILED ARE PROHIBITED.

DETERMINE FINAL RADIAL WARNING FIELD CONFIGURATION AD ITS INDIVIDUAL PLATE LOCATIONS. PERFORM PRE-LAYOUT PRIOR TO PLACEMENT IN PLASTIC CONCRETE. FOLLOW MANUFACTURER'S PRODUCT LIST AND INSTALLATION RECOMMENDATIONS.

(2) GRADE CHANGE BETWEEN GUTTER FLAG SLOPE AND THE CURB RAMP SLOPE SHALL NOT EXCEED 11%. MAXIMUM GUTTER FLAG SLOPE IS 4%. PROVIDE LONGITUDINAL DRAINAGE AROUND CURB AND AWAY FROM CURB RAMP. NO VERTICAL LIPS OR DISCONTINUITIES GREATER THAN ¼ - INCH ARE ALLOWED. SLOPE OF CURB HEAD OPENING SHALL MATCH THE RAMP SLOPE, MINIMALLY 1.5% AND NOT TO EXCEED 7%. WHEN ADJACENT TO 1.5% LANDING, CONSTRUCT CURB HEAD OPENING AT 1.5% IN THE DIRECTION OF PEDESTRIAN TRAVEL.

(3) AN 8.33% CURB RAMP SLOPE IS ALLOWABLE WITH FLATTENED GUTTER FLAG SLOPE AND NOT TO EXCEED 11% GRADE CHANGE.

(4) ±0.5% CONSTRUCTION TOLERANCE IN SIDEWALK CROSS SLOPE. THE SIDEWALK CROSS SLOPE SHALL NOT EXCEED 2% WITHOUT PRIOR APPROVAL FROM THE ENGINEER.

(6) PROVIDE A LEVEL LANDING (MAXIMUM 2% SLOPE) IN ANY DIRECTION OF PEDESTRIAN TRAVEL. STANDARD LANDING SIZE IS 5 FEET BY 5 FEET.

(8) PROVIDE GRADE BREAK PERPENDICULAR TO DIRECTION OF WHEELCHAIR TRAVEL.

(14) CONSULT ENGINEER IF GRADE BREAK LOCATION (END OF LANDING DIMENSION "XR") REQUIRES FIELD ADJUSTMENT WHEN ESTABLISHING FINAL RADIAL DETECTABLE WARNING FIELD LOCATION.

(15) FIELD SAW CUTS ALONG RADIAL DETECTABLE WARNING PLATES WILL BE NECESSARY TO MATCH EACH CURB RAMP EDGE. AVOID CUTTING THROUGH DOMES WHENEVER POSSIBLE. MAKE FIELD CUTS TRUE TO LINE AND WITHIN ⅛" DEVIATION. SMOOTH EDGES OF FIELD CUT PLATES.

(16) USE 1' X 2" RECTANGULAR END PLATE AT END OF TYPE 4A1 RAMP AND PROVIDE MINIMUM 2' - 0" DETECTABLE WARNING FIELD COVERAGE (IN DIRECTION OF PEDESTRIAN TRAVEL) ALONG THE ENTIRE CURB RAMP WIDTH.

(17) A MAXIMUM 3 INCH CONCRETE BORDER WITH IS ALLOWABLE IN FROM OF RADIAL DETECTABLE WARNING FIELD FOR CONSTRUCTABILITY PURPOSES. CONCRETE BORDER WIDTH MAY VARY UP TO 1 INCH.

RADIAL DETECTABLE WARNING FIELD PLACEMENT WHEN 5 FOOT GRADE BREAK DISTANCE PER SDD 8D5-b IS EXCEEDED

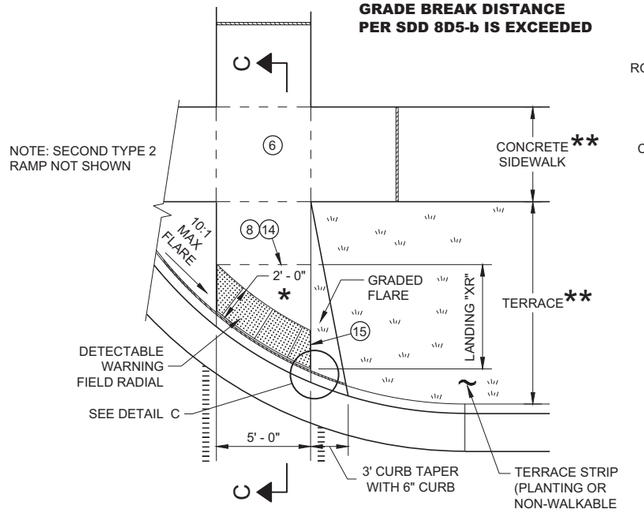

PLAN VIEW

CURB RAMP TYPE 2

(GRADE BREAK DISTANCE GREATER THAN 5 FEET)

(ON LINE WITH SIDEWALK)

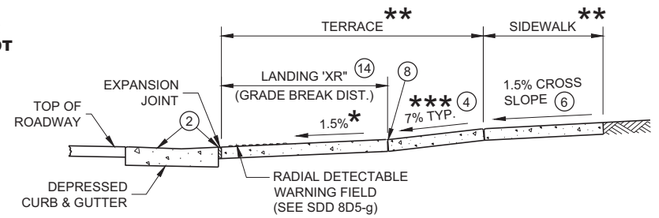

SECTION C - C FOR TYPE 2

* MAXIMUM 2% SLOPE IN ALL DIRECTIONS IN FRONT OF GRADE BREAK

** WIDTH SHOWN ELSEWHERE IN THE PLANS

*** MAXIMUM 8.33%

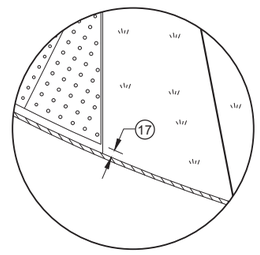

DETAIL C

CURB RAMPS RADIAL DETECTABLE WARNING FIELD APPLICATIONS

STATE OF WISCONSIN
DEPARTMENT OF TRANSPORTATION

SDD 08D05 - 20f

SDD 08D05 - 20f

	MIN.	MAX.
A	1.6"	2.4"
B	0.65"	1.5"
C	*	*
D	0.9"	1.4"

* THE C DIMENSION IS 50% TO 65% OF THE D DIMENSION.

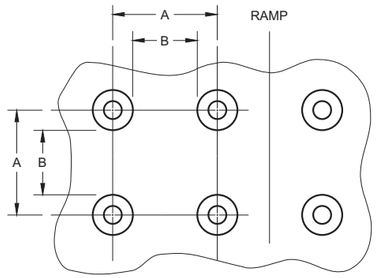

PLAN VIEW

ELEVATION VIEW

TRUNCATED DOMES
DETECTABLE WARNING PATTERN DETAIL

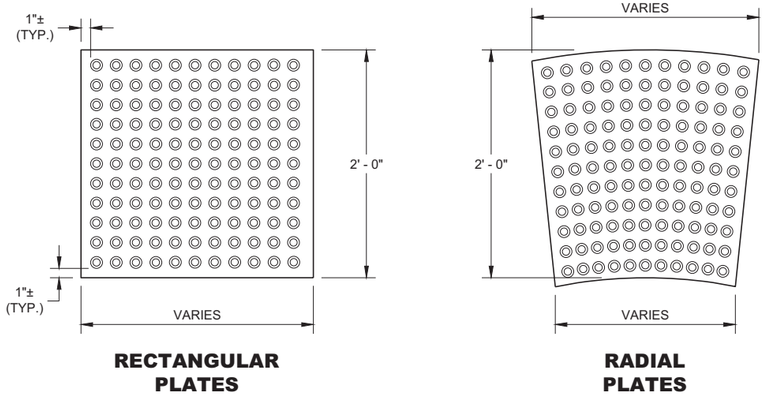

RECTANGULAR PLATES

RADIAL PLATES

PLAN VIEW
DETECTABLE WARNING FIELDS (TYPICAL)

GENERAL NOTES

DETECTABLE WARNING FIELDS THAT ARE INSTALLED AT A CURB RAMP SHALL BE FROM THE SAME MANUFACTURER.

PLACE ALL DETECTABLE WARNING FIELD SYSTEMS IN ACCORDANCE TO THE MANUFACTURER'S RECOMMENDATION.

FIELD CUTS AT INTERMEDIATE JOINTS WITHIN THE RADIAL DETECTABLE WARNING FILED ARE PROHIBITED.

DETERMINE FINAL RADIAL WARNING FIELD CONFIGURATION AND ITS INDIVIDUAL PLATE LOCATIONS. PERFORM PRE-LAYOUT PRIOR TO PLACEMENT IN PLASTIC CONCRETE. FOLLOW MANUFACTURER'S PRODUCT LIST AND INSTALLATION RECOMMENDATIONS.

FOR RADIAL DETECTABLE WARNING FIELD APPLICATIONS WHERE STANDARD RADIAL PLATES ARE NOT AVAILABLE AT AN INTERSECTION CURB RADIUS, A COMBINATION OF SQUARE OR RECTANGULAR PLATES AND RADIAL PLATES MAY BE USED TO FORM RADIAL CONFIGURATION. RADIAL WEDGE PLATES IN COMBINATION WITH SQUARE PLATES ARE ALSO ACCEPTABLE. FOLLOW MANUFACTURER'S RECOMMENDATIONS.

REFER TO CONTRACT AND STANDARD SPECIFICATIONS FOR FIELD CUTTING REQUIREMENTS.

DO NOT EMBED IN CONCRETE ANY FIELD-CUT PLATES WITH CUT EDGES SHORTER THAN 6 INCHES. CONSULT WITH MANUFACTURER FOR RE-DRILLING AND ANCHORING REQUIREMENTS OF FIELD-CUT PLATES.

(15) FIELD SAW CUTS ALONG RADIAL DETECTABLE WARNING PLATES WILL BE NECESSARY TO MATCH EACH CURB RAMP EDGE. AVOID CUTTING THROUGH DOMES WHENEVER POSSIBLE. MAKE FIELD CUTS TRUE TO LINE AND WITHIN ⅛" DEVIATION. SMOOTH EDGES OF FIELD CUT PLATES.

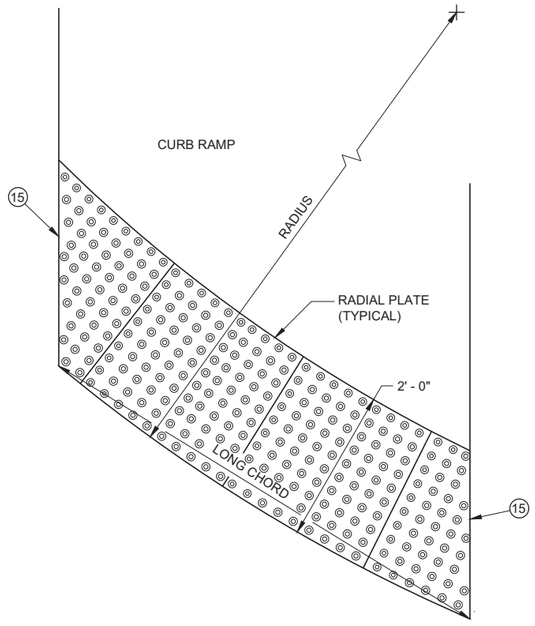

PLAN VIEW
RADIAL DETECTABLE WARNING FIELD ATTRIBUTES

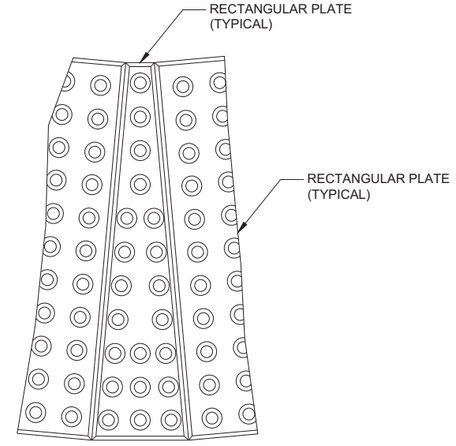

PLAN VIEW
RADIAL WEDGE PLATE CONNECTION DETAIL

CURB RAMPS
RECTANGULAR AND RADIAL
DETECTABLE WARNING PLATES

STATE OF WISCONSIN
DEPARTMENT OF TRANSPORTATION

APPROVED
May 2019
DATE
/S/ Rodney Taylor
ROADWAY STANDARDS DEVE UNIT SUPERVISOR

FHWA

6

SDD 08D05 - 20g

6

SDD 08D05 - 20g

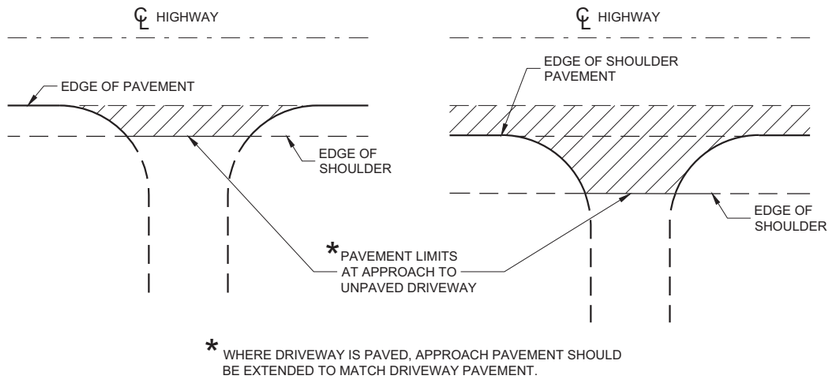

PLAN VIEW
(UNPAVED SHOULDER ON HIGHWAY)

PLAN VIEW
(PAVED SHOULDER ON HIGHWAY)

RURAL DRIVEWAY INTERSECTION DETAIL
(NO CURB AND GUTTER OR SIDEWALK)

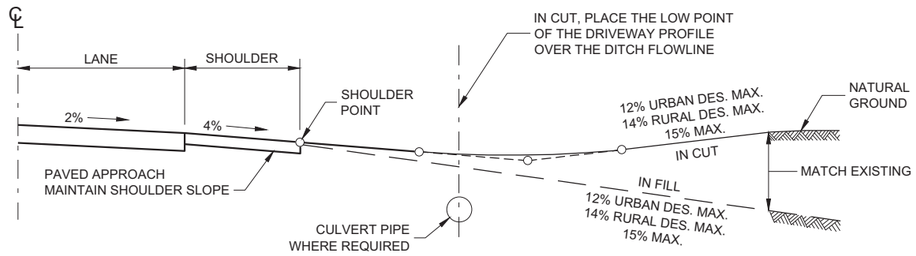

TYPICAL DRIVEWAY PROFILES

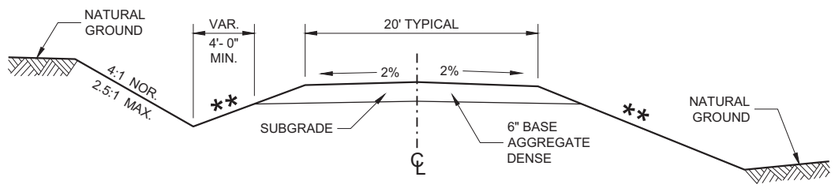

IN CUT **IN FILL**

TYPICAL CROSS SECTION FOR PRIVATE DRIVE OR FIELD ENTRANCE AGGREGATE SURFACE

** SLOPE CAN VARY WITH SPEED. SEE 11-45-30.6.2

POSTED SPEED MPH	MAX. SLOPE
<35	4:1
≥ 35 TO < 60	6:1
≥60	10:1

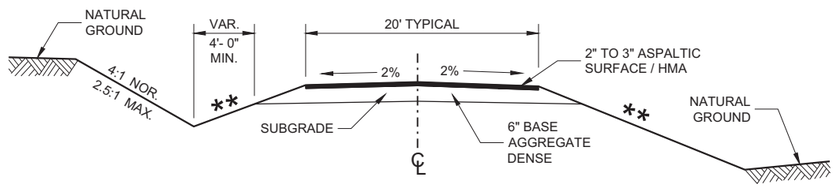

IN CUT **IN FILL**

TYPICAL CROSS SECTION FOR PRIVATE DRIVE OR FIELD ENTRANCE ASPHALTIC SURFACE

DRIVEWAYS WITHOUT CURB AND GUTTER

STATE OF WISCONSIN
DEPARTMENT OF TRANSPORTATION

APPROVED
December 2017 — DATE
/S/ Rodney Taylor — ROADWAY STANDARDS DEVE UNIT SUPERVISOR

FHWA

6

SDD 08D21 - 01
SDD 08D21 - 01

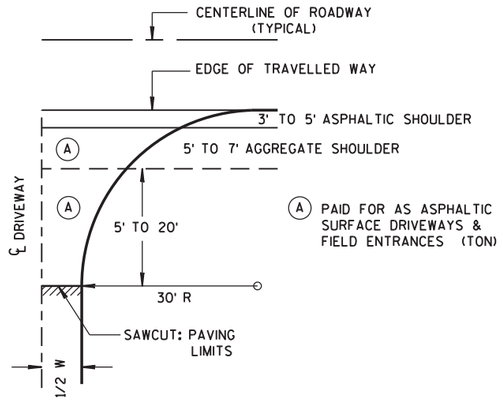

W MIN. = 16'
W MAX. = 24'

PLAN VIEW
HALF SECTION

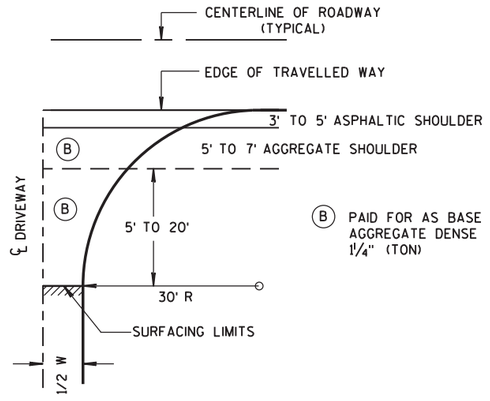

PLAN VIEW
HALF SECTION

GENERAL NOTES

(1) DESIGN WILL DETERMINE FINAL DRIVEWAY ASPHALTIC THICKNESS BASED ON TYPE OF USAGE AND LOADINGS.

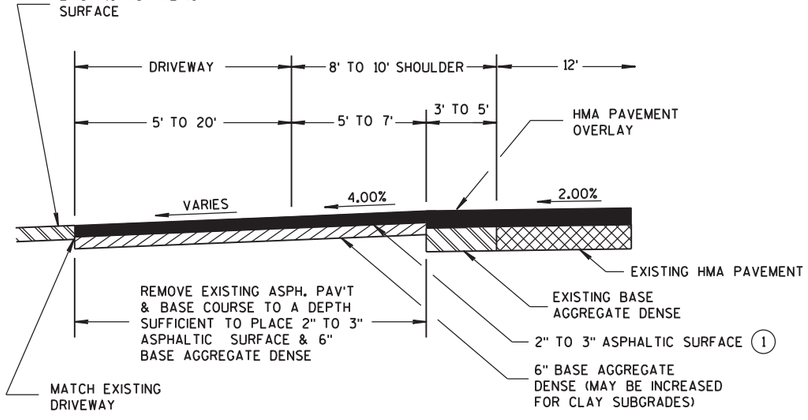

PROFILE VIEW

RURAL ENTRANCE WITH ASPHALTIC SURFACE

RESURFACING PROJECTS

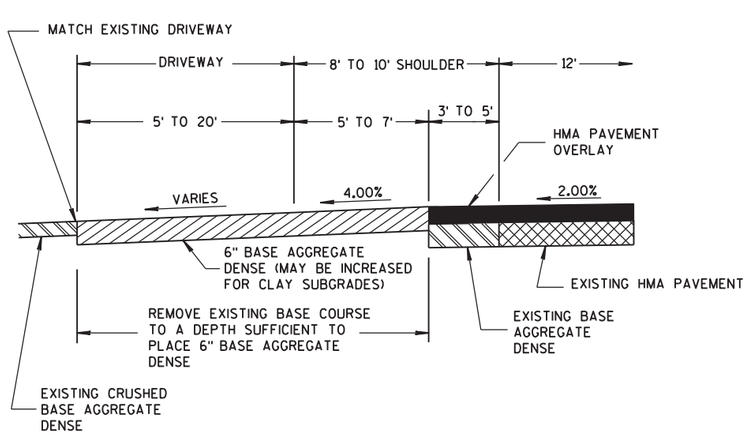

PROFILE VIEW

RURAL ENTRANCE WITH AGGREGATE SURFACE

6" BASE AGGREGATE DENSE
RESURFACING PROJECTS

DRIVEWAYS WITHOUT CURB & GUTTER RESURFACING PROJECTS RURAL

STATE OF WISCONSIN
DEPARTMENT OF TRANSPORTATION

APPROVED
December, 2016 — /S/ Rodney Taylor
DATE — ROADWAY STANDARDS UNIT SUPERV — ENT
FHWA

6

S.D.D. 8 D 22-1

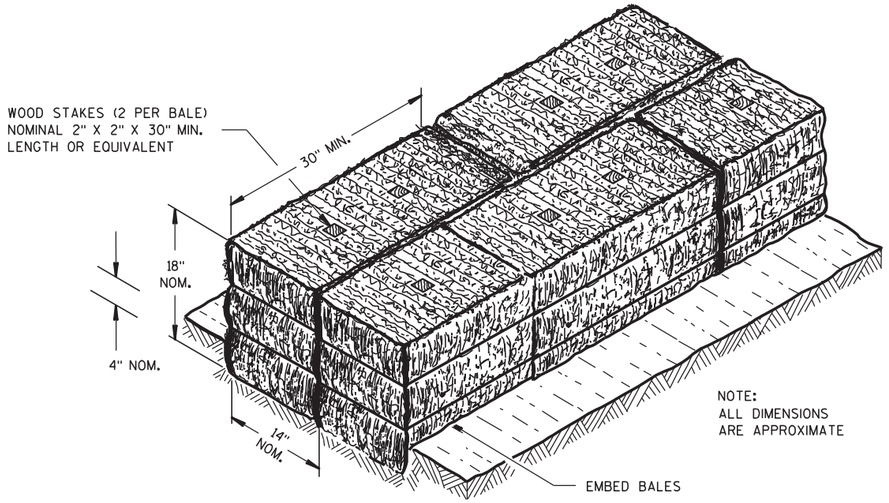

SECTION A-A

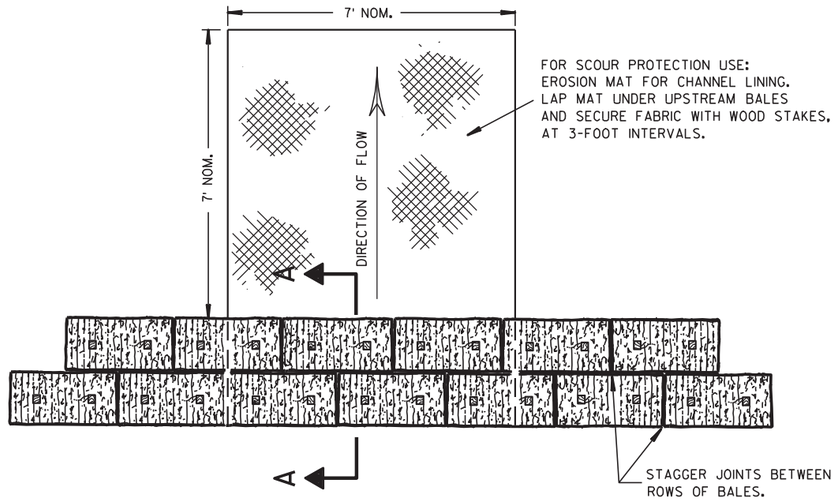

PLAN VIEW

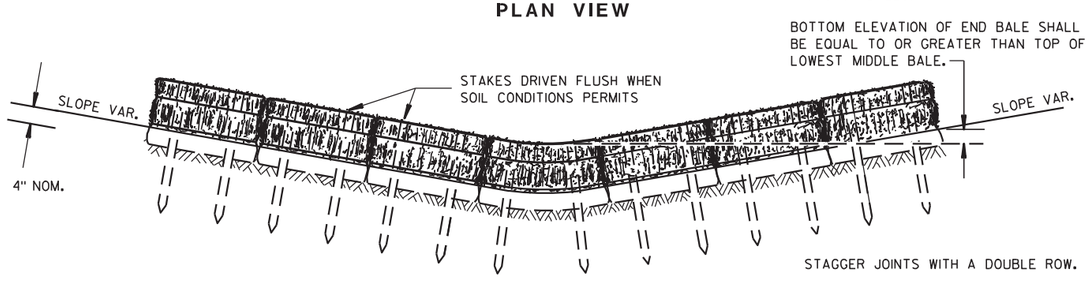

FRONT ELEVATION

TEMPORARY DITCH CHECK USING EROSION BALES (1)

GENERAL NOTES

DETAILS OF CONSTRUCTION, MATERIALS AND WORKMANSHIP NOT SHOWN ON THIS DRAWING SHALL CONFORM TO THE PERTINENT REQUIREMENTS OF THE STANDARD SPECIFICATIONS AND THE APPLICABLE SPECIAL PROVISIONS.

(1) TEMPORARY DITCH CHECKS EITHER EROSION BALES OR MANUFACTURED SHALL BE PAID FOR UNDER THE BID ITEM OF TEMPORARY DITCH CHECK. THE DEPARTMENT WILL NOT PAY FOR TEMPORARY DITCH CHECKS CONSTRUCTED OF A SINGLE ROW OF EROSION BALES.

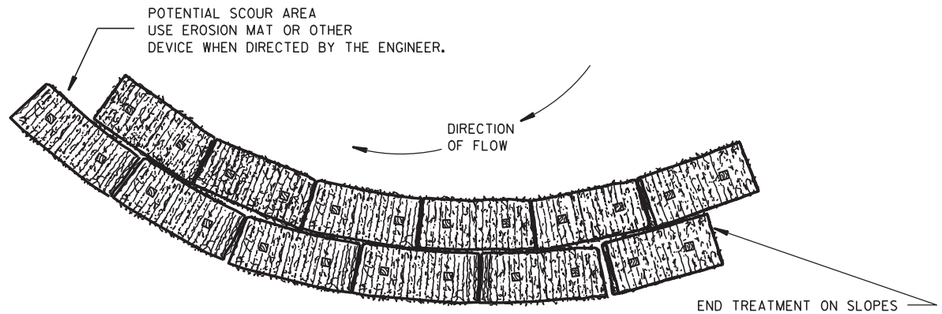

PLAN VIEW

WHEN ALTERING THE DIRECTION OF FLOW

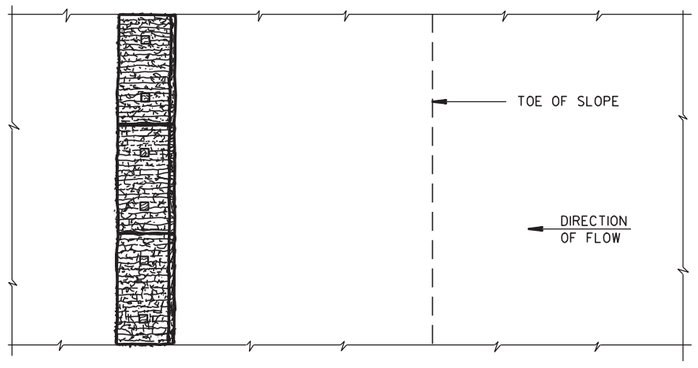

PLAN VIEW

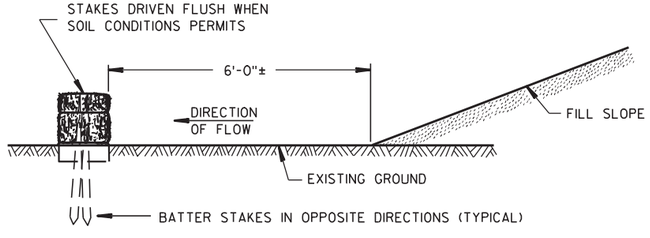

FRONT ELEVATION

WHEN EXISTING GROUND SLOPES AWAY FROM FILL SLOPE

EROSION BALES FOR SHEET FLOW

TYPICAL INSTALLATIONS OF EROSION BALES / TEMPORARY DITCH CHECKS

STATE OF WISCONSIN
DEPARTMENT OF TRANSPORTATION

APPROVED
6/04/02 DATE
/S/ Beth Cannestra
CHIEF ROADWAY DEVELOPMENT ENGINEER
FHWA

6
S.D.D. 8 E 8-3

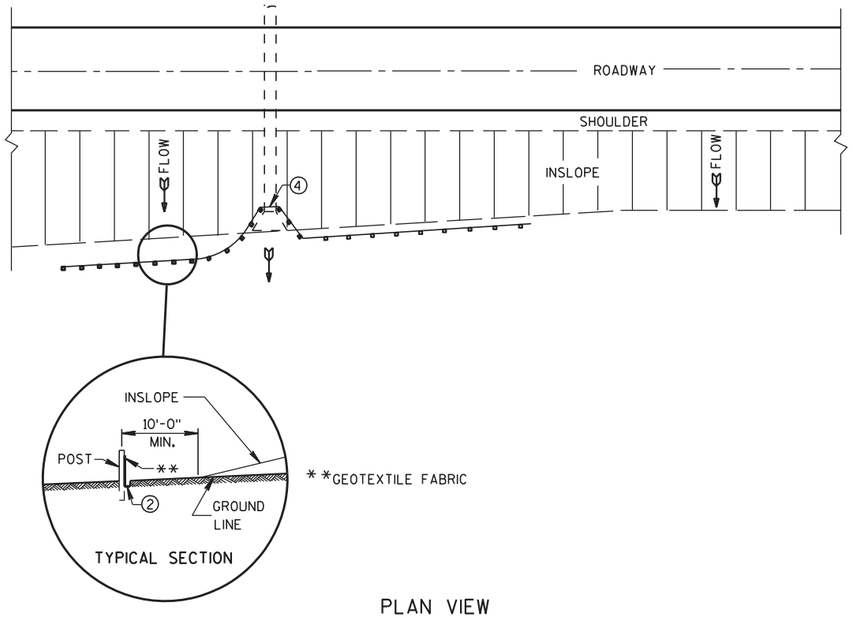

PLAN VIEW

TYPICAL APPLICATION OF SILT FENCE

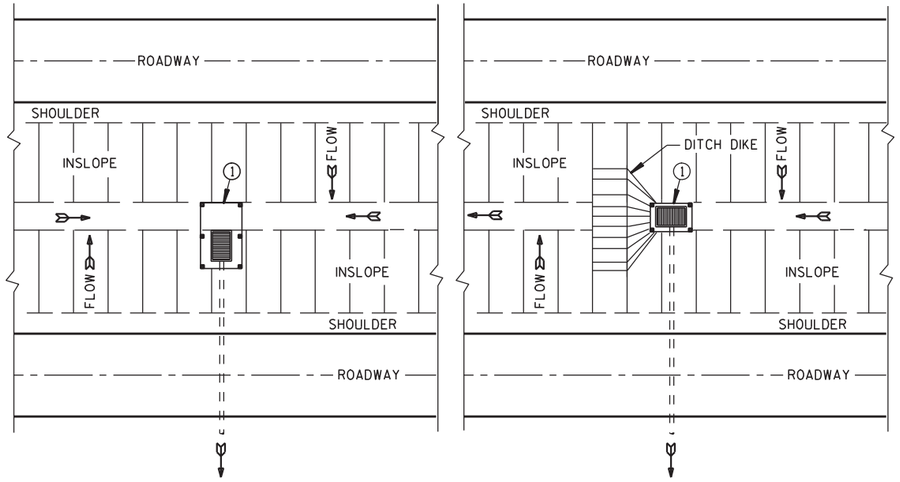

PLAN VIEW

SILT FENCE AT MEDIAN SURFACE DRAINS

GENERAL NOTES

DETAILS OF CONSTRUCTION NOT SHOWN ON THIS DRAWING SHALL CONFORM TO THE PERTINENT REQUIREMENTS OF THE STANDARD SPECIFICATIONS AND APPLICABLE SPECIAL PROVISIONS.

1. HORIZONTAL BRACE REQUIRED WITH 2" X 4" WOODEN FRAME OR EQUIVALENT AT TOP OF POSTS.
2. FOR MANUAL INSTALLATIONS THE TRENCH SHALL BE A MINIMUM OF 4" WIDE & 6" DEEP TO BURY AND ANCHOR THE GEOTEXTILE FABRIC. FOLD MATERIAL TO FIT TRENCH AND BACKFILL & COMPACT TRENCH WITH EXCAVATED SOIL.
3. WOOD POSTS SHALL BE A MINIMUM SIZE OF 1⅛" X 1⅛" OF OAK OR HICKORY.
4. SILT FENCE TO EXTEND ACROSS THE TOP OF THE PIPE.
5. CONSTRUCT SILT FENCE FROM A CONTINUOUS ROLL IF POSSIBLE BY CUTTING LENGTHS TO AVOID JOINTS. IF A JOINT IS NECESSARY USE ONE OF THE FOLLOWING TWO METHODS; A) OVERLAP THE END POSTS AND TWIST, OR ROTATE, AT LEAST 180 DEGREES, B) HOOK THE END OF EACH SILT FENCE LENGTH.

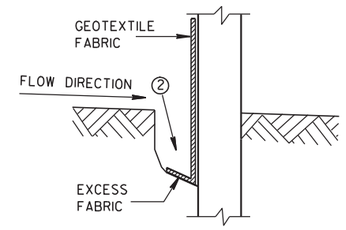

TRENCH DETAIL

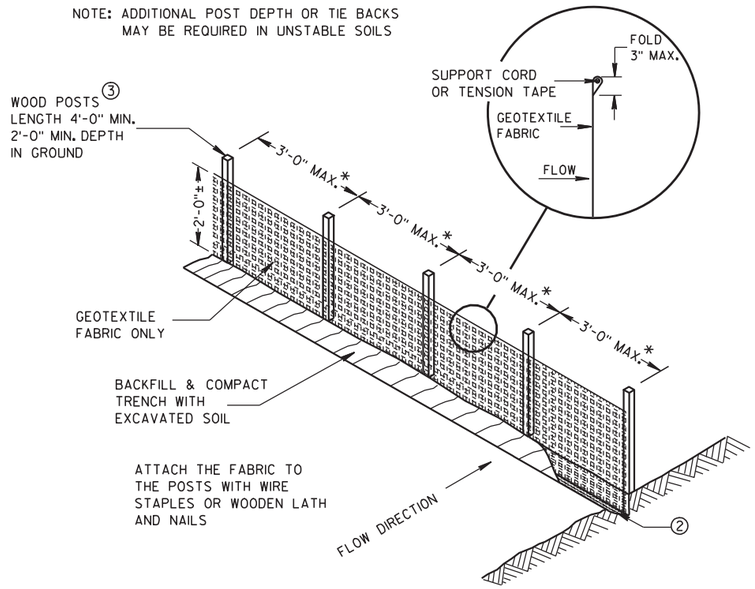

SILT FENCE

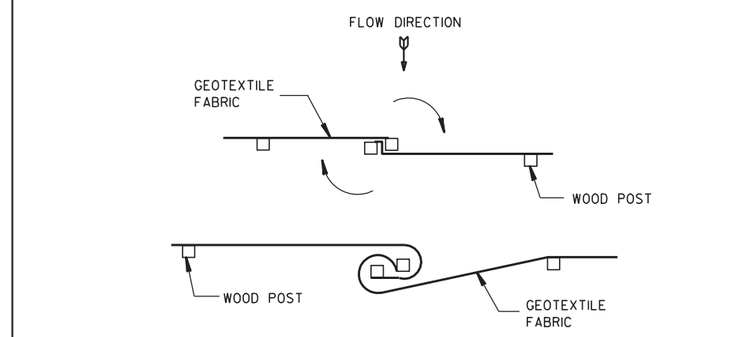

JOINING TWO LENGTHS OF SILT FENCE 5

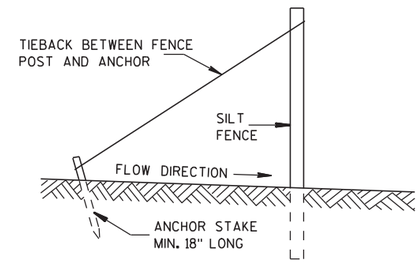

SILT FENCE TIE BACK

(WHEN REQUIRED BY THE ENGINEER)

SILT FENCE

STATE OF WISCONSIN
DEPARTMENT OF TRANSPORTATION

APPROVED
4-29-05 DATE
/S/ Beth Cannestra
CHIEF ROADWAY DEVELOPMENT ENGINEER
FHWA

6

S.D.D. 8 E 9-6

6

S.D.D. 8 E 9-6

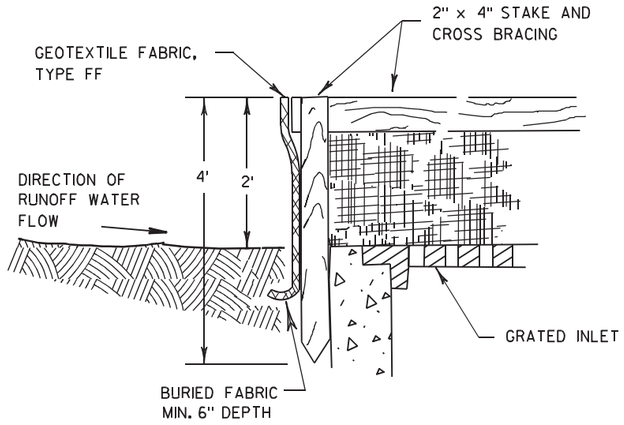

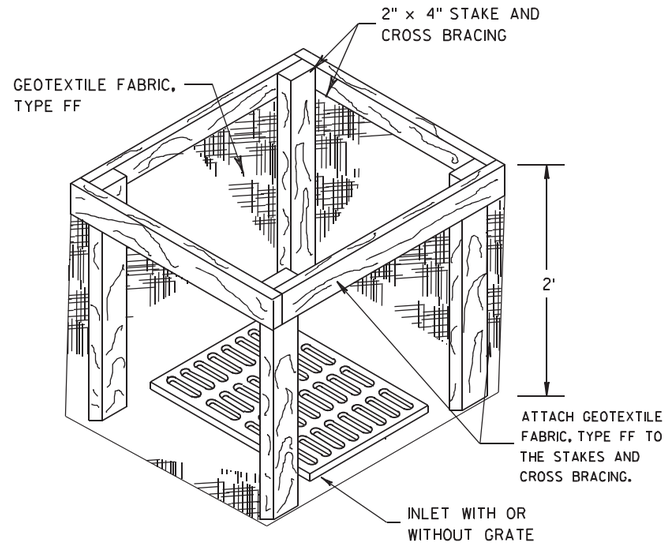

INLET PROTECTION, TYPE A

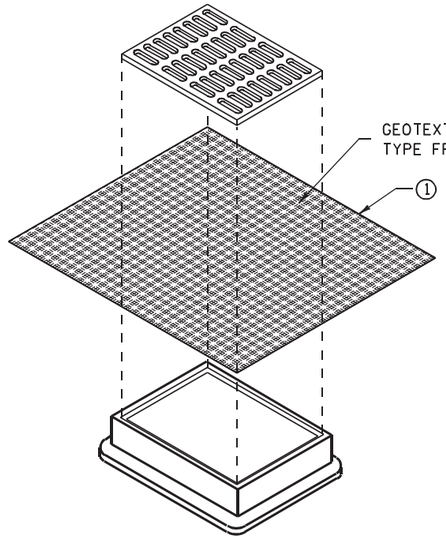

INLET PROTECTION, TYPE B
(WITHOUT CURB BOX)

(CAN BE INSTALLED IN ANY INLET WITHOUT A CURB BOX)

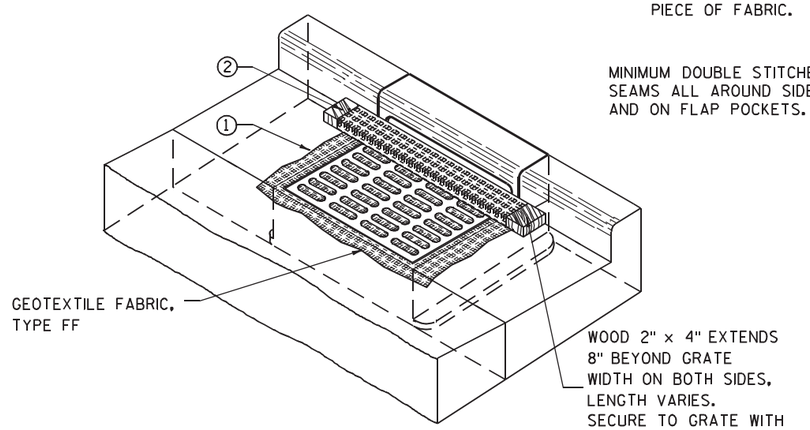

INLET PROTECTION, TYPE C (WITH CURB BOX)

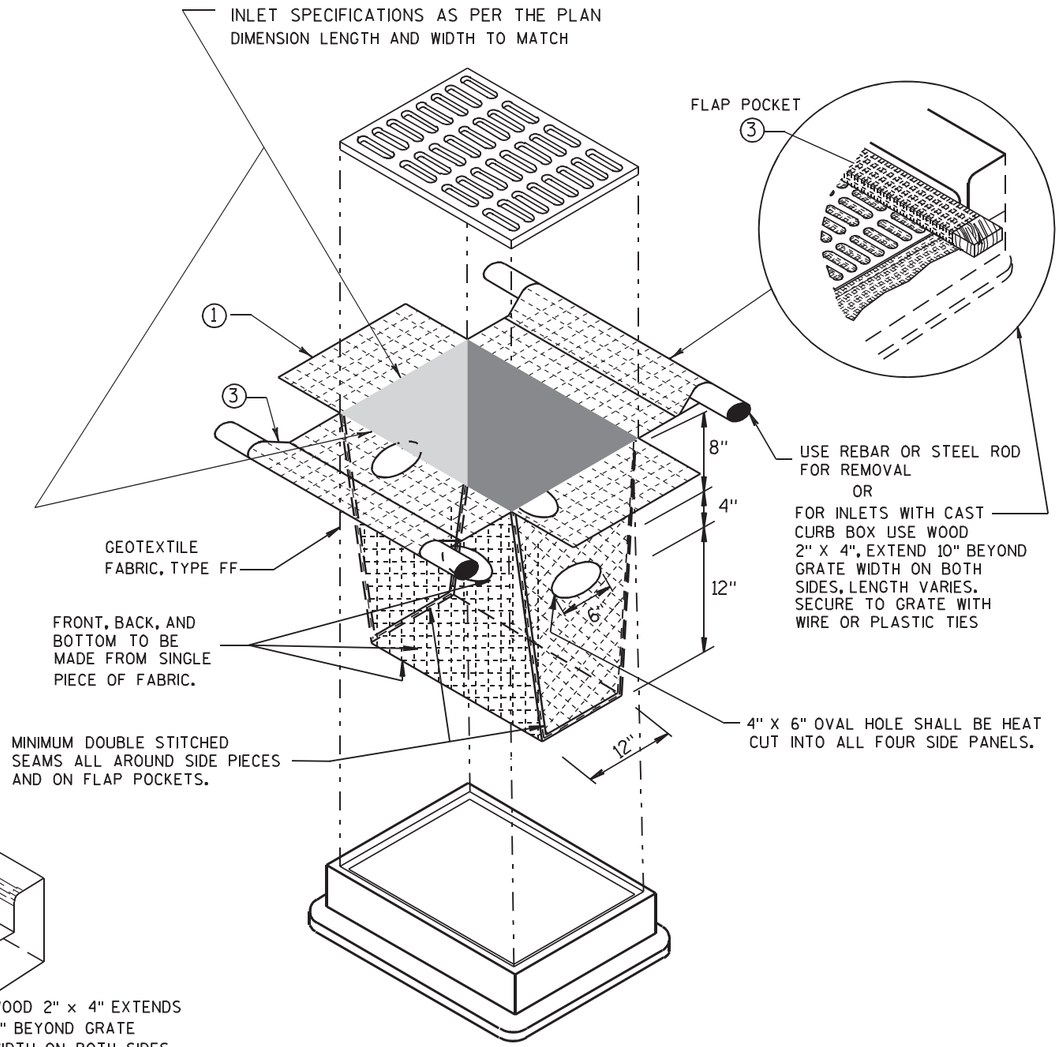

INLET PROTECTION, TYPE D

(CAN BE INSTALLED IN ANY INLET TYPE WITH
OR WITHOUT A CURB BOX AS PER NOTE ②)

GENERAL NOTES

INLET PROTECTION DEVICES SHALL BE MAINTAINED OR REPLACED AT THE DIRECTION OF THE ENGINEER.

MANUFACTURED ALTERNATIVES APPROVED AND LISTED ON THE DEPARTMENT'S EROSION CONTROL PRODUCT ACCEPTABILITY LIST MAY BE SUBSTITUTED.

WHEN REMOVING OR MAINTAINING INLET PROTECTION, CARE SHALL BE TAKEN SO THAT THE SEDIMENT TRAPPED ON THE GEOTEXTILE FABRIC DOES NOT FALL INTO THE INLET. ANY MATERIAL FALLING INTO THE INLET SHALL BE REMOVED IMMEDIATELY.

① FINISHED SIZE, INCLUDING FLAP POCKETS WHERE REQUIRED, SHALL EXTEND A MINIMUM OF 10" AROUND THE PERIMETER TO FACILITATE MAINTENANCE OR REMOVAL.

② FOR INLET PROTECTION, TYPE C (WITH CURB BOX), AN ADDITIONAL 18" OF FABRIC IS WRAPPED AROUND THE WOOD AND SECURED WITH STAPLES. THE WOOD SHALL NOT BLOCK THE ENTIRE HEIGHT OF THE CURB BOX OPENING.

③ FLAP POCKETS SHALL BE LARGE ENOUGH TO ACCEPT WOOD 2X4.

INSTALLATION NOTES

TYPE B & C

TRIM EXCESS FABRIC IN THE FLOW LINE TO WITHIN 3" OF THE GRATE.

THE CONTRACTOR SHALL DEMONSTRATE A METHOD OF MAINTENANCE, USING A SEWN FLAP, HAND HOLDS OR OTHER METHOD TO PREVENT ACCUMULATED SEDIMENT FROM ENTERING THE INLET.

TYPE D

DO NOT INSTALL INLET PROTECTION TYPE D IN INLETS SHALLOWER THAN 30", MEASURED FROM THE BOTTOM OF THE INLET TO THE TOP OF THE GRATE.

TRIM EXCESS FABRIC IN THE FLOW LINE TO WITHIN 3" OF THE GRATE.

THE INSTALLED BAG SHALL HAVE A MINIMUM SIDE CLEARANCE, BETWEEN THE INLET WALLS AND THE BAG, MEASURED AT THE BOTTOM OF THE OVERFLOW HOLES, OF 3". WHERE NECESSARY THE CONTRACTOR SHALL CINCH THE BAG, USING PLASTIC ZIP TIES, TO ACHIEVE THE 3" CLEARANCE. THE TIES SHALL BE PLACED AT A MAXIMUM OF 4" FROM THE BOTTOM OF THE BAG.

INLET PROTECTION
TYPE A, B, C, AND D

STATE OF WISCONSIN
DEPARTMENT OF TRANSPORTATION

APPROVED
10/16/02
DATE
/S/ Beth Cannestra
CHIEF ROADWAY DEVELOPMENT ENGINEER
FHWA

6
S.D.D. 8 E 10-2

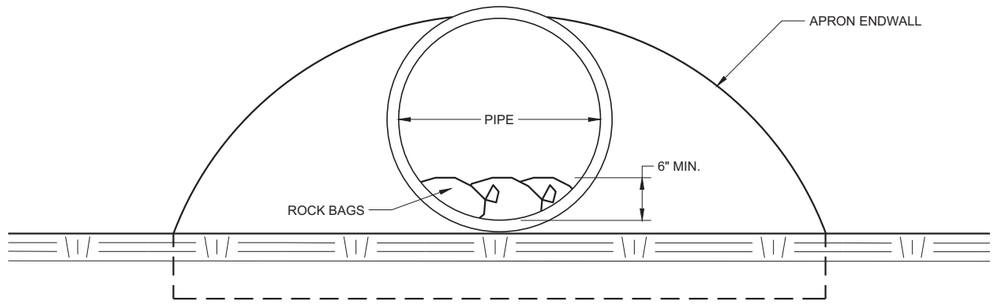

END VIEW

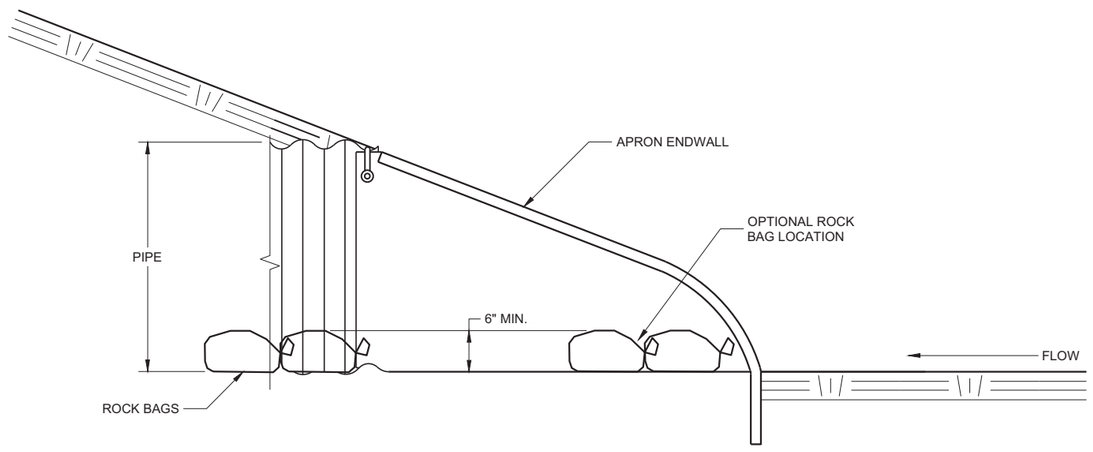

SIDE VIEW

CULVERT PIPE CHECK

(INSTALL ON INLET END ONLY)

CULVERT PIPE CHECK

STATE OF WISCONSIN
DEPARTMENT OF TRANSPORTATION

APPROVED
May 2019
DATE
/S/ Daniel Schave
EROSION CONTROL ENGI

FHWA

6

SDD 08E15 - 01

6

SDD 08E15 - 01

METAL APRON ENDWALLS

PIPE DIA. (IN.)	MIN. THICK. (Inches) STEEL	MIN. THICK. (Inches) ALUM.	DIMENSIONS (Inches) A (±1")	B (MAX.)	H (±1")	L (±1 1/2")	L1 ①	L2 ①	W (±2")	APPROX. SLOPE	BODY
12	.064	.060	6	6	6	21	12	17 1/2	24	2 1/2 to 1	1 Pc.
15	.064	.060	7	8	6	26	14	21 3/4	30	2 1/2 to 1	1 Pc.
18	.064	.060	8	10	6	31	15	28 1/4	36	2 1/2 to 1	1 Pc.
21	.064	.060	9	12	6	36	18	29 5/8	42	2 1/2 to 1	1 Pc.
24	.064	.075	10	13	6	41	18	37 1/4	48	2 1/2 to 1	1 Pc.
30	.079	.075	12	16	8	51	18	52 1/4	60	2 1/2 to 1	1 Pc.
36	.079	.105	14	19	9	60	24	59 3/4	72	2 1/2 to 1	2 Pc.
42	.109	.105	16	22	11	69	24	75 5/8	84	2 1/2 to 1	2 Pc.
48	.109	.105	18	27	12	78	24	81	90	2 1/4 to 1	3 Pc.
54	.109	.105	18	30	12	84	30	85 1/2	102	2 1/4 to 1	3 Pc.
60	.109×	.105×	18	33	12	87	—	—	114	2 to 1	3 Pc.
66	.109×	.105×	18	36	12	87	—	—	120	2 to 1	3 Pc.
72	.109×	.105×	18	39	12	87	—	—	126	2 to 1	3 Pc.
78	.109×	.105×	18	42	12	87	—	—	132	1 1/2 to 1	3 Pc.
84	.109×	.105×	18	45	12	87	—	—	138	1 1/2 to 1	3 Pc.
90	.109×	.105×	18	37	12	87	—	—	144	1 1/2 to 1	3 Pc.
96	.109×	.105×	18	35	12	87	—	—	150	1 1/2 to 1	3 Pc.

× EXCEPT CENTER PANEL SEE GENERAL NOTES

REINFORCED CONCRETE APRON ENDWALLS

PIPE DIA. (IN.)	DIMENSIONS (Inches) T	A	B	C	D	E	G	APPROX. SLOPE
12	2	4	24	48 7/8	72 7/8	24	2	3 to 1
15	2 1/4	6	27	46	73	30	2 1/4	3 to 1
18	2 1/2	9	27	46	73	36	2 1/2	3 to 1
21	2 3/4	9	36	37 1/2	73 1/2	42	2 3/4	3 to 1
24	3	9 1/2	43 1/2	30	73 1/2	48	3	3 to 1
27	3 1/4	10 1/2	49 1/2	24	73 1/2	54	3 1/4	3 to 1
30	3 1/2	12	54	19 3/4	73 1/2	60	3 1/2	3 to 1
36	4	15	63	34 3/4	97 3/4	72	4	3 to 1
42	4 1/2	21	63	35	98	78	4 1/2	3 to 1
48	5	24	72	26	98	84	5	3 to 1
54	5 1/2	27	65	* 33 1/4 - ** 35	* 98 1/4 - ** 100	90	5 1/2	2 2/5 to 1
60	6	* 30 - ** 35	60	39	99	96	5	2 to 1
66	6 1/2	* 24 - ** 30	* ** 72-78	* ** 21-27	99	102	5 1/2	2 to 1
72	7	* 24 - ** 36	78	21	99	108	6	2 to 1
78	7 1/2	* 24 - ** 36	78	21	99	114	6 1/2	2 to 1
84	8	36	90 1/2	21	111 1/2	120	6 1/2	1 1/2 to 1
90	8 1/2	41	87 1/2	24	111 1/2	132	6 1/2	1 1/2 to 1

*MINIMUM
**MAXIMUM

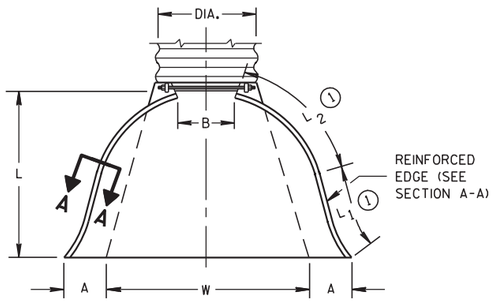

PLAN VIEW

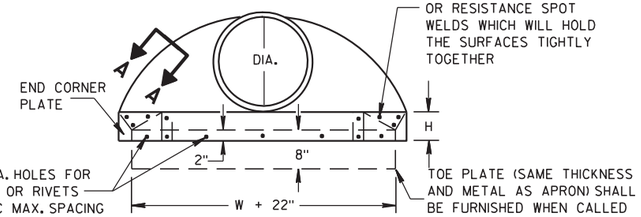

END VIEW

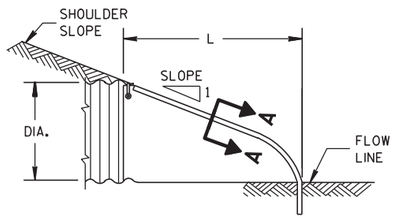

SIDE ELEVATION

METAL ENDWALLS

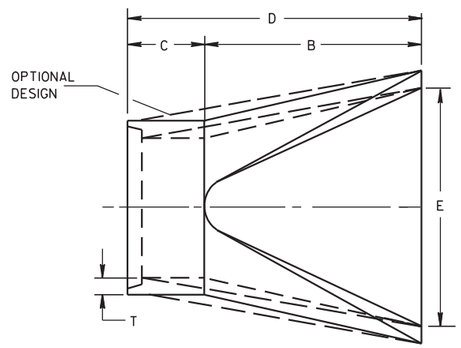

PLAN

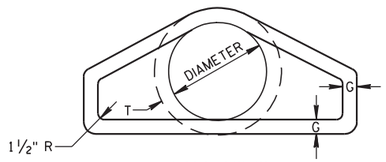

END VIEW

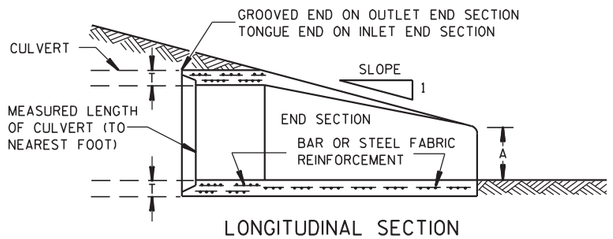

LONGITUDINAL SECTION

CONCRETE ENDWALLS

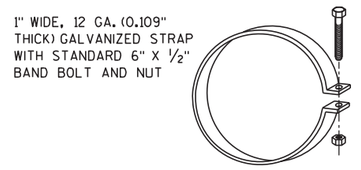

ALTERNATE FOR TYPE 1 CONNECTION

END SECTION CONNECTOR STRAP

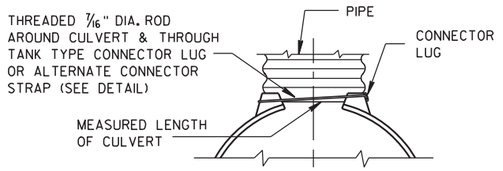

TYPE 1
FOR 12" THRU 24" CORR. PIPE

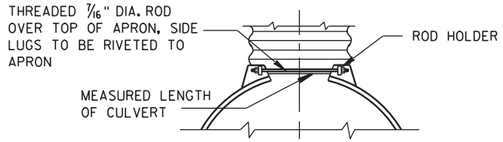

TYPE 2
FOR 30" THRU 96" CORR. PIPE

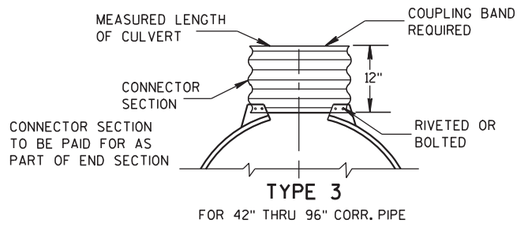

TYPE 3
FOR 42" THRU 96" CORR. PIPE

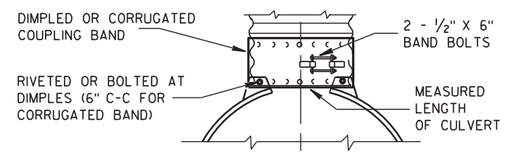

TYPE 5
ALTERNATE FOR:
ALL SIZES CORRUGATED CIRCULAR PIPE

NOTE: DIMPLED BAND FITS OVER OUTSIDE OF ENDWALL. AND CORRUGATED BAND FITS INSIDE ENDWALL. DIMPLED BAND MAY BE USED WITH HELICALLY CORRUGATED PIPE.

FOR CIRCUMFERENTIALLY CORRUGATED PIPE USE ENDWALL CONNECTION DETAILS 1, 2, 3 OR 5 AS APPLICABLE.

FOR HELICALLY CORRUGATED PIPE USE ENDWALL CONNECTION DETAILS 1, 2 OR 5.

FOR HELICALLY CORRUGATED PIPES WITH TWO CIRCUMFERENTIAL CORRUGATIONS AT EACH END USE ENDWALL CONNECTION DETAILS 1, 2 OR 3.

CONNECTION DETAILS

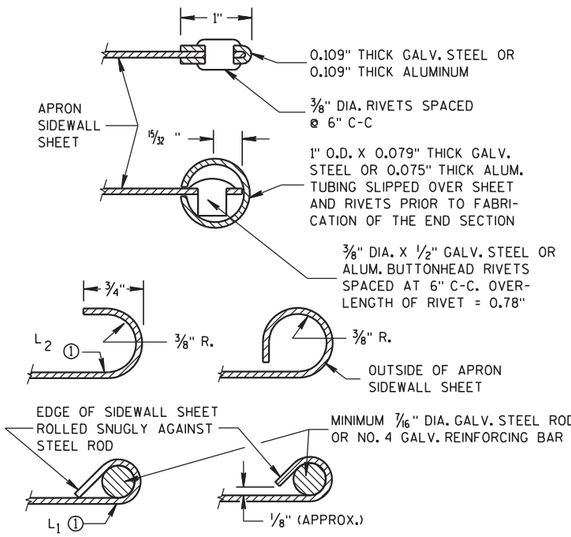

SECTION A-A

GENERAL NOTES

DETAILS OF CONSTRUCTION, MATERIALS AND WORKMANSHIP NOT SHOWN ON THIS DRAWING SHALL CONFORM TO THE PERTINENT REQUIREMENTS OF THE STANDARD SPECIFICATIONS AND THE APPLICABLE SPECIAL PROVISIONS.

CONCRETE CULVERT ENDWALLS MAY NOT BE USED WITH GALVANIZED STEEL OR ALUMINUM CULVERT PIPE OR VISE VERSA. GALVANIZED STEEL OR ALUMINUM ENDWALLS SHALL NORMALLY BE INSTALLED ON CULVERT PIPE OF THE SAME METAL.

ALL THREE PIECE STEEL APRON ENDWALLS FOR 60" DIAMETER PIPE AND LARGER SHALL HAVE 0.109" SIDES AND 0.138" CENTER PANELS. ALL THREE PIECE ALUMINUM APRON ENDWALLS FOR 60" DIAMETER PIPE AND LARGER SHALL HAVE 0.105" SIDES AND 0.134" CENTER PANELS. THE WIDTH OF CENTER PANELS SHALL BE GREATER THAN 20 PERCENT OF THE PIPE PERIMETER.

LAP SEAMS SHALL BE TIGHTLY JOINED BY GALVANIZED RIVETS OR BOLTS FOR STEEL UNITS AND ALUMINUM RIVETS AND BOLTS FOR ALUMINUM UNITS. FOR THE 60" THROUGH 96" DIAMETER APRON ENDWALL SIZES, THE REINFORCED EDGES AND CENTER PANEL SEAMS SHALL BE FURTHER REINFORCED WITH GALVANIZED STEEL OR ALUMINUM STIFFENER ANGLES. THE ANGLES SHALL BE ATTACHED BY GALVANIZED NUTS AND BOLTS FOR STEEL UNITS AND ALUMINUM NUTS AND BOLTS FOR ALUMINUM UNITS.

WHERE TWO OR MORE PIPES WITH APRON ENDWALLS ARE LAID ADJACENT TO EACH OTHER, THEY SHALL BE SEPARATED BY A DISTANCE SUFFICIENT TO PROVIDE A MINIMUM CLEARANCE OF 6 INCHES BETWEEN APRON ENDWALLS.

① FOR PIPE SIZES UP TO 60" DIAMETER, A 180° ROLLED EDGE MAY BE USED INSTEAD OF STEEL ROD REINFORCEMENT. SEE SECTION A-A.

APRON ENDWALLS FOR CULVERT PIPE

STATE OF WISCONSIN
DEPARTMENT OF TRANSPORTATION

APPROVED
11/30/94 — DATE
/S/ Rory L. Rhinesmith — CHIEF ROADWAY DEVELOP 155 NEER
FHWA

6
S.D.D. 8 F 1-11

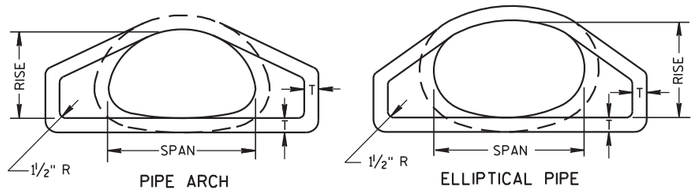

END VIEW

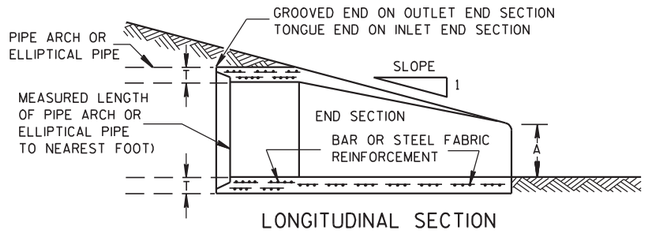

LONGITUDINAL SECTION

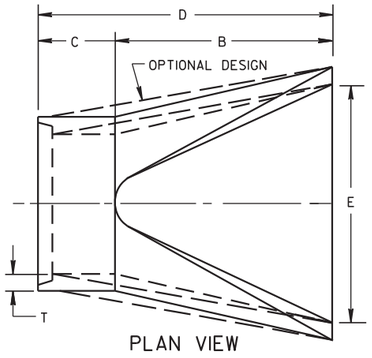

PLAN VIEW

CONCRETE ENDWALLS

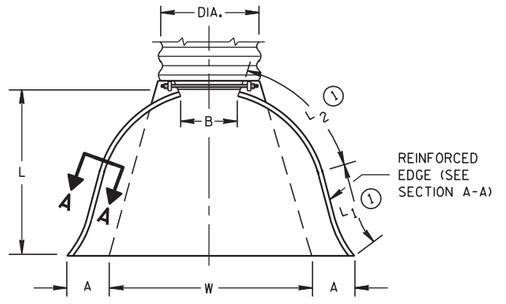

PLAN VIEW

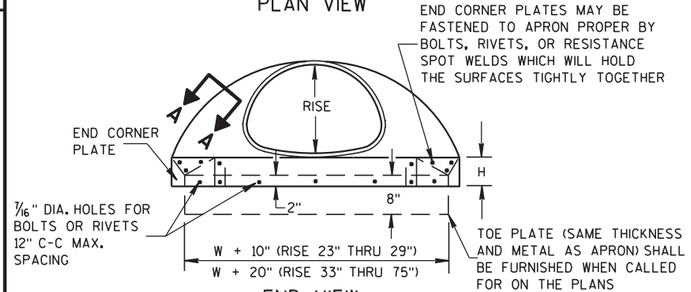

END VIEW

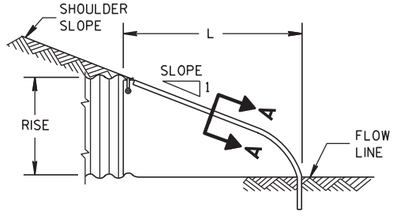

SIDE ELEVATION

METAL ENDWALLS

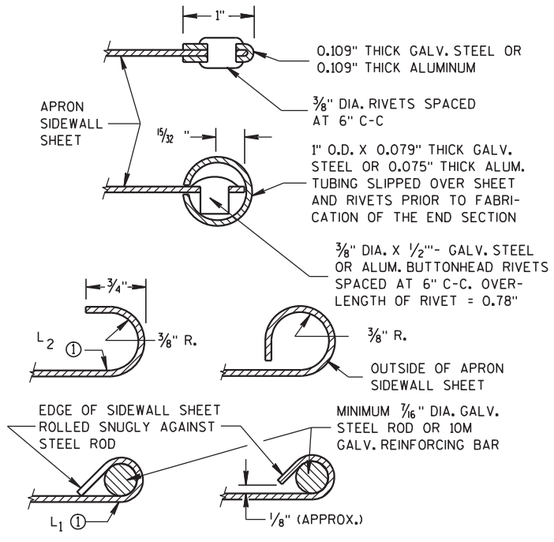

SECTION A-A

2- 2/3" X 1/2" CORRUGATIONS

EQUIV. DIA. (Inches)	(Inches) SPAN	(Inches) RISE	MIN. THICK. (Inches) STEEL	MIN. THICK. (Inches) ALUM.	DIMENSIONS (Inches) A (±1")	B (MAX.)	H (±1")	L (±1 1/2")	L1 ①	L2 ①	W (±2")	APPROX. SLOPE	BODY
15	17	13	.064	.060	7	9	6	19	14	16	30	2½ to 1	1 Pc.
18	21	15	.064	.060	7	10	6	23	14	19⅜	36	2½ to 1	1 Pc.
21	24	18	.064	.060	8	12	6	28	18	21¾	42	2½ to 1	1 Pc.
24	28	20	.064	.060	9	14	6	32	18	27½	48	2½ to 1	1 Pc.
30	35	24	.079	.075	10	16	6	39	18	37⅝	60	2½ to 1	1 Pc.
36	42	29	.079	.075	12	18	8	46	24	45⅜	75	2½ to 1	1 Pc.
42	49	33	.109	.105	13	21	9	53	24	54¾	85	2½ to 1	2 Pc.
48	57	38	.109	.105	18	26	12	63	24	68	90	2½ to 1	3 Pc.
54	64	43	.109	.105	18	30	12	70	24	72¾	102	2¼ to 1	3 Pc.
60	71	47	.109*	.105*	18	33	12	77	30	82¼	114	2¼ to 1	3 Pc.
66	77	52	.109*	.105*	18	36	12	77	—	—	126	2 to 1	3 Pc.
72	83	57	.109*	.105*	18	39	12	77	—	—	138	2 to 1	3 Pc.

3" X 1" CORRUGATIONS

EQUIV. DIA. (Inches)	(Inches) SPAN	(Inches) RISE	MIN. THICK. (Inches) STEEL	MIN. THICK. (Inches) ALUM.	DIMENSIONS (Inches) A (±1")	B (MAX.)	H (±1")	L (±1 1/2")	L1 ①	L2 ①	W (±2")	APPROX. SLOPE	BODY
48	53	41	.109	.105	18	26	12	63	24	72¾	90	2½ to 1	2 Pc.
54	60	46	.109	.105	18	30	12	70	30	82¼	102	2 to 1	2 Pc.
60	66	51	.109*	.105*	18	33	12	77	—	—	114	1½ to 1	3 Pc.
66	73	55	.109*	.105*	18	36	12	77	—	—	126	1½ to 1	3 Pc.
72	81	59	.109*	.105*	18	39	12	77	—	—	138	2 to 1	3 Pc.
78	87	63	.109*	.105*	22	38	12	77	—	—	148	1½ to 1	3 Pc.
84	95	67	.109*	.105*	22	34	12	77	—	—	162	1½ to 1	3 Pc.
90	103	71	.109*	.105*	22	38	12	77	—	—	174	1½ to 1	3 Pc.
96	112	75	.109*	.105*	24	40	12	77	—	—	174	1½ to 1	3 Pc.

NOTE: ALL SPLICES TO BE LAP RIVETED OR BOLTED.

* EXCEPT CENTER PANEL SEE GENERAL NOTES

NOTE: DIMPLED BAND FITS OVER OUTSIDE OF ENDWALL, AND CORRUGATED BAND FITS INSIDE ENDWALL.

CONNECTION DETAILS

REINFORCED CONCRETE PIPE ARCH

EQUIV. DIA. (Inches)	DIMENSIONS (Inches) ** SPAN	** RISE	T	A	B	C	D	E	APPROX. SLOPE
24	29	18	3	8½	39	33	72	48	3 to 1
30	36	22	3½	9½	50	46	96	60	3 to 1
36	44	27	4	11⅛	60	36	96	72	3 to 1
42	51	31	4½	15 13/16	60	36	96	78	3 to 1
48	58	36	5	21	60	36	96	84	3 to 1
54	65	40	5½	25½	60	36	96	90	3 to 1
60	73	45	6	31	60	36	96	96	3 to 1
72	88	54	7	31	60	39	99	120	2 to 1
84	102	62	8	28½	83	19	102	144	2 to 1

REINFORCED CONCRETE ELLIPTICAL PIPE

EQUIV. DIA. (Inches)	DIMENSIONS (Inches) ** SPAN	** RISE	T	A	B	C	D	E	APPROX. SLOPE
24	30	19	3¼	8½	39	33	72	48	3 to 1
30	38	24	3¾	9½	54	18	72	60	3 to 1
36	45	29	4½	11⅛	60	24	84	72	2½ to 1
42	53	34	5	15¾	60	36	96	78	2½ to 1
48	60	38	5½	21	60	36	96	84	2½ to 1
54	68	43	6	25½	60	36	96	90	2½ to 1
60	76	48	6½	30	60	36	96	96	2½ to 1

**NOMINAL SIZE

GENERAL NOTES

DETAILS OF CONSTRUCTION, MATERIALS AND WORKMANSHIP NOT SHOWN ON THIS DRAWING SHALL CONFORM TO THE PERTINENT REQUIREMENTS OF THE STANDARD SPECIFICATIONS AND THE APPLICABLE SPECIAL PROVISIONS.

CONCRETE APRON ENDWALLS MAY NOT BE USED WITH GALVANIZED STEEL OR ALUMINUM CULVERT PIPE OR VISE VERSA. GALVANIZED STEEL OR ALUMINUM APRON ENDWALLS SHALL NORMALLY BE INSTALLED ON CULVERT PIPE OF THE SAME METAL.

ALL THREE PIECE STEEL APRON ENDWALLS FOR 66" X 51" PIPE ARCH AND LARGER SHALL HAVE 0.109" SIDES AND 0.138" CENTER PANELS. ALL THREE PIECE ALUMINUM APRON ENDWALLS FOR 66" X 51" PIPE ARCH AND LARGER SHALL HAVE 0.105" SIDES AND 0.134" CENTER PANELS. THE WIDTH OF CENTER PANELS SHALL BE GREATER THAN 20 PERCENT OF THE PIPE ARCH PERIMETER.

LAP SEAMS SHALL BE TIGHTLY JOINED BY GALVANIZED RIVETS OR BOLTS FOR STEEL UNITS AND ALUMINUM RIVETS AND BOLTS FOR ALUMINUM UNITS. FOR THE 77" X 52" THROUGH 112" X 75" APRON ENDWALL SIZES, THE REINFORCED EDGES AND CENTER PANEL SEAMS SHALL BE FURTHER REINFORCED WITH GALVANIZED STEEL OR ALUMINUM STIFFENER ANGLES. THE ANGLES SHALL BE ATTACHED BY GALVANIZED NUTS AND BOLTS FOR STEEL UNITS AND ALUMINUM NUTS AND BOLTS FOR ALUMINUM UNITS.

WHERE TWO OR MORE PIPES WITH APRON ENDWALLS ARE LAID ADJACENT TO EACH OTHER, THEY SHALL BE SEPARATED BY A DISTANCE SUFFICIENT TO PROVIDE A MINIMUM CLEARANCE OF 6 INCHES BETWEEN APRON ENDWALLS.

① FOR PIPE ARCH SIZES UP TO 73" X 55" A 180° ROLLED EDGE MAY BE USED INSTEAD OF STEEL ROD REINFORCEMENT. SEE SECTION A-A.

APRON ENDWALLS FOR PIPE ARCH AND ELLIPTICAL PIPE

STATE OF WISCONSIN
DEPARTMENT OF TRANSPORTATION

APPROVED

11/30/94 — DATE

/S/ Rory L. Rhinesmith — CHIEF ROADWAY DEVELOPMENT ENGINEER

FHWA

6

S.D.D. 8 F 2-1

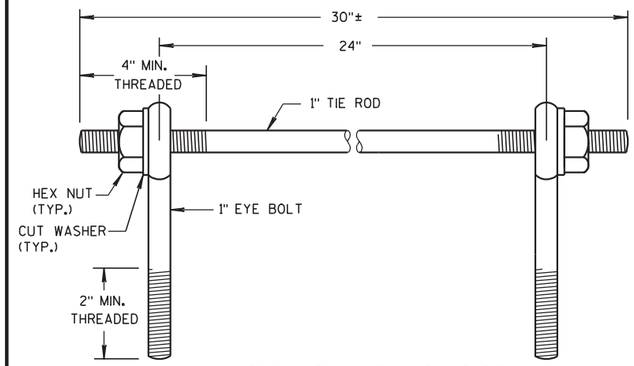

EYE BOLTS AND TIE ROD

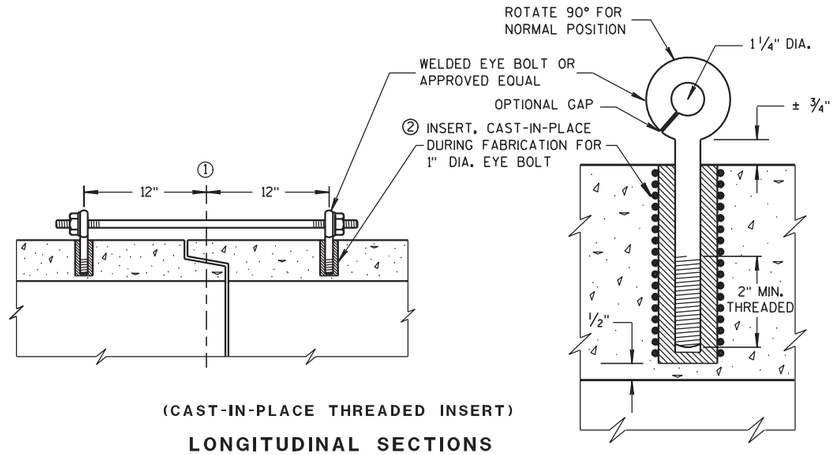

(CAST-IN-PLACE THREADED INSERT)

LONGITUDINAL SECTIONS

EYE BOLT AND TIE ROD ASSEMBLY (ALTERNATE NO. 1)

GENERAL NOTES

DETAILS OF CONSTRUCTION, MATERIALS, AND WORKMANSHIP NOT SHOWN ON THIS DRAWING SHALL CONFORM TO THE PERTINENT REQUIREMENTS OF THE STANDARD SPECIFICATIONS AND APPLICABLE SPECIAL PROVISIONS.

CONCRETE CULVERT AND STORM SEWER PIPE SHALL BE TIED TOGETHER IN THE MANNER ILLUSTRATED BY THIS DETAIL AT LOCATIONS DESIGNATED IN THE STANDARD SPECIFICATIONS AND THE PLAN. THE CONTRACTOR MAY USE EITHER ALTERNATE 1, 2 OR 3 FOR DRAINAGE STRUCTURES. ONLY ALTERNATE 1 AND 3 MAY BE USED FOR CATTLE PASSES, UNLESS OTHERWISE STATED IN THE CONTRACT. THE MATERIALS, FABRICATION AND WORK NECESSARY TO TIE THE PIPE BY THIS DETAIL WILL BE CONSIDERED INCIDENTAL TO THE PIPE AND APRON ENDWALLS IF REQUIRED.

DETAILED DRAWINGS FOR PROPOSED ALTERNATE DESIGNS FOR JOINT TIES SHALL BE SUBMITTED TO THE ENGINEER FOR APPROVAL.

JOINT TIES TO BE HOT-DIP GALVANIZED PER ASTM A 153.

① ℄ OF TONGUE AND GROOVE OR BELL AND SPIGOT JOINTS.

② THE INSIDE OF THE THREADED INSERTS SHALL BE CLEAN TO ALLOW THE INSERTION OF THREADED EYE BOLTS.

③ HOLES SHALL BE CAST-IN-PLACE OR DRILLED 12 INCHES FROM ℄ OF TONGUE AND GROOVE.

④ BOLT PROJECTION INSIDE OF PIPE SHALL NOT EXCEED 2 INCHES.

⑤ OPENING TO BE ROD DIAMETER PLUS 1 INCH.

⑥ LENGTH ADEQUATE TO EXTEND TO WITHIN 1/2 INCH OF THE INNER SURFACE OF THE PIPE.

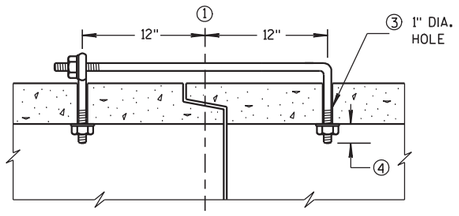

(TONGUE & GROOVE PIPE)

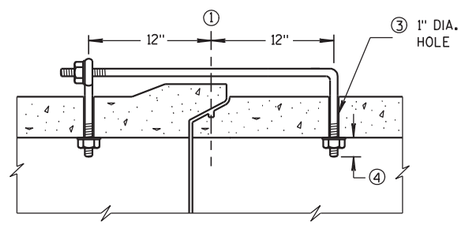

(MODIFIED BELL PIPE)

LONGITUDINAL SECTION

EYE BOLT DIMENSION TABLE

PIPE SIZE	L = LENGTH	
	TONGUE & GROOVE PIPE	MODIFIED BELL PIPE
18" TO 24"	4 1/2"	6 1/4"
30"	5"	7"
36"	5 1/2"	7"
42"	6"	
48"	6 1/2"	
60"	7 1/2"	
66"	8"	

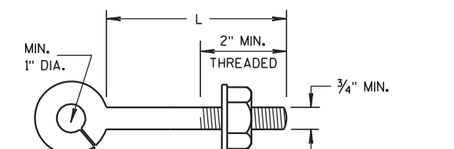

EYE BOLT

NOTE: TWO EYE BOLTS MAY BE USED WITH A 30" LONG THREADED ROD IN LIEU OF THE 90° BENT TIE ROD.

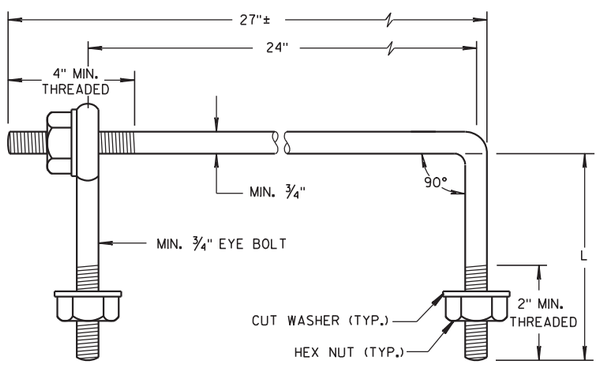

EYE BOLT AND TIE ROD

(JOINT TIES FOR 18" TO 66" DIA. CONCRETE PIPE)

EYE BOLT AND TIE ROD ASSEMBLY (ALTERNATE NO. 2)

ADJUSTABLE TIE ROD TABLE

PIPE DIAMETER	TIE ROD DIAMETER	D	L_1	N
12-60	5/8	5/8	5	1/2
66-84	3/4	3/4	5	1/2
90-108	1	1	7	1 7/16

DIMENSIONS SHOWN ARE IN INCHES

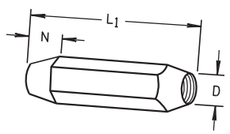

TAPERED

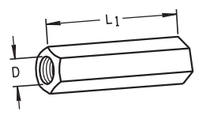

PLAIN

RIGHT AND LEFT THREADS

SLEEVE NUTS

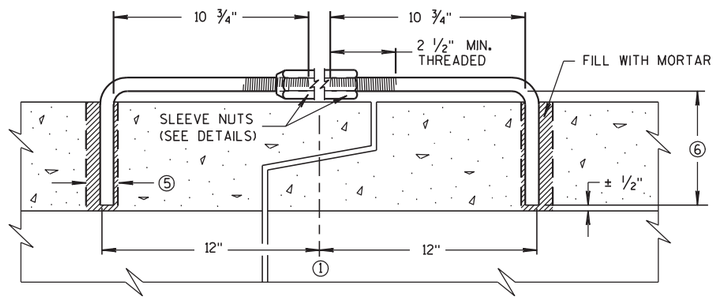

LONGITUDINAL SECTION

(JOINT TIES FOR 12" TO 108" DIA. CONCRETE PIPE)

ADJUSTABLE TIE ROD (ALTERNATE NO. 3)

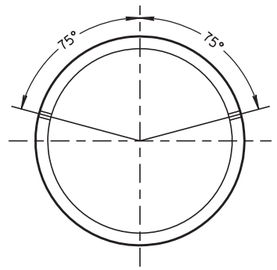

PLACEMENT OF (2) CAST-IN-PLACE INSERTS OR HOLES DURING FABRICATION FOR PIPE SECTIONS REQUIRING TIE RODS

TRANSVERSE SECTION

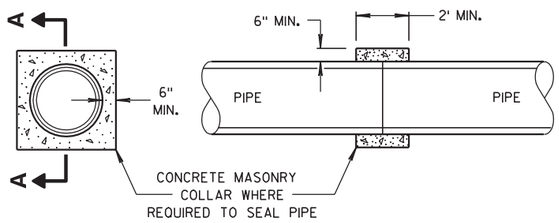

SECTION A-A

CONCRETE COLLAR DETAIL

JOINT TIES FOR CONCRETE PIPE AND CONCRETE COLLAR DETAIL

STATE OF WISCONSIN
DEPARTMENT OF TRANSPORTATION

APPROVED
6/5/2012 — DATE
/S/ Jerry H. Zogg — ROADWAY STANDARDS ENGINEER
157
FHWA

6

S.D.D. 8 F 4-7

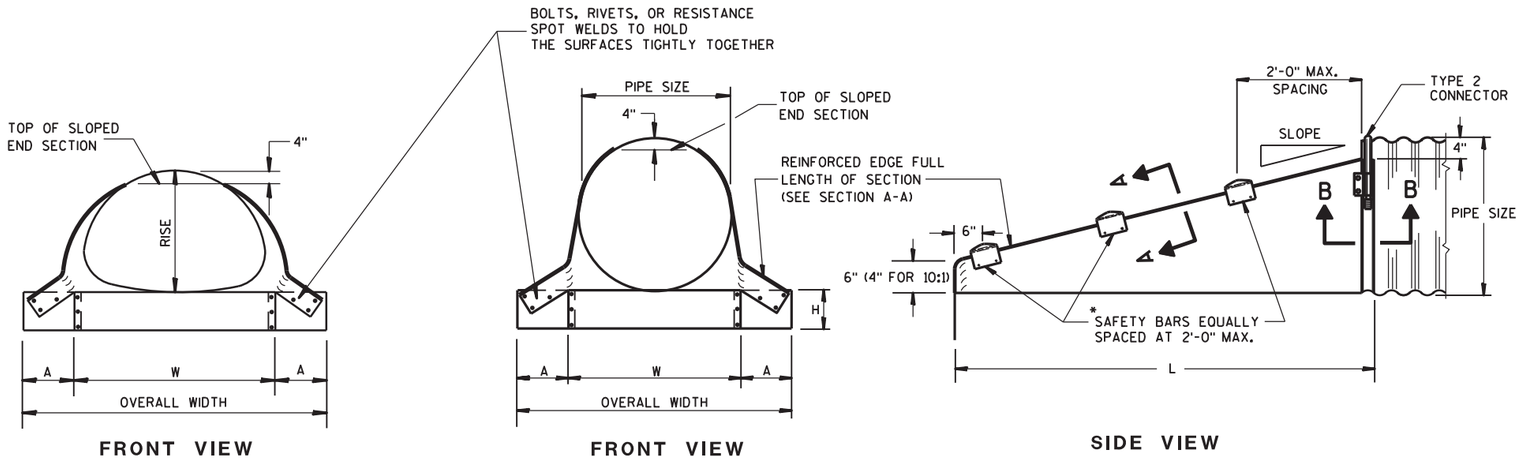

FRONT VIEW

FRONT VIEW

SIDE VIEW

GENERAL NOTES

DETAILS OF CONSTRUCTION, MATERIALS AND WORKMANSHIP NOT SHOWN ON THIS DRAWING SHALL CONFORM TO THE PERTINENT REQUIREMENTS OF THE STANDARD SPECIFICATIONS AND THE APPLICABLE SPECIAL PROVISIONS.

SLOPED END SECTIONS SHALL CONFORM TO THE REQUIREMENTS OF THE STANDARD SPECIFICATIONS, SECTION 521 FOR STEEL APRON ENDWALLS.

SAFETY BARS SHALL BE FABRICATED FROM GALVANIZED STEEL PIPE MEETING THE REQUIREMENTS OF ASTM A-53, GRADE B, SCHEDULE 40 OR APPROVED EQUAL.

STEEL APRON ENDWALLS FOR CULVERT PIPE SLOPED SIDE DRAINS

PIPE DIA. (IN.)	MIN. THICK. (Inches)	DIMENSIONS (Inches)				L DIMENSIONS					
		A	H	W	OVERALL WIDTH	SLOPE	LENGTH INCHES	SLOPE	LENGTH INCHES	SLOPE	LENGTH INCHES
15	.064	8	6	21	37	4:1	20	6:1	30	10:1	70
18	.064	8	6	24	40	4:1	32	6:1	48	10:1	100
21	.064	8	6	27	43	4:1	44	6:1	66	10:1	130
24	.064	8	6	30	46	4:1	56	6:1	84	10:1	160
30	.109	12	9	36	60	4:1	80	6:1	120	10:1	220
36	.109	12	9	42	66	4:1	104	6:1	156	10:1	280
42	.109	16	12	48	80	4:1	128	6:1	192	——	——
48	.109	16	12	54	86	4:1	152	6:1	228	——	——
54	.109	16	12	60	92	4:1	176	6:1	264	——	——
60	.109	16	12	66	98	4:1	200	6:1	300	——	——

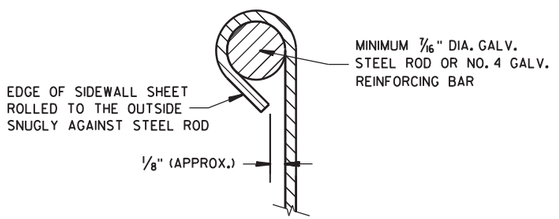

SECTION A-A

*NOTE:
THREE SAFETY BARS ARE SHOWN. ACTUAL NUMBER OF BARS REQUIRED AT A 2'-0" C-C MAX. SPACING WILL VARY DEPENDING ON THE LENGTH OF THE END SECTION.

3" GALVANIZED PIPE. FLATTEN ENDS, THEN BEND OUTSIDE 4" TO MATCH END SECTION SIDES.

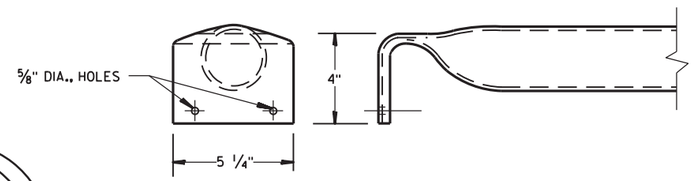

DETAIL OF SAFETY BAR

STEEL APRON ENDWALLS FOR PIPE ARCH SLOPED SIDE DRAINS

EQUIV. DIA. (Inches)	(Inches) SPAN	(Inches) RISE	MIN. THICK. (Inches) ①	DIMENSIONS (Inches) A	H	W	OVERALL WIDTH	L DIMENSIONS SLOPE	LENGTH INCHES	SLOPE	LENGTH INCHES	SLOPE	LENGTH INCHES
15	17	13	.064 *	7	6	30	44	4:1	19	6:1	30	10:1 ②	70
18	21	15	.064 *	8	6	27	43	4:1	20	6:1	30	10:1	70
21	24	18	.064 *	8	6	30	46	4:1	32	6:1	48	10:1	100
24	28	20	.064 *	8	6	34	50	4:1	40	6:1	60	10:1	120
30	35	24	.079 *	12	9	41	65	4:1	56	6:1	84	10:1	160
36	42	29	.109 *	12	9	48	72	4:1	76	6:1	114	10:1	210
42	49	33	.109	16	12	55	87	4:1	92	6:1	138	——	——
48	57	38	.109	16	12	63	95	4:1	112	6:1	168	——	——
54	64	43	.109	16	12	70	102	4:1	132	6:1	198	——	——

① * MINIMUM THICKNESS OF ALL 10:1 SLOPED SIDE DRAINS IS 0.109".
② ACTUAL SLOPE GREATER THAN 10:1.

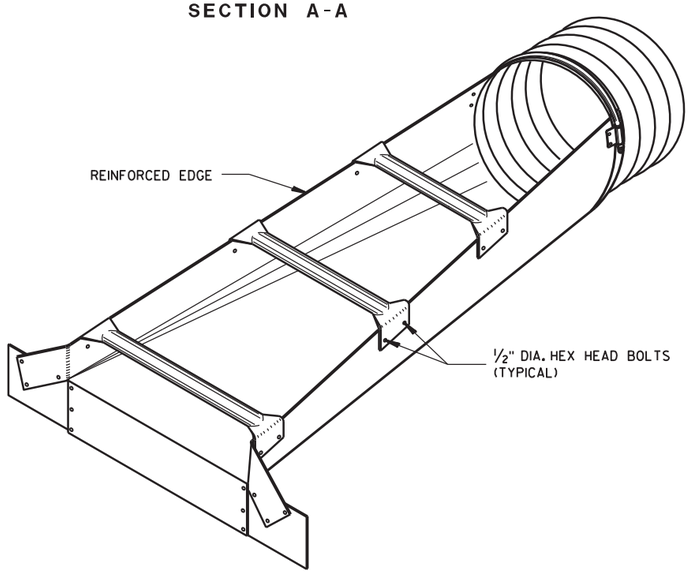

ISOMETRIC VIEW

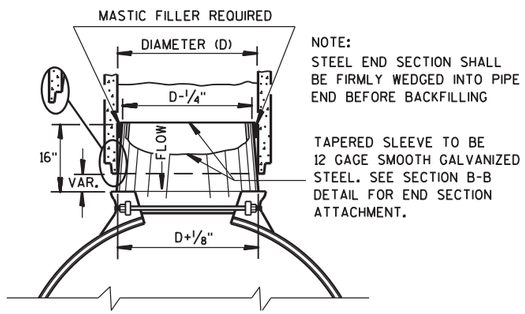

STEEL ADAPTER SLEEVE FOR CONCRETE PIPE

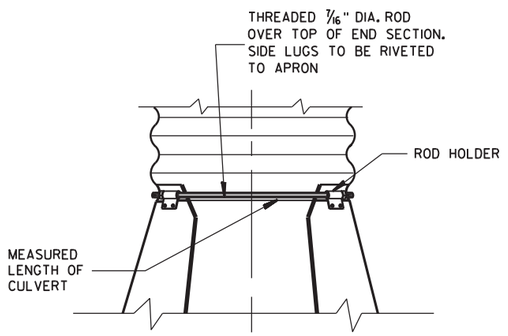

TYPE 2
CONNECTION DETAIL

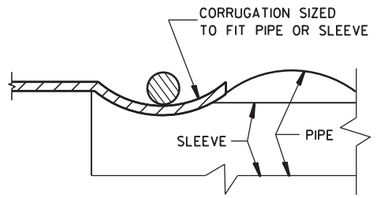

SECTION B-B

STEEL APRON ENDWALLS FOR CULVERT PIPE AND PIPE ARCH SLOPED SIDE DRAINS

STATE OF WISCONSIN
DEPARTMENT OF TRANSPORTATION

APPROVED
9/14/2012 DATE
/S/ Jerry H. Zoda
ROADWAY STANDARDS DEVELOPMENT ENGINEER
FHWA

6

S.D.D. 8 F 7-5

6

S.D.D. 8 F 7-5

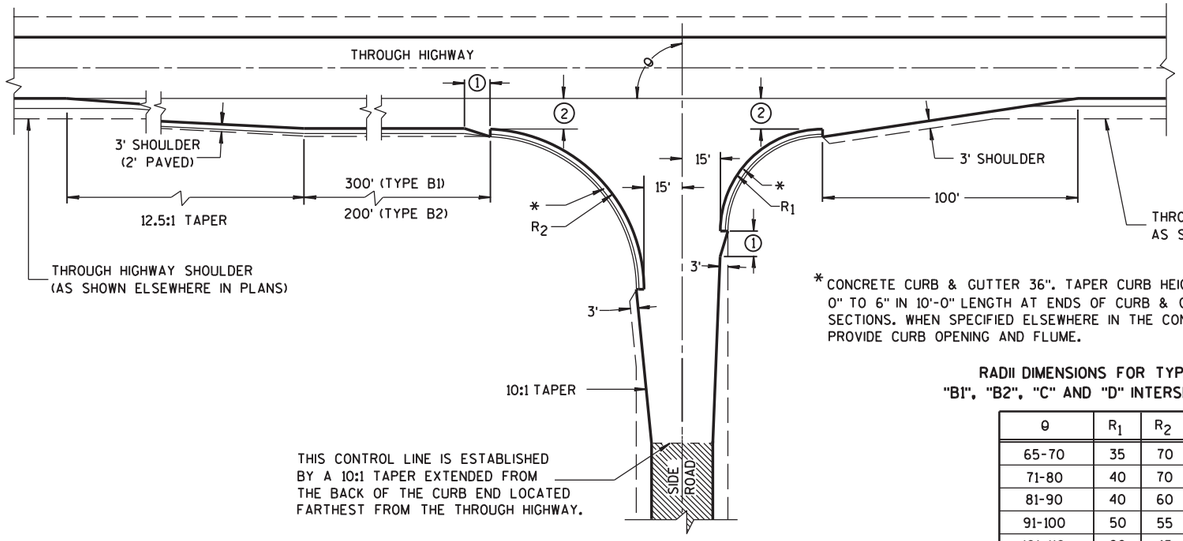

TYPE "B1" AND "B2"

*CONCRETE CURB & GUTTER 36". TAPER CURB HEIGHT 0" TO 6" IN 10'-0" LENGTH AT ENDS OF CURB & GUTTER SECTIONS. WHEN SPECIFIED ELSEWHERE IN THE CONTRACT, PROVIDE CURB OPENING AND FLUME.

RADII DIMENSIONS FOR TYPES "B1", "B2", "C" AND "D" INTERSECTIONS

θ	R_1	R_2
65-70	35	70
71-80	40	70
81-90	40	60
91-100	50	55
101-110	60	45

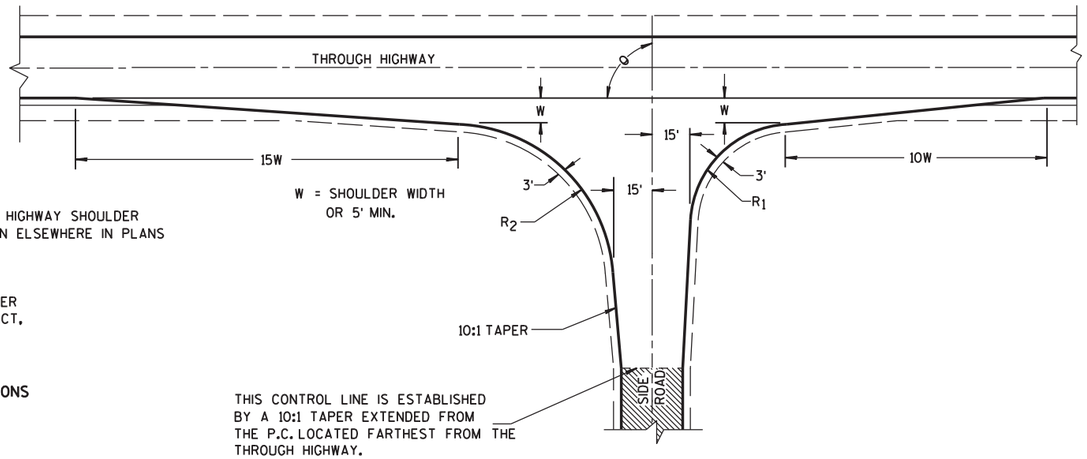

TYPE "C"

GENERAL NOTES

DESIGNS MAY BE USED INTERCHANGEABLY IN COMBINATION OR SEPARATELY FOR ANY ONE COMPLETE INTERSECTION DEPENDING UPON INTERSECTION ANGLE AND SURFACING OF EACH APPROACH ROADWAY.

SIDE ROAD SURFACING NOTE

WHEN THE SIDE ROAD IS NOT PRESENTLY PAVED, PAVEMENT SHALL BE PLACED TO THE LIMITS SHOWN UNLESS OTHERWISE PROVIDED IN THE CONTRACT. WHERE THE CONSTRUCTION LIMITS ARE BEYOND THE PAVING LIMITS, CRUSHED AGGREGATE SURFACING SHALL BE PLACED BETWEEN THE PAVING LIMITS AND CONSTRUCTION LIMITS.

WHEN THE SIDE ROAD IS PRESENTLY PAVED, NEW PAVEMENT SHALL BE PLACED TO THE LIMITS OF DESIGN AS SHOWN AND BEYOND, IF NECESSARY, TO MEET EXISTING PAVEMENT.

WHEN THE SIDE ROAD IS THE CONSTRUCTION PROJECT, THE INTERSECTION SURFACING SHALL BE THE SAME AS FOR THE PROJECT.

EXISTING PAVED SURFACE

BYPASS LANE

(1) 10-FT TYPICAL.

(2) 12-FT** PLUS ADDITIONAL WIDTH FOR BIKE LANE IF SHOWN ELSEWHERE IN THE PLAN.

**10-FT MAY BE USED ON TYPE B2 ON RESURFACING PROJECTS IF SPECIFIED IN THE CONTRACT.

(3) BYPASS LANE PAVED SURFACE WIDTH OUTSIDE OF TRAVEL LANE
-ASPHALT = 12-FT PLUS PAVED SHOULDER WIDTH.
-PC CPNCRETE = 13-FT PLUS PAVED SHOULDER WIDTH.

(4) BYPASS LANE PAVED SHOULDER WIDTH = THE GREATER OF 1-FT OR THE PAVED SHOULDER WIDTH OF THE THROUGH HIGHWAY.

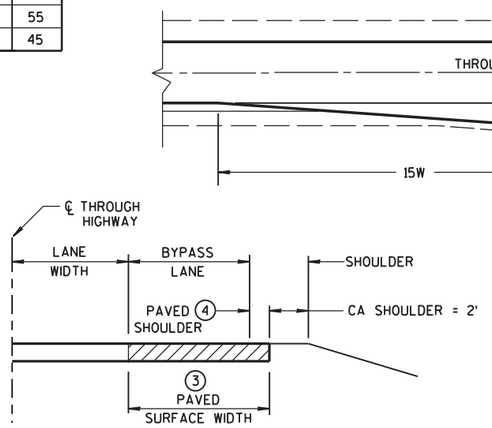

SECTION A-A
(SHOWING BYPASS LANE AND SHOULDER)

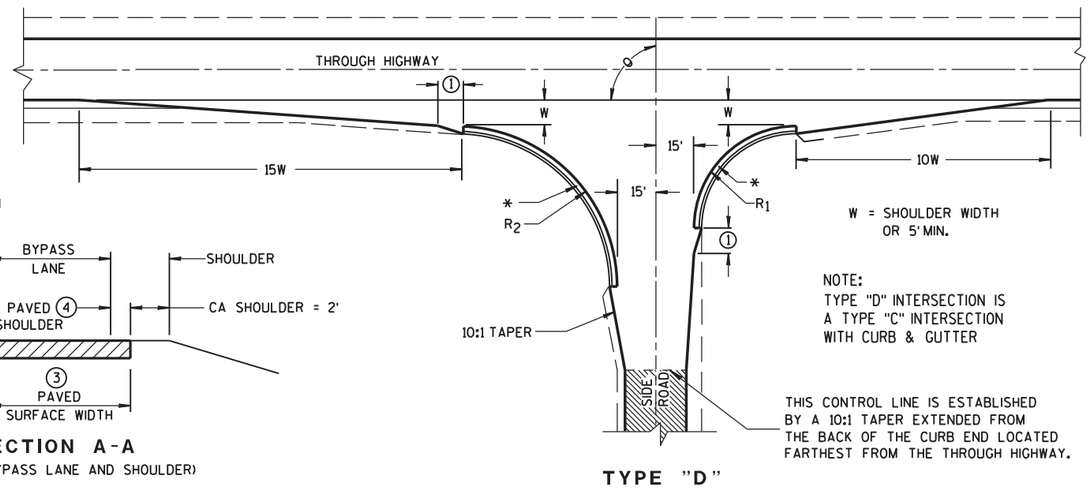

TYPE "D"

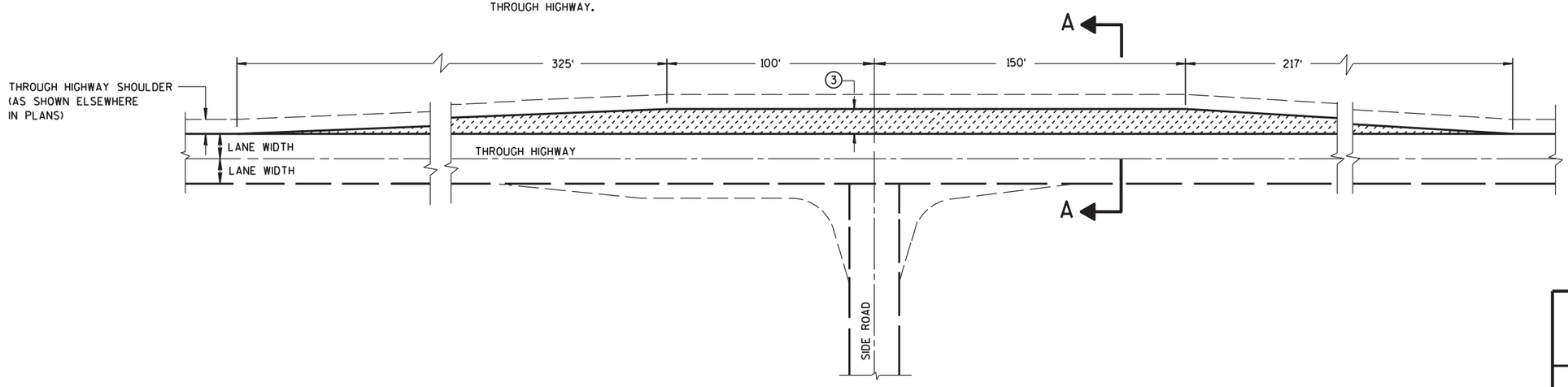

TEE INTERSECTION BYPASS LANE DETAIL

AT-GRADE SIDE ROAD INTERSECTION, TYPES "B1", "B2", "C" AND "D" AND TEE INTERSECTION BYPASS LANE

STATE OF WISCONSIN
DEPARTMENT OF TRANSPOI

6

S.D.D. 9 A 1-13a

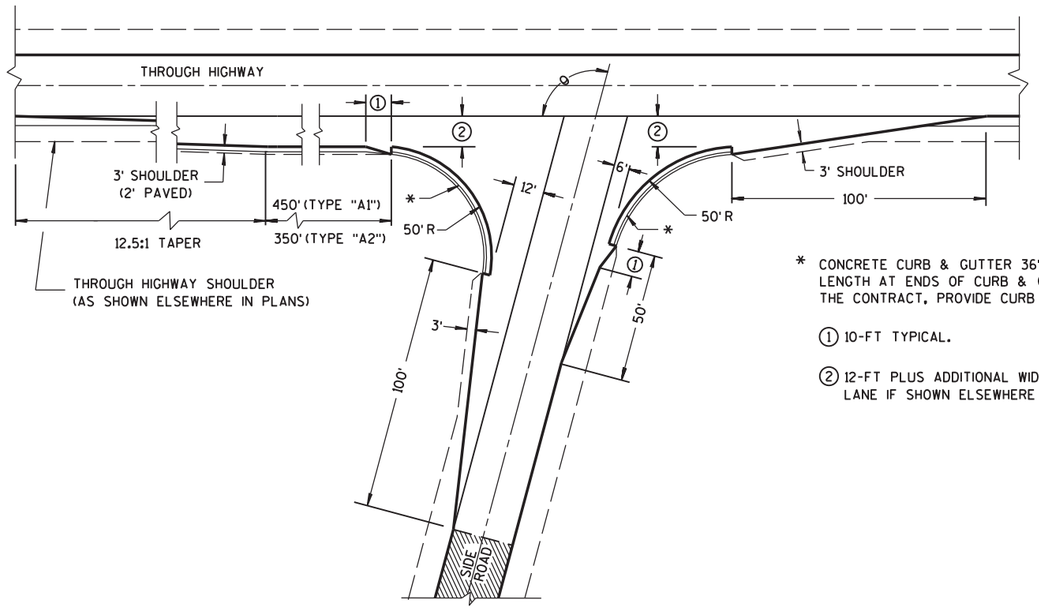

θ = MORE THAN 80°

* CONCRETE CURB & GUTTER 36". TAPER CURB HEIGHT 0" TO 6" IN 10'-0" LENGTH AT ENDS OF CURB & GUTTER SECTIONS. WHEN SPECIFIED ELSEWHERE IN THE CONTRACT, PROVIDE CURB OPENING AND FLUME.

① 10-FT TYPICAL.

② 12-FT PLUS ADDITIONAL WIDTH FOR BIKE LANE IF SHOWN ELSEWHERE IN THE PLANS.

▨ EXISTING PAVED SURFACE

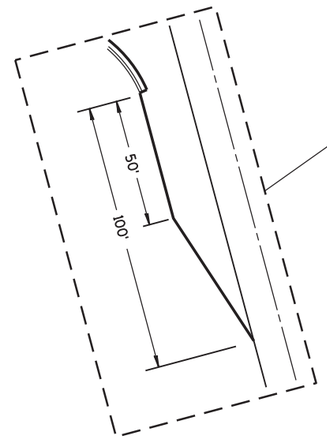

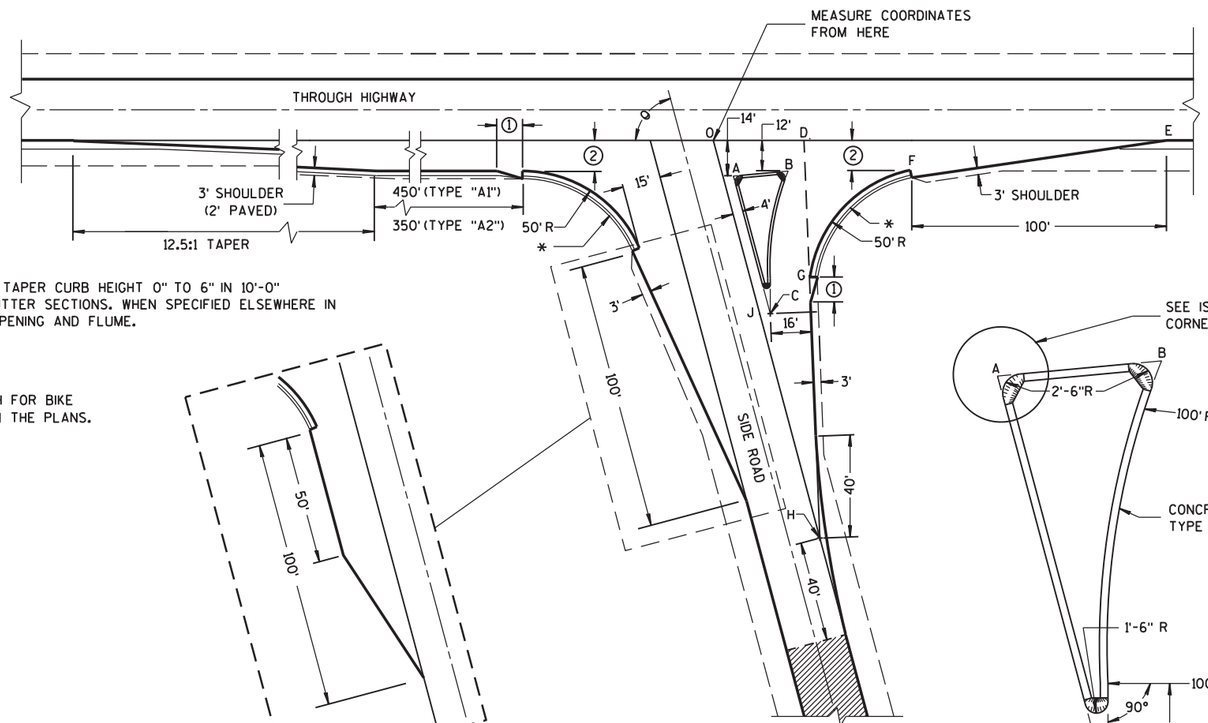

θ = ACUTE ANGLES 80° OR LESS

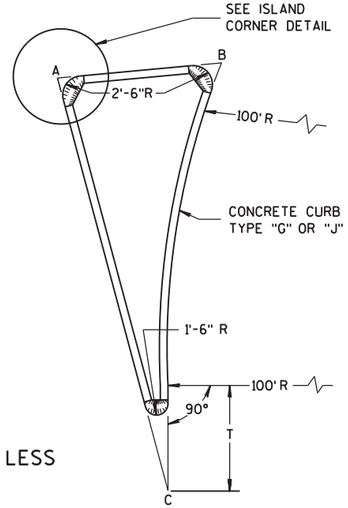

SIDE ROAD WIDENING AND TAPER REQUIRED WHERE THE THROUGH HIGHWAY CARRIES TWO-WAY TRAFFIC
θ = ACUTE ANGLES 70° OR LESS

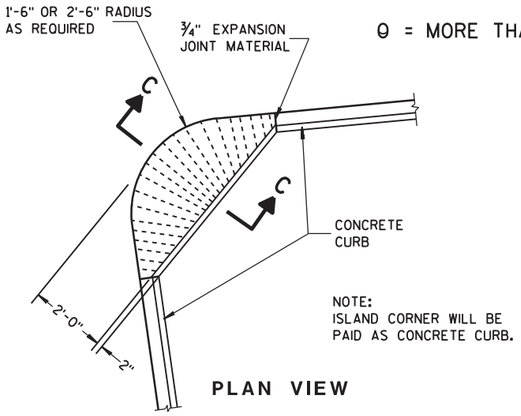

NOTE:
ISLAND CORNER WILL BE PAID AS CONCRETE CURB.

PLAN VIEW

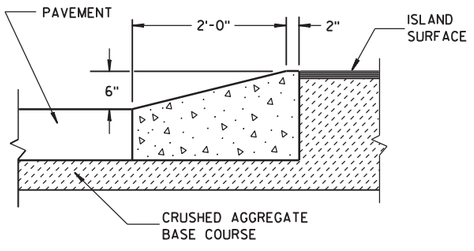

SECTION C-C

ISLAND CORNER DETAIL

(TO BE CONSTRUCTED AT ALL ISLAND CORNERS)

TABLE OF DIMENSIONS FOR
VARIABLE SIDE ROAD INTERSECTION ANGLES
(INTERPOLATE VALUES FOR ANGLES NOT SHOWN)

ANGLE θ DEGREES	COORDINATES IN FEET (MEASURED FROM POINT "O") X / Y								LENGTH IN FEET				
	A	B	C	D	E	F	G	H	AB	AC	T	OJ	OH
60	12.7 / -14.0	44.9 / -12.0	46.4 / -72.4	41.9 / 0.0	205.0 / 0.0	104.6 / -12.0	64.0 / -75.5	85.0 / -147.1	32.3	67.4	4.9	85.9	169.9
65	10.9 / -14.0	39.0 / -12.0	37.8 / -71.6	39.4 / 0.0	196.1 / 0.0	95.7 / -12.0	54.1 / -71.5	70.5 / -151.3	28.2	63.6	8.5	80.9	166.9
70	9.4 / -14.0	33.9 / -12.0	29.8 / -70.1	37.4 / 0.0	188.3 / 0.0	87.8 / -12.0	45.6 / -67.5	56.1 / -154.2	24.6	59.7	11.5	76.1	164.1
75	7.9 / -14.0	29.3 / -12.0	22.3 / -67.9	35.7 / 0.0	181.2 / 0.0	80.7 / -12.0	38.2 / -63.4	41.8 / -155.9	21.5	55.8	13.8	71.4	161.4
80	6.5 / -14.0	25.4 / -12.0	15.6 / -65.2	34.4 / 0.0	174.8 / 0.0	74.4 / -12.0	31.8 / -59.3	27.6 / -156.5	18.9	52.0	15.6	66.9	158.9

TYPE "A1" & "A2" SIDE ROAD INTERSECTION DETAILS

AT-GRADE SIDE ROAD INTERSECTION, TYPE "A1" & "A2"

STATE OF WISCONSIN
DEPARTMENT OF TRANSPORTATION

APPROVED
12/18/12 — DATE
/S/ Jerry H. Zogg — ROADWAY STANDARDS DEVELOPMENT ENGINEER
FHWA

6

S.D.D. 9 A 1-13b

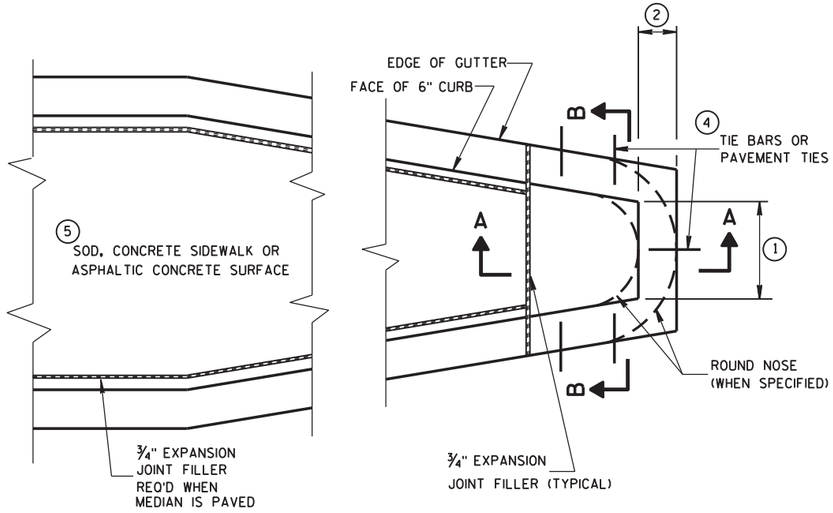

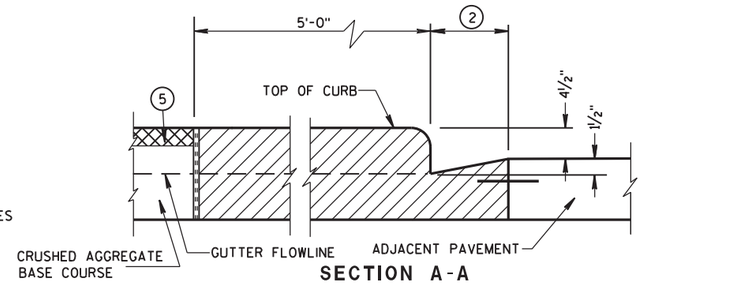

SECTION A-A

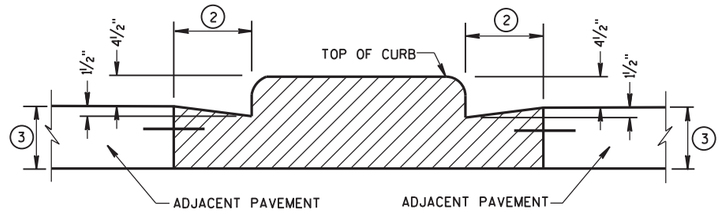

SECTION B-B

CONCRETE MEDIAN BLUNT NOSE DETAIL

GENERAL NOTES

DETAILS OF CONSTRUCTION, MATERIALS AND WORKMANSHIP NOT SHOWN ON THIS DRAWING SHALL CONFORM TO THE PERTINENT REQUIREMENTS OF THE STANDARD SPECIFICATIONS AND THE APPLICABLE SPECIAL PROVISIONS.

(1) SEE PLAN FOR MEDIAN NOSE WIDTH AND RADIUS (FOR ROUND NOSE ALTERNATE).

(2) WIDTH OF GUTTER TO MATCH EXISTING ADJACENT GUTTER OR AS SPECIFIED ELSEWHERE IN THE PLAN.

(3) DEPTH EQUAL TO ADJACENT PAVEMENT. ADJACENT PAVEMENT STRUCTURE DETAILS ARE SHOWN ON THE PLAN. TYPICAL OPTIONS ARE:

(1) NEW OR EXISTING CONCRETE PAVEMENT.

(2) ASPHALTIC CONCRETE PAVEMENT OVER NEW OR EXISTING CONCRETE BASE COURSE.

(3) ASPHALTIC CONCRETE PAVEMENT OVER CRUSHED AGGREGATE BASE COURSE.

(4) TIE BARS OR PAVEMENT TIES REQUIRED IN NEW CONCRETE PAVEMENT OR CONCRETE BASE COURSE. TIE BARS SHALL BE NO. 4 X 2'-0" SPACED AT 2'-0" C-C.

PAVEMENT TIES REQUIRED IN EXISTING CONCRETE BASE COURSE. PAVEMENT TIES SHALL BE NO. 6 X 1'-0" SPACED AT 3'-0" C-C INSTALLED ON A HORIZONTAL SKEW OF 6:1. THE DIRECTION OF SKEW SHALL ALTERNATE AFTER EVERY ONE OR TWO BARS.

(5) SURFACE TYPE AND DETAILS ARE SHOWN ELSEWHERE IN THE PLAN.

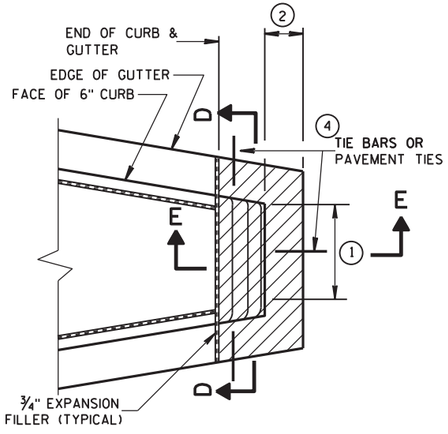

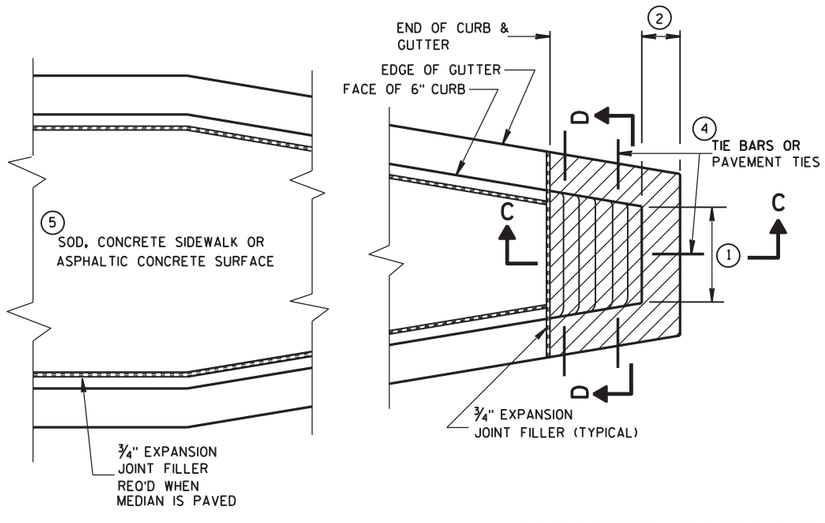

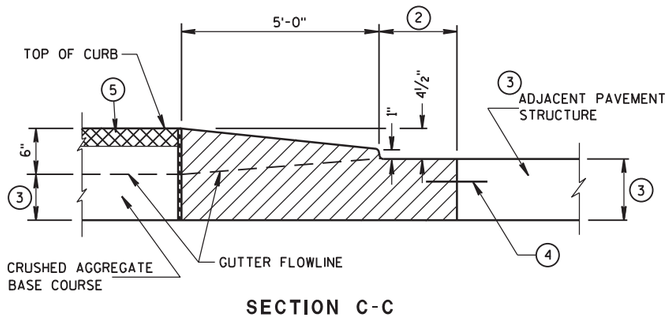

SECTION C-C

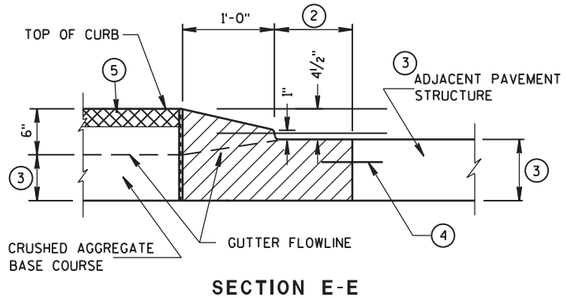

SECTION E-E

CONCRETE MEDIAN SLOPED NOSE TYPE 1

CONCRETE MEDIAN SLOPED NOSE TYPE 2

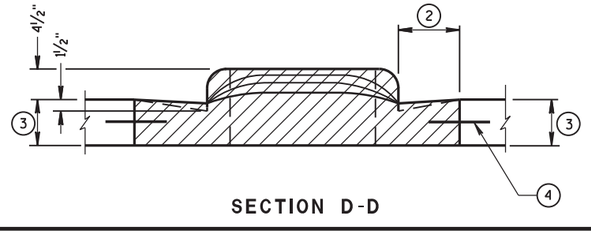

SECTION D-D

CONCRETE MEDIAN NOSE

STATE OF WISCONSIN
DEPARTMENT OF TRANSPORTATION

APPROVED
6/8/2006 — DATE
/S/ Jerry H. Zogg — ROADWAY STANDARDS D ENGINEER

FHWA

6

S.D.D. 11 B 2-2

6

S.D.D. 11 B 2-2

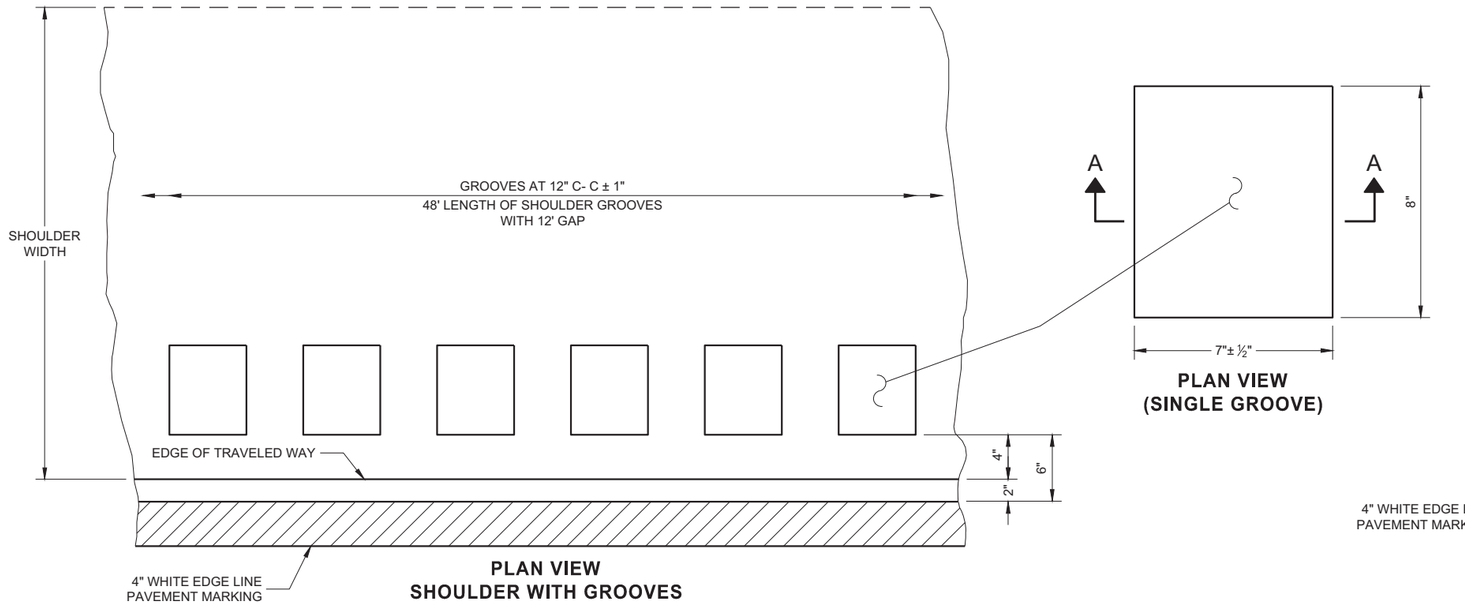

PLAN VIEW
SHOULDER WITH GROOVES

PLAN VIEW
(SINGLE GROOVE)

GENERAL NOTES

DETAILS OF CONSTRUCTION NO SHOWN ON THIS DRAWING SHALL CONFORM TO THE PERTINENT REQUIREMENTS OF THE STANDARD SPECIFICATIONS AND APPLICABLE SPECIAL PROVISIONS.

DO NOT MILL SHOULDER GROOVES THROUGH ANY INTERSECTION, MARKED CROSSWALK, NON-MOTORIZED PATH CROSSING, OR SNOWMOBILE CROSSING.

(1) SHOULDER GROOVES MAY BE OMITTED IN AREAS WITH HIGH CONCENTRATIONS OF DRIVEWAYS. WHEN DIRECTED BY THE ENGINEER.

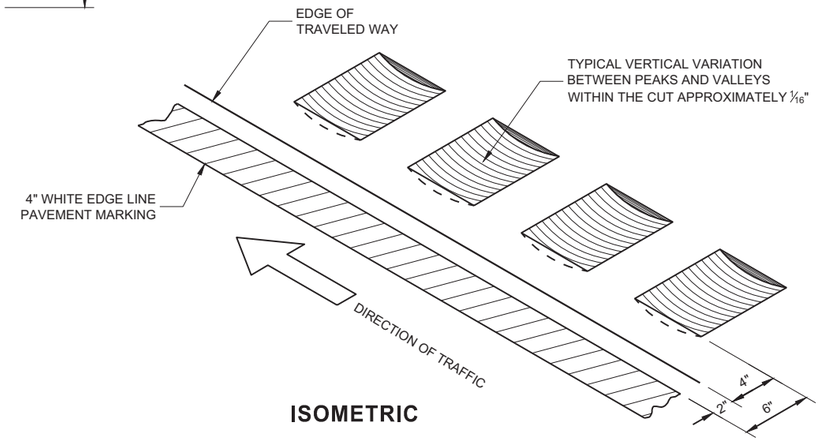

ISOMETRIC

PLACEMENT DETAIL FOR TYPE 1 MILLED RUMBLE STRIP

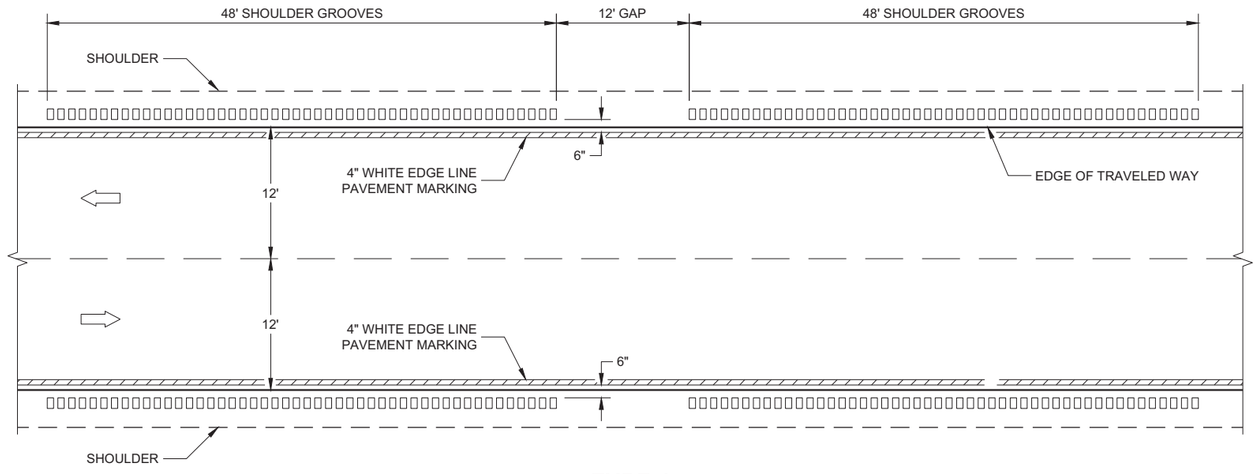

TYPE 1
2 - LANE SHOULDER RUMBLE STRIP

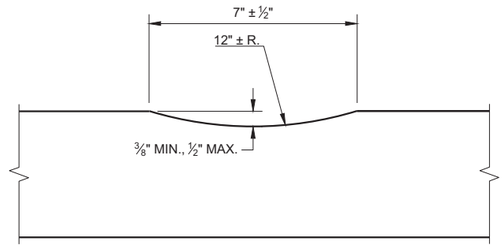

SECTION A - A

2-LANE RURAL SHOULDER RUMBLE STRIP, MILLING

STATE OF WISCONSIN
DEPARTMENT OF TRANSPORTATION

SDD 13A10 - 02a

6

SDD 13A10 - 02a

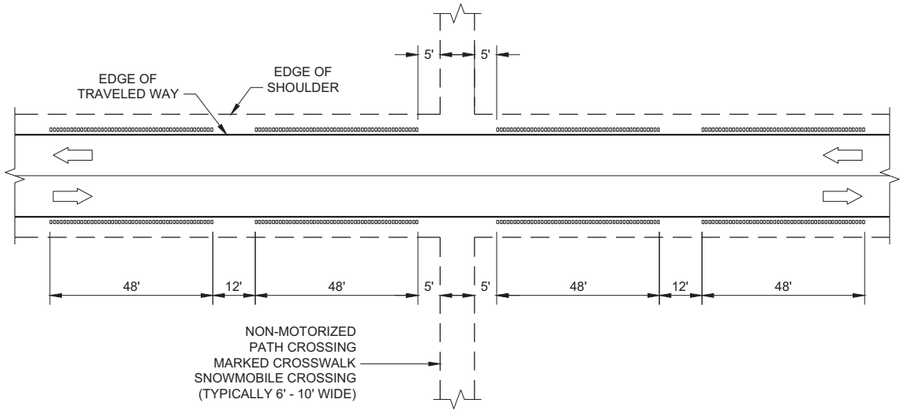

SHOULDER GROOVES AT MISCELLANEOUS CROSSINGS

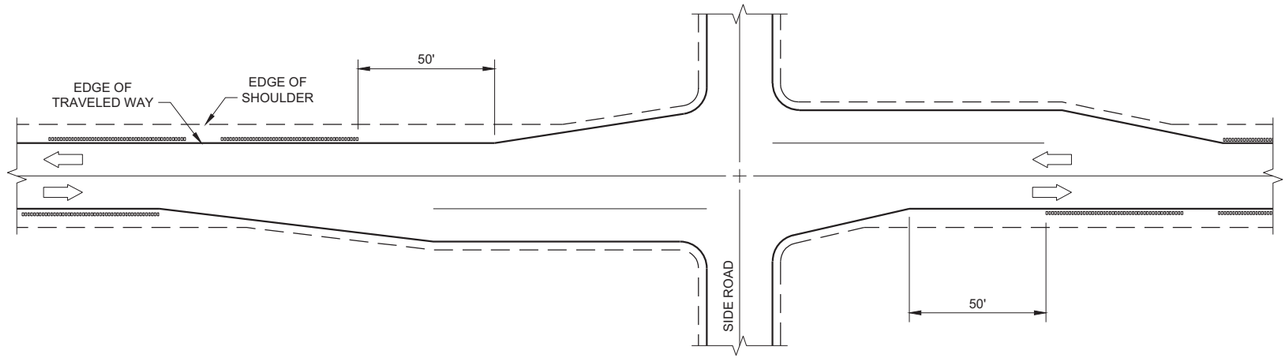

SHOULDER GROOVES AT RIGHT TURN LANE

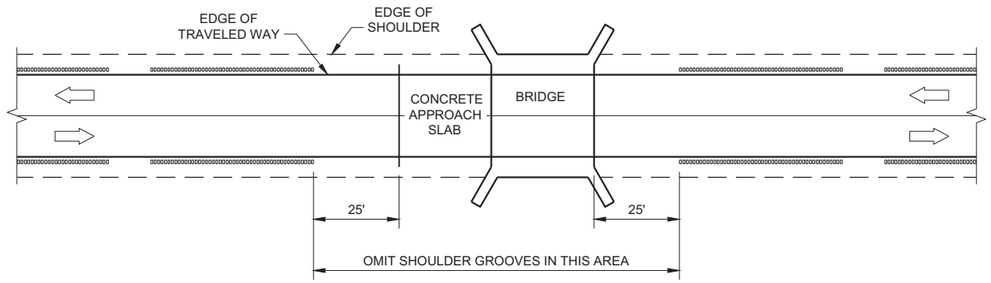

SHOULDER GROOVES AT BRIDGES

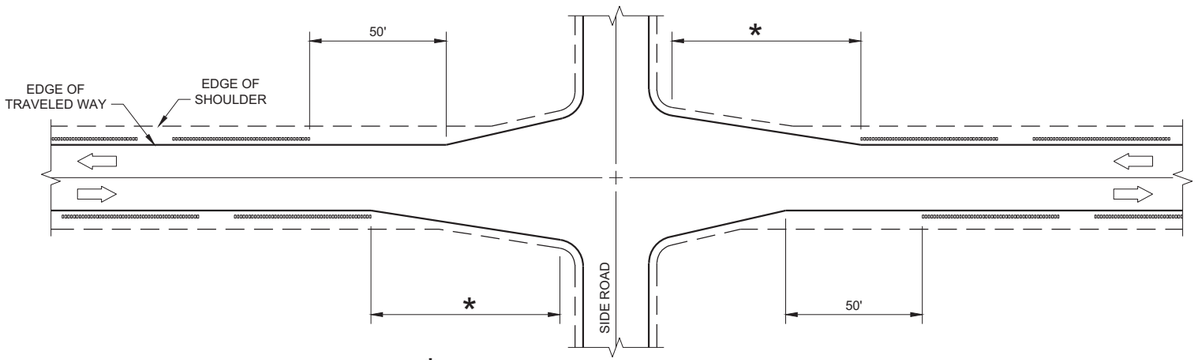

* GREATER OF 100' OR APPROACH TAPER LENGTH

SHOULDER GROOVES AT INTERSECTIONS WITH APPROACH TAPER

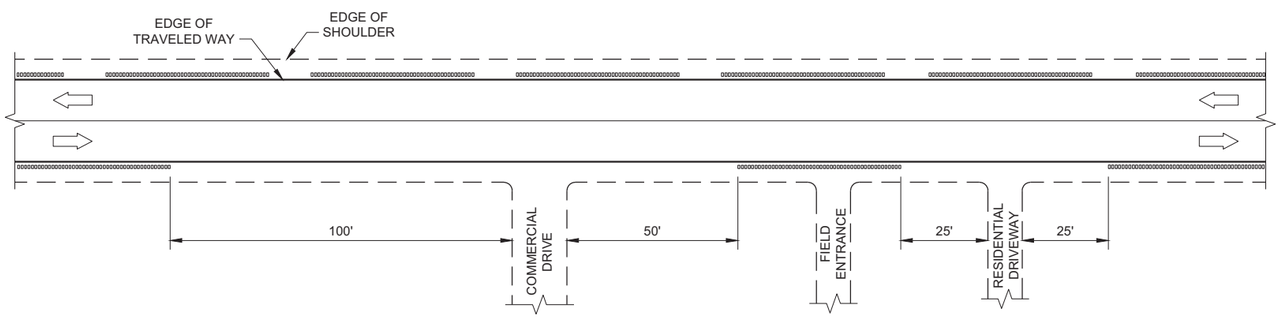

SHOULDER GROOVES AT DRIVEWAYS (1)

GENERAL NOTES

(1) SHOULDER GROOVES MAY BE OMITTED IN AREAS WITH HIGH CONCENTRATIONS OF DRIVEWAYS. WHEN DIRECTED BY THE ENGINEER.

2-LANE RURAL SHOULDER RUMBLE STRIP, MILLING

STATE OF WISCONSIN
DEPARTMENT OF TRANSPORTA

6

SDD 13A10 - 02c
SDD 13A10 - 02c

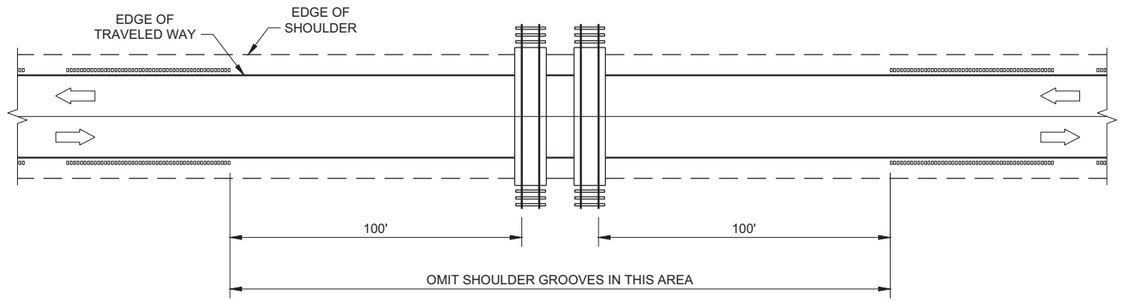

SHOULDER GROOVES AT RAILROADS

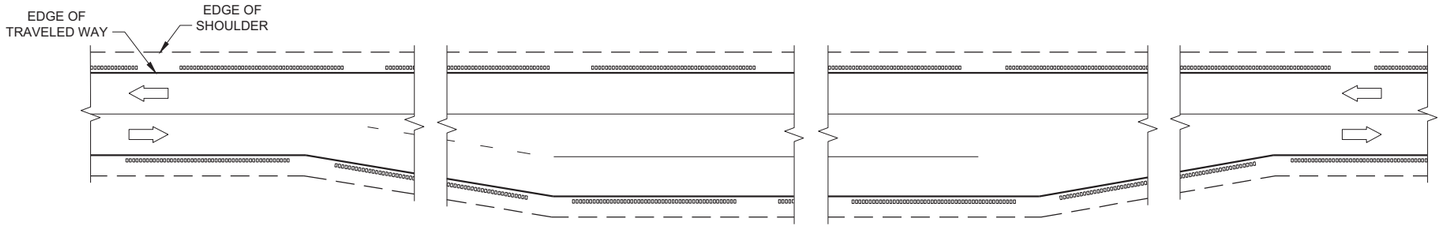

SHOULDER GROOVES AT PASSING AND CLIMBING LANES

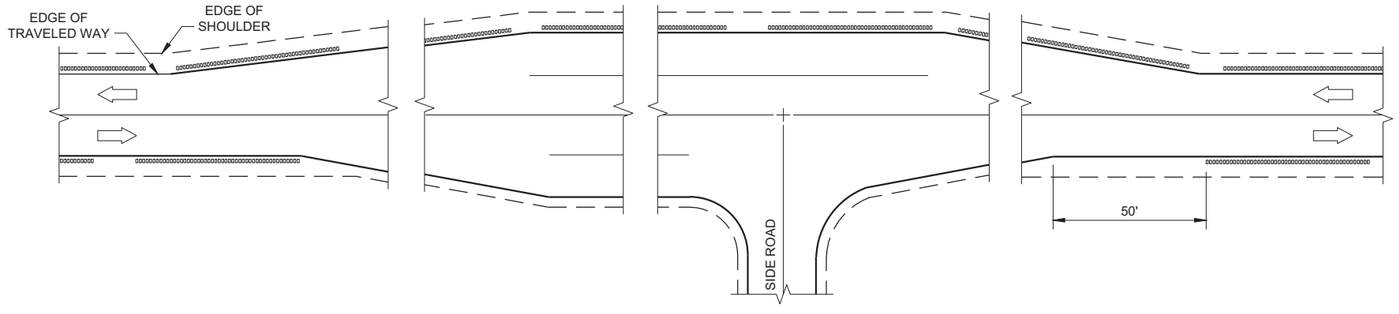

SHOULDER GROOVES AT BYPASS LANES

6

6

SDD 13A10 - 02d

SDD13A10 - 02d

2-LANE RURAL SHOULDER RUMBLE STRIP, MILLING

STATE OF WISCONSIN
DEPARTMENT OF TRANSPORTATION

APPROVED

7/2018
DATE

/S/ Rodney Taylor
ROADWAY STANDARDS DEVE ENGINEER

FHWA

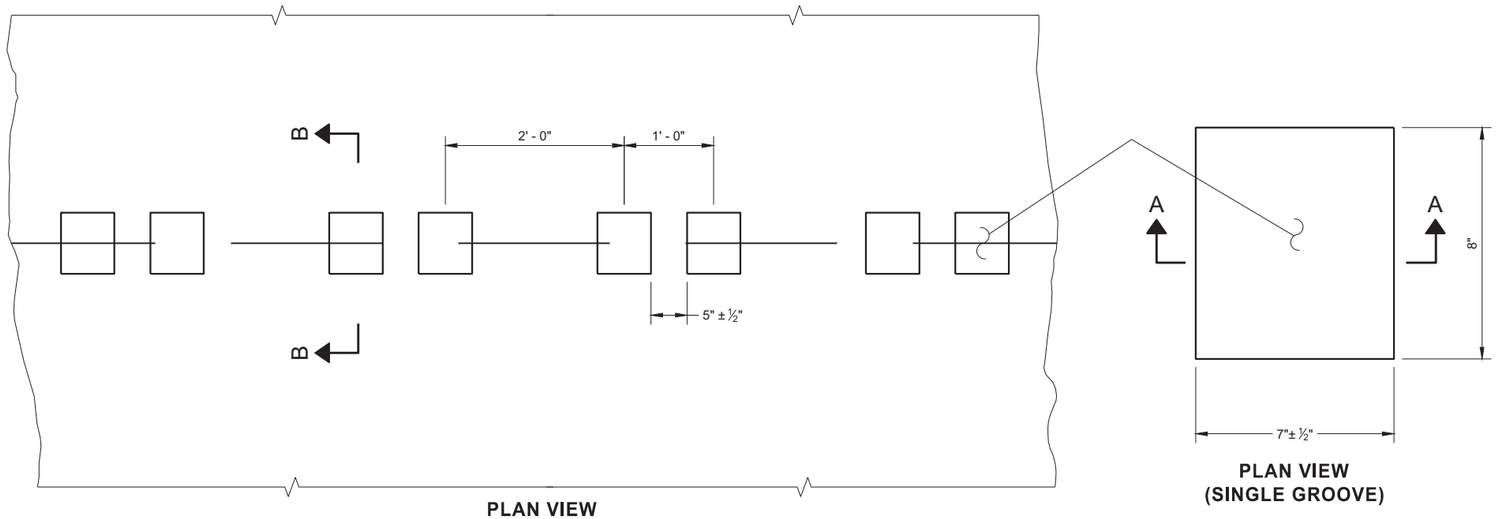

PLAN VIEW
SHOULDER WITH GROOVES

PLAN VIEW
(SINGLE GROOVE)

PLACEMENT DETAIL FOR TYPE 1 MILLED RUMBLE STRIP

GENERAL NOTES

DETAILS OF CONSTRUCTION NO SHOWN ON THIS DRAWING SHALL CONFORM TO THE PERTINENT REQUIREMENTS OF THE STANDARD SPECIFICATIONS AND APPLICABLE SPECIAL PROVISIONS.

DO NOT MILL CENTERLINE GROOVES THROUGH ANY INTERSECTION, MARKED CROSSWALK, NON-MOTORIZED PATH CROSSING, OR SNOWMOBILE CROSSING.

INSTALL PAVEMENT MARKING AFTER THE GROOVES ARE INSTALLED.

SEE SIGNING PLAN FOR SIGN REQUIREMENTS THAT MAY BE NEEDED.

(1) CENTERLINE GROOVES MAY BE OMITTED IN AREAS WITH HIGH CONCENTRATIONS OF DRIVEWAYS. WHEN DIRECTED BY THE ENGINEER.

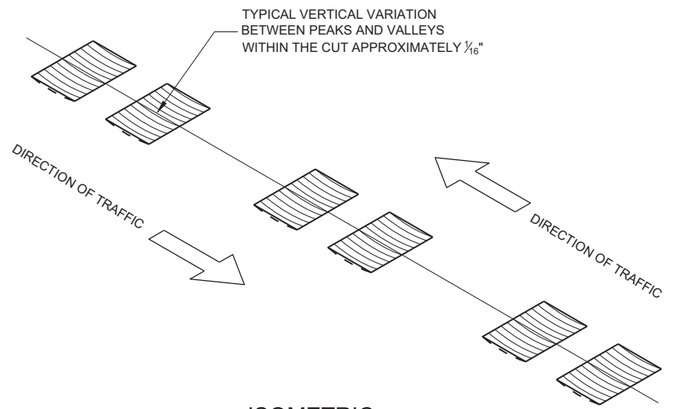

ISOMETRIC

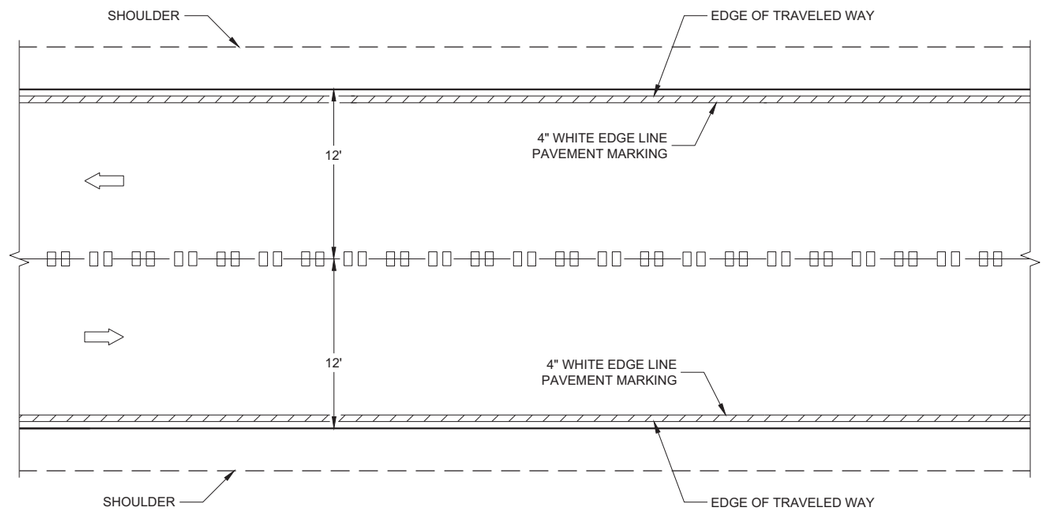

CENTERLINE GROOVES ON TWO-WAY ROADWAYS

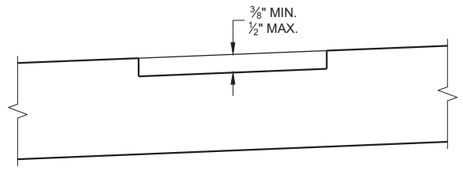

SECTION B - B
SUPERELEVATED ROADWAY

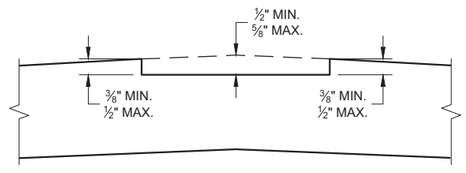

SECTION B - B
CROWNED ROADWAY

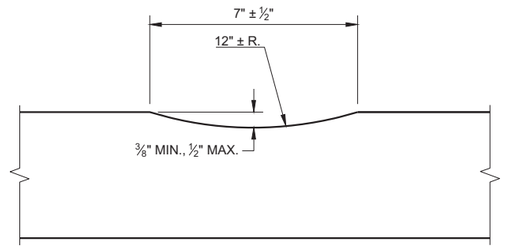

SECTION A - A

2-LANE RURAL
CENTER LINE RUMBLE STRIP, MILLING

STATE OF WISCONSIN
DEPARTMENT OF TRANSPORTATION

6

SDD 13A11 - 03a

6

SDD 13A11 - 03a

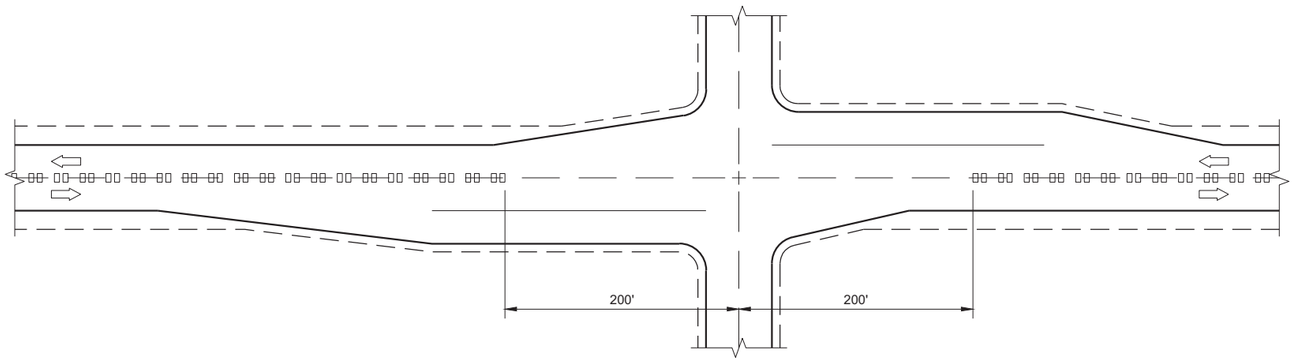

CENTERLINE GROOVES AT INTERSECTIONS

GENERAL NOTES

1. CENTERLINE GROOVES MAY BE OMITTED IN AREAS WITH HIGH CONCENTRATIONS OF DRIVEWAYS. WHEN DIRECTED BY THE ENGINEER.

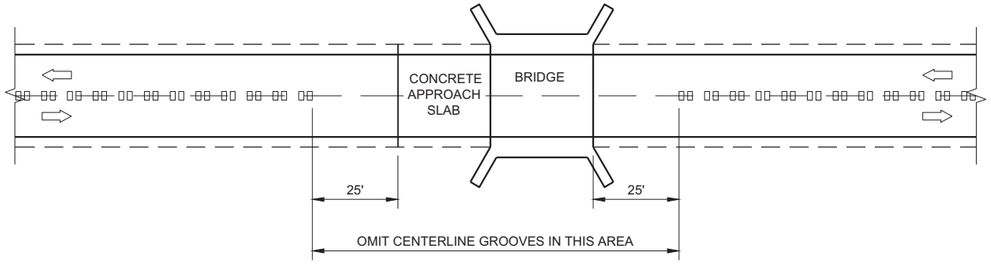

CENTERLINE GROOVES AT BRIDGES

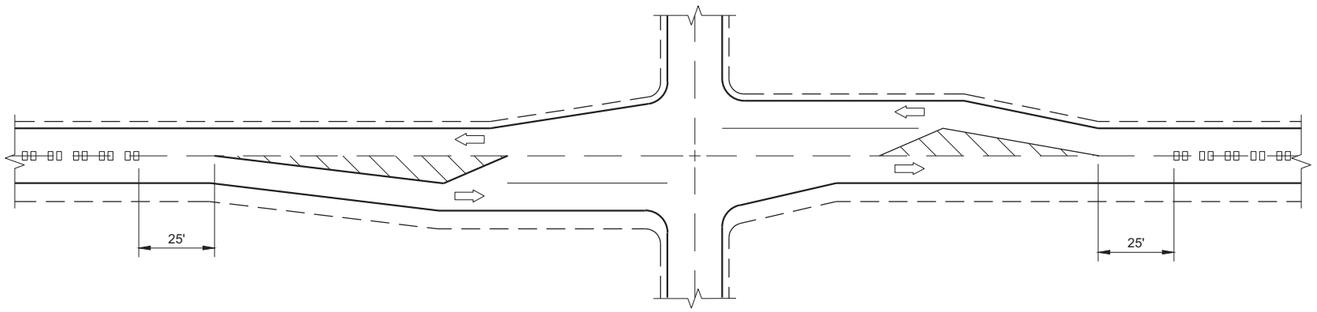

CENTERLINE GROOVES AT INTERSECTIONS (WITH LEFT TURN LANES)

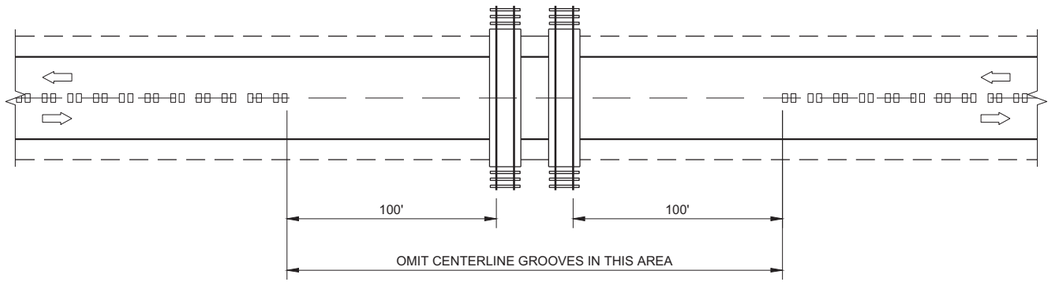

CENTERLINE GROOVES AT RAILROADS

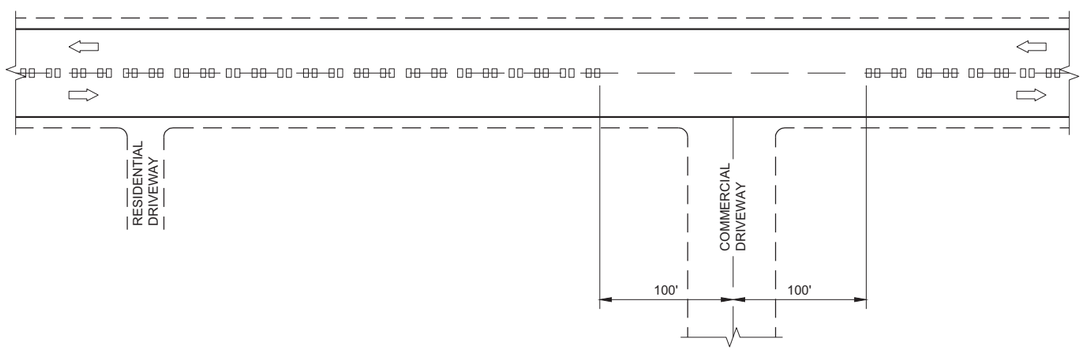

CENTERLINE GROOVES AT DRIVEWAYS (1)

2-LANE RURAL
CENTERLINE RUMBLE STRIP, MILLING

STATE OF WISCONSIN
DEPARTMENT OF TRANSPORTATION

APPROVED
7/2018
DATE

/S/ Rodney Taylor
ROADWAY STANDARDS DEVE ENGINEER

FHWA

6

SDD 13A11 - 03b

6

SDD 13A11 - 03b

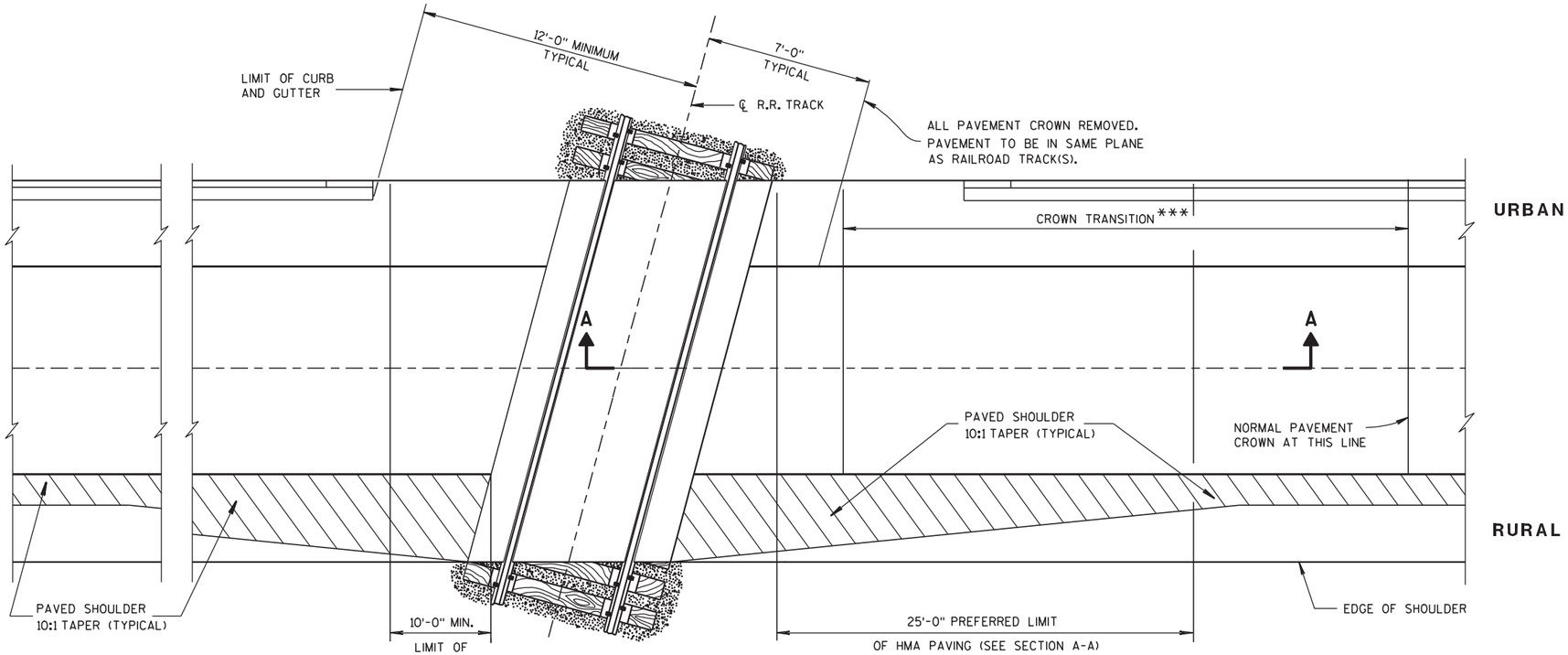

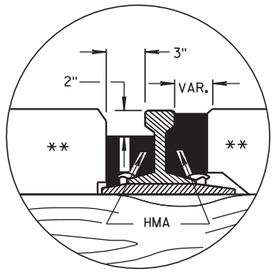

DETAIL B

HMA FLANGEWAY AND FIELD FILLERS

GENERAL NOTES

DETAILS OF CONSTRUCTION, MATERIALS AND WORKMANSHIP NOT SHOWN ON THIS DRAWING SHALL CONFORM TO THE PERTINENT REQUIREMENTS OF THE STANDARD SPECIFICATIONS AND THE APPLICABLE SPECIAL PROVISIONS.

TIMBER, CONCRETE OR RUBBER CROSSING SURFACE MATERIAL, RAILS, TIES, BALLAST, GEOTEXTILE FABRIC AND CROSSING DRAINAGE SYSTEM BY OTHERS UNLESS OTHERWISE PROVIDED.

HMA PAVEMENT APPROACHES AND HMA PAVEMET CROSSING SURFACES TO BE PLACED BY CONTRACTOR UNLESS OTHERWISE PROVIDED.

HMA FLANGEWAY AND FIELD FILLERS TO BE PLACED AND THOROUGHLY HAND COMPACTED BY THE CONTRACTOR WHEN NOT PROVIDED BY OTHERS. SEE DETAIL B. HMA FILLERS NOT REQUIRED WHEN RUBBER FILLERS ARE PROVIDED.

HMA PAVEMENT SHALL BE ROLLED PARALLEL TO THE TRACK.

** CROSSING SURFACE MAY BE TIMBER, RUBBER, CONCRETE, HMA PAVEMENT OR A COMBINATION OF SUCH MATERIALS.

*** CROWN TRANSITION LENGTH SHOWN ELSEWHERE IN THE PLAN.

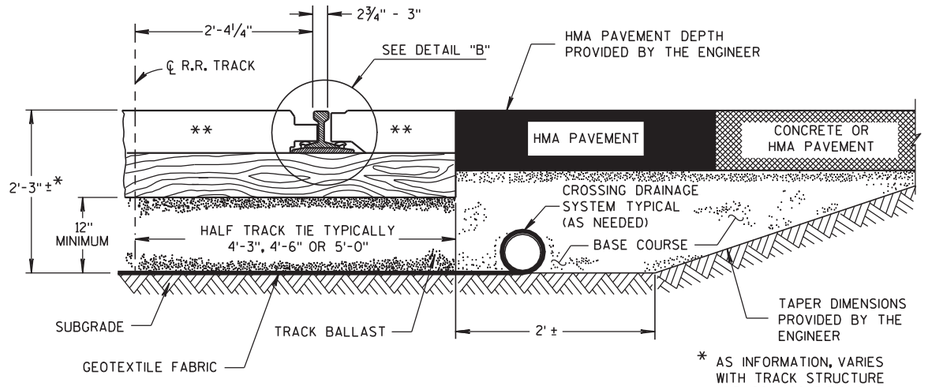

TYPICAL HALF SECTION

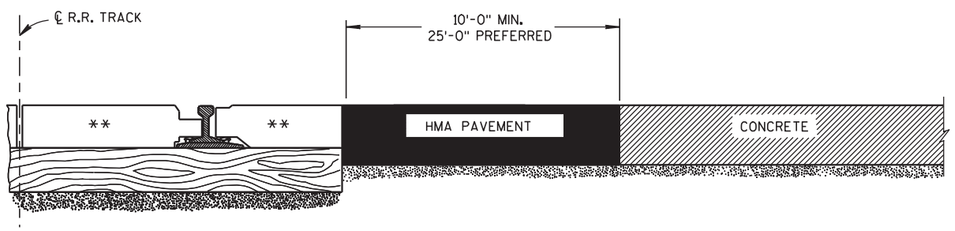

SECTION A-A

CONCRETE PAVEMENT APPROACH

SECTION A-A

HMA PAVEMENT APPROACH

EXAMPLES OF PAVEMENT APPROACHES

PAVEMENT DETAILS FOR RAILROAD APPROACH

STATE OF WISCONSIN
DEPARTMENT OF TRANSPORTATION

APPROVED
8-28-09 DATE
/S/ Ronald E. Adams
CHIEF, RAILROADS & HAI CTION
FHWA

6

S.D.D. 13 B 1-10
S.D.D. 13 B 1-10

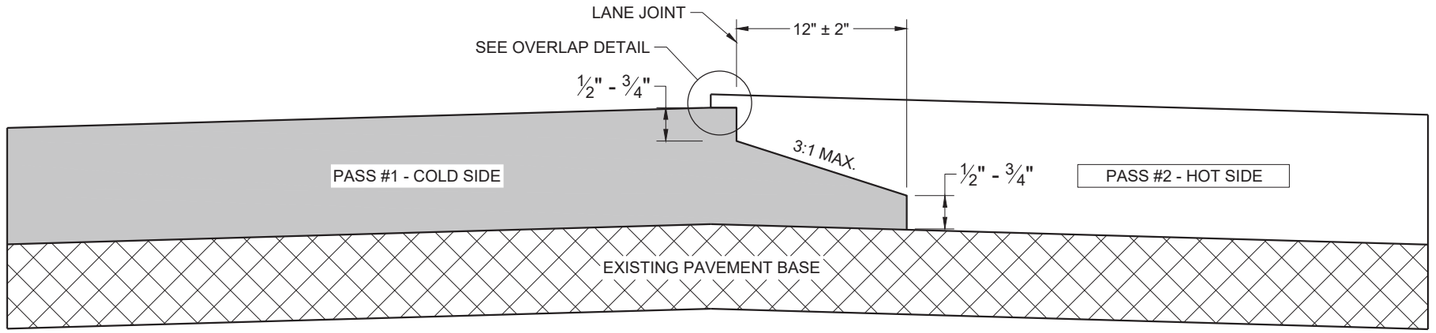

TYPICAL PAVEMENT CROSS SECTION
NOTCHED WEDGE JOINT

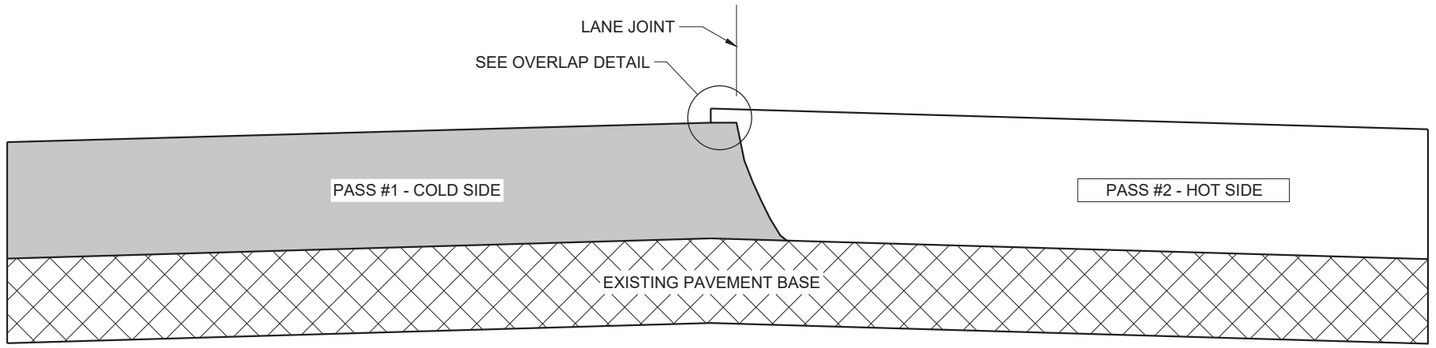

TYPICAL PAVEMENT CROSS SECTION
VERTICAL JOINT

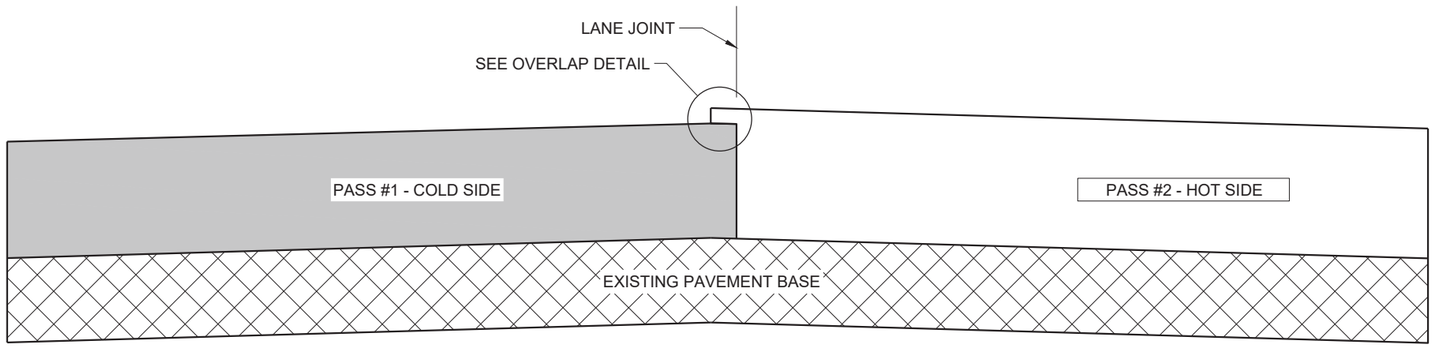

TYPICAL PAVEMENT CROSS SECTION
VERTICAL JOINT (MILLED)

GENERAL NOTES

IN ADDITION TO THE DETAILS PROVIDED IN THIS DRAWING, CONFORM TO STANDARD SPECIFICATION 450.3.2.8 FOR WHEN A NOTCHED WEDGE JOINT IS REQUIRED AND FOR GENERAL JOINT CONSTRUCTION REQUIREMENTS.

FOR ALL LONGITUDINAL JOINTS, ENSURE THE PAVER SCREED OVERLAPS THE PREVIOUSLY PLACED PAVEMENT BY 1" ± 0.5" AND THE HOT SIDE OF THE JOINT REMAINS HIGHER THAN THE COLD SIDE BY APPROXIMATELY 0.1" AFTER FINAL COMPACTION. (IT WILL BE FLUSH WHEN PAVING IN ECHELON.)

ONLY REMOVE THE LONGITUDINAL NOTCHED WEDGE JOINT FOR SMA PAVEMENT OR AS DIRECTED BY THE ENGINEER TO ADDRESS SPECIFIC LENGTHS OF JOINT DAMAGED BY TRAFFIC.

WHEN MILLING BACK OR REMOVING ANY LONGITUDINAL JOINT, LIMIT THE MATERIAL REMOVED TO 2" FROM THE TOP NOTCH OR FROM THE VERTICAL JOINT EDGE ON THE COLD SIDE OF THE JOINT.

USE LONGITUDINAL MILLED JOINT AS PLANS SHOW OR THE AS THE ENGINEER DIRECTS.

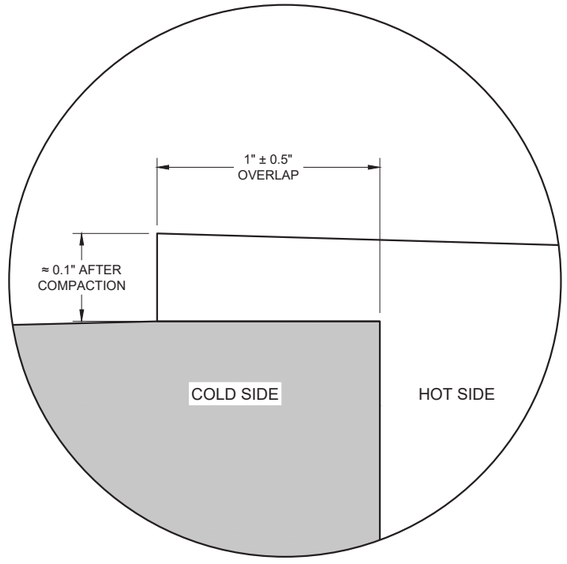

OVERLAP DETAIL (TYPICAL)

HMA LONGITUDINAL JOINTS

STATE OF WISCONSIN
DEPARTMENT OF TRANSPORTATION

APPROVED
November 2020
DATE

/S/ Steven Hefel
HMA PAVEMENT ENGIN

FHWA

6

SDD 13C19 - 03

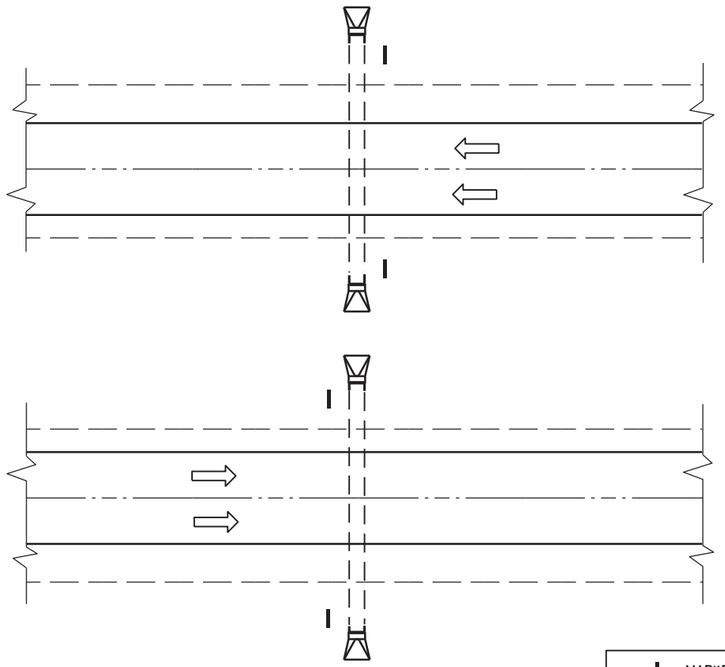

PLAN VIEW

DIVIDED HIGHWAY

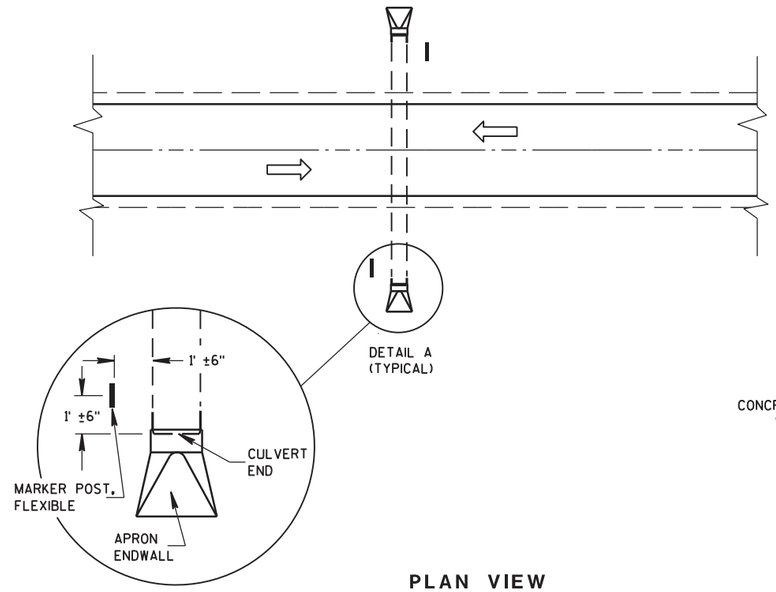

DETAIL A
(TYPICAL)

PLAN VIEW

UNDIVIDED HIGHWAY

MARKER POST, FLEXIBLE

DIRECTION OF TRAFFIC FLOW

GENERAL NOTES

DETAILS OF CONSTRUCTION, MATERIALS AND WORKMANSHIP NOT SHOWN ON THIS DRAWING SHALL CONFORM TO THE PERTINENT REQUIREMENTS OF THE STANDARD SPECIFICATIONS AND THE APPLICABLE SPECIAL PROVISIONS.

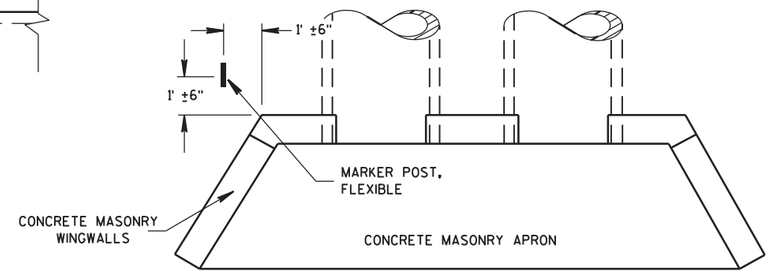

PLAN VIEW

CONCRETE MASONRY ENDWALLS FOR CULVERT PIPE AND PIPE ARCH

FLEXIBLE MARKER POST LOCATION

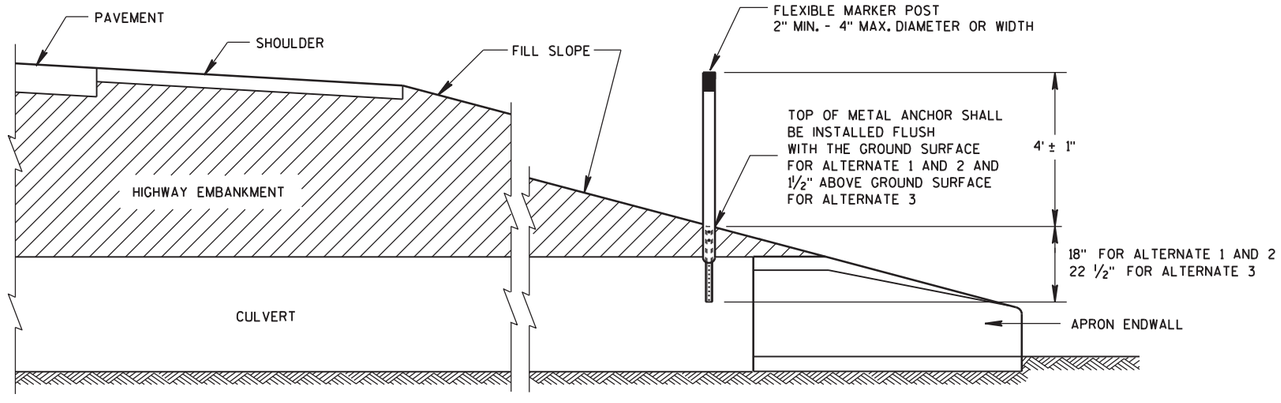

CROSS SECTION

FLEXIBLE MARKER POST

FLEXIBLE MARKER POST FOR CULVERT END

STATE OF WISCONSIN
DEPARTMENT OF TRANSPOI

6

S.D.D. 15 A 3-2a

6

S.D.D. 15 A 3-2a

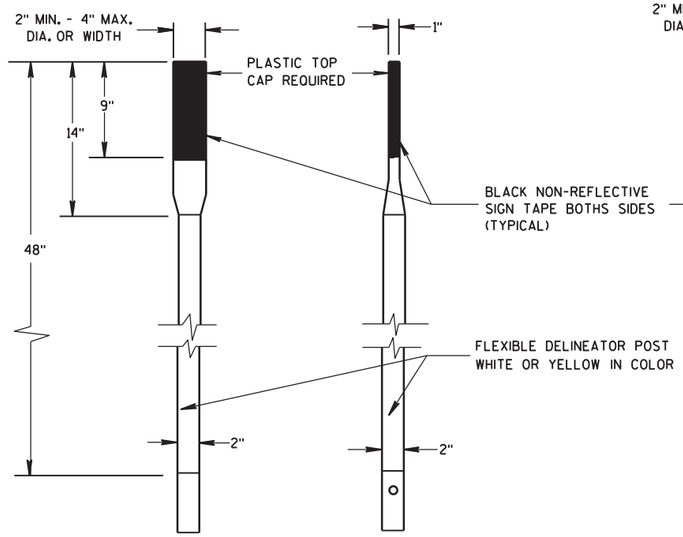

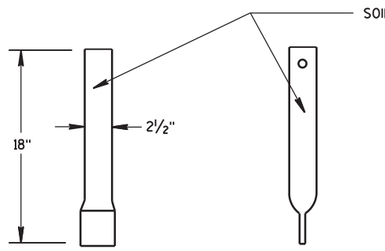

FRONT VIEW SIDE VIEW

ALTERNATE 1

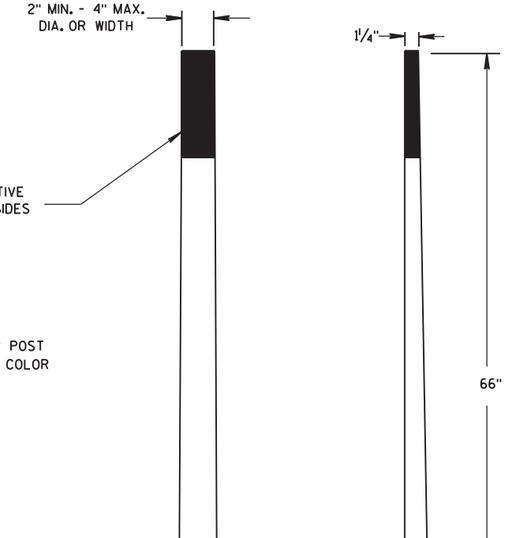

FRONT VIEW SIDE VIEW

ALTERNATE 2

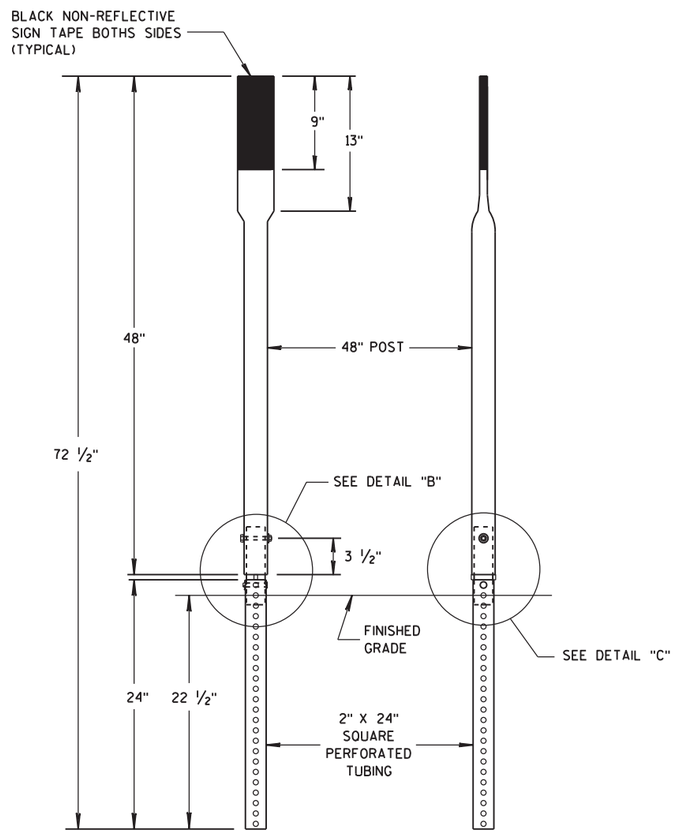

FRONT VIEW SIDE VIEW

ALTERNATE 3

FLEXIBLE MARKER POSTS

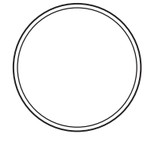

SECTION A-A

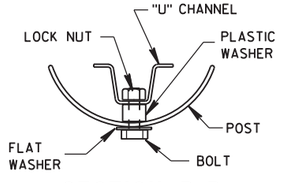

SECTION B-B

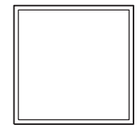

SECTION C-C

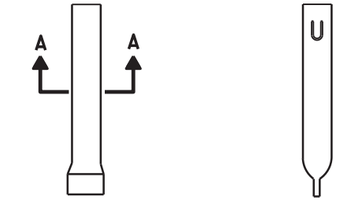

FRONT VIEW SIDE VIEW

ALTERNATE 1

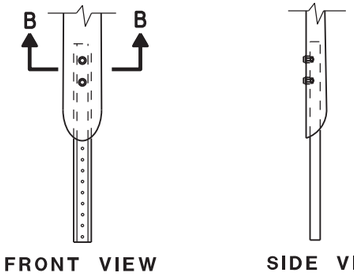

FRONT VIEW SIDE VIEW

ALTERNATE 2

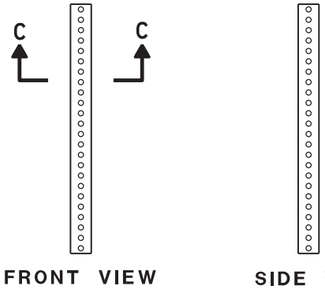

FRONT VIEW SIDE VIEW

ALTERNATE 3

FLEXIBLE MARKER POST ANCHORS

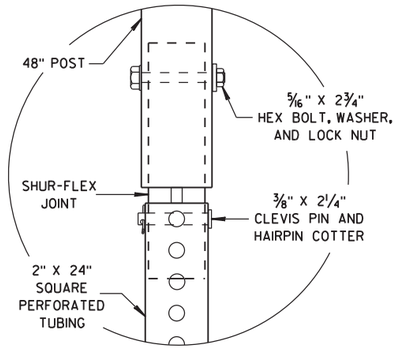

DETAIL B

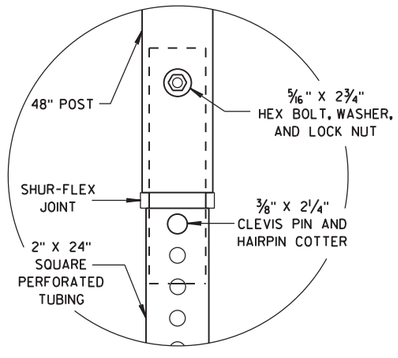

DETAIL C

FLEXIBLE MARKER POST
FOR CULVERT END

STATE OF WISCONSIN
DEPARTMENT OF TRANSPORTATION

APPROVED
10/1/2012
DATE
/S/ Travis Feltes
STATE TRAFFIC ENGINEER
FHWA

6
S.D.D. 15 A 3-2b

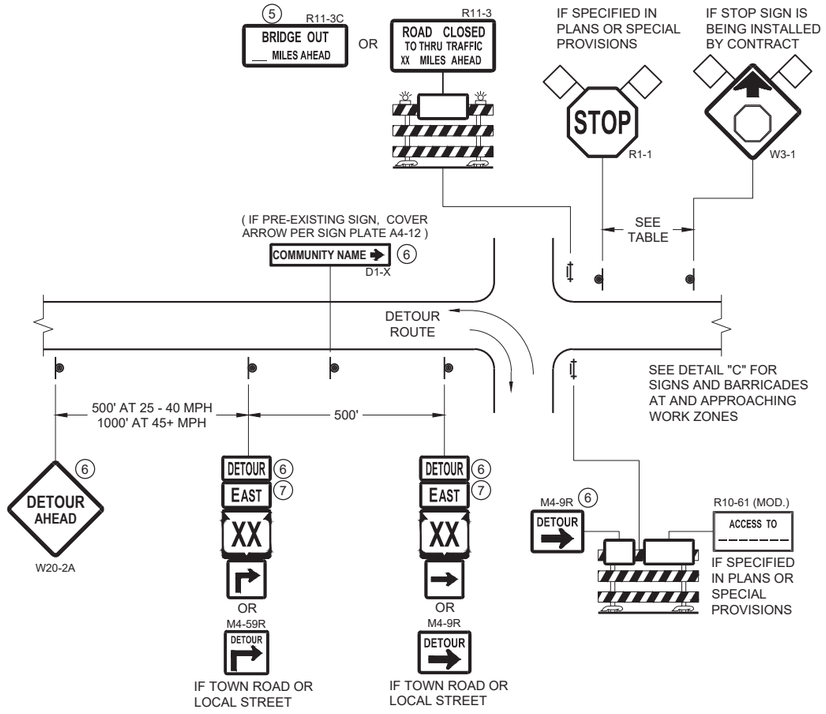

DETAIL A
MAINLINE CLOSURE WITH POSTED DETOUR

WORK ZONE GREATER THAN OR EQUAL TO ½ □ MILE FROM DETOUR ROUTE (1000 FEET IF URBAN)

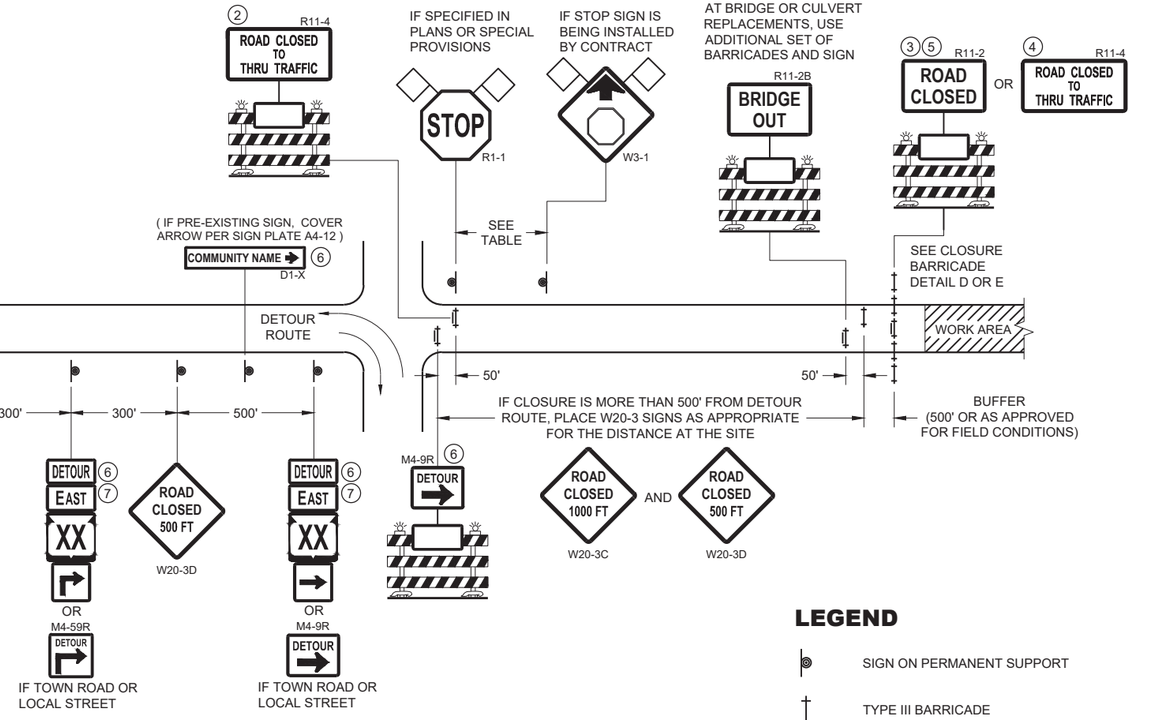

DETAIL B
MAINLINE CLOSURE WITH POSTED DETOUR

WORK ZONE LESS THAN ½ □ MILE FROM DETOUR ROUTE (1000 FEET IF URBAN)

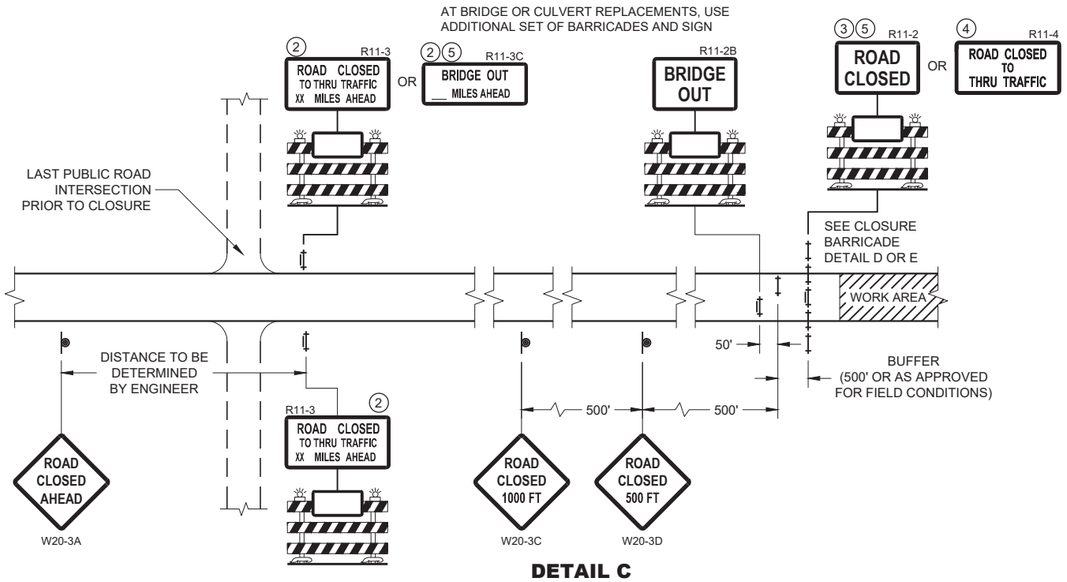

DETAIL C
MAINLINE CLOSURE, NO POSTED DETOUR

SPEED LIMIT (MPH)	"STOP AHEAD" ADVANCE WARNING DISTANCE (FT)
25	200
30	200
35	350
40	350
45	500
50	550
55	750

SEE SDD 15C2-SHEET "b"
FOR GENERAL NOTES
AND FOOTNOTES ① THROUGH ⑦

LEGEND

- SIGN ON PERMANENT SUPPORT
- TYPE III BARRICADE
- TYPE III BARRICADE WITH ATTACHED SIGN
- TYPE "A" WARNING LIGHT (FLASHING)
- WORK AREA
- FLAGS, 16" X 16" MIN. (ORANGE)

DETOUR M4 - 8
EAST M3 - X
XX M1 - 4 OR XX M1 - 6 OR COUNTY X M1 - 5A
M05 - 1 OR M06 - 1

BARRICADES AND SIGNS FOR MAINLINE CLOSURES

STATE OF WISCONSIN
DEPARTMENT OF TRANSPORTATION

APPROVED
February 2020
DATE
/S/ Andrew Heidtke
WORK ZONE ENGINEER

FHWA

6

SDD 15C02 - 08a

SDD 15C02 - 08a

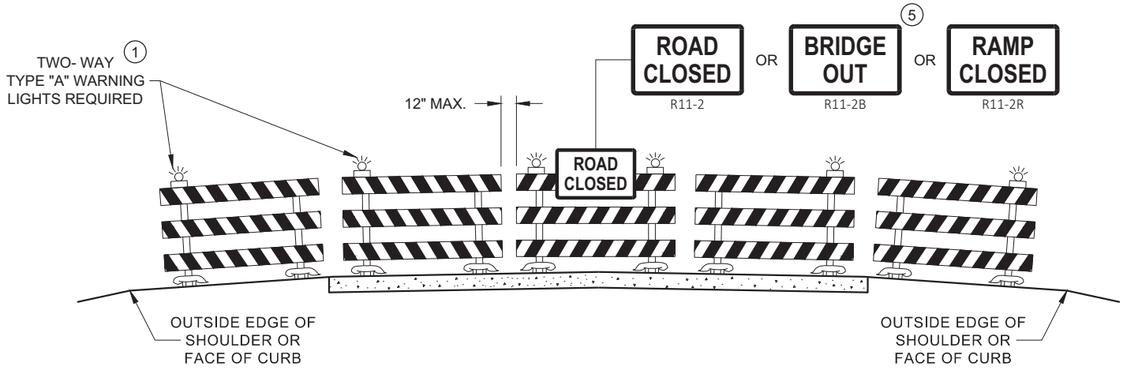

DETAIL D
ROAD CLOSURE BARRICADE DETAIL
APPROACH VIEW

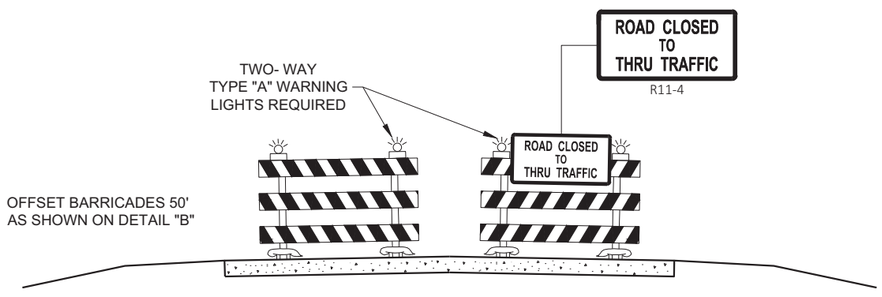

DETAIL E
LANE CLOSURE BARRICADE DETAIL
APPROACH VIEW

SEE SDD 15C2 - SHEET "a" FOR LEGEND

GENERAL NOTES

THE EXACT NUMBER, LOCATION, AND SPACING OF ALL SIGNS AND BARRICADES SHALL BE ADJUSTED TO FIT FIELD CONDITIONS AS APPROVED BY THE ENGINEER.

ANY SIGNS TEMPORARY OR EXISTING, WHICH CONFLICT WITH TRAFFIC CONTROL "IN USE", SHALL BE REMOVED OR COVERED AS NEEDED AND AS APPROVED BY THE ENGINEER.

THE SPACING BETWEEN TRAFFIC CONTROL SIGNS SHOULD BE ADJUSTED TO NOT CONFLICT WITH AND SHOULD PROVIDE A DESIRABLE MINIMUM OF 200 FEET CLEARANCE TO EXISTING SIGNS THAT WILL REMAIN IN PLACE.

BARRICADES THAT MUST BE MOVED FOR A WORK OPERATION SHALL BE IMMEDIATELY RE-ESTABLISHED UPON COMPLETION OF THE OPERATION, OR FOR CONTINUING OPERATIONS, AT THE END OF EACH WORKING DAY.

SIGNS THAT WILL BE IN PLACE LESS THAN 7 CONTINUOUS DAYS AND NIGHTS MAY BE MOUNTED ON PORTABLE SUPPORTS.

ALL TYPE III BARRICADES SHALL HAVE RAILS REFLECTORIZED ON BOTH FACES. STRIPES SHALL BE PROPERLY SLOPED DOWN TOWARD THE TRAFFIC SIDE OR AS SHOWN IN THE ROAD CLOSURE BARRICADE DETAIL "D" FOR FULL ROAD CLOSURES.

TYPE "A" LOW - INTENSITY FLASHING WARNING LIGHTS SHALL BE VISIBLE ON BOTH SIDES OF THE BARRICADE.

THE R11 - 2, R11 - 3, M4 - 9, R11 - 4, AND R10 - 61 SIGNS PLACED ON THE BARRICADES SHALL COVER NO MORE THAN THE TOP RAIL. THE SIGNS SHALL NOT COVER ANY PORTION OF THE MIDDLE RAIL OR BOTTOM RAILS.

"WO" AND "MO" SIGNS ARE THE SAME AS "W" AND "M" SIGNS EXCEPT THE BACKGROUND IS ORANGE.

ALL SIGNS SHALL BE 48" X 48" UNLESS OTHERWISE NOTED BELOW:
- R11 - 2 SHALL BE 48" X 30"
- R11 - 3 SHALL, R11 - 4 AND R10 - 61 SHALL BE 60 " X 30"
- M4 - 9 SHALL BE 30" X 24"
- M3 - X SHALL BE 24" X 12" (36" X 18" IF NEEDED TO MATCH EXISTING SIGNS)
- M4 - 8 SHALL BE 24" X 12" (36" X 18" IF NEEDED TO MATCH EXISTING SIGNS)
- M1 - 4, M1 - 5A AND M1 - 6 SHALL BE 24" X 24" (36" X 36" IF NEEDED TO MATCH EXISTING SIGNS)
- MO5 - 1 AND MO6 - 1 SHALL BE 21" X 21" (30" X 30" IF NEEDED TO MATCH EXISTING SIGNS)
- D1 - X SHALL BE AS SHOWN ON SPECIFIC PROJECT SIGNING DETAIL SHEETS.
- R1 - 1 SHALL BE 36" X 36"

(1) TWO WARNING LIGHTS SHALL BE PROVIDED ON THE CENTER BARRICADE AND A MINIMUM OF ONE WARNING LIGHT SHALL BE PROVIDED ON EACH OF THE OTHER BARRICADES WITHIN THE ROADWAY LIMITS. SPACING OF THE WARNING LIGHTS SHALL BE UNIFORM TO THE EDGE OF ROADWAY AS SHOWN (APPROX. 8 FOOT LIGHT SPACING.

(2) THESE SIGNS AND BARRICADES ARE NOT REQUIRED IF ROAD CLOSURE BEGINS AT AN INTERSECTION.

(3) FOR ROAD CLOSURE WITHOUT LOCAL ACCESS TO PROJECT, SEE ROAD CLOSURE BARRICADE DETAIL "D".

(4) FOR ROAD CLOSURE WITH LOCAL ACCESS TO PROJECT, SEE ROAD CLOSURE BARRICADE DETAIL "E".

(5) FOR BRIDGE OR CULVERT REPLACEMENTS, SUBSTITUTE "BRIDGE OUT" INSTEAD OF "ROAD CLOSED" ON R11 - 2 AND R11 - 3 SIGNS.

(6) INSTALL DETOUR AND COMMUNITY GUIDE SIGNS AND ARROWS ONLY IF SPECIFIED IN THE CONTRACT. IF THERE ARE EXISTING ROUTE MARKER ASSEMBLIES THAT WILL REMAIN IN PLACE, ADJUST THE LOCATION OF THE DETOUR ROUTE SIGNS TO CORRESPOND WITH THE EXISTING ASSEMBLIES. MODIFY EXISTING SIGNS WHERE POSSIBLE. SEE SPECIFIC PROJECT DETOUR SIGNING DETAIL SHEETS. IF DETOUR SIGNS ARE BEING INSTALLED BY OTHERS, PLACE THE CONTRACTED TRAFFIC CONTROL SIGNS TO ALLOW FOR PLACEMENT OF ALL WARNING, DETOUR AND GUIDE SIGNS AS SHOWN.

(7) "EAST" CARDINAL DIRECTION MARKERS AND RIGHT TURN ARROWS ARE SHOWN. USE OTHER CARDINAL DIRECTIONS AND ARROWS AS APPROPRIATE.

BARRICADES AND SIGNS FOR VARIOUS CLOSURES

STATE OF WISCONSIN
DEPARTMENT OF TRANSPORTATION

APPROVED
February 2020
DATE
/S/ Andrew Heidtke
WORK ZONE ENGINEE

FHWA

6

SDD 15C02 - 08b

6

SDD 15C02 - 08b

THIS DRAWING PROVIDES GENERAL GUIDANCE ON TYPICAL DETOUR SIGN LAYOUT AND SPACING. SEE PROJECT DETOUR SIGNING SHEETS FOR SPECIFIC DETAILS FOR EACH PROJECT.

LEGEND

- SIGN ON PERMANENT SUPPORT
- WORK AREA
- DETOUR — M4 - 8
- EAST — M3 - X
- XX — M1 - 4 OR XX — M1 - 6 OR COUNTY X — M1 - 5A
- M05 - 1 OR M06 - 1 OR M06 - 1

GENERAL NOTES

THE EXACT NUMBER, LOCATION AND SPACING OF ALL SIGNS SHALL BE ADJUSTED TO FIT FIELD CONDITIONS AS APPROVED BY THE ENGINEER.

IF THERE ARE EXISTING ROUTE MARKER ASSEMBLIES THAT WILL REMAIN IN PLACE, ADJUST THE LOCATION OF THE DETOUR ROUTE SIGNS TO CORRESPOND WITH THE EXISTING ASSEMBLIES. SEE SPECIFIC PROJECT DETOUR SIGNING DETAIL SHEETS. MODIFY EXISTING SIGNS WHERE POSSIBLE.

THE SPACING BETWEEN TRAFFIC CONTROL AND DETOUR SIGNS SHOULD BE ADJUSTED TO NOT CONFLICT WITH AND TO PROVIDE A DESIRABLE MINIMUM OF 200 FEET CLEARANCE TO EXISTING SIGNS THAT WILL REMAIN IN PLACE.

ANY SIGNS TEMPORARY OR EXISTING, WHICH CONFLICT WITH TRAFFIC CONTROL "IN USE" SHALL BE REMOVED OR COVERED AS NEEDED AND AS APPROVED BY THE ENGINEER.

SIGNS THAT WILL BE IN PLACE LESS THAN 7 CONTINUOUS DAYS AND NIGHTS MAY BE MOUNTED ON PORTABLE SUPPORTS.

"MO" SIGNS ARE THE SAME AS "M" SIGNS EXCEPT THE BACKGROUND IS ORANGE.

SIGN SIZES SHALL BE AS FOLLOWS:

- M3-X SHALL BE 24" X 12" (36" X 18" IF NEEDED TO MATCH EXISTING SIGNS)
- M4-8 SHALL BE 24" X 12" (36" X 18" IF NEEDED TO MATCH EXISTING SIGNS)
- M1-4, M1-5A AND M1-6 SHALL BE 24" X 24" (36" X 36" IF NEEDED TO MATCH EXISTING SIGNS)
- M05-1 AND M06-1 SHALL BE 21" X 21" (30" X 30" IF NEEDED TO MATCH EXISTING SIGNS)
- M4-9 AND M4-59 SHALL BE 30" X 24"
- M4-8a SHALL BE 24" X 18"
- G20-51 SHALL BE 60" X 24"
- W20-2A SHALL BE 48" X 48"
- D1-X SHALL BE AS SHOWN ON SPECIFIC PROJECT SIGNING DETAIL SHEETS.

* OPTIONAL SIGNS. SEE SPECIFIC PROJECT DETOUR SIGNING DETAIL SHEETS.

** FOR A TOWN ROAD OR LOCAL STREET DETOURED ONTO A STATE TRUNK HIGHWAY, PLACE A ROAD NAME PLAQUE ABOVE THE M4-9 SIGN AS SPECIFIED IN THE CONTRACT.

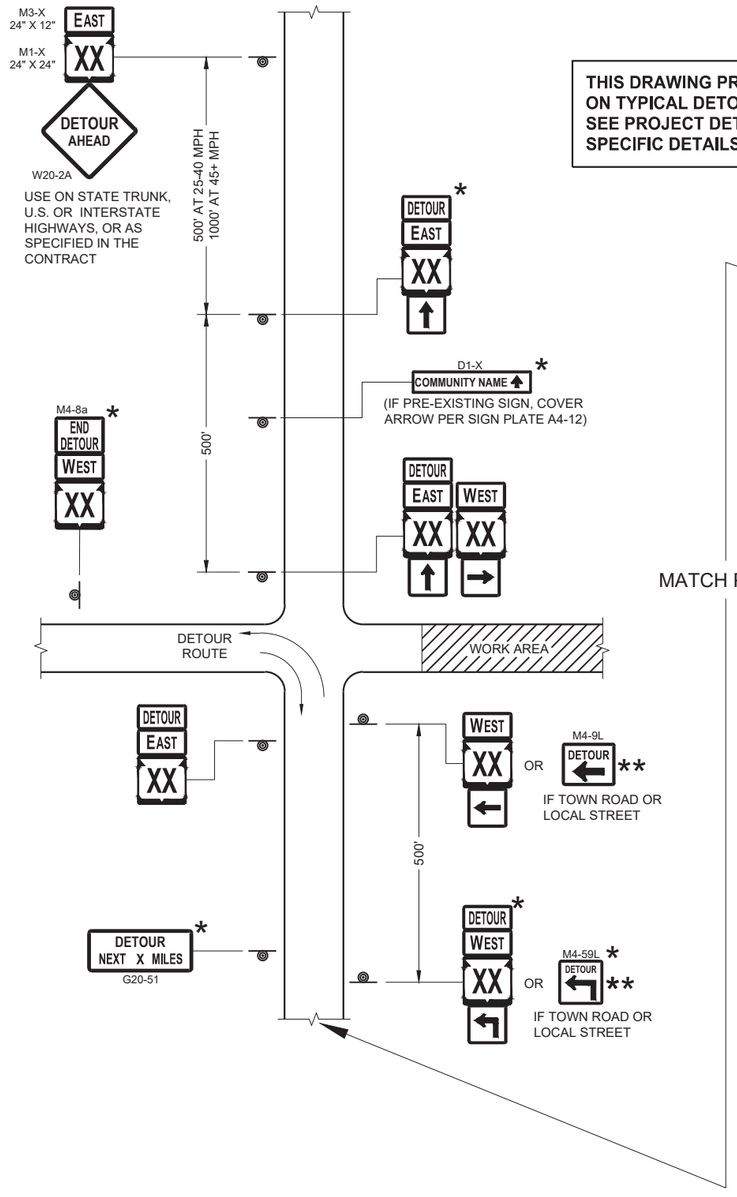

MATCH POINT

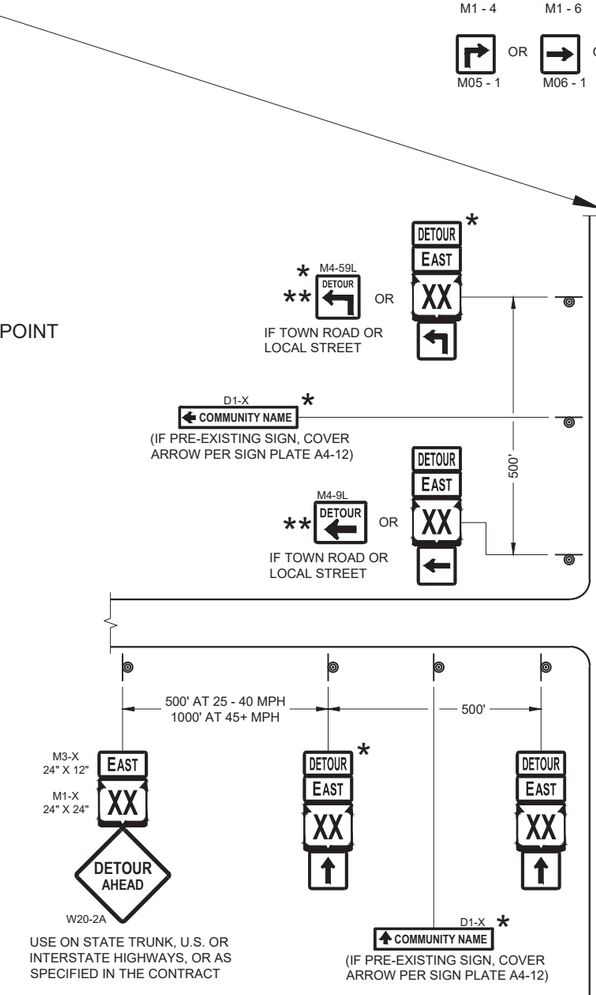

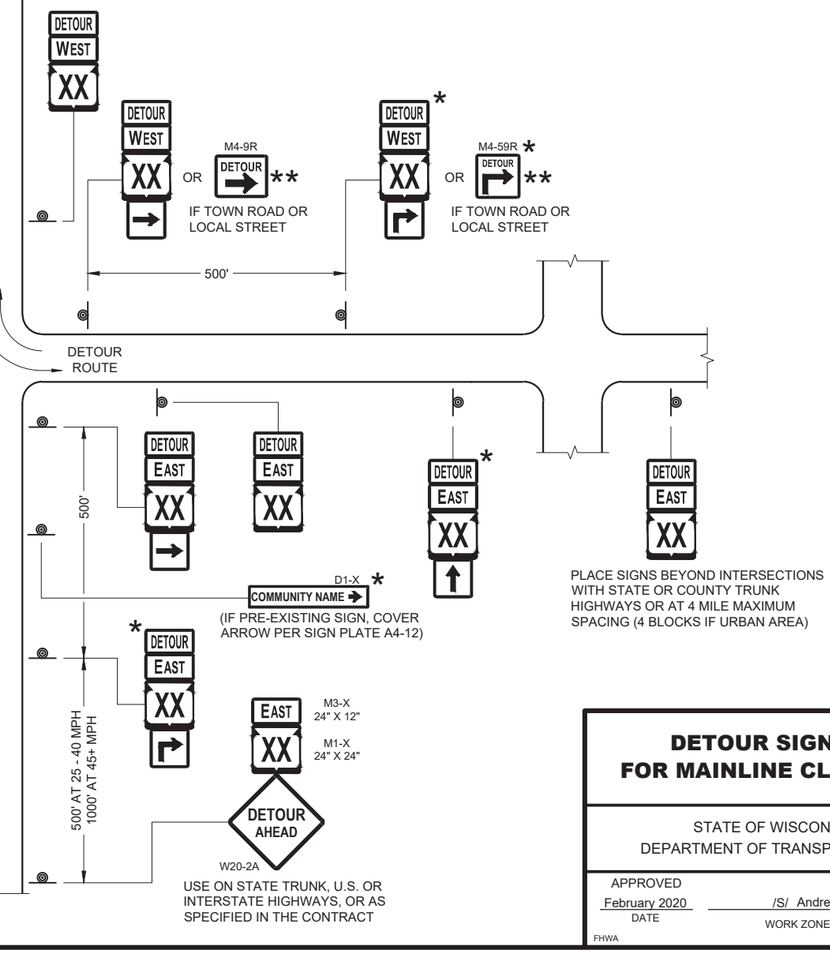

SEE SPECIFIC PROJECT DETOUR SIGNING DETAIL SHEETS AND DETAIL A OR B ON SDD SHEET 15C02 - SHEET "a"

DETAIL F
DETOUR SIGNING

DETOUR SIGNING FOR MAINLINE CLOSURES

STATE OF WISCONSIN
DEPARTMENT OF TRANSPORTATION

APPROVED
February 2020
DATE

/S/ Andrew Heidtke
WORK ZONE ENGINEER

FHWA

6

SDD 15C02 - 08c

GENERAL NOTES

THE EXACT NUMBER, LOCATION, AND SPACING OF ALL SIGNS AND DEVICES SHALL BE ADJUSTED TO FIT FIELD CONDITIONS.

THE SPACING BETWEEN TRAFFIC CONTROL SIGNS SHOULD BE ADJUSTED TO NOT CONFLICT WITH AND SHOULD PROVIDE A MINIMUM OF 200 FEET (500 FEET DESIRABLE) CLEARANCE TO EXISTING SIGNS THAT WILL REMAIN IN PLACE.

ALL SIGNS ARE 48" X 48" UNLESS OTHERWISE NOTED.

SIGNS THAT WILL BE IN PLACE LESS THAN SEVEN CONTINUOUS DAYS AND NIGHTS MAY BE MOUNTED ON PORTABLE SUPPORTS.

IF A "STOP" SIGN MUST BE REMOVED FOR A WORK OPERATION, A TEMPORARY "STOP" SIGN SHALL BE PLACED PRIOR TO THE SIGN REMOVAL, OR A FLAGGER SHALL BE PROVIDED UNTIL THE SIGN IS REESTABLISHED.

* OMIT G20-1 SIGNS IF LENGTH OF WORK AREA IS 2 MILES OR LESS

** PLACE AN ADDITIONAL W20-1A "ROAD WORK AHEAD" SIGN IF WORK AREA WITHIN THE PROJECT IS SEPARATED BY MORE THAN 2 MILES FROM PREVIOUS WORK AREA.

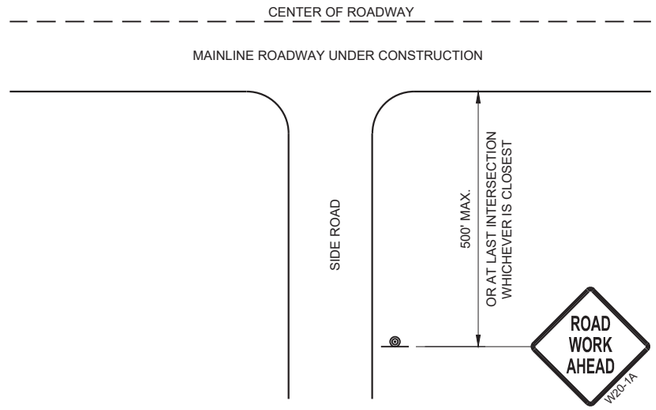

TYPICAL SIDE ROAD APPROACH WARNING SIGN DETAIL

LEGEND

SIGN ON PERMANENT SUPPORT

DIRECTION OF TRAFFIC

WORK AREA

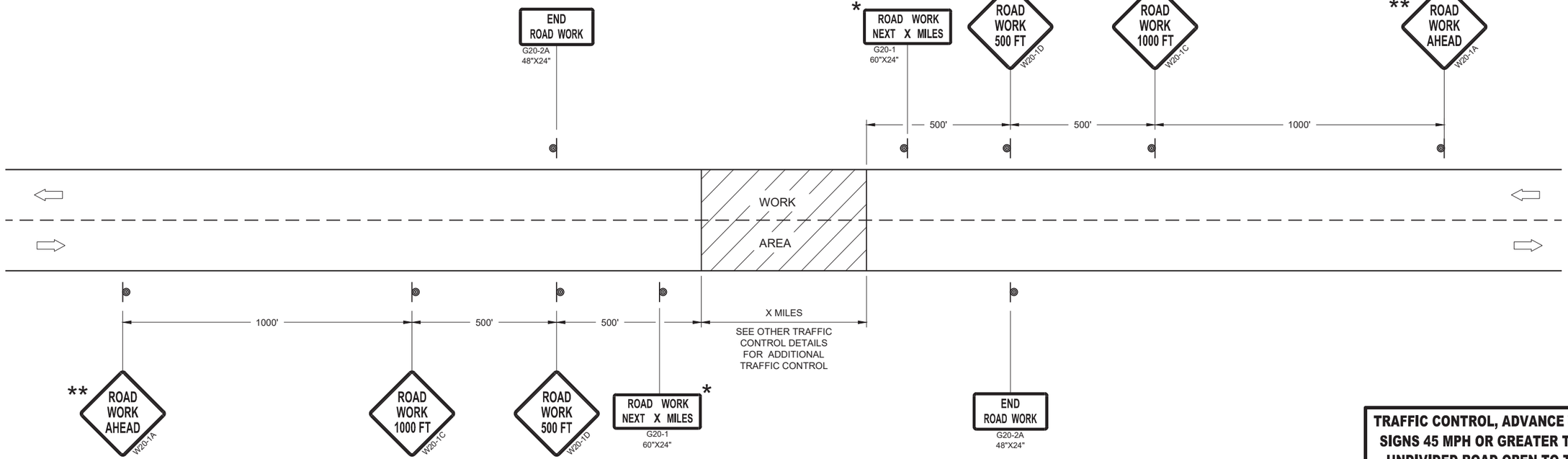

TRAFFIC CONTROL, ADVANCE WARNING SIGNS 45MPH OR GREATER

TRAFFIC CONTROL, ADVANCE WARNING SIGNS 45 MPH OR GREATER TWO-WAY UNDIVIDED ROAD OPEN TO TRAFFIC

STATE OF WISCONSIN
DEPARTMENT OF TRANSPORTATION

APPROVED
July 2018
DATE

/S/ Andrew Heidtke
WORK ZONE ENGINEE

FHWA

6

SDD 15C04 - 05

GENERAL NOTES

THE EXACT NUMBER, LOCATION, AND SPACING OF ALL SIGNS AND DEVICES SHALL BE ADJUSTED TO FIT FIELD CONDITIONS.

THE SPACING BETWEEN TRAFFIC CONTROL SIGNS SHOULD BE ADJUSTED TO NOT CONFLICT WITH AND SHOULD PROVIDE A MINIMUM OF 200 FEET (500 FEET DESIRABLE) CLEARANCE TO EXISTING SIGNS THAT WILL REMAIN IN PLACE.

ALL SIGNS ARE 48" X 48" UNLESS OTHERWISE NOTED. IF NECESSARY DUE TO SPACE CONSTRAINTS, 36"X36" SIGNS MAY BE USED INSTEAD OF 48" X 48" SIGNS.

SIGNS THAT WILL BE IN PLACE LESS THAN SEVEN CONTINUOUS DAYS AND NIGHTS MAY BE MOUNTED ON PORTABLE SUPPORTS.

IF A "STOP" SIGN MUST BE REMOVED FOR A WORK OPERATION, A TEMPORARY "STOP" SIGN SHALL BE PLACED PRIOR TO THE SIGN REMOVAL, OR A FLAGGER SHALL BE PROVIDED UNTIL THE SIGN IS REESTABLISHED.

* THE THIRD W20-1 SIGN IS REQUIRED ONLY IF THERE IS AN INTERSECTION BETWEEN THE "ROAD WORK 500 FEET" SIGN AND THE WORK ZONE. ADJUST THE PLACEMENT OF THIS SIGN BASED ON INTERSECTION LOCATION AND OTHER FIELD CONDITIONS.

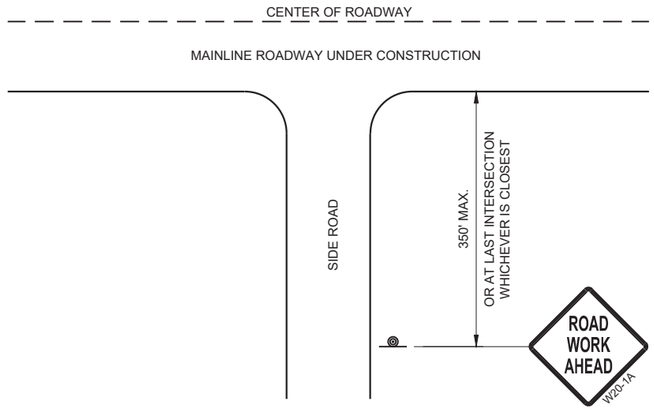

TYPICAL SIDE ROAD APPROACH WARNING SIGN DETAIL

LEGEND

SIGN ON PERMANENT SUPPORT

DIRECTION OF TRAFFIC

WORK AREA

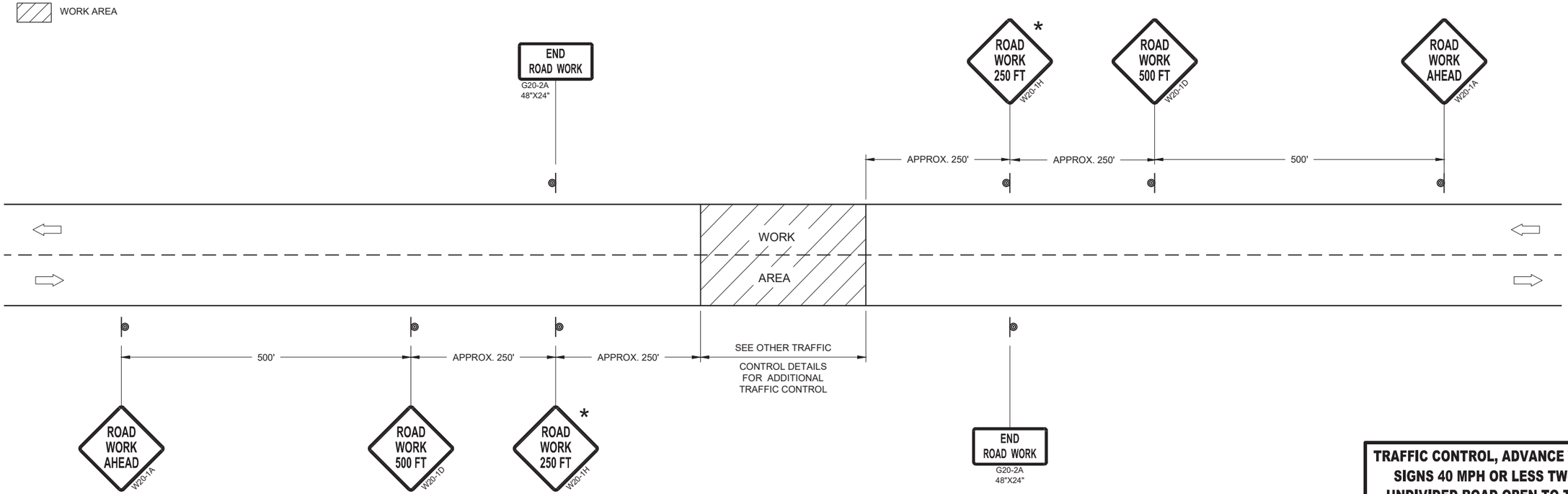

TRAFFIC CONTROL, ADVANCE WARNING SIGNS 40MPH OR LESS

TRAFFIC CONTROL, ADVANCE WARNING SIGNS 40 MPH OR LESS TWO-WAY UNDIVIDED ROAD OPEN TO TRAFFIC

STATE OF WISCONSIN
DEPARTMENT OF TRANSPORTATION

APPROVED
July 2018
DATE

/S/ Andrew Heidtke
WORK ZONE ENGINEE

FHWA

6

SDD 15C05 - 05

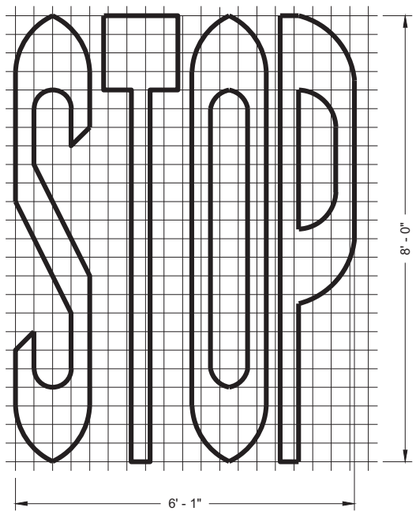

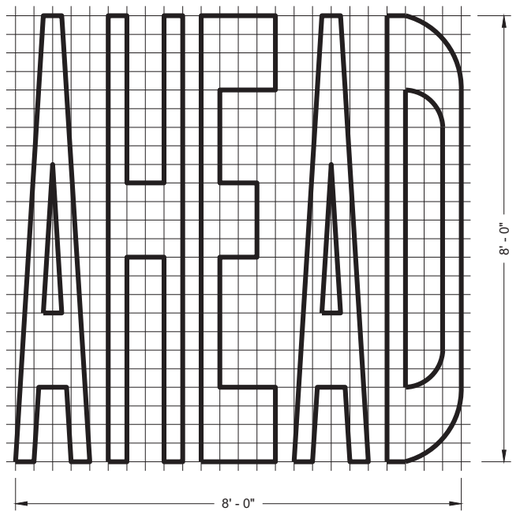

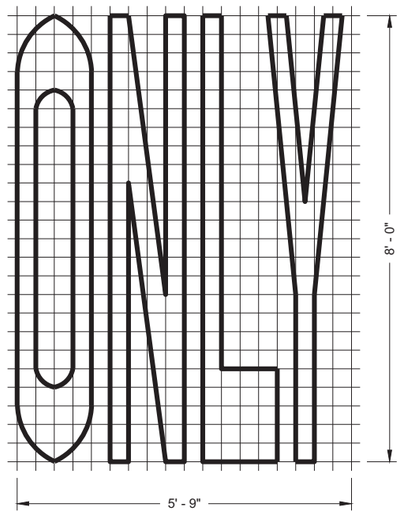

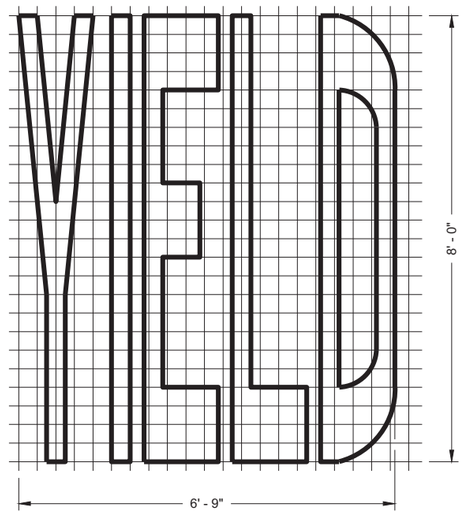

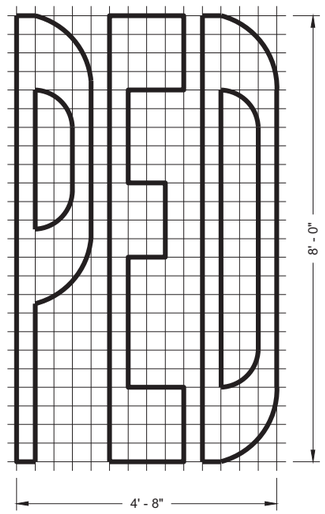

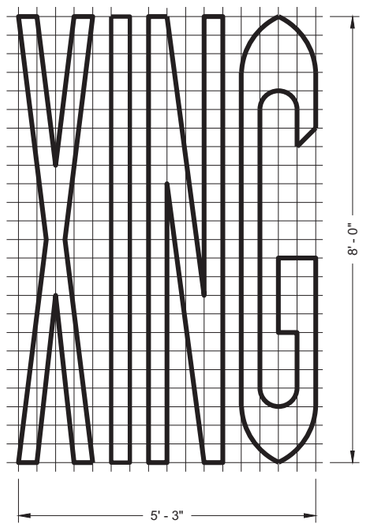

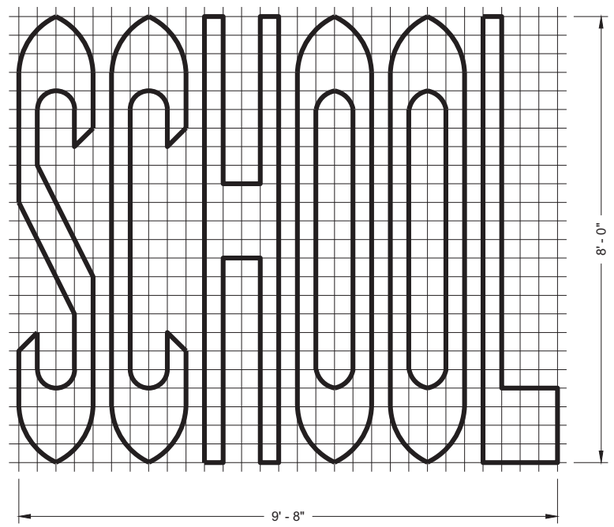

SINGLE LANE

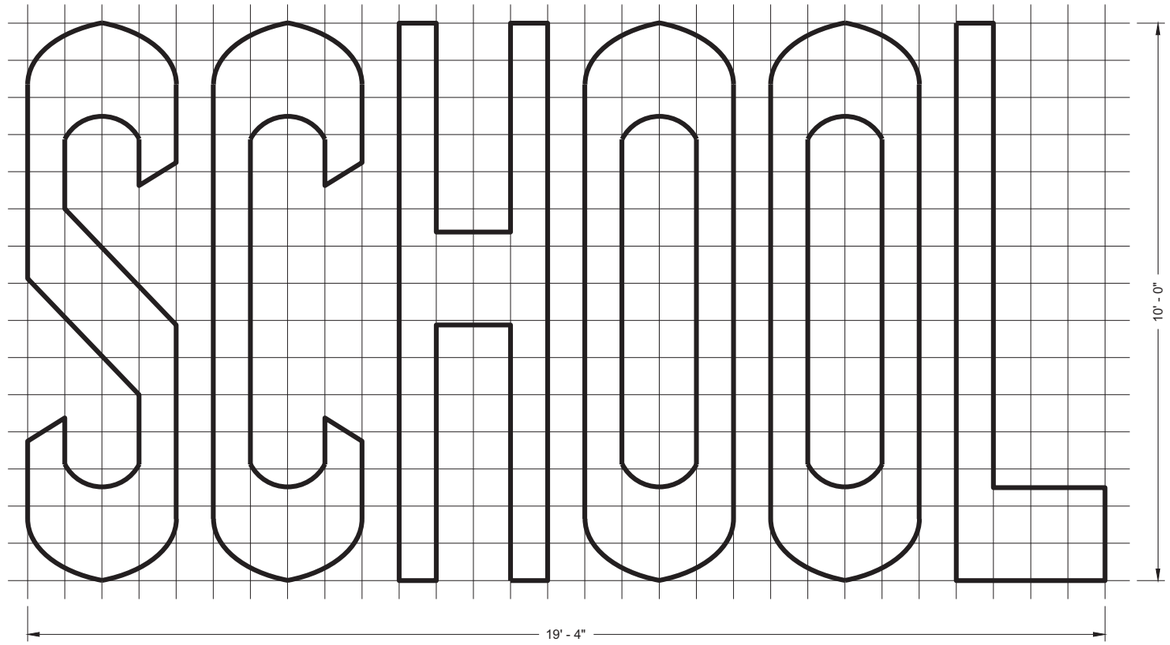

TWO - LANE

GENERAL NOTES

DETAILS OF INSTALLATION, MATERIALS AND WORKMANSHIP NOT SHOWN ON THIS DRAWING SHALL CONFORM TO THE PERTINENT REQUIREMENTS OF THE STANDARD SPECIFICATIONS AND APPLICABLE SPECIAL PROVISIONS.

PAVEMENT MARKING WORDS

STATE OF WISCONSIN
DEPARTMENT OF TRANSPORTATION

APPROVED
November 2019 — DATE
/S/ Matthew Rauch — STATE SIGNING AND MAF ENGINEER
FHWA

6

SDD 15C07 - 15b

6

SDD 15C07 - 15b

GENERAL NOTES

DETAILS OF INSTALLATION, MATERIALS AND WORKMANSHIP NOT SHOWN ON THIS DRAWING SHALL CONFORM TO THE PERTINENT REQUIREMENTS OF THE STANDARD SPECIFICATIONS AND APPLICABLE SPECIAL PROVISIONS.

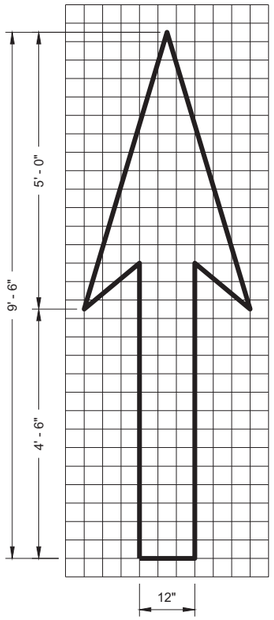

TYPE 1

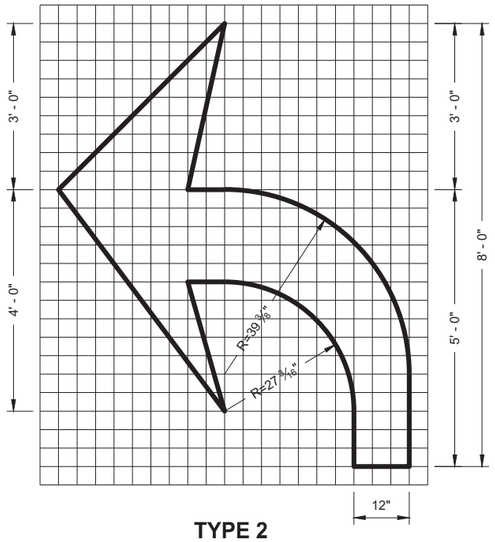

TYPE 2

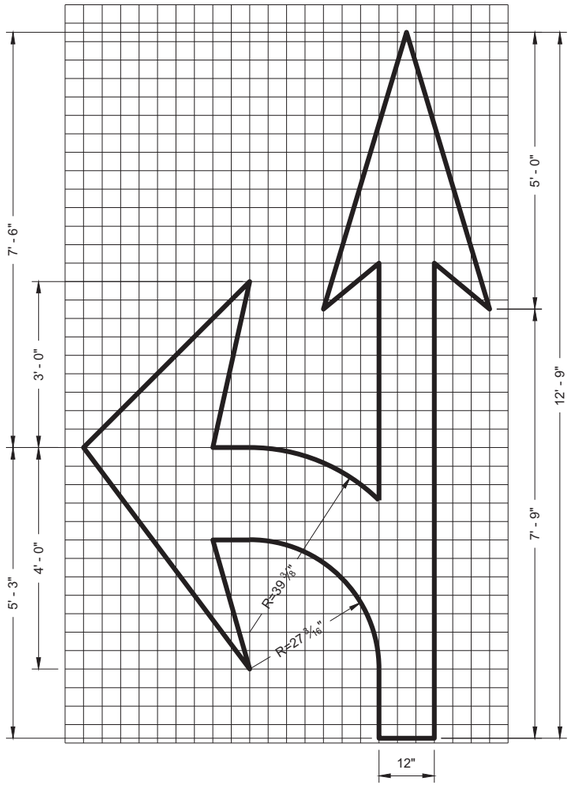

TYPE 3

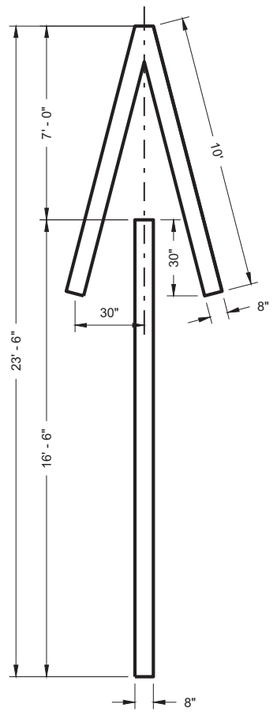

TYPE 4

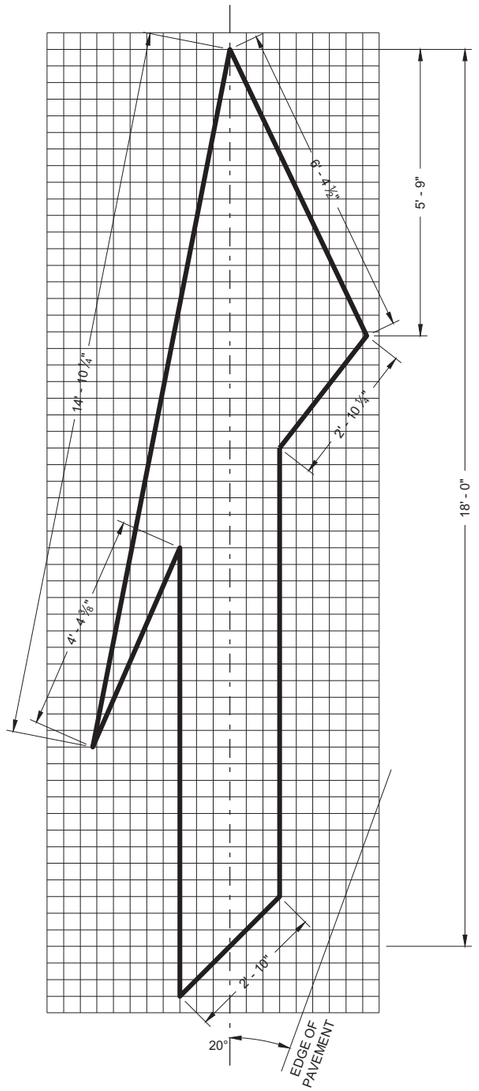

TYPE 5 LANE DROP ARROW

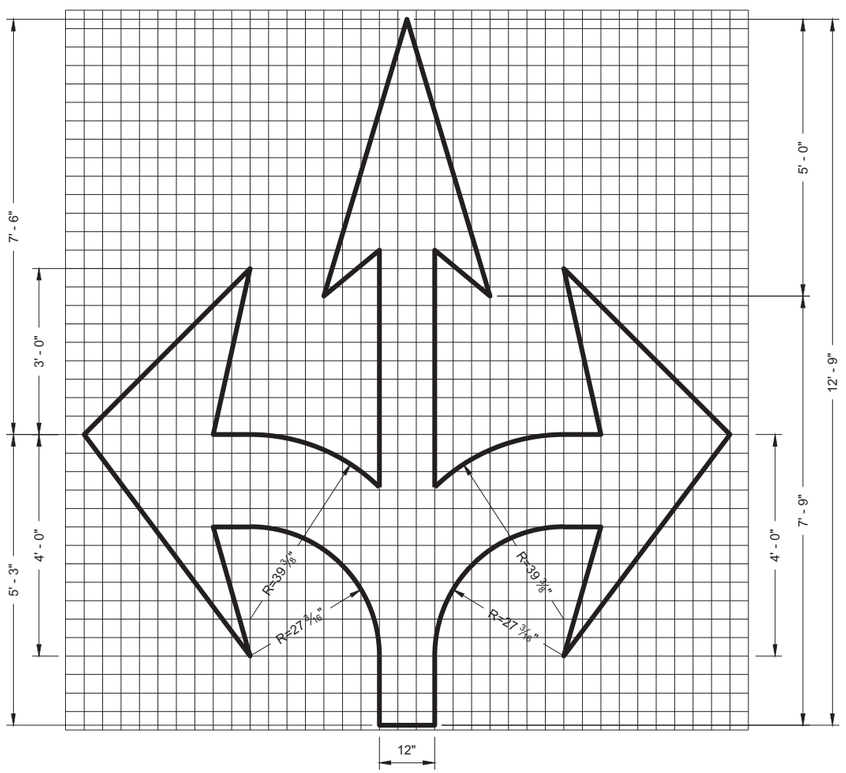

TYPE 6

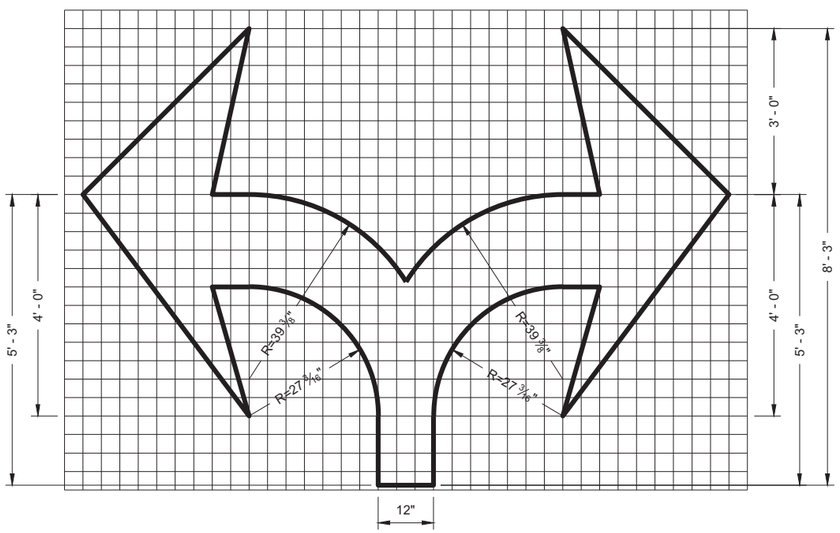

TYPE 7

PAVEMENT MARKING ARROWS

STATE OF WISCONSIN
DEPARTMENT OF TRANSPORTATION

APPROVED
November 2019 — DATE
/S/ Matthew Rauch — STATE SIGNING AND MARKING ENGINEER

FHWA

6

SDD 15C07 - 15c

6

SDD 15C07 - 15c

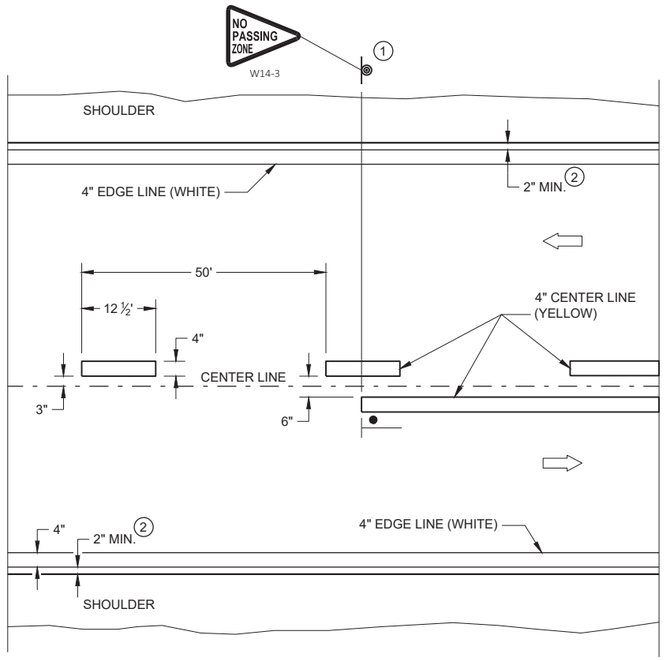

TWO WAY TRAFFIC

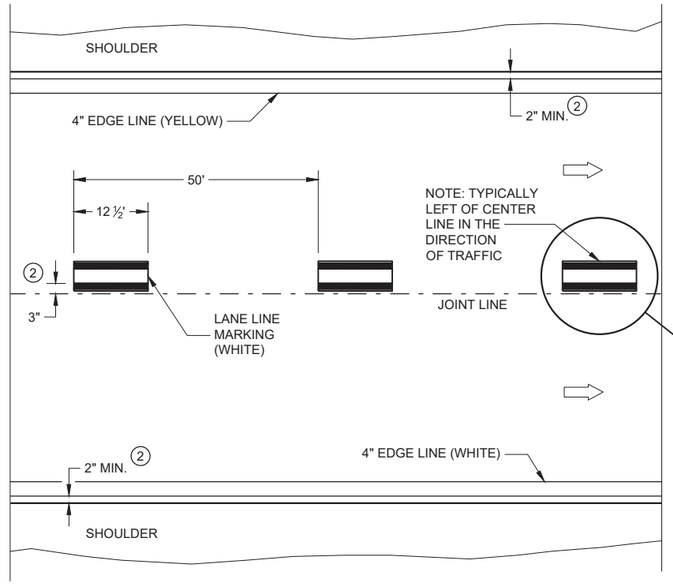

ONE WAY TRAFFIC

PERMANENT PAVEMENT MARKING

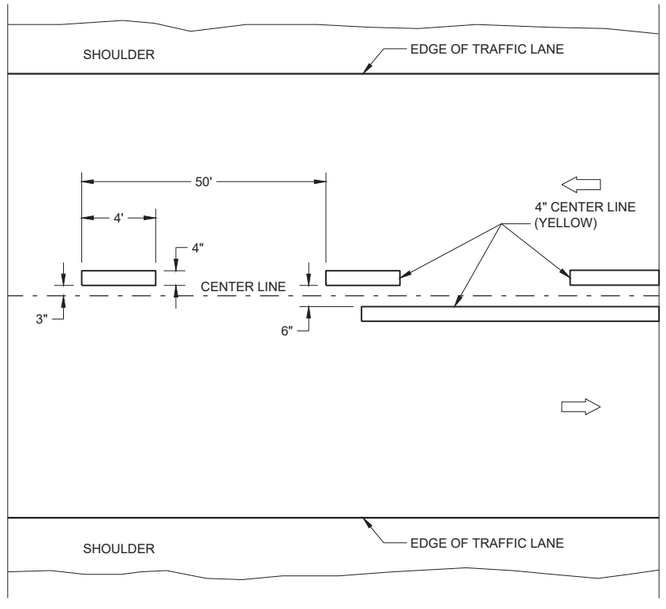

TWO WAY TRAFFIC

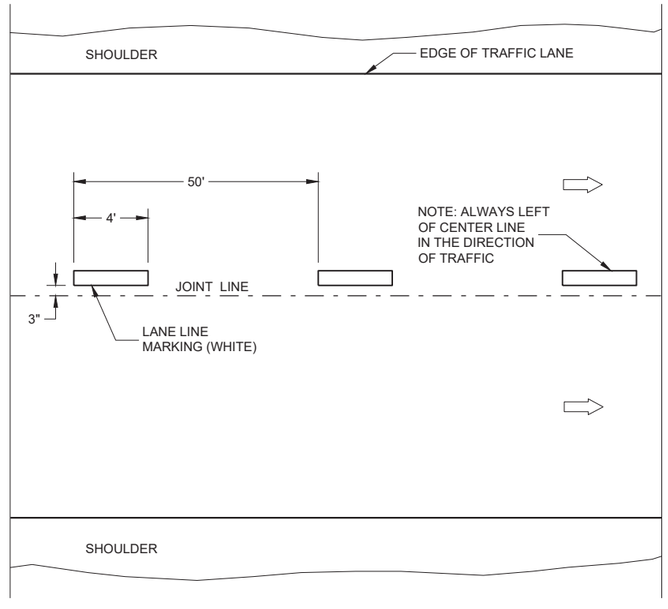

ONE WAY TRAFFIC

TEMPORARY PAVEMENT MARKING

GENERAL NOTES

DETAILS OF CONSTRUCTION NOT SHOWN ON THIS DRAWING SHALL CONFORM TO STANDARD SPECIFICATIONS AND SPECIAL PROVISIONS.

1. LOCATE THE NO PASSING ZONE W14-3 SIGN WITHIN 50 FEET OF THE "T" MARKING
2. MEASURE FROM EDGE OF MARKING TO JOINT LINE. THIS DOES NOT INCLUDE SPACE NEEDED FOR GROOVING OPERATIONS.

LEGEND

"T" MARKING

SIGN ON PERMANENT SUPPORT

DIRECTION OF TRAFFIC

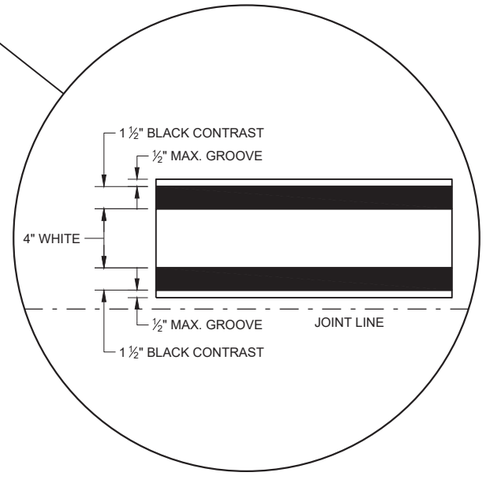

LONGITUDINAL MARKING (MAINLINE)

STATE OF WISCONSIN
DEPARTMENT OF TRANSPORTATION

APPROVED
February 2020
DATE
/S/ Matthew Rauch
STATEWIDE SIGNING AND M ENGINEER

FHWA

SDD 15C08 - 20a

SDD 15C08 - 20a

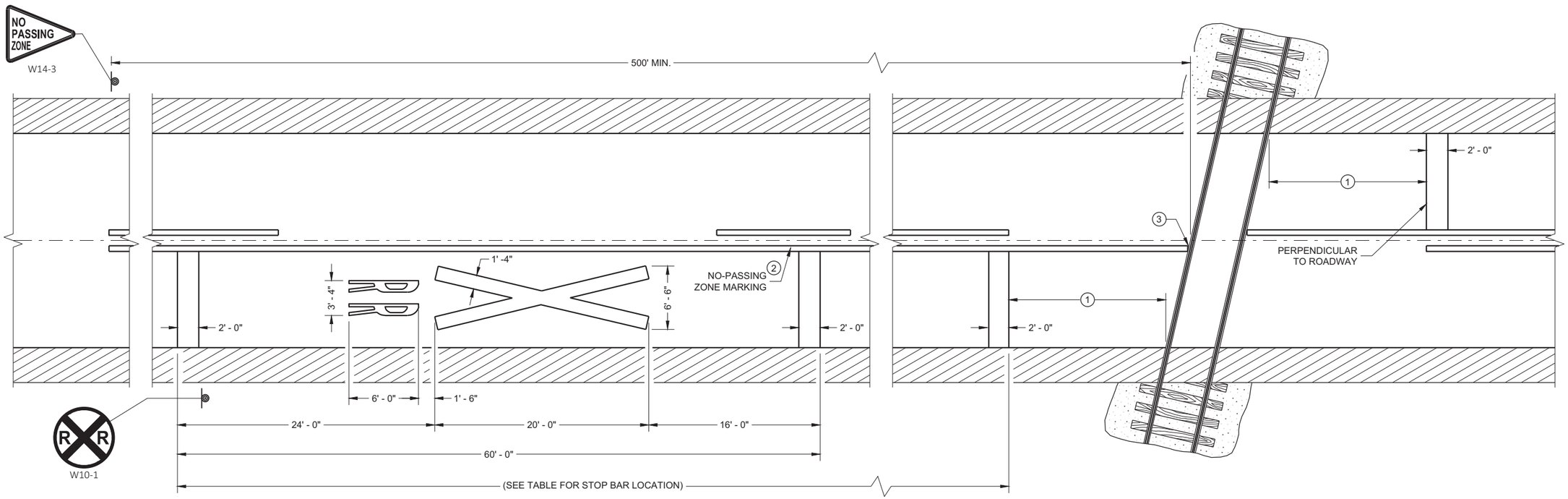

PAVEMENT MARKING

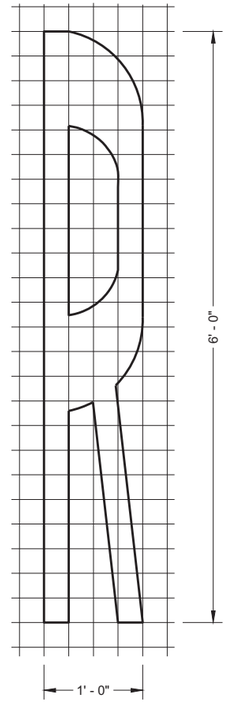

LEGEND

SIGN ON PERMANENT SUPPORT

GENERAL NOTES

DETAILS OF CONSTRUCTION, MATERIALS, AND WORKMANSHIP NOT SHOWN ON THIS DRAWING SHALL CONFORM TO THE PERTINENT REQUIREMENTS OF THE STANDARD SPECIFICATIONS AND THE APPLICABLE SPECIAL PROVISIONS.

ON MULTI-LANE ROADS THE TRANSVERSE BANDS SHOULD EXTEND ACROSS ALL APPROACH LANES, AND INDIVIDUAL R X R SYMBOLS SHOULD BE USED IN EACH APPROACH LANE.

CENTER OR LANE LINES AND NO-PASSING ZONE MARKINGS SHOWN ON THIS DRAWING ARE REQUIRED AND PAID FOR UNDER OTHER ITEMS IN THE CONTRACT.

TRACE EXISTING SYMBOL WHERE EXISTING SYMBOLS ARE PLACED.

(1) MINIMUM 8' FROM ANY RAILROAD WARNING DEVICES (SIGNAL , GATES, ETC.) OR 25' FROM THE NEAREST RAIL, WHICHEVER DISTANCE IS GREATER.

(2) 500' MINIMUM. MARKING LIMITS MAY BE EXTENDED AS DIRECTED BY THE ENGINEER TO MEET ADJACENT NO-PASSING ZONE MARKINGS.

(3) FOR MULTIPLE TRACK CROSSINGS, THE BARRIER LINE SHALL EXTEND TO THE NEAR RAIL OF THE FURTHEST TRACK IN THE DIRECTION OF HIGHWAY TRAVEL.

DISTANCE TABLE

TABLE BASED UPON 2C-4 WISCONSIN SUPPLEMENT OF MANUAL ON UNIFORM TRAFFIC CONTROL DEVICES.

POSTED SPEED (M.P.H.)	DIMENSION RANGE (FEET)
25	150* - 250'
30	200* - 300'
35	250* - 450'
40	300* - 500'
45	400* - 650'
50	550* - 800'
55	750* - 1000'
60	1000* - 1250'
65	1000* - 1250'

* THE MINIMUM DISTANCES IN THE TABLE ARE DESIRABLE AND SHOULD BE USED. THE DISTANCES MAY BE INCREASED UP TO THE MAXIMUM TO ALLOW FOR FIELD CONDITIONS SUCH AS THE CLOSED PROXIMITY OF DRIVEWAYS, BRIDGES, SIDE ROADS OR OTHER FEATURES THAT WOULD PROHIBIT THE MINIMUM DISTANCES FROM BEING USED.

SIGNING AND PAVEMENT MARKING DETAILS FOR RAILROAD - HIGHWAY GRADE CROSSINGS

STATE OF WISCONSIN
DEPARTMENT OF TRANSPORTATION

APPROVED
February 2021
DATE

/S/ Matthew R. Rauch
STATE SIGNING AND MAF ENGINEER

FHWA

6

SDD 15C09 - 12a

SDD 15C09 - 12a

GENERAL NOTES

1. REFLECTIVE SHEETING SHALL FOLLOW THE REQUIREMENTS IN THE APPROVED PRODUCTS LISTING FOR SIGN SHEETING.
2. LOCATION OF WARNING LIGHTS WHEN SHOWN ON THE PLAN.

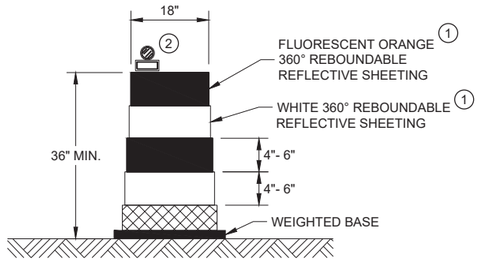

DRUM

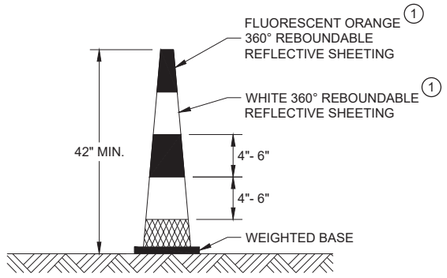

42" CONE

DO NOT USE IN TAPERS
½ SPACING OF DRUMS

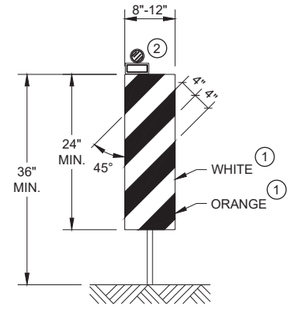

VERTICAL PANEL

THE STRIPES SHALL SLOPE DOWNWARD TO
THE TRAFFIC SIDE FOR CHANNELIZATION.

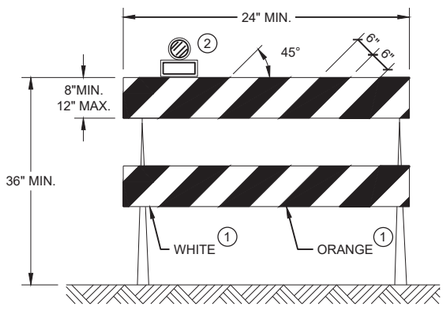

TYPE II BARRICADE

FOR RAILS LESS THAN 36" LONG, 4" WIDE STRIPES
MAY BE USED. ALL STRIPES SHALL SLOPE DOWNWARD
TO THE TRAFFIC SIDE FOR CHANNELIZATION.

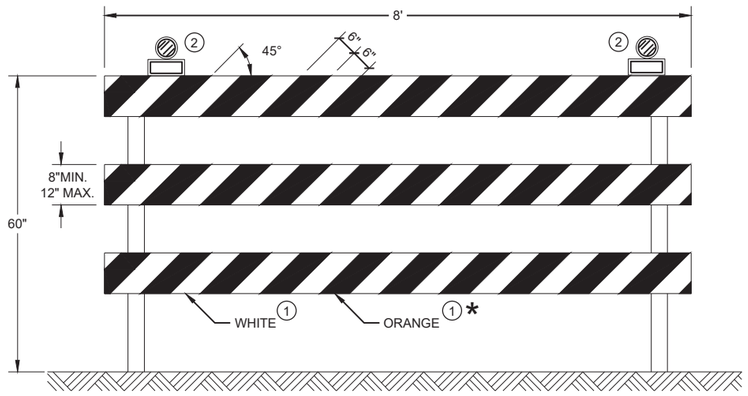

TYPE III BARRICADE

IF SIGN MOUNTED, DO NOT COVER MORE THAN 50% OF THE TOP
TWO RAILS OR 33% OF THE TOTAL AREA OF THE THREE RAILS.

* IF USED FOR A PERMANENT APPLICATION USE RED SHEETING.

CHANNELIZING DEVICES
DRUMS, CONES, BARRICADES
AND VERTICAL PANELS

STATE OF WISCONSIN
DEPARTMENT OF TRANSPORTATION

APPROVED
May 2021
DATE

/S/ Andrew Heidtke
WORK ZONE ENGINEER

FHWA

6

SDD 15C11 - 09b
SDD 15C11 - 09b

LEGEND

SIGN ON PORTABLE OR PERMANENT SUPPORT

TEMPORARY PORTABLE RUMBLE STRIP ARRAY

DIRECTION OF TRAFFIC

WORK AREA

FLAGGER, EQUIPPED WITH STOP/SLOW PADDLE FASTENED ON SUPPORT STAFF

GENERAL NOTES

DETAILS OF TRAFFIC CONTROL DEVICES AND INSTALLATION NOT SHOWN ON THIS DRAWING SHALL CONFORM TO THE PERTINENT REQUIREMENTS OF THE STANDARD SPECIFICATIONS, THE SPECIAL PROVISIONS, AND THE MANUAL ON UNIFORM TRAFFIC CONTROL DEVICES.

ALL SIGNS ARE 48" X 48" UNLESS OTHERWISE NOTED.

"WO" SIGNS ARE THE SAME AS "W" SIGNS EXCEPT THE BACKGROUND IS ORANGE.

THE EXACT NUMBER, LOCATION AND SPACING OF ALL SIGNS, DEVICES, AND LOCATION OF ALL FLAGGERS SHALL BE ADJUSTED TO FIT FIELD CONDITIONS AS APPROVED BY THE ENGINEER.

THE FIRST ADVANCE WARNING SIGN SHOULD TYPICALLY BE LOCATED IN ADVANCE OF THE ANTICIPATED TRAFFIC BACKUP OR QUEUE.

WHEN A SIDE ROAD OR RAMP INTERSECTS THE FACILITY ON WHICH THE WORK IS BEING PERFORMED, ADDITIONAL TRAFFIC CONTROLS SHALL BE PROVIDED AS SPECIFIED IN THE PLANS AND/OR THE SPECIAL PROVISIONS OR AS APPROVED BY THE ENGINEER.

FLAGGING

FLAGGERS SHALL BE IN SIGHT OF EACH OTHER OR IN DIRECT COMMUNICATION AT ALL TIMES. THEY SHALL BE EQUIPPED WITH STOP/SLOW PADDLES FASTENED ON SUPPORT STAFFS. WHEN THE FLAGGING OPERATION IS NOT IN EFFECT REMOVE TEMPORARY PORTABLE RUMBLE STRIPS PRIOR TO COVERING OR REMOVING ALL ADVANCE SIGNING.

(1) FOR MOVING WORK OPERATIONS, POST ADDITIONAL W20-7A FLAGGER SIGNS AT APPROXIMATELY 3,500' INTERVALS IN THE MOVING WORK OPERATION OR AS APPROVED BY THE ENGINEER.

(2) SIGN NOT REQUIRED IF FLAGGING OPERATION OCCURS WITHIN A SIGNED ROAD WORK ZONE AREA.

WHEN THE DISTANCE BETWEEN FLAGGERS EXCEEDS 2 MILES, A PILOT CAR IS REQUIRED. WHEN CURVES REDUCE SIGHT DISTANCE BELOW 400', A PILOT CAR IS REQUIRED.

TEMPORARY PORTABLE RUMBLE STRIPS

UTILIZE TEMPORARY PORTABLE RUMBLE STRIPS ON ALL FLAGGING OPERATIONS.

(3) EACH TEMPORARY PORTABLE RUMBLE STRIP ARRAY CONSISTS OF THREE RUMBLE STRIPS SPACED ACCORDING TO MANUFACTURER'S RECOMMENDATION, PLACED TRANSVERSE ACROSS THE LANE AT LOCATIONS SHOWN.

ONLY USE TEMPORARY PORTABLE RUMBLE STRIPS FOR THE APPROVED PRODUCTS LIST.

INSTALL TEMPORARY RUMBLE STRIPS PER MANUFACTURER'S RECOMMENDATIONS.

PLACE ADVANCE SIGNING PRIOR TO INSTALLING TEMPORARY RUMBLE STRIPS.

DO NOT INSTALL TEMPORARY PORTABLE RUMBLE STRIPS ON GRAVEL, MILLED SURFACES, OR ASPHALT THAT HAS BEEN PAVED LESS THAN 12 HOURS.

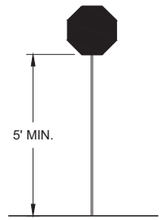

STOP/SLOW PADDLE ON SUPPORT STAFF

SIGN AND TEMPORARY RUMBLE STRIP ARRAY SPACING TABLE

SPEED LIMIT	SPACING "A"
25-30 MPH	200'
35-40 MPH	350'
45-55 MPH	500'

WO3-4

USE OF WO3-4 SIGN IS OPTIONAL. WHEN USED, THIS SIGN SHALL BE LOCATED BETWEEN THE W20-7A AND W20-4A SIGNS, USING SPACING "A".

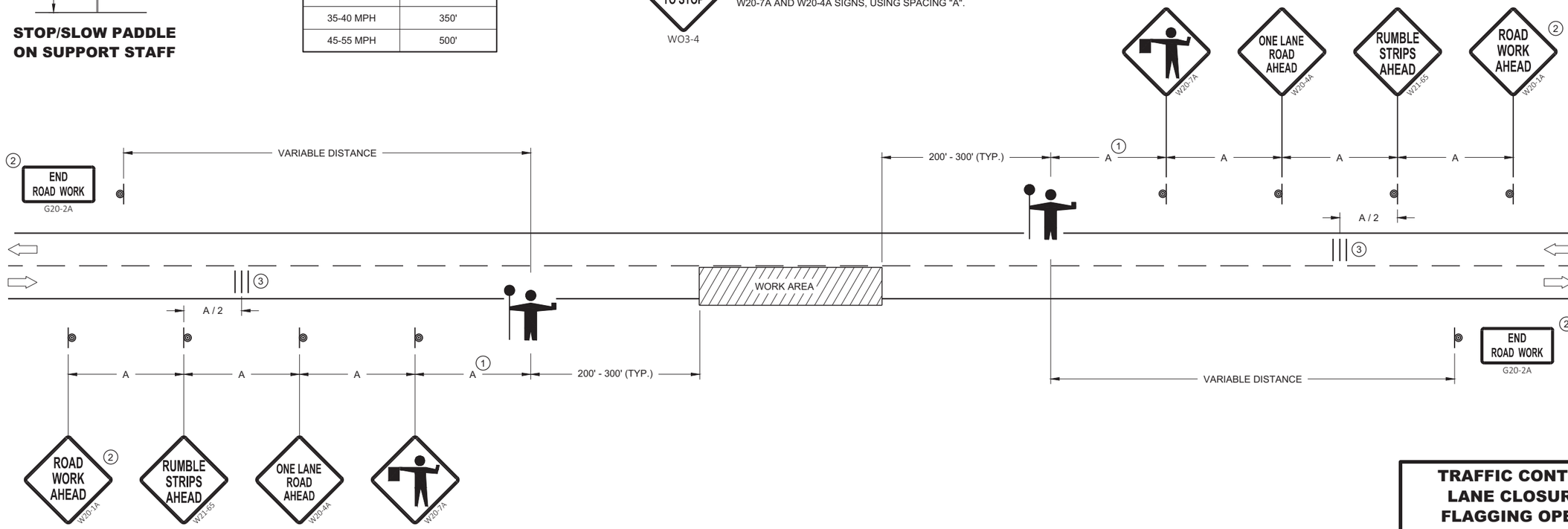

TRAFFIC CONTROL FOR LANE CLOSURE WITH FLAGGING OPERATION

TRAFFIC CONTROL FOR LANE CLOSURE WITH FLAGGING OPERATION

STATE OF WISCONSIN
DEPARTMENT OF TRANSPORTATION

APPROVED
May 2019
DATE

/S/ Andrew Heidtke
WORK ZONE ENGINEE

FHWA

6

SDD 15C12 - 07

6

SDD 15C12 - 07

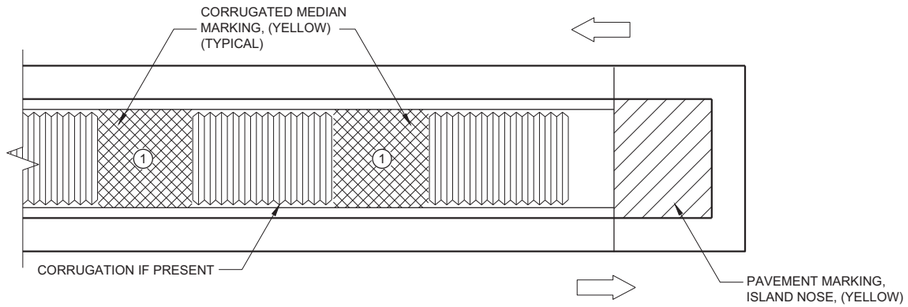

MEDIAN ISLAND WITH SQUARE BLUNT NOSE

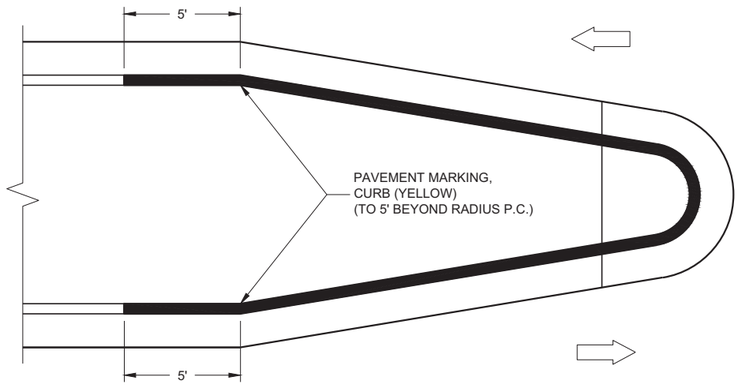

MEDIAN ISLAND WITH ROUND BLUNT NOSE

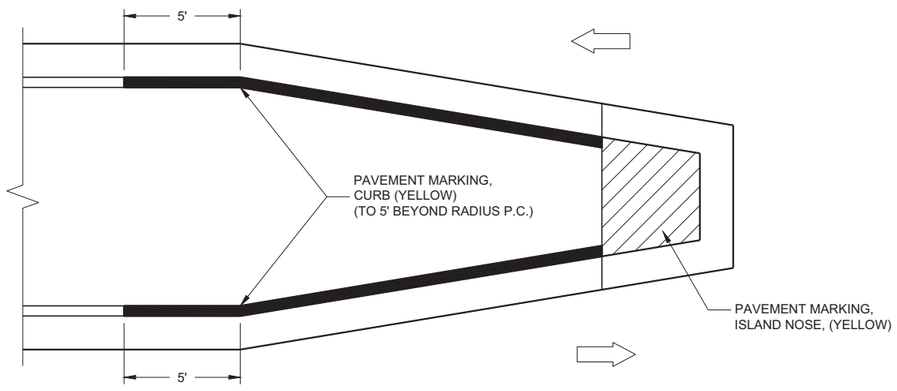

MEDIAN ISLAND WITH SLOPED NOSE

TYPICAL PLACEMENT OF PAVEMENT MARKING ON MEDIAN ISLANDS

GENERAL NOTES

WHEN CONCRETE CORRUGATED MEDIAN IS CONSTRUCTED TO SEPARATE TRAFFIC OPERATING IN THE OPPOSING DIRECTION, YELLOW PAVEMENT MARKING SHALL BE APPLIED TO THE FLAT PORTION OF THE CONCRETE CORRUGATED MEDIAN. THE ITEM OF PAVEMENT MARKING, CONCRETE CORRUGATED MEDIAN, WILL BE MEASURED IN PLACE AND ACCEPTED IN ACCORDANCE WITH THE CONTRACT AND PAID FOR AT THE CONTRACT UNIT PRICE PER SQUARE FOOT.

ISLAND NOSE MARKING

CURB MARKING

CORRUGATED MEDIAN MARKING

DIRECTION OF TRAVEL

PAVEMENT MARKINGS, MEDIAN ISLAND NOSE

STATE OF WISCONSIN
DEPARTMENT OF TRANSPORTATION

APPROVED

February 2021
DATE

/S/ Matthew R. Rauch
STATE SIGNING AND MAF ENGINEER

FHWA

6

SDD 15C18 - 05b

6

SDD15C18 - 05b

GENERAL NOTES

STOP SIGN SHALL BE PLACED A MINIMUM OF 6 FEET TO A MAXIMUM OF 50 FEET FROM THE EDGELINE LOCATION.

1. 18-INCH STOP LINES MAY BE DELETED OR ADDED BY THE REGION MARKING ENGINEER BASED ON VISIBILITY AND SIGHT LINES.
2. NO STOP LINE IS REQUIRED IF STOP SIGN IS LESS THAN OR EQUAL TO 40 FEET FROM THE EDGELINE.
3. NO STOP LINE IS REQUIRED IF STOP SIGN IS LESS THAN OR EQUAL TO 30 FEET FROM THE FLANGELINE EXTENSION.
4. MOVE CLOSER TO THE EDGE OF TRAVEL LINE AS NEEDED FOR VISIBILITY AND SIGHT LINES (NO CLOSER THAN 4 FEET).
5. LADDER BAR CROSSWALKS SHOULD ONLY BE USED FOR MID BLOCK CROSSINGS. USE 2 - 6" TRANSVERSE LINES INSTEAD.

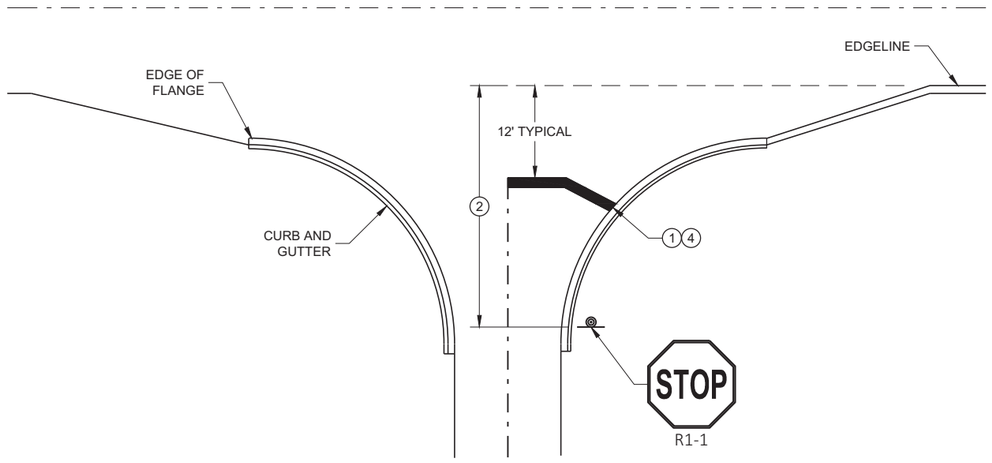

TYPICAL STOP LINE PAVEMENT MARKING WITH CURB AND GUTTER

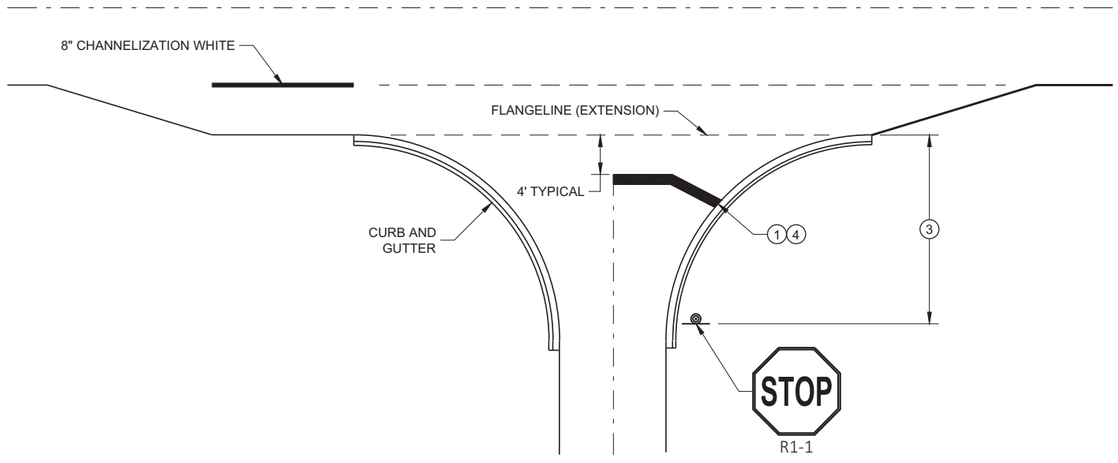

TYPICAL STOP LINE PAVEMENT MARKING FOR SIDEROADS WITH RIGHT TURN LANE

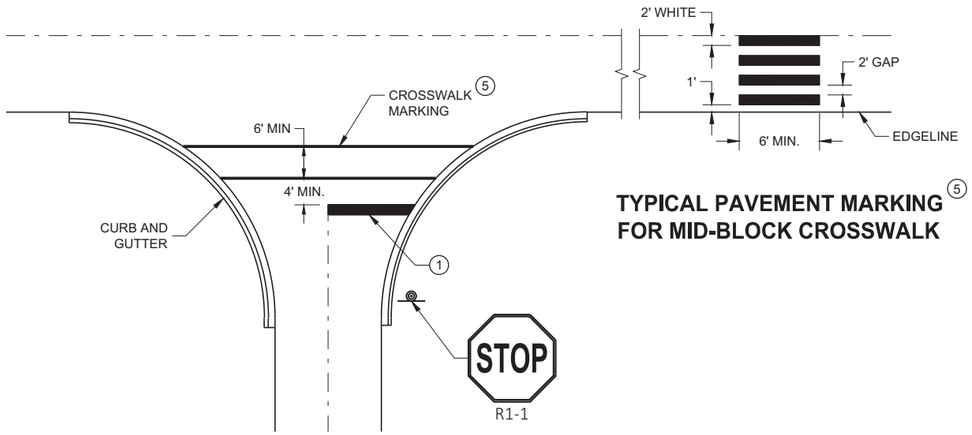

TYPICAL STOP LINE PAVEMENT MARKING FOR SIDEROADS WITH CROSSWALK MARKING

TYPICAL PAVEMENT MARKING FOR MID-BLOCK CROSSWALK 5

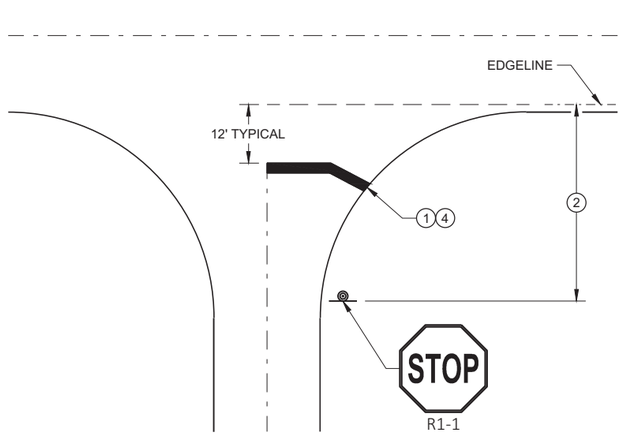

TYPICAL STOP LINE PAVEMENT MARKING WITHOUT CURB AND GUTTER

STOP LINE AND CROSSWALK PAVEMENT MARKING

STATE OF WISCONSIN
DEPARTMENT OF TRANSPORTATION

APPROVED
November 2019 — DATE
/S/ Matthew Rauch — STATE SIGNING AND MARKING ENGINEER
FHWA

6

SDD 15C33 - 04

SDD 15C33 - 04

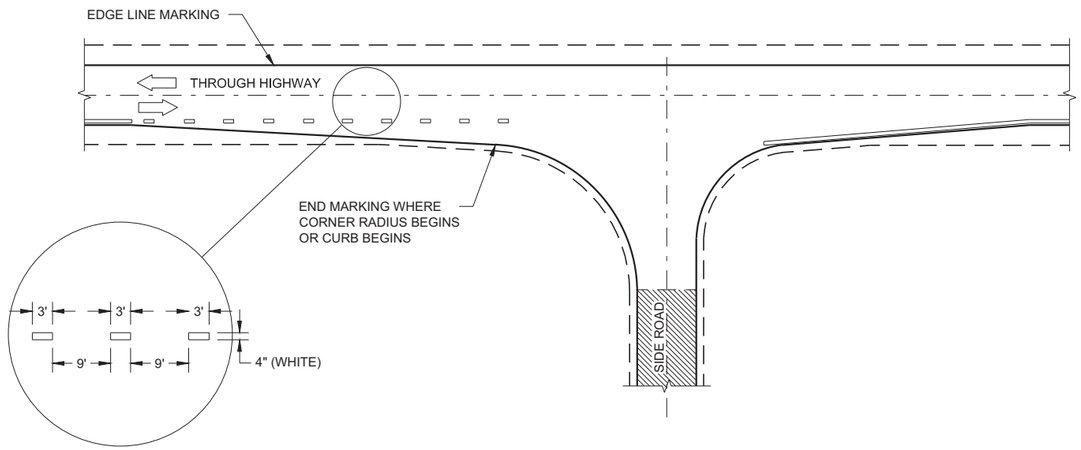

MINOR INTERSECTION

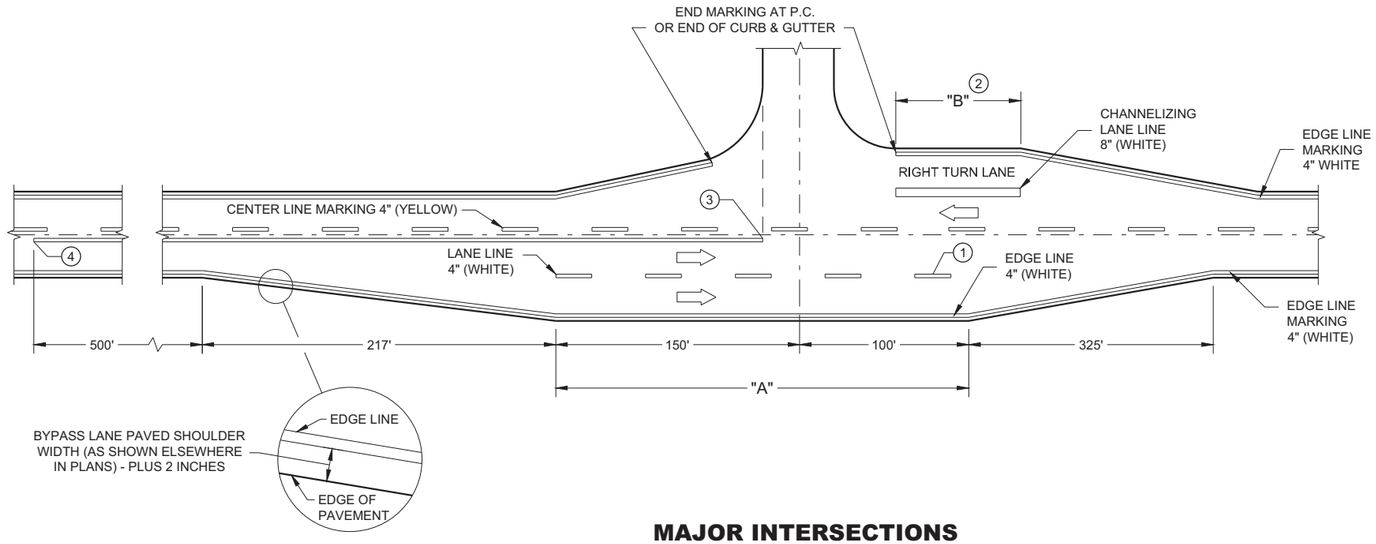

MAJOR INTERSECTIONS

(INTERSECTION WITH FULL RIGHT TURN LANE OR BYPASS LANE)

GENERAL NOTES

OMIT EDGE LINES THROUGH INTERSECTIONS. CONTINUE EDGE LINES THROUGH DRIVEWAYS.

1. WHEN DISTANCE "A" IS LESS THAN 250 FEET, OMIT LANE LINE.
2. WHEN DISTANCE "B" IS LESS THAN 100 FEET, OMIT CHANNELIZING LANE LINE.
3. BARRIER LINE ENDS AT SIDE ROAD PAVEMENT / SURFACE EDGE EXTENSION.
4. BARRIER LINE STARTS 500 FEET PRIOR TO THE BYPASS TAPER.

LEGEND

DIRECTION OF TRAVEL

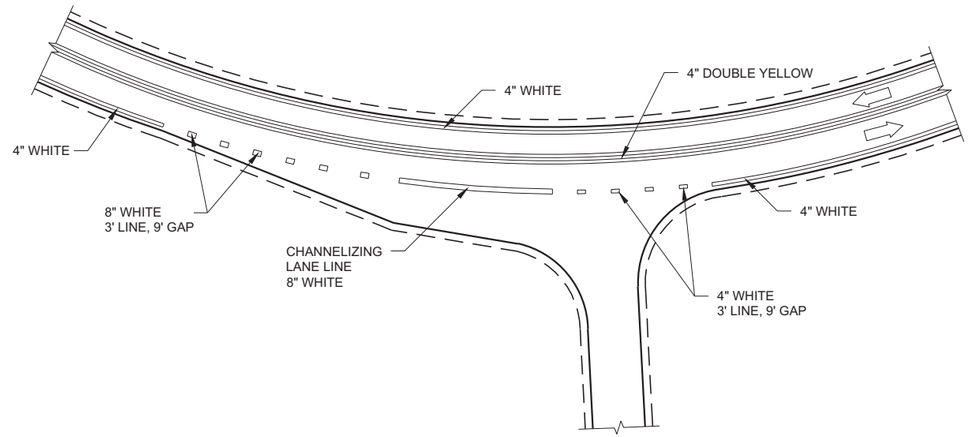

INTERSECTION ON OUTSIDE OF CURVE

PAVEMENT MARKING (INTERSECTIONS)

STATE OF WISCONSIN
DEPARTMENT OF TRANSPORTATION

6

SDD 15C35 - 04a

6

SDD 15C35 - 04a

LEGEND

SIGN ON PERMANENT SUPPORT

TRAFFIC CONTROL DRUM

DIRECTION OF TRAFFIC

WORK ZONE

GENERAL NOTES

ALL SIGNS ARE 48"X48" UNLESS OTHERWISE NOTED. IF NECESSARY DUE TO SPACE CONSTRAINTS IN URBAN AREAS, 36" X 36" SIGNS MAY BE USED IF APPROVED BY THE REGIONAL TRAFFIC UNIT.

"WO" SIGN IS THE SAME AS "W" SIGN EXCEPT THE BACKGROUND IS ORANGE.

ANY SIGNS TEMPORARY OR EXISTING, WHICH CONFLICT WITH THE TRAFFIC CONTROL "IN USE" SHALL BE REMOVED OR COVERED AS NEEDED AND AS APPROVED BY THE ENGINEER.

THE EXACT NUMBER, LOCATION, AND SPACING OF ALL SIGNS AND DEVICES SHALL BE ADJUSTED TO FIT FIELD CONDITIONS AS APPROVED BY THE ENGINEER.

CHANNELIZING DEVICES PLACED ADJACENT TO WORK AREA SHALL BE PULLED BACK FROM THE TRAVEL LANE WHEN WORK IS NOT IN PROGRESS.

SIGNS THAT WILL BE IN PLACE LESS THAN 7 CONTINUOUS DAYS AND NIGHTS MAY BE MOUNTED ON PORTABLE SUPPORTS.

W20-1A AND G20-2A SIGNS ARE NOT REQUIRED IF THE WORK AREA IS WITHIN A LARGER WORK ZONE WHERE THESE SIGNS ARE ALREADY PRESENT. G20-2A SIGNS MAY ALSO BE OMITTED IF DURATION OF WORK IS LESS THAN 7 CONTINUOUS DAYS AND NIGHTS.

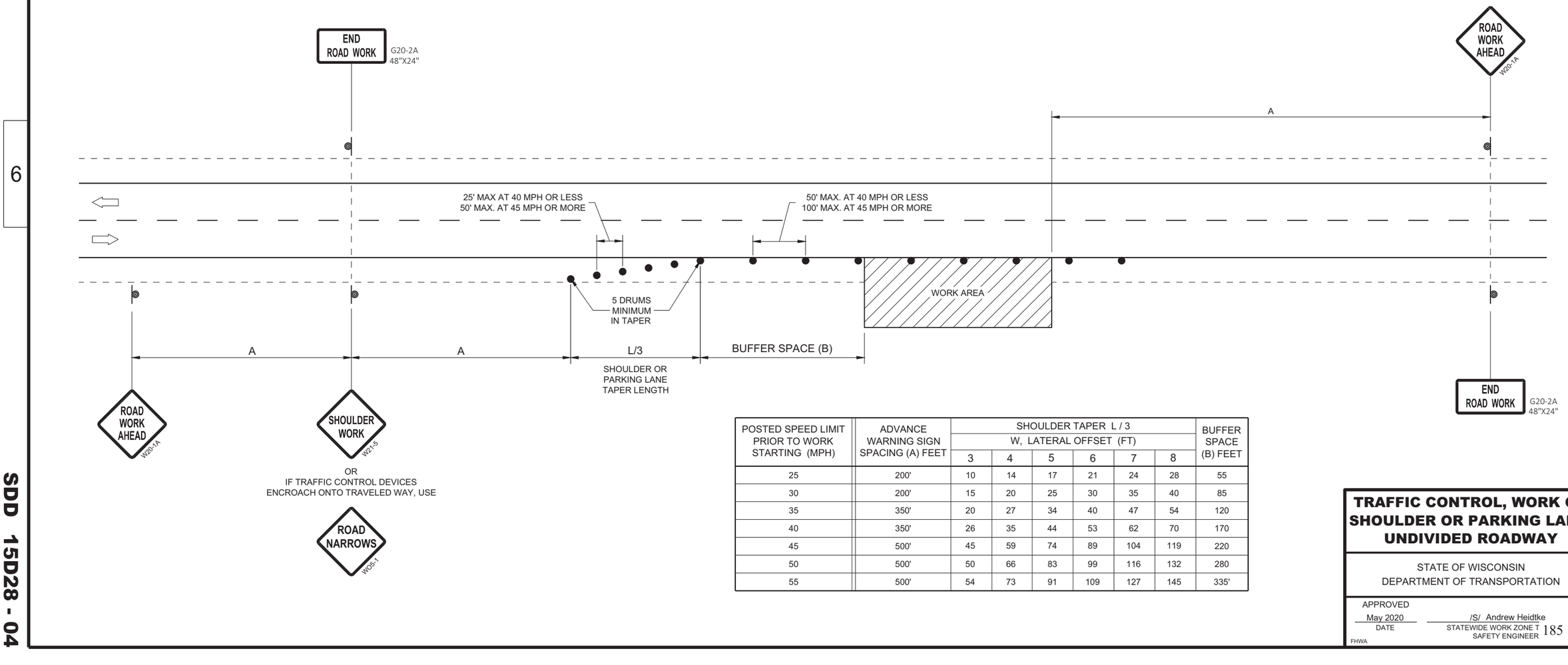

POSTED SPEED LIMIT PRIOR TO WORK STARTING (MPH)	ADVANCE WARNING SIGN SPACING (A) FEET	SHOULDER TAPER L / 3 W, LATERAL OFFSET (FT)						BUFFER SPACE (B) FEET
		3	4	5	6	7	8	
25	200'	10	14	17	21	24	28	55
30	200'	15	20	25	30	35	40	85
35	350'	20	27	34	40	47	54	120
40	350'	26	35	44	53	62	70	170
45	500'	45	59	74	89	104	119	220
50	500'	50	66	83	99	116	132	280
55	500'	54	73	91	109	127	145	335'

TRAFFIC CONTROL, WORK ON SHOULDER OR PARKING LANE, UNDIVIDED ROADWAY

STATE OF WISCONSIN
DEPARTMENT OF TRANSPORTATION

APPROVED
May 2020
DATE

/S/ Andrew Heidtke
STATEWIDE WORK ZONE T SAFETY ENGINEER

FHWA

6

SDD 15D28 - 04

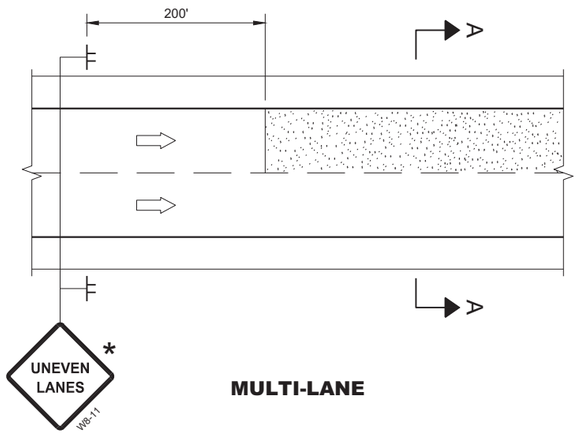

MULTI-LANE

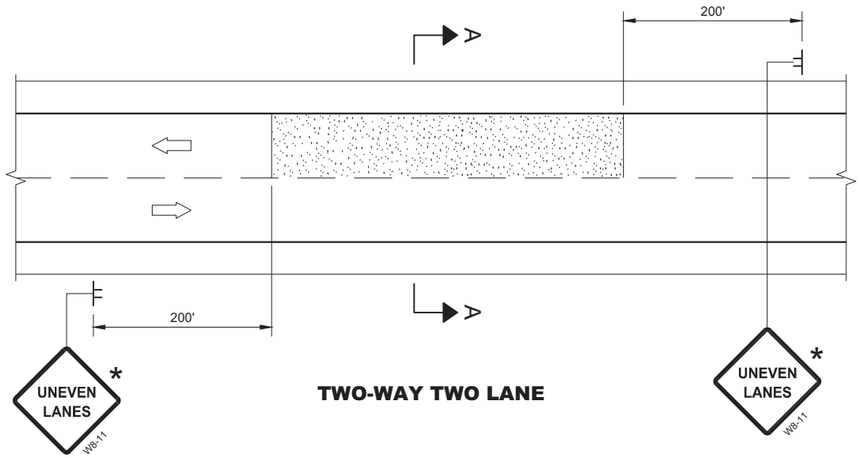

TWO-WAY TWO LANE

GENERAL NOTES

FOR SPOT LOCATIONS USE ENGINEERING JUDGEMENT WHEN PLACING ADDITIONAL SIGNS.

ALL SIGNS ARE 48" X 48" UNLESS OTHERWISE NOTED.

"WO" SIGNS ARE THE SAME AS "W" SIGNS EXCEPT THE BACKGROUND IS ORANGE.

WARNING LIGHTS ARE NOT REQUIRED IF THE LANE CLOSURE IS A DAYTIME ONLY OPERATION.

* IF THE DROP-OFF IS CONTINUOUS ALONG THE PROJECT, PLACE ADDITIONAL SIGNS EVERY 1 MILE AND AFTER EVERY ENTRANCE RAMP.

(1) USE CLOSER SPACING WHEN DELINEATING DROP-OFF.

LEGEND

- SIGN ON TEMPORARY SUPPORT
- TRAFFIC CONTROL DRUM
- TYPE III BARRICADE WITH ATTACHED SIGN
- TYPE "A" WARNING LIGHT (FLASHING)
- DIRECTION OF TRAFFIC
- WORK AREA WITH DROP-OFF
- MILLED SURFACE

SECTION A - A

OR

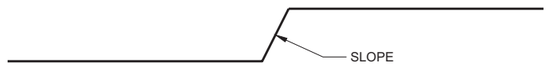

SECTION A - A

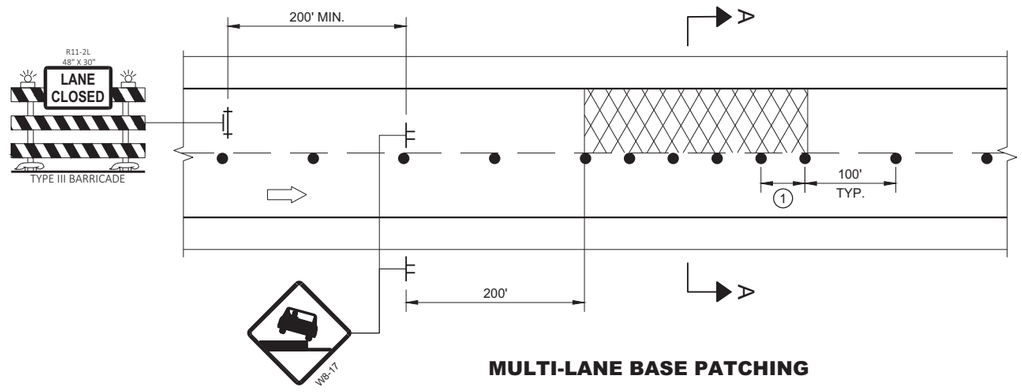

MULTI-LANE BASE PATCHING

ADJACENT LANE DROP-OFFS

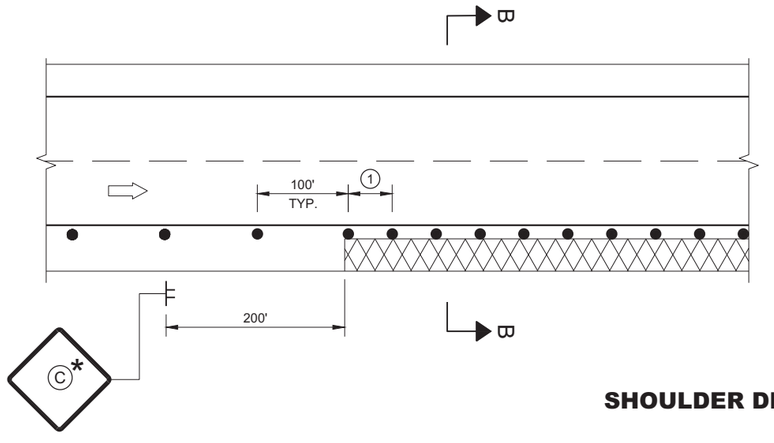

SHOULDER DROP-OFFS

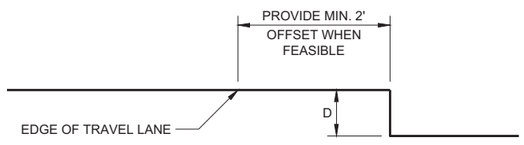

SECTION B - B

D	SIGN (C)
< 2" WITH A SLOPE STEEPER THAN 3:1	LOW SHOULDER WO8-9
2" < 6" WITH A SLOPE STEEPER THAN 3:1	SHOULDER DROP - OFF W8-9A PROVIDE A 3:1 OR FLATTER SLOPE OF MATERIAL ADJACENT TO THE PAVEMENT

TRAFFIC CONTROL, DROP-OFF SIGNING

STATE OF WISCONSIN
DEPARTMENT OF TRANSPORTATION

APPROVED
March 2018
DATE

/S/ Andrew Heidtke
WORK ZONE ENGINEE

FHWA

SDD 15D39 - 02

6

SDD 15D39 - 02

GENERAL NOTES

DRAWING NOT TO SCALE. ALL SIGNS AND POSTS ON THIS SHEET SHALL BE PAID FOR WITH 'TRAFFIC CONTROL SIGNS' BID ITEM. ALL SIDE ROADS WHICH ARE UNDER CONSTRUCTION OF CURB AND GUTTER AND/OR GRADING SHALL BE ADEQUATELY SIGNED.

ALL SIGNS AND DEVICES SHALL BE IN CONFORMANCE WITH THE WISCONSIN MANUAL OF UNIFORM TRAFFIC CONTROL DEVICES (WMUTCD). SIGN LAYOUTS SHALL BE IN ACCORDANCE WITH THE WISDOT STANDARD SIGN PLATES.

"WO" SIGNS ARE THE SAME AS "W" SIGNS EXCEPT THAT THE BACKGROUND IS ORANGE.

ALL SIGNS ARE 48" X 48" UNLESS OTHERWISE NOTED.

THE EXACT NUMBER, LOCATION AND SPACING OF ALL SIGNS AND DEVICES SHALL BE ADJUSTED TO FIT FIELD CONDITIONS AS DIRECTED BY THE ENGINEER.

ALL SIGNS INAPPROPRIATE TO THE STATUS OF THE CONTROL ZONE, INCLUDING PRE-EXISTING SIGNS IN THE VICINITY, SHALL BE COVERED OR REMOVED AS DIRECTED BY THE ENGINEER.

SEE 15C34 FOR ADDITIONAL TRAFFIC CONTROL SIGNING WHEN CENTERLINE PAVEMENT MAKINGS ARE MISSING. 'DO NOT PASS' SIGNS MUST BE INSTALLED ON THE SAME DAY AS MILLING OPERATIONS.

(1) PLACE SIGNS 350' IN ADVANCE OF MILLED SURFACES AND AT 1 MILE INTERVALS, OR AS DIRECTED BY THE ENGINEER.

(2) PLACE SIGN 200' MIN. FROM INTERSECTION AND 200' MIN. AFTER ADVANCE WARNING SIGN SHOWN IN SDD 15C04.

LEGEND

SIGN ON TEMPORARY SUPPORT

DIRECTION OF TRAFFIC

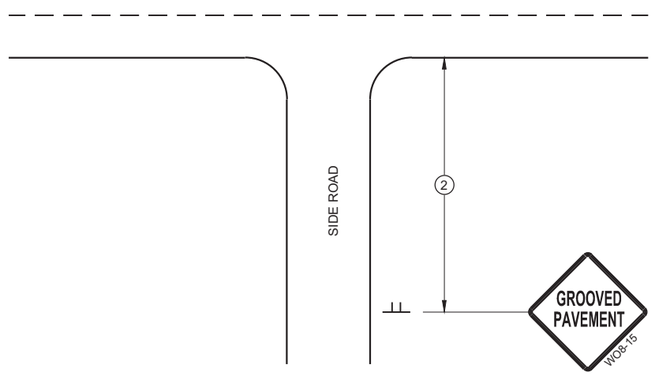

TYPICAL SIDE ROAD APPROACH SIGN DETAIL

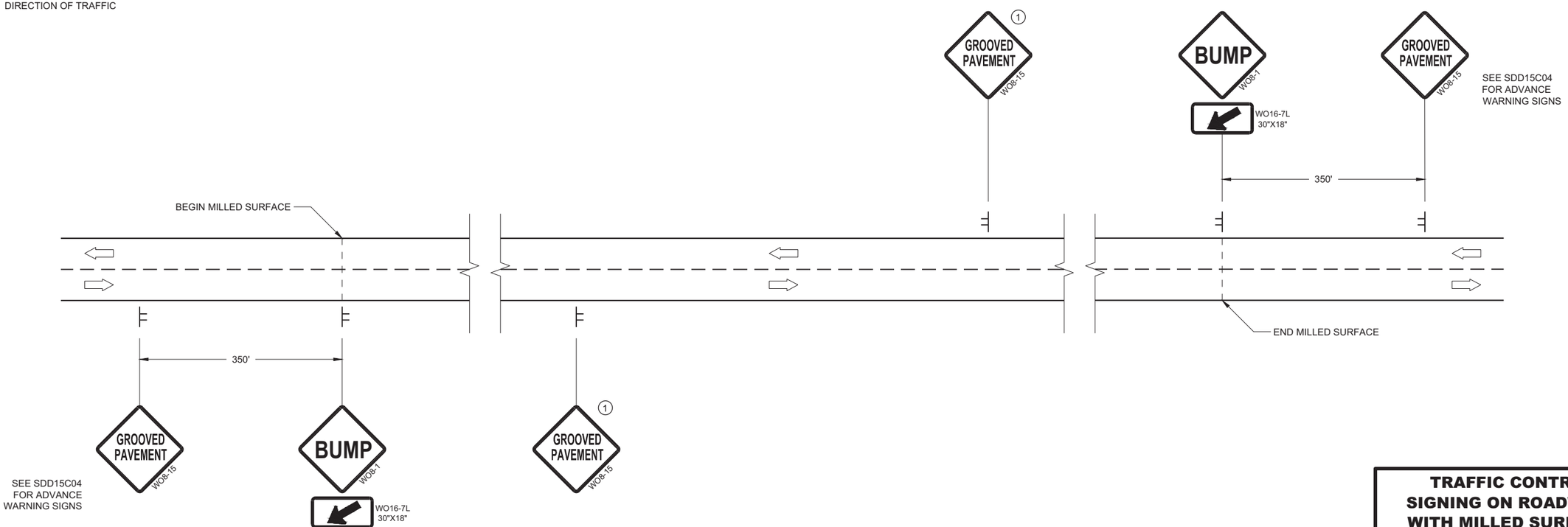

DETAIL FOR SIGNING ON MILLED SURFACES

TRAFFIC CONTROL, SIGNING ON ROADWAYS WITH MILLED SURFACES

STATE OF WISCONSIN
DEPARTMENT OF TRANSPORTATION

APPROVED
February 2020
DATE

/S/ Andrew Heidtke
WORK ZONE ENGINEER

FHWA

6
SDD 15D44 - 02

NOTES

1. Fixed Message Type II Signs - Type F Reflective
2. Color:
   Background - Orange
   Message - Black
3. Message Series - C

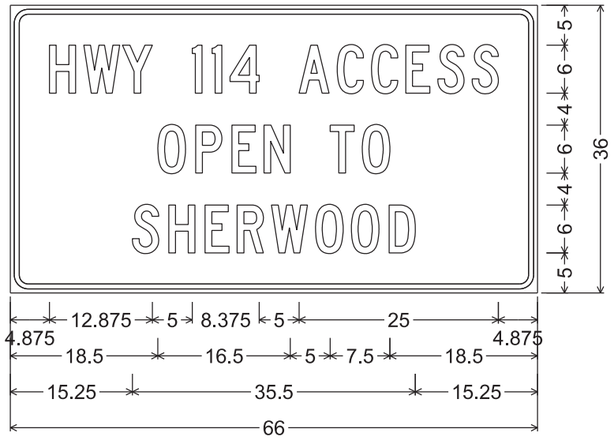

2.250" Radius, 0.625" Border, 0.500" Indent

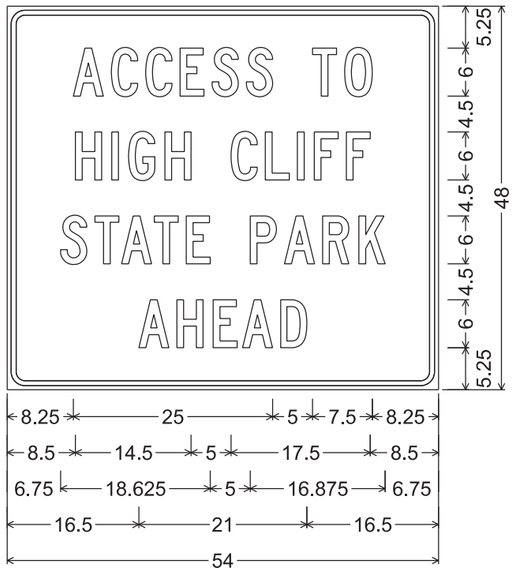

2.250" Radius, 0.625" Border, 0.500" Indent

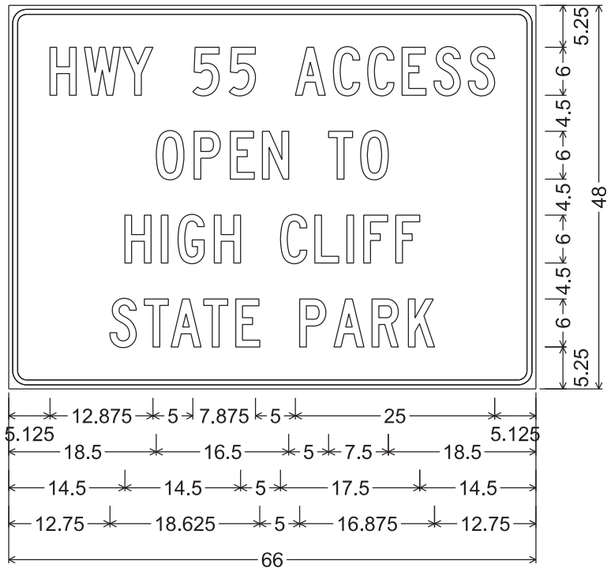

2.250" Radius, 0.625" Border, 0.500" Indent

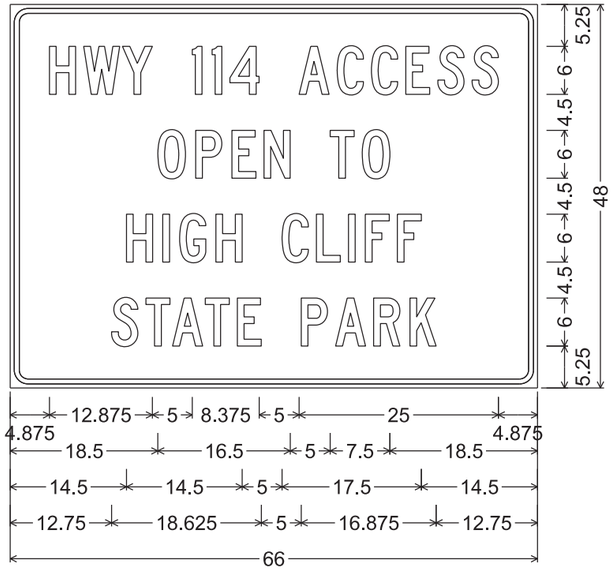

2.250" Radius, 0.625" Border, 0.500" Indent

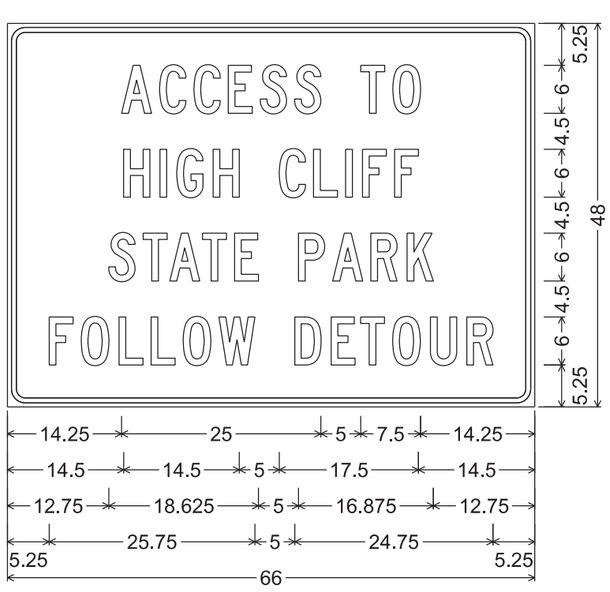

2.250" Radius, 0.625" Border, 0.500" Indent

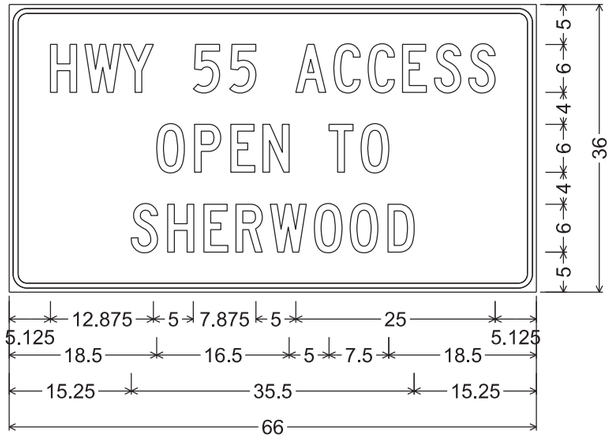

2.250" Radius, 0.625" Border, 0.500" Indent

NOTES

1. Fixed Message Type II Signs - Type F Reflective
2. Color:
   Background - Orange
   Message - Black
3. Message Series - C

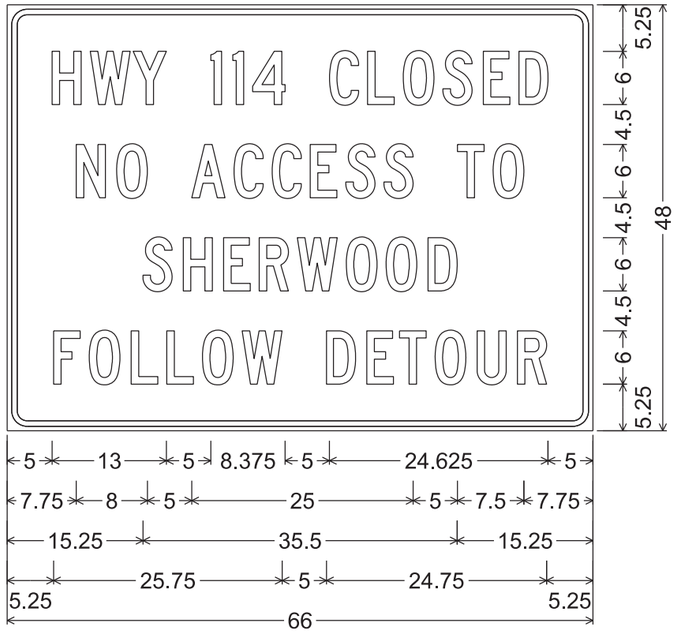

2.250" Radius, 0.625" Border, 0.500" Indent

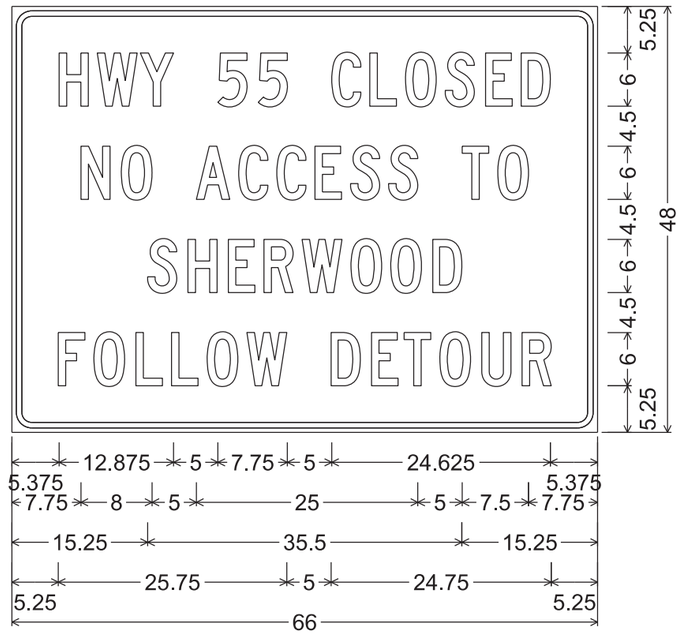

2.250" Radius, 0.625" Border, 0.500" Indent

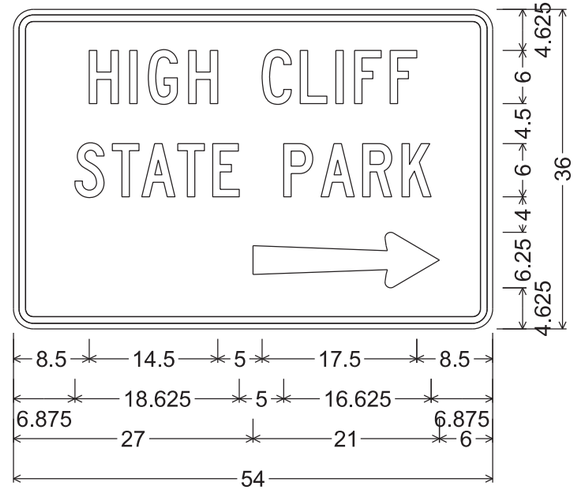

2.250" Radius, 0.750" Border, 0.625" Indent

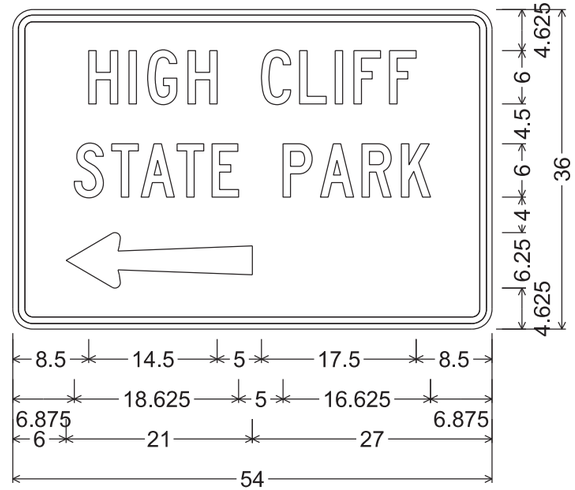

2.250" Radius, 0.750" Border, 0.625" Indent

URBAN AREA

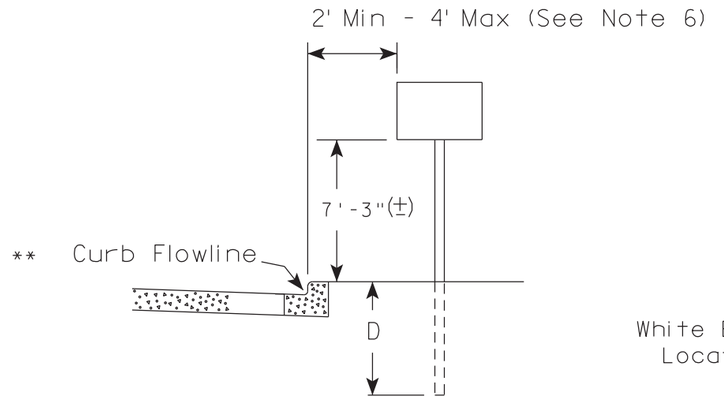

RURAL AREA (See Note 2)

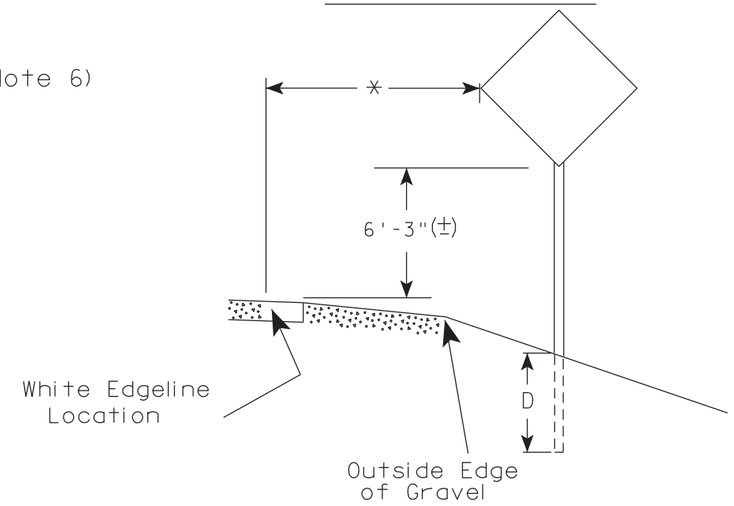

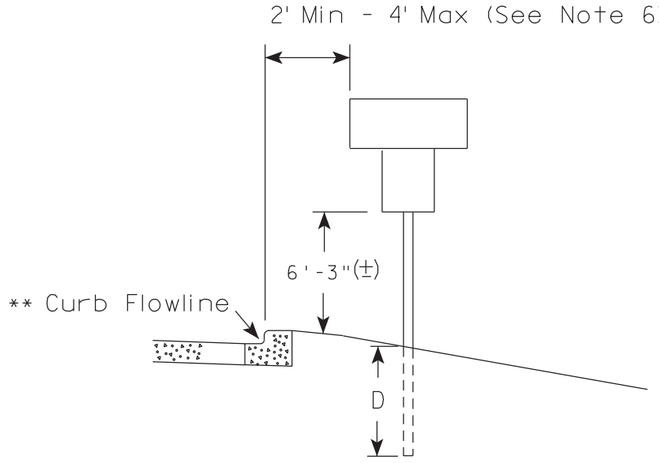

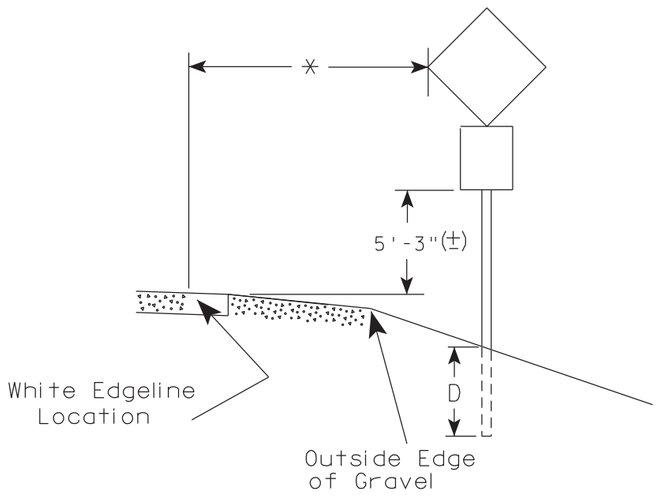

** The existence of curb and gutter does not in itself mandate the vertical clearance illustrated. That height is typically measured where there is sidewalk adjacent to the roadway or parking is permitted. In the absence of sidewalk vertical clearance is measured from the top of the curb. Offset of signs is measured from the flow line.

* 6 feet from edge of a paved shoulder or 12 feet from the edge of pavement (edge line location) or 2 feet from outside edge of gravel, whichever is greater unless directed by project engineer.

POST EMBEDMENT DEPTH

Area of Sign Installation (Sq.Ft.)	D (Min)
20 or Less	4'
Greater than 20	5'

GENERAL NOTES

1. Signs wider than 4 feet or 20 sq.ft or larger, shall be mounted on multiple posts. Refer to plate A4-4.
2. If signs are mounted on or behind barrier wall, see A4-10 sign plate.
   The Double Arrow sign (W12-1D) shall be mounted at a height of 2'-3" (±). The Chevron sign (W1-8), Roundabout Chevron panel (R6-4B), Enhanced Reference Markers, Clearance Markers (W5-52), Mile Markers (D10 series), In Road Object Markers (W5-54) & End of Road Markers (W5-56) shall be mounted at a height of 4'-3" (±).
3. For expressways and freeways, mounting height is 7'- 3" (±) or 6'-3" (±) depending upon existence of a sub-sign.
4. Minimum mounting height for signs mounted on traffic signal poles is 5'- 3" (±).
5. Offset distance shall be consistent with existing signs or consistent throughout length of project.
6. The (±) tolerance for mounting height is 3 inches.
7. Folding signs shall be mounted at a height of 5'-3" (±) or as directd by the Engineer.

TYPICAL INSTALLATION OF PERMANENT TYPE II SIGNS ON SINGLE POSTS

WISCONSIN DEPT OF TRANSPORTATION

APPROVED Matthew R Rauch
for State Traffic Engineer

DATE 5/13/2020 PLATE NO. A4-3.22

PROJECT NO:	HWY:	COUNTY:		SHEET NO: 190	E

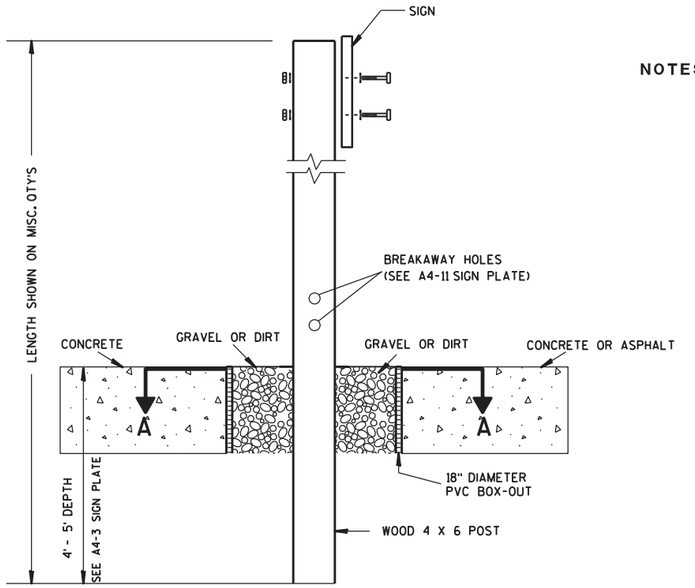

ELEVATION VIEW

DETAIL OF WOOD 4 X 6 SIGN POST IN BOX-OUT

NOTES:
1. ALL MATERIAL TO BE APPROVED BY ENGINEER PRIOR TO INSTALLATION
2. SEE SIGN PLATE A4-8 FOR SIGN HARDWARE REQUIREMENTS
3. 18 INCH X 18 INCH SQUARE BOX-OUTS MAY BE USED FOR INSTALLATIONS IN EXISTING CONCRETE OR ASPHALT LOCATIONS.

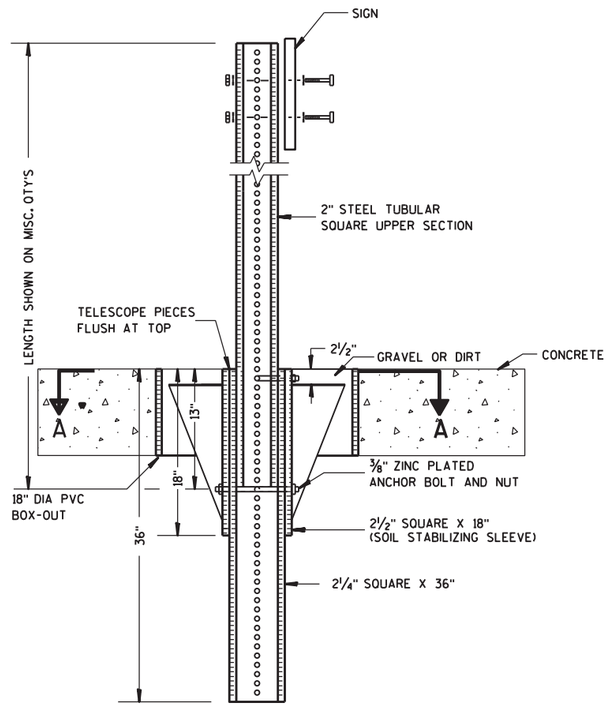

ELEVATION VIEW

DETAIL OF STEEL 2 X 2 SIGN POST IN BOX-OUT

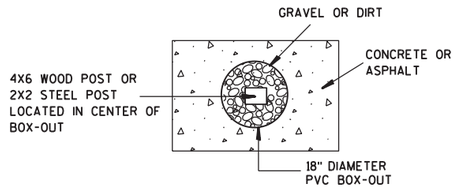

PLAN VIEW

FOR NEW CONCRETE/ASPHALT INSTALLATIONS

SIGN POST
BOX-OUTS
A4-3B

WISCONSIN DEPT OF TRANSPORTATION

APPROVED Matthew R Rauch
for State Traffic Engineer

DATE 1/27/14 PLATE NO. A4-3B.1

PROJECT NO:	HWY:	COUNTY:		SHEET NO:	E

FILE NAME : C:\CAEFiles\Projects\tr_stdplate\A43B.DGN PLOT DATE : 27-JAN-2014 09:48 PLOT BY : mscsja PLOT NAME : PLOT SCALE : 13.659812:1.000000 WISDOT/CADDS SHEET 42

URBAN AREA

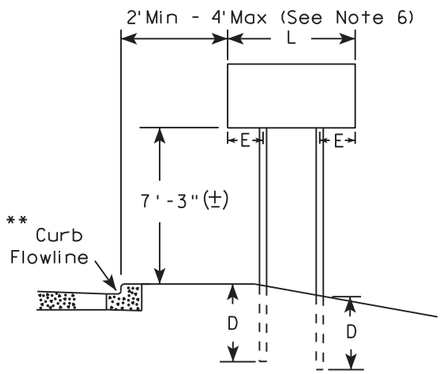

RURAL AREA (See Note 3)

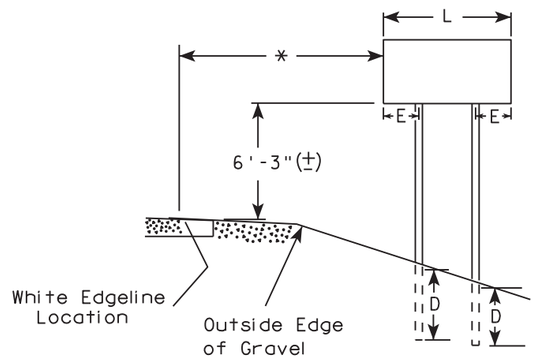

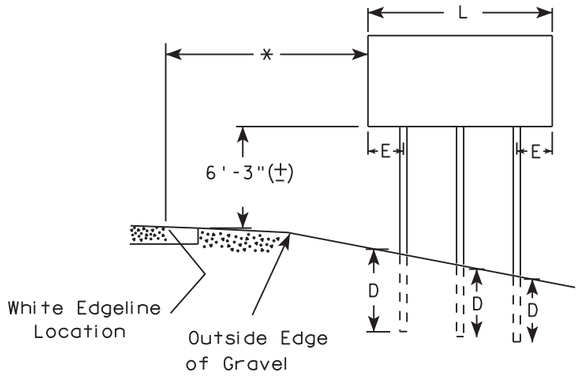

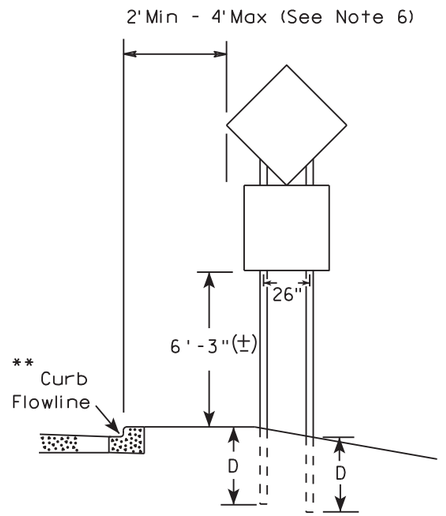

48" DIAMOND WARNING SIGN

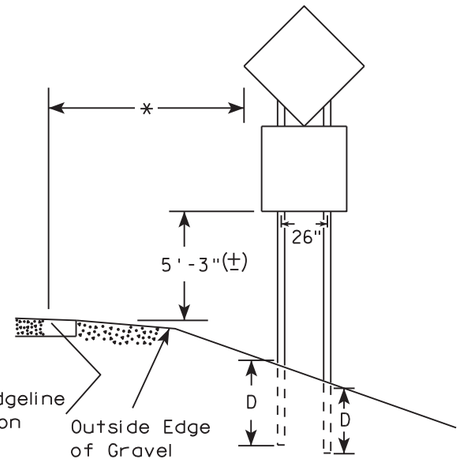

48" DIAMOND WARNING SIGN

***	SIGN SHAPE OTHER THAN DIAMOND (TWO POSTS REQUIRED)	
	L	E
	Greater than 48" Less than 60"	12"
	60" to 108"	L/5

SIGN SHAPE OTHER THAN DIAMOND (THREE POSTS REQUIRED)	
L	E
Greater than 108" to 144"	12"

GENERAL NOTES

1. For 3 or 4 post installations, individual post spacing shall be greater than 3'-6".
2. See tables below for required number of posts.
3. For expressways and freeways, mounting height is 7'-3" (±) or 6'-3" (±) depending upon existence of sub-sign.
4. The (±) tolerance for mounting height is 3 inches.
5. J-Assemblies are considered to be one sign for mounting height.
6. Offset distance shall be consistent with existing signs or consistent throughout length of project.
7. Folding signs shall be mounted at a height of 5'-3" (±) or as directed by the engineer.
8. The Double Arrow sign (W12-1) shall be mounted at a height of 2'-3" (±). The Chevron sign (W1-8), Roundabout Chevron panel (R6-4B), Clearance Markers (W5-52), Mile Markers (D10 series), In Road Object Markers (W5-54) & End of Road Markers (W5-56) shall be mounted at a height of 4"-3" (±).

* 6 feet from edge of a paved shoulder or 12 feet from the edge of pavement (edge line location) or 2 feet from outside edge of gravel, whichever is greater unless directed by project engineer.

** The existence of curb and gutter does not in itself mandate the vertical clearance illustrated. That height is typically measured where there is sidewalk adjacent to the roadway or parking is permitted. In the absence of sidewalk vertical clearance is measured from the top of the curb. Offset of signs is measured from the flow line.

*** See A4-3 sign plate for signs 4' or less in width and less than 20 S.F. in area.

POST EMBEDMENT DEPTH

Area of Sign Installation (Sq. Ft.)	D (Min)
20 or Less	4'
Greater than 20	5'

TYPICAL INSTALLATION OF TYPE II SIGNS ON MULTIPLE POSTS

WISCONSIN DEPT OF TRANSPORTATION

APPROVED Matthew R Rauch
for State Traffic Engineer

DATE 8/21/17 PLATE NO. A4-4.15

PROJECT NO:	HWY:	COUNTY:		SHEET NO: 192	E

FILE NAME : C:\CAEfiles\Projects\tr_stdplate\A44.DGN PLOT DATE : 21-AUG-2017 15:54 PLOT BY : $$...plotuser...$$ PLOT NAME : PLOT SCALE : 108.188297:1.000000

7

7

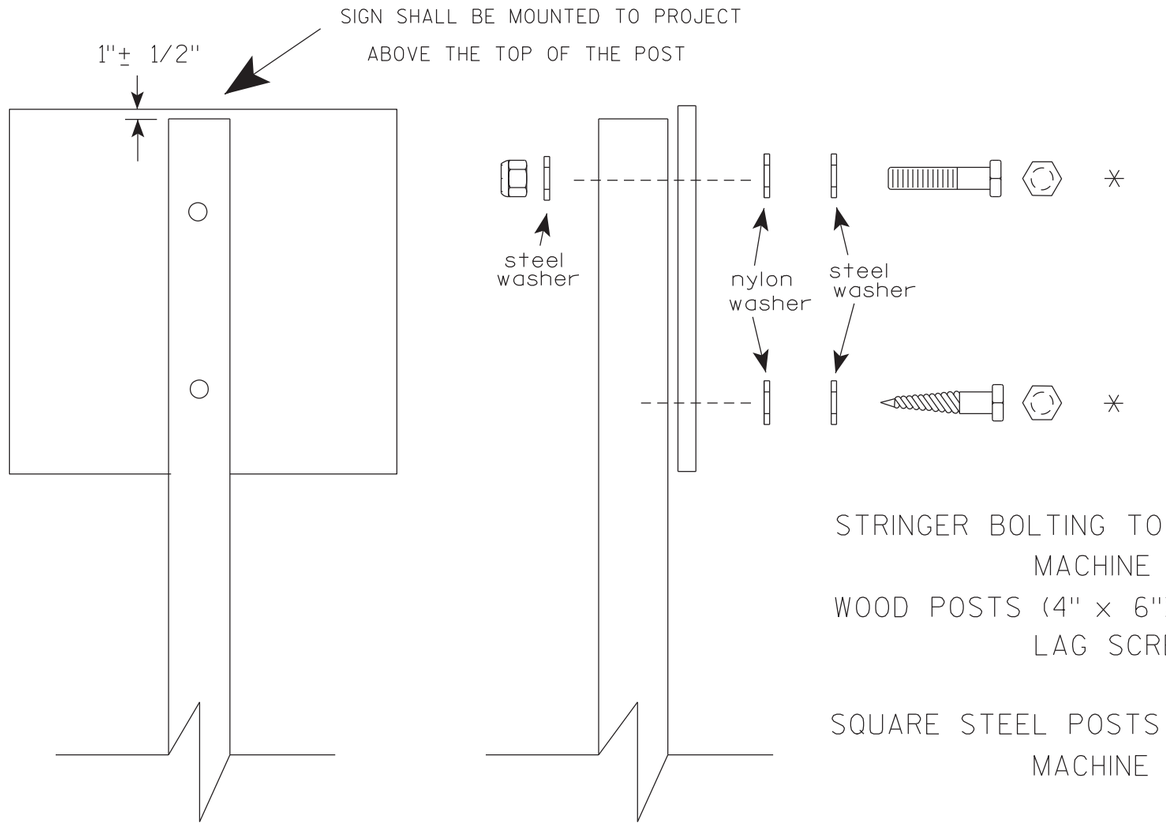

Nuts, bolts and lags used for mounting signs shall have hexagonal heads and shall be either :

a. Hot dip galvanized in accordance with ASTM Designation: A 153, Class D, or SC 3

b. Electro-galvanized in accordance with ASTM Designation : B 633, TYPE III, SC 3.

Threads on bolts and nuts shall be manufactured with sufficient allowance for the cadmium plate or galvanized coating to permit the nuts to run freely on the bolts.

STRINGER BOLTING TO ALUMINUM SIGNS (SEE SIGN PLATE A4-18)

MACHINE BOLTS - 5/16" X 1-3/4" Length w/ lock nuts

WOOD POSTS (4" x 6")

LAG SCREWS - 3/8" X 3" (NO STRINGERS ON BACK OF SIGN)
3/8" X 4" (STRINGERS ON BACK OF SIGN)

SQUARE STEEL POSTS (2" x 2")

MACHINE BOLTS - 3/8" X 3-1/4" Length w/ nuts (NO STRINGER ON BACK OF SIGN)
3/8" X 5" Length w/ nuts (STRINGERS ON BACK OF SIGN)

RIVETS - 9/32" (6605-9-6) BULB-TITE, TRI-FOLD, ALUMINUM BODY/MANDREL
O.D. FLANGE .720-.765 INCH, GRIP RANGE .042-.375 INCH

WASHERS (ALL POSTS) -

1-1/4" O.D. X 3/8" I.D. X 1/16" STEEL

1-1/4" O.D. X 3/8" I.D. X .080 NYLON

* Two different fastening systems are shown for illustration purposes. On any individual sign, either one or the other system shall be used. Actual number of fasteners per sign varies with the sign area, but normally there are two. For a single post installation, all signs greater than 9 sq. ft. require the use of 3 fasteners.

ATTACHMENT OF SIGNS TO POSTS

WISCONSIN DEPT OF TRANSPORTATION

APPROVED Matthew R Rauch
for State Traffic Engineer

DATE 4/1/2020 PLATE NO. A4-8.9

PROJECT NO:

SHEET NO: 193 E

FILE NAME : C:\CAEFiles\Projects\tr_stdplate\A48.DGN PLOT DATE : 01-APRIL-2020 PLOT BY : dotc4c

WISDOT/CADDS SHEET 42

7

7

TELESCOPIC TUBING ANCHORS
TWO PIECE SYSTEM

2 1/4 " SQUARE
12 GAUGE
PERFORATED
GALVANIZED FINISH

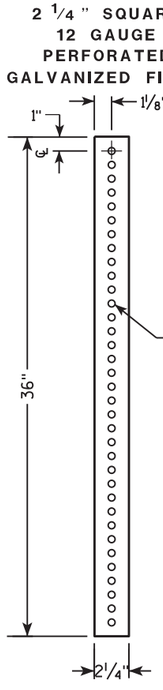

2 1/2 " SQUARE
12 GAUGE
OMNI-DIRECTIONAL
PERFORATED
SOIL STABILIZING SLEEVE
GALVANIZED FINISH

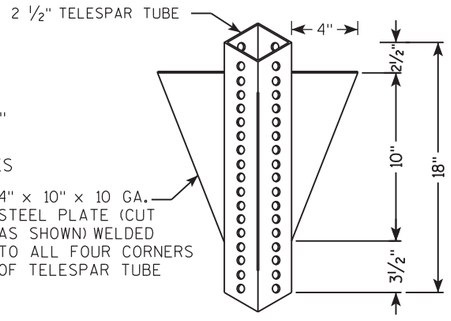

DETAIL OF TUBULAR STEEL SIGN POST
(IN POURED CONCRETE OR ASPHALT)

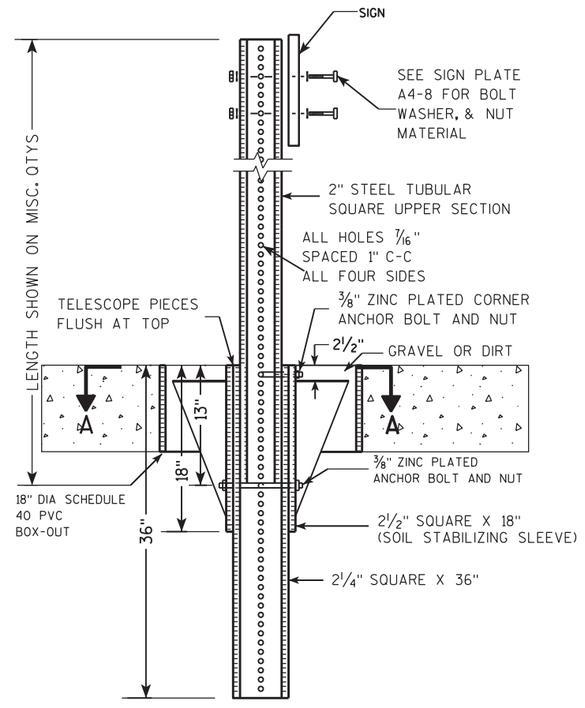

DETAIL OF TUBULAR STEEL SIGN POST
(IN LOCATIONS OTHER THAN POURED CONCRETE OR ASPHALT)

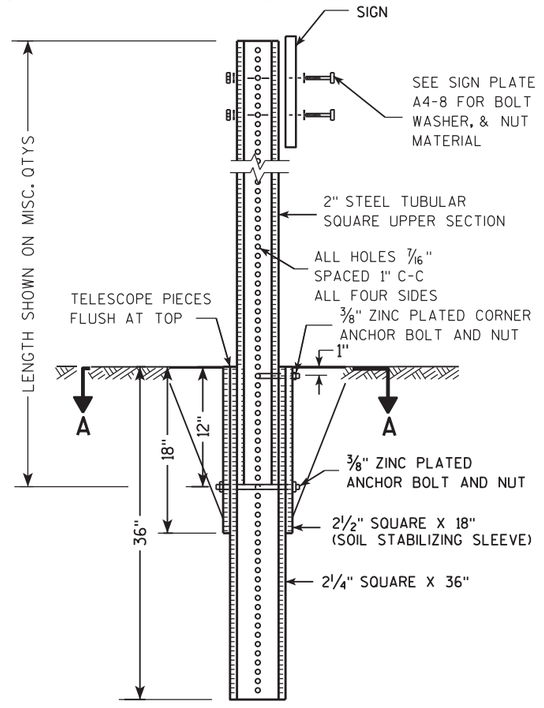

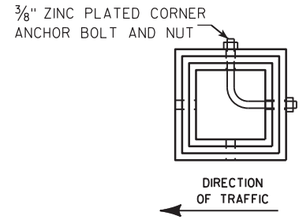

SECTION A-A

Area of Sign Installation (Sq. Ft.)	Number of Required Posts
9 or less	1
Greater than 9 less than or equal to 18	2
Greater than 18 less than or equal to 27	3

Signs wider than 3 feet or larger than 9 sq. ft shall be mounted on multiple posts (see above table).

TUBULAR STEEL
SIGN POST
A4-9

WISCONSIN DEPT OF TRANSPORTATION

APPROVED Matthew R Rauch
for State Traffic Engineer

DATE 2/05/15 PLATE A4-9.9

PROJECT NO:	HWY:	COUNTY:		SHEET NO:	E

FILE NAME : C:\CAEFiles\Projects\tr_stdplate\A49.DGN PLOT DATE : 05-FEB-2015 17:09 PLOT BY : mscsja PLOT NAME : PLOT SCALE : 13.659812:1.000000
WISDOT/CADDS SHEET 42

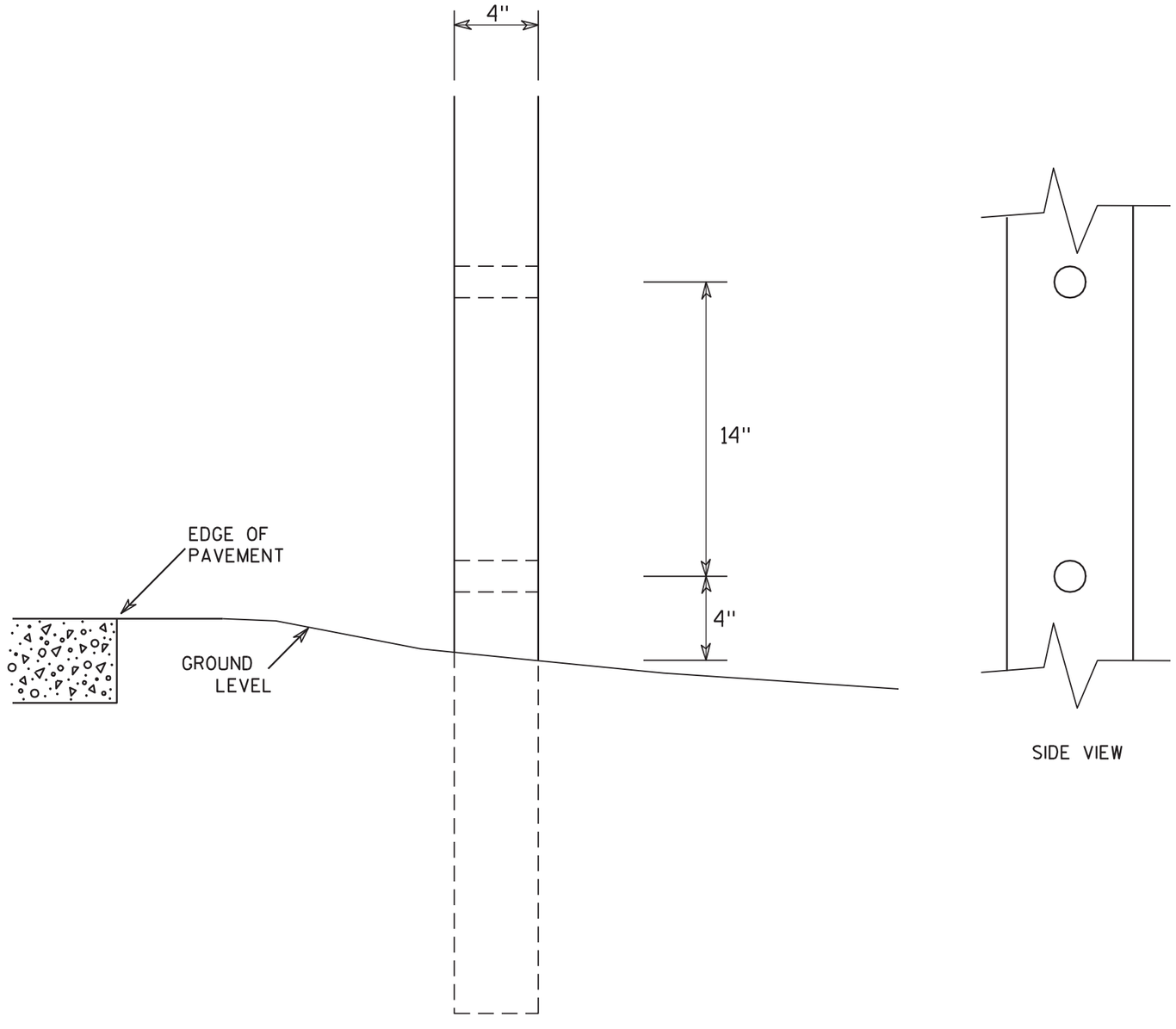

SIDE VIEW

GENERAL NOTES

1. All 4 x 6 Wood Posts shall be modified by having two 1½" diameter holes drilled perpendicular to the roadway centerline.

7

7

4 X 6 WOOD POST MODIFICATIONS

WISCONSIN DEPT OF TRANSPORTATION

APPROVED Chester J Spang
for State Traffic Engineer

DATE 3/27/97 PLATE NO. A4-11.2

PROJECT NO:	HWY:	COUNTY:		SHEET NO: 195	E

BANDING

SINGLE SIGN

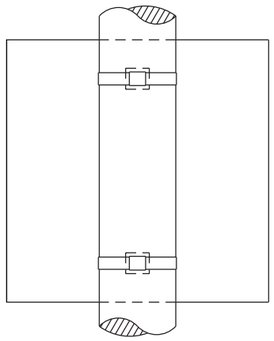

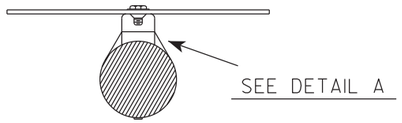

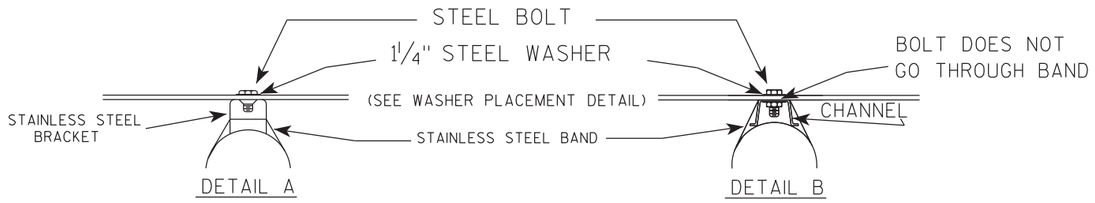

WASHER PLACEMENT

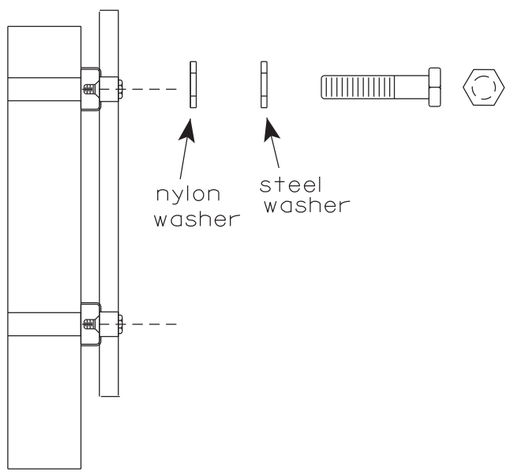

WASHERS (ALL POSTS) -
1-1/4" O.D. X 3/8" I.D. X 1/16" STEEL
1-1/4" O.D. X 3/8" I.D. X .080 NYLON
FOR ALL TYPE H SIGNS

GENERAL NOTES

1. Any sign over 3 feet in width shall use the V-Block banding method. See A5-10 standard plate.
2. Signs 3 feet or greater in height shall have three bracket bands installed. Signs less than 3 feet in height shall have two bracket bands installed.
3. Banding and assembly bracket shall be stainless steel. All bands shall be ¾" in width and 0.025" thickness.
4. ALL SIGN MOUNTING BOLTS AND WASHERS SHALL BE EITHER:
   a. Hot dip or mechanically galvanized in accordance with ASTM Designation: A 153, Class D
   b. Electro-galvanized in accordance with ASTM designation: B 633, Type III, SC 3

"J" ASSEMBLY

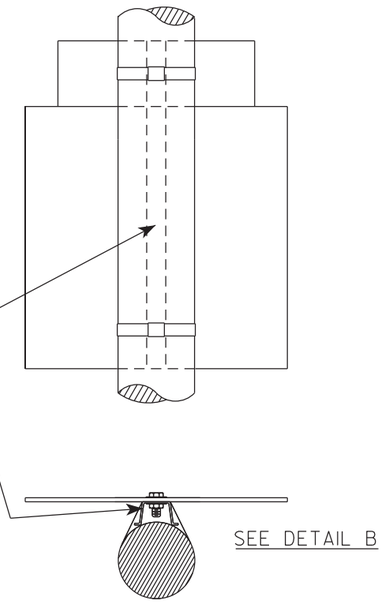

STANDARD SIGN
SIGN BANDING DETAILS

WISCONSIN DEPT OF TRANSPORTATION

APPROVED Matthew R Rauch
for State Traffic Engineer

DATE 6/10/19 PLATE NO. A5-9.4

PROJECT NO:	HWY:	COUNTY:		SHEET NO: 196	E

FILE NAME : C:\CAEfiles\Projects\tr_stdplate\A59.dgn PLOT DATE : 10-JUN 2019 4:10 PLOT BY : mscj9h PLOT NAME : PLOT SCALE : $$.....plotscale.....$$ WISDOT/CADDS SHEET 42

7

7

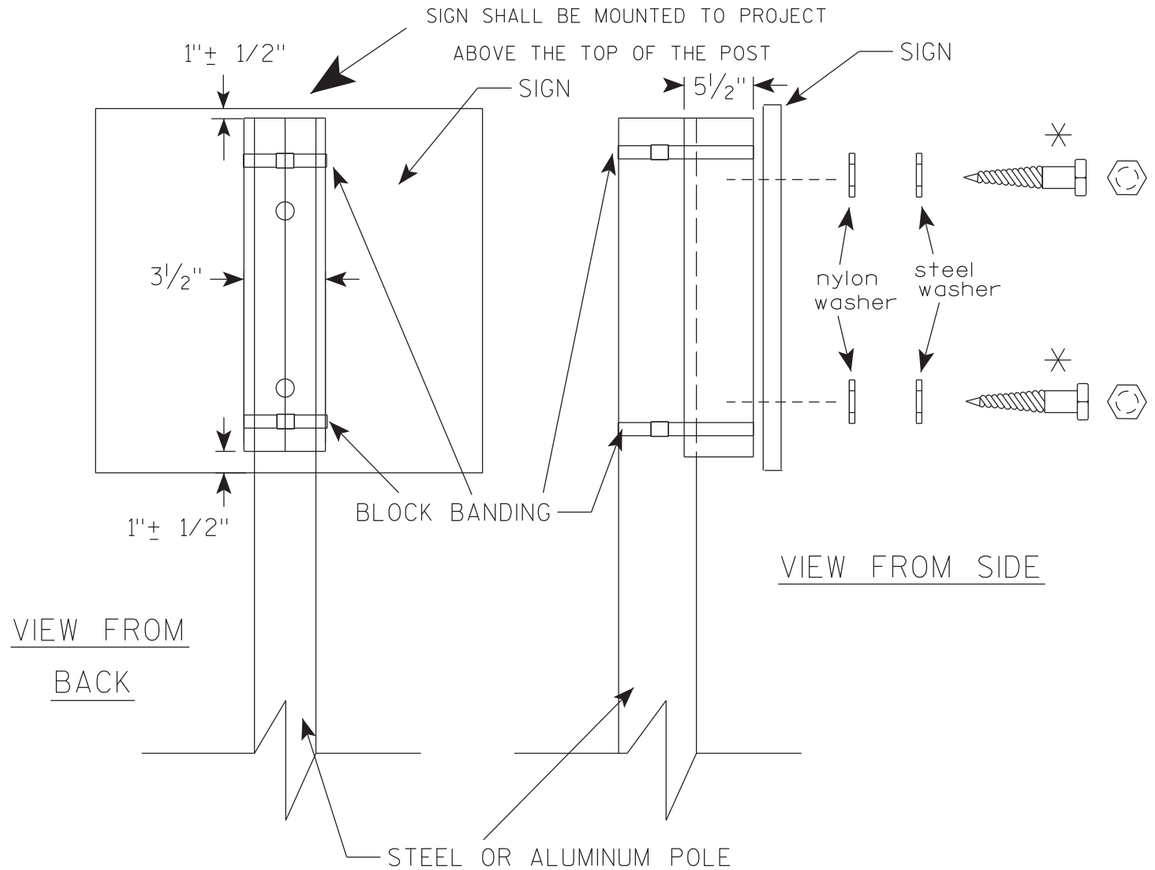

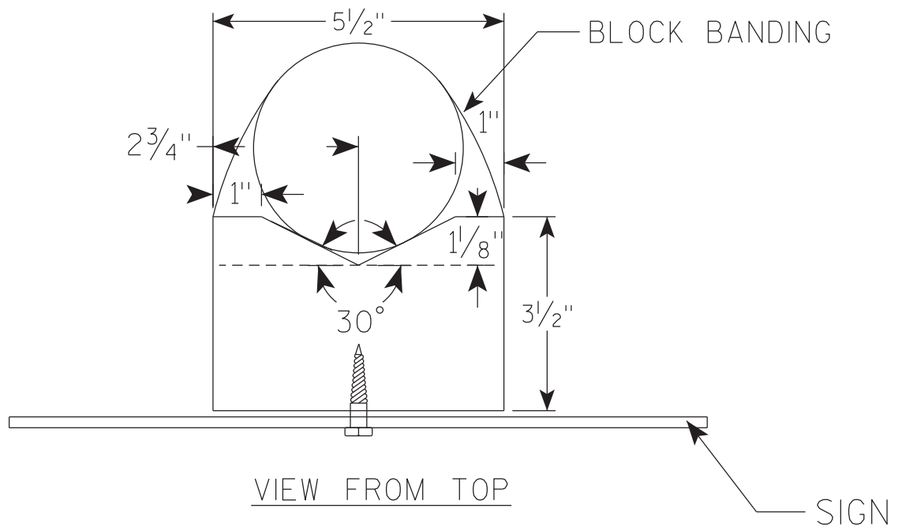

GENERAL NOTES

1. WOOD 4"X6" POST MATERIAL SHALL CONFORM TO 507.2.2 OF THE WisDOT STANDARD SPECIFICATIONS
2. BLOCK BANDING AND CLIPS SHALL BE STAINLESS STEEL, ¾" WIDTH AND 0.025" THICKNESS
3. SIGNS 3' OR GREATER IN HEIGHT SHALL UTILIZE 3 BLOCK BANDS. SIGNS UNDER 3' IN HEIGHT SHALL UTILIZE 2 BLOCK BANDS
4. ACTUAL NUMBER OF FASTENERS PER SIGN VARIES WITH THE SIGN AREA, BUT NORNALLY THERE ARE TWO. FOR SIGNS GREATER THAN 9 S.F. 3 FASTENERS SHALL BE USED.
5. ALL SIGN MOUNTING BOLTS AND WASHERS SHALL BE EITHER:
   a. Hot dip or mechanically galvanized in accordance with ASTM Designation: A 153, Class D
   b. Electro-galvanized in accordance with ASTM Designation : B 633, TYPE III, SC 3
6. ALL BOLTS SHALL HAVE HEXAGONAL HEADS.
7. STEEL WASHERS SHALL BE 1¼" O.D. X ⅜" I.D. X 1/16"
8. NYLON WASHERS SHALL BE 1¼" O.D. X ⅜" I.D. X .080 FOR TYPE H OR TYPE F FACE SIGN

✳ LAG BOLTS SHALL BE ⅜" X 2½"

BLOCK BANDING DETAIL (V-BLOCK OPTION)

WISCONSIN DEPT OF TRANSPORTATION

APPROVED Matthew R Rauch
For State Traffic Engineer

DATE 6/10/19 PLATE NO. A5-10.2

PROJECT NO: | SHEET NO: 197 | E

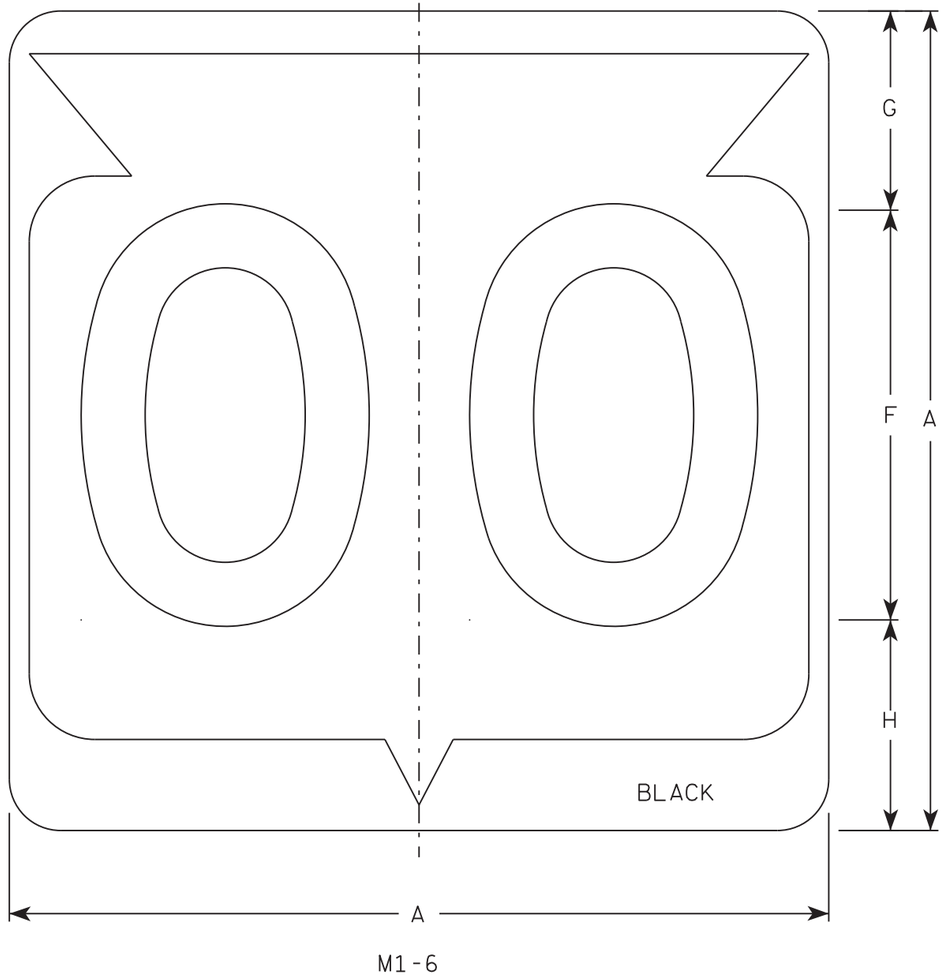

M1-6

NOTES

1. Sign is Type II - Type H Reflective
2. Color:
   Background - White
   Message - Black
3. Message Series - D except 3 number signs Series C
4. Corners may be square or rounded when base material is plywood but borders shall be rounded as shown. When base material is metal, the corners and borders shall be rounded.

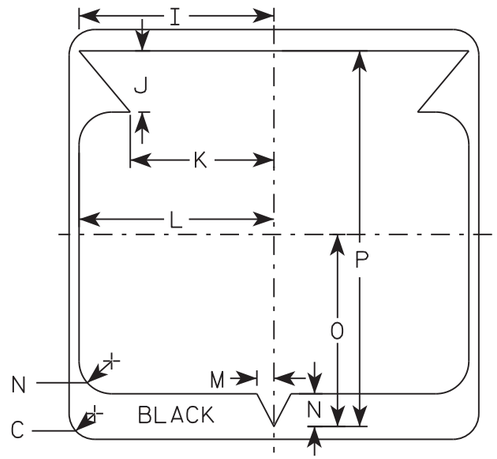

SIZE	A	B	C	D	E	F	G	H	I	J	K	L	M	N	O	P	Q	R	S	T	U	V	W	X	Y	Z	Area sq. ft.
1																											
2	24		1 1/2			12	5 1/2	6 1/2	10 1/4	2 1/2	8 7/8	11 1/2	1	1 7/8	11 1/4	21 7/8											4.0
3	36		2 1/4			18	8 3/4	9 1/4	15 3/8	5 3/8	12 5/8	17 1/8	1 1/2	2 7/8	16 7/8	33											9.0
4	36		2 1/4			18	8 3/4	9 1/4	15 3/8	5 3/8	12 5/8	17 1/8	1 1/2	2 7/8	16 7/8	33											9.0
5	36		2 1/4			18	8 3/4	9 1/4	15 3/8	5 3/8	12 5/8	17 1/8	1 1/2	2 7/8	16 7/8	33											9.0

STATE ROUTE MARKER M1-6 FOR ASSEMBLIES

WISCONSIN DEPT OF TRANSPORTATION

APPROVED Matthew R Rauch for State Traffic Engineer

DATE 3/16/18 PLATE NO. M1-6.10

PROJECT NO: | HWY: | COUNTY: | SHEET NO: 198 | E

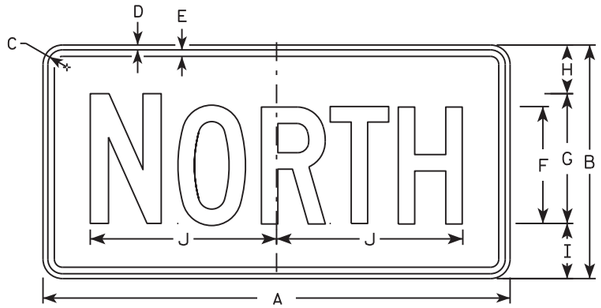

M3-1
MM3-1
MP3-1

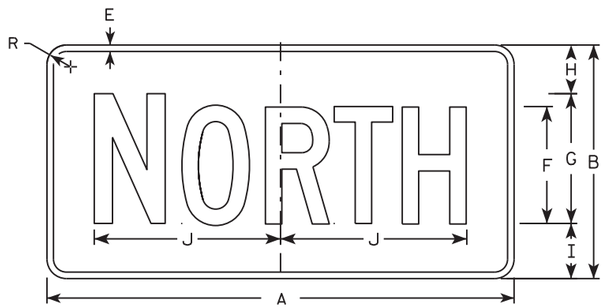

MB3-1
MK3-1
MN3-1

M3-2
MM3-2
MP3-2

MB3-2
MK3-2
MN3-2

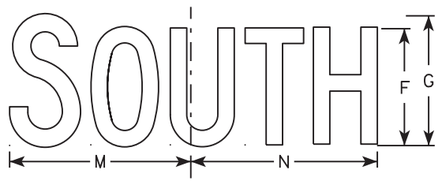

M3-3
MM3-3
MP3-3

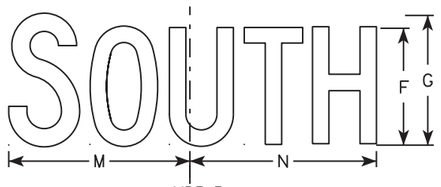

MB3-3
MK3-3
MN3-3

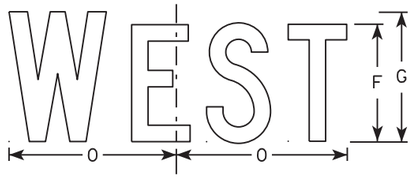

M3-4
MM3-4
MP3-4

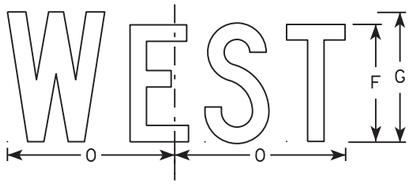

MB3-4
MK3-4
MN3-4

NOTES

1. All Signs Type II - Type H
2. Color:
   Background - See note 5
   Message - See note 5
3. Message Series - C
4. Corners may be square or rounded when base material is plywood but borders shall be rounded as shown. When base material is metal, the corners and borders shall be rounded.
5. M3-1 thru M3-4 Background - White
   Message - Black
   MB3-1 thru MB3-4 Background - Blue
   Message - White
   MK3-1 thru MK3-4 Background - Green
   Message - White
   MM3-1 thru MM3-4 Background - White
   Message - Green
   MN3-1 thru MN3-4 Background - Brown
   Message - White
   MP3-1 thru MP3-4 Background - White
   Message - Blue
6. Note the first letter of each direction is larger than the remainder of the message.

SIZE	A	B	C	D	E	F	G	H	I	J	K	L	M	N	O	P	Q	R	S	T	U	V	W	X	Y	Z	Area sq. ft.
1																											
2	24	12	1 1/8	3/8	3/8	6	7	2 1/4	2 3/4	10 1/4	7 7/8	8 3/8	10 1/4	9 3/4	8 3/4			1 1/2									2.00
3	36	18	1 1/8	3/8	1/2	9	10	3 3/4	4 1/4	14 3/8	12	12 1/8	14	14 1/8	13			1 1/2									4.5
4	36	18	1 1/8	3/8	1/2	9	10	3 3/4	4 1/4	14 3/8	12	12 1/8	14	14 1/8	13			1 1/2									4.5
5	36	18	1 1/8	3/8	1/2	9	10	3 3/4	4 1/4	14 3/8	12	12 1/8	14	14 1/8	13			1 1/2									4.5

STANDARD SIGNS
M3-1 thur M3-4
SERIES

WISCONSIN DEPT OF TRANSPORTATION

APPROVED Matthew P Rauch for State Traffic Engineer

DATE 10/15/15 PLATE NO M3-1.14

PROJECT NO: | HWY: | COUNTY: | SHEET NO: E

FILE NAME : C:\CAEfiles\Projects\tr_stdplate\M31.DGN PLOT DATE : 01-DEC-2015 17:54 PLOT BY : $$ plotuser $$ PLOT NAME : PLOT SCALE : 11.675051:1.000000

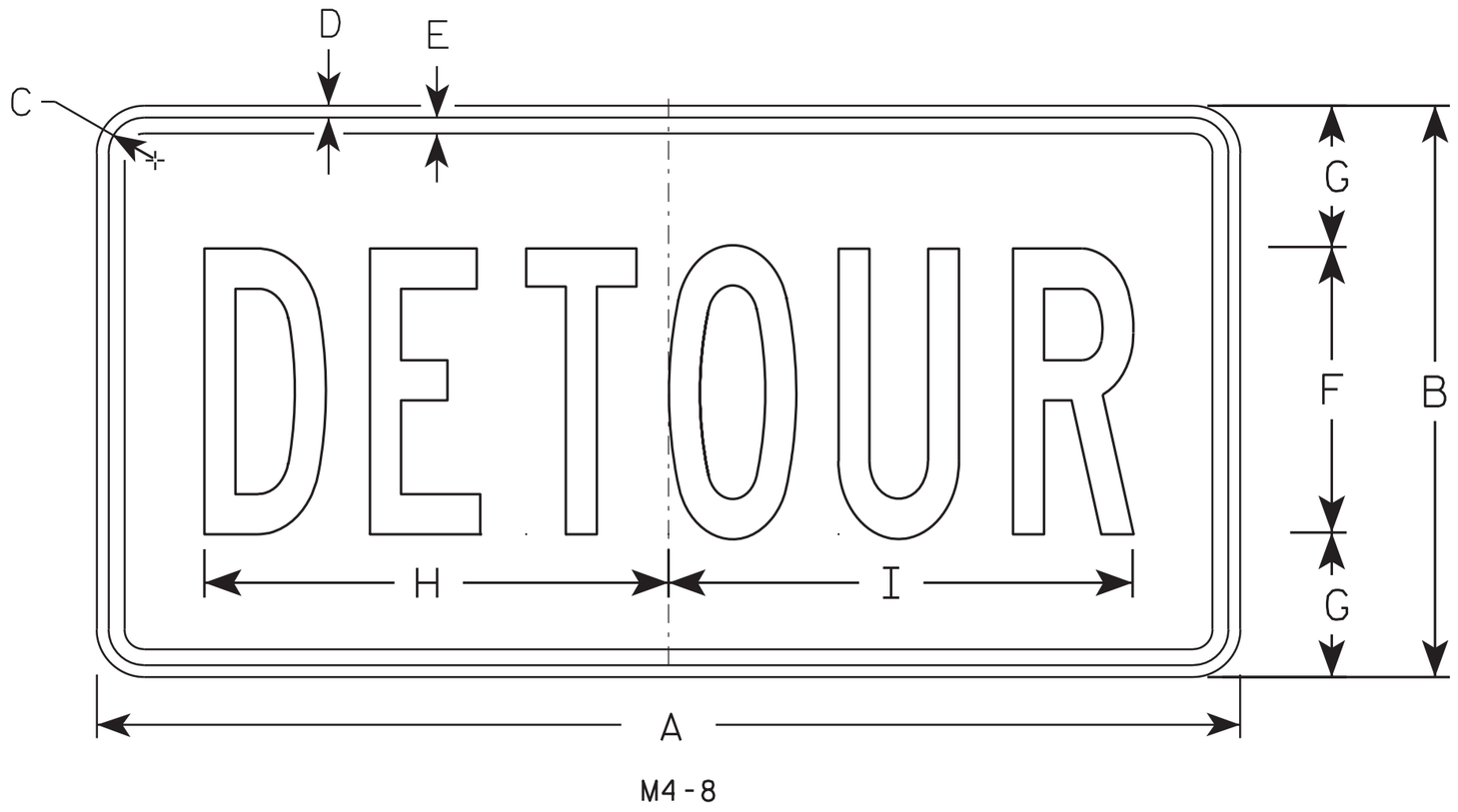

M4-8

NOTES

1. Sign is Type II - Type F Reflective - reference WIS DOT Standard Specification for HIGHWAY and STRUCTURE CONSTRUCTION latest edition.
2. Color:
   Background - Orange
   Message - Black
3. Message Series - B
4. Corners may be square or rounded when base material is plywood but borders shall be rounded as shown. When base material is metal, the corners and borders shall be rounded.

SIZE	A	B	C	D	E	F	G	H	I	J	K	L	M	N	O	P	Q	R	S	T	U	V	W	X	Y	Z	Area sq. ft.
1																											
2	24	12	1 1/8	3/8	3/8	6	3	10	10 1/4																		2.0
3	36	18	1 1/8	3/8	1/2	9	4 1/2	14 5/8	14 1/2																		4.5
4																											
5																											

STANDARD SIGN
M4-8

WISCONSIN DEPT OF TRANSPORTATION

APPROVED Matthew R Rauch
for State Traffic Engineer

DATE 11/10/10 PLATE NO. M4-8.2

PROJECT NO:	HWY:	COUNTY:		SHEET NO: 200	E

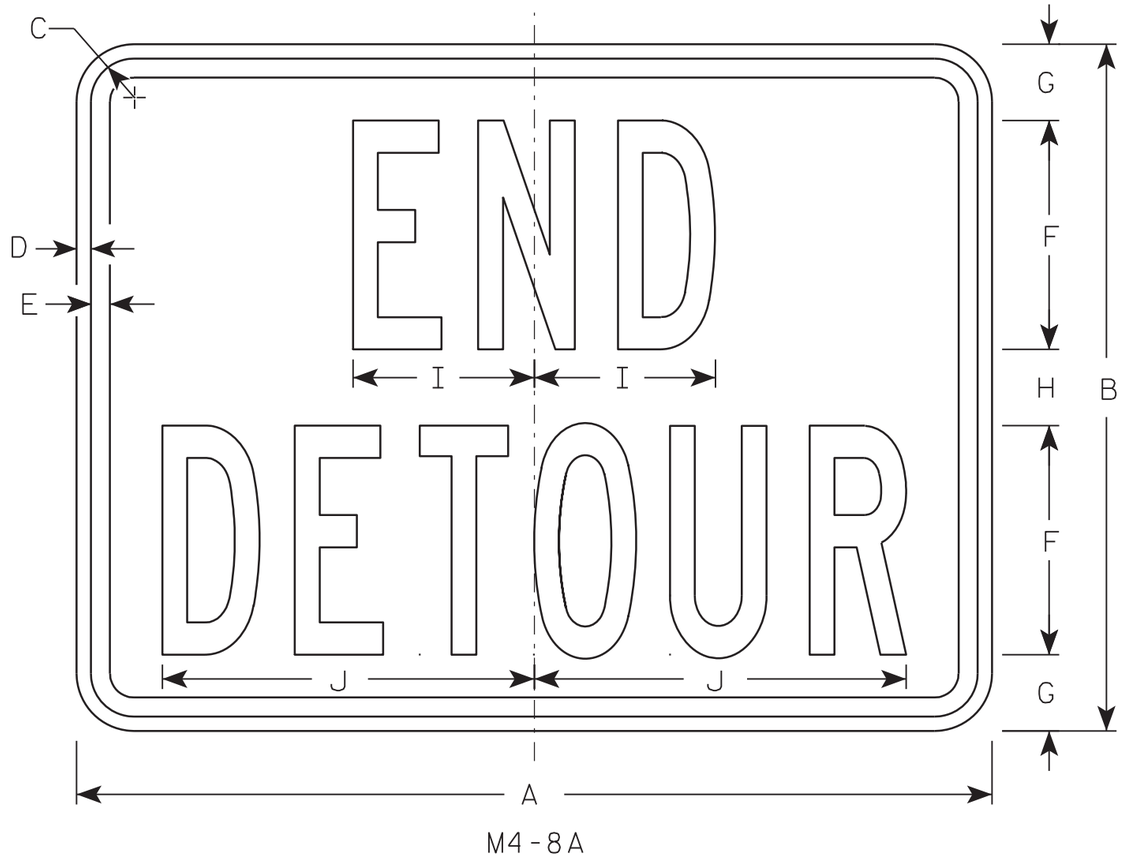

M4-8A

NOTES

1. Sign is Type II - Type F Reflective - reference WIS DOT Standard Specification for HIGHWAY and STRUCTURE CONSTRUCTION latest edition.
2. Color:
   Background - Orange
   Message - Black
3. Message Series - B
4. Corners may be square or rounded when base material is plywood but borders shall be rounded as shown. When base material is metal, the corners and borders shall be rounded.

SIZE	A	B	C	D	E	F	G	H	I	J	K	L	M	N	O	P	Q	R	S	T	U	V	W	X	Y	Z	Area sq. ft.
1																											
2	24	18	1 1/8	3/8	1/2	6	2	2	4 3/4	9 3/4																	3.0
3	30	24	1 1/8	3/8	1/2	8	2 1/2	3	6 3/4	13																	5.0
4																											
5																											

STANDARD SIGN
M4-8A

WISCONSIN DEPT OF TRANSPORTATION

APPROVED Matthew R Rauch
for State Traffic Engineer

DATE 3/9/11 PLATE NO. M4-8A.2

PROJECT NO:	HWY:	COUNTY:		SHEET NO: 201	E

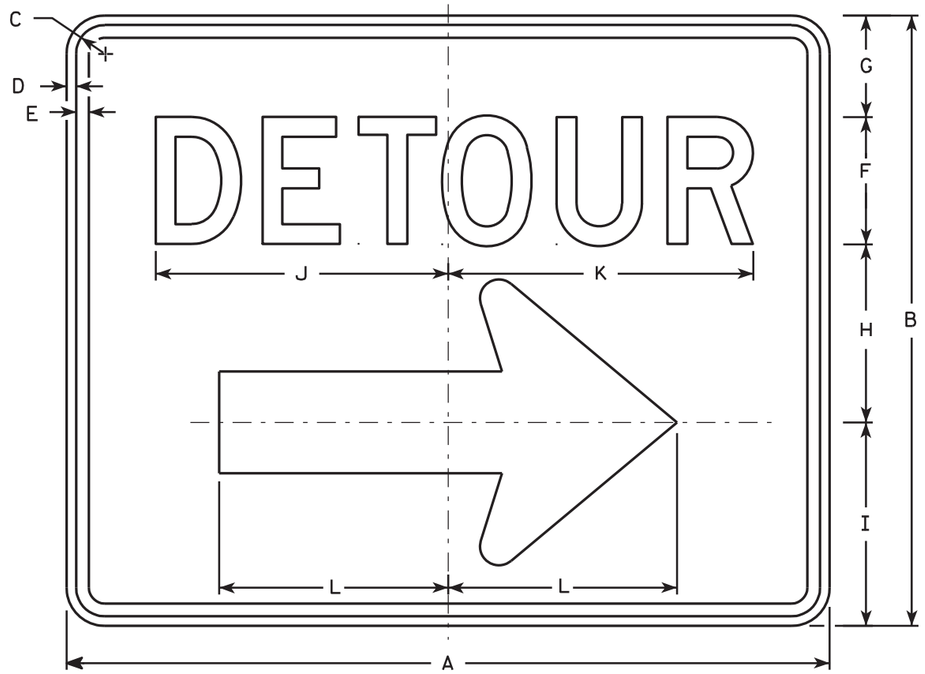

M4-9R

NOTES

1. Sign is Type II - Type F Reflective - reference WIS DOT Standard Specification for HIGHWAY and STRUCTURE CONSTRUCTION latest edition.
2. Color:
   Background - Orange
   Message - Black
3. Message Series - D
4. Corners may be square or rounded when base material is plywood but borders shall be rounded as shown. When base material is metal, the corners and borders shall be rounded.
5. M4-9L is the same as M4-9R except the arrow is reversed.

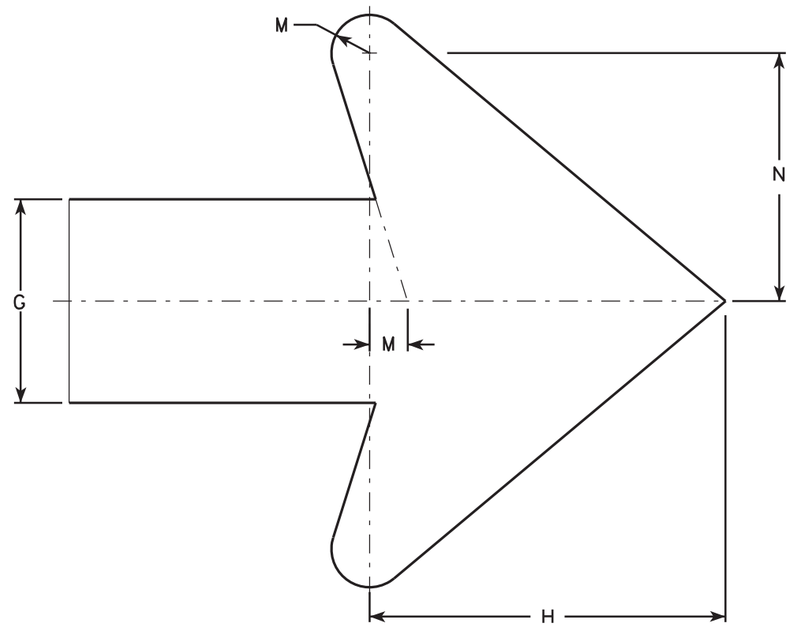

Arrow Detail

SIZE	A	B	C	D	E	F	G	H	I	J	K	L	M	N	O	P	Q	R	S	T	U	V	W	X	Y	Z	Area sq. ft.
1																											
2	30	24	1 1/8	3/8	1/2	5	4	7	8	11 1/2	12	9	3/4	4 7/8													5.00
3	30	24	1 1/8	3/8	1/2	5	4	7	8	11 1/2	12	9	3/4	4 7/8													5.00
4	48	36	1 3/8	1/2	5/8	8	6	10 1/2	11 5/8	20 5/8	20 1/2	13 1/4	1 1/8	6 7/8													12.0
5	48	36	1 3/8	1/2	5/8	8	6	10 1/2	11 5/8	20 5/8	20 1/2	13 1/4	1 1/8	6 7/8													12.0

STANDARD SIGN
M4-9 R & L

WISCONSIN DEPT OF TRANSPORTATION

APPROVED Matthew R Rauch
for State Traffic Engineer

DATE 3/9/11 PLATE NO. M4-9R.4

PROJECT NO:	HWY:	COUNTY:		SHEET NO: 202	E

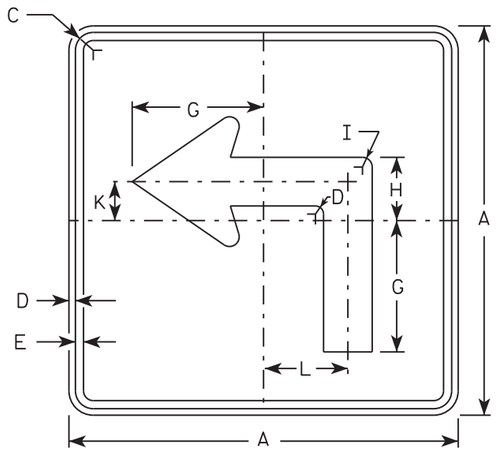

M5-1L
MM5-1L
MO5-1L
MP5-1L

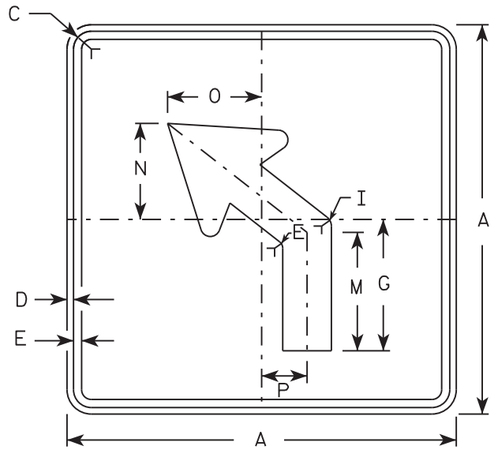

M5-2L
MM5-2L
MO5-2L
MP5-2L

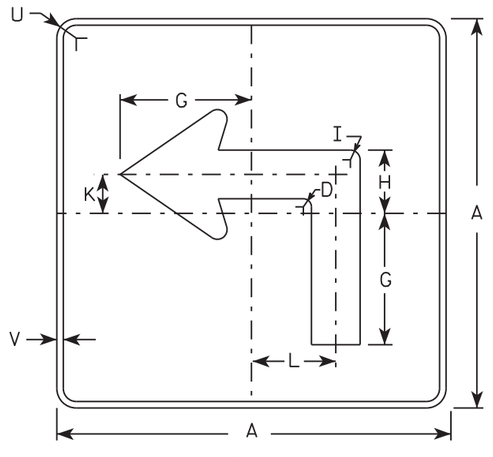

MB5-1L
MK5-1L
MN5-1L
MR5-1L

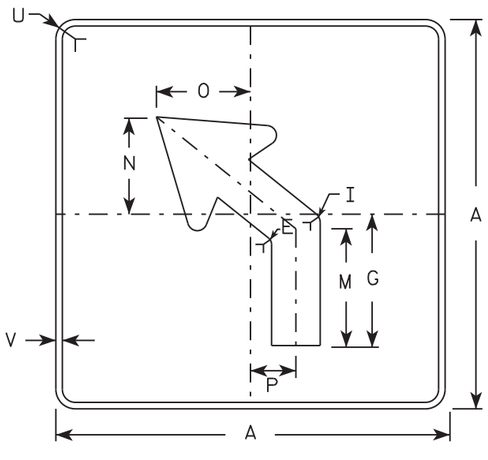

MB5-2L
MK5-2L
MN5-2L
MR5-2L

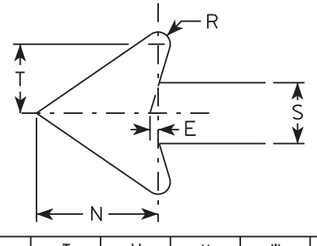

NOTES

1. Signs are Type II - Type H reflective except as shown
2. Color:
   Background - See note 4
   Message - See note 4
3. Corners may be square or rounded when base material is plywood but borders shall be rounded as shown. When base material is metal, the corners and borders shall be rounded.
4. M5-1 and M5-2 Background - White
   Message - Black
   MB5-1 and MB5-2 Background - Blue
   Message - White
   MK5-1 and MK5-2 Background - Green
   Message - White
   MM5-1 and MM5-2 Background - White
   Message - Green
   MN5-1 and MN5-2 Background - Brown
   Message - White
   MO5-1 and MO5-2 Background - Orange - Type F Reflective
   Message - Black
   MP5-1 and MP5-2 Background - White - Type H Reflective
   Message - Blue
   MR5-1 and MR5-2 Background - Brown
   Message - Yellow
5. M5-1R same as M5-1L except arrow points right.
6. M5-2R same as M5-2L except arrow tilts right.

SIZE	A	B	C	D	E	F	G	H	I	J	K	L	M	N	O	P	Q	R	S	T	U	V	W	X	Y	Z	Area sq. ft.
1																											
2	21		1 1/8	3/8	3/8		7	3 3/8	5/8		2 1/8	4 1/2	6 3/8	5 1/4	5	2 1/2		1/2	2 5/8	3	1 1/2	1/2					3.06
3	30		1 3/8	1/2	5/8		10 1/8	4 7/8	7/8		3	6 1/2	9 1/8	7 1/2	7 1/4	3 1/2		3/4	3 3/4	4 1/4	1 7/8	1/2					6.25
4	30		1 3/8	1/2	5/8		10 1/8	4 7/8	7/8		3	6 1/2	9 1/8	7 1/2	7 1/4	3 1/2		3/4	3 3/4	4 1/4	1 7/8	1/2					6.25
5	30		1 3/8	1/2	5/8		10 1/8	4 7/8	7/8		3	6 1/2	9 1/8	7 1/2	7 1/4	3 1/2		3/4	3 3/4	4 1/4	1 7/8	1/2					6.25

STANDARD SIGN
M5-1 & M5-2

WISCONSIN DEPT OF TRANSPORTATION

APPROVED Matthew R Rauch
for State Traffic Engineer

DATE 10/15/15 PLATE NO. M5-1.13

PROJECT NO: | HWY: | COUNTY: | SHEET NO: E

FILE NAME : C:\CAEfiles\Projects\tr_stdplate\M51.DGN PLOT DATE : 01-DEC-2015 18:07 PLOT BY : $$ plotuser $$ PLOT NAME : PLOT SCALE : 11.675051:1.000000

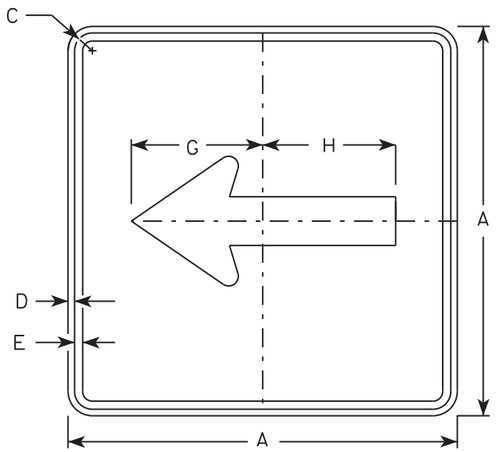

M6-1
MM6-1
MO6-1
MP6-1

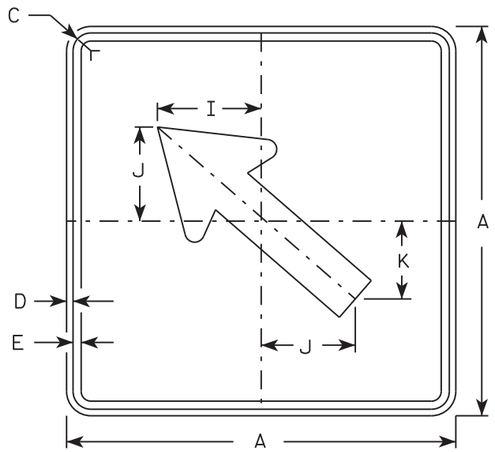

M6-2
MM6-2
MO6-2
MP6-2

NOTES

1. Signs are Type II - Type H except as Shown
2. Color:
   Background - See note 4
   Message - See note 4
3. Corners may be square or rounded when base material is plywood but borders shall be rounded as shown. When base material is metal, the corners and borders shall be rounded.
4. M6-1 and M6-2 Background - White
   Message - Black
   MB6-1 and MB6-2 Background - Blue
   Message - White
   MK6-1 and MK6-2 Background - Green
   Message - White
   MM6-1 and MM6-2 Background - White
   Message - Green
   MN6-1 and MN6-2 Background - Brown
   Message - White
   MO6-1 and MO6-2 Background - Orange - Type F Reflective
   Message - Black
   MP6-1 and MP6-2 Background - White
   Message - Blue
   MR6-1 and MR6-2 Background - Brown
   Message - Yellow

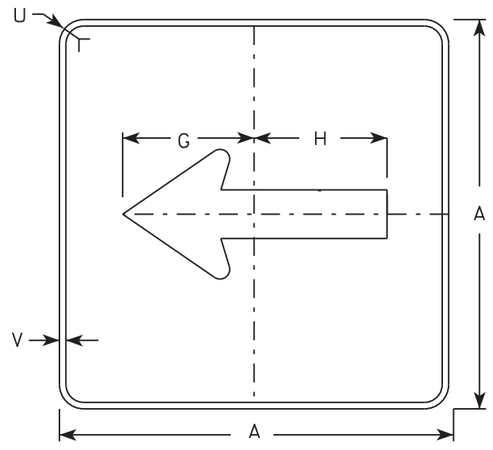

MB6-1
MK6-1
MN6-1
MR6-1

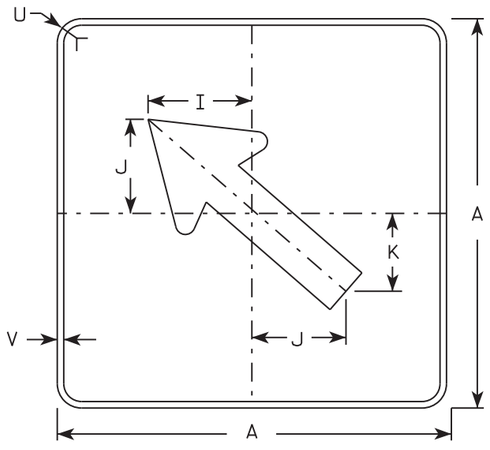

MB6-2
MK6-2
MN6-2
MR6-2

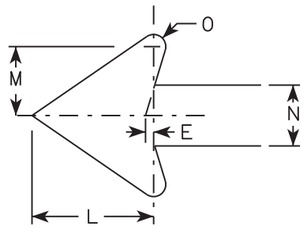

SIZE	A	B	C	D	E	F	G	H	I	J	K	L	M	N	O	P	Q	R	S	T	U	V	W	X	Y	Z	Area sq. ft.
1																											
2	21		1 1/8	3/8	3/8		7 1/2	7 1/8	5 5/8	5	4 1/4	5 1/4	3	2 5/8	1/2						1 1/2	1/2						3.06
3	30		1 3/8	1/2	5/8		10 3/4	10 1/4	8	7 1/4	6	7 1/2	4 1/4	3 3/4	3/4						1 7/8	1/2						6.25
4	30		1 3/8	1/2	5/8		10 3/4	10 1/4	8	7 1/4	6	7 1/2	4 1/4	3 3/4	3/4						1 7/8	1/2						6.25
5	30		1 3/8	1/2	5/8		10 3/4	10 1/4	8	7 1/4	6	7 1/2	4 1/4	3 3/4	3/4						1 7/8	1/2						6.25

STANDARD SIGN
M6-1 & M6-2
SERIES

WISCONSIN DEPT OF TRANSPORTATION

APPROVED Matthew R Rauch
for State Traffic Engineer

DATE 10/15/15 PLATI 204 M6-1.15

PROJECT NO:	HWY:	COUNTY:		SHEET NO:	E

FILE NAME : C:\CAEfiles\Projects\tr_stdplate\M61.DGN PLOT DATE : 01-DEC-2015 17:57 PLOT BY : $$ plotuser $$ PLOT NAME : PLOT SCALE : 11.675051:1.000000

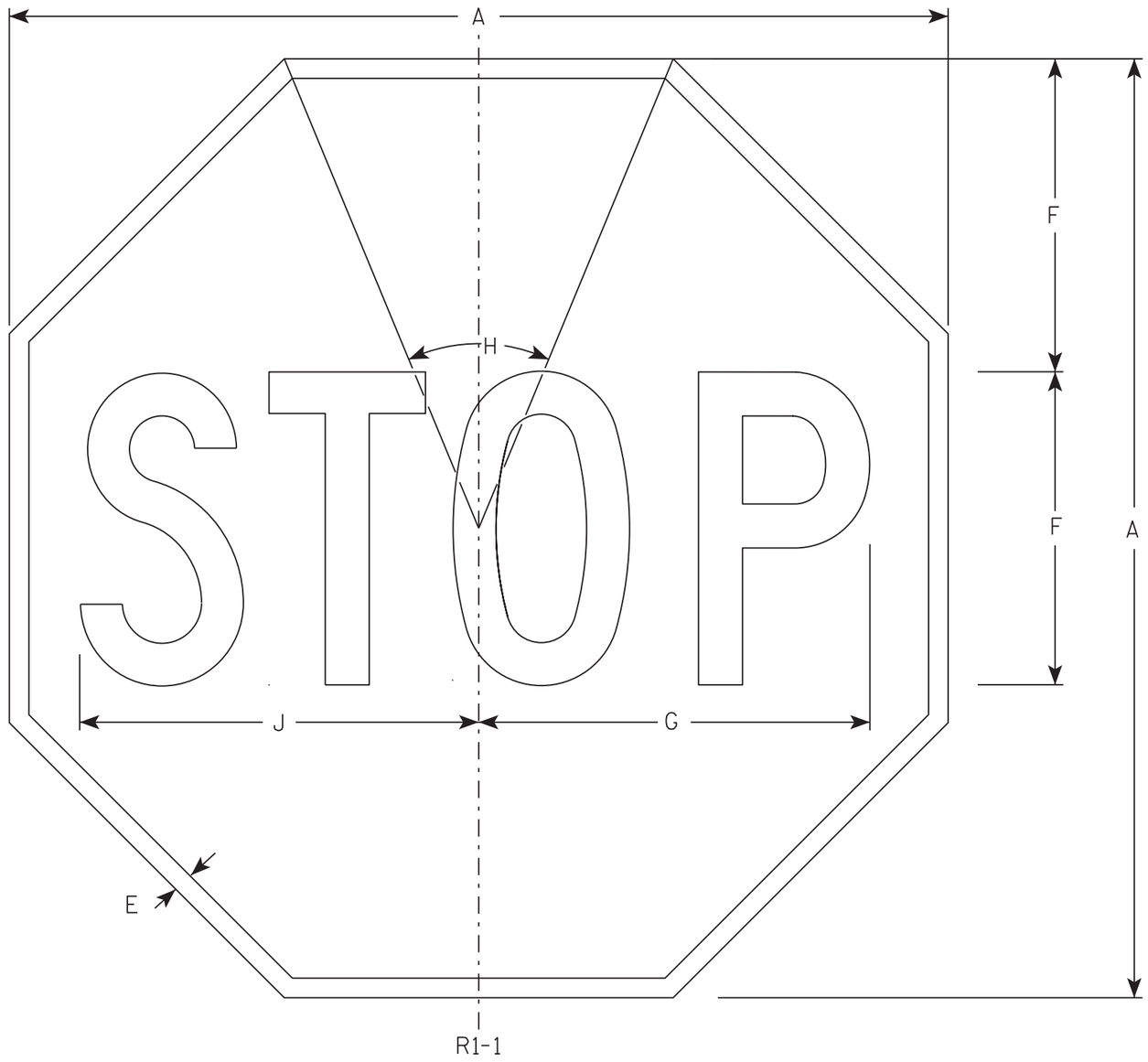

NOTES

1. Sign is Type II - Type H Reflective - reference WIS DOT Standard Specification for HIGHWAY and STRUCTURE CONSTRUCTION latest edition.
2. Color:
   Background - Red
   Message - White
3. Message Series - C

SIZE	A	B	C	D	E	F	G	H	I	J	K	L	M	N	O	P	Q	R	S	T	U	V	W	X	Y	Z	Area sq. ft.
1	30				5/8	10	12 1/2	45°		12 3/4																	5.18
2S	30				5/8	10	12 1/2	45°		12 3/4																	5.18
2M	36				3/4	12	15	45°		15 3/8																	7.46
3	36				3/4	12	15	45°		15 3/8																	7.46
4	48				1	16	20	45°		20 1/2																	13.25
5	48				1	16	20	45°		20 1/2																	13.25
6	18				3/8	6	7 3/4	45°		7 3/4																	1.86
7	12				1/4	4	5	45°		5 1/8																	0.78

STANDARD SIGN
R1-1

WISCONSIN DEPT OF TRANSPORTATION

APPROVED Matthew R Rauch
for State Traffic Engineer

DATE 11/12/15 PLATE NO. R1-1.13

PROJECT NO:	HWY:	COUNTY:		SHEET NO: 205	E

NOTES

1. Sign is Type II - Type H Reflective
2. Color:
   Background - White
   Message - Black
3. Message Series - C
4. Corners may be square or rounded when base material is plywood but borders shall be rounded as shown. When base material is metal, the corners and borders shall be rounded.
5. Substitute appropriate numerals to nearest quarter mile and optically adjust spacing to achieve proper balance.

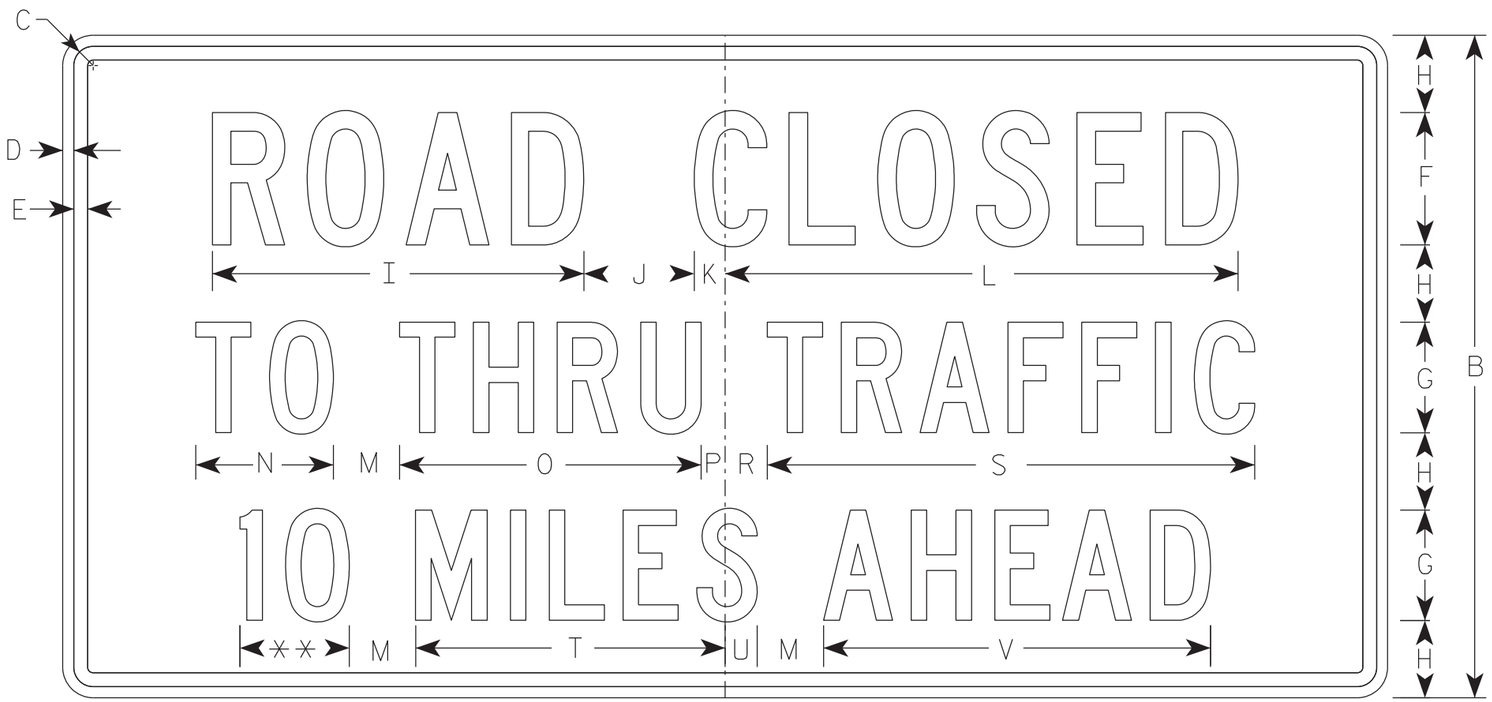

R11-3

** See Note 5

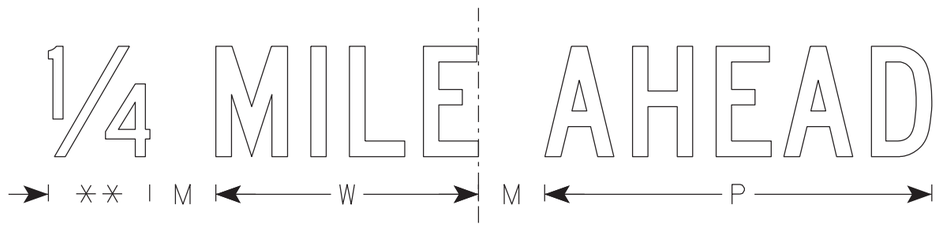

SIZE	A	B	C	D	E	F	G	H	I	J	K	L	M	N	O	P	Q	R	S	T	U	V	W	X	Y	Z	Area sq. ft.
1	36	18	1 1/4	3/8	3/8	4	3	2	11 1/4	3	1 1/8	15 3/8	2	3 3/4	8 1/4	5/8		1 3/8	13 1/4	8 3/8	7/8	10 1/2	7 1/8				4.5
2S	60	30	1 3/8	1/2	5/8	6	5	3 1/2	16 7/8	5	1 3/8	23 1/4	3	6 1/4	13 5/8	1 1/8		1 7/8	22 1/8	14	1 1/2	17 1/2	11 7/8				12.5
2M	60	30	1 3/8	1/2	5/8	6	5	3 1/2	16 7/8	5	1 3/8	23 1/4	3	6 1/4	13 5/8	1 1/8		1 7/8	22 1/8	14	1 1/2	17 1/2	11 7/8				12.5
3																											
4																											
5																											

STANDARD SIGN
R11-3

WISCONSIN DEPT OF TRANSPORTATION

APPROVED Matthew R Rauch
for State Traffic Engineer
DATE 6/14/2021 PLATE NO. R11-3.9

PROJECT NO:	HWY:	COUNTY:		SHEET NO: 206	E

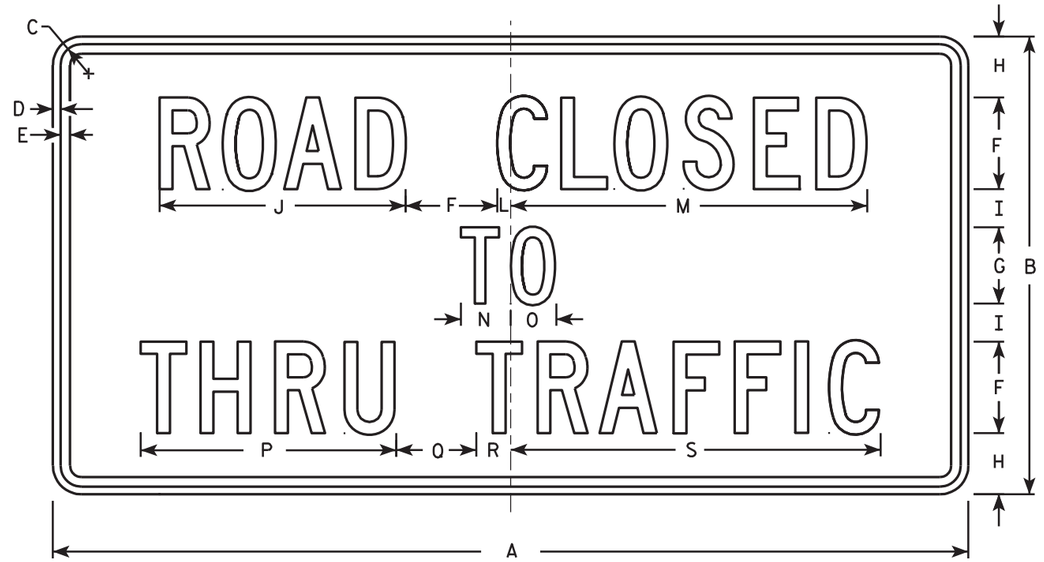

R11-4

NOTES

1. Sign is Type II - Type H Reflective - reference WIS DOT Standard Specification for HIGHWAY and STRUCTURE CONSTRUCTION latest edition.
2. Color:
   Background - White
   Message - Black
3. Message Series - C
4. Corners may be square or rounded when base material is plywood but borders shall be rounded as shown. When base material is metal, the corners and borders shall be rounded.

SIZE	A	B	C	D	E	F	G	H	I	J	K	L	M	N	O	P	Q	R	S	T	U	V	W	X	Y	Z	Area sq. ft.
1																											
2S	60	30	1 3/8	1/2	5/8	6	5	4	2 1/2	16 1/8		7/8	23 3/8	3 1/4	3	16 3/4	5 1/4	2 1/4	24 1/4								12.5
2M	60	30	1 3/8	1/2	5/8	6	5	4	2 1/2	16 1/8		7/8	23 3/8	3 1/4	3	16 3/4	5 1/4	2 1/4	24 1/4								12.5
3																											
4																											
5																											

STANDARD SIGN
R11 - 4

WISCONSIN DEPT OF TRANSPORTATION

APPROVED Matthew R Rauch for State Traffic Engineer

DATE 4/1/11 PLATE NO. R11-4.3

PROJECT NO: | HWY: | COUNTY: | SHEET NO: 207 | E

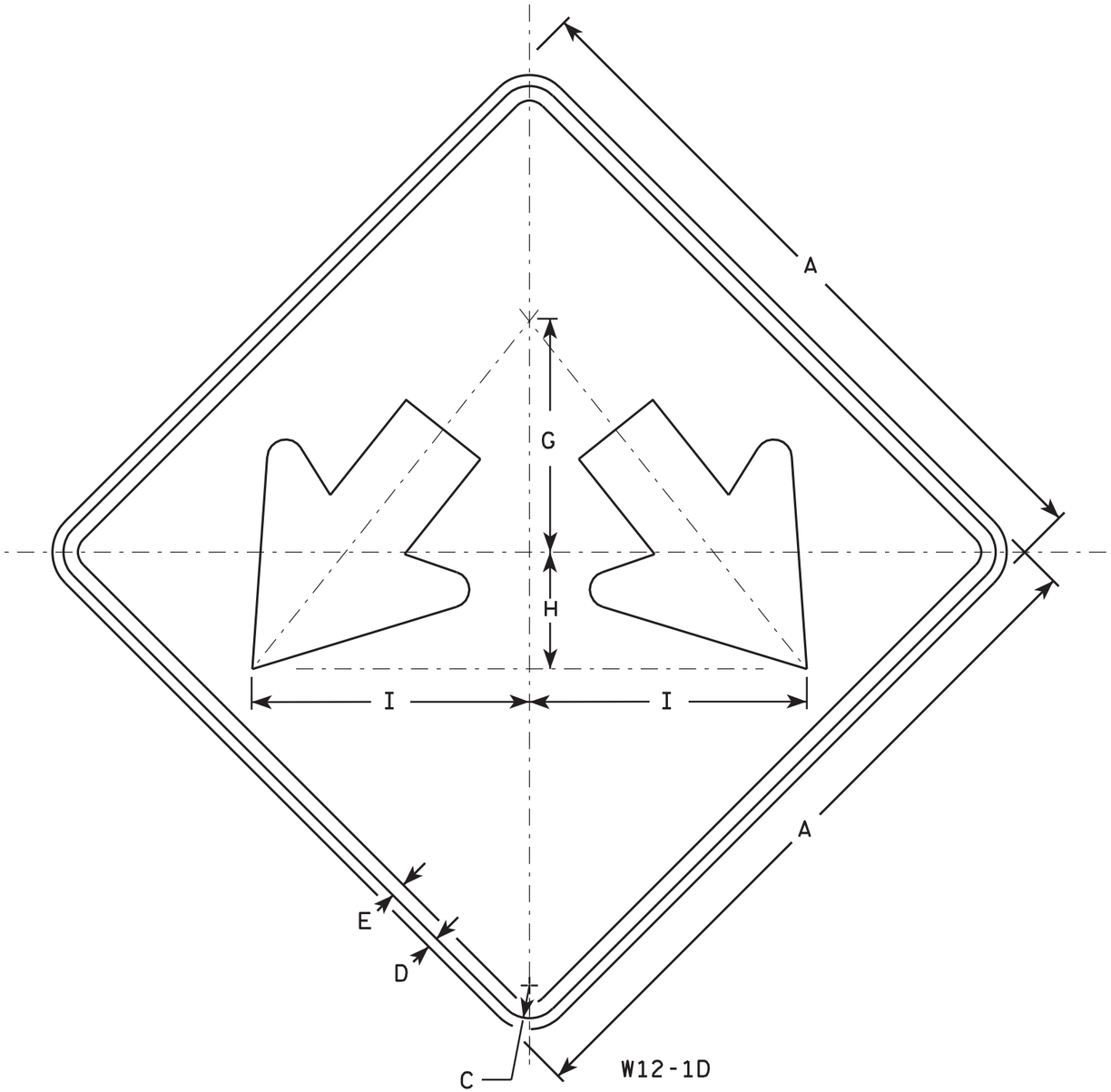

W12-1D

NOTES

1. Sign is Type II - Type F Reflective - reference WIS DOT Standard Specification for HIGHWAY and STRUCTURE CONSTRUCTION latest edition.
2. Color:
   Background - Yellow
   Message - Black
3. Corners may be square or rounded when base material is plywood but borders shall be rounded as shown. When base material is metal, the corners and borders shall be rounded.

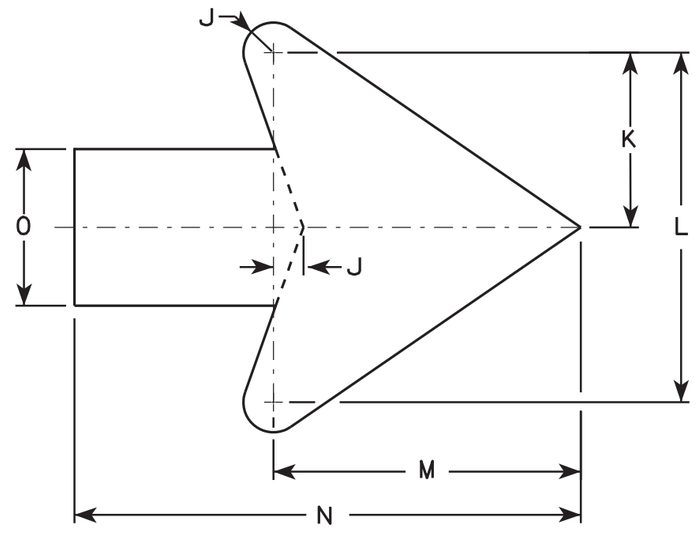

Arrow Detail

SIZE	A	B	C	D	E	F	G	H	I	J	K	L	M	N	O	P	Q	R	S	T	U	V	W	X	Y	Z	Area sq. ft.
1																											
2S	24		1 1/8	1/2	3/8		8	4	9 1/2	3/8	3 3/8	7 1/4	6 3/8	10 3/8	3 1/4												4.0
2M	24		1 1/8	1/2	3/8		8	4	9 1/2	3/8	3 3/8	7 1/4	6 3/8	10 3/8	3 1/4												4.0
3	30		1 3/8	1/2	5/8		10	5	11 7/8	3/4	4 1/2	9	7 7/8	13	4												6.25
4	36		1 3/8	1/2	5/8		12	6	14 1/4	1	5 1/2	10 7/8	9 5/8	15 3/4	4 3/4												9.0
5	48		2 1/4	3/4	1		16	8	19	1 1/4	7 1/4	14 1/2	12 3/4	21	6 1/4												16.0

STANDARD SIGN
W12-1D

WISCONSIN DEPT OF TRANSPORTATION

APPROVED Matthew R Rauch
for State Traffic Engineer

DATE 3/13/13 PLATE NO. W12-1D.15

PROJECT NO: | HWY: | COUNTY: | SHEET NO: 208 | E

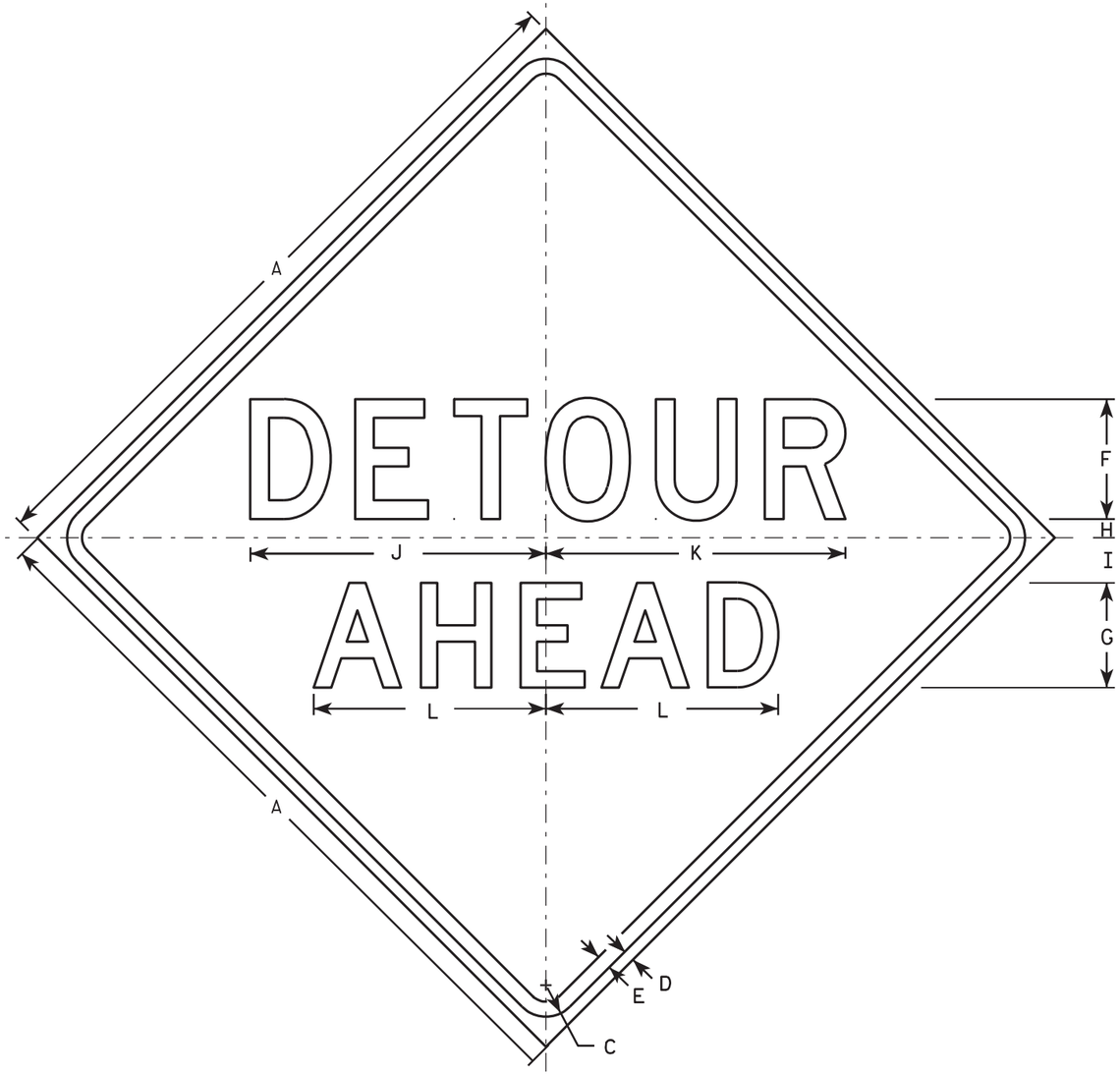

W20-2A

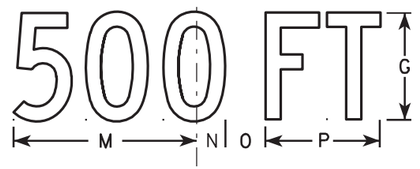

W20-2D

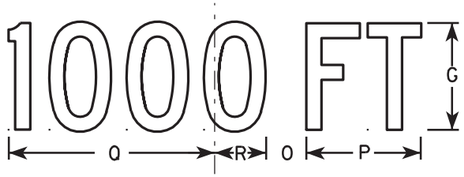

W20-2C

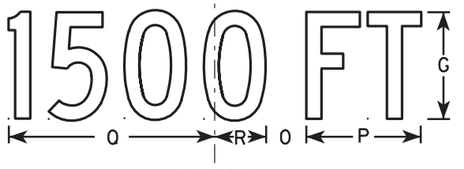

W20-2B

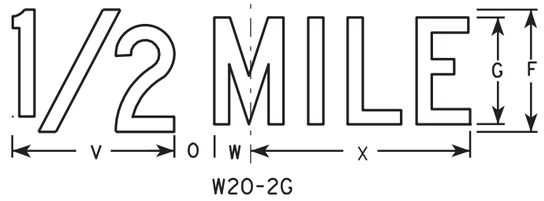

W20-2G

W20-2F

NOTES

1. Sign is Type II - Type F Reflective - reference WIS DOT Standard Specification for HIGHWAY and STRUCTURE CONSTRUCTION latest edition.
2. Color:
   Background - Orange
   Message - Black
3. Message Series - See note 5
4. Corners may be square or rounded when base material is plywood but borders shall be rounded as shown. When base material is metal, the corners and borders shall be rounded.
5. Line 1 is Series D.
   Line 2 is Series D for AHEAD and Series C for all other distances.

SIZE	A	B	C	D	E	F	G	H	I	J	K	L	M	N	O	P	O	R	S	T	U	V	W	X	Y	Z	Area sq. ft.
1	36		1 5/8	5/8	3/4	6	5	1	2 1/4	14 3/4	15	11 5/8	9	1 3/8	1 7/8	5 5/8	10 1/8	2 1/2	1 1/8	4 1/2	3 1/2	8	1 3/4	10 3/4			9.0
2S	48		2 1/4	3/4	1	8	7	1 1/4	3	19 3/4	20	15 1/2	12	1 7/8	2 5/8	7 1/2	13 1/2	3 3/8	1 1/2	6	4 5/8	10 5/8	2 3/8	14 3/8			16.0
2M	48		2 1/4	3/4	1	8	7	1 1/4	3	19 3/4	20	15 1/2	12	1 7/8	2 5/8	7 1/2	13 1/2	3 3/8	1 1/2	6	4 5/8	10 5/8	2 3/8	14 3/8			16.0
3	48		2 1/4	3/4	1	8	7	1 1/4	3	19 3/4	20	15 1/2	12	1 7/8	2 5/8	7 1/2	13 1/2	3 3/8	1 1/2	6	4 5/8	10 5/8	2 3/8	14 3/8			16.0
4	48		2 1/4	3/4	1	8	7	1 1/4	3	19 3/4	20	15 1/2	12	1 7/8	2 5/8	7 1/2	13 1/2	3 3/8	1 1/2	6	4 5/8	10 5/8	2 3/8	14 3/8			16.0
5	48		2 1/4	3/4	1	8	7	1 1/4	3	19 3/4	20	15 1/2	12	1 7/8	2 5/8	7 1/2	13 1/2	3 3/8	1 1/2	6	4 5/8	10 5/8	2 3/8	14 3/8			16.0

STANDARD SIGN
W20-2A,B,C,D,F & G

WISCONSIN DEPT OF TRANSPORTATION

APPROVED Matthew R Rauch
for State Traffic Engineer

DATE 3/18/11 PLATE NO. W20-2.6

PROJECT NO: | HWY: | COUNTY: | SHEET NO: 209 | E

7

FILE NAME : C:\Users\PROJECTS\tr_stdplate\W202.DGN PLOT DATE : 18-MAR-2011 10:00 PLOT BY : mscj9h PLOT NAME : PLOT SCALE : 9.931739:1.000000
WISDOT/CADDS SHEET 42

DIVISION	FROM/TO STATION	LOCATION	205.0100 COMMON EXCAVATION (1) CUT (2)	205.0100 COMMON EXCAVATION (1) EBS EXCAVATION (3)	SALVAGED/UNUSABLE PAVEMENT MATERIAL (4)	AVAILABLE MATERIAL (5)	EXPANDED EBS BACKFILL (3) FACTOR 1.00	UNEXPANDED FILL	EXPANDED FILL (13) FACTOR 1.43	MASS ORDINATE +/- (14)	WASTE	COMMENT
DIVISION 1 - STATE PARK RD												
114@STATEPARKSOUTH	272+27.484/277+27.06	STH 114	344	139	40	304	139	34	49	256	256	USE EXCESS MATERIAL FROM 114@STATEPARKNORTH FOR FILL AT STATE PARK RD DRIVEWAY REMOVAL AND NEW DRIVEWAY
STATEPARKNORTH	45+51.431/45+82.842	STATE PARK RD.	110	0	32	78	0	0	0	78	78	
114@STATEPARKNORTH	276+90.973/283+77.751	STH 114	974	213	184	790	213	50	72	719	473	
STATE PARK RD DRIVEWAY REMOVAL	0+54/1+28	HARRISON DRIVEWAY	106	0	67	39	0	102	146	-107	0	
NEW DRIVEWAY	284+14/284+86	STH 114	0	0	0	0	0	97	139	-139	0	
DIVISION 1 SUBTOTAL			1,534	352	322	1,212	352	283	405	807	807	
DIVISION 2 - PIGEON RD												
114@PIGEONRD	305+24.436/307+43.169	STH 114	344	42	106	238	42	33	47	191	191	
PIGEONRD	47+83.308/49+48.455	PIGEON RD.	393	109	125	268	109	6	9	260	260	
DIVISION 2 SUBTOTAL			737	151	230	507	151	39	56	451	451	
DIVISION 3 - CASTLE DR												
114@CASTLEDR	390+82.094/397+36.663	STH 114	681	285	142	539	285	83	119	420	420	
CASTLEDR	78+83.196/79+49.876	CASTLE DR.	150	0	60	90	0	13	19	71	71	
DIVISION 3 SUBTOTAL			831	285	202	629	285	96	137	491	491	
DIVISION 4 - RAILROAD												
RAILROAD CROSSING WIDENING	360+23.43/362+19.392	STH 114	0	0	0	0	0	42	60	-60	0	USE EXCESS MATEIRAL FROM RIALROAD CROSSING EXCAVATION FOR FILL FOR RAILROAD CROSSING WIDENING
RAILROAD CROSSING EXCAVATION	360+52.44/361+91.77	STH 114	115	0	38	77	0	0	0	77	17	
DIVISION 4 SUBTOTAL			115	0	38	77	0	42	60	17	17	
DIVISION 5 - RUBBILIZING												
EXCAVATION OVER CONCRETE RUBBILIZING	290+30/310+30	STH 114	1,556	0	1,074	481		0	0	481	481	(16)
DIVISION 5 SUBTOTAL												
GRAND TOTAL			4,666	788	1,800	2,866	788	261	373	2,493	2,248	
TOTAL COMMON EXC			5,454									

NOTES:

(1) COMMON EXCAVATION IS THE SUM OF THE CUT AND EBS EXCAVATION COLUMNS. ITEM NUMBER 205.0100

(2) SALVAGED/UNSUABLE PAVEMENT MATERIAL IS INCLUDED IN CUT.

(3) EBS EXCAVATION TO BE BACKFILLED WITH SELECT CRUSHED MATERIAL, ITEM 312.0110 (QUANTITY SHOWN ELSE WHERE); EBS IS NOT TO BE USED IN FILL; NOT INLCUDED IN WASTE TOTAL

(4) SALVAGED/UNUSABLE PAVEMENT MATERIAL NOT INCLUDED IN WASTE TOTAL

(5) AVAILABLE MATERIAL = CUT - SALVAGED/UNUSUABLE PAVEMENT MATERIAL

(13) EXPANDED FILL FACTOR = 1.43

(14) THE MASS ORDINATE + OR - QTY CALCULATED FOR THE DIVISION. PLUS QUANTITY INDICATES AN EXCESS OF MATERIAL WITHIN THE DIVISION. MINUS INDICATES A SHORTAGE OF MATERIAL WITHIN THE DIVISION.

(15) FACTORS USED TO COMPUTE ANTICIPATED WASTE AND THE COMPUTED WASTE VOLUME IDENTIFIED ARE FOR GENERAL INFORMATION ONLY.

(16) ESTIMATED DEPTH OF EXCAVATION SHOWN ON TYPICAL SECTIONS AND CORING LOG

Division 1 - STATE PARK RD - 114@STATEPARKRD SOUTH - STH 114 (45801000)

STATION	REAL STATION	DISTANCE	AREA (SF)				INCREMENTAL VOL (CY) (UNADJUSTED)				CUMULATIVE VOL (CY)			
			CUT	SALVAGED/ UNUSABLE PAVEMENT MATERIAL	FILL	EBS	CUT NOTE 1	SALVAGED/UNUSABLE PAVEMENT MATERIAL NOTE 2	FILL NOTE 3	EBS NOTE 4	CUT 1.00 NOTE 1	EXPANDED FILL 1.43 NOTE 5	EXPANDED EBS BACKFILL 1.00 NOTE 6	MASS ORDINATE NOTE 7
272+27.484	27227.48	0.00	0.04	0.00	3.39	0.00	0	0	0	0	0	0	0	0
272+50	27250.00	22.52	0.04	0.00	3.15	0.00	0	0	3	0	0	4	0	-4
272+75	27275.00	25.00	0.06	0.00	3.21	0.00	0	0	3	0	0	9	0	-9
273+00	27300.00	25.00	2.95	0.00	0.92	0.00	1	0	2	0	1	11	0	-10
273+25	27325.00	25.00	18.81	0.00	0.17	0.00	10	0	1	0	11	13	0	-2
273+50	27350.00	25.00	18.94	0.00	0.04	0.00	17	0	0	0	28	13	0	15
273+75	27375.00	25.00	19.01	0.00	0.00	4.37	18	0	0	2	46	13	2	33
274+00	27400.00	25.00	18.34	0.00	0.35	7.76	17	0	0	6	63	13	8	50
274+25	27425.00	25.00	20.16	0.00	1.89	10.10	18	0	1	8	81	14	16	67
274+50	27450.00	25.00	23.62	0.00	2.78	13.05	20	0	2	11	101	17	27	84
274+75	27475.00	25.00	24.41	0.00	2.45	14.50	22	0	2	13	123	20	40	103
275+00	27500.00	25.00	23.57	0.00	2.53	14.34	22	0	2	13	145	23	53	122
275+25	27525.00	25.00	22.80	0.00	2.78	13.96	21	0	2	13	166	26	66	140
275+50	27550.00	25.00	24.09	0.00	2.89	13.15	22	0	3	13	188	30	79	158
275+75	27575.00	25.00	27.09	0.00	2.75	12.57	24	0	3	12	212	34	91	178
276+00	27600.00	25.00	28.69	0.00	2.07	12.86	26	0	2	12	238	37	103	201
276+25	27625.00	25.00	30.29	0.00	1.38	13.25	27	0	2	12	265	40	115	225
276+50	27650.00	25.00	32.68	0.00	1.29	11.31	29	0	1	11	294	41	126	253
276+75	27675.00	25.00	34.43	0.00	1.64	8.88	31	0	1	9	325	43	135	282
277+00	27700.00	25.00	2.45	0.00	2.07	0.00	17	0	2	4	342	46	139	296
277+25	27725.00	25.00	1.23	0.00	2.62	0.00	2	0	2	0	344	49	139	295
277+27.06	27727.06	2.06	1.29	0.00	2.67	0.00	0	0	0	0	344	49	139	295

Division 1 - STATE PARK RD - STATE PARK NORTH

STATION	REAL STATION	DISTANCE	AREA (SF)				INCREMENTAL VOL (CY) (UNADJUSTED)				CUMULATIVE VOL (CY)			
			CUT	SALVAGED/UNUSABLE PAVEMENT MATERIAL	FILL	EBS	CUT NOTE 1	SALVAGED/UNUSABLE PAVEMENT MATERIAL NOTE 2	FILL NOTE 3	EBS NOTE 4	CUT 1.00 NOTE 1	EXPANDED FILL 1.43 NOTE 5	EXPANDED EBS BACKFILL 1.00 NOTE 7	MASS ORDINATE NOTE 8
45+51.431	4551.43	0.00	82.33	0.00	0.00	0.00	0	0	0	0	0	0	0	0
45+58.12	4558.12	6.69	113.90	0.00	0.00	0.00	24	0	0	0	24	0	0	24
45+75	4575.00	16.88	95.25	0.00	0.08	0.00	65	0	0	0	89	0	0	89
45+82.842	4582.84	7.84	52.65	0.00	0.00	0.00	21	0	0	0	110	0	0	110

Notes:	
1 - CUT	CUT INCLUDES SALVAGED/UNUSABLE PAVEMENT MATERIAL
2 - SALVAGED/UNUSABLE PAVEMENT MATERIAL	THIS DOES NOT SHOW UP IN CROSS SECTIONS AND IS CALCULATED IN THE SUMMARY TABLE INSTEAD OF BY CROSS SECTION
3 - FILL	DOES NOT INCLUDE UNUSABLE PAVEMENT EXC VOLUME
4 - EBS	EBS EXCAVATION IS NOT TO BE USED IN FILL
5 - EXPANDED FILL	EXPANDED FILL FACTOR = 1.43
6 - EXPANDED EBS BACKFILL	REDUCED EBS EXCAVATION THAT CAN BE USED IN FILL
7 - MASS ORDINATE	[(CUT - SALVAGED PAVT) - ((FILL * FILL FACTOR)]

Division 1 - STATE PARK RD - 114@STATEPARKRDNORTH - STH 114 (45801000)

STATION	REAL STATION	DISTANCE	AREA (SF)				INCREMENTAL VOL (CY) (UNADJUSTED)				CUMULATIVE VOL (CY)			
			CUT	SALVAGED/UNUSABLE PAVEMENT MATERIAL	FILL	EBS	CUT NOTE 1	SALVAGED/UNUSABLE PAVEMENT MATERIAL NOTE 2	FILL NOTE 3	EBS NOTE 4	CUT 1.00 NOTE 1	EXPANDED FILL 1.43 NOTE 5	EXPANDED EBS BACKFILL 1.00 NOTE 6	MASS ORDINATE NOTE 7
276+90.973	27690.97	0.00	28.41	0.00	0.00	0.00	0	0	0	0	0	0	0	0
277+00	27700.00	9.03	26.97	0.00	0.00	0.00	9	0	0	0	9	0	0	9
277+25	27725.00	25.00	22.82	0.00	0.00	0.00	23	0	0	0	32	0	0	32
277+50	27750.00	25.00	24.76	0.00	0.00	0.00	22	0	0	0	54	0	0	54
277+75	27775.00	25.00	28.56	0.00	0.00	0.00	25	0	0	0	79	0	0	79
278+00	27800.00	25.00	38.55	0.00	0.02	0.00	31	0	0	0	110	0	0	110
278+25	27825.00	25.00	64.80	0.00	0.00	0.00	48	0	0	0	158	0	0	158
278+50	27850.00	25.00	61.44	0.00	0.00	0.00	58	0	0	0	216	0	0	216
278+75	27875.00	25.00	67.96	0.00	0.00	0.00	60	0	0	0	276	0	0	276
279+00	27900.00	25.00	63.37	0.00	1.98	0.00	61	0	1	0	337	1	0	336
279+25	27925.00	25.00	47.39	0.00	4.14	0.00	51	0	3	0	388	6	0	382
279+50	27950.00	25.00	43.18	0.00	1.37	15.59	42	0	3	7	430	10	7	420
279+75	27975.00	25.00	44.74	0.00	1.45	15.51	41	0	1	14	471	11	21	460
280+00	28000.00	25.00	46.16	0.00	1.50	15.40	42	0	1	14	513	13	35	500
280+25	28025.00	25.00	47.68	0.00	1.57	15.21	43	0	1	14	556	14	49	542
280+50	28050.00	25.00	41.67	0.00	2.16	14.99	41	0	2	14	597	17	63	580
280+75	28075.00	25.00	38.27	0.00	2.27	15.30	37	0	2	14	634	20	77	614
281+00	28100.00	25.00	35.08	0.00	3.37	15.71	34	0	3	14	668	24	91	644
281+25	28125.00	25.00	32.92	0.00	4.56	16.19	31	0	4	15	699	30	106	669
281+50	28150.00	25.00	61.87	0.00	0.00	21.26	44	0	2	17	743	33	123	710
281+75	28175.00	25.00	66.81	0.00	0.00	21.53	60	0	0	20	803	33	143	770
282+00	28200.00	25.00	30.07	0.00	4.33	17.52	45	0	2	18	848	36	161	812
282+25	28225.00	25.00	23.29	0.00	5.95	16.24	25	0	5	16	873	43	177	830
282+50	28250.00	25.00	20.09	0.00	6.32	13.24	20	0	6	14	893	51	191	842
282+75	28275.00	25.00	17.80	0.00	6.02	9.91	18	0	6	11	911	60	202	851
283+00	28300.00	25.00	16.21	0.00	3.27	7.51	16	0	4	8	927	66	210	861
283+25	28325.00	25.00	15.67	0.00	0.79	0.00	15	0	2	3	942	69	213	873
283+50	28350.00	25.00	15.84	0.00	0.85	0.00	15	0	1	0	957	70	213	887
283+75	28375.00	25.00	16.03	0.00	0.65	0.00	15	0	1	0	972	72	213	901
283+77.751	28377.75	2.75	16.04	0.00	0.61	0.00	2	0	0	0	974	72	213	903

Division 1 - STATE PARK DRIVEWAY REMOVAL

STATION	REAL STATION	DISTANCE	AREA (SF)				INCREMENTAL VOL (CY) (UNADJUSTED)				CUMULATIVE VOL (CY)			
			CUT	SALVAGED/UNUSABLE PAVEMENT MATERIAL	FILL	EBS	CUT NOTE 1	SALVAGED/UNUSABLE PAVEMENT MATERIAL NOTE 2	FILL NOTE 3	EBS NOTE 4	CUT 1.00 NOTE 1	EXPANDED FILL 1.43 NOTE 5	EXPANDED EBS BACKFILL 1.00 NOTE 6	MASS ORDINATE NOTE 7
00+54.229	54.23	0.00	21.66	0.00	20.00	0.00	0	0	0	0	0	0	0	0
00+75	75.00	20.77	39.44	0.00	40.02	0.00	24	0	23	0	24	33	0	-9
01+00	100.00	25.00	42.28	0.00	40.01	0.00	38	0	37	0	62	86	0	-24
01+25	125.00	25.00	42.56	0.00	40.00	0.00	39	0	37	0	101	139	0	-38
01+28.378	128.38	3.38	42.19	0.00	40.00	0.00	5	0	5	0	106	146	0	-40

Notes:	
1 - CUT	CUT INCLUDES SALVAGED/UNUSABLE PAVEMENT MATERIAL
2 - SALVAGED/UNUSABLE PAVEMENT MATERIAL	THIS DOES NOT SHOW UP IN CROSS SECTIONS AND IS CALCULATED IN THE SUMMARY TABLE INSTEAD OF BY CROSS SECTION
3 - FILL	DOES NOT INCLUDE UNUSABLE PAVEMENT EXC VOLUME
4 - EBS	EBS EXCAVATION IS NOT TO BE USED IN FILL
5 - EXPANDED FILL	EXPANDED FILL FACTOR = 1.43
6 - EXPANDED EBS BACKFILL	REDUCED EBS EXCAVATION THAT CAN BE USED IN FILL
7 - MASS ORDINATE	[(CUT - SALVAGED PAVT) - ((FILL * FILL FACTOR)]

Division 2 - PIGEON RD - 114@PIGEONRD - STH 114 (45801000)

STATION	REAL STATION	DISTANCE	AREA (SF)				INCREMENTAL VOL (CY) (UNADJUSTED)				CUMULATIVE VOL (CY)			
			CUT	SALVAGED/UNUSABLE PAVEMENT MATERIAL	FILL	EBS	CUT NOTE 1	SALVAGED/UNUSABLE PAVEMENT MATERIAL NOTE 2	FILL NOTE 3	EBS NOTE 4	CUT 1.00 NOTE 1	EXPANDED FILL 1.43 NOTE 5	EXPANDED EBS BACKFILL 1.00 NOTE 6	MASS ORDINATE NOTE 7
305+24.436	30524.44	0.00	25.72	0.00	1.95	0.00	0	0	0	0	0	0	0	0
305+25	30525.00	0.56	25.87	0.00	1.90	0.00	1	0	0	0	1	0	0	1
305+50	30550.00	25.00	41.58	0.00	0.59	0.00	31	0	1	0	32	1	0	31
305+75	30575.00	25.00	69.57	0.00	0.00	0.00	51	0	0	0	83	1	0	82
306+00	30600.00	25.00	70.87	0.00	0.00	0.00	65	0	0	0	148	1	0	147
306+25	30625.00	25.00	66.61	0.00	0.00	10.93	64	0	0	5	212	1	5	211
306+50	30650.00	25.00	32.82	0.00	8.39	23.60	46	0	4	16	258	7	21	251
306+75	30675.00	25.00	28.84	0.00	21.76	0.62	29	0	14	11	287	27	32	260
307+00	30700.00	25.00	23.78	0.00	2.59	6.81	24	0	11	3	311	43	35	268
307+25	30725.00	25.00	19.10	0.00	2.12	4.99	20	0	2	5	331	46	40	285
307+43.169	30743.17	18.17	18.06	0.00	0.76	0.00	13	0	1	2	344	47	42	297

Division 2 - PIGEON RD - PIGEON RD

STATION	REAL STATION	DISTANCE	AREA (SF)				INCREMENTAL VOL (CY) (UNADJUSTED)				CUMULATIVE VOL (CY)			
			CUT	SALVAGED/UNUSABLE PAVEMENT MATERIAL	FILL	EBS	CUT NOTE 1	SALVAGED/UNUSABLE PAVEMENT MATERIAL NOTE 2	FILL NOTE 3	EBS NOTE 4	CUT 1.00 NOTE 1	EXPANDED FILL 1.43 NOTE 5	EXPANDED EBS BACKFILL 1.00 NOTE 6	MASS ORDINATE NOTE 7
47+83.308	4783.31	0.00	45.75	0.00	0.76	8.95	0	0	0	0	0	0	0	0
48+00	4800.00	16.69	45.71	0.00	0.48	8.94	28	0	0	6	28	0	6	28
48+25	4825.00	25.00	49.10	0.00	0.37	9.72	44	0	0	9	72	0	15	72
48+50	4850.00	25.00	54.48	0.00	0.37	14.63	48	0	0	11	120	0	26	120
48+75	4875.00	25.00	65.40	0.00	0.35	22.74	56	0	0	17	176	0	43	176
49+00	4900.00	25.00	84.19	0.00	0.31	29.84	69	0	0	24	245	0	67	245
49+25	4925.00	25.00	95.73	0.00	7.04	31.41	83	0	3	28	328	4	95	324
49+48.455	4948.45	23.45	54.82	0.00	0.37	0.00	65	0	3	14	393	9	109	384

Notes:	
1 - CUT	CUT INCLUDES SALVAGED/UNUSABLE PAVEMENT MATERIAL
2 - SALVAGED/UNUSABLE PAVEMENT MATERIAL	THIS DOES NOT SHOW UP IN CROSS SECTIONS AND IS CALCULATED IN THE SUMMARY TABLE INSTEAD OF BY CROSS SECTION
3 - FILL	DOES NOT INCLUDE UNUSABLE PAVEMENT EXC VOLUME
4 - EBS	EBS EXCAVATION IS NOT TO BE USED IN FILL
5 - EXPANDED FILL	EXPANDED FILL FACTOR = 1.43
6 - EXPANDED EBS BACKFILL	REDUCED EBS EXCAVATION THAT CAN BE USED IN FILL
7 - MASS ORDINATE	[(CUT - SALVAGED PAVT) - ((FILL * FILL FACTOR)]

Division 3 - CASTLE DR - 114@CASTLEDR - STH 114 (45801000)

STATION	REAL STATION	DISTANCE	AREA (SF)				INCREMENTAL VOL (CY) (UNADJUSTED)				CUMULATIVE VOL (CY)			
			CUT	SALVAGED/UNUSABLE PAVEMENT MATERIAL	FILL	EBS	CUT NOTE 1	SALVAGED/UNUSABLE PAVEMENT MATERIAL NOTE 2	FILL NOTE 3	EBS NOTE 4	CUT 1.00 NOTE 1	EXPANDED FILL 1.43 NOTE 5	EXPANDED EBS BACKFILL 1.00 NOTE 6	MASS ORDINATE NOTE 7
390+82.094	39082.09	0.00	18.56	0.00	0.25	0.00	0	0	0	0	0	0	0	0
391+00	39100.00	17.91	18.53	0.00	0.28	0.00	12	0	0	0	12	0	0	12
391+25	39125.00	25.00	18.47	0.00	0.31	0.00	17	0	0	0	29	0	0	29
391+50	39150.00	25.00	18.91	0.00	0.14	0.00	17	0	0	0	46	0	0	46
391+75	39175.00	25.00	19.14	0.00	0.33	0.00	18	0	0	0	64	0	0	64
392+00	39200.00	25.00	19.68	0.00	1.87	12.12	18	0	1	6	82	1	6	81
392+25	39225.00	25.00	21.09	0.00	4.60	19.06	19	0	3	14	101	6	20	95
392+50	39250.00	25.00	21.92	0.00	5.22	20.24	20	0	5	18	121	13	38	108
392+75	39275.00	25.00	22.95	0.00	5.00	20.40	21	0	5	19	142	20	57	122
393+00	39300.00	25.00	23.98	0.00	4.50	20.57	22	0	4	19	164	26	76	138
393+25	39325.00	25.00	25.42	0.00	3.94	20.63	23	0	4	19	187	31	95	156
393+50	39350.00	25.00	32.72	0.00	3.45	20.52	27	0	3	19	214	36	114	178
393+75	39375.00	25.00	38.12	0.00	2.91	20.37	33	0	3	19	247	40	133	207
394+00	39400.00	25.00	33.01	0.00	3.55	20.91	33	0	3	19	280	44	152	236
394+25	39425.00	25.00	27.91	0.00	6.23	21.36	28	0	5	20	308	51	172	257
394+50	39450.00	25.00	21.09	0.00	8.13	22.56	23	0	7	20	331	61	192	270
394+75	39475.00	25.00	19.46	0.00	9.10	24.58	19	0	8	22	350	73	214	277
395+00	39500.00	25.00	20.90	0.00	10.59	28.40	19	0	9	25	369	86	239	283
395+25	39525.00	25.00	21.56	0.00	10.44	35.55	20	0	10	30	389	100	269	289
395+50	39550.00	25.00	22.21	0.00	6.64	0.00	20	0	8	16	409	112	285	297
395+75	39575.00	25.00	31.11	0.00	0.01	0.00	25	0	3	0	434	116	285	318
396+00	39600.00	25.00	34.89	0.00	1.90	0.00	31	0	1	0	465	117	285	348
396+25	39625.00	25.00	53.67	0.00	0.00	0.00	41	0	1	0	506	119	285	387
396+50	39650.00	25.00	60.31	0.00	0.00	0.00	53	0	0	0	559	119	285	440
396+75	39675.00	25.00	54.22	0.00	0.00	0.00	53	0	0	0	612	119	285	493
397+00	39700.00	25.00	24.65	0.00	0.00	0.00	37	0	0	0	649	119	285	530
397+25	39725.00	25.00	22.72	0.00	0.00	0.00	22	0	0	0	671	119	285	552
397+36.663	39736.66	11.66	22.75	0.00	0.00	0.00	10	0	0	0	681	119	285	562

Division 3 - CASTLE DR - CASTLE DR

STATION	REAL STATION	DISTANCE	AREA (SF)				INCREMENTAL VOL (CY) (UNADJUSTED)				CUMULATIVE VOL (CY)			
			CUT	SALVAGED/UNUSABLE PAVEMENT MATERIAL	FILL	EBS	CUT NOTE 1	SALVAGED/UNUSABLE PAVEMENT MATERIAL NOTE 2	FILL NOTE 3	EBS NOTE 4	CUT 1.00 NOTE 1	EXPANDED FILL 1.43 NOTE 5	EXPANDED EBS BACKFILL 1.00 NOTE 6	MASS ORDINATE NOTE 7
78+83.196	7883.20	0.00	62.05	0.00	0.55	0.00	0	0	0	0	0	0	0	0
79+00	7900.00	16.80	65.22	0.00	3.66	0.00	40	0	1	0	40	1	0	39
79+25	7925.00	25.00	68.84	0.00	11.33	0.00	62	0	7	0	102	11	0	91
79+49.876	7949.88	24.88	36.32	0.00	0.00	0.00	48	0	5	0	150	19	0	131

Notes:	
1 - CUT	CUT INCLUDES SALVAGED/UNUSABLE PAVEMENT MATERIAL
2 - SALVAGED/UNUSABLE PAVEMENT MATERIAL	THIS DOES NOT SHOW UP IN CROSS SECTIONS AND IS CALCULATED IN THE SUMMARY TABLE INSTEAD OF BY CROSS SECTION
3 - FILL	DOES NOT INCLUDE UNUSABLE PAVEMENT EXC VOLUME
4 - EBS	EBS EXCAVATION IS NOT TO BE USED IN FILL
5 - EXPANDED FILL	EXPANDED FILL FACTOR = 1.43
6 - EXPANDED EBS BACKFILL	REDUCED EBS EXCAVATION THAT CAN BE USED IN FILL
7 - MASS ORDINATE	[(CUT - SALVAGED PAVT) - ((FILL * FILL FACTOR)]

DIVISION 4 - RAILROAD - RAILROAD CROSSING WIDENING - STH 114 (45801000)

STATION	REAL STATION	DISTANCE	AREA (SF)				INCREMENTAL VOL (CY) (UNADJUSTED)				CUMULATIVE VOL (CY)			
			CUT	SALVAGED/UNUSABLE PAVEMENT MATERIAL	FILL	EBS	CUT NOTE 1	SALVAGED/UNUSABLE PAVEMENT MATERIAL NOTE 2	FILL NOTE 3	EBS NOTE 4	CUT 1.00 NOTE 1	EXPANDED FILL 1.43 NOTE 5	EXPANDED EBS BACKFILL 1.00 NOTE 6	MASS ORDINATE NOTE 7
360+23.43	36023.43	0.00	0.00	0.00	4.83	0.00	0	0	0	0	0	0	0	0
360+25	36025.00	1.57	0.00	0.00	4.49	0.00	0	0	0	0	0	0	0	0
360+50	36050.00	25.00	0.00	0.00	3.48	0.00	0	0	4	0	0	6	0	-6
360+75	36075.00	25.00	0.04	0.00	2.42	0.00	0	0	3	0	0	10	0	-10
361+00	36100.00	25.00	0.27	0.00	10.20	0.00	0	0	6	0	0	19	0	-19
361+25	36125.00	25.00	0.09	0.00	8.93	0.00	0	0	9	0	0	31	0	-31
361+50	36150.00	25.00	0.00	0.00	6.65	0.00	0	0	7	0	0	41	0	-41
361+75	36175.00	25.00	0.00	0.00	3.55	0.00	0	0	5	0	0	49	0	-49
362+00	36200.00	25.00	0.00	0.00	5.50	0.00	0	0	4	0	0	54	0	-54
362+19.392	36219.39	19.39	0.00	0.00	5.03	0.00	0	0	4	0	0	60	0	-60

Notes:	
1 - CUT	CUT INCLUDES SALVAGED/UNUSABLE PAVEMENT MATERIAL
2 - SALVAGED/UNUSABLE PAVEMENT MATERIAL	THIS DOES NOT SHOW UP IN CROSS SECTIONS AND IS CALCULATED IN THE SUMMARY TABLE INSTEAD OF BY CROSS SECTION
3 - FILL	DOES NOT INCLUDE UNUSABLE PAVEMENT EXC VOLUME
4 - EBS	EBS EXCAVATION IS NOT TO BE USED IN FILL
5 - EXPANDED FILL	EXPANDED FILL FACTOR = 1.43
6 - EXPANDED EBS BACKFILL	REDUCED EBS EXCAVATION THAT CAN BE USED IN FILL
7 - MASS ORDINATE	[(CUT - SALVAGED PAVT) - ((FILL * FILL FACTOR)]

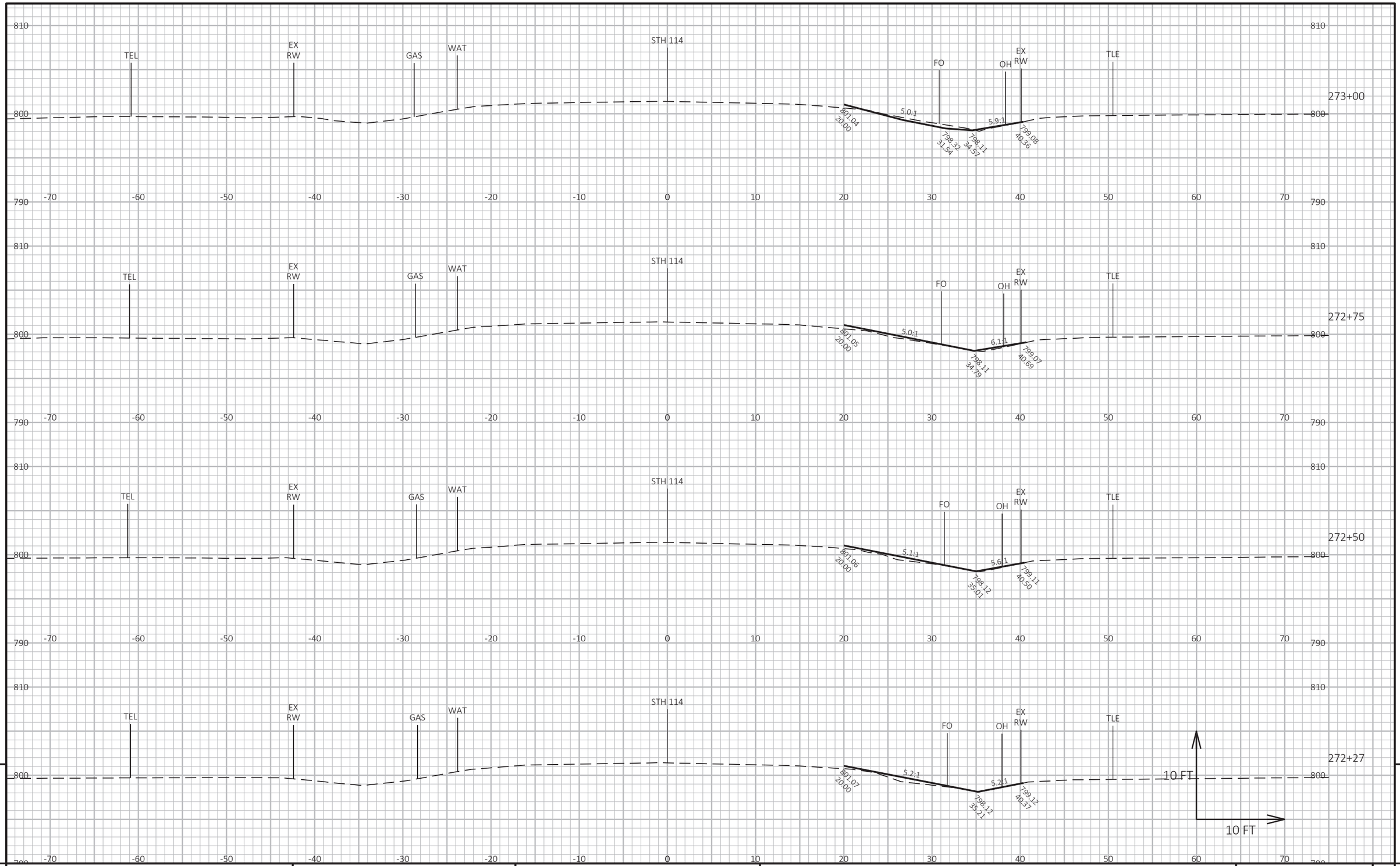

9

9

PROJECT NO: 4580-10-71	HWY: STH 114	COUNTY: CALUMET	CROSS SECTIONS: STH 114	SHEET 216	E

FILE NAME : C:\CIVIL 3D PROJECTS\45801000\SHEETSPLAN\090201-XS.DWG
LAYOUT NAME - 090201-xs

PLOT DATE : 10/20/2021 3:08 PM PLOT BY : SMITH, JENNIFER B PLOT NAME : PLOT SCALE : 1 IN:10 FT HORZ. / 1 IN:10 FT VERT.

WISDOT/CADDS SHEET 49

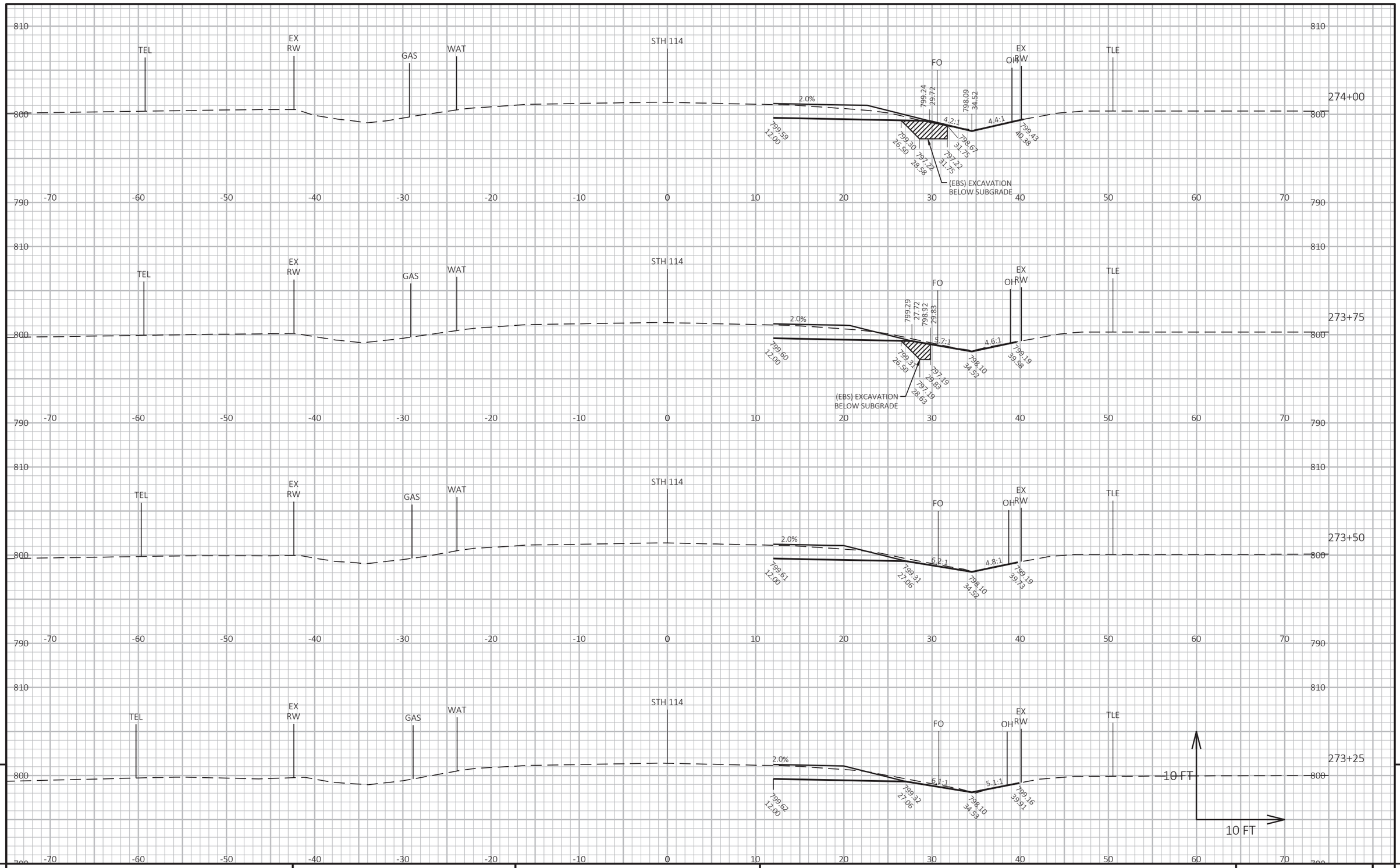

9

9

PROJECT NO: 4580-10-71	HWY: STH 114	COUNTY: CALUMET	CROSS SECTIONS: STH 114	SHEET 217	E

FILE NAME : C:\CIVIL 3D PROJECTS\45801000\SHEETSPLAN\090201-XS.DWG
LAYOUT NAME - 090202-xs

PLOT DATE : 10/20/2021 3:08 PM

PLOT BY : SMITH, JENNIFER B

PLOT NAME :

PLOT SCALE : 1 IN:10 FT HORZ. / 1 IN:10 FT VERT.

WISDOT/CADDS SHEET 49

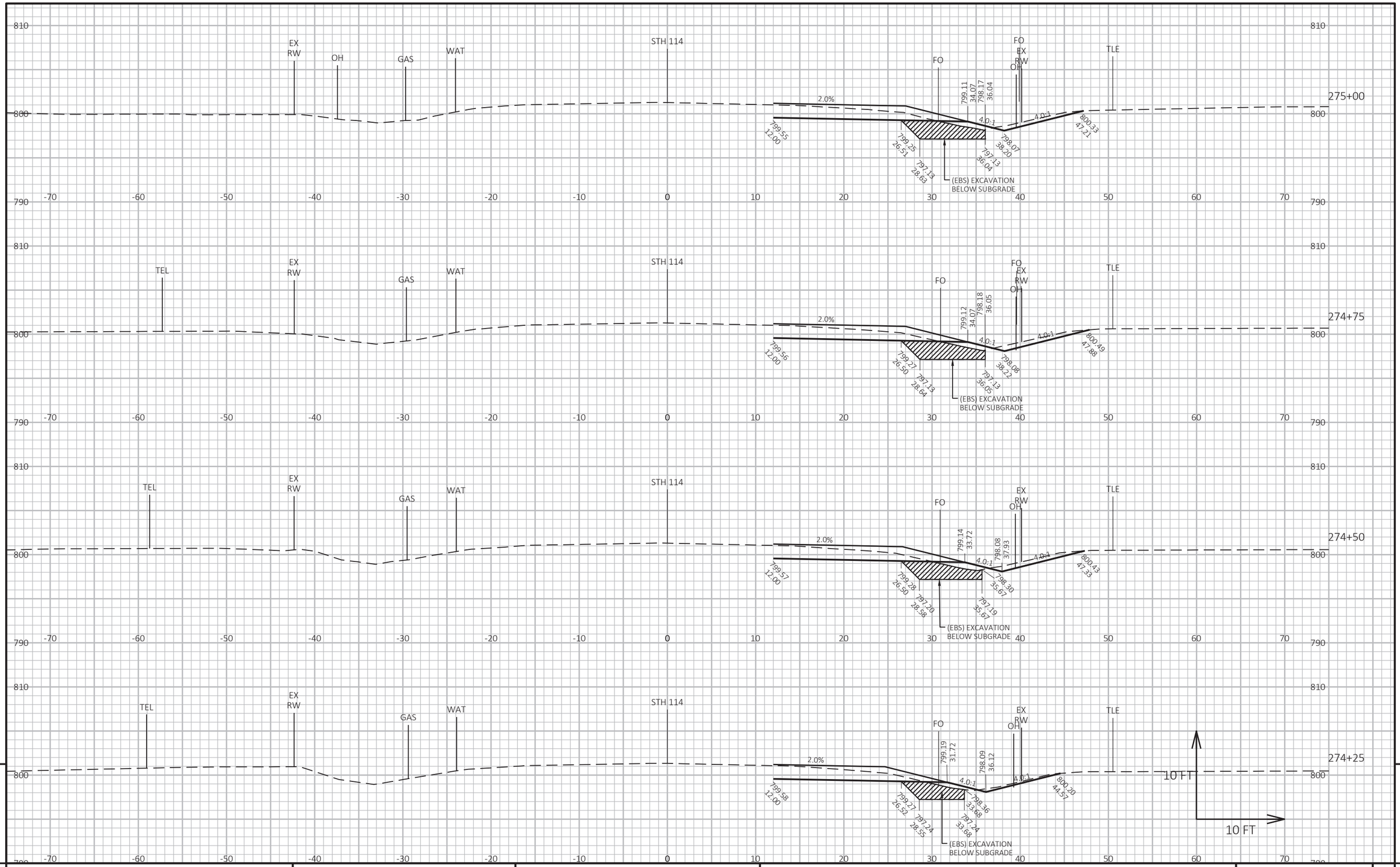

9

9

PROJECT NO: 4580-10-71	HWY: STH 114	COUNTY: CALUMET	CROSS SECTIONS: STH 114	SHEET 218	E

FILE NAME : C:\CIVIL 3D PROJECTS\45801000\SHEETSPLAN\090201-XS.DWG
LAYOUT NAME - 090203-xs

PLOT DATE : 10/20/2021 3:08 PM

PLOT BY : SMITH, JENNIFER B

PLOT NAME :

PLOT SCALE : 1 IN:10 FT HORZ. / 1 IN:10 FT VERT.

WISDOT/CADDS SHEET 49

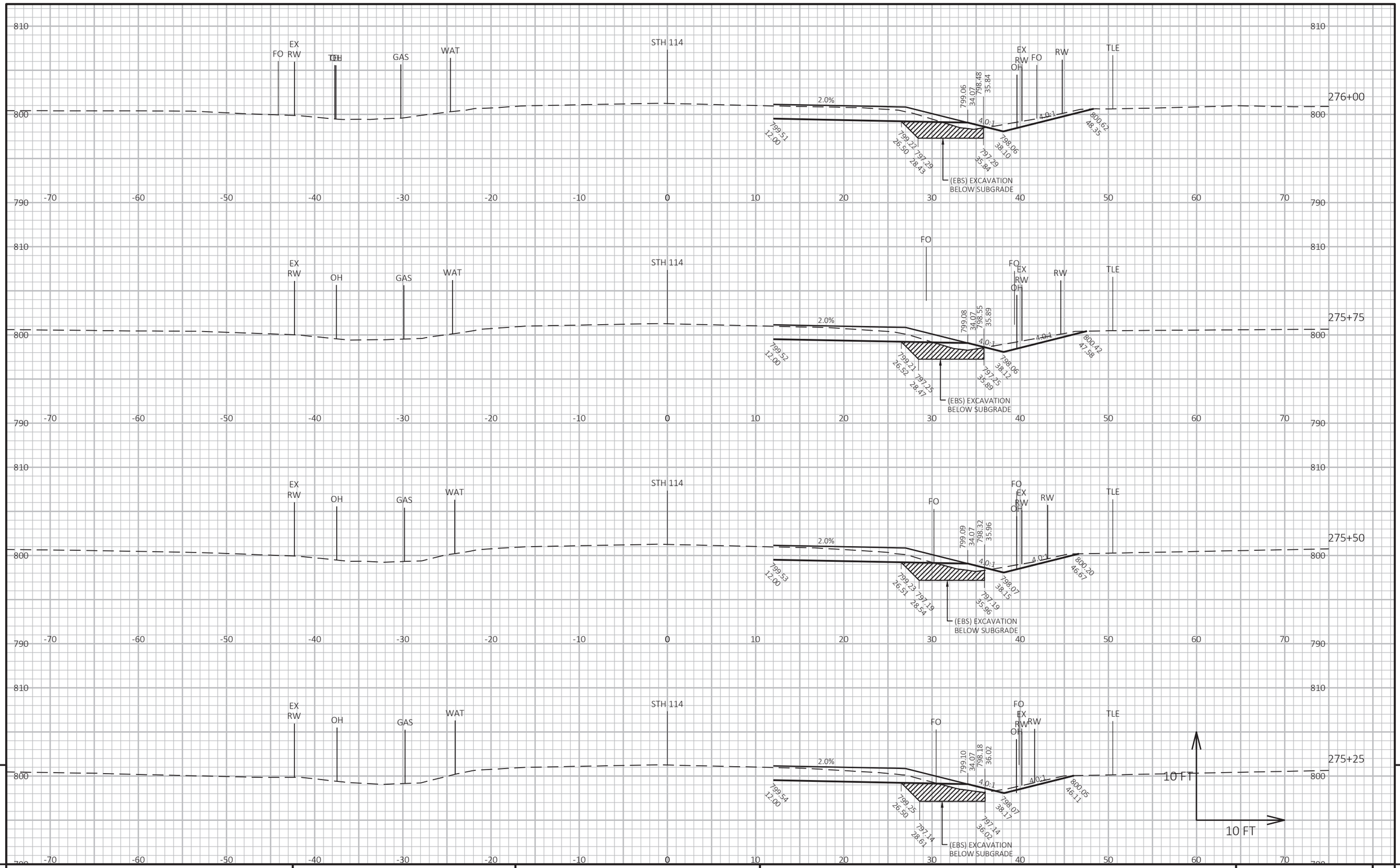

9

9

PROJECT NO: 4580-10-71	HWY: STH 114	COUNTY: CALUMET	CROSS SECTIONS: STH 114	SHEET 219	E

FILE NAME : C:\CIVIL 3D PROJECTS\45801000\SHEETSPLAN\090201-XS.DWG
LAYOUT NAME - 090204-xs

PLOT DATE : 10/20/2021 3:08 PM

PLOT BY : SMITH, JENNIFER B

PLOT NAME :

PLOT SCALE : 1 IN:10 FT HORZ. / 1 IN:10 FT VERT.

WISDOT/CADDS SHEET 49

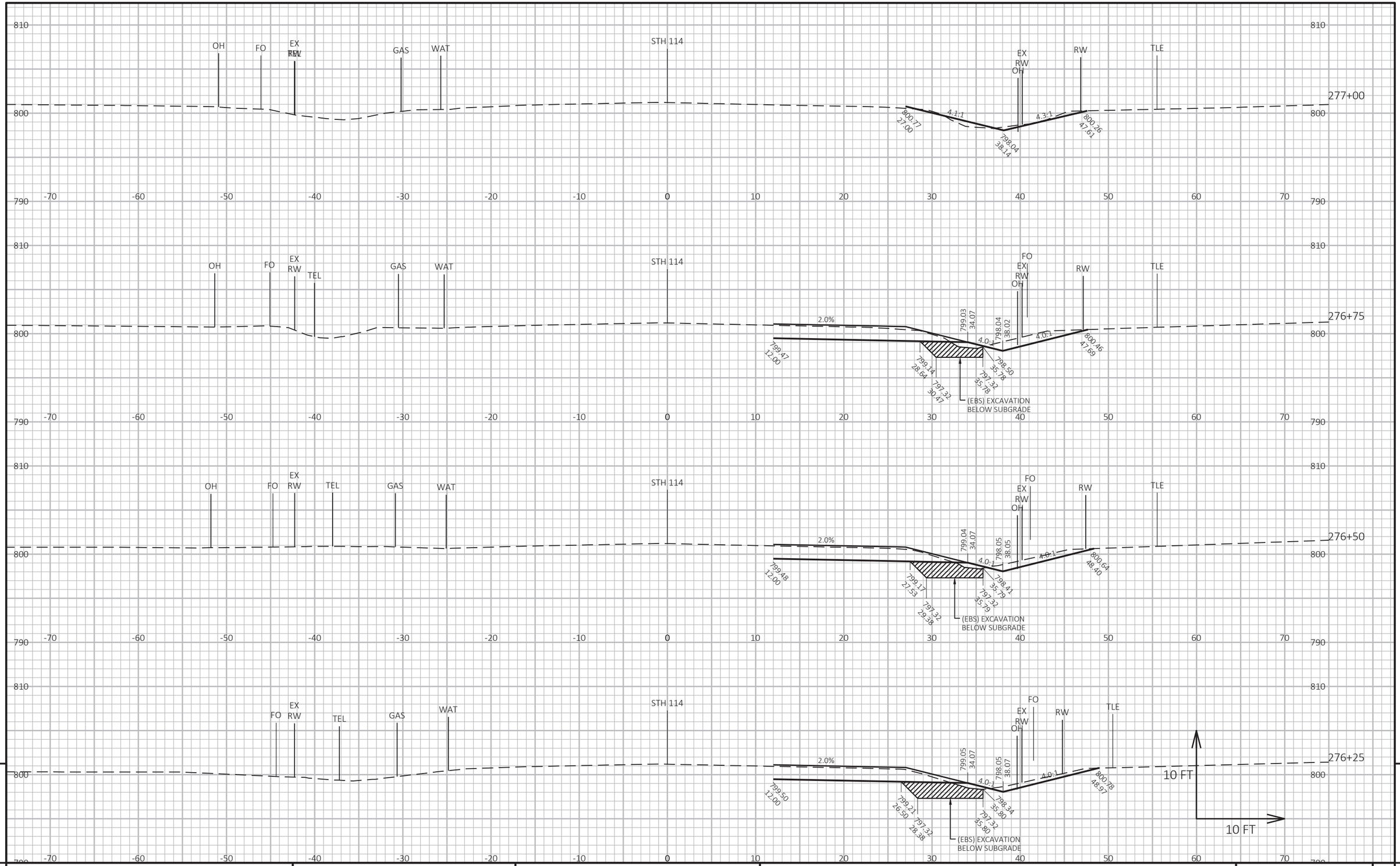

PROJECT NO: 4580-10-71	HWY: STH 114	COUNTY: CALUMET	CROSS SECTIONS: STH 114	SHEET 220 E

FILE NAME : C:\CIVIL 3D PROJECTS\45801000\SHEETSPLAN\090201-XS.DWG
LAYOUT NAME - 090205-xs

PLOT DATE : 10/20/2021 3:08 PM

PLOT BY : SMITH, JENNIFER B

PLOT NAME :

PLOT SCALE : 1 IN:10 FT HORZ. / 1 IN:10 FT VERT.

WISDOT/CADDS SHEET 49

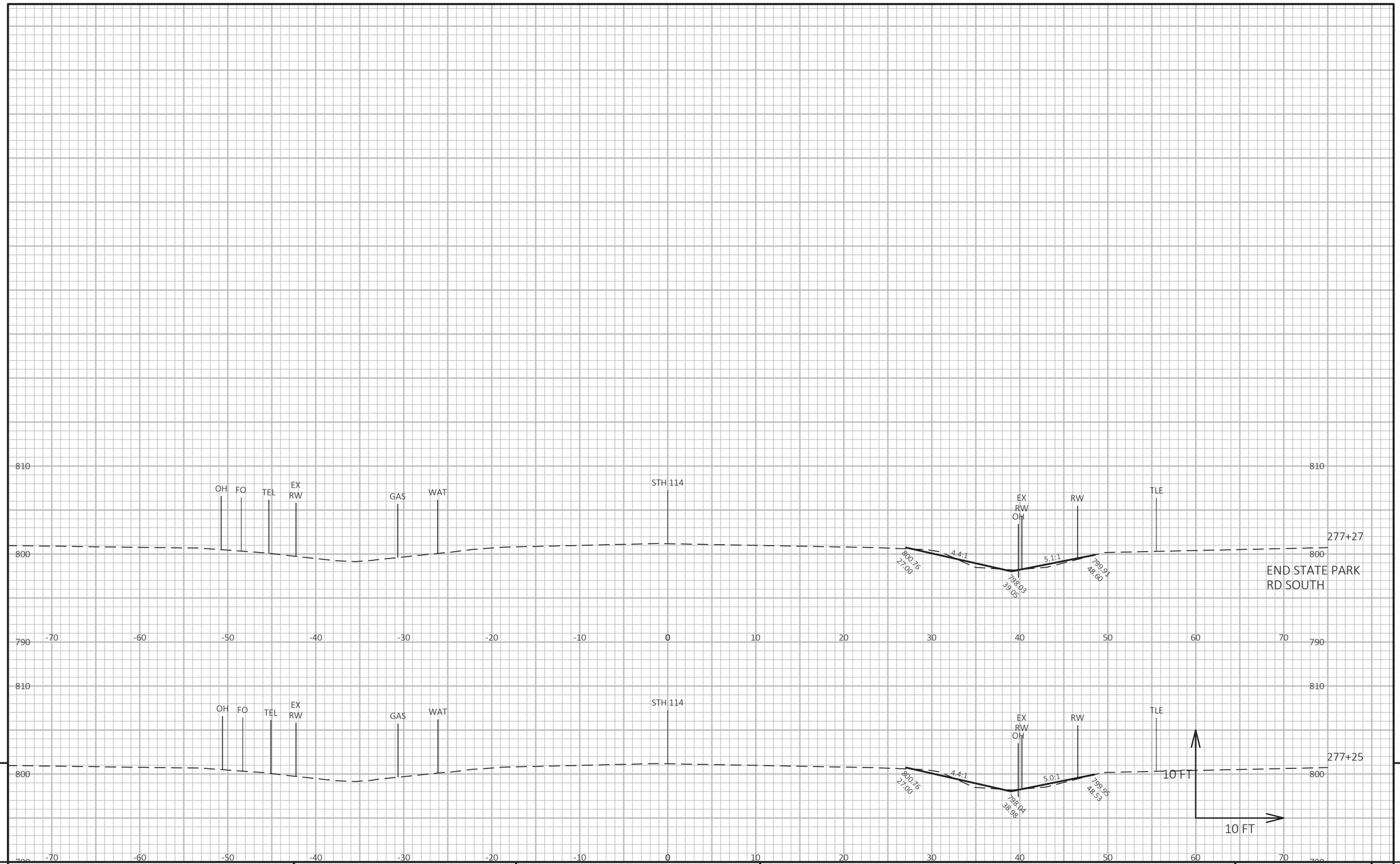

9

9

PROJECT NO: 4580-10-71	HWY: STH 114	COUNTY: CALUMET	CROSS SECTIONS: STH 114	SHEET 221	E

FILE NAME : C:\CIVIL 3D PROJECTS\45801000\SHEETSPLAN\090201-XS.DWG
LAYOUT NAME - 090206-xs

PLOT DATE : 10/20/2021 3:08 PM PLOT BY : SMITH, JENNIFER B PLOT NAME : PLOT SCALE : 1 IN:10 FT HORZ. / 1 IN:10 FT VERT.

WISDOT/CADDS SHEET 49

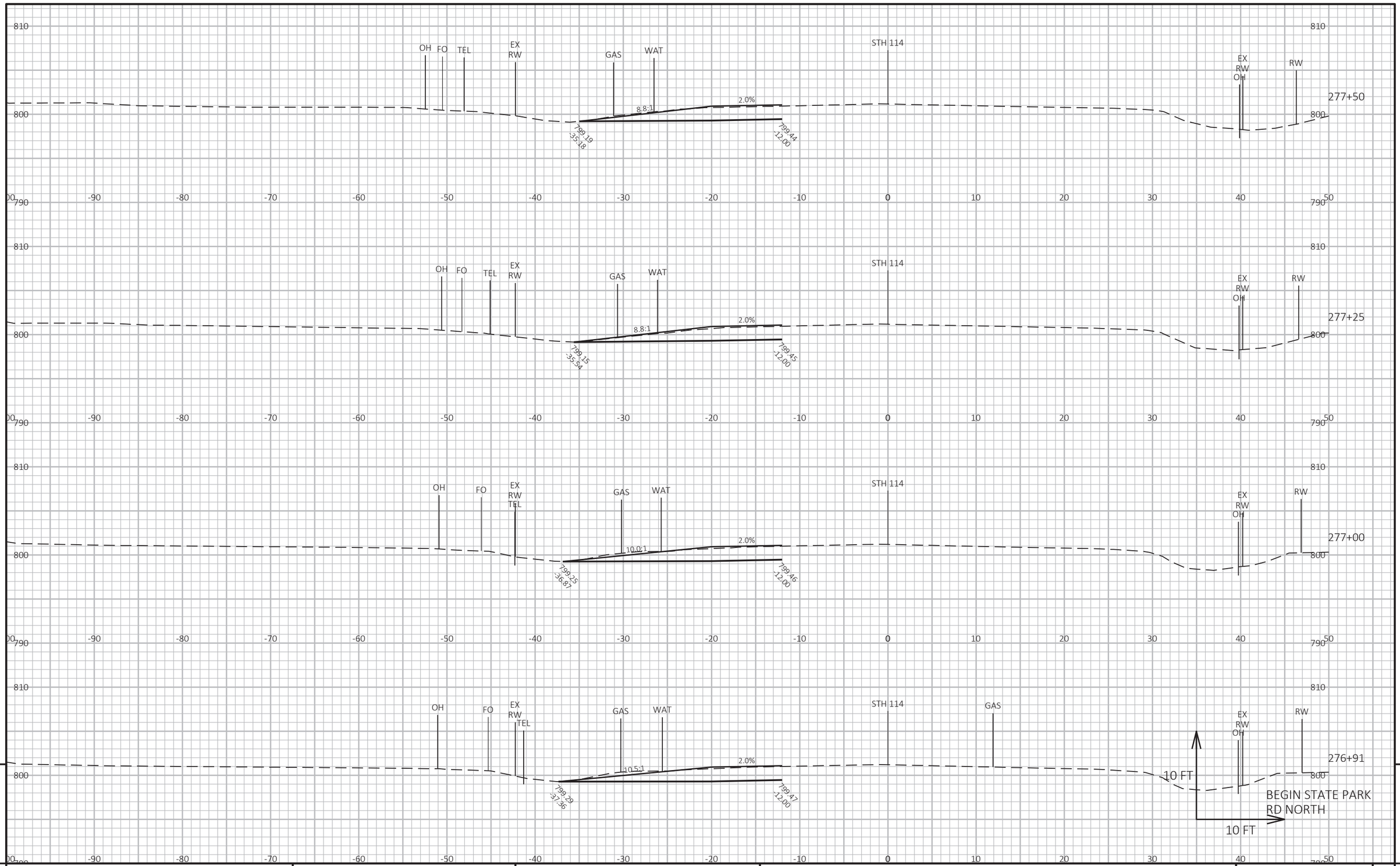

PROJECT NO: 4580-10-71	HWY: STH 114	COUNTY: CALUMET	CROSS SECTIONS: STH 114	SHEET 222	E

FILE NAME : C:\CIVIL 3D PROJECTS\45801000\SHEETSPLAN\090201-XS.DWG
LAYOUT NAME - 090207-xs

PLOT DATE : 10/20/2021 3:08 PM

PLOT BY : SMITH, JENNIFER B

PLOT NAME :

PLOT SCALE : 1 IN:10 FT HORZ. / 1 IN:10 FT VERT.

WISDOT/CADDS SHEET 49

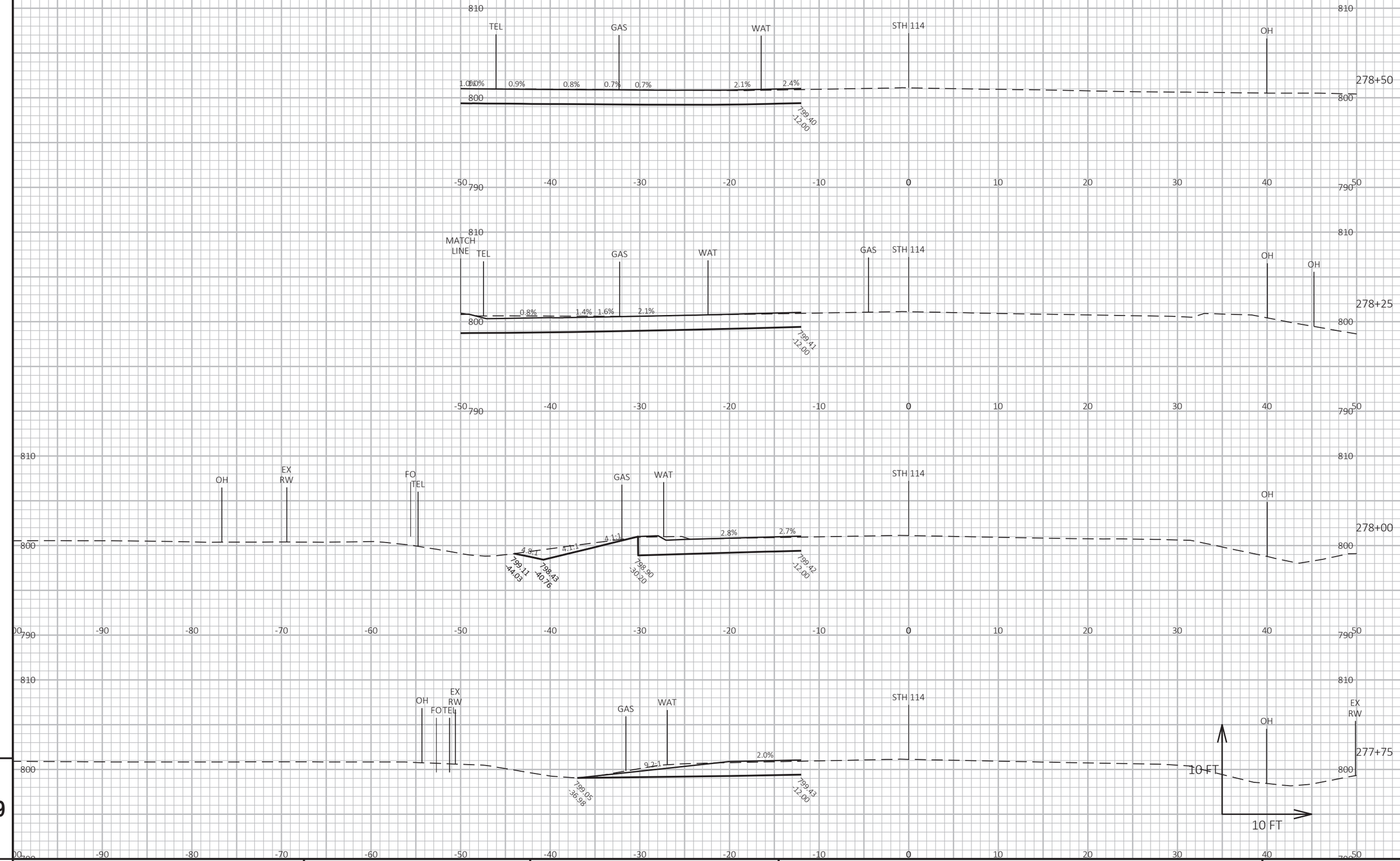

9

9

PROJECT NO: 4580-10-71	HWY: STH 114	COUNTY: CALUMET	CROSS SECTIONS: STH 114	SHEET 223	E

FILE NAME : C:\CIVIL 3D PROJECTS\45801000\SHEETSPLAN\090201-XS.DWG
LAYOUT NAME - 090208-xs

PLOT DATE : 10/20/2021 3:09 PM

PLOT BY : SMITH, JENNIFER B

PLOT NAME :

PLOT SCALE : 1 IN:10 FT HORZ. / 1 IN:10 FT VERT.

WISDOT/CADDS SHEET 49

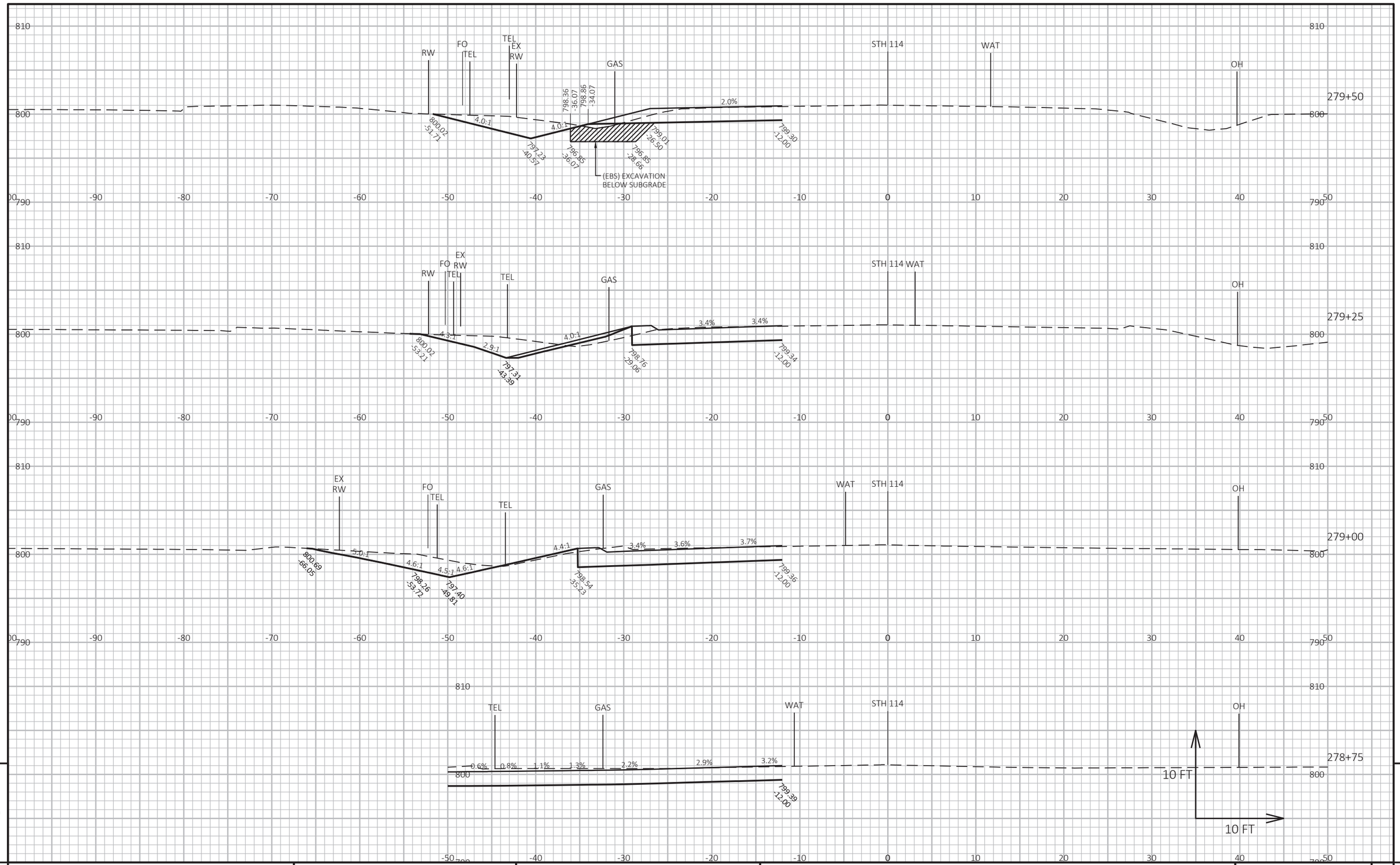

9

9

PROJECT NO: 4580-10-71	HWY: STH 114	COUNTY: CALUMET	CROSS SECTIONS: STH 114	SHEET 224	E

FILE NAME : C:\CIVIL 3D PROJECTS\45801000\SHEETSPLAN\090201-XS.DWG
LAYOUT NAME - 090209-xs

PLOT DATE : 10/20/2021 3:09 PM

PLOT BY : SMITH, JENNIFER B

PLOT NAME :

PLOT SCALE : 1 IN:10 FT HORZ. / 1 IN:10 FT VERT.

WISDOT/CADDS SHEET 49

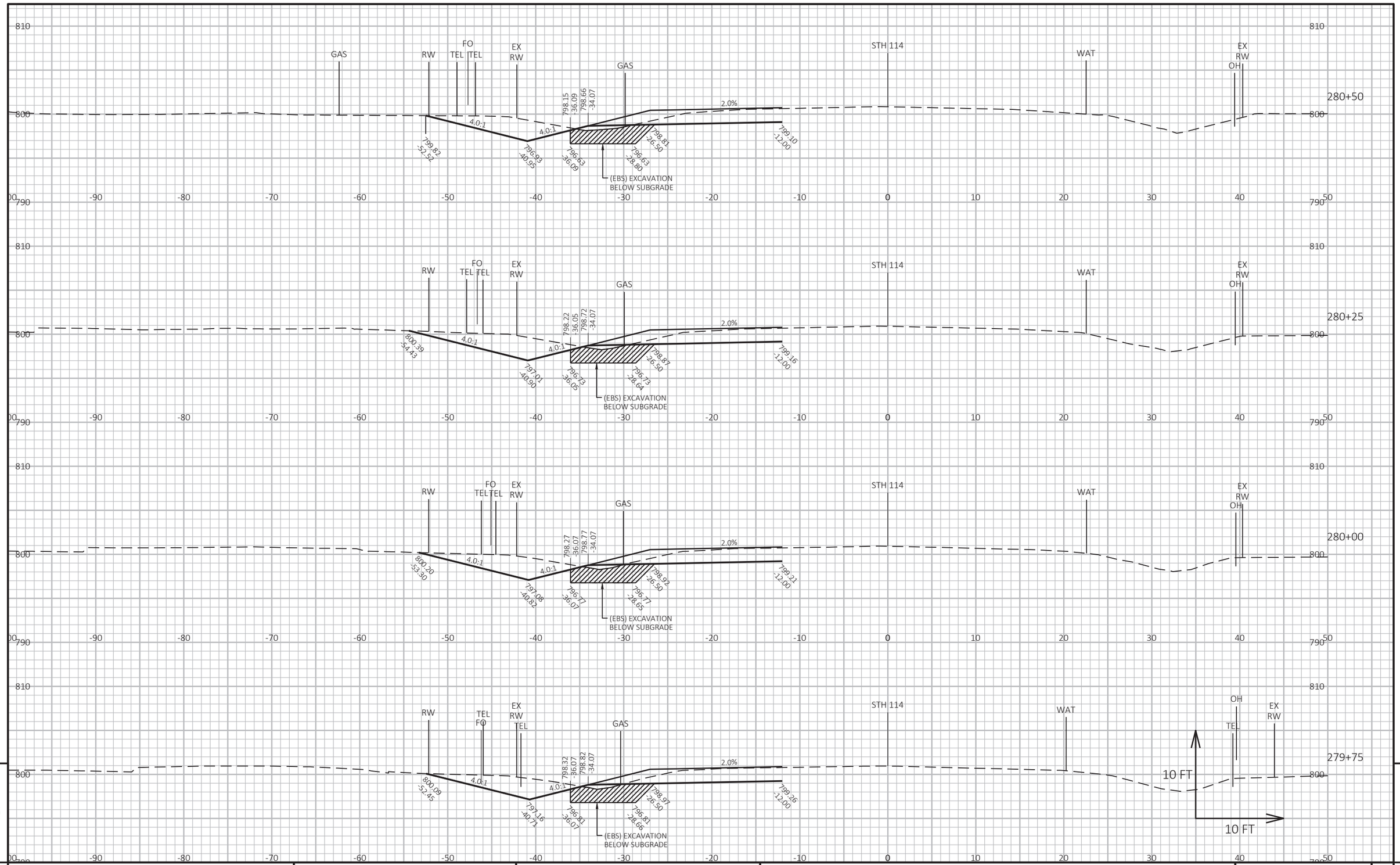

9

9

PROJECT NO: 4580-10-71	HWY: STH 114	COUNTY: CALUMET	CROSS SECTIONS: STH 114	SHEET 225	E

FILE NAME : C:\CIVIL 3D PROJECTS\45801000\SHEETSPLAN\090201-XS.DWG
LAYOUT NAME - 090210-xs

PLOT DATE : 10/20/2021 3:09 PM

PLOT BY : SMITH, JENNIFER B

PLOT NAME :

PLOT SCALE : 1 IN:10 FT HORZ. / 1 IN:10 FT VERT.

WISDOT/CADDS SHEET 49

9

9

PROJECT NO: 4580-10-71	HWY: STH 114	COUNTY: CALUMET	CROSS SECTIONS: STH 114	SHEET 226	E

FILE NAME : C:\CIVIL 3D PROJECTS\45801000\SHEETSPLAN\090201-XS.DWG
LAYOUT NAME - 090211-xs

PLOT DATE : 10/20/2021 3:09 PM

PLOT BY : SMITH, JENNIFER B

PLOT NAME :

PLOT SCALE : 1 IN:10 FT HORZ. / 1 IN:10 FT VERT.

WISDOT/CADDS SHEET 49

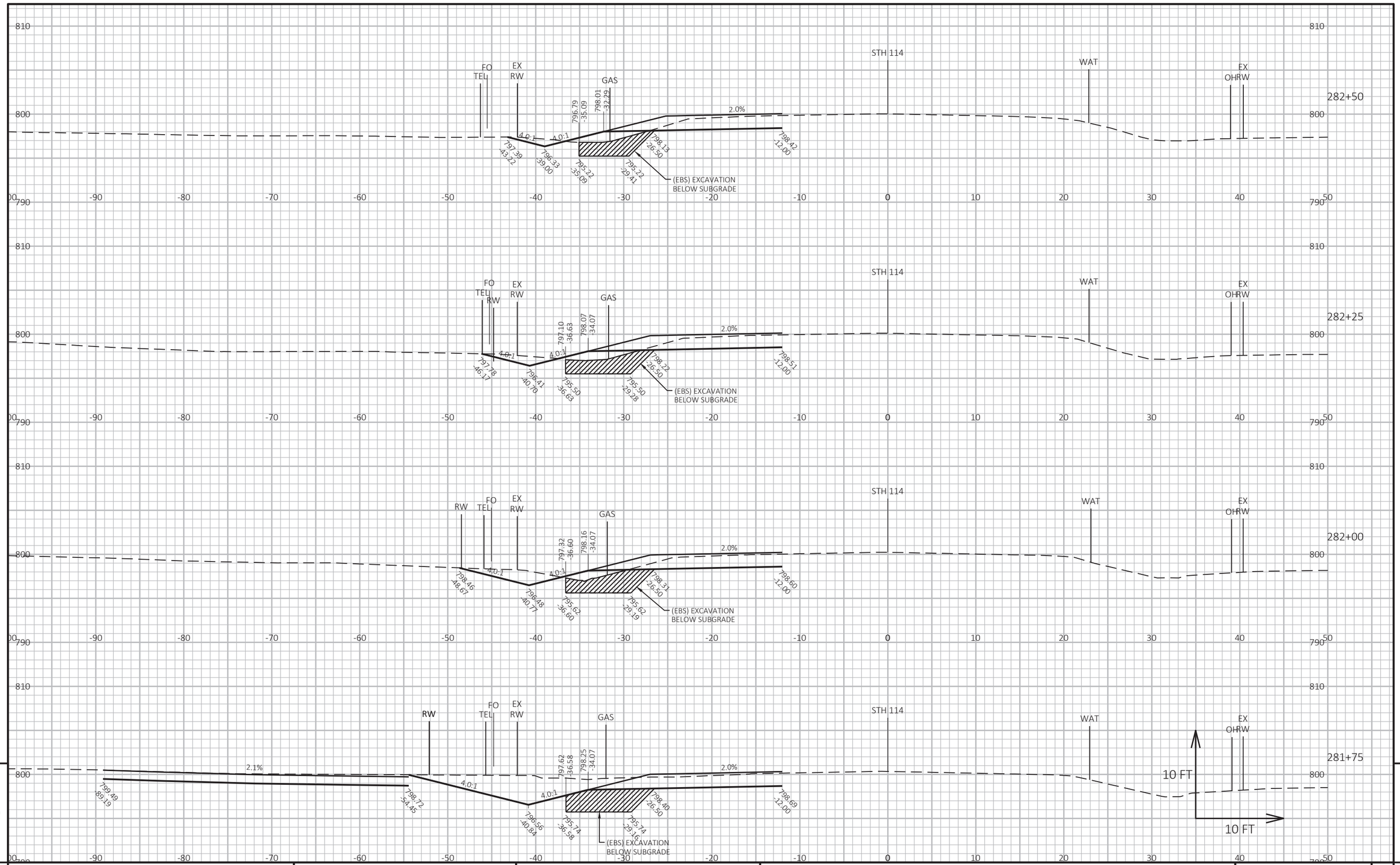

9

9

PROJECT NO: 4580-10-71	HWY: STH 114	COUNTY: CALUMET	CROSS SECTIONS: STH 114	SHEET 227	E

FILE NAME : C:\CIVIL 3D PROJECTS\45801000\SHEETSPLAN\090201-XS.DWG
LAYOUT NAME - 090212-xs

PLOT DATE : 10/20/2021 3:09 PM

PLOT BY : SMITH, JENNIFER B

PLOT NAME :

PLOT SCALE : 1 IN:10 FT HORZ. / 1 IN:10 FT VERT.

WISDOT/CADDS SHEET 49

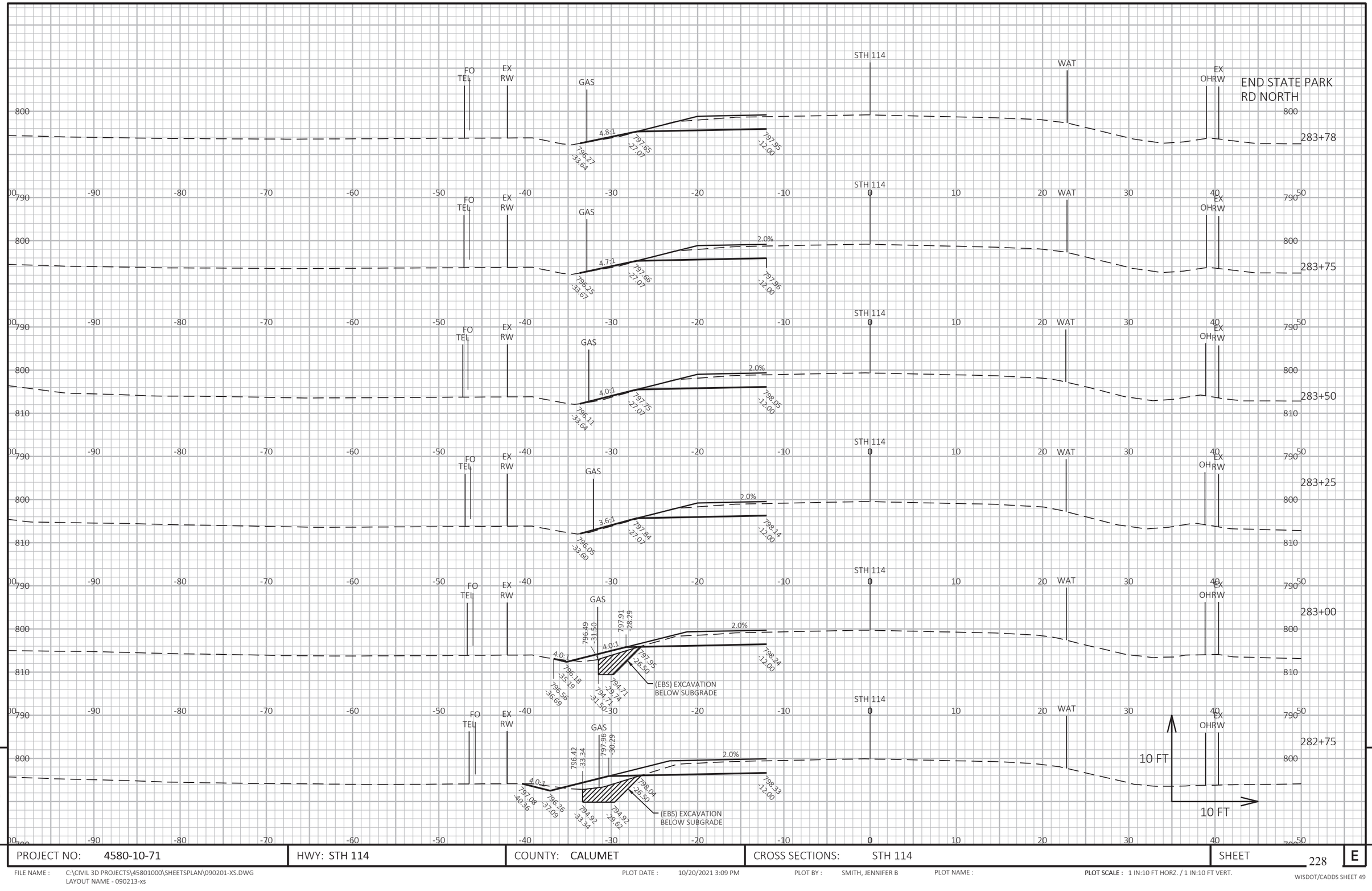

PROJECT NO: 4580-10-71	HWY: STH 114	COUNTY: CALUMET	CROSS SECTIONS: STH 114	SHEET 228	E

FILE NAME : C:\CIVIL 3D PROJECTS\45801000\SHEETSPLAN\090201-XS.DWG
LAYOUT NAME - 090213-xs

PLOT DATE : 10/20/2021 3:09 PM PLOT BY : SMITH, JENNIFER B PLOT NAME : **PLOT SCALE :** 1 IN:10 FT HORZ. / 1 IN:10 FT VERT.

WISDOT/CADDS SHEET 49

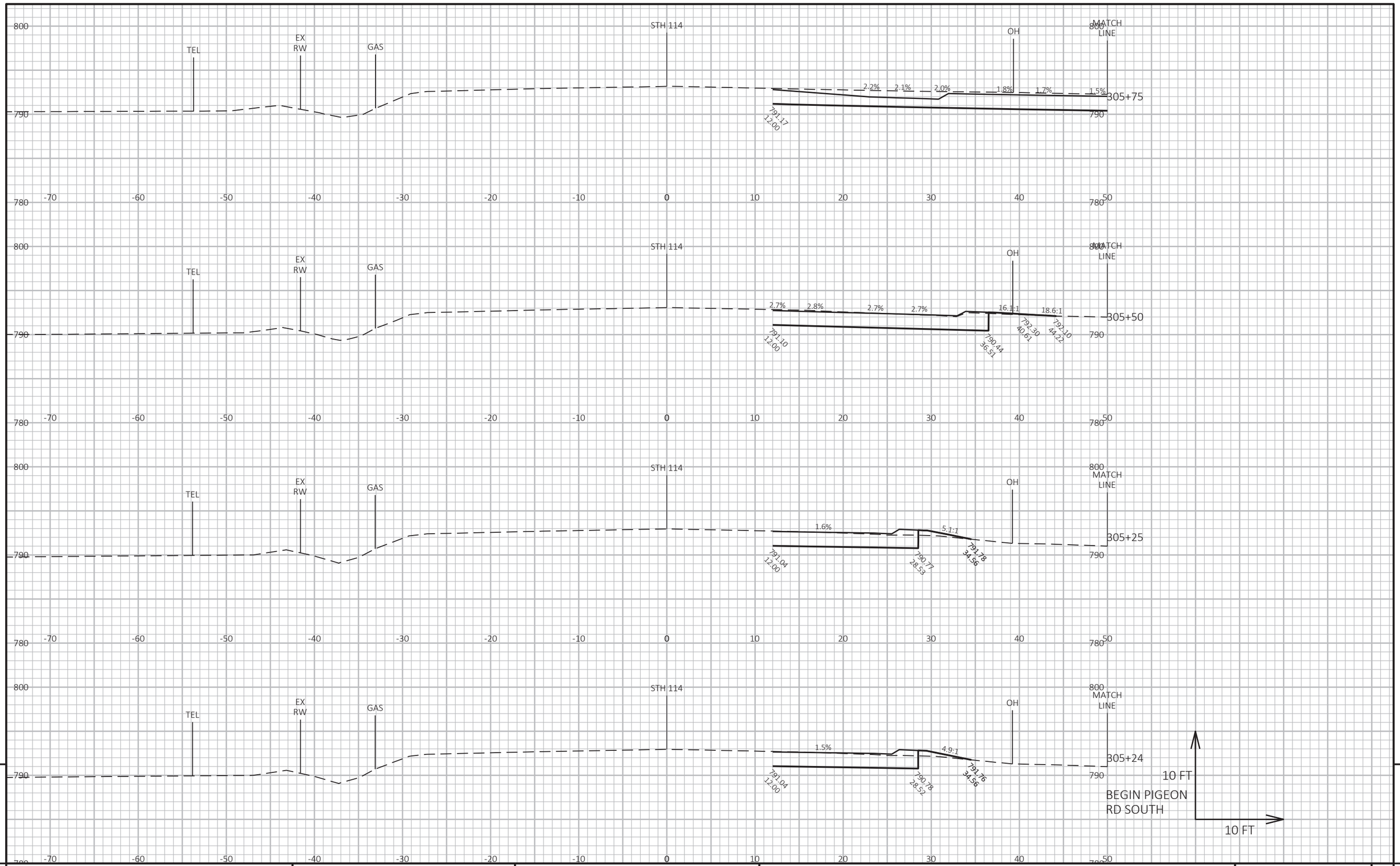

9

9

PROJECT NO: 4580-10-71	HWY: STH 114	COUNTY: CALUMET	CROSS SECTIONS: STH 114	SHEET 229	E

FILE NAME : N:\PDS\C3D\45801000\SHEETSPLAN\090201-XS.DWG
LAYOUT NAME - 090214-xs

PLOT DATE : 12/17/2021 11:45 AM PLOT BY : LANG, JOSHUA J PLOT NAME :

PLOT SCALE : 1 IN:10 FT HORZ. / 1 IN:10 FT VERT.

WISDOT/CADDS SHEET 49

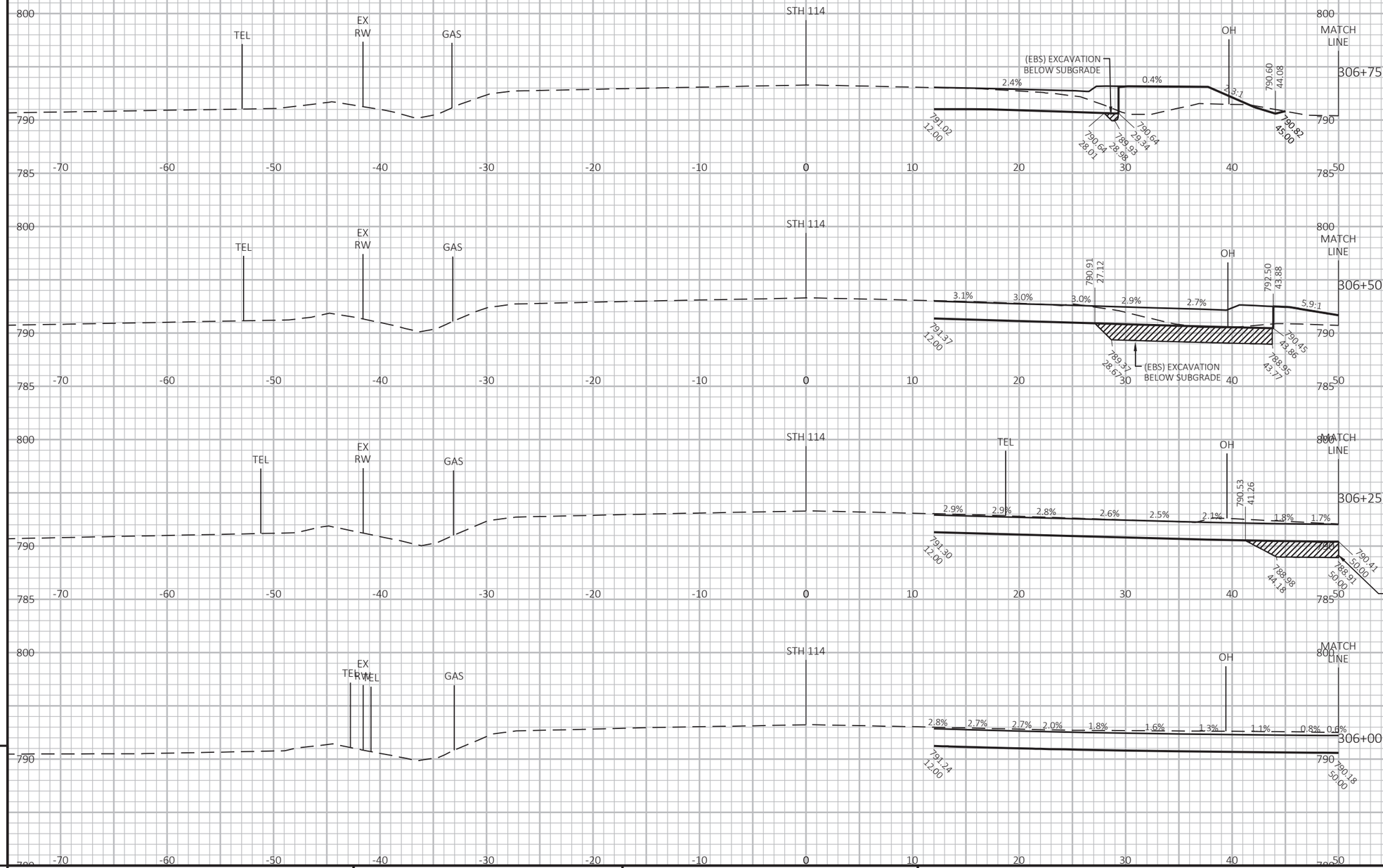

PROJECT NO: 4580-10-71	HWY: STH 114	COUNTY: CALUMET	CROSS SECTIONS: STH 114	SHEET 230	E

FILE NAME : N:\PDS\C3D\45801000\SHEETSPLAN\090201-XS.DWG
LAYOUT NAME - 090215-xs

PLOT DATE : 12/17/2021 11:45 AM PLOT BY : LANG, JOSHUA J PLOT NAME : **PLOT SCALE :** 1 IN:10 FT HORZ. / 1 IN:10 FT VERT.

WISDOT/CADDS SHEET 49

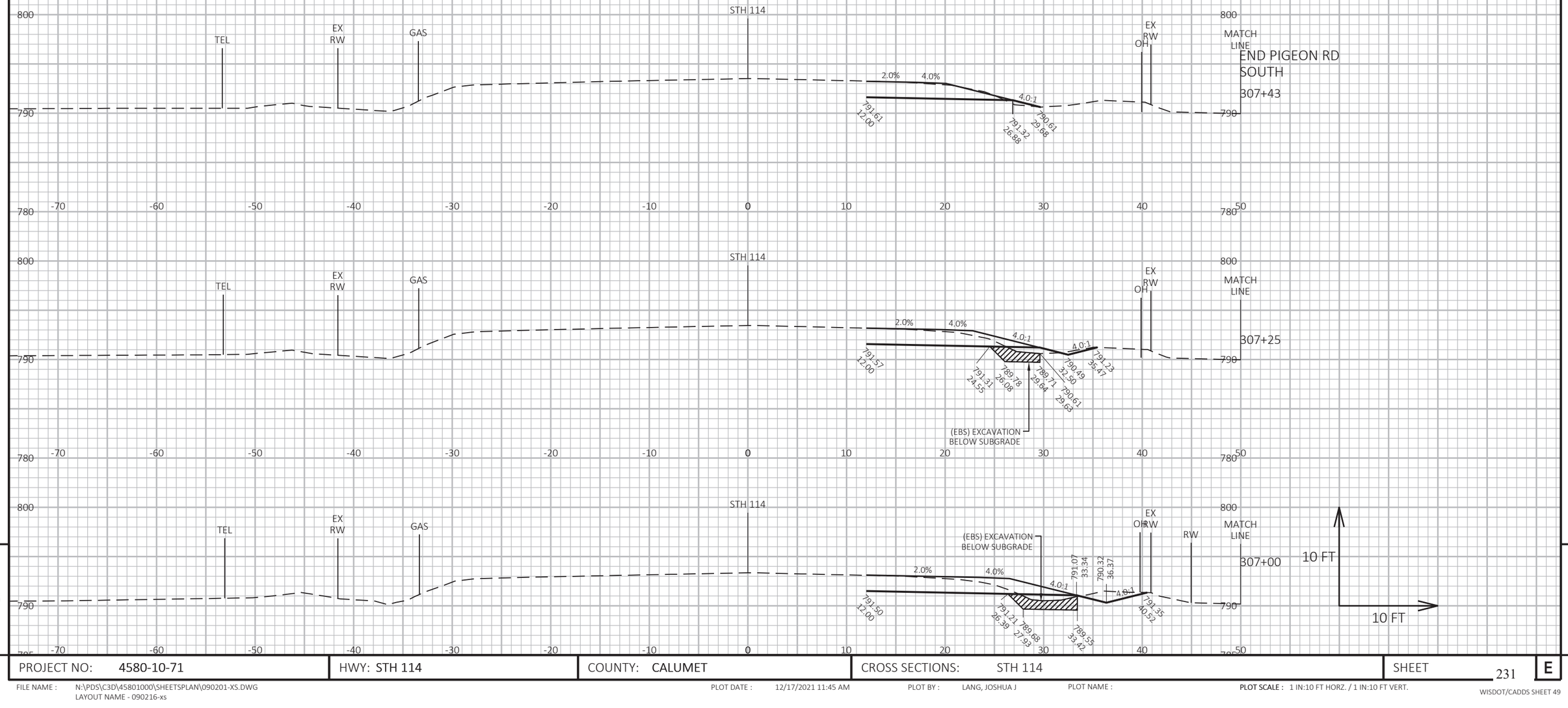

9

9

PROJECT NO: 4580-10-71	HWY: STH 114	COUNTY: CALUMET	CROSS SECTIONS: STH 114	SHEET 231	E

FILE NAME : N:\PDS\C3D\45801000\SHEETSPLAN\090201-XS.DWG
LAYOUT NAME - 090216-xs

PLOT DATE : 12/17/2021 11:45 AM PLOT BY : LANG, JOSHUA J PLOT NAME : PLOT SCALE : 1 IN:10 FT HORZ. / 1 IN:10 FT VERT.

WISDOT/CADDS SHEET 49

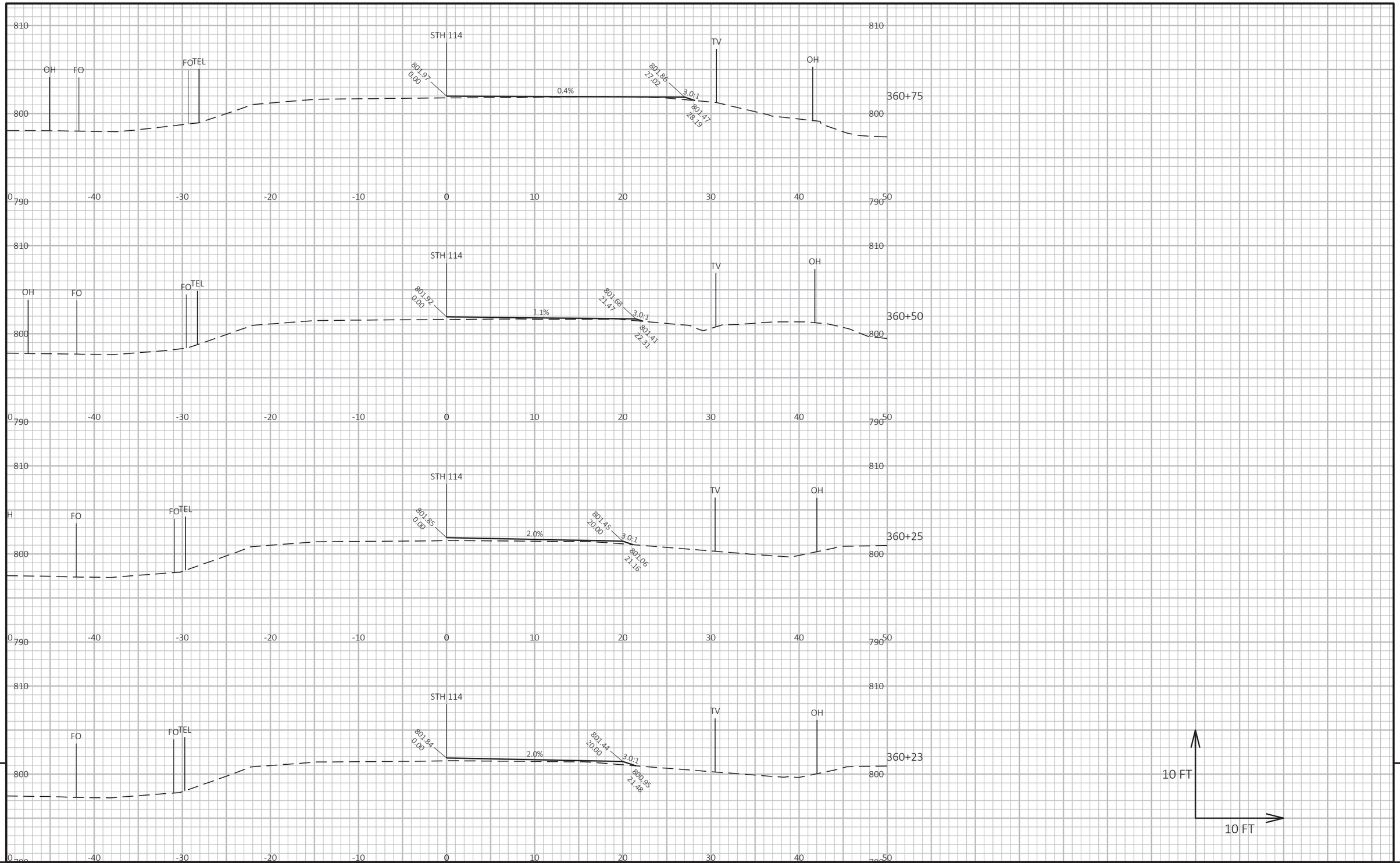

9

9

PROJECT NO: 4580-10-71	HWY: STH 114	COUNTY: CALUMET	CROSS SECTIONS: RAILROAD CROSSING	SHEET 232	E

FILE NAME : C:\CIVIL 3D PROJECTS\45801000\SHEETSPLAN\090201-XS.DWG
LAYOUT NAME - 090217-xs

PLOT DATE : 10/20/2021 3:09 PM

PLOT BY : SMITH, JENNIFER B

PLOT NAME :

PLOT SCALE : 1 IN:10 FT HORZ. / 1 IN:10 FT VERT.

WISDOT/CADDS SHEET 49

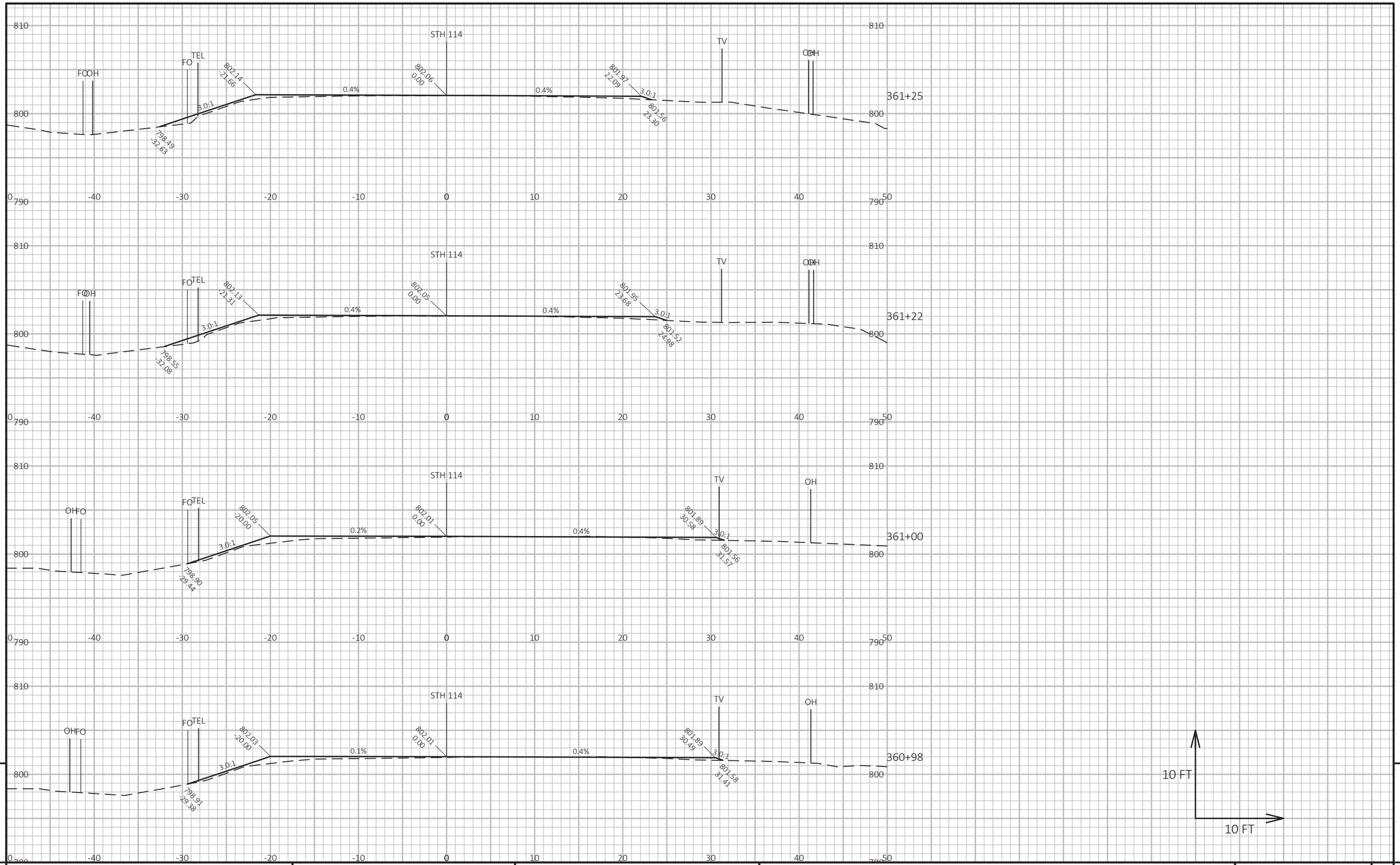

9

9

PROJECT NO: 4580-10-71	HWY: STH 114	COUNTY: CALUMET	CROSS SECTIONS: RAILROAD CROSSING	SHEET 233	E

FILE NAME : C:\CIVIL 3D PROJECTS\45801000\SHEETSPLAN\090201-XS.DWG
LAYOUT NAME - 090218-xs

PLOT DATE : 10/20/2021 3:09 PM PLOT BY : SMITH, JENNIFER B PLOT NAME :

PLOT SCALE : 1 IN:10 FT HORZ. / 1 IN:10 FT VERT.

WISDOT/CADDS SHEET 49

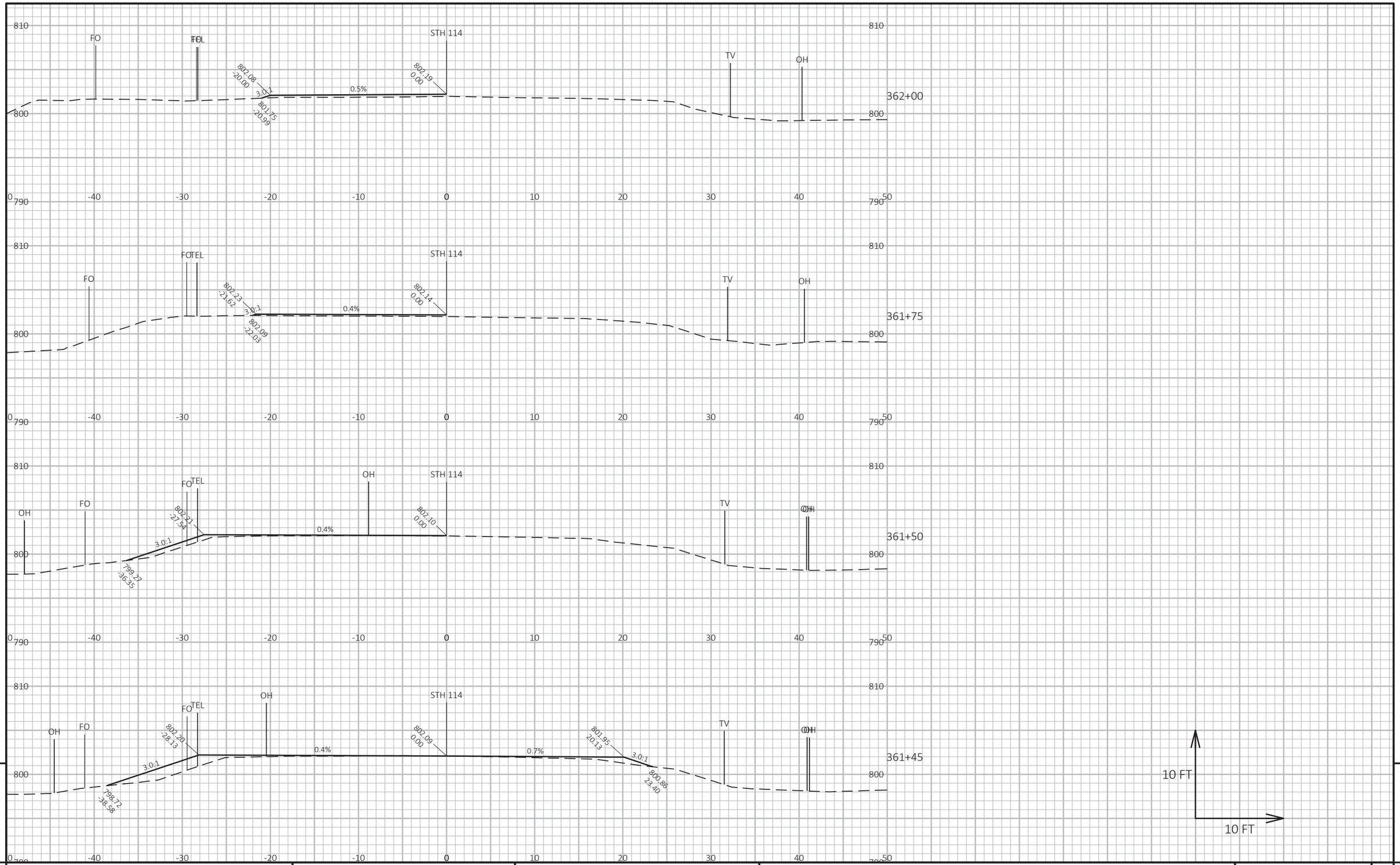

9

9

PROJECT NO: 4580-10-71	HWY: STH 114	COUNTY: CALUMET	CROSS SECTIONS: RAILROAD CROSSING	SHEET 234	E

FILE NAME : C:\CIVIL 3D PROJECTS\45801000\SHEETSPLAN\090201-XS.DWG
LAYOUT NAME - 090219-xs

PLOT DATE : 10/20/2021 3:09 PM PLOT BY : SMITH, JENNIFER B PLOT NAME :

PLOT SCALE : 1 IN:10 FT HORZ. / 1 IN:10 FT VERT.

WISDOT/CADDS SHEET 49

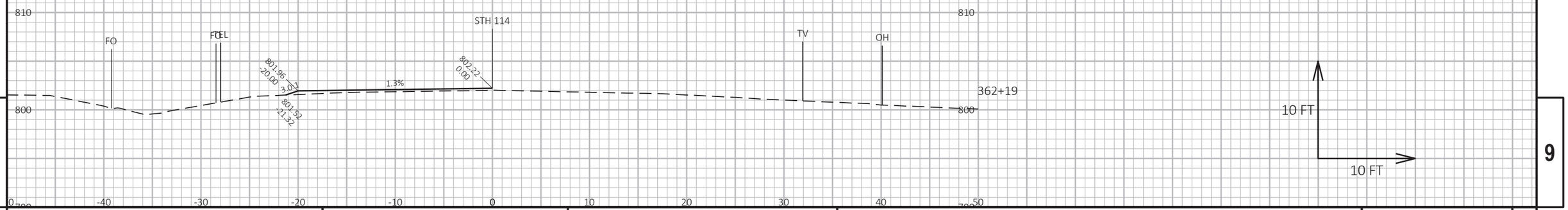

9

9

PROJECT NO: 4580-10-71	HWY: STH 114	COUNTY: CALUMET	CROSS SECTIONS: RAILROAD CROSSING	SHEET 235	E

FILE NAME : C:\CIVIL 3D PROJECTS\45801000\SHEETSPLAN\090201-XS.DWG
LAYOUT NAME - 090220-xs

PLOT DATE : 10/20/2021 3:09 PM PLOT BY : SMITH, JENNIFER B PLOT NAME :

PLOT SCALE : 1 IN:10 FT HORZ. / 1 IN:10 FT VERT.

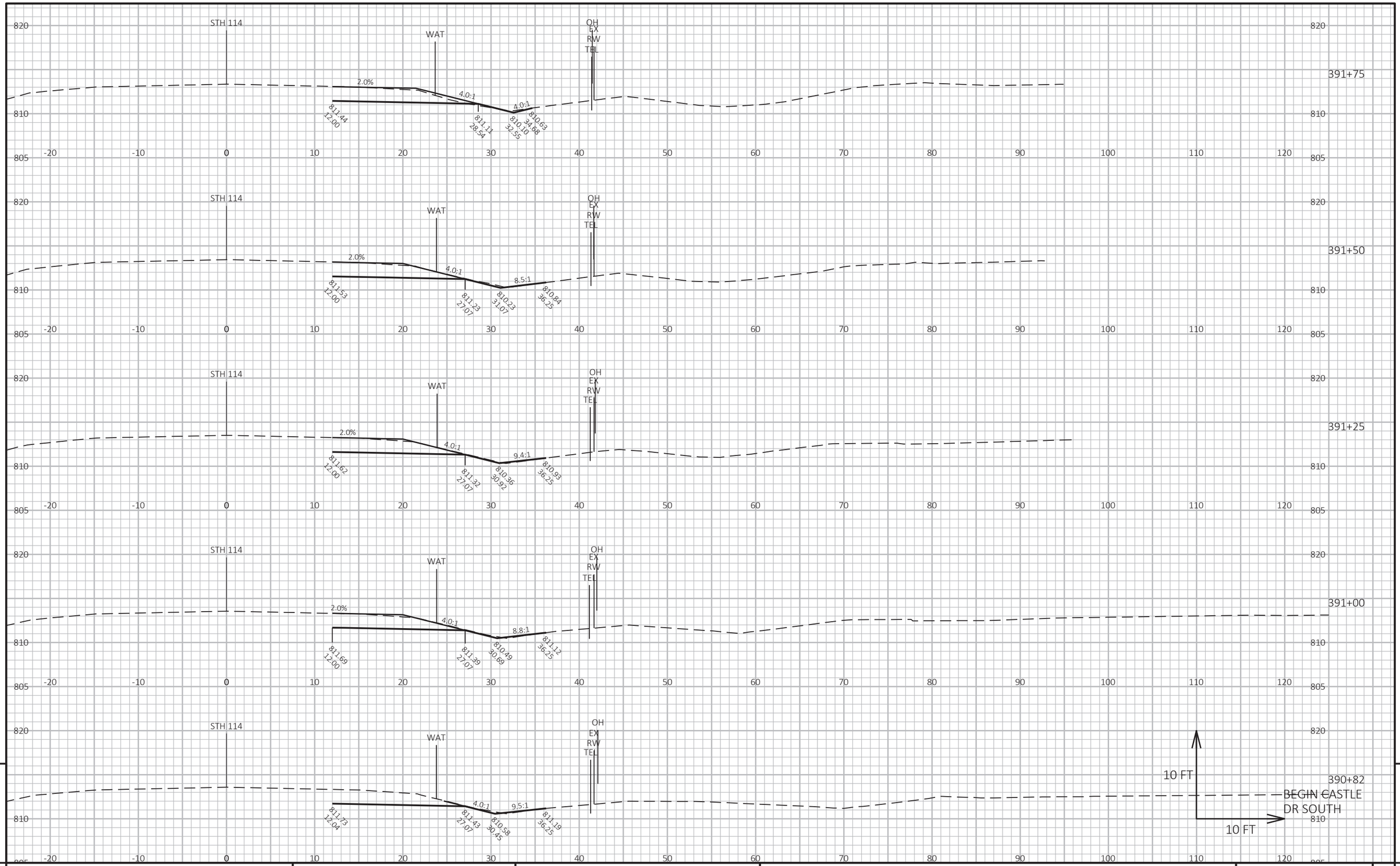

9

PROJECT NO: 4580-10-71	HWY: STH 114	COUNTY: CALUMET	CROSS SECTIONS: STH 114	SHEET 236	E

9

FILE NAME : C:\CIVIL 3D PROJECTS\45801000\SHEETSPLAN\090201-XS.DWG
LAYOUT NAME - 090221-xs

PLOT DATE : 10/20/2021 3:09 PM PLOT BY : SMITH, JENNIFER B PLOT NAME :

PLOT SCALE : 1 IN:10 FT HORZ. / 1 IN:10 FT VERT.

WISDOT/CADDS SHEET 49

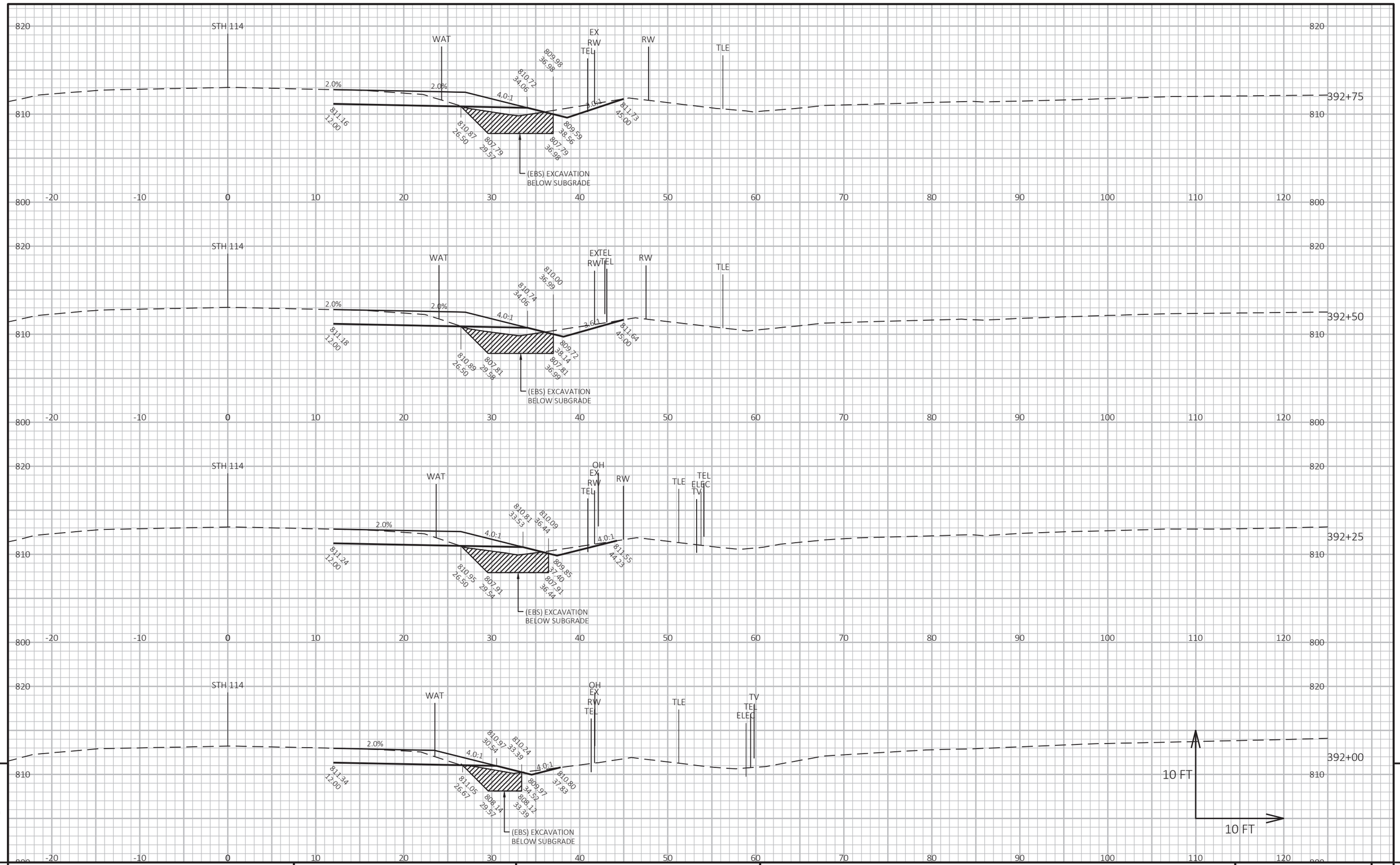

9

9

PROJECT NO: 4580-10-71	HWY: STH 114	COUNTY: CALUMET	CROSS SECTIONS: STH 114	SHEET 237	E

FILE NAME : C:\CIVIL 3D PROJECTS\45801000\SHEETSPLAN\090201-XS.DWG
LAYOUT NAME - 090222-xs

PLOT DATE : 10/20/2021 3:10 PM

PLOT BY : SMITH, JENNIFER B

PLOT NAME :

PLOT SCALE : 1 IN:10 FT HORZ. / 1 IN:10 FT VERT.

WISDOT/CADDS SHEET 49

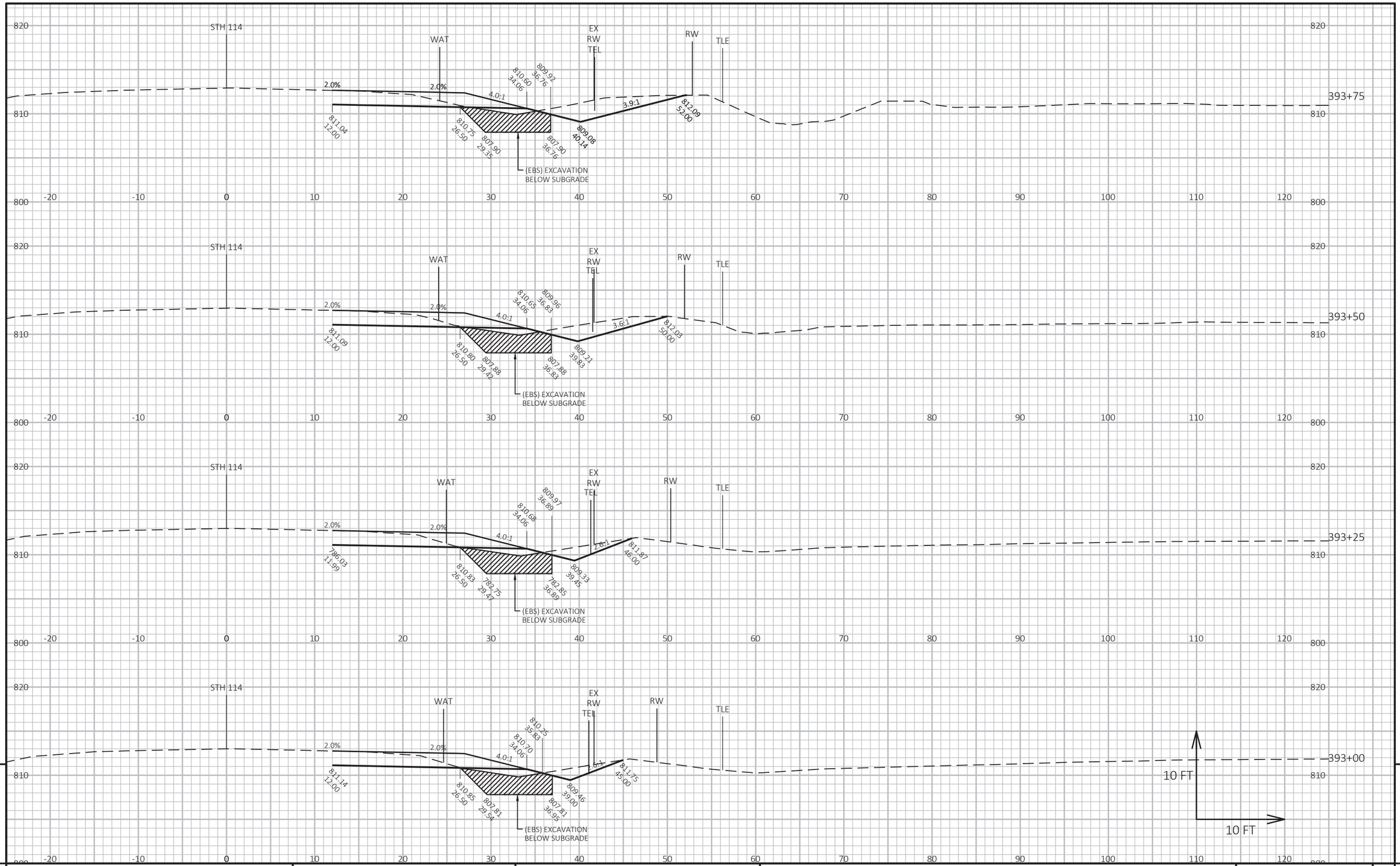

9

9

PROJECT NO: 4580-10-71	HWY: STH 114	COUNTY: CALUMET	CROSS SECTIONS: STH 114	SHEET 238	E

FILE NAME : C:\CIVIL 3D PROJECTS\45801000\SHEETSPLAN\090201-XS.DWG
LAYOUT NAME - 090223-xs

PLOT DATE : 10/20/2021 3:10 PM

PLOT BY : SMITH, JENNIFER B

PLOT NAME :

PLOT SCALE : 1 IN:10 FT HORZ. / 1 IN:10 FT VERT.

WISDOT/CADDS SHEET 49

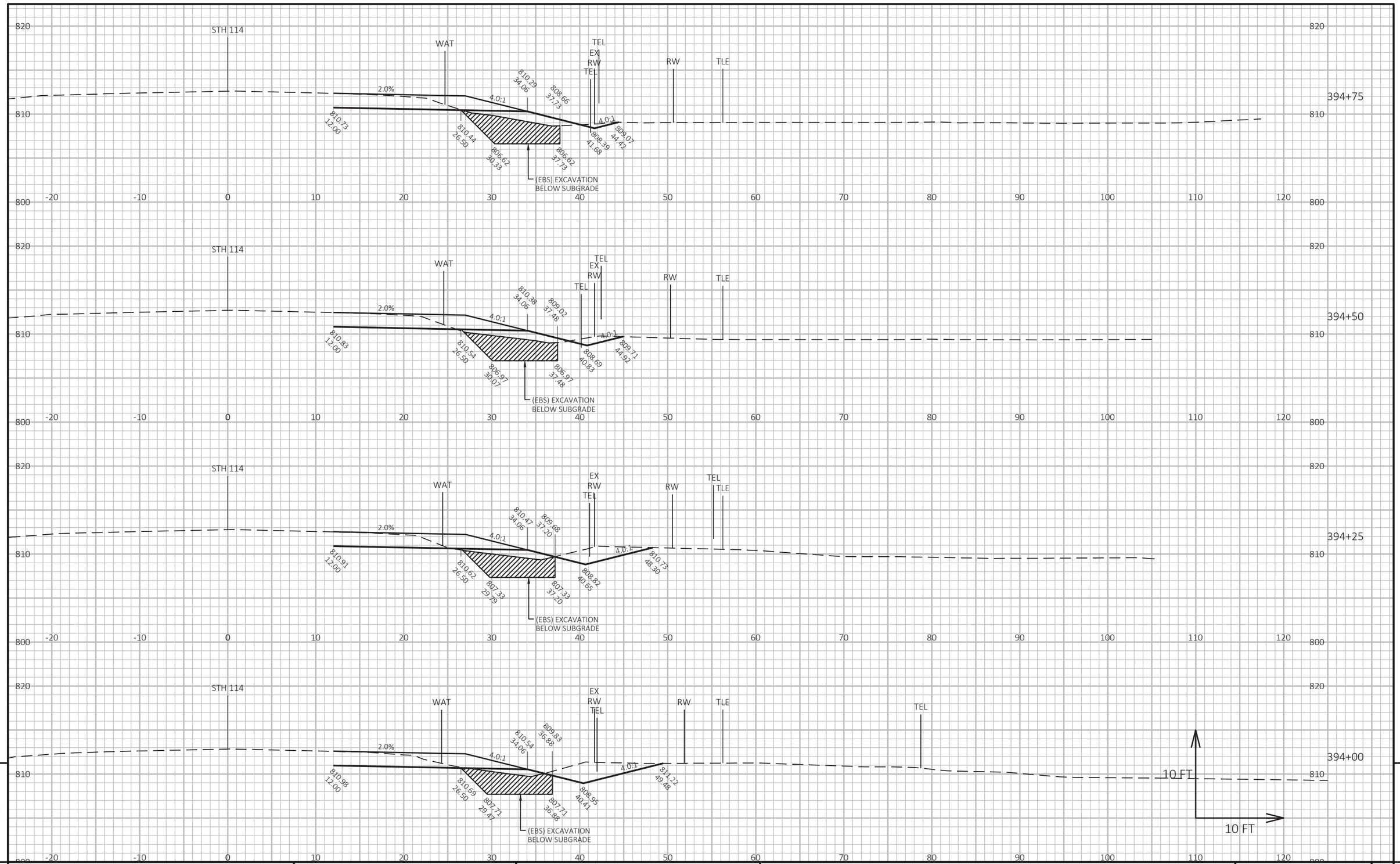

PROJECT NO: 4580-10-71	HWY: STH 114	COUNTY: CALUMET	CROSS SECTIONS: STH 114	SHEET 239	E

FILE NAME : C:\CIVIL 3D PROJECTS\45801000\SHEETSPLAN\090201-XS.DWG
LAYOUT NAME - 090224-xs

PLOT DATE : 10/20/2021 3:10 PM

PLOT BY : SMITH, JENNIFER B

PLOT NAME :

PLOT SCALE : 1 IN:10 FT HORZ. / 1 IN:10 FT VERT.

WISDOT/CADDS SHEET 49

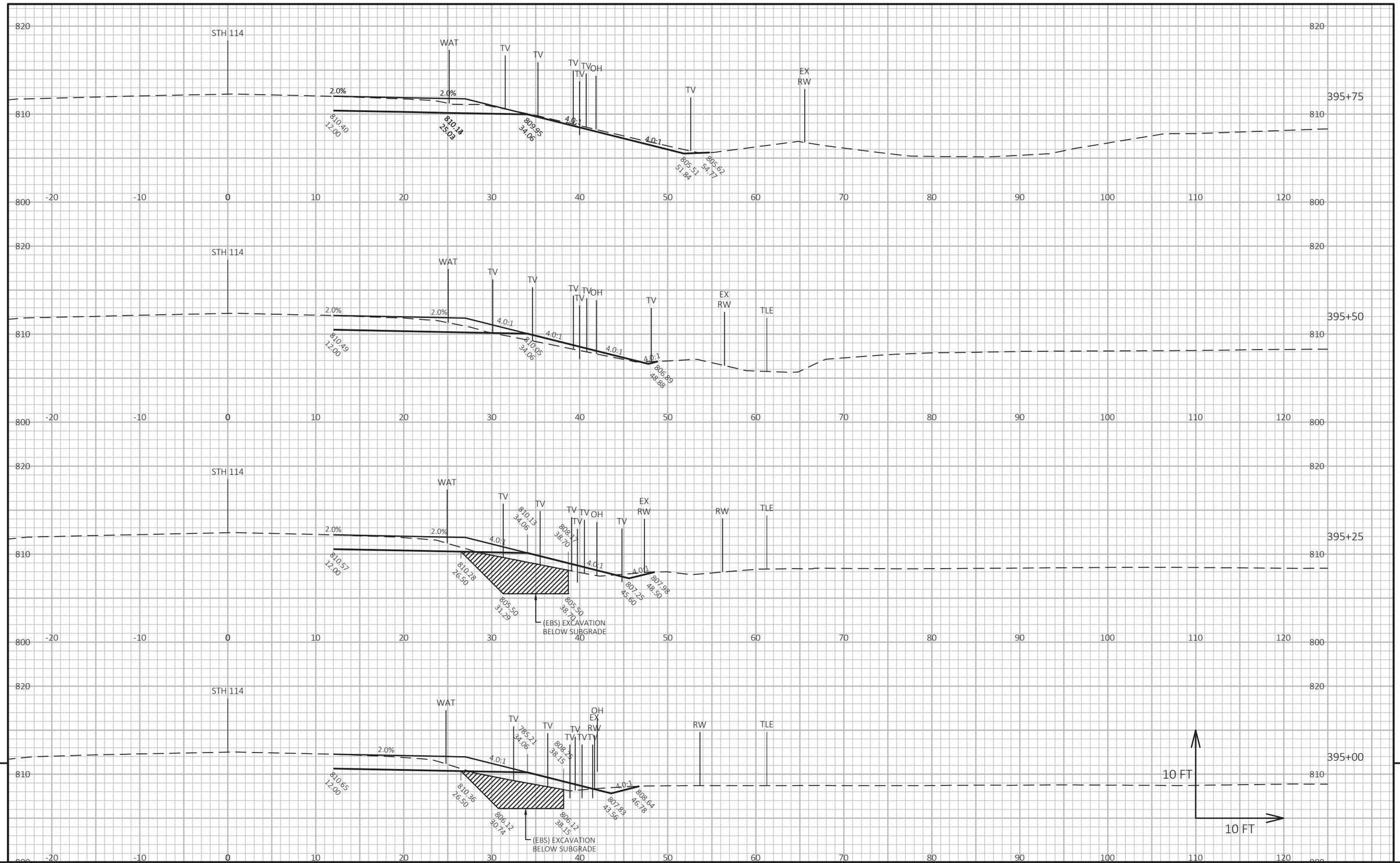

9

9

PROJECT NO: 4580-10-71	HWY: STH 114	COUNTY: CALUMET	CROSS SECTIONS: STH 114	SHEET 240	E

FILE NAME : C:\CIVIL 3D PROJECTS\45801000\SHEETSPLAN\090201-XS.DWG
LAYOUT NAME - 090225-xs

PLOT DATE : 10/20/2021 3:10 PM

PLOT BY : SMITH, JENNIFER B

PLOT NAME :

PLOT SCALE : 1 IN:10 FT HORZ. / 1 IN:10 FT VERT.

WISDOT/CADDS SHEET 49

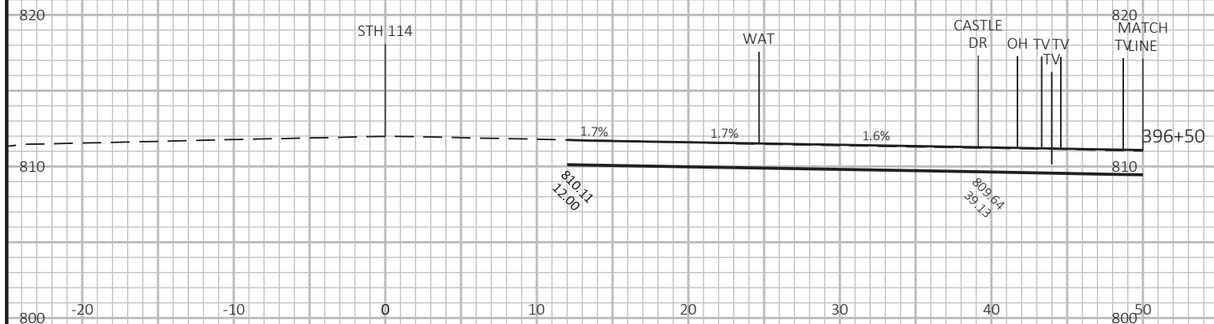

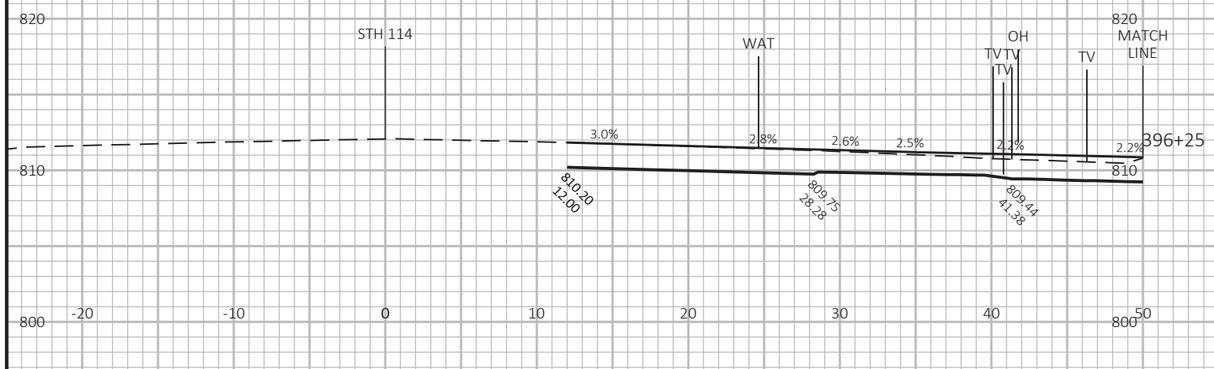

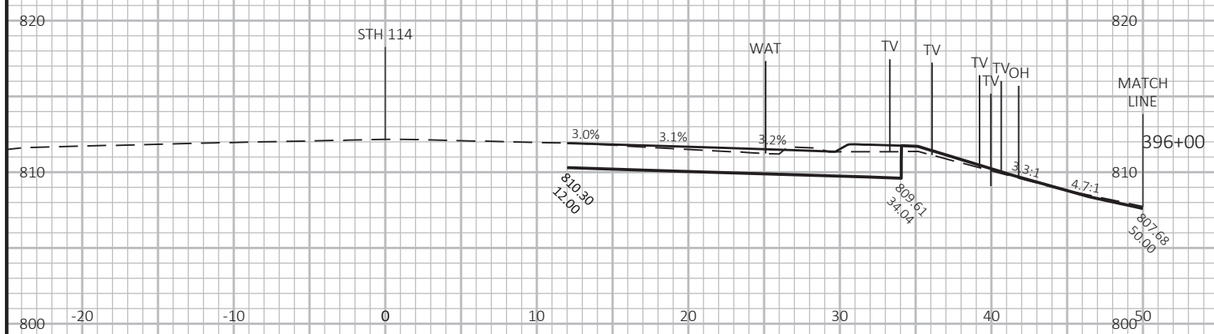

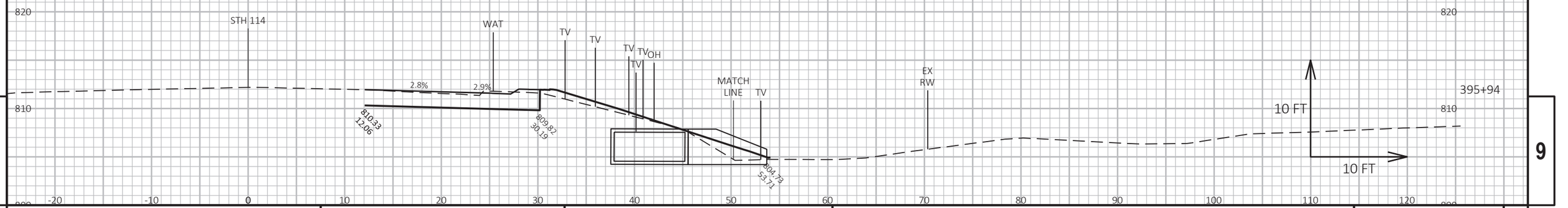

9

9

PROJECT NO: 4580-10-71	HWY: STH 114	COUNTY: CALUMET	CROSS SECTIONS: STH 114	SHEET 241	E

FILE NAME : C:\CIVIL 3D PROJECTS\45801000\SHEETSPLAN\090201-XS.DWG
LAYOUT NAME - 090226-xs

PLOT DATE : 10/20/2021 3:10 PM

PLOT BY : SMITH, JENNIFER B

PLOT NAME :

PLOT SCALE : 1 IN:10 FT HORZ. / 1 IN:10 FT VERT.

WISDOT/CADDS SHEET 49

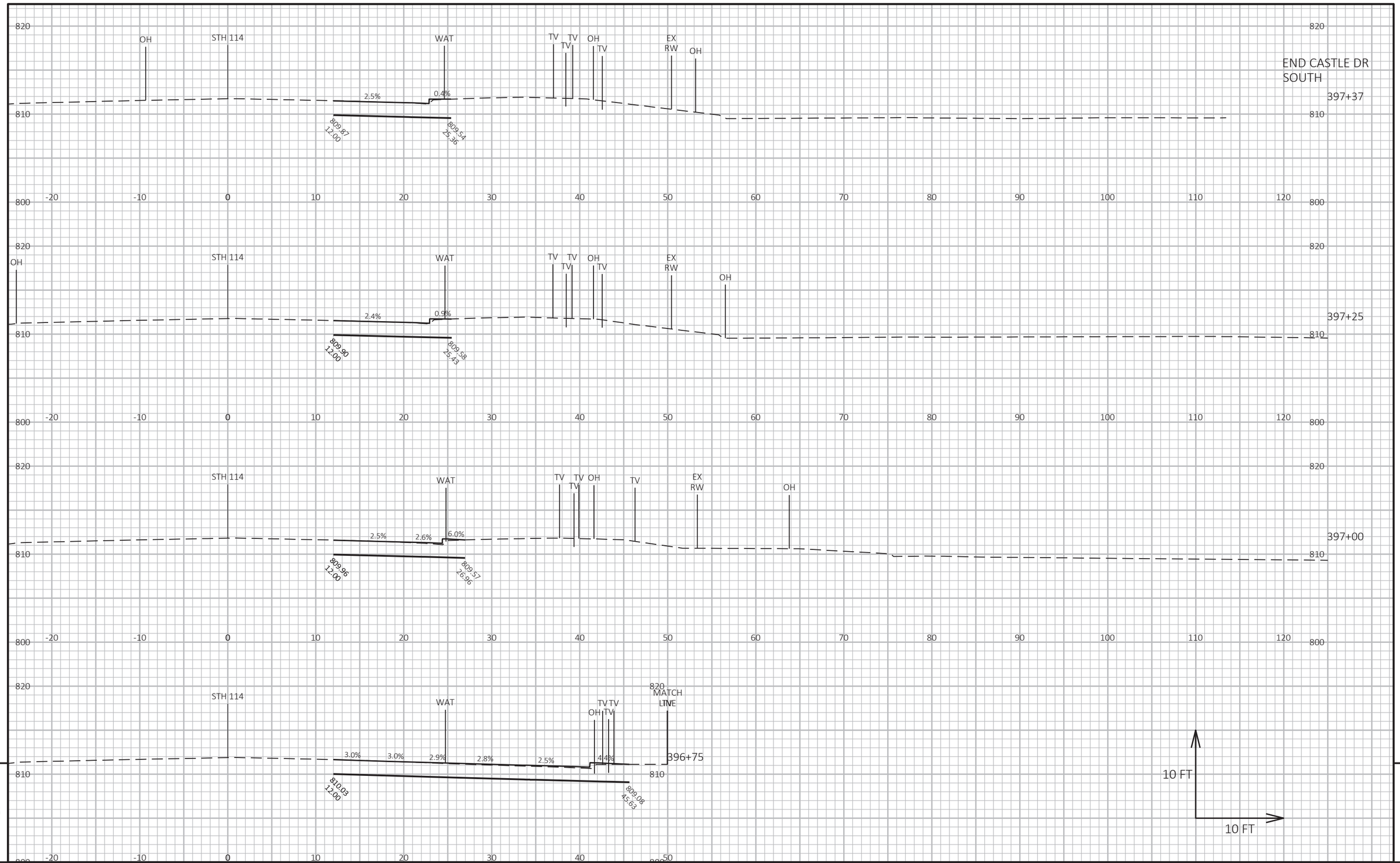

PROJECT NO: 4580-10-71	HWY: STH 114	COUNTY: CALUMET	CROSS SECTIONS: STH 114	SHEET 242	E

FILE NAME : C:\CIVIL 3D PROJECTS\45801000\SHEETSPLAN\090201-XS.DWG
LAYOUT NAME - 090227-xs

PLOT DATE : 10/20/2021 3:10 PM

PLOT BY : SMITH, JENNIFER B

PLOT NAME :

PLOT SCALE : 1 IN:10 FT HORZ. / 1 IN:10 FT VERT.

WISDOT/CADDS SHEET 49

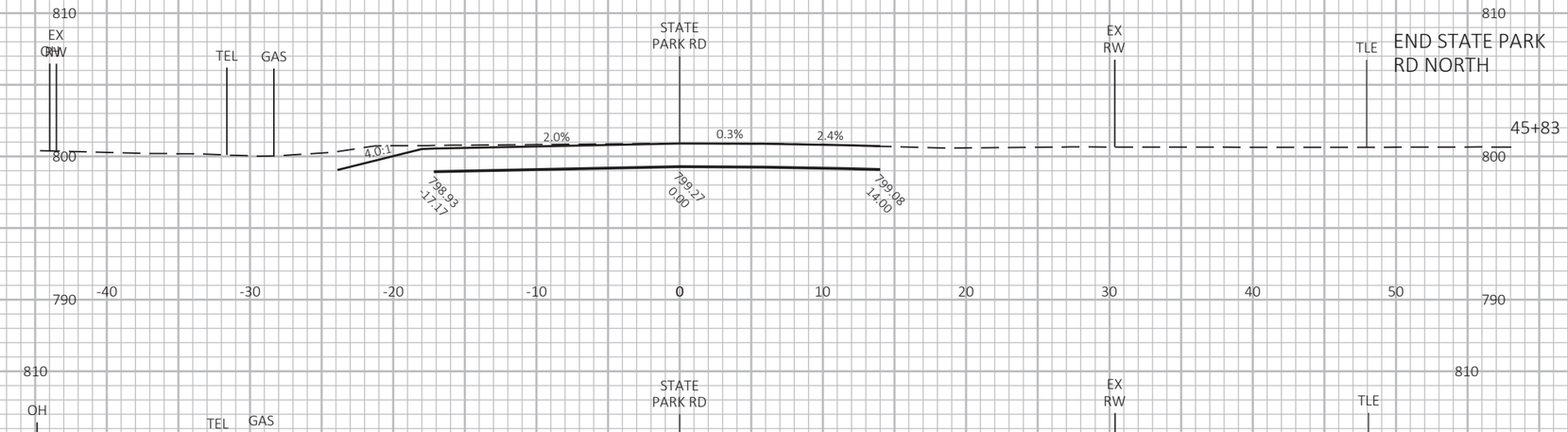

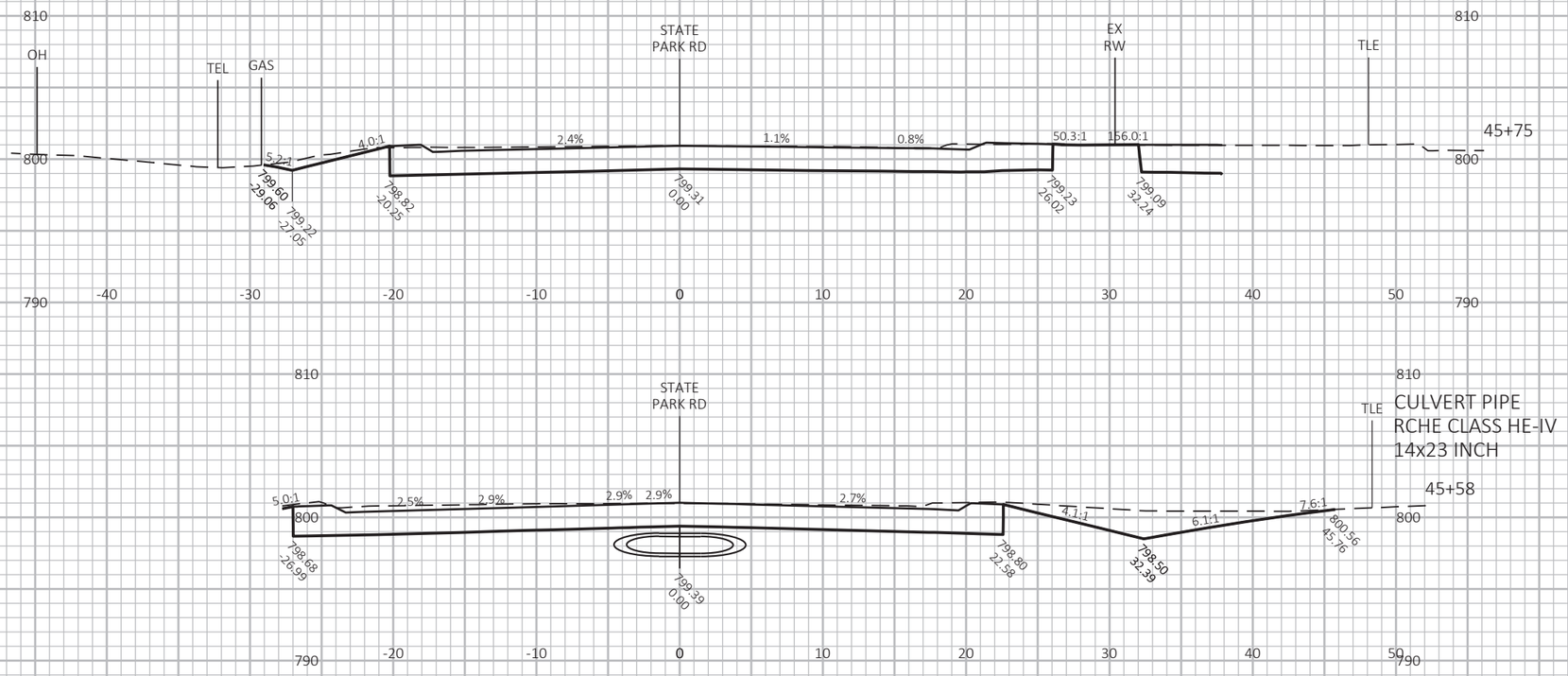

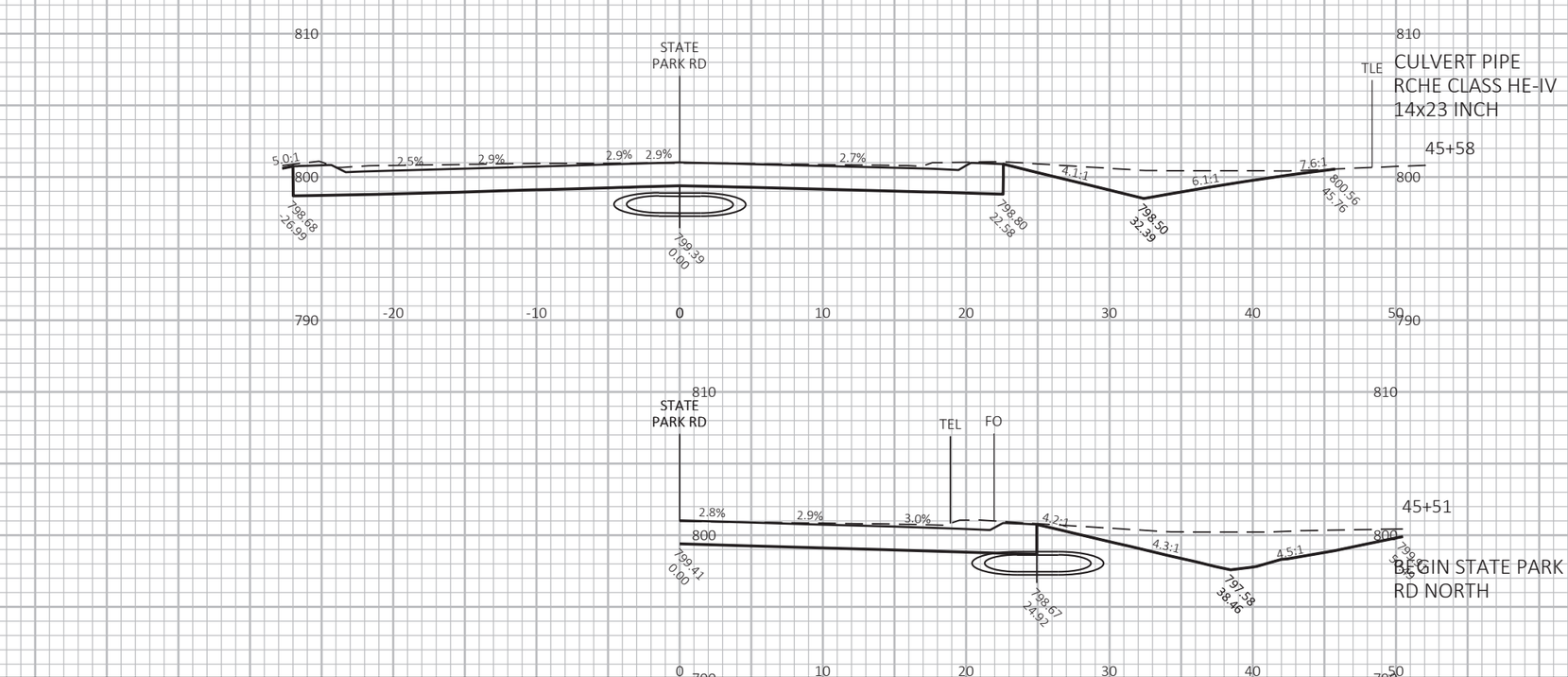

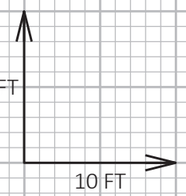

9

9

PROJECT NO: 4580-10-71	HWY: STH 114	COUNTY: CALUMET	CROSS SECTIONS: STATE PARK RD	SHEET 243	E

FILE NAME : C:\CIVIL 3D PROJECTS\45801000\SHEETSPLAN\090201-XS.DWG
LAYOUT NAME - 090228-xs

PLOT DATE : 10/20/2021 3:10 PM

PLOT BY : SMITH, JENNIFER B

PLOT NAME :

PLOT SCALE : 1 IN:10 FT HORZ. / 1 IN:10 FT VERT.

WISDOT/CADDS SHEET 49

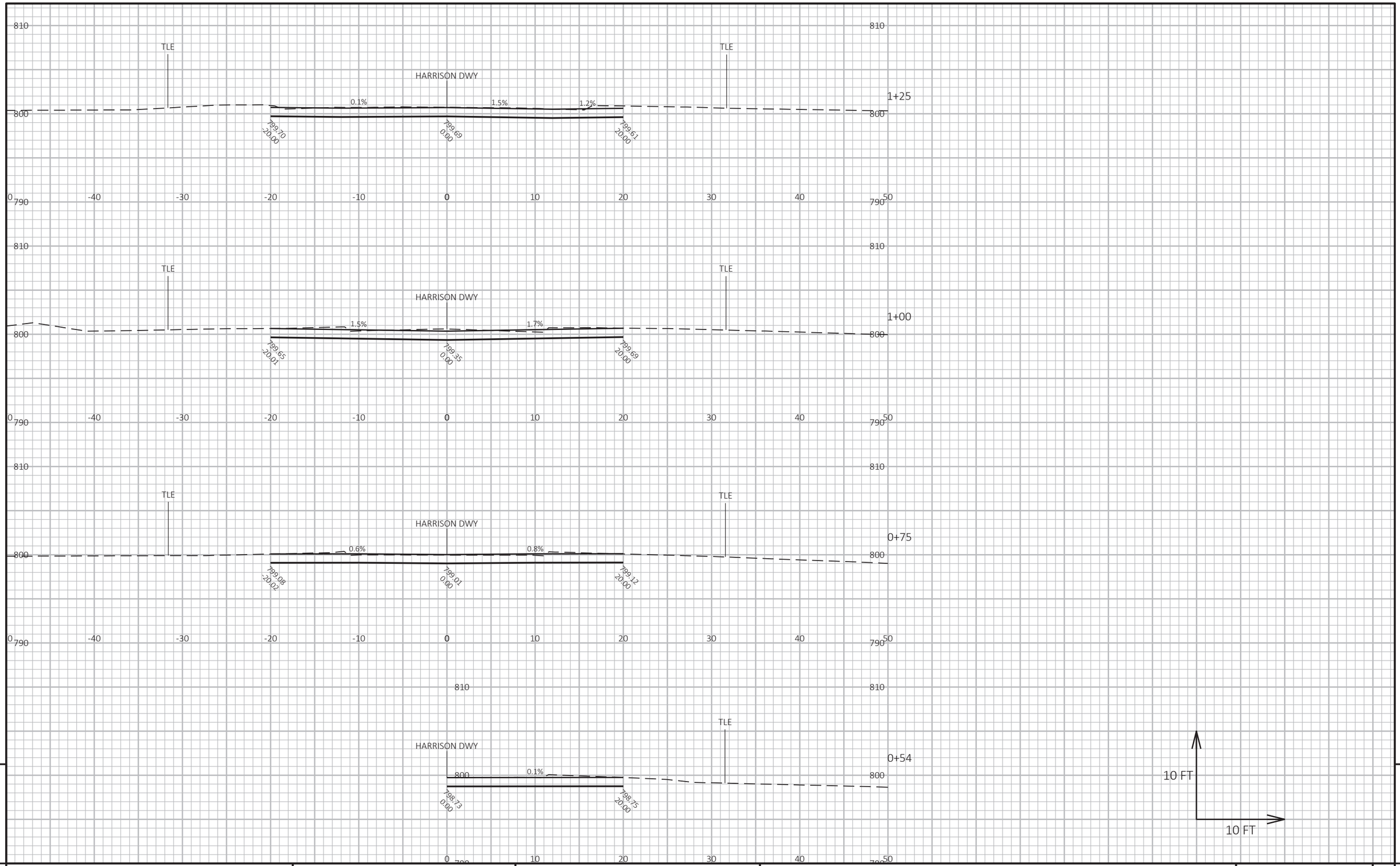

9

9

PROJECT NO: 4580-10-71	HWY: STH 114	COUNTY: CALUMET	CROSS SECTIONS: STATE PARK RD DRIVEWAY REMOVAL	SHEET 244	E

FILE NAME : C:\CIVIL 3D PROJECTS\45801000\SHEETSPLAN\090201-XS.DWG
LAYOUT NAME - 090229-xs

PLOT DATE : 10/20/2021 3:10 PM PLOT BY : SMITH, JENNIFER B PLOT NAME : PLOT SCALE : 1 IN:10 FT HORZ. / 1 IN:10 FT VERT.

WISDOT/CADDS SHEET 49

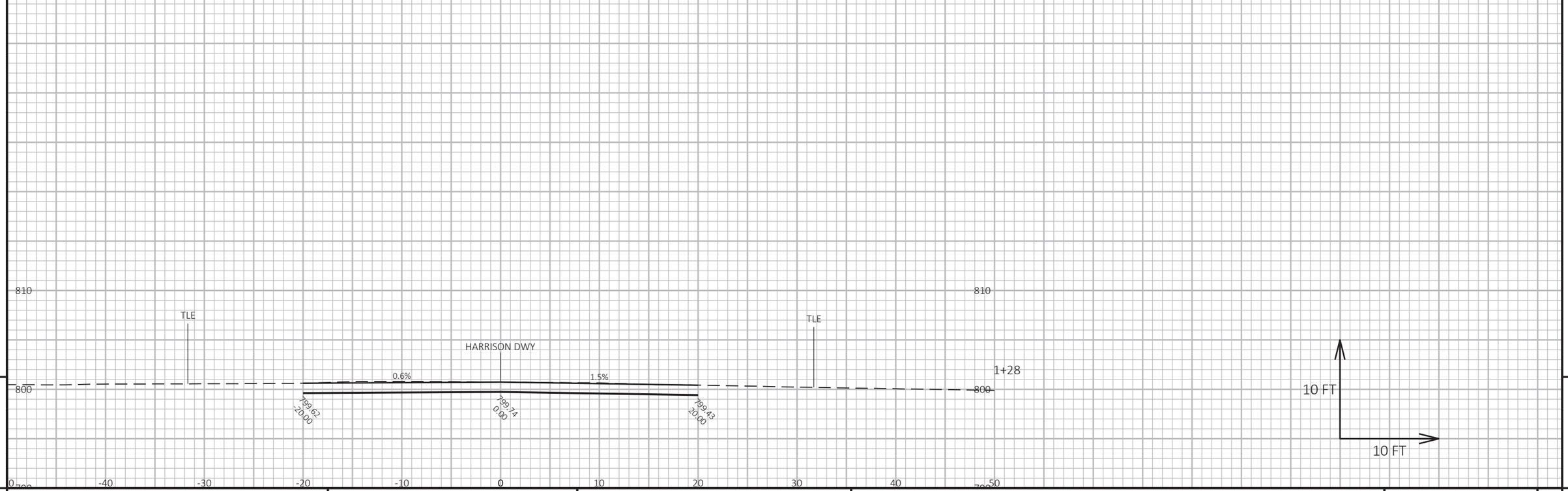

9

9

PROJECT NO: 4580-10-71	HWY: STH 114	COUNTY: CALUMET	CROSS SECTIONS: STATE PARK RD DRIVEWAY REMOVAL	SHEET 245	E

FILE NAME : C:\CIVIL 3D PROJECTS\45801000\SHEETSPLAN\090201-XS.DWG
LAYOUT NAME - 090230-xs

PLOT DATE : 10/20/2021 3:10 PM PLOT BY : SMITH, JENNIFER B PLOT NAME : **PLOT SCALE :** 1 IN:10 FT HORZ. / 1 IN:10 FT VERT.

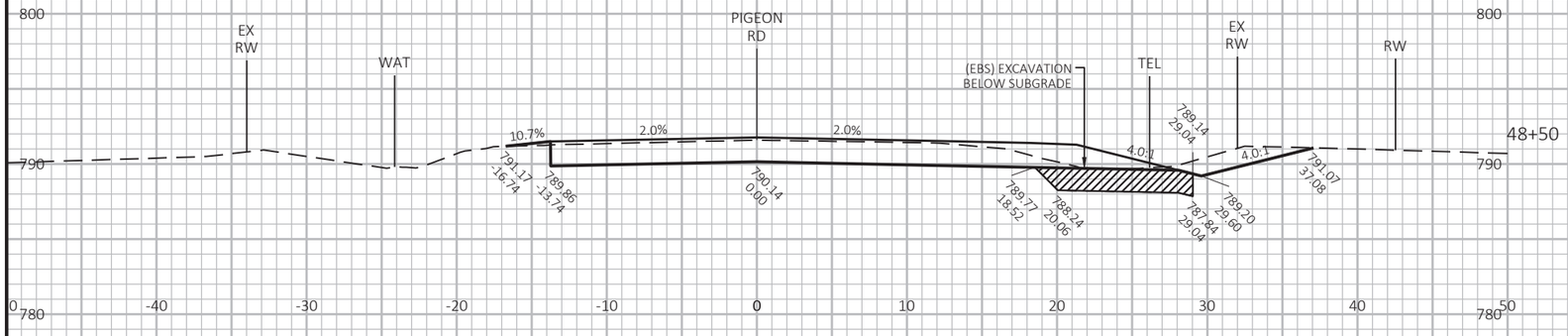

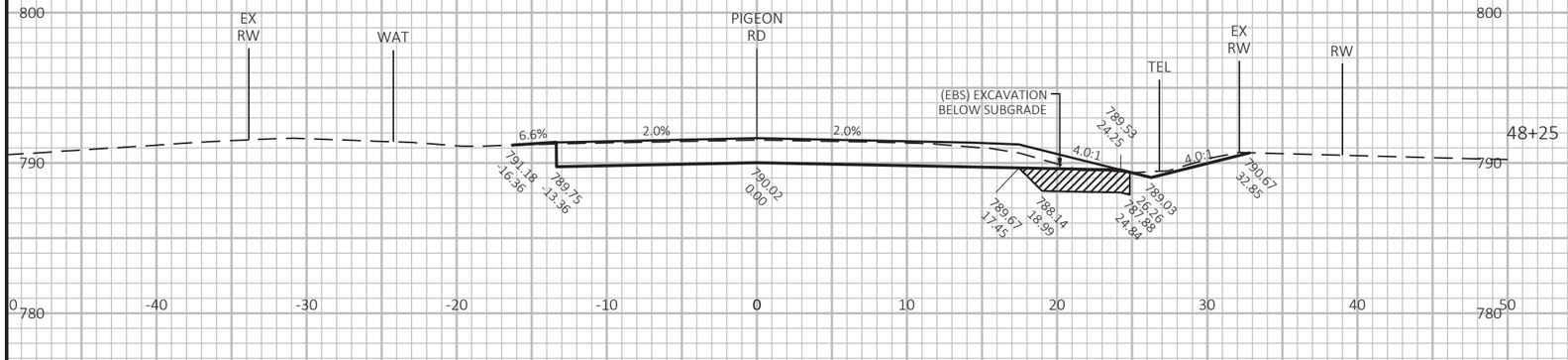

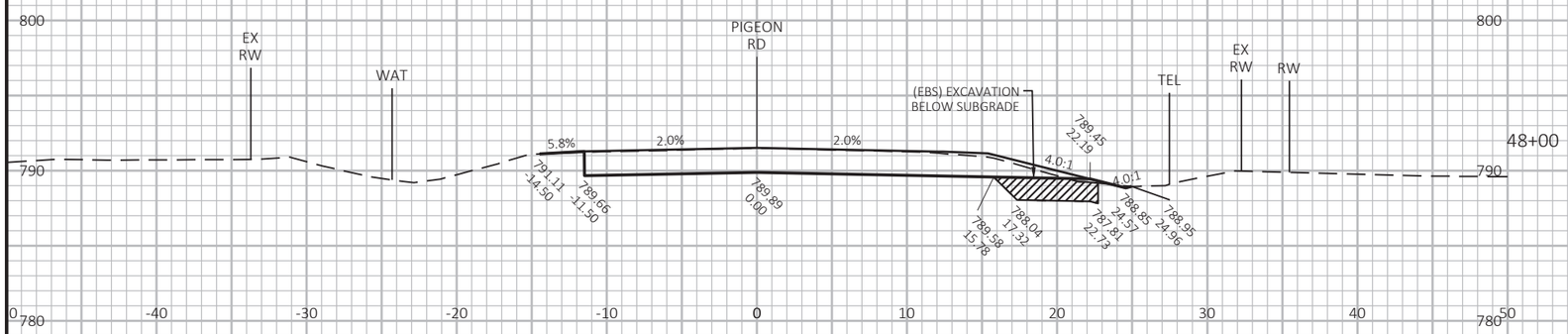

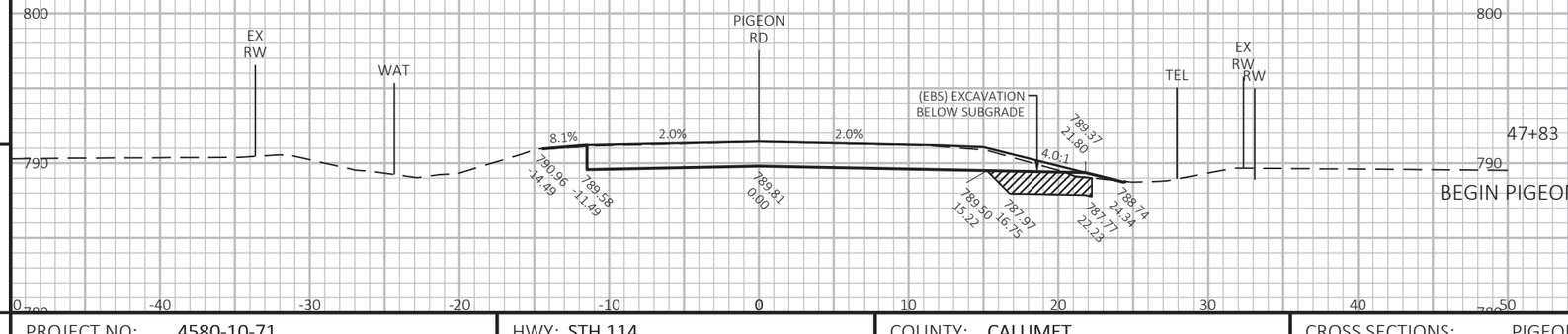

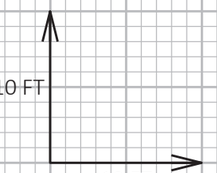

9

9

PROJECT NO: 4580-10-71	HWY: STH 114	COUNTY: CALUMET	CROSS SECTIONS: PIGEON ROAD	SHEET 246	E

FILE NAME : N:\PDS\C3D\45801000\SHEETSPLAN\090201-XS.DWG
LAYOUT NAME - 090231-xs

PLOT DATE : 12/17/2021 12:07 PM

PLOT BY : LANG, JOSHUA J

PLOT NAME :

PLOT SCALE : 1 IN:10 FT HORZ. / 1 IN:10 FT VERT.

WISDOT/CADDS SHEET 49

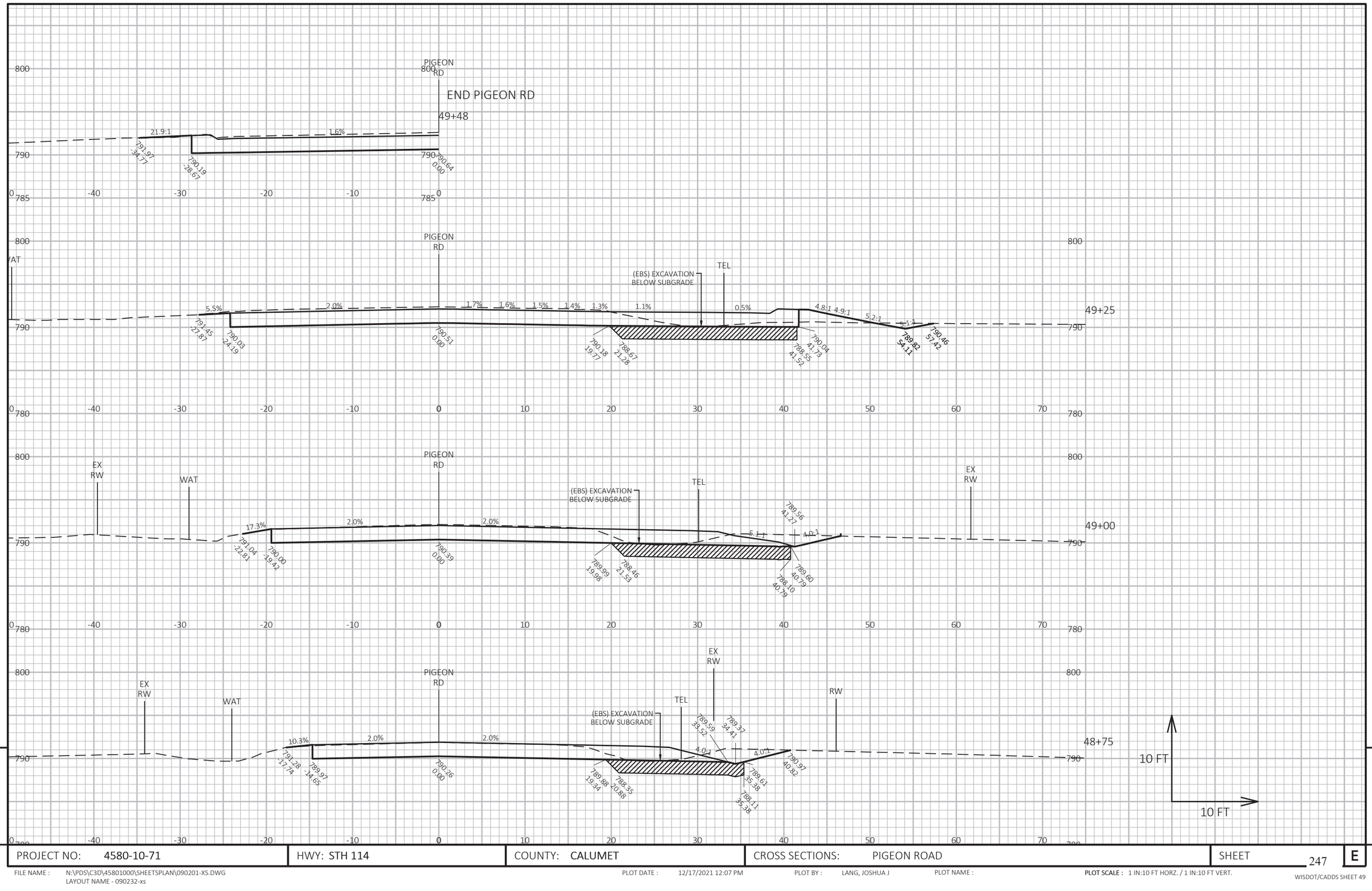

PROJECT NO: 4580-10-71	HWY: STH 114	COUNTY: CALUMET	CROSS SECTIONS: PIGEON ROAD	SHEET

FILE NAME : N:\PDS\C3D\45801000\SHEETSPLAN\090201-XS.DWG
LAYOUT NAME - 090232-xs

PLOT DATE : 12/17/2021 12:07 PM PLOT BY : LANG, JOSHUA J PLOT NAME : PLOT SCALE : 1 IN:10 FT HORZ. / 1 IN:10 FT VERT.

WISDOT/CADDS SHEET 49

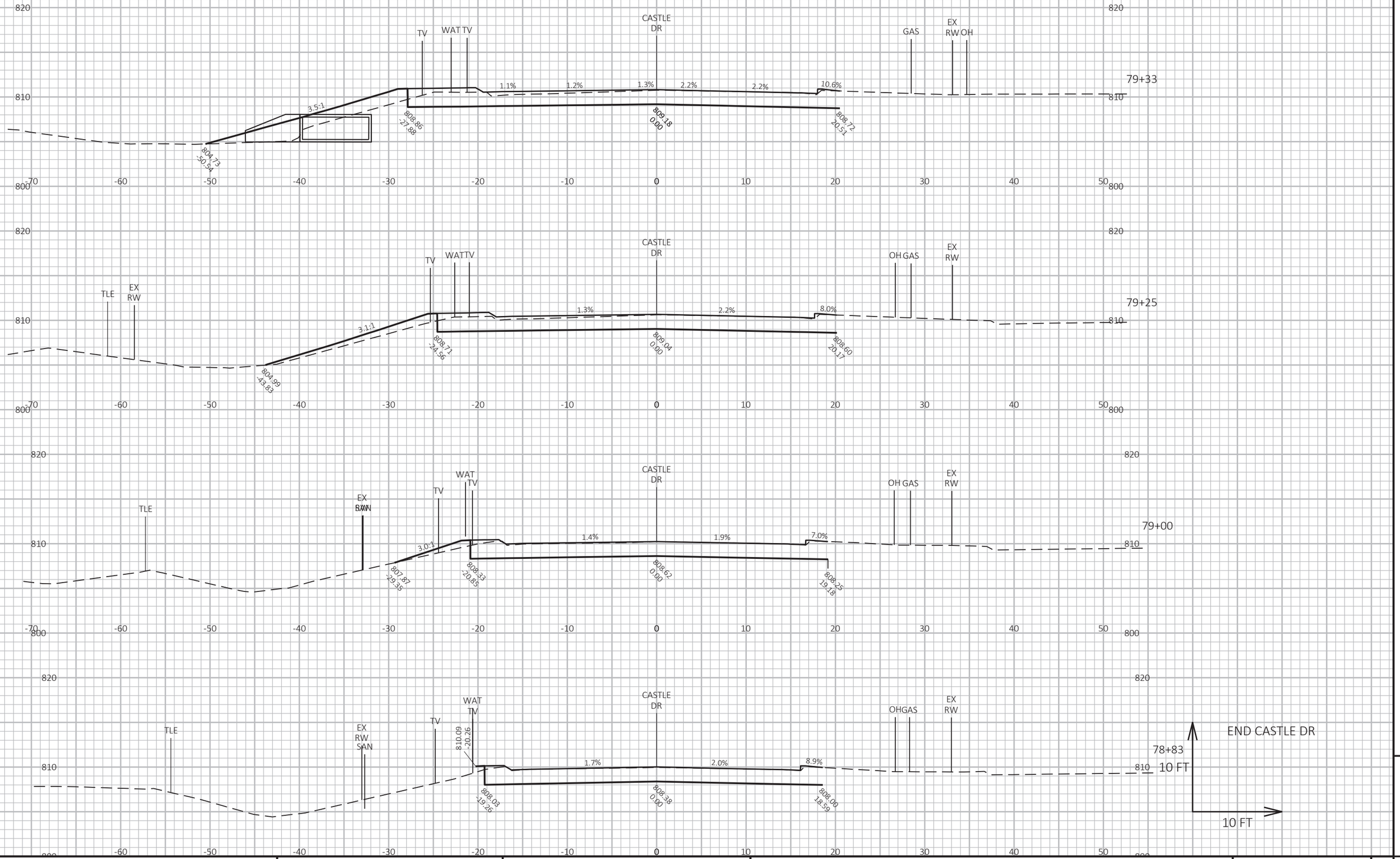

9

9

PROJECT NO: 4580-10-71	HWY: STH 114	COUNTY: CALUMET	CROSS SECTIONS: CASTLE DR	SHEET 248	E

FILE NAME : C:\CIVIL 3D PROJECTS\45801000\SHEETSPLAN\090201-XS.DWG
LAYOUT NAME - 090233-xs

PLOT DATE : 10/20/2021 3:10 PM

PLOT BY : SMITH, JENNIFER B

PLOT NAME :

PLOT SCALE : 1 IN:10 FT HORZ. / 1 IN:10 FT VERT.

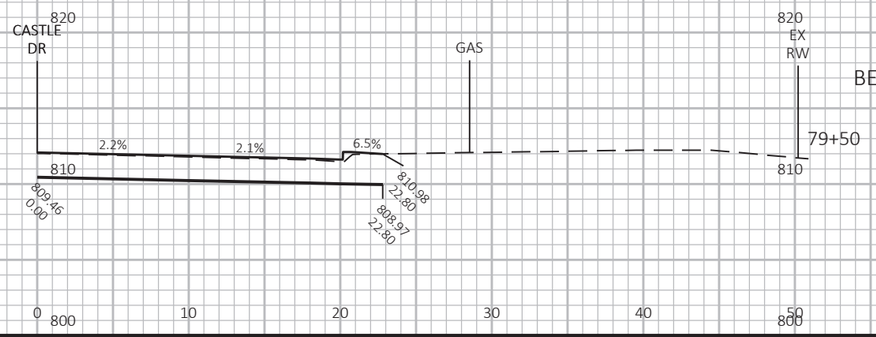

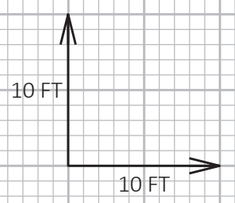

9

9

PROJECT NO: 4580-10-71	HWY: STH 114	COUNTY: CALUMET	CROSS SECTIONS: CASTLE DR	SHEET 249	E

FILE NAME : C:\CIVIL 3D PROJECTS\45801000\SHEETSPLAN\090201-XS.DWG
LAYOUT NAME - 090234-xs

PLOT DATE : 10/20/2021 3:10 PM PLOT BY : SMITH, JENNIFER B PLOT NAME : PLOT SCALE : 1 IN:10 FT HORZ. / 1 IN:10 FT VERT.

Wisconsin Department of Transportation

Dedicated people creating transportation solutions
through innovation and exceptional service.

http://www.dot.wisconsin.gov