US 41–WIS 441 OPERATIONAL NEEDS STUDY

US 41 (North of Breezewood Lane to Orange Lane) *and* WIS 441 (East of US 10 to North System Interchange)



PHASE II REPORT

April 2014

PROJ ID: 1130-31-00

PREPARED FOR

Wisconsin Department of Transportation
944 Vanderperren Way
Green Bay, WI 54304

PREPARED BY

HNTB Corporation
10 W. Mifflin Street
Suite 300
Madison, WI 53703

Contact:
Jerry Shadewald
(608) 294-5009
jshadewald@hntb.com

WISCONSIN DEPARTMENT OF TRANSPORTATION

HNTB

TABLE OF CONTENTS

EXECUTIVE SUMMARY 1
ES.1 STUDY PURPOSE AND LOCATION 1
ES.2 RECENT AND ONGOING CONSTRUCTION 4
ES.3 RECENT AND ONGOING STUDIES 4
US 41 (Wisconsin State Line – Green Bay) Interstate Conversion, Ongoing 4
WIS 441 Tri-County Project, County CB – Oneida Street Project, Ongoing 4
Operational Needs Assessment, US 41 (CTH JJ/WIS 114 – CTH S) and WIS 441, November 2011 4
WisDOT Backbone Needs and Improvement Study for WIS 125 Interchange, March 2007 4
College Avenue Traffic Safety and Operational Study, October 28, 2002 5
WisDOT Backbone Needs and Improvement Study for WIS 96 Interchange, April 2007 5
WisDOT Backbone Needs and Improvement Study for WIS 47 Interchange, May 2007 5
WisDOT Backbone Needs and Improvement Study for WIS 55 Interchange, May 2008 5
WIS 441/ CTH KK Interchange Evaluation, August 2008 5
WIS 441/ CTH KK Corridor Expansion Study, June 2012 5
STH 441/ CTH KK Area Traffic Study Summary Report, September 2000 6
Brown County Southern Crossing EIS, Ongoing 6
ES.4 TRAFFIC COUNTS AND FORECASTS 6
ES.5 INTERCHANGE TRAFFIC OPERATIONAL ANALYSIS 7
ES.6 INTERCHANGE DESIGN STANDARDS 7
ES.7 PRE-NEPA ENVIRONMENTAL SCREENING 8
ES.8 CONSIDERATION OF TRAFFIC OPERATIONS INFRASTRUCTURE PLAN (TOIP) 11
ES.9 STRUCTURES 11
Bridges 11
Retaining Walls 14
Noise Walls 14
Sign Bridges 14
Box Culverts (classified as bridges) 14
ES.10 COMPLETE STREETS 14
ES.11 UTILITIES 14
ES.12 COST ESTIMATING ASSUMPTIONS 15
ES.13 POTENTIAL PHASING OF MAINLINE IMPROVEMENTS 16
ES.14 SUMMARY OF EXPANSION CONCEPT 19

Short-Term Interchange Improvements **19**
Long-Term Mainline and Interchange Improvements **19**

SEGMENT 1 - US 41: NORTH OF BREEZEWOOD LANE TO SOUTH OF COUNTY BB (6.030 MILES) 1-1

1.1 EXISTING CONDITIONS **1-1**
Traffic and Operations Summary **1-1**
Safety Summary **1-1**
Roadway Summary **1-2**
Structures Summary **1-2**
Bridges 1-2
Pre-NEPA Environmental Screening Summary **1-5**
North of Breezewood Ln (Appleblossom Dr) to WIS 114/County JJ (Winneconne Ave) 1-5
Open Water *1-5*
WIS 114/County JJ (Winneconne Ave) to Oakridge Rd/Main St 1-5
Oakridge Rd/Main St to North of County II (North Green Bay Rd) 1-5
Community and Residential *1-5*
Environmental Justice *1-6*
Section 4(f) *1-6*
Archaeological Resources *1-6*
North of County II (North Green Bay Rd) to South of County BB (Fox Cities Drive) 1-6

1.2 EXPANSION DESIGN CONCEPT **1-7**
Mainline Segment 1 ..... **1-7**
Section 1: Breezewood Lane to WIS 114/County JJ (Winneconne Avenue) 1-7
US 41 Alignment *1-7*
US 41 Typical Section *1-7*
US 41 Ramps and Auxiliary Lanes *1-7*
Frontage Roads *1-7*
Addressing Geometric Deficiencies *1-8*
Right-of-Way Impacts *1-8*
Utilities *1-8*
Further Analysis Recommendations *1-8*
Section 2: WIS 114/County JJ (Winneconne Avenue) to Oakridge Road/Main Street 1-12
US 41 Alignment *1-12*
US 41 Typical Section *1-12*
US 41 Ramps and Auxiliary Lanes *1-12*
Frontage Roads *1-12*
Addressing Geometric Deficiencies *1-12*
Right-of-Way Impacts *1-12*
Utilities *1-12*
Further Analysis Recommendations *1-13*
Section 3: Oakridge Road/Main Street to County II (Winchester Road) 1-18
US 41 Alignment *1-18*

US 41 Typical Section *1-18*
US 41 Ramps and Auxiliary Lanes *1-18*
Frontage Roads *1-18*
Addressing Geometric Deficiencies *1-18*
Right-of-Way Impacts *1-18*
Utilities *1-18*
Further Analysis Recommendations *1-19*
Section 4: County II (Winchester Road) to US 10/WIS 441 1-22
US 41 Alignment *1-22*
US 41 Typical Section *1-22*
US 41 Ramps and Auxiliary Lanes *1-24*
Frontage Roads *1-24*
Addressing Geometric Deficiencies *1-24*
Right-of-Way Impacts *1-24*
Utilities *1-25*
Further Analysis Recommendations *1-25*
Section 5: US 10/WIS 441 to South of County BB 1-30
US 41 Alignment *1-30*
US 41 Typical Section *1-30*
US 41 Ramps and Auxiliary Lanes *1-30*
Frontage Roads *1-30*
Addressing Geometric Deficiencies *1-31*
Right-of-Way Impacts *1-31*
Utilities *1-31*
Further Analysis Recommendations *1-32*
Structures 1-37
Bridges 1-37
Interchanges 1-40
WIS 114/ County JJ (Winneconne Avenue) Interchange 1-40
Interchange Alternatives Summary *1-40*
Alternative Represented in Expansion Design Concept *1-43*
Traffic Operations *1-43*
Right-of-way Impacts *1-43*
Access *1-44*
Complete Streets *1-44*
Further Analysis Recommendations *1-44*
Oakridge Road/Main Street Interchange 1-46
Interchange Alternatives Summary *1-46*
Alternative Represented in Expansion Design Concept *1-49*
Traffic Operations *1-49*
Right-of-way Impacts *1-49*
Access *1-49*
Complete Streets *1-50*
Further Analysis Recommendations *1-50*

County II (Winchester Road) Interchange 1-52
Interchange Alternatives Summary *1-52*
Alternative Represented in Expansion Design Concept *1-53*
Traffic Operations *1-53*
Right-of-Way Impacts *1-55*
Access *1-55*
Complete Streets *1-55*
Further Analysis Recommendations *1-55*

1.3 COST SUMMARY 1-57

SEGMENT 2 - US 41: SOUTH OF COUNTY BB TO NORTH OF WIS 96 STRUCTURES (1.922 MILES) 2-1

2.1 EXISTING CONDITIONS 2-1
Traffic and Operations Summary 2-1
Safety Summary 2-1
Roadway Summary 2-1
Structures Summary 2-2
Bridges 2-2
Pre-NEPA Environmental Screening Summary 2-2
South of County BB (Fox Cities Drive) to WIS 125 2-2
Streams and Floodplains *2-2*
WIS 125 to WIS 96 2-5
Streams and Floodplains *2-5*

2.2 EXPANSION DESIGN CONCEPT 2-5
Mainline Segment 2 2-5
Section 1: South of County BB to WIS 125 2-5
US 41 Alignment *2-5*
US 41 Typical Section *2-5*
US 41 Ramps and Auxiliary Lanes *2-5*
Frontage Roads *2-6*
Addressing Geometric Deficiencies *2-6*
Right-of-Way Impacts *2-6*
Utilities *2-6*
Further Analysis Recommendations *2-7*
Section 2: WIS 125 (College Avenue) to North of WIS 96 (Wisconsin Avenue) Structures 2-12
US 41 Alignment *2-12*
US 41 Typical Section *2-12*
US 41 Ramps and Auxiliary Lanes *2-12*
Frontage Roads *2-12*
Addressing Geometric Deficiencies *2-12*
Right-of-Way Impacts *2-12*
Utilities *2-13*
Further Analysis Recommendations *2-13*

Structures **2-18**
Bridges 2-18
Interchanges **2-20**
County BB (West Prospect Avenue) Interchange 2-20
Interchange Alternatives Summary *2-20*
Alternative Represented in Expansion Design Concept *2-21*
Traffic Operations *2-21*
Right-of-Way Impacts *2-22*
Access *2-22*
Complete Streets *2-22*
Further Analysis Recommendations *2-22*
WIS 125 (West College Avenue) Interchange 2-25
Interchange Alternatives Summary *2-25*
Alternative Represented in Expansion Design Concept *2-28*
Traffic Operations *2-28*
Right-of-Way Impacts *2-28*
Access *2-29*
Complete Streets *2-29*
Further Analysis Recommendations *2-29*
WIS 96 (West Wisconsin Avenue) Interchange 2-32
Interchange Alternative Summary *2-32*
Alternative Represented in Expansion Design Concept *2-33*
Traffic Operations *2-34*
Right-of-Way Impacts *2-34*
Access *2-35*
Complete Streets *2-35*
Further Analysis Recommendations *2-35*
2.3 COST SUMMARY **2-38**

SEGMENT 3 - US 41: NORTH OF WIS 96 STRUCTURES TO SOUTH OF WIS 15 STRUCTURES (0.965 MILES) **3-1**
3.1 EXISTING CONDITIONS **3-1**
Traffic and Operations Summary **3-1**
Safety Summary **3-1**
Roadway Summary **3-1**
Structures Summary **3-1**
Bridges 3-1
Pre-NEPA Environmental Screening Summary **3-4**
North of WIS 96 Structures to South of WIS 15 Structures 3-4
3.2 EXPANSION DESIGN CONCEPT **3-4**
Mainline Segment 3 ..... **3-4**
Section 1: US 41 North of WIS 96 Structures to South of WIS 15 Structures 3-4
US 41 Alignment *3-4*

US 41 Typical Section *3-4*
US 41 Ramps and Auxiliary Lanes *3-8*
Frontage Roads & Multi-Use Paths *3-8*
Addressing Geometric Deficiencies *3-8*
Right-of-Way Impacts *3-8*
Utilities *3-8*
Further Analysis Recommendations *3-8*
Structures **3-11**
Bridges 3-11
3.3 COST SUMMARY **3-13**

SEGMENT 4 - US 41: SOUTH OF WIS 15 STRUCTURES TO WEST OF COUNTY E (4.980 MILES) 4-1
4.1 EXISTING CONDITIONS **4-1**
Traffic and Operations Summary **4-1**
Safety Summary **4-1**
Roadway Summary **4-1**
Structures Summary **4-2**
Bridges 4-2
Pre-NEPA Environmental Screening Summary **4-5**
WIS 15 to WIS 47 4-5
WIS 47 to County E 4-5
Section 4(f) *4-5*
4.2 EXPANSION DESIGN CONCEPT **4-5**
Mainline Segment 4 ..... **4-5**
Section 1: South of WIS 15 Structures to WIS 47 (Richmond Street) 4-6
US 41 Alignment *4-6*
US 41 Typical Section *4-6*
US 41 Ramps and Auxiliary Lanes *4-8*
Frontage Roads *4-8*
Addressing Geometric Deficiencies *4-8*
Right-of-Way Impacts *4-8*
Utilities *4-8*
Further Analysis Recommendations *4-9*
Section 2: WIS 47 (Richmond Street) to West of County E 4-16
US 41 Alignment *4-16*
US 41 Typical Section *4-16*
US 41 Ramps and Auxiliary Lanes *4-18*
Multi-Use Paths *4-18*
Addressing Geometric Deficiencies *4-18*
Right-of-Way Impacts *4-18*
Utilities *4-18*
Further Analysis Recommendations *4-19*

Structures **4-24**
Bridges 4-24
Interchanges **4-27**
WIS 15/County OO (West Northland Avenue) Interchange 4-27
Interchange Alternatives Summary *4-27*
Alternative Represented in Expansion Design Concept *4-29*
Traffic Operations *4-29*
Right-of-Way Impacts *4-31*
Access *4-31*
Complete Streets *4-31*
Further Analysis Recommendations *4-31*
WIS 47 (Richmond Street) Interchange (Current PDS Project ID 1130-33-00) 4-33
4.3 COST SUMMARY **4-33**

SEGMENT 5 - US 41: WEST OF COUNTY E TO WEST OF COUNTY N (INCLUDES US 41/WIS 441 NORTH SYSTEM INTERCHANGE) (4.011 MILES) **5-1**
5.1 EXISTING CONDITIONS **5-1**
Traffic and Operations Summary **5-1**
Safety Summary **5-1**
Roadway Summary **5-1**
Structures Summary **5-2**
Bridges 5-2
Pre-NEPA Environmental Screening Summary **5-5**
US 41 between County E and County N and WIS 441 between Fox River Bridge and US 41 .5-5
Streams *5-5*
Section 4(f) *5-5*
5.2 EXPANSION DESIGN CONCEPT **5-5**
Introduction **5-5**
Mainline Segment 5 ..... **5-6**
Section 1: US 41 - West of County E (Ballard Road) to 3500’ East of French Road 5-6
US 41 Alignment *5-6*
US 41 Typical Section *5-6*
US 41 Ramps, C-D Roads and Auxiliary Lanes *5-8*
Frontage Roads *5-8*
Addressing Geometric Deficiencies *5-8*
Right-of-Way Impacts *5-8*
Utilities *5-9*
Further Analysis Recommendations *5-9*
Section 2: US 41 - 3500’ East of French Road to West of County N (Freedom Road) 5-16
US 41 Alignment *5-16*
US 41 Typical Section *5-16*
Frontage Roads *5-16*
Addressing Geometric Deficiencies *5-16*

Right-of-Way Impacts *5-16*
Utilities *5-16*
Further Analysis Recommendations *5-16*
Section 3: WIS 441 - North of Fox River Bridges to North System Interchange 5-21
WIS 441 Alignment *5-21*
WIS 441 Typical Section *5-21*
Frontage Roads *5-23*
WIS 441 Ramps *5-23*
Addressing Geometric Deficiencies *5-23*
Right-of-Way Impacts *5-23*
Utilities *5-24*
Further Analysis Recommendations *5-24*
Structures 5-29
Bridges 5-29
Interchanges 5-31
County E (Ballard Road) Interchange 5-31
Interchange Alternative Summary *5-31*
Alternative Represented in Expansion Design Concept *5-33*
Traffic Operations *5-33*
Right-of-Way Impacts *5-35*
Access *5-35*
Complete Streets *5-36*
Further Analysis Recommendations *5-36*
County OO (Northland Avenue) Interchange 5-38
Interchange Alternative Summary *5-38*
Alternative Represented in Expansion Design Concept *5-40*
Traffic Operations *5-40*
Right-of-Way Impacts *5-42*
Access *5-42*
Complete Streets *5-42*
Further Analysis Recommendations *5-42*
5.3 COST SUMMARY 5-44

SEGMENT 6 - US 41: WEST OF COUNTY N TO WEST OF COUNTY J (2.953 MILES) 6-1
6.1 EXISTING CONDITIONS 6-1
Traffic and Operations Summary 6-1
Safety Summary 6-1
Roadway Summary 6-2
Structures Summary 6-2
Bridges 6-2
Pre-NEPA Environmental Screening Summary 6-5
6.2 EXPANSION DESIGN CONCEPT 6-5
Mainline Segment 6 6-5

Section 1: West of County N (Freedom Road) to WIS 55 (Delanglade Street) 6-5
US 41 Alignment *6-5*
US 41 Typical Section *6-5*
US 41 Ramps and Auxiliary Lanes *6-5*
Frontage Roads *6-6*
Addressing Geometric Deficiencies *6-6*
Right-of-Way Impacts *6-6*
Utilities *6-6*
Further Analysis Recommendations *6-6*
Section 2: WIS 55 (Delanglade Street) to West of County J (Hyland Avenue) 6-13
US 41 Alignment *6-13*
US 41 Typical Section *6-13*
US 41 Ramps and Auxiliary Lanes *6-13*
Frontage Roads *6-13*
Addressing Geometric Deficiencies *6-13*
Right-of-Way Impacts *6-13*
Utilities *6-13*
Further Analysis Recommendations *6-14*
Structures 6-17
Bridges 6-17
Interchanges 6-19
County N (Freedom Road) Interchange 6-19
Interchange Alternatives Summary *6-19*
Alternative Represented in Expansion Design Concept *6-22*
Traffic Operations *6-22*
Right-of-Way Impacts *6-22*
Access *6-23*
Complete Streets *6-23*
Further Analysis Recommendations *6-23*
WIS 55 (Delanglade Street) Interchange (Current PDS Project ID 4650-08-71) 6-25
6.3 COST SUMMARY 6-25

SEGMENT 7 - US 41: WEST OF COUNTY J TO ORANGE LANE (10.706 MILES) 7-1
7.1 EXISTING CONDITIONS 7-1
Traffic and Operations Summary 7-1
Safety Summary 7-1
Roadway Summary 7-1
Structures Summary 7-2
Bridges 7-2
Pre-NEPA Environmental Screening Summary 7-5
County J to County U 7-5
Section 4(f) *7-5*
Archaeological Resources *7-5*

County U to North of County S (Orange Lane) 7-5
Streams and Floodplains *7-5*
Section 4(f) *7-6*
Archaeological Resources *7-6*
7.2 EXPANSION DESIGN CONCEPT 7-6
Mainline Segment 7 7-6
Section 1: West of County J (Hyland Avenue) to County U (South County Line Road) 7-6
US 41 Alignment *7-6*
US 41 Typical Section *7-6*
US 41 Ramps and Auxiliary Lanes *7-8*
Frontage Roads *7-8*
Addressing Geometric Deficiencies *7-8*
Right-of-Way Impacts *7-8*
Utilities *7-8*
Section 2: County U (South County Line Road) to County S (Freedom Road) 7-18
US 41 Alignment *7-18*
US 41 Typical Section *7-18*
US 41 Ramps and Auxiliary Lanes *7-18*
Frontage Roads *7-18*
Addressing Geometric Deficiencies *7-18*
Right-of-Way Impacts *7-18*
Utilities *7-18*
Section 3: County S (Freedom Road) to Orange Lane 7-26
US 41 Alignment *7-26*
US 41 Typical Section *7-26*
Frontage Roads *7-26*
Addressing Geometric Deficiencies *7-26*
Right-of-Way Impacts *7-26*
Utilities *7-27*
Further Analysis Recommendations *7-37*
Structures 7-37
Interchanges 7-40
County J (Hyland Avenue) Interchange 7-40
Interchange Alternatives Summary *7-40*
Alternative Represented in Expansion Design Concept *7-40*
Traffic Operations *7-40*
Right-of-Way Impacts *7-40*
Access *7-40*
Complete Streets *7-41*
Further Analysis Recommendations *7-41*
County U (South County Line Road) Interchange 7-44
Interchange Alternatives Summary *7-44*
Alternative Represented in Expansion Design Concept *7-44*
Traffic Operations *7-44*

Right-of-Way Impacts *7-45*
Access *7-45*
Complete Streets *7-45*
Further Analysis Recommendations *7-45*
County S (Freedom Road) Interchange 7-48
Interchange Alternatives Summary *7-48*
Alternative Represented in Expansion Design Concept *7-48*
Traffic Operations *7-49*
Right-of-Way Impacts *7-49*
Access *7-49*
Complete Streets *7-49*
Further Analysis Recommendations *7-49*
7.3 COST SUMMARY 7-52

SEGMENT 8 - WIS 441: EAST OF US 10 TO FOX RIVER BRIDGE NORTH ABUTMENT (4.253 MILES) 8-1

8.1 EXISTING CONDITIONS 8-1
Traffic and Operations Summary 8-1
Safety Summary 8-1
Roadway Summary 8-1
Structures Summary 8-3
Bridges 8-3
Pre-NEPA Environmental Screening Summary 8-6
East of US 10 to County KK (Calumet Street) 8-6
County KK (Calumet Street) to County CE (College Avenue) 8-6
Archaeological Resources *8-6*
County CE (College Avenue) to the north Fox River bridge abutment 8-6
Community and Residential *8-6*
Wetlands *8-7*
Streams and Floodplains *8-7*
Upland Habitat *8-8*
Archaeological Resources *8-8*
Aesthetics *8-8*
8.2 EXPANSION DESIGN CONCEPT 8-8
Mainline Segment 8 8-8
Section 1: East of US 10 to County KK Interchange 8-8
WIS 441 Alignment *8-8*
WIS 441 Typical Section *8-9*
WIS 441 Ramps and Auxiliary Lanes *8-11*
Frontage Roads *8-11*
Addressing Geometric Deficiencies *8-11*
Right-of-way Impacts *8-11*
Utilities *8-11*

Further Analysis Recommendations *8-13*
Section 2: County KK Interchange to County CE Interchange 8-18
WIS 441 Alignment *8-18*
WIS 441 Typical Section *8-18*
WIS 441 Ramps and Auxiliary Lanes *8-20*
Frontage Roads *8-20*
Addressing Geometric Deficiencies *8-20*
Right-of-way Impacts *8-20*
Utilities *8-20*
Further Analysis Recommendations *8-20*
Section 3: County CE Interchange to the north abutment of structure B-44-126 over the Fox River and CN Railroad 8-25
WIS 441 Alignment *8-25*
WIS 441 Typical Section *8-25*
WIS 441 Ramps and Auxiliary Lanes *8-27*
Frontage Roads *8-27*
Addressing Geometric Deficiencies *8-27*
Right-of-way Impacts *8-27*
Utilities *8-27*
Further Analysis Recommendations *8-28*
Structures 8-32
Bridges 8-32
Noise Walls 8-32
Interchanges 8-34
County KK Interchange 8-34
Interchange Alternative Summary *8-34*
Alternative Represented in Expansion Design Concept *8-39*
Traffic Operations *8-39*
Right-of-way Impacts *8-39*
Access *8-40*
Complete Streets *8-40*
Further Analysis Recommendations *8-40*
County CE Interchange 8-43
Interchange Alternatives Summary *8-43*
Alternative Represented in Expansion Design Concept *8-44*
Traffic Operations *8-44*
Right-of-way Impacts *8-44*
Access *8-44*
Complete Streets *8-45*
Further Analysis Recommendations *8-45*
8.3 COST SUMMARY 8-48

LIST OF TABLES

Table ES1-1: Pre-NEPA Summary of Qualitative Environmental Impacts ES-10
Table ES1-2: Summary of US 41/WIS 441 Bridge Structure Recommendations ES-12
Table ES1-3: Project Cost Summary Items ES-15
Table ES1-4: Summary of Expansion Concept ES-20

Table 1-1: Segment 1 – US 41 Crash Data 1-1
Table 1-2: Segment 1 – Roadway Geometric Deficiencies 1-2
Table 1-3: Segment 1 – Summary of Existing Bridge Conditions 1-3
Table 1-4: Segment 1 – Summary of Existing Bridge Geometry 1-4
Table 1-5: Segment 1 – Summary of Potential Bridge Geometry 1-38
Table 1-6: WIS 114 Interchange Intersection Level of Service (LOS) 1-43
Table 1-7: Main Street Interchange Intersection Level of Service (LOS) 1-49
Table 1-8: County II Interchange Intersection Level of Service (LOS) 1-53
Table 1-9: Segment 1 – Cost Summary 1-57

Table 2-1: Segment 2 – US 41 Crash Data 2-1
Table 2-2: Segment 2 – Roadway Geometric Deficiencies 2-1
Table 2-3: Segment 2 – Summary of Existing Bridge Conditions 2-3
Table 2-4: Segment 2 – Summary of Existing Bridge Geometry 2-4
Table 2-5: Segment 2 – Summary of Potential Bridge Geometry 2-19
Table 2-6: County BB Interchange Intersection Level of Service (LOS) 2-21
Table 2-7: WIS 125 Interchange Intersection Level of Service (LOS) 2-28
Table 2-8: WIS 96 Interchange Intersection Level of Service (LOS) 2-34
Table 2-9: Segment 2 – Cost Summary 2-38

Table 3-1: Segment 3 – Roadway Geometric Deficiencies 3-1
Table 3-2: Segment 3 – Summary of Existing Bridge Conditions 3-2
Table 3-3: Segment 3 – Summary of Existing Bridge Geometry 3-3
Table 3-4: Segment 3 – Summary of Potential Bridge Geometry 3-12
Table 3-5: Segment 3 – Cost Summary 3-13

Table 4-1: Segment 4 – US 41 Crash Data 4-1
Table 4-2: Segment 4 – Roadway Geometric Deficiencies 4-2
Table 4-3: Segment 4 – Summary of Existing Bridge Conditions 4-3
Table 4-4: Segment 4 – Summary of Existing Bridge Geometry 4-4

Table 4-5: Segment 4 – Summary of Potential Bridge Geometry....4-25
Table 4-6: WIS 15/County OO Interchange Intersection Level of Service (LOS)....4-31
Table 4-7: Segment 4 – Cost Summary....4-33

Table 5-1: Segment 5 – US 41 Crash Data....5-1
Table 5-2: Segment 5 – Roadway Geometric Deficiencies....5-2
Table 5-3: Segment 5 – Summary of Existing Bridge Conditions....5-3
Table 5-4: Segment 5 – Summary of Existing Bridge Geometry....5-4
Table 5-5: Segment 5 – Summary of Potential Bridge Geometry....5-30
Table 5-6: County E Interchange Intersection Level of Service (LOS)....5-33
Table 5-7: County OO Interchange Intersection Level of Service (LOS)....5-40
Table 5-8: Segment 5 – Cost Summary....5-44

Table 6-1: Segment 6 – US 41 Crash Data....6-1
Table 6-2: Segment 6 – Roadway Geometric Deficiencies....6-2
Table 6-3: Segment 6 – Summary of Existing Bridge Conditions....6-3
Table 6-4: Segment 6 – Summary of Existing Bridge Geometry....6-4
Table 6-5: Segment 6 – Summary of Potential Bridge Geometry....6-18
Table 6-6: County N Interchange Intersection Level of Service (LOS)....6-22
Table 6-7: Segment 6 – Cost Summary....6-25

Table 7-1: Segment 7 – US 41 Crash Data....7-1
Table 7-2: Segment 7 – Roadway Geometric Deficiencies....7-2
Table 7-3: Segment 7 – Summary of Existing Bridge Conditions....7-3
Table 7-4: Segment 7 – Summary of Existing Bridge Geometry....7-4
Table 7-5: Segment 7 – Summary of Potential Bridge Geometry....7-38
Table 7-6: County J Interchange Intersection Level of Service (LOS)....7-40
Table 7-7: County U Interchange Intersection Level of Service (LOS)....7-44
Table 7-8: County S Interchange Intersection Level of Service (LOS)....7-49
Table 7-9: Segment 7 – Cost Summary....7-52

Table 8-1: Segment 8 – WIS 441 Crash Data....8-1
Table 8-2: Segment 8 – Roadway Geometric Deficiencies....8-2
Table 8-3: Segment 8 – Summary of Existing Bridge Conditions....8-4
Table 8-4: Segment 8 - Summary of Existing Bridge Geometry....8-5
Table 8-5: Segment 8 – Summary of Potential Bridge Geometry....8-33
Table 8-6: County KK Interchange Intersection Level of Service (LOS)....8-39

Table 8-7: County CE Interchange Intersection Level of Service (LOS) 8-44
Table 8-8: Segment 8 – Cost Summary..... 8-48

LIST OF EXHIBITS

Exhibit 1-1: US 41 Segment 1/Section 1 (Sheet 1) 1-9
Exhibit 1-2: US 41 Segment 1 / Section 1 (Sheet 2) 1-10
Exhibit 1-3: US 41 Segment 1 / Section 1 (Sheet 3) 1-11
Exhibit 1-4: US 41 Segment 1/Section 2 (Sheet 1) 1-15
Exhibit 1-5: US 41 Segment 1/Section 2 (Sheet 2) 1-16
Exhibit 1-6: US 41 Segment 1/Section 2 (Sheet 3) 1-17
Exhibit 1-7: US 41 Segment 1/Section 3 (Sheet 1) 1-20
Exhibit 1-8: US 41 Segment 1/Section 3 (Sheet 2) 1-21
Exhibit 1-9: US 41 Segment 1/Section 4 (Sheet 1) 1-27
Exhibit 1-10: US 41 Segment 1/Section 4 (Sheet 2) 1-28
Exhibit 1-11: US 41 Segment 1/Section 4 (Sheet 3) 1-29
Exhibit 1-12: US 41 Segment 1/Section 5 (Sheet 1) 1-33
Exhibit 1-13: US 41 Segment 1/Section 5 (Sheet 2) 1-34
Exhibit 1-14: US 41 Segment 1/Section 5 (Sheet 3) 1-35
Exhibit 1-15: US 41 Segment 1/Section 5 (Sheet 4) 1-36

Exhibit 2-1: US 41 Segment 2/Section 1 (Sheet 1) 2-9
Exhibit 2-2: US 41 Segment 2/Section 1 (Sheet 2) 2-10
Exhibit 2-3: US 41 Segment 2/Section 1 (Sheet 3) 2-11
Exhibit 2-4: US 41 Segment 2/Section 2 (Sheet 1) 2-15
Exhibit 2-5: US 41 Segment 2/Section 2 (Sheet 2) 2-16
Exhibit 2-6: US 41 Segment 2/Section 2 (Sheet 3) 2-17

Exhibit 3-1: US 41 Segment 3/Section 1 (Sheet 1) 3-9
Exhibit 3-2: US 41 Segment 3/Section 1 (Sheet 2) 3-10

Exhibit 4-1: US 41 Segment 4/Section 1 (Sheet 1) 4-10
Exhibit 4-2: US 41 Segment 4/Section 1 (Sheet 2) 4-11
Exhibit 4-3: US 41 Segment 4/Section 1 (Sheet 3) 4-12
Exhibit 4-4: US 41 Segment 4/Section 1 (Sheet 4) 4-13
Exhibit 4-5: US 41 Segment 4/Section 1 (Sheet 5) 4-14
Exhibit 4-6: US 41 Segment 4/Section 1 (Sheet 6) 4-15
Exhibit 4-7: US 41 Segment 4/Section 2 (Sheet 1) 4-20
Exhibit 4-8: US 41 Segment 4/Section 2 (Sheet 2) 4-21
Exhibit 4-9: US 41 Segment 4/Section 2 (Sheet 3) 4-22

Exhibit 4-10: US 41 Segment 4/Section 2 (Sheet 4) 4-23

Exhibit 5-1: US 41 Segment 5/Section 1 (Sheet 1) 5-11
Exhibit 5-2: US 41 Segment 5/Section 1 (Sheet 2) 5-12
Exhibit 5-3: US 41 Segment 5/Section 1 (Sheet 3) 5-13
Exhibit 5-4: US 41 Segment 5/Section 1 (Sheet 4) 5-14
Exhibit 5-5: US 41 Segment 5/Section 1 (Sheet 5) 5-15
Exhibit 5-6: US 41 Segment 5/Section 2 (Sheet 1) 5-18
Exhibit 5-7: US 41 Segment 5/Section 2 (Sheet 2) 5-19
Exhibit 5-8: US 41 Segment 5/Section 2 (Sheet 3) 5-20
Exhibit 5-9: US 41 Segment 5/Section 3 (Sheet 1) 5-26
Exhibit 5-10: US 41 Segment 5/Section 3 (Sheet 2) 5-27
Exhibit 5-11: US 41 Segment 5/Section 3 (Sheet 3) 5-28

Exhibit 6-1: US 41 Segment 6/Section 1 (Sheet 1) 6-8
Exhibit 6-2: US 41 Segment 6/Section 1 (Sheet 2) 6-9
Exhibit 6-3: US 41 Segment 6/Section 1 (Sheet 3) 6-10
Exhibit 6-4: US 41 Segment 6/Section 1 (Sheet 3) 6-11
Exhibit 6-5: US 41 Segment 6/Section 1 (Sheet 5) 6-12
Exhibit 6-6: US 41 Segment 6/Section 2 (Sheet 1) 6-15
Exhibit 6-7: US 41 Segment 6/Section 2 (Sheet 2) 6-16

Exhibit 7-1: US 41 Segment 7/Section 1 (Sheet 1) 7-10
Exhibit 7-2: US 41 Segment 7/Section 1 (Sheet 2) 7-11
Exhibit 7-3: US 41 Segment 7/Section 1 (Sheet 3) 7-12
Exhibit 7-4: US 41 Segment 7/Section 1 (Sheet 4) 7-13
Exhibit 7-5: US 41 Segment 7/Section 1 (Sheet 5) 7-14
Exhibit 7-6: US 41 Segment 7/Section 1 (Sheet 6) 7-15
Exhibit 7-7: US 41 Segment 7/Section 1 (Sheet 7) 7-16
Exhibit 7-8: US 41 Segment 7/Section 1 (Sheet 8) 7-17
Exhibit 7-9: US 41 Segment 7/Section 2 (Sheet 1) 7-21
Exhibit 7-10: US 41 Segment 7/Section 2 (Sheet 2) 7-22
Exhibit 7-11: US 41 Segment 7/Section 2 (Sheet 3) 7-23
Exhibit 7-12: US 41 Segment 7/Section 2 (Sheet 4) 7-24
Exhibit 7-13: US 41 Segment 7/Section 2 (Sheet 5) 7-25
Exhibit 7-14: US 41 Segment 7/Section 3 (Sheet 1) 7-29
Exhibit 7-15: US 41 Segment 7/Section 3 (Sheet 2) 7-30

Exhibit 7-16: US 41 Segment 7/Section 3 (Sheet 3) 7-31
Exhibit 7-17: US 41 Segment 7/Section 3 (Sheet 4) 7-32
Exhibit 7-18: US 41 Segment 7/Section 3 (Sheet 5) 7-33
Exhibit 7-19: US 41 Segment 7/Section 3 (Sheet 6) 7-34
Exhibit 7-20: US 41 Segment 7/Section 3 (Sheet 7) 7-35
Exhibit 7-21: US 41 Segment 7/Section 3 (Sheet 8) 7-36

Exhibit 8-1: WIS 441 Segment 8/Section 1 (Sheet 1) 8-14
Exhibit 8-2: WIS 441 Segment 8/Section 1 (Sheet 2) 8-15
Exhibit 8-3: WIS 441 Segment 8/Section 1 (Sheet 3) 8-16
Exhibit 8-4: WIS 441 Segment 8/Section 1 (Sheet 4) 8-17
Exhibit 8-5: WIS 441 Segment 8/Section 2 (Sheet 1) 8-22
Exhibit 8-6: WIS 441 Segment 8/Section 2 (Sheet 2) 8-23
Exhibit 8-7: WIS 441 Segment 8/Section 2 (Sheet 3) 8-24
Exhibit 8-8: WIS 441 Segment 8/Section 3 (Sheet 1) 8-29
Exhibit 8-9: WIS 441 Segment 8/Section 3 (Sheet 2) 8-30
Exhibit 8-10: WIS 441 Segment 8/Section 3 (Sheet 3) 8-31

LIST OF FIGURES

Figure ES1-1: US 41 and WIS 441 Study Area Map ES-2
Figure ES1-2: Map of US 41 and WIS 441 Segments ES-3
Figure ES1-3: Map of US 41/WIS 441 Bridge Structure Recommendations ES-13
Figure ES1-4: Map of US 41/WIS 441 Concrete Pavement Age ES-18

Figure 1-1: US 41 (North of Breezewood Ln/ Bell St to CTH II), Typical Existing Section and Desirable Proposed Section 1-14
Figure 1-2: US 10/WIS 441/US 41 Interchange Transition to CTH II Interchange 1-23
Figure 1-3: US 41, CTH II to Jacobsen Rd, Typical Finished Section 1-26
Figure 1-4: WIS 114 Interchange 1-42
Figure 1-5: WIS 114 Interchange, Existing Geometry and 2038 Traditional/Roundabout Improvements 1-45
Figure 1-6: Oakridge Rd/Main St Interchange 1-48
Figure 1-7: Oakridge Rd/Main St Interchange, Existing Geometry and 2038 Traditional Improvements 1-51
Figure 1-8: County II (Winchester Road) Interchange 1-54
Figure 1-9: County II Interchange, Existing Geometry and 2038 Traditional Improvements 1-56

Figure 2-1: US 41 (South of County BB to WIS 125), Typical Existing Section and Desirable Proposed Section 2-8
Figure 2-2: US 41 (South of WIS 125 to North of WIS 96 Structures), Typical Existing Section and Desirable Proposed Section 2-14
Figure 2-3: County BB Interchange 2-23
Figure 2-4: County BB Interchange, Existing Geometry and 2038 Improvements 2-24
Figure 2-5: WIS 125 Interchange 2-30
Figure 2-6: WIS 125 Interchange, Existing Geometry and 2038 Improvements 2-31
Figure 2-7: WIS 96 Interchange 2-36
Figure 2-8: WIS 96 Interchange, Existing Geometry and 2038 Improvements 2-37

Figure 3-1: US 41 (WIS 96 Interchange to South of WIS 15), Typical Existing Section and Desirable Proposed Section 3-5
Figure 3-2: US 41 (South of WIS 15 to WIS 15 Interchange), Typical Existing Section and Desirable Proposed Section 3-6
Figure 3-3: US 41 (WIS 15 Interchange), Typical Existing Section and Desirable Proposed Section 3-7

Figure 4-1: US 41 (south of WIS 15 to WIS 47 Interchange), Typical Existing Section and Desirable Proposed Section 4-7
Figure 4-2: US 41 (WIS 47 Interchange to Meade Street), Typical Existing Section and Desirable Proposed Section 4-17
Figure 4-3: WIS 15/County OO Interchange 4-30

Figure 4-4: WIS 15/County OO Interchange, Existing Geometry and 2038 Improvements 4-32

Figure 5-1: US 41 (CTH E Interchange to WIS 441 Interchange), Typical Existing Section and Desirable Proposed Section 5-7

Figure 5-2: US 41 (East of North System Interchange to CTH N), Typical Existing Section and Desirable Proposed Section 5-17

Figure 5-3: WIS 441 (North of Fox River Bridge to North System Interchange), Typical Existing Section and Desirable Proposed Section 5-22

Figure 5-4: US 41/CTH E Interchange 5-34

Figure 5-5: US 41/CTH E, Existing Geometry and 2038 Traditional Improvements 5-37

Figure 5-6: County OO (Northland Ave) Interchange 5-41

Figure 5-7: CTH OO, Existing Geometry and 2038 Traditional Improvements 5-43

Figure 6-1: US 41 (CTH N to CTH J), Typical Existing Section and Desirable Proposed Section 6-7

Figure 6-2: County N Interchange 6-20

Figure 6-3: County N Interchange, Existing Geometry and 2038 Traditional/Roundabout Improvements 6-21

Figure 6-4: Patriot Drive Monument 6-24

Figure 7-1: US 41 (West of County J to County U), Typical Existing Section and Desirable Proposed Section 7-7

Figure 7-2: US 41 (County U to County S), Typical Existing Section and Desirable Proposed Section . 7-19

Figure 7-3: US 41 (at South Lawrence Cemetery), Typical Existing Section and Desirable Proposed Section 7-20

Figure 7-4: US 41 (County S to Orange Lane), Typical Existing Section and Desirable Proposed Section 7-28

Figure 7-5: County J Interchange 7-42

Figure 7-6: County J Interchange, Existing Geometry and 2038 Improvements 7-43

Figure 7-7: County U Interchange 7-46

Figure 7-8: County U Interchange, Existing Geometry and 2038 Improvements 7-47

Figure 7-9: County S Interchange 7-50

Figure 7-10: County S Interchange, Existing Geometry and 2038 Improvements 7-51

Figure 8-1: East of US 10 to County KK Interchange, Typical Existing Section and Desirable Proposed Section 8-10

Figure 8-2: County KK Interchange to County CE Interchange, Typical Existing Section and Desirable Proposed Section 8-19

Figure 8-3: County CE Interchange to the north abutment of structure B-44-126 over the Fox River and CN Railroad, Typical Existing Section and Desirable Proposed Section 8-26

Figure 8-4: County KK Interchange 8-41

Figure 8-5: County KK Interchange, Existing Geometry and 2038 Improvements 8-42

Figure 8-6: County CE Interchange 8-46

Figure 8-7: County CE Interchange, Existing Geometry and 2038 Improvements..... 8-47

EXECUTIVE SUMMARY

ES.1 Study Purpose and Location

This report has been compiled for the use by Wisconsin Department of Transportation staff to evaluate potential costs associated with a potential program of short to long term projects aimed at expanding US 41 in the Fox Valley area. The study limits starts just north of Breezewood Lane in Neenah, Winnebago County and ends at Orange Lane in De Pere, Brown County (refer to Figure ES1-1 on page ES-2). For this study, the US 41 (31.567 miles) and WIS 441(4.253 miles) study corridors have been broken into eight (8) individual segments (refer to Figure ES1-2 on page ES-3). The segment concepts developed in this report are intended to provide a conservative footprint and cost estimate with a planning level understanding for subsequent environmental assessment and public review during a future National Environmental Policy Act (NEPA) study. The planning study seeks to identify the potential layout, obstacles and costs to expand US 41 by one lane each direction through the majority of the corridor. The planning study is evaluating operational needs through year 2038. The 2038 horizon year was selected for this study due to the overlapping efforts for the WIS 441 Tri-County Freeway Project, which was programmed for completion by year 2018 at the time of traffic forecast development, requiring a 2038 horizon year forecast to provide a 20-year design life.

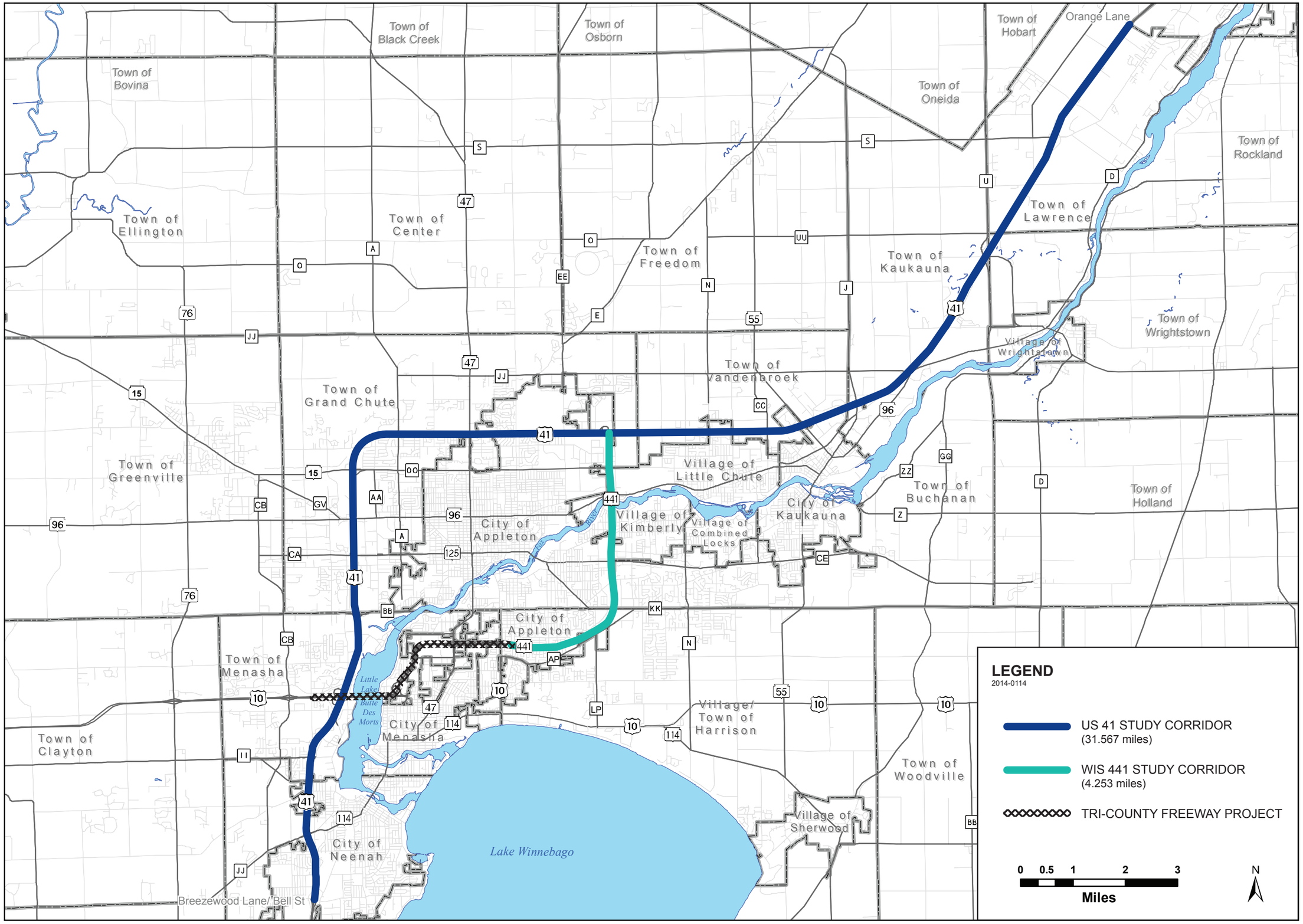

FIGURE ES-1

US 41 AND WIS 441 STUDY AREA MAP

HNTB

US 41/WIS 441 CORRIDOR

FIGURE ES-2

MAP OF US 41 AND WIS 441 SEGMENTS

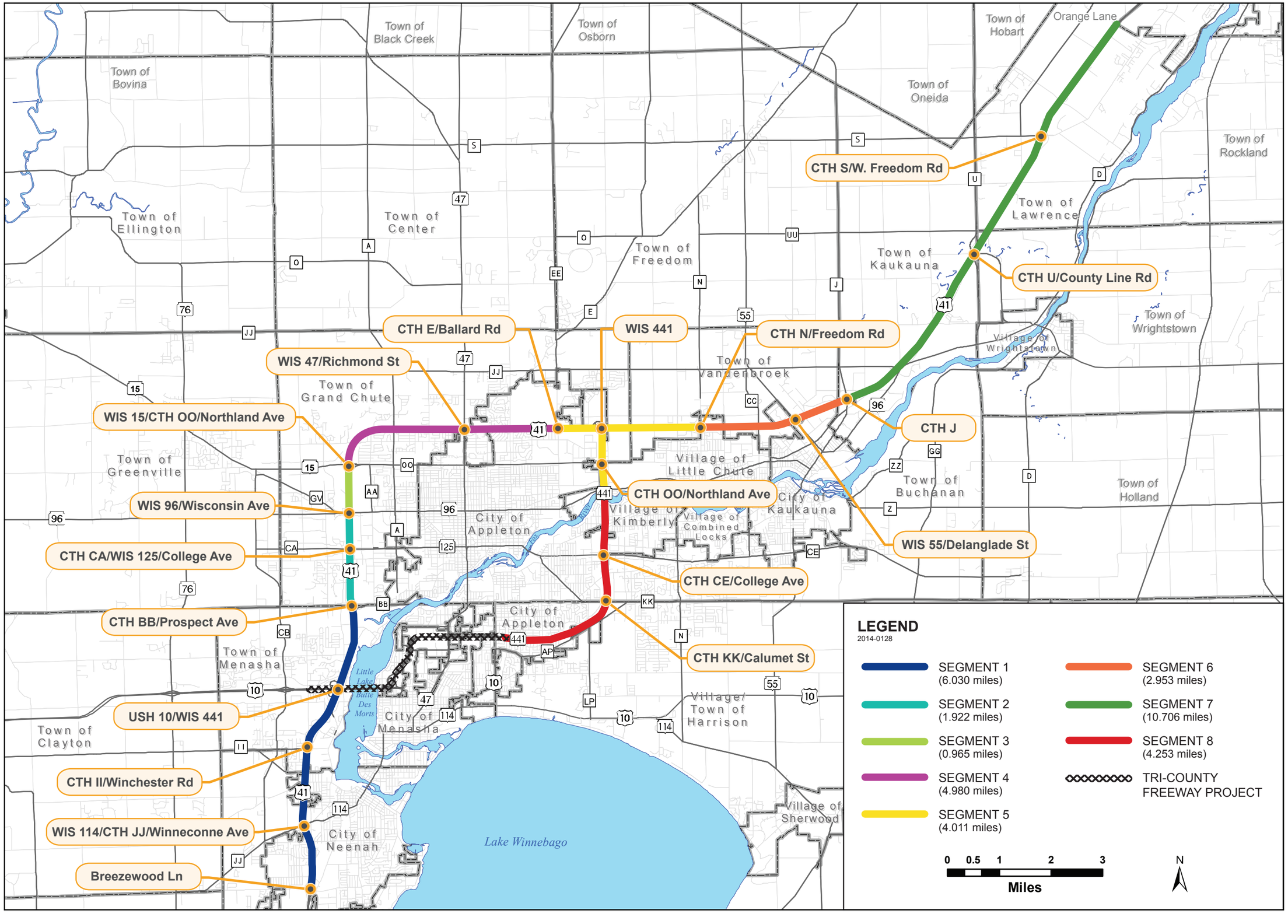

HNTB

US 41/WIS 441 CORRIDOR

ES.2 Recent and Ongoing Construction

The segments of US 41 just south of Breezewood Lane, Neenah, Winnebago County and north of Orange Lane, De Pere, Brown County are currently under reconstruction to six (6) lanes. Winnebago County mainline work is complete with on-going side-road expected to be complete by 2014 whereas for Brown County, construction completion is scheduled for 2017.

ES.3 Recent and Ongoing Studies

The following recent and ongoing studies address certain sections of the study area and have been used as appropriate in development of this report at the request of the Wisconsin Department of Transportation.

US 41 (Wisconsin State Line – Green Bay) Interstate Conversion, Ongoing

The federal Safe, Accountable, Flexible, Efficient Transportation Equity Act, A legacy for Users (SAFETEA-LU) was enacted in 2005 and designated US 41 as a future Interstate route. WisDOT is currently preparing final environmental documents for the US 41 Interstate Conversion scheduled for completion in spring 2014. The documents pull together community and agency interests and recommends a future course of action. Interstate design standards developed in the Interstate Conversion project have been utilized for this report.

WIS 441 Tri-County Project, County CB – Oneida Street Project, Ongoing

WisDOT is currently preparing design plans and draft PS&E documents to add mainline capacity to US 10/WIS 441, constructing a new parallel bridge crossing for Little Lake Butte des Morts, redecking the existing bridge, reconstructing the US 41 and US 10/WIS 441 system interchange, realigning WIS 441 deficient geometrics, reconstructing County P (Racine Street) interchange, WIS 47 (Appleton Road) interchange, US 10 (Oneida Street) interchange and addressing freeway lighting and Intelligent Transportation Systems (ITS). Construction is currently scheduled to begin in 2014 and extend through 2019.

Operational Needs Assessment, US 41 (CTH JJ/WIS 114 – CTH S) and WIS 441, November 2011

WisDOT completed the Phase 1 Operational Needs Study to identify geometric and safety deficiencies primarily at the interchange locations within the study area. A set of recommendations were developed to address these deficiencies prior to capacity expansion of the mainline. These short- to medium-term improvements have been reevaluated in this report based on the updated traffic operational analysis.

WisDOT Backbone Needs and Improvement Study for WIS 125 Interchange, March 2007

WisDOT prepared a study report analyzing existing conditions and future needs, and identifying improvement alternatives to address needs for the WIS 47/US 41 Interchange. The study assisted the WisDOT Backbone Programming Committee in determining future interchange programming needs and prioritization for interchange improvement projects. Based on that

report, improvements were constructed at the ramp terminals and long term recommendations were brought into this report.

College Avenue Traffic Safety and Operational Study, October 28, 2002

WisDOT prepared this report working with Outagamie County, City of Appleton, and the Town of Grand Chute. The College Avenue study area included intersections from Casaloma Drive through Perkins Street including frontage road intersections on north and south sides. This study provided short-, medium-, and long-term recommendations that address safety and operational issues along the corridor. Based on that report, improvements were constructed at the ramp terminals.

WisDOT Backbone Needs and Improvement Study for WIS 96 Interchange, April 2007

WisDOT prepared a study report analyzing existing conditions and future needs, and identifying improvement alternatives to address needs for the WIS 47/US 41 Interchange. The study assisted the WisDOT Backbone Programming Committee in determining future interchange programming needs and prioritization for interchange improvement projects. Based on that report, improvements were constructed at the ramp terminals.

WisDOT Backbone Needs and Improvement Study for WIS 47 Interchange, May 2007

WisDOT prepared a study report analyzing existing conditions and future needs, and identifying improvement alternatives to address needs for the WIS 47/US 41 Interchange. The study assisted the WisDOT Backbone Programming Committee in determining future interchange programming needs and prioritization for interchange improvement projects including Project ID 1130-33 to be constructed in year 2014.

WisDOT Backbone Needs and Improvement Study for WIS 55 Interchange, May 2008

WisDOT prepared a study report backbone study methodology, analyzing existing conditions and future needs, and identifying improvement alternatives to address needs for the WIS 55/US 41 Interchange. Project ID 4650-08-71 is a WisDOT design project for the WIS 55 interchange roundabout alternative improvements to be constructed in year 2017.

WIS 441/ CTH KK Interchange Evaluation, August 2008

WisDOT prepared a study report using backbone study methodology, analyzing existing conditions and future needs, and identifying improvement alternatives to address needs for the WIS 441/County KK Interchange. Short-term and long-term alternatives were evaluated.

WIS 441/ CTH KK Corridor Expansion Study, June 2012

WisDOT prepared this study report in collaboration with Calumet County, Outagamie County, City of Appleton, Town of Buchanan, Town of Harrison, and ECWRPC to aid in updating the vision for the CTH KK corridor to be shared and implemented by the local stakeholders. The

corridor expansion study area covered several intersections including CTH KK, CTH CE, CTH AP, Kensington Drive, Eisenhower Drive, CTH LP and US 10. Several alternatives were investigated including signalized intersections, roundabout intersections, and high efficiency interchanges such as a single point urban interchange (SPUI) and a diverging diamond interchange (DDI).

STH 441/ CTH KK Area Traffic Study Summary Report, September 2000

The East Central Wisconsin Regional Planning Commission (ECWRPC) worked with local jurisdictions to prepare this study for the southeast portion of the Fox Cities. A technical advisory committee with representatives from Outagamie County, Calumet County, City of Appleton, Town of Buchanan, Town of Harrison, WisDOT NE Region, WisDOT forecast section, UW Extension and ECWRPC convened throughout the study. The purpose of the study was to assess the traffic impact to the STH 441 and CTH KK interchange and adjacent street and highway system.

Brown County Southern Crossing EIS, Ongoing

Brown County, Wisconsin, in cooperation with the Wisconsin Department of Transportation (WisDOT) and Federal Highway Administration (FHWA), is developing an Environmental Impact Statement (EIS) for a new Fox River bridge and connecting arterial street system. The EIS is being completed for the three project alternatives:

- Alternative 1: A new Fox River bridge and connecting arterial street system along Scheuring Road and Heritage Road
- Alternative 2: A new Fox River bridge and connecting arterial street system along Rockland Road and Red Maple/Southbridge Road with a full-service interchange at US 41
- Alternative 3: A new Fox River bridge and connecting arterial street system along Rockland Road and Red Maple/Southbridge Road with an overpass at US 41.

The Record of Decision for the EIS is anticipated in 2015.

ES.4 Traffic Counts and Forecasts

Updated traffic counts were collected in 2011 at each interchange throughout the study area. These updated counts were used in conjunction with the previously collected 2008 traffic counts to re-establish a base condition for year 2011. The 2011 counts were then used to forecast traffic volumes for 2038 using the Northeast Region travel demand model and the US 41/WIS 441 corridor Paramics model. See Appendix 1 for Traffic Forecasting Methodology, which provides further details on the development of traffic projections.

The Traffic Forecasting Methodology includes estimates of K30, K100 and K250 values for each segment of US 41 and WIS 441. This assessment of future traffic volumes indicates the need for 8 lanes along US 41 between the Breezewood/Bell interchange at the southern end of the project to WIS 125 (College Avenue). Traffic operations along US 41 between WIS 125 and WIS 96 (Wisconsin Avenue) currently require an auxiliary lane connecting the two interchanges,

bringing the effective cross section to 8 lanes, as constructed in 2013. The future traffic volumes indicate the need for 6 lanes along the remainder of US 41 from WIS 96 to Orange Lane in Brown County. Expansion of WIS 441 from US 10 (Oneida Street) to the northern system interchange with US 41 is less clearly indicated by the future traffic volumes, with a mix of 4 and 6 lane requirements. The WIS 441 corridor was reviewed for expansion to 6 lanes within this report as detailed in Segment 8.

Traffic projections for the US 41 interchange with WIS 96 were updated in early 2013 based on concerns that the traffic count collected on December 1, 2011 was impacted by the holiday shopping activities of the Fox Valley Mall to the west. A subsequent count collected on January 16, 2013 was used to reestablish the 2038 traffic projections along WIS 96. See Appendix 18 for more details.

ES.5 Interchange Traffic Operational Analysis

Traffic operations for each interchange intersection, and most immediately adjacent cross-street intersections were evaluated for design year 2038 peak hour volumes. For this planning-level study, the desire is to establish a conservative but reasonable footprint which results in mostly traditional signalized intersections with a few modern roundabouts at select interchanges.

The recommended analysis procedures for predicting traffic operations at modern roundabouts were updated during the course of this study. WisDOT currently recommends the use of Highway Capacity Software for Roundabout analysis, in lieu of the previously recommended RODEL software. The change in software was accompanied by recommended model parameters for gap acceptance. These changes to the analysis procedure required a review of previous roundabout operational analysis. See Appendix 2 for further discussion on changes to the analysis procedures and corresponding impacts to the operational analysis of roundabouts within the study area.

Several intersections throughout the study area have 2038 traffic projections that result in unacceptable traffic operations when evaluated as a 3 lane roundabout. These locations were reevaluated as traditional signalized interchanges. In keeping with this study's goal of establishing a conservative footprint, innovative solutions such as Diverging Diamond Interchanges (DDI), Single Point Urban Interchange (SPUI) or Echelon interchanges were not evaluated. These interchange types may provide significant increases in traffic operational efficiency along with reduced footprints and costs, and should be evaluated during subsequent NEPA studies and through the Intersection Control Evaluation (ICE) phase of design.

ES.6 Interchange Design Standards

US 41 is currently under study for conversion to an Interstate throughout this project's study limits. The conversion to an Interstate requires any future mainline reconstruction or expansion to utilize Interstate design standards. The concepts displayed in this report follow the standards developed for the current US 41 and WIS 441 design projects. See Appendix 3 for a listing of the US 41 Interstate design standards and WIS 441 design standards used within this report

US 41 and WIS 441 expansion conceptual layouts presented in the segment exhibits were developed in schematic line work form only using Interstate design criteria, without detailed

engineering of the concepts. Horizontal alignments were not developed for any roadway element including mainline, service or system interchange ramps, cross roads or frontage roads.

Two foot county topography contours were obtained to determine crude dimensions for structural bridge and retaining wall needs, new system interchange mainline and ramp slopes. Vertical alignments were not developed for any roadway element using Interstate criteria.

Assumptions for real estate needs along the corridor were developed using right-of-way mapping obtained from the GRAEF ftp site with US 41 project right-of-way data. Areas shown indicate possible impact locations that should be further reviewed during the future NEPA project. These designated areas may increase in size and severity of impact based upon preliminary horizontal and vertical alignments to be generated.

For the majority of the corridor, the suggested US 41 mainline median is generally a 36.5-foot median that has 14-foot inside shoulders and two single face 52-inch barriers. The future NEPA study and preliminary design may determine that a single 52-inch median barrier with 16.75-foot inside shoulders similar to Brown County's typical section is desirable allowing for future conversion of the inside shoulder to HOV lane use. The two barrier layout was used for cost estimating purposes as the conservative option.

The expansion conceptual layouts generally used parallel type entrance ramps and tapered type exit ramps unless geometric needs deemed otherwise. Future study should consider alternative exit ramp configurations, including the use of auxiliary lanes that facilitate dual lane exits with a choice lane configuration. Entrance ramp acceleration length was typically shown as 1200-feet plus a 360-foot end taper to provide a conservative length for cost estimates and pre-NEPA environmental screening reviews. Entrance and exit ramp curve R_1 was set as 1350-feet for a 60 mile-per-hour (mph) design speed with increasing (entrance) or decreasing (exit) design speeds of 10 mph increments.

The expansion conceptual auxiliary lane layout at exit ramps extends the auxiliary lane from the exit ramp to merge in just prior to the entrance ramp location. This provides a conservative roadway length and structure width for cost estimates and pre-NEPA environmental screening.

Within the expansion concept, outside concrete barrier (42-inch) was used for locations where the clear zone or lateral clearance was not met and where slopes were estimated to be too steep. These locations may be converted to beam guard or averted through providing traversable side slopes within the future preliminary design.

ES.7 Pre-NEPA Environmental Screening

A pre-NEPA environmental screening was conducted to provide early insight about identifiable environmental constraints and potential impacts that may result from implementing improvements under consideration for the US 41 mainline between Breezewood Lane in Winnebago County and Orange Lane in Brown County and the WIS 441 mainline from east of US 10 in Calumet County to the north system interchange with US 41 in Outagamie County.

This assessment does not fulfill the requirements of a NEPA study, rather it is a preliminary screening that flags potential issues that would likely need further NEPA level environmental

review. Environmental analysis that would require considerable coordination effort, such as impacts to threatened and endangered species, Native American resources and indirect and cumulative effects are not addressed in this document. Future coordination with the appropriate state and local agencies, Native American Tribes and public stakeholders should start during project scoping and should be continued throughout the NEPA process.

Impacts to the surrounding environment that are recorded in this screening are based on conceptual design of a potential US 41 and WIS 441 mainline expansion and configuration of the US 41/WIS 441 north system interchange. The environmental corridor analyzed for this screening was based on 50 feet from the edge of designed pavement on either side of the highway, except along WIS 441 between the Canadian National Railway crossing north of County CE and the south Fox River bridge abutment where a higher level of engineering was done to help identify potential right-of-way acquisition needs. This more detailed analysis of right-of-way was needed to develop bridge alternatives and better understand the impacts of the WIS 441 and Fox River bridge expansion on a large number of adjacent residential properties south of the Fox River.

Table ES1-1 (page ES-10) provides an environmental overview for each mainline section of US 41. The full Pre-NEPA environmental screening for each mainline section is located in Appendix 4. Although the review was a Pre-NEPA environmental screening, similar screening worksheets were used to document the environmental issues.

The likelihood of impacts for each alternative is rated by the following Impact Rating:

- ○ Low: No impact is expected.
- ◦ Medium: Potential for impacts, but impacts can likely be avoided or mitigated. Examples include wetland, noise, and some Section 4(f) impacts, all of which can likely be adequately mitigated or avoided by coordinating with appropriate agencies and public stakeholders, but would not preclude the ability to construct the project.
- ● High: Potentially severe impact is expected. Further review should be done to determine severity and significance and to develop avoidance and/or mitigation measures. Examples include impacts to cemeteries and other federally protected resources that would halt the completion of the project without significant redesign.

A Pre-NEPA summary of each individual impact is listed in Table ES1-1 (page ES-10).

Table ES1-1: Pre-NEPA Summary of Qualitative Environmental Impacts

	MAINLINE SEGMENT 1			MAINLINE SEGMENT 2		MAINLINE SEGMENT 3	MAINLINE SEGMENT 4		MAINLINE SEGMENT 5	MAINLINE SEGMENT 6		MAINLINE SEGMENT 7		MAINLINE SEGMENT 8		
	North of Breezewood Ln to Winneconne Ave	Winneconne Ave to Oakridge Rd/ Main St	Oakridge Rd/ Main St to North of County II	South of County BB to WIS 125	WIS 125 to WIS 96	WIS 96 to WIS 15	WIS 15 to WIS 47	WIS 47 to County E	US 41 and WIS 441 North System	County N to WIS 55	WIS 55 to County J	County J to County U	County U to County S	East of US 10 to County KK	County KK to County CE	County CE to North End of Fox River Bridge
SOCIO-ECONOMIC FACTORS																
A. General economics	○	●	●	●	○	●	●	●	●	●	●	○	○	●	●	●
B. Community and residential	○	○	●	●	○	●	●	●	●	●	○	○	●	●	●	●
C. Economic development	○	●	●	●	○	○	○	●	●	●	●	○	●	○	●	●
D. Agriculture	○	○	○	○	○	○	○	○	●	●	○	○	●	○	○	○
E. Environmental justice	●	●	●	●	●	●	●	●	●	●	●	●	●	●	●	●
NATURAL ENVIRONMENTAL FACTORS																
F. Wetlands	●	○	○	●	○	○	●	○	●	○	○	○	●	●	●	●
G. Streams and floodplains	●	●	●	●	●	●	●	●	●	●	●	○	●	●	●	●
H. Lakes or other open water	●	●	○	○	○	○	○	●	●	●	○	●	○	●	●	○
I. Upland habitat	○	○	○	○	○	●	○	●	○	○	○	○	○	○	○	●
J. Erosion control	●	●	●	●	○	●	●	●	●	●	●	●	○	●	●	●
K. Storm water management	●	●	●	●	●	●	●	●	●	●	●	●	●	●	●	●
PHYSICAL ENVIRONMENTAL FACTORS																
L. Air quality	●	●	●	●	●	●	●	●	●	●	●	●	●	●	●	●
M. Construction noise	●	●	●	●	○	●	●	●	●	●	●	●	●	●	●	●
N. Traffic noise	●	●	●	●	○	●	●	●	●	●	●	●	●	●	●	●
CULTURAL ENVIRONMENTAL FACTORS																
O. Section 4(f) and 6 (f)	○	○	●	○	○	●	●	●	●	○	○	●	●	●	●	●
P. Historic resources	●	●	●	●	●	●	●	●	●	●	●	●	●	●	●	●
Q. Archaeological resources	●	●	●	●	●	●	●	●	●	●	●	●	●	○	●	●
R. Hazardous substances/USTs	○	●	●	●	○	●	●	○	●	●	●	●	●	○	●	●
S. Aesthetics	○	○	○	○	○	○	○	○	○	○	○	○	○	○	○	●
T. Coastal Zone	○	○	○	○	○	○	○	○	○	○	○	○	○	○	○	○
U. Airport	○	○	●	●	●	●	●	○	○	○	○	○	●	○	○	○

LEGEND: High Impact ● Medium Impact ● Low Impact ○

ES.8 Consideration of Traffic Operations Infrastructure Plan (TOIP)

WisDOT maintains a Traffic Operations Infrastructure Plan (TOIP), which identifies intelligent transportation system (ITS) recommendations for major corridors throughout the state. The TOIP identifies ITS improvements along the US 41 corridor, including both Appleton and Green Bay areas. Most improvements are focused at interchange locations, specifically traffic detection, traffic signal improvements, crash investigation sites, law enforcement pads and ramp closure gates. A lump sum cost of $150,000 for these improvements has been included in the cost estimates for each interchange. The TOIP maps for both Appleton and Green Bay metropolitan areas are located in Appendix 5. In addition, 1% of the overall segment or interchange costs were assumed for Corridor ITS.

ES.9 Structures

Bridges

Existing bridge plan, typical sections, and latest inspection reports were downloaded from the Wisconsin Department of Transportation Highway Structure Information (HIS) system. The expansion design concept reviewed the bridges to develop a conservative construction cost estimate. Bridge structures were reviewed to determine if their age currently exceeds 50-years old. Bridges that exceed 50-years old are shown as “Reconstruction” within the design recommendations. Interchange bridges were reviewed for new interchange configuration. If the existing bridge configuration does not allow for rehabilitation to desired geometry, the bridges are shown as “Reconstruction” within the design recommendations. If bridges were shown as “Reconstruction” in the design recommendations, the bridge geometry considered local road future expansion needs and complete streets requirements including outside bicycle lanes and wide terrace areas with sidewalks. If bridges were shown as “Rehabilitation” in the design recommendations, the bridge geometry considered local road future expansion needs including complete street requirements and makes recommendations for the retrofit to incorporate these needs. Bridges were reviewed using FDM 11-35 Attachments 1.8 and 1.9 (July 22, 2009) to meet minimum vertical clearance requirements and aim for desired vertical clearances. Design recommendations including elevation adjustments should be reviewed further within the future NEPA study.

Table ES1-2: Summary of US 41/WIS 441 Bridge Structure Recommendations

BRIDGE NUMBER	BRIDGE LOCATION	YEAR BUILT	RECOMMENDATION
	SEGMENT 1		
B-70-0049	US 41 SB over Cecil Street	1969	Reconstruction
B-70-0050	US 41 NB over Cecil Street	1969	Reconstruction
B-70-0123	US 41 SB over WIS 114	1993	Reconstruction
B-70-0124	US 41 NB over IWS 114	1994	Reconstruction
B-70-0125	US 41 SB over Main Street	1994	Reconstruction
B-70-0126	US 41 NB over Main Street	1994	Reconstruction
B-70-0127	US 41 SB over North Street	1994	Rehabilitation
B-70-0128	US 41 NB over North Street	1994	Rehabilitation
B-70-0129	US 41 SB over County II	1994	Reconstruction
B70-0130	US 41 NB over County II	1994	Reconstruction
B-70-0131	US 41 SB over American Drive/North Green Bay Road/CNRR	1994	Reconstruction
B-70-0132	US 41 NB over American Drive/North Green Bay Road/CNRR	1994	Reconstruction
B-70-0210	North Lake Street/Jacobsen Road over US 41	2001	Rehabilitation
B-70-133	US 41 SB over Menasha Creek	1992	Rehabilitation
B-70-134	US 41 NB over Menasha Creek	1992	Rehabilitation
	SEGMENT 2		
B-70-0135	US 41 SB over County BB	1992	Reconstruction
B-70-0136	US 41 NB over County BB	1992	Reconstruction
B-44-0163	US 41 SB over Spencer Street	1992	Reconstruction
B-44-0164	US 41 NB over Spencer Street	1992	Reconstruction
B-44-0155	US 41 SB over WIS 125	1992	Reconstruction
B-44-0156	US 41 NB over WIS 125	1992	Reconstruction
B-44-0157	US 41 SB over WIS 96	1992	Reconstruction
B-44-0158	US 41 NB over WIS 96	1992	Reconstruction
	SEGMENT 3		
B-44-0162	US 41 SB over Fox Valley Railroad	1992	Reconstruction
B-44-0161	US 41 NB over Fox Valley Railroad	1992	Reconstruction
B-44-0190	Bicycle/Pedestrian over US 41	2002	Rehabilitation

BRIDGE NUMBER	BRIDGE LOCATION	YEAR BUILT	RECOMMENDATION
	SEGMENT 4		
B-44-0177	WIS 15 EB over US 41	1997	Reconstruction
B-44-0178	WIS 15 WB over US 41	1997	Reconstruction
B-44-0024	Capital Drive over US 41	1960	Reconstruction
B-44-0140	County A over US 41	2005	Rehabilitation
B-44-0020	US 41 SB over Soo Line	1960	Reconstruction
B-44-0021	US 41 NB over Soo Line	1960	Reconstruction
B-44-0028	US 41 SB over Gillett Street	1961	Reconstruction
B-44-0029	US 41 NB over Gillett Street	1961	Reconstruction
B-44-0035	WIS 47 SB over US 41	1961	Rehabilitation
B-44-0036	WIS 47 NB over US 41	1961	Rehabilitation
B-44-0171	Meade Street over US 41	1996	Rehabilitation
	SEGMENT 5		
B-44-0172	County E over US 41	1995	Reconstruction
B-44-0129	US 41 SB over WIS 441 SB Ramp	1993	Reconstruction
B-44-0130	WIS 441 SB over US 41	1993	Demolition
B-44-xxxx	WIS 441 NB over US 41		New Structure
B-44-0132	French Road over US 41	1992	Reconstruction
B-44-0033	Holland Road over US 41	1960	Reconstruction
B-44-0034	VendenBroek Road over US 41	1960	Reconstruction
B-44-0127	WIS 441 NB over County OO	1993	Reconstruction
B-44-0128	WIS 441 SB over County OO	1993	Reconstruction
	SEGMENT 6		
B-44-0179	County N over US 41	2002	Rehabilitation
B-44-0038	Buchanan Street over US 41	1961	Reconstruction
B-44-0039	County CC over US 41	1961	Reconstruction
B-44-0040	US 41 SB over WIS 55	1961	Reconstruction
B-44-0041	US 41 NB over WIS 55	1961	Reconstruction
B-44-0042	US 41 SB over Maloney Road	1961	Reconstruction
B-44-0043	US 41 NB over Maloney Road	1961	Reconstruction

BRIDGE NUMBER	BRIDGE LOCATION	YEAR BUILT	RECOMMENDATION
	SEGMENT 7		
B-44-0044	County J over US 41	1961	Reconstruction
B-44-0071	US 41 SB over County JJ	2000	Reconstruction
B-44-0072	US 41 NB over County JJ	1999	Reconstruction
B-44-0073	US 41 SB over Wrightstown Road	2000	Reconstruction
B-44-0074	US 41 NB over Wrightstown Road	2000	Reconstruction
B-44-0159	US 41 SB over County U	1999	Reconstruction
B-44-0160	US 41 NB over County U	1999	Reconstruction
B-05-0080	US 41 SB over Apple Creek	1987	Rehabilitation
B-05-0053	US 41 NB over Apple Creek	1963	Rehabilitation
B-05-0162	County S over US 41	1999	Reconstruction
B-05-0165	US 41 SB over Little Rapids Road	2000	Reconstruction
B-05-0200	US 41 NB over Little Rapids Road	2000	Reconstruction
	SEGMENT 8		
B-08-024	Telulah Ave over STH 441	1992	Rehabilitation
B-08-025	STH 441 NB over Lake Park Road	1993	Rehabilitation
B-08-026	STH 441 SB over Lake Park Road	1993	Rehabilitation
B-08-027	WIS 441 NB Over County KK	1993	Rehabilitation
B-08-028	WIS 441 SB Over County KK	1993	Rehabilitation
B-44-137	WIS 441 over Drainage Way	1991	Reconstruction
B-44-122	WIS 441 NB Over County CE	1992	Reconstruction
B-44-123	WIS 441 NB Over County CE	1992	Reconstruction
B-44-124	Fox River Valley Railroad over WIS 441	1992	Reconstruction
B-44-125	Newberry Street over STH 441	1992	Reconstruction
B-44-126	WIS 441 Over STH 96 – Fox River – CNW Railroad	1992	Parallel Structure

FIGURE ES-3

SUMMARY OF US 41/WIS 441 BRIDGE STRUCTURE RECOMMENDATIONS

Town of Bovina
Town of Black Creek
Town of Osborn
Town of Hobart
Orange Lane
Town of Oneida
Town of Rockland
Town of Ellington
Town of Center
Town of Freedom
Town of Lawrence
Town of Kaukauna
Town of Wrightstown
Village of Wrightstown
Town of Vandenbroek
Town of Grand Chute
Village of Little Chute
Town of Greenville
Town of Buchanan
Town of Holland
City of Appleton
Village of Kimberly
Village of Combined Locks
City of Kaukauna
City of Menasha
Town of Menasha
Village/ Town of Harrison
Town of Clayton
City of Neenah
Village of Sherwood
Little Lake Butte Des Morts
Lake Winnebago
Breezewood Lane/Bell St

B-05-0165
B-05-0200
B-05-0162
B-05-0053
B-05-0080
B-44-0159
B-44-0160
B-44-0073
B-44-0074
B-44-0071
B-44-0072
B-44-0044
B-44-0042
B-44-0043
B-44-0039
B-44-0038
B-44-0034
B-44-0132
B-44-0033
B-44-0172
B-44-0028
B-44-0029
B-44-0035
B-44-0036
B-44-0140
B-44-0190
B-44-0177
B-44-0178
B-44-0024
B-44-0020
B-44-0021
B-44-0171
B-44-0179
B-44-0129
B-44-0130
B-44-xxxx
B-44-0126
B-44-0127
B-44-0128
B-44-0040
B-44-0041
B-44-0161
B-44-0162
B-44-0157
B-44-0158
B-44-0155
B-44-0156
B-44-0163
B-44-0164
B-44-0125
B-44-0122
B-44-0123
B-70-0135
B-70-0136
B-70-0133
B-70-0134
B-08-0027
B-08-0028
B-08-0025
B-08-0026
B-08-0024
B-70-0131
B-70-0132
B-70-0129
B-70-0130
B-70-0125
B-70-0126
B-70-0123
B-70-0124
B-70-0049
B-70-0050
B-70-0210
B-70-0127
B-70-0128
B-70-0055

US 10/WIS 441
Project Excluded

LEGEND

2014-0128

- STRUCTURE ON US 41/WIS 441
- STRUCTURE OVER US 41/WIS 441
- **B-XX-XXXX** RECONSTRUCTION
- *B-XX-XXXX* REHABILITATION
- B-XX-XXXX DEMOLITION
- B-XX-XXXX NEW STRUCTURE
- TRI-COUNTY FREEWAY PROJECT

0 0.5 1 2 3
Miles

N

WISCONSIN DEPARTMENT OF TRANSPORTATION

HNTB

US 41/WIS 441 CORRIDOR

Retaining Walls

Existing retaining wall plans, typical sections and latest inspection reports were downloaded from the Wisconsin Department of Transportation Highway Structure Information (HIS) system and reviewed. The expansion design concepts assumed that all existing retaining walls will need to be reconstructed. In addition, mainline or interchange locations that have tight right-of-way locations assumed that retaining walls would be needed. The potential retaining wall area was calculated by using 2-foot topographic contour data obtained from County websites. Mechanically Stabilized Earth (MSE) walls were assumed for this study.

Noise Walls

Existing noise wall plans, typical sections and latest inspection reports were downloaded from the Wisconsin Department of Transportation Highway Structure Information (HIS) system and reviewed. The expansion design concepts reviewed noise walls for conflicts and only minor impacts were assumed for noise wall removal and reconstruction. Additionally, noise walls were added along the mainline in locations that have high residential use adjacent to the mainline corridor. The potential noise wall height was assumed to be 18-feet tall.

Sign Bridges

Existing sign bridge structure information was downloaded from the Wisconsin Department of Transportation Highway Structure Information (HIS) system and reviewed. All existing sign bridges were assumed to be replaced with new sign bridge structures. New sign bridges were added along auxiliary lanes and at reconstructed interchanges.

Box Culverts (classified as bridges)

Existing box culvert information was downloaded from the Wisconsin Department of Transportation Highway Structure Information (HIS) system and major culverts were reviewed. Box culverts shown on the exhibits are assumed to be reconstructed for the long term expansion design concepts.

ES.10 Complete Streets

Wisconsin's Pedestrian and Bicycle Accommodations law addressing Complete Streets was codified in 2009. It was incorporated as State Statute SS 84.01(35) and later into administrative rule as Transportation 75. For each interchange and grade separated crossing, accommodations have been included to provide for Complete Streets, including 4-foot bicycle lanes with integral curb and gutter and 5-foot sidewalks with 6-foot minimum terrace. The specific accommodations will need to be refined during the NEPA and design processes, including coordination with surrounding local government and public stakeholder.

ES.11 Utilities

Utility companies were contacted by letter, and were asked to provide locations of their facilities within the study area. The contact list for the utilities was provided by the Department. A copy of the letter, project location map, distribution list and a correspondence log are attached in

Appendix 19. Utility locations shown on the displays are approximate and will need to be verified as part of the future preliminary and final design. Most of the responses showed facilities on hard copy system maps, which were then transferred to electronic files and combined with aerial photography and potential geometrics to create roll plot exhibits. These exhibits are included within Appendix 19. In addition, approximate locations of utilities crossing the corridor were included on the segment exhibits.

ES.12 Cost Estimating Assumptions

US 41 is currently being reconstructed and expanded in both Brown County to the north and Winnebago County to the south. These construction projects are very similar in scope to the expansion being considered as part of this study, and provide a robust data set for cost estimating purposes. The University of Wisconsin-Madison Construction and Materials Support Center has created a Majors Program Cost Estimating Software for developing reliable and accurate cost estimates. Version 2 of the Microsoft Excel based spreadsheet was used for estimating the corridor by segment and interchange. The spreadsheet program summary tab was slightly modified to include pavement, base, and subbase mainline and ramp shoulder costs as separate items. Likewise, bridge re-decking and bridge widening were added as separate structural cost line items. The following quantity items are detailed within separate worksheet tabs and summarized in a Program cost summary page.

- Removing Removing pavement
- Barrier wall
- Curb & gutter
- Earthwork
- Signalized intersections
- Pavement, base, and subbase
- Bridge removal
- Bridge (new)
- Bridge (rehabilitation)
- New retaining wall
- Noise wall removal
- New noise wall
- New box culvert
- Sign bridge – cantilever
- Sign bridge – single span

The Program Cost summary page includes the items listed in Table ES1-3.

Table ES1-3: Project Cost Summary Items

Project information, scope, location and site characteristics
Items such as project ID, highway, project title and limits, project type, duration, current year, design start year, construction start year, construction end year, topography and soil type are included.
Construction costs estimate (CCE)
Major Roadway Quantity items include removing pavement, barrier wall, curb and gutter, earthwork, signalized intersections, pavement, base, and subbase.
Allowance Items include drainage, erosion control & restoration, lighting, roadway incidentals, signing and marking, traffic control & staging, and ITS/FTMS are based upon percentages of major roadway quantities.
Structure costs include bridge removal, new bridges, bridge re-decking, bridge widening, retaining walls, noise wall removal, noise walls, box culvert/extension, cantilever sign bridge or single span sign bridge and structural incidentals.

Special Construction Elements such as temporary bridges, temporary roadways, environment mitigation, community sensitive design, hazardous materials and bypass/alternative routes are included.
Community sensitive solutions (CSS)
Item is based upon a percentage of CCE items above. The maximum percentage allowed is: • 3% of roadway, mobilization, and design contingency costs • 7% of new bridge costs (per bridge) • 5% of retaining wall costs • 4% of noise wall costs
Base construction costs estimate (BCCE)
Represents summation of CCE and CSS cost items.
Scope change allowance items
Items are figured based upon a percentage of BCCE. Some scope change items to consider are construction methods, community interests, sight conditions or design changes.
Project delivery allowance items
Includes items such as 7.2% preliminary engineering, 5.4% final engineering, 9.2% construction engineering, 10.4% construction change orders & claims, 1.5% traffic mitigation and 1.0% public involvement estimated based upon a percentage of BCCE.
External costs
External costs such as real estate (6% mainline/10% interchange), compensable utilities (3% mainline/5% Interchange), and jurisdictional transfers (none included for this segment cost estimates) are estimated based upon a percentage of BCCE since detailed information is not currently available.
Risk adjustment items
Roundabout designs are currently evolving due to updated policies and parameters. These changes may ultimately impact the size and feasibility of roundabout construction in the future. Interchange locations identified as potentially being reconstructed with roundabouts have an additional risk adjustment equaling 10% of BCCE added to account for additional real estate, construction, and operations of future roundabouts.
Estimate uncertainty items
Current year total project cost estimate
Total cost of segment or interchange based upon summation of BCCE, scope change allowance items, project delivery allowance items, external costs, risk adjustments items, and estimate uncertainty items.

A copy of the previous Winnebago and Brown County cost data sets used for unit costs, Cost Estimating Software User Manual, Brown County data set, spreadsheet assumptions and detailed spreadsheet output is included within Appendix 6.

All costs developed for this study are priced in year 2013 dollars and do not include inflation for future year construction or material costs.

ES.13 Potential Phasing of Mainline Improvements

Various combinations of capacity expansion through the study area have previously been tested using the Northeast Region travel demand model. See Appendix 7 for the full technical memorandum. The results of that analysis indicated the following priority for capacity expansion. However, this may be subjected to change in the future. Refer to Figure ES1-4 (page ES-18).

- US 41: WIS 96 to WIS 15 operational improvements such as auxiliary lanes. The roadway concrete pavement (11-inch) for this area was constructed in 1992 and is included for reconstruction.

- US 41: WIS 15 to County J capacity expansion to 6 lanes. This segment has been identified in the Appleton MPO long range transportation plan as a candidate for expansion due to projected over capacity conditions by 2035. The majority of this roadway concrete pavement (9-inch) was constructed in 1962, is approaching the end of its useful life, and is included for reconstruction.
- US 41: County J to Orange Lane (South of County F) capacity expansion to 6 lanes. This segment has also been identified in the Appleton MPO long range transportation plan as a candidate for expansion, but is a lower priority than the segment between WIS 15 and County J due to lower traffic demands. Further assessment of phased expansion should consider inclusion of this segment as a priority to provide a continuous 6+ lane cross section along US 41 from WIS 26 south of Oshkosh to County M (Lineville Road) north of Green Bay. The portion of roadway from County J to Orange Lane is a patchwork of pavement ages due to modified alignments during the two to four lane expansion, including concrete pavement (9 inch) that was constructed in 1963 and is approaching the end of its useful life, along with 11 inch pavement constructed in 2000. The portion of roadway concrete pavement (11-inch) between County J and WIS 55 was recently constructed in 2000. For the purpose of this study, this pavement is included for reconstruction when expanded to 6-lanes.
- US 41: Breezewood Lane through the WIS 96 interchange, capacity expansion to 8 lanes. Current design efforts at the US 10/WIS 441/US 41 system interchange are expected to improve operations along this segment of US 41. The portion of roadway concrete pavement (11 inch) from Breezewood Lane to US 10/WIS 441 Interchange was constructed in 1995. The portion of roadway concrete pavement (11-inch) between the US 10/WIS 441 Interchange and WIS 96 was constructed in 1992. For the purpose of this study, these pavement areas are included for reconstruction when expanded to 8-lanes.
- WIS 441: Oneida Street to North System interchange (US 41/WIS 441) capacity expansion to 6 lanes. The portion of WIS 441 roadway concrete pavement (10-inch) was constructed in 1993. For the purposes of this study, this pavement area is included for reconstruction when expanded to 6 lanes.

FIGURE ES-4

MAP OF US 41/WIS 441 CONCRETE PAVEMENT AGE

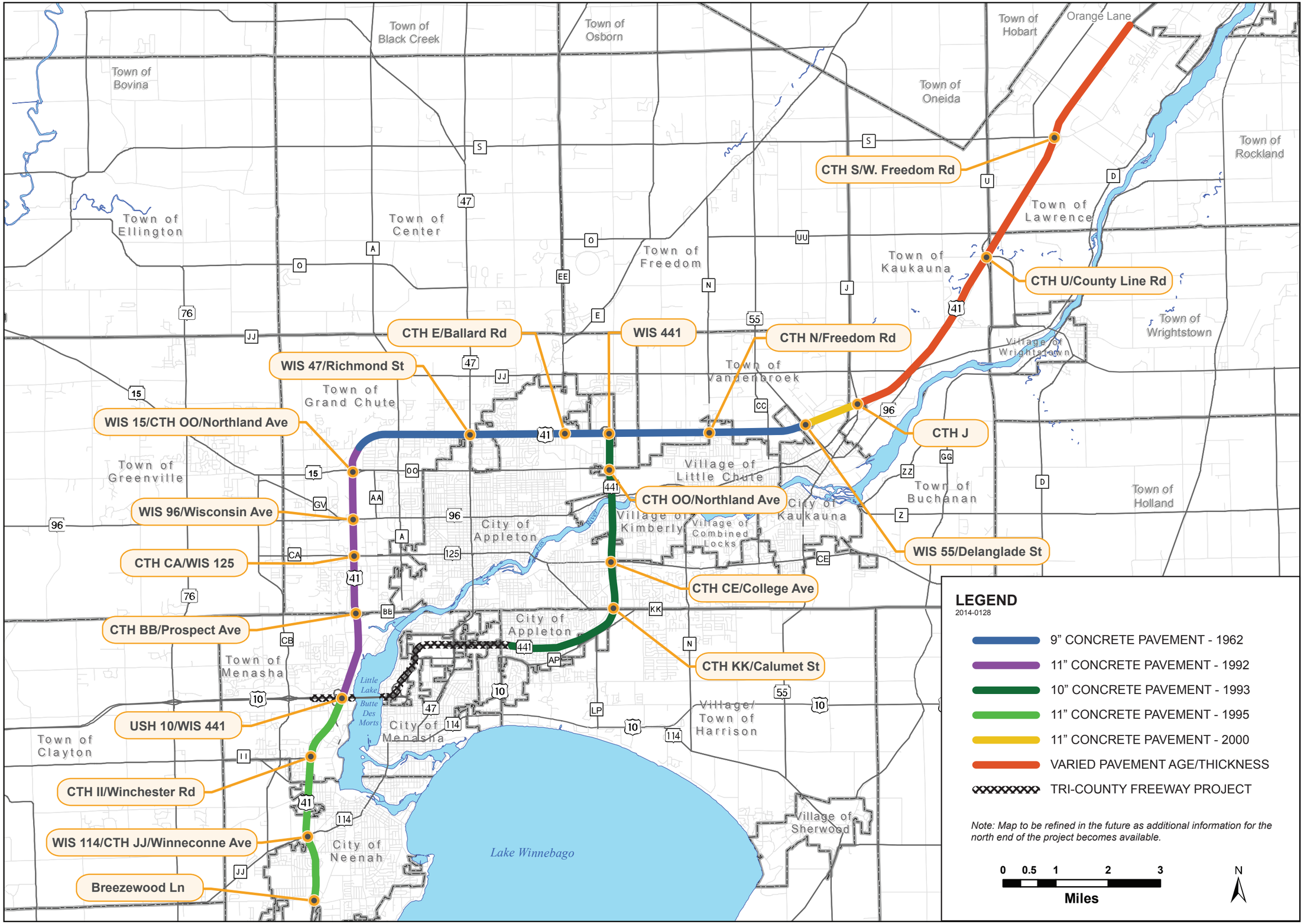

WISCONSIN DEPARTMENT OF TRANSPORTATION

HNTB

US 41/WIS 441 CORRIDOR

ES.14 Summary of Expansion Concept

Short-Term Interchange Improvements

Phase I of the US 41/WIS 441 Operational Needs Study identified geometric and safety deficiencies primarily at the interchange locations within the study area. A set of recommendations were developed to address these deficiencies prior to capacity expansion of the mainline. These short term improvements have been reevaluated based on the updated traffic operational analysis. Table ES1-4 (page ES-20) identifies the recommended short term improvements and implementation year that would address current operational, geometric or safety issues within the context of the potential long-term mainline expansion. If these short-term improvements are implemented, there is a risk that these improvements would likely need to be reconstructed again with the future long-term improvements. Some minor benefits such as wider pavement for traffic staging at ramps or reuse of placed construction materials would occur.

Long-Term Mainline and Interchange Improvements

Table ES1-4 (page ES-20) shows mainline section and interchange conceptual long-term improvements. Improvement description and cost estimate for each segment and interchange is also included.

Table ES1-4: Summary of Expansion Concept

SEGMENT	MAINLINE SEGMENT LIMITS/INTERCHANGES LOCATIONS	REPRESENTATIVE CONCEPTUAL IMPROVEMENT	SUGGESTED IMPLEMENTATION YEAR	US 41 & WIS 441 SHORT-TERM COST*	US 41 LONG-TERM COST*	WIS 441 LONG-TERM COST*
1	US 41: North of Breezewood Ln to South of County BB	Long-term improvement: Reconstruction to 8 lanes from Breezewood Ln to US 10/IWS 441			$206,400,000	
	WIS 114/County JJ (Winneconne Ave) Interchange	Short-term improvement (Alternative 1): Merge and diverge ramp improvements	2015-2017	$616,000		
		Long-term improvement (Alternative 4): Traditional signalized intersections			$13,583,000	
	Oakridge Rd/Main St Interchange	Short-term improvement (Alternative 5): Partial implementation of ramp terminal intersection improvements	2015-2017	$167,000		
		Long-term improvement (Alternative 5): Reconstruction with wider roadway median			$7,950,000	
	County II (Winchester Rd) Interchange	Long-term improvement (Alternative 4): Reconstruction with roundabout intersection			$11,852,000	
2	US 41: South of County BB to North of WIS 96 Structures	Long-term improvement: Reconstruction to 8 lanes from South of County BB through WIS 96			$91,203,000	
	County BB (West Prospect Ave) Interchange	Short-term improvement (Alternative 1): Extended on-ramp acceleration lanes	2015-2017	$276,000		
		Long-term improvement (Alternative 6): Reconstruction with roundabout intersection improvements			$15,367,000	
	WIS 125 (West College Ave) Interchange	Long-term improvement (Alternative 4): Traditional signalized intersections			$40,127,000	
	WIS 96 (West Wisconsin Ave) Interchange	Long-term improvement (Alternative 4): Traditional signalized intersections			$21,276,000	
3	US 41: North of WIS 96 Structures to South of WIS 15 Structures	Long-term improvement: Reconstruction with transition from 6 to 8 lanes between WIS 96 to WIS 15			$35,502,000	
4	US 41: South of WIS 15 Structures to West of County E	Long-term improvement: Reconstruction to 6 lanes from WIS 15 to County E			$133,582,000	
	WIS 15/County OO (West Northland Avenue) Interchange	Short-term improvement (Alternative 1): On and off-ramp improvements	2012-2014	$321,000		
		Long-term improvement (Alternative 6): Traditional signalized intersections with high efficiency intersection at WIS 15/Casaloma Drive Intersection.			$52,365,000	
	WIS 47 (Richmond Street) Interchange	Long-term improvement: Interchange planned for construction in 2013. Minor lump sum rehabilitation cost included.			$10,000,000	
5	US 41: West of County E to West of County N (Includes US41/WIS 441 North System Interchange) & WIS 441: Fox River Bridge to US 41	Long-term improvement: Reconstruction to 6 lanes from WIS E to County N with new system flyover interchange configuration with US 41 SB C-D Road improvements			$147,938,000	
	County E (Ballard Road) Interchange	Short-term improvement (Alternative 2): Off-ramp improvements with deceleration lanes. Look-ahead left-turn lanes along County E NB and SB.	2012-2014	$702,000		
		Long-term improvement (Alternative 5): Traditional signalized intersections with additional capacity along County E from Capitol Drive to West Evergreen Drive			$29,405,000	
	WIS 441/County OO (East Northland Avenue) Interchange	Short-term improvement (Alternative 1): Improve off-ramps	2012-2014	$603,000		
		Long-term improvement (Alternative 7): Provide WIS 441 NB on-ramp access from County OO as a loop ramp in the SE quadrant and WIS 441 NB off-ramp connection to County OO near French Road. Relocate French Road intersection further to the east on County OO.			$28,279,000	
6	US 41: West of County N to West of County J	Long-term improvement: Reconstruction to 6 lanes from County N to County J			$59,417,000	
	County N (North Freedom Road) Interchange	Short-term improvement (Alternative 1): Improve on-ramp acceleration length	2012-2014	$699,000		
		Long-term improvement (Alternative 4): Traditional signalized intersections.			$14,987,000	
	WIS 55 (Delanglade Street) Interchange	Long-term improvement: Interchange planned for construction in 2013. Minor lump sum rehabilitation cost included.			$10,000,000	

SEGMENT	MAINLINE SEGMENT LIMITS/INTERCHANGES LOCATIONS	REPRESENTATIVE CONCEPTUAL IMPROVEMENT	SUGGESTED IMPLEMENTATION YEAR	US 41 & WIS 441 SHORT-TERM COST*	US 41 LONG-TERM COST*	WIS 441 LONG-TERM COST*
7	US 41: West of County J to Orange Lane	Long-term improvement: Reconstruction to 6 lanes from County J to Orange Lane			$182,717,000	
	County J (Hyland Avenue) Interchange	Long-term improvement: Interchange recently constructed. Minor lump sum rehabilitation cost included.			$4,880,000	
	County U (South County Line Road) Interchange	Long-term improvement (Alternative 2): Add weight in motion interface and other vehicle identification equipment. Add acceleration lane from weigh station on US 41 NB. Complete street improvement along County U.			$3,034,000	
	County S (Freedom Road) Interchange	Short-term improvement (Alternative 2): Improve off-ramps along with County S turn lane improvements	2025	$706,000		
		Long-term improvement (Alternative 4): Relocate frontage roads from ramp locations to improve intersection spacing. Widen County S structures and roadway.			$10,117,000	
8	WIS 441: East of US 10 to South of US41/WIS 441 North System Interchange	Long-term improvement: Reconstruction to 6 lanes from US 10 to US 41/WIS 441 North System Interchange				$198,739,000
	County KK (Calumet Street) Interchange	Long-term improvement (Alternative 7): Traditional signalized intersections.				$27,543,000
	County CE (College Avenue) Interchange	Long-term improvement (Alternative 5): Traditional signalized intersections.				$18,113,000
Total Corridor	US 41 (North of Breezewood Lane to Orange Lane) and WIS 441 (East of US 10 to South of US 41/WIS 441 North System Interchange)			$4,090,000	$1,129,981,000	$244,395,000

** Both Short Term and Long Term Costs are shown in 2013 dollars with no future year construction or material cost increases from inflation included.*

SEGMENT 1 - US 41: NORTH OF BREEZEWOOD LANE TO SOUTH OF COUNTY BB (6.030 MILES)

1.1 Existing Conditions

Traffic and Operations Summary

Mainline traffic forecasts were developed for each section of segment 1 through consultation with WisDOT Traffic Forecasting section. The K30 hourly volume projections developed using the Northeast Region travel demand model for year 2038 indicate four lanes each direction, with residual hourly capacities of over 875 vehicles per hour for all sections. Traffic Analysis Forecasting Information System (TAFIS) generated K30 projections also indicate a need for four lanes, with potential for five lanes in each direction between County II and the US 10/WIS 441 system interchange. The current design being implemented through the WIS 441 Tri-County Freeway Project is addressing this future need. Additional detail concerning the traffic forecasts is available in the Traffic Forecasting Methodology memo in Appendix 1.

Safety Summary

The US 41 Interstate Conversion project has assessed crash data for a three year period along this segment of US 41. Table 1-1 below identifies the segments that exceed statewide averages for the same three year period.

Table 1-1: Segment 1 – US 41 Crash Data

SECTION	CRITERIA	3-YEAR AVERAGE RATE*	SEGMENT RATE*
WIS 114/County JJ to Main St (MM 131.0 to MM 132.0)	Total fatal and incapacitating crashes	1.7 (Urban)	3.6
	Total fatal crashes	0.2 (Urban)	2.5
Main St to North Green Bay Rd (MM 132.0 to MM 133.0)	Total fatal and incapacitating crashes	1.7 (Urban)	2.6
North Green Bay Rd to US 10/WIS 441 (MM 133.0 to MM 134.0)	Total fatal and incapacitating crashes	1.7 (Urban)	5.3
	Total fatal crashes	0.2 (Urban)	1.3
North of Menasha Creek to County BB (MM 135.0 to MM 136.0)	Total fatal and incapacitating crashes	1.7 (Urban)	2.9

** 3-Year Average Rate (2005-2007) represents the Wisconsin statewide average number of crashes per 100 million vehicle miles traveled for urban and rural facilities. The Segment Rate represents the actual number of crashes per 100 million vehicle miles traveled for the mainline section listed.*

Roadway Summary

The US 41 Interstate Conversion project has quantified existing geometric deficiencies that require action. Table 1-2 below identifies the deficiencies.

Table 1-2: Segment 1 – Roadway Geometric Deficiencies

SECTION	MILE MARKER	CRITERIA	ACTUAL VALUE
Breezewood Ln to WIS 114/County JJ (MM 129.6 to MM 131.0)	129.6 to 129.8	Min. Vertical Grade = 0.5% Desired = 0.3% min.	0.22% (addressed with US 41 project)
	129.9 to 130.0	Min. Vertical Grade = 0.5% Desired = 0.3% min.	0.10%
	130.1 to 130.2	Min. K Crest = 401	184
WIS 114/County JJ to US 10/ WIS 441 (MM 131.0 to MM 134.0)	132.6	Superelevation R = 5729' Desired SE = 3.4%	SE = 3.0% Appropriate speed = 65 mph
	133.0	Min. Horizontal Curve Radius of 2050' 0º 45' Deflection	1762.95'
	133.1	Superelevation R = 1762' Desired SE = 6.0%	SE = 6.0% Appropriate speed = 65 mph
US 10/WIS 441 to County BB (MM 134.0 to MM 136.0)	134.1	Min. Vertical Grade = 0.5% Desired = 0.3% min.	0.10%
	135.1	Min. Vertical Grade = 0.5% Desired = 0.3% min.	0.05%
	135.2	Superelevation R = 2864' Desired SE = 5.5%	SE = 5.0% Appropriate speed = 65 mph
	135.8	Superelevation R = 2864' Desired SE = 5.5%	SE = 5.0% Appropriate speed = 65 mph

Structures Summary

Bridges

Summary of existing bridge conditions from Highway Structure Information is shown in Table 1-3 (page 1-3) and includes bridge number, mile marker, bridge name, girder type, year built, year widened or raised, overlay or new deck year, current deck state, national bridge index values for deck, superstructure and substructure, sufficiency rating and inventory ratings as of October 31, 2012.

Summary of existing bridge geometry is shown in Table 1-4 (page 1-4) and includes bridge number, mile marker, bridge name, girder type, girder depth in inches, vertical clearance, superelevation and direction of super, clear bridge width, bridge length, number of spans, span configuration, bridge skew and cross road typical section.

Table 1-3: Segment 1 – Summary of Existing Bridge Conditions

BRIDGE NUMBER	MILE MARKER (MM)	BRIDGE NAME	GIRDER TYPE	YEAR BUILT	YEAR WIDENED OR RAISED	YEAR OVERLAY OR NEW DECK	CURRENT DECK STATE	NBI [1] DECK	NBI [1] SUPER	NBI [1] SUB	SUFFICIENCY RATING [2]	INVENTORY RATING [3]
B-70-0049	130.7	US 41 SB Bridge Over Cecil Street	Prestressed Concrete Deck Girder	1969	1993	N/A	Original & Widened	7	8	7	98	28
B-70-0050	130.7	US 41 NB Bridge Over Cecil Street	Prestressed Concrete Deck Girder	1969	1993	N/A	Original	6	8	7	97	28
B-70-0123	131.0	US 41 SB Bridge Over WIS 114	Prestressed Concrete Deck Girder	1993	N/A	N/A	Original	8	8	7	95.5	23
B-70-0124	131.0	US 41 NB Bridge Over WIS 114	Prestressed Concrete Deck Girder	1994	N/A	N/A	Original	7	8	7	98	23
B-70-0125	132.0	US 41 SB Bridge Over Main Street	Prestressed Concrete Deck Girder	1994	N/A	N/A	Original	7	8	7	96.2	23
B-70-0126	132.0	US 41 NB Bridge Over Main Street	Prestressed Concrete Deck Girder	1994	N/A	N/A	Original	7	8	7	98.2	25
B-70-0127	132.2	US 41 SB Bridge Over North Street	Prestressed Concrete Deck Girder	1994	N/A	N/A	Original	7	8	7	95.1	22
B-70-0128	132.2	US 41 NB Bridge Over North Street	Prestressed Concrete Deck Girder	1994	N/A	N/A	Original	7	8	7	97.2	22
B-70-0129	132.7	US 41 SB Bridge Over County II	Prestressed Concrete Deck Girder	1994	N/A	N/A	Original	7	8	7	98	22
B-70-0130	132.7	US 41 NB Bridge Over County II	Prestressed Concrete Deck Girder	1994	N/A	N/A	Original	7	8	7	100	22
B-70-0131	133.0	US 41 SB Bridge Over American Drive/North Green Bay Road/CNRR	Continuous Steel Deck Girder	1994	N/A	N/A	Original	7	7	7	96	21
B-70-0132	133.0	US 41 NB Bridge Over American Drive/North Green Bay Road/CNRR	Continuous Steel Deck Girder	1994	N/A	N/A	Original	5	7	7	98	21
B-70-0210	133.7	Jacobsen Road Bridge Over US 41	Steel Deck Girder	2001	N/A	N/A	Original	7	7	7	98.8	27
B-70-0133	134.8	US 41 SB Bridge Over Menasha Creek	Prestressed Concrete Deck Girder	1992	N/A	N/A	Original	6	8	7	90.8	26
B-70-0134	134.8	US 41 SB Bridge Over Menasha Creek	Prestressed Concrete Deck Girder	1992	N/A	N/A	Original	6	8	7	92.4	26

1 The Federal Highway Administration (FHWA) Recording and Coding Guide for the Structure Inventory and Appraisal of the Nation's Bridges (Coding Guide) is the basis for the National Bridge Inventory (NBI) Inspection. Each bridge component, i.e. deck, superstructure, or substructure, is assigned a numeric rating code ranging from 9 to 0, with 9 being "excellent condition" and 0 being "failed condition". A bridge becomes structurally deficient when the condition of the deck, superstructure, or substructure condition is 4 or less.

2 Following a thorough review of the deck, superstructure and substructure, bridges are assigned a "sufficiency rating" number between one and 100. The rating takes into account some 75 factors reviewed during a bridge inspection and also considers a bridge's age, length and width, and the average amount of traffic the bridge handles. WisDOT uses the sufficiency ratings to help prioritize bridge improvements. A bridge with a sufficiency rating of 80 or less is eligible for bridge rehabilitation funding. A bridge with a sufficiency rating of 50 or less is eligible for replacement funding. Each year, all states including Wisconsin are required to submit a report to the FHWA that reviews the condition of its bridges.

3 The FHWA currently requires that two capacity ratings, referred to as the Inventory Rating and Operating Rating be submitted with the NBI file. The Inventory Rating is the load level that a structure can safely sustain for an indefinite period. The Operating Rating is the absolute maximum permissible load level to which a structure may be subjected. The FHWA requires that the standard AASHTO HS truck or lane loading be used as the vehicle when load rating with the Load Factor Rating method (LFR) and that the AASHTO HL-93 loading be utilized as the vehicle when load rating with the Load and Resistance Factor method (LRFR). The above table is shown in LFR using the AASHTO HS truck standard. Bridges are not eligible for replacement unless the Inventory Rating is HS10 or less.

Table 1-4: Segment 1 – Summary of Existing Bridge Geometry

BRIDGE NO.	MILE MARKER (MM)	BRIDGE NAME	GIRDER TYPE	GIRDER DEPTH (INCHES)	VERTICAL CLEARANCE (FEET)	SUPER-ELEVATION %	BRIDGE CLEAR WIDTH (FEET)	BRIDGE LENGTH (FEET)	NUMBER OF SPANS	SPAN CONFIGURATION (FEET)	BRIDGE SKEW	LOCAL ROAD TYPICAL SECTION
B-70-0049	130.7	US 41 SB Bridge Over Cecil Street	Prestressed Concrete Deck Girder	45	14.95	4.1 LT	68.25	137.05	3	27.48/74.44/31.47	16° 51' LF	End Span: 2:1 Slope paving; Main Span: 1-12' lane and 1-10 shoulder with c&g each direction, 10' terrace
B-70-0050	130.7	US 41 NB Bridge Over Cecil Street	Prestressed Concrete Deck Girder	45	15.45	4.1 LT	68.25	135.88	3	28.04/74.11/30.05	16° 51' LF	End Span: 2:1 Slope paving; Main Span: 1-12' lane and 1-10' shoulder with c&g each direction, 10' terrace
B-70-0123	131.0	US 41 SB Bridge Over WIS 114	Prestressed Concrete Deck Girder	54	17.13	5.0 RT	56.25	199.52	2	98.0/98.0	5° 16' 10" RF	End Spans: 11' median; 3-12' lanes with c&g each direction, 19' terrace, 2:1 slope paving
B-70-0124	131.0	US 41 NB Bridge Over WIS 114	Prestressed Concrete Deck Girder	54	17.09	5.0 RT	56.25	199.52	2	98.0/98.0	5° 16' 10" RF	End Spans: 11' median; 3-12' lanes with c&g each direction, 19' terrace, 2:1 slope paving
B-70-0125	132.0	US 41 SB Bridge Over Main Street	Prestressed Concrete Deck Girder	45	15.62	NC; Ramp 6.0	Varies 68.48 to 81.55	149.5	3	32.0/82.0/32.0	2° 29' 32" RF	End Spans: 2:1 slope paving; Middle Span: 4' median, 2-12' lanes with c&g in each direction, 10' terrace
B-70-0126	132.0	US 41 NB Bridge Over Main Street	Prestressed Concrete Deck Girder	45	17.89	NC	56.25	149.5	3	32.0/82.0/32.0	2° 29' 32" RF	End Spans: 2:1 slope paving; Middle Span: 4' median, 2-12' lanes with c&g in each direction, 10' terrace
B-70-0127	132.2	US 41 SB Bridge Over North Street	Prestressed Concrete Deck Girder	36	15.15	NC	68.25	136.77	3	32.0/69.25/32.0	4° 27' 02" RF	End Spans: 2:1 slope paving; Middle Span: 4' median, 2-12' lanes with c&g in each direction, 10' terrace
B-70-0128	132.2	US 41 NB Bridge Over North Street	Prestressed Concrete Deck Girder	36	17.25	NC	56.25	136.77	3	32.0/69.25/32.0	4° 27' 02" RF	End Spans: 2:1 slopes; Middle Span: 2-12' lanes with c&g in each direction, 6' terrace
B-70-0129	132.7	US 41 SB Bridge Over County II	Prestressed Concrete Deck Girder	54	17.25	NC	56	208.6	2	105.0/100.0	14° 22' RF	End Spans: 14' median; 3-12' lanes with c&g each direction, 18' terrace, 2:1 slope paving
B-70-0130	132.7	US 41 NB Bridge Over County II	Prestressed Concrete Deck Girder	54	18.28	NC	56	208.58	2	105.0/100.0	11° 00' RF	End Spans: 14' median; 3-12' lanes with c&g each direction, 18' terrace, 2:1 slope paving
B-70-0131	133.0	US 41 SB Bridge Over American Drive/North Green Bay Road/CNRR	Continuous Steel Deck Girder	54	24.42*	5.9 RT	68	281.5	2	135.5/140.0	41° 25' 28" LF	Span 1: 2:1 slope paving, 2-12' lanes with c&g in each direction, 4' terrace; Span 2: ditches with Railroad and 2:1 slope paving
B-70-0132	133.0	US 41 NB Bridge Over American Drive/North Green Bay Road/CNRR	Continuous Steel Deck Girder	54	23.18*	5.9 RT	68	281.5	2	135.5/140.0	41° 25' 28" LF	Span 1: 2:1 slope paving, 2-12' lanes with c&g in each direction, 4' terrace; Span 2: ditches with Railroad and 2:1 slope paving
B-70-0210	133.7	North Lake Street/Jacobsen Road Bridge Over US 41	Steel Deck Girder	54	16.24	NC	34	391.92	3	145.0/95.0/145.0	41° 30' LF	2-12' lanes with 4' or 6' shoulders and 10' sidewalk along north side of bridge
B-70-0133	134.8	US 41 SB Bridge Over Menasha Creek	Prestressed Concrete Deck Girder	36	N/A	Super Transition	69	41.69	1	38.0	18° 00' LF	N/A
B-70-0134	134.8	US 41 SB Bridge Over Menasha Creek	Prestressed Concrete Deck Girder	36	N/A	Super Transition	69	41.69	1	38.0	18° 00' LF	N/A

** Vertical clearance is for span over railroad track.*

Legend:
ES = Exception to Standard
RT = Superelevation Right
NC = Normal Crown
LT = Superelevation Left
LF = Left Forward
RF = Right Forward
N/A = Not Applicable
c&g = Curb and Gutter

Pre-NEPA Environmental Screening Summary

Impacts within Segment 1 mainly consist of “low” and “medium” impact items. Low impact items generally include potential impacts on agriculture, wetlands, and upland habitat as the majority of the segment is commercially and industrially developed, creating an environment that lacks residential community, agricultural, and natural resources.

Medium impact items generally include potential impacts on economic resources, air quality, noise, and the ever present potential for erosion, storm water, open water resources and historic impacts. Even though the perceived risk of impact is considered medium, further consideration will be needed to gain a better understanding of any imminent impacts, their severity, and mitigation or avoidance measures.

High impact items include impacts on community and residential resources, environmental justice, open water, Section 4(f), and archaeological resources. General discussion about these impacts can be seen below. Further information on environmental impacts can be seen in the Pre-NEPA Environmental Screening located in Appendix 4.

North of Breezewood Ln (Appleblossom Dr) to WIS 114/County JJ (Winneconne Ave)

Open Water

The Neenah Slough is located to the east of US 41 and flows generally parallel to the highway (WDNR Surface Water Data Viewer, 2012). Conceptual design alludes to the potential need to re-channelize the slough to accommodate the expansion of the highway and likely reconstruction of Jewelers Park Drive. Impacts to the slough should be assessed in coordination with the WDNR and the USACE.

WIS 114/County JJ (Winneconne Ave) to Oakridge Rd/Main St

No environmental factors are rated as “high” impact.

Oakridge Rd/Main St to North of County II (North Green Bay Rd)

Community and Residential

Residential property exists on the west side of US 41 roughly between North Street and Independence Drive. The neighborhood is comprised of single-family homes and includes Spring Road Elementary School located in the southwest quadrant of the County II interchange.

Additionally, Habitat for Humanity is building three homes along Hoffman Street in the northwest quadrant of the County II interchange. Conceptual design of the interchange indicates the need to acquire land from all three residential properties to construct the interchange. The proximity of the conceptual southbound off-ramp to the three homes also suggests the potential for relocation.

Adjustments to the ramp design and/or the construction of improvements that would minimize right-of-way acquisition should be considered to avoid relocations and limit physical impacts on the properties. Public outreach coordination with Habitat for Humanity and the occupants is recommended.

Environmental Justice

As stated in the Community and Residential section, Habitat for Humanity is building three homes in the northwest quadrant of the County II interchange. Conceptual design of the interchange indicates that construction of the County II Interchange would result in the acquisition of land from all three residential properties and the potential relocation of the homes.

Adjustments to the ramp design and/or the construction of improvements that would minimize right-of-way acquisition should be considered to avoid relocations and limit physical impacts on the properties. Public outreach coordination with Habitat for Humanity and the occupants is recommended.

Additionally, impacts to EJ populations in the area should be further examined and appropriate public involvement and CSD efforts should be made during future design and construction phases.

Section 4(f)

Analysis of conceptual highway design indicates the potential to encroach upon Oak Hill Cemetery and St. Patrick's Cemetery. Work within the cemeteries should be avoided as they are protected under Wis. Stats. 157.70 and would constitute a Section 4(f) use.

Archaeological Resources

Analysis of conceptual highway design indicates the potential to encroach upon Oak Hill Cemetery and St. Patrick's Cemetery. Oak Hill Cemetery is located in the northwest quadrant of the Oakridge Road/Main Street interchange and spans adjacently along US 41 to North Street. St. Patrick's Cemetery is located between Ridgeway Road and Chapman Avenue and is also adjacent to US 41. These burial sites have not been catalogued by the Wisconsin Historical Society, however the sites are protected under Wis. Stats. 157.70. The burial sites will need to be taken into consideration during the design and construction phases to avoid the disturbance of human burials.

No other known designated archaeological sites and no national register listed sites exist in the project area. An archaeological survey was completed along the existing US 41 corridor within Winnebago County in June of 1960, but no archaeological finds were recorded along this segment (Penman, WHS, 1978). The Section 106 process will have to be completed unless it is eligible for WisDOT's screening list for archaeology.

North of County II (North Green Bay Rd) to South of County BB (Fox Cities Drive)

This section has been analyzed as a part of the WIS 441 Tri-County Project. An assessment of the environmental impacts in this area can be obtained from the *Design Refinement and Environmental Assessment Update Report for US 41 and US 10/WIS 441 Tri-County Freeway* (Design Phase Project ID: 1517-07-04), January 2013 which can be found in Appendix 20.

1.2 Expansion Design Concept

Mainline Segment 1

For ease in discussion, Segment 1 – US 41: North of Breezewood Lane to South of County BB was broken into mainline sections with limits at interchange cross roads.

Section 1: Breezewood Lane to WIS 114/County JJ (Winneconne Avenue)

US 41 Alignment

The section of US 41 begins approximately 500' north of the Breezewood Lane overpass structure and proceeds northward to WIS 114. This section is very constrained between two frontage roads; Gillingham Road and Jewelers Park Drive.

US 41 alignment was shifted further to the west between Breezewood Lane and the next curve to the north resulting in impacts to the adjacent noise wall. See Exhibit 1-1 (page 1-9) and Exhibit 1-2 (page 1-10) for further US 41 alignment discussion on (1-1-A and 1-1-B respectively).

The US 41 section from West Cecil Street to WIS 114 is anticipated to remain on existing alignment.

US 41 Typical Section

The mainline typical section north of the Breezewood ramps consists of a 36.5-foot median (14-foot inside shoulders with 56-inch single face barriers) and four (4) 12-foot lanes in the NB and SB directions. Both NB and SB have 12-foot outside shoulder with 42-inch single face barrier for the majority of the section near frontage roads with tight right-of-way constraints.

A US 41 typical section constraint exists at Breezewood Lane. See Exhibit 1-1 (page 1-9) for constrained typical section (1-1-C).

US 41 Ramps and Auxiliary Lanes

Review all exit ramp configurations for single or dual lane needs.

Refer to Exhibit 1-1 (page 1-9) for further discussion on-ramp reconfiguration at the Breezewood Bell Interchange (1-1-D).

Refer to Exhibit 1-2 (page 1-10) discussion for existing noise wall conflicts and Exhibit 1-3 (page 1-11) for new noise wall information (1-1-E and 1-1-F respectively).

Refer to Exhibit 1-3 (page 1-11) for US 41 NB off-ramp shift discussion (1-1-G).

Frontage Roads

Refer to Exhibit 1-2 (page 1-10) for impacts to frontage roads Gillingham Road and Jewelers Park Drive (1-1-H).

Addressing Geometric Deficiencies

All geometric deficiencies are anticipated to be corrected within the long-term improvement expansion concept. Refer to Exhibit 1-1 (page 1-9) for discussion on deficient vertical grades (1-1-I) addressed with US 41 Winnebago County project. Refer to Exhibit 1-2 (page 1-10) for discussion on deficient vertical curve (1-1-J).

Right-of-Way Impacts

Preliminary plans do not show considerable right of way impacts, however a detailed design that incorporates vertical design and slope intercepts may identify right of way impacts. Refer to Exhibit 1-1 (page 1-9) and Exhibit 1-2 (page 1-10) for further discussion of potential right-of-way impacts (1-1-K).

Utilities

The following utilities are shown on Exhibit 1-1 (page 1-9):

- The City of Neenah has an underground water crossing on US 41 along the north side of Breezewood Lane (1-1-L). At this same general location along US 41, the City of Neenah also has an underground sanitary crossing.
- WE Energies has three (3) overhead electric crossings at Apple Blossom Drive (1-1-M).

The following utilities are shown on Exhibit 1-2 (page 1-10):

- The City of Neenah has an underground water crossing on US 41 at 100’ south of Byrd Ave (1-1-N).
- WE Energies has an overhead electric crossing at Byrd Avenue and at West Cecil Street (1-1-O).
- WE Energies has a buried gas crossing located at Cecil Street (1-1-P).

The following utilities are shown on Exhibit 1-3 (page 1-11):

- WE Energies has an overhead electric crossing at WIS 114/County JJ/Winneconne Street (1-1-Q).
- US Signal Company has a buried fiber optic cable crossing of US 41 at WIS 114/County JJ/Winneconne Street (1-1-R).

Further Analysis Recommendations

Further review is recommended to determine if any refinements to US 41 mainline alignment could minimize the impacts to the existing noise wall and frontage roads within this segment.

DRAFT

US 41 ALIGNMENT (1-1-A): THE TANGENT SECTION OF US 41 WAS SHIFTED TOWARDS THE WEST HOLDING JEWELERS PARK DRIVE IN THE SAME LOCATION TO AVOID FURTHER STREAM ENVIRONMENTAL IMPACTS TO THE EAST. A SHARPER CURVE ADJUSTMENT (R = 5018.25 FEET) AT THE SOUTH END IS REQUIRED TO TIE BACK INTO THE EXISTING TANGENT ALIGNMENT PRIOR TO BREEZEWOOD LANE. LIKEWISE, A SHARPER CURVE ADJUSTMENT (R = 3204.25 FEET) IS REQUIRED AT THE NORTH END TO TIE-BACK INTO THE EXISTING TANGENT ALIGNMENT SOUTH OF WEST CECIL STREET.

US 41 TYPICAL SECTION (1-1-C): THE US 41 ROADWAY SECTION UNDERNEATH BREEZEWOOD LANE WAS RECONSTRUCTED AS PART OF THE WINNEBAGO COUNTY US 41 EXPANSION PROJECT. THE NEWLY CONSTRUCTED BRIDGE AND CONCRETE TILT UP PANEL RETAINING WALLS WERE CONSTRUCTED TO PROVIDE THREE THRU LANES IN THE NB AND SB DIRECTIONS ALONG WITH 14-FEET INSIDE AND OUTSIDE SHOULDERS WITH BARRIERS. RETAINING WALLS ARE CONSTRUCTED CLOSE TO THE OUTSIDE SHOULDER BARRIER AND DO NOT PROVIDE ADDITIONAL CAPACITY TO PASS A FOURTH LANE IN EACH DIRECTION. SB OFF- AND NB ON-RAMPS NORTH OF THE BREEZEWOOD/BELL INTERCHANGE DEVELOP INTO THE FOURTH THRU LANE IN EACH DIRECTION FOR US 41.

US 41 RAMPS AND AUXILIARY LANES (1-1-D): THE SB OFF- AND NB ON-RAMPS NORTH OF THE BREEZEWOOD/BELL INTERCHANGE WILL REQUIRE SOME RECONFIGURATION DUE TO THE SHIFT IN US 41 MAINLINE TANGENT ALIGNMENT. MUCH OF THE EXISTING RAMP CONFIGURATION CAN BE MAINTAINED AS RECENTLY BUILT. THE US 41 SB OFF-RAMP TO BREEZEWOOD LANE IS A PARALLEL CONFIGURATION EXIT ONLY LANE AND DOES NOT INCORPORATE AN AUXILIARY LANE THROUGH THE INTERCHANGE. THE US 41 NB ON-RAMP FROM WEST BELL STREET IS A LONG TAPERED CONFIGURATION THAT DEVELOPS INTO THE FOURTH THRU LANE IN THE NB DIRECTION.

GEOMETRIC DEFICIENCIES (1-1-I): ADDRESSED WITH WINNEBAGO COUNTY US 41EXPANSION PROJECT.

RIGHT OF WAY IMPACTS (1-1-K): TEMPORARY LIMITED EASEMENTS, PERMANENT EASEMENTS, OR FEE MAY BE REQUIRED ALONG THE WEST SIDE OF GILLINGHAM ROAD FOR PROVIDING TRANS 75 PEDESTRIAN AND BICYCLE FACILITIES ALONG WITH NEW DRIVEWAY CONNECTIONS DUE TO POTENTIAL RECONSTRUCTION OF GILLINGHAM ROAD ASSOCIATED WITH US 41 MAINLINE ALIGNMENT PUSHED WEST.

UTILITIES (1-1-L): THE CITY OF NEENAH HAS UNDERGROUND WATER CROSSINGS ON US 41 ALONG THE NORTH SIDE OF BREEZEWOOD LANE. THEY ALSO HAVE UNDERGROUND SANITARY CROSSING ALONG THE NORTH SIDE OF BREEZEWOOD LANE AND ALONG THE EASTERLY RIGHT OF WAY OF US 41.

UTILITIES (1-1-M): APPROXIMATE LOCATION OF WE ENERGIES OVERHEAD ELECTRIC CROSSING (3 LINES) AT THIS LOCATION.

BREEZEWOOD LN

UTILITIES (1-1-L)

GEOMETRIC DEFICIENCY (1-1-I): ADDRESSED WITH WINNEBAGO COUNTY US 41 EXPANSION PROJECT

GILLINGHAM RD

APPLEBLOSSOM DR

UTILITIES (1-1-M)

PROPOSED US 41

GEOMETRIC DEFICIENCY (1-1-I): APPROXIMATE END OF DEFICIENT VERTICAL GRADE ACTUAL 0.10% DESIRED 0.5% MINIMUM 0.3%

MATCHLINE

1-1-D

1-1-K

US 41 NB

US 41 SB

1-1-C

B-70-285 NO WORK

1-1-A

1-1-D

JEWELERS PARK DR

BEGIN SEGMENT 1

EXISTING RIGHT OF WAY

GEOMETRIC DEFICIENCY (1-1-I): ADDRESSED WITH WINNEBAGO COUNTY US 41 EXPANSION PROJECT

W. BELL ST

HARRISON ST

GEOMETRIC DEFICIENCY (1-1-I): APPROXIMATE START OF DEFICIENT VERTICAL GRADE ACTUAL 0.10% DESIRED 0.5% MINIMUM 0.3%

LEGEND

- APPROXIMATE UTILITY CROSSING
- EXISTING ROW
- PROPOSED ROW
- EXISTING ROADWAYS
- PROPOSED LOCAL ROADS
- PROPOSED US 41
- PROPOSED STRUCTURE
- PROPOSED CONCRETE BARRIER
- PROPOSED LOCAL SIDEWALK
- ROADWAY OBLITERATION
- PROPOSED NOISE WALL

WISCONSIN DEPARTMENT OF TRANSPORTATION

0 100' 200'

N

PROJECT NO: 1130-31-00	HWY: US 41	COUNTY: WINNEBAGO	EXHIBIT 1-1: US 41 SEGMENT 1 / SECTION 1 / SHEET 1	PAGE 1-9	E

FILE NAME : \\madw00\ingrproj\44386\t1\Short Term Solutions\Amendment #5\CDS\0220_PO.dgn PLOT DATE : 3/13/2014 2:26:21 PM PLOT BY : lzidek PLOT NAME : PLOT SCALE : 200:1

DRAFT

US 41 ALIGNMENT (1-1-B): AN EXISTING NOISE WALL EXISTS BETWEEN US 41 SB AND GILLINGHAM ROAD STARTING JUST SOUTH OF LAUREL COURT AND RUNS TO WINNECONNE AVENUE TO THE NORTH. A RETAINING WALL IS REQUIRED BETWEEN US 41 SB AND GILLINGHAM ROAD DUE TO THE TANGENT ALIGNMENT SHIFT TO THE WEST BUT WILL IMPACT APPROXIMATELY 700 FEET OF THE NOISE WALL.

US 41 RAMPS AND AUXILIARY LANES (1-1-E): THE SB ON-RAMP FROM WIS 114 IS SHOWN AS A PARALLEL CONFIGURATION HAVING APPROXIMATELY A 1400 FEET PARALLEL SECTION WITH A 360 FOOT TAPER THAT TIES INTO US 41 SB JUST TO THE NORTH OF WHERE GILLINGHAM ROAD DIVERGES FROM THE MAINLINE. PART OF THE EXISTING NOISE WALL CONFLICTS WITH THE NEW RETAINING WALL. A NEW NOISE WALL WILL BE REQUIRED FOR THIS CONFLICT AREA. THE US 41 NB OFF-RAMP TO WIS 114 IS A TAPERED CONFIGURATION.

FRONTAGE ROADS (1-1-H): BOTH GILLINGHAM ROAD AND JEWELERS PARK DRIVE HAVE TWO-WAY TRAFFIC AND RUN FROM BREEZEWOOD LANE/WEST BELL STREET TO WEST CECIL STREET. IT IS ANTICIPATED THAT THESE FRONTAGE ROADS WILL BE IMPACTED FROM US 41 MAINLINE CONSTRUCTION. CONCRETE BARRIER WILL BE REQUIRED BETWEEN FRONTAGE ROADS AND US 41 MAINLINE. BARRIER ALONG GILLINGHAM ROAD AND THE US 41 SB OUTSIDE SHOULDER COULD BE INCORPORATED INTO THE NOISE WALL. COMPLETE STREET PEDESTRIAN AND BICYCLE ACCOMMODATIONS MAY BE NEEDED BASED UPON TRANS 75 REQUIREMENTS.

ADDRESSING GEOMETRIC DEFICIENCIES (1-1-J): THE DEFICIENT VERTICAL CURVE (MM 130.1 TO 130.2) IS ANTICIPATED TO BE CORRECTED DURING FUTURE RECONSTRUCTION.

RIGHT OF WAY IMPACTS (1-1-K): TEMPORARY LIMITED EASEMENTS, PERMANENT EASEMENTS, OR FEE MAY BE REQUIRED ALONG THE WEST SIDE OF GILLINGHAM ROAD FOR PROVIDING TRANS 75 PEDESTRIAN AND BICYCLE FACILITIES ALONG WITH NEW DRIVEWAY CONNECTIONS DUE TO POTENTIAL RECONSTRUCTION OF GILLINGHAM ROAD ASSOCIATED WITH US 41 MAINLINE ALIGNMENT PUSHED WEST.

UTILITIES (1-1-N): THE CITY OF NEENAH HAS A UNDERGROUND WATER CROSSING ON US 41 APPROXIMATELY 100 FEET SOUTH OF BYRD AVENUE.

UTILITIES (1-1-O): APPROXIMATE LOCATION OF WE ENERGIES OVERHEAD ELECTRIC CROSSING.

UTILITIES (1-1-P): APPROXIMATE LOCATION OF WE ENERGIES GAS MAIN CROSSING AT CECIL STREET.

MELROSE ST
LAUREL CT
HOLLY CT
SUND ST
EVANS ST
W. CECIL ST
BYRD AVE
GAY DR
GILLINGHAM RD
US 41 SB
US 41 NB
JEWELERS PARK DR
CAMERON WAY
W. CECIL ST
MATCHLINE
MATCHLINE
UTILITIES (1-1-O)
UTILITIES (1-1-O)
PROPOSED US 41
EXISTING NOISE WALL TO BE REMOVED AND REPLACED
B-70-49 RECONSTRUCT
B-70-50 RECONSTRUCT
UTILITIES (1-1-P)
EXISTING RIGHT OF WAY
GEOMETRIC DEFICIENCY (1-1-J):
DEFICIENT VERTICAL CURVE
ACTUAL K CREST = 184
DESIRED MIN K CREST = 401
UTILITIES (1-1-N)
1-1-H
1-1-K
1-1-B
1-1-E
1-1-H

LEGEND

- APPROXIMATE UTILITY CROSSING
- EXISTING ROW
- PROPOSED ROW
- EXISTING ROADWAYS
- PROPOSED LOCAL ROADS
- PROPOSED US 41
- PROPOSED STRUCTURE
- PROPOSED CONCRETE BARRIER
- PROPOSED LOCAL SIDEWALK
- ROADWAY OBLITERATION
- PROPOSED NOISE WALL

WISCONSIN DEPARTMENT OF TRANSPORTATION

0 100' 200'

N

PROJECT NO: 1130-31-00	HWY: US 41	COUNTY: WINNEBAGO	EXHIBIT 1-2: US 41 SEGMENT 1 / SECTION 1 / SHEET 2	PAGE I-10	E

FILE NAME : J:\44386\t1\Short Term Solutions\Amendment #5\CDS\0221_P0.dgn PLOT DATE : 12/19/2013 PLOT BY : lzidek PLOT NAME : PLOT SCALE : 200:1

DRAFT

US 41 RAMPS AND AUXILIARY LANES (1-1-F): A NEW NOISE WALL IS PROPOSED ALONG THE WIS 114 SB ON-RAMP. THE RAMP GEOMETRY IS SHIFTED FURTHER TO THE WEST TO ALIGN WITH THE NEW RAMP TERMINAL INTERSECTION.

US 41 RAMPS AND AUXILIARY LANES (1-1-G): THE US 41 NB OFF-RAMP TO WIS 114 IS A TAPERED RAMP CONFIGURATION. THE RAMP HAS BEEN SHIFTED FURTHER TO THE EAST TO ALIGN WITH THE NEW RAMP TERMINAL INTERSECTION.

UTILITIES (1-1-Q): APPROXIMATE LOCATION OF WE ENERGIES OVERHEAD ELECTRIC CROSSING AT THIS LOCATION.

UTILITIES (1-1-R): US SIGNAL COMPANY HAS A BURIED FIBER OPTIC CROSSING OF US 41 AT WIS 114/COUNTY JJ.

MEADOW LN
MEADOWVIEW ST
W. CECIL ST
GREENMEADOWS ST
HILLCREST PL
MATCHLINE
1-1-F
US 41 SB ON RAMP
US 41 SB
US 41 NB
1-1-G
US 41 NB OFF RAMP
EXISTING RIGHT OF WAY
PROPOSED US 41
UTILITIES (1-1-Q)
WIS 114/ CTH JJ
UTILITIES (1-1-R)
US 41 SB OFF RAMP
B-70-123 RECONSTRUCT
B-70-124 RECONSTRUCT
US 41 NB ON RAMP
MATCHLINE
S. GREEN BAY RD
FOX POINT SO

LEGEND

- APPROXIMATE UTILITY CROSSING
- EXISTING ROW
- PROPOSED ROW
- EXISTING ROADWAYS
- PROPOSED LOCAL ROADS
- PROPOSED US 41
- PROPOSED STRUCTURE
- PROPOSED CONCRETE BARRIER
- PROPOSED LOCAL SIDEWALK
- ROADWAY OBLITERATION
- PROPOSED NOISE WALL

WISCONSIN DEPARTMENT OF TRANSPORTATION

0 100' 200'

N

PROJECT NO: 1130-31-00	HWY: US 41	COUNTY: WINNEBAGO	EXHIBIT 1-3: US 41 SEGMENT 1 / SECTION 1 / SHEET 3	PAGE I-II	E

FILE NAME : J:\44386\t1\Short Term Solutions\Amendment #5\CDS\0222_PO.dgn PLOT DATE : 12/19/2013 PLOT BY : lzidek PLOT NAME : PLOT SCALE : 200:1

Section 2: WIS 114/County JJ (Winneconne Avenue) to Oakridge Road/Main Street

US 41 Alignment

This section of US 41 mainline from WIS 114 to Oakridge Road/Main Street is on the existing alignment.

US 41 Typical Section

The mainline typical section north of WIS 114 consists of a 36.5-foot median (14-foot inside shoulders with 56-inch single face barriers). The NB mainline has five (5) 12-foot lanes, including one auxiliary lane. SB mainline has four (4) 12-foot lanes. Both NB and SB have 12-foot outside shoulders. Refer to Figure 1-1 (page 1-14) for a typical section of Segment 1.

US 41 Ramps and Auxiliary Lanes

Review all exit ramp configurations for single or dual lane needs.

Refer to Exhibit 1-4 (page 1-14) for further discussion on WIS 114 SB off-ramp realignment (1-2-A). Refer to Exhibit 1-4 (page 1-14) and Exhibit 1-5 (page 1-16) for WIS 114 NB on-ramp realignment (1-2-B).

Refer to Exhibit 1-5 (page 1-16) for further information on parallel ramp and auxiliary lane configurations (1-2-C and 1-2-D).

Frontage Roads

Frontage roads within this section are not directly adjacent and do not present any impacts to mainline US 41.

Addressing Geometric Deficiencies

There are no geometric deficiencies identified within Section 2.

Right-of-Way Impacts

See further analysis recommendations below.

Utilities

The following utilities are shown on Exhibit 1-5 (page 1-16):

- WE Energies has a buried gas crossing located at Plummer Court approximately 3000 feet south of Main Street (1-2-E).

The following utilities are shown on Exhibit 1-6 (page 1-17):

- ATT-TCG has a buried cable at the Main Street crossing (1-2-F).
- WE Energies has an overhead electric crossing 100 feet south of Main Street (1-2-G).
- WE Energies has buried gas crossings located at the following location 100 feet south of Main Street (1-2-H).

Further Analysis Recommendations

Coordination on relocation of the retention pond located in the northwest quadrant of the County JJ interchange will be required (1-2-A).

Refer to Exhibit 1-6 (page 1-17) for discussion on possible alternatives for further evaluation at the Oakridge Road/Main Street Interchange (1-2-I).

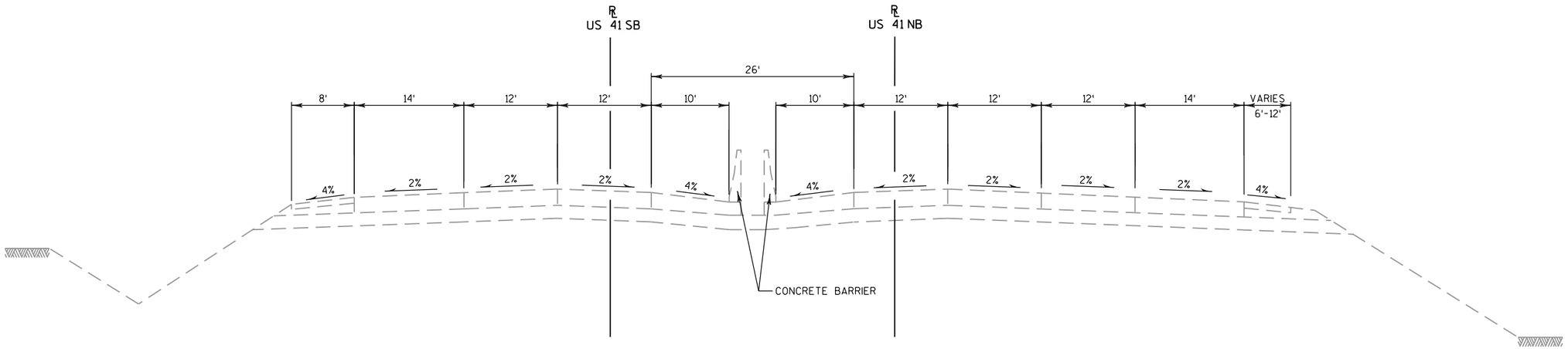

TYPICAL EXISTING SECTION

US 41 (JUST NORTH OF BREEZEWOOD LN/BELL ST TO CTH II)

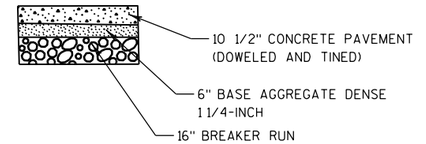

NOTE: THE ASSUMED SECTION USED FOR COST ESTIMATE PURPOSES.

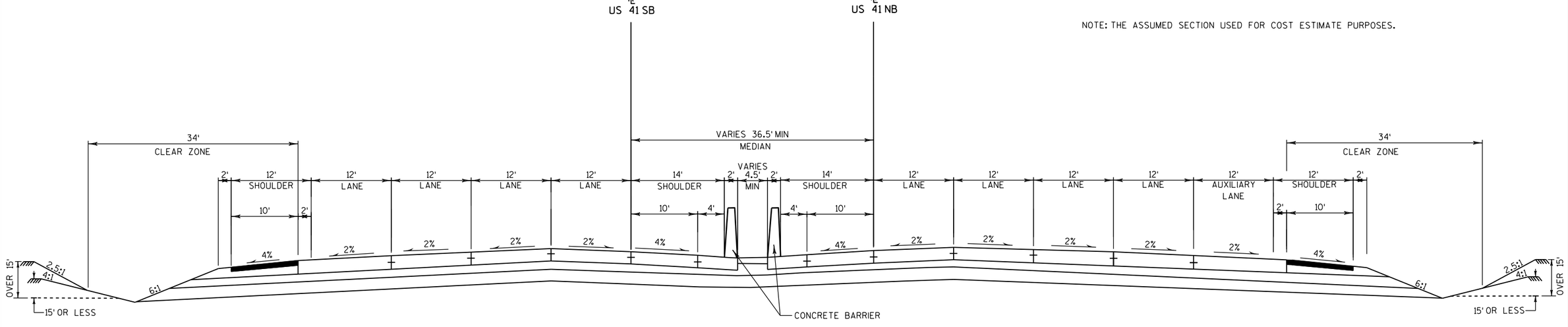

DESIRABLE PROPOSED SECTION

US 41 (JUST NORTH OF BREEZEWOOD LN/BELL ST TO CTH II)

PROJECT NO: 1130-31-00	HWY: US 41	COUNTY: WINNEBAGO	FIGURE I-1: US 41 (NORTH OF BREEZEWOOD LN/ BELL ST TO CTH II), TYPICAL EXISTING SECTION AND DESIRABLE PROPOSED SECTION	PAGE I-14	E

DRAFT

US 41 RAMPS AND AUXILIARY LANES (1-2-A): THE US 41 SB OFF-RAMP TO WIS 114 IS A TAPERED RAMP CONFIGURATION OFF OF THE SB AUXILIARY LANE. THE RAMP HAS BEEN SHIFTED FURTHER TO THE WEST TO ALIGN WITH THE NEW RAMP TERMINAL INTERSECTION. THE RAMP WILL REQUIRE CONSIDERABLE RIGHT-OF-WAY ASSOCIATED WITH THE REALIGNMENT. IN ADDITION, THE RAMP RELOCATION IMPACTS A MAN-MADE POND LOCATED DIRECTLY TO THE EAST OF THE EXISTING RAMP LOCATION. A RETAINING WALL IS NEEDED TO MINIMIZE FURTHER IMPACTS ON THE ADJACENT PROPERTY.

US 41 RAMPS AND AUXILIARY LANES (1-2-B): THE NB ON-RAMP FROM WIS 114 IS A DUAL LANE ON-RAMP WITH A PARALLEL TYPE CONFIGURATION HAVING APPROXIMATELY AN 1800-FEET PARALLEL SECTION WITH A 360-FOOT TAPER THAT TIES INTO US 41 NB. CONCRETE BARRIER WILL LIKELY BE NEEDED ALONG WITH STEEPER SIDE SLOPES TO AVOID RIGHT-OF-WAY ACQUISITION.

MEADOW LN
MEADOWVIEW ST
W. CECIL ST
GREENMEADOWS ST
HILLCREST PL
MATCHLINE
US 41 SB ON RAMP
WIS 114/ CTH JJ
US 41 SB OFF RAMP
1-2-A
B-70-123
RECONSTRUCT
PROPOSED US 41
US 41 SB
US 41 NB
B-70-124
RECONSTRUCT
1-2-B
US 41 NB ON RAMP
US 41 NB OFF RAMP
EXISTING RIGHT OF WAY
WIS 114/ CTH JJ
MATCHLINE
S. GREEN BAY RD
FOX POINT SO

LEGEND

- APPROXIMATE UTILITY CROSSING
- EXISTING ROW
- PROPOSED ROW
- EXISTING ROADWAYS
- PROPOSED LOCAL ROADS
- PROPOSED US 41
- PROPOSED STRUCTURE
- PROPOSED CONCRETE BARRIER
- PROPOSED LOCAL SIDEWALK
- ROADWAY OBLITERATION
- PROPOSED NOISE WALL

WISCONSIN DEPARTMENT OF TRANSPORTATION

0 100' 200'

N

PROJECT NO: 1130-31-00	HWY: US 41	COUNTY: WINNEBAGO	EXHIBIT 1-4: US 41 SEGMENT 1 / SECTION 2 / SHEET 1	PAGE I-15	E

FILE NAME : J:\44386\t1\Short Term Solutions\Amendment #5\CDS\0222A_PO.dgn PLOT DATE : 12/19/2013 PLOT BY : lzidek PLOT NAME : PLOT SCALE : 200:1

2

US 41 RAMPS AND AUXILIARY LANES (1-2-B): THE NB ON-RAMP FROM WIS 114 IS A DUAL LANE ON-RAMP WITH A PARALLEL TYPE CONFIGURATION HAVING APPROXIMATELY AN 1800-FEET PARALLEL SECTION WITH A 360-FOOT TAPER THAT TIES INTO US 41 NB. CONCRETE BARRIER WILL LIKELY BE NEEDED ALONG WITH STEEPER SIDE SLOPES TO AVOID RIGHT-OF-WAY ACQUISITION.

US 41 RAMPS AND AUXILIARY LANES (1-2-C): A MAINLINE 41 NB AUXILIARY LANE CONNECTS THE WIS 114 PARALLEL ON-RAMP TO OAKRIDGE ROAD/MAIN STREET TAPERED OFF-RAMP.

US 41 RAMPS AND AUXILIARY LANES (1-2-D): SOUTH OF US 41 SB MAINLINE OFF-RAMP TO OAKRIDGE ROAD/MAIN STREET, A 41 SB AUXILIARY LANE CONTINUES APPROXIMATELY 1100-FEET UNTIL MERGING INTO THE OUTSIDE SB LANE. THE US 41 SB OFF-RAMP FOR WIS 114 IS A TAPERED CONFIGURATION. SEE SECTION 3 FOR INFORMATION ON SB 41 OFF-RAMP TO OAKRIDGE ROAD/MAIN STREET.

UTILITIES (1-2-E): APPROXIMATE LOCATION OF WE ENERGIES GAS MAIN CROSSING AT PLUMMER COURT.

DRAFT

2

STONECREST CT

ROCK LEDGE LN

PROPOSED US 41

UTILITIES (1-2-E)

1-2-D

US 41 SB

US 41 NB

1-2-B

1-2-C

TYPICAL SECTION (SEE FIGURE 1-1)

MATCHLINE

EXISTING RIGHT OF WAY

W. NORTH PLUMMER CT

MATCHLINE

S. GREEN BAY RD

LEGEND

- APPROXIMATE UTILITY CROSSING
- EXISTING ROW
- PROPOSED ROW
- EXISTING ROADWAYS
- PROPOSED LOCAL ROADS
- PROPOSED US 41
- PROPOSED STRUCTURE
- PROPOSED CONCRETE BARRIER
- PROPOSED LOCAL SIDEWALK
- ROADWAY OBLITERATION
- PROPOSED NOISE WALL

WISCONSIN DEPARTMENT OF TRANSPORTATION

0 100' 200'

N

PROJECT NO: 1130-31-00	HWY: US 41	COUNTY: WINNEBAGO	EXHIBIT 1-5: US 41 SEGMENT 1 / SECTION 2 / SHEET 2	PAGE 1-16	E

FILE NAME : \\madw00\ingrproj\44386\t1\Short Term Solutions\Amendment #5\CDS\0223_P0.dgn PLOT DATE : 4/30/2013 PLOT BY : Jgallamore PLOT NAME : PLOT SCALE : 200:1

DRAFT

UTILITIES (1-2-F): APPROXIMATE LOCATION OF ATT-TCG HAS BURIED CABLE AT THE MAIN STREET CROSSING.

UTILITIES (1-2-G): LOCATION OF WE ENERGIES OVERHEAD ELECTRIC CROSSING IS APPROXIMATELY 100 FEET SOUTH OF MAIN STREET CROSSING.

UTILITIES (1-2-H): APPROXIMATE LOCATION OF WE ENERGIES GAS MAIN CROSSING.

FURTHER ANALYSIS RECOMMENDED (1-2-I): THE PROPOSED US 41 SB OVER MAIN STREET BRIDGE WILL BE WIDER THAN EXISTING CONDITIONS AND WILL ENCROACH INTO THE NON-GRAVE PART OF THE ST. MARGARET'S CEMETERY. THE EXPANSION DESIGN CONCEPT SHOWS RIGHT-OF-WAY ACQUISITION REQUIRED. THE FUTURE NEPA STUDY WILL NEED TO EVALUATE OTHER ALTERNATIVES. SOME ALTERNATIVES FOR EVALUATION ARE:

(1) MOVE US 41 MAINLINE ALIGNMENT TO THE EAST: THIS ALTERNATIVE WILL REDUCE IMPACTS TO THE CEMETERY BUT WILL INCREASE IMPACTS TO EAST SIDE BUSINESS PROPERTIES.
(2) REMOVE THE US 41 OFF-RAMP TO OAKRIDGE ROAD/MAIN STREET: THIS ALTERNATIVE WILL IMPACT US 41 AND LOCAL TRAFFIC OPERATIONS.
(3) MOVE THE US 41 OFF RAMP TO OAKRIDGE ROAD/MAIN STREET TO THE SOUTH: THIS ALTERNATIVE WILL IMPACT THE CHURCH LOCATED TO THE SOUTHWEST SIDE OF THE INTERCHANGE.

US 41 SB OFF RAMP
OAKRIDGE RD
ST. MARGARET'S CEMETERY
CTH O / NORTH ST
ST. MARGARET'S CEMETERY
GLENVIEW DR
UTILITIES (1-2-H)
UTILITIES (1-2-G)
UTILITIES (1-2-F)
B-70-125
RECONSTRUCT
PROPOSED US 41
B-70-127
REHABILITATE
US 41 SB
US 41 NB
US 41 SB
US 41 NB
B-70-126
RECONSTRUCT
B-70-128
REHABILITATE
RIDGEWAY RD
ST. PATRICK'S CEMETERY
US 41 NB OFF RAMP
MATCHLINE
MAIN ST
NORTH ST
EXISTING RIGHT OF WAY
MATCHLINE
N. GREEN BAY RD
CHAPMAN AVE
DENHARDT AVE

LEGEND

- APPROXIMATE UTILITY CROSSING
- EXISTING ROW
- PROPOSED ROW
- EXISTING ROADWAYS
- PROPOSED LOCAL ROADS
- PROPOSED US 41
- PROPOSED STRUCTURE
- PROPOSED CONCRETE BARRIER
- PROPOSED LOCAL SIDEWALK
- ROADWAY OBLITERATION
- PROPOSED NOISE WALL

WISCONSIN DEPARTMENT OF TRANSPORTATION

0 100' 200'

N

PROJECT NO: 1130-31-00	HWY: US 41	COUNTY: WINNEBAGO	EXHIBIT 1-6: US 41 SEGMENT 1 / SECTION 2 / SHEET 3	PAGE I-17	E

FILE NAME : J:\44386\t1\Short Term Solutions\Amendment "5\CDS\0224_PO.dgn PLOT DATE : 12/19/2013 PLOT BY : lzidek PLOT NAME : PLOT SCALE : 200:1

Section 3: Oakridge Road/Main Street to County II (Winchester Road)

US 41 Alignment

This section of US 41 mainline from Oakridge Road/Main Street to County II is on the existing alignment.

US 41 Typical Section

The mainline typical section north of Oakridge Road/Main Street on-ramp for US 41 NB mainline consists of a 36.5-foot median (14' inside shoulders with 56-inch single face barriers). The NB mainline has four (4) 12-foot lanes and the SB mainline has five (5) 12-foot lanes, including one auxiliary lane. Both NB and SB mainline have 12-foot outside shoulders with 42-inch single face barrier or retaining walls for portions of the section with tight right-of-way constraints.

US 41 Ramps and Auxiliary Lanes

Review all exit ramp configurations for single or dual lane needs.

Refer to Exhibit 1-7 (page 1-20) for further information on parallel ramp and auxiliary lane configuration (1-3-A and 1-3-B).

Frontage Roads

Refer to Exhibit 1-7 (page 1-20) for further discussion on frontage road Ridgeway Road and its relevance to adjacent cemetery (1-3-C).

Addressing Geometric Deficiencies

All geometric deficiencies are anticipated to be corrected within the long-term improvement expansion concept. Refer to Exhibit 1-8 (page 1-21) for discussion on deficient superelevation (1-3-D).

Right-of-Way Impacts

Refer to Exhibit 1-8 (page 1-21) for Habitat for Humanity houses that are being constructed along the SB exit ramp to County II (1-3-L). Also the Prolamina building in the southeast quadrant of County II and Green Bay Road (1-3-M).

See further analysis recommendations below.

Utilities

The following utilities are shown on Exhibit 1-7 (page 1-20):

- Time Warner has buried cable crossing US 41 along the north side of Main Street (1-3-E).
- WE Energies has three (3) overhead electric crossings at North Street /County O (1-3-F).
- WE Energies has a buried gas crossing at Main Street (1-3-G):

The following utilities are shown on Exhibit 1-8 (page 1-21):

- The Town of Menasha has facilities crossing under US 41 for 16-inch water and 18-inch sanitary at Viola Street (1-3-H).
- WE Energies has two (2) overhead electric crossings along the south side of County II (1-3-I).
- WE Energies has two (2) buried gas crossings along the south side of County II (1-3-J).

Further Analysis Recommendations

Refer to Exhibit 1-8 (page 1-21) for discussion on additional alternatives in lieu of right of way acquisition near side roads Viola Street and Glenview Drive (item 1-3-K), Habitat for Humanity houses (item 1-3-L) and the Prolamina property (item 1-3-M).

DRAFT

US 41 RAMPS AND AUXILIARY LANES (1-3-A): ON US 41 NB, THE AUXILIARY LANE FROM WIS 114 TO OAKRIDGE ROAD/MAIN STREET OFF-RAMP TERMINATES JUST NORTH OF THE OAKRIDGE ROAD/MAIN STREET BRIDGES. THE US 41 NB OFF-RAMP TO COUNTY II IS A TAPERED CONFIGURATION.

US 41 RAMPS AND AUXILIARY LANES (1-3-B): A MAINLINE 41 SB AUXILIARY LANE STARTS AT THE COUNTY II ON-RAMP AND TERMINATES APPROXIMATELY 1100-FEET PAST OAKRIDGE ROAD/MAIN STREET. IN ADDITION, A 600-FOOT PARALLEL OFF-RAMP TO OAKRIDGE ROAD/MAIN STREET IS PROVIDED FOR THE LOW SPEED RAMP CONDITION (40 MPH DESIGN SPEED, 35 MPH POSTED).

FRONTAGE ROADS (1-3-C): RIDGEWAY ROAD IS A NARROW TWO-WAY FRONTAGE ROAD ALONG THE EAST SIDE OF US 41 JUST NORTH OF CTH O/NORTH STREET. THIS ROADWAY PROVIDES ACCESS TO SEVERAL BUSINESSES AND ST. PATRICK'S CEMETERY.

UTILITIES (1-3-E): APPROXIMATE LOCATION OF TIME WARNER BURIED CABLE NORTH OF MAIN STREET.

UTILITIES (1-3-F): APPROXIMATE LOCATION OF WE ENERGIES OVERHEAD UTILITY CROSSING.

UTILITIES (1-3-G): APPROXIMATE LOCATION OF WE ENERGIES GAS MAIN.

US 41 SB OFF RAMP
MAIN ST
UTILITIES (1-3-G)
UTILITIES (1-3-E)
B-70-125
RECONSTRUCT
ST. MARGARET'S CEMETERY
PROPOSED US 41
CTH O / NORTH ST
ST. MARGARET'S CEMETERY
GLENVIEW DR
B-70-127
REHABILITATE
1-3-B
US 41 SB
US 41 NB
US 41 SB
US 41 NB
1-3-A
US 41 NB OFF RAMP
B-70-126
RECONSTRUCT
B-70-128
REHABILITATE
RIDGEWAY RD
ST. PATRICK'S CEMETERY
NORTH ST
UTILITIES (1-3-F)
MATCHLINE
MAIN ST
EXISTING RIGHT OF WAY
N. GREEN BAY RD
MATCHLINE
CHAPMAN AVE
DENHARDT AVE

LEGEND

- APPROXIMATE UTILITY CROSSING
- EXISTING ROW
- PROPOSED ROW
- EXISTING ROADWAYS
- PROPOSED LOCAL ROADS
- PROPOSED US 41
- PROPOSED STRUCTURE
- PROPOSED CONCRETE BARRIER
- PROPOSED LOCAL SIDEWALK
- ROADWAY OBLITERATION
- PROPOSED NOISE WALL

WISCONSIN DEPARTMENT OF TRANSPORTATION

0 100' 200'

N

PROJECT NO: 1130-31-00	HWY: US 41	COUNTY: WINNEBAGO	EXHIBIT 1-7: US 41 SEGMENT 1 / SECTION 3 / SHEET 1	PAGE I-20	E

FILE NAME : J:\44386\t1\Short Term Solutions\Amendment "5\CDS\0224A_PO.dgn PLOT DATE : 4/30/2013 PLOT BY : Jgallamore PLOT NAME : PLOT SCALE : 200:1

DRAFT

2

2

ADDRESSING GEOMETRIC DEFICIENCIES (1-3-D): DEFICIENT SUPERELEVATION FOR US 41 MAINLINE (MM 132.6) WILL BE CORRECTED DURING RECONSTRUCTION.

UTILITIES (1-3-H): APPROXIMATE LOCATION OF TOWN OF MENASHA 16-INCH WATER LINE AND 18-INCH SANITARY SEWER LINE AT VIOLA STREET CROSSING.

UTILITIES (1-3-I): APPROXIMATE LOCATION OF WE ENERGIES OVERHEAD UTILITY CROSSING (2 LINES).

UTILITIES (1-3-J): APPROXIMATE LOCATION OF WE ENERGIES BURIED GAS CROSSING SOUTH OF COUNTY II (2 LINES).

RIGHT OF WAY IMPACTS (1-3-L): HABITAT FOR HUMANITY HOUSING CURRENTLY UNDER CONSTRUCTION.

RIGHT OF WAY IMPACTS (1-3-M): POTENTIAL IMPACT TO PROLAMINA PROPERTY.

SPRING ROAD DR
GLENVIEW DR
VIOLA ST
CTH II
BURNETTE ST
KLUCK ST
DAWN ST
KUEHN CT
1-3-L
UTILITIES (1-3-I)
UTILITIES (1-3-J)
PROPOSED US 41
US 41SB ON RAMP
1-3-K
US 41SB
US 41NB
US 41NB OFF RAMP
US 41SB OFF RAMP
B-70-129
RECONSTRUCT
MATCHLINE
UTILITIES (1-3-H)
EXISTING RIGHT OF WAY
ST. PATRICK'S CEMETERY
MATCHLINE
N. GREEN BAY RD
US 41NB ON RAMP
B-70-130
RECONSTRUCT
GEOMETRIC DEFICIENCY (1-3-D):
DEFICIENT SUPERELEVATION
ACTUAL 3.0%
DESIRED 3.4%
1-3-M
N. GREEN BAY RD
EHLERS RD
CANDIAN NATIONAL RR
WINCHESTER RD

FURTHER ANALYSIS RECOMMENDED (1-3-K): THE EXISTING RIGHT-OF-WAY ALONG US 41 SB NORTH OF CTH O/NORTH STREET NEAR GLENVIEW DRIVE AND VIOLA STREET IS SHOWN APPROXIMATELY 90 FEET FROM THE US 41 MAINLINE CENTERLINE. THE NEW US 41 MAINLINE SECTION WILL BE WIDER THAN EXISTING AND WILL ENCROACH OVER THIS RIGHT-OF-WAY LINE. WITHIN THE EXPANSION DESIGN CONCEPT, AN ADDITIONAL 80 FEET IS SHOWN FOR FUTURE US 41 RIGHT-OF-WAY ACQUISITION TO ACCOMMODATE THESE NEEDS. THE FUTURE NEPA STUDY WILL NEED TO EVALUATE OTHER ALTERNATIVES. SOME ALTERNATIVES FOR EVALUATION ARE:

(1) USE RETAINING WALLS TO MINIMIZE RIGHT-OF-WAY IMPACTS: THIS ALTERNATIVE WILL REDUCE IMPACTS TO RIGHT-OF-WAY BUT WILL INCREASE PROJECT COSTS.

(2) MOVE US 41 MAINLINE ALIGNMENT TO THE EAST: THIS ALTERNATIVE WILL MINIMIZE IMPACTS TO THE WEST SIDE RESIDENTIAL PROPERTIES BUT INCREASE IMPACTS TO A COMMERCIAL PROPERTY AND ST. PATRICK'S CEMETERY.

LEGEND

- APPROXIMATE UTILITY CROSSING
- EXISTING ROW
- PROPOSED ROW
- EXISTING ROADWAYS
- PROPOSED LOCAL ROADS
- PROPOSED US 41
- PROPOSED STRUCTURE
- PROPOSED CONCRETE BARRIER
- PROPOSED LOCAL SIDEWALK
- ROADWAY OBLITERATION
- PROPOSED NOISE WALL

WISCONSIN DEPARTMENT OF TRANSPORTATION

0 100' 200'

N

PROJECT NO: 1130-31-00	HWY: US 41	COUNTY: WINNEBAGO	EXHIBIT 1-8: US 41 SEGMENT 1 / SECTION 3 / SHEET 2	PAGE 1-21	E

FILE NAME : J:\44386\t1\Short Term Solutions\Amendment #5\CDS\0224B_P0.dgn PLOT DATE : 12/19/2013 PLOT BY : lzidek PLOT NAME : PLOT SCALE : 200:1

Section 4: County II (Winchester Road) to US 10/WIS 441

US 41 Alignment

The section of US 41 begins at County II and ends at US 10 WB over US 41 structure.

US 41 alignment was shifted to the east to correct the deficient horizontal curve on US 41 at Green Bay Road. See Exhibit 1-9 (page 1-27) for further discussion on substandard horizontal curve correction (1-4-A). Also refer to addressing geometric deficiencies on same exhibit (1-4-J).

Refer to Exhibit 1-11 (page 1-29) for discussion on US 41 mainline alignment at Jacobsen Road Bridge and US 10 EB ramp to US 41 NB on-ramp alignment adjustments at tie-in (1-4-B and 1-4-C respectively).

US 41 Typical Section

The mainline typical section north of County II consists of a 36.5-foot median (14-foot inside shoulders with 56-inch single face barriers) through the Jacobsen Road overpass. The US 10/WIS 441 system interchange area of influence extends from the County II interchange through the system interchange to south of CTH BB, refer to Figure 1-3 (page 1-26).

Several retaining walls will be constructed during the WIS 441 Tri-County Freeway Project as part of the reconstruction of the US 41 and US 10/WIS 441 System Interchange. Refer to Exhibit 1-10 (page 1-28) for further discussion on impacts to fill retaining walls (1-4-D and 1-4-F) and cut retaining walls (1-4-E).

The US 41 mainline median widens to accommodate the US 41 and US 10/WIS 441 System Interchange ramp flyover piers. Refer to Exhibit 1-11 (page 1-29) for discussion on median transitions (1-4-G).

The SB mainline south of US 10 EB transitions from four (4) 12-foot lanes to three (3) 12-foot lanes just to the north of the on-ramp from US 10/WIS 441 to US 41 SB. With the addition of the three lane on-ramp, the six (6) 12-foot lanes section transitions to five (5) 12-foot lanes with the outside lane remaining as an auxiliary lane down to County II. Both NB and SB mainline have 12-foot outside shoulders with 42-inch single face barrier or retaining walls for portions of the section with tight right-of-way constraints.

Figure 1-2: US 10/WIS 441/US 41 Interchange Transition to CTH II Interchange

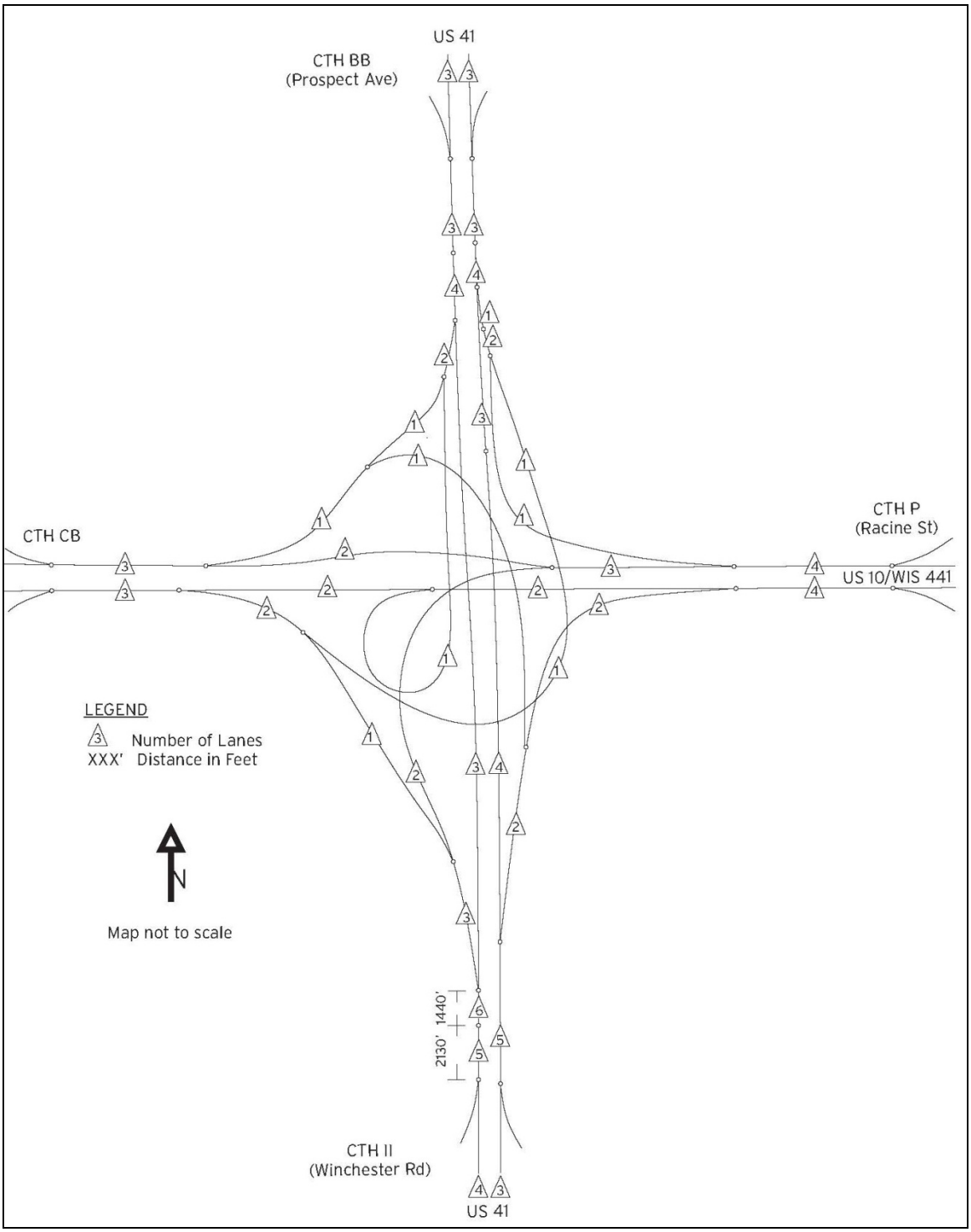

US 41 Ramps and Auxiliary Lanes

Review all exit ramp configurations for single or dual lane needs.

Refer to Exhibit 1-9 (page 1-27) for discussion on US 41 ramp realignments at the County II Interchange and resulting impacts to adjacent parking lots (1-4-H and 1-4-I).

The ramping configurations through the County II to US 10 section are integral to the US 10/WIS 441 system interchange, as shown in Figure 1-2 (page 1-23).

The US 41 NB parallel on-ramp at County II is a 2-lane ramp that transitions into one NB auxiliary lane approximately 1100' north of the entrance. The US 41 NB off-ramp to US 10/WIS 441 is a 2-lane tapered ramp with the inside lane as a choice lane to the off-ramp or auxiliary lane. The US 41 NB auxiliary lane terminates just north of the off-ramp.

The US 41 SB auxiliary lane terminates 1000' north of Jacobsen Road over US 41 transitioning from a 4-lane section to 3-lane section. At US 10/WIS 441, an additional 3-lane on-ramp to US 41 SB creates a 6-lane section. One US 10/WIS 441 on-ramp lane merges into US 41 SB transitioning to a 5-lane section including an auxiliary lane that continues to County II then transitioning to a 4-lane section. The US 41 SB off-ramp to County II is a 2-lane tapered ramp with the inside lane as a choice lane to the off-ramp or continued fourth SB lane.

Frontage Roads

American Drive and Ehlers Road are two tightly spaced frontage roads along US 41 that service many commercial and industry businesses. Both frontage roads start at North Green Bay Road and continue northward to Jacobsen Road.

Addressing Geometric Deficiencies

All geometric deficiencies are anticipated to be corrected within the long-term improvement expansion concept. Refer to Exhibit 1-9 through Exhibit 1-11 (pages 1-26 through 1-29) for discussion on deficient horizontal curve and deficient superelevation (1-4-J).

Right-of-Way Impacts

Right-of-way impacts are anticipated along mainline US 41 specifically at frontage road locations and the expansion design concept shows acquisition for these locations.

Refer to Exhibit 1-9 (page 1-27) for discussion of right of way impacts to adjacent business parking lots due to County II Interchange ramp realignment (1-4-K).

Refer to Exhibit 1-10 (page 1-28) for discussion of right of way impacts along US 41 NB and SB mainline for retaining wall construction and drainage maintenance area (1-4-L).

Refer to Exhibit 1-11 (page 1-29) for additional right of way required for new mainline embankment side slopes and drainage area (1-4-M).

Utilities

The following utilities are shown on Exhibit 1-9 (page 1-27):

- The Town of Menasha has a 16-inch water utility crossing under US 41 at County II (1-4-N).
- TDS Metrocom has a buried fiber optic crossing US 41 along the south side of Green Bay Road (1-4-O).
- Time Warner has a buried cable utility crossing US 41 approximately 100 feet north of County II (1-4-P).

The following utilities are shown on Exhibit 1-10 (page 1-28):

- The Town of Menasha has a 16-inch water utility crossing under US 41 approximately 600 feet north of Wheeler Road (1-4-Q).
- WE Energies has an overhead electric crossing at Haase Court/Wheeler Road (1-4-R).

The following utilities are shown on Exhibit 1-11 (page 1-29):

- WE Energies has three (3) overhead electric crossings approximately 1550 feet north of Wheeler Road (1-4-S)

Further Analysis Recommendations

See Exhibit 1-10 (page 1-28) for further discussion on additional alternatives associated with correcting the deficient US 41 mainline horizontal curve at American Drive (1-4-T).

Refer to Exhibit 1-11 (page 1-29) for discussion on coordination with WIS 441 Tri-County Freeway Project's US 41 NB and SB mainline reconstruction (1-4-U).

2

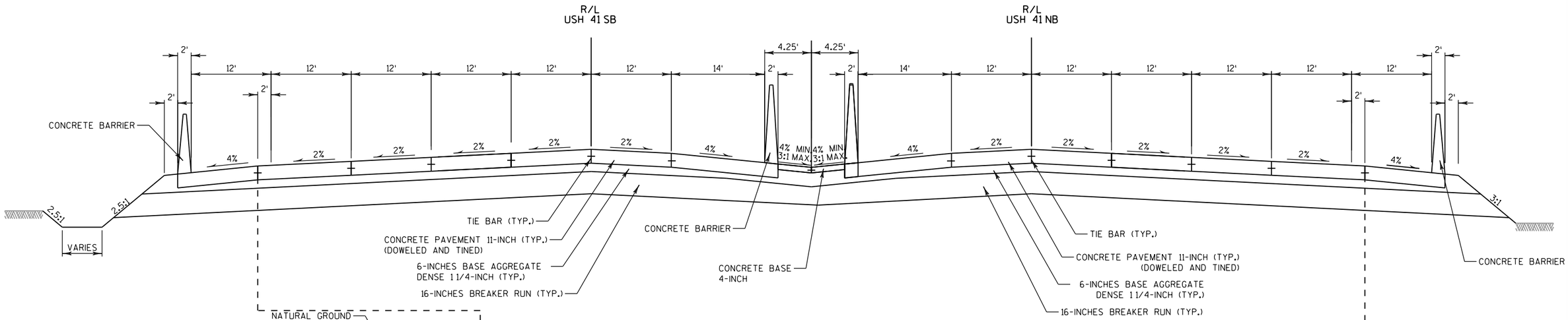

DESIRABLE PROPOSED TYPICAL SECTION

USH 41
CTH II TO JACOBSEN RD

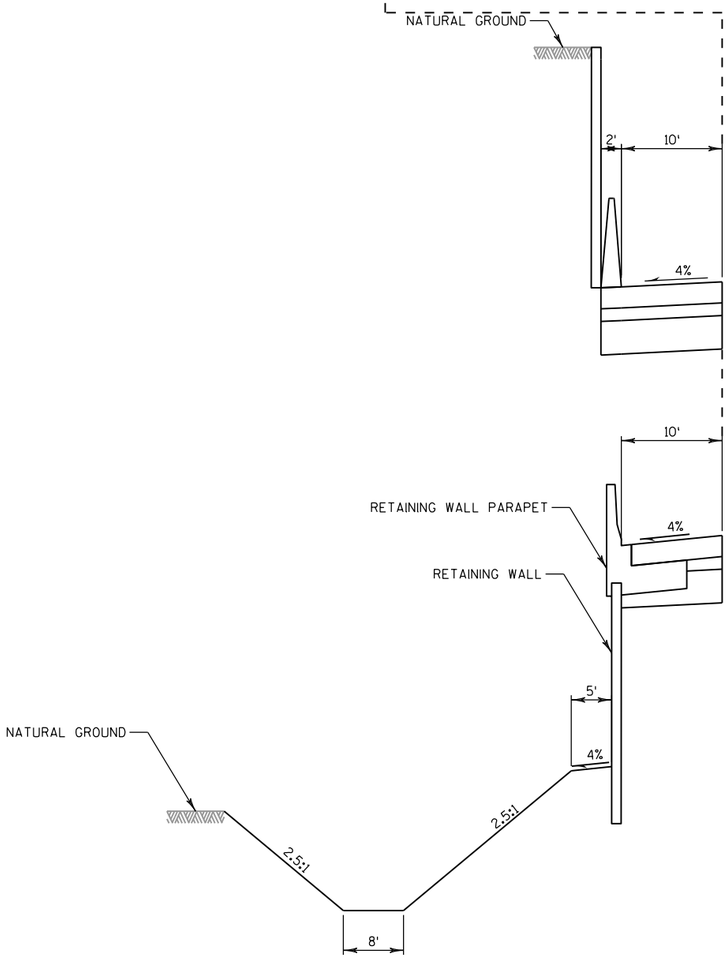

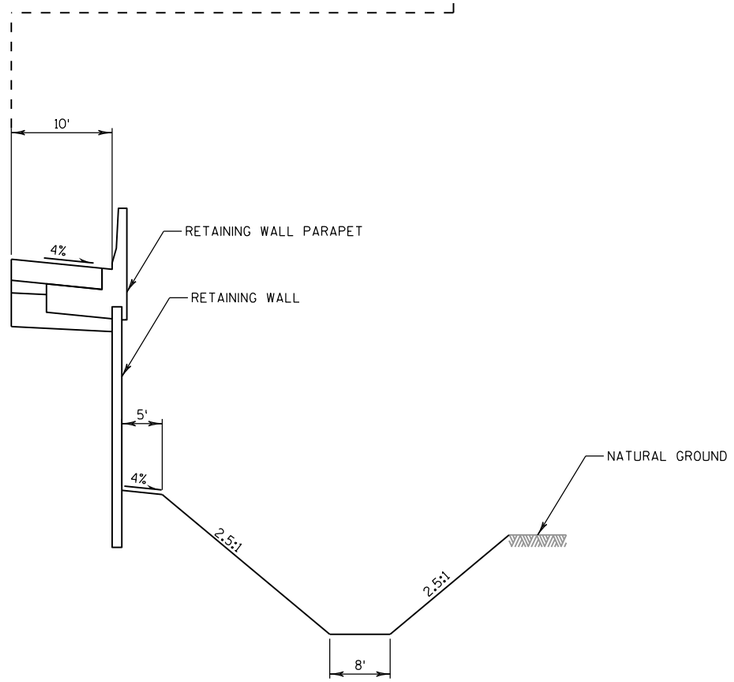

PROJECT NO: 1517-75-71	HWY: USH 41	COUNTY: WINNEBAGO	FIGURE 1-3: US 41 (CTH II TO JACOBSEN RD) DESIRABLE PROPOSED SECTION	PAGE 1-26	E

FILE NAME : \\madw00\ingrproj\44386\t1\Short Term Solutions\Amendment "5\TYICAL SECTIONS2.dgn PLOT DATE : 3/12/2014 3:32:21 PM PLOT BY : lzidek PLOT NAME : $FILE$ PLOT SCALE : 15:1

DRAFT

US 41 ALIGNMENT (1-4-A): THE US 41 MAINLINE SUBSTANDARD HORIZONTAL CURVE LOCATED NEAR NORTH GREEN BAY ROAD HAS A RADIUS OF 1763 FT. AND A MINIMUM DESIRED RADIUS OF 2050 FT. THE EXPANSION DESIGN CONCEPT DRAWING SHOWS THE ALIGNMENT MODIFIED TO MEET THE MINIMUM DESIRED RADIUS. THIS SHIFTS THE US 41 MAINLINE ALIGNMENT OVER 10 FT. TO THE EAST IN ADDITION TO THE REQUIRED WIDENING. THIS ENCROACHES FURTHER ON THE COMMERCIAL PROPERTY TO THE EAST. THE EXHIBITS SHOW ADDITIONAL RIGHT-OF-WAY REQUIRED IN THIS LOCATION.

US 41 RAMPS AND AUXILIARY LANES (1-4-H): THE DUAL US 41 NB ON-RAMP IS SHOWN RELOCATED TO ACCOMMODATE THE US 41 RAMP TERMINAL ROUNDABOUT INTERSECTION CONFIGURATION. THIS RAMP RELOCATION IMPACTS THE ADJACENT PARKING LOT BETWEEN THE RAMP AND FRONTAGE ROAD.

US 41 RAMPS AND AUXILIARY LANES (1-4-I): THE DUAL US 41 SB OFF-RAMP IS SHOWN RELOCATED TO ACCOMMODATE THE US 41 SB RAMP TERMINAL ROUNDABOUT INTERSECTION CONFIGURATION. THIS RAMP RELOCATION IMPACTS THE ADJACENT PARKING LOT. A RETAINING WALL ALONG THE RAMP WILL BE NEEDED TO MINIMIZE FURTHER IMPACTS TO THE COMMERCIAL BUILDING LOADING RAMP USE AND PARKING LOT CIRCULATION.

ADDRESSING GEOMETRIC DEFICIENCIES (1-4-J): DEFICIENT HORIZONTAL CURVE AND SUPERELEVATION (MM 133.0 AND 133.1) AND DEFICIENT VERTICAL GRADE (MM 134.1) FOR US 41 MAINLINE WILL BE CORRECTED DURING RECONSTRUCTION.

SPRING ROAD DR
GLENVIEW DR
VIOLA ST
PROPOSED US 41
US 41 SB ON RAMP
US 41 SB
US 41 NB
US 41 NB OFF RAMP
EXISTING RIGHT OF WAY
ST. PATRICK'S CEMETERY
MATCHLINE
N. GREEN BAY RD
CTH II
BURNETTE ST
KLUCK ST
DAWN ST
KUEHN CT
UTILITIES (1-4-N)
B-70-129
RECONSTRUCT
1-4-K
US 41 SB OFF RAMP
1-4-I
MATCHLINE
1-4-A
US 41 NB ON RAMP
1-4-H
B-70-130
RECONSTRUCT
UTILITIES (1-4-O)
UTILITIES (1-4-P)
1-4-K
N. GREEN BAY RD
GEOMETRIC DEFICIENCIES (1-4-J):
DEFICIENT HORIZONTAL CURVE
EXISTING RADIUS 1763 FT.
DESIRED MIN. RADIUS 2050 FT.
EHLERS RD
CANDIAN NATIONAL RR
WINCHESTER RD

LEGEND

- APPROXIMATE UTILITY CROSSING
- EXISTING ROW
- PROPOSED ROW
- EXISTING ROADWAYS
- PROPOSED LOCAL ROADS
- PROPOSED US 41
- PROPOSED STRUCTURE
- PROPOSED CONCRETE BARRIER
- PROPOSED LOCAL SIDEWALK
- ROADWAY OBLITERATION
- PROPOSED NOISE WALL

WISCONSIN DEPARTMENT OF TRANSPORTATION

0 100' 200'

N

RIGHT OF WAY IMPACTS (1-4-K): MOSTLY STRIP ACQUISITIONS ARE NEEDED AT THE COUNTY II INTERCHANGE. THE MOST SIGNIFICANT RIGHT OF WAY IMPACTS ARE LOCATED AT THE US 41 SB OFF-RAMP AND US 41 NB-ON RAMP ADJACENT PARKING LOT LOCATIONS. JUST SOUTH OF THE US 41 NB BRIDGE OVER GREEN BAY ROAD, ADDITIONAL RIGHT OF WAY IS NEEDED FOR WIDENED SIDE SLOPES DUE TO WIDER PAVEMENT SECTION AND ADJUSTED HORIZONTAL CURVE GEOMETRY.

UTILITIES (1-4-N): APPROXIMATE LOCATION OF TOWN OF MENASHA 16-INCH WATER MAIN CROSSING ALONG COUNTY II.

UTILITIES (1-4-O): APPROXIMATE LOCATION OF TDS METROCOM BURIED FIBER OPTIC CROSSING OF US 41 ALONG THE SOUTH SIDE OF GREEN BAY ROAD.

UTILITIES (1-4-P): LOCATION OF TIME WARNER BURIED CABLE CROSSING OF US 41 APPROXIMATELY 100 FEET NORTH OF COUNTY II.

PROJECT NO: 1130-31-00	HWY: US 41	COUNTY: WINNEBAGO	EXHIBIT 1-9: US 41 SEGMENT 1 / SECTION 4 / SHEET 1	PAGE 1-27	E

FILE NAME : \\madw00\ingrproj\44386\t1\Short Term Solutions\Amendment "5\CDS\0225_P0.dgn PLOT DATE : 6/10/2013 PLOT BY : arosemeyer PLOT NAME : PLOT SCALE : 200:1

US 41 TYPICAL SECTION (1-4-D): BY 2019, THE 441 MAJORS RECONSTRUCTION PROJECT WILL ADD ADDITIONAL SOUTHBOUND LANES TO TIE IN THE 10/441 INTERCHANGE SOUTHBOUND MOVEMENT. AMERICAN DRIVE, THE ADJACENT WEST SIDE FRONTAGE ROAD, WILL BE RECONSTRUCTED FURTHER TO THE WEST TO ACCOMMODATE THE WIDENING. BETWEEN US 41 AND AMERICAN DRIVE, A FILL RETAINING WALL WILL BE CONSTRUCTED ALONG THE US 41 SOUTHBOUND OUTSIDE SHOULDER DURING THE 441 MAJORS PROJECT. THIS EXHIBIT SHOWS AMERICAN DRIVE IN THE RECONSTRUCTED LOCATION. THE FILL RETAINING WALL IS CONSERVATIVELY SHOWN TO BE RECONSTRUCTED TO ACCOMMODATE THE FUTURE US 41 RECONSTRUCTION WIDER TYPICAL SECTION, SPECIFICALLY A WIDER MEDIAN.

US 41 TYPICAL SECTION (1-4-E): SIMILAR TO 1-4-D ABOVE, A CUT RETAINING WALL ALONG THE US 41 SOUTHBOUND OUTSIDE SHOULDER WILL BE CONSTRUCTED DURING THE WIS 441 MAJORS RECONSTRUCTION PROJECT. THE WALL RETAINS A PORTION OF THE AMERICAN DRIVE FRONTAGE ROAD. A NEW CUT RETAINING WALL AND BARRIER ALONG US 41 IS CONSERVATIVELY SHOWN TO BE RECONSTRUCTED TO ACCOMMODATE THE FUTURE US 41 WIDER TYPICAL SECTION.

US 41 TYPICAL SECTION (1-4-F): SIMILAR TO BOTH 1-4-D AND 1-4-E ABOVE, A FILL RETAINING WALL ALONG THE US 41 NORTHBOUND OUTSIDE SHOULDER IS TO BE CONSTRUCTED DURING THE WIS 441 MAJORS RECONSTRUCTION PROJECT. THE WALL IS VERY CLOSE TO THE PROPERTY LINE FOR THE CONWAY FREIGHT PARCEL. A NEW RETAINING WALL WITH BARRIER ALONG US 41 IS CONSERVATIVELY SHOWN TO BE RECONSTRUCTED TO ACCOMMODATE THE FUTURE US 41 WIDER TYPICAL SECTION. THE CONWAY FREIGHT PARKING LOT WILL LIKELY BE IMPACTED TO PURCHASE PERMANENT LIMITED EASEMENT IN FRONT OF THE RETAINING WALL FOR MAINTENANCE NEEDS.

ADDRESSING GEOMETRIC DEFICIENCIES (1-4-J): DEFICIENT HORIZONTAL CURVE AND SUPERELEVATION (MM 133.0 AND 133.1) AND DEFICIENT VERTICAL GRADE (MM 134.1) IS SHOWN AS RECONSTRUCTED TO CURRENT STANDARDS WITHIN THESE EXHIBITS.

LEGEND

- APPROXIMATE UTILITY CROSSING
- EXISTING ROW
- PROPOSED ROW
- EXISTING ROADWAYS
- PROPOSED LOCAL ROADS
- PROPOSED US 41
- PROPOSED STRUCTURE
- PROPOSED CONCRETE BARRIER
- PROPOSED LOCAL SIDEWALK
- ROADWAY OBLITERATION
- PROPOSED NOISE WALL

WISCONSIN DEPARTMENT OF TRANSPORTATION

0 100' 200'

DRAFT

RIGHT OF WAY IMPACTS (1-4-L): JUST NORTH OF NORTH GREEN BAY ROAD ALONG US 41 NB AND SB MAINLINE, ADDITIONAL RIGHT-OF-WAY WILL BE NEEDED TO CONSTRUCT PROPOSED RETAINING WALLS AND MAINTAIN DRAINAGE IN FRONT OF THE WALLS.

UTILITIES (1-4-Q): LOCATION OF TOWN OF MENASHA 16-INCH WATER MAIN CROSSING IS APPROXIMATELY 600-FEET NORTH OF WHEELER ROAD.

UTILITIES (1-4-R): APPROXIMATE LOCATION OF WE ENERGIES OVERHEAD ELECTRIC CROSSING AT HAASE COURT AND WHEELER ROAD.

N. GREEN BAY RD
KUEHN CT
COLD SPRING RD
COURT
STROHMEYER
WHEELER RD
JAMESON ST
MATCHLINE
B-70-131
RECONSTRUCT
1-4-L
1-4-T
EXISTING RIGHT OF WAY
AMERICAN DR
PROPOSED US 41
UTILITIES (1-4-Q)
1-4-D
US 41SB
US 41NB
TYPICAL SECTION (SEE FIGURE 1-3)
MATCHLINE
1-4-E
CANDIAN NATIONAL RR
B-70-132
RECONSTRUCT
GEOMETRIC DEFICIENCY (1-4-J):
DEFICIENT SUPERELEVATION
FOR HORIZONTAL CURVE RADIUS
GEOMETRIC DEFICIENCY (1-4-J):
DEFICIENT HORIZONTAL CURVE
EXISTING RADIUS 1763'
DESIRED MIN. RADIUS 2050'
UTILITIES (1-4-R)
1-4-F
EHLERS RD
HAASE ST

FURTHER ANALYSIS RECOMMENDATIONS (1-4-T): THE FUTURE NEPA STUDY WILL NEED TO EVALUATE OTHER ALTERNATIVES FOR THE US 41 MAINLINE HORIZONTAL CURVE IMPROVEMENTS LOCATED AT NORTH GREEN BAY ROAD THAT CAN MINIMIZE IMPACTS ALONG THE EAST SIDE. ONE ALTERNATIVE FOR EVALUATION IS TO SHIFT THE HORIZONTAL CURVE TO THE SOUTH BY MOVING THE PC AND PT FURTHER SOUTH WHICH INFLUENCES THE TANGENT SECTION ADJACENT TO AMERICAN DRIVE.

PROJECT NO: 1130-31-00	HWY: US 41	COUNTY: WINNEBAGO	EXHIBIT 1-10: US 41 SEGMENT 1 / SECTION 4 / SHEET 2	PAGE 1-28	E

DRAFT

LEGEND

- APPROXIMATE UTILITY CROSSING
- EXISTING ROW
- PROPOSED ROW
- EXISTING ROADWAYS
- PROPOSED LOCAL ROADS
- PROPOSED US 41
- PROPOSED STRUCTURE
- PROPOSED CONCRETE BARRIER
- PROPOSED LOCAL SIDEWALK
- ROADWAY OBLITERATION
- PROPOSED NOISE WALL

WISCONSIN DEPARTMENT OF TRANSPORTATION

0 100' 200'

US 41 ALIGNMENT (1-4-B): THE SECTION OF US 41 NB MAINLINE AROUND JACOBSEN ROAD BRIDGE OVER US 41 WILL BE SHIFTED TOWARDS THE MEDIAN TO MATCH THE NB OUTSIDE SHOULDER RETAINING WALL CONSTRUCTED DURING THE WIS 441 MAJORS RECONSTRUCTION PROJECT WHILE MAINTAINING THE REQUIRED US 41 MAINLINE EXPANSION TYPICAL SECTION.

US 41 ALIGNMENT (1-4-C): THE US 10 EB OFF-RAMP TO US 41 NB ON-RAMP ALIGNMENT WILL NEED TO BE ADJUSTED TO TRANSITION INTO THE US 41 SB MAINLINE PROPOSED TYPICAL SECTION.

US 41 TYPICAL SECTION (1-4-G): ALONG US 41 JUST NORTH OF JACOBSEN ROAD, THE US 41 MEDIAN WIDENS FROM 36.5 FEET TO APPROXIMATELY 48 FEET TO ACCOMMODATE SYSTEM INTERCHANGE FLYOVER RAMP PIERS WITHIN THE MEDIAN AREA. ONCE PAST THE US 10 EB TO US 41 NB RAMP, THE US 41 NB MAINLINE REDUCES FROM FOUR 12-FOOT LANES TO THREE 12 FOOT LANES JUST SOUTH OF US 10 EB TO ACCOMMODATE THE WIS 441 SB TO US 41 SB FLYOVER RAMP PIER LOCATIONS.

ADDRESSING GEOMETRIC DEFICIENCIES (1-4-J): DEFICIENT HORIZONTAL CURVE AND SUPERELEVATION (MM 133.0 AND 133.1) AND DEFICIENT VERTICAL GRADE (MM 134.1) FOR US 41 MAINLINE WILL BE CORRECTED DURING RECONSTRUCTION.

ADDRESSING GEOMETRIC DEFICIENCIES (1-4-J): APPROXIMATE LOCATION OF DEFICIENT VERTICAL GRADE
ACTUAL = 0.10%
DESIRED = 0.50%
MINIMUM = 0.30%

RIGHT OF WAY IMPACTS (1-4-M): THE LOCATIONS ADJACENT TO US 41 SB BETWEEN AMERICAN DRIVE AND JACOBSEN ROAD AND US 41 NB JUST NORTH OF JACOBSEN ROAD ARE NEEDED FOR NEW MAINLINE AND RAMP EMBANKMENT SIDE SLOPES AND DRAINAGE AREAS.

UTILITIES (1-4-S): APPROXIMATE LOCATION OF WE ENERGIES OVERHEAD ELECTRIC CROSSINGS FOR US 41 (3 LINES).

FURTHER ANALYSIS RECOMMENDATIONS (1-4-U): THE WIS 441 MAJORS RECONSTRUCTION PROJECT IS RECONSTRUCTING APPROXIMATELY 1100 FEET OF NORTHBOUND AND SOUTHBOUND US 41 MAINLINE UNDERNEATH US 10 WITHIN THE INTERCHANGE CORE TO LOWER THE PROFILE GRADE AND PROVIDE THE REQUIRED VERTICAL CLEARANCES ALONG US 41. THE PLANNING STUDY ASSUMES THAT THIS AREA WILL BE RECONSTRUCTED TO MEET THE PROPOSED US 41 CROSS SECTION, ALTHOUGH FURTHER STUDY SHOULD BE PERFORMED TO DETERMINE IF THE FUTURE MAINLINE ALIGNMENTS CAN BE ADJUSTED TO SAVE THE RECENTLY CONSTRUCTED MAINLINE PAVEMENT.

JACOBSEN RD
AMERICAN DR
US 10 EB TO US 41 NB RAMP
USH 10
US 10 EB TO US 41 SB RAMP
US 10 EB TO US 41 SB FLYOVER RAMP
WIS 441 SB TO US 41 SB
MATCHLINE
MATCHLINE
1-4-M
1-4-C
1-4-G
1-4-B
1-4-M
1-4-U
1-4-G
1-4-J
1-4-U
US 41 SB
US 41 NB
US 41 NB TO US 10 FLYOVER RAMP
US 41 NB TO WIS 441 NB RAMP
PROPOSED US 41
EXISTING RIGHT OF WAY
UTILITIES (1-4-S)
B-70-210
REHABILITATE
EHLERS RD
EHLERS RD
JACOBSEN RD
CANADIAN NATIONAL RR

PROJECT NO: 1130-31-00	HWY: US 41	COUNTY: WINNEBAGO	EXHIBIT 1-11: US 41 SEGMENT 1 / SECTION 4 / SHEET 3	PAGE I-29	E

FILE NAME : \\madw00\ingrproj\44386\t1\Short Term Solutions\Amendment #5\CDS\0225B_PO.dgn PLOT DATE : 4/30/2013 PLOT BY : Jgallamore PLOT NAME : PLOT SCALE : 200:1

Section 5: US 10/WIS 441 to South of County BB

US 41 Alignment

The section of US 41 begins at US 10 WB over US 41 structure and ends south of County BB.

Refer to Exhibit 1-12 (page 1-33) to discuss US 41 NB and SB mainline alignment constraints with existing ramp retaining walls and bridge piers (1-5-A and 1-5-B).

US 41 Typical Section

The US 41 mainline median narrows after accommodating the US 41 and US 10/WIS 441 System Interchange ramp flyover piers. Refer to Exhibit 1-12 (page 1-33) for discussion on median transitions (1-5-C).

At the beginning of Section 5 (US 10/WIS 441 overpass), the US 41 mainline typical section consists of an approximate 48-foot median that transitions down to a 36.5-foot median (14-foot inside shoulders with 56-inch single face barriers) further to the north just prior to the system interchange ramp NB merge and SB diverge locations. At this location, the US 41 NB mainline section has three (3) 12-foot lanes just south of the US 10/WIS 441 on-ramp to US 41. The addition of the two-lane on-ramp creates a five (5) lane section that transitions down to four (4) lanes just north of Menasha Creek and continues all the way to just south of County BB. SB mainline consists mainly of four (4) 12-foot lanes from County BB to the US 10WIS 441 overpass except for on- and off-ramp additions (See US 41 Ramps and Auxiliary Lanes below). Both NB and SB mainline have 12-foot outside shoulders with 42-inch single face barrier or retaining walls for portions of the section with tight right-of-way constraints.

US 41 Ramps and Auxiliary Lanes

Review all exit ramp configurations for single or dual lane needs.

Refer to Exhibit 1-12 (page 1-33) for brief description of US 41 NB and SB system interchange ramps (1-5-D and 1-5-G respectively).

Refer to Exhibit 1-14 (page 1-35) for County BB Interchange southbound on-ramp realignments discussion (1-5-F).

Refer to Exhibit 1-15 (page 1-36) for County BB Interchange ramp realignments and adjacent frontage road reconstruction (1-5-E).

Frontage Roads

American Court, Holly Road and Northern Road are three tightly spaced frontage roads along US 41 that service many commercial and industry businesses. American Court and Holly Road are connected to Shady Lane on the west side of US 41 while Northern Road is along the east side.

These frontage roads are shown as needing reconstruction to accommodate the added US 41 mainline widening, barrier and retaining walls, and any required drainage improvements. A barrier or urban section with curb and gutter may be needed along these frontage roads depending upon lateral clearance and clear zone requirements. Complete street pedestrian and

bicycle accommodations should be evaluated based upon Trans 75 requirements. The frontage roads will be maintained as bi-directional two-lane roadways. The driveway access points to businesses will need to be reconstructed. If implemented, sidewalk additions may require strip takings but no relocations are anticipated.

Addressing Geometric Deficiencies

All geometric deficiencies are anticipated to be corrected within the long-term improvement expansion concept. Refer to Exhibit 1-13 (page 1-34) for discussion on deficient vertical grades (1-5-H). Refer to Exhibit 1-13 and Exhibit 1-14 (pages 1-34 and 1-35 respectively) for deficient superelevations (1-5-I).

Right-of-Way Impacts

See Exhibit 1-13 (page 1-34) for discussion on tight right of way constraints along US 41 SB off-ramp to US 10/WIS 441 (1-5-J).

Refer to Exhibit 1-14 (page 1-35) for right of way acquisition adjacent to commercial businesses along US 41 NB (1-5-K). Minor strip takings may be needed along frontage roads to implement sidewalk and driveway connections.

Refer to Exhibit 1-15 (page 1-36) for right of way acquisition and business relocation required along Northern Road at the County BB Interchange (1-5-L).

Utilities

During reconstruction of the US 41/US 10/WIS 441 interchange, some utilities will adjusted or relocated.

The following utilities are shown on Exhibit 1-12 (page 1-33):

- WE Energies has a buried gas crossing located approximately at Gas Road (1-5-M).
- WisDOT has a weather station located approximately 1150- feet north of USH 10/WIS 441 (1-5-N). The station is located along the southbound US 41 roadway, and may include sensors in the SB pavement.

The following utilities are shown on Exhibit 1-13 (page 1-34):

- The Town of Menasha has an 8-inch water line (north) and 48-inch sanitary sewer line (south) approximately 340 feet south of Shady Lane (1-5-O).
- WE Energies has two (2) overhead electric crossings at Shady Lane (1-5-P).
- WE Energies has a buried gas crossing located at Shady lane (1-5-Q).

The following utilities are shown on Exhibit 1-14 (page 1-35):

- American Transmission Company has a multiple circuit line crossing under US 41 located approximately 530-feet south of Stroebe Road (1-5-R).
- The Town of Menasha has a 2-inch water line and 12-inch sanitary sewer line (diagonal) crossing under US 41 at approximately 750 feet north of Fox Cities Drive (1-5-S).

- The Town of Menasha has a 10-inch water line and 6-inch sanitary sewer line crossing under US 41 at approximately Stroebe Road (1-5-T).
- WE Energies has an overhead electric crossing approximately 250-feet north of Fox Cities Drive (1-5-U).
- WE Energies has two (2) overhead electric crossings approximately 500-feet south of Stroebe Road (1-5-V).
- WE Energies has an overhead electric crossing (diagonal) approximately 70-feet south of Stroebe Road (1-5-W).
- WE Energies has buried electric approximately 500-feet south of Stroebe Road (1-5-X).
- WE Energies has buried gas crossing located approximately 100-feet south of Stroebe Road
  (1-5-Y).

The following utilities are shown on Exhibit 1-15 (page 1-36):

- ATT-TCG has buried cable at the West Prospect Avenue crossing (1-5-Z).

Further Analysis Recommendations

Refer to Exhibit 1-12 (page 1-33) for discussion on coordination with WIS 441 Tri-County Freeway Project's US 41 NB and SB mainline reconstruction (1-5-AA).

Refer to Exhibit 1-13 and Exhibit 1-14 (pages 1-34 and 1-35 respectively) for recommendations of further study areas to balance frontage road and right of way impacts while maintaining required mainline typical sections (1-5-AB).

DRAFT

LEGEND

- APPROXIMATE UTILITY CROSSING
- EXISTING ROW
- PROPOSED ROW
- EXISTING ROADWAYS
- PROPOSED LOCAL ROADS
- PROPOSED US 41
- PROPOSED STRUCTURE
- PROPOSED CONCRETE BARRIER
- PROPOSED LOCAL SIDEWALK
- ROADWAY OBLITERATION
- PROPOSED NOISE WALL

WISCONSIN DEPARTMENT OF TRANSPORTATION

0 100' 200'

N

US 41 ALIGNMENT (1-5-A): THE US 41 NB AND SB MAINLINE ALIGNMENTS NEED TO INTEGRATE THE US 41 NB OFF-RAMP TO US 10 WB ON-RAMP PIERS AND THE WIS 441 SB OFF-RAMP TO US 41 NB ON-RAMP RETAINING WALLS WHILE PROVIDING THE US 41 NB MAINLINE PROPOSED TYPICAL SECTION WIDTH.

US 41 ALIGNMENT (1-5-B): THE TANGENT SECTION OF US 41 NB MAINLINE LOCATED NEAR MENASHA CREEK IS PUSHED TO THE WEST TO ACCOMMODATE THE TIGHT RIGHT-OF-WAY CONSTRAINT WITH THE CANADIAN NATIONAL RAILROAD AND MATCH INTO THE RETAINING WALL CONSTRUCTED ALONG THE US 41 NB OUTSIDE SHOULDER WITHIN THE WIS 441 MAJORS RECONSTRUCTION PROJECT.

US 41 TYPICAL SECTION (1-5-C): ALONG US 41 JUST NORTH OF THE US 41 NB TO US 10 WB FLYOVER RAMP, THE US 41 MEDIAN REDUCES FROM APPROXIMATELY 48 FEET (ACCOMMODATING FLYOVER PIERS IN MEDIAN) TO 36.5 FEET TO TIGHTEN THE US 41 TYPICAL SECTION BETWEEN FRONTAGE ROADS AND THE CANADIAN NATIONAL RAILROAD.

US 41 RAMPS AND AUXILIARY LANES (1-5-D): THE US 41 NB TAPERED ON-RAMP FROM US 10/WIS 441 IS A 2-LANE RAMP WHEN COMBINED WITH US 41 NB MAINLINE FORMS A 5-LANE SECTION FOR AROUND 1000 FT. THEN THE OUTSIDE RAMP LANE MERGES INTO ONE LANE WHICH BECOMES A FOURTH LANE CONTINUING NORTHWARD.

US 41 RAMPS AND AUXILIARY LANES (1-5-G): THE US 41 SB OFF-RAMP TO US 10/WIS 441 IS A 2-LANE TAPERED RAMP WITH THE INSIDE LANE AS A CHOICE LANE TO THE OFF-RAMP OR CONTINUED FOURTH SB LANE. THE FOURTH LANE MERGES JUST NORTH OF THE US 10/WIS 441 ON RAMP CREATING A THREE LANE SECTION.

UTILITIES (1-5-M): APPROXIMATE LOCATION OF WE ENERGIES BURIED GAS MAIN CROSSING AT GAS ROAD.

UTILITIES (1-5-N): APPROXIMATE LOCATION OF WISDOT WEATHER STATION AND POSSIBLE PAVEMENT SENSORS.

FURTHER ANALYSIS RECOMMENDED (1-5-AA): THE WIS 441 MAJORS RECONSTRUCTION PROJECT IS RECONSTRUCTING APPROXIMATELY 1100 FEET OF NORTHBOUND AND SOUTHBOUND US 41 MAINLINE UNDERNEATH US 10 WITHIN THE INTERCHANGE CORE TO LOWER THE PROFILE GRADE AND PROVIDE THE REQUIRED VERTICAL CLEARANCES ALONG US 41. THE PLANNING STUDY ASSUMES THAT THIS AREA WILL BE RECONSTRUCTED TO MEET THE PROPOSED US 41 CROSS SECTION, ALTHOUGH FURTHER STUDY SHOULD BE PERFORMED TO DETERMINE IF THE FUTURE MAINLINE ALIGNMENTS CAN BE ADJUSTED TO SAVE THE RECENTLY CONSTRUCTED MAINLINE PAVEMENT.

USH 10
MATCHLINE
US 41 SB TO US 10 WB RAMP
AMERICAN DR
COPPERHEAD DR
GAS RD
MATCHLINE
PROPOSED US 41
UTILITIES (1-5-N)
UTILITIES (1-5-M)
EXISTING RIGHT OF WAY
1-5-AA
1-5-G
US 41 SB
1-5-C
US 41 NB
1-5-B
1-5-A
1-5-D
US 41 NB TO US 10 WB FLYOVER RAMP
US 10 EB TO US 41 NB RAMP
WIS 441 SB TO US 41 NB RAMP
US 41 NB TO WIS 441 NB RAMP
CANADIAN NATIONAL RR
CANADIAN NATIONAL RR
W. BUTTE DES MORTS BEACH RD

PROJECT NO: 1130-31-00	HWY: US 41	COUNTY: WINNEBAGO	EXHIBIT 1-12: US 41 SEGMENT 1 / SECTION 5 / SHEET 1	PAGE 1-33	E

FILE NAME : \\madw00\ingrproj\44386\t1\Short Term Solutions\Amendment #5\CDS\0225C_PO.dgn PLOT DATE : 4/30/2013 PLOT BY : Jgallamore PLOT NAME : PLOT SCALE : 200:1

DRAFT

LEGEND

- APPROXIMATE UTILITY CROSSING
- EXISTING ROW
- PROPOSED ROW
- EXISTING ROADWAYS
- PROPOSED LOCAL ROADS
- PROPOSED US 41
- PROPOSED STRUCTURE
- PROPOSED CONCRETE BARRIER
- PROPOSED LOCAL SIDEWALK
- ROADWAY OBLITERATION
- PROPOSED NOISE WALL

WISCONSIN DEPARTMENT OF TRANSPORTATION

0 100' 200'

N

ADDRESSING GEOMETRIC DEFICIENCIES (1-5-H): DEFICIENT VERTICAL GRADES (MM 134.1 AND 135.1) FOR US 41 MAINLINE WILL BE CORRECTED DURING RECONSTRUCTION.

ADDRESSING GEOMETRIC DEFICIENCIES (1-5-I): DEFICIENT SUPERELEVATIONS FOR US 41 MAINLINE (MM 134.1 AND 135.1) WILL BE CORRECTED DURING RECONSTRUCTION.

RIGHT OF WAY IMPACTS (1-5-J): RIGHT-OF-WAY IMPACTS ARE ANTICIPATED ALONG THE US 41 SB PARALLEL OFF-RAMP TO US 10/WIS 441 TO ACCOMMODATE THE RAMP WIDENING AND ANTICIPATED DRAINAGE IMPROVEMENTS.

UTILITIES (1-5-O): APPROXIMATE LOCATION OF TOWN OF MENASHA 48-INCH SANITARY SEWER (SOUTH) AND 8-INCH WATER MAIN (NORTH) NEAR SHADY LANE.

UTILITIES (1-5-P): APPROXIMATE LOCATION OF WE ENERGIES OVERHEAD ELECTRIC CROSSING AT SHADY LANE (2 LINES).

UTILITIES (1-5-Q): APPROXIMATE LOCATION OF WE ENERGIES BURIED GAS MAIN CROSSING AT SHADY LANE.

FURTHER ANALYSIS RECOMMENDATION (1-5-AB): FURTHER REVIEW IS RECOMMENDED TO DETERMINE IF ANY REFINEMENTS TO MAINLINE ALIGNMENT COULD BE IMPLEMENTED TO MAINTAIN PROPOSED TYPICAL SECTION WHILE MINIMIZING THE RIGHT-OF-WAY IMPACTS FROM THE US 41 SB OFF-RAMP TO US 10/WIS 441 ALONG THE WEST SIDE AND NOT IMPACTING THE OUTSIDE RETAINING WALL CONSTRUCTED WITH THE WIS 441 MAJORS RECONSTRUCTION PROJECT FOR THE US 41 NB ON-RAMP FROM US 10/WIS 441.

AMERICAN DR

FOX CITIES DR

SHADY LN

AMERICAN CT

HOLLY RD

MATCHLINE

MATCHLINE

UTILITIES (1-5-O)

GEOMETRIC DEFICIENCY (1-5-H):
DEFICIENT VERTICAL GRADE
ACTUAL = 0.05%
DESIRED = 0.50%
MINIMUM = 0.30%

B-70-133
REHABILITATE

PROPOSED US 41

1-5-J

US 41 SB

US 41 NB

CANADIAN NATIONAL RR

CANADIAN NATIONAL RR

B-70-134
REHABILITATE

EXISTING RIGHT OF WAY

1-5-AB

W. BUTTE DES MORTS BEACH RD

UTILITIES (1-5-Q)

UTILITIES (1-5-P)

GEOMETRIC DEFICIENCY (1-5-I):
DEFICIENT SUPERELEVATION
ACTUAL 5.0%
DESIRED 5.5%

PROJECT NO: 1130-31-00	HWY: US 41	COUNTY: WINNEBAGO	EXHIBIT 1-13: US 41 SEGMENT 1 / SECTION 5 / SHEET 2	PAGE I-34	E

FILE NAME : \\madw00\ingrproj\44386\t1\Short Term Solutions\Amendment #5\CDS\0225D_P0.dgn PLOT DATE : 4/30/2013 PLOT BY : Jgallamore PLOT NAME : PLOT SCALE : 200:1

2

US 41 RAMPS AND AUXILIARY LANES (1-5-F): THE US 41 SB PARALLEL ON-RAMP FROM COUNTY BB IS APPROXIMATELY 900 FT. LONG PRIOR TO MERGING INTO THE OUTSIDE US 41 SB LANE. SIMILAR TO THE US 41 NB OFF-RAMP, A BOX CULVERT EXISTS UNDERNEATH THE EXISTING RAMP AND IS INCLUDED FOR RECONSTRUCTION WITHIN THE CURRENT COST ESTIMATE.

ADDRESSING GEOMETRIC DEFICIENCIES (1-5-I): DEFICIENT SUPERELEVATIONS FOR US 41 MAINLINE (MM 134.1 AND 135.1) WILL BE CORRECTED DURING RECONSTRUCTION.

RIGHT OF WAY IMPACTS (1-5-K): ALONG US 41 NB JUST NORTH OF THE US 41 NB AND RAILROAD DIVERGING POINT, ADDITIONAL ACQUISITION IS SHOWN NEAR COMMERCIAL BUSINESSES CERTIFIED PROFESSIONAL RESTORATION AND SERVPRO OF THE FOX CITIES. NO RELOCATIONS ARE ANTICIPATED.

UTILITIES (1-5-R): LOCATION OF AMERICAN TRANSMISSION COMPANY MULTIPLE CIRCUIT LINE CROSSING UNDER US 41 APPROXIMATELY 530 FEET SOUTH OF STROEBE ROAD (MULTIPLE LINES).

UTILITIES (1-5-S): LOCATION OF TOWN OF MENASHA 12-INCH SANITARY SEWER (DIAGONAL) AND 2-INCH WATER MAIN APPROXIMATELY 750 FEET NORTH OF FOX CITIES DRIVE.

UTILITIES (1-5-T): LOCATION OF TOWN OF MENASHA 6-INCH SANITARY SEWER AND 10-INCH WATER MAIN APPROXIMATELY AT STROEBE ROAD.

UTILITIES (1-5-U): APPROXIMATE LOCATION OF WE ENERGIES OVERHEAD ELECTRIC CROSSING APPROXIMATELY 250 FEET NORTH OF FOX CITIES DRIVE.

UTILITIES (1-5-V): APPROXIMATE LOCATION OF WE ENERGIES OVERHEAD ELECTRIC CROSSING APPROXIMATELY 500 FEET SOUTH OF STROEBE ROAD (2 LINES).

UTILITIES (1-5-W): APPROXIMATE LOCATION OF WE ENERGIES OVERHEAD ELECTRIC CROSSING APPROXIMATELY 70 FEET SOUTH OF STROEBE ROAD (DIAGONAL).

UTILITIES (1-5-X): APPROXIMATE LOCATION OF WE ENERGIES BURIED ELECTRIC CROSSING SOUTH OF STROEBE ROAD.

UTILITIES (1-5-Y): LOCATION OF WE ENERGIES BURIED GAS MAIN CROSSING APPROXIMATELY 100 FEET SOUTH OF STROEBE ROAD.

FURTHER ANALYSIS RECOMMENDATION (1-5-AB): FURTHER STUDY IS RECOMMENDED TO BALANCE THE FRONTAGE ROAD IMPACTS BETWEEN HOLLY ROAD/AMERICAN COURT AND NORTHERN ROAD.

DRAFT

2

FOX CITIES DR
MATCHLINE
UTILITIES (1-5-U)
GEOMETRIC DEFICIENCY (1-5-I):
DEFICIENT SUPERELEVATION
ACTUAL 5.0%
DESIRED 5.5%
UTILITIES (1-5-R)
UTILITIES (1-5-X)
UTILITIES (1-5-W)
PROPOSED US 41
HOLLY RD
HOLLY RD
MATCHLINE
1-5-E
US 41 SB
US 41 NB
1-5-AB
NORTHERN RD
1-5-K
UTILITIES (1-5-S)
UTILITIES (1-5-S)
EXISTING RIGHT OF WAY
CANADIAN NATIONAL RR
CANADIAN NATIONAL RR
UTILITIES (1-5-V)
UTILITIES (1-5-T)
UTILITIES (1-5-Y)
STROEBE RD
BUTTE DES MORRIS BEACH RD

LEGEND

- APPROXIMATE UTILITY CROSSING
- EXISTING ROW
- PROPOSED ROW
- EXISTING ROADWAYS
- PROPOSED LOCAL ROADS
- PROPOSED US 41
- PROPOSED STRUCTURE
- PROPOSED CONCRETE BARRIER
- PROPOSED LOCAL SIDEWALK
- ROADWAY OBLITERATION
- PROPOSED NOISE WALL

WISCONSIN DEPARTMENT OF TRANSPORTATION

0 100' 200'

N

PROJECT NO: 1130-31-00	HWY: US 41	COUNTY: WINNEBAGO	EXHIBIT 1-14: US 41 SEGMENT 1 / SECTION 5 / SHEET 3	PAGE 1-35	E

FILE NAME : \\madw00\ingrproj\44386\t1\Short Term Solutions\Amendment #5\CDS\0226_PO.dgn PLOT DATE : 4/30/2013 PLOT BY : Jgallamore PLOT NAME : PLOT SCALE : 200:1

DRAFT

US 41 RAMPS AND AUXILIARY LANES (1-5-E): THE US 41 NB OFF-RAMP AT COUNTY BB IS A SINGLE LANE PARALLEL TYPE OFF-RAMP. THE RAMP IS SHOWN ON NEW ALIGNMENT TO TIE INTO THE COUNTY BB ROUNDABOUT INTERSECTION APPROACH. THE RAMP REALIGNMENT IMPACTS THE ADJACENT NORTHERN ROAD FRONTAGE ROAD AND AN ADJACENT BUSINESS PARCEL REQUIRING THE FRONTAGE ROAD TO BE RECONSTRUCTED AND THE BUSINESS PARCEL TO BE ACQUIRED. IN ADDITION, THE FRONTAGE ROAD AND OFF-RAMP HAVE AN EXISTING BOX CULVERT THAT RUNS UNDERNEATH THEM. THE BOX CULVERT EXISTING CONDITION SHOULD BE REVIEWED FURTHER TO DETERMINE ITS CONDITION AND WHAT OVERALL IMPACTS WILL OCCUR DUE TO THE RAMP AND FRONTAGE ROAD RECONSTRUCTION. THE BOX CULVERT WAS ASSUMED TO NEED RECONSTRUCTION WITHIN THE COST ESTIMATE.

US 41 RAMPS AND AUXILIARY LANES (1-5-F): THE US 41 SB PARALLEL ON-RAMP FROM COUNTY BB IS APPROXIMATELY 900 FT. LONG PRIOR TO MERGING INTO THE OUTSIDE US 41 SB LANE. SIMILAR TO THE US 41 NB OFF-RAMP, A BOX CULVERT EXISTS UNDERNEATH THE EXISTING RAMP AND IS INCLUDED FOR RECONSTRUCTION WITHIN THE CURRENT COST ESTIMATE.

RIGHT-OF-WAY IMPACTS (1-5-L): APPROXIMATELY 2.5 ACRES ALONG THE COUNTY BB NORTHBOUND OFF-RAMP RECONSTRUCTION IS REQUIRED IN ADDITION TO A BUSINESS ACQUISITION AND RELOCATION.

UTILITIES (1-5-Z): APPROXIMATE LOCATION FOR ATT-TCG BURIED CABLE LINE CROSSING AT WEST PROSPECT DRIVE.

UTILITIES (1-5-Z)

B-70-21
RECONSTRUCT

END SEGMENT 1

GEOMETRIC DEFICIENCY (1-5-I)
DEFICIENT SUPERELEVATION
ACTUAL 5.0%
DESIRED 5.5%

1-5-F

1-5-E

1-5-L

NORTHERN RD

PROPOSED US 41

EXISTING RIGHT OF WAY

B-70-84
RECONSTRUCT

BEGIN SEGMENT 2

B-70-135
RECONSTRUCT

B-70-136
RECONSTRUCT

CTH BB

S. VAN DYKE RD

US 41 SB OFF RAMP

US 41 SB ON RAMP

US 41 SB

US 41 NB

US 41 NB ON RAMP

US 41 NB OFF RAMP

MATCHLINE

MATCHLINE

LEGEND

- APPROXIMATE UTILITY CROSSING
- EXISTING ROW
- PROPOSED ROW
- EXISTING ROADWAYS
- PROPOSED LOCAL ROADS
- PROPOSED US 41
- PROPOSED STRUCTURE
- PROPOSED CONCRETE BARRIER
- PROPOSED LOCAL SIDEWALK
- ROADWAY OBLITERATION
- PROPOSED NOISE WALL

WISCONSIN DEPARTMENT OF TRANSPORTATION

0 100' 200'

N

PROJECT NO: 1130-31-00	HWY: US 41	COUNTY: WINNEBAGO	EXHIBIT 1-15: US 41 SEGMENT 1 / SECTION 5 / SHEET 4	PAGE 1-36	E

FILE NAME : \\madw00\ingrproj\44386\t1\Short Term Solutions\Amendment #5\CDS\0227_P0.dgn PLOT DATE : 2/7/2014 PLOT BY : lzidek PLOT NAME : PLOT SCALE : 200:1

Structures

Bridges

Summary of potential bridge geometry is shown in Table 1-5 (page 1-38) and include bridge number, mile marker, bridge name, existing bridge age in 2013, girder type, girder depth, desired vertical clearance, minimum vertical clearance, anticipated vertical clearance, superelevation and direction of curve, clear bridge width, bridge length, number of spans, span configuration, bridge skew, local road typical section, and design recommendations.

Costs for interchange bridges over US 41 mainline are included within the interchange cost estimates. All other US 41 mainline structures or overpasses are included with the mainline cost estimate.

Table 1-5: Segment 1 – Summary of Potential Bridge Geometry

BRIDGE NO.	MILE MARKER (MM)	BRIDGE NAME	AGE IN 2013	GIRDER TYPE	GIRDER DEPTH (INCH)	DESIRED VERT. CLEAR (FEET)	MIN. VERT. CLEAR (FEET)	VERT. CLEAR (FEET)	SUPER % & DIR.	BRIDGE CLEAR WIDTH (FEET)	BRIDGE LENGTH (FEET)	NO. OF SPANS	SPAN CONFIG. (FEET)	BRIDGE SKEW	LOCAL ROAD TYPICAL SECTION	DESIGN RECOMMENDATIONS
B-70-0049	130.7	US 41 SB Over Cecil Street	44	Prestressed Concrete Deck Girder	36	15.25	14.75	15.25	4.4 LT	82	165.30	3	36.6/87.9/36.6	17 ^{o} LF	End Spans: 2:1 Slope paving; Main Span: 1-12' lanes and 14' parking/bike lane with c&g each direction, 16' terrace	Reconstruction since bridge will be nearly 50-years old at time of expansion project. Profile for US 41 SB will be adjusted up by approximately 1.0'.
B-70-0050	130.7	US 41 NB Over Cecil Street	44	Prestressed Concrete Deck Girder	36	15.25	14.75	15.25	4.4 LT	74	165.30	3	36.6/87.9/36.6	17° LF	End Spans: 2:1 Slope paving; Main Span: 1-12' lanes and 14' parking/bike lane with c&g each direction, 16' terrace	Reconstruction since bridge will be nearly 50-years old at time of expansion project.
B-70-0123	131.0	US 41 SB Over WIS 114	20	Prestressed Concrete Deck Girder	36	16.75	16.33	16.75	5.5 RT	74	245.1	4	38.2/74.3/ 90.4/38.2	5.25^{o} RF	End Spans: 2:1 Slope paving; Main Span: 12' median; 2-12' left-turn lanes EB, 1-12' left-turn lane WB, 3-12' thru lanes with 4' bike lane and c&g each direction, 15' terrace	Reconstruction since side road alignment is affected by roundabout orientation impacting center pier location.
B-70-0124	131.0	US 41 NB Over WIS 114	19	Prestressed Concrete Deck Girder	36	16.75	16.33	16.75	5.5 RT	74	245.1	4	38.2/74.3/ 90.4/38.2	5.25^{o} RF	End Spans: 2:1 Slope paving; Main Span: 12' median; 2-12' left-turn lanes EB, 1-12' left-turn lane WB, 3-12' thru lanes with 4' bike lane and c&g each direction, 15' terrace	Reconstruction since side road alignment is affected by roundabout orientation impacting center pier location.
B-70-0125	132.0	US 41 SB Over Main Street	19	Prestressed Concrete Deck Girder	36	16.75	16.33	16.75	NC, Ramp 6.0	Varies 93.87 to 100.3	206.20	2	101.1/101.1	2.5^{o} RF	End Span: 2:1 Slope paving; 30' median; 2-12' lanes and 4' bike lanes with c&g in each direction, 16' terrace	Reconstruction since side road profile impacts vertical clearance greatly. Raise US 41 SB profile or lower Main Street profile by a combination of 2.0'.
B-70-0126	132.0	US 41 NB Over Main Street	19	Prestressed Concrete Deck Girder	36	16.75	16.33	16.75	NC	86	206.20	2	101.1/101.1	2.5 ^{o} RF	End Span: 2:1 Slope paving; 30' median; 2-12' lanes and 4' bike lanes with c&g in each direction, 16' terrace	Reconstruction to match SB bridge. Profiles to maintain clearance are not a problem on US 41 NB.
B-70-0127	132.2	US 41 SB Over North Street	19	Prestressed Concrete Deck Girder	36	15.25	14.50 or ES	14.50	NC	86	136.77	3	32.0/69.25/32.0	4° 27' 02"RF	End Spans: 2:1 Slope paving; Main Span: 2-12' lanes with c&g in each direction, approximate 8' terrace	Rehabilitation alternative requires bridge jacking due to widening reduction of vertical clearance. Bridge will be raised a minimum of 4-inches to meet FDM 11-35 Attachment 1.9. Roadway can add bike lanes forming reduced terrace area. Retaining walls within slope paving area could provide pedestrian area.

Legend:
ES = Exception to Standard
RT = Superelevation Right
NC = Normal Crown
LT = Superelevation Left
LF = Left Forward
RF = Right Forward
N/A = Not Applicable
c&g = Curb and Gutter

BRIDGE NO.	MILE MARKER (MM)	BRIDGE NAME	AGE IN 2013	GIRDER TYPE	GIRDER DEPTH (INCH)	DESIRED VERT. CLEAR (FEET)	MIN. VERT. CLEAR (FEET)	VERT. CLEAR (FEET)	SUPER % & DIR.	BRIDGE CLEAR WIDTH (FEET)	BRIDGE LENGTH (FEET)	NO. OF SPANS	SPAN CONFIG. (FEET)	BRIDGE SKEW	LOCAL ROAD TYPICAL SECTION	DESIGN RECOMMENDATIONS
B-70-0128	132.2	US 41 NB Over North Street	19	Prestressed Concrete Deck Girder	36	15.25	14.50 or ES	17.00	NC	74	136.77	3	32.0/69.25/32.0	4° 27' 02"RF	End Span: 2:1 Slope paving; Main Span: 2-12' lanes with c&g in each direction, approximate 8' terrace	Rehabilitation alternative does not require bridge jacking. Roadway can add bike lanes forming reduced terrace area. Retaining walls within slope paving area could provide pedestrian area.
B-70-0129	132.7	US 41 SB Over County II	19	Prestressed Concrete Deck Girder	54	16.75	16.00 or ES	16.61	NC	74	237.2	2	39.2/82.5/ 72.3/39.2	14° 17' 18" RF	End Spans: 2:1 Slope paving; 22' median; 2-12' lanes with c&g in each direction, approximate 30' terrace	Reconstruction to match roundabout layout.
B-70-0130	132.7	US 41 NB Over County II	19	Prestressed Concrete Deck Girder	54	16.75	16.00 or ES	18.08	NC	74	237.2	2	39.2/82.5/ 72.3/39.2	14° 17' 18" RF	End Spans: 2:1 Slope paving; 22' median; 2-12' lanes with c&g in each direction, approximate 30' terrace	Reconstruction to match roundabout layout.
B-70-0131	133.0	US 41 SB Over American Drive/North Green Bay Road/CNRR	19	Continuous Steel Deck Girder	54	16.75	16.33	16.75	5.9 RT	86	340.29	2	145.5/189.42	41° 30' LF	Span 1: 2:1 Slope paving, 2-12' lanes with 4' bike lane and c&g in each direction, approximate 16' terrace ; Span 2: Railroad span and 2:1 slope paving	Reconstruction with similar steel span configuration to realign the deficient horizontal curve.
B-70-0132	133.0	US 41 NB Over American Drive/North Green Bay Road/CNRR	19	Continuous Steel Deck Girder	54	16.75	16.33	16.75	5.9 RT	98	340.29	2	145.5/189.42	41° 30' LF	Span 1: 2:1 Slope paving, 2-12' lanes with 4' bike lane and c&g in each direction, approximate 16' terrace ; Span 2: Railroad span and 2:1 slope paving	Reconstruction with similar steel span configuration to realign the deficient horizontal curve.
B-70-0210	133.7	North Lake Street/Jacobsen Road Over US 41	12	Steel Deck Girder	54	16.75	16.00 or ES	16.00	NC	34	391.92	3	145.0/95.0/145.0	41° 30' LF	2-12' lanes with 4' or 6' shoulders and 10' sidewalk along north side of bridge	Rehabilitation with addition of barrier along the US 10/WIS 441 on-ramp and a retaining wall along the US 41 NB outside shoulder. The retaining wall will be placed in the WIS 441 Tri-County Project. Further evaluation of vertical clearance is needed for mainline profiles including superelevation.
B-70-133	138.8	US 41 SB Over Menasha Creek	21	Prestressed Concrete Deck Girder	28	N/A	N/A	N/A	NC	82	41.69	1	38	18° 00' LF	N/A	Rehabilitation to wider bridge section for ramp improvements
B-70-134	138.8	US 41 NB Over Menasha Creek	21	Prestressed Concrete Deck Girder	28	N/A	N/A	N/A	NC	82	41.69	1	38	18° 00' LF	N/A	Rehabilitation to wider bridge section for ramp improvements

Legend:
ES = Exception to Standard
RT = Superelevation Right
NC = Normal Crown
LT = Superelevation Left
LF = Left Forward
RF = Right Forward
N/A = Not Applicable
c&g = Curb and Gutter

Interchanges

WIS 114/ County JJ (Winneconne Avenue) Interchange

Interchange Alternatives Summary

Three short-term improvement alternatives (Alternatives 1 through 3) for the WIS 114/County JJ Interchange were developed within the Operational Needs Assessment Phase I Final Report dated November 2011 (see Appendix 14). Alternative 1 addresses the existing safety and operational issues on the US 41 mainline within the interchange area. Alternatives 2 and 3 developed roundabout options for the ramp terminals and tie-into the existing roundabout constructed at Winneconne Avenue and Green Bay Road.

Alternative 4 is a traditional intersection alternative that has been developed to address long-term interchange capacity for design year 2038 traffic volumes. Refer to Figure 1-4 (page 1-42) for Interchange layout. Refer to Appendix 15 for operational analysis.

Alternative 1 improves merge and diverge locations on the US 41 SB on- and off-ramps and US 41 NB off-ramp to address crash severity problems at these locations. An additional 800’ deceleration lane for US 41 SB off-ramp to Winneconne Avenue is included. A receiving lane from eastbound Winneconne Avenue right turn to US 41 SB on-ramp is recommended along with a 270’ extension of right and left-turn lanes on the US 41 SB off-ramp to Winneconne Avenue.

Alternative 2 is a roundabout alternative designed for year 2020 traffic volumes. It maintains a four-lane facility along Winneconne Avenue with a two-lane roundabout at both ramp terminals. These potential improvements tie-into the existing three-lane roundabout constructed previously at the intersection of Winneconne Avenue and Green Bay Road.

Alternative 3 is a roundabout configuration very similar to Alternative 2 but designed for year 2035 traffic volumes. The main geometric difference is a dual right-turn bypass lane addition from the US 41 SB off-ramp to westbound Winneconne Avenue. Alternative 3 was reevaluated for 2038 traffic volumes and with updated roundabout analysis parameters. Operational problems are now predicted at the Southbound ramp terminal (LOS E) and WIS 114/Green Bay Road intersection (LOS D) (Refer to Appendix 15 for further operational analysis information).

Alternative 4 is a long-term traditional intersection configuration designed for 2038 traffic volumes. An additional westbound lane along WIS 114 is added through the ramp terminal and Westowne Plaza intersections. An eastbound lane along WIS 114 is added through the northbound ramp terminal intersection. Existing ramp merge and diverge operations and safety issues are addressed by US 41 northbound and southbound mainline expansion improvements. The existing intersection of WIS 114 with Green Bay Avenue and intersections north, east, and south of the intersection were recently reconstructed as roundabouts. Alternative 4 suggests keeping those roundabouts in place even though traffic analysis shows operational problems in the design year.

Alternative 4 is represented in Figure 1-4 (page 1-42) and includes the following specific elements:

WIS 114 and Green Bay Road intersection improvements include:

- This intersection was reconstructed as a roundabout in (2010).
- Add an eastbound semi-bypass lane for right turning traffic.

WIS 114 and Northbound ramp terminal intersection improvements include:

- Free continuous westbound right-turn movement becomes thru lane and a 450’ lane free flow turning movement to US 41 northbound on-ramp is added.
- Continuous eastbound single left-turn lane becomes dual 250’ long left-turn lane while providing three (3) eastbound thru lanes.

WIS 114 and Southbound ramp terminal intersection improvements include:

- Existing eastbound look-ahead left-turn lane becomes dedicated third thru lane.
- Eastbound right-turn lane is lengthened an additional 100’ from 200’ to 300’.
- Southbound US 41 off-ramp provides an additional 450’ right-turn lane and lengthens the existing right-turn lane from 225’ to 450’ long to create a dual right-turn lane.
- Southbound US 41 off-ramp lengthens the existing left-turn lane an additional 300’ from 200’ to 500’.
- Continuous westbound single left-turn lane becomes isolated 300’ long left-turn lane while providing three (3) westbound thru lanes (one additional).

WIS 114 and Westowne Plaza intersection improvements include:

- Free continuous westbound right-turn movement becomes thru lane and a 250’ lane right-turn movement to northbound Westowne Plaza is added.
- Existing westbound left-turn lane is lengthened 75’ from 175’ to 250’.
- Provide one additional westbound dedicated thru lane.
- Existing Southbound left-turn lane is lengthened 150’ from 100’ to 250’.
- Isolate northbound left and thru movements into dedicated lanes. Provide a 225’ left-turn lane and provide one (1) thru lane.
- Existing northbound right-turn lane is lengthened 75’ from 75’ to 150’.

US 41 & WIS 114 (2038)

DRAFT

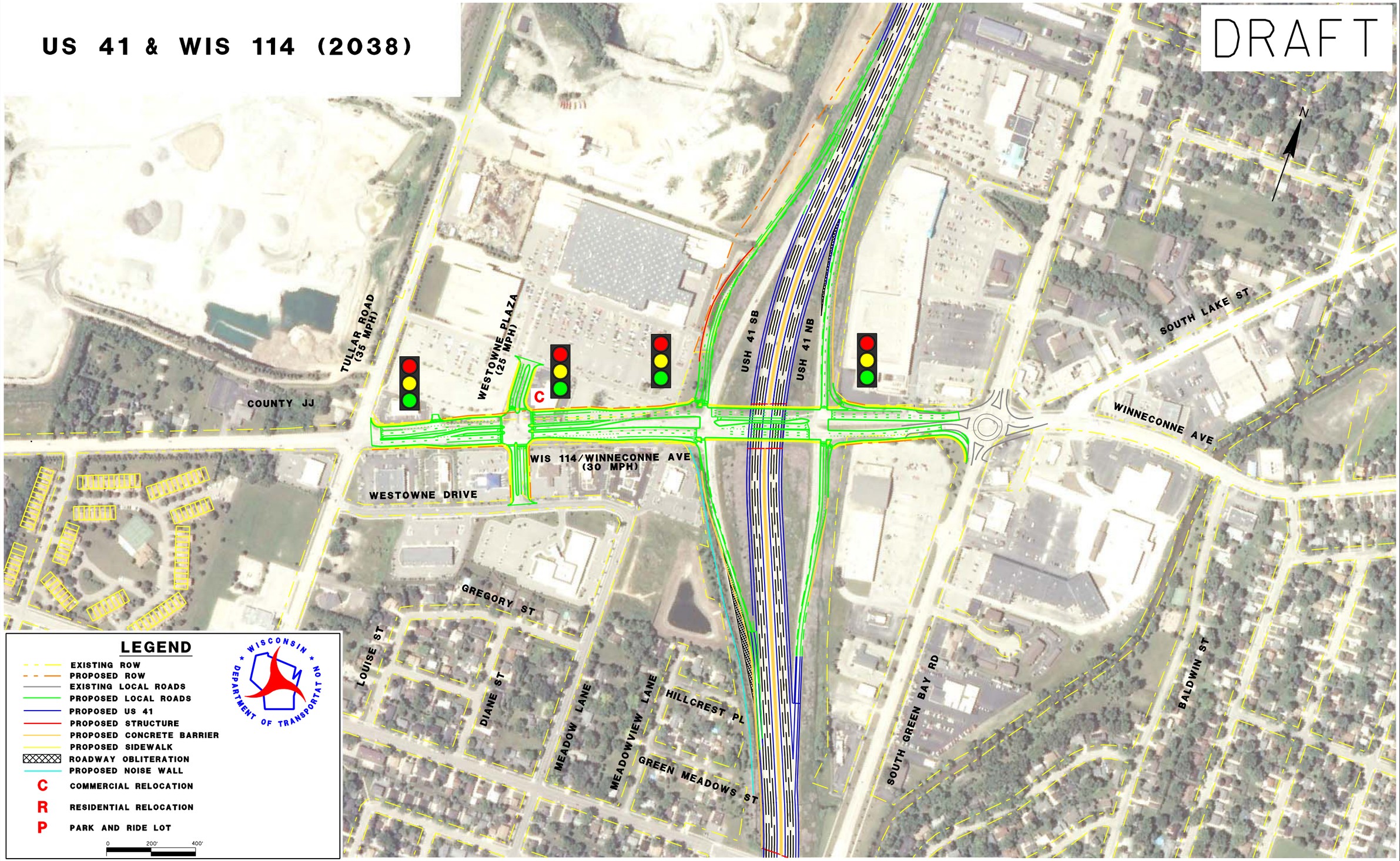

LEGEND

- EXISTING ROW
- PROPOSED ROW
- EXISTING LOCAL ROADS
- PROPOSED LOCAL ROADS
- PROPOSED US 41
- PROPOSED STRUCTURE
- PROPOSED CONCRETE BARRIER
- PROPOSED SIDEWALK
- ROADWAY OBLITERATION
- PROPOSED NOISE WALL
- C COMMERCIAL RELOCATION
- R RESIDENTIAL RELOCATION
- P PARK AND RIDE LOT

0 200' 400'

WISCONSIN DEPARTMENT OF TRANSPORTATION

PROJECT NO: 1130-31-00	HWY: US 41	COUNTY: OUTAGAMIE	FIGURE I-4: WIS 114 INTERCHANGE	PAGE I-42	E

FILE NAME : $$....designfile....$$ PLOT DATE : $$...plottingdate...$$ PLOT BY : $$...plotuser...$$ PLOT NAME : PLOT SCALE : $$.....plotscale.....$$ WISDOT/CADDS SHEET 42

Alternative Represented in Expansion Design Concept

Alternative 4 was identified as meeting the long-term capacity needs for the interchange as presented in Figure 1-4 (page 1-42). Figure 1-5 (page 1-45) is a line diagram indicating Alternative 4 traditional intersection improvements required.

The short-term improvement Alternative 1 is suggested for implementation in 2015 to 2017 prior to the long-term expansion project. Alternative 1 provides immediate safety and operational improvements while minimizing throw away costs to implement the long-term improvement Alternative 4.

Costs for both short term and long term improvements are included in Table 1-9 (page 1-57) within Cost Summary section below.

Traffic Operations

Year 2038 traffic analysis was conducted at the WIS 114 interchange intersections using the geometrics presented in Alternative 4. A summary of the Year 2038 intersection operating conditions is provided in Table 1-6.

Table 1-6: WIS 114 Interchange Intersection Level of Service (LOS)

WIS 114 Intersection	Intersection Type	Peak Hour LOS by Intersection	
		AM	PM
Westowne Plaza	Traffic Signal	C	C
US 41 Southbound Ramps	Traffic Signal	C	D
US 41 Northbound Ramps	Traffic Signal	B	B

Right-of-way Impacts

Alternative 4 would potentially require one (1) commercial relocation of the mini mall at the northeast corner of the WIS 114/Westowne Plaza intersection.

A Kwik Trip gas station was recently built in the south side of WIS 114 just east of the Northbound off-ramp that is not shown on the aerial photo. Further evaluation will be needed to determine if the new car wash and garbage corral would be impacted by WIS 114 construction.

Alternative 4 would also have parking impacts to a strip mall in the northeast corner of the WIS 114/Tullar intersection, Fox Communities Credit Union, Kohl's, Walmart, and Shopko. The parking lot impact to Shopko is along the far south side of the parcel. Further evaluation will be needed to determine if the impacts to the parking lot would restrict access to the loading dock at the southwest corner of the Shopko building.

Alternative 4 would shift the southbound US 41 exit ramp significantly closer to the Walmart store. The existing storm water retention pond would be impacted and there is no available location on the site to add a new retention facility. A retaining wall is conceivable along the exit ramp to avoid impacts to the Walmart building and loading dock. Further analysis will be needed

to determine the exact height of the wall and potential remediation for the loss of the detention pond.

Access

The driveways on the north and south side of WIS 114 between the US 41 NB ramps and Green Bay Road would need to be removed because of their proximity to the ramps and Green Bay Road. With the newly constructed roundabouts both parcels have full access to Green Bay Road.

The two Culver's access points on Westowne Plaza would be converted from full access to right in right out only because they would be adjacent to the raised island for the northbound left-turn lane. Drivers would no longer be able to access Culver's from Westowne Drive or turn left from their driveway to access WIS 114 with this change.

Complete Streets

Alternative 4 (Figure 1-4, page 1-42) includes sidewalk along both sides of WIS 114/County JJ and Westowne Plaza within the reconstruction limits to provide pedestrian accommodation. A 16' wide outside lane is identified along both directions of WIS 114 to provide bicycle accommodation.

Further Analysis Recommendations

The future NEPA study will further evaluate long-term interchange alternatives for effectively minimizing impacts while meeting Interchange safety and operational needs.

Review the alternatives for relocating the retention pond and/or the alignment of the southbound exit ramp to WIS 114/County JJ

Further analysis is recommended for the 2038 roundabout alternative at the WIS 114 and Green Bay Road intersection for remaining operational problems.

FIGURE I-5: WIS 114 INTERCHANGE, EXISTING GEOMETRY AND 2038 TRADITIONAL/ROUNDABOUT IMPROVEMENTS

PREPARED 3-1-13

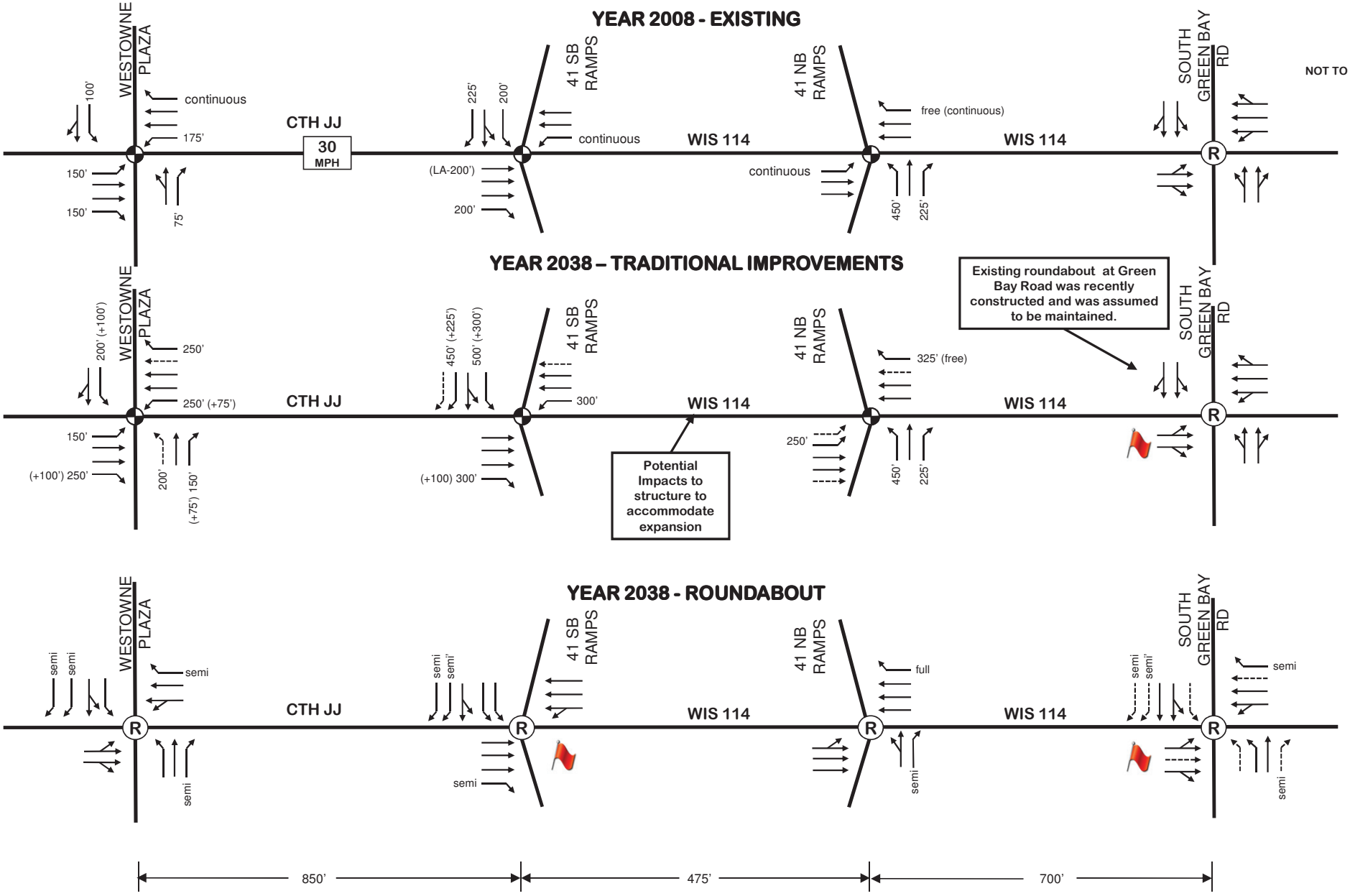

Legend

XX' BASE GEOMETRICS PLANNED TURN BAY LENGTH	MEDIAN DIVIDED ROADWAY	TRAFFIC SIGNAL	OPERATIONAL PROBLEMS REMAIN
(+XX') ADDITIONAL TURN BAY LENGTH RECOMMENED	BASE GEOMETRICS	STOP SIGN	
(LA-XX') LOOK-AHEAD TURN LANE – STORAGE LENGTH	ADDITIONAL IMPROVEMENT RECOMMENDED	(R) ROUNDABOUT	

Oakridge Road/Main Street Interchange

Interchange Alternatives Summary

Four short-term to intermediate improvement alternatives (Alternatives 1 through 4) were developed within the Operational Needs Assessment Phase I Final Report dated November 2011 (see Appendix 14). Alternative 1 addresses the existing safety and operational issues within the interchange. Alternative 2 upgrades the complete interchange to Interstate standards. Alternatives 3 and 4 developed roundabout options for the ramp terminals and the intersection of Main Street and Green Bay Road. Alternative 5 is a traditional intersection alternative evaluated for 2038 traffic volumes. Refer to Figure 1-6 (page 1-48) for Interchange layout. Refer to Appendix 15 for operational analysis.

Alternative 1 improves US 41 SB off-ramp geometrics (first and second curve radii) for the US 41 SB off-ramp and extends the NB right turn bay storage length to 400’ to addresses the existing safety and operational issues within the interchange.

Alternative 2 identifies completely reconstructing the interchange by realigning US 41 mainline and Oakridge Road/Main Street while constructing new northbound and southbound standard exit ramps to a length of 1200’. New US 41 structures over Main Street will be required along with widening for US 41 NB over North Street bridge.

Alternatives 3 and 4 are roundabout alternatives designed for year 2020 and 2035 traffic volumes respectively. Both maintain a two-lane facility along Oakridge Road/Main Street with a one-lane roundabout at both ramp terminals and a two-lane roundabout with Green Bay Road.

Alternative 5 is similar to Alternative 1 with the following additions:

- US 41 mainline northbound and southbound auxiliary lanes have been added through the interchange off-ramps and merge in prior to on-ramp gore locations.
- To provide additional safety for the existing loop ramp, a deceleration lane was added next to the US 41 southbound auxiliary lane.
- The loop ramp terminal provides lengthened left-turn lane improvements.
- Main Street/Oakridge Road requires a wider median to improve ramp terminal turning radii and intersection operations.
- A free flow right turn movement was added to the loop ramp.
- An additional westbound thru lane was added at the US 41 SB on-ramp intersection.

Improvements to the Oakridge Road and Green Bay Road intersection include:

- The northbound combined thru/left-turn lane would potentially be modified to a dedicated thru lane and a dedicated 200’ long left-turn lane.
- The southbound combined thru/left-turn lane would potentially be modified to a dedicated thru lane and a dedicated 250’ left-turn lane.

- The eastbound combined thru/left-turn lane would potentially be modified to a dedicated thru lane and a dedicated 150’ long turn bay.
- The westbound combined thru/right-turn lane would potentially be modified to a dedicated thru lane and a dedicated 150’ long right-turn lane.

US 41 & OAKRIDGE (2038)

DRAFT

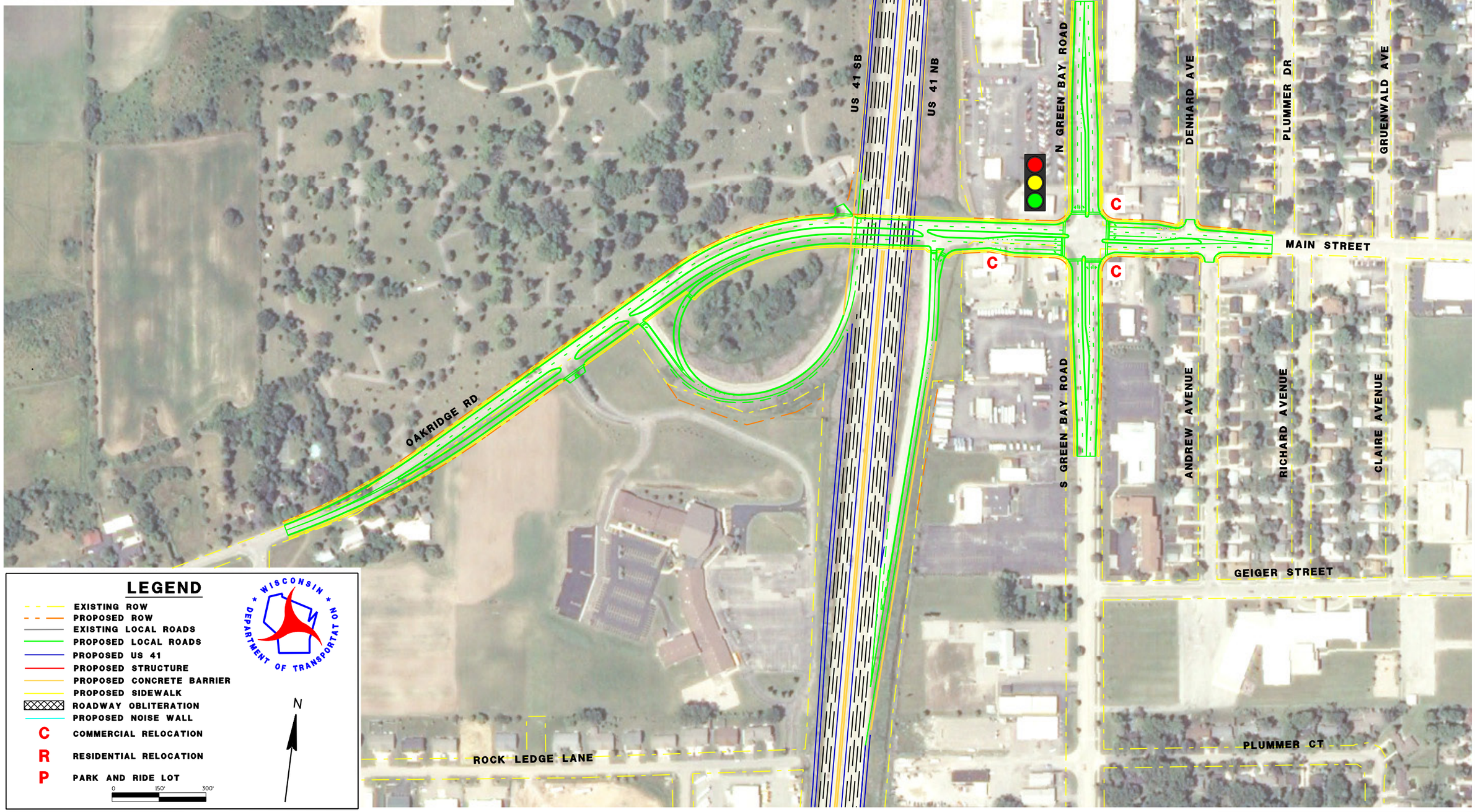

LEGEND

- EXISTING ROW
- PROPOSED ROW
- EXISTING LOCAL ROADS
- PROPOSED LOCAL ROADS
- PROPOSED US 41
- PROPOSED STRUCTURE
- PROPOSED CONCRETE BARRIER
- PROPOSED SIDEWALK
- ROADWAY OBLITERATION
- PROPOSED NOISE WALL
- C COMMERCIAL RELOCATION
- R RESIDENTIAL RELOCATION
- P PARK AND RIDE LOT

0 150' 300'

WISCONSIN DEPARTMENT OF TRANSPORTATION

N

PROJECT NO: 1130-31-00	HWY: US 41	COUNTY: WINNEBAGO	FIGURE I-6: OAKRIDGE RD/MAIN ST INTERCHANGE	PAGE I-48	E

FILE NAME : $$....designfile....$$ PLOT DATE : $$...plottingdate...$$ PLOT BY : $$...plotuser...$$ PLOT NAME : PLOT SCALE : $$.....plotscale.....$$

Alternative Represented in Expansion Design Concept

Alternative 5 was identified as meeting the long-term capacity needs for the interchange as presented in Figure 1-6 (page 1-48). Figure 1-7 (page 1-51) is a line diagram indicating Alternative 5 interchange improvements required.

Local road and ramp terminal portions of the Alternative 5 long-term improvement are suggested for early implementation in 2015 to 2017 prior to the overall expansion project. Southbound parallel off-ramp deceleration lane improvements are not included in this early work and are recommended for construction with the mainline auxiliary lane during long-term expansion.

Traffic Operations

Year 2038 traffic analysis was conducted at the Main Street interchange intersections using the geometrics presented in Alternative 5. A summary of the Year 2038 intersection operating conditions is provided in Table 1-7.

Table 1-7: Main Street Interchange Intersection Level of Service (LOS)

Main Street Intersection	Intersection Type	Peak Hour LOS by Intersection	
		AM	PM
US 41 Southbound Ramps	One-Way Stop Control	A	A
US 41 Northbound Ramps	One-Way Stop Control	A	A
North/South Green Bay Rd	Traffic Signal	C	C

Right-of-way Impacts

Alternative 5 would potentially relocate 3 commerical businesses. The potential relocations are:

- The Citgo gas station in the northeast corner of the Oakridge Road/Green Bay Road intersection
- A restaurant on the southeast corner of the Oakridge Road/Green Bay Road intersection
- The BP gas station on the south side of Oakridge Road just east of the US 41 northbound exit ramp.

Alternative 5 would also potentially impact St Margaret's Cemetery on the north side of Main Street west of US 41. The potential impact would be an approximately 10 foot wide strip along the cemetery from Tullar Road to US 41. Further investigation will be needed to determine if gravesites would be impacted by this alternative.

Access

Alternative 5 would add a raised median along Oakridge Drive and Green Bay Road that would convert Denhardt Avenue from a full access intersection to a right in-right out access point.

Complete Streets

Alternative 5 (Figure 1-6, page 1-48) includes sidewalks along both sides of Main Street, Oakridge Road, and Green Bay Road to provide pedestrian accommodations. A 16’ wide outside lane would be identified for Main Street, Oakridge Road, and Green Bay Road to provide bicycle accommodations.

Further Analysis Recommendations

The future NEPA study will further evaluate long-term interchange alternatives for effectively minimizing impacts while meeting Interchange safety and operational needs.

Southbound parallel off-ramp deceleration lane improvements could be constructed with the short-term early implementation work or as an early advanceable project. This requires further design work to determine that the US 41 bridge and retaining wall structures be located in their permanent locations.

Review intersection stopping sight distance for northbound exit ramp. Verify bridge abutments lie far enough south to facilitate safe movements when the southbound exit ramp’s free right turn is included.

FIGURE I-7: OAKRIDGE RD/MAIN ST INTERCHANGE,
EXISTING GEOMETRY AND 2038 TRADITIONAL IMPROVEMENTS

PREPARED 3/21/2013

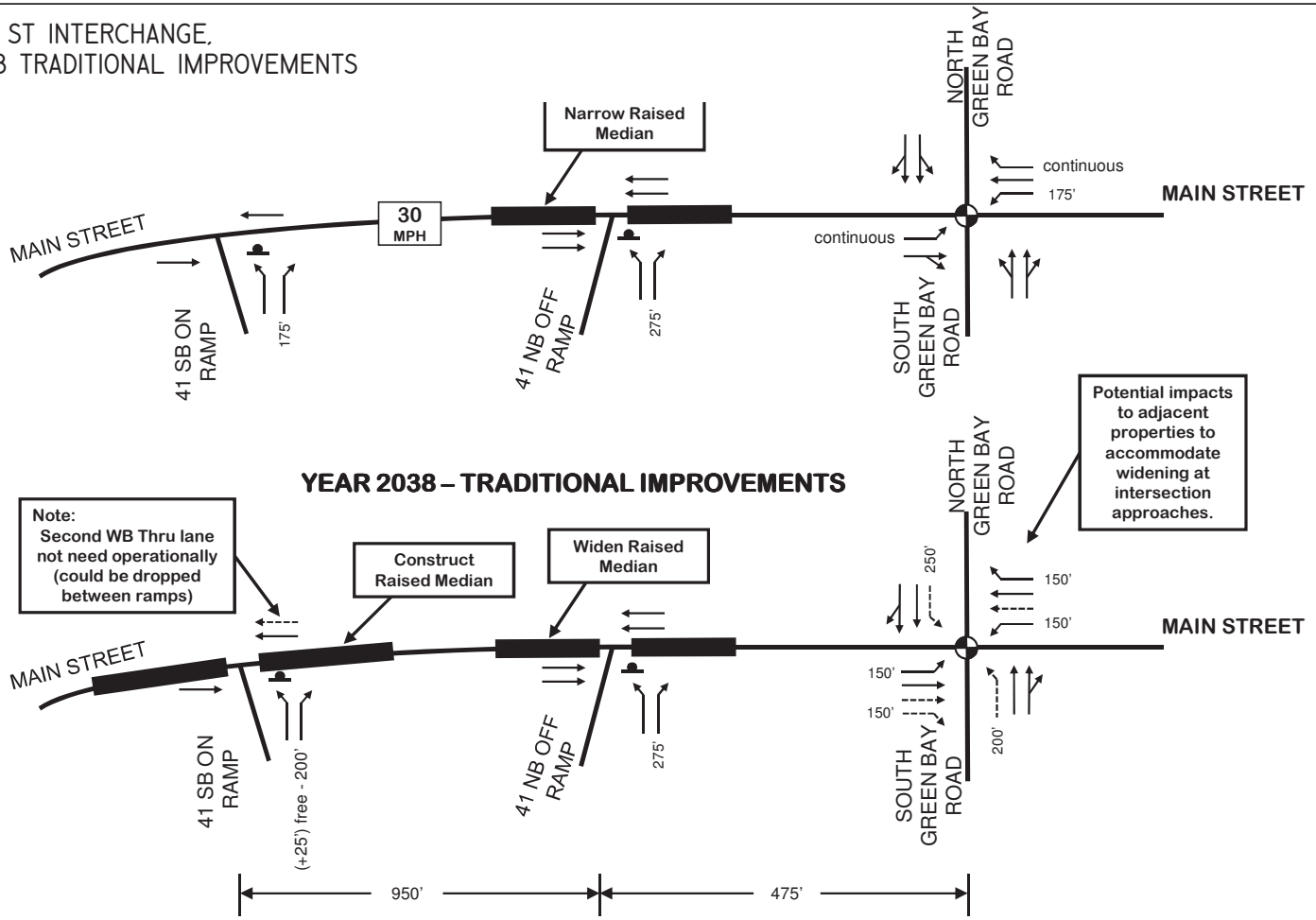

Legend

XX' BASE GEOMETRICS PLANNED TURN BAY LENGTH	MEDIAN DIVIDED ROADWAY	TRAFFIC SIGNAL	OPERATIONAL PROBLEMS REMAIN
(+XX') ADDITIONAL TURN BAY LENGTH RECOMMENED	BASE GEOMETRICS	STOP SIGN	
(LA-XX') LOOK-AHEAD TURN LANE – STORAGE LENGTH	ADDITIONAL IMPROVEMENT RECOMMENDED	(R) ROUNDABOUT	

County II (Winchester Road) Interchange

Interchange Alternatives Summary

The study developed four sets of short to intermediate-term alternatives (Alternatives 1 through 4) for the CTH II interchange within the Operational Needs Assessment Phase I Final Report dated November 2011 (see Appendix 14). Alternative 1 addresses existing safety and operational issues of the US 41 mainline within the interchange area. Alternative 2 addresses traffic operations at the ramp terminal intersections. Subsequent work identified local road improvements at the CTH II and Green Bay Road intersection that would benefit traffic operations of CTH II, but were deemed to be outside the jurisdiction of WisDOT. Alternatives 3 and 4 developed roundabout options for the CTH II intersections at the ramp terminals and Green Bay Road. Alternative 5 is a traditional intersection alternative that has been developed to address long-term interchange capacity for design year 2038 traffic volumes. Refer to Figure 1-8 (page 1-54) for Interchange layout. Refer to Appendix 15 for operational analysis.

Alternative 1 adds an additional 250’ left-turn lane to outside of the existing ramp and adds a continuous westbound right-turn lane along County II from Green Bay Road to the northbound on-ramp. In addition, a committed project is identified to provide a northbound merge auxiliary lane between County II and WIS 441/US 10.

Alternative 2 in addition to Alternative 1 extends the southbound off-ramp left and right-turn lanes by 100’ from the Alternative 1 identified 250’ for a total of 350’ on each lane. An additional US 41 northbound on-ramp lane is added. At the County II and Green Bay Road Intersection, an eastbound 190’ left-turn lane is added as well as adding a continuous right-turn lane. Also at the intersection, the northbound left-turn lane is extended from 260’ to 400’ and a 250’ southbound right-turn lane is added.

Alternatives 3 and 4 are roundabout alternatives designed for year 2020 and 2035 traffic volumes respectively. Both maintain a two-lane facility along County II with a two-lane roundabout at both ramp terminals and a two-lane roundabout with Green Bay Road. In addition, Alternative 4 adds a free-flow bypass lane for the US 41 Northbound on-ramp and a partial bypass lane for the US 41 Northbound off-ramp, the US 41 Southbound off-ramp, and SB Green Bay Road. Alternative 4 was re-evaluated for 2038 traffic volumes and successfully meets operational needs with the identified layout.

Alternative 5 includes reconstruction of the County II mainline through both ramp terminals and adjacent frontage roadways with a wider cross section to provide a greater median width separation. Existing ramp merge and diverge operations and safety issues would be addressed by US 41 northbound and southbound mainline expansion improvements. Within the WIS 441 Tri-County Freeway Project, a second Northbound entrance ramp lane would be added.

County II and Green Bay Road intersection improvements include:

- Isolate southbound right movement from dedicated thru movement by adding a 400’ right-turn lane.

- The existing dedicated northbound thru movement was modified to a continuous left-turn lane. The northbound thru movement will be handled by the existing combined thru and right-turn lane.

County II and US 41 Northbound Off- and On-ramp intersection improvements include:

- Existing westbound single 245’ right-turn lane was modified to a dual 145’ right-turn lane to US 41 Northbound on-ramp.
- The northbound US 41 off-ramp adds a 300’ long left-turn lane and extends the existing left-turn lane and additional 70’ from the existing 230’ to 300’.
- A continuous eastbound left-turn lane was added.

County II and US 41 Southbound Off- and On-ramp intersection improvements include:

- The existing US 41 Southbound Off-ramp 275’ left-turn lane was modified to a continuous left-turn lane.
- A 400’ long eastbound look-ahead left-turn lane was added.

No changes are required for the Spring Road Drive intersection.

Alternative Represented in Expansion Design Concept

Both Alternative 4 and Alternative 5 meet operational and safety interchange improvement needs. Alternative 4 was represented within the study exhibits for larger footprint impacts and cost estimate purposes.

Traffic Operations

Year 2038 traffic analysis was conducted at the County II interchange intersections using the geometrics presented in Alternative 4. A summary of the Year 2038 intersection operating conditions is provided in Table 1-8.

Table 1-8: County II Interchange Intersection Level of Service (LOS)

County II Intersection	Intersection Type	Peak Hour LOS by Intersection	
		AM	PM
Zeh Ave	One-Way Stop Control	A	A
US 41 Southbound Ramps	Roundabout	C	C
US 41 Northbound Ramps	Roundabout	A	A
N. Green Bay Rd	Roundabout	B	B

US 41 & COUNTY II (2038)

DRAFT

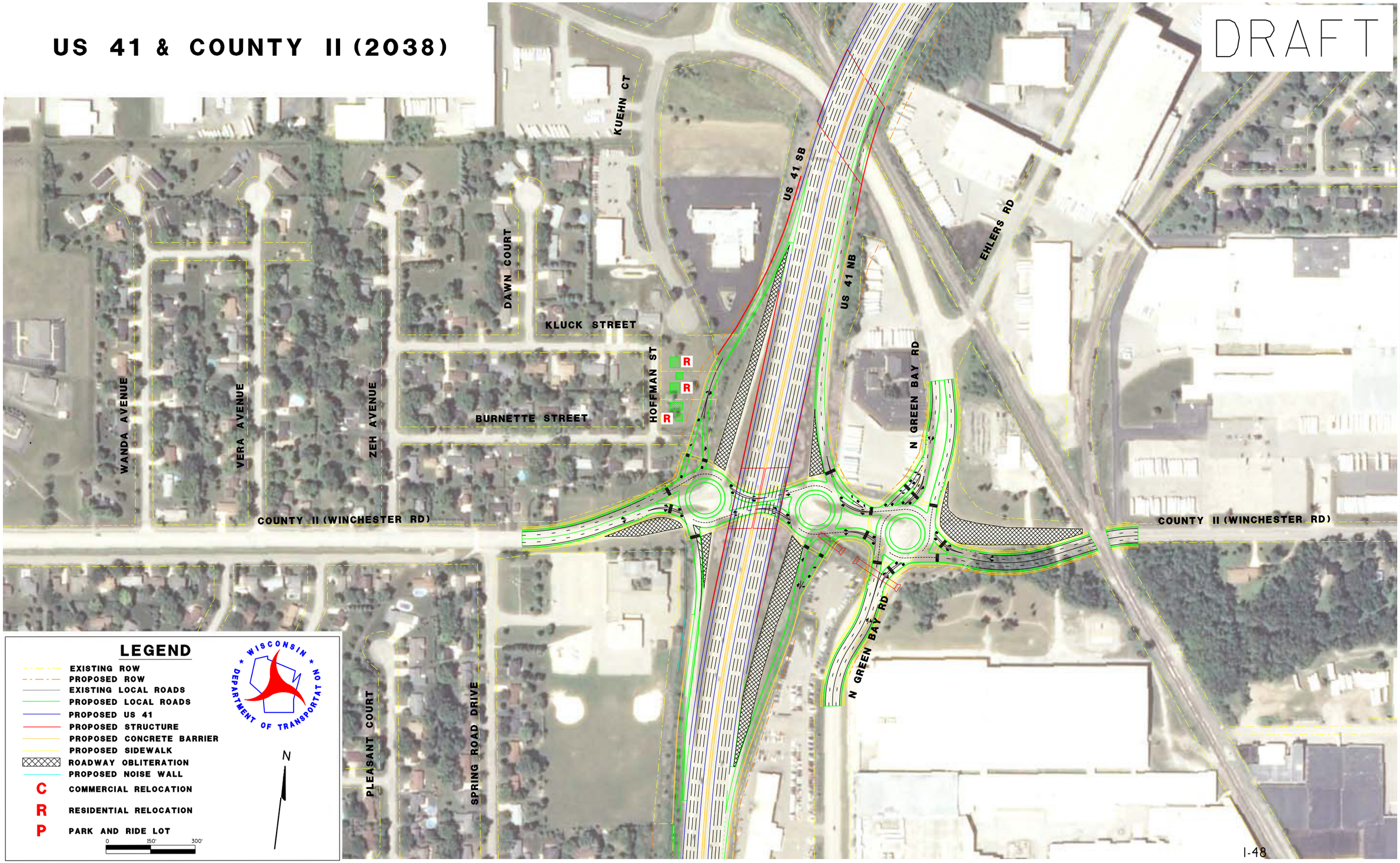

LEGEND

- EXISTING ROW
- PROPOSED ROW
- EXISTING LOCAL ROADS
- PROPOSED LOCAL ROADS
- PROPOSED US 41
- PROPOSED STRUCTURE
- PROPOSED CONCRETE BARRIER
- PROPOSED SIDEWALK
- ROADWAY OBLITERATION
- PROPOSED NOISE WALL
- C — COMMERCIAL RELOCATION
- R — RESIDENTIAL RELOCATION
- P — PARK AND RIDE LOT

0 150' 300'

WISCONSIN DEPARTMENT OF TRANSPORTATION

N

I-48

PROJECT NO: 1130-31-00	HWY: US 41	COUNTY: WINNEBAGO	FIGURE I-8: COUNTY II INTERCHANGE	PAGE I-54	E

Right-of-Way Impacts

Alternative 4 may impact the Habitat for Humanity houses being constructed along the SB exit ramp to County II, along with the Prolamina building in the southeast quadrant of County II and Green Bay Road.

Alternative 4 may require relocation and would potentially have impacts to 2 parking lots. The parking lots that would potentially be impacted are:

- The Bergstrom General Motors of Neenah dealership on Green Bay Road south of County II
- The semi-trailer storage area between US 41 and Green Bay Road on the north side of County II

Access

Alternative 4 would not require any major changes to access throughout the interchange footprint.

Complete Streets

Alternative 4 includes a sidewalk along both sides of County II for the length of reconstruction to provide pedestrian accommodations. Alternative 4 also includes a 16’ wide outside lane on County II to provide bicycle accommodations.

Further Analysis Recommendations

US 41 SB off-ramp new lane and island improvements at County II ramp terminal and County II WB acceleration lane improvements are recommended to be built with the WIS 441 Tri-County Project (See 1-O).

The future NEPA study should further evaluate long-term interchange Alternatives 4 and 5 since both meet required interchange safety and operational needs.

WisDOT standards for roundabout design, construction and operations are evolving and shall be revisited prior to implementation.

FIGURE I-9: COUNTY II INTERCHANGE, EXISTING GEOMETRY AND 2038 TRADITIONAL IMPROVEMENTS

PREPARED 6/7/2013

N

NOT TO SCALE

YEAR 2008 – EXISTING

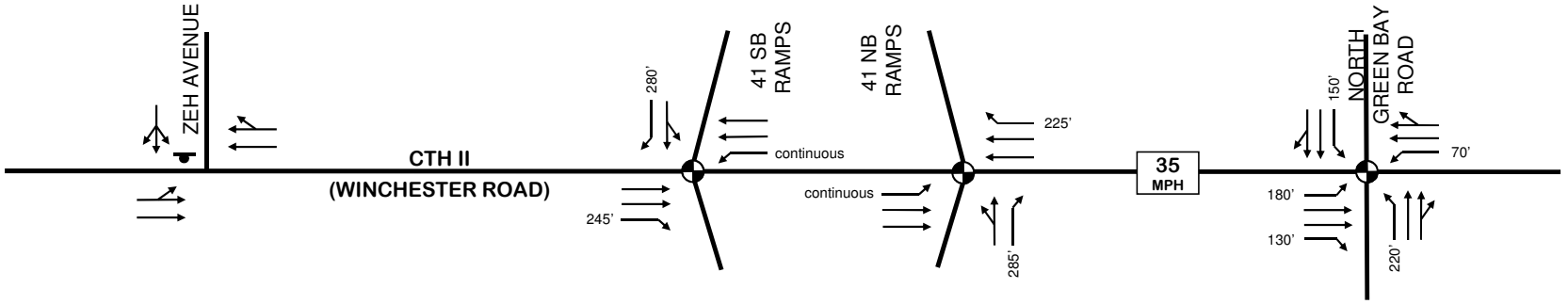

YEAR 2038 – TRADITIONAL IMPROVEMENTS

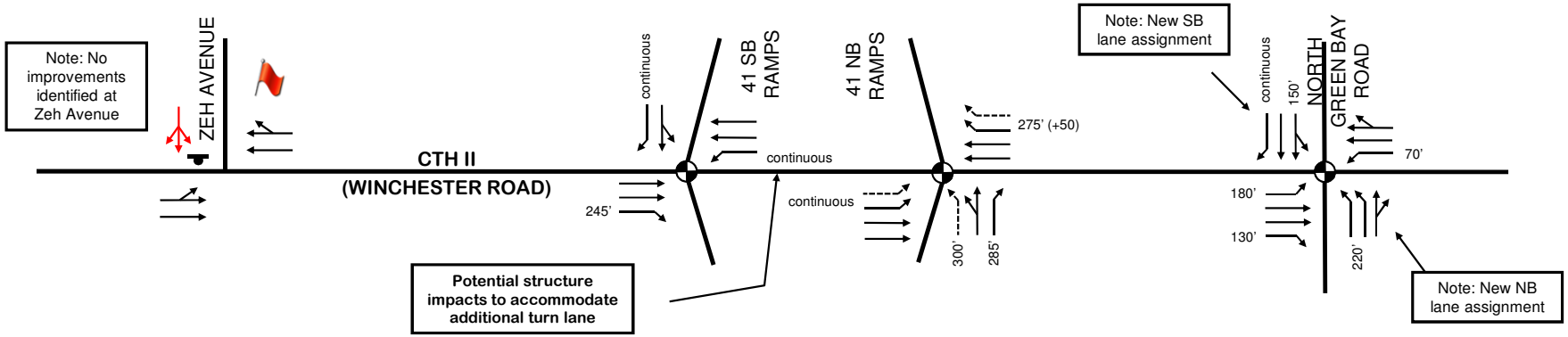

YEAR 2038 - ROUNDABOUT

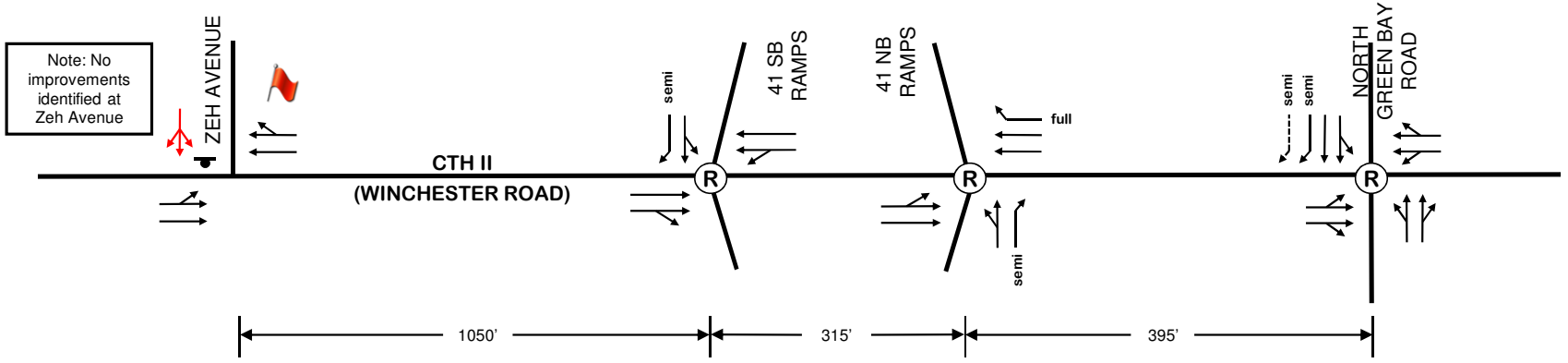

Legend

XX'	BASE GEOMETRICS PLANNED TURN BAY LENGTH		MEDIAN DIVIDED ROADWAY	TRAFFIC SIGNAL	OPERATIONAL PROBLEMS REMAIN
(+XX')	ADDITIONAL TURN BAY LENGTH RECOMMENED	→	BASE GEOMETRICS	STOP SIGN	
(LA-XX')	LOOK-AHEAD TURN LANE – STORAGE LENGTH	⇢	ADDITIONAL IMPROVEMENT RECOMMENDED	(R) ROUNDABOUT	

1.3 Cost Summary

Table 1-9 below summarizes the short term and long term alternative costs for Segment 1. Individual one page cost summaries using the US 41 Majors cost estimating worksheets are included for each US 41 mainline segment and Interchange. See Appendix 6 for a detailed breakdown of these cost estimating worksheets by segment/interchange.

Table 1-9: Segment 1 – Cost Summary

MAINLINE SEGMENT LIMITS/INTERCHANGE	SHORT-TERM COSTS*	LONG-TERM COSTS*	TOTALS
North of Breezewood Lane to South of County BB			
Major Roadway Items		$44,982,000	
Allowance Items		$26,887,000	
Structures		$38,547,000	
Special Construction Elements		$0	
Context Sensitive Solutions (CSS)		$5,521,000	
Scope Change Allowance Items		$27,825,000	
Project Delivery Allowance Items		$49,885,000	
External Costs and Risk Assessment		$12,753,000	$206,400,000
WIS 114/County JJ (Winneconne Avenue) Interchange			
Short-Term Alternative 1	$616,000		$616,000
Long-Term Alternative 4			
Major Roadway Items		$3,751,000	
Allowance Items		$2,243,000	
Structures		$1,273,000	
Special Construction Elements		$0	
Context Sensitive Solutions (CSS)		$363,000	
Scope Change Allowance Items		$1,831,000	
Project Delivery Allowance Items		$3,283,000	
External Costs and Risk Assessment		$839,000	$13,583,000
Oakridge Road/Main Street Interchange			
Short-Term (partial implementation of Alternative 5 at ramp terminal)	$167,000		$167,000
Long-Term Alternative 6			
Major Roadway Items		$2,661,000	
Allowance Items		$1,592,000	
Structures		$0	
Special Construction Elements		$0	
Context Sensitive Solutions (CSS)		$213,000	
Scope Change Allowance Items		$1,072,000	
Project Delivery Allowance Items		$1,921,000	
External Costs and Risk Assessment		$491,000	$7,950,000
County II (Winchester Road) Interchange			
Long-Term Alternative 4			
Major Roadway Items		$2,463,000	
Allowance Items		$1,474,000	
Structures		$1,767,000	
Special Construction Elements		$300,000	
Context Sensitive Solutions (CSS)		$300,000	
Scope Change Allowance Items		$1,513,000	
Project Delivery Allowance Items		$2,712,000	
External Costs		$1,323,000	$11,852,000
Segment 1 Total	**$783,000**	**$239,785,000**	**$240,568,000**

**Costs are shown in 2013 dollars with no future year construction or material cost increases from inflation included.*

SEGMENT 2 - US 41: SOUTH OF COUNTY BB TO NORTH OF WIS 96 STRUCTURES (1.922 MILES)

2.1 Existing Conditions

Traffic and Operations Summary

Mainline traffic forecasts were developed for each section of segment 2 through consultation with WisDOT Traffic Forecasting section. The K30 hourly volume projections developed using the Northeast Region travel demand model for year 2038 indicate four lanes each direction from the US 10/WIS 441 system interchange and the WIS 125 interchange, with residual hourly capacities of over 1,250 vehicles per hour for all sections. Traffic Analysis Forecasting Information System (TAFIS) generated K30 projections indicate a need for three or four lanes, with minimal residual capacity as a three lane section. Therefore a four lane section was identified due to operational needs associated with bringing ramps onto the US 41 mainline from the US 10/WIS 441 system interchange and the weaving complexities between the WIS 125 and WIS 96 interchanges. Additional detail concerning the traffic forecasts is available in the Traffic Forecasting Methodology memo in Appendix 1.

Safety Summary

The US 41 Interstate Conversion project has assessed crash data for a three year period along this segment of US 41. Table 2-1 below identifies the segment that exceeds statewide averages for the same three year period.

Table 2-1: Segment 2 – US 41 Crash Data

SECTION	CRITERIA	3-YEAR AVERAGE RATE*	SEGMENT RATE*
County BB to Spencer Street (MM 136.0 to 137.0)	Total fatal and incapacitating crashes	1.7 (Urban)	3.0

** 3-Year Average Rate (2005-2007) represents the Wisconsin statewide average number of crashes per 100 million vehicle miles traveled for urban and rural facilities. The Segment Rate represents the actual number of crashes per 100 million vehicle miles traveled for the mainline section listed.*

Roadway Summary

The US 41 Interstate Conversion project has quantified existing geometric deficiencies that require action. Table 2-2 below identifies the deficiencies.

Table 2-2: Segment 2 – Roadway Geometric Deficiencies

SECTION	MILE MARKER	CRITERIA	ACTUAL VALUE
South of County BB to Spencer Street (MM 136.0 to 137.0)	136.1	Superelevation R=3870' Desired SE=4.5%	SE=4.1% Appropriate Speed=65 mph
	136.4 to 136.8	Min. Vertical Grade = 0.5% Desired = 0.3% Min.	0.19%

Structures Summary

Bridges

Summary of existing bridge conditions from Highway Structure Information is shown in Table 2-3 (page 2-3) and includes bridge number, mile marker, bridge name, girder type, year built, year widened or raised, overlay or new deck year, current deck state, national bridge index values for deck, superstructure and substructure, sufficiency rating, and inventory ratings as of October 31, 2012.

Summary of existing bridge geometry is shown in Table 2-4 (page 2-4) and includes bridge number, mile marker, bridge name, girder type, girder depth in inches, vertical clearance, superelevation and direction of super, clear bridge width, bridge length, number of spans, span configuration, bridge skew, and crossroad typical section.

Pre-NEPA Environmental Screening Summary

Impacts within Segment 2 mainly consist of “low” and “medium” impact items. Low impact items generally include potential impacts on community and residential resources, agriculture, open water, and upland habitat as the majority of the segment is commercially and industrially developed, creating an environment that lacks residential community, agricultural, and natural resources.

Medium impact items generally include potential impacts on economic resources, environmental justice, air quality, noise, airports, and the ever present potential for erosion, storm water, historic, and archaeological impacts. Even though the perceived risk of impact is considered medium, further consideration will be needed to gain a better understanding of any imminent impacts, their severity, and mitigation or avoidance measures.

High impact items include impacts on streams and floodplains. General discussion about these impacts can be seen below. Further information on environmental impacts can be seen in the Pre-NEPA Environmental Screening located in Appendix 4.

South of County BB (Fox Cities Drive) to WIS 125

Streams and Floodplains

One unnamed stream crosses under US 41 at the County BB interchange. The stream drains into nearby Mud Creek and ultimately into Little Lake Butte Des Morts. (WDNR Surface Water Data Viewer, 2012) Future expansion of US 41 will likely require the replacement of the existing box culvert structures at the stream crossing. Reconstruction of the box culverts would result in the local re-channelization or realignment of the stream.

The US 41 mainline does cross an existing floodplain located along the unnamed stream that crosses under US 41 at the County BB interchange. Another floodplain located along Mud Creek parallels the east side of US 41 between County BB and WIS 125. It should also be noted that the WIS 125 interchange is partially built on a flood plain (WDNR Surface Water Data Viewer, 2012).

Table 2-3: Segment 2 – Summary of Existing Bridge Conditions

BRIDGE NUMBER	MILE MARKER (MM)	BRIDGE NAME	GIRDER TYPE	YEAR BUILT	YEAR WIDENED OR RAISED	YEAR OVERLAY OR NEW DECK	CURRENT DECK STATE	NBI [1] DECK	NBI [1] SUPER	NBI [1] SUB	SUFFICIENCY RATING [2]	INVENTORY RATING [3]
B-70-0135	136.0	US 41 SB Bridge Over County BB	Prestressed Concrete Deck Girder	1992	N/A	N/A	Original	6	8	7	98	21
B-70-0136	136.0	US 41 NB Bridge Over County BB	Prestressed Concrete Deck Girder	1992	N/A	N/A	Original	7	8	7	98	21
B-44-0163	137.0	US 41 SB Bridge Over Spencer Street	Continuous Concrete Haunch Slab	1992	N/A	N/A	Original	8	8	8	96	27
B-44-0164	137.0	US 41 NB Bridge Over Spencer Street	Continuous Concrete Haunch Slab	1992	N/A	N/A	Original	7	7	8	98	27
B-44-0155	137.25	US 41 SB Bridge Over WIS 125	Prestressed Concrete Deck Girder	1992	N/A	N/A	Original	8	8	8	95.9	23
B-44-0156	137.25	US 41 NB Bridge Over WIS 125	Prestressed Concrete Deck Girder	1992	N/A	N/A	Original	7	7	7	95.9	23
B-44-0157	138.0	US 41 SB Bridge Over WIS 96	Continuous Steel Deck Girder	1992	N/A	N/A	Original	7	7	7	96.7	24
B-44-0158	138.0	US 41 SB Bridge Over WIS 96	Continuous Steel Deck Girder	1992	N/A	N/A	Original	7	7	7	96.7	24

1 The Federal Highway Administration (FHWA) Recording and Coding Guide for the Structure Inventory and Appraisal of the Nation's Bridges (Coding Guide) is the basis for the National Bridge Inventory (NBI) Inspection. Each bridge component, i.e. deck, superstructure, or substructure, is assigned a numeric rating code ranging from 9 to 0, with 9 being "excellent condition" and 0 being "failed condition". A bridge becomes structurally deficient when the condition of the deck, superstructure, or substructure condition is 4 or less.

2 Following a thorough review of the deck, superstructure and substructure, bridges are assigned a "sufficiency rating" number between one and 100. The rating takes into account some 75 factors reviewed during a bridge inspection and also considers a bridge's age, length and width, and the average amount of traffic the bridge handles. WisDOT uses the sufficiency ratings to help prioritize bridge improvements. A bridge with a sufficiency rating of 80 or less is eligible for bridge rehabilitation funding. A bridge with a sufficiency rating of 50 or less is eligible for replacement funding. Each year, all states including Wisconsin are required to submit a report to the FHWA that reviews the condition of its bridges.

3 The FHWA currently requires that two capacity ratings, referred to as the Inventory Rating and Operating Rating be submitted with the NBI file. The Inventory Rating is the load level that a structure can safely sustain for an indefinite period. The Operating Rating is the absolute maximum permissible load level to which a structure may be subjected. The FHWA requires that the standard AASHTO HS truck or lane loading be used as the vehicle when load rating with the Load Factor Rating method (LFR) and that the AASHTO HL-93 loading be utilized as the vehicle when load rating with the Load and Resistance Factor method (LRFR). The above table is shown in LFR using the AASHTO HS truck standard. Bridges are not eligible for replacement unless the Inventory Rating is HS10 or less.

Table 2-4: Segment 2 – Summary of Existing Bridge Geometry

BRIDGE NO.	MILE MARKER (MM)	BRIDGE NAME	GIRDER TYPE	GIRDER DEPTH (INCHES)	VERTICAL CLEARANCE (FEET)	SUPER-ELEVATION %	BRIDGE CLEAR WIDTH (FEET)	BRIDGE LENGTH (FEET)	NUMBER OF SPANS	SPAN CONFIGURATION (FEET)	BRIDGE SKEW	LOCAL ROAD TYPICAL SECTION
B-70-0135	136.0	US 41 SB Bridge Over County BB	Prestressed Concrete Deck Girder	45	17.17	4.1 RT	57	181.67	2	89.0/89.0	17º 11' 34" LF	End Spans: 11' median; 2-12' lanes with c&g each direction, 16' terrace, 2:1 slope paving
B-70-0136	136.0	US 41 NB Bridge Over County BB	Prestressed Concrete Deck Girder	45	16.42	4.1 RT	57	181.67	2	89.0/89.0	17º 11' 34" LF	End Spans: 11' median; 2-12' lanes with c&g each direction, 16' terrace, 2:1 slope paving
B-44-0163	137.0	US 41 SB Bridge Over Spencer Street	Continuous Concrete Haunch Slab	20 typ./ 30 @ pier	15.25	NC/ 5.6 @ Ramp	Varies 78.02 to 81.60	112.67	3	27.0/55.0/29.0	0º 56' RF	End Spans: 2:1 slope paving; Middle Span: 1 - 12' lane and 1- 8' shoulder with c&g each direction, 2' terrace
B-44-0164	137.0	US 41 NB Bridge Over Spencer Street	Continuous Concrete Haunch Slab	20 typ./ 30 @ pier	15.67	NC/ 5.6 @ Ramp	Varies 66.27 to 70.43	112.67	3	27.0/55.0/29.0	No Skew	End Spans: 2:1 slope paving; Middle Span: 1 - 12' lane and 1- 8' shoulder with c&g each direction, 2' terrace
B-44-0155	137.3	US 41 SB Bridge Over WIS 125	Prestressed Concrete Deck Girder	54	17.00	NC	57	195.5	2	98.0/94.0	1º 47' 18" LF	End Spans: 11' median; 3-12' lanes with c&g each direction, 18' terrace, 2:1 slope paving
B-44-0156	137.3	US 41 NB Bridge Over WIS 125	Prestressed Concrete Deck Girder	54	17.34	NC	57	195.5	2	98.0/94.0	1º 47' 18" LF	End Spans: 11' median; 3-12' lanes with c&g each direction, 18' terrace, 2:1 slope paving
B-44-0157	138.0	US 41 SB Bridge Over WIS 96	Continuous Steel Deck Girder	36	16.25	NC	57	198.5	2	94.0/98.0	0º 01' 26" RF	End Spans: 11' median; 3-12' lanes with c&g each direction, 18' terrace, 2:1 slope paving
B-44-0158	138.0	US 41 SB Bridge Over WIS 96	Continuous Steel Deck Girder	36	16.25	NC	57	198.5	2	94.0/98.0	0º 01' 26" RF	End Spans: 11' median; 3-12' lanes with c&g each direction, 18' terrace, 2:1 slope paving

Legend:
RT = Superelevation Right
NC = Normal Crown
LT = Superelevation Left
LF = Left Forward
RF = Right Forward
N/A = Not Applicable
c&g = Curb and Gutter

Migratory bird nests may exist on bridges and fish habitat may be present in the stream. Impacts to streams, floodplains, and habitat should be assessed in coordination with the WDNR, USACE, and the U.S. Fish & Wildlife Service.

WIS 125 to WIS 96

Streams and Floodplains

Mud Creek and one other unnamed stream cross under US 41 between WIS 125 and WIS 96 (WDNR Surface Water Data Viewer, 2012). Future expansion of US 41 will likely require the replacement of the existing box culvert structure at the stream crossings. Reconstruction of the box culverts would result in the local re-channelization or realignment of the streams. The entire segment is built alongside a floodplain that follows Mud Creek across the WIS 125 interchange and one other unnamed stream (WDNR Surface Water Data Viewer, 2012).

Migratory bird nests may exist on bridges and fish habitat may be present in the stream. Impacts to streams, floodplains, and habitat should be assessed in coordination with the WDNR and the U.S. Fish & Wildlife Service.

2.2 Expansion Design Concept

Mainline Segment 2

For ease in discussion, Segment 2 – US 41: South of County BB to North of WIS 96 Structures was broken into mainline sections with limits at interchange cross roads.

Section 1: South of County BB to WIS 125

US 41 Alignment

This section of US 41 from just south of County BB to WIS 125 is shown on existing alignment. This alignment is very constrained with commercial property close to the west and the frontage road South Westland Drive along the east side of US 41.

US 41 Typical Section

The mainline typical section north of County BB consists of a 36.5’ median (14’ inside shoulders with 56-inch single face barriers). The northbound and southbound are comprised of 4 – 12’ lanes and 12’ outside shoulders with 42-inch single face barrier or retaining walls for portions of the section with tight right-of-way constraints. Refer to Figure 2-1 (page 2-8) for Typical Section.

US 41 Ramps and Auxiliary Lanes

Review all exit ramp configurations for single or dual lane needs.

Refer to Exhibit 2-1 (page 2-9) for further discussion on CTH BB on-ramp impacts to golf course (2-1-A).

Refer to Exhibit 2-1 (page 2-9) for discussion on CTH BB westbound right-of-way impacts along the north side of CTH BB (2-1-B).

Refer to Exhibit 2-3 (page 2-11) for discussion on WIS 125 northbound off-ramp configuration (2-1-C).

Refer to Exhibit 2-3 (page 2-11) for discussion on WIS 125 southbound on-ramp (2-1-D).

Frontage Roads

Refer to Exhibit 2-1 (page 2-9) for discussion on Northern Road reconstruction (2-1-E).

Refer to Exhibit 2-2 (page 2-10) for discussion on South Westland Drive reconstruction and right-of-way impacts (2-1-F).

Addressing Geometric Deficiencies

All geometric deficiencies are anticipated to be corrected during the long-term improvement expansion project. Refer to Exhibit 2-1 (page 2-9) for discussion on deficient superelevation (2-1-G). Refer to Exhibit 2-2 (page 2-10) for discussion on deficient vertical grade (2-1-H).

Right-of-Way Impacts

Refer to Exhibit 2-1 (page 2-9) for discussion on County BB right-of-way impacts (2-1-I).

Refer to Exhibit 2-1 (page 2-9) for discussion on County BB southbound off-ramp right-of-way impacts (2-1-J).

Refer to Exhibit 2-1 (page 2-9) for discussion on County BB right-of-way impacts to the First Business Center property (2-1-AD).

Refer to Exhibit 2-2 (page 2-10) for discussion on South Westland Drive right-of-way impacts (2-1-K).

Utilities

The following utilities are shown on Exhibit 2-1 (page 2-9):

- The Town of Menasha has a 12-inch water line crossing US 41 at the County BB interchange (2-1-L).
- TDS Metrocom has a buried fiber optic line crossing US 41 just north of the County BB interchange (2-1-M).
- Time Warner has a buried cable line crossing US 41 just north of the County BB interchange (2-1-N).
- WE Energies has an overhead electric crossing approximately 100 feet north of the County BB interchange (2-1-O).
- WE Energies has a buried gas line crossing at the County BB interchange (2-1-P).
- Time Warner has an overhead line crossing US 41 approximately 100 feet north of the County BB interchange (2-1-Q).

The following utilities are shown on Exhibit 2-2 (page 2-10):

- Time Warner has a buried cable crossing US 41 just south of Pine Street (2-1-R).

- WE Energies has an overhead electric crossing US 41 just south of Pine Street (2-1-S).
- WE Energies has a buried gas line crossing US 41 just north of Pine Street (2-1-T).

The following utilities are shown on Exhibit 2-3 (page 2-11):

- TDS Metrocom has a buried fiber optic line crossing US 41 along the south side of Spencer Street (2-1-U).
- Time Warner has a buried cable crossing US 41 at Spencer Street (2-1-V).
- WE Energies has two buried gas lines crossing US 41. One is just along the south side of Spencer Street and the other crossing at Spencer Street (2-1-W).
- WE Energies has an overhead electric crossing (2 lines) at approximately 100 feet north of Spencer Street (2-1-X).
- ANR Pipeline has an 8-inch and a 16-inch buried gas line crossing US 41 approximately 350 feet north of Spencer Street (2-1-Y).
- AT&T has a buried cable line crossing US 41 at College Avenue (2-1-Z).
- TDS Metrocom has a buried fiber optic line crossing US 41 at College Avenue (2-1-AA).

Further Analysis Recommendations

Refer to Exhibit 2-1 (page 2-9) for discussion on further recommendations to reduce right-of-way impacts at the County BB interchange (2-1-AB).

Refer to Exhibit 2-1 (page 2-9) for discussion on County BB right-of-way impacts to the First Business Center property (2-1-AD). Modifications to the alignment of the roundabouts should be explored, which will require balancing impacts to the various land uses around the interchange, potentially reducing impacts to structures in exchange for larger impacts to the golf course.

Refer to Exhibit 2-3 (page 2-11) for discussion on further study at WIS 125 interchange ramps (2-1-AC).

2

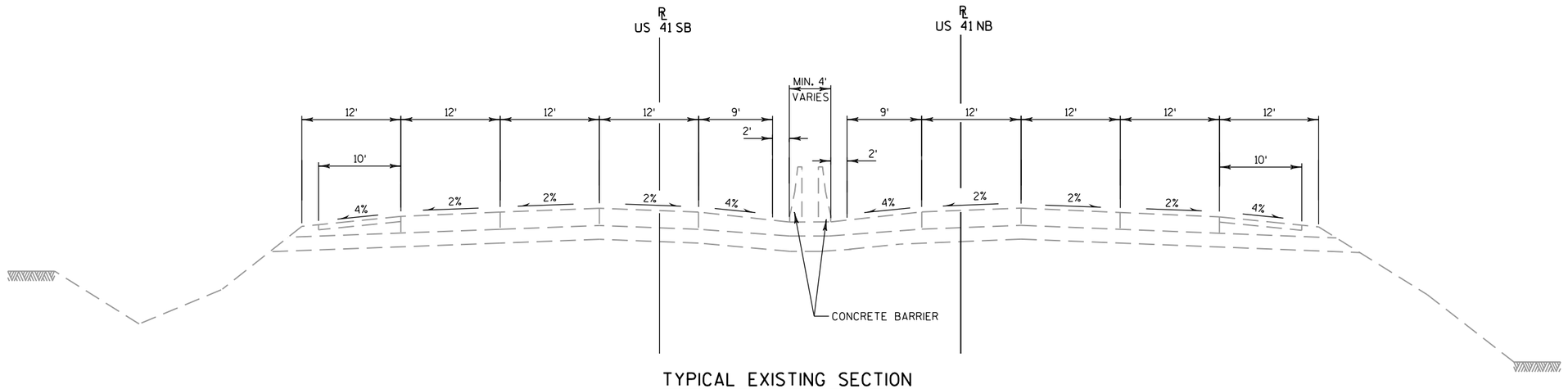

TYPICAL EXISTING SECTION
US 41 (WIS 125 TO WIS 96 INTERCHANGE)
(INSIDE INTERCHANGE AREA)

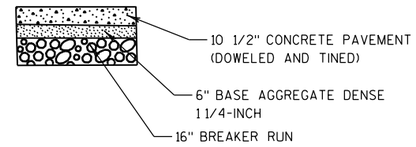

NOTE: THE ASSUMED SECTION USED FOR COST ESTIMATE PURPOSES.

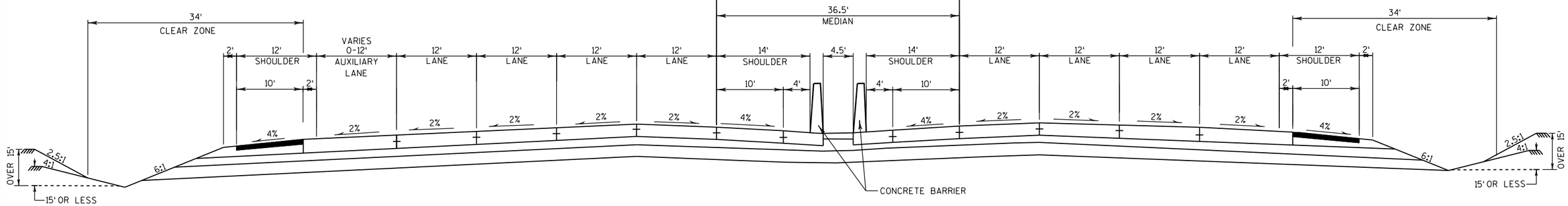

DESIRABLE PROPOSED SECTION
US 41 (WIS 125 TO WIS 96 INTERCHANGE)
(INSIDE INTERCHANGE AREA)

PROJECT NO: 1130-31-00	HWY: US 41	COUNTY: OUTAGAMIE	FIGURE 2-1: US 41 (SOUTH OF COUNTY BB TO WIS 125), TYPICAL EXISTING SECTION AND DESIRABLE PROPOSED SECTION	PAGE 2-8	E

DRAFT

US 41 RAMPS AND AUXILIARY LANES (2-1-A): THE COUNTY BB NORTHBOUND ON-RAMP IS A SINGLE-LANE PARALLEL TYPE ON-RAMP THAT WHEN RECONSTRUCTED WILL IMPACT THE GOLF COURSE ALONG THE EAST SIDE. SEE RIGHT-OF-WAY IMPACTS DISCUSSION BELOW FOR FURTHER INFORMATION.

US 41 RAMPS AND AUXILIARY LANES (2-1-B): THE COUNTY BB SOUTHBOUND OFF-RAMP IS A SINGLE-LANE TAPERED TYPE OFF-RAMP CONFIGURATION THAT DEVELOPS INTO A DUAL RIGHT TURN AND SINGLE THRU/LEFT TURN LANE AT THE RAMP TERMINAL. ADDITIONAL RIGHT-OF-WAY WILL BE REQUIRED ALONG THE OUTSIDE OF THE RAMP AND ALONG THE NORTH SIDE OF CTH BB TO ACCOMMODATE THE REQUIRED OFF RAMP CONFIGURATION. SEE RIGHT-OF-WAY IMPACTS DISCUSSION BELOW FOR FURTHER INFORMATION.

FRONTAGE ROADS (2-1-E): NORTHERN ROAD LOCATED TO THE SOUTHEAST OF THE COUNTY BB INTERCHANGE IS SHOWN TO BE RECONSTRUCTED TO MOVE THE ROADWAY FURTHER TO THE EAST ALLOWING ROOM FOR US 41 EXPANSION AND COUNTY BB INTERCHANGE RECONSTRUCTION INCLUDING THE NORTHBOUND OFF-RAMP.

RIGHT-OF-WAY IMPACTS (2-1-I): THE US 41 NORTHBOUND ON-RAMP AT COUNTY BB WILL IMPACT THE GOLF COURSE PROPERTY ALONG THE EAST SIDE OF US 41. THE GOLF COURSE IS A PRIVATE GOLF COURSE AND IS NOT ANTICIPATED TO BE A 4F OR 6F ENVIRONMENTAL CONCERN. APPROXIMATELY 1.0 ACRE WILL BE IMPACTED. NO IMPACT TO GOLF COURSE LAYOUT IS ANTICIPATED.

RIGHT-OF-WAY IMPACTS (2-1-J): THE US 41 SOUTHBOUND OFF-RAMP AT COUNTY BB WILL IMPACT RIGHT-OF-WAY ALONG THE OUTSIDE OF THE RAMP AND ALONG THE NORTH SIDE OF COUNTY BB. STRIP TAKINGS ARE ANTICIPATED FROM MULTIPLE BUSINESSES SUCH AS MOBILE GAS STATION, FOX CONVENIENCE, WITH SIGNIFICANT IMPACTS SHOWN TO THE VAN ZEELAND•S AUTO CARE CENTER PARKING LOT. APPROXIMATELY 0.4 ACRES WILL BE IMPACTED INCLUDING EXISTING FLUME DRAINAGE STRUCTURE. SEE FURTHER ANALYSIS RECOMMENDATIONS.

END SEGMENT 1

BEGIN SEGMENT 2

PROPOSED US 41

EXISTING RIGHT OF WAY

MATCHLINE

MATCHLINE

S. VAN DYKE RD

NORTHERN RD

CTH BB

CTH BB

2-1-J

2-1-AB

2-1-B

2-1-A

2-1-I

2-1-E

2-1-AD

US 41 SB ON RAMP

US 41 SB OFF RAMP

US 41 NB OFF RAMP

US 41 NB ON RAMP

US 41 SB

US 41 NB

B-70-135
RECONSTRUCT

B-70-136
RECONSTRUCT

GEOMETRIC DEFICIENCY (2-1-G):
DEFICIENT SUPERELEVATION
ACTUAL 4.1%
DESIRED 4.5%

UTILITIES (2-1-O)

UTILITIES (2-1-Q)

UTILITIES (2-1-M)

UTILITIES (2-1-L)

UTILITIES (2-1-P)

UTILITIES (2-1-N)

UTILITIES (2-1-L): THE TOWN OF MENASHA HAS A 12-INCH WATER LINE CROSSING US 41 AT THE COUNTY BB INTERCHANGE.

UTILITIES (2-1-M): TDS METROCOM HAS A BURIED FIBER OPTIC LINE CROSSING US 41 JUST NORTH OF THE COUNTY BB INTERCHANGE.

UTILITIES (2-1-N): TIME WARNER HAS A BURIED CABLE LINE CROSSING US 41 JUST NORTH OF THE COUNTY BB INTERCHANGE.

UTILITIES (2-1-O): WE ENERGIES HAS AN OVERHEAD ELECTRIC CROSSING APPROXIMATELY 100 FEET NORTH OF THE COUNTY BB INTERCHANGE.

UTILITIES (2-1-P): WE ENERGIES HAS A BURIED GAS LINE CROSSING AT APPROXIMATELY THE COUNTY BB INTERCHANGE.

UTILITIES (2-1-Q): TIME WARNER HAS AN OVERHEAD LINE CROSSING US 41 APPROXIMATELY 100 FEET NORTH OF THE COUNTY BB INTERCHANGE.

FURTHER ANALYSIS RECOMMENDATIONS (2-1-AB): FURTHER STUDY IS RECOMMENDED TO MINIMIZE IMPACTS TO THE NORTHWEST QUADRANT OF THE CTH BB INTERCHANGE DUE TO THE COUNTY BB INTERCHANGE SOUTHBOUND OFF RAMP. THERE IS ADDITIONAL OPEN SPACE TO THE SOUTHWEST SIDE OF THE INTERCHANGE. REVIEW ROUNDABOUT GEOMETRY TO DETERMINE IF THE WEST SIDE ROUNDABOUT CAN BE LOCATED FURTHER TO THE SOUTH MINIMIZING IMPACTS TO THE NORTH PROPERTIES. A CONSTRAINT IS THE SKEW DEVELOPED BETWEEN THE WEST AND EAST SIDE ROUNDABOUTS WHICH IMPACTS ROUNDABOUT EXIT AND APPROACH GEOMETRY. ANY REDUCTION IN IMPACTS WILL NEED TO BE BALANCED WITH ANY IMPACTS RESULTING IN THE OTHER SOUTHEAST QUADRANT TO THE COMMERCIAL OFFICE BUILDING OR NORTHEAST QUADRANT WITH THE PRIVATE GOLF COURSE. ANOTHER CONSIDERATION IS TO INCLUDE RETAINING WALLS ALONG THE RAMPS TO MINIMIZE RIGHT-OF-WAY NEEDED FOR EMBANKMENT SLOPE CONSTRUCTION AND LONG TERM DRAINAGE MAINTENANCE.

RIGHT-OF-WAY IMPACTS (2-1-AD): POTENTIAL IMPACT TO FIRST BUSINESS CENTER PROPERTY.

LEGEND

- APPROXIMATE UTILITY CROSSING
- EXISTING ROW
- PROPOSED ROW
- EXISTING ROADWAYS
- PROPOSED LOCAL ROADS
- PROPOSED US 41
- PROPOSED STRUCTURE
- PROPOSED CONCRETE BARRIER
- PROPOSED LOCAL SIDEWALK
- ROADWAY OBLITERATION
- PROPOSED NOISE WALL

WISCONSIN DEPARTMENT OF TRANSPORTATION

0 100' 200'

N

PROJECT NO: 1130-31-00	HWY: US 41	COUNTY: OUTAGAMIE	EXHIBIT 2-1: US 41 SEGMENT 2 / SECTION 1 / SHEET 1	PAGE 2-9	E

FILE NAME : \\madw00\ingrproj\44386\t1\Short Term Solutions\Amendment #5\CDS\0227A_PO.dgn PLOT DATE : 2/7/2014 PLOT BY : lzidek PLOT NAME : PLOT SCALE : 200:1

2

FRONTAGE ROADS (2-1-F): SOUTH WESTLAND DRIVE ABUTS THE US 41 MAINLINE ALONG THE EAST SIDE AND IS SHOWN TO BE RECONSTRUCTED TO MOVE THE FRONTAGE ROADWAY FURTHER TO THE EAST ALLOWING ROOM FOR US 41 EXPANSION. RIGHT-OF-WAY STRIP TAKINGS ARE ANTICIPATED ALONG SOUTH WESTLAND DRIVE. THE CUL-DU-SAC RECONSTRUCTION LOCATED AT THE SOUTH END OF SOUTH WESTLAND DRIVE NEAR WEST GOLF TERRACE IS ANTICIPATED TO IMPACT RIGHT-OF-WAY DUE TO A LARGER RADIUS REQUIREMENT TO MEET CURRENT DESIGN STANDARDS. SEE RIGHT-OF-WAY IMPACTS DISCUSSION BELOW.

RIGHT-OF-WAY IMPACTS (2-1-K): SOUTH WESTLAND DRIVE WILL REQUIRE STRIP TAKINGS FOR THE FRONTAGE ROAD AND CUL-DA-SAC AREAS NO RELOCATIONS OR ACQUISITIONS ARE ANTICIPATED, ONLY STRIP TAKINGS. SOME COMMERCIAL BUSINESSES AND PRIVATE RESIDENTS WILL BE IMPACTED AND INCLUDE THE FOLLOWING: AMERICAN MOTOR INN, RJ KAMPO PLUMBING AND HEATING, GROW BIG HYDROPONICS, CROSS FIT APPLETON, BBR CONTRACTING, DIVER'S REALM, U HAUL NEIGHBORHOOD DEALER, PROTECTIVE COATING SPECIALISTS, MACCO'S FLOOR COVERING CENTER. OTHER COMMERCIAL BUSINESSES AND PRIVATE RESIDENTS ALONG SOUTH WESTLAND DRIVE WERE NOT ABLE TO BE IDENTIFIED AND WILL REQUIRE FURTHER RESEARCH TO IDENTIFY. APPROXIMATELY 0.6 ACRES WILL BE IMPACTED ALONG SOUTH WESTLAND DRIVE AND WEST GOLF TERRACE.

UTILITIES (2-1-R): TIME WARNER HAS A BURIED CABLE CROSSING US 41 APPROXIMATELY JUST SOUTH OF PINE STREET.

UTILITIES (2-1-S): WE ENERGIES HAS AN OVERHEAD ELECTRIC CROSSING US 41 APPROXIMATELY JUST SOUTH OF PINE STREET.

UTILITIES (2-1-T): WE ENERGIES HAS A BURIED GAS LINE CROSSING US 41 APPROXIMATELY JUST NORTH OF PINE STREET.

DRAFT

S. NICOLET RD

S. VAN DYKE RD

BOARDWALK CT

W. PINE ST

GEOMETRIC DEFICIENCY (2-1-H):
APPROXIMATE END OF DEFICIENT VERTICAL GRADE
ACTUAL 0.19%
DESIRED 0.5%
MINIMUM 0.3%

PROPOSED US 41

US 41 SB

US 41 NB

S. WESTLAND DR

2-1-F

2-1-K

UTILITIES (2-1-T)

UTILITIES (2-1-S)

UTILITIES (2-1-R)

EXISTING RIGHT OF WAY

W. GOLF TERRACE CT

MATCHLINE

MATCHLINE

GEOMETRIC DEFICIENCY (2-1-H):
APPROXIMATE START OF DEFICIENT VERTICAL GRADE
ACTUAL 0.19%
DESIRED 0.5%
MINIMUM 0.3%

S. TIMMERS LN

LEGEND

- APPROXIMATE UTILITY CROSSING
- EXISTING ROW
- PROPOSED ROW
- EXISTING ROADWAYS
- PROPOSED LOCAL ROADS
- PROPOSED US 41
- PROPOSED STRUCTURE
- PROPOSED CONCRETE BARRIER
- PROPOSED LOCAL SIDEWALK
- ROADWAY OBLITERATION
- PROPOSED NOISE WALL

WISCONSIN DEPARTMENT OF TRANSPORTATION

0 100' 200'

N

2

PROJECT NO: 1130-31-00	HWY: US 41	COUNTY: OUTAGAMIE	EXHIBIT 2-2: US 41 SEGMENT 2 / SECTION 1 / SHEET 2	PAGE 2-10	E

FILE NAME : \\madw00\ingrproj\44386\t1\Short Term Solutions\Amendment #5\CDS\0228_PO.dgn PLOT DATE : 4/30/2013 PLOT BY : Jgallamore PLOT NAME : PLOT SCALE : 200:1

US 41 RAMPS AND AUXILIARY LANES (2-1-C): THE WIS 125 NORTHBOUND OFF-RAMP IS A SINGLE LANE TAPERED TYPE OFF-RAMP CONFIGURATION THAT AFTER THE GORE AREA QUICKLY DEVELOPS INTO A MULTIPLE 5-LANE RAMP SECTION. BARRIER WALL IS INCLUDED ALONG THE OUTSIDE SHOULDER FOR THE RAMP TO MINIMIZE IMPACTS TO THE ADJACENT PARKING LOT AREA.

US 41 RAMPS AND AUXILIARY LANES (2-1-D): THE WIS 125 SOUTHBOUND ON-RAMP IS A DUAL-LANE PARALLEL TYPE ON-RAMP CONFIGURATION THAT IS TIGHT ALONG THE WEST SIDE US 41 RIGHT-OF-WAY LINE. A RETAINING WALL IS ANTICIPATED SOUTH OF THE BRIDGE. FURTHER STUDY IS REQUIRED TO DETERMINE DRAINAGE AND WALL STRUCTURE REQUIREMENTS.

UTILITIES (2-1-U): TDS METROCOM HAS A BURIED FIBER OPTIC LINE CROSSING US 41 ALONG THE SOUTH SIDE OF SPENCER STREET.

UTILITIES (2-1-V): TIME WARNER HAS A BURIED CABLE CROSSING US 41 AT APPROXIMATELY SPENCER STREET.

UTILITIES (2-1-W): WE ENERGIES HAS TWO BURIED GAS LINES CROSSING US 41. ONE IS JUST ALONG THE SOUTH SIDE OF SPENCER STREET AND THE OTHER CROSSING AT SPENCER STREET.

UTILITIES (2-1-X): WE ENERGIES HAS AN OVERHEAD ELECTRIC CROSSING APPROXIMATELY 100 FEET NORTH OF SPENCER STREET (2 LINES).

UTILITIES (2-1-Y): ANR PIPELINE HAS AN 8-INCH AND A 16-INCH BURIED GAS LINE CROSSING US 41 APPROXIMATELY 350 FEET NORTH OF SPENCER STREET. THESE LINES CROSS AT AN ANGLE OVER THE MAINLINE, SB ON RAMP, AND NB OFF RAMP.

UTILITIES (2-1-Z): AT&T HAS A BURIED CABLE LINE CROSSING US 41 AT APPROXIMATELY COLLEGE AVENUE.

UTILITIES (2-1-AA): TDS METROCOM HAS A BURIED FIBER OPTIC LINE CROSSING US 41 AT APPROXIMATELY COLLEGE AVENUE.

2

2

S. NICOLET RD

N. MALL DR

FOX RIVER DR

WIS 125/ CTH CA

UTILITIES (2-1-AA)

UTILITIES (2-1-Z)

B-44-155
RECONSTRUCT

UTILITIES (2-1-W)

B-44-163
RECONSTRUCT

US 41 SB ON RAMP

US 41 SB OFF RAMP

2-1-D

PROPOSED US 41

US 41 SB

US 41 NB

TYPICAL SECTION (SEE FIGURE 2-1)

2-1-C

US 41 NB OFF RAMP

2-1-AC

US 41 NB ON RAMP

S. WESTLAND DR

UTILITIES (2-1-U)

UTILITIES (2-1-V)

B-44-164
RECONSTRUCT

UTILITIES (2-1-X)

UTILITIES (2-1-Y)

MATCHLINE

W. SPENCER ST

S. GLENRIDGE CT

B-44-156
RECONSTRUCT

EXISTING RIGHT OF WAY

MATCHLINE

WIS 125/ CTH CA

LEGEND

- APPROXIMATE UTILITY CROSSING
- EXISTING ROW
- PROPOSED ROW
- EXISTING ROADWAYS
- PROPOSED LOCAL ROADS
- PROPOSED US 41
- PROPOSED STRUCTURE
- PROPOSED CONCRETE BARRIER
- PROPOSED LOCAL SIDEWALK
- ROADWAY OBLITERATION
- PROPOSED NOISE WALL

WISCONSIN DEPARTMENT OF TRANSPORTATION

0 100' 200'

N

FURTHER ANALYSIS RECOMMENDATIONS (2-1-AC): WIS 125 RAMPS INCLUDING PROFILE GRADES AND LENGTH SHOULD BE FURTHER EVALUATED FOR IMPACTS. THE RAISED ELEVATION OF US 41 MAINLINE BRIDGES OVER WIS 125 INCREASES THE MAINLINE PROFILE GRADES, INFLUENCING THE RAMP GORE POINTS AND SUBSEQUENT RAMP GRADES. THE GRADES CREATED MAY REQUIRE THE RAMPS TO BE LENGTHENED SLIGHTLY TO STAY WITHIN REQUIRED DESIGN STANDARDS. ADDITIONALLY, A RETAINING WALL MAY BE REQUIRED BETWEEN THE RAMP AND MAINLINE.

PROJECT NO: 1130-31-00	HWY: US 41	COUNTY: OUTAGAMIE	EXHIBIT 2-3: US 41 SEGMENT 2 / SECTION 1 / SHEET 3	PAGE 2-11	E

FILE NAME : J:\44386\t1\Short Term Solutions\Amendment #5\CDS\0229_PO.dgn PLOT DATE : 12/19/2013 PLOT BY : lzidek PLOT NAME : PLOT SCALE : 200:1

Section 2: WIS 125 (College Avenue) to North of WIS 96 (Wisconsin Avenue) Structures

US 41 Alignment

Refer to Exhibit 2-5 (page 2-16) for further discussion on US 41 Alignment limitations including Mud Creek box culverts and retaining wall requirements (2-2-A).

US 41 Typical Section

Between the WIS 125 and WIS 96 interchanges, the mainline typical section consists of a 36.5' median (14' inside shoulders with 56-inch single face barriers), 4 – 12' lanes and 1 – 12' auxiliary lane in each direction, and 12' outside shoulders with 42-inch single face barrier or retaining walls for portions of the section with tight right-of-way constraints. Refer to Figure 2-2 (page 2-14) for Typical Section.

US 41 Ramps and Auxiliary Lanes

Review all exit ramp configurations for single or dual lane needs.

Refer to Exhibit 2-4 (page 2-15) for further discussion on the WIS 125 northbound on-ramp configuration and discussion on existing box culvert reconstruction (2-2-B).

Refer to Exhibit 2-4 (page 2-15) for discussion on the WIS 125 southbound off-ramp configuration with retaining walls (2-2-C).

Refer to Exhibit 2-5 (page 2-16) for discussion on the WIS 96 southbound on-ramp and auxiliary lane configuration with retaining walls (2-2-D).

Refer to Exhibit 2-5 (page 2-16) for discussion on the WIS 96 northbound off-ramp configuration (2-2-E).

Frontage Roads

Refer to Exhibit 2-5 (page 2-16) for discussion on Fox River Mall frontage road (2-2-F).

Addressing Geometric Deficiencies

There are no mainline geometric deficiencies identified within Section 2.

Right-of-Way Impacts

Refer to Exhibit 2-5 (page 2-16) for discussion on right-of-way impacts along US 41 southbound between mainline and Mud Creek (2-2-G).

Refer to Exhibit 2-5 (page 2-16) for discussion on right-of-way impacts along US 41 northbound (2-2-H).

Refer to Exhibit 2-5 (page 2-16) for discussion on right-of-way impacts along WIS 96 northbound off-ramp (2-2-I).

Utilities

The following utilities are shown on Exhibit 2-6 (page 2-17):

- WE Energies has an overhead electric facility (3 lines) crossing US 41 at approximately 100 feet north of WIS 96 (2-2-J).
- WE Energies has a buried gas line crossing approximately at WIS 96 (2-2-K).

Further Analysis Recommendations

Refer to Exhibit 2-5 (page 2-16) for recommendations of further study areas to balance impacts to Mud Creek on the west side of US 41 and right-of-way impacts along the east side while maintaining required mainline typical sections (2-2-L).

Refer to Exhibit 2-6 (page 2-17) for discussion on further study at WIS 96 interchange ramps (2-2-M).

2

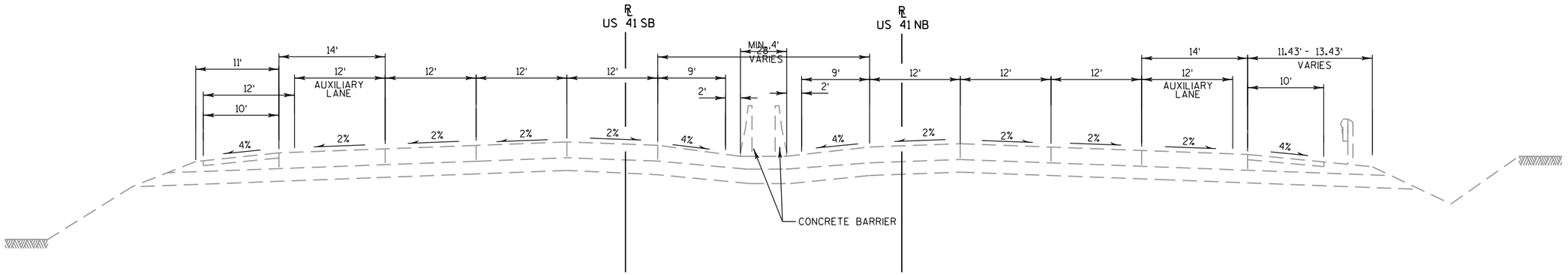

TYPICAL EXISTING SECTION
US 41 (WIS 125 TO WIS 96 INTERCHANGE)
(OUTSIDE INTERCHANGE AREA)

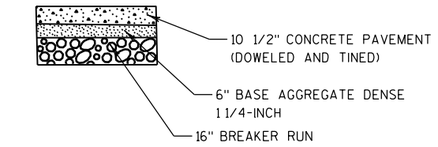

NOTE: THE ASSUMED SECTION USED FOR COST ESTIMATE PURPOSES.

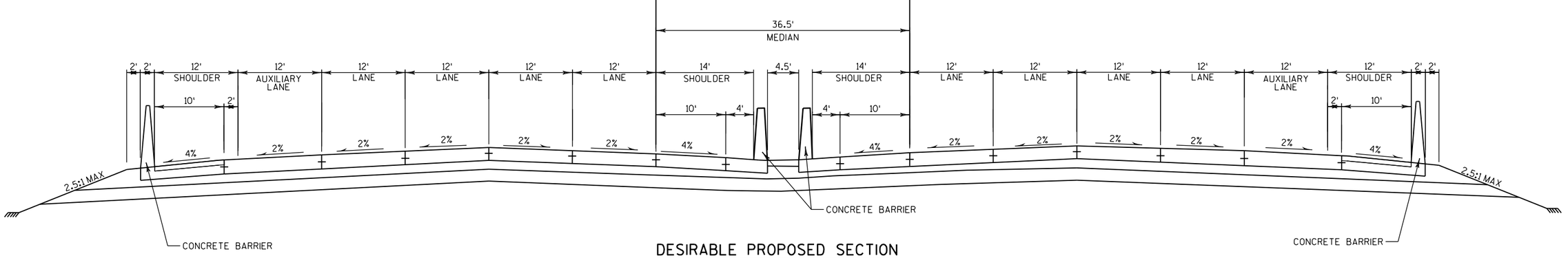

DESIRABLE PROPOSED SECTION
US 41 (WIS 125 TO WIS 96 INTERCHANGE)
(OUTSIDE INTERCHANGE AREA)

PROJECT NO: 1130-31-00	HWY: US 41	COUNTY: OUTAGAMIE	FIGURE 2-2: US 41 (SOUTH OF WIS 125 TO NORTH OF WIS 96 STRUCTURES). TYPICAL EXISTING SECTION AND DESIRABLE PROPOSED SECTION	PAGE 2-14	E

FILE NAME : J:\44386\t1\Short Term Solutions\Amendment "5\TYICAL SECTIONS2.dgn PLOT DATE : 4/29/2013 PLOT BY : Jgallamore PLOT NAME : $FILE$ PLOT SCALE : 15:1

2

US 41 RAMPS AND AUXILIARY LANES (2-2-B): THE US 41 NORTHBOUND ON-RAMP AT WIS 125 IS A PARALLEL TYPE DUAL-LANE ON-RAMP THAT MERGES INTO THE AUXILIARY LANE BETWEEN WIS 125 AND WIS 96. THE AUXILIARY LANE CONTINUES PAST WIS 96 AND MERGES INTO THE OUTSIDE LANE BETWEEN THE BRIDGE AND US 41 NORTHBOUND ON-RAMP FROM WIS 96. IN ADDITION, THE RAMP HAS AN EXISTING BOX CULVERT THAT RUNS UNDERNEATH THAT SHOULD BE REVIEWED FURTHER TO DETERMINE ITS CONDITION AND WHAT OVERALL IMPACTS WILL OCCUR DUE TO THE RAMP RECONSTRUCTION. THE BOX CULVERT WAS ASSUMED TO NEED RECONSTRUCTION. IT IS ANTICIPATED TO BE COMBINED WITH THE MAINLINE BOX CULVERT AS ONE BOX STRUCTURE AND IS INCLUDED IN THE COST ESTIMATE.

US 41 RAMPS AND AUXILIARY LANES (2-2-C): THE US 41 SOUTHBOUND OFF-RAMP AT WIS 125 IS A DUAL-LANE TAPERED TYPE OFF-RAMP CONFIGURATION THAT AFTER THE GORE AREA QUICKLY DEVELOPS INTO A MULTIPLE 5-LANE RAMP SECTION. THE RAMP HAS AN EXISTING BOX CULVERT THAT RUNS UNDERNEATH AND CONTINUES UNDER THE US 41 MAINLINE. IT SHOULD BE REVIEWED FURTHER TO DETERMINE ITS CONDITION AND WHAT OVERALL IMPACTS WILL OCCUR DUE TO THE RAMP RECONSTRUCTION. RETAINING WALLS ARE ANTICIPATED TO MINIMIZE IMPACTS TO THE ADJACENT MUD CREEK. THE BOX CULVERT WAS ASSUMED TO NEED RECONSTRUCTION WITHIN THE COST ESTIMATE.

DRAFT

2

S. NICOLET RD
N. MALL DR
FOX RIVER DR
W. SPENCER ST
WIS 125/ CTH CA
B-44-163
RECONSTRUCT
B-44-155
RECONSTRUCT
US 41 SB ON RAMP
US 41 SB OFF RAMP
2-2-C
PROPOSED US 41
US 41 SB
US 41 NB
S. WESTLAND DR
US 41 NB OFF RAMP
US 41 NB ON RAMP
2-2-B
B-44-164
RECONSTRUCT
B-44-156
RECONSTRUCT
EXISTING RIGHT OF WAY
S. GLENRIDGE CT
MATCHLINE
MATCHLINE

LEGEND

- APPROXIMATE UTILITY CROSSING
- EXISTING ROW
- PROPOSED ROW
- EXISTING ROADWAYS
- PROPOSED LOCAL ROADS
- PROPOSED US 41
- PROPOSED STRUCTURE
- PROPOSED CONCRETE BARRIER
- PROPOSED LOCAL SIDEWALK
- ROADWAY OBLITERATION
- PROPOSED NOISE WALL

WISCONSIN DEPARTMENT OF TRANSPORTATION

0 100' 200'

N

PROJECT NO: 1130-31-00	HWY: US 41	COUNTY: OUTAGAMIE	EXHIBIT 2-4: US 41 SEGMENT 2 / SECTION 2 / SHEET 1	PAGE 2-15	E

FILE NAME : \\madw00\ingrproj\44386\t1\Short Term Solutions\Amendment #5\CDS\0229A_PO.dgn PLOT DATE : 3/26/2014 1:40:37 PM PLOT BY : lzidek PLOT NAME : PLOT SCALE : 200:1

2

US 41 ALIGNMENT (2-2-A): THIS SECTION OF US 41 FROM WIS 125 TO WIS 96 IS SHOWN ON EXISTING ALIGNMENT. THIS ALIGNMENT IS CONSTRAINED WITH COMMERCIAL PROPERTY CLOSE TO THE EAST RIGHT-OF-WAY AND MUD CREEK ALONG THE WEST SIDE OF US 41. TWO EXISTING MUD CREEK BOX CULVERTS RUN UNDERNEATH THE US 41 MAINLINE NORTHBOUND AND SOUTHBOUND LANES. THE FIRST IS APPROXIMATELY 350-FEET NORTH OF WIS 125 AT A 38-DEGREE LEFT FORWARD SKEW (REFER TO EXHIBIT 2-4). THE SECOND IS APPROXIMATELY 1200-FEET SOUTH OF WIS 96 AT A 34-DEGREE RIGHT FORWARD SKEW. RETAINING WALLS ALONG US 41 MAINLINE AT THESE BOX CULVERT LOCATIONS HAVE BEEN INCORPORATED INTO THE COST ESTIMATE ALONG WITH RECONSTRUCTION OF THESE BOX CULVERTS.

US 41 RAMPS AND AUXILIARY LANES (2-2-D): THE US 41 SOUTHBOUND ON-RAMP AT WIS 96 IS A PARALLEL TYPE DUAL-LANE ON-RAMP THAT DEVELOPS INTO THE AUXILIARY LANE BETWEEN WIS 96 AND WIS 125. RETAINING WALLS ARE ANTICIPATED ALONG THE OUTSIDE OF THE AUXILIARY RAMP MINIMIZING IMPACTS TO THE ADJACENT MUD CREEK AND CONNECTING INTO THE MUD CREEK BOX CULVERTS. THE AUXILIARY LANE CONTINUES PAST WIS 125 AND MERGES INTO THE OUTSIDE LANE BETWEEN THE BRIDGE AND US 41 SOUTHBOUND ON-RAMP FROM WIS 125.

US 41 RAMPS AND AUXILIARY LANES (2-2-E): THE US 41 NORTHBOUND OFF-RAMP AT WIS 96 IS A SINGLE-LANE TAPERED TYPE OFF-RAMP CONFIGURATION THAT AFTER THE GORE AREA QUICKLY DEVELOPS INTO A MULTIPLE 5-LANE RAMP SECTION.

FRONTAGE ROADS (2-2-F): THE ONLY FRONTAGE ROAD WITHIN THIS STRETCH OF US 41 IS THE MALL CIRCULATION ROADWAY AT THE FOX RIVER MALL ALONG THE WEST SIDE OF US 41 MAINLINE AND THE US 41 SOUTHBOUND ON-RAMP AT WIS 96. NO IMPACTS ARE ANTICIPATED WITH THE FOX RIVER MALL FRONTAGE ROAD SYSTEM.

DRAFT

2-2-F

FOX RIVER MALL FRONTAGE ROAD

2-2-D

2-2-A

PROPOSED US 41

2-2-G

US 41SB

US 41NB

TYPICAL SECTION (SEE FIGURE 2-2)

US 41 SB ON RAMP

US 41NB OFF RAMP

2-2-H

2-2-L

2-2-H

2-2-I

2-2-E

EXISTING RIGHT OF WAY

MATCHLINE

MATCHLINE

W. WHEELER RD

RIGHT-OF-WAY IMPACTS (2-2-G): THE RIGHT-OF-WAY LINE IS EXTREMELY CLOSE BETWEEN US 41 SOUTHBOUND MAINLINE AND MUD CREEK. A BERM SECTION IS LOCATED JUST OFF THE US 41 RIGHT-OF-WAY LINE BETWEEN THE MAINLINE AND MUD CREEK. APPROXIMATELY 1.5 ACRES OF RIGHT-OF-WAY ACQUISITION IS SHOWN BEING NEEDED WITHIN THIS AREA. FURTHER REVIEW OF RIGHT-OF-WAY IMPACTS, RETAINING WALLS (SEE US 41 ALIGNMENT DISCUSSION ABOVE) AND MAINLINE SIDE SLOPE REQUIREMENTS ARE NEEDED IN THIS AREA TO MINIMIZE THE ENVIRONMENTAL IMPACTS TO MUD CREEK. IN ADDITION, SEE FURTHER ANALYSIS RECOMMENDATIONS BELOW.

RIGHT-OF-WAY IMPACTS (2-2-H): ALONG US 41 NORTHBOUND MAINLINE, APPROXIMATELY 1.9 ACRES IS SHOWN AS REQUIRED ACQUISITION WITHIN TWO LOCATIONS. THESE LOCATIONS ARE IN TIGHT RIGHT-OF-WAY AREAS WHERE ADDITIONAL STRIP TAKINGS ARE NEEDED TO AVOID ADDITIONAL COSTLY RETAINING WALLS FOR US 41.

RIGHT-OF-WAY IMPACTS (2-2-I): ALONG WIS 96 NORTHBOUND OFF-RAMP, A RETAINING WALL AND CONCRETE BARRIER WALL IS REQUIRED ALONG THE RAMP OUTSIDE SHOULDER TO MINIMIZE IMPACTS TO THE ADJACENT KWIK TRIP AND COMFORT SUITES APPLETON AIRPORT COMMERCIAL PARCELS. APPROXIMATELY 0.3 ACRES IS SHOWN AS REQUIRED FOR DRAINAGE AND MAINTENANCE NEEDS IN FRONT OF THE WALL AND BARRIER.

FURTHER ANALYSIS RECOMMENDATIONS (2-2-L): CONSIDER SHIFTING THE US 41 MAINLINE ALIGNMENT TO THE EAST TO AVOID FURTHER IMPACTS TO MUD CREEK. BY SHIFTING THE ALIGNMENT TO THE EAST, ADDITIONAL RIGHT-OF-WAY IMPACTS MAY OCCUR TO THE FOLLOWING COMMERCIAL PROPERTIES ALONG US 41: COMFORT SUITES APPLETON AIRPORT, BURLINGTON COAT FACTORY, WOODMAN•S FOOD MARKET, GANDER MOUNTAIN, UNIVERSITY OF PHOENIX, AND THE LA QUINTA. IN ADDITION TO SHIFTING US 41 ALIGNMENT TO THE EAST, ANOTHER CONSIDERATION IS TO INCLUDE RETAINING WALLS ALONG THE AUXILIARY LANE TO MINIMIZE RIGHT-OF-WAY NEEDED FOR EMBANKMENT SLOPE CONSTRUCTION AND LONG TERM DRAINAGE MAINTENANCE.

LEGEND

- APPROXIMATE UTILITY CROSSING
- EXISTING ROW
- PROPOSED ROW
- EXISTING ROADWAYS
- PROPOSED LOCAL ROADS
- PROPOSED US 41
- PROPOSED STRUCTURE
- PROPOSED CONCRETE BARRIER
- PROPOSED LOCAL SIDEWALK
- ROADWAY OBLITERATION
- PROPOSED NOISE WALL

WISCONSIN DEPARTMENT OF TRANSPORTATION

0 100' 200'

N

PROJECT NO: 1130-31-00	HWY: US 41	COUNTY: OUTAGAMIE	EXHIBIT 2-5: US 41 SEGMENT 2 / SECTION 2 / SHEET 2	PAGE 2-16	E

DRAFT

UTILITIES (2-2-J): WE ENERGIES HAS AN OVERHEAD ELECTRIC FACILITY (3 LINES) CROSSING US 41 AT APPROXIMATELY 100 FEET NORTH OF WIS 96.

UTILITIES (2-2-K): WE ENERGIES HAS A BURIED GAS LINE CROSSING APPROXIMATELY AT WIS 96.

FURTHER ANALYSIS RECOMMENDATIONS (2-2-M): WIS 96 RAMPS INCLUDING PROFILE GRADES AND LENGTH SHOULD BE FURTHER EVALUATED FOR IMPACTS. THE RAISED ELEVATION OF US 41 MAINLINE BRIDGES OVER WIS 96 INCREASES THE MAINLINE PROFILE GRADES, INFLUENCING THE RAMP GORE POINTS AND SUBSEQUENT RAMP GRADES. THE GRADES CREATED MAY REQUIRE THE RAMPS TO BE LENGTHENED TO STAY WITHIN REQUIRED DESIGN STANDARDS. ADDITIONALLY, A RETAINING WALL MAY BE REQUIRED BETWEEN RAMP AND MAINLINE.

N. WESTFIELD DR

W. BREWSTER ST

B-44-157
RECONSTRUCT

END SEGMENT 2

WIS 96

US 41 SB
ON RAMP

US 41 SB OFF RAMP

N. WESTFIELD DR

FOX VALLEY RR

B-44-157
RECONSTRUCT

PROPOSED US 41

2.2 M

US 41 SB

US 41 NB

US 41 NB
OFF RAMP

US 41 NB ON RAMP

BEGIN SEGMENT 3

B-44-158
RECONSTRUCT

UTILITIES (2-2-J)

UTILITIES (2-2-K)

EXISTING RIGHT OF WAY

B-44-158
RECONSTRUCT

MATCHLINE

MATCHLINE

LEGEND

- APPROXIMATE UTILITY CROSSING
- EXISTING ROW
- PROPOSED ROW
- EXISTING ROADWAYS
- PROPOSED LOCAL ROADS
- PROPOSED US 41
- PROPOSED STRUCTURE
- PROPOSED CONCRETE BARRIER
- PROPOSED LOCAL SIDEWALK
- ROADWAY OBLITERATION
- PROPOSED NOISE WALL

WISCONSIN DEPARTMENT OF TRANSPORTATION

0 100' 200'

N

PROJECT NO: 1130-31-00	HWY: US 41	COUNTY: OUTAGAMIE	EXHIBIT 2-6: US 41 SEGMENT 2 / SECTION 2 / SHEET 3	PAGE 2-17	E

FILE NAME : \\madw00\ingrproj\44386\t1\Short Term Solutions\Amendment #5\CDS\0231_PO.dgn PLOT DATE : 4/30/2013 PLOT BY : Jgallamore PLOT NAME : PLOT SCALE : 200:1

Structures

Bridges

A summary of potential bridge geometry is shown in Table 2-5 (page 2-19). This summary includes bridge number, mile marker, bridge name, existing bridge age in 2013, girder type, girder depth, desired vertical clearance, minimum vertical clearance, potential vertical clearance, superelevation and direction of curve, clear bridge width, bridge length, number of spans, span configuration, bridge skew, local road typical section, and design recommendations.

Table 2-5: Segment 2 – Summary of Potential Bridge Geometry

BRIDGE NO.	MILE MARKER (MM)	BRIDGE NAME	AGE IN 2013	GIRDER TYPE	GIRDER DEPTH (INCH)	DESIRED VERT. CLEAR (FEET)	MIN. VERT. CLEAR (FEET)	VERT. CLEAR (FEET)	SUPER % & DIR.	BRIDGE CLEAR WIDTH (FEET)	BRIDGE LENGTH (FEET)	NO. OF SPANS	SPAN CONFIG. (FEET)	BRIDGE SKEW	LOCAL ROAD TYPICAL SECTION	DESIGN RECOMMENDATIONS
B-70-0135	136.0	US 41 SB Over County BB	26	Prestressed Concrete Deck Girder	36	16.75	16.33	16.75	4.6 RT	74	250.00	4	44.5/94/68.5/ 39.5	No Skew (Radial)	End Spans: 2:1 Slope paving; Middle Spans: 30' median; 4-12' lanes and 4' bike lane with c&g each direction, 20' terrace	Use reconstruction since side road alignment is affected by roundabout orientation impacting center pier location.
B-70-0136	136.0	US 41 NB Over County BB	26	Prestressed Concrete Deck Girder	36	16.75	16.33	16.75	4.6 RT	74	245.00	4	44/92/67/ 39	No Skew (Radial)	End Spans: 2:1 Slope paving; Middle Spans: 30' median; 4-12' lanes and 4' bike lane with c&g each direction, 20' terrace	Use reconstruction since side road alignment is affected by roundabout orientation impacting center pier location.
B-44-0163	137.0	US 41 SB Over Spencer Street	26	Continuous Concrete Haunch Slab	36	15.25	14.75	15.25	NC/ Ramp 6.0	90.46 to 102.08	144.00	3	35.0/70.0/35.0	No Skew	End Spans: 2:1 Slope paving; Middle Span: 1-12' lane and 4' bike lane with c&g each direction, 16' terrace	If rehabilitated, the bridge would be over halfway reconstructed due to the ramp cross slope needing removal of continuous concrete deck slab. Likely WIS 125 on-ramp will further impact bridge width. Use reconstruction. US 41 SB profile to be raised approx. 1.0'.
B-44-0164	137.0	US 41 NB Over Spencer Street	26	Continuous Concrete Haunch Slab	36	15.25	14.75	15.25	NC/ Ramp 6.0	82.18 to 90.86	144.00	3	35.0/70.0/35.0	No Skew	End Spans: 2:1 Slope paving; Middle Span: 1-12' lane and 4' bike lane with c&g each direction, 16' terrace	If rehabilitated, the bridge would be over halfway reconstructed due to the ramp cross slope needing removal of continuous concrete deck slab. Use reconstruction. US 41 NB profile to be raised approx. 1.0'.
B-44-0155	137.3	US 41 SB Over WIS 125	26	Prestressed Concrete Deck Girder	36	16.75	16.33	16.75	NC	86	286.00	4	52.0/91.0/ 91.0/52.0	1° 38' LF	End Spans: 2:1 Slope paving; Middle Spans: 14' median; 3 - 12' turn lanes, 3 -12' thru lane and a 4' bike lane with c&g each side, 18' terrace	Reconstruction due to side road width requirements.
B-44-0156	137.3	US 41 NB Over WIS 125	26	Prestressed Concrete Deck Girder	36	16.75	16.33	16.75	NC	74	286.00	4	52.0/91.0/ 91.0/52.0	1° 38' LF	End Spans: 2:1 Slope paving; Middle Spans: 14' median; 3 - 12' turn lanes, 3 -12' thru lane and a 4' bike lane with c&g each side, 18' terrace	Reconstruction due to side road width requirements.
B-44-0157	138.0	US 41 SB Over WIS 96	26	Continuous Steel Deck Girder	36	16.75	16.33	16.75	NC	74	262.00	4	50.0/79.0/ 79.0/50.0	No Skew	End Spans: 2:1 Slope paving; Middle Spans: 14' median; 3 - 12' turn lanes, 3 -12' thru lane and a 4' bike lane with c&g each side, 18' terrace	Reconstruction due to side road width requirements.
B-44-0158	138.0	US 41 NB Over WIS 96	26	Continuous Steel Deck Girder	36	16.75	16.33	16.75	NC	86	262.00	4	50.0/79.0/ 79.0/50.0	No Skew	End Spans: 2:1 Slope paving; Middle Spans: 14' median; 3 - 12' turn lanes, 3 -12' thru lane and a 4' bike lane with c&g each side, 18' terrace	Reconstruction due to side road width requirements.

Legend:

ES = Exception to Standard
RT = Superelevation Right
NC = Normal Crown
LT = Superelevation Left
LF = Left Forward
RF = Right Forward
N/A = Not Applicable
c&g = Curb and Gutter

Interchanges

County BB (West Prospect Avenue) Interchange

Interchange Alternatives Summary

Five short-term to intermediate improvement alternatives (Alternatives 1 through 5) for the County BB interchange were developed within the Operational Needs Assessment Phase I Final Report dated November 2011 (see Appendix 14). Alternative 1 addresses existing safety and operational issues of the US 41 mainline within the interchange area by improving the on-ramp acceleration lanes. Alternative 2 addresses traffic operations at the ramp terminal intersections by reducing ramp queue lengths although severe congestion is anticipated until County BB is expanded. Alternative 3 addresses the congestion issues along County BB by further expansion and improvements at the ramp and frontage road intersections. Alternatives 4 and 5 developed roundabout options for the County BB intersections at the ramp terminals and frontage roads American Drive and Northern Road. Alternative 6 is a roundabout intersection alternative evaluated for 2038 traffic volumes. Refer to Figure 2-3 (page 2-23) for interchange layout. Refer to Appendix 15 for operational analysis.

Alternative 1 improves the on-ramp acceleration lanes by extending them from 360-feet to 1200-feet to improve crash safety and crash severity at the ramp merge locations.

Alternative 2 incorporates Alternative 1 improvements, and in addition provides look-ahead lefts along eastbound and westbound County BB approaches to the interchange. It also extends the left-turn lane on the northbound off-ramp. These improvements will improve left-turn lane queues at the ramps and add more capacity approaching the interchange, although the American Drive frontage road intersection still has significant congestion issues.

Alternative 3 incorporates Alternative 1 and 2 improvements and significantly reconstructs the County BB corridor to add one additional thru lane in each direction. This alternative will improve operations at the adjacent frontage road intersections. Numerous turn lane improvements are incorporated including:

- Add additional 250’ left-turn lane from CTH BB onto Northern Road.
- Add an eastbound continuous right-turn lane from American Drive to southbound US 41 on-ramp.
- Add an additional westbound continuous left-turn lane and a 300’ left-turn lane onto American Drive.
- CTH BB eastbound west of American Drive, add a 300’ left-turn lane and one exclusive 300’ right-turn lane. Extend box culvert to accommodate additional roadway width.
- Extend right-turn lane to 400’ and modify turn bay from American Drive onto CTH BB.
- Add additional right- and thru lane and reconstruct intersection to accommodate additional roadway width from Van Dyke Road.

Two box culvert structures require widening west of American Drive for the recommended intersection improvements. Complete streets can be incorporated into Alternative 3 although

additional retaining walls along the right-of-way line, additional real estate impacts including possible relocations, and a bridge widening on County BB east of the interchange are anticipated.

Alternative 4 is a 2020 roundabout alternative that requires a four-lane facility to the west of the northbound US 41 on-ramp and three-lane facility (2 westbound) to the east. Two-lane roundabouts would be provided along the corridor. The roundabouts allow for right-in/right-outs at current and future driveway locations as U-turns are accommodated within the roundabouts.

Alternative 5 is a 2035 roundabout alternative similar to Alternative 4, although provides free-flow right-turn lanes at the American Drive frontage road and US 41 Southbound on-ramp with an auxiliary lane in between. This impacts the gas station and private residence properties along the southwest quadrant of the County BB interchange.

Alternative 6 has been reviewed for 2038 traffic volumes and is similar to Alternative 4. An additional roundabout would be added at the Northern Road intersection rather than the stop controlled intersection shown in Alternative 4.

Alternative Represented in Expansion Design Concept

Alternative 6 would work operationally, but it would likely have the highest construction cost and would potentially have significant real estate costs specifically at the County BB and American Drive intersection. Alternative 6 is currently shown in the planning study exhibits, but should be further evaluated within the future NEPA study for effectively minimizing impacts while meeting interchange safety and operational needs. Figure 2-4 (page 2-24) is a line diagram indicating Year 2038 traditional intersection improvements required, as well as the Alternative 6 recommended roundabout concept.

The short-term improvement Alternative 1 is suggested for implementation in 2015 to 2017 prior to the long-term expansion project. Alternative 1 provides immediate safety and operational improvements while minimizing throw away costs to implement the long-term improvement Alternative 6.

Traffic Operations

Year 2038 traffic analysis was conducted at the County BB interchange intersections using the geometrics presented in Alternative 6. A summary of the Year 2038 intersection operating conditions is provided in Table 2-6.

Table 2-6: County BB Interchange Intersection Level of Service (LOS)

County BB Intersection	Intersection Type	Peak Hour LOS by Intersection	
		AM	PM
S. Van Dyke Road/American Drive	Roundabout	C	B
US 41 Southbound Ramps	Roundabout	B	C
US 41 Northbound On-Ramp	Roundabout	C	C
US 41 Northbound Off-Ramp	Roundabout	B	C
Northern Road	Roundabout	C	C

Right-of-Way Impacts

Alternative 6 would potentially relocate three commercial businesses and one residence. The potential relocations are:

- Citgo Station in the southeast corner of the County BB/American Drive intersection
- Van Zeelands Auto Care Center in the northwest corner of the County BB/Southbound US 41 ramp intersection
- Multi-Tenant office building on Northern Road south of County BB
- Private residence on County BB just east of the Citgo station

Alternative 6 would also potentially have significant impacts to other parcels including:

- Potential impacts to underground gas tanks at Mobil station in northeast corner of County BB/American Drive intersection
- Potential loss of storage area and parking at industrial building along east and south side of Van Dyke Road
- Potential loss of parking at the multi-story First Business Center
- Potential impacts to two holes of the Butte Des Mortes Country Club. One of the two tee boxes that would potentially be impacted appears to be an existing encroachment on the County BB right-of-way.

Access

With Alternative 6 access to the Mobil would potentially need to be reduced from two access points to one access point. The access on County BB would remain, but the access on Van Dyke Road would potentially need to be removed because of its proximity to the crosswalk at the roundabout.

Complete Streets

Alternative 6 includes a 10’ wide multi-use path along both sides of County BB and the east side of American drive for pedestrians and bicyclists. A 5’ wide sidewalk is identified on both sides of Van Dyke Road and the west side of American Drive for pedestrian accommodations. A 16’ wide outside lane is identified along both sides of County BB, American Drive, Van Dyke Road, and Northern Road to provide bicycle accommodations.

Further Analysis Recommendations

This interchange is within numerous jurisdictions and will require significant coordination between municipalities including Winnebago and Outagamie Counties, Town of Menasha, and the Town of Grand Chute.

WisDOT standards for roundabout design, construction and operations are evolving and shall be revisited prior to implementation.

US 41 & COUNTY BB (2038)

DRAFT

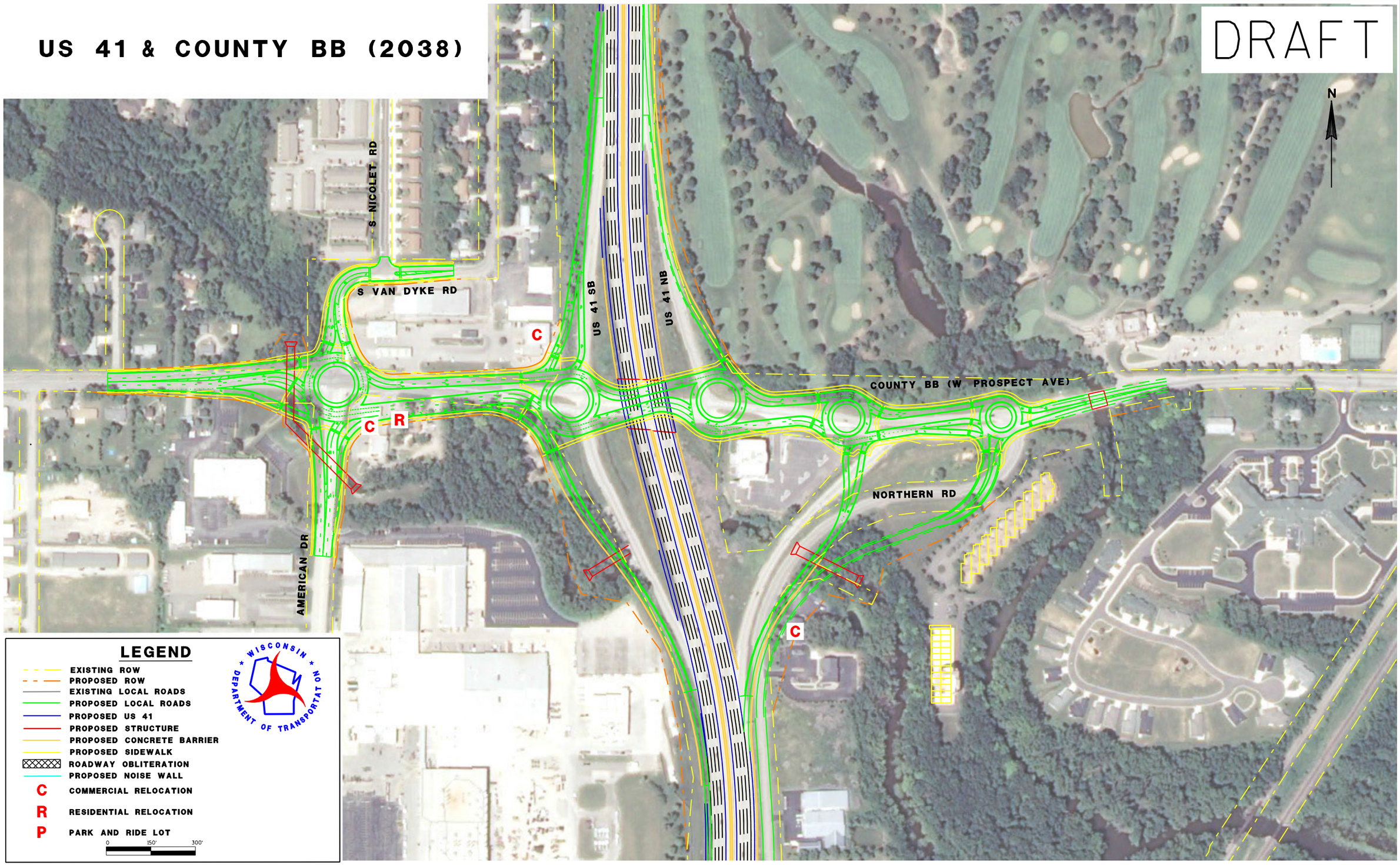

LEGEND

- EXISTING ROW
- PROPOSED ROW
- EXISTING LOCAL ROADS
- PROPOSED LOCAL ROADS
- PROPOSED US 41
- PROPOSED STRUCTURE
- PROPOSED CONCRETE BARRIER
- PROPOSED SIDEWALK
- ROADWAY OBLITERATION
- PROPOSED NOISE WALL
- C COMMERCIAL RELOCATION
- R RESIDENTIAL RELOCATION
- P PARK AND RIDE LOT

0 150' 300'

WISCONSIN DEPARTMENT OF TRANSPORTATION

PROJECT NO: 1130-31-00	HWY: US 41	COUNTY: OUTAGAMIE/WINNEBAGO	FIGURE 2-3: COUNTY BB INTERCHANGE	PAGE 2-23	E

FILE NAME : $$....designfile....$$ PLOT DATE : $$...plottingdate...$$ PLOT BY : $$...plotuser...$$ PLOT NAME : PLOT SCALE : $$.....plotscale.....$$

WISDOT/CADDS SHEET 42

FIGURE 2-4: COUNTY BB INTERCHANGE, EXISTING GEOMETRY AND 2038 IMPROVEMENTS
PREPARED 3/21/2013

N
NOT TO SCALE

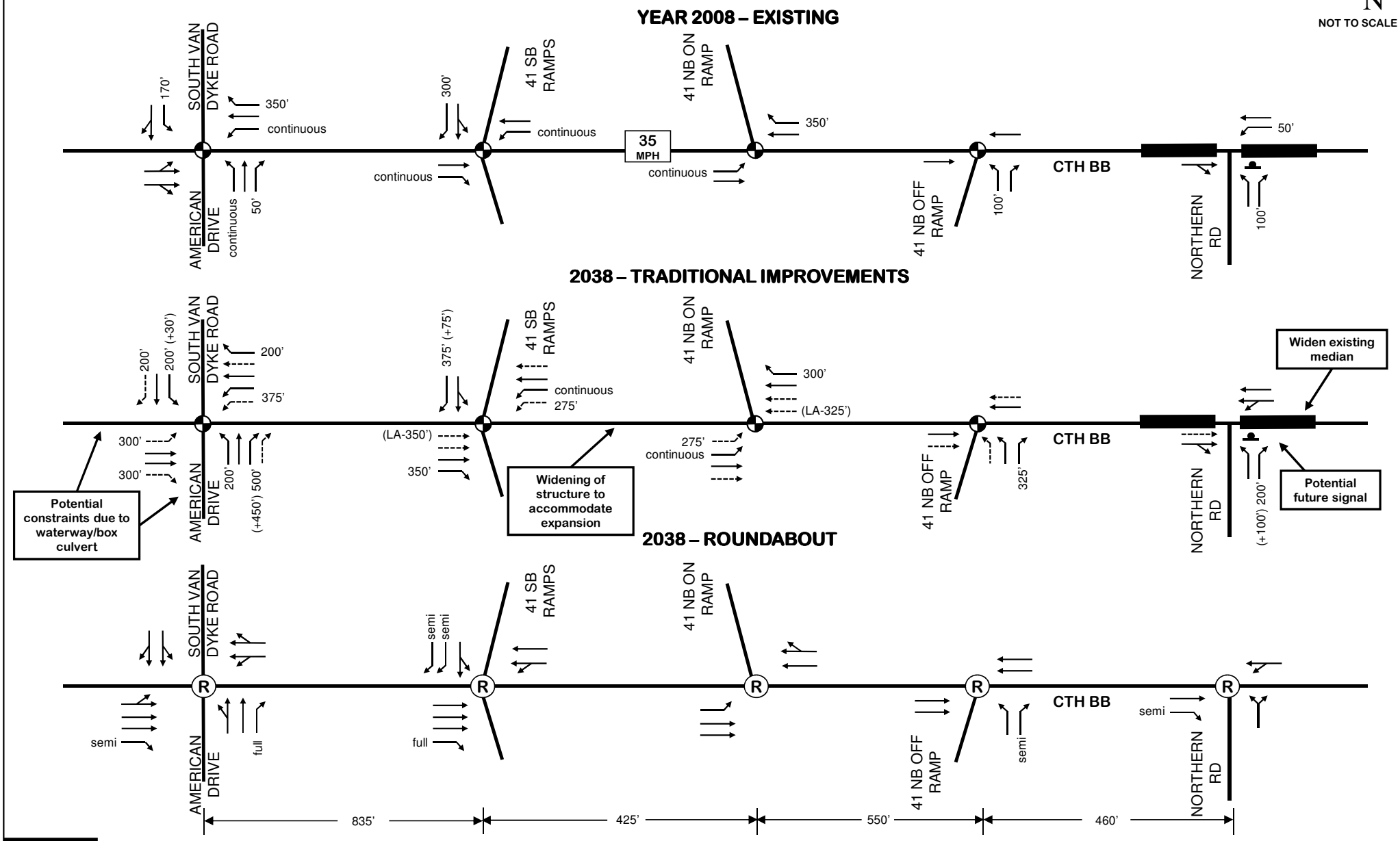

Legend

XX' BASE GEOMETRICS PLANNED TURN BAY LENGTH	MEDIAN DIVIDED ROADWAY	TRAFFIC SIGNAL	OPERATIONAL PROBLEMS REMAIN
(+XX') ADDITIONAL TURN BAY LENGTH RECOMMENED	BASE GEOMETRICS	STOP SIGN	
(LA-XX') LOOK-AHEAD TURN LANE – STORAGE LENGTH	ADDITIONAL IMPROVEMENT RECOMMENDED	(R) ROUNDABOUT	

WIS 125 (West College Avenue) Interchange

Interchange Alternatives Summary

A previous WisDOT Backbone Needs and Improvement Study was prepared on April 2007 and included one short-term improvement and two long-term improvements using a 2035 design year. See Appendix 10 for the WisDOT Backbone Needs and Improvement Study for Alternatives 1 through 3. Alternative 4 is a long-term traditional intersection layout configuration evaluated for 2038 traffic volumes.

Alternative 1, a short-term alternative, improves the most significant long queues on the southbound and northbound off-ramps and improves turning movement LOS but is not adequate as the design year approaches 2020. Alternative 1 was implemented within a 2012 WisDOT project with the following:

- Auxiliary lanes on US 41 southbound and northbound from WIS 96 to WIS 125
- Adding a second exiting lane at the southbound off-ramp.
- Providing 340-foot dual left- and dual right-turn lanes at the southbound ramp terminal.
- Provide 800-foot dual left- and dual right-turn lanes at northbound ramp terminal.
- Prohibit right turn on red at southbound ramp terminal.
- Create signalized right-turn movement at northbound ramp terminal.

Alternative 2, a long-term alternative, improves all existing and projected operational and safety problems through 2035 except the safety issue of weaving and queue spillback between the Nicolet Road/Mall Drive intersection and the southbound ramp terminal intersection. In addition to Alternative 1, Alternative 2 suggests the following:

- Reconstruct all on-ramps to provide dual lanes for a portion of the ramp.
- Reconstruction of WIS 125 through the interchange to have four thru lanes, plus single right-turn lanes and dual look-ahead left-turn lanes at the ramp terminal intersections.
- Closure of the median and removing the signal at the Nicolet Road/Mall Drive and WIS 125 intersection.

Alternative 3, a long-term alternative, improves all existing and projected operational and safety problems through 2035 at the interchange. It includes Alternative 1 and Alternative 2 improvements as well as the following:

- Cul de sac existing South Nicolet Road and North Mall Drive to prohibit direct access to and from WIS 125.
- Realign South Nicolet Road and North Mall Drive 350-feet west of their existing alignments.

Alternative 4 provides an additional lane in both the eastbound and westbound directions from Westhill Boulevard to Mall Drive. Refer to Figure 2-5 (page 2-30) for interchange layout. Refer to Appendix 15 for operational analysis. The Mall Drive relocation shown in the exhibits is based

on a layout done by Earth Tech during a previous study. Further alternatives analysis will be done with a future NEPA study. Additional study will be needed at the WIS 125 and Casaloma Drive intersection because of its proximity to the WIS 125/Mall Drive intersection. The construction cost estimate for this interchange includes an estimated lump sum cost for this intersection since it will also need to be reconstructed with this alternative, but is outside of limits for this study.

The following intersection improvements are also identified as part of Alternative 4.

The WIS 125 and Westhill Boulevard intersection improvements include:

- The westbound right-turn lane was increased by 100’ from 200’ to 300’ long.
- The westbound left-turn lane was increased by 125’ from 175’ to 300’ long.
- The southbound single right-turn lane was modified to a dual right-turn lane and increased by 25’ from 175’ to 200’ long.
- The southbound single left-turn lane was modified to a dual left-turn lane and increased by 25’ from 175’ to 200’ long.
- An additional southbound thru lane was incorporated.
- The eastbound single continuous right-turn lane was modified to a 300’ long right-turn lane.
- The eastbound single left-turn lane was modified to a triple left-turn lane and increased by 25’ from 275’ to 300’ long.
- An additional northbound thru lane was incorporated.
- The northbound single left-turn lane was modified to a dual left-turn lane and increased by 150’ from 50’ to 200’ long.

The WIS 125 and US 41 northbound ramp intersection improvements include:

- The westbound free-flow right-turn lane was modified to a signalized 375’ long from 225’ long.
- A 375’ westbound look-ahead left-turn lane was added.
- A 300’ eastbound left-turn lane was added to the existing continuous left-turn lane.
- The northbound free-flow right-turn lane (850’) was modified to a dual 400’ right-turn lane.
- The northbound left-turn lane (585’) was modified to a dual 400’ left-turn lane. These two turn lanes combined with the existing left/thru lane create a triple left-turn lane.

The WIS 125 and US 41 southbound ramp intersection improvements include:

- A 300’ westbound left-turn lane was added to the existing continuous left-turn lane.
- The southbound right-turn lane was modified from the existing 30’ long bay to a free-flow right-turn movement that is 225’ long.
- An additional 200’ southbound left-turn lane was added.
- The westbound look-ahead left-turn lane was made continuous back to the Mall Drive and WIS 125 intersection.
- The existing westbound 200’ long right-turn lane was made a free-flow 300’ long right-turn lane.

The WIS 125 and Mall Drive intersection improvements include:

- The westbound continuous right-turn lane would be modified to a 215’ dual right-turn lane.
- The existing 275’ left-turn lane would be modified to a 300’ triple left-turn lane.
- An additional westbound thru lane is added creating four (4) thru lanes.
- The existing southbound shared left/thru lane would be modified to a dedicated thru lane and a dedicated 150’ long left-turn lane. The existing southbound continuous left-turn lane would be modified to a 150’ long left-turn lane. An additional 150’ southbound left-turn lane would be added creating a triple left-turn lane with 150’ long left-turn lanes.
- An additional southbound thru lane would be added creating two (2) southbound thru lanes.
- The existing southbound right-turn lane would be modified to a 200’ long right-turn lane.
- The existing 250’ eastbound left-turn lane would be extended to 275’ and an additional left-turn lane would be added creating a 275’ dual left-turn lane.
- An additional eastbound thru lane would be added creating 4 eastbound thru lanes.
- The existing 200’ eastbound right-turn lane would be modified to a 275’ right-turn lane.
- The existing northbound combined thru and left-turn lane would be modified to a dedicated thru lane and a 225’ dedicated left-turn lane. An additional 225’ northbound left-turn lane would be added creating a 225’ dual left-turn lane.
- An additional northbound thru lane would be added creating three (3) thru lanes.

The existing 100’ long northbound right-turn lane would be modified into a 225’ long dual right-turn lane.

Alternative Represented in Expansion Design Concept

Alternative 4 was identified as meeting the long-term capacity needs for the interchange as presented in Figure 2-5 (page 2-30). Figure 2-6 (page 2-31) is a line diagram indicating Alternative 4 interchange improvements required.

Traffic Operations

Year 2038 traffic analysis was conducted at the WIS 125 interchange intersections using the geometrics presented in Alternative 4. A summary of the Year 2038 intersection operating conditions is provided in Table 2-7.

Table 2-7: WIS 125 Interchange Intersection Level of Service (LOS)

WIS 125 Intersection	Intersection Type	Peak Hour LOS by Intersection	
		AM	PM
N. Mall Dr/S. Nicolet Rd	Traffic Signal	C	D
US 41 Southbound Ramps	Traffic Signal	B	B
US 41 Northbound Ramps	Traffic Signal	C	C
N. Westhill Blvd/S. Kools St	Traffic Signal	C	D

Right-of-Way Impacts

Alternative 4 would potentially relocate five commercial businesses and one residence. The potential relocations are:

- Car wash in the southeast corner of the WIS 125/Kools Street intersection
- BP gas station in the northeast corner of the WIS 125/Westhill Boulevard intersection
- Days Inn along Westhill Boulevard north of WIS 125
- Multi-story office building on the south side of WIS 125 just west of relocated Mall Drive
- Strip mall along Mall Drive north of WIS 125 that has several tenants (this parcel has been redeveloped since the 2008 aerial photo, so the new building is not shown on the exhibit)
- Apartment building on the east side of Kools Street just south of WIS 125

As part of the potential relocation of Mall Drive, the drive-thru at the Citizen's Bank would potentially be impacted by Mall Drive and would potentially need to be removed. The remainder of the building would remain.

Alternative 4 would also have significant parking impacts throughout the interchange area, affecting areas including the Outdoor Outlet, the Country Village Shoppe, the vacant car dealership west of Mall Drive, the Citizens Bank building, Applebee's, La Quinta Inn and Naturally Healthy Concepts.

Access

With Alternative 4 the existing frontage road south of WIS 125 east of US 41 would be removed. Traffic would need to use existing cross access through adjacent businesses or the new cul-de sac south of WIS 125 to access Kools Street or Westhill Boulevard. The remaining frontage roads at the WIS 125/Kools St/Westhill Boulevard intersection would need to be reconfigured to eliminate direct access to Kools Street and Westhill Boulevard.

The existing intersection of Fox River Drive with Mall Drive would be removed and Fox River Drive would be converted to cul-de-sac.

Complete Streets

Alternative 4 is includes sidewalks along both sides of WIS 125, Kools St, Westhill Boulevard, and Mall Drive within the reconstruction limits to provide pedestrian accommodations. A 16’ wide outside lane is identified along both sides of WIS 125, Kools Street, Westhill Boulevard, and Mall Drive to provide bicycle accommodations.

Further Analysis Recommendations

Alternative interchange layouts such as a diverging diamond interchange (DDI) may reduce the interchange footprint and associated costs warranting further evaluation during the future NEPA Study.

Further evaluation of Mall access is warranted for expansion of Mall Drive and WIS 125 intersection since business impacts are likely.

US 41 & WIS 125 (2038)

DRAFT

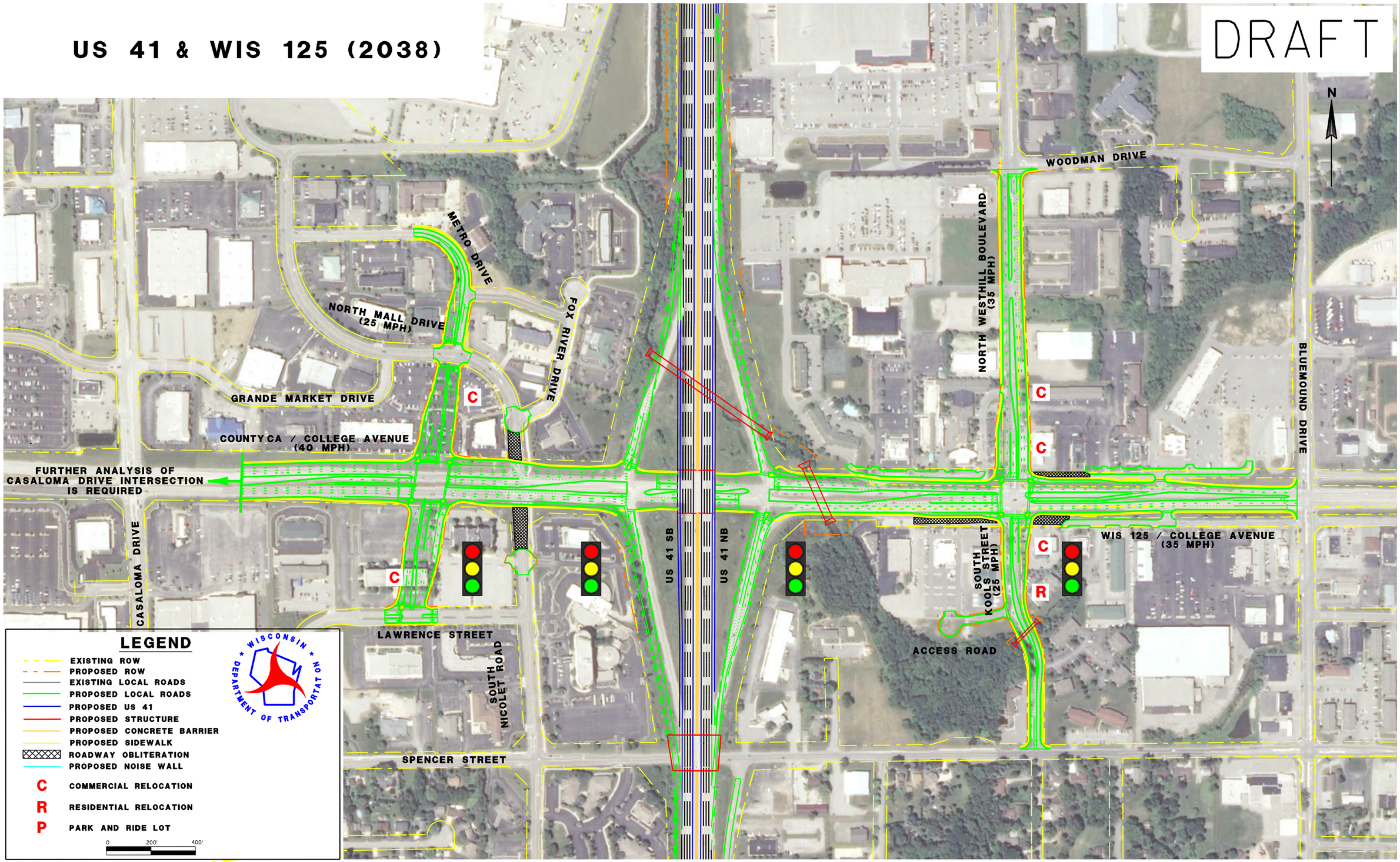

LEGEND

- EXISTING ROW
- PROPOSED ROW
- EXISTING LOCAL ROADS
- PROPOSED LOCAL ROADS
- PROPOSED US 41
- PROPOSED STRUCTURE
- PROPOSED CONCRETE BARRIER
- PROPOSED SIDEWALK
- ROADWAY OBLITERATION
- PROPOSED NOISE WALL
- C COMMERCIAL RELOCATION
- R RESIDENTIAL RELOCATION
- P PARK AND RIDE LOT

0 200' 400'

WISCONSIN DEPARTMENT OF TRANSPORTATION

PROJECT NO: 1130-31-00	HWY: US 41	COUNTY: OUTAGAMIE	FIGURE 2-5: WIS 125 INTERCHANGE	PAGE 2-30	E

FILE NAME : $$....designfile....$$ PLOT DATE : $$...plottingdate...$$ PLOT BY : $$...plotuser...$$ PLOT NAME : PLOT SCALE : $$.....plotscale.....$$

WISDOT/CADDS SHEET 42

FIGURE 2-6: WIS 125 INTERCHANGE, EXISTING GEOMETRY AND 2038 IMPROVEMENTS

PREPARED 4/18/2013

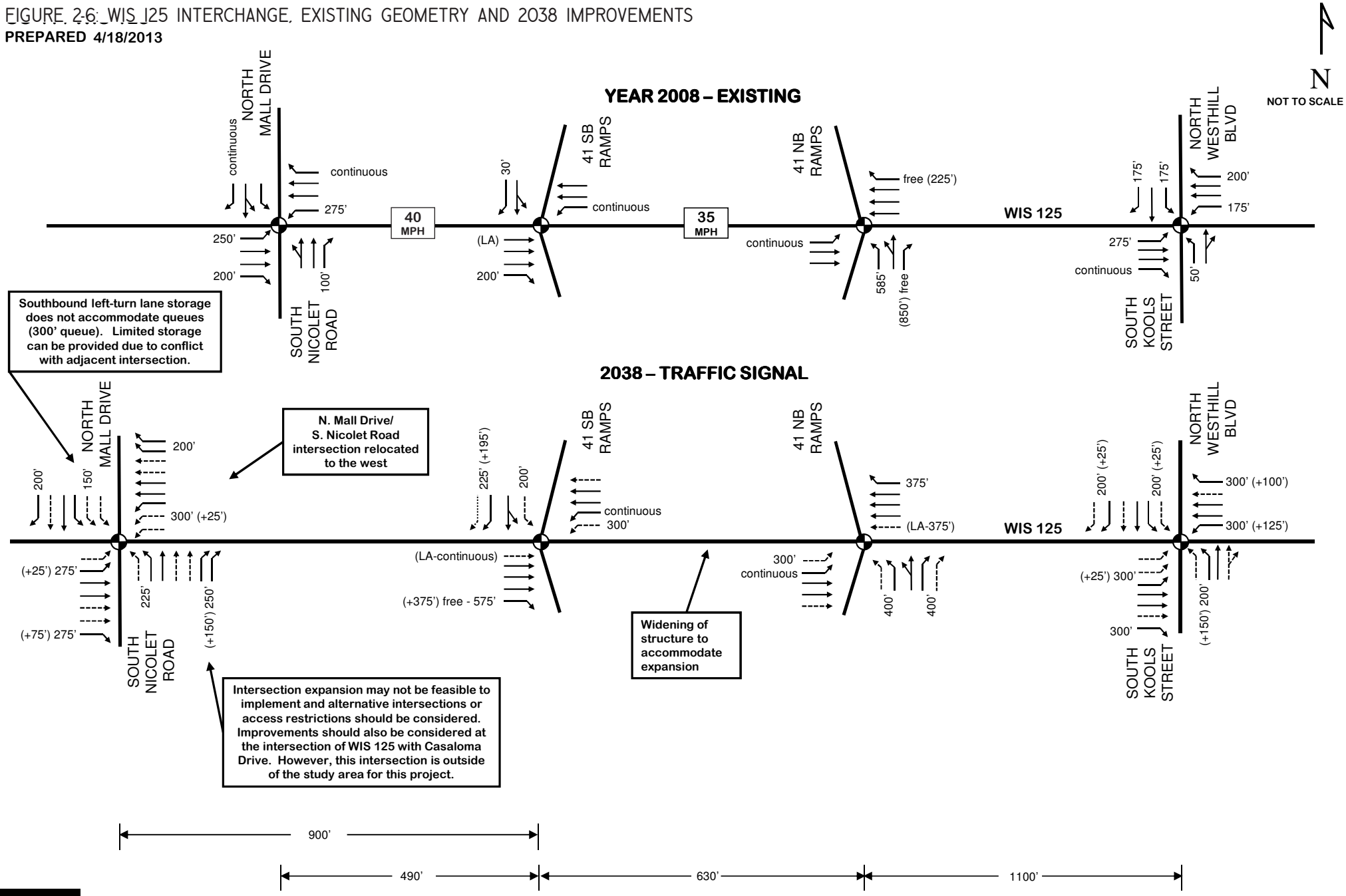

Legend

XX' BASE GEOMETRICS PLANNED TURN BAY LENGTH	MEDIAN DIVIDED ROADWAY	TRAFFIC SIGNAL	OPERATIONAL PROBLEMS REMAIN
(+XX') ADDITIONAL TURN BAY LENGTH RECOMMENED	BASE GEOMETRICS	STOP SIGN	
(LA-XX') LOOK-AHEAD TURN LANE – STORAGE LENGTH	ADDITIONAL IMPROVEMENT RECOMMENDED	(R) ROUNDABOUT	

WIS 96 (West Wisconsin Avenue) Interchange

Interchange Alternative Summary

Similar to WIS 125, a previous WisDOT Backbone Needs and Improvement Study was prepared on April 2007 and included one short-term improvement and two long-term improvements using a 2035 design year. See Appendix 18 for the WisDOT Backbone Needs and Improvement Study Alternatives 1 through 3. Alternative 4 is a long-term traditional intersection layout configuration evaluated for 2038 traffic volumes.

Alternative 1, a short-term alternative, does not adequately improve operations through 2035. Alternative 1 was implemented within a 2012 WisDOT project with the following:

- Auxiliary lanes on US 41 northbound and southbound from WIS 125 to WIS 96.
- Implementing a new phasing concept and retiming the traffic signals at the northbound and southbound ramp terminal intersections with TTI phasing.
- Constructing a raised median between the northbound ramp terminal and Westhill Boulevard to restrict left turns onto WIS 96.

Alternative 2, a long-term alternative, improves all existing and projected operational and safety problems through 2035 except the northbound merge onto US 41. In addition to Alternative 1 suggested improvements, Alternative 2 suggests the following:

- Reconstruction of WIS 96 through the interchange to have four thru lanes at the ramp terminal intersections.
- Reconstruction of both on-ramps to provide two lanes for a portion of the ramp.
- Adding a second exiting lane at the northbound off-ramp.
- Provide 350-foot dual left- and dual right-turn lanes at the southbound ramp.
- Provide 210-foot dual left- and dual right-turn lanes at the northbound ramp.

Alternative 3, a long-term alternative, improves all existing and projected operational and safety problems through 2035 at the interchange. It includes Alternative 1 and Alternative 2 improvements as well as the following:

- Extending the northbound on-ramp acceleration taper lane 400 feet.
- Widening the existing railroad bridge on US 41 north of the northbound on-ramp.

Alternative 4 is a long-term traditional intersection layout configuration evaluated for 2038 traffic volumes. Refer to Figure 2-7 (page 2-36) for interchange layout and refer to Appendix 15 for operational analysis).

The following intersection improvements are identified with Alternative 4.

The WIS 96 and Westhill Boulevard intersection improvements include:

- The westbound left-turn lane would be decreased by 100’ from 375’ to 275’ long, and an additional 275’ left turn would be added creating a dual left-turn lane.

- The northbound single left-turn lane would be modified to a dual left-turn lane and increased by 200’ from 125’ to 325’ long.

The WIS 96 and US 41 northbound ramp intersection improvements include:

- A 425’ westbound look-ahead left-turn lane would be added.
- A 200’ eastbound left-turn lane would be added to the existing continuous left-turn lane creating a dual left-turn lane.
- The northbound right-turn lane (180’) would be modified to a dual 275’ right-turn lane.
- The existing northbound left-turn lane would be shortened from 325’ to 275’, and the existing combined thru and left-turn lane remains as is.

The WIS 96 and US 41 southbound ramp intersection improvements include:

- A 200’ westbound left-turn lane would be added to the existing continuous left-turn lane creating a dual left-turn lane.
- The southbound right-turn lane would be modified from the existing 125’ long bay to dual right-turn movement that is 300’ long.
- An additional southbound left-turn lane at 225’ long would be added to the existing combined thru and left-turn lane creating a dual left-turn lane.
- A 575’ long westbound look-ahead left-turn lane would be added.
- The existing eastbound 800’ long right-turn lane would be shortened to 325’.

The WIS 96 and Greenville Drive intersection improvements include:

- The westbound free-flow right-turn lane is modified to a 325’ free-flow right-turn lane.
- The westbound dual 350’ left-turn lane is modified to a dual 525’ left-turn lane.
- The existing southbound combined right-turn, thru and left-turn lane is modified to a dedicated thru, 350’ dedicated left-turn lane, and combined thru and right-turn lane. An additional left-turn lane is added creating a triple left-turn with length of 350’.
- The eastbound single 100’ left-turn lane is modified to a 350’ left-turn lane.
- The eastbound right-turn lane is increased by 250’ from 100’ to 350’ long.
- The northbound continuous single left-turn lane is decreased to 325’ long.
- One additional northbound thru lane is added.

The existing northbound continuous right-turn lane was modified to be a 325’ dual right-turn lane.

Alternative Represented in Expansion Design Concept

Alternative 4 was identified as meeting the long-term capacity needs for the interchange as presented in Figure 2-7 (page 2-36). Figure 2-8 (page 2-37) is a line diagram indicating Alternative 4 interchange improvements required.

Traffic Operations

Year 2038 traffic analysis was conducted at the WIS 96 interchange intersections using the geometrics presented in Alternative 4. A summary of the Year 2038 intersection operating conditions is provided in Table 2-8.

Table 2-8: WIS 96 Interchange Intersection Level of Service (LOS)

WIS 96 Intersection	Intersection Type	Peak Hour LOS by Intersection	
		AM	PM
County GV (Greenville Dr)	Traffic Signal	C	D
US 41 Southbound Ramps	Traffic Signal	C	B
US 41 Northbound Ramps	Traffic Signal	C	C
Westhill Blvd	Traffic Signal	B	C

Right-of-Way Impacts

Alternative 4 would require strip right-of-way acquisition along 3 of the 4 US 41 ramps and along small portions of WIS 96, Westhill Boulevard and Greenville Drive.

Alternative 4 would result in a loss of parking to both the Wendy's and Arby's restaurants to construct a cul-de-sac between the two parcels as part of the desired access control for Alternative 4. Both parcels would lose approximately five (5) parking stalls.

The Kwik Trip gas station in the southeast corner of the WIS 96/US 41 NB ramp intersection would need to move their large sign in the northwest corner of their property. The Comfort Suites hotel in the southeast quadrant of the interchange would lose approximately 25 parking stalls adjacent to the US 41 NB exit ramp to provide a drainage ditch adjacent to the realigned ramp. The loss of parking could be minimized by using a combination of storm sewer and retaining walls.

National Envelope Corporation has what appears to be a large manhole that would likely be impacted by US 41 NB entrance ramp grading. Further investigation will need to be done to determine if there is an underground structure that would be impacted by ramp construction.

The Paradise Club in the southwest quadrant of the interchange would be relocation because the building would be impacted by the potential eastbound right-turn lane.

The International House of Pancakes (IHOP) restaurant in the southwest corner of the interchange would have a large loss of parking because of US 41 SB entrance ramp construction. They would lose approximately 35 parking spaces, the equivalent of about two-thirds of their total parking. The use of barrier wall and storm sewer adjacent to the parking lot could reduce or eliminate these impacts. There would be a large remnant parcel adjacent to the IHOP parcel if the Paradise Club is razed that could potentially provide additional parking for IHOP. If additional parking is not available, IHOP may become relocation because they would not have enough parking to be economically viable.

Access

The access road between WIS 96 and Wheeler Road would be eliminated because it is undesirable to have any access points between the ramps and first intersection away from the interchange. Traffic would need to use the existing access point onto Westhill Boulevard to access WIS 96.

The Kwik Trip in the southeast corner of the interchange would lose direct access to WIS 96. Kwik Trip traffic would need to use the existing cross access they have through the Comfort Suites parking lot to Wheeler Road. Wendy's and Arby's would also lose direct access to WIS 96. This is further complicated by the restricted left turn movement from Wheeler Road on to Westhill Boulevard due to the proposed median barrier along Westhill Boulevard that extends from WIS 96 to south of the Wheeler Road intersection. Potential options to address access for the parcels in the southeast quadrant of the interchange would be to keep the right-in, right-out driveway between Wendy's and Arby's and construct a roundabout at the intersection of WIS 96 and Westhill Boulevard, or allow less than desired access control on Westhill Boulevard by providing full access between Wheeler Road and Westhill Boulevard. These options would provide more reasonable access back to US 41 from these businesses.

The existing frontage road north of WIS 96 between US 41 and Casaloma Drive would be removed between Greenville Road and Casaloma Drive because of the realignment of Greenville Road. A new access road would be built along the north side of Best Buy and Dick's Sporting Goods to connect the businesses to Federated Drive.

Complete Streets

Alternative 4 includes sidewalks along both sides of WIS 96, Westhill Boulevard and Greenville Drive within the reconstruction limits to provide pedestrian accommodation. A 16' wide outside lane is identified on WIS 96, Greenville Drive, and Westhill Boulevard to provide bicycle accommodation.

Further Analysis Recommendations

Alternative interchange layouts such as a diverging diamond interchange (DDI) may reduce the interchange footprint and associated costs warranting further evaluation during the future NEPA Study.

Further evaluation of Greenville Drive reconfiguration is warranted for expansion of Greenville Drive, Casaloma, and WIS 96 Intersections since business impacts are likely.

US 41 & WIS 96 (2038)

DRAFT

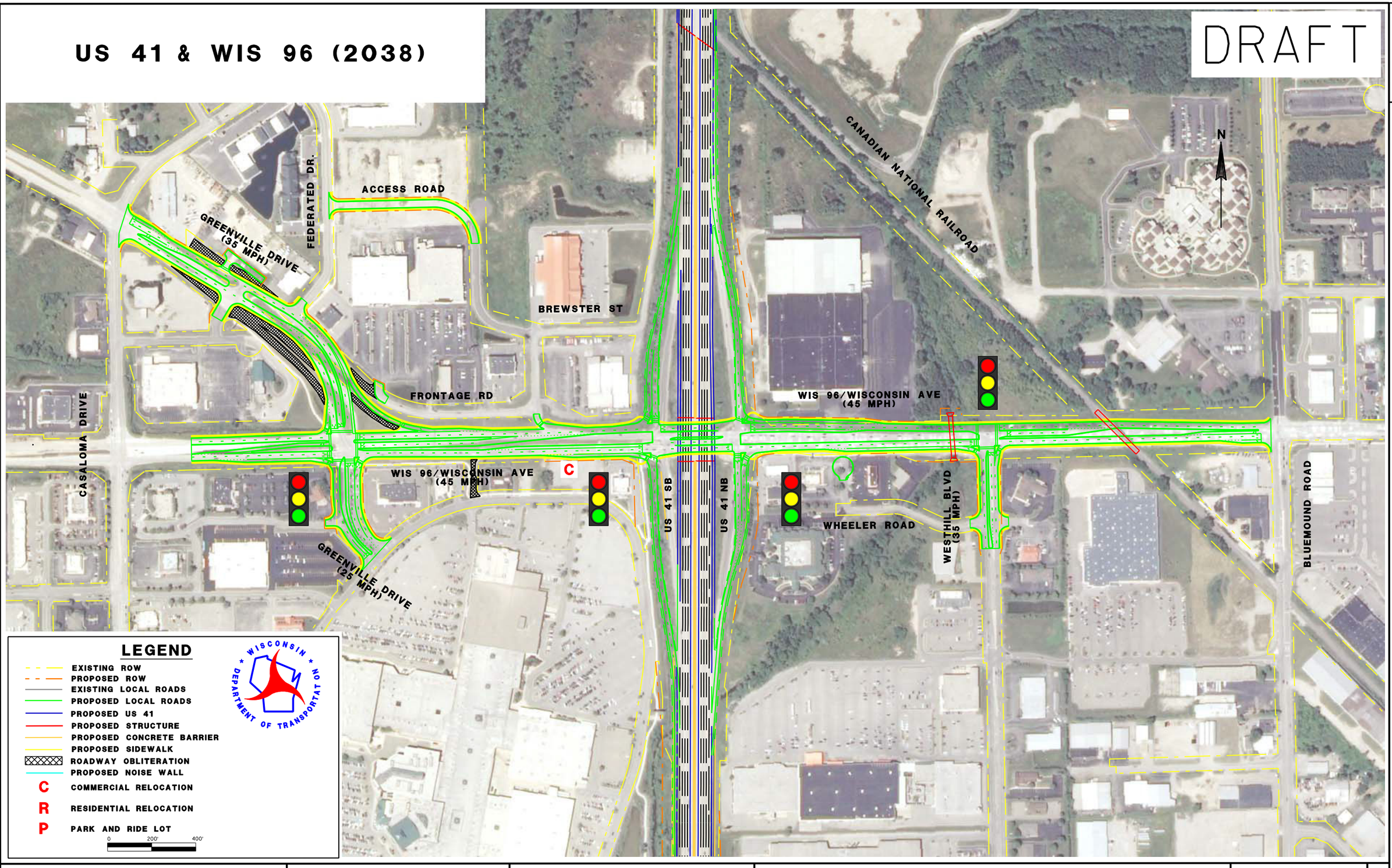

LEGEND

- EXISTING ROW
- PROPOSED ROW
- EXISTING LOCAL ROADS
- PROPOSED LOCAL ROADS
- PROPOSED US 41
- PROPOSED STRUCTURE
- PROPOSED CONCRETE BARRIER
- PROPOSED SIDEWALK
- ROADWAY OBLITERATION
- PROPOSED NOISE WALL
- C COMMERCIAL RELOCATION
- R RESIDENTIAL RELOCATION
- P PARK AND RIDE LOT

0 200' 400'

WISCONSIN DEPARTMENT OF TRANSPORTATION

PROJECT NO: 1130-31-00	HWY: US 41	COUNTY: OUTAGAMIE	FIGURE 2-7: WIS 96 INTERCHANGE	PAGE 2-36	E

FILE NAME : $$....designfile....$$ PLOT DATE : $$...plottingdate...$$ PLOT BY : $$...plotuser...$$ PLOT NAME : PLOT SCALE : $$.....plotscale.....$$

WISDOT/CADDS SHEET 42

FIGURE 2-8: WIS 96 INTERCHANGE, EXISTING GEOMETRY AND 2038 IMPROVEMENTS

PREPARED 3-1-13

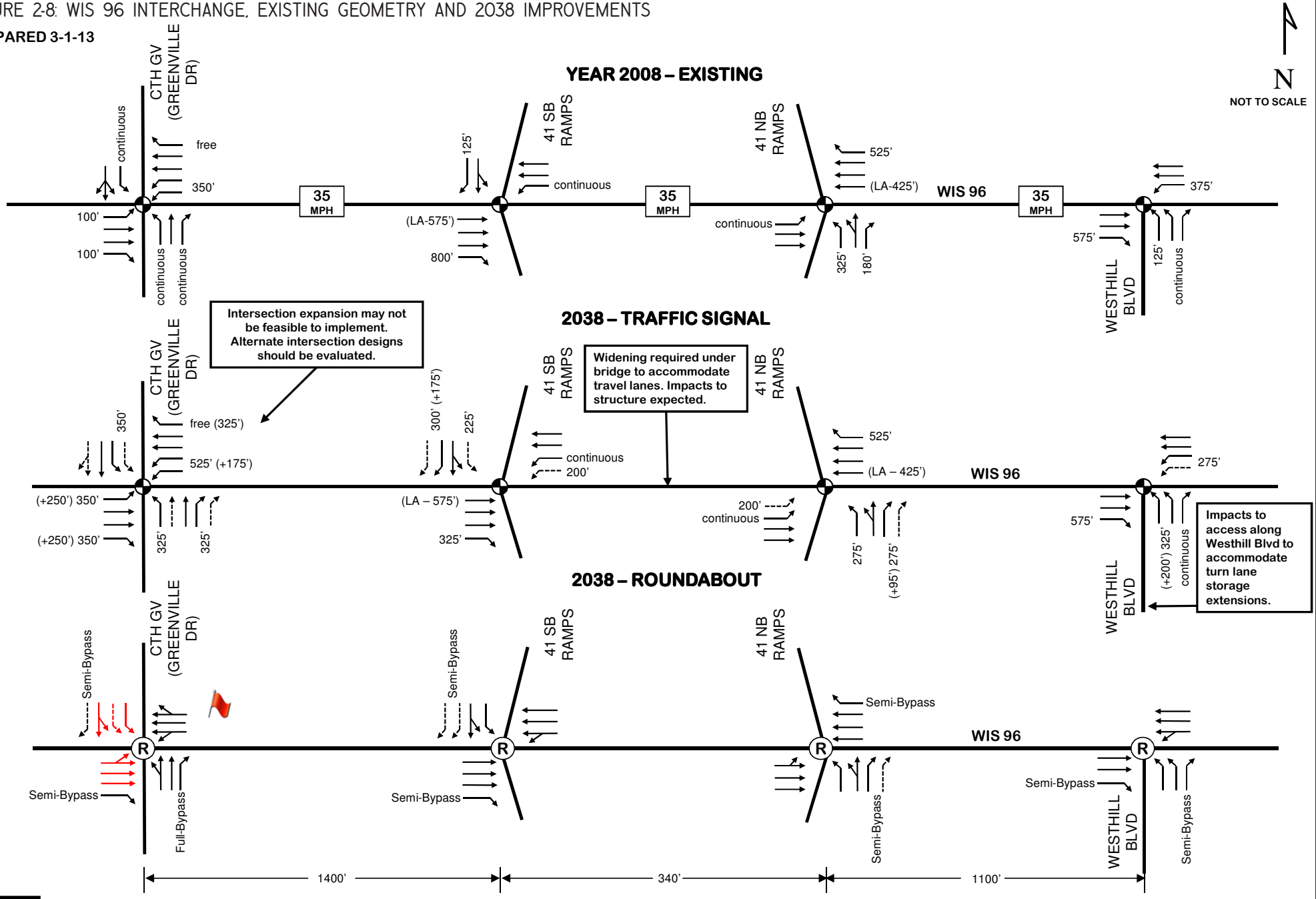

Legend

XX' BASE GEOMETRICS PLANNED TURN BAY LENGTH	MEDIAN DIVIDED ROADWAY	TRAFFIC SIGNAL	OPERATIONAL PROBLEMS REMAIN
(+XX') ADDITIONAL TURN BAY LENGTH RECOMMENED	BASE GEOMETRICS	STOP SIGN	
(LA-XX') LOOK-AHEAD TURN LANE – STORAGE LENGTH	ADDITIONAL IMPROVEMENT RECOMMENDED	(R) ROUNDABOUT	

2.3 Cost Summary

Table 2-9 below summarizes the short-term and long-term alternative costs for Segment 2. Individual one page cost summaries using the US 41 Majors cost estimating worksheets are included for each US 41 mainline segment and interchange. See Appendix 6 for a detailed breakdown of these cost estimating worksheets by segment or interchange.

Table 2-9: Segment 2 – Cost Summary

MAINLINE SEGMENT LIMITS/INTERCHANGE	SHORT-TERM COSTS*	LONG-TERM COSTS*	TOTALS
South of County BB to North of WIS 96 Structures			
Major Roadway Items		$14,185,000	
Allowance Items		$8,479,000	
Structures		$26,126,000	
Special Construction Elements		$0	
Context Sensitive Solutions (CSS)		$2,440,000	
Scope Change Allowance Items		$12,295,000	
Project Delivery Allowance Items		$22,043,000	
External Costs and Risk Assessment		$5,635,000	$91,203,000
County BB Interchange			
Short-Term Alternative 1	$276,000		$276,000
Long-Term Alternative 6			
Major Roadway Items		$3,761,000	
Allowance Items		$2,248,000	
Structures		$1,775,000	
Special Construction Elements		$0	
Context Sensitive Solutions (CSS)		$389,000	
Scope Change Allowance Items		$1,962,000	
Project Delivery Allowance Items		$3,516,000	
External Costs and Risk Assessment		$1,716,000	$15,367,000
WIS 125 Interchange			
Long-Term Alternative 4			
Major Roadway Items		$8,747,000	
Allowance Items		$5,227,000	
Structures		$2,493,000	
Special Construction Elements		$5,000,000	
Context Sensitive Solutions (CSS)		$1,073,000	
Scope Change Allowance Items		$5,410,000	
Project Delivery Allowance Items		$9,698,000	
External Costs and Risk Assessment		$2,479,000	$40,127,000
WIS 96 Interchange			
Long-Term Alternative 4			
Major Roadway Items		$6,355,000	
Allowance Items		$3,799,000	
Structures		$1,229,000	
Special Construction Elements		$0	
Context Sensitive Solutions (CSS)		$569,000	
Scope Change Allowance Items		$2,868,000	
Project Delivery Allowance Items		$5,141,000	
External Costs and Risk Assessment		$1,315,000	$21,276,000
Segment 2 Total	**$276,000**	**$167,973,000**	**$168,249,000**

** Costs are shown in 2013 dollars with no future year construction or material cost increases from inflation included.*