RHI

SEPTEMBER 2021

ORDER OF SHEETS

Section No.	1	Title
Section No.	2	Typical Sections and Details (Includes Erosion Control)
Section No.	3	Estimate of Quantities
Section No.	3	Miscellaneous Quantities
~~Section No.~~	~~4~~	~~Right of Way Plat~~
Section No.	5	Plan and Profile
Section No.	6	Standard Detail Drawings
Section No.	7	Sign Plates
Section No.	8	Structure Plans
Section No.	9	Computer Earthwork Data
Section No.	9	Cross Sections

TOTAL SHEETS = 148

PROJECT ID: 1610-44-62

WITH: 1610-44-63 & 1610-44-64

COUNTY: PRICE

STATE OF WISCONSIN
DEPARTMENT OF TRANSPORTATION

PLAN OF PROPOSED IMPROVEMENT

PRENTICE - PARK FALLS

FLAMBEAU RIVER BRIDGES B-50-21, 22

STH 13
PRICE COUNTY

STATE PROJECT NUMBER
1610-44-62

STATE PROJECT	FEDERAL PROJECT	
	PROJECT	CONTRACT
1610-44-62		

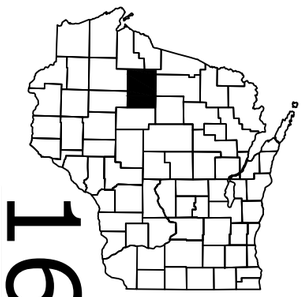

16

N

DESIGN DESIGNATION

A.A.D.T.	2022	=	4300 - 4800
A.A.D.T.	2042	=	4800 - 5400
D.H.V.	2042	=	530 - 600
D.D.		=	60/40
T.		=	18.8%
DESIGN SPEED		=	40 MPH - 55 MPH
ESALS		=	N/A

CONVENTIONAL SYMBOLS

PLAN

CORPORATE LIMITS
PROPERTY LINE
LOT LINE
LIMITED HIGHWAY EASEMENT
EXISTING RIGHT OF WAY
PROPOSED OR NEW R/W LINE
SLOPE INTERCEPT
REFERENCE LINE (300'EB')
EXISTING CULVERT
PROPOSED CULVERT (Box or Pipe)
COMBUSTIBLE FLUIDS (CAUTION)
MARSH AREA
WOODED OR SHRUB AREA

PROFILE

GRADE LINE
ORIGINAL GROUND
MARSH OR ROCK PROFILE (To be noted as such) (ROCK)
SPECIAL DITCH (LABEL)
GRADE ELEVATION (95.36)
CULVERT (Profile View)

UTILITIES

ELECTRIC — E
FIBER OPTIC — FO
GAS — G
SANITARY SEWER — SAN
STORM SEWER — SS
TELEPHONE — T
WATER — W
UTILITY PEDESTAL
POWER POLE
TELEPHONE POLE

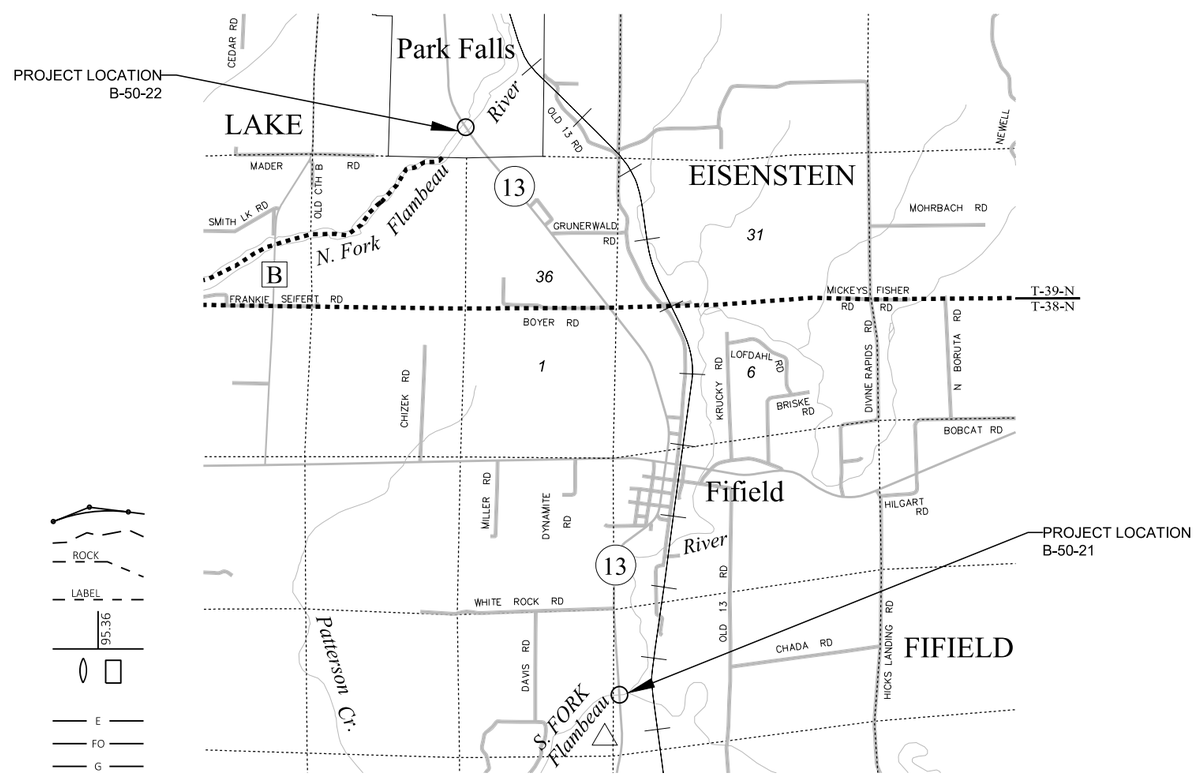

LAYOUT

SCALE 0 — 1 MI

TOTAL NET LENGTH OF CENTERLINE = 0.000 MI

HORIZONTAL POSITIONS SHOWN ON THIS PLAN ARE WISCONSIN COORDINATE REFERENCE SYSTEM (WISCRS), PRICE COUNTY, NAD83 (2011), IN U.S. SURVEY FEET. POSITIONS SHOWN ARE GRID COORDINATES, GRID BEARINGS, AND GRID DISTANCES. GRID DISTANCES ARE THE SAME AS GROUND DISTANCES. ELEVATIONS ARE REFERENCED TO NAVD 88 (2012).

emcs inc
500 North 17th Avenue
Wausau, WI 54401
715.845.1081 Fax 715.845.1099

WISCONSIN PROFESSIONAL ENGINEER
SCOTT M. KAISER
E-41772-6
MOSINEE
WI

3-29-2021 (Date) Scott Kaiser (Signature)

STATE OF WISCONSIN
DEPARTMENT OF TRANSPORTATION

PREPARED BY

Surveyor	EMCS, INC.
Designer	EMCS, INC.
Project Manager	KAI KILEN
Regional Examiner	CHERYL SIMON
Regional Supervisor	DANIEL ERVA

APPROVED FOR THE DEPARTMENT

DATE: 3/29/2021 (Signature)

E

GENERAL NOTES

THE LOCATIONS OF EXISTING AND PROPOSED UTILITY INSTALLATIONS AS SHOWN ON PLANS ARE APPROXIMATE.
THERE MAY BE OTHER UTILITY INSTALLATIONS WITHIN THE PROJECT AREA THAT ARE NOT SHOWN.

AS-BUILTS USED FOR PLAN DEVELOPMENT

PROJECT NO: 1614-04-71, CONSTRUCTION YEAR: 1972
PROJECT NO: 1614-05-70, CONSTRUCTION YEAR: 1973
PROJECT NO: 1614-04-72, CONSTRUCTION YEAR: 1990
PROJECT NO: 1614-05-72, CONSTRUCTION YEAR: 1992
PROJECT NO: 1614-05-73, CONSTRUCTION YEAR: 1992
PROJECT NO: 1612-01-60, CONSTRUCTION YEAR: 1996
PROJECT NO: 1610-31-60, CONSTRUCTION YEAR: 2006
PROJECT NO: 1610-40-60, CONSTRUCTION YEAR: 2007

ORDER OF SECTION 2 SHEETS

TYPICAL SECTIONS
CONSTRUCTION DETAILS
EROSION CONTROL
TRAFFIC CONTROL

UTILITIES

COMMUNICATIONS

CHARTER COMMUNICATIONS
STEVE BROWN
821 LINCOLN ST
RHINELANDER, WI 54501
OFFICE: (715) 519-0042
STEVE.BROWN@CHARTER.COM

CENTURYLINK
BEN BAKER
625 SOUTH AVE
HAWKINS, WI 54530
OFFICE: (715) 567-0725
BEN.BAKER@CENTURYLINK.COM

PRICE COUNTY TELEPHONE COMPANY
GUY FOLSOM
43705 USH 63
CABLE, WI 54821
OFFICE: (715) 798-7123
MOBILE: (715) 580-8123
GFOLSOM@NARVADO.COM

ELECTRIC - DISTRIBUTION

PRICE ELECTRIC COOPERATION INC.
BEN ORYSEN
W6803 SPRINGS DRIVE
PHILLIPS, WI 54555
OFFICE: (715) 339-2155
MOBILE: (715) 820-0200
BORYSEN@PRICE-ELECTRIC.COM

XCEL ENERGY
MITCH DIENGER
414 NICOLLET MALL, 5TH FLOOR
MINNEAPOLIS, MN 55401
OFFICE: (612) 330-6348
MOBILE: (612) 321-3109
MITCHELL.A.DIENGER@XCELENERGY.COM

SANITARY SEWER

PARK FALLS WATER AND SEWER DEPARTMENT
SCOTT HILGART
P.O. BOX 146
PARK FALLS, WI 54552
OFFICE: (715) 492-0564
DPW@CITYOFPARKFALLS.COM

WATER

PARK FALLS MUNICIPAL WATER UTILITY
SCOTT HILGART
P.O. BOX 146
PARK FALLS, WI 54552
OFFICE: (715) 492-0564
DPW@CITYOFPARKFALLS.COM

RUNOFF COEFFICIENT TABLE

	HYDROLOGIC SOIL GROUP											
	A			B			C			D		
	SLOPE RANGE (PERCENT)			SLOPE RANGE (PERCENT)			SLOPE RANGE (PERCENT)			SLOPE RANGE (PERCENT)		
LAND USE:	0-2	2-6	6 & OVER	0-2	2-6	6 & OVER	0-2	2-6	6 & OVER	0-2	2-6	6 & OVER
ROW CROPS	.08 .22	.16 .30	.22 .38	.12 .26	.20 .34	.27 .44	.15 .30	.24 .37	.33 .50	.19 .34	.28 .41	.38 .56
MEDIAN STRIP-TURF	.19 .24	.20 .26	.24 .30	.19 .25	.22 .28	.26 .33	.20 .26	.23 .30	.30 .37	.20 .27	.25 .32	.30 .40
SIDE SLOPE-TURF			.25 .32			.27 .34			.28 .36			.30 .38
PAVEMENT:												
ASPHALT	.70 - .95											
CONCRETE	.80 - .95											
BRICK	.70 - .80											
DRIVES, WALKS	.75 - .85											
ROOFS	.75 - .95											
GRAVEL ROADS, SHOULDERS	.40 - .60											

TOTAL PROJECT AREA = 9 ACRES
TOTAL AREA EXPECTED TO BE DISTURBED BY CONSTRUCTION ACTIVITIES = 1 ACRE

DIGGERS HOTLINE
Dial 811 or (800)242-8511
www.DiggersHotline.com

OTHER CONTACTS

DNR LIAISON

WENDY HENNIGES
DNR NORTHERN REGION HEADQUARTERS
107 SUTLIFF AVENUE
RHINELANDER, WI 54501
PHONE: (715) 365-8916
WENDY.HENNIGES@WISCONSIN.GOV

DAM OPERATION

KURT ROSENTHAL
RENEWABLE WORLD ENERGIES
100 S. STATE ST
NESHKORO, WI 54960
PHONE: 1-855-99-HYDRO

RWIS CONTACT

WISDOT RWIS PROGRAM
MICHAEL J. ADAMS
PO BOX 7986
MADISON, WI 53707
OFFICE: (608) 266-5004
MICHAEL.ADAMS@DOT.WI.GOV

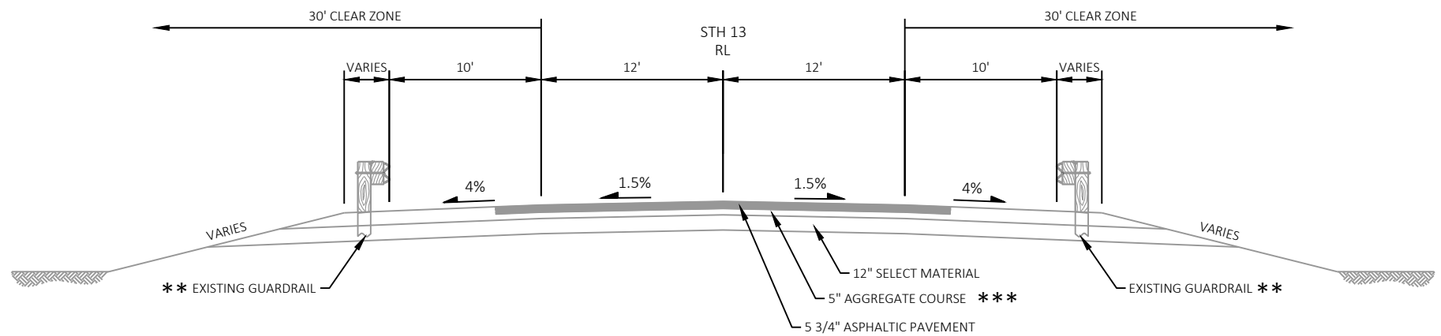

EXISTING TYPICAL SECTION

STA 1254+32 - STA 1256+00 (B-50-21)
STA 1257+41 (B-50-21) - STA 1259+94

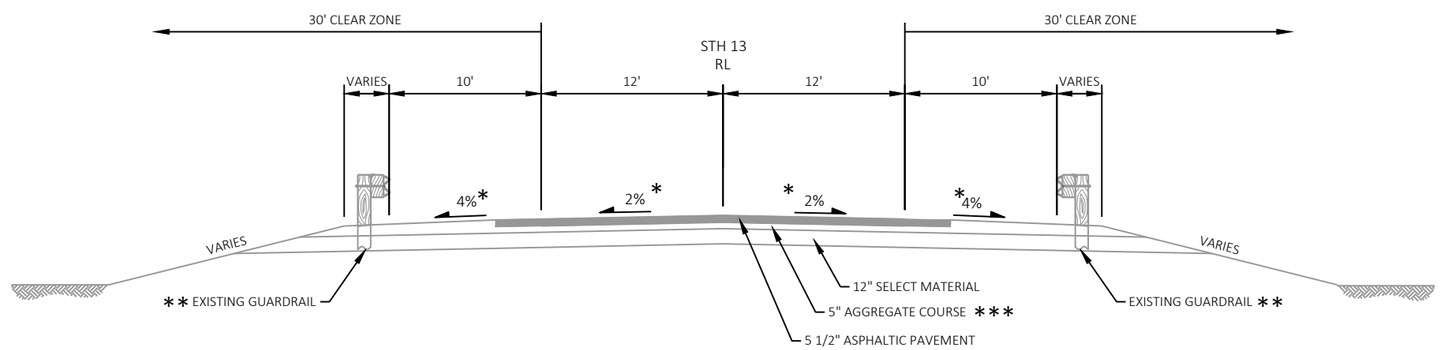

EXISTING TYPICAL SECTION

STA 1480+10 - STA 1483+18 (B-50-22)
STA 1487+13 (B-50-22) - STA 1489+63

NOTES

* CROSS SLOPE VARIES DUE TO SUPERELEVATION. SEE SECTION 5 PLANS FOR SUPERELEVATION INFORMATION.

** SEE SECTION 5 PLAN SHEETS FOR LOCATIONS OF EXISTING GUARDRAIL.

*** MIX OF ORIGINAL AGGREGATE AND PULVERIZED ASPHALTIC PAVEMENT.

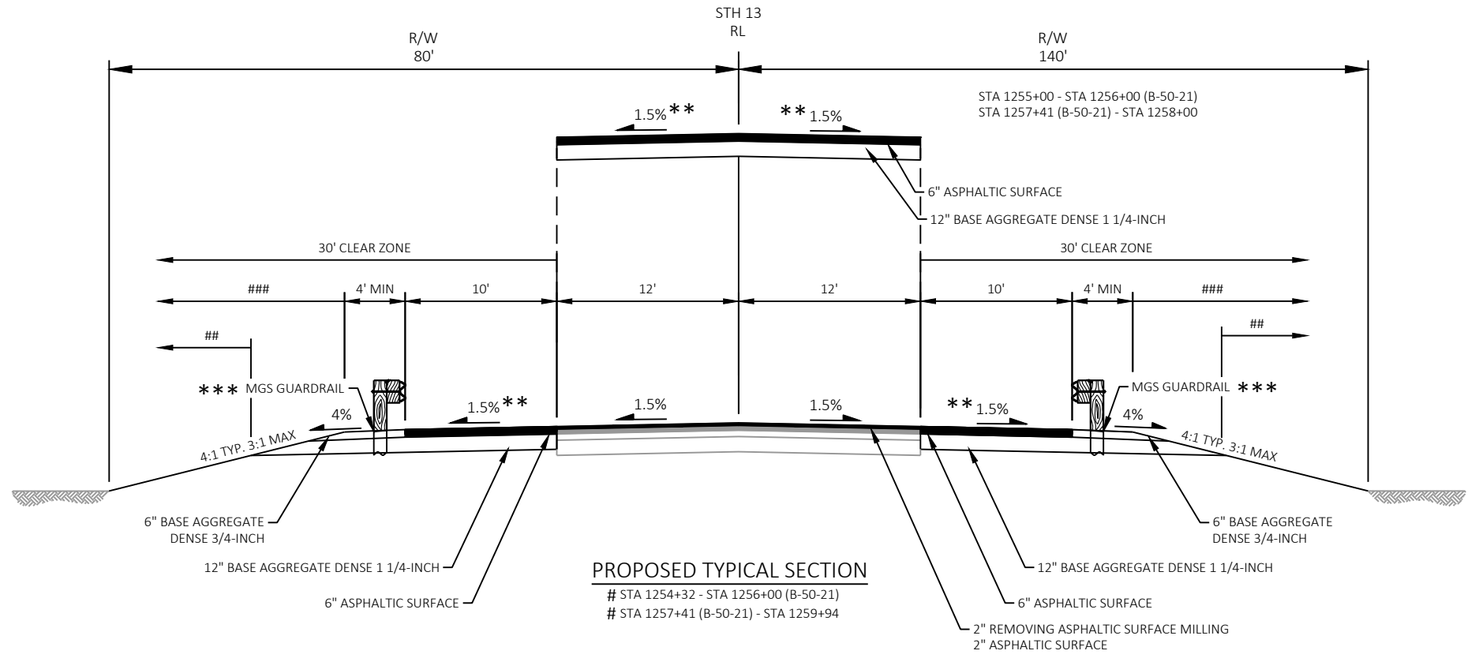

PROPOSED TYPICAL SECTION

STA 1254+32 - STA 1256+00 (B-50-21)
STA 1257+41 (B-50-21) - STA 1259+94

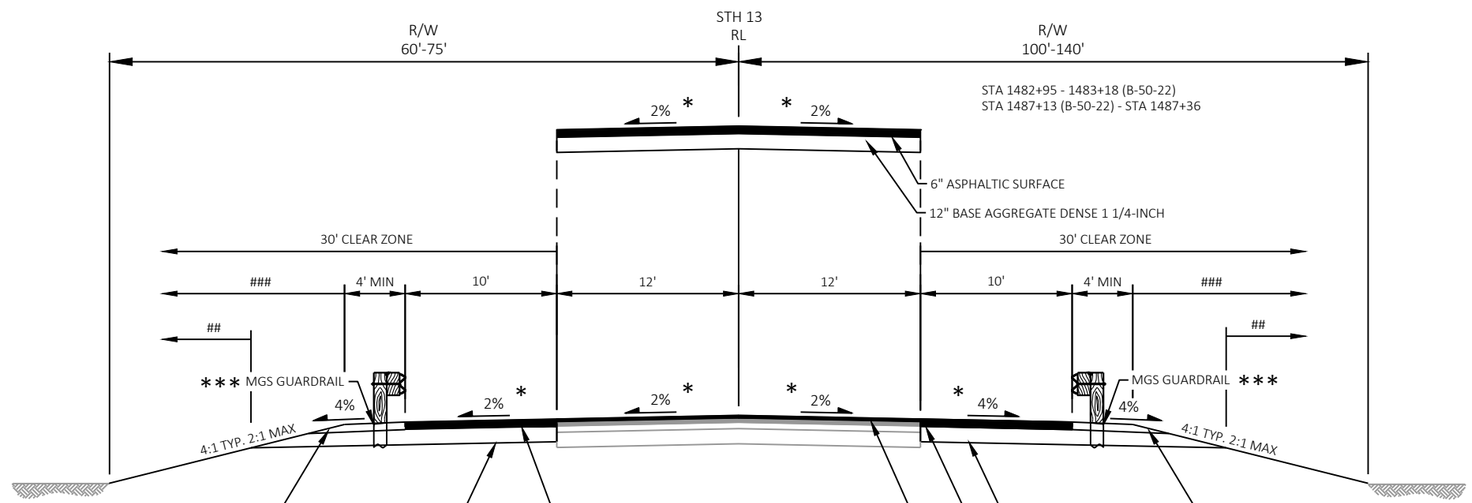

PROPOSED TYPICAL SECTION

STA 1480+10 - STA 1483+18 (B-50-22)
STA 1487+13 (B-50-22) - STA 1489+63

NOTES

*	CROSS SLOPE VARIES DUE TO SUPERELEVATION. SEE SECTION 5 PLANS FOR SUPERELEVATION INFORMATION.
**	CROSS SLOPE VARIES DUE TO TRANSITION, BRIDGE CROSS SLOPE TO BE CORRECTED TO 2%.
***	SEE SDD AND SECTION 5 PLAN SHEETS FOR LOCATIONS OF PROPOSED MGS GUARDRAIL, VARIABLE WIDTH SHOULDER TRANSITIONS AND LOCATIONS OF CURB & GUTTER.
#	SEE SECTION 5 PLAN SHEETS FOR LIMITS OF CONCRETE APPROACH SLABS, SHOULDER RECONSTRUCTION LIMITS INCLUDING CHANGES IN THE PAVED SHOULDER, AND SLOPE GRADING LIMITS.
##	TOPSOIL, SEED, FERTILIZER, AND EROSION MAT. SEE SECTION 5 PLANS AND EROSION CONTROL PLANS FOR ADDITIONAL DETAILS.
###	SEEDING AND FERTILIZER

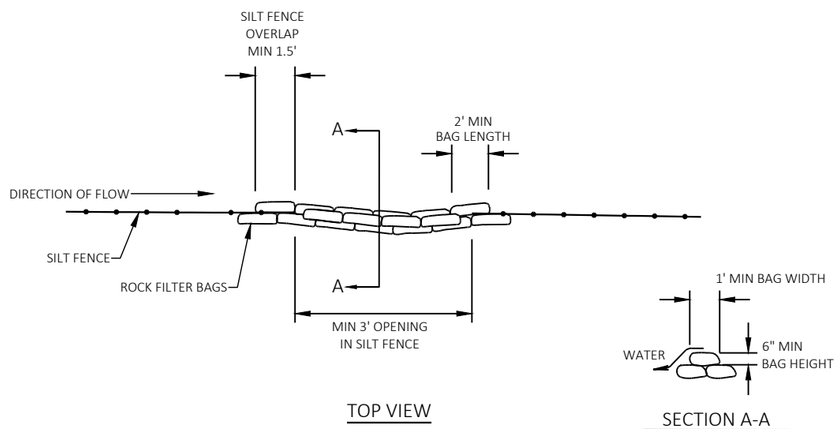

DETAIL OF ROCK BAGS USED FOR SILT FENCE RELIEF

PAID AS ROCK BAGS

NOTE

SEE EROSION CONTROL PLANS FOR LOCATIONS.

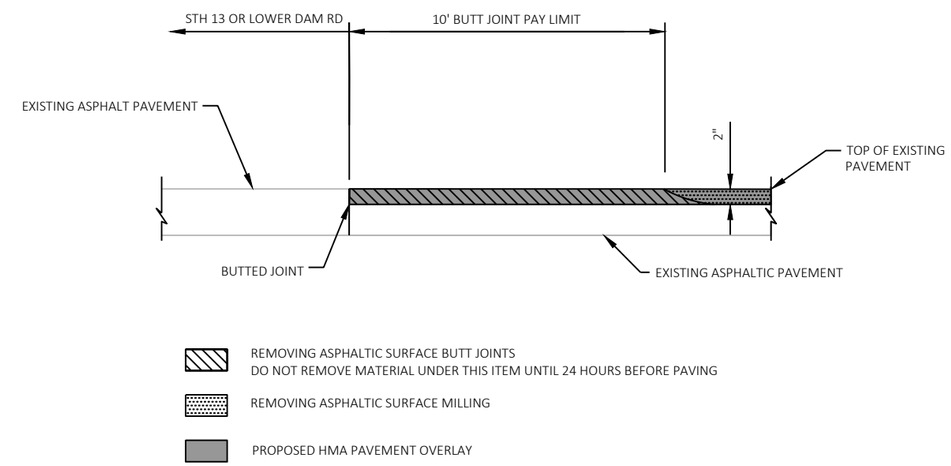

MAINLINE AND SIDE ROAD BUTT JOINT DETAIL

STA 1254+32
STA 1259+94
STA 1480+10
STA 1489+63
LOWER DAM RD

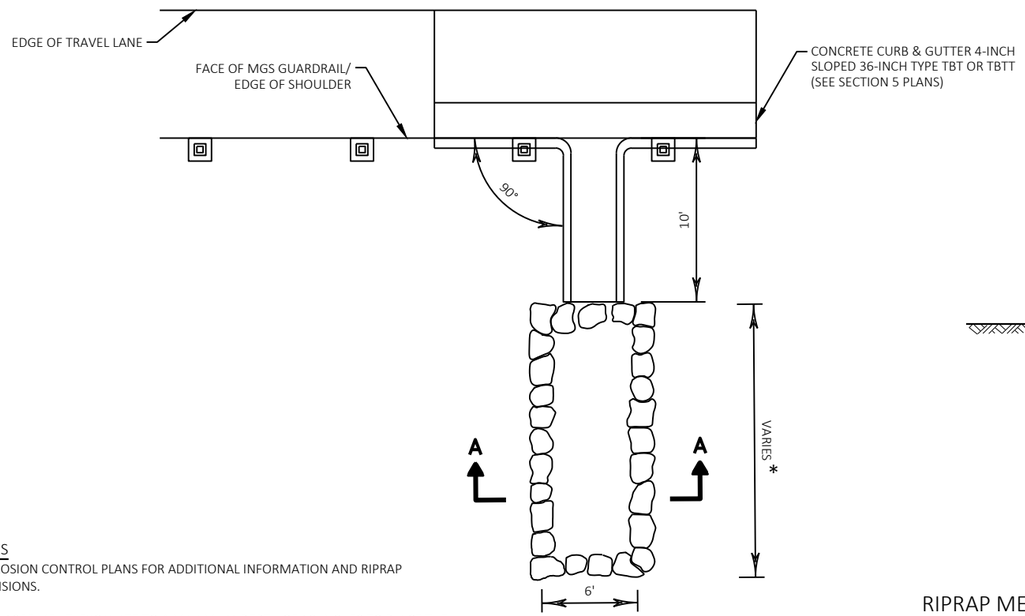

STA 1255+46 LT&RT

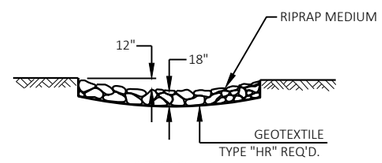

SECTION A-A

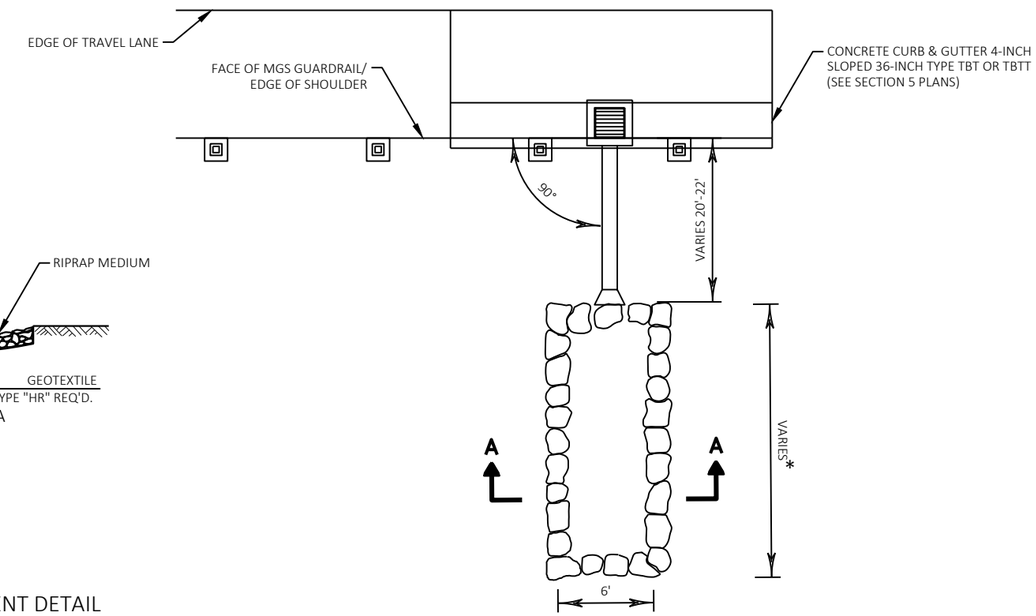

STA 1487+63 LT
STA 1487+73 RT

RIPRAP MEDIUM TREATMENT DETAIL AT CONCRETE SURFACE DRAINS

NOTES

* SEE EROSION CONTROL PLANS FOR ADDITIONAL INFORMATION AND RIPRAP DIMENSIONS.

AT STA 1255+45 LT, EXCAVATE TO A MAXIMUM DEPTH OF 18-INCHES TO PLACE THE RIPRAP TO AVOID THE EXISTING TELEPHONE FACILITY.

VERIFY PROPOSED GUARDRAIL POST LOCATIONS PRIOR TO INSTALLING CONCRETE SURFACE DRAIN.

FOR DETAILS NOT SHOWN SEE SDD FOR "CONCRETE SURFACE DRAINS FLUME TYPE AT STRUCTURES" AND "CONCRETE SURFACE DRAINS DROP INLET TYPE AT STRUCTURES"

LEGEND

CONCRETE PAVEMENT APPROACH SLAB

CONCRETE PAVEMENT 7" FOR SHOULDERS

NOTES

PLACE TIE BARS BETWEEN THE CONCRETE PAVEMENT APPROACH SLAB AND CONCRETE PAVEMENT 7" FOR SHOULDERS.

1 1/2" EXPANSION JOINT IS INCIDENTAL TO THE CONCRETE PAVEMENT APPROACH SLAB.

SEE SDD "CONCRETE PAVEMENT APPROACH SLAB" FOR ADDITIONAL INFORMATION.

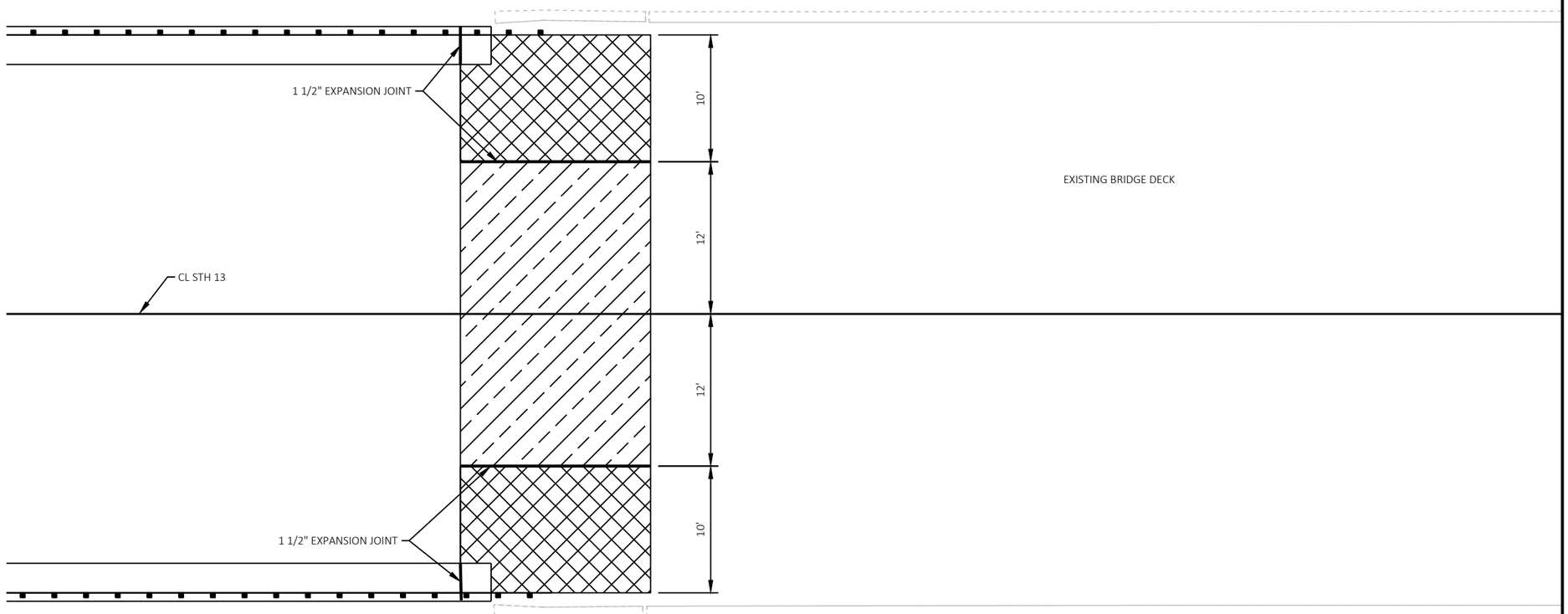

APPROACH SLAB EXPANSION JOINT DETAIL

2

LEGEND

PROTECTIVE THERMOPLASTIC COATING AT SNOWMOBILE TRAIL CROSSINGS

SIGNPOST
SIGNPOST
GUY
GUY
POST
POST

STA 1480+81.67
O/S 15.00' LT

STA 1480+35.81
O/S 15.00' RT

10:1 TAPER
10:1 TAPER

3'
3'
7'
7'
15'
15'

1479+00
1480+00
STH 13
1481+00
1482+00
1483+00
1484+00

EXISTING B-50-22
CONCRETE OVERLAY AND
OTHER STRUCTURE REPAIRS
(SEE STRUCTURE PLANS)

EXISTING
SNOWMOBILE TRAIL

NORTH FORK
FLAMBEAU RIVER

N

2

LOWER DAM RD

GUY
GUY
GUY
GUY
POST
WV

STA 1488+53.75
O/S 28.50' LT

STA 1489+34.71
O/S 15.00' RT

12:1 TAPER
10:1 TAPER

7'
7'
15'
15'
13'
3'
3'

EXISTING B-50-22
CONCRETE OVERLAY AND
OTHER STRUCTURE REPAIRS
(SEE STRUCTURE PLANS)

1485+00
1486+00
STH 13
1487+00
1488+00
1489+00
1490+00

EXISTING
SNOWMOBILE TRAIL

NORTH FORK
FLAMBEAU RIVER

N

PROJECT NO: 1610-44-62	HWY: STH 13	COUNTY: PRICE	CONSTRUCTION DETAILS - PROTECTIVE THERMOPLASTIC COATING	SHEET 8	E

2

LEGEND

- CONCRETE PAVEMENT APPROACH SLAB AND CONCRETE PAVEMENT 7" FOR SHOULDERS
- 6-INCH ASPHALTIC SURFACE
- MILL AND OVERLAY (SEE TYPICAL SECTIONS FOR ASPHALTIC SURFACE DEPTH)
- RIPRAP MEDIUM (SEE EROSION CONTROL DETAILS)
- INLETS 2X2-FT
- .XXXXXXXXX. SAWING ASPHALT
- C1 CONCRETE CURB & GUTTER 4-INCH SLOPED 36-INCH TYPE TBTT
- C2 CONCRETE CURB & GUTTER 4-INCH SLOPED 36-INCH TYPE TBT
- X STRUCTURE NUMBER

NOTE
CONFIRM THE PROPOSED GUARDRAIL POST LOCATIONS PRIOR TO PLACING THE INLETS.

STORM SEWER SCHEDULE

STRUCT NO.	STATION	(1) OFFSET	C-C (FT)	TO STRUCTURE	INLET TYPE / COVER	(2) GRATE ELEV.	(3) T.O.S. ELEV.	(4) DEPTH (FT)	DISCHARGE PIPE CLASS	SIZE (IN)	INLET ELEV.	DISCHARGE ELEV.	(5) LENGTH (FT)	(6) SLOPE (%)	REMARKS
1	1487+68.94	21.00' LT	6.3	2	2-FT X 2FT / V	1487.28	1485.95	3.50	III	12	1482.45	1482.32	4.3	2.96	SEE SDD "CONCRETE SURFACE DRAINS DROP INLET TYPE AT STRUCTURES" FOR ADDITIONAL INFORMATION
2	1487+62.69	21.00' LT	20.0	3	2-FT X 2FT / V	1487.35	1486.02	3.70	--	12	1482.32	1481.10	19.0	6.44	SEE SDD "CONCRETE SURFACE DRAINS DROP INLET TYPE AT STRUCTURES" FOR ADDITIONAL INFORMATION
3	1487+62.69	41.00' LT	--	--	--	--	--	--	--	--	--	--	--	--	APRON ENDWALL AND MARKERS CULVERT END REQ'D. (7)
4	1487+79.09	21.00' RT	6.3	5	2-FT X 2FT / V	1486.93	1485.60	2.50	III	12	1483.10	1482.98	4.3	2.94	SEE SDD "CONCRETE SURFACE DRAINS DROP INLET TYPE AT STRUCTURES" FOR ADDITIONAL INFORMATION
5	1487+72.84	21.00' RT	20.0	6	2-FT X 2FT / V	1487.00	1485.67	2.70	--	12	1482.97	1482.71	19.0	1.39	SEE SDD "CONCRETE SURFACE DRAINS DROP INLET TYPE AT STRUCTURES" FOR ADDITIONAL INFORMATION
6	1487+72.84	41.00' RT	--	--	--	--	--	--	--	--	--	--	--	--	APRON ENDWALL AND MARKERS CULVERT END REQ'D. (7)

(1) STRUCTURE OFFSET IS TO CENTER OF STRUCTURE
(2) CASTING ELEVATION FOR INLETS 2-FT X 2-FT IS MEASURED AT FLANGE LINE OF THE CASTING
(3) TOP OF STRUCTURE ELEVATION (T.O.S.) DETERMINED BY SUBTRACTING CASTING HEIGHT AND 6-INCHES, FOR ADJUSTMENT, FROM RIM ELEVATION. A TYPE V INLET CASTING IS 10 INCHES IN HEIGHT.
(4) DEPTH OF STRUCTURE IS MEASURED BY SUBTRACTING INLET ELEVATION FROM T.O.S.
(5) PIPE LENGTH IS MEASURED FROM INSIDE WALL OF STRUCTURE TO INSIDE WALL OF STRUCTURE OR THE END OF ENDWALL, USED FOR SLOPE CALCULATION ONLY
(6) PIPE SLOPE IS CALCULATED USING PIPE LENGTH FROM THE INSIDE WALL OF STRUCTURE TO INSIDE WALL OF STRUCTURE OR END OF ENDWALL
(7) STATION AND OFFSET AT ENDWALL IS TO THE END OF ENDWALL

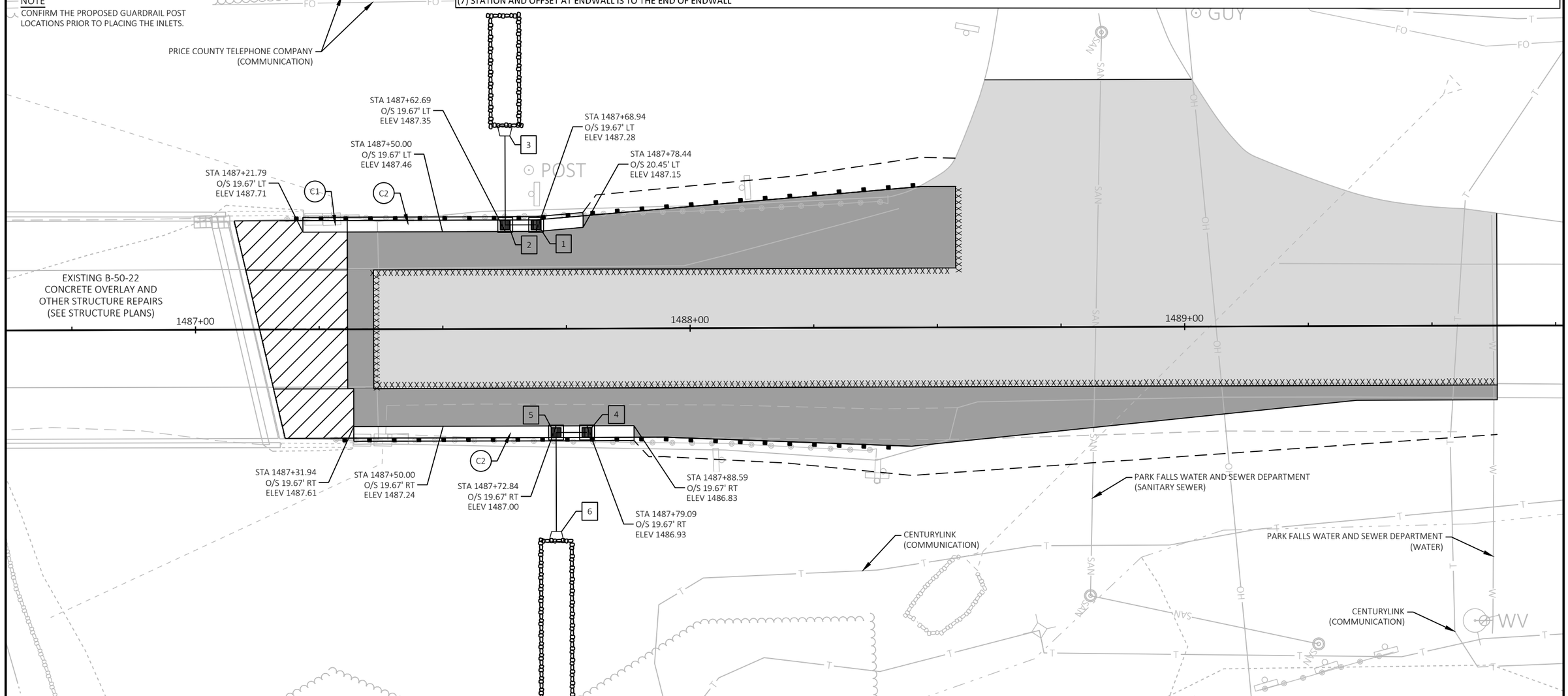

PROJECT NO: 1610-44-62	HWY: STH 13	COUNTY: PRICE	CONSTRUCTION DETAILS - B-50-22 CONCRETE SURFACE DRAINS	SHEET 9	E

2

LEGEND

- EROSION MAT CLASS I TYPE B
- EROSION MAT URBAN CLASS I TYPE B
- PERMITTED WETLAND IMPACTS
- SILT FENCE
- RIPRAP MEDIUM (SEE CONSTRUCTION DETAILS)
- RIPRAP HEAVY (SEE STRUCTURE PLANS)
- SLOPE INTERCEPT
- TEMPORARY DITCH CHECKS
- SILT FENCE RELIEF (ROCK BAGS)
- SURFACE WATER FLOW
- DELINEATED WETLAND BOUNDARY
- INLET PROTECTION TYPE C

NOTES

DISTURBED AREAS WITHIN THE RIGHT-OF-WAY, EXCEPT THE AREAS WITHIN THE FINISHED SHOULDER POINTS, SHALL BE TOPSOILED, FERTILIZED, SEEDED AND COVERED WITH EROSION MAT.

PLACE SILT FENCE WITHIN 1 FT TO 3 FT OF THE SLOPE INTERCEPT IN WETLAND AREAS.

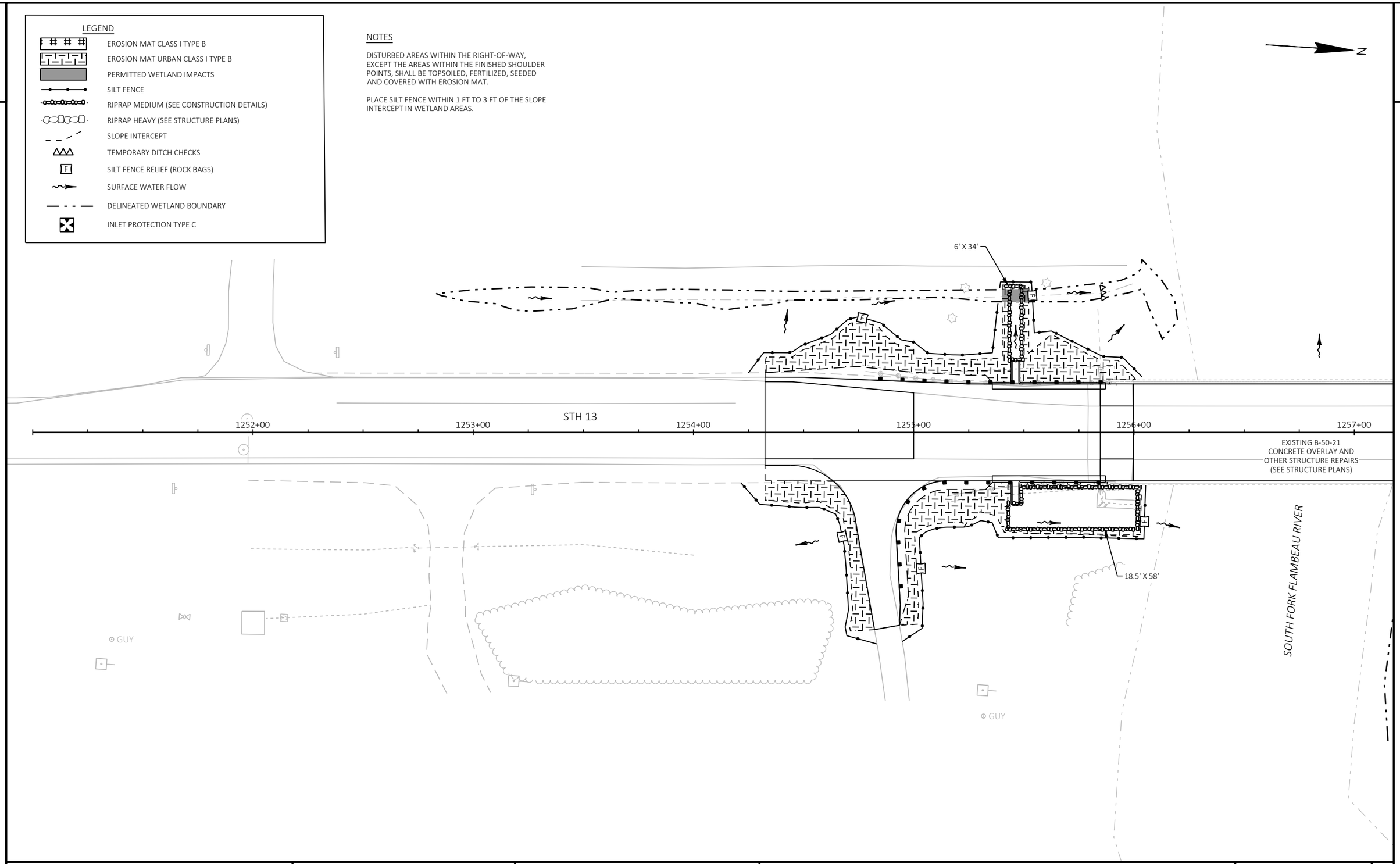

2

PROJECT NO: 1610-44-62	HWY: STH 13	COUNTY: PRICE	EROSION CONTROL	SHEET 10	E

2

LEGEND

- EROSION MAT CLASS I TYPE B
- EROSION MAT URBAN CLASS I TYPE B
- PERMITTED WETLAND IMPACTS
- SILT FENCE
- RIPRAP MEDIUM (SEE CONSTRUCTION DETAILS)
- RIPRAP HEAVY (SEE STRUCTURE PLANS)
- SLOPE INTERCEPT
- TEMPORARY DITCH CHECKS
- SILT FENCE RELIEF (ROCK BAGS)
- SURFACE WATER FLOW
- DELINEATED WETLAND BOUNDARY
- INLET PROTECTION TYPE C

NOTES

DISTURBED AREAS WITHIN THE RIGHT-OF-WAY, EXCEPT THE AREAS WITHIN THE FINISHED SHOULDER POINTS, SHALL BE TOPSOILED, FERTILIZED, SEEDED AND COVERED WITH EROSION MAT.

PLACE SILT FENCE WITHIN 1 FT TO 3 FT OF THE SLOPE INTERCEPT IN WETLAND AREAS.

N

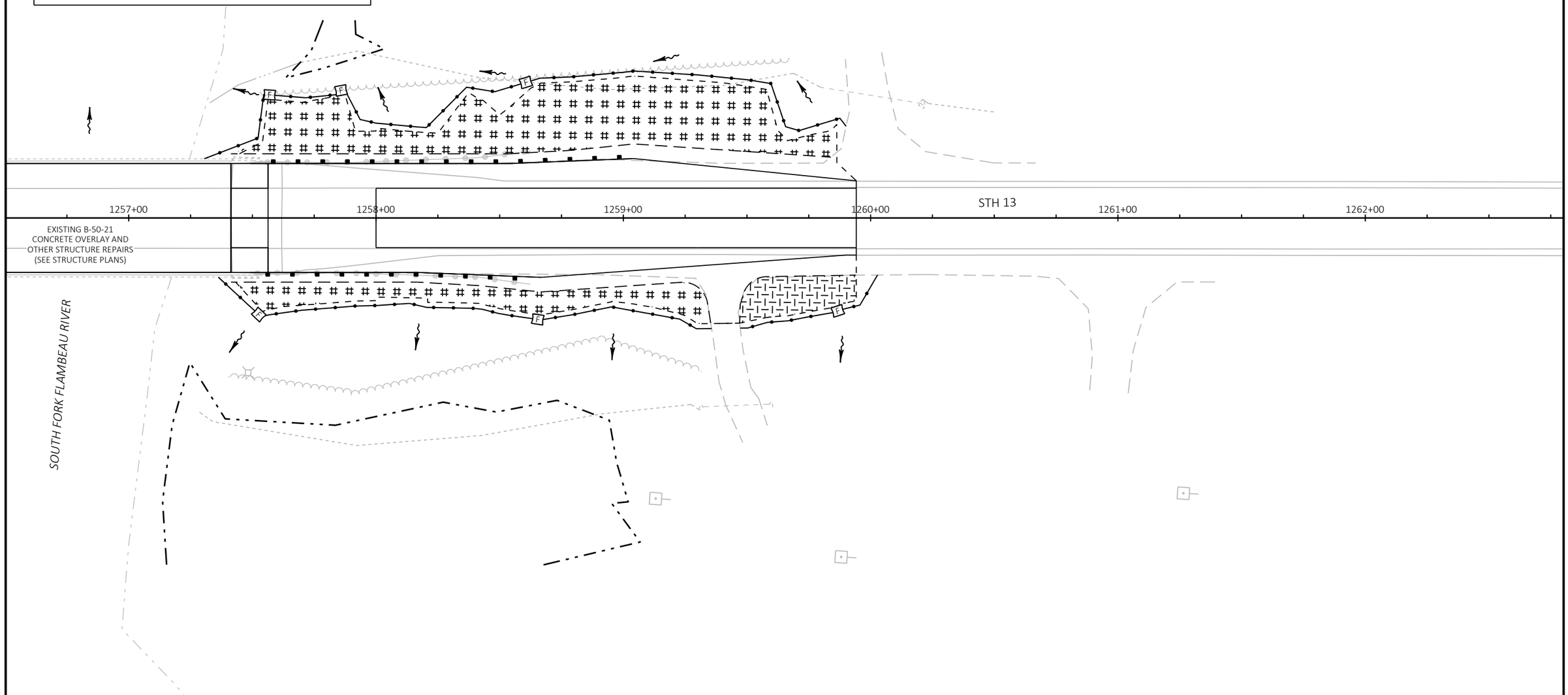

2

PROJECT NO: 1610-44-62	HWY: STH 13	COUNTY: PRICE	EROSION CONTROL	SHEET 11	E

FILE NAME : P:\52XX\5201.DP.19.STH13.PRC\CADDS\16104462\SHEETSPLAN\022001-EC.DWG
LAYOUT NAME - 02
PLOT DATE : 2/17/2021 4:33 PM
PLOT BY : SCOTT KAISER
PLOT NAME :
PLOT SCALE : 1 IN:40 FT
WISDOT/CADDS SHEET 42

2

LEGEND

- EROSION MAT CLASS I TYPE B
- EROSION MAT URBAN CLASS I TYPE B
- PERMITTED WETLAND IMPACTS
- SILT FENCE
- RIPRAP MEDIUM (SEE CONSTRUCTION DETAILS)
- RIPRAP HEAVY (SEE STRUCTURE PLANS)
- SLOPE INTERCEPT
- TEMPORARY DITCH CHECKS
- SILT FENCE RELIEF (ROCK BAGS)
- SURFACE WATER FLOW
- DELINEATED WETLAND BOUNDARY
- INLET PROTECTION TYPE C

NOTES

DISTURBED AREAS WITHIN THE RIGHT-OF-WAY, EXCEPT THE AREAS WITHIN THE FINISHED SHOULDER POINTS, SHALL BE TOPSOILED, FERTILIZED, SEEDED AND COVERED WITH EROSION MAT.

PLACE SILT FENCE WITHIN 1 FT TO 3 FT OF THE SLOPE INTERCEPT IN WETLAND AREAS.

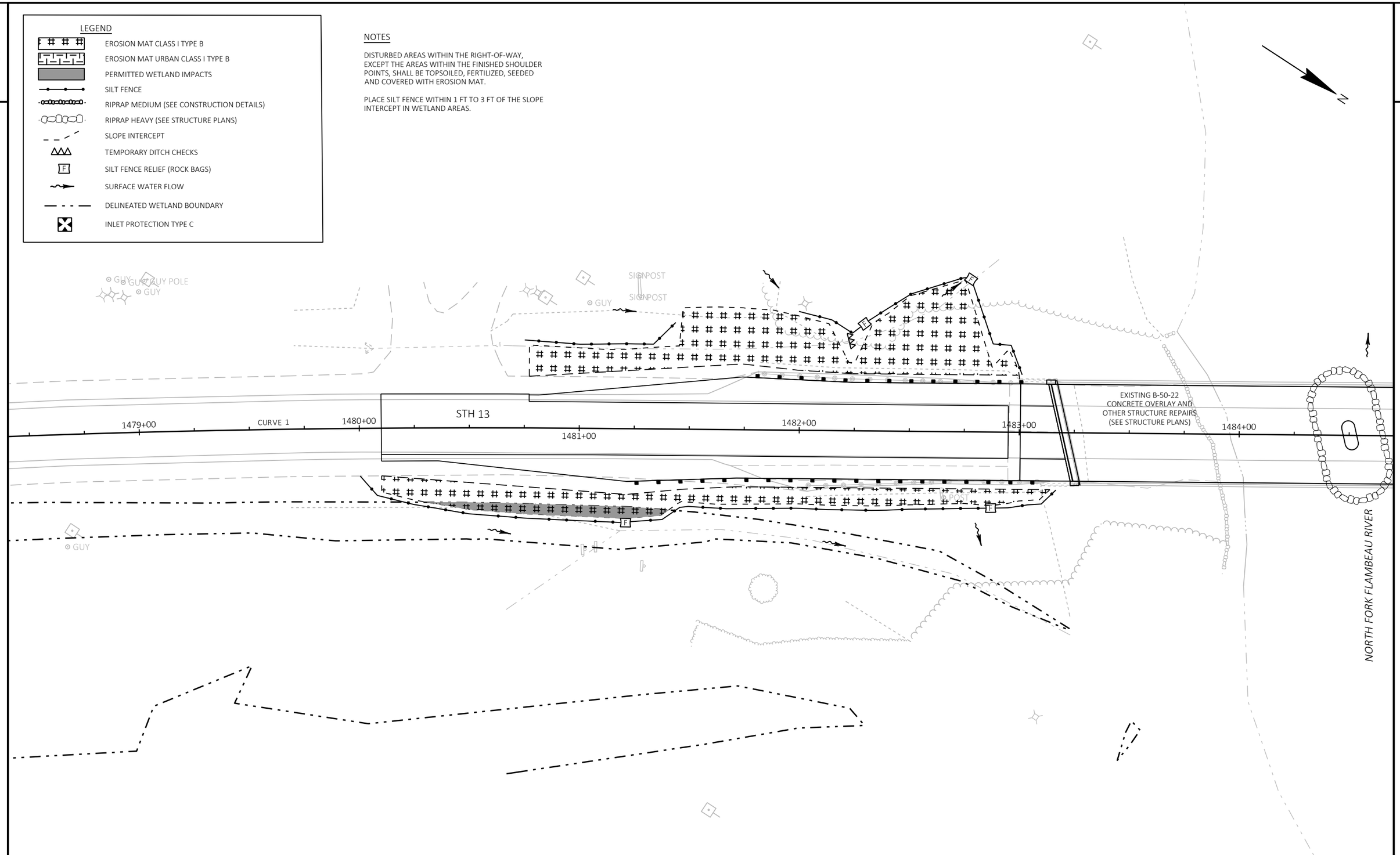

2

PROJECT NO: 1610-44-62	HWY: STH 13	COUNTY: PRICE	EROSION CONTROL	SHEET 12	E

FILE NAME : P:\52XX\5201.DP.19.STH13.PRC\CADDS\16104462\SHEETSPLAN\022001-EC.DWG
LAYOUT NAME - 03
PLOT DATE : 2/17/2021 4:33 PM
PLOT BY : SCOTT KAISER
PLOT NAME :
PLOT SCALE : 1 IN:40 FT
WISDOT/CADDS SHEET 42

2

LEGEND

- EROSION MAT CLASS I TYPE B
- EROSION MAT URBAN CLASS I TYPE B
- PERMITTED WETLAND IMPACTS
- SILT FENCE
- RIPRAP MEDIUM (SEE CONSTRUCTION DETAILS)
- RIPRAP HEAVY (SEE STRUCTURE PLANS)
- SLOPE INTERCEPT
- TEMPORARY DITCH CHECKS
- SILT FENCE RELIEF (ROCK BAGS)
- SURFACE WATER FLOW
- DELINEATED WETLAND BOUNDARY
- INLET PROTECTION TYPE C

NOTES

DISTURBED AREAS WITHIN THE RIGHT-OF-WAY, EXCEPT THE AREAS WITHIN THE FINISHED SHOULDER POINTS, SHALL BE TOPSOILED, FERTILIZED, SEEDED AND COVERED WITH EROSION MAT.

PLACE SILT FENCE WITHIN 1 FT TO 3 FT OF THE SLOPE INTERCEPT IN WETLAND AREAS.

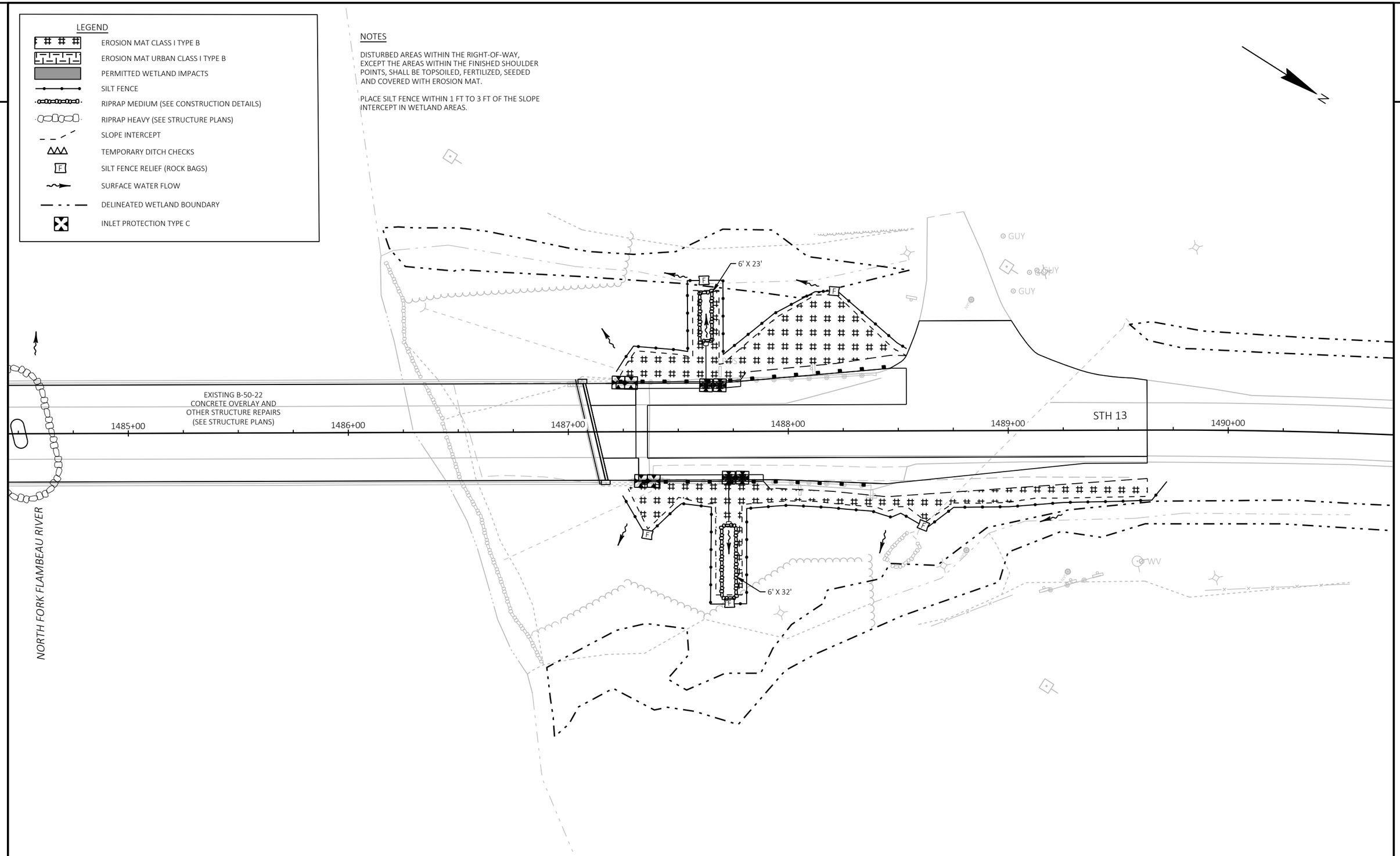

2

PROJECT NO: 1610-44-62	HWY: STH 13	COUNTY: PRICE	EROSION CONTROL	SHEET 13	E

FILE NAME : P:\52XX\5201.DP.19.STH13.PRC\CADDS\16104462\SHEETSPLAN\022001-EC.DWG
LAYOUT NAME - 04
PLOT DATE : 2/17/2021 4:33 PM
PLOT BY : SCOTT KAISER
PLOT NAME :
PLOT SCALE : 1 IN:40 FT
WISDOT/CADDS SHEET 42

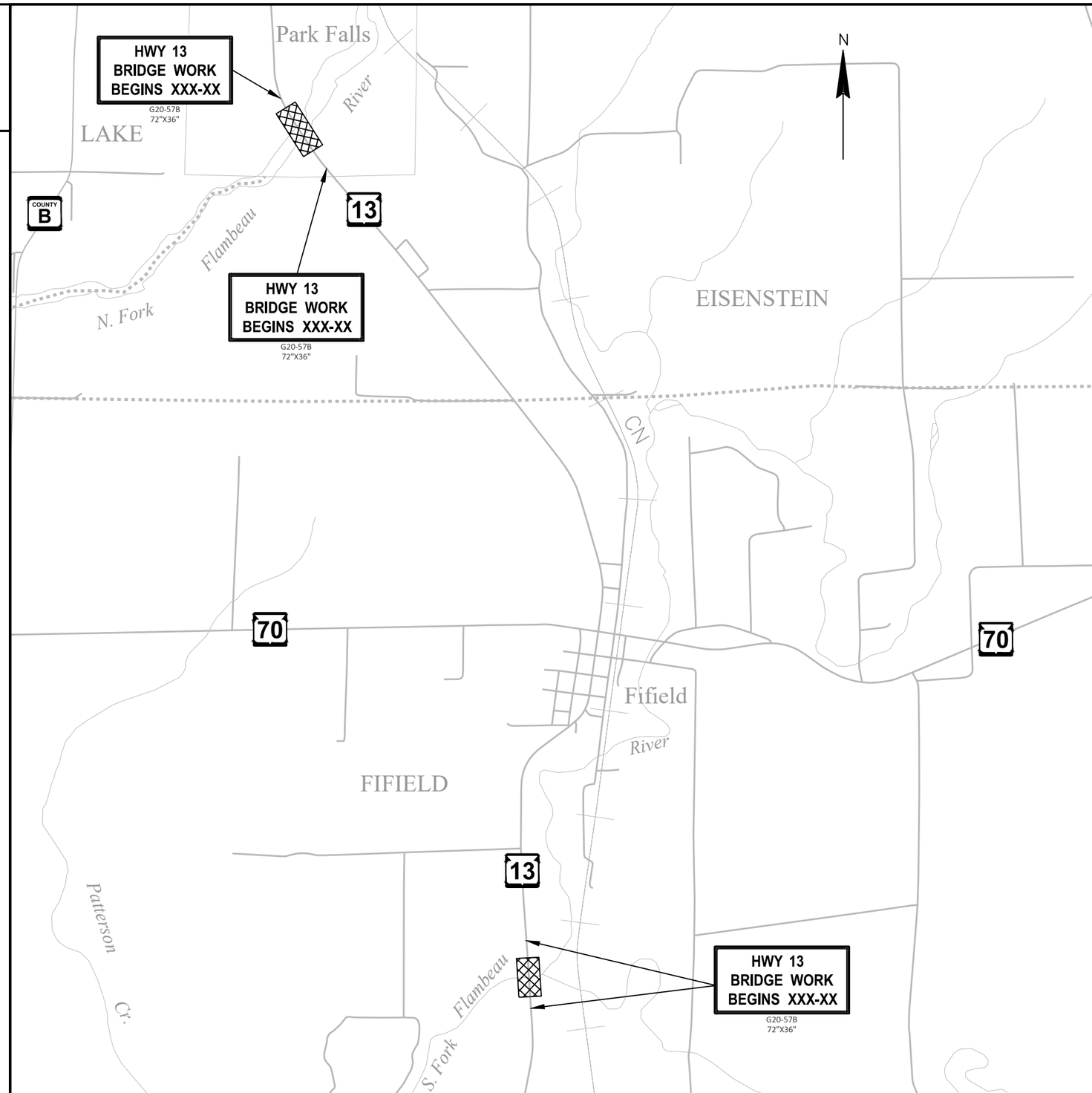

LEGEND

WORK ZONE

TRAFFIC CONTROL GENERAL NOTES

1. ALL SIGNS ARE 48" X 48" UNLESS OTHERWISE NOTED.

2. "WO" SIGNS ARE THE SAME AS "W" SIGNS EXCEPT THE BACKGROUND IS ORANGE.

3. ALL TYPE III BARRICADES SHALL BE EQUIPPED WITH TYPE "A" (LOW INTENSITY FLASHING LIGHTS) PER SDD'S.

4. PLACE TRAFFIC CONTROL SIGNS AND DRUMS PER SDD "TRAFFIC CONTROL, WORK ON SHOULDER OR PARKING LANE, UNDIVIDED ROADWAY". IN AREAS OF GUARD RAIL REPLACEMENT.

5. DELINEATE PRIVATE ACCESS WITH TRAFFIC CONTROL DRUMS, WHERE REQUIRED.

6. PLACE G20-57B FIXED MESSAGE SIGNS AND DISPLAY THE MESSAGE 7 DAYS PRIOR TO THE EXPECTED START OF THE PROPOSED WORK AT EACH BRIDGE AND REMOVE WHEN CONSTRUCTION BEGINS.

2

PROJECT NO: 1610-44-62	HWY: STH 13	COUNTY: PRICE	TRAFFIC CONTROL OVERVIEW	SHEET 14	E

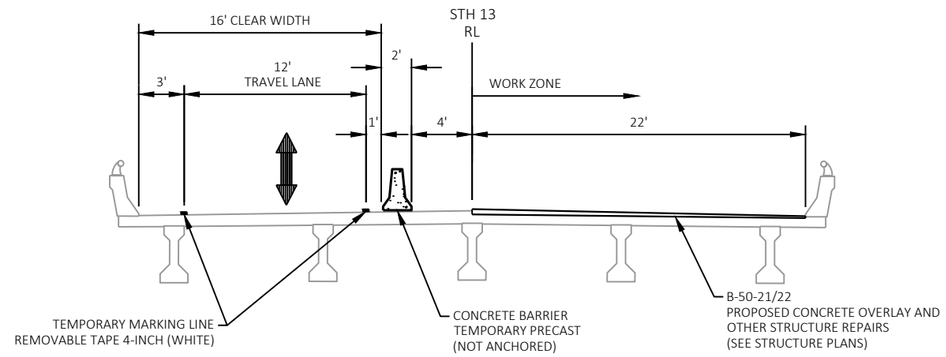

TRAFFIC CONTROL TYPICAL SECTION STAGE 1 B-50-21/22

STH 13

CONSTRUCT RIGHT SIDE OVERLAY, OTHER STRUCTURE REPAIRS AND APPROACHES

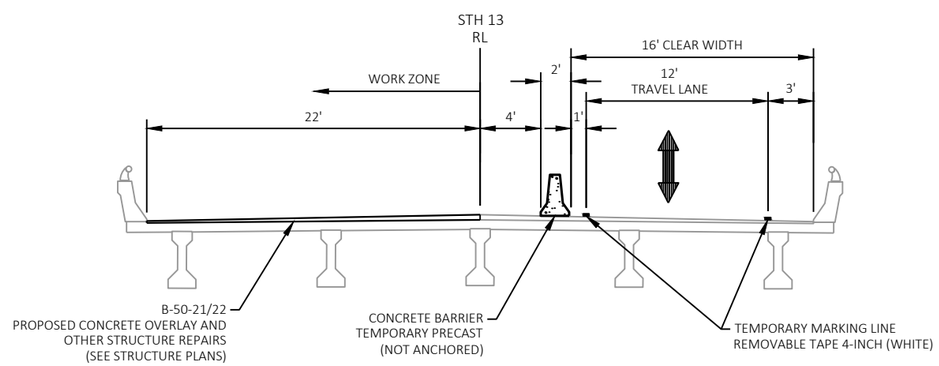

TRAFFIC CONTROL TYPICAL SECTION STAGE 2 B-50-21/22

STH 13

CONSTRUCT LEFT SIDE OVERLAY, OTHER STRUCTURE REPAIRS AND APPROACHES

NOTE

SEE TRAFFIC CONTROL PLAN SHEETS FOR ADDITIONAL PROPOSED WORK AND INFORMATION INCLUDING TEMPORARY SHOULDER PAVING.

2

LEGEND

- TYPE III BARRICADE WITH/WITHOUT ATTACHED SIGN
- TRAFFIC CONTROL DRUM
- TRAFFIC CONTROL DRUM WITH TYPE C LIGHT
- TRAFFIC ACTUATED TRAILER MOUNTED TEMPORARY SIGNAL
- SIGN ON TEMPORARY SUPPORT
- CONCRETE BARRIER TEMPORARY PRECAST
- CRASH CUSHIONS TEMPORARY
- 4" ASPHALTIC SURFACE TEMPORARY
- WORK AREA
- DIRECTION OF TRAFFIC
- REM — MARKING REMOVAL LINE 4-INCH
- TTY — TEMPORARY MARKING LINE REMOVABLE TAPE 4-INCH (DOUBLE YELLOW)
- TTW — TEMPORARY MARKING LINE REMOVABLE TAPE 4-INCH (WHITE)
- STP — TEMPORARY MARKING STOP LINE REMOVABLE TAPE 18-INCH (WHITE)

NOTES

TEMPORARY MARKING, TRAFFIC CONTROL DRUMS AND TEMPORARY SIGNAL PLACEMENT ARE SHOWN ON THE PLANS, SEE SDD "TRAFFIC CONTROL, ONE LANE ROAD WITH TEMPORARY SIGNALS" FOR ADDITIONAL INFORMATION

THE DRUMS LOCATED IN THE TAPER MAY NEED TO BE MOVED DURING THE SHOULDER WORK OPERATIONS IF ONE LANE SIGNALIZED CONDITIONS ARE MAINTAINED

SEE SDD "BRIDGE TEMPORARY TRAFFIC SIGNAL INSTALLATION" FOR ADDITIONAL INFORMATION

N

SIGNAL TIMING

SIGNAL TIMING PROVIDED BY NC REGION, TRAFFIC SECTION. SIGNAL TIMING ASSUMES 766' SPACING BETWEEN STOP LINES.

SIGNAL LOCATION	Ø 1 NB STH 13	Ø 2 WB DRIVEWAY	Ø 3 SB STH 13
MINIMUM GREEN TIME	9 SEC	5 SEC	9 SEC
MAXIMUM PASSAGE TIME DURING GREEN PHASE	5 SEC	5 SEC	5 SEC
MINIMUM PASSAGE TIME DURING GREEN PHASE	3 SEC	-	3 SEC
START OF REDUCTION OF PASSAGE FROM MAX. TO MIN. DURING GREEN PHASE	15 SEC	-	15 SEC
TIME TO REDUCE PASSAGE FROM MAX. TO MIN. DURING GREEN PHASE	0 SEC	-	0 SEC
MAXIMUM GREEN TIME	27 SEC	7 SEC	27 SEC
YELLOW	5 SEC	3 SEC	5 SEC
ALL-RED	8 SEC	20 SEC	24 SEC
RECALL MODE	MIN	MIN	MIN

PHASE 2 SHALL COME AFTER PHASE 1, PHASE 3 SHALL COME AFTER PHASE 2, PHASE 1 SHALL COME AFTER PHASE 3.

CONTRACTOR SHALL REVIEW SIGNALS AFTER PROGRAMMING TO ASSURE THERE ARE NOT CONFLICTING MOVEMENTS.

IF THERE ARE QUESTIONS REGARDING THE TIMINGS, PLEASE CONTACT WISDOT TRAFFIC ENGINEER.

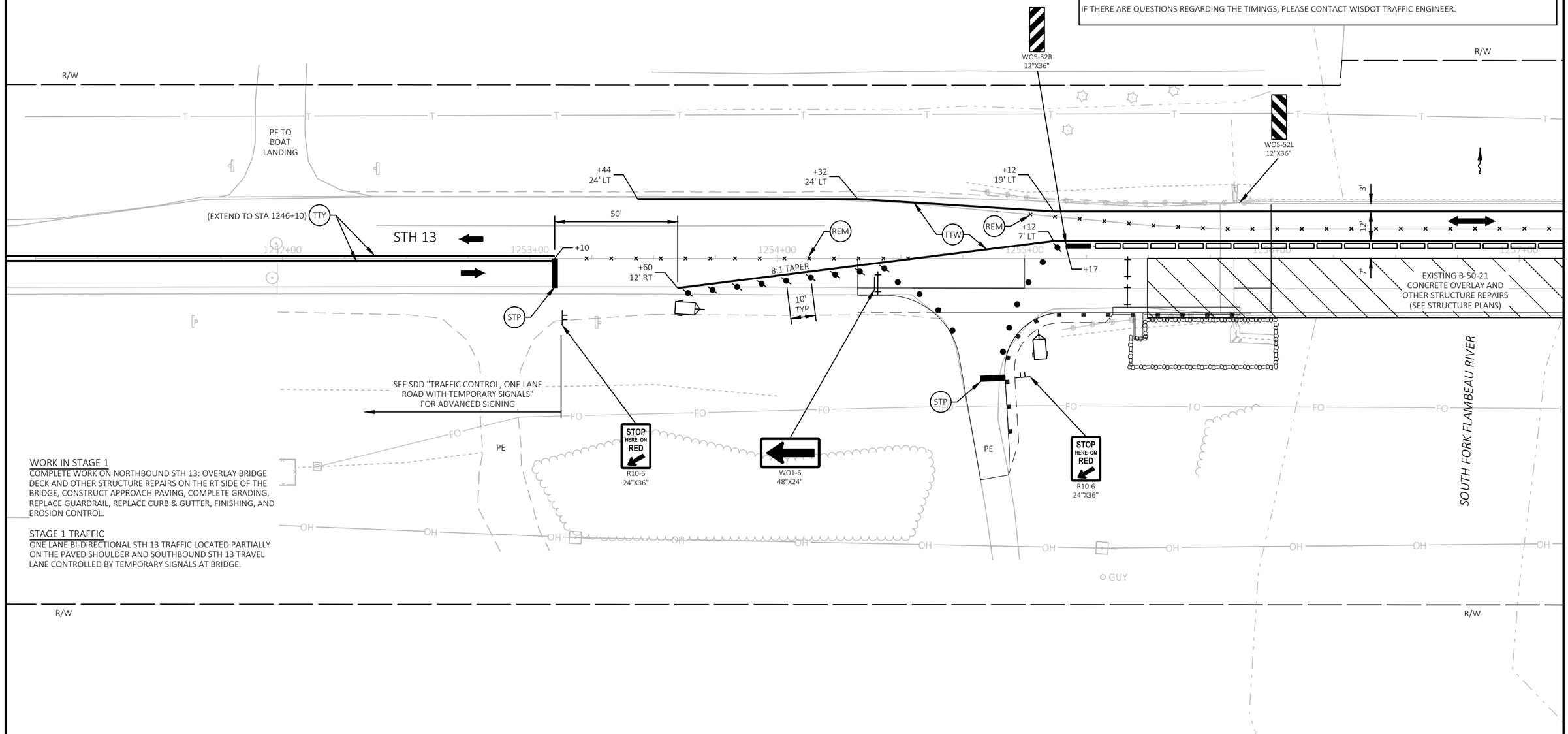

WORK IN STAGE 1

COMPLETE WORK ON NORTHBOUND STH 13: OVERLAY BRIDGE DECK AND OTHER STRUCTURE REPAIRS ON THE RT SIDE OF THE BRIDGE, CONSTRUCT APPROACH PAVING, COMPLETE GRADING, REPLACE GUARDRAIL, REPLACE CURB & GUTTER, FINISHING, AND EROSION CONTROL.

STAGE 1 TRAFFIC

ONE LANE BI-DIRECTIONAL STH 13 TRAFFIC LOCATED PARTIALLY ON THE PAVED SHOULDER AND SOUTHBOUND STH 13 TRAVEL LANE CONTROLLED BY TEMPORARY SIGNALS AT BRIDGE.

PROJECT NO: 1610-44-62	HWY: STH 13	COUNTY: PRICE	TRAFFIC CONTROL - B-50-21 - STAGE 1	SHEET 16	E

2

LEGEND

- TYPE III BARRICADE WITH/WITHOUT ATTACHED SIGN
- TRAFFIC CONTROL DRUM
- TRAFFIC CONTROL DRUM WITH TYPE C LIGHT
- TRAFFIC ACTUATED TRAILER MOUNTED TEMPORARY SIGNAL
- SIGN ON TEMPORARY SUPPORT
- CONCRETE BARRIER TEMPORARY PRECAST
- CRASH CUSHIONS TEMPORARY
- 4" ASPHALTIC SURFACE TEMPORARY
- WORK AREA
- DIRECTION OF TRAFFIC
- REM — MARKING REMOVAL LINE 4-INCH
- TTY — TEMPORARY MARKING LINE REMOVABLE TAPE 4-INCH (DOUBLE YELLOW)
- TTW — TEMPORARY MARKING LINE REMOVABLE TAPE 4-INCH (WHITE)
- STP — TEMPORARY MARKING STOP LINE REMOVABLE TAPE 18-INCH (WHITE)

NOTES

TEMPORARY MARKING, TRAFFIC CONTROL DRUMS AND TEMPORARY SIGNAL PLACEMENT ARE SHOWN ON THE PLANS, SEE SDD "TRAFFIC CONTROL, ONE LANE ROAD WITH TEMPORARY SIGNALS" FOR ADDITIONAL INFORMATION

THE DRUMS LOCATED IN THE TAPER MAY NEED TO BE MOVED DURING THE SHOULDER WORK OPERATIONS IF ONE LANE SIGNALIZED CONDITIONS ARE MAINTAINED

SEE SDD "BRIDGE TEMPORARY TRAFFIC SIGNAL INSTALLATION" FOR ADDITIONAL INFORMATION

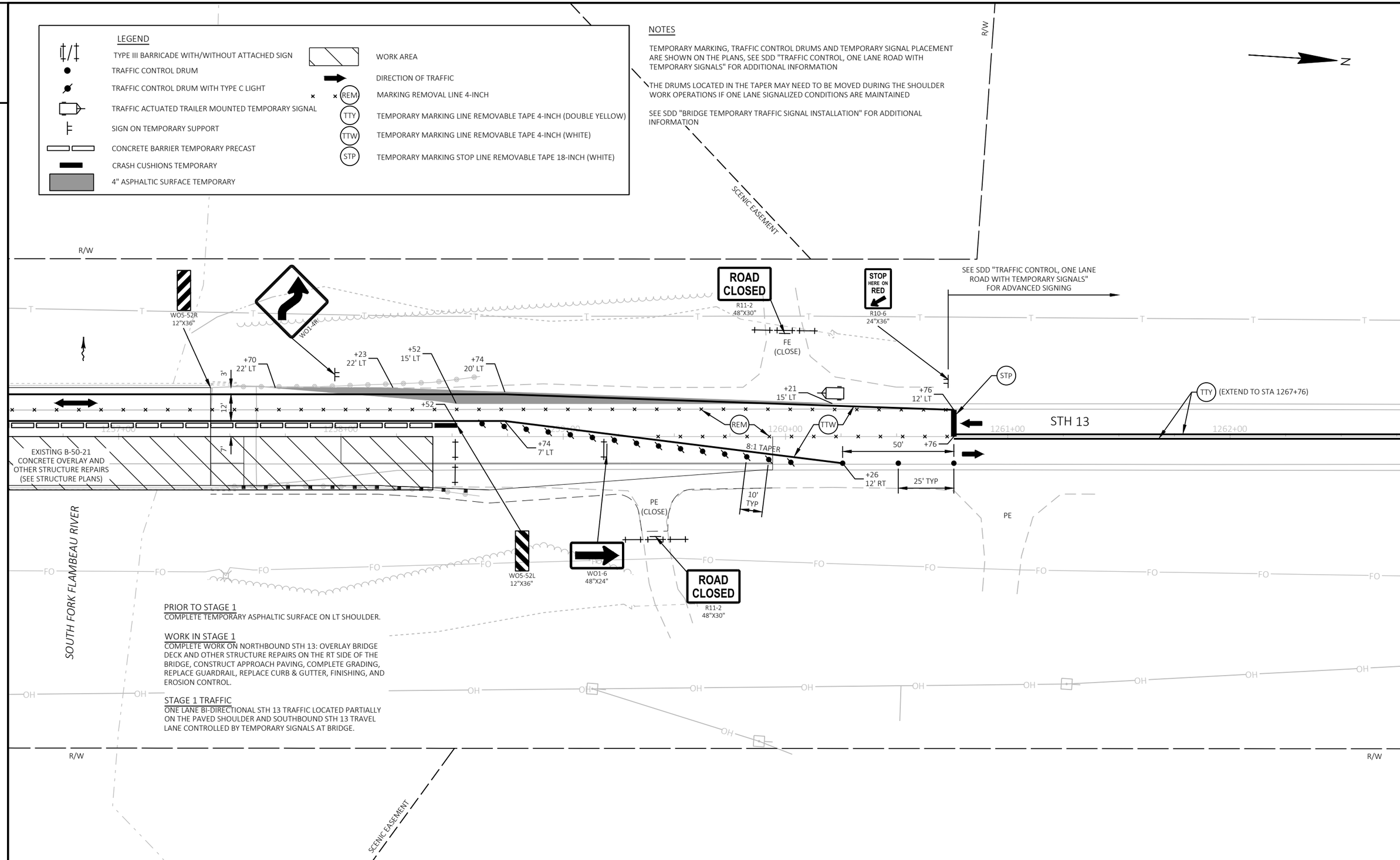

PRIOR TO STAGE 1

COMPLETE TEMPORARY ASPHALTIC SURFACE ON LT SHOULDER.

WORK IN STAGE 1

COMPLETE WORK ON NORTHBOUND STH 13: OVERLAY BRIDGE DECK AND OTHER STRUCTURE REPAIRS ON THE RT SIDE OF THE BRIDGE, CONSTRUCT APPROACH PAVING, COMPLETE GRADING, REPLACE GUARDRAIL, REPLACE CURB & GUTTER, FINISHING, AND EROSION CONTROL.

STAGE 1 TRAFFIC

ONE LANE BI-DIRECTIONAL STH 13 TRAFFIC LOCATED PARTIALLY ON THE PAVED SHOULDER AND SOUTHBOUND STH 13 TRAVEL LANE CONTROLLED BY TEMPORARY SIGNALS AT BRIDGE.

PROJECT NO: 1610-44-62	HWY: STH 13	COUNTY: PRICE	TRAFFIC CONTROL - B-50-21 - STAGE 1	SHEET 17	E

2

LEGEND

- TYPE III BARRICADE WITH/WITHOUT ATTACHED SIGN
- TRAFFIC CONTROL DRUM
- TRAFFIC CONTROL DRUM WITH TYPE C LIGHT
- TRAFFIC ACTUATED TRAILER MOUNTED TEMPORARY SIGNAL
- SIGN ON TEMPORARY SUPPORT
- CONCRETE BARRIER TEMPORARY PRECAST
- CRASH CUSHIONS TEMPORARY
- 4" ASPHALTIC SURFACE TEMPORARY
- WORK AREA
- DIRECTION OF TRAFFIC
- × × REM — MARKING REMOVAL LINE 4-INCH
- TTY — TEMPORARY MARKING LINE REMOVABLE TAPE 4-INCH (DOUBLE YELLOW)
- TTW — TEMPORARY MARKING LINE REMOVABLE TAPE 4-INCH (WHITE)
- STP — TEMPORARY MARKING STOP LINE REMOVABLE TAPE 18-INCH (WHITE)

NOTES

TEMPORARY MARKING, TRAFFIC CONTROL DRUMS AND TEMPORARY SIGNAL PLACEMENT ARE SHOWN ON THE PLANS, SEE SDD "TRAFFIC CONTROL, ONE LANE ROAD WITH TEMPORARY SIGNALS" FOR ADDITIONAL INFORMATION

THE DRUMS LOCATED IN THE TAPER MAY NEED TO BE MOVED DURING THE SHOULDER WORK OPERATIONS IF ONE LANE SIGNALIZED CONDITIONS ARE MAINTAINED

SEE SDD "BRIDGE TEMPORARY TRAFFIC SIGNAL INSTALLATION" FOR ADDITIONAL INFORMATION

* TEMPORARY MARKING PLACED IN PREVIOUS STAGE

N

SIGNAL TIMING

SIGNAL TIMING PROVIDED BY NC REGION, TRAFFIC SECTION. SIGNAL TIMING ASSUMES 766' SPACING BETWEEN STOP LINES.

SIGNAL LOCATION	Ø 1 NB STH 13	Ø 2 WB DRIVEWAY	Ø 3 SB STH 13
MINIMUM GREEN TIME	9 SEC	5 SEC	9 SEC
MAXIMUM PASSAGE TIME DURING GREEN PHASE	5 SEC	5 SEC	5 SEC
MINIMUM PASSAGE TIME DURING GREEN PHASE	3 SEC	-	3 SEC
START OF REDUCTION OF PASSAGE FROM MAX. TO MIN. DURING GREEN PHASE	15 SEC	-	15 SEC
TIME TO REDUCE PASSAGE FROM MAX. TO MIN. DURING GREEN PHASE	0 SEC	-	0 SEC
MAXIMUM GREEN TIME	27 SEC	7 SEC	27 SEC
YELLOW	5 SEC	3 SEC	5 SEC
ALL-RED	8 SEC	20 SEC	24 SEC
RECALL MODE	MIN	MIN	MIN

PHASE 2 SHALL COME AFTER PHASE 1, PHASE 3 SHALL COME AFTER PHASE 2, PHASE 1 SHALL COME AFTER PHASE 3.

CONTRACTOR SHALL REVIEW SIGNALS AFTER PROGRAMMING TO ASSURE THERE ARE NOT CONFLICTING MOVEMENTS.

IF THERE ARE QUESTIONS REGARDING THE TIMINGS, PLEASE CONTACT WISDOT TRAFFIC ENGINEER.

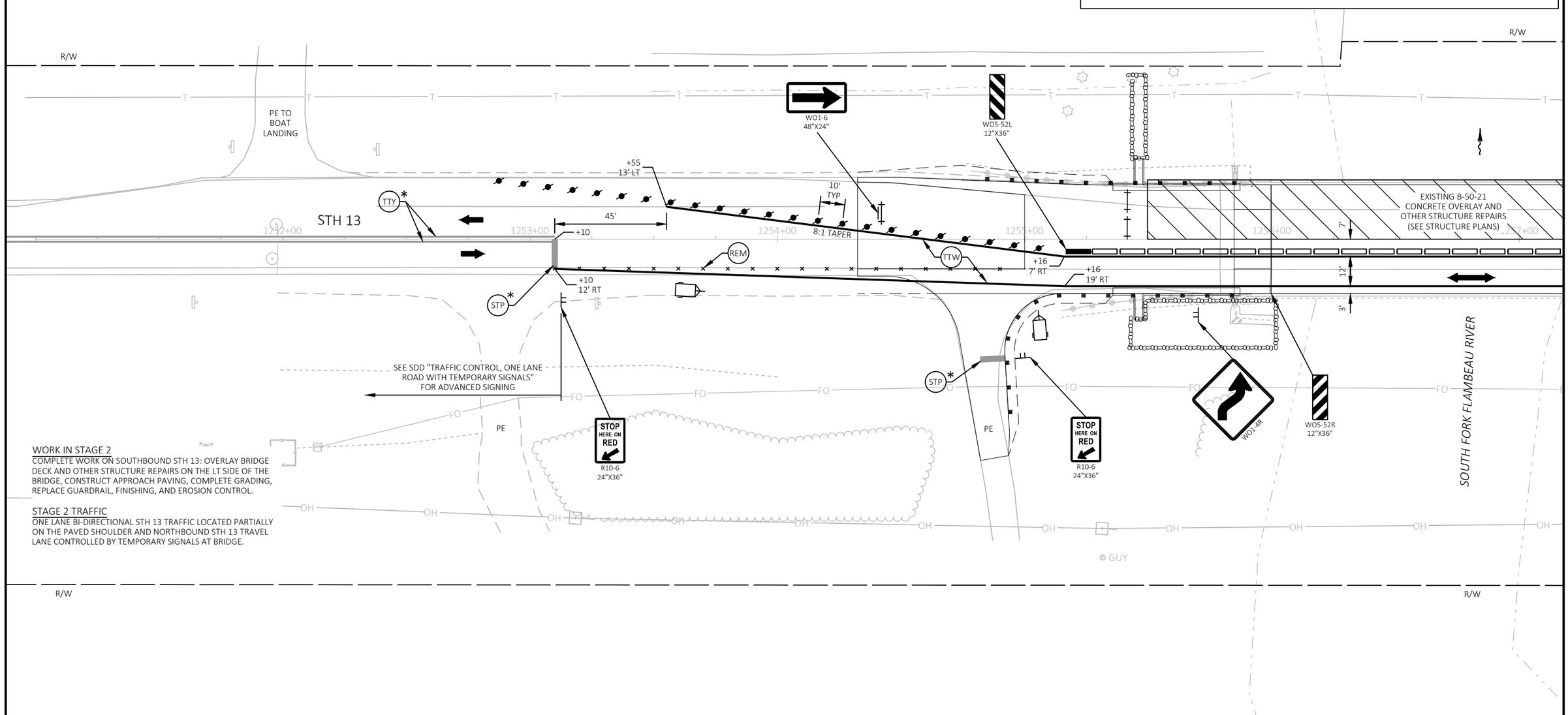

WORK IN STAGE 2

COMPLETE WORK ON SOUTHBOUND STH 13: OVERLAY BRIDGE DECK AND OTHER STRUCTURE REPAIRS ON THE LT SIDE OF THE BRIDGE, CONSTRUCT APPROACH PAVING, COMPLETE GRADING, REPLACE GUARDRAIL, FINISHING, AND EROSION CONTROL.

STAGE 2 TRAFFIC

ONE LANE BI-DIRECTIONAL STH 13 TRAFFIC LOCATED PARTIALLY ON THE PAVED SHOULDER AND NORTHBOUND STH 13 TRAVEL LANE CONTROLLED BY TEMPORARY SIGNALS AT BRIDGE.

2

LEGEND

- TYPE III BARRICADE WITH/WITHOUT ATTACHED SIGN
- TRAFFIC CONTROL DRUM
- TRAFFIC CONTROL DRUM WITH TYPE C LIGHT
- TRAFFIC ACTUATED TRAILER MOUNTED TEMPORARY SIGNAL
- SIGN ON TEMPORARY SUPPORT
- CONCRETE BARRIER TEMPORARY PRECAST
- CRASH CUSHIONS TEMPORARY
- 4" ASPHALTIC SURFACE TEMPORARY
- WORK AREA
- DIRECTION OF TRAFFIC
- × × REM — MARKING REMOVAL LINE 4-INCH
- TTY — TEMPORARY MARKING LINE REMOVABLE TAPE 4-INCH (DOUBLE YELLOW)
- TTW — TEMPORARY MARKING LINE REMOVABLE TAPE 4-INCH (WHITE)
- STP — TEMPORARY MARKING STOP LINE REMOVABLE TAPE 18-INCH (WHITE)

NOTES

TEMPORARY MARKING, TRAFFIC CONTROL DRUMS AND TEMPORARY SIGNAL PLACEMENT ARE SHOWN ON THE PLANS, SEE SDD "TRAFFIC CONTROL, ONE LANE ROAD WITH TEMPORARY SIGNALS" FOR ADDITIONAL INFORMATION

THE DRUMS LOCATED IN THE TAPER MAY NEED TO BE MOVED DURING THE SHOULDER WORK OPERATIONS IF ONE LANE SIGNALIZED CONDITIONS ARE MAINTAINED

SEE SDD "BRIDGE TEMPORARY TRAFFIC SIGNAL INSTALLATION" FOR ADDITIONAL INFORMATION

* TEMPORARY MARKING PLACED IN PREVIOUS STAGE

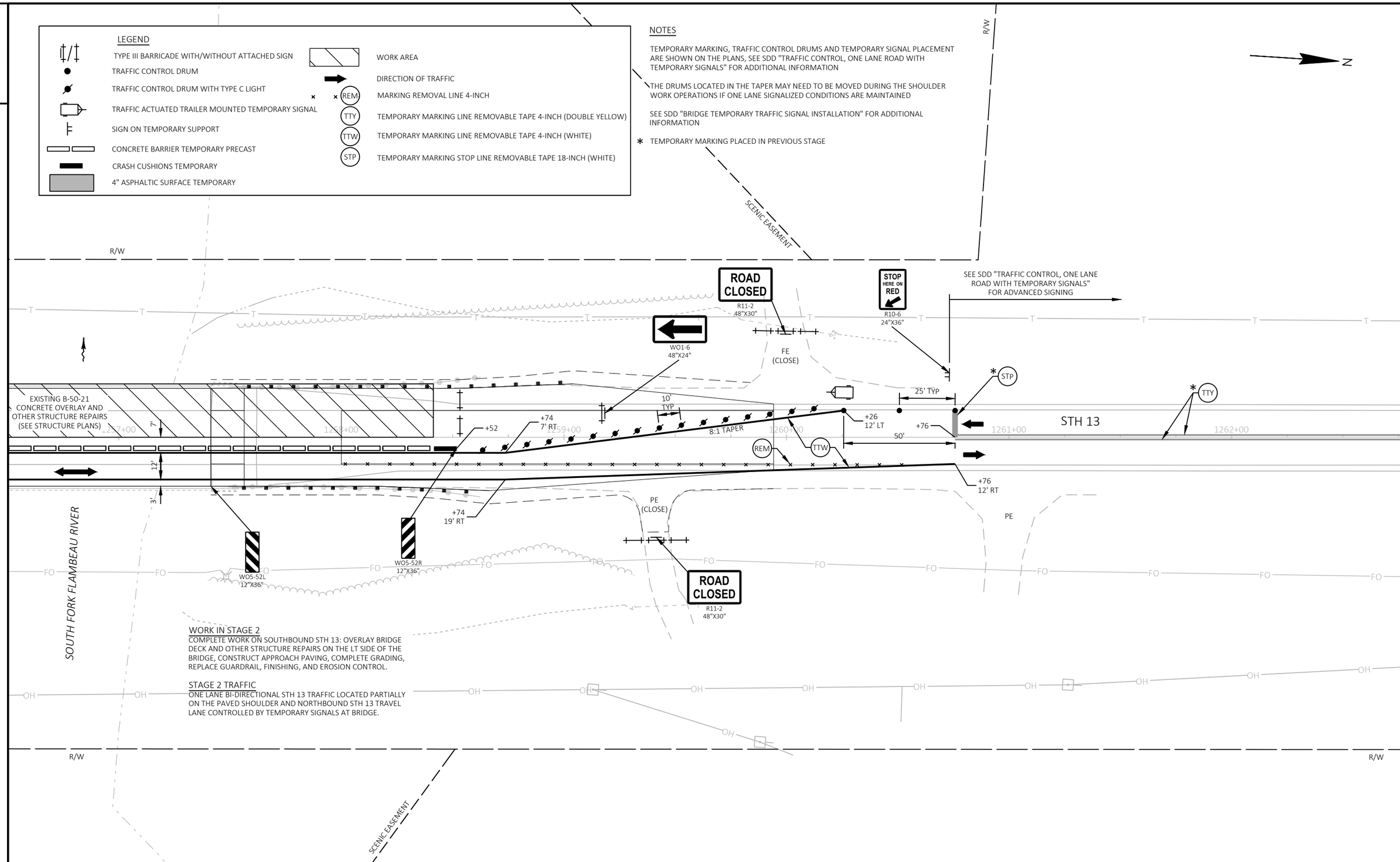

WORK IN STAGE 2

COMPLETE WORK ON SOUTHBOUND STH 13: OVERLAY BRIDGE DECK AND OTHER STRUCTURE REPAIRS ON THE LT SIDE OF THE BRIDGE, CONSTRUCT APPROACH PAVING, COMPLETE GRADING, REPLACE GUARDRAIL, FINISHING, AND EROSION CONTROL.

STAGE 2 TRAFFIC

ONE LANE BI-DIRECTIONAL STH 13 TRAFFIC LOCATED PARTIALLY ON THE PAVED SHOULDER AND NORTHBOUND STH 13 TRAVEL LANE CONTROLLED BY TEMPORARY SIGNALS AT BRIDGE.

PROJECT NO: 1610-44-62	HWY: STH 13	COUNTY: PRICE	TRAFFIC CONTROL - B-50-21 - STAGE 2	SHEET 19	E

2

LEGEND

- TYPE III BARRICADE WITH/WITHOUT ATTACHED SIGN
- TRAFFIC CONTROL DRUM
- TRAFFIC CONTROL DRUM WITH TYPE C LIGHT
- TRAFFIC ACTUATED TRAILER MOUNTED TEMPORARY SIGNAL
- SIGN ON TEMPORARY SUPPORT
- CONCRETE BARRIER TEMPORARY PRECAST
- CRASH CUSHIONS TEMPORARY
- 4" ASPHALTIC SURFACE TEMPORARY
- WORK AREA
- DIRECTION OF TRAFFIC
- REM — MARKING REMOVAL LINE 4-INCH
- TTY — TEMPORARY MARKING LINE REMOVABLE TAPE 4-INCH (DOUBLE YELLOW)
- TTW — TEMPORARY MARKING LINE REMOVABLE TAPE 4-INCH (WHITE)
- STP — TEMPORARY MARKING STOP LINE REMOVABLE TAPE 18-INCH (WHITE)

NOTES

TEMPORARY MARKING, TRAFFIC CONTROL DRUMS AND TEMPORARY SIGNAL PLACEMENT ARE SHOWN ON THE PLANS, SEE SDD "TRAFFIC CONTROL, ONE LANE ROAD WITH TEMPORARY SIGNALS" FOR ADDITIONAL INFORMATION

THE DRUMS LOCATED IN THE TAPER MAY NEED TO BE MOVED DURING THE SHOULDER WORK OPERATIONS IF ONE LANE SIGNALIZED CONDITIONS ARE MAINTAINED

SEE SDD "BRIDGE TEMPORARY TRAFFIC SIGNAL INSTALLATION" FOR ADDITIONAL INFORMATION

SIGNAL TIMING

SIGNAL TIMING PROVIDED BY NC REGION, TRAFFIC SECTION. SIGNAL TIMING ASSUMES 964' SPACING BETWEEN STOP LINES.

SIGNAL LOCATION	Ø 1 NB STH 13	Ø 2 SB STH 13	Ø 3 EB LOWER DAM RD
MINIMUM GREEN TIME	9 SEC	9 SEC	5 SEC
MAXIMUM PASSAGE TIME DURING GREEN PHASE	5 SEC	5 SEC	5 SEC
MINIMUM PASSAGE TIME DURING GREEN PHASE	3 SEC	3 SEC	-
START OF REDUCTION OF PASSAGE FROM MAX. TO MIN. DURING GREEN PHASE	15 SEC	15 SEC	-
TIME TO REDUCE PASSAGE FROM MAX. TO MIN. DURING GREEN PHASE	0 SEC	0 SEC	-
MAXIMUM GREEN TIME	31 SEC	31 SEC	7 SEC
YELLOW	4 SEC	4 SEC	3 SEC
ALL-RED	28 SEC	4 SEC	26 SEC
RECALL MODE	MIN	MIN	MIN

PHASE 2 SHALL COME AFTER PHASE 1, PHASE 3 SHALL COME AFTER PHASE 2, PHASE 1 SHALL COME AFTER PHASE 3.

CONTRACTOR SHALL REVIEW SIGNALS AFTER PROGRAMMING TO ASSURE THERE ARE NOT CONFLICTING MOVEMENTS.

IF THERE ARE QUESTIONS REGARDING THE TIMINGS, PLEASE CONTACT WISDOT TRAFFIC ENGINEER.

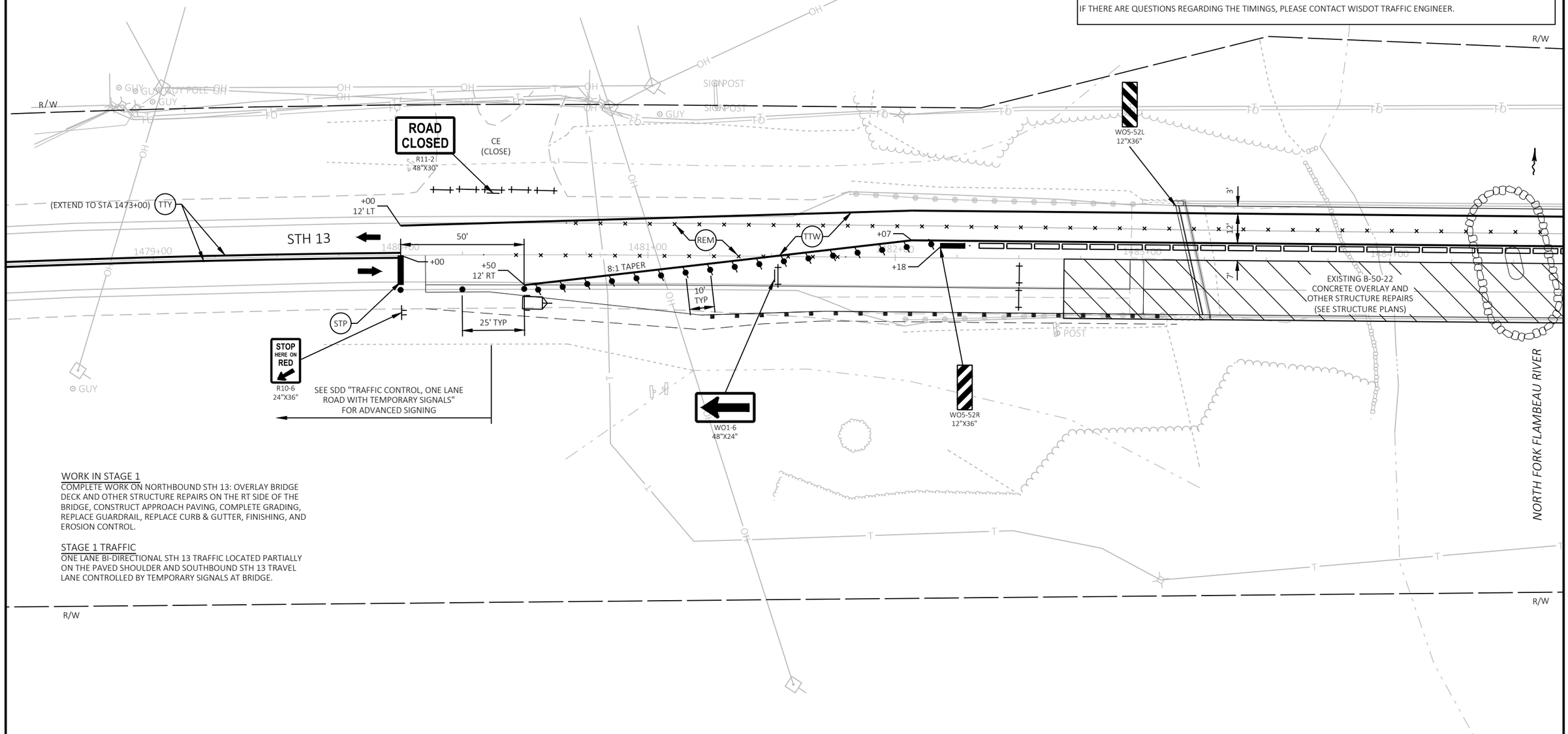

WORK IN STAGE 1

COMPLETE WORK ON NORTHBOUND STH 13: OVERLAY BRIDGE DECK AND OTHER STRUCTURE REPAIRS ON THE RT SIDE OF THE BRIDGE, CONSTRUCT APPROACH PAVING, COMPLETE GRADING, REPLACE GUARDRAIL, REPLACE CURB & GUTTER, FINISHING, AND EROSION CONTROL.

STAGE 1 TRAFFIC

ONE LANE BI-DIRECTIONAL STH 13 TRAFFIC LOCATED PARTIALLY ON THE PAVED SHOULDER AND SOUTHBOUND STH 13 TRAVEL LANE CONTROLLED BY TEMPORARY SIGNALS AT BRIDGE.

LEGEND

- TYPE III BARRICADE WITH/WITHOUT ATTACHED SIGN
- TRAFFIC CONTROL DRUM
- TRAFFIC CONTROL DRUM WITH TYPE C LIGHT
- TRAFFIC ACTUATED TRAILER MOUNTED TEMPORARY SIGNAL
- SIGN ON TEMPORARY SUPPORT
- CONCRETE BARRIER TEMPORARY PRECAST
- CRASH CUSHIONS TEMPORARY
- 4" ASPHALTIC SURFACE TEMPORARY
- WORK AREA
- DIRECTION OF TRAFFIC
- REM — MARKING REMOVAL LINE 4-INCH
- TTY — TEMPORARY MARKING LINE REMOVABLE TAPE 4-INCH (DOUBLE YELLOW)
- TTW — TEMPORARY MARKING LINE REMOVABLE TAPE 4-INCH (WHITE)
- STP — TEMPORARY MARKING STOP LINE REMOVABLE TAPE 18-INCH (WHITE)

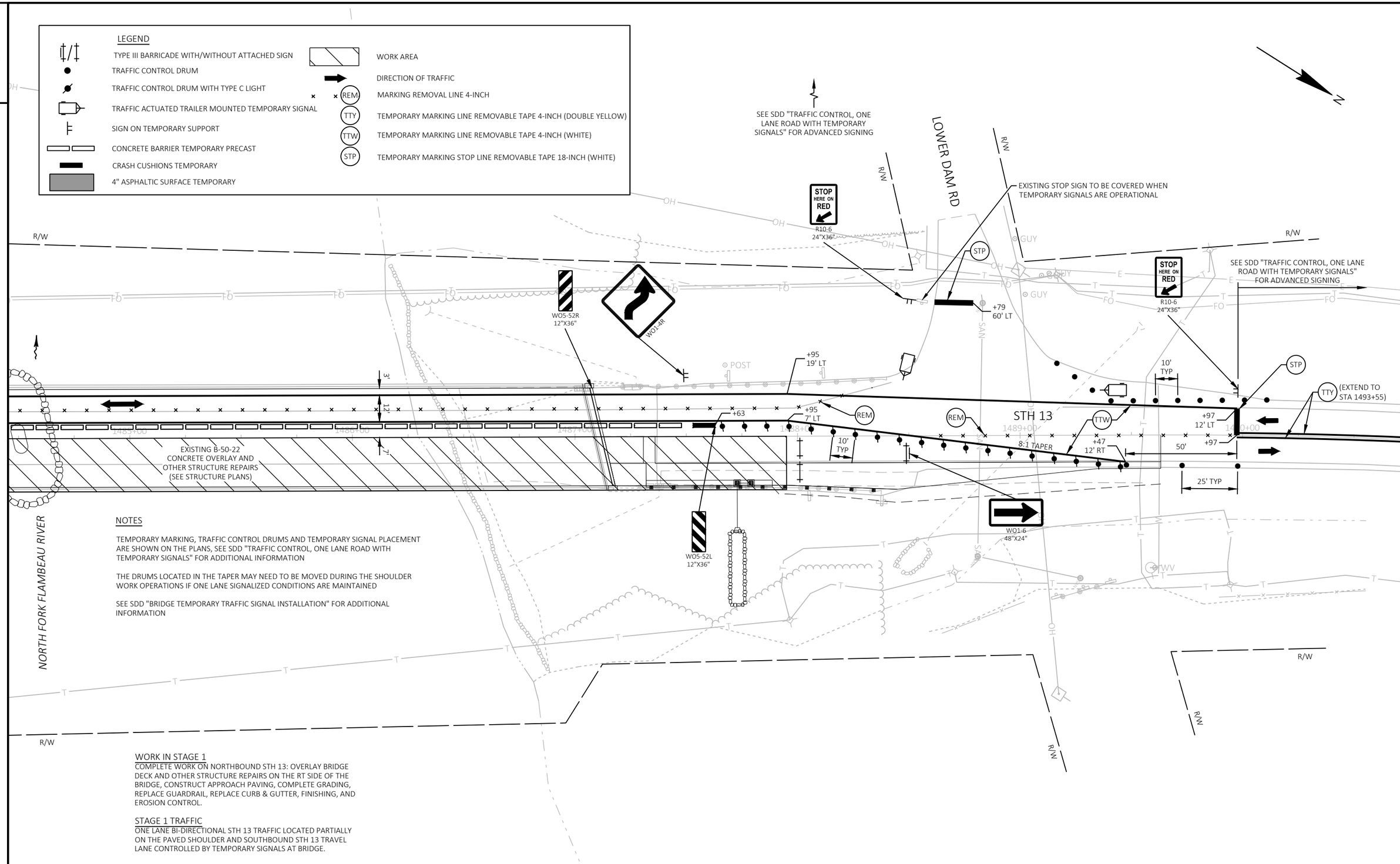

NOTES

TEMPORARY MARKING, TRAFFIC CONTROL DRUMS AND TEMPORARY SIGNAL PLACEMENT ARE SHOWN ON THE PLANS, SEE SDD "TRAFFIC CONTROL, ONE LANE ROAD WITH TEMPORARY SIGNALS" FOR ADDITIONAL INFORMATION

THE DRUMS LOCATED IN THE TAPER MAY NEED TO BE MOVED DURING THE SHOULDER WORK OPERATIONS IF ONE LANE SIGNALIZED CONDITIONS ARE MAINTAINED

SEE SDD "BRIDGE TEMPORARY TRAFFIC SIGNAL INSTALLATION" FOR ADDITIONAL INFORMATION

WORK IN STAGE 1

COMPLETE WORK ON NORTHBOUND STH 13: OVERLAY BRIDGE DECK AND OTHER STRUCTURE REPAIRS ON THE RT SIDE OF THE BRIDGE, CONSTRUCT APPROACH PAVING, COMPLETE GRADING, REPLACE GUARDRAIL, REPLACE CURB & GUTTER, FINISHING, AND EROSION CONTROL.

STAGE 1 TRAFFIC

ONE LANE BI-DIRECTIONAL STH 13 TRAFFIC LOCATED PARTIALLY ON THE PAVED SHOULDER AND SOUTHBOUND STH 13 TRAVEL LANE CONTROLLED BY TEMPORARY SIGNALS AT BRIDGE.

PROJECT NO: 1610-44-62	HWY: STH 13	COUNTY: PRICE	TRAFFIC CONTROL - B-50-22 - STAGE 1	SHEET 21	E

2

LEGEND

- TYPE III BARRICADE WITH/WITHOUT ATTACHED SIGN
- TRAFFIC CONTROL DRUM
- TRAFFIC CONTROL DRUM WITH TYPE C LIGHT
- TRAFFIC ACTUATED TRAILER MOUNTED TEMPORARY SIGNAL
- SIGN ON TEMPORARY SUPPORT
- CONCRETE BARRIER TEMPORARY PRECAST
- CRASH CUSHIONS TEMPORARY
- 4" ASPHALTIC SURFACE TEMPORARY
- WORK AREA
- DIRECTION OF TRAFFIC
- × × REM — MARKING REMOVAL LINE 4-INCH
- TTY — TEMPORARY MARKING LINE REMOVABLE TAPE 4-INCH (DOUBLE YELLOW)
- TTW — TEMPORARY MARKING LINE REMOVABLE TAPE 4-INCH (WHITE)
- STP — TEMPORARY MARKING STOP LINE REMOVABLE TAPE 18-INCH (WHITE)

NOTES

TEMPORARY MARKING, TRAFFIC CONTROL DRUMS AND TEMPORARY SIGNAL PLACEMENT ARE SHOWN ON THE PLANS, SEE SDD "TRAFFIC CONTROL, ONE LANE ROAD WITH TEMPORARY SIGNALS" FOR ADDITIONAL INFORMATION

THE DRUMS LOCATED IN THE TAPER MAY NEED TO BE MOVED DURING THE SHOULDER WORK OPERATIONS IF ONE LANE SIGNALIZED CONDITIONS ARE MAINTAINED

SEE SDD "BRIDGE TEMPORARY TRAFFIC SIGNAL INSTALLATION" FOR ADDITIONAL INFORMATION

* TEMPORARY MARKING PLACED IN PREVIOUS STAGE

SIGNAL TIMING

SIGNAL TIMING PROVIDED BY NC REGION, TRAFFIC SECTION. SIGNAL TIMING ASSUMES 964' SPACING BETWEEN STOP LINES.

SIGNAL LOCATION	Ø 1 NB STH 13	Ø 2 SB STH 13	Ø 3 EB LOWER DAM RD
MINIMUM GREEN TIME	9 SEC	9 SEC	5 SEC
MAXIMUM PASSAGE TIME DURING GREEN PHASE	5 SEC	5 SEC	5 SEC
MINIMUM PASSAGE TIME DURING GREEN PHASE	3 SEC	3 SEC	-
START OF REDUCTION OF PASSAGE FROM MAX. TO MIN. DURING GREEN PHASE	15 SEC	15 SEC	-
TIME TO REDUCE PASSAGE FROM MAX. TO MIN. DURING GREEN PHASE	0 SEC	0 SEC	-
MAXIMUM GREEN TIME	31 SEC	31 SEC	7 SEC
YELLOW	4 SEC	4 SEC	3 SEC
ALL-RED	28 SEC	4 SEC	26 SEC
RECALL MODE	MIN	MIN	MIN

PHASE 2 SHALL COME AFTER PHASE 1, PHASE 3 SHALL COME AFTER PHASE 2, PHASE 1 SHALL COME AFTER PHASE 3.

CONTRACTOR SHALL REVIEW SIGNALS AFTER PROGRAMMING TO ASSURE THERE ARE NOT CONFLICTING MOVEMENTS.

IF THERE ARE QUESTIONS REGARDING THE TIMINGS, PLEASE CONTACT WISDOT TRAFFIC ENGINEER.

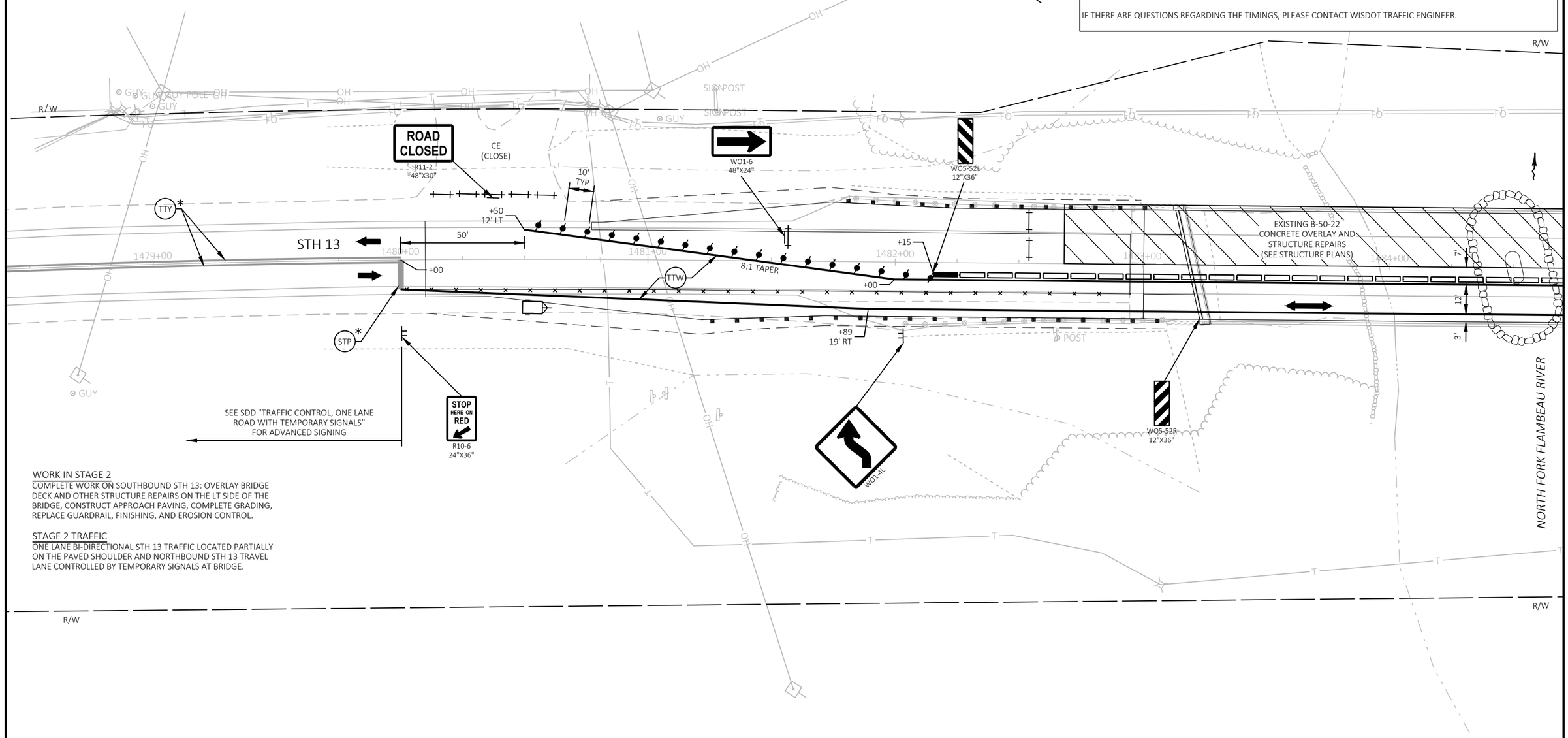

WORK IN STAGE 2

COMPLETE WORK ON SOUTHBOUND STH 13: OVERLAY BRIDGE DECK AND OTHER STRUCTURE REPAIRS ON THE LT SIDE OF THE BRIDGE, CONSTRUCT APPROACH PAVING, COMPLETE GRADING, REPLACE GUARDRAIL, FINISHING, AND EROSION CONTROL.

STAGE 2 TRAFFIC

ONE LANE BI-DIRECTIONAL STH 13 TRAFFIC LOCATED PARTIALLY ON THE PAVED SHOULDER AND NORTHBOUND STH 13 TRAVEL LANE CONTROLLED BY TEMPORARY SIGNALS AT BRIDGE.

PROJECT NO: 1610-44-62	HWY: STH 13	COUNTY: PRICE	TRAFFIC CONTROL - B-50-22 - STAGE 2	SHEET 22	E

LEGEND

- TYPE III BARRICADE WITH/WITHOUT ATTACHED SIGN
- TRAFFIC CONTROL DRUM
- TRAFFIC CONTROL DRUM WITH TYPE C LIGHT
- TRAFFIC ACTUATED TRAILER MOUNTED TEMPORARY SIGNAL
- SIGN ON TEMPORARY SUPPORT
- CONCRETE BARRIER TEMPORARY PRECAST
- CRASH CUSHIONS TEMPORARY
- 4" ASPHALTIC SURFACE TEMPORARY
- WORK AREA
- DIRECTION OF TRAFFIC
- REM — MARKING REMOVAL LINE 4-INCH
- TTY — TEMPORARY MARKING LINE REMOVABLE TAPE 4-INCH (DOUBLE YELLOW)
- TTW — TEMPORARY MARKING LINE REMOVABLE TAPE 4-INCH (WHITE)
- STP — TEMPORARY MARKING STOP LINE REMOVABLE TAPE 18-INCH (WHITE)

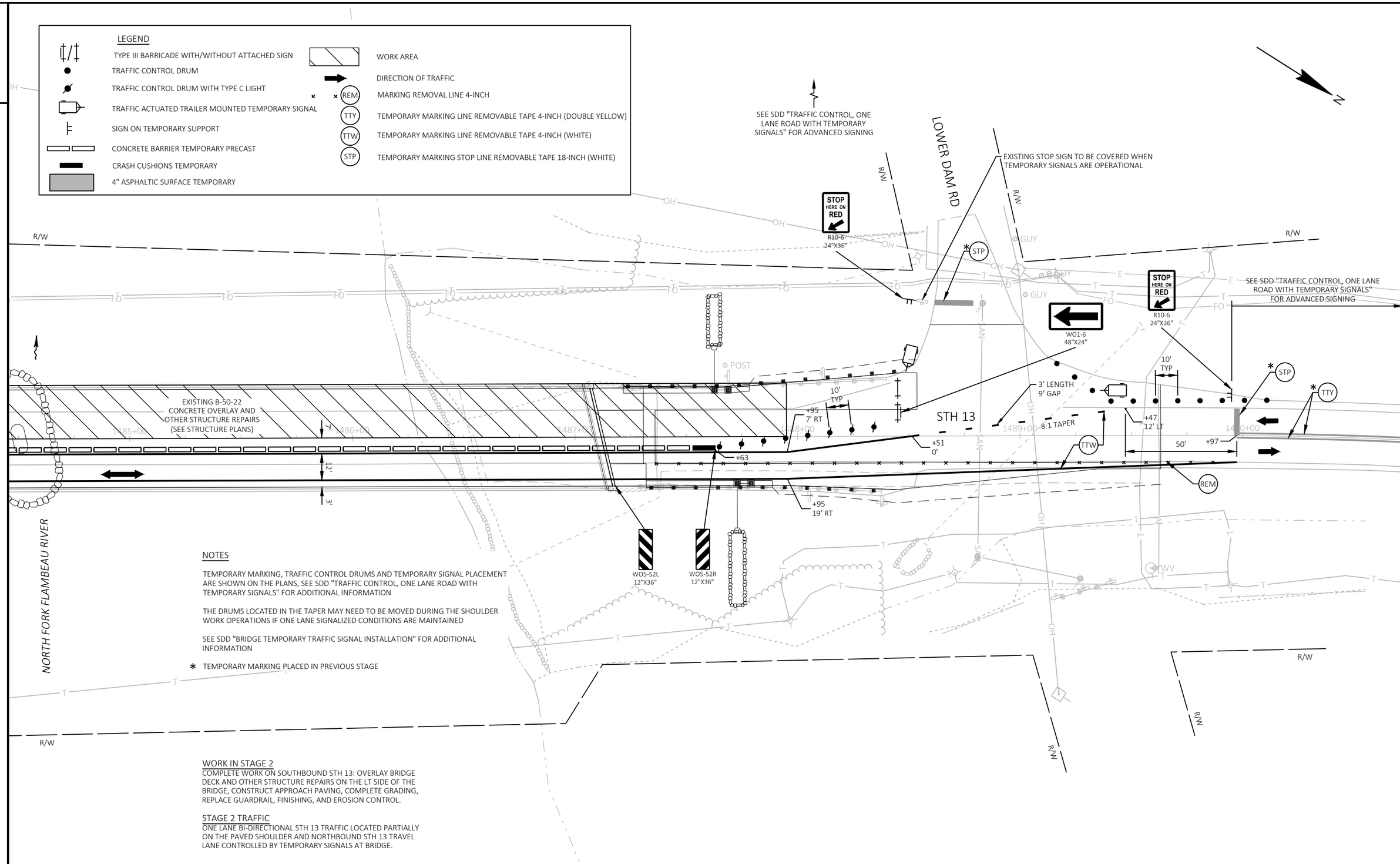

NOTES

TEMPORARY MARKING, TRAFFIC CONTROL DRUMS AND TEMPORARY SIGNAL PLACEMENT ARE SHOWN ON THE PLANS, SEE SDD "TRAFFIC CONTROL, ONE LANE ROAD WITH TEMPORARY SIGNALS" FOR ADDITIONAL INFORMATION

THE DRUMS LOCATED IN THE TAPER MAY NEED TO BE MOVED DURING THE SHOULDER WORK OPERATIONS IF ONE LANE SIGNALIZED CONDITIONS ARE MAINTAINED

SEE SDD "BRIDGE TEMPORARY TRAFFIC SIGNAL INSTALLATION" FOR ADDITIONAL INFORMATION

* TEMPORARY MARKING PLACED IN PREVIOUS STAGE

WORK IN STAGE 2

COMPLETE WORK ON SOUTHBOUND STH 13: OVERLAY BRIDGE DECK AND OTHER STRUCTURE REPAIRS ON THE LT SIDE OF THE BRIDGE, CONSTRUCT APPROACH PAVING, COMPLETE GRADING, REPLACE GUARDRAIL, FINISHING, AND EROSION CONTROL.

STAGE 2 TRAFFIC

ONE LANE BI-DIRECTIONAL STH 13 TRAFFIC LOCATED PARTIALLY ON THE PAVED SHOULDER AND NORTHBOUND STH 13 TRAVEL LANE CONTROLLED BY TEMPORARY SIGNALS AT BRIDGE.

PROJECT NO: 1610-44-62	HWY: STH 13	COUNTY: PRICE	TRAFFIC CONTROL - B-50-22 - STAGE 2	SHEET 23	E

1610-44-62

Line	Item	Item Description	Unit	Total	Qty
0002	201.0105	Clearing	STA	2.000	2.000
0004	201.0205	Grubbing	STA	2.000	2.000
0008	203.0210.S	Abatement of Asbestos Containing Material (structure) 02. B-50-22	LS	1.000	1.000
0014	204.0100	Removing Concrete Pavement	SY	450.000	450.000
0020	204.0115	Removing Asphaltic Surface Butt Joints	SY	140.000	140.000
0022	204.0120	Removing Asphaltic Surface Milling	SY	2,490.000	2,490.000
0024	204.0150	Removing Curb & Gutter	LF	6.000	6.000
0026	204.0165	Removing Guardrail	LF	880.000	880.000
0028	204.0190	Removing Surface Drains	EACH	2.000	2.000
0030	204.0220	Removing Inlets	EACH	4.000	4.000
0032	204.0245	Removing Storm Sewer (size) 01. 12-inch	LF	8.000	8.000
0034	204.0280	Sealing Pipes	EACH	2.000	2.000
0036	205.0100	Excavation Common	CY	1,867.000	1,867.000
0038	211.0100	Prepare Foundation for Asphaltic Paving (project) 01. 1610-44-62	LS	1.000	1.000
0044	213.0100	Finishing Roadway (project) 01. 1610-44-62	EACH	1.000	1.000
0050	305.0110	Base Aggregate Dense 3/4-Inch	TON	350.000	350.000
0052	305.0120	Base Aggregate Dense 1 1/4-Inch	TON	2,800.000	2,800.000
0054	415.0070	Concrete Pavement 7-Inch	SY	142.000	142.000
0056	415.0410	Concrete Pavement Approach Slab	SY	176.000	176.000
0058	416.0610	Drilled Tie Bars	EACH	94.000	94.000
0060	416.1010	Concrete Surface Drains	CY	2.000	2.000
0062	455.0605	Tack Coat	GAL	270.000	270.000
0064	465.0105	Asphaltic Surface	TON	950.000	950.000
0068	465.0120	Asphaltic Surface Driveways and Field Entrances	TON	25.000	25.000
0070	465.0125	Asphaltic Surface Temporary	TON	20.000	20.000
0076	502.3101	Expansion Device	LF	99.000	99.000
0078	502.3200	Protective Surface Treatment	SY	2,643.000	2,643.000
0080	502.3210	Pigmented Surface Sealer	SY	504.000	504.000
0082	502.4205	Adhesive Anchors No. 5 Bar	EACH	92.000	92.000
0084	505.0600	Bar Steel Reinforcement HS Coated Structures	LB	2,920.000	2,920.000
0086	509.0301	Preparation Decks Type 1	SY	147.000	147.000
0088	509.0302	Preparation Decks Type 2	SY	79.000	79.000
0092	509.0505.S	Cleaning Decks to Reapply Concrete Masonry Overlay	SY	2,611.000	2,611.000
0094	509.1000	Joint Repair	SY	44.000	44.000
0098	509.1500	Concrete Surface Repair	SF	662.000	662.000
0100	509.2000	Full-Depth Deck Repair	SY	14.000	14.000
0102	509.2500	Concrete Masonry Overlay Decks	CY	280.000	280.000
0108	509.9005.S	Removing Concrete Masonry Deck Overlay (structure) 02. B-50-21	SY	693.000	693.000
0110	509.9005.S	Removing Concrete Masonry Deck Overlay (structure) 03. B-50-22	SY	1,918.000	1,918.000
0112	509.9050.S	Cleaning Parapets	LF	1,177.000	1,177.000
0114	521.1012	Apron Endwalls for Culvert Pipe Steel 12-Inch	EACH	2.000	2.000
0116	530.0112	Culvert Pipe Corrugated Polyethylene 12-Inch	LF	42.000	42.000
0118	601.0588	Concrete Curb & Gutter 4-Inch Sloped 36-Inch Type TBT	LF	207.000	207.000
0120	601.0590	Concrete Curb & Gutter 4-Inch Sloped 36-Inch Type TBTT	LF	9.000	9.000
0122	603.8000	Concrete Barrier Temporary Precast Delivered	LF	850.000	850.000
0124	603.8125	Concrete Barrier Temporary Precast Installed	LF	1,700.000	1,700.000
0126	604.0500	Slope Paving Crushed Aggregate	SY	794.000	794.000
0130	606.0200	Riprap Medium	CY	115.000	115.000
0132	606.0300	Riprap Heavy	CY	181.000	181.000
0134	608.3012	Storm Sewer Pipe Class III-A 12-Inch	LF	12.000	12.000
0136	611.0654	Inlet Covers Type V	EACH	4.000	4.000

1610-44-62

Line	Item	Item Description	Unit	Total	Qty
0138	611.3220	Inlets 2x2-FT	EACH	4.000	4.000
0144	614.0905	Crash Cushions Temporary	EACH	8.000	8.000
0146	614.2300	MGS Guardrail 3	LF	350.000	350.000
0148	614.2350	MGS Guardrail Short Radius	LF	37.500	37.500
0150	614.2500	MGS Thrie Beam Transition	LF	320.000	320.000
0152	614.2610	MGS Guardrail Terminal EAT	EACH	7.000	7.000
0154	614.2630	MGS Guardrail Short Radius Terminal	EACH	1.000	1.000
0156	618.0100	Maintenance And Repair of Haul Roads (project) 01. 1610-44-62	EACH	1.000	1.000
0162	619.1000	Mobilization	EACH	0.600	0.600
0164	624.0100	Water	MGAL	10.000	10.000
0166	625.0100	Topsoil	SY	3,160.000	3,160.000
0168	628.1504	Silt Fence	LF	2,775.000	2,775.000
0170	628.1520	Silt Fence Maintenance	LF	2,775.000	2,775.000
0172	628.1905	Mobilizations Erosion Control	EACH	5.000	5.000
0174	628.1910	Mobilizations Emergency Erosion Control	EACH	2.000	2.000
0176	628.2004	Erosion Mat Class I Type B	SY	2,500.000	2,500.000
0178	628.2008	Erosion Mat Urban Class I Type B	SY	670.000	670.000
0180	628.7015	Inlet Protection Type C	EACH	8.000	8.000
0182	628.7504	Temporary Ditch Checks	LF	40.000	40.000
0184	628.7570	Rock Bags	EACH	375.000	375.000
0186	629.0210	Fertilizer Type B	CWT	2.000	2.000
0188	630.0130	Seeding Mixture No. 30	LB	53.000	53.000
0190	630.0140	Seeding Mixture No. 40	LB	4.100	4.100
0192	630.0500	Seed Water	MGAL	4.900	4.900
0194	638.2102	Moving Signs Type II	EACH	6.000	6.000
0196	638.3000	Removing Small Sign Supports	EACH	1.000	1.000
0198	638.4000	Moving Small Sign Supports	EACH	8.000	8.000
0200	642.5201	Field Office Type C	EACH	0.500	0.500
0202	643.0300	Traffic Control Drums	DAY	7,645.000	7,645.000
0204	643.0420	Traffic Control Barricades Type III	DAY	2,325.000	2,325.000
0206	643.0705	Traffic Control Warning Lights Type A	DAY	2,930.000	2,930.000
0208	643.0715	Traffic Control Warning Lights Type C	DAY	6,525.000	6,525.000
0210	643.0900	Traffic Control Signs	DAY	4,910.000	4,910.000
0212	643.0920	Traffic Control Covering Signs Type II	EACH	1.000	1.000
0214	643.1000	Traffic Control Signs Fixed Message	SF	72.000	72.000
0216	643.5000	Traffic Control	EACH	0.500	0.500
0222	645.0120	Geotextile Type HR	SY	300.000	300.000
0224	646.1020	Marking Line Epoxy 4-Inch	LF	4,200.000	4,200.000
0228	646.9000	Marking Removal Line 4-Inch	LF	2,720.000	2,720.000
0232	648.0100	Locating No-Passing Zones	MI	0.400	0.400
0234	649.0150	Temporary Marking Line Removable Tape 4-Inch	LF	11,480.000	11,480.000
0238	649.0850	Temporary Marking Stop Line Removable Tape 18-Inch	LF	76.000	76.000
0240	650.4000	Construction Staking Storm Sewer	EACH	4.000	4.000
0242	650.4500	Construction Staking Subgrade	LF	205.000	205.000
0244	650.5000	Construction Staking Base	LF	919.000	919.000
0246	650.5500	Construction Staking Curb Gutter and Curb & Gutter	LF	207.000	207.000
0248	650.7000	Construction Staking Concrete Pavement	LF	70.000	70.000
0250	650.9910	Construction Staking Supplemental Control (project) 01. 1610-44-62	LS	1.000	1.000
0254	650.9920	Construction Staking Slope Stakes	LF	989.000	989.000
0256	661.0100	Temporary Traffic Signals for Bridges (structure) 01. B-50-21	LS	1.000	1.000
0258	661.0100	Temporary Traffic Signals for Bridges (structure) 02. B-50-22	LS	1.000	1.000
0264	690.0150	Sawing Asphalt	LF	1,650.000	1,650.000

1610-44-62

Line	Item	Item Description	Unit	Total	Qty
0266	690.0250	Sawing Concrete	LF	180.000	180.000
0268	715.0415	Incentive Strength Concrete Pavement	DOL	500.000	500.000
0276	SPV.0030	Special 01. Fertilizer for Lawn Type Turf	CWT	1.000	1.000
0280	SPV.0105	Special 02. Temporary Vehicle Detection B-50-21	LS	1.000	1.000
0282	SPV.0105	Special 03. Temporary Vehicle Detection B-50-22	LS	1.000	1.000
0284	SPV.0180	Special 01. Abutment Seat Cleaning and Sealing	SY	19.000	19.000
0286	SPV.0180	Special 02. Protective Thermoplastic Coating at Snowmobile Trail Crossings	SY	665.000	665.000
0288	SPV.0180	Special 03. Preparing Topsoil for Lawn Type Turf	SY	680.000	680.000

3

CLEARING AND GRUBBING

CATEGORY	STATION TO	STATION	OFFSET	201.0105 CLEARING STA	201.0205 GRUBBING STA
0010					
	1481+88 -	1482+58	LT	2	2
TOTALS				2	2

REMOVAL ITEMS

CATEGORY	STATION	TO	STATION	OFFSET	204.0100 REMOVING CONCRETE PAVEMENT SY	204.0115 REMOVING ASPHALTIC SURFACE BUTT JOINTS SY	204.0120 REMOVING ASPHALTIC SURFACE MILLING SY	204.0150 REMOVING CURB & GUTTER LF
0010								
	1254+32	-	1256+00	LT&RT	101	40	250	--
	1257+41	-	1259+94	LT&RT	101	28	520	--
	1481+10	-	1483+24	LT&RT	124	32	790	--
	1487+08	-	1489+63	LT&RT	124	40	930	6
TOTALS					450	140	2,490	6

REMOVING DRAINAGE ITEMS

CATEGORY	STATION	OFFSET	204.0190 REMOVING SURFACE DRAINS EACH	204.0220 REMOVING INLETS EACH	204.0245 REMOVING STORM SEWER (12-INCH) LF	204.0280 SEALING PIPES EACH
0010						
	1255+85	LT&RT	2	--	--	--
	1487+24	LT	--	1	--	--
	1487+24 - 1487+28	LT	--	--	4	1
	1487+28	LT	--	1	--	--
	1487+34	RT	--	1	--	--
	1487+34 - 1487+38	RT	--	--	4	1
	1487+38	RT	--	1	--	--
TOTALS			2	4	8	2

3

EARTHWORK SUMMARY

DIVISION	LOCATION	ITEM 205.0100 EXCAVATION COMMON (CY) (NOTE 1)	SALVAGED / UNUSEABLE PAVEMENT MATERIAL (NOTE 2)	AVAILABLE MATERIAL (NOTE 3)	UNEXPANDED FILL	EXPANDED FILL (NOTE 4) FILL FACTOR 1.25	MASS ORDINATE +/- (NOTE 5)
STH 13							
1	B-50-21, STA 1254+32 - STA 1256+00 RT (STAGE 1)	240	71	169	12	15	154
2	B-50-21, STA 1257+41 - STA 1259+94 RT (STAGE 1)	268	35	233	3	4	229
3	B-50-21, STA 1254+32 - STA 1256+00 LT (STAGE 2)	178	45	133	3	4	129
4	B-50-21, STA 1257+41 - STA 1259+94 LT (STAGE 2)	243	36	207	77	96	111
5	B-50-22, STA 1480+10 - STA 1483+23 RT (STAGE 1)	291	26	265	18	23	242
6	B-50-22, STA 1487+13 - STA 1489+63 RT (STAGE 1)	232	23	209	1	1	208
7	B-50-22, STA 1480+77 - STA 1483+18 LT (STAGE 2)	265	44	221	66	83	138
8	B-50-22, STA 1487+08 - STA 1488+54 LT (STAGE 2)	150	38	112	16	20	92
TOTALS		1,867	318	1,549	196	246	1,303

1) SALVAGED/UNSUABLE PAVEMENT MATERIAL IS INCLUDED IN CUT
2) SALVAGED/UNUSABLE PAVEMENT MATERIAL = (AREA OF PROJECT PAVEMENT REMOVAL) * (TYPICAL DEPTH)
3) AVAILABLE MATERIAL = CUT - SALVAGED/UNUSUABLE PAVEMENT MATERIAL
4) EXPANDED FILL FACTOR = (UNEXPANDED FILL) * (FILL FACTOR)
5) MASS ORDINATE = AVAILABLE MATERIAL - (EXPANDED FILL); POSITIVE INDICATES AN EXCESS OF MATERIAL

MISCELLANEOUS ASPHALTIC ITEMS

CATEGORY	LOCATION	211.0100 PREPARE FOUNDATION FOR ASPHALTIC PAVING (1610-44-62) LS	213.0100 FINISHING ROADWAY (1610-44-62) EACH
0010			
	PROJECT	1	1
TOTALS		1	1

BASE AGGREGATE ITEMS

CATEGORY	STATION	TO	STATION	OFFSET	305.0110 BASE AGGREGATE DENSE 3/4-INCH TON	305.0120 BASE AGGREGATE DENSE 1 1/4-INCH TON
0010						
	1254+32	-	1256+00	LT&RT	40	600
	1257+56	-	1259+94	LT&RT	120	820
	1480+10	-	1483+23	LT&RT	120	800
	1487+08	-	1489+63	LT&RT	70	580
TOTALS					350	2,800

CONCRETE PAVEMENT ITEMS

CATEGORY	STATION	TO	STATION	OFFSET	416.0610 DRILLED TIE BARS EACH	415.0070 CONCRETE PAVEMENT 7-INCH SY	415.0410 CONCRETE PAVEMENT APPROACH SLAB SY
0010							
	1255+85	-	1256+00	LT&RT	22	32	40
	1257+41	-	1257+56	LT&RT	22	33	40
	1483+01	-	1483+23	LT&RT	24	39	48
	1487+08	-	1487+31	LT&RT	26	38	48
TOTALS					94	142	176

ASPHALTIC ITEMS

CATEGORY	STATION	TO	STATION	OFFSET	455.0605 TACK COAT GAL	465.0105 ASPHALTIC SURFACE TON	465.0120 ASPHALTIC SURFACE DRIVEWAYS AND FIELD ENTRANCES TON	465.0125 ASPHALTIC SURFACE TEMPORARY TON
0010								
	1254+32	-	1255+85	LT&RT	44	190	25	--
	1257+56	-	1259+94	LT&RT	66	260	--	20
	1480+10	-	1483+01	LT&RT	80	270	--	--
	1487+31	-	1489+63	LT&RT	80	230	--	--
TOTALS					270	950	25	20

3

CONCRETE CURB & GUTTER

CATEGORY	STATION	TO	STATION	OFFSET	601.0588 CONCRETE CURB & GUTTER 4-INCH SLOPED 36-INCH TYPE TBT LF	601.0590 CONCRETE CURB & GUTTER 4-INCH SLOPED 36-INCH TYPE TBTT LF
0010						
	1255+34	-	1255+87	LT&RT	102	--
	1487+21	-	1487+84	LT&RT	105	9
TOTALS					207	9

SURFACE DRAINS

CATEGORY	STATION	OFFSET	416.1010 CONCRETE SURFACE DRAINS CY	521.1012 APRON ENDWALLS FOR CULVERT PIPE STEEL 12-INCH EACH	530.0112 CULVERT PIPE CORRUGATED POLYETHYLENE 12-INCH LF	608.3012 STORM SEWER PIPE CLASS III-A 12-INCH LF	611.0654 INLET COVERS TYPE V EACH	611.3220 INLETS 2X2-FT EACH
0010								
	1255+44	LT&RT	2	--	--	--	--	--
	1487+63	LT	--	1	20	--	1	1
	1487+69	LT	--	--	--	6	1	1
	1487+73	RT	--	1	22	--	1	1
	1487+79	RT	--	--	--	6	1	1
TOTALS			2	2	42	12	4	4

RIPRAP ITEMS

CATEGORY	STATION	OFFSET	606.0200 RIPRAP MEDIUM CY	645.0120 GEOTEXTILE TYPE HR SY
0010				
	1255+45	LT	12	36
	1255+45	RT	58	141
	1487+43	LT	8	25
	1487+73	RT	11	34
	UNDISTRIBUTED		24	64
TOTALS			115	300

3

EROSION CONTROL ITEMS

CATEGORY	STATION	TO	STATION	OFFSET	628.1504 SILT FENCE LF	628.1520 SILT FENCE MAINTENANCE LF	628.2004 EROSION MAT CLASS I TYPE B SY	628.2008 EROSION MAT URBAN CLASS I TYPE B SY	628.7504 TEMPORARY DITCH CHECKS LF	628.7570 ROCK BAGS EACH
0010										
	1254+32	-	1256+00	LT	240	240	--	240	15	30
	1254+32	-	1256+00	RT	300	300	--	220	--	45
	1257+41	-	1259+94	LT	310	310	510	--	--	45
	1257+41	-	1259+94	RT	260	260	180	70	--	45
	1480+10	-	1483+25	RT	320	320	300	--	--	30
	1480+77	-	1483+15	LT	210	210	510	--	15	30
	1487+08	-	1488+54	LT	220	220	270	--	--	30
	1487+17	-	1489+63	RT	360	360	230	--	--	45
	UNDISTRIBUTED				555	555	500	140	10	75
TOTALS					2,775	2,775	2,500	670	40	375

RESTORATION ITEMS

CATEGORY	STATION	TO	STATION	OFFSET	625.0100 TOPSOIL SY	629.0210 FERTILIZER TYPE B CWT	630.0130 SEEDING MIXTURE NO. 30 LB	630.0140 SEEDING MIXTURE NO. 40 LB	630.0500 SEED WATER MGAL	SPV.0030.01 FERTILIZER FOR LAWN TYPE TURF CWT	SPV.0180.03 PREPARING TOPSOIL FOR LAWN TYPE TURF SY
0010											
	1254+32	-	1256+00	LT	240	--	2.9	1.4	2.0	0.2	240
	1254+32	-	1256+00	RT	220	--	2.5	1.5	1.5	0.2	220
	1257+41	-	1259+94	LT	510	0.4	9.2	--	--	--	--
	1257+41	-	1259+94	RT	250	0.2	4.3	0.4	0.4	0.1	80
	1480+10	-	1483+25	RT	300	0.2	5.4	--	--	--	--
	1480+77	-	1483+15	LT	510	0.4	9.2	--	--	--	--
	1487+08	-	1488+54	LT	270	0.2	4.8	--	--	--	--
	1487+17	-	1489+63	RT	230	0.2	4.2	--	--	--	--
	UNDISTRIBUTED				630	0.4	10.5	0.8	1.0	0.5	140
TOTALS					3,160	2.0	53.0	4.1	4.9	1.0	680

EROSION CONTROL MOBILIZATION

CATEGORY	LOCATION	628.1905 MOBILIZATIONS EROSION CONTROL EACH	628.1910 MOBILIZATIONS EMERGENCY EROSION CONTROL EACH
0010			
	PROJECT	5	2
TOTALS		5	2

INLET PROTECTION TYPE C

CATEGORY	STATION	OFFSET	628.7015 EACH
0010			
	1487+25	LT	2
	1487+35	RT	2
	1487+64	LT	2
	1487+75	RT	2
TOTAL			8

REMOVING AND MOVING SIGNS

CATEGORY	SIGN NUMBER	DESCRIPTION	638.2102 MOVING SIGNS TYPE II EACH	638.3000 REMOVING SMALL SIGN SUPPORTS EACH	638.4000 MOVING SMALL SIGN SUPPORTS EACH	COMMENTS
0010						
	--	POST WITH NO SIGN	--	1	--	STA 1255+82, RT
	3-1	NAT'L FOREST INFORMATION 1/2 MILE & SNOWMOBILE ROUTE	1	--	2	SIGNS MOUNTED ON SAME POSTS
	4-1	NORTH FORK FLAMBEAU RIVER & SNOWMOBILE ROUTE	1	--	2	SIGNS MOUNTED ON SAME POSTS
	4-2	SPEED LIMIT 40 MPH	1	--	1	
	4-3	SPEED LIMIT 40 MPH	1	--	1	
		UNDISTRIBUTED	2	--	2	
TOTALS			6	1	8	

3

TEMPORARY BARRIER ITEMS

CATEGORY	STAGE	STATION	TO	STATION	OFFSET	603.8000 CONCRETE BARRIER TEMPORARY PRECAST DELIVERED LF	603.8125 CONCRETE BARRIER TEMPORARY PRECAST INSTALLED LF
0010	1						
		1255+28	-	1258+41	LT	325	325
		1482+30	-	1487+55	LT	525	525
STAGE 1 SUBTOTALS						850	850
	2						
		1255+28	-	1258+41	RT	--	325
		1482+30	-	1487+55	RT	--	525
STAGE 2 SUBTOTALS						--	850
TOTALS						850	1,700

CRASH CUSHIONS TEMPORARY

CATEGORY	STAGE	STATION	OFFSET	614.0905 EACH	BACK WIDTH FT	OBJECT MARKING PATTERN	CRASH TEST LEVEL	TRAFFIC DIRECTION	TRAFFIC LOCATION	CRASH CUSHION SHIELDS
0010	1									
		1255+17	LT	1	2	OM-3R	TL-3	BIDIRECTIONAL	L	TEMPORARY CONCRETE BARRIER
		1258+52	LT	1	2	OM-3L	TL-3	BIDIRECTIONAL	R	TEMPORARY CONCRETE BARRIER
		1482+18	LT	1	2	OM-3R	TL-3	BIDIRECTIONAL	L	TEMPORARY CONCRETE BARRIER
		1487+63	LT	1	2	OM-3L	TL-3	BIDIRECTIONAL	R	TEMPORARY CONCRETE BARRIER
STAGE 1 SUBTOTAL				4						
	2									
		1255+17	RT	1	2	OM-3L	TL-3	BIDIRECTIONAL	R	TEMPORARY CONCRETE BARRIER
		1258+52	RT	1	2	OM-3R	TL-3	BIDIRECTIONAL	L	TEMPORARY CONCRETE BARRIER
		1482+18	RT	1	2	OM-3L	TL-3	BIDIRECTIONAL	R	TEMPORARY CONCRETE BARRIER
		1487+63	RT	1	2	OM-3R	TL-3	BIDIRECTIONAL	L	TEMPORARY CONCRETE BARRIER
STAGE 2 SUBTOTAL				4						
TOTAL				8						

3

TRAFFIC CONTROL ITEMS

CATEGORY	STAGE	STAGE DURATION DAYS	643.0300 TRAFFIC CONTROL DRUMS NO.	DAY	643.0420 TRAFFIC CONTROL BARRICADES TYPE III NO.	DAY	643.0705 TRAFFIC CONTROL WARNING LIGHTS TYPE A NO.	DAY	643.0715 TRAFFIC CONTROL WARNING LIGHTS TYPE C NO.	DAY	643.0900 TRAFFIC CONTROL SIGNS NO.	DAY	643.1000 TRAFFIC CONTROL SIGNS FIXED MESSAGE SF	643.5000 TRAFFIC CONTROL EACH
0010														
	PRIOR TO STAGE 1 (B-50-21)	7	--	--	--	--	--	--	--	--	--	--	36	--
	PRIOR TO STAGE 1 (B-50-22)	7	--	--	--	--	--	--	--	--	--	--	36	--
	STAGE 1 (B-50-21)	40	37	1,480	12	480	15	600	25	1,000	24	960	--	--
	STAGE 1 (B-50-22)	65	42	2,730	11	715	14	910	36	2,340	23	1,495	--	--
STAGE 1 SUBTOTALS				4,210		1,195		1,510		3,340		2,455	72	0
	STAGE 2 (B-50-21)	40	42	1,680	12	480	16	640	39	1,560	24	960	--	--
	STAGE 2 (B-50-22)	65	27	1,755	10	650	12	780	25	1,625	23	1,495	--	--
STAGE 2 SUBTOTALS				3,435		1,130		1,420		3,185		2,455	0	0
	PROJECT			--		--		--		--		--	--	0.50
TOTALS				7,645		2,325		2,930		6,525		4,910	72	0.50

TRAFFIC CONTROL COVERING SIGNS

CATEGORY	LOCATION	NUMBER OF CYCLES	643.0920 TRAFFIC CONTROL COVERING SIGNS TYPE II NO.	EACH	COMMENTS
0010					
	LOWER DAM ROAD	1	1	1	STOP SIGN COVERED WHILE TEMPORARY TRAFFIC SIGNALS ARE IN USE
TOTAL				1	

TEMPORARY PAVEMENT MARKING ITEMS

CATEGORY	STAGE	646.9000 MARKING REMOVAL LINE 4-INCH 12.5' LINE 37.5' SKIP WHITE LF	649.0150 TEMPORARY MARKING LINE REMOVABLE TAPE 4-INCH 3' LINE 9' SKIP WHITE LF	SOLID WHITE LF	SOLID YELLOW LF	649.0850 TEMPORARY MARKING STOP LINE REMOVABLE TAPE 18-INCH SOLID WHITE LF
0010						
	STAGE 1 (B-50-21)	662	--	1,400	2,800	34
	STAGE 1 (B-50-22)	988	--	1,900	2,120	42
STAGE 1 SUBTOTALS		1,650	--	3,300	4,920	76
				8,220		
	STAGE 2 (B-50-21)	514	--	1,440	--	--
	STAGE 2 (B-50-22)	556	20	1,800	--	--
STAGE 2 SUBTOTALS		1,070	20	3,240	--	--
				3,260		
TOTALS		2,720	20	6,540	4,920	76
				11,480		

PAVEMENT MARKING ITEMS

CATEGORY	STATION	TO	STATION	646.1020 MARKING LINE EPOXY 4-INCH SOLID WHITE LF	12.5' LINE 37.5' SKIP YELLOW LF	SOLID YELLOW LF	SPV.0180.02 PROTECTIVE THERMOPLASTIC COATING AT SNOWMOBILE TRAIL CROSSINGS SY
0010							
	1253+10	-	1260+76	1,205	200	--	--
	1480+00	-	1489+97	1,845	250	700	665
TOTALS				3,050	450	700	665
					4,200		

3

LOCATING NO-PASSING ZONES

CATEGORY	STATION	TO	STATION	648.0100 LOCATING NO-PASSING ZONES MI
0010				
	1253+10	-	1260+76	0.2
	1480+00	-	1489+97	0.2
TOTAL				0.4

GUARDRAIL ITEMS

CATEGORY	STATION	TO	STATION	OFFSET	204.0165 REMOVING GUARDRAIL LF	614.2300 MGS GUARDRAIL 3 LF	614.2350 MGS GUARDRAIL SHORT RADIUS LF	614.2500 MGS THRIE BEAM TRANSITION LF	614.2610 MGS GUARDRAIL TERMINAL EAT EACH	614.2630 MGS GUARDRAIL SHORT RADIUS TERMINAL EACH	COMMENTS
0010											
	1254+74	-	1255+92	LT	115	25.0	--	40	1	--	
	1254+92	-	1255+92	RT	77	37.5	37.5	40	--	1	6 CRT POSTS REQ'D
	1257+49	-	1259+04	LT	115	62.5	--	40	1	--	
	1257+49	-	1258+67	RT	115	25.0	--	40	1	--	
	1481+22	-	1483+14	RT	108	100.0	--	40	1	--	
	1481+74	-	1483+04	LT	121	37.5	--	40	1	--	
	1487+17	-	1488+47	LT	121	37.5	--	40	1	--	
	1487+27	-	1488+45	RT	108	25.0	--	40	1	--	
TOTALS					880	350.0	37.5	320	7	1	

3

TEMPORARY TRAFFIC SIGNAL ITEMS

CATEGORY	LOCATION	661.0100.01 TEMPORARY TRAFFIC SIGNALS FOR BRIDGES (B-50-21) LS	661.0100.02 TEMPORARY TRAFFIC SIGNALS FOR BRIDGES (B-50-22) LS	SPV.0105.02 TEMPORARY VEHICLE DETECTION B-50-21 LS	SPV.0105.03 TEMPORARY VEHICLE DETECTION B-50-22 LS
0010					
	PROJECT	1	1	1	1
TOTALS		1	1	1	1

CONSTRUCTION STAKING

CATEGORY	STATION	TO	STATION	OFFSET	650.4000 CONSTRUCTION STAKING STORM SEWER EACH	650.4500 CONSTRUCTION STAKING SUBGRADE LF	650.5000 CONSTRUCTION STAKING BASE LF	650.5500 CONSTRUCTION STAKING CURB GUTTER AND CURB & GUTTER LF	650.7000 CONSTRUCTION STAKING CONCRETE PAVEMENT LF	650.9910 CONSTRUCTION STAKING SUPPLEMENTAL CONTROL (1610-44-62) LS	650.9920 CONSTRUCTION STAKING SLOPE STAKES LF
0010											
	1254+32	-	1256+00	LT&RT	--	100	153	102	15	--	168
	1257+41	-	1259+94	LT&RT	--	59	238	--	15	--	253
	1480+10	-	1483+23	LT&RT	--	23	293	--	20	--	313
	1487+08	-	1489+63	LT&RT	4	23	235	105	20	--	255
	PROJECT				--	--	--	--	--	1	--
TOTALS					4	205	919	207	70	1	989

WATER

CATEGORY	LOCATION	624.0100 MGAL
0010	PROJECT-BASE COMPACTION	10
TOTAL		10

SAWING ITEMS

CATEGORY	STATION	TO	STATION	OFFSET	690.0150 SAWING ASPHALT LF	690.0250 SAWING CONCRETE LF
0010						
	1254+32	-	1256+00	LT&RT	260	65
	1257+41	-	1259+94	LT&RT	457	65
	1480+10	-	1483+23	LT&RT	533	25
	1487+08	-	1489+63	LT&RT	400	25
TOTALS					1,650	180

LEGEND

- SLOPE INTERCEPT
- DELINEATED WETLAND BOUNDARY
- X CLEARING AND GRUBBING
- CONCRETE PAVEMENT APPROACH SLAB AND CONCRETE PAVEMENT 7" FOR SHOULDERS (SEE CONSTRUCTION DETAILS)
- 6-INCH ASPHALTIC SURFACE
- MILL AND OVERLAY (SEE TYPICAL SECTIONS FOR ASPHALTIC SURFACE DEPTH)
- RIPRAP HEAVY (SEE STRUCTURE PLANS)
- RIPRAP MEDIUM (SEE EROSION CONTROL DETAILS)
- CONCRETE SURFACE DRAIN FLUME
- XXXXXXX SAWING ASPHALT
- X SIGN - MOVE
- C1 CONCRETE CURB & GUTTER 4-INCH SLOPED 36-INCH TYPE TBTT
- C2 CONCRETE CURB & GUTTER 4-INCH SLOPED 36-INCH TYPE TBT
- H1 ASPHALTIC SURFACE DRIVEWAYS AND FIELD ENTRANCES (3")

BENCH MARKS			
NO.	STATION/OFFSET	DESCRIPTION	ELEV.
603	1255+31.86, 116.64' RT	BM BENCH-TIE SET POWERPOLE	1,441.04

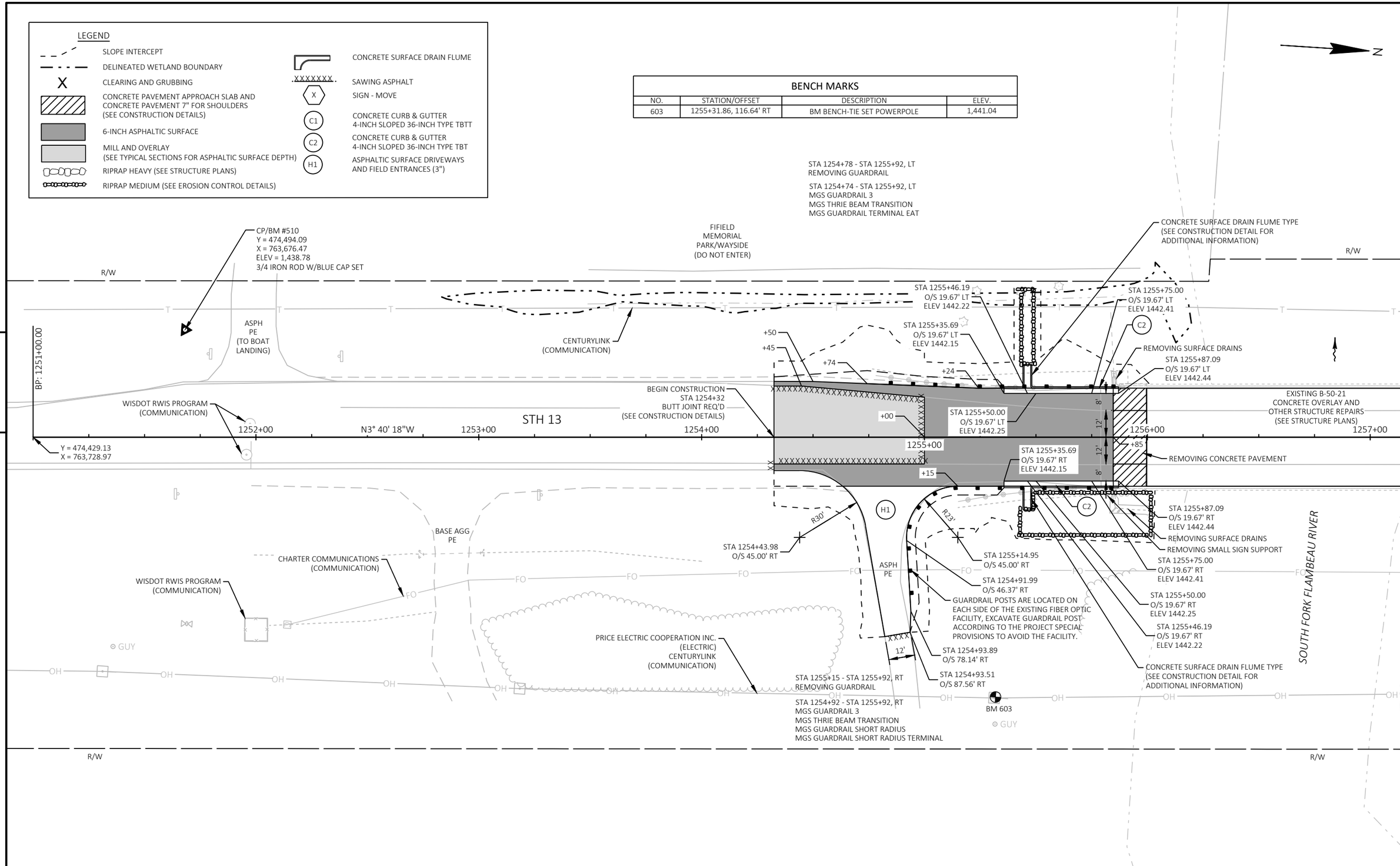

PROJECT NO: 1610-44-62	HWY: STH 13	COUNTY: PRICE	PLAN	SHEET 31	E

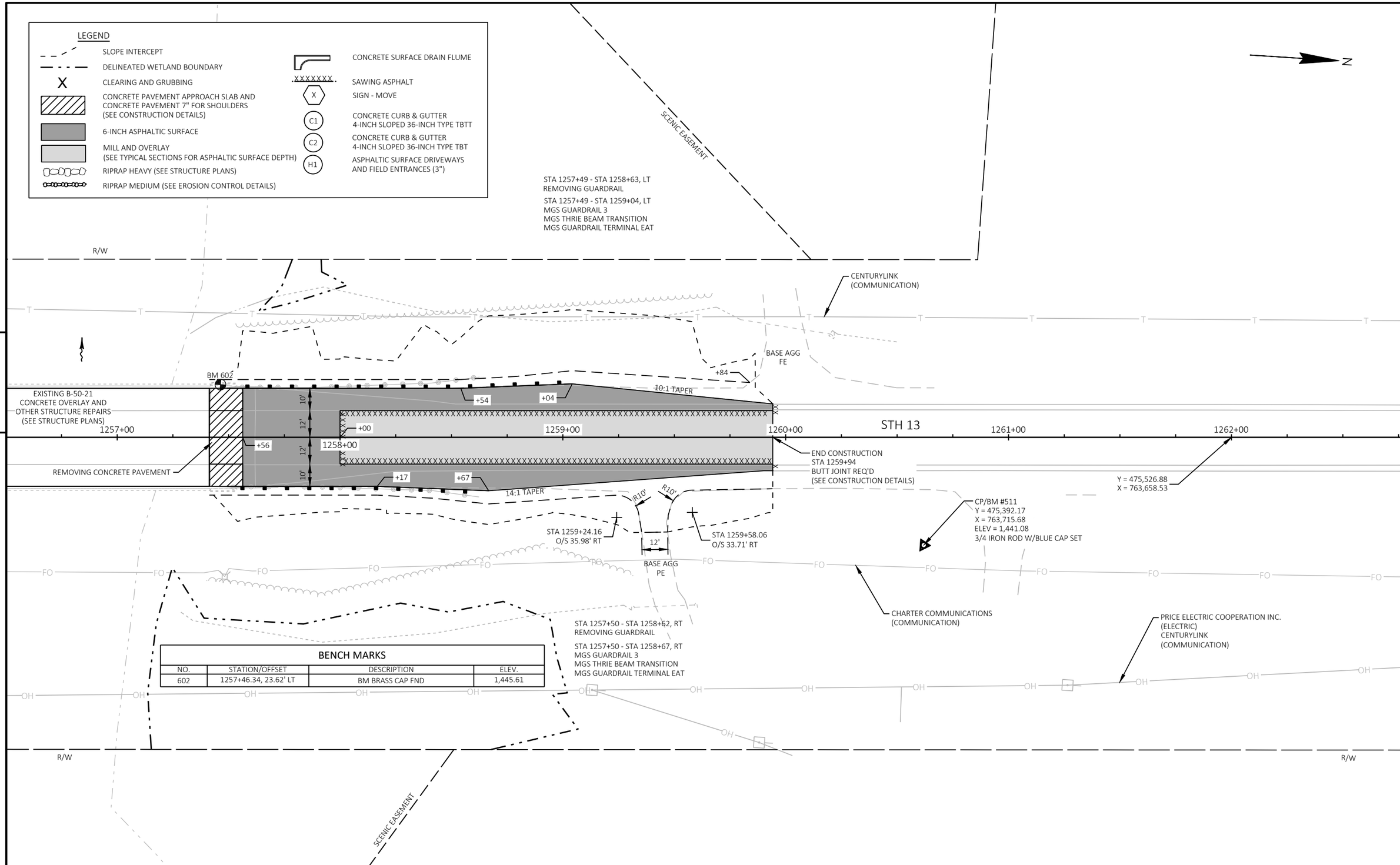

BENCH MARKS

NO.	STATION/OFFSET	DESCRIPTION	ELEV.
602	1257+46.34, 23.62' LT	BM BRASS CAP FND	1,445.61

5

5

PROJECT NO: 1610-44-62	HWY: STH 13	COUNTY: PRICE	PLAN	SHEET 32	E

FILE NAME : P:\52XX\5201.DP.19.STH13.PRC\CADDS\16104462\SHEETSPLAN\050201-PN.DWG
LAYOUT NAME - 02
PLOT DATE : 1/14/2021 2:31 PM
PLOT BY : SCOTT KAISER
PLOT NAME :
PLOT SCALE : 1 IN:40 FT
WISDOT/CADDS SHEET 44

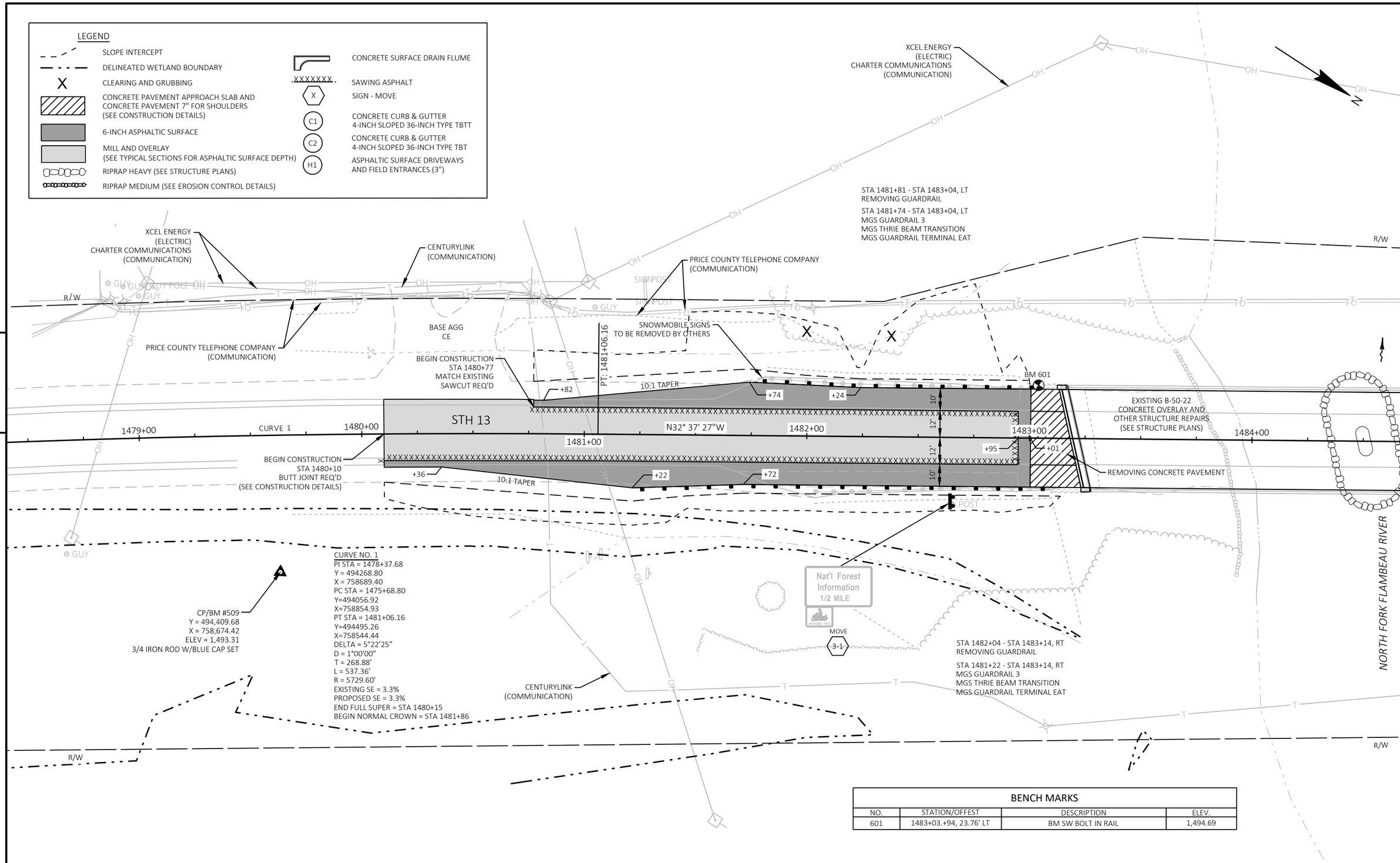

BENCH MARKS			
NO.	STATION/OFFEST	DESCRIPTION	ELEV.
601	1483+03.+94, 23.76' LT	BM SW BOLT IN RAIL	1,494.69

PROJECT NO: 1610-44-62	HWY: STH 13	COUNTY: PRICE	PLAN	SHEET 33	E

FILE NAME : P:\52XX\5201.DP.19.STH13.PRC\CADDS\16104462\SHEETSPLAN\050201-PN.DWG
LAYOUT NAME - 03
PLOT DATE : 1/14/2021 2:31 PM PLOT BY : SCOTT KAISER PLOT NAME : PLOT SCALE : 1 IN:40 FT

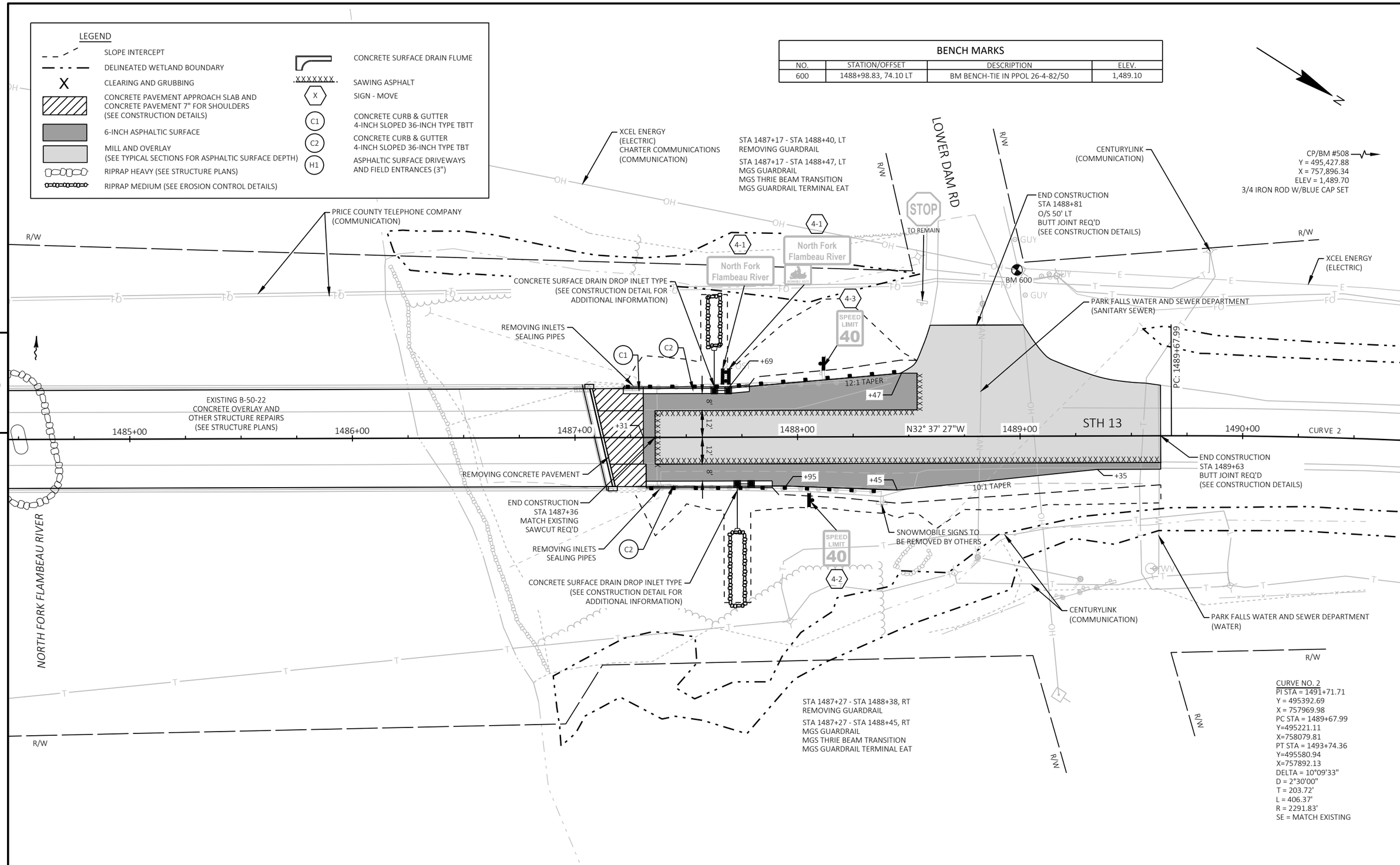

PROJECT NO: 1610-44-62	HWY: STH 13	COUNTY: PRICE	PLAN	SHEET 34	E

FILE NAME : P:\52XX\5201.DP.19.STH13.PRC\CADDS\16104462\SHEETSPLAN\050201-PN.DWG
LAYOUT NAME - 04
PLOT DATE : 1/14/2021 2:31 PM
PLOT BY : SCOTT KAISER
PLOT NAME :
PLOT SCALE : 1 IN:40 FT
WISDOT/CADDS SHEET 44

Standard Detail Drawing List

08A05-19C	INLET COVERS TYPE F, HM, HM-S, S, T, V, HM-GJ, & HM-GJ-S
08C07-02	INLETS 2X2-FT, 2X2.5-FT, 2X3-FT AND 2.5X3-FT
08D01-22A	CONCRETE CURB & GUTTER
08D01-22B	CONCRETE CURB, TIES AND CURB AND GUTTER APPLICATIONS
08D02-07A	CONCRETE SURFACE DRAINS FLUME TYPE AT STRUCTURES
08D02-07B	CONCRETE SURFACE DRAINS FLUME TYPE AT STRUCTURES
08D02-07C	CONCRETE SURFACE DRAINS FLUME TYPE AT STRUCTURES
08D03-08A	CONCRETE SURFACE DRAINS DROP INLET TYPE AT STRUCTURES
08D03-08B	CONCRETE SURFACE DRAINS DROP INLET TYPE AT STRUCTURES
08D21-01	DRIVEWAYS WITHOUT CURB & GUTTER
08E08-03	TYPICAL INSTALLATIONS OF EROSION BALES / TEMPORARY DITCH CHECKS
08E09-06	SILT FENCE
08E10-02	INLET PROTECTION TYPE A, B, C AND D
08F01-11	APRON ENDWALLS FOR CULVERT PIPE
09G02-05A	BRIDGE TEMPORARY TRAFFIC SIGNAL INSTALLATION
09G02-05B	BRIDGE TEMPORARY TRAFFIC SIGNAL INSTALLATION
09G02-05C	BRIDGE TEMPORARY TRAFFIC SIGNAL INSTALLATION
13B02-09A	CONCRETE PAVEMENT APPROACH SLAB
14B07-15A	CONCRETE BARRIER TEMPORARY PRECAST, 12'-6"
14B07-15B	CONCRETE BARRIER TEMPORARY PRECAST, 12'-6"
14B07-15C	CONCRETE BARRIER TEMPORARY PRECAST, 12'-6"
14B07-15D	CONCRETE BARRIER TEMPORARY PRECAST, 12'-6"
14B07-15E	CONCRETE BARRIER TEMPORARY PRECAST, 12'-6"
14B07-15F	CONCRETE BARRIER TEMPORARY PRECAST, 12'-6"
14B07-15G	CONCRETE BARRIER TEMPORARY PRECAST, 12'-6"
14B07-15H	CONCRETE BARRIER TEMPORARY PRECAST, 12'-6"
14B07-15I	CONCRETE BARRIER TEMPORARY PRECAST, 12'-6"
14B08-02A	CRASH CUSHION/SAND BARREL ARRAY AND OTHER TEMPORARY BARRIER LAYOUT DETAILS
14B08-02B	CRASH CUSHION/SAND BARREL ARRAY AND OTHER TEMPORARY BARRIER LAYOUT DETAILS
14B08-02C	CRASH CUSHION/SAND BARREL ARRAY AND OTHER TEMPORARY BARRIER LAYOUT DETAILS
14B08-02D	CRASH CUSHION/SAND BARREL ARRAY AND OTHER TEMPORARY BARRIER LAYOUT DETAILS
14B08-02E	CRASH CUSHION/SAND BARREL ARRAY AND OTHER TEMPORARY BARRIER LAYOUT DETAILS
14B42-06A	MIDWEST GUARDRAIL SYSTEM (MGS) GUARDRAIL
14B42-06B	MIDWEST GUARDRAIL SYSTEM (MGS) GUARDRAIL
14B42-06C	MIDWEST GUARDRAIL SYSTEM (MGS) GUARDRAIL
14B42-06D	MIDWEST GUARDRAIL SYSTEM (MGS) GUARDRAIL
14B44-04A	MIDWEST GUARDRAIL SYSTEM ENERGY ABSORBING TERMINAL (MGS)
14B44-04B	MIDWEST GUARDRAIL SYSTEM ENERGY ABSORBING TERMINAL (MGS)
14B44-04C	MIDWEST GUARDRAIL SYSTEM ENERGY ABSORBING TERMINAL (MGS)
14B45-05A	MIDWEST GUARDRAIL SYSTEM THRIE BEAM TRANSITION (MGS)
14B45-05B	MIDWEST GUARDRAIL SYSTEM THRIE BEAM TRANSITION (MGS)
14B45-05C	MIDWEST GUARDRAIL SYSTEM THRIE BEAM TRANSITION (MGS)
14B45-05D	MIDWEST GUARDRAIL SYSTEM THRIE BEAM TRANSITION (MGS)
14B45-05E	MIDWEST GUARDRAIL SYSTEM THRIE BEAM TRANSITION (MGS)
14B45-05F	MIDWEST GUARDRAIL SYSTEM THRIE BEAM TRANSITION (MGS)
14B45-05G	MIDWEST GUARDRAIL SYSTEM THRIE BEAM TRANSITION (MGS)
14B45-05H	MIDWEST GUARDRAIL SYSTEM THRIE BEAM TRANSITION (MGS)
14B45-05I	MIDWEST GUARDRAIL SYSTEM THRIE BEAM TRANSITION (MGS)
14B45-05J	MIDWEST GUARDRAIL SYSTEM THRIE BEAM TRANSITION (MGS)
14B45-05K	MIDWEST GUARDRAIL SYSTEM THRIE BEAM TRANSITION (MGS)
14B45-05L	MIDWEST GUARDRAIL SYSTEM THRIE BEAM TRANSITION (MGS)
14B53-01A	SHORT RADIUS BEAM GUARD (MGS) SHORT RADIUS TERMINAL (MGS)
14B53-01B	SHORT RADIUS BEAM GUARD (MGS) SHORT RADIUS TERMINAL (MGS)
14B53-01C	SHORT RADIUS BEAM GUARD (MGS) SHORT RADIUS TERMINAL (MGS)
14B53-01D	SHORT RADIUS BEAM GUARD (MGS) SHORT RADIUS TERMINAL (MGS)
14B53-01E	SHORT RADIUS BEAM GUARD (MGS) SHORT RADIUS TERMINAL (MGS)
14B53-01F	SHORT RADIUS BEAM GUARD (MGS) SHORT RADIUS TERMINAL (MGS)
14B53-01G	SHORT RADIUS BEAM GUARD (MGS) SHORT RADIUS TERMINAL (MGS)
14B53-01H	SHORT RADIUS BEAM GUARD (MGS) SHORT RADIUS TERMINAL (MGS)
14B53-01I	SHORT RADIUS BEAM GUARD (MGS) SHORT RADIUS TERMINAL (MGS)
15C08-20A	LONGITUDINAL MARKING (MAINLINE)
15C11-08B	CHANNELIZING DEVICES DRUMS, CONES, BARRICADES AND VERTICAL PANELS
15C12-07	TRAFFIC CONTROL FOR LANE CLOSURE WITH FLAGGING OPERATION
15D28-04	TRAFFIC CONTROL, WORK ON SHOULDER OR PARKING LANE, UNDIVIDED ROADWAY
15D33-06	TRAFFIC CONTROL, ONE LANE ROAD WITH TEMPORARY SIGNALS
15D38-02A	TEMPORARY TRAFFIC CONTROL SIGN MOUNTING
15D38-02B	ATTACHMENT OF SIGNS TO POSTS

6

6

GENERAL NOTES

DETAILS OF CONSTRUCTION, MATERIALS AND WORKMANSHIP NOT SHOWN ON THIS DRAWING SHALL CONFORM TO THE PERTINENT REQUIREMENTS OF THE STANDARD SPECIFICATIONS AND THE APPLICABLE SPECIAL PROVISIONS.

DETAIL DRAWINGS FOR PROPOSED ALTERNATE DESIGNS FOR INLET COVERS SHALL BE SUBMITTED TO THE ENGINEER FOR APPROVAL PROVIDING THAT SUCH ALTERNATE DESIGNS MAKE PROVISION FOR EQUIVALENT CAPACITY AND STRENGTH.

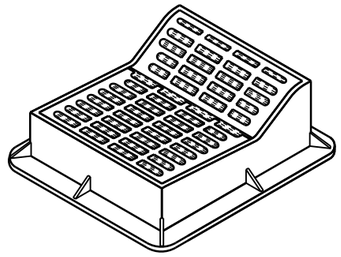

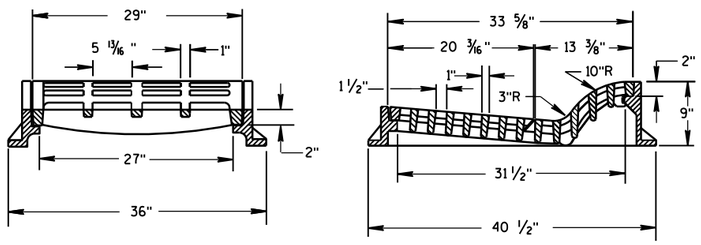

TYPE "F"

USE WITH TYPES A & D CONCRETE CURB & GUTTER, 36 INCH.

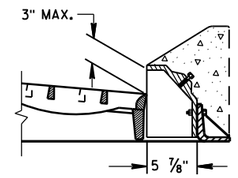

ALTERNATIVE CURB BOX FOR TYPE "HM" COVER

USE WITH TYPES G & J CONCRETE CURB & GUTTER, 30 INCH
NOTED AS TYPE HM-GJ ON DRAINAGE TABLE

NOTE:
SPECIAL GRATE FOR THE
TYPE "H" COVER MAY ALSO BE
USED FOR THE TYPE "HM-GJ" COVER
NOTED AS TYPE HM-GJ-S ON DRAINAGE TABLE

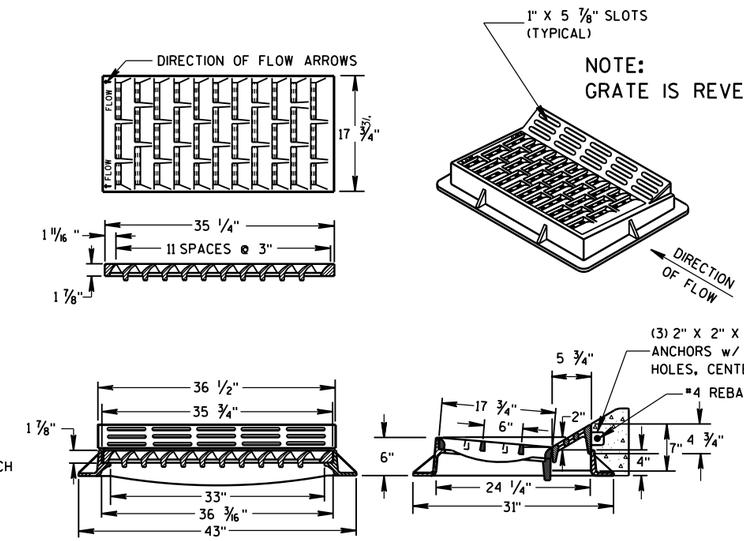

NOTE:
GRATE IS REVERSIBLE.

TYPE "HM"

USE WITH TYPES A & D CONCRETE CURB & GUTTER, 36 INCH.

NOTE:
SPECIAL GRATE FOR THE
TYPE "H" COVER MAY ALSO BE
USED FOR THE TYPE "HM" COVER
NOTED AS TYPE HM-S ON DRAINAGE TABLE

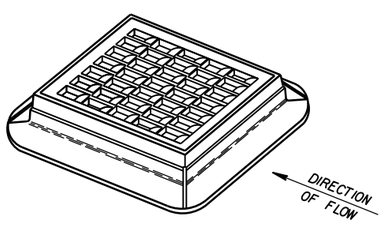

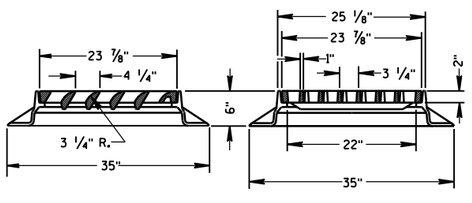

TYPE "S"

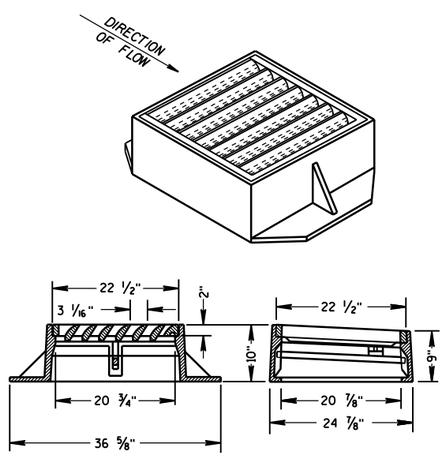

TYPE "V"

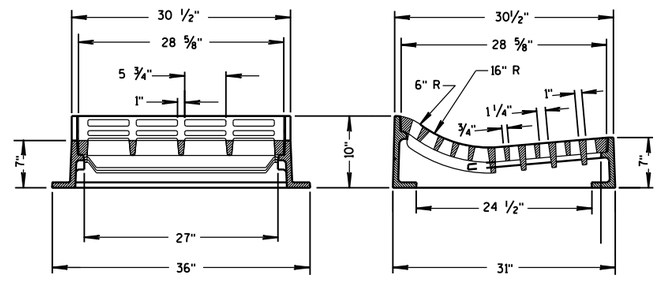

TYPE "T"

USE WITH TYPES R & T CONCRETE CURB & GUTTER, 36 INCH.

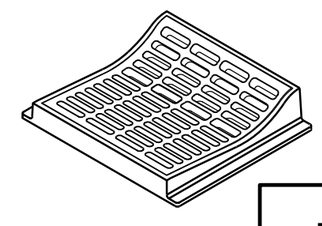

INLET COVERS
TYPE F, HM, HM-S, S, T, V, HM-GJ, & HM-GJ-S

STATE OF WISCONSIN
DEPARTMENT OF TRANSPORTATION

APPROVED
11/27/2013 — DATE
/S/ Jerry H. Zogg — ROADWAY STANDARDS DEVELOPMENT ENGINEER
FHWA

6

S.D.D. 8 A 5-19c

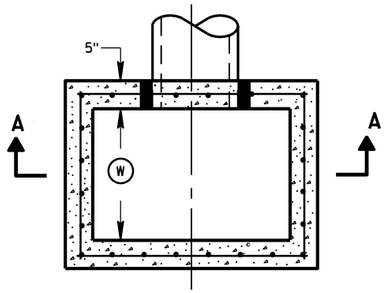

PLAN VIEW

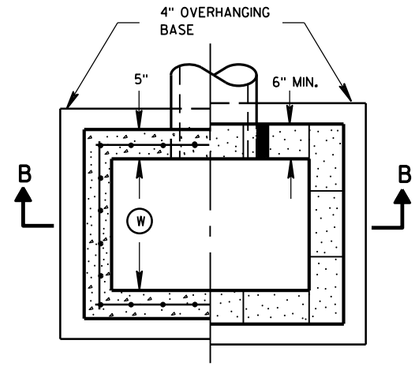

PLAN VIEW

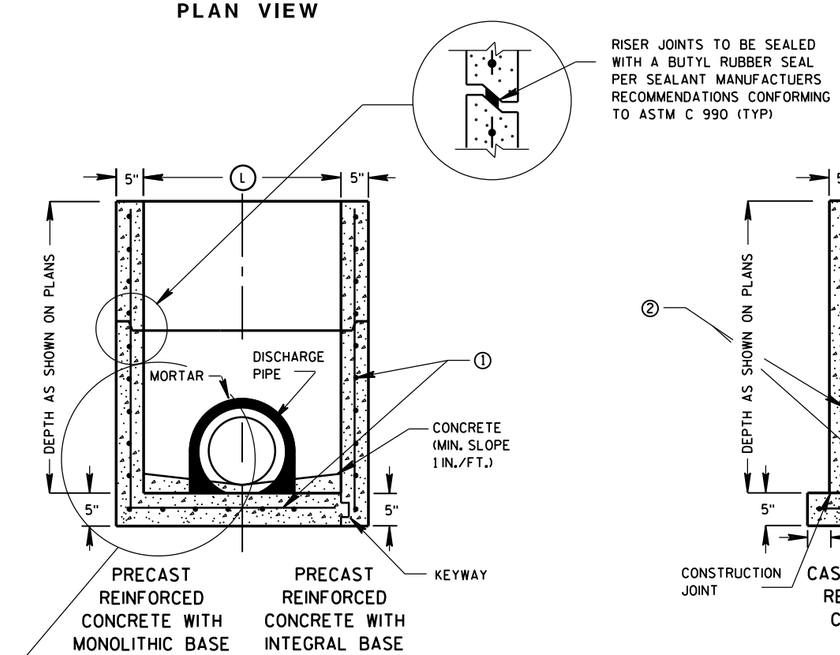

SECTION A-A

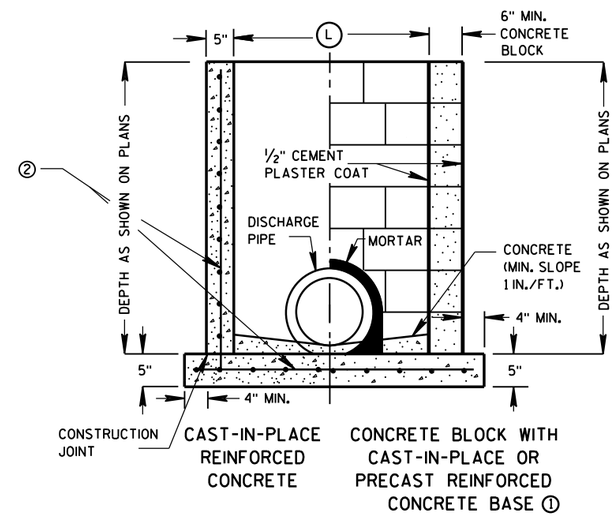

SECTION B-B

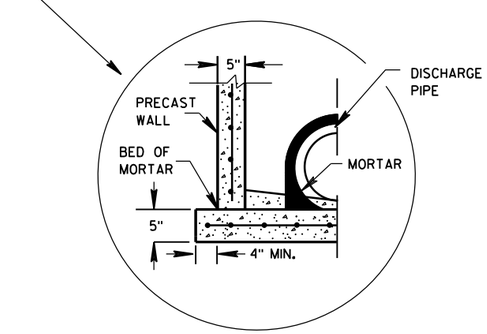

SEPARATE PRECAST REINFORCED CONCRETE BASE OPTION

GENERAL NOTES

DETAILS OF CONSTRUCTION, MATERIALS AND WORKMANSHIP NOT SHOWN ON THIS DRAWING SHALL CONFORM TO THE PERTINENT REQUIREMENTS OF THE STANDARD SPECIFICATIONS AND THE APPLICABLE SPECIAL PROVISIONS.

UNLESS OTHERWISE AUTHORIZED IN WRITING BY THE ENGINEER, THE CONTRACTOR SHALL NOT ORDER AND DELIVER PRECAST INLET UNITS REQUIRED FOR THE PROJECT UNTIL A LIST OF SIZES IS FURNISHED BY THE ENGINEER.

DETAILED DRAWINGS FOR PROPOSED ALTERNATE DESIGNS FOR UNDERGROUND DRAINAGE STRUCTURES SHALL BE SUBMITTED TO THE ENGINEER FOR APPROVAL PROVIDING THAT SUCH ALTERNATE DESIGNS MAKE PROVISION FOR EQUIVALENT CAPACITY AND STRENGTH.

ALL PRECAST INLET UNITS SHALL CONFORM TO THE PERTINENT REQUIREMENTS OF ASTM C 913.

ALL DRAINAGE STRUCTURES ARE DESIGNATED ON THE PLANS AS "MANHOLES 3X3-L", "CATCH BASINS 4-B", "INLETS 2X3-H", ETC. THE FIRST NUMBERS DESIGNATES THE SIZE OF THE STRUCTURE, AND THE FOLLOWING LETTER DESIGNATES THE TYPE OF COVER TO BE USED TO COMPRISE THE COMPLETE UNIT.

BASES SHALL BE PLACED ON A BED OF MATERIAL AT LEAST 6 INCHES IN DEPTH, WHICH MEETS THE REQUIREMENTS OF FOUNDATION BACKFILL. THIS BEDDING SHALL BE COMPACTED AND PROVIDE UNIFORM SUPPORT FOR THE ENTIRE AREA OF THE BASE.

ALL BAR STEEL REINFORCEMENT SHALL BE EMBEDDED 2 INCHES CLEAR UNLESS OTHERWISE SHOWN OR NOTED.

PRECAST REINFORCED RISERS SHALL HAVE A TONGUE AND GROOVE JOINT WITH TONGUE UP OR DOWN.

4" OVERHANGING BASES ARE REQUIRED FOR CAST-IN-PLACE REINFORCED CONCRETE AND CONCRETE BLOCK INSTALLATIONS.
4" OVERHANG IS REQUIRED WHEN SEPARATE PRECAST BASE IS PROVIDED.
OVERHANG IS NOT REQUIRED ON PRECAST STRUCTURES WITH AN INTEGRAL OR MONOLITHIC BASE.

MAXIMUM INSIDE PIPE DIAMETER DETERMINED BY 3 INCH CLEARANCE ON EACH SIDE OF THE OUTSIDE WALL OF THE PIPE. SEE DETAIL "A". ASSUMES PIPE ENTERS PERPENDICULAR TO THE STRUCTURE.

① FOR PRECAST INLETS PROVIDE REINFORCING STEEL IN ACCORDANCE TO ASTM C 913.

② CONTRACTOR TO PROVIDE DRAWING(S) STAMPED BY A PROFESSIONAL ENGINEER FOR STEEL REINFORCING DESIGN FOR CAST-IN-PLACE STRUCTURES.

INLET COVER MATRIX

INLET SIZE		INLET COVER TYPE	ALL A'S	ALL B'S	BW	F	ALL H'S	S	T	V	WM
	WIDTH Ⓦ (FT)	LENGTH Ⓛ (FT)									
2X2-FT	2	2	X	X				X		X	
2X2.5-FT	2	2.5			X			X	X	X	X
2X3-FT	2	3					X				
2.5X3-FT	2.5	3				X					

PIPE MATRIX

INLET SIZE	MAXIMUM INSIDE PIPE DIAMETER	
	WIDTH (IN)	LENGTH (IN)
2X2-FT	12	12
2X2.5-FT	12	18
2X3-FT	12	24
2.5X3-FT	18	24

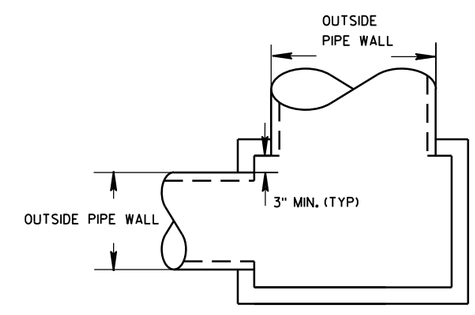

DETAIL "A"

INLETS 2X2-FT, 2X2.5-FT, 2X3-FT AND 2.5X3-FT

INLETS 2X2-FT, 2X2.5-FT, 2X3-FT AND 2.5X3-FT

STATE OF WISCONSIN
DEPARTMENT OF TRANSPORTATION

APPROVED
Sept., 2016 — DATE
/S/ Rodney Taylor
ROADWAY STANDARDS D IT
UNIT SUPERVIS
FHWA

6

S.D.D. 8 C 7-2

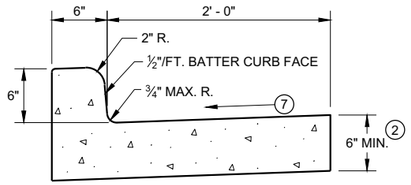

TYPES A[1] & D

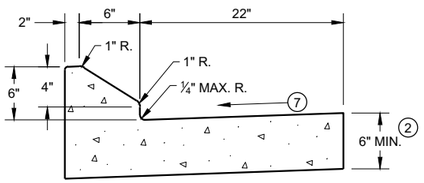

6" SLOPED CURB TYPES G[1] & J

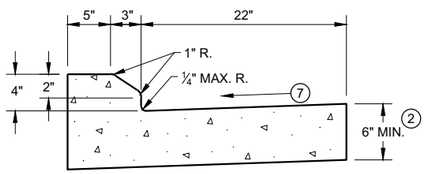

4" SLOPED CURB TYPES G[1] & J

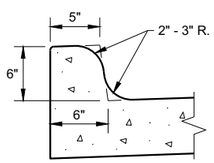

TYPES K[1] & L
(OPTIONAL CURB SHAPE)

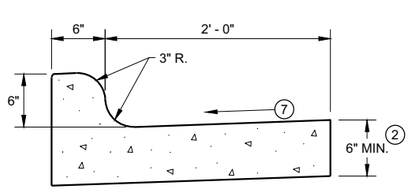

TYPES K[1] & L

CONCRETE CURB AND GUTTER 30"

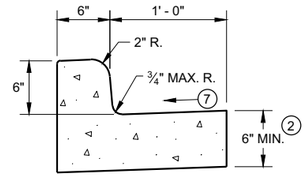

TYPES A[1] & D

CONCRETE CURB AND GUTTER 18"

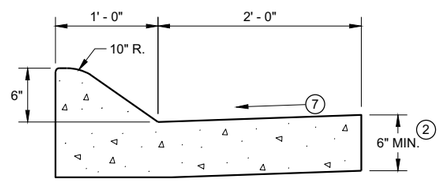

6" SLOPED CURB TYPES A[1] & D

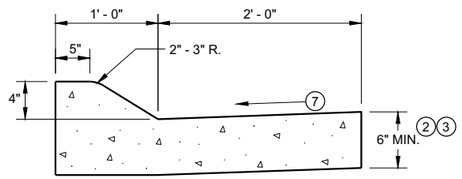

4" SLOPED CURB TYPES A[1] & D

CONCRETE CURB AND GUTTER 36"

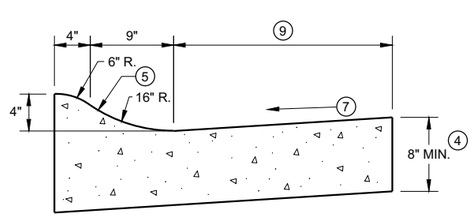

4" SLOPED CURB TYPES R[1] & T

TBT & TBTT	X
30"	22"
36"	28"

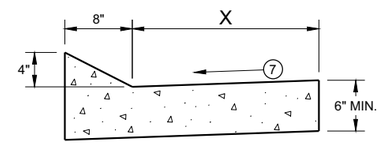

TYPES TBT & TBTT[1]

CONCRETE CURB AND GUTTER

PAVEMENT THICKNESS AND MAXIMUM CONCRETE PANEL WIDTH TABLE

PAVEMENT THICKNESS	MAXIMUM PANEL WIDTH
LESS THAN 10"	12'
10" & ABOVE	15'

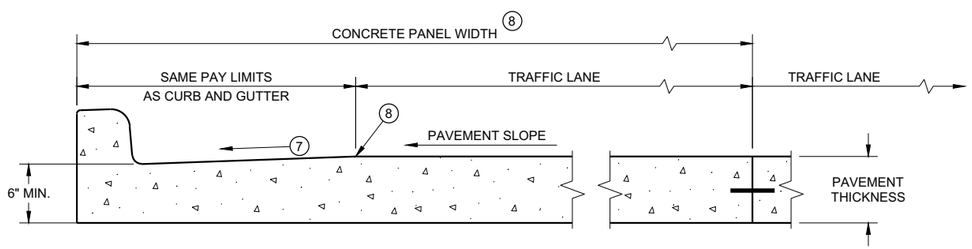

PARTIAL SECTION OF PAVEMENT *
WITH INTEGRAL CURB AND GUTTER

* BIKE LANE IS NOT SHOWN

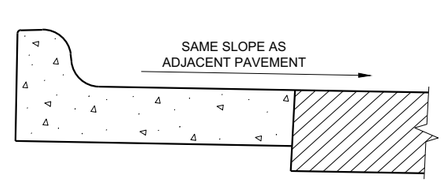

REVERSE SLOPE GUTTER[6]
(TYPICAL FOR ALL CURB & GUTTER TYPES)

GENERAL NOTES

DETAILS OF CONSTRUCTION AND WORKMANSHIP NOT SHOWN ON THIS DRAWING SHALL CONFORM TO THE PERTINENT REQUIREMENTS OF THE CONTRACT.

PAVEMENT TIES AND TIE BARS SHALL BE EPOXY COATED IN CONFORMANCE WITH SUBSECTION 505.2.6.2 OF THE STANDARD SPECIFICATIONS.

INTEGRAL CURB AND GUTTER SHALL CONFORM TO THE DETAILS SHOWN FOR CONCRETE CURB AND GUTTER INCLUDING THE TRANSVERSE GUTTER SLOPE.

UNLESS OTHERWISE SHOWN ON THE TYPICAL CROSS SECTIONS, THE BASE AGGREGATE AND COMMON EXCAVATION LIMITS ARE 2' - 0" BEHIND THE BACK OF CURBS.

1. TIE BARS ARE REQUIRED FOR CURB AND GUTTERS TYPES A, G, K, R, AND TBTT.
2. THE BOTTOM OF CURB AND GUTTER MAY BE CONSTRUCTED EITHER LEVEL OR PARALLEL TO THE SLOPE OF THE SUBGRADE OR BASE AGGREGATE PROVIDED A 6" MINIMUM GUTTER THICKNESS IS MAINTAINED.
3. USE 8" MINIMUM GUTTER THICKNESS WHEN USED WITH AN ADJACENT CONCRETE TRUCK APRON PLACED BEHIND BACK OF CURB.
4. THE BOTTOM OF CURB AND GUTTER MAY BE CONSTRUCTED EITHER LEVEL OR PARALLEL TO THE SLOPE OF THE SUBGRADE OR BASE AGGREGATE PROVIDED A 8" MINIMUM GUTTER THICKNESS IS MAINTAINED.
5. UNLESS OTHERWISE NOTED, FOR STAKING PURPOSES THE FACE OF CURB IS 6" FROM THE BACK OF CURB.
6. WHEN REVERSE SLOPE GUTTER IS REQUIRED, THE LOCATION(S) WILL BE SHOWN ELSEWHERE IN THE PLAN.
7. USE 4% GUTTER CROSS SLOPE UNLESS OTHERWISE NOTED IN THE PLANS.
8. INCLUDE LONGITUDINAL JOINT AND TIE BARS ALONG LANE EDGE WHEN CONCRETE PANEL WIDTH EXCEEDS THE MAXIMUM WIDTH PER TABLE BELOW. LONGITUDINAL JOINT(S) ARE NOT ALLOWED WITHIN TRAFFIC LANES AND BIKE LANES. LONGITUDINAL JOINT MAY BE SAWED.
9. CONCRETE CURB AND GUTTER 4-INCH SLOPED 30-INCH TYPE "R" AND "T" = 17 INCHES
   CONCRETE CURB AND GUTTER 4-INCH SLOPED 36-INCH TYPE "R" AND "T" = 23 INCHES

CONCRETE CURB AND GUTTER

STATE OF WISCONSIN
DEPARTMENT OF TRANSPORTATION

GENERAL NOTES

DETAILS OF CONSTRUCTION AND WORKMANSHIP NOT SHOWN ON THIS DRAWING SHALL CONFORM TO THE PERTINENT REQUIREMENTS OF THE CONTRACT.

PAVEMENT TIES AND TIE BARS SHALL BE EPOXY COATED IN CONFORMANCE WITH SUBSECTION 505.2.6.2 OF THE STANDARD SPECIFICATIONS.

UNLESS OTHERWISE SHOWN ON THE TYPICAL CROSS SECTIONS, THE BASE AGGREGATE AND COMMON EXCAVATION LIMITS ARE 2' - 0" BEHIND THE BACK OF CURBS.

(1) TIE BARS ARE REQUIRED FOR CURB AND GUTTERS TYPES A, G, K, R, AND TBTT.

(2) THE BOTTOM OF CURB AND GUTTER MAY BE CONSTRUCTED EITHER LEVEL OR PARALLEL TO THE SLOPE OF THE SUBGRADE OR BASE AGGREGATE PROVIDED A 6" MINIMUM GUTTER THICKNESS IS MAINTAINED.

(9) REFER TO SDD 08D18 AND 08D19 FOR ADDITIONAL DRIVEWAY ENTRANCE CURB DETAILS.

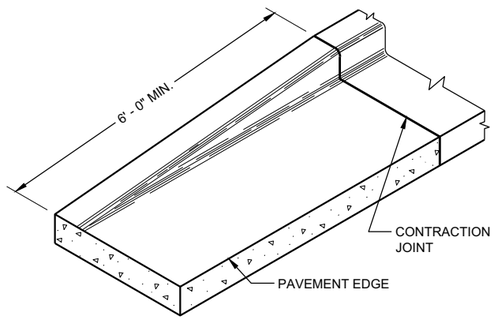

END SECTIONCURB AND GUTTER

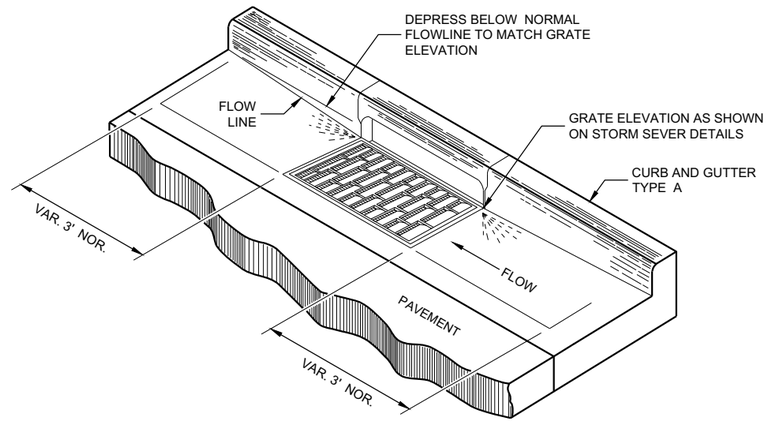

DETAIL OF CURB AND GUTTER AT INLETS
(TYPICAL H INLET COVER SHOWN)

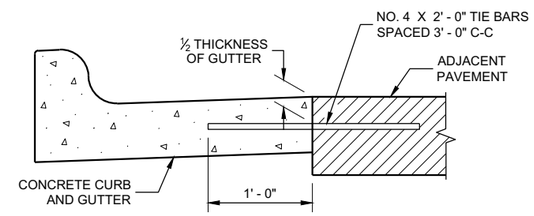

TYPICAL TIE BAR LOCATION (1)

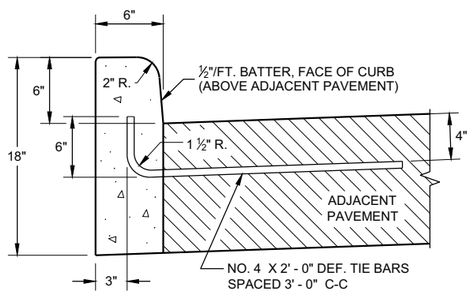

TYPES A (1) & D

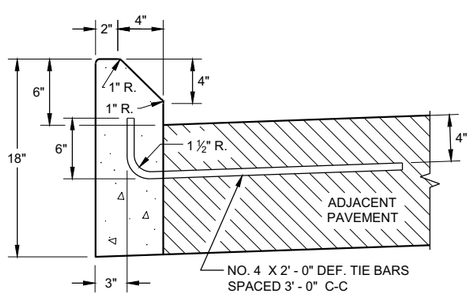

TYPES G (1) & J

CONCRETE CURB

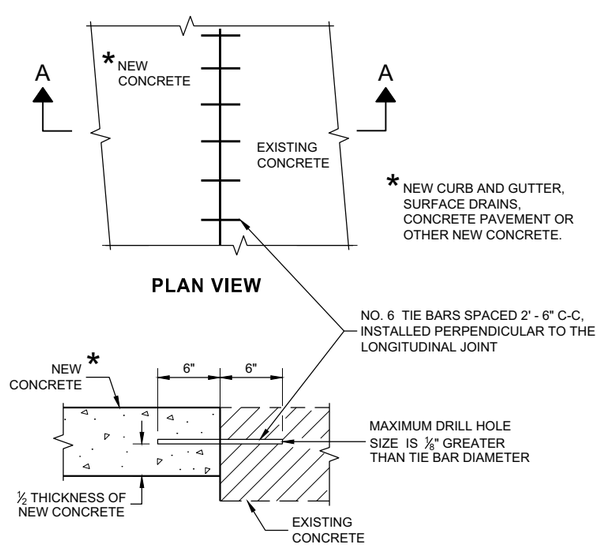

PLAN VIEW

SECTION A - A

TIE BARS DRILLED INTO EXISTING PAVEMENT

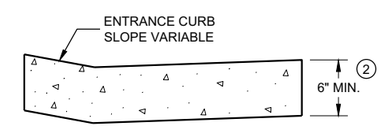

DRIVEWAY ENTRANCE CURB (9)
(WHEN DIRECTED BY THE ENGINEER)

CONCRETE CURB, TIES AND CURB AND GUTTER APPLICATIONS

STATE OF WISCONSIN
DEPARTMENT OF TRANSPORTATION

APPROVED
February 2021 — DATE
/S/ Rodnery Taylor — ROADWAY STANDARDS DEVE ENGINEER
FHWA

6

SDD 08D01 - 22b

GENERAL NOTES

DETAILS OF CONSTRUCTION, MATERIALS AND WORKMANSHIP NOT SHOWN ON THIS DRAWING SHALL CONFORM TO THE PERTINENT REQUIREMENTS OF THE STANDARD SPECIFICATIONS AND THE APPLICABLE SPECIAL PROVISIONS.

ALL STEEL REINFORCEMENT SHALL BE EMBEDDED 2 INCHES CLEAR UNLESS OTHERWISE SHOWN OR NOTED.

1. USE A JOINT SEALANT CONFORMING TO STANDARD SPECIFICATION 415.2.6.
2. NO. 4 X 2' - 0" TIE BARS SPACED AT 12" C-C TO BE PLACED BY BRIDGE CONTRACTOR OR DRILLED TIE BARS PLACED AS DIRECTED BY THE ENGINEER.
3. PAVED CONCRETE SHOULDER (SDD 13A03) OR CONCRETE DRAINAGE SLAB.
4. CONCRETE PAVEMENT APPROACH SLAB (SHOWN) OR STRUCTURE APPROACH SLAB AND CONCRETE PAVEMENT APPROACH SLAB. SEE SDD 13B02.
5. PAVED CONCRETE SHOULDER (SDD 13A03) OR ASPHALT SHOULDER.
6. CONCRETE CURB AND GUTTER 4-INCH SLOPED 36-INCH TYPE TBT OR TBTT. USE TYPE TBTT CURB WITH NO. 4 X 2' -0" TIE BARS SPACED AT 3' - 0" C-C ONLY WHEN ADJACENT TO CONCRETE PAVEMENTS.
7. PLACE FLUME BEFORE MSG THRIE BEAM TRANSITION POST 1 (SEE SDD 14B45)
8. CENTER FLUME BETWEEN POSTS. 6-INCH MINIMUM SEPARATION FROM OUTSIDE EDGE OF FLUME TO POSTS.
9. MINIMUM REINFORCEMENT SHALL BE 4" X 4" - W3.0 X W3.0 OR NO. 3 BARS LONGITUDINAL AND TRANSVERSE SPACING 12" C -C.
10. SEE ROADWAY PLANS FOR FLUME LOCATION.
11. START CURB AND GUTTER TRANSITION OR END SECTION.
12. DEPRESS FLOW LINE (SEE DETAIL)

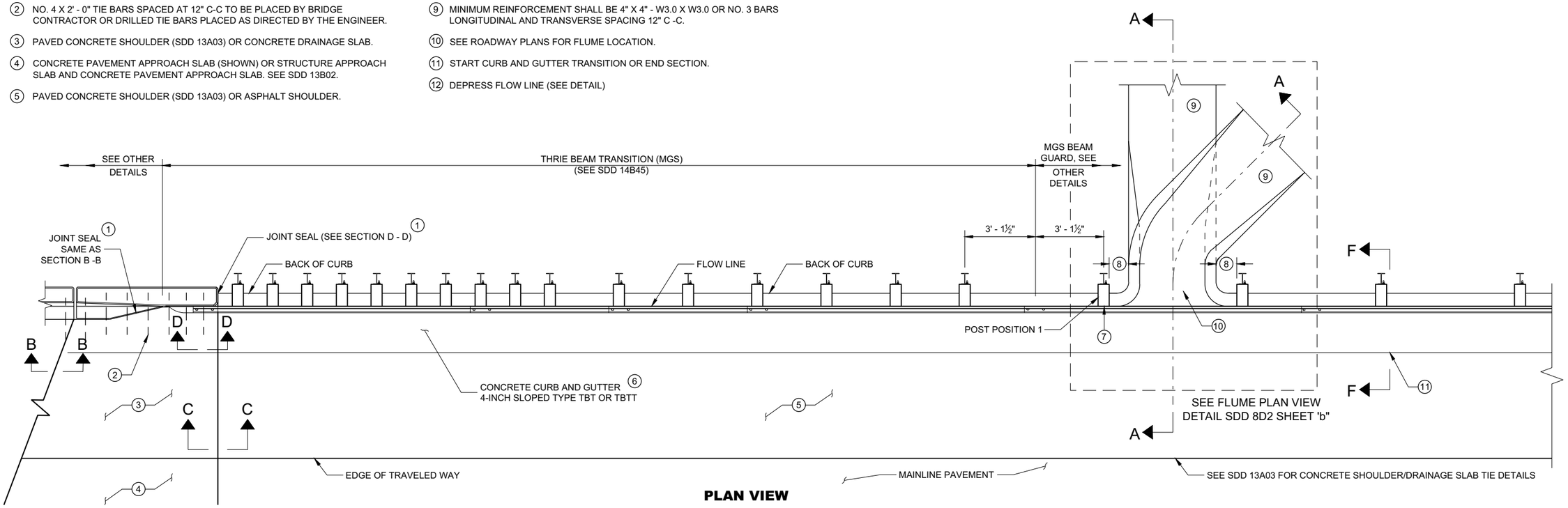

PLAN VIEW

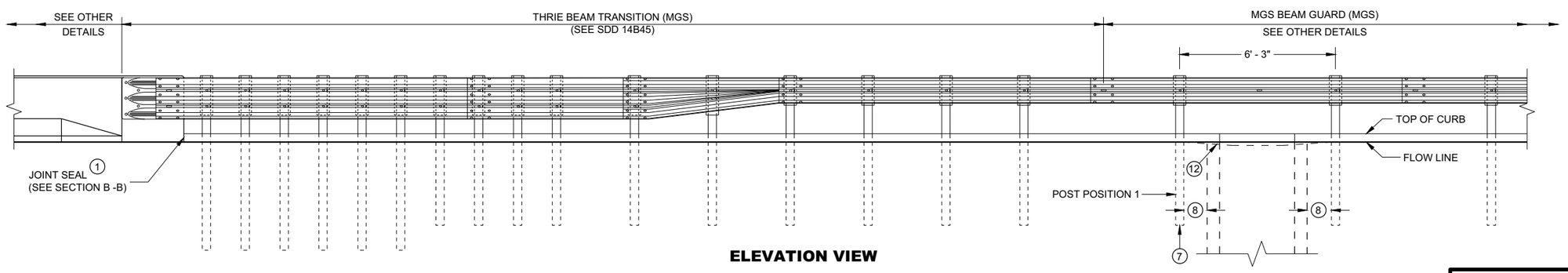

ELEVATION VIEW

CONCRETE SURFACE DRAINS FLUME TYPE AT STRUCTURES

STATE OF WISCONSIN
DEPARTMENT OF TRANSPORTAT

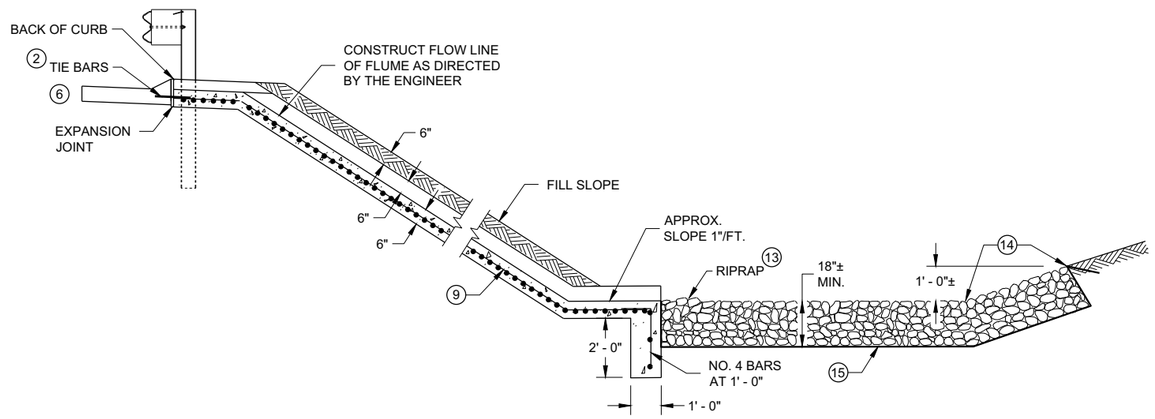

SECTION A - A

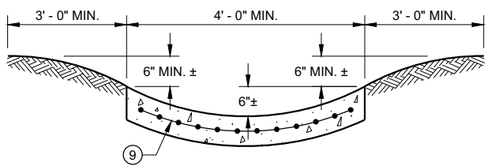

SECTION G - G

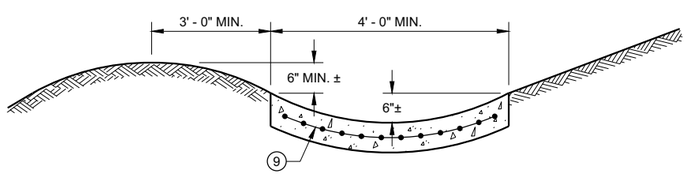

SECTION H - H

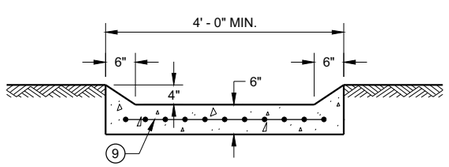

SECTION I - I

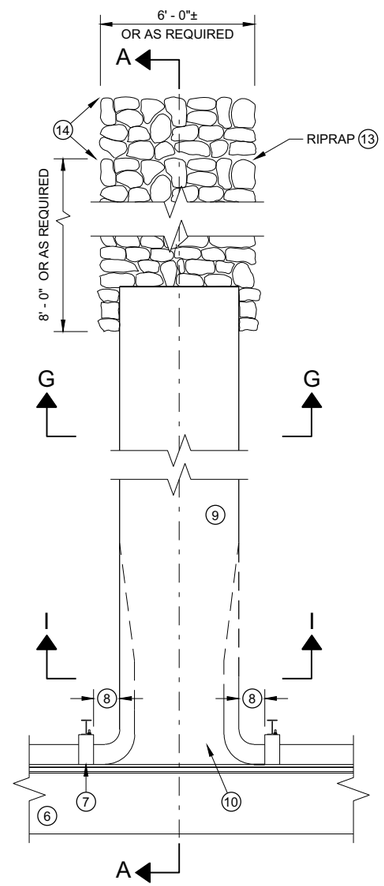

PLAN VIEW PERPENDICULAR FLUME

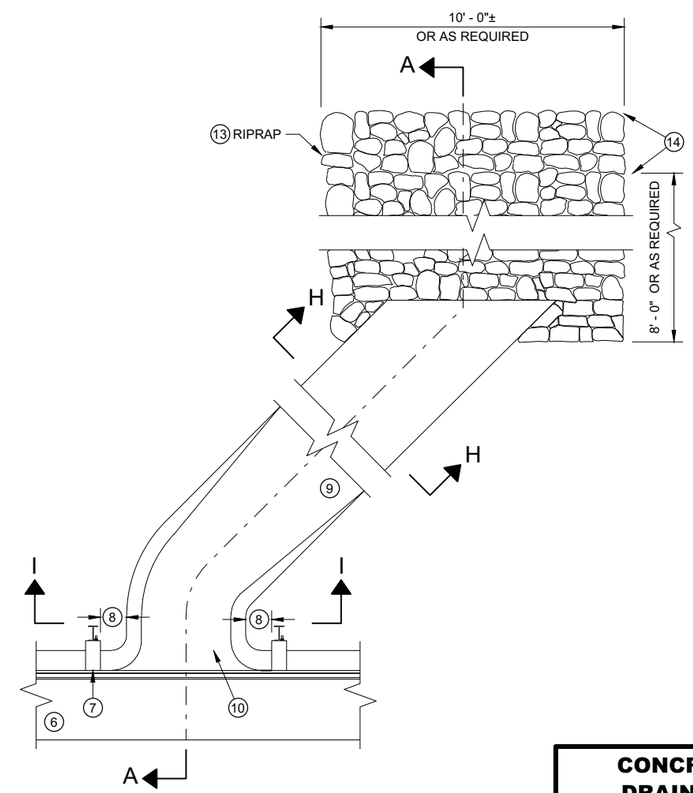

PLAN VIEW SKEWED FLUME

GENERAL NOTES

DETAILS OF CONSTRUCTION, MATERIALS AND WORKMANSHIP NOT SHOWN ON THIS DRAWING SHALL CONFORM TO THE PERTINENT REQUIREMENTS OF THE STANDARD SPECIFICATIONS AND THE APPLICABLE SPECIAL PROVISIONS.

ALL STEEL REINFORCEMENT SHALL BE EMBEDDED 2 INCHES CLEAR UNLESS OTHERWISE SHOWN OR NOTED.

1. USE A JOINT SEALANT CONFORMING TO STANDARD SPECIFICATION 415.2.6.
2. NO. 4 X 2' - 0" TIE BARS SPACED AT 12" C-C TO BE PLACED BY BRIDGE CONTRACTOR OR DRILLED TIE BARS PLACED AS DIRECTED BY THE ENGINEER.
3. PAVED CONCRETE SHOULDER (SDD 13A03) OR CONCRETE DRAINAGE SLAB.
4. CONCRETE PAVEMENT APPROACH SLAB (SHOWN) OR STRUCTURE APPROACH SLAB AND CONCRETE PAVEMENT APPROACH SLAB. SEE SDD 13B02 AND STRUCTURE PLANS.
5. PAVED CONCRETE SHOULDER (SDD 13A03) OR ASPHALT SHOULDER.
6. CONCRETE CURB AND GUTTER 4-INCH SLOPED 36-INCH TYPE TBT OR TBTT. USE TYPE TBTT CURB WITH NO. 4 X 2' -0" TIE BARS SPACED AT 3' - 0" C-C ONLY WHEN ADJACENT TO CONCRETE PAVEMENTS.
7. PLACE FLUME BEFORE MSG THRIE BEAM TRANSITION POST 1 (SEE SDD 14B45)
8. CENTER FLUME BETWEEN POSTS. 6-INCH MINIMUM SEPARATION FROM OUTSIDE EDGE OF FLUME TO POSTS.
9. MINIMUM REINFORCEMENT SHALL BE 4" X 4" - W3.0 X W3.0 OR NO. 3 BARS LONGITUDINAL AND TRANSVERSE SPACING 12" C -C.
10. SEE ROADWAY PLANS FOR FLUME LOCATION.
11. START CURB AND GUTTER TRANSITION OR END SECTION.
12. DEPRESS FLOW LINE (SEE DETAIL)
13. MEDIUM RIPRAP UNLESS OTHERWISE SPECIFIED.
14. LIMITS OF ADDITIONAL RIPRAP WHEN SPECIAL DITCH AS REQUIRED.
15. GEOTEXTILE FABRIC TYPE HR.

CONCRETE SURFACE DRAINS FLUME TYPE AT STRUCTURES

STATE OF WISCONSIN
DEPARTMENT OF TRANSPORTAT

6

SDD 08D02 - 07b

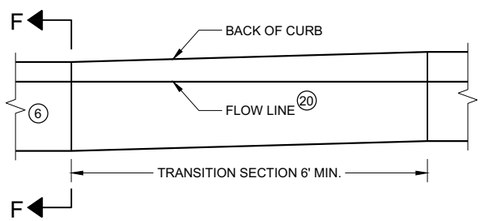

CURB AND GUTTER TRANSITION SECTION
CONCRETE CURB AND GUTTER 4-INCH SLOPED
36 INCH TYPE TBT OR TBTT

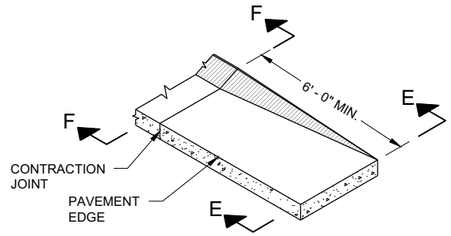

CURB AND GUTTER END SECTION
CONCRETE CURB AND GUTTER 4-INCH SLOPED
36 INCH TYPE TBT OR TBTT

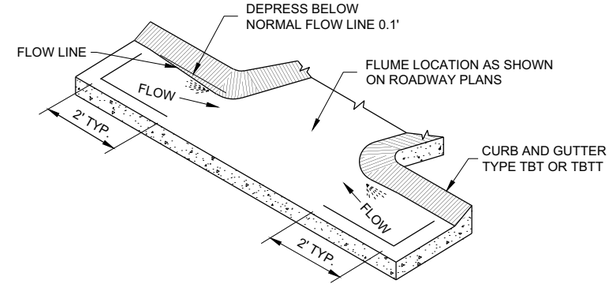

CURB AND GUTTER FLOW LINE DEPRESSION
AT FLUMES CONCRETE CURB AND GUTTER
4-INCH SLOPED 36 INCH TYPE TBT OR TBTT

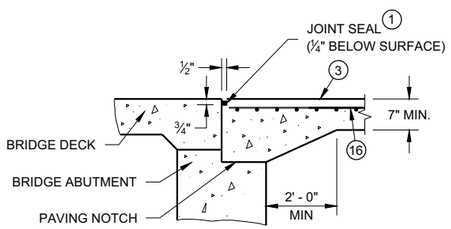

SECTION B-B 4

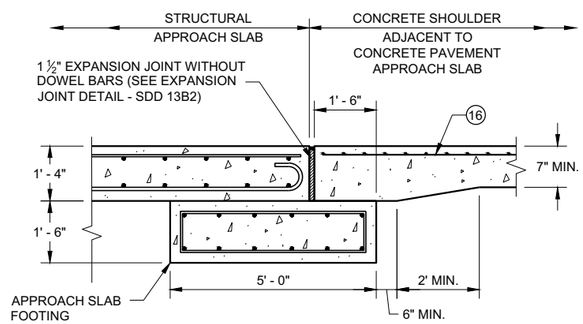

SECTION C - C
JOINT DETAIL FOR BRIDGE WITH STRUCTURAL
APPROACH SLAB AND CONCRETE APPROACH SLAB

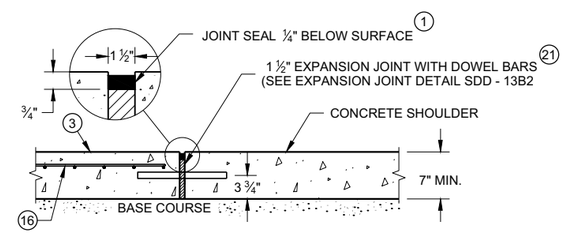

SECTION C - C
JOINT DETAIL FOR BRIDGE APPROACH
WITH CONCRETE SHOULDERS

GENERAL NOTES

DETAILS OF CONSTRUCTION, MATERIALS AND WORKMANSHIP NOT SHOWN ON THIS DRAWING SHALL CONFORM TO THE PERTINENT REQUIREMENTS OF THE STANDARD SPECIFICATIONS AND THE APPLICABLE SPECIAL PROVISIONS.

ALL STEEL REINFORCEMENT SHALL BE EMBEDDED 2 INCHES CLEAR UNLESS OTHERWISE SHOWN OR NOTED.

1. USE A JOINT SEALANT CONFORMING TO STANDARD SPECIFICATION 415.2.6.
2. NO. 4 X 2' - 0" TIE BARS SPACED AT 12" C-C TO BE PLACED BY BRIDGE CONTRACTOR OR DRILLED TIE BARS PLACED AS DIRECTED BY THE ENGINEER.
3. PAVED CONCRETE SHOULDER (SDD 13A03) OR CONCRETE DRAINAGE SLAB.
4. CONCRETE PAVEMENT APPROACH SLAB (SHOWN) OR STRUCTURE APPROACH SLAB AND CONCRETE PAVEMENT APPROACH SLAB. SEE SDD 13B02 AND STRUCTURE PLANS.
5. PAVED CONCRETE SHOULDER (SDD 13A03) OR ASPHALT SHOULDER.
6. CONCRETE CURB AND GUTTER 4-INCH SLOPED 36-INCH TYPE TBT OR TBTT. USE TYPE TBTT CURB WITH NO. 4 X 2' -0" TIE BARS SPACED AT 3' - 0" C-C ONLY WHEN ADJACENT TO CONCRETE PAVEMENTS.
7. PLACE FLUME BEFORE MSG THRIE BEAM TRANSITION POST 1 (SEE SDD 14B45)
8. CENTER FLUME BETWEEN POSTS. 6-INCH MINIMUM SEPARATION FROM OUTSIDE EDGE OF FLUME TO POSTS.
9. MINIMUM REINFORCEMENT SHALL BE 4" X 4" - W3.0 X W3.0 OR NO. 3 BARS LONGITUDINAL AND TRANSVERSE SPACING 12" C -C.
10. SEE ROADWAY PLANS FOR FLUME LOCATION.
11. START CURB AND GUTTER TRANSITION OR END SECTION.
12. DEPRESS FLOW LINE (SEE DETAIL)
13. MEDIUM RIPRAP UNLESS OTHERWISE SPECIFIED.
14. LIMITS OF ADDITIONAL RIPRAP WHEN SPECIAL DITCH IS REQUIRED.
15. GEOTEXTILE FABRIC TYPE HR.
16. MINIMUM REINFORCEMENT SHALL BE 6" X 6" - W4.0 X W4.0 OR NO. 3 BARS LONGITUDINAL AND TRANSVERSE SPACING 12" C - C.
17. MSG THRIE BEAM TRANSITION POST 1. SEE SDD 14B45 FOR ADDITIONAL CONSTRUCTION DETAILS AND ACCEPTABLE MATERIALS.
18. MAINTAIN WIDTH, THICKNESS AND CROSS SLOPE OF ADJACENT TYPE TBT OR TBTT CURB. SEE NOTE 6 FOR TIE BAR SPACING.
19. ALIGN FACE OF POST BLOCK WITH FLOW LINE.
20. MAINTAIN FLOW LINE AT EDGE OF PAVEMENT/FACE OF BEAM GUARD AS APPLICABLE.
21. DO NOT CONSTRUCT AN EXPANSION JOINT OR INSTALL DOWEL BARS WHEN ABUTTING HMA PAVEMENTS.

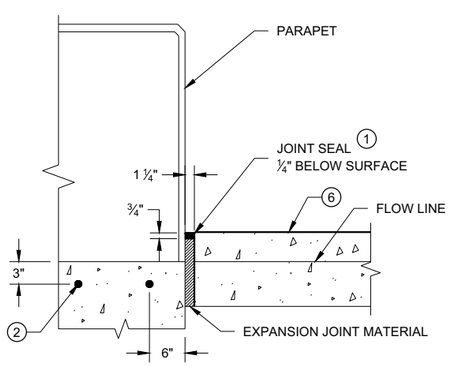

SECTION D - D

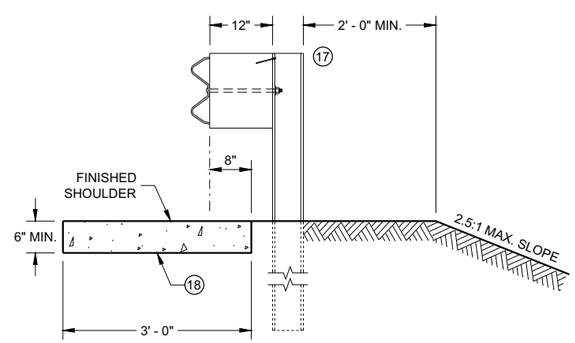

SECTION E - E

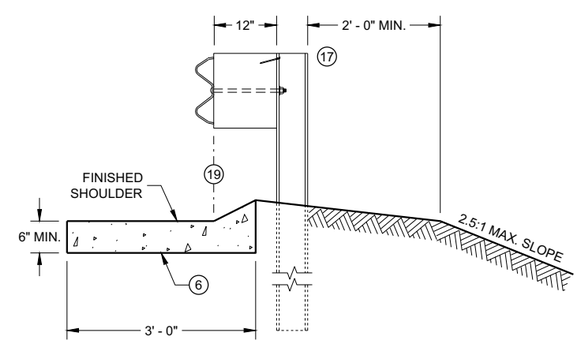

SECTION F - F

CONCRETE SURFACE DRAINS FLUME TYPE AT STRUCTURES

STATE OF WISCONSIN
DEPARTMENT OF TRANSPORTATION

APPROVED
February 2020 — DATE
/S/ Rodney Taylor — ROADWAY STANDARDS DEVE ENGINEER
FHWA

SDD 08D02 - 07c

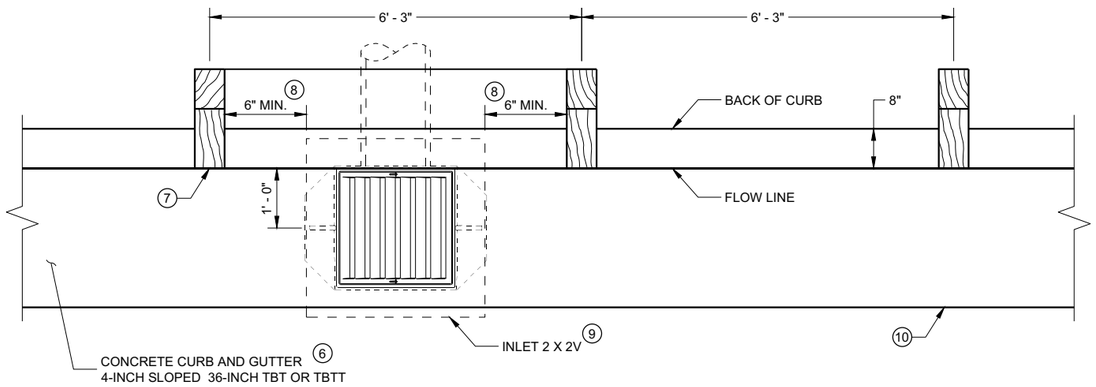

INLET PLAN VIEW

(NOTE: RAIL NOT SHOWN FOR CLARITY)

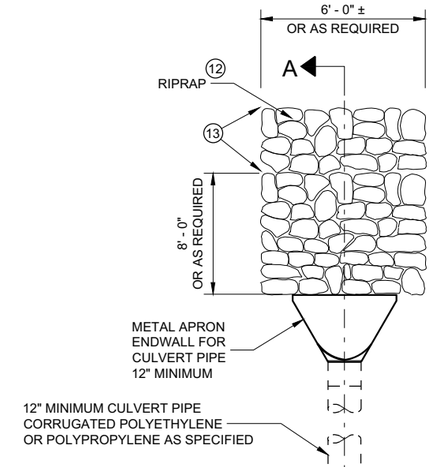

GENERAL NOTES

DETAILS OF CONSTRUCTION, MATERIALS AND WORKMANSHIP NOT SHOWN ON THIS DRAWING SHALL CONFORM TO THE PERTINENT REQUIREMENTS OF THE STANDARD SPECIFICATIONS AND THE APPLICABLE SPECIAL PROVISIONS.

ALL STEEL REINFORCEMENT SHALL BE EMBEDDED 2 INCHES CLEAR UNLESS OTHERWISE SHOWN OR NOTED.

1. USE A JOINT SEALANT CONFORMING TO STANDARD SPECIFICATION 415.2.6.
2. NO. 4 X 2' - 0" TIE BARS SPACED AT 12" C-C TO BE PLACED BY BRIDGE CONTRACTOR OR DRILLED TIE BARS PLACED AS DIRECTED BY THE ENGINEER.
3. PAVED CONCRETE SHOULDER (SDD 13A03) OR CONCRETE DRAINAGE SLAB.
4. CONCRETE PAVEMENT APPROACH SLAB (SHOWN) OR STRUCTURE APPROACH SLAB AND CONCRETE PAVEMENT APPROACH SLAB. SEE SDD 13B02.
5. PAVED CONCRETE SHOULDER (SDD 13A03) OR ASPHALT SHOULDER.
6. CONCRETE CURB AND GUTTER 4-INCH SLOPED 36-INCH TYPE TBT OR TBTT. USE TYPE TBTT CURB WITH NO. 4 X 2' -0" TIE BARS SPACED AT 3' - 0" C-C ONLY WHEN ADJACENT TO CONCRETE PAVEMENTS.
7. PLACE DRAINAGE STRUCTURE BEFORE MSG THRIE BEAM TRANSITION POST 1 (SEE SDD 14B45)
8. CENTER DRAINAGE STRUCTURE BETWEEN POSTS. 6-INCH MINIMUM SEPARATION FROM OUTSIDE WALL OF DRAINAGE STRUCTURE TO POSTS.
9. SEE SDD 08A05 AND 08C07 FOR DETAILS. SEE ROADWAY PLANS FOR LOCATION.
10. START CURB AND GUTTER TRANSITION OR END SECTION.
11. DEPRESS FLOW LINE (SEE DETAIL)
12. MEDIUM RIPRAP UNLESS OTHERWISE SPECIFIED.
13. LIMITS OF ADDITIONAL RIPRAP WHEN SPECIAL DITCH IS REQUIRED.

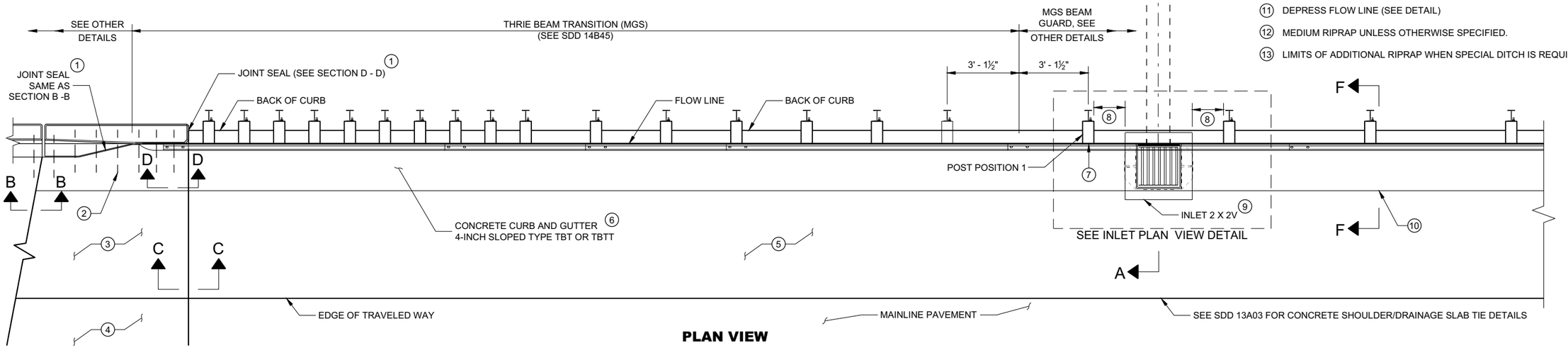

PLAN VIEW

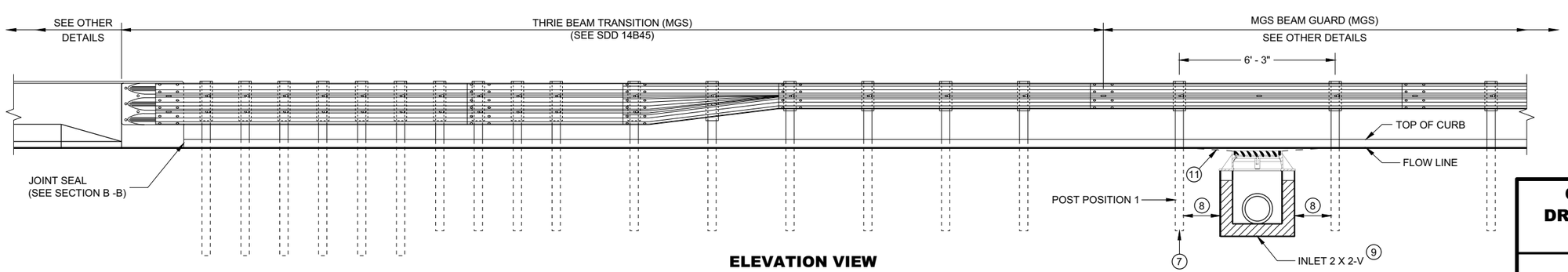

ELEVATION VIEW

CONCRETE SURFACE DRAINS DROP INLET TYPE AT STRUCTURES

STATE OF WISCONSIN
DEPARTMENT OF TRANSPORTATION

SDD 08D03 - 08a

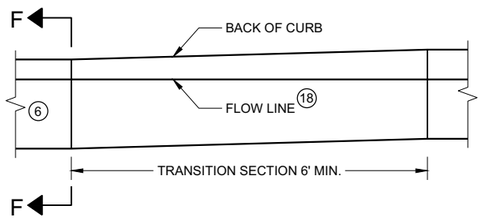

CURB AND GUTTER TRANSITION SECTION CONCRETE CURB AND GUTTER 4-INCH SLOPED 36 INCH TYPE TBT OR TBTT

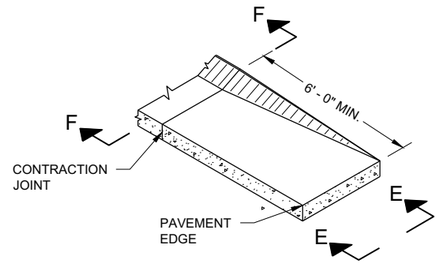

CURB AND GUTTER END SECTION CONCRETE CURB AND GUTTER 4-INCH SLOPED 36 INCH TYPE TBT OR TBTT

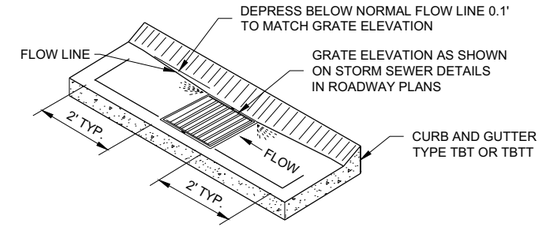

CURB AND GUTTER FLOW LINE DEPRESSION AT INLETS CONCRETE CURB AND GUTTER 4-INCH SLOPED 36 INCH TYPE TBT OR TBTT

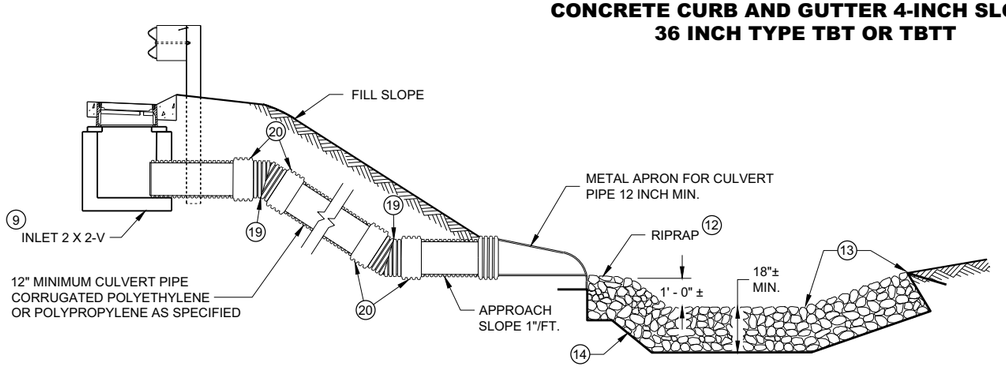

SECTION A - A

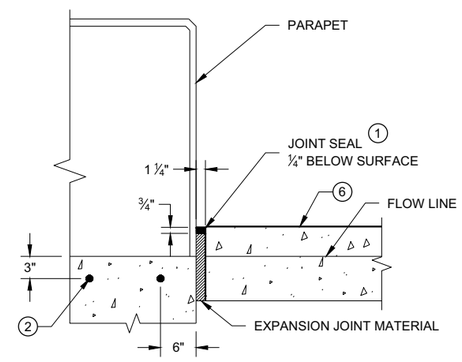

SECTION D - D

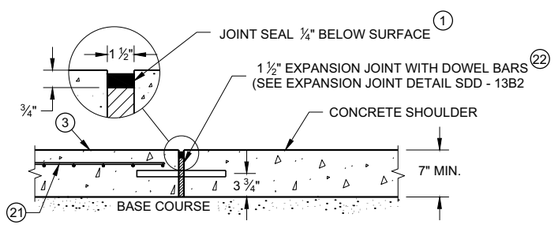

SECTION C - C

JOINT DETAIL FOR BRIDGE APPROACH WITH CONCRETE SHOULDERS

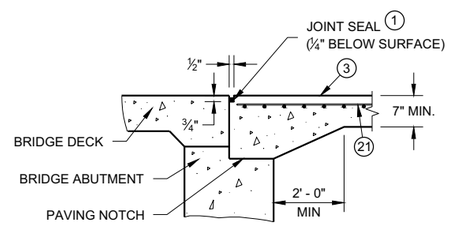

SECTION B-B 4

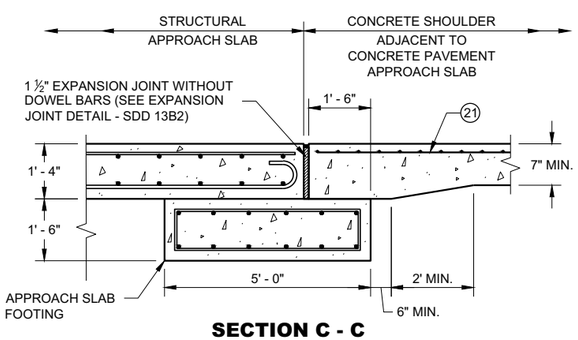

SECTION C - C

JOINT DETAIL FOR BRIDGE WITH STRUCTURAL APPROACH SLAB AND CONCRETE APPROACH SLAB

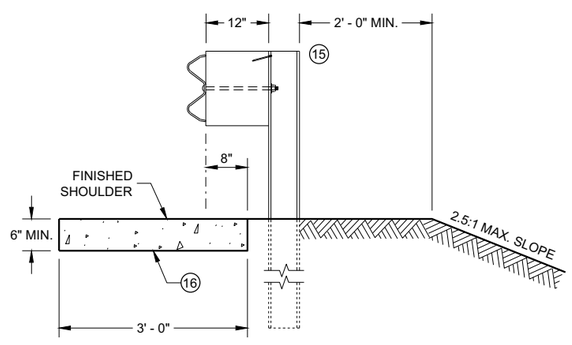

SECTION E - E

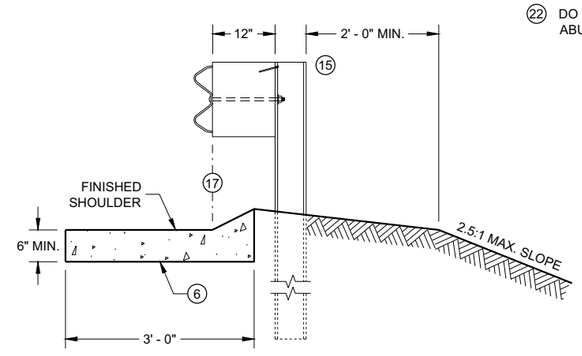

SECTION F - F

GENERAL NOTES

DETAILS OF CONSTRUCTION, MATERIALS AND WORKMANSHIP NOT SHOWN ON THIS DRAWING SHALL CONFORM TO THE PERTINENT REQUIREMENTS OF THE STANDARD SPECIFICATIONS AND THE APPLICABLE SPECIAL PROVISIONS.

ALL STEEL REINFORCEMENT SHALL BE EMBEDDED 2 INCHES CLEAR UNLESS OTHERWISE SHOWN OR NOTED.

1. USE A JOINT SEALANT CONFORMING TO STANDARD SPECIFICATION 415.2.6.
2. NO. 4 X 2' - 0" TIE BARS SPACED AT 12" C-C TO BE PLACED BY BRIDGE CONTRACTOR OR DRILLED TIE BARS PLACED AS DIRECTED BY THE ENGINEER.
3. PAVED CONCRETE SHOULDER (SDD 13A03) OR CONCRETE DRAINAGE SLAB.
4. CONCRETE PAVEMENT APPROACH SLAB (SHOWN) OR STRUCTURE APPROACH SLAB AND CONCRETE PAVEMENT APPROACH SLAB. SEE SDD 13B02 AND STRUCTURE PLANS.
5. PAVED CONCRETE SHOULDER (SDD 13A03) OR ASPHALT SHOULDER.
6. CONCRETE CURB AND GUTTER 4-INCH SLOPED 36-INCH TYPE TBT OR TBTT. USE TYPE TBTT CURB WITH NO. 4 X 2' -0" TIE BARS SPACED AT 3' - 0" C-C ONLY WHEN ADJACENT TO CONCRETE PAVEMENTS.
7. PLACE DRAINAGE STRUCTURE BEFORE MSG THRIE BEAM TRANSITION POST 1 (SEE SDD 14B45)
8. CENTER DRAINAGE STRUCTURE BETWEEN POSTS. 6-INCH MINIMUM SEPARATION FROM OUTSIDE WALL OF DRAINAGE STRUCTURE TO POSTS.
9. SEE SDD 08A05 AND 08C07 FOR DETAILS. SEE ROADWAY PLANS FOR LOCATION.
10. START CURB AND GUTTER TRANSITION OR END SECTION.
11. DEPRESS FLOW LINE (SEE DETAIL)
12. MEDIUM RIPRAP UNLESS OTHERWISE SPECIFIED.
13. LIMITS OF ADDITIONAL RIPRAP WHEN SPECIAL DITCH IS REQUIRED.
14. GEOTEXTILE FABRIC TYPE HR.
15. MSG THRIE BEAM TRANSITION POST 1. SEE SDD 14B45 FOR ADDITIONAL CONSTRUCTION DETAILS AND ACCEPTABLE MATERIALS.
16. MAINTAIN WIDTH, THICKNESS AND CROSS SLOPE OF ADJACENT TYPE TBT OR TBTT CURB. SEE NOTE 6 FOR TIE BAR SPACING.
17. ALIGN FACE OF POST BLOCK WITH FLOW LINE.
18. MAINTAIN FLOW LINE AT EDGE OF PAVEMENT/FACE OF BEAM GUARD AS APPLICABLE.
19. MANUFACTURER SUPPLIED BEND.
20. MANUFACTURER SUPPLIED EXTERNAL MECHANICAL COUPLING OR A MANUFACTURER RECOMMENDED COUPLING WITH A MASTIC IMPREGNATED GEOTEXTILE WRAP AND MECHANICAL FASTENING BANDS.
21. MINIMUM REINFORCEMENT SHALL BE 6" X 6" - W4.0 X W4.0 OR NO. 3 BARS LONGITUDINAL AND TRANSVERSE SPACING 12" C - C.
22. DO NOT CONSTRUCT AN EXPANSION JOINT OR INSTALL DOWEL BARS WHEN ABUTTING HMA PAVEMENTS.

CONCRETE SURFACE DRAINS DROP INLET TYPE AT STRUCTURES

STATE OF WISCONSIN
DEPARTMENT OF TRANSPORTATION

APPROVED
February 2020 — DATE
/S/ Rodney Taylor — ROADWAY STANDARDS DEVE ENGINEER

FHWA

6

SDD 08D03 - 08b

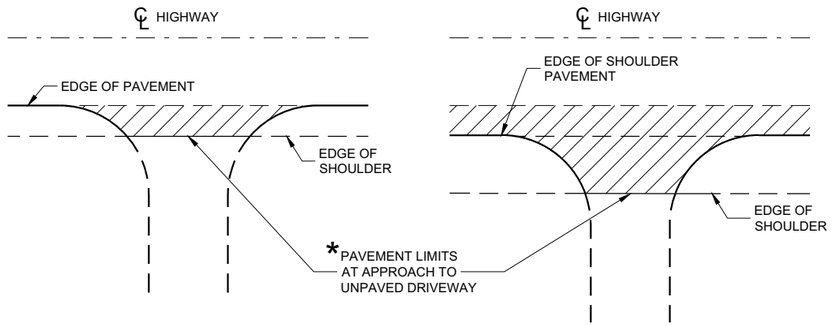

* WHERE DRIVEWAY IS PAVED, APPROACH PAVEMENT SHOULD BE EXTENDED TO MATCH DRIVEWAY PAVEMENT.

PLAN VIEW
(UNPAVED SHOULDER ON HIGHWAY)

PLAN VIEW
(PAVED SHOULDER ON HIGHWAY)

RURAL DRIVEWAY INTERSECTION DETAIL
(NO CURB AND GUTTER OR SIDEWALK)

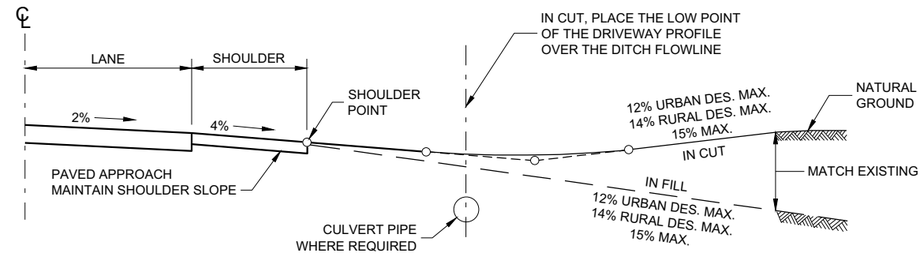

TYPICAL DRIVEWAY PROFILES

6

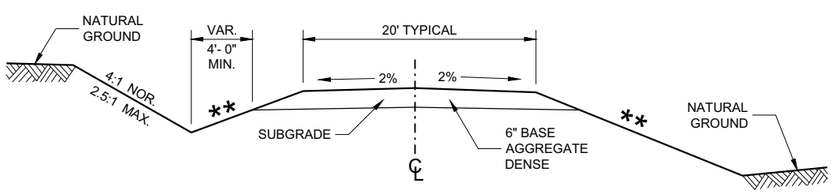

IN CUT **IN FILL**

TYPICAL CROSS SECTION FOR PRIVATE DRIVE OR FIELD ENTRANCE AGGREGATE SURFACE

** SLOPE CAN VARY WITH SPEED. SEE 11-45-30.6.2

POSTED SPEED MPH	MAX. SLOPE
<35	4:1
≥ 35 TO < 60	6:1
≥60	10:1

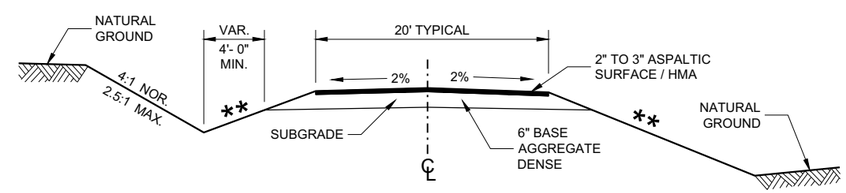

IN CUT **IN FILL**

TYPICAL CROSS SECTION FOR PRIVATE DRIVE OR FIELD ENTRANCE ASPHALTIC SURFACE

DRIVEWAYS WITHOUT CURB AND GUTTER

STATE OF WISCONSIN
DEPARTMENT OF TRANSPORTATION

APPROVED
December 2017 — DATE
/S/ Rodney Taylor — ROADWAY STANDARDS DEVE UNIT SUPERVISOR
FHWA

SDD 08D21 - 01

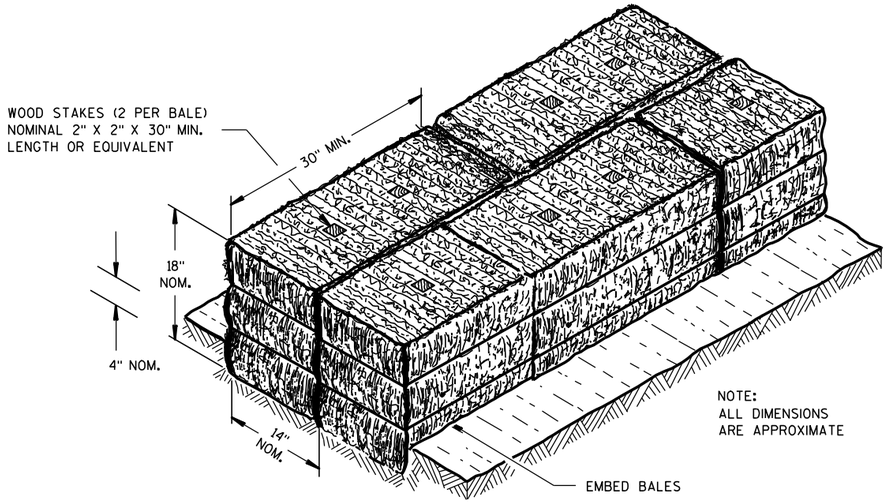

SECTION A-A

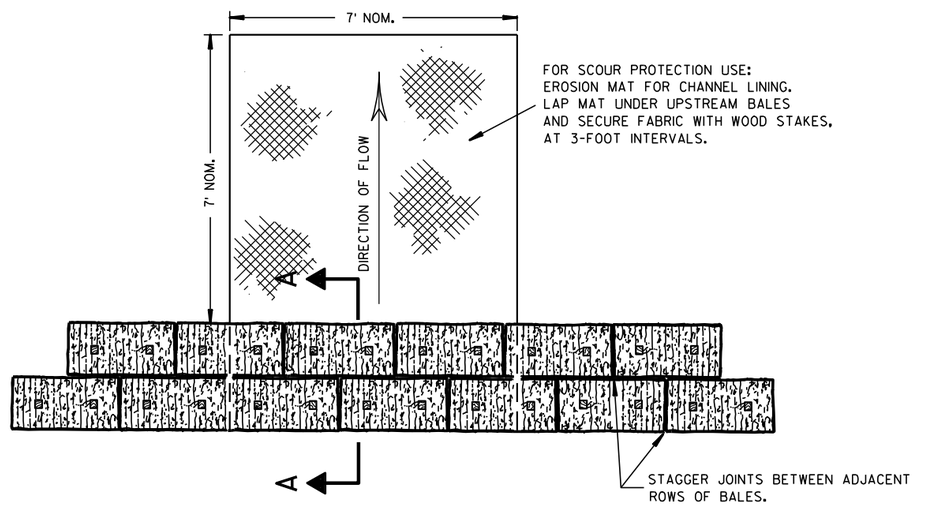

PLAN VIEW

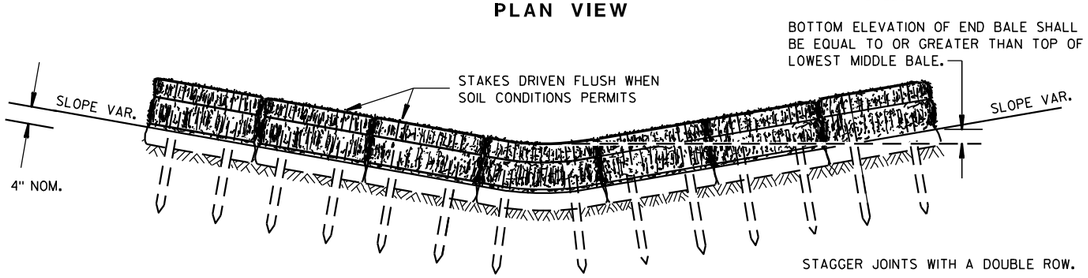

FRONT ELEVATION

TEMPORARY DITCH CHECK USING EROSION BALES ①

GENERAL NOTES

DETAILS OF CONSTRUCTION, MATERIALS AND WORKMANSHIP NOT SHOWN ON THIS DRAWING SHALL CONFORM TO THE PERTINENT REQUIREMENTS OF THE STANDARD SPECIFICATIONS AND THE APPLICABLE SPECIAL PROVISIONS.

① TEMPORARY DITCH CHECKS EITHER EROSION BALES OR MANUFACTURED SHALL BE PAID FOR UNDER THE BID ITEM OF TEMPORARY DITCH CHECK. THE DEPARTMENT WILL NOT PAY FOR TEMPORARY DITCH CHECKS CONSTRUCTED OF A SINGLE ROW OF EROSION BALES.

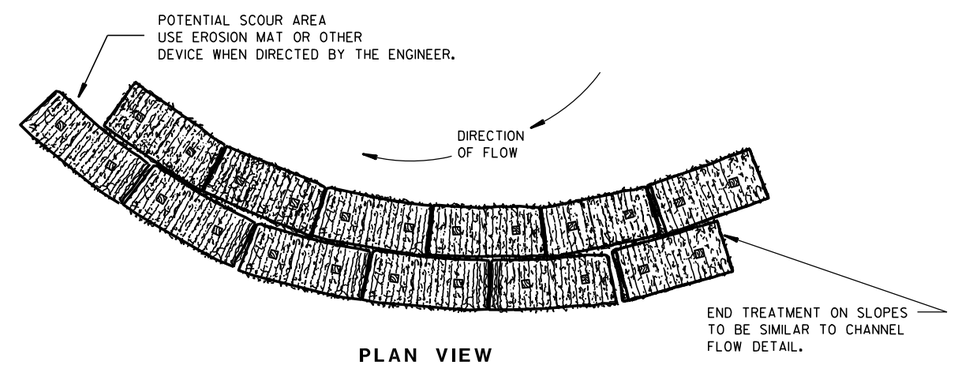

PLAN VIEW

WHEN ALTERING THE DIRECTION OF FLOW

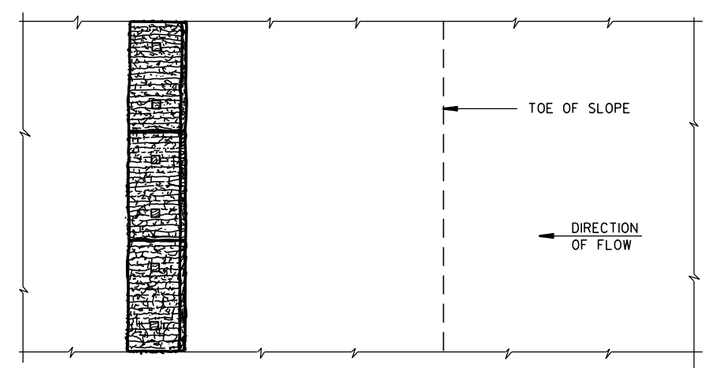

PLAN VIEW

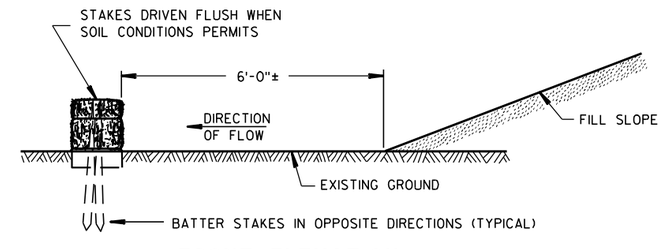

FRONT ELEVATION

WHEN EXISTING GROUND SLOPES AWAY FROM FILL SLOPE

EROSION BALES FOR SHEET FLOW

TYPICAL INSTALLATIONS OF EROSION BALES / TEMPORARY DITCH CHECKS

STATE OF WISCONSIN
DEPARTMENT OF TRANSPORTATION

APPROVED
6/04/02 — DATE
/S/ Beth Cann — CHIEF ROADWAY DEVELOPMENT ENGINEER
FHWA

6

6

S.D.D. 8 E 8-3

S.D.D. 8 E 8-3

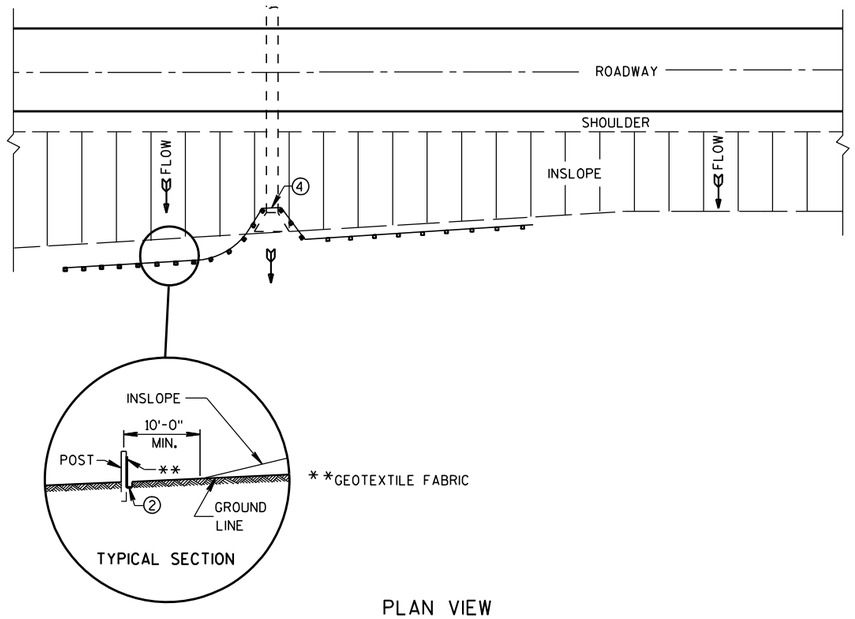

PLAN VIEW

TYPICAL APPLICATION OF SILT FENCE

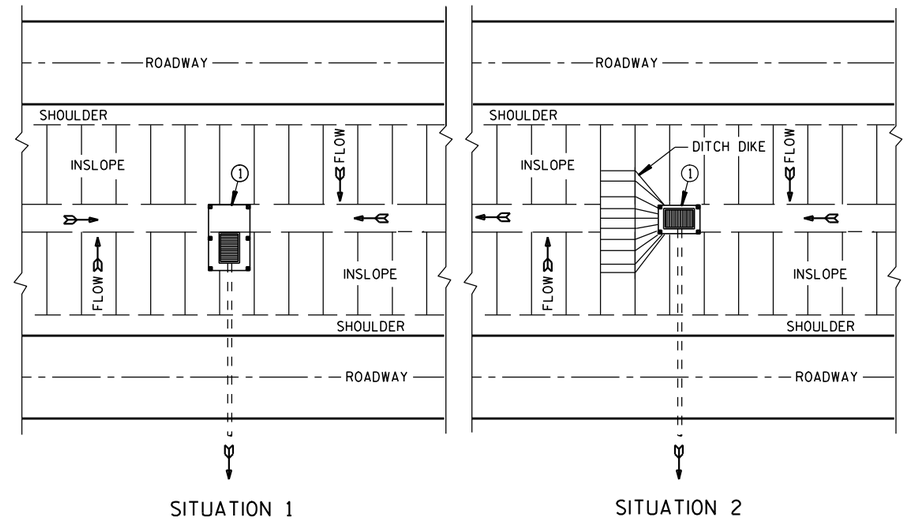

PLAN VIEW

SILT FENCE AT MEDIAN SURFACE DRAINS

GENERAL NOTES

DETAILS OF CONSTRUCTION NOT SHOWN ON THIS DRAWING SHALL CONFORM TO THE PERTINENT REQUIREMENTS OF THE STANDARD SPECIFICATIONS AND APPLICABLE SPECIAL PROVISIONS.

① HORIZONTAL BRACE REQUIRED WITH 2" X 4" WOODEN FRAME OR EQUIVALENT AT TOP OF POSTS.

② FOR MANUAL INSTALLATIONS THE TRENCH SHALL BE A MINIMUM OF 4" WIDE & 6" DEEP TO BURY AND ANCHOR THE GEOTEXTILE FABRIC. FOLD MATERIAL TO FIT TRENCH AND BACKFILL & COMPACT TRENCH WITH EXCAVATED SOIL.

③ WOOD POSTS SHALL BE A MINIMUM SIZE OF 1⅛" X 1⅛" OF OAK OR HICKORY.

④ SILT FENCE TO EXTEND ACROSS THE TOP OF THE PIPE.

⑤ CONSTRUCT SILT FENCE FROM A CONTINUOUS ROLL IF POSSIBLE BY CUTTING LENGTHS TO AVOID JOINTS. IF A JOINT IS NECESSARY USE ONE OF THE FOLLOWING TWO METHODS; A) OVERLAP THE END POSTS AND TWIST, OR ROTATE, AT LEAST 180 DEGREES. B) HOOK THE END OF EACH SILT FENCE LENGTH.

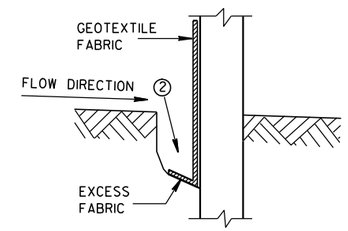

TRENCH DETAIL

NOTE: ADDITIONAL POST DEPTH OR TIE BACKS MAY BE REQUIRED IN UNSTABLE SOILS

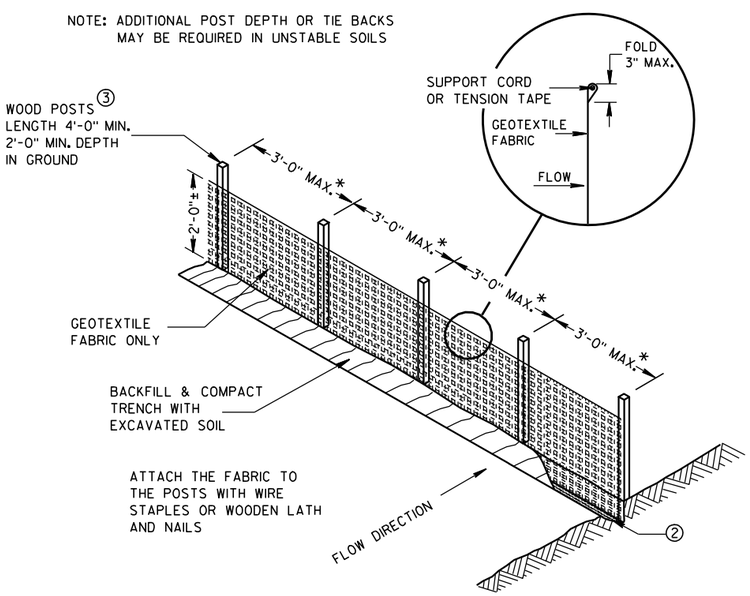

*NOTE: 8'-0" POST SPACING ALLOWED IF A WOVEN GEOTEXTILE FABRIC IS USED.

SILT FENCE

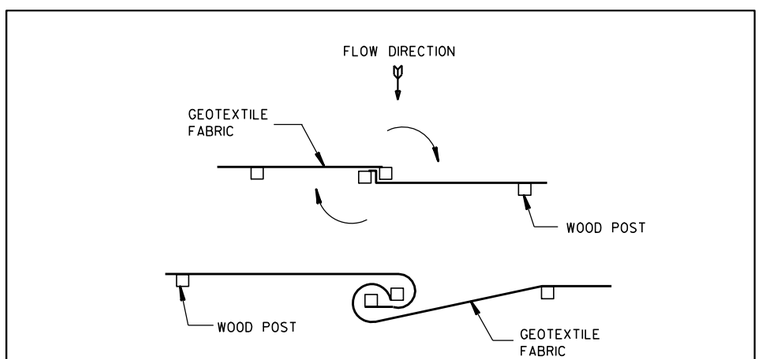

TWIST METHOD

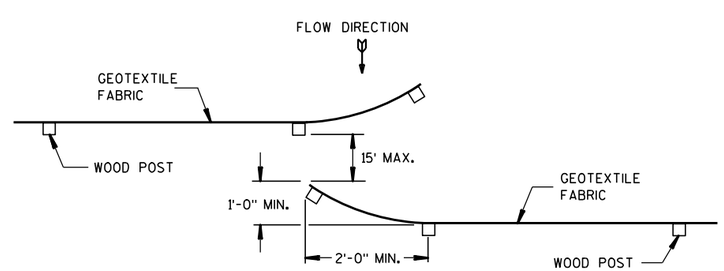

HOOK METHOD

JOINING TWO LENGTHS OF SILT FENCE ⑤

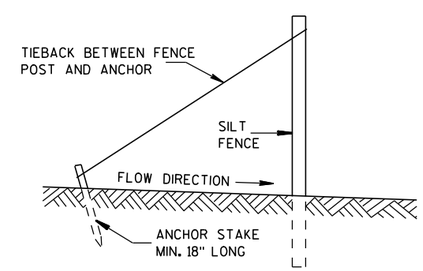

SILT FENCE TIE BACK

(WHEN REQUIRED BY THE ENGINEER)

SILT FENCE
STATE OF WISCONSIN DEPARTMENT OF TRANSPORTATION
APPROVED 4-29-05 /S/ Beth Cann----- DATE CHIEF ROADWAY DEVELOP ENGINEER FHWA

6

6

S.D.D. 8 E 9-6

S.D.D. 8 E 9-6

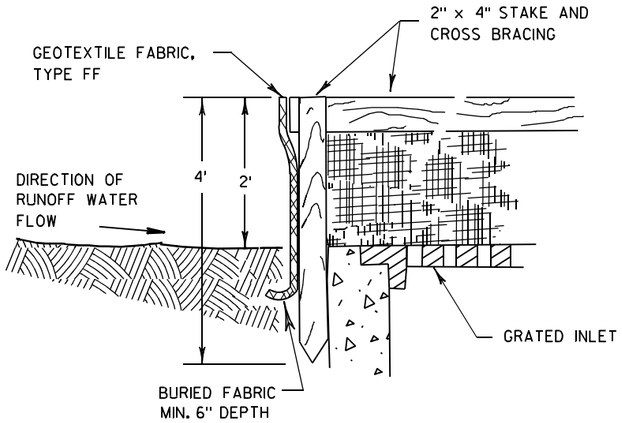

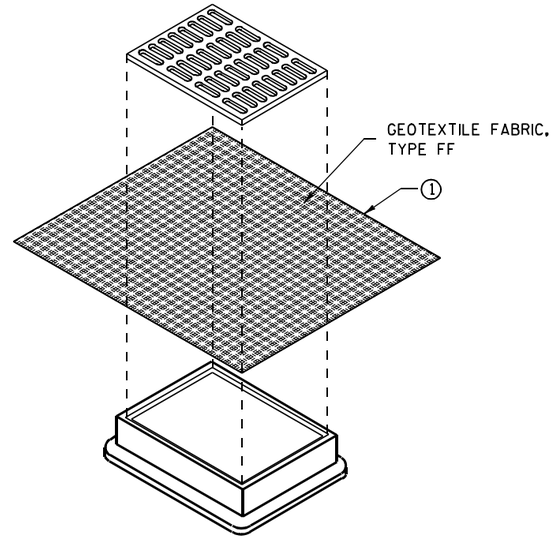

INLET PROTECTION, TYPE B
(WITHOUT CURB BOX)

(CAN BE INSTALLED IN ANY INLET WITHOUT A CURB BOX)

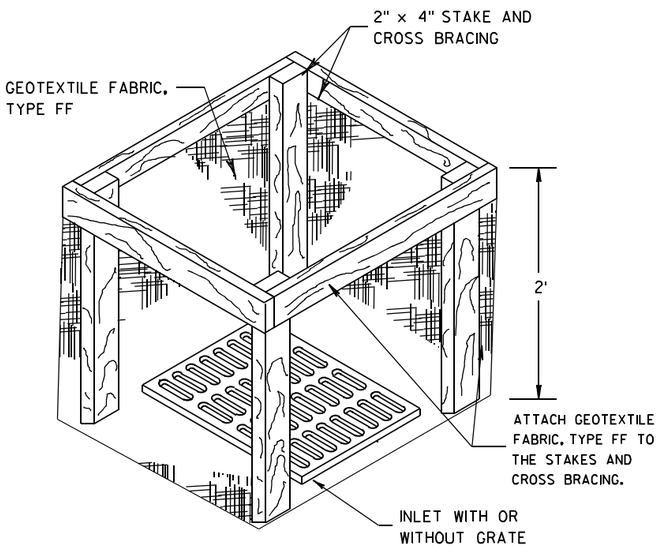

INLET PROTECTION, TYPE A

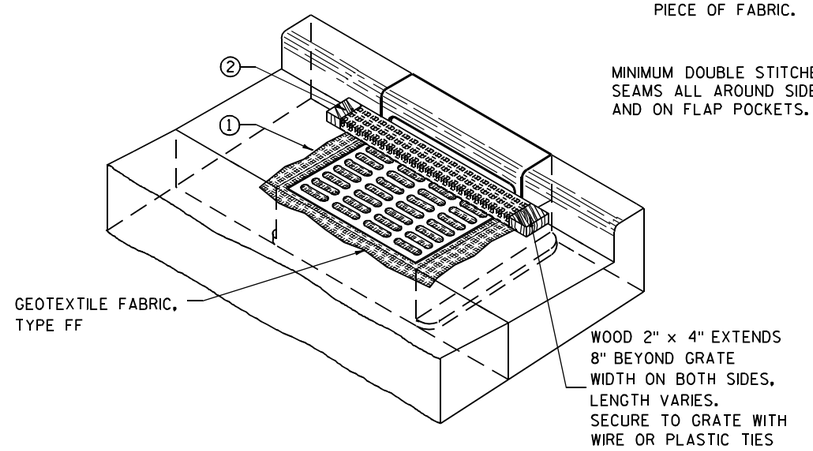

INLET PROTECTION, TYPE C (WITH CURB BOX)

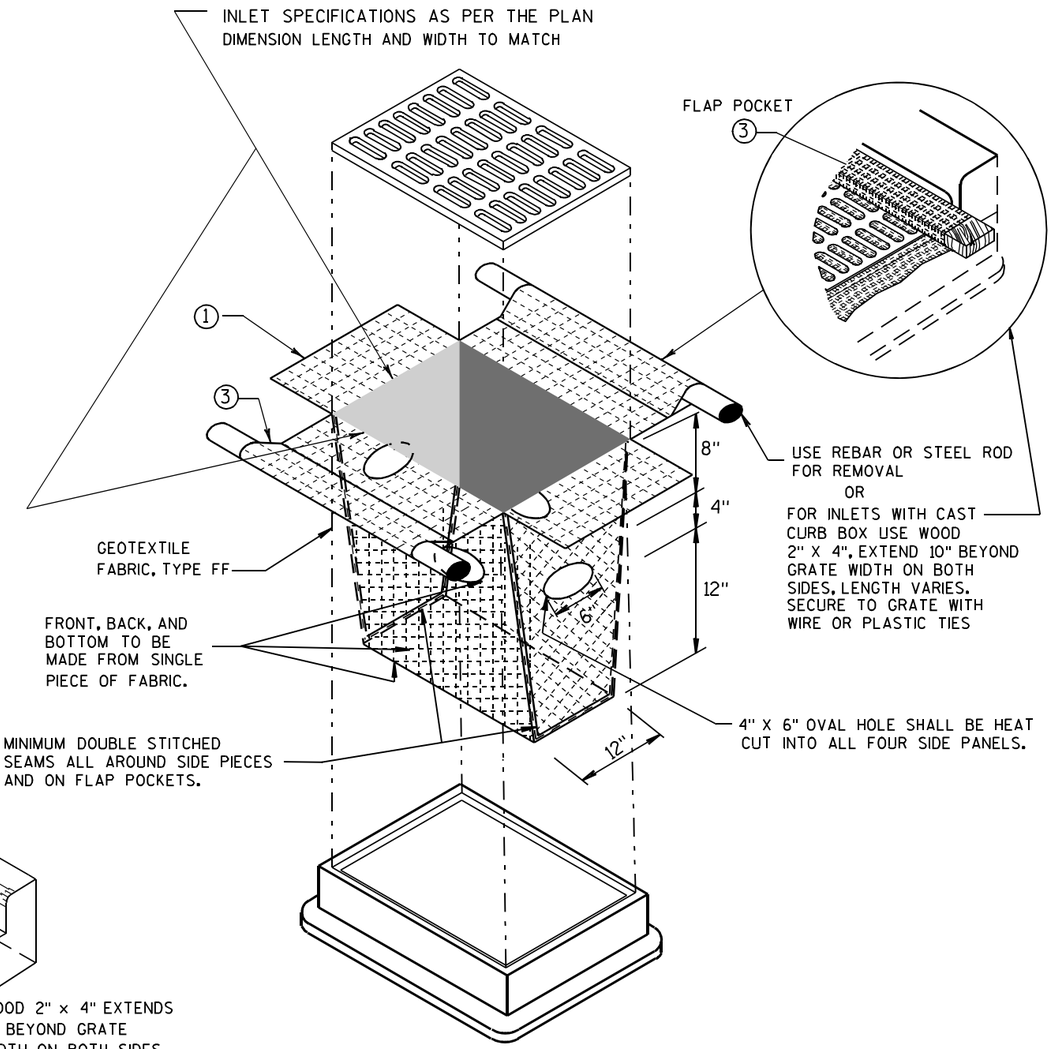

INLET PROTECTION, TYPE D

(CAN BE INSTALLED IN ANY INLET TYPE WITH
OR WITHOUT A CURB BOX AS PER NOTE 2)

GENERAL NOTES

INLET PROTECTION DEVICES SHALL BE MAINTAINED OR REPLACED AT THE DIRECTION OF THE ENGINEER.

MANUFACTURED ALTERNATIVES APPROVED AND LISTED ON THE DEPARTMENT'S EROSION CONTROL PRODUCT ACCEPTABILITY LIST MAY BE SUBSTITUTED.

WHEN REMOVING OR MAINTAINING INLET PROTECTION, CARE SHALL BE TAKEN SO THAT THE SEDIMENT TRAPPED ON THE GEOTEXTILE FABRIC DOES NOT FALL INTO THE INLET. ANY MATERIAL FALLING INTO THE INLET SHALL BE REMOVED IMMEDIATELY.

1 FINISHED SIZE, INCLUDING FLAP POCKETS WHERE REQUIRED, SHALL EXTEND A MINIMUM OF 10" AROUND THE PERIMETER TO FACILITATE MAINTENANCE OR REMOVAL.

2 FOR INLET PROTECTION, TYPE C (WITH CURB BOX), AN ADDITIONAL 18" OF FABRIC IS WRAPPED AROUND THE WOOD AND SECURED WITH STAPLES. THE WOOD SHALL NOT BLOCK THE ENTIRE HEIGHT OF THE CURB BOX OPENING.

3 FLAP POCKETS SHALL BE LARGE ENOUGH TO ACCEPT WOOD 2X4.

INSTALLATION NOTES

TYPE B & C

TRIM EXCESS FABRIC IN THE FLOW LINE TO WITHIN 3" OF THE GRATE.

THE CONTRACTOR SHALL DEMONSTRATE A METHOD OF MAINTENANCE, USING A SEWN FLAP, HAND HOLDS OR OTHER METHOD TO PREVENT ACCUMULATED SEDIMENT FROM ENTERING THE INLET.

TYPE D

DO NOT INSTALL INLET PROTECTION TYPE D IN INLETS SHALLOWER THAN 30", MEASURED FROM THE BOTTOM OF THE INLET TO THE TOP OF THE GRATE.

TRIM EXCESS FABRIC IN THE FLOW LINE TO WITHIN 3" OF THE GRATE.

THE INSTALLED BAG SHALL HAVE A MINIMUM SIDE CLEARANCE, BETWEEN THE INLET WALLS AND THE BAG, MEASURED AT THE BOTTOM OF THE OVERFLOW HOLES, OF 3". WHERE NECESSARY THE CONTRACTOR SHALL CINCH THE BAG, USING PLASTIC ZIP TIES, TO ACHIEVE THE 3" CLEARANCE. THE TIES SHALL BE PLACED AT A MAXIMUM OF 4" FROM THE BOTTOM OF THE BAG.

INLET PROTECTION
TYPE A, B, C, AND D

STATE OF WISCONSIN
DEPARTMENT OF TRANSPORTATION

APPROVED
10/16/02 — DATE
/S/ Beth Cannestra
CHIEF ROADWAY DEVELOPMENT ENGINEER
FHWA

6

S.D.D. 8 E 10-2

METAL APRON ENDWALLS

PIPE DIA. (IN.)	MIN. THICK. (Inches) STEEL	MIN. THICK. (Inches) ALUM.	DIMENSIONS (Inches) A (±1")	B (MAX.)	H (±1")	L (±1 1/2")	L1 ①	L2 ①	W (±2")	APPROX. SLOPE	BODY
12	.064	.060	6	6	6	21	12	17 1/2	24	2 1/2 to 1	1 Pc.
15	.064	.060	7	8	6	26	14	21 3/4	30	2 1/2 to 1	1 Pc.
18	.064	.060	8	10	6	31	15	28 1/4	36	2 1/2 to 1	1 Pc.
21	.064	.060	9	12	6	36	18	29 5/8	42	2 1/2 to 1	1 Pc.
24	.064	.075	10	13	6	41	18	37 1/4	48	2 1/2 to 1	1 Pc.
30	.079	.075	12	16	8	51	18	52 1/4	60	2 1/2 to 1	1 Pc.
36	.079	.105	14	19	9	60	24	59 3/4	72	2 1/2 to 1	2 Pc.
42	.109	.105	16	22	11	69	24	75 5/8	84	2 1/2 to 1	2 Pc.
48	.109	.105	18	27	12	78	24	81	90	2 1/4 to 1	3 Pc.
54	.109	.105	18	30	12	84	30	85 1/2	102	2 1/4 to 1	3 Pc.
60	.109×	.105×	18	33	12	87	—	—	114	2 to 1	3 Pc.
66	.109×	.105×	18	36	12	87	—	—	120	2 to 1	3 Pc.
72	.109×	.105×	18	39	12	87	—	—	126	2 to 1	3 Pc.
78	.109×	.105×	18	42	12	87	—	—	132	1 1/2 to 1	3 Pc.
84	.109×	.105×	18	45	12	87	—	—	138	1 1/2 to 1	3 Pc.
90	.109×	.105×	18	37	12	87	—	—	144	1 1/2 to 1	3 Pc.
96	.109×	.105×	18	35	12	87	—	—	150	1 1/2 to 1	3 Pc.

× EXCEPT CENTER PANEL
SEE GENERAL NOTES

REINFORCED CONCRETE APRON ENDWALLS

PIPE DIA. (IN.)	DIMENSIONS (Inches) T	A	B	C	D	E	G	APPROX. SLOPE
12	2	4	24	48 7/8	72 7/8	24	2	3 to 1
15	2 1/4	6	27	46	73	30	2 1/4	3 to 1
18	2 1/2	9	27	46	73	36	2 1/2	3 to 1
21	2 3/4	9	36	37 1/2	73 1/2	42	2 3/4	3 to 1
24	3	9 1/2	43 1/2	30	73 1/2	48	3	3 to 1
27	3 1/4	10 1/2	49 1/2	24	73 1/2	54	3 1/4	3 to 1
30	3 1/2	12	54	19 3/4	73 1/2	60	3 1/2	3 to 1
36	4	15	63	34 3/4	97 3/4	72	4	3 to 1
42	4 1/2	21	63	35	98	78	4 1/2	3 to 1
48	5	24	72	26	98	84	5	3 to 1
54	5 1/2	27	65	*33 1/4-**35	*98 1/4-**100	90	5 1/2	2 2/5 to 1
60	6	*30-**35	60	39	99	96	5	2 to 1
66	6 1/2	*24-**30	*72-**78	*21-**27	99	102	5 1/2	2 to 1
72	7	*24-**36	78	21	99	108	6	2 to 1
78	7 1/2	*24-**36	78	21	99	114	6 1/2	2 to 1
84	8	36	90 1/2	21	111 1/2	120	6 1/2	1 1/2 to 1
90	8 1/2	41	87 1/2	24	111 1/2	132	6 1/2	1 1/2 to 1

*MINIMUM
**MAXIMUM

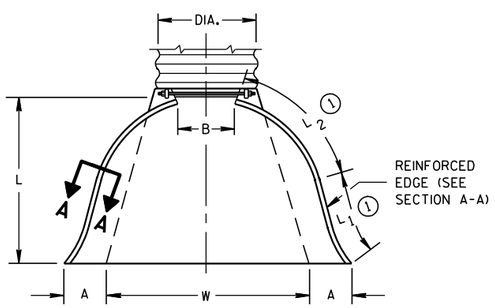

PLAN VIEW

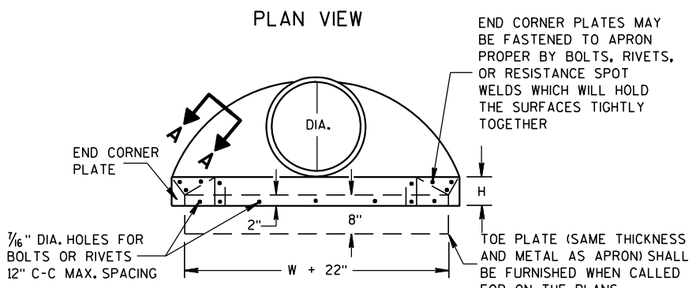

END VIEW

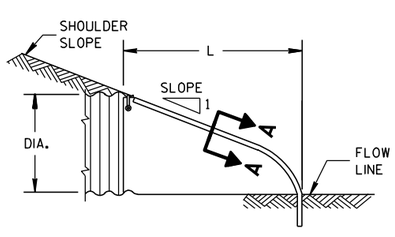

SIDE ELEVATION

METAL ENDWALLS

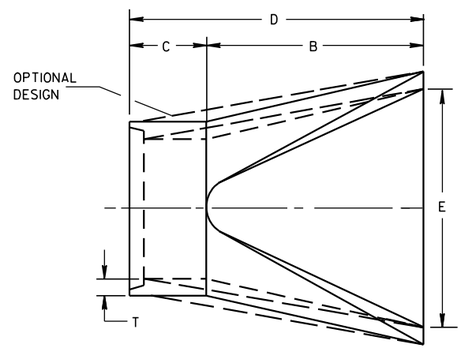

PLAN

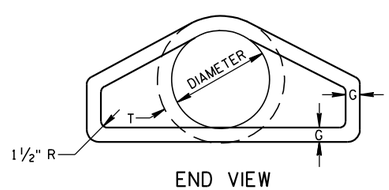

END VIEW

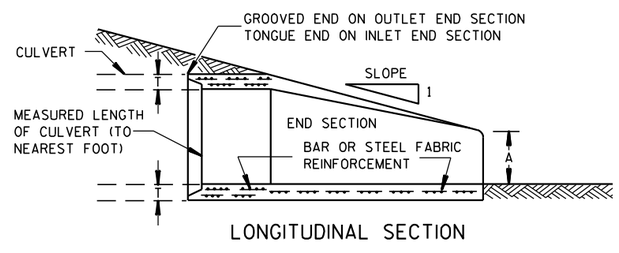

LONGITUDINAL SECTION

CONCRETE ENDWALLS

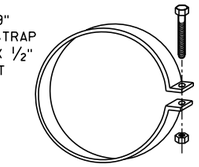

ALTERNATE FOR TYPE 1 CONNECTION

END SECTION CONNECTOR STRAP

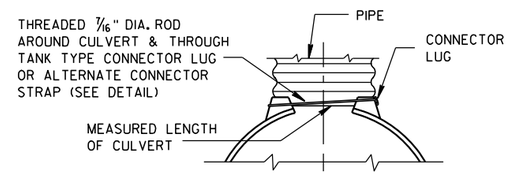

TYPE 1
FOR 12" THRU 24" CORR. PIPE

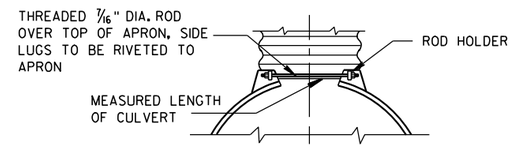

TYPE 2
FOR 30" THRU 96" CORR. PIPE

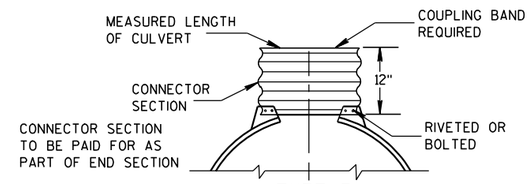

TYPE 3
FOR 42" THRU 96" CORR. PIPE

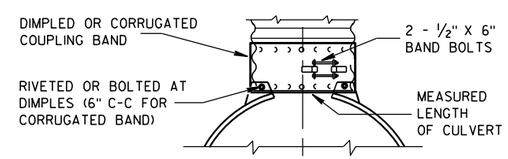

TYPE 5
ALTERNATE FOR:
ALL SIZES CORRUGATED CIRCULAR PIPE

NOTE: DIMPLED BAND FITS OVER OUTSIDE OF ENDWALL, AND CORRUGATED BAND FITS INSIDE ENDWALL. DIMPLED BAND MAY BE USED WITH HELICALLY CORRUGATED PIPE.

FOR CIRCUMFERENTIALLY CORRUGATED PIPE USE ENDWALL CONNECTION DETAILS 1, 2, 3 OR 5 AS APPLICABLE.

FOR HELICALLY CORRUGATED PIPE USE ENDWALL CONNECTION DETAILS 1, 2 OR 5.

FOR HELICALLY CORRUGATED PIPES WITH TWO CIRCUMFERENTIAL CORRUGATIONS AT EACH END USE ENDWALL CONNECTION DETAILS 1, 2 OR 3.

CONNECTION DETAILS

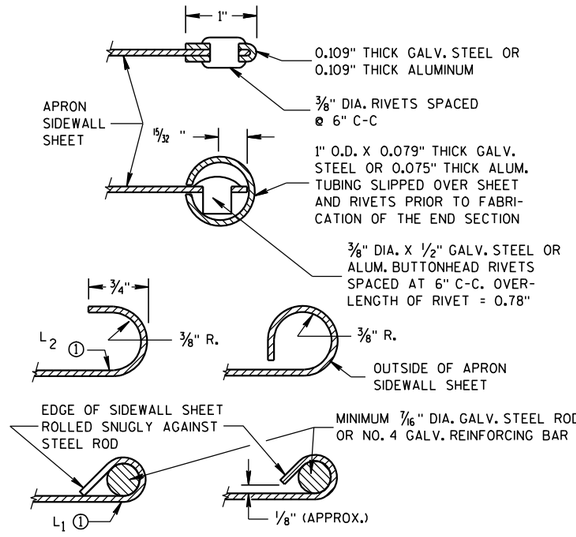

SECTION A-A

GENERAL NOTES

DETAILS OF CONSTRUCTION, MATERIALS AND WORKMANSHIP NOT SHOWN ON THIS DRAWING SHALL CONFORM TO THE PERTINENT REQUIREMENTS OF THE STANDARD SPECIFICATIONS AND THE APPLICABLE SPECIAL PROVISIONS.

CONCRETE CULVERT ENDWALLS MAY NOT BE USED WITH GALVANIZED STEEL OR ALUMINUM CULVERT PIPE OR VISE VERSA. GALVANIZED STEEL OR ALUMINUM ENDWALLS SHALL NORMALLY BE INSTALLED ON CULVERT PIPE OF THE SAME METAL.

ALL THREE PIECE STEEL APRON ENDWALLS FOR 60" DIAMETER PIPE AND LARGER SHALL HAVE 0.109" SIDES AND 0.138" CENTER PANELS. ALL THREE PIECE ALUMINUM APRON ENDWALLS FOR 60" DIAMETER PIPE AND LARGER SHALL HAVE 0.105" SIDES AND 0.134" CENTER PANELS. THE WIDTH OF CENTER PANELS SHALL BE GREATER THAN 20 PERCENT OF THE PIPE PERIMETER.

LAP SEAMS SHALL BE TIGHTLY JOINED BY GALVANIZED RIVETS OR BOLTS FOR STEEL UNITS AND ALUMINUM RIVETS AND BOLTS FOR ALUMINUM UNITS. FOR THE 60" THROUGH 96" DIAMETER APRON ENDWALL SIZES, THE REINFORCED EDGES AND CENTER PANEL SEAMS SHALL BE FURTHER REINFORCED WITH GALVANIZED STEEL OR ALUMINUM STIFFENER ANGLES. THE ANGLES SHALL BE ATTACHED BY GALVANIZED NUTS AND BOLTS FOR STEEL UNITS AND ALUMINUM NUTS AND BOLTS FOR ALUMINUM UNITS.

WHERE TWO OR MORE PIPES WITH APRON ENDWALLS ARE LAID ADJACENT TO EACH OTHER, THEY SHALL BE SEPARATED BY A DISTANCE SUFFICIENT TO PROVIDE A MINIMUM CLEARANCE OF 6 INCHES BETWEEN APRON ENDWALLS.

① FOR PIPE SIZES UP TO 60" DIAMETER, A 180° ROLLED EDGE MAY BE USED INSTEAD OF STEEL ROD REINFORCEMENT. SEE SECTION A-A.

APRON ENDWALLS FOR CULVERT PIPE

STATE OF WISCONSIN
DEPARTMENT OF TRANSPORTATION

APPROVED
11/30/94 — DATE
/S/ Rory L. Rhinesmith — CHIEF ROADWAY DEVELOPMENT ENGINEER
FHWA

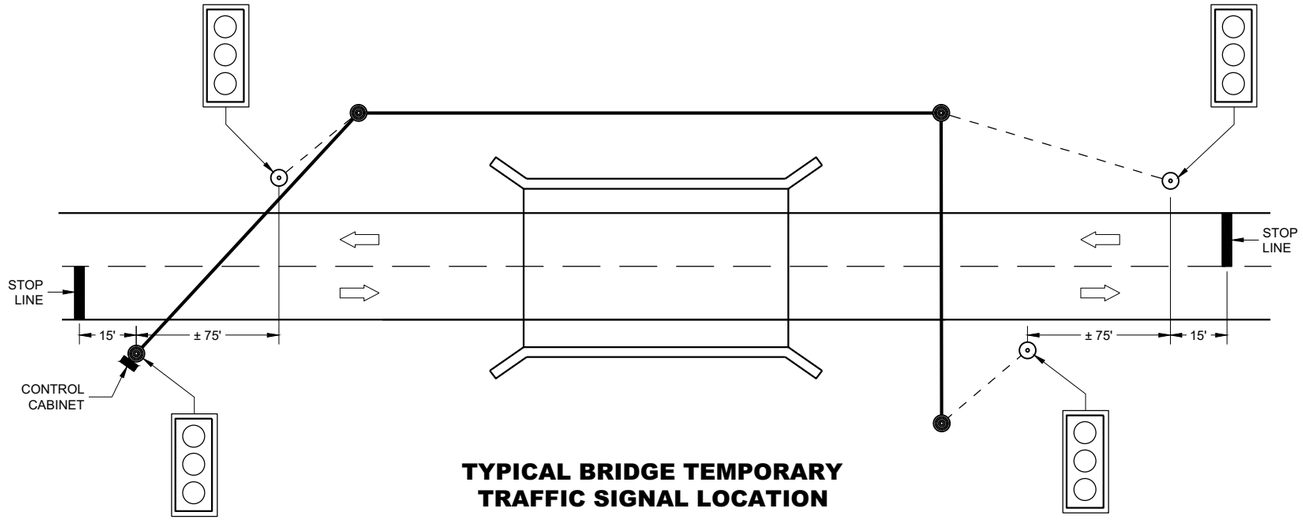

TYPICAL BRIDGE TEMPORARY TRAFFIC SIGNAL LOCATION

LEGEND

- WOOD POLE (NON-BREAKAWAY)
- WOOD POST (BREADAWAY)
- SIGNAL CABLE
- SIGNAL CABLE W/MESSENGER
- DIRECTION OF TRAFFIC
- LED TRAFFIC SIGNAL WITH BACKPLATE (3-12")

GENERAL NOTES

DETAILS OF CONSTRUCTION, MATERIALS AND WORKMANSHIP NOT SHOWN ON THIS DRAWING SHALL CONFORM TO THE PERTINENT REQUIREMENTS OF THE CONTRACT.

POLE MOUNTED TRAFFIC SIGNAL CONTROL CABINET MAY BE MOUNTED ON THE SERVICE POLE IF THE ELECTRICAL UTILITY ALLOWS THE INSTALLATION.

WHEN UTILITY POLES ARE USED TO SPAN THE TEMPORARY OVERHEAD CABLE, WRITTEN PERMISSION MUST BE OBTAINED FROM THE OWNER OF THE POLES AND GIVEN TO THE PROJECT MANAGER. ALL PERTINENT UTILITY AND CODE CLEARANCES SHALL BE MAINTAINED.

WOOD POLES (NON-BREAKAWAY) SHALL BE NO CLOSER TO EDGE OF PAVEMENT THAN OFFSET DISTANCE CHART ALLOWS OR 4 FEET BEHIND PROTECTIVE BARRIER (BEAM GUARD, ETC.).

WOOD POSTS (BREAKAWAY) SHALL BE NO CLOSER THAN 2 FEET OUTSIDE OF SHOULDER.

VERTICAL CLEARANCE ETC. PER NEC.

TRAFFIC SIGNAL FACES SHALL BE TYPICALLY PLACED 12 FEET FROM EDGE OF PAVEMENT.

EACH TRAFFIC SIGNAL SHALL HAVE A BACKPLATE.

SIGNING, PAVEMENT MARKING AND LANE CONTROL REQUIREMENTS SHALL CONFORM TO STANDARD DETAIL DRAWING 15D33.

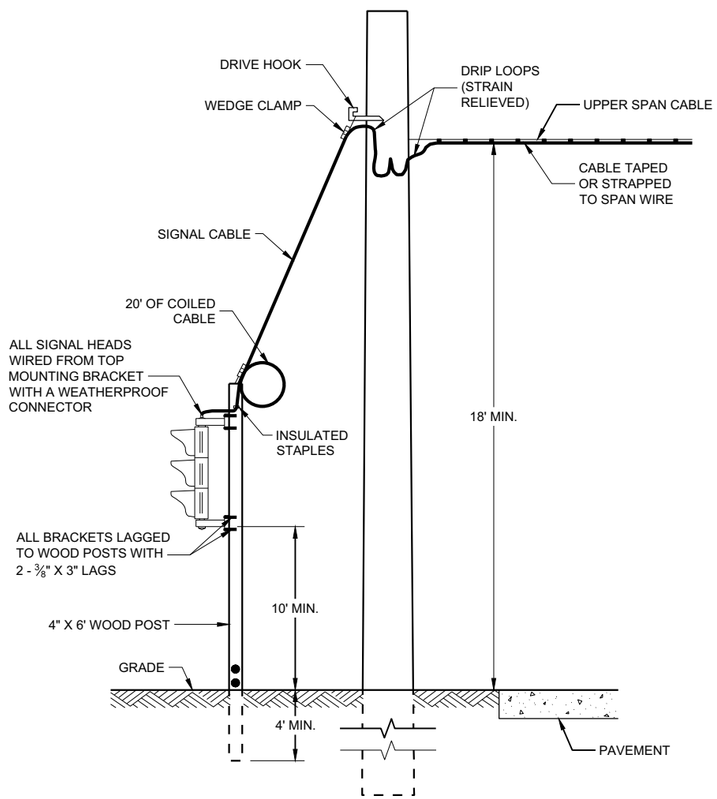

TYPICAL DROP TO TRAFFIC SIGNAL FACE

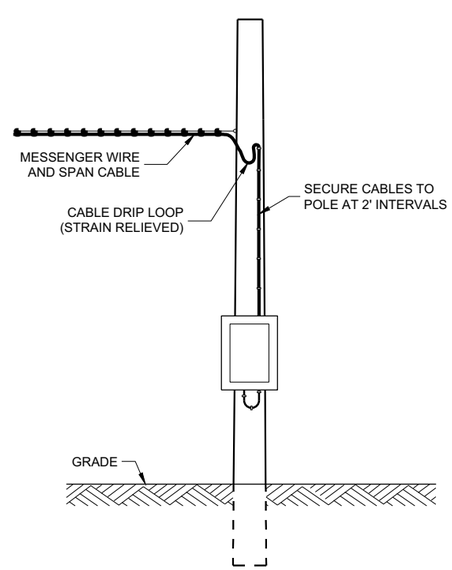

POLE MOUNT CABINET INSTALLATION

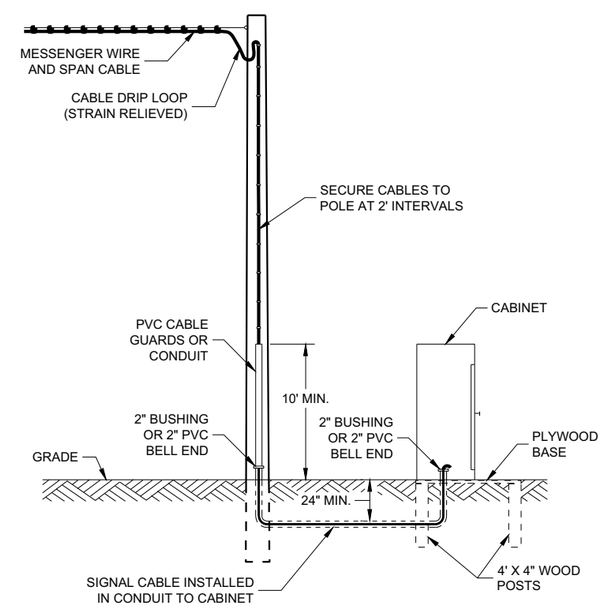

GROUND MOUNT CABINET INSTALLATION

MINIMUM POLE LENGTHS	CLASS	POLE BURIAL DEPTHS
25'	V	5'
30'	V	6'
35'	IV	7'
40'	IV	8'
45'	IV	9'

OFFSET DISTANCES FOR TEMPORARY NON-BREAKAWAY POLES	
SPEED LIMIT	OFFSET DISTANCE*
GREATER THAN 45 MPH	18 FT
45 MPH OR LESS	12 FT
45 MPH OR LESS W/CURBS	2 FT

* NOTE: OFFSET MEASURED FROM OUTER EDGE OF OUTSIDE THRU LANE.

BRIDGE TEMPORARY TRAFFIC SIGNAL INSTALLATION

STATE OF WISCONSIN
DEPARTMENT OF TRANSPORTATION

APPROVED
March 2018 — DATE
/S/ Ahmet Demirbilek — ROADWAY STANDARDS DEVE ENGINEER
FHWA

6

SDD09G02 - 05a

GENERAL NOTES

USE ¾" DRILL IN WOOD POLE TO PROVIDE FOR ⅝" BOLTS.

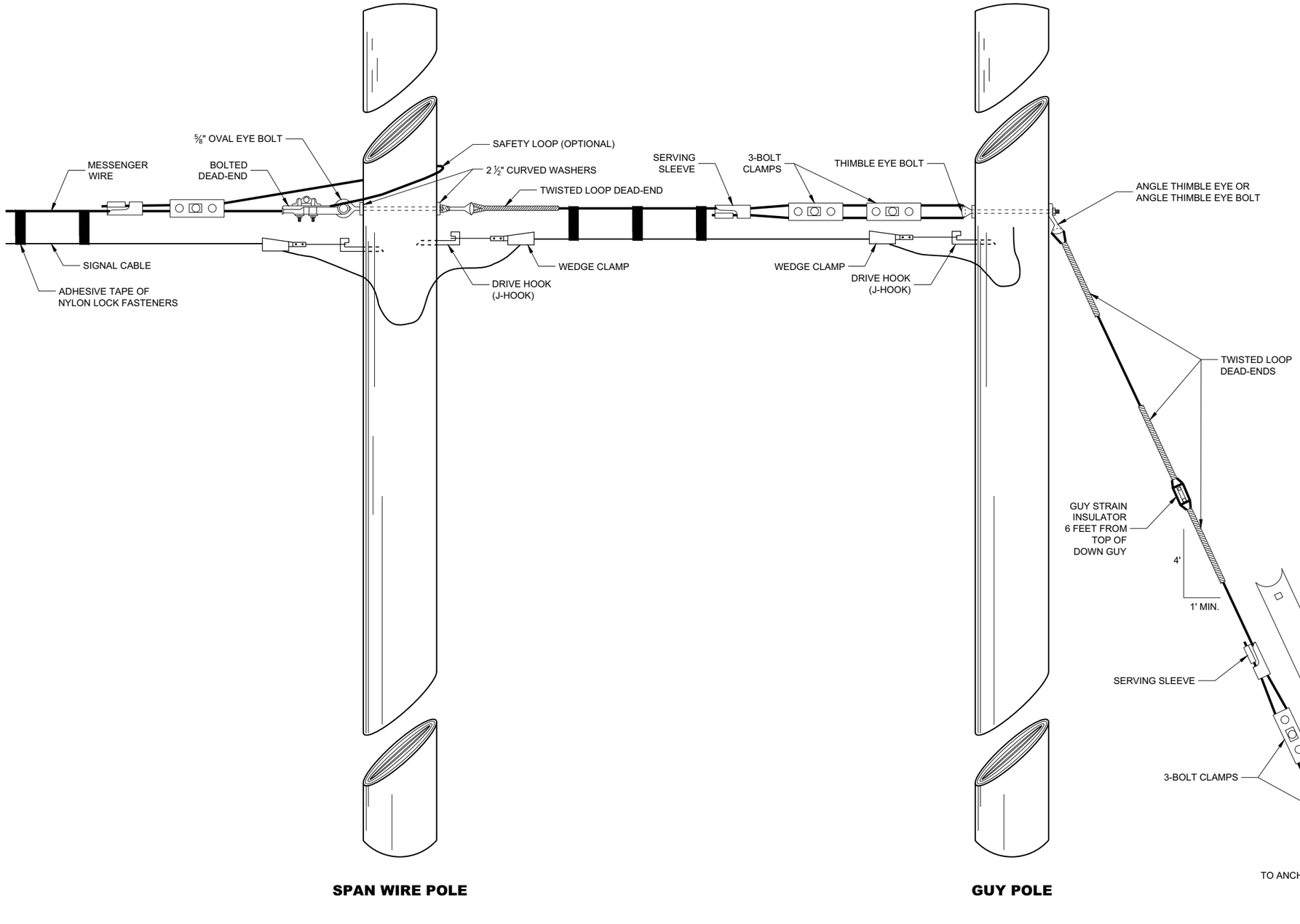

TYPICAL DEAD-ENDINGS OR GUYING

BRIDGE TEMPORARY TRAFFIC SIGNAL INSTALLATION

STATE OF WISCONSIN
DEPARTMENT OF TRANSPORTATION

APPROVED
June 2015 — DATE
/S/ Ahmet Demerbilek — ROADWAY STANDARDS DEVE ENGINEER
FHWA

6

SDD09G02 - 05b

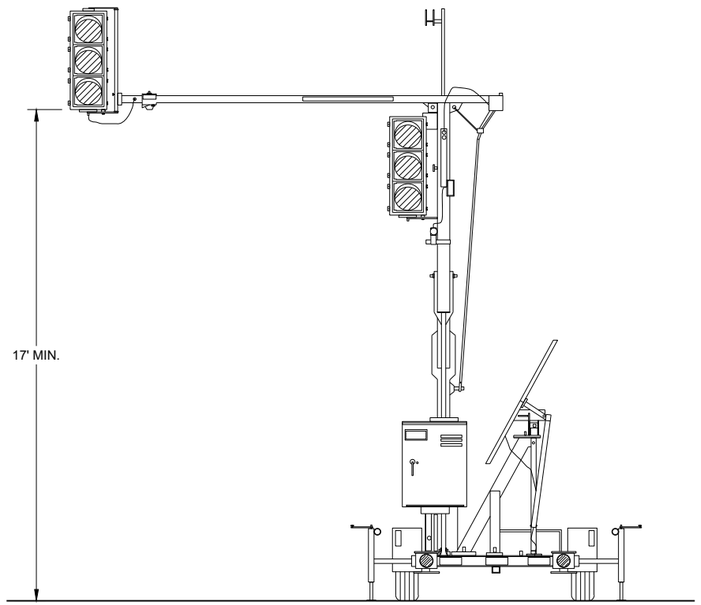

TRAILER MOUNTED TRAFFIC SIGNAL

GENERAL NOTES

DETAIL OF CONSTRUCTION, MATERIALS AND WORKMANSHIP NOT SHOWN ON THIS DRAWING SHALL CONFORM TO THE PERTINENT REQUIREMENTS OF THE CONTRACT.

SIGNING, PAVEMENT MARKING AND LANE CONTROL REQUIREMENTS SHALL CONFORM TO STANDARD DETAIL DRAWING 15D33.

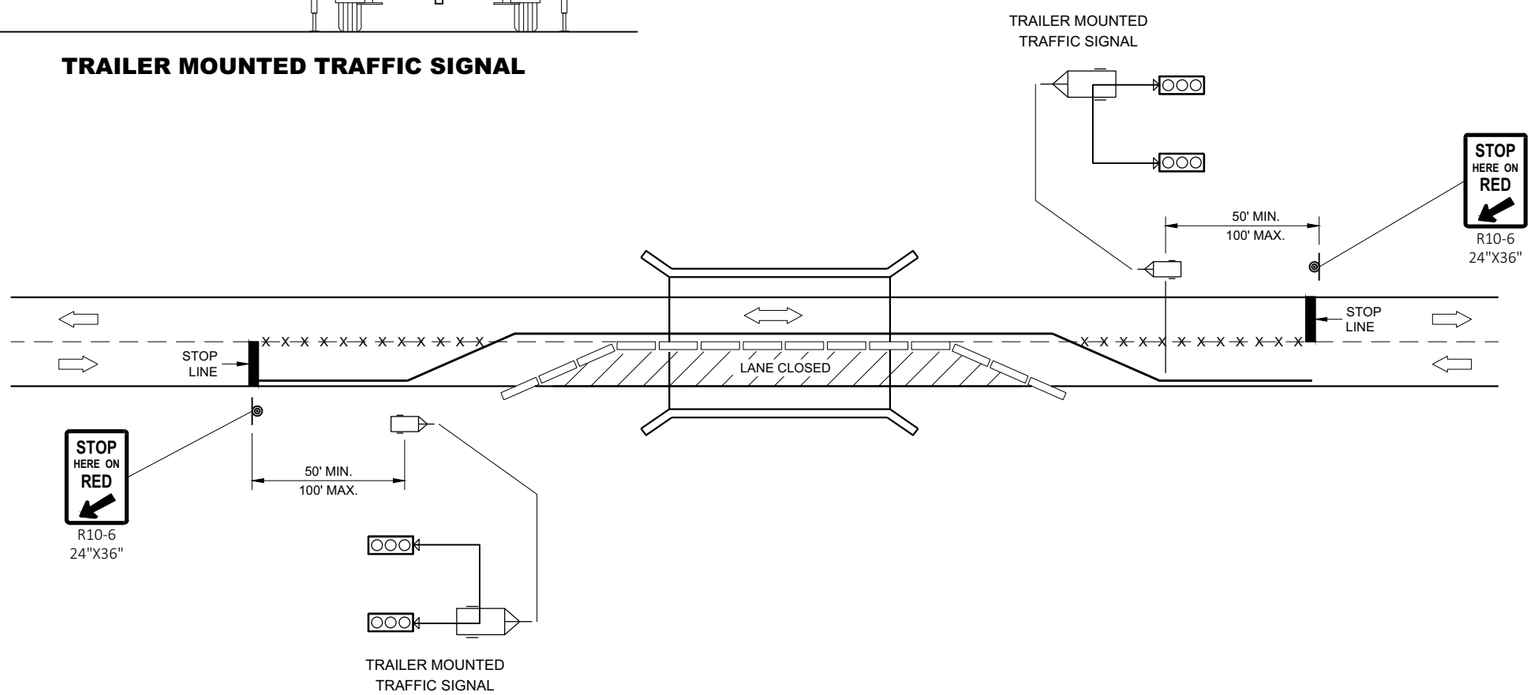

TYPICAL TRAILER MOUNTED TRAFFIC SIGNAL LOCATION

LEGEND

- POST MOUNTED SIGN
- TEMPORARY PRECAST CONCRETE BARRIER
- TRAILER MOUNTED TRAFFIC SIGNAL
- REMOVE PAVEMENT MARKINGS
- DIRECTION OF TRAFFIC

BRIDGE TEMPORARY TRAFFIC SIGNAL INSTALLATION

STATE OF WISCONSIN
DEPARTMENT OF TRANSPORTATION

APPROVED
June 2015 — DATE
/S/ Ahmet Demerbilek — ROADWAY STANDARDS DEVE ENGINEER
FHWA

6

SDD 09G02 - 05c

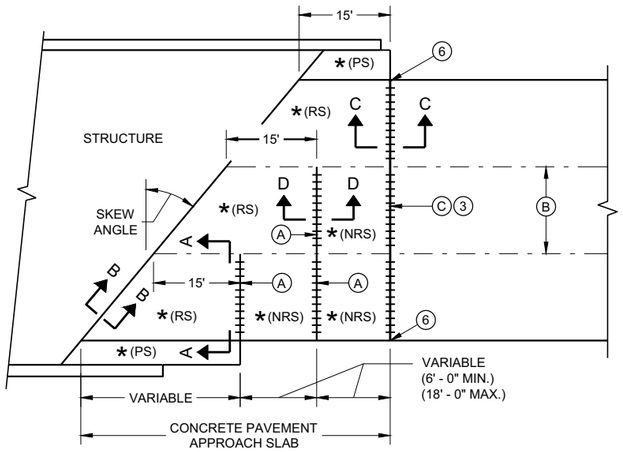

SKEWED APPROACH
(PAVEMENT MORE THAN TWO LANES)

* (RS) = REINFORCED CONCRETE SLAB

* (PS) = PAVED CONCRETE SHOULDER OR CONCRETE DRAINAGE SLAB

* (NRS) - NON - REINFORCED CONCRETE SLAB

*** STANDARD DOWEL BAR DIAMETER (SEE SDD 13C11 AND SDD 13C13)

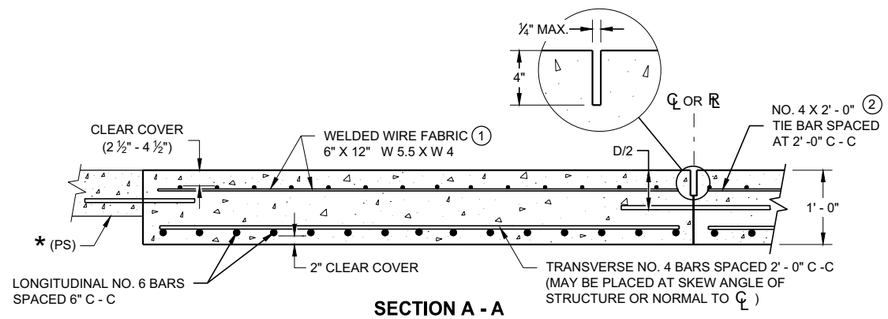

SECTION A - A
REINFORCEMENT POSITIONING DETAIL

GENERAL NOTES

THE CONTRACTOR MAY SPLICE NO. 6 BARS IN THE APPROACH SLAB FOR SKEWED STRUCTURES ONLY. STAGGER SPLICES WITH A MAXIMUM OF ONE SPLICE PER BAR. THE LENGTH OF LAP IS 20 INCHES.

TACK WELD DOWEL BARS TO THE BASKETS ON ALTERNATE ENDS.

1. THE CONTRACTOR MAY USE NO. 4 BARS SPACED AT 2' - 0 " C - C IN BOTH THE LONGITUDINAL AND TRANSVERSE DIRECTIONS FOR TOP REINFORCEMENT AS AN ALTERNATIVE TO THE WELDED WIRE FABRIC.
2. THE CONTRACTOR MAY OMIT THE BARS BETWEEN REINFORCED SLABS WHERE SLAB REINFORCEMENT BARS EXTEND ACROSS THE CENTERLINE OR REFERENCE LINE.
3. DO NOT CONSTRUCT AN EXPANSION JOINT OR INSTALL DOWEL BARS WHEN ABUTTING AN HMA PAVEMENT.
4. USE A JOINT SEALANT CONFORMING TO STANDARD SPECIFICATION 415.2.6.
5. PLACE EXPANSION CAP ON THE END OF THE DOWEL THAT IS NOT TACK WELDED TO THE BASKET. DO NOT FORCE DOWEL BAR PAST THE DOWEL STOP.
6. EXTEND EXPANSION JOINT THROUGH ANY ADJACENT TIED CONCRETE.

A. STANDARD CONTRACTION JOINT NORMAL TO ℄ OR ℞.

B. STANDARD LONGITUDINAL JOINT WITH TIE BARS.

C. 1 ½" EXPANSION JOINT WITH DOWEL BARS NORMAL TO ℄ OR ℞ .

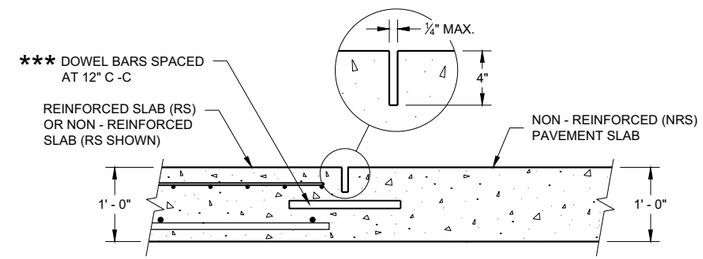

SECTION D - D
CONTRACTION JOINT

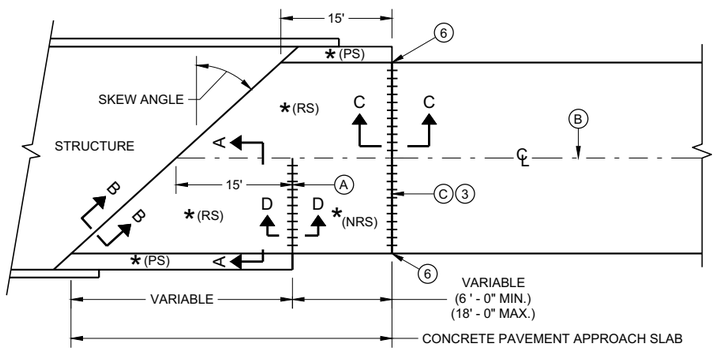

SKEWS > 20°
(PAVEMENT WIDTH ≤ 30')

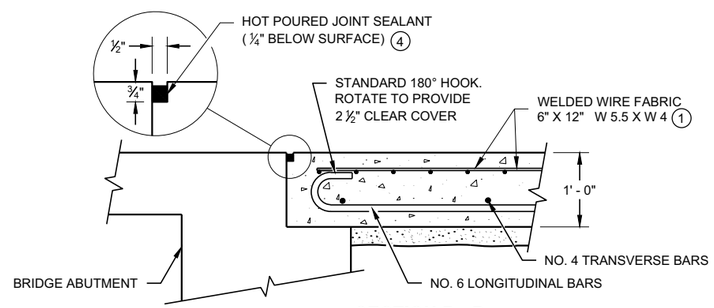

SECTION B - B
BEND DETAIL
BOTTOM REINFORCEMENT

EXPANSION JOINT DETAIL

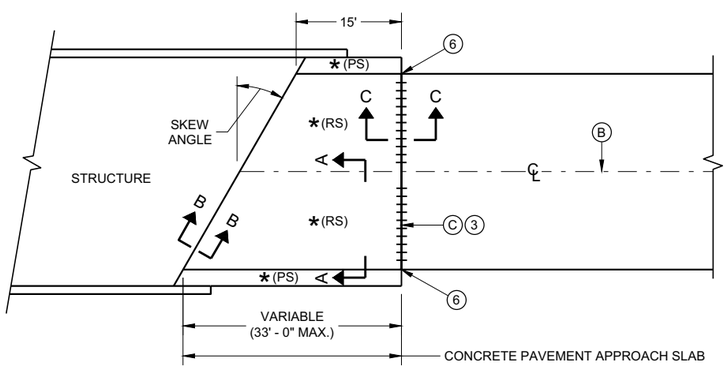

SKEWS ≤ 20°
(PAVEMENT WIDTH ≤ 30')

APPROACH SLAB AND ADJACENT PAVEMENT

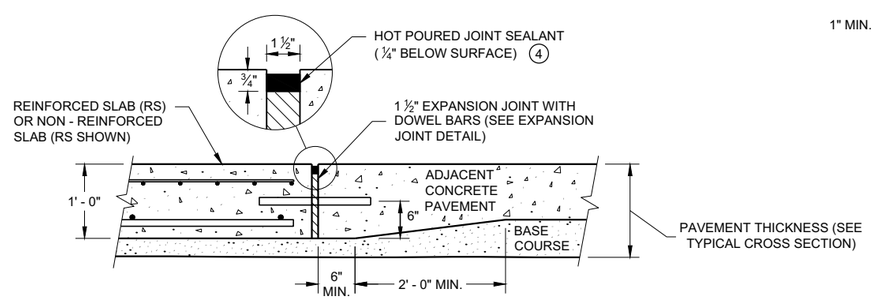

SECTION C - C
TRANSITION DETAIL
APPROACH SLAB TO ADJACENT PAVEMENT

CONCRETE PAVEMENT APPROACH SLAB

STATE OF WISCONSIN
DEPARTMENT OF TRANSPORTATION

APPROVED
November 2018 /S/ Peter Kemp, P.E.
DATE PAVEMENT SUPERVISOR
FHWA

6

6

SDD 13B02 - 09a

SDD 13B02 - 09a

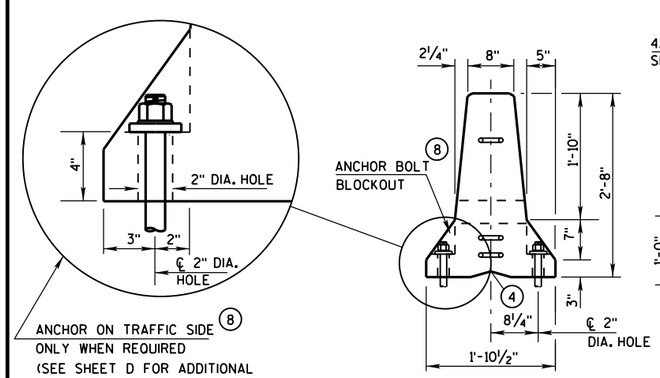

END VIEW

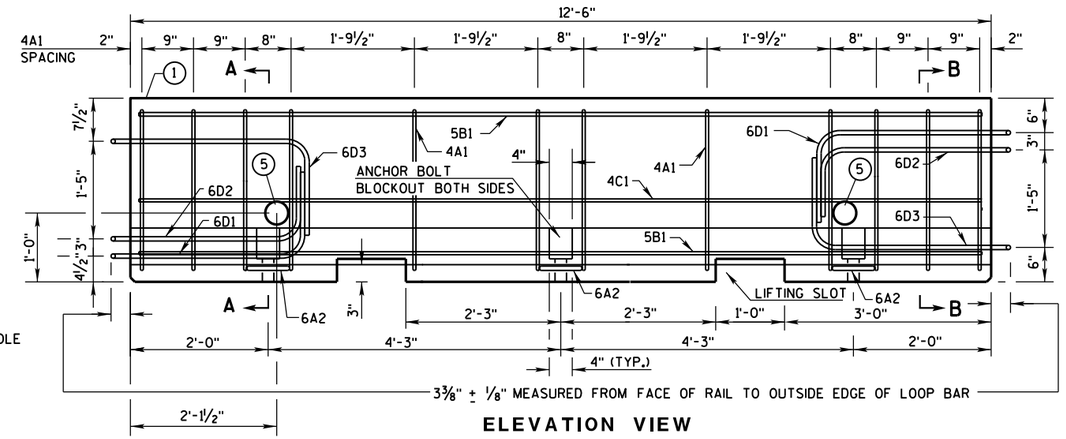

ELEVATION VIEW

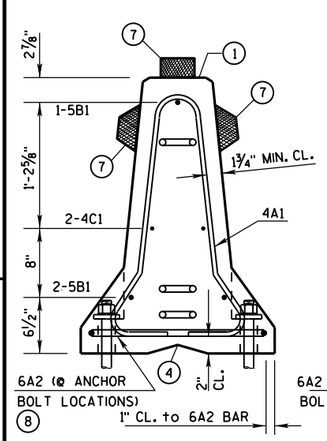

SECTION A-A
(STIRRUP PLACEMENT)

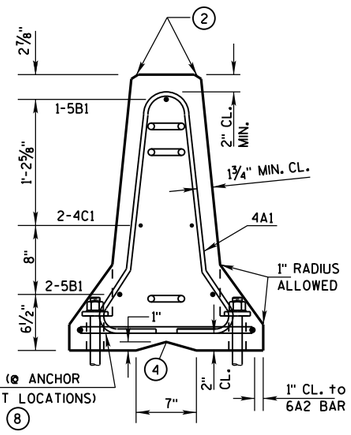

SECTION B-B
(STIRRUP PLACEMENT)

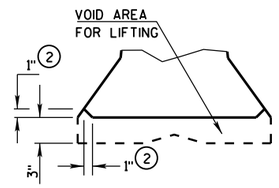

DETAIL "B"
LIFTING SLOT DETAIL

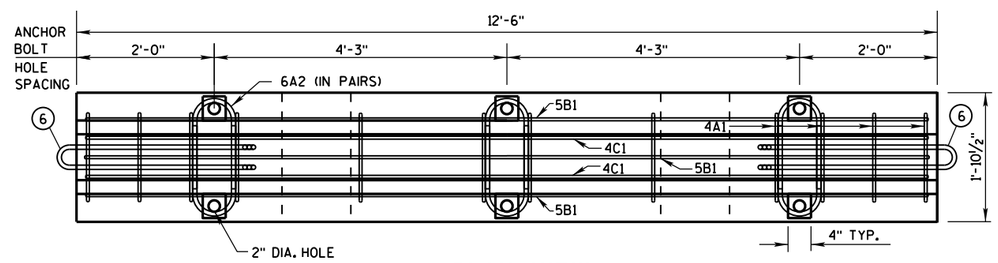

PLAN VIEW

DETAILS OF BARRIER SECTION

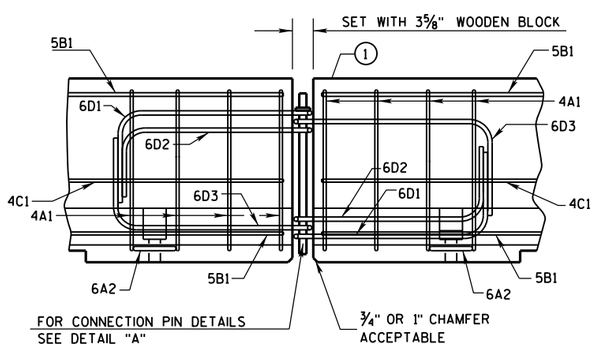

DETAILS OF BARRIER CONNECTION

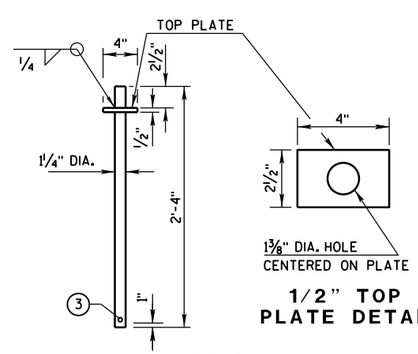

1/2" TOP PLATE DETAIL

DETAIL "A"
CONNECTION PIN
(A36 STEEL (10.9 LB EACH))

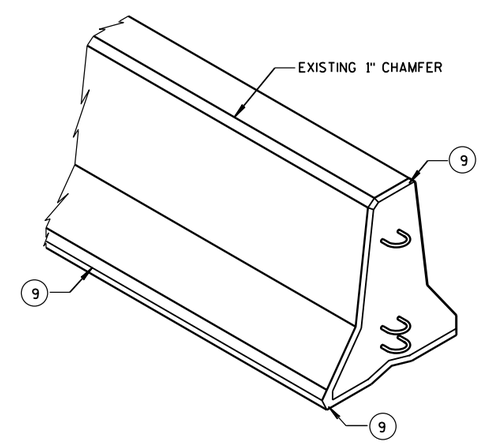

GENERAL NOTES

THESE GENERAL NOTES APPLY TO SHEETS 14B7-15(a) THRU 14B7-15(i).

DO NOT INTERMIX CONCRETE BARRIER TEMPORARY PRCAST, 12'-6" (CBTP12.5) WITH OTHER TEMPORARY CONCRETE BARRIERS.

USE ASTM A-615, GRADE 60, DEFORMED STEEL BARS FOR BARS 4A1, 6A2, 5B1 AND 4C1 IN THE BARRIER SECTION AND FOR 4V1, 4V2, 4V3, 4V4, 4V5, 4V6, 4F1, 4F2 AND 5F3 IN THE BARRIER TAPER SECTION.

LOOP BARS 6D1, 6D2 AND 6D3 SHALL BE ¾" SMOOTH STEEL BARS WITH A MINIMUM YIELD STRENGTH OF 60 KSI, A TENSILE STRENGTH OF NOT LESS THAN 1.25 TIMES THE YIELD STRENGTH BUT A MINIMUM OF 80 KSI, A MINIMUM 14% ELONGATION IN 8 INCHES AND PASSING A 180 DEGREE BEND TEST USING A 3-½" PIN BEND DIAMETER FOR BEND TESTS. THE LOOPS SHALL BE INSTALLED WITHIN ⅛" OF THE PLAN DIMENSION.

CONSTRUCT LIFTING SLOTS AS SPECIFIED ON THE PLANS TO FACILITATE THE DRAINAGE OF WATER AFTER INSTALLATION.

PLACE BARRIER ON A PAVED SURFACE. REMOVE ALL LOOSE DIRT AND SAND FROM THE ROADWAY SURFACE PRIOR TO PLACEMENT OF THE BARRIER.

INSTALL MECHANICAL OR ADHESIVE ANCHORS PER MANUFACTURER'S RECOMMENDATIONS. PROVIDE MANUFACTURER'S INFORMATION TO PROJECT ENGINEER.

1. MARK ONE END OF EACH BARRIER PERMANENTLY BY FORMING INTO THE BARRIER THE FOLLOWING INFORMATION:
   a. TYPE: WI CBTP
   b. MANUFACTURER
   c. DATE MANUFACTURED (MONTH AND YEAR)
2. 1" CHAMFER TO PREVENT SPALLING.
3. A ⅜" HOLE IN THE CONNECTION PIN, AT THE LOCATION SHOWN, IS ACCEPTABLE, BUT NOT REQUIRED..
4. "V" NOTCH IS OPTIONAL.
5. THE 4" DIAMETER, 11 GAUGE STEEL, ROUND MECHANICAL TUBING SLEEVE FOR LIFTING (OPTIONAL).
6. NEVER USE LOOP BARS (6D1, 6D2 OR 6D3) TO LIFT, MOVE OR REPOSITION THE BARRIER.
7. USE DELINEATORS CONFORMING TO SECTION 633 OF THE STANDARD SPECIFICATIONS. CONTRACTOR MAY USE ALTERNATE SHAPES AND HOUSING. INSTALL DELINEATORS ACCORDING TO MANUFACTURES INSTRUCTION. INSTALL YELLOW REFLECTORS WHEN BARRIER IS LOCATED TO THE LEFT OF TRAFFIC AND WHITE REFLECTORS WHEN BARRIER IS LOCATED TO THE RIGHT OF TRAFFIC. SPACE DELINEATORS A MAXIMUM OF 25 FEET APART. PROVIDE TOP MOUNTED DELINEATORS IN ADDITION TO THE SIDE MOUNTED DELINEATORS ON ALL BARRIER INSTALLATIONS LOCATED ON A CURVED ALIGNMENT LONGER THAN 200 FEET AND ON BARRIERS USED TO SEPARATE OPPOSING TRAFFIC.
8. SEE SHEET D FOR HOW TO ANCHOR BARRIER. SEE SHEET E FOR WHEN TO ANCHOR BARRIER.
9. 1" CHAMFER OPTIONAL.

f'c = 4,000 psi

CONCRETE BARRIER
TEMPORARY PRECAST, 12'-6"

STATE OF WISCONSIN
DEPARTMENT OF TRANSPOR

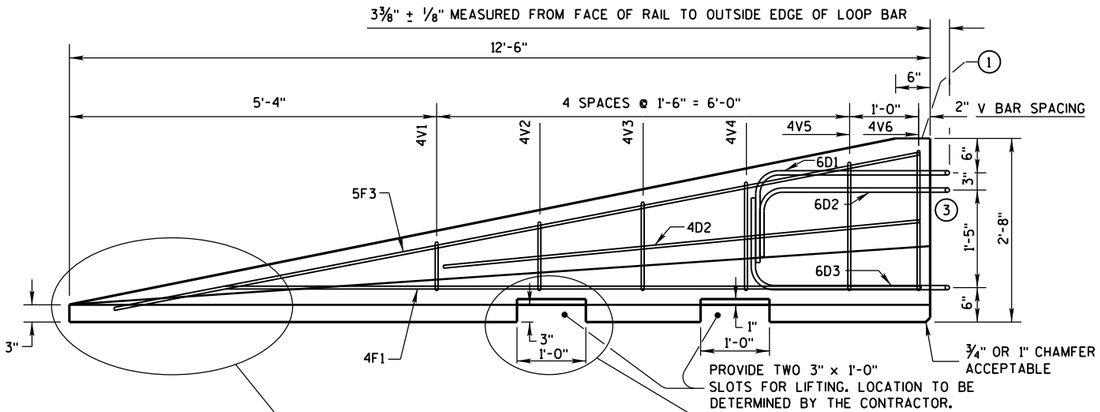

SIDE ELEVATION

(FOR CONNECTION TO LEFT END OF BARRIER)

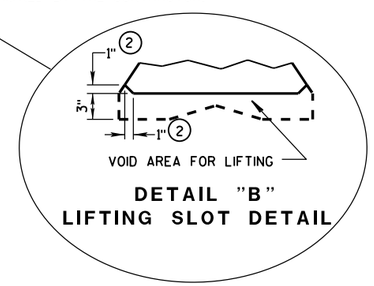

DETAIL "B"
LIFTING SLOT DETAIL

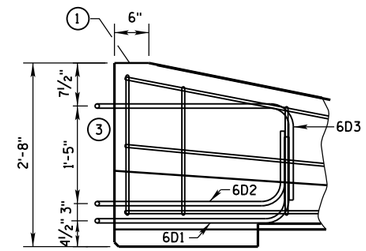

SIDE ELEVATION

LOOP BAR ASSEMBLY INVERTED
FOR OPPOSITE END.
(FOR CONNECTION TO RIGHT END OF BARRIER)

GENERAL NOTES

1. MARK ONE END OF EACH BARRIER PERMANENTLY BY FORMING INTO THE BARRIER THE FOLLOWING INFORMATION:
   a. TYPE WICBTP
   b. MANUFACTURER
   c. DATE MANUFACTURED (MONTH AND YEAR)
2. 1" CHAMFER TO PREVENT SPALLING.
3. NEVER USE LOOP BARS (6D1, 6D2 OR 6D3) TO LIFT, MOVE OR REPOSITION THE BARRIER.

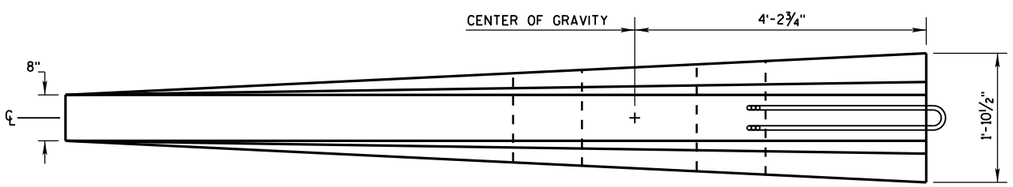

PLAN VIEW

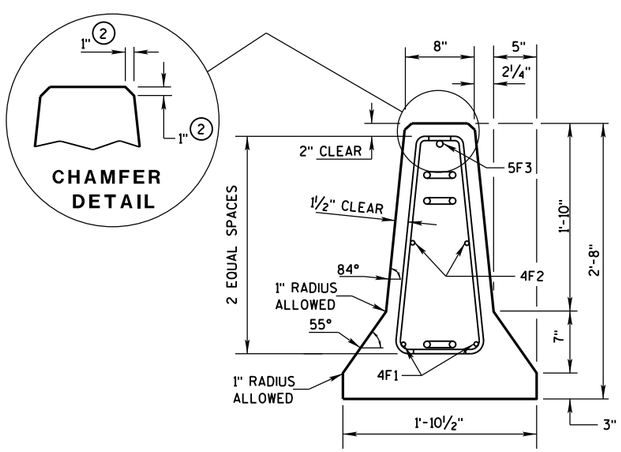

END SECTION

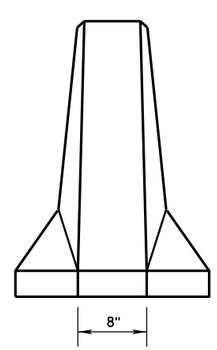

FRONT ELEVATION

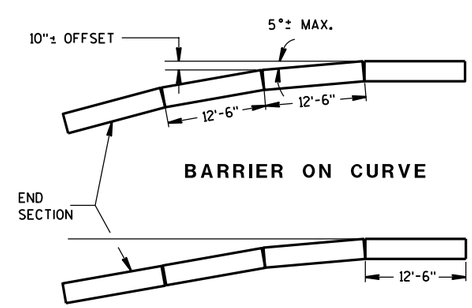

BARRIER ON CURVE

FLARE AT BARRIER END

POSTED SPEED, (MPH)	FLARE RATE
40 OR LESS	6:1
45 OR GREATER	8:1

DETAILS OF BARRIER TAPER SECTION

CONCRETE BARRIER
TEMPORARY PRECAST, 12'-6"

STATE OF WISCONSIN
DEPARTMENT OF TRANSPORTATION

GENERAL NOTES

(1) NEVER USE LOOP BARS (6D1, 6D2 OR 6D3) TO LIFT, MOVE OR REPOSITION THE BARRIER.

BARRIER TAPER SECTION BILL OF MATERIALS

(PER 12'-6" BARRIER TAPER SECTION)

BAR	BAR SIZE	NO. OF BARS	LENGTH FT.
4V1	4	2	1'-11"
4V2	4	2	2'-2"
4V3	4	2	2'-6"
4V4	4	2	2'-9"
4V5	4	2	3'-2"
4V6	4	2	3'-4"
4F1	4	2	12'-0"
4F2	4	2	7'-6"
5F3	5	1	11'-9"
LOOP ASSEMBLY			
6D1	6	1	8'-5"
6D2	6	1	7'-7"
6D3	6	1	8'-6"

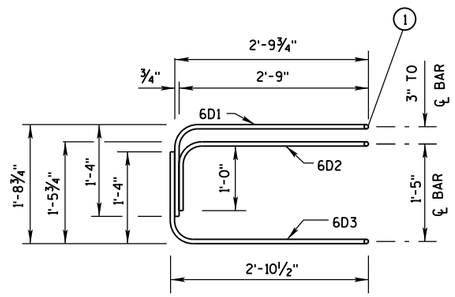

ELEVATION
LOOP BAR ASSEMBLY

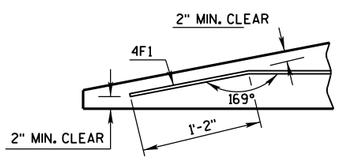

DETAIL "C"
BENT BAR DETAIL

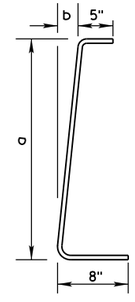

BAR	a	b
V1	10"	1"
V2	1'-1"	1¼"
V3	1'-5"	1⅝"
V4	1'-8"	1⅞"
V5	2'-0½"	2⅜"
V6	2'-3"	2¾"

4V BARS
2 AT EACH SIZE REQUIRED
FOR STIRRUP ASSEMBLY

TAPER BARRIER SECTION

BARRIER SECTION BILL OF MATERIALS

(PER 12'-6" BARRIER SECTION)

BAR	BAR SIZE	NO. OF BARS	LENGTH FT.
4A1	4	12	6'-0"
6A2	6	6	2'-11"
5B1	5	3	12'-2"
4C1	4	2	12'-2"
LOOP ASSEMBLY			
6D1	6	2	8'-5"
6D2	6	2	7'-7"
6D3	6	2	8'-6"

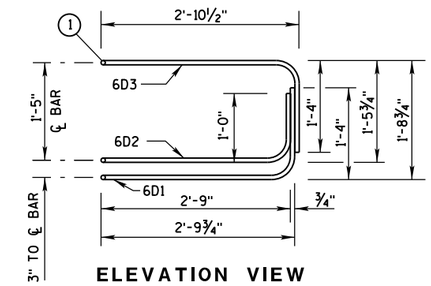

ELEVATION VIEW

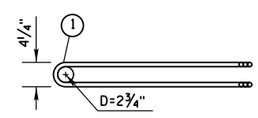

PLAN VIEW
LOOP BAR ASSEMBLY
(MARKED END SHOWN, INVERT FOR OTHER END)

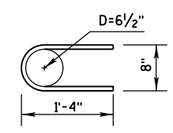

6A2

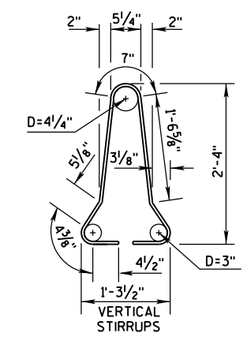

VERTICAL STIRRUPS
4A1

BARRIER SECTION

6

6

CONCRETE BARRIER
TEMPORARY PRECAST, 12'-6"

STATE OF WISCONSIN
DEPARTMENT OF TRANSPOR

S.D.D. 14 B 7-15c

S.D.D. 14 B 7-15c

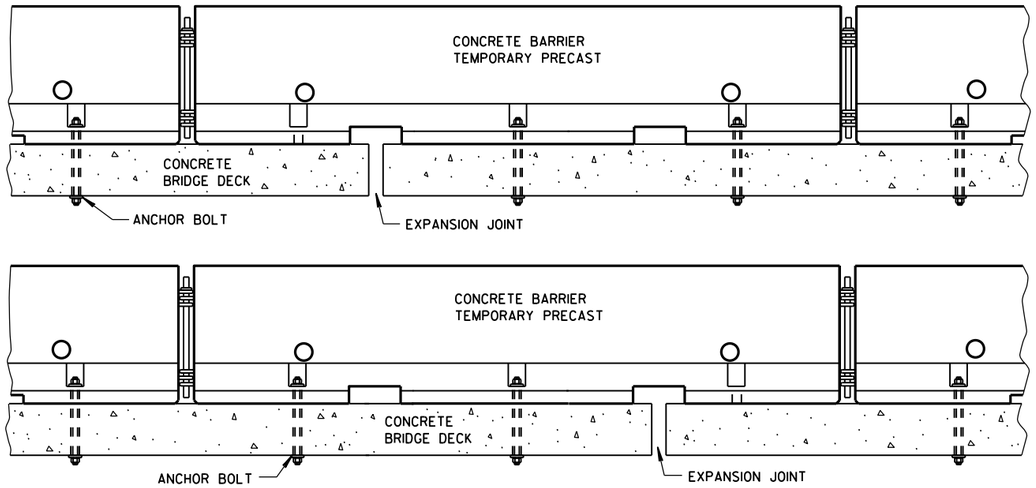

TREATMENT AT BRIDGE DECK EXPANSION JOINTS

(NO SINGLE CONCRETE BARRIER SECTION SHALL BE ANCHORED TO BOTH THE BRIDGE DECK AND THE APPROACH SLAB. ALL ANCHOR BOLT LOCATIONS SHALL BE ANCHORED TO THE DECK IN ACCORDANCE WITH THE DETAIL. NO MORE THAN ONE ANCHOR BOLT SHALL BE ELIMINATED FROM A BARRIER SECTION WHEN SPANNING AN EXPANSION JOINT.)

GENERAL NOTES

SEE SHEET E FOR WHEN TO ANCHOR. OTHER PARTS OF THE PLAN MAY SHOW ADDITIONAL LOCATIONS REQUIRING ANCHORING.

REMOVE ALL ANCHORS WHEN NO LONGER NEEDED. FILL CONCRETE PAVEMENTS, DECKS AND APPROACH SLABS WITH NON-SHRINK COMMERICAL GROUT FROM THE APPROVED PRODUCT LIST. FILL ASPHALT PAVEMENTS WITH ASTM D6690 TYPE II RUBBERIZED CRACK FILLER.

1. 1⅛" DIAMENTER A307 THREADED ROD, ½" X 3" X 3" SQUARE PLATE WASHER WITH ASTM A36 STEEL. ASTM A563A HEAVY HEX NUT.
2. ADHESIVE ANCHORS WITH A MINIMUM BOND STRENGTH OF 1,800 PSI AND 5¼" EMBEDMENT. SEE 603.2 AND 603.3.1.2 OF THE WISCONSIN STANDARD SPECIFICATIONS FOR MORE INFORMATION ON ADHESIVE ANCHORS.
3. ASPHALT SURFACE SHOWN. CONTRACTOR MAY DRILL THROUGH CONCRETE PAVEMENT AND THAN DRIVE ASPHALT ANCHOR PIN.

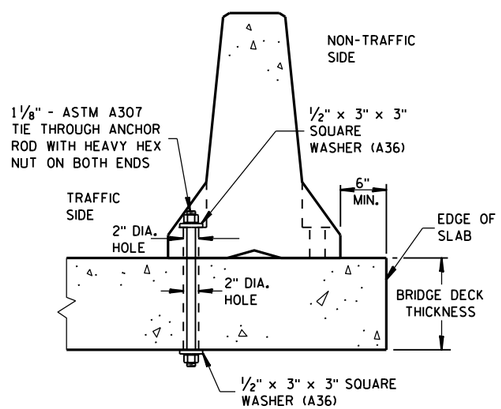

THROUGH BOLTED ANCHOR INSTALLATION ON BRIDGE DECK

(DO NOTUSE ON CONCRETE BRIDGE DECK WITH ASPHALT OVERLAY)

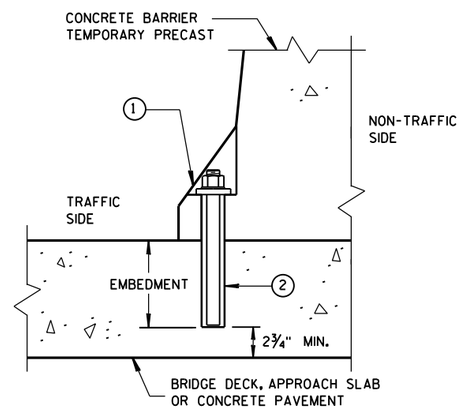

REMOVABLE ADHESIVE ANCHOR INSTALLATION ON CONCRETE BRIDGE DECK, CONCRETE APPROACH SLAB, OR CONCRETE PAVEMENT

(DO NOT USE ON CONCRETE WITH AN ASPHALTIC OVERLAY)

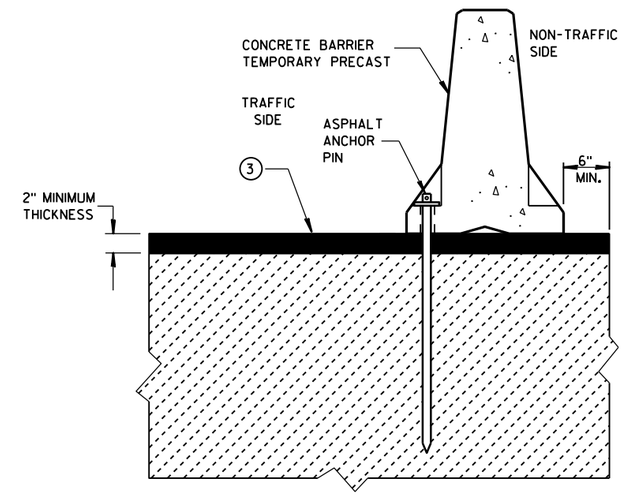

STAKE DOWN INSTALLATION FOR ASPHALTIC SURFACE

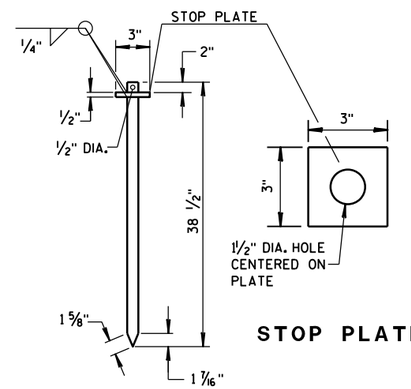

STOP PLATE

ASPHALT ANCHOR PIN

(ASTM A36 STEEL)

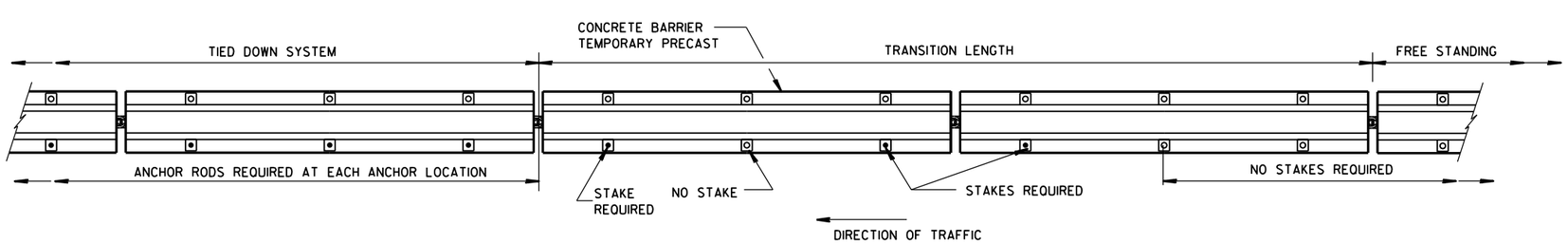

PLAN VIEW

FREE STANDING TRANSITION TO TIED-DOWN SYSTEM

(PLACE TRANSITION IN A TANGENT SECTION OF BARRIER PARALLEL TO THE ROADWAY. IF TRANSITION OCCURS ON STRUCTURAL SLAB, ANCHOR AS SHOWN.)

CONCRETE BARRIER
TEMPORARY PRECAST, 12'-6"

STATE OF WISCONSIN
DEPARTMENT OF TRANSPOI

6

S.D.D. 14 B 7-15d

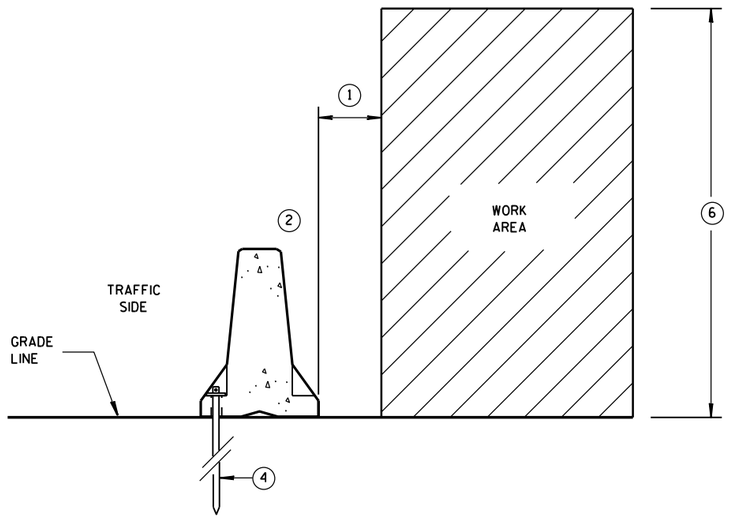

ANCHORED BARRIER SPACE REQUIREMENTS FOR HAZARDS EXTENDED ABOVE THE GRADE LINE

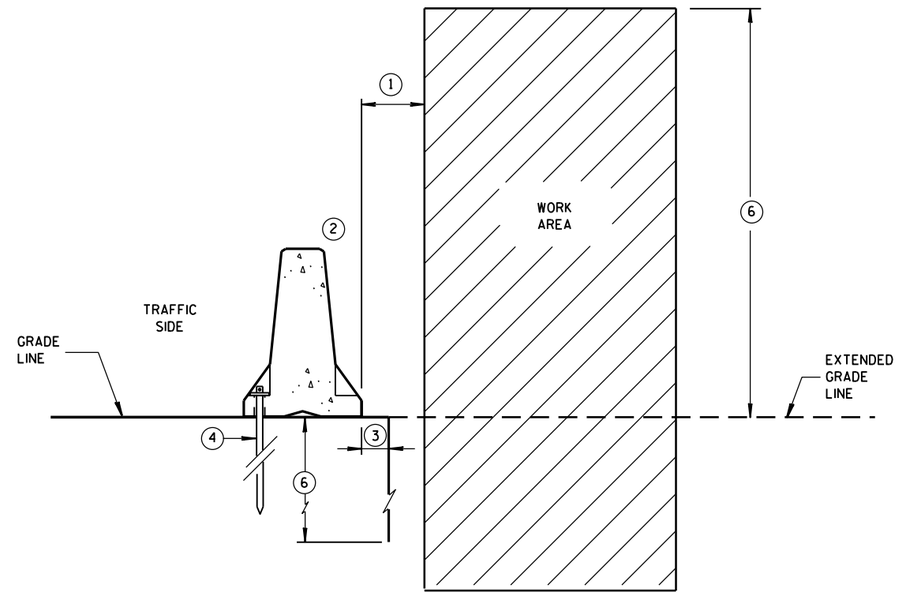

ANCHORED BARRIER SPACE REQUIREMENTS ON VERTICAL DROP OFFS

GENERAL NOTES

1. WHEN OBJECTS EXTEND ABOVE THE GRADE, A MINIMUM OF 1 FOOT IS REQUIRED FROM BACK OF BARRIER TO OBJECT. SEE OTHER DETAILS FOR FOR THE MINIMUM OFFSET FROM BACK OF BARRIER TO SLOPES OR VERTICAL DROPS.
2. OBJECTS ARE NOT TO BE PLACED ON, MOUNTED TO, OR LEANED AGAINST THE BARRIER WITHOUT PERMISSION OF THE PROJECT ENGINEER.
3. SEE OTHER DETAIL ON SHEET "D" FOR SPACE REQUIREMENTS.
4. SEE BOLT THROUGH DECK, REMOVABLE ADHESIVE ANCHOR, OR A STAKE DOWN FOR ASPHALTIC SURFACE TREATMENT DETAILS. ASPHALTIC ANCHOR SHOWN.
5. DEPTH OF 3 FEET OR MORE.
6. Y = 6'-6".

POSTED SPEED MPH	X
45 OR GREATER	4'
40 OR LESS	2'

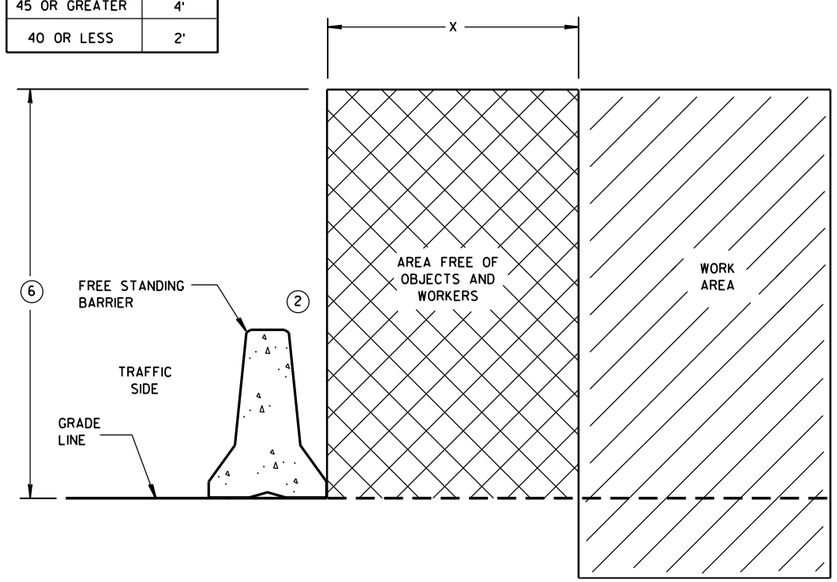

FREE STANDING BARRIER SPACE REQUIREMENTS

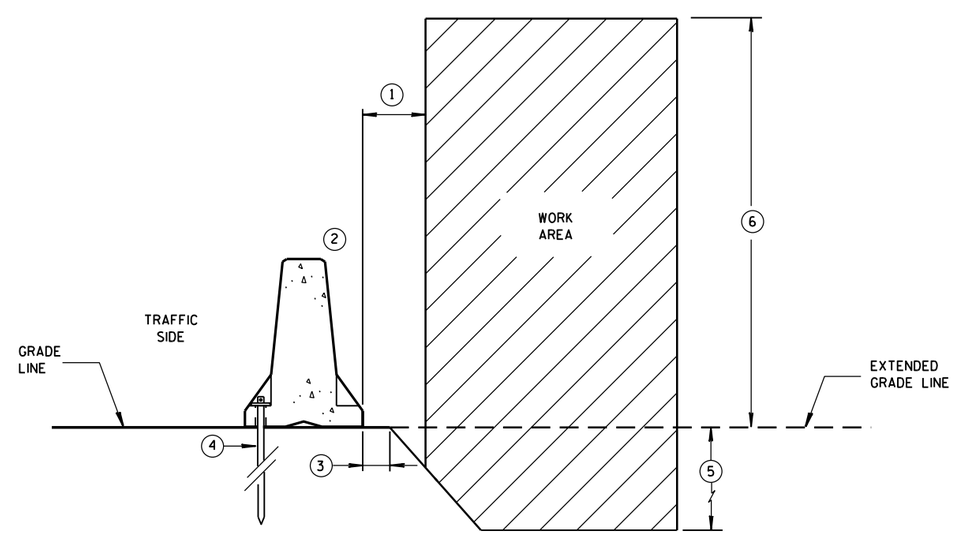

ANCHORED BARRIER SPACE REQUIREMENTS ON SLOPES

CONCRETE BARRIER
TEMPORARY PRECAST, 12'-6"

STATE OF WISCONSIN
DEPARTMENT OF TRANSPOR

6

6

S.D.D. 14 B 7-15e

S.D.D. 14 B 7-15e

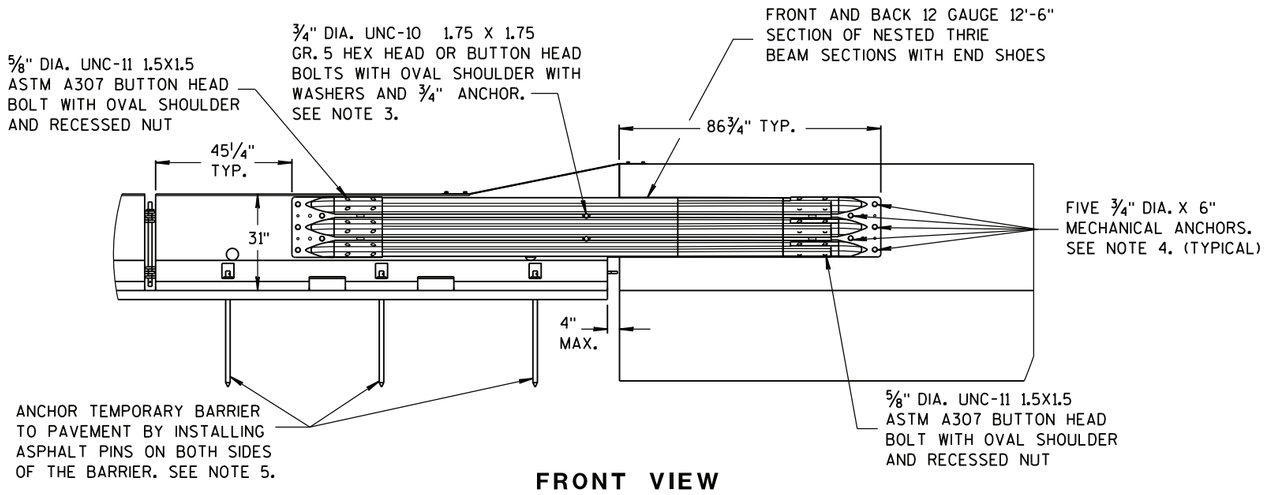

FRONT VIEW

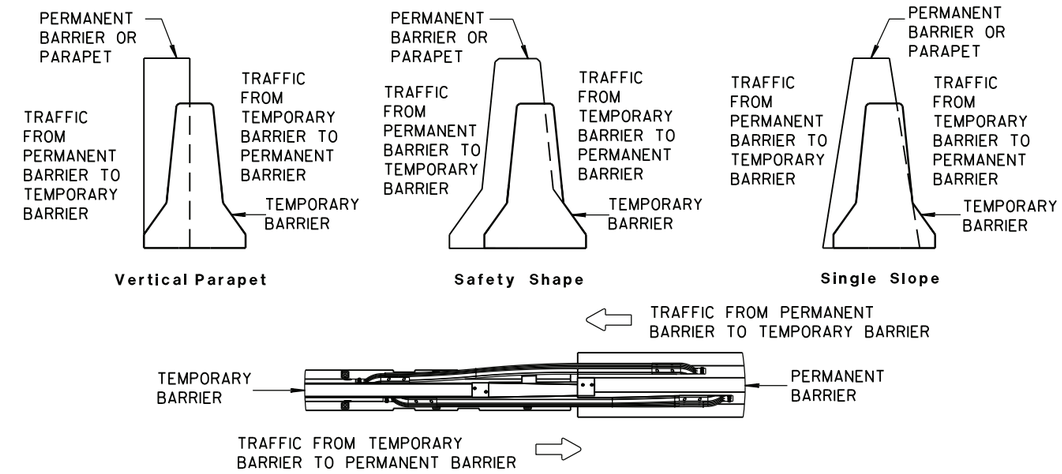

TEMPORARY BARRIER PLACEMENT FOR TRANSITION TO TIED DOWN SYSTEM

NOTES

NESTED THRIE BEAM IS REQUIRED ON BOTH SIDES OF THE TEMPORARY BARRIER FOR ALL INSTALLATIONS REGARDLESS OF TRAFFIC.

1. CAP END PLATE PLACED FLUSH WITH UPSTREAM END OF PERMANENT BARRIER OR PARAPET.
2. THRIE BEAM PIECES ARE OFFSET 15 1/4" TO PREVENT INTERFERENCE FROM THE ANCHORS ON OPPOSING SIDES.
3. MINIMUM MECHANICAL OR ADHESIVE ANCHOR STRENGTH REQUIREMENTS: ULTIMATE TENSILE LOAD 9.48 KIPS AND ULTIMATE SHEAR LOAD 10.48 KIPS.
4. MINIMUM MECHANICAL OR ADHESIVE ANCHOR STRENGTH REQUIREMENTS: ULTIMATE TENSILE LOAD 17.9 KIPS AND ULTIMATE SHEAR LOAD 21.96 KIPS.
5. MAY BE USED ON CONCRETE OR ASPHALT PAVEMENTS. ASPHALT OPTION SHOWN. FOR CONCRETE OPTION SEE OTHER DETAILS.
6. MINIMUM MECHANICAL OR ADHESIVE ANCHOR STRENGTH REQUIREMENTS: ULTIMATE TENSILE LOAD 12.14 KIPS AND ULTIMATE SHEAR LOAD 17.5 KIPS.

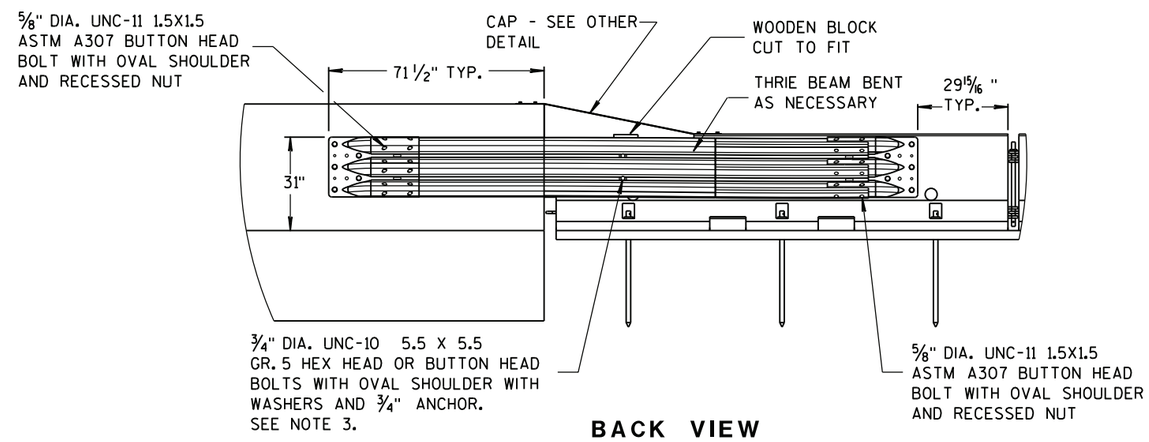

BACK VIEW

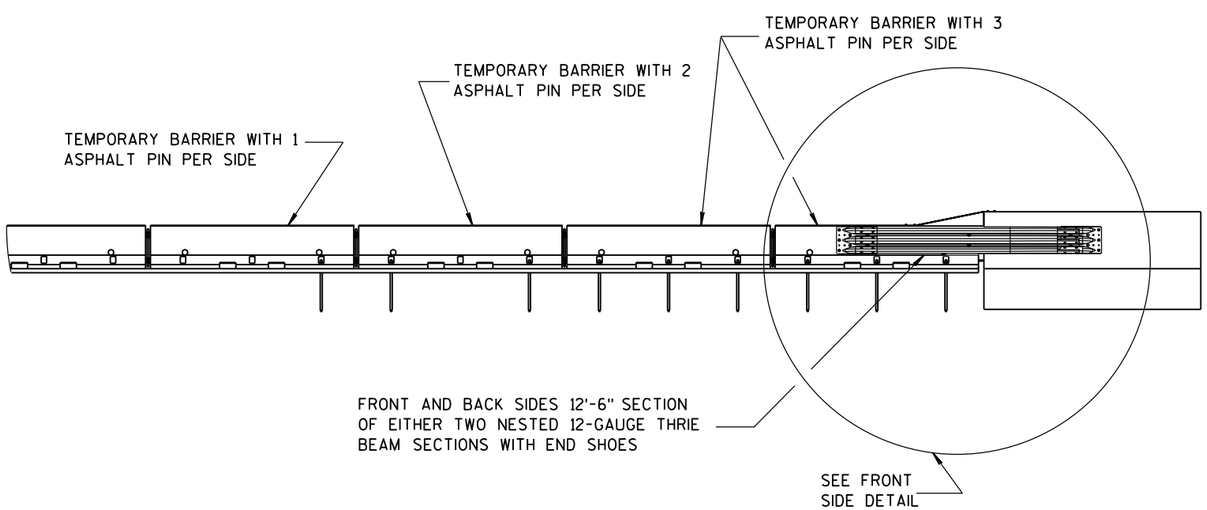

FRONT VIEW

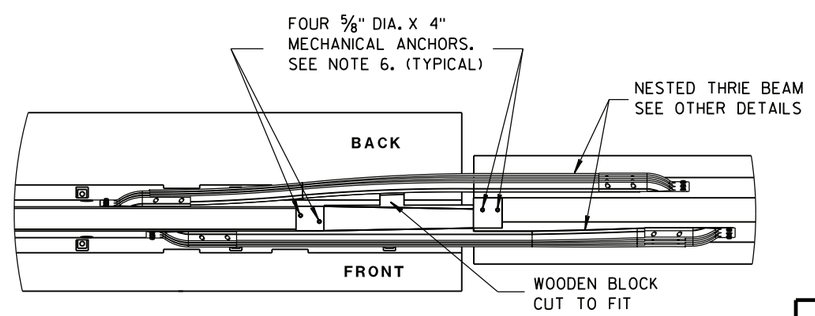

PLAN VIEW

TRANSITION TO TIED DOWN SYSTEM

CONCRETE BARRIER
TEMPORARY PRECAST, 12'-6"

STATE OF WISCONSIN
DEPARTMENT OF TRANSPOR

6

S.D.D. 14 B 7-15f

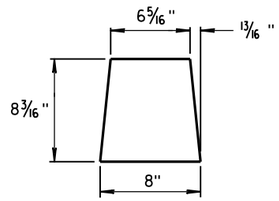

GUSSET 1

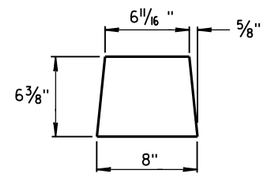

GUSSET 2

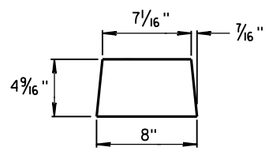

GUSSET 3

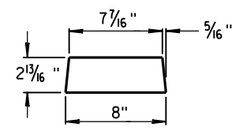

GUSSET 4

GUSSETS

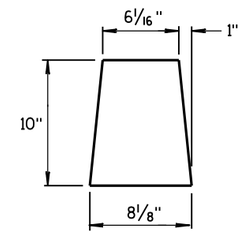

END PLATE

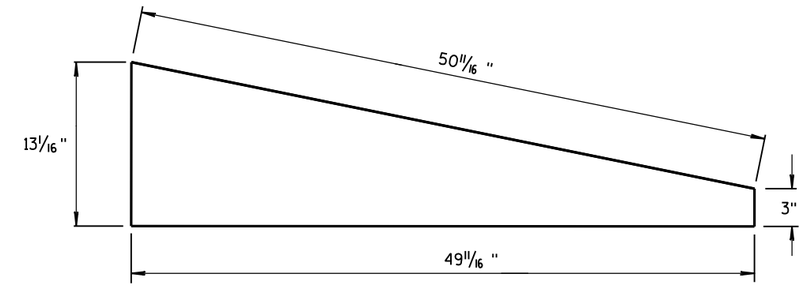

SIDE PLATE

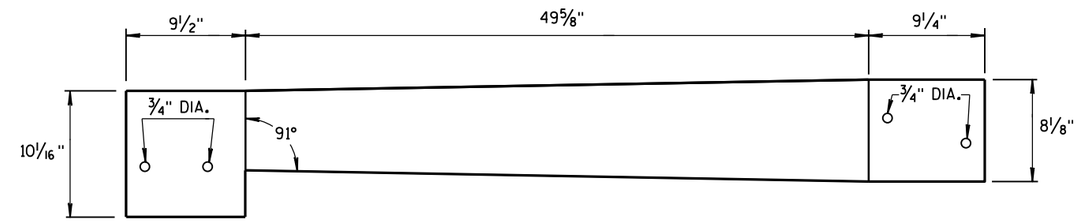

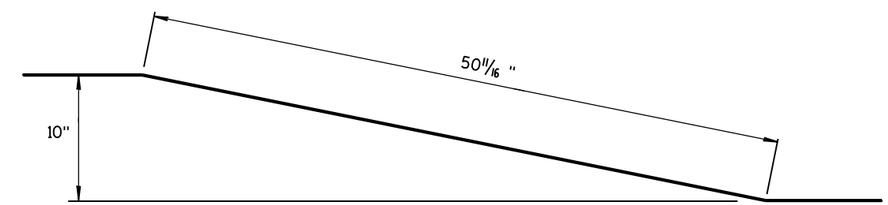

TOP PLATE

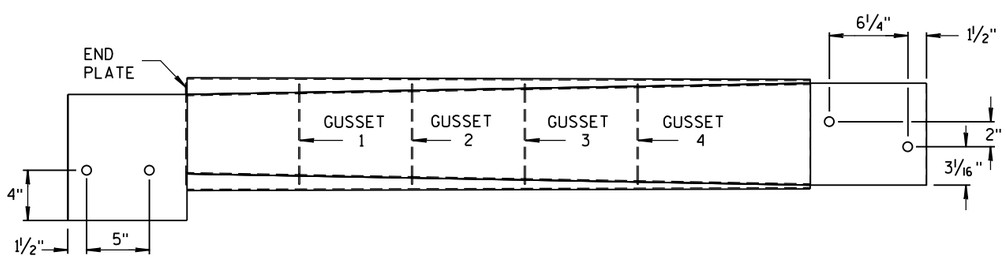

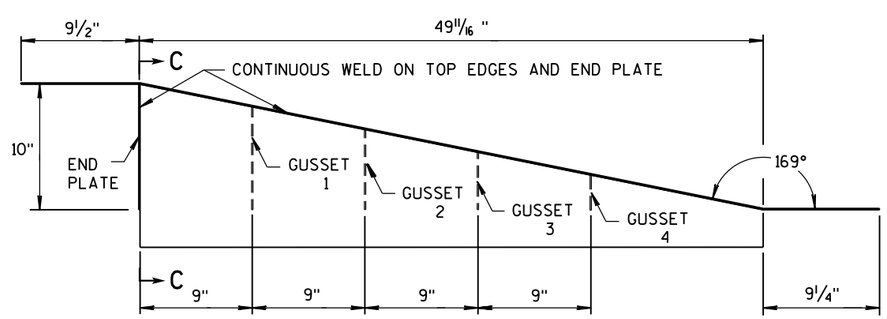

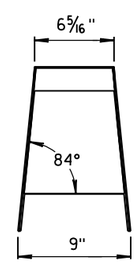

SECTION C-C

SIDE, TOP AND END PLATES FOR CAP FROM TEMPORARY CONCRETE BARRIER TO 42" PERMANENT CONCRETE BARRIER

SIDE PLATES, TOP PLATE, END PLATE AND GUSSETS ARE 12 GAUGE ASTM A36 GALVANIZED STEEL.

NOTES

1. FOUR GUSSETS AND END PLATE ARE STITCH WELDED ON THREE SIDES.
2. TWO TRIANGULAR SIDE PLATES ARE STITCH WELDED TO TOP PLATE, END PLATE, AND GUSSETS.

CAP DETAILS FOR TEMPORARY CONCRETE BARRIER TO 42" PERMANENT CONCRETE BARRIER

CONCRETE BARRIER
TEMPORARY PRECAST, 12'-6"

STATE OF WISCONSIN
DEPARTMENT OF TRANSPO

6

S.D.D. 14 B 7-15g

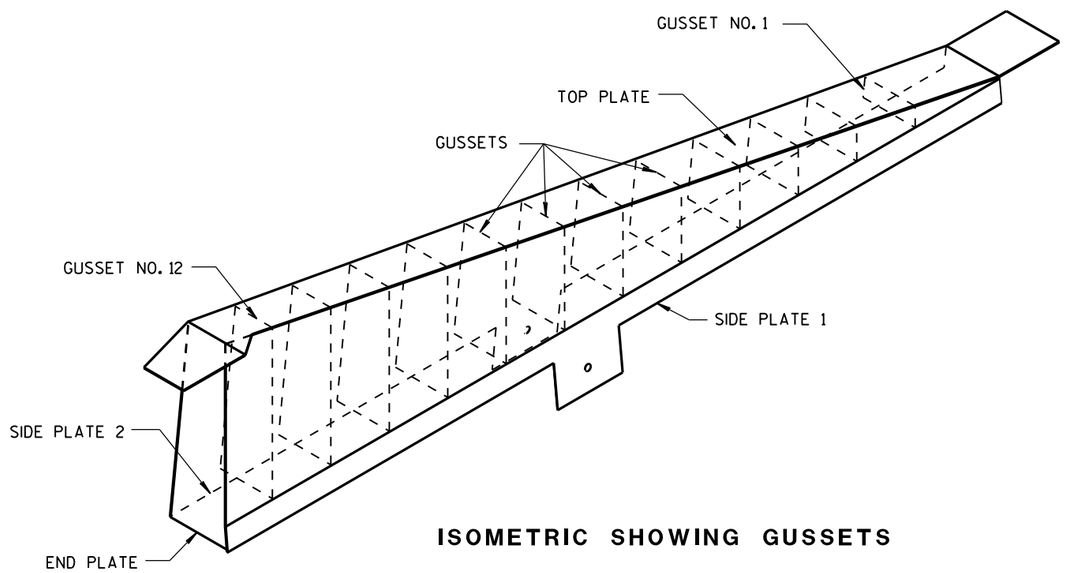

ISOMETRIC SHOWING GUSSETS

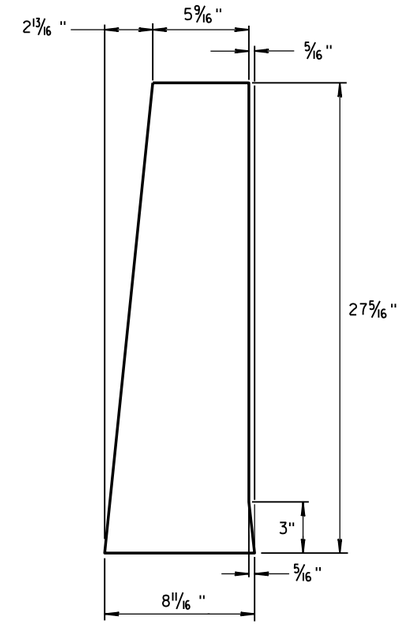

END PLATE

1/8" STEEL PLATE

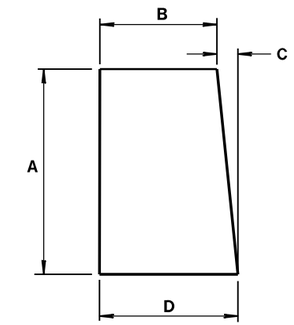

GUSSETS 1 - 12

ALL GUSSETS 1/8" STEEL PLATE

GUSSET DIMENSIONS				
GUSSET NO.	A	B	C	D
1	2 7/8"	7 3/4"	1/4"	8
2	4 11/16 "	7 9/16 "	1/2"	8
3	6 1/2"	7 3/8"	11/16 "	8 1/16 "
4	8 5/16 "	7 3/16 "	7/8"	8 1/16 "
5	10 1/8"	7"	1 1/16 "	8 1/16 "
6	11 15/16 "	6 13/16 "	1 1/4"	8 1/16 "
7	13 3/4"	6 5/8"	1 7/16 "	8 1/16 "
8	15 9/16 "	6 7/16 "	1 9/16 "	8 1/16 "
9	17 3/8"	6 1/4"	1 13/16 "	8 1/16 "
10	19 3/16 "	6 1/16 "	1 15/16 "	8 1/16 "
11	21"	5 7/8"	2 3/16 "	8 1/16 "
12	22 13/16 "	5 11/16 "	2 5/16 "	8 1/16 "

SIDE PLATES, TOP PLATE, END PLATE AND GUSSETS ARE 12 GAUGE ASTM A36 STEEL AND GALVANIZED.

GUSSETS AND END PLATE ARE STITCH WELDED ON 3 SIDES. TWO TRIANGULAR SIDE PLATES ARE STITCH WELDED TO TOP PLATE, END PLATE AND GUSSETS.

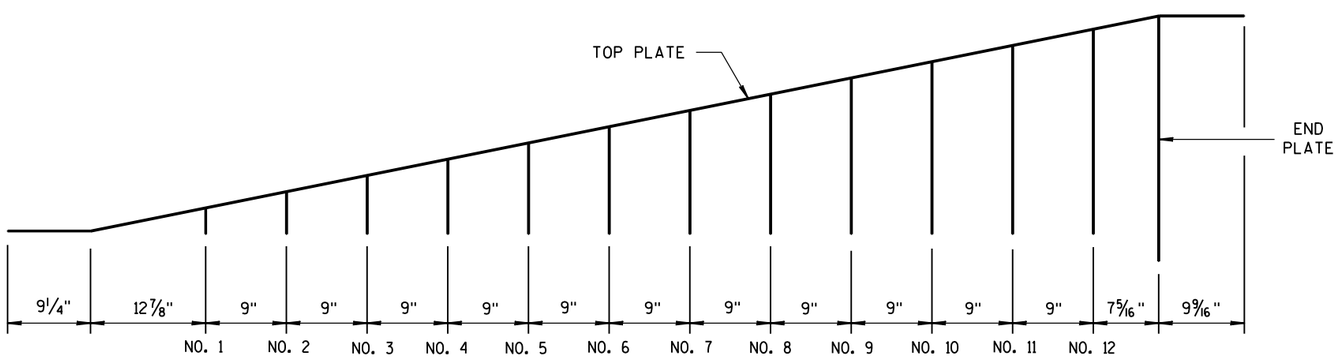

GUSSET LOCATION

CAP DETAILS FOR TEMPORARY CONCRETE BARRIER TO 56" PERMANENT CONCRETE BARRIER

CONCRETE BARRIER
TEMPORARY PRECAST, 12'-6"

STATE OF WISCONSIN
DEPARTMENT OF TRANSPOR

6

S.D.D. 14 B 7-15h

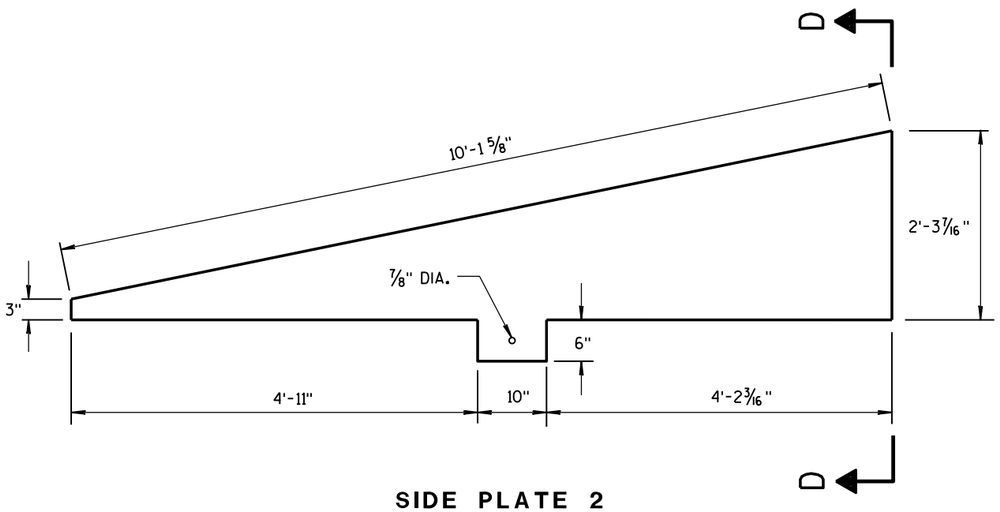

SIDE PLATE 2

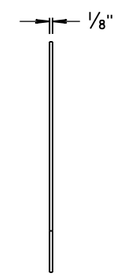

END VIEW

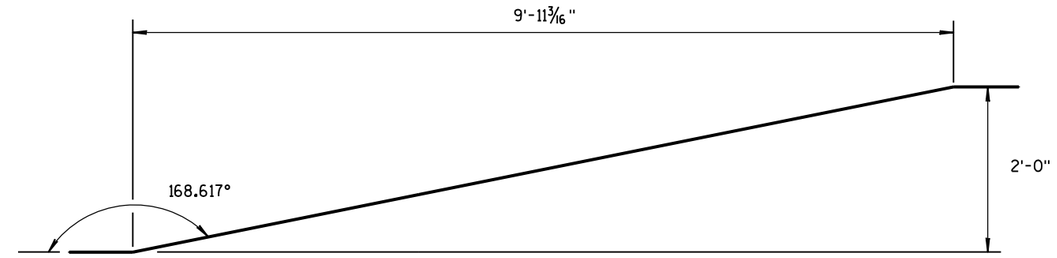

SIDE VIEW

TOP PLATE

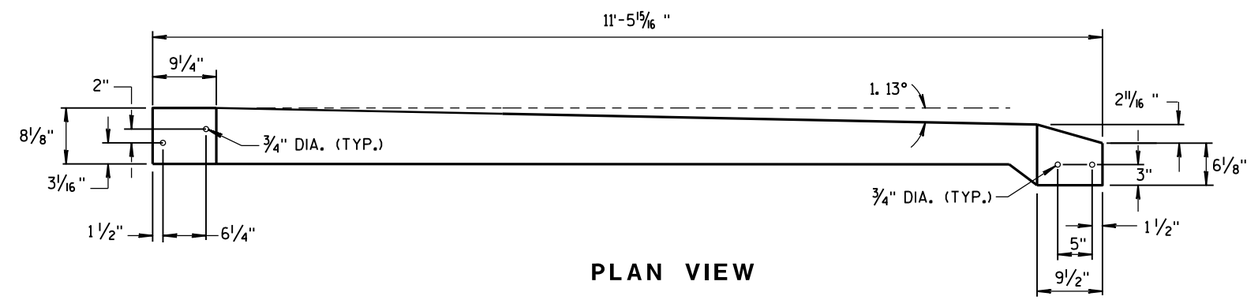

PLAN VIEW

TOP PLATE

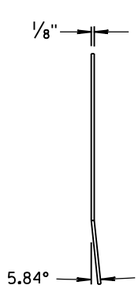

END VIEW

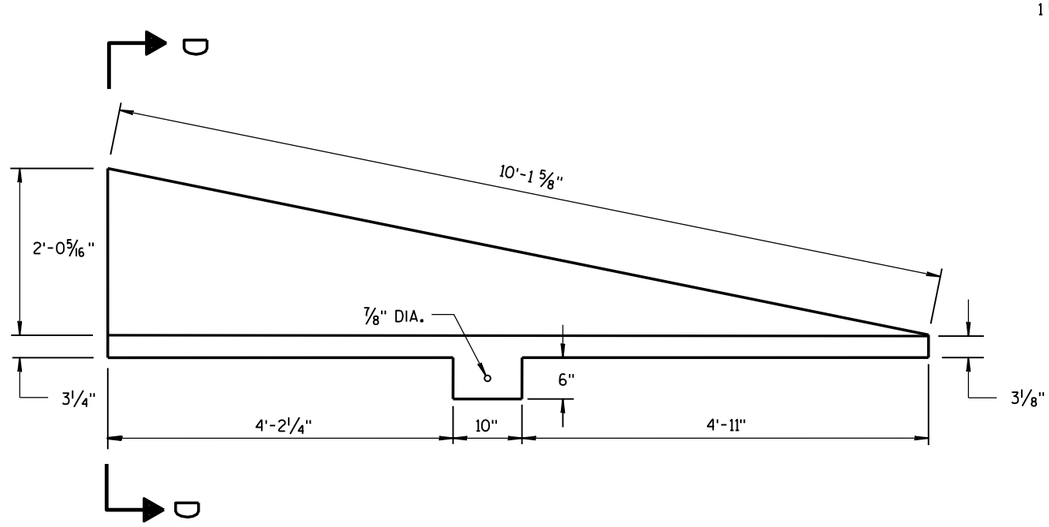

SIDE PLATE 1

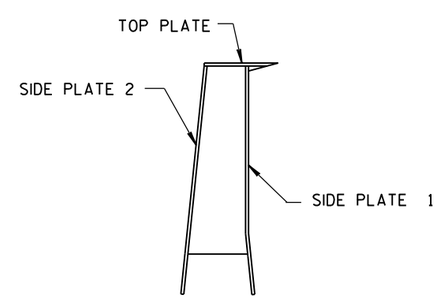

SECTION D-D

CAP DETAILS FOR TEMPORARY CONCRETE BARRIER TO 56" PERMANENT CONCRETE BARRIER

CONCRETE BARRIER
TEMPORARY PRECAST, 12'-6"

STATE OF WISCONSIN
DEPARTMENT OF TRANSPORTATION

APPROVED
June 2017 — DATE
/S/ Rodney Taylor — ROADWAY STANDARD UNIT SUPERV
FHWA

6

S.D.D. 14 B 7-15i

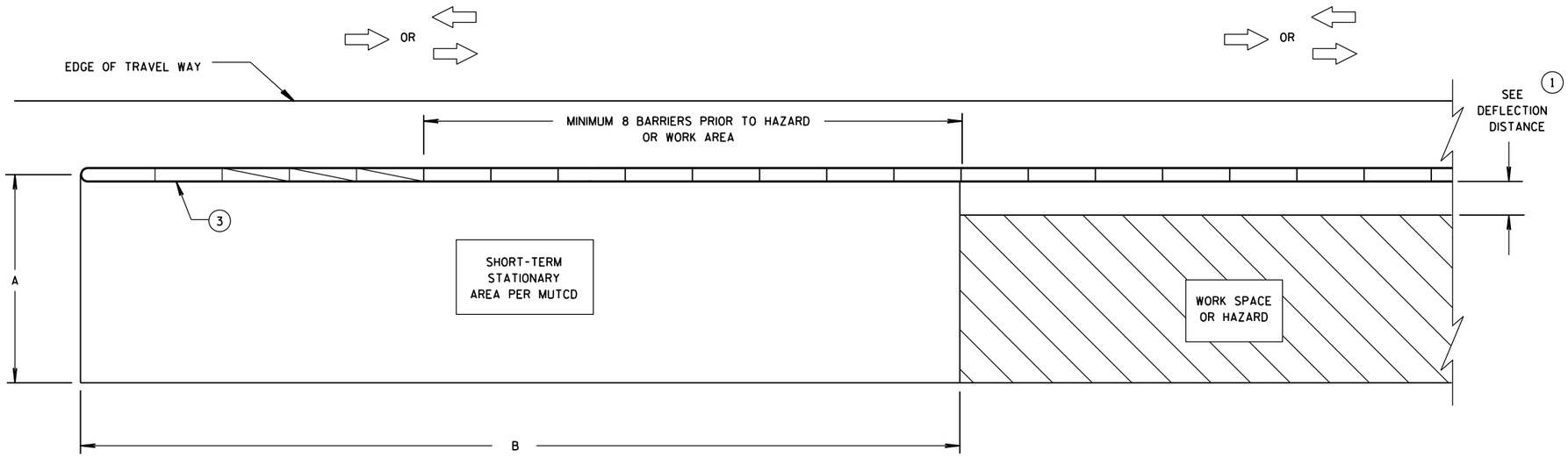

CRASH CUSHION/SAND BARREL ARRAY AND TEMPORARY BARRIER INSTALLATION FOR TRAFFIC ON ONE SIDE OF BARRIER

DIMENSION A TABLE (2)

FACILITY	POSTED SPEED MPH	DIMENSION A MIN. FT	DIMENSION A MAX. FT
FREEWAY/EXPRESSWAY	ALL	15	20
NON-FREEWAY/EXPRESSWAY	GREATER THAN OR EQUAL TO 45	10	15
NON-FREEWAY/EXPRESSWAY	LESS THAN 45	8	10
AADT LESS THAN 1,500	ALL	8	10

DIMENSION B TABLE (2)

POSTED SPEEDS MPH	DIMENSION B FT
20	115
25	155
30	200
35	250
40	305
45	360
50	425
55	495
60	570
65	645

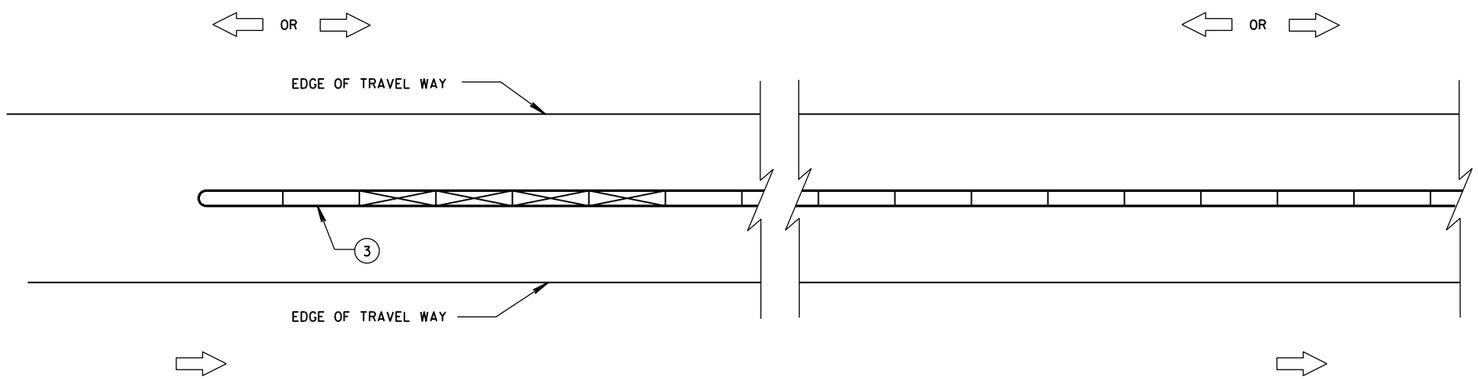

CRASH CUSHION/SAND BARREL ARRAY AND TEMPORARY BARRIER INSTALLATION FOR TRAFFIC ON BOTH SIDES OF BARRIER

LEGEND

- DIRECTION OF TRAVEL
- CRASH CUSHION OR SAND BARREL ARRAY
- SEE FREE STANDING TRANSITION TO TIED-DOWN SYSTEM DETAILS
- SEE BI-DIRECTIONAL TRANSITION TO TIED-DOWN SYSTEM DETAILS
- 3 PINS PLACED ON TRAFFIC SIDE OF BARRIER
- PERMANENT CONCRETE BARRIER OR CONCRETE PARAPET
- FREE STANDING TEMPORARY BARRIER

GENERAL NOTES

SEE STANDARD DETAIL DRAWING 14B7 FOR MORE INFORMATION.

DETAILS PROVIDE A GENERAL LAYOUT OF TEMPORARY CONCRETE BARRIER, CRASH CUSHIONS, SAND BARREL ARRAYS AND TIE DOWN TRANSITIONS. DETAILS PROVIDED MAY NOT FIT ALL POSSIBLE SITUATIONS OR SITE CONDITIONS. SEE OTHER SECTIONS OF THE CONTRACT OR PROJECT ENGINEER FOR MORE DETAILS.

ADDITIONAL TEMPORARY BARRIER MAY BE REQUIRED TO PROTECT TRAVELING PUBLIC FROM HAZARDS, CONTRACTOR'S OPERATIONS OR TO CONTROL TRAFFIC.

TEMPORARY BARRIER MAY BE REQUIRED TO BE ANCHORED TO PAVEMENT OR BRIDGE DECK.

FOR DETAILS ON CRASH CUSHION OR SAND BARREL ARRAYS SEE OTHER SECTIONS OF THE PLAN AND MANUFACTURE'S DETAILS.

SLOPES LEADING TO TEMPORARY BARRIER, CRASH CUSHION OR SAND BARREL ARRAY ARE 10:1 OR LESS.

(1) FOR DEFLECTION INFORMATION SEE STANDARD DETAIL DRAWING 14B7.

(2) VALUES PROVIDED MAY NOT FIT ALL POSSIBLE SITUATIONS OR SITE CONDITIONS. SEE OTHER SECTIONS OF THE CONTRACT OR PROJECT ENGINEER FOR MORE DETAILS.

(3) ANCHOR TEMPORARY BARRIER ACCORDING TO CRASH CUSHION OR SAND BARREL MANUFACTURER'S RECOMMENDATIONS. IF MANUFACTURER'S RECOMMENDATIONS ARE NOT PROVIDED, ANCHOR 3 PINS ON TRAFFIC SIDE.

CRASH CUSHION/SAND BARREL ARRAY AND OTHER TEMPORARY BARRIER LAYOUT DETAILS

STATE OF WISCONSIN
DEPARTMENT OF TRANSPOR

6

S.D.D. 14 B 8-2a

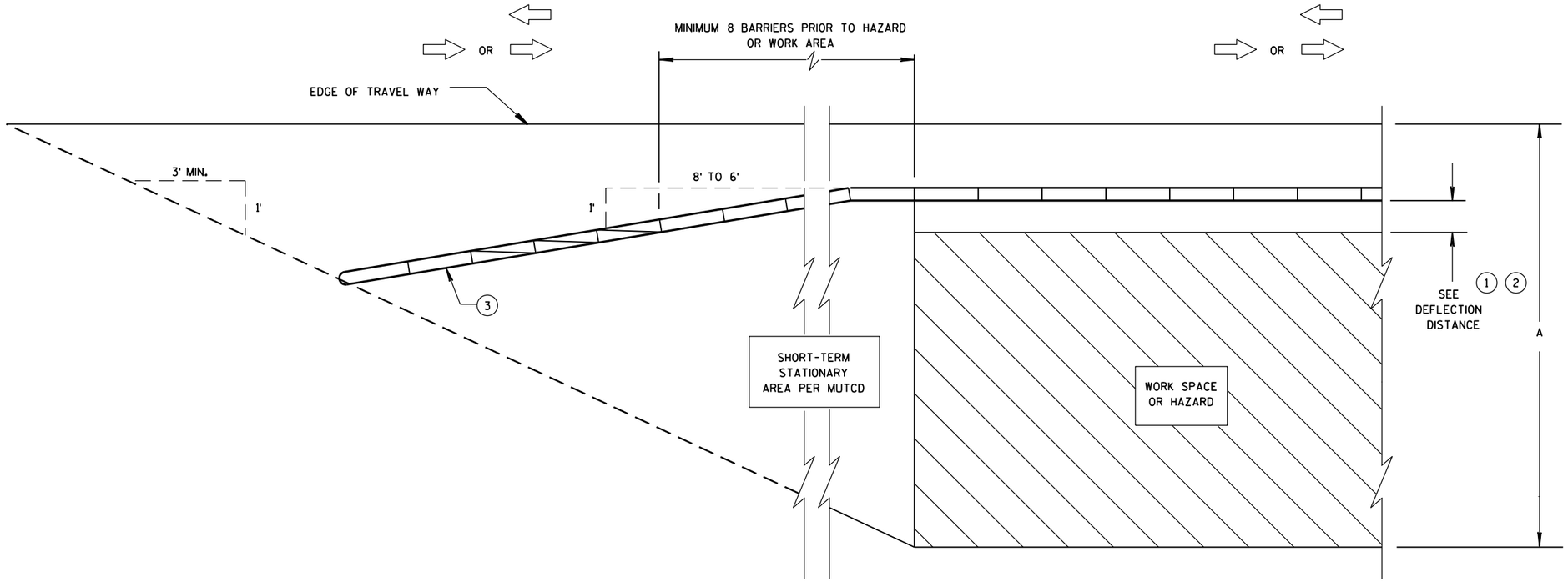

CRASH CUSHION/SAND BARREL ARRAY AND TEMPORARY BARRIER INSTALLATION FOR TRAFFIC ON ONE SIDE - FLARED INSTALLATION

6

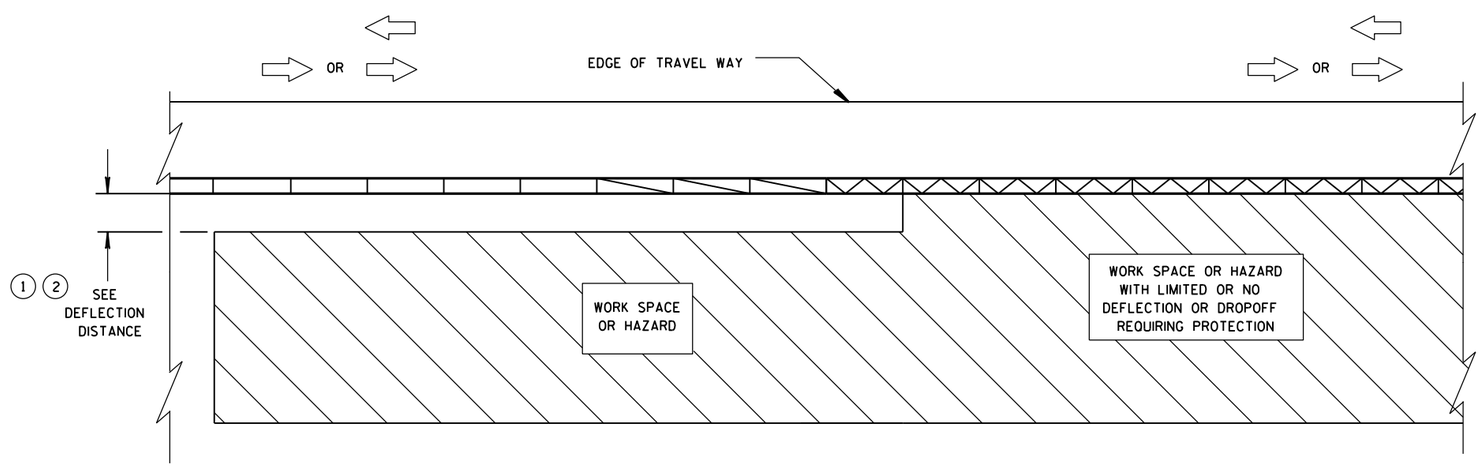

TRANSITION FROM FREE STANDING TEMPORARY BARRIER TO ANCHORED BARRIER

LEGEND

- DIRECTION OF TRAVEL
- CRASH CUSHION OR SAND BARREL ARRAY
- SEE FREE STANDING TRANSITION TO TIED-DOWN SYSTEM DETAILS
- SEE BI-DIRECTIONAL TRANSITION TO TIED-DOWN SYSTEM DETAILS
- 3 PINS PLACED ON TRAFFIC SIDE OF BARRIER
- PERMANENT CONCRETE BARRIER OR CONCRETE PARAPET
- FREE STANDING TEMPORARY BARRIER

CRASH CUSHION/SAND BARREL ARRAY AND OTHER TEMPORARY BARRIER LAYOUT DETAILS

STATE OF WISCONSIN
DEPARTMENT OF TRANSPOR

S.D.D. 14 B 8-2b

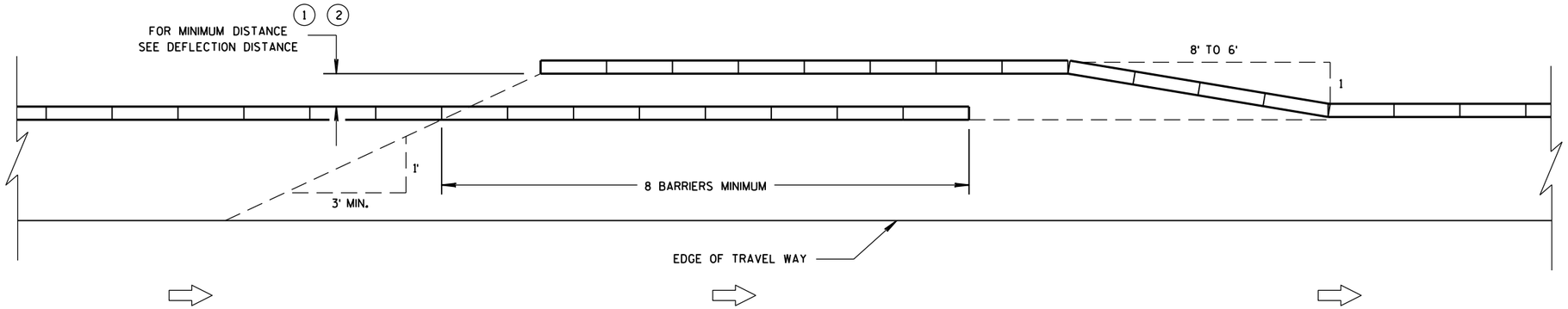

TEMPORARY BARRIER OVERLAP - ONE-WAY TRAFFIC

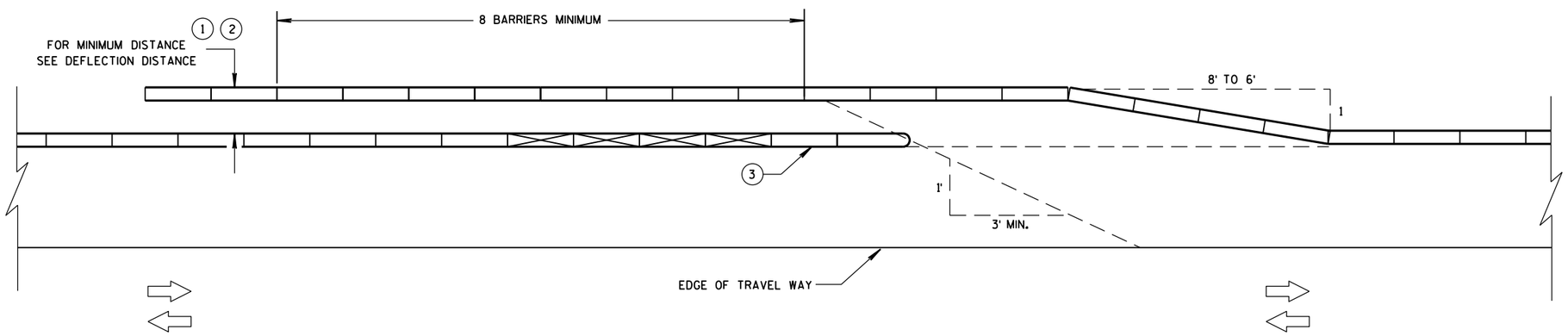

TEMPORARY BARRIER OVERLAP - TWO-WAY TRAFFIC

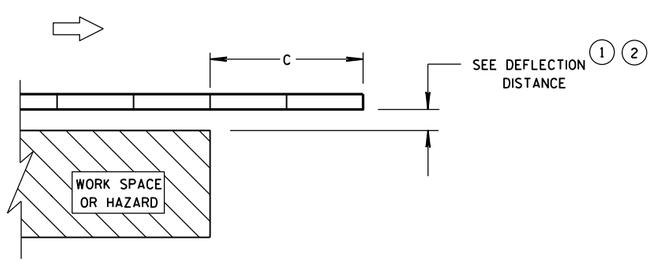

ENDING TEMPORARY BARRIER DOWNSTREAM - UNANCHORED

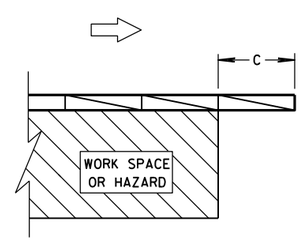

ENDING TEMPORARY BARRIER DOWNSTREAM - ANCHORED

LEGEND

- DIRECTION OF TRAVEL
- CRASH CUSHION OR SAND BARREL ARRAY
- SEE FREE STANDING TRANSITION TO TIED-DOWN SYSTEM DETAILS
- SEE BI-DIRECTIONAL TRANSITION TO TIED-DOWN SYSTEM DETAILS
- 3 PINS PLACED ON TRAFFIC SIDE OF BARRIER
- PERMANENT CONCRETE BARRIER OR CONCRETE PARAPET
- FREE STANDING TEMPORARY BARRIER

CRASH CUSHION/SAND BARREL ARRAY AND OTHER TEMPORARY BARRIER LAYOUT DETAILS

STATE OF WISCONSIN
DEPARTMENT OF TRANSPOR

6

6

S.D.D. 14 B 8-2c

S.D.D. 14 B 8-2c

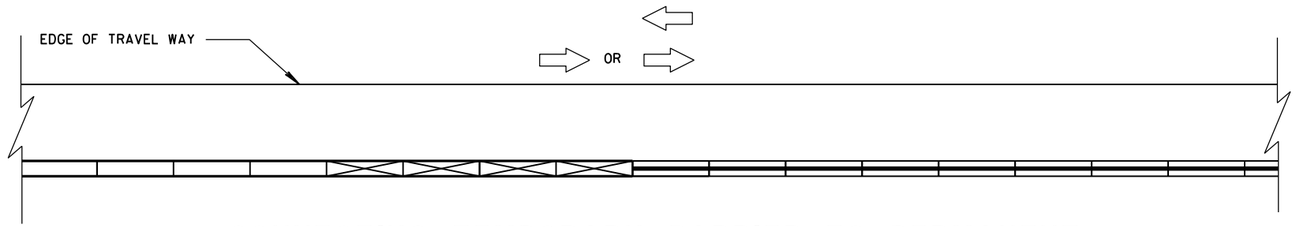

CONNECTING TEMPORARY BARRIER TO PERMANENT
CONCRETE BARRIER-TRAFFIC ON ONE SIDE

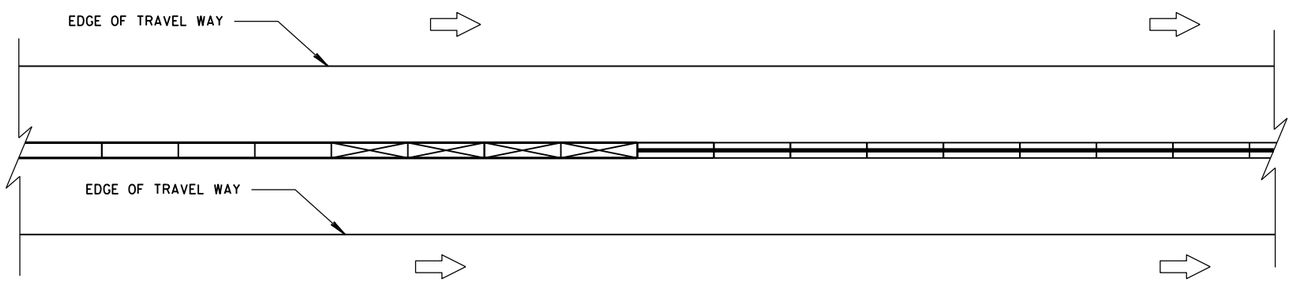

CONNECTING TEMPORARY BARRIER TO PERMANENT
CONCRETE BARRIER-TRAFFIC ON BOTH SIDES

LEGEND

DIRECTION OF TRAVEL

CRASH CUSHION OR
SAND BARREL ARRAY

SEE FREE STANDING TRANSITION
TO TIED-DOWN SYSTEM DETAILS

SEE BI-DIRECTIONAL TRANSITION
TO TIED-DOWN SYSTEM DETAILS

3 PINS PLACED ON
TRAFFIC SIDE OF BARRIER

PERMANENT CONCRETE BARRIER
OR CONCRETE PARAPET

FREE STANDING TEMPORARY
BARRIER

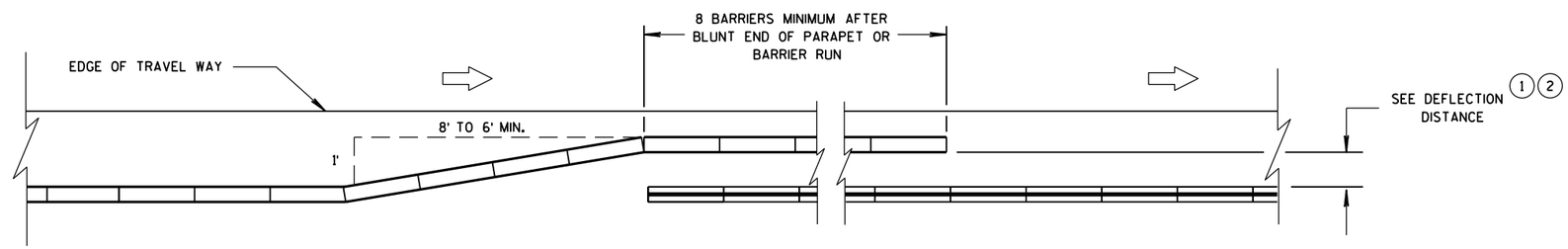

OVERLAPPING TEMPORARY BARRIER AND PERMANENT BARRIER -
ONE WAY TRAFFIC

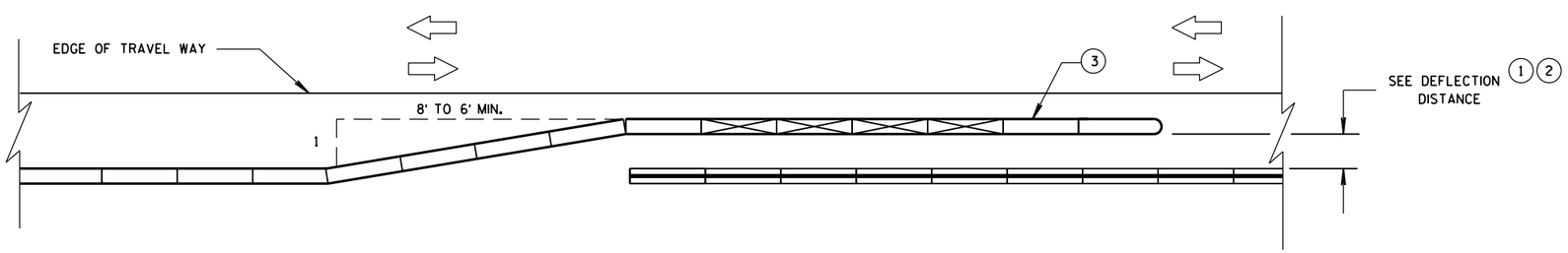

OVERLAPPING TEMPORARY BARRIER AND PERMANENT BARRIER -
TWO WAY TRAFFIC

CRASH CUSHION/SAND BARREL
ARRAY AND OTHER TEMPORARY
BARRIER LAYOUT DETAILS

STATE OF WISCONSIN
DEPARTMENT OF TRANSPOR

6

S.D.D. 14 B 8-2d

LEGEND

DIRECTION OF TRAVEL

CRASH CUSHION OR SAND BARREL ARRAY

SEE FREE STANDING TRANSITION TO TIED-DOWN SYSTEM DETAILS

SEE BI-DIRECTIONAL TRANSITION TO TIED-DOWN SYSTEM DETAILS

3 PINS PLACED ON TRAFFIC SIDE OF BARRIER

PERMANENT CONCRETE BARRIER OR CONCRETE PARAPET

FREE STANDING TEMPORARY BARRIER

DIMENSION C TABLE (2)

AVAILABLE DEFLECTION DISTANCE	MINIMUM LENGTH OF BARRIER BEYOND HAZARD FT
GREATER THAN 8'	12.5
LESS THAN OR EQUAL TO 8' BUT GREATER THAN 4'	50
LESS THAN OR EQUAL TO 4'	100

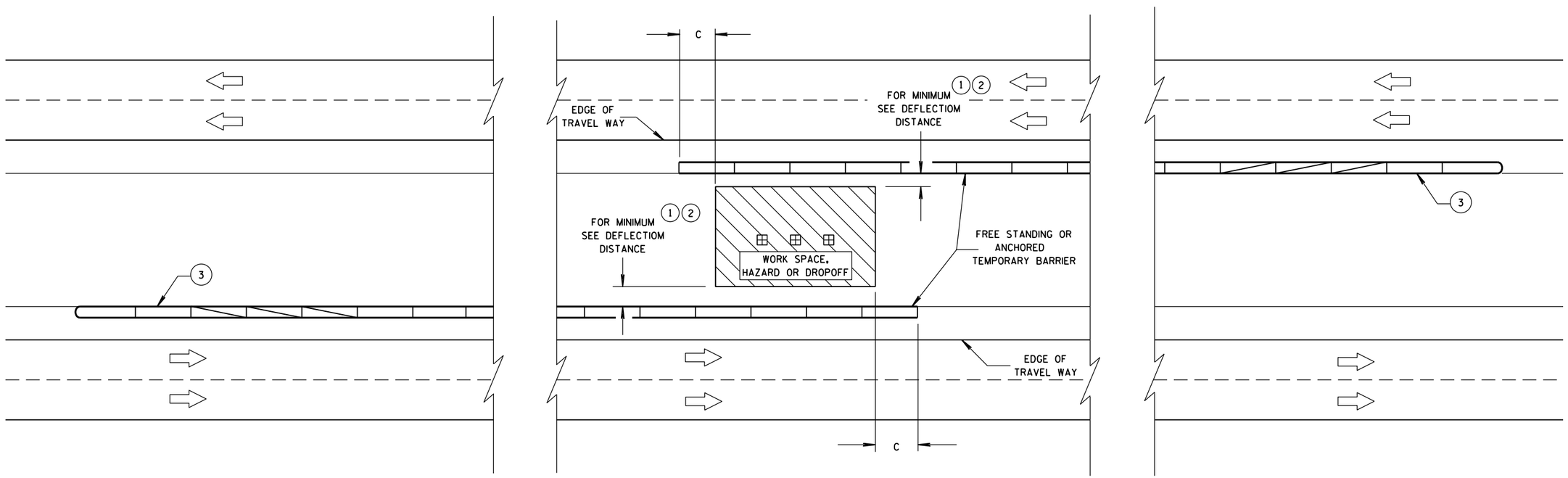

CRASH CUSHION/SAND BARREL ARRAY AND OTHER TEMPORARY BARRIER LAYOUT DETAILS

STATE OF WISCONSIN
DEPARTMENT OF TRANSPORTATION

APPROVED
June, 2015 — DATE
/S/ Jerry H. Zogg — ROADWAY STANDARDS DEVELOPMENT ENGINEER
FHWA

1. WOOD OR STEEL POSTS (w6X9 OR w6X8.5) MAY BE USED. DO NOT INTERMIX WOOD AND STEEL POSTS. INSTALL STEEL POSTS WITH HOLES ON APPROACHING TRAFFIC SIDE.
2. USE WOOD OR APPROVED PLASTIC BLOCKOUTS. WOOD BLOCKOUTS MAY BE CONSTRUCTED OUT OF TWO OR MORE WOOD BLOCKOUTS. SEE ALTERNATE WOOD BLOCKOUT DETAIL. DIMENSIONS OF APPROVED PLASTIC BLOCKOUTS MAY VARY.
3. IF ROCK IS ENCOUNTERED DURING EXCAVATION, PROVIDE A HOLE 12 INCHES IN DIAMETER EXTENDING 20 INCHES DEEP INTO THE ROCK. PLACE APPROXIMATELY 2 1/2" INCHES OF GRANULAR MATERIAL IN THE BOTTOM OF THE HOLE. CUT THE POSTS THE TO LENGTH AMD INSTALL. BACKFILL WITH EXCAVATED MATERIAL AND COMPACT. BACKFILL IS TO BE FREE OF LARGE ROCKS.
4. WHEN THE DISTANCE FROM BACK OF POST TO SHOULDER HINGE POINT IS LESS THAN 2 FEET INSTALL LONGER POST AT HALF POST SPACING (K).
5. FOR NEW MGS INSTALLATION TOP OF W-BEAM RAIL TOLERANCE IS +1". FOR EXISTING MGS INSTALLATION TOP OF W-BEAM IS BETWEEN 27 ¾" TO 32".
6. WHEN USING STEEL POST AND WOOD BLOCKOUTS INSTALL FOUR 16D GALVANIZED NAILS. INSTALL NAILS AT THE BACK CORNERS OF THE BLOCK AND BEND THE NAILS OVER THE FLANGE OF THE STEEL POST.
7. TOTAL POST LENGTH FOR TYPE K IS 7' - 0". TOTAL POST LENGTH FOR OTHER MGS TYPES IS 6' - 0".

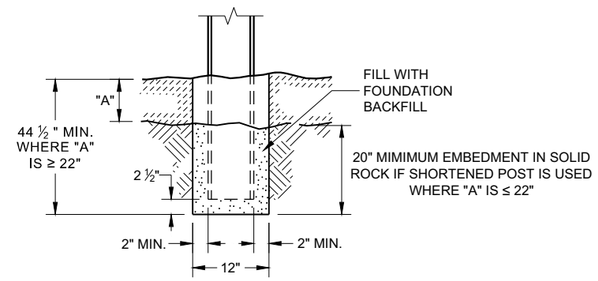

END VIEW
SETTING STEEL OR WOOD POST IN ROCK (3)

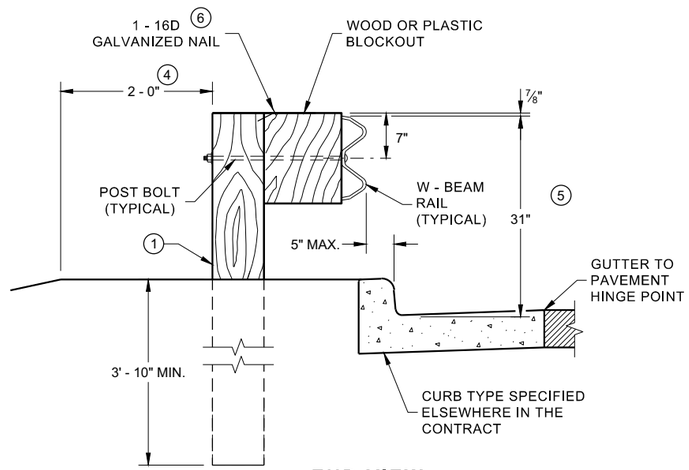

END VIEW
LOCATED ALONG A CURBED ROADWAY

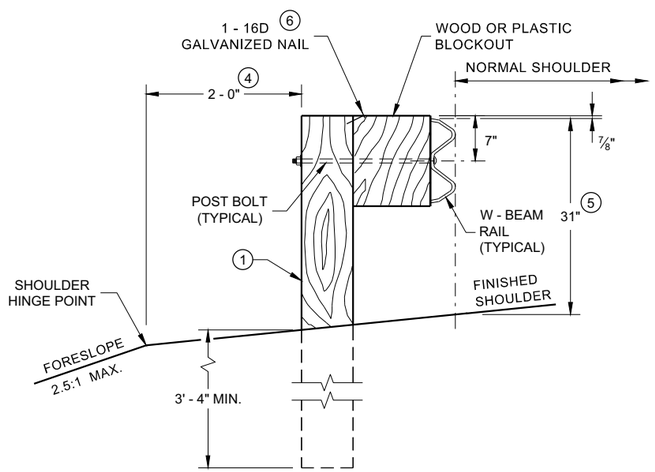

END VIEW
LOCATED ALONG A ROADWAY SHOULDER STANDARD INSTALLATION

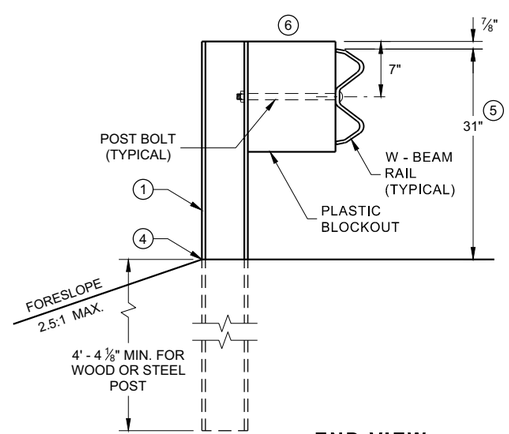

END VIEW
MGS LONGER POST AT HALFPOST SPACING W BEAM (K)

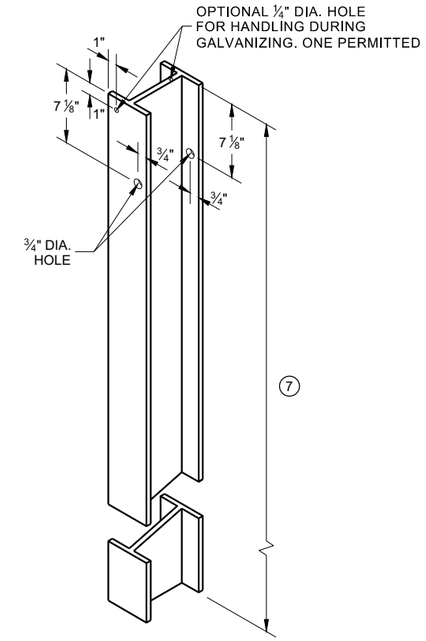

STEEL POST & HOLE PUNCHING DETAIL (W 6 X 9) (1)

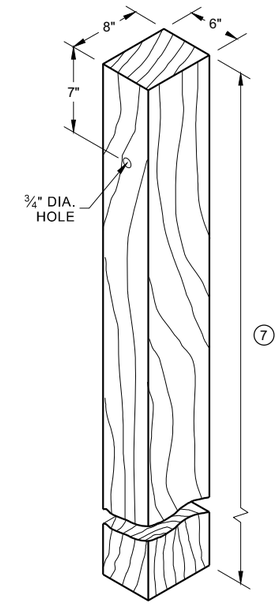

WOOD POST (6" X 8") NOMINAL (1)

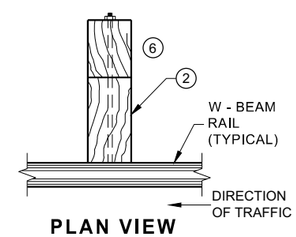

PLAN VIEW WOOD POST, BLOCKOUT & BEAM

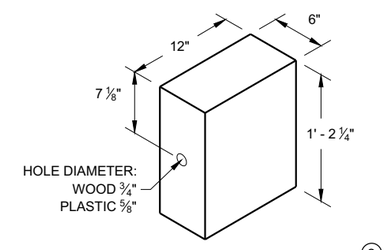

WOOD OR PLASTIC BLOCKOUT (2)

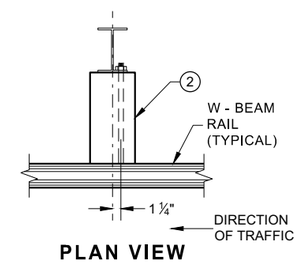

PLAN VIEW STEEL POST, PLASTIC BLOCKOUT & BEAM

MIDWEST GUARDRAIL SYSTEM (MGS) GUARDRAIL

STATE OF WISCONSIN
DEPARTMENT OF TRANSPORTA

6

SDD 14B42 - 06a

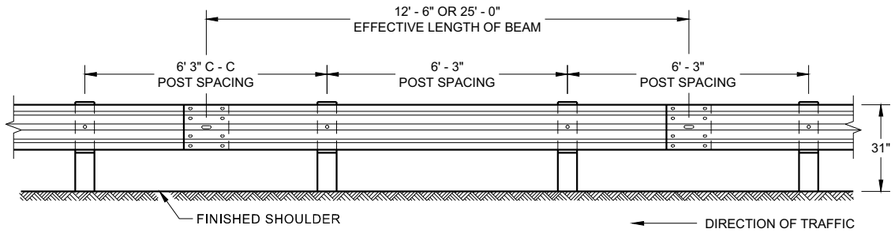

FRONT VIEW
POST SPACING STANDARD INSTALLATION

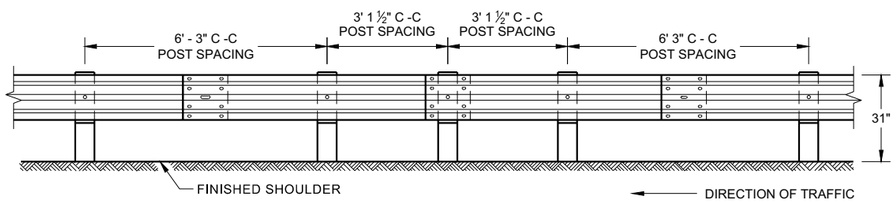

FRONT VIEW
HALF POST SPACING (HS) AND HALF POST SPACING WITH LONGER POSTS (K)

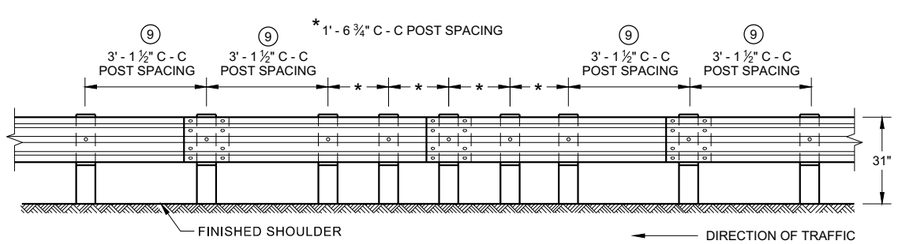

FRONT VIEW
QUARTER POST SPACING (QS)

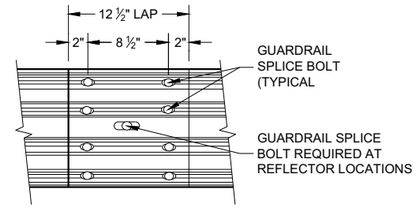

FRONT VIEW
MID-SPAN BEAM SPLICE

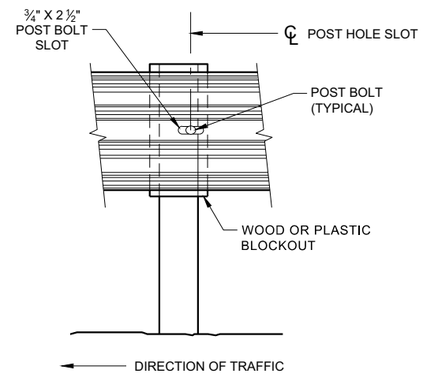

FRONT VIEW AT STEEL POST

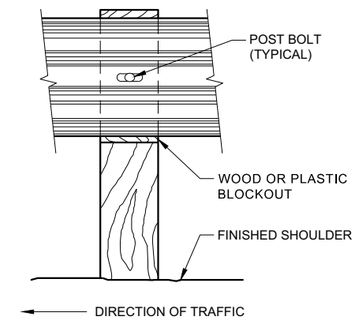

FRONT VIEW AT WOOD POST

GENERAL NOTES

8 DO NOT INSTALL REFLECTORS ON THE FIRST 50 FEET OF THE APPROACH END OF THE ENERGY ABSORBING TERMINAL.

9 25 FEET OF HALF POST SPACING IS REQUIRED ON APPROACH AND DEPARTURE ENDS OF QUARTER POST SPACING.

POST BOLTS ARE A ⅝" DIAMETER ASTM A307 GUARDRAIL BOLT. A POST BOLT REQUIRES ⅝" DIAMETER A563A DOUBLE RECESSED (DR) HEAVY HEX NUT AND ⅝" DIAMETER F844 FLAT WASHER. POST BOLTS MAY BE LONGER IF MULTIPLE BLOCKOUTS ARE BEING USED.

GUARD RAIL SPLICE BOLTS ARE A ⅝" DIAMETER ASTM A307 GUARDRAIL HEAD BOLT. A GUARDRAIL SPLICE BOLT REQUIRES ⅝" DIAMETER A563A DOUBLE RECESSED (DR) HEAVY HEX NUT.

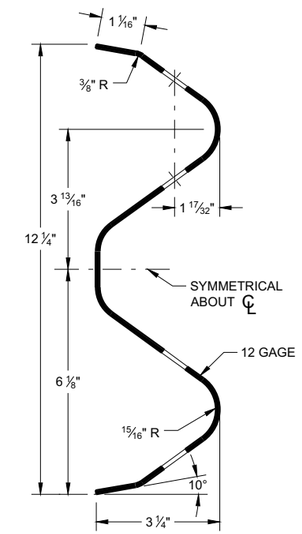

SECTION THRU W-BEAM RAIL

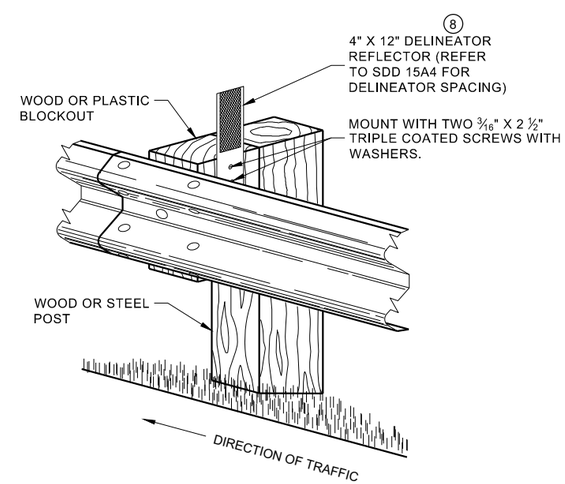

ONE SIDED REFLECTOR DETAIL AND TYPICAL INSTALLATION

MIDWEST GUARDRAIL SYSTEM (MGS) GUARDRAIL

STATE OF WISCONSIN
DEPARTMENT OF TRANSPORTAT

6

SDD 14B42 - 06b

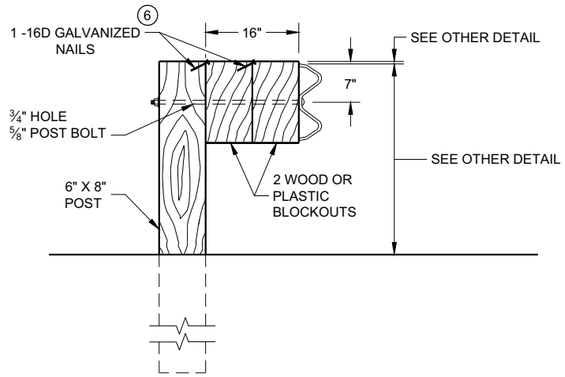

DETAIL FOR 16" BLOCKOUT DEPTH

IT IS ACCEPTABLE TO USE BLOCKOUTS UP TO 16" DEEP TO INCREASE THE POST OFFSET TO AVOID UNDERGROUND OBSTACLES. THERE IS NO LIMIT TO THE NUMBER OF POSTS THAT CAN HAVE ADDITIONAL BLOCKOUTS UP TO 16" DEEP.

NOTE:

1. ALL FILLETS SHALL HAVE A MINIMUM RADIUS OF 3/16".
2. IF THE BOLT EXTENDS MORE THAN ¼" FROM THE NUT THE BOLT SHOULD BE TRIMMED BACK.

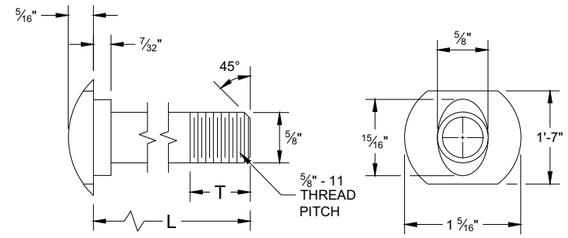

POST BOLT TABLE

L	T (MIN.)
1 ¼"	1 ⅛"
2"	1 ¾"
10"	4"
14"	4 1/16"
18"	4"
21"	4 1/16"
25"	4"

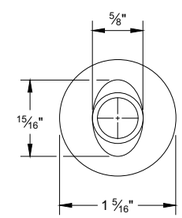

ALTERNATE BOLT HEAD

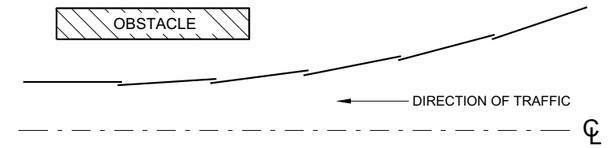

PLAN VIEW
BEAM LAPPING DETAIL

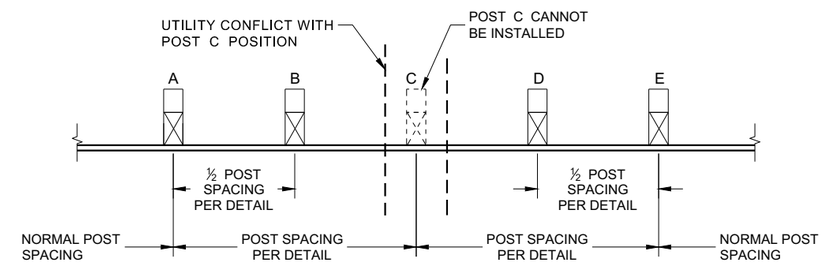

POST DRIVING FOR CONTINUOUS UNDERGROUND OBSTRUCTION

6

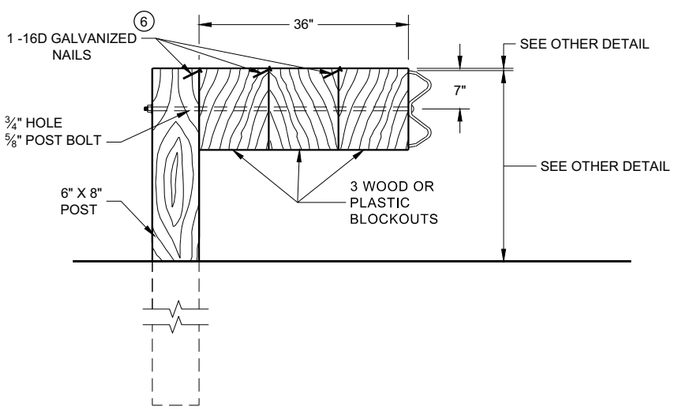

DETAIL FOR 36" BLOCKOUT DEPTH

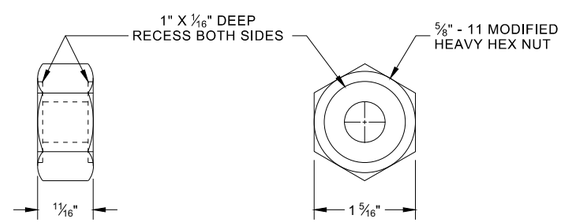

POST BOLT, SPLICE BOLT AND RECESS NUT

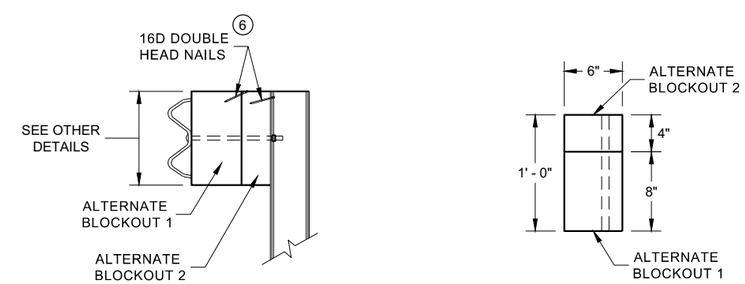

SIDE VIEW

PLAN VIEW

ALTERNATE WOOD BLOCKOUT DETAIL

NOTES: UNDER SPECIAL CIRCUMSTANCES, SUCH AS AVOIDING OBSTACLES THAT ARE NOT RELOCATED, IT IS ACCEPTABLE TO INSTALL ADDITIONAL BLOCKOUTS TO OBTAIN UP TO 36" DEPTH FOR ONE OR TWO POSTS IN A SECTION OF GUARDRAIL.

DO NOT USE 16" OR 36" BLOCKOUTS IF IT CAUSES THE POST TO BE DRIVEN BEYOND SHOULDER HINGE POINT OR CAUSES A FIXED OBJECT TO BE WITHIN THE DEFLECTION DISTANCE OF THE BARRIER.

(6) WHEN USING STEEL POST AD WOOD BLOCKOUTS, INSTALL FOUR 16D GALVANIZED NAILS. INSTALL NAILS AT THE BACK CORNERS OF THE BLOCK AND BEND THE NAILS OVER THE FLANGE OF THE STEEL POST.

MIDWEST GUARDRAIL SYSTEM (MGS) GUARDRAIL

STATE OF WISCONSIN
DEPARTMENT OF TRANSPORTA

SDD 14B42 - 06c

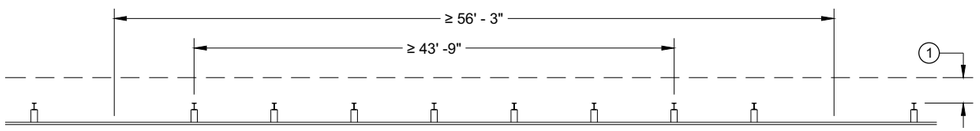

MISSING POST IN NORMAL BEAM GUARD RUN

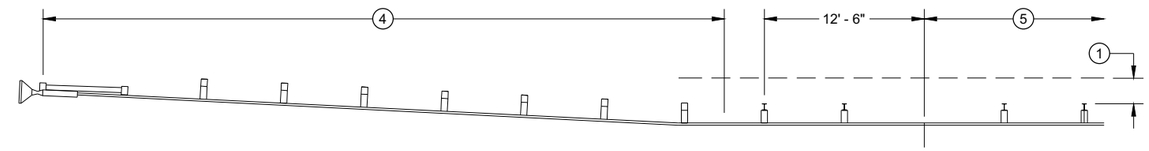

MISSING POST IN NORMAL BEAM GUARD RUN NEAR EAT

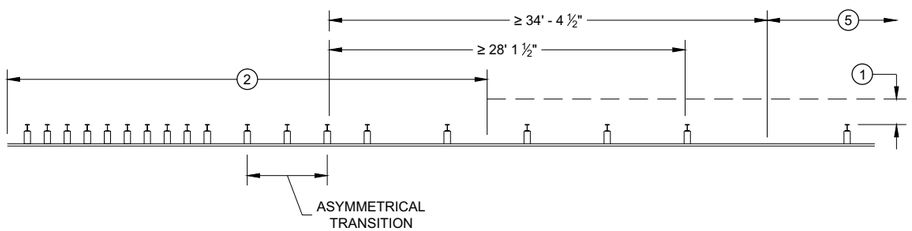

MISSING POST NEAR APPROACH THRIE BEAM TRANSITION

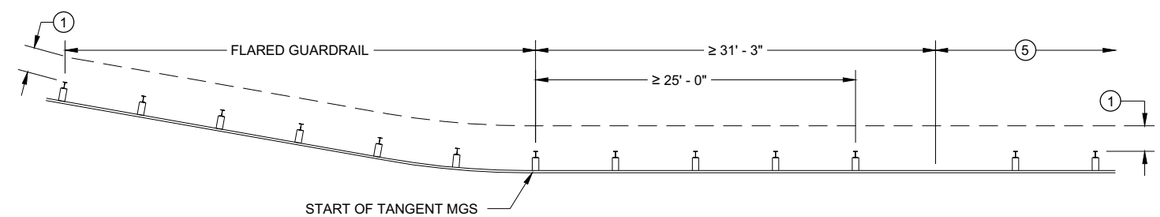

MISSING POST IN NORMAL BEAM GUARD RUN NEAR FLARED BEAM GUARD

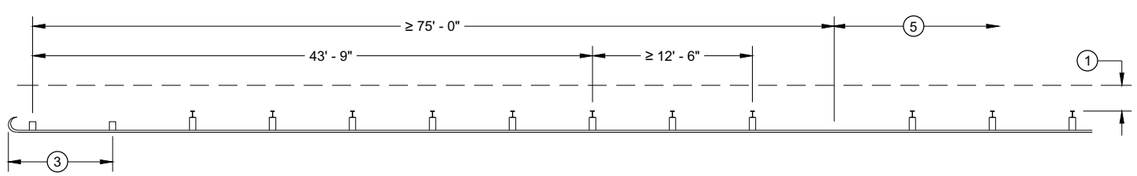

MISSING POST IN NORMAL BEAM GUARD RUN NEAR TYPE 2 TERMINAL

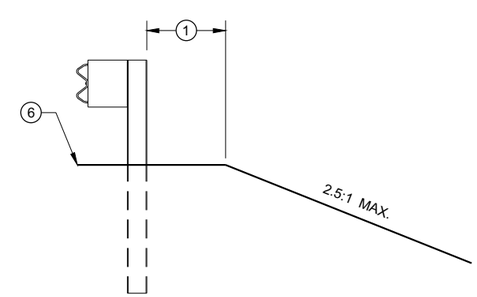

CROSS SECTION VIEW

1. MINIMUM OF 2 FEET OF GRADING BEHIND POST.
2. SEE SDD 14B45 FOR MORE DETAILS.
3. SEE SDD 14B47 FOR MORE DETAILS.
4. SEE SDD 14B44 FOR MORE DETAILS.
5. SEE MISSING POST IN NORMAL BEAM GUARD RUN FOR DISTANCE TO NEXT MISSING POST AND AREA FOR WELL DRAINED, COMPACTED SOILS.
6. SEE PLAN FOR SHOULDER DESIGN.

MIDWEST GUARDRAIL SYSTEM (MGS) GUARDRAIL

STATE OF WISCONSIN
DEPARTMENT OF TRANSPORTATION

APPROVED
7/2018 — DATE
/S/ Rodney Taylor — ROADWAY STANDARDS DEVE UNIT SUPERVISOR
FHWA

6

SDD 14B42 - 06d

GENERAL NOTES

(A) THE SLOPE IN THE AREA BOUNDED BY THE GRADELINE, THE HINGE POINT LINE (HPL) AND THE CLEAR ZONE LIMITS (CZL) SHALL BE 4:1 OR FLATTER.

(B) AFTER FINAL ASSEMBLY, RECHECK CABLE TO BE SURE IT IS TAUT AND HAS NOT RELAXED

(C) DIFFERENT MANUFACTURERS REQUIRE DIFFERENT PERFORATED W - BEAM RAIL END PANELS. SEE MANUFACTURER'S INFORMATION.

(D) ATTACH ALUMINUM SHEET TO E.A.T. HEAD USING 4 STAINLESS STEEL SELF - TAPPING SCREWS. ONE SCREW PER CORNER.

(E) HARDWARE MAY VARY BETWEEN MANUFACTURER. SEE MANUFACTURER'S DRAWING FOR INFORMATION.

DIMENSIONS MAY VARY, MANUFACTURER'S INFORMATION.

SEE SDD 14B42 FOR MORE INFORMATION.

* DO NOT ATTACH BLOCKOUTS TO POST 1 AND 2.

DO NOT INSTALL REFLECTORS ON THE FIRST 50 FEET OF THE APPROACH END OF THE ENERGY ABSORBING TERMINAL.

SEE MANUFACTURER'S DRAWING FOR SPLICE LOCATION, HARDWARE DIMENSIONS AND INSTALLATION INSTRUCTIONS.

THE CENTER OF THE UPPER 3 ½" DIAMETER HOLE ON POST NUMBER 3 THROUGH POST 9 IS TO BE FLUSH WITH THE GROUND LINE UP TO A MAXIMUM OF 2" ABOVE GROUND LINE. WOOD BLOCKS ON POSTS NUMBERED 3 THROUGH 9 MAY BE ADJUSTED UP TO 3" ABOVE THE TOP OF POST.

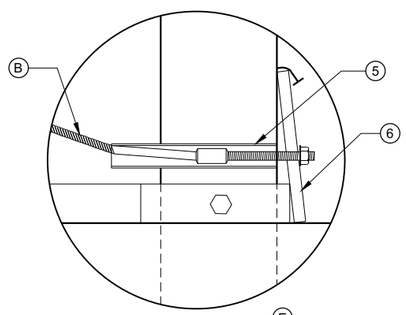

DETAIL "A" (E)

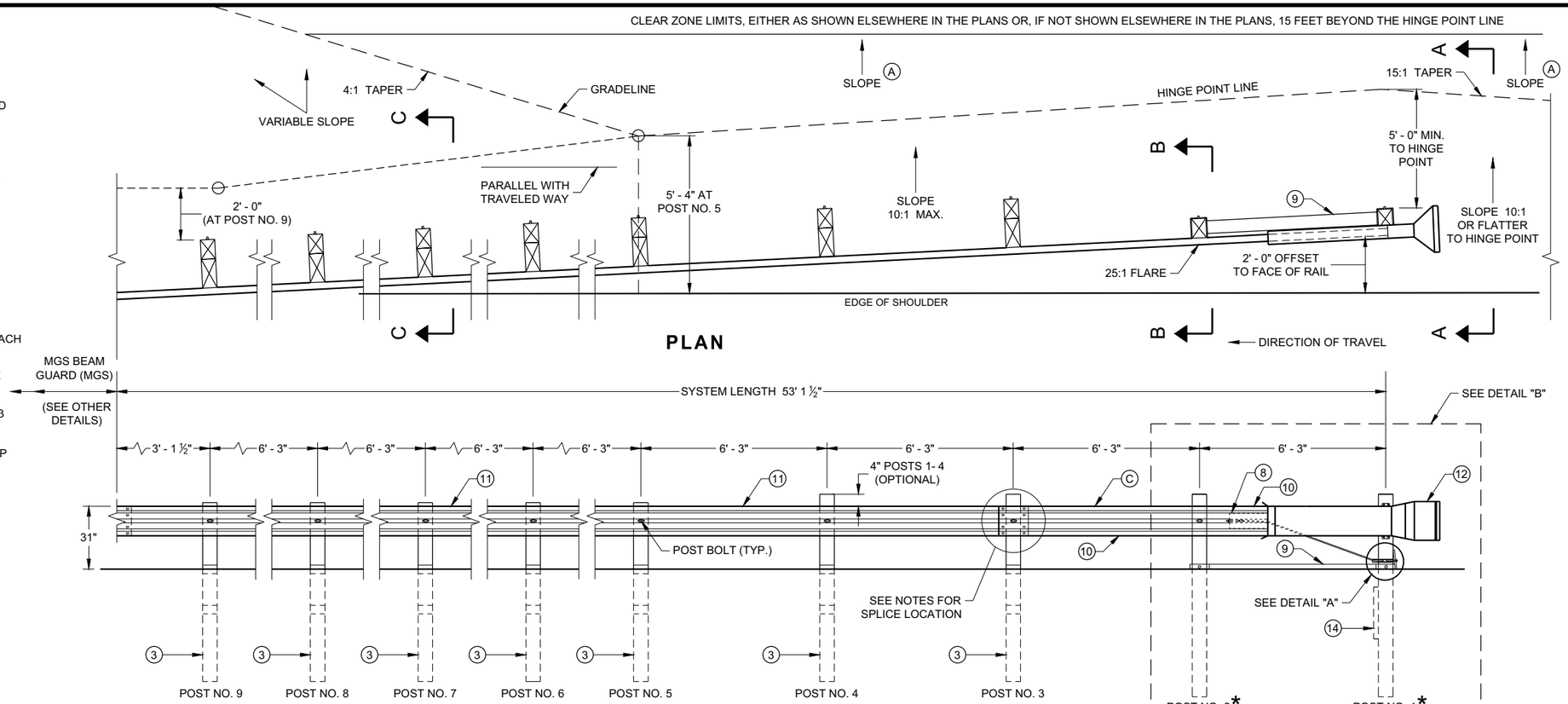

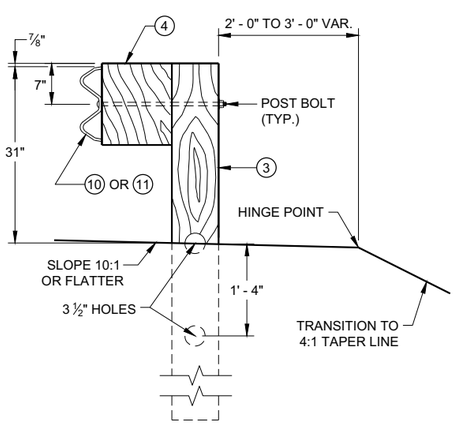

SECTION C - C
TYPICAL AT POST NOS. 3 - 9

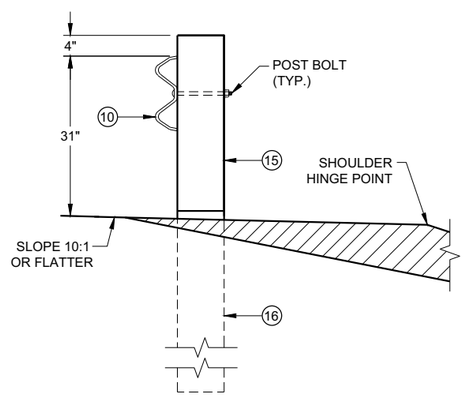

SECTION B - B
TYPICAL AT POST NO. 2*

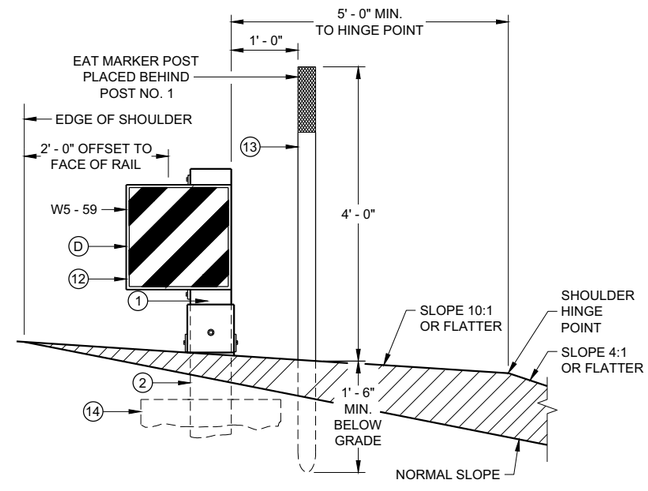

SECTION A - A
TYPICAL AT POST NO. 1*

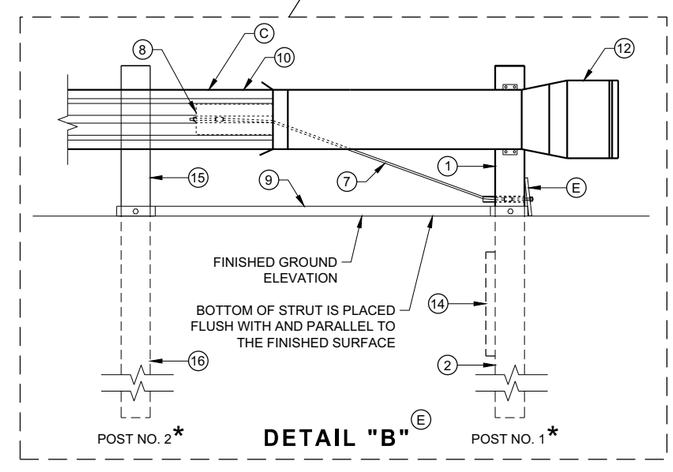

DETAIL "B" (E)

MIDWEST GUARDRAIL SYSTEM ENERGY ABSORBING TERMINAL (MGS)

STATE OF WISCONSIN
DEPARTMENT OF TRANSPORTATION

6

6

SDD 14B44 - 04a

SDD 14B44 - 04a

BILL OF MATERIALS

PART NO.	DESCRIPTION MATERIALS PROVIDED BY MGS EAT MANUFACTURER. SEE MANUGACTURER'S DETAILS FOR MORE INFORMATION.
1	UPPER POST NO. 1 6" X 6" TUBE
2	LOWER POST NO. 1
3	WOOD CRT
4	WOOD BLOCKOUT
5	PIPE SLEEVE
6	BEARING PLATE
7	BCT CABLE ASSEMBLY
8	ANCHOR CABLE BOX
9	GROUND STRUT
10	PERFORATED W-BEAM RAIL END PANEL, 12'-6" LONG.
11	STANDARD W-BEAM RAIL. MULTIPLE SECTIONS REQUIRED. SECTIONS VARY IN LENGTH.
12	IMPACT HEAD
13	EAT MARKER POST - YELLOW (SEE APPROVED PRODUCTS LIST)
14	SOIL PLATE
15	UPPER POST NO. 2
16	LOWER POST NO. 2

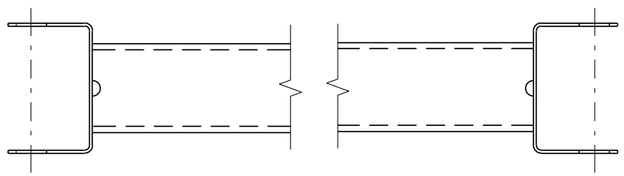

GENERIC GROUND STRUT 9 E

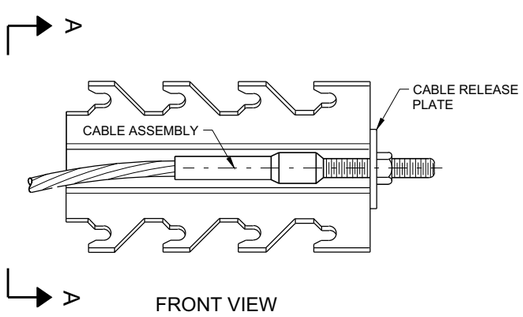

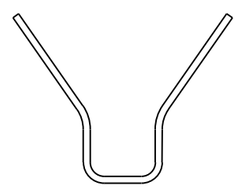

SECTION A - A

GENERIC ANCHOR CABLE BOX 9 E

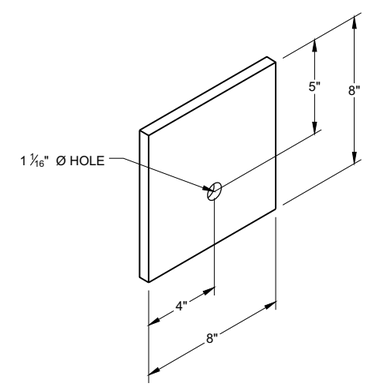

BEARING PLATE 6 E

MIDWEST GUARDRAIL SYSTEM ENERGY ABSORBING TERMINAL (MGS)

STATE OF WISCONSIN
DEPARTMENT OF TRANSPORTAT

6

SDD 14B44 - 04b

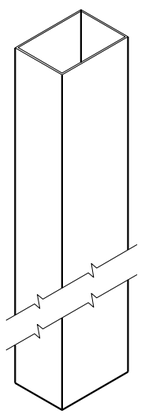

UPPER POST NO. 1 (1) (E)

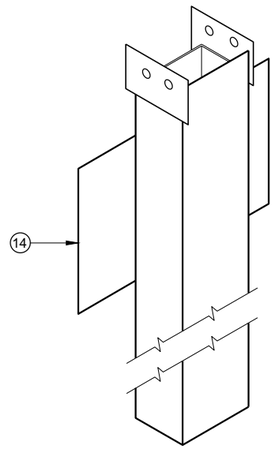

LOWER POST NO. 1 (2) (E)

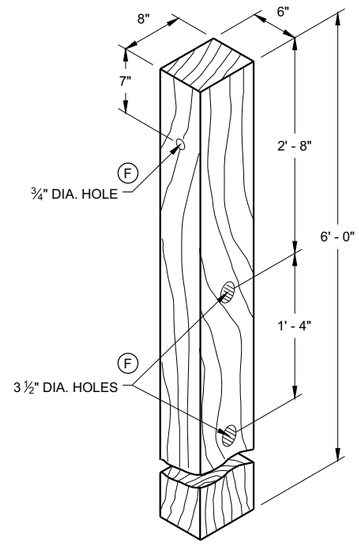

WOOD CRT POST (3) (E)

POSTS NUMBER 3-9

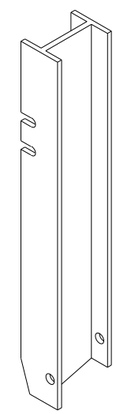

UPPER POST NO. 2 (15) (E)

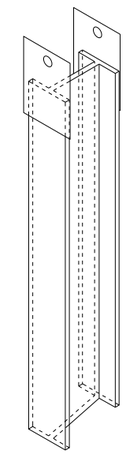

LOWER POST NO. 2 (16) (E)

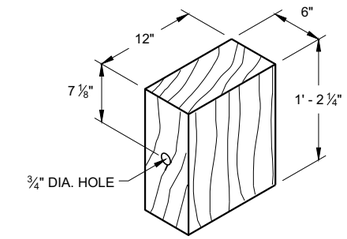

WOOD BLOCKOUT (4)

REQ'D. AT ALL POSTS EXCEPT POST NO'S 1 & 2

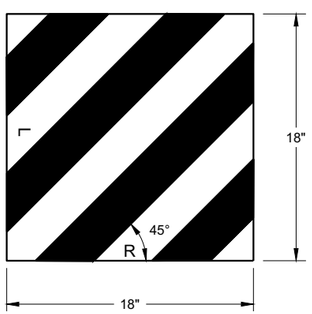

W5 - 59

REFLECTIVE SHEETING DETAIL (E)

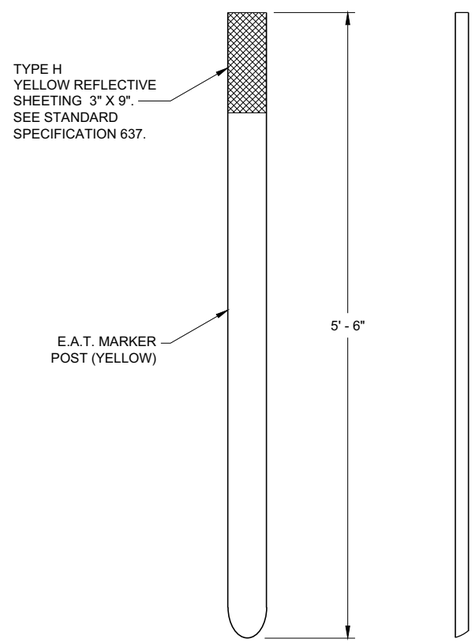

FRONT VIEW SIDE VIEW

E.A.T. MARKER POST (13)

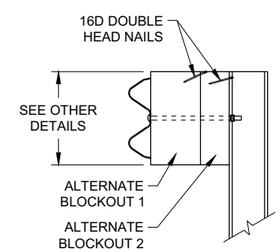

SIDE VIEW

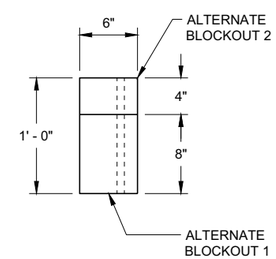

TOP VIEW

ALTERNATE WOOD BLOCKOUT DETAIL

MIDWEST GUARDRAIL SYSTEM ENERGY ABSORBING TERMINAL (MGS)

STATE OF WISCONSIN
DEPARTMENT OF TRANSPORTATION

APPROVED
7/2018 — DATE
/S/ Rodney Taylor — ROADWAY STANDARDS DEVE UNIT SUPERVISOR
FHWA

6
SDD 14B44 - 04c

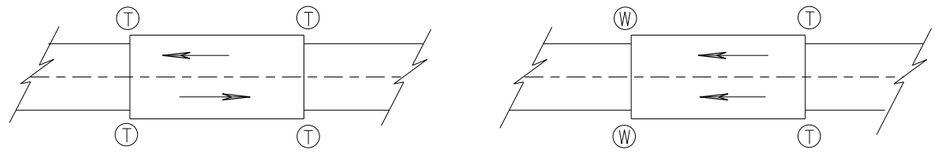

TWO WAY TRAFFIC **ONE WAY TRAFFIC**

(T) THRIE BEAM CONNECTION

(W) W-BEAM CONNECTION WHEN REQUIRED

TYPICAL LOCATIONS OF THRIE BEAM AND W-BEAM CONNECTIONS TO BRIDGE

GENERAL NOTES

IF ROCK IS ENCOUNTERED, REMOVE ROCK TO FULL DEPTH OF POST PLUS 2½", AND 12" DIAMETER AROUND POST. SEE 14B42 FOR MORE DETAILS.

TRANSITION USES STEEL POSTS ONLY.

SEE STANDARD DETAIL DRAWING 14 B 42 FOR MORE INFORMATION.

POST 2 THROUGH 17 USES STEEL POST ONLY

(1) BRIDGE RAILING TYPE "W" DOES NOT REQUIRE A TERMINAL CONNECTOR.

(2) OPTIONAL CURB AND GUTTER OR DRAINAGE FEATURE SEE PLAN FOR INFORMATION.

(13) STEEL OR WOOD POST IS ACCEPTABLE AT POST 1. SEE SDD14B42

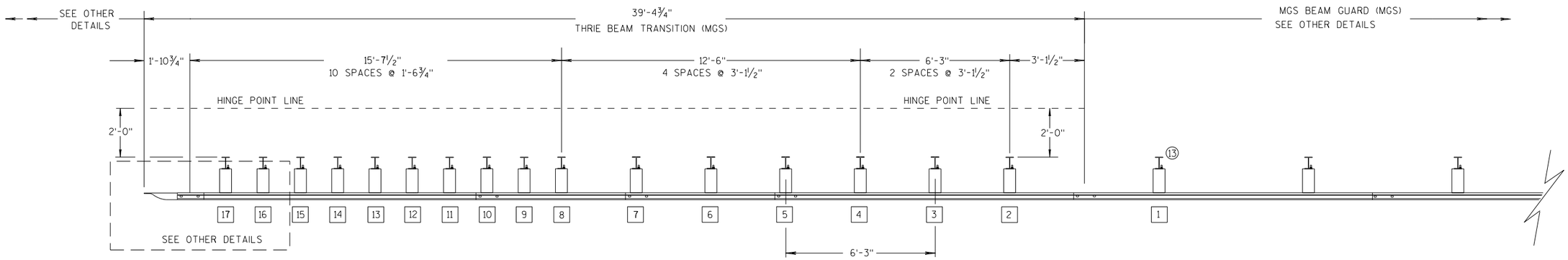

PLAN VIEW

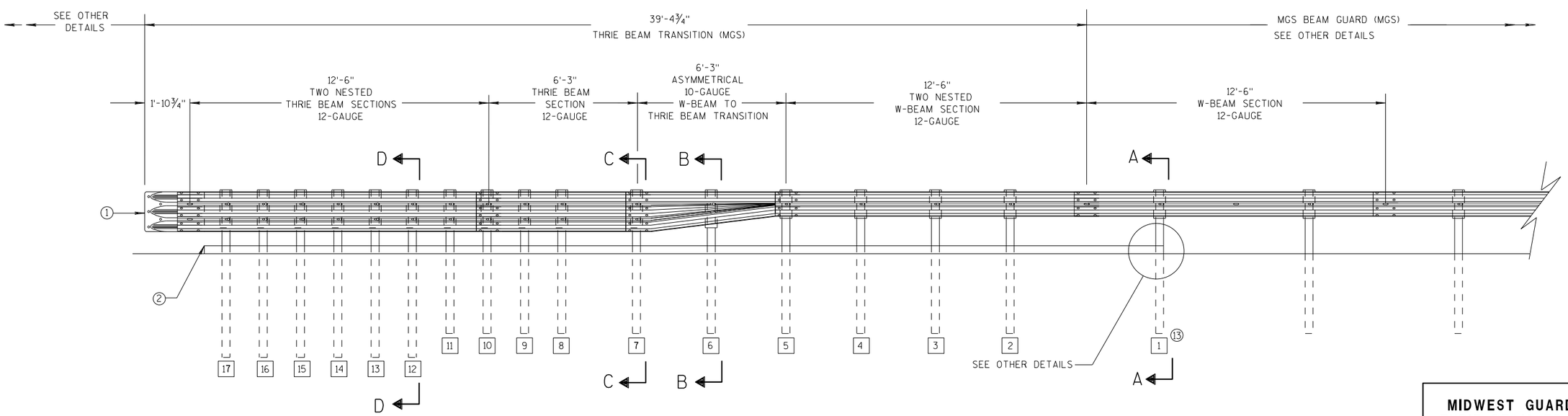

ELEVATION VIEW

MIDWEST GUARDRAIL SYSTEM THRIE BEAM TRANSITION

MIDWEST GUARDRAIL SYSTEM THRIE BEAM TRANSITION (MGS)

STATE OF WISCONSIN
DEPARTMENT OF TRANSPOR

6

S.D.D. 14 B 45-5a

GENERAL NOTES

(2) OPTIONAL CURB AND GUTTER OR DRAINAGE FEATURE SEE PLAN FOR INFORMATION.

(3) WHEN USING STEEL POSTS AND WOOD BLOCKOUTS INSTALL FOUR 10D GALVANIZED NAILS. INSTALL NAILS AT THE BACK CORNERS OF THE BLOCK AND BEND THE NAILS OVER THE FLANGE OF THE STEEL POST.

(4) TOLERANCE FOR TOP OF W-BEAM RAIL IS ± 1".

(13) STEEL OR WOOD POST IS ACCEPTABLE AT POST 1. SEE SDD 14B42

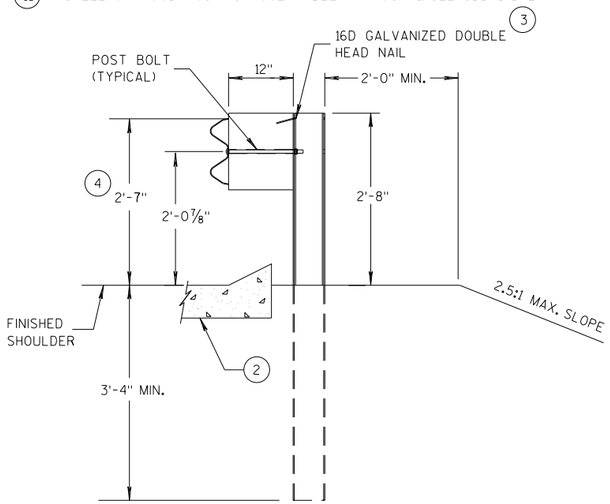

SECTION A-A (13)

POSTS 1-5

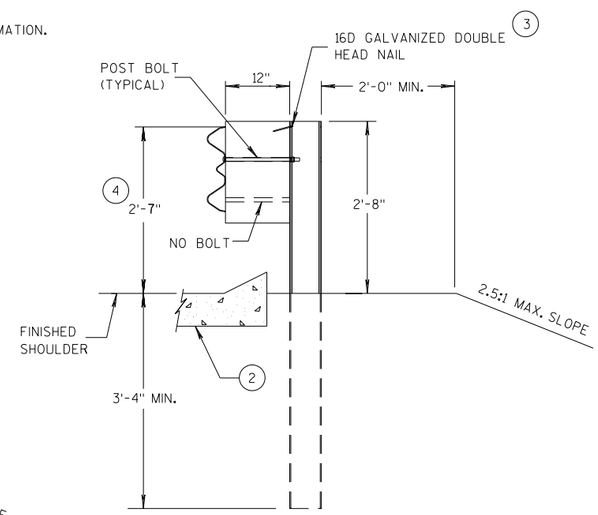

SECTION B-B

POST 6

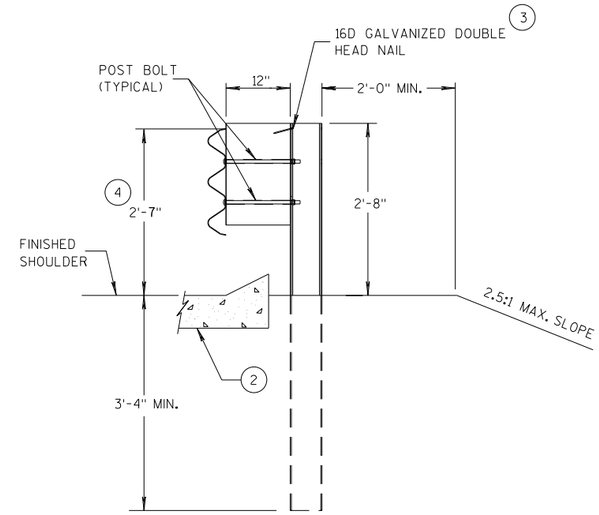

SECTION C-C

POSTS 7-11

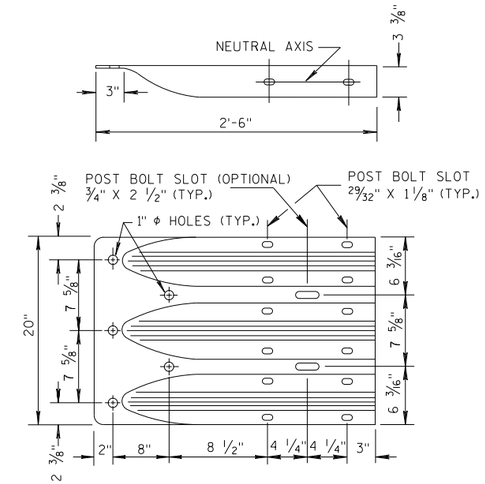

THRIE BEAM TERMINAL CONNECTOR

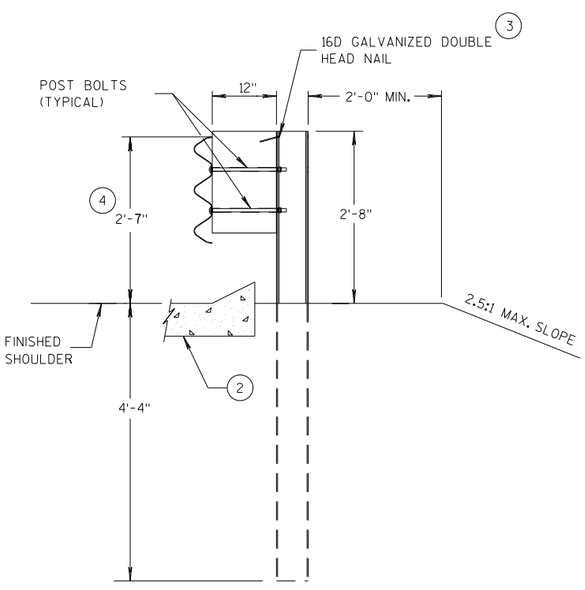

SECTION D-D

POSTS 12-17

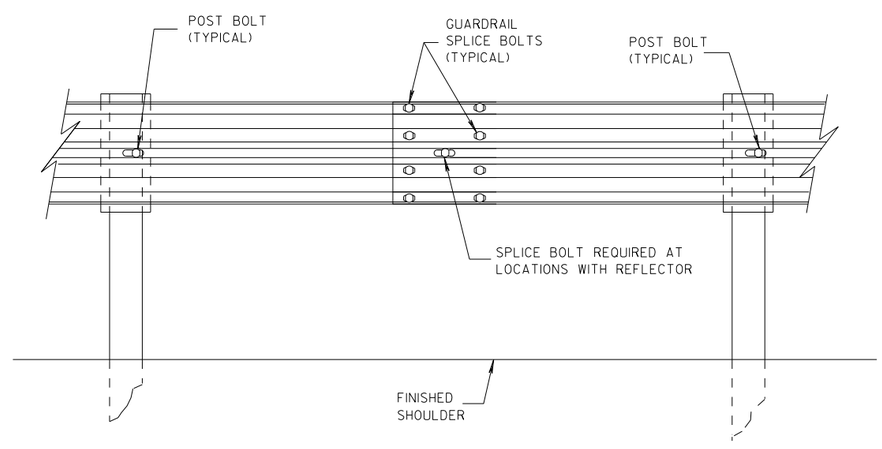

SPLICE DETAIL

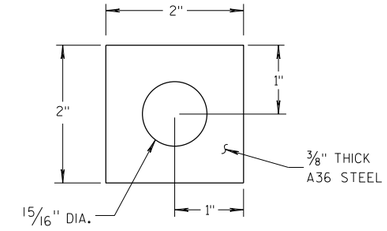

PLATE WASHER DETAIL

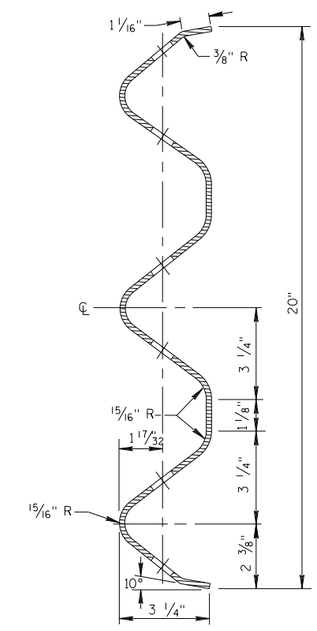

SECTION THRU THRIE BEAM RAIL ELEMENT

MIDWEST GUARDRAIL SYSTEM
THRIE BEAM TRANSITION (MGS)

STATE OF WISCONSIN
DEPARTMENT OF TRANSPOR

6

S.D.D. 14 B 45-5b

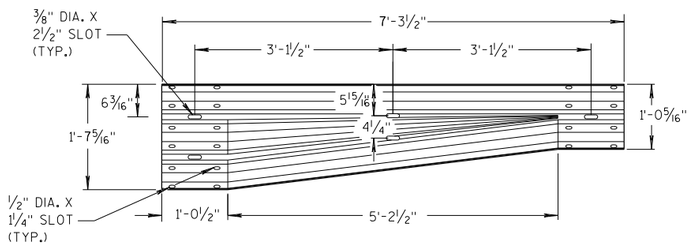

W-BEAM TO THRIE BEAM TRANSITION SECTION

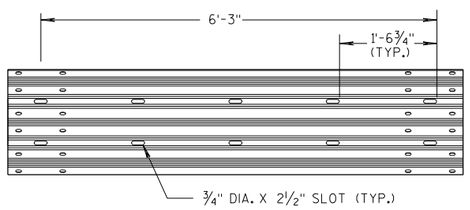

6'-3" THRIE BEAM SECTION

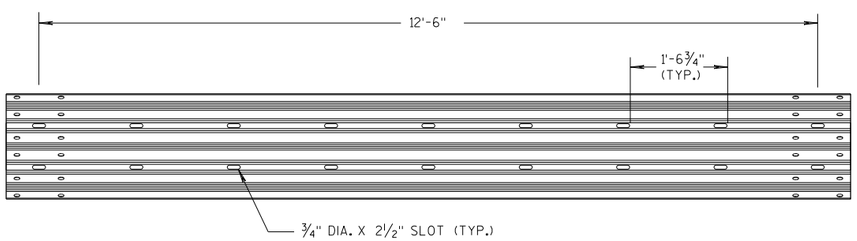

12'-6" THRIE BEAM SECTION

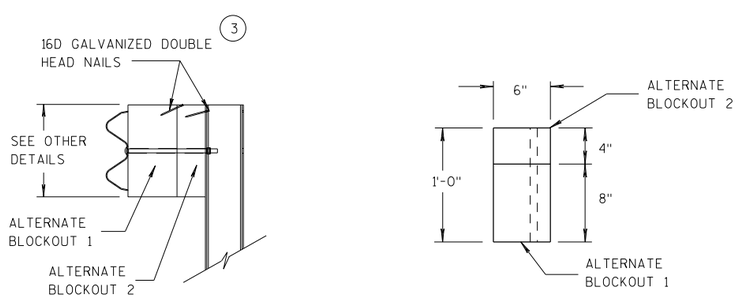

SIDE VIEW TOP VIEW

ALTERNATE WOOD BLOCKOUT DETAIL

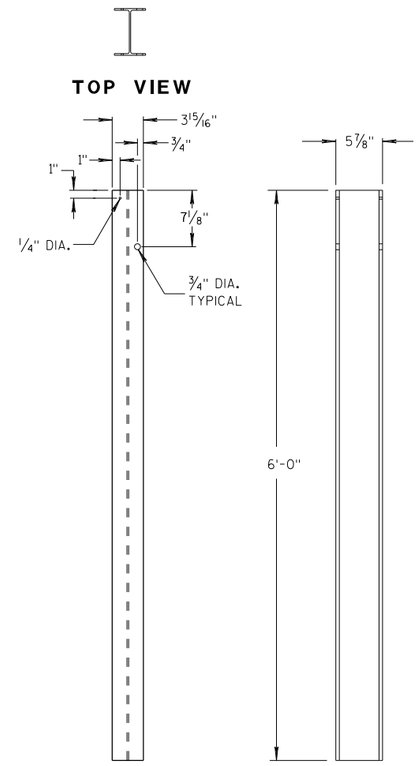

STEEL POSTS 1-5 (13)

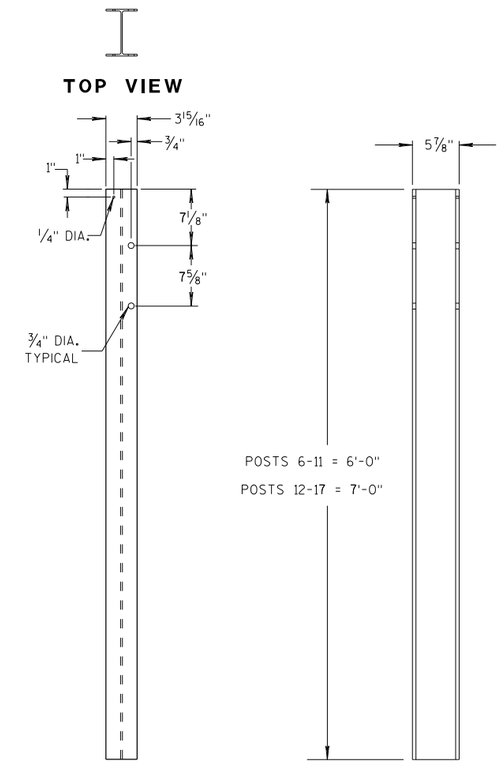

STEEL POSTS 6-17

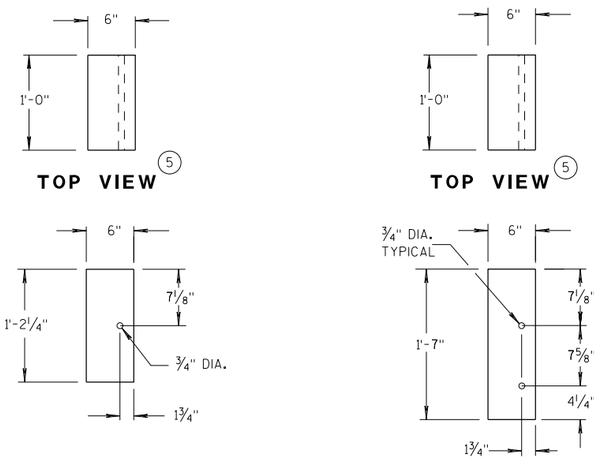

BLOCKOUT POSTS 1-5

BLOCKOUT POSTS 6-17

GENERAL NOTES

STEEL POSTS ARE W6X9 OR W6X8.5.

BOLT HOLES FOR POST ARE ON FRONT AND OF SIDE OF POST.

(3) WHEN USING STEEL POSTS AND WOOD BLOCKOUTS INSTALL FOUR 16D GALVANIZED NAILS. INSTALL NAILS AT THE BACK CORNERS OF THE BLOCK AND BEND THE NAILS OVER THE FLANGE OF THE STEEL POST.

(5) WOOD BLOCKS MAY BE CONSTRUCTED OUT OF 2 WOOD BLOCKS. SEE ALTERNATE WOOD BLOCK DETAIL.

(13) STEEL OR WOOD POST IS ACCEPTABLE AT POST 1. SEE SDD 14B42.

MIDWEST GUARDRAIL SYSTEM THRIE BEAM TRANSITION (MGS)

STATE OF WISCONSIN
DEPARTMENT OF TRANSPOR 77

6
S.D.D. 14 B 45-5c

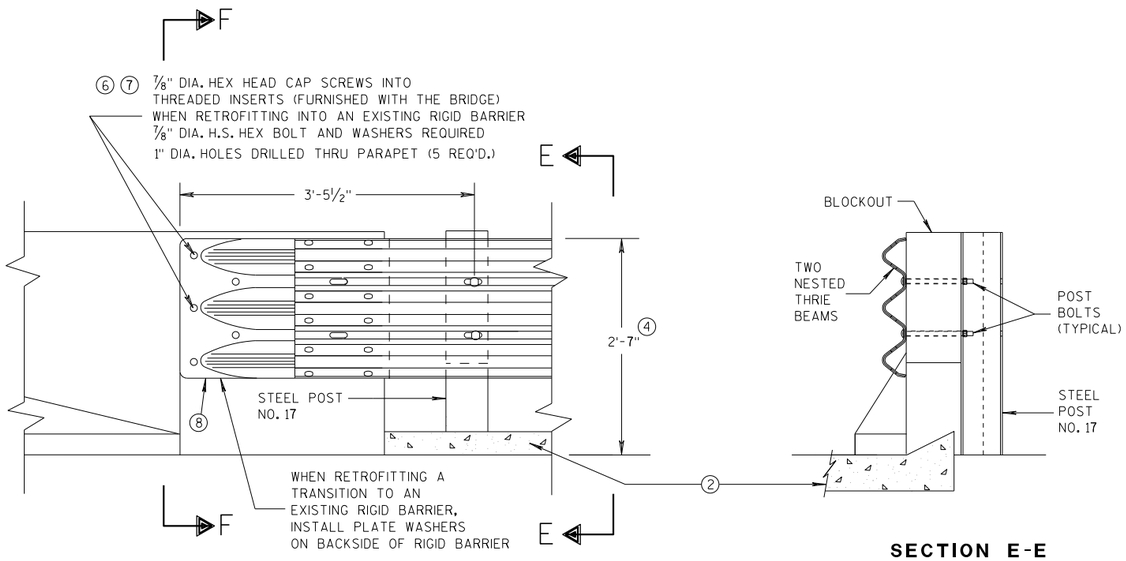

FRONT VIEW

SECTION E-E

THRIE BEAM CONNECTION TO BRIDGE PARAPET WITH SQUARE ENDS

GENERAL NOTES

THESE ARE TYPICAL CONNECTION DETAILS. ADJUST THE POSTION OF CONNECTIONS TO EXISTING BRIDGES TO FIT THE ACTUAL BRIDGE AND SITE DIMENSIONS.

② OPTIONAL CURB AND GUTTER OR DRAINAGE FEATURE SEE PLAN FOR INFORMATION.

④ TOLERANCE FOR TOP OF BEAM IS ± 1".

⑥ DRILLING BOLT HOLES THROUGH THE PARAPET, BOLTS, NUTS, WASHERS AND REPAIRING DAMAGED CONCRETE ARE INCIDENTAL TO THE CONTRACT.

⑦ BOLTS MAY BE A325 BOLTS OR A449 BOLTS. BOLT LENGTH AND THREADING LENGTH ARE TO ALLOW FOR A TIGHT CONNECTION BETWEEN RIGID BARRIER AND THRIE BEAM CONNECTION PLATE. CONTRACTOR IS TO FIELD VERIFY BOLT LENGTH AND THREAD LENGTH. ONE ROUND WASHER REQUIRED BETWEEN BOLT HEAD AND THRIE BEAM CONNECTOR PLATE. BOLTS THAT EXTEND THROUGH THE PARAPET AND OUT THE BACK FACE REQUIRE A HARDENED ROUND STEEL WASHER THAT IS 2" O.D. X 5/32" THICK AND ONE PLATE WASHER. REPAIR ANY DAMAGED CONCRETE FROM BOLT INSTALLATION.

⑧ THE RECESS FOR A W-BEAM CONNECTION, WHICH EXISTS ON SOME PARAPETS OF THIS TYPE, SHALL BE FILLED WITH A TREATED TIMBER BLOCKOUT. BLOCKOUT SIZE IS 1'-6" X 2'-0" X 3 1/2".

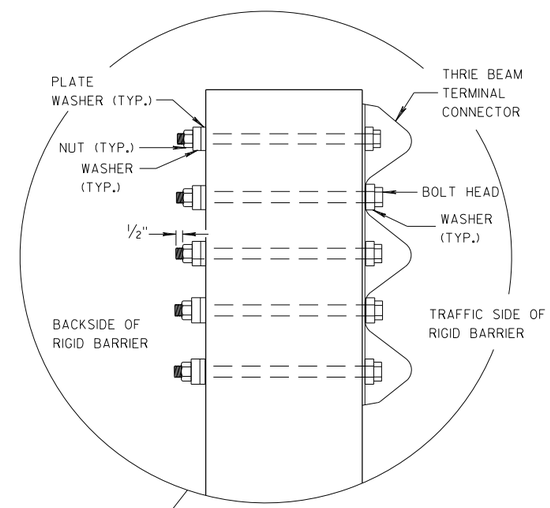

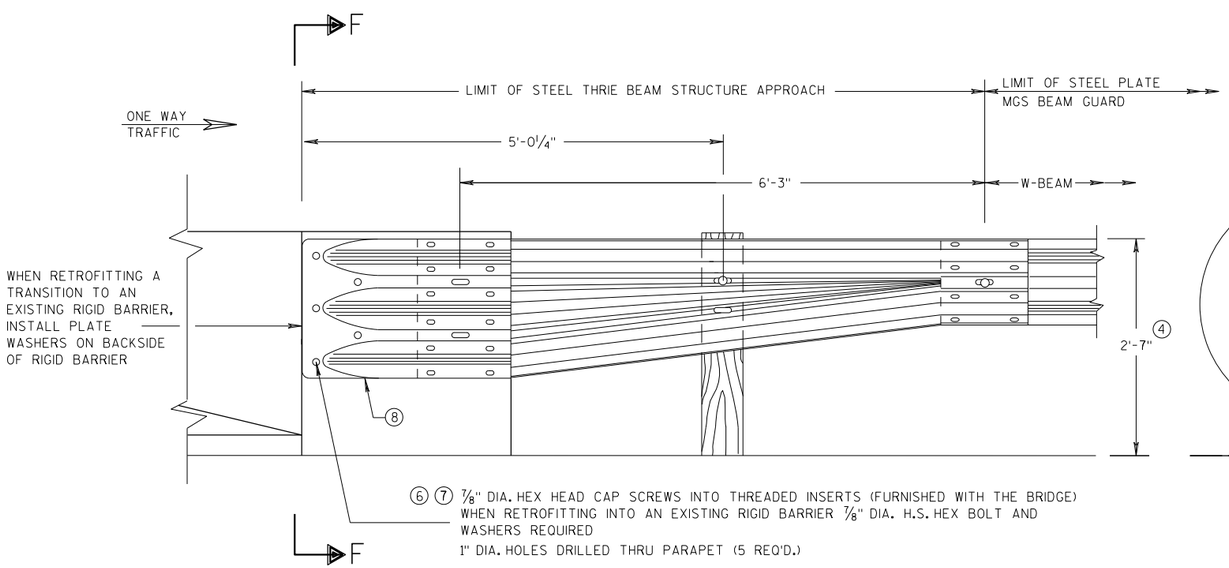

FRONT VIEW

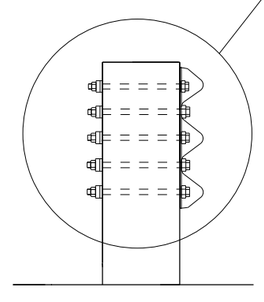

SECTION F-F

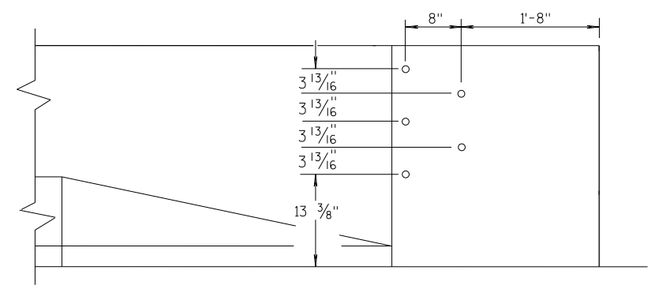

DRILL HOLE LOCATION

W BEAM TRANSITION AND CONNECTION TO BRIDGE PARAPETS WITH SQUARE ENDS

(USE ONLY ON THE TRAFFIC EXIT END OF ONE WAY BRIDGES)

MIDWEST GUARDRAIL SYSTEM THRIE BEAM TRANSITION (MGS)

STATE OF WISCONSIN
DEPARTMENT OF TRANSPORTATION

APPROVED
07/2018 — DATE
/S/ Rodney Taylor — ROADWAY STANDARDS DEVELOPMENT UNIT SUPERVISOR
FHWA

6

S.D.D. 14 B 45-5d

GENERAL NOTES

THESE ARE TYPICAL CONNECTION DETAILS. ADJUST THE POSTION OF CONNECTIONS TO EXISTING BRIDGES TO FIT THE ACTUAL BRIDGE AND SITE DIMENSIONS.

(2) OPTIONAL CURB AND GUTTER OR DRAINAGE FEATURE SEE PLAN FOR INFORMATION.

(4) TOLERANCE FOR TOP OF BEAM IS ± 1".

(6) DRILLING BOLT HOLES THROUGH THE PARAPET, BOLTS, NUTS, WASHERS AND REPAIRING DAMAGED CONCRETE ARE INCIDENTAL TO THE CONTRACT.

(7) BOLTS MAY BE A325 BOLTS OR A449 BOLTS. BOLT LENGTH AND THREADING LENGTH ARE TO ALLOW FOR A TIGHT CONNECTION BETWEEN RIGID BARRIER AND THRIE BEAM CONNECTION PLATE. CONTRACTOR IS TO FIELD VERIFY BOLT LENGTH AND THREAD LENGTH. ONE ROUND WASHER REQUIRED BETWEEN BOLT HEAD AND THRIE BEAM CONNECTOR PLATE. BOLTS THAT EXTEND THROUGH THE PARAPET AND OUT THE BACK FACE REQUIRE A HARDENED ROUND STEEL WASHER THAT IS 2" O.D. X 5/32" THICK AND ONE PLATE WASHER. REPAIR ANY DAMAGED CONCRETE FROM BOLT INSTALLATION.

(8) THE RECESS FOR A W-BEAM CONNECTION, WHICH EXISTS ON SOME PARAPETS OF THIS TYPE, SHALL BE FILLED WITH A TREATED TIMBER BLOCKOUT. BLOCKOUT SIZE IS 1'-6" X 2'-0" X 3 1/2".

(9) BOLT, NUT AND WASHERS NOT REQUIRED FOR THIS LOCATION WHEN RETROFITTING AN EXISTING PAPAPET AND THE HOLE IS EITHER ABOVE PARAPET OR WITHIN 4 INCHES OF THE EDGE OF PARAPET.

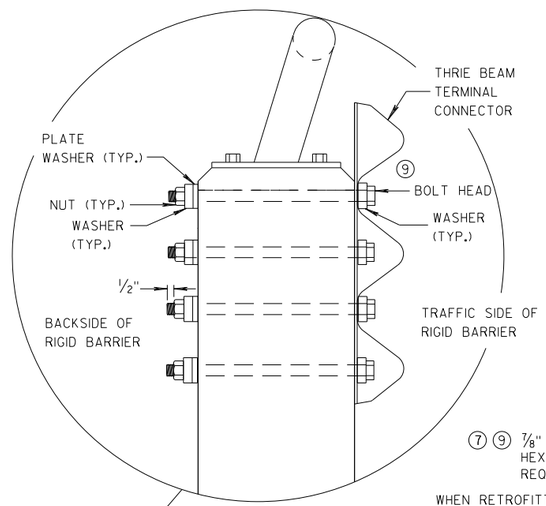

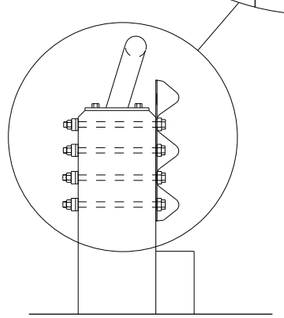

SECTION G-G

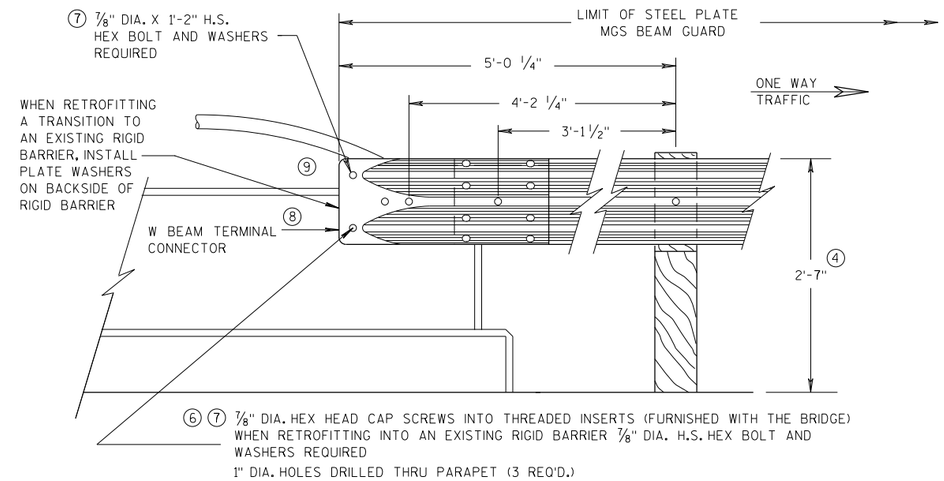

FRONT VIEW

W BEAM CONNECTION TO VERTICAL FACE PARAPET

(USE ONLY ON THE TRAFFIC EXIT END OF ONE WAY BRIDGES)

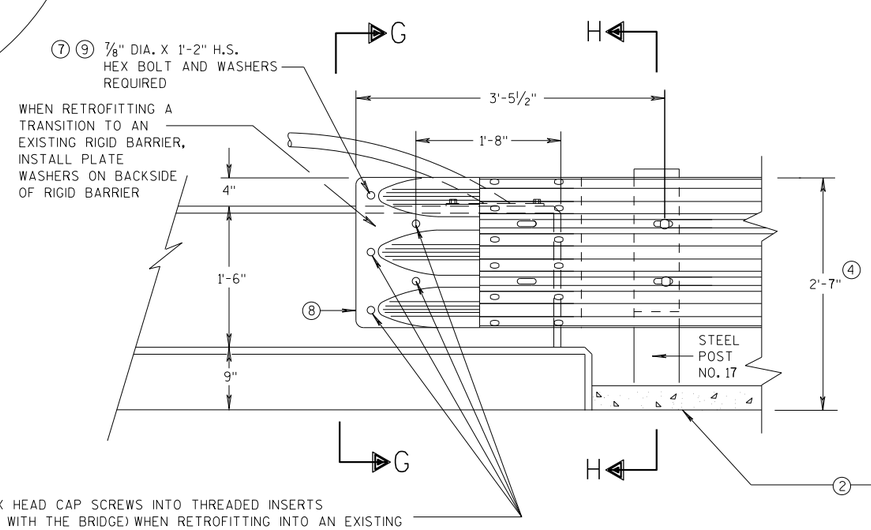

FRONT VIEW

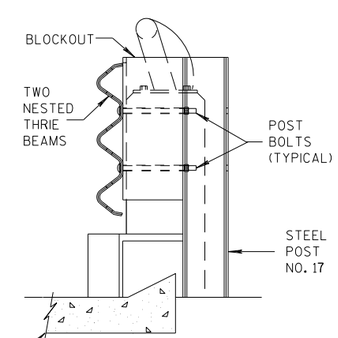

SECTION H-H

THRIE BEAM CONNECTION TO VERTICAL FACED PARAPETS

MIDWEST GUARDRAIL SYSTEM
THRIE BEAM TRANSITION (MGS)

STATE OF WISCONSIN
DEPARTMENT OF TRANSPORTATION

APPROVED
07/2018 — DATE
/S/ Rodney Taylor
ROADWAY STANDARDS D[illegible] UNIT SUPERVI[illegible]
FHWA

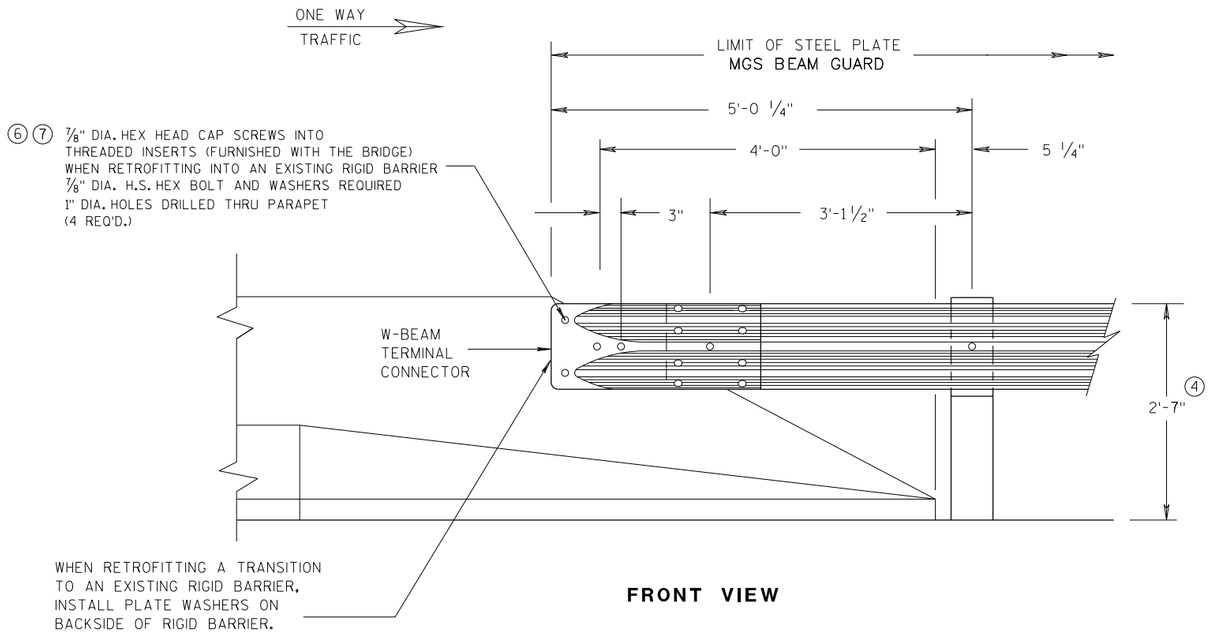

FRONT VIEW

W BEAM CONNECTION TO PARAPETS WITH SLOPED ENDS

(USE ONLY AT TRAFFIC EXIT END OF ONE WAY BRIDGE)

GENERAL NOTES

② OPTIONAL CURB AND GUTTER OR DRAINAGE FEATURE SEE PLAN FOR INFORMATION.

④ TOLERANCE FOR TOP OF BEAM IS ± 1".

⑥ DRILLING BOLT HOLES THROUGH THE PARAPET, BOLTS, NUTS, WASHERS AND REPAIRING DAMAGED CONCRETE ARE INCIDENTAL TO THE CONTRACT.

⑦ BOLTS MAY BE A325 BOLTS OR A449 BOLTS. BOLT LENGTH AND THREADING LENGTH ARE TO ALLOW FOR A TIGHT CONNECTION BETWEEN RIGID BARRIER AND THRIE BEAM CONNECTION PLATE. CONTRACTOR IS TO FIELD VERIFY BOLT LENGTH AND THREAD LENGTH. ONE ROUND WASHER REQUIRED BETWEEN BOLT HEAD AND THRIE BEAM CONNECTOR PLATE. BOLTS THAT EXTEND THROUGH THE PARAPET AND OUT THE BACK FACE REQUIRE A HARDENED ROUND STEEL WASHER THAT IS 2" O.D. X 5/32" THICK AND ONE PLATE WASHER. REPAIR ANY DAMAGED CONCRETE FROM BOLT INSTALLATION.

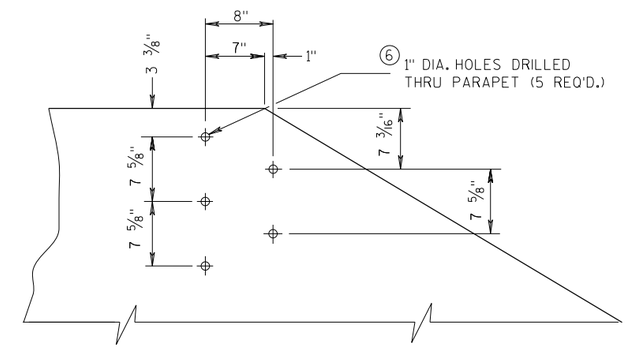

DRILL HOLE LOCATION AND PATTERN FOR THRIE BEAM CONNECTION

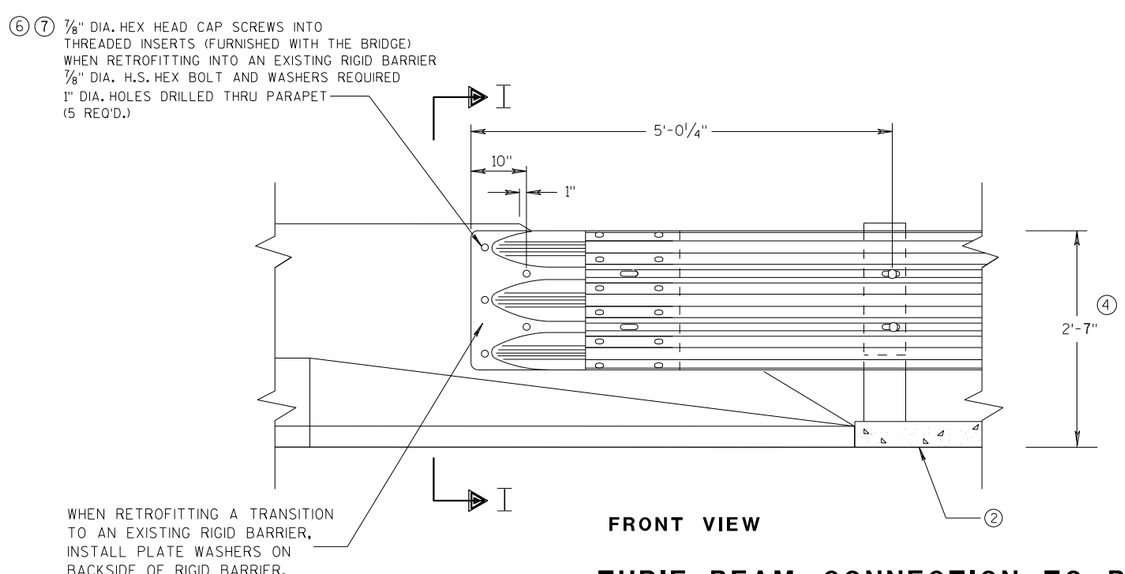

FRONT VIEW

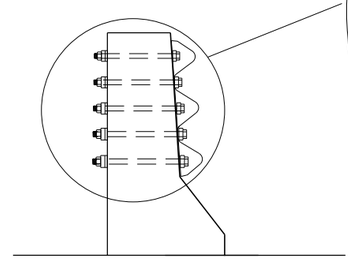

SECTION I-I

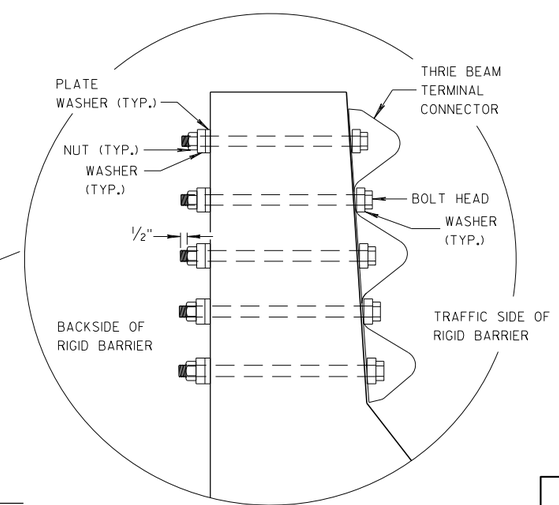

THRIE BEAM CONNECTION TO BRIDGE PARAPETS WITH SLOPED ENDS

MIDWEST GUARDRAIL SYSTEM THRIE BEAM TRANSITION (MGS)

STATE OF WISCONSIN
DEPARTMENT OF TRANSPORTATION

APPROVED
07/2018 — DATE
/S/ Rodney Taylor
ROADWAY STANDARDS DEVELOPMENT UNIT SUPERVISOR
FHWA

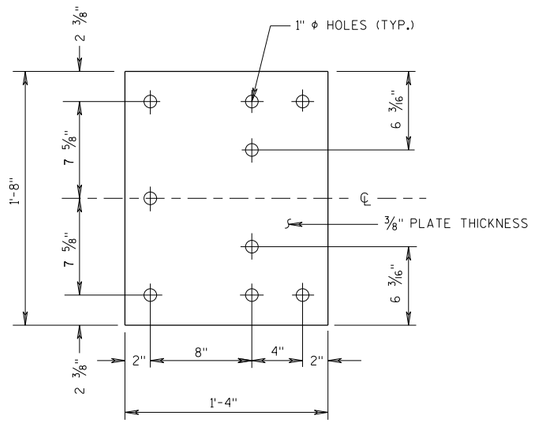

BACK-UP PLATE DETAIL

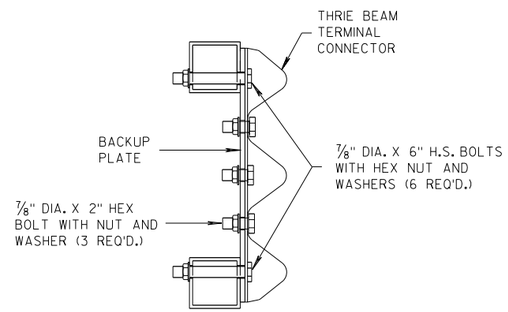

SECTION J-J

GENERAL NOTES

(4) TOLERANCE FOR TOP OF BEAM IS ± 1".

(6) DRILLING HOLES THROUGH THE PAPRPET, BOLTS, NUTS, WASHERS AND REPAIRING DAMAGED CONCRETE ARE INCIDENTAL TO THE CONTRACT.

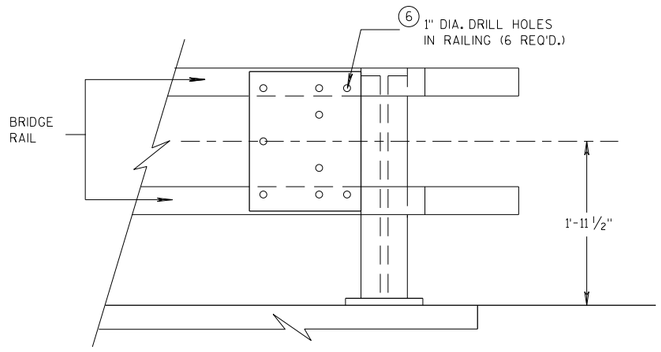

BACK-UP PLATE MOUNTING ONTO BRIDGE RAILING

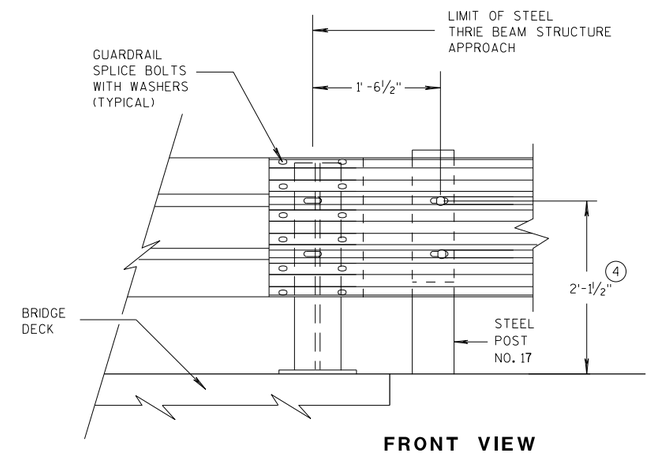

FRONT VIEW

THRIE BEAM CONNECTION TO STEEL RAILING TYPE "W"

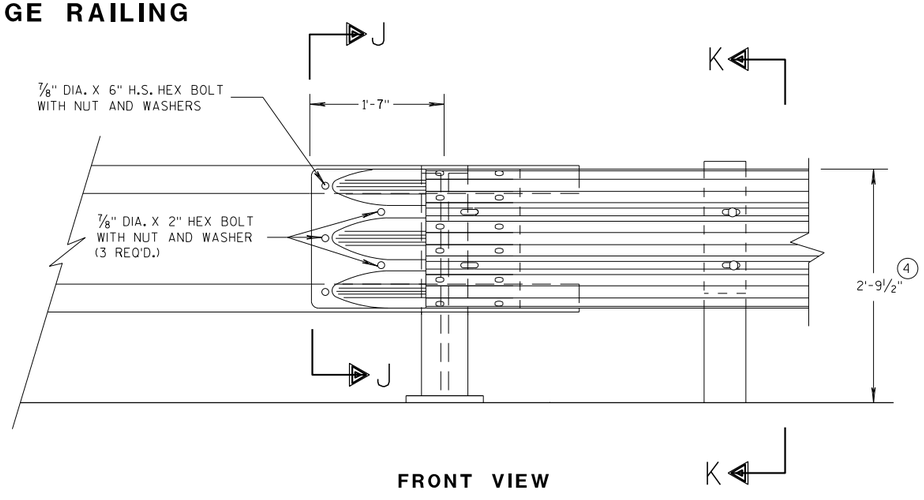

FRONT VIEW

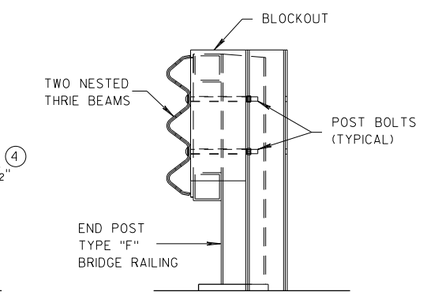

SECTION K-K

THRIE BEAM CONNECTION TO TUBULAR RAILING TYPE "F"

MIDWEST GUARDRAIL SYSTEM THRIE BEAM TRANSITION (MGS)

STATE OF WISCONSIN
DEPARTMENT OF TRANSPORTATION

APPROVED 07/2018 — DATE — FHWA

/S/ Rodney Taylor — ROADWAY STANDARDS DEVELOPMENT UNIT SUPERVISOR

S.D.D. 14 B 45-5g

GENERAL NOTES

(4) TOLERANCE FOR TOP OF W-BEAM RAIL IS ± 1".

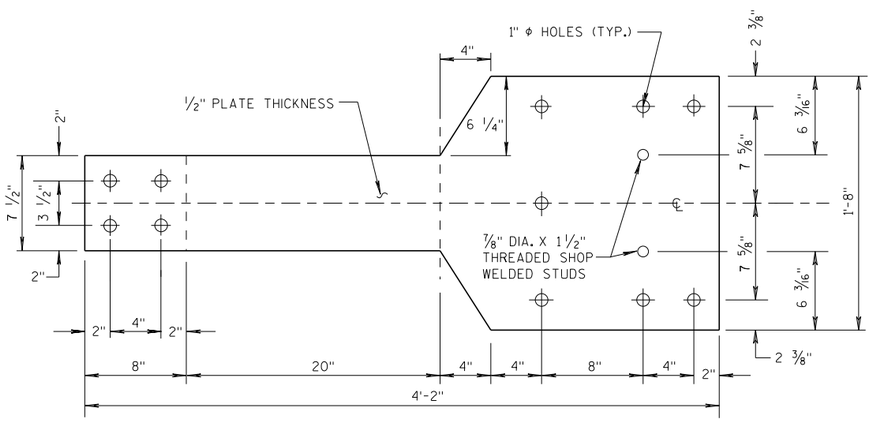

FRONT VIEW

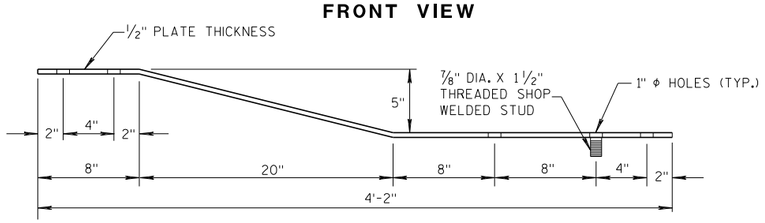

PLAN VIEW

BACK-UP PLATE DETAIL, TYPE "M"

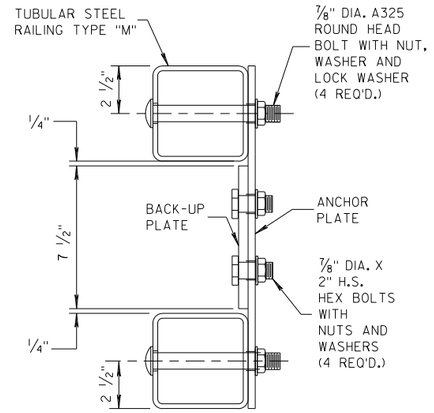

SECTION L-L

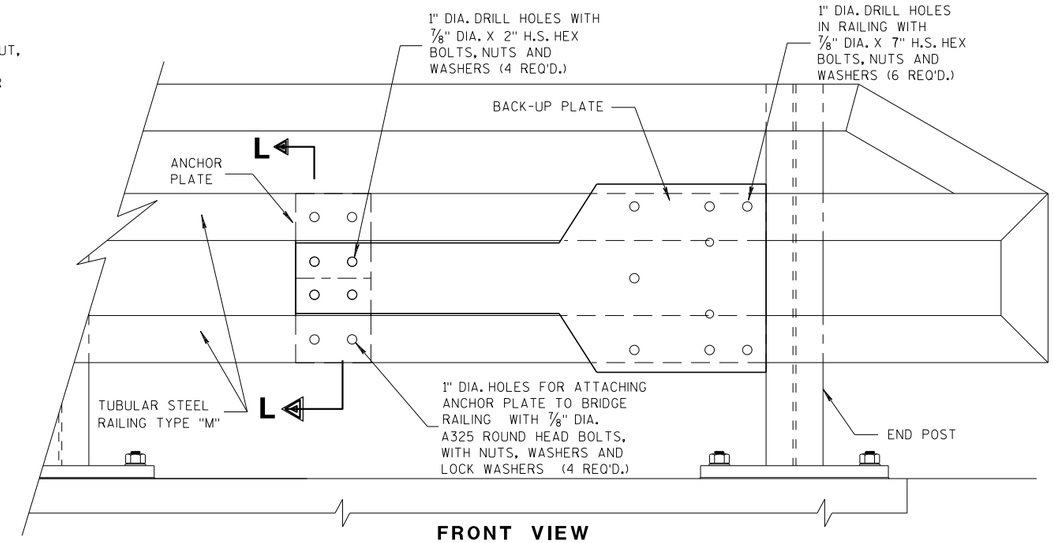

FRONT VIEW

ANCHOR AND BACK-UP PLATE MOUNTING TO BRIDGE RAILING, TYPE "M"

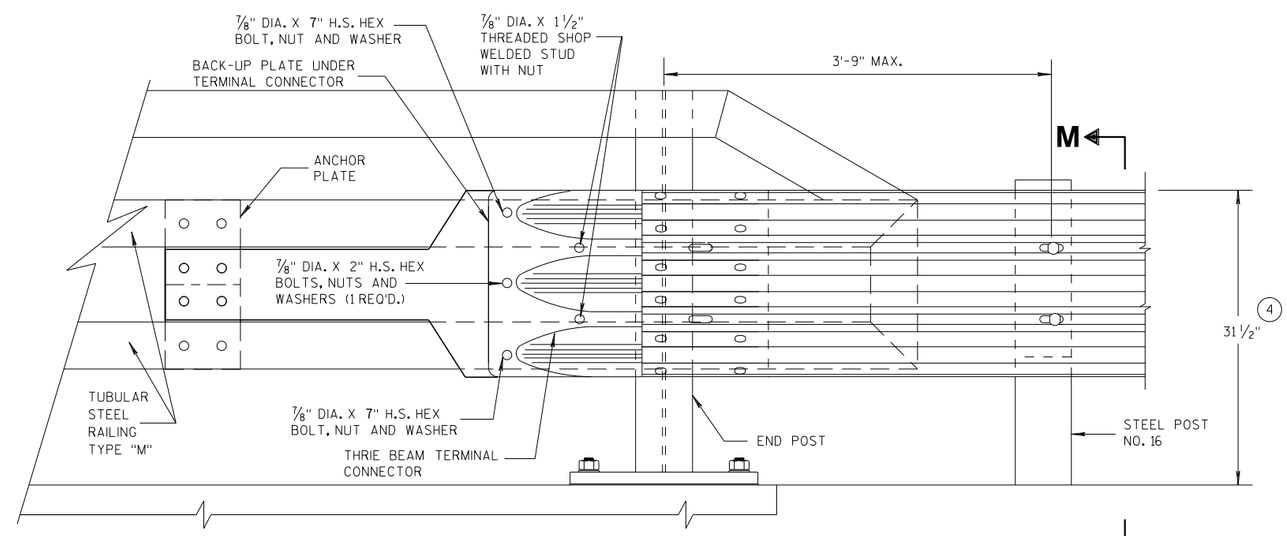

FRONT VIEW

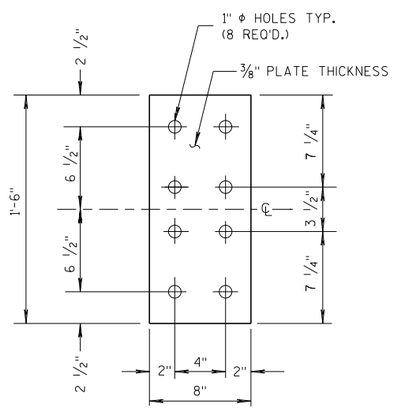

FRONT VIEW

ANCHOR PLATE DETAIL, TYPE "M"

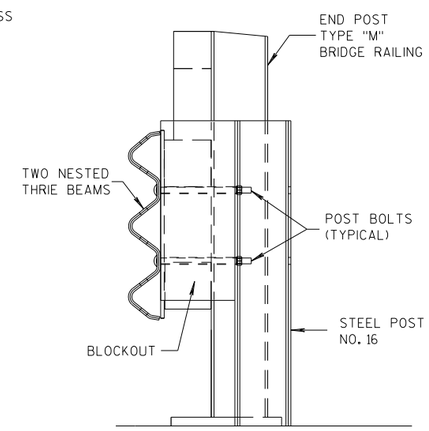

SECTION M-M

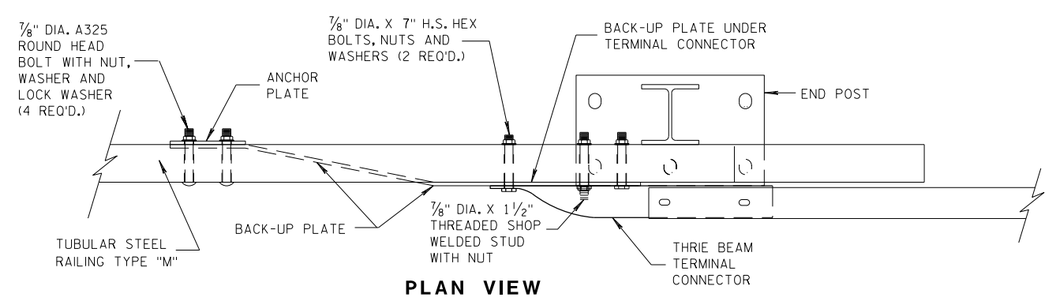

PLAN VIEW

THRIE BEAM CONNECTION TO TUBULAR RAILING, TYPE "M"

MIDWEST GUARDRAIL SYSTEM THRIE BEAM TRANSITION (MGS)

STATE OF WISCONSIN
DEPARTMENT OF TRANSPORTATION

APPROVED
07/2018 — DATE
/S/ Rodney Taylor — ROADWAY STANDARDS DEVELOPMENT UNIT SUPERVISOR
FHWA

GENERAL NOTES

COVER PLATE PANELS ARE 3/16" THICK.

ALL STIFFENERS ARE 1/4" THICK.

CONNECTOR PLATE SHALL BE FABRICATED FROM ASTM GRADE A36 STEEL AND GALVANIZED.

FOR GALVANIZED REQUIREMENTS, SEE SECTION 614 OF THE STANDARD SPECIFICATIONS.

ALL HOLE DIAMETERS SHALL BE 1".

FOR OPPOSITE SIDE INSTALLATION MIRROR DRAWINGS.

(10) STIFFENERS LOCATED AT THE OUTSIDE EDGES OF THE COVER PLATES SHALL BE WELDED AS FOLLOWS:
SINGLE BEVEL GROOVE WELD ON EXTERNAL SIDES AND 3/16" FILLET WELD BY 1" LONG SPACED AT 2" ON INTERNAL SIDES.

(11) STIFFENERS LOCATED ON THE INSIDE OF THE COVER PLATE SHALL BE WELDED AS FOLLOWS:
3/16" FILLET WELD BY 1" LONG SPACED AT 2".

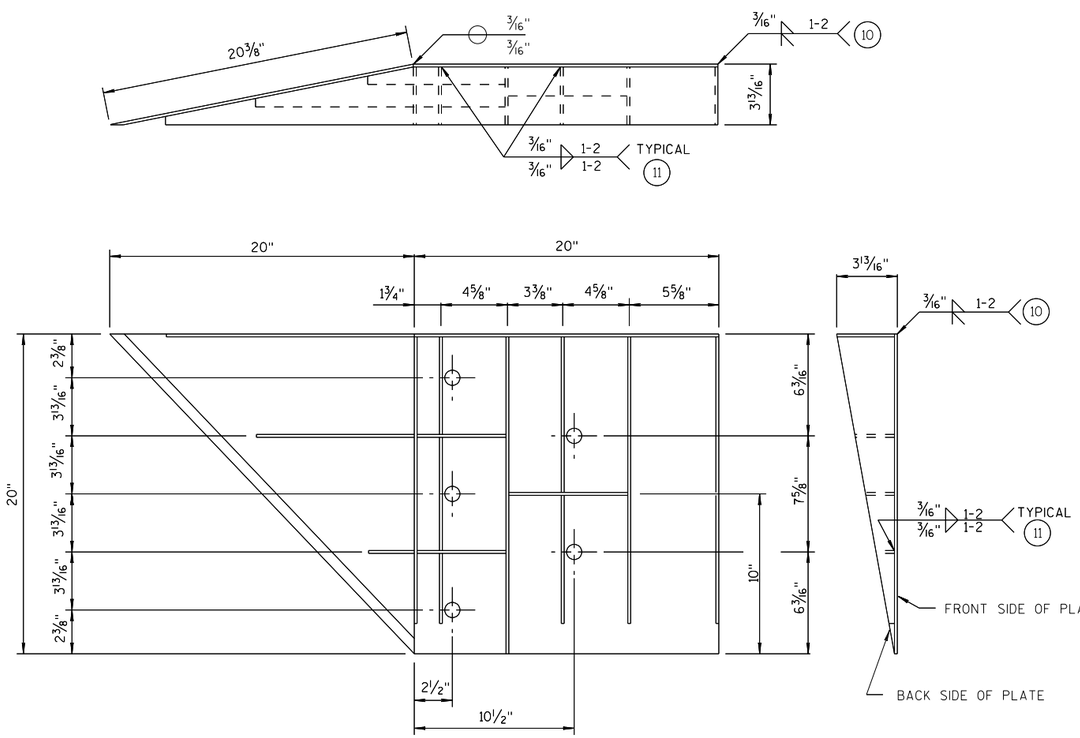

WELDING INSTRUCTION

(VIEWED FROM BACK SIDE OF PLATE)

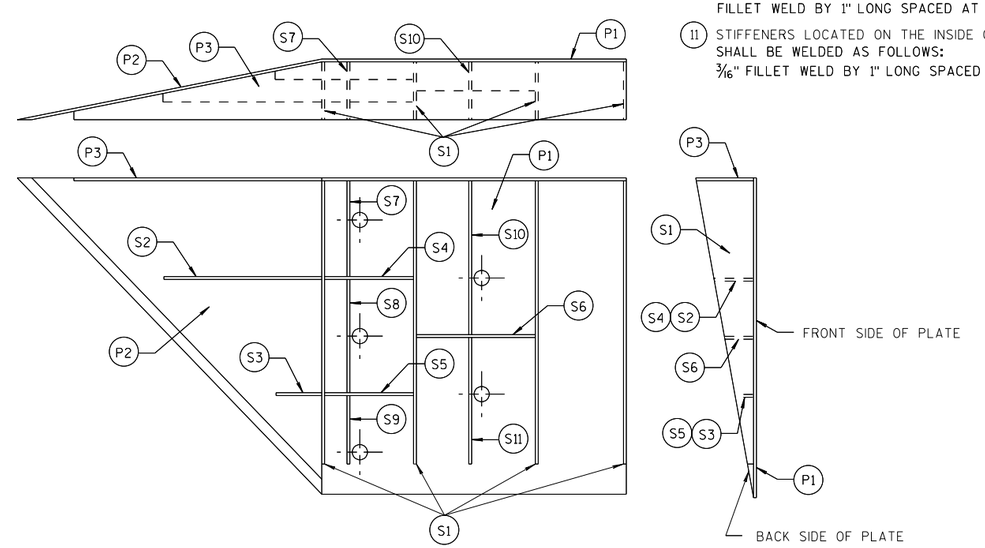

PLATE AND STIFFENER IDENTIFICATION

(VIEWED FROM BACK SIDE OF PLATE)

CONNECTOR PLATE DIMENSION (PER ASSEMBLY)				
PLATE	QUANTITY	SHAPE	SIZE (A x B x C x D)	THICKNESS
P1	1		20" x 20"	3/16"
P2	1		20" x 20" x 28 9/16"	3/16"
P3	1		39" x 3 5/8" x 20" x 19 5/16"	3/16"
S1	4		18 7/16" x 3 5/8" x 18 3/4"	1/4"
S2	1		10 1/4" x 2 7/16" x 10 3/8" x 1/2"	1/4"
S3	1		3" x 1 1/16" x 3 1/8" x 1/2"	1/4"
S4	1		6 1/8" x 2 7/16"	1/4"
S5	1		6 1/8" x 1 1/16"	1/4"
S6	1		7 3/4" x 1 3/4"	1/4"
S7	1		2 9/16" x 6" x 3 5/8" x 5 7/8"	1/4"
S8	1		1 5/32" x 7 1/2" x 2 1/2" x 7 3/8"	1/4"
S9	1		6 1/16" x 6 3/16" x 1 3/32"	1/4"
S10	1		1 7/8" x 9 7/8" x 3 5/8" x 9 11/16"	1/4"
S11	1		8 1/2" x 8 3/4" x 1 13/16"	1/4"

SINGLE SLOPE CONNECTION PLATE

MIDWEST GUARDRAIL SYSTEM THRIE BEAM TRANSITION (MGS)

STATE OF WISCONSIN
DEPARTMENT OF TRANSPORTATION

APPROVED
7/2018 /S/ Rodney Taylor
DATE ROADWAY STANDARDS DEVELOPMENT UNIT SUPERVISOR
FHWA

GENERAL NOTES

CONNECTOR PLATE, DRILLING BOLT HOLES THROUGH THE PARAPET, BOLTS, NUTS, WASHERS AND REPAIRING DAMAGED CONCRETE ARE INCIDENTAL TO THE CONTRACT.

(2) OPTIONAL CURB AND GUTTER OR DRAINAGE FEATURE SEE PLAN FOR INFORMATION.

(7) BOLTS MAY BE A325 BOLTS OR A449 BOLTS. BOLT LENGTH AND THREADING LENGTH ARE TO ALLOW FOR A TIGHT CONNECTION BETWEEN RIGID BARRIER AND THRIE BEAM CONNECTION PLATE. CONTRACTOR IS TO FIELD VERIFY BOLT LENGTH AND THREAD LENGTH. ONE ROUND WASHER REQUIRED BETWEEN BOLT HEAD AND THRIE BEAM CONNECTOR PLATE. BOLTS THAT EXTEND THROUGH THE PARAPET AND OUT THE BACK FACE REQUIRE A HARDENED ROUND STEEL WASHER THAT IS 2" O.D. X 5/32" THICK AND ONE PLATE WASHER. REPAIR ANY DAMAGED CONCRETE FROM BOLT INSTALLATION.

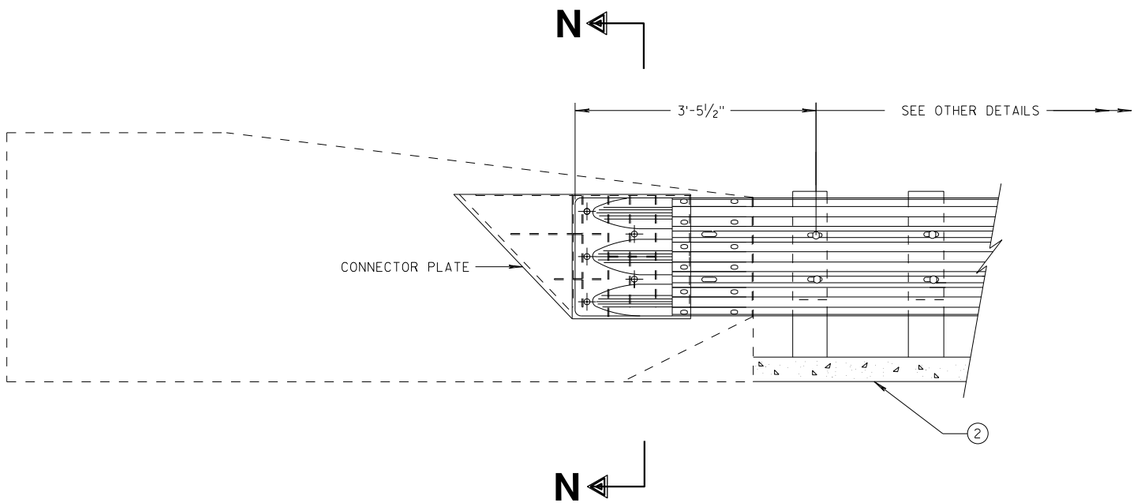

THRIE BEAM CONNECTION TO SINGLE SLOPE BARRIER

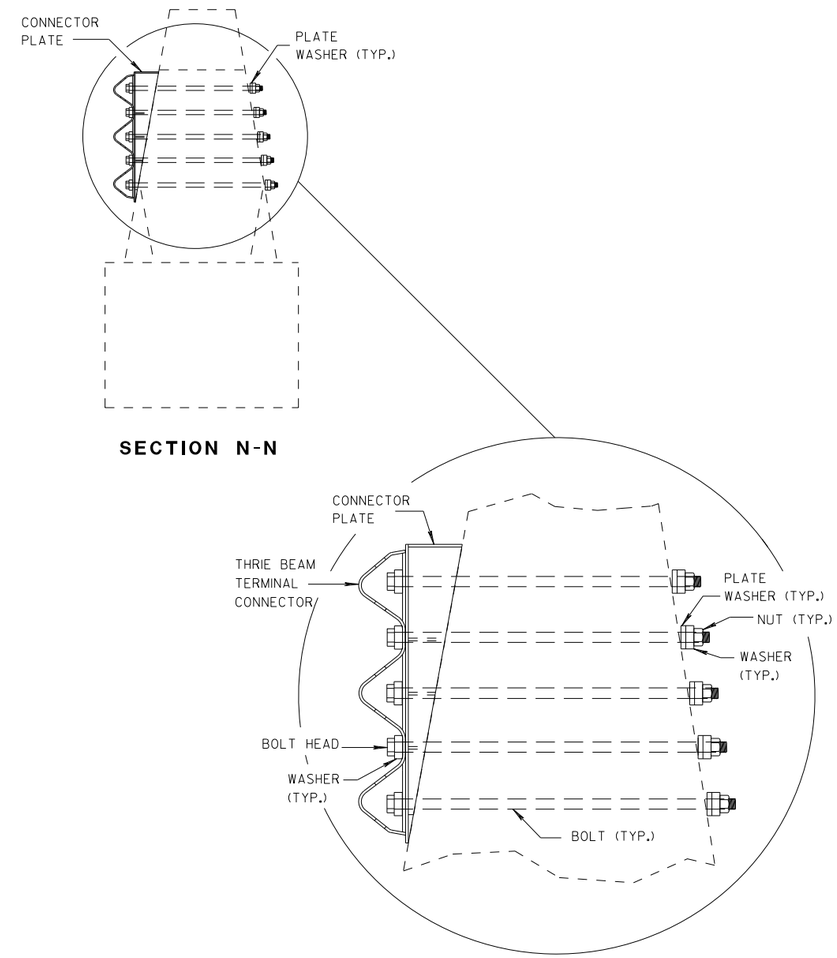

SECTION N-N

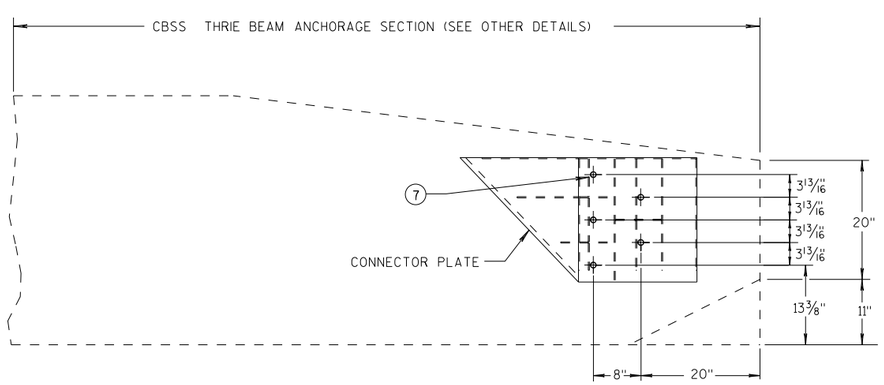

SINGLE SLOPE CONNECTION PLATE PLACEMENT

MIDWEST GUARDRAIL SYSTEM THRIE BEAM TRANSITION (MGS)

STATE OF WISCONSIN
DEPARTMENT OF TRANSPORTATION

APPROVED
7/2018 — DATE
/S/ Rodney Taylor — ROADWAY STANDARDS DEVELOPMENT UNIT SUPERVISOR
FHWA

6

S.D.D. 14 B 45-5j

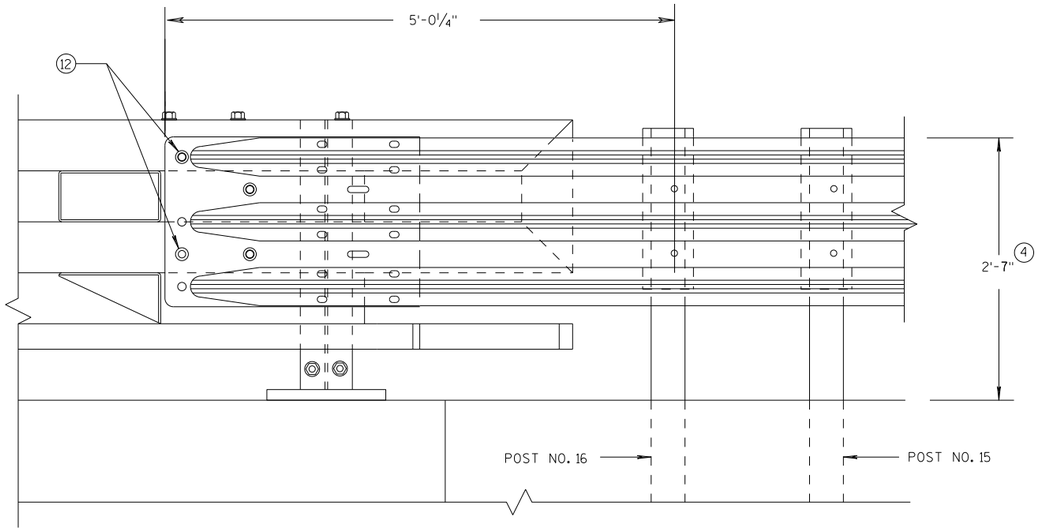

ELEVATION OF DETAIL AT NY3 END POST

THRIE BEAM RAIL ATTACHMENT

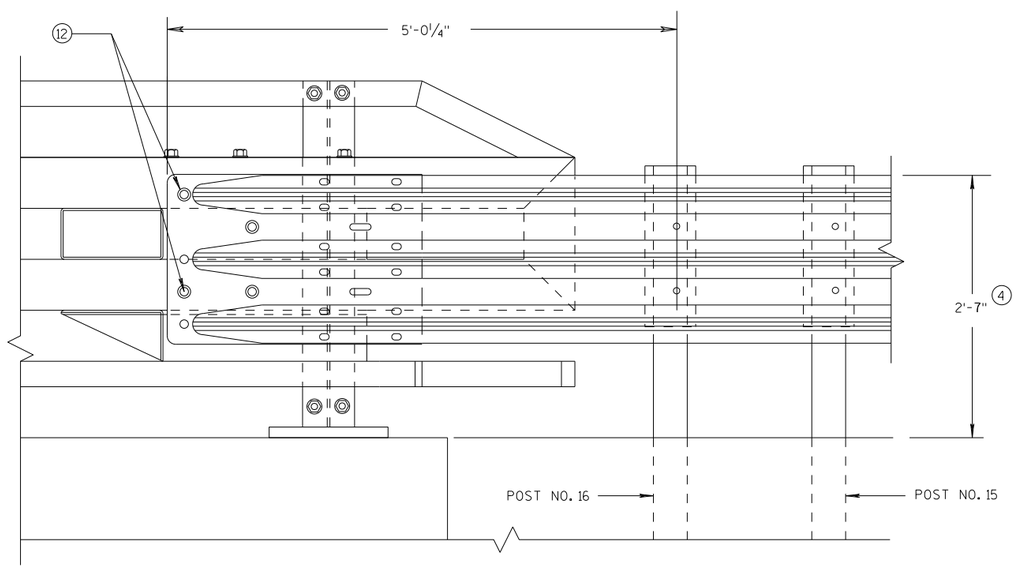

ELEVATION OF DETAIL AT NY4 END POST

THRIE BEAM RAIL ATTACHMENT

GENERAL NOTES

(4) TOLERANCE FOR TOP OF BEAM IS ± 1".

(12) BOLTS MAY BE A325 BOLTS OR A449 BOLTS. BOLT LENGTH AND THREADING LENGTH ARE TO ALLOW FOR A TIGHT CONNECTION BETWEEN RIGID BARRIER AND THRIE BEAM CONNECTION PLATE. CONTRACTOR IS TO FIELD VERIFY BOLT LENGTH AND THREAD LENGTH. ONE ROUND WASHER REQUIRED BETWEEN BOLT HEAD AND THRIE BEAM CONNECTOR PLATE. ON BACKSIDE OF PARAPET ONE ROUND WASHER, AND NUT REQUIRED. BOLT THREAD IS TO EXTEND ½-INCH BEYOND NUT.

MIDWEST GUARDRAIL SYSTEM
THRIE BEAM TRANSITION (MGS)

STATE OF WISCONSIN
DEPARTMENT OF TRANSPORTATION

APPROVED
7/2018
DATE
FHWA

/S/ Rodney Taylor
ROADWAY STANDARDS D
UNIT SUPERVIS

NT

6

S.D.D. 14 B 45-5k

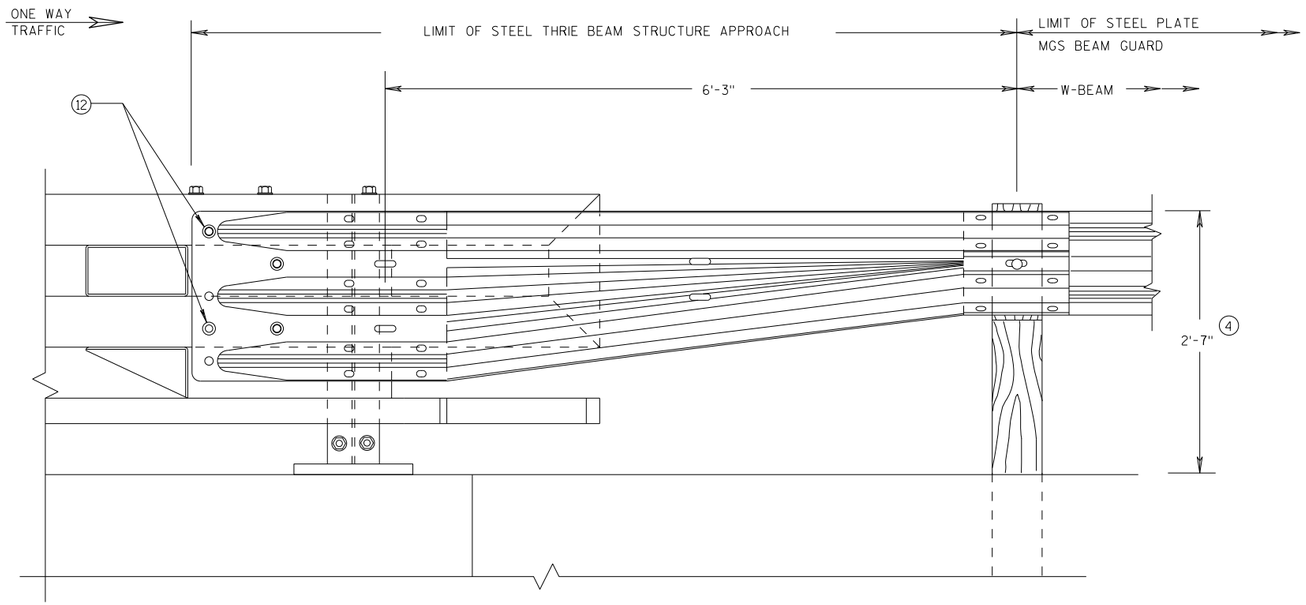

FRONT VIEW

W BEAM TRANSITION AND CONNECTION TO BRIDGE RAILING TYPE "NY3"

(USE ONLY ON THE TRAFFIC EXIT END OF ONE WAY BRIDGES)

GENERAL NOTES

(4) TOLERANCE FOR TOP OF BEAM IS ± 1".

(12) BOLTS MAY BE A325 BOLTS OR A449 BOLTS. BOLT LENGTH AND THREADING LENGTH ARE TO ALLOW FOR A TIGHT CONNECTION BETWEEN RIGID BARRIER AND THRIE BEAM CONNECTION PLATE. CONTRACTOR IS TO FIELD VERIFY BOLT LENGTH AND THREAD LENGTH. ONE ROUND WASHER REQUIRED BETWEEN BOLT HEAD AND THRIE BEAM CONNECTOR PLATE. ON BACKSIDE OF PARAPET ONE ROUND WASHER, AND NUT REQUIRED. BOLT THREAD IS TO EXTEND ½-INCH BEYOND NUT.

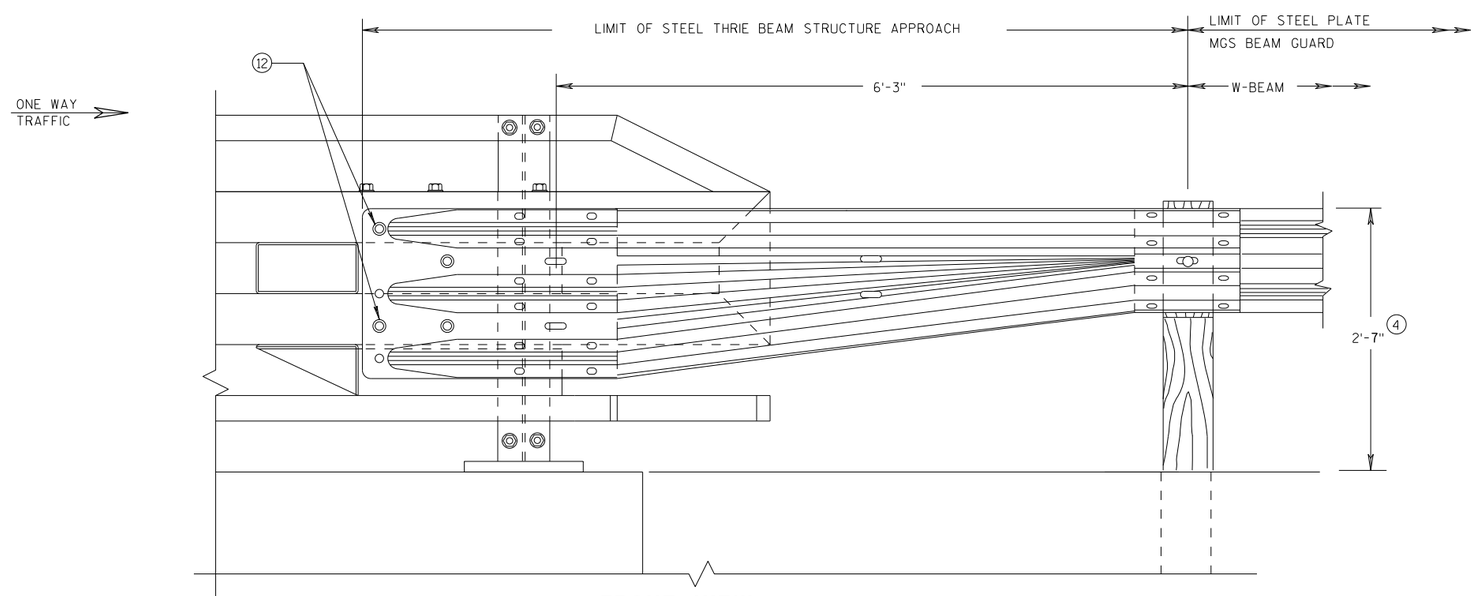

FRONT VIEW

W BEAM TRANSITION AND CONNECTION TO BRIDGE RAILING TYPE "NY4"

(USE ONLY ON THE TRAFFIC EXIT END OF ONE WAY BRIDGES)

MIDWEST GUARDRAIL SYSTEM THRIE BEAM TRANSITION (MGS)

STATE OF WISCONSIN
DEPARTMENT OF TRANSPORTATION

APPROVED
7/2018 — DATE
/S/ Rodney Taylor — ROADWAY STANDARDS DEVELOPMENT UNIT SUPERVISOR
NT
FHWA

6

S.D.D. 14 B 45-5L

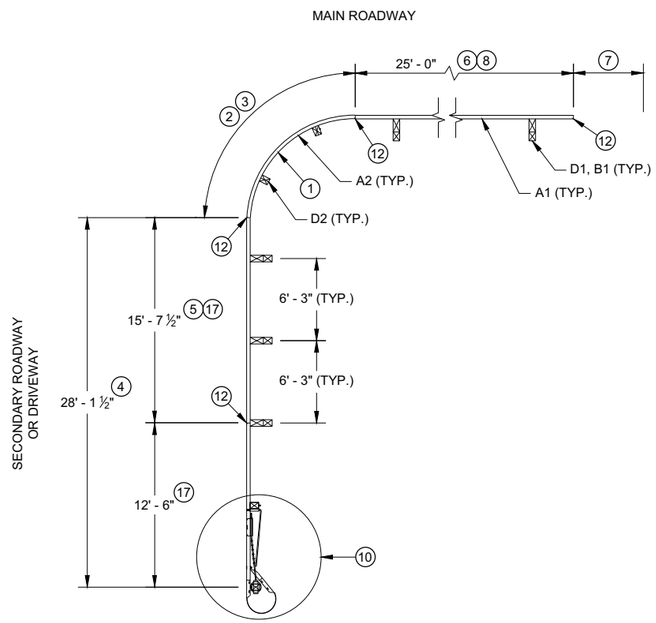

PLAN VIEW

SHORT RADIUS BEAM GUARD WITH SHORT RADIUS TERMINAL ON SECONDARY ROAD OR DRIVEWAY

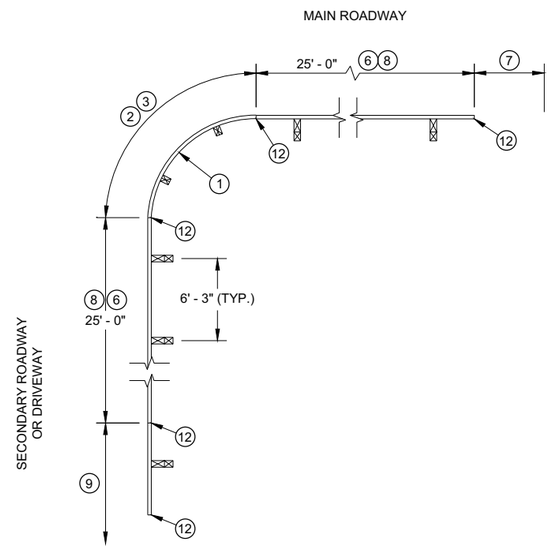

PLAN VIEW

SHORT RADIUS BEAM GUARD WITH EAT, ADDITIONAL BEAM GUARD OR TRANSITION TO RIGID BARRIER ON SECONDARY ROAD OR DRIVEWAY

TABLE FOR RADIUS OF 32' AND LESS

RADIUS (FT)	LENGTH (FT)	WIDTH (FT)
8	25	15
16	30	15
24	40	20
32	50	30

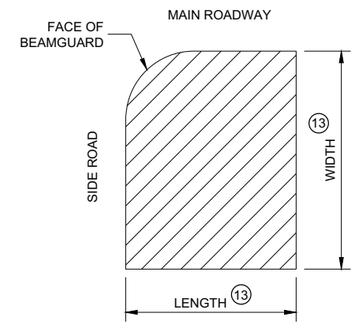

AREA FREE OF FIXED OBJECTS FOR RADIUS 32' AND LESS (16)

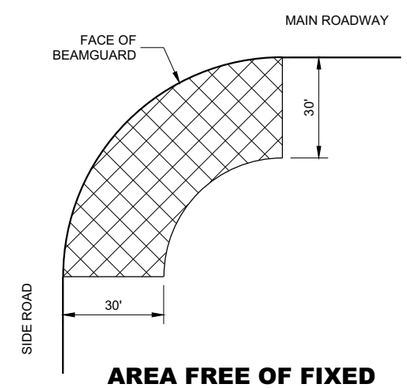

AREA FREE OF FIXED OBJECTS FOR RADIUS GREATER THAN 32'

GENERAL NOTES

SEE PLANS FOR OTHER BARRIER SYSTEM AND LOCATION SPECIFICS.

SEE SDD 14B42 FOR MORE INFORMATION ON BEAM GUARD INSTALLATION, PARTS, MATERIALS, AND INSTALLATION INFORMATION.

GALVANIZE PARTS AFTER FABRICATION.

WELDING TO FOLLOW CURRENT REQUIREMENTS OF THE AMERICAN WELDING SOCIETY STRUCTURAL WELDING CODE ANSI / AWS D1.1.

UNLESS NOTED OTHERWISE, ALL PLATES ARE FLAT AND FREE OF WARP.

UNLESS NOTED OTHERWISE, ALL EDGES ARE SMOOTH, STRAIGHT AND VERTICAL.

ALL CUTS AND HOLES, EXCEPT IN BEAM GUARD RAIL ARE TO BE MACHINED OR MACHINE FLAME CUT.

UNLESS NOTED OTHERWISE, CUT OR PROVIDE BOLTS THAT ARE ¼" TO ½" BEYOND THE NUT.

DRAWINGS ARE NOT TO SCALE.

(1) RADIUS MEASURE FROM INSIDE OF RAIL. LENGTH OF BEAM GUARD SHORT RADIUS GUARD MEASURED ALONG TRAFFIC SIDE OF RAIL. RADIUS BETWEEN 8 FEET TO 150 FEET. SEE PLAN FOR REQUIRED RADIUS. BEAM GUARD RAIL IN RADIUS IS SHOP BENT. ODD RAIL LENGTH OR FIELD CUTS MAY BE REQUIRED.

(2) CONTROLLED RELEASE TERMINAL (CRT) POSTS ARE USED IN THE RADIUS. CONTROLLED RELEASE TERMINAL (CRT) POSTS ARE SPACED 6' - 3". SEE PLAN FOR NUMBER OF CONTROLLED RELEASE (CRT) POSTS.

(3) WITHIN RADIUS BEAM GUARD RAILS ARE NOT BOLTED TO POSTS. BEAM GUARD RAIL IS RESTED ON TOP OF LAG SCREW.

(4) MINIMUM LENGTH OF BEAM GUARD ALONG SIDE ROAD OR DRIVEWAY TO INSTALL SHORT RADIUS TERMINAL. BEAM GUARD IS PAID WITH BEAM GUARD ITEM.

(5) ODD LENGTH OF BEAM GUARD REQUIRED TO INSTALL SHORT RADIUS TERMINAL.

(6) MINIMUM AMOUNT OF BEAM GUARD TO BE INSTALLED PRIOR TO TRANSITION TO RIGID BARRIER. ADDITIONAL BEAM GUARD, OR EAT. BEAM GUARD PAID FOR WITH BEAM GUARD ITEM. SEE PLANS FOR MORE DETAIL.

(7) BEAM GUARD, EAT, OR TRANSITION TO RIGID BARRIER. SEE PLAN.

(8) TOP OF BEAM GUARD BY THE RADIUS IS 27". HEIGHT OF BEAM GUARD IS 31" BY TRANSITION TO RIGID BARRIER, ADDITIONAL BEAM GUARD OR EAT.

(9) ADDITIONAL BEAM GUARD, EAT OR TRANSITION TO RIGID BARRIER. BEAM GUARD SHOWN. SEE PLAN FOR DETAILS.

(10) SHORT RADIUS TERMINAL (SEE OTHER DETAILS).

(11) HEIGHT VARIES. SEE NOTE (8) AND (8).

(12) BEAM GUARD RAIL SPLICE LOCATION. SPLICE LOCATION REQUIRES PART F1 AND F2. SEE SDD 14B42 FOR DETAILS.

(13) SEE TABLE FOR VALUES.

(14) MAXIMUM HEIGHT FOR CENTER OF HOLE IS ¾" ABOVE FINISHED GROUND ±1".

(15) DRILL POST 15/64" DIA. PILOT HOLE. DO NOT HAMMER LAG SCREW INTO POST.

(16) SMALL SIGNS ON BREAKAWAY HARDWARE ARE ACCEPTABLE.

(17) TOP OF RAIL HEIGHT IS 27" WHEN USING A SHORT RADIUS TERMINAL (CRT).

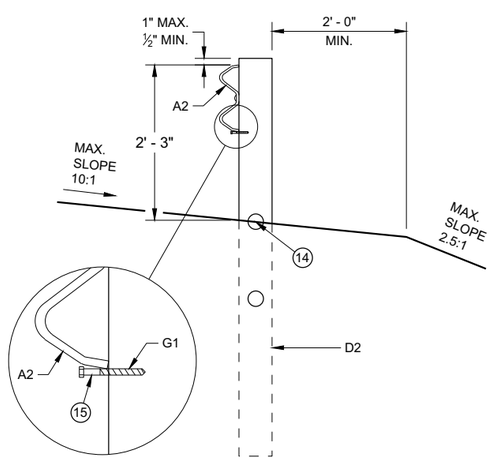

CONTROLLED RELEASE TERMINAL POST (CRT) IN RADIUS

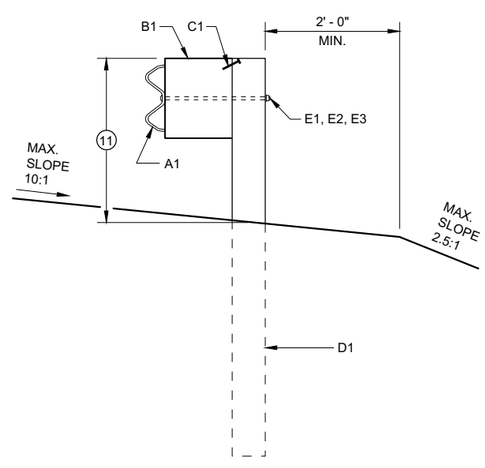

BEAM GUARD POSTS IN HEIGHT TRANSITION

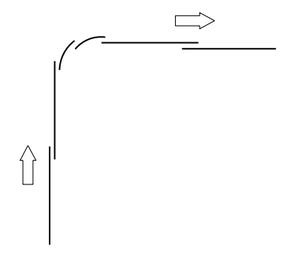

LAP SPLICE DETAIL

SHORT RADIUS BEAM GUARD (MGS) SHORT RADIUS TERMINAL (MGS)

STATE OF WISCONSIN
DEPARTMENT OF TRANSPORTATION

6

SDD 14B53 - 01a

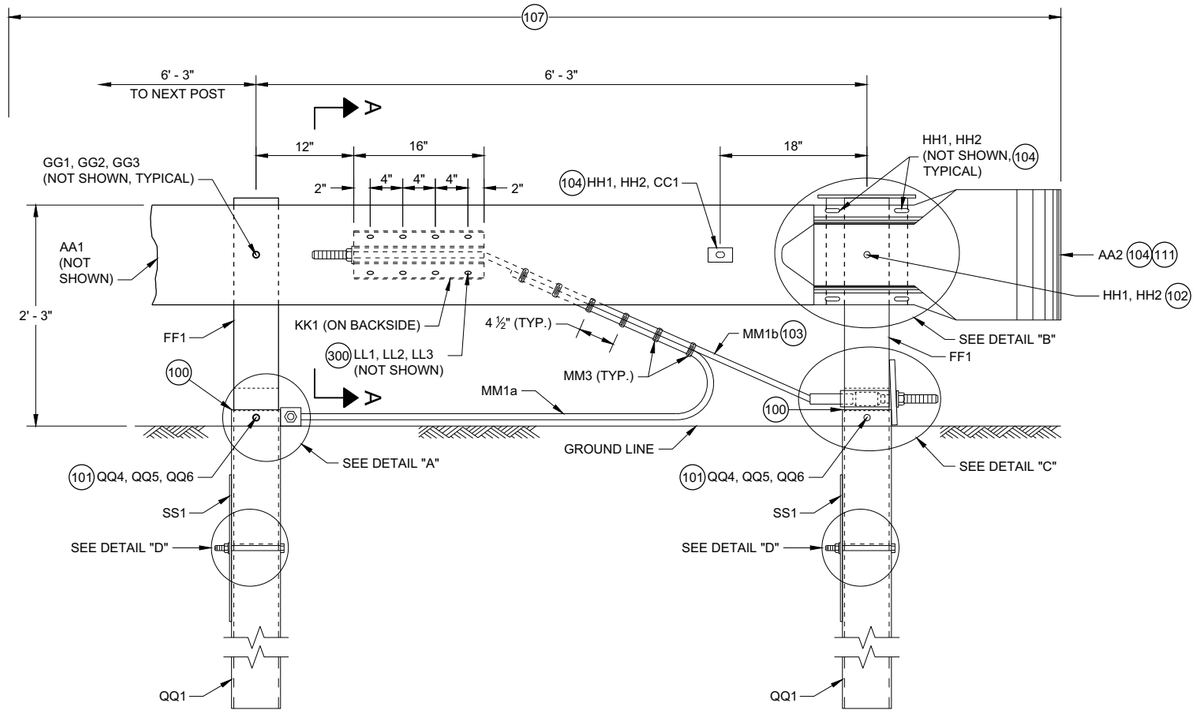

PROFILE VIEW

SHORT RADIUS TERMINAL

GENERAL NOTES

100 TOP OF FOUNDATION TUBE 2 INCHES MAXIMUM ABOVE FINISHED GROUND.

101 WASHERS REQUIRED BETWEEN BOLT HEAD AND FOUNDATION TUBE AND BETWEEN NUT AND FOUNDATION TUBE.

102 SPLICE BOLT AND NUT CONNECTS BEAM GUARD RAIL, W-BEAM SECTION BUFFER, AND STEEL PIPE ASSEMBLY. NO WASHER REQUIRED. SEE DETAIL "B".

103 CABLE IS TAUT.

104 ADJUST AA2 AND BB1 TO FIT.

105 BREAK POINT OF SHOULDER.

106 TACK WELD CABLE CONNECTOR TUBE PLATE TO CABLE CONNECTION TUBE. SEE DETAIL "A" PROFILE VIEW.

107 PAY LIMIT FOR BEAM GUARD.

108 SQUARE WASHER BETWEEN HEAD OF BOLT AND TRAFFIC FACE OF BEAM GUARD. ROUND WASHER REQUIRED BETWEEN NUT AND BB1.

109 CUT OR PROVIDE THREADED STUD THAT IS FLUSH WITH FACE OF BEAM GUARD RAIL KK1 (PLUS OR MINUS ½" TOLERANCE). DEBURR AFTER CUTTING.

110 SEE STEEL PIPE ASSEMBLY DETAILS.

111 ATTACH UU2 WITH UU3. SHOP APPLY UU1 TO UU2.

112 FOUR (4) HH1 AND HH2 REQUIRED TO ATTACH AA1 TO AA2.

113 FOUR (4) HH1 AND HH2 REQUIRED TO ATTACH AA2 TO BB1.

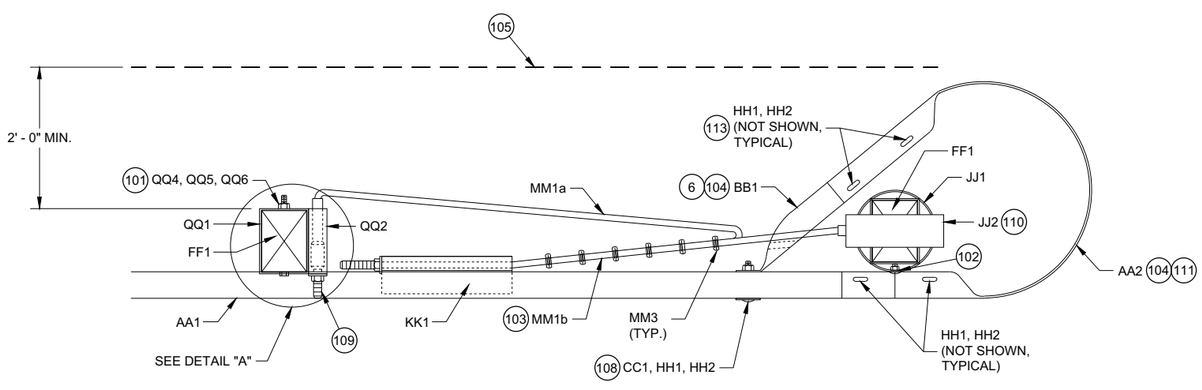

TOP VIEW

SHORT RADIUS TERMINAL

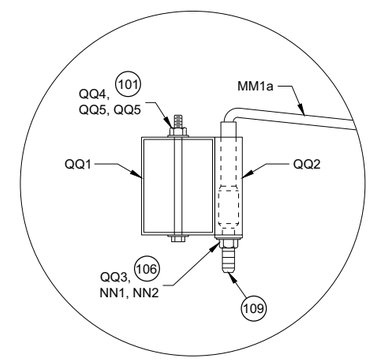

TOP VIEW

DETAIL "A"

(WOOD BREAKAWAY AND BEAM GUARD RAIL POSTS NOT SHOWN)

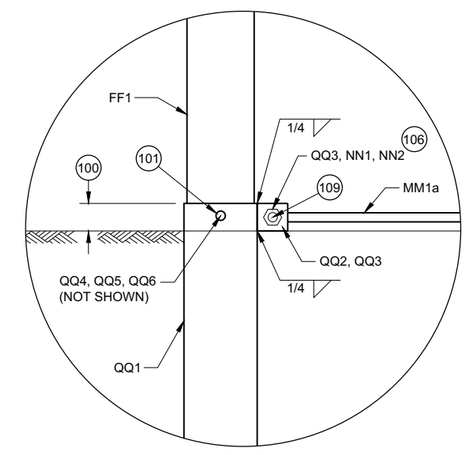

PROFILE VIEW

DETAIL "A"

6

6

SDD 14B53 - 01b

SDD 14B53 - 01b

SHORT RADIUS BEAM GUARD (MGS) SHORT RADIUS TERMINAL (MGS)

STATE OF WISCONSIN
DEPARTMENT OF TRANSPORTAT

GENERAL NOTES

(200) TWO (2) NAILS SPACED 4 INCHES CENTER TO CENTER.

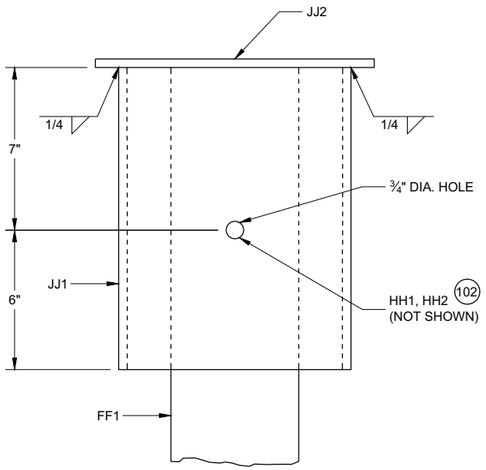

PROFILE VIEW

DETAIL "B"
STEEL PIPE ASSEMBLY
(BEAM GUARD AND W BEAM END SECTION NOT SHOWN)

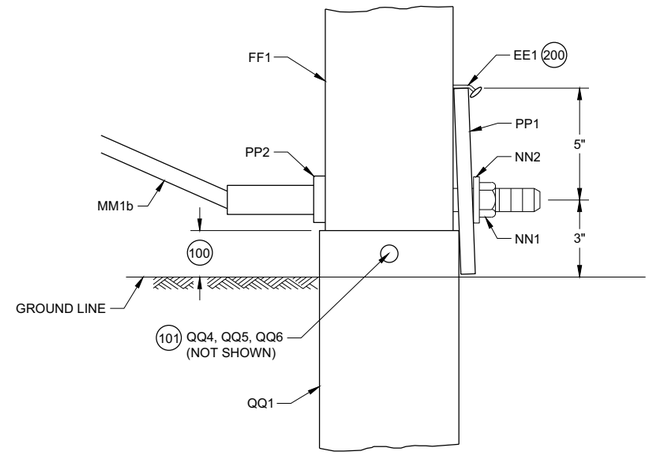

PROFILE VIEW

DETAIL "C"

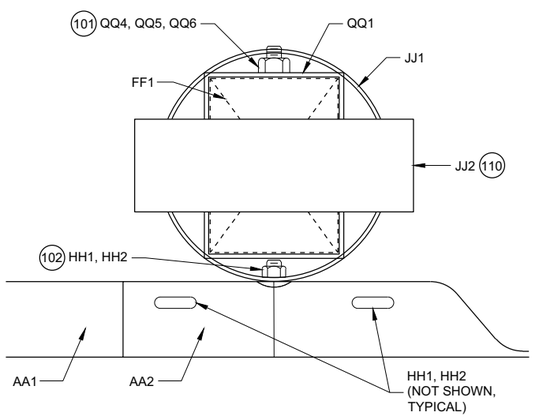

PLAN VIEW

DETAIL "B"
STEEL PIPE ASSEMBLY

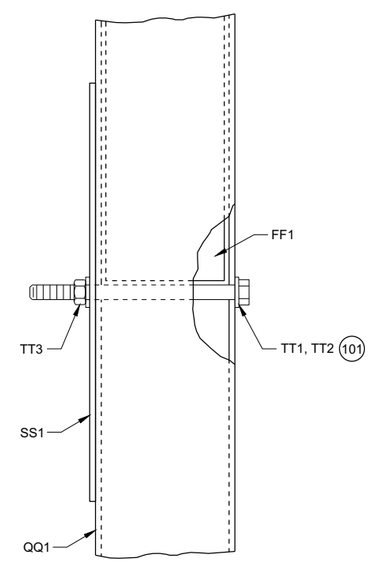

PROFILE VIEW

DETAIL "D"

SHORT RADIUS BEAM GUARD (MGS) SHORT RADIUS TERMINAL (MGS)

STATE OF WISCONSIN
DEPARTMENT OF TRANSPORTAT

6

6

SDD 14B53 - 01c

SDD 14B53 - 01c

GENERAL NOTES

300 WASHERS REQUIRED BETWEEN BOLT HEAD AND BEAM GUARD RAIL AND BETWEEN NUT AND ANCHOR BRACKET. EIGHT (8) LL1 AND LL3 REQUIRED. SIXTEEN (16) LL2 REQUIRED.

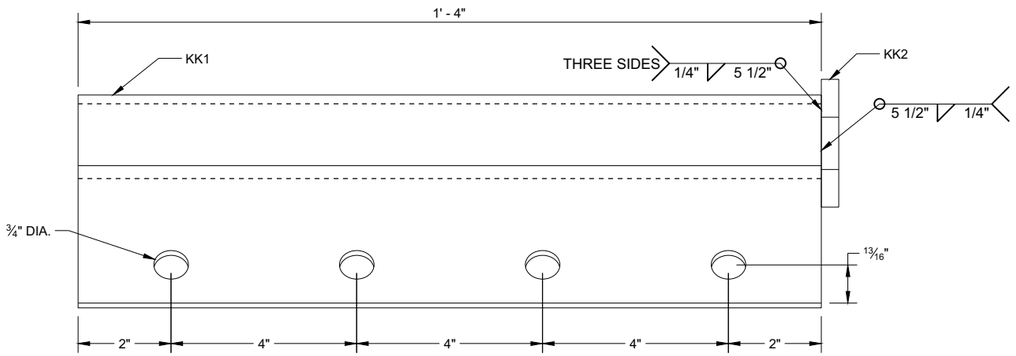

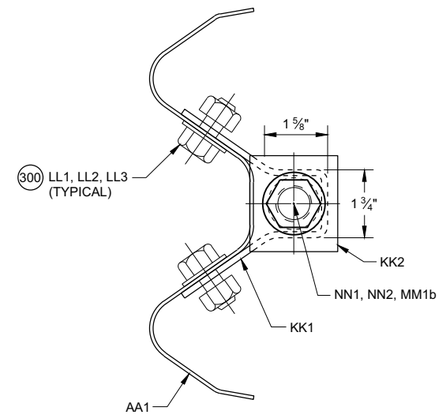

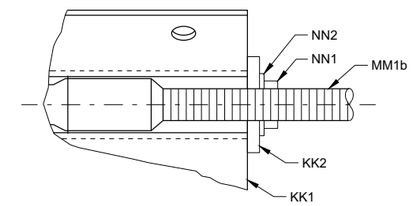

SECTION A - A

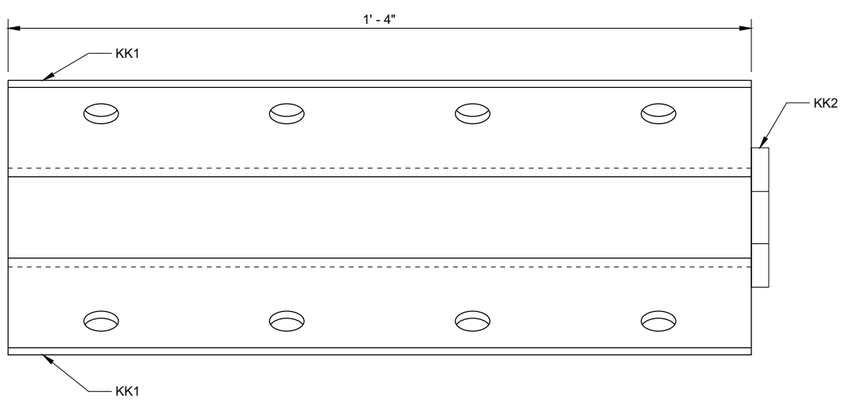

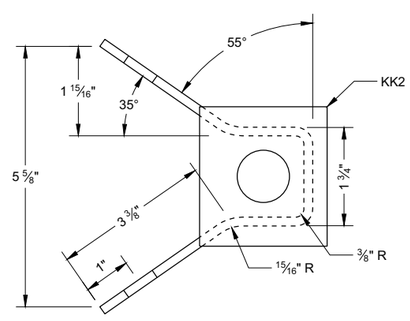

ANCHOR BRACKET (KK1, KK2)

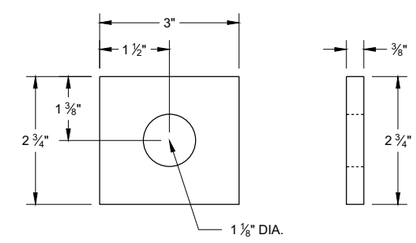

ANCHOR BRACKET BEARING PLATE (KK2)

6

6

SDD 14B53 - 01d

SDD 14B53 - 01d

SHORT RADIUS BEAM GUARD (MGS) SHORT RADIUS TERMINAL (MGS)

STATE OF WISCONSIN
DEPARTMENT OF TRANSPORTAT

GENERAL NOTES

400 CROSS SECTION OF PART IS TO FIT OVER AA1 .

401 CROSS SECTION OF PART IS TO FIT OVER OR UNDER AA1 .

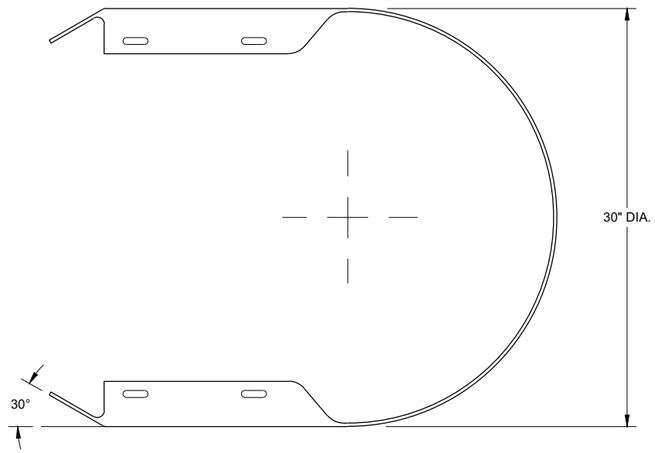

TOP VIEW

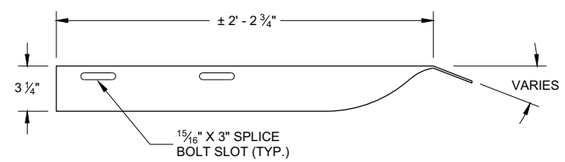

TOP VIEW

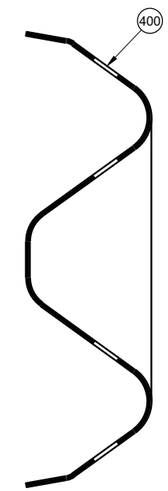

SECTION B -B

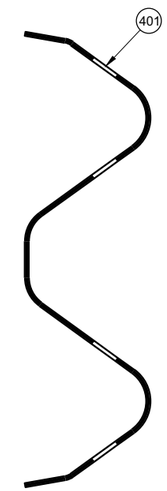

SECTION C -C

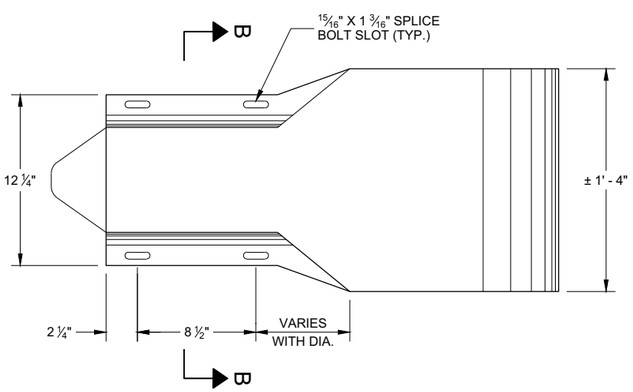

PROFILE VIEW

W BEAM
END SECTION BUFFER (AA2)

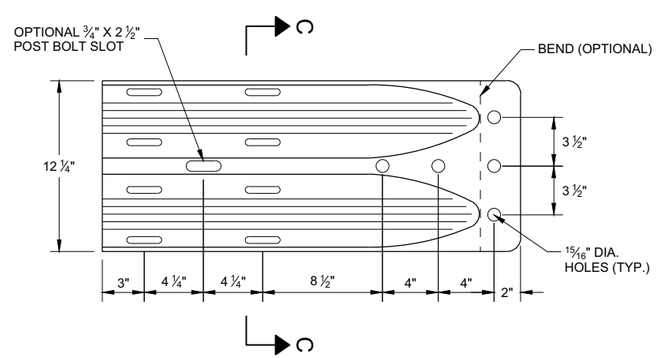

PROFILE VIEW

W BEAM
TERMINAL CONNECTOR (BB1)

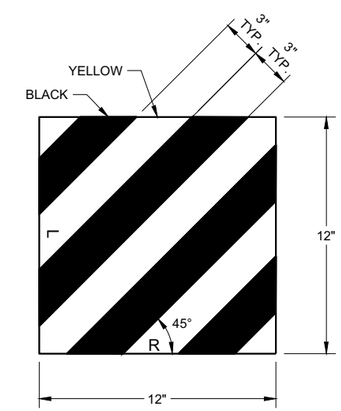

REFLECTIVE SHEETING (UU1, UU2)

SHORT RADIUS BEAM GUARD (MGS) SHORT RADIUS TERMINAL (MGS)

STATE OF WISCONSIN
DEPARTMENT OF TRANSPORTAT

6
SDD 14B53 - 01e

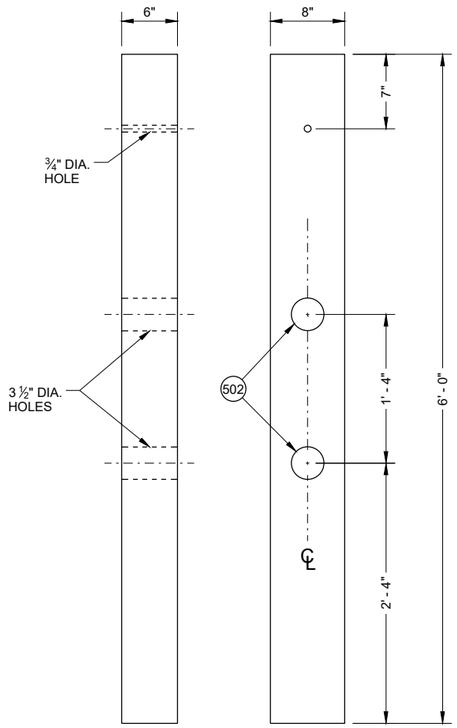

FRONT VIEW SIDE VIEW

CONTROLLED RELEASE POST (CRT) (DD2)

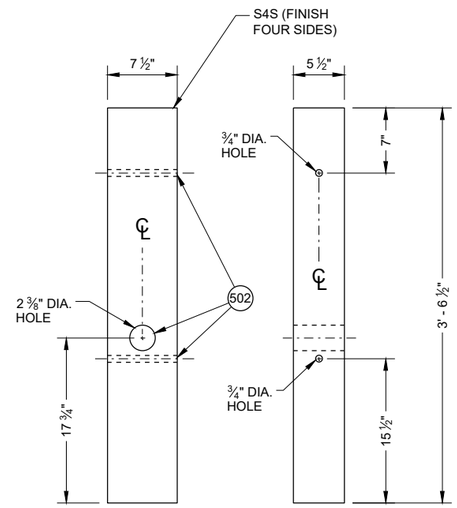

FRONT VIEW SIDE VIEW

WOOD BREAKAWAY POST (FF1)

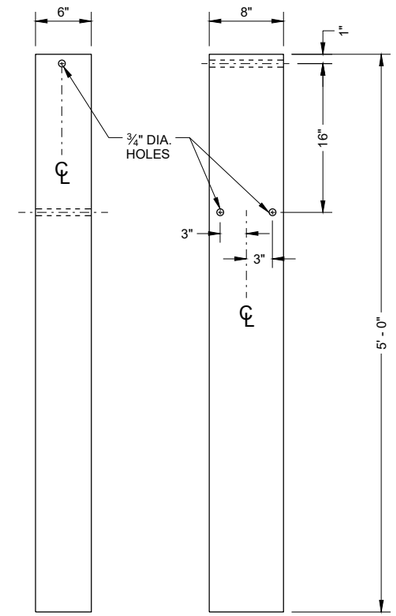

FRONT VIEW SIDE VIEW

FOUNDATION TUBE (QQ1) 500

GENERAL NOTES

500 SEE DETAIL "D" FOR LOCATION AND ATTACHMENT OF SS1.

501 FOR MM1a THREADED STUD ONLY REQUIRED ON ONE END. SWAGED FITTING REQUIRED.

502 LOCATE HOLES ON THE CENTERLINE OF THE SIDE OF THE POST.

503 MM1a MAY HAVE ONE THREADED STUD 4 INCHES LONG. SEE NOTE 109.

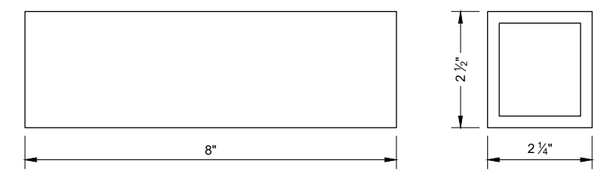

FOUNDATION TUBE - ANCHOR CABLE TUBE (QQ2)

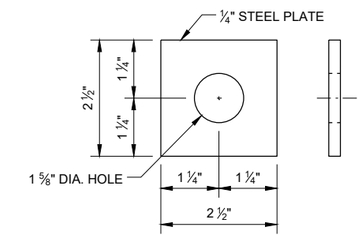

ANCHOR CABLE TUBE END PLATE (QQ3)

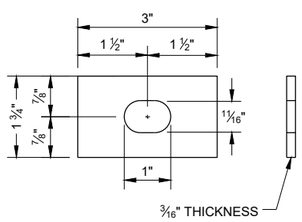

RECTANGULAR PLATE WASHER (CC1)

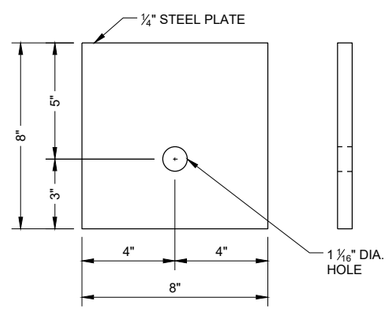

BEARING PLATE (PP1)

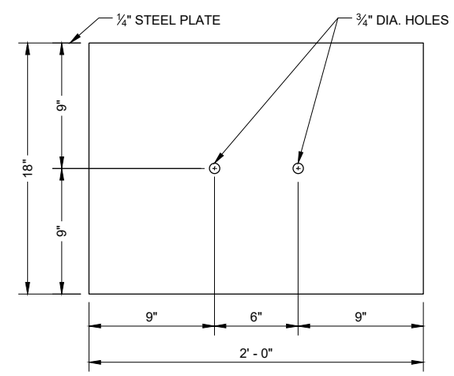

SOIL PLATE (SS1)

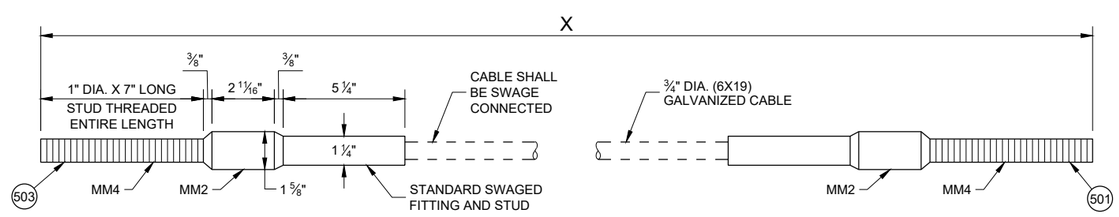

CABLE ASSEMBLY (MM1a, MM1b)

"X" LENGTH

MM1b	9' - 0"
MM1b	6' - 8"

SHORT RADIUS BEAM GUARD (MGS) SHORT RADIUS TERMINAL (MGS)

STATE OF WISCONSIN
DEPARTMENT OF TRANSPORTAT

6

SDD 14B53 - 01f

BILL OF MATERIALS - SHORT RADIUS BEAM GUARD (MGS)

PART	DESCRIPTION	MATERIALS SPECIFICATIONS	NOTES
A1	BEAM GUARD RAIL	AASHTO M180, CLASS A, TYPE 2	
		APPROVED PRODUCER	
A2	BEAM GUARD RAIL - SHOP BENT	INDICATE ON BACK OF RAIL THE RADIUS THAT RAIL WAS BENT TO. SHOP BEND RADIUS IS TO THE NEAREST FOOT. FOLLOW AASHTO M180 ON HOW TO MARK RADIUS INFORMATION.	
		AASHTO M180, CLASS A, TYPE 2	
		APPROVED PRODUCER	
B1	BLOCK - WOOD	WISDOT SPEC. 614	SEE SDD 14B42
C1	NAIL	ASTM A153 HOT DIP CLASS D	
		ASTM F1667 TYPE 1 STYLE 12 (16 DOUBLE HEAD)	
D1	POST-STRONG POST-WOOD	WISDOT SPEC. 614	SEE SDD 14B42
D2	POST-CRT-WOOD	WISDOT SPEC. 614	
E1	POST BOLT	ASTM A307 GRADE A OR SAE J429 GRADE 2	⅝" DIA. SEE SDD 14B42 FOR BOLT GEOMETRY
		AASHTO M180	
		GALV. HOT DIP TO AASHTO M232 CLASS C / ASTM A153 CLASS C / ASTM F2329 OR GALV. MECHANICALLY TO AASHTO M298 CLASS 50, TYPE 1 / ASTM B695 CLASS 50, TYPE 1	
		UNC	
E2	POST BOLT - WASHER	ASTM F436 TYPE 1 (HARDEN TYPICALLY USED WITH STEEL) OR ASTM F844 (UNHARDENED TYPICALLY WITH WOOD)	⅝" DIA.
		GALV. AASHTO M111 / ASTM A 123 OR GALV. HOT DIP. TO AASHTO M232 CLASS C / ASTM A153 CLASS C / ASTM F2329	
E3	POST BOLT - NUT	AASHTO M180 DOUBLE RECESSED HEAVY HEX HEAD	⅝" DIA. SEE SDD 14B42 FOR BOLT GEOMETRY
		GALV. HOT DIP TO AASHTO M232 CLASS C / ASTM A153 CLASS C / ASTM F2329 OR GALV. MECHANICALLY TO AASHTO M298 CLASS 50, TYPE 1 / ASTM B695 CLASS 50, TYPE 1	
		UNC	
		OVER TAPPED NUTS OVER-SIZE AS SPECIFIED IN AASHTO 291 / ASTM A 563	
		ASTM A563 GRADE A HEAVY HEX HEAD	
F1	SPLICE BOLT	GALV. HOT DIP TO AASHTO M232 CLASS C / ASTM A153 CLASS C / ASTM F2329 OR GALV. MECHANICALLY TO AASHTO M298 CLASS 50, TYPE 1 / ASTM B695 CLASS 50, TYPE 1	⅝" DIA. SEE SDD 14B42 FOR BOLT GEOMETRY
		ASTM A307 GRADE A OR SAE J429 GRADE 2	
		UNC	
		AASHTO M180	

PART	DESCRIPTION	MATERIALS SPECIFICATIONS	NOTES
F2	SPLICE BOLT - NUT	ASTM A563 GRADE A	⅝" DIA. SEE SDD 14B42 FOR BOLT GEOMETRY
		AASHTO M180 DOUBLE RECESSED HEAVY HEX HEAD	
		GALV. HOT DIP TO AASHTO M232 CLASS C/ASTM A153 CLASS C/ASTM F2329 OR GALV. MECHANICALLY TO AASHTO M298 CLASS 50, TYPE 1/ASTM B695 CLASS 50, TYPE 1	
		OVER TAPPED NUTS OVER-SIZE AS SPECIFIED IN AASHTO 291 / ASTM A 563	
		UNC	
G1	LAG SCREW	ASTM A308 GRADE A ASTM A153 CLASS D	½" DIA. 6" LONG
H1	DELINEATOR - BEAM GUARD		SEE SDD 14B42 FOR MORE INFORMATION
H2	DELINEATION - SHEETING	YELLOW OR WHITE	
		WISDOT SPEC 637 TYPE SH	
		APPROVED PRODUCT LIST	
J1	FOUNDATION BACKFILL	STANDARD SPEC. 614	
AA1	BEAM GUARD RAIL - PUNCHED	AASHTO M180, CLASS A, TYPE 2	
		APPROVED PRODUCER	
AA2	BEAM GUARD RAIL - END SECTION BUFFER	AASHTO M180, CLASS A, TYPE 2	
		APPROVED PRODUCER	
BB1	BEAM GUARD RAIL - TERMINAL CONNECTOR MODIFIED	AASHTO M180, CLASS A, TYPE 2	
		APPROVED PRODUCER	
CC1	SHORT RADIUS - SQUARE WASHER	AASHTO M180	
		GALV. AASHTO M111 / ASTM A123	
EE1	NAIL	ASTM A153 HOT DIP CLASS D	
		ASTM F1667 TYPE 1 STYLE 12 (16 DOUBLE HEADED)	
FF1	POST - BCT - WOOD	S4S FINISH ON 4 SIDES	
		WISDOT SPEC. 614	
GG1	POST BOLT	ASTM A307 GRADE A OR SAE J429 GRADE 2	⅜" DIA. SEE SDD 14B42 FOR BOLT GEOMETRY
		AASHTO M180	
		GALV. HOT DIP TO AASHTO M232 CLASS C/ASTM A153 CLASS C/ASTM F2329 OR GALV. MECHANICALLY TO AASHTO M298 CLASS 50, TYPE 1/ASTM B695 CLASS 50, TYPE 1	
		UNC	
GG2	POST BOLT - WASHER	ASTM F436 TYPE 1 (HARDEN TYPICALLY USED WITH STEEL) OR ASTM F844 (UNHARDENED TYPICALLY WITH WOOD)	⅜" DIA.
		GALV. AASHTO M111 / ASTM A 123 OR GALV. HOT DIP. TO AASHTO M232 CLASS C/ASTM A153 CLASS C / ASTM F2329	

6

6

SHORT RADIUS BEAM GUARD (MGS) SHORT RADIUS TERMINAL (MGS)

STATE OF WISCONSIN
DEPARTMENT OF TRANSPORTA

SDD 14B53 - 01g

SDD 14B53 - 01g

BILL OF MATERIALS - SHORT RADIUS BEAM GUARD (MGS)

PART	DESCRIPTION	MATERIALS SPECIFICATIONS	NOTES
GG3	POST BOLT - NUT	ASTM A563 GRADE A	⅜" DIA. SEE 14B42 FOR GEOMETRY
		AASHTO M180 DOUBLE RECESSED HEAVY HEX HEAD	
		GALV. HOT DIP TO AASHTO M232 CLASS C / ASTM A153 CLASS C / ASTM F2329 OR GALV. MECHANICALLY TO AASHTO M298 CLASS 50, TYPE 1 / ASTM B695 CLASS 50, TYPE 1	
		UNC	
		OVER TAPPED NUTS OVER-SIZE AS SPECIFIED IN AASHTO 291 / ASTM A 563	
		ASTM A563 GRADE A HEAVY HEX HEAD	
HH1	SPLICE BOLT	GALV. HOT DIP TO AASHTO M232 CLASS C / ASTM A153 CLASS C / ASTM F2329 OR GALV. MECHANICALLY TO AASHTO M298 CLASS 50, TYPE 1 / ASTM B695 CLASS 50, TYPE 1	⅜" DIA. SEE SDD 14B42 FOR BOLT GEOMETRY
		ASTM A307 GRADE A OR SAE J429 GRADE 2	
		UNC	
		AASHTO M180 HEAD GEOMETRY	
HH2	SPLICE BOLT - NUT	ASTM A563 GRADE A	⅜" DIA. SEE SDD 14B42 FOR BOLT GEOMETRY
		AASHTO M180 DOUBLE RECESSED HEAVY HEX HEAD	
		GALV. HOT DIP TO AASHTO M232 CLASS C / ASTM A153 CLASS C / ASTM F2329 OR GALV. MECHANICALLY TO AASHTO M298 CLASS 50, TYPE 1 / ASTM B695 CLASS 50, TYPE 1	
		OVER TAPPED NUTS OVER-SIZE AS SPECIFIED IN AASHTO 291 / ASTM A 563	
		UNC	
JJ1	PIPE - STEEL	ASTM A53 GALVANIZED GRADE B SCHEDULE 40	10" O.D.
JJ2	TOP PLATE	ASTM A36 MIN. STRENGTH 36 KSI, OR ASTM A529 MAX. STRENGTH 50 KSI, OR ASTM A572 MAX STRENGTH 50 KSI OR ASTM A709 MAX STRENGTH 50 KSI OR ASTM A992 MAX STRENGTH 50 KSI	DIMENSIONS ⅜" X 4" X 1' - 0"
		GALV. AASHTO M111 / ASTM A123	
KK1	ANCHOR BRACKET	ASTM A36 MIN. STRENGTH 36 KSI, OR ASTM A529 MAX. STRENGTH 50 KSI, OR ASTM A572 MAX STRENGTH 50 KSI OR ASTM A709 MAX STRENGTH 50 KSI OR ASTM A992 MAX STRENGTH 50 KSI	
		GALV. AASHTO M111 / ASTM A123	
KK2	ANCHOR BRACKET - BEARING PLATE	ASTM A36 MIN. STRENGTH 36 KSI, OR ASTM A529 MAX. STRENGTH 50 KSI, OR ASTM A572 MAX STRENGTH 50 KSI OR ASTM A709 MAX STRENGTH 50 KSI OR ASTM A992 MAX STRENGTH 50 KSI	
		GALV. AASHTO M111 / ASTM A123	
LL1	ANCHOR BRACKET - BOLT	ASTM A307 GRADE B HEAVY HEX HEAD OR SAE J429 GRADE 2 HEAVY HEX HEAD	⅝" DIA.
		GALV. HOT DIP TO AASHTO M232 CLASS C / ASTM A153 CLASS C / ASTM F2329 OR GALV. MECHANICALLY TO AASHTO M298 CLASS 50, TYPE 1 / ASTM B695 CLASS 50, TYPE 1	
		UNC	

PART	DESCRIPTION	MATERIALS SPECIFICATIONS	NOTES
LL2	ANCHOR BRACKET - WASHER	ASTM F436 TYPE 1 (HARDEN WASHER ONLY)	⅝" DIA.
		GALV. AASHTO M111 / ASTM A123 OR GALV. HOT DIP TO AASHTO M232 CLASS C / ASTM A153 CLASS C / ASTM F2329	
LL3	ANCHOR BRACKET - NUT	ASTM A563 GRADE A	⅝" DIA.
		GALV. HOT DIP TO AASHTO M232 CLASS C / ASTM A153 CLASS C / ASTM F2329 OR GALV. MECHANICALLY TO AASHTO M298 CLASS 50, TYPE 1 / ASTM B695 CLASS 50, TYPE 1	
		OVER TAPPED NUTS OVER-SIZE AS SPECIFIED IN AASHTO 291 / ASTM A 563	
		UNC	
MM1a	ANCHOR CABLE	AASHTO M30 / ASTM A741 INDEPENDENT WIRE CORE (IWRC) OR WIRE STRAND CORE (WCS), IMPROVED PLOW STEEL (IPS), 6X19, TYPE II OR IIc CLASS C ZINC COATED	
MM1b	ANCHOR CABLE	AASHTO M30 / ASTM A741 INDEPENDENT WIRE CORE (IWRC) OR WIRE STRAND CORE (WCS), IMPROVED PLOW STEEL (IPS), 6X19, TYPE II OR IIc CLASS C ZINC COATED	
MM2	ANCHOR CABLE - SWAGE FITTING	ASTM A576 GRADE 1035	
		SWAGE FITTINGS ARE TO BE FACTORY SWEDGED. WITH A BREAKING STRENGTH 40,000 LBS.	
		GALV. AASHTO M111 / ASTM A123	
		ASME B30.26 FORGED, CAST, OR DIE STAMPED WITH THE FOLLOWING INTO CONNECTION: NAME OF MANUFACTURER OR TRADEMARK OF CONNECTION'S MANUFACTURER, SIZE OR RATED LOAD, GRADE.	
MM3	WIRE ROPE CABLE CLAMPS	FF-C-450D TYPE 1 CLASS 1	¾"
		ASTM A153 HOT DIP CLASS D	
MM4	ANCHOR CABLE - SWAGE FITTING - STUD	ASTM F3125 GRADE A325 TYPE 1 OR SAE GRADE 5 OR ASTM A449 TYPE 1 HEAVY HEX HEAD	
		GALV. HOT DIP TO AASHTO M232 CLASS C / ASTM A153 CLASS C / ASTM F2329 OR GALV. MECHANICALLY TO AASHTO M298 CLASS 50, TYPE 1 / ASTM B695 CLASS 50, TYPE 1	
		UNC	
NN1	ANCHOR CABLE - NUT	ASTM A563 GRADE A	1" DIA.
		AASHTO M180 DOUBLE RECESSED HEAVY HEX HEAD	
		GALV. HOT DIP TO AASHTO M232 CLASS C / ASTM A153 CLASS C / ASTM F2329 OR GALV. MECHANICALLY TO AASHTO M298 CLASS 50, TYPE 1 / ASTM B695 CLASS 50, TYPE 1	
		OVER TAPPED NUTS OVER-SIZE AS SPECIFIED IN AASHTO 291 / ASTM A 563	
		UNC	
NN2	ANCHOR CABLE - NUT - WASHER	ASTM F436 TYPE 1 (HARDEN WASHER ONLY)	1" DIA.
		GALV. AASHTO M111 / ASTM A123 OR GALV. HOT DIP TO AASHTO M232 CLASS C / ASTM A153 CLASS C / ASTM F2329	

6

SDD 14B53 - 01h

SHORT RADIUS BEAM GUARD (MGS) SHORT RADIUS TERMINAL (MGS)

STATE OF WISCONSIN
DEPARTMENT OF TRANSPORTAT

6

SDD 14B53 - 01h

BILL OF MATERIALS - SHORT RADIUS BEAM GUARD (MGS)

PART	DESCRIPTION	MATERIALS SPECIFICATIONS	NOTES
PP1	BEARING PLATE AT POST	ASTM A36 MIN. STRENGTH 36 KSI, OR ASTM A529 MAX. STRENGTH 50 KSI, OR ASTM A572 MAX STRENGTH 50 KSI OR ASTM A709 MAX STRENGTH 50 KSI OR ASTM A992 MAX STRENGTH 50 KSI	
		GALV. AASHTO M111 / ASTM A123	
PP2	PIPE - STEEL	ASTM A53 GALVANIZED GRADE B SCHEDULE 40	2" DIA. x 6" LONG
QQ1	FOUNDATION TUBE	ASTM A500 GRADE B	8" X 6" X 3/16"
		GALV. AASHTO M111 / ASTM A123	
QQ2	SHORT RADIUS - FOUNDATION TUBE - ANCHOR CABLE - TUBE	ASTM A500 GRADE B	DIMENSIONS 2 1/2" X 2 1/4" X 1/4" X 8"
		GALV. AASHTO M111 / ASTM A123	
QQ3	SHORT RADIUS - SOIL TUBE - ANCHOR CABLE - TUBE - END PLATE	ASTM A36 MIN. STRENGTH 36 KSI, OR ASTM A529 MAX. STRENGTH 50 KSI, OR ASTM A572 MAX STRENGTH 50 KSI OR ASTM A709 MAX STRENGTH 50 KSI OR ASTM A992 MAX STRENGTH 50 KSI	DIMENSIONS 2 1/2" X 2 1/2" X 1/4"
		GALV. AASHTO M111 / ASTM A123	
QQ4	GROUND STRUT AND YOKE - BOLT	GALV. HOT DIP TO AASHTO M232 CLASS C / ASTM A153 CLASS C / ASTM F2329 OR GALV. MECHANICALLY TO AASHTO M298 CLASS 50, TYPE 1 / ASTM B695 CLASS 50, TYPE 1	5/8 DIA.
		ASTM A307 GRADE B HEAVY HEX HEAD OR SAE J429 GRADE 2 HEAVY HEX HEAD	
		UNC	
QQ5	GROUND PLATE AND YOKE - WASHER	ASTM F436 TYPE 1 (HARDEN WASHER ONLY)	5/8 DIA.
		GALV. AASHTO M111 / ASTM A123 OR GALV. HOT DIP TO AASHTO M232 CLASS C / ASTM A153 CLASS C / ASTM F2329	
QQ6	GROUND STRUT AND YOKE - NUT	HEAVY HEX	5/8 DIA.
		UNC	
		ASTM A563 GRADE A	
		OVER TAPPED NUTS AS SPECIFIED IN AASHTO 291 / ASTM A 563	
		GALV. HOT DIP TO AASHTO M232 CLASS C / ASTM A153 CLASS C / ASTM F2329 OR GALV. MECHANICALLY TO AASHTO M298 CLASS 50, TYPE 1 / ASTM B695 CLASS 50, TYPE 1	

PART	DESCRIPTION	MATERIALS SPECIFICATIONS	NOTES
SS1	SOIL PLATE	ASTM A36 MIN. STRENGTH 36 KSI, OR ASTM A529 MAX. STRENGTH 50 KSI, OR ASTM A572 MAX STRENGTH 50 KSI OR ASTM A709 MAX STRENGTH 50 KSI OR ASTM A992 MAX STRENGTH 50 KSI	
		GALV. AASHTO M111 / A123	
TT1	SOIL PLATE - BOLT	ASTM A307 GRADE B HEAVY HEX HEAD OR SAE J429 GRADE 2 HEAVY HEX HEAD	5/8 DIA.
		GALV. HOT DIP TO AASHTO M232 CLASS C / ASTM A153 CLASS C / ASTM F2329 OR GALV. MECHANICALLY TO AASHTO M298 CLASS 50, TYPE 1 / ASTM B695 CLASS 50, TYPE 1	
		UNC	
TT2	SOIL PLATE - WASHER	ASTM F436 TYPE 1 (HARDEN WASHER ONLY)	5/8 DIA.
		GALV. AASHTO M111 / ASTM A123 OR GALV. HOT DIP TO AASHTO M232 CLASS C / ASTM A153 CLASS C / ASTM F2329	
TT3	SOIL PLATE - NUT	GALV. HOT DIP TO AASHTO M232 CLASS C / ASTM A153 CLASS C / ASTM F2329 OR GALV. MECHANICALLY TO AASHTO M298 CLASS 50, TYPE 1 / ASTM B695 CLASS 50, TYPE 1	5/8 DIA.
UU1	OBJECT MARKER - SHEETING	MUTCD / WISDOT OBJECT MARKER TYPE 3	PATTERN AND COLOR FOR SHEETING. SHEETING TYPE FOR MARKER.
		WISDOT SPEC 637 TYPE F	
		APPROVED PRODUCT LIST	
UU2	OBJECT MARKER - ALUMINUM PLATE	WISDOT SPEC 637 ALUMINUM PLATE	MATERIAL AND THICKNESS OF MATERIALS
UU3	OBJECT MARKER - SCREWS	STAINLESS SELF-TAPPING SCREWS	
VV1	FOUNDATION BACKFILL	WISDOT SPEC 614	

SHORT RADIUS BEAM GUARD (MGS) SHORT RADIUS TERMINAL (MGS)

STATE OF WISCONSIN
DEPARTMENT OF TRANSPORTATION

APPROVED
June 2017 — DATE
/S/ Rodney Taylor — ROADWAY STANDARDS DEVE ENGINEER
FHWA

6
SDD 14B53 - 01i

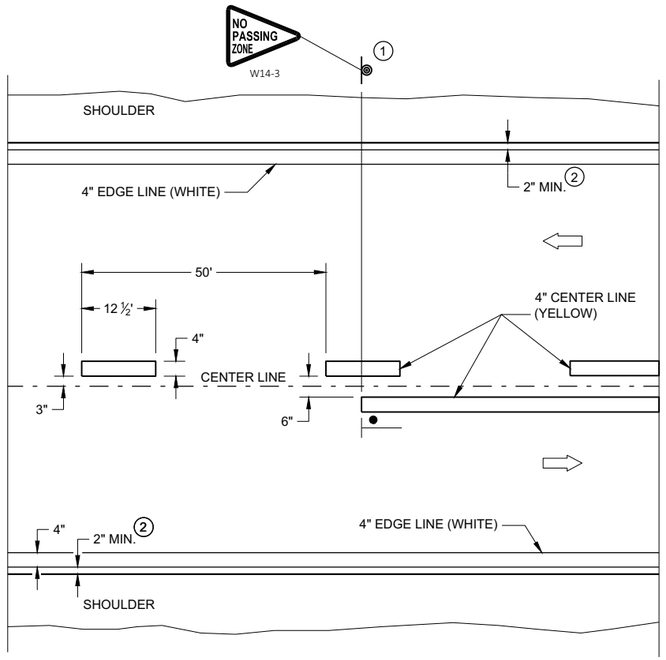

TWO WAY TRAFFIC

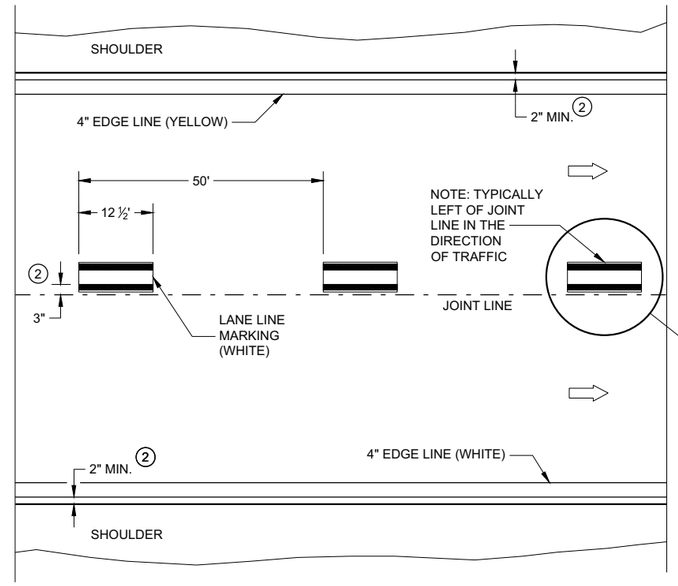

ONE WAY TRAFFIC

PERMANENT PAVEMENT MARKING

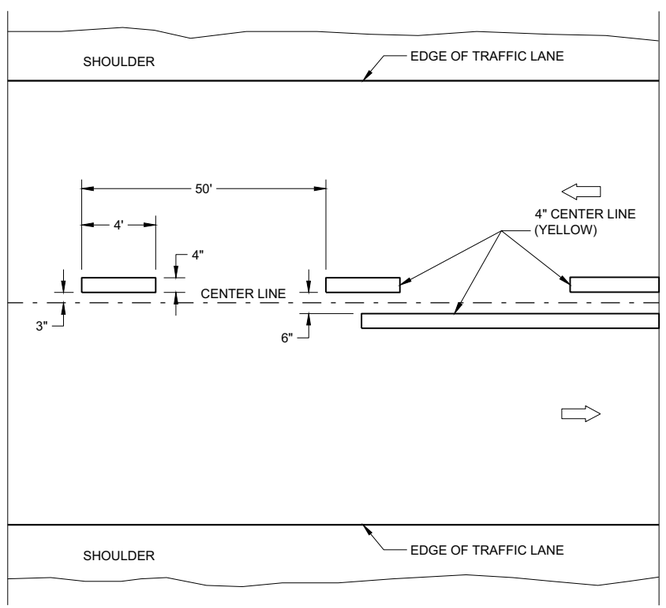

TWO WAY TRAFFIC

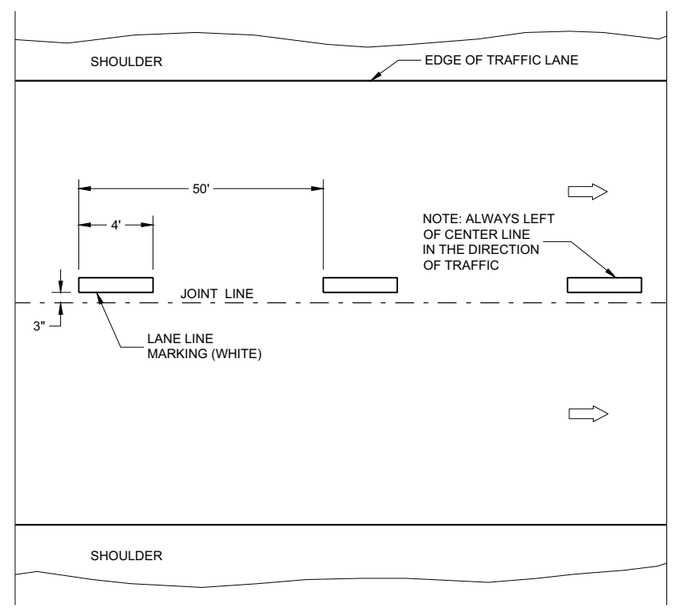

ONE WAY TRAFFIC

TEMPORARY PAVEMENT MARKING

GENERAL NOTES

DETAILS OF CONSTRUCTION NO SHOWN ON THIS DRAWING SHALL CONFORM TO STANDARD SPECIFICATIONS AND SPECIAL PROVISIONS.

1. LOCATE THE NO PASSING ZONE W14-3 SIGN WITH 50 FEET OF THE "T" MARKING
2. MEASURE FROM EDGE OF MARKING TO JOINT LINE. THIS DOES NOT INCLUDE SPACE NEEDED FOR GROOVING OPERATIONS.

LEGEND

"T" MARKING

SIGN ON PERMANENT SUPPORT

DIRECTION OF TRAFFIC

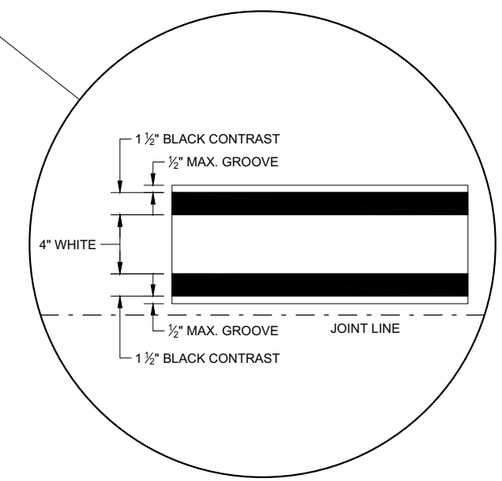

LONGITUDINAL MARKING (MAINLINE)

STATE OF WISCONSIN
DEPARTMENT OF TRANSPORTATION

APPROVED
February 2020 — DATE
/S/ Matthew Rauch — STATEWIDE SIGNING AND M ENGINEER
FHWA

6

SDD 15C08 - 20a

GENERAL NOTES

1. REFLECTIVE SHEETING SHALL FOLLOW THE REQUIREMENTS IN THE APPROVED PRODUCTS LISTING FOR SIGN SHEETING.
2. LOCATION OF WARNING LIGHTS WHEN SHOWN ON THE PLAN.

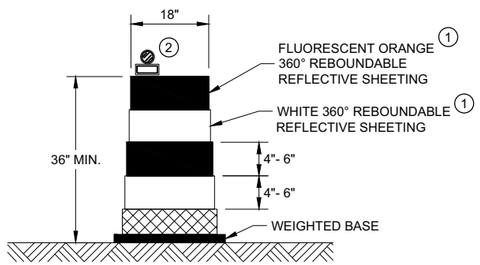

DRUM

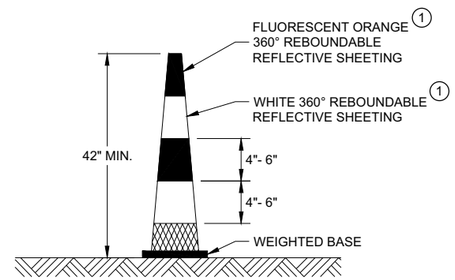

42" CONE

DO NOT USE IN TAPERS
½ SPACING OF DRUMS

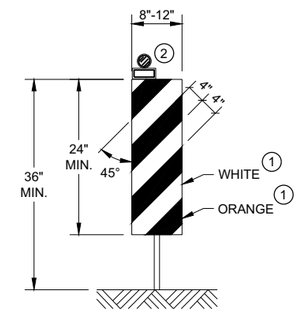

VERTICAL PANEL

THE STRIPES SHALL SLOPE DOWNWARD TO
THE TRAFFIC SIDE FOR CHANNELIZATION.

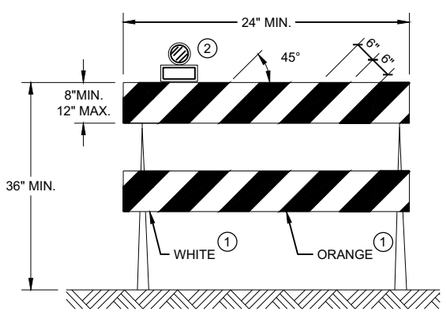

TYPE II BARRICADE

FOR RAILS LESS THAN 36" LONG, 4" WIDE STRIPES
MAY BE USED. ALL STRIPES SHALL SLOPE DOWNWARD
TO THE TRAFFIC SIDE FOR CHANNELIZATION.

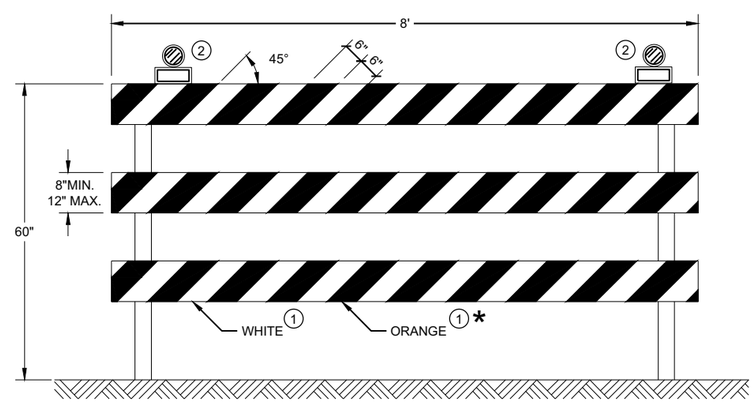

TYPE III BARRICADE

IF SIGN MOUNTED, DO NOT COVER MORE THAN 50% OF THE TOP
TWO RAILS OR 33% OF THE TOTAL AREA OF THE THREE RAILS.

* IF USED FOR A PERMANENT APPLICATION USE RED SHEETING.

CHANNELIZING DEVICES DRUMS, CONES, BARRICADES AND VERTICAL PANELS

STATE OF WISCONSIN
DEPARTMENT OF TRANSPORTATION

APPROVED
November 2020 — /S/ Andrew Heidtke
DATE — WORK ZONE ENGINEE
FHWA

6

6

SDD 15C11 - 08b

SDD 15C11 - 08b

LEGEND

SIGN ON PORTABLE OR PERMANENT SUPPORT

TEMPORARY PORTABLE RUMBLE STRIP ARRAY

DIRECTION OF TRAFFIC

WORK AREA

FLAGGER, EQUIPPED WITH STOP/SLOW PADDLE FASTENED ON SUPPORT STAFF

GENERAL NOTES

DETAILS OF TRAFFIC CONTROL DEVICES AND INSTALLATION NOT SHOWN ON THIS DRAWING SHALL CONFORM TO THE PERTINENT REQUIREMENTS OF THE STANDARD SPECIFICATIONS, THE SPECIAL PROVISIONS, AND THE MANUAL ON UNIFORM TRAFFIC CONTROL DEVICES.

ALL SIGNS ARE 48" X 48" UNLESS OTHERWISE NOTED.

"WO" SIGNS ARE THE SAME AS "W" SIGNS EXCEPT THE BACKGROUND IS ORANGE.

THE EXACT NUMBER, LOCATION AND SPACING OF ALL SIGNS, DEVICES, AND LOCATION OF ALL FLAGGERS SHALL BE ADJUSTED TO FIT FIELD CONDITIONS AS APPROVED BY THE ENGINEER.

THE FIRST ADVANCE WARNING SIGN SHOULD TYPICALLY BE LOCATED IN ADVANCE OF THE ANTICIPATED TRAFFIC BACKUP OR QUEUE.

WHEN A SIDE ROAD OR RAMP INTERSECTS THE FACILITY ON WHICH THE WORK IS BEING PERFORMED, ADDITIONAL TRAFFIC CONTROLS SHALL BE PROVIDED AS SPECIFIED IN THE PLANS AND/OR THE SPECIAL PROVISIONS OR AS APPROVED BY THE ENGINEER.

FLAGGING

FLAGGERS SHALL BE IN SIGHT OF EACH OTHER OR IN DIRECT COMMUNICATION AT ALL TIMES. THEY SHALL BE EQUIPPED WITH STOP/SLOW PADDLES FASTENED ON SUPPORT STAFFS. WHEN THE FLAGGING OPERATION IS NOT IN EFFECT REMOVE TEMPORARY PORTABLE RUMBLE STRIPS PRIOR TO COVERING OR REMOVING ALL ADVANCE SIGNING.

(1) FOR MOVING WORK OPERATIONS, POST ADDITIONAL W20-7A FLAGGER SIGNS AT APPROXIMATELY 3,500' INTERVALS IN THE MOVING WORK OPERATION OR AS APPROVED BY THE ENGINEER.

(2) SIGN NOT REQUIRED IF FLAGGING OPERATION OCCURS WITHIN A SIGNED ROAD WORK ZONE AREA.

WHEN THE DISTANCE BETWEEN FLAGGERS EXCEEDS 2 MILES, A PILOT CAR IS REQUIRED. WHEN CURVES REDUCE SIGHT DISTANCE BELOW 400', A PILOT CAR IS REQUIRED.

TEMPORARY PORTABLE RUMBLE STRIPS

UTILIZE TEMPORARY PORTABLE RUMBLE STRIPS ON ALL FLAGGING OPERATIONS.

(3) EACH TEMPORARY PORTABLE RUMBLE STRIP ARRAY CONSISTS OF THREE RUMBLE STRIPS SPACED ACCORDING TO MANUFACTURER'S RECOMMENDATION, PLACED TRANSVERSE ACROSS THE LANE AT LOCATIONS SHOWN.

ONLY USE TEMPORARY PORTABLE RUMBLE STRIPS FOR THE APPROVED PRODUCTS LIST.

INSTALL TEMPORARY RUMBLE STRIPS PER MANUFACTURER'S RECOMMENDATIONS.

PLACE ADVANCE SIGNING PRIOR TO INSTALLING TEMPORARY RUMBLE STRIPS.

DO NOT INSTALL TEMPORARY PORTABLE RUMBLE STRIPS ON GRAVEL, MILLED SURFACES, OR ASPHALT THAT HAS BEEN PAVED LESS THAN 12 HOURS.

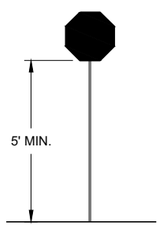

STOP/SLOW PADDLE ON SUPPORT STAFF

SIGN AND TEMPORARY RUMBLE STRIP ARRAY SPACING TABLE

SPEED LIMIT	SPACING "A"
25-30 MPH	200'
35-40 MPH	350'
45-55 MPH	500'

WO3-4

USE OF WO3-4 SIGN IS OPTIONAL. WHEN USED, THIS SIGN SHALL BE LOCATED BETWEEN THE W20-7A AND W20-4A SIGNS, USING SPACING "A".

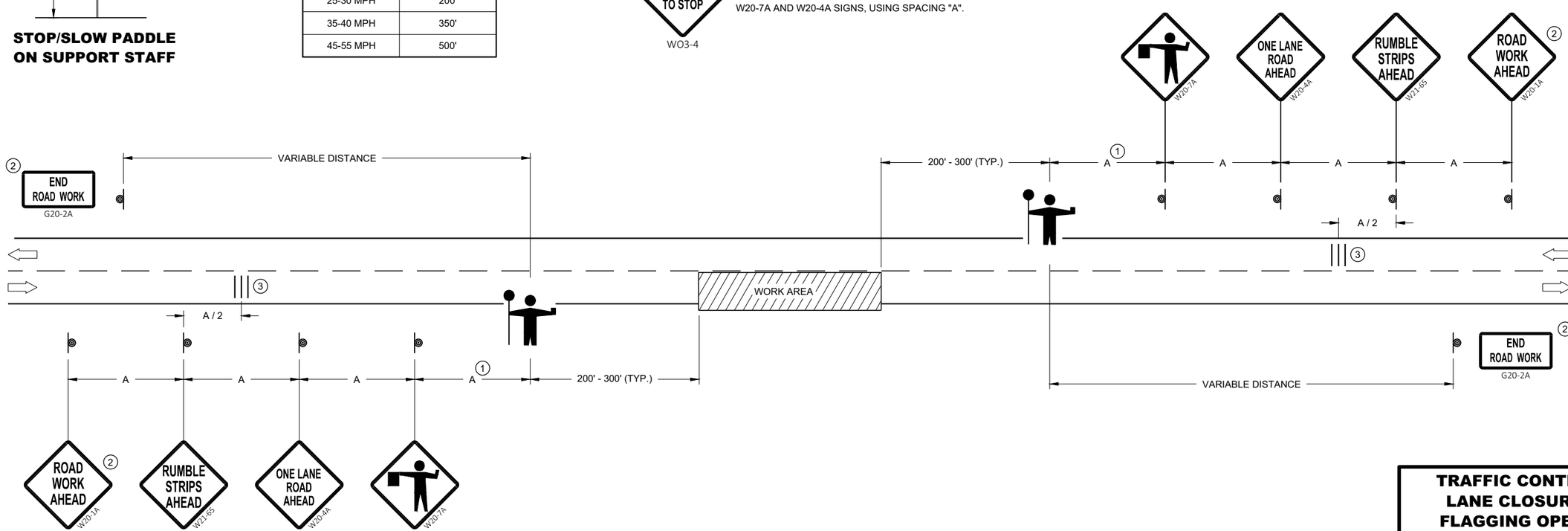

TRAFFIC CONTROL FOR LANE CLOSURE WITH FLAGGING OPERATION

TRAFFIC CONTROL FOR LANE CLOSURE WITH FLAGGING OPERATION

STATE OF WISCONSIN
DEPARTMENT OF TRANSPORTATION

APPROVED
May 2019 — DATE
/S/ Andrew Heidtke — WORK ZONE ENGINEE
FHWA

LEGEND

- SIGN ON PERMANENT SUPPORT
- TRAFFIC CONTROL DRUM
- DIRECTION OF TRAFFIC
- WORK ZONE

GENERAL NOTES

ALL SIGNS ARE 48"X48" UNLESS OTHERWISE NOTED. IF NECESSARY DUE TO SPACE CONSTRAINTS IN URBAN AREAS, 36" X 36" SIGNS MAY BE USED IF APPROVED BY THE REGIONAL TRAFFIC UNIT.

"WO" SIGN IS THE SAME AS "W" SIGN EXCEPT THE BACKGROUND IS ORANGE.

ANY SIGNS TEMPORARY OR EXISTING, WHICH CONFLICT WITH THE TRAFFIC CONTROL "IN USE" SHALL BE REMOVED OR COVERED AS NEEDED AND AS APPROVED BY THE ENGINEER.

THE EXACT NUMBER, LOCATION, AND SPACING OF ALL SIGNS AND DEVICES SHALL BE ADJUSTED TO FIT FIELD CONDITIONS AS APPROVED BY THE ENGINEER.

CHANNELIZING DEVICES PLACED ADJACENT TO WORK AREA SHALL BE PULLED BACK FROM THE TRAVEL LANE WHEN WORK IS NOT IN PROGRESS.

SIGNS THAT WILL BE IN PLACE LESS THAN 7 CONTINUOUS DAYS AND NIGHTS MAY BE MOUNTED ON PORTABLE SUPPORTS.

W20-1A AND G20-2A SIGNS ARE NOT REQUIRED IF THE WORK AREA IS WITHIN A LARGER WORK ZONE WHERE THESE SIGNS ARE ALREADY PRESENT. G20-2A SIGNS MAY ALSO BE OMITTED IF DURATION OF WORK IS LESS THAN 7 CONTINUOUS DAYS AND NIGHTS.

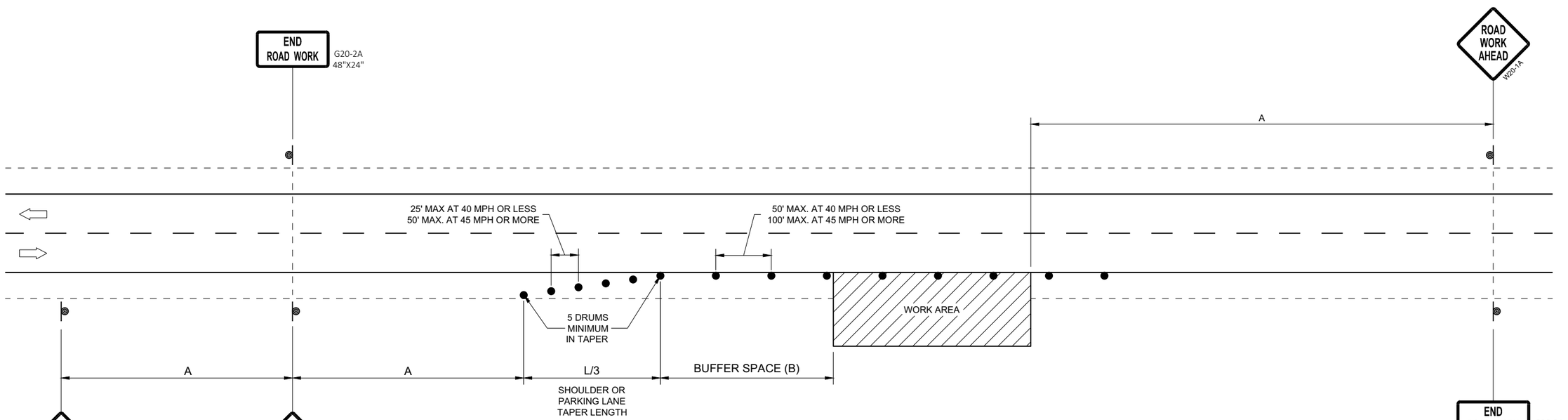

OR
IF TRAFFIC CONTROL DEVICES
ENCROACH ONTO TRAVELED WAY, USE

POSTED SPEED LIMIT PRIOR TO WORK STARTING (MPH)	ADVANCE WARNING SIGN SPACING (A) FEET	SHOULDER TAPER L / 3 W, LATERAL OFFSET (FT)						BUFFER SPACE (B) FEET
		3	4	5	6	7	8	
25	200'	10	14	17	21	24	28	55
30	200'	15	20	25	30	35	40	85
35	350'	20	27	34	40	47	54	120
40	350'	26	35	44	53	62	70	170
45	500'	45	59	74	89	104	119	220
50	500'	50	66	83	99	116	132	280
55	500'	54	73	91	109	127	145	335'

TRAFFIC CONTROL, WORK ON SHOULDER OR PARKING LANE, UNDIVIDED ROADWAY

STATE OF WISCONSIN
DEPARTMENT OF TRANSPORTATION

APPROVED
May 2020 — DATE
/S/ Andrew Heidtke — STATEWIDE WORK ZONE T SAFETY ENGINEER
FHWA

6

SDD 15D28 - 04

LEGEND

- TYPE III BARRICADE WITH ATTACHED SIGN
- SIGN ON PERMANENT SUPPORT
- TRAFFIC CONTROL DRUM WITH TYPE "C" STEADY BURN LIGHT
- TRAFFIC CONTROL DRUM
- FLAGS, 16" X 16" MIN. (ORANGE)
- REMOVING PAVEMENT MARKING
- DIRECTION OF TRAFFIC
- ASPHALTIC PAVEMENT WIDENING
- CONCRETE BARRIER TEMPORARY PRECAST
- TEMPORARY SIGNAL. SEE SDD 09G02 FOR EXACT PLACEMENT

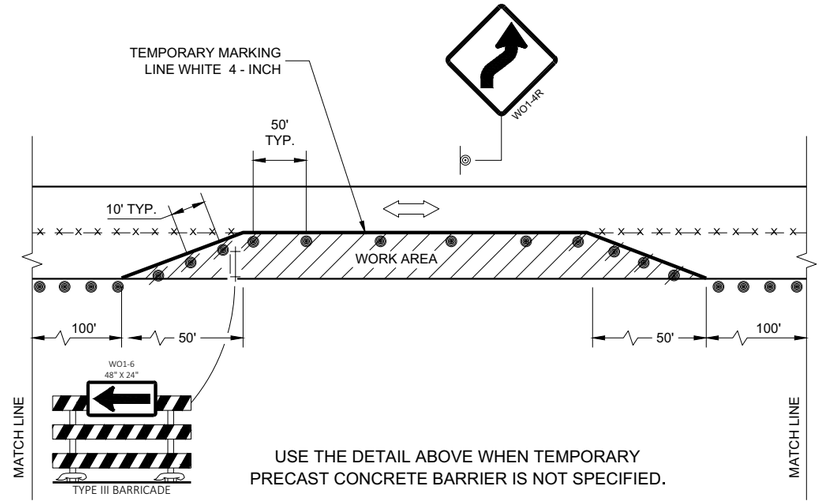

USE THE DETAIL ABOVE WHEN TEMPORARY PRECAST CONCRETE BARRIER IS NOT SPECIFIED.

GENERAL NOTES

THE EXACT NUMBER, LOCATION, AND SPACING OF ALL SIGNS AND DEVICES SHALL BE ADJUSTED TO FIT FIELD CONDITIONS AS APPROVED BY THE ENGINEER.

THE SPACING BETWEEN TRAFFIC CONTROL SIGNS SHOULD BE ADJUSTED TO NOT CONFLICT WITH AND TO PROVIDE A MINIMUM OF 200 FEET (500 FEET DESIRABLE) CLEARANCE TO EXISTING SIGNS THAT WILL REMAIN IN PLACE..

THIS LANE CLOSURE IS TYPICAL FOR CLOSING RIGHT LANE - REVERSE FOR CLOSING LEFT LANE.

ALL SIGNS ARE 48" x 48" UNLESS OTHERWISE NOTED.

"WO" IS THE SAME AS "W" EXCEPT THE BACKGROUND IS ORANGE.

ANY SIGNS TEMPORARY OR EXISTING, WHICH CONFLICT WITH TRAFFIC CONTROL "IN USE" SHALL BE REMOVED OR COVERED AS NEEDED OR AS APPROVED BY THE ENGINEER.

PLACE TEMPORARY PAVEMENT MARKING EDGELINE AND CENTERLINE AND REMOVE EXISTING PAVEMENT MARKINGS IF LANE CLOSURE IS TO BE IN PLACE 4 OR MORE CONTINUOUS DAYS AND NIGHTS OR AS NOTED ON DETAIL.

1. 500 FOOT SPACING SHOWN IS FOR ROADWAYS WITH A PRE-CONSTRUCTION REGULATORY SPEED LIMIT OF 45 MPH OR MORE. FOR 35 - 40 MPH, USE 350 FOOT TYPICAL SPACING. FOR 25 - 30 MPH, USE 200 FOOT TYPICAL SPACING.
2. USE 300 FOOT SPACING IF THE PRE - CONSTRUCTION REGULATORY SPEED IS 35 MPH OR LESS.
3. DIMENSION DETERMINED BY CBTP TAPER FROM EDGE LINE TO TANGENT SECTION OF THE ROAD.
4. TEMPORARY MARKING STOP LINE REMOVABLE TAPE 18 - INCH.
5. 700 FOOT TEMPORARY MARKING LINE, DOUBLE YELLOW 4 - INCH . WHEN THE DISTANCE FOR THE PRECEDING NO - PASSING ZONE IS LESS THAN THE MINIMUM DISTANCE BETWEEN ZONES AS INDICATED IN THE SPECIFICATIONS, THE TWO ZONES SHALL BE CONNECTED.
6. SEE SDD 15C02 - SHEET "F" FOR ADVANCED WIDTH RESTRICTION SIGNING.

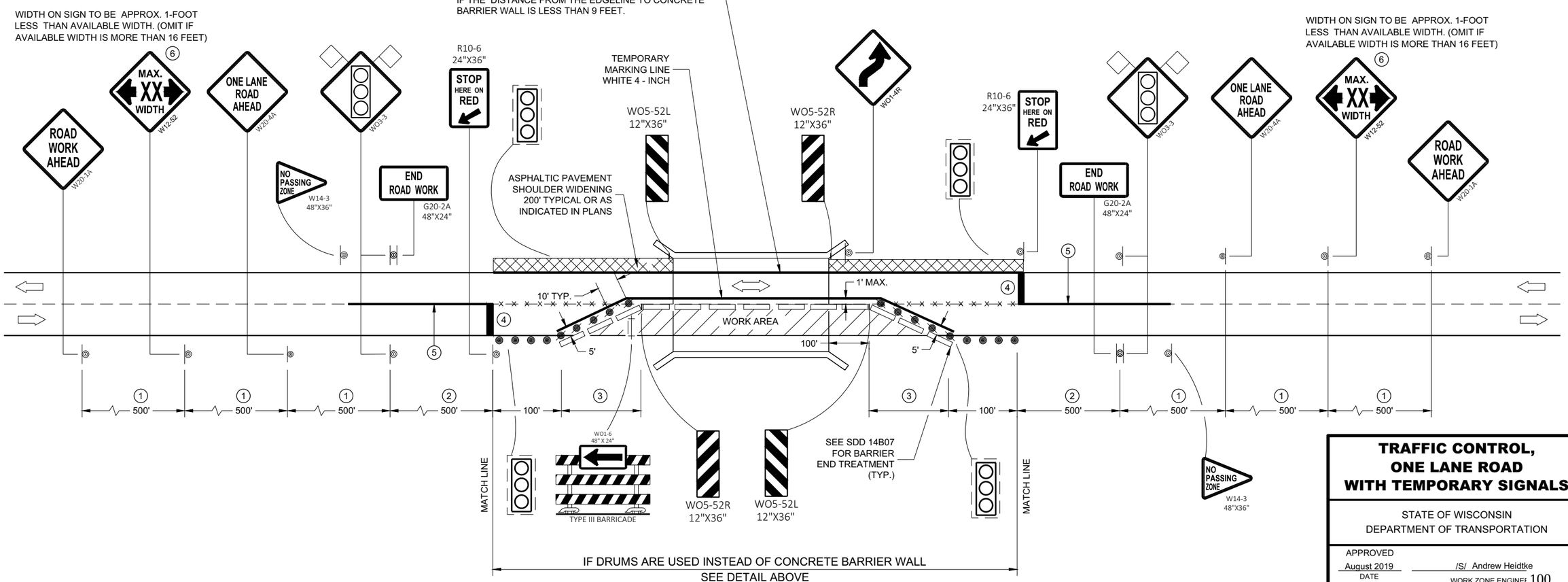

TRAFFIC CONTROL, ONE LANE ROAD WITH TEMPORARY SIGNALS

STATE OF WISCONSIN
DEPARTMENT OF TRANSPORTATION

APPROVED
August 2019 — DATE
/S/ Andrew Heidtke — WORK ZONE ENGINEER
FHWA

6

SDD 15D33 - 06

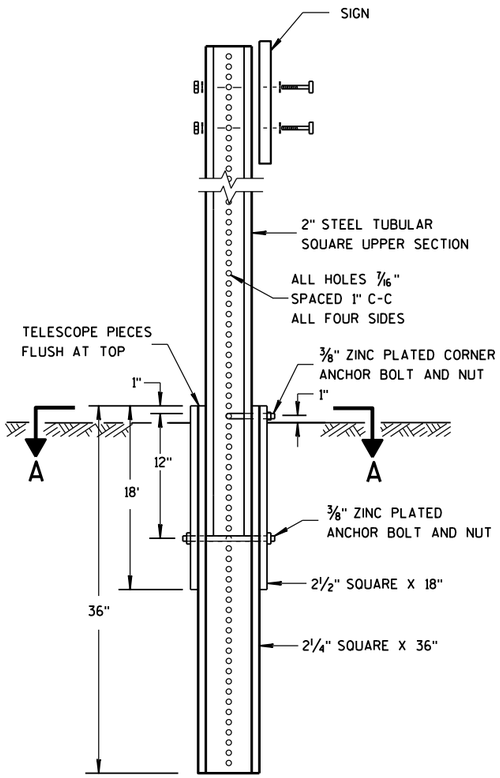

DETAIL OF TUBULAR STEEL SIGN POST

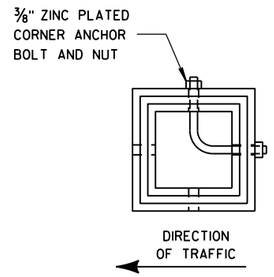

SECTION A-A

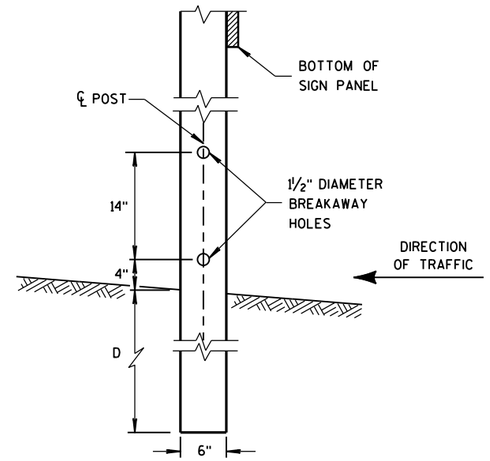

4"x6" WOOD POST MODIFICATION

GENERAL NOTES

1. 6 FEET FROM THE EDGE OF PAVEMENT (EDGE LINE LOCATION) UNLESS OTHERWISE DIRECTED BY THE PROJECT ENGINEER. LATERAL OFFSET SHOULD BE ADJUSTED TO AVOID THE DITCH FLOWLINE.
2. THE EXISTENCE OF CURB AND GUTTER DOES NOT IN ITSELF MANDATE THE VERTICAL CLEARANCE ILLUSTRATED. THAT HEIGHT IS TYPICALLY MEASURED WHERE THERE IS SIDEWALK ADJACENT TO THE ROADWAY OR PARKING IS PERMITTED. IN THE ABSENCE OF SIDEWALK, VERTICAL CLEARANCE IS MEASURED FROM THE TOP OF THE CURB. IF NO SIDEWALK AND NO PARKING, VERTICAL CLEARANCE MAY BE REDUCED TO 5 FOOT MINIMUM. OFFSET OF SIGNS IS MEASURED FROM THE CURB FLOWLINE.
3. FOR SIGNS REQUIRING 4 POSTS, SPACE INTERMEDIATE POSTS EVENLY.

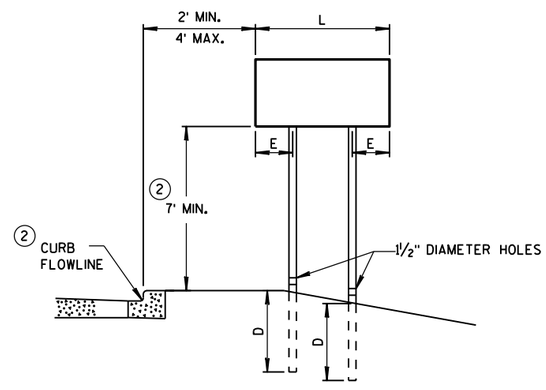

URBAN AREA

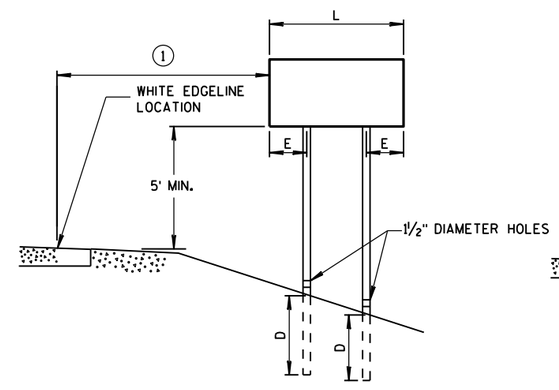

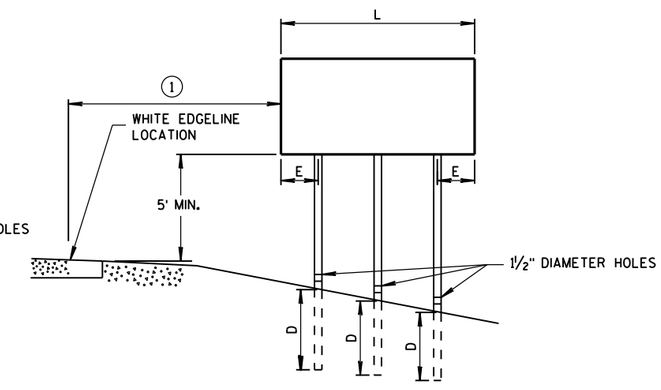

RURAL AREA

POST MOUNTING DETAIL FOR TEMPORARY TRAFFIC CONTROL FIXED MESSAGE SIGNS

TUBULAR STEEL POSTS

AREA OF SIGN INSTALLATION (SQ. FT.)	NUMBER OF REQUIRED TUBULAR STEEL POSTS
9 OR LESS	1
GREATER THAN 9 LESS THAN OR EQUAL TO 18	2
GREATER THAN 18 LESS THAN OR EQUAL TO 27	3

SIGNS WIDER THAN 3 FEET OR LARGER THAN 9 SQ. FT. SHALL BE MOUNTED ON MULTIPLE POSTS (SEE ABOVE TABLE).

SIGNS LARGER THAN 27 SQ. FT. SHALL NOT BE MOUNTED ON TUBULAR STEEL POSTS.

WOOD POST EMBEDMENT DEPTH

AREA OF SIGN INSTALLATION (SQ. FT.)	D (MIN)
20 OR LESS	4'
GREATER THAN 20	5'

4" X 6" WOOD POST

POST SPACING REQUIREMENTS		NUMBER OF WOOD POSTS REQUIRED
L	E	
48" OR LESS AND LESS THAN 20 SQ. FT.	-	1
LESS THAN 60"	12"	2
60" TO 120"	L/5	2
GREATER THAN 120" LESS THAN 168"	12"	3
168" AND GREATER	12"	4

SEE NOTE 3

TEMPORARY TRAFFIC CONTROL SIGN MOUNTING

STATE OF WISCONSIN
DEPARTMENT OF TRANSPO

6

S.D.D. 15 D 38-2a

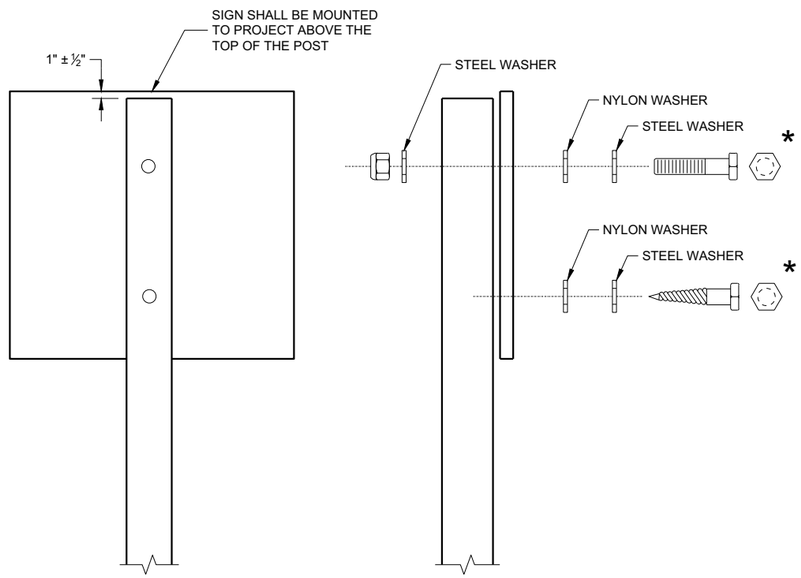

NUTS, BOLTS AND LAGS USED FOR MOUNTING SIGNS SHALL HAVE HEXAGONAL HEADS AND SHALL BE EITHER:

A. HOT DIP GALVANIZED IN ACCORDANCE WITH ASTM DESIGNATION: A 153, CLASS D, OR SC 3
B. ELECTRO-GALVANIZED IN ACCORDANCE WITH ASTM DESIGNATION: B 633, TYPE III, SC 3

THREADS ON BOLTS AND NUTS SHALL BE MANUFACTURED WITH SUFFICIENT ALLOWANCE FOR THE CADMIUM PLATE OR GALVANIZED COATING TO PERMIT THE NUTS TO RUN FREELY ON THE BOLTS.

WOOD POST (4" x 6")
LAG SCREWS - ⅜" x 3"
MACHINE BOLTS - 5/16" x 6 ½" OR 7" LENGTH W/NUTS

SQUARE STEEL POST (2" x 2")
MACHINE BOLTS - ⅜" x 3 ¼" LENGTH W/NUTS
RIVETS - 9/32" (6605-9-6) BULB-TITE, TRI-FOLD, ALUMINUM BODY/MANDREL O.D. FLANGE 0.720 - 0.765 INCH, GRIP RANGE 0.042 - 0.375 INCH

WASHERS (ALL POSTS) -
1 ¼" O.D. x ⅜" I.D. x 1/16" STEEL
1 ¼" O.D. x ⅜" I.D. x 0.080 NYLON

* TWO DIFFERENT FASTENING SYSTEMS ARE SHOWN FOR ILLUSTRATION PURPOSES. ON ANY INDIVIDUAL SIGN, EITHER ONE OR THE OTHER SYSTEM SHALL BE USED. ACTUAL NUMBER OF FASTENERS PER SIGN VARIES WITH THE SIGN AREA. FOR A SINGLE POST INSTALLATION, ALL SIGNS GREATER THAN 9 SQ. FT. REQUIRE THE USE OF 3 FASTENERS.

6

SDD 15D38 - 02b

ATTACHMENT OF SIGNS TO POSTS

STATE OF WISCONSIN
DEPARTMENT OF TRANSPORTATION

APPROVED
June 2017 — DATE
/S/ Andrew Heidtke — WORK ZONE ENGINEE
FHWA

6

SDD 15D38 - 02b

URBAN AREA

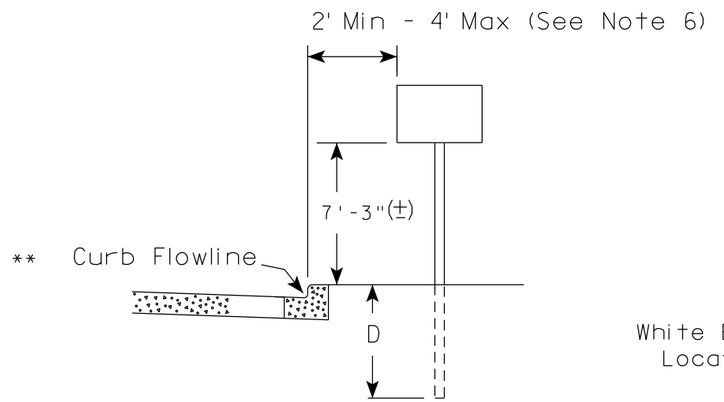

RURAL AREA (See Note 2)

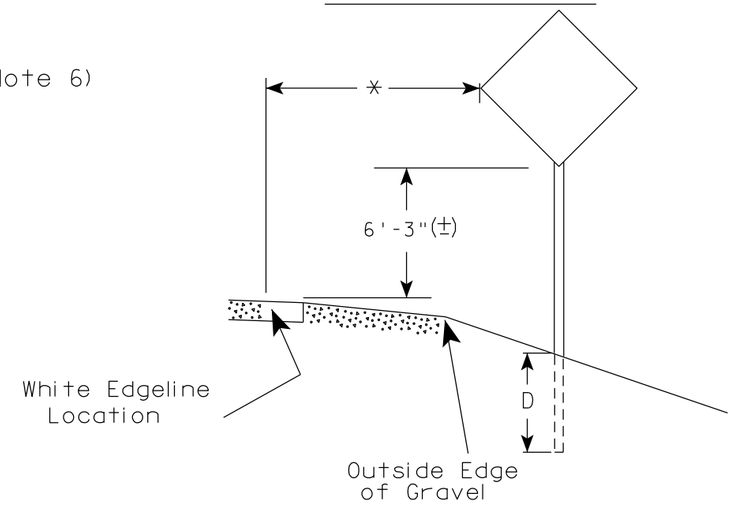

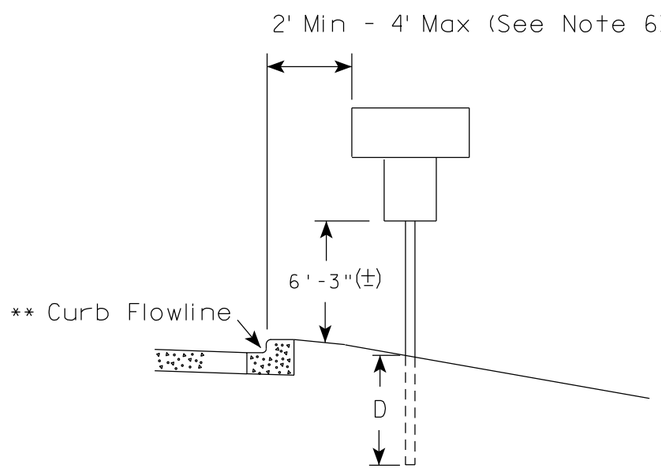

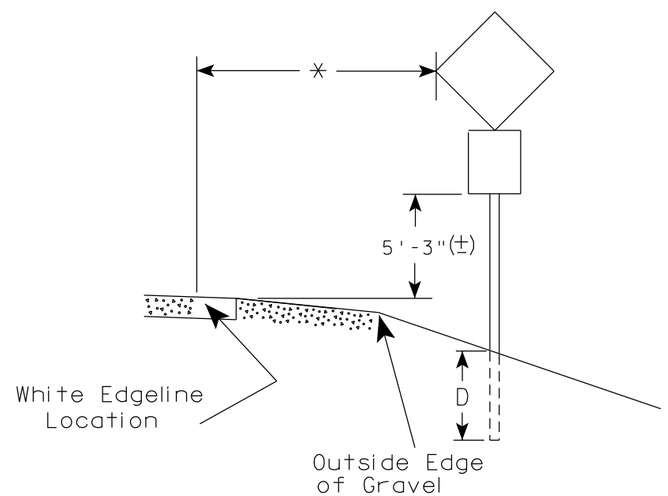

** The existence of curb and gutter does not in itself mandate the vertical clearance illustrated. That height is typically measured where there is sidewalk adjacent to the roadway or parking is permitted. In the absence of sidewalk vertical clearance is measured from the top of the curb. Offset of signs is measured from the flow line.

* 6 feet from edge of a paved shoulder or 12 feet from the edge of pavement (edge line location) or 2 feet from outside edge of gravel, whichever is greater unless directed by project engineer.

GENERAL NOTES

1. Signs wider than 4 feet or 20 sq.ft or larger, shall be mounted on multiple posts. Refer to plate A4-4.
2. If signs are mounted on or behind barrier wall, see A4-10 sign plate.
   The Double Arrow sign (W12-1D) shall be mounted at a height of 2'-3" (±). The Chevron sign (W1-8), Roundabout Chevron panel (R6-4B), Enhanced Reference Markers, Clearance Markers (W5-52), Mile Markers (D10 series), In Road Object Markers (W5-54) & End of Road Markers (W5-56) shall be mounted at a height of 4'-3" (±).
3. For expressways and freeways, mounting height is 7'- 3" (±) or 6'-3" (±) depending upon existence of a sub-sign.
4. Minimum mounting height for signs mounted on traffic signal poles is 5'- 3" (±).
5. Offset distance shall be consistent with existing signs or consistent throughout length of project.
6. The (±) tolerance for mounting height is 3 inches.
7. Folding signs shall be mounted at a height of 5'-3" (±) or as directd by the Engineer.

POST EMBEDMENT DEPTH

Area of Sign Installation (Sq.Ft.)	D (Min)
20 or Less	4'
Greater than 20	5'

TYPICAL INSTALLATION OF PERMANENT TYPE II SIGNS ON SINGLE POSTS

WISCONSIN DEPT OF TRANSPORTATION

APPROVED Matthew R Rauch for State Traffic Engineer

DATE 5/13/2020 PLATE NO. A4-3.22

7 7

PROJECT NO:	HWY:	COUNTY:		SHEET NO: 103	E

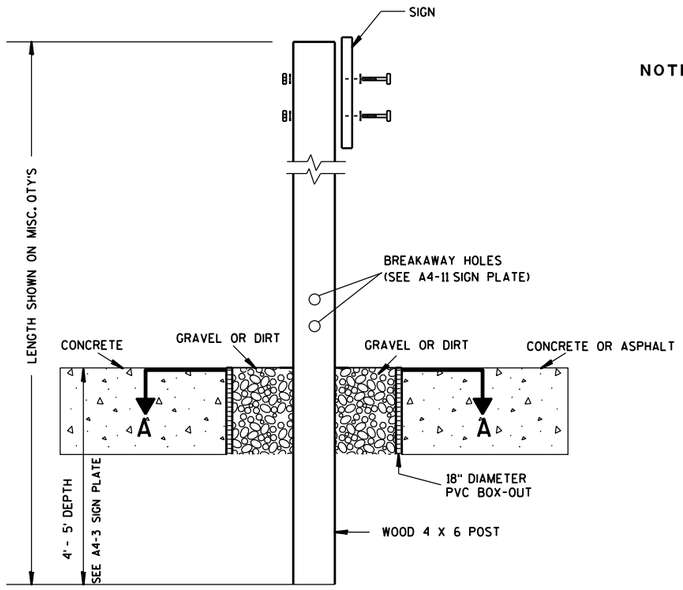

ELEVATION VIEW

DETAIL OF WOOD 4 X 6 SIGN POST IN BOX-OUT

NOTES:
1. ALL MATERIAL TO BE APPROVED BY ENGINEER PRIOR TO INSTALLATION
2. SEE SIGN PLATE A4-8 FOR SIGN HARDWARE REQUIREMENTS
3. 18 INCH X 18 INCH SQUARE BOX-OUTS MAY BE USED FOR INSTALLATIONS IN EXISTING CONCRETE OR ASPHALT LOCATIONS.

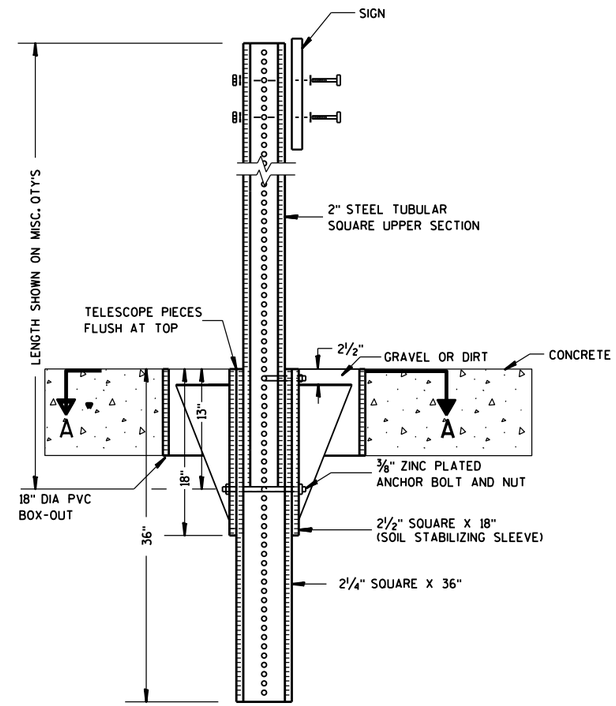

ELEVATION VIEW

DETAIL OF STEEL 2 X 2 SIGN POST IN BOX-OUT

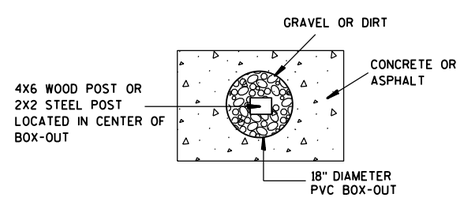

PLAN VIEW

FOR NEW CONCRETE/ASPHALT INSTALLATIONS

SIGN POST
BOX-OUTS
A4-3B

WISCONSIN DEPT OF TRANSPORTATION

APPROVED Matthew R Rauch
for State Traffic Engineer

DATE 1/27/14 PLATE NO. A4-3B.1

PROJECT NO:	HWY:	COUNTY:		SHEET NO:	E

URBAN AREA

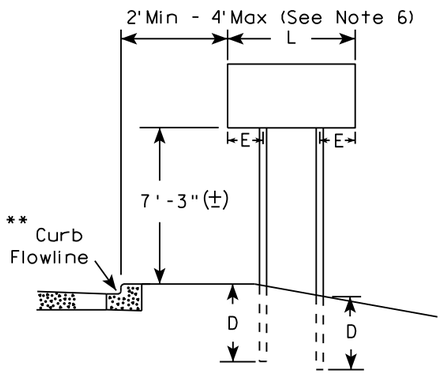

RURAL AREA (See Note 3)

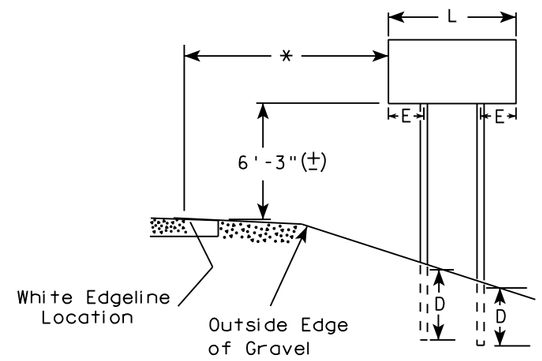

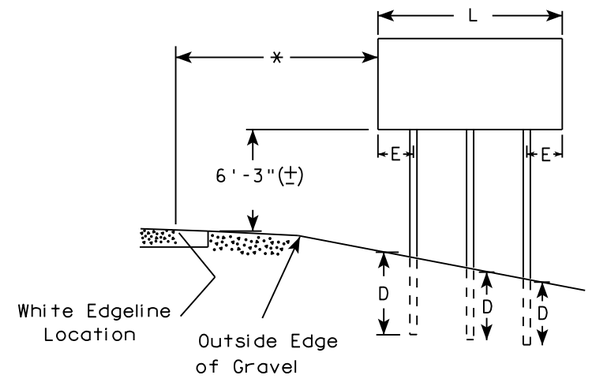

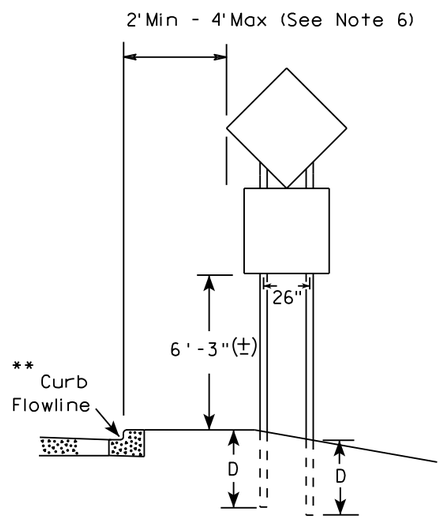

48" DIAMOND WARNING SIGN

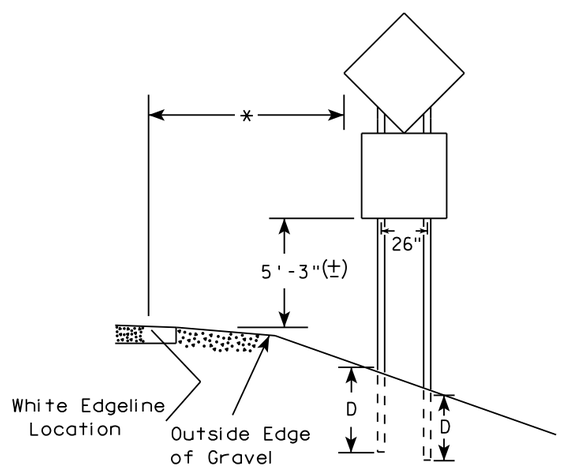

48" DIAMOND WARNING SIGN

SIGN SHAPE OTHER THAN DIAMOND (TWO POSTS REQUIRED)	
L	E
*** Greater than 48" Less than 60"	12"
60" to 108"	L/5

SIGN SHAPE OTHER THAN DIAMOND (THREE POSTS REQUIRED)	
L	E
Greater than 108" to 144"	12"

GENERAL NOTES

1. For 3 or 4 post installations, individual post spacing shall be greater than 3'-6".
2. See tables below for required number of posts.
3. For expressways and freeways, mounting height is 7'-3" (±) or 6'-3" (±) depending upon existence of sub-sign.
4. The (±) tolerance for mounting height is 3 inches.
5. J-Assemblies are considered to be one sign for mounting height.
6. Offset distance shall be consistent with existing signs or consistent throughout length of project.
7. Folding signs shall be mounted at a height of 5'-3" (±) or as directed by the engineer.
8. The Double Arrow sign (W12-1) shall be mounted at a height of 2'-3" (±). The Chevron sign (W1-8), Roundabout Chevron panel (R6-4B), Clearance Markers (W5-52), Mile Markers (D10 series), In Road Object Markers (W5-54) & End of Road Markers (W5-56) shall be mounted at a height of 4"-3" (±).

* 6 feet from edge of a paved shoulder or 12 feet from the edge of pavement (edge line location) or 2 feet from outside edge of gravel, whichever is greater unless directed by project engineer.

** The existence of curb and gutter does not in itself mandate the vertical clearance illustrated. That height is typically measured where there is sidewalk adjacent to the roadway or parking is permitted. In the absence of sidewalk vertical clearance is measured from the top of the curb. Offset of signs is measured from the flow line.

*** See A4-3 sign plate for signs 4' or less in width and less than 20 S.F. in area.

POST EMBEDMENT DEPTH

Area of Sign Installation (Sq. Ft.)	D (Min)
20 or Less	4'
Greater than 20	5'

TYPICAL INSTALLATION OF TYPE II SIGNS ON MULTIPLE POSTS

WISCONSIN DEPT OF TRANSPORTATION

APPROVED Matthew R Rauch
For State Traffic Engineer

DATE 8/21/17 PLATE NO. A4-4.15

7

7

PROJECT NO:	HWY:	COUNTY:		SHEET NO: 105	E

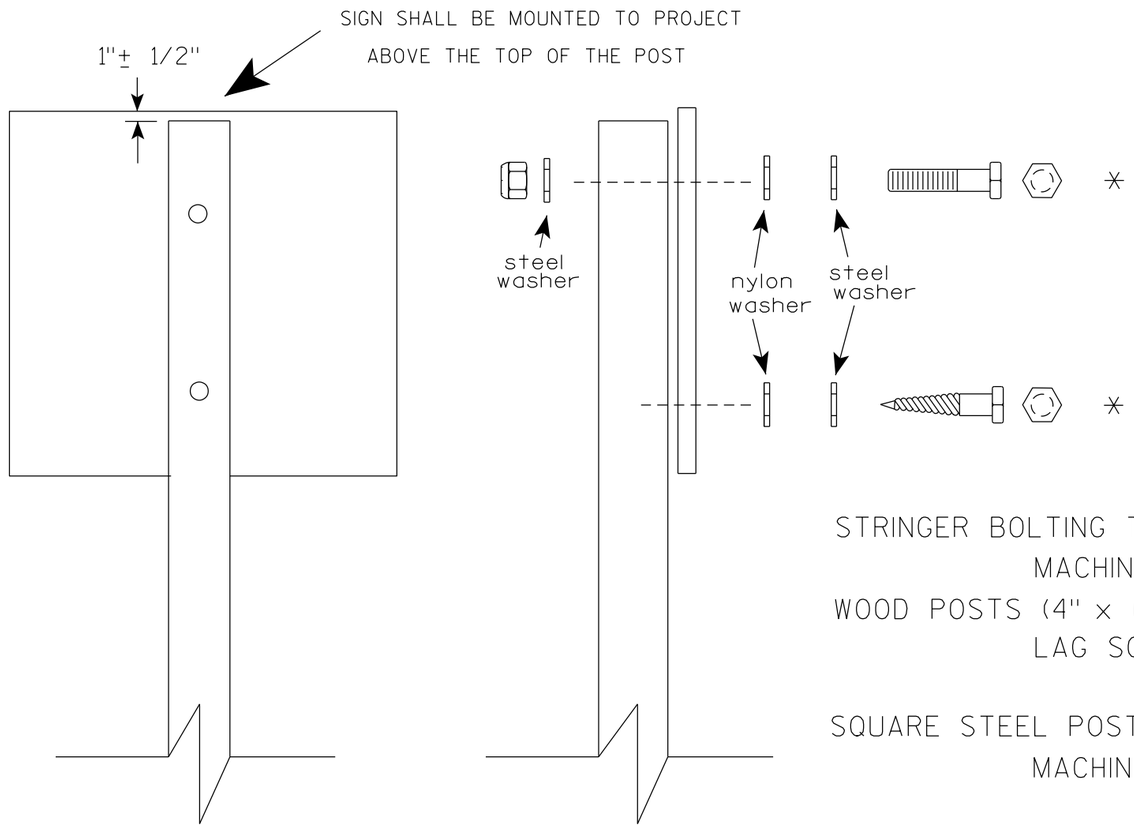

Nuts, bolts and lags used for mounting signs shall have hexagonal heads and shall be either :

a. Hot dip galvanized in accordance with ASTM Designation: A 153, Class D, or SC 3

b. Electro-galvanized in accordance with ASTM Designation : B 633, TYPE III, SC 3.

Threads on bolts and nuts shall be manufactured with sufficient allowance for the cadmium plate or galvanized coating to permit the nuts to run freely on the bolts.

STRINGER BOLTING TO ALUMINUM SIGNS (SEE SIGN PLATE A4-18)

MACHINE BOLTS - 5/16" X 1-3/4" Length w/ lock nuts

WOOD POSTS (4" x 6")

LAG SCREWS - 3/8" X 3" (NO STRINGERS ON BACK OF SIGN)
3/8" X 4" (STRINGERS ON BACK OF SIGN)

SQUARE STEEL POSTS (2" x 2")

MACHINE BOLTS - 3/8" X 3-1/4" Length w/ nuts (NO STRINGER ON BACK OF SIGN)
3/8" X 5" Length w/ nuts (STRINGERS ON BACK OF SIGN)

RIVETS - 9/32 " (6605-9-6) BULB-TITE, TRI-FOLD, ALUMINUM BODY/MANDREL
O.D. FLANGE .720-.765 INCH, GRIP RANGE .042-.375 INCH

WASHERS (ALL POSTS) -

1-1/4" O.D. X 3/8" I.D. X 1/16" STEEL
1-1/4" O.D. X 3/8" I.D. X .080 NYLON

* Two different fastening systems are shown for illustration purposes. On any individual sign, either one or the other system shall be used. Actual number of fasteners per sign varies with the sign area, but normally there are two. For a single post installation, all signs greater than 9 sq. ft. require the use of 3 fasteners.

ATTACHMENT OF SIGNS TO POSTS

WISCONSIN DEPT OF TRANSPORTATION

APPROVED Matthew R Rauch
for State Traffic Engineer

DATE 4/1/2020 PLATE NO. A4-8.9

TELESCOPIC TUBING ANCHORS
TWO PIECE SYSTEM

2 1/4" SQUARE
12 GAUGE
PERFORATED
GALVANIZED FINISH

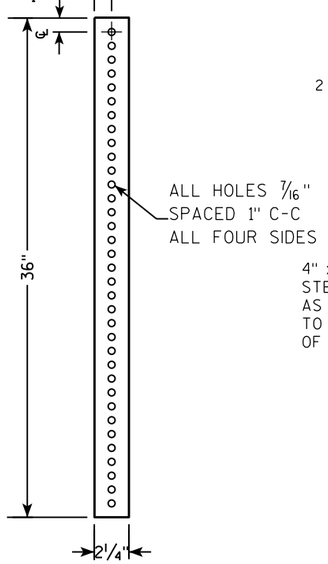

2 1/2" SQUARE
12 GAUGE
OMNI-DIRECTIONAL
PERFORATED
SOIL STABILIZING SLEEVE
GALVANIZED FINISH

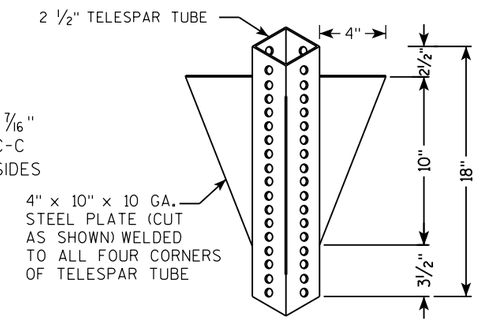

DETAIL OF TUBULAR STEEL SIGN POST
(IN POURED CONCRETE OR ASPHALT)

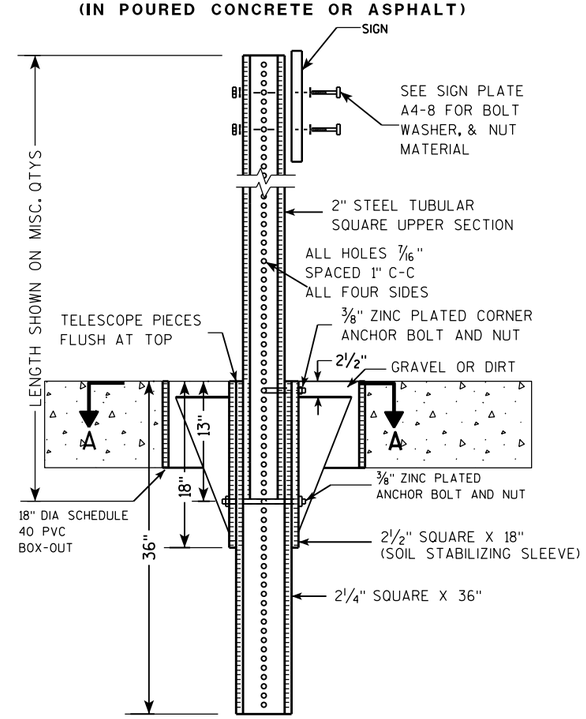

DETAIL OF TUBULAR STEEL SIGN POST
(IN LOCATIONS OTHER THAN POURED CONCRETE OR ASPHALT)

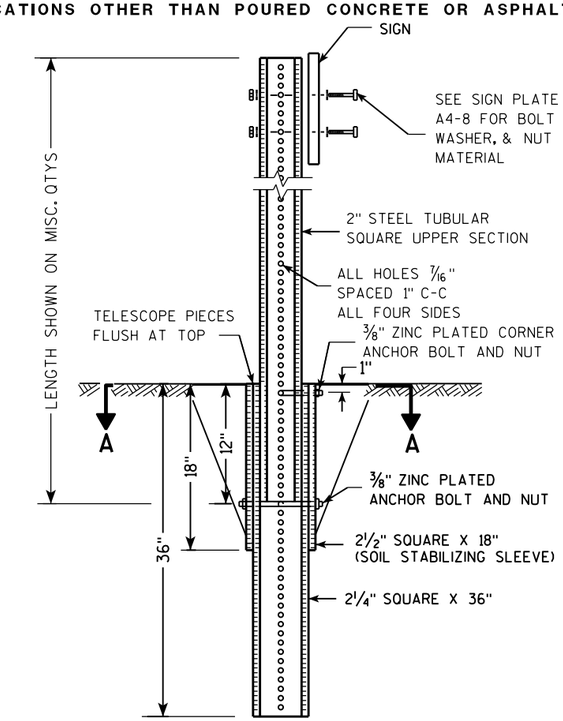

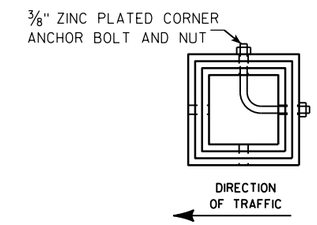

SECTION A-A

Area of Sign Installation (Sq. Ft.)	Number of Required Posts
9 or less	1
Greater than 9 less than or equal to 18	2
Greater than 18 less than or equal to 27	3

Signs wider than 3 feet or larger than 9 sq. ft shall be mounted on multiple posts (see above table).

TUBULAR STEEL
SIGN POST
A4-9

WISCONSIN DEPT OF TRANSPORTATION

APPROVED Matthew R Rauch
for State Traffic Engineer

DATE 2/05/15 PLATE A4-9.9

7 7

PROJECT NO:	HWY:	COUNTY:		SHEET NO:	E

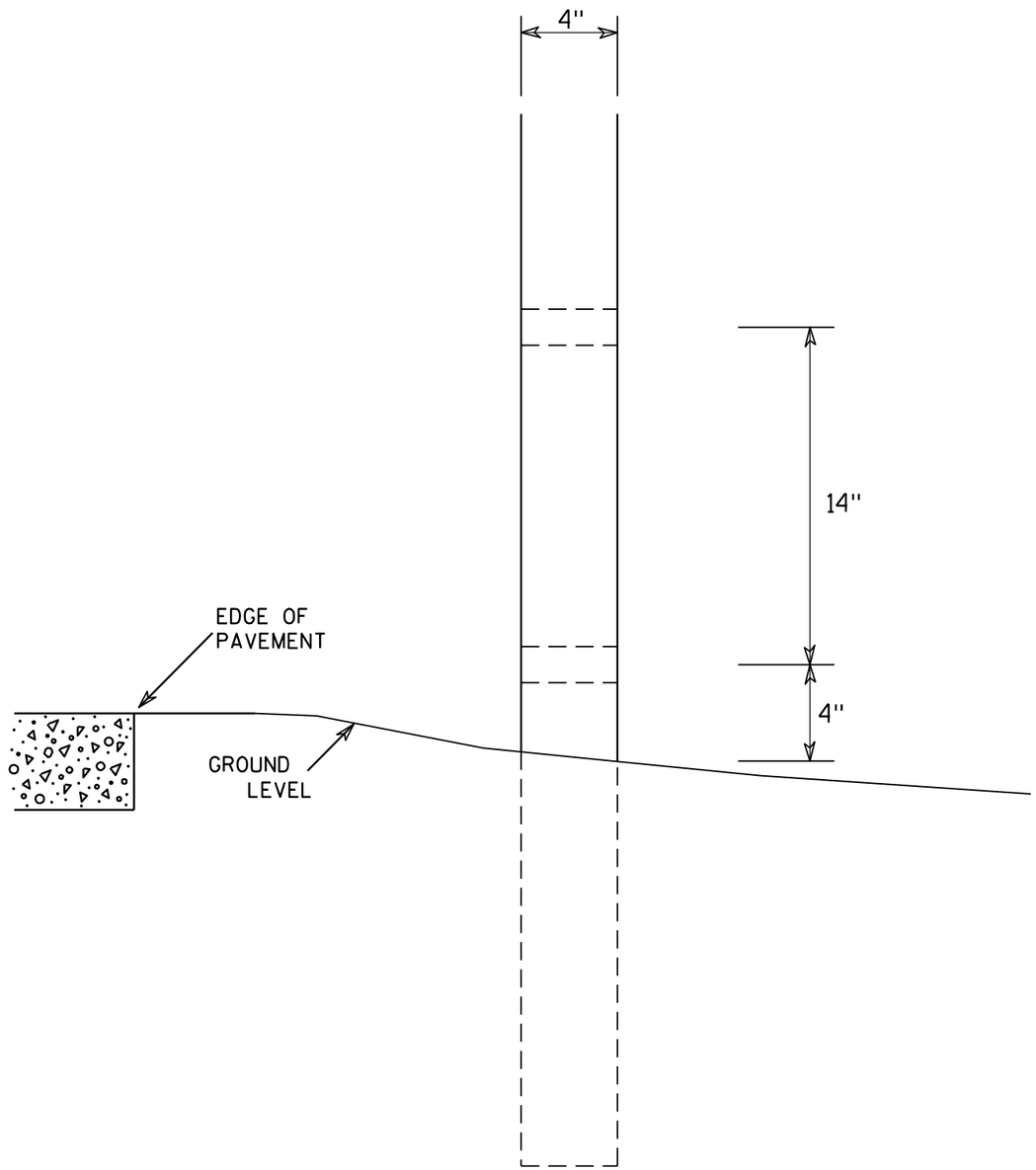

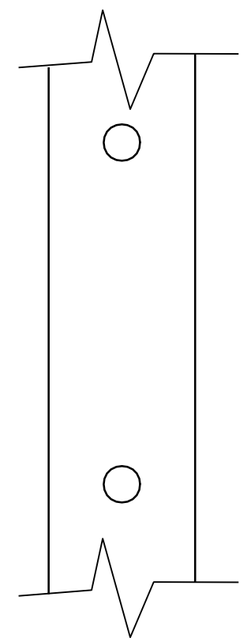

SIDE VIEW

GENERAL NOTES

1. All 4 x 6 Wood Posts shall be modified by having two 1½" diameter holes drilled perpendicular to the roadway centerline.

4 X 6 WOOD POST MODIFICATIONS

WISCONSIN DEPT OF TRANSPORTATION

APPROVED Chester J Spang for State Traffic Engineer

DATE 3/27/97 PLATE NO. A4-11.2

PROJECT NO:	HWY:	COUNTY:		SHEET NO: 108	E

BANDING

SINGLE SIGN

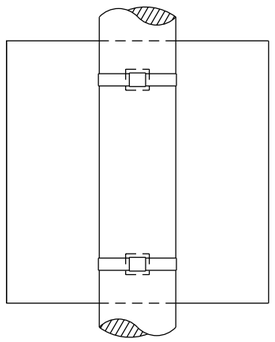

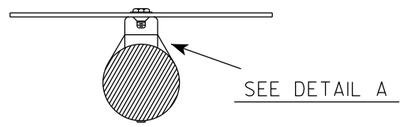

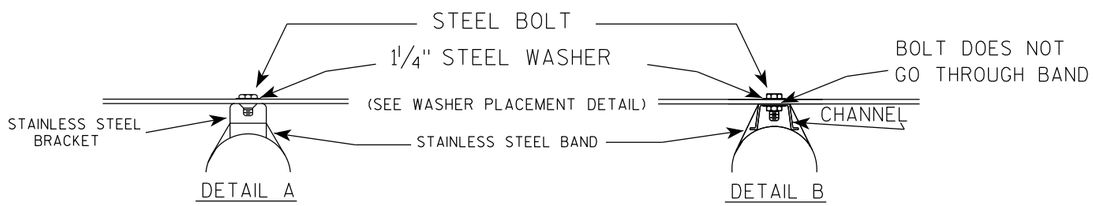

WASHER PLACEMENT

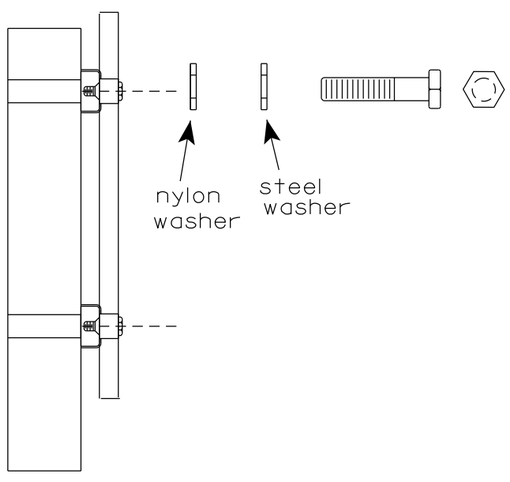

WASHERS (ALL POSTS) -
1-1/4" O.D. X 3/8" I.D. X 1/16" STEEL
1-1/4" O.D. X 3/8" I.D. X .080 NYLON
FOR ALL TYPE H SIGNS

GENERAL NOTES

1. Any sign over 3 feet in width shall use the V-Block banding method. See A5-10 standard plate.
2. Signs 3 feet or greater in height shall have three bracket bands installed. Signs less than 3 feet in height shall have two bracket bands installed.
3. Banding and assembly bracket shall be stainless steel. All bands shall be 3/4" in width and 0.025" thickness.
4. ALL SIGN MOUNTING BOLTS AND WASHERS SHALL BE EITHER:
   a. Hot dip or mechanically galvanized in accordance with ASTM Designation: A 153, Class D
   b. Electro-galvanized in accordance with ASTM designation: B 633, Type III, SC 3

"J" ASSEMBLY

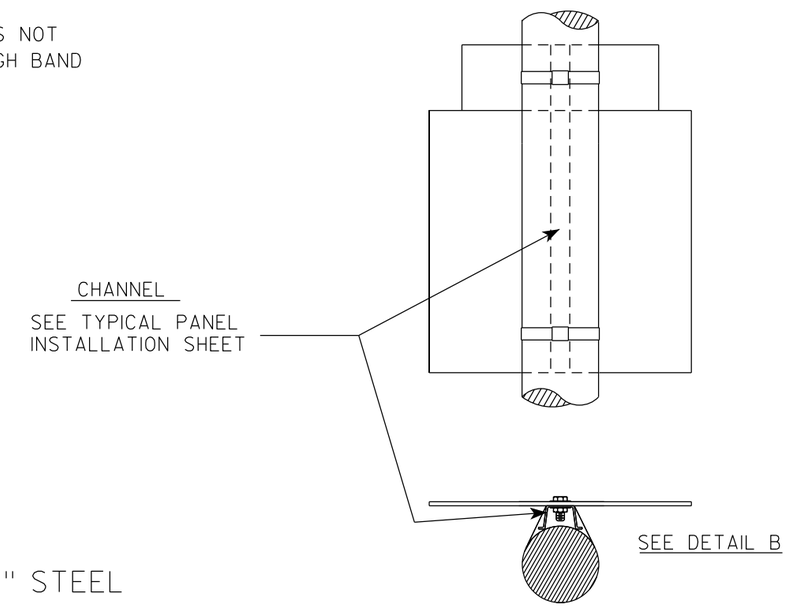

STANDARD SIGN
SIGN BANDING DETAILS

WISCONSIN DEPT OF TRANSPORTATION

APPROVED Matthew R Rauch for State Traffic Engineer

DATE 6/10/19 PLATE NO. A5-9.4

PROJECT NO:	HWY:	COUNTY:		SHEET NO: 109	E

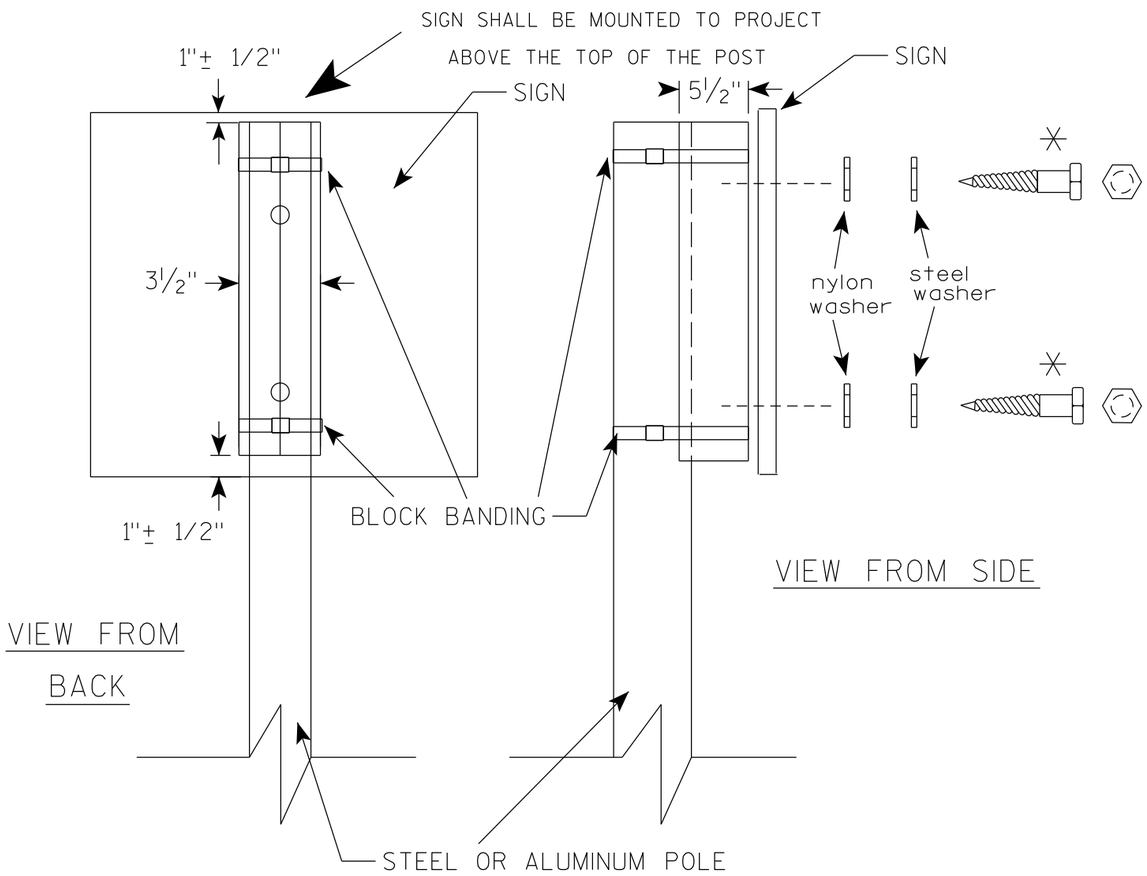

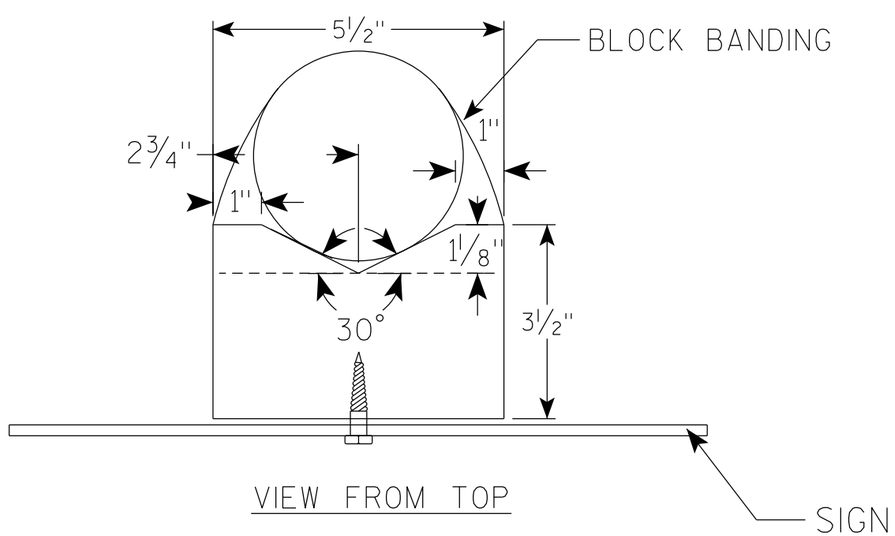

GENERAL NOTES

1. WOOD 4"X6" POST MATERIAL SHALL CONFORM TO 507.2.2 OF THE WisDOT STANDARD SPECIFICATIONS
2. BLOCK BANDING AND CLIPS SHALL BE STAINLESS STEEL, ¾" WIDTH AND 0.025" THICKNESS
3. SIGNS 3' OR GREATER IN HEIGHT SHALL UTILIZE 3 BLOCK BANDS. SIGNS UNDER 3' IN HEIGHT SHALL UTILIZE 2 BLOCK BANDS
4. ACTUAL NUMBER OF FASTENERS PER SIGN VARIES WITH THE SIGN AREA, BUT NORNALLY THERE ARE TWO. FOR SIGNS GREATER THAN 9 S.F. 3 FASTENERS SHALL BE USED.
5. ALL SIGN MOUNTING BOLTS AND WASHERS SHALL BE EITHER:
   a. Hot dip or mechanically galvanized in accordance with ASTM Designation: A 153, Class D
   b. Electro-galvanized in accordance with ASTM Designation : B 633, TYPE III, SC 3
6. ALL BOLTS SHALL HAVE HEXAGONAL HEADS.
7. STEEL WASHERS SHALL BE 1¼" O.D. X ⅜" I.D. X 1/16"
8. NYLON WASHERS SHALL BE 1¼" O.D. X ⅜" I.D. X .080 FOR TYPE H OR TYPE F FACE SIGN

✳ LAG BOLTS SHALL BE ⅜" X 2½"

BLOCK BANDING DETAIL
(V-BLOCK OPTION)

WISCONSIN DEPT OF TRANSPORTATION

APPROVED Matthew R Rauch
For State Traffic Engineer

DATE 6/10/19 PLATE NO. A5-10.2

PROJECT NO:				SHEET NO: 110	E

NOTES

1. Sign is Type II - Type F Reflective
2. Color:
   Background - Orange
   Message - Black
3. Message Series - D
4. Substitute appropriate numeral and adjust spacing to achieve proper balance.

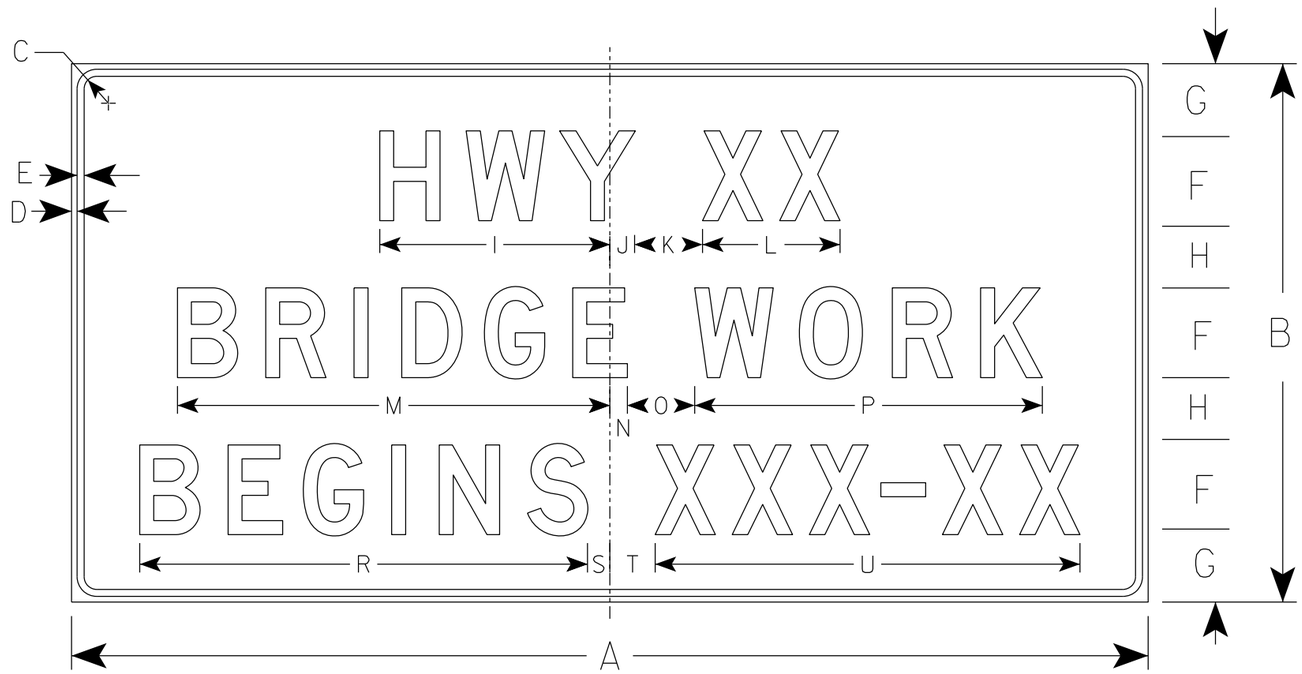

G20-57B

SIZE	A	B	C	D	E	F	G	H	I	J	K	L	M	N	O	P	Q	R	S	T	U	V	W	X	Y	Z	Area sq. ft.
1																											
2																											
3	72	36	1 1/8	1/2	5/8	6	5	4	15 5/8	1 5/8	5	9 1/4	29 1/8	7/8	5	23 1/4		29 7/8	1 3/4	3 1/4	28 1/2						18.0
4	96	48	2 1/4	3/4	1	8	6 1/2	5 1/2	20 5/8	2 1/4	6	12 1/4	38 1/2	1 1/2	6	31		39 1/4	2	4	37 7/8						32.0
5																											

STANDARD SIGN
G20-57B

WISCONSIN DEPT OF TRANSPORTATION

APPROVED Matthew R Rauch
for State Traffic Engineer

DATE 1/22/19 PLATE NO. G20-57B.1

PROJECT NO:	HWY:	COUNTY:		SHEET NO: 111	E

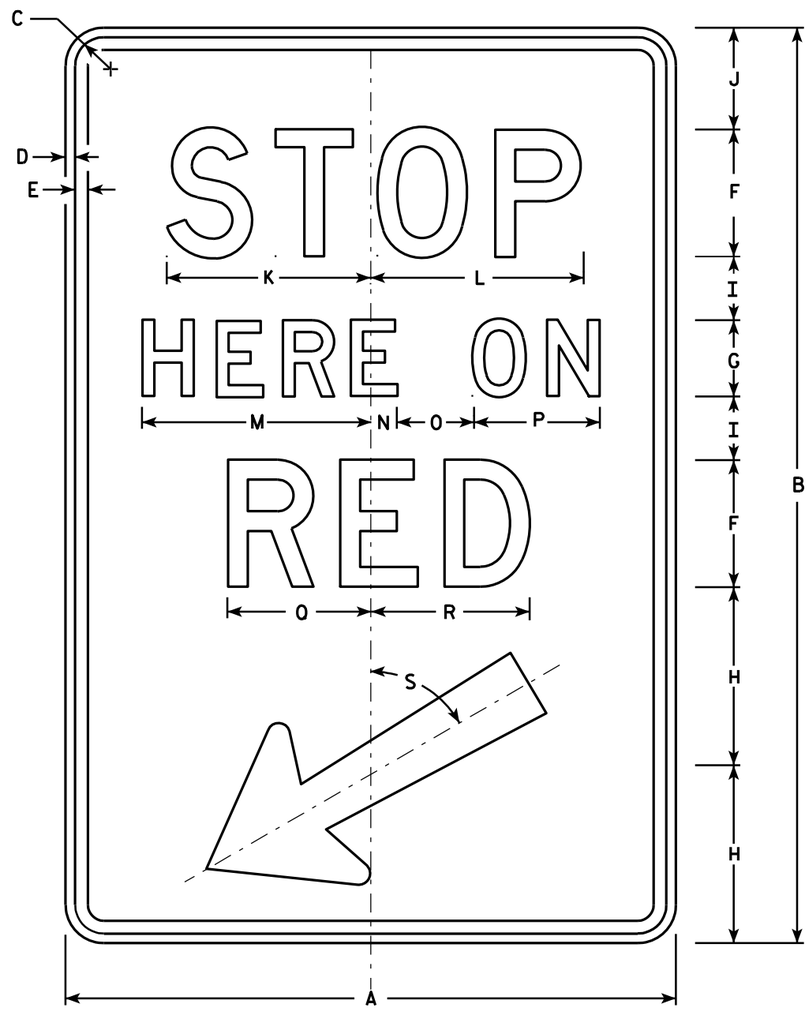

R10-6

NOTES

1. Sign is Type II - Type H Reflective - reference WIS DOT Standard Specification for HIGHWAY and STRUCTURE CONSTRUCTION latest edition.
2. Color:
   Background - White
   Message - Black
3. Message Series - D
4. Corners may be square or rounded when base material is plywood but borders shall be rounded as shown. When base material is metal, the corners and borders shall be rounded.

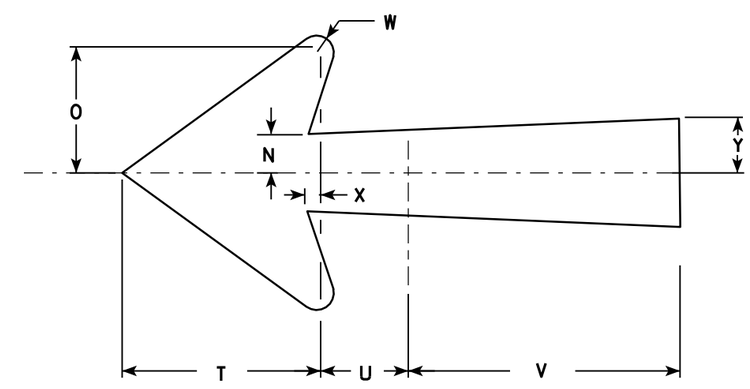

Arrow Detail

SIZE	A	B	C	D	E	F	G	H	I	J	K	L	M	N	O	P	Q	R	S	T	U	V	W	X	Y	Z	Area sq. ft.
1																											
2S	24	36	1 1/8	3/8	1/2	5	3	7	2 1/2	4	8	8 3/8	9	1	3	5	5 5/8	6 1/4	60°	5 1/4	2 1/4	7 1/8	1/2	3/8	1 3/8		6.0
2M	24	36	1 1/8	3/8	1/2	5	3	7	2 1/2	4	8	8 3/8	9	1	3	5	5 5/8	6 1/4	60°	5 1/4	2 1/4	7 1/8	1/2	3/8	1 3/8		6.0
3																											
4																											
5																											

STANDARD SIGN
R10-6

WISCONSIN DEPT OF TRANSPORTATION

APPROVED Matthew R Rauch
for State Traffic Engineer

DATE 4/5/11 PLATE NO. R10-6.6

PROJECT NO:	HWY:	COUNTY:		SHEET NO: 112	E

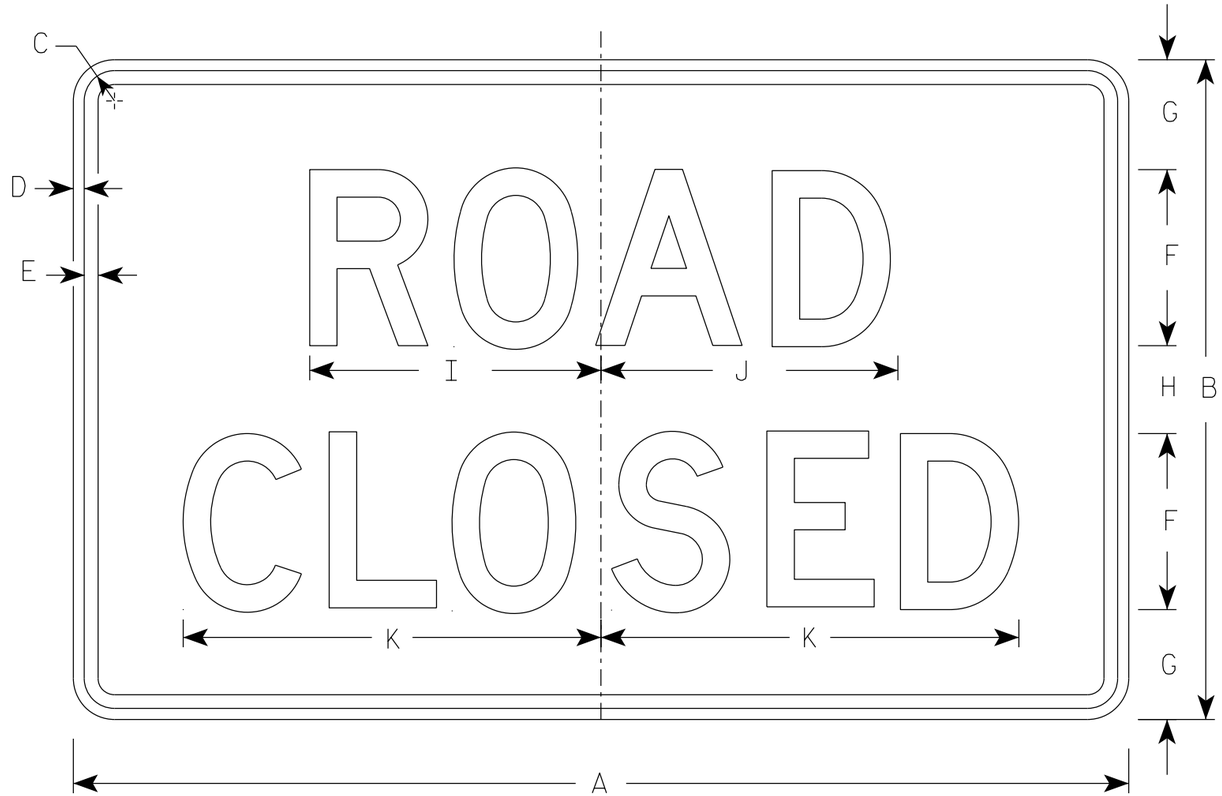

R11-2

NOTES

1. Sign is Type II - Type H Reflective
2. Color:
   Background - White
   Message - Black
3. Message Series - D
4. Corners may be square or rounded when base material is plywood but borders shall be rounded as shown. When base material is metal, the corners and borders shall be rounded.
5. Modify the message as required.

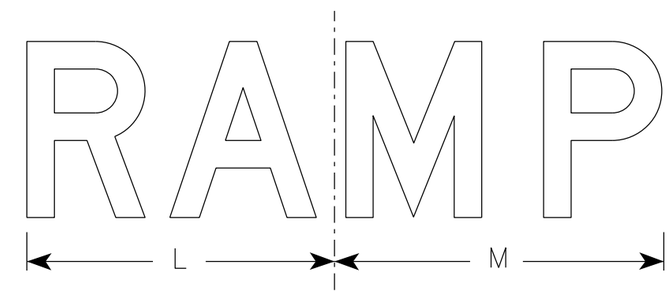

R11-2R

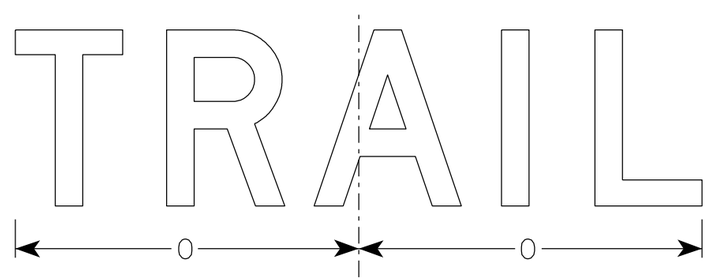

R11-2T

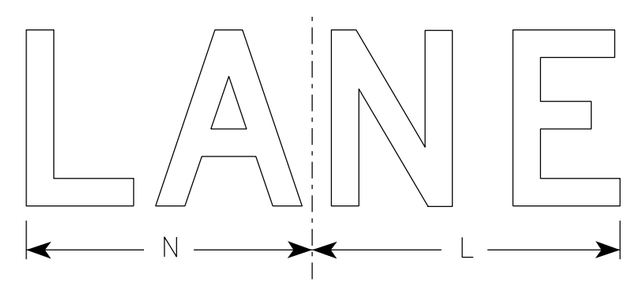

R11-2L

SIZE	A	B	C	D	E	F	G	H	I	J	K	L	M	N	O	P	Q	R	S	T	U	V	W	X	Y	Z	Area sq. ft.
1																											
2S	48	30	1 3/8	1/2	5/8	8	5	4	13 1/4	13 1/2	19	14	15	13	15 5/8												10.0
2M	48	30	1 3/8	1/2	5/8	8	5	4	13 1/4	13 1/2	19	14	15	13	15 5/8												10.0
3	48	30	1 3/8	1/2	5/8	8	5	4	13 1/4	13 1/2	19	14	15	13	15 5/8												10.0
4	48	30	1 3/8	1/2	5/8	8	5	4	13 1/4	13 1/2	19	14	15	13	15 5/8												10.0
5	48	30	1 3/8	1/2	5/8	8	5	4	13 1/4	13 1/2	19	14	15	13	15 5/8												10.0

STANDARD SIGN
R11-2

WISCONSIN DEPT OF TRANSPORTATION

APPROVED Matthew R Rauch
for State Traffic Engineer

DATE 3/29/2021 PLATE NO. R11-2.11

PROJECT NO: | HWY: | COUNTY: | SHEET NO: E

7

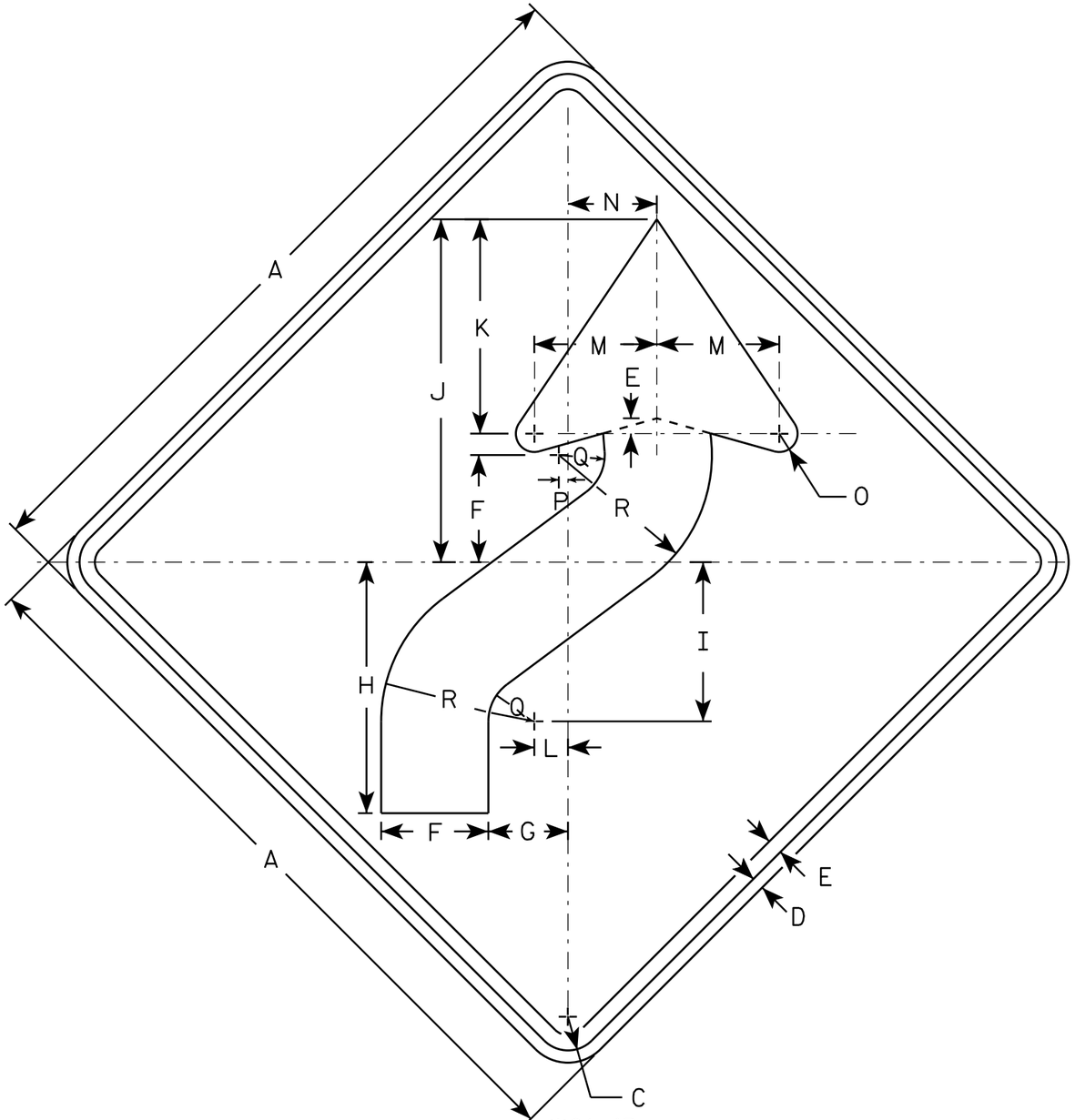

W01-4R

NOTES

1. Sign is Type II - Type F Reflective - reference WIS DOT Standard Specification for HIGHWAY and STRUCTURE CONSTRUCTION latest edition.
2. Color:
   Background - Orange
   Message - Black
3. Corners may be square or rounded when base material is plywood but borders shall be rounded as shown. When base material is metal, the corners and borders shall be rounded.
4. W01-4L is the same as W01-4R except the arrow is reversed along the vertical centerline.

SIZE	A	B	C	D	E	F	G	H	I	J	K	L	M	N	O	P	Q	R	S	T	U	V	W	X	Y	Z	Area sq. ft.
1	36		1 5/8	5/8	3/4	5 1/4	4	12 3/8	7 7/8	16 7/8	10 1/2	1 5/8	6	4 1/2	1	1/2	2 1/4	7 1/2									9.0
2S	48		2 1/4	3/4	1	7	5 1/4	16 1/2	10 1/2	22 1/2	14	2 1/4	8	6	1 1/4	5/8	3	10									16.0
2M	48		2 1/4	3/4	1	7	5 1/4	16 1/2	10 1/2	22 1/2	14	2 1/4	8	6	1 1/4	5/8	3	10									16.0
3	48		2 1/4	3/4	1	7	5 1/4	16 1/2	10 1/2	22 1/2	14	2 1/4	8	6	1 1/4	5/8	3	10									16.0
4	48		2 1/4	3/4	1	7	5 1/4	16 1/2	10 1/2	22 1/2	14	2 1/4	8	6	1 1/4	5/8	3	10									16.0
5	48		2 1/4	3/4	1	7	5 1/4	16 1/2	10 1/2	22 1/2	14	2 1/4	8	6	1 1/4	5/8	3	10									16.0

STANDARD SIGN
W01-4

WISCONSIN DEPT OF TRANSPORTATION

APPROVED Matthew R Rauch
for State Traffic Engineer

DATE 11/18/13 PLATE NO W01-4.1

PROJECT NO:	HWY:	COUNTY:		SHEET NO:	E

NOTES

1. Sign is Type II - Type F Reflective - reference WIS DOT Standard Specification for HIGHWAY and STRUCTURE CONSTRUCTION latest edition.
2. Color:
   Background - Orange
   Message - Black
3. Corners may be square or rounded when base material is plywood but borders shall be rounded as shown. When base material is metal, the corners and borders shall be rounded.

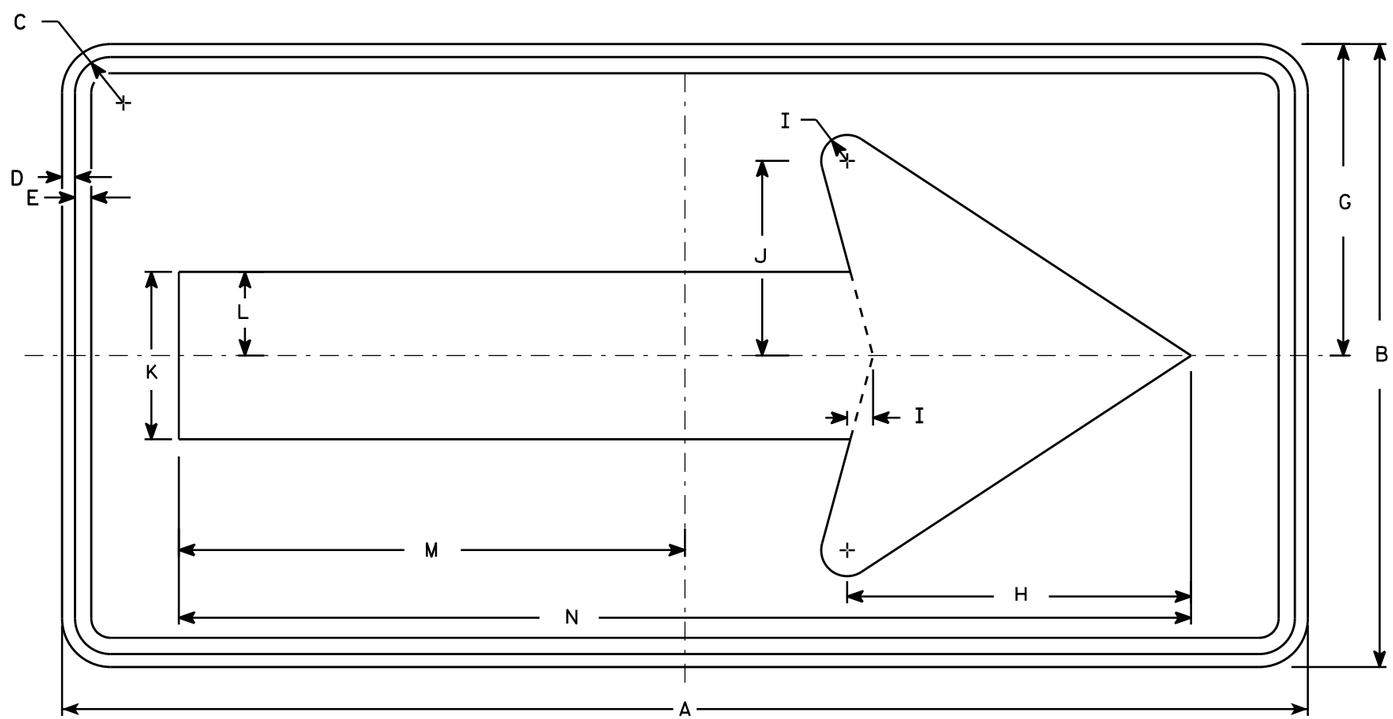

W01-6

SIZE	A	B	C	D	E	F	G	H	I	J	K	L	M	N	O	P	Q	R	S	T	U	V	W	X	Y	Z	Area sq. ft.
1																											
2S	48	24	1 3/8	1/2	5/8		12	13 1/4	1	7 1/2	6 1/2	3 1/4	19 1/2	39													8.0
2M	48	24	1 3/8	1/2	5/8		12	13 1/4	1	7 1/2	6 1/2	3 1/4	19 1/2	39													8.0
3	60	30	1 3/8	1/2	5/8		15	16 1/4	1 1/4	9 1/4	8	4	24 3/8	48 3/4													12.5
4	60	30	1 3/8	1/2	5/8		15	16 1/4	1 1/4	9 1/4	8	4	24 3/8	48 3/4													12.5
5	60	30	1 3/8	1/2	5/8		15	16 1/4	1 1/4	9 1/4	8	4	24 3/8	48 3/4													12.5

STANDARD SIGN
W01-6

WISCONSIN DEPT OF TRANSPORTATION

APPROVED Matthew R Rauch
for State Traffic Engineer

DATE 11/18/13 PLATE NO. W01-6.1

PROJECT NO: | HWY: | COUNTY: | SHEET NO: | E

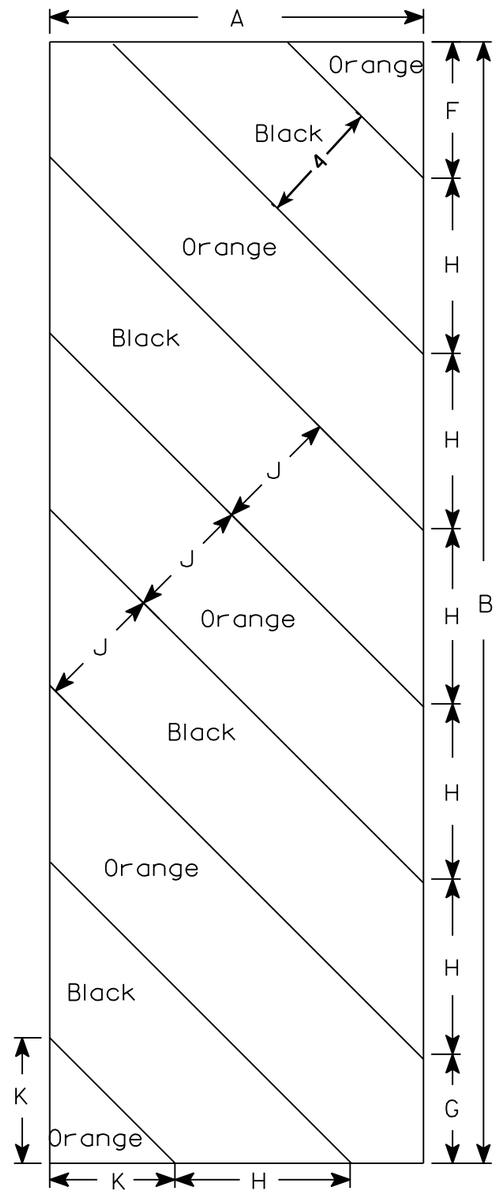

W05-52L

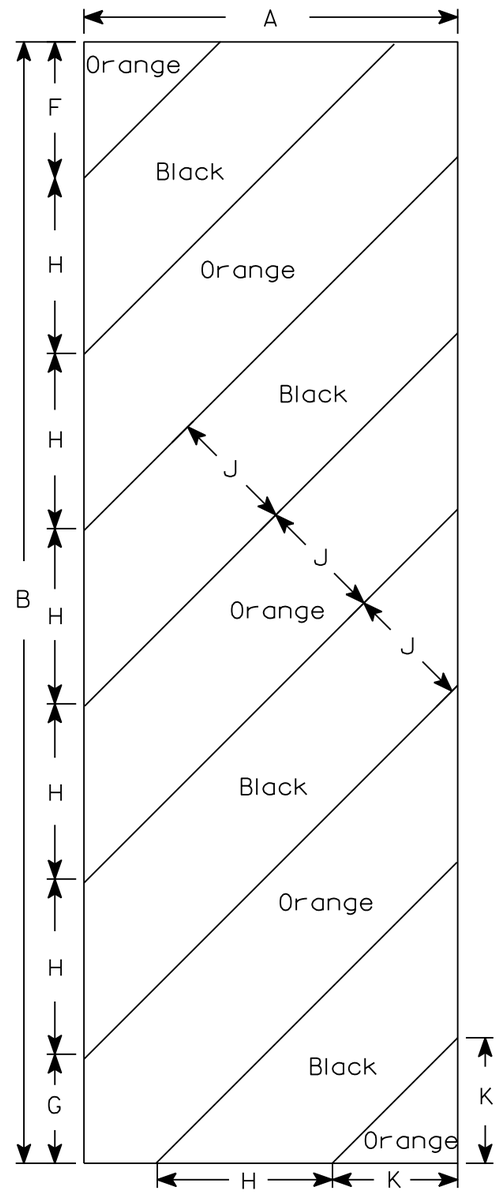

W05-52R

NOTES

1. Sign is Type II - Type F Reflective - reference WIS DOT Standard Specification for HIGHWAY and STRUCTURE CONSTRUCTION latest edition.
2. Color:
   Background - Orange
   Message - Black
3. Corners may be square or rounded when base material is plywood but borders shall be rounded as shown. When base material is metal, the corners and borders shall be rounded.
4. Alternate colors of stripes as shown.

SIZE	A	B	C	D	E	F	G	H	I	J	K	L	M	N	O	P	Q	R	S	T	U	V	W	X	Y	Z	Area sq. ft.
1																											
2S	12	36				4 3/8	3 1/2	5 5/8	45°	4	4																3.0
2M	12	36				4 3/8	3 1/2	5 5/8	45°	4	4																3.0
3	18	54				6	5 1/2	8 1/2	45°	6	6 9/16																6.75
4																											
5																											

STANDARD SIGN

W05-52L & W05-52R

WISCONSIN DEPT OF TRANSPORTATION

APPROVED Matthew R Rauch
for State Traffic Engineer

DATE 11/20/13 PLATE No. W05-52.1

PROJECT NO: | HWY: | COUNTY: | SHEET NO: E

STATE PROJECT NUMBER

1610-44-62

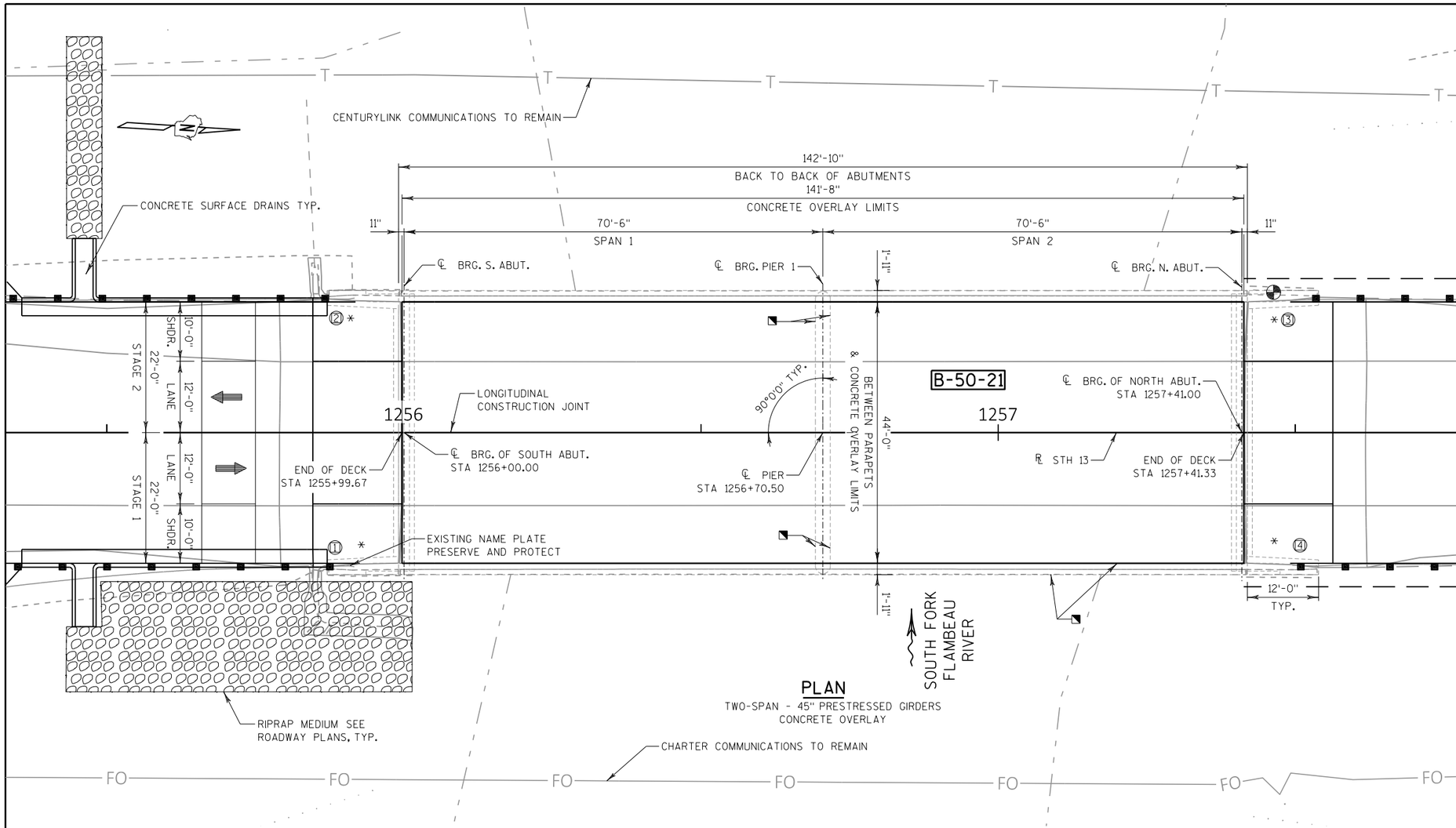

PLAN

TWO-SPAN - 45" PRESTRESSED GIRDERS
CONCRETE OVERLAY

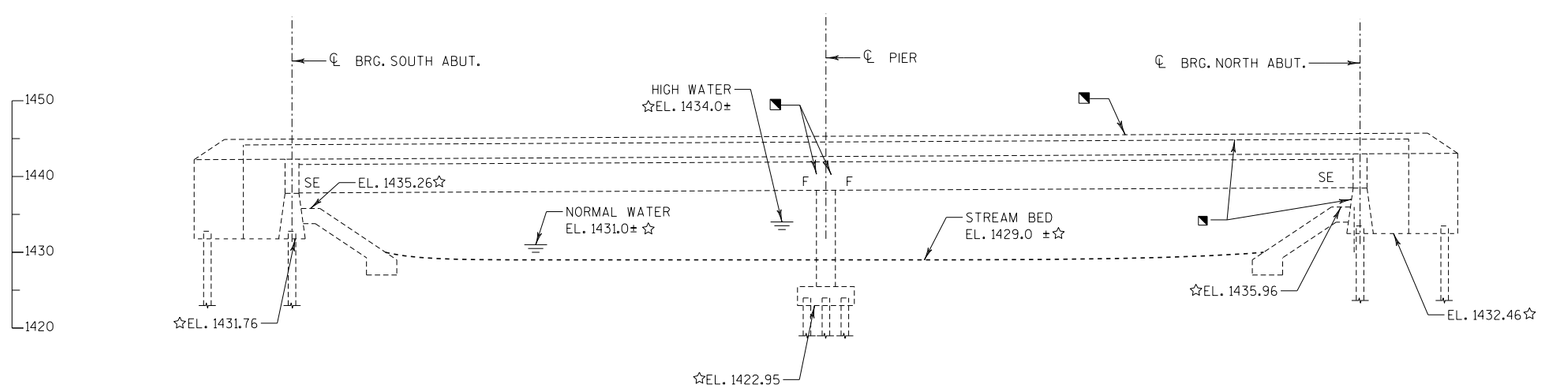

ELEVATION

(LOOKING DOWNSTREAM)

NOTES

- (X) DENOTES WINGWALL NUMBER
- ⁎ THRIE BEAM RAIL ATTACHMENT
- ◥ CONCRETE SURFACE REPAIR
- ☆ ELEVATIONS FROM EXISTING PLANS DATED 1972.

DESIGN DATA

LIVE LOAD:

DESIGN LOADING: HS-20
INVENTORY RATING: HS-17
OPERATING RATING: HS-29
WISCONSIN STD. PERMIT VEHICLE (WIS-SPV) = 166 KIPS

MATERIAL PROPERTIES:

CONCRETE MASONRY OVERLAY DECKS—— f'c = 4,000 psi
CONCRETE MASONRY SUBSTRUCTURE—— f'c = 4,000 psi

TRAFFIC DATA

STH 13

ADT = 4,300 (2022)
ADT = 4,800 (2042)
RDS = 55 M.P.H.

LIST OF DRAWINGS

1. GENERAL PLAN & ELEVATION
2. TYPICAL SECTION & QUANTITIES

WISCONSIN PROFESSIONAL ENGINEER
JOSHUA R. MITCHELL
E-46242-6
MILWAUKEE, WI

Joshua Mitchell
2-23-2021

STRUCTURES DESIGN CONTACTS

BRIDGE OFFICE: AARON BONK (608) 261-0261
CONSULTANT: MICHAEL RADTKE (414) 939-7039

NO.	DATE	REVISION	BY

emcs inc
1300 W. Canal Street, Suite 200
Milwaukee, WI 53233
414.347.1607 Fax 414.347.1347

STATE OF WISCONSIN
DEPARTMENT OF TRANSPORTATION

ACCEPTED SDR 05/11/21
CHIEF STRUCTURES DESIGN ENGINEER DATE

STRUCTURE B-50-21

STH 13 OVER SOUTH FORK OF FLAMBEAU RIVER

COUNTY	PRICE	TOWN	FIFIELD

DESIGN SPEC. REHABILITATION N/A

DESIGNED BY	JRM	DESIGN CK'D.	MDR	DRAWN BY	JRM	PLANS CK'D.	MDR

GENERAL PLAN & ELEVATION

SHEET 1 OF 2
117

8

8

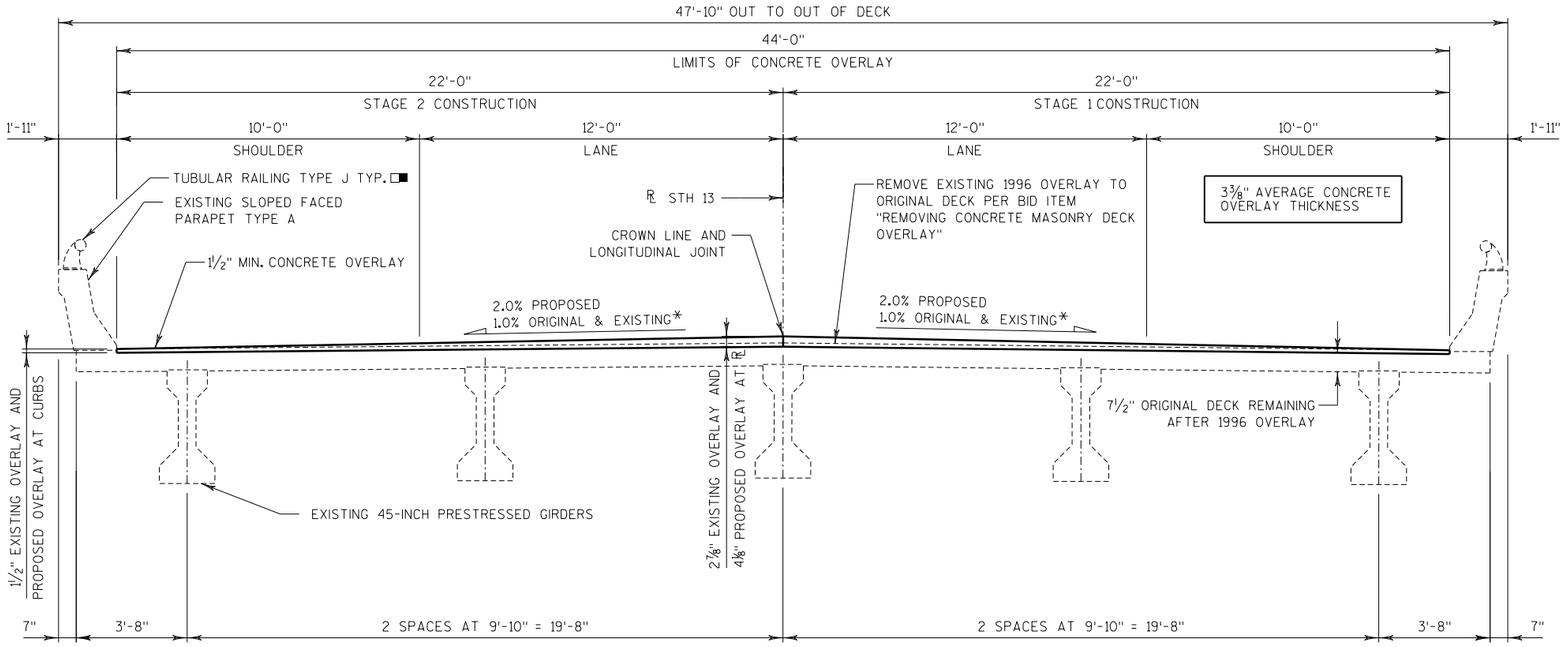

TYPICAL SECTION THRU STH 13

LOOKING UPSTATION

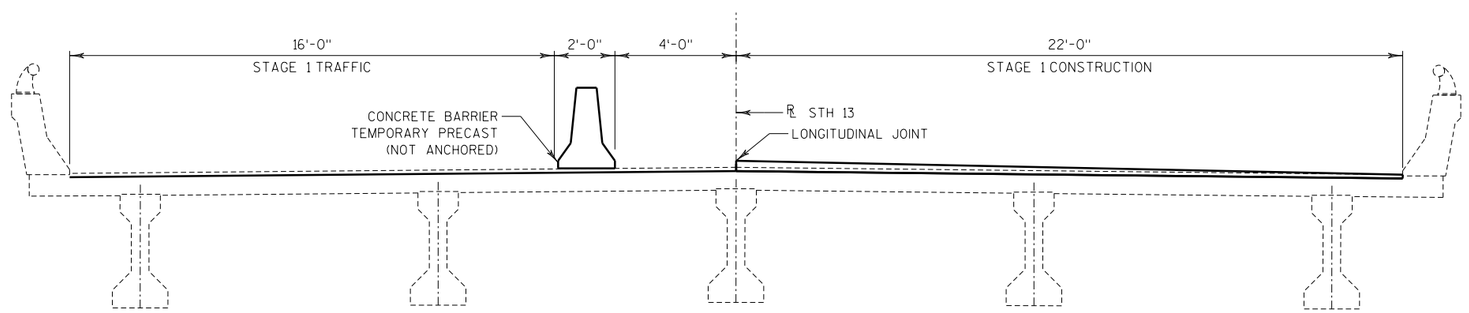

STAGE 1 CONSTRUCTION

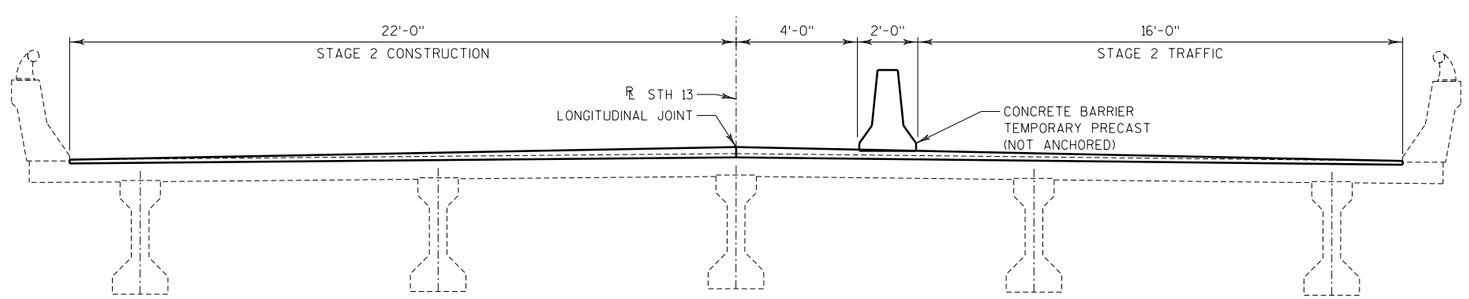

STAGE 2 CONSTRUCTION

GENERAL NOTES

DRAWINGS SHALL NOT BE SCALED.

DIMENSIONS SHOWN ARE BASED ON THE ORIGINAL STRUCTURE PLANS.

ALL DIMENSIONS ARE IN FEET AND INCHES UNLESS OTHERWISE NOTED.

ALL STATIONS AND ALL ELEVATIONS ARE IN FEET AND ARE TAKEN FROM THE 1972 ORIGINAL PLANS.

SEAL OVERLAY CONSTRUCTION JOINTS ACCORDING TO SECTION 502.3.13.1 OF THE STANDARD SPECIFICATION. COST IS CONSIDERED INCLUDED IN BID ITEM "CONCRETE MASONRY OVERLAY DECKS".

PREPARATION DECKS TYPE 1, TYPE 2, AND FULL DEPTH DECK REPAIR ARE BASED ON THE PLANS AND AS DETERMINED BY THE FIELD ENGINEER. DECK PREPARATION AND FULL-DEPTH DECK REPAIRS SHALL BE FILLED WITH "CONCRETE MASONRY OVERLAY DECKS". INFRARED DECK SCANS ARE AVAILABLE UPON REQUEST TO THE ENGINEER.

ANY EXCAVATION REQUIRED TO COMPLETE THE OVERLAY AT THE ABUTMENTS IS TO BE INCLUDED IN WORK FOR BID ITEM "CONCRETE MASONRY OVERLAY DECKS".

PROFILE GRADE LINE SHALL BE DETERMINED IN THE FIELD BASED ON A MINIMUM OVERLAY THICKNESS OF 1½" AT THE CURBS AND 4⅛"AT THE ℄ PLACED ABOVE THE DECK SURFACE AFTER SURFACE PREPARATION. EXPECTED AVERAGE OVERLAY THICKNESS IS 3⅜". THE AVERAGE OVERLAY THICKNESS IS BASED ON THE MINIMUM OVERLAY THICKNESS PLUS ½" TO ACCOUNT FOR VARIATIONS IN THE DECK SURFACE. IF EXPECTED AVERAGE OVERLAY THICKNESS IS EXCEEDED BY MORE THAN ½", CONTACT THE STRUCTURES DESIGN SECTION.

ALL CONCRETE REMOVAL NOT COVERED WITH CONCRETE OVERLAY SHALL BE DEFINED BY A 1" DEEP SAW CUT.

PIGMENTED SURFACE SEALER WILL BE APPLIED TO THE TOPS AND INSIDE FACES OF THE PARAPETS FROM END OF WINGWALL TO END OF WINGWALL.

PROTECTIVE SURFACE TREATMENT WILL BE APPLIED TO THE TOP AND VERTICAL FACE OF THE PAVING NOTCHES AND TO THE TO THE ENTIRE TOP SURFACE OF THE NEW CONCRETE OVERLAY.

◪ CONCRETE SURFACE REPAIR QUANTITIES ARE AN ESTIMATE ONLY. QUANTITIES TO BE DETERMINED IN THE FIELD BY THE FIELD ENGINEER.

* 1996 OVERLAY ASBUILTS SHOW CROSS SLOPE OF 1.5%. PROJECT SURVEY INFORMATION SHOWS CROSS SLOPE OF 1.0%.

□■ REMOVAL OF THE EXISTING RAILING TO FACILITATE THE PLACEMENT OF THE CONCRETE OVERLAY IS ACCEPTABLE. ALL COSTS FOR REMOVING AND REPLACING THE RAILING ARE INCIDENTAL TO THE OVERLAY WORK. ALL FASTENERS SHALL BE STAINLESS STEEL IF REPLACED.

TOTAL ESTIMATED QUANTITIES

BID ITEM NO.	BID ITEMS	UNIT	TOTAL
502.3200	PROTECTIVE SURFACE TREATMENT	SY	709
502.3210	PIGMENTED SURFACE SEALER	SY	143
509.0301	PREPARATION DECKS TYPE 1	SY	70
509.0302	PREPARATION DECKS TYPE 2	SY	35
509.0505.S	CLEANING DECKS TO REAPPLY CONCRETE MASONRY OVERLAY	SY	693
◪ 509.1500	CONCRETE SURFACE REPAIR	SF	30
509.2000	FULL-DEPTH DECK REPAIR	SY	4
509.2500	CONCRETE MASONRY OVERLAY DECKS	CY	70
509.9005.S	REMOVING CONCRETE MASONRY DECK OVERLAY B-50-21	SY	693
509.9050.S	CLEANING PARAPETS	LF	332

8

8

NO.	DATE	REVISION	BY

STATE OF WISCONSIN
DEPARTMENT OF TRANSPORTATION

STRUCTURE B-50-21

DRAWN BY JRM | PLANS CK'D. MDR

TYPICAL SECTION & QUANTITIES

STATE PROJECT NUMBER

1610-44-62

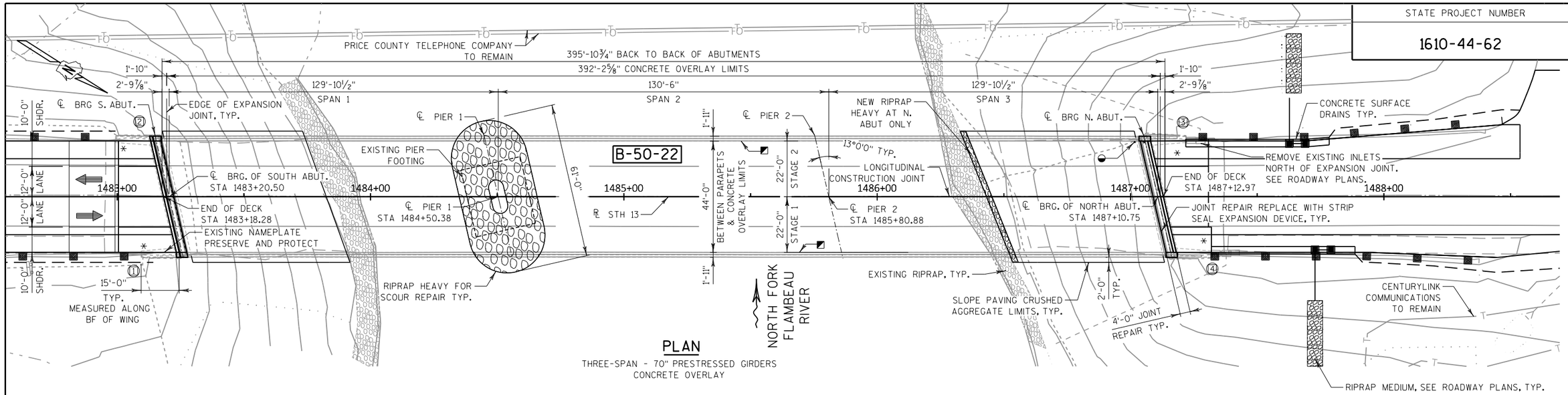

PLAN

THREE-SPAN - 70" PRESTRESSED GIRDERS
CONCRETE OVERLAY

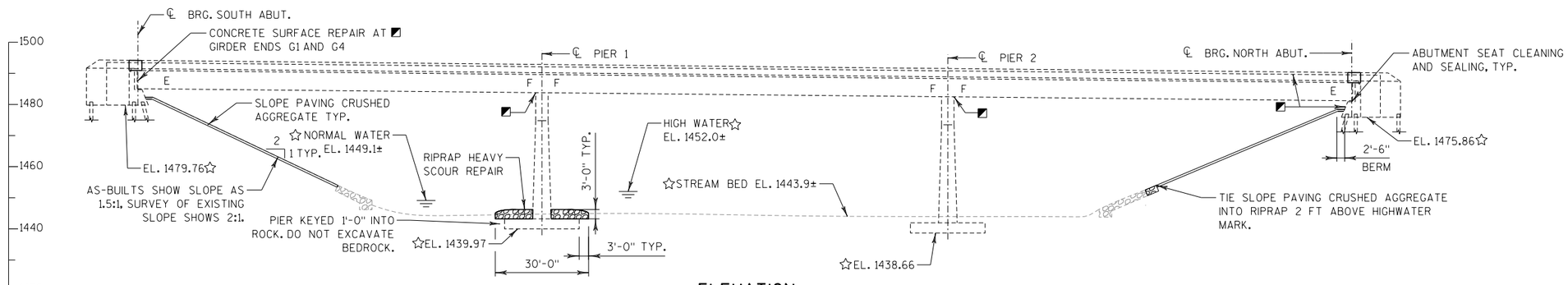

ELEVATION

(LOOKING DOWNSTREAM)

8

NOTES

(X) DENOTES WINGWALL NUMBER

⁎ THRIE BEAM RAIL ATTACHMENT

◩ CONCRETE SURFACE REPAIR

◒ EXISTING DECK DRAIN INSTALLED IN FIELD DUE TO PONDING ISSUE. REMOVE DRAIN AND ELMINATE POND WITH NEW OVERLAY. REMOVAL TO BE PAID UNDER BID ITEM "REMOVING CONCRETE MASONRY DECK OVERLAY".

☆ELEVATIONS FROM EXISTING PLANS DATED 1973.

DESIGN DATA

LIVE LOAD:

DESIGN LOADING: HS-20
INVENTORY RATING: HS-27
OPERATING RATING: HS-63
WISCONSIN STD. PERMIT VEHICLE (WIS-SPV) = 250 KIPS

MATERIAL PROPERTIES:

CONCRETE MASONRY OVERLAY DECKS ____ f'c = 4,000 psi
CONCRETE SURFACE REPAIR _____ f'c = 4,000 psi

TRAFFIC DATA

STH 13

ADT = 4,800 (2022)
ADT = 5,400 (2042)
RDS = 40 M.P.H.

LIST OF DRAWINGS

1. GENERAL PLAN & ELEVATION
2. TYPICAL SECTION & QUANTITIES
3. SLOPE PAVING DETAILS
4. EXPANSION JOINT DETAILS 1
5. EXPANSION JOINT DETAILS 2
6. EXPANSION JOINT DETAILS 3

WISCONSIN
MICHAEL D. RADTKE
E-40967
ELM GROVE, WI
PROFESSIONAL ENGINEER
4/29/2021

STRUCTURES DESIGN CONTACTS

BRIDGE OFFICE: AARON BONK (608) 261-0261
CONSULTANT: MICHAEL RADTKE (414) 939-7039

NO.	DATE	REVISION	BY

emcs inc
1300 W. Canal Street, Suite 200
Milwaukee, WI 53233
414.347.1607 Fax 414.347.1347

STATE OF WISCONSIN
DEPARTMENT OF TRANSPORTATION

ACCEPTED SDR 05/05/21
CHIEF STRUCTURES DESIGN ENGINEER DATE

STRUCTURE B-50-22

STH 13 OVER NORTH FORK OF FLAMBEAU RIVER

COUNTY	PRICE	CITY	PARK FALLS
DESIGN SPEC.	REHABILITATION N/A		
DESIGNED BY JRM	DESIGN CK'D. MDR	DRAWN BY JRM	PLANS CK'D. MDR

GENERAL PLAN & ELEVATION

SHEET 1 OF 6
119

8

STATE PROJECT NUMBER

1610-44-62

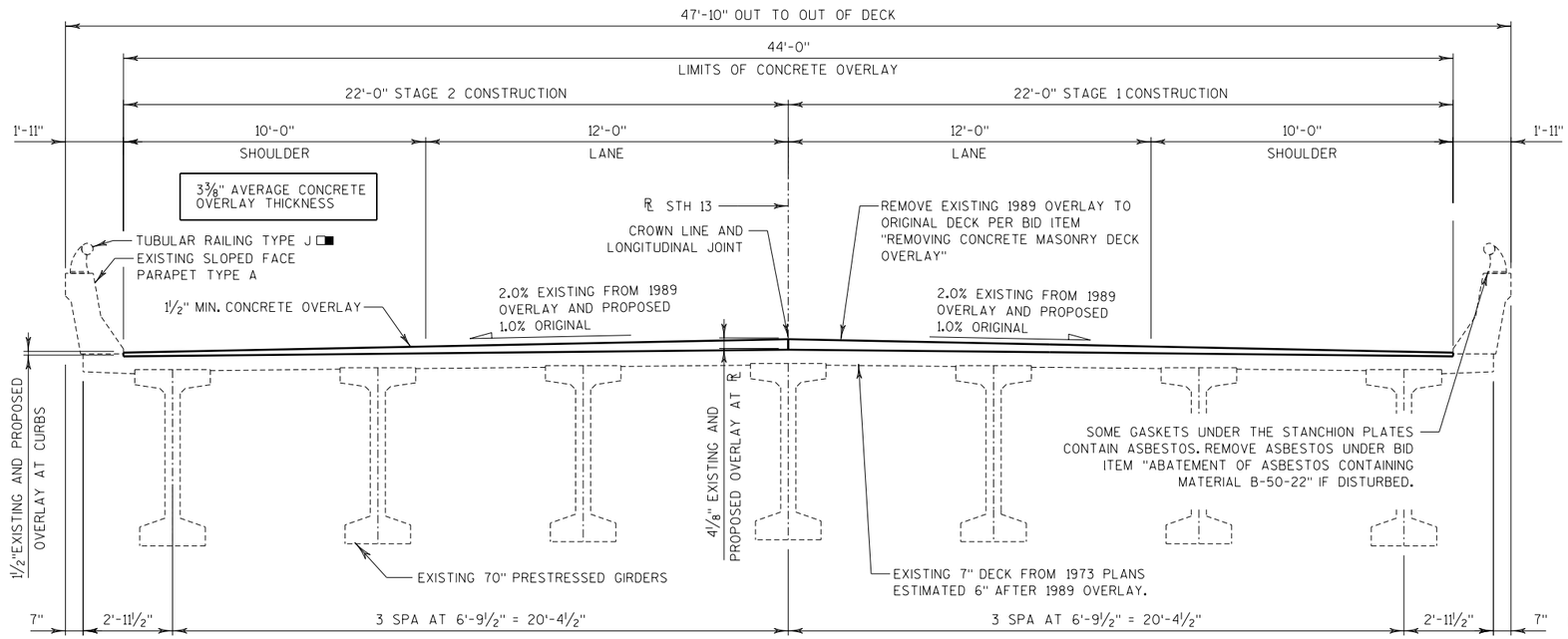

TYPICAL SECTION THRU STH 13

LOOKING UP STATION

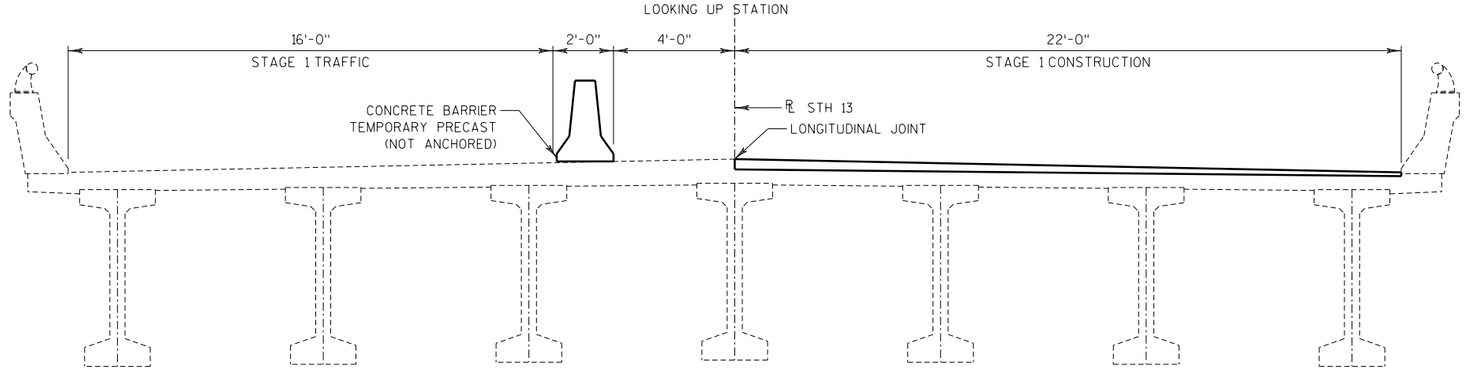

STAGE 1 CONSTRUCTION

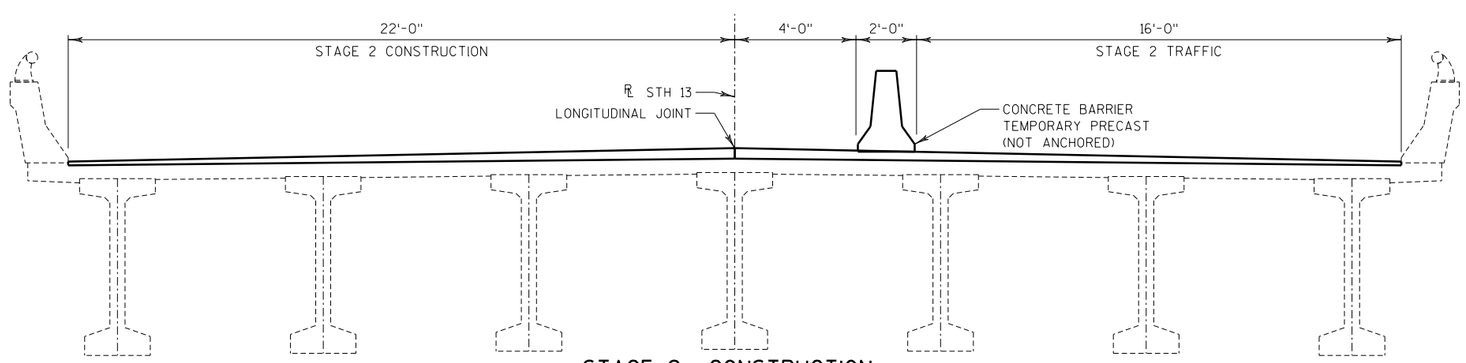

STAGE 2 CONSTRUCTION

GENERAL NOTES

DRAWINGS SHALL NOT BE SCALED.

DIMENSIONS SHOWN ARE BASED ON THE ORIGINAL STRUCTURE PLANS.

ALL DIMENSIONS ARE IN FEET AND INCHES UNLESS OTHERWISE NOTED.

ALL STATIONS AND ALL ELEVATIONS ARE IN FEET. ELEVATIONS SHOWN ARE TAKEN FROM THE 1973 AS-BUILTS.

SEAL OVERLAY CONSTRUCTION JOINTS ACCORDING TO SECTION 502.3.13.1 OF THE STANDARD SPECIFICATION. COST IS CONSIDERED INCLUDED IN BID ITEM "CONCRETE MASONRY OVERLAY DECKS".

PREPARATION DECKS TYPE 1, TYPE 2, AND FULL DEPTH DECK REPAIR ARE BASED ON THE PLANS AND AS DETERMINED BY THE FIELD ENGINEER. DECK PREPARATION AND FULL-DEPTH DECK REPAIRS SHALL BE FILLED WITH "CONCRETE MASONRY OVERLAY DECKS". INFRARED DECK SCANS AVAILABLE UPON REQUEST TO THE ENGINEER.

ANY EXCAVATION REQUIRED TO COMPLETE THE OVERLAY OR JOINT REPAIRS AT THE ABUTMENTS IS TO BE INCLUDED IN WORK FOR BID ITEM "CONCRETE MASONRY OVERLAY DECKS".

PROFILE GRADE LINE SHALL BE DETERMINED IN THE FIELD BASED ON A MINIMUM OVERLAY THICKNESS OF 1½" AT THE CURBS AND 4⅛"AT THE ℄ PLACED ABOVE THE DECK SURFACE AFTER SURFACE PREPARATION. EXPECTED AVERAGE OVERLAY THICKNESS IS 3⅜". THE AVERAGE OVERLAY THICKNESS IS BASED ON THE MINIMUM OVERLAY THICKNESS PLUS ½" TO ACCOUNT FOR VARIATIONS IN THE DECK SURFACE. IF EXPECTED AVERAGE OVERLAY THICKNESS IS EXCEEDED BY MORE THAN ½", CONTACT THE STRUCTURES DESIGN SECTION.

ALL CONCRETE REMOVAL NOT COVERED WITH CONCRETE OVERLAY SHALL BE DEFINED BY A 1" DEEP SAW CUT.

PIGMENTED SURFACE SEALER WILL BE APPLIED TO THE TOPS AND INSIDE FACES OF THE PARAPETS FROM END OF WINGWALL TO END OF WINGWALL.

PROTECTIVE SURFACE TREATMENT WILL BE APPLIED TO THE TOP AND VERTICAL FACE OF THE PAVING NOTCHES AND THE NEW CONCRETE OVERLAY.

◪ CONCRETE SURFACE REPAIR QUANTITIES ARE AN ESTIMATE ONLY. QUANTITIES TO BE DETERMINED IN THE FIELD BY THE FIELD ENGINEER.

◨ REMOVAL OF THE EXISTING RAILING TO FACILITATE THE PLACEMENT OF THE CONCRETE OVERLAY AND THE CONCRETE SURFACE REPAIR TO THE PARAPETS IS ACCEPTABLE. ALL COSTS FOR REMOVING AND REPLACING THE RAILING ARE INCIDENTAL TO THE OVERLAY WORK. ALL FASTENERS SHALL BE STAINLESS STEEL IF REPLACED.

ASBESTOS CONTAINING MATERIAL IS PRESENT N THE GRAY GASKET MATERIAL BELOW THE METAL BASEPLATES. FOR MORE INFORMATION SEE THE ASBESTOS REPORT. ABATEMENT OF MATERIAL IS REQUIRED IF DISTURBED.

TOTAL ESTIMATED QUANTITIES

BID ITEM NO.	BID ITEMS	UNIT	TOTAL
203.0210.S	ABATEMENT OF ASBESTOS CONTAINING MATERIAL B-50-22	LS	1
502.3101	EXPANSION DEVICE	LF	99
502.3200	PROTECTIVE SURFACE TREATMENT	SY	1,934
502.3210	PIGMENTED SURFACE SEALER	SY	361
502.4205	ADHESIVE ANCHORS NO. 5 BAR	EACH	92
505.0600	BAR STEEL REINFORCEMENT HS COATED STRUCTURES	LB	2,920
509.0301	PREPARATION DECKS TYPE 1	SY	77
509.0302	PREPARATION DECKS TYPE 2	SY	44
509.0505.S	CLEANING DECKS TO REAPPLY CONCRETE MASONRY OVERLAY	SY	1,918
509.1000	JOINT REPAIR	SY	44
◪ 509.1500	CONCRETE SURFACE REPAIR	SF	632
509.2000	FULL-DEPTH DECK REPAIR	SY	10
509.2500	CONCRETE MASONRY OVERLAY DECKS	CY	210
509.9005.S	REMOVING CONCRETE MASONRY DECK OVERLAY B-50-22	SY	1,918
509.9050.S	CLEANING PARAPETS	LF	845
604.0500	SLOPE PAVING CRUSHED AGGREGATE	SY	794
606.0300	RIPRAP HEAVY	CY	181
SPV.0180	ABUTMENT SEAT CLEANING AND SEALING	SY	19
	NON-BID ITEMS		
	FILLER	SIZE	

NO.	DATE	REVISION	BY

STATE OF WISCONSIN
DEPARTMENT OF TRANSPORTATION

STRUCTURE B-50-22

DRAWN BY JRM | PLANS CK'D. MDR

TYPICAL SECTION & QUANTITIES

SHEET 2 OF 6

120

8

STATE PROJECT NUMBER

1610-44-62

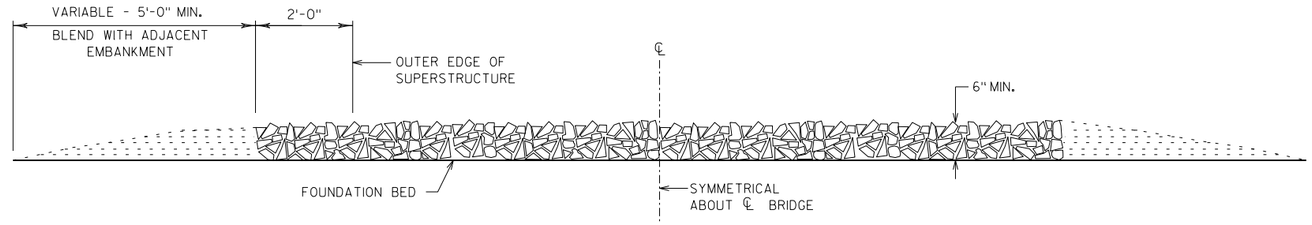

SECTION A-A

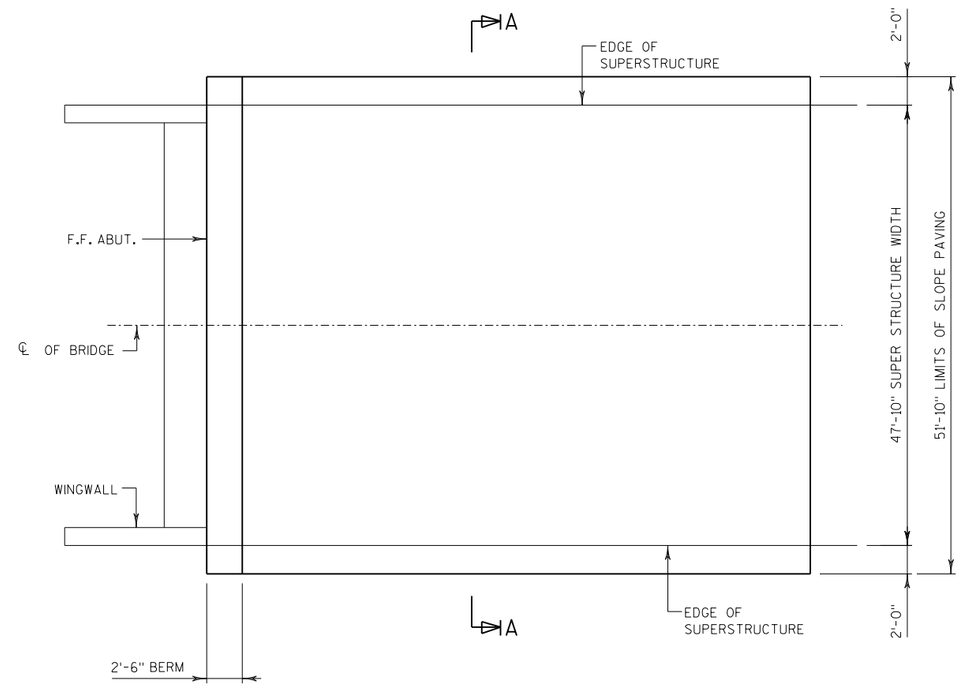

PLAN

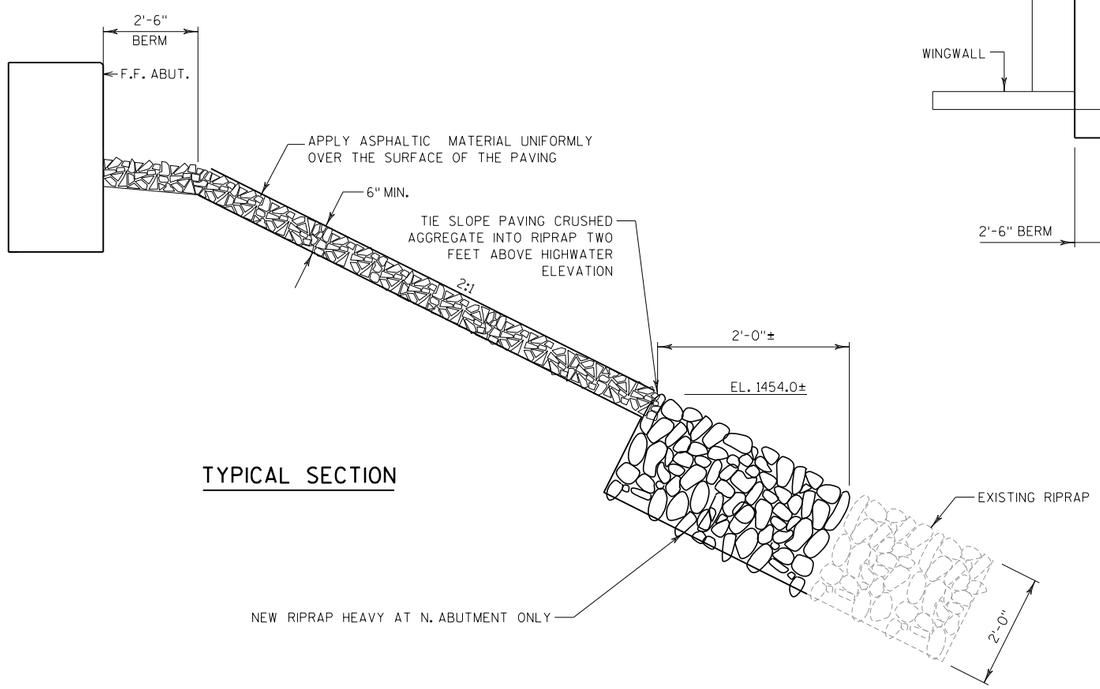

TYPICAL SECTION

8

8

NO.	DATE	REVISION	BY

STATE OF WISCONSIN
DEPARTMENT OF TRANSPORTATION

STRUCTURE B-50-22

DRAWN BY JRM | PLANS CK'D. MDR

SLOPE PAVING DETAILS

SHEET 3 OF 6

STATE PROJECT NUMBER

1610-44-62

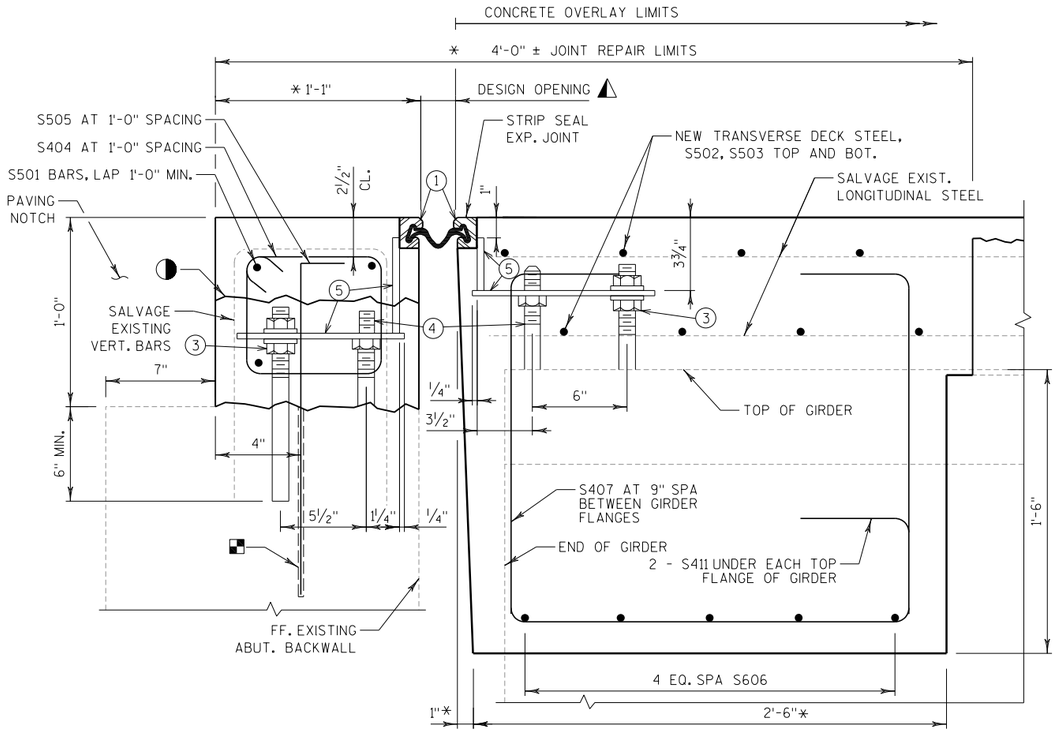

SECTION THRU PROPOSED JOINT AND END DIAPHRAGM

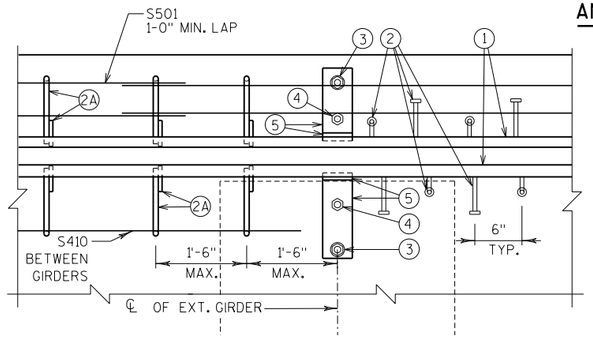

PART PLAN

NOTES

ONE FIELD SPLICE PERMITTED IN STEEL EXTRUSIONS, UNLESS MORE ARE REQUIRED FOR STAGED CONSTRUCTION,HANDLING, OR GALVANIZING REQUIREMENTS. IF USED, ANCHOR PLATES SHALL BE PROVIDED 3" FROM EACH SIDE OF THE FILED SPLICE. DETAILS SHALL BE SUBMITTED FOR APPROVAL. NO SPLICING PERMITTED IN NEOPRENE STRIP SEAL.

AFTER FABRICATION, BUT BEFORE SHIPMENT, STRAIGHTEN STEEL EXTRUSIONS SUCH THAT THEY SHALL BE FREE FROM WARP, TWIST & SWEEP.

FABRICATOR SHALL PROVIDE MEANS OF KEEPING GALVANIZED EXTRUSIONS CLEAN AND SMOOTH DURING SHIPMENT AND PRIOR TO APPLYING LUBRICANT ADHESIVE FOR NEOPRENE GLAND INSTALLATION.

SANDBLAST PLATES, SUPPORTS, AND EXTRUSIONS AFTER FABRICATION IN ACCORDANCE WITH SSPC SP. #6 "COMMERCIAL BLAST CLEANING". AFTER BLAST CLEANING, THE PLATES, SUPPORTS, AND EXTRUSIONS SHALL BE HOT DIPPED GALVANIZED. SLIP-RESISTANT SURFACE IS APPLIED TO SIDEWALK COVER PLATES BY THE MANUFACTURER AND THEN HOT DIPPED GALVANIZED TO THEIR RECOMMENDATIONS TO MAINTAIN THEINTEGRITY OF THIS SURFACE.

ANCHOR SYSTEM NO. 8 & NO. 9 SHALL CONFORM TO ASTM A307 & SHALL BE GALVANIZED IN ACCORDANCE WITH ASTM A153 CLASS C & D.

ALL MATERIAL IN THE EXPANSION JOINT ASSEMBLY, INCLUDING ANCHOR STUDS & HARDWARE WILL BE PAID FOR AT THE PRICE BID FOR "EXPANSION DEVICE B-50-22", LF.

PRESERVE AND PROTECT EXISTING REINFORCEMENT. IF EXISTING BARS ARE SEVERELY CORRODED SEE ENGINEER FOR REPLACEMENT OPTIONS. IF EXISTING BARS ARE DAMAGED DURING CONCRETE REMOVAL OPERATIONS, THE CONTRACTOR WILL REPLACE REINFORCEMENT AT THE DIRECTION OF THE ENGINEER AT NO ADDITIONAL EXPENSE TO THE OWNER.

JOINT OPENINGS ARE MEASURED PERPENDICULAR TO JOINT. SMALL JOINT OPENINGS DUE TO HIGH TEMPERATURE AT TIME OF CONSTRUCTION MAY REQUIRE NEOPRENE STRIP SEAL INSTALLATION INTO STEEL EXTRUSTION PRIOR TO SETTING THE EXPANSION JOINT.

LEGEND

1. NEOPRENE STRIP SEAL (4 - INCH) AND STEEL EXTRUSIONS.
2. STUDS ⅝" DIA. X 6⅜" LONG AT 6" ALTERNATE CENTERS. WELD TO EXTRUSIONS AND BEND AS SHOWN AFTER WELDING.
2A. ½" THICK ANCHOR PLATE WITH ⅝" DIA. ROD (OR ALTERNATE STRIP SEAL ANCHOR). WELD ROD TO ANCHOR PLATE, WELD ANCHOR PLATE TO NO. 1 AT 1'-6" CENTERS BETWEEN GIRDERS.
3. ¾" DIA. THREADED ROD WITH 2 NUTS AND PLATE WASHERS. GROUT THREADED ROD INTO FIELD DRILLED HOLES ON ℄ GIRDER. ON ABUTMENT SIDE, GROUT THREADED ROD INTO FIELD DRILLED HOLES IN ABUTMENT BACKWALL AS SHOWN.
4. ¾" DIA. THREADED ROD WITH NUT. TACK WELD NUT TO NO. 5.
5. FABRICATE SUPPORT FROM 3" X ½" BAR AS SHOWN OR EQUIVALENT. ONE PER GIRDER PER SIDE. SHOP OR FIELD WELD TO NO. 1. IF FIELD WELDED, COVER WELDED AREAS WITH EPOXY-COATING MATERIAL. PROVIDE 1½" DIA. HOLE FOR NO. 3 & 1" DIA HOLE FOR NO.4
6. GALVANIZED PLATE ⅜" X 10½" X 2'-2" LONG WITH HOLES FOR NO. 7. BEND AS SHOWN.
7. ¾" DIA. X 1½" STAINLESS STEEL SOCKET FLAT HEAD SCREWS WITH ANTI-SEIZE LUBRICANT. PLACE IN COUNTERSUNK HOLE. RECESS 1/16" BELOW PLATE SURFACE.
8. ¾" DIA. X 4" GALVANIZED HEX HEAD BOLT. BEND 45°.
9. ¾" DIA. X 2¼" GALVANIZED THREADED COUPLING.
10. 1" X 5" SLOTTED COUNTERSUNK HOLE FOR NO. 7. PLACE SLOT PARALLEL TO DIRECTION OF MOVEMENT.

BLOCK OUT CONCRETE 2" EITHER SIDE OF JOINT OPENING.

JOINT OPENING DIM. ALONG SKEW PLUS ½"

ADHESIVE ANCHORS NO. 5 BAR EMBED 1'-0" IN CONCRETE. TURN 10" LEG AS NECESSARY TO FIT.

OPTIONAL CONSTRUCTION JOINT. 1" MIN BELOW EXISTING REINFORCEMENT.

* DIMENSIONS GIVEN ARE NORMAL TO ℄ OF SUBSTRUCTURE UNIT.

⚠ TEMPERATURE TABLE

SHADED UNDERSIDE DECK TEMP. (°F)	JOINT OPENING (NORMAL TO JT.)
90°	1 5/16"
80°	1⅜"
70°	1⅝"
60°	1¾"
50°	1⅞"
40°	2 1/16"
30°	2 3/16"

TEMPERATURE SETTING IS TAKEN FROM EXISTING 1989 PLANS.

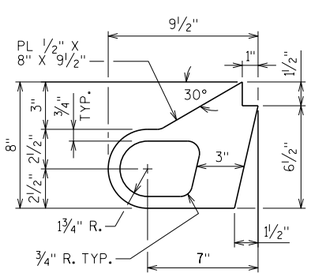

ALTERNATE STRIP SEAL ANCHOR

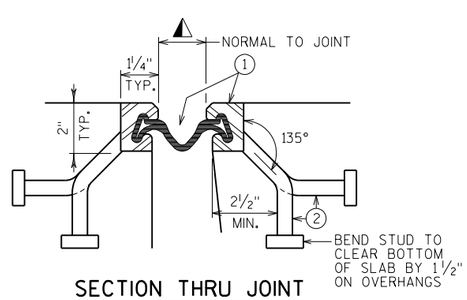

SECTION THRU JOINT

EXTERIOR GIRDER TO EDGE OF DECK AND AT PARAPETS

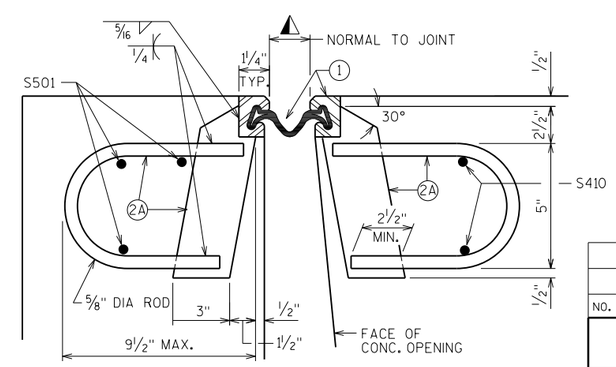

SECTION THRU JOINT AT ABUTMENT

ROADWAY TRAFFIC AREA BETWEEN EXTERIOR GIRDERS.

NO.	DATE	REVISION	BY

STATE OF WISCONSIN
DEPARTMENT OF TRANSPORTATION

STRUCTURE B-50-22

DRAWN BY JRM | PLANS CK'D. MDR

EXPANSION JOINT DETAILS 1

SHEET 4 OF 6

8

8

STATE PROJECT NUMBER

1610-44-62

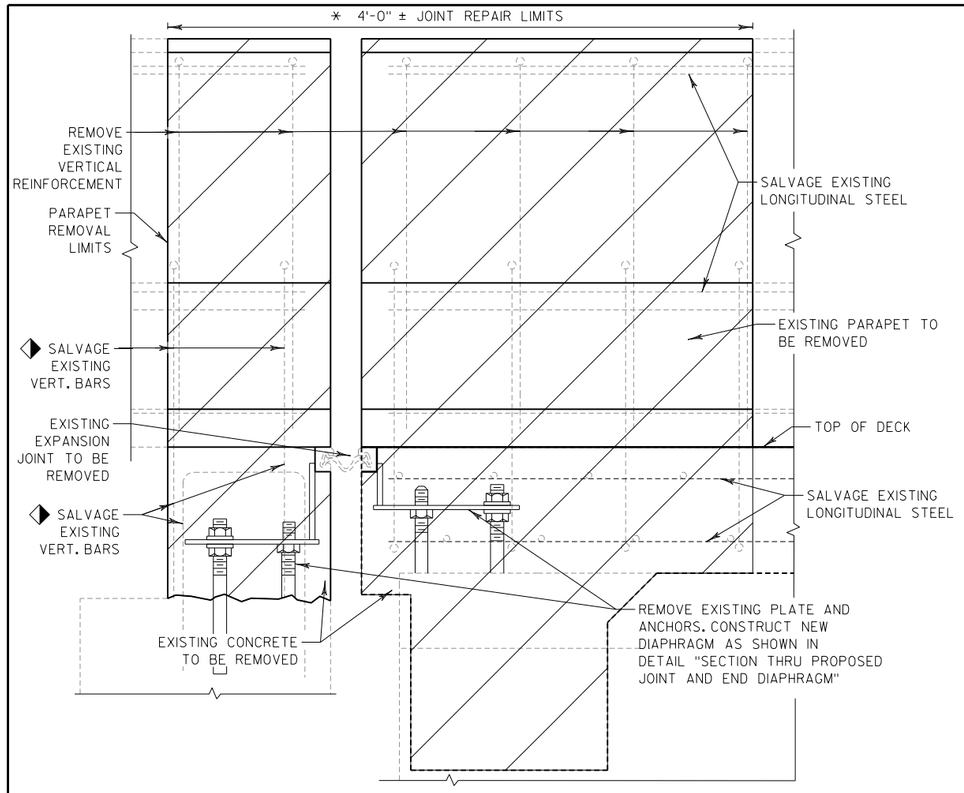

JOINT REMOVAL LIMITS

HATCHED AREA IS CONCRETE TO BE REMOVED

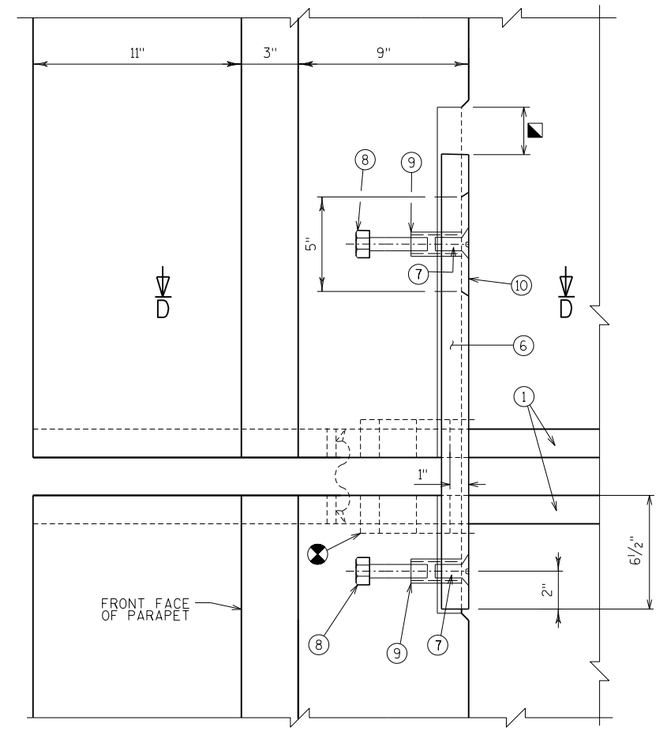

PLAN AT PARAPET

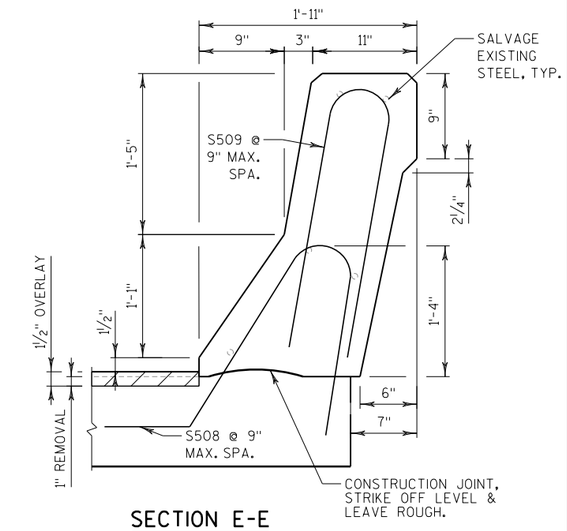

SECTION E-E

SLOPE FACE PARAPET "A"

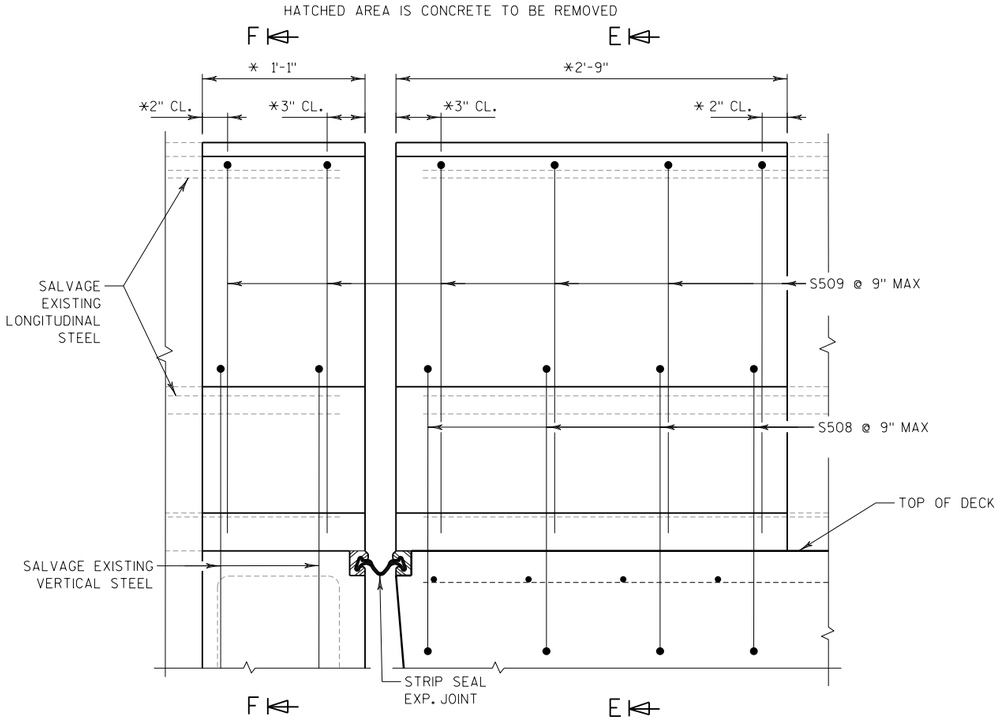

PARAPET REPLACEMENT PLAN

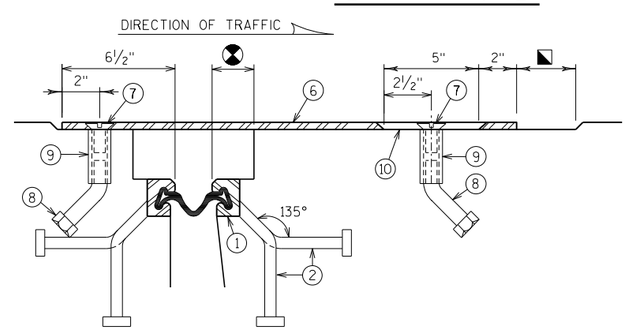

SECTION C-C

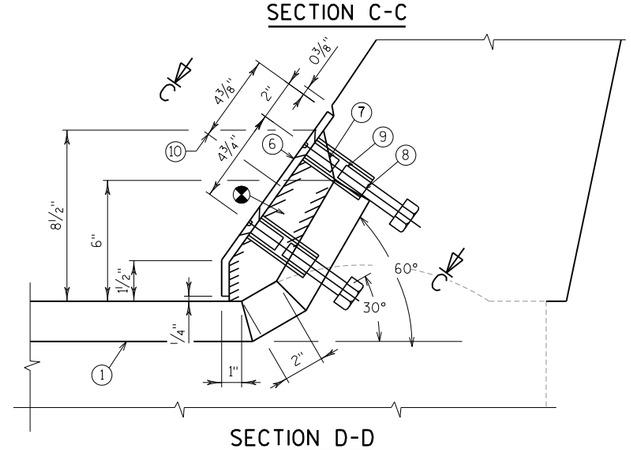

SECTION D-D

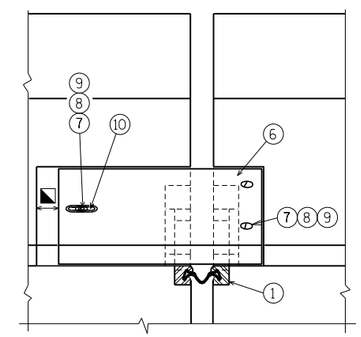

VIEW OF PARAPET PLATE FROM ROADWAY

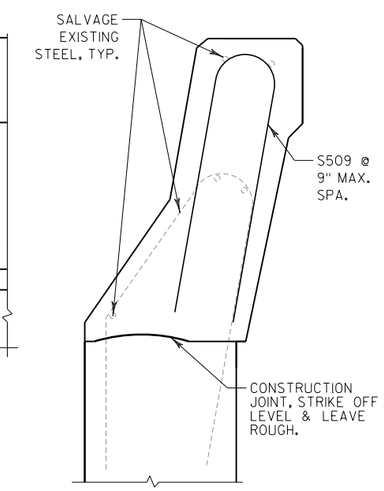

SECTION F-F

NOTES:

FOR NOTES AND LEGEND SEE "EXPANSION JOINT DETAILS 1" SHEET

NO.	DATE	REVISION	BY

STATE OF WISCONSIN
DEPARTMENT OF TRANSPORTATION

STRUCTURE B-50-22

DRAWN BY JRM | PLANS CK'D. MDR

EXPANSION JOINT DETAILS 2

SHEET 5 OF 6

123

8

8

STATE PROJECT NUMBER

1610-44-62

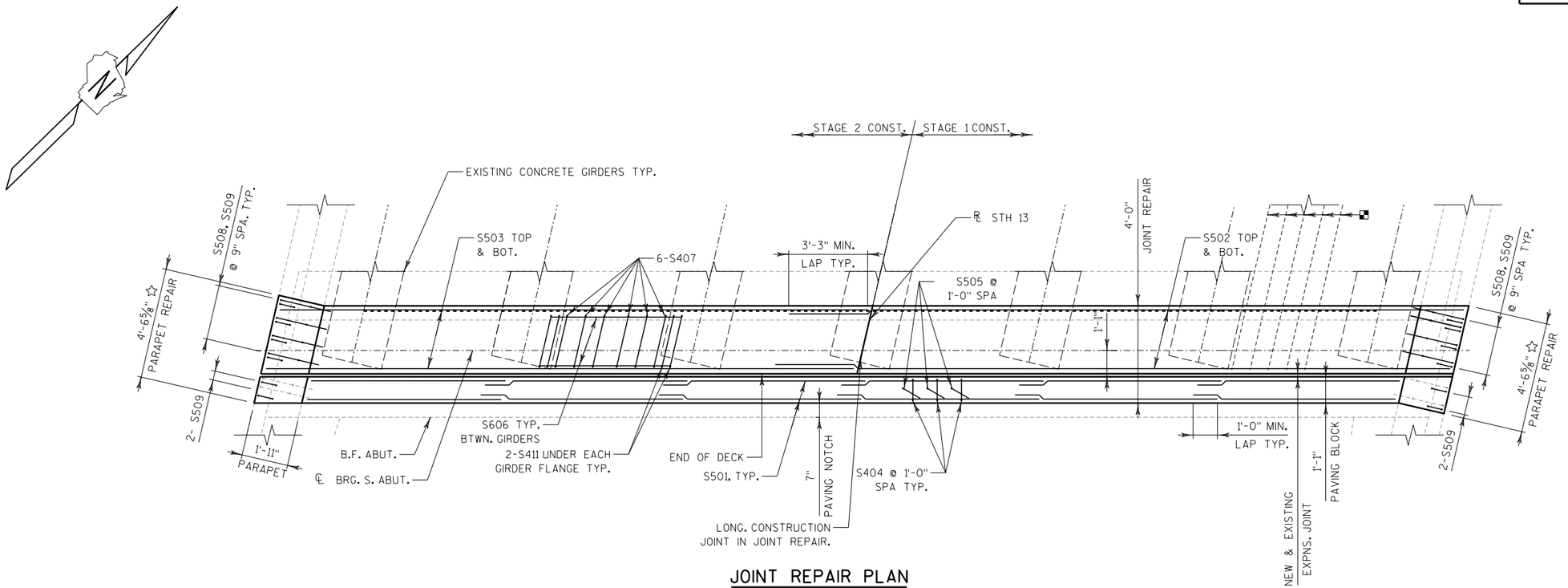

JOINT REPAIR PLAN

SOUTH ABUTMENT SHOWN, NORTH ABUTMENT SIMILAR

NOTES:

SEE SHEET 4 AND 5 FOR SECTIONS THROUGH JOINT AT ABUTMENT AND SECTIONS THROUGH PARAPETS.

SALVAGE EXISTING LONGITUDINAL DECK AND PARAPET REINFORCEMENT AND EXTEND FULL LENGTH INTO NEW WORK.

☆ EXTENT OF PARAPET REMOVAL AND REPLACEMENT.

▲ DENOTES ADHESIVE ANCHORS NO. 5 BAR.

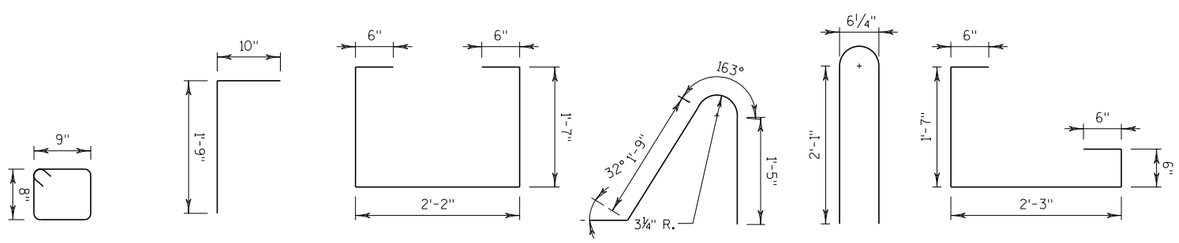

BILL OF BARS

BAR MARK	COAT	NO.	LENGTH	BENT	LOCATION
S501	X	36	8'-6"		PAVING BLOCK HORIZONTAL
S502	X	16	27'-7"		STAGE 1 DECK TRANS.
S503	X	16	24'-2"		STAGE 2 DECK TRANS.
S404	X	92	3'-4"	X	PAVING BLOCK STIRRUPS
S505	X	92	2'-6"	X	PAVING BLOCK ANCHOR
S606	X	60	5'-11"		DIAPHRAGM HORIZ.
S407	X	72	6'-1"	X	DIAPHRAGM STIRRUP
S508	X	16	4'-9"	X	PARAPETS VERTICAL
S509	X	24	5'-0"	X	PARAPETS VERTICAL
S410	X	24	6'-3"		EXPANSION JOINT HORIZONTAL
S411	X	48	5'-0"	X	DIAPHRAGM STIRRUP

NO.	DATE	REVISION	BY

STATE OF WISCONSIN
DEPARTMENT OF TRANSPORTATION

STRUCTURE B-50-22

DRAWN BY JRM PLANS CK'D. MDR

EXPANSION JOINT DETAILS 3

SHEET 6 OF 6

124

8

8

B-50-21, STH 13 STA 1254+32 - STA 1256+00 RT (STAGE 1)

STATION	DISTANCE	AREA (SF)		INCREMENTAL VOL (CY) (UNADJUSTED)		CUMULATIVE VOL (CY)		
		CUT	FILL	CUT NOTE 1	FILL NOTE 2	CUT 1.00 NOTE 1	EXPANDED FILL 1.25 NOTE 3	MASS ORDINATE NOTE 4
1254+32	0	22.2	0.0	0	0	0	0	0
1254+44	12	24.2	0.0	10	0	10	0	10
1254+50	6	24.7	0.0	5	0	15	0	15
1254+74	24	41.3	0.0	30	0	45	0	45
1254+84	10	56.2	0.0	17	0	62	0	62
1254+92	8	55.7	0.0	17	0	79	0	79
1254+99	7	44.2	0.0	14	0	93	0	93
1255+00	1	60.1	0.0	2	0	95	0	95
1255+15	15	45.5	0.0	29	0	124	0	124
1255+24	9	41.8	0.0	15	0	139	0	139
1255+50	26	38.4	0.2	38	0	177	0	177
1255+85	35	33.3	12.7	46	8	223	10	213
1256+00	15	29.0	0.0	17	4	240	15	225
		COLUMN TOTALS		240	12			

B-50-21, STH 13 STA 1257+41 - STA 1259+94 RT (STAGE 1)

STATION	DISTANCE	AREA (SF)		INCREMENTAL VOL (CY) (UNADJUSTED)		CUMULATIVE VOL (CY)		
		CUT	FILL	CUT NOTE 1	FILL NOTE 2	CUT 1.00 NOTE 1	EXPANDED FILL 1.25 NOTE 3	MASS ORDINATE NOTE 4
1257+41	0	30.1	0.0	0	0	0	0	0
1257+50	9	30.9	0.0	10	0	10	0	10
1257+56	6	39.8	0.6	8	1	18	1	17
1258+00	44	40.3	0.0	65	0	83	1	82
1258+17	17	22.3	0.0	19	0	102	1	101
1258+42	25	23.0	0.1	21	0	123	1	122
1258+50	8	22.8	0.4	7	0	130	1	129
1258+54	4	22.7	0.6	4	1	134	3	132
1258+67	13	22.4	1.2	10	1	144	4	140
1258+79	12	22.3	0.4	10	0	154	4	150
1259+00	21	23.0	0.0	17	0	171	4	167
1259+04	4	23.5	0.0	4	0	175	4	171
1259+41	37	30.7	0.0	37	0	212	4	208
1259+50	9	30.3	0.0	11	0	223	4	219
1259+84	34	25.4	0.0	35	0	258	4	254
1259+90	6	23.4	0.0	6	0	264	4	260
1259+94	4	22.4	0.0	4	0	268	4	264
		COLUMN TOTALS		268	3			

NOTES:	
1 - CUT	CUT INCLUDES SALVAGED/UNUSABLE PAVEMENT MATERIAL. SALVAGED UNUSABLE PAVEMENT MATERIAL IS CALCULATED ON THE SUMMARY SHEET IN SECTION 3 OF THE PLANS.
2 - FILL	FILL DOES NOT INCLUDE UNUSABLE PAVEMENT EXC VOLUME, SALVAGED UNUSABLE PAVEMENT MATERIAL IS CALCULATED ON THE SUMMARY SHEET IN SECTION 3 OF THE PLANS.
3 - EXPANDED FILL	(UNEXPANDED FILL) * (FILL FACTOR)
4 - MASS ORDINATE	CUT - (EXPANDED FILL); PLUS INDICATES AN EXCESS OF MATERIAL. SEE SUMMARY SHEET IN SECTION 3 FOR MASS ORDINATE ACCOUNTING FOR SALVAGED UNUSABLE PAVEMENT MATERIAL.

B-50-21, STH 13 STA 1254+32 - STA 1256+00 LT (STAGE 2)

STATION	DISTANCE	AREA (SF)		INCREMENTAL VOL (CY) (UNADJUSTED)		CUMULATIVE VOL (CY)		
		CUT	FILL	CUT NOTE 1	FILL NOTE 2	CUT 1.00 NOTE 1	EXPANDED FILL 1.25 NOTE 3	MASS ORDINATE NOTE 4
1254+32	0	11.0	0.0	0	0	0	0	0
1254+44	12	10.9	0.0	5	0	5	0	5
1254+50	6	11.5	0.2	2	0	7	0	7
1254+74	24	13.5	3.9	11	2	18	3	16
1254+84	10	14.3	1.6	5	1	23	4	19
1254+92	8	14.8	0.6	4	0	27	4	23
1254+99	7	15.1	0.4	4	0	31	4	27
1255+00	1	45.5	0.0	1	0	32	4	28
1255+15	15	44.6	0.0	24	0	56	4	52
1255+24	9	43.9	0.0	15	0	71	4	67
1255+50	26	41.7	0.0	41	0	112	4	108
1255+85	35	34.0	0.2	49	0	161	4	157
1256+00	15	28.8	0.0	17	0	178	4	174
		COLUMN TOTALS		178	3			

B-50-21, STH 13 STA 1257+41 - STA 1259+94 LT (STAGE 2)

STATION	DISTANCE	AREA (SF)		INCREMENTAL VOL (CY) (UNADJUSTED)		CUMULATIVE VOL (CY)		
		CUT	FILL	CUT NOTE 1	FILL NOTE 2	CUT 1.00 NOTE 1	EXPANDED FILL 1.25 NOTE 3	MASS ORDINATE NOTE 4
1257+41	0	30.3	0.0	0	0	0	0	0
1257+50	9	30.8	0.0	10	0	10	0	10
1257+56	6	36.5	12.7	8	1	18	1	17
1258+00	44	41.3	0.1	63	10	81	14	67
1258+17	17	21.9	0.2	20	0	101	14	87
1258+42	25	22.0	0.9	20	0	121	14	107
1258+50	8	21.8	0.6	7	0	128	14	114
1258+54	4	21.9	1.2	3	0	131	14	117
1258+67	13	22.0	6.8	10	2	141	16	125
1258+79	12	21.8	13.4	10	4	151	21	130
1259+00	21	21.1	27.2	17	16	168	41	127
1259+04	4	21.1	29.3	3	4	171	46	125
1259+41	37	22.1	15.3	29	30	200	84	116
1259+50	9	22.3	9.7	8	4	208	89	119
1259+84	34	25.8	0.0	30	6	238	96	142
1259+90	6	10.2	0.0	4	0	242	96	146
1259+94	4	4.5	0.0	1	0	243	96	147
		COLUMN TOTALS		243	77			

NOTES:	
1 - CUT	CUT INCLUDES SALVAGED/UNUSABLE PAVEMENT MATERIAL. SALVAGED UNUSABLE PAVEMENT MATERIAL IS CALCULATED ON THE SUMMARY SHEET IN SECTION 3 OF THE PLANS.
2 - FILL	FILL DOES NOT INCLUDE UNUSABLE PAVEMENT EXC VOLUME, SALVAGED UNUSABLE PAVEMENT MATERIAL IS CALCULATED ON THE SUMMARY SHEET IN SECTION 3 OF THE PLANS.
3 - EXPANDED FILL	(UNEXPANDED FILL) * (FILL FACTOR)
4 - MASS ORDINATE	CUT - (EXPANDED FILL); PLUS INDICATES AN EXCESS OF MATERIAL. SEE SUMMARY SHEET IN SECTION 3 FOR MASS ORDINATE ACCOUNTING FOR SALVAGED UNUSABLE PAVEMENT MATERIAL.

B-50-22, STH 13 STA 1480+10 - STA 1483+23 RT (STAGE 1)

STATION	DISTANCE	AREA (SF)		INCREMENTAL VOL (CY) (UNADJUSTED)		CUMULATIVE VOL (CY)		
		CUT	FILL	CUT NOTE 1	FILL NOTE 2	CUT 1.00 NOTE 1	EXPANDED FILL 1.25 NOTE 3	MASS ORDINATE NOTE 4
1480+10	0	19.7	0.0	0	0	0	0	0
1480+36	26	18.3	1.4	18	1	18	1	17
1480+50	14	17.4	3.2	9	1	27	3	25
1480+77	27	17.3	5.9	18	5	45	9	36
1480+82	5	17.7	5.9	3	1	48	10	38
1481+00	18	19.6	5.6	13	4	61	15	46
1481+22	22	21.9	4.4	17	4	78	20	58
1481+47	25	23.8	0.0	21	2	99	23	77
1481+50	3	24.2	0.0	3	0	102	23	80
1481+72	22	26.0	0.0	20	0	122	23	100
1481+74	2	26.1	0.0	2	0	124	23	102
1481+99	25	26.2	0.0	24	0	148	23	126
1482+00	1	26.1	0.0	1	0	149	23	127
1482+24	24	26.7	0.0	24	0	173	23	151
1482+50	26	25.2	0.0	25	0	198	23	176
1482+95	45	42.5	0.0	56	0	254	23	232
1483+00	5	41.6	0.0	8	0	262	23	240
1483+13	13	32.8	0.0	18	0	280	23	258
1483+18	5	35.5	0.0	7	0	287	23	265
1483+23	5	1.8	0.0	4	0	291	23	269
		COLUMN TOTALS		291	18			

B-50-22, STH 13 STA 1487+13 - STA 1489+63 RT (STAGE 1)

STATION	DISTANCE	AREA (SF)		INCREMENTAL VOL (CY) (UNADJUSTED)		CUMULATIVE VOL (CY)		
		CUT	FILL	CUT NOTE 1	FILL NOTE 2	CUT 1.00 NOTE 1	EXPANDED FILL 1.25 NOTE 3	MASS ORDINATE NOTE 4
1487+13	0	0.0	0.0	0	0	0	0	0
1487+18	5	35.3	0.0	3	0	3	0	3
1487+31	13	33.1	0.0	16	0	19	0	19
1487+36	5	38.6	4.1	7	0	26	0	26
1487+50	14	22.7	0.0	16	1	42	1	41
1487+69	19	26.1	0.0	17	0	59	1	58
1487+95	26	24.8	0.0	24	0	83	1	82
1487+97	2	24.6	0.0	2	0	85	1	84
1488+00	3	24.3	0.0	3	0	88	1	87
1488+20	20	25.3	0.0	18	0	106	1	105
1488+22	2	25.8	0.0	2	0	108	1	107
1488+45	23	24.8	0.1	21	0	129	1	128
1488+47	2	24.8	0.1	2	0	131	1	130
1488+54	7	26.8	0.0	7	0	138	1	137
1489+00	46	24.3	0.0	44	0	182	1	181
1489+35	35	20.1	0.0	29	0	211	1	210
1489+50	15	19.8	0.0	11	0	222	1	221
1489+63	13	19.8	0.0	10	0	232	1	231
		COLUMN TOTALS		232	1			

NOTES:	
1 - CUT	CUT INCLUDES SALVAGED/UNUSABLE PAVEMENT MATERIAL. SALVAGED UNUSABLE PAVEMENT MATERIAL IS CALCULATED ON THE SUMMARY SHEET IN SECTION 3 OF THE PLANS.
2 - FILL	FILL DOES NOT INCLUDE UNUSABLE PAVEMENT EXC VOLUME, SALVAGED UNUSABLE PAVEMENT MATERIAL IS CALCULATED ON THE SUMMARY SHEET IN SECTION 3 OF THE PLANS.
3 - EXPANDED FILL	(UNEXPANDED FILL) * (FILL FACTOR)
4 - MASS ORDINATE	CUT - (EXPANDED FILL); PLUS INDICATES AN EXCESS OF MATERIAL. SEE SUMMARY SHEET IN SECTION 3 FOR MASS ORDINATE ACCOUNTING FOR SALVAGED UNUSABLE PAVEMENT MATERIAL.

B-50-22, STH 13 STA 1480+77 - STA 1483+18 LT (STAGE 2)

STATION	DISTANCE	AREA (SF)		INCREMENTAL VOL (CY) (UNADJUSTED)		CUMULATIVE VOL (CY)		
		CUT	FILL	CUT NOTE 1	FILL NOTE 3	CUT 1.00 NOTE 1	EXPANDED FILL 1.25	MASS ORDINATE NOTE 8
1480+77	0	21.7	0.5	0	0	0	0	0
1480+82	5	21.7	0.4	4	0	4	0	4
1481+00	18	22.4	0.5	15	0	19	0	19
1481+22	22	23.4	1.0	18	1	37	1	36
1481+47	25	36.7	2.4	28	2	65	4	61
1481+50	3	37.3	3.3	5	0	70	4	66
1481+72	22	40.4	4.9	31	3	101	8	94
1481+74	2	40.9	5.1	4	0	105	8	98
1481+99	25	31.6	5.0	34	5	139	14	125
1482+00	1	31.4	5.0	1	0	140	14	126
1482+24	24	25.0	0.0	25	2	165	16	149
1482+50	26	23.4	39.3	22	19	187	40	147
1482+95	45	38.3	0.0	51	33	238	81	157
1483+00	5	36.1	4.3	7	0	245	81	164
1483+13	13	33.0	0.0	17	1	262	83	180
1483+18	5	0.0	0.0	3	0	265	83	183
		COLUMN TOTALS		265	66			

B-50-22, STH 13 STA 1487+08 - STA 1488+54 LT (STAGE 2)

STATION	DISTANCE	AREA (SF)		INCREMENTAL VOL (CY) (UNADJUSTED)		CUMULATIVE VOL (CY)		
		CUT	FILL	CUT NOTE 1	FILL NOTE 2	CUT 1.00 NOTE 1	EXPANDED FILL 1.25 NOTE 3	MASS ORDINATE NOTE 4
1487+08	0	0.0	0.0	0	0	0	0	0
1487+13	5	36.0	0.0	3	0	3	0	3
1487+18	5	35.2	0.0	7	0	10	0	10
1487+31	13	40.6	1.6	18	0	28	0	28
1487+36	5	37.4	2.6	8	0	36	0	36
1487+50	14	20.0	1.8	15	1	51	1	50
1487+69	19	21.6	0.0	15	1	66	3	64
1487+95	26	23.6	1.8	22	1	88	4	84
1487+97	2	23.9	0.8	2	0	90	4	86
1488+00	3	24.3	0.6	3	0	93	4	89
1488+20	20	25.7	16.4	18	6	111	11	100
1488+22	2	26.0	15.1	2	1	113	13	101
1488+45	23	32.5	0.0	25	6	138	20	118
1488+47	2	33.1	0.0	3	0	141	20	121
1488+54	7	33.8	0.0	9	0	150	20	130
		COLUMN TOTALS		150	16			

NOTES:	
1 - CUT	CUT INCLUDES SALVAGED/UNUSABLE PAVEMENT MATERIAL. SALVAGED UNUSABLE PAVEMENT MATERIAL IS CALCULATED ON THE SUMMARY SHEET IN SECTION 3 OF THE PLANS.
2 - FILL	FILL DOES NOT INCLUDE UNUSABLE PAVEMENT EXC VOLUME, SALVAGED UNUSABLE PAVEMENT MATERIAL IS CALCULATED ON THE SUMMARY SHEET IN SECTION 3 OF THE PLANS.
3 - EXPANDED FILL	(UNEXPANDED FILL) * (FILL FACTOR)
4 - MASS ORDINATE	CUT - (EXPANDED FILL); PLUS INDICATES AN EXCESS OF MATERIAL. SEE SUMMARY SHEET IN SECTION 3 FOR MASS ORDINATE ACCOUNTING FOR SALVAGED UNUSABLE PAVEMENT MATERIAL.

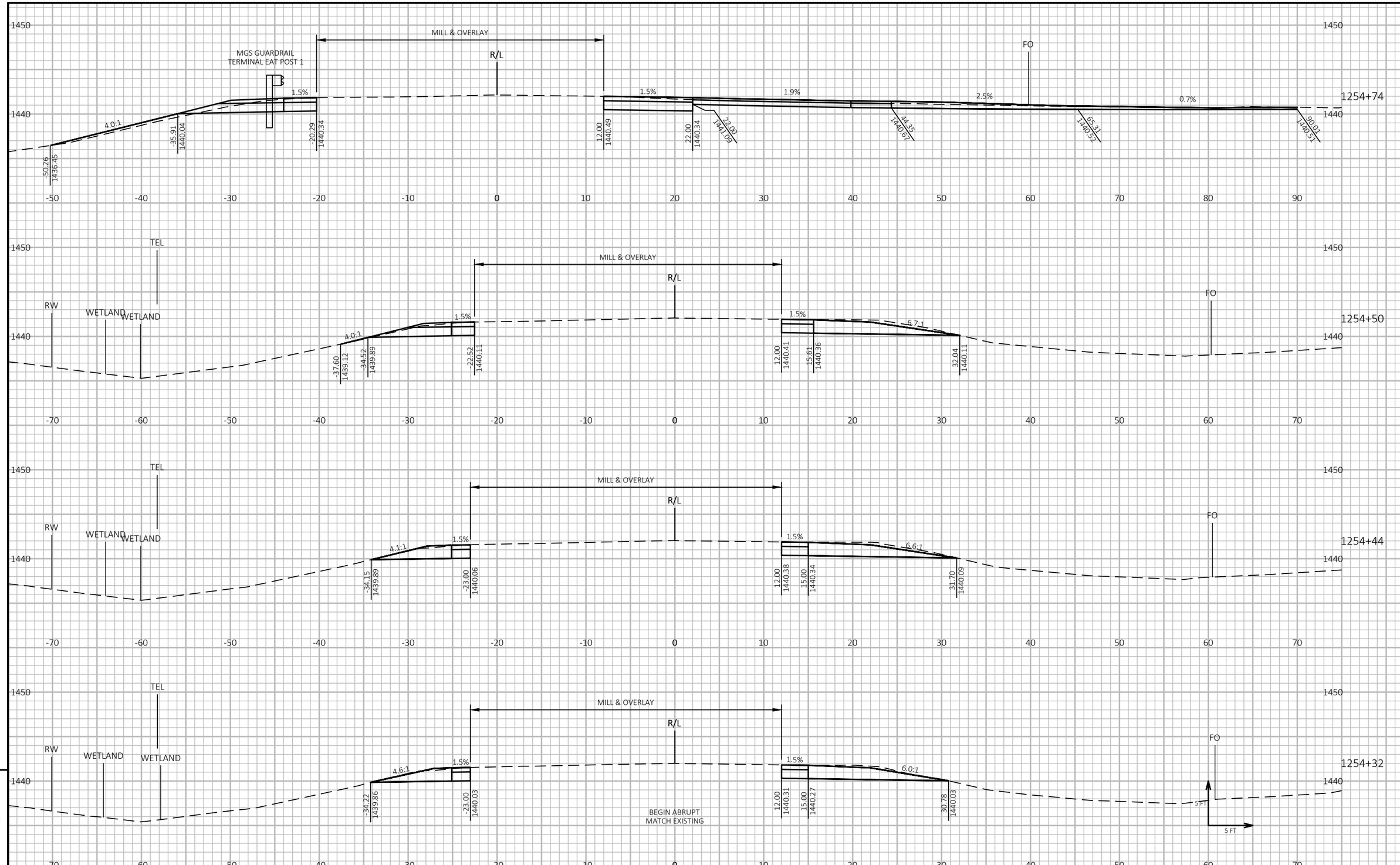

PROJECT NO: 1610-44-62	HWY: STH 13	COUNTY: PRICE	CROSS SECTIONS: STH 13 B-50-21	SHEET 129	E

FILE NAME : P:\52XX\5201.DP.19.STH13.PRC\CADDS\16104462\SHEETSPLAN\090201-XS.DWG
LAYOUT NAME - 01
PLOT DATE : 1/12/2021 2:40 PM
PLOT BY : DREW NELSON
PLOT NAME :
PLOT SCALE : 1 IN:10 FT HORZ. / 1 IN:10 FT VERT.
WISDOT/CADDS SHEET 49

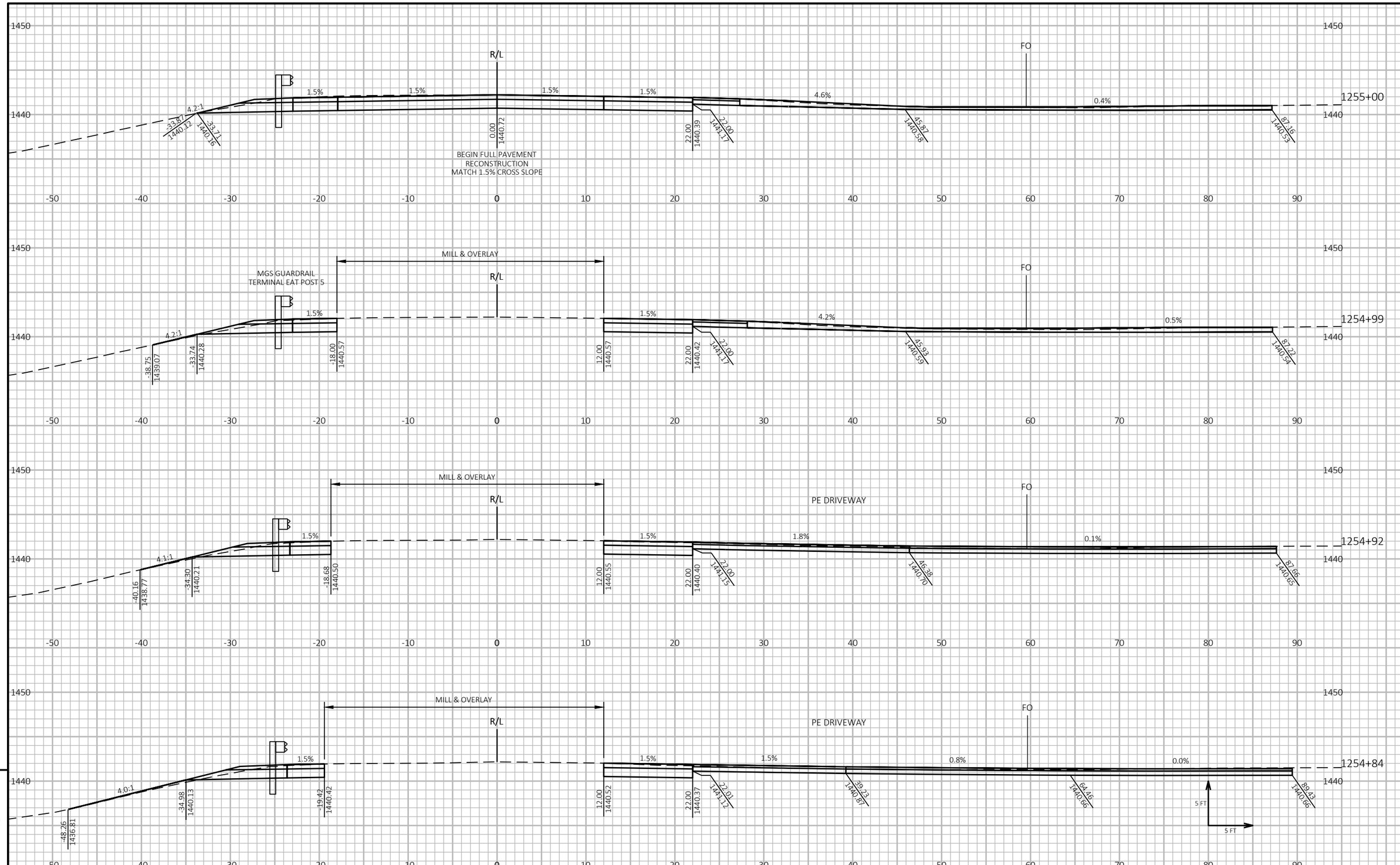

9

9

PROJECT NO: 1610-44-62	HWY: STH 13	COUNTY: PRICE	CROSS SECTIONS: STH 13 B-50-21	SHEET 130	E

FILE NAME : P:\52XX\5201.DP.19.STH13.PRC\CADDS\16104462\SHEETSPLAN\090201-XS.DWG
LAYOUT NAME - 02
PLOT DATE : 1/12/2021 2:40 PM
PLOT BY : DREW NELSON
PLOT NAME :
PLOT SCALE : 1 IN:10 FT HORZ. / 1 IN:10 FT VERT.
WISDOT/CADDS SHEET 49

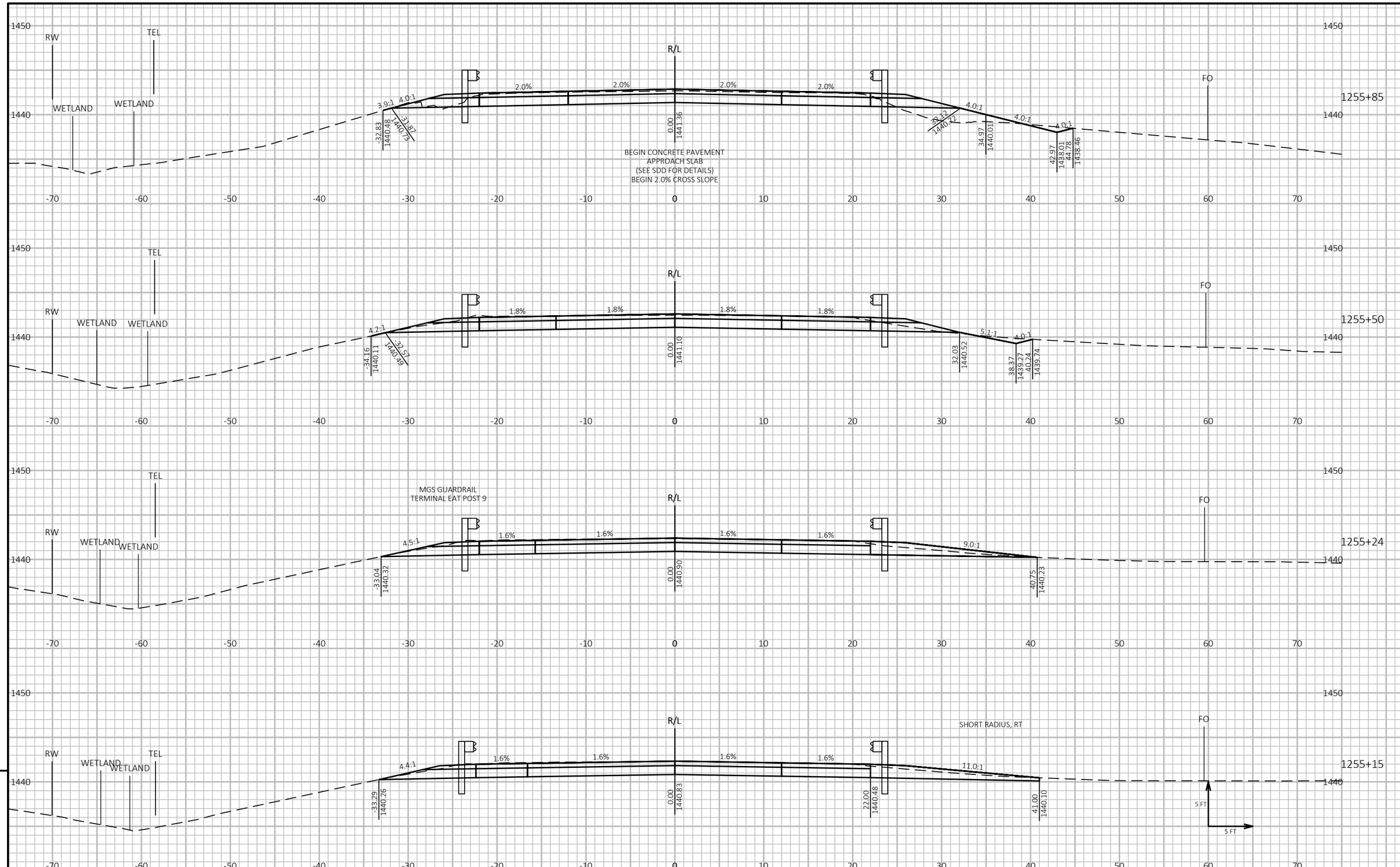

9

9

PROJECT NO: 1610-44-62	HWY: STH 13	COUNTY: PRICE	CROSS SECTIONS: STH 13 B-50-21	SHEET 131	E

FILE NAME : P:\52XX\5201.DP.19.STH13.PRC\CADDS\16104462\SHEETSPLAN\090201-XS.DWG
LAYOUT NAME - 03
PLOT DATE : 1/12/2021 2:40 PM
PLOT BY : DREW NELSON
PLOT NAME :
PLOT SCALE : 1 IN:10 FT HORZ. / 1 IN:10 FT VERT.
WISDOT/CADDS SHEET 49

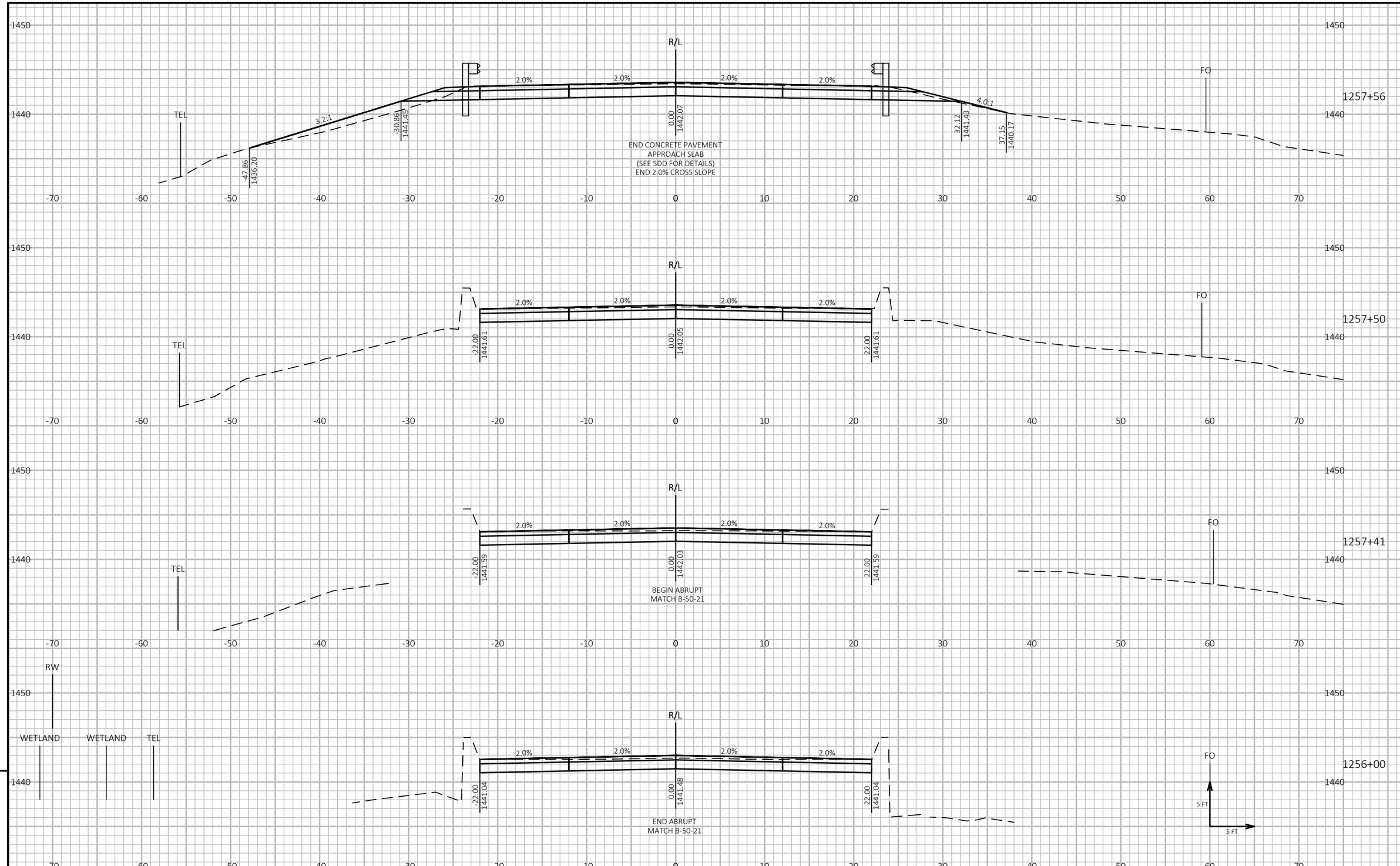

9

9

PROJECT NO: 1610-44-62	HWY: STH 13	COUNTY: PRICE	CROSS SECTIONS: STH 13 B-50-21	SHEET 132	E

FILE NAME : P:\52XX\5201.DP.19.STH13.PRC\CADDS\16104462\SHEETSPLAN\090201-XS.DWG
LAYOUT NAME - 04
PLOT DATE : 1/12/2021 2:40 PM
PLOT BY : DREW NELSON
PLOT NAME :
PLOT SCALE : 1 IN:10 FT HORZ. / 1 IN:10 FT VERT.
WISDOT/CADDS SHEET 49

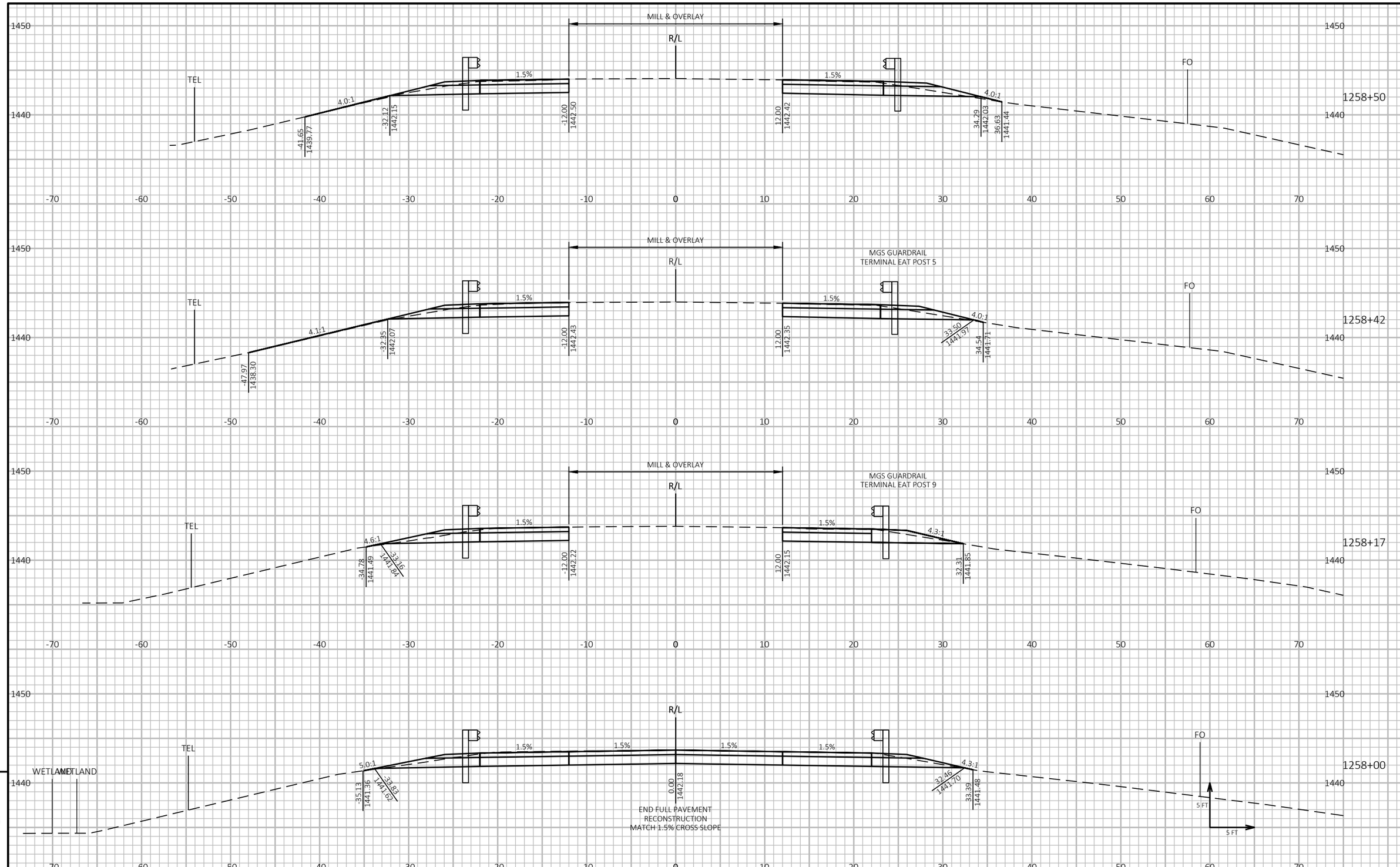

9

9

PROJECT NO: 1610-44-62	HWY: STH 13	COUNTY: PRICE	CROSS SECTIONS: STH 13 B-50-21	SHEET 133	E

FILE NAME : P:\52XX\5201.DP.19.STH13.PRC\CADDS\16104462\SHEETSPLAN\090201-XS.DWG
LAYOUT NAME - 05
PLOT DATE : 1/12/2021 2:40 PM
PLOT BY : DREW NELSON
PLOT NAME :
PLOT SCALE : 1 IN:10 FT HORZ. / 1 IN:10 FT VERT.
WISDOT/CADDS SHEET 49

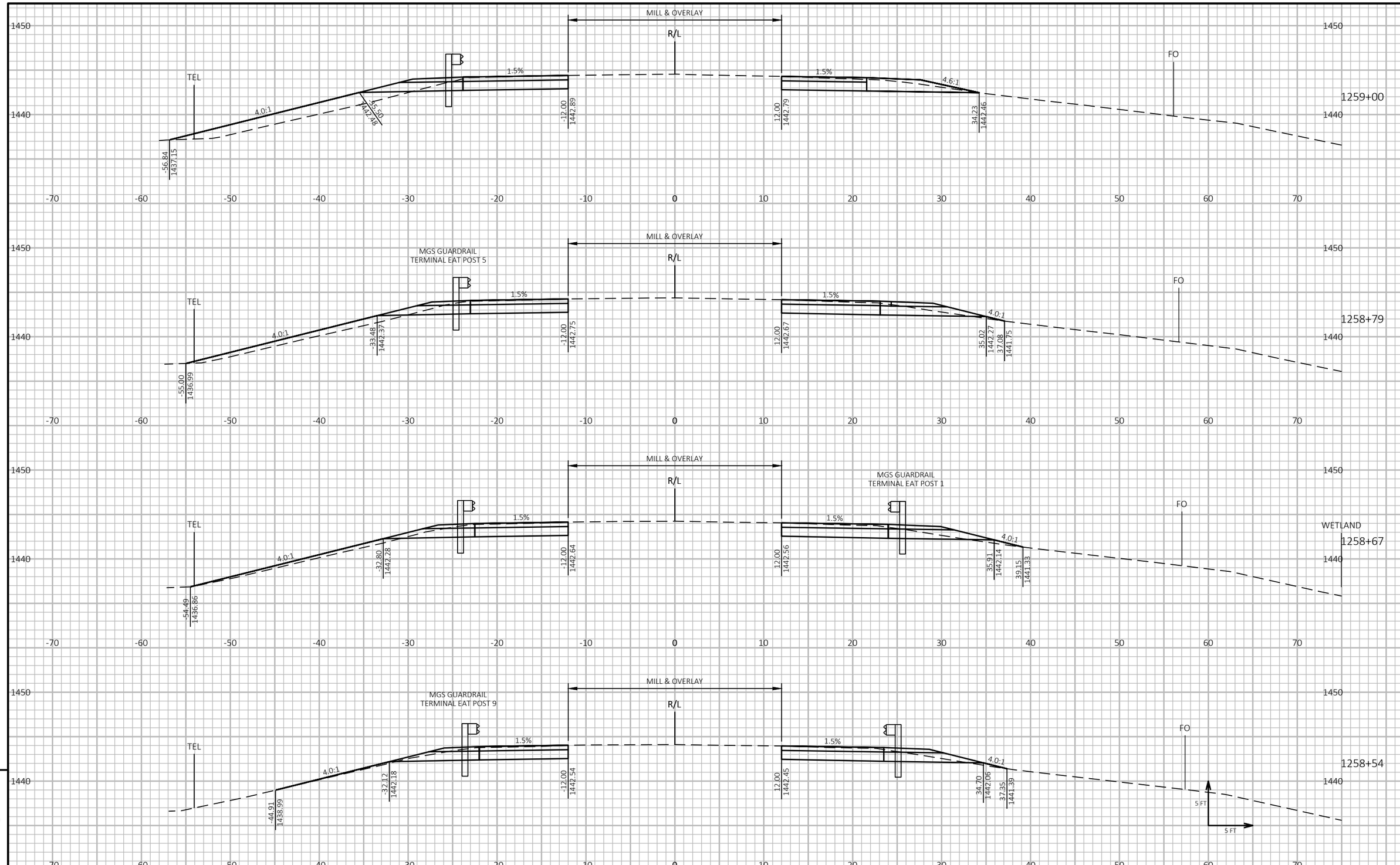

9

9

PROJECT NO: 1610-44-62	HWY: STH 13	COUNTY: PRICE	CROSS SECTIONS: STH 13 B-50-21	SHEET 134	E

FILE NAME : P:\52XX\5201.DP.19.STH13.PRC\CADDS\16104462\SHEETSPLAN\090201-XS.DWG
LAYOUT NAME - 06

PLOT DATE : 1/12/2021 2:40 PM

PLOT BY : DREW NELSON

PLOT NAME :

PLOT SCALE : 1 IN:10 FT HORZ. / 1 IN:10 FT VERT.

WISDOT/CADDS SHEET 49

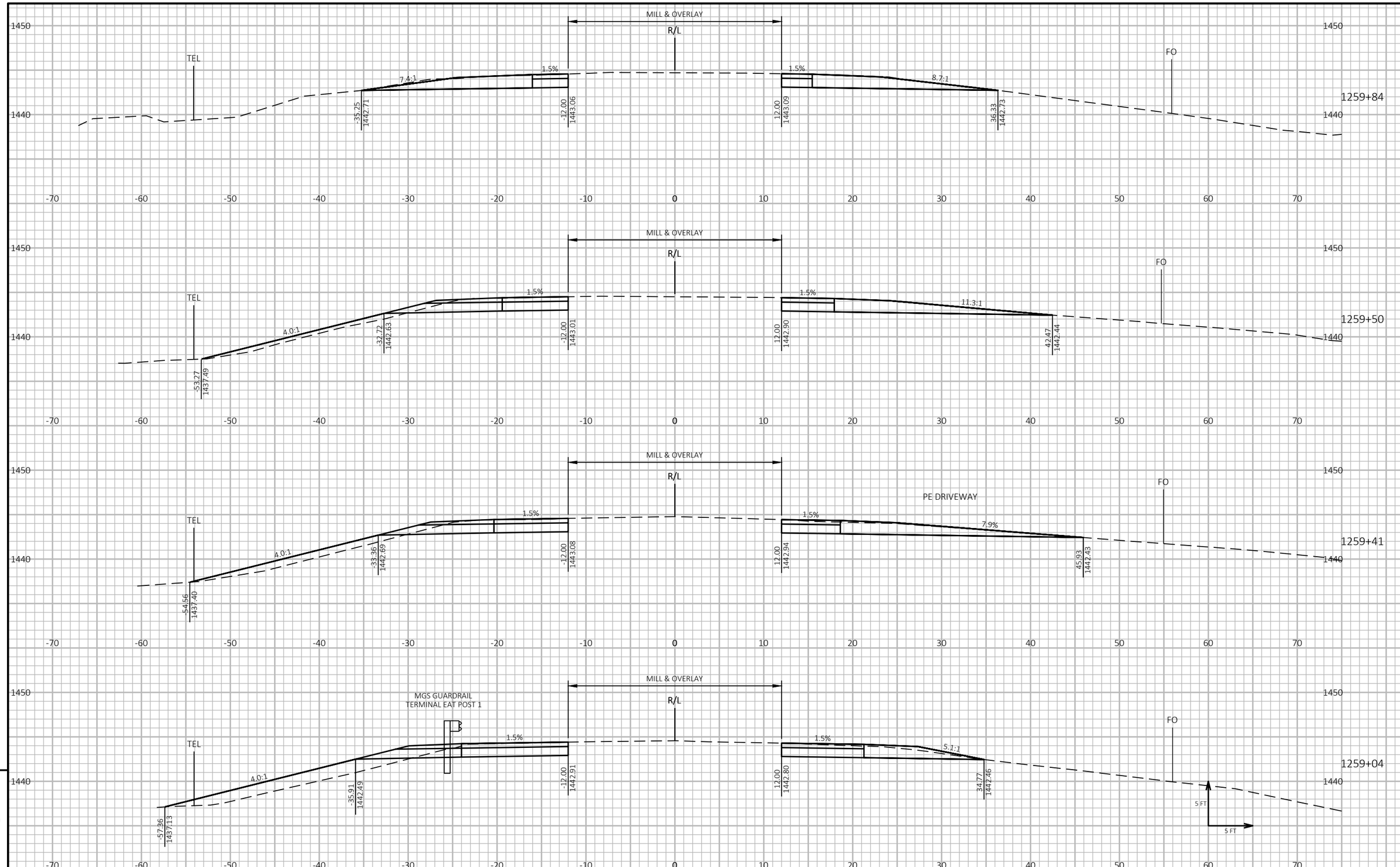

9

9

PROJECT NO: 1610-44-62	HWY: STH 13	COUNTY: PRICE	CROSS SECTIONS: STH 13 B-50-21	SHEET 135	E

FILE NAME : P:\52XX\5201.DP.19.STH13.PRC\CADDS\16104462\SHEETSPLAN\090201-XS.DWG
LAYOUT NAME - 07

PLOT DATE : 1/12/2021 2:40 PM PLOT BY : DREW NELSON PLOT NAME : **PLOT SCALE :** 1 IN:10 FT HORZ. / 1 IN:10 FT VERT.

WISDOT/CADDS SHEET 49

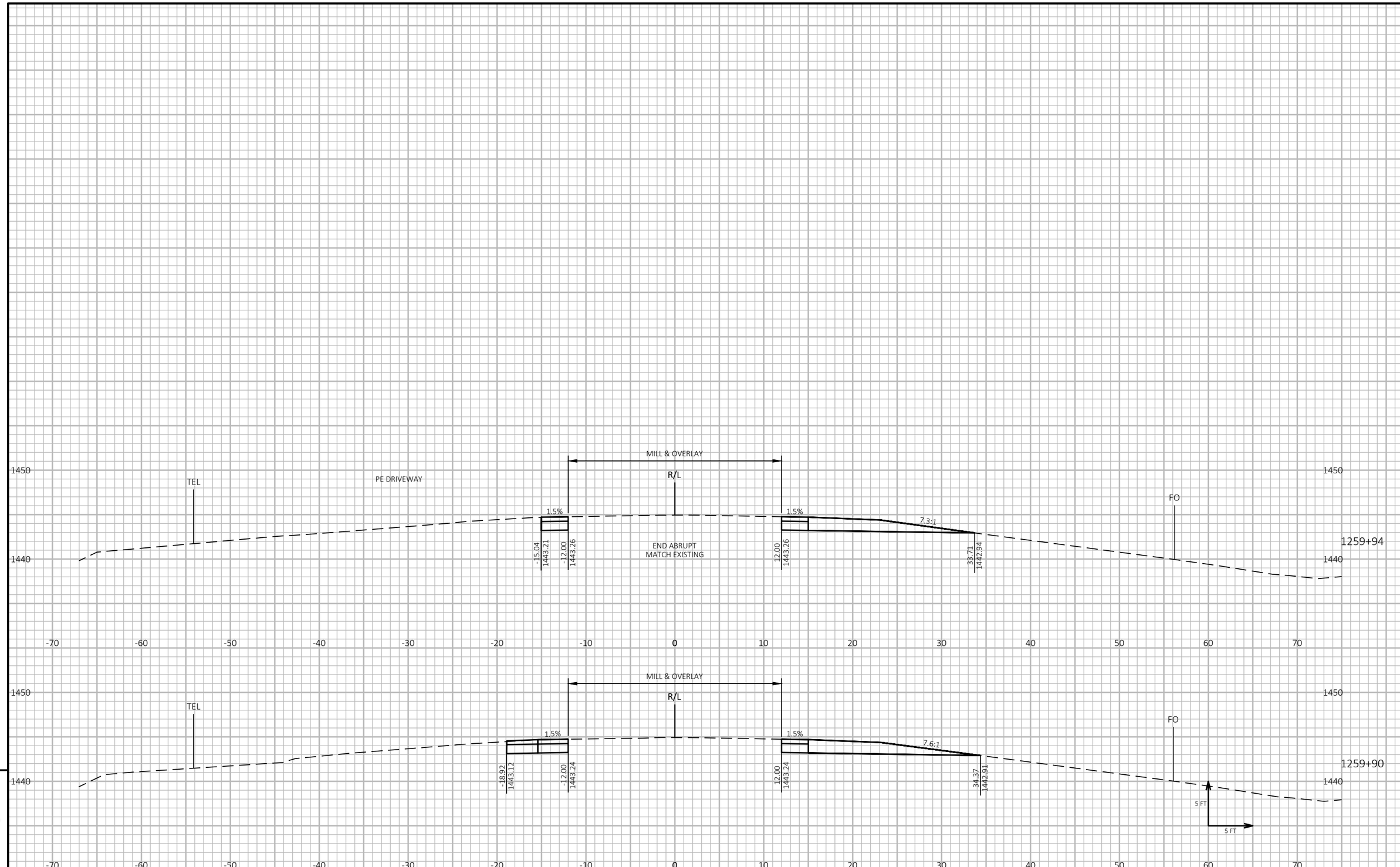

9

9

PROJECT NO: 1610-44-62	HWY: STH 13	COUNTY: PRICE	CROSS SECTIONS: STH 13 B-50-21	SHEET 136	E

FILE NAME : P:\52XX\5201.DP.19.STH13.PRC\CADDS\16104462\SHEETSPLAN\090201-XS.DWG
LAYOUT NAME - 08

PLOT DATE : 1/12/2021 2:41 PM PLOT BY : DREW NELSON PLOT NAME : **PLOT SCALE :** 1 IN:10 FT HORZ. / 1 IN:10 FT VERT.

WISDOT/CADDS SHEET 49

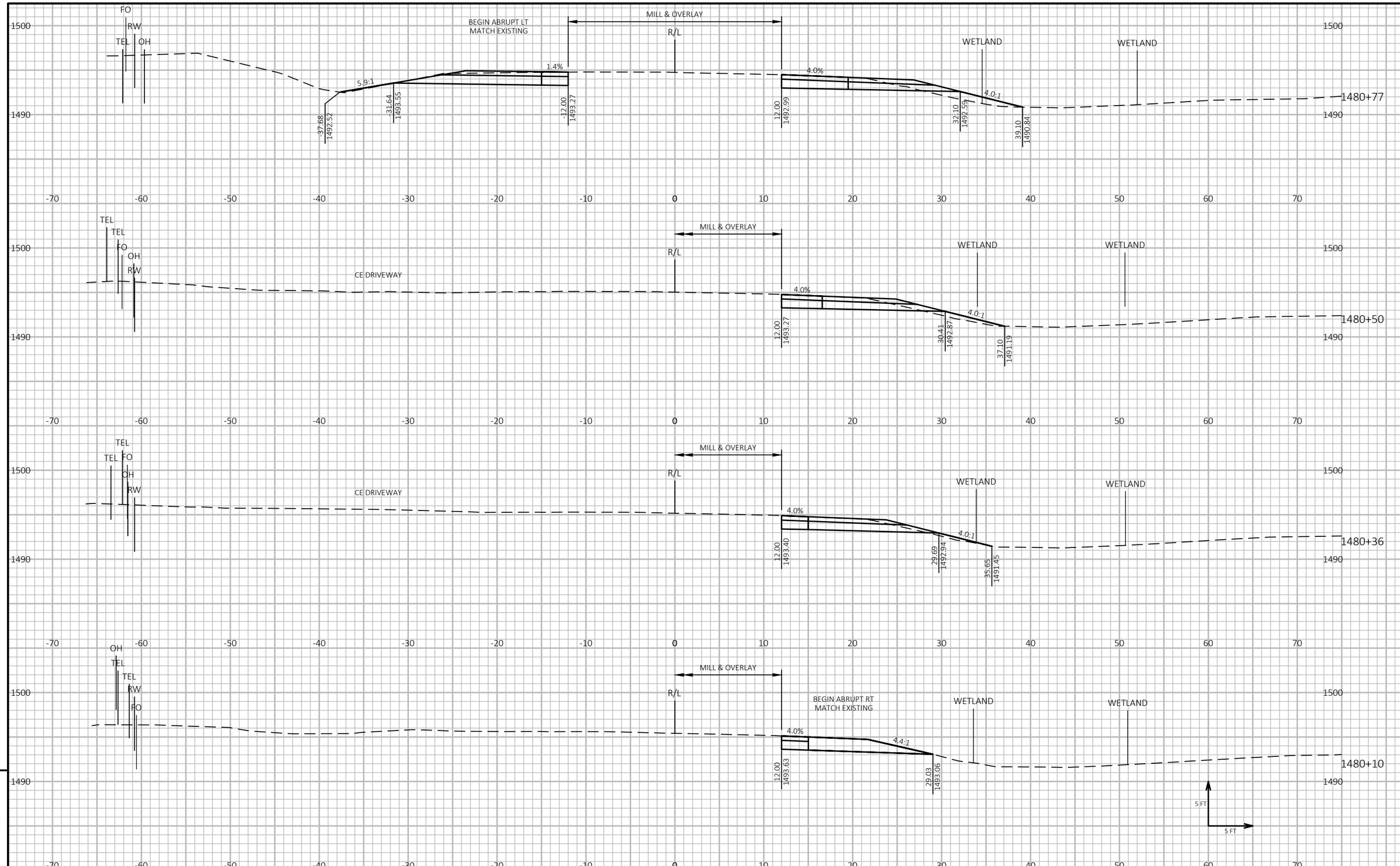

9

9

PROJECT NO: 1610-44-62	HWY: STH 13	COUNTY: PRICE	CROSS SECTIONS: STH 13 B-50-22	SHEET 137	E

FILE NAME : P:\52XX\5201.DP.19.STH13.PRC\CADDS\16104462\SHEETSPLAN\090202-XS.DWG
LAYOUT NAME - 01
PLOT DATE : 1/12/2021 2:41 PM
PLOT BY : DREW NELSON
PLOT NAME :
PLOT SCALE : 1 IN:10 FT HORZ. / 1 IN:10 FT VERT.
WISDOT/CADDS SHEET 49

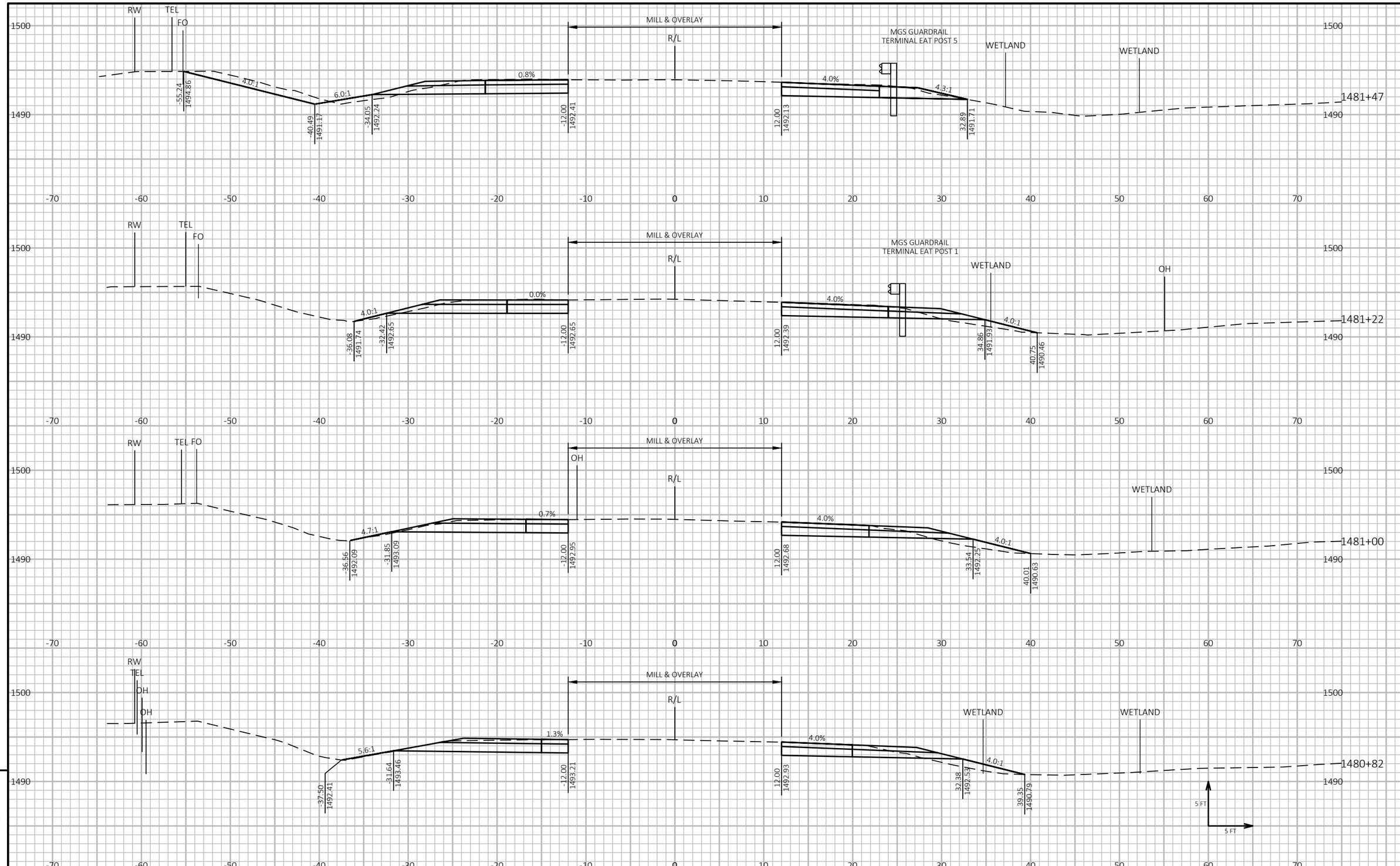

9

9

PROJECT NO: 1610-44-62	HWY: STH 13	COUNTY: PRICE	CROSS SECTIONS: STH 13 B-50-22	SHEET 138	E

FILE NAME : P:\52XX\5201.DP.19.STH13.PRC\CADDS\16104462\SHEETSPLAN\090202-XS.DWG
LAYOUT NAME - 02
PLOT DATE : 1/12/2021 2:41 PM
PLOT BY : DREW NELSON
PLOT NAME :
PLOT SCALE : 1 IN:10 FT HORZ. / 1 IN:10 FT VERT.
WISDOT/CADDS SHEET 49

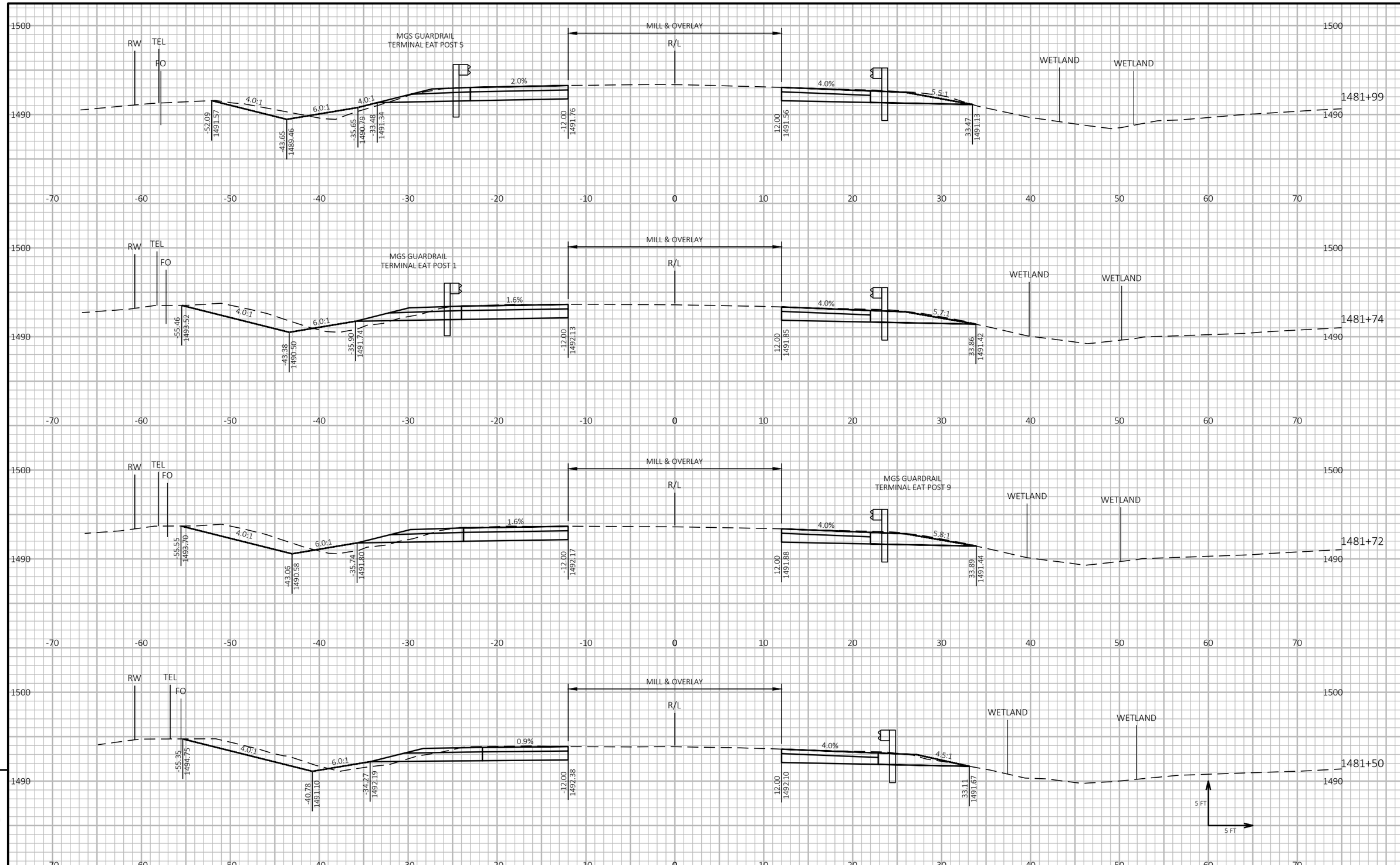

PROJECT NO: 1610-44-62	HWY: STH 13	COUNTY: PRICE	CROSS SECTIONS: STH 13 B-50-22	SHEET 139	E

FILE NAME : P:\52XX\5201.DP.19.STH13.PRC\CADDS\16104462\SHEETSPLAN\090202-XS.DWG
LAYOUT NAME - 03
PLOT DATE : 1/12/2021 2:41 PM
PLOT BY : DREW NELSON
PLOT NAME :
PLOT SCALE : 1 IN:10 FT HORZ. / 1 IN:10 FT VERT.
WISDOT/CADDS SHEET 49

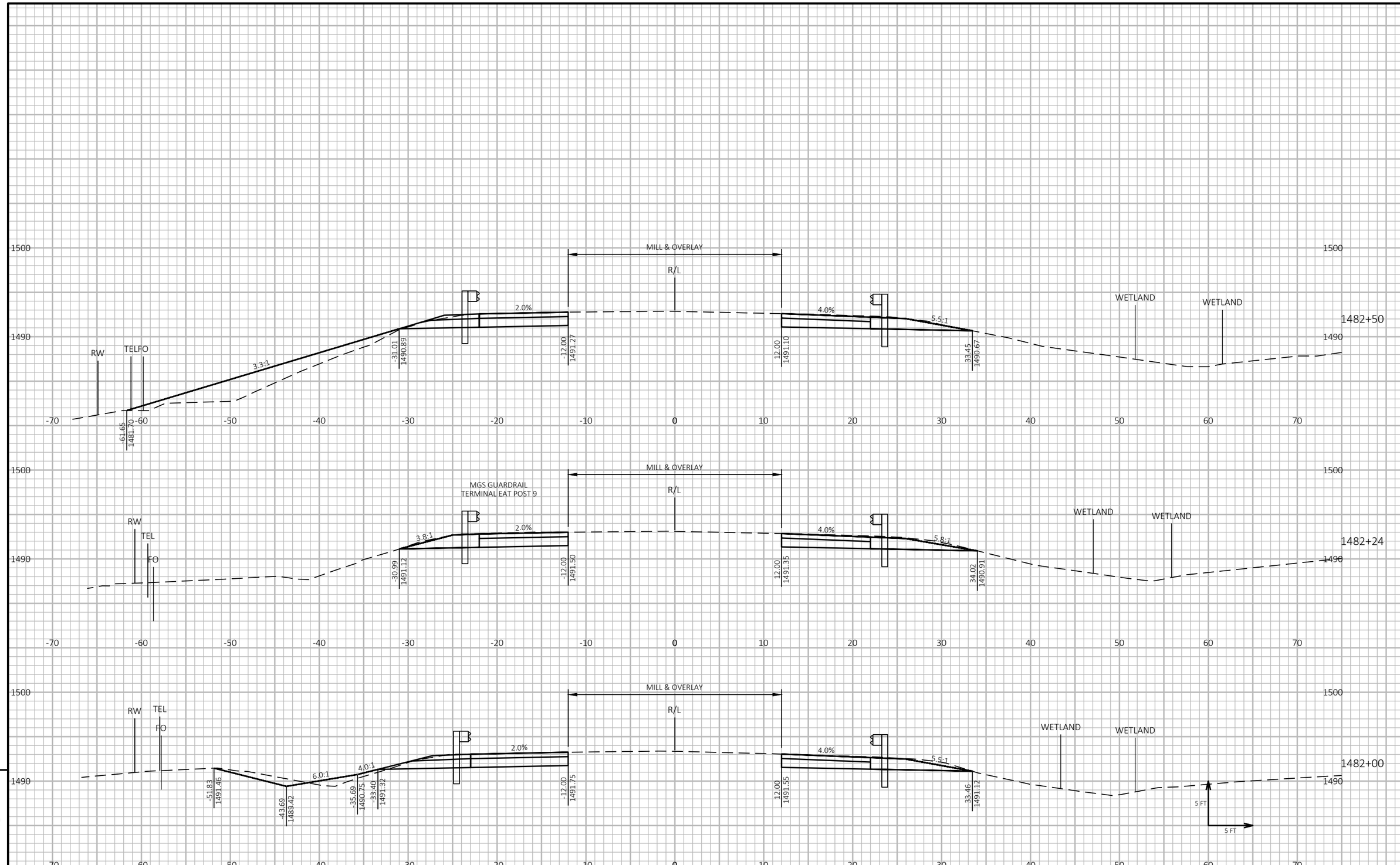

9

9

PROJECT NO: 1610-44-62	HWY: STH 13	COUNTY: PRICE	CROSS SECTIONS: STH 13 B-50-22	SHEET 140	E

FILE NAME : P:\52XX\5201.DP.19.STH13.PRC\CADDS\16104462\SHEETSPLAN\090202-XS.DWG
LAYOUT NAME - 04
PLOT DATE : 1/12/2021 2:41 PM
PLOT BY : DREW NELSON
PLOT NAME :
PLOT SCALE : 1 IN:10 FT HORZ. / 1 IN:10 FT VERT.
WISDOT/CADDS SHEET 49

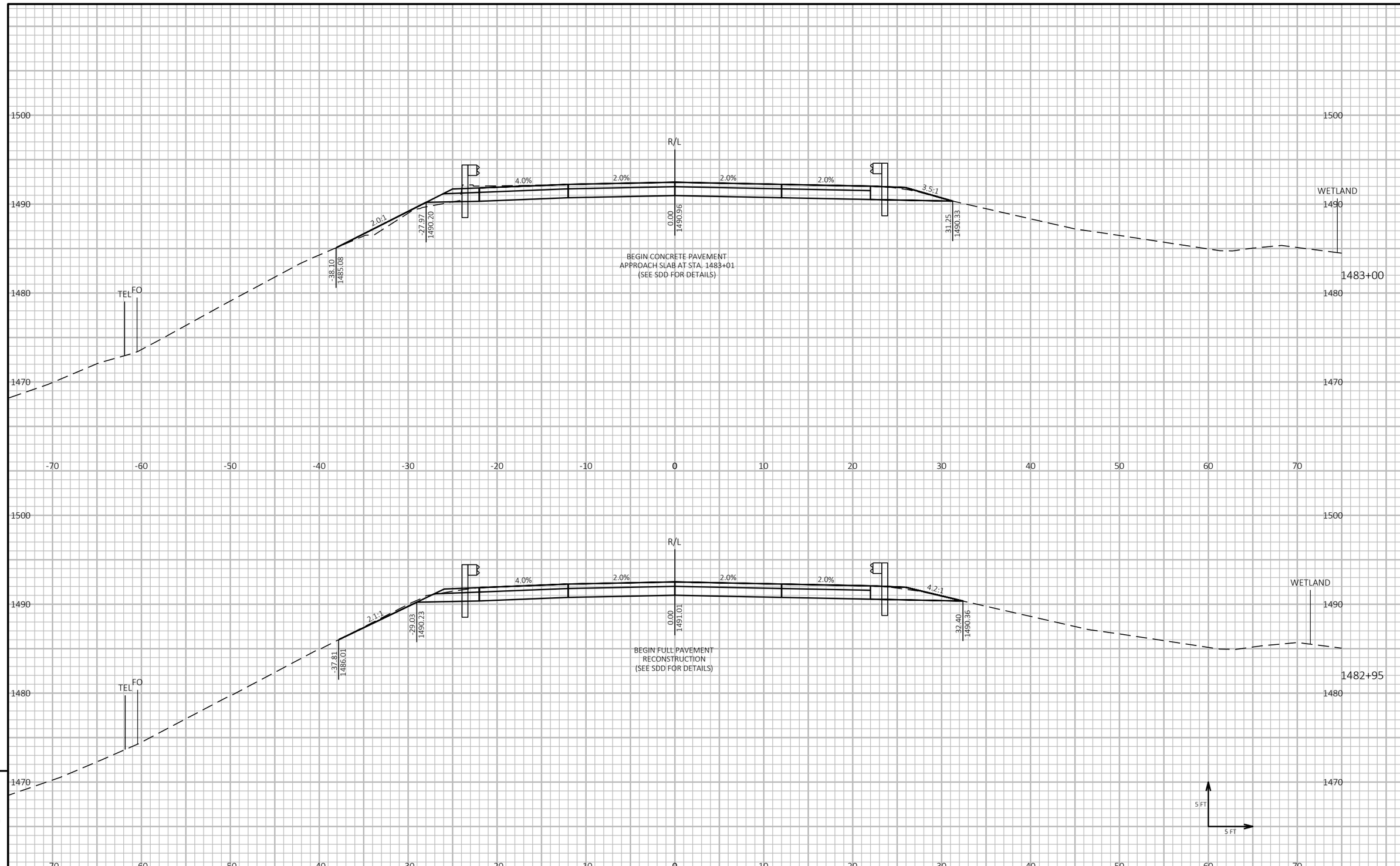

9

9

PROJECT NO: 1610-44-62	HWY: STH 13	COUNTY: PRICE	CROSS SECTIONS: STH 13 B-50-22	SHEET 141	E

FILE NAME : P:\52XX\5201.DP.19.STH13.PRC\CADDS\16104462\SHEETSPLAN\090202-XS.DWG
LAYOUT NAME - 05
PLOT DATE : 1/12/2021 2:41 PM
PLOT BY : DREW NELSON
PLOT NAME :
PLOT SCALE : 1 IN:10 FT HORZ. / 1 IN:10 FT VERT.
WISDOT/CADDS SHEET 49

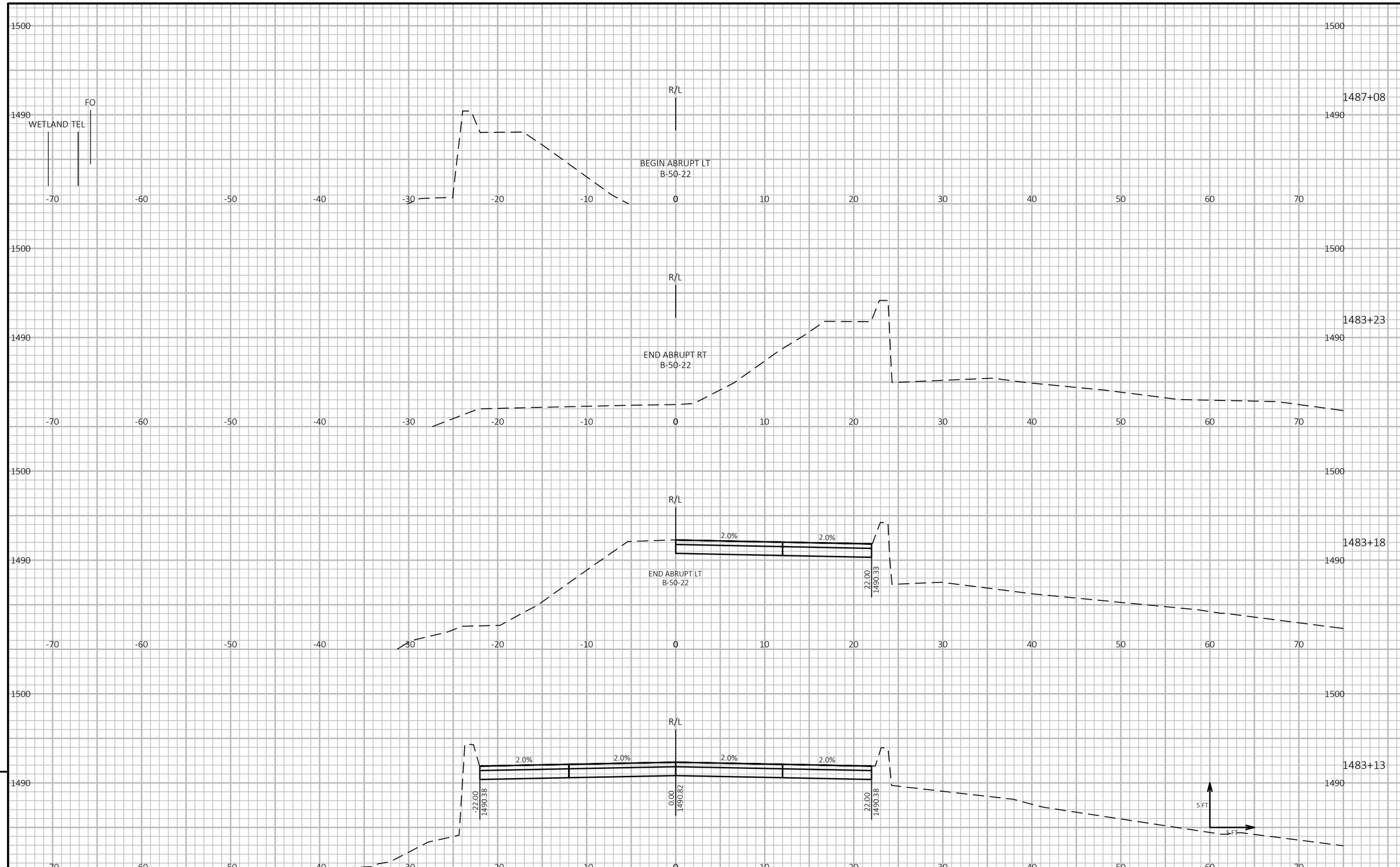

9

9

PROJECT NO: 1610-44-62	HWY: STH 13	COUNTY: PRICE	CROSS SECTIONS: STH 13 B-50-22	SHEET 142	E

FILE NAME : P:\52XX\5201.DP.19.STH13.PRC\CADDS\16104462\SHEETSPLAN\090202-XS.DWG
LAYOUT NAME - 06
PLOT DATE : 1/12/2021 2:41 PM
PLOT BY : DREW NELSON
PLOT NAME :
PLOT SCALE : 1 IN:10 FT HORZ. / 1 IN:10 FT VERT.
WISDOT/CADDS SHEET 49

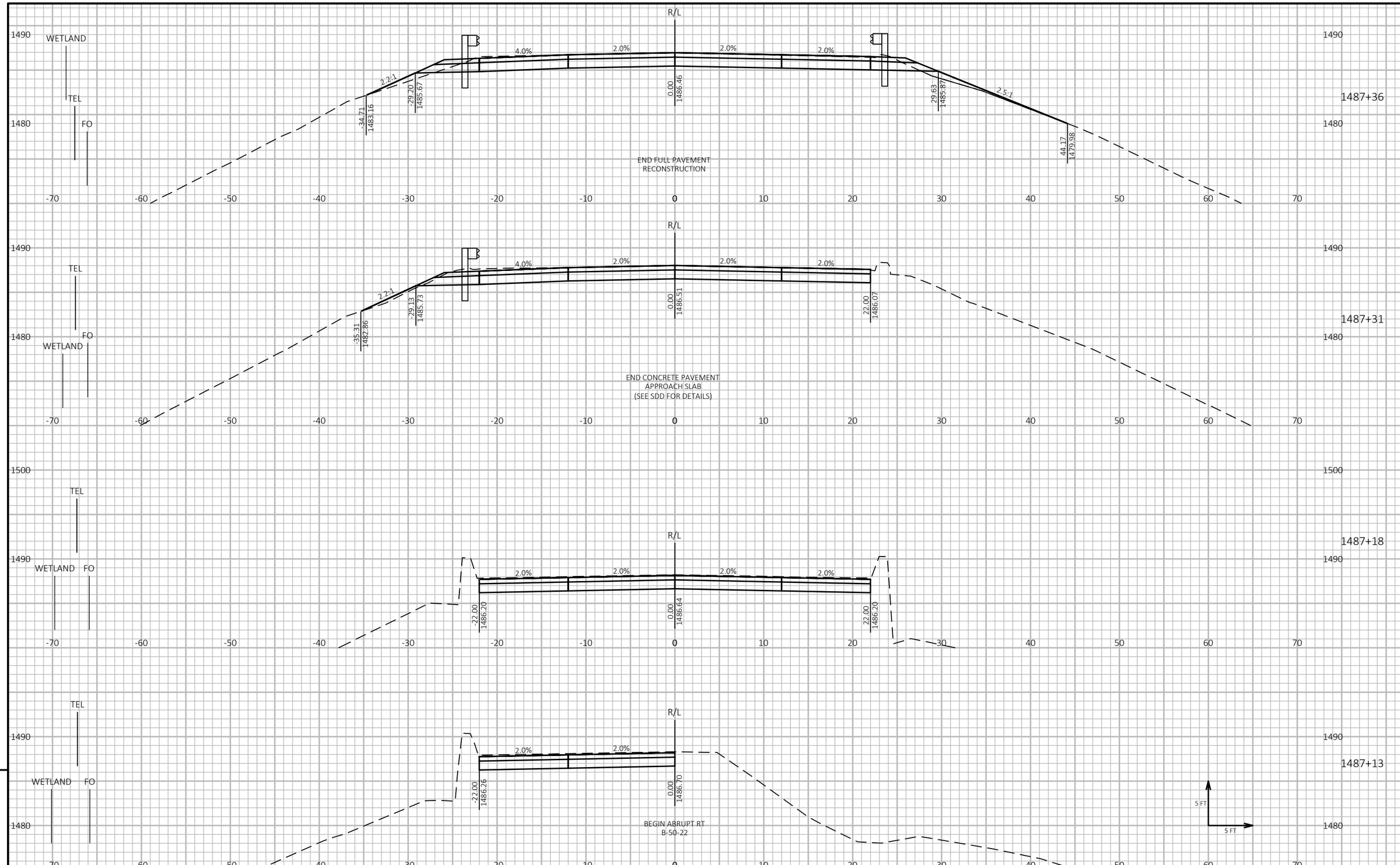

9

9

PROJECT NO: 1610-44-62	HWY: STH 13	COUNTY: PRICE	CROSS SECTIONS: STH 13 B-50-22	SHEET 143	E

FILE NAME : P:\52XX\5201.DP.19.STH13.PRC\CADDS\16104462\SHEETSPLAN\090202-XS.DWG
LAYOUT NAME - 07
PLOT DATE : 1/12/2021 2:41 PM
PLOT BY : DREW NELSON
PLOT NAME :
PLOT SCALE : 1 IN:10 FT HORZ. / 1 IN:10 FT VERT.
WISDOT/CADDS SHEET 49

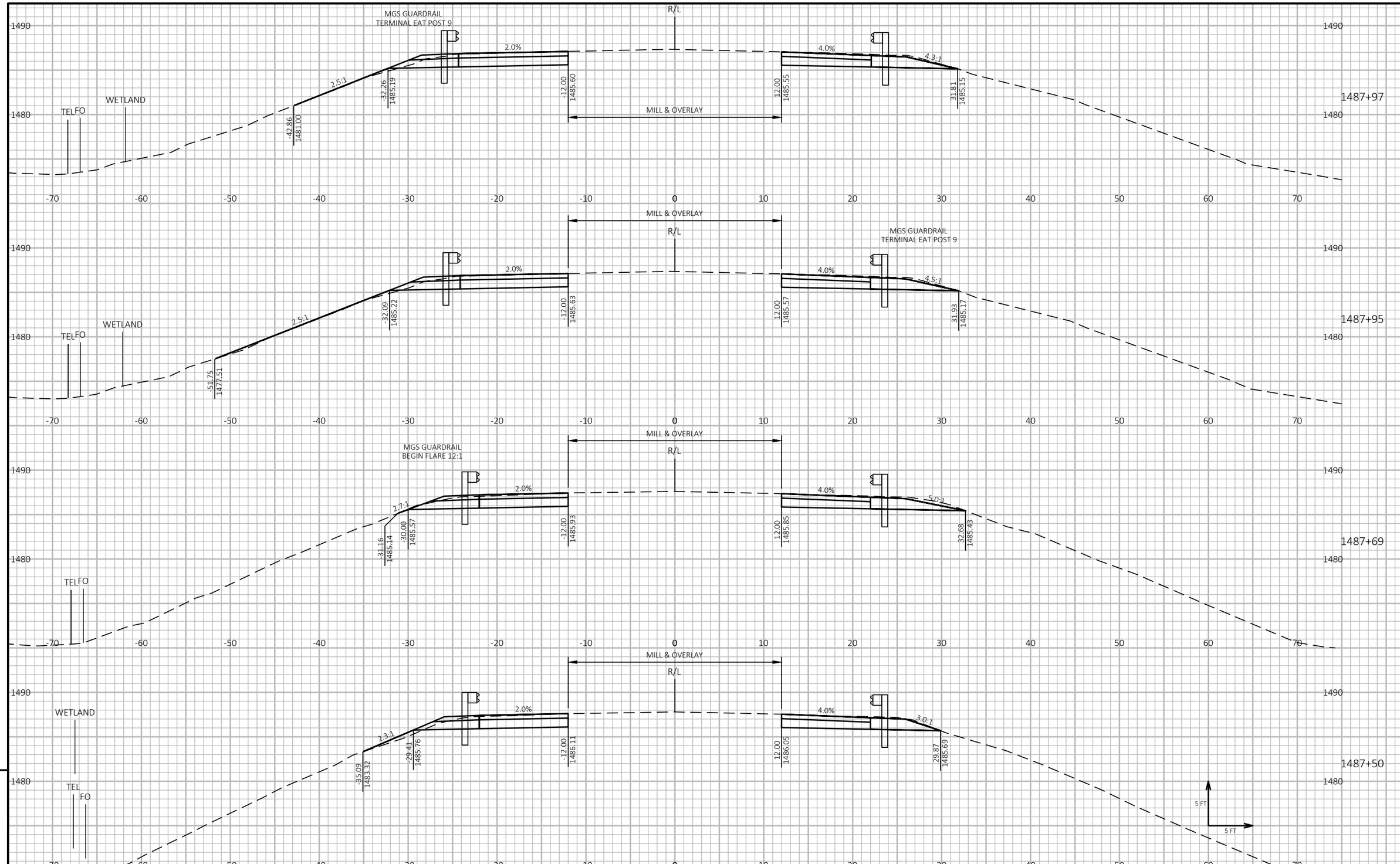

PROJECT NO: 1610-44-62	HWY: STH 13	COUNTY: PRICE	CROSS SECTIONS: STH 13 B-50-22	SHEET 144	E

FILE NAME : P:\52XX\5201.DP.19.STH13.PRC\CADDS\16104462\SHEETSPLAN\090202-XS.DWG
LAYOUT NAME - 08
PLOT DATE : 1/12/2021 2:41 PM
PLOT BY : DREW NELSON
PLOT NAME :
PLOT SCALE : 1 IN:10 FT HORZ. / 1 IN:10 FT VERT.
WISDOT/CADDS SHEET 49

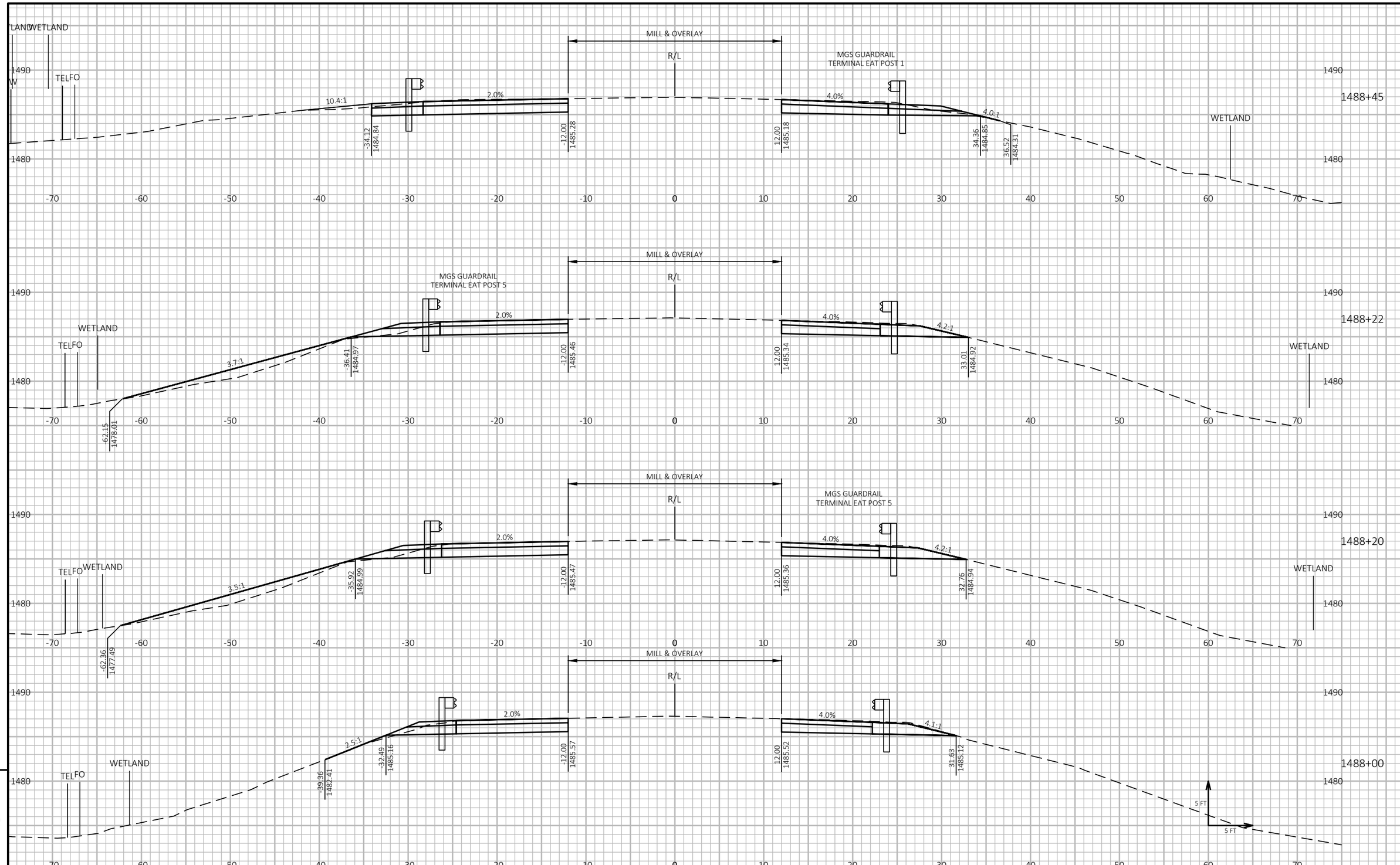

9

9

PROJECT NO: 1610-44-62	HWY: STH 13	COUNTY: PRICE	CROSS SECTIONS: STH 13 B-50-22	SHEET 145	E

FILE NAME : P:\52XX\5201.DP.19.STH13.PRC\CADDS\16104462\SHEETSPLAN\090202-XS.DWG
LAYOUT NAME - 09
PLOT DATE : 1/12/2021 2:41 PM
PLOT BY : DREW NELSON
PLOT NAME :
PLOT SCALE : 1 IN:10 FT HORZ. / 1 IN:10 FT VERT.
WISDOT/CADDS SHEET 49

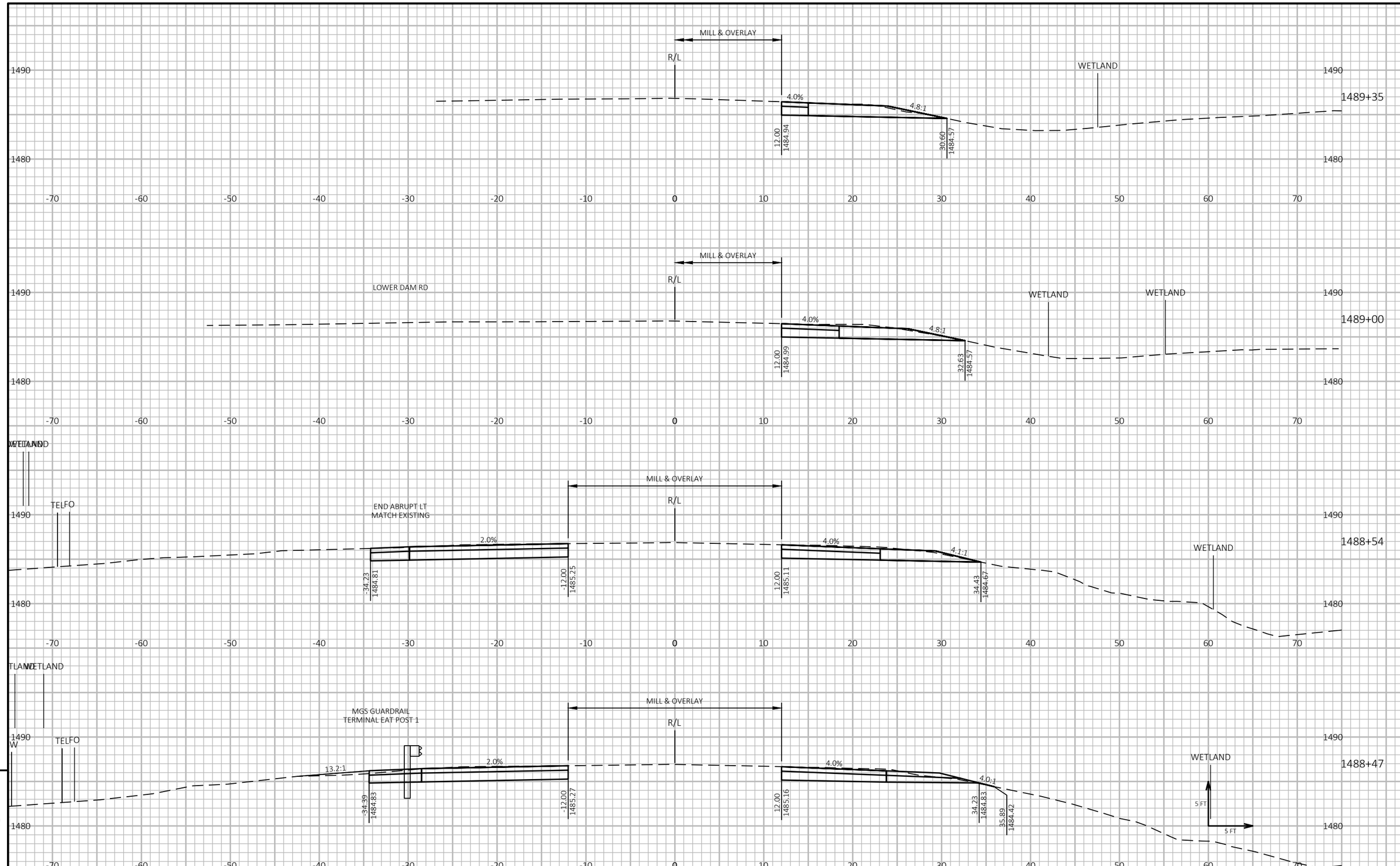

9

9

PROJECT NO: 1610-44-62	HWY: STH 13	COUNTY: PRICE	CROSS SECTIONS: STH 13 B-50-22	SHEET 146	E

FILE NAME : P:\52XX\5201.DP.19.STH13.PRC\CADDS\16104462\SHEETSPLAN\090202-XS.DWG
LAYOUT NAME - 10

PLOT DATE : 1/12/2021 2:42 PM PLOT BY : DREW NELSON PLOT NAME : PLOT SCALE : 1 IN:10 FT HORZ. / 1 IN:10 FT VERT.

WISDOT/CADDS SHEET 49

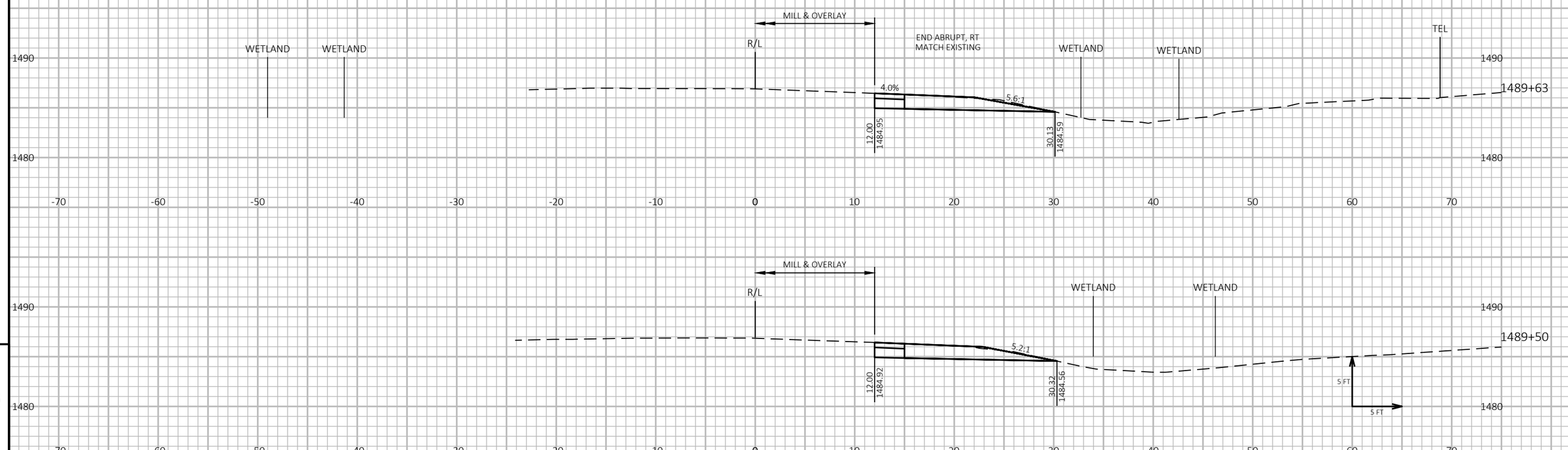

9

9

PROJECT NO: 1610-44-62	HWY: STH 13	COUNTY: PRICE	CROSS SECTIONS: STH 13 B-50-22	SHEET 147	E

FILE NAME : P:\52XX\5201.DP.19.STH13.PRC\CADDS\16104462\SHEETSPLAN\090202-XS.DWG
LAYOUT NAME - 11
PLOT DATE : 1/12/2021 2:42 PM
PLOT BY : DREW NELSON
PLOT NAME :
PLOT SCALE : 1 IN:10 FT HORZ. / 1 IN:10 FT VERT.
WISDOT/CADDS SHEET 49

Wisconsin Department of Transportation

Dedicated people creating transportation solutions through innovation and exceptional service.

http://www.dot.wisconsin.gov

RHI

SEPTEMBER 2021

PROJECT ID: 1610-44-63

WITH: 1610-44-62 & 1610-44-64

COUNTY: PRICE

ORDER OF SHEETS

Section No.	1	Title
Section No.	2	Typical Sections and Details (Includes Erosion Control)
Section No.	3	Estimate of Quantities
Section No.	3	Miscellaneous Quantities
~~Section No.~~	~~4~~	~~Right of Way Plat~~
Section No.	5	Plan and Profile
Section No.	6	Standard Detail Drawings
Section No.	7	Sign Plates
Section No.	8	Structure Plans
~~Section No.~~	~~9~~	~~Computer Earthwork Data~~
~~Section No.~~	~~9~~	~~Cross Sections~~

TOTAL SHEETS = 72

STATE OF WISCONSIN
DEPARTMENT OF TRANSPORTATION

PLAN OF PROPOSED IMPROVEMENT

C PHILLIPS, LAKE STREET

ELK RIVER BRIDGE B-50-0019

STH 13
PRICE COUNTY

STATE PROJECT	FEDERAL PROJECT	
	PROJECT	CONTRACT
1610-44-63		

STATE PROJECT NUMBER

1610-44-63

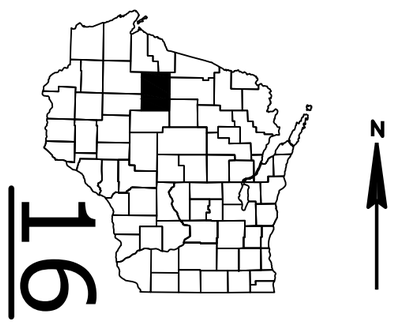

N

DESIGN DESIGNATION

A.A.D.T.	2022	=	7,200
A.A.D.T.	2042	=	8,200
D.H.V.	2042	=	900
D.D.		=	60/40
T.		=	13.7%
DESIGN SPEED		=	40 MPH
ESALS		=	1,490,000

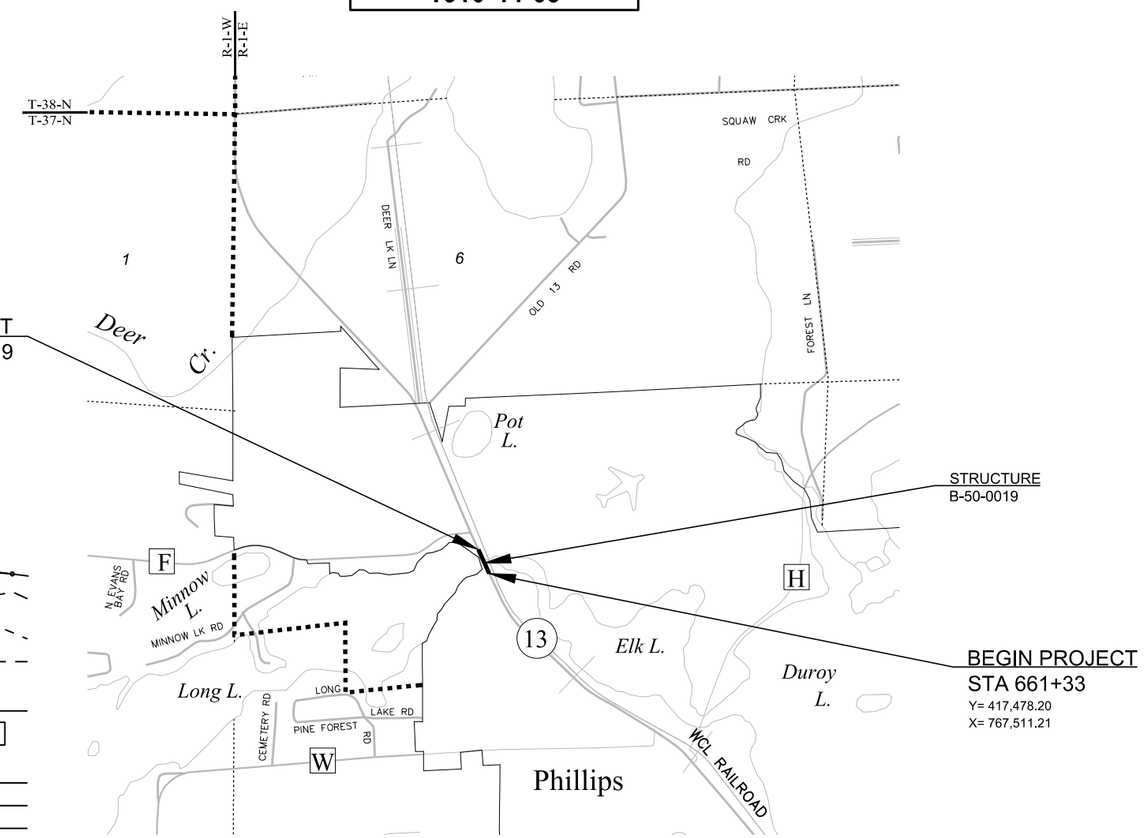

CONVENTIONAL SYMBOLS

PLAN

CORPORATE LIMITS
PROPERTY LINE
LOT LINE
LIMITED HIGHWAY EASEMENT
EXISTING RIGHT OF WAY
PROPOSED OR NEW R/W LINE
SLOPE INTERCEPT
REFERENCE LINE (300'EB')
EXISTING CULVERT
PROPOSED CULVERT (Box or Pipe)
COMBUSTIBLE FLUIDS (CAUTION)
MARSH AREA
WOODED OR SHRUB AREA

PROFILE

GRADE LINE
ORIGINAL GROUND
MARSH OR ROCK PROFILE (To be noted as such) (ROCK)
SPECIAL DITCH (LABEL)
GRADE ELEVATION (955.36)
CULVERT (Profile View)

UTILITIES

ELECTRIC (E)
FIBER OPTIC (FO)
GAS (G)
SANITARY SEWER (SAN)
STORM SEWER (SS)
TELEPHONE (T)
WATER (W)
UTILITY PEDESTAL
POWER POLE
TELEPHONE POLE

LAYOUT

SCALE 0 — 0.5 MI

TOTAL NET LENGTH OF CENTERLINE = 0.035 MI

HORIZONTAL POSITIONS SHOWN ON THIS PLAN ARE WISCONSIN COORDINATE REFERENCE SYSTEM (WISCRS), PRICE COUNTY, NAD83 (2011), IN U.S. SURVEY FEET. POSITIONS SHOWN ARE GRID COORDINATES, GRID BEARINGS, AND GRID DISTANCES. GRID DISTANCES ARE THE SAME AS GROUND DISTANCES. ELEVATIONS ARE REFERENCED TO NAVD 88 (2012).

emcs inc
500 North 17th Avenue
Wausau, WI 54401
715.845.1081 Fax 715.845.1099

WISCONSIN PROFESSIONAL ENGINEER
SCOTT M. KAISER
E-41772-6
MOSINEE
WI

3-29-2021 (Date) Scott Kaiser (Signature)

STATE OF WISCONSIN
DEPARTMENT OF TRANSPORTATION

PREPARED BY

Surveyor	EMCS, INC.
Designer	EMCS, INC.
Project Manager	KAI KILEN
Regional Examiner	CHERYL SIMON
Regional Supervisor	DANIEL ERVA

APPROVED FOR THE DEPARTMENT

DATE: 3/29/2021 (Signature)

E

GENERAL NOTES

THE LOCATIONS OF EXISTING AND PROPOSED UTILITY INSTALLATIONS AS SHOWN ON PLANS ARE APPROXIMATE. THERE MAY BE OTHER UTILITY INSTALLATIONS WITHIN THE PROJECT AREA THAT ARE NOT SHOWN.

EROSION CONTROL MEASURES ARE SHOWN ON SECTION 5 PLANS AND APPLICABLE CONSTRUCTION DETAILS.

AS-BUILTS USED FOR PLAN DEVELOPMENT

PROJECT NO: 1614-03-73, CONSTRUCTION YEAR: 1972/1973
PROJECT NO: 1614-10-60, CONSTRUCTION YEAR: 1996

ORDER OF SECTION 2 SHEETS

TYPICAL SECTIONS

CONSTRUCTION DETAILS

TRAFFIC CONTROL

UTILITIES

COMMUNICATIONS

PRICE COUNTY TELEPHONE COMPANY
KIRK BOGDANOVIC
105 N AVON AVENUE
PHILLIPS WI, 54555
OFFICE: (800) 250-8927
KBOGDANOVIC@NORVADO.COM

ELECTRIC - DISTRIBUTION

XCEL ENERGY
KATHY SCHANTNER
310 HICKORY HILLS LANE
PHILLIPS, WI 54555
OFFICE: (715) 737-1102
CELL: (715) 567-0037
KATHLEEN.R.SCHANTNER@XCELENERGY.COM

GAS/PETROLEUM

XCEL ENERGY
KATHY SCHANTNER
310 HICKORY HILLS LANE
PHILLIPS, WI 54555
OFFICE: (715) 737-1102
CELL: (715) 567-0037
KATHLEEN.R.SCHANTNER@XCELENERGY.COM

SANITARY SEWER

PHILLIPS MUNICIPAL WATER WORKS
JASON LYON
174 S EYDER AVE
PHILLIPS, WI 54555
OFFICE: (715) 339-4186
CELL: (715) 820-1066
PHILPSWD@PCTCNET.NET

WATER

PHILLIPS MUNICIPAL WATER WORKS
JASON LYON
174 S EYDER AVE
PHILLIPS, WI 54555
OFFICE: (715) 339-4186
CELL: (715) 820-1066
PHILPSWD@PCTCNET.NET

RUNOFF COEFFICIENT TABLE

	HYDROLOGIC SOIL GROUP											
	A			B			C			D		
	SLOPE RANGE (PERCENT)			SLOPE RANGE (PERCENT)			SLOPE RANGE (PERCENT)			SLOPE RANGE (PERCENT)		
LAND USE:	0-2	2-6	6 & OVER	0-2	2-6	6 & OVER	0-2	2-6	6 & OVER	0-2	2-6	6 & OVER
ROW CROPS	.08 .22	.16 .30	.22 .38	.12 .26	.20 .34	.27 .44	.15 .30	.24 .37	.33 .50	.19 .34	.28 .41	.38 .56
MEDIAN STRIP-TURF	.19 .24	.20 .26	.24 .30	.19 .25	.22 .28	.26 .33	.20 .26	.23 .30	.30 .37	.20 .27	.25 .32	.30 .40
SIDE SLOPE-TURF			.25 .32			.27 .34			.28 .36			.30 .38
PAVEMENT:												
ASPHALT	.70 - .95											
CONCRETE	.80 - .95											
BRICK	.70 - .80											
DRIVES, WALKS	.75 - .85											
ROOFS	.75 - .95											
GRAVEL ROADS, SHOULDERS	.40 - .60											

TOTAL PROJECT AREA = 0.5 ACRE
TOTAL AREA EXPECTED TO BE DISTURBED BY CONSTRUCTION ACTIVITIES = 0.1 ACRE

DIGGERS HOTLINE
Dial 811 or (800)242-8511
www.DiggersHotline.com

DNR LIAISON

WENDY HENNIGES
DNR NORTHERN REGION HEADQUARTERS
107 SUTLIFF AVENUE
RHINELANDER, WI 54501
PHONE: (715) 365-8916
WENDY.HENNIGES@WISCONSIN.GOV

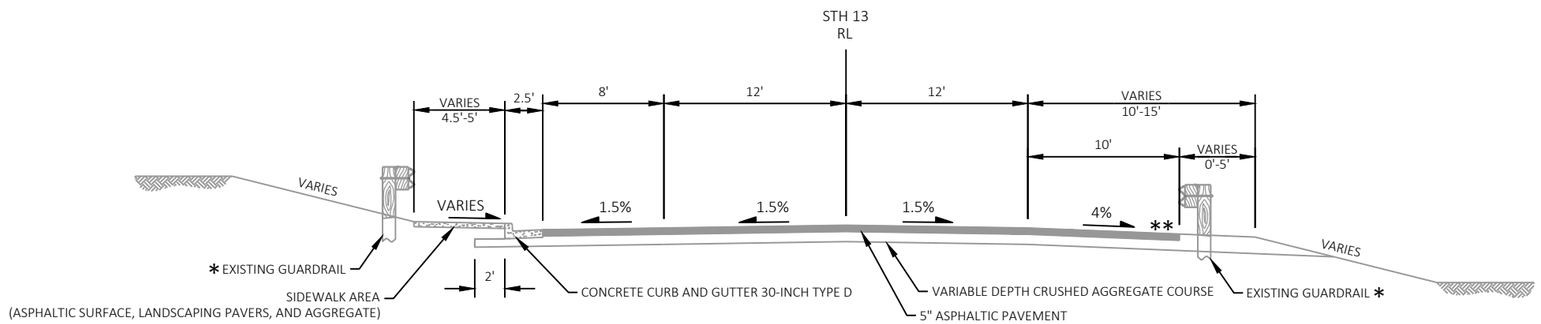

EXISTING TYPICAL SECTION

STA 661+33 - STA 661+95 (B-50-0019)
STA 662+96 (B-50-0019) - STA 663+19

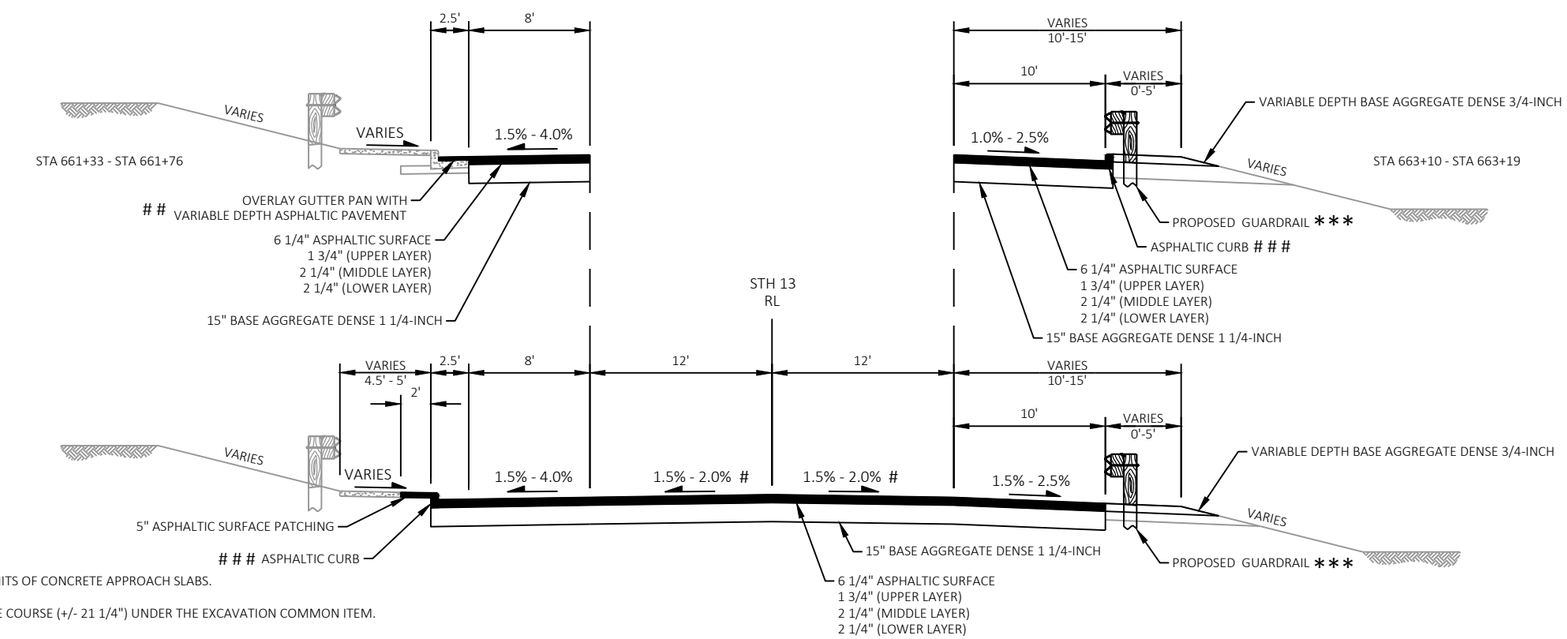

PROPOSED TYPICAL SECTION

STA 661+33 - STA 661+95 (B-50-0019)
STA 662+96 (B-50-0019) - STA 663+19

NOTES

SEE SECTION 5 PLAN SHEETS AND APPLICABLE SDD FOR LIMITS OF CONCRETE APPROACH SLABS.

REMOVE EXISTING ASPHALTIC PAVEMENT AND AGGREGATE COURSE (+/- 21 1/4") UNDER THE EXCAVATION COMMON ITEM.

* SEE SECTION 5 PLANS FOR LIMITS OF EXISTING GUARDRAILS.

** THERE IS EXISTING CURB AND GUTTER FROM STA 663+10 TO STA 663+19, RT.

*** SEE CONSTRUCTION DETAIL FOR PROPOSED GUARDRAIL MODIFICATIONS.

\# TRANSITION THE ROADWAY CROSS SLOPE FROM EXISTING 1.5% TO PROPOSED 2% CROSS SLOPE ON B-50-0019.

\# # SEE CONSTRUCTION DETAIL FOR CURB & GUTTER ASPHALTIC SURFACE OVERLAY DETAILS.

\# # # SEE SDD "CONCRETE CURB AND GUTTER" AND MAKE THE ASPHALTIC CURB HEAD SIMILAR TO THE CURB HEAD FOR CONCRETE CURB & GUTTER 30-INCH TYPE D.

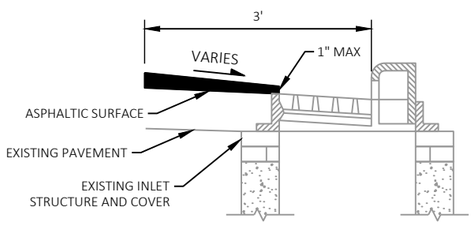

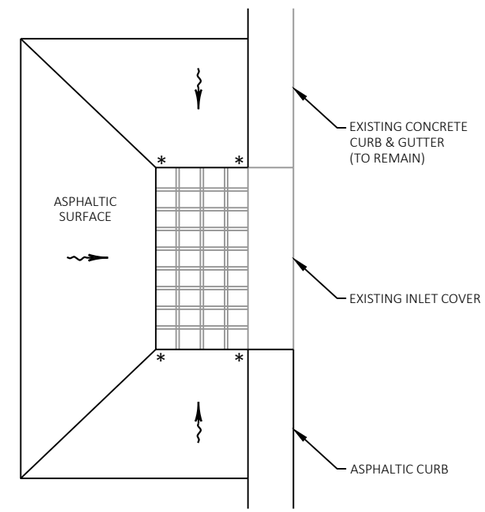

* 1" MAXIMUM PAVEMENT HEIGHT
ABOVE EXISTING INLET COVER

ASPHALT TAPER AROUND INLET DETAIL

STH 13
STA 661+74, LT

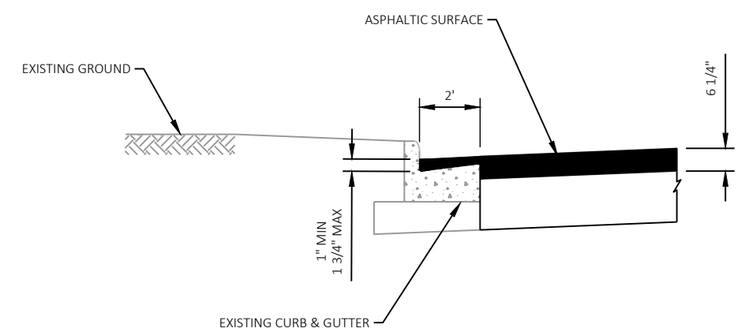

CURB & GUTTER ASPHALTIC SURFACE OVERLAY DETAIL

STH 13
STA 661+33 - STA 661+76, LT

2

LEGEND

- CONCRETE PAVEMENT APPROACH SLAB (SEE SDD "CONCRETE PAVEMENT APPROACH SLAB" FOR ADDITIONAL INFORMATION)
- ASPHALTIC SURFACE
- A1 ASPHALTIC CURB
- A2 5-INCH ASPHALTIC SURFACE PATCHING
- B1 REMOVING GUARDRAIL STEEL THRIE BEAM STRUCTURE APPROACH
- B2 ADJUSTING STEEL PLATE BEAM GUARD
- S1 SAWING

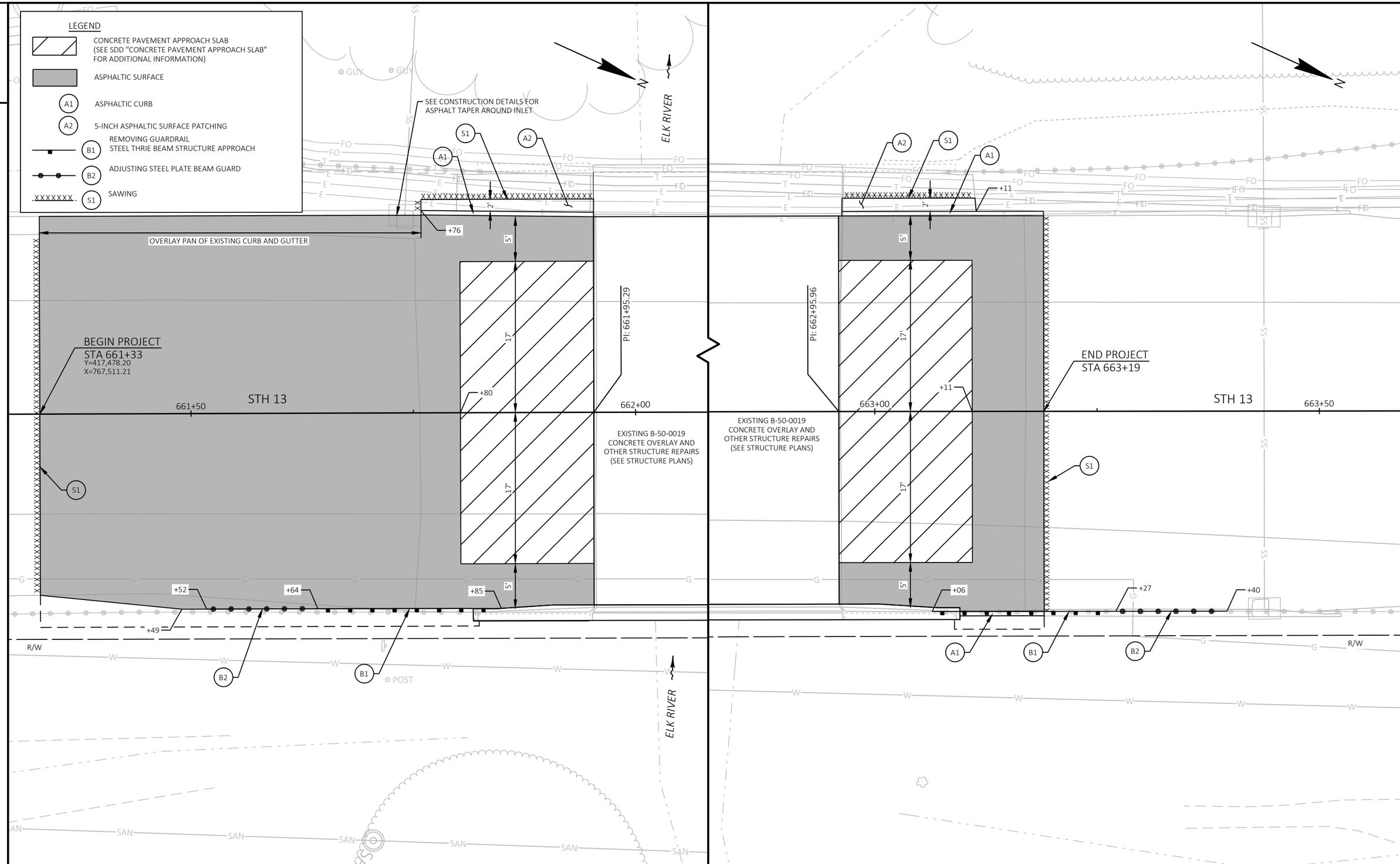

PROJECT NO: 1610-44-63	HWY: STH 13	COUNTY: PRICE	CONSTRUCTION DETAILS	SHEET 5	E

FILE NAME : P:\52XX\5201.DP.19.STH13.PRC\CADDS\16104463\SHEETSPLAN\021002-CD.DWG
LAYOUT NAME - 01
PLOT DATE : 2/17/2021 3:16 PM
PLOT BY : SCOTT KAISER
PLOT NAME :
PLOT SCALE : 1 IN:10 FT

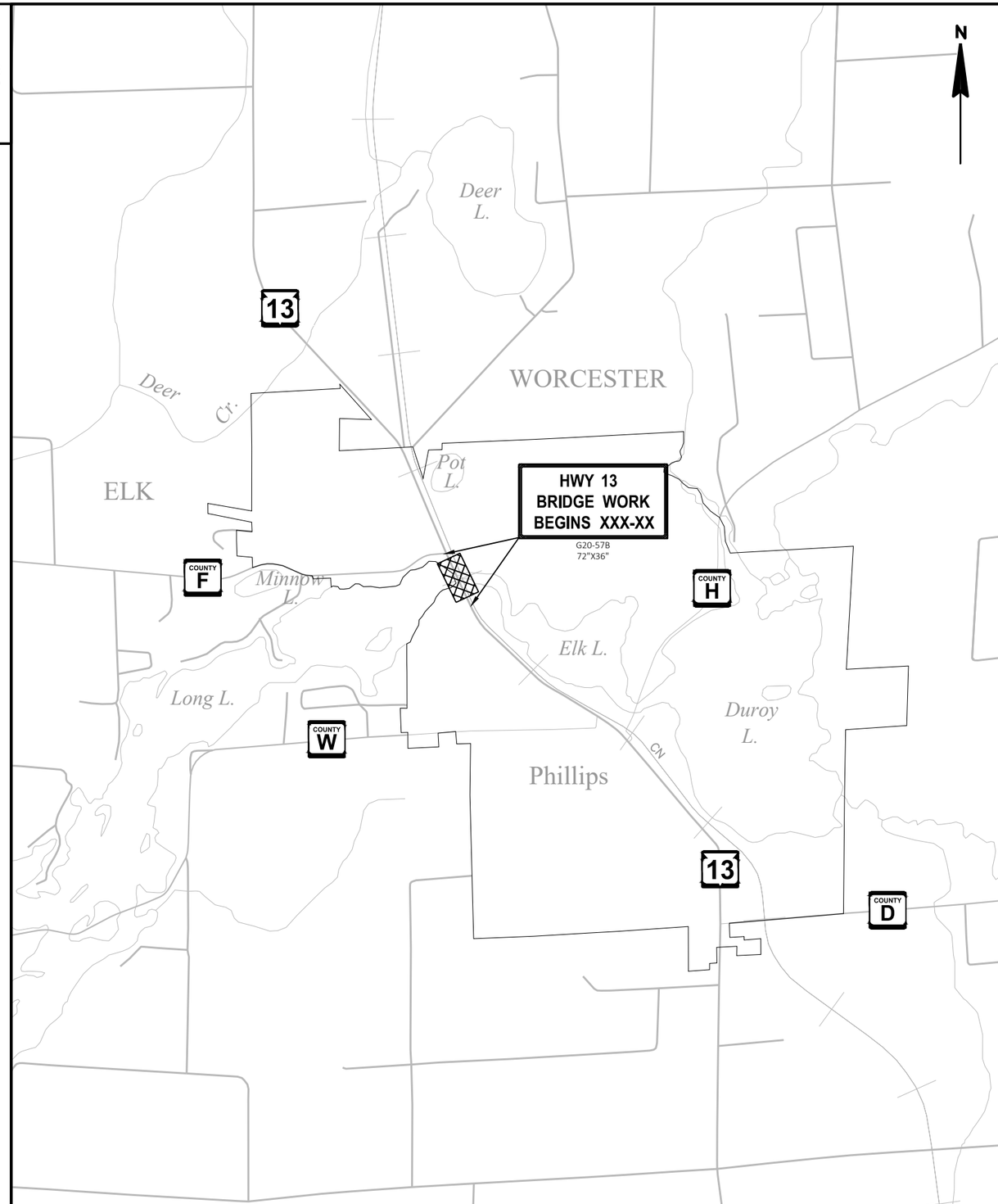

LEGEND

WORK ZONE

TRAFFIC CONTROL GENERAL NOTES

1. ALL SIGNS ARE 48" X 48" UNLESS OTHERWISE NOTED.

2. "WO" SIGNS ARE THE SAME AS "W" SIGNS EXCEPT THE BACKGROUND IS ORANGE.

3. ALL TYPE III BARRICADES SHALL BE EQUIPPED WITH TYPE "A" (LOW INTENSITY FLASHING LIGHTS) PER SDD'S.

4. PLACE TRAFFIC CONTROL SIGNS AND DRUMS PER SDD "TRAFFIC CONTROL, WORK ON SHOULDER OR PARKING LANE, UNDIVIDED ROADWAY" IN AREAS OF GUARD RAIL REPLACEMENT. IF NOT PROTECTED BY TEMPORARY BARRIER.

5. DELINEATE PRIVATE ACCESS WITH TRAFFIC CONTROL DRUMS, WHERE REQUIRED.

NOTE

PLACE G20-57B FIXED MESSAGE SIGNS AND DISPLAY THE MESSAGE 7 DAYS PRIOR TO THE EXPECTED START OF THE PROPOSED WORK AND REMOVE WHEN CONSTRUCTION BEGINS.

2

PROJECT NO: 1610-44-63	HWY: STH 13	COUNTY: PRICE	TRAFFIC CONTROL OVERVIEW	SHEET 6	E

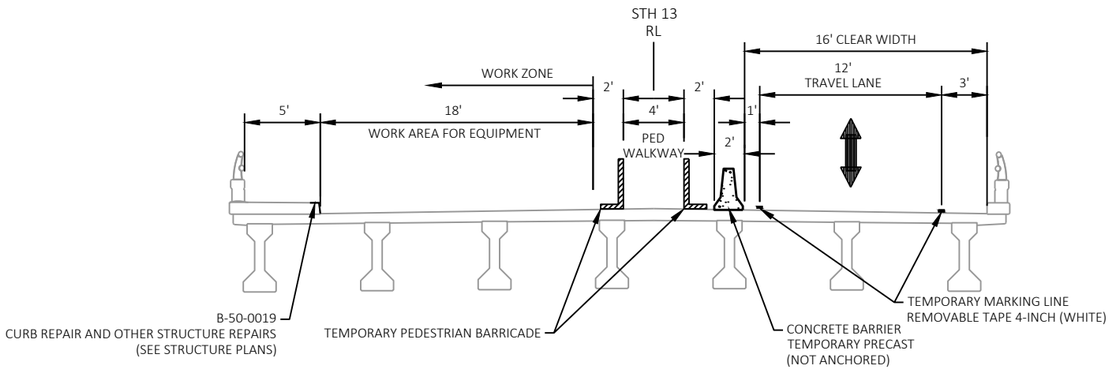

TRAFFIC CONTROL TYPICAL SECTION STAGE 1
STH 13
CONSTRUCT LEFT SIDE ASPHALTIC CURB, ASPHALTIC SURFACE PATCHING, CURB REPAIR, AND OTHER STRUCTURE REPAIRS.

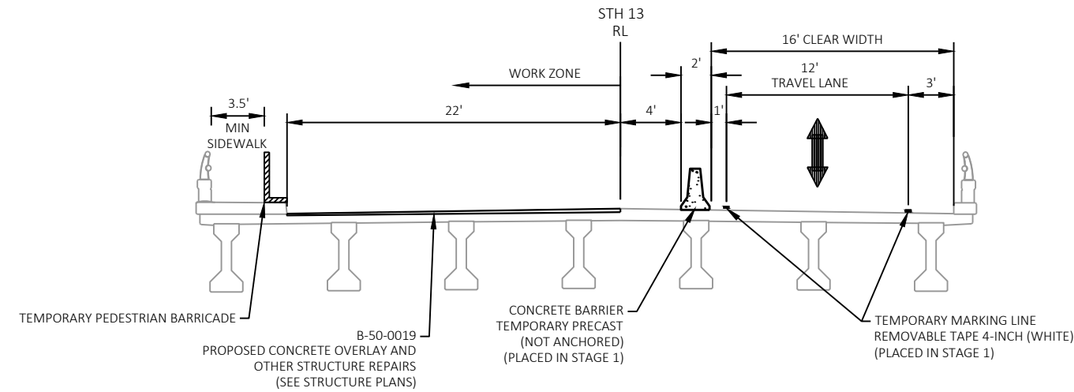

TRAFFIC CONTROL TYPICAL SECTION STAGE 2
STH 13
CONSTRUCT LEFT SIDE OVERLAY, OTHER STRUCTURE REPAIRS, AND APPROACHES

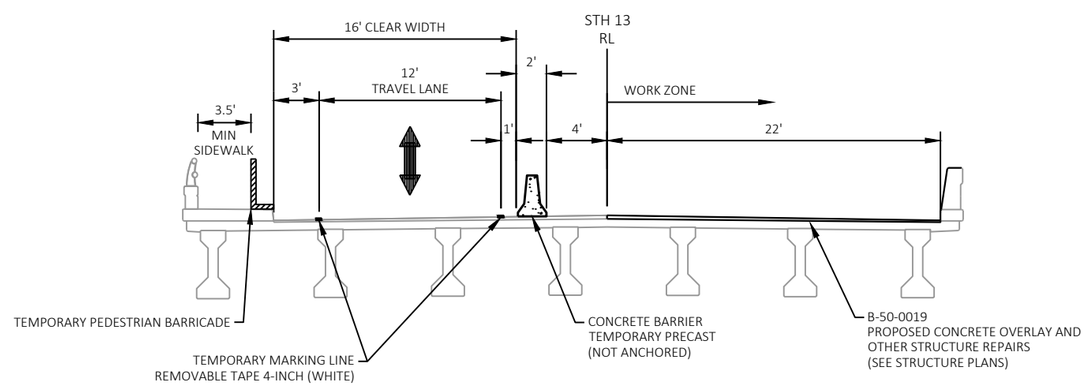

TRAFFIC CONTROL TYPICAL SECTION STAGE 3
STH 13
CONSTRUCT RIGHT SIDE OVERLAY, OTHER STRUCTURE REPAIRS, AND APPROACHES

NOTE
SEE TRAFFIC CONTROL PLAN SHEETS FOR ADDITIONAL INFORMATION.

2

LEGEND

- TYPE II BARRICADE WITH/WITHOUT ATTACHED SIGN
- TYPE III BARRICADE WITH/WITHOUT ATTACHED SIGN
- TRAFFIC CONTROL DRUM
- TRAFFIC CONTROL DRUM WITH TYPE C LIGHT
- TRAFFIC ACTUATED TRAILER MOUNTED TEMPORARY SIGNAL
- SIGN ON TEMPORARY SUPPORT
- CONCRETE BARRIER TEMPORARY PRECAST
- CRASH CUSHIONS TEMPORARY
- EXISTING PAVEMENT MARKING
- WORK AREA
- DIRECTION OF TRAFFIC
- RE4 — MARKING REMOVAL LINE 4-INCH
- REW — MARKING REMOVAL LINE WIDE
- TTW — TEMPORARY MARKING LINE REMOVABLE TAPE 4-INCH (WHITE)
- TTP — TEMPORARY MARKING LINE REMOVABLE TAPE 8-INCH (WHITE, 3' LINE-9' GAP)
- STP — TEMPORARY MARKING STOP LINE REMOVABLE TAPE 18-INCH (WHITE)

NOTES

TEMPORARY MARKING, TRAFFIC CONTROL DRUMS AND TEMPORARY SIGNAL PLACEMENT ARE SHOWN ON THE PLANS, SEE SDD "TRAFFIC CONTROL, ONE LANE ROAD WITH TEMPORARY SIGNALS" FOR ADDITIONAL INFORMATION

SEE SDD "BRIDGE TEMPORARY TRAFFIC SIGNAL INSTALLATION" FOR ADDITIONAL INFORMATION

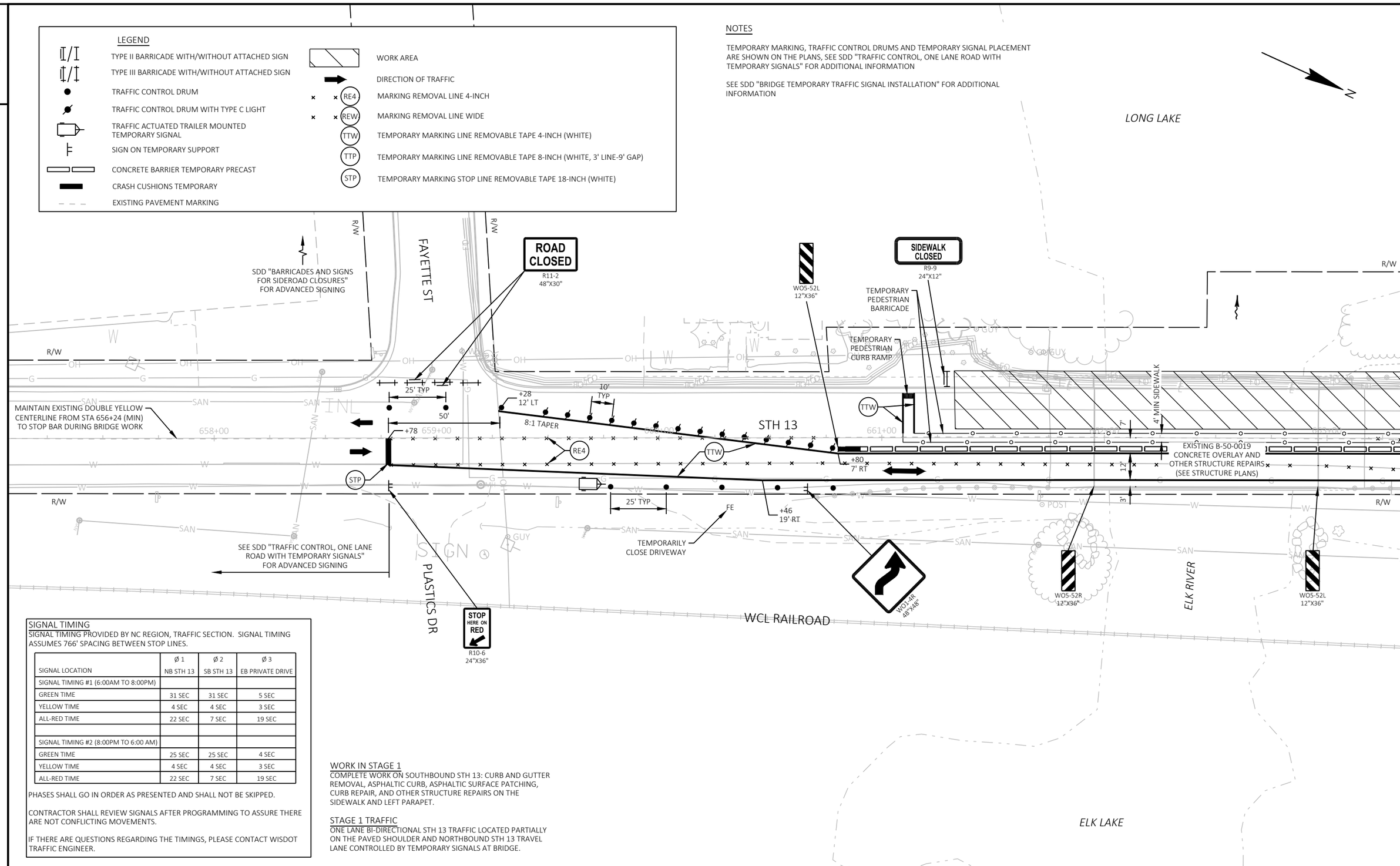

SIGNAL TIMING

SIGNAL TIMING PROVIDED BY NC REGION, TRAFFIC SECTION. SIGNAL TIMING ASSUMES 766' SPACING BETWEEN STOP LINES.

SIGNAL LOCATION	Ø 1 NB STH 13	Ø 2 SB STH 13	Ø 3 EB PRIVATE DRIVE
SIGNAL TIMING #1 (6:00AM TO 8:00PM)			
GREEN TIME	31 SEC	31 SEC	5 SEC
YELLOW TIME	4 SEC	4 SEC	3 SEC
ALL-RED TIME	22 SEC	7 SEC	19 SEC
SIGNAL TIMING #2 (8:00PM TO 6:00 AM)			
GREEN TIME	25 SEC	25 SEC	4 SEC
YELLOW TIME	4 SEC	4 SEC	3 SEC
ALL-RED TIME	22 SEC	7 SEC	19 SEC

PHASES SHALL GO IN ORDER AS PRESENTED AND SHALL NOT BE SKIPPED.

CONTRACTOR SHALL REVIEW SIGNALS AFTER PROGRAMMING TO ASSURE THERE ARE NOT CONFLICTING MOVEMENTS.

IF THERE ARE QUESTIONS REGARDING THE TIMINGS, PLEASE CONTACT WISDOT TRAFFIC ENGINEER.

WORK IN STAGE 1

COMPLETE WORK ON SOUTHBOUND STH 13: CURB AND GUTTER REMOVAL, ASPHALTIC CURB, ASPHALTIC SURFACE PATCHING, CURB REPAIR, AND OTHER STRUCTURE REPAIRS ON THE SIDEWALK AND LEFT PARAPET.

STAGE 1 TRAFFIC

ONE LANE BI-DIRECTIONAL STH 13 TRAFFIC LOCATED PARTIALLY ON THE PAVED SHOULDER AND NORTHBOUND STH 13 TRAVEL LANE CONTROLLED BY TEMPORARY SIGNALS AT BRIDGE.

2

LEGEND

- TYPE II BARRICADE WITH/WITHOUT ATTACHED SIGN
- TYPE III BARRICADE WITH/WITHOUT ATTACHED SIGN
- TRAFFIC CONTROL DRUM
- TRAFFIC CONTROL DRUM WITH TYPE C LIGHT
- TRAFFIC ACTUATED TRAILER MOUNTED TEMPORARY SIGNAL
- SIGN ON TEMPORARY SUPPORT
- CONCRETE BARRIER TEMPORARY PRECAST
- CRASH CUSHIONS TEMPORARY
- EXISTING PAVEMENT MARKING
- WORK AREA
- DIRECTION OF TRAFFIC
- RE4 — MARKING REMOVAL LINE 4-INCH
- REW — MARKING REMOVAL LINE WIDE
- TTW — TEMPORARY MARKING LINE REMOVABLE TAPE 4-INCH (WHITE)
- TTP — TEMPORARY MARKING LINE REMOVABLE TAPE 8-INCH (WHITE, 3' LINE-9' GAP)
- STP — TEMPORARY MARKING STOP LINE REMOVABLE TAPE 18-INCH (WHITE)

NOTES

TEMPORARY MARKING, TRAFFIC CONTROL DRUMS AND TEMPORARY SIGNAL PLACEMENT ARE SHOWN ON THE PLANS, SEE SDD "TRAFFIC CONTROL, ONE LANE ROAD WITH TEMPORARY SIGNALS" FOR ADDITIONAL INFORMATION

SEE SDD "BRIDGE TEMPORARY TRAFFIC SIGNAL INSTALLATION" FOR ADDITIONAL INFORMATION

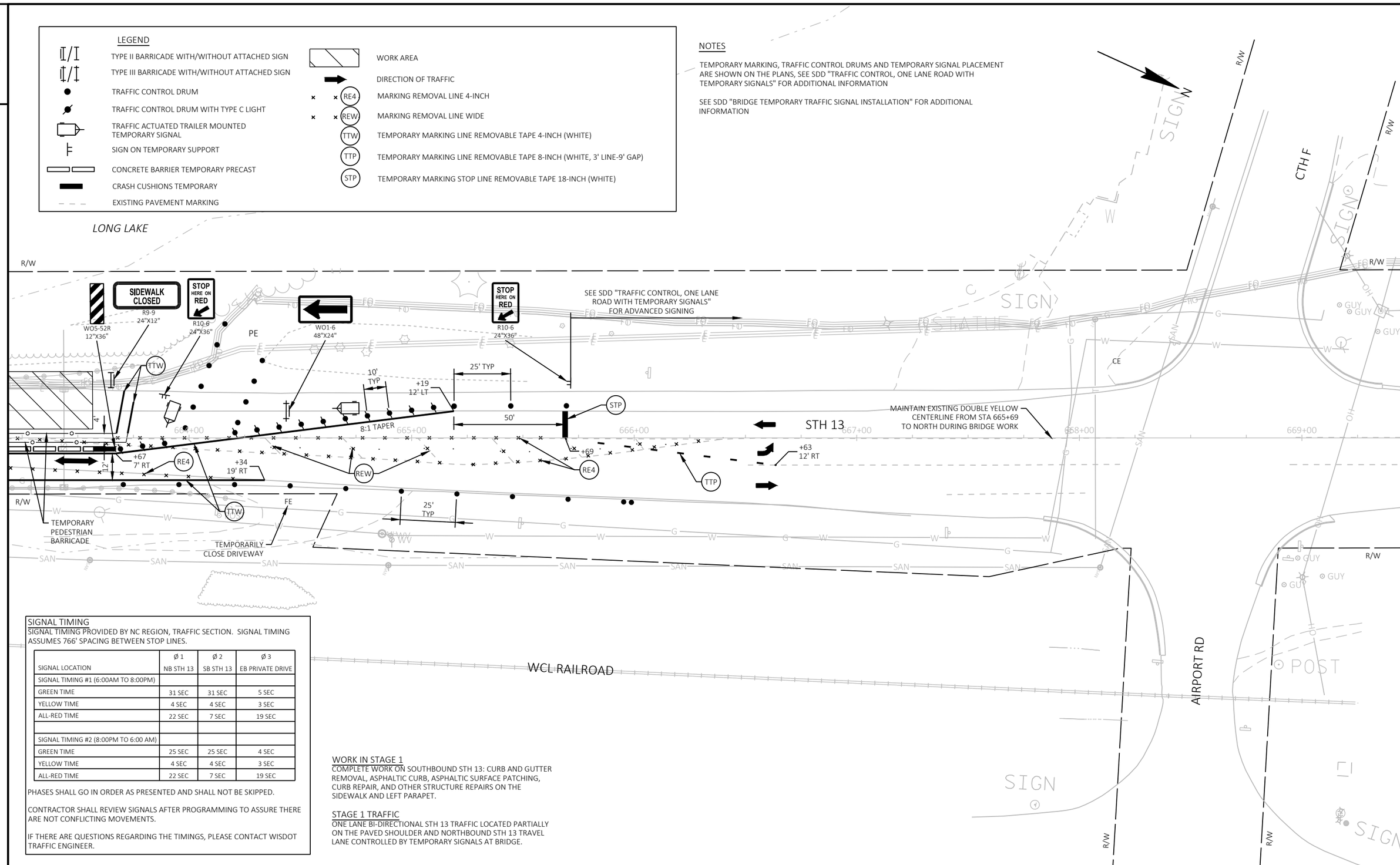

SIGNAL TIMING

SIGNAL TIMING PROVIDED BY NC REGION, TRAFFIC SECTION. SIGNAL TIMING ASSUMES 766' SPACING BETWEEN STOP LINES.

SIGNAL LOCATION	Ø 1 NB STH 13	Ø 2 SB STH 13	Ø 3 EB PRIVATE DRIVE
SIGNAL TIMING #1 (6:00AM TO 8:00PM)			
GREEN TIME	31 SEC	31 SEC	5 SEC
YELLOW TIME	4 SEC	4 SEC	3 SEC
ALL-RED TIME	22 SEC	7 SEC	19 SEC
SIGNAL TIMING #2 (8:00PM TO 6:00 AM)			
GREEN TIME	25 SEC	25 SEC	4 SEC
YELLOW TIME	4 SEC	4 SEC	3 SEC
ALL-RED TIME	22 SEC	7 SEC	19 SEC

PHASES SHALL GO IN ORDER AS PRESENTED AND SHALL NOT BE SKIPPED.

CONTRACTOR SHALL REVIEW SIGNALS AFTER PROGRAMMING TO ASSURE THERE ARE NOT CONFLICTING MOVEMENTS.

IF THERE ARE QUESTIONS REGARDING THE TIMINGS, PLEASE CONTACT WISDOT TRAFFIC ENGINEER.

WORK IN STAGE 1

COMPLETE WORK ON SOUTHBOUND STH 13: CURB AND GUTTER REMOVAL, ASPHALTIC CURB, ASPHALTIC SURFACE PATCHING, CURB REPAIR, AND OTHER STRUCTURE REPAIRS ON THE SIDEWALK AND LEFT PARAPET.

STAGE 1 TRAFFIC

ONE LANE BI-DIRECTIONAL STH 13 TRAFFIC LOCATED PARTIALLY ON THE PAVED SHOULDER AND NORTHBOUND STH 13 TRAVEL LANE CONTROLLED BY TEMPORARY SIGNALS AT BRIDGE.

2

LEGEND

- TYPE II BARRICADE WITH/WITHOUT ATTACHED SIGN
- TYPE III BARRICADE WITH/WITHOUT ATTACHED SIGN
- TRAFFIC CONTROL DRUM
- TRAFFIC CONTROL DRUM WITH TYPE C LIGHT
- TRAFFIC ACTUATED TRAILER MOUNTED TEMPORARY SIGNAL
- SIGN ON TEMPORARY SUPPORT
- CONCRETE BARRIER TEMPORARY PRECAST
- CRASH CUSHIONS TEMPORARY
- EXISTING PAVEMENT MARKING
- WORK AREA
- DIRECTION OF TRAFFIC
- RE4 — MARKING REMOVAL LINE 4-INCH
- REW — MARKING REMOVAL LINE WIDE
- TTW — TEMPORARY MARKING LINE REMOVABLE TAPE 4-INCH (WHITE)
- TTP — TEMPORARY MARKING LINE REMOVABLE TAPE 8-INCH (WHITE, 3' LINE-9' GAP)
- STP — TEMPORARY MARKING STOP LINE REMOVABLE TAPE 18-INCH (WHITE)

NOTES

TEMPORARY MARKING, TRAFFIC CONTROL DRUMS AND TEMPORARY SIGNAL PLACEMENT ARE SHOWN ON THE PLANS, SEE SDD "TRAFFIC CONTROL, ONE LANE ROAD WITH TEMPORARY SIGNALS" FOR ADDITIONAL INFORMATION

SEE SDD "BRIDGE TEMPORARY TRAFFIC SIGNAL INSTALLATION" FOR ADDITIONAL INFORMATION

EXISTING PAVEMENT MARKING ON NB STH 13 REMOVED IN STAGE 1

* TEMPORARY MARKING PLACED IN PREVIOUS STAGE

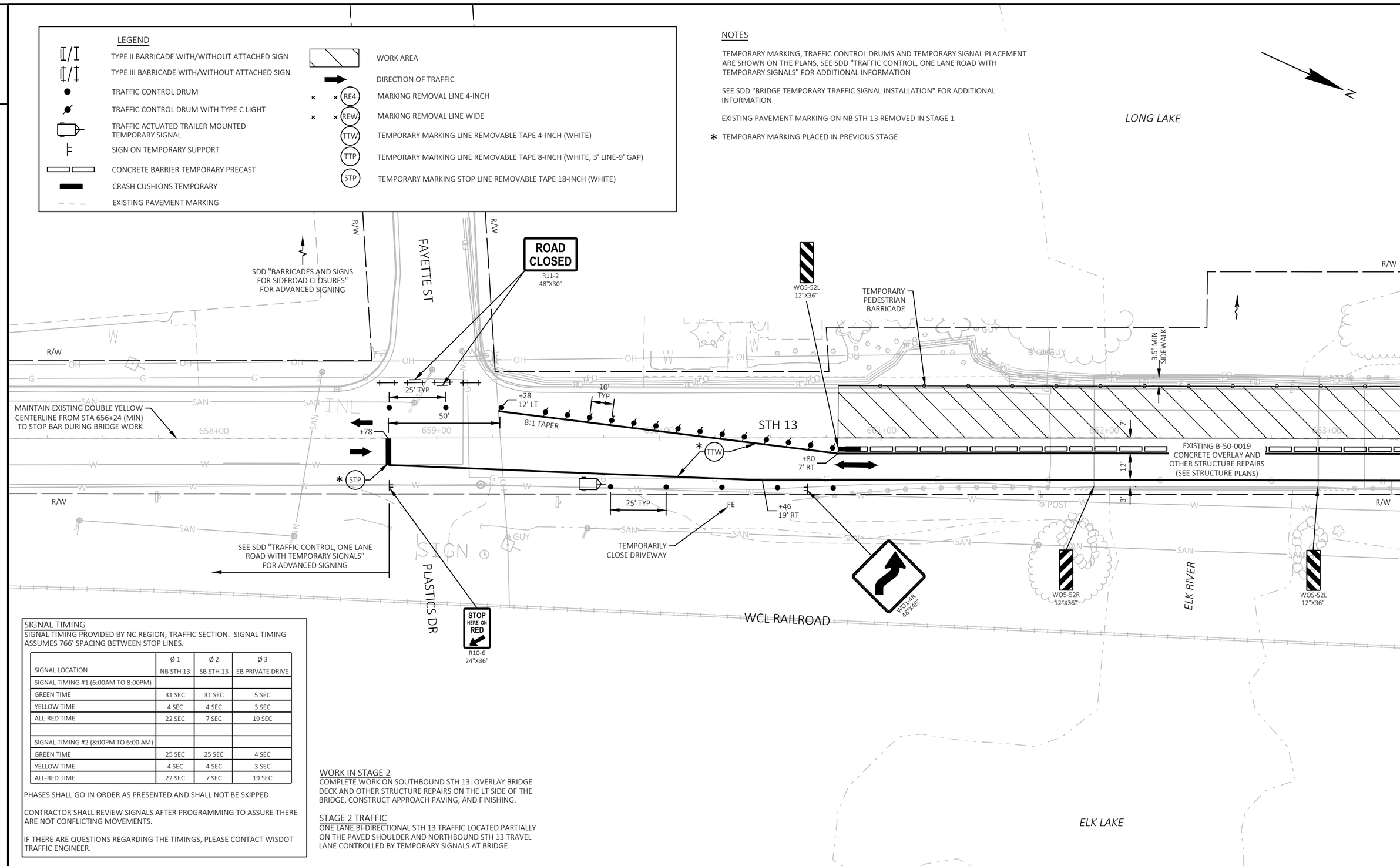

SIGNAL TIMING

SIGNAL TIMING PROVIDED BY NC REGION, TRAFFIC SECTION. SIGNAL TIMING ASSUMES 766' SPACING BETWEEN STOP LINES.

SIGNAL LOCATION	Ø 1 NB STH 13	Ø 2 SB STH 13	Ø 3 EB PRIVATE DRIVE
SIGNAL TIMING #1 (6:00AM TO 8:00PM)			
GREEN TIME	31 SEC	31 SEC	5 SEC
YELLOW TIME	4 SEC	4 SEC	3 SEC
ALL-RED TIME	22 SEC	7 SEC	19 SEC
SIGNAL TIMING #2 (8:00PM TO 6:00 AM)			
GREEN TIME	25 SEC	25 SEC	4 SEC
YELLOW TIME	4 SEC	4 SEC	3 SEC
ALL-RED TIME	22 SEC	7 SEC	19 SEC

PHASES SHALL GO IN ORDER AS PRESENTED AND SHALL NOT BE SKIPPED.

CONTRACTOR SHALL REVIEW SIGNALS AFTER PROGRAMMING TO ASSURE THERE ARE NOT CONFLICTING MOVEMENTS.

IF THERE ARE QUESTIONS REGARDING THE TIMINGS, PLEASE CONTACT WISDOT TRAFFIC ENGINEER.

WORK IN STAGE 2

COMPLETE WORK ON SOUTHBOUND STH 13: OVERLAY BRIDGE DECK AND OTHER STRUCTURE REPAIRS ON THE LT SIDE OF THE BRIDGE, CONSTRUCT APPROACH PAVING, AND FINISHING.

STAGE 2 TRAFFIC

ONE LANE BI-DIRECTIONAL STH 13 TRAFFIC LOCATED PARTIALLY ON THE PAVED SHOULDER AND NORTHBOUND STH 13 TRAVEL LANE CONTROLLED BY TEMPORARY SIGNALS AT BRIDGE.

2

LEGEND

- TYPE II BARRICADE WITH/WITHOUT ATTACHED SIGN
- TYPE III BARRICADE WITH/WITHOUT ATTACHED SIGN
- TRAFFIC CONTROL DRUM
- TRAFFIC CONTROL DRUM WITH TYPE C LIGHT
- TRAFFIC ACTUATED TRAILER MOUNTED TEMPORARY SIGNAL
- SIGN ON TEMPORARY SUPPORT
- CONCRETE BARRIER TEMPORARY PRECAST
- CRASH CUSHIONS TEMPORARY
- EXISTING PAVEMENT MARKING
- WORK AREA
- DIRECTION OF TRAFFIC
- RE4 — MARKING REMOVAL LINE 4-INCH
- REW — MARKING REMOVAL LINE WIDE
- TTW — TEMPORARY MARKING LINE REMOVABLE TAPE 4-INCH (WHITE)
- TTP — TEMPORARY MARKING LINE REMOVABLE TAPE 8-INCH (WHITE, 3' LINE-9' GAP)
- STP — TEMPORARY MARKING STOP LINE REMOVABLE TAPE 18-INCH (WHITE)

NOTES

TEMPORARY MARKING, TRAFFIC CONTROL DRUMS AND TEMPORARY SIGNAL PLACEMENT ARE SHOWN ON THE PLANS, SEE SDD "TRAFFIC CONTROL, ONE LANE ROAD WITH TEMPORARY SIGNALS" FOR ADDITIONAL INFORMATION

SEE SDD "BRIDGE TEMPORARY TRAFFIC SIGNAL INSTALLATION" FOR ADDITIONAL INFORMATION

EXISTING PAVEMENT MARKING ON NB STH 13 REMOVED IN STAGE 1

* TEMPORARY MARKING PLACED IN PREVIOUS STAGE

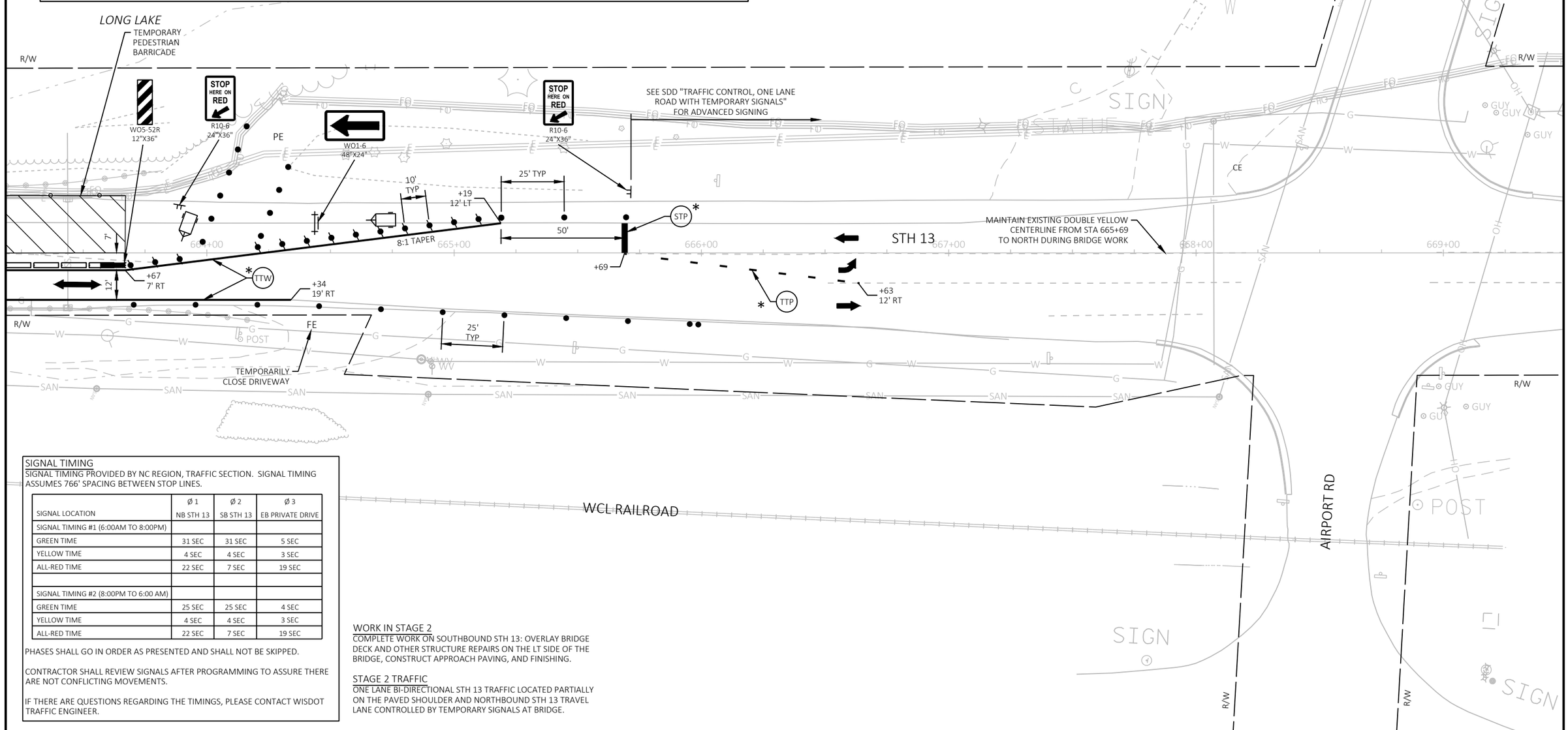

SIGNAL TIMING

SIGNAL TIMING PROVIDED BY NC REGION, TRAFFIC SECTION. SIGNAL TIMING ASSUMES 766' SPACING BETWEEN STOP LINES.

SIGNAL LOCATION	Ø 1 NB STH 13	Ø 2 SB STH 13	Ø 3 EB PRIVATE DRIVE
SIGNAL TIMING #1 (6:00AM TO 8:00PM)			
GREEN TIME	31 SEC	31 SEC	5 SEC
YELLOW TIME	4 SEC	4 SEC	3 SEC
ALL-RED TIME	22 SEC	7 SEC	19 SEC
SIGNAL TIMING #2 (8:00PM TO 6:00 AM)			
GREEN TIME	25 SEC	25 SEC	4 SEC
YELLOW TIME	4 SEC	4 SEC	3 SEC
ALL-RED TIME	22 SEC	7 SEC	19 SEC

PHASES SHALL GO IN ORDER AS PRESENTED AND SHALL NOT BE SKIPPED.

CONTRACTOR SHALL REVIEW SIGNALS AFTER PROGRAMMING TO ASSURE THERE ARE NOT CONFLICTING MOVEMENTS.

IF THERE ARE QUESTIONS REGARDING THE TIMINGS, PLEASE CONTACT WISDOT TRAFFIC ENGINEER.

WORK IN STAGE 2

COMPLETE WORK ON SOUTHBOUND STH 13: OVERLAY BRIDGE DECK AND OTHER STRUCTURE REPAIRS ON THE LT SIDE OF THE BRIDGE, CONSTRUCT APPROACH PAVING, AND FINISHING.

STAGE 2 TRAFFIC

ONE LANE BI-DIRECTIONAL STH 13 TRAFFIC LOCATED PARTIALLY ON THE PAVED SHOULDER AND NORTHBOUND STH 13 TRAVEL LANE CONTROLLED BY TEMPORARY SIGNALS AT BRIDGE.

2

LEGEND

- TYPE II BARRICADE WITH/WITHOUT ATTACHED SIGN
- TYPE III BARRICADE WITH/WITHOUT ATTACHED SIGN
- TRAFFIC CONTROL DRUM
- TRAFFIC CONTROL DRUM WITH TYPE C LIGHT
- TRAFFIC ACTUATED TRAILER MOUNTED TEMPORARY SIGNAL
- SIGN ON TEMPORARY SUPPORT
- CONCRETE BARRIER TEMPORARY PRECAST
- CRASH CUSHIONS TEMPORARY
- EXISTING PAVEMENT MARKING
- WORK AREA
- DIRECTION OF TRAFFIC
- RE4 — MARKING REMOVAL LINE 4-INCH
- REW — MARKING REMOVAL LINE WIDE
- TTW — TEMPORARY MARKING LINE REMOVABLE TAPE 4-INCH (WHITE)
- TTP — TEMPORARY MARKING LINE REMOVABLE TAPE 8-INCH (WHITE, 3' LINE-9' GAP)
- STP — TEMPORARY MARKING STOP LINE REMOVABLE TAPE 18-INCH (WHITE)

NOTES

TEMPORARY MARKING, TRAFFIC CONTROL DRUMS AND TEMPORARY SIGNAL PLACEMENT ARE SHOWN ON THE PLANS, SEE SDD "TRAFFIC CONTROL, ONE LANE ROAD WITH TEMPORARY SIGNALS" FOR ADDITIONAL INFORMATION

SEE SDD "BRIDGE TEMPORARY TRAFFIC SIGNAL INSTALLATION" FOR ADDITIONAL INFORMATION

* TEMPORARY MARKING PLACED IN PREVIOUS STAGE

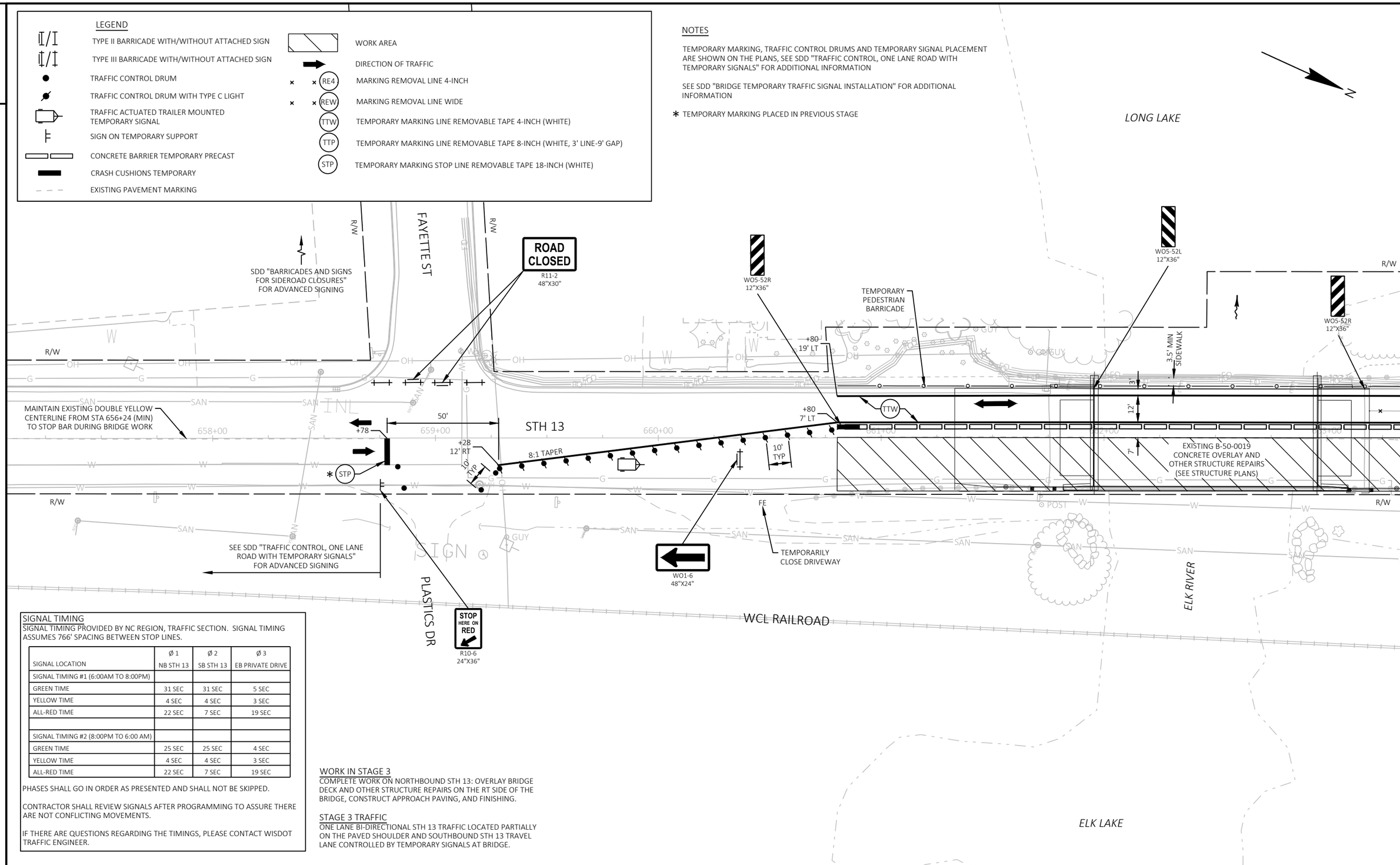

SIGNAL TIMING

SIGNAL TIMING PROVIDED BY NC REGION, TRAFFIC SECTION. SIGNAL TIMING ASSUMES 766' SPACING BETWEEN STOP LINES.

SIGNAL LOCATION	Ø 1 NB STH 13	Ø 2 SB STH 13	Ø 3 EB PRIVATE DRIVE
SIGNAL TIMING #1 (6:00AM TO 8:00PM)			
GREEN TIME	31 SEC	31 SEC	5 SEC
YELLOW TIME	4 SEC	4 SEC	3 SEC
ALL-RED TIME	22 SEC	7 SEC	19 SEC
SIGNAL TIMING #2 (8:00PM TO 6:00 AM)			
GREEN TIME	25 SEC	25 SEC	4 SEC
YELLOW TIME	4 SEC	4 SEC	3 SEC
ALL-RED TIME	22 SEC	7 SEC	19 SEC

PHASES SHALL GO IN ORDER AS PRESENTED AND SHALL NOT BE SKIPPED.

CONTRACTOR SHALL REVIEW SIGNALS AFTER PROGRAMMING TO ASSURE THERE ARE NOT CONFLICTING MOVEMENTS.

IF THERE ARE QUESTIONS REGARDING THE TIMINGS, PLEASE CONTACT WISDOT TRAFFIC ENGINEER.

WORK IN STAGE 3

COMPLETE WORK ON NORTHBOUND STH 13: OVERLAY BRIDGE DECK AND OTHER STRUCTURE REPAIRS ON THE RT SIDE OF THE BRIDGE, CONSTRUCT APPROACH PAVING, AND FINISHING.

STAGE 3 TRAFFIC

ONE LANE BI-DIRECTIONAL STH 13 TRAFFIC LOCATED PARTIALLY ON THE PAVED SHOULDER AND SOUTHBOUND STH 13 TRAVEL LANE CONTROLLED BY TEMPORARY SIGNALS AT BRIDGE.

2

LEGEND

- TYPE II BARRICADE WITH/WITHOUT ATTACHED SIGN
- TYPE III BARRICADE WITH/WITHOUT ATTACHED SIGN
- TRAFFIC CONTROL DRUM
- TRAFFIC CONTROL DRUM WITH TYPE C LIGHT
- TRAFFIC ACTUATED TRAILER MOUNTED TEMPORARY SIGNAL
- SIGN ON TEMPORARY SUPPORT
- CONCRETE BARRIER TEMPORARY PRECAST
- CRASH CUSHIONS TEMPORARY
- EXISTING PAVEMENT MARKING
- WORK AREA
- DIRECTION OF TRAFFIC
- RE4 MARKING REMOVAL LINE 4-INCH
- REW MARKING REMOVAL LINE WIDE
- TTW TEMPORARY MARKING LINE REMOVABLE TAPE 4-INCH (WHITE)
- TTP TEMPORARY MARKING LINE REMOVABLE TAPE 8-INCH (WHITE, 3' LINE-9' GAP)
- STP TEMPORARY MARKING STOP LINE REMOVABLE TAPE 18-INCH (WHITE)

NOTES

TEMPORARY MARKING, TRAFFIC CONTROL DRUMS AND TEMPORARY SIGNAL PLACEMENT ARE SHOWN ON THE PLANS, SEE SDD "TRAFFIC CONTROL, ONE LANE ROAD WITH TEMPORARY SIGNALS" FOR ADDITIONAL INFORMATION

SEE SDD "BRIDGE TEMPORARY TRAFFIC SIGNAL INSTALLATION" FOR ADDITIONAL INFORMATION

* TEMPORARY MARKING PLACED IN PREVIOUS STAGE

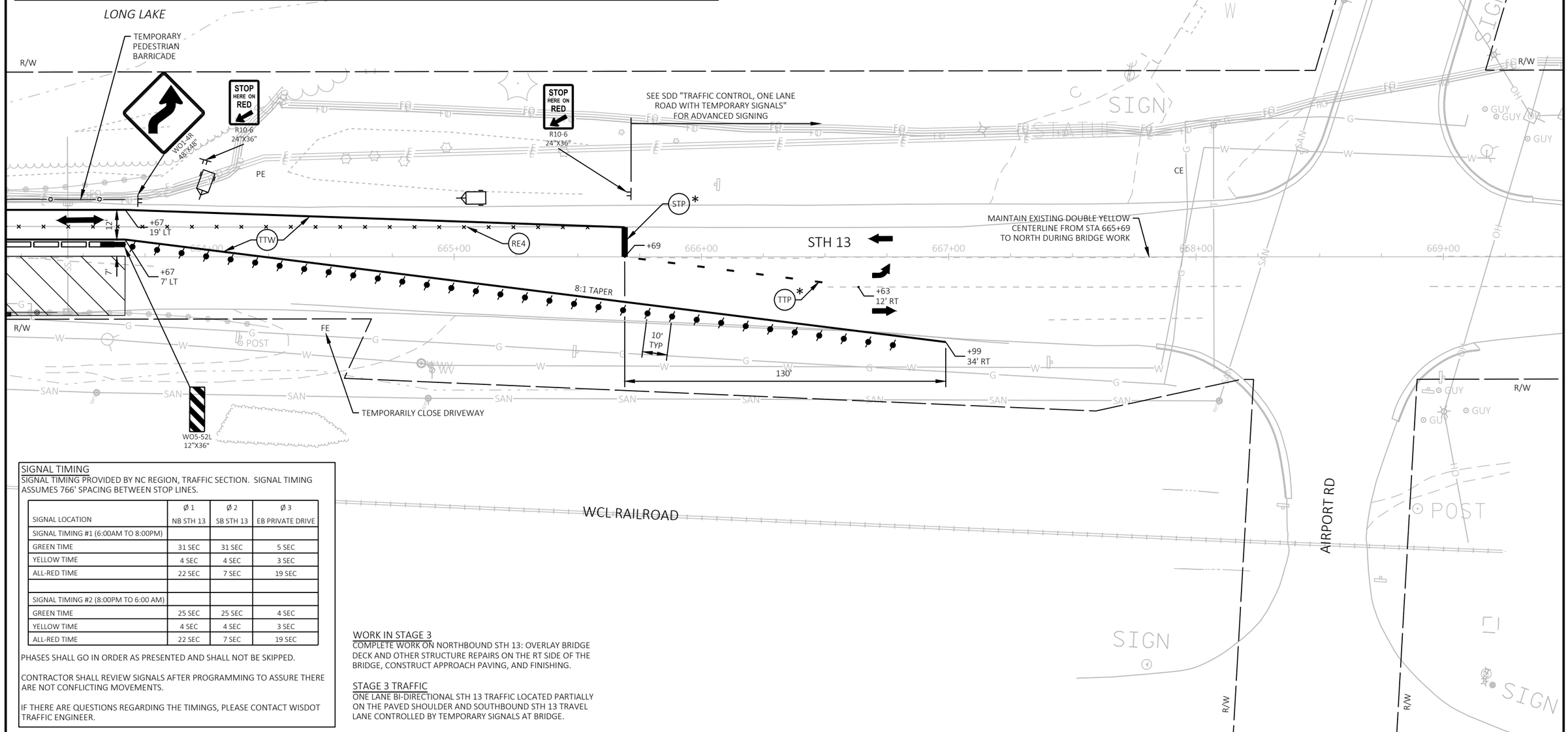

SIGNAL TIMING

SIGNAL TIMING PROVIDED BY NC REGION, TRAFFIC SECTION. SIGNAL TIMING ASSUMES 766' SPACING BETWEEN STOP LINES.

SIGNAL LOCATION	Ø 1 NB STH 13	Ø 2 SB STH 13	Ø 3 EB PRIVATE DRIVE
SIGNAL TIMING #1 (6:00AM TO 8:00PM)			
GREEN TIME	31 SEC	31 SEC	5 SEC
YELLOW TIME	4 SEC	4 SEC	3 SEC
ALL-RED TIME	22 SEC	7 SEC	19 SEC
SIGNAL TIMING #2 (8:00PM TO 6:00 AM)			
GREEN TIME	25 SEC	25 SEC	4 SEC
YELLOW TIME	4 SEC	4 SEC	3 SEC
ALL-RED TIME	22 SEC	7 SEC	19 SEC

PHASES SHALL GO IN ORDER AS PRESENTED AND SHALL NOT BE SKIPPED.

CONTRACTOR SHALL REVIEW SIGNALS AFTER PROGRAMMING TO ASSURE THERE ARE NOT CONFLICTING MOVEMENTS.

IF THERE ARE QUESTIONS REGARDING THE TIMINGS, PLEASE CONTACT WISDOT TRAFFIC ENGINEER.

WORK IN STAGE 3

COMPLETE WORK ON NORTHBOUND STH 13: OVERLAY BRIDGE DECK AND OTHER STRUCTURE REPAIRS ON THE RT SIDE OF THE BRIDGE, CONSTRUCT APPROACH PAVING, AND FINISHING.

STAGE 3 TRAFFIC

ONE LANE BI-DIRECTIONAL STH 13 TRAFFIC LOCATED PARTIALLY ON THE PAVED SHOULDER AND SOUTHBOUND STH 13 TRAVEL LANE CONTROLLED BY TEMPORARY SIGNALS AT BRIDGE.

1610-44-63

Line	Item	Item Description	Unit	Total	Qty
0006	203.0210.S	Abatement of Asbestos Containing Material (structure) 01. B-50-19	LS	1.000	1.000
0012	203.0500.S	Removing Old Structure Over Waterway (station) 01. Station 661+95.62	LS	1.000	1.000
0014	204.0100	Removing Concrete Pavement	SY	210.000	210.000
0018	204.0110	Removing Asphaltic Surface	SY	6.000	6.000
0024	204.0150	Removing Curb & Gutter	LF	53.000	53.000
0026	204.0165	Removing Guardrail	LF	42.000	42.000
0036	205.0100	Excavation Common	CY	216.000	216.000
0040	211.0100	Prepare Foundation for Asphaltic Paving (project) 02. 1610-44-63	LS	1.000	1.000
0046	213.0100	Finishing Roadway (project) 02. 1610-44-63	EACH	1.000	1.000
0050	305.0110	Base Aggregate Dense 3/4-Inch	TON	5.000	5.000
0052	305.0120	Base Aggregate Dense 1 1/4-Inch	TON	345.000	345.000
0056	415.0410	Concrete Pavement Approach Slab	SY	120.000	120.000
0062	455.0605	Tack Coat	GAL	40.000	40.000
0064	465.0105	Asphaltic Surface	TON	110.000	110.000
0066	465.0110	Asphaltic Surface Patching	TON	2.000	2.000
0072	465.0310	Asphaltic Curb	LF	53.000	53.000
0074	502.0100	Concrete Masonry Bridges	CY	15.000	15.000
0078	502.3200	Protective Surface Treatment	SY	507.000	507.000
0080	502.3210	Pigmented Surface Sealer	SY	69.000	69.000
0082	502.4205	Adhesive Anchors No. 5 Bar	EACH	402.000	402.000
0084	505.0600	Bar Steel Reinforcement HS Coated Structures	LB	1,890.000	1,890.000
0086	509.0301	Preparation Decks Type 1	SY	35.000	35.000
0088	509.0302	Preparation Decks Type 2	SY	15.000	15.000
0092	509.0505.S	Cleaning Decks to Reapply Concrete Masonry Overlay	SY	493.000	493.000
0096	509.1200	Curb Repair	LF	101.000	101.000
0098	509.1500	Concrete Surface Repair	SF	6.000	6.000
0100	509.2000	Full-Depth Deck Repair	SY	3.000	3.000
0102	509.2500	Concrete Masonry Overlay Decks	CY	49.000	49.000
0106	509.9005.S	Removing Concrete Masonry Deck Overlay (structure) 01. B-50-19	SY	493.000	493.000
0122	603.8000	Concrete Barrier Temporary Precast Delivered	LF	275.000	275.000
0124	603.8125	Concrete Barrier Temporary Precast Installed	LF	550.000	550.000
0132	606.0300	Riprap Heavy	CY	26.000	26.000
0140	614.0200	Steel Thrie Beam Structure Approach	LF	42.000	42.000
0142	614.0400	Adjusting Steel Plate Beam Guard	LF	25.000	25.000
0144	614.0905	Crash Cushions Temporary	EACH	4.000	4.000
0158	618.0100	Maintenance And Repair of Haul Roads (project) 02. 1610-44-63	EACH	1.000	1.000
0162	619.1000	Mobilization	EACH	0.300	0.300
0164	624.0100	Water	MGAL	4.000	4.000
0172	628.1905	Mobilizations Erosion Control	EACH	2.000	2.000
0174	628.1910	Mobilizations Emergency Erosion Control	EACH	2.000	2.000
0180	628.7015	Inlet Protection Type C	EACH	3.000	3.000
0200	642.5201	Field Office Type C	EACH	0.250	0.250
0202	643.0300	Traffic Control Drums	DAY	3,822.000	3,822.000
0204	643.0420	Traffic Control Barricades Type III	DAY	335.000	335.000
0206	643.0705	Traffic Control Warning Lights Type A	DAY	536.000	536.000
0208	643.0715	Traffic Control Warning Lights Type C	DAY	2,481.000	2,481.000
0210	643.0900	Traffic Control Signs	DAY	1,829.000	1,829.000
0214	643.1000	Traffic Control Signs Fixed Message	SF	36.000	36.000
0216	643.5000	Traffic Control	EACH	0.250	0.250
0218	644.1601	Temporary Pedestrian Curb Ramp	DAY	10.000	10.000
0220	644.1810	Temporary Pedestrian Barricade	LF	810.000	810.000

1610-44-63

Line	Item	Item Description	Unit	Total	Qty
0224	646.1020	Marking Line Epoxy 4-Inch	LF	3,365.000	3,365.000
0226	646.7120	Marking Diagonal Epoxy 12-Inch	LF	80.000	80.000
0228	646.9000	Marking Removal Line 4-Inch	LF	2,740.000	2,740.000
0230	646.9200	Marking Removal Line Wide	LF	80.000	80.000
0234	649.0150	Temporary Marking Line Removable Tape 4-Inch	LF	2,500.000	2,500.000
0236	649.0250	Temporary Marking Line Removable Tape 8-Inch	LF	20.000	20.000
0238	649.0850	Temporary Marking Stop Line Removable Tape 18-Inch	LF	24.000	24.000
0242	650.4500	Construction Staking Subgrade	LF	85.000	85.000
0244	650.5000	Construction Staking Base	LF	55.000	55.000
0248	650.7000	Construction Staking Concrete Pavement	LF	30.000	30.000
0252	650.9910	Construction Staking Supplemental Control (project) 02. 1610-44-63	LS	1.000	1.000
0260	661.0100	Temporary Traffic Signals for Bridges (structure) 03. B-50-19	LS	1.000	1.000
0264	690.0150	Sawing Asphalt	LF	170.000	170.000
0266	690.0250	Sawing Concrete	LF	40.000	40.000
0268	715.0415	Incentive Strength Concrete Pavement	DOL	500.000	500.000
0270	715.0502	Incentive Strength Concrete Structures	DOL	500.000	500.000
0272	999.2000.S	Installing and Maintaining Bird Deterrent System 01. B-50-19	EACH	1.000	1.000
0278	SPV.0105	Special 01. Temporary Vehicle Detection B-50-19	LS	1.000	1.000
0290	SPV.0180	Special 04. Pigmented Surface Reseal	SY	101.000	101.000

3

REMOVAL ITEMS

CATEGORY	STATION	TO	STATION	OFFSET	204.0100 REMOVING CONCRETE PAVEMENT SY	204.0110 REMOVING ASPHALTIC SURFACE SY	204.0150 REMOVING CURB & GUTTER LF
0010							
	661+75	-	661+95	LT	50	3	20
	661+75	-	661+95	RT	50	--	--
	662+96	-	663+19	LT	55	3	23
	662+96	-	663+19	RT	55	--	10
TOTALS					210	6	53

EARTHWORK SUMMARY

DIVISION	LOCATION	ITEM 205.0100 EXCAVATION COMMON (CY) (NOTE 1)	SALVAGED / UNUSEABLE PAVEMENT MATERIAL (NOTE 2)	AVAILABLE MATERIAL (NOTE 3)	UNEXPANDED FILL	EXPANDED FILL (NOTE 4)	MASS ORDINATE +/- (NOTE 5)
						FILL FACTOR 1.25	
STH 13							
1	B-50-19, STA 661+33 - STA 661+95 LT (STAGE 2)	84	31	53	0	0	53
2	B-50-19, STA 662+96 - STA 663+19 LT (STAGE 2)	27	15	12	0	0	12
3	B-50-19, STA 661+33 - STA 661+95 RT (STAGE 3)	80	30	50	0	0	50
4	B-50-19, STA 662+96 - STA 663+19 RT (STAGE 3)	25	14	11	0	0	11
TOTALS		216	90	126	0	0	126

1) SALVAGED/UNSUABLE PAVEMENT MATERIAL IS INCLUDED IN CUT
2) SALVAGED/UNUSABLE PAVEMENT MATERIAL = (AREA OF PROJECT PAVEMENT REMOVAL) * (TYPICAL DEPTH)
3) AVAILABLE MATERIAL = CUT - SALVAGED/UNUSUABLE PAVEMENT MATERIAL
4) EXPANDED FILL FACTOR = (UNEXPANDED FILL) * (FILL FACTOR)
5) MASS ORDINATE = AVAILABLE MATERIAL - (EXPANDED FILL); POSITIVE INDICATES AN EXCESS OF MATERIAL

3

MISCELLANEOUS ASPHALTIC ITEMS

CATEGORY	LOCATION	211.0100 PREPARE FOUNDATION FOR ASPHALTIC PAVING (1610-44-63) LS	213.0100 FINISHING ROADWAY (1610-44-63) EACH
0010			
	PROJECT	1	1
TOTALS		1	1

BASE AGGREGATE ITEMS

CATEGORY	STATION	TO	STATION	OFFSET	305.0110 BASE AGGREGATE DENSE 3/4-INCH TON	305.0120 BASE AGGREGATE DENSE 1 1/4-INCH TON
0010						
	661+33	-	661+95	LT	--	130
	661+33	-	661+95	RT	4	125
	662+96	-	663+19	LT	--	45
	662+96	-	663+19	RT	1	45
TOTALS					5	345

CONCRETE PAVEMENT ITEMS

CATEGORY	STATION	TO	STATION	OFFSET	415.0410 CONCRETE PAVEMENT APPROACH SLAB SY
0010					
	661+80	-	661+95	LT	30
	661+80	-	661+95	RT	30
	662+96	-	663+11	LT	30
	662+96	-	663+11	RT	30
TOTAL					120

ASPHALTIC ITEMS

CATEGORY	STATION	TO	STATION	OFFSET	455.0605 TACK COAT GAL	465.0105 ASPHALTIC SURFACE TON	465.0110 ASPHALTIC SURFACE PATCHING TON	465.0310 ASPHALTIC CURB LF
0010								
	661+33	-	661+95	LT	15	43	1	20
	661+33	-	661+95	RT	15	43	--	--
	662+96	-	663+19	LT	5	12	1	23
	662+96	-	663+19	RT	5	12	--	10
TOTALS					40	110	2	53

WATER

CATEGORY	LOCATION	624.0100 MGAL
0010	PROJECT-BASE COMPACTION	4
TOTAL		4

INLET PROTECTION TYPE C

CATEGORY	STATION	OFFSET	628.7015 EACH
0010			
	661+74	LT	1
	663+44	LT&RT	2
TOTAL			3

3

TRAFFIC CONTROL ITEMS

CATEGORY	STAGE	STAGE DURATION DAYS	643.0300 TRAFFIC CONTROL DRUMS NO.	643.0300 TRAFFIC CONTROL DRUMS DAY	643.0420 TRAFFIC CONTROL BARRICADES TYPE III NO.	643.0420 TRAFFIC CONTROL BARRICADES TYPE III DAY	643.0705 TRAFFIC CONTROL WARNING LIGHTS TYPE A NO.	643.0705 TRAFFIC CONTROL WARNING LIGHTS TYPE A DAY	643.0715 TRAFFIC CONTROL WARNING LIGHTS TYPE C NO.	643.0715 TRAFFIC CONTROL WARNING LIGHTS TYPE C DAY	643.0900 TRAFFIC CONTROL SIGNS NO.	643.0900 TRAFFIC CONTROL SIGNS DAY	643.1000 TRAFFIC CONTROL SIGNS FIXED MESSAGE SF	643.5000 TRAFFIC CONTROL EACH
0010														
	PRIOR TO PROJECT	7	--	--	--	--	--	--	--	--	--	--	36	--
	B-50-19	10	58	580	5	50	8	80	27	270	29	290	--	--
STAGE 1 SUBTOTALS				580		50		80		270		290	36	0
	B-50-19	25	58	1,450	5	125	8	200	27	675	27	675	--	--
STAGE 2 SUBTOTALS				1,450		125		200		675		675	0	0
	B-50-19	32	56	1,792	5	160	8	256	48	1,536	27	864	--	--
STAGE 3 SUBTOTALS				1,792		160		256		1,536		864	0	0
	PROJECT			--		--		--		--		--	--	0.25
TOTALS				3,822		335		536		2,481		1,829	36	0.25

TEMPORARY BARRIER ITEMS

CATEGORY	STAGE	STATION	TO	STATION	OFFSET	603.8000 CONCRETE BARRIER TEMPORARY PRECAST DELIVERED LF	603.8125 CONCRETE BARRIER TEMPORARY PRECAST INSTALLED LF
0010	1						
		660+86	-	663+61	RT	275	275
		661+10	-	663+72	LT&RT	--	--
STAGE 1 SUBTOTALS						275	275
	2						
		660+80	-	663+67	LT	--	--
STAGE 2 SUBTOTALS						--	--
	3						
		660+86	-	663+61	LT	--	275
STAGE 3 SUBTOTALS						--	275
TOTALS						275	550

3

CRASH CUSHIONS TEMPORARY

CATEGORY	STAGE	STATION	OFFSET	614.0905 EACH	BACK WIDTH FT	OBJECT MARKING PATTERN	CRASH TEST LEVEL	TRAFFIC DIRECTION	TRAFFIC LOCATION	CRASH CUSHION SHIELDS
0010										
	1									
		660+86	RT	1	2	OM-3L	TL-3	BIDIRECTIONAL	R	TEMPORARY CONCRETE BARRIER
		663+61	RT	1	2	OM-3R	TL-3	BIDIRECTIONAL	L	TEMPORARY CONCRETE BARRIER
STAGE 1 SUBTOTAL				2						
	3									
		660+86	LT	1	2	OM-3R	TL-3	BIDIRECTIONAL	L	TEMPORARY CONCRETE BARRIER
		663+61	LT	1	2	OM-3L	TL-3	BIDIRECTIONAL	R	TEMPORARY CONCRETE BARRIER
STAGE 3 SUBTOTAL				2						
TOTAL				4						

TEMPORARY PAVEMENT MARKING ITEMS

CATEGORY	STAGE	STATION	TO STATION	646.9000 MARKING REMOVAL LINE 4-INCH SOLID WHITE LF	646.9000 MARKING REMOVAL LINE 4-INCH SOLID YELLOW LF	646.9200 MARKING REMOVAL LINE WIDE SOLID YELLOW LF	649.0150 TEMPORARY MARKING LINE REMOVABLE TAPE 4-INCH SOLID WHITE LF	649.0250 TEMPORARY MARKING LINE REMOVABLE TAPE 8-INCH 3' LINE 9' SKIP WHITE LF	649.0850 TEMPORARY MARKING STOP LINE REMOVABLE TAPE 18-INCH SOLID WHITE LF
0010									
	STAGE 1 (B-50-19)	1246+10	- 1267+76	720	1,770	80	1,230	20	24
STAGE 1 SUBTOTALS				720	1,770	80	1,230	20	24
				2,490					
	STAGE 3 (B-50-19)	1246+10	- 1267+76	250	--	--	1,270		--
STAGE 3 SUBTOTALS				250	--	--	1,270	--	--
				250					
TOTALS				970	1,770	80	2,500	20	24
				2,740					

EROSION CONTROL MOBILIZATION

CATEGORY	LOCATION	628.1905 MOBILIZATIONS EROSION CONTROL EACH	628.1910 MOBILIZATIONS EMERGENCY EROSION CONTROL EACH
0010			
	PROJECT	2	2
TOTALS		2	2

TEMPORARY PEDESTRIAN ACCOMODATION ITEMS

CATEGORY	STAGE	STATION	TO	STATION	OFFSET	644.1601 TEMPORARY PEDESTRIAN CURB RAMP DAY	644.1810 TEMPORARY PEDESTRIAN BARRICADE LF
0010	1						
		661+10	-	663+72	LT&RT	10	523
STAGE 1 SUBTOTALS						10	523
	2						
		660+80	-	663+67	LT	--	287
STAGE 2 SUBTOTALS						--	287
TOTALS						10	810

GUARDRAIL ITEMS

CATEGORY	STATION	TO	STATION	OFFSET	204.0165 REMOVING GUARDRAIL LF	614.0200 STEEL THRIE BEAM STRUCTURE APPROACH LF	614.0400 ADJUSTING STEEL PLATE BEAM GUARD LF
0010							
	661+52	-	661+85	RT	21	21	12.5
	663+06	-	663+40	RT	21	21	12.5
TOTALS					42	42	25

3

PAVEMENT MARKING ITEMS

CATEGORY	STATION	TO	STATION	646.1020 MARKING LINE EPOXY 4-INCH SOLID WHITE LF	646.1020 MARKING LINE EPOXY 4-INCH SOLID YELLOW LF	646.7120 MARKING DIAGONAL EPOXY 12-INCH LF
0010						
	658+78	-	666+46	1,164	2,201	80
TOTALS				1,164	2,201	80
				3,365		

CONSTRUCTION STAKING

CATEGORY	STATION	TO	STATION	OFFSET	650.4500 CONSTRUCTION STAKING SUBGRADE LF	650.5000 CONSTRUCTION STAKING BASE LF	650.7000 CONSTRUCTION STAKING CONCRETE PAVEMENT LF	650.9910 CONSTRUCTION STAKING SUPPLEMENTAL CONTROL (1610-44-63) LS
0010								
	661+33	-	661+95	LT&RT	62	47	15	--
	662+96	-	663+19	LT&RT	23	8	15	--
	PROJECT				--	--	--	1
TOTALS					85	55	30	1

3

TEMPORARY TRAFFIC SIGNAL ITEMS

CATEGORY	LOCATION	661.0100.01 TEMPORARY TRAFFIC SIGNALS FOR BRIDGES (B-50-19) LS	SPV.0105.01 TEMPORARY VEHICLE DETECTION B-50-19 LS
0010			
	PROJECT	1	1
TOTAL		1	1

SAWING ITEMS

CATEGORY	STATION	TO	STATION	OFFSET	690.0150 SAWING ASPHALT LF	690.0250 SAWING CONCRETE LF
0010						
	661+33	-	661+95	LT&RT	105	20
	662+96	-	663+19	LT&RT	65	20
TOTALS					170	40

INSTALLING AND MAINTAINING BIRD DETERRENT SYSTEM

CATEGORY	LOCATION	999.2000.S EACH
0010	STRUCTURE B-50-19	1
TOTAL		1

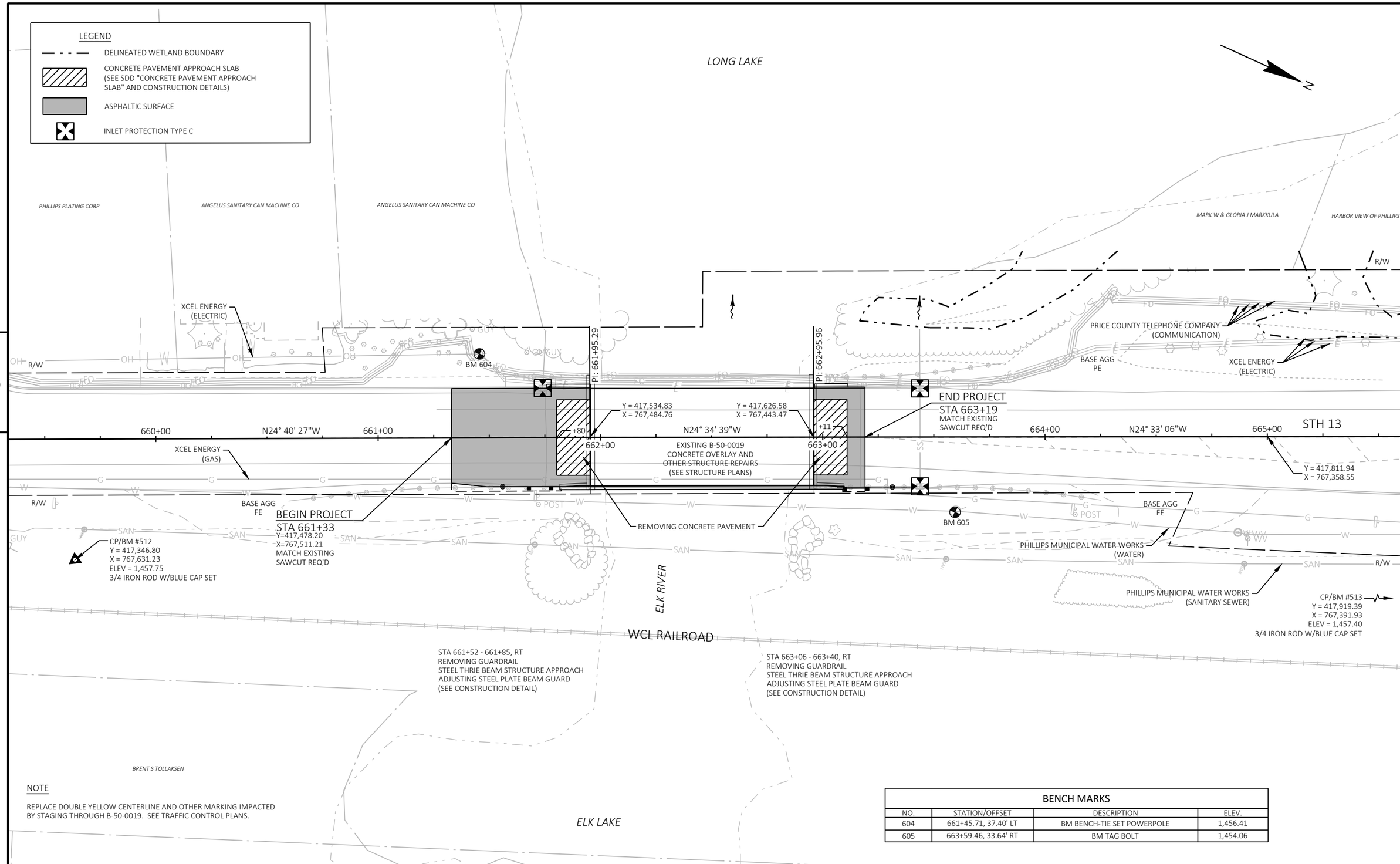

NOTE

REPLACE DOUBLE YELLOW CENTERLINE AND OTHER MARKING IMPACTED BY STAGING THROUGH B-50-0019. SEE TRAFFIC CONTROL PLANS.

BENCH MARKS

NO.	STATION/OFFSET	DESCRIPTION	ELEV.
604	661+45.71, 37.40' LT	BM BENCH-TIE SET POWERPOLE	1,456.41
605	663+59.46, 33.64' RT	BM TAG BOLT	1,454.06

Standard Detail Drawing List

08E08-03	TYPICAL INSTALLATIONS OF EROSION BALES / TEMPORARY DITCH CHECKS
08E10-02	INLET PROTECTION TYPE A, B, C AND D
09G02-05A	BRIDGE TEMPORARY TRAFFIC SIGNAL INSTALLATION
09G02-05B	BRIDGE TEMPORARY TRAFFIC SIGNAL INSTALLATION
09G02-05C	BRIDGE TEMPORARY TRAFFIC SIGNAL INSTALLATION
12A03-10	NAME PLATE (STRUCTURES)
13B02-09A	CONCRETE PAVEMENT APPROACH SLAB
14B07-15A	CONCRETE BARRIER TEMPORARY PRECAST, 12'-6"
14B07-15B	CONCRETE BARRIER TEMPORARY PRECAST, 12'-6"
14B07-15C	CONCRETE BARRIER TEMPORARY PRECAST, 12'-6"
14B07-15D	CONCRETE BARRIER TEMPORARY PRECAST, 12'-6"
14B07-15E	CONCRETE BARRIER TEMPORARY PRECAST, 12'-6"
14B07-15F	CONCRETE BARRIER TEMPORARY PRECAST, 12'-6"
14B07-15G	CONCRETE BARRIER TEMPORARY PRECAST, 12'-6"
14B07-15H	CONCRETE BARRIER TEMPORARY PRECAST, 12'-6"
14B07-15I	CONCRETE BARRIER TEMPORARY PRECAST, 12'-6"
14B08-02A	CRASH CUSHION/SAND BARREL ARRAY AND OTHER TEMPORARY BARRIER LAYOUT DETAILS
14B08-02B	CRASH CUSHION/SAND BARREL ARRAY AND OTHER TEMPORARY BARRIER LAYOUT DETAILS
14B08-02C	CRASH CUSHION/SAND BARREL ARRAY AND OTHER TEMPORARY BARRIER LAYOUT DETAILS
14B08-02D	CRASH CUSHION/SAND BARREL ARRAY AND OTHER TEMPORARY BARRIER LAYOUT DETAILS
14B08-02E	CRASH CUSHION/SAND BARREL ARRAY AND OTHER TEMPORARY BARRIER LAYOUT DETAILS
14B15-11A	STEEL PLATE BEAM GUARD, CLASS "A" INSTALLATION & ELEMENTS
14B15-11B	STEEL PLATE BEAM GUARD, CLASS "A" INSTALLATION & ELEMENTS
14B15-11C	STEEL PLATE BEAM GUARD, CLASS "A", INSTALLATION & ELEMENTS
14B20-11A	STEEL THRIE BEAM STRUCTURE APPROACH
15C08-20A	LONGITUDINAL MARKING (MAINLINE)
15C11-08B	CHANNELIZING DEVICES DRUMS, CONES, BARRICADES AND VERTICAL PANELS
15C12-07	TRAFFIC CONTROL FOR LANE CLOSURE WITH FLAGGING OPERATION
15D28-04	TRAFFIC CONTROL, WORK ON SHOULDER OR PARKING LANE, UNDIVIDED ROADWAY
15D33-06	TRAFFIC CONTROL, ONE LANE ROAD WITH TEMPORARY SIGNALS
15D38-02A	TEMPORARY TRAFFIC CONTROL SIGN MOUNTING
15D38-02B	ATTACHMENT OF SIGNS TO POSTS

6

6

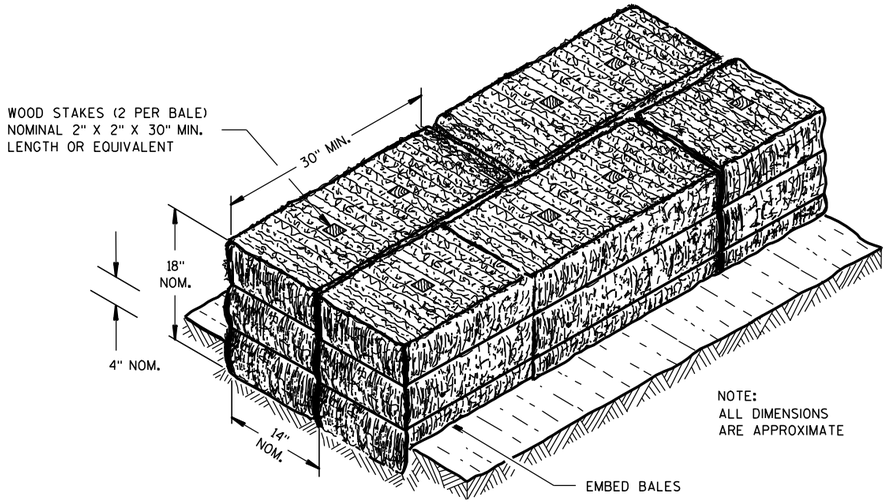

SECTION A-A

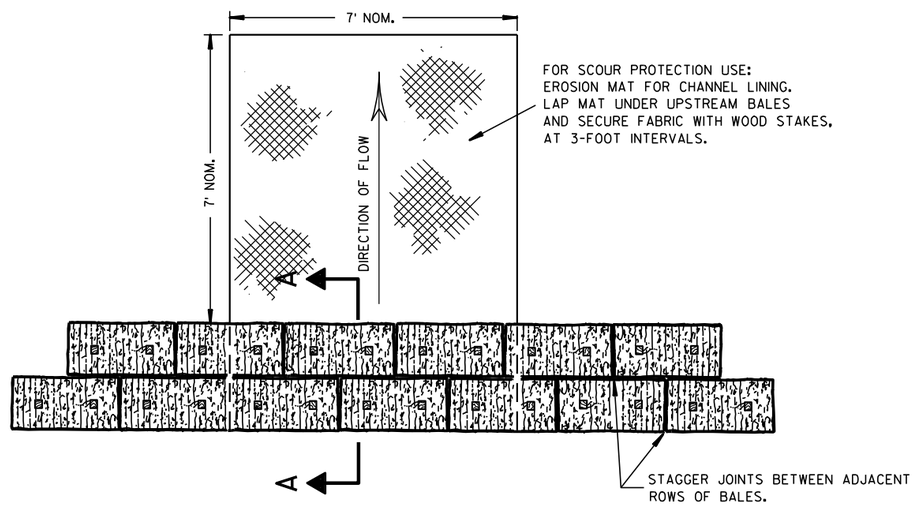

PLAN VIEW

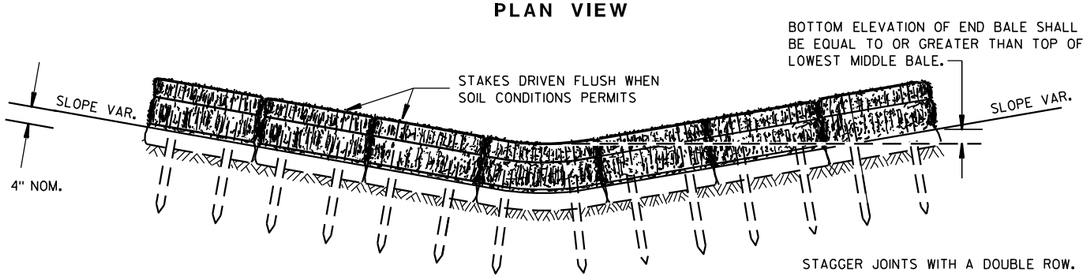

FRONT ELEVATION

TEMPORARY DITCH CHECK USING EROSION BALES ①

GENERAL NOTES

DETAILS OF CONSTRUCTION, MATERIALS AND WORKMANSHIP NOT SHOWN ON THIS DRAWING SHALL CONFORM TO THE PERTINENT REQUIREMENTS OF THE STANDARD SPECIFICATIONS AND THE APPLICABLE SPECIAL PROVISIONS.

① TEMPORARY DITCH CHECKS EITHER EROSION BALES OR MANUFACTURED SHALL BE PAID FOR UNDER THE BID ITEM OF TEMPORARY DITCH CHECK. THE DEPARTMENT WILL NOT PAY FOR TEMPORARY DITCH CHECKS CONSTRUCTED OF A SINGLE ROW OF EROSION BALES.

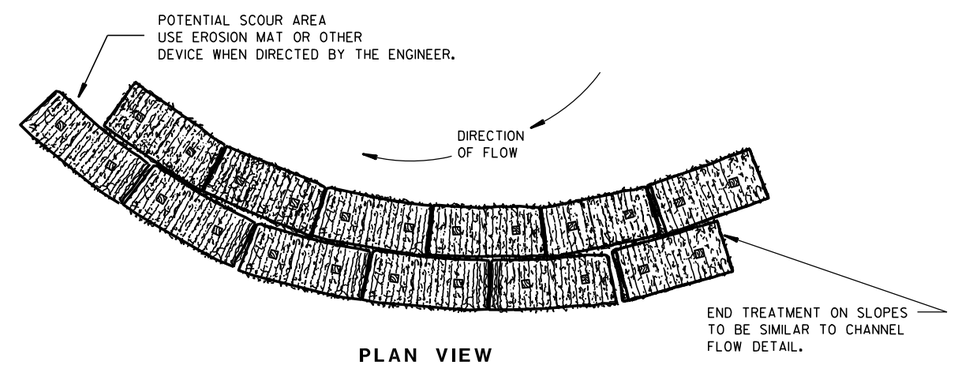

PLAN VIEW

WHEN ALTERING THE DIRECTION OF FLOW

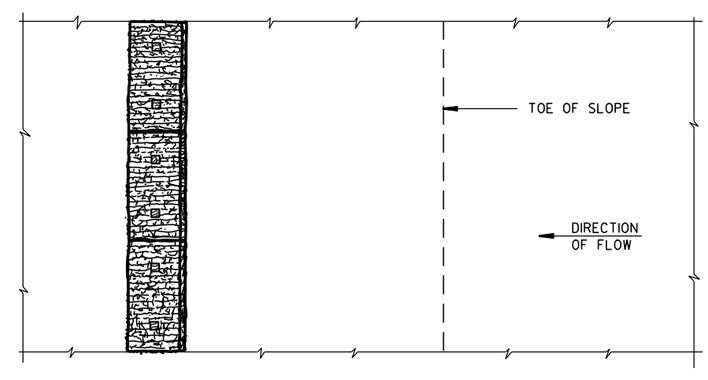

PLAN VIEW

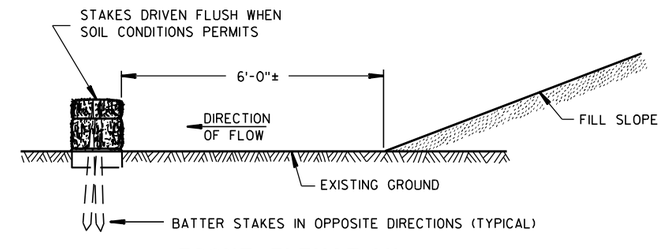

FRONT ELEVATION

WHEN EXISTING GROUND SLOPES AWAY FROM FILL SLOPE

EROSION BALES FOR SHEET FLOW

TYPICAL INSTALLATIONS OF EROSION BALES / TEMPORARY DITCH CHECKS

STATE OF WISCONSIN
DEPARTMENT OF TRANSPORTATION

APPROVED
6/04/02 — DATE
/S/ Beth Cann — CHIEF ROADWAY DEVELOPMENT ENGINEER
FHWA

6

6

S.D.D. 8 E 8-3

S.D.D. 8 E 8-3

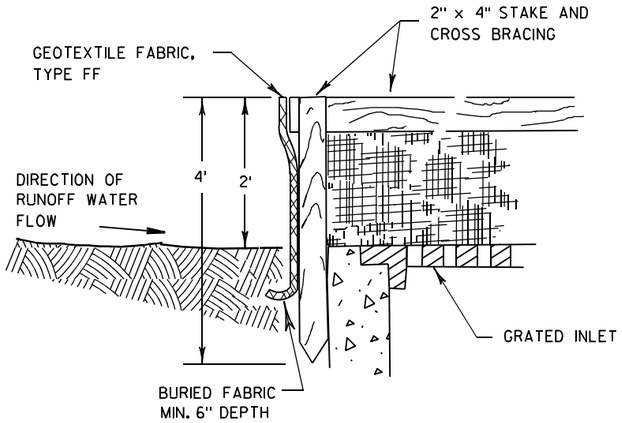

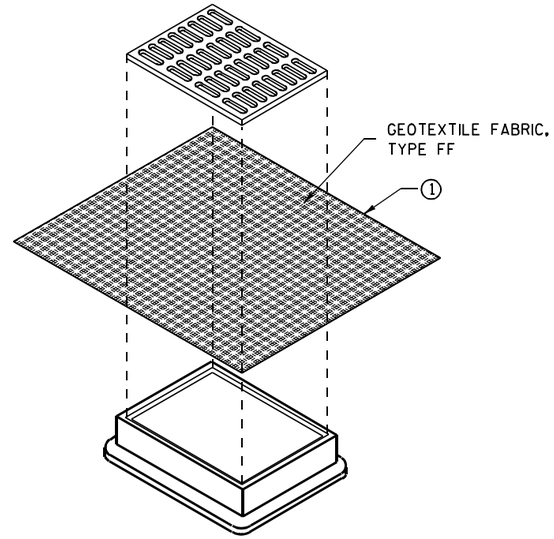

INLET PROTECTION, TYPE B
(WITHOUT CURB BOX)

(CAN BE INSTALLED IN ANY INLET WITHOUT A CURB BOX)

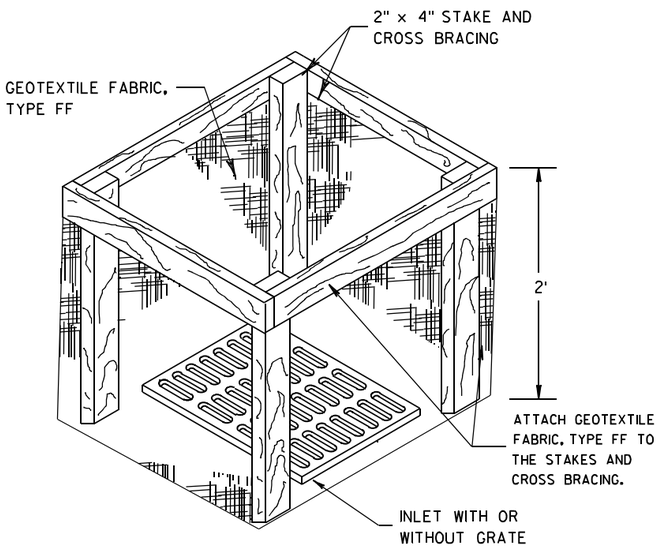

INLET PROTECTION, TYPE A

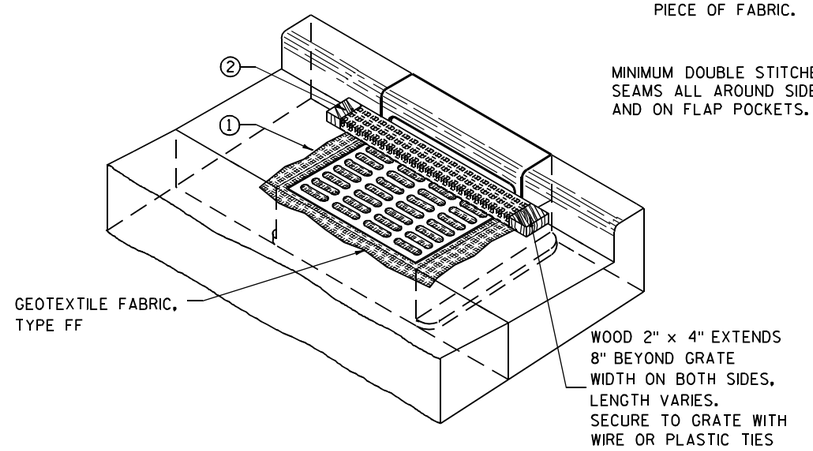

INLET PROTECTION, TYPE C (WITH CURB BOX)

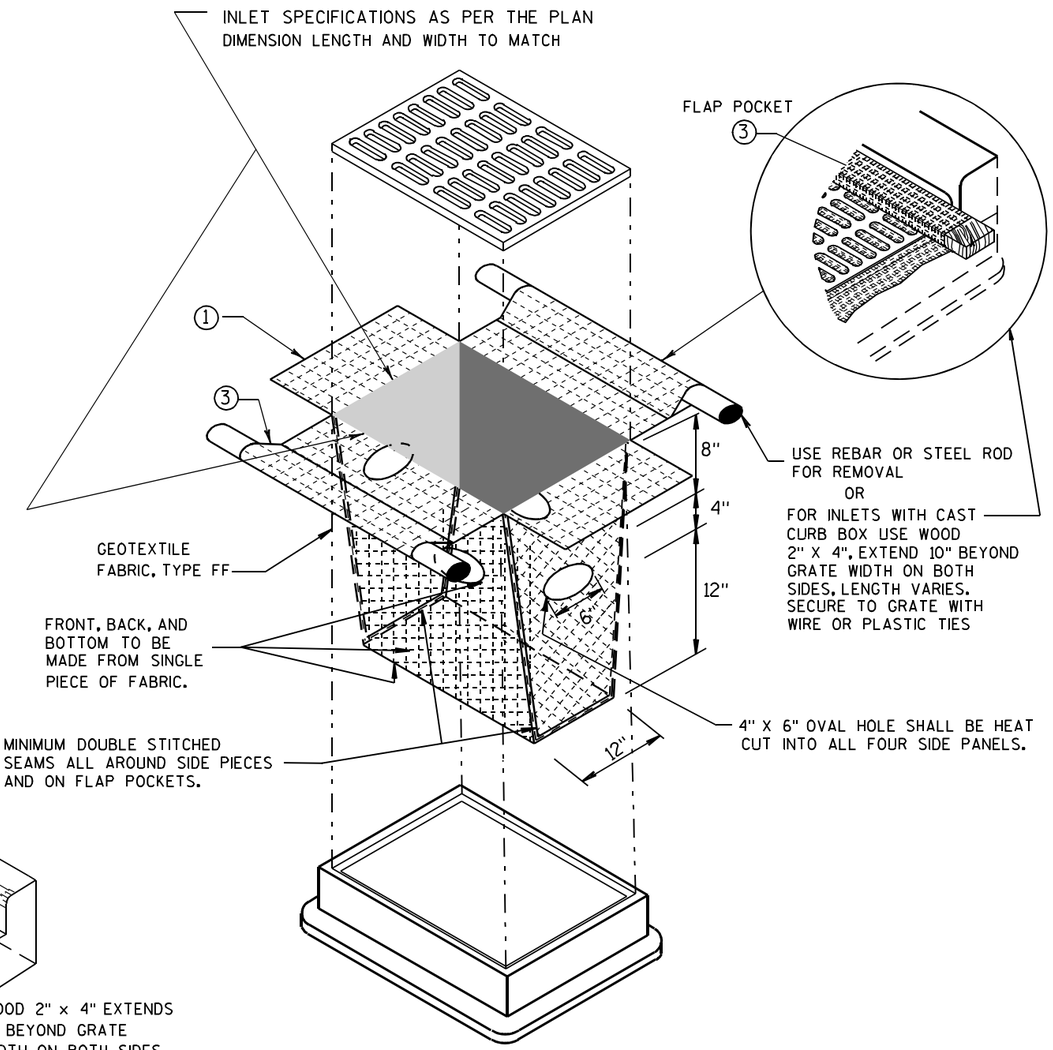

INLET PROTECTION, TYPE D

(CAN BE INSTALLED IN ANY INLET TYPE WITH
OR WITHOUT A CURB BOX AS PER NOTE 2)

GENERAL NOTES

INLET PROTECTION DEVICES SHALL BE MAINTAINED OR REPLACED AT THE DIRECTION OF THE ENGINEER.

MANUFACTURED ALTERNATIVES APPROVED AND LISTED ON THE DEPARTMENT'S EROSION CONTROL PRODUCT ACCEPTABILITY LIST MAY BE SUBSTITUTED.

WHEN REMOVING OR MAINTAINING INLET PROTECTION, CARE SHALL BE TAKEN SO THAT THE SEDIMENT TRAPPED ON THE GEOTEXTILE FABRIC DOES NOT FALL INTO THE INLET. ANY MATERIAL FALLING INTO THE INLET SHALL BE REMOVED IMMEDIATELY.

1 FINISHED SIZE, INCLUDING FLAP POCKETS WHERE REQUIRED, SHALL EXTEND A MINIMUM OF 10" AROUND THE PERIMETER TO FACILITATE MAINTENANCE OR REMOVAL.

2 FOR INLET PROTECTION, TYPE C (WITH CURB BOX), AN ADDITIONAL 18" OF FABRIC IS WRAPPED AROUND THE WOOD AND SECURED WITH STAPLES. THE WOOD SHALL NOT BLOCK THE ENTIRE HEIGHT OF THE CURB BOX OPENING.

3 FLAP POCKETS SHALL BE LARGE ENOUGH TO ACCEPT WOOD 2X4.

INSTALLATION NOTES

TYPE B & C

TRIM EXCESS FABRIC IN THE FLOW LINE TO WITHIN 3" OF THE GRATE.

THE CONTRACTOR SHALL DEMONSTRATE A METHOD OF MAINTENANCE, USING A SEWN FLAP, HAND HOLDS OR OTHER METHOD TO PREVENT ACCUMULATED SEDIMENT FROM ENTERING THE INLET.

TYPE D

DO NOT INSTALL INLET PROTECTION TYPE D IN INLETS SHALLOWER THAN 30", MEASURED FROM THE BOTTOM OF THE INLET TO THE TOP OF THE GRATE.

TRIM EXCESS FABRIC IN THE FLOW LINE TO WITHIN 3" OF THE GRATE.

THE INSTALLED BAG SHALL HAVE A MINIMUM SIDE CLEARANCE, BETWEEN THE INLET WALLS AND THE BAG, MEASURED AT THE BOTTOM OF THE OVERFLOW HOLES, OF 3". WHERE NECESSARY THE CONTRACTOR SHALL CINCH THE BAG, USING PLASTIC ZIP TIES, TO ACHIEVE THE 3" CLEARANCE. THE TIES SHALL BE PLACED AT A MAXIMUM OF 4" FROM THE BOTTOM OF THE BAG.

INLET PROTECTION
TYPE A, B, C, AND D

STATE OF WISCONSIN
DEPARTMENT OF TRANSPORTATION

APPROVED
10/16/02 — DATE
/S/ Beth Cannestra — CHIEF ROADWAY DEVELOPMENT ENGINEER
FHWA

6

S.D.D. 8 E 10-2

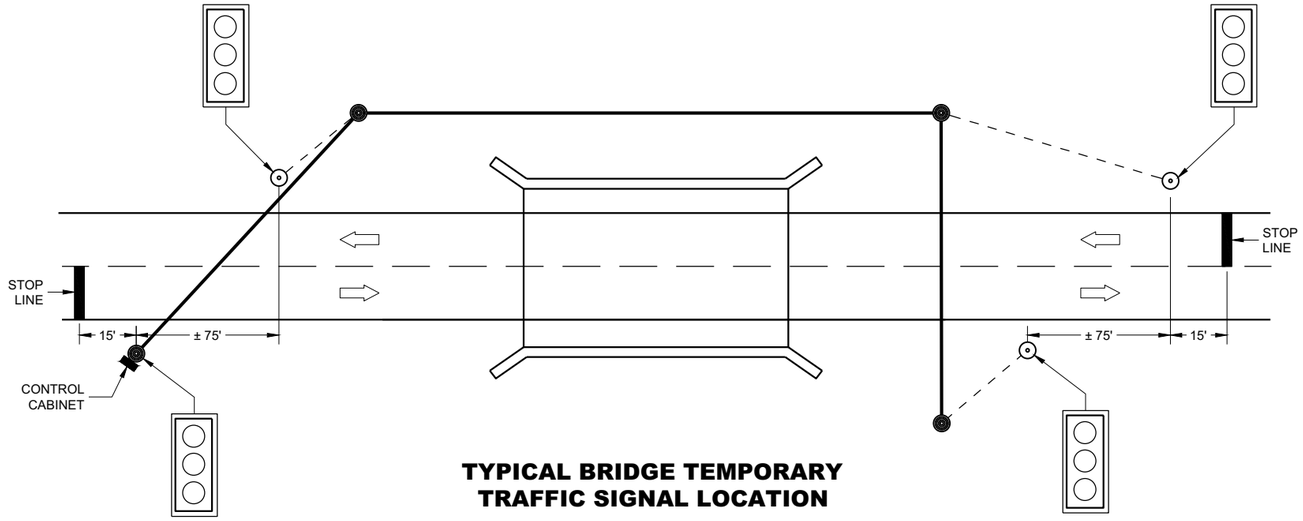

TYPICAL BRIDGE TEMPORARY TRAFFIC SIGNAL LOCATION

LEGEND

- WOOD POLE (NON-BREAKAWAY)
- WOOD POST (BREADAWAY)
- SIGNAL CABLE
- SIGNAL CABLE W/MESSENGER
- DIRECTION OF TRAFFIC
- LED TRAFFIC SIGNAL WITH BACKPLATE (3-12")

GENERAL NOTES

DETAILS OF CONSTRUCTION, MATERIALS AND WORKMANSHIP NOT SHOWN ON THIS DRAWING SHALL CONFORM TO THE PERTINENT REQUIREMENTS OF THE CONTRACT.

POLE MOUNTED TRAFFIC SIGNAL CONTROL CABINET MAY BE MOUNTED ON THE SERVICE POLE IF THE ELECTRICAL UTILITY ALLOWS THE INSTALLATION.

WHEN UTILITY POLES ARE USED TO SPAN THE TEMPORARY OVERHEAD CABLE, WRITTEN PERMISSION MUST BE OBTAINED FROM THE OWNER OF THE POLES AND GIVEN TO THE PROJECT MANAGER. ALL PERTINENT UTILITY AND CODE CLEARANCES SHALL BE MAINTAINED.

WOOD POLES (NON-BREAKAWAY) SHALL BE NO CLOSER TO EDGE OF PAVEMENT THAN OFFSET DISTANCE CHART ALLOWS OR 4 FEET BEHIND PROTECTIVE BARRIER (BEAM GUARD, ETC.).

WOOD POSTS (BREAKAWAY) SHALL BE NO CLOSER THAN 2 FEET OUTSIDE OF SHOULDER.

VERTICAL CLEARANCE ETC. PER NEC.

TRAFFIC SIGNAL FACES SHALL BE TYPICALLY PLACED 12 FEET FROM EDGE OF PAVEMENT.

EACH TRAFFIC SIGNAL SHALL HAVE A BACKPLATE.

SIGNING, PAVEMENT MARKING AND LANE CONTROL REQUIREMENTS SHALL CONFORM TO STANDARD DETAIL DRAWING 15D33.

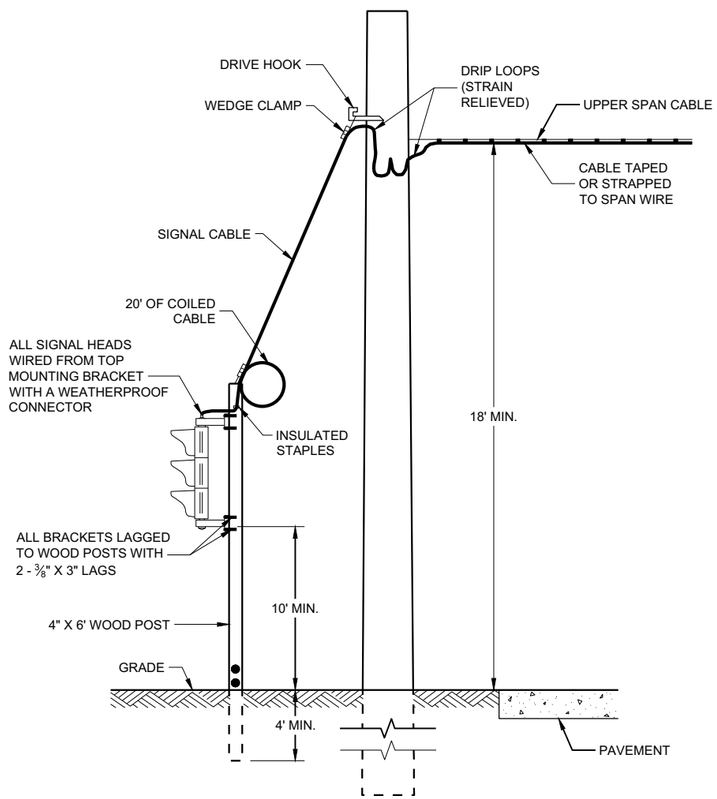

TYPICAL DROP TO TRAFFIC SIGNAL FACE

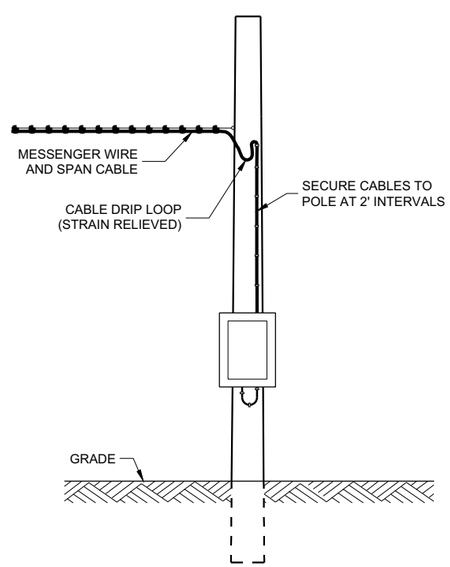

POLE MOUNT CABINET INSTALLATION

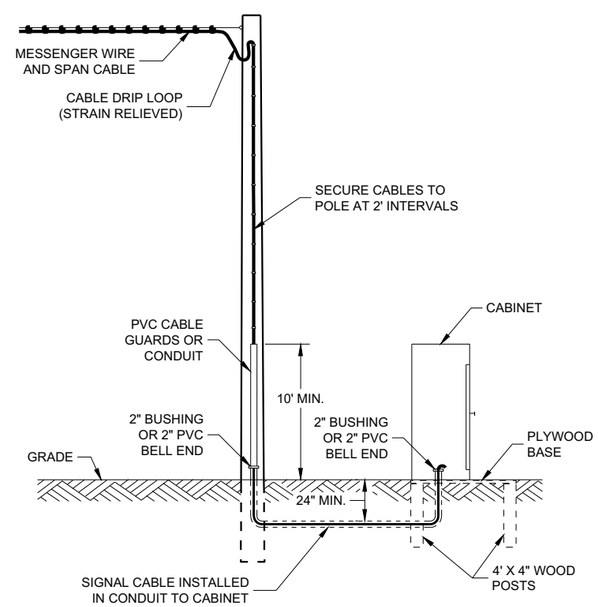

GROUND MOUNT CABINET INSTALLATION

MINIMUM POLE LENGTHS	CLASS	POLE BURIAL DEPTHS
25'	V	5'
30'	V	6'
35'	IV	7'
40'	IV	8'
45'	IV	9'

OFFSET DISTANCES FOR TEMPORARY NON-BREAKAWAY POLES	
SPEED LIMIT	OFFSET DISTANCE*
GREATER THAN 45 MPH	18 FT
45 MPH OR LESS	12 FT
45 MPH OR LESS W/CURBS	2 FT

* NOTE: OFFSET MEASURED FROM OUTER EDGE OF OUTSIDE THRU LANE.

BRIDGE TEMPORARY TRAFFIC SIGNAL INSTALLATION

STATE OF WISCONSIN
DEPARTMENT OF TRANSPORTATION

APPROVED
March 2018 — DATE
/S/ Ahmet Demirbilek — ROADWAY STANDARDS DEVE ENGINEER
FHWA

6

SDD09G02 - 05a

GENERAL NOTES

USE ¾" DRILL IN WOOD POLE TO PROVIDE FOR ⅝" BOLTS.

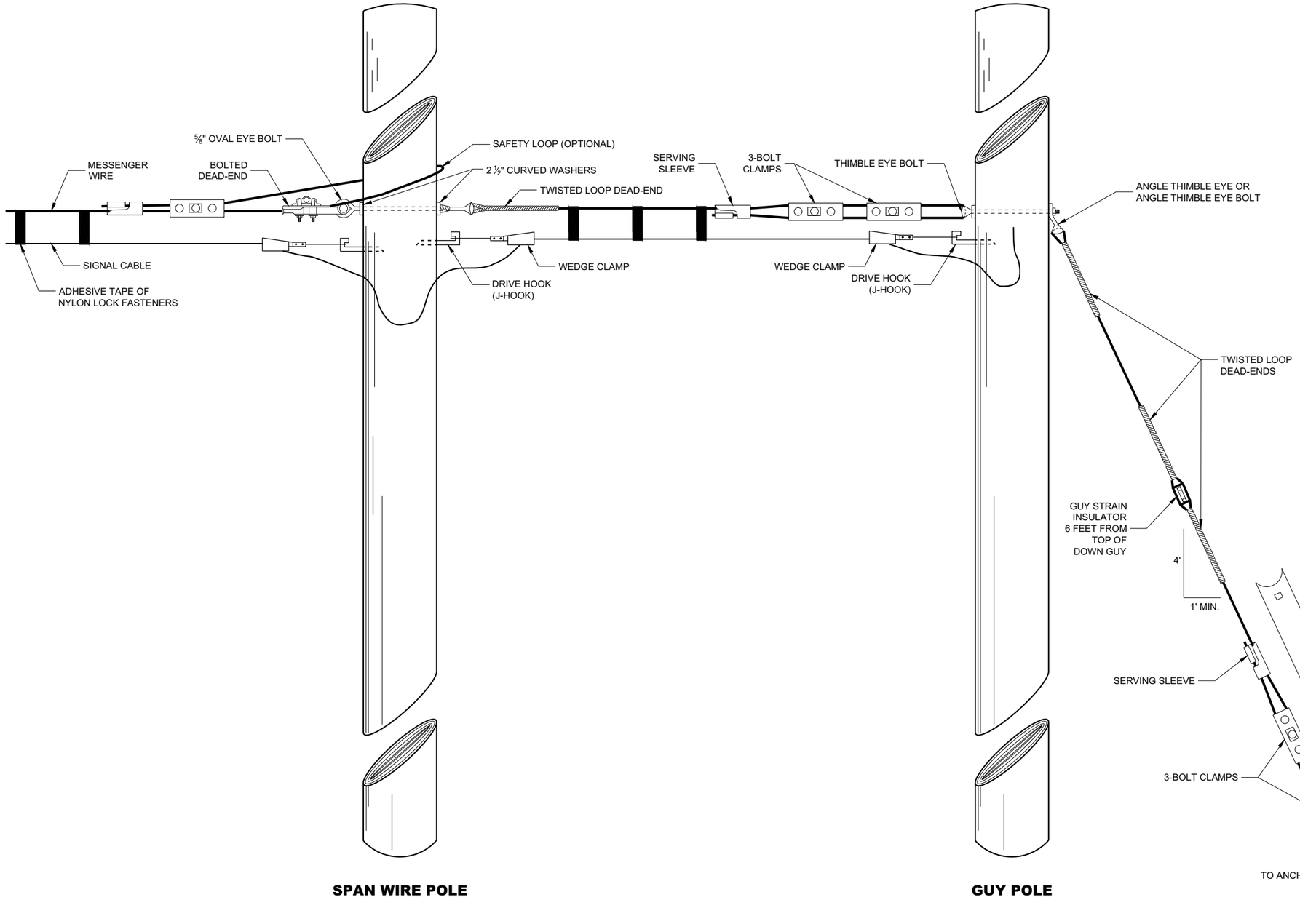

TYPICAL DEAD-ENDINGS OR GUYING

BRIDGE TEMPORARY TRAFFIC SIGNAL INSTALLATION

STATE OF WISCONSIN
DEPARTMENT OF TRANSPORTATION

APPROVED
June 2015 — DATE
/S/ Ahmet Demerbilek — ROADWAY STANDARDS DEVE ENGINEER
FHWA

6

6

SDD09G02 - 05b

SDD09G02 - 05b

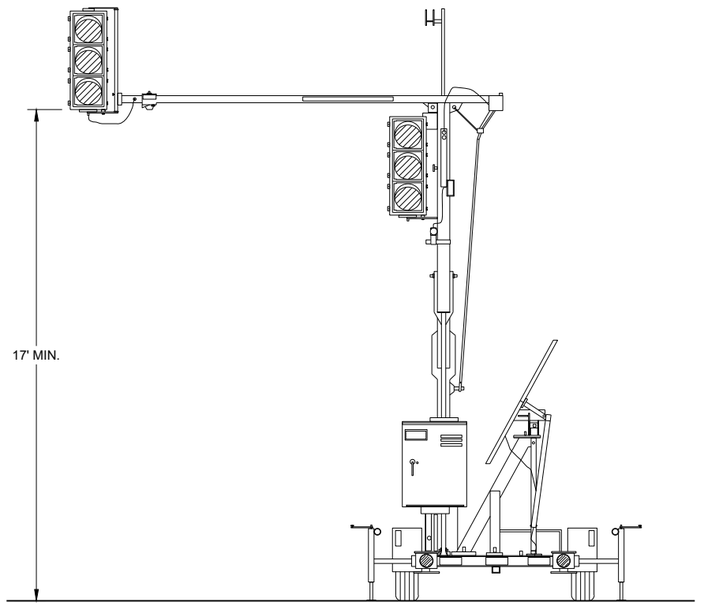

TRAILER MOUNTED TRAFFIC SIGNAL

GENERAL NOTES

DETAIL OF CONSTRUCTION, MATERIALS AND WORKMANSHIP NOT SHOWN ON THIS DRAWING SHALL CONFORM TO THE PERTINENT REQUIREMENTS OF THE CONTRACT.

SIGNING, PAVEMENT MARKING AND LANE CONTROL REQUIREMENTS SHALL CONFORM TO STANDARD DETAIL DRAWING 15D33.

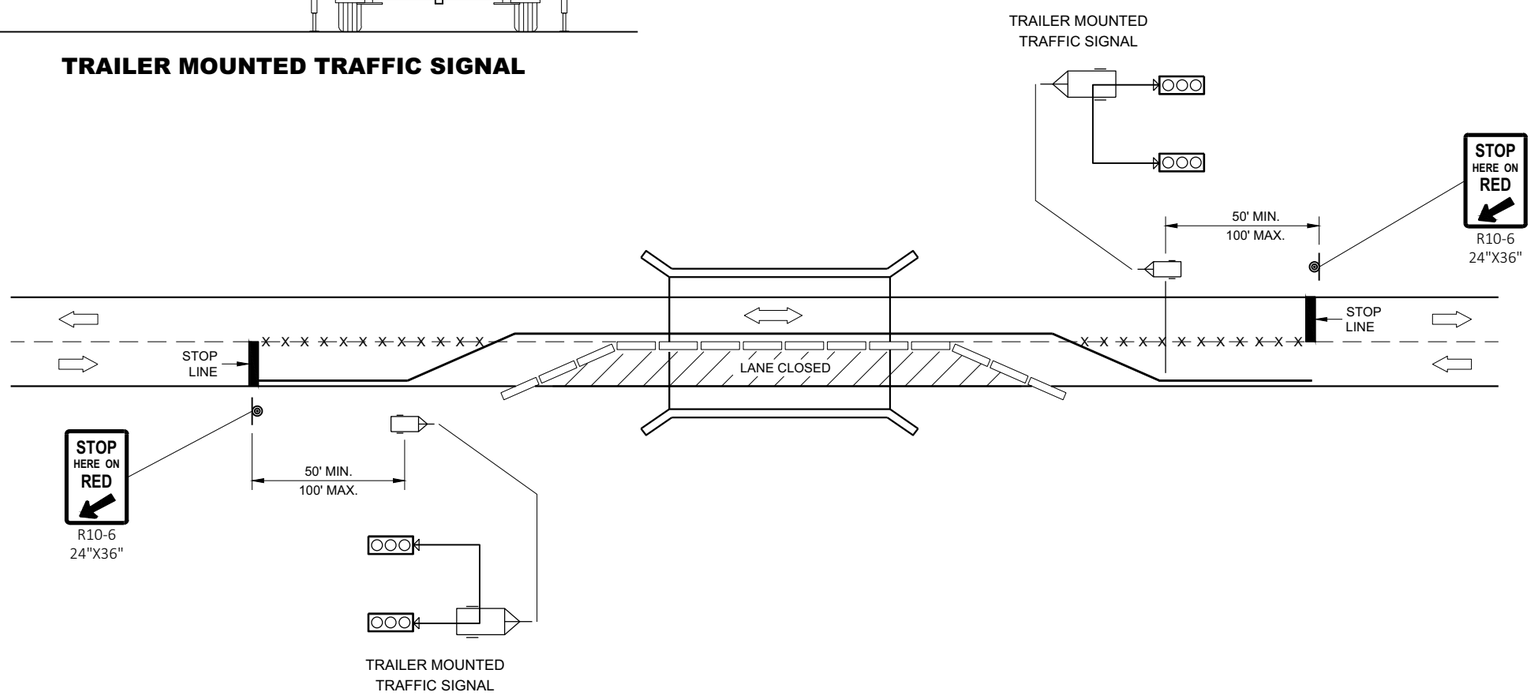

TYPICAL TRAILER MOUNTED TRAFFIC SIGNAL LOCATION

LEGEND

- POST MOUNTED SIGN
- TEMPORARY PRECAST CONCRETE BARRIER
- TRAILER MOUNTED TRAFFIC SIGNAL
- REMOVE PAVEMENT MARKINGS
- DIRECTION OF TRAFFIC

BRIDGE TEMPORARY TRAFFIC SIGNAL INSTALLATION

STATE OF WISCONSIN
DEPARTMENT OF TRANSPORTATION

APPROVED
June 2015 — DATE
/S/ Ahmet Demerbilek — ROADWAY STANDARDS DEVE ENGINEER

FHWA

6

SDD 09G02 - 05c

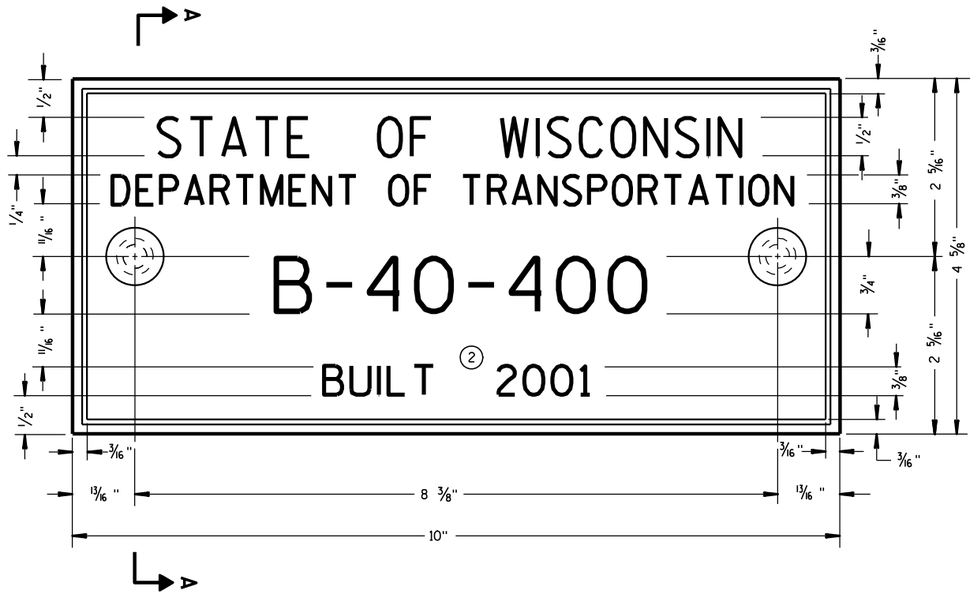

TYPICAL NAME PLATE
(BRIDGES, CULVERTS, AND RETAINING WALLS)

GENERAL NOTES

NAME PLATES TO BE INSTALLED ON BRIDGES, CULVERTS, AND RETAINING WALLS SHALL CONFORM TO THE REQUIREMENTS OF SECTION 502.3.11 OF THE STANDARD SPECIFICATIONS.

THE BRIDGE NUMBER AND YEAR BUILT SHOWN ON THIS DRAWING ARE EXAMPLES ONLY. SEE CONSTRUCTION PLANS FOR INDIVIDUAL NUMBERING AND YEAR BUILT.

① EPOXY RESIN SHALL BE FROM AN APPROVED MANUFACTURER AND USED IN ACCORDANCE WITH MANUFACTURER'S RECOMMENDATIONS.

② REHABILITATION OF AN EXISTING STRUCTURE SHOULD USE THE DATE OF ORIGINAL STRUCTURE CONSTRUCTION.

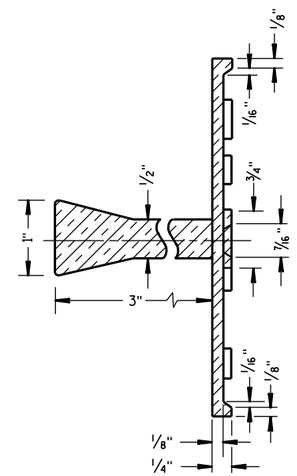

SECTION A-A

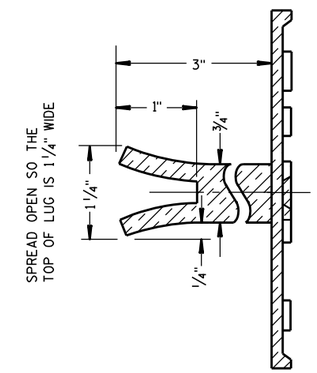

ALTERNATE LUG

6

FOR MULTI-UNIT STRUCTURES
LINE 3 ABOVE SHALL READ

B = BRIDGE
C = CULVERT
R = RETAINING WALL

COUNTY NO.

BRIDGE NO.

UNIT NO. FOR MULTIPLE
UNIT BRIDGE

B-40-400-1A

NUMBERING DESIGNATION
MULTI-UNIT STRUCTURES

① ADHERE ANCHOR LUG TO PRECAST RETAINING WALL WITH EPOXY RESIN.

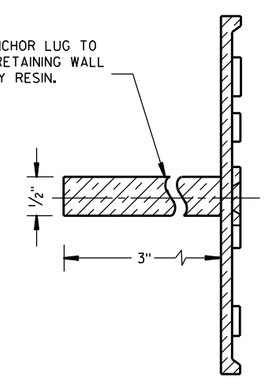

ALTERNATE LUG
(FOR ATTACHMENT TO PRECAST STRUCTURES)

NAME PLATE (STRUCTURES)

STATE OF WISCONSIN
DEPARTMENT OF TRANSPORTATION

APPROVED

3/26/10 — DATE

/S/ Scot Beck — CHIEF STRUCTURAL DEVELOPER

FHWA

S.D.D. 12 A 3-10

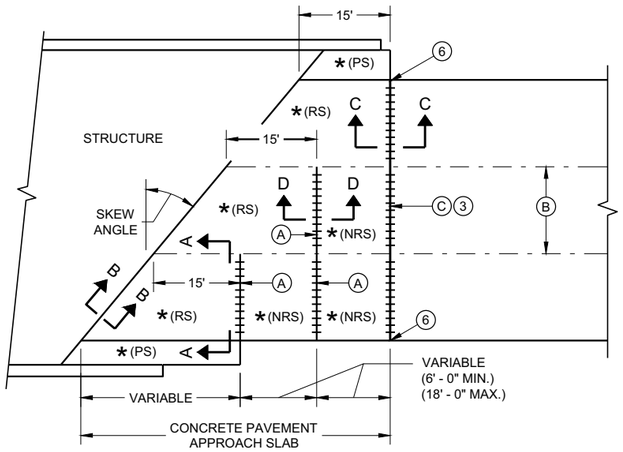

SKEWED APPROACH
(PAVEMENT MORE THAN TWO LANES)

* (RS) = REINFORCED CONCRETE SLAB

* (PS) = PAVED CONCRETE SHOULDER OR CONCRETE DRAINAGE SLAB

* (NRS) - NON - REINFORCED CONCRETE SLAB

*** STANDARD DOWEL BAR DIAMETER (SEE SDD 13C11 AND SDD 13C13)

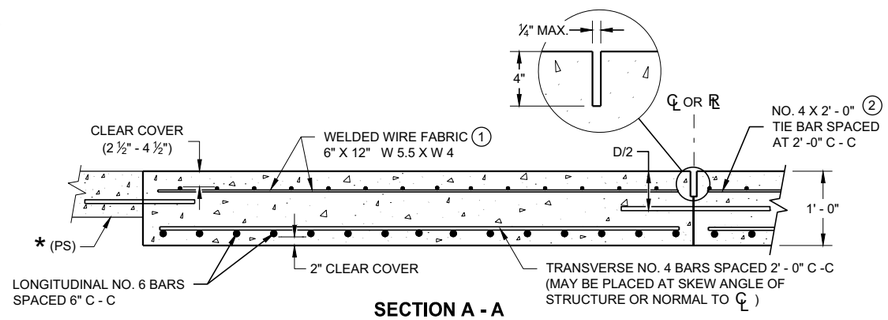

SECTION A - A
REINFORCEMENT POSITIONING DETAIL

GENERAL NOTES

THE CONTRACTOR MAY SPLICE NO. 6 BARS IN THE APPROACH SLAB FOR SKEWED STRUCTURES ONLY. STAGGER SPLICES WITH A MAXIMUM OF ONE SPLICE PER BAR. THE LENGTH OF LAP IS 20 INCHES.

TACK WELD DOWEL BARS TO THE BASKETS ON ALTERNATE ENDS.

1. THE CONTRACTOR MAY USE NO. 4 BARS SPACED AT 2' - 0 " C - C IN BOTH THE LONGITUDINAL AND TRANSVERSE DIRECTIONS FOR TOP REINFORCEMENT AS AN ALTERNATIVE TO THE WELDED WIRE FABRIC.
2. THE CONTRACTOR MAY OMIT THE BARS BETWEEN REINFORCED SLABS WHERE SLAB REINFORCEMENT BARS EXTEND ACROSS THE CENTERLINE OR REFERENCE LINE.
3. DO NOT CONSTRUCT AN EXPANSION JOINT OR INSTALL DOWEL BARS WHEN ABUTTING AN HMA PAVEMENT.
4. USE A JOINT SEALANT CONFORMING TO STANDARD SPECIFICATION 415.2.6.
5. PLACE EXPANSION CAP ON THE END OF THE DOWEL THAT IS NOT TACK WELDED TO THE BASKET. DO NOT FORCE DOWEL BAR PAST THE DOWEL STOP.
6. EXTEND EXPANSION JOINT THROUGH ANY ADJACENT TIED CONCRETE.

A. STANDARD CONTRACTION JOINT NORMAL TO ℄ OR ℞.

B. STANDARD LONGITUDINAL JOINT WITH TIE BARS.

C. 1 ½" EXPANSION JOINT WITH DOWEL BARS NORMAL TO ℄ OR ℞ .

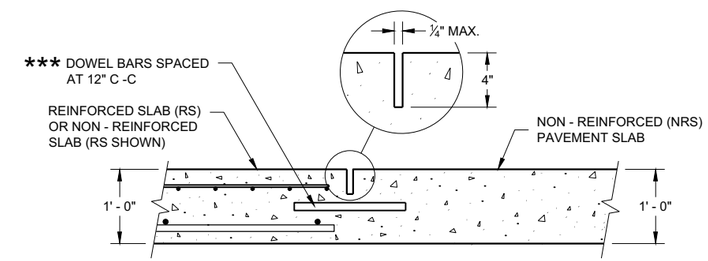

SECTION D - D
CONTRACTION JOINT

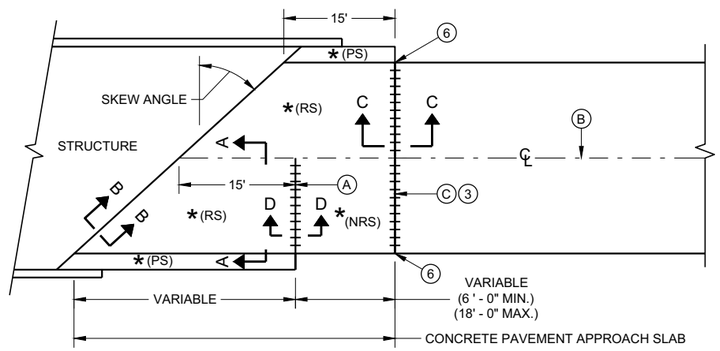

SKEWS > 20°
(PAVEMENT WIDTH ≤ 30')

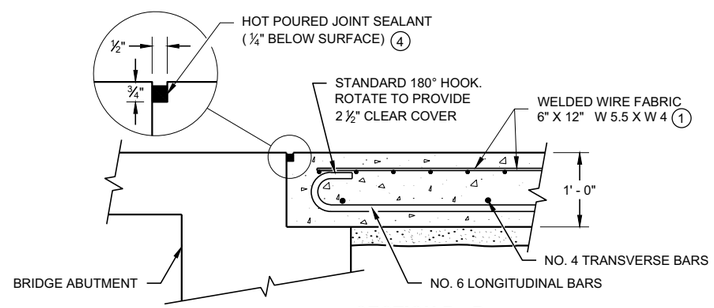

SECTION B - B
BEND DETAIL
BOTTOM REINFORCEMENT

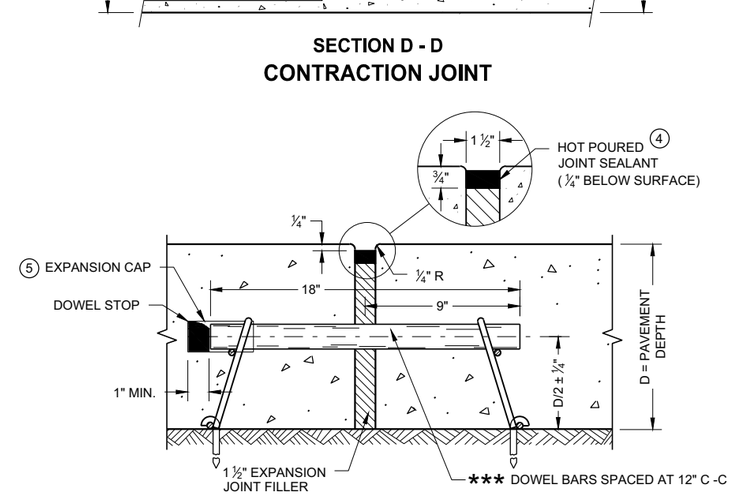

EXPANSION JOINT DETAIL

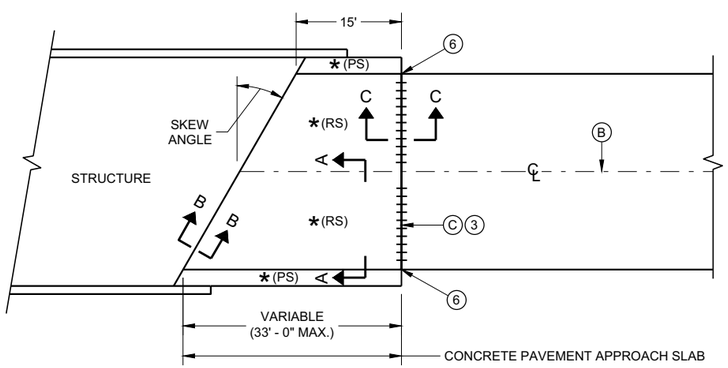

SKEWS ≤ 20°
(PAVEMENT WIDTH ≤ 30')

APPROACH SLAB AND ADJACENT PAVEMENT

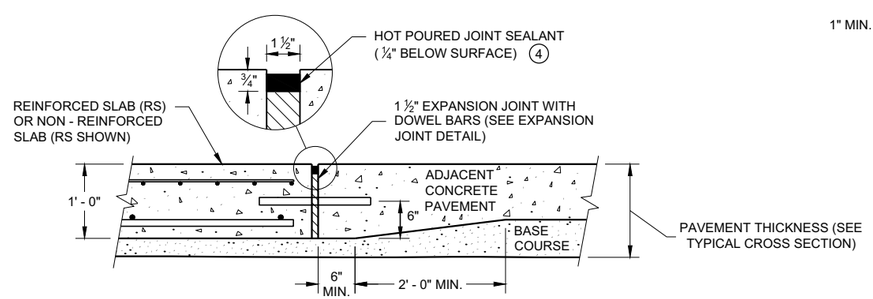

SECTION C - C
TRANSITION DETAIL
APPROACH SLAB TO ADJACENT PAVEMENT

CONCRETE PAVEMENT APPROACH SLAB

STATE OF WISCONSIN
DEPARTMENT OF TRANSPORTATION

APPROVED
November 2018 /S/ Peter Kemp, P.E.
DATE PAVEMENT SUPERVISOR

FHWA

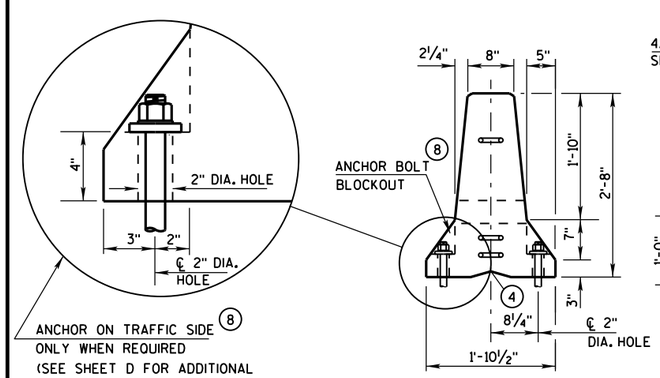

END VIEW

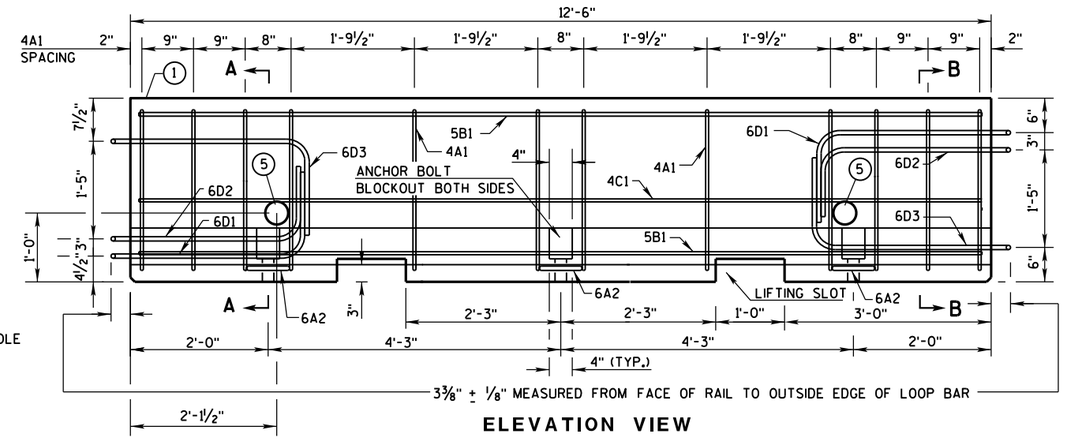

ELEVATION VIEW

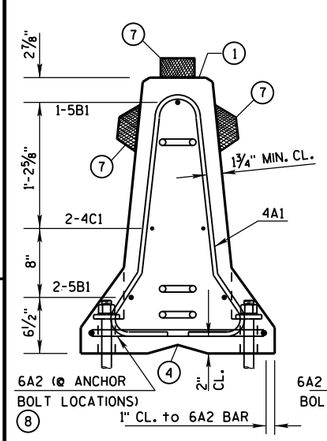

SECTION A-A
(STIRRUP PLACEMENT)

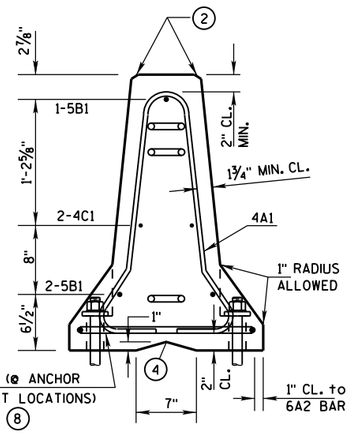

SECTION B-B
(STIRRUP PLACEMENT)

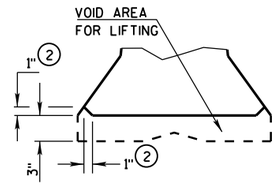

DETAIL "B"
LIFTING SLOT DETAIL

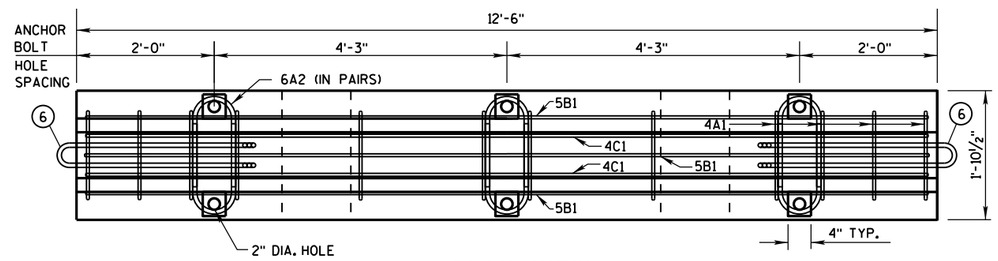

PLAN VIEW

DETAILS OF BARRIER SECTION

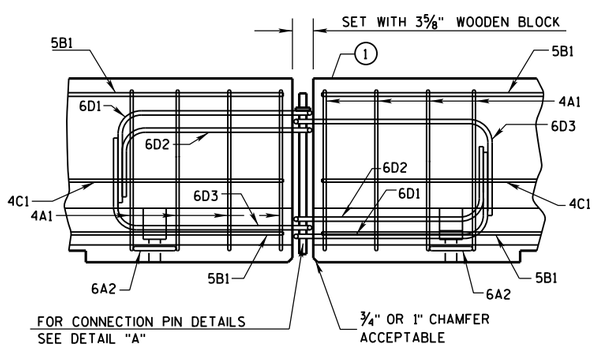

DETAILS OF BARRIER CONNECTION

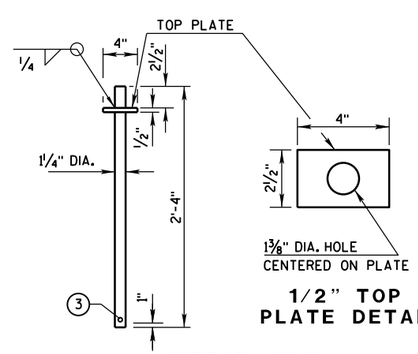

1/2" TOP PLATE DETAIL

DETAIL "A"
CONNECTION PIN
(A36 STEEL (10.9 LB EACH))

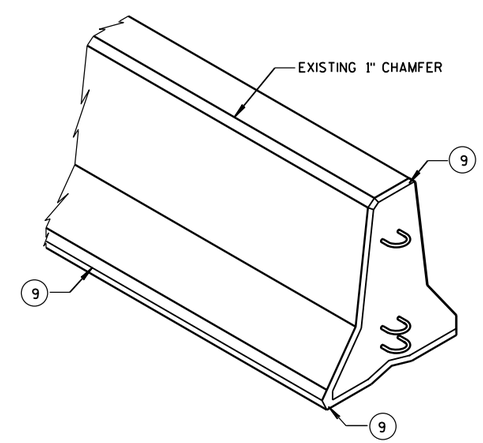

GENERAL NOTES

THESE GENERAL NOTES APPLY TO SHEETS 14B7-15(a) THRU 14B7-15(i).

DO NOT INTERMIX CONCRETE BARRIER TEMPORARY PRCAST, 12'-6" (CBTP12.5) WITH OTHER TEMPORARY CONCRETE BARRIERS.

USE ASTM A-615, GRADE 60, DEFORMED STEEL BARS FOR BARS 4A1, 6A2, 5B1 AND 4C1 IN THE BARRIER SECTION AND FOR 4V1, 4V2, 4V3, 4V4, 4V5, 4V6, 4F1, 4F2 AND 5F3 IN THE BARRIER TAPER SECTION.

LOOP BARS 6D1, 6D2 AND 6D3 SHALL BE ¾" SMOOTH STEEL BARS WITH A MINIMUM YIELD STRENGTH OF 60 KSI, A TENSILE STRENGTH OF NOT LESS THAN 1.25 TIMES THE YIELD STRENGTH BUT A MINIMUM OF 80 KSI, A MINIMUM 14% ELONGATION IN 8 INCHES AND PASSING A 180 DEGREE BEND TEST USING A 3-½" PIN BEND DIAMETER FOR BEND TESTS. THE LOOPS SHALL BE INSTALLED WITHIN ⅛" OF THE PLAN DIMENSION.

CONSTRUCT LIFTING SLOTS AS SPECIFIED ON THE PLANS TO FACILITATE THE DRAINAGE OF WATER AFTER INSTALLATION.

PLACE BARRIER ON A PAVED SURFACE. REMOVE ALL LOOSE DIRT AND SAND FROM THE ROADWAY SURFACE PRIOR TO PLACEMENT OF THE BARRIER.

INSTALL MECHANICAL OR ADHESIVE ANCHORS PER MANUFACTURER'S RECOMMENDATIONS. PROVIDE MANUFACTURER'S INFORMATION TO PROJECT ENGINEER.

1. MARK ONE END OF EACH BARRIER PERMANENTLY BY FORMING INTO THE BARRIER THE FOLLOWING INFORMATION:
   a. TYPE: WI CBTP
   b. MANUFACTURER
   c. DATE MANUFACTURED (MONTH AND YEAR)
2. 1" CHAMFER TO PREVENT SPALLING.
3. A ⅜" HOLE IN THE CONNECTION PIN, AT THE LOCATION SHOWN, IS ACCEPTABLE, BUT NOT REQUIRED..
4. "V" NOTCH IS OPTIONAL.
5. THE 4" DIAMETER, 11 GAUGE STEEL, ROUND MECHANICAL TUBING SLEEVE FOR LIFTING (OPTIONAL).
6. NEVER USE LOOP BARS (6D1, 6D2 OR 6D3) TO LIFT, MOVE OR REPOSITION THE BARRIER.
7. USE DELINEATORS CONFORMING TO SECTION 633 OF THE STANDARD SPECIFICATIONS. CONTRACTOR MAY USE ALTERNATE SHAPES AND HOUSING. INSTALL DELINEATORS ACCORDING TO MANUFACTURES INSTRUCTION. INSTALL YELLOW REFLECTORS WHEN BARRIER IS LOCATED TO THE LEFT OF TRAFFIC AND WHITE REFLECTORS WHEN BARRIER IS LOCATED TO THE RIGHT OF TRAFFIC. SPACE DELINEATORS A MAXIMUM OF 25 FEET APART. PROVIDE TOP MOUNTED DELINEATORS IN ADDITION TO THE SIDE MOUNTED DELINEATORS ON ALL BARRIER INSTALLATIONS LOCATED ON A CURVED ALIGNMENT LONGER THAN 200 FEET AND ON BARRIERS USED TO SEPARATE OPPOSING TRAFFIC.
8. SEE SHEET D FOR HOW TO ANCHOR BARRIER. SEE SHEET E FOR WHEN TO ANCHOR BARRIER.
9. 1" CHAMFER OPTIONAL.

f'c = 4,000 psi

CONCRETE BARRIER
TEMPORARY PRECAST, 12'-6"

STATE OF WISCONSIN
DEPARTMENT OF TRANSPOR

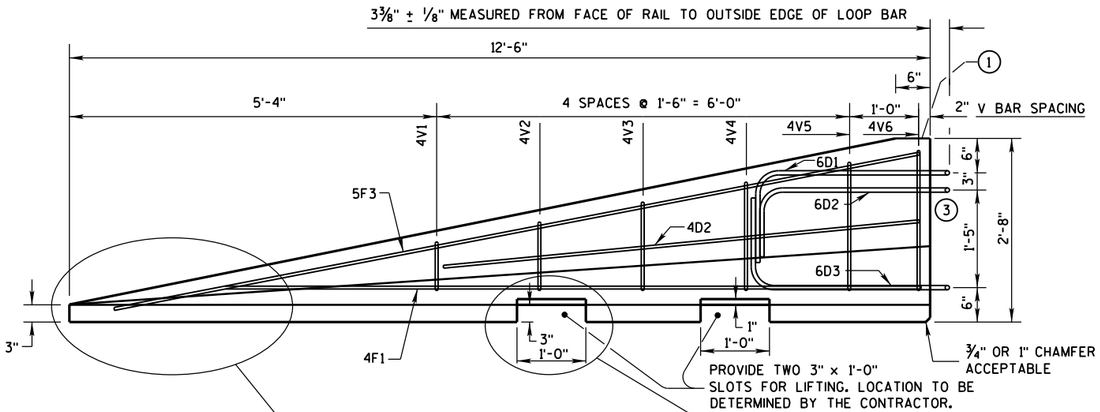

SIDE ELEVATION

(FOR CONNECTION TO LEFT END OF BARRIER)

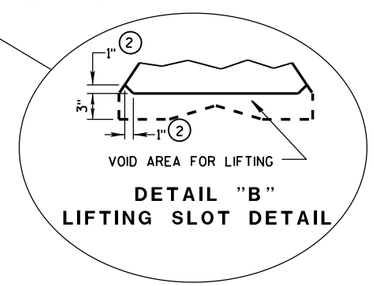

DETAIL "B"
LIFTING SLOT DETAIL

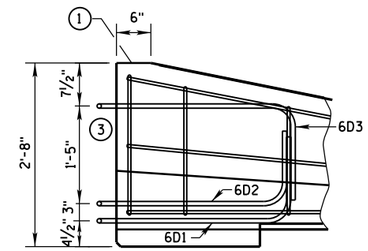

SIDE ELEVATION

LOOP BAR ASSEMBLY INVERTED
FOR OPPOSITE END.
(FOR CONNECTION TO RIGHT END OF BARRIER)

GENERAL NOTES

1. MARK ONE END OF EACH BARRIER PERMANENTLY BY FORMING INTO THE BARRIER THE FOLLOWING INFORMATION:
   a. TYPE WICBTP
   b. MANUFACTURER
   c. DATE MANUFACTURED (MONTH AND YEAR)
2. 1" CHAMFER TO PREVENT SPALLING.
3. NEVER USE LOOP BARS (6D1, 6D2 OR 6D3) TO LIFT, MOVE OR REPOSITION THE BARRIER.

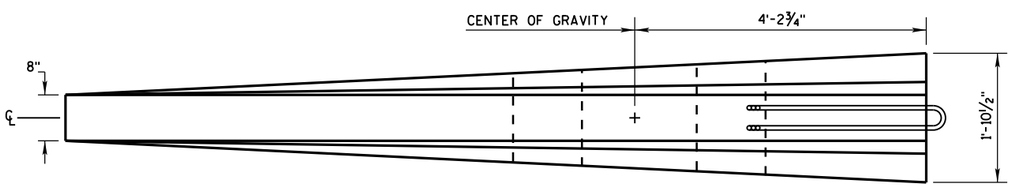

PLAN VIEW

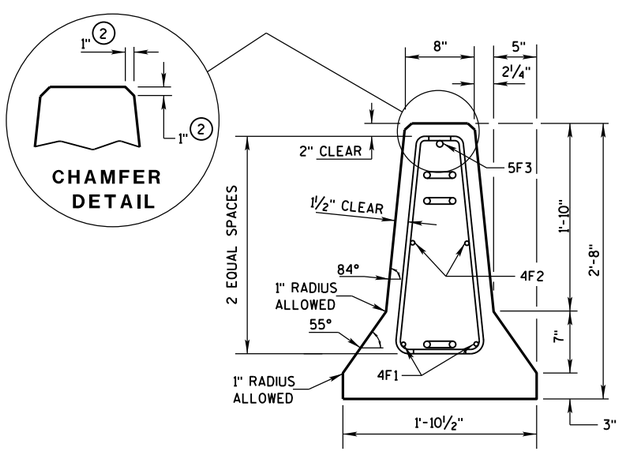

END SECTION

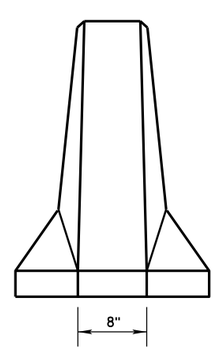

FRONT ELEVATION

DETAILS OF BARRIER TAPER SECTION

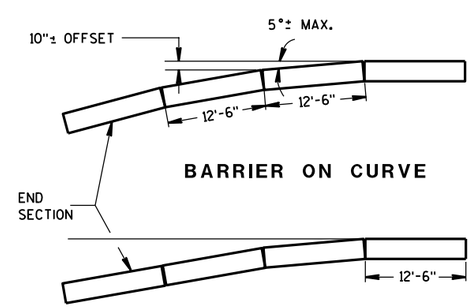

BARRIER ON CURVE

FLARE AT BARRIER END

POSTED SPEED, (MPH)	FLARE RATE
40 OR LESS	6:1
45 OR GREATER	8:1

CONCRETE BARRIER
TEMPORARY PRECAST, 12'-6"

STATE OF WISCONSIN
DEPARTMENT OF TRANSPORTATION

6

S.D.D. 14 B 7-15b

GENERAL NOTES

(1) NEVER USE LOOP BARS (6D1, 6D2 OR 6D3) TO LIFT, MOVE OR REPOSITION THE BARRIER.

BARRIER TAPER SECTION BILL OF MATERIALS

(PER 12'-6" BARRIER TAPER SECTION)

BAR	BAR SIZE	NO. OF BARS	LENGTH FT.
4V1	4	2	1'-11"
4V2	4	2	2'-2"
4V3	4	2	2'-6"
4V4	4	2	2'-9"
4V5	4	2	3'-2"
4V6	4	2	3'-4"
4F1	4	2	12'-0"
4F2	4	2	7'-6"
5F3	5	1	11'-9"
LOOP ASSEMBLY			
6D1	6	1	8'-5"
6D2	6	1	7'-7"
6D3	6	1	8'-6"

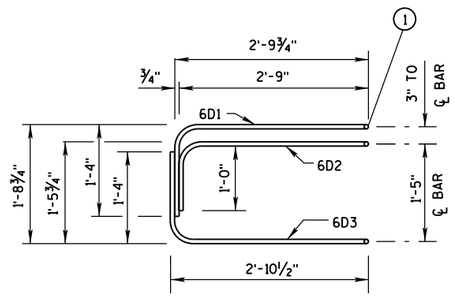

ELEVATION
LOOP BAR ASSEMBLY

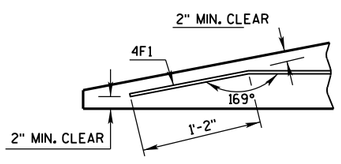

DETAIL "C"
BENT BAR DETAIL

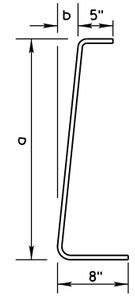

BAR	a	b
V1	10"	1"
V2	1'-1"	1¼"
V3	1'-5"	1⅝"
V4	1'-8"	1⅞"
V5	2'-0½"	2⅜"
V6	2'-3"	2¾"

4V BARS
2 AT EACH SIZE REQUIRED
FOR STIRRUP ASSEMBLY

TAPER BARRIER SECTION

BARRIER SECTION BILL OF MATERIALS

(PER 12'-6" BARRIER SECTION)

BAR	BAR SIZE	NO. OF BARS	LENGTH FT.
4A1	4	12	6'-0"
6A2	6	6	2'-11"
5B1	5	3	12'-2"
4C1	4	2	12'-2"
LOOP ASSEMBLY			
6D1	6	2	8'-5"
6D2	6	2	7'-7"
6D3	6	2	8'-6"

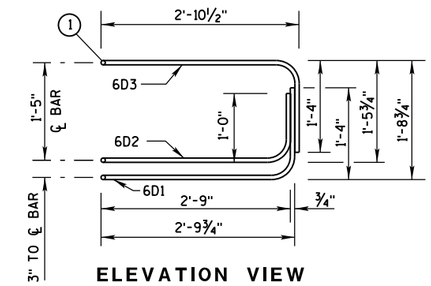

ELEVATION VIEW

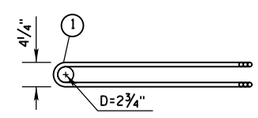

PLAN VIEW
LOOP BAR ASSEMBLY
(MARKED END SHOWN, INVERT FOR OTHER END)

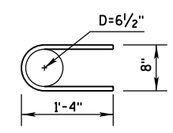

6A2

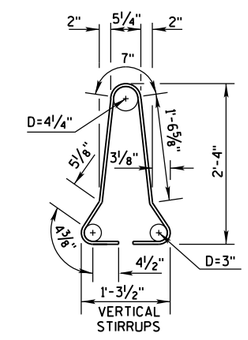

VERTICAL STIRRUPS
4A1

BARRIER SECTION

6

6

CONCRETE BARRIER
TEMPORARY PRECAST, 12'-6"

STATE OF WISCONSIN
DEPARTMENT OF TRANSPOR

S.D.D. 14 B 7-15c

S.D.D. 14 B 7-15c

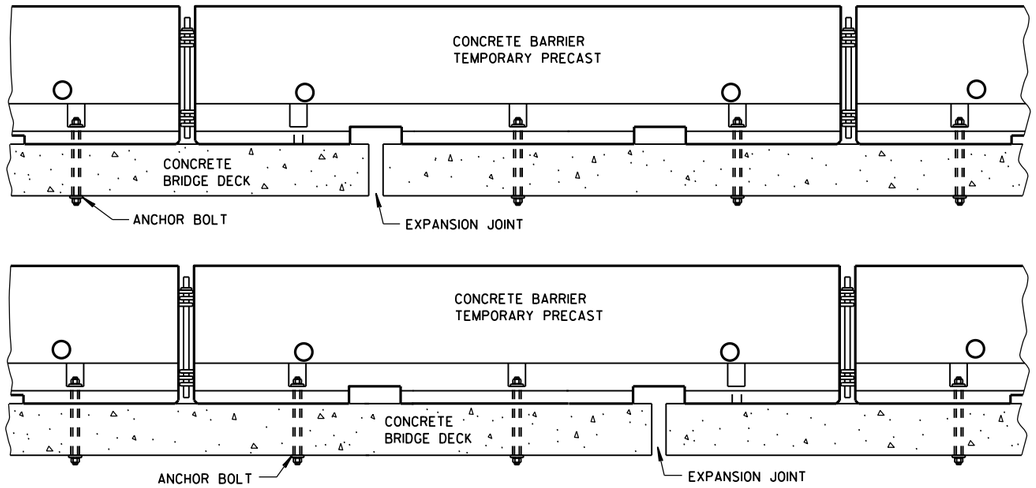

TREATMENT AT BRIDGE DECK EXPANSION JOINTS

(NO SINGLE CONCRETE BARRIER SECTION SHALL BE ANCHORED TO BOTH THE BRIDGE DECK AND THE APPROACH SLAB. ALL ANCHOR BOLT LOCATIONS SHALL BE ANCHORED TO THE DECK IN ACCORDANCE WITH THE DETAIL. NO MORE THAN ONE ANCHOR BOLT SHALL BE ELIMINATED FROM A BARRIER SECTION WHEN SPANNING AN EXPANSION JOINT.)

GENERAL NOTES

SEE SHEET E FOR WHEN TO ANCHOR. OTHER PARTS OF THE PLAN MAY SHOW ADDITIONAL LOCATIONS REQUIRING ANCHORING.

REMOVE ALL ANCHORS WHEN NO LONGER NEEDED. FILL CONCRETE PAVEMENTS, DECKS AND APPROACH SLABS WITH NON-SHRINK COMMERICAL GROUT FROM THE APPROVED PRODUCT LIST. FILL ASPHALT PAVEMENTS WITH ASTM D6690 TYPE II RUBBERIZED CRACK FILLER.

1. 1⅛" DIAMENTER A307 THREADED ROD, ½" X 3" X 3" SQUARE PLATE WASHER WITH ASTM A36 STEEL. ASTM A563A HEAVY HEX NUT.
2. ADHESIVE ANCHORS WITH A MINIMUM BOND STRENGTH OF 1,800 PSI AND 5¼" EMBEDMENT. SEE 603.2 AND 603.3.1.2 OF THE WISCONSIN STANDARD SPECIFICATIONS FOR MORE INFORMATION ON ADHESIVE ANCHORS.
3. ASPHALT SURFACE SHOWN. CONTRACTOR MAY DRILL THROUGH CONCRETE PAVEMENT AND THAN DRIVE ASPHALT ANCHOR PIN.

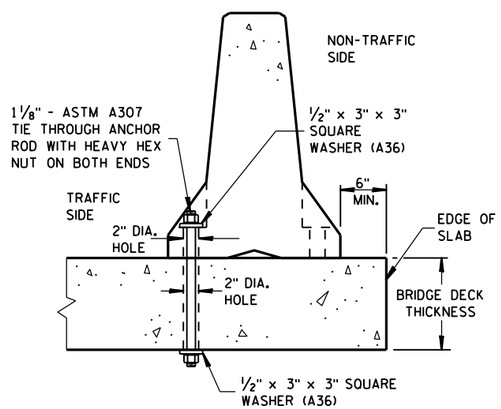

THROUGH BOLTED ANCHOR INSTALLATION ON BRIDGE DECK

(DO NOTUSE ON CONCRETE BRIDGE DECK WITH ASPHALT OVERLAY)

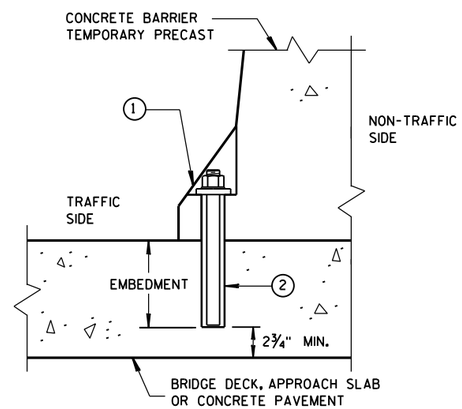

REMOVABLE ADHESIVE ANCHOR INSTALLATION ON CONCRETE BRIDGE DECK, CONCRETE APPROACH SLAB, OR CONCRETE PAVEMENT

(DO NOT USE ON CONCRETE WITH AN ASPHALTIC OVERLAY)

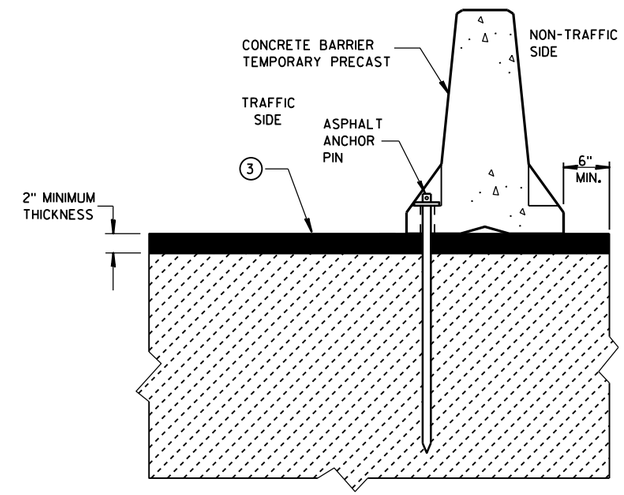

STAKE DOWN INSTALLATION FOR ASPHALTIC SURFACE

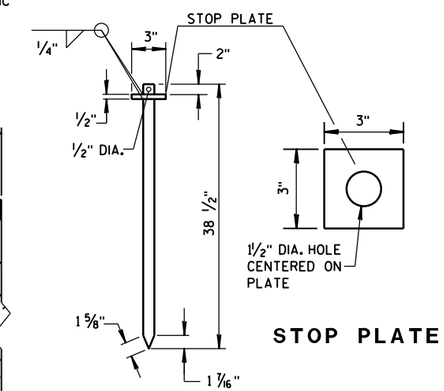

ASPHALT ANCHOR PIN

(ASTM A36 STEEL)

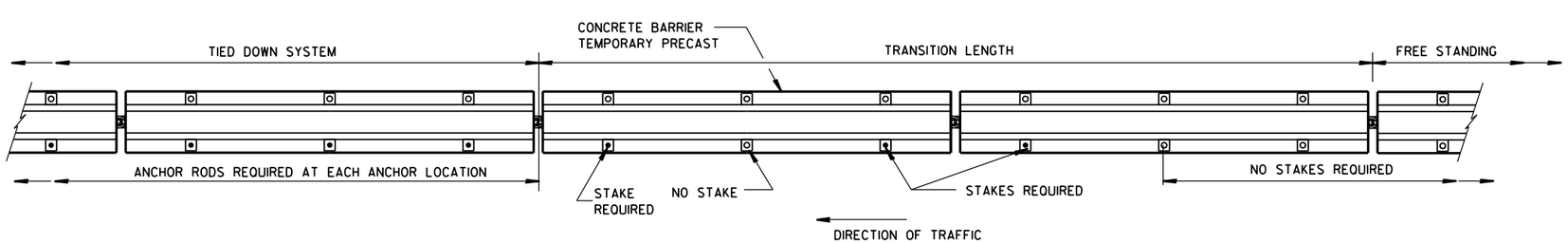

PLAN VIEW

FREE STANDING TRANSITION TO TIED-DOWN SYSTEM

(PLACE TRANSITION IN A TANGENT SECTION OF BARRIER PARALLEL TO THE ROADWAY. IF TRANSITION OCCURS ON STRUCTURAL SLAB, ANCHOR AS SHOWN.)

CONCRETE BARRIER
TEMPORARY PRECAST, 12'-6"

STATE OF WISCONSIN
DEPARTMENT OF TRANSPOI

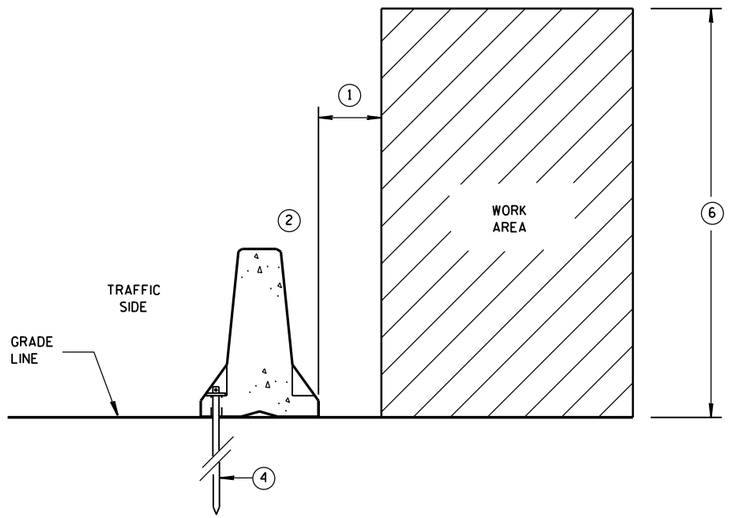

ANCHORED BARRIER SPACE REQUIREMENTS FOR HAZARDS EXTENDED ABOVE THE GRADE LINE

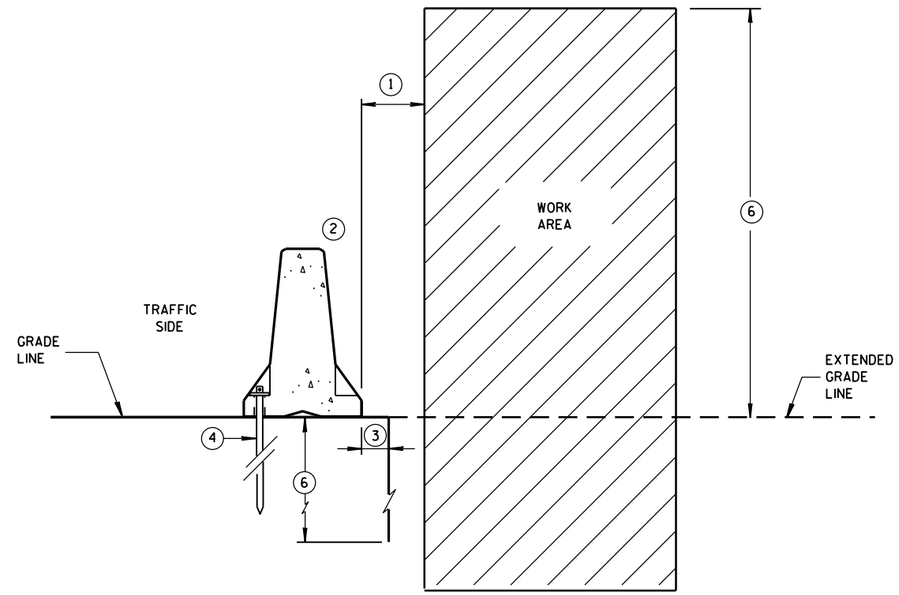

ANCHORED BARRIER SPACE REQUIREMENTS ON VERTICAL DROP OFFS

GENERAL NOTES

1. WHEN OBJECTS EXTEND ABOVE THE GRADE, A MINIMUM OF 1 FOOT IS REQUIRED FROM BACK OF BARRIER TO OBJECT. SEE OTHER DETAILS FOR FOR THE MINIMUM OFFSET FROM BACK OF BARRIER TO SLOPES OR VERTICAL DROPS.
2. OBJECTS ARE NOT TO BE PLACED ON, MOUNTED TO, OR LEANED AGAINST THE BARRIER WITHOUT PERMISSION OF THE PROJECT ENGINEER.
3. SEE OTHER DETAIL ON SHEET "D" FOR SPACE REQUIREMENTS.
4. SEE BOLT THROUGH DECK, REMOVABLE ADHESIVE ANCHOR, OR A STAKE DOWN FOR ASPHALTIC SURFACE TREATMENT DETAILS. ASPHALTIC ANCHOR SHOWN.
5. DEPTH OF 3 FEET OR MORE.
6. Y = 6'-6".

POSTED SPEED MPH	X
45 OR GREATER	4'
40 OR LESS	2'

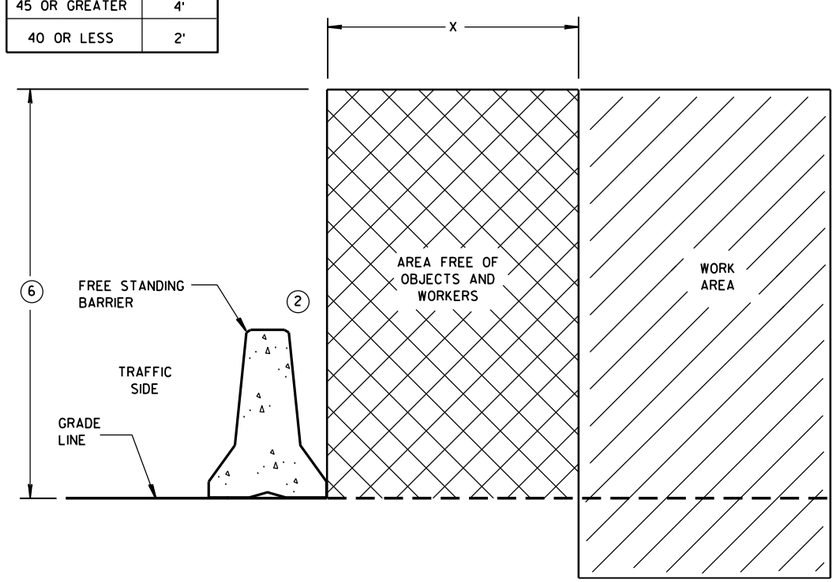

FREE STANDING BARRIER SPACE REQUIREMENTS

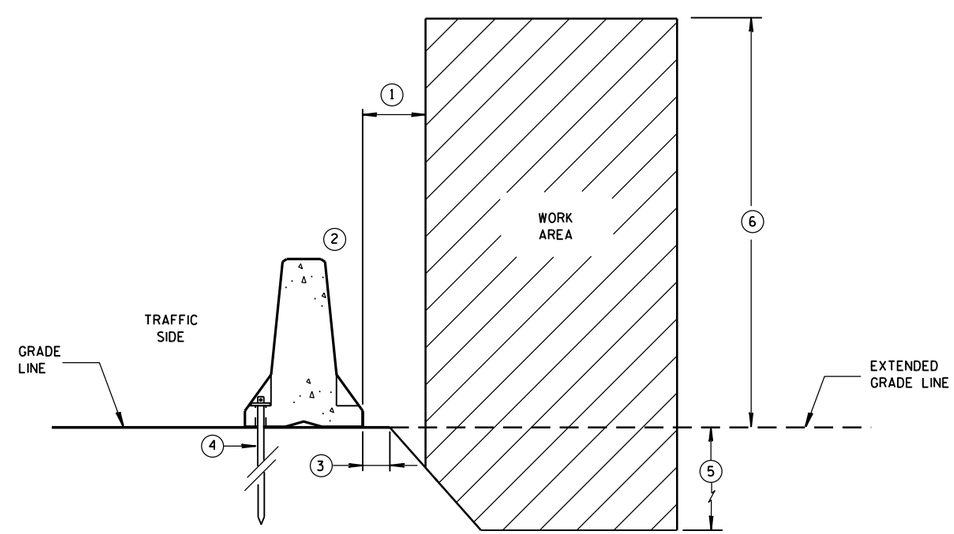

ANCHORED BARRIER SPACE REQUIREMENTS ON SLOPES

CONCRETE BARRIER
TEMPORARY PRECAST, 12'-6"

STATE OF WISCONSIN
DEPARTMENT OF TRANSPOR

6

S.D.D. 14 B 7-15e

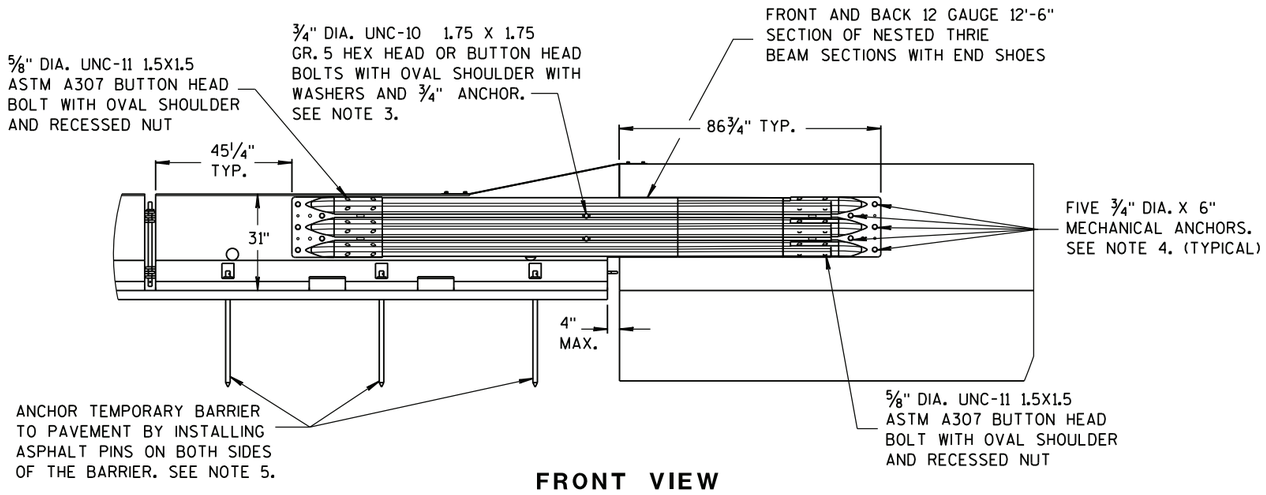

FRONT VIEW

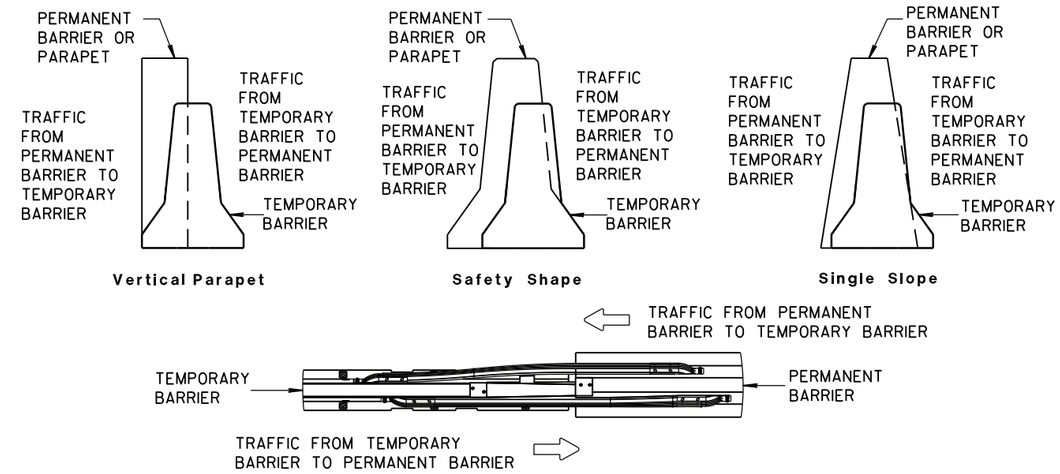

TEMPORARY BARRIER PLACEMENT FOR TRANSITION TO TIED DOWN SYSTEM

NOTES

NESTED THRIE BEAM IS REQUIRED ON BOTH SIDES OF THE TEMPORARY BARRIER FOR ALL INSTALLATIONS REGARDLESS OF TRAFFIC.

1. CAP END PLATE PLACED FLUSH WITH UPSTREAM END OF PERMANENT BARRIER OR PARAPET.
2. THRIE BEAM PIECES ARE OFFSET 15 1/4" TO PREVENT INTERFERENCE FROM THE ANCHORS ON OPPOSING SIDES.
3. MINIMUM MECHANICAL OR ADHESIVE ANCHOR STRENGTH REQUIREMENTS: ULTIMATE TENSILE LOAD 9.48 KIPS AND ULTIMATE SHEAR LOAD 10.48 KIPS.
4. MINIMUM MECHANICAL OR ADHESIVE ANCHOR STRENGTH REQUIREMENTS: ULTIMATE TENSILE LOAD 17.9 KIPS AND ULTIMATE SHEAR LOAD 21.96 KIPS.
5. MAY BE USED ON CONCRETE OR ASPHALT PAVEMENTS. ASPHALT OPTION SHOWN. FOR CONCRETE OPTION SEE OTHER DETAILS.
6. MINIMUM MECHANICAL OR ADHESIVE ANCHOR STRENGTH REQUIREMENTS: ULTIMATE TENSILE LOAD 12.14 KIPS AND ULTIMATE SHEAR LOAD 17.5 KIPS.

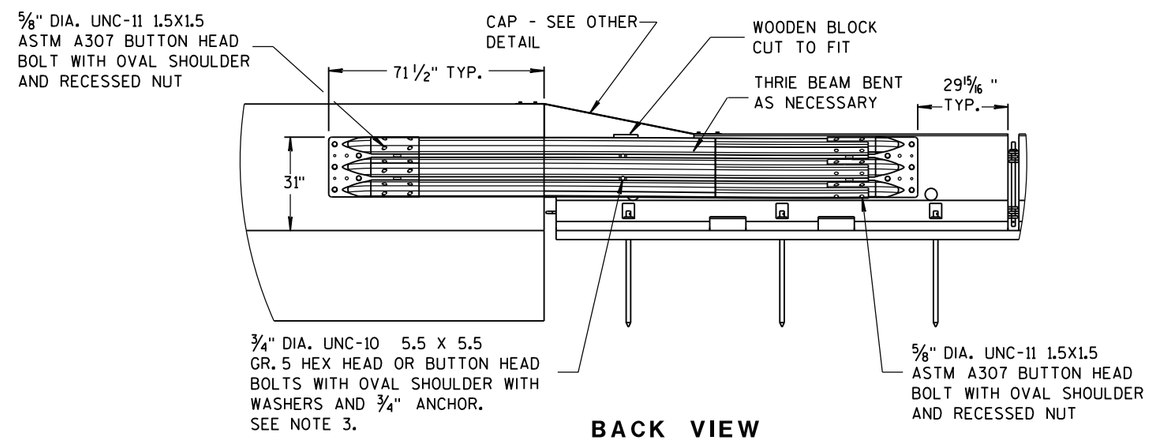

BACK VIEW

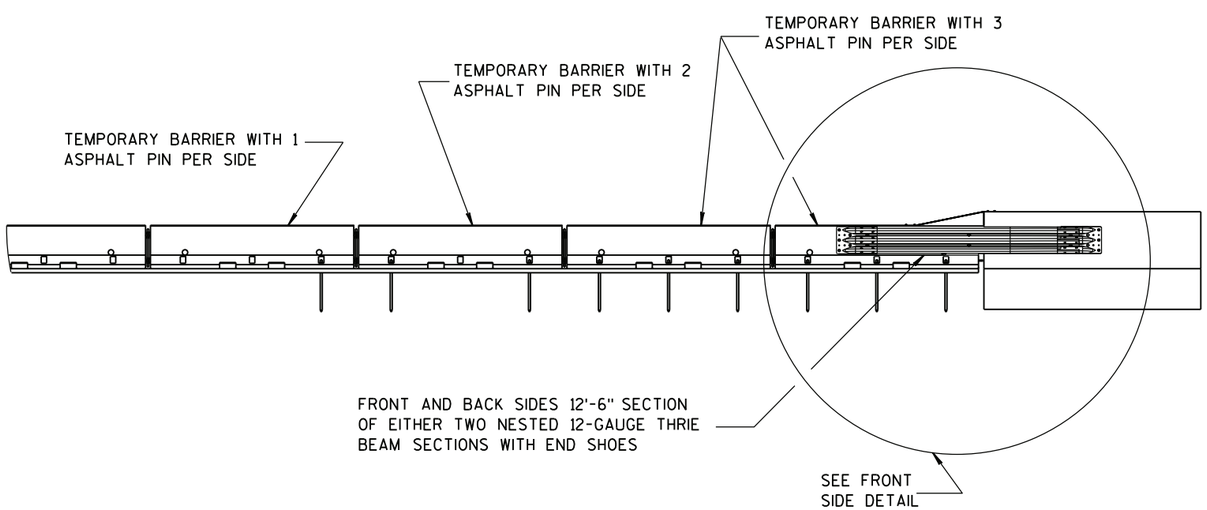

FRONT VIEW

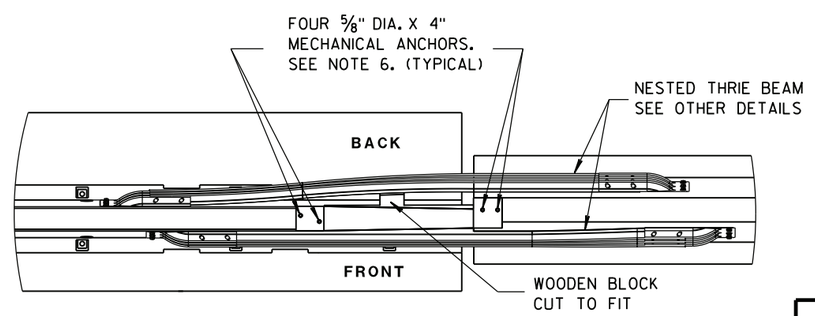

PLAN VIEW

TRANSITION TO TIED DOWN SYSTEM

CONCRETE BARRIER
TEMPORARY PRECAST, 12'-6"

STATE OF WISCONSIN
DEPARTMENT OF TRANSPO

6

6

S.D.D. 14 B 7-15f

S.D.D. 14 B 7-15f

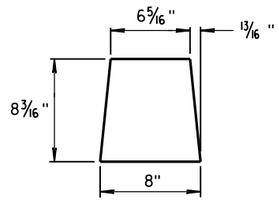

GUSSET 1

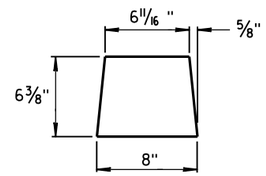

GUSSET 2

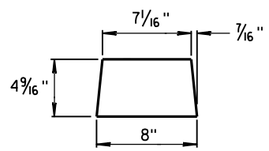

GUSSET 3

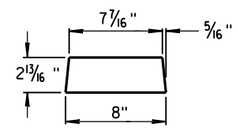

GUSSET 4

GUSSETS

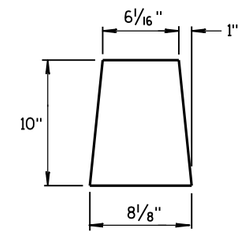

END PLATE

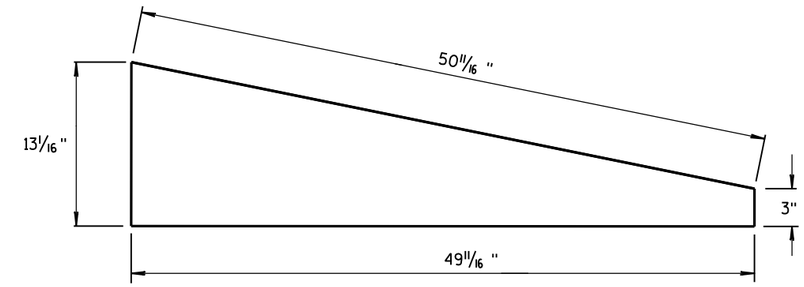

SIDE PLATE

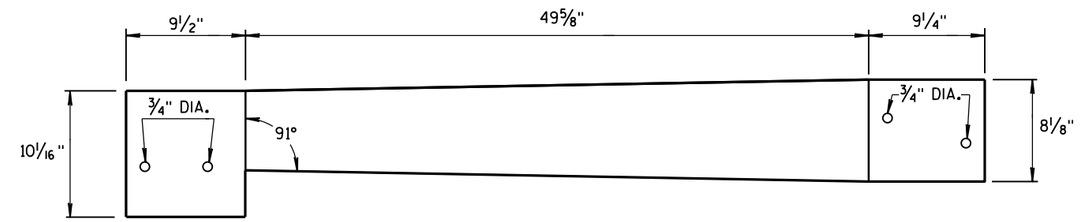

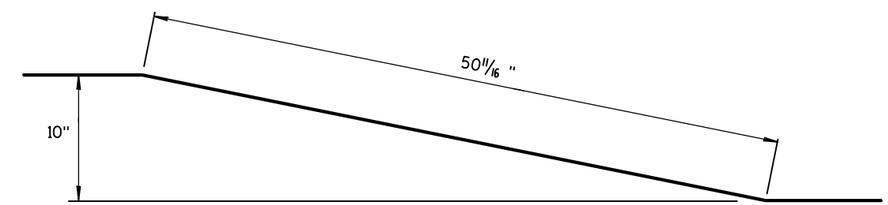

TOP PLATE

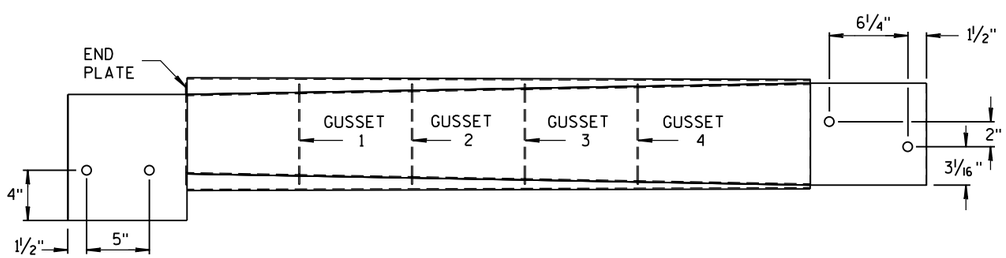

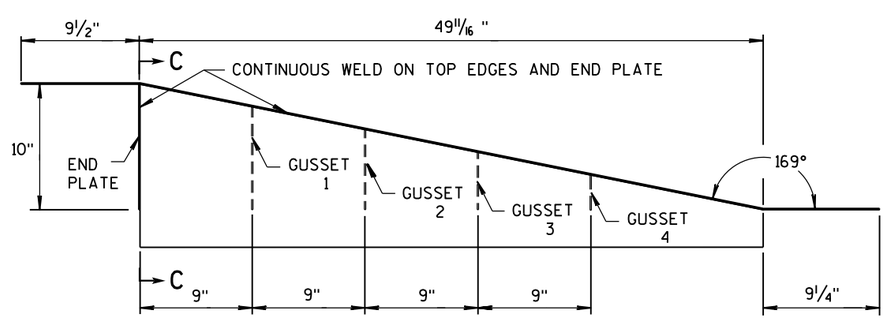

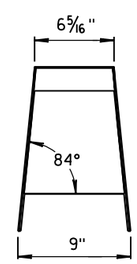

SECTION C-C

SIDE, TOP AND END PLATES FOR CAP FROM TEMPORARY CONCRETE BARRIER TO 42" PERMANENT CONCRETE BARRIER

SIDE PLATES, TOP PLATE, END PLATE AND GUSSETS ARE 12 GAUGE ASTM A36 GALVANIZED STEEL.

NOTES

1. FOUR GUSSETS AND END PLATE ARE STITCH WELDED ON THREE SIDES.
2. TWO TRIANGULAR SIDE PLATES ARE STITCH WELDED TO TOP PLATE, END PLATE, AND GUSSETS.

CAP DETAILS FOR TEMPORARY CONCRETE BARRIER TO 42" PERMANENT CONCRETE BARRIER

CONCRETE BARRIER
TEMPORARY PRECAST, 12'-6"

STATE OF WISCONSIN
DEPARTMENT OF TRANSPOR

6

S.D.D. 14 B 7-15g

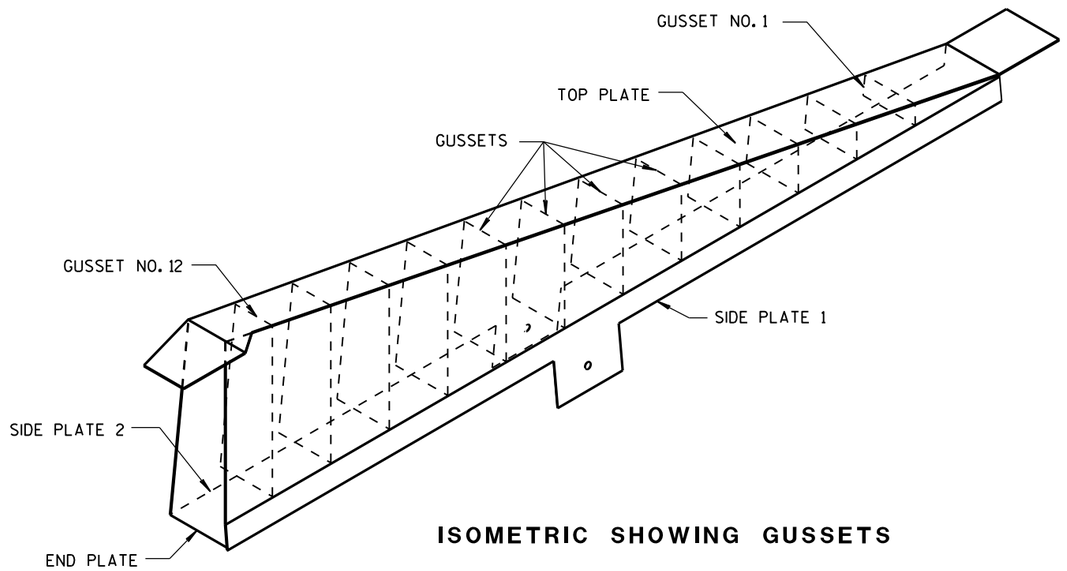

ISOMETRIC SHOWING GUSSETS

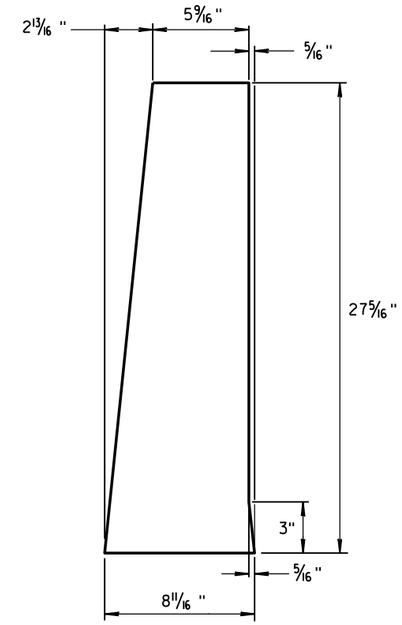

END PLATE

1/8" STEEL PLATE

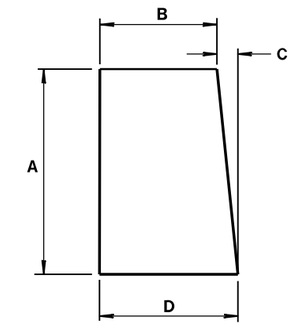

GUSSETS 1 - 12

ALL GUSSETS 1/8" STEEL PLATE

GUSSET DIMENSIONS				
GUSSET NO.	A	B	C	D
1	2 7/8"	7 3/4"	1/4"	8
2	4 11/16 "	7 9/16 "	1/2"	8
3	6 1/2"	7 3/8"	11/16 "	8 1/16 "
4	8 5/16 "	7 3/16 "	7/8"	8 1/16 "
5	10 1/8"	7"	1 1/16 "	8 1/16 "
6	11 15/16 "	6 13/16 "	1 1/4"	8 1/16 "
7	13 3/4"	6 5/8"	1 7/16 "	8 1/16 "
8	15 9/16 "	6 7/16 "	1 9/16 "	8 1/16 "
9	17 3/8"	6 1/4"	1 13/16 "	8 1/16 "
10	19 3/16 "	6 1/16 "	1 15/16 "	8 1/16 "
11	21"	5 7/8"	2 3/16 "	8 1/16 "
12	22 13/16 "	5 11/16 "	2 5/16 "	8 1/16 "

SIDE PLATES, TOP PLATE, END PLATE AND GUSSETS ARE 12 GAUGE ASTM A36 STEEL AND GALVANIZED.

GUSSETS AND END PLATE ARE STITCH WELDED ON 3 SIDES. TWO TRIANGULAR SIDE PLATES ARE STITCH WELDED TO TOP PLATE, END PLATE AND GUSSETS.

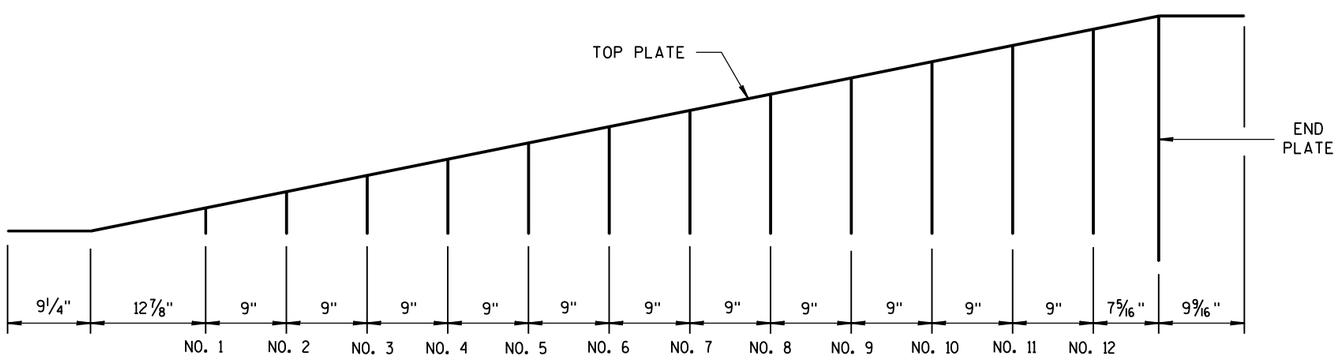

GUSSET LOCATION

CAP DETAILS FOR TEMPORARY CONCRETE BARRIER TO 56" PERMANENT CONCRETE BARRIER

CONCRETE BARRIER
TEMPORARY PRECAST, 12'-6"

STATE OF WISCONSIN
DEPARTMENT OF TRANSPOR

6

S.D.D. 14 B 7-15h

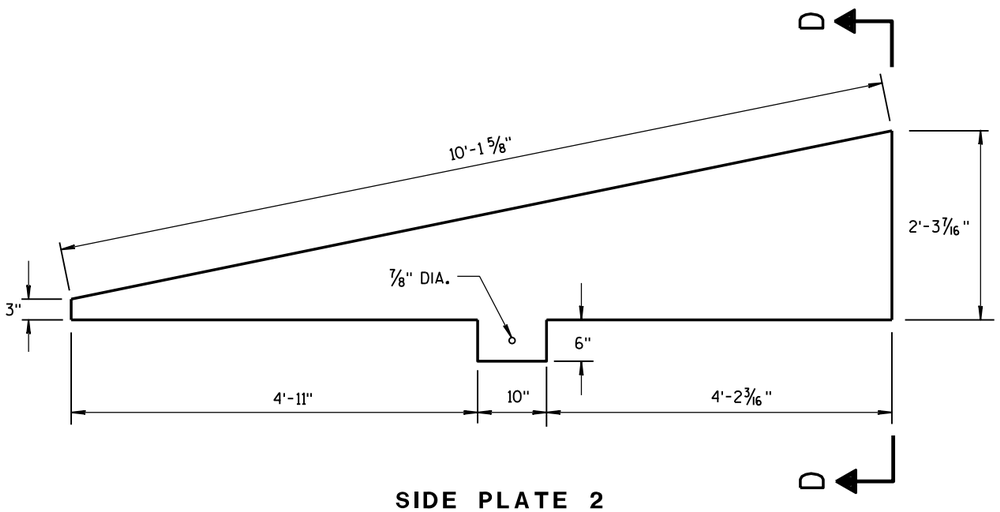

SIDE PLATE 2

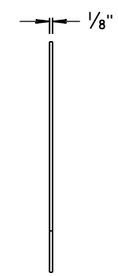

END VIEW

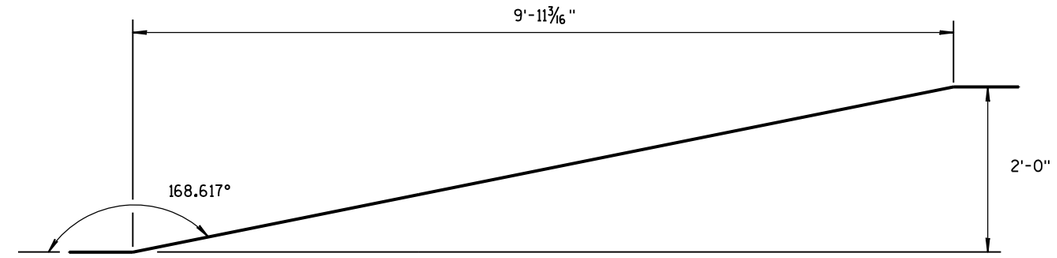

SIDE VIEW

TOP PLATE

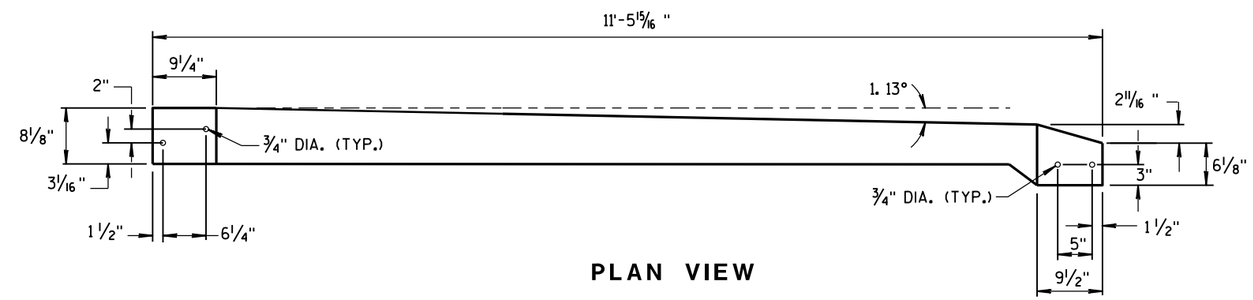

PLAN VIEW

TOP PLATE

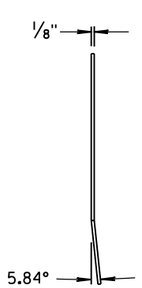

END VIEW

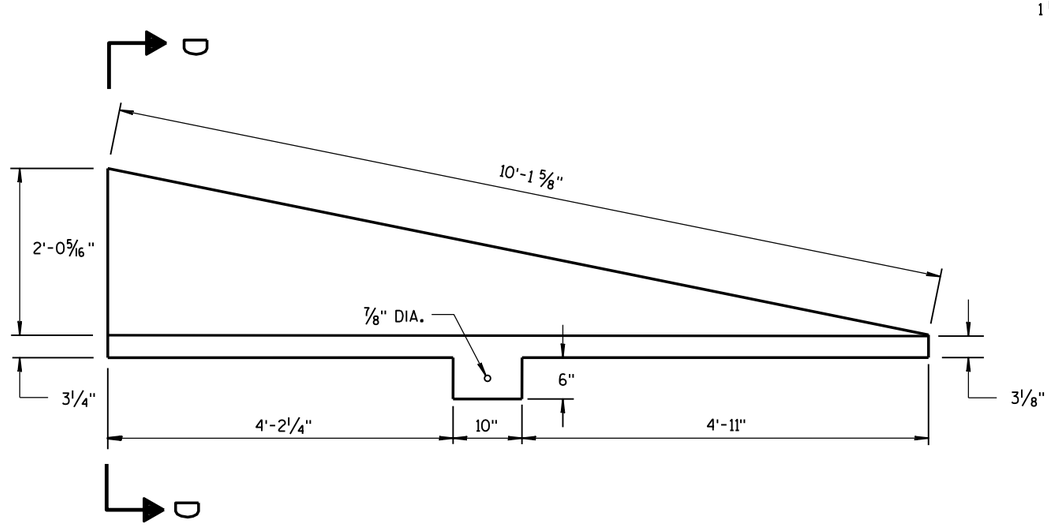

SIDE PLATE 1

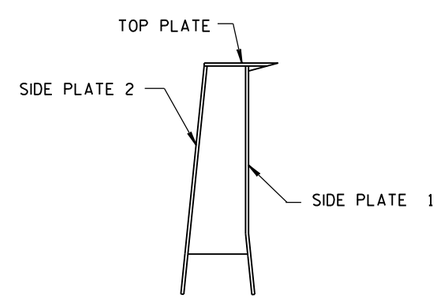

SECTION D-D

CAP DETAILS FOR TEMPORARY CONCRETE BARRIER TO 56" PERMANENT CONCRETE BARRIER

CONCRETE BARRIER
TEMPORARY PRECAST, 12'-6"

STATE OF WISCONSIN
DEPARTMENT OF TRANSPORTATION

APPROVED
June 2017 — DATE
/S/ Rodney Taylor — ROADWAY STANDARD UNIT SUPERV
FHWA

6

S.D.D. 14 B 7-15i

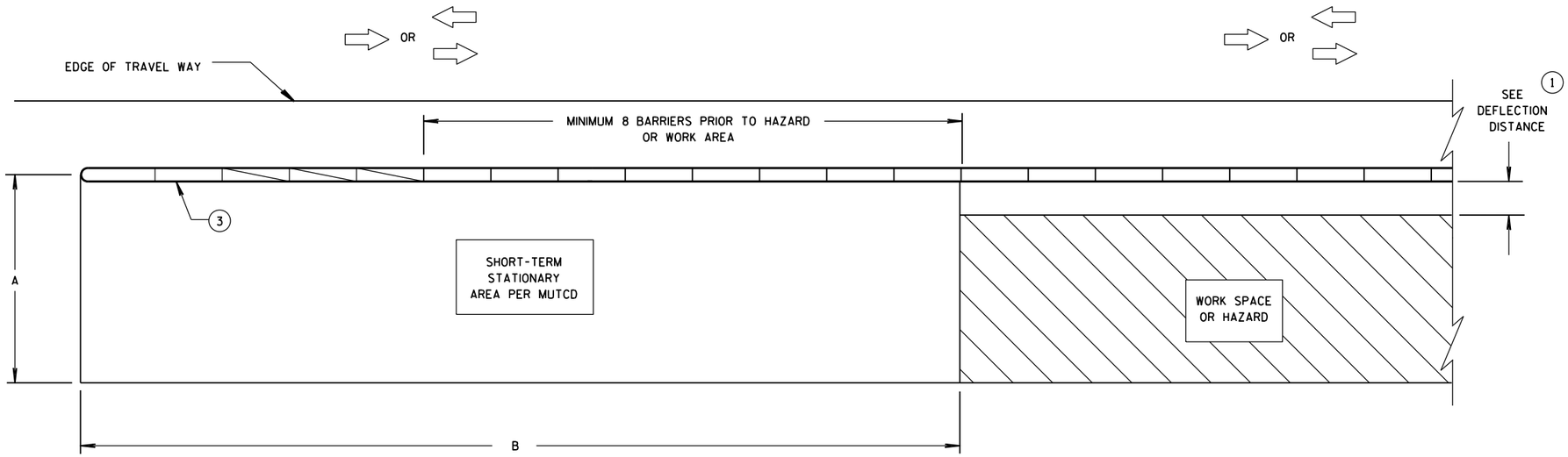

CRASH CUSHION/SAND BARREL ARRAY AND TEMPORARY BARRIER INSTALLATION FOR TRAFFIC ON ONE SIDE OF BARRIER

DIMENSION A TABLE (2)

FACILITY	POSTED SPEED MPH	DIMENSION A MIN. FT	DIMENSION A MAX. FT
FREEWAY/EXPRESSWAY	ALL	15	20
NON-FREEWAY/EXPRESSWAY	GREATER THAN OR EQUAL TO 45	10	15
NON-FREEWAY/EXPRESSWAY	LESS THAN 45	8	10
AADT LESS THAN 1,500	ALL	8	10

DIMENSION B TABLE (2)

POSTED SPEEDS MPH	DIMENSION B FT
20	115
25	155
30	200
35	250
40	305
45	360
50	425
55	495
60	570
65	645

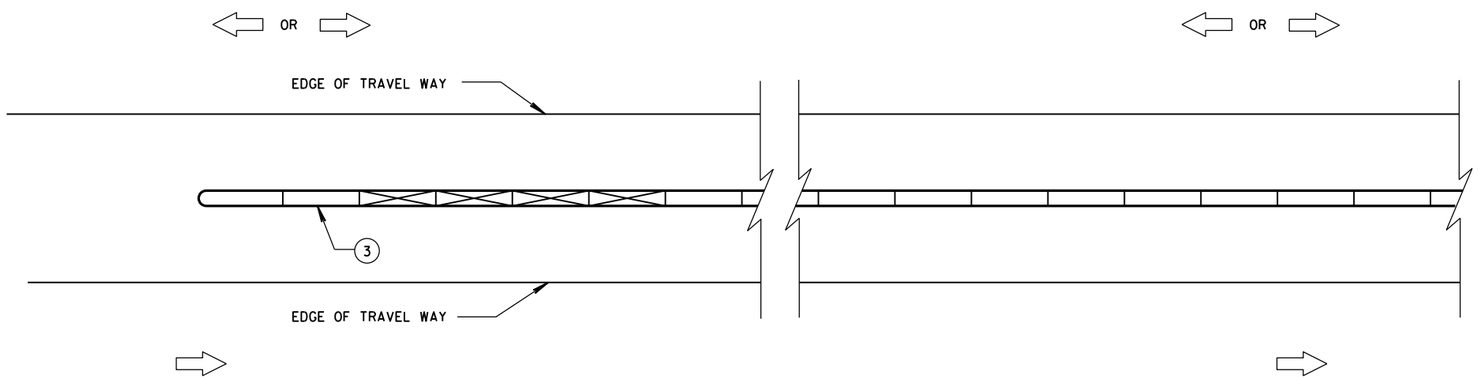

CRASH CUSHION/SAND BARREL ARRAY AND TEMPORARY BARRIER INSTALLATION FOR TRAFFIC ON BOTH SIDES OF BARRIER

LEGEND

- DIRECTION OF TRAVEL
- CRASH CUSHION OR SAND BARREL ARRAY
- SEE FREE STANDING TRANSITION TO TIED-DOWN SYSTEM DETAILS
- SEE BI-DIRECTIONAL TRANSITION TO TIED-DOWN SYSTEM DETAILS
- 3 PINS PLACED ON TRAFFIC SIDE OF BARRIER
- PERMANENT CONCRETE BARRIER OR CONCRETE PARAPET
- FREE STANDING TEMPORARY BARRIER

GENERAL NOTES

SEE STANDARD DETAIL DRAWING 14B7 FOR MORE INFORMATION.

DETAILS PROVIDE A GENERAL LAYOUT OF TEMPORARY CONCRETE BARRIER, CRASH CUSHIONS, SAND BARREL ARRAYS AND TIE DOWN TRANSITIONS. DETAILS PROVIDED MAY NOT FIT ALL POSSIBLE SITUATIONS OR SITE CONDITIONS. SEE OTHER SECTIONS OF THE CONTRACT OR PROJECT ENGINEER FOR MORE DETAILS.

ADDITIONAL TEMPORARY BARRIER MAY BE REQUIRED TO PROTECT TRAVELING PUBLIC FROM HAZARDS, CONTRACTOR'S OPERATIONS OR TO CONTROL TRAFFIC.

TEMPORARY BARRIER MAY BE REQUIRED TO BE ANCHORED TO PAVEMENT OR BRIDGE DECK.

FOR DETAILS ON CRASH CUSHION OR SAND BARREL ARRAYS SEE OTHER SECTIONS OF THE PLAN AND MANUFACTURE'S DETAILS.

SLOPES LEADING TO TEMPORARY BARRIER, CRASH CUSHION OR SAND BARREL ARRAY ARE 10:1 OR LESS.

(1) FOR DEFLECTION INFORMATION SEE STANDARD DETAIL DRAWING 14B7.

(2) VALUES PROVIDED MAY NOT FIT ALL POSSIBLE SITUATIONS OR SITE CONDITIONS. SEE OTHER SECTIONS OF THE CONTRACT OR PROJECT ENGINEER FOR MORE DETAILS.

(3) ANCHOR TEMPORARY BARRIER ACCORDING TO CRASH CUSHION OR SAND BARREL MANUFACTURER'S RECOMMENDATIONS. IF MANUFACTURER'S RECOMMENDATIONS ARE NOT PROVIDED, ANCHOR 3 PINS ON TRAFFIC SIDE.

CRASH CUSHION/SAND BARREL ARRAY AND OTHER TEMPORARY BARRIER LAYOUT DETAILS

STATE OF WISCONSIN
DEPARTMENT OF TRANSPOR

6

S.D.D. 14 B 8-2a

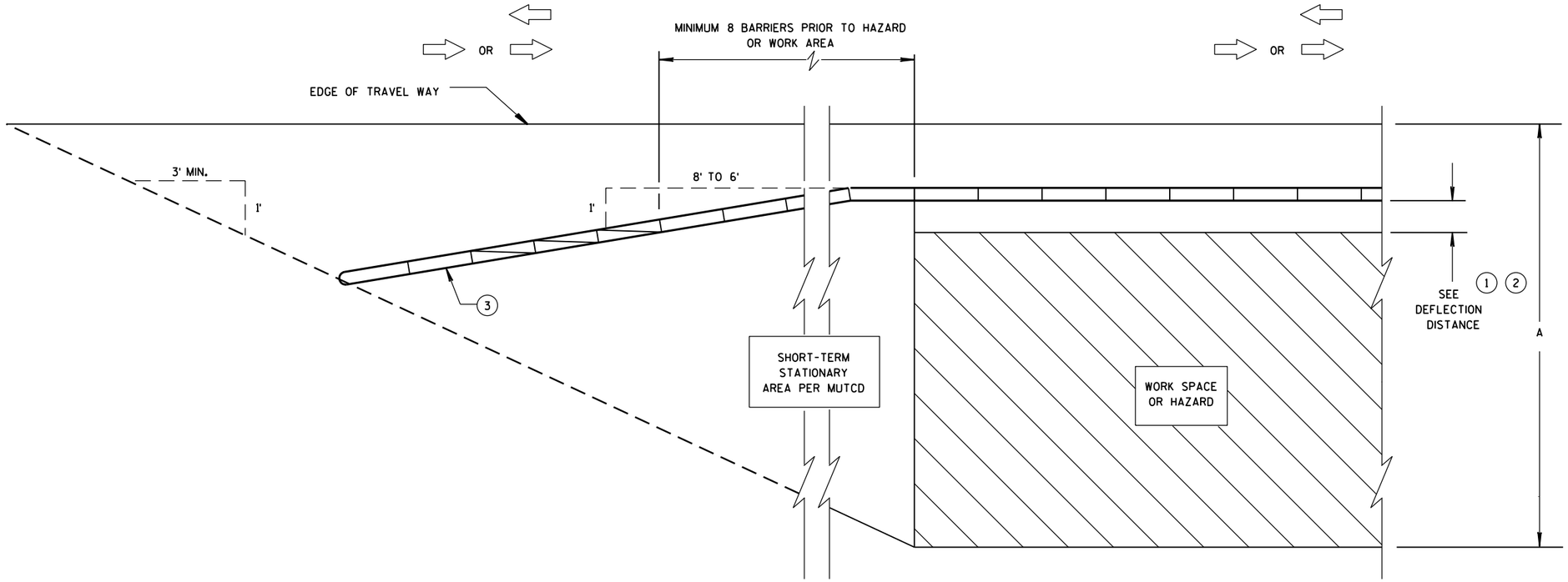

CRASH CUSHION/SAND BARREL ARRAY AND TEMPORARY BARRIER INSTALLATION FOR TRAFFIC ON ONE SIDE - FLARED INSTALLATION

6

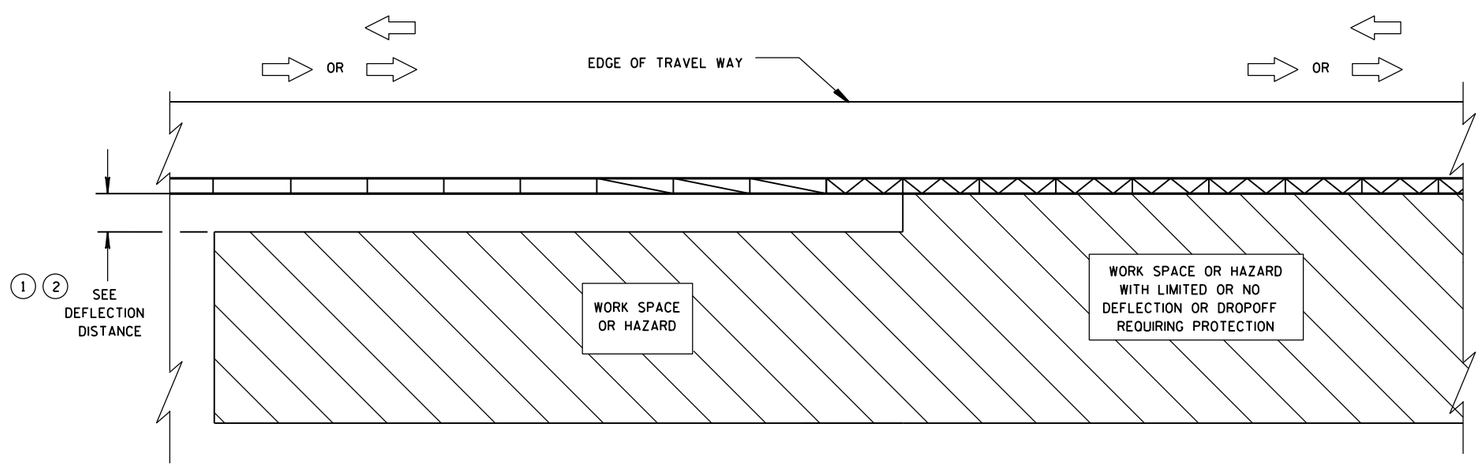

TRANSITION FROM FREE STANDING TEMPORARY BARRIER TO ANCHORED BARRIER

LEGEND

- DIRECTION OF TRAVEL
- CRASH CUSHION OR SAND BARREL ARRAY
- SEE FREE STANDING TRANSITION TO TIED-DOWN SYSTEM DETAILS
- SEE BI-DIRECTIONAL TRANSITION TO TIED-DOWN SYSTEM DETAILS
- 3 PINS PLACED ON TRAFFIC SIDE OF BARRIER
- PERMANENT CONCRETE BARRIER OR CONCRETE PARAPET
- FREE STANDING TEMPORARY BARRIER

CRASH CUSHION/SAND BARREL ARRAY AND OTHER TEMPORARY BARRIER LAYOUT DETAILS

STATE OF WISCONSIN
DEPARTMENT OF TRANSPOR

S.D.D. 14 B 8-2b

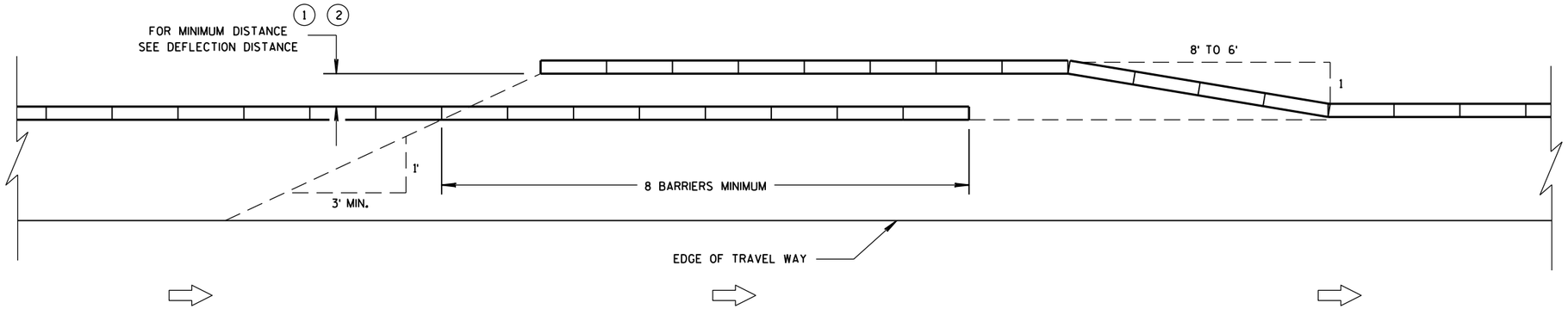

TEMPORARY BARRIER OVERLAP - ONE-WAY TRAFFIC

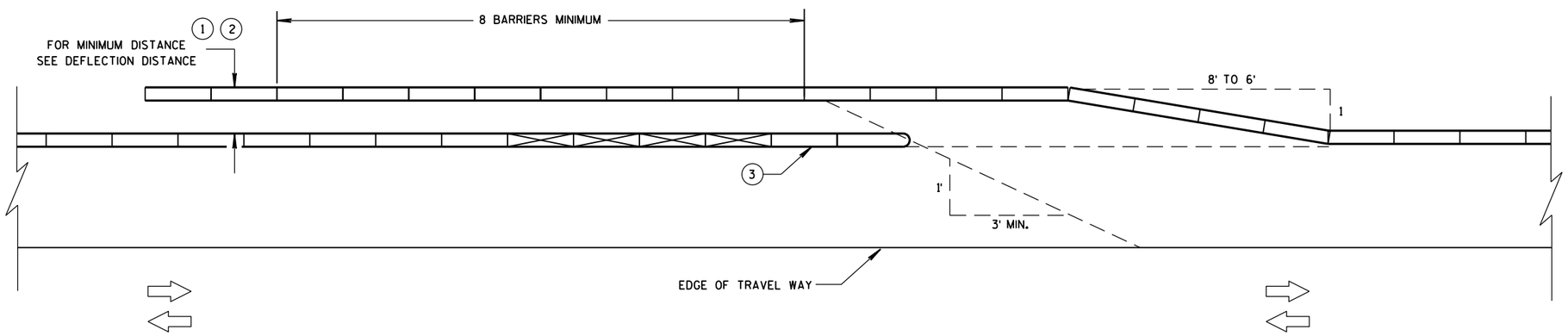

TEMPORARY BARRIER OVERLAP - TWO-WAY TRAFFIC

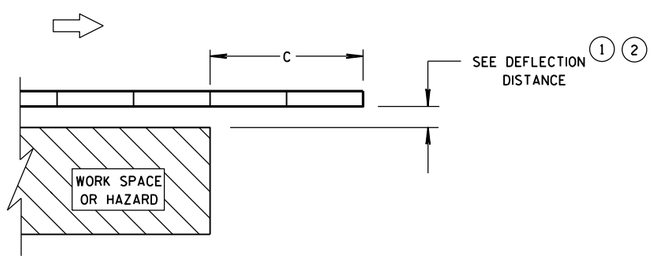

ENDING TEMPORARY BARRIER DOWNSTREAM - UNANCHORED

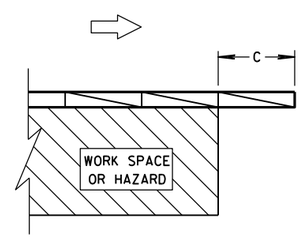

ENDING TEMPORARY BARRIER DOWNSTREAM - ANCHORED

LEGEND

- DIRECTION OF TRAVEL
- CRASH CUSHION OR SAND BARREL ARRAY
- SEE FREE STANDING TRANSITION TO TIED-DOWN SYSTEM DETAILS
- SEE BI-DIRECTIONAL TRANSITION TO TIED-DOWN SYSTEM DETAILS
- 3 PINS PLACED ON TRAFFIC SIDE OF BARRIER
- PERMANENT CONCRETE BARRIER OR CONCRETE PARAPET
- FREE STANDING TEMPORARY BARRIER

CRASH CUSHION/SAND BARREL ARRAY AND OTHER TEMPORARY BARRIER LAYOUT DETAILS

STATE OF WISCONSIN
DEPARTMENT OF TRANSPOR

6

6

S.D.D. 14 B 8-2c

S.D.D. 14 B 8-2c

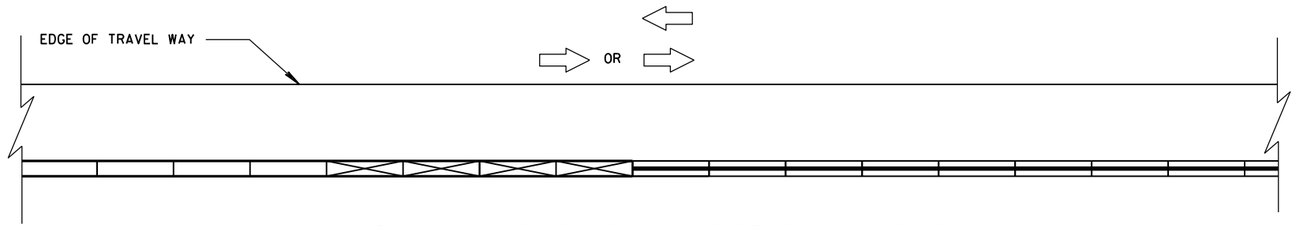

CONNECTING TEMPORARY BARRIER TO PERMANENT
CONCRETE BARRIER-TRAFFIC ON ONE SIDE

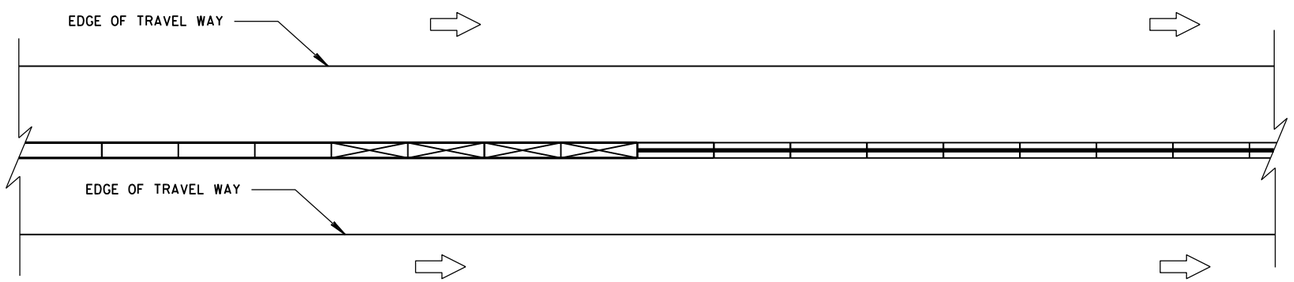

CONNECTING TEMPORARY BARRIER TO PERMANENT
CONCRETE BARRIER-TRAFFIC ON BOTH SIDES

LEGEND

DIRECTION OF TRAVEL

CRASH CUSHION OR
SAND BARREL ARRAY

SEE FREE STANDING TRANSITION
TO TIED-DOWN SYSTEM DETAILS

SEE BI-DIRECTIONAL TRANSITION
TO TIED-DOWN SYSTEM DETAILS

3 PINS PLACED ON
TRAFFIC SIDE OF BARRIER

PERMANENT CONCRETE BARRIER
OR CONCRETE PARAPET

FREE STANDING TEMPORARY
BARRIER

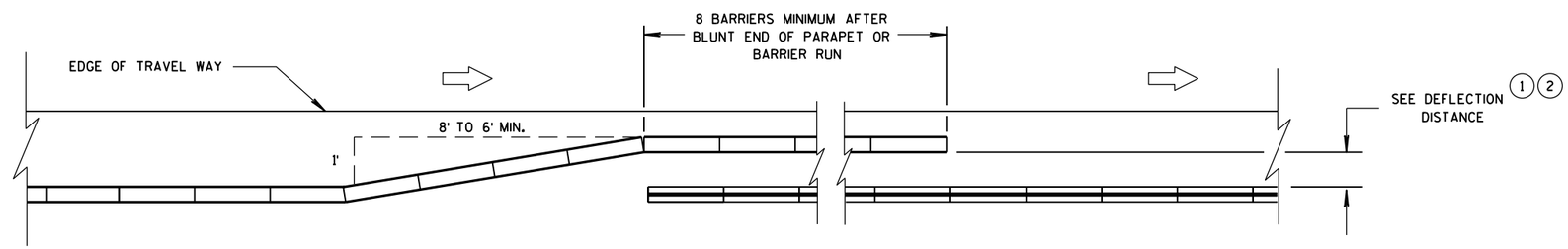

OVERLAPPING TEMPORARY BARRIER AND PERMANENT BARRIER -
ONE WAY TRAFFIC

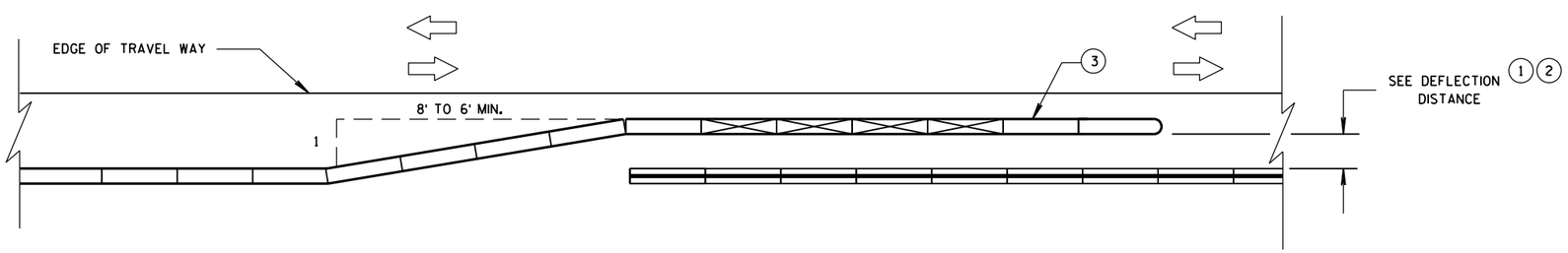

OVERLAPPING TEMPORARY BARRIER AND PERMANENT BARRIER -
TWO WAY TRAFFIC

CRASH CUSHION/SAND BARREL
ARRAY AND OTHER TEMPORARY
BARRIER LAYOUT DETAILS

STATE OF WISCONSIN
DEPARTMENT OF TRANSPOR

6

S.D.D. 14 B 8-2d

LEGEND

DIRECTION OF TRAVEL

CRASH CUSHION OR SAND BARREL ARRAY

SEE FREE STANDING TRANSITION TO TIED-DOWN SYSTEM DETAILS

SEE BI-DIRECTIONAL TRANSITION TO TIED-DOWN SYSTEM DETAILS

3 PINS PLACED ON TRAFFIC SIDE OF BARRIER

PERMANENT CONCRETE BARRIER OR CONCRETE PARAPET

FREE STANDING TEMPORARY BARRIER

DIMENSION C TABLE (2)

AVAILABLE DEFLECTION DISTANCE	MINIMUM LENGTH OF BARRIER BEYOND HAZARD FT
GREATER THAN 8'	12.5
LESS THAN OR EQUAL TO 8' BUT GREATER THAN 4'	50
LESS THAN OR EQUAL TO 4'	100

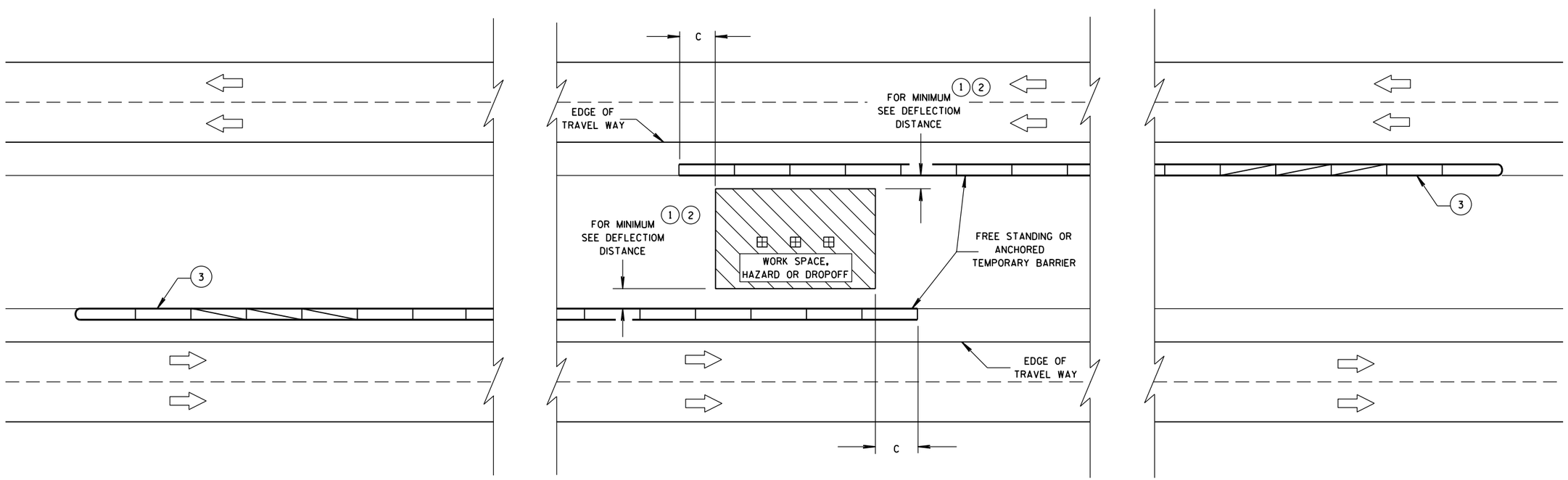

CRASH CUSHION/SAND BARREL ARRAY AND OTHER TEMPORARY BARRIER LAYOUT DETAILS

STATE OF WISCONSIN
DEPARTMENT OF TRANSPORTATION

APPROVED
June, 2015 — DATE
/S/ Jerry H. Zogg — ROADWAY STANDARDS DEVELOPMENT ENGINNER
FHWA

GENERAL NOTES

1. W6 X 9 OR W6 X 8.5 STEEL POSTS AND NOTCHED PLASTIC BLOCKOUTS ARE ACCEPTABLE ALTERNATIVES FOR 6" X 8" WOOD POSTS WITH WOOD OR PLASTIC BLOCKOUTS. USE APPROVED NOTCHED PLASTIC BLOCKOUTS WITH STEEL POSTS. APPROVED PLASTIC BLOCKOUT DESIGNS MAY VARY FROM THIS TYPICAL DETAIL WHEN USED IN CONJUNCTION WITH STEEL POSTS.

   DO NOT MIX STEEL POSTS AND WOOD POSTS IN A SINGLE INSTALLATION.
2. USE STRUCTURAL STEEL POSTS CONFORMING TO ASTM A 36. GALVANIZED POSTS ACCORDING TO AASHTO M 111. EITHER SET THE POSTS IN DRILLED HOLES OR DRIVE TO GRADE. REMOVE MUSHROOMING CAUSED BY DRIVING AND REPAIR DAMAGED SPELTER COATING ON GALVANIZED POSTS.
3. INSTALL STEEL POSTS WITH HOLES ON APPROACHING TRAFFIC SIDE.
4. USE EITHER WOOD OR APPROVED PLASTIC BLOCKOUTS ON WOOD POSTS.
5. IF THE DISTANCE FROM BACK OF POST TO SHOULDER HINGE POINT IS LESS THAN 2 FEET INSTALL LONGER POST AT HALF POST SPACING, W BEAM (LHW).
6. IF ROCK IS ENCOUNTERED DURING EXCAVATION, THE ENGINEER MAY APPROVE USING A 12 INCH DIAMETER POST HOLE EXTENDING 20 INCHES DEEP INTO THE ROCK. PLACE GRANULAR MATERIAL IN THE BOTTOM OF THE HOLE APPROXIMATELY 2½ INCHES DEEP. CUT THE POSTS TO LENGTH AND PLACE IN YHE HOLE. BACKFILL WITH MATERIAL EXCAVATED FROM THE HOLE AND COMPACT ADEQUATEY.
7. WHEN USING STEEL POSTS AND WOOD BLOCKOUTS INSTALL FOUR 16D GALVANIZED NAILS. INSTALL NAILS AT THE BACK CORNERS OF THE BLOCK AND BEND THE NAILS OVER THE FLANGE OF THE STEEL POST.

INSTALL BEAM GUARD SECTIONS AND ALL NECESSARY HARDWARE ACCORDING TO THE APPLICABLE PLAN AND CURRENT STANDARD AND SUPPLEMENTAL SPECIFICATIONS.

ALL DIMENSIONS ARE SUBJECT TO MANUFACTURER'S TOLERANCES EXCEPT WHERE ALLOWABLE TOLERANCES ARE SHOWN.

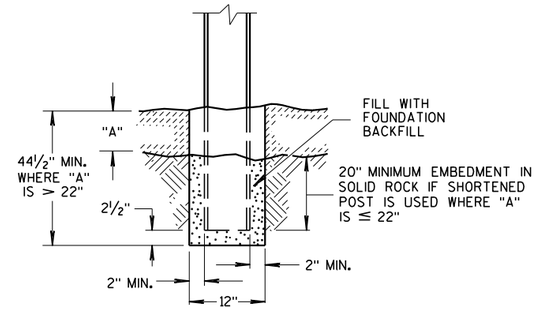

END VIEW
SETTING STEEL OR WOOD POST IN ROCK (6)

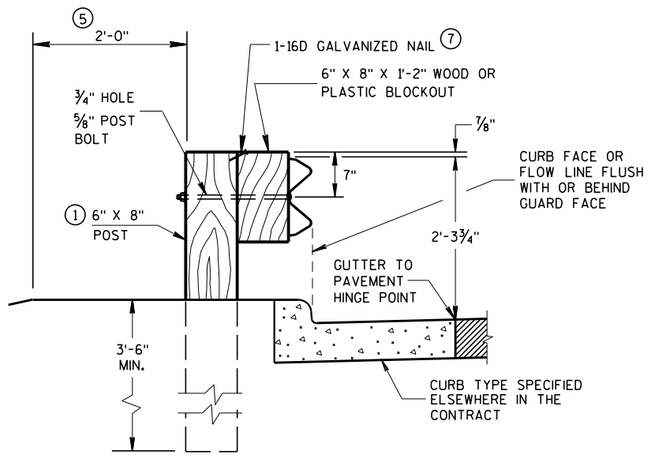

END VIEW
LOCATED ALONG A CURBED ROADWAY

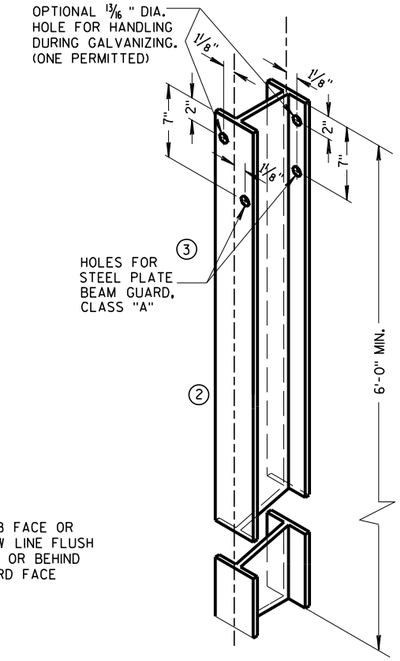

STEEL POST &
HOLE PUNCHING DETAIL
(W6 X 9) (1)

ALL HOLES 13/16" DIAMETER EXCEPT AS NOTED

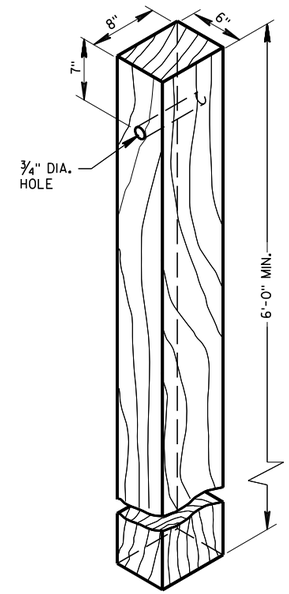

WOOD POST
(6"X8") NOMINAL

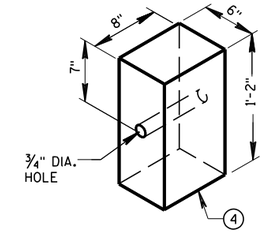

WOOD OR PLASTIC
BLOCKOUT FOR
WOOD POSTS

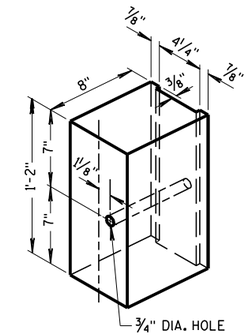

TYPICAL NOTCHED (1)
PLASTIC BLOCKOUT
FOR STEEL POSTS

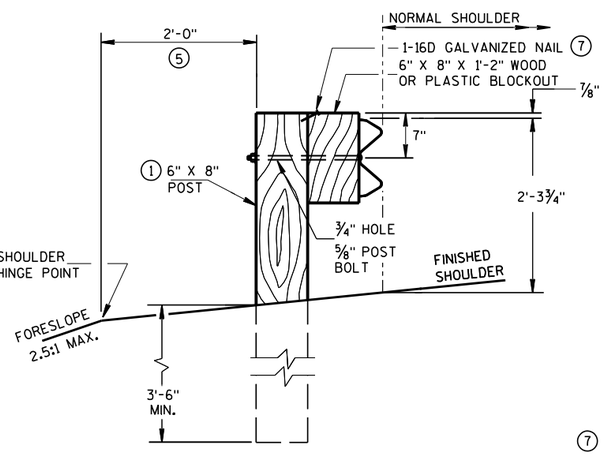

END VIEW
LOCATED ALONG A ROADWAY SHOULDER
STANDARD INSTALLATION

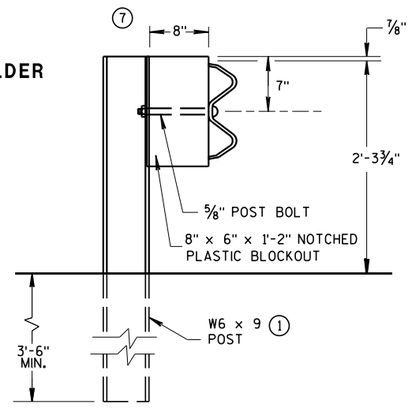

END VIEW
STEEL POST & NOTCHED
PLASTIC BLOCKOUT ALTERNATIVE
STANDARD INSTALLATION

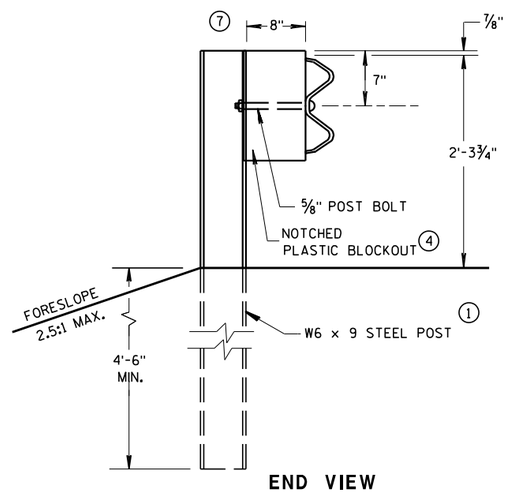

END VIEW
LONGER POST AT HALF
POST SPACING W BEAM
(LHW)

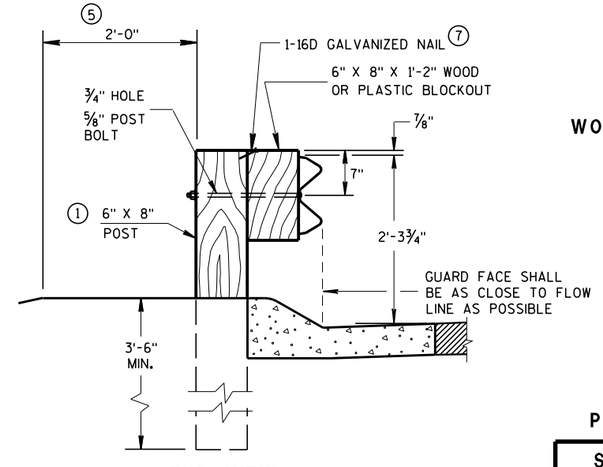

END VIEW
LOCATED ALONG A
MOUNTABLE CURBED ROADWAY

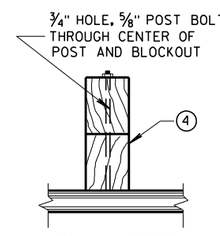

PLAN VIEW
WOOD POST, BLOCKOUT & BEAM

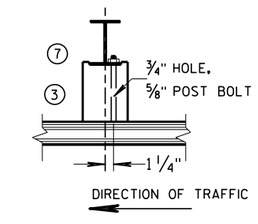

PLAN VIEW
STEEL POST, NOTCHED
PLASTIC BLOCKOUT & BEAM

TYPICAL INSTALLATION OF STEEL PLATE BEAM GUARD

STEEL PLATE BEAM GUARD,
CLASS "A"
INSTALLATION & ELEMENTS

STATE OF WISCONSIN
DEPARTMENT OF TRANSPORTATION

6

S.D.D. 14 B 15-11a

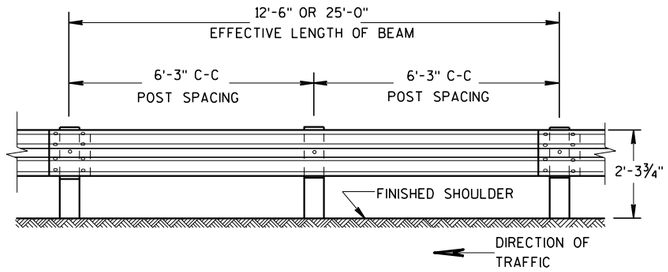

FRONT VIEW

POST SPACING STANDARD INSTALLATION

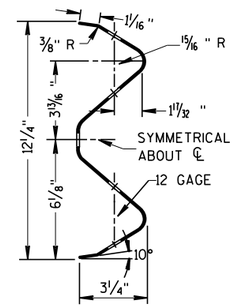

SECTION THRU W BEAM

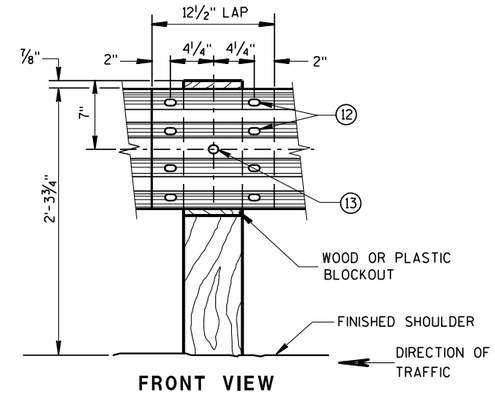

FRONT VIEW

BEAM SPLICE AT WOOD POST AND POST MOUNTING DETAIL

GENERAL NOTES

FURNISH GUARDRAIL DEFLECTORS FROM APPROVED PRODUCTS LIST.

(9) DO NOT INSTALL REFLECTORS ON THE FIRST 50 FEET OF THE APPROACH END OF THE ENERGY ABSORBING TERMINA. START REFLECTORS AT POST #9 AND SPACE EVENLY EVERY 100 FEET (MAX.) TO THE END OF GUARDRAIL RUN, USING A MINIMUM OF 3 REFLECTORS.

(12) 8 -5/8" Φ X 2" BUTTON HEAD BOLTS WITH OVAL SHOULDERS & RECESS NUTS.

(13) 5/8" DIA. BUTTON HEAD BOLT AND RECESS NUT WITH 5/8" DIA. F844 FLAT WASHER UNDER NUT.

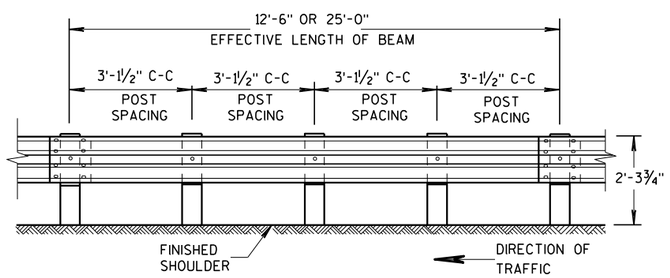

FRONT VIEW

POST SPACING FOR LONGER POST AT HALF POST SPACING W BEAM (LHW)

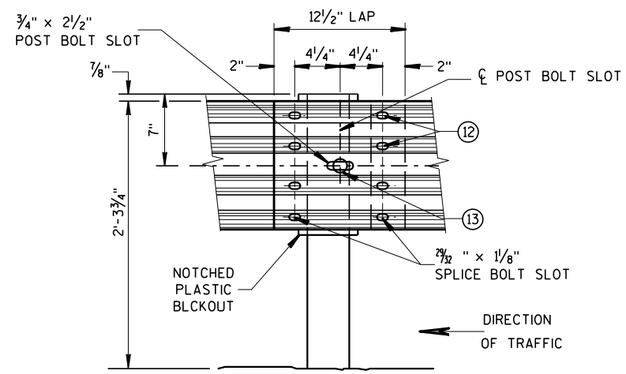

FRONT VIEW
BEAM SPLICE AT STEEL POST

TYPICAL SPLICING DETAILS OF STEEL PLATE BEAM GUARD

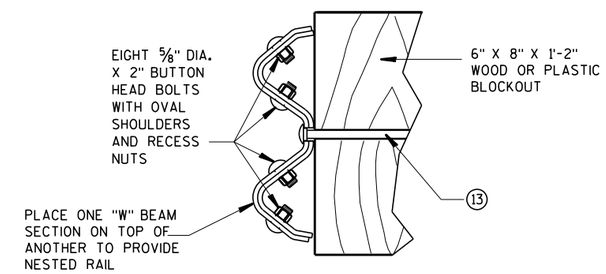

NESTED W BEAM (NW)

USE ALL OTHER STANDARD BEAM GUARD DETAILS FOR CONSTRUCTING NESTED W BEAM (NW)

* USE DOUBLE SIDED WHITE GUADRAIL REFLECTORS ON ROADWAYS WITH BI-DIRECTIONAL TRAFFIC (NO MEDIAN). USE SINGLE SIDED WHITE (RIGHT SIDE) AND SINGLE SIDED YELLOW (LEFT SIDE) ON ROADWAYS WITH MEDIAN SEPARATION.

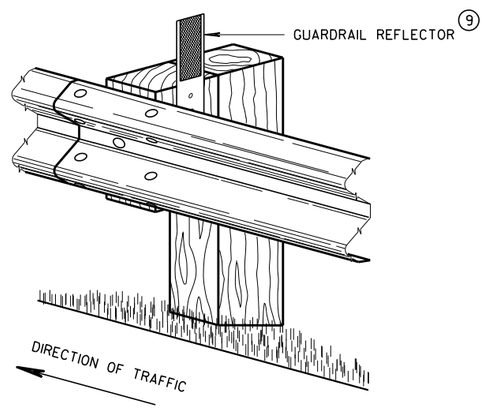

4" X 12" GUARDRAIL REFLECTOR DETAIL AND TYPICAL INSTALLATION *

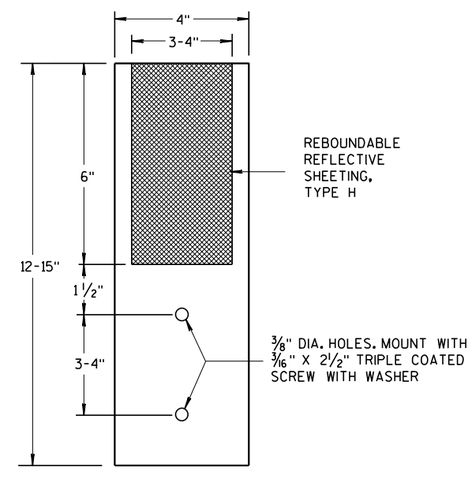

4"x 12" GUARDRAIL REFLECTOR

STEEL PLATE BEAM GUARD, CLASS "A", INSTALLATION & ELEMENTS

STATE OF WISCO 43
DEPARTMENT OF TRANSPORTATION

6

6

S.D.D. 14 B 15-11b

S.D.D. 14 B 15-11b

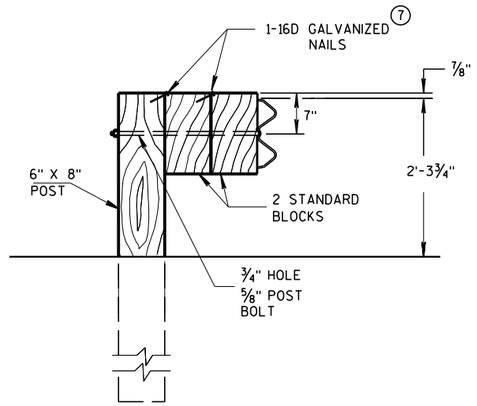

DETAIL FOR DOUBLE BLOCKS

THE NUMBER OF DOUBLE BLOCK POSTS WITHIN A BARRIER RUN IS UNLIMITED

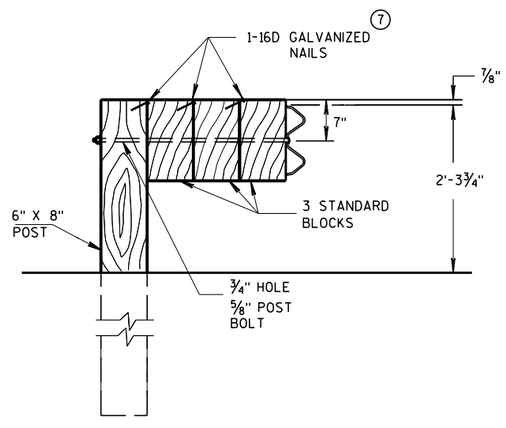

DETAIL FOR TRIPLE BLOCKS

TRIPLE BLOCK DETAIL IS LIMITED TO ONE LOCATION WITHIN A BEAM GUARD RUN.

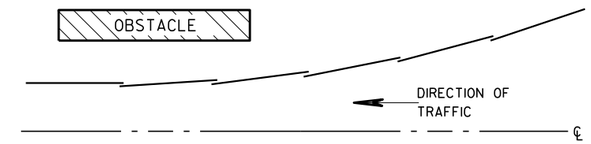

PLAN VIEW
BEAM LAPPING DETAIL

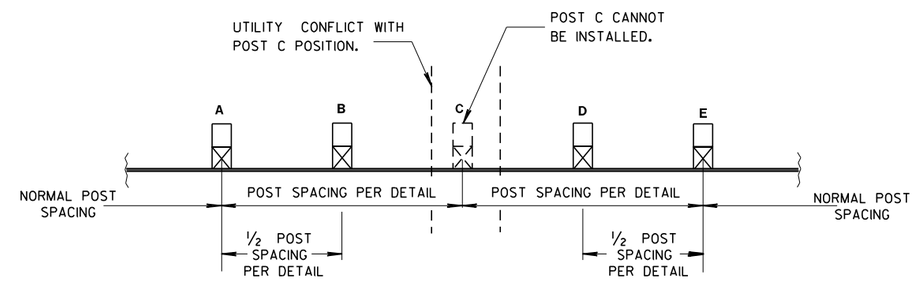

POST DRIVING FOR CONTINUOUS UNDERGROUND OBSTRUCTION

NOTES: USE DOUBLE OR TRIPLE BLOCKS WHEN UNDERGROUND OBSTACLES PREVENT THE POST FROM BEING INSTALLED.

DO NOT USE EXTRA BLOCKOUTS IF IT CAUSES THE POST TO BE DRIVEN BEYOND SHOULDER HINGE POINT OR CAUSES A FIXED OBJECT TO BE WITHIN THE DEFLECTION DISTANCE OF THE BARRIER.

STEEL PLATE BEAM GUARD, CLASS "A", INSTALLATION & ELEMENTS

STATE OF WISCONSIN
DEPARTMENT OF TRANSPORTATION

APPROVED
June 2017 — DATE
/S/ Rodney Taylor — ROADWAY STANDARDS DEVELOPMENT UNIT SUPERVISOR
FHWA

6

S.D.D. 14 B 15-11c

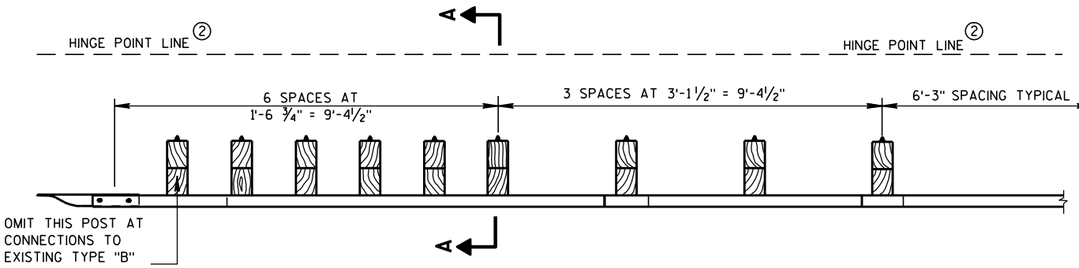

PLAN VIEW

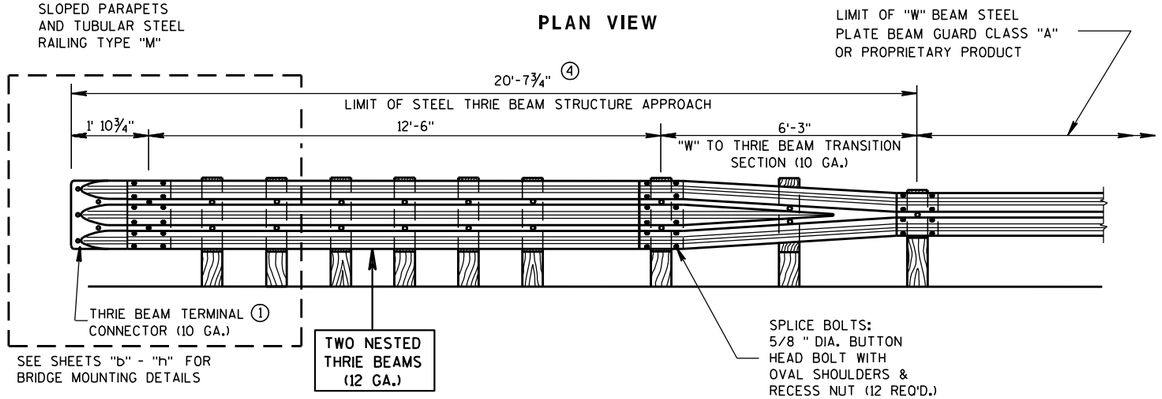

FRONT VIEW

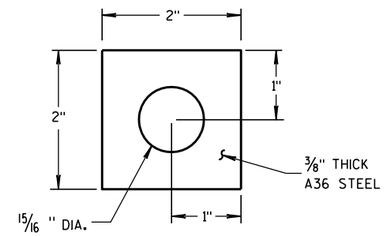

PLATE WASHER DETAIL

GENERAL NOTES

BOLT THE THRIE BEAM TO ALL POSTS AND BLOCKOUTS. DRILL OR PUNCH BOLT HOLES IN THE BEAM IF THE POST SPACING IS LESS THAN 6'-3".

DO NOT USE STEEL POSTS AND NOTCHED PLASTIC BLOCKOUTS IN THE STEEL THRIE BEAM STRUCTURAL APPROACH AND THE TRANSITION SECTION OF STEEL PLATE BEAM GUARD, CLASS "A" INSTALLATIONS.

IF ROCK IS ENCOUNTERED, REMOVE ROCK TO FULL DEPTH OF POST PLUS 2 1/2", AND 12" DIAMETER AROUND POST. SEE 14B15 FOR MORE DETAILS.

① BRIDGE RAILING TYPE "W" DOES NOT REQUIRE A TERMINAL CONNECTOR.

② MINIMUM EMBEDMENT SHALL BE 4'-0". WHERE EXISTING CONDITIONS DO NOT PERMIT THE APPROPRIATE EARTHWORK SHOWN ON THE PLAN TYPICAL SECTIONS OR DETAILS, THE ENGINEER MAY ALLOW THE REDUCTION OR ELIMINATION OF THE 2 FOOT DISTANCE TO THE HINGE POINT. OTHERWISE BUILD AS THE PLAN SHOWS OR AS THE ENGINEER DIRECTS. IF THE 2 FOOT DISTANCE TO THE HINGE POINT IS REDUCED OR ELIMINATED, INCREASE THE POST EMBEDMENT DEPTH TO 4'-6" OR MORE.

③ POST BOLTS ARE 5/8" DIAMETER ASTM A307 BUTTON HEAD BOLT. A POST BOLT REQUIRES A 5/8" DIAMETER A563A DOUBLE RECESSED (DR) HEAVY HEX AND A 5/8" DIAMETER F844 FLAT WASHER. LENGTH OF POST BOLT MAY VARY.

④ ALL WOOD POSTS MUST BE 6" X 8" AND AT LEAST 7'-0" LONG.

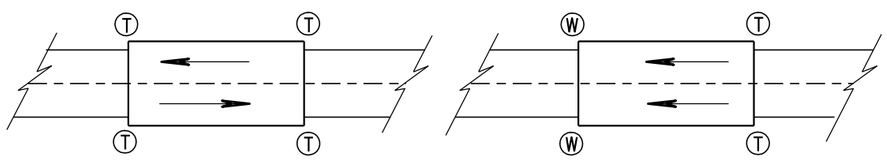

TWO WAY TRAFFIC

ONE WAY TRAFFIC

Ⓣ THRIE BEAM CONNECTION

Ⓦ W-BEAM CONNECTION WHEN REQUIRED

TYPICAL LOCATIONS OF THRIE BEAM AND W-BEAM CONNECTIONS TO BRIDGE

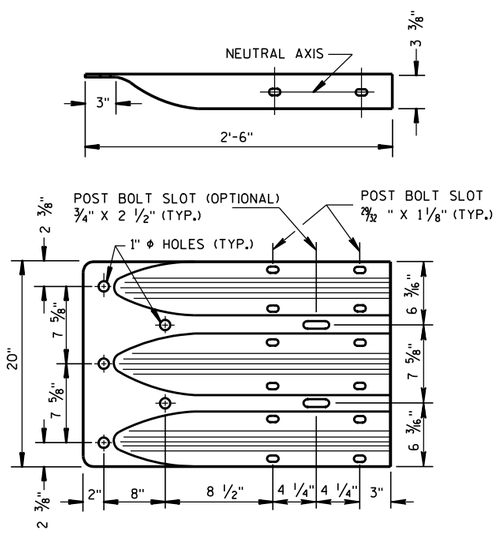

THRIE BEAM TERMINAL CONNECTOR

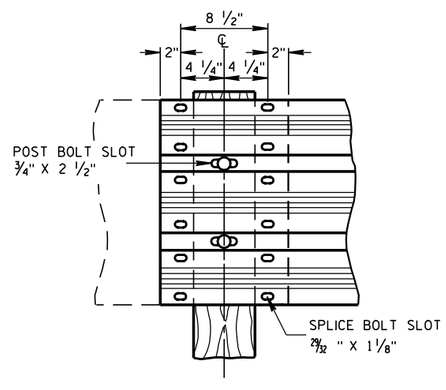

THRIE BEAM SPLICE

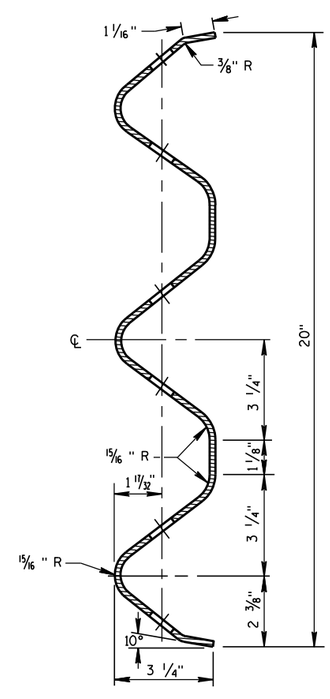

SECTION THRU THRIE BEAM RAIL ELEMENT

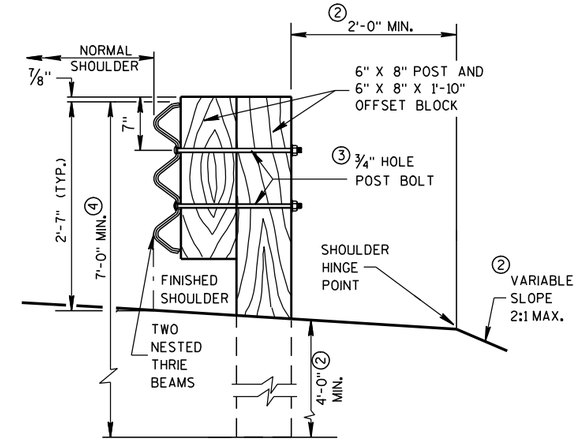

SECTION A-A

STEEL THRIE BEAM STRUCTURE APPROACH

STATE OF WISCONSIN
DEPARTMENT OF TRANSPORTATION

APPROVED

8/31/2012 — DATE

/S/ Jerry H. Zogg — ROADWAY STANDARDS DEVELOPMENT ENGINEER

FHWA

6

6

S.D.D. 14 B 20-11a

S.D.D. 14 B 20-11a

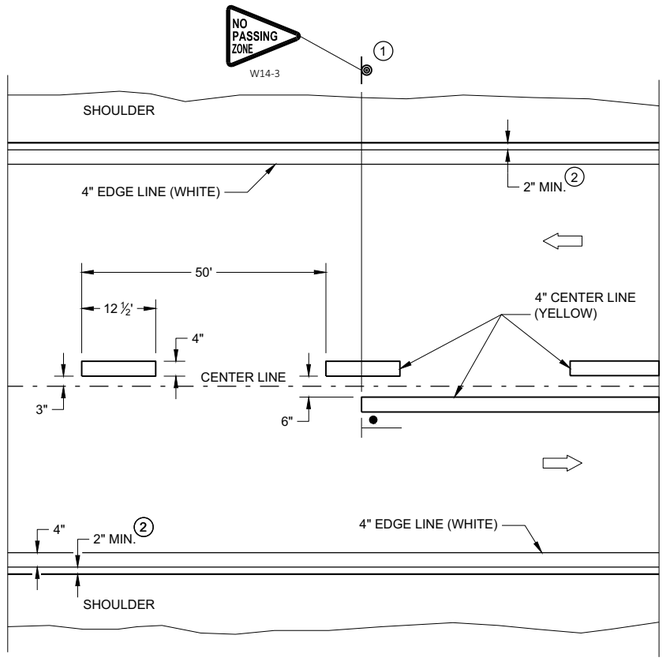

TWO WAY TRAFFIC

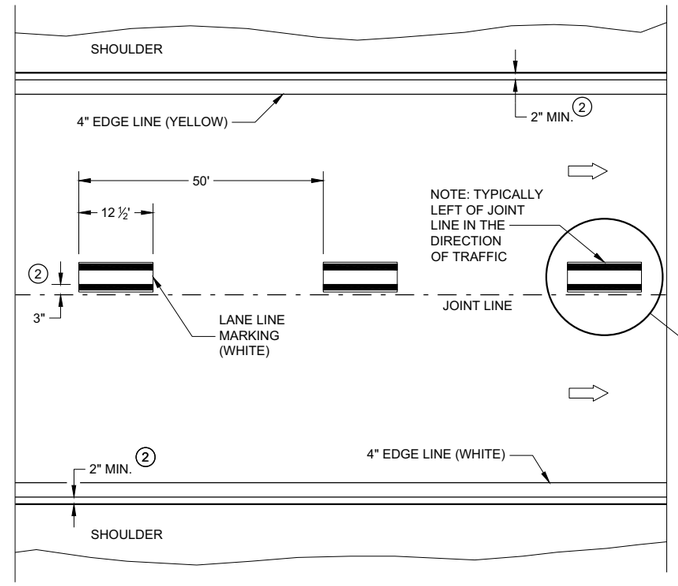

ONE WAY TRAFFIC

PERMANENT PAVEMENT MARKING

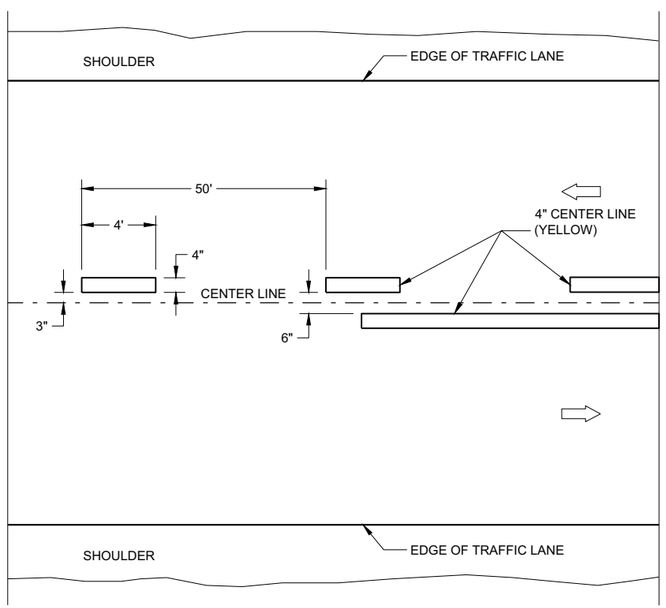

TWO WAY TRAFFIC

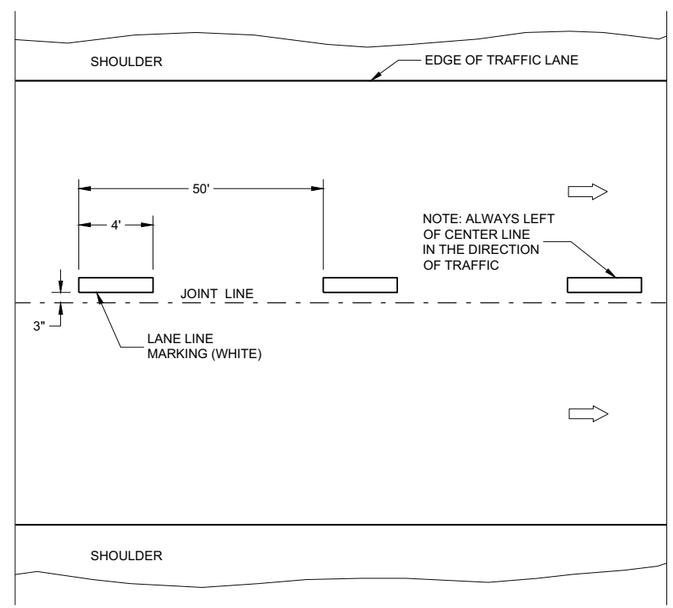

ONE WAY TRAFFIC

TEMPORARY PAVEMENT MARKING

GENERAL NOTES

DETAILS OF CONSTRUCTION NO SHOWN ON THIS DRAWING SHALL CONFORM TO STANDARD SPECIFICATIONS AND SPECIAL PROVISIONS.

1. LOCATE THE NO PASSING ZONE W14-3 SIGN WITH 50 FEET OF THE "T" MARKING
2. MEASURE FROM EDGE OF MARKING TO JOINT LINE. THIS DOES NOT INCLUDE SPACE NEEDED FOR GROOVING OPERATIONS.

LEGEND

"T" MARKING

SIGN ON PERMANENT SUPPORT

DIRECTION OF TRAFFIC

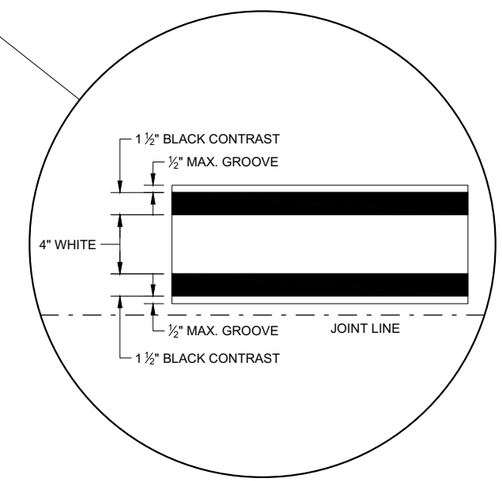

LONGITUDINAL MARKING (MAINLINE)

STATE OF WISCONSIN
DEPARTMENT OF TRANSPORTATION

APPROVED
February 2020 — DATE
/S/ Matthew Rauch — STATEWIDE SIGNING AND M ENGINEER
FHWA

6

SDD 15C08 - 20a

GENERAL NOTES

1. REFLECTIVE SHEETING SHALL FOLLOW THE REQUIREMENTS IN THE APPROVED PRODUCTS LISTING FOR SIGN SHEETING.
2. LOCATION OF WARNING LIGHTS WHEN SHOWN ON THE PLAN.

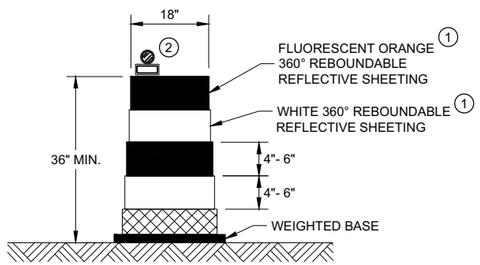

DRUM

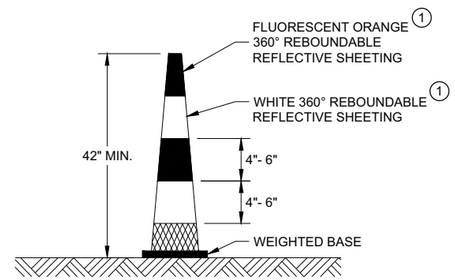

42" CONE

DO NOT USE IN TAPERS
½ SPACING OF DRUMS

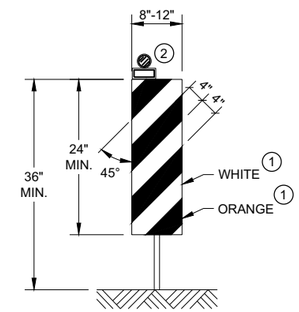

VERTICAL PANEL

THE STRIPES SHALL SLOPE DOWNWARD TO
THE TRAFFIC SIDE FOR CHANNELIZATION.

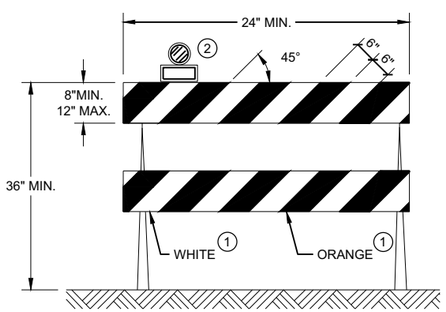

TYPE II BARRICADE

FOR RAILS LESS THAN 36" LONG, 4" WIDE STRIPES
MAY BE USED. ALL STRIPES SHALL SLOPE DOWNWARD
TO THE TRAFFIC SIDE FOR CHANNELIZATION.

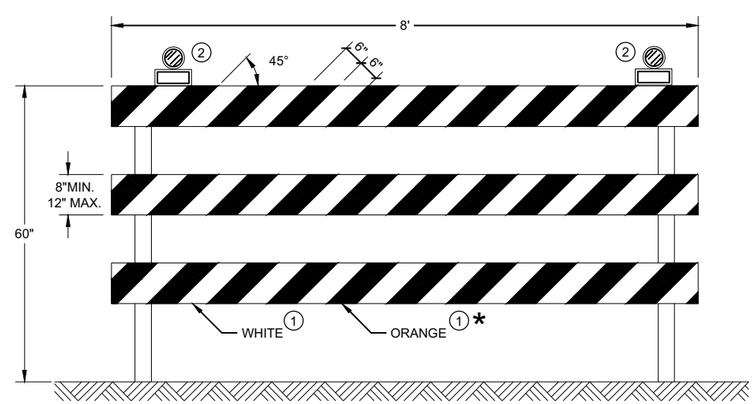

TYPE III BARRICADE

IF SIGN MOUNTED, DO NOT COVER MORE THAN 50% OF THE TOP
TWO RAILS OR 33% OF THE TOTAL AREA OF THE THREE RAILS.

* IF USED FOR A PERMANENT APPLICATION USE RED SHEETING.

CHANNELIZING DEVICES DRUMS, CONES, BARRICADES AND VERTICAL PANELS

STATE OF WISCONSIN
DEPARTMENT OF TRANSPORTATION

APPROVED
November 2020 /S/ Andrew Heidtke
DATE WORK ZONE ENGINEE
FHWA

6

6

SDD 15C11 - 08b

SDD 15C11 - 08b

LEGEND

SIGN ON PORTABLE OR PERMANENT SUPPORT

TEMPORARY PORTABLE RUMBLE STRIP ARRAY

DIRECTION OF TRAFFIC

WORK AREA

FLAGGER, EQUIPPED WITH STOP/SLOW PADDLE FASTENED ON SUPPORT STAFF

GENERAL NOTES

DETAILS OF TRAFFIC CONTROL DEVICES AND INSTALLATION NOT SHOWN ON THIS DRAWING SHALL CONFORM TO THE PERTINENT REQUIREMENTS OF THE STANDARD SPECIFICATIONS, THE SPECIAL PROVISIONS, AND THE MANUAL ON UNIFORM TRAFFIC CONTROL DEVICES.

ALL SIGNS ARE 48" X 48" UNLESS OTHERWISE NOTED.

"WO" SIGNS ARE THE SAME AS "W" SIGNS EXCEPT THE BACKGROUND IS ORANGE.

THE EXACT NUMBER, LOCATION AND SPACING OF ALL SIGNS, DEVICES, AND LOCATION OF ALL FLAGGERS SHALL BE ADJUSTED TO FIT FIELD CONDITIONS AS APPROVED BY THE ENGINEER.

THE FIRST ADVANCE WARNING SIGN SHOULD TYPICALLY BE LOCATED IN ADVANCE OF THE ANTICIPATED TRAFFIC BACKUP OR QUEUE.

WHEN A SIDE ROAD OR RAMP INTERSECTS THE FACILITY ON WHICH THE WORK IS BEING PERFORMED, ADDITIONAL TRAFFIC CONTROLS SHALL BE PROVIDED AS SPECIFIED IN THE PLANS AND/OR THE SPECIAL PROVISIONS OR AS APPROVED BY THE ENGINEER.

FLAGGING

FLAGGERS SHALL BE IN SIGHT OF EACH OTHER OR IN DIRECT COMMUNICATION AT ALL TIMES. THEY SHALL BE EQUIPPED WITH STOP/SLOW PADDLES FASTENED ON SUPPORT STAFFS. WHEN THE FLAGGING OPERATION IS NOT IN EFFECT REMOVE TEMPORARY PORTABLE RUMBLE STRIPS PRIOR TO COVERING OR REMOVING ALL ADVANCE SIGNING.

(1) FOR MOVING WORK OPERATIONS, POST ADDITIONAL W20-7A FLAGGER SIGNS AT APPROXIMATELY 3,500' INTERVALS IN THE MOVING WORK OPERATION OR AS APPROVED BY THE ENGINEER.

(2) SIGN NOT REQUIRED IF FLAGGING OPERATION OCCURS WITHIN A SIGNED ROAD WORK ZONE AREA.

WHEN THE DISTANCE BETWEEN FLAGGERS EXCEEDS 2 MILES, A PILOT CAR IS REQUIRED. WHEN CURVES REDUCE SIGHT DISTANCE BELOW 400', A PILOT CAR IS REQUIRED.

TEMPORARY PORTABLE RUMBLE STRIPS

UTILIZE TEMPORARY PORTABLE RUMBLE STRIPS ON ALL FLAGGING OPERATIONS.

(3) EACH TEMPORARY PORTABLE RUMBLE STRIP ARRAY CONSISTS OF THREE RUMBLE STRIPS SPACED ACCORDING TO MANUFACTURER'S RECOMMENDATION, PLACED TRANSVERSE ACROSS THE LANE AT LOCATIONS SHOWN.

ONLY USE TEMPORARY PORTABLE RUMBLE STRIPS FOR THE APPROVED PRODUCTS LIST.

INSTALL TEMPORARY RUMBLE STRIPS PER MANUFACTURER'S RECOMMENDATIONS.

PLACE ADVANCE SIGNING PRIOR TO INSTALLING TEMPORARY RUMBLE STRIPS.

DO NOT INSTALL TEMPORARY PORTABLE RUMBLE STRIPS ON GRAVEL, MILLED SURFACES, OR ASPHALT THAT HAS BEEN PAVED LESS THAN 12 HOURS.

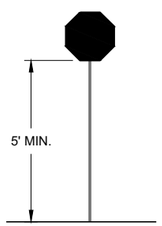

STOP/SLOW PADDLE ON SUPPORT STAFF

SIGN AND TEMPORARY RUMBLE STRIP ARRAY SPACING TABLE

SPEED LIMIT	SPACING "A"
25-30 MPH	200'
35-40 MPH	350'
45-55 MPH	500'

USE OF WO3-4 SIGN IS OPTIONAL. WHEN USED, THIS SIGN SHALL BE LOCATED BETWEEN THE W20-7A AND W20-4A SIGNS, USING SPACING "A".

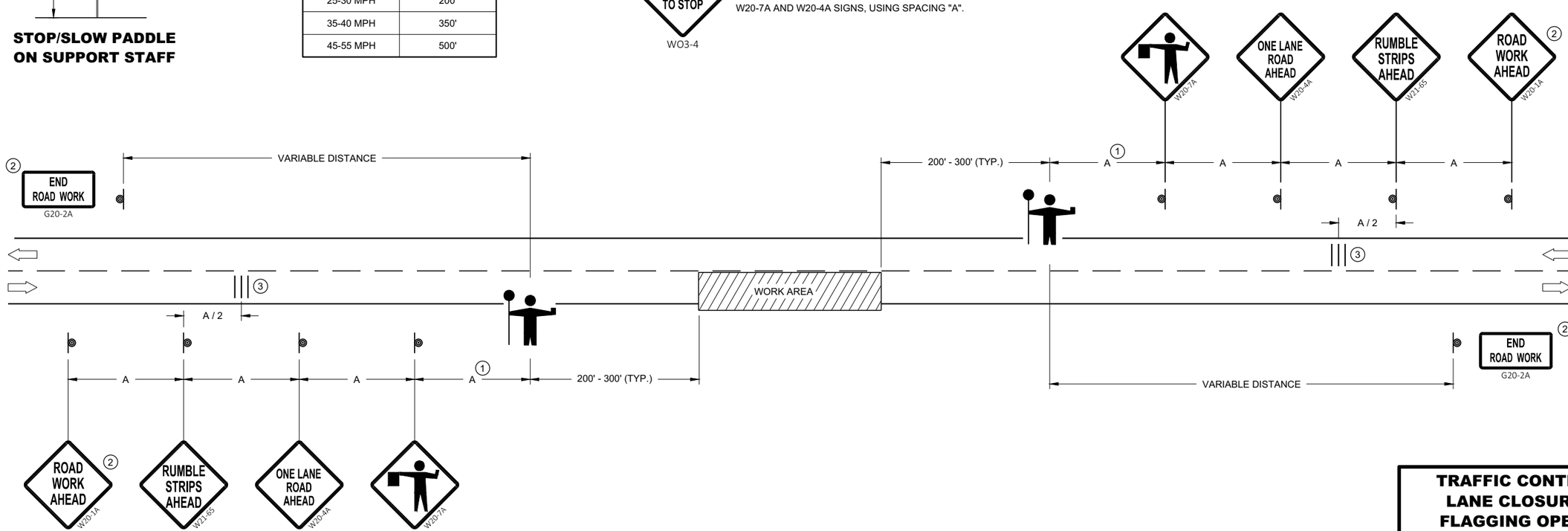

TRAFFIC CONTROL FOR LANE CLOSURE WITH FLAGGING OPERATION

TRAFFIC CONTROL FOR LANE CLOSURE WITH FLAGGING OPERATION

STATE OF WISCONSIN
DEPARTMENT OF TRANSPORTATION

APPROVED
May 2019 — DATE
/S/ Andrew Heidtke — WORK ZONE ENGINEE
FHWA

6
SDD 15C12 - 07

LEGEND

SIGN ON PERMANENT SUPPORT

TRAFFIC CONTROL DRUM

DIRECTION OF TRAFFIC

WORK ZONE

GENERAL NOTES

ALL SIGNS ARE 48"X48" UNLESS OTHERWISE NOTED. IF NECESSARY DUE TO SPACE CONSTRAINTS IN URBAN AREAS, 36" X 36" SIGNS MAY BE USED IF APPROVED BY THE REGIONAL TRAFFIC UNIT.

"WO" SIGN IS THE SAME AS "W" SIGN EXCEPT THE BACKGROUND IS ORANGE.

ANY SIGNS TEMPORARY OR EXISTING, WHICH CONFLICT WITH THE TRAFFIC CONTROL "IN USE" SHALL BE REMOVED OR COVERED AS NEEDED AND AS APPROVED BY THE ENGINEER.

THE EXACT NUMBER, LOCATION, AND SPACING OF ALL SIGNS AND DEVICES SHALL BE ADJUSTED TO FIT FIELD CONDITIONS AS APPROVED BY THE ENGINEER.

CHANNELIZING DEVICES PLACED ADJACENT TO WORK AREA SHALL BE PULLED BACK FROM THE TRAVEL LANE WHEN WORK IS NOT IN PROGRESS.

SIGNS THAT WILL BE IN PLACE LESS THAN 7 CONTINUOUS DAYS AND NIGHTS MAY BE MOUNTED ON PORTABLE SUPPORTS.

W20-1A AND G20-2A SIGNS ARE NOT REQUIRED IF THE WORK AREA IS WITHIN A LARGER WORK ZONE WHERE THESE SIGNS ARE ALREADY PRESENT. G20-2A SIGNS MAY ALSO BE OMITTED IF DURATION OF WORK IS LESS THAN 7 CONTINUOUS DAYS AND NIGHTS.

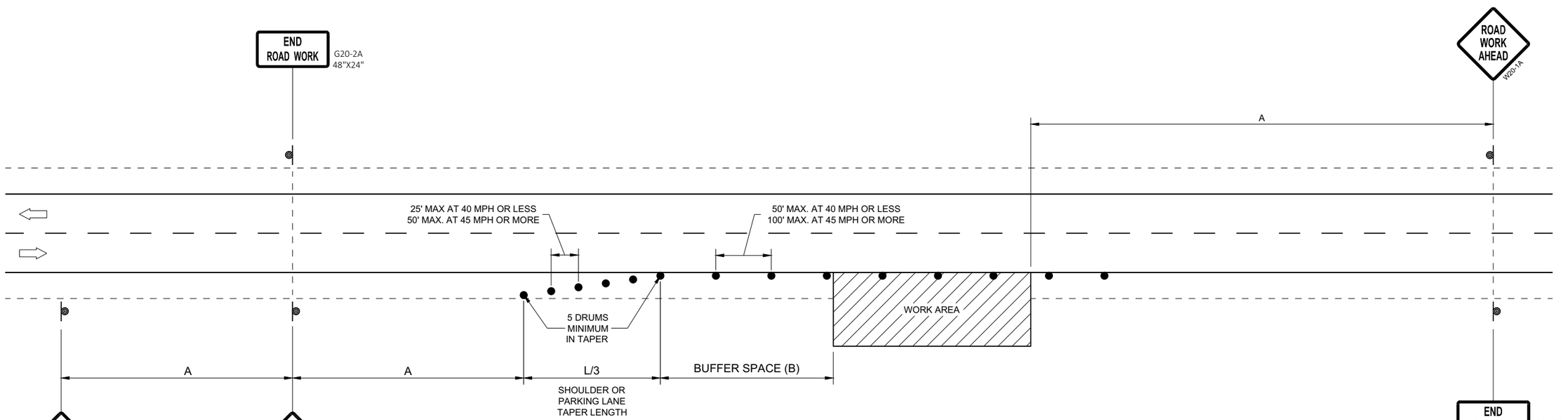

OR
IF TRAFFIC CONTROL DEVICES
ENCROACH ONTO TRAVELED WAY, USE

POSTED SPEED LIMIT PRIOR TO WORK STARTING (MPH)	ADVANCE WARNING SIGN SPACING (A) FEET	SHOULDER TAPER L / 3 W, LATERAL OFFSET (FT)						BUFFER SPACE (B) FEET
		3	4	5	6	7	8	
25	200'	10	14	17	21	24	28	55
30	200'	15	20	25	30	35	40	85
35	350'	20	27	34	40	47	54	120
40	350'	26	35	44	53	62	70	170
45	500'	45	59	74	89	104	119	220
50	500'	50	66	83	99	116	132	280
55	500'	54	73	91	109	127	145	335'

TRAFFIC CONTROL, WORK ON SHOULDER OR PARKING LANE, UNDIVIDED ROADWAY

STATE OF WISCONSIN
DEPARTMENT OF TRANSPORTATION

APPROVED
May 2020
DATE

/S/ Andrew Heidtke
STATEWIDE WORK ZONE T
SAFETY ENGINEER

FHWA

6

SDD 15D28 - 04

LEGEND

- TYPE III BARRICADE WITH ATTACHED SIGN
- SIGN ON PERMANENT SUPPORT
- TRAFFIC CONTROL DRUM WITH TYPE "C" STEADY BURN LIGHT
- TRAFFIC CONTROL DRUM
- FLAGS, 16" X 16" MIN. (ORANGE)
- REMOVING PAVEMENT MARKING
- DIRECTION OF TRAFFIC
- ASPHALTIC PAVEMENT WIDENING
- CONCRETE BARRIER TEMPORARY PRECAST
- TEMPORARY SIGNAL. SEE SDD 09G02 FOR EXACT PLACEMENT

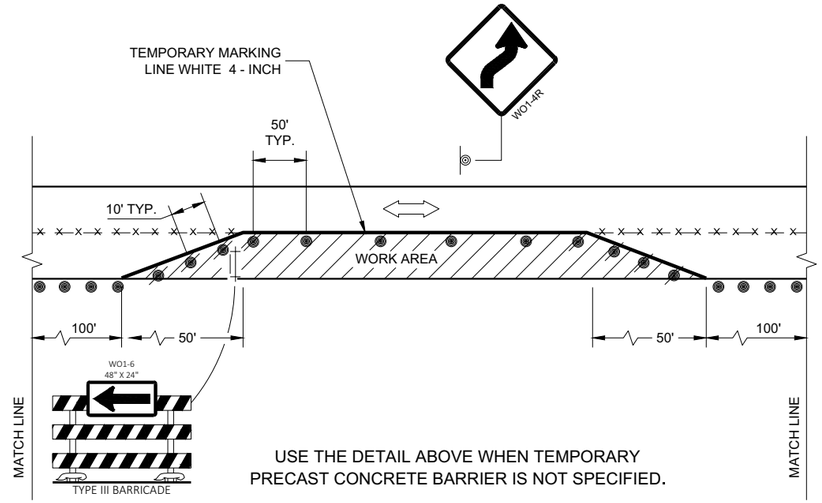

USE THE DETAIL ABOVE WHEN TEMPORARY PRECAST CONCRETE BARRIER IS NOT SPECIFIED.

GENERAL NOTES

THE EXACT NUMBER, LOCATION, AND SPACING OF ALL SIGNS AND DEVICES SHALL BE ADJUSTED TO FIT FIELD CONDITIONS AS APPROVED BY THE ENGINEER.

THE SPACING BETWEEN TRAFFIC CONTROL SIGNS SHOULD BE ADJUSTED TO NOT CONFLICT WITH AND TO PROVIDE A MINIMUM OF 200 FEET (500 FEET DESIRABLE) CLEARANCE TO EXISTING SIGNS THAT WILL REMAIN IN PLACE..

THIS LANE CLOSURE IS TYPICAL FOR CLOSING RIGHT LANE - REVERSE FOR CLOSING LEFT LANE.

ALL SIGNS ARE 48" x 48" UNLESS OTHERWISE NOTED.

"WO" IS THE SAME AS "W" EXCEPT THE BACKGROUND IS ORANGE.

ANY SIGNS TEMPORARY OR EXISTING, WHICH CONFLICT WITH TRAFFIC CONTROL "IN USE" SHALL BE REMOVED OR COVERED AS NEEDED OR AS APPROVED BY THE ENGINEER.

PLACE TEMPORARY PAVEMENT MARKING EDGELINE AND CENTERLINE AND REMOVE EXISTING PAVEMENT MARKINGS IF LANE CLOSURE IS TO BE IN PLACE 4 OR MORE CONTINUOUS DAYS AND NIGHTS OR AS NOTED ON DETAIL.

1. 500 FOOT SPACING SHOWN IS FOR ROADWAYS WITH A PRE-CONSTRUCTION REGULATORY SPEED LIMIT OF 45 MPH OR MORE. FOR 35 - 40 MPH, USE 350 FOOT TYPICAL SPACING. FOR 25 - 30 MPH, USE 200 FOOT TYPICAL SPACING.
2. USE 300 FOOT SPACING IF THE PRE - CONSTRUCTION REGULATORY SPEED IS 35 MPH OR LESS.
3. DIMENSION DETERMINED BY CBTP TAPER FROM EDGE LINE TO TANGENT SECTION OF THE ROAD.
4. TEMPORARY MARKING STOP LINE REMOVABLE TAPE 18 - INCH.
5. 700 FOOT TEMPORARY MARKING LINE, DOUBLE YELLOW 4 - INCH . WHEN THE DISTANCE FOR THE PRECEDING NO - PASSING ZONE IS LESS THAN THE MINIMUM DISTANCE BETWEEN ZONES AS INDICATED IN THE SPECIFICATIONS, THE TWO ZONES SHALL BE CONNECTED.
6. SEE SDD 15C02 - SHEET "F" FOR ADVANCED WIDTH RESTRICTION SIGNING.

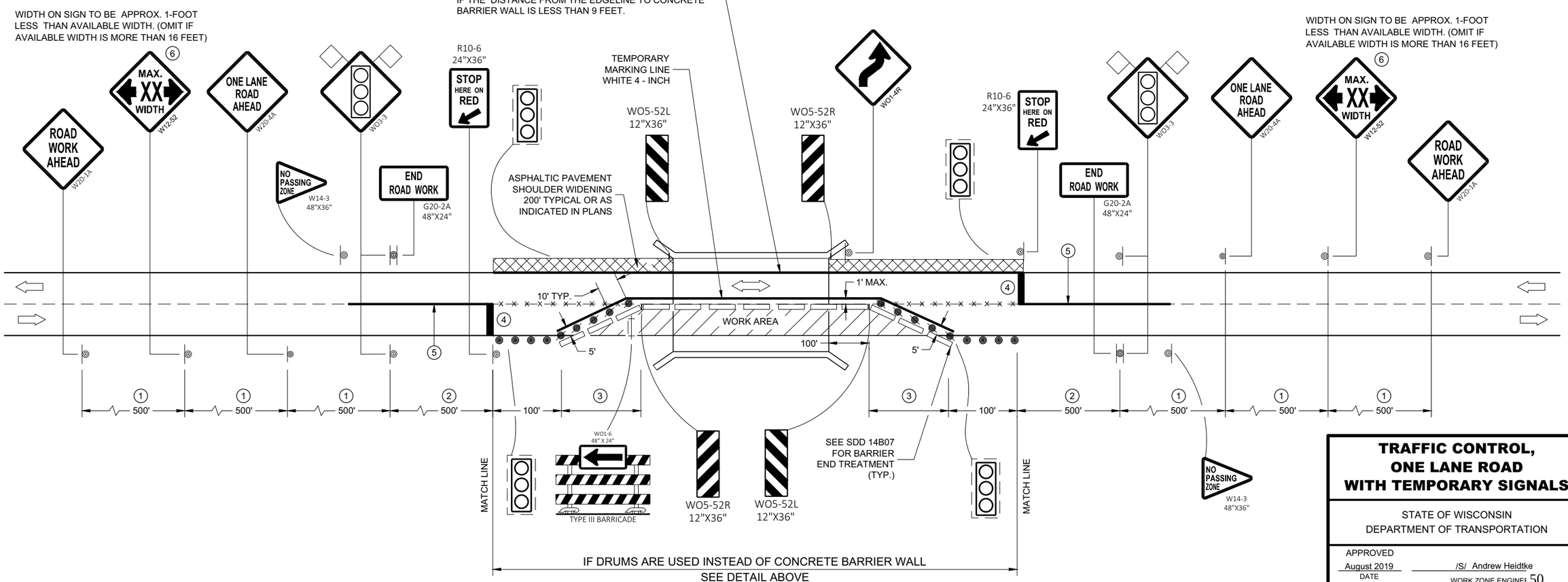

TRAFFIC CONTROL, ONE LANE ROAD WITH TEMPORARY SIGNALS

STATE OF WISCONSIN
DEPARTMENT OF TRANSPORTATION

APPROVED
August 2019 — DATE
/S/ Andrew Heidtke — WORK ZONE ENGINEE
FHWA

6

SDD 15D33 - 06

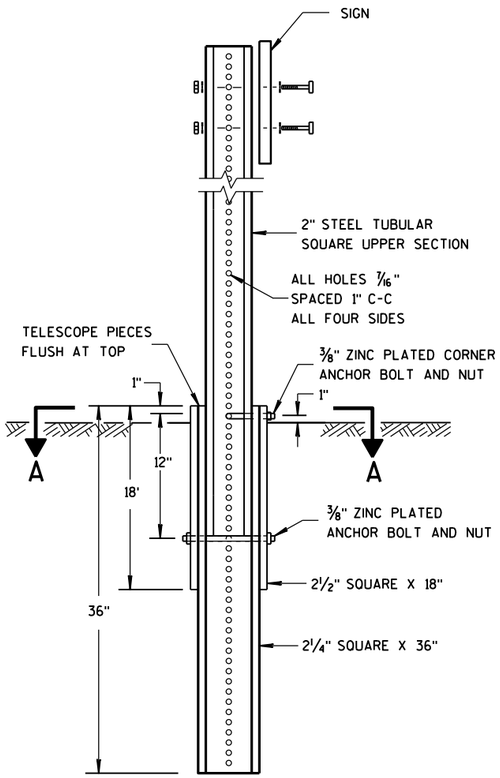

DETAIL OF TUBULAR STEEL SIGN POST

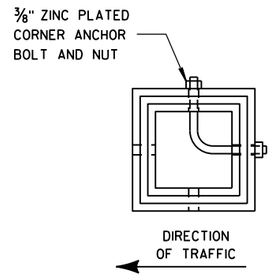

SECTION A-A

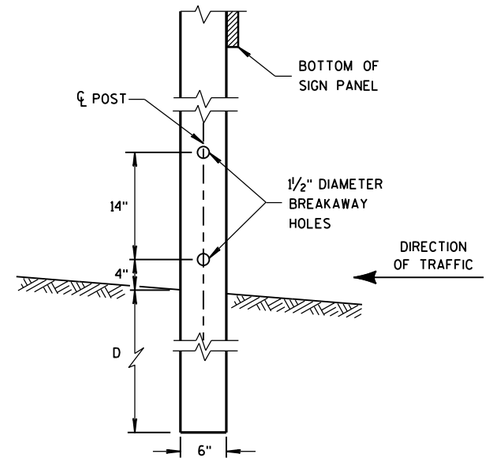

4"x6" WOOD POST MODIFICATION

GENERAL NOTES

1. 6 FEET FROM THE EDGE OF PAVEMENT (EDGE LINE LOCATION) UNLESS OTHERWISE DIRECTED BY THE PROJECT ENGINEER. LATERAL OFFSET SHOULD BE ADJUSTED TO AVOID THE DITCH FLOWLINE.
2. THE EXISTENCE OF CURB AND GUTTER DOES NOT IN ITSELF MANDATE THE VERTICAL CLEARANCE ILLUSTRATED. THAT HEIGHT IS TYPICALLY MEASURED WHERE THERE IS SIDEWALK ADJACENT TO THE ROADWAY OR PARKING IS PERMITTED. IN THE ABSENCE OF SIDEWALK, VERTICAL CLEARANCE IS MEASURED FROM THE TOP OF THE CURB. IF NO SIDEWALK AND NO PARKING, VERTICAL CLEARANCE MAY BE REDUCED TO 5 FOOT MINIMUM. OFFSET OF SIGNS IS MEASURED FROM THE CURB FLOWLINE.
3. FOR SIGNS REQUIRING 4 POSTS, SPACE INTERMEDIATE POSTS EVENLY.

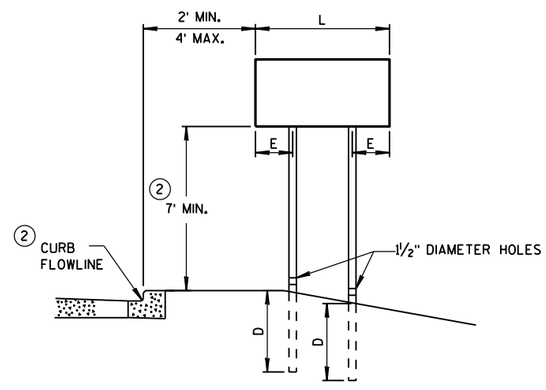

URBAN AREA

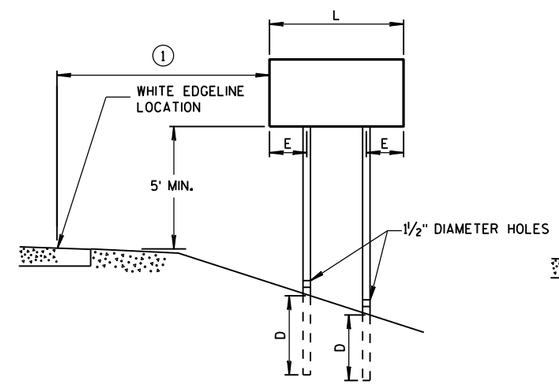

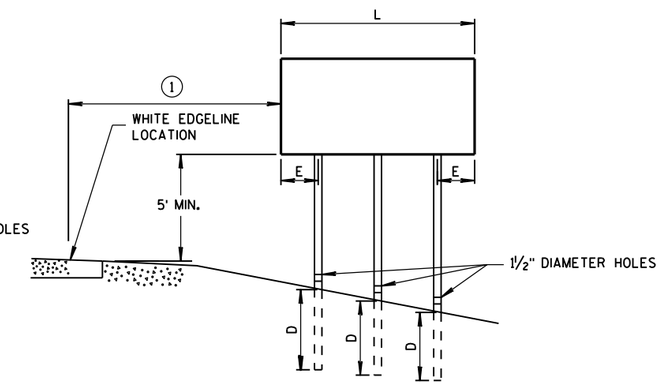

RURAL AREA

POST MOUNTING DETAIL FOR TEMPORARY TRAFFIC CONTROL FIXED MESSAGE SIGNS

TUBULAR STEEL POSTS

AREA OF SIGN INSTALLATION (SQ. FT.)	NUMBER OF REQUIRED TUBULAR STEEL POSTS
9 OR LESS	1
GREATER THAN 9 LESS THAN OR EQUAL TO 18	2
GREATER THAN 18 LESS THAN OR EQUAL TO 27	3

SIGNS WIDER THAN 3 FEET OR LARGER THAN 9 SQ. FT. SHALL BE MOUNTED ON MULTIPLE POSTS (SEE ABOVE TABLE).

SIGNS LARGER THAN 27 SQ. FT. SHALL NOT BE MOUNTED ON TUBULAR STEEL POSTS.

WOOD POST EMBEDMENT DEPTH

AREA OF SIGN INSTALLATION (SQ. FT.)	D (MIN)
20 OR LESS	4'
GREATER THAN 20	5'

4" X 6" WOOD POST

POST SPACING REQUIREMENTS		NUMBER OF WOOD POSTS REQUIRED
L	E	
48" OR LESS AND LESS THAN 20 SQ. FT.	-	1
LESS THAN 60"	12"	2
60" TO 120"	L/5	2
GREATER THAN 120" LESS THAN 168"	12"	3
168" AND GREATER	12"	4

SEE NOTE 3

TEMPORARY TRAFFIC CONTROL SIGN MOUNTING

STATE OF WISCONSIN
DEPARTMENT OF TRANSPO

6
S.D.D. 15 D 38-2a

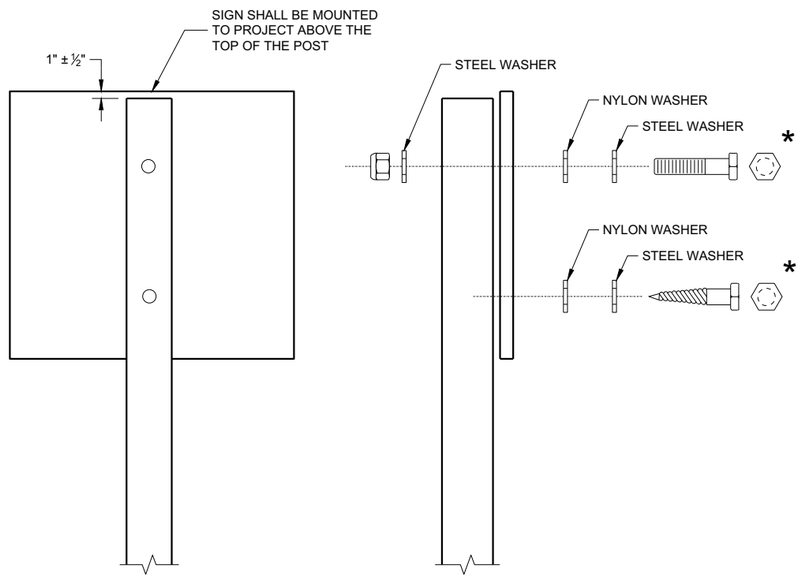

NUTS, BOLTS AND LAGS USED FOR MOUNTING SIGNS
SHALL HAVE HEXAGONAL HEADS AND SHALL BE EITHER:

A. HOT DIP GALVANIZED IN ACCORDANCE WITH ASTM
DESIGNATION: A 153, CLASS D, OR SC 3
B. ELECTRO-GALVANIZED IN ACCORDANCE WITH ASTM
DESIGNATION: B 633, TYPE III, SC 3

THREADS ON BOLTS AND NUTS SHALL BE MANUFACTURED WITH SUFFICIENT ALLOWANCE FOR THE CADMIUM PLATE OR GALVANIZED COATING TO PERMIT THE NUTS TO RUN FREELY ON THE BOLTS.

WOOD POST (4" x 6")
LAG SCREWS - ⅜" x 3"
MACHINE BOLTS - 5/16" x 6 ½" OR 7" LENGTH W/NUTS

SQUARE STEEL POST (2" x 2")
MACHINE BOLTS - ⅜" x 3 ¼" LENGTH W/NUTS
RIVETS - 9/32" (6605-9-6) BULB-TITE, TRI-FOLD, ALUMINUM
BODY/MANDREL O.D. FLANGE 0.720 - 0.765 INCH,
GRIP RANGE 0.042 - 0.375 INCH

WASHERS (ALL POSTS) -
1 ¼" O.D. x ⅜" I.D. x 1/16" STEEL
1 ¼" O.D. x ⅜" I.D. x 0.080 NYLON

* TWO DIFFERENT FASTENING SYSTEMS ARE SHOWN FOR ILLUSTRATION PURPOSES. ON ANY INDIVIDUAL SIGN, EITHER ONE OR THE OTHER SYSTEM SHALL BE USED. ACTUAL NUMBER OF FASTENERS PER SIGN VARIES WITH THE SIGN AREA. FOR A SINGLE POST INSTALLATION, ALL SIGNS GREATER THAN 9 SQ. FT. REQUIRE THE USE OF 3 FASTENERS.

6

6

SDD 15D38 - 02b

ATTACHMENT OF SIGNS TO POSTS

STATE OF WISCONSIN
DEPARTMENT OF TRANSPORTATION

APPROVED
June 2017 — DATE
/S/ Andrew Heidtke — WORK ZONE ENGINEE
FHWA

SDD 15D38 - 02b

URBAN AREA

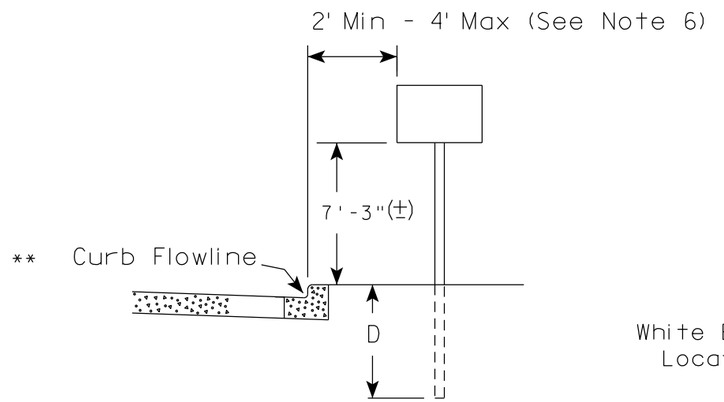

RURAL AREA (See Note 2)

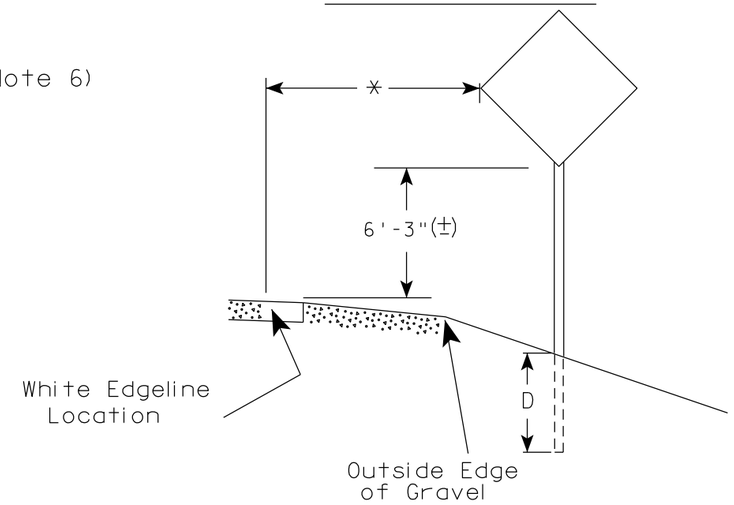

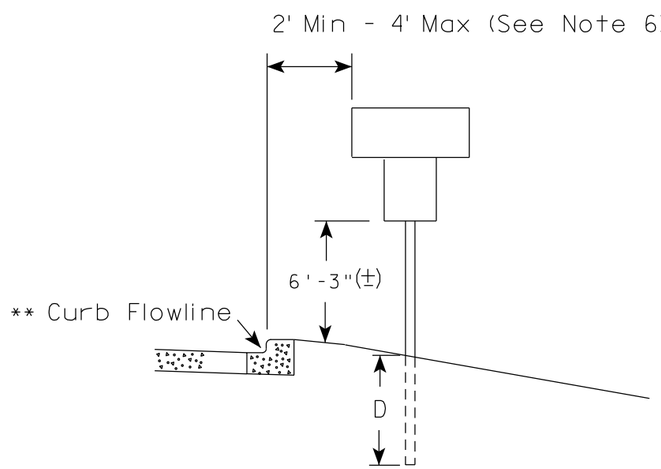

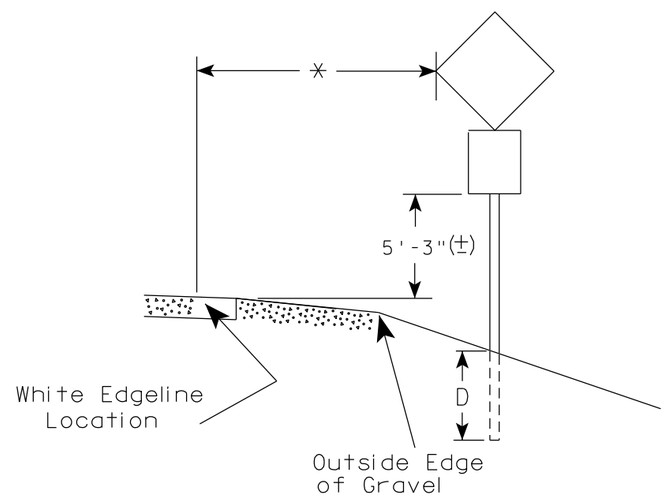

** The existence of curb and gutter does not in itself mandate the vertical clearance illustrated. That height is typically measured where there is sidewalk adjacent to the roadway or parking is permitted. In the absence of sidewalk vertical clearance is measured from the top of the curb. Offset of signs is measured from the flow line.

* 6 feet from edge of a paved shoulder or 12 feet from the edge of pavement (edge line location) or 2 feet from outside edge of gravel, whichever is greater unless directed by project engineer.

GENERAL NOTES

1. Signs wider than 4 feet or 20 sq.ft or larger, shall be mounted on multiple posts. Refer to plate A4-4.
2. If signs are mounted on or behind barrier wall, see A4-10 sign plate.
   The Double Arrow sign (W12-1D) shall be mounted at a height of 2'-3" (±). The Chevron sign (W1-8), Roundabout Chevron panel (R6-4B), Enhanced Reference Markers, Clearance Markers (W5-52), Mile Markers (D10 series), In Road Object Markers (W5-54) & End of Road Markers (W5-56) shall be mounted at a height of 4'-3" (±).
3. For expressways and freeways, mounting height is 7'- 3" (±) or 6'-3" (±) depending upon existence of a sub-sign.
4. Minimum mounting height for signs mounted on traffic signal poles is 5'- 3" (±).
5. Offset distance shall be consistent with existing signs or consistent throughout length of project.
6. The (±) tolerance for mounting height is 3 inches.
7. Folding signs shall be mounted at a height of 5'-3" (±) or as directd by the Engineer.

POST EMBEDMENT DEPTH

Area of Sign Installation (Sq.Ft.)	D (Min)
20 or Less	4'
Greater than 20	5'

TYPICAL INSTALLATION OF PERMANENT TYPE II SIGNS ON SINGLE POSTS

WISCONSIN DEPT OF TRANSPORTATION

APPROVED Matthew R Rauch for State Traffic Engineer

DATE 5/13/2020 PLATE NO. A4-3.22

7 7

PROJECT NO:	HWY:	COUNTY:		SHEET NO: 53	E

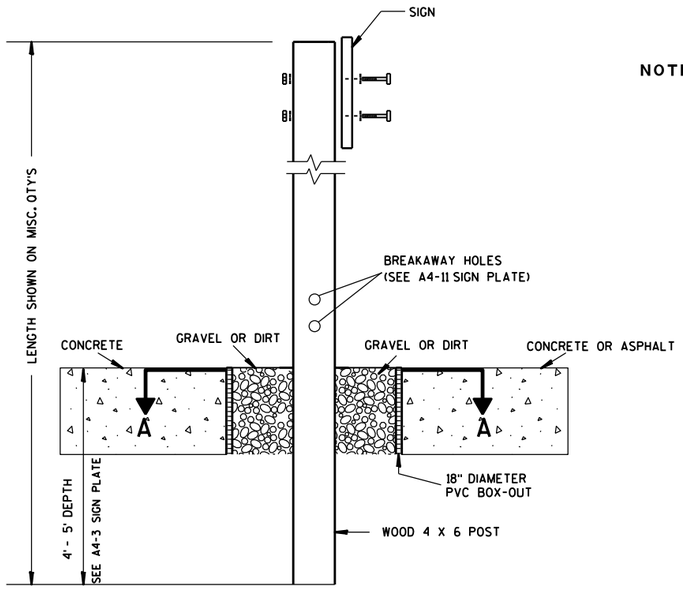

ELEVATION VIEW

DETAIL OF WOOD 4 X 6 SIGN POST IN BOX-OUT

NOTES:
1. ALL MATERIAL TO BE APPROVED BY ENGINEER PRIOR TO INSTALLATION
2. SEE SIGN PLATE A4-8 FOR SIGN HARDWARE REQUIREMENTS
3. 18 INCH X 18 INCH SQUARE BOX-OUTS MAY BE USED FOR INSTALLATIONS IN EXISTING CONCRETE OR ASPHALT LOCATIONS.

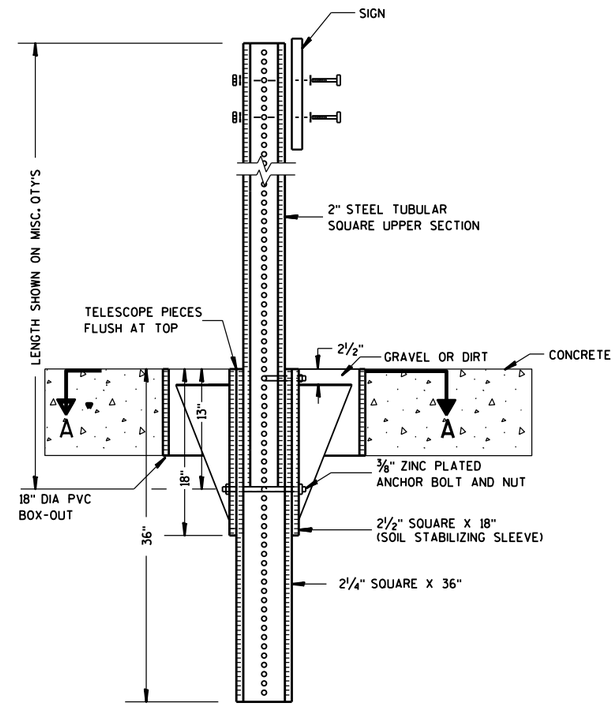

ELEVATION VIEW

DETAIL OF STEEL 2 X 2 SIGN POST IN BOX-OUT

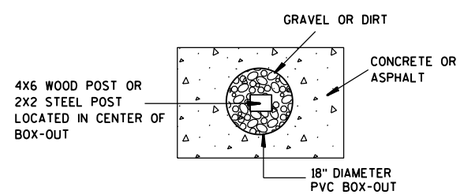

PLAN VIEW

FOR NEW CONCRETE/ASPHALT INSTALLATIONS

SIGN POST
BOX-OUTS
A4-3B

WISCONSIN DEPT OF TRANSPORTATION

APPROVED Matthew R Rauch
for State Traffic Engineer

DATE 1/27/14 PLATE NO. A4-3B.1

PROJECT NO:	HWY:	COUNTY:		SHEET NO:	E

URBAN AREA

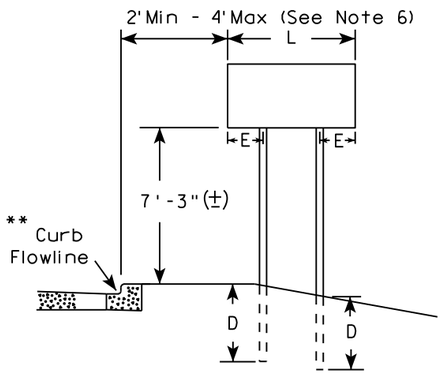

RURAL AREA (See Note 3)

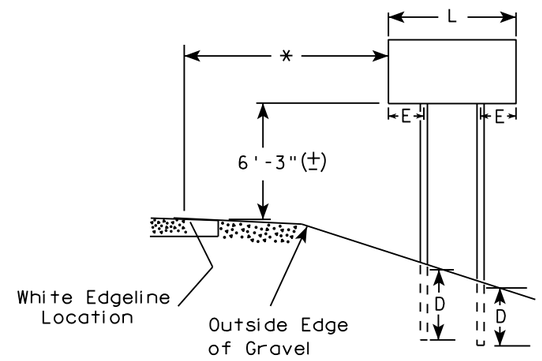

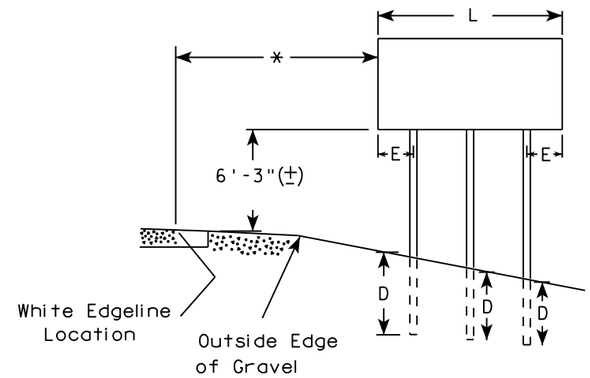

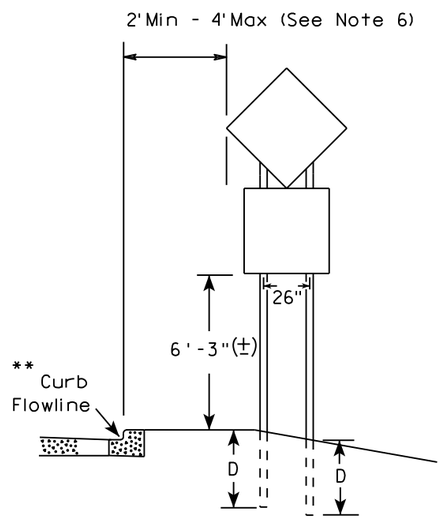

48" DIAMOND WARNING SIGN

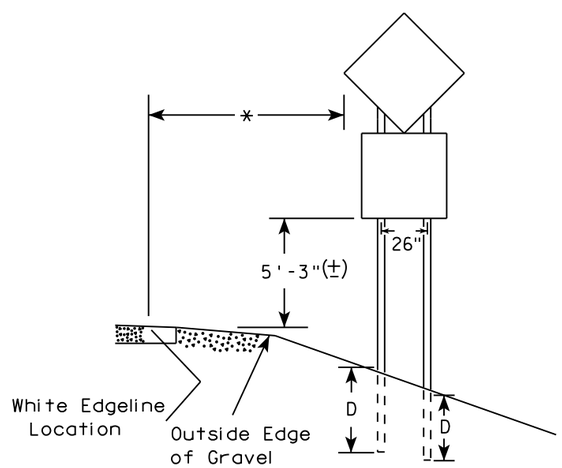

48" DIAMOND WARNING SIGN

SIGN SHAPE OTHER THAN DIAMOND (TWO POSTS REQUIRED)	
L	E
*** Greater than 48" Less than 60"	12"
60" to 108"	L/5

SIGN SHAPE OTHER THAN DIAMOND (THREE POSTS REQUIRED)	
L	E
Greater than 108" to 144"	12"

GENERAL NOTES

1. For 3 or 4 post installations, individual post spacing shall be greater than 3'-6".
2. See tables below for required number of posts.
3. For expressways and freeways, mounting height is 7'-3" (±) or 6'-3" (±) depending upon existence of sub-sign.
4. The (±) tolerance for mounting height is 3 inches.
5. J-Assemblies are considered to be one sign for mounting height.
6. Offset distance shall be consistent with existing signs or consistent throughout length of project.
7. Folding signs shall be mounted at a height of 5'-3" (±) or as directed by the engineer.
8. The Double Arrow sign (W12-1) shall be mounted at a height of 2'-3" (±). The Chevron sign (W1-8), Roundabout Chevron panel (R6-4B), Clearance Markers (W5-52), Mile Markers (D10 series), In Road Object Markers (W5-54) & End of Road Markers (W5-56) shall be mounted at a height of 4"-3" (±).

* 6 feet from edge of a paved shoulder or 12 feet from the edge of pavement (edge line location) or 2 feet from outside edge of gravel, whichever is greater unless directed by project engineer.

** The existence of curb and gutter does not in itself mandate the vertical clearance illustrated. That height is typically measured where there is sidewalk adjacent to the roadway or parking is permitted. In the absence of sidewalk vertical clearance is measured from the top of the curb. Offset of signs is measured from the flow line.

*** See A4-3 sign plate for signs 4' or less in width and less than 20 S.F. in area.

POST EMBEDMENT DEPTH

Area of Sign Installation (Sq. Ft.)	D (Min)
20 or Less	4'
Greater than 20	5'

TYPICAL INSTALLATION OF TYPE II SIGNS ON MULTIPLE POSTS

WISCONSIN DEPT OF TRANSPORTATION

APPROVED Matthew R Rauch
For State Traffic Engineer

DATE 8/21/17 PLATE NO. A4-4.15

7

7

PROJECT NO:	HWY:	COUNTY:		SHEET NO: 55	E

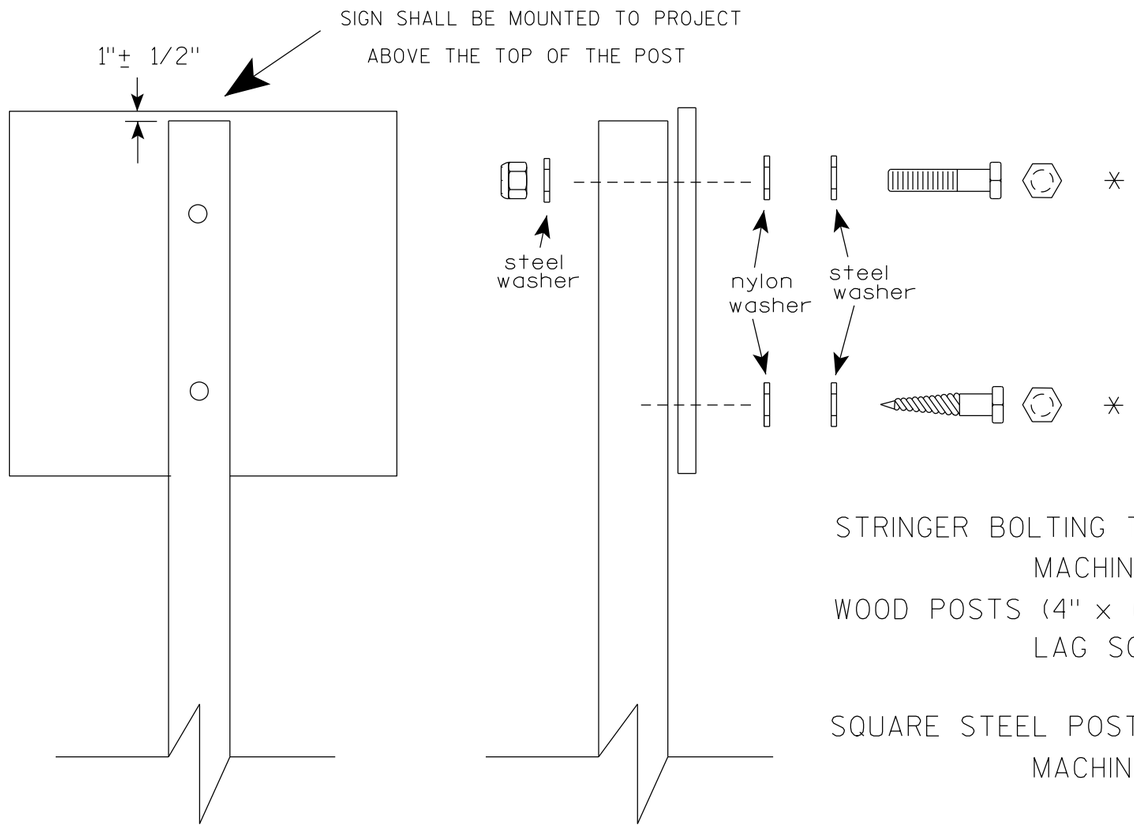

Nuts, bolts and lags used for mounting signs shall have hexagonal heads and shall be either :

a. Hot dip galvanized in accordance with ASTM Designation: A 153, Class D, or SC 3

b. Electro-galvanized in accordance with ASTM Designation : B 633, TYPE III, SC 3.

Threads on bolts and nuts shall be manufactured with sufficient allowance for the cadmium plate or galvanized coating to permit the nuts to run freely on the bolts.

STRINGER BOLTING TO ALUMINUM SIGNS (SEE SIGN PLATE A4-18)

MACHINE BOLTS - 5/16" X 1-3/4" Length w/ lock nuts

WOOD POSTS (4" x 6")

LAG SCREWS - 3/8" X 3" (NO STRINGERS ON BACK OF SIGN)
3/8" X 4" (STRINGERS ON BACK OF SIGN)

SQUARE STEEL POSTS (2" x 2")

MACHINE BOLTS - 3/8" X 3-1/4" Length w/ nuts (NO STRINGER ON BACK OF SIGN)
3/8" X 5" Length w/ nuts (STRINGERS ON BACK OF SIGN)

RIVETS - 9/32 " (6605-9-6) BULB-TITE, TRI-FOLD, ALUMINUM BODY/MANDREL
O.D. FLANGE .720-.765 INCH, GRIP RANGE .042-.375 INCH

WASHERS (ALL POSTS) -

1-1/4" O.D. X 3/8" I.D. X 1/16" STEEL
1-1/4" O.D. X 3/8" I.D. X .080 NYLON

* Two different fastening systems are shown for illustration purposes. On any individual sign, either one or the other system shall be used. Actual number of fasteners per sign varies with the sign area, but normally there are two. For a single post installation, all signs greater than 9 sq. ft. require the use of 3 fasteners.

ATTACHMENT OF SIGNS TO POSTS

WISCONSIN DEPT OF TRANSPORTATION

APPROVED Matthew R Rauch
for State Traffic Engineer

DATE 4/1/2020 PLATE NO. A4-8.9

TELESCOPIC TUBING ANCHORS
TWO PIECE SYSTEM

2 1/4" SQUARE
12 GAUGE
PERFORATED
GALVANIZED FINISH

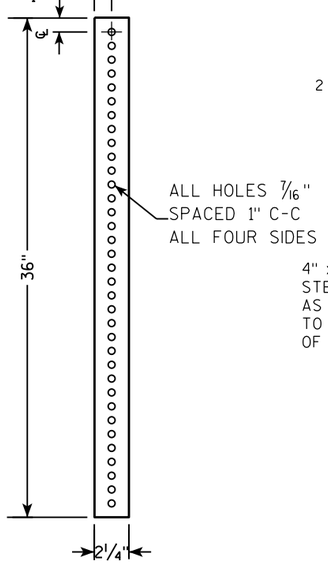

2 1/2" SQUARE
12 GAUGE
OMNI-DIRECTIONAL
PERFORATED
SOIL STABILIZING SLEEVE
GALVANIZED FINISH

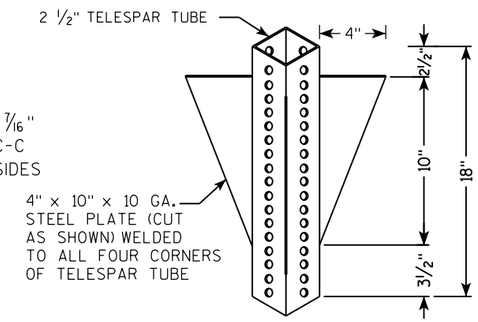

DETAIL OF TUBULAR STEEL SIGN POST
(IN POURED CONCRETE OR ASPHALT)

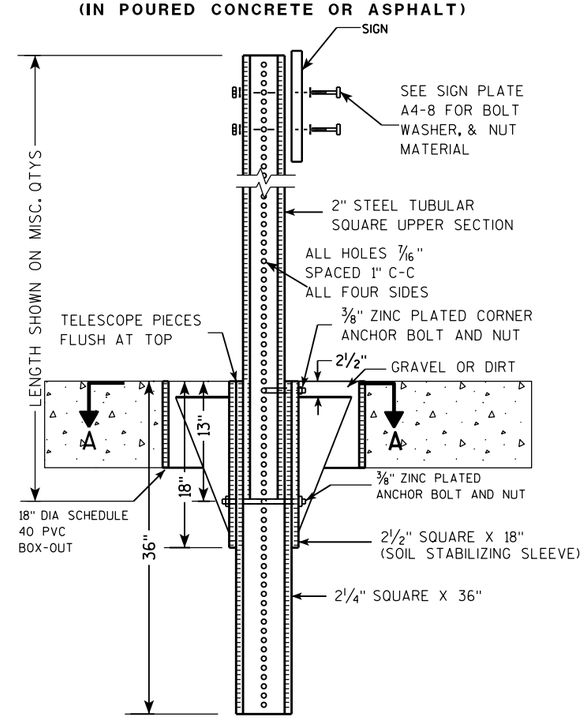

DETAIL OF TUBULAR STEEL SIGN POST
(IN LOCATIONS OTHER THAN POURED CONCRETE OR ASPHALT)

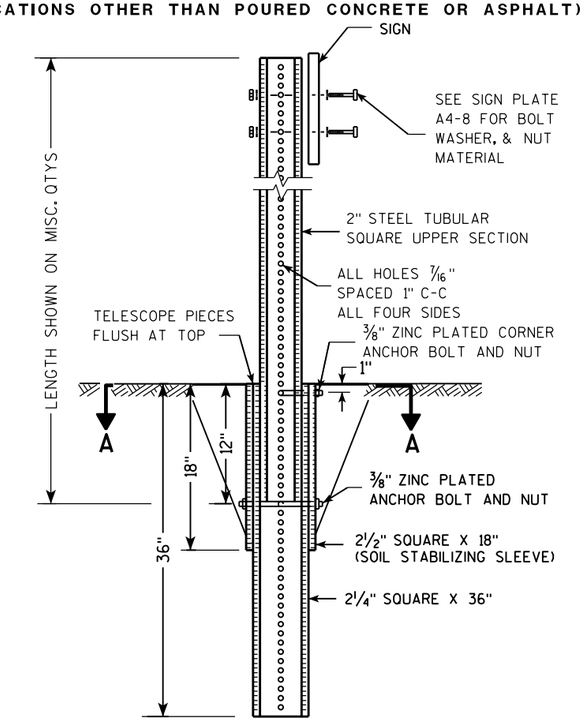

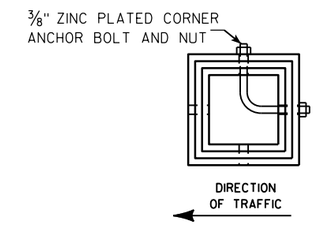

SECTION A-A

Area of Sign Installation (Sq. Ft.)	Number of Required Posts
9 or less	1
Greater than 9 less than or equal to 18	2
Greater than 18 less than or equal to 27	3

Signs wider than 3 feet or larger than 9 sq. ft shall be mounted on multiple posts (see above table).

TUBULAR STEEL
SIGN POST
A4-9

WISCONSIN DEPT OF TRANSPORTATION

APPROVED Matthew R Rauch
for State Traffic Engineer

DATE 2/05/15 PLATE A4-9.9

7 7

PROJECT NO:	HWY:	COUNTY:		SHEET NO:	E

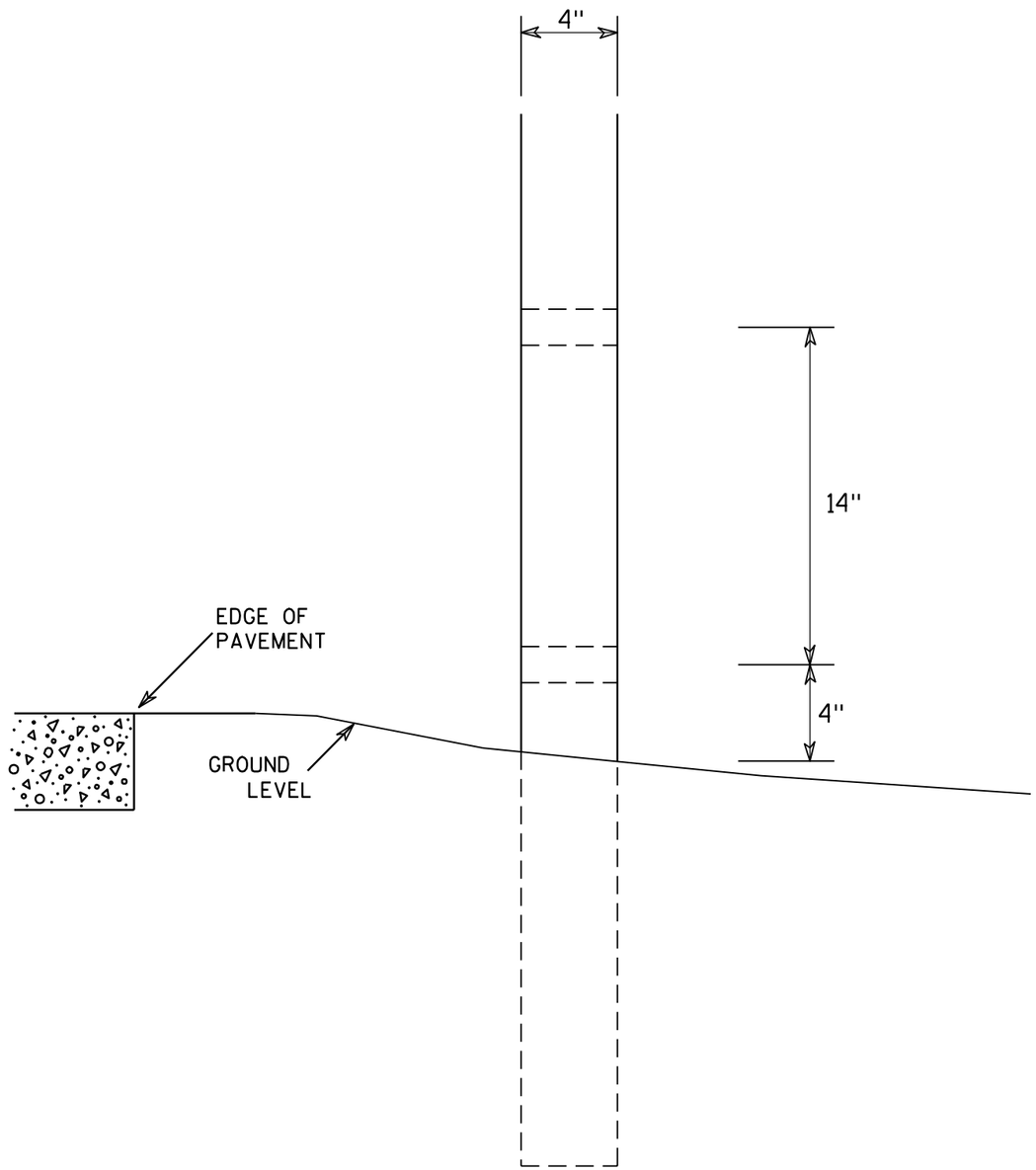

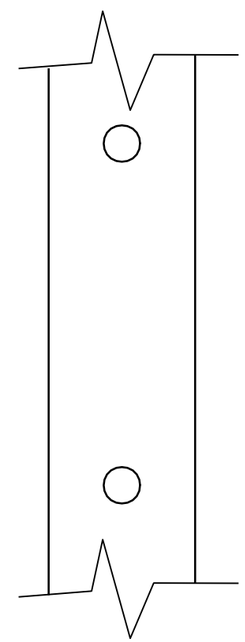

SIDE VIEW

GENERAL NOTES

1. All 4 x 6 Wood Posts shall be modified by having two 1½" diameter holes drilled perpendicular to the roadway centerline.

4 X 6 WOOD POST MODIFICATIONS

WISCONSIN DEPT OF TRANSPORTATION

APPROVED Chester J Spang for State Traffic Engineer

DATE 3/27/97 PLATE NO. A4-11.2

PROJECT NO:	HWY:	COUNTY:		SHEET NO: 58	E

BANDING

SINGLE SIGN

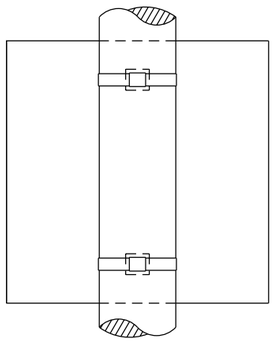

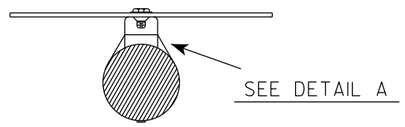

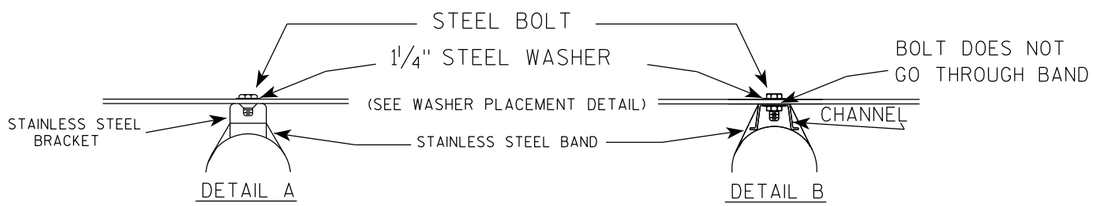

WASHER PLACEMENT

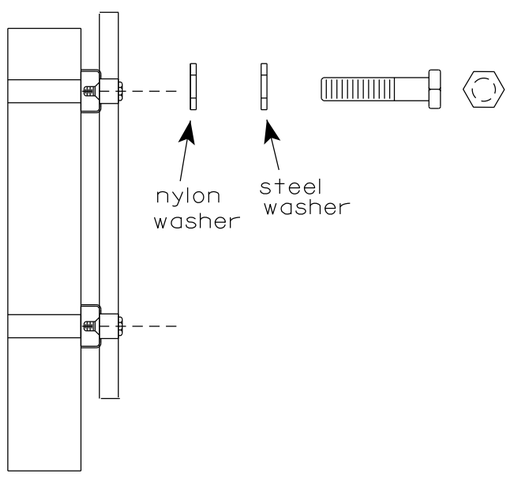

WASHERS (ALL POSTS) -
1-1/4" O.D. X 3/8" I.D. X 1/16" STEEL
1-1/4" O.D. X 3/8" I.D. X .080 NYLON
FOR ALL TYPE H SIGNS

GENERAL NOTES

1. Any sign over 3 feet in width shall use the V-Block banding method. See A5-10 standard plate.
2. Signs 3 feet or greater in height shall have three bracket bands installed. Signs less than 3 feet in height shall have two bracket bands installed.
3. Banding and assembly bracket shall be stainless steel. All bands shall be ¾" in width and 0.025" thickness.
4. ALL SIGN MOUNTING BOLTS AND WASHERS SHALL BE EITHER:
   a. Hot dip or mechanically galvanized in accordance with ASTM Designation: A 153, Class D
   b. Electro-galvanized in accordance with ASTM designation: B 633, Type III, SC 3

"J" ASSEMBLY

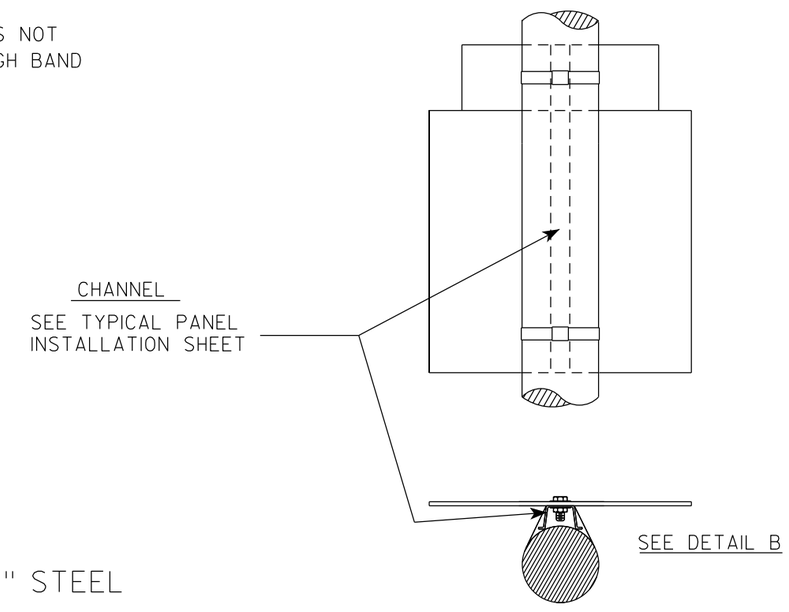

STANDARD SIGN
SIGN BANDING DETAILS

WISCONSIN DEPT OF TRANSPORTATION

APPROVED Matthew R Rauch for State Traffic Engineer

DATE 6/10/19 PLATE NO. A5-9.4

PROJECT NO:	HWY:	COUNTY:		SHEET NO: 59	E

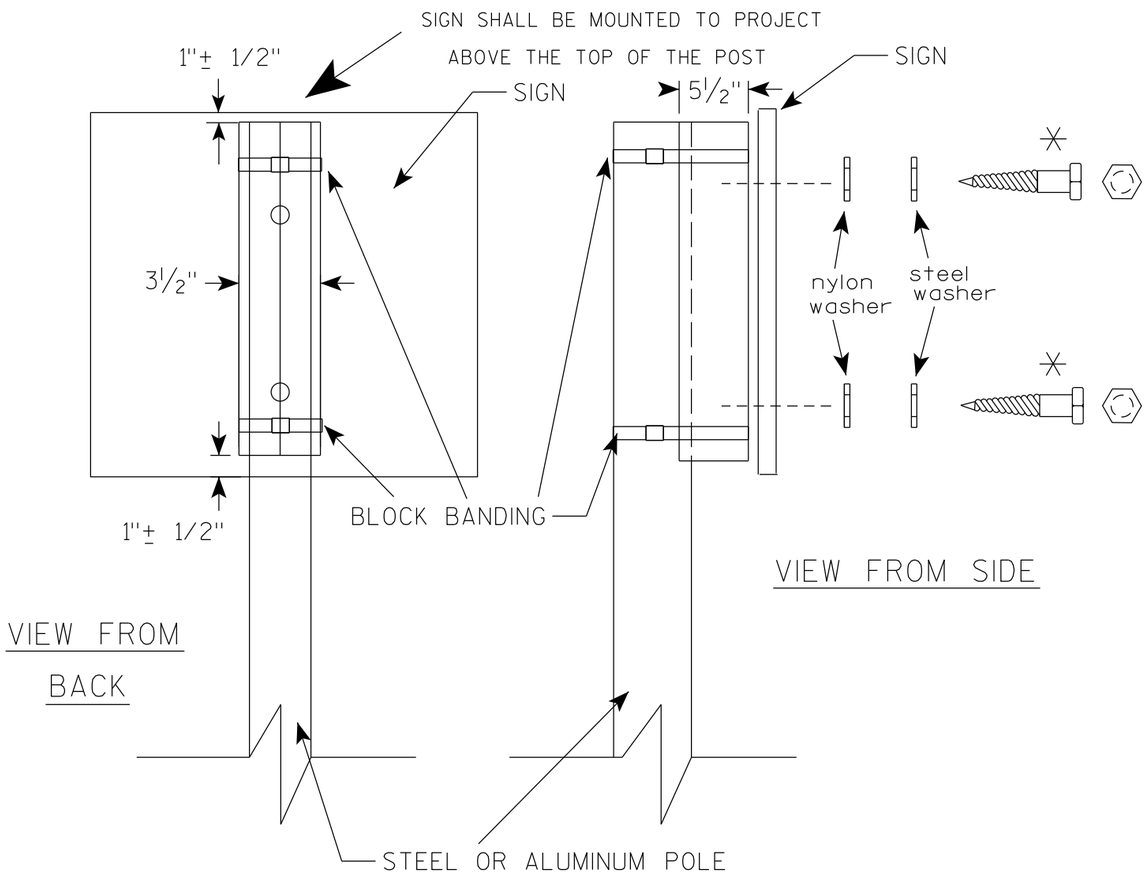

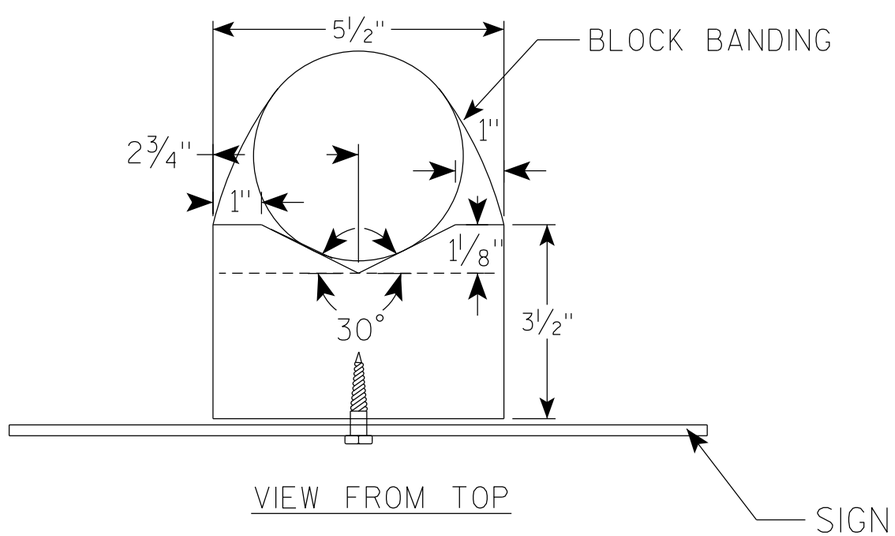

GENERAL NOTES

1. WOOD 4"X6" POST MATERIAL SHALL CONFORM TO 507.2.2 OF THE WisDOT STANDARD SPECIFICATIONS
2. BLOCK BANDING AND CLIPS SHALL BE STAINLESS STEEL, 3/4" WIDTH AND 0.025" THICKNESS
3. SIGNS 3' OR GREATER IN HEIGHT SHALL UTILIZE 3 BLOCK BANDS. SIGNS UNDER 3' IN HEIGHT SHALL UTILIZE 2 BLOCK BANDS
4. ACTUAL NUMBER OF FASTENERS PER SIGN VARIES WITH THE SIGN AREA, BUT NORNALLY THERE ARE TWO. FOR SIGNS GREATER THAN 9 S.F. 3 FASTENERS SHALL BE USED.
5. ALL SIGN MOUNTING BOLTS AND WASHERS SHALL BE EITHER:
   a. Hot dip or mechanically galvanized in accordance with ASTM Designation: A 153, Class D
   b. Electro-galvanized in accordance with ASTM Designation : B 633, TYPE III, SC 3
6. ALL BOLTS SHALL HAVE HEXAGONAL HEADS.
7. STEEL WASHERS SHALL BE 1 1/4" O.D. X 3/8" I.D. X 1/16"
8. NYLON WASHERS SHALL BE 1 1/4" O.D. X 3/8" I.D. X .080 FOR TYPE H OR TYPE F FACE SIGN

✳ LAG BOLTS SHALL BE 3/8" X 2 1/2"

BLOCK BANDING DETAIL
(V-BLOCK OPTION)

WISCONSIN DEPT OF TRANSPORTATION

APPROVED Matthew R Rauch
For State Traffic Engineer

DATE 6/10/19 PLATE NO. A5-10.2

PROJECT NO:				SHEET NO: 60	E

NOTES

1. Sign is Type II - Type F Reflective
2. Color:
   Background - Orange
   Message - Black
3. Message Series - D
4. Substitute appropriate numeral and adjust spacing to achieve proper balance.

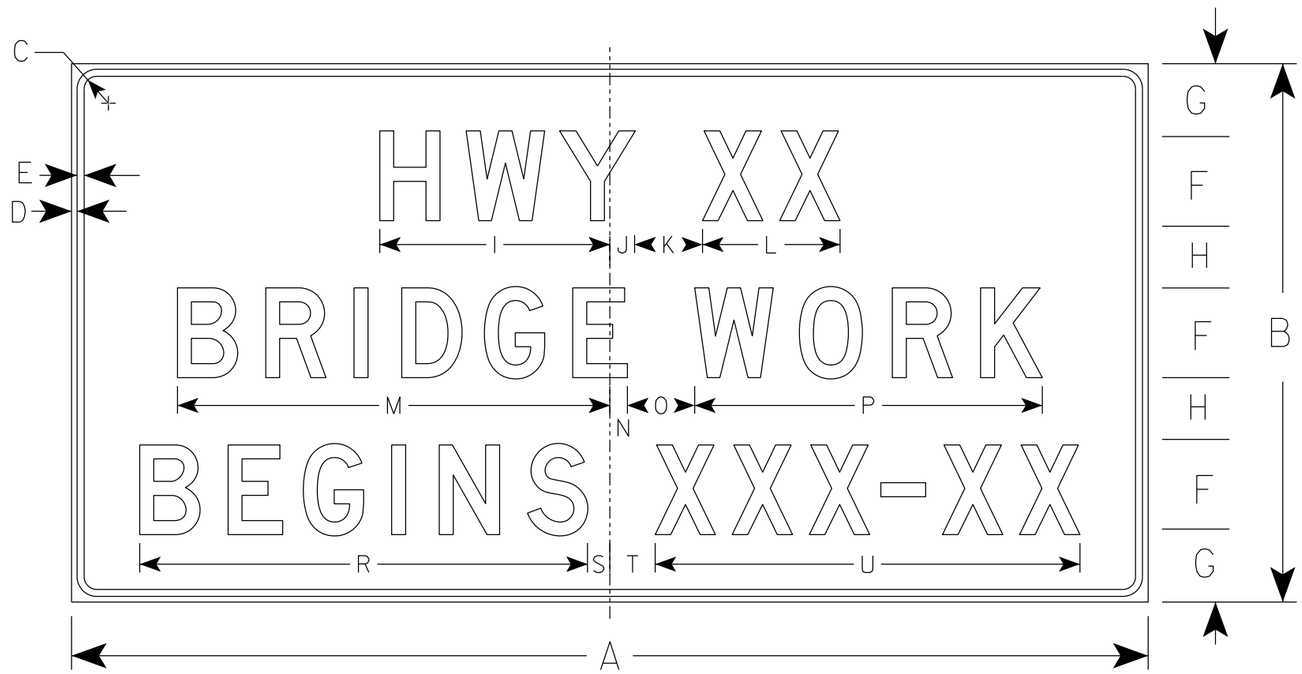

G20-57B

SIZE	A	B	C	D	E	F	G	H	I	J	K	L	M	N	O	P	Q	R	S	T	U	V	W	X	Y	Z	Area sq. ft.
1																											
2																											
3	72	36	1 1/8	1/2	5/8	6	5	4	15 5/8	1 5/8	5	9 1/4	29 1/8	7/8	5	23 1/4		29 7/8	1 3/4	3 1/4	28 1/2						18.0
4	96	48	2 1/4	3/4	1	8	6 1/2	5 1/2	20 5/8	2 1/4	6	12 1/4	38 1/2	1 1/2	6	31		39 1/4	2	4	37 7/8						32.0
5																											

STANDARD SIGN
G20-57B

WISCONSIN DEPT OF TRANSPORTATION

APPROVED Matthew R Rauch
for State Traffic Engineer

DATE 1/22/19 PLATE NO. G20-57B.1

PROJECT NO:	HWY:	COUNTY:		SHEET NO: 61	E

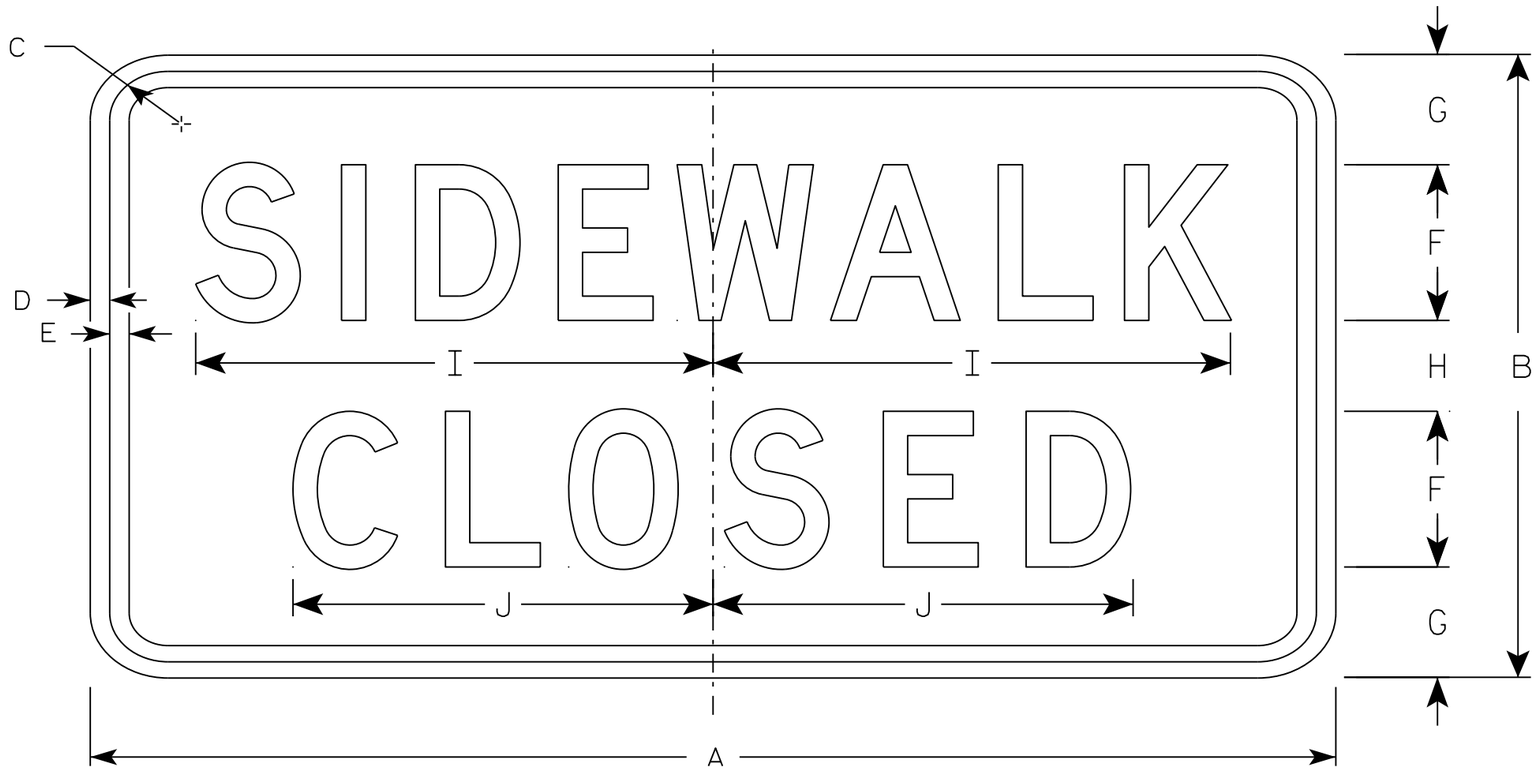

R9-9

NOTES

1. Sign is Type II - Type H Reflective - reference WIS DOT Standard Specification for HIGHWAY and STRUCTURE CONSTRUCTION latest edition.
2. Color:
   Background - White
   Message - Black
3. Message Series - C
4. Corners may be square or rounded when base material is plywood but borders shall be rounded as shown. When base material is metal, the corners and borders shall be rounded.
5. Use Size 2 for Sidewalks. Use Size 3 for Paths and Trails.

SIZE	A	B	C	D	E	F	G	H	I	J	K	L	M	N	O	P	Q	R	S	T	U	V	W	X	Y	Z	Area sq. ft.
1																											
2S	24	12	1 3/4	1/2	1/2	3	2 1/8	1 3/4	10	8 1/8																	2.0
2M	24	12	1 3/4	1/2	1/2	3	2 1/8	1 3/4	10	8 1/8																	2.0
3	30	18	1 3/4	1/2	1/2	4	3 1/2	3	12 1/2	10 1/4																	3.75
4																											
5																											

STANDARD SIGN
R9-9

WISCONSIN DEPT OF TRANSPORTATION

APPROVED Matthew R Rauch
for State Traffic Engineer

DATE 8/11/16 PLATE 62 R9-9.6

PROJECT NO:	HWY:	COUNTY:		SHEET NO:	E

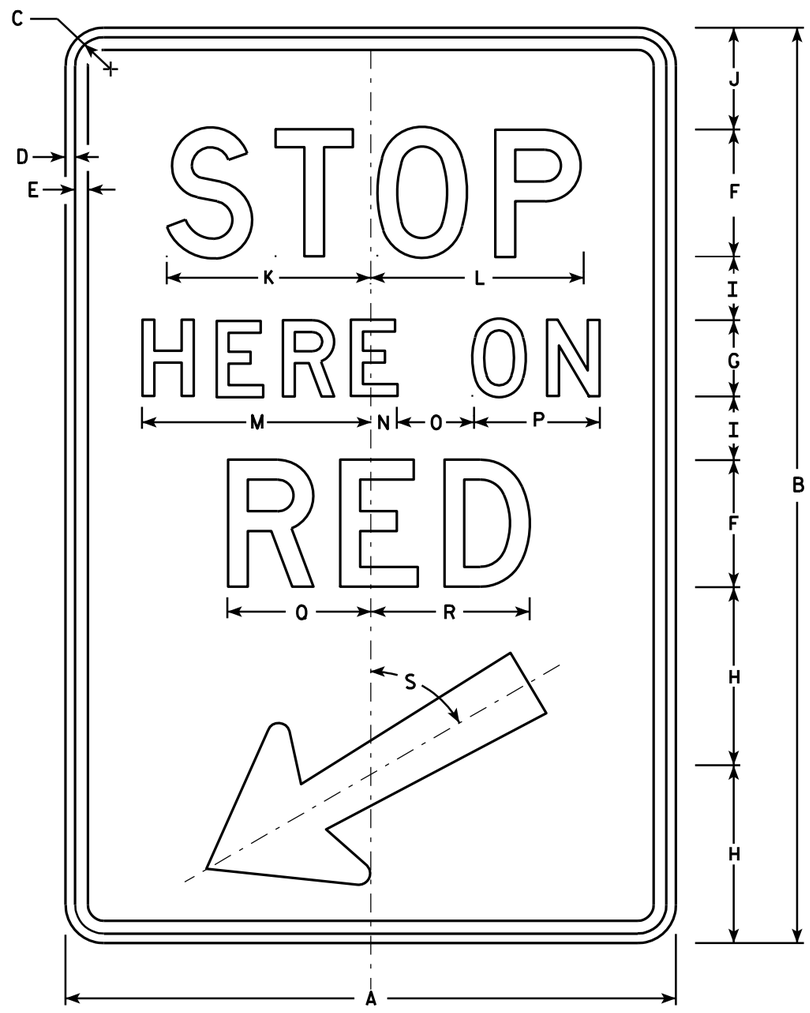

R10-6

NOTES

1. Sign is Type II - Type H Reflective - reference WIS DOT Standard Specification for HIGHWAY and STRUCTURE CONSTRUCTION latest edition.
2. Color:
   Background - White
   Message - Black
3. Message Series - D
4. Corners may be square or rounded when base material is plywood but borders shall be rounded as shown. When base material is metal, the corners and borders shall be rounded.

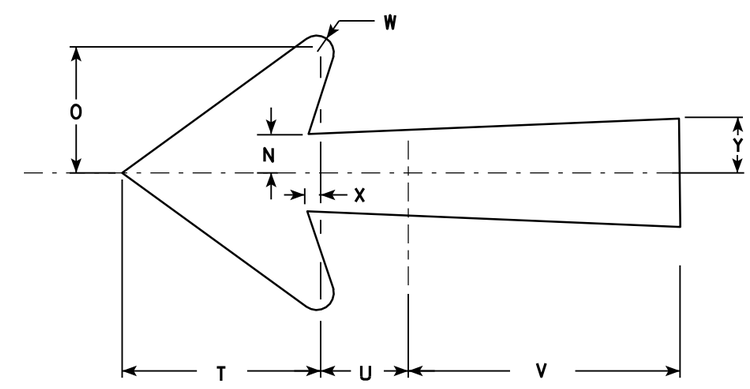

Arrow Detail

SIZE	A	B	C	D	E	F	G	H	I	J	K	L	M	N	O	P	Q	R	S	T	U	V	W	X	Y	Z	Area sq. ft.
1																											
2S	24	36	1 1/8	3/8	1/2	5	3	7	2 1/2	4	8	8 3/8	9	1	3	5	5 5/8	6 1/4	60°	5 1/4	2 1/4	7 1/8	1/2	3/8	1 3/8		6.0
2M	24	36	1 1/8	3/8	1/2	5	3	7	2 1/2	4	8	8 3/8	9	1	3	5	5 5/8	6 1/4	60°	5 1/4	2 1/4	7 1/8	1/2	3/8	1 3/8		6.0
3																											
4																											
5																											

STANDARD SIGN
R10-6

WISCONSIN DEPT OF TRANSPORTATION

APPROVED Matthew R Rauch
for State Traffic Engineer

DATE 4/5/11 PLATE NO. R10-6.6

PROJECT NO:	HWY:	COUNTY:		SHEET NO: 63	E

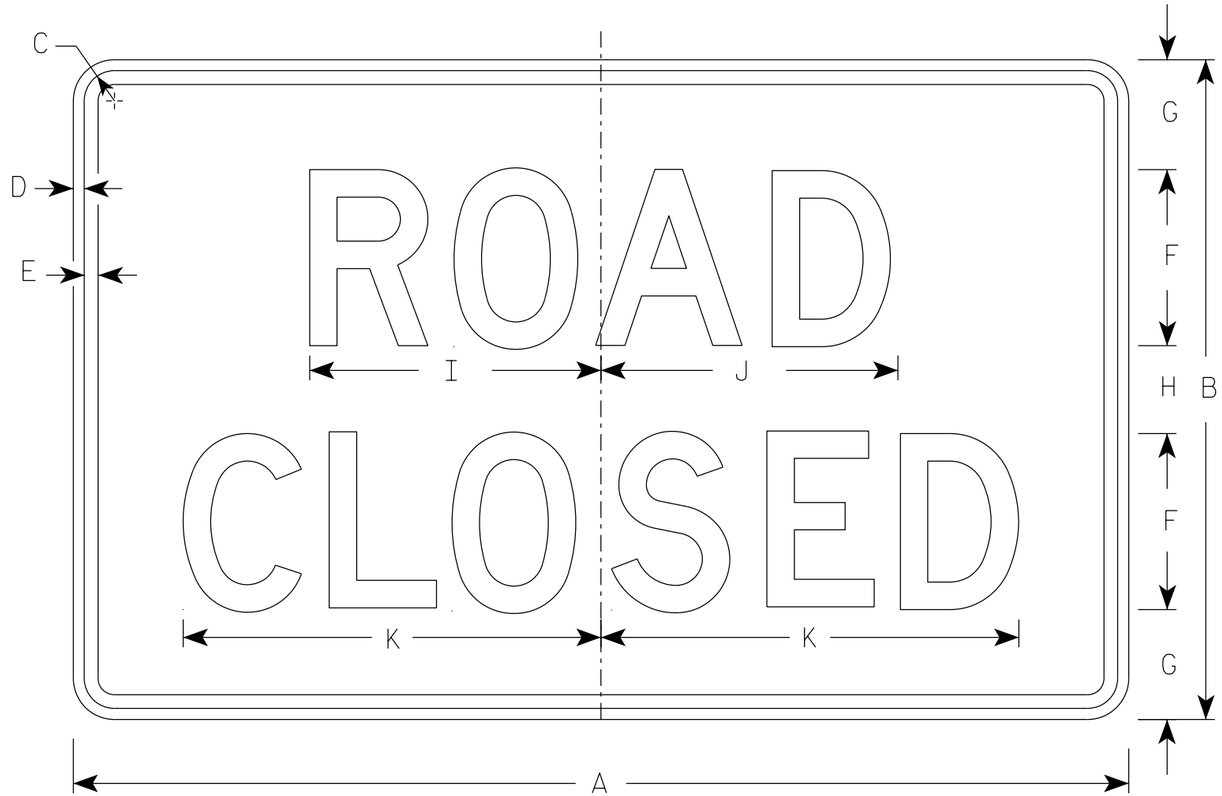

R11-2

NOTES

1. Sign is Type II - Type H Reflective
2. Color:
   Background - White
   Message - Black
3. Message Series - D
4. Corners may be square or rounded when base material is plywood but borders shall be rounded as shown. When base material is metal, the corners and borders shall be rounded.
5. Modify the message as required.

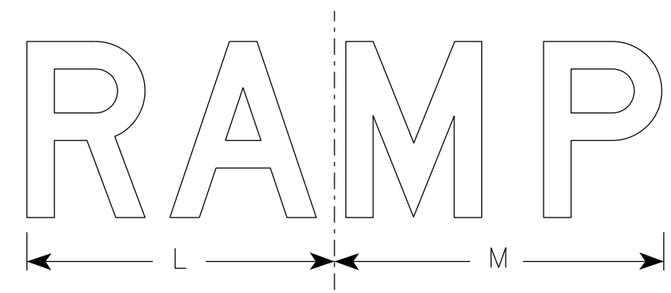

R11-2R

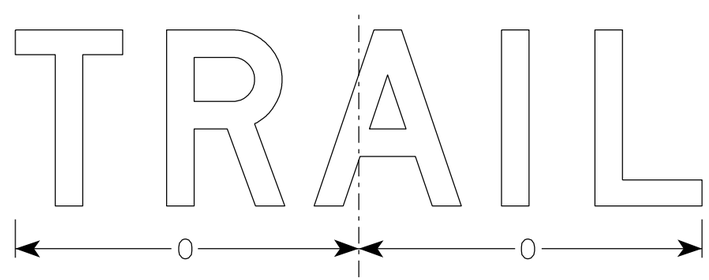

R11-2T

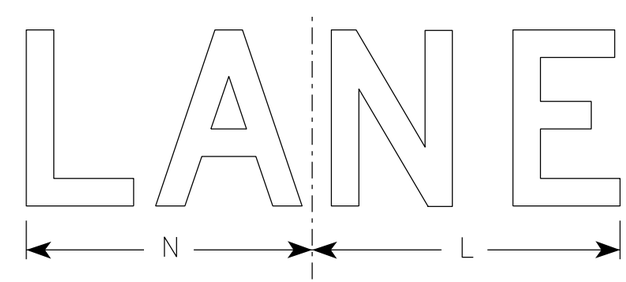

R11-2L

SIZE	A	B	C	D	E	F	G	H	I	J	K	L	M	N	O	P	Q	R	S	T	U	V	W	X	Y	Z	Area sq. ft.
1																											
2S	48	30	1 3/8	1/2	5/8	8	5	4	13 1/4	13 1/2	19	14	15	13	15 5/8												10.0
2M	48	30	1 3/8	1/2	5/8	8	5	4	13 1/4	13 1/2	19	14	15	13	15 5/8												10.0
3	48	30	1 3/8	1/2	5/8	8	5	4	13 1/4	13 1/2	19	14	15	13	15 5/8												10.0
4	48	30	1 3/8	1/2	5/8	8	5	4	13 1/4	13 1/2	19	14	15	13	15 5/8												10.0
5	48	30	1 3/8	1/2	5/8	8	5	4	13 1/4	13 1/2	19	14	15	13	15 5/8												10.0

STANDARD SIGN
R11-2

WISCONSIN DEPT OF TRANSPORTATION

APPROVED Matthew R Rauch
for State Traffic Engineer

DATE 3/29/2021 PLATE NO. R11-2.11

PROJECT NO: | HWY: | COUNTY: | SHEET NO: E

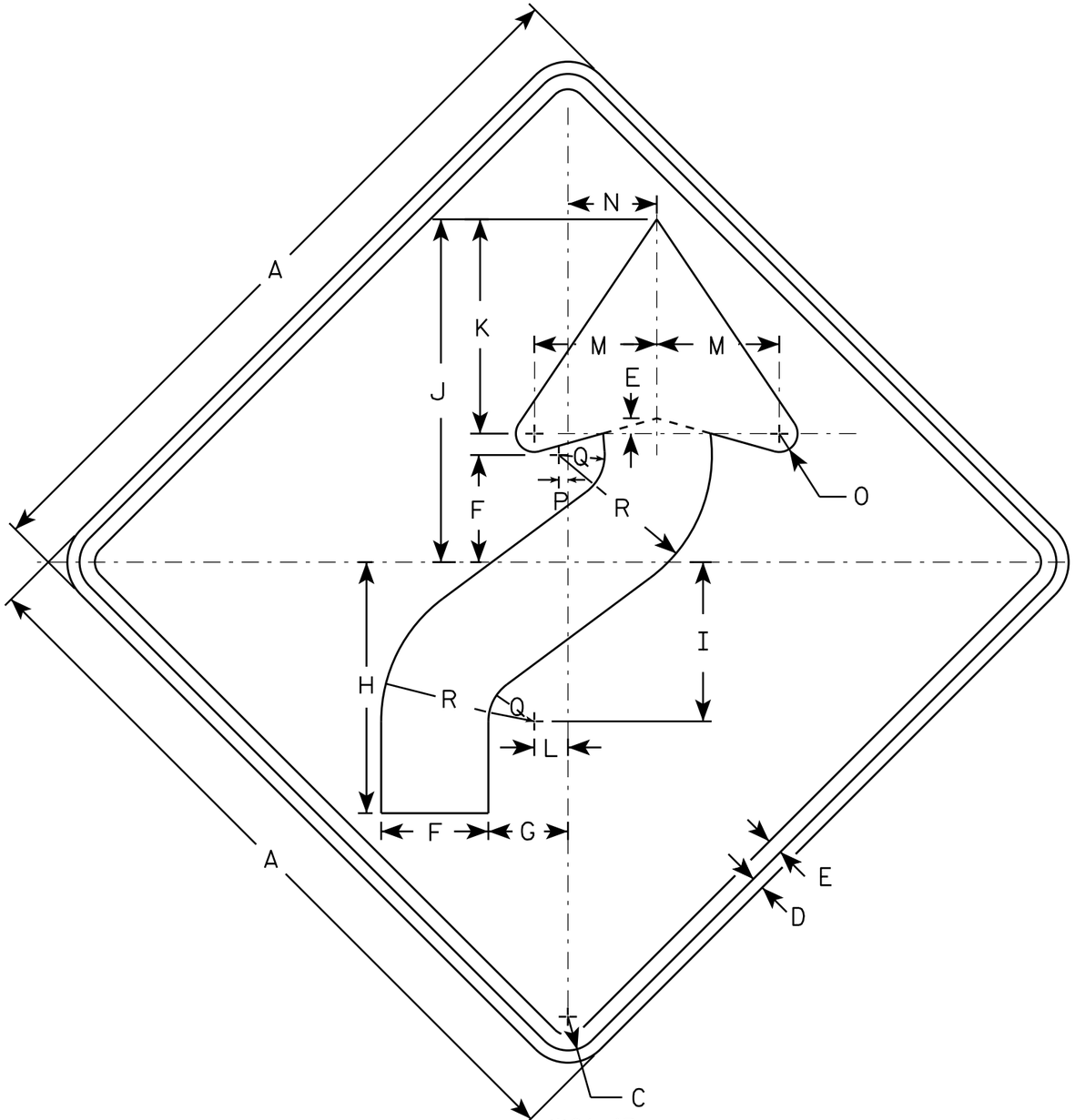

W01-4R

NOTES

1. Sign is Type II - Type F Reflective - reference WIS DOT Standard Specification for HIGHWAY and STRUCTURE CONSTRUCTION latest edition.
2. Color:
   Background - Orange
   Message - Black
3. Corners may be square or rounded when base material is plywood but borders shall be rounded as shown. When base material is metal, the corners and borders shall be rounded.
4. W01-4L is the same as W01-4R except the arrow is reversed along the vertical centerline.

SIZE	A	B	C	D	E	F	G	H	I	J	K	L	M	N	O	P	Q	R	S	T	U	V	W	X	Y	Z	Area sq. ft.
1	36		1 5/8	5/8	3/4	5 1/4	4	12 3/8	7 7/8	16 7/8	10 1/2	1 5/8	6	4 1/2	1	1/2	2 1/4	7 1/2									9.0
2S	48		2 1/4	3/4	1	7	5 1/4	16 1/2	10 1/2	22 1/2	14	2 1/4	8	6	1 1/4	5/8	3	10									16.0
2M	48		2 1/4	3/4	1	7	5 1/4	16 1/2	10 1/2	22 1/2	14	2 1/4	8	6	1 1/4	5/8	3	10									16.0
3	48		2 1/4	3/4	1	7	5 1/4	16 1/2	10 1/2	22 1/2	14	2 1/4	8	6	1 1/4	5/8	3	10									16.0
4	48		2 1/4	3/4	1	7	5 1/4	16 1/2	10 1/2	22 1/2	14	2 1/4	8	6	1 1/4	5/8	3	10									16.0
5	48		2 1/4	3/4	1	7	5 1/4	16 1/2	10 1/2	22 1/2	14	2 1/4	8	6	1 1/4	5/8	3	10									16.0

STANDARD SIGN
W01-4

WISCONSIN DEPT OF TRANSPORTATION

APPROVED Matthew R Rauch
for State Traffic Engineer

DATE 11/18/13 PLATE NO W01-4.1

PROJECT NO:	HWY:	COUNTY:		SHEET NO:	E

NOTES

1. Sign is Type II - Type F Reflective - reference WIS DOT Standard Specification for HIGHWAY and STRUCTURE CONSTRUCTION latest edition.
2. Color:
   Background - Orange
   Message - Black
3. Corners may be square or rounded when base material is plywood but borders shall be rounded as shown. When base material is metal, the corners and borders shall be rounded.

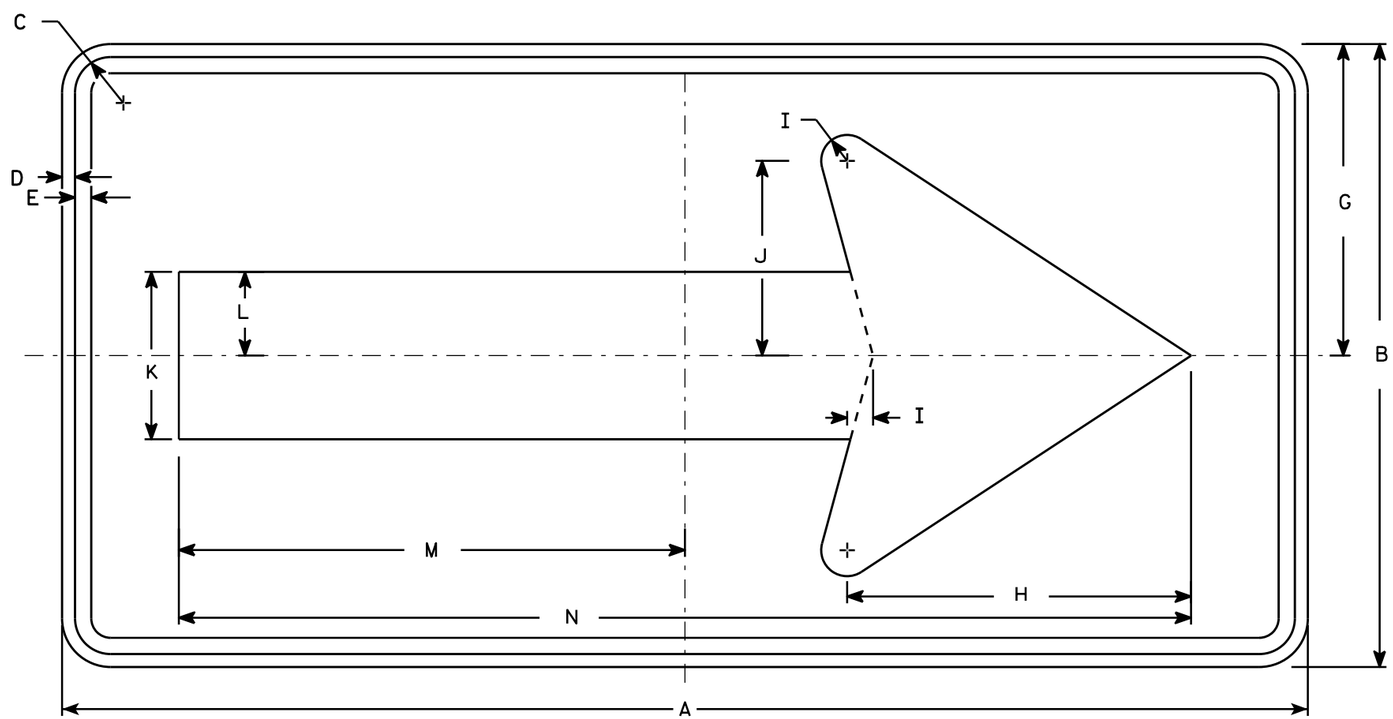

W01-6

SIZE	A	B	C	D	E	F	G	H	I	J	K	L	M	N	O	P	Q	R	S	T	U	V	W	X	Y	Z	Area sq. ft.
1																											
2S	48	24	1 3/8	1/2	5/8		12	13 1/4	1	7 1/2	6 1/2	3 1/4	19 1/2	39													8.0
2M	48	24	1 3/8	1/2	5/8		12	13 1/4	1	7 1/2	6 1/2	3 1/4	19 1/2	39													8.0
3	60	30	1 3/8	1/2	5/8		15	16 1/4	1 1/4	9 1/4	8	4	24 3/8	48 3/4													12.5
4	60	30	1 3/8	1/2	5/8		15	16 1/4	1 1/4	9 1/4	8	4	24 3/8	48 3/4													12.5
5	60	30	1 3/8	1/2	5/8		15	16 1/4	1 1/4	9 1/4	8	4	24 3/8	48 3/4													12.5

STANDARD SIGN
W01-6

WISCONSIN DEPT OF TRANSPORTATION

APPROVED Matthew R Rauch
for State Traffic Engineer

DATE 11/18/13 PLATE NO W01-6.1

PROJECT NO: | HWY: | COUNTY: | SHEET NO: | E

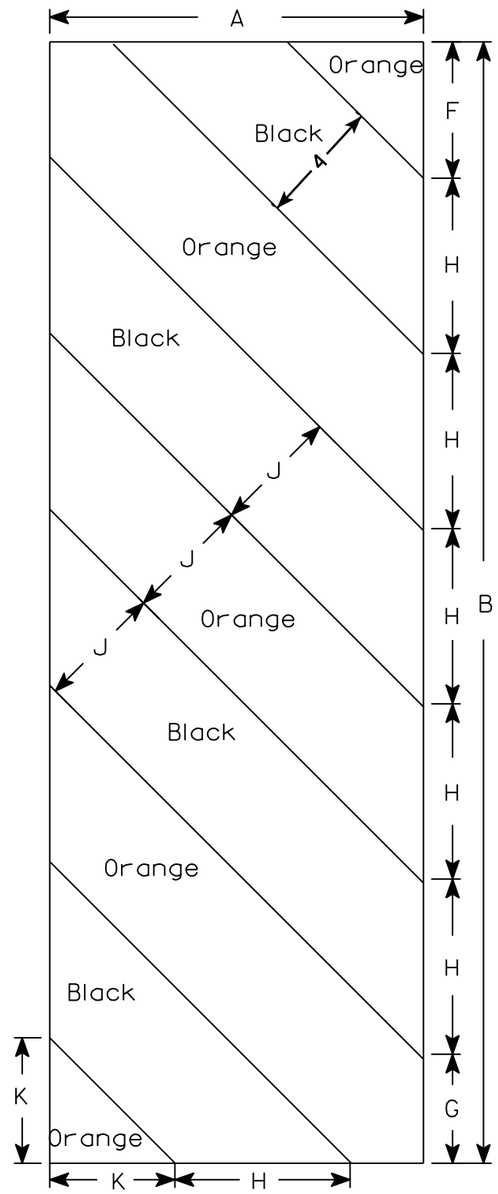

W05-52L

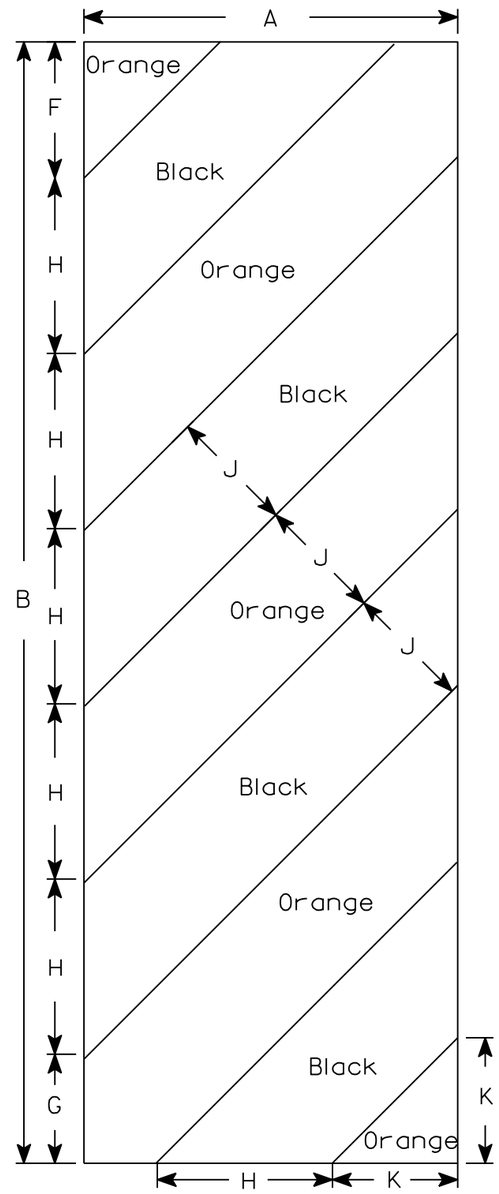

W05-52R

NOTES

1. Sign is Type II - Type F Reflective - reference WIS DOT Standard Specification for HIGHWAY and STRUCTURE CONSTRUCTION latest edition.
2. Color:
   Background - Orange
   Message - Black
3. Corners may be square or rounded when base material is plywood but borders shall be rounded as shown. When base material is metal, the corners and borders shall be rounded.
4. Alternate colors of stripes as shown.

SIZE	A	B	C	D	E	F	G	H	I	J	K	L	M	N	O	P	Q	R	S	T	U	V	W	X	Y	Z	Area sq. ft.
1																											
2S	12	36				4 3/8	3 1/2	5 5/8	45°	4	4																3.0
2M	12	36				4 3/8	3 1/2	5 5/8	45°	4	4																3.0
3	18	54				6	5 1/2	8 1/2	45°	6	6 9/16																6.75
4																											
5																											

STANDARD SIGN

W05-52L & W05-52R

WISCONSIN DEPT OF TRANSPORTATION

APPROVED Matthew R Rauch
for State Traffic Engineer

DATE 11/20/13 PLATE NO. W05-52.1

PROJECT NO: | HWY: | COUNTY: | SHEET NO: E

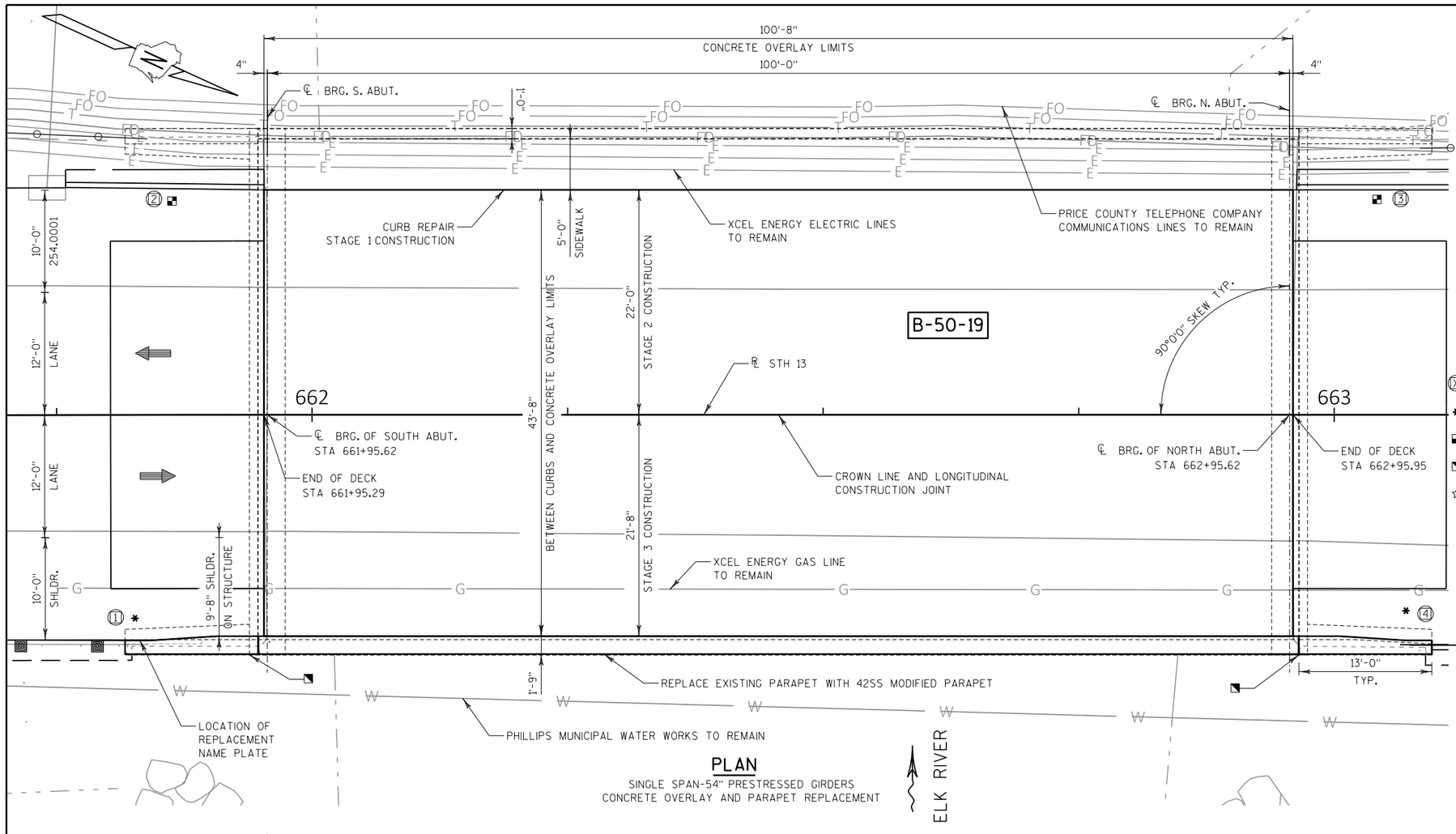

PLAN

SINGLE SPAN-54" PRESTRESSED GIRDERS
CONCRETE OVERLAY AND PARAPET REPLACEMENT

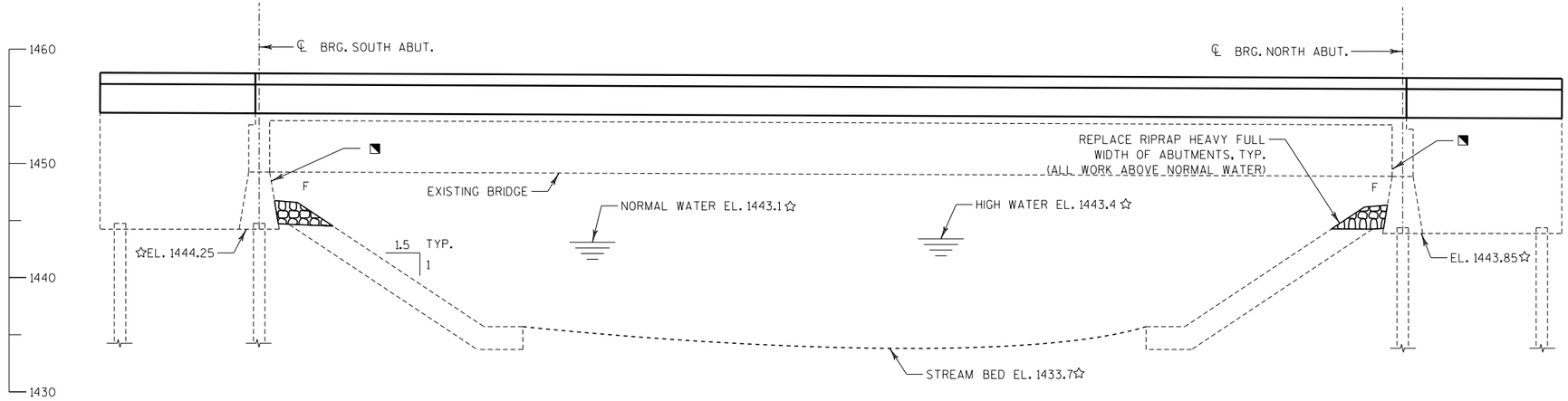

ELEVATION

NORMAL TO STH 13
(LOOKING WEST)

BENCH MARK

NO.	STATION	OFFSET	DESCRIPTION	ELEV.
604	661+45.71 STH 13	37.40' LT	BM-TIE SET POWERPOLE	1456.41
605	663+59.46 STH 13	33.64' RT	BM TAG BOLT	1454.06

STATE PROJECT NUMBER

1610-44-63

NOTES

DRAWINGS SHALL NOT BE SCALED.

DIMENSIONS SHOWN ARE BASED ON THE ORIGINAL STRUCTURE PLANS.

ALL DIMENSIONS ARE IN FEET AND INCHES UNLESS OTHERWISE NOTED.

ALL STATIONS AND ALL ELEVATIONS ARE IN FEET. ELEVATIONS ARE FROM EXISTING 1971 AS-BUILTS.

THE CONTRACTOR SHALL SUPPLY A NEW NAME PLATE IN ACCORDANCE WITH SECTION 502.3.11 OF THE STANDARD SPECIFICATIONS AND THE STANDARD DETAIL DRAWINGS. NAME PLATE TO SHOW ORIGINAL CONSTRUCTION YEAR, 1971.

THE FIRST OR FIRST TWO DIGITS OF THE BAR MARK SIGNIFIES THE BAR SIZE. BAR STEEL REINFORCEMENT SHALL BE EMBEDDED 2" CLEAR UNLESS NOTED OTHERWISE.

UTILIZE EXISTING BAR STEEL REINFORCEMENT WHERE SHOWN AND EXTEND 24 BAR DIAMTERS INTO NEW WORK, UNLESS SPECIFIED OTHERWISE.

(X) DENOTES WINGWALL NUMBER

* THRIE BEAM RAIL ATTACHMENT

EXISTING GUARDRAIL ATTACHMENT TO REMAIN

CONCRETE SURFACE REPAIR

☆ ELEVATIONS FROM EXISTING PLANS DATED 1971.

TRAFFIC DATA

STH 13
ADT = 7,200 (2022)
ADT = 8,200 (2042)
RDS = 40 MPH

LIST OF DRAWINGS

1. GENERAL PLAN & ELEVATION
2. TYPICAL SECTION AND QUANTITIES
3. STAGING DETAILS
4. PARAPET DETAILS

DESIGN DATA

LIVE LOAD:

DESIGN LOADING: HS-20
INVENTORY RATING: HS-15
OPERATING RATING: HS-41
WISCONSIN STD. PERMIT VEHICLE (WIS-SPV) = 194 KIPS

MATERIAL PROPERTIES:

CONCRETE MASONRY PARAPETS, CURBS _____ f'c = 4,000 psi
CONCRETE MASONRY SUBSTRUCTURE _____ f'c = 4,000 psi
CONCRETE MASONRY OVERLAY DECKS _____ f'c = 4,000 psi
HIGH STRENGTH STEEL- BAR REINFORCEMENT _____ fy = 60,000 psi

WISCONSIN
MICHAEL D. RADTKE
E-40967
ELM GROVE, WI
PROFESSIONAL ENGINEER
4/28/2021

STRUCTURES DESIGN CONTACTS

BRIDGE OFFICE: AARON BONK (608) 261-0261
CONSULTANT: MICHAEL RADTKE (414) 939-7039

NO.	DATE	REVISION	BY

emcs inc
1300 W. Canal Street, Suite 200
Milwaukee, WI 53233
414.347.1607 Fax 414.347.1347

STATE OF WISCONSIN
DEPARTMENT OF TRANSPORTATION

ACCEPTED SDR 05/11/21
CHIEF STRUCTURES DESIGN ENGINEER DATE

STRUCTURE B-50-19

STH 13 OVER ELK RIVER

COUNTY	PRICE	CITY	PHILIPS

DESIGN SPEC. REHABILITATION N/A

DESIGNED BY	JRM	DESIGN CK'D.	MDR	DRAWN BY	JRM	PLANS CK'D.	MDR

GENERAL PLAN & ELEVATION

SHEET 1 OF 4
68

8

8

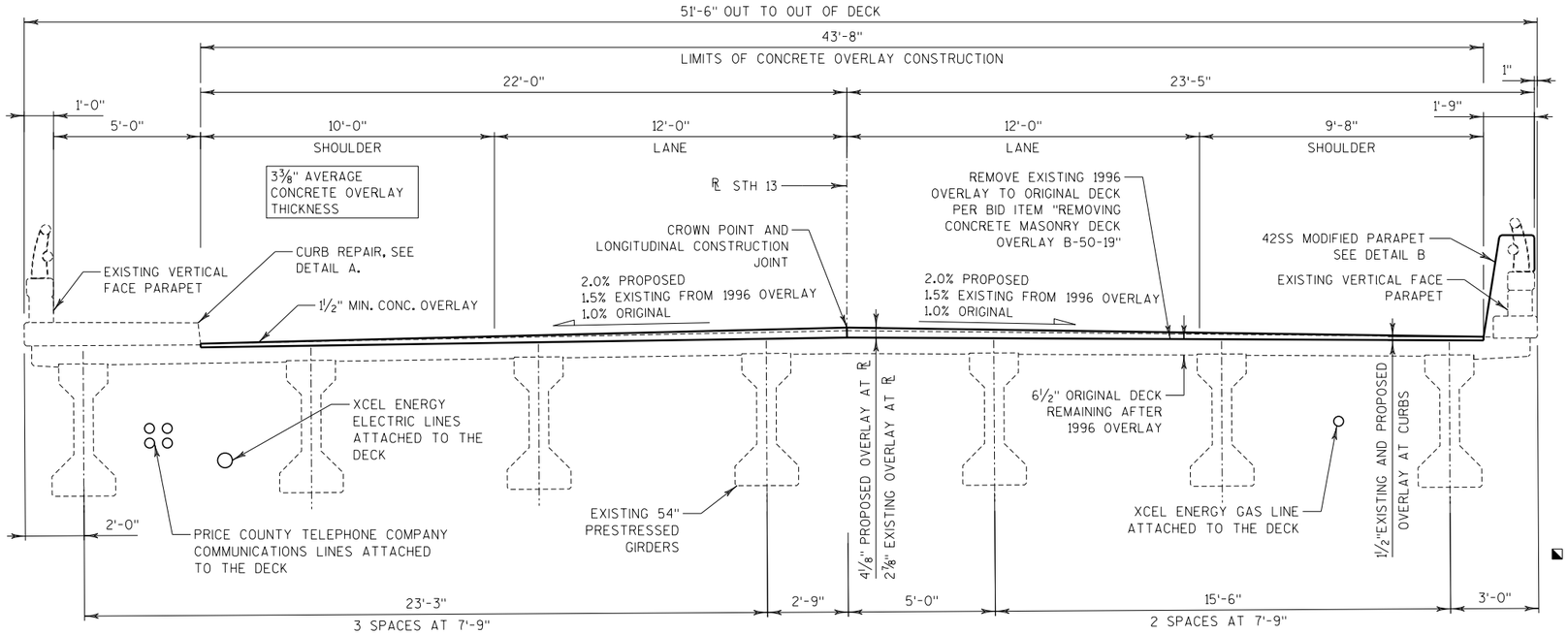

TYPICAL SECTION THRU STH 13

LOOKING UPSTATION

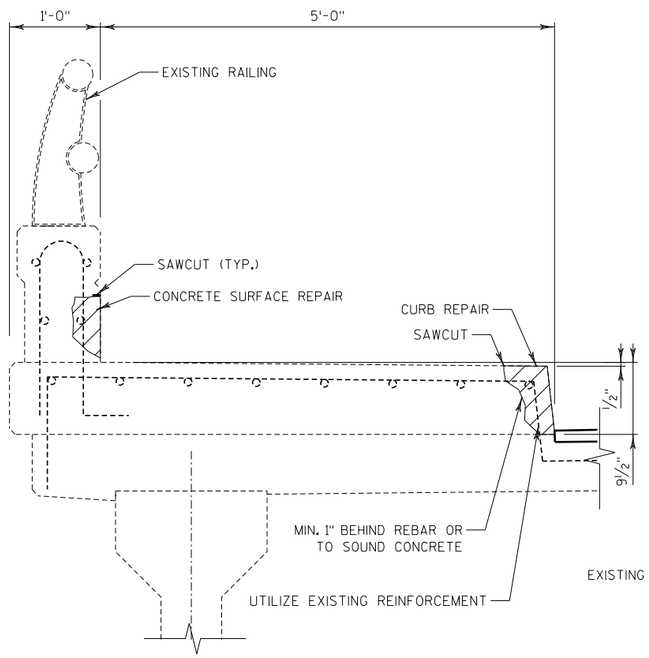

DETAIL A

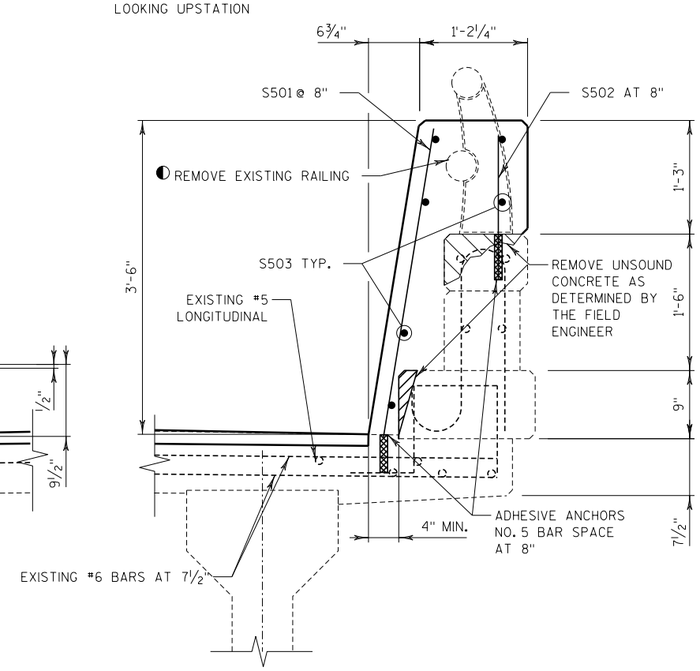

DETAIL B

NOTES

SEAL OVERLAY CONSTRUCTION JOINTS ACCORDING TO SECTION 502.3.13.1 OF THE STANDARD SPECIFICATION. COST IS CONSIDERED INCLUDED IN BID ITEM "CONCRETE MASONRY OVERLAY DECKS".

PREPARATION DECKS TYPE 1, TYPE 2, AND FULL DEPTH DECK REPAIR ARE BASED ON THE PLANS AND AS DETERMINED BY THE FIELD ENGINEER. DECK PREPARATION AND FULL-DEPTH DECK REPAIRS SHALL BE FILLED WITH "CONCRETE MASONRY OVERLAY DECKS".

ANY EXCAVATION REQUIRED TO COMPLETE THE OVERLAY AT THE ABUTMENTS IS TO BE INCLUDED IN WORK FOR BID ITEM "CONCRETE MASONRY OVERLAY DECKS".

PROFILE GRADE LINE SHALL BE DETERMINED IN THE FIELD BASED ON A MINIMUM OVERLAY THICKNESS OF 1½" AT THE CURBS AND 4⅛" AT THE ℄ PLACED ABOVE THE DECK SURFACE AFTER SURFACE PREPARATION. EXPECTED AVERAGE OVERLAY THICKNESS IS 3⅜". THE AVERAGE OVERLAY THICKNESS IS BASED ON THE MINIMUM OVERLAY THICKNESS PLUS ½" TO ACCOUNT FOR VARIATIONS IN THE DECK SURFACE. IF EXPECTED AVERAGE OVERLAY THICKNESS IS EXCEEDED BY MORE THAN ½", CONTACT THE STRUCTURES DESIGN SECTION.

ALL CONCRETE REMOVAL NOT COVERED WITH CONCRETE OVERLAY SHALL BE DEFINED BY A 1" DEEP SAW CUT.

PIGMENTED SURFACE SEALER WILL BE APPLIED TO THE TOPS AND INSIDE FACES OF THE 42SS MODIFIED PARAPET FROM END OF WINGWALL TO END OF WINGWALL.

PIGMENTED SURFACE RESEAL WILL BE APPLIED TO THE TOP AND INSIDE FACE OF THE PEDESTRIAN PARAPET FROM END OF WINGWALL TO END OF WINGWALL, TO THE TOP OF THE SIDEWALK, AND TO THE VERTICAL FACE OF THE CURB AFTER THE CURB REPAIR IS COMPLETED.

PROTECTIVE SURFACE TREATMENT WILL BE APPLIED TO THE TOP AND VERTICAL FACE OF THE PAVING NOTCHES AND TO THE TO THE ENTIRE TOP SURFACE OF THE NEW CONCRETE OVERLAY.

◪ CONCRETE SURFACE REPAIR QUANTITIES ARE AN ESTIMATE ONLY. QUANTITIES TO BE DETERMINED IN THE FIELD BY THE FIELD ENGINEER.

THE CONTRACTOR SHALL SUPPLY A NEW NAME PLATE IN ACCORDANCE WITH SECTION 502.3.11 OF THE STANDARD SPECIFICATIONS AND THE STANDARD DETAIL DRAWINGS. NAME PLATE TO SHOW ORIGINAL CONSTRUCTION YEAR, 1971.

◐ SALVAGE THE EXISTING RAILING, STANCHIONS, AND BASE PLATES PER SPECIFICATIONS. WORK IS CONSIDERED INCLUDED IN BID ITEM "REMOVING OLD STRUCTURE OVER WATERWAY STA 661+95.62".

UTILIZE EXISTING BAR STEEL REINFORCEMENT WHERE SHOWN AND EXTEND 24 BAR DIAMETERS INTO NEW WORK, UNLESS SPECIFIED OTHERWISE.

ASBESTOS CONTAINING MATERIAL IS PRESENT IN THE GRAY GASKET MATERIAL BELOW THE METAL BASEPLATES. FOR MORE INFORMATION SEE THE ASBESTOS REPORT.

TOTAL ESTIMATED QUANTITIES

BID ITEM NO.	BID ITEMS	UNIT	TOTAL
203.0210.S	ABATEMENT OF ASBESTOS CONTAINING MATERIAL B-50-19	LS	1
203.0500.S	REMOVING OLD STRUCTURE OVER WATERWAY STATION STA 661+95.62	LS	1
502.0100	CONCRETE MASONRY BRIDGES	CY	15
502.3200	PROTECTIVE SURFACE TREATMENT	SY	507
502.3210	PIGMENTED SURFACE SEALER	SY	69
502.4205	ADHESIVE ANCHORS NO. 5 BAR	EACH	402
505.0600	BAR STEEL REINFORCEMENT HS COATED STRUCTURES	LB	1,890
509.0301	PREPARATION DECKS TYPE 1	SY	35
509.0302	PREPARATION DECKS TYPE 2	SY	15
509.0505.S	CLEANING DECKS TO REAPPLY CONCRETE MASONRY OVERLAY	SY	493
509.1200	CURB REPAIR	LF	101
◪ 509.1500	CONCRETE SURFACE REPAIR	SF	6
509.2000	FULL-DEPTH DECK REPAIR	SY	3
509.2500	CONCRETE MASONRY OVERLAY DECKS	CY	49
509.9005.S	REMOVING CONCRETE MASONRY DECK OVERLAY B-50-19	SY	493
606.0300	RIPRAP HEAVY	CY	26
SPV.0180	PIGMENTED SURFACE RESEAL	SY	101
	NON-BID ITEMS		
	FILLER, NAME PLATE	SIZE	1/2"

NO.	DATE	REVISION	BY

STATE OF WISCONSIN
DEPARTMENT OF TRANSPORTATION

STRUCTURE B-50-19

DRAWN BY JRM | PLANS CK'D. MDR

TYPICAL SECTION AND QUANTITIES

8

8

STATE PROJECT NUMBER

1610-44-63

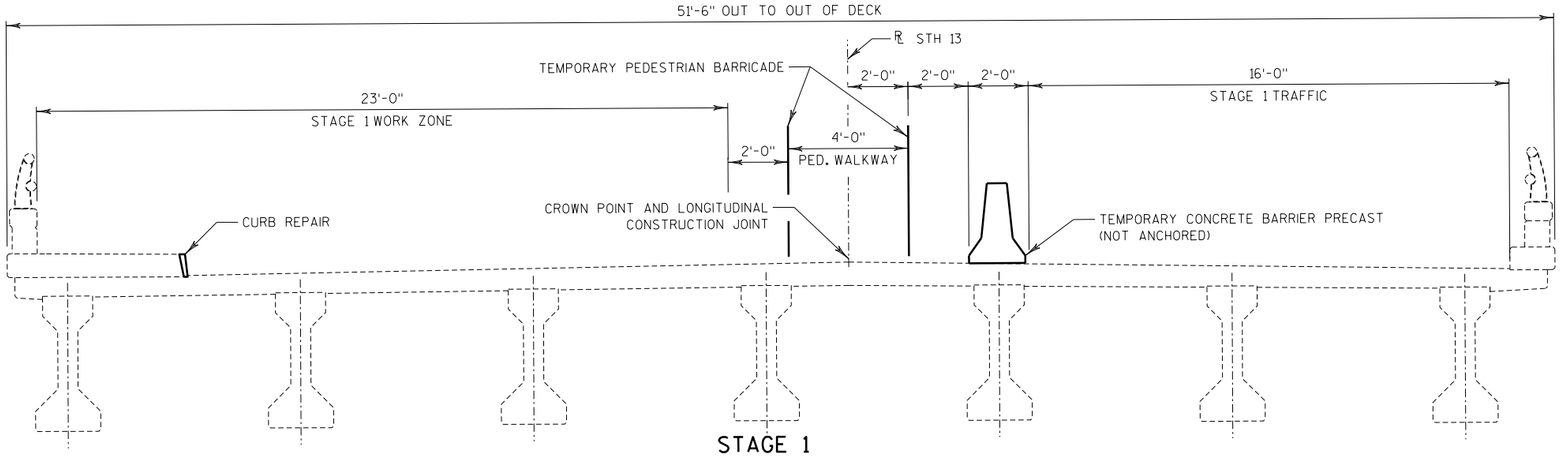

STAGE 1

LOOKING UPSTATION

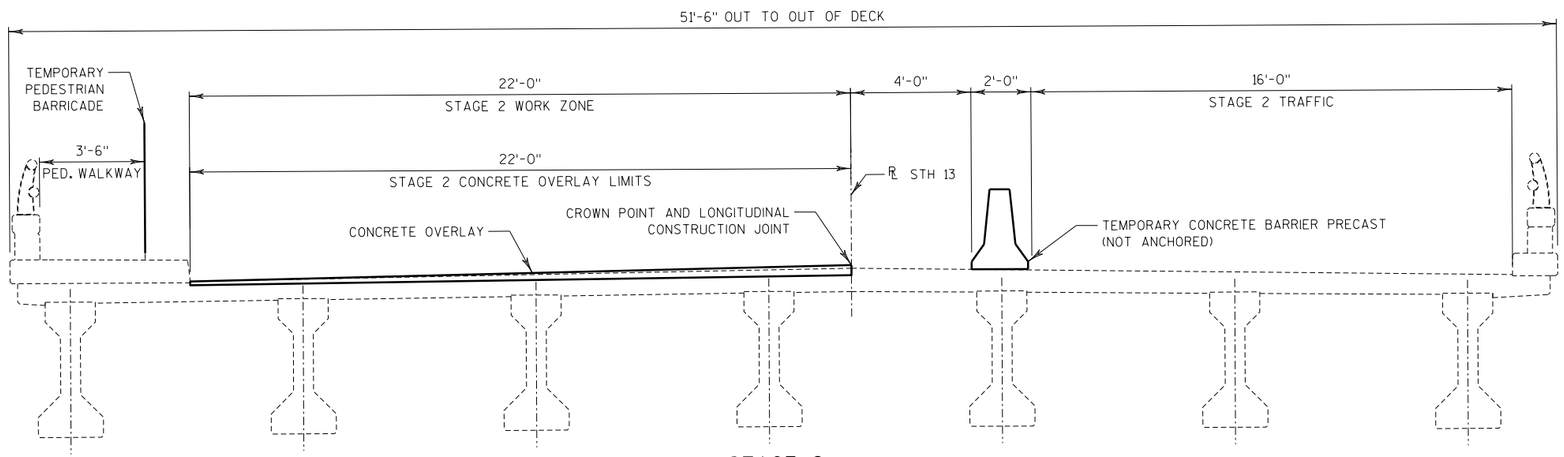

STAGE 2

LOOKING UPSTATION

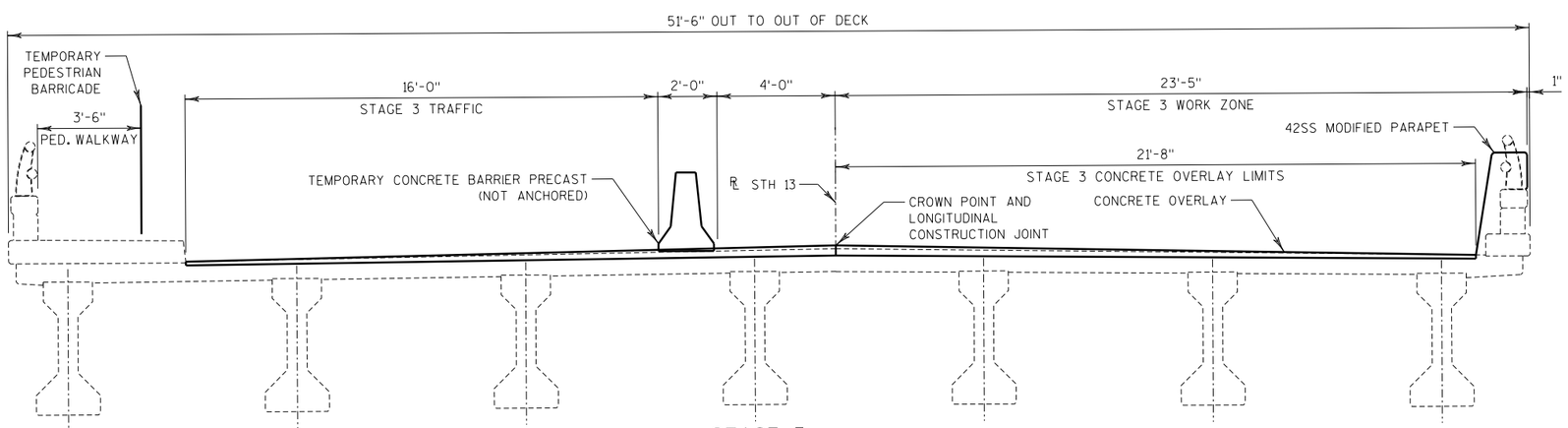

STAGE 3

LOOKING UPSTATION

8

8

PRELIMINARY PLANS

NO.	DATE	REVISION	BY

STATE OF WISCONSIN
DEPARTMENT OF TRANSPORTATION

STRUCTURE B-50-19

DRAWN BY JRM | PLANS CK'D. MDR

STAGING DETAILS

SHEET 3 OF 4

70

FILE NAME : P:\52xx\5201.DP.19.STH13.PRC\09 STRUCTURES\B-50-19\Plan\080103_sd_B-50-19.dgn

PLOT DATE : 4/28/2021

PLOT BY : mdr

STATE PROJECT NUMBER

1610-44-63

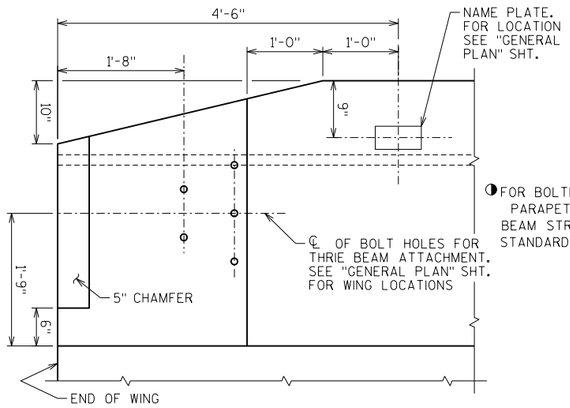

PARAPET END TREATMENT DETAIL

LOOKING AT INSIDE FACE OF PARAPET

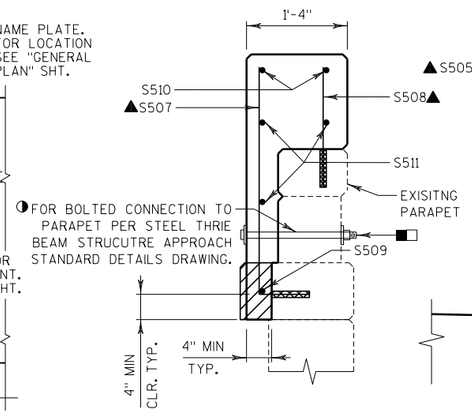

SECTION A

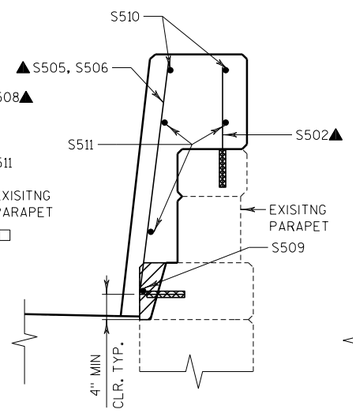

SECTION B

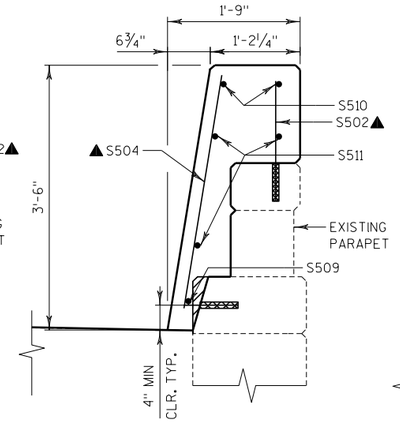

SECTION C

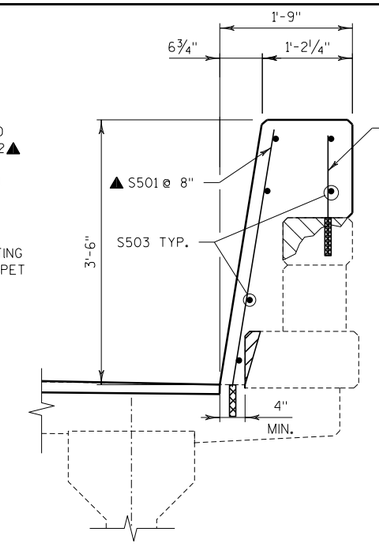

SECTION THRU PARAPET REPLACEMENT ON BRIDGE

NOTES:

▲ ADHESIVE ANCHOR NO. 5 BARS. EMBED 4" INTO EXISTING DECK OR 5" INTO EXISTING PARAPET.

◪ BENCH MARK CAP (WHEN SUPPLIED). AVOID PLACING A BENCH MARK CAP BELOW A RAIL OR FENCE SYSTEM THAT IS ATTACHED TO THE TOP OF THE PARAPET.

◑ DRILLING BOLT HOLES THROUGH THE PARAPET IS INCLUDED IN THE BID ITEM "CONCRETE MASONRY BRIDGES".

■□ BOLTS, NUTS AND WASHERS TO BE GALVANIZED PER STANDARD DETAILS.

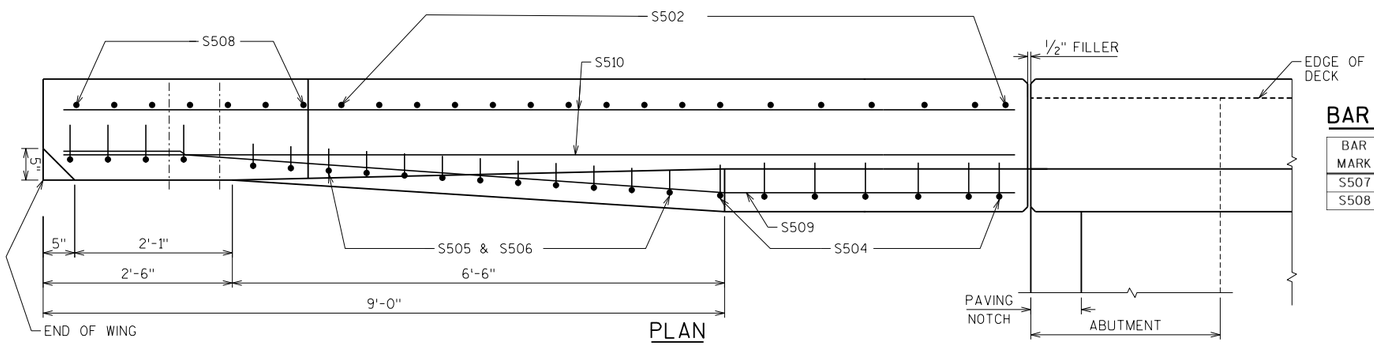

PLAN

BAR SERIES●

BAR MARK	NO. REQ'D.	LENGTH
S507	2	2'-11" TO 3'-7"
S508	2	10" TO 1'-4"

BILL OF BARS

	BAR MARK	COAT	NO.	LENGTH	SERIES	BENT	LOCATION
▲	S501	X	153	3'-8"		X	PARAPET VERTICAL
▲	S502	X	189	1'-6"			PARAPET VERTICAL
	S503	X	12	52'-0"			PARAPET HORIZONTAL
▲	S504	X	14	3'-8"		X	PARAPET WINGS VERTICAL
▲	S505	X	12	3'-8"		X	PARAPET WINGS VERTICAL
▲	S506	X	10	3'-8"		X	PARAPET WINGS VERTICAL
▲	S507	X	12	3'-3"	●	X	PARAPET WINGS VERTICAL
▲	S508	X	12	1'-2"	●		PARAPET WINGS VERTICAL
	S509	X	2	12'-7"		X	PARAPET WINGS HORIZONTAL
	S510	X	4	12'-7"		X	PARAPET WINGS HORIZONTAL
	S511	X	6	12'-8"			PARAPET WINGS HORIZONTAL

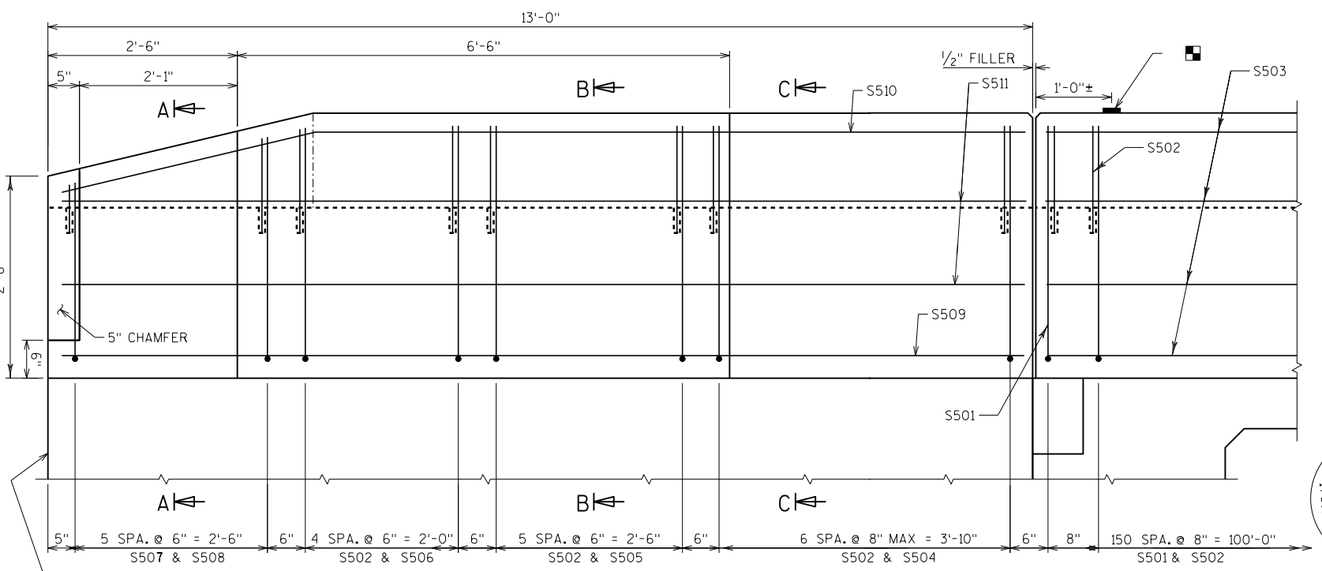

INSIDE ELEVATION

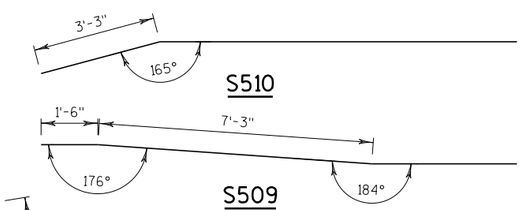

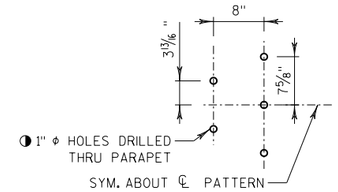

DETAIL OF THRIE BEAM BOLT PATTERN

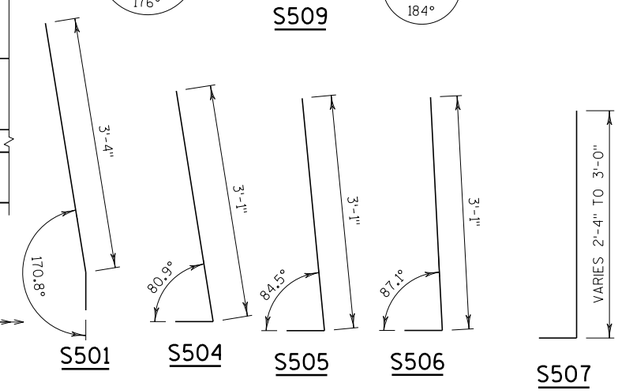

NO.	DATE	REVISION	BY

STATE OF WISCONSIN
DEPARTMENT OF TRANSPORTATION

STRUCTURE B-50-19

DRAWN BY JRM | PLANS CK'D. MDR

PARAPET DETAILS

SHEET 4 OF 4

71

8

8

Wisconsin Department of Transportation

Dedicated people creating transportation solutions through innovation and exceptional service.

http://www.dot.wisconsin.gov

RHI

SEPTEMBER 2021

PROJECT ID: 1610-44-64

WITH: 1610-44-62, 1610-44-63

COUNTY: PRICE

ORDER OF SHEETS

Section No.	1	Title
Section No.	2	Typical Sections and Details
Section No.	3	Estimate of Quantities
Section No.	3	Miscellaneous Quantities
~~Section No.~~	~~4~~	~~Right of Way Plat~~
~~Section No.~~	~~5~~	~~Plan and Profile~~
Section No.	6	Standard Detail Drawings
Section No.	7	Sign Plates
Section No.	8	Structure Plans
~~Section No.~~	~~9~~	~~Computer Earthwork Data~~
~~Section No.~~	~~9~~	~~Cross Sections~~

TOTAL SHEETS = 60

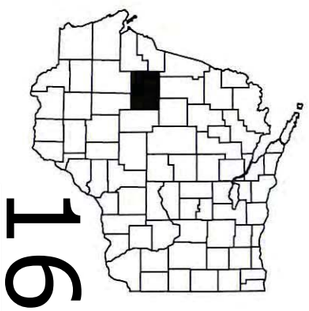

16

N

STATE OF WISCONSIN
DEPARTMENT OF TRANSPORTATION

PLAN OF PROPOSED IMPROVEMENT

HAWKINS - BRADLEY

WISCONSIN CENTRAL RR B-50-0048

USH 8

PRICE COUNTY

STATE PROJECT NUMBER
1610-44-64

STATE PROJECT	FEDERAL PROJECT	
	PROJECT	CONTRACT
1610-44-64		

DESIGN DESIGNATION

A.A.D.T.	2019	=	2,300
A.A.D.T.	2039	=	2,750
D.H.V.		=	331
D.D.		=	61/39
T.		=	23.5%
DESIGN SPEED		=	55 MPH/45 MPH
ESALS		=	1,160,000

CONVENTIONAL SYMBOLS

PLAN

CORPORATE LIMITS
PROPERTY LINE
LOT LINE
LIMITED HIGHWAY EASEMENT
EXISTING RIGHT OF WAY
PROPOSED OR NEW R/W LINE
SLOPE INTERCEPT
REFERENCE LINE (300' EB)
EXISTING CULVERT
PROPOSED CULVERT (Box or Pipe)
COMBUSTIBLE FLUIDS (CAUTION)
MARSH AREA
WOODED OR SHRUB AREA

PROFILE

GRADE LINE
ORIGINAL GROUND
MARSH OR ROCK PROFILE (To be noted as such) (ROCK)
SPECIAL DITCH (LABEL)
GRADE ELEVATION (95.36)
CULVERT (Profile View)

UTILITIES

ELECTRIC — E —
FIBER OPTIC — FO —
GAS — G —
SANITARY SEWER — SAN —
STORM SEWER — SS —
TELEPHONE — T —
WATER — W —
UTILITY PEDESTAL
POWER POLE
TELEPHONE POLE

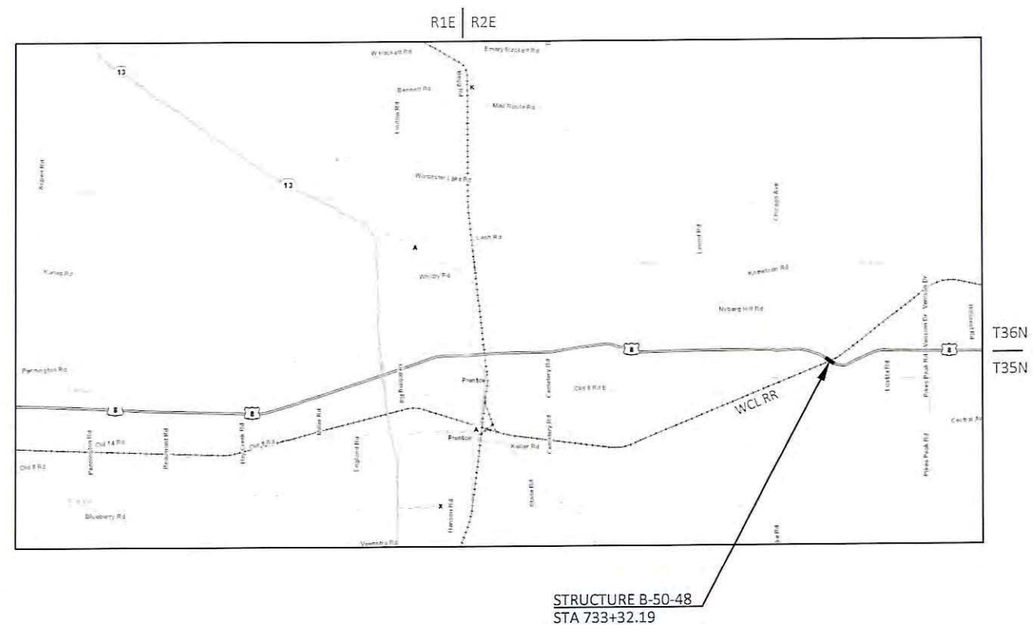

LAYOUT

SCALE 0 — 2 MI

TOTAL NET LENGTH OF CENTERLINE = 0.033 MI

ELEVATIONS SHOWN ON THE PLAN ARE REFERENCED TO THE NORTH AMERICAN VERTICAL DATUM OF 1988 (NAVD 88). 2012

HORIZONTAL POSITIONS SHOWN ON THIS PLAN ARE WISCONSIN COUNTY COORDINATES, PRICE COUNTY, NAD83 (YEAR), IN U.S. SURVEY FEET. VALUES ARE GRID COORDINATES, GRID BEARINGS, AND GRID DISTANCES. GRID DISTANCES MAY BE USED AS GROUND DISTANCES.

ORIGINAL PLANS PREPARED BY:
SHORT ELLIOTT HENDRICKSON INC.

WISCONSIN
VANCE P. POWERS
E-36761-6
DALLAS
WIS.
PROFESSIONAL ENGINEER
12/3/21

STATE OF WISCONSIN
DEPARTMENT OF TRANSPORTATION

PREPARED BY

Surveyor	WISDOT/SEH
Designer	SEH
Project Manager	KAI KILEN
Regional Examiner	CHERYL SIMON
Regional Supervisor	DANIEL ERVA

APPROVED FOR THE DEPARTMENT

DATE: 4/22/2022 (Signature)

E

GENERAL NOTES

WHEN THE QUANTITY OF THE ITEMS OF BASE AGGREGATE, SUBBASE, OR HMA PAVEMENT IS MEASURED FOR PAYMENT BY THE TON OR CUBIC YARD, THE DEPTH OR THICKNESS OF THE LAYERS SHOWN ON THE PLAN IS APPROXIMATE AND THE ACTUAL THICKNESS WILL DEPEND ON THE DISTRIBUTION OF THE MATERIAL AS DIRECTED BY THE ENGINEER

CONTRACTOR WILL BE RESPONSIBLE FOR RESHAPING, SEEDING, AND EMATTING ANY PREVIOUSLY GRASSED AREAS WHICH ARE DISTURBED BY HIS OPERATION OUTSIDE OF NORMAL CONSTRUCTION LIMITS

THE LOCATIONS OF EXISTING AND PROPOSED UTILITY INSTALLATIONS AS SHOWN ON THE PLANS ARE APPROXIMATE. THERE MAY BE OTHER UTILITY INSTALLATIONS WITHIN THE PROJECT THAT ARE NOT SHOWN. CONTRACTOR IS RESPONSIBLE FOR CONTACTING UTILITIES AND DIGGERS HOTLINE PRIOR TO THE START OF WORK.

ORDER OF TYPICAL SECTIONS AND DETAILS

GENERAL NOTES
PROJECT OVERVIEW
CONSTRUCTION DETAILS
PERMANENT SIGNING
TRAFFIC CONTROL
ALIGNMENT DIAGRAM

WDNR

WENDY HENNIGES
107 SUTLIFF AVE.
RHINELANDER, WI 54501
DESK: (715) 365-8916
EMAIL: WENDY.HENNIGES@WISCONSIN.GOV

OTHER CONTACTS

WISCONSIN CENTRAL LTD (CN)
JACKIE MACEWICZ
1625 DEPORT STREET
STEVENS POINT, WI 54481
MOBILE: 715-345-2503
E-MAIL:JACKIE.MACEWICS@CN.CA
NOT PART OF DIGGERS HOTLINE, CALL CN BEFORE YOU DIG 734-783-4533
WILL ADD CONTACT INFORMATION FROM RETURNED WORK PLANS

UTILITIES

XCEL ENERGY
KATHY SCHANTNER
310 HICKORY HILLS LANE
PHILLIPS, WI 54555
OFFICE: (715) 737-1102
MOBILE: (715) 567-0037
KATHY.R.SCHANTNER@EXCELENERGY.COM

DIGGERS HOTLINE
Dial 811 or (800)242-8511
www.DiggersHotline.com

RUNOFF COEFFICIENT TABLE

	HYDROLOGIC SOIL GROUP											
	A			B			C			D		
	SLOPE RANGE (PERCENT)			SLOPE RANGE (PERCENT)			SLOPE RANGE (PERCENT)			SLOPE RANGE (PERCENT)		
LAND USE:	0-2	2-6	6 & OVER	0-2	2-6	6 & OVER	0-2	2-6	6 & OVER	0-2	2-6	6 & OVER
ROW CROPS	.08 .22	.16 .30	.22 .38	.12 .26	.20 .34	.27 .44	.15 .30	.24 .37	.33 .50	.19 .34	.28 .41	.38 .56
MEDIAN STRIP-TURF	.19 .24	.20 .26	.24 .30	.19 .25	.22 .28	.26 .33	.20 .26	.23 .30	.30 .37	.20 .27	.25 .32	.30 .40
SIDE SLOPE-TURF			.25 .32			.27 .34			.28 .36			.30 .38
PAVEMENT:												
ASPHALT	.70 - .95											
CONCRETE	.80 - .95											
BRICK	.70 - .80											
DRIVES, WALKS	.75 - .85											
ROOFS	.75 - .95											
GRAVEL ROADS, SHOULDERS	.40 - .60											

TOTAL AREA EXPECTED TO BE DISTURBED BY CONSTRUCTION ACTIVITIES = 0.055 ACRES

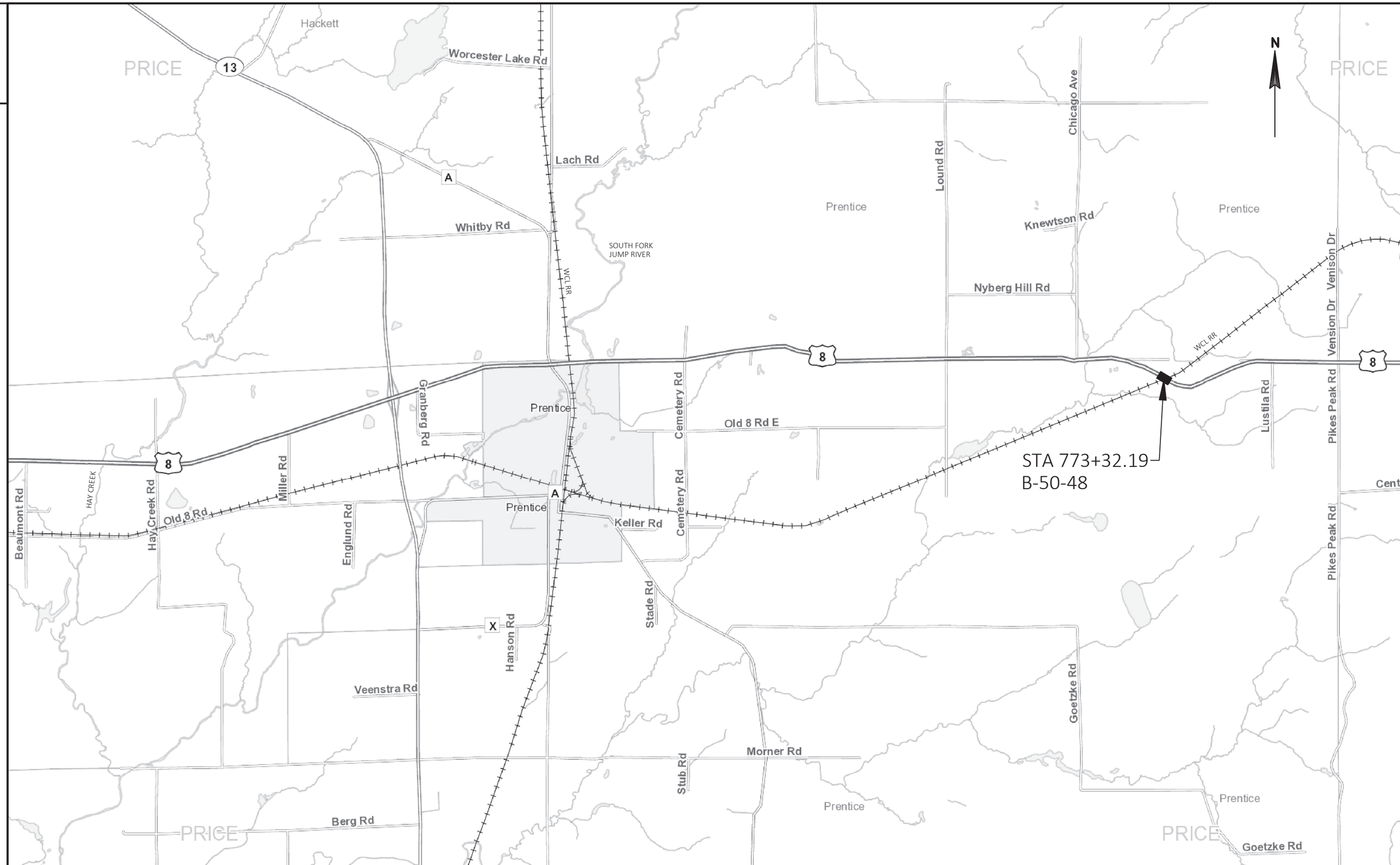

PROJECT NO: 1610-44-64	HWY: USH 8	COUNTY: PRICE	PROJECT OVERVIEW	SHEET 3	E

FILE NAME : P:\UZ\W\WITNC\144737\CIVIL 3D\15803003\SHEETSPLAN B-50-48\020201-PO.DWG
LAYOUT NAME - 01
PLOT DATE : 6/24/2021 8:36 AM
PLOT BY : ANNIE JEROME
PLOT NAME :
PLOT SCALE : NOT TO SCALE
WISDOT/CADDS SHEET 42

2

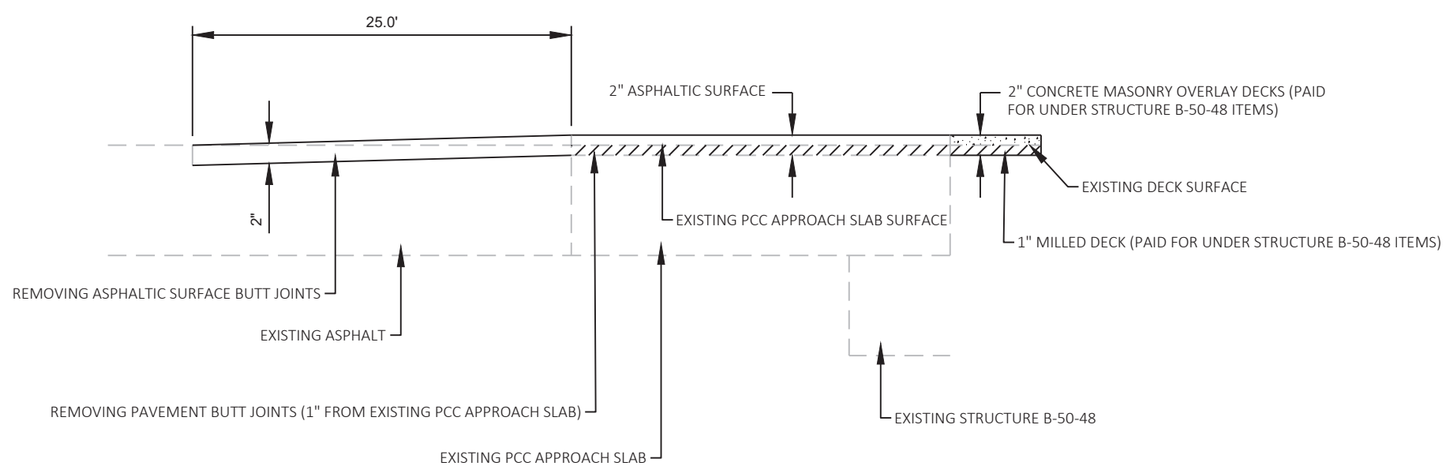

BUTT JOINT

PROJECT NO: 1610-44-64	HWY: USH 8	COUNTY: PRICE	PLAN: CONSTRUCTION DETAILS	SHEET 4	E

2

LEGEND

EXISTING SIGN MOUNTED ON POST(S)

PROPOSED SIGN MOUNTED ON POST(S)

XXX DENOTES SIGN NUMBER

A MARKING LINE 4-INCH EPOXY (WHITE)

B MARKING LINE 4-INCH EPOXY (DOUBLE YELLOW)

NOTE:

PERMANENT SIGN LOCATIONS ARE APPROXIMATE. FINAL LOCATIONS SHALL BE PLACED IN ACCORDANCE TO DETAILS AND THE MUTCD. NO PASSING ZONE PENNANTS SHALL BE PLACED IN ACCORDANCE WITH THE RESULTS OF THE LOCATING NO PASSING ZONE ITEM.

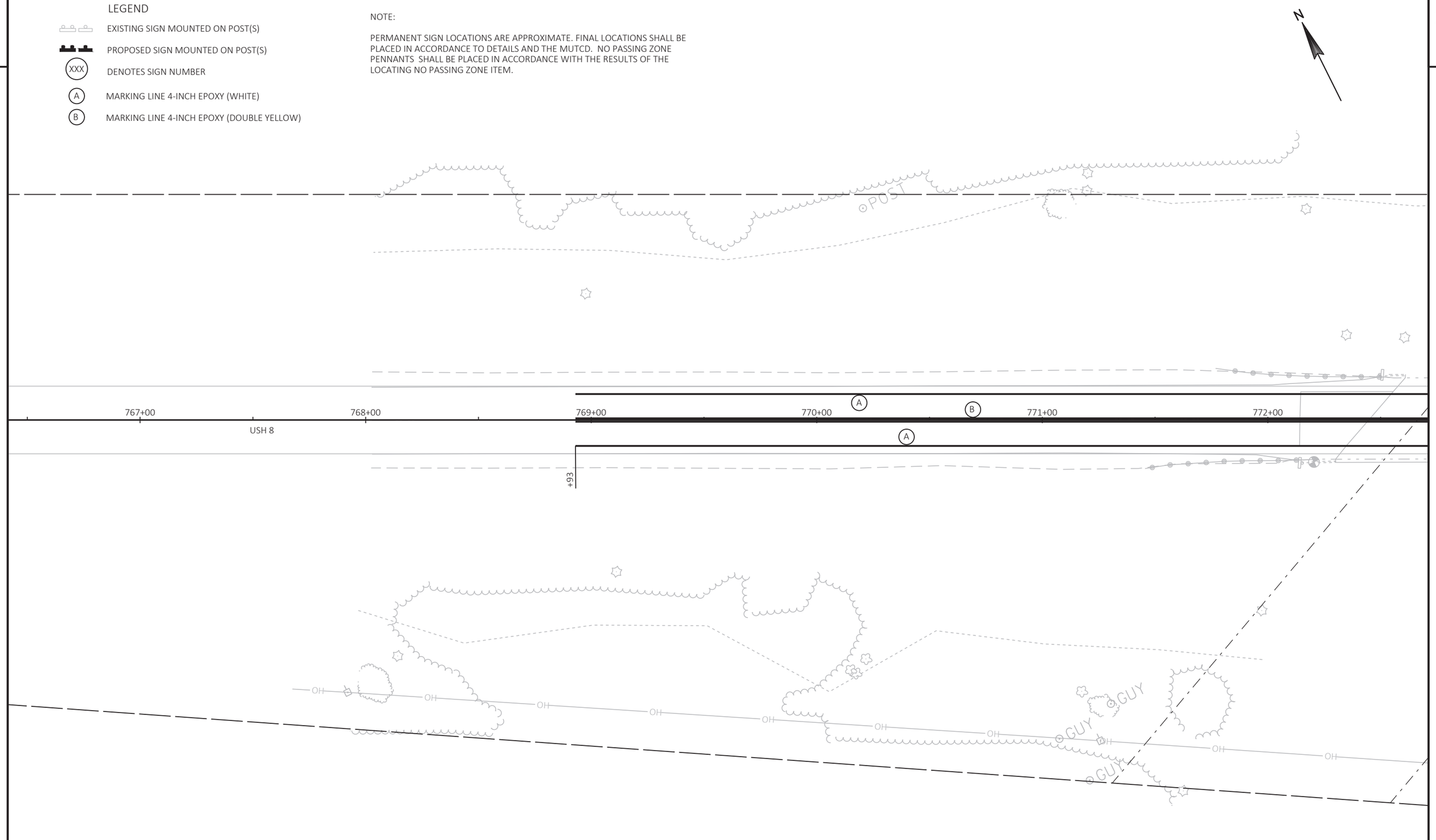

2

PROJECT NO: 1610-44-64	HWY: USH 8	COUNTY: PRICE	PERMANENT SIGNING & PAVEMENT MARKING	SHEET 5	E

FILE NAME : P:\UZ\W\WITNC\144737\CIVIL 3D\15803003\SHEETSPLAN B-50-48\023201 PS.DWG
LAYOUT NAME - 01

PLOT DATE : 6/24/2021 8:37 AM PLOT BY : ANNIE JEROME PLOT NAME : PLOT SCALE : 1 IN:40 FT

WISDOT/CADDS SHEET 42

2

LEGEND

EXISTING SIGN MOUNTED ON POST(S)

PROPOSED SIGN MOUNTED ON POST(S)

XXX DENOTES SIGN NUMBER

A MARKING LINE 4-INCH EPOXY (WHITE)

B MARKING LINE 4-INCH EPOXY (DOUBLE YELLOW)

NOTE:

PERMANENT SIGN LOCATIONS ARE APPROXIMATE. FINAL LOCATIONS SHALL BE PLACED IN ACCORDANCE TO DETAILS AND THE MUTCD. NO PASSING ZONE PENNANTS SHALL BE PLACED IN ACCORDANCE WITH THE RESULTS OF THE LOCATING NO PASSING ZONE ITEM.

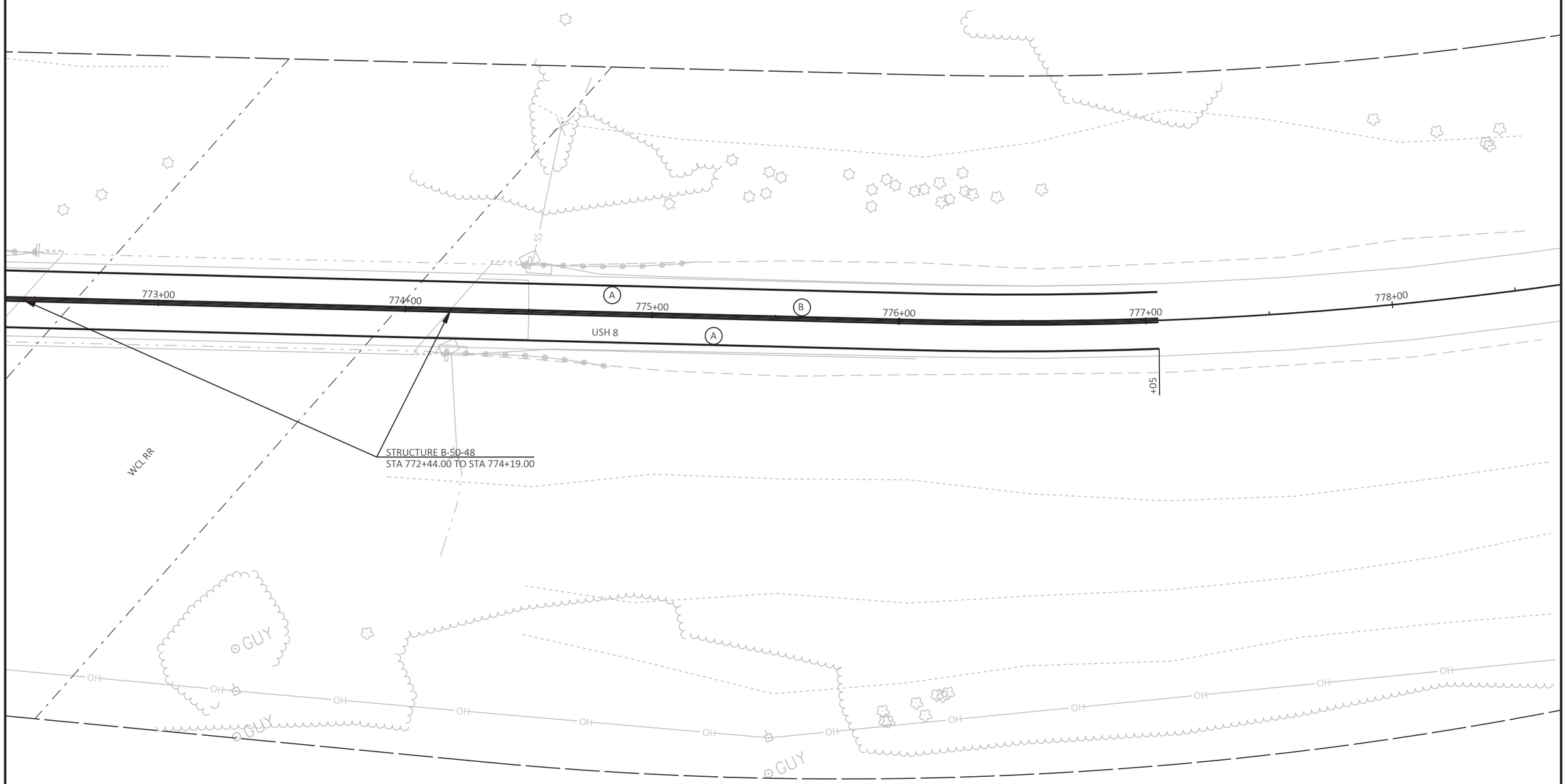

2

PROJECT NO: 1610-44-64	HWY: USH 8	COUNTY: PRICE	PERMANENT SIGNING & PAVEMENT MARKING	SHEET 6	E

FILE NAME : P:\UZ\W\WITNC\144737\CIVIL 3D\15803003\SHEETSPLAN B-50-48\023201 PS.DWG
LAYOUT NAME - 02

PLOT DATE : 6/24/2021 8:37 AM PLOT BY : ANNIE JEROME PLOT NAME : PLOT SCALE : 1 IN:40 FT

WISDOT/CADDS SHEET 42

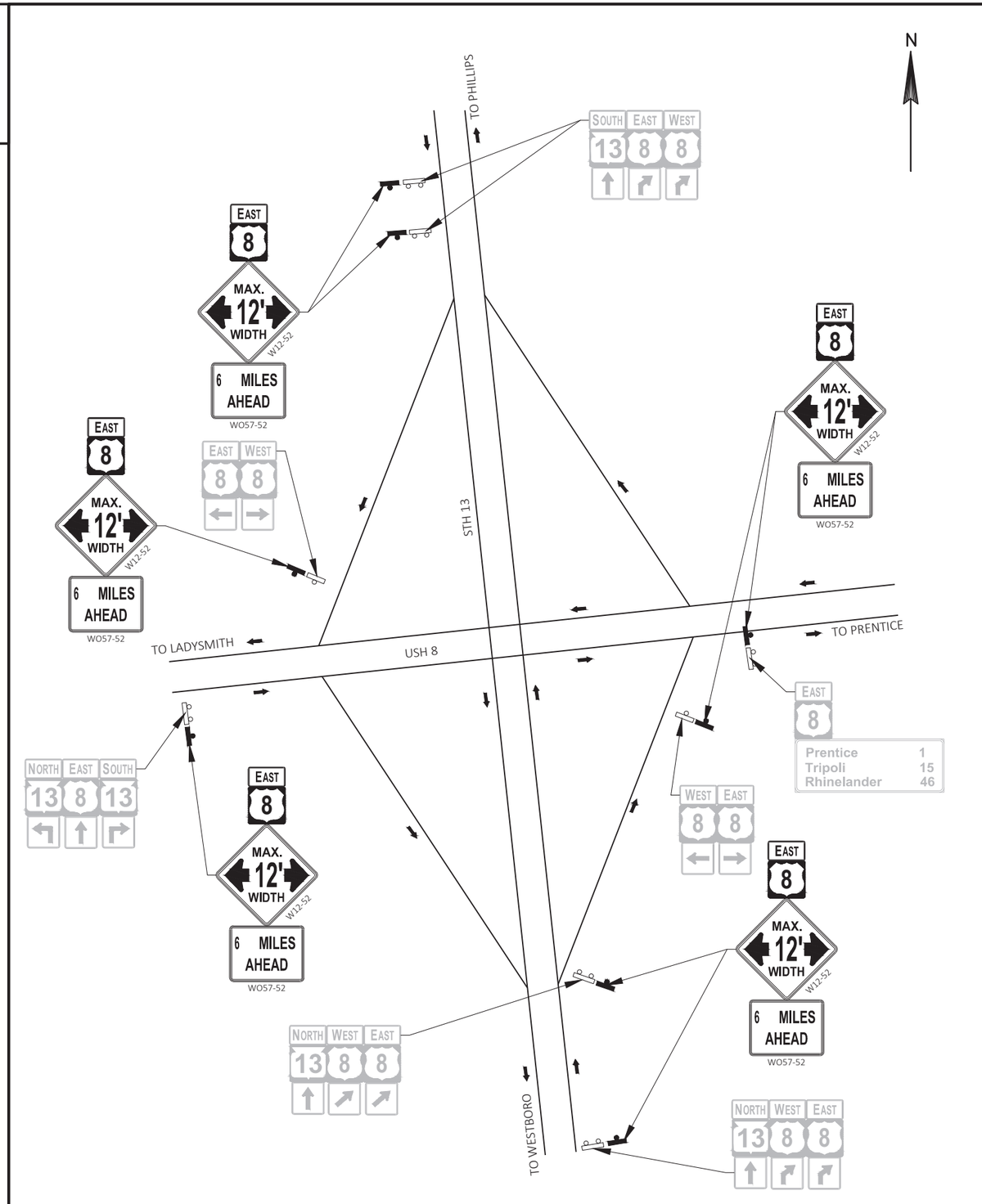

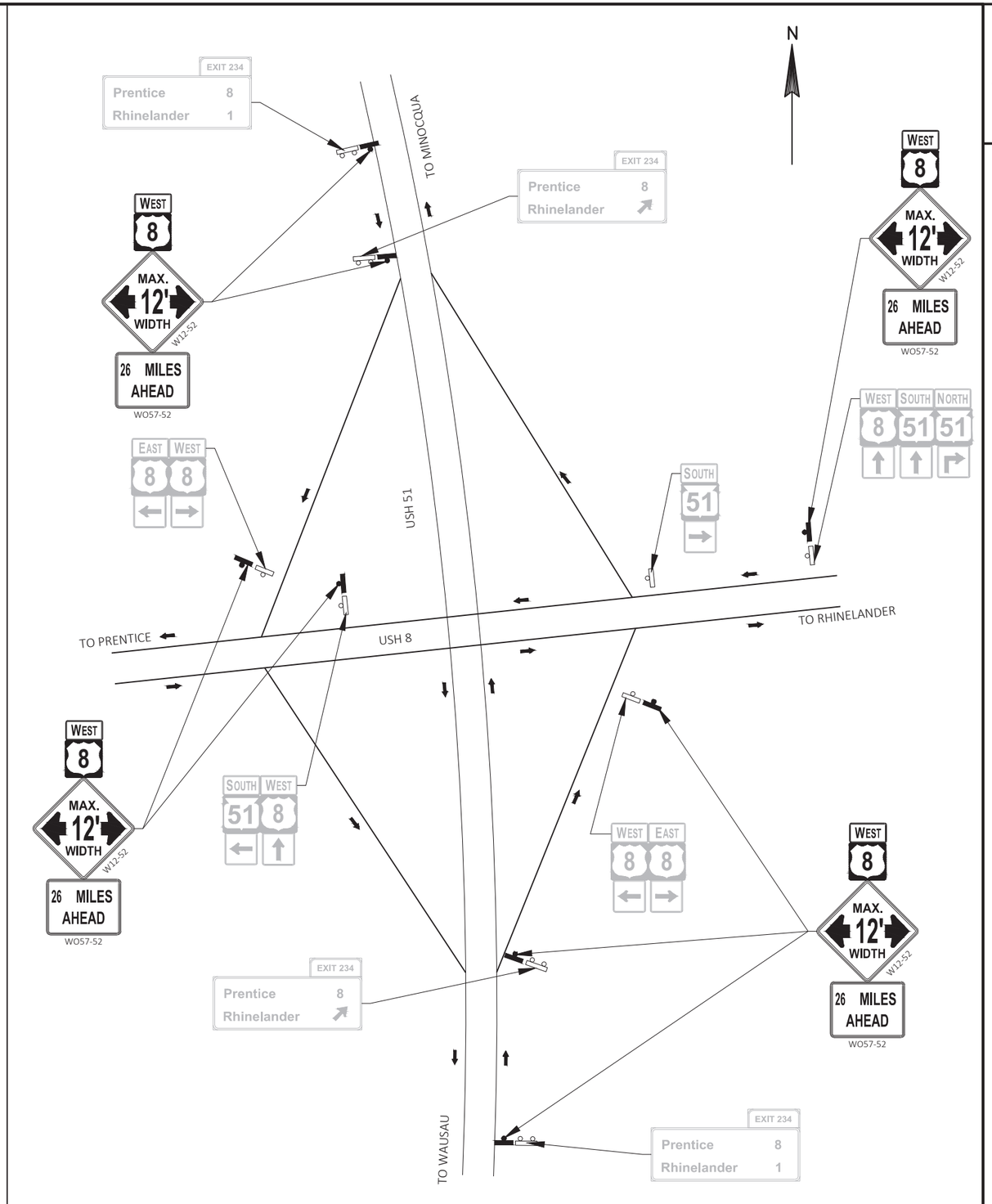

PROJECT NO: 1610-44-64	HWY: USH 8	COUNTY: PRICE	TRAFFIC CONTROL	SHEET 7	E

2

GENERAL NOTES:

PLACE TEMPORARY TRAFFIC SIGNALS AND SIGNING PER STANDARD DETAIL DRAWING 15D33: TRAFFIC CONTROL, ONE LANE ROAD WITH TEMPORARY SIGNALS.

THE EXACT NUMBER, LOCATION, AND SPACING OF DEVICES SHALL BE ADJUSTED TO FIT FIELD CONDITIONS AS DIRECTED BY THE ENGINEER.

PLACE ADDITIONAL WIDTH RESTRICTION SIGNS (W12-52 AND WO57-52) AT STH 13 AND USH 51.

REFER TO SDD 15D33: TRAFFIC CONTROL, ONE LANE ROAD WITH TEMPORARY SIGNALS FOR REMOVAL AND REPLACEMENT OF TEMPORARY PAVEMENT MARKING.

B-50-48 STAGE 1:

PRIOR TO PLACING TRAFFIC CONTROL ITEMS FOR STAGE 1, CONSTRUCT THE ASPHALTIC SURFACE TEMPORARY BETWEEN STA 769+50 - STA 772+11 RT AND STA 774+26 - S TA 776+50 RT UTILIZING SDD 15C12: TRAFFIC CONTROL FOR LANE CLOSURE WITH FLAGGING OPERATIONS.

UTILIZING SDD 15D33: TRAFFIC CONTROL, ONE LANE ROAD WITH TEMPORARY SIGNALS SHIFT TRAFFIC TO UTILIZE THE EXISTING EASTBOUND TRAFFIC LANE. REMOVE AND REPLACE NORTH HALF OF STRUCTURE B-50-48 BRIDGE DECK. CONSTRUCT NORTH HALF OF CONCRETE APPROACH SLABS, CONCRETE SURFACE DRAINS AND STORM SEWER.

* USE SAME TRAFFIC CONTROL FOR YEAR 2 STAGE 3 (CONSTRUCTION YEAR 2023) BRIDGE DECK POLYMER OVERLAYS EXCEPT USE TRAFFIC CONTROL DRUMS IN PLACE OF CONCRETE BARRIER TEMPORARY PRECAST.

SIGNAL TIMING INFORMATION

STRUCTURE #	STAGE #	YELLOW		ALL RED		GREEN		TOTAL SPLIT	
		Φ3	Φ4	Φ3	Φ4	Φ3	Φ4	Φ3	Φ4
		EB	WB	EB	WB	EB	WB	EB	WB
B-50-48	1/2	2.8	2.8	22.6	22.6	24.5	24.5	50.0	50.0

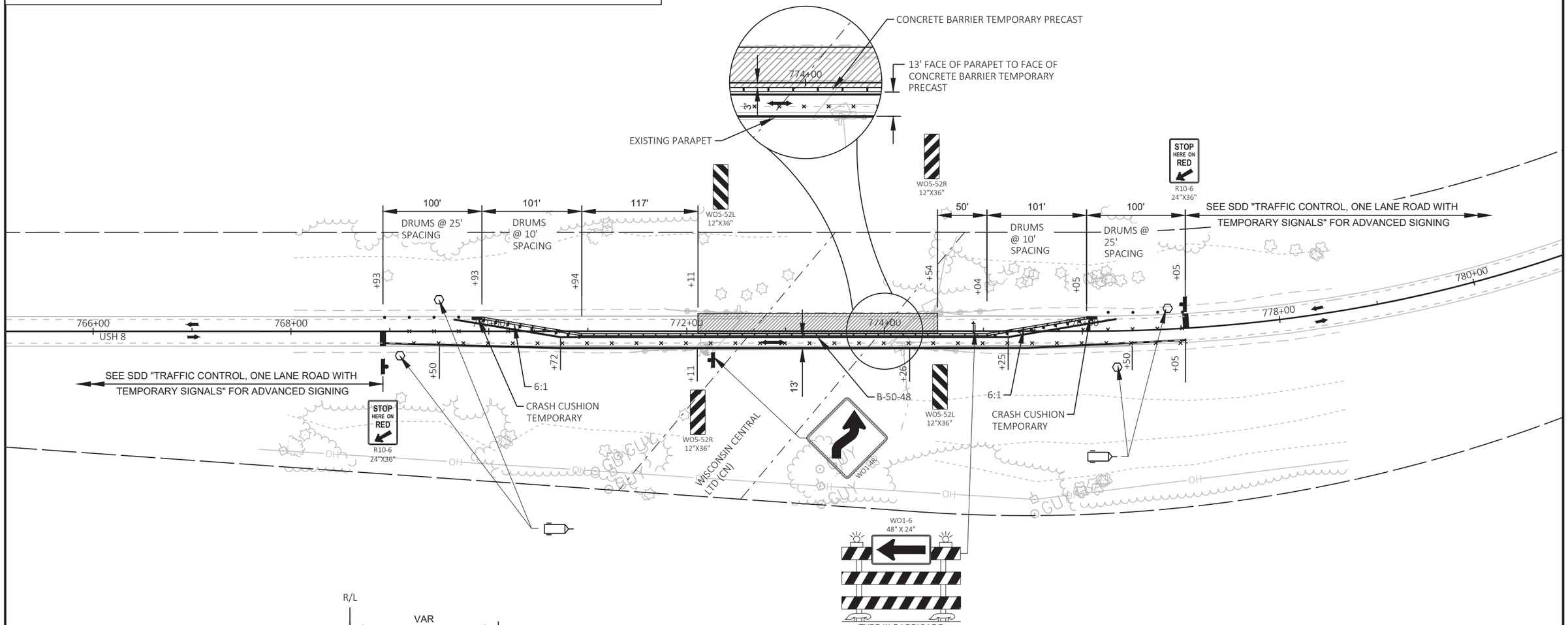

PROJECT NO: 1610-44-64	HWY: USH 8	COUNTY: PRICE	TRAFFIC CONTROL - YEAR 1 - STAGE 1/3 *	SHEET 8	E

FILE NAME : P:\UZ\W\WITNC\144737\CIVIL 3D\15803003\SHEETSPLAN B-50-48\025001 TC B-50-48 YR 1 STAGE 1.DWG
LAYOUT NAME - TC B-50-48 YEAR 1 STAGE 1
PLOT DATE : 6/24/2021 8:37 AM PLOT BY : ANNIE JEROME PLOT NAME : PLOT SCALE : ######

2

GENERAL NOTES:

PLACE TEMPORARY TRAFFIC SIGNALS AND SIGNING PER STANDARD DETAIL DRAWING 15D33: TRAFFIC CONTROL, ONE LANE ROAD WITH TEMPORARY SIGNALS.

THE EXACT NUMBER, LOCATION, AND SPACING OF DEVICES SHALL BE ADJUSTED TO FIT FIELD CONDITIONS AS DIRECTED BY THE ENGINEER.

PLACE ADDITIONAL WIDTH RESTRICTION SIGNS (W12-52 AND WO57-52) AT STH 13 AND USH 51.

REFER TO SDD 15D33: TRAFFIC CONTROL, ONE LANE ROAD WITH TEMPORARY SIGNALS FOR REMOVAL AND REPLACEMENT OF TEMPORARY PAVEMENT MARKING.

B-50-48 STAGE 2:

PRIOR TO PLACING TRAFFIC CONTROL ITEMS FOR STAGE 2, CONSTRUCT THE ASPHALTIC SURFACE TEMPORARY BETWEEN STA 769+50 - STA 772+42 LT AND STA 774+65 - STA 776+50 LT UTILIZING SDD 15C12: TRAFFIC CONTROL FOR LANE CLOSURE WITH FLAGGING OPERATIONS.

UTILIZING SDD 15D33: TRAFFIC CONTROL, ONE LANE ROAD WITH TEMPORARY SIGNALS SHIFT TRAFFIC TO UTILIZE THE EXISTING WESTBOUND TRAFFIC LANE. REMOVE AND REPLACE SOUTH HALF OF STRUCTURE B-50-48 BRIDGE DECK. CONSTRUCT NORTH HALF OF CONCRETE APPROACH SLABS, CONCRETE SURFACE DRAINS AND STORM SEWER.

AFTER COMPLETING ALL REQ'D STRUCTURE WORK AND YEAR 1 STAGE 2 TRAFFIC CONTROL IS REMOVED, REMOVE ALL TEMPORARY WIDENING AND PLACE BASE AGGREGATE DENSE 3/4-INCH UTILIZING SDD: TRAFFIC CONTROL FOR LANE CLOSURE WITH FLAGGING OPERATIONS.

* USE SAME TRAFFIC CONTROL FOR YEAR 2 STAGE 4 (CONSTRUCTION YEAR 2023) BRIDGE DECK POLYMER OVERLAYS EXCEPT USE TRAFFIC CONTROL DRUMS IN PLACE OF CONCRETE BARRIER TEMPORARY PRECAST.

SIGNAL TIMING INFORMATION

STRUCTURE #	STAGE #	YELLOW		ALL RED		GREEN		TOTAL SPLIT	
		Φ3	Φ4	Φ3	Φ4	Φ3	Φ4	Φ3	Φ4
		EB	WB	EB	WB	EB	WB	EB	WB
B-50-48	1/2	2.8	2.8	22.6	22.6	24.5	24.5	50.0	50.0

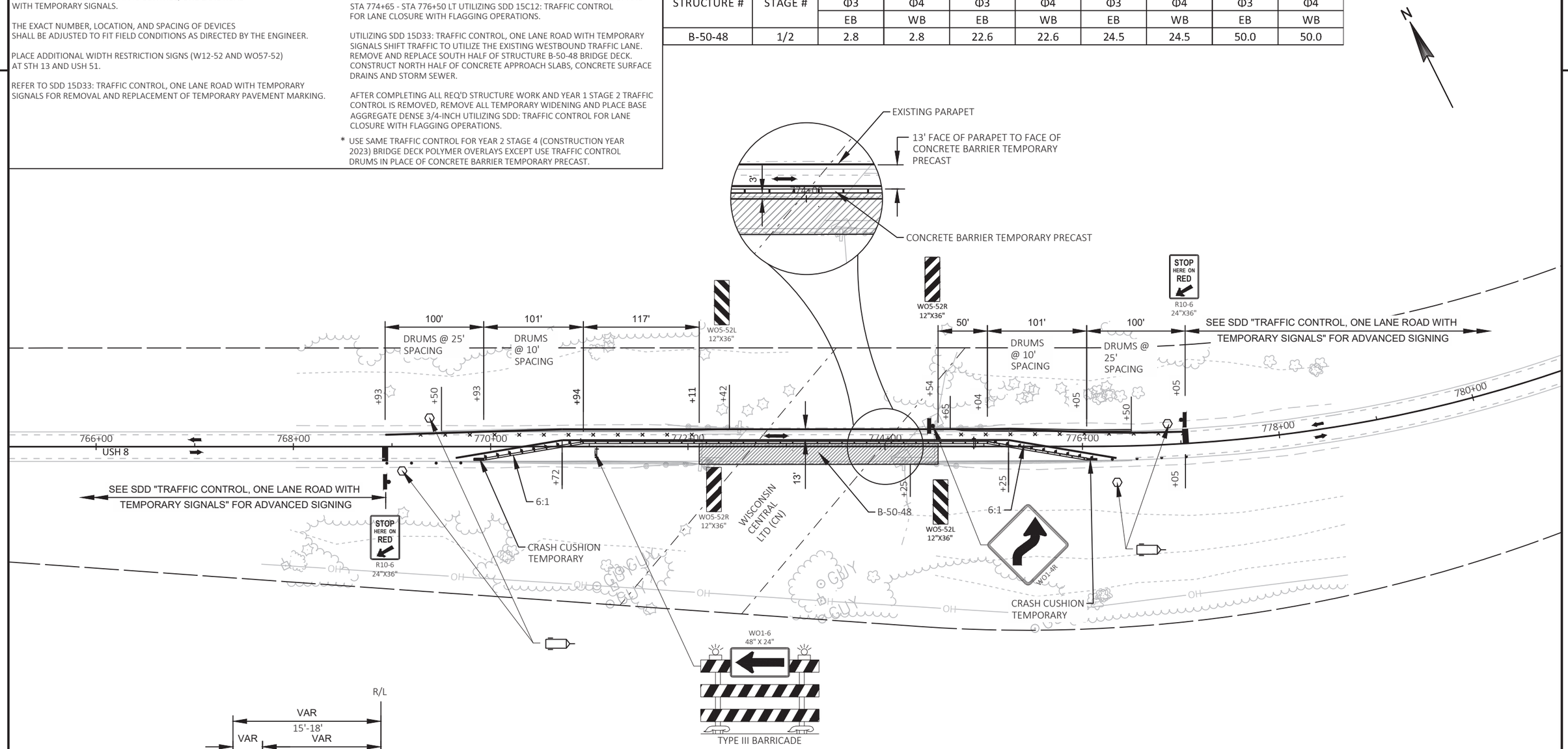

REQ'D STAGE WIDENING
STA 769+50 TO STA 772+42 LT
STA 774+65 TO STA 776+50 LT

LEGEND

- SIGN ON PERMANENT SUPPORT
- TYPE III BARRICADE
- TYPE III BARRICADE WTH ATTACHED SIGN
- TRAFFIC CONTROL DRUM
- TRAFFIC CONTROL DRUM WITH TYPE C STEADY BURN LIGHT
- TRAILER MOUNTED TEMPORARY SIGNAL
- CONCRETE BARRIER TEMPORARY PRECAST
- CRASH CUSHION TEMPORARY
- DIRECTION OF TRAFFIC
- MARKING REMOVAL LINE
- WORK AREA
- ASPHALTIC SURFACE TEMPORARY

2

PROJECT NO: 1610-44-64	HWY: USH 8	COUNTY: PRICE	TRAFFIC CONTROL - YEAR 1 - STAGE 2/4 *	SHEET 9	E

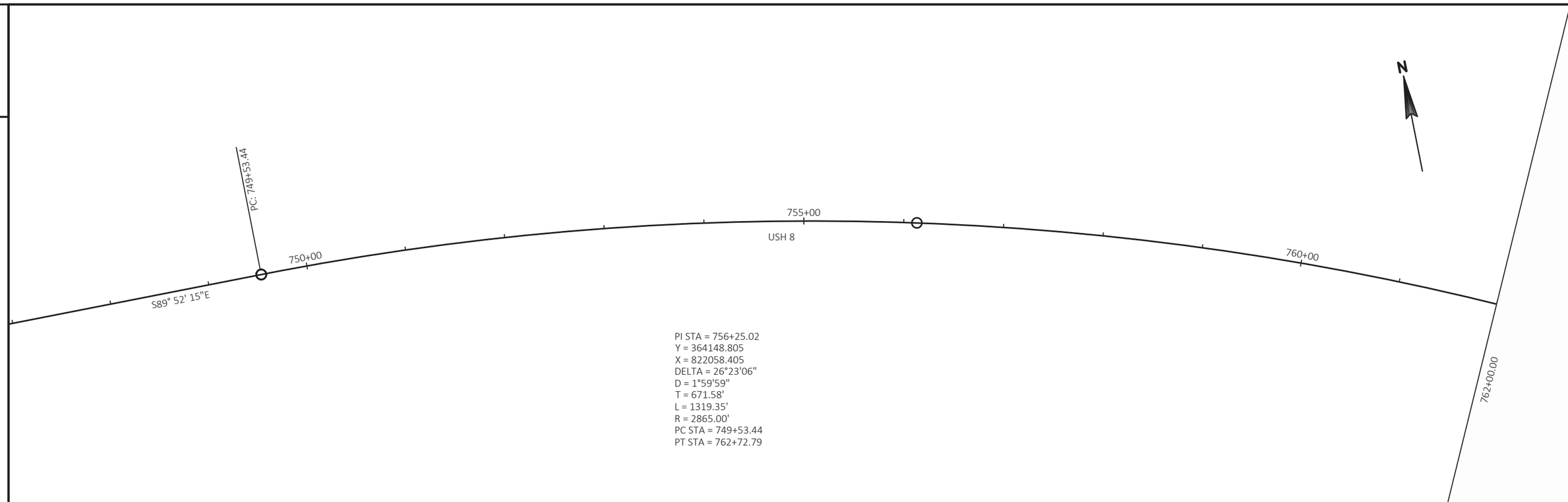

PI STA = 756+25.02
Y = 364148.805
X = 822058.405
DELTA = 26°23'06"
D = 1°59'59"
T = 671.58'
L = 1319.35'
R = 2865.00'
PC STA = 749+53.44
PT STA = 762+72.79

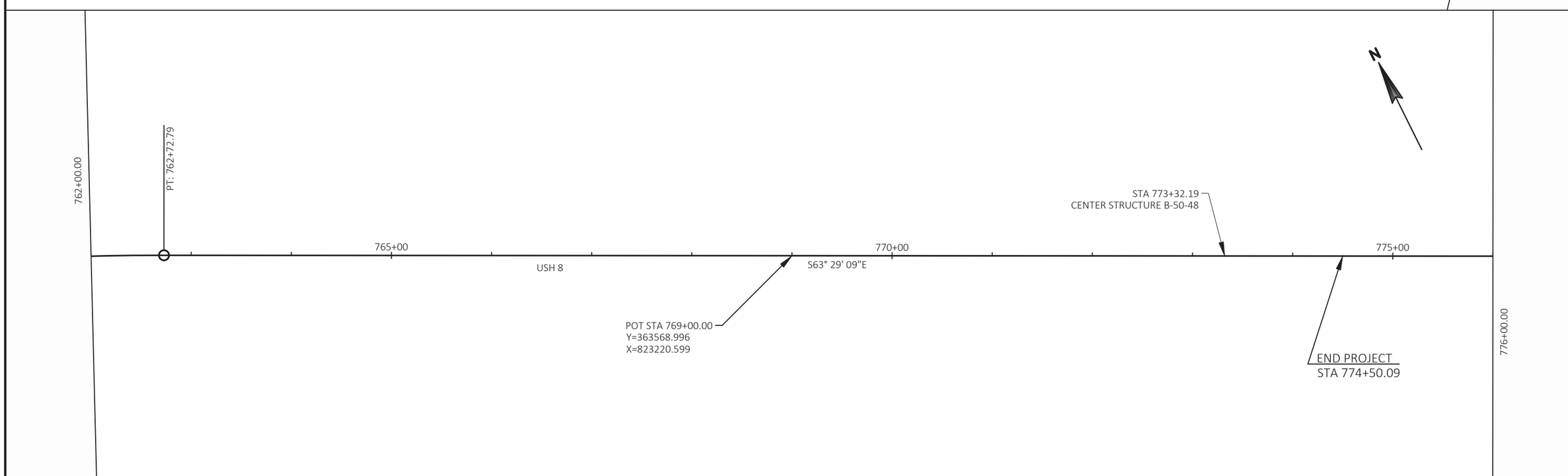

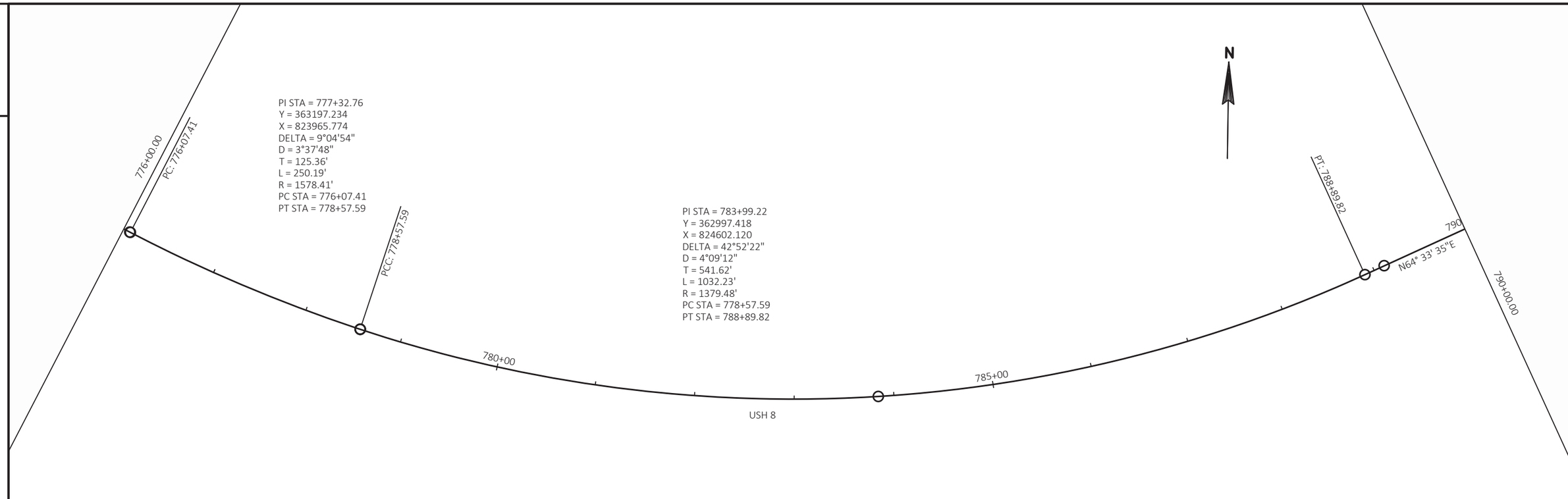

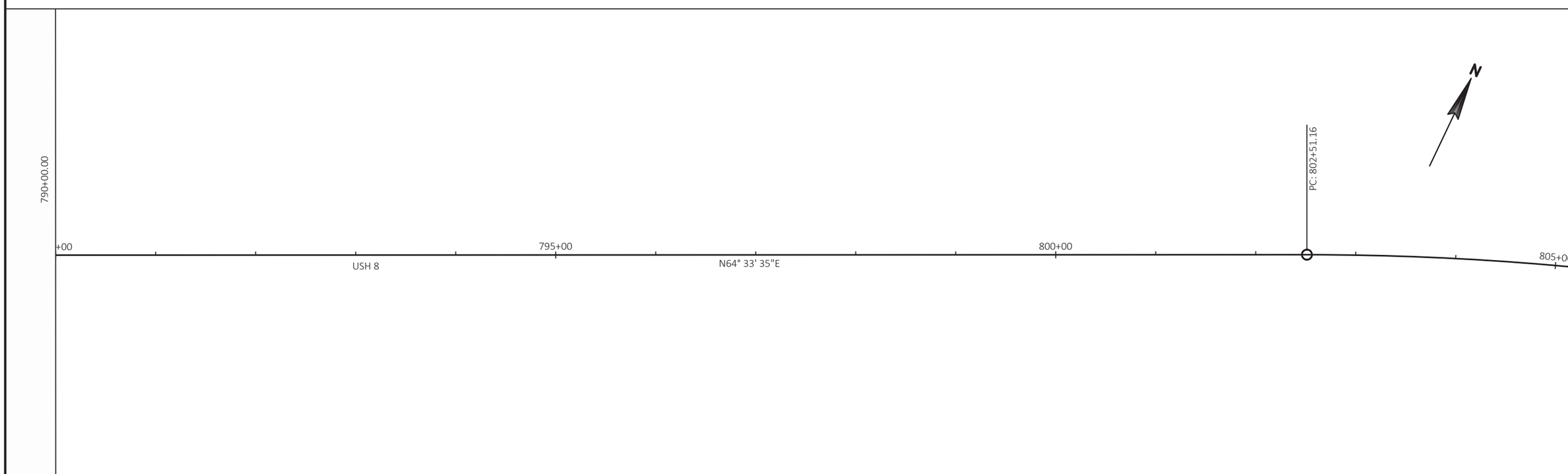

PROJECT NO: 1610-44-64	HWY: USH 8	COUNTY: PRICE	ALIGNMENT DIAGRAM	SHEET 11	E

FILE NAME : P:\UZ\W\WITNC\144737\CIVIL 3D\15803003\SHEETSPLAN B-50-48\027201 AD.DWG
LAYOUT NAME - 02
PLOT DATE : 6/24/2021 8:38 AM PLOT BY : ANNIE JEROME PLOT NAME : PLOT SCALE : 1 IN:100 FT

Estimate Of Quantities By Plan Sets

1610-44-64

Line	Item	Item Description	Unit	Total	Qty
0010	203.0225.S	Debris Containment (structure) 01. B-50-48	LS	1.000	1.000
0016	204.0105	Removing Pavement Butt Joints	SY	163.000	163.000
0018	204.0110	Removing Asphaltic Surface	SY	265.000	265.000
0020	204.0115	Removing Asphaltic Surface Butt Joints	SY	200.000	200.000
0042	211.0400	Prepare Foundation for Asphaltic Shoulders	STA	11.000	11.000
0048	213.0100	Finishing Roadway (project) 03. 1610-44-64	EACH	1.000	1.000
0050	305.0110	Base Aggregate Dense 3/4-Inch	TON	62.000	62.000
0062	455.0605	Tack Coat	GAL	22.000	22.000
0064	465.0105	Asphaltic Surface	TON	21.000	21.000
0070	465.0125	Asphaltic Surface Temporary	TON	62.000	62.000
0078	502.3200	Protective Surface Treatment	SY	700.000	700.000
0080	502.3210	Pigmented Surface Sealer	SY	167.000	167.000
0086	509.0301	Preparation Decks Type 1	SY	55.000	55.000
0088	509.0302	Preparation Decks Type 2	SY	25.000	25.000
0090	509.0500	Cleaning Decks	SY	700.000	700.000
0098	509.1500	Concrete Surface Repair	SF	10.000	10.000
0100	509.2000	Full-Depth Deck Repair	SY	1.000	1.000
0102	509.2500	Concrete Masonry Overlay Decks	CY	45.000	45.000
0104	509.5100.S	Polymer Overlay	SY	700.000	700.000
0112	509.9050.S	Cleaning Parapets	LF	400.000	400.000
0122	603.8000	Concrete Barrier Temporary Precast Delivered	LF	614.000	614.000
0124	603.8125	Concrete Barrier Temporary Precast Installed	LF	1,228.000	1,228.000
0128	604.9015.S	Reseal Crushed Aggregate Slope Paving	SY	675.000	675.000
0144	614.0905	Crash Cushions Temporary	EACH	4.000	4.000
0160	618.0100	Maintenance And Repair of Haul Roads (project) 03. 1610-44-64	EACH	1.000	1.000
0162	619.1000	Mobilization	EACH	0.100	0.100
0164	624.0100	Water	MGAL	1.000	1.000
0200	642.5201	Field Office Type C	EACH	0.250	0.250
0202	643.0300	Traffic Control Drums	DAY	3,980.000	3,980.000
0204	643.0420	Traffic Control Barricades Type III	DAY	140.000	140.000
0206	643.0705	Traffic Control Warning Lights Type A	DAY	280.000	280.000
0208	643.0715	Traffic Control Warning Lights Type C	DAY	2,520.000	2,520.000
0210	643.0900	Traffic Control Signs	DAY	15,400.000	15,400.000
0216	643.5000	Traffic Control	EACH	0.250	0.250
0224	646.1020	Marking Line Epoxy 4-Inch	LF	3,248.000	3,248.000
0228	646.9000	Marking Removal Line 4-Inch	LF	3,876.000	3,876.000
0234	649.0150	Temporary Marking Line Removable Tape 4-Inch	LF	5,957.000	5,957.000
0238	649.0850	Temporary Marking Stop Line Removable Tape 18-Inch	LF	72.000	72.000
0262	661.0100	Temporary Traffic Signals for Bridges (structure) 04. B-50-48	LS	1.000	1.000
0264	690.0150	Sawing Asphalt	LF	1,034.000	1,034.000
0274	999.2000.S	Installing and Maintaining Bird Deterrent System 02. B-50-48	EACH	1.000	1.000

3

REMOVING ASPHALTIC SURFACE

STATION	LOCATION	204.0110 SY	REMARKS
USH 8			
STAGE 2			
769+50 - 772+11	RT	75	TEMPORARY WIDENING
774+26- 776+50	RT	70	TEMPORARY WIDENING
769+50 - 772+42	LT	75	TEMPORARY WIDENING
774+65 - 776+50	LT	45	TEMPORARY WIDENING
STAGE 2 SUBTOTAL		265	
ITEM TOTAL		265	

REMOVING PAVEMENT BUTT JOINTS

STATION	LOCATION	204.0105 SY	REMARKS
USH 8			
STAGE 1			
772+14 - 772+56	LT	50	CONCRETE APPROACH SLAB
774+18 - 774+50	LT	37	CONCRETE APPROACH SLAB
STAGE 1 SUBTOTAL		87	
USH 8			
STAGE 2			
772+14 - 772+44	RT	32	CONCRETE APPROACH SLAB
774+05 - 774+50	RT	44	CONCRETE APPROACH SLAB
STAGE 2 SUBTOTAL		76	
ITEM TOTAL		163	

REMOVING ASPHALTIC SURFACE BUTT JOINTS

STATION	LOCATION	204.0115 SY	REMARKS
USH 8			
STAGE 1			
771+89 - 772+14	LT	50	FOR PCC TO HMA TRANSITION
774+50 - 774+75	LT	50	FOR PCC TO HMA TRANSITION
STAGE 1 SUBTOTAL		100	
USH 8			
STAGE 2			
771+89 - 772+14	RT	50	FOR PCC TO HMA TRANSITION
774+50 - 774+75	RT	50	FOR PCC TO HMA TRANSITION
STAGE 2 SUBTOTAL		100	
ITEM TOTAL		200	

3

PREPARE FOUNDATION FOR

STATION	LOCATION	211.0400 ASPHALTIC SHOULDERS STA	COMMENT
USH 8			
STAGE 1			
770+25 - 772+11	RT	2	TEMP WIDENING
774+25 - 776+76	RT	3	TEMP WIDENING
STAGE 1 SUBTOTAL		5	
STAGE 2			
769+75 - 772+42	LT	3	TEMP WIDENING
774+65 - 776+75	LT	3	TEMP WIDENING
STAGE 2 SUBTOTAL		6	
ITEM TOTAL		11	

BASE AGGREGATE

STATION	LOCATION	305.0110 DENSE 3/4-INCH TON	624.0100 WATER MGAL
USH 8			
769+50 - 772+11	RT	18	0.3
774+26 - 776+50	RT	16	0.3
769+50 - 772+42	LT	18	0.3
774+65 - 776+50	LT	10	0.2
STAGE 2 SUBTOTAL		62	1.1
ITEM TOTALS		62	1

TACK COAT

STATION	LOCATION	455.0605 GAL	REMARKS
USH 8			
STAGE 1			
771+89 - 772+56	LT	6	FOR PCC TO HMA TRANSITION
774+18 - 774+75	LT	5	FOR PCC TO HMA TRANSITION
STAGE 1 SUBTOTAL		11	
USH 8			
STAGE 2			
771+89 - 772+44	RT	5	FOR PCC TO HMA TRANSITION
774+05 - 774+75	RT	6	FOR PCC TO HMA TRANSITION
STAGE 2 SUBTOTAL		11	
ITEM TOTAL		22	

ASPHALTIC SURFACE

STATION	LOCATION	465.0105 TON	COMMENTS
USH 8			
STAGE 1			
771+89 - 772+56	LT	5.8	FOR PCC TO HMA BUTT JOINT
774+18 - 774+75	LT	5.1	FOR PCC TO HMA BUTT JOINT
STAGE 1 SUBTOTAL		11	
STAGE 2			
771+89 - 772+44	RT	4.8	FOR PCC TO HMA BUTT JOINT
774+05 - 774+75	RT	5.3	FOR PCC TO HMA BUTT JOINT
STAGE 2 SUBTOTAL		10	
ITEM TOTAL		21	

ASPHALTIC SURFACE TEMPORARY

STATION	LOCATION	465.0125 TON	COMMENTS
USH 8			
STAGE 1			
769+50 - 772+11	RT	18	STAGE WIDENING
774+26 - 776+50	RT	16	STAGE WIDENING
STAGE 1 SUBTOTAL		34	
STAGE 2			
769+50 - 772+42	LT	18	STAGE WIDENING
774+65 - 776+50	LT	10	STAGE WIDENING
STAGE 2 SUBTOTAL		28	
ITEM TOTAL		62	

CONCRETE BARRIER TEMPORARY PRECAST

STATION	LOCATION	603.8000 DELIVERED LF	603.8125 INSTALLED LF
USH 8			
STAGE 1			
769+93 - 776+05	LT & RT	614	614
STAGE 1 SUBTOTAL		614	614
STAGE 2			
769+93 - 776+05	LT & RT		614
STAGE 2 SUBTOTAL			614
ITEM TOTALS		614	1228

NOTE: ALL ITEMS AND QUANTITIES ON THIS SHEET ARE FOR ENGINEER ESTIMATE CATEGORY 0010, UNLESS OTHERWISE NOTED.

3

CRASH CUSHION TEMPORARY

STATION	LOCATION	614.0905 EACH	BACK WIDTH FT	SIGN PLATE	CRASH TEST LEVEL	TRAFFIC LOCATION
USH 8						
STAGE 1						
769+93	LT	1	2	WO5-58L	TL-3	LT
776+05	LT	1	2	WO5-58R	TL-3	RT
STAGE 1 SUBTOTAL		2				
STAGE 2						
769+93	RT	1	2	WO5-58L	TL-3	LT
776+05	RT	1	2	WO5-58R	TL-3	RT
STAGE 2 SUBTOTAL		2				
ITEM TOTAL		4				

TRAFFIC CONTROL

LOCATION	643.0300 DRUMS DAYS	643.0420 BARRICADES TYPE III DAYS	643.5000 TRAFFIC CONTROL EACH	643.0705 WARNING LIGHTS TYPE A DAYS	643.0715 WARNING LIGHTS TYPE C DAYS	643.0900 SIGNS DAYS
USH 8						
B-50-48						
STAGE 1	1560	60	0.062	120	1080	6600
STAGE 2	1560	60	0.062	120	1080	6600
STAGE 3	430	10	0.062	20	180	1100
STAGE 4	430	10	0.062	20	180	1100
B-50-48 SUBTOTAL	3980	140	0.25	280	2520	15400
ITEM TOTALS	3980	140	0.25	280	2520	15400

3

MARKING REMOVAL LINE 4-INCH

STATION	LOCATION	646.9000 LF	COMMENTS
USH 8			
STAGE 1			
768+93 - 770+73	R/L	360	DOUBLE YELLOW
768+93 - 777+05	RT	812	EDGE LINE
775+25 - 777+05	R/L	360	DOUBLE YELLOW
STAGE 1 SUBTOTAL		1532	
STAGE 3			
768+93 - 770+73	R/L	360	DOUBLE YELLOW
768+93 - 777+05	RT	812	EDGE LINE
775+25 - 777+05	R/L	360	DOUBLE YELLOW
STAGE 3 SUBTOTAL		1532	
STAGE 4			
768+93 - 777+05	LT	812	EDGE LINE
STAGE 4 SUBTOTAL		812	
ITEM TOTAL		3876	

TEMPORARY MARKING LINE REMOVABLE TAPE 4-INCH

STATION	LOCATION	649.0150 LF	COMMENT
USH 8			
STAGE 1			
768+93 - 777+05	RT	815	WHITE
769+64 - 776+35	LT & RT	675	WHITE
STAGE 1 SUBTOTAL		1490	
STAGE 2			
768+93 - 777+05	LT	815	WHITE
769+64 - 776+35	LT & RT	675	WHITE
STAGE 2 SUBTOTAL		1490	
STAGE 3			
768+93 - 777+05	RT	815	WHITE
769+64 - 776+35	LT & RT	675	WHITE
STAGE 3 SUBTOTAL		1490	
STAGE 4			
768+93 - 777+05	RT	812	WHITE
769+64 - 776+35	LT & RT	675	WHITE
STAGE 4 SUBTOTAL		1487	
ITEM TOTAL		5957	

TEMPORARY MARKING STOP LINE REMOVABLE TAPE 18-INCH

STATION	LOCATION	649.0850 LF	COMMENT
USH 8			
STAGE 1			
768+93	RT	12	WHITE
777+05	LT	12	WHITE
STAGE 1 SUBTOTAL		24	
STAGE 2			
768+93	RT	12	WHITE
777+05	LT	12	WHITE
STAGE 2 SUBTOTAL		24	
STAGE 3			
768+93	RT	12	WHITE
777+05	LT	12	WHITE
STAGE 3 SUBTOTAL		24	
ITEM TOTAL		72	

MARKING LINE EPOXY 4-INCH

STATION	LOCATION	646.0120 (YELLOW) LF	646.0120 (WHITE) LF	COMMENT
USH 8				
STAGE 4				
768+93 - 777+05	RT	1624		DOUBLE YELLOW
769+64 - 776+35	LT & RT		1624	EDGE LINE
STAGE 4 SUBTOTAL		1624	1624	
SUBTOTAL		1624	1624	
ITEM TOTAL		3248		

FINISHING ROADWAY (1610-44-64)

STATION	LOCATION	213.0100 EACH
USH 8		
1610-44-64	LT & RT	1
ITEM TOTAL		1

NOTE: ALL ITEMS AND QUANTITIES ON THIS SHEET ARE FOR ENGINEER ESTIMATE CATEGORY 0010, UNLESS OTHERWISE NOTED.

3

TEMPORARY TRAFFIC SIGNALS FOR BRIDGES (B-50-48)

STATION	LOCATION	661.0100 LS
USH 8		
YEAR 1 & 2	LT & RT	1
ITEM TOTALS		1

SAWING

STATION	LOCATION	690.0150 ASPHALT LF	COMMENTS
USH 8			
STAGE 1			
769+50 - 772+11	RT	261	TEMP WIDENING
774+26 - 776+50	RT	224	TEMP WIDENING
771+89 - 772+56	LT	18	FOR PCC TO HMA BUTT JOINT
774+18 - 774+75	LT	18	FOR PCC TO HMA BUTT JOINT
STAGE 1 SUBTOTAL		521	
STAGE 2			
769+50 - 772+42	LT	292	TEMP WIDENING
774+65 - 776+50	LT	185	TEMP WIDENING
771+89 - 772+44	RT	18	FOR PCC TO HMA BUTT JOINT
774+05 - 774+75	RT	18	FOR PCC TO HMA BUTT JOINT
STAGE 2 SUBTOTAL		513	
ITEM TOTAL		1034	

INSTALLING AND MAINTAINING BIRD DETERRENT SYSTEM

STATION	LOCATION	999.2000.s EACH
USH 8		
1610-44-64	STRUCTURE B-50-48	1
ITEM TOTAL		1

NOTE: ALL ITEMS AND QUANTITIES ON THIS SHEET ARE FOR ENGINEER ESTIMATE CATEGORY 0010, UNLESS OTHERWISE NOTED.

Standard Detail Drawing List

09G02-05A	BRIDGE TEMPORARY TRAFFIC SIGNAL INSTALLATION
09G02-05B	BRIDGE TEMPORARY TRAFFIC SIGNAL INSTALLATION
09G02-05C	BRIDGE TEMPORARY TRAFFIC SIGNAL INSTALLATION
14B07-15A	CONCRETE BARRIER TEMPORARY PRECAST, 12'-6"
14B07-15B	CONCRETE BARRIER TEMPORARY PRECAST, 12'-6"
14B07-15C	CONCRETE BARRIER TEMPORARY PRECAST, 12'-6"
14B07-15D	CONCRETE BARRIER TEMPORARY PRECAST, 12'-6"
14B07-15E	CONCRETE BARRIER TEMPORARY PRECAST, 12'-6"
14B07-15F	CONCRETE BARRIER TEMPORARY PRECAST, 12'-6"
14B07-15G	CONCRETE BARRIER TEMPORARY PRECAST, 12'-6"
14B07-15H	CONCRETE BARRIER TEMPORARY PRECAST, 12'-6"
14B07-15I	CONCRETE BARRIER TEMPORARY PRECAST, 12'-6"
14B08-02A	CRASH CUSHION/SAND BARREL ARRAY AND OTHER TEMPORARY BARRIER LAYOUT DETAILS
14B08-02B	CRASH CUSHION/SAND BARREL ARRAY AND OTHER TEMPORARY BARRIER LAYOUT DETAILS
14B08-02C	CRASH CUSHION/SAND BARREL ARRAY AND OTHER TEMPORARY BARRIER LAYOUT DETAILS
14B08-02D	CRASH CUSHION/SAND BARREL ARRAY AND OTHER TEMPORARY BARRIER LAYOUT DETAILS
14B08-02E	CRASH CUSHION/SAND BARREL ARRAY AND OTHER TEMPORARY BARRIER LAYOUT DETAILS
15C02-08F	ADVANCED WIDTH RESTRICTION SIGNING
15C08-20A	LONGITUDINAL MARKING (MAINLINE)
15C11-08B	CHANNELIZING DEVICES DRUMS, CONES, BARRICADES AND VERTICAL PANELS
15C12-07	TRAFFIC CONTROL FOR LANE CLOSURE WITH FLAGGING OPERATION
15D28-04	TRAFFIC CONTROL, WORK ON SHOULDER OR PARKING LANE, UNDIVIDED ROADWAY
15D33-06	TRAFFIC CONTROL, ONE LANE ROAD WITH TEMPORARY SIGNALS
15D38-02A	TEMPORARY TRAFFIC CONTROL SIGN MOUNTING
15D38-02B	ATTACHMENT OF SIGNS TO POSTS

6

6

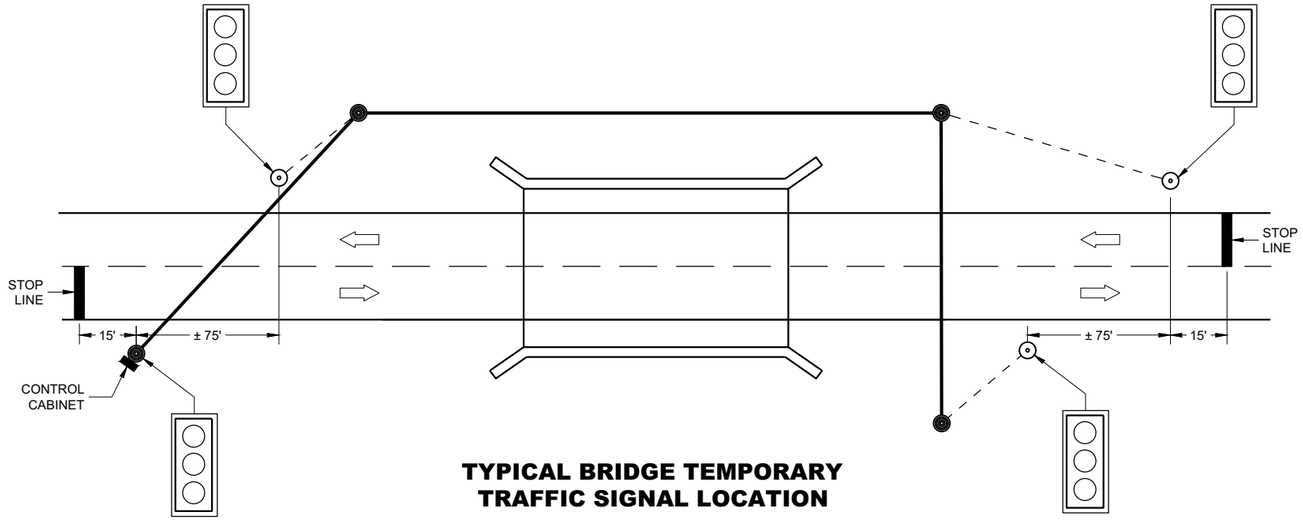

TYPICAL BRIDGE TEMPORARY TRAFFIC SIGNAL LOCATION

LEGEND

- WOOD POLE (NON-BREAKAWAY)
- WOOD POST (BREADAWAY)
- SIGNAL CABLE
- SIGNAL CABLE W/MESSENGER
- DIRECTION OF TRAFFIC
- LED TRAFFIC SIGNAL WITH BACKPLATE (3-12")

GENERAL NOTES

DETAILS OF CONSTRUCTION, MATERIALS AND WORKMANSHIP NOT SHOWN ON THIS DRAWING SHALL CONFORM TO THE PERTINENT REQUIREMENTS OF THE CONTRACT.

POLE MOUNTED TRAFFIC SIGNAL CONTROL CABINET MAY BE MOUNTED ON THE SERVICE POLE IF THE ELECTRICAL UTILITY ALLOWS THE INSTALLATION.

WHEN UTILITY POLES ARE USED TO SPAN THE TEMPORARY OVERHEAD CABLE, WRITTEN PERMISSION MUST BE OBTAINED FROM THE OWNER OF THE POLES AND GIVEN TO THE PROJECT MANAGER. ALL PERTINENT UTILITY AND CODE CLEARANCES SHALL BE MAINTAINED.

WOOD POLES (NON-BREAKAWAY) SHALL BE NO CLOSER TO EDGE OF PAVEMENT THAN OFFSET DISTANCE CHART ALLOWS OR 4 FEET BEHIND PROTECTIVE BARRIER (BEAM GUARD, ETC.).

WOOD POSTS (BREAKAWAY) SHALL BE NO CLOSER THAN 2 FEET OUTSIDE OF SHOULDER.

VERTICAL CLEARANCE ETC. PER NEC.

TRAFFIC SIGNAL FACES SHALL BE TYPICALLY PLACED 12 FEET FROM EDGE OF PAVEMENT.

EACH TRAFFIC SIGNAL SHALL HAVE A BACKPLATE.

SIGNING, PAVEMENT MARKING AND LANE CONTROL REQUIREMENTS SHALL CONFORM TO STANDARD DETAIL DRAWING 15D33.

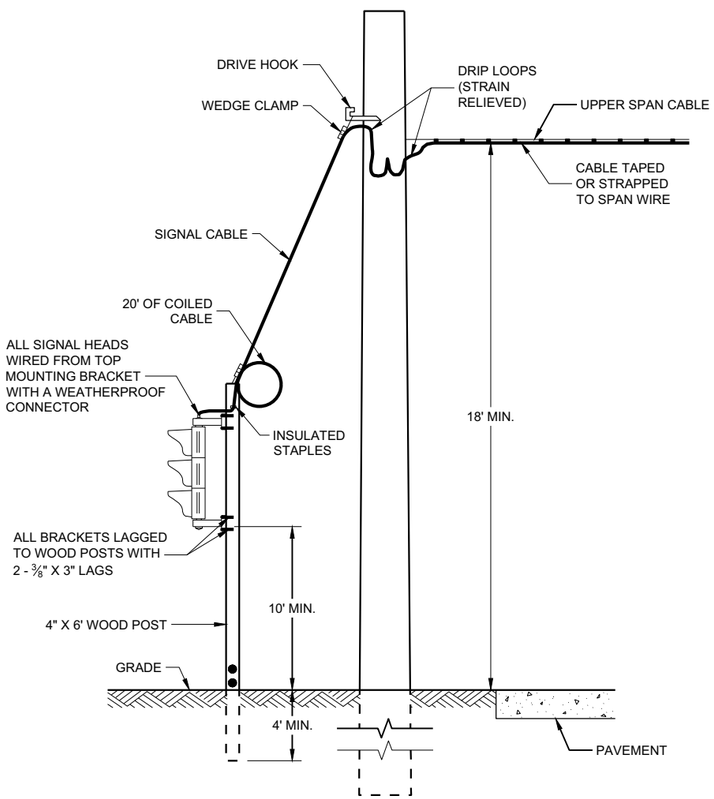

TYPICAL DROP TO TRAFFIC SIGNAL FACE

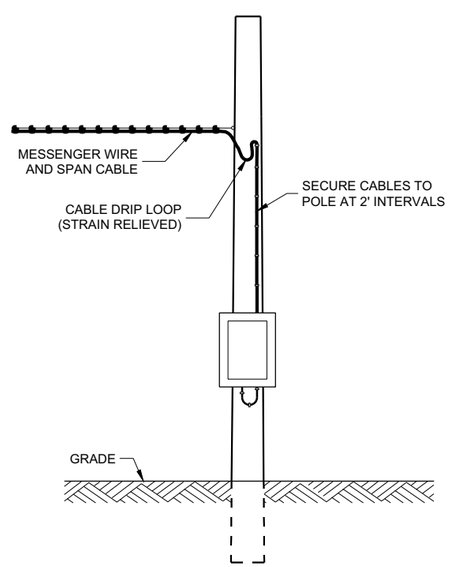

POLE MOUNT CABINET INSTALLATION

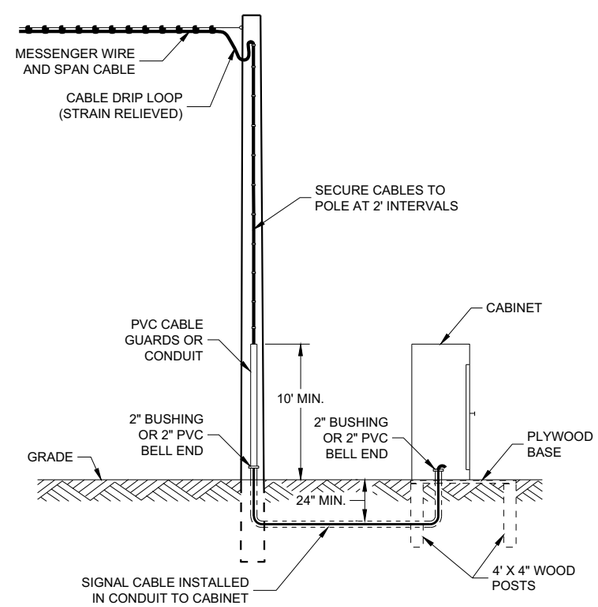

GROUND MOUNT CABINET INSTALLATION

MINIMUM POLE LENGTHS	CLASS	POLE BURIAL DEPTHS
25'	V	5'
30'	V	6'
35'	IV	7'
40'	IV	8'
45'	IV	9'

OFFSET DISTANCES FOR TEMPORARY NON-BREAKAWAY POLES	
SPEED LIMIT	OFFSET DISTANCE*
GREATER THAN 45 MPH	18 FT
45 MPH OR LESS	12 FT
45 MPH OR LESS W/CURBS	2 FT

* NOTE: OFFSET MEASURED FROM OUTER EDGE OF OUTSIDE THRU LANE.

BRIDGE TEMPORARY TRAFFIC SIGNAL INSTALLATION

STATE OF WISCONSIN
DEPARTMENT OF TRANSPORTATION

APPROVED
March 2018 — DATE
/S/ Ahmet Demirbilek — ROADWAY STANDARDS DEVE ENGINEER
FHWA

6

SDD09G02 - 05a

GENERAL NOTES

USE ¾" DRILL IN WOOD POLE TO PROVIDE FOR ⅝" BOLTS.

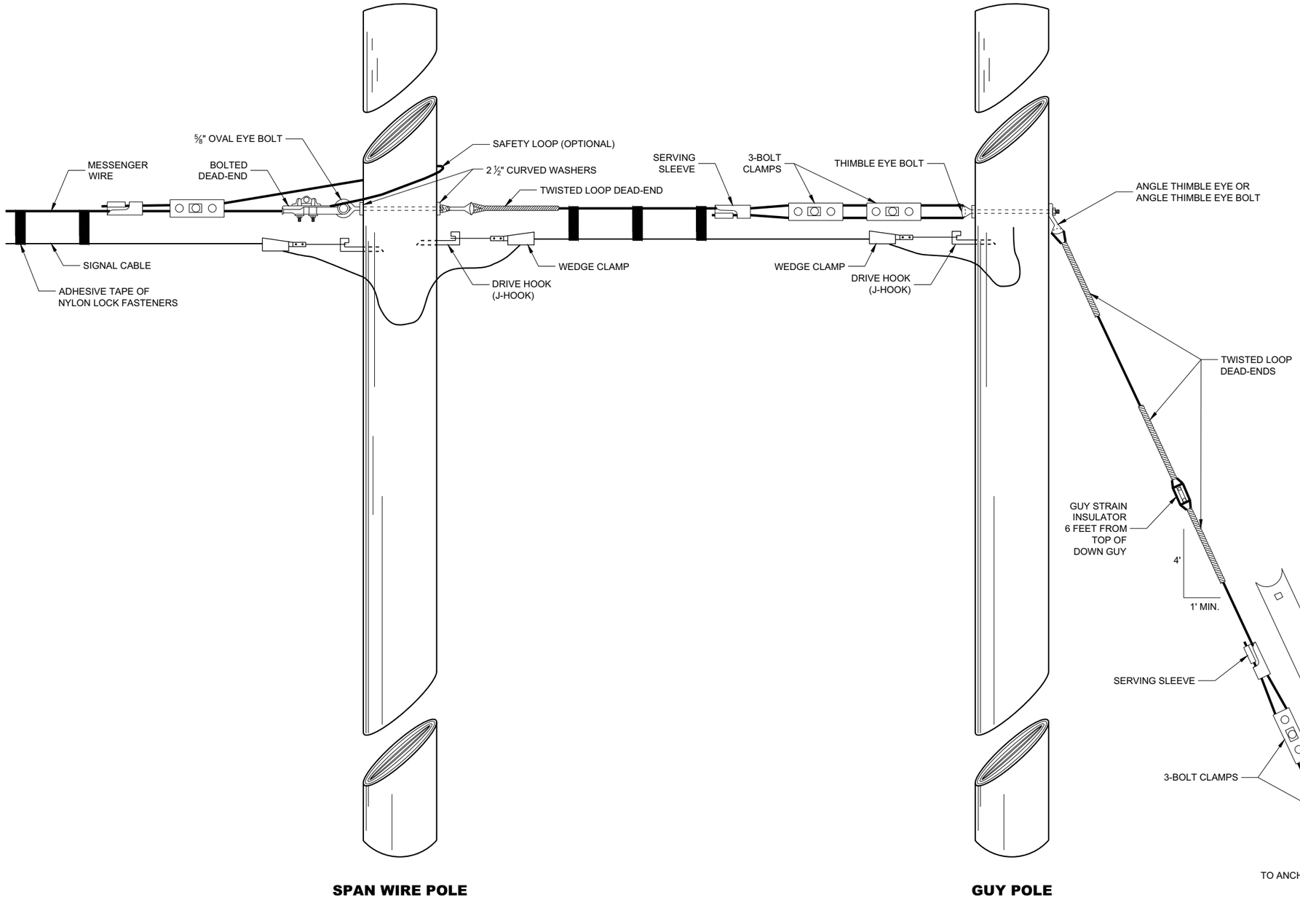

SPAN WIRE POLE

GUY POLE

TYPICAL DEAD-ENDINGS OR GUYING

BRIDGE TEMPORARY TRAFFIC SIGNAL INSTALLATION

STATE OF WISCONSIN
DEPARTMENT OF TRANSPORTATION

APPROVED
June 2015 — DATE
/S/ Ahmet Demerbilek — ROADWAY STANDARDS DEVE ENGINEER

FHWA

6

6

SDD09G02 - 05b

SDD09G02 - 05b

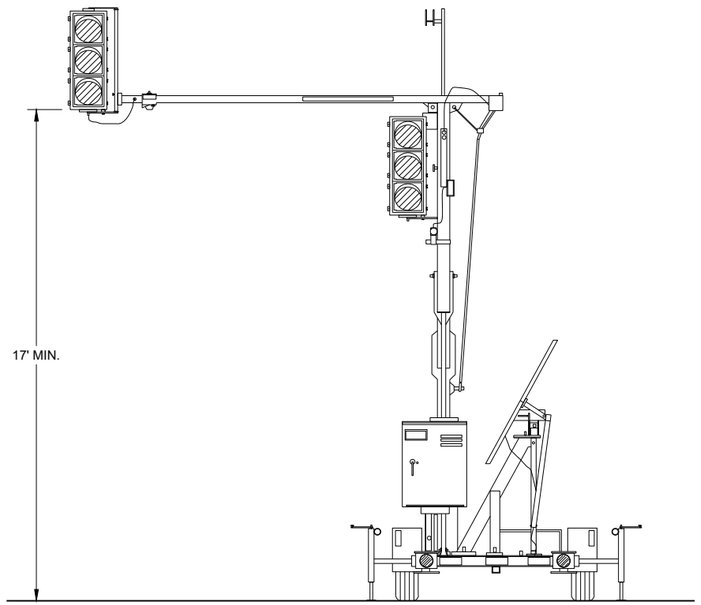

TRAILER MOUNTED TRAFFIC SIGNAL

GENERAL NOTES

DETAIL OF CONSTRUCTION, MATERIALS AND WORKMANSHIP NOT SHOWN ON THIS DRAWING SHALL CONFORM TO THE PERTINENT REQUIREMENTS OF THE CONTRACT.

SIGNING, PAVEMENT MARKING AND LANE CONTROL REQUIREMENTS SHALL CONFORM TO STANDARD DETAIL DRAWING 15D33.

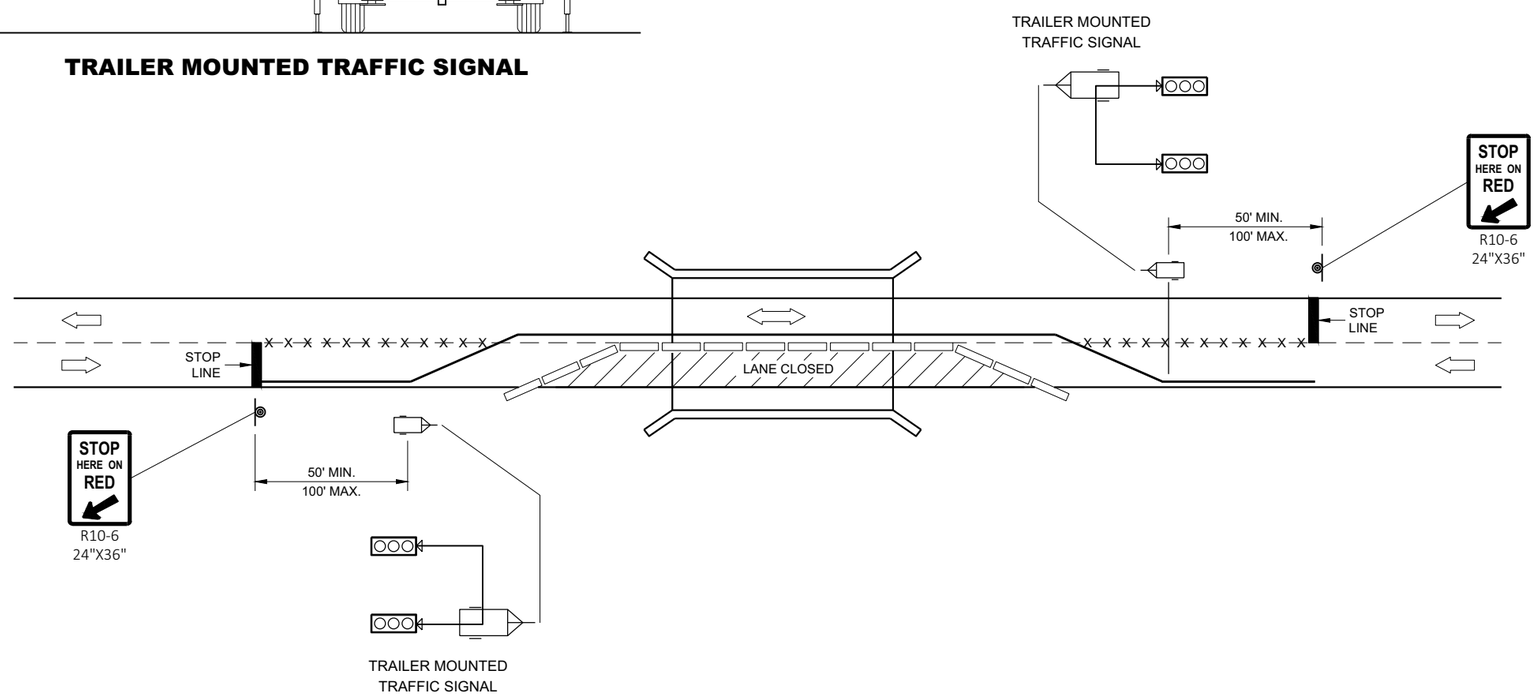

TYPICAL TRAILER MOUNTED TRAFFIC SIGNAL LOCATION

LEGEND

- POST MOUNTED SIGN
- TEMPORARY PRECAST CONCRETE BARRIER
- TRAILER MOUNTED TRAFFIC SIGNAL
- REMOVE PAVEMENT MARKINGS
- DIRECTION OF TRAFFIC

BRIDGE TEMPORARY TRAFFIC SIGNAL INSTALLATION

STATE OF WISCONSIN
DEPARTMENT OF TRANSPORTATION

APPROVED
June 2015 — DATE
/S/ Ahmet Demerbilek — ROADWAY STANDARDS DEVE ENGINEER

FHWA

6

SDD 09G02 - 05c

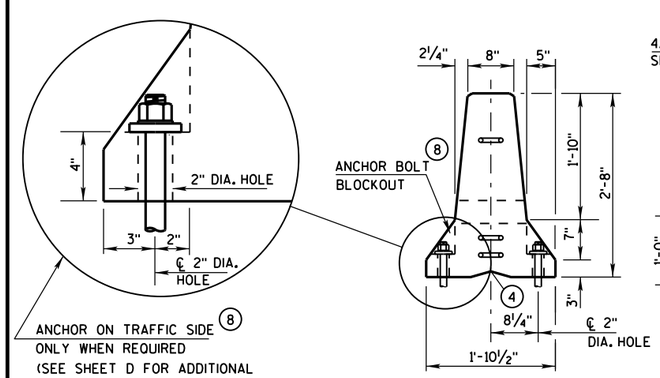

END VIEW

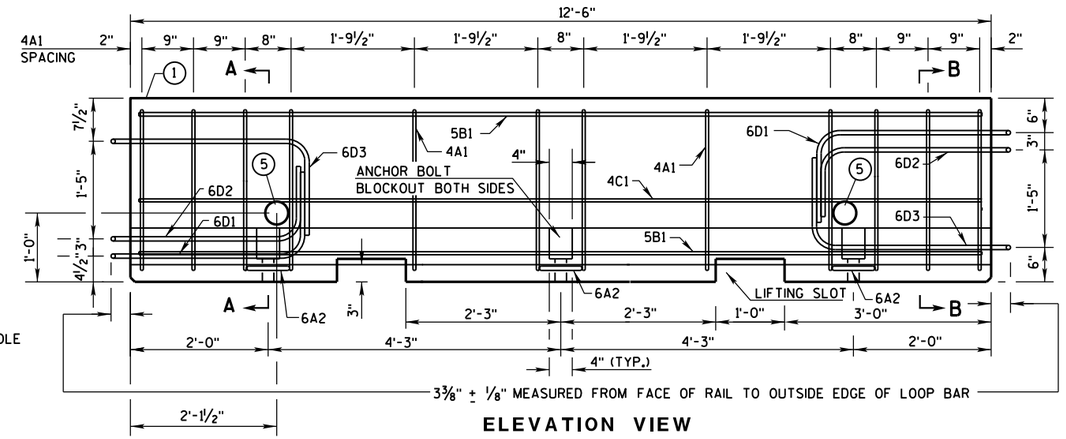

ELEVATION VIEW

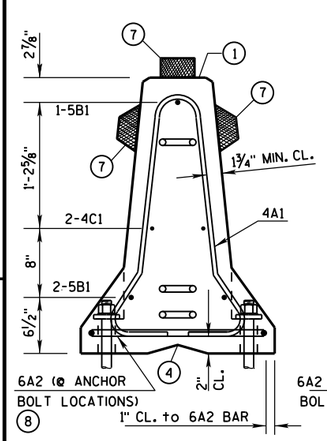

SECTION A-A
(STIRRUP PLACEMENT)

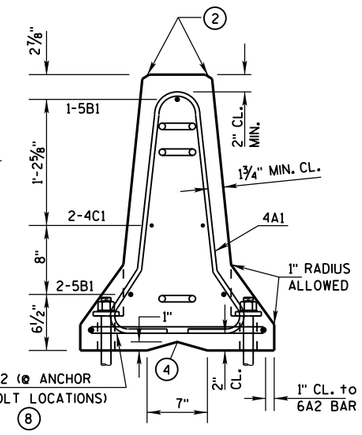

SECTION B-B
(STIRRUP PLACEMENT)

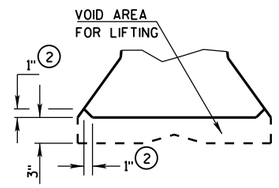

DETAIL "B"
LIFTING SLOT DETAIL

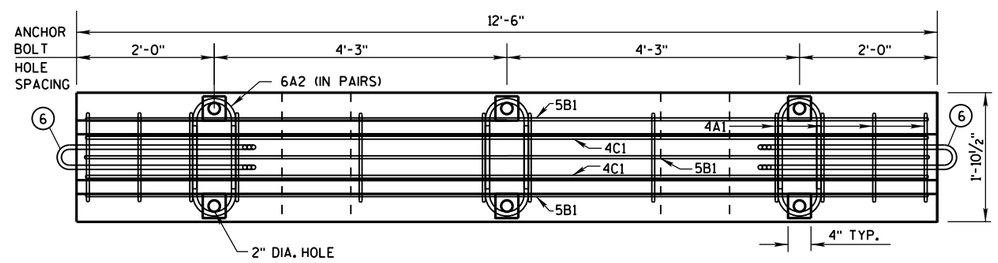

PLAN VIEW

DETAILS OF BARRIER SECTION

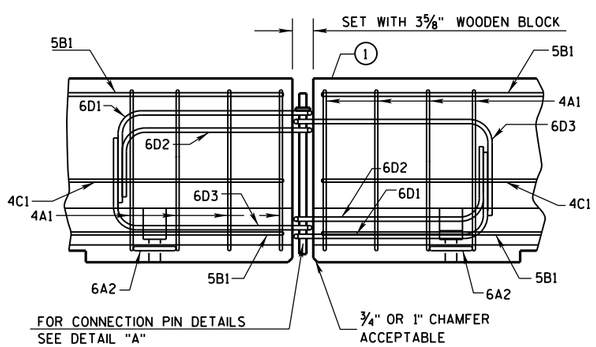

DETAILS OF BARRIER CONNECTION

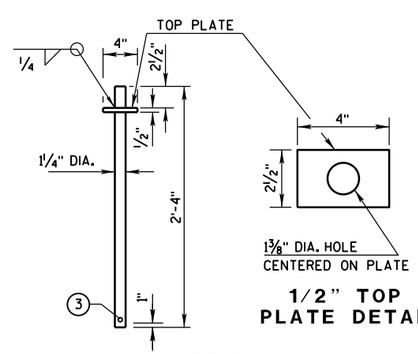

1/2" TOP PLATE DETAIL

DETAIL "A"
CONNECTION PIN
(A36 STEEL (10.9 LB EACH))

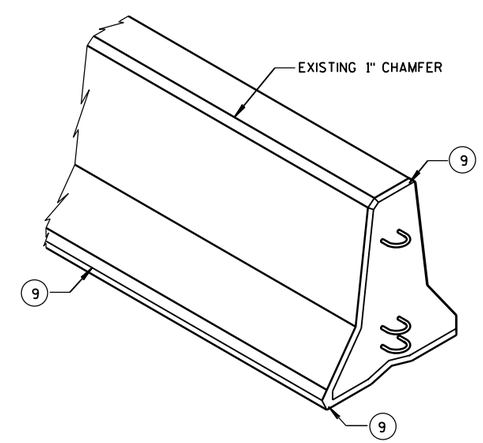

GENERAL NOTES

THESE GENERAL NOTES APPLY TO SHEETS 14B7-15(a) THRU 14B7-15(i).

DO NOT INTERMIX CONCRETE BARRIER TEMPORARY PRCAST, 12'-6" (CBTP12.5) WITH OTHER TEMPORARY CONCRETE BARRIERS.

USE ASTM A-615, GRADE 60, DEFORMED STEEL BARS FOR BARS 4A1, 6A2, 5B1 AND 4C1 IN THE BARRIER SECTION AND FOR 4V1, 4V2, 4V3, 4V4, 4V5, 4V6, 4F1, 4F2 AND 5F3 IN THE BARRIER TAPER SECTION.

LOOP BARS 6D1, 6D2 AND 6D3 SHALL BE ¾" SMOOTH STEEL BARS WITH A MINIMUM YIELD STRENGTH OF 60 KSI, A TENSILE STRENGTH OF NOT LESS THAN 1.25 TIMES THE YIELD STRENGTH BUT A MINIMUM OF 80 KSI, A MINIMUM 14% ELONGATION IN 8 INCHES AND PASSING A 180 DEGREE BEND TEST USING A 3-½" PIN BEND DIAMETER FOR BEND TESTS. THE LOOPS SHALL BE INSTALLED WITHIN ⅛" OF THE PLAN DIMENSION.

CONSTRUCT LIFTING SLOTS AS SPECIFIED ON THE PLANS TO FACILITATE THE DRAINAGE OF WATER AFTER INSTALLATION.

PLACE BARRIER ON A PAVED SURFACE. REMOVE ALL LOOSE DIRT AND SAND FROM THE ROADWAY SURFACE PRIOR TO PLACEMENT OF THE BARRIER.

INSTALL MECHANICAL OR ADHESIVE ANCHORS PER MANUFACTURER'S RECOMMENDATIONS. PROVIDE MANUFACTURER'S INFORMATION TO PROJECT ENGINEER.

1. MARK ONE END OF EACH BARRIER PERMANENTLY BY FORMING INTO THE BARRIER THE FOLLOWING INFORMATION:
   a. TYPE: WI CBTP
   b. MANUFACTURER
   c. DATE MANUFACTURED (MONTH AND YEAR)
2. 1" CHAMFER TO PREVENT SPALLING.
3. A ⅜" HOLE IN THE CONNECTION PIN, AT THE LOCATION SHOWN, IS ACCEPTABLE, BUT NOT REQUIRED..
4. "V" NOTCH IS OPTIONAL.
5. THE 4" DIAMETER, 11 GAUGE STEEL, ROUND MECHANICAL TUBING SLEEVE FOR LIFTING (OPTIONAL).
6. NEVER USE LOOP BARS (6D1, 6D2 OR 6D3) TO LIFT, MOVE OR REPOSITION THE BARRIER.
7. USE DELINEATORS CONFORMING TO SECTION 633 OF THE STANDARD SPECIFICATIONS. CONTRACTOR MAY USE ALTERNATE SHAPES AND HOUSING. INSTALL DELINEATORS ACCORDING TO MANUFACTURES INSTRUCTION. INSTALL YELLOW REFLECTORS WHEN BARRIER IS LOCATED TO THE LEFT OF TRAFFIC AND WHITE REFLECTORS WHEN BARRIER IS LOCATED TO THE RIGHT OF TRAFFIC. SPACE DELINEATORS A MAXIMUM OF 25 FEET APART. PROVIDE TOP MOUNTED DELINEATORS IN ADDITION TO THE SIDE MOUNTED DELINEATORS ON ALL BARRIER INSTALLATIONS LOCATED ON A CURVED ALIGNMENT LONGER THAN 200 FEET AND ON BARRIERS USED TO SEPARATE OPPOSING TRAFFIC.
8. SEE SHEET D FOR HOW TO ANCHOR BARRIER. SEE SHEET E FOR WHEN TO ANCHOR BARRIER.
9. 1" CHAMFER OPTIONAL.

f'c = 4,000 psi

CONCRETE BARRIER
TEMPORARY PRECAST, 12'-6"

STATE OF WISCONSIN
DEPARTMENT OF TRANSPO

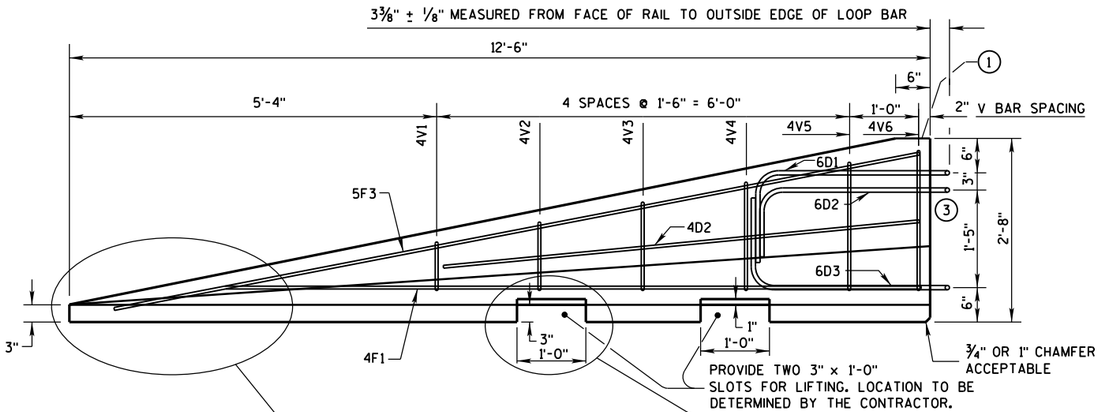

SIDE ELEVATION

(FOR CONNECTION TO LEFT END OF BARRIER)

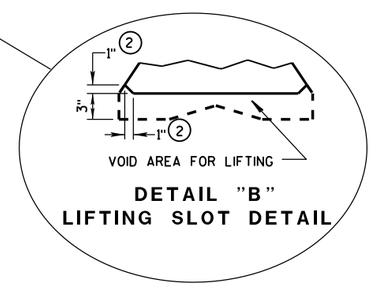

DETAIL "B"
LIFTING SLOT DETAIL

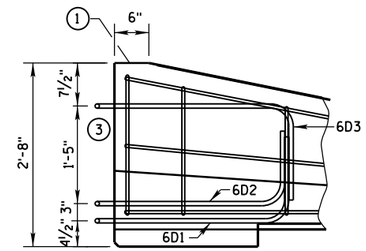

SIDE ELEVATION

LOOP BAR ASSEMBLY INVERTED
FOR OPPOSITE END.
(FOR CONNECTION TO RIGHT END OF BARRIER)

GENERAL NOTES

1. MARK ONE END OF EACH BARRIER PERMANENTLY BY FORMING INTO THE BARRIER THE FOLLOWING INFORMATION:
   a. TYPE WICBTP
   b. MANUFACTURER
   c. DATE MANUFACTURED (MONTH AND YEAR)
2. 1" CHAMFER TO PREVENT SPALLING.
3. NEVER USE LOOP BARS (6D1, 6D2 OR 6D3) TO LIFT, MOVE OR REPOSITION THE BARRIER.

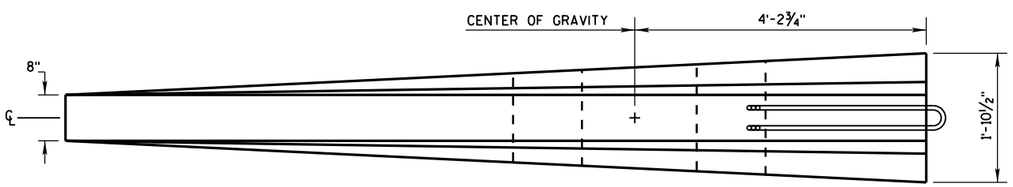

PLAN VIEW

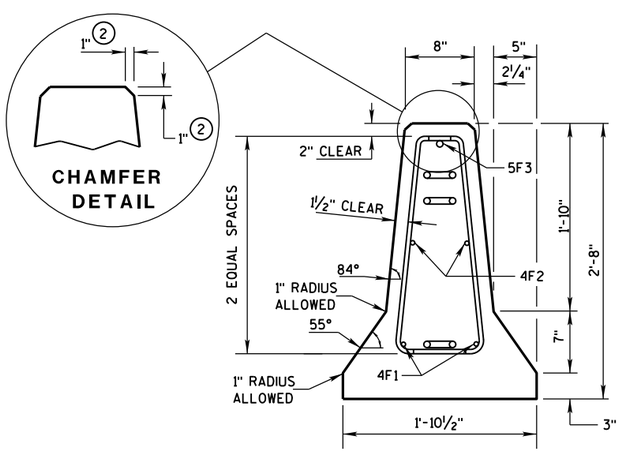

END SECTION

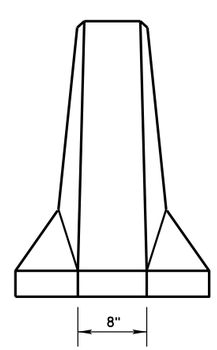

FRONT ELEVATION

DETAILS OF BARRIER TAPER SECTION

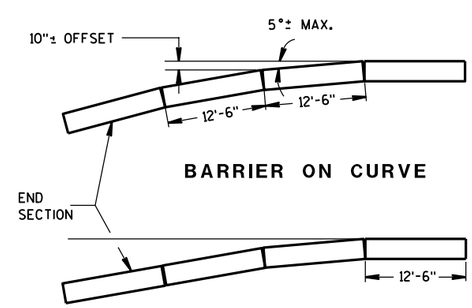

BARRIER ON CURVE

FLARE AT BARRIER END

POSTED SPEED, (MPH)	FLARE RATE
40 OR LESS	6:1
45 OR GREATER	8:1

CONCRETE BARRIER
TEMPORARY PRECAST, 12'-6"

STATE OF WISCONSIN
DEPARTMENT OF TRANSPORTATION

6

S.D.D. 14 B 7-15b

GENERAL NOTES

(1) NEVER USE LOOP BARS (6D1, 6D2 OR 6D3) TO LIFT, MOVE OR REPOSITION THE BARRIER.

BARRIER TAPER SECTION BILL OF MATERIALS

(PER 12'-6" BARRIER TAPER SECTION)

BAR	BAR SIZE	NO. OF BARS	LENGTH FT.
4V1	4	2	1'-11"
4V2	4	2	2'-2"
4V3	4	2	2'-6"
4V4	4	2	2'-9"
4V5	4	2	3'-2"
4V6	4	2	3'-4"
4F1	4	2	12'-0"
4F2	4	2	7'-6"
5F3	5	1	11'-9"
LOOP ASSEMBLY			
6D1	6	1	8'-5"
6D2	6	1	7'-7"
6D3	6	1	8'-6"

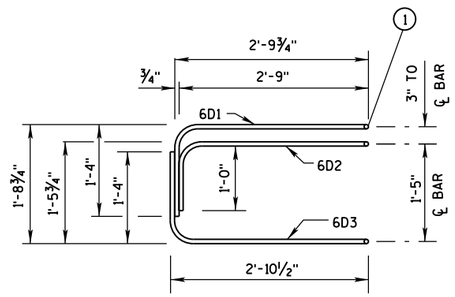

ELEVATION
LOOP BAR ASSEMBLY

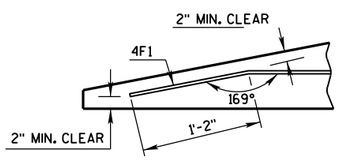

DETAIL "C"
BENT BAR DETAIL

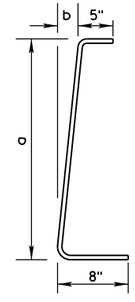

BAR	a	b
V1	10"	1"
V2	1'-1"	1¼"
V3	1'-5"	1⅝"
V4	1'-8"	1⅞"
V5	2'-0½"	2⅜"
V6	2'-3"	2¾"

4V BARS
2 AT EACH SIZE REQUIRED
FOR STIRRUP ASSEMBLY

TAPER BARRIER SECTION

BARRIER SECTION BILL OF MATERIALS

(PER 12'-6" BARRIER SECTION)

BAR	BAR SIZE	NO. OF BARS	LENGTH FT.
4A1	4	12	6'-0"
6A2	6	6	2'-11"
5B1	5	3	12'-2"
4C1	4	2	12'-2"
LOOP ASSEMBLY			
6D1	6	2	8'-5"
6D2	6	2	7'-7"
6D3	6	2	8'-6"

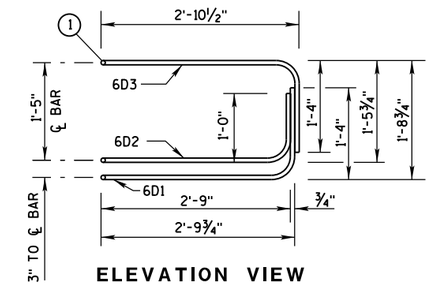

ELEVATION VIEW

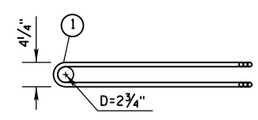

PLAN VIEW
LOOP BAR ASSEMBLY
(MARKED END SHOWN, INVERT FOR OTHER END)

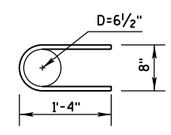

6A2

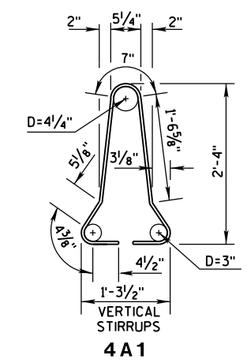

VERTICAL STIRRUPS
4A1

BARRIER SECTION

6

6

CONCRETE BARRIER
TEMPORARY PRECAST, 12'-6"

STATE OF WISCONSIN
DEPARTMENT OF TRANSPOR

S.D.D. 14 B 7-15c

S.D.D. 14 B 7-15c

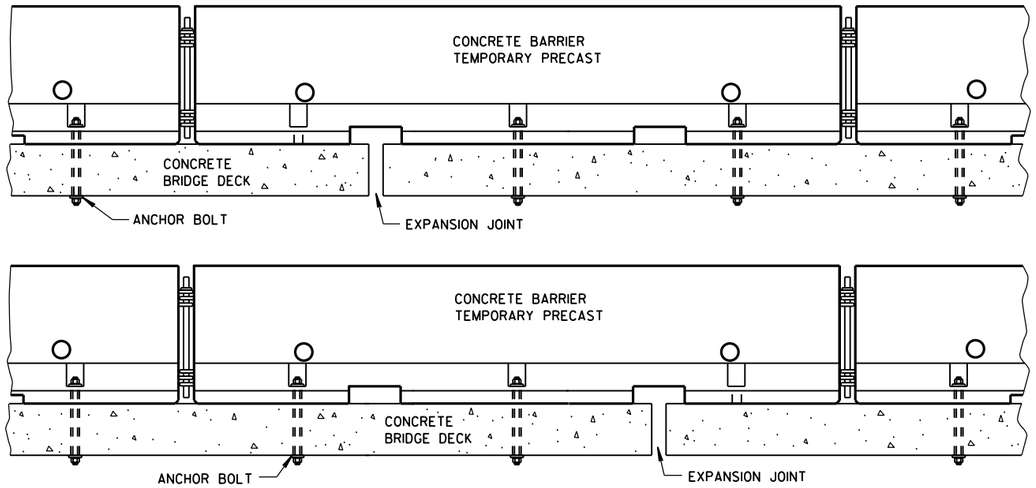

TREATMENT AT BRIDGE DECK EXPANSION JOINTS

(NO SINGLE CONCRETE BARRIER SECTION SHALL BE ANCHORED TO BOTH THE BRIDGE DECK AND THE APPROACH SLAB. ALL ANCHOR BOLT LOCATIONS SHALL BE ANCHORED TO THE DECK IN ACCORDANCE WITH THE DETAIL. NO MORE THAN ONE ANCHOR BOLT SHALL BE ELIMINATED FROM A BARRIER SECTION WHEN SPANNING AN EXPANSION JOINT.)

GENERAL NOTES

SEE SHEET E FOR WHEN TO ANCHOR. OTHER PARTS OF THE PLAN MAY SHOW ADDITIONAL LOCATIONS REQUIRING ANCHORING.

REMOVE ALL ANCHORS WHEN NO LONGER NEEDED. FILL CONCRETE PAVEMENTS, DECKS AND APPROACH SLABS WITH NON-SHRINK COMMERICAL GROUT FROM THE APPROVED PRODUCT LIST. FILL ASPHALT PAVEMENTS WITH ASTM D6690 TYPE II RUBBERIZED CRACK FILLER.

1. 1⅛" DIAMENTER A307 THREADED ROD, ½" X 3" X 3" SQUARE PLATE WASHER WITH ASTM A36 STEEL. ASTM A563A HEAVY HEX NUT.
2. ADHESIVE ANCHORS WITH A MINIMUM BOND STRENGTH OF 1,800 PSI AND 5¼" EMBEDMENT. SEE 603.2 AND 603.3.1.2 OF THE WISCONSIN STANDARD SPECIFICATIONS FOR MORE INFORMATION ON ADHESIVE ANCHORS.
3. ASPHALT SURFACE SHOWN. CONTRACTOR MAY DRILL THROUGH CONCRETE PAVEMENT AND THAN DRIVE ASPHALT ANCHOR PIN.

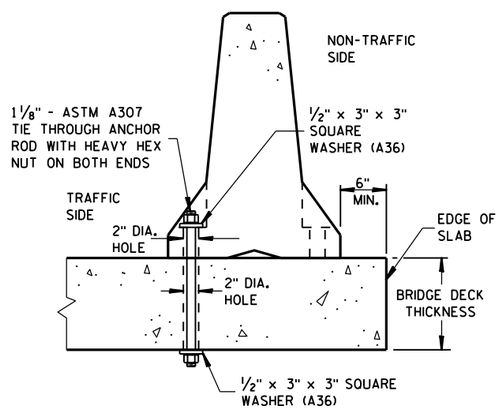

THROUGH BOLTED ANCHOR INSTALLATION ON BRIDGE DECK

(DO NOTUSE ON CONCRETE BRIDGE DECK WITH ASPHALT OVERLAY)

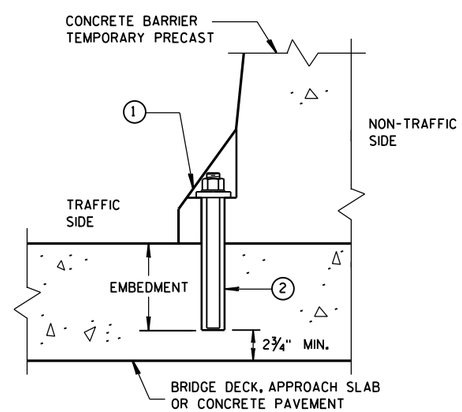

REMOVABLE ADHESIVE ANCHOR INSTALLATION ON CONCRETE BRIDGE DECK, CONCRETE APPROACH SLAB, OR CONCRETE PAVEMENT

(DO NOT USE ON CONCRETE WITH AN ASPHALTIC OVERLAY)

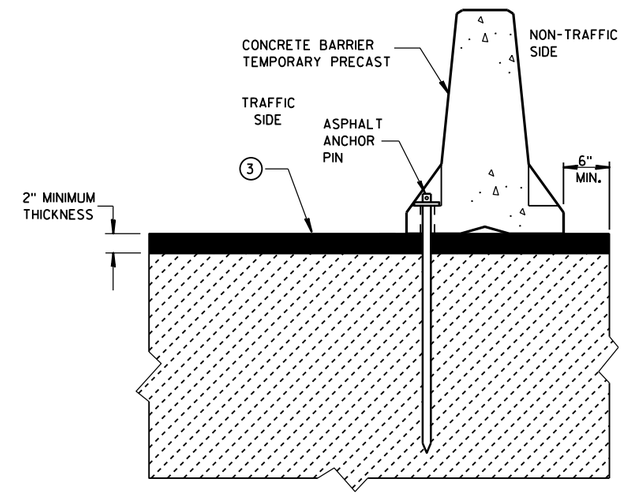

STAKE DOWN INSTALLATION FOR ASPHALTIC SURFACE

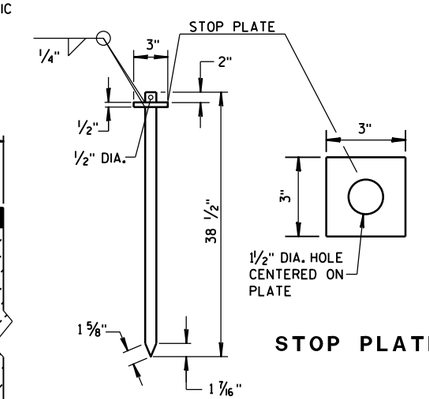

STOP PLATE

ASPHALT ANCHOR PIN

(ASTM A36 STEEL)

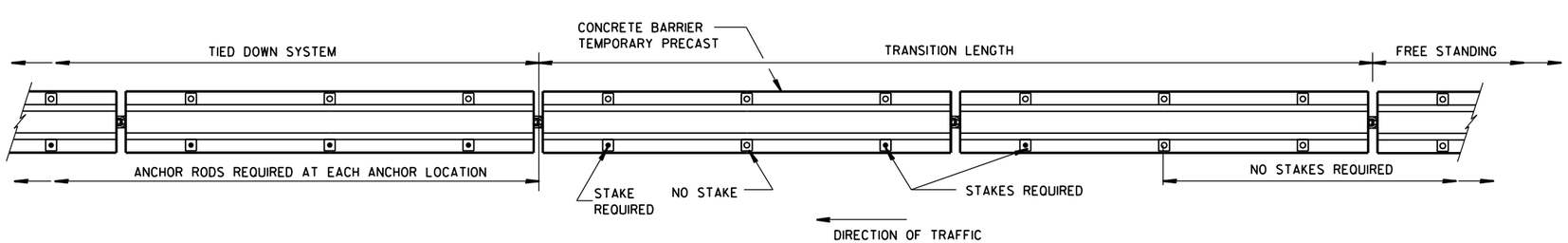

PLAN VIEW

FREE STANDING TRANSITION TO TIED-DOWN SYSTEM

(PLACE TRANSITION IN A TANGENT SECTION OF BARRIER PARALLEL TO THE ROADWAY. IF TRANSITION OCCURS ON STRUCTURAL SLAB, ANCHOR AS SHOWN.)

CONCRETE BARRIER
TEMPORARY PRECAST, 12'-6"

STATE OF WISCONSIN
DEPARTMENT OF TRANSPOI

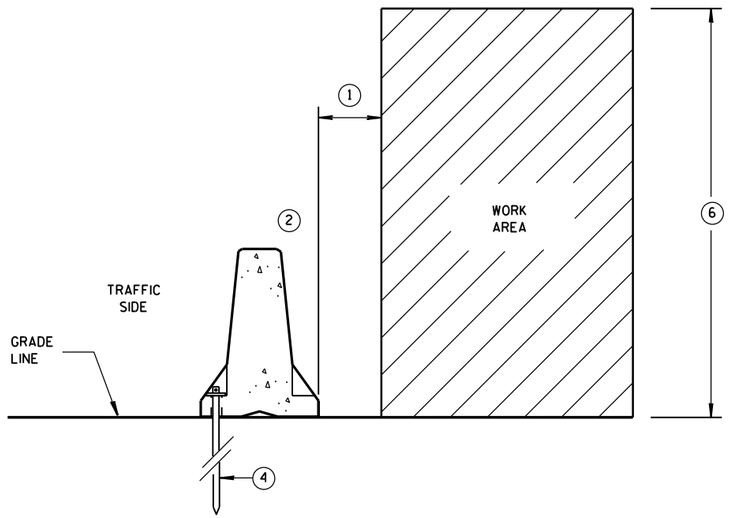

ANCHORED BARRIER SPACE REQUIREMENTS FOR HAZARDS EXTENDED ABOVE THE GRADE LINE

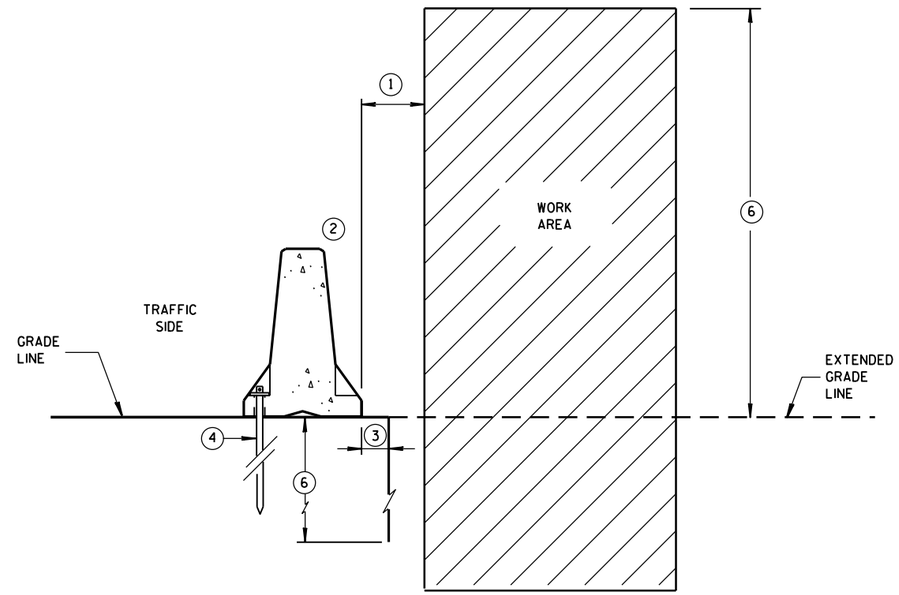

ANCHORED BARRIER SPACE REQUIREMENTS ON VERTICAL DROP OFFS

GENERAL NOTES

1. WHEN OBJECTS EXTEND ABOVE THE GRADE, A MINIMUM OF 1 FOOT IS REQUIRED FROM BACK OF BARRIER TO OBJECT. SEE OTHER DETAILS FOR FOR THE MINIMUM OFFSET FROM BACK OF BARRIER TO SLOPES OR VERTICAL DROPS.
2. OBJECTS ARE NOT TO BE PLACED ON, MOUNTED TO, OR LEANED AGAINST THE BARRIER WITHOUT PERMISSION OF THE PROJECT ENGINEER.
3. SEE OTHER DETAIL ON SHEET "D" FOR SPACE REQUIREMENTS.
4. SEE BOLT THROUGH DECK, REMOVABLE ADHESIVE ANCHOR, OR A STAKE DOWN FOR ASPHALTIC SURFACE TREATMENT DETAILS. ASPHALTIC ANCHOR SHOWN.
5. DEPTH OF 3 FEET OR MORE.
6. Y = 6'-6".

POSTED SPEED MPH	X
45 OR GREATER	4'
40 OR LESS	2'

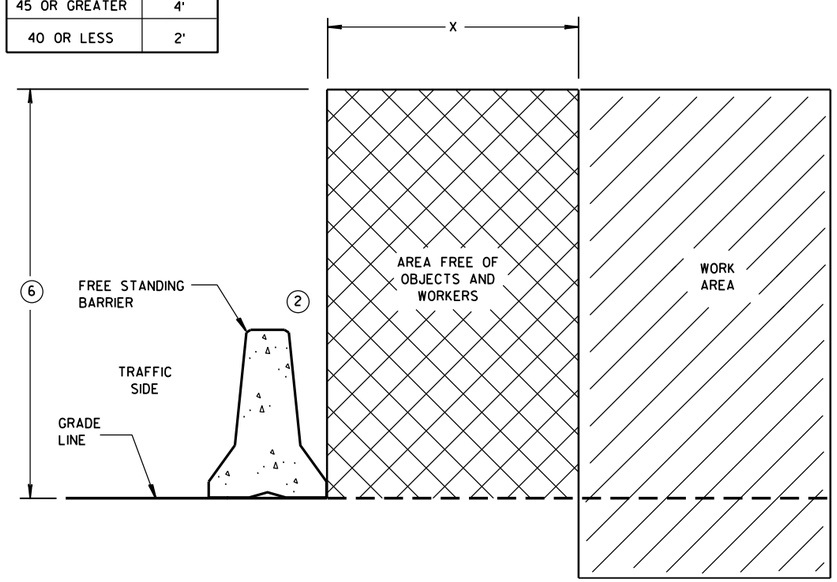

FREE STANDING BARRIER SPACE REQUIREMENTS

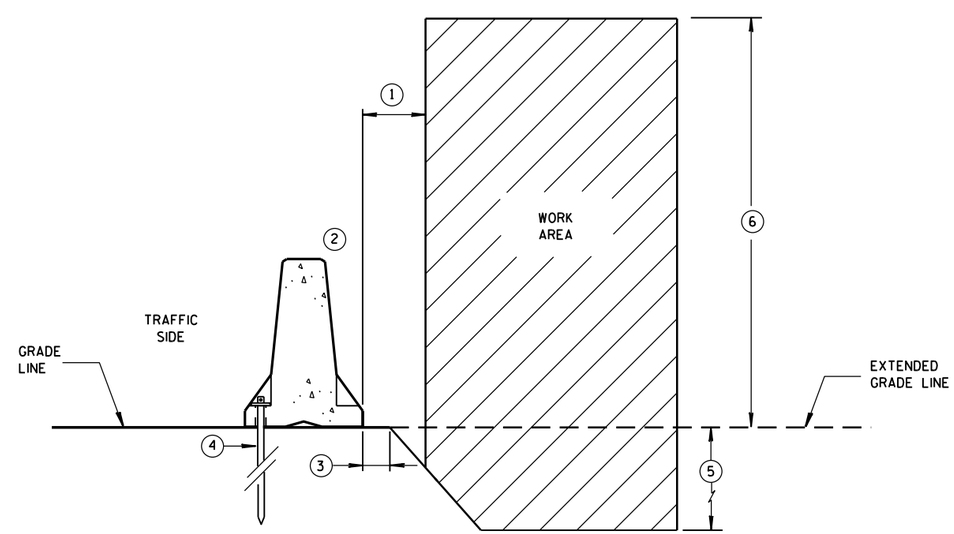

ANCHORED BARRIER SPACE REQUIREMENTS ON SLOPES

CONCRETE BARRIER
TEMPORARY PRECAST, 12'-6"

STATE OF WISCONSIN
DEPARTMENT OF TRANSPOR

6

S.D.D. 14 B 7-15e

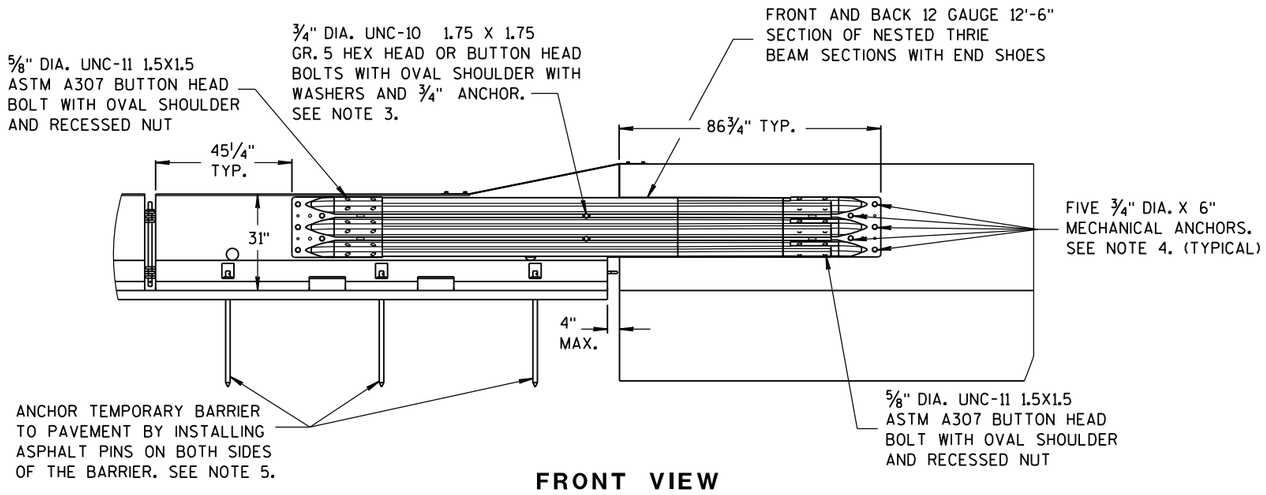

FRONT VIEW

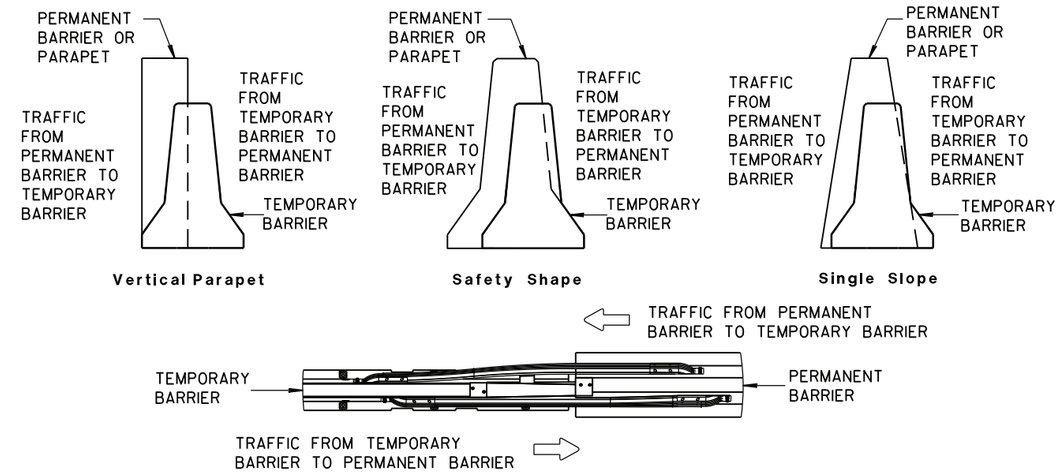

TEMPORARY BARRIER PLACEMENT FOR TRANSITION TO TIED DOWN SYSTEM

NOTES

NESTED THRIE BEAM IS REQUIRED ON BOTH SIDES OF THE TEMPORARY BARRIER FOR ALL INSTALLATIONS REGARDLESS OF TRAFFIC.

1. CAP END PLATE PLACED FLUSH WITH UPSTREAM END OF PERMANENT BARRIER OR PARAPET.
2. THRIE BEAM PIECES ARE OFFSET 15 1/4" TO PREVENT INTERFERENCE FROM THE ANCHORS ON OPPOSING SIDES.
3. MINIMUM MECHANICAL OR ADHESIVE ANCHOR STRENGTH REQUIREMENTS: ULTIMATE TENSILE LOAD 9.48 KIPS AND ULTIMATE SHEAR LOAD 10.48 KIPS.
4. MINIMUM MECHANICAL OR ADHESIVE ANCHOR STRENGTH REQUIREMENTS: ULTIMATE TENSILE LOAD 17.9 KIPS AND ULTIMATE SHEAR LOAD 21.96 KIPS.
5. MAY BE USED ON CONCRETE OR ASPHALT PAVEMENTS. ASPHALT OPTION SHOWN. FOR CONCRETE OPTION SEE OTHER DETAILS.
6. MINIMUM MECHANICAL OR ADHESIVE ANCHOR STRENGTH REQUIREMENTS: ULTIMATE TENSILE LOAD 12.14 KIPS AND ULTIMATE SHEAR LOAD 17.5 KIPS.

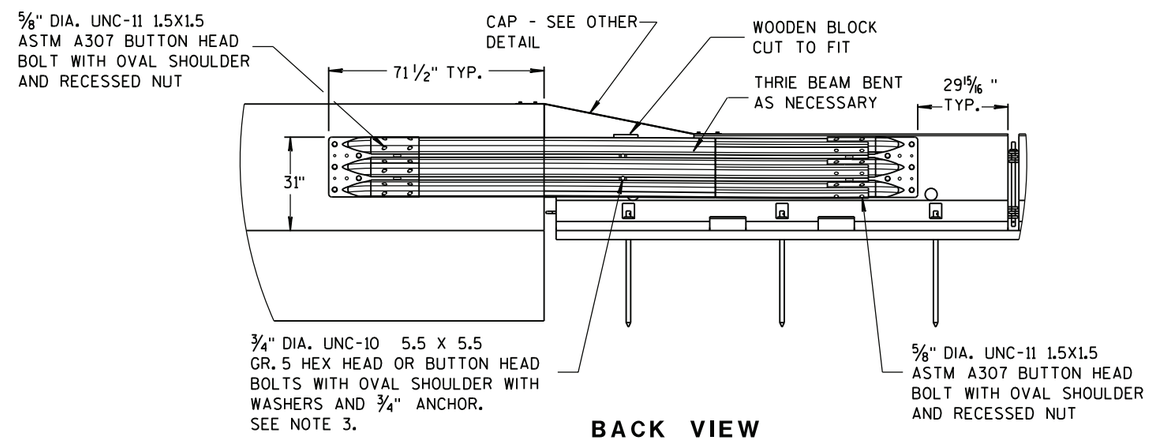

BACK VIEW

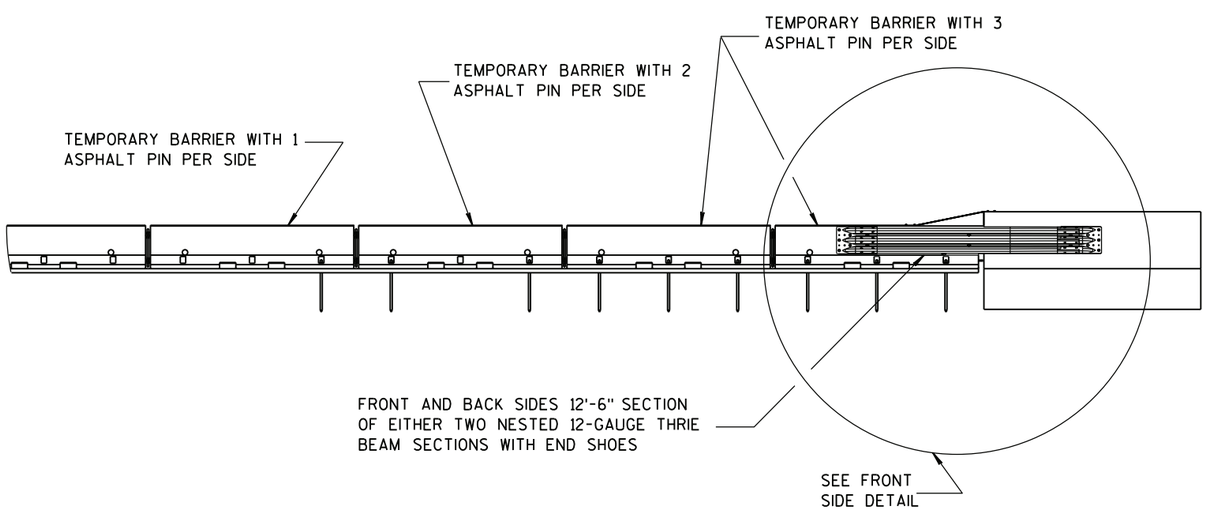

FRONT VIEW

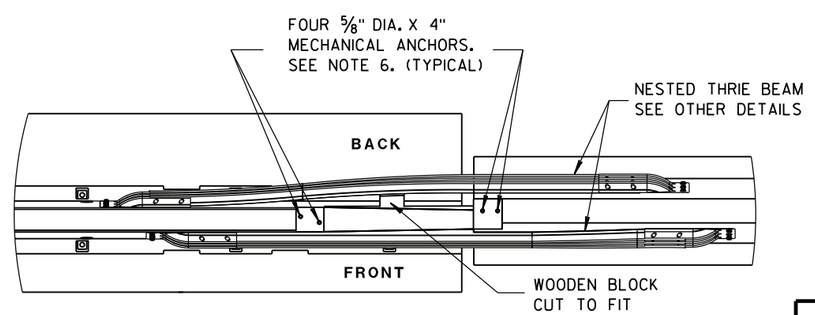

PLAN VIEW

TRANSITION TO TIED DOWN SYSTEM

CONCRETE BARRIER
TEMPORARY PRECAST, 12'-6"

STATE OF WISCONSIN
DEPARTMENT OF TRANSPO

6

S.D.D. 14 B 7-15f

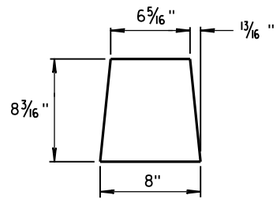

GUSSET 1

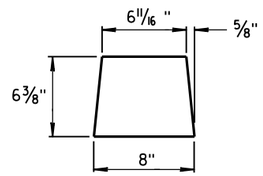

GUSSET 2

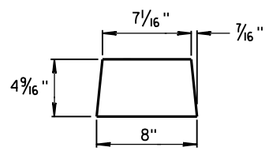

GUSSET 3

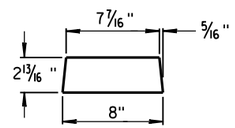

GUSSET 4

GUSSETS

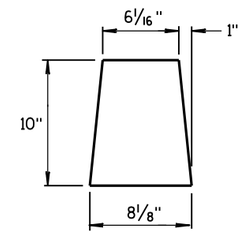

END PLATE

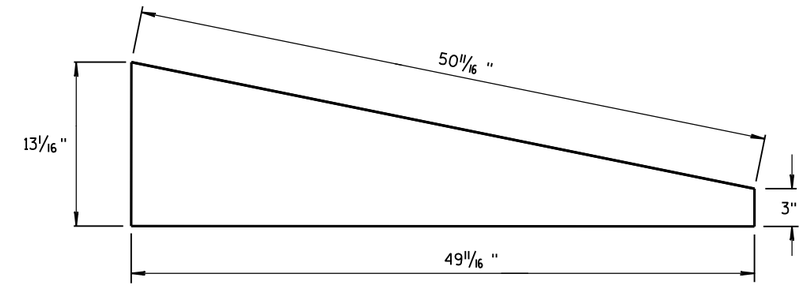

SIDE PLATE

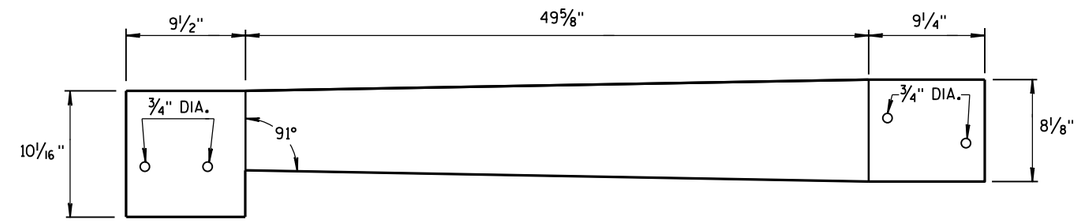

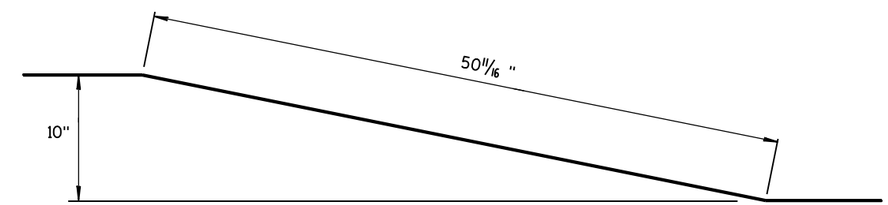

TOP PLATE

SIDE, TOP AND END PLATES FOR CAP FROM TEMPORARY CONCRETE BARRIER TO 42" PERMANENT CONCRETE BARRIER

SIDE PLATES, TOP PLATE, END PLATE AND GUSSETS ARE 12 GAUGE ASTM A36 GALVANIZED STEEL.

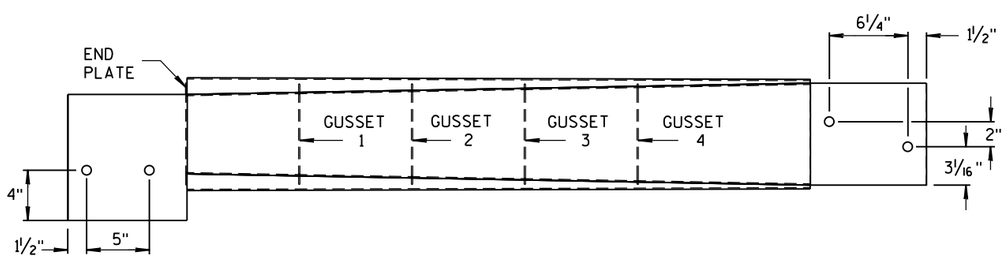

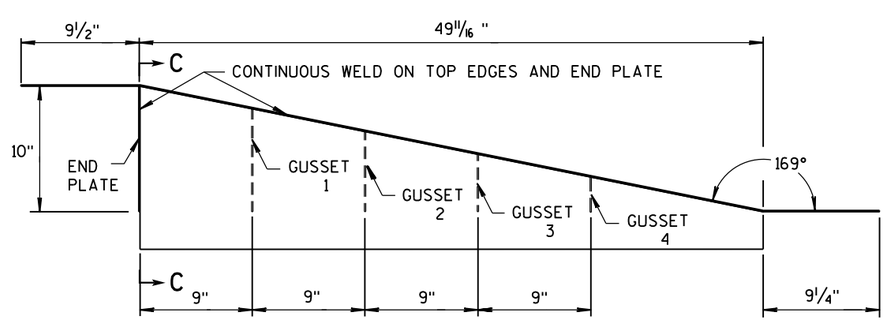

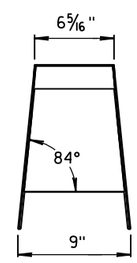

SECTION C-C

NOTES

1. FOUR GUSSETS AND END PLATE ARE STITCH WELDED ON THREE SIDES.
2. TWO TRIANGULAR SIDE PLATES ARE STITCH WELDED TO TOP PLATE, END PLATE, AND GUSSETS.

CAP DETAILS FOR TEMPORARY CONCRETE BARRIER TO 42" PERMANENT CONCRETE BARRIER

CONCRETE BARRIER
TEMPORARY PRECAST, 12'-6"

STATE OF WISCONSIN
DEPARTMENT OF TRANSPOR

6

S.D.D. 14 B 7-15g

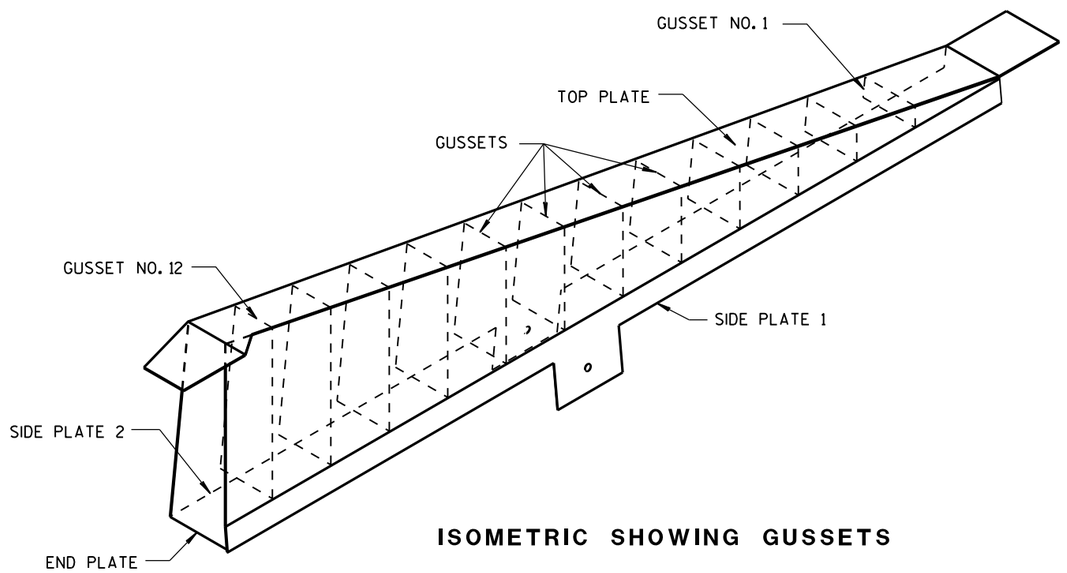

ISOMETRIC SHOWING GUSSETS

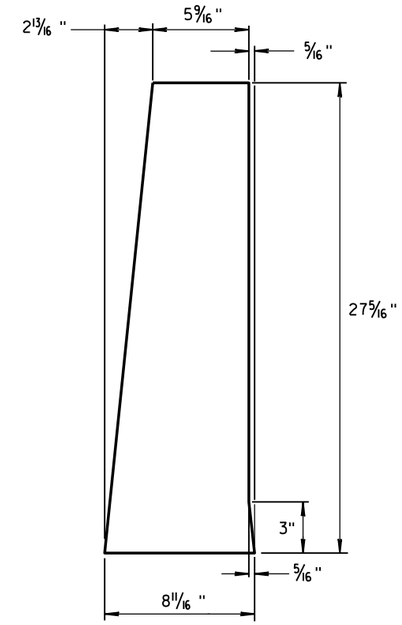

END PLATE

1/8" STEEL PLATE

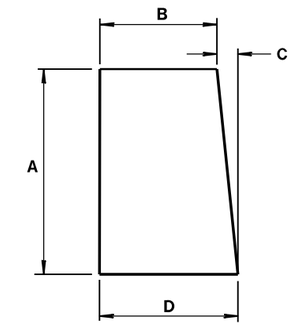

GUSSETS 1 - 12

ALL GUSSETS 1/8" STEEL PLATE

GUSSET DIMENSIONS				
GUSSET NO.	A	B	C	D
1	2 7/8"	7 3/4"	1/4"	8
2	4 11/16 "	7 9/16 "	1/2"	8
3	6 1/2"	7 3/8"	11/16 "	8 1/16 "
4	8 5/16 "	7 3/16 "	7/8"	8 1/16 "
5	10 1/8"	7"	1 1/16 "	8 1/16 "
6	11 15/16 "	6 13/16 "	1 1/4"	8 1/16 "
7	13 3/4"	6 5/8"	1 7/16 "	8 1/16 "
8	15 9/16 "	6 7/16 "	1 9/16 "	8 1/16 "
9	17 3/8"	6 1/4"	1 13/16 "	8 1/16 "
10	19 3/16 "	6 1/16 "	1 15/16 "	8 1/16 "
11	21"	5 7/8"	2 3/16 "	8 1/16 "
12	22 13/16 "	5 11/16 "	2 5/16 "	8 1/16 "

SIDE PLATES, TOP PLATE, END PLATE AND GUSSETS ARE 12 GAUGE ASTM A36 STEEL AND GALVANIZED.

GUSSETS AND END PLATE ARE STITCH WELDED ON 3 SIDES. TWO TRIANGULAR SIDE PLATES ARE STITCH WELDED TO TOP PLATE, END PLATE AND GUSSETS.

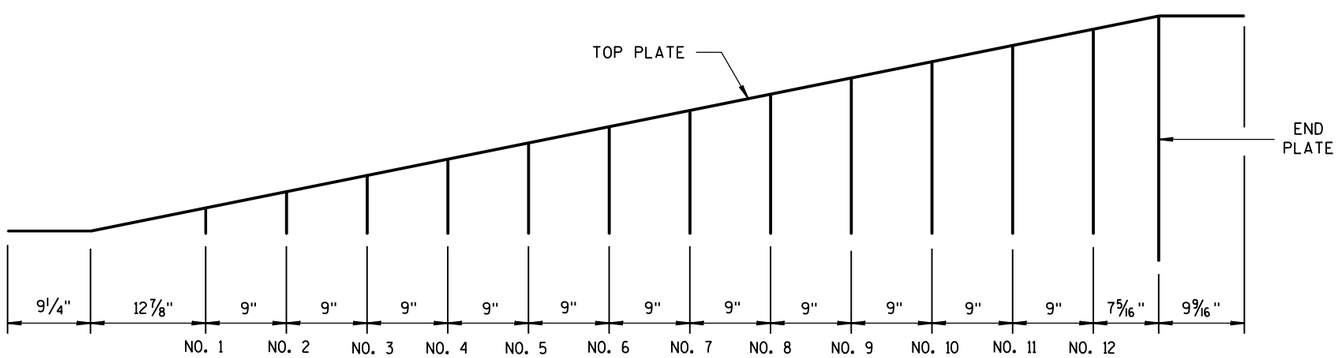

GUSSET LOCATION

CAP DETAILS FOR TEMPORARY CONCRETE BARRIER TO 56" PERMANENT CONCRETE BARRIER

CONCRETE BARRIER
TEMPORARY PRECAST, 12'-6"

STATE OF WISCONSIN
DEPARTMENT OF TRANSPOR

6

S.D.D. 14 B 7-15h

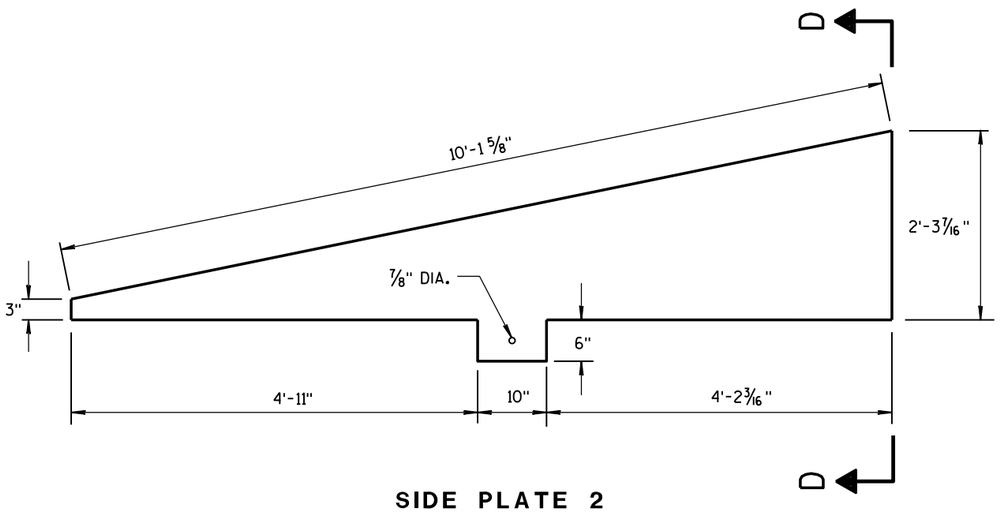

SIDE PLATE 2

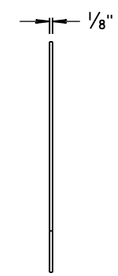

END VIEW

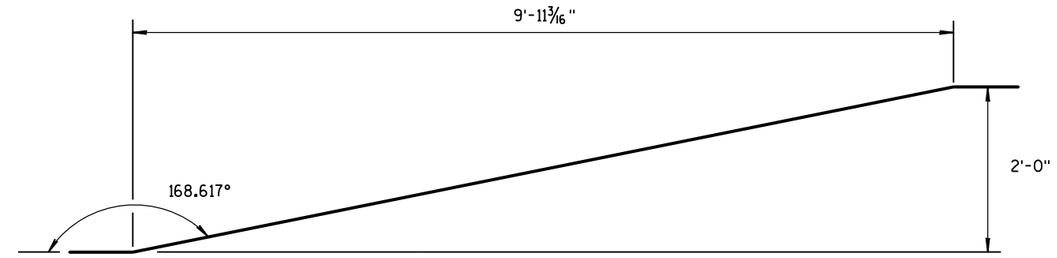

SIDE VIEW

TOP PLATE

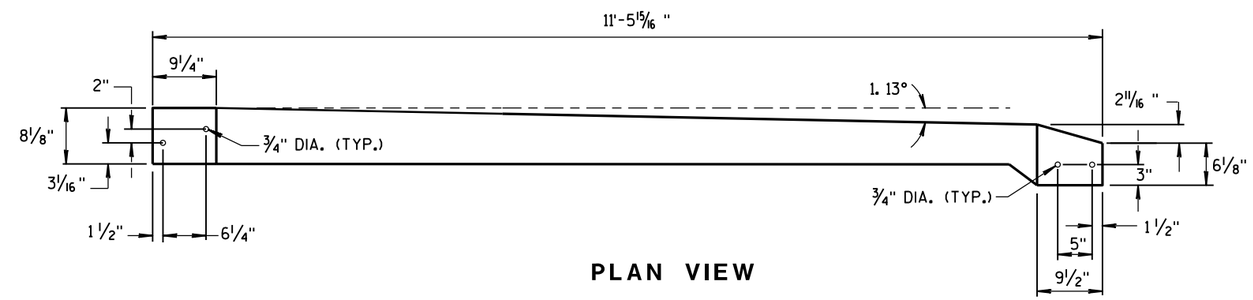

PLAN VIEW

TOP PLATE

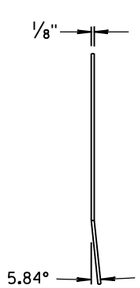

END VIEW

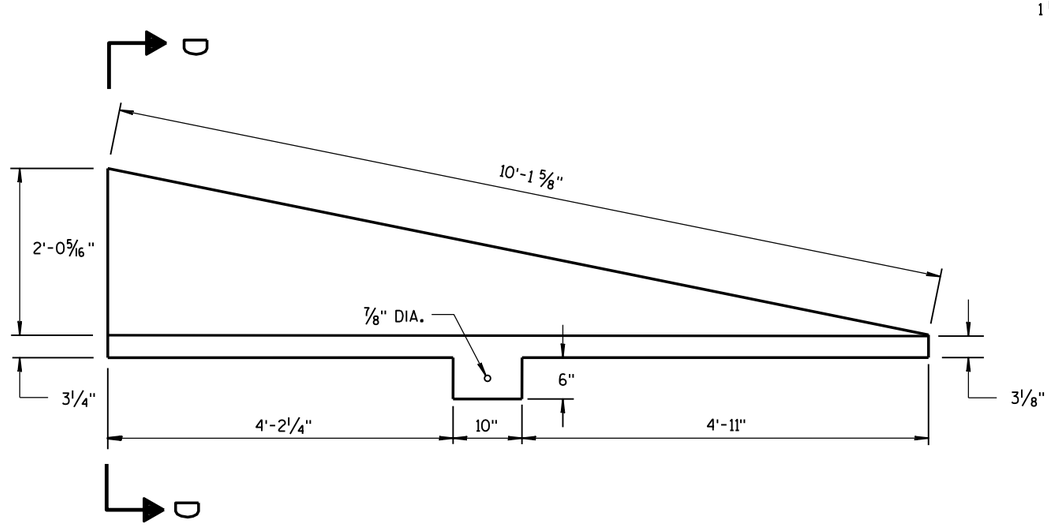

SIDE PLATE 1

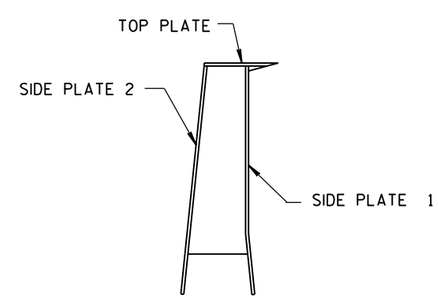

SECTION D-D

CAP DETAILS FOR TEMPORARY CONCRETE BARRIER TO 56" PERMANENT CONCRETE BARRIER

CONCRETE BARRIER
TEMPORARY PRECAST, 12'-6"

STATE OF WISCONSIN
DEPARTMENT OF TRANSPORTATION

APPROVED
June 2017 — DATE
/S/ Rodney Taylor — ROADWAY STANDARD DEVELOPMENT UNIT SUPERVISOR
FHWA

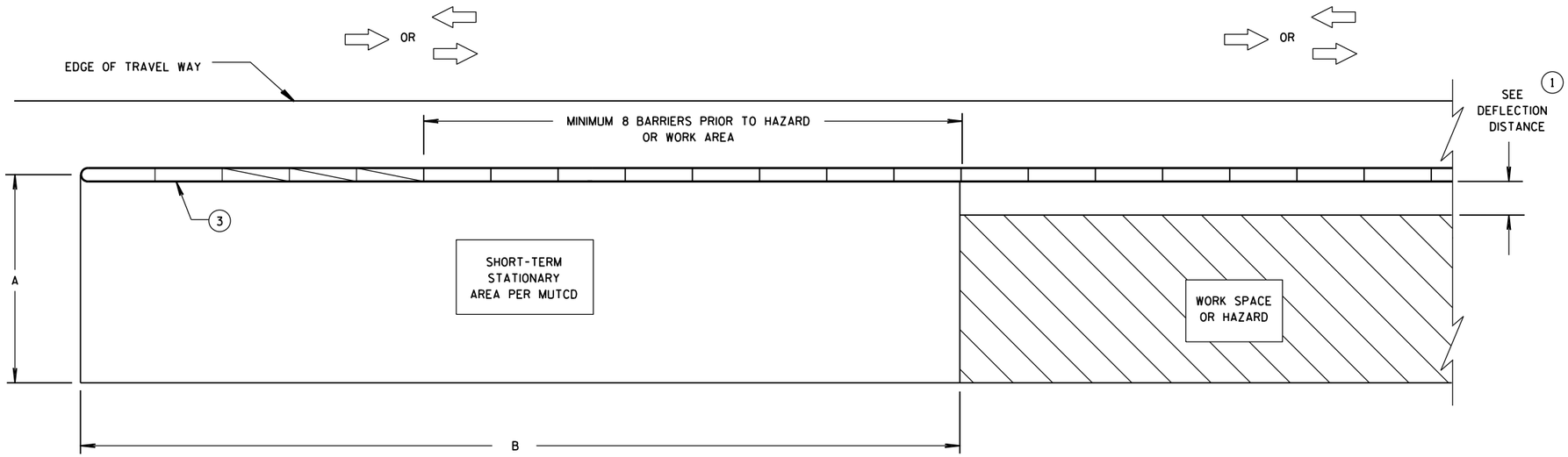

CRASH CUSHION/SAND BARREL ARRAY AND TEMPORARY BARRIER INSTALLATION FOR TRAFFIC ON ONE SIDE OF BARRIER

DIMENSION A TABLE (2)

FACILITY	POSTED SPEED MPH	DIMENSION A MIN. FT	DIMENSION A MAX. FT
FREEWAY/EXPRESSWAY	ALL	15	20
NON-FREEWAY/EXPRESSWAY	GREATER THAN OR EQUAL TO 45	10	15
NON-FREEWAY/EXPRESSWAY	LESS THAN 45	8	10
AADT LESS THAN 1,500	ALL	8	10

DIMENSION B TABLE (2)

POSTED SPEEDS MPH	DIMENSION B FT
20	115
25	155
30	200
35	250
40	305
45	360
50	425
55	495
60	570
65	645

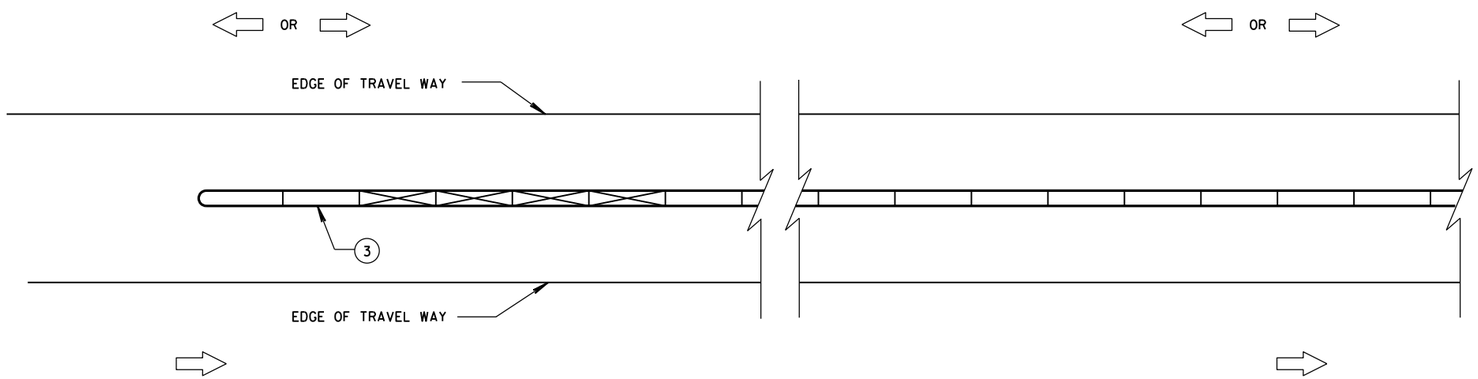

CRASH CUSHION/SAND BARREL ARRAY AND TEMPORARY BARRIER INSTALLATION FOR TRAFFIC ON BOTH SIDES OF BARRIER

LEGEND

- DIRECTION OF TRAVEL
- CRASH CUSHION OR SAND BARREL ARRAY
- SEE FREE STANDING TRANSITION TO TIED-DOWN SYSTEM DETAILS
- SEE BI-DIRECTIONAL TRANSITION TO TIED-DOWN SYSTEM DETAILS
- 3 PINS PLACED ON TRAFFIC SIDE OF BARRIER
- PERMANENT CONCRETE BARRIER OR CONCRETE PARAPET
- FREE STANDING TEMPORARY BARRIER

GENERAL NOTES

SEE STANDARD DETAIL DRAWING 14B7 FOR MORE INFORMATION.

DETAILS PROVIDE A GENERAL LAYOUT OF TEMPORARY CONCRETE BARRIER, CRASH CUSHIONS, SAND BARREL ARRAYS AND TIE DOWN TRANSITIONS. DETAILS PROVIDED MAY NOT FIT ALL POSSIBLE SITUATIONS OR SITE CONDITIONS. SEE OTHER SECTIONS OF THE CONTRACT OR PROJECT ENGINEER FOR MORE DETAILS.

ADDITIONAL TEMPORARY BARRIER MAY BE REQUIRED TO PROTECT TRAVELING PUBLIC FROM HAZARDS, CONTRACTOR'S OPERATIONS OR TO CONTROL TRAFFIC.

TEMPORARY BARRIER MAY BE REQUIRED TO BE ANCHORED TO PAVEMENT OR BRIDGE DECK.

FOR DETAILS ON CRASH CUSHION OR SAND BARREL ARRAYS SEE OTHER SECTIONS OF THE PLAN AND MANUFACTURE'S DETAILS.

SLOPES LEADING TO TEMPORARY BARRIER, CRASH CUSHION OR SAND BARREL ARRAY ARE 10:1 OR LESS.

(1) FOR DEFLECTION INFORMATION SEE STANDARD DETAIL DRAWING 14B7.

(2) VALUES PROVIDED MAY NOT FIT ALL POSSIBLE SITUATIONS OR SITE CONDITIONS. SEE OTHER SECTIONS OF THE CONTRACT OR PROJECT ENGINEER FOR MORE DETAILS.

(3) ANCHOR TEMPORARY BARRIER ACCORDING TO CRASH CUSHION OR SAND BARREL MANUFACTURER'S RECOMMENDATIONS. IF MANUFACTURER'S RECOMMENDATIONS ARE NOT PROVIDED, ANCHOR 3 PINS ON TRAFFIC SIDE.

CRASH CUSHION/SAND BARREL ARRAY AND OTHER TEMPORARY BARRIER LAYOUT DETAILS

STATE OF WISCONSIN
DEPARTMENT OF TRANSPOR

6

S.D.D. 14 B 8-2a

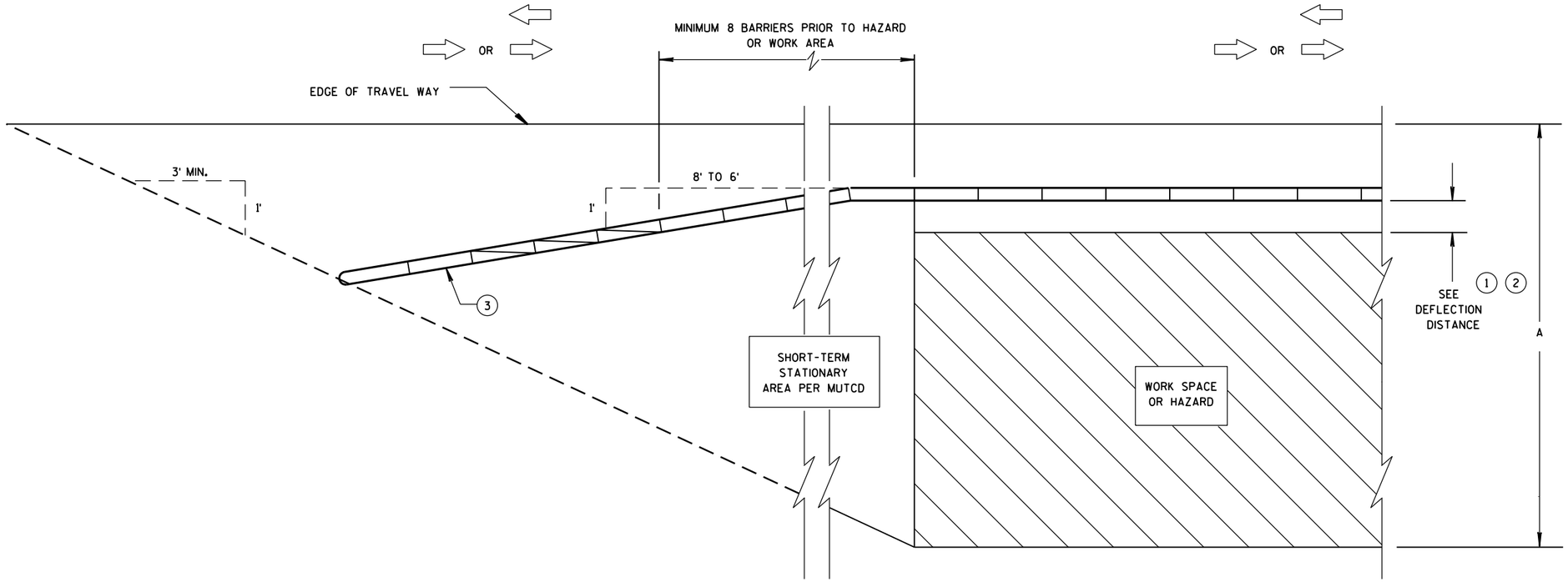

CRASH CUSHION/SAND BARREL ARRAY AND TEMPORARY BARRIER INSTALLATION FOR TRAFFIC ON ONE SIDE - FLARED INSTALLATION

6

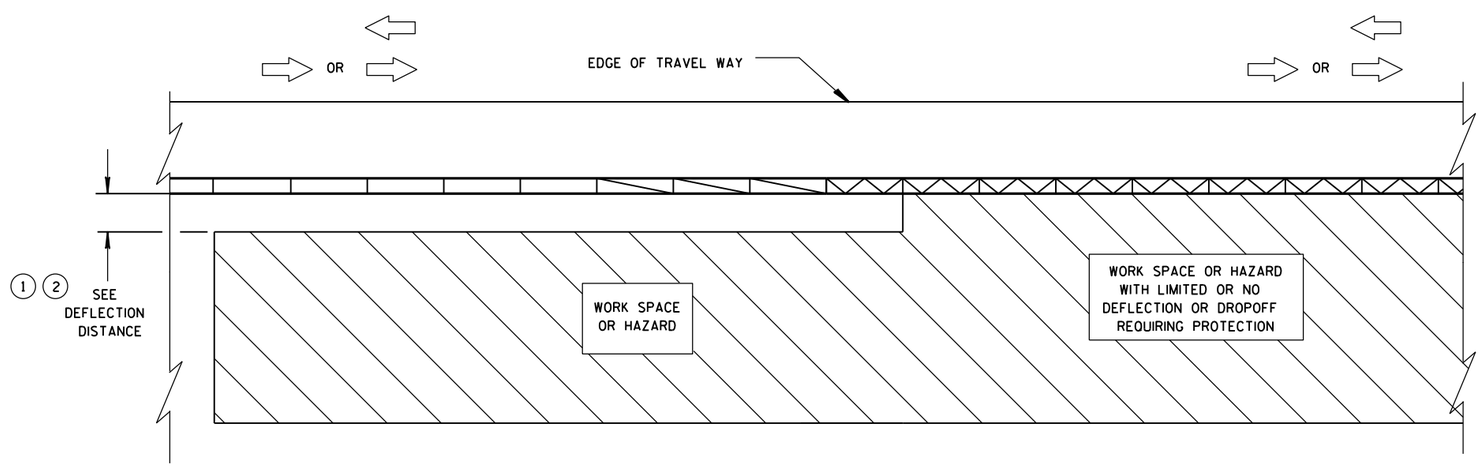

TRANSITION FROM FREE STANDING TEMPORARY BARRIER TO ANCHORED BARRIER

LEGEND

- DIRECTION OF TRAVEL
- CRASH CUSHION OR SAND BARREL ARRAY
- SEE FREE STANDING TRANSITION TO TIED-DOWN SYSTEM DETAILS
- SEE BI-DIRECTIONAL TRANSITION TO TIED-DOWN SYSTEM DETAILS
- 3 PINS PLACED ON TRAFFIC SIDE OF BARRIER
- PERMANENT CONCRETE BARRIER OR CONCRETE PARAPET
- FREE STANDING TEMPORARY BARRIER

CRASH CUSHION/SAND BARREL ARRAY AND OTHER TEMPORARY BARRIER LAYOUT DETAILS

STATE OF WISCONSIN
DEPARTMENT OF TRANSPOR

S.D.D. 14 B 8-2b

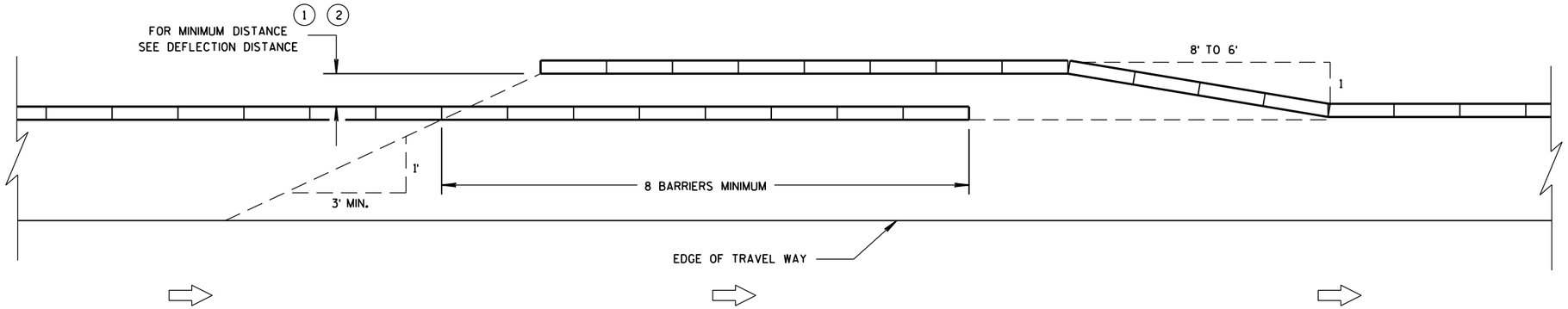

TEMPORARY BARRIER OVERLAP - ONE-WAY TRAFFIC

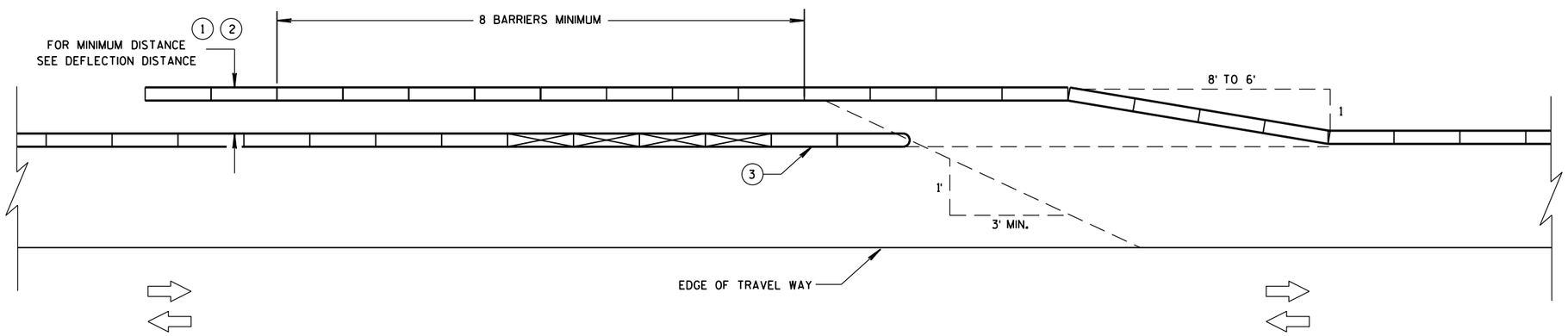

TEMPORARY BARRIER OVERLAP - TWO-WAY TRAFFIC

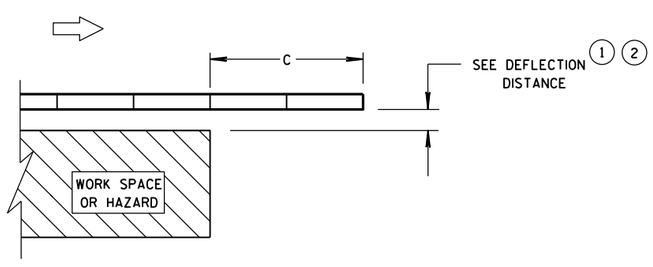

ENDING TEMPORARY BARRIER DOWNSTREAM - UNANCHORED

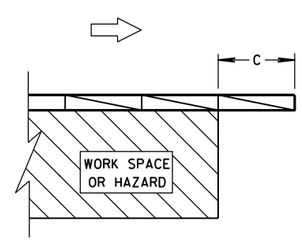

ENDING TEMPORARY BARRIER DOWNSTREAM - ANCHORED

LEGEND

- DIRECTION OF TRAVEL
- CRASH CUSHION OR SAND BARREL ARRAY
- SEE FREE STANDING TRANSITION TO TIED-DOWN SYSTEM DETAILS
- SEE BI-DIRECTIONAL TRANSITION TO TIED-DOWN SYSTEM DETAILS
- 3 PINS PLACED ON TRAFFIC SIDE OF BARRIER
- PERMANENT CONCRETE BARRIER OR CONCRETE PARAPET
- FREE STANDING TEMPORARY BARRIER

CRASH CUSHION/SAND BARREL ARRAY AND OTHER TEMPORARY BARRIER LAYOUT DETAILS

STATE OF WISCONSIN
DEPARTMENT OF TRANSPOR

6

6

S.D.D. 14 B 8-2c

S.D.D. 14 B 8-2c

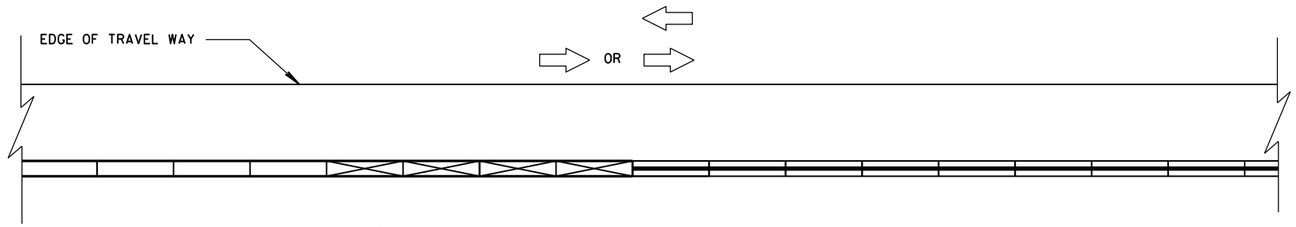

CONNECTING TEMPORARY BARRIER TO PERMANENT
CONCRETE BARRIER-TRAFFIC ON ONE SIDE

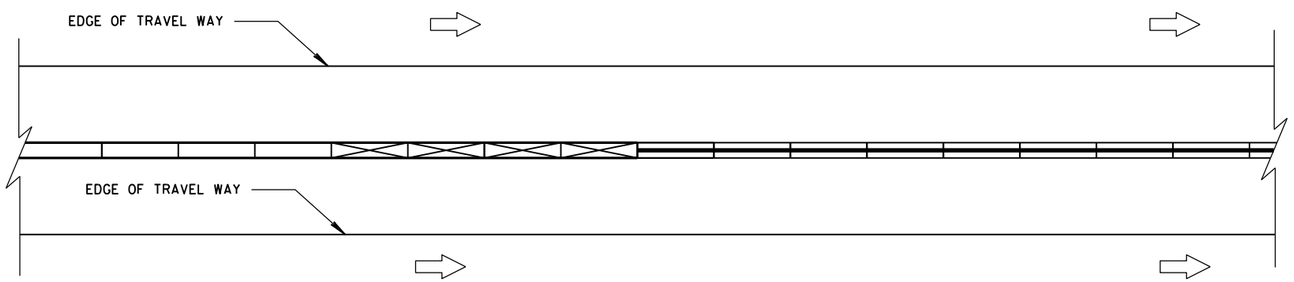

CONNECTING TEMPORARY BARRIER TO PERMANENT
CONCRETE BARRIER-TRAFFIC ON BOTH SIDES

LEGEND

DIRECTION OF TRAVEL

CRASH CUSHION OR
SAND BARREL ARRAY

SEE FREE STANDING TRANSITION
TO TIED-DOWN SYSTEM DETAILS

SEE BI-DIRECTIONAL TRANSITION
TO TIED-DOWN SYSTEM DETAILS

3 PINS PLACED ON
TRAFFIC SIDE OF BARRIER

PERMANENT CONCRETE BARRIER
OR CONCRETE PARAPET

FREE STANDING TEMPORARY
BARRIER

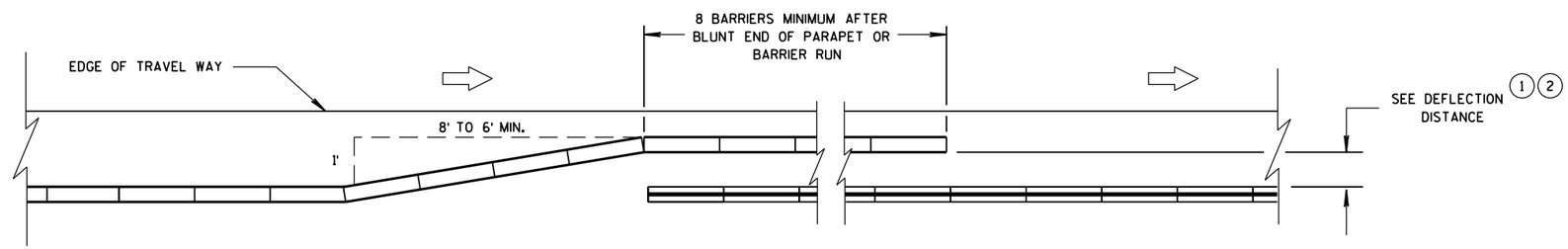

OVERLAPPING TEMPORARY BARRIER AND PERMANENT BARRIER -
ONE WAY TRAFFIC

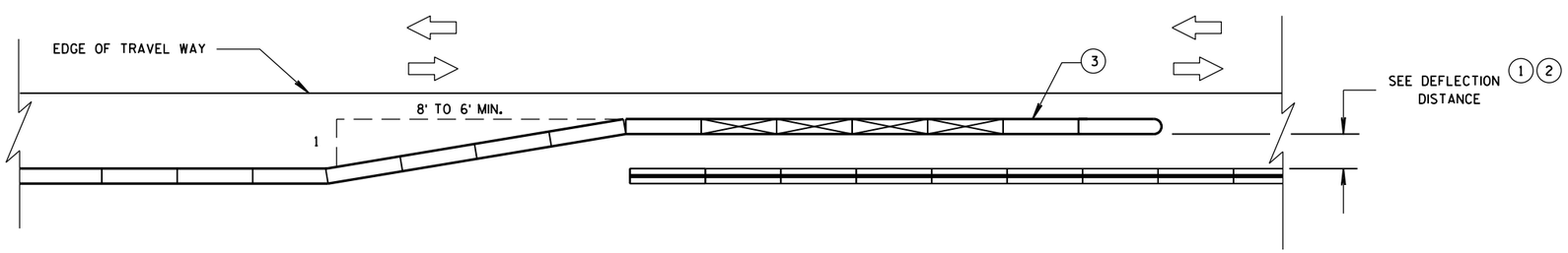

OVERLAPPING TEMPORARY BARRIER AND PERMANENT BARRIER -
TWO WAY TRAFFIC

CRASH CUSHION/SAND BARREL
ARRAY AND OTHER TEMPORARY
BARRIER LAYOUT DETAILS

STATE OF WISCONSIN
DEPARTMENT OF TRANSPOR

6
S.D.D. 14 B 8-2d

LEGEND

DIRECTION OF TRAVEL

CRASH CUSHION OR SAND BARREL ARRAY

SEE FREE STANDING TRANSITION TO TIED-DOWN SYSTEM DETAILS

SEE BI-DIRECTIONAL TRANSITION TO TIED-DOWN SYSTEM DETAILS

3 PINS PLACED ON TRAFFIC SIDE OF BARRIER

PERMANENT CONCRETE BARRIER OR CONCRETE PARAPET

FREE STANDING TEMPORARY BARRIER

DIMENSION C TABLE (2)

AVAILABLE DEFLECTION DISTANCE	MINIMUM LENGTH OF BARRIER BEYOND HAZARD FT
GREATER THAN 8'	12.5
LESS THAN OR EQUAL TO 8' BUT GREATER THAN 4'	50
LESS THAN OR EQUAL TO 4'	100

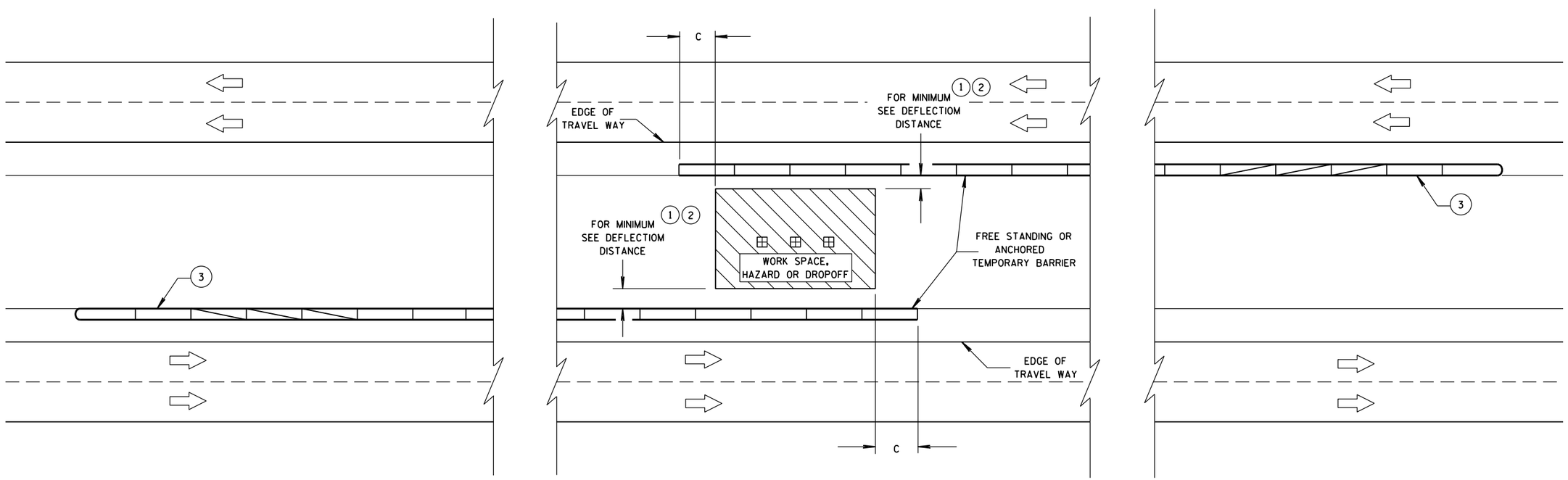

CRASH CUSHION/SAND BARREL ARRAY AND OTHER TEMPORARY BARRIER LAYOUT DETAILS

STATE OF WISCONSIN
DEPARTMENT OF TRANSPORTATION

APPROVED
June, 2015 — DATE
/S/ Jerry H. Zogg — ROADWAY STANDARDS DEVELOPMENT ENGINNER
FHWA

6

S.D.D. 14 B 8-2e

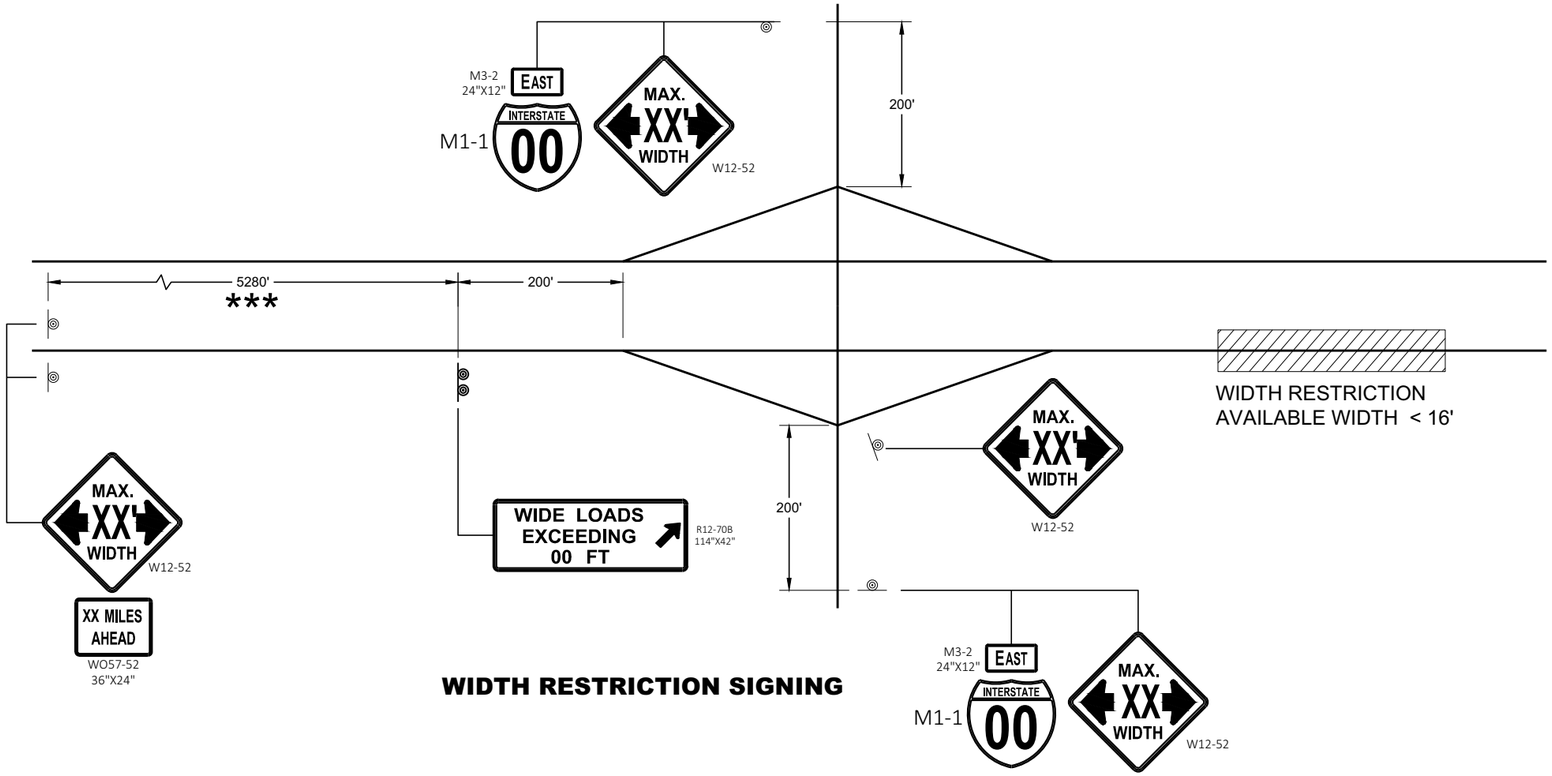

WIDTH RESTRICTION SIGNING

LEGEND

◎ SIGN ON PERMANENT SUPPORT

GENERAL NOTES

THE EXACT NUMBER, LOCATION AND SPACING OF ALL SIGNS SHALL BE ADJUSTED TO FIT FIELD CONDITIONS AS APPROVED BY THE ENGINEER.

THE SPACING BETWEEN SIGNS SHOULD BE ADJUSTED TO NOT CONFLICT WITH AND TO PROVIDE A DESIRABLE MINIMUM OF 200 FEET CLEARANCE TO EXISTING SIGNS THAT WILL REMAIN IN PLACE.

ANY SIGNS TEMPORARY OR EXISTING, WHICH CONFLICT WITH TRAFFIC CONTROL " IN USE" SHALL BE REMOVED OR COVERED AS NEEDED AND AS APPROVED BY THE ENGINEER.

ALL SIGNS ARE 48" X 48" UNLESS OTHERWISE NOTED.

"WO" SIGNS ARE THE SAME AS "W" SIGNS EXCEPT THE BACKGROUND IS ORANGE.

WIDTH ON SIGN TO BE APPROXIMATELY ONE FOOT LESS THAN AVAILABLE WIDTH.

* PLACE 500 FEET AFTER THE W20 - 1A AND 500 FEET BEFORE ADDITIONAL SIGNS FOR ROADWAYS WITH A PRE - CONSTRUCTION SPEED LIMIT OF 45 MPH OR MORE. FOR 35-40 MPH, USE 350 FOOT TYPICAL SPACING. FOR 25-30 MPH, USE 200 FOOT TYPICAL SPACING.

** SIGN SHALL BE VISIBLE FROM ROADWAY.

*** ADDITIONAL SIGNS NEEDED IF THERE IS AN ON RAMP BETWEEN SIGNS.

WIDTH ON SIGN TO BE APPROX. 1 - FOOT LESS THAN AVAILABLE WIDTH

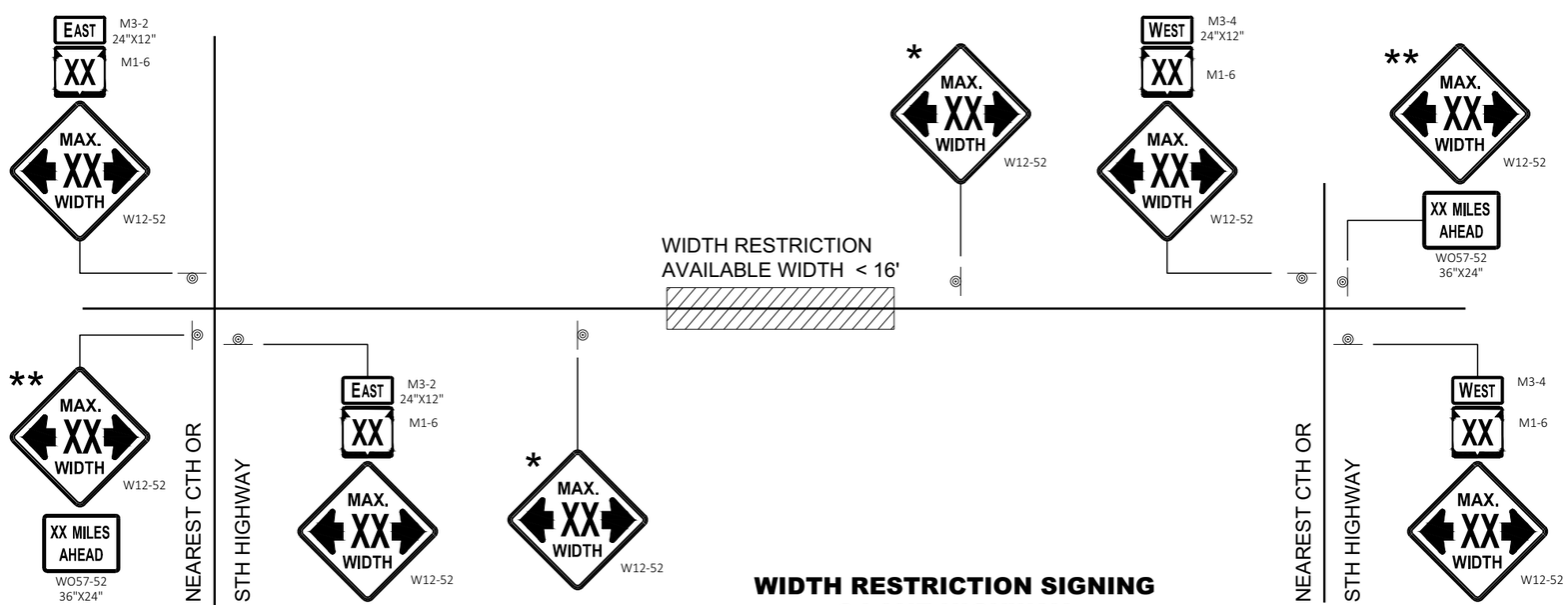

WIDTH RESTRICTION SIGNING
2 LANE HIGHWAY

ADVANCED WIDTH RESTRICTION SIGNING

STATE OF WISCONSIN
DEPARTMENT OF TRANSPORTATION

APPROVED
February 2020 — DATE
/S/ Andrew Heidtke — WORK ZONE ENGINEER
FHWA

6

SDD 15C02 - 08f

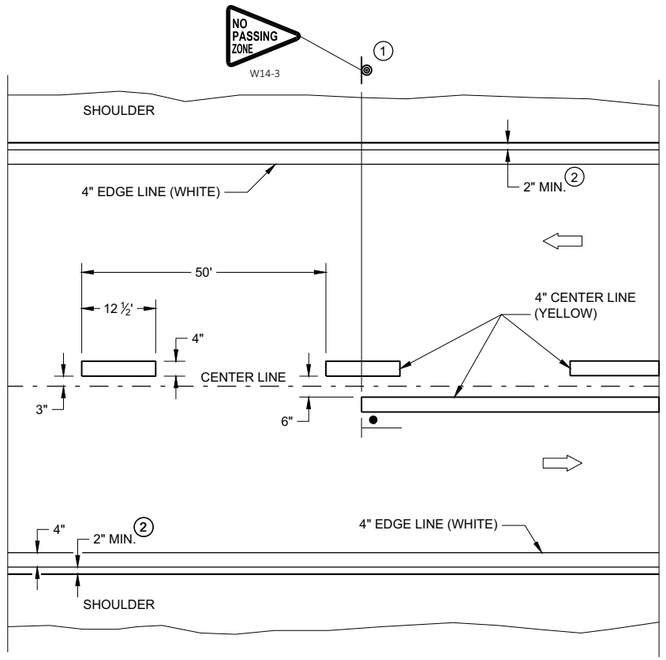

TWO WAY TRAFFIC

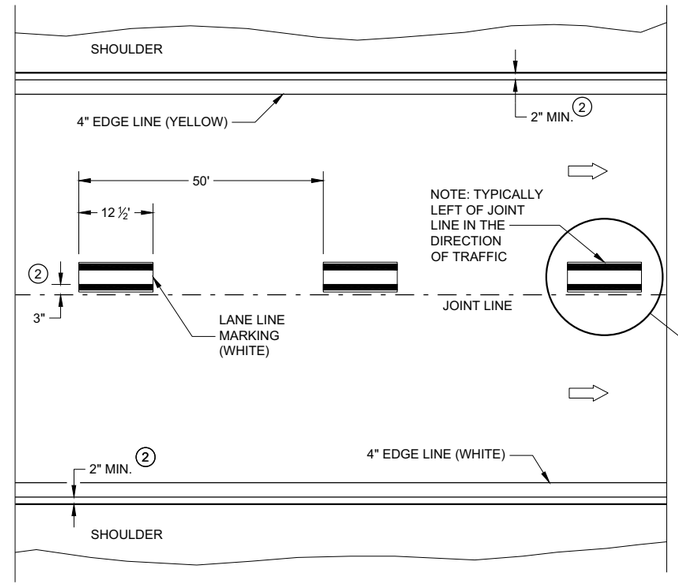

ONE WAY TRAFFIC

PERMANENT PAVEMENT MARKING

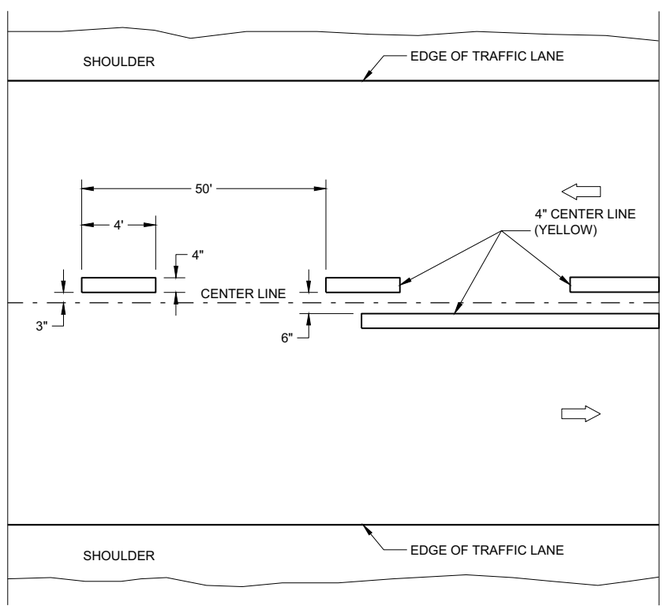

TWO WAY TRAFFIC

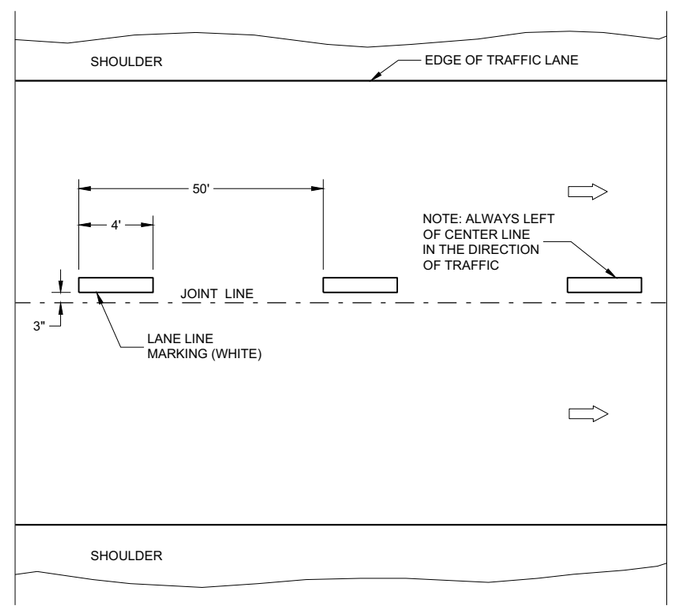

ONE WAY TRAFFIC

TEMPORARY PAVEMENT MARKING

GENERAL NOTES

DETAILS OF CONSTRUCTION NO SHOWN ON THIS DRAWING SHALL CONFORM TO STANDARD SPECIFICATIONS AND SPECIAL PROVISIONS.

1. LOCATE THE NO PASSING ZONE W14-3 SIGN WITH 50 FEET OF THE "T" MARKING
2. MEASURE FROM EDGE OF MARKING TO JOINT LINE. THIS DOES NOT INCLUDE SPACE NEEDED FOR GROOVING OPERATIONS.

LEGEND

"T" MARKING

SIGN ON PERMANENT SUPPORT

DIRECTION OF TRAFFIC

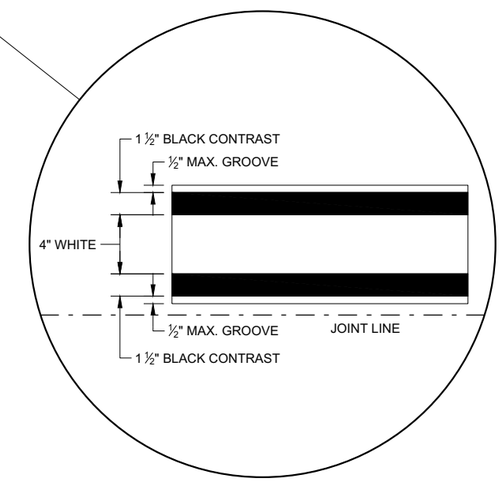

LONGITUDINAL MARKING (MAINLINE)

STATE OF WISCONSIN
DEPARTMENT OF TRANSPORTATION

APPROVED
February 2020 — DATE
/S/ Matthew Rauch — STATEWIDE SIGNING AND M ENGINEER
FHWA

6

SDD 15C08 - 20a

GENERAL NOTES

1. REFLECTIVE SHEETING SHALL FOLLOW THE REQUIREMENTS IN THE APPROVED PRODUCTS LISTING FOR SIGN SHEETING.
2. LOCATION OF WARNING LIGHTS WHEN SHOWN ON THE PLAN.

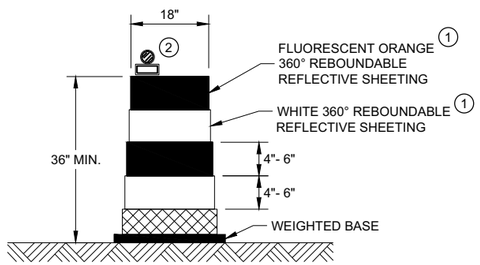

DRUM

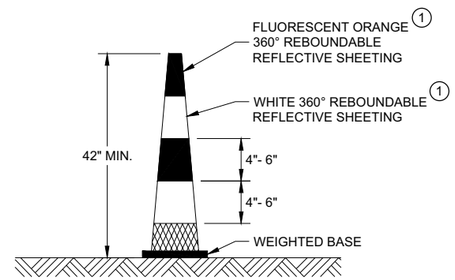

42" CONE

DO NOT USE IN TAPERS
½ SPACING OF DRUMS

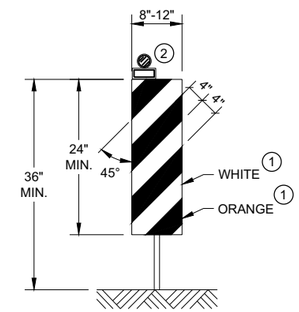

VERTICAL PANEL

THE STRIPES SHALL SLOPE DOWNWARD TO
THE TRAFFIC SIDE FOR CHANNELIZATION.

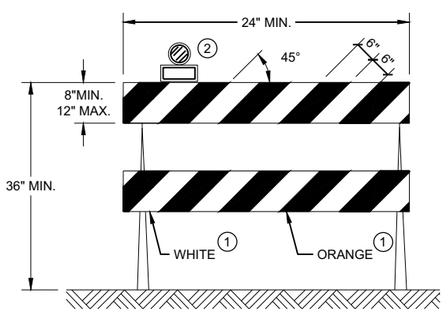

TYPE II BARRICADE

FOR RAILS LESS THAN 36" LONG, 4" WIDE STRIPES
MAY BE USED. ALL STRIPES SHALL SLOPE DOWNWARD
TO THE TRAFFIC SIDE FOR CHANNELIZATION.

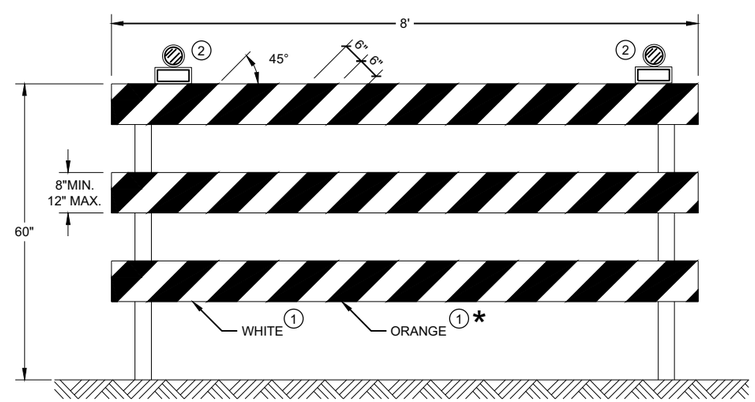

TYPE III BARRICADE

IF SIGN MOUNTED, DO NOT COVER MORE THAN 50% OF THE TOP
TWO RAILS OR 33% OF THE TOTAL AREA OF THE THREE RAILS.

* IF USED FOR A PERMANENT APPLICATION USE RED SHEETING.

CHANNELIZING DEVICES DRUMS, CONES, BARRICADES AND VERTICAL PANELS

STATE OF WISCONSIN
DEPARTMENT OF TRANSPORTATION

APPROVED
November 2020 /S/ Andrew Heidtke
DATE WORK ZONE ENGINEE
FHWA

6

SDD 15C11 - 08b

LEGEND

SIGN ON PORTABLE OR PERMANENT SUPPORT

TEMPORARY PORTABLE RUMBLE STRIP ARRAY

DIRECTION OF TRAFFIC

WORK AREA

FLAGGER, EQUIPPED WITH STOP/SLOW PADDLE FASTENED ON SUPPORT STAFF

GENERAL NOTES

DETAILS OF TRAFFIC CONTROL DEVICES AND INSTALLATION NOT SHOWN ON THIS DRAWING SHALL CONFORM TO THE PERTINENT REQUIREMENTS OF THE STANDARD SPECIFICATIONS, THE SPECIAL PROVISIONS, AND THE MANUAL ON UNIFORM TRAFFIC CONTROL DEVICES.

ALL SIGNS ARE 48" X 48" UNLESS OTHERWISE NOTED.

"WO" SIGNS ARE THE SAME AS "W" SIGNS EXCEPT THE BACKGROUND IS ORANGE.

THE EXACT NUMBER, LOCATION AND SPACING OF ALL SIGNS, DEVICES, AND LOCATION OF ALL FLAGGERS SHALL BE ADJUSTED TO FIT FIELD CONDITIONS AS APPROVED BY THE ENGINEER.

THE FIRST ADVANCE WARNING SIGN SHOULD TYPICALLY BE LOCATED IN ADVANCE OF THE ANTICIPATED TRAFFIC BACKUP OR QUEUE.

WHEN A SIDE ROAD OR RAMP INTERSECTS THE FACILITY ON WHICH THE WORK IS BEING PERFORMED, ADDITIONAL TRAFFIC CONTROLS SHALL BE PROVIDED AS SPECIFIED IN THE PLANS AND/OR THE SPECIAL PROVISIONS OR AS APPROVED BY THE ENGINEER.

FLAGGING

FLAGGERS SHALL BE IN SIGHT OF EACH OTHER OR IN DIRECT COMMUNICATION AT ALL TIMES. THEY SHALL BE EQUIPPED WITH STOP/SLOW PADDLES FASTENED ON SUPPORT STAFFS. WHEN THE FLAGGING OPERATION IS NOT IN EFFECT REMOVE TEMPORARY PORTABLE RUMBLE STRIPS PRIOR TO COVERING OR REMOVING ALL ADVANCE SIGNING.

(1) FOR MOVING WORK OPERATIONS, POST ADDITIONAL W20-7A FLAGGER SIGNS AT APPROXIMATELY 3,500' INTERVALS IN THE MOVING WORK OPERATION OR AS APPROVED BY THE ENGINEER.

(2) SIGN NOT REQUIRED IF FLAGGING OPERATION OCCURS WITHIN A SIGNED ROAD WORK ZONE AREA.

WHEN THE DISTANCE BETWEEN FLAGGERS EXCEEDS 2 MILES, A PILOT CAR IS REQUIRED. WHEN CURVES REDUCE SIGHT DISTANCE BELOW 400', A PILOT CAR IS REQUIRED.

TEMPORARY PORTABLE RUMBLE STRIPS

UTILIZE TEMPORARY PORTABLE RUMBLE STRIPS ON ALL FLAGGING OPERATIONS.

(3) EACH TEMPORARY PORTABLE RUMBLE STRIP ARRAY CONSISTS OF THREE RUMBLE STRIPS SPACED ACCORDING TO MANUFACTURER'S RECOMMENDATION, PLACED TRANSVERSE ACROSS THE LANE AT LOCATIONS SHOWN.

ONLY USE TEMPORARY PORTABLE RUMBLE STRIPS FOR THE APPROVED PRODUCTS LIST.

INSTALL TEMPORARY RUMBLE STRIPS PER MANUFACTURER'S RECOMMENDATIONS.

PLACE ADVANCE SIGNING PRIOR TO INSTALLING TEMPORARY RUMBLE STRIPS.

DO NOT INSTALL TEMPORARY PORTABLE RUMBLE STRIPS ON GRAVEL, MILLED SURFACES, OR ASPHALT THAT HAS BEEN PAVED LESS THAN 12 HOURS.

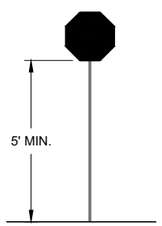

STOP/SLOW PADDLE ON SUPPORT STAFF

SIGN AND TEMPORARY RUMBLE STRIP ARRAY SPACING TABLE

SPEED LIMIT	SPACING "A"
25-30 MPH	200'
35-40 MPH	350'
45-55 MPH	500'

USE OF WO3-4 SIGN IS OPTIONAL. WHEN USED, THIS SIGN SHALL BE LOCATED BETWEEN THE W20-7A AND W20-4A SIGNS, USING SPACING "A".

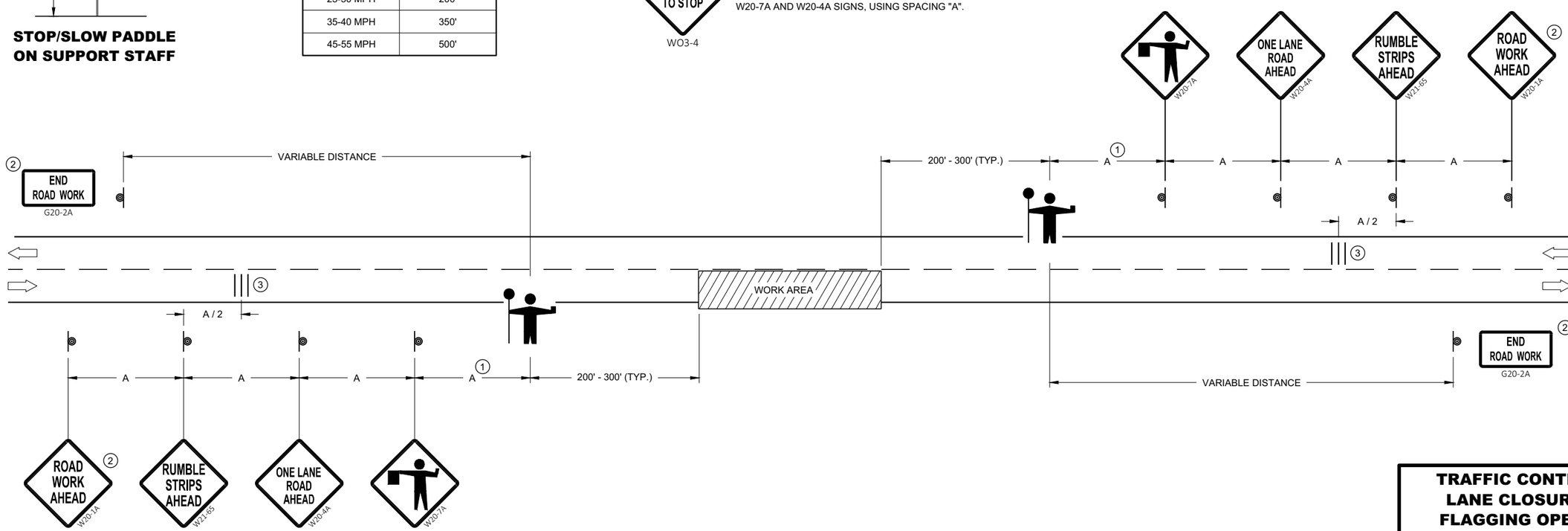

TRAFFIC CONTROL FOR LANE CLOSURE WITH FLAGGING OPERATION

TRAFFIC CONTROL FOR LANE CLOSURE WITH FLAGGING OPERATION

STATE OF WISCONSIN
DEPARTMENT OF TRANSPORTATION

APPROVED
May 2019 — DATE
/S/ Andrew Heidtke — WORK ZONE ENGINEE
FHWA

6
SDD 15C12 - 07

LEGEND

- SIGN ON PERMANENT SUPPORT
- TRAFFIC CONTROL DRUM
- DIRECTION OF TRAFFIC
- WORK ZONE

GENERAL NOTES

ALL SIGNS ARE 48"X48" UNLESS OTHERWISE NOTED. IF NECESSARY DUE TO SPACE CONSTRAINTS IN URBAN AREAS, 36" X 36" SIGNS MAY BE USED IF APPROVED BY THE REGIONAL TRAFFIC UNIT.

"WO" SIGN IS THE SAME AS "W" SIGN EXCEPT THE BACKGROUND IS ORANGE.

ANY SIGNS TEMPORARY OR EXISTING, WHICH CONFLICT WITH THE TRAFFIC CONTROL "IN USE" SHALL BE REMOVED OR COVERED AS NEEDED AND AS APPROVED BY THE ENGINEER.

THE EXACT NUMBER, LOCATION, AND SPACING OF ALL SIGNS AND DEVICES SHALL BE ADJUSTED TO FIT FIELD CONDITIONS AS APPROVED BY THE ENGINEER.

CHANNELIZING DEVICES PLACED ADJACENT TO WORK AREA SHALL BE PULLED BACK FROM THE TRAVEL LANE WHEN WORK IS NOT IN PROGRESS.

SIGNS THAT WILL BE IN PLACE LESS THAN 7 CONTINUOUS DAYS AND NIGHTS MAY BE MOUNTED ON PORTABLE SUPPORTS.

W20-1A AND G20-2A SIGNS ARE NOT REQUIRED IF THE WORK AREA IS WITHIN A LARGER WORK ZONE WHERE THESE SIGNS ARE ALREADY PRESENT. G20-2A SIGNS MAY ALSO BE OMITTED IF DURATION OF WORK IS LESS THAN 7 CONTINUOUS DAYS AND NIGHTS.

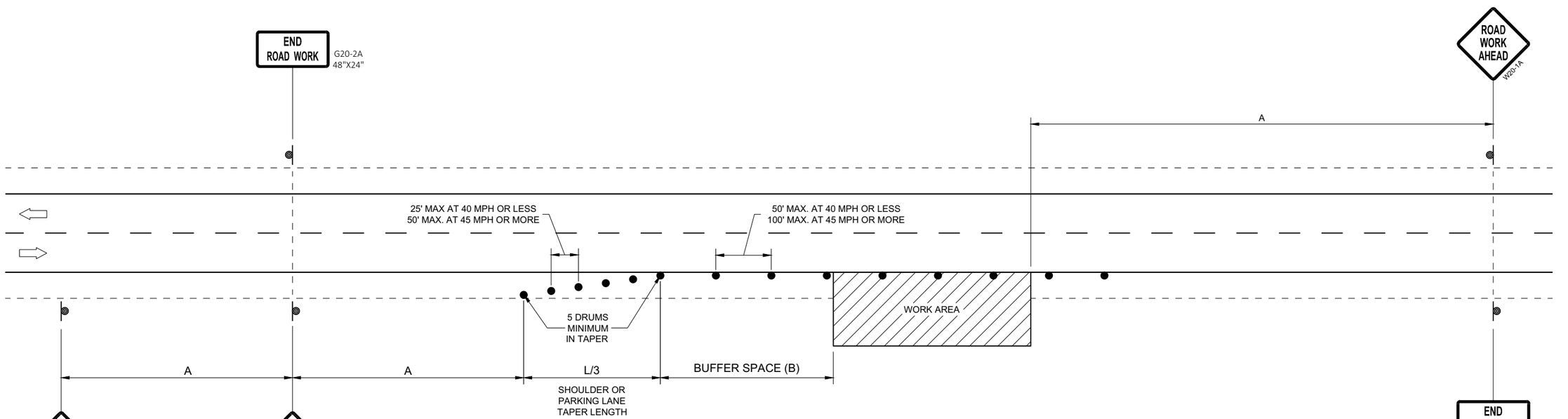

OR
IF TRAFFIC CONTROL DEVICES
ENCROACH ONTO TRAVELED WAY, USE

POSTED SPEED LIMIT PRIOR TO WORK STARTING (MPH)	ADVANCE WARNING SIGN SPACING (A) FEET	SHOULDER TAPER L / 3 W, LATERAL OFFSET (FT)						BUFFER SPACE (B) FEET
		3	4	5	6	7	8	
25	200'	10	14	17	21	24	28	55
30	200'	15	20	25	30	35	40	85
35	350'	20	27	34	40	47	54	120
40	350'	26	35	44	53	62	70	170
45	500'	45	59	74	89	104	119	220
50	500'	50	66	83	99	116	132	280
55	500'	54	73	91	109	127	145	335'

TRAFFIC CONTROL, WORK ON SHOULDER OR PARKING LANE, UNDIVIDED ROADWAY

STATE OF WISCONSIN
DEPARTMENT OF TRANSPORTATION

APPROVED
May 2020 — DATE
/S/ Andrew Heidtke — STATEWIDE WORK ZONE T SAFETY ENGINEER
FHWA

6

SDD 15D28 - 04

LEGEND

- TYPE III BARRICADE WITH ATTACHED SIGN
- SIGN ON PERMANENT SUPPORT
- TRAFFIC CONTROL DRUM WITH TYPE "C" STEADY BURN LIGHT
- TRAFFIC CONTROL DRUM
- FLAGS, 16" X 16" MIN. (ORANGE)
- REMOVING PAVEMENT MARKING
- DIRECTION OF TRAFFIC
- ASPHALTIC PAVEMENT WIDENING
- CONCRETE BARRIER TEMPORARY PRECAST
- TEMPORARY SIGNAL. SEE SDD 09G02 FOR EXACT PLACEMENT

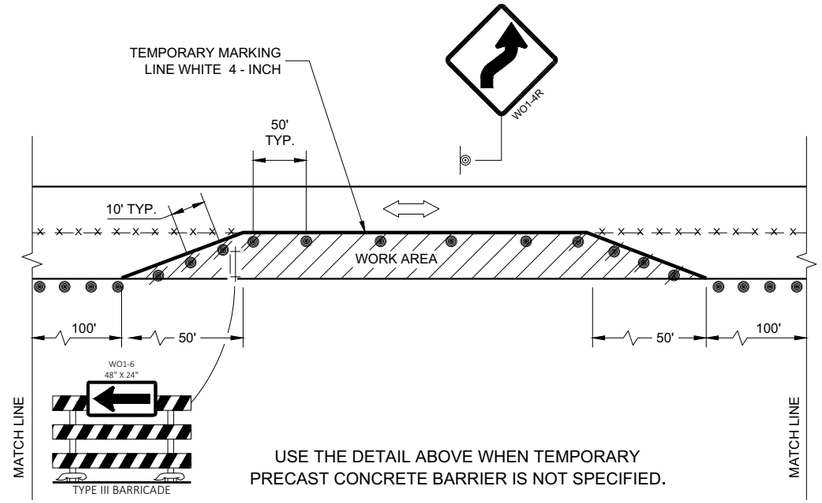

USE THE DETAIL ABOVE WHEN TEMPORARY PRECAST CONCRETE BARRIER IS NOT SPECIFIED.

GENERAL NOTES

THE EXACT NUMBER, LOCATION, AND SPACING OF ALL SIGNS AND DEVICES SHALL BE ADJUSTED TO FIT FIELD CONDITIONS AS APPROVED BY THE ENGINEER.

THE SPACING BETWEEN TRAFFIC CONTROL SIGNS SHOULD BE ADJUSTED TO NOT CONFLICT WITH AND TO PROVIDE A MINIMUM OF 200 FEET (500 FEET DESIRABLE) CLEARANCE TO EXISTING SIGNS THAT WILL REMAIN IN PLACE..

THIS LANE CLOSURE IS TYPICAL FOR CLOSING RIGHT LANE - REVERSE FOR CLOSING LEFT LANE.

ALL SIGNS ARE 48" x 48" UNLESS OTHERWISE NOTED.

"WO" IS THE SAME AS "W" EXCEPT THE BACKGROUND IS ORANGE.

ANY SIGNS TEMPORARY OR EXISTING, WHICH CONFLICT WITH TRAFFIC CONTROL "IN USE" SHALL BE REMOVED OR COVERED AS NEEDED OR AS APPROVED BY THE ENGINEER.

PLACE TEMPORARY PAVEMENT MARKING EDGELINE AND CENTERLINE AND REMOVE EXISTING PAVEMENT MARKINGS IF LANE CLOSURE IS TO BE IN PLACE 4 OR MORE CONTINUOUS DAYS AND NIGHTS OR AS NOTED ON DETAIL.

1. 500 FOOT SPACING SHOWN IS FOR ROADWAYS WITH A PRE-CONSTRUCTION REGULATORY SPEED LIMIT OF 45 MPH OR MORE. FOR 35 - 40 MPH, USE 350 FOOT TYPICAL SPACING. FOR 25 - 30 MPH, USE 200 FOOT TYPICAL SPACING.
2. USE 300 FOOT SPACING IF THE PRE - CONSTRUCTION REGULATORY SPEED IS 35 MPH OR LESS.
3. DIMENSION DETERMINED BY CBTP TAPER FROM EDGE LINE TO TANGENT SECTION OF THE ROAD.
4. TEMPORARY MARKING STOP LINE REMOVABLE TAPE 18 - INCH.
5. 700 FOOT TEMPORARY MARKING LINE, DOUBLE YELLOW 4 - INCH . WHEN THE DISTANCE FOR THE PRECEDING NO - PASSING ZONE IS LESS THAN THE MINIMUM DISTANCE BETWEEN ZONES AS INDICATED IN THE SPECIFICATIONS, THE TWO ZONES SHALL BE CONNECTED.
6. SEE SDD 15C02 - SHEET "F" FOR ADVANCED WIDTH RESTRICTION SIGNING.

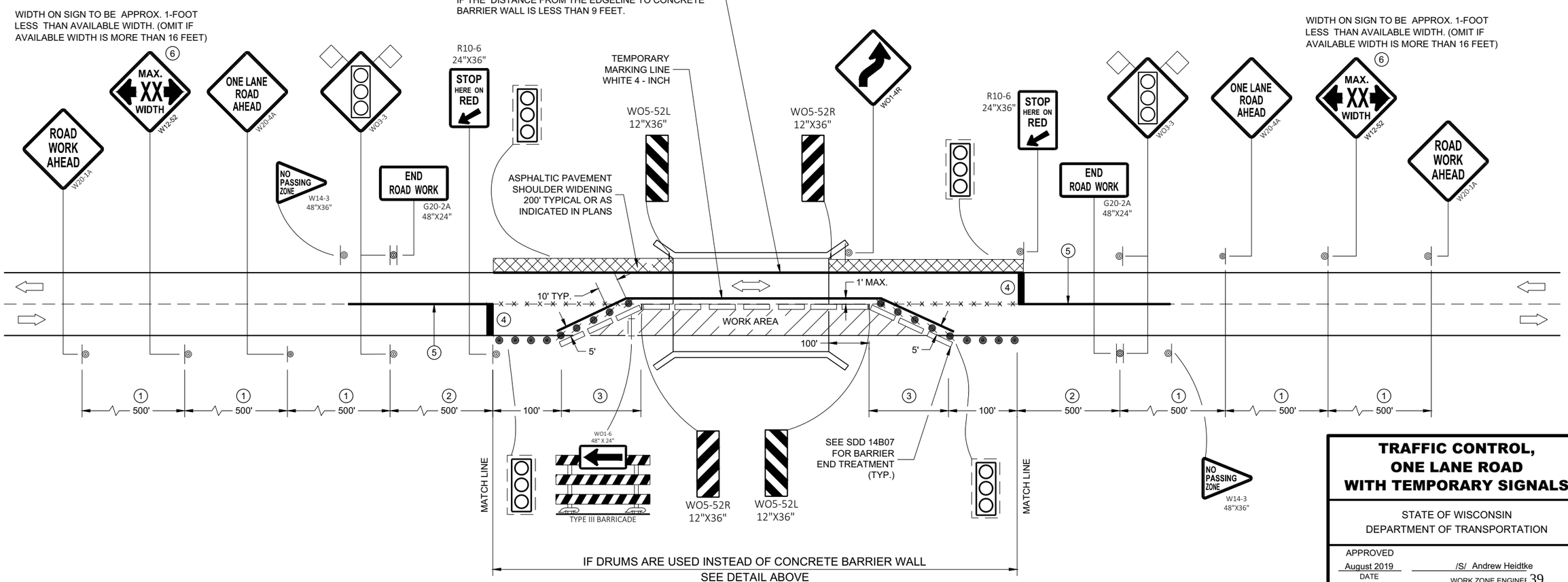

TRAFFIC CONTROL, ONE LANE ROAD WITH TEMPORARY SIGNALS

STATE OF WISCONSIN
DEPARTMENT OF TRANSPORTATION

APPROVED
August 2019 — DATE
/S/ Andrew Heidtke — WORK ZONE ENGINEE
FHWA

6

SDD 15D33 - 06

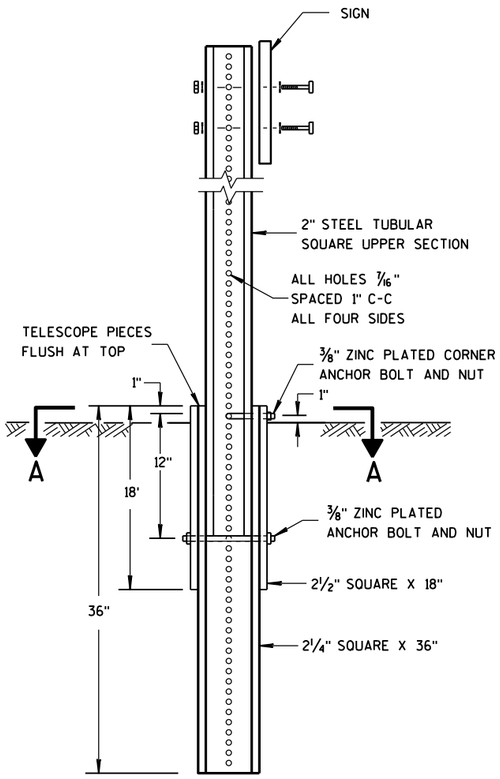

DETAIL OF TUBULAR STEEL SIGN POST

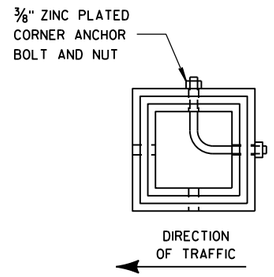

SECTION A-A

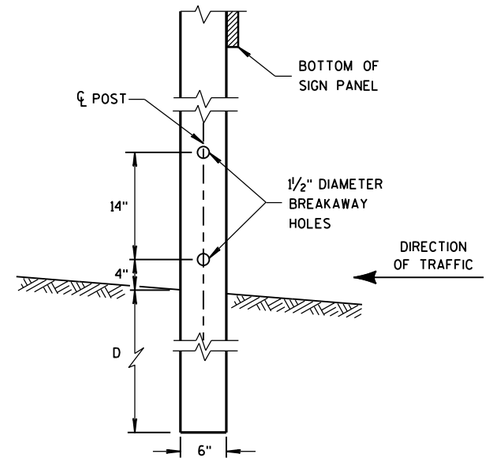

4"x6" WOOD POST MODIFICATION

GENERAL NOTES

1. 6 FEET FROM THE EDGE OF PAVEMENT (EDGE LINE LOCATION) UNLESS OTHERWISE DIRECTED BY THE PROJECT ENGINEER. LATERAL OFFSET SHOULD BE ADJUSTED TO AVOID THE DITCH FLOWLINE.
2. THE EXISTENCE OF CURB AND GUTTER DOES NOT IN ITSELF MANDATE THE VERTICAL CLEARANCE ILLUSTRATED. THAT HEIGHT IS TYPICALLY MEASURED WHERE THERE IS SIDEWALK ADJACENT TO THE ROADWAY OR PARKING IS PERMITTED. IN THE ABSENCE OF SIDEWALK, VERTICAL CLEARANCE IS MEASURED FROM THE TOP OF THE CURB. IF NO SIDEWALK AND NO PARKING, VERTICAL CLEARANCE MAY BE REDUCED TO 5 FOOT MINIMUM. OFFSET OF SIGNS IS MEASURED FROM THE CURB FLOWLINE.
3. FOR SIGNS REQUIRING 4 POSTS, SPACE INTERMEDIATE POSTS EVENLY.

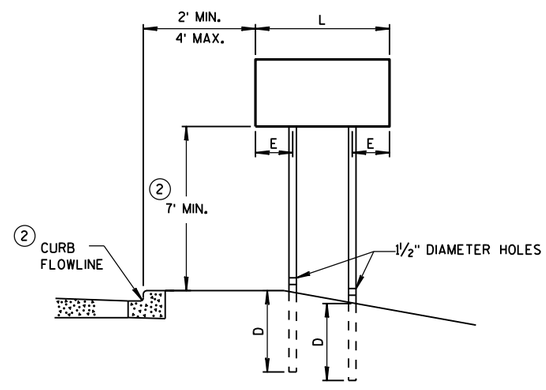

URBAN AREA

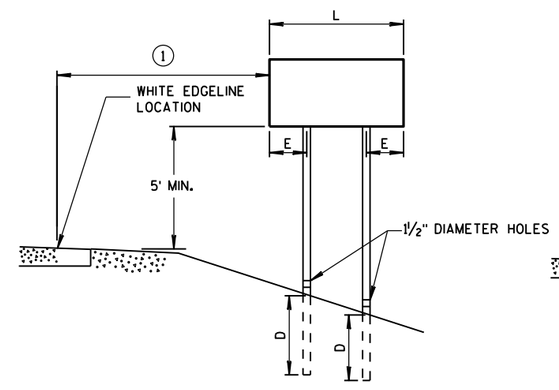

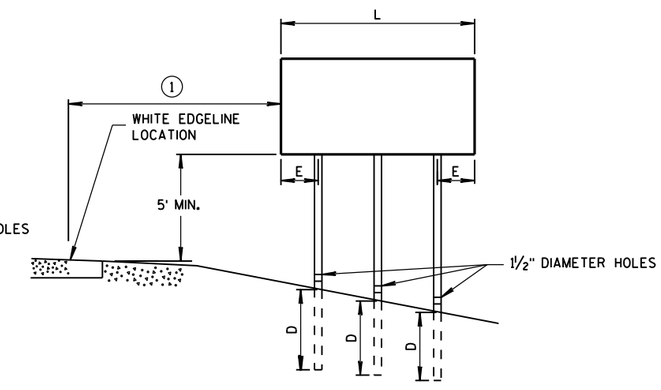

RURAL AREA

POST MOUNTING DETAIL FOR TEMPORARY TRAFFIC CONTROL FIXED MESSAGE SIGNS

TUBULAR STEEL POSTS

AREA OF SIGN INSTALLATION (SQ. FT.)	NUMBER OF REQUIRED TUBULAR STEEL POSTS
9 OR LESS	1
GREATER THAN 9 LESS THAN OR EQUAL TO 18	2
GREATER THAN 18 LESS THAN OR EQUAL TO 27	3

SIGNS WIDER THAN 3 FEET OR LARGER THAN 9 SQ. FT. SHALL BE MOUNTED ON MULTIPLE POSTS (SEE ABOVE TABLE).

SIGNS LARGER THAN 27 SQ. FT. SHALL NOT BE MOUNTED ON TUBULAR STEEL POSTS.

WOOD POST EMBEDMENT DEPTH

AREA OF SIGN INSTALLATION (SQ. FT.)	D (MIN)
20 OR LESS	4'
GREATER THAN 20	5'

4" X 6" WOOD POST

POST SPACING REQUIREMENTS		NUMBER OF WOOD POSTS REQUIRED
L	E	
48" OR LESS AND LESS THAN 20 SQ. FT.	-	1
LESS THAN 60"	12"	2
60" TO 120"	L/5	2
GREATER THAN 120" LESS THAN 168"	12"	3
168" AND GREATER	12"	4

SEE NOTE 3

TEMPORARY TRAFFIC CONTROL SIGN MOUNTING

STATE OF WISCONSIN
DEPARTMENT OF TRANSPO

6

S.D.D. 15 D 38-2a

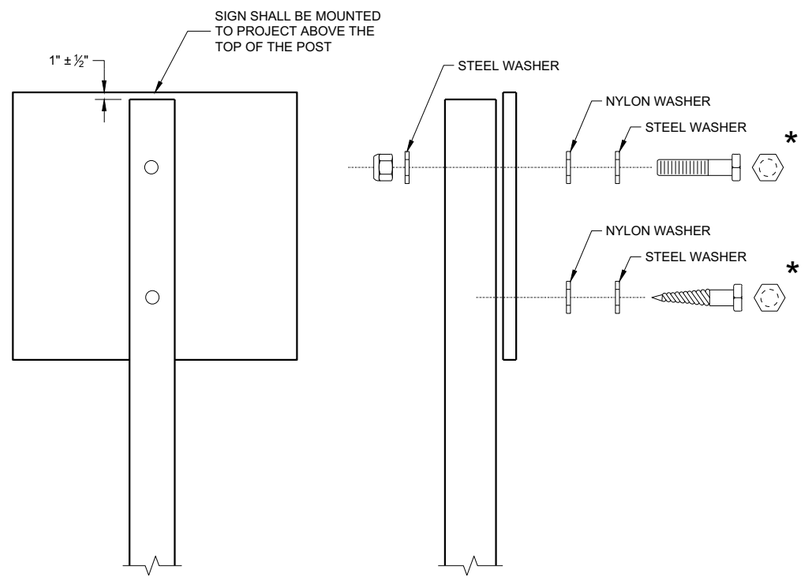

NUTS, BOLTS AND LAGS USED FOR MOUNTING SIGNS SHALL HAVE HEXAGONAL HEADS AND SHALL BE EITHER:

A. HOT DIP GALVANIZED IN ACCORDANCE WITH ASTM DESIGNATION: A 153, CLASS D, OR SC 3
B. ELECTRO-GALVANIZED IN ACCORDANCE WITH ASTM DESIGNATION: B 633, TYPE III, SC 3

THREADS ON BOLTS AND NUTS SHALL BE MANUFACTURED WITH SUFFICIENT ALLOWANCE FOR THE CADMIUM PLATE OR GALVANIZED COATING TO PERMIT THE NUTS TO RUN FREELY ON THE BOLTS.

WOOD POST (4" x 6")
LAG SCREWS - ⅜" x 3"
MACHINE BOLTS - 5/16" x 6 ½" OR 7" LENGTH W/NUTS

SQUARE STEEL POST (2" x 2")
MACHINE BOLTS - ⅜" x 3 ¼" LENGTH W/NUTS
RIVETS - 9/32" (6605-9-6) BULB-TITE, TRI-FOLD, ALUMINUM BODY/MANDREL O.D. FLANGE 0.720 - 0.765 INCH, GRIP RANGE 0.042 - 0.375 INCH

WASHERS (ALL POSTS) -
1 ¼" O.D. x ⅜" I.D. x 1/16" STEEL
1 ¼" O.D. x ⅜" I.D. x 0.080 NYLON

* TWO DIFFERENT FASTENING SYSTEMS ARE SHOWN FOR ILLUSTRATION PURPOSES. ON ANY INDIVIDUAL SIGN, EITHER ONE OR THE OTHER SYSTEM SHALL BE USED. ACTUAL NUMBER OF FASTENERS PER SIGN VARIES WITH THE SIGN AREA. FOR A SINGLE POST INSTALLATION, ALL SIGNS GREATER THAN 9 SQ. FT. REQUIRE THE USE OF 3 FASTENERS.

6

6

SDD 15D38 - 02b

ATTACHMENT OF SIGNS TO POSTS

STATE OF WISCONSIN
DEPARTMENT OF TRANSPORTATION

APPROVED
June 2017 — DATE
/S/ Andrew Heidtke — WORK ZONE ENGINEE
FHWA

SDD 15D38 - 02b

URBAN AREA

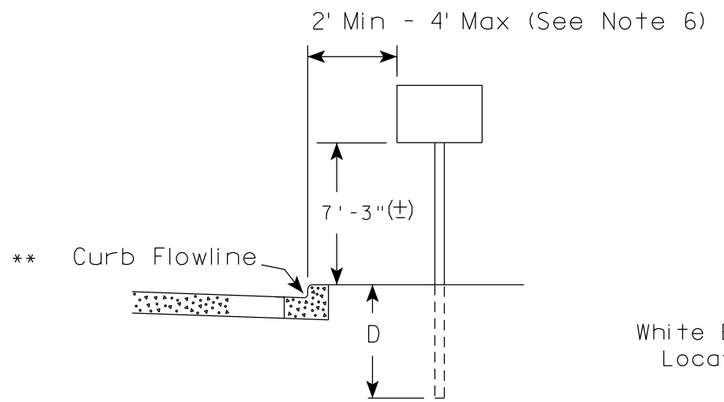

RURAL AREA (See Note 2)

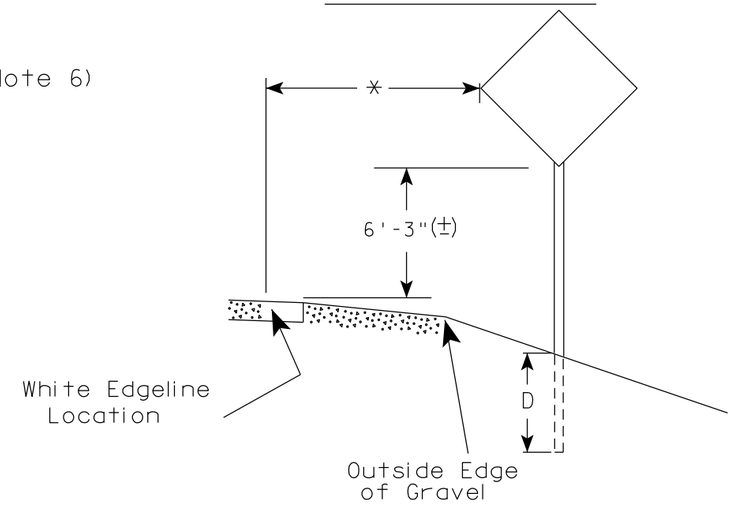

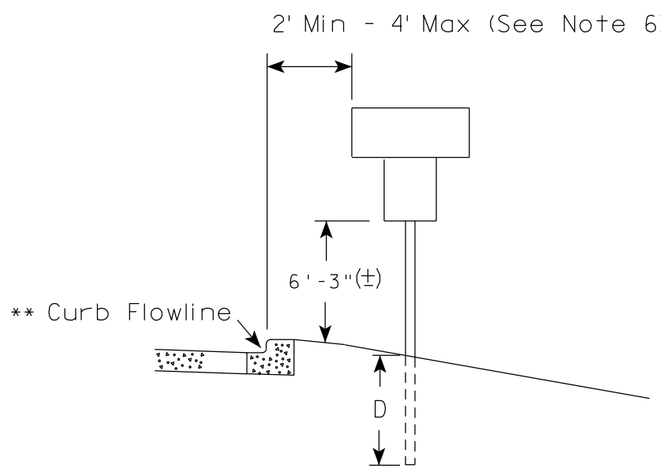

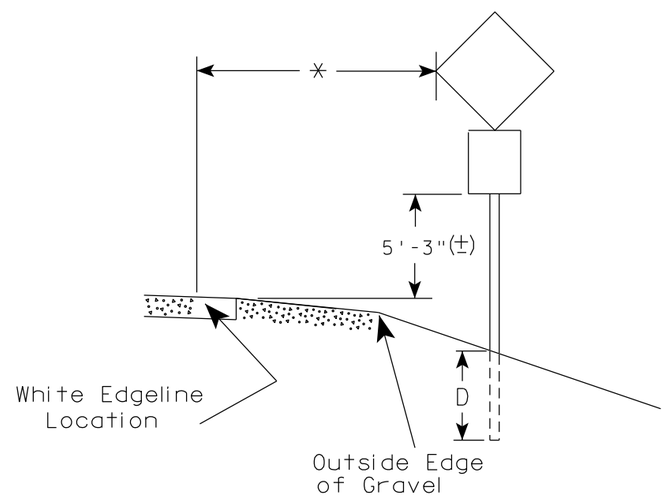

** The existence of curb and gutter does not in itself mandate the vertical clearance illustrated. That height is typically measured where there is sidewalk adjacent to the roadway or parking is permitted. In the absence of sidewalk vertical clearance is measured from the top of the curb. Offset of signs is measured from the flow line.

* 6 feet from edge of a paved shoulder or 12 feet from the edge of pavement (edge line location) or 2 feet from outside edge of gravel, whichever is greater unless directed by project engineer.

GENERAL NOTES

1. Signs wider than 4 feet or 20 sq.ft or larger, shall be mounted on multiple posts. Refer to plate A4-4.
2. If signs are mounted on or behind barrier wall, see A4-10 sign plate.
   The Double Arrow sign (W12-1D) shall be mounted at a height of 2'-3" (±). The Chevron sign (W1-8), Roundabout Chevron panel (R6-4B), Enhanced Reference Markers, Clearance Markers (W5-52), Mile Markers (D10 series), In Road Object Markers (W5-54) & End of Road Markers (W5-56) shall be mounted at a height of 4'-3" (±).
3. For expressways and freeways, mounting height is 7'- 3" (±) or 6'-3" (±) depending upon existence of a sub-sign.
4. Minimum mounting height for signs mounted on traffic signal poles is 5'- 3" (±).
5. Offset distance shall be consistent with existing signs or consistent throughout length of project.
6. The (±) tolerance for mounting height is 3 inches.
7. Folding signs shall be mounted at a height of 5'-3" (±) or as directd by the Engineer.

POST EMBEDMENT DEPTH

Area of Sign Installation (Sq.Ft.)	D (Min)
20 or Less	4'
Greater than 20	5'

TYPICAL INSTALLATION OF PERMANENT TYPE II SIGNS ON SINGLE POSTS

WISCONSIN DEPT OF TRANSPORTATION

APPROVED Matthew R Rauch for State Traffic Engineer

DATE 5/13/2020 PLATE NO. A4-3.22

7 7

PROJECT NO:	HWY:	COUNTY:		SHEET NO: 42	E

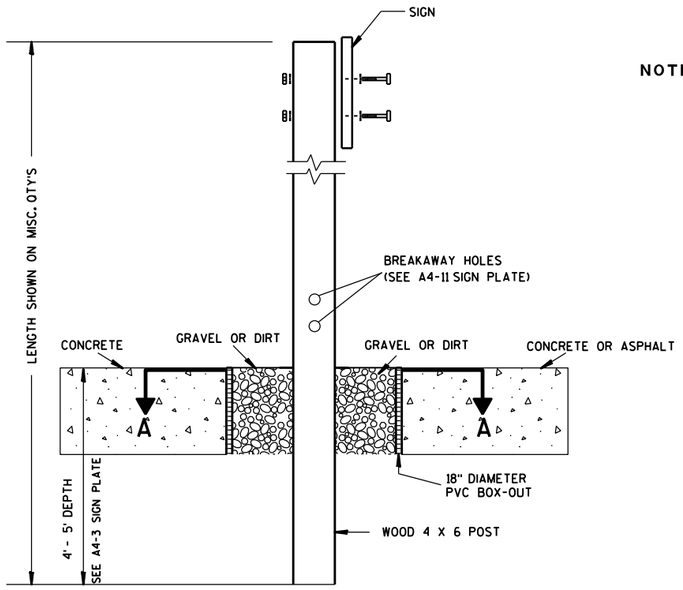

ELEVATION VIEW

DETAIL OF WOOD 4 X 6 SIGN POST IN BOX-OUT

NOTES:
1. ALL MATERIAL TO BE APPROVED BY ENGINEER PRIOR TO INSTALLATION
2. SEE SIGN PLATE A4-8 FOR SIGN HARDWARE REQUIREMENTS
3. 18 INCH X 18 INCH SQUARE BOX-OUTS MAY BE USED FOR INSTALLATIONS IN EXISTING CONCRETE OR ASPHALT LOCATIONS.

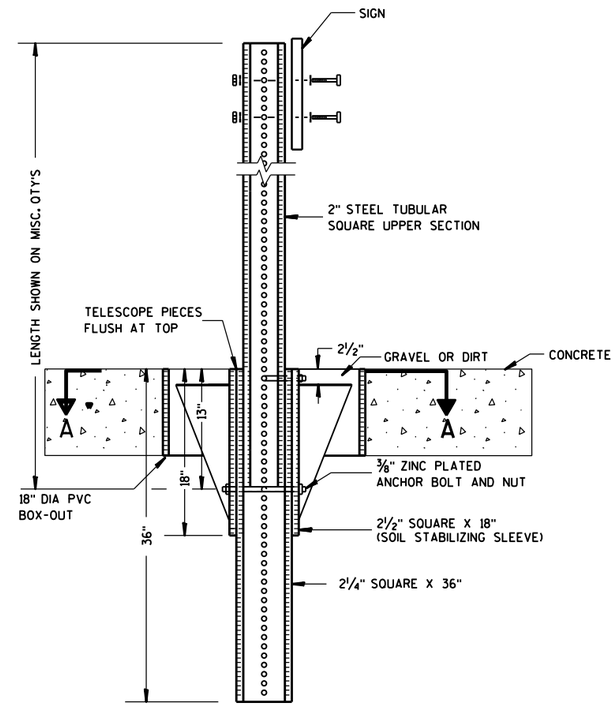

ELEVATION VIEW

DETAIL OF STEEL 2 X 2 SIGN POST IN BOX-OUT

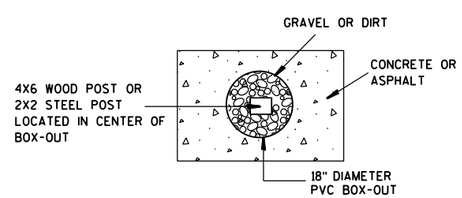

PLAN VIEW

FOR NEW CONCRETE/ASPHALT INSTALLATIONS

SIGN POST
BOX-OUTS
A4-3B

WISCONSIN DEPT OF TRANSPORTATION

APPROVED Matthew R Rauch
for State Traffic Engineer

DATE 1/27/14 PLATE NO. A4-3B.1

PROJECT NO:	HWY:	COUNTY:		SHEET NO:	E

URBAN AREA

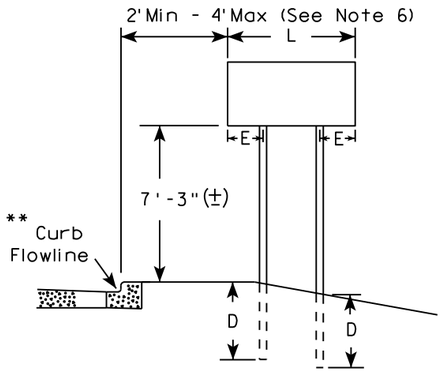

RURAL AREA (See Note 3)

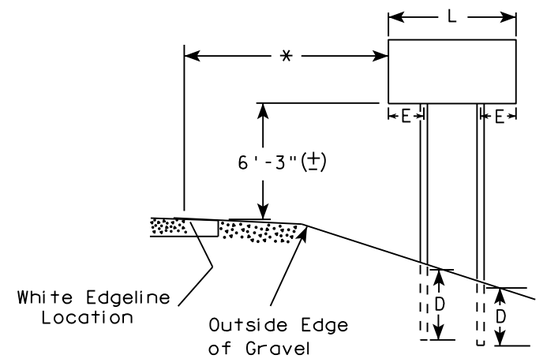

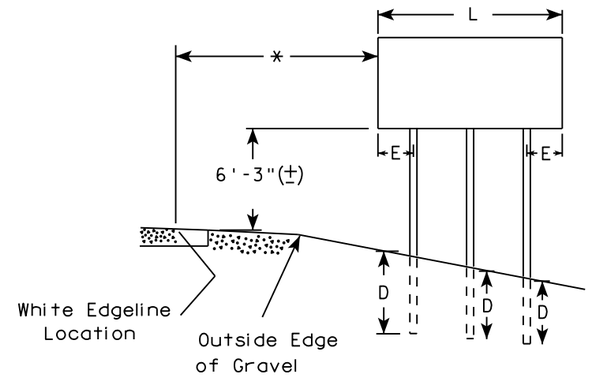

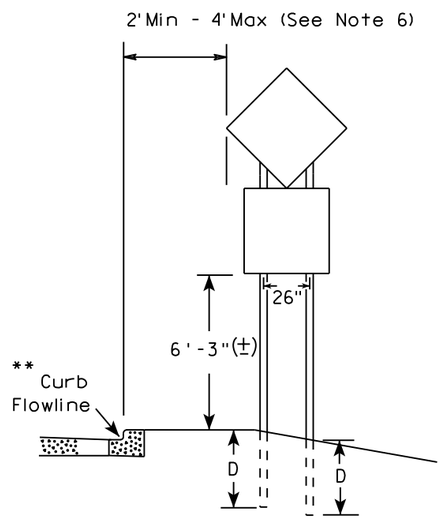

48" DIAMOND WARNING SIGN

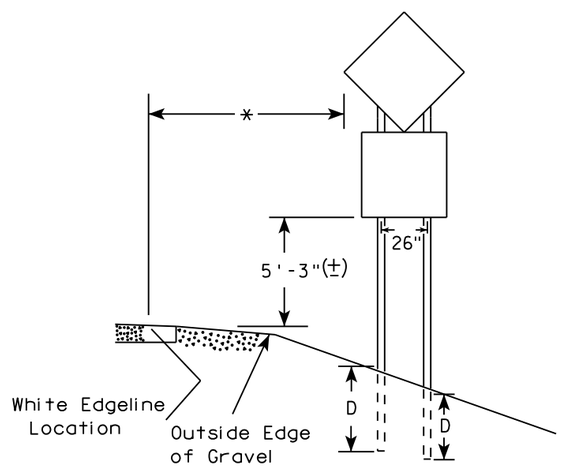

48" DIAMOND WARNING SIGN

GENERAL NOTES

1. For 3 or 4 post installations, individual post spacing shall be greater than 3'-6".
2. See tables below for required number of posts.
3. For expressways and freeways, mounting height is 7'-3" (±) or 6'-3" (±) depending upon existence of sub-sign.
4. The (±) tolerance for mounting height is 3 inches.
5. J-Assemblies are considered to be one sign for mounting height.
6. Offset distance shall be consistent with existing signs or consistent throughout length of project.
7. Folding signs shall be mounted at a height of 5'-3" (±) or as directed by the engineer.
8. The Double Arrow sign (W12-1) shall be mounted at a height of 2'-3" (±). The Chevron sign (W1-8), Roundabout Chevron panel (R6-4B), Clearance Markers (W5-52), Mile Markers (D10 series), In Road Object Markers (W5-54) & End of Road Markers (W5-56) shall be mounted at a height of 4"-3" (±).

* 6 feet from edge of a paved shoulder or 12 feet from the edge of pavement (edge line location) or 2 feet from outside edge of gravel, whichever is greater unless directed by project engineer.

** The existence of curb and gutter does not in itself mandate the vertical clearance illustrated. That height is typically measured where there is sidewalk adjacent to the roadway or parking is permitted. In the absence of sidewalk vertical clearance is measured from the top of the curb. Offset of signs is measured from the flow line.

*** See A4-3 sign plate for signs 4' or less in width and less than 20 S.F. in area.

SIGN SHAPE OTHER THAN DIAMOND (TWO POSTS REQUIRED)	
L	E
*** Greater than 48" Less than 60"	12"
60" to 108"	L/5

SIGN SHAPE OTHER THAN DIAMOND (THREE POSTS REQUIRED)	
L	E
Greater than 108" to 144"	12"

POST EMBEDMENT DEPTH

Area of Sign Installation (Sq. Ft.)	D (Min)
20 or Less	4'
Greater than 20	5'

TYPICAL INSTALLATION OF TYPE II SIGNS ON MULTIPLE POSTS

WISCONSIN DEPT OF TRANSPORTATION

APPROVED Matthew R Rauch
For State Traffic Engineer

DATE 8/21/17 PLATE NO. A4-4.15

7

7

PROJECT NO:	HWY:	COUNTY:		SHEET NO: 44	E

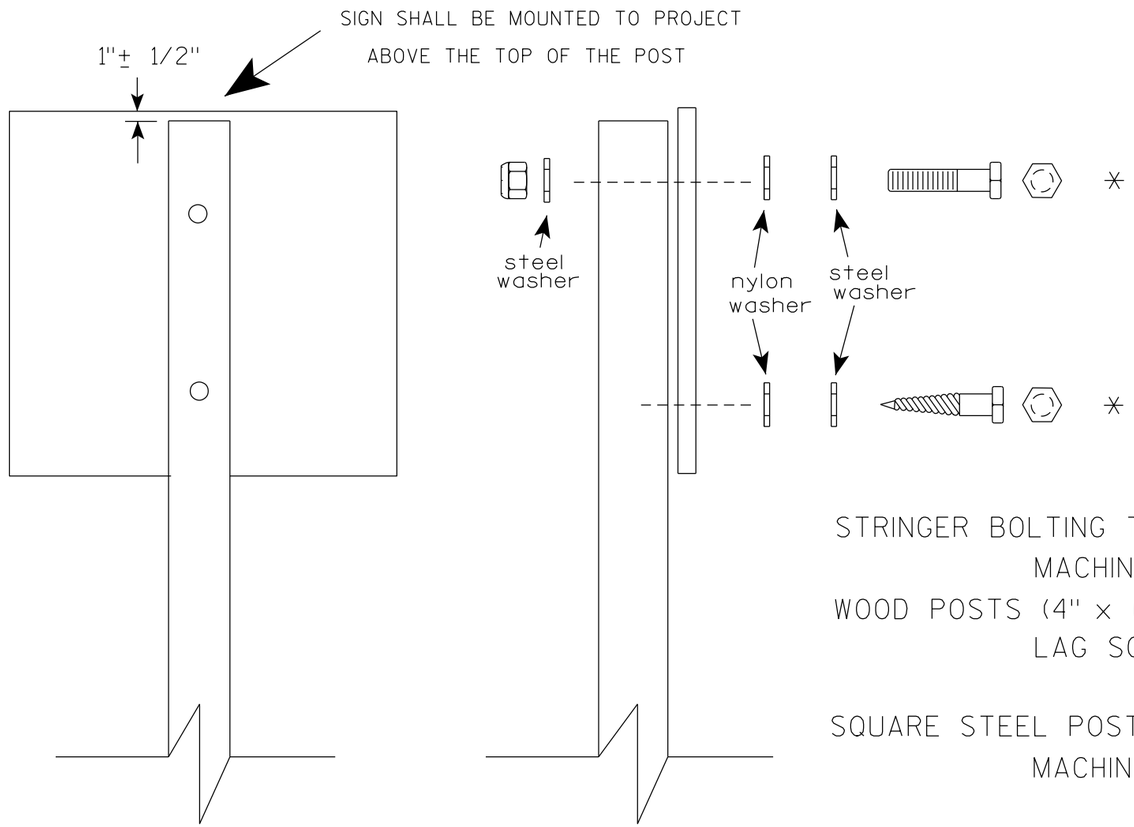

Nuts, bolts and lags used for mounting signs shall have hexagonal heads and shall be either :

a. Hot dip galvanized in accordance with ASTM Designation: A 153, Class D, or SC 3

b. Electro-galvanized in accordance with ASTM Designation : B 633, TYPE III, SC 3.

Threads on bolts and nuts shall be manufactured with sufficient allowance for the cadmium plate or galvanized coating to permit the nuts to run freely on the bolts.

STRINGER BOLTING TO ALUMINUM SIGNS (SEE SIGN PLATE A4-18)

MACHINE BOLTS - 5/16" X 1-3/4" Length w/ lock nuts

WOOD POSTS (4" x 6")

LAG SCREWS - 3/8" X 3" (NO STRINGERS ON BACK OF SIGN)
3/8" X 4" (STRINGERS ON BACK OF SIGN)

SQUARE STEEL POSTS (2" x 2")

MACHINE BOLTS - 3/8" X 3-1/4" Length w/ nuts (NO STRINGER ON BACK OF SIGN)
3/8" X 5" Length w/ nuts (STRINGERS ON BACK OF SIGN)

RIVETS - 9/32" (6605-9-6) BULB-TITE, TRI-FOLD, ALUMINUM BODY/MANDREL
O.D. FLANGE .720-.765 INCH, GRIP RANGE .042-.375 INCH

WASHERS (ALL POSTS) -

1-1/4" O.D. X 3/8" I.D. X 1/16" STEEL
1-1/4" O.D. X 3/8" I.D. X .080 NYLON

* Two different fastening systems are shown for illustration purposes. On any individual sign, either one or the other system shall be used. Actual number of fasteners per sign varies with the sign area, but normally there are two. For a single post installation, all signs greater than 9 sq. ft. require the use of 3 fasteners.

ATTACHMENT OF SIGNS TO POSTS

WISCONSIN DEPT OF TRANSPORTATION

APPROVED Matthew R Rauch
for State Traffic Engineer

DATE 4/1/2020 PLATE NO. A4-8.9

TELESCOPIC TUBING ANCHORS
TWO PIECE SYSTEM

2 1/4 " SQUARE
12 GAUGE
PERFORATED
GALVANIZED FINISH

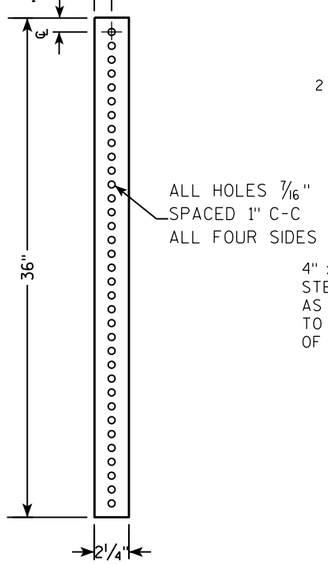

2 1/2 " SQUARE
12 GAUGE
OMNI-DIRECTIONAL
PERFORATED
SOIL STABILIZING SLEEVE
GALVANIZED FINISH

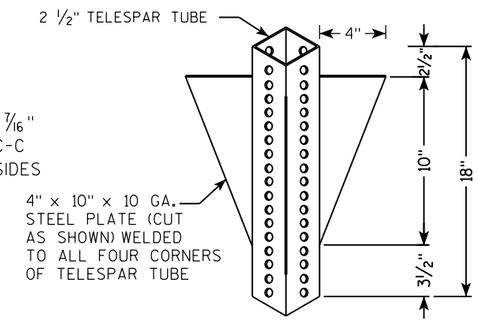

DETAIL OF TUBULAR STEEL SIGN POST
(IN POURED CONCRETE OR ASPHALT)

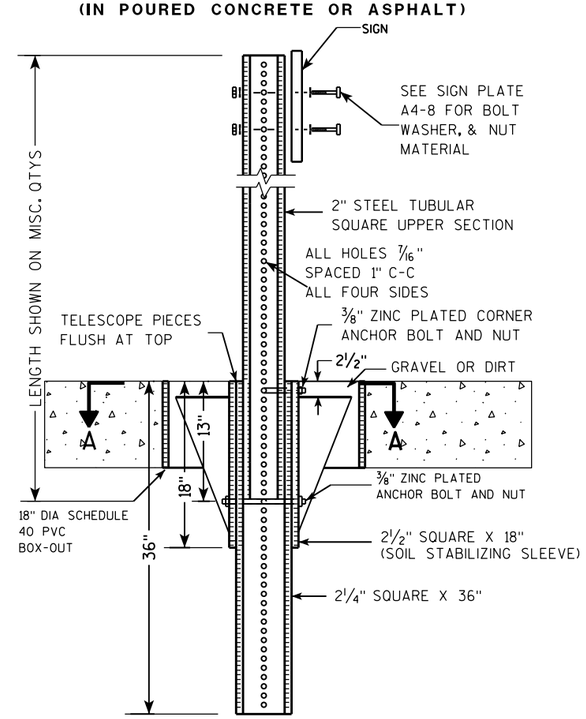

DETAIL OF TUBULAR STEEL SIGN POST
(IN LOCATIONS OTHER THAN POURED CONCRETE OR ASPHALT)

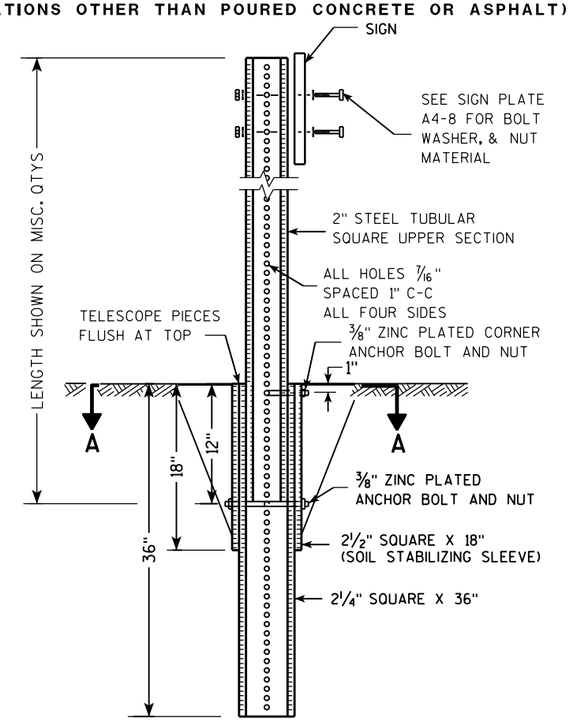

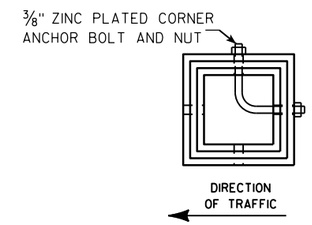

SECTION A-A

Area of Sign Installation (Sq. Ft.)	Number of Required Posts
9 or less	1
Greater than 9 less than or equal to 18	2
Greater than 18 less than or equal to 27	3

Signs wider than 3 feet or larger than 9 sq. ft shall be mounted on multiple posts (see above table).

TUBULAR STEEL
SIGN POST
A4-9

WISCONSIN DEPT OF TRANSPORTATION

APPROVED Matthew R Rauch
for State Traffic Engineer

DATE 2/05/15 PLATE A4-9.9

7 7

PROJECT NO:	HWY:	COUNTY:		SHEET NO:	E

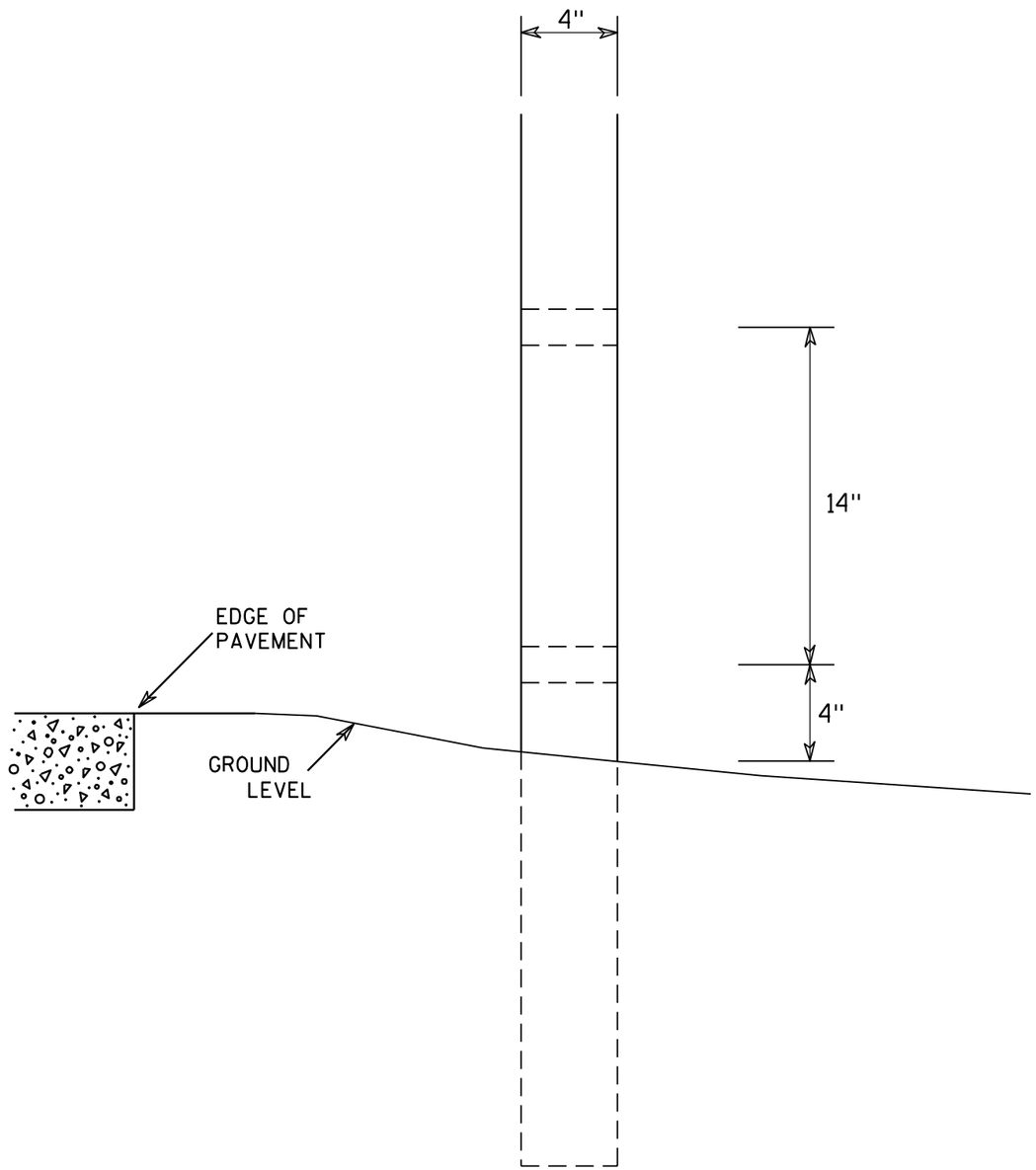

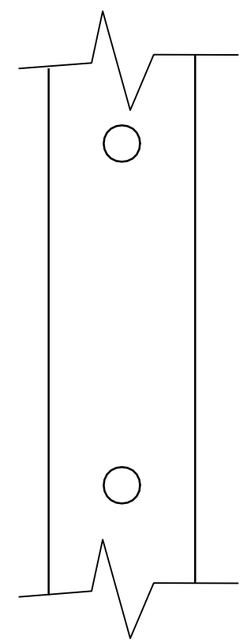

SIDE VIEW

GENERAL NOTES

1. All 4 x 6 Wood Posts shall be modified by having two 1½" diameter holes drilled perpendicular to the roadway centerline.

4 X 6 WOOD POST MODIFICATIONS

WISCONSIN DEPT OF TRANSPORTATION

APPROVED Chester J Spang for State Traffic Engineer

DATE 3/27/97 PLATE NO. A4-11.2

PROJECT NO:	HWY:	COUNTY:		SHEET NO: 47	E

BANDING

SINGLE SIGN

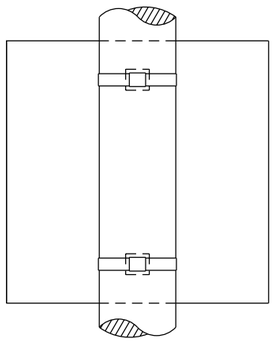

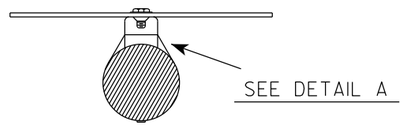

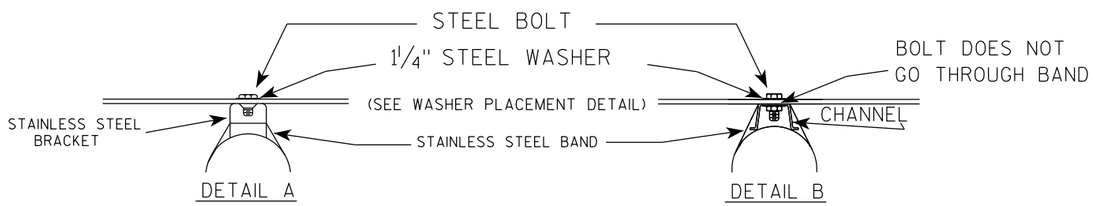

WASHER PLACEMENT

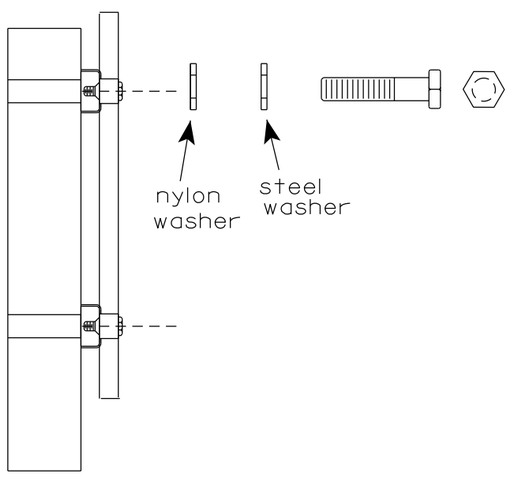

WASHERS (ALL POSTS) -
1-1/4" O.D. X 3/8" I.D. X 1/16" STEEL
1-1/4" O.D. X 3/8" I.D. X .080 NYLON
FOR ALL TYPE H SIGNS

GENERAL NOTES

1. Any sign over 3 feet in width shall use the V-Block banding method. See A5-10 standard plate.
2. Signs 3 feet or greater in height shall have three bracket bands installed. Signs less than 3 feet in height shall have two bracket bands installed.
3. Banding and assembly bracket shall be stainless steel. All bands shall be ¾" in width and 0.025" thickness.
4. ALL SIGN MOUNTING BOLTS AND WASHERS SHALL BE EITHER:
   a. Hot dip or mechanically galvanized in accordance with ASTM Designation: A 153, Class D
   b. Electro-galvanized in accordance with ASTM designation: B 633, Type III, SC 3

"J" ASSEMBLY

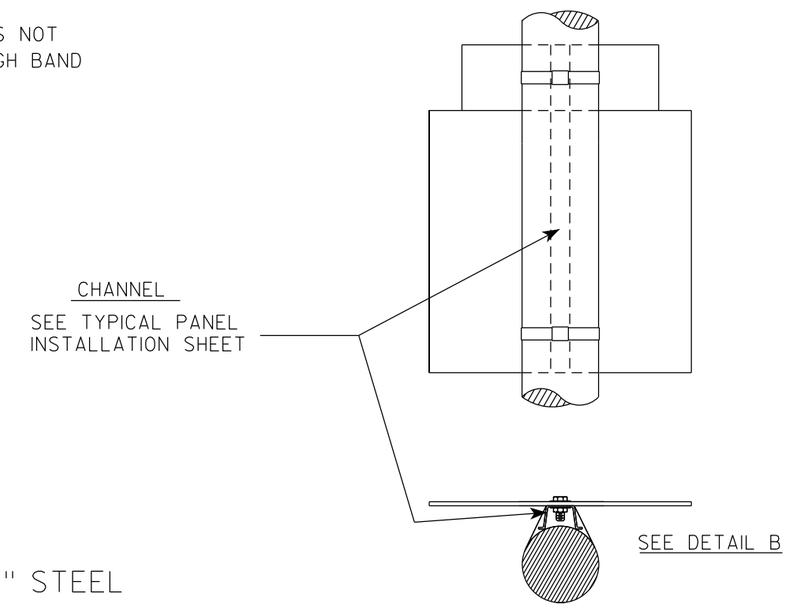

STANDARD SIGN
SIGN BANDING DETAILS

WISCONSIN DEPT OF TRANSPORTATION

APPROVED Matthew R Rauch for State Traffic Engineer

DATE 6/10/19 PLATE NO. A5-9.4

PROJECT NO:	HWY:	COUNTY:		SHEET NO: 48	E

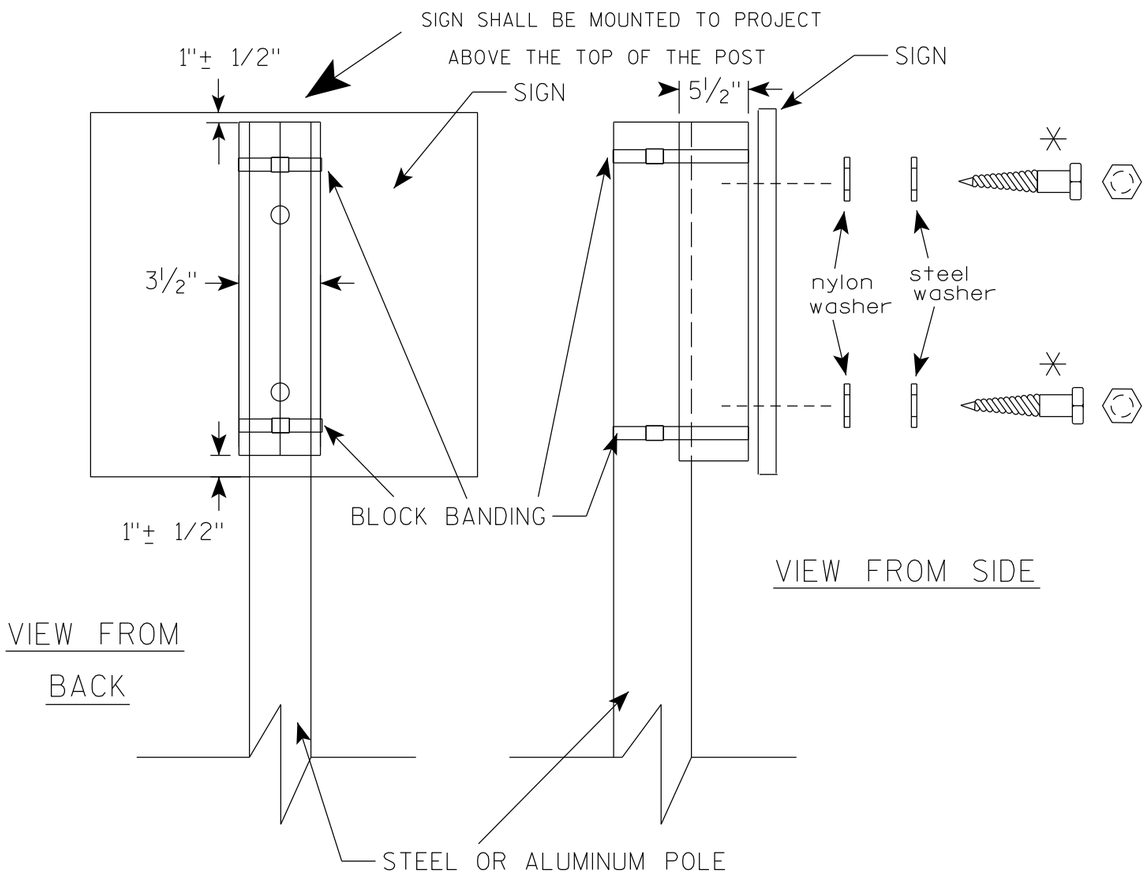

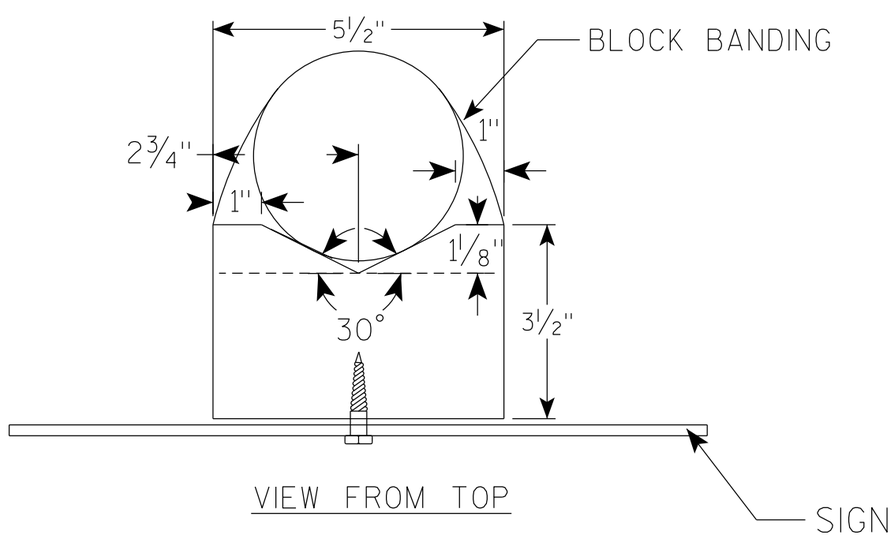

GENERAL NOTES

1. WOOD 4"X6" POST MATERIAL SHALL CONFORM TO 507.2.2 OF THE WisDOT STANDARD SPECIFICATIONS
2. BLOCK BANDING AND CLIPS SHALL BE STAINLESS STEEL, ¾" WIDTH AND 0.025" THICKNESS
3. SIGNS 3' OR GREATER IN HEIGHT SHALL UTILIZE 3 BLOCK BANDS. SIGNS UNDER 3' IN HEIGHT SHALL UTILIZE 2 BLOCK BANDS
4. ACTUAL NUMBER OF FASTENERS PER SIGN VARIES WITH THE SIGN AREA, BUT NORNALLY THERE ARE TWO. FOR SIGNS GREATER THAN 9 S.F. 3 FASTENERS SHALL BE USED.
5. ALL SIGN MOUNTING BOLTS AND WASHERS SHALL BE EITHER:
   a. Hot dip or mechanically galvanized in accordance with ASTM Designation: A 153, Class D
   b. Electro-galvanized in accordance with ASTM Designation : B 633, TYPE III, SC 3
6. ALL BOLTS SHALL HAVE HEXAGONAL HEADS.
7. STEEL WASHERS SHALL BE 1¼" O.D. X ⅜" I.D. X 1/16"
8. NYLON WASHERS SHALL BE 1¼" O.D. X ⅜" I.D. X .080 FOR TYPE H OR TYPE F FACE SIGN

✳ LAG BOLTS SHALL BE ⅜" X 2½"

7

7

BLOCK BANDING DETAIL
(V-BLOCK OPTION)

WISCONSIN DEPT OF TRANSPORTATION

APPROVED Matthew R Rauch
For State Traffic Engineer

DATE 6/10/19 PLATE NO. A5-10.2

PROJECT NO:				SHEET NO: 49	E

NOTES

1. Sign is Type II - Type H Reflective
2. Color:
   Background - White
   Message - Black
3. Message Series - D except 3 number signs Series C
4. Corners may be square or rounded when base material is plywood but borders shall be rounded as shown. When base material is metal, the corners and borders shall be rounded.

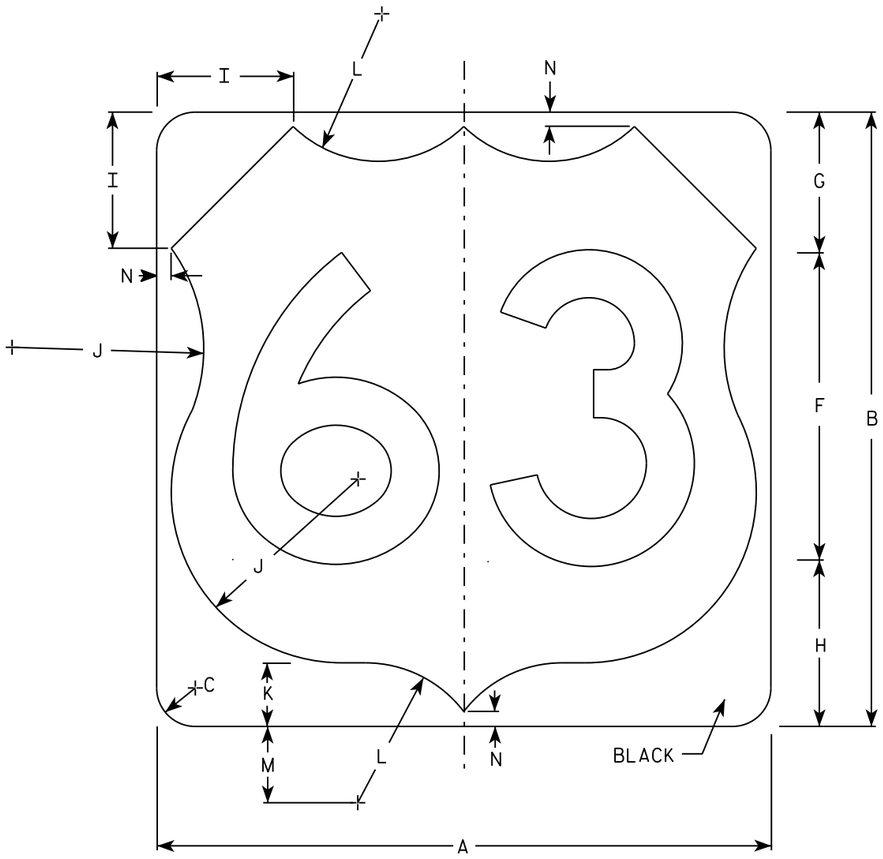

M1-4

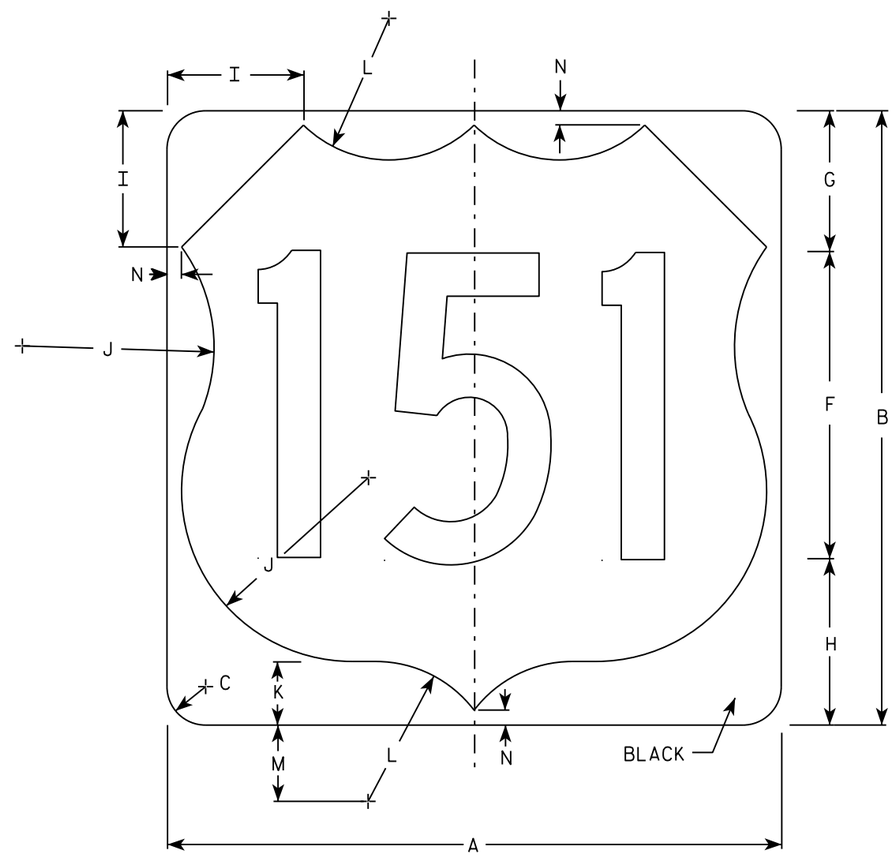

M1-4

SIZE	A	B	C	D	E	F	G	H	I	J	K	L	M	N	O	P	Q	R	S	T	U	V	W	X	Y	Z	Area sq. ft.
1																											
2	24	24	1 1/2			12	5 1/2	6 1/2	5	7 1/2	2 1/2	5 1/2	3	1/2													4.0
3	36	36	2 1/4			18	8 1/4	9 1/4	7 1/4	11 1/4	3 3/4	8 1/4	4 1/2	3/4													9.0
4	36	36	2 1/4			18	8 1/4	9 1/4	7 1/4	11 1/4	3 3/4	8 1/4	4 1/2	3/4													9.0
5	36	36	2 1/4			18	8 1/4	9 1/4	7 1/4	11 1/4	3 3/4	8 1/4	4 1/2	3/4													9.0

USH MARKER
M1-4 FOR ASSEMBLIES

WISCONSIN DEPT OF TRANSPORTATION

APPROVED Matthew R Rauch
for State Traffic Engineer

DATE 3/16/18 PLATE NO. M1-4.10

PROJECT NO: | HWY: | COUNTY: | SHEET NO: 50 | E

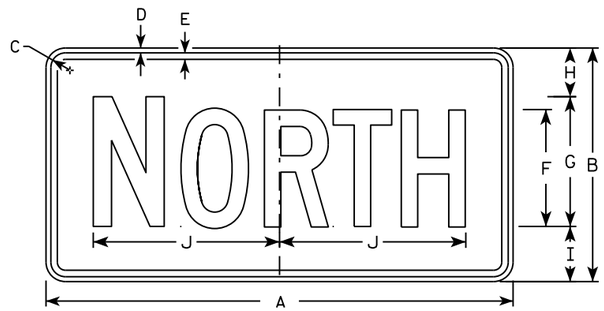

M3-1
MM3-1
MP3-1

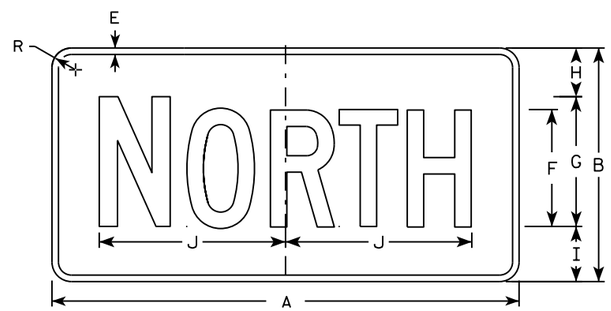

MB3-1
MK3-1
MN3-1

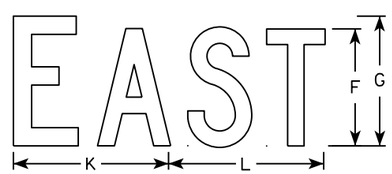

M3-2
MM3-2
MP3-2

MB3-2
MK3-2
MN3-2

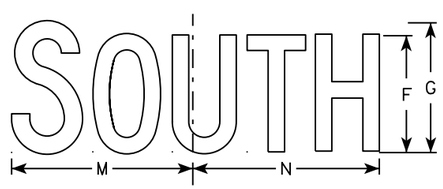

M3-3
MM3-3
MP3-3

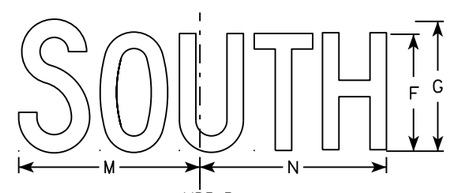

MB3-3
MK3-3
MN3-3

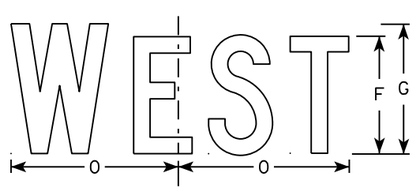

M3-4
MM3-4
MP3-4

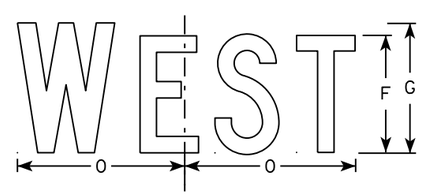

MB3-4
MK3-4
MN3-4

NOTES

1. All Signs Type II - Type H
2. Color:
   Background - See note 5
   Message - See note 5
3. Message Series - C
4. Corners may be square or rounded when base material is plywood but borders shall be rounded as shown. When base material is metal, the corners and borders shall be rounded.
5. M3-1 thru M3-4 Background - White
   Message - Black
   MB3-1 thru MB3-4 Background - Blue
   Message - White
   MK3-1 thru MK3-4 Background - Green
   Message - White
   MM3-1 thru MM3-4 Background - White
   Message - Green
   MN3-1 thru MN3-4 Background - Brown
   Message - White
   MP3-1 thru MP3-4 Background - White
   Message - Blue
6. Note the first letter of each direction is larger than the remainder of the message.

SIZE	A	B	C	D	E	F	G	H	I	J	K	L	M	N	O	P	Q	R	S	T	U	V	W	X	Y	Z	Area sq. ft.
1																											
2	24	12	1 1/8	3/8	3/8	6	7	2 1/4	2 3/4	10 1/4	7 7/8	8 3/8	10 1/4	9 3/4	8 3/4			1 1/2									2.00
3	36	18	1 1/8	3/8	1/2	9	10	3 3/4	4 1/4	14 3/8	12	12 1/8	14	14 1/8	13			1 1/2									4.5
4	36	18	1 1/8	3/8	1/2	9	10	3 3/4	4 1/4	14 3/8	12	12 1/8	14	14 1/8	13			1 1/2									4.5
5	36	18	1 1/8	3/8	1/2	9	10	3 3/4	4 1/4	14 3/8	12	12 1/8	14	14 1/8	13			1 1/2									4.5

STANDARD SIGNS
M3-1 thur M3-4
SERIES

WISCONSIN DEPT OF TRANSPORTATION

APPROVED Matthew R Rauch
for State Traffic Engineer

DATE 10/15/15 PLATE NO M3-1.14

PROJECT NO: | HWY: | COUNTY: | SHEET NO: | E

FILE NAME : C:\CAEfiles\Projects\tr_stdplate\M31.DGN PLOT DATE : 01-DEC-2015 17:54 PLOT BY : $$ plotuser $$ PLOT NAME : PLOT SCALE : 11.675051:1.000000

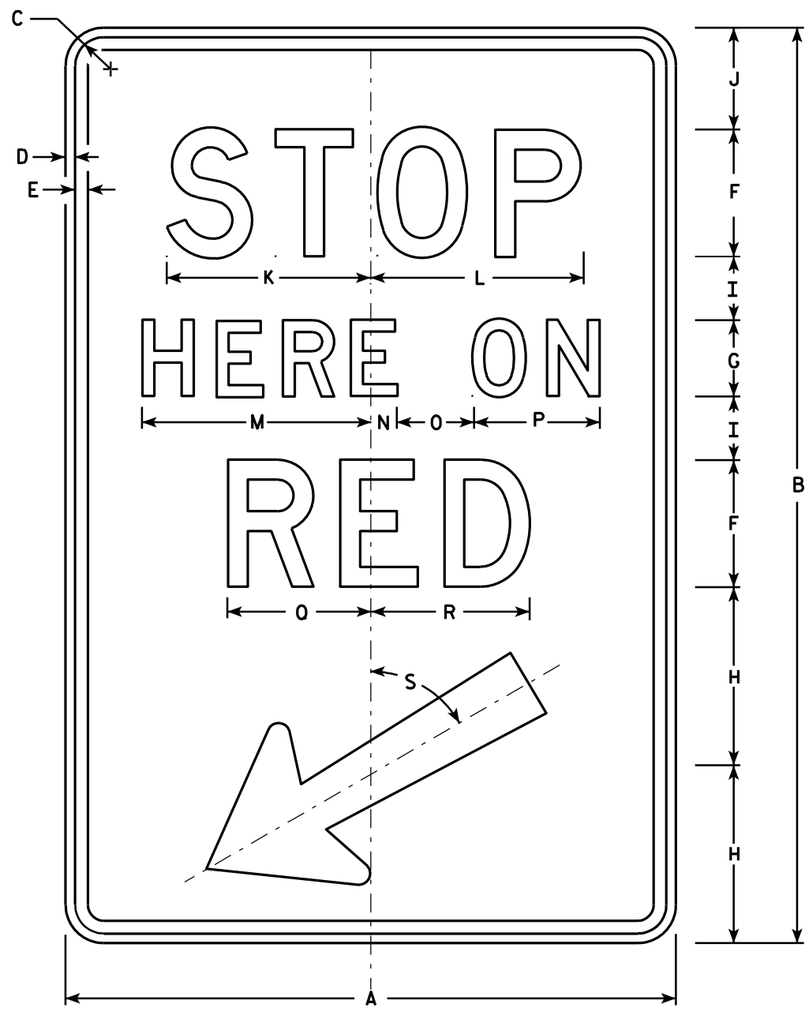

R10-6

NOTES

1. Sign is Type II - Type H Reflective - reference WIS DOT Standard Specification for HIGHWAY and STRUCTURE CONSTRUCTION latest edition.
2. Color:
   Background - White
   Message - Black
3. Message Series - D
4. Corners may be square or rounded when base material is plywood but borders shall be rounded as shown. When base material is metal, the corners and borders shall be rounded.

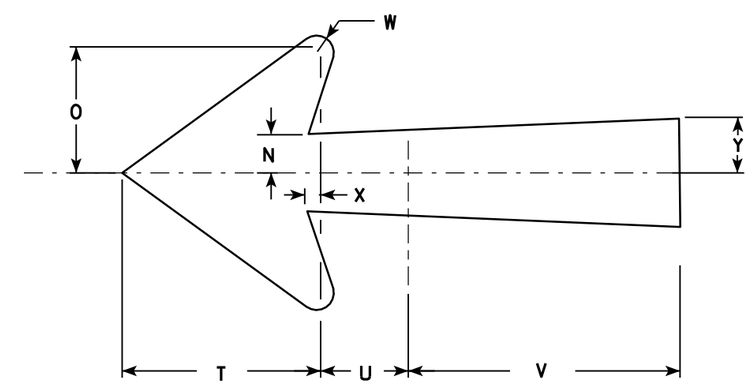

Arrow Detail

SIZE	A	B	C	D	E	F	G	H	I	J	K	L	M	N	O	P	Q	R	S	T	U	V	W	X	Y	Z	Area sq. ft.
1																											
2S	24	36	1 1/8	3/8	1/2	5	3	7	2 1/2	4	8	8 3/8	9	1	3	5	5 5/8	6 1/4	60°	5 1/4	2 1/4	7 1/8	1/2	3/8	1 3/8		6.0
2M	24	36	1 1/8	3/8	1/2	5	3	7	2 1/2	4	8	8 3/8	9	1	3	5	5 5/8	6 1/4	60°	5 1/4	2 1/4	7 1/8	1/2	3/8	1 3/8		6.0
3																											
4																											
5																											

STANDARD SIGN
R10-6

WISCONSIN DEPT OF TRANSPORTATION

APPROVED Matthew R Rauch
for State Traffic Engineer

DATE 4/5/11 PLATE NO. R10-6.6

PROJECT NO:	HWY:	COUNTY:		SHEET NO: 52	E

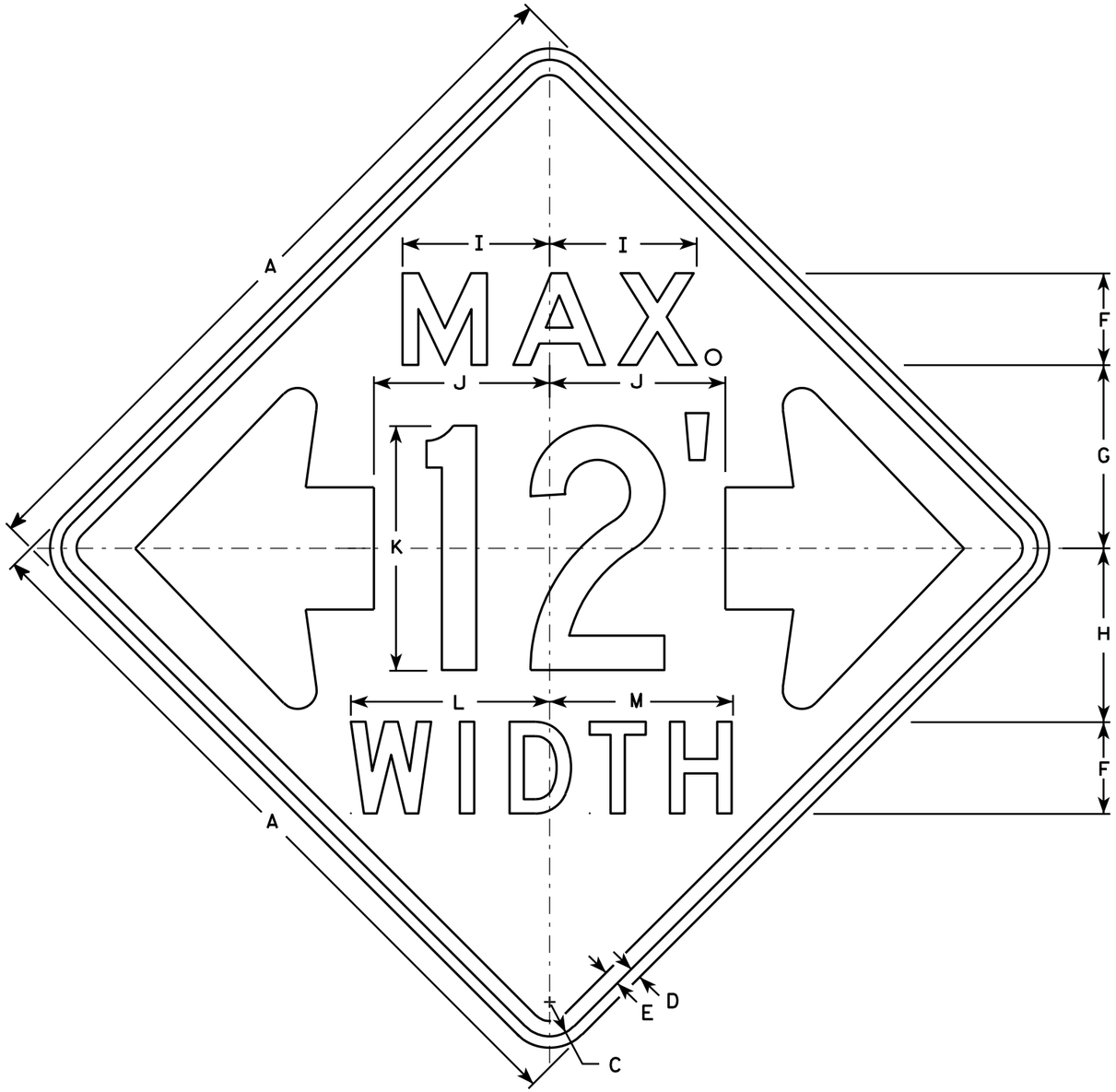

W12-52

NOTES

1. Sign is Type II - Type F Reflective - reference WIS DOT Standard Specification for HIGHWAY and STRUCTURE CONSTRUCTION latest edition.
2. Color:
   Background - Orange
   Message - Black
3. Message Series - See note 5
4. Corners may be square or rounded when base material is plywood but borders shall be rounded as shown. When base material is metal, the corners and borders shall be rounded.
5. The top line is series E, the numerals are series C, and the bottom line is series D.
6. Substitute appropriate numerals and adjust spacing as required.

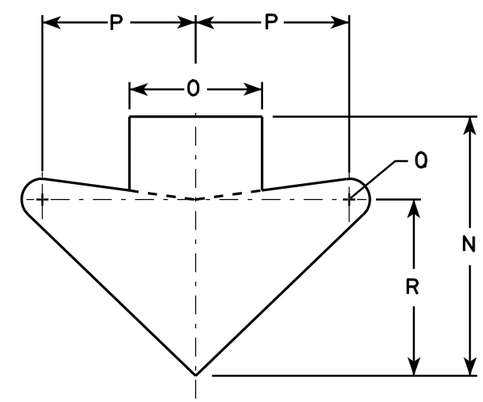

ARROW DETAIL

SIZE	A	B	C	D	E	F	G	H	I	J	K	L	M	N	O	P	Q	R	S	T	U	V	W	X	Y	Z	Area sq. ft.
1																											
2S	48		2 1/4	3/4	1	6	12	11 3/8	9 5/8	11 1/2	16	13	12	15 5/8	8	9 1/4	1 1/4	10 5/8									16.0
2M	48		2 1/4	3/4	1	6	12	11 3/8	9 5/8	11 1/2	16	13	12	15 5/8	8	9 1/4	1 1/4	10 5/8									16.0
3																											
4																											
5																											

STANDARD SIGN
W12-52

WISCONSIN DEPT OF TRANSPORTATION

APPROVED Matthew R Rauch
for State Traffic Engineer

DATE 3/16/11 PLATE NO. W12-52.7

PROJECT NO:	HWY:	COUNTY:		SHEET NO: 53	E

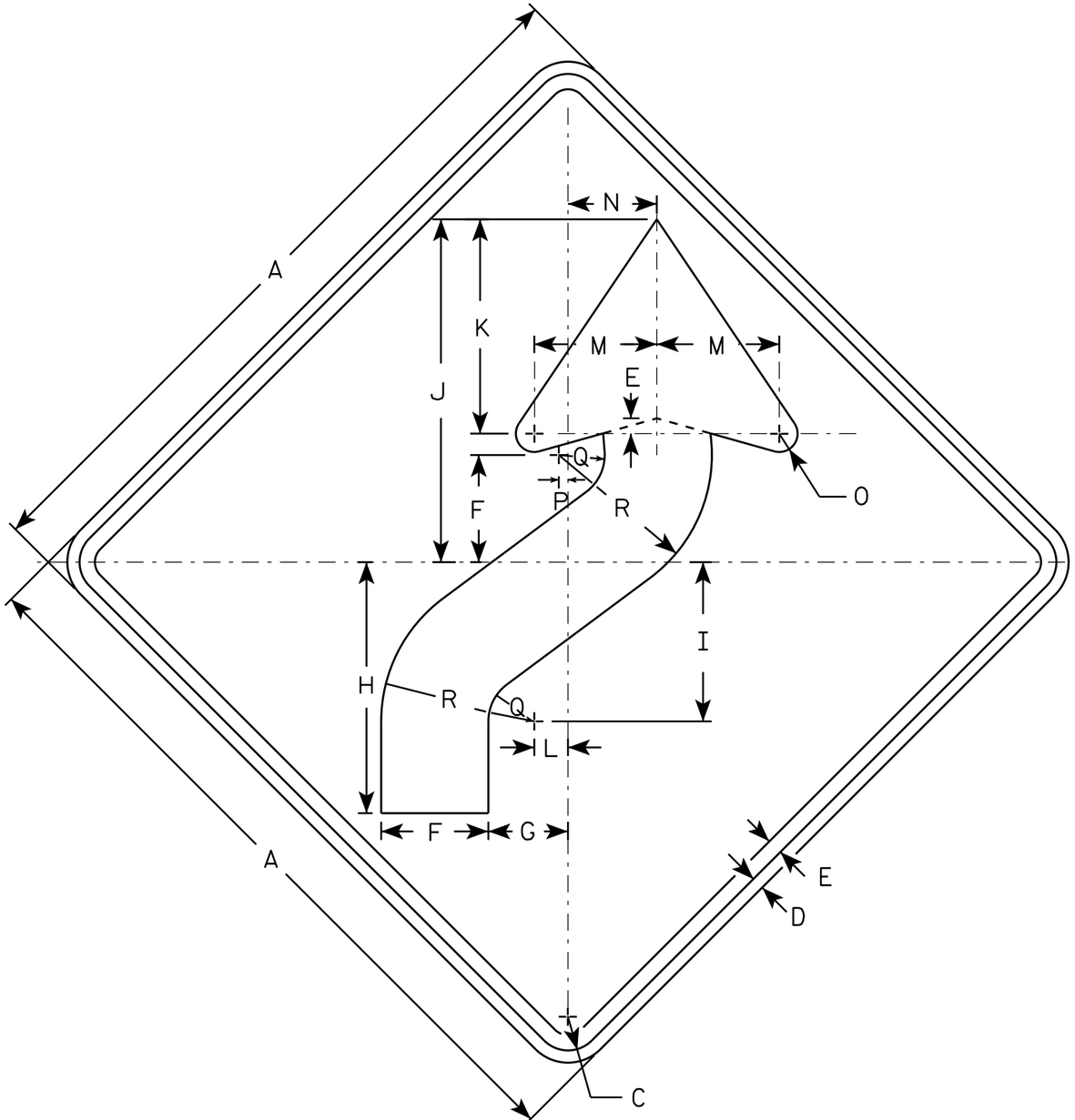

W01-4R

NOTES

1. Sign is Type II - Type F Reflective - reference WIS DOT Standard Specification for HIGHWAY and STRUCTURE CONSTRUCTION latest edition.
2. Color:
   Background - Orange
   Message - Black
3. Corners may be square or rounded when base material is plywood but borders shall be rounded as shown. When base material is metal, the corners and borders shall be rounded.
4. W01-4L is the same as W01-4R except the arrow is reversed along the vertical centerline.

SIZE	A	B	C	D	E	F	G	H	I	J	K	L	M	N	O	P	Q	R	S	T	U	V	W	X	Y	Z	Area sq. ft.
1	36		1 5/8	5/8	3/4	5 1/4	4	12 3/8	7 7/8	16 7/8	10 1/2	1 5/8	6	4 1/2	1	1/2	2 1/4	7 1/2									9.0
2S	48		2 1/4	3/4	1	7	5 1/4	16 1/2	10 1/2	22 1/2	14	2 1/4	8	6	1 1/4	5/8	3	10									16.0
2M	48		2 1/4	3/4	1	7	5 1/4	16 1/2	10 1/2	22 1/2	14	2 1/4	8	6	1 1/4	5/8	3	10									16.0
3	48		2 1/4	3/4	1	7	5 1/4	16 1/2	10 1/2	22 1/2	14	2 1/4	8	6	1 1/4	5/8	3	10									16.0
4	48		2 1/4	3/4	1	7	5 1/4	16 1/2	10 1/2	22 1/2	14	2 1/4	8	6	1 1/4	5/8	3	10									16.0
5	48		2 1/4	3/4	1	7	5 1/4	16 1/2	10 1/2	22 1/2	14	2 1/4	8	6	1 1/4	5/8	3	10									16.0

STANDARD SIGN
W01-4

WISCONSIN DEPT OF TRANSPORTATION

APPROVED Matthew R Rauch
for State Traffic Engineer

DATE 11/18/13 PLATE NO W01-4.1

PROJECT NO:	HWY:	COUNTY:		SHEET NO:	E

NOTES

1. Sign is Type II - Type F Reflective - reference WIS DOT Standard Specification for HIGHWAY and STRUCTURE CONSTRUCTION latest edition.
2. Color:
   Background - Orange
   Message - Black
3. Corners may be square or rounded when base material is plywood but borders shall be rounded as shown. When base material is metal, the corners and borders shall be rounded.

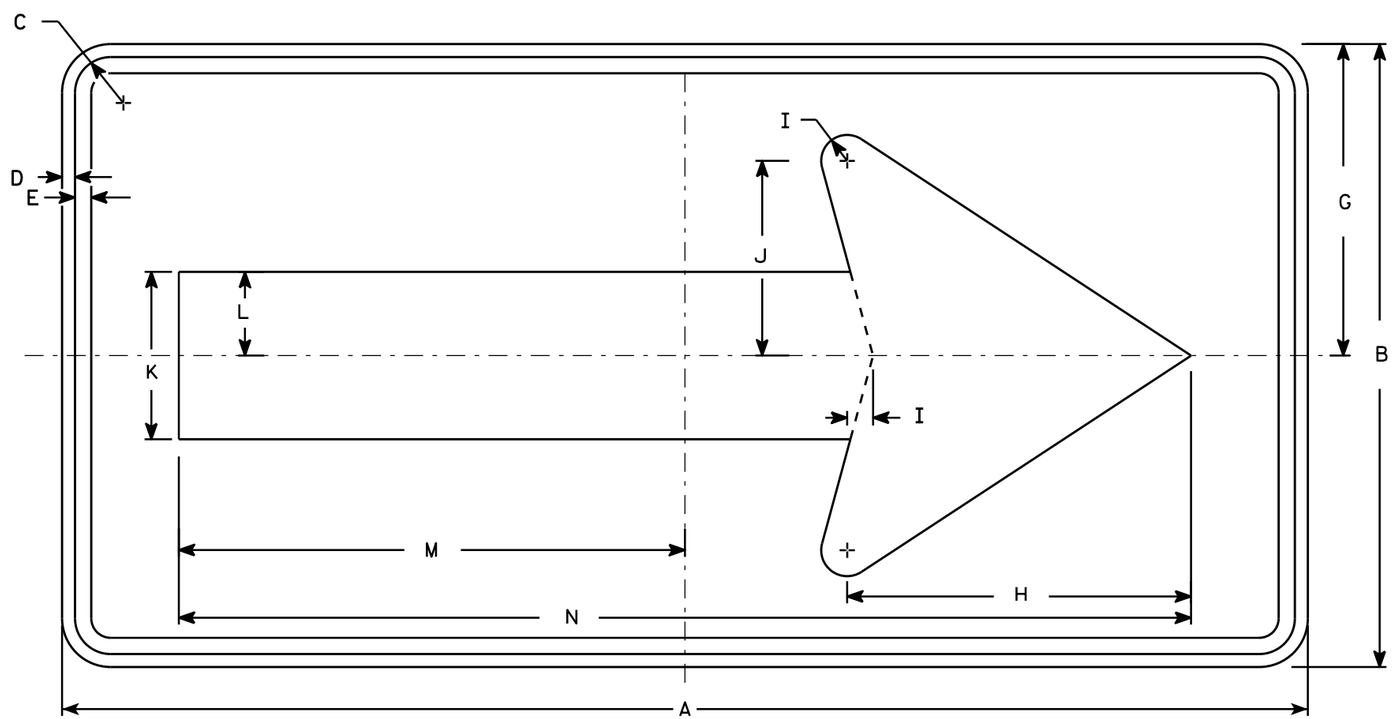

W01-6

SIZE	A	B	C	D	E	F	G	H	I	J	K	L	M	N	O	P	Q	R	S	T	U	V	W	X	Y	Z	Area sq. ft.
1																											
2S	48	24	1 3/8	1/2	5/8		12	13 1/4	1	7 1/2	6 1/2	3 1/4	19 1/2	39													8.0
2M	48	24	1 3/8	1/2	5/8		12	13 1/4	1	7 1/2	6 1/2	3 1/4	19 1/2	39													8.0
3	60	30	1 3/8	1/2	5/8		15	16 1/4	1 1/4	9 1/4	8	4	24 3/8	48 3/4													12.5
4	60	30	1 3/8	1/2	5/8		15	16 1/4	1 1/4	9 1/4	8	4	24 3/8	48 3/4													12.5
5	60	30	1 3/8	1/2	5/8		15	16 1/4	1 1/4	9 1/4	8	4	24 3/8	48 3/4													12.5

STANDARD SIGN
W01-6

WISCONSIN DEPT OF TRANSPORTATION

APPROVED Matthew R Rauch
for State Traffic Engineer

DATE 11/18/13 PLATE NO. W01-6.1

PROJECT NO: | HWY: | COUNTY: | SHEET NO: | E

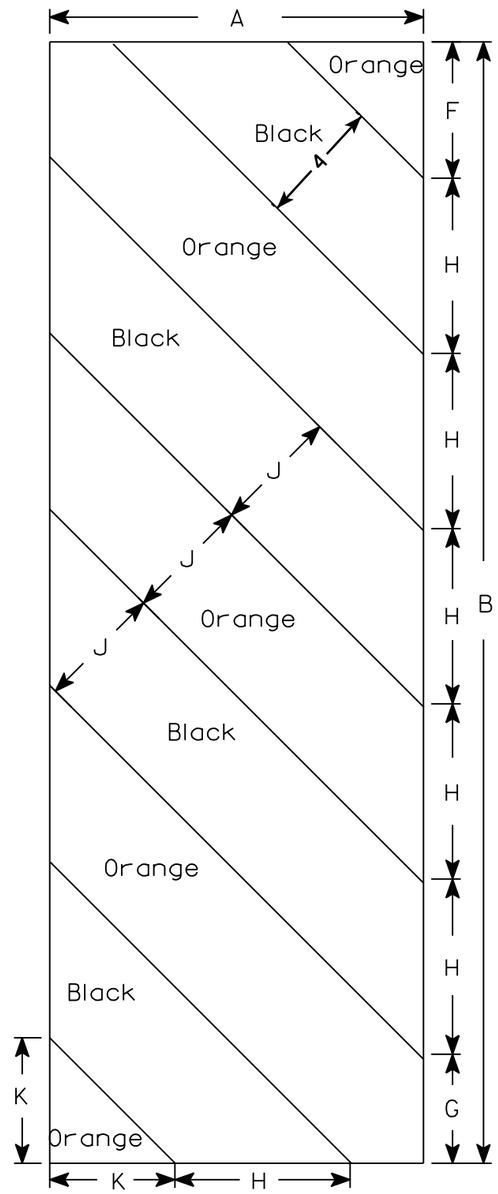

W05-52L

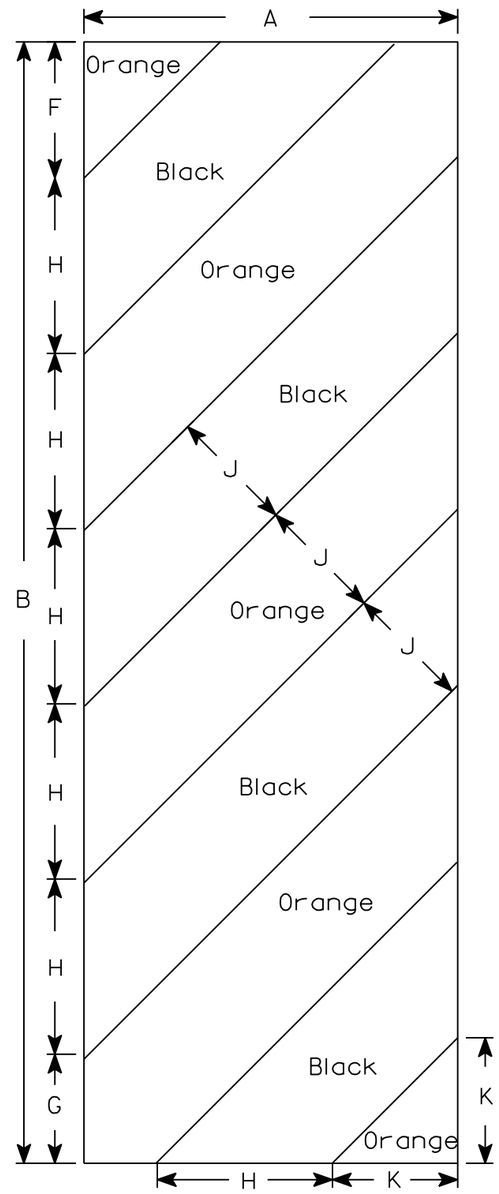

W05-52R

NOTES

1. Sign is Type II - Type F Reflective - reference WIS DOT Standard Specification for HIGHWAY and STRUCTURE CONSTRUCTION latest edition.
2. Color:
   Background - Orange
   Message - Black
3. Corners may be square or rounded when base material is plywood but borders shall be rounded as shown. When base material is metal, the corners and borders shall be rounded.
4. Alternate colors of stripes as shown.

SIZE	A	B	C	D	E	F	G	H	I	J	K	L	M	N	O	P	Q	R	S	T	U	V	W	X	Y	Z	Area sq. ft.
1																											
2S	12	36				4 3/8	3 1/2	5 5/8	45°	4	4																3.0
2M	12	36				4 3/8	3 1/2	5 5/8	45°	4	4																3.0
3	18	54				6	5 1/2	8 1/2	45°	6	6 9/16																6.75
4																											
5																											

STANDARD SIGN

W05-52L & W05-52R

WISCONSIN DEPT OF TRANSPORTATION

APPROVED *Matthew R Rauch*
for State Traffic Engineer

DATE 11/20/13 PLATE NO. W05-52.1

PROJECT NO:	HWY:	COUNTY:		SHEET NO:	E

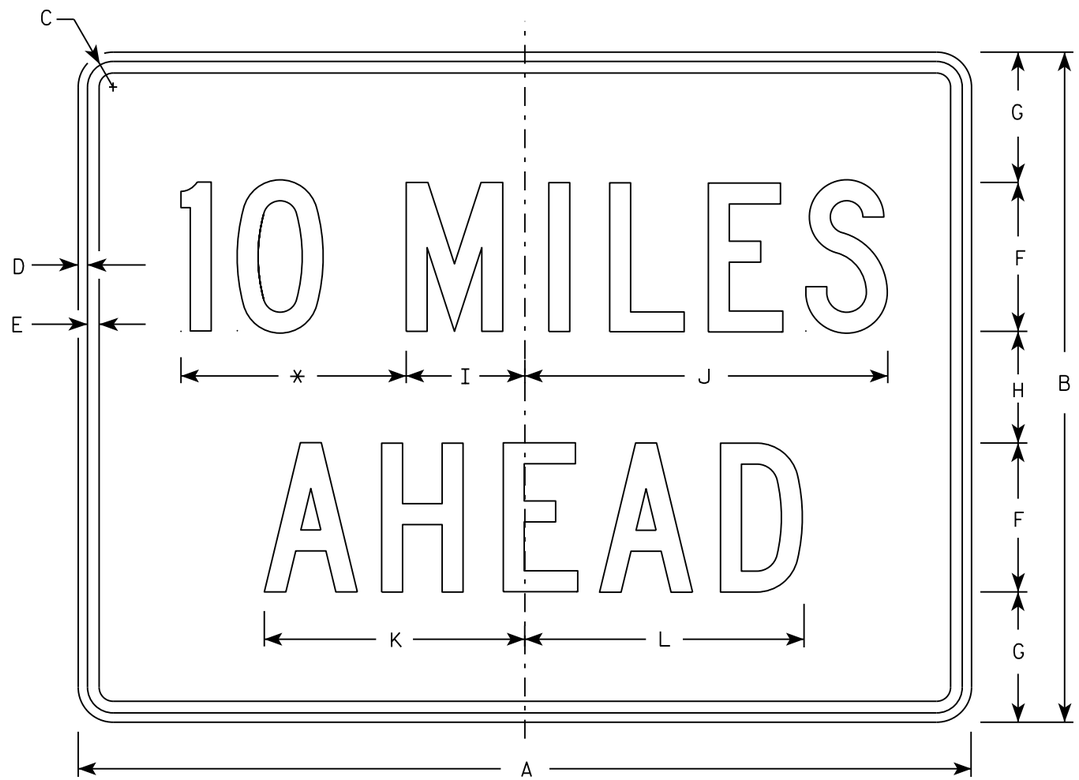

W057-52

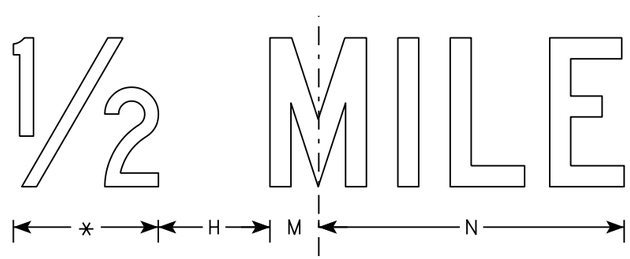

* See note 5

NOTES

1. Sign is Type II - Type F Reflective
2. Color:
   Background - Orange
   Message - Black
3. Message Series - C
4. Corners may be square or rounded when base material is plywood but borders shall be rounded as shown. When base material is metal, the corners and borders shall be rounded.
5. Substitute appropriate numerals to the nearest quarter mile and optically adjust spacing to achieve proper balance.

SIZE	A	B	C	D	E	F	G	H	I	J	K	L	M	N	O	P	Q	R	S	T	U	V	W	X	Y	Z	Area sq. ft.
1	36	24	1 1/8	3/8	1/2	6	4 1/2	3	4 3/4	14 5/8	10 5/8	11 3/8	2	12													6.0
2S	48	36	1 3/8	1/2	5/8	8	7	6	6 3/8	19 1/2	14	15	2 3/4	16 3/8													12.0
2M	48	36	1 3/8	1/2	5/8	8	7	6	6 3/8	19 1/2	14	15	2 3/4	16 3/8													12.0
3	48	36	1 3/8	1/2	5/8	8	7	6	6 3/8	19 1/2	14	15	2 3/4	16 3/8													12.0
4	48	36	1 3/8	1/2	5/8	8	7	6	6 3/8	19 1/2	14	15	2 3/4	16 3/8													12.0
5	48	36	1 3/8	1/2	5/8	8	7	6	6 3/8	19 1/2	14	15	2 3/4	16 3/8													12.0

STANDARD SIGN
W057-52

WISCONSIN DEPT OF TRANSPORTATION

APPROVED Matthew R Rauch
for State Traffic Engineer

DATE 3/21/17 PLATE NO. W057-52.2

PROJECT NO: | HWY: | COUNTY: | SHEET NO: 57 | E

STATE PROJECT NUMBER
1610-44-64

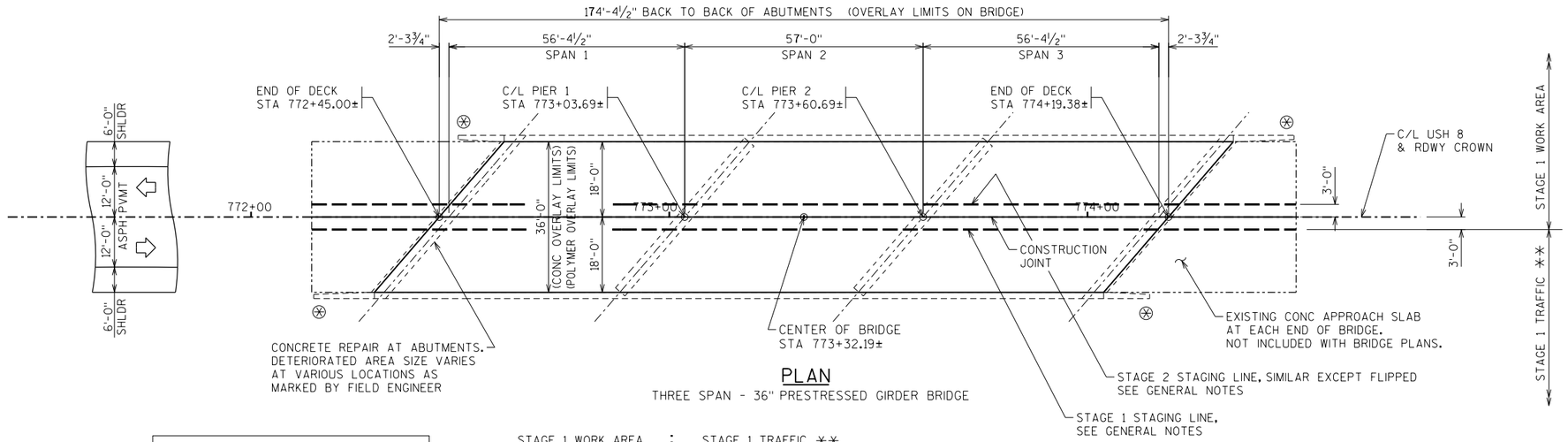

PLAN

THREE SPAN - 36" PRESTRESSED GIRDER BRIDGE

⊛ BEAM GUARD TO REMAIN

** SEE ROADWAY PLANS FOR TRAFFIC CONTROL STAGING.

INDICATES REMOVAL

COAT EXISTING PARAPET WITH "PIGMENTED SURFACE SEALER" PER THE STANDARD SPECIFICATIONS, SEE NOTES ON SHEETS 2.

COAT DECK WITH PROTECTIVE SURFACE TREATMENT PER THE STANDARD SPECIFICATIONS, SEE NOTES ON SHEET 2. APPLICATION TO BE APPLIED IN THE 2022 CONSTRUCTION YEAR.

* 2¼" AVERAGE OVERLAY THICKNESS (INCLUDES CONCRETE AND POLYMER)

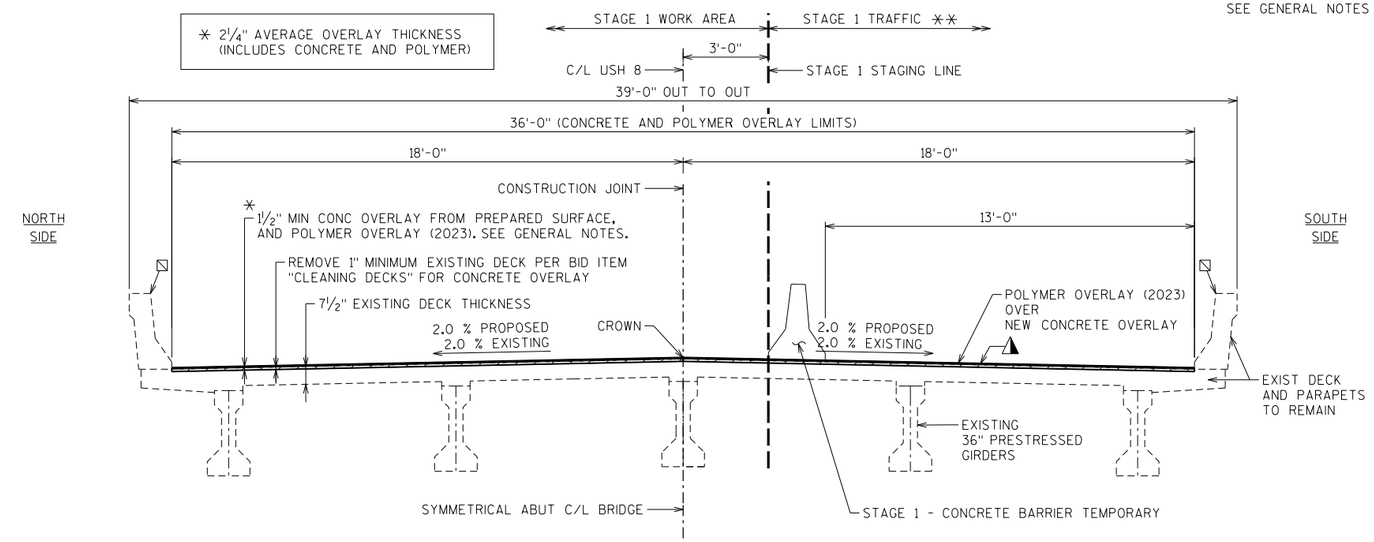

CROSS SECTION THRU ROADWAY

(LOOKING EAST)

NOTE: STAGE 2 NOT SHOWN IN SECTION FOR CLARITY
STAGE 2 STAGING LINE, SIMILAR EXCEPT FLIPPED
SEE GENERAL NOTES

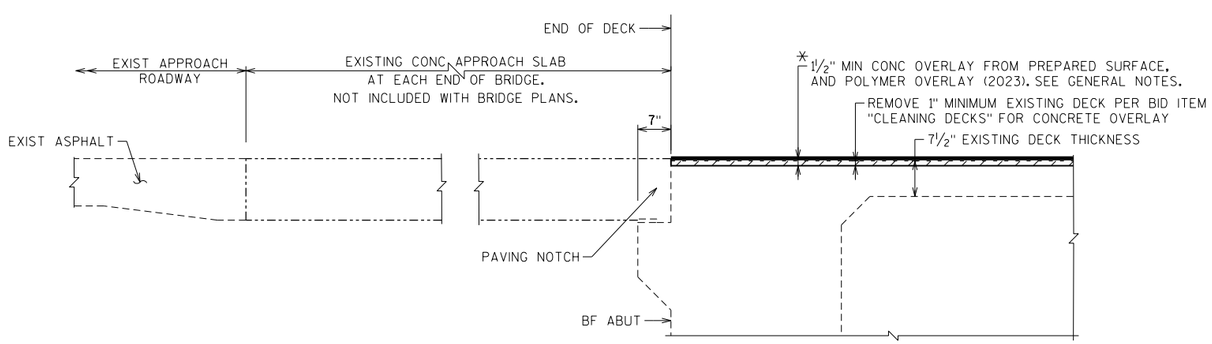

TYPICAL LONGITUDINAL SECTION AT END OF DECK

DESIGN DATA

LIVE LOAD:

DESIGN LOADING: HS20

INVENTORY RATING FACTOR: RF = HS24
OPERATING RATING RACTOR: RF = HS40
WISCONSIN STANDARD PERMIT VEHICLE (WIS-SPV) = 200 KIPS

MATERIAL PROPERTIES:

CONCRETE MASONRY - SUPERSTRUCTURE _____ f'c = 4,000 psi
- OVERLAY _____ f'c = 4,000 psi
- ALL OTHER _____ f'c = 3,500 psi

TRAFFIC DATA

ADT (2019)	=	2300
ADT (2039)	=	2750
DHV	=	331
DD	=	61/39
T	=	23.5 %
DESIGN SPEED	=	55 MPH

LIST OF DRAWINGS

1 DECK OVERLAYS
2 NOTES AND QUANTITIES

WISCONSIN PROFESSIONAL ENGINEER
CHRISTOPHER J. BLUM
E-33157
MADISON, WI

9/16/2020

SEH CONTACT: CHRIS BLUM, PE, 608.620.6192
WISDOT BRIDGE OFFICE CONTACT: AARON BONK, PE, 608.261.0261

NO.	DATE	REVISION	BY

SEH
SHORT ELLIOTT HENDRICKSON INC.

STATE OF WISCONSIN
DEPARTMENT OF TRANSPORTATION

ACCEPTED _____ SDR 05/11/21
CHIEF STRUCTURES DESIGN ENGINEER DATE

STRUCTURE B-50-48

U.S.H. 8 OVER WISCONSIN CENTRAL RR

COUNTY	TOWN ~~/CITY/VILLAGE~~
PRICE	PRENTICE

DESIGN SPEC. REHABILITATION N/A

DESIGNED BY	DESIGN CK'D.	DRAWN BY	PLANS CK'D.
NCK	CJB	DLF	CJB

DECK OVERLAYS

SHEET 1 OF 2
58

8

8

PLOT TIME: 7:58:57 AM
PLOT DATE: 9/15/2020
FILE NAME : S:\UZ\W\Wtnc\44737\5-final-dsgn\51-drawings\20-Struct\B-50-48\bridge\b50048gl.dgn

STATE PROJECT NUMBER
1610-44-64

GENERAL NOTES

DRAWINGS SHALL NOT BE SCALED.

ALL DIMENSIONS ARE IN FEET AND INCHES UNLESS OTHERWISE NOTED.

DIMENSIONS SHOWN ARE BASED ON THE ORIGINAL STRUCTURE PLANS AND INSPECTION REPORTS. EXISTING BRIDGE PLANS AVAILABLE AT WISDOT.

STATIONING MAY VARY BASED ON EXACT LOCATION OF BRIDGE TO PROPOSED ALIGNMENT.

CONTRACTOR TO VERIFY EXISTING UTILITY LOCATIONS.

ANY EXCAVATION REQUIRED TO COMPLETE THE DECK AND APPROACH SLABS OVERLAY AT THE ABUTMENTS, TO BE CONSIDERED INCIDENTAL TO THE BID ITEM "CONCRETE MASONRY OVERLAY DECKS".

STAGING LINE LOCATION TO BE DETERMINED BY THESE PLANS AND BY THE FIELD ENGINEER. COORDINATE WITH STAGING PLANS.

A MINIMUM OF 1-INCH OF CONCRETE SHALL BE REMOVED FROM THE ENTIRE BRIDGE DECK AND APPROACH SLABS UNDER THE BID ITEM "CLEANING DECKS". CONTRACTOR TO VERIFY COMPLETENESS OF REMOVALS WITH THE FIELD ENGINEER.

PREPARATION DECKS TYPE 1, PREPARAION DECKS TYPE 2, CONCRETE SURFACE REPAIR AND FULL-DEPTH DECK REPAIR AS DETERMINED, LOCATED, MARKED AND MEASURED BY THE FIELD ENGINEER. DECK PREPARATION AND FULL-DEPTH DECK PREPAIRS SHALL BE FILLED WITH "CONCRETE MASONRY OVERLAY DECKS".

BOTTOM OF THE EXISTING DECK WILL BE INSPECTED FOR AREAS OF FULL-DEPTH DECK REPAIR PRIOR TO DECK PREPARATION OPERATIONS.

BOTTOM OF THE EXISTING DECK IS TO BE INSPECTED FOR AREAS OF DISTRESS AFTER COMPLETION OF THE DECK PREPARTION AND PRIOR TO OVERLAYING THE BRIDGE.

ALL CONCRETE REMOVAL NOT COVERED WITH A CONCRETE OVERLAY SHALL BE DEFINED BY A 1-INCH DEEP SAW CUT.

THESE STRUCTURE PLANS ARE ONLY THE STRUCTURE REPAIR WORK. ANY ADDITIONAL REMOVAL REQUIRED, OUTSIDE OF THE LIMITS SHOWN IIN THESE PLANS MUST BE COORDINATED WITH THE FIELD ENGINEER. FILED ENGINEER SHOULD BE CONTACTED FOR APPROVAL OF ADDITIONAL REMOVAL.

POLYMER OVERLAY APPLICATION TO THE DECK TO BE SUSPENDED ONE YEAR UNTIL 2023 CONSTRUCTION YEAR.

PROFILE GRADE LINE SHALL BE DETERMINED IN THE FIELD BASED ON A MINIMUM CONCRETE OVERLAY THICKNESS OF 1½" PLACED ABOVE THE DECK SURFACE AFTER SURFACE PREPARATION PLUS A ¼" MINIMUM POLYMER OVERLAY PLACED ON THE DECK IN THE 2020 CONSTRUCTION YEAR. EXPECTED AVERAGE OVERLAY THICKNESS IS 2¼" (INCLUDES CONCRETE AND POLYMER OVERLAY) OR AS GIVEN ON THE PLANS. IF EXPECTED AVERAGE OVERLAY THICKNESS IS EXCEEDED BY MORE THAN ½", CONTACT THE STRUCTURES DESIGN SECTION.

CLEAN ALL LOOSE MATERIAL ON THE DECK AFTER CLEANING OPERATIONS USING HIGH PRESSURE WATER OR AIR, ENSURING ALL FREE-STANDING WATER IS REMOVED PRIOR TO PLACEMENT OF THE CONC OVERLAY, PROTECTIVE SURFACE TREATMENT AND PIGMENTED SURFACE SEALER.

AT THE ABUTMENTS, THE DECK JOINT IS COMPRISED OF A FILLER AND SEALANT, THERE IS NO STRIP SEAL OR COVER PLATED EXPANSION JOINT.

APPLY "PIGMENTED SURFACE SEALER" TO THE EXISTING CONCRETE PARAPETS PER THE STANDARD SPECIFICATIONS AND AS SHOWN IN THIS PLAN SET.

APPLY PROTECTIVE SURFACE TREATMENT TO THE DECK AFTER THE CONCRETE OVERLAY HAS BEEN APPLIED PER THE STANDARD SPECIFICATIONS AND AS SHOWN IN THIS PLAN SET.

SEE ROADWAY PLAN FOR LANE STAGING AND TRAFFIC SHIFT. COORDINATE WITH THESE STRUCTURE PLANS THE BRIDGE STAGING.

DECK SURFACE PREPARATION FOR APPLICATION OF THE POLYMER OVERLAY IN THE 2023 CONSTRUCTION YEAR IS INCLUDED IN THE BID ITEM "POLYMER OVERLAY".

TOTAL ESTIMATED QUANTITIES - B-50-48

	BID ITEM NUMBER	BID ITEMS	UNIT	TOTALS
	203.0225.S	DEBRIS CONTAINMENT B-50-48	LS	1
8	502.3200	PROTECTIVE SURFACE TREATMENT	SY	700
4	502.3210	PIGMENTED SURFACE SEALER	SY	167
3	509.0301	PREPARATION DECKS TYPE 1	SY	55
3	509.0302	PREPARATION DECKS TYPE 2	SY	25
1	509.0500	CLEANING DECKS	SY	700
5	509.1500	CONCRETE SURFACE REPAIR	SF	10
6	509.2000	FULL-DEPTH DECK REPAIR	SY	1
2	509.2500	CONCRETE MASONRY OVERLAY DECKS	CY	45
9	509.5100.S	POLYMER OVERLAY	SY	700
7	509.9050.S	CLEANING PARAPETS	LF	400
	604.9015.S	RESEAL CRUSHED AGGREGATE SLOPE PAVING	SY	675
		NON-BID ITEMS		
		FILLER	SIZE	¾"

QUANTITIES NOTES

1. BASED ON 1" DEEP BY LIMITS OF OVERLAY ON DECK.
2. CONCRETE FOR:
   * PREPARATION DECKS TYPE 1 & 2, *FULL-DEPTH DECK REPAIR. AND OVERLAY.
3. PERTAINS TO DECK.
4. APPLY PIGMENTED SEALER TO FRONT FACE, TOP, AND ENDS OF EXISTING PARAPETS. CLEAN THE INSIDE FACE, TOP AND ENDS OF PARAPET PER BID ITEM "CLEANING PARAPETS". APPLICATION PER SPEC. APPLICATION AND QUANTITY ARE CONSIDERED INCIDENTAL TO BRIDGE BID ITEM " PIGMENTED SURFACE SEALER".
5. ABUTMENT/WING JONT - AS LOCATED BY FIELD ENGINEER.
6. UNDISTRIBUTED AMOUNT.
7. INCLUDES PARAPETS ON WINGWALLS AND DECK.
8. APPLY PROTECTIVE SURFACE TREATMENT TO THE DECK CONCRETE OVERLAY. APPLICATION AND DECK PREPARATION PER SPECIFICATION.
9. TO BE APPLIED TO THE DECK SURFACE IN 2023 CONSTRUCTION YEAR.

* THESE QUANTITIES TOTALS ARE AN ESTIMATE AND ARE INCLUDED IN BID ITEM "CONCRETE MASONRY OVERLAY, DECKS".

-PREPARATION DECKS TYPE 1 = 3.3 CY
-PREPARATION DECKS TYPE 2 = 2.6 CY
-FULL-DEPTH DECK REPAIR = 0.4 CY

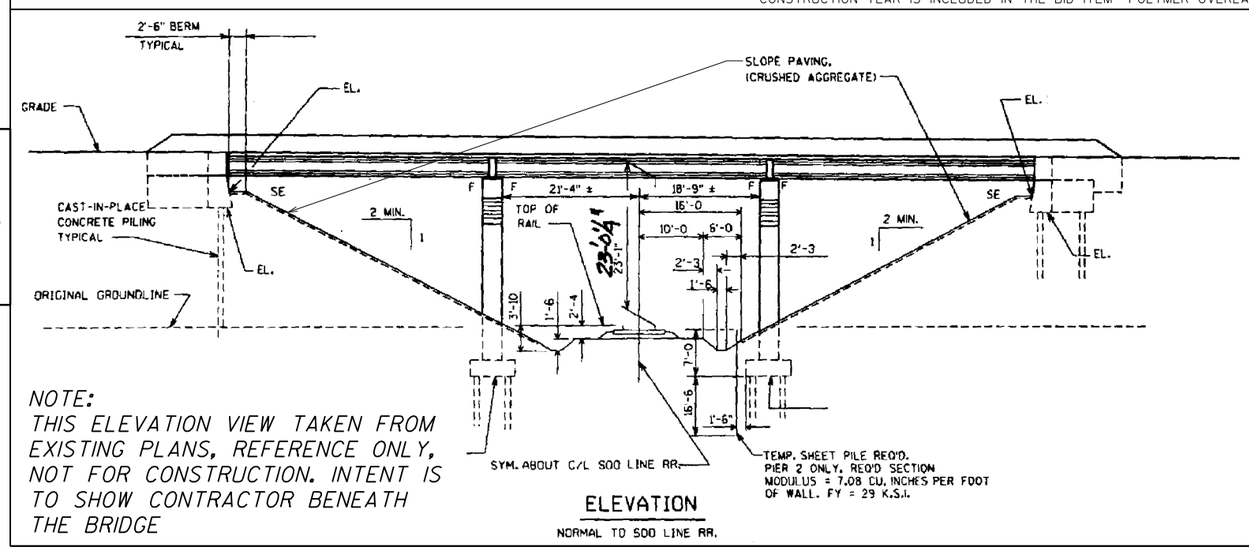

NOTE:
THIS ELEVATION VIEW TAKEN FROM EXISTING PLANS, REFERENCE ONLY, NOT FOR CONSTRUCTION. INTENT IS TO SHOW CONTRACTOR BENEATH THE BRIDGE

ELEVATION
NORMAL TO 500 LINE RR.

NO.	DATE	REVISION	BY

STATE OF WISCONSIN
DEPARTMENT OF TRANSPORTATION

STRUCTURE B-50-48

DRAWN BY DLF | PLANS CK'D. CJB

NOTES AND QUANTITIES

SHEET 2 OF 2

PLOT DATE: 9/15/2020 PLOT TIME: 7:58:57 AM
FILE NAME : S:\UZ\W\Witnc\144737\5-final-dsgn\51-drawings\20-Struct\B-50-48\bridge\b50048g2.dgn

Wisconsin Department of Transportation

Dedicated people creating transportation solutions through innovation and exceptional service.

http://www.dot.wisconsin.gov