LAX

SEPTEMBER 2021

PROJECT ID: 1641-03-75

WITH: N/A

COUNTY: LA CROSSE

ORDER OF SHEETS

Section No.	1	Title
Section No.	2	Typical Sections and Details
Section No.	3	Estimate of Quantities
Section No.	3	Miscellaneous Quantities
Section No.	4	Right of Way Plat
~~Section No.~~	~~5~~	~~Plan and Profile~~
Section No.	6	Standard Detail Drawings
~~Section No.~~	~~7~~	~~Sign Plates~~
~~Section No.~~	~~8~~	~~Structure Plans~~
~~Section No.~~	~~9~~	~~Computer Earthwork Data~~
~~Section No.~~	~~9~~	~~Cross Sections~~

TOTAL SHEETS = 108

02

N

DESIGN DESIGNATION

USH 14/61
STH 35
MORMON COULEE RD

A.A.D.T.	2021	=	26,350
A.A.D.T.	2041	=	28,210
D.H.V.		=	3,103
D.D.		=	59/41
T.		=	11%
DESIGN SPEED		=	45 MPH
ESALS		=	4,720,000

CONVENTIONAL SYMBOLS

PLAN

CORPORATE LIMITS
PROPERTY LINE
LOT LINE
LIMITED HIGHWAY EASEMENT
EXISTING RIGHT OF WAY
PROPOSED OR NEW R/W LINE
SLOPE INTERCEPT
REFERENCE LINE (300'EB')
EXISTING CULVERT
PROPOSED CULVERT (Box or Pipe)
COMBUSTIBLE FLUIDS (CAUTION)
MARSH AREA
WOODED OR SHRUB AREA

PROFILE

GRADE LINE
ORIGINAL GROUND
MARSH OR ROCK PROFILE (To be noted as such) (ROCK)
SPECIAL DITCH (LABEL)
GRADE ELEVATION (95.36)
CULVERT (Profile View)

UTILITIES

ELECTRIC (E)
FIBER OPTIC (FO)
GAS (G)
SANITARY SEWER (SAN)
STORM SEWER (SS)
TELEPHONE (T)
WATER (W)
UTILITY PEDESTAL
POWER POLE
TELEPHONE POLE

STATE OF WISCONSIN
DEPARTMENT OF TRANSPORTATION

PLAN OF PROPOSED IMPROVEMENT

C LA CROSSE, INTERSECTION IMPRVMNTS

MORMON COULEE RD / BROADVIEW PL INTER

USH 14

LA CROSSE COUNTY

STATE PROJECT	FEDERAL PROJECT	
	PROJECT	CONTRACT
1641-03-75	WISC 2021492	1

STATE PROJECT NUMBER
1641-03-75

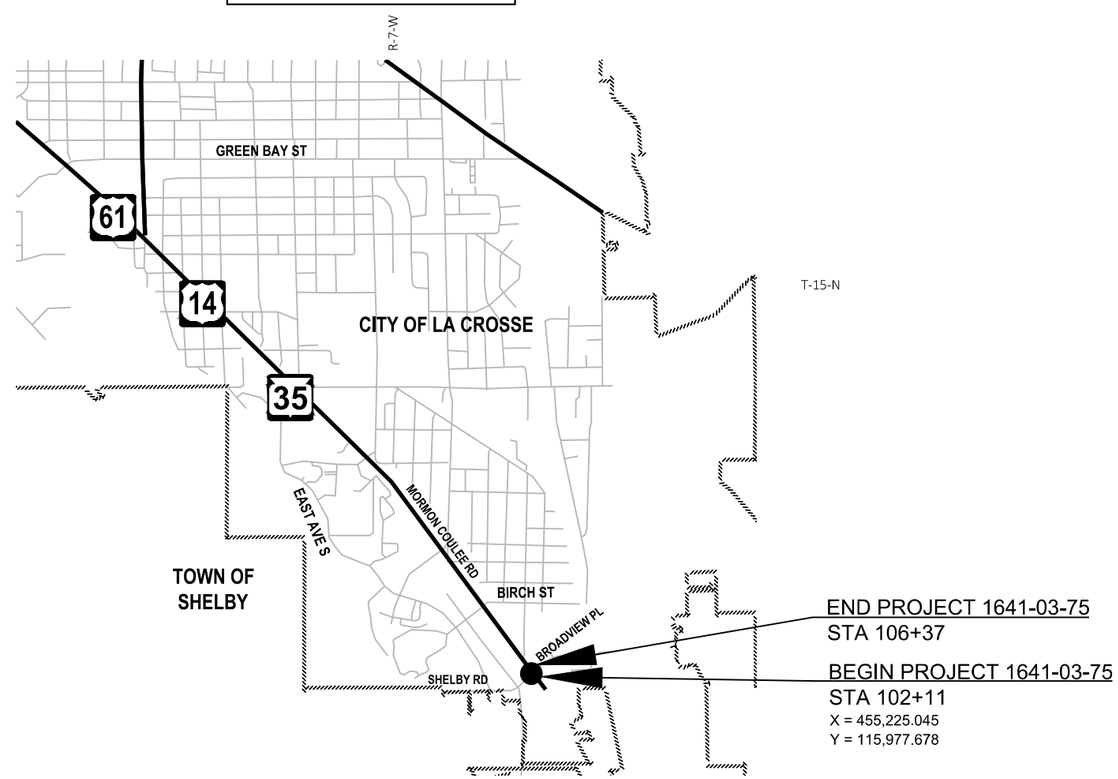

LAYOUT

SCALE 0 — 0.5 MI

TOTAL NET LENGTH OF CENTERLINE = 0.081 MI

HORIZONTAL POSITIONS SHOWN ON THIS PLAN ARE WISCONSIN COORDINATE REFERENCE SYSTEM (WISCRS), LA CROSSE COUNTY, NAD83 (2011), IN U.S. SURVEY FEET. POSITIONS SHOWN ARE GRID COORDINATES, GRID BEARINGS, AND GRID DISTANCES. GRID DISTANCES ARE THE SAME AS GROUND DISTANCES.

ELEVATIONS ARE REFERENCED TO NAVD 88 (2007). GPS DERIVED ELEVATIONS ARE BASED ON GEOID 12A.

ACCEPTED FOR

CITY of LA CROSSE

RANDY TURTENWALD (Printed Name) — (Signature)

4-12-21 (Date) — CITY ENGINEER (Title of Official)

ORIGINAL PLANS PREPARED BY

raSmith
CREATIVITY BEYOND ENGINEERING
rasmith.com

WISCONSIN PROFESSIONAL ENGINEER
JOHN P. BRUGGEMAN
E-39737
BAYSIDE, WI

4/14/21 (Date) — (Signature)

STATE OF WISCONSIN
DEPARTMENT OF TRANSPORTATION

PREPARED BY

Surveyor	raSmith
Designer	raSmith
Project Manager	CRAIG FISHER
Regional Examiner	SW REGION
Regional Supervisor	OSCAR WINGER

APPROVED FOR THE DEPARTMENT

DATE: 4/12/2021 (Signature)

E

DESIGN CONSULTANT

JOHN BRUGGEMAN
raSmith
16745 W BLUEMOUND RD
BROOKFIELD, WI 53005
(262) 317-3353
JOHN.BRUGGEMAN@RASMITH.COM

CITY OF LA CROSSE

STEPHANIE SWARD
400 LA CROSSE ST
LA CROSSE, WI 54601
(608) 789-7505
SWARDS@CITYOFLACROSSE.ORG

WISCONSIN DNR

KAREN KALVELAGE
3550 MORMON COULEE RD
LA CROSSE, WI 54601
(608) 785-9115
KAREN.KALVELAGE@WISCONSIN.GOV

CITY OF LA CROSSE MUNICIPAL TRANSIT (MTU)

ADAM LORENTZ
2000 MARCO DR
LA CROSSE, WI 54601
(608) 789-7350
LORENTZA@CITYOFLACROSSE.ORG

WISCONSIN DEPT OF TRANSPORTATION

CRAIG FISHER
3550 MORMON COULEE RD
LA CROSSE, WI 54601
(608) 785-9946
CRAIG.FISHER@DOT.WI.GOV

UTILITIES

GAS

TOM LALOND
XCEL ENERGY
3215 COMMERCE ST
LA CROSSE, WI 54603
(608) 789-3681
THOMAS.J.LALOND@XCELENERGY.COM

ELECTRIC

JASON MCROBERTS
XCEL ENERGY
3215 COMMERCE ST
LA CROSSE, WI 54603
(608) 789-3689
JASON.L.MCROBERTS@XCELENERGY.COM

COMMUNICATION

TOM MURRAY
CENTURYLINK
333 N FRONT ST
LA CROSSE, WI 54601
(608) 780-0895
TOM.L.MURRAY@CENTURYLINK.COM

SANITARY

STEVE ASP
CITY OF LA CROSSE
905 HOUSKA PARK DR
LA CROSSE, WI 54601
(608) 789-7330
ASPA@CITYOFLACROSSE.ORG

WATER

MARK GRAFF
CITY OF LA CROSSE
800 EAST AVE N
LA CROSSE, WI 54601
(608) 789-7384
GRAFFM@CITYOFLACROSSE.ORG

COMMUNICATION

PERRY MCCLELLAN
CHARTER
1228 12TH AVE S
ONALASKA, WI 54650
(608) 317-6213
PERRY.MCCLELLAN@CHARTER.COM

ORDER OF SECTION 2 SHEETS

GENERAL NOTES
PROJECT OVERVIEW
TYPICAL SECTIONS
CONSTRUCTION DETAILS
PLAN DETAILS
PAVEMENT DETAILS
CURB RAMP DETAILS
UTILITY DETAILS
TRAFFIC SIGNAL REMOVAL
TRAFFIC SIGNAL TEMPORARY
TRAFFIC SIGNAL PERMANENT
PAVEMENT MARKING
TRAFFIC CONTROL

GENERAL NOTES

1. THE LOCATIONS OF EXISTING AND PROPOSED UTILITY INSTALLATIONS AS SHOWN ON THE PLAN ARE APPROXIMATE. THERE MAY BE OTHER UTILITY INSTALLATIONS WITHIN THE PROJECT AREA WHICH ARE NOT SHOWN.
2. ALL OPENINGS BELOW SUBGRADE, RESULTING FROM REMOVALS OR ABANDONMENTS, SHALL BE BACKFILLED IN ACCORDANCE WITH SECTION 204 OF THE STANDARD SPECS. BACKFILL MATERIAL SHALL BE INCIDENTAL TO CONSTRUCTION.
3. NO TREES OR SHRUBS SHALL BE REMOVED WITHOUT APPROVAL OF THE ENGINEER.
4. CURB AND GUTTER GRADES ARE MEASURED AT THE FLANGE LINE UNLESS OTHERWISE NOTED. CURB AND GUTTER STATIONS, OFFSETS, AND RADII ARE MEASURED AT THE FACE OF CURB UNLESS OTHERWISE NOTED.
5. EROSION CONTROL DEVICES ARE AT SUGGESTED LOCATIONS. THE ACTUAL LOCATIONS WILL BE DETERMINED BY THE CONTRACTOR'S EROSION CONTROL IMPLEMENTATION PLAN AND BY THE ENGINEER. EROSION CONTROL DEVICES SHALL BE MAINTAINED UNTIL PERMANENT VEGETATION IS ESTABLISHED OR UNTIL THE ENGINEER DETERMINES THAT THE DEVICES ARE NO LONGER REQUIRED.
6. THE LIMITS OF SIDEWALK AND CURB & GUTTER REMOVALS ARE APPROXIMATE. FINAL LOCATIONS TO BE DETERMINED BY THE ENGINEER.
7. REMOVAL OF EXISTING SIGNS AND INSTALLATION OF PERMANENT SIGNS TO BE COMPLETED BY THE CITY OF LA CROSSE. CONTACT STEPHANIE SWARD AT LEAST 14 CALENDAR DAYS PRIOR TO THE ANTICIPATED PROJECT START DATE AND COMPLETION DATE TO COORDINATE EXISTING SIGN REMOVAL AND PERMANENT SIGN INSTALLATION, RESPECTIVELY.

DIGGERS HOTLINE
Dial 811 or (800)242-8511
www.DiggersHotline.com

2

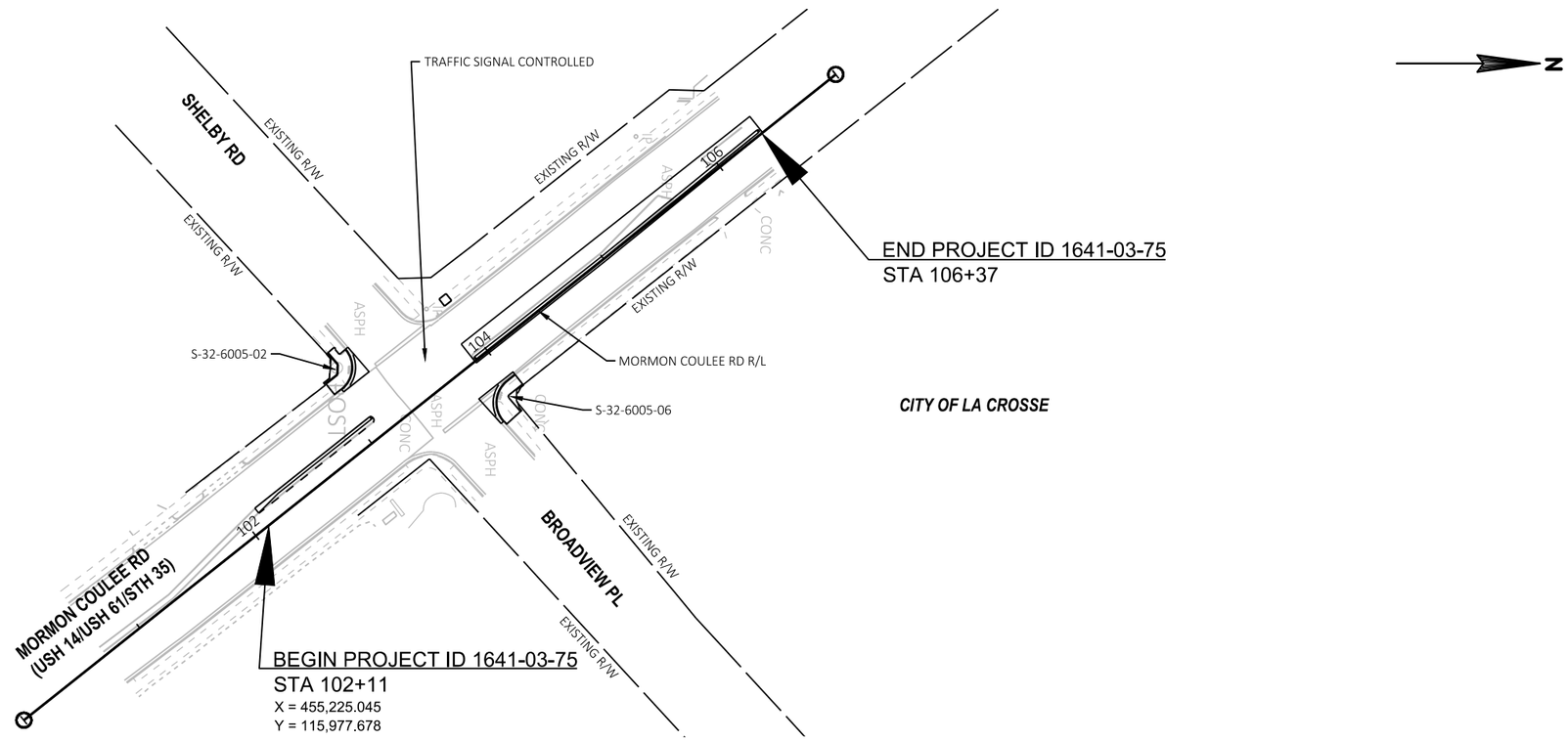

PROJECT NO: 1641-03-75	HWY: USH 14	COUNTY: LA CROSSE	PROJECT OVERVIEW	SHEET 3	E

FILE NAME : T:\1190937.02\CIVIL3D\16410304\SHEETSPLAN\16410375\020201-PO.DWG
LAYOUT NAME - 01
PLOT DATE : 6/8/2021 9:47 AM
PLOT BY : AXT, ANDREW
PLOT NAME :
PLOT SCALE : ##########

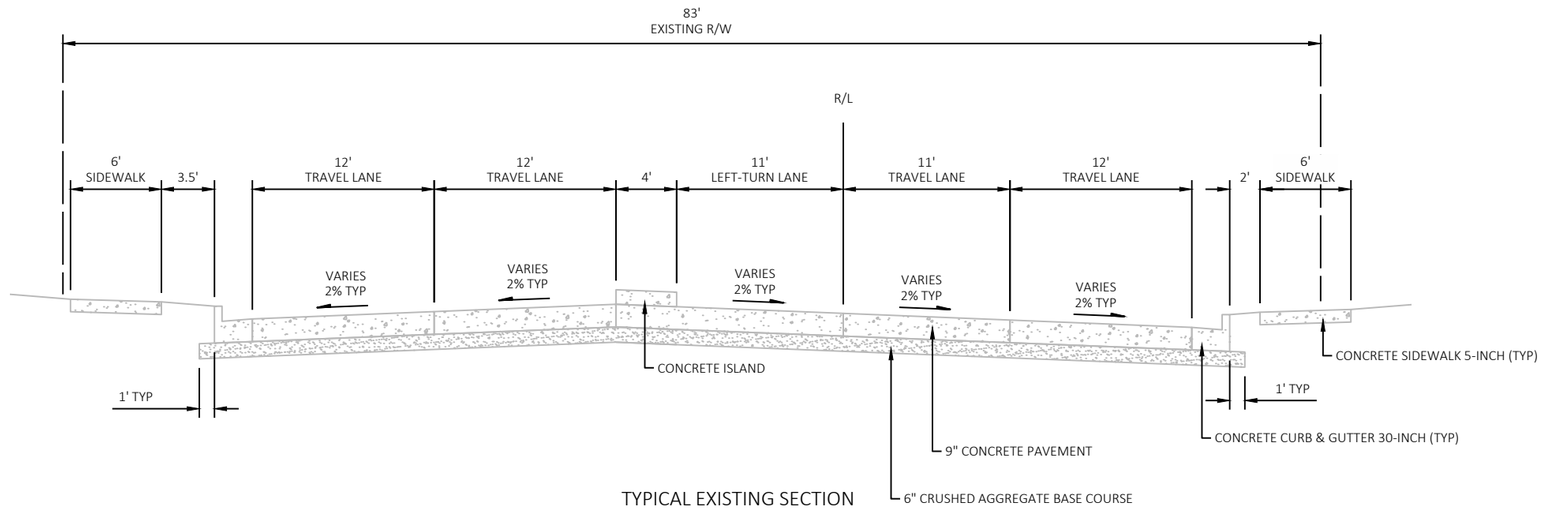

TYPICAL EXISTING SECTION
MORMON COULEE RD
(USH 14, USH 61, STH 35)

STA 102+11 TO STA 103+18

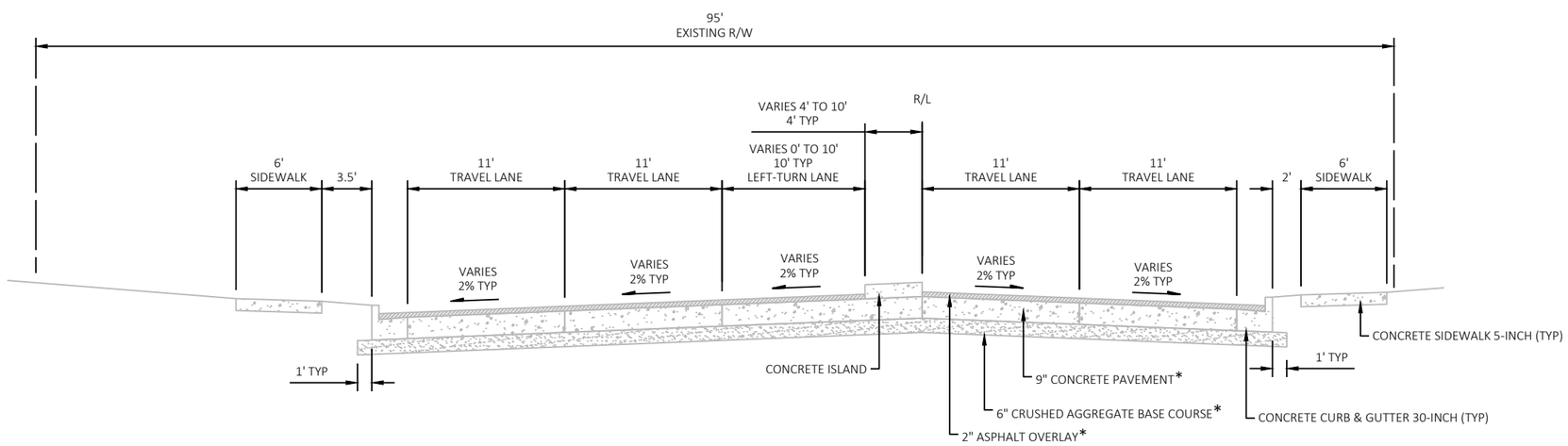

TYPICAL EXISTING SECTION
MORMON COULEE RD
(USH 14, USH 61, STH 35)

STA 103+86 TO STA 106+37

*ASPHALT OVERLAY THICKNESS AND CRUSHED AGGREGATE BASE COURSE THICKNESS ASSUMED; UNDERLYING CONCRETE PAVEMENT ASSUMED BASED ON FIELD REVIEW OF ASPHALT OVERLAY CRACKING PATTERNS. AS-BUILTS NOT AVAILABLE.

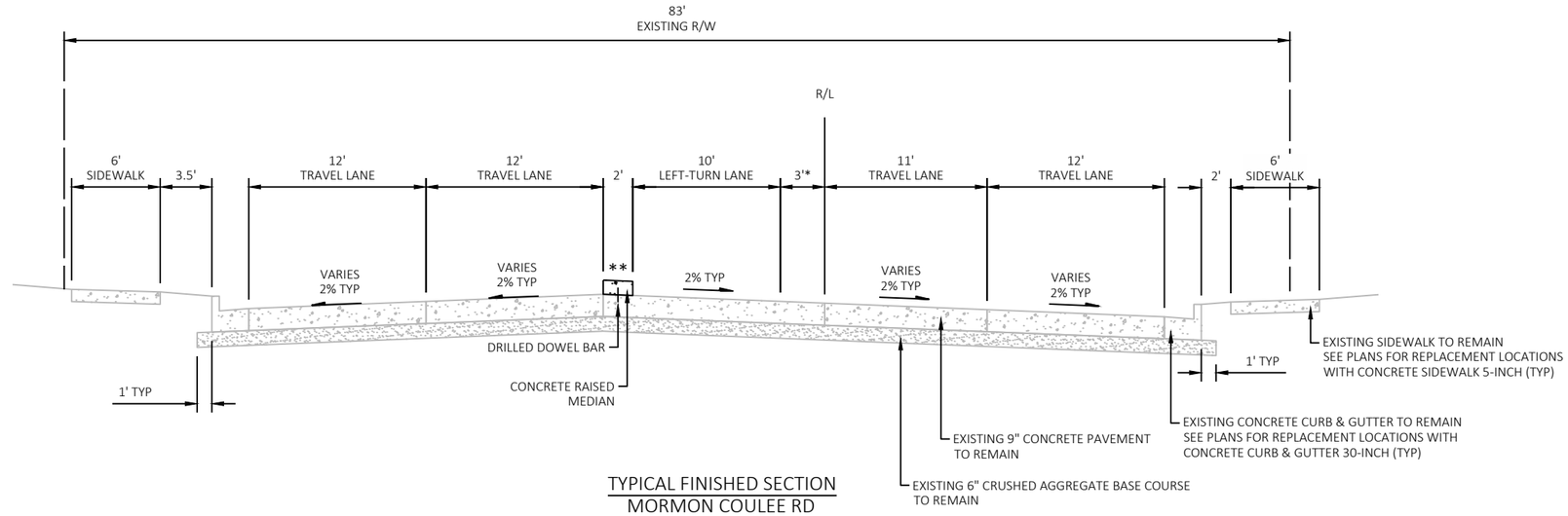

TYPICAL FINISHED SECTION
MORMON COULEE RD
(USH 14, USH 61, STH 35)

STA 102+11 TO STA 103+18
V = 45 MPH

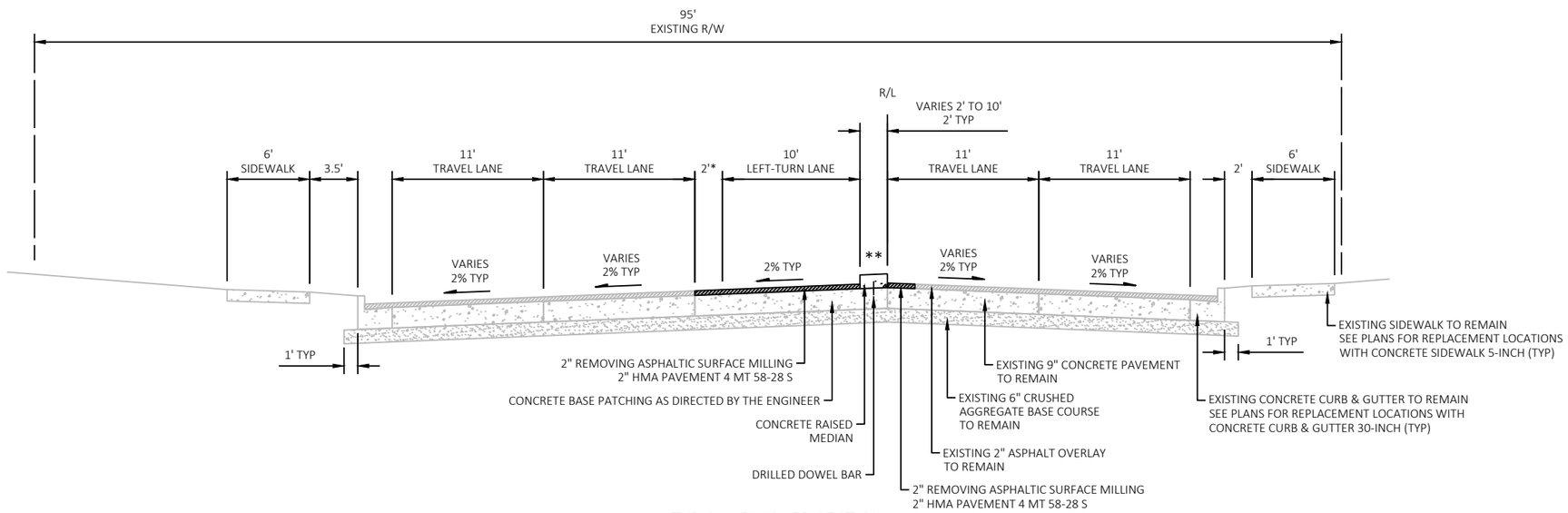

TYPICAL FINISHED SECTION
MORMON COULEE RD
(USH 14, USH 61, STH 35)

STA 103+86 TO STA 106+37
V = 45 MPH

*SEPARATOR WIDTH TO BE PAVEMENT MARKED.
**SLOPE VARIES -3% TO +4%.

RUNOFF COEFFICIENT TABLE

	HYDROLOGIC SOIL GROUP											
	A			B			C			D		
	SLOPE RANGE (PERCENT)			SLOPE RANGE (PERCENT)			SLOPE RANGE (PERCENT)			SLOPE RANGE (PERCENT)		
LAND USE:	0-2	2-6	6 & OVER	0-2	2-6	6 & OVER	0-2	2-6	6 & OVER	0-2	2-6	6 & OVER
ROW CROPS	.08 .22	.16 .30	.22 .38	.12 .26	.20 .34	.27 .44	.15 .30	.24 .37	.33 .50	.19 .34	.28 .41	.38 .56
MEDIAN STRIP-TURF	.19 .24	.20 .26	.24 .30	.19 .25	.22 .28	.26 .33	.20 .26	.23 .30	.30 .37	.20 .27	.25 .32	.30 .40
SIDE SLOPE: TURF			.25 .32			.27 .34			.28 .36			.30 .38
PAVEMENT:												
ASPHALT	.70 - .95											
CONCRETE	.80 - .95											
BRICK	.70 - .80											
DRIVES, WALKS	.75 - .85											
ROOFS	.75 - .95											
GRAVEL ROADS, SHOULDERS	.40 - .60											

TOTAL PROJECT AREA = 0.86 ACRES
TOTAL AREA EXPECTED TO BE DISTURBED BY CONSTRUCTION ACTIVITIES = 0.13 ACRES

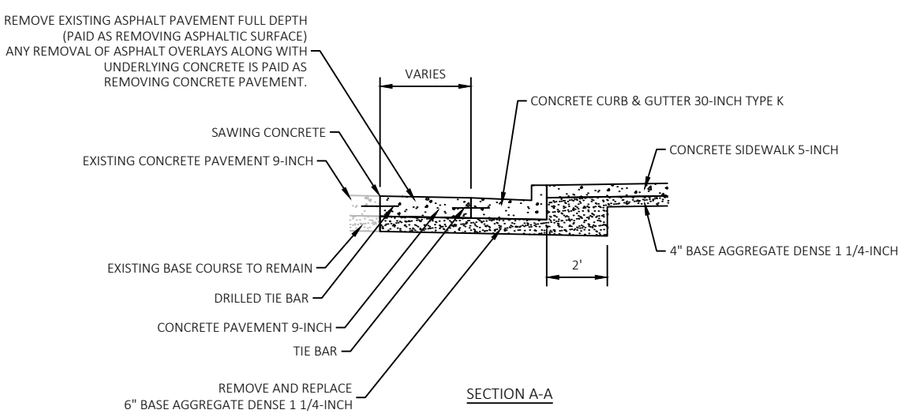

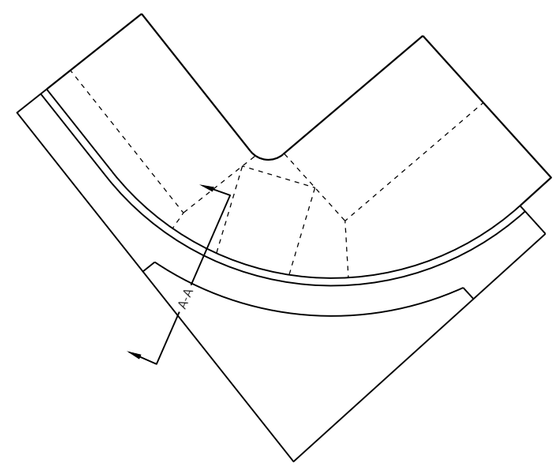

CURB & GUTTER REPLACEMENT DETAIL

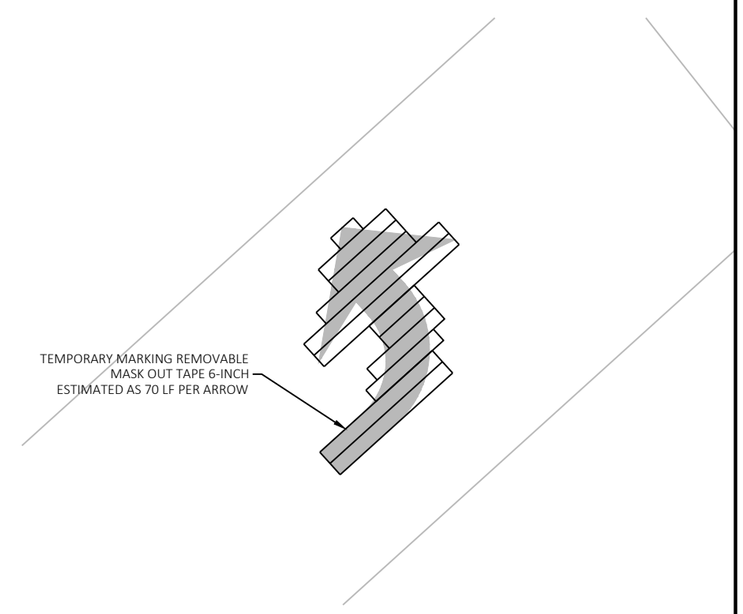

MASKING EXISTING LEFT-TURN ARROWS - STAGES 1 & 2
MORMON COULEE RD (USH 14/USH 61/STH 35) & SHELBY RD/BROADVIEW PL INTERSECTION

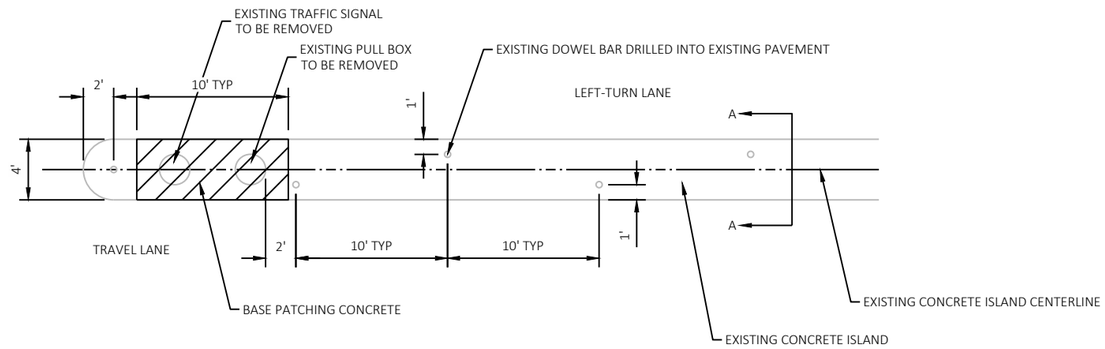

PLAN VIEW

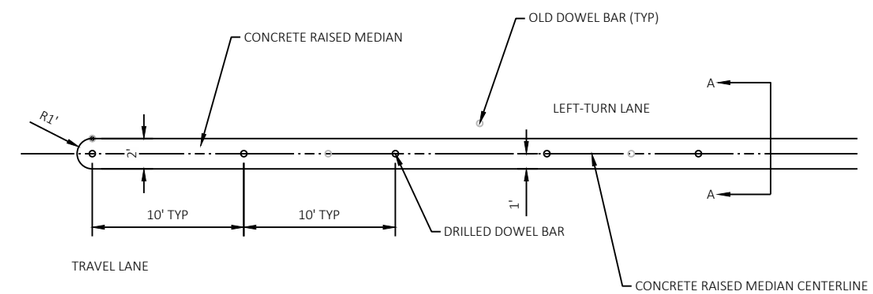

PLAN VIEW

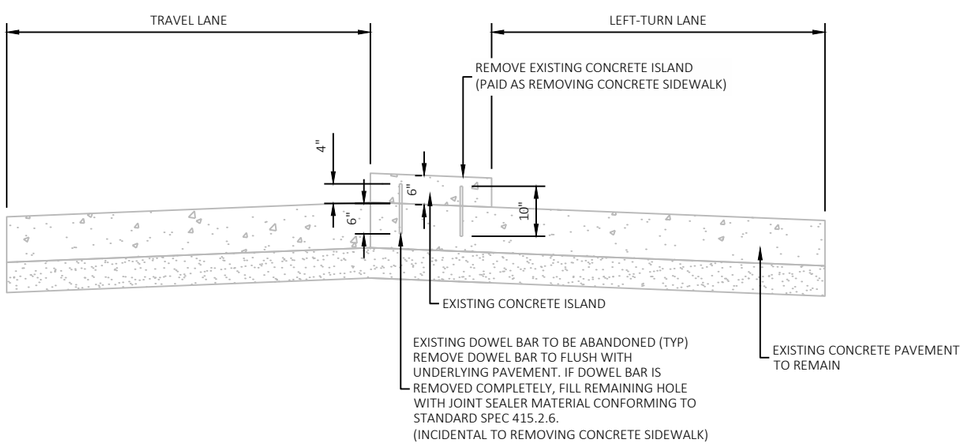

SECTION A-A

EXISTING CONCRETE ISLAND REMOVAL

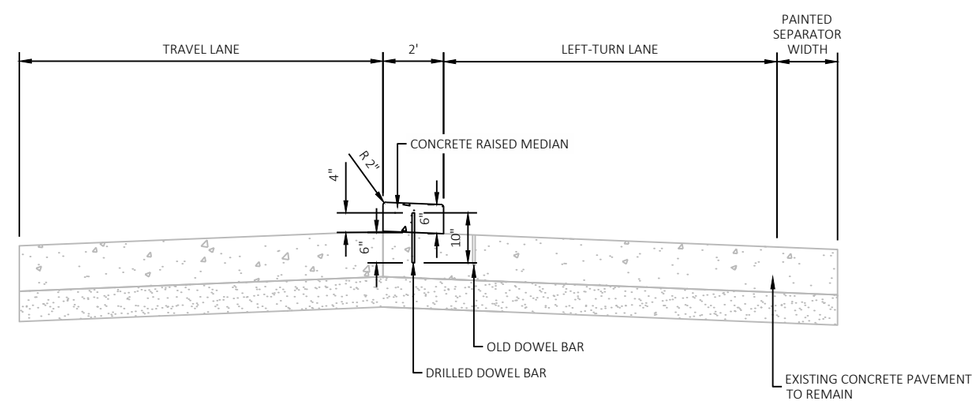

SECTION A-A

PROPOSED CONCRETE RAISED MEDIAN

CONCRETE RAISED MEDIAN DETAIL

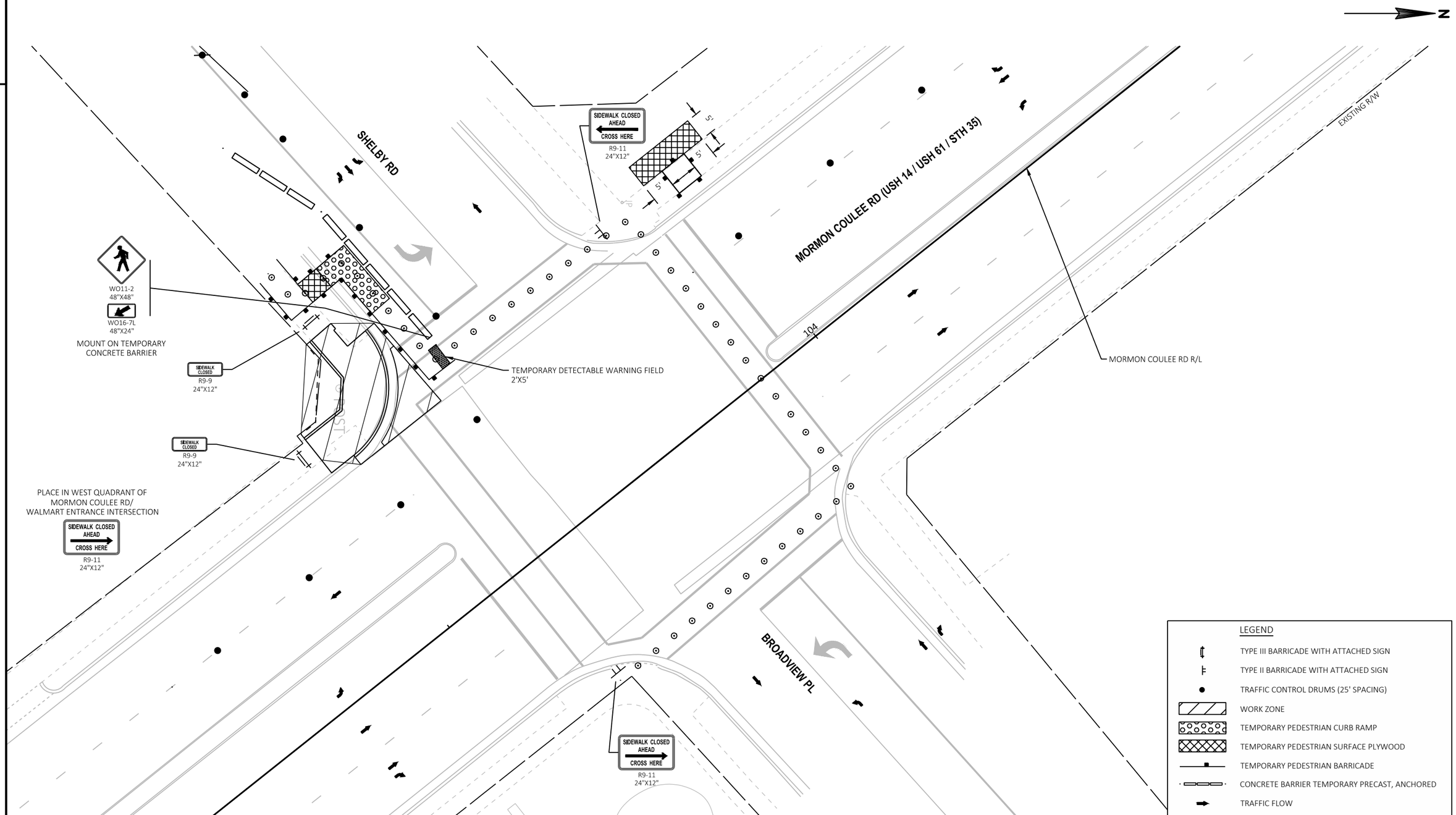

TEMPORARY PEDESTRIAN ACCOMMODATION - STAGE 1

MORMON COULEE RD (USH 14/USH 61/STH 35) & SHELBY RD/BROADVIEW PL INTERSECTION

SEE SDD TRAFFIC CONTROL, PEDESTRIAN ACCOMMODATION FOR ADDITIONAL INFORMATION

2

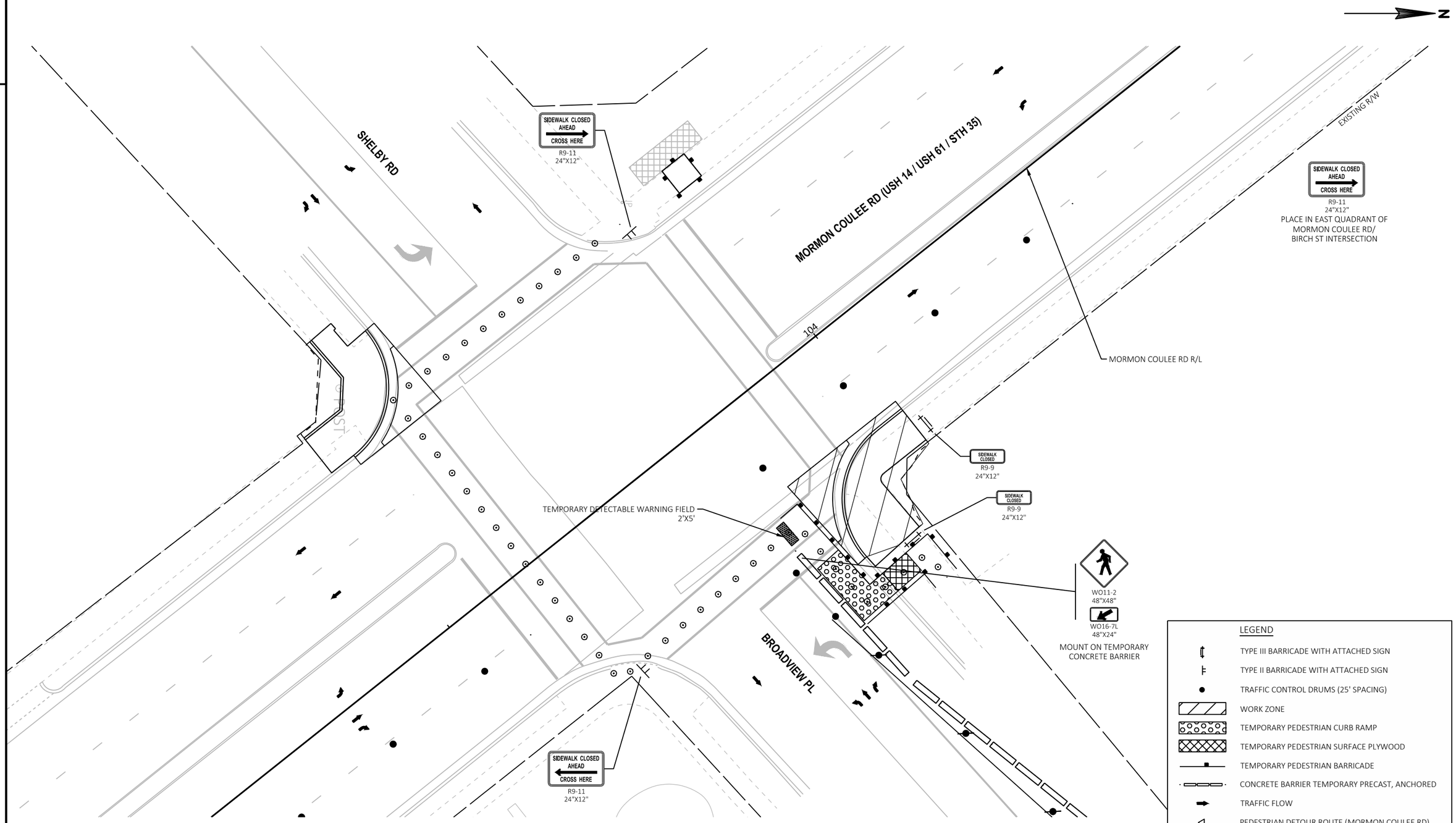

TEMPORARY PEDESTRIAN ACCOMMODATION - STAGE 2

MORMON COULEE RD (USH 14/USH 61/STH 35) & SHELBY RD/BROADVIEW PL INTERSECTION

SEE SDD TRAFFIC CONTROL, PEDESTRIAN ACCOMMODATION FOR ADDITIONAL INFORMATION

PROJECT NO: 1641-03-75	HWY: USH 14	COUNTY: LA CROSSE	CONSTRUCTION DETAILS	SHEET 9	E

CONTROL POINTS

CP2	STA 102+03.80, 27.94' RT	ELEV. 665.21	MAG NAIL ON EAST SIDE OF MORMON COULEE RD, APPROXIMATELY 2.5' BEHIND CURB
CP3	STA 104+88.71, 43.58' LT	ELEV. 666.54	MAG NAIL IN SIDEWALK ON WEST SIDE OF MORMON COULEE RD

BENCHMARKS

BM5789	STA 103+12.50, 28.59' RT	ELEV. 668.02	WEST BOLT OF LIGHT POLE BASE AT SE CORNER OF MORMON COULEE RD/BROADVIEW PL INTERSECTION
BM5672	STA 103+88.84, 40.70' LT	ELEV. 668.36	EAST BOLT OF LIGHT POLE BASE AT NW CORNER OF MORMON COULEE RD/BROADVIEW PL INTERSECTION

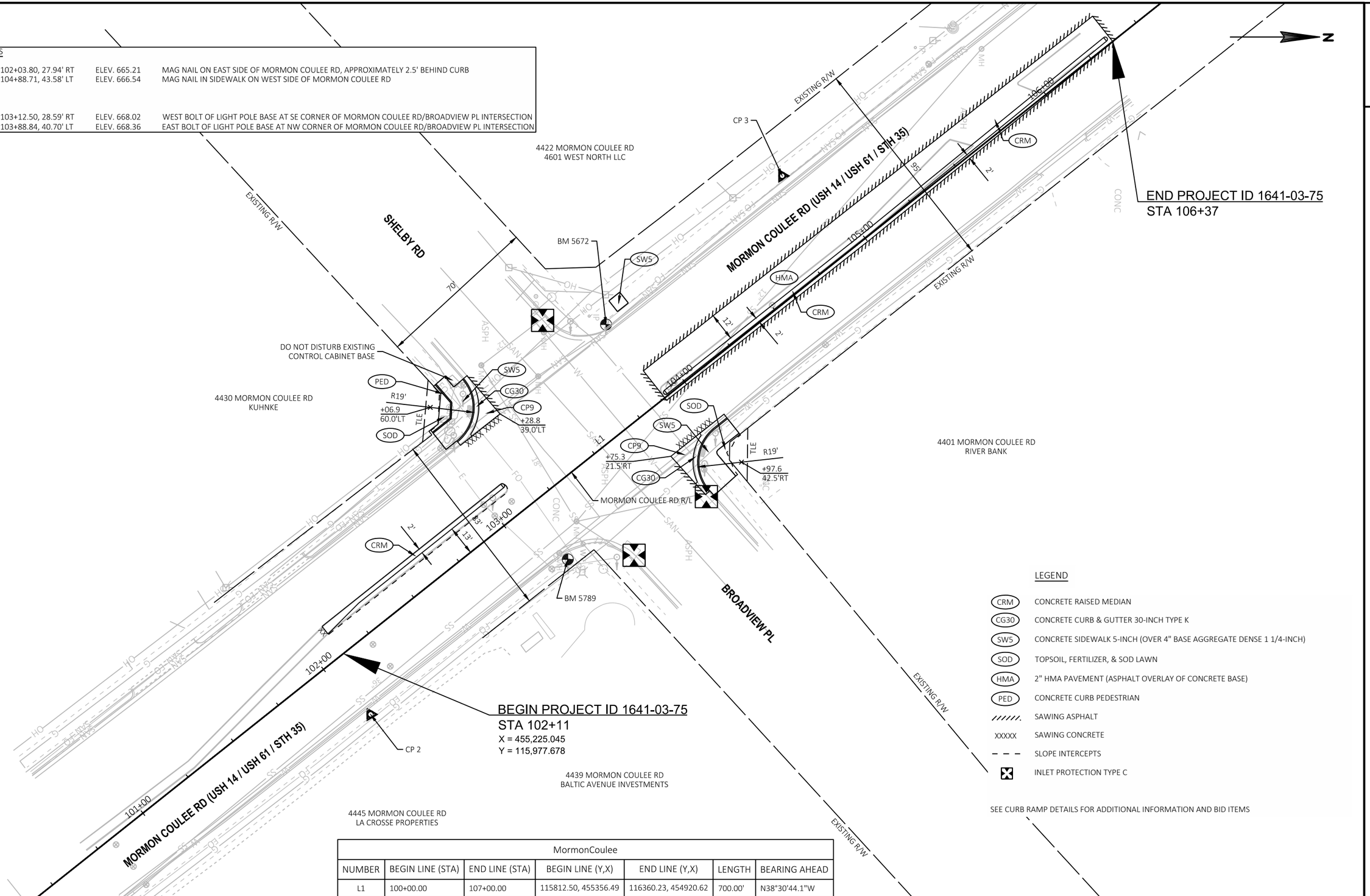

MormonCoulee						
NUMBER	BEGIN LINE (STA)	END LINE (STA)	BEGIN LINE (Y,X)	END LINE (Y,X)	LENGTH	BEARING AHEAD
L1	100+00.00	107+00.00	115812.50, 455356.49	116360.23, 454920.62	700.00'	N38°30'44.1"W

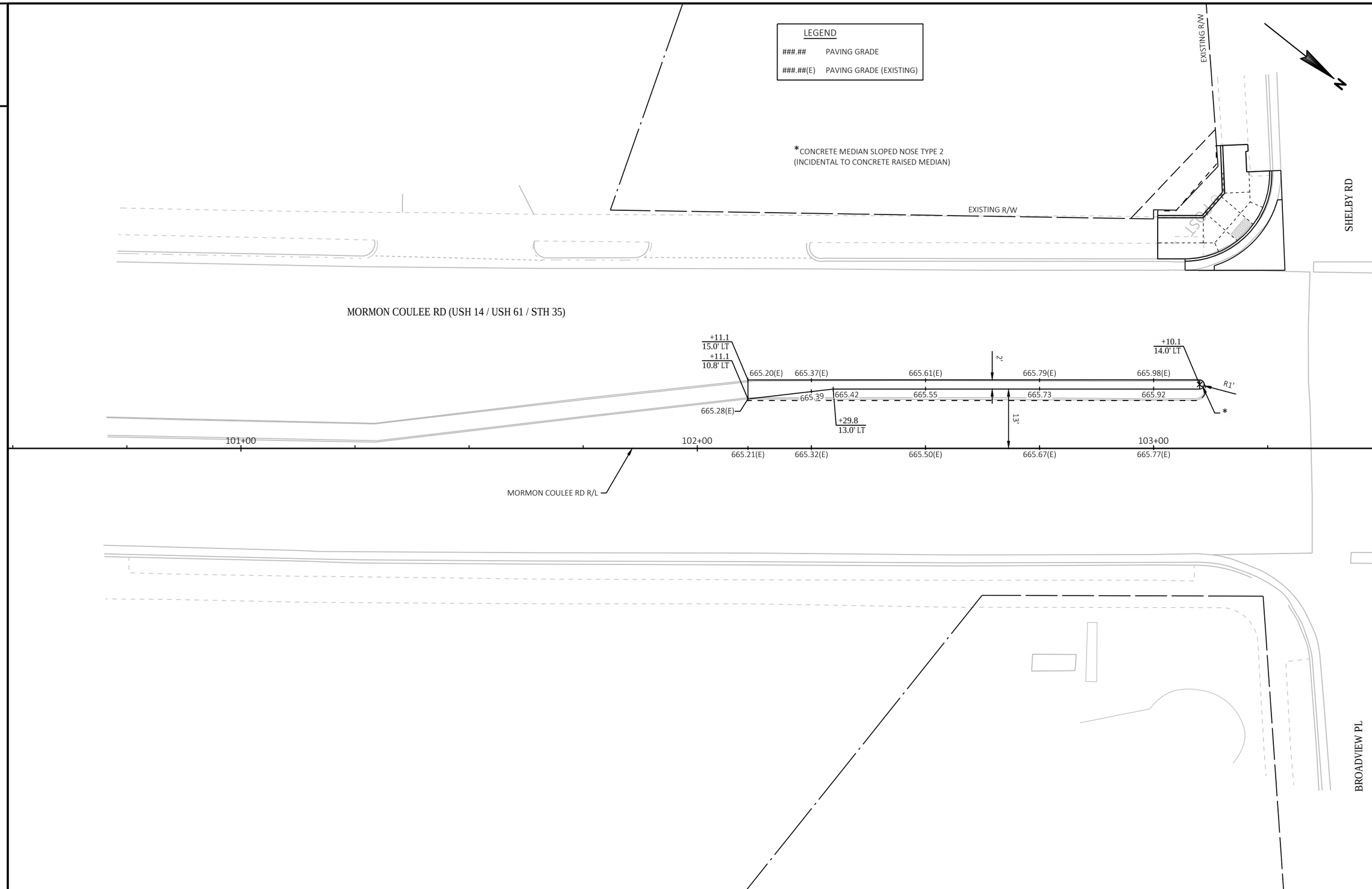

PROJECT NO: 1641-03-75	HWY: USH 14	COUNTY: LA CROSSE	PAVEMENT DETAILS	SHEET 11	E

FILE NAME : T:\1190937.02\CIVIL3D\16410304\SHEETSPLAN\16410375\021202-PD.DWG
LAYOUT NAME - 01
PLOT DATE : 4/22/2021 8:12 PM
PLOT BY : AXT, ANDREW
PLOT NAME :
PLOT SCALE : 1 IN:20 FT
WISDOT/CADDS SHEET 42

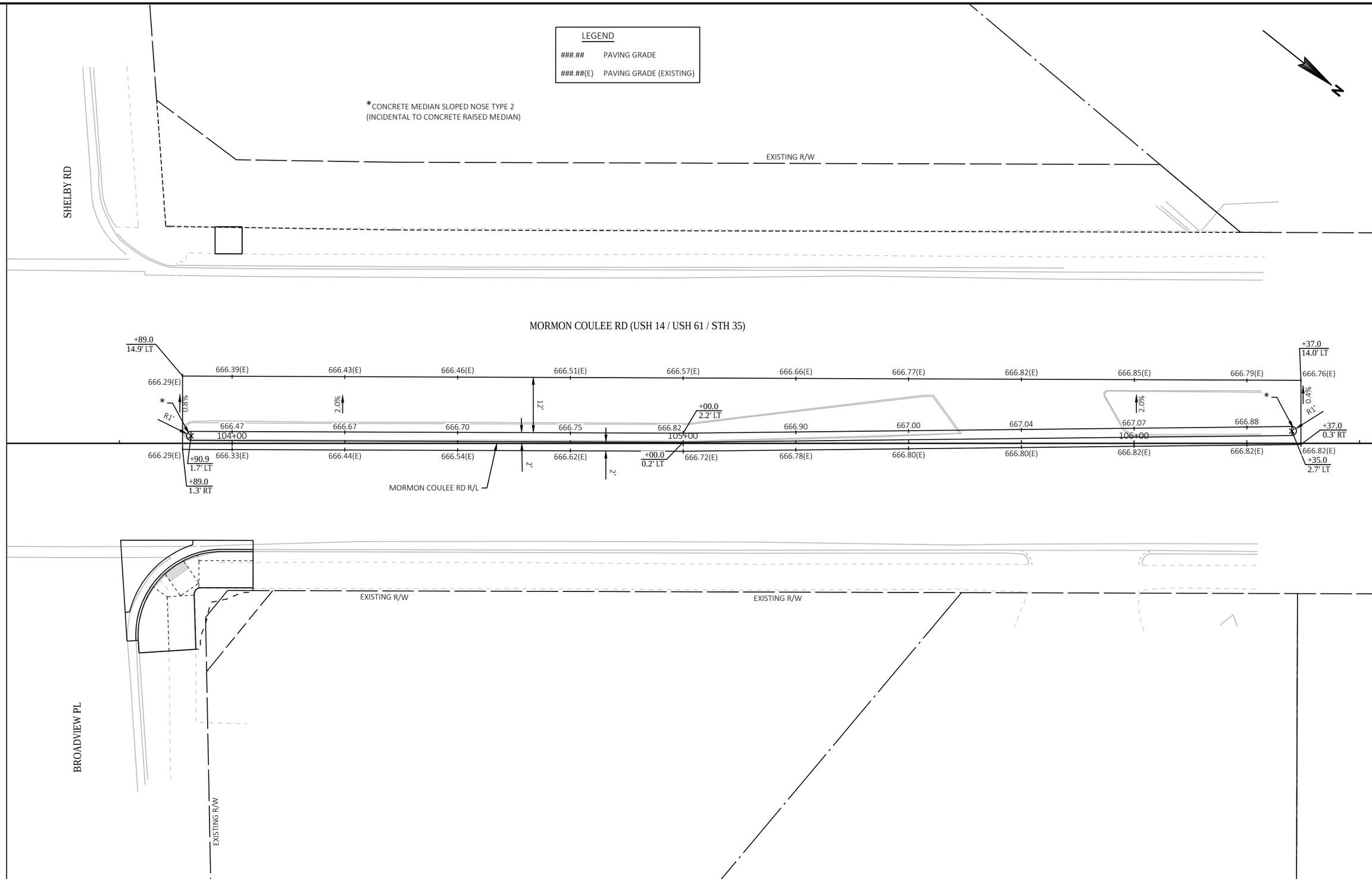
LEGEND
###.## PAVING GRADE
###.##(E) PAVING GRADE (EXISTING)
*CONCRETE MEDIAN SLOPED NOSE TYPE 2
(INCIDENTAL TO CONCRETE RAISED MEDIAN)
EXISTING R/W
SHELBY RD
MORMON COULEE RD (USH 14 / USH 61 / STH 35)
MATCHLINE STA 103+50
+89.0
14.9' LT
666.29(E)
666.39(E)
666.43(E)
666.46(E)
666.51(E)
666.57(E)
666.66(E)
666.77(E)
666.82(E)
666.85(E)
666.79(E)
+37.0
14.0' LT
666.76(E)
0.8%
2.0%
12'
2.0%
0.4%
R1'
666.47
104+00
666.67
666.70
666.75
666.82
105+00
+00.0
2.2' LT
666.90
667.00
667.04
667.07
106+00
666.88
+37.0
0.3' RT
666.29(E)
+90.9
1.7' LT
+89.0
1.3' RT
666.33(E)
666.44(E)
666.54(E)
666.62(E)
2'
2'
+00.0
0.2' LT
666.72(E)
666.78(E)
666.80(E)
666.80(E)
666.82(E)
666.82(E)
666.82(E)
+35.0
2.7' LT
MORMON COULEE RD R/L
EXISTING R/W
EXISTING R/W
BROADVIEW PL
EXISTING R/W

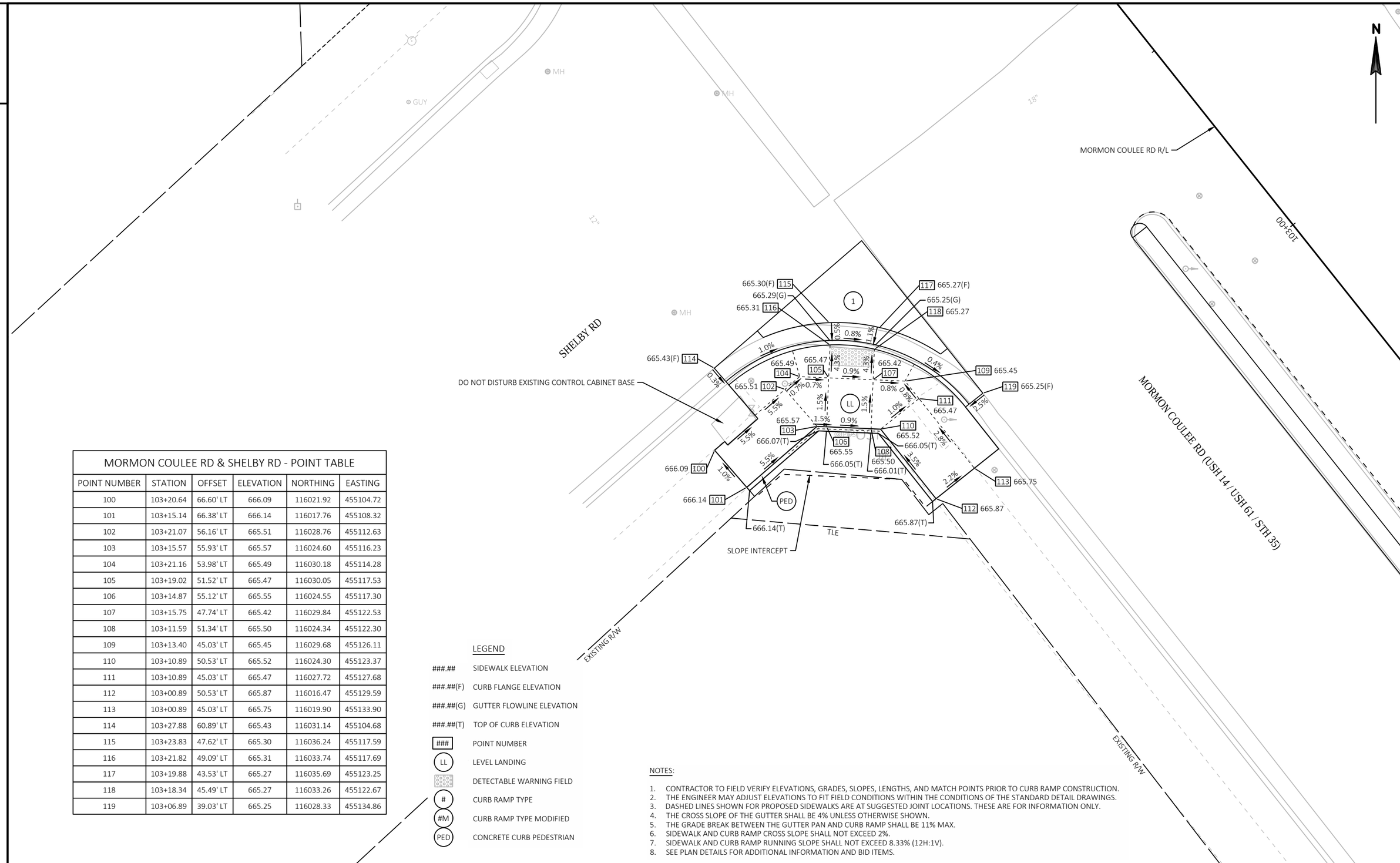

MORMON COULEE RD & SHELBY RD - POINT TABLE					
POINT NUMBER	STATION	OFFSET	ELEVATION	NORTHING	EASTING
100	103+20.64	66.60' LT	666.09	116021.92	455104.72
101	103+15.14	66.38' LT	666.14	116017.76	455108.32
102	103+21.07	56.16' LT	665.51	116028.76	455112.63
103	103+15.57	55.93' LT	665.57	116024.60	455116.23
104	103+21.16	53.98' LT	665.49	116030.18	455114.28
105	103+19.02	51.52' LT	665.47	116030.05	455117.53
106	103+14.87	55.12' LT	665.55	116024.55	455117.30
107	103+15.75	47.74' LT	665.42	116029.84	455122.53
108	103+11.59	51.34' LT	665.50	116024.34	455122.30
109	103+13.40	45.03' LT	665.45	116029.68	455126.11
110	103+10.89	50.53' LT	665.52	116024.30	455123.37
111	103+10.89	45.03' LT	665.47	116027.72	455127.68
112	103+00.89	50.53' LT	665.87	116016.47	455129.59
113	103+00.89	45.03' LT	665.75	116019.90	455133.90
114	103+27.88	60.89' LT	665.43	116031.14	455104.68
115	103+23.83	47.62' LT	665.30	116036.24	455117.59
116	103+21.82	49.09' LT	665.31	116033.74	455117.69
117	103+19.88	43.53' LT	665.27	116035.69	455123.25
118	103+18.34	45.49' LT	665.27	116033.26	455122.67
119	103+06.89	39.03' LT	665.25	116028.33	455134.86

LEGEND

###.##	SIDEWALK ELEVATION
###.##(F)	CURB FLANGE ELEVATION
###.##(G)	GUTTER FLOWLINE ELEVATION
###.##(T)	TOP OF CURB ELEVATION
###	POINT NUMBER
LL	LEVEL LANDING
	DETECTABLE WARNING FIELD
#	CURB RAMP TYPE
#M	CURB RAMP TYPE MODIFIED
PED	CONCRETE CURB PEDESTRIAN

NOTES:

1. CONTRACTOR TO FIELD VERIFY ELEVATIONS, GRADES, SLOPES, LENGTHS, AND MATCH POINTS PRIOR TO CURB RAMP CONSTRUCTION.
2. THE ENGINEER MAY ADJUST ELEVATIONS TO FIT FIELD CONDITIONS WITHIN THE CONDITIONS OF THE STANDARD DETAIL DRAWINGS.
3. DASHED LINES SHOWN FOR PROPOSED SIDEWALKS ARE AT SUGGESTED JOINT LOCATIONS. THESE ARE FOR INFORMATION ONLY.
4. THE CROSS SLOPE OF THE GUTTER SHALL BE 4% UNLESS OTHERWISE SHOWN.
5. THE GRADE BREAK BETWEEN THE GUTTER PAN AND CURB RAMP SHALL BE 11% MAX.
6. SIDEWALK AND CURB RAMP CROSS SLOPE SHALL NOT EXCEED 2%.
7. SIDEWALK AND CURB RAMP RUNNING SLOPE SHALL NOT EXCEED 8.33% (12H:1V).
8. SEE PLAN DETAILS FOR ADDITIONAL INFORMATION AND BID ITEMS.

LEGEND

###.##	SIDEWALK ELEVATION
###.##(F)	CURB FLANGE ELEVATION
###.##(G)	GUTTER FLOWLINE ELEVATION
###.##(T)	TOP OF CURB ELEVATION
###	POINT NUMBER
LL	LEVEL LANDING
	DETECTABLE WARNING FIELD
#	CURB RAMP TYPE
#M	CURB RAMP TYPE MODIFIED
PED	CONCRETE CURB PEDESTRIAN

NOTES:

1. CONTRACTOR TO FIELD VERIFY ELEVATIONS, GRADES, SLOPES, LENGTHS, AND MATCH POINTS PRIOR TO CURB RAMP CONSTRUCTION.
2. THE ENGINEER MAY ADJUST ELEVATIONS TO FIT FIELD CONDITIONS WITHIN THE CONDITIONS OF THE STANDARD DETAIL DRAWINGS.
3. DASHED LINES SHOWN FOR PROPOSED SIDEWALKS ARE AT SUGGESTED JOINT LOCATIONS. THESE ARE FOR INFORMATION ONLY.
4. THE CROSS SLOPE OF THE GUTTER SHALL BE 4% UNLESS OTHERWISE SHOWN.
5. THE GRADE BREAK BETWEEN THE GUTTER PAN AND CURB RAMP SHALL BE 11% MAX.
6. SIDEWALK AND CURB RAMP CROSS SLOPE SHALL NOT EXCEED 2%.
7. SIDEWALK AND CURB RAMP RUNNING SLOPE SHALL NOT EXCEED 8.33% (12H:1V).
8. SEE PLAN DETAILS FOR ADDITIONAL INFORMATION AND BID ITEMS.

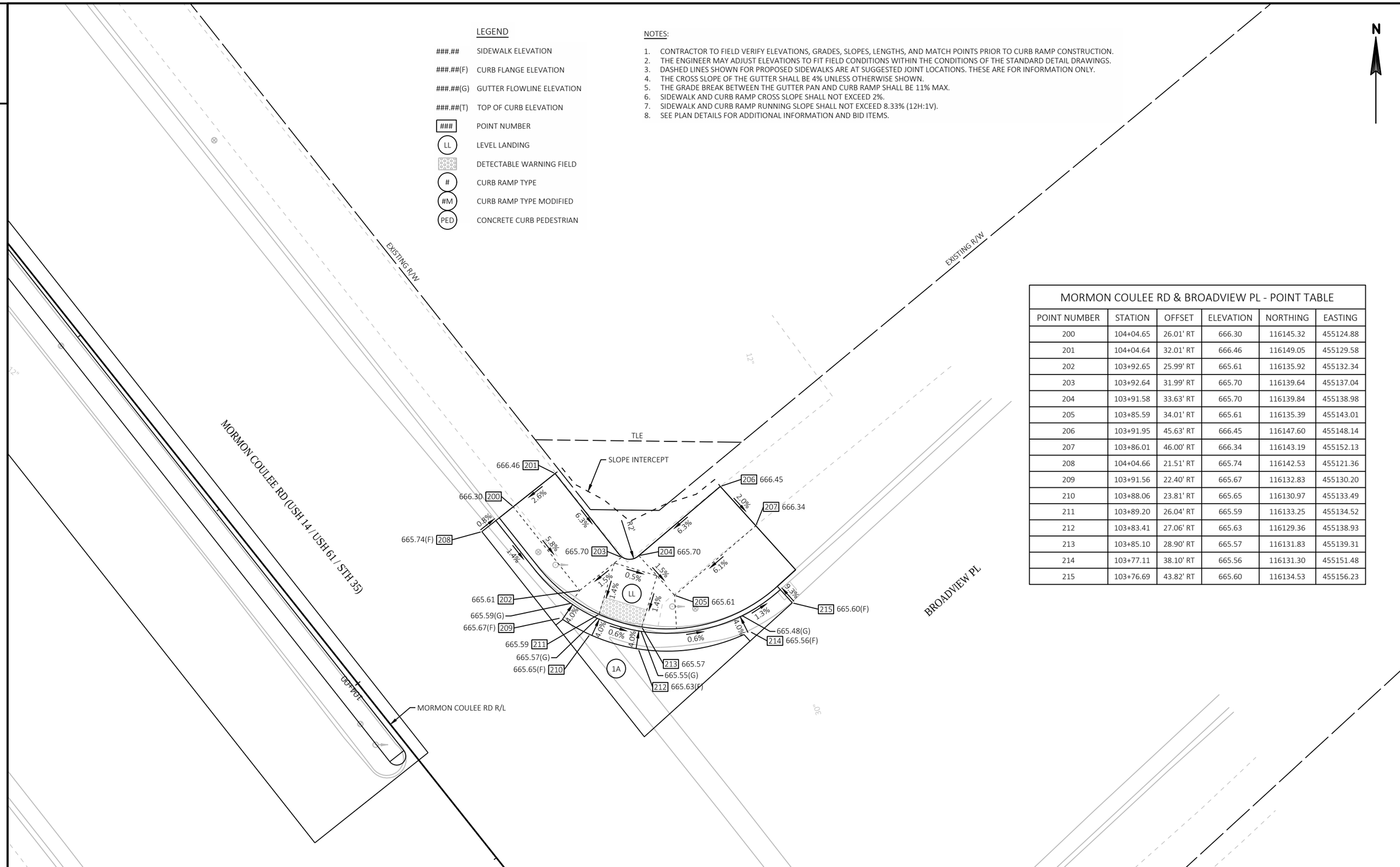

MORMON COULEE RD & BROADVIEW PL - POINT TABLE

POINT NUMBER	STATION	OFFSET	ELEVATION	NORTHING	EASTING
200	104+04.65	26.01' RT	666.30	116145.32	455124.88
201	104+04.64	32.01' RT	666.46	116149.05	455129.58
202	103+92.65	25.99' RT	665.61	116135.92	455132.34
203	103+92.64	31.99' RT	665.70	116139.64	455137.04
204	103+91.58	33.63' RT	665.70	116139.84	455138.98
205	103+85.59	34.01' RT	665.61	116135.39	455143.01
206	103+91.95	45.63' RT	666.45	116147.60	455148.14
207	103+86.01	46.00' RT	666.34	116143.19	455152.13
208	104+04.66	21.51' RT	665.74	116142.53	455121.36
209	103+91.56	22.40' RT	665.67	116132.83	455130.20
210	103+88.06	23.81' RT	665.65	116130.97	455133.49
211	103+89.20	26.04' RT	665.59	116133.25	455134.52
212	103+83.41	27.06' RT	665.63	116129.36	455138.93
213	103+85.10	28.90' RT	665.57	116131.83	455139.31
214	103+77.11	38.10' RT	665.56	116131.30	455151.48
215	103+76.69	43.82' RT	665.60	116134.53	455156.23

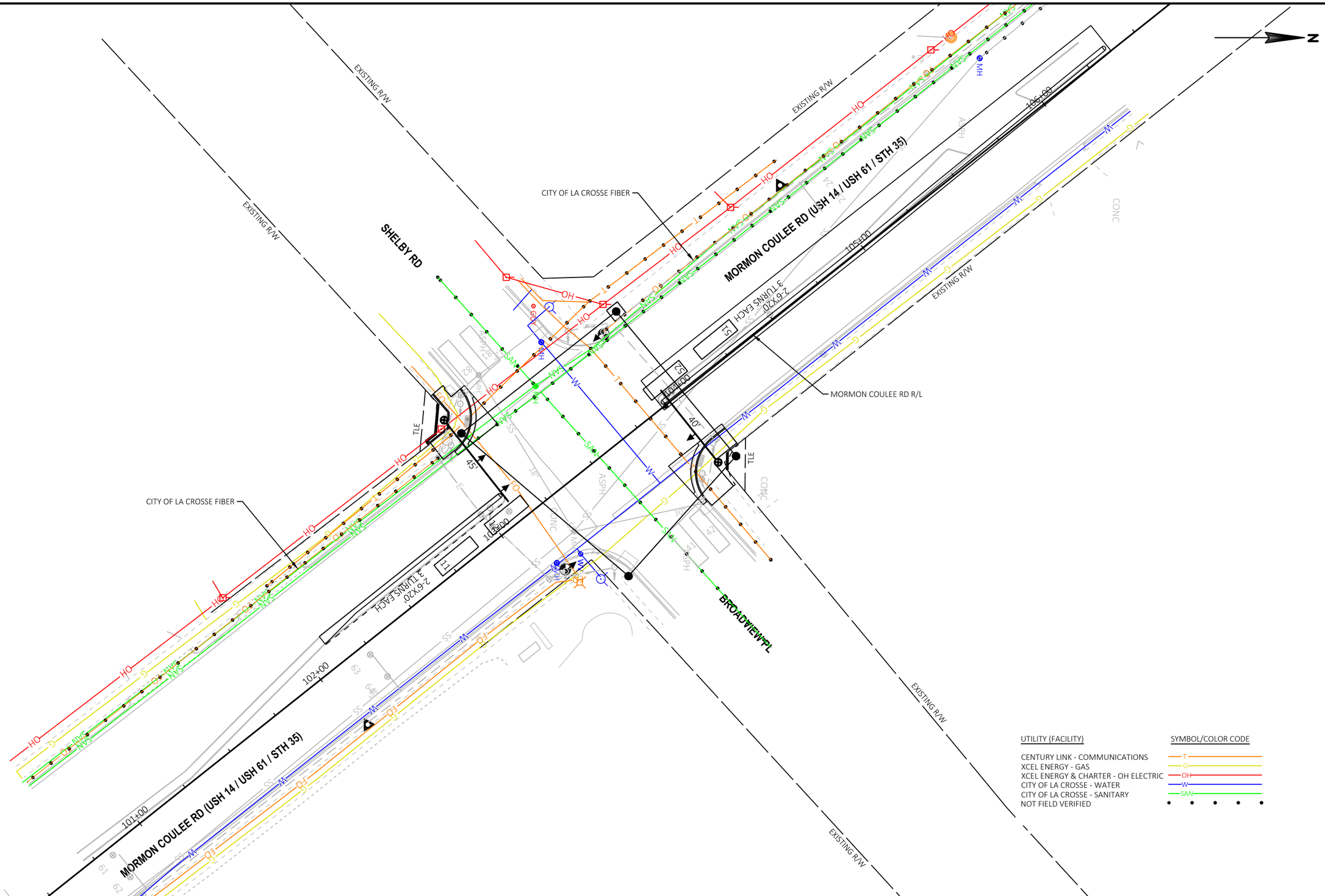

UTILITY (FACILITY)	SYMBOL/COLOR CODE
CENTURY LINK - COMMUNICATIONS	T
XCEL ENERGY - GAS	G
XCEL ENERGY & CHARTER - OH ELECTRIC	OH
CITY OF LA CROSSE - WATER	W
CITY OF LA CROSSE - SANITARY	SAN
NOT FIELD VERIFIED	• • • • •

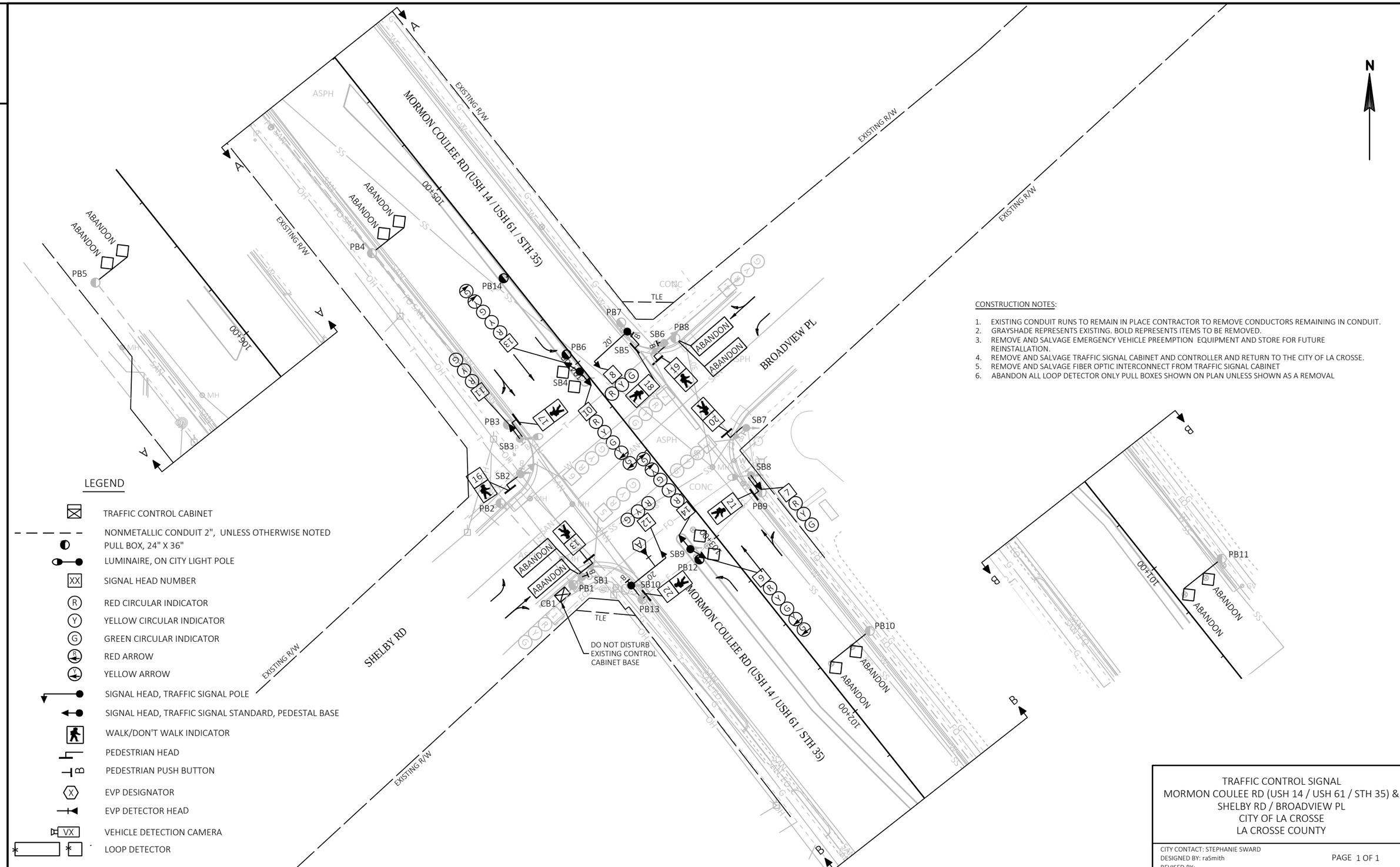

CONSTRUCTION NOTES:

1. EXISTING CONDUIT RUNS TO REMAIN IN PLACE CONTRACTOR TO REMOVE CONDUCTORS REMAINING IN CONDUIT.
2. GRAYSHADE REPRESENTS EXISTING. BOLD REPRESENTS ITEMS TO BE REMOVED.
3. REMOVE AND SALVAGE EMERGENCY VEHICLE PREEMPTION EQUIPMENT AND STORE FOR FUTURE REINSTALLATION.
4. REMOVE AND SALVAGE TRAFFIC SIGNAL CABINET AND CONTROLLER AND RETURN TO THE CITY OF LA CROSSE.
5. REMOVE AND SALVAGE FIBER OPTIC INTERCONNECT FROM TRAFFIC SIGNAL CABINET
6. ABANDON ALL LOOP DETECTOR ONLY PULL BOXES SHOWN ON PLAN UNLESS SHOWN AS A REMOVAL

LEGEND

- TRAFFIC CONTROL CABINET
- NONMETALLIC CONDUIT 2", UNLESS OTHERWISE NOTED
- PULL BOX, 24" X 36"
- LUMINAIRE, ON CITY LIGHT POLE
- XX SIGNAL HEAD NUMBER
- R RED CIRCULAR INDICATOR
- Y YELLOW CIRCULAR INDICATOR
- G GREEN CIRCULAR INDICATOR
- R RED ARROW
- Y YELLOW ARROW
- SIGNAL HEAD, TRAFFIC SIGNAL POLE
- SIGNAL HEAD, TRAFFIC SIGNAL STANDARD, PEDESTAL BASE
- WALK/DON'T WALK INDICATOR
- PEDESTRIAN HEAD
- B PEDESTRIAN PUSH BUTTON
- X EVP DESIGNATOR
- EVP DETECTOR HEAD
- VX VEHICLE DETECTION CAMERA
- LOOP DETECTOR

TRAFFIC CONTROL SIGNAL
MORMON COULEE RD (USH 14 / USH 61 / STH 35) &
SHELBY RD / BROADVIEW PL
CITY OF LA CROSSE
LA CROSSE COUNTY

CITY CONTACT: STEPHANIE SWARD
DESIGNED BY: raSmith
REVISED BY:

PAGE 1 OF 1

PROJECT NO: 1641-03-75	HWY: USH 14	COUNTY: LA CROSSE	TRAFFIC SIGNAL REMOVAL PLAN	SHEET 16	E

FILE NAME : T:\1190937.02\CIVIL3D\16410304\SHEETSPLAN\16410375\024003-SR-MORMONCOULEE.DWG
LAYOUT NAME - MormonCoulee
PLOT DATE : 6/8/2021 9:49 AM
PLOT BY : AXT, ANDREW
PLOT NAME :
PLOT SCALE : 1 IN:40 FT

CONSTRUCTION NOTES:

1. FINAL LOCATION OF SIGNAL POLES, SIGNAL HEADS, AND SIGNAL CABINET SHALL BE AS DIRECTED BY ENGINEER.
2. POLE & POSTS INSTALLED BEHIND CURB SHALL BE OFFSET A MINIMUM OF 2 FEET FROM THE FACE OF THE CURB TO THE SIDE OF THE POST OR POLE.
3. MOUNT NEAR RIGHT SIGNAL ABOVE TETHER WIRE WHEN OVER ROAD.
4. ALL EXISTING SIGNAL HEADS SHALL BE REMOVED, COVERED, OR TURNED AWAY FROM TRAFFIC IMMEDIATELY AFTER TURNING ON TEMPORARY SIGNALS.
5. GUYING OF POLES IS REQUIRED AND LOCATIONS SHALL BE APPROVED BY THE ENGINEER.
6. ADJUST TEMPORARY SIGNAL AS DIRECTED BY THE ENGINEER TO MAINTAIN MUTCD SIGNAL REQUIREMENTS.
7. PROPOSED TRAFFIC SIGNAL BASES SHOWN FOR REFERENCE ONLY. SEE PERMANENT SIGNAL PLANS.

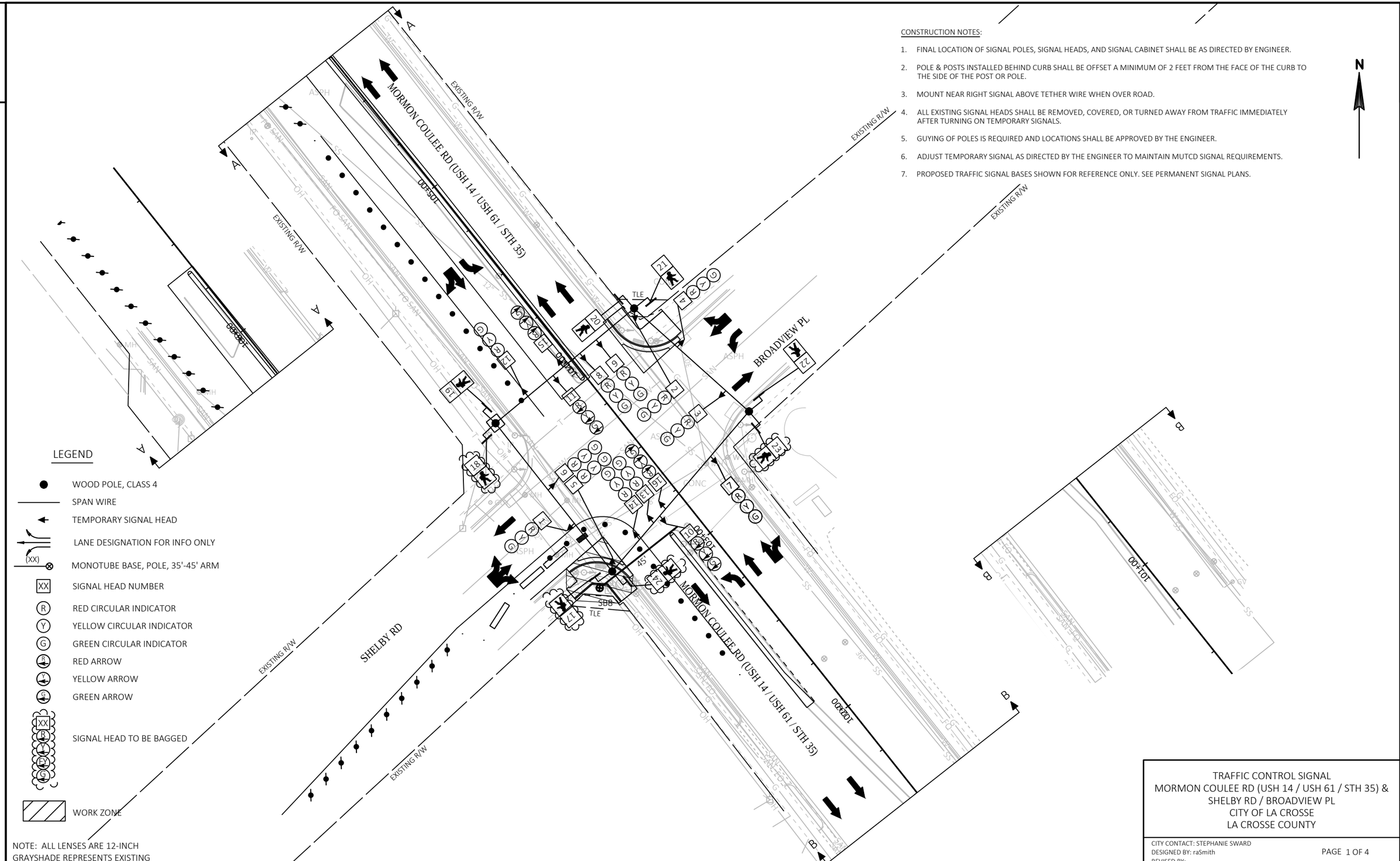

LEGEND

- WOOD POLE, CLASS 4
- SPAN WIRE
- TEMPORARY SIGNAL HEAD
- LANE DESIGNATION FOR INFO ONLY
- (XX) MONOTUBE BASE, POLE, 35'-45' ARM
- XX SIGNAL HEAD NUMBER
- R RED CIRCULAR INDICATOR
- Y YELLOW CIRCULAR INDICATOR
- G GREEN CIRCULAR INDICATOR
- R RED ARROW
- Y YELLOW ARROW
- G GREEN ARROW
- XX SIGNAL HEAD TO BE BAGGED
- WORK ZONE

NOTE: ALL LENSES ARE 12-INCH
GRAYSHADE REPRESENTS EXISTING

TRAFFIC CONTROL SIGNAL
MORMON COULEE RD (USH 14 / USH 61 / STH 35) &
SHELBY RD / BROADVIEW PL
CITY OF LA CROSSE
LA CROSSE COUNTY

CITY CONTACT: STEPHANIE SWARD
DESIGNED BY: raSmith
REVISED BY:

PAGE 1 OF 4

PROJECT NO: 1641-03-75	HWY: USH 14	COUNTY: LA CROSSE	TEMPORARY SIGNAL PLAN - STAGE 1	SHEET 17	E

FILE NAME : T:\1190937.02\CIVIL3D\16410304\SHEETSPLAN\16410375\024103-ST1-MORMONCOULEE.DWG
LAYOUT NAME - MormonCoulee
PLOT DATE : 6/8/2021 9:50 AM PLOT BY : AXT, ANDREW PLOT NAME : PLOT SCALE : 1 IN:40 FT

2

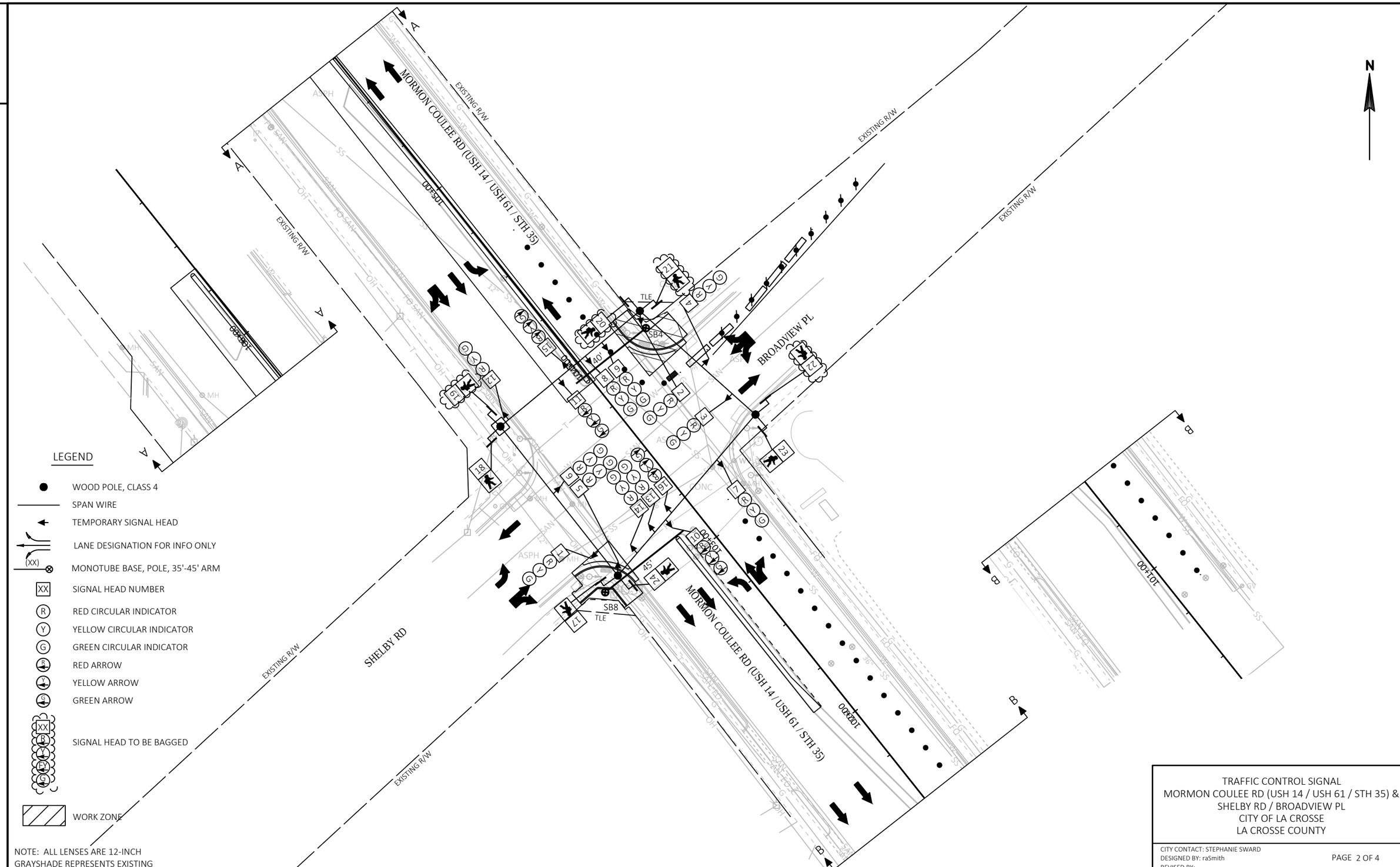

NOTE: ALL LENSES ARE 12-INCH
GRAYSHADE REPRESENTS EXISTING

TRAFFIC CONTROL SIGNAL
MORMON COULEE RD (USH 14 / USH 61 / STH 35) &
SHELBY RD / BROADVIEW PL
CITY OF LA CROSSE
LA CROSSE COUNTY

CITY CONTACT: STEPHANIE SWARD
DESIGNED BY: raSmith
REVISED BY:

PAGE 2 OF 4

PROJECT NO: 1641-03-75	HWY: USH 14	COUNTY: LA CROSSE	TEMPORARY SIGNAL PLAN - STAGE 2	SHEET 18	E

FILE NAME : T:\1190937.02\CIVIL3D\16410304\SHEETSPLAN\16410375\024103-ST2-MORMONCOULEE.DWG
LAYOUT NAME - MormonCoulee
PLOT DATE : 6/8/2021 9:51 AM
PLOT BY : AXT, ANDREW
PLOT NAME :
PLOT SCALE : 1 IN:40 FT

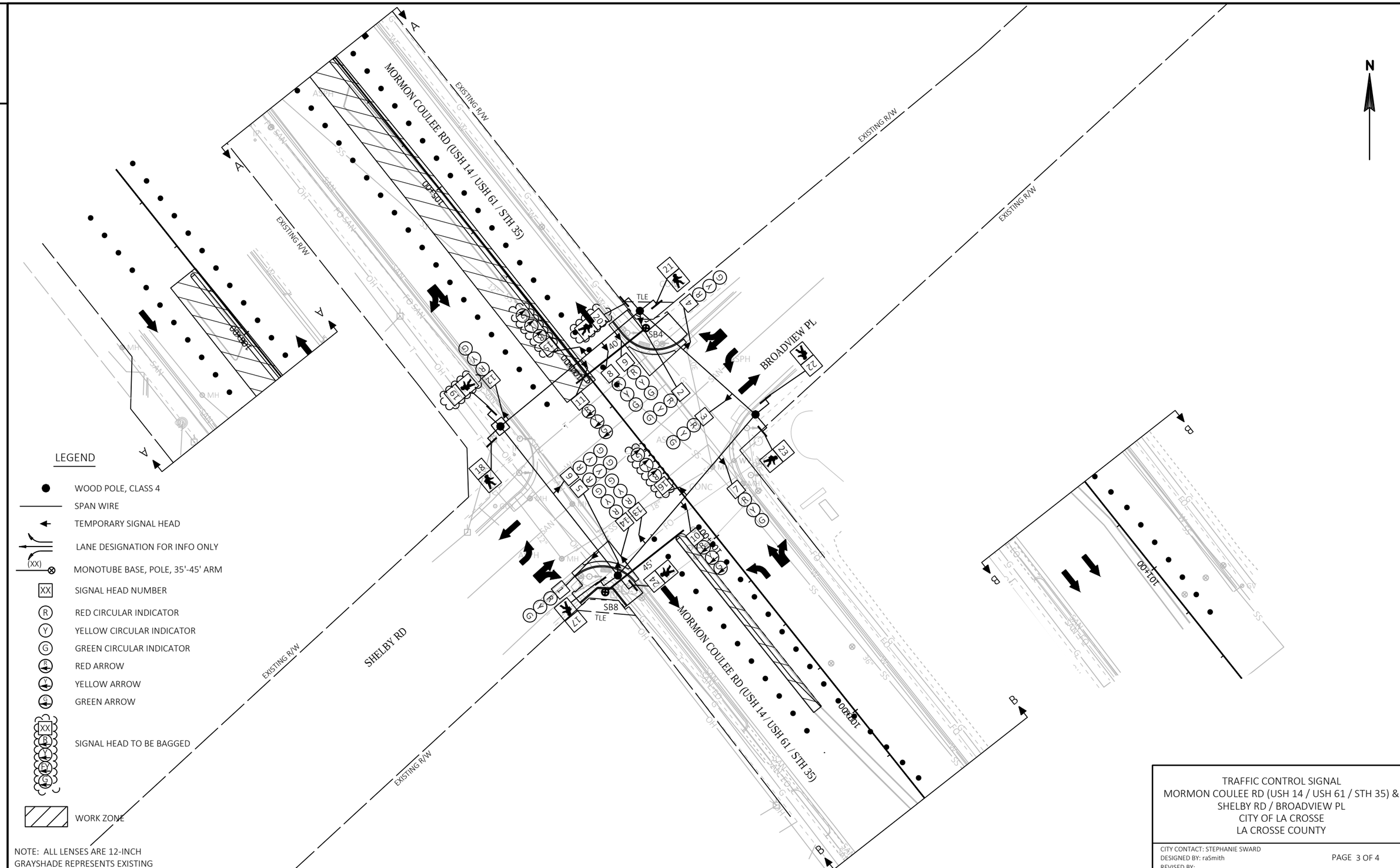

TRAFFIC CONTROL SIGNAL
MORMON COULEE RD (USH 14 / USH 61 / STH 35) &
SHELBY RD / BROADVIEW PL
CITY OF LA CROSSE
LA CROSSE COUNTY

CITY CONTACT: STEPHANIE SWARD
DESIGNED BY: raSmith
REVISED BY:

PAGE 3 OF 4

PROJECT NO: 1641-03-75	HWY: USH 14	COUNTY: LA CROSSE	TEMPORARY SIGNAL PLAN - STAGE 3	SHEET 19	E

FILE NAME : T:\1190937.02\CIVIL3D\16410304\SHEETSPLAN\16410375\024103-ST3-MORMONCOULEE.DWG
LAYOUT NAME - MormonCoulee
PLOT DATE : 6/8/2021 9:51 AM
PLOT BY : AXT, ANDREW
PLOT NAME :
PLOT SCALE : 1 IN:40 FT

	HEAD NUMBERS	FLASH
Ø1	10,11	R ←
Ø2	12,13,14	R
Ø3		
Ø4	4,5,6	R
Ø5	15,16	R ←
Ø6	7,8,9	R
Ø7		
Ø8	1,2,3	R
Ø2P	17,18	
Ø4P	19,20	
Ø6P	21,22	
Ø8P	23,24	
OLA		
OLB		
OLC		
OLD		

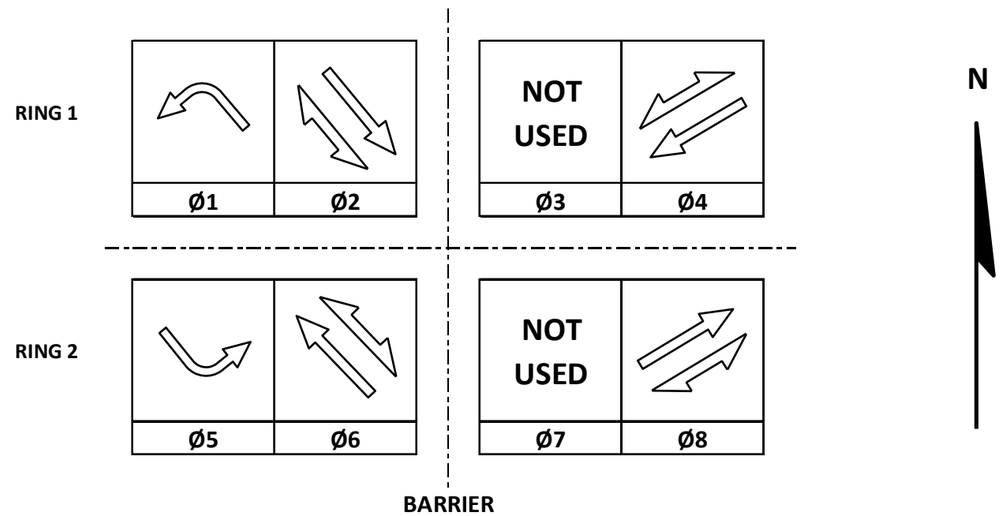

CONTROLLER LOGIC

PHASE NUMBER	PHASE LOCKING	DUAL ENTRY W / Ø	PHASE RECALL	PHASE ACTIVE
1	X	6	MAX	X
2	X	6	MAX	X
3				
4	X	8	MAX	X
5	X	2	MAX	X
6	X	2	MAX	X
7				
8	X	4	MAX	X

TYPE OF INTERCONNECT/COMMUNICATION	
NONE	X
CLOSED LOOP	
TWISTED PAIR	
FIBER OPTIC*	
FIBER OPTIC (ETHERNET)	
RADIO	
CELL MODEM	

TYPE OF COORDINATION	
NONE	X
TBC	
TRAFFIC RESPONSIVE	
ADAPTIVE	
*LOCATION OF MASTER CONTROLLER NO:	S-
SIGNAL SYSTEM NO:	SS-

TYPE OF LIGHTING	
BY OTHER AGENCY	
IN TRAFFIC CABINET	
IN SEPARATE LIGHTING CABINET	X

TYPE OF PRE-EMPT	
NONE	X
RAILROAD	
EMERGENCY VEHICLE	
GTT	
TOMAR	
HARDWIRE	
OTHER	
LIFT BRIDGE	
QUEUE DETECTION	

GENERAL NOTES:

1. OMIT PHASE 5 DURING STAGE 3. SEE TIMING PLAN.

MORMON COULEE RD & BROADVIEW PL
CITY OF LA CROSSE
LA CROSSE COUNTY

SIGNAL NO: CABINET TYPE: TEMP
CONTROLLER TYPE: TEMP
DATE: 5/1/21 PAGE NO. 4 OF 4

PROJECT NO: 1641-03-75	HWY: USH 14	COUNTY: LA CROSSE	TEMPORARY SEQUENCE OF OPERATIONS – ALL STAGES	SHEET NO: 20	E

FILE NAME : _____ PLOT DATE : _____ PLOT BY : _____ PLOT NAME : _____ PLOT SCALE : 1:1

CONSTRUCTION NOTES:

1. THE LOCATIONS OF EXISTING AND PROPOSED UTILITY INSTALLATIONS ARE APPROXIMATE. THERE MAY BE OTHER UTILITY INSTALLATIONS WITHIN THE PROJECT AREA WHICH ARE NOT SHOWN
2. PROPOSED PAVEMENT MARKINGS & DETECTABLE WARNING FIELDS GRAYSHADED FOR PLAN CLARITY.
3. INSTALL TRAFFIC SIGNAL CABINET ON EXISTING CABINET BASE.
4. REINSTALL EMERGENCY VEHICLE PREEMPTION SYSTEM IN NEW CABINET.
5. REINSTALL FIBER OPTIC CABLE AND SPLICE IN CV1. BYPASS TRAFFIC SIGNAL CABINET.
6. RECONNECT EXISTING CONDUIT AT LOCATIONS OF REMOVED PULL BOXES IN MORMON COULEE ROAD MEDIAN NEAR STOP BAR (SEE REMOVAL PLAN FOR REMOVED PULL BOXES)
7. REINSTALLED EVP EQUIPMENT SHOWN IN BOLD FOR PLAN CLARITY.
8. GRAYSHADE SIGNAL EQUIPMENT REPRESENTS EXISTING.

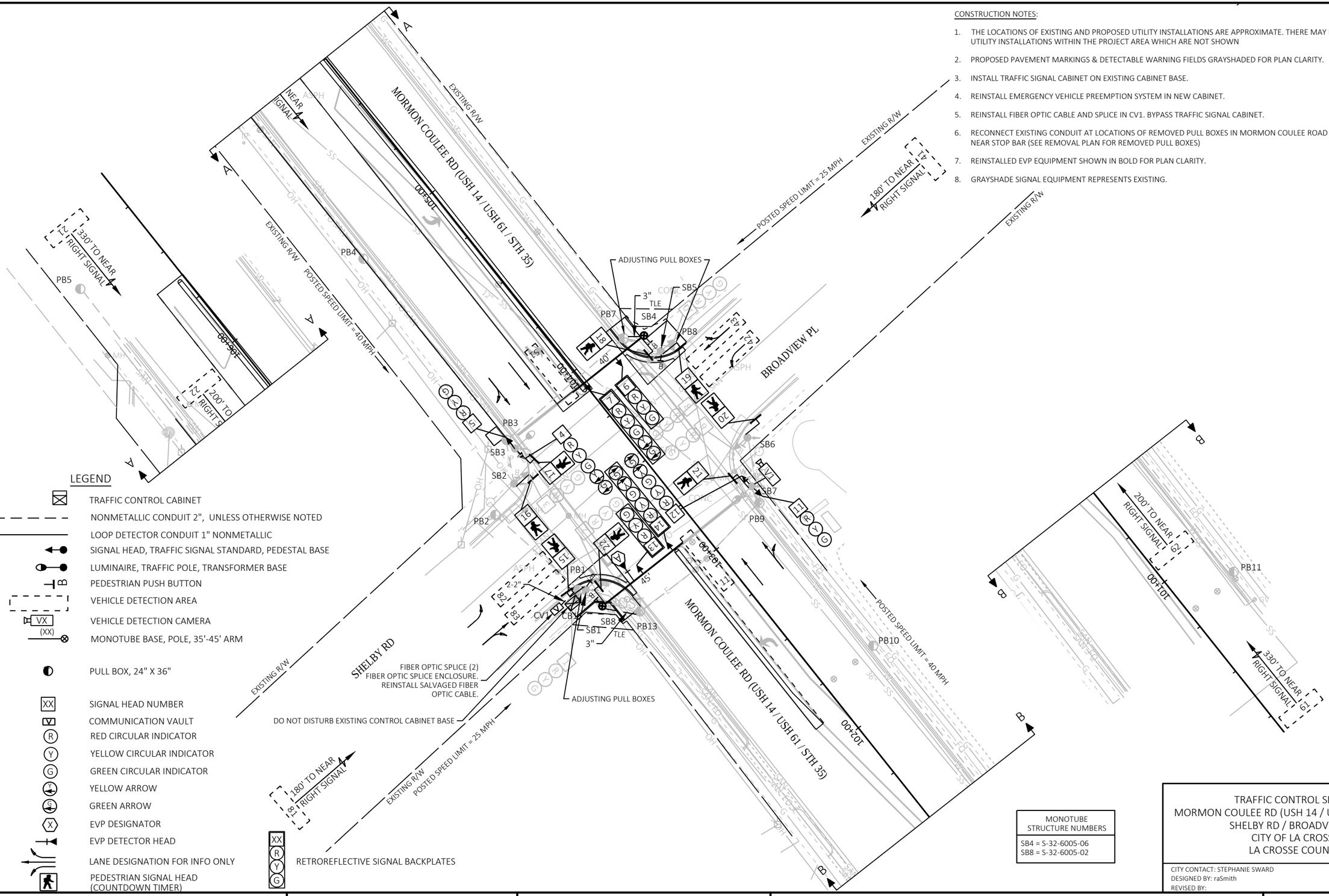

MONOTUBE STRUCTURE NUMBERS
SB4 = S-32-6005-06
SB8 = S-32-6005-02

TRAFFIC CONTROL SIGNAL
MORMON COULEE RD (USH 14 / USH 61 / STH 35) &
SHELBY RD / BROADVIEW PL
CITY OF LA CROSSE
LA CROSSE COUNTY

CITY CONTACT: STEPHANIE SWARD
DESIGNED BY: raSmith
REVISED BY:

PAGE 1 OF 2

PROJECT NO: 1641-03-75	HWY: USH 14	COUNTY: LA CROSSE	TRAFFIC SIGNAL PLAN	SHEET 21	E

FILE NAME : T:\1190937.02\CIVIL3D\16410304\SHEETSPLAN\16410375\024203-SP-MORMONCOULEE.DWG
LAYOUT NAME - MormonCoulee
PLOT DATE : 6/8/2021 9:54 AM PLOT BY : AXT, ANDREW PLOT NAME : PLOT SCALE : 1 IN:40 FT

	HEAD NUMBERS	FLASH
Ø1	4,7	-
Ø2	5,12,13,14	R
Ø3		
Ø4	2,3,10	R
Ø5	12,14	-
Ø6	4,6,7,11	R
Ø7		
Ø8	1,8,9	R
Ø2P	15,16	
Ø4P	17,18	
Ø6P	19,20	
Ø8P	21,22	
OLE		
OLF		
OLG		
OLH		

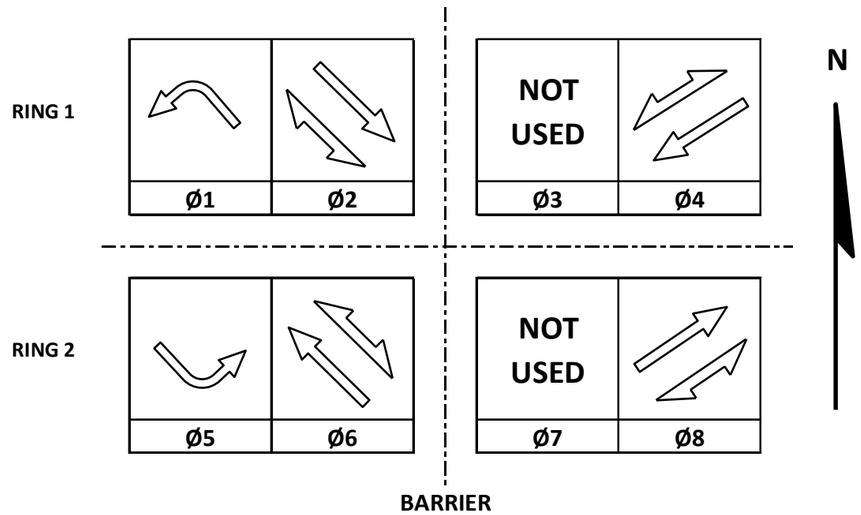

CONTROLLER LOGIC

PHASE NUMBER	PHASE LOCKING	DUAL ENTRY W / Ø	PHASE RECALL	PHASE ACTIVE
1		6		X
2	X	6	MIN	X
3				
4		8		X
5		2		X
6	X	2	MIN	X
7				
8		4		X

TYPE OF INTERCONNECT/COMMUNICATION	
NONE	
CLOSED LOOP	
TWISTED PAIR	
FIBER OPTIC*	X
FIBER OPTIC (ETHERNET)	
RADIO	
CELL MODEM	

TYPE OF COORDINATION	
NONE	
TBC	X
TRAFFIC RESPONSIVE	
ADAPTIVE	
*LOCATION OF MASTER CONTROLLER NO:	S-
SIGNAL SYSTEM NO:	SS-

EMERGENCY VEHICLE PREEMPTION SEQUENCE

EMERGENCY VEHICLE PREEMPTOR	A	B	C	D
MOVEMENT				
PHASE	2+5			

AFTER PREEMPTION SEQUENCE 2+5, CONTROLLER SHALL RETURN TO PHASES 2+6.

TYPE OF LIGHTING	
BY OTHER AGENCY	
IN TRAFFIC CABINET	X
IN SEPARATE LIGHTING CABINET	

TYPE OF PRE-EMPT	
NONE	
RAILROAD	
EMERGENCY VEHICLE	X
GTT	X
TOMAR	
HARDWIRE	
OTHER	
CONFIRMATION LIGHTS	
LIFT BRIDGE	
QUEUE DETECTION	

DETECTOR LOGIC

DETECTOR INPUT	3	1	7	5	11	9	15	13	19	17	23	21	27	25	31	29	DETECTOR INPUT
PLAN VIDEO DETECTION ZONE*(S)	11	21	41	43	51	61	81	83									PLAN VIDEO DETECTION ZONE
CALLED PHASE	1	2	4	4	5	6	8	8									CALLED PHASE
CALL OPTION	X	X	X	X	X	X	X	X									CALL OPTION
DELAY TIME																	DELAY TIME
EXTENSION OPTION	X	X	X	X	X	X	X	X									EXTENSION OPTION
EXTEND TIME			X				X										EXTEND TIME
USE ADDED INITIAL		X				X											USE ADDED INITIAL
CROSS SWITCH PHASE																	CROSS SWITCH PHASE

DETECTOR INPUT	4	2	8	6	12	10	16	14	20	18	24	22	28	26	32	30	DETECTOR INPUT
PLAN VIDEO DETECTION ZONE*(S)		22	42			62	82										PLAN VIDEO DETECTION ZONE
CALLED PHASE		2	4			6	8										CALLED PHASE
CALL OPTION		X	X			X	X										CALL OPTION
DELAY TIME			X				X										DELAY TIME
EXTENSION OPTION		X	X			X	X										EXTENSION OPTION
EXTEND TIME																	EXTEND TIME
USE ADDED INITIAL		X				X											USE ADDED INITIAL
CROSS SWITCH PHASE																	CROSS SWITCH PHASE

MORMON COULEE ROAD & BROADVIEW PLACE / SHELBY ROAD
CITY OF LA CROSSE
LA CROSSE COUNTY

SIGNAL NO: CABINET TYPE: TS2
CONTROLLER TYPE: ECONOLITE
DATE: May 2021 PAGE NUMBER: 2 OF 2

2

PROJECT ID:	1641-03-75
INTERSECTION:	Mormon Coulee Rd & Broadview Pl

Signal Wire Color Coding			
	BLK - black	RED - red	GRN - green
	WHT - white	BLU - blue	ORG - orange

DATE	5/1/21

2

CB1 TO	JUMPER	# OF COND.	HEAD NO.	SIGNAL INDICATION WIRE COLOR									PED BUTTON	APS
				RED	YELLOW	GREEN	<RED>	<YELLOW>	<GREEN>	<FLASHING YELLOW>	D/WALK	WALK		
SB1		12	1	RED	ORG	GRN								
			2	RED/BLK	ORG/BLK	GRN/BLK								
			15								BLK	BLU		
			BUTTON										WHT/BLK	
SB2		12	3	RED	ORG	GRN								
			16								BLK	BLU		
			BUTTON										WHT/BLK	
SB3		12	4	RED	ORG	GRN		BLK/WHT	BLU/BLK					
			5	RED/BLK	ORG/BLK	GRN/BLK								
			17								BLK	BLU		
			BUTTON										WHT/BLK	
SB4		12	6	RED	ORG	GRN								
			7	RED	ORG	GRN		ORG/BLK	GRN/BLK					
			18								BLK	BLU		
			BUTTON										WHT/BLK	
SB5		12	8	RED	ORG	GRN								
			10	RED/BLK	ORG/BLK	GRN/BLK								
			19								BLK	BLU		
			BUTTON										WHT/BLK	
SB6		12	9	RED	ORG	GRN								
			20								BLK	BLU		
			BUTTON										WHT/BLK	
SB7		12	11	RED	ORG	GRN								
			12	RED/BLK	ORG/BLK	GRN/BLK		BLK/WHT	BLU/BLK					
			21								BLK	BLU		
			BUTTON										WHT/BLK	
SB8		12	13	RED	ORG	GRN								
			14	RED	ORG	GRN		ORG/BLK	GRN/BLK					
			22								BLK	BLU		
			BUTTON										WHT/BLK	

EQUIPMENT GROUNDING CONDUCTOR 10 AWG GRN XLP	
FROM	TO
CB1	SB1
SB1	SB2
SB2	SB3
SB3	SB4
SB4	SB5
SB6	SB7
SB7	SB8
SB8	CB1

PULL BOX BONDING JUMPER 10 AWG GRN XLP	
FROM	TO
PB1	SB1
PB2	SB3
PB3	SB3
PB7	SB4
PB8	SB5
PB9	SB7
PB13	SB8

LIGHTING UF 10 AWG W/GROUND	
FROM	TO
CB1	SB3
CB1	SB7

EMERGENCY VEHICLE PREEMPTION (EVP) CABLE	
FROM	TO
CB1	HEAD A (SB8)

*Use the white conductor in the cable assembly as the grounded conductor for all traffic signal indications.
*Ensure the grounded conductor in the feeder cable and the pole cables are both 18" longer than the ungrounded conductors.
*At the signal bases, connect one terminal from the pedestrian push buttons to the color indicated in the chart. Connect the other terminal to
*Reconnect the grounding conductors wherever the circuit has been interrupted to ensure the grounding circuit is complete.

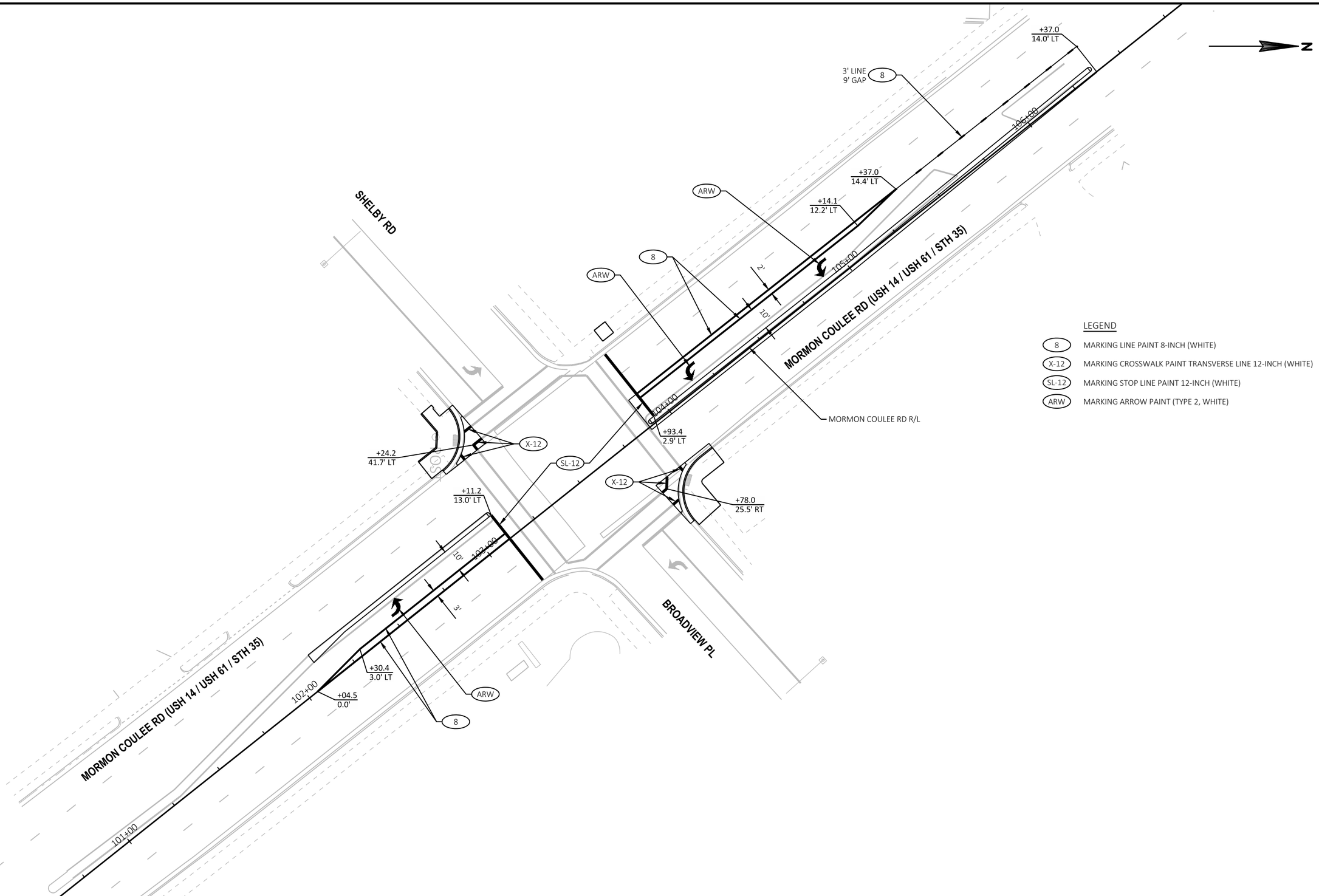
SHELBY RD
MORMON COULEE RD (USH 14 / USH 61 / STH 35)
MORMON COULEE RD (USH 14 / USH 61 / STH 35)
BROADVIEW PL
MORMON COULEE RD R/L
3' LINE
9' GAP
8
ARW
X-12
SL-12
+37.0
14.0' LT
+37.0
14.4' LT
+14.1
12.2' LT
+93.4
2.9' LT
+78.0
25.5' RT
+24.2
41.7' LT
+11.2
13.0' LT
+30.4
3.0' LT
+04.5
0.0'
101+00
102+00
103+00
104+00
105+00
106+00
10'
2'
LEGEND
8 MARKING LINE PAINT 8-INCH (WHITE)
X-12 MARKING CROSSWALK PAINT TRANSVERSE LINE 12-INCH (WHITE)
SL-12 MARKING STOP LINE PAINT 12-INCH (WHITE)
ARW MARKING ARROW PAINT (TYPE 2, WHITE)
N

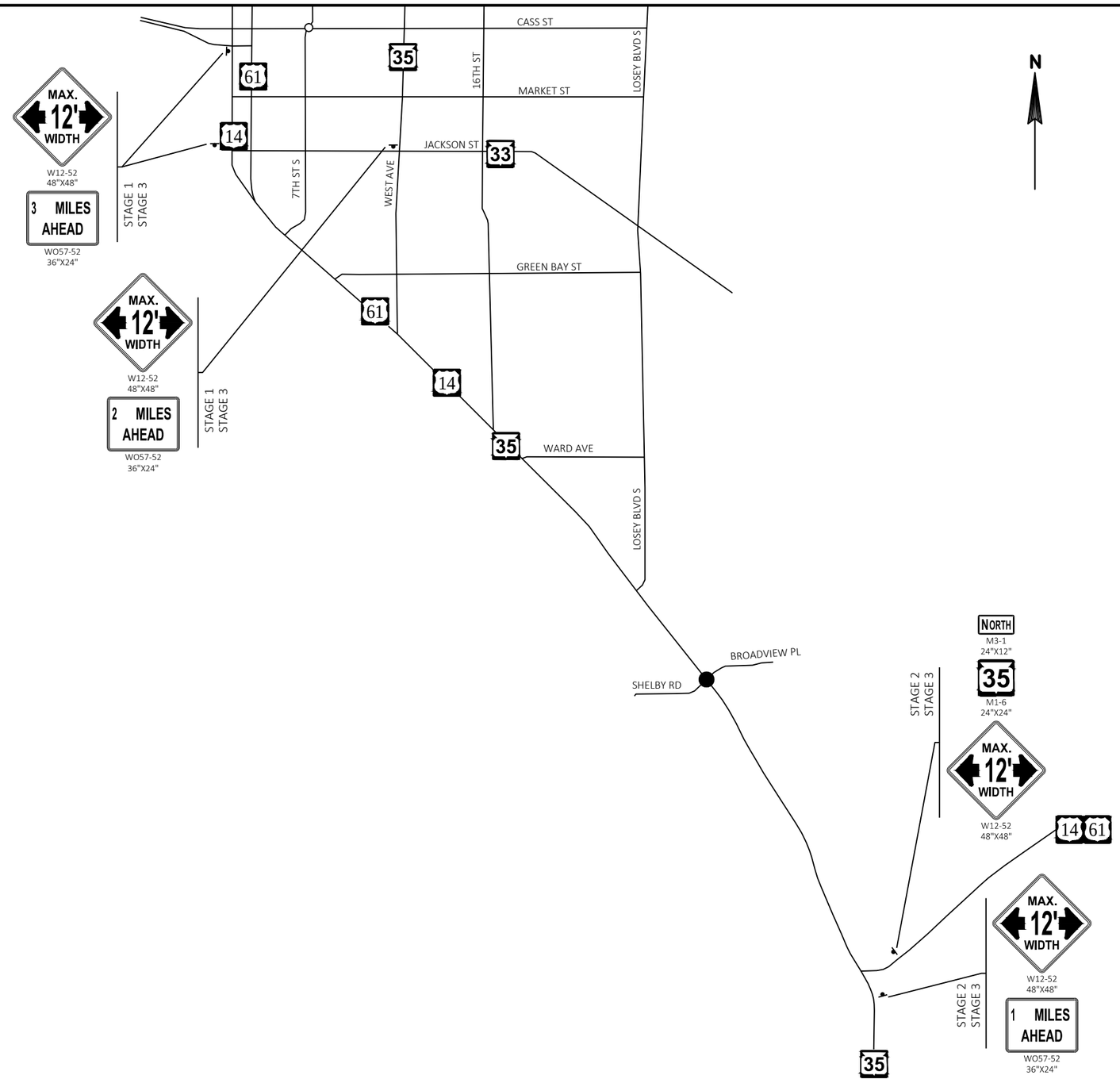

ADVANCED WIDTH RESTRICTION SIGNING

SEE SDD TRAFFIC CONTROL ADVANCED WIDTH RESTRICTION SIGNING FOR ADDITIONAL INFORMATION

TRAFFIC CONTROL NOTES:

1. MAINTAIN MINIMUM ONE 11' LANE IN EACH DIRECTION ON MORMON COULEE RD, BROADVIEW PL, AND SHELBY RD.
2. MAINTAIN ACCESS TO ALL DRIVEWAYS EXCEPT WHEN WORKING IMMEDIATELY IN FRONT OF DRIVEWAY.
3. SEE SDD TRAFFIC CONTROL, SINGLE LANE CLOSURE, DIVIDED NON FREEWAY/EXPRESSWAY.
4. SEE SDD TRAFFIC CONTROL, INTERSECTION WITHIN SINGLE RIGHT LANE CLOSURE. SEE SDD TRAFFIC CONTROL, INTERSECTION WITHIN SINGLE LEFT LANE CLOSURE.
5. ALL SIGNS SHALL BE 48"X48" UNLESS NOTED OTHERWISE.
6. THE EXACT NUMBER, LOCATION, AND SPACING OF ALL SIGNS AND BARRICADES SHALL BE ADJUSTED TO FIT FIELD CONDITIONS AS APPROVED BY THE ENGINEER.
7. PERMANENT PAVEMENT MARKING SHALL BE INSTALLED WHEN APPROPRIATE DURING CONSTRUCTION STAGING OR AS DIRECTED BY THE ENGINEER.
8. SEE PLAN FOR MORMON COULEE RD TRAFFIC CONTROL LAYOUT AND DEVICES.

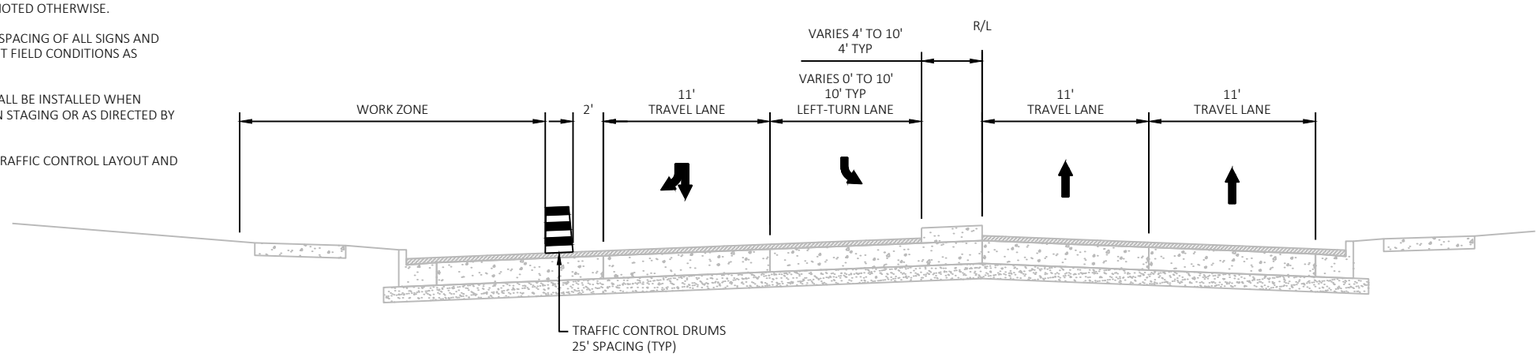

TRAFFIC CONTROL - STAGE 1
MORMON COULEE RD
(LOOKING NORTH)

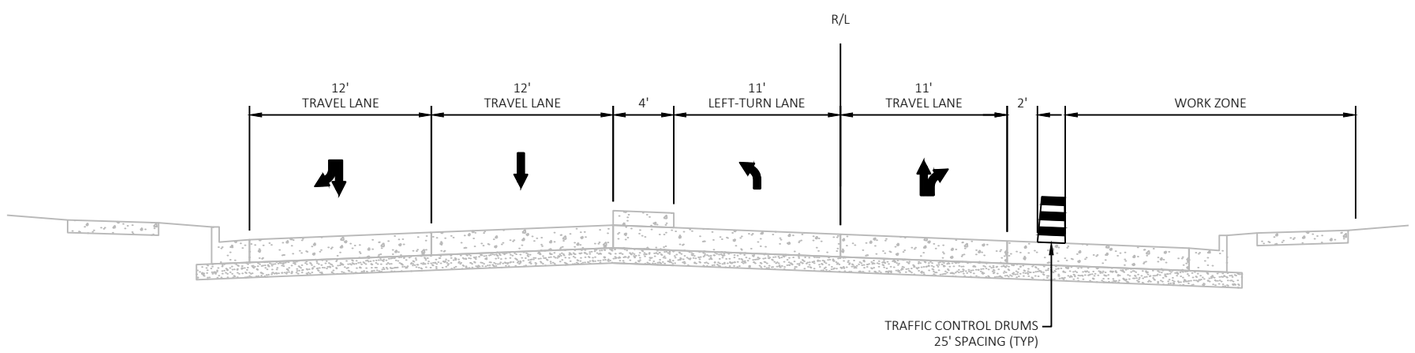

TRAFFIC CONTROL - STAGE 2
MORMON COULEE RD
(LOOKING NORTH)

TRAFFIC CONTROL NOTES:

1. MAINTAIN MINIMUM ONE 11' LANE IN EACH DIRECTION ON MORMON COULEE RD, BROADVIEW PL, AND SHELBY RD.
2. MAINTAIN ACCESS TO ALL DRIVEWAYS EXCEPT WHEN WORKING IMMEDIATELY IN FRONT OF DRIVEWAY.
3. SEE SDD TRAFFIC CONTROL, SINGLE LANE CLOSURE, DIVIDED NON FREEWAY/EXPRESSWAY.
4. SEE SDD TRAFFIC CONTROL, INTERSECTION WITHIN SINGLE RIGHT LANE CLOSURE. SEE SDD TRAFFIC CONTROL, INTERSECTION WITHIN SINGLE LEFT LANE CLOSURE.
5. ALL SIGNS SHALL BE 48"X48" UNLESS NOTED OTHERWISE.
6. THE EXACT NUMBER, LOCATION, AND SPACING OF ALL SIGNS AND BARRICADES SHALL BE ADJUSTED TO FIT FIELD CONDITIONS AS APPROVED BY THE ENGINEER.
7. PERMANENT PAVEMENT MARKING SHALL BE INSTALLED WHEN APPROPRIATE DURING CONSTRUCTION STAGING OR AS DIRECTED BY THE ENGINEER.
8. SEE PLAN FOR MORMON COULEE RD TRAFFIC CONTROL LAYOUT AND DEVICES.

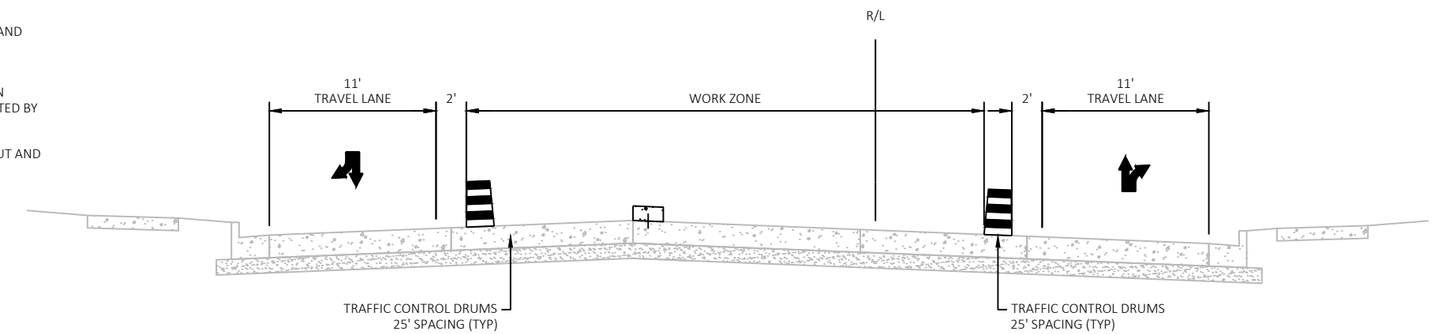

MORMON COULEE RD
SOUTH OF SHELBY ST/BROADVIEW PL INTERSECTION

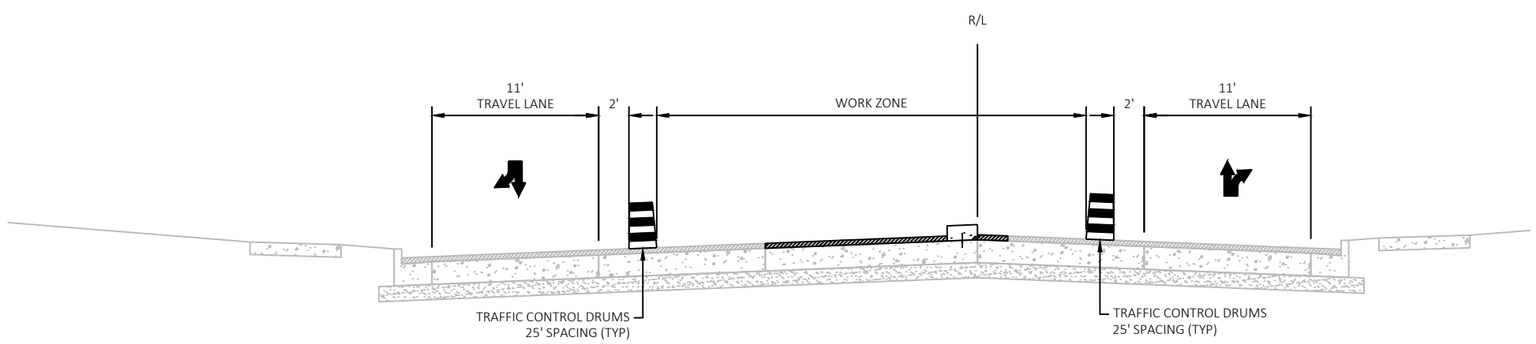

MORMON COULEE RD
NORTH OF SHELBY RD/BROADVIEW PL INTERSECTION

TRAFFIC CONTROL - STAGE 3
MORMON COULEE RD
(LOOKING NORTH)

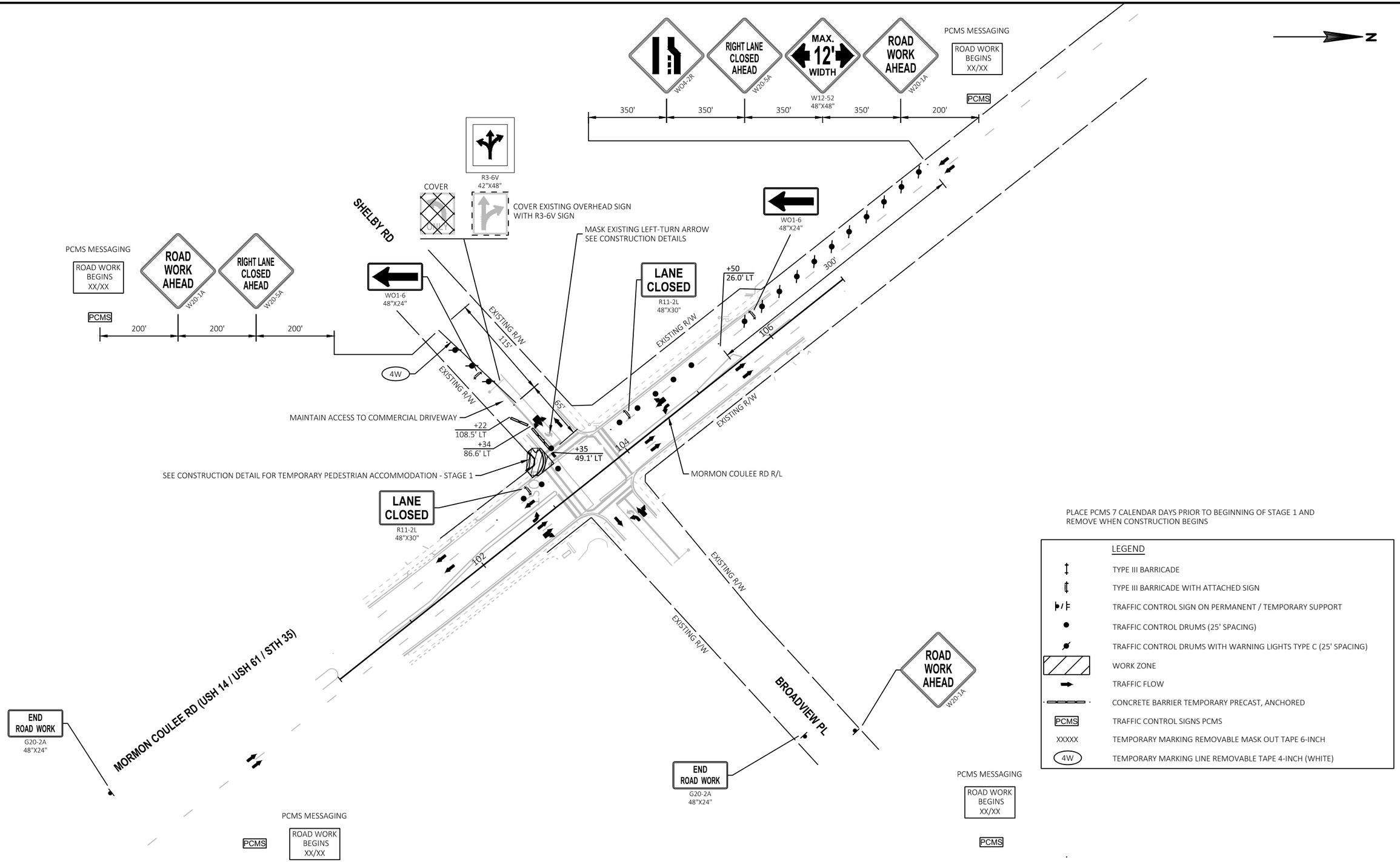

PLACE PCMS 7 CALENDAR DAYS PRIOR TO BEGINNING OF STAGE 1 AND REMOVE WHEN CONSTRUCTION BEGINS

LEGEND

- TYPE III BARRICADE
- TYPE III BARRICADE WITH ATTACHED SIGN
- TRAFFIC CONTROL SIGN ON PERMANENT / TEMPORARY SUPPORT
- TRAFFIC CONTROL DRUMS (25' SPACING)
- TRAFFIC CONTROL DRUMS WITH WARNING LIGHTS TYPE C (25' SPACING)
- WORK ZONE
- TRAFFIC FLOW
- CONCRETE BARRIER TEMPORARY PRECAST, ANCHORED
- PCMS — TRAFFIC CONTROL SIGNS PCMS
- XXXXX — TEMPORARY MARKING REMOVABLE MASK OUT TAPE 6-INCH
- 4W — TEMPORARY MARKING LINE REMOVABLE TAPE 4-INCH (WHITE)

PROJECT NO: 1641-03-75	HWY: USH 14	COUNTY: LA CROSSE	TRAFFIC CONTROL - STAGE 1	SHEET 28	E

FILE NAME : T:\1190937.02\CIVIL3D\16410304\SHEETSPLAN\16410375\026001-TC1.DWG
LAYOUT NAME - MC
PLOT DATE : 6/8/2021 10:03 AM PLOT BY : AXT, ANDREW PLOT NAME : PLOT SCALE : 1 IN:100 FT

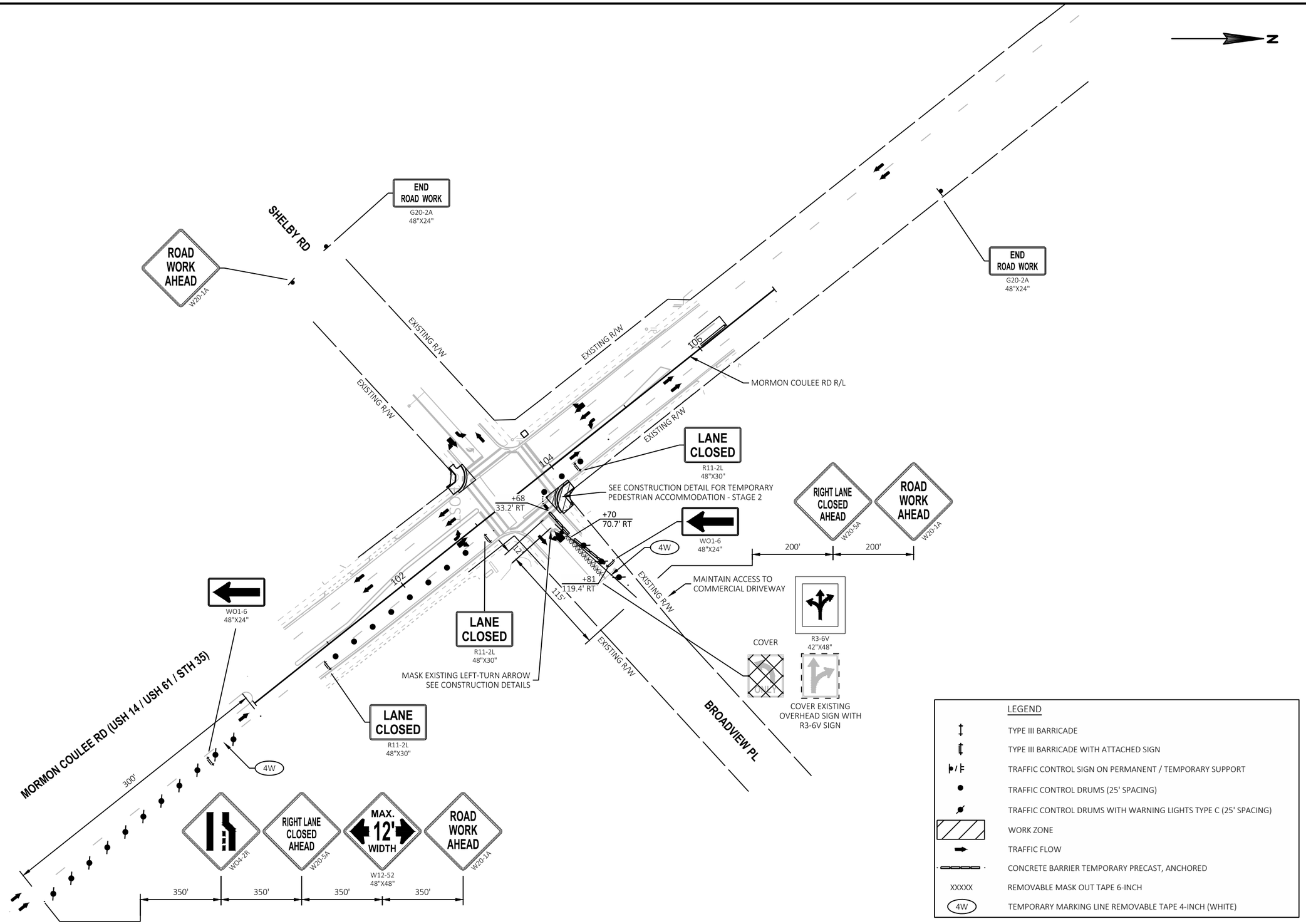

PROJECT NO: 1641-03-75	HWY: USH 14	COUNTY: LA CROSSE	TRAFFIC CONTROL - STAGE 2	SHEET 29	E

FILE NAME : T:\1190937.02\CIVIL3D\16410304\SHEETSPLAN\16410375\026002-TC2.DWG
LAYOUT NAME - MC
PLOT DATE : 6/8/2021 10:04 AM PLOT BY : AXT, ANDREW PLOT NAME : PLOT SCALE : 1 IN:100 FT

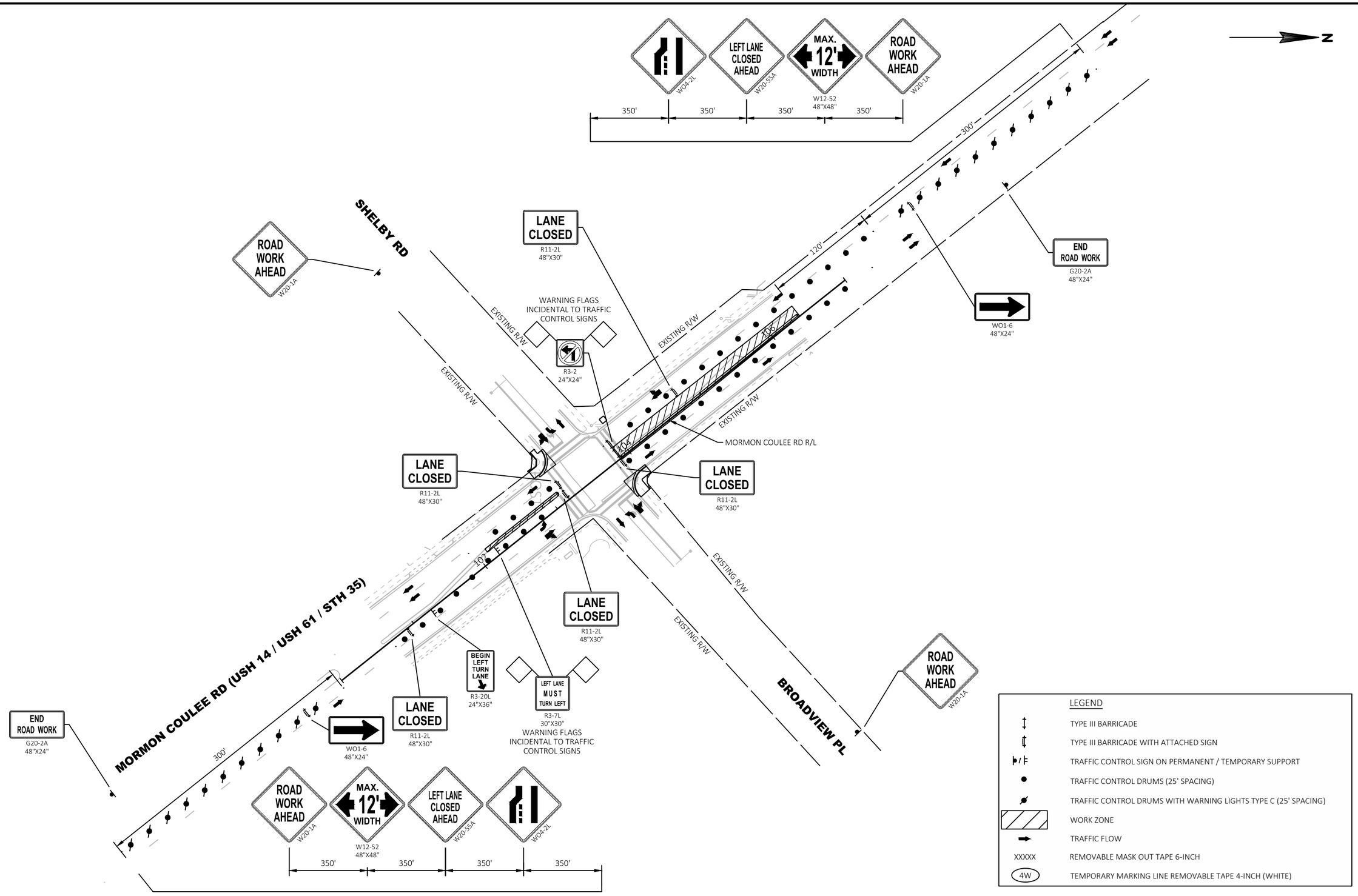

PROJECT NO: 1641-03-75	HWY: USH 14	COUNTY: LA CROSSE	TRAFFIC CONTROL - STAGE 3	SHEET 30	E

FILE NAME : T:\1190937.02\CIVIL3D\16410304\SHEETSPLAN\16410375\026003-TC3.DWG
LAYOUT NAME - MC
PLOT DATE : 6/8/2021 10:04 AM PLOT BY : AXT, ANDREW PLOT NAME : PLOT SCALE : 1 IN:100 FT

Estimate Of Quantities

1641-03-75

Line	Item	Item Description	Unit	Total	Qty
0002	204.0110	Removing Asphaltic Surface	SY	17.000	17.000
0004	204.0120	Removing Asphaltic Surface Milling	SY	292.000	292.000
0006	204.0150	Removing Curb & Gutter	LF	69.000	69.000
0008	204.0155	Removing Concrete Sidewalk	SY	198.000	198.000
0010	204.0195	Removing Concrete Bases	EACH	4.000	4.000
0012	204.9105.S	Removing (item description) 01. Traffic Signals (Mormon Coulee Rd & Broadview Pl)	LS	1.000	1.000
0014	204.9105.S	Removing (item description) 02. Loop Detector Wire & Lead-In Cable (Mormon Coulee Rd & Broadview Pl)	LS	1.000	1.000
0016	213.0100	Finishing Roadway (project) 01. 1641-03-75	EACH	1.000	1.000
0018	305.0120	Base Aggregate Dense 1 1/4-Inch	TON	20.000	20.000
0020	390.0303	Base Patching Concrete	SY	70.000	70.000
0022	415.0090	Concrete Pavement 9-Inch	SY	24.000	24.000
0024	415.5110.S	Concrete Pavement Joint Layout	LS	1.000	1.000
0026	416.0610	Drilled Tie Bars	EACH	64.000	64.000
0028	416.0620	Drilled Dowel Bars	EACH	130.000	130.000
0030	455.0605	Tack Coat	GAL	27.000	27.000
0032	460.2000	Incentive Density HMA Pavement	DOL	30.000	30.000
0034	460.6224	HMA Pavement 4 MT 58-28 S	TON	45.000	45.000
0036	601.0417	Concrete Curb & Gutter 30-Inch Type K	LF	69.000	69.000
0038	601.0600	Concrete Curb Pedestrian	LF	28.000	28.000
0040	602.0410	Concrete Sidewalk 5-Inch	SF	633.000	633.000
0042	602.0505	Curb Ramp Detectable Warning Field Yellow	SF	20.000	20.000
0044	603.8000	Concrete Barrier Temporary Precast Delivered	LF	150.000	150.000
0046	603.8125	Concrete Barrier Temporary Precast Installed	LF	150.000	150.000
0048	603.8500	Anchoring Concrete Barrier Temporary Precast	LF	150.000	150.000
0050	619.1000	Mobilization	EACH	1.000	1.000
0052	624.0100	Water	MGAL	1.000	1.000
0054	625.0100	Topsoil	SY	9.000	9.000
0056	628.1905	Mobilizations Erosion Control	EACH	2.000	2.000
0058	628.1910	Mobilizations Emergency Erosion Control	EACH	1.000	1.000
0060	628.7015	Inlet Protection Type C	EACH	3.000	3.000
0062	629.0210	Fertilizer Type B	CWT	0.600	0.600
0064	631.0300	Sod Water	MGAL	0.300	0.300
0066	631.1000	Sod Lawn	SY	9.000	9.000
0068	642.5001	Field Office Type B	EACH	1.000	1.000
0070	643.0300	Traffic Control Drums	DAY	2,492.000	2,492.000
0072	643.0410	Traffic Control Barricades Type II	DAY	142.000	142.000
0074	643.0420	Traffic Control Barricades Type III	DAY	523.000	523.000
0076	643.0705	Traffic Control Warning Lights Type A	DAY	1,188.000	1,188.000
0078	643.0715	Traffic Control Warning Lights Type C	DAY	1,147.000	1,147.000
0080	643.0900	Traffic Control Signs	DAY	2,004.000	2,004.000
0082	643.0920	Traffic Control Covering Signs Type II	EACH	4.000	4.000
0084	643.1050	Traffic Control Signs PCMS	DAY	28.000	28.000
0086	643.5000	Traffic Control	EACH	1.000	1.000
0088	644.1420	Temporary Pedestrian Surface Plywood	SF	135.000	135.000
0090	644.1601	Temporary Pedestrian Curb Ramp	DAY	48.000	48.000
0092	644.1810	Temporary Pedestrian Barricade	LF	188.000	188.000
0094	646.3005	Marking Line Paint 8-Inch	LF	473.000	473.000
0096	646.5005	Marking Arrow Paint	EACH	3.000	3.000
0098	646.6005	Marking Stop Line Paint 12-Inch	LF	70.000	70.000
0100	649.0150	Temporary Marking Line Removable Tape 4-Inch	LF	230.000	230.000
0102	649.0960	Temporary Marking Removable Mask Out Tape 6-Inch	LF	140.000	140.000
0104	650.7000	Construction Staking Concrete Pavement	LF	32.000	32.000
0106	650.8500	Construction Staking Electrical Installations (project) 01. 1641-03-75	LS	1.000	1.000

1641-03-75

Line	Item	Item Description	Unit	Total	Qty
0108	650.9000	Construction Staking Curb Ramps	EACH	2.000	2.000
0110	650.9910	Construction Staking Supplemental Control (project) 01. 1641-03-75	LS	1.000	1.000
0112	652.0225	Conduit Rigid Nonmetallic Schedule 40 2-Inch	LF	35.000	35.000
0114	652.0235	Conduit Rigid Nonmetallic Schedule 40 3-Inch	LF	26.000	26.000
0116	652.0700.S	Install Conduit into Existing Item	EACH	3.000	3.000
0118	653.0900	Adjusting Pull Boxes	EACH	3.000	3.000
0120	653.0905	Removing Pull Boxes	EACH	3.000	3.000
0122	654.0120	Concrete Bases Type 10-Special	EACH	2.000	2.000
0124	655.0230	Cable Traffic Signal 5-14 AWG	LF	413.000	413.000
0126	655.0240	Cable Traffic Signal 7-14 AWG	LF	185.000	185.000
0128	655.0260	Cable Traffic Signal 12-14 AWG	LF	1,256.000	1,256.000
0130	655.0320	Cable Type UF 2-10 AWG Grounded	LF	305.000	305.000
0132	655.0515	Electrical Wire Traffic Signals 10 AWG	LF	842.000	842.000
0134	655.0610	Electrical Wire Lighting 12 AWG	LF	246.000	246.000
0136	656.0200	Electrical Service Meter Breaker Pedestal (location) 01. Mormon Coulee Rd & Broadview Pl	LS	1.000	1.000
0138	657.0347	Poles Type 9-Special	EACH	2.000	2.000
0140	657.0541	Monotube Arms 40-FT-Special	EACH	1.000	1.000
0142	657.0546	Monotube Arms 45-FT-Special	EACH	1.000	1.000
0144	658.0173	Traffic Signal Face 3S 12-Inch	EACH	4.000	4.000
0146	658.0175	Traffic Signal Face 5S 12-Inch	EACH	4.000	4.000
0148	658.0416	Pedestrian Signal Face 16-Inch	EACH	8.000	8.000
0150	658.0500	Pedestrian Push Buttons	EACH	4.000	4.000
0152	658.5069	Signal Mounting Hardware (location) 01. West Ave & Jackson St	LS	1.000	1.000
0154	661.0200	Temporary Traffic Signals for Intersections (location) 01. Mormon Coulee Rd & Broadview Pl	LS	1.000	1.000
0156	673.0105	Communication Vault Type 1	EACH	1.000	1.000
0158	678.0200	Fiber Optic Splice Enclosure	EACH	1.000	1.000
0160	678.0300	Fiber Optic Splice	EACH	2.000	2.000
0162	690.0150	Sawing Asphalt	LF	586.000	586.000
0164	690.0250	Sawing Concrete	LF	554.000	554.000
0166	715.0415	Incentive Strength Concrete Pavement	DOL	500.000	500.000
0168	ASP.1T0A	On-the-Job Training Apprentice at $5.00/HR	HRS	700.000	700.000
0170	ASP.1T0G	On-the-Job Training Graduate at $5.00/HR	HRS	600.000	600.000
0172	SPV.0045	Special 01. Temporary Detectable Warning Fields	DAY	45.000	45.000
0174	SPV.0090	Special 01. Marking Crosswalk Paint Transverse Line 12-Inch	LF	30.000	30.000
0176	SPV.0105	Special 01. Traffic Signal Controller & Cabinet (Mormon Coulee Rd & Broadview Pl)	LS	1.000	1.000
0178	SPV.0105	Special 02. Remove, Salvage, & Reinstall EVP System (Mormon Coulee Rd & Broadview Pl)	LS	1.000	1.000
0180	SPV.0105	Special 03. Remove, Salvage, & Reinstall Traffic Signal Interconnect	LS	1.000	1.000
0182	SPV.0105	Special 04. Install Video Detection System (Mormon Coulee Rd & Broadview Pl)	LS	1.000	1.000
0184	SPV.0165	Special 01. Concrete Raised Median	SF	712.000	712.000

3

REMOVAL ITEMS

LOCATION	STATION TO STATION	204.0110 REMOVING ASPHALTIC SURFACE SY	204.0120 REMOVING ASPHALTIC SURFACE MILLING SY	204.0150 REMOVING CURB & GUTTER LF	204.0155 REMOVING CONCRETE SIDEWALK SY
MORMON COULEE RD & BROADVIEW PL	102+11 - 106+37	17	292	69	198
PROJECT TOTALS		**17**	**292**	**69**	**198**

CONCRETE PAVEMENT ITEMS

LOCATION	STATION TO STATION	# 390.0303 BASE PATCHING CONCRETE SY	415.0090 CONCRETE PAVEMENT 9-INCH SY	415.5110.S CONCRETE PAVEMENT JOINT LAYOUT LS	416.0610 DRILLED TIE BARS EACH	416.0620 DRILLED DOWEL BARS EACH
MORMON COULEE RD & SHELBY RD/BROADVIEW PL	102+11 - 106+37	70	24	1	64	130
PROJECT TOTALS		**70**	**24**	**1**	**64**	**130**

ESTIMATED TO BE 20% OF ASPHALTIC SURFACE MILLING AREA. AREA ALSO INCLUDES BASE PATCHES FOR MEDIAN TRAFFIC SIGNAL BASE AND PULL BOX REMOVALS.

CONCRETE MISCELLANEOUS ITEMS

LOCATION	STATION TO STATION	601.0417 CONCRETE CURB & GUTTER 30-INCH TYPE K LF	601.0600 CONCRETE CURB PEDESTRIAN LF	602.0410 CONCRETE SIDEWALK 5-INCH SF	602.0505 CURB RAMP DETECTABLE WARNING FIELD YELLOW SF	SPV.0165.01 CONCRETE RAISED MEDIAN SF
MORMON COULEE RD & BROADVIEW PL	102+11 - 106+37	69	28	633	20	712
PROJECT TOTALS		**69**	**28**	**633**	**20**	**712**

REMOVING TRAFFIC SIGNALS MORMON COULEE RD & BROADVIEW PL

LOCATION	204.9105.S.01 REMOVING TRAFFIC SIGNALS (MORMON COULEE RD & BROADVIEW PL) LS
MORMON COULEE RD & BROADVIEW PL	1
PROJECT TOTALS	**1**

3

REMOVING LOOP DETECTOR WIRE AND LEAD-IN CABLE MORMON COULEE RD & BROADVIEW PL

LOCATION	204.9105.S.02 REMOVING LOOP DETECTOR WIRE & LEAD-IN CABLE (MORMON COULEE RD & BROADVIEW PL) LS
MORMON COULEE RD & BROADVIEW PL	1
PROJECT TOTALS	**1**

ASPHALT PAVEMENT ITEMS

LOCATION	STATION TO STATION	455.0605 TACK COAT GAL	460.6224 HMA PAVEMENT 4 MT 58-28 S TON
MORMON COULEE RD & BROADVIEW PL	103+86 - 106+37	27	45
PROJECT TOTALS		**27**	**45**

BASE AGGREGATE ITEMS

LOCATION	305.0120 BASE AGGREGATE DENSE 1 1/4-INCH TON	624.0100 WATER MGAL
MORMON COULEE RD & BROADVIEW PL	20	1
PROJECT TOTALS	**20**	**1**

QUANTITY INCLUDED FOR ADDING MATERIAL UNDERNEATH REMOVED CURB & GUTTER OR SIDEWALK

ALL ITEMS CATEGORY 0010 UNLESS NOTED

3

EROSION CONTROL ITEMS

LOCATION	STATION	TO	STATION	628.1905 MOBILIZATIONS EROSION CONTROL EACH	628.1910 MOBILIZATIONS EMERGENCY EROSION CONTROL EACH	628.7015 INLET PROTECTION TYPE C EACH
MORMON COULEE RD & BROADVIEW PL	102+11	-	106+37	2	1	2
UNDISTRIBUTED				--	--	1
PROJECT TOTALS				**2**	**1**	**3**

RESTORATION ITEMS

LOCATION	STATION	TO	STATION	625.0100 TOPSOIL SY	629.0210 FERTILIZER TYPE B CWT	631.0300 SOD WATER MGAL	631.1000 SOD LAWN SY
MORMON COULEE RD & BROADVIEW PL	102+11	-	106+37	8	0.5	0.2	8
UNDISTRIBUTED				1	0.1	0.1	1
PROJECT TOTALS				**9**	**0.6**	**0.3**	**9**

3

TRAFFIC CONTROL ITEMS

LOCATION	DURATION DAYS	603.8000 CONCRETE BARRIER TEMPORARY PRECAST DELIVERED LF	603.8125 CONCRETE BARRIER TEMPORARY PRECAST INSTALLED LF	603.8500 ANCHORING CONCRETE BARRIER TEMPORARY PRECAST LF	643.0300 TRAFFIC CONTROL DRUMS QTY*	643.0300 DAY	643.0410 TRAFFIC CONTROL BARRICADES TYPE II QTY*	643.0410 DAY	643.0420 TRAFFIC CONTROL BARRICADES TYPE III QTY*	643.0420 DAY	643.0705 TRAFFIC CONTROL WARNING LIGHTS TYPE A QTY*	643.0705 DAY	643.0715 TRAFFIC CONTROL WARNING LIGHTS TYPE C QTY*	643.0715 DAY	643.0900 TRAFFIC CONTROL SIGNS QTY*	643.0900 DAY	# 643.0920 TRAFFIC CONTROL COVERING SIGNS TYPE II EACH	643.1050 TRAFFIC CONTROL SIGNS PCMS QTY*	643.1050 DAY	644.1420 TEMPORARY PEDESTRIAN SURFACE PLYWOOD SF	644.1601 TEMPORARY PEDESTRIAN CURB RAMP QTY*	644.1601 DAY	644.1810 TEMPORARY PEDESTRIAN BARRICADE LF	SPV.0045.01 TEMPORARY DETECTABLE WARNING FIELDS SF*	SPV.0045.01 DAY
MORMON COULEE RD & BROADVIEW PL																									
STAGE 1	27	62.5	62.5	62.5	23	621	3	81	6	162	15	405	14	378	27	729	2	4	28	100	1	27	104	10	27
STAGE 2	18	87.5	87.5	87.5	25	450	3	54	7	126	17	306	14	252	27	486	2	--	--	25	1	18	74	10	18
STAGE 3	21	--	--	--	62	1302	--	--	10	210	20	420	22	462	33	693	--	--	--	--	--	--	--	--	--
SUBTOTALS		150	150	150		2,373		135		498		1,131		1,092		1,908	4		28	125		45	178		45
UNDISTRIBUTED		--	--	--		119		7		25		57		55		96	--		--	10		3	10		--
PROJECT TOTALS		**150**	**150**	**150**		**2,492**		**142**		**523**		**1,188**		**1,147**		**2,004**	**4**		**28**	**135**		**48**	**188**		**45**

* FOR INFORMATION ONLY

TWO TOTAL SIGNS IN EACH STAGE. ONE CYCLE OF COVERING/UNCOVERING EACH SIGN.

PAVEMENT MARKING

LOCATION	STATION	TO	STATION	646.3005 MARKING LINE PAINT 8-INCH LF	646.5005 MARKING ARROW PAINT EACH	646.6005 MARKING STOP LINE PAINT 12-INCH	SPV.0090.01 MARKING CROSSWALK PAINT TRANSVERSE LINE 12-INCH LF
MORMON COULEE RD & BROADVIEW PL	102+11	-	106+37	473	3	70	30
PROJECT TOTALS				**473**	**3**	**70**	**30**

ALL ITEMS CATEGORY 0010 UNLESS NOTED

PROJECT NO: 1641-03-75	HWY: USH 14	COUNTY: LA CROSSE	MISCELLANEOUS QUANTITIES	SHEET NO: 34	E

3

TEMPORARY PAVEMENT MARKING

LOCATION		649.0150 TEMPORARY MARKING LINE REMOVABLE TAPE 4-INCH (WHITE) LF	649.0960 TEMPORARY MARKING REMOVABLE MASK OUT TAPE 6-INCH LF
MORMON COULEE RD & BROADVIEW PL			
	STAGE 1	115	--
	STAGE 2	115	140
	STAGE 3	--	--
	SUBTOTAL	230	
PROJECT TOTALS		**230**	**140**

CONSTRUCTION STAKING ITEMS

LOCATION	STATION	TO	STATION	650.7000 CONSTRUCTION STAKING CONCRETE PAVEMENT LF	650.8500.01 CONSTRUCTION STAKING ELECTRICAL INSTALLATIONS 1641-03-75 LS	650.9000 CONSTRUCTION STAKING CURB RAMPS EACH	650.9910.01 CONSTRUCTION STAKING SUPPLEMENTAL CONTROL 1641-03-75 LS
MORMON COULEE RD & BROADVIEW PL	102+11	-	106+37	32	1	2	1
PROJECT TOTALS				**32**	**1**	**2**	**1**

3

SIGNAL REMOVALS & ADJUSTMENTS

LOCATION	ITEM NO.	204.0195 REMOVING CONCRETE BASES EACH	653.0900 ADJUSTING PULL BOXES EACH	653.0905 REMOVING PULL BOXES EACH
MORMON COULEE RD & BROADVIEW PL	SB4	1	-	-
	SB5	1	-	-
	SB9	1	-	-
	SB10	1	-	-
	PB1	-	1	-
	PB6	-	-	1
	PB7	-	1	-
	PB8	-	1	-
	PB12	-	-	1
	PB14	-	-	1
PROJECT TOTALS		**4**	**3**	**3**

CONDUIT ITEMS

LOCATION	FROM	TO	652.0225 CONDUIT RIGID NONMETALLIC SCHEDULE 40 2-INCH LF	652.0235 CONDUIT RIGID NONMETALLIC SCHEDULE 40 3-INCH LF	652.0700.S INSTALL CONDUIT INTO EXISTING ITEM EACH	CONSTRUCTION METHOD
MORMON COULEE RD & BROADVIEW PL	PB1	CV1	25	--	1	TRENCH
	PB7	SB4	--	9	1	TRENCH
	PB13	SB8	--	17	1	TRENCH
		PB6	5	--	--	TRENCH
		PB12	5	--	--	TRENCH
PROJECT TOTALS			**35**	**26**	**3**	

CONCRETE BASES

LOCATION	SIGNAL BASE NO.	ALIGNMENT	STATION	OFFSET	654.0120 CONCRETE BASES TYPE 10 SPECIAL EACH
MORMON COULEE RD & BROADVIEW PL	SB4	MORMON COULEE RD	103+93.1	33.5' RT	1
	SB8	MORMON COULEE RD	103+11.7	54.6' LT	1
PROJECT TOTALS					2

ALL ITEMS CATEGORY 0010 UNLESS NOTED

TRAFFIC SIGNAL CABLE AND ELECTRICAL WIRE (1 OF 2)

LOCATION	FROM	TO	655.0230 CABLE TRAFFIC SIGNAL 5-14 AWG LF	655.0240 CABLE TRAFFIC SIGNAL 7-14 AWG LF	655.0260 CABLE TRAFFIC SIGNAL 12-14 AWG LF	655.0320 CABLE TYPE TYPE UF 2-10 AWG GROUNDED LF	655.0515 ELECTRICAL WIRE TRAFFIC SIGNALS 10 AWG LF	655.0610 ELECTRICAL WIRE LIGHTING 12 AWG LF	(INCIDENTAL) LOOP DETECTOR LEAD IN CABLE LF
MORMON COULEE RD & BROADVIEW PL	CB1	SB1	--	--	21	--	21	--	--
	CB1	SB2	--	--	152	--	--	--	--
	CB1	SB3	--	--	136	136	--	--	--
	CB1	SB4	--	--	237	--	--	--	--
	CB1	SB5	--	--	270	--	--	--	--
	CB1	SB6	--	--	192	--	--	--	--
	CB1	SB7	--	--	169	169	--	--	--
	CB1	SB8	--	--	79	--	79	--	--
	SB1	SB2	--	--	--	--	149	--	--
	SB2	SB3	--	--	--	--	40	--	--
	SB3	SB4	--	--	--	--	123	--	--
	SB4	SB5	--	--	--	--	63	--	--
	SB7	SB8	--	--	--	--	138	--	--
	SB6	SB7	--	--	--	--	52	--	--
	PB1	SB1	--	--	--	--	16	--	--
	PB2	SB3	--	--	--	--	53		--
	PB3	SB3	--	--	--	--	16	--	--
	PB7	SB4	--	--	--	--	22	--	--
	PB8	SB5	--	--	--	--	19	--	--
	PB9	SB7	--	--	--	--	21	--	--
	PB13	SB8	--	--	--	--	30	--	--
SUBTOTAL			--	--	1256	305	842	--	--

(CONTINUED ON NEXT PAGE)

ALL ITEMS CATEGORY 0010 UNLESS NOTED

3

TRAFFIC SIGNAL CABLE AND ELECTRICAL WIRE (2 OF 2)

LOCATION	FROM	TO	655.0230 CABLE TRAFFIC SIGNAL 5-14 AWG LF	655.0240 CABLE TRAFFIC SIGNAL 7-14 AWG LF	655.0260 CABLE TRAFFIC SIGNAL 12-14 AWG LF	655.0320 CABLE TYPE TYPE UF 2-10 AWG GROUNDED LF	655.0515 ELECTRICAL WIRE TRAFFIC SIGNALS 10 AWG LF	655.0610 ELECTRICAL WIRE LIGHTING 12 AWG LF	(INCIDENTAL) LOOP DETECTOR LEAD IN CABLE LF
MORMON COULEE RD & BROADVIEW PL	SB1	HEAD 1	19	--	--	--	--	--	--
	SB1	HEAD 2	19	--	--	--	--	--	--
	SB1	HEAD 15	15	--	--	--	--	--	--
	SB1	PUSH BUTTON	--	--	--	--	--	--	6
	SB2	HEAD 3	19	--	--	--	--	--	--
	SB2	HEAD 16	15	--	--	--	--	--	--
	SB2	PUSH BUTTON	--	--	--	--	--	--	6
	SB3	HEAD 4	--	23	--	--	--	--	--
	SB3	HEAD 5	22	--	--	--	--	--	--
	SB3	HEAD 17	15	--	--	--	--	--	--
	SB3	PUSH BUTTON	--	--	--	--	--	--	6
	SB3	LUMINAIRE	--	--	--	--	--	123	--
	SB4	HEAD 6	65	--	--	--	--	--	--
	SB4	HEAD 7	--	67	--	--	--	--	--
	SB4	HEAD 18	15	--	--	--	--	--	--
	SB4	PUSH BUTTON							6
	SB5	HEAD 8	19	--	--	--	--	--	--
	SB5	HEAD 10	19	--	--	--	--	--	--
	SB5	HEAD 19	15	--	--	--	--	--	--
	SB5	PUSH BUTTON	--	--	--	--	--	--	6
	SB6	HEAD 9	19	--	--	--	--	--	--
	SB6	HEAD 20	15	--	--	--	--	--	--
	SB6	PUSH BUTTON	--	--	--	--	--	--	6
	SB7	HEAD 11	22	--	--	--	--	--	--
	SB7	HEAD 12	--	23	--	--	--	--	--
	SB7	HEAD 21	15	--	--	--	--	--	--
	SB7	PUSH BUTTON	--	--	--	--	--	--	6
	SB7	LUMINAIRE	--	--	--	--	--	123	--
	SB8	HEAD 13	70	--	--	--	--	--	--
	SB8	HEAD 14	--	72	--	--	--	--	--
	SB8	HEAD 22	15	--	--	--	--	--	--
	SB8	PUSH BUTTON		--	--	--	--	--	6
SUBTOTAL			413	185	--	--	--	246	48
PROJECT TOTALS			**413**	**185**	**1256**	**305**	**842**	**246**	**48**

3

ELECTRICAL SERVICE METER BREAKER PEDESTAL

LOCATION	656.0200.01 ELECTRICAL SERVICE METER BREAKER PEDESTAL (MORMON COULEE RD & BROADVIEW PL) LS
MORMON COULEE RD & BROADVIEW PL	1
TOTAL	**1**

ALL ITEMS CATEGORY 0010 UNLESS NOTED

3

SIGNAL MOUNTING HARDWARE
MORMON COULEE RD & BROADVIEW PL

LOCATION	658.5069.01 SIGNAL MOUNTING HARDWARE (MORMON COULEE RD & BROADVIEW PL) LS
MORMON COULEE RD & BROADVIEW PL	1
PROJECT TOTALS	**1**

SIGNAL BASES, POLES, AND MAST ARMS

LOCATION	SIGNAL BASE NO	657.0347 POLES TYPE 9 SPECIAL EACH	657.0541 MONOTUBE ARMS 40-FT SPECIAL EACH	657.0546 MONOTUBE ARMS 45-FT SPECIAL EACH	658.0500 PEDESTRIAN PUSH BUTTONS EACH
MORMON COULEE RD & BROADVIEW PL	SB1	--	--	--	1
	SB4	1	1	--	1
	SB5	--	--	--	1
	SB8	1	--	1	1
PROJECT TOTALS		**2**	**1**	**1**	**4**

3

TEMPORARY TRAFFIC SIGNALS FOR INTERSECTIONS

LOCATION	661.0200.01 TEMPORARY TRAFFIC SIGNALS FOR INTERSECTIONS (MORMON COULEE RD & BROADVIEW PL) LS
MORMON COULEE RD & BROADVIEW PL	1
PROJECT TOTALS	**1**

SIGNAL FACES

LOCATION	SIG. BASE NO	SIG. HEAD NO	TYPE OF MOUNT	658.0173 TRAFFIC SIGNAL FACE 3S 12-INCH EACH	658.0175 TRAFFIC SIGNAL FACE 5S 12-INCH EACH	+ BACKPLATE 3-SEC EACH	+ BACKPLATE 5-SEC EACH	+ LED RED BALL EACH	+ LED YELLOW BALL EACH	+ LED GREEN BALL EACH	+ LED YELLOW ARROW EACH	+ LED GREEN ARROW EACH	658.0416 PEDESTRIAN SIGNAL FACE 16-INCH EACH	++ LED MODULES COUNTDOWN TIMER 16-INCH EACH
MORMON COULEE RD & BROADVIEW PL	SB1	15	PEDESTRIAN	--	--	--	--	--	--	--	--	--	1	1
	SB2	16	PEDESTRIAN	--	--	--	--	--	--	--	--	--	1	1
	SB3	4	POST MOUNT VERTICAL	--	1	--	1	1	1	1	1	1	--	--
	SB3	5	POST MOUNT VERTICAL	1	--	1	--	1	1	1	--	--	--	--
	SB3	17	PEDESTRIAN	--	--	--	--	--	--	--	--	--	1	1
	SB4	6	MONOTUBE ARM MOUNT VERTICAL	1	--	1	--	1	1	1	--	--	--	--
	SB4	7	MONOTUBE ARM MOUNT VERTICAL	--	1	--	1	1	1	1	1	1	--	--
	SB4	18	PEDESTRIAN	--	--	--	--	--	--	--	--	--	1	1
	SB5	19	PEDESTRIAN	--	--	--	--	--	--	--	--	--	1	1
	SB6	20	PEDESTRIAN	--	--	--	--	--	--	--	--	--	1	1
	SB7	11	POST MOUNT VERTICAL	1	--	1	--	1	1	1	--	--	--	--
	SB7	12	POST MOUNT VERTICAL	--	1	--	1	1	1	1	1	1	--	--
	SB7	21	PEDESTRIAN	--	--	--	--	--	--	--	--	--	1	1
	SB8	13	MONOTUBE ARM MOUNT VERTICAL	1	--	1	--	1	1	1	--	--	--	--
	SB8	14	MONOTUBE ARM MOUNT VERTICAL	--	1	--	1	1	1	1	1	1	--	--
	SB8	22	PEDESTRIAN	--	--	--	--	--	--	--	--	--	1	1
PROJECT TOTALS				**4**	**4**	**4**	**4**	**8**	**8**	**8**	**4**	**4**	**8**	**8**

+ INCIDENTAL TO 658.0173 OR 658.0175
++ INCIDENTAL TO 658.0416

ALL ITEMS CATEGORY 0010 UNLESS NOTED

3

COMMUNICATION VAULT TYPE 1

LOCATION	673.0105 COMMUNICATION VAULT TYPE 1 EACH
MORMON COULEE RD & BROADVIEW PL	1
TOTAL	**1**

FIBER OPTIC SPLICING

LOCATION	678.0200 FIBER OPTIC SPLICE ENCLOSURE EACH	678.0300 FIBER OPTIC SPLICE EACH
MORMON COULEE RD & BROADVIEW PL	1	2
TOTAL	**1**	**2**

3

TRAFFIC SIGNAL CONTROLLER & CABINET
MORMON COULEE RD & BROADVIEW PL

LOCATION	SPV.0105.01 TRAFFIC SIGNAL CONTROLLER & CABINET (MORMON COULEE RD & BROADVIEW PL) LS
MORMON COULEE RD & BROADVIEW PL	1
PROJECT TOTALS	**1**

REMOVE, SALVAGE, & REINSTALL EVP SYSTEM
MORMON COULEE RD & BROADVIEW PL

LOCATION	SPV.0105.02 REMOVE, SALVAGE, & REINSTALL EVP SYSTEM (MORMON COULEE RD & BROADVIEW PL) LS
MORMON COULEE RD & BROADVIEW PL	1
PROJECT TOTALS	**1**

REMOVE, SALVAGE, & REINSTALL TRAFFIC SIGNAL INTERCONNECT

LOCATION	SPV.0105.03 REMOVE, SALVAGE, & REINSTALL TRAFFIC SIGNAL INTERCONNECT LS
MORMON COULEE RD & BROADVIEW PL	1
PROJECT TOTALS	**1**

INSTALL VIDEO DETECTION SYSTEM
MORMON COULEE RD & BROADVIEW PL

LOCATION	SPV.0105.04 INSTALL VIDEO DETECTION SYSTEM (MORMON COULEE RD & BROADVIEW PL) LS
MORMON COULEE RD & BROADVIEW PL	1
PROJECT TOTALS	**1**

SAWING

LOCATION	STATION	TO	STATION	690.0150 SAWING ASPHALT LF	690.0250 SAWING CONCRETE LF
MORMON COULEE RD & BROADVIEW PL	102+11	-	106+37	586	554
PROJECT TOTALS				**586**	**554**

SUMMARY OF CITY FURNISHED MATERIALS

QUANTITY	DESCRIPTION
1	ETHERNET SWITCH
1	VIDEO DETECTION SYSTEM

ALL ITEMS CATEGORY 0010 UNLESS NOTED

R/W PROJECT NUMBER	SHEET NUMBER	TOTAL SHEETS
1641-03-25		
FEDERAL PROJECT NUMBER N/A	4.01	7

PLAT OF RIGHT OF WAY REQUIRED FOR

VARIOUS INTERSECTIONS

MORMON COULEE RD, JACKSON ST & LACROSSE ST

CONSTRUCTION PROJECT NUMBER	
1641-03-75/5120-02-70/7575-07-70	LACROSSE COUNTY

4

CONVENTIONAL SYMBOLS

SECTION LINE
QUARTER LINE
SIXTEENTH LINE
NEW REFERENCE LINE
NEW R/W LINE
EXISTING R/W LINE
PROPERTY LINE (P.L.)
LOT, TIE, AND OTHER MINOR LINES
SLOPE INTERCEPT
CORPORATE LIMITS
UNDERGROUND FACILITY (COMMUNICATIONS, ELECTRIC, ETC) (W) (TYPE)
FEE ACQUISITION AREA (HATCHING VARIES BY OWNER)
TEMP. LIMITED EASEMENT AREA
EASEMENT AREA (HIGHWAY, PERMANENT LIMITED, OR RESTRICTED DEVELOPMENT)
TRANSMISSION STRUCTURES
BUILDING
BUILDING (TO BE REMOVED)
BRIDGE

PARCEL NUMBER 25
SECTION CORNER (18, 23, 24, 16, 15, 9)
NOTATION FOR COMBUSTABLE FLUIDS (CAUTION)
NOTATION FOR HIGH VOLTAGE TRANSMISSION LINES (CAUTION)

UTILITY NUMBER 40
R/W MONUMENT
NON-MONUMENTED R/W POINT
FOUND ¾" IRON ROD (IR)
FOUND 1" IRON PIPE (IP)
VALVE (GAS, WATER, ETC.) (TYPE)
SIGN
OFF-PREMISE SIGN (#1-25) SIGN

ACCESS CONTROLLED BY ACQUISITION
NO ACCESS (BY STATUTORY AUTHORITY)
ACCESS RESTRICTED (BY PREVIOUS PROJECT OR CONTROL)
NO ACCESS (NEW HIGHWAY)
NATIONAL GEODETIC SURVEY MONUMENT
SIXTEENTH CORNER MONUMENT
PARALLEL OFFSETS

CONVENTIONAL UTILITY SYMBOLS

WATER	W
GAS	G
TELEPHONE	T
OVERHEAD TRANSMISSION LINES	OH
ELECTRIC	E
CABLE TELEVISION	TV
FIBER OPTIC	FO
SANITARY SEWER	SAN
STORM SEWER	SS
ELECTRIC TOWER	

	NON-COMPENSABLE	COMPENSABLE
POWER POLE		
TELEPHONE POLE		
TELEPHONE PEDESTAL		

CURVE DATA ABBREVIATIONS

LONG CHORD	LCH
LONG CHORD BEARING	LCB
RADIUS	R
DEGREE OF CURVE	D
CENTRAL ANGLE	Δ /DELTA
LENGTH OF CURVE	L
TANGENT	T
DIRECTION AHEAD	DA
DIRECTION BACK	DB

CONVENTIONAL ABBREVIATIONS

ACCESS RIGHTS	AR	OUTLOT	OL
ACRES	AC	PAGE	P
AHEAD	AH	POINT OF TANGENCY	PT
ALUMINUM	ALUM	PROPERTY LINE	PL
AND OTHERS	ET AL	RECORDED AS	(100')
BACK	BK	REEL / IMAGE	R/I
BLOCK	BLK	REFERENCE LINE	R/L
CENTERLINE	C/L	PERMANENT LIMITED EASEMENT	PLE
CERTIFIED SURVEY MAP	CSM	POINT OF BEGINNING	POB
CONCRETE	CONC	POINT OF CURVATURE	PC
COUNTY	CO	POINT OF COMPOUND CURVE	PCC
COUNTY TRUNK HIGHWAY	CTH	POINT OF INTERSECTION	PI
DISTANCE	DIST	REMAINING	REM
CORNER	COR	RESTRICTIVE DEVELOPMENT EASEMENT	RDE
DOCUMENT NUMBER	DOC	RIGHT	RT
EASEMENT	EASE	RIGHT OF WAY	R/W
EXISTING	EX	SECTION	SEC
GAS VALVE	GV	SEPTIC VENT	SEPV
GRID NORTH	GN	SQUARE FEET	SF
HIGHWAY EASEMENT	HE	STATE TRUNK HIGHWAY	STH
IDENTIFICATION	ID	STATION	STA
LAND CONTRACT	LC	TELEPHONE PEDESTAL	TP
LEFT	LT	TEMPORARY LIMITED EASEMENT	TLE
MONUMENT	MON	TRANSPORTATION PROJECT PLAT	TPP
NATIONAL GEODETIC SURVEY	NGS	UNITED STATES HIGHWAY	USH
NUMBER	NO	VOLUME	V

BEGIN RELOCATION ORDER
STA 403+10.65
937.5 FEET SOUTH AND 81.5 FEET EAST OF THE CENTER 1/4 CORNER OF SECTION 32, T 16 N, R 7 W

END RELOCATION ORDER
STA 412+00.00
55.4 FEET SOUTH AND 17.5 FEET WEST OF THE CENTER 1/4 CORNER OF SECTION 32, T 16 N, R 7 W

END RELOCATION ORDER
STA 212+00.00
565.1 FEET SOUTH AND 27.2 FEET WEST OF THE CENTER 1/4 CORNER OF SECTION 5, T 15 N, R 7 W

BEGIN RELOCATION ORDER
STA 200+00.00
1763.3 FEET SOUTH AND 91.4 FEET WEST OF THE CENTER 1/4 CORNER OF SECTION 5, T 15 N, R 7 W

END RELOCATION ORDER
STA 107+00.00
536.8 FEET NORTH AND 1365.6 FEET WEST OF THE SOUTHEAST CORNER OF SECTION 16, T 15 N, R 7 W

BEGIN RELOCATION ORDER
STA 100+00.00
10.9 FEET SOUTH AND 929.7 FEET WEST OF THE SOUTHEAST CORNER OF SECTION 16, T 15 N, R 7 W

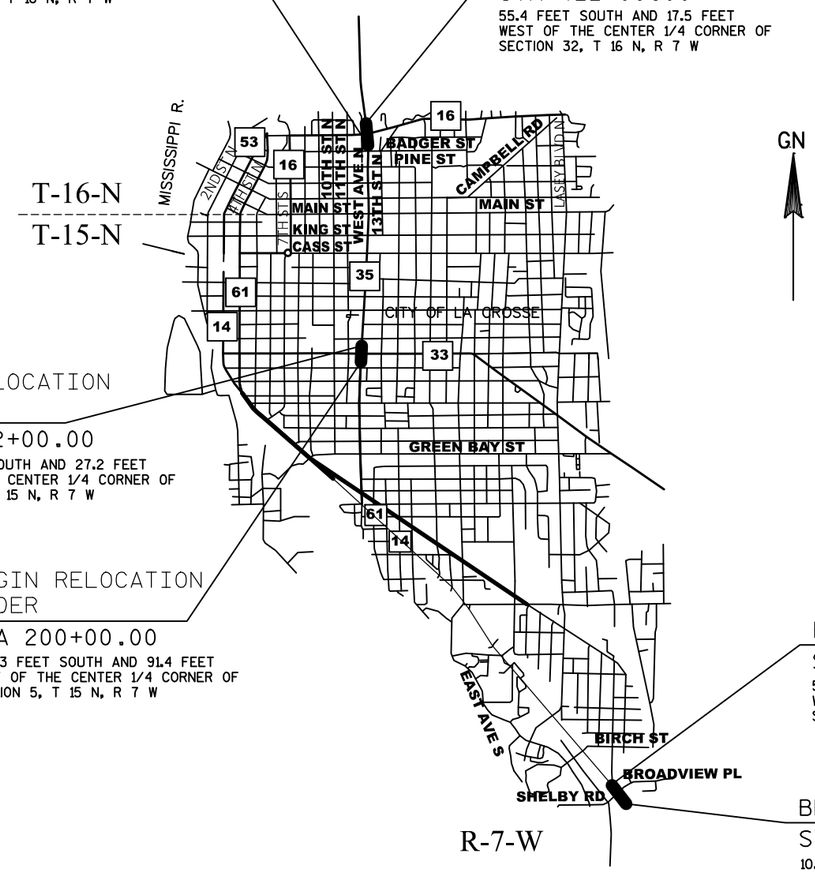

LAYOUT
1"=300'

TOTAL NET LENGTH OF REFERENCE LINE = 0.520 MI

NOTES:

POSITIONS SHOWN ON THIS PLAT ARE WISCONSIN COORDINATE REFERENCE SYSTEM COORDINATES (WISCRS), LACROSSE COUNTY, NAD83 (2011) IN US SURVEY FEET. VALUES SHOWN ARE GRID COORDINATES, GRID BEARINGS, AND GRID DISTANCES. GRID DISTANCES MAY BE USED AS GROUND DISTANCES.

ALL NEW RIGHT-OF-WAY MONUMENTS WILL BE TYPE 2 (TYPICALLY 1" X 24" IRON PIPES), UNLESS OTHERWISE NOTED, AND WILL BE PLACED PRIOR TO THE COMPLETION OF THE PROJECT.

RIGHT-OF-WAY BOUNDARIES ARE DEFINED WITH COURSES OF THE PERIMETER OF THE HIGHWAY LANDS REFERENCED TO THE U.S. PUBLIC LAND SURVEY SYSTEM OR OTHER "SURVEYS OF PUBLIC RECORD".

FOR THE LATEST ACCESS/DRIVEWAY INFORMATION CONTACT THE PLANNING DEPARTMENT OF THE CITY OF LACROSSE.

A TEMPORARY LIMITED EASEMENT (TLE) IS A RIGHT FOR CONSTRUCTION PURPOSES, AS DEFINED HEREIN, INCLUDING THE RIGHT TO OPERATE NECESSARY EQUIPMENT THEREON, THE RIGHT OF INGRESS AND EGRESS, AS LONG AS REQUIRED FOR SUCH PUBLIC PURPOSE, INCLUDING THE RIGHT TO PRESERVE, PROTECT, REMOVE, OR PLANT THEREON ANY VEGETATION THAT THE HIGHWAY AUTHORITIES MAY DEEM DESIRABLE. ALL (TLEs) ON THE PLAT EXPIRE AT THE COMPLETION OF THE CONSTRUCTION PROJECT FOR WHICH THIS INSTRUMENT IS GIVEN.

DIMENSIONING FOR THE NEW RIGHT-OF-WAY IS MEASURED ALONG AND PERPENDICULAR TO NEW REFERENCE LINES.

THIS PLAT IS A GRAPHIC REPRESENTATION AND IS FOR REFERENCE PURPOSES ONLY. DEEDS MUST BE CHECKED TO DETERMINE PROPERTY BOUNDARIES AND ACCESS RIGHTS.

ORIGINAL PLAT PREPARED BY

raSmith
CREATIVITY BEYOND ENGINEERING
16745 W. Bluemound Road, Brookfield, WI 53005
262-781-1000 Fax 262-781-8466
www.rasmithnations.com

WISCONSIN MICHAEL J. RATZBURG S-2236 WAUKESHA WI LAND SURVEYOR

DATE: 08/10/20 Michael J. Ratzburg
LAND SURVEYOR

REVISION DATE: 10/7/2020 (2)

CITY OF LACROSSE

APPROVED FOR THE CITY OF LACROSSE
DATE: 10/15/2020 Scott Euen
(Signatur

SCHEDULE OF LANDS & INTERESTS REQUIRED

AREAS SHOWN IN THE TOTAL ACRES COLUMN MAY BE APPROXIMATE AND ARE DERIVED FROM TAX ROLLS OR OTHER AVAILABLE SOURCES AND MAY NOT INCLUDE LANDS OF THE OWNER WHICH ARE NOT CONTIGUOUS TO THE AREA TO BE ACQUIRED.

OWNERS NAMES ARE SHOWN FOR REFERENCE PURPOSES ONLY, AND ARE SUBJECT TO CHANGE PRIOR TO TRANSFER OF LAND AND INTERESTS TO THE CITY OF LACROSSE.

PARCEL NUMBER	SHEET NUMBER	OWNER(S)	INTEREST REQUIRED	TOTAL ACRES	R/W REQUIRED ACRES			TOTAL REMAINING ACRES	T.L.E. ACRES	P.L.E. ACRES	PARCEL NUMBER
					NEW	EXISTING	TOTAL				
1	4.05	CRYSTAL M. & CHAD KUHNKE	FEE, TLE	0.46	0.001	-	0.001	0.46	0.003	-	1
2	4.05	RIVER BANK	FEE, TLE	1.00	0.001	-	0.001	1.00	0.003	-	2
3	4.06	WILLIAM J. BERGE	TLE	0.32	-	-	-	0.32	0.008	-	3
4	4.06	GREAT NORTHERN INVESTMENT OF LACROSSE, INC.	FEE, TLE	1.41	0.004	-	0.004	1.41	0.009	-	4
5	4.06	J & K HOSPITALITY, LLC	TLE	0.37	-	-	-	0.37	0.008	-	5
6	4.07	KT REAL ESTATE HOLDINGS, LLC.	TLE	0.08	-	-	-	0.08	0.005	-	6
7	4.07	ROTTINGHAUS REAL ESTATE, LLC.	FEE, TLE	0.26	0.004	-	0.004	0.26	0.007	-	7
8	4.07	MARY LOU PETERSON	FEE, TLE	0.34	0.005	-	0.005	0.34	0.007	-	8
101	4.05	XCEL ELECTRIC	RELEASE OF RIGHTS								
102	4.06 & 4.07	XCEL GAS	RELEASE OF RIGHTS								

4

4

REVISION DATE:	DATE: 08-10-2020	SCALE, FEET 0 N/A N/A	HWY: VARIOUS INTERSECTIONS	STATE R/W PROJECT NUMBER: 1641-03-25	PLAT SHEET: 4.02	
	GRID FACTOR: N/A		COUNTY: LACROSSE	CONSTRUCTION PROJECT NUMBER: 1641-03-75/5120-02-70/7575-07-70	PS&E SHEET:	E

FILE NAME:S/5168021/DWG/52200404/PLAT/SPP title.DWG

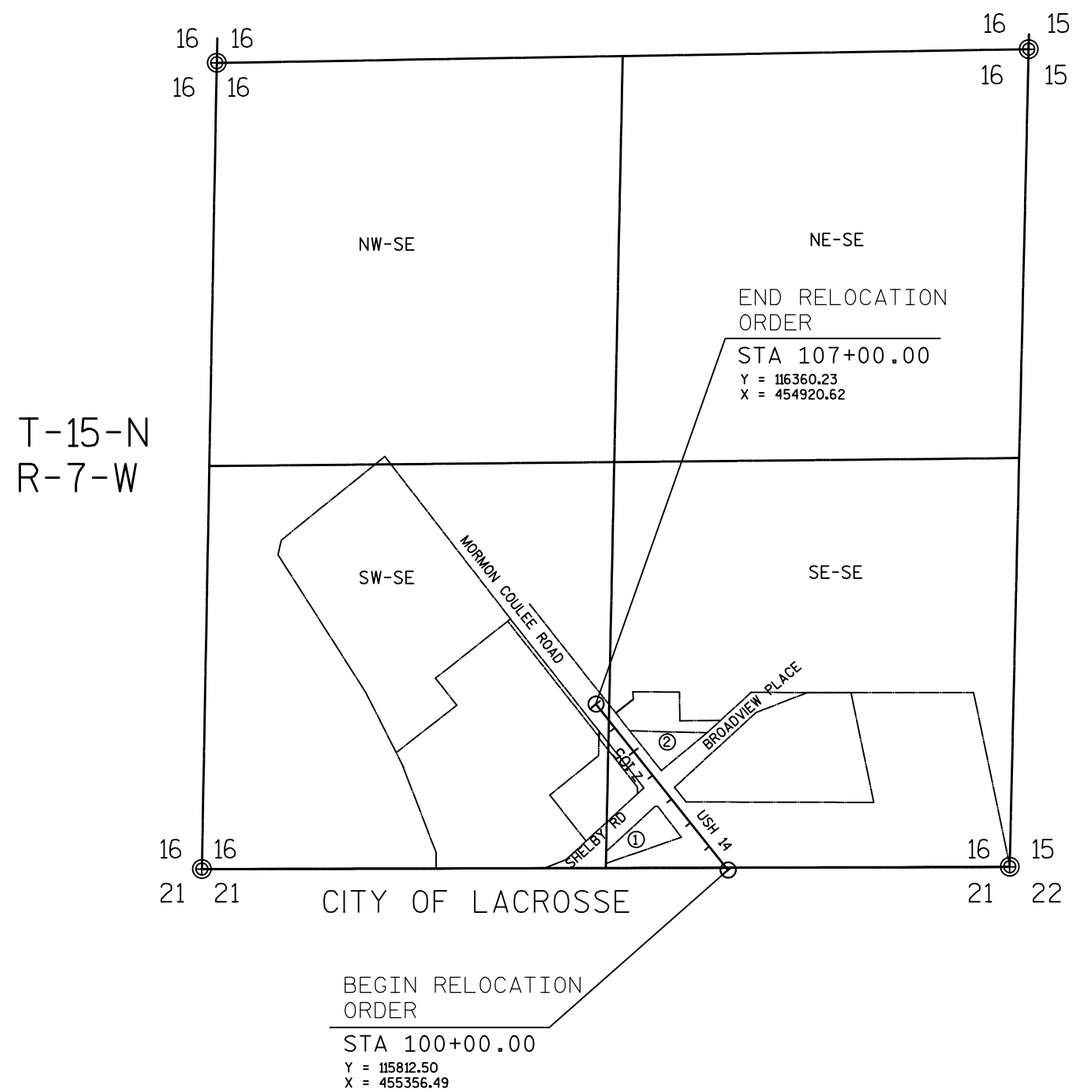

REVISION DATE:	DATE: 08-10-2020	SCALE, FEET 0 N/A N/A	HWY: VARIOUS INTERSECTIONS	STATE R/W PROJECT NUMBER: 1641-03-25	PLAT SHEET: 4.03
	GRID FACTOR: N/A		COUNTY: LACROSSE	CONSTRUCTION PROJECT NUMBER: 1641-03-75	PS&E SHEET: E

FILE NAME:S/5168021/DWG/52200404/PLAT/SPP title.DWG

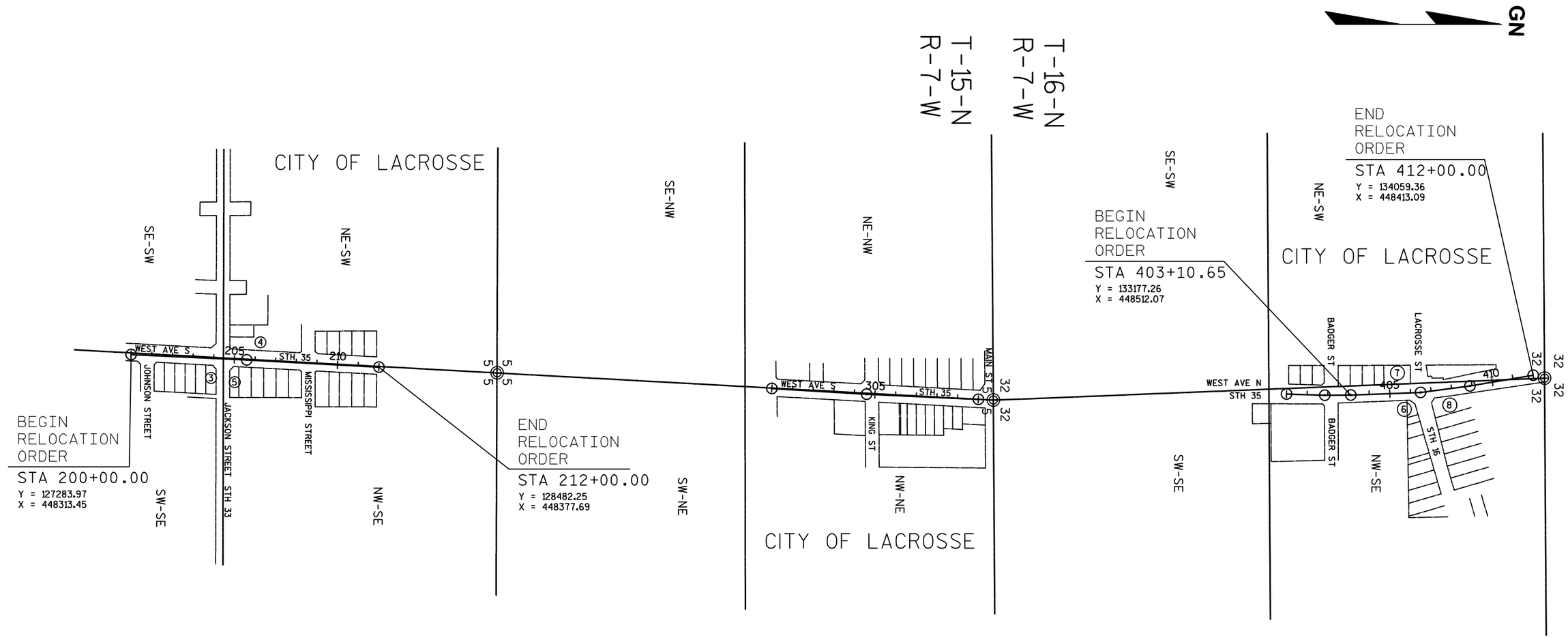

REVISION DATE:	DATE: 08-10-2020	SCALE, FEET 0 N/A N/A	HWY: VARIOUS INTERSECTIONS	STATE R/W PROJECT NUMBER: 1641-03-25	PLAT SHEET: 4.04	
	GRID FACTOR: N/A		COUNTY: LACROSSE	CONSTRUCTION PROJECT NUMBER: 5120-02-70/7575-07-70	PS&E SHEET:	E

FILE NAME:S/5168021/DWG/52200404/PLAT/SPP title.DWG

1641-03-25 - 4.04

NOTES:

POSITIONS SHOWN ON THIS PLAT ARE WISCONSIN COORDINATE REFERENCE SYSTEM COORDINATES (WISCRS), LACROSSE COUNTY, NAD83 (2011) IN US SURVEY FEET. VALUES SHOWN ARE GRID COORDINATES, GRID BEARINGS, AND GRID DISTANCES. GRID DISTANCES MAY BE USED AS GROUND DISTANCES.

ALL NEW RIGHT-OF-WAY MONUMENTS WILL BE TYPE 2 (TYPICALLY 1" X 24" IRON PIPES), UNLESS OTHERWISE NOTED, AND WILL BE PLACED PRIOR TO THE COMPLETION OF THE PROJECT.

FOR THE LATEST ACCESS/DRIVEWAY INFORMATION CONTACT THE PLANNING DEPARTMENT OF THE CITY OF LACROSSE.

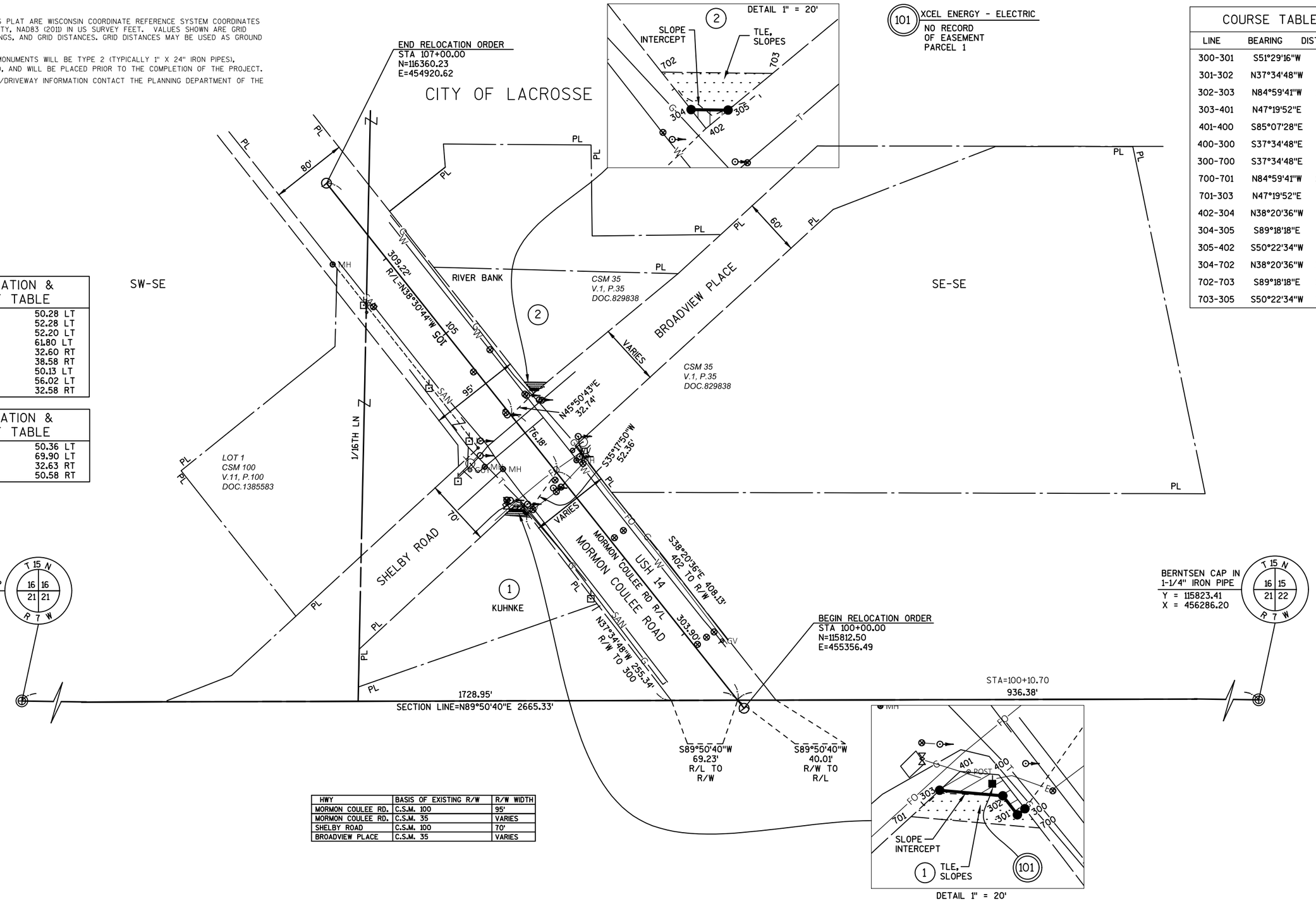

R/W STATION & OFFSET TABLE		
300	103+00.00	50.28 LT
301	103+00.00	52.28 LT
302	103+05.00	52.20 LT
303	103+14.12	61.80 LT
304	103+99.00	32.60 RT
305	103+94.11	38.58 RT
400	103+08.97	50.13 LT
401	103+14.54	56.02 LT
402	103+94.00	32.58 RT

TLE STATION & OFFSET TABLE		
700	102+94.97	50.36 LT
701	103+13.53	69.90 LT
702	104+09.00	32.63 RT
703	103+94.35	50.58 RT

COURSE TABLE		
LINE	BEARING	DISTANCE
300-301	S51°29'16"W	2.00
301-302	N37°34'48"W	5.00
302-303	N84°59'41"W	13.24
303-401	N47°19'52"E	5.80
401-400	S85°07'28"E	8.10
400-300	S37°34'48"E	8.97
300-700	S37°34'48"E	5.03
700-701	N84°59'41"W	26.95
701-303	N47°19'52"E	8.12
402-304	N38°20'36"W	5.00
304-305	S89°18'18"E	7.73
305-402	S50°22'34"W	6.00
304-702	N38°20'36"W	10.00
702-703	S89°18'18"E	23.18
703-305	S50°22'34"W	12.00

HWY	BASIS OF EXISTING R/W	R/W WIDTH
MORMON COULEE RD.	C.S.M. 100	95'
MORMON COULEE RD.	C.S.M. 35	VARIES
SHELBY ROAD	C.S.M. 100	70'
BROADVIEW PLACE	C.S.M. 35	VARIES

REVISION DATE: 10/7/2020 (NC)	DATE: 08-10-2020	SCALE, FEET 0 50 100	HWY: VARIOUS INTERSECTIONS	STATE R/W PROJECT NUMBER: 1641-03-25	PLAT SHEET: 4.05
	GRID FACTOR: N/A		COUNTY: LACROSSE	CONSTRUCTION PROJECT NUMBER: 1641-03-75	PS&E SHEET:

E

FILE NAME:S/5168021/DWG/52200404/PLAT/SPP title.DWG

NOTES:

POSITIONS SHOWN ON THIS PLAT ARE WISCONSIN COORDINATE REFERENCE SYSTEM COORDINATES (WISCRS), LACROSSE COUNTY, NAD83 (2011) IN US SURVEY FEET. VALUES SHOWN ARE GRID COORDINATES, GRID BEARINGS, AND GRID DISTANCES. GRID DISTANCES MAY BE USED AS GROUND DISTANCES.

ALL NEW RIGHT-OF-WAY MONUMENTS WILL BE TYPE 2 (TYPICALLY 1" X 24" IRON PIPES), UNLESS OTHERWISE NOTED, AND WILL BE PLACED PRIOR TO THE COMPLETION OF THE PROJECT.

FOR THE LATEST ACCESS/DRIVEWAY INFORMATION CONTACT THE PLANNING DEPARTMENT OF THE CITY OF LACROSSE.

R/W STATION & OFFSET TABLE		
309	204+67.74	82.81 LT
310	204+72.74	83.03 LT
311	204+73.79	59.52 LT
312	204+85.44	49.97 LT
313	205+08.74	34.12 RT
317	204+07.61	51.45 RT
318	203+90.79	33.34 RT
403	204+68.77	59.83 LT
404	204+83.00	49.99 LT
405	204+90.74	34.07 RT
406	204+73.87	55.44 RT

TLE STATION & OFFSET TABLE		
706	204+77.73	83.25 LT
707	204+78.77	60.02 LT
708	205+08.04	59.88 LT
709	205+08.12	49.88 LT
710	205+08.80	43.12 RT
711	204+90.01	43.07 RT
712	204+78.95	57.08 RT
713	204+79.54	70.20 RT
714	204+74.55	70.43 RT
715	204+08.33	66.91 RT
716	203+77.25	33.29 RT

PI	Y	X
201+15.18	127399.59	448320.05
203+86.05	127669.45	448334.53
204+96.76	127780.04	448339.78

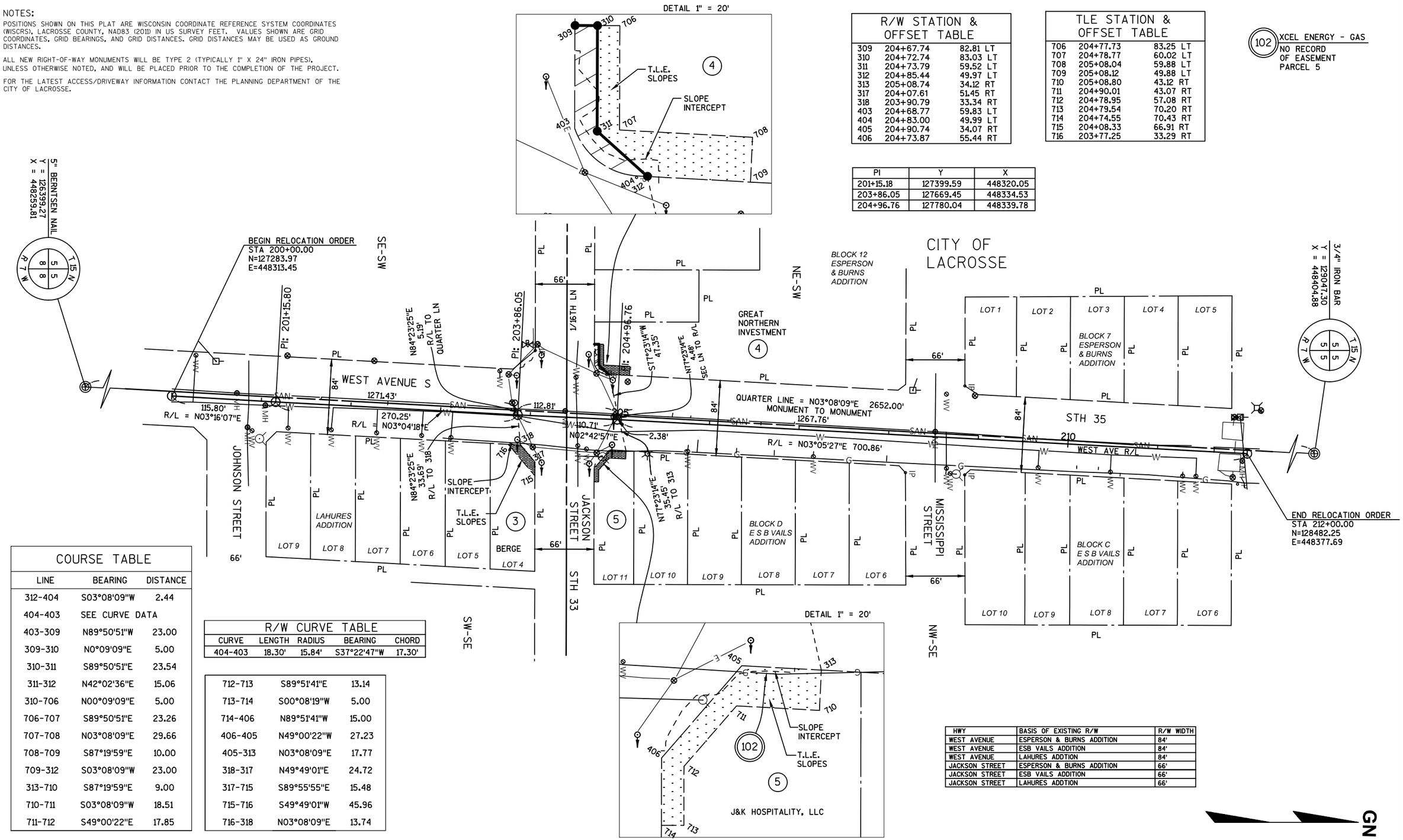

COURSE TABLE		
LINE	BEARING	DISTANCE
312-404	S03°08'09"W	2.44
404-403	SEE CURVE DATA	
403-309	N89°50'51"W	23.00
309-310	N0°09'09"E	5.00
310-311	S89°50'51"E	23.54
311-312	N42°02'36"E	15.06
310-706	N00°09'09"E	5.00
706-707	S89°50'51"E	23.26
707-708	N03°08'09"E	29.66
708-709	S87°19'59"E	10.00
709-312	S03°08'09"W	23.00
313-710	S87°19'59"E	9.00
710-711	S03°08'09"W	18.51
711-712	S49°00'22"E	17.85

R/W CURVE TABLE				
CURVE	LENGTH	RADIUS	BEARING	CHORD
404-403	18.30'	15.84'	S37°22'47"W	17.30'

712-713	S89°51'41"E	13.14
713-714	S00°08'19"W	5.00
714-406	N89°51'41"W	15.00
406-405	N49°00'22"W	27.23
405-313	N03°08'09"E	17.77
318-317	N49°49'01"E	24.72
317-715	S89°55'55"E	15.48
715-716	S49°49'01"W	45.96
716-318	N03°08'09"E	13.74

HWY	BASIS OF EXISTING R/W	R/W WIDTH
WEST AVENUE	ESPERSON & BURNS ADDITION	84'
WEST AVENUE	ESB VAILS ADDITION	84'
WEST AVENUE	LAHURES ADDTION	84'
JACKSON STREET	ESPERSON & BURNS ADDITION	66'
JACKSON STREET	ESB VAILS ADDITION	66'
JACKSON STREET	LAHURES ADDTION	66'

REVISION DATE: 10/7/2020 (NC)	DATE: 08-10-2020	SCALE, FEET 0 50 100	HWY: VARIOUS INTERSECTIONS	STATE R/W PROJECT NUMBER: 1641-03-25	PLAT SHEET: 4.06
	GRID FACTOR: N/A		COUNTY: LACROSSE	CONSTRUCTION PROJECT NUMBER: 5120-02-70	PS&E SHEET: E

FILE NAME:S/5168021/DWG/52200404/PLAT/SPP title.DWG

NOTES:

POSITIONS SHOWN ON THIS PLAT ARE WISCONSIN COORDINATE REFERENCE SYSTEM COORDINATES (WISCRS), LACROSSE COUNTY, NAD83 (2011) IN US SURVEY FEET. VALUES SHOWN ARE GRID COORDINATES, GRID BEARINGS, AND GRID DISTANCES. GRID DISTANCES MAY BE USED AS GROUND DISTANCES.

ALL NEW RIGHT-OF-WAY MONUMENTS WILL BE TYPE 2 (TYPICALLY 1" X 24" IRON PIPES), UNLESS OTHERWISE NOTED, AND WILL BE PLACED PRIOR TO THE COMPLETION OF THE PROJECT.

FOR THE LATEST ACCESS/DRIVEWAY INFORMATION CONTACT THE PLANNING DEPARTMENT OF THE CITY OF LACROSSE.

HWY	BASIS OF EXISTING R/W	R/W WIDTH
WEST AVENUE	METZGERS & FUNKS ADDITION	VARIES
WEST AVENUE	BURNS DURAND SMITH & RUBLEES ADD.	VARIES
WEST AVENUE	DC EVANS ADDITION	VARIES
LACROSSE STREET	BURNS DURAND SMITH & RUBLEES ADD.	VARIES
LACROSSE STREET	DC EVANS ADDITION	VARIES

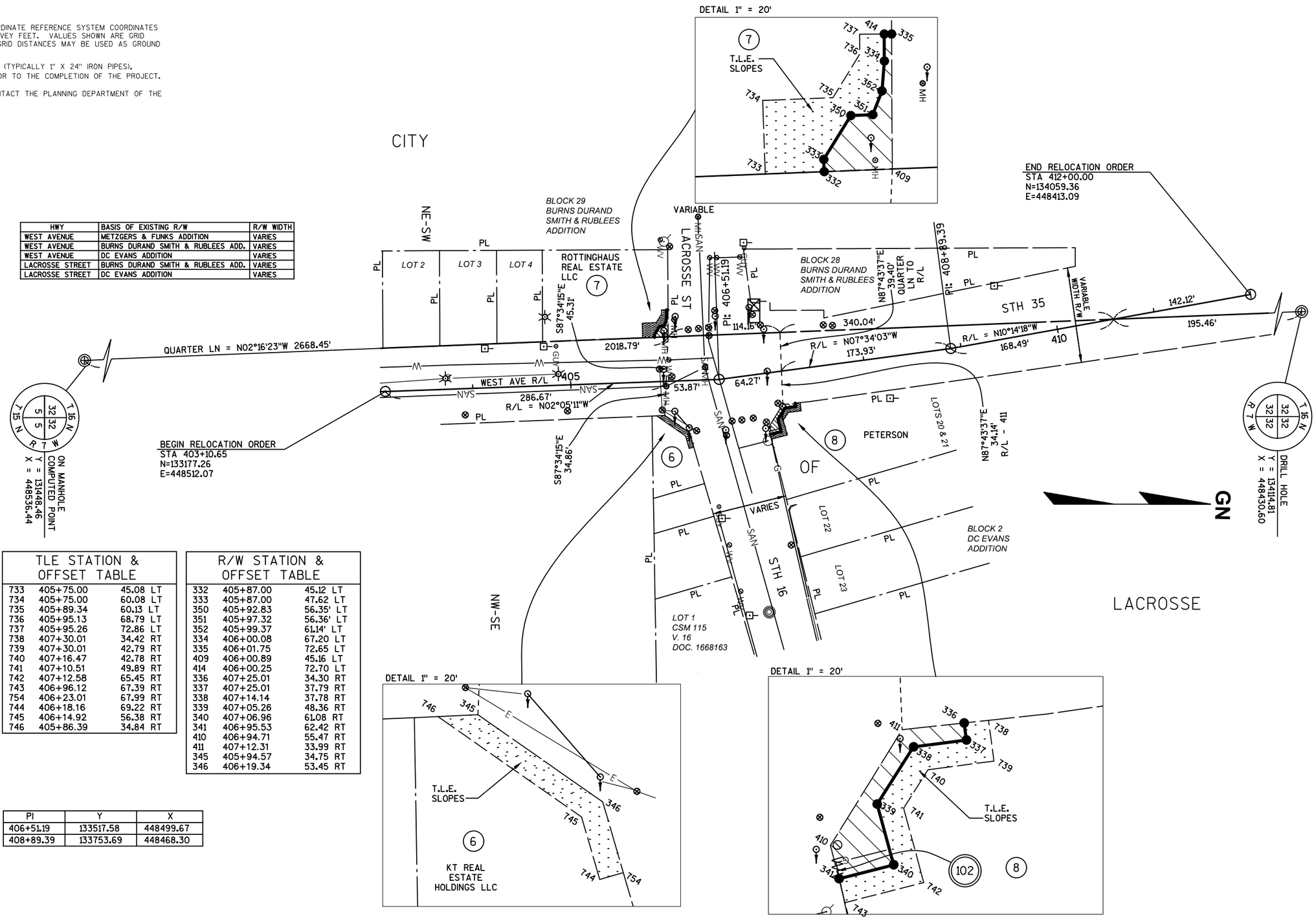

COURSE TABLE		
LINE	BEARING	DISTANCE
409-332	S02°16'23"E	13.89
332-333	S87°54'49"W	2.50
333-350	N58°20'31"W	10.50
350-351	N02°16'23"W	4.49
351-352	N68°50'41"W	5.19
352-334	N85°24'33"W	6.11
334-414	S89°43'23"W	5.50
414-335	N00°16'37"W	1.50
335-409	N89°43'23"E	27.50
332-733	S02°16'23"E	12.00
733-734	S87°54'49"W	15.00
734-735	N02°16'23"W	14.34
735-736	N58°20'31"W	10.42
736-737	S89°43'23"W	4.07
737-414	N00°16'37"W	5.00
411-336	N06°10'29"W	12.70
336-337	N82°25'57"E	3.49
337-338	S07°30'34"E	10.87
338-339	S57°33'44"E	13.82
339-340	N74°49'43"E	12.83
340-341	S14°17'29"E	11.50
341-410	S75°42'31"W	7.00
410-411	N58°14'09"W	27.77
336-738	N06°10'29"W	5.00
738-739	N82°25'57"E	8.37
739-740	S07°30'34"E	13.54
740-741	S57°33'44"E	9.28
741-742	N74°49'43"E	15.70
742-743	S14°17'29"E	16.58
743-341	S75°42'31"W	5.00
345-346	N34°57'38"E	31.03
346-754	N73°45'19"E	15.00
754-744	S16°14'41"E	5.00
744-745	S73°45'19"W	13.24
745-746	S34°57'38"W	35.75
746-345	N02°41'11"W	8.19

TLE STATION & OFFSET TABLE		
733	405+75.00	45.08 LT
734	405+75.00	60.08 LT
735	405+89.34	60.13 LT
736	405+95.13	68.79 LT
737	405+95.26	72.86 LT
738	407+30.01	34.42 RT
739	407+30.01	42.79 RT
740	407+16.47	42.78 RT
741	407+10.51	49.89 RT
742	407+12.58	65.45 RT
743	406+96.12	67.39 RT
754	406+23.01	67.99 RT
744	406+18.16	69.22 RT
745	406+14.92	56.38 RT
746	405+86.39	34.84 RT

R/W STATION & OFFSET TABLE		
332	405+87.00	45.12 LT
333	405+87.00	47.62 LT
350	405+92.83	56.35' LT
351	405+97.32	56.36' LT
352	405+99.37	61.14' LT
334	406+00.08	67.20 LT
335	406+01.75	72.65 LT
409	406+00.89	45.16 LT
414	406+00.25	72.70 LT
336	407+25.01	34.30 RT
337	407+25.01	37.79 RT
338	407+14.14	37.78 RT
339	407+05.26	48.36 RT
340	407+06.96	61.08 RT
341	406+95.53	62.42 RT
410	406+94.71	55.47 RT
411	407+12.31	33.99 RT
345	405+94.57	34.75 RT
346	406+19.34	53.45 RT

PI	Y	X
406+51.19	133517.58	448499.67
408+89.39	133753.69	448468.30

REVISION DATE: 10/7/2020 (2)	DATE: 08-10-2020	SCALE, FEET 0 50 100	HWY: VARIOUS INTERSECTIONS	STATE R/W PROJECT NUMBER: 1641-03-25	PLAT SHEET: 4.07
	GRID FACTOR: N/A		COUNTY: LACROSSE	CONSTRUCTION PROJECT NUMBER: 7575-07-70	PS&E SHEET: E

FILE NAME:S/5168021/DWG/52200404/PLAT/SPP title.DWG

1641-03-25 - 4.07

Standard Detail Drawing List

08D01-22A	CONCRETE CURB & GUTTER
08D01-22B	CONCRETE CURB, TIES AND CURB AND GUTTER APPLICATIONS
08D05-20A	CURB RAMPS TYPES 1 AND 1-A
08D05-20B	CURB RAMPS TYPES 2 AND 3
08D05-20C	CURB RAMPS TYPES 4A AND 4A1
08D05-20D	CURB RAMPS TYPE 4B AND 4B1
08D05-20E	CURB RAMPS TYPES 5, 6, 7A, 7B & 8
08D05-20F	CURB RAMPS RADIAL DETECTABLE WARNING FIELD APPLICATIONS
08D05-20G	CURB RAMPS RECTANGULAR AND RADIAL DETECTABLE WARNING PLATES
08E10-02	INLET PROTECTION TYPE A, B, C AND D
09B02-10	CONDUIT
09C02-09	CONCRETE BASES, TYPES 1, 2, 5, & 6
09C03-04	TRANSFORMER/PEDESTAL BASES
09C11-10	CONCRETE BASE TYPE 10
09C15-01	CONCRETE BASE TYPE 10 SPECIAL
09D02-03	SIGNAL CONTROL CABINET
09E01-15G	HARDWARE DETAILS FOR POLE MOUNTINGS
09E03-06	NON-FREEWAY LIGHTING UNIT POLE WIRING
09E06-05	TRAFFIC SIGNAL STANDARD POLY BRACKET MOUNTINGS (TYPICAL) 13 FT. OR 15 FT.
09E07-06	TRAFFIC SIGNAL STANDARD PEDESTRIAN AND FLASHER TYPICAL MOUNTING DETAILS
09E08-09E	TYPE 10 POLE 15'-30' MONOTUBE ARM
09E08-09F	TYPE 10 SPECIAL POLE 35' MONOTUBE ARM
09E08-09G	TYPE 10 SPECIAL POLE 40' MONOTUBE ARM
09E08-09K	GENERAL NOTES,HARDWARE DETAILS FOR TYPE 9/10,9/10 SPECIAL,12 & 13 POLES W/MONOTUBE ARMS
09F15-04A	LOOP DETECTOR INSTALLED IN BASE COURSE WITH PULL (SPLICE) BOX OFF ROADWAY (OPTION 1)
09G01-04B	SPAN WIRE TEMPORARY TRAFFIC SIGNAL
09G01-04D	SPAN WIRE TEMPORARY TRAFFIC SIGNAL
09G01-04E	SPAN WIRE TEMPORARY TRAFFIC SIGNAL
09G01-04F	SPAN WIRE TEMPORARY TRAFFIC SIGNAL
09G01-04G	SPAN WIRE TEMPORARY TRAFFIC SIGNAL
11B02-02	CONCRETE MEDIAN NOSE
13C01-19	CONCRETE PAVEMENT LONGITUDINAL JOINTS AND TIES
13C13-09	URBAN DOWELED CONCRETE PAVEMENT
13C18-07A	CONCRETE PAVEMENT JOINTING
13C18-07C	CONCRETE PAVEMENT JOINT TYPES
13C18-07D	CONCRETE PAVEMENT JOINT TYPES AT UTILITY FIXTURES
14B07-15A	CONCRETE BARRIER TEMPORARY PRECAST, 12'-6"
14B07-15B	CONCRETE BARRIER TEMPORARY PRECAST, 12'-6"
14B07-15C	CONCRETE BARRIER TEMPORARY PRECAST, 12'-6"
14B07-15D	CONCRETE BARRIER TEMPORARY PRECAST, 12'-6"
14B07-15E	CONCRETE BARRIER TEMPORARY PRECAST, 12'-6"
14B07-15F	CONCRETE BARRIER TEMPORARY PRECAST, 12'-6"
14B07-15G	CONCRETE BARRIER TEMPORARY PRECAST, 12'-6"
14B07-15H	CONCRETE BARRIER TEMPORARY PRECAST, 12'-6"
14B07-15I	CONCRETE BARRIER TEMPORARY PRECAST, 12'-6"
15C02-08F	ADVANCED WIDTH RESTRICTION SIGNING
15C07-15C	PAVEMENT MARKING ARROWS
15C08-20C	PAVEMENT MARKING (TURN LANES)
15C11-08B	CHANNELIZING DEVICES DRUMS, CONES, BARRICADES AND VERTICAL PANELS
15C33-04	STOP LINE AND CROSSWALK PAVEMENT MARKING
15D20-05B	TRAFFIC CONTROL, SINGLE RIGHT LANE CLOSURE, UNDIVIDED NON-FREEWAY/EXPRESSWAY
15D20-05C	TRAFFIC CONTROL, SINGLE LEFT LANE CLOSURE, UNDIVIDED NON-FREEWAY/EXPRESSWAY
15D21-07A	TRAFFIC CONTROL, INTERSECTION WITHIN SINGLE LANE CLOSURE
15D21-07B	TRAFFIC CONTROL, INTERSECTION WITHIN SINGLE LANE CLOSURE
15D30-06A	TRAFFIC CONTROL, PEDESTRIAN ACCOMMODATION
15D30-06B	TRAFFIC CONTROL, TEMPORARY ADA COMPLIANT PEDESTRIAN ACCOMMODATION
15D30-06C	TRAFFIC CONTROL, PEDESTRIAN ACCOMMODATION
15D38-02A	TEMPORARY TRAFFIC CONTROL SIGN MOUNTING
15D38-02B	ATTACHMENT OF SIGNS TO POSTS

6

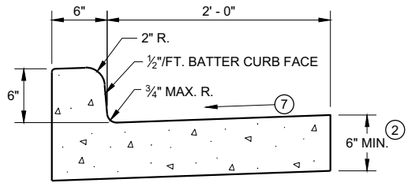

TYPES A[1] & D

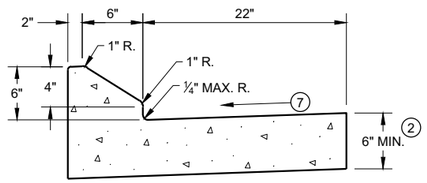

6" SLOPED CURB TYPES G[1] & J

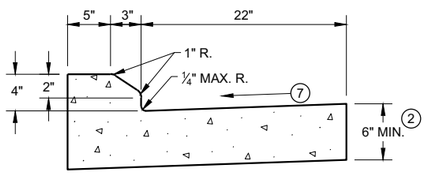

4" SLOPED CURB TYPES G[1] & J

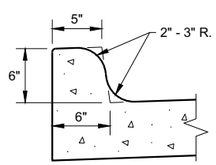

TYPES K[1] & L
(OPTIONAL CURB SHAPE)

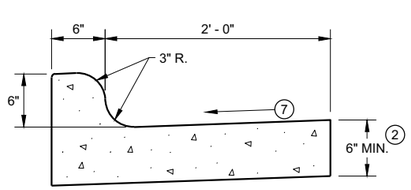

TYPES K[1] & L

CONCRETE CURB AND GUTTER 30"

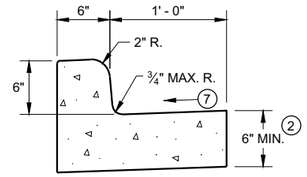

TYPES A[1] & D

CONCRETE CURB AND GUTTER 18"

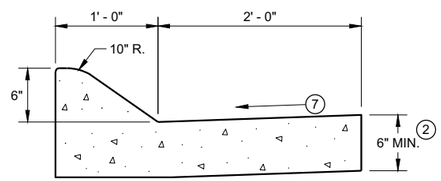

6" SLOPED CURB TYPES A[1] & D

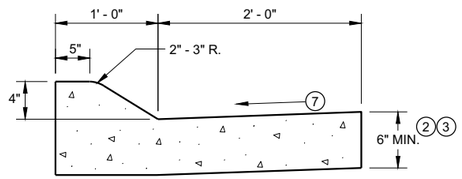

4" SLOPED CURB TYPES A[1] & D

CONCRETE CURB AND GUTTER 36"

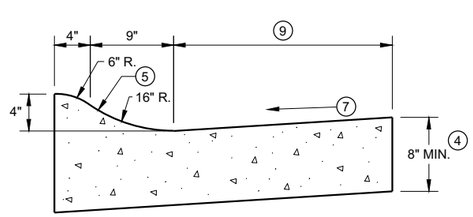

4" SLOPED CURB TYPES R[1] & T

TBT & TBTT	X
30"	22"
36"	28"

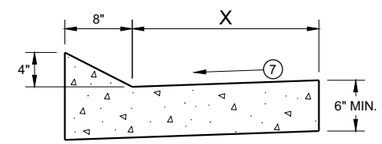

TYPES TBT & TBTT[1]

CONCRETE CURB AND GUTTER

PAVEMENT THICKNESS AND MAXIMUM CONCRETE PANEL WIDTH TABLE

PAVEMENT THICKNESS	MAXIMUM PANEL WIDTH
LESS THAN 10"	12'
10" & ABOVE	15'

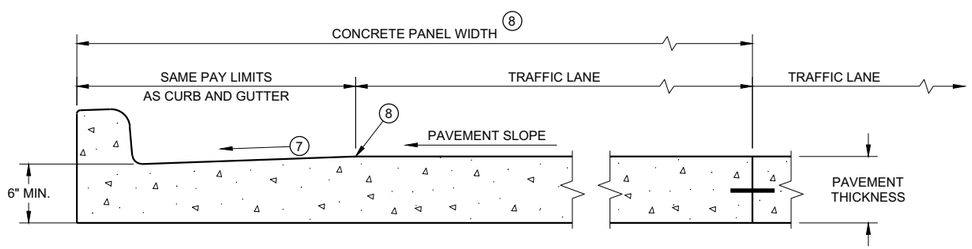

PARTIAL SECTION OF PAVEMENT *
WITH INTEGRAL CURB AND GUTTER

* BIKE LANE IS NOT SHOWN

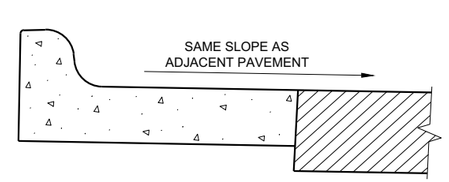

REVERSE SLOPE GUTTER[6]
(TYPICAL FOR ALL CURB & GUTTER TYPES)

GENERAL NOTES

DETAILS OF CONSTRUCTION AND WORKMANSHIP NOT SHOWN ON THIS DRAWING SHALL CONFORM TO THE PERTINENT REQUIREMENTS OF THE CONTRACT.

PAVEMENT TIES AND TIE BARS SHALL BE EPOXY COATED IN CONFORMANCE WITH SUBSECTION 505.2.6.2 OF THE STANDARD SPECIFICATIONS.

INTEGRAL CURB AND GUTTER SHALL CONFORM TO THE DETAILS SHOWN FOR CONCRETE CURB AND GUTTER INCLUDING THE TRANSVERSE GUTTER SLOPE.

UNLESS OTHERWISE SHOWN ON THE TYPICAL CROSS SECTIONS, THE BASE AGGREGATE AND COMMON EXCAVATION LIMITS ARE 2' - 0" BEHIND THE BACK OF CURBS.

1. TIE BARS ARE REQUIRED FOR CURB AND GUTTERS TYPES A, G, K, R, AND TBTT.
2. THE BOTTOM OF CURB AND GUTTER MAY BE CONSTRUCTED EITHER LEVEL OR PARALLEL TO THE SLOPE OF THE SUBGRADE OR BASE AGGREGATE PROVIDED A 6" MINIMUM GUTTER THICKNESS IS MAINTAINED.
3. USE 8" MINIMUM GUTTER THICKNESS WHEN USED WITH AN ADJACENT CONCRETE TRUCK APRON PLACED BEHIND BACK OF CURB.
4. THE BOTTOM OF CURB AND GUTTER MAY BE CONSTRUCTED EITHER LEVEL OR PARALLEL TO THE SLOPE OF THE SUBGRADE OR BASE AGGREGATE PROVIDED A 8" MINIMUM GUTTER THICKNESS IS MAINTAINED.
5. UNLESS OTHERWISE NOTED, FOR STAKING PURPOSES THE FACE OF CURB IS 6" FROM THE BACK OF CURB.
6. WHEN REVERSE SLOPE GUTTER IS REQUIRED, THE LOCATION(S) WILL BE SHOWN ELSEWHERE IN THE PLAN.
7. USE 4% GUTTER CROSS SLOPE UNLESS OTHERWISE NOTED IN THE PLANS.
8. INCLUDE LONGITUDINAL JOINT AND TIE BARS ALONG LANE EDGE WHEN CONCRETE PANEL WIDTH EXCEEDS THE MAXIMUM WIDTH PER TABLE BELOW. LONGITUDINAL JOINT(S) ARE NOT ALLOWED WITHIN TRAFFIC LANES AND BIKE LANES. LONGITUDINAL JOINT MAY BE SAWED.
9. CONCRETE CURB AND GUTTER 4-INCH SLOPED 30-INCH TYPE "R" AND "T" = 17 INCHES
   CONCRETE CURB AND GUTTER 4-INCH SLOPED 36-INCH TYPE "R" AND "T" = 23 INCHES

CONCRETE CURB AND GUTTER

STATE OF WISCONSIN
DEPARTMENT OF TRANSPORTATION

6

SDD 08D01 - 22a

GENERAL NOTES

DETAILS OF CONSTRUCTION AND WORKMANSHIP NOT SHOWN ON THIS DRAWING SHALL CONFORM TO THE PERTINENT REQUIREMENTS OF THE CONTRACT.

PAVEMENT TIES AND TIE BARS SHALL BE EPOXY COATED IN CONFORMANCE WITH SUBSECTION 505.2.6.2 OF THE STANDARD SPECIFICATIONS.

UNLESS OTHERWISE SHOWN ON THE TYPICAL CROSS SECTIONS, THE BASE AGGREGATE AND COMMON EXCAVATION LIMITS ARE 2' - 0" BEHIND THE BACK OF CURBS.

(1) TIE BARS ARE REQUIRED FOR CURB AND GUTTERS TYPES A, G, K, R, AND TBTT.

(2) THE BOTTOM OF CURB AND GUTTER MAY BE CONSTRUCTED EITHER LEVEL OR PARALLEL TO THE SLOPE OF THE SUBGRADE OR BASE AGGREGATE PROVIDED A 6" MINIMUM GUTTER THICKNESS IS MAINTAINED.

(9) REFER TO SDD 08D18 AND 08D19 FOR ADDITIONAL DRIVEWAY ENTRANCE CURB DETAILS.

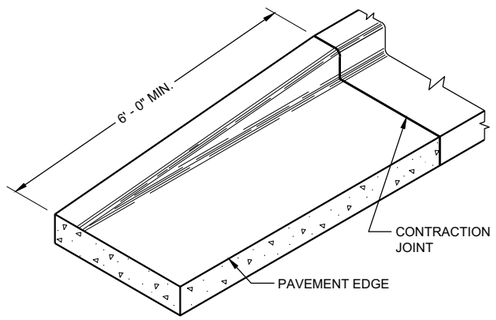

END SECTIONCURB AND GUTTER

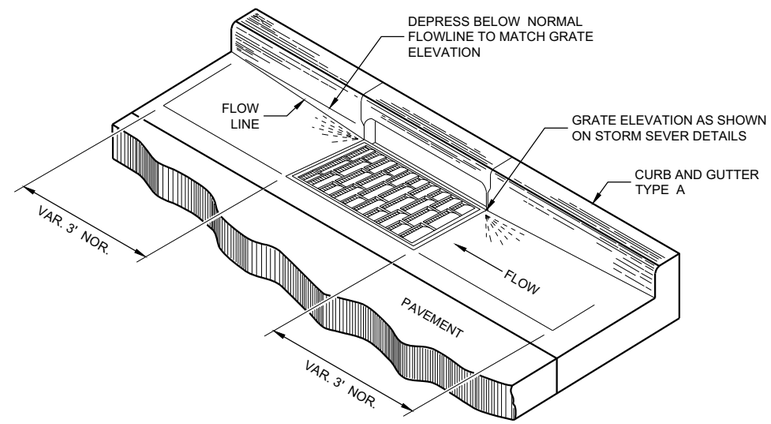

DETAIL OF CURB AND GUTTER AT INLETS
(TYPICAL H INLET COVER SHOWN)

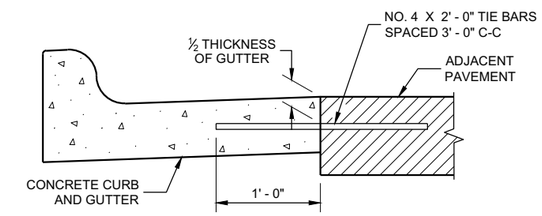

TYPICAL TIE BAR LOCATION (1)

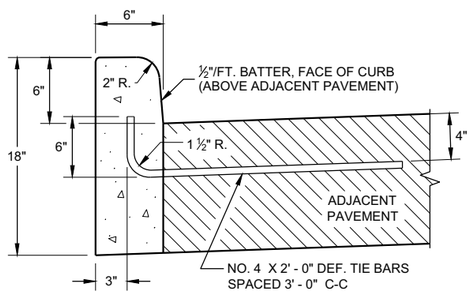

TYPES A (1) & D

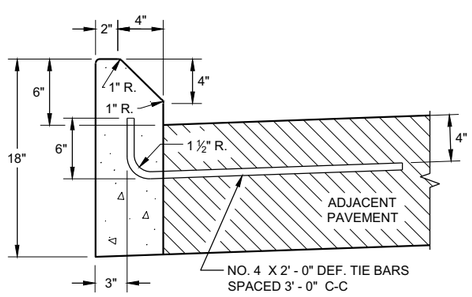

TYPES G (1) & J

CONCRETE CURB

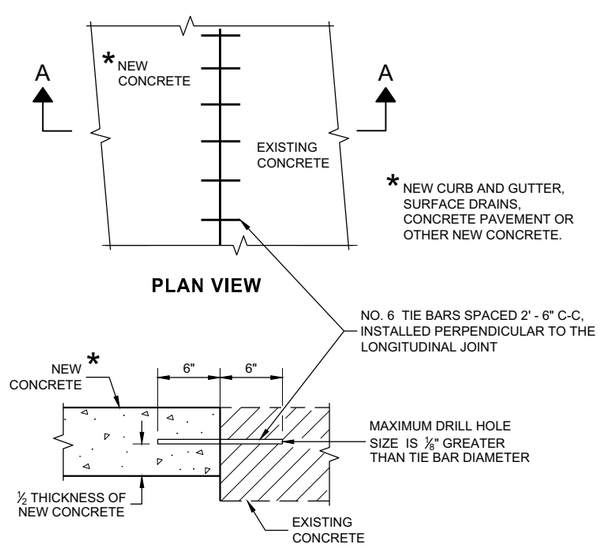

PLAN VIEW

SECTION A - A

TIE BARS DRILLED INTO EXISTING PAVEMENT

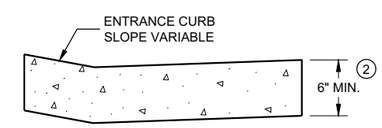

DRIVEWAY ENTRANCE CURB (9)
(WHEN DIRECTED BY THE ENGINEER)

CONCRETE CURB, TIES AND CURB AND GUTTER APPLICATIONS

STATE OF WISCONSIN
DEPARTMENT OF TRANSPORTATION

APPROVED
February 2021 — DATE
/S/ Rodnery Taylor — ROADWAY STANDARDS DEVE ENGINEER
FHWA

6
SDD 08D01 - 22b

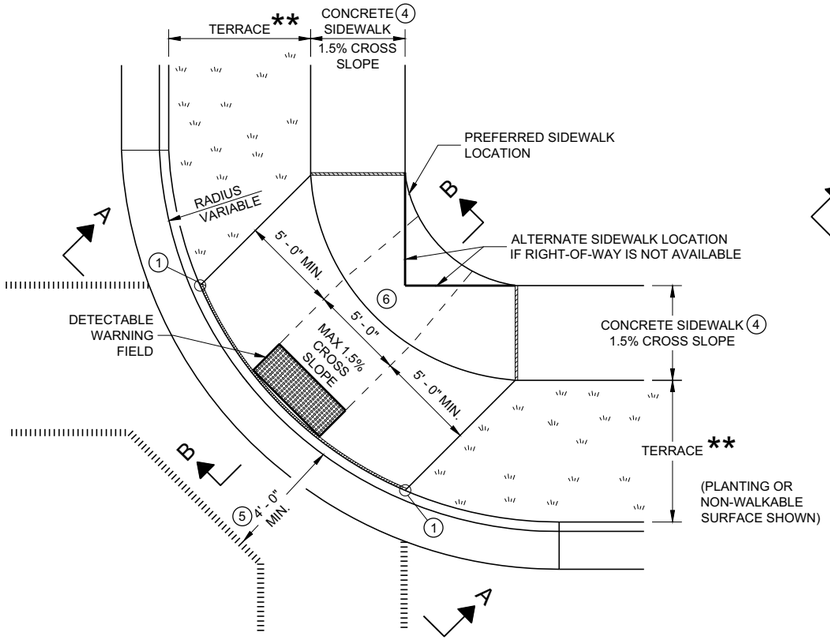

PLAN VIEW

CURB RAMP TYPE 1

(CENTER OF CORNER RADIUS)

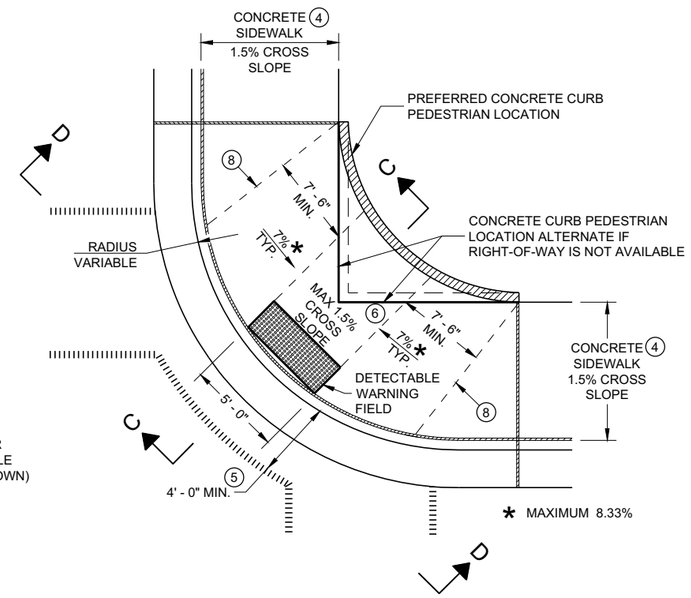

PLAN VIEW

CURB RAMP TYPE 1 - A

(NO TERRACE)

GENERAL NOTES

AVOID PLACING DRAINAGE STRUCTURES, JUNCTION BOXES OR OTHER OBSTRUCTIONS IN FRONT OF RAMP ACCESS AREAS.

DETAILS OF CONSTRUCTION, MATERIALS AND WORKMANSHIP NOT SHOWN ON THIS DRAWING SHALL CONFORM TO THE PERTINENT REQUIREMENTS OF THE STANDARD SPECIFICATIONS AND THE APPLICABLE SPECIAL PROVISIONS.

WHEN NECESSARY, THE SIDEWALK ELEVATION MAY BE LOWERED TO MEET THE HIGH POINT ON THE RAMP.

TYPE 1 CURB RAMPS SHALL HAVE A NORMAL SIDEWALK APRON AND CURB ON BOTH SIDES OF RAMP.

DETECTABLE WARNING FILED SHALL BE MEASURED AND PAID BY THE SQUARE FOOT AS "CURB RAMP DETECTABLE WARNING FIELD". THE CONCRETE PEDESTRIAN CURB, IF NEEDED, SHALL BE MEASURED AND PAID BY THE LINEAR FOOT AS "CONCRETE CURB PEDESTRIAN". CONCRETE SIDEWALK IN THE CURB RAMP AREA SHALL BE MEASURED AND PAID BY THE SQUARE FOOT AS CONCRETE SIDEWALK, INCLUDING THE AREA UNDER THE DETECTABLE WARNING FIELD.

SELECT CURB RAMP DETECTABLE WARNING FIELD MATERIALS AND DEVICES FROM THE DEPARTMENT'S APPROVED MATERIALS LIST. THE COLOR OF THE DETECTABLE WARNING FIELD IS SPECIFIED ELSEWHERE AND IS INCIDENTAL TO THE BID ITEM OF "CURB RAMP DETECTABLE WARNING FIELD"

DETECTABLE WARNING FIELDS THAT ARE INSTALLED AS A GROUP OR SIDE BY SIDE, SHALL BE FROM THE SAME MANUFACTURER.

SURFACE TEXTURE OF THE RAMP SHALL BE OBTAINED BY COARSE BROOMING TRANSVERSE TO THE SLOPE OF THE RAMP.

1. THIS POINT IS AN EXTENSION OF OUTSIDE EDGE OF APPROACHING SIDEWALK WHERE IT MEETS THE BACK OF CONCRETE CURB. POINT LOCATION MAY BE ADJUSTED TO ALIGN WITH BEGINNING OF FULL-HEIGHT CURB IF THIS DISTANCE IS SHORT.
2. GRADE CHANGE BETWEEN GUTTER FLAG SLOPE AND THE CURB RAMP SLOPE SHALL NOT EXCEED 11%. MAXIMUM GUTTER FLAG SLOPE IS 4%. PROVIDE LONGITUDINAL DRAINAGE AROUND CURB AND AWAY FROM CURB RAMP. NO VERTICAL LIPS OR DISCONTINUITIES GREATER THAN ¼ - INCH ARE ALLOWED. SLOPE OF CURB HEAD OPENING SHALL MATCH THE RAMP SLOPE, MINIMALLY 1.5% AND NOT TO EXCEED 7%. WHEN ADJACENT TO 1.5% LANDING, CONSTRUCT CURB HEAD OPENING AT 1.5% IN THE DIRECTION OF PEDESTRIAN TRAVEL.
3. MAXIMUM 8.33% CURB RAMP SLOPE IS ALLOWABLE WITH FLATTENED GUTTER FLAG SLOPE AND NOT TO EXCEED 11% GRADE CHANGE.
4. ±0.5% CONSTRUCTION TOLERANCE IN SIDEWALK CROSS SLOPE. THE SIDEWALK CROSS SLOPE SHALL NOT EXCEED 2% WITHOUT PRIOR APPROVAL FROM THE ENGINEER.
5. PROVIDE A LEVEL LANDING IN THE STREET AND GUTTER AREA (2% MAXIMUM SLOPE IN ANY DIRECTION). WHEN THE GUTTER SLOPE EXCEEDS 2%, CONSTRUCT THE LEVEL LANDING IN THE STREET AREA.
6. PROVIDE A LEVEL LANDING (MAXIMUM 2% SLOPE) IN ANY DIRECTION OF PEDESTRIAN TRAVEL. STANDARD LEVEL LANDING SIZE IS 5 FEET BY 5 FEET.
8. PROVIDE GRADE BREAK PERPENDICULAR TO DIRECTION OF WHEELCHAIR TRAVEL.

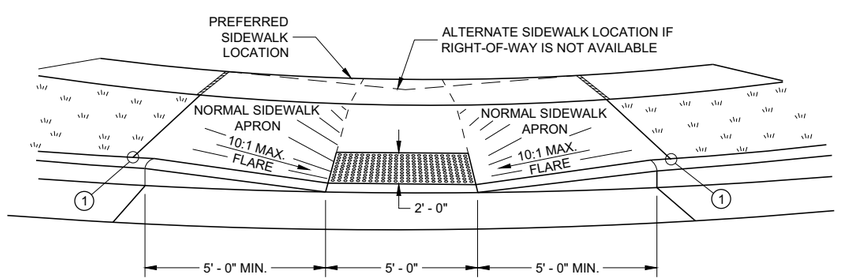

VIEW A - A FOR TYPE 1

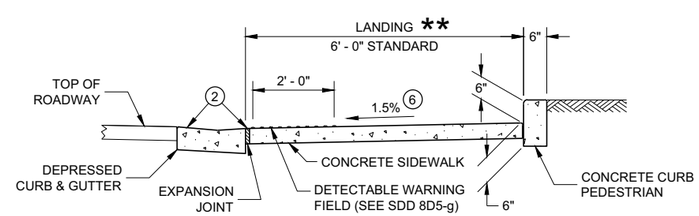

SECTION C - C FOR TYPE 1 - A

LEGEND

- ½" EXPANSION JOINT SIDEWALK
- CONTRACTION JOINT FIELD LOCATED
- PAVEMENT MARKING CROSSWALK (WHITE)

** WIDTH SHOWN ELSEWHERE IN THE PLANS

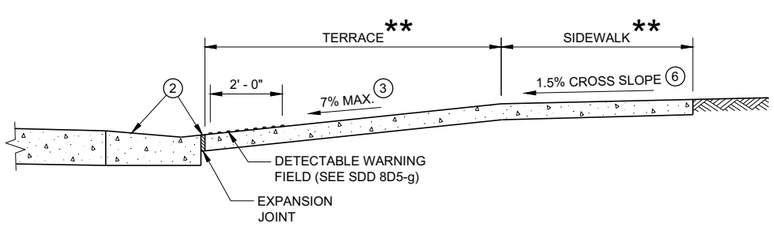

SECTION B - B FOR TYPE 1

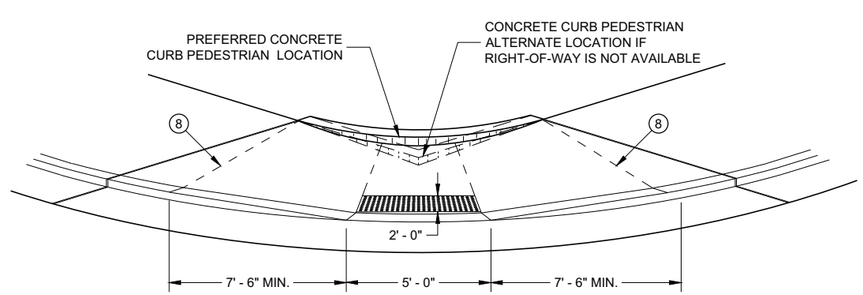

VIEW D - D FOR TYPE 1 - A

CURB RAMPS TYPE 1 AND 1-A

STATE OF WISCONSIN
DEPARTMENT OF TRANSPORTATION

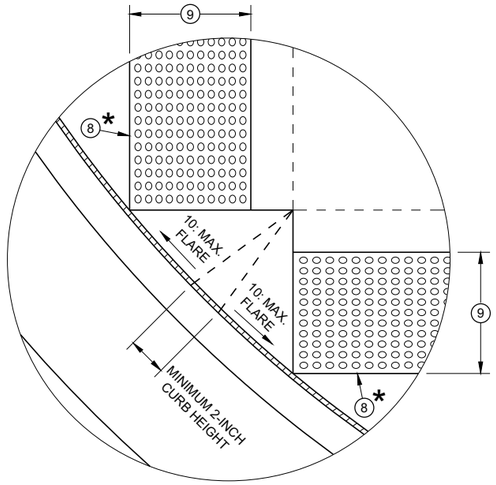

DETAIL A

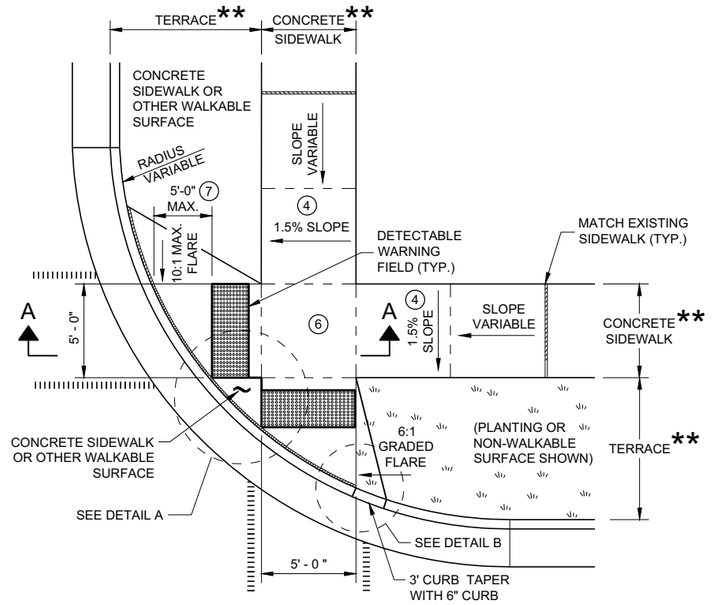

PLAN VIEW
CURB RAMP TYPE 2
(CENTER OF CORNER RADIUS)

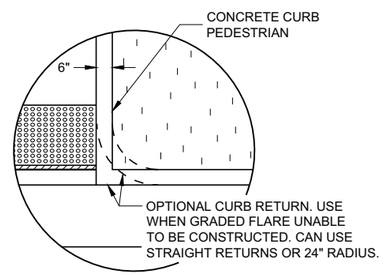

DETAIL B

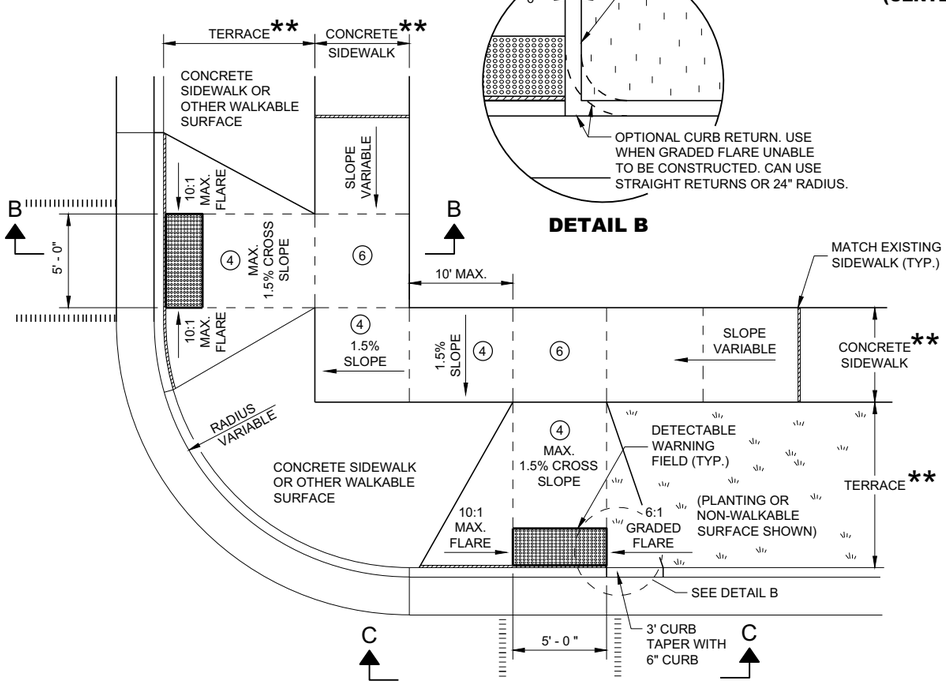

PLAN VIEW
CURB RAMP TYPE 3
(OUTSIDE OF CROSSWALK AREA)

GENERAL NOTES

AVOID PLACING DRAINAGE STRUCTURES, JUNCTION BOXES OR OTHER OBSTRUCTIONS IN FRONT OF RAMP ACCESS AREAS.

DETAILS OF CONSTRUCTION, MATERIALS AND WORKMANSHIP NOT SHOWN ON THIS DRAWING SHALL CONFORM TO THE PERTINENT REQUIREMENTS OF THE STANDARD SPECIFICATIONS AND THE APPLICABLE SPECIAL PROVISIONS.

DETECTABLE WARNING FIELDS THAT ARE INSTALLED AS A GROUP OR SIDE BY SIDE SHALL BE FROM THE SAME MANUFACTURER.

(2) GRADE CHANGE BETWEEN GUTTER FLAG SLOPE AND THE CURB RAMP SLOPE SHALL NOT EXCEED 11%. MAXIMUM GUTTER FLAG SLOPE IS 4%. PROVIDE LONGITUDINAL DRAINAGE AROUND CURB AND AWAY FROM CURB RAMP. NO VERTICAL LIPS OR DISCONTINUITIES GREATER THAN ¼ - INCH ARE ALLOWED. SLOPE OF CURB HEAD OPENING SHALL MATCH THE RAMP SLOPE, MINIMALLY 1.5% AND NOT TO EXCEED 7%. WHEN ADJACENT TO 1.5% LANDING, CONSTRUCT CURB HEAD OPENING AT 1.5% IN THE DIRECTION OF PEDESTRIAN TRAVEL.

(3) AN 8.33% CURB RAMP SLOPE IS ALLOWABLE WITH FLATTENED GUTTER FLAG SLOPE (2.67% OR LESS) AND NOT TO EXCEED 11% GRADE CHANGE.

(4) ±0.5% CONSTRUCTION TOLERANCE IN SIDEWALK CROSS SLOPE. THE SIDEWALK CROSS SLOPE SHALL NOT EXCEED 2% WITHOUT PRIOR APPROVAL FROM THE ENGINEER.

(6) PROVIDE A LEVEL LANDING (MAXIMUM 2% SLOPE) IN ANY DIRECTION OF PEDESTRIAN TRAVEL. STANDARD LEVEL LANDING SIZE IS 5 FEET X 5 FEET.

(7) WHEN GRADE BREAK DISTANCE EXCEEDS 5 FEET, USE RADIAL DETECTABLE WARNING FIELD PER SDD 8D5-f.

(8) PROVIDE GRADE BREAK PERPENDICULAR TO DIRECTION OF WHEELCHAIR TRAVEL.

(9) WHEN DISTANCE IS LESS THAN 6' - 0", IT MAY BE DIFFICULT TO ACHIEVE A 7% SLOPE OR FLATTER ALONG THE RAMP. REDUCE CURB HEIGHT IN TRIANGLE AREA TO ACHIEVE 7% SLOPE OR FLATTER ON RAMP. CONSTRUCT 2-INCH MINIMUM CURB HEIGHT BETWEEN 10:1 FLARES.

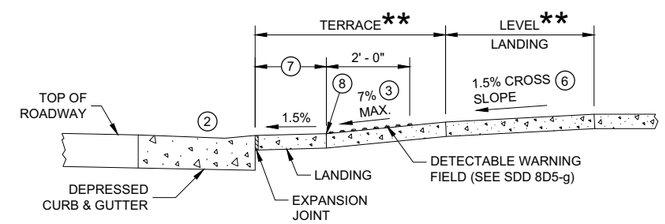

SECTION A - A FOR TYPE 2

* MAXIMUM 2.0% SLOPE IN ALL DIRECTIONS IN FRONT OF GRADE BREAK

** WIDTH SHOWN ELSEWHERE IN THE PLANS

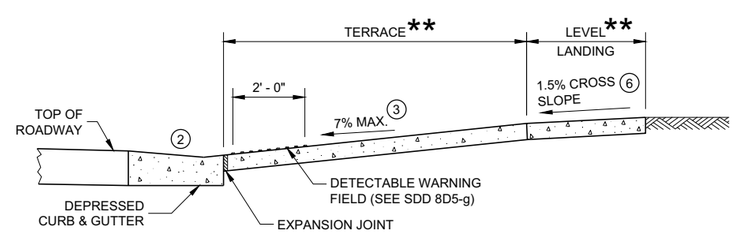

SECTION B - B FOR TYPE 3

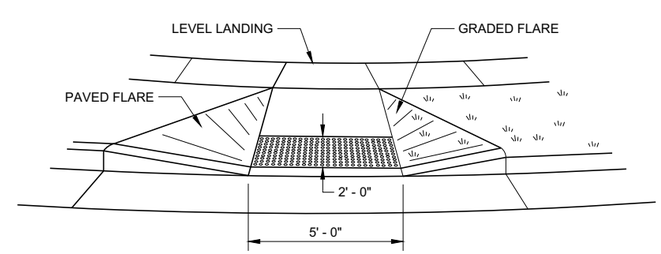

VIEW C - C FOR TYPE 3

LEGEND

- ½" EXPANSION JOINT SIDEWALK
- CONTRACTION JOINT SIDEWALK
- PAVEMENT MARKING CROSSWALK (WHITE)

CURB RAMPS TYPE 2 AND 3

STATE OF WISCONSIN
DEPARTMENT OF TRANSPORTA

6

SDD 08D05 - 20b

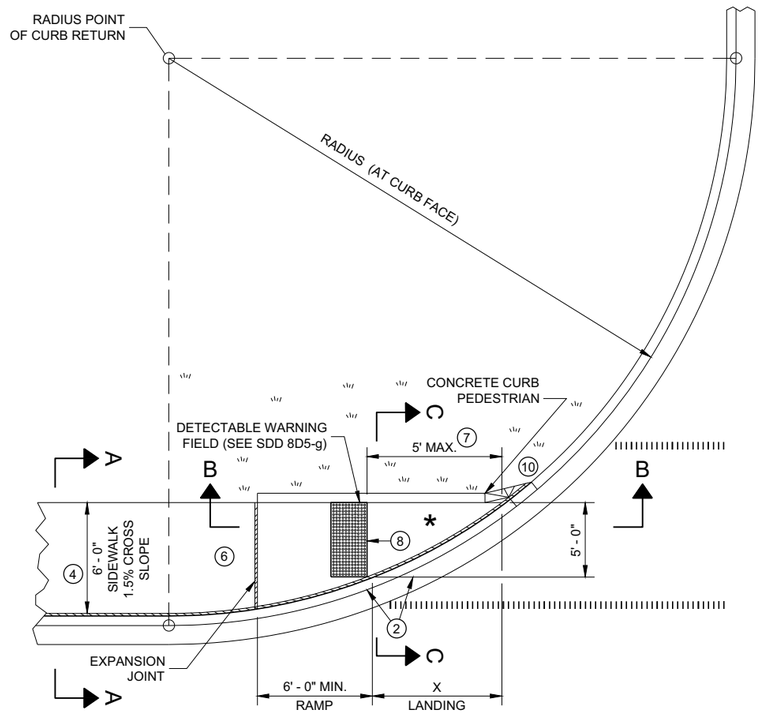

PLAN VIEW
CURB RAMP TYPE 4A

RADIUS (AT CURB FACE)	X
10 FEET	4' - 7"
15 FEET	6' - 5½"

INTERMEDIATE RADII CAN BE INTERPOLATED

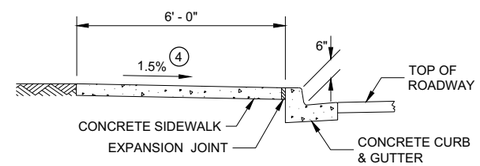

SECTION A - A FOR TYPE 4A

GENERAL NOTES

AVOID PLACING DRAINAGE STRUCTURES, JUNCTION BOXES OR OTHER OBSTRUCTIONS IN FRONT OF RAMP ACCESS AREAS.

DETAILS OF CONSTRUCTION, MATERIALS AND WORKMANSHIP NOT SHOWN ON THIS DRAWING SHALL CONFORM TO THE PERTINENT REQUIREMENTS OF THE STANDARD SPECIFICATIONS AND THE APPLICABLE SPECIAL PROVISIONS.

DETECTABLE WARNING FIELDS THAT ARE INSTALLED AS A GROUP OR SIDE BY SIDE, SHALL BE FROM THE SAME MANUFACTURER.

(2) GRADE CHANGE BETWEEN GUTTER FLAG SLOPE AND THE CURB RAMP SLOPE SHALL NOT EXCEED 11%. MAXIMUM GUTTER FLAG SLOPE IS 4%. PROVIDE LONGITUDINAL DRAINAGE AROUND CURB AND AWAY FROM CURB RAMP. NO VERTICAL LIPS OR DISCONTINUITIES GREATER THAN ¼ - INCH ARE ALLOWED. SLOPE OF CURB HEAD OPENING SHALL MATCH THE RAMP SLOPE, MINIMALLY 1.5% AND NOT TO EXCEED 7%. WHEN ADJACENT TO 1.5% LANDING, CONSTRUCT CURB HEAD OPENING AT 1.5% IN THE DIRECTION OF PEDESTRIAN TRAVEL.

(3) AN 8.33% CURB RAMP SLOPE IS ALLOWABLE WITH FLATTENED GUTTER FLAG SLOPE AND NOT TO EXCEED 11% GRADE CHANGE.

(4) ±0.5% CONSTRUCTION TOLERANCE IN SIDEWALK CROSS SLOPE. THE SIDEWALK CROSS SLOPE SHALL NOT EXCEED 2% WITHOUT PRIOR APPROVAL FROM THE ENGINEER.

(6) PROVIDE A LEVEL LANDING (MAXIMUM 2% SLOPE) IN ANY DIRECTION OF PEDESTRIAN TRAVEL. STANDARD LEVEL LANDING SIZE IS 5 FEET BY 5 FEET.

(7) WHEN THIS GRADE BREAK DISTANCE EXCEEDS 5 FEET, USE RADIAL DETECTABLE WARNING FIELD PER SDD 8D5-f.

(8) PROVIDE GRADE BREAK PERPENDICULAR TO DIRECTION OF WHEELCHAIR TRAVEL.

(10) INSTALL TRANSITION NOSE (INCIDENTAL TO OTHER PAY ITEMS). DO NOT MARK TRANSITION NOSE.

LEGEND

- ½" EXPANSION JOINT SIDEWALK
- CONTRACTION JOINT SIDEWALK
- PAVEMENT MARKING CROSSWALK (WHITE)

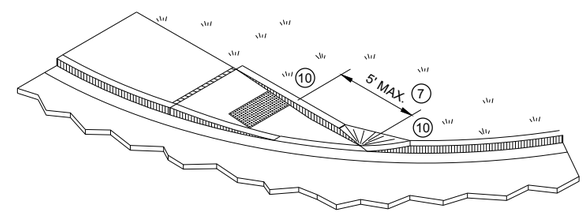

ISOMETRIC VIEW FOR TYPE 4A

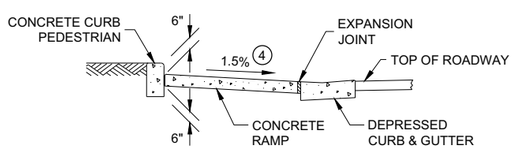

SECTION C - C FOR TYPE 4A

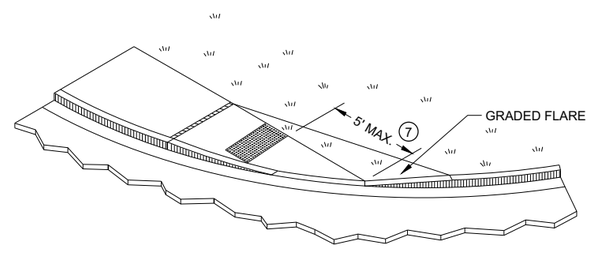

ISOMETRIC VIEW FOR TYPE 4A1

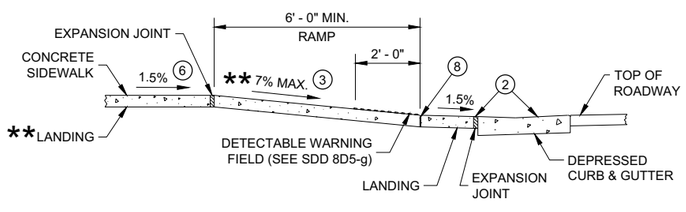

** IF RAMP SLOPE IS LESS THAN 5.0%, THEN NO ADJACENT UPHILL LANDING IS REQUIRED

SECTION B - B FOR TYPE 4A AND TYPE 4A1

* MAXIMUM 2.0% SLOPE IN ALL DIRECTIONS IF FRONT OF GRADE BREAK

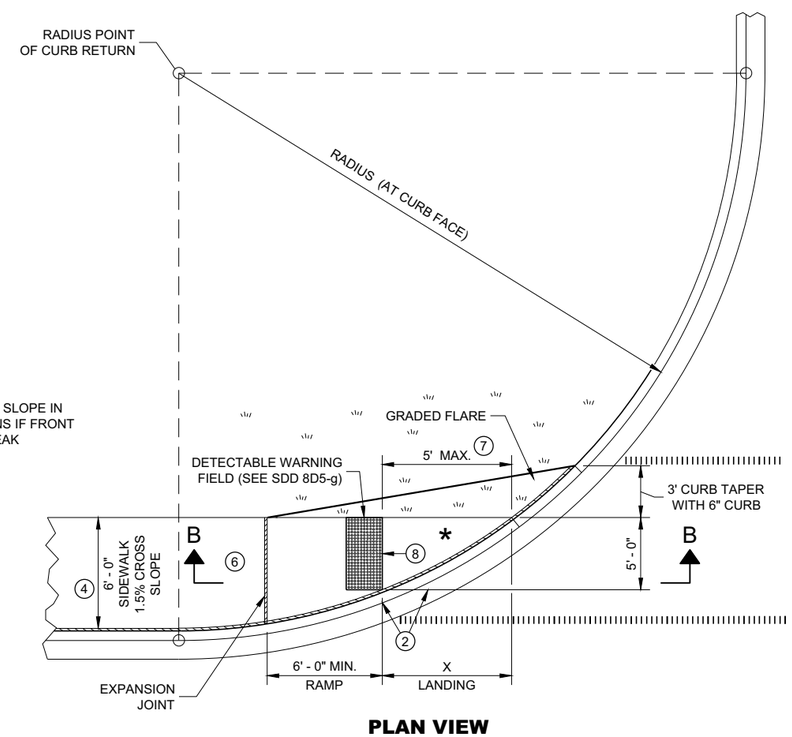

PLAN VIEW
CURB RAMP TYPE 4A1

CURB RAMPS
TYPE 4A AND 4A1

STATE OF WISCONSIN
DEPARTMENT OF TRANSPORTATION

6

SDD 08D05 - 20c

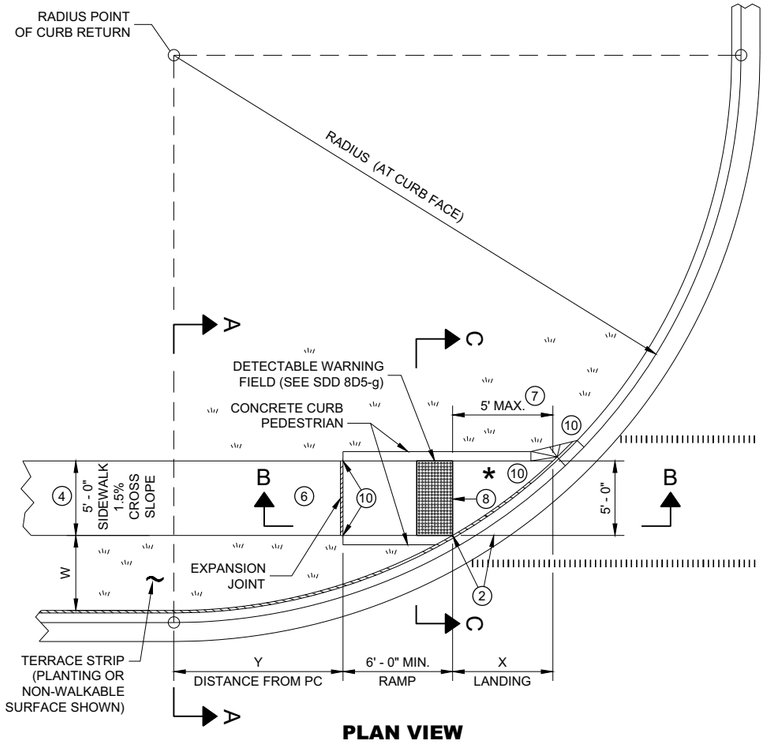

PLAN VIEW

CURB RAMP TYPE 4B

RADIUS (AT CURB FACE)	W = 3' - 0"		W = 4' - 0"		W = 5' - 0"		W = 6' - 0"		W = 7' - 0"		W = 8' - 0"		W = 9' - 0"		W = 10' - 0"	
	X	Y	X	Y	X	Y	X	Y	X	Y	X	Y	X	Y	X	Y
10 FEET	2' - 10 ¼"	0' - 5"	2' - 1"	1' - 4 ½"	1' - 5"	2' - 1"	0' - 10"	2' - 7 ½"	0' - 3 ¼"	3' - 0 ¼"						
15 FEET	4' - 6 ¾"	2' - 1 ¾"	3' - 9"	3' - 5 ¾"	3' - 1 ¼"	4' - 6"	2' - 6 ¾"	5' - 4 ½"	2' - 1"	6' - 1"	1' - 8"	6' - 8 ½"	1' - 3 ¼"	7' - 2 ½"	0' - 10 ¾"	7' - 7 ¼"
20 FEET	5' - 9 ¾"	3' - 6 ½"	4' - 11 ½"	5' - 1 ¾"	4' - 3 ¼"	6' - 5 ½"	3' - 8 ¾"	7' - 7"	3' - 3"	8' - 6 ½"	2' - 10"	9' - 4 ½"	2' - 5 ½"	10' - 1 ¼"	2' - 1 ¼"	10' - 9"
30 FEET			6' - 9 ¼"	7' - 11 ¼"	6' - 0 ¼"	9' - 8"	5' - 5"	11' - 1 ¾"	4' - 10 ¾"	12' - 5 ¾"	4' - 5 ½"	13' - 7 ¾"	4' - 0 ¾"	14' - 8 ½"	3' - 8 ½"	15' - 8 ¼"
40 FEET									6' - 1 ¾"	15' - 8 ½"	5' - 8"	17' - 2"	5' - 3"	18' - 5 ¾"	4' - 10 ¾"	19' - 8 ¼"
50 FEET															5' - 10 ¼"	23' - 2"

INTERMEDIATE RADII CAN BE INTERPOLATED
DIMENSION "Y" IS CALCULATED BASED ON 6'-0" RAMP LENGTH
DIMENSION "X" IS CALCULATED BASED ON 5'-0" SIDEWALK WIDTH

LEGEND

- ½" EXPANSION JOINT SIDEWALK
- CONTRACTION JOINT SIDEWALK
- PAVEMENT MARKING CROSSWALK (WHITE)

GENERAL NOTES

AVOID PLACING DRAINAGE STRUCTURES, JUNCTION BOXES OR OTHER OBSTRUCTIONS IN FRONT OF RAMP ACCESS AREAS.

DETAILS OF CONSTRUCTION, MATERIALS AND WORKMANSHIP NOT SHOWN ON THIS DRAWING SHALL CONFORM TO THE PERTINENT REQUIREMENTS OF THE STANDARD SPECIFICATIONS AND THE APPLICABLE SPECIAL PROVISIONS.

DETECTABLE WARNING FIELDS THAT ARE INSTALLED AS A GROUP OR SIDE BY SIDE, SHALL BE FROM THE SAME MANUFACTURER.

(2) GRADE CHANGE BETWEEN GUTTER FLAG SLOPE AND THE CURB RAMP SLOPE SHALL NOT EXCEED 11%. MAXIMUM GUTTER FLAG SLOPE IS 4%. PROVIDE LONGITUDINAL DRAINAGE AROUND CURB AND AWAY FROM CURB RAMP. NO VERTICAL LIPS OR DISCONTINUITIES GREATER THAN ¼ - INCH ARE ALLOWED. SLOPE OF CURB HEAD OPENING SHALL MATCH THE RAMP SLOPE, MINIMALLY 1.5% AND NOT TO EXCEED 7%. WHEN ADJACENT TO 1.5% LANDING, CONSTRUCT CURB HEAD OPENING AT 1.5% IN THE DIRECTION OF PEDESTRIAN TRAVEL.

(3) AN 8.33% CURB RAMP SLOPE IS ALLOWABLE WITH FLATTENED GUTTER FLAG SLOPE AND NOT TO EXCEED 11% GRADE CHANGE.

(4) ±0.5% CONSTRUCTION TOLERANCE IN SIDEWALK CROSS SLOPE. THE SIDEWALK CROSS SLOPE SHALL NOT EXCEED 2% WITHOUT PRIOR APPROVAL FROM THE ENGINEER.

(6) PROVIDE A LEVEL LANDING (MAXIMUM 2% SLOPE) IN ANY DIRECTION OF PEDESTRIAN TRAVEL. STANDARD LEVEL LANDING SIZE IS 5 FEET BY 5 FEET.

(7) WHEN THIS GRADE BREAK DISTANCE EXCEEDS 5 FEET, USE RADIAL DETECTABLE WARNING FIELD PER SDD 8D5-f.

(8) PROVIDE GRADE BREAK PERPENDICULAR TO DIRECTION OF WHEELCHAIR TRAVEL.

(10) INSTALL TRANSITION NOSE (INCIDENTAL TO OTHER PAY ITEMS). DO NOT MARK TRANSITION NOSE.

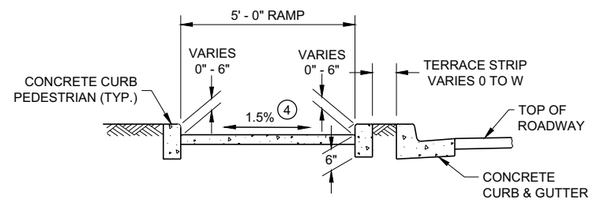

SECTION C - C FOR TYPE 4B

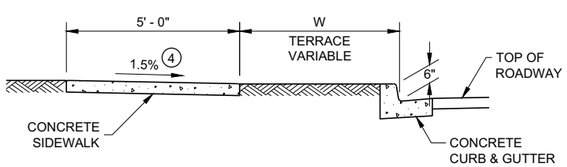

SECTION A - A FOR TYPE 4B

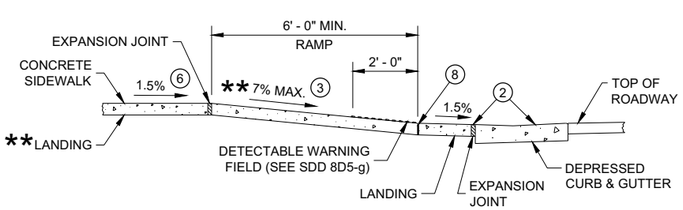

** IF RAMP SLOPE IS LESS THAN 5.0%, THEN NO ADJACENT UPHILL LANDING IS REQUIRED

SECTION B - B FOR TYPE 4B AND TYPE 4B1

* MAXIMUM 2.0% SLOPE IN ALL DIRECTIONS IF FRONT OF GRADE BREAK

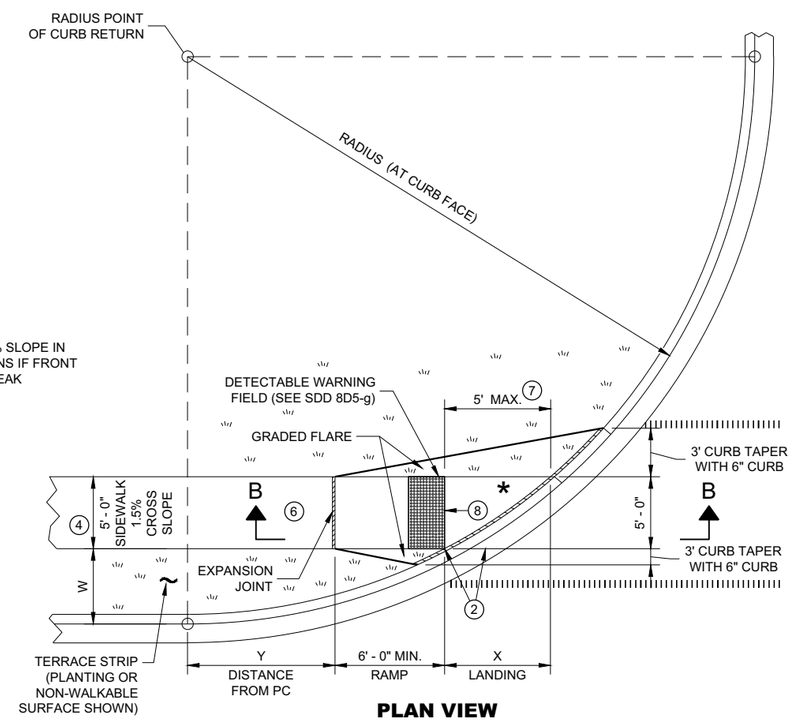

PLAN VIEW

CURB RAMP TYPE 4B1

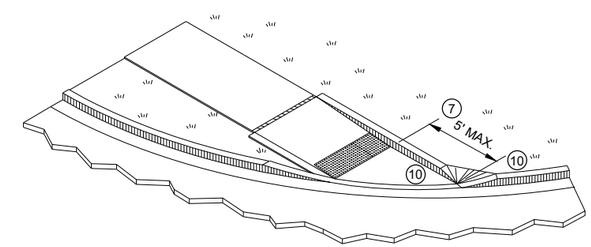

ISOMETRIC VIEW FOR TYPE 4B

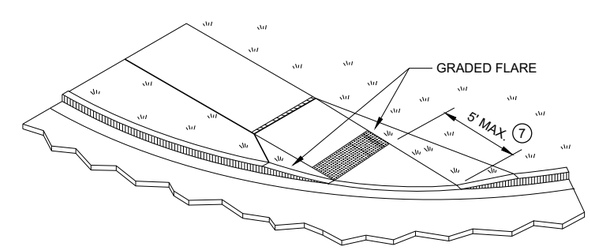

ISOMETRIC VIEW FOR TYPE 4B1

CURB RAMPS TYPE 4B AND 4B1

STATE OF WISCONSIN
DEPARTMENT OF TRANSPORTATION

6

SDD 08D05 - 20d

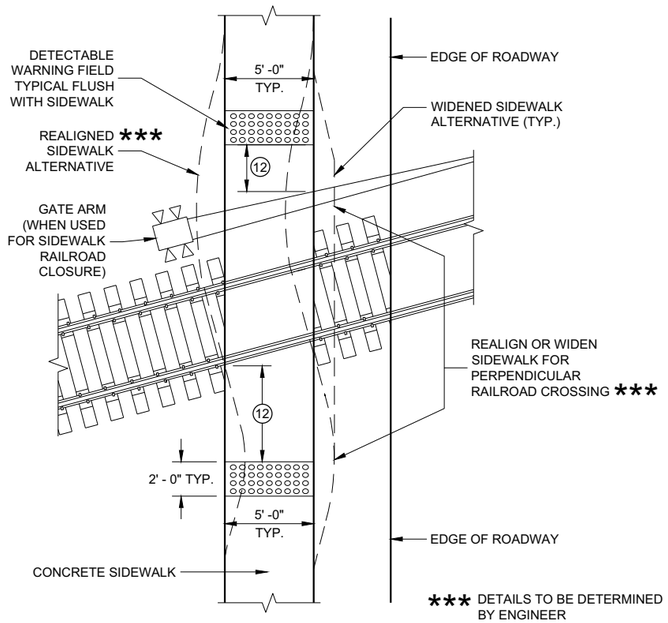

CURB RAMP TYPE 8

DETECTABLE WARNINGS AT RAILROAD CROSSING

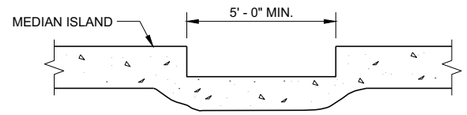

SECTION A - A FOR TYPE 5

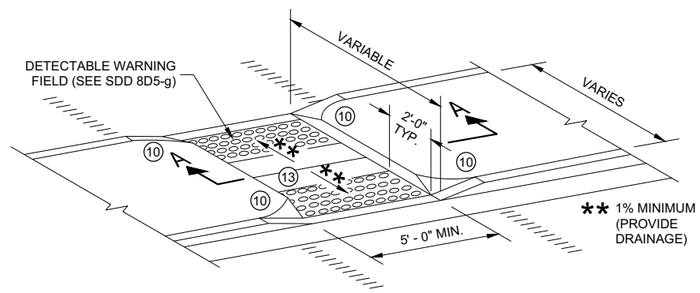

CURB RAMP TYPE 5

MEDIAN ISLAND NON-ELEVATED PEDESTRIAN CROSSING

GENERAL NOTES

AVOID PLACING DRAINAGE STRUCTURES, JUNCTION BOXES OR OTHER OBSTRUCTIONS IN FRONT OF RAMP ACCESS AREAS.

DETAILS OF CONSTRUCTION, MATERIALS AND WORKMANSHIP NOT SHOWN ON THIS DRAWING SHALL CONFORM TO THE PERTINENT REQUIREMENTS OF THE STANDARD SPECIFICATIONS AND THE APPLICABLE SPECIAL PROVISIONS.

SIDEWALK CROSS SLOPE SHALL NOT EXCEED 2%.

DETECTABLE WARNING FIELDS THAT ARE INSTALLED AS A GROUP OR SIDE BY SIDE, SHALL BE FROM THE SAME MANUFACTURER.

(2) GRADE CHANGE BETWEEN GUTTER FLAG SLOPE AND THE CURB RAMP SLOPE SHALL NOT EXCEED 11%. MAXIMUM GUTTER FLAG SLOPE IS 4%. PROVIDE LONGITUDINAL DRAINAGE AROUND CURB AND AWAY FROM CURB RAMP. NO VERTICAL LIPS OR DISCONTINUITIES GREATER THAN ¼ - INCH ARE ALLOWED. SLOPE OF CURB HEAD OPENING SHALL MATCH THE RAMP SLOPE, MINIMALLY 1.5% AND NOT TO EXCEED 7%. WHEN ADJACENT TO 1.5% LANDING, CONSTRUCT CURB HEAD OPENING AT 1.5% IN THE DIRECTION OF PEDESTRIAN TRAVEL.

(3) AN 8.33% CURB RAMP SLOPE IS ALLOWABLE WITH FLATTENED GUTTER FLAG SLOPE AND NOT TO EXCEED 11% GRADE CHANGE.

(4) ±0.5% CONSTRUCTION TOLERANCE IN SIDEWALK CROSS SLOPE. THE SIDEWALK CROSS SLOPE SHALL NOT EXCEED 2% WITHOUT PRIOR APPROVAL FROM THE ENGINEER.

(6) PROVIDE A LEVEL LANDING (MAXIMUM 2% SLOPE) IN ANY DIRECTION OF PEDESTRIAN TRAVEL. STANDARD LEVEL LANDING SIZE IS 5 FEET BY 5 FEET.

(10) INSTALL TRANSITION NOSE (INCIDENTAL TO OTHER PAY ITEMS). DO NOT MARK TRANSITION NOSE.

(11) SLOPE SIDEWALK TOWARD LANDING AS SHOWN WHERE THERE IS NO TERRACE OR WHERE THE TERRACE WIDTH IS LESS THAN 6 FEET WIDE.

(12) THE EDGE OF THE DETECTABLE WARNING FIELD NEAREST TO A RAILROAD CROSSING SHALL BE 1.5 FEET ±0.1' FROM THE FACE OF THE GATE ARM IF THE GATE ARM EXTENDS ACROSS THE SIDEWALK. WHERE THERE IS NO PEDESTRIAN GATE, THE EDGE OF THE DETECTABLE WARNING FIELD NEAREST TO THE RAILROAD CROSSING SHALL BE 15 FEET FROM THE NEAREST RAIL.

(13) DO NOT INSTALL DETECTABLE WARNING FIELDS AT THE EDGES OF STEET-LEVEL PEDESTRIAN REFUGE ISLANDS IF A MINIMUM 2 FOOT CONCRETE SURFACE WITHOUT DETECTABLE WARNINGS (MEASURED IN THE DIRECTION OF PEDESTRIAN TRAVEL) CANNOT BE ACHIEVED.

LEGEND

- ½" EXPANSION JOINT SIDEWALK
- CONTRACTION JOINT FIELD LOCATED
- PAVEMENT MARKING CROSSWALK (WHITE)

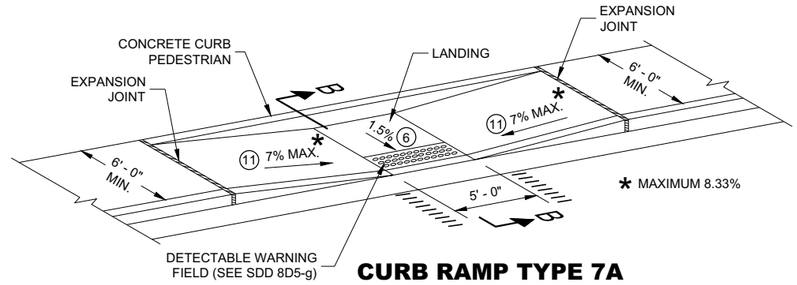

CURB RAMP TYPE 7A

MID BLOCK CROSSING

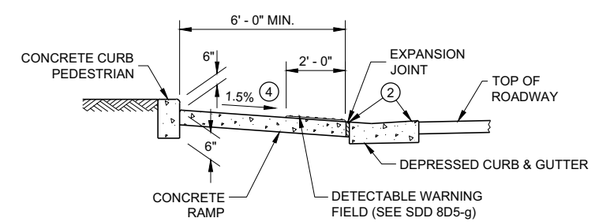

SECTION B - B FOR TYPE 7A

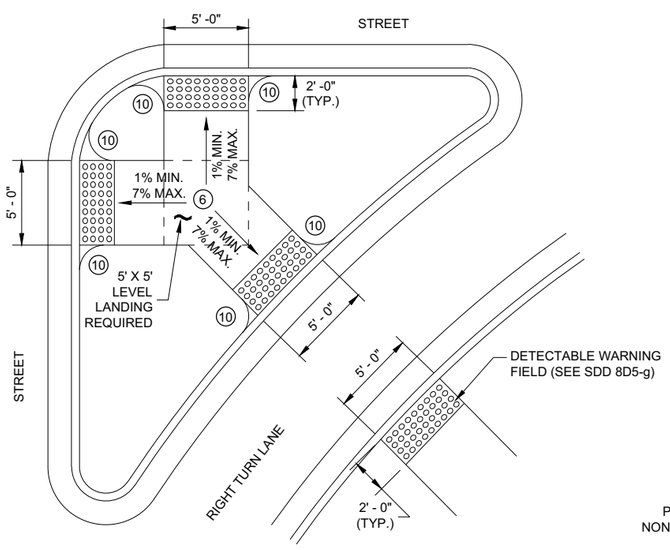

CURB RAMP TYPE 6

DETECTABLE WARNING AT ISLANDS

REFER TO GENERAL NOTES (2) AND (3) FOR ALL ISLAND CURB RAMPS

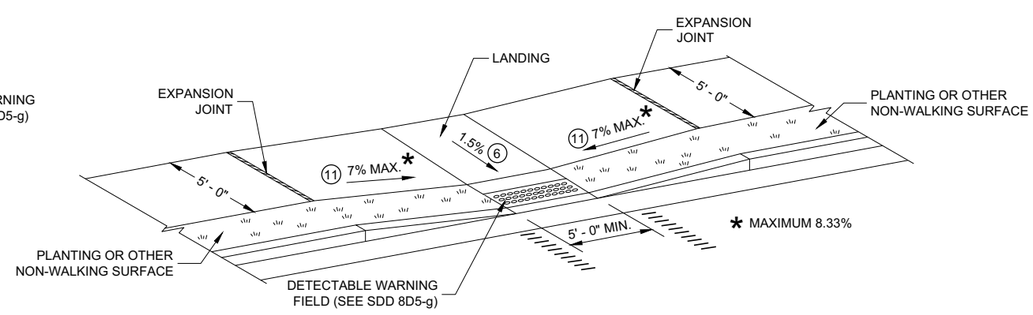

CURB RAMP TYPE 7B

MID BLOCK CROSSING

NOTE: THESE PARALLEL AND PARALLEL/PERPENDICULAR CURB RAMPS MAY BE USED AT INTERSECTIONS AND MID BLOCK LOCATIONS.

CURB RAMPS TYPE 5, 6, 7A, 7B & 8

STATE OF WISCONSIN
DEPARTMENT OF TRANSPORTATION

6

SDD 08D05 - 20e

RADIAL DETECTABLE WARNING FIELD PLACEMENT WHEN 5 FOOT GRADE BREAK DISTANCE PER SDD 8D5-c IS EXCEEDED

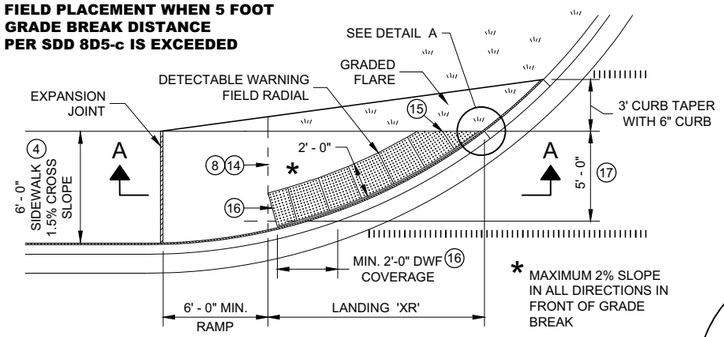

PLAN VIEW

CURB RAMP TYPE 4A1

(GRADE BREAK DISTANCE GREATER THAN 5 FEET)

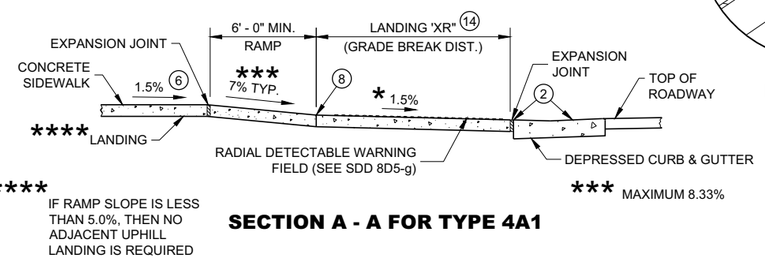

SECTION A - A FOR TYPE 4A1

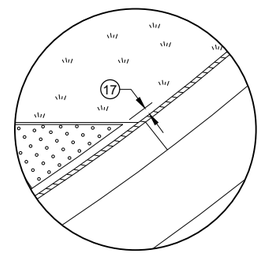

DETAIL A

LEGEND

- ½" EXPANSION JOINT SIDEWALK
- CONTRACTION JOINT SIDEWALK
- PAVEMENT MARKING CROSSWALK (WHITE)

GENERAL NOTES

AVOID PLACING DRAINAGE STRUCTURES, JUNCTION BOXES OR OTHER OBSTRUCTIONS IN FRONT OF RAMP ACCESS AREAS.

DETAILS OF CONSTRUCTION, MATERIALS AND WORKMANSHIP NOT SHOWN ON THIS DRAWING SHALL CONFORM TO THE PERTINENT REQUIREMENTS OF THE STANDARD SPECIFICATIONS AND THE APPLICABLE SPECIAL PROVISIONS.

DETECTABLE WARNING FIELDS THAT ARE INSTALLED AS A GROUP OR SIDE BY SIDE, SHALL BE FROM THE SAME MANUFACTURER.

APPLY RADIAL DETECTABLE WARNING PLACEMENT SIMILARLY FOR TYPE 4A AND 4A1 CURB RAMPS AND SIMILARLY FOR TYPE 4B AND 4B1 CURB RAMPS. TYPE 4A AND 4B CURB RAMPS ARE NOT SHOWN.

REFER TO SDD 8D5-g FOR ADDITIONAL RADIAL PLATE REQUIREMENTS.

FIELD CUTS AT INTERMEDIATE JOINTS WITHIN THE RADIAL DETECTABLE WARNING FILED ARE PROHIBITED.

DETERMINE FINAL RADIAL WARNING FIELD CONFIGURATION AD ITS INDIVIDUAL PLATE LOCATIONS. PERFORM PRE-LAYOUT PRIOR TO PLACEMENT IN PLASTIC CONCRETE. FOLLOW MANUFACTURER'S PRODUCT LIST AND INSTALLATION RECOMMENDATIONS.

(2) GRADE CHANGE BETWEEN GUTTER FLAG SLOPE AND THE CURB RAMP SLOPE SHALL NOT EXCEED 11%. MAXIMUM GUTTER FLAG SLOPE IS 4%. PROVIDE LONGITUDINAL DRAINAGE AROUND CURB AND AWAY FROM CURB RAMP. NO VERTICAL LIPS OR DISCONTINUITIES GREATER THAN ¼ - INCH ARE ALLOWED. SLOPE OF CURB HEAD OPENING SHALL MATCH THE RAMP SLOPE, MINIMALLY 1.5% AND NOT TO EXCEED 7%. WHEN ADJACENT TO 1.5% LANDING, CONSTRUCT CURB HEAD OPENING AT 1.5% IN THE DIRECTION OF PEDESTRIAN TRAVEL.

(3) AN 8.33% CURB RAMP SLOPE IS ALLOWABLE WITH FLATTENED GUTTER FLAG SLOPE AND NOT TO EXCEED 11% GRADE CHANGE.

(4) ±0.5% CONSTRUCTION TOLERANCE IN SIDEWALK CROSS SLOPE. THE SIDEWALK CROSS SLOPE SHALL NOT EXCEED 2% WITHOUT PRIOR APPROVAL FROM THE ENGINEER.

(6) PROVIDE A LEVEL LANDING (MAXIMUM 2% SLOPE) IN ANY DIRECTION OF PEDESTRIAN TRAVEL. STANDARD LANDING SIZE IS 5 FEET BY 5 FEET.

(8) PROVIDE GRADE BREAK PERPENDICULAR TO DIRECTION OF WHEELCHAIR TRAVEL.

(14) CONSULT ENGINEER IF GRADE BREAK LOCATION (END OF LANDING DIMENSION "XR") REQUIRES FIELD ADJUSTMENT WHEN ESTABLISHING FINAL RADIAL DETECTABLE WARNING FIELD LOCATION.

(15) FIELD SAW CUTS ALONG RADIAL DETECTABLE WARNING PLATES WILL BE NECESSARY TO MATCH EACH CURB RAMP EDGE. AVOID CUTTING THROUGH DOMES WHENEVER POSSIBLE. MAKE FIELD CUTS TRUE TO LINE AND WITHIN ⅛" DEVIATION. SMOOTH EDGES OF FIELD CUT PLATES.

(16) USE 1' X 2" RECTANGULAR END PLATE AT END OF TYPE 4A1 RAMP AND PROVIDE MINIMUM 2' - 0" DETECTABLE WARNING FIELD COVERAGE (IN DIRECTION OF PEDESTRIAN TRAVEL) ALONG THE ENTIRE CURB RAMP WIDTH.

(17) A MAXIMUM 3 INCH CONCRETE BORDER WITH IS ALLOWABLE IN FROM OF RADIAL DETECTABLE WARNING FIELD FOR CONSTRUCTABILITY PURPOSES. CONCRETE BORDER WIDTH MAY VARY UP TO 1 INCH.

RADIAL DETECTABLE WARNING FIELD PLACEMENT WHEN 5 FOOT GRADE BREAK DISTANCE PER SDD 8D5-d IS EXCEEDED

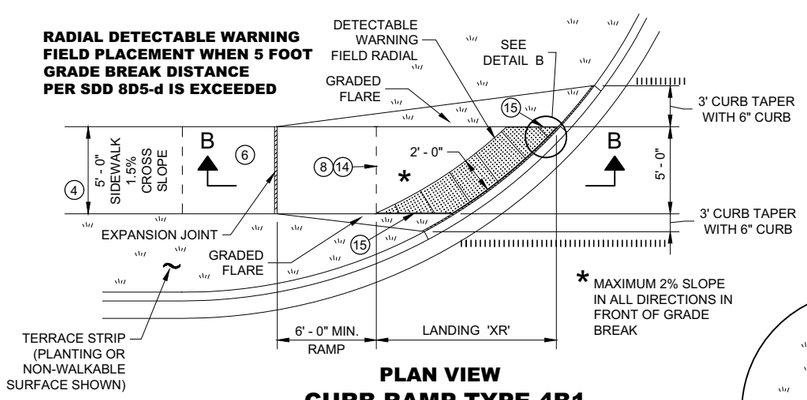

PLAN VIEW

CURB RAMP TYPE 4B1

(GRADE BREAK DISTANCE GREATER THAN 5 FEET)

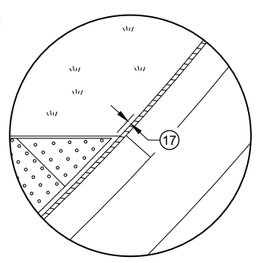

DETAIL B

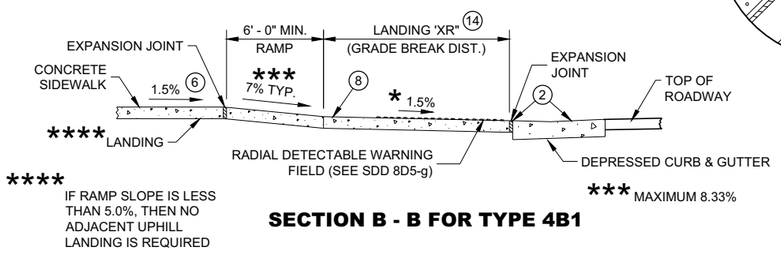

SECTION B - B FOR TYPE 4B1

RADIAL DETECTABLE WARNING FIELD PLACEMENT WHEN 5 FOOT GRADE BREAK DISTANCE PER SDD 8D5-b IS EXCEEDED

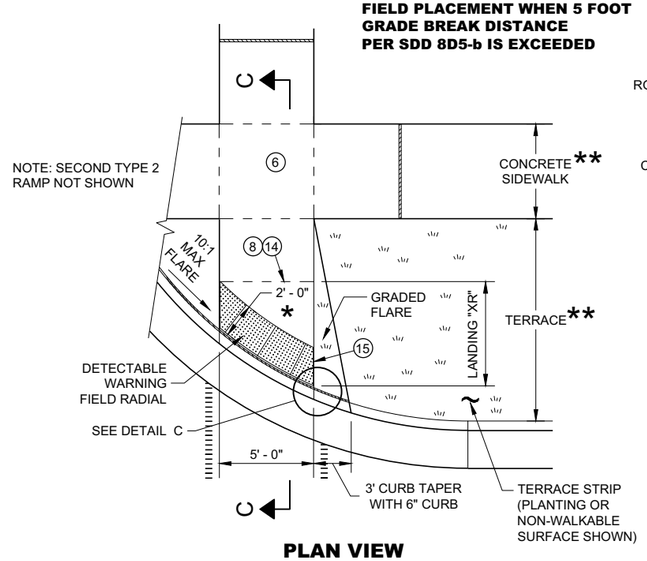

PLAN VIEW

CURB RAMP TYPE 2

(GRADE BREAK DISTANCE GREATER THAN 5 FEET)

(ON LINE WITH SIDEWALK)

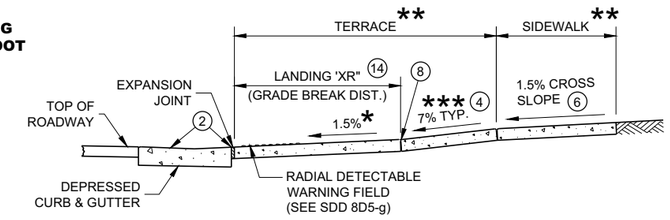

SECTION C - C FOR TYPE 2

* MAXIMUM 2% SLOPE IN ALL DIRECTIONS IN FRONT OF GRADE BREAK

** WIDTH SHOWN ELSEWHERE IN THE PLANS

*** MAXIMUM 8.33%

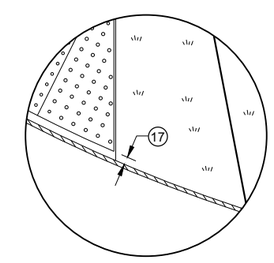

DETAIL C

CURB RAMPS
RADIAL DETECTABLE WARNING FIELD APPLICATIONS

STATE OF WISCONSIN
DEPARTMENT OF TRANSPORTATION

6

6

SDD 08D05 - 20f

SDD 08D05 - 20f

	MIN.	MAX.
A	1.6"	2.4"
B	0.65"	1.5"
C	*	*
D	0.9"	1.4"

* THE C DIMENSION IS 50% TO 65% OF THE D DIMENSION.

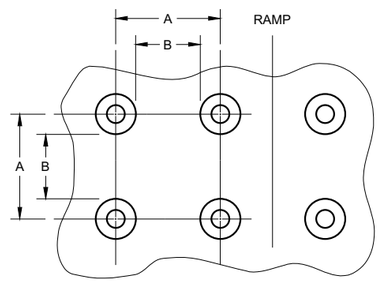

PLAN VIEW

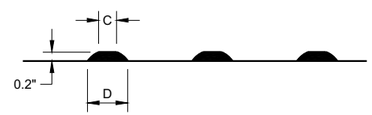

ELEVATION VIEW

TRUNCATED DOMES
DETECTABLE WARNING PATTERN DETAIL

GENERAL NOTES

DETECTABLE WARNING FIELDS THAT ARE INSTALLED AT A CURB RAMP SHALL BE FROM THE SAME MANUFACTURER.

PLACE ALL DETECTABLE WARNING FIELD SYSTEMS IN ACCORDANCE TO THE MANUFACTURER'S RECOMMENDATION.

FIELD CUTS AT INTERMEDIATE JOINTS WITHIN THE RADIAL DETECTABLE WARNING FILED ARE PROHIBITED.

DETERMINE FINAL RADIAL WARNING FIELD CONFIGURATION AND ITS INDIVIDUAL PLATE LOCATIONS. PERFORM PRE-LAYOUT PRIOR TO PLACEMENT IN PLASTIC CONCRETE. FOLLOW MANUFACTURER'S PRODUCT LIST AND INSTALLATION RECOMMENDATIONS.

FOR RADIAL DETECTABLE WARNING FIELD APPLICATIONS WHERE STANDARD RADIAL PLATES ARE NOT AVAILABLE AT AN INTERSECTION CURB RADIUS, A COMBINATION OF SQUARE OR RECTANGULAR PLATES AND RADIAL PLATES MAY BE USED TO FORM RADIAL CONFIGURATION. RADIAL WEDGE PLATES IN COMBINATION WITH SQUARE PLATES ARE ALSO ACCEPTABLE. FOLLOW MANUFACTURER'S RECOMMENDATIONS.

REFER TO CONTRACT AND STANDARD SPECIFICATIONS FOR FIELD CUTTING REQUIREMENTS.

DO NOT EMBED IN CONCRETE ANY FIELD-CUT PLATES WITH CUT EDGES SHORTER THAN 6 INCHES. CONSULT WITH MANUFACTURER FOR RE-DRILLING AND ANCHORING REQUIREMENTS OF FIELD-CUT PLATES.

(15) FIELD SAW CUTS ALONG RADIAL DETECTABLE WARNING PLATES WILL BE NECESSARY TO MATCH EACH CURB RAMP EDGE. AVOID CUTTING THROUGH DOMES WHENEVER POSSIBLE. MAKE FIELD CUTS TRUE TO LINE AND WITHIN ⅛" DEVIATION. SMOOTH EDGES OF FIELD CUT PLATES.

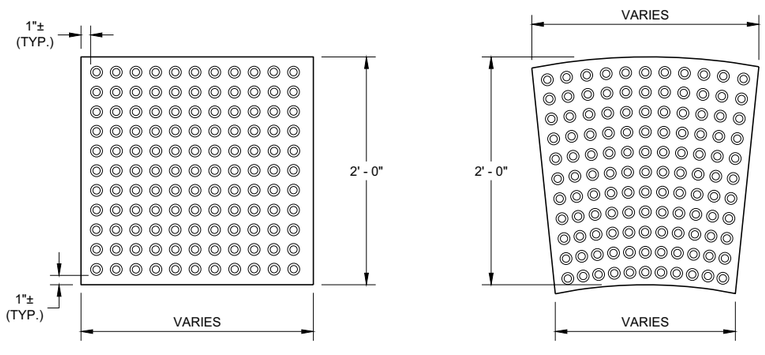

RECTANGULAR PLATES **RADIAL PLATES**

PLAN VIEW
DETECTABLE WARNING FIELDS (TYPICAL)

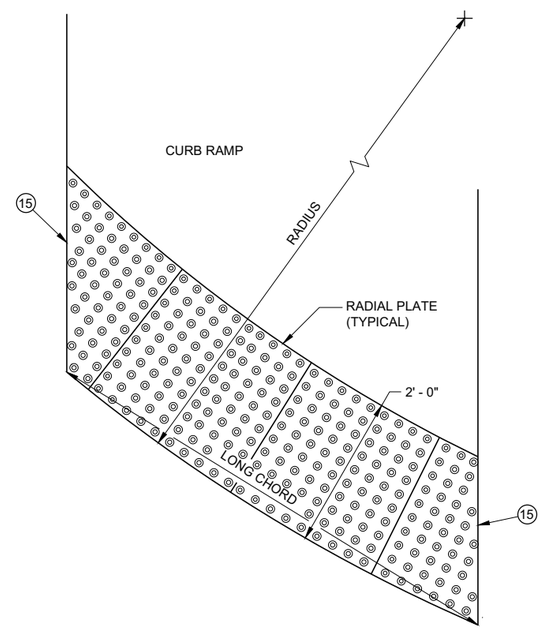

PLAN VIEW
RADIAL DETECTABLE WARNING FIELD ATTRIBUTES

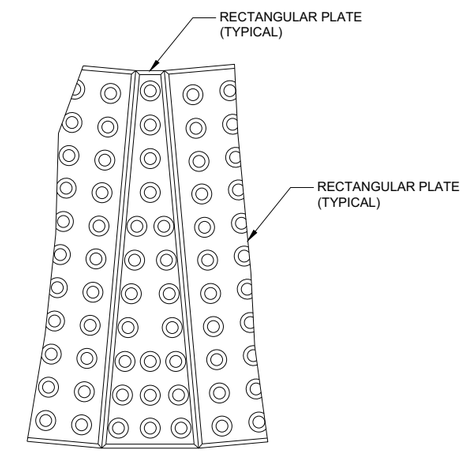

PLAN VIEW
RADIAL WEDGE PLATE CONNECTION DETAIL

6

6

SDD 08D05 - 20g

SDD 08D05 - 20g

CURB RAMPS RECTANGULAR AND RADIAL DETECTABLE WARNING PLATES

STATE OF WISCONSIN
DEPARTMENT OF TRANSPORTATION

APPROVED
May 2019 — DATE
/S/ Rodney Taylor — ROADWAY STANDARDS DEVE UNIT SUPERVISOR

FHWA

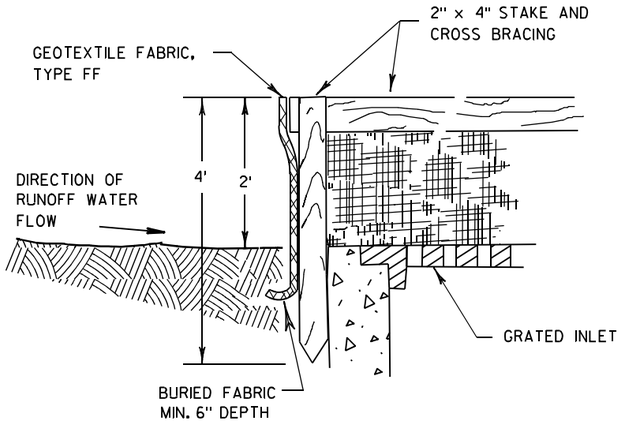

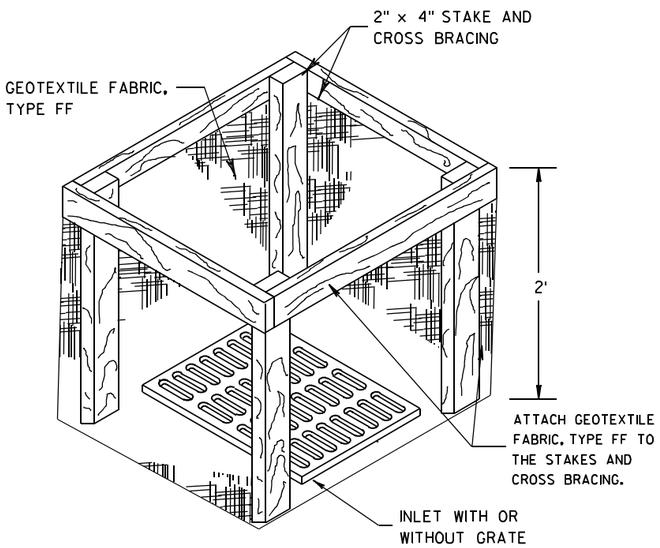

INLET PROTECTION, TYPE A

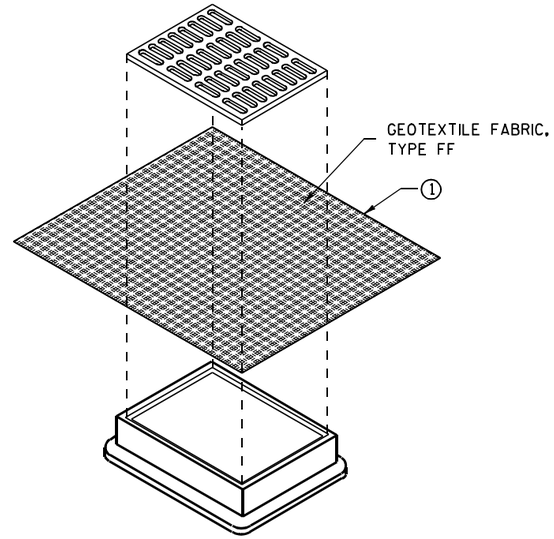

INLET PROTECTION, TYPE B
(WITHOUT CURB BOX)

(CAN BE INSTALLED IN ANY INLET WITHOUT A CURB BOX)

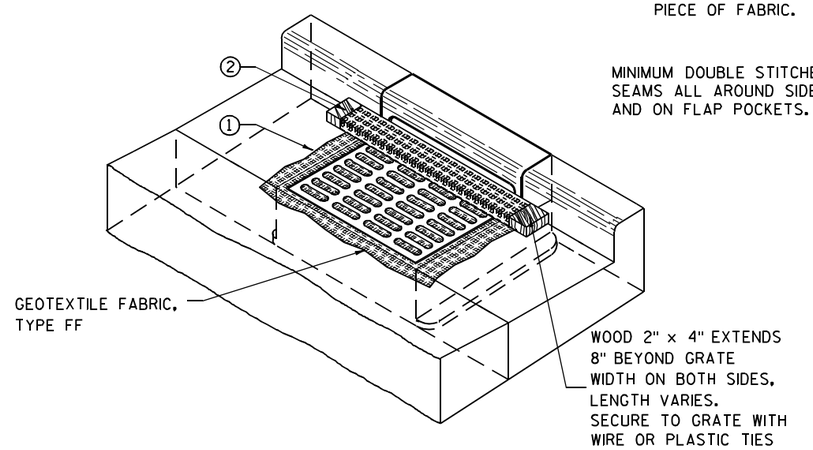

INLET PROTECTION, TYPE C (WITH CURB BOX)

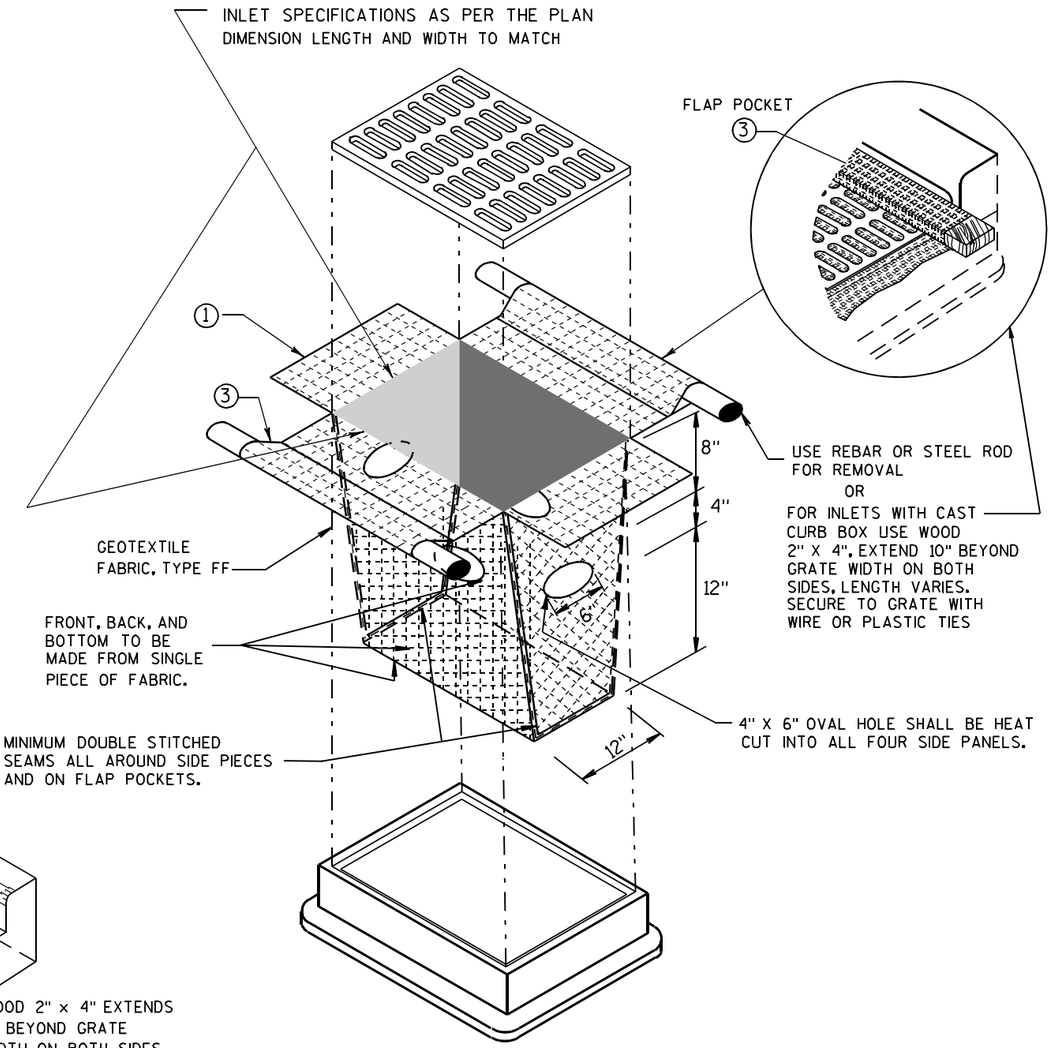

INLET PROTECTION, TYPE D

(CAN BE INSTALLED IN ANY INLET TYPE WITH
OR WITHOUT A CURB BOX AS PER NOTE ②)

GENERAL NOTES

INLET PROTECTION DEVICES SHALL BE MAINTAINED OR REPLACED AT THE DIRECTION OF THE ENGINEER.

MANUFACTURED ALTERNATIVES APPROVED AND LISTED ON THE DEPARTMENT'S EROSION CONTROL PRODUCT ACCEPTABILITY LIST MAY BE SUBSTITUTED.

WHEN REMOVING OR MAINTAINING INLET PROTECTION, CARE SHALL BE TAKEN SO THAT THE SEDIMENT TRAPPED ON THE GEOTEXTILE FABRIC DOES NOT FALL INTO THE INLET. ANY MATERIAL FALLING INTO THE INLET SHALL BE REMOVED IMMEDIATELY.

① FINISHED SIZE, INCLUDING FLAP POCKETS WHERE REQUIRED, SHALL EXTEND A MINIMUM OF 10" AROUND THE PERIMETER TO FACILITATE MAINTENANCE OR REMOVAL.

② FOR INLET PROTECTION, TYPE C (WITH CURB BOX), AN ADDITIONAL 18" OF FABRIC IS WRAPPED AROUND THE WOOD AND SECURED WITH STAPLES. THE WOOD SHALL NOT BLOCK THE ENTIRE HEIGHT OF THE CURB BOX OPENING.

③ FLAP POCKETS SHALL BE LARGE ENOUGH TO ACCEPT WOOD 2X4.

INSTALLATION NOTES

TYPE B & C

TRIM EXCESS FABRIC IN THE FLOW LINE TO WITHIN 3" OF THE GRATE.

THE CONTRACTOR SHALL DEMONSTRATE A METHOD OF MAINTENANCE, USING A SEWN FLAP, HAND HOLDS OR OTHER METHOD TO PREVENT ACCUMULATED SEDIMENT FROM ENTERING THE INLET.

TYPE D

DO NOT INSTALL INLET PROTECTION TYPE D IN INLETS SHALLOWER THAN 30", MEASURED FROM THE BOTTOM OF THE INLET TO THE TOP OF THE GRATE.

TRIM EXCESS FABRIC IN THE FLOW LINE TO WITHIN 3" OF THE GRATE.

THE INSTALLED BAG SHALL HAVE A MINIMUM SIDE CLEARANCE, BETWEEN THE INLET WALLS AND THE BAG, MEASURED AT THE BOTTOM OF THE OVERFLOW HOLES, OF 3". WHERE NECESSARY THE CONTRACTOR SHALL CINCH THE BAG, USING PLASTIC ZIP TIES, TO ACHIEVE THE 3" CLEARANCE. THE TIES SHALL BE PLACED AT A MAXIMUM OF 4" FROM THE BOTTOM OF THE BAG.

INLET PROTECTION
TYPE A, B, C, AND D

STATE OF WISCONSIN
DEPARTMENT OF TRANSPORTATION

APPROVED
10/16/02 — DATE
/S/ Beth Cannestra — CHIEF ROADWAY DEVELOPMENT ENGINEER
FHWA

6

S.D.D. 8 E 10-2

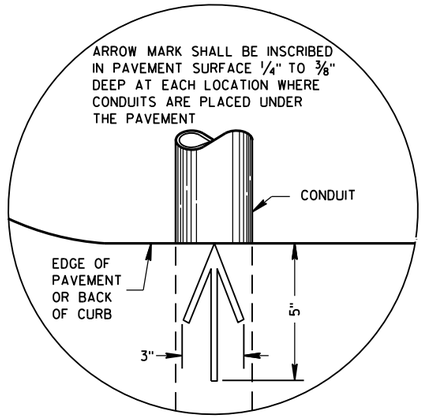

PLAN VIEW

ARROW MARK

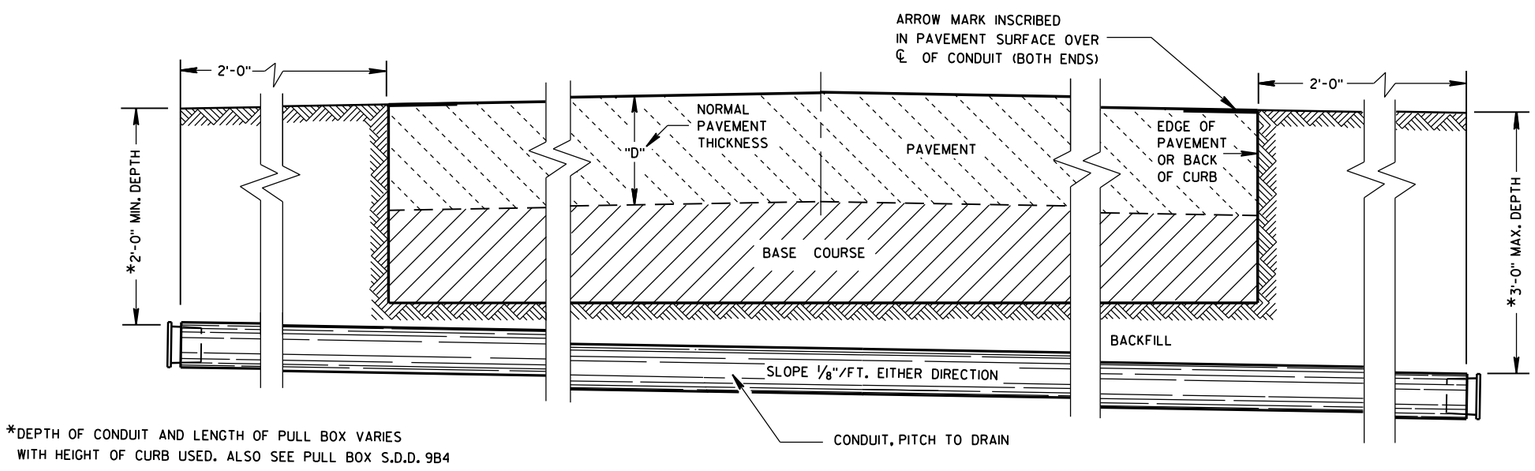

*DEPTH OF CONDUIT AND LENGTH OF PULL BOX VARIES WITH HEIGHT OF CURB USED. ALSO SEE PULL BOX S.D.D. 9B4

SIDE ELEVATION

DETAIL FOR CONDUIT UNDER PAVED HIGHWAYS

GENERAL NOTES

DETAILS OF CONSTRUCTION, MATERIALS AND WORKMANSHIP NOT SHOWN ON THIS DRAWING SHALL CONFORM TO THE PERTINENT REQUIREMENTS OF THE CONTRACT.

METALLIC (STANDARD SPECIFICATION 652.2.2) OR NONMETALLIC (STANDARD SPECIFICATION 652.2.3) CONDUIT SHALL BE FURNISHED AND PLACED AS SHOWN.

DEPTH OF CONDUIT INSTALLED BELOW THE TRAVELED WAY SHALL BE 24 INCHES MINIMUM AND 36 INCHES MAXIMUM.

DEPTH OF CONDUIT INSTALLED THAT IS NOT BELOW THE TRAVELED WAY SHALL BE 18 INCHES MINIMUM AND 36 INCHES MAXIMUM.

ANY EXCEPTION TO THE MAXIMUM DEPTH SHALL BE ONLY WITH THE WRITTEN APPROVAL OF THE ENGINEER.

THE TRENCH SHALL NOT BE BACKFILLED PRIOR TO INSPECTION OF THE CONDUIT.

ALL METALLIC CONDUIT RACEWAY ENDS SHALL BE REAMED AND THREADED.

ALL METALLIC CONDUIT IN WHICH WIRE OR CABLE IS TO BE INSTALLED SHALL BE BUSHED WITH APPROVED THREADED BUSHINGS BEFORE INSTALLATION OF THE WIRE OR CABLE.

ALL METALLIC CONDUITS IN WHICH WIRE OR CABLE IS NOT TO BE INSTALLED SHALL BE CAPPED WITH THREADED PROTECTIVE CAPS, AS APPROVED BY THE ENGINEER.

ALL NONMETALLIC CONDUIT SHALL BE CAPPED OR PLUGGED IMMEDIATELY AFTER INSTALLATION AND SHALL REMAIN CAPPED OR PLUGGED UNTIL WIRE/CABLES ARE INSTALLED.

NONMETALLIC CONDUITS IN WHICH WIRE OR CABLE IS NOT BEING INSTALLED SHALL REMAIN CAPPED OR PLUGGED.

BENDING OF PVC ELECTRICAL CONDUIT SHALL BE ACCOMPLISHED BY USING A BLANKET OR EMERSION TYPE TANK DESIGNED FOR THE PURPOSE OF BENDING PVC ELECTRICAL CONDUIT.

ALL CUT ENDS SHALL BE TRIMMED INSIDE AND OUTSIDE TO REMOVE ALL ROUGH EDGES ON NONMETALLIC CONDUIT. (SEE NEC 347.5)

WHEN REQUIRED TO CONNECT NONMETALLIC CONDUIT TO METALLIC CONDUIT, ONLY U.L. LISTED ADAPTER FITTINGS SHALL BE USED.

PRIOR TO CONDUIT ACCEPTANCE, CONDUIT CAPS OR PLUGS SHALL BE REMOVED, AND THE CAPS, PLUGS AND CONDUIT ENDS SHALL BE THOROUGHLY CLEANED AND THEN THE CAPS OR PLUGS REINSTALLED TO ENSURE THAT THE CAPS OR PLUGS CAN BE EASILY REMOVED IN THE FUTURE.

ALL CONDUIT BEING FURNISHED AND INSTALLED SHALL HAVE THE U.L. LABEL FIRMLY ATTACHED.

CONDUIT RUNS SHALL BE THE SAME SIZE OF CONDUIT FROM ONE END TO THE OTHER (FROM PULL BOX TO PULL BOX-OR-JUNCTION BOX TO JUNCTION BOX-OR-BASE TO BASE, ETC.).

TRACER WIRE SHALL BE INSTALLED AS STATED IN THE STANDARD SPECIFICATION, ITEM 652.3.1.1.

ALL CONDUIT RUNS SHALL BE STRAIGHT (WITHOUT BENDS) FROM PULL BOX TO PULL BOX, PULL BOX TO BASE AND BASE TO BASE AS SHOWN ON THE PLANS.

CONDUIT

STATE OF WISCONSIN
DEPARTMENT OF TRANSPORTATION

APPROVED
March, 2017 — /S/ Ahmet Demirbilek
DATE — STATE ELECTRICAL
FHWA

FORM DEPTH SHALL BE NO MORE THAN 6" BELOW GRADE ON THE LOWER SIDE OF BASE

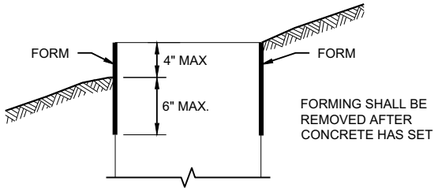

FORMING DETAIL

QUANTITY REQUIREMENTS	CONCRETE BASE TYPE		
	1	2	5 & 6
APPROX. CUBIC YARDS OF CONCRETE	0.40	0.57	0.40
LBS. OF HOOP BAR STEEL	NONE	23	16
LBS. OF VERTICAL BAR STEEL	NONE	60	18

GENERAL NOTES

DETAILS OF CONSTRUCTION, MATERIALS AND WORKMANSHIP NOT SHOWN ON THIS DRAWINGSHALL CONFORM TO THE PERTINENT REQUIREMENTS OF THE CONTRACT.

BASES SHALL BE EXCAVATED BY USE OF A CIRCULAR AUGER.

TOP SURFACES OF CONCRETE BASES SHALL BE TROWEL FINISHED SMOOTH AND LEVEL.

CONDUIT SIZES AND LOCATIONS SHALL BE SHOWN ON THE PLANS

THE FINAL OR TERMINATING CONCRETE BASE IN A CONDUIT RUN SHALL HAVE A 6" EXIT STUB INSTALLED FOR FUTURE CABLING USE. THE EXIT STUB SHALL BE SIZED AS USED THROUGHOUT THE CONDUIT RUN AS SHOWN A THE ENTRANCE OF THE BASE.

ENDS OF CONDUIT INSTALLED BELOW GRADE FRO FUTURE USE SHALL BE CAPPED IF METALLIC OR PLUGGED IF NON-METALLIC.

MINIMUM BENDING RADIUS OF CONDUIT IS EQUAL TO 6X THE DIAMETER.

CONDUIT HEIGHT ABOVE CONCRETE BASES SHALL BE 1 INCH. ALL METALLIC CONDUIT ENDS SHALL BE REAMED AND THREADED.

ALL CONDUIT ENDS AT THE TOP OF CONCRETE BASES SHALL BE CAPPED IF METALLIC OR PLUGGED IF NON-METALLIC IMMEDIATELY AFTER PLACEMENT AND BEFORE CONCRETE IS POURED. CONDUITS IN WHICH WIRE OR CABLE IS NOT INSTALLED SHALL REMAIN CAPPED OR PLUGGED.

BELL ENDS SHALL BE INSTALLED ON ALL PVC CONDUIT EXPOSED AT THE TOP OF CONCRETE BASES BEFORE INSTALLATION.

WHEN REQUIRED TO CONNECT NON-METALLIC CONDUIT TO METALLIC CONDUIT, ONLY ADAPTER FITTINGS, U.L. LISTED FOR ELECTRICAL USE, SHALL BE USED.

IF A BASE REQUIRES A DEEP FORM BECAUSE OF LOOSE DIRT OR FILL, THE FORM SHALL BE REMOVED BEFORE BACKFILLING AROUND THE BASE. BACKFILL SHALL BE TAMPED TIGHT AGAINST THE BARE CONCRETE BASE IN LAYERS OF 1 FOOT OR LESS.

A NO. 4 AWG STRANDED COPPER EQUIPMENT GROUNDING CONDUCTOR SHALL BE EXOTHERMICALLY WELDED TO THE EQUIPMENT GROUNDING ELECTRODE (GROUND ROD) FOR TYPE 2, TYPE 5 AND TYPE 6 BASES.

THE EQUIPMENT GROUNDING CONDUCTOR SHALL BE FURNISHED AND INSTALLED TO ENTER ALL BASE TYPES THROUGH A 1 INCH CONDUIT INSTALLED FOR GROUNDING PURPOSES, LEAVING A 4 FOOT COIL OF WIRE ABOVE THE CONCRETE BASE. THE EQUIPMENT GROUNDING CONDUCTOR SHALL BE NEATLY COILED AND THE COILS TIED TOGETHER.

ANCHOR RODS SHALL BE THREADED 12" IN LENGTH ON EACH END OF THE ROD. ANCHOR RODS SHALL BE MANUFACTURED IN ACCORDANCE WITH SECTION 654.2.1 OF THE STANDARD SPECIFICATIONS.

WASHERS AND LOCK WASHERS ARE REQUIRED ON ALL ANCHOR RODS.

WHEN ANCHOR RODS USING THE ALTERNATE "L" BEND ARE FURNISHED, THE 4 INCH"L" BEND SHALL BE IN ADDITION TO THE SPECIFIED ANCHOR ROD BAR LENGTH. THE "L" BEND SHALL NOT BE THREADED.

ANCHOR RODS SHALL BE INSTALLED WITH MISALIGNMENTS OF LESS THAN 1:40 FROM VERTICAL.

WELDING OF THE ANCHOR RODS TO THE CAGE IS UNACCEPTABLE. TIE WIRES SHALL BE USED.

BAR STEEL REINFORCEMENT SHALL BE COATED WITH POWDERED EPOXY RESIN IN ACCORDANCE WITH SECTION 505 OF THE STANDARD SPECIFICATIONS (LATEST EDITION).

(1) THE MINIMUM DEPTH OF CONDUIT EXITING THE CONCRETE BASE AND INSTALLED BELOW THE TRAVELED WAY SHALL BE 24 INCHES. THE MINIMUM DEPTH OF CONDUIT EXITING THE CONCRETE BASE THAT IS NOT INSTALLED BELOW THE TRAVELED WAY SHALL BE 18 INCHES. THE MAXIMUM DEPTH OF ALL CONDUIT SHALL BE 36 INCHES EXCEPT WITH WRITTEN APPROVAL OF THE ENGINEER.

(2) (4) 1" DIA. X 3' - 6" ANCHOR RODS.

(3) (4) 1" DIA. X 5' - 0" ANCHOR RODS.

(4) (6) NO. 6 X 6' - 8" BAR STEEL REINFORCEMENT.

(5) (7) NO. 4 X 5' - 1" BAR STEEL REINFORCEMENT @ 1' - 0" C - C.

(6) (4) 1" DIA. X 3' - 6" ANCHOR RODS.

(7) (6) NO. 4 X 4' - 8" BAR STEEL REINFORCEMENT.

(8) (5) NO. 4 X 5' - 1" BAR STELL REINFORCEMENT @ 1' - 0" C -C.

(9) EXOTHERMIC CONNECTION TO EUIPMENT GROUNDING CONDUCTOR

(10) ⅝" DIA. X 8' -0" COPPERCLAD EQUIPMENT GROUNDING ELECTRODE REQUIRED

(11) ANY ANCHOR ROD PROJECTION SHORTER THAN 2 ¾" OR LONGER THAN 3 ¼" SHALL REQUIRE THE BASE TO BE REMOVED AND REPLACED AT THE CONTRACTORS EXPENSE.

(12) FOR NON - BREAKAWAY INSTALLATIONS, 4 ½" ± ANCHOR ROD PROJECTION WITH THE USE OF LEVELING NUTS. RODENT SCREEN REQUIRED.

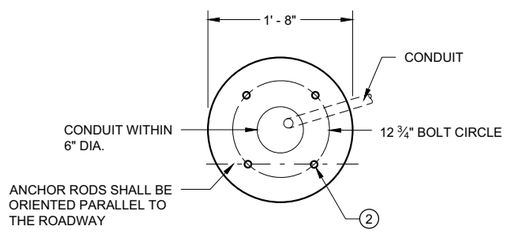

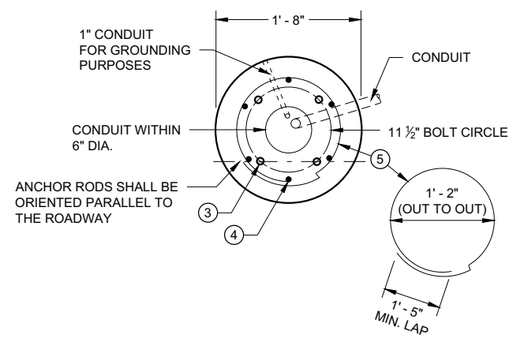

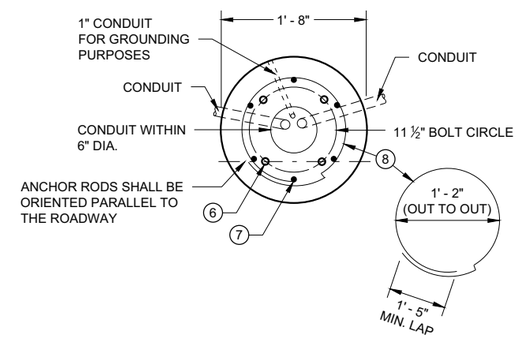

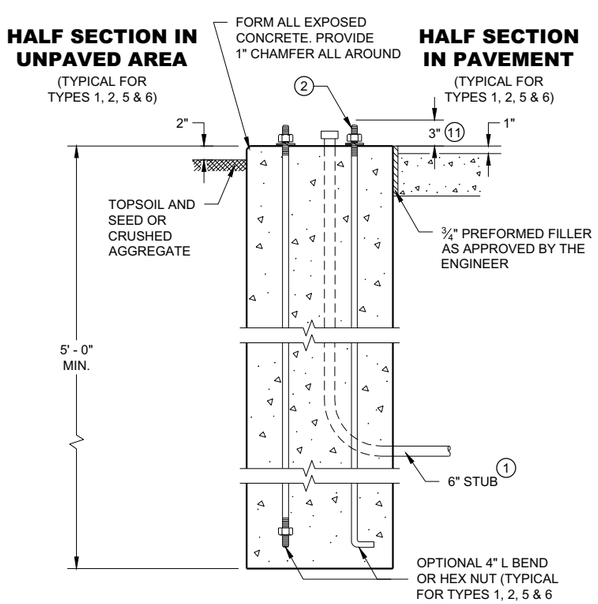

TYPE 1

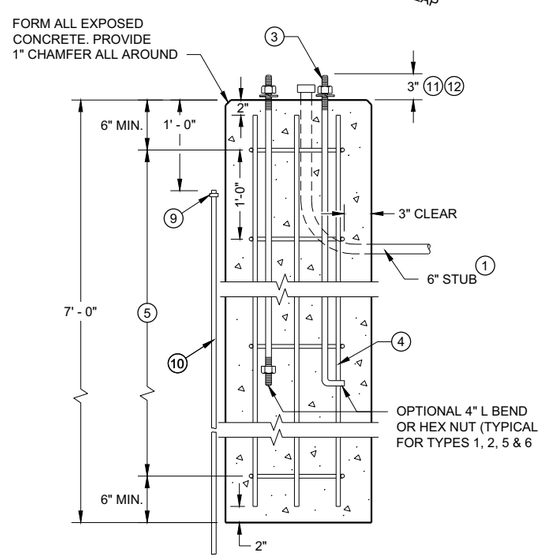

TYPE 2

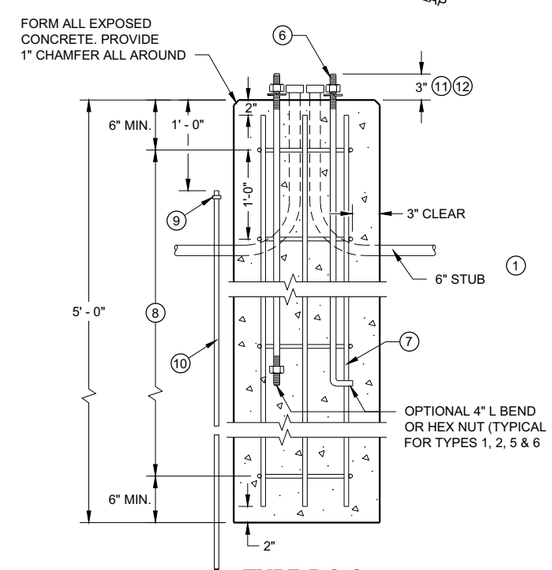

TYPE 5 & 6

CONCRETE BASES

CONCRETE BASES
TYPES 1, 2, 5, & 6

STATE OF WISCONSIN
DEPARTMENT OF TRANSPORTATION

APPROVED
May 2019 — DATE
/S/ Ahmet Demirbilek — STATE ELECTRICAL ENGI
FHWA

6

SDD 09C02 - 09

GENERAL NOTES

DETAILS OF CONSTRUCTION, MATERIALS AND WORKMANSHIP NOT SHOWN ON THIS DRAWING SHALL CONFORM TO THE PERTINENT REQUIREMENTS OF THE CONTRACT.

FOUR (4) BOLTS SHALL BE FURNISHED WITH EACH TRANSFORMER BASE. BOLTS SHALL BE 1" DIAMETER, 4" IN LENGTH, WITH WASHERS, LOCK WASHERS AND NUTS. BOLTS, NUTS AND WASHERS SHALL BE MANUFACTURED IN ACCORDANCE WITH SECTION 531.2.2 OF THE STANDARD SPECIFICATIONS.

LEVELING SHIMS, IF NEEDED, SHALL BE DESIGNED FOR THE PURPOSE AND USED UNDER CAST BASES WHEN PLUMBING POLES OR STANDARDS DURING INSTALLATION. THE USE OF WASHERS IN LIEU OF PROPER LEVELING SHIMS IS NOT ACCEPTABLE.

SHIM LENGTH SHALL BE LONG ENOUGH TO COMPLETELY COVER THE AREA UNDER THE LENGTH AND WIDTH OF THE BASE MOUNTING FLANGE.

DOUBLE NUTTING IS NOT ACCEPTABLE FOR LEVELING OR MOUNTING PURPOSES.

A NEMA APPROVED, U.L. LISTED, COPPER WITH BRASS OR STAINLESS STEEL SET SCREW, DIRECT BURY RATED, MECHANICAL CONNECTOR (LUG), SIZED TO ACCEPT AWG. #10 TO #4 COPPER STRANDED WIRE SHALL BE FURNISHED AND INSTALLED IN THE PEDESTAL AND TRANSFORMER BASES.

THE MECHANICAL CONNECTOR SHALL BE INSTALLED USING A 1/4" - 20 (TPI) STAINLESS STEEL HEX HEAD BOLT OF SUFFICIENT LENGTH TO FIRMLY ATTACH THE LUG TO THE BASE.

SHOULD THE MANNER OF ATTACHMENT OF THE LUG REQUIRE WASHERS, HEX NUTS, LOCK WASHER - THEY SHALL BE STAINLESS STEEL AS IS THE BOLT. THE MANNER OF ATTACHMENT SHALL NOT BLOCK ACCESSIBILITY TO WIRE PLACEMENT IN THE CONNECTOR.

PEDESTAL BASE COLLAR THREADING SHALL BE TAPERED AND IN ACCORDANCE WITH NATIONAL PIPE THREADING DIMENSIONS.

BASE COLLAR THREADING SHALL EXTEND INTO THE BASE COLLAR WITH SUFFICIENT DEPTH TO ACCEPT THE INSTALLATION OF TRAFFIC SIGNAL STANDARDS TO A DEPTH OF 1 1/2", THEN TIGHTENING TO A POINT OF BEING IMMOVABLE.

THE ACCESS DOOR SHALL BE OF THE SAME MATERIAL AS THE BASE.

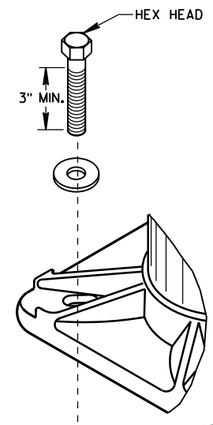

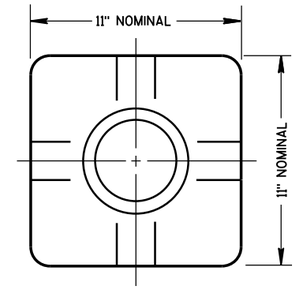

TOP VIEW
(PEDESTAL BASE)

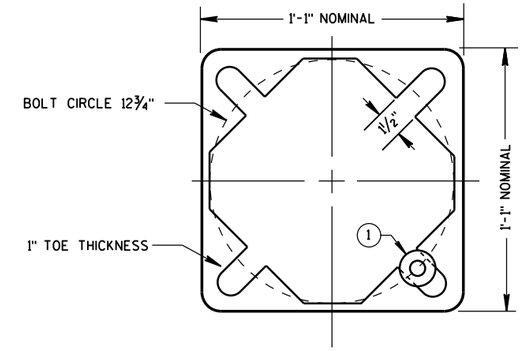

BOTTOM VIEW
(PEDESTAL BASE)

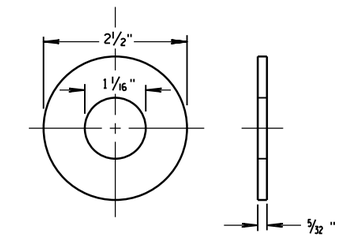

ZINC COATED STEEL WASHER
TO BE PROVIDED BY THE CONTRACTOR

PEDESTAL BASE WASHER (1)

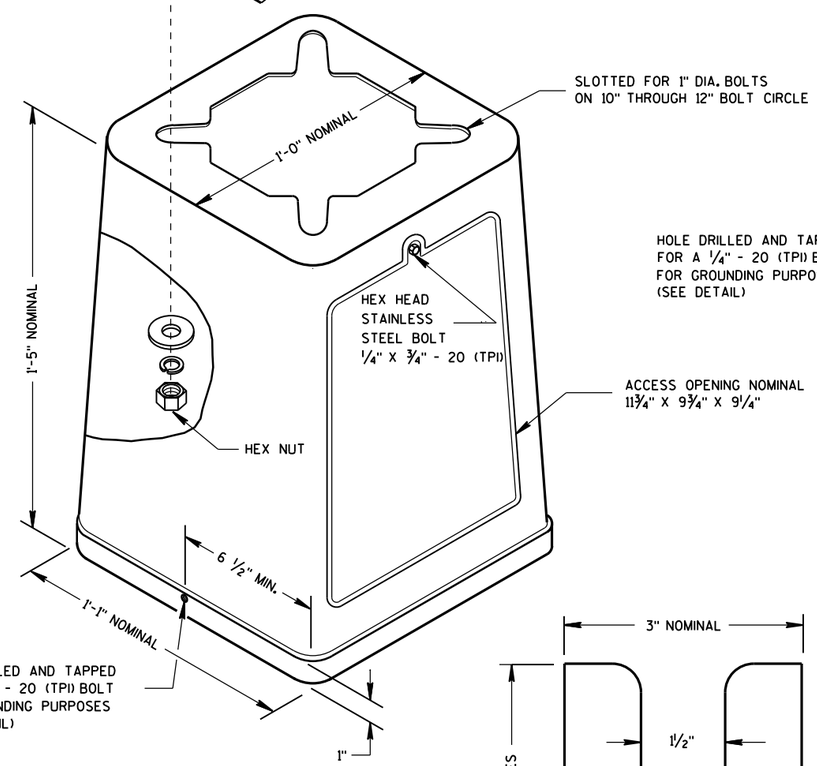

ISOMETRIC VIEW

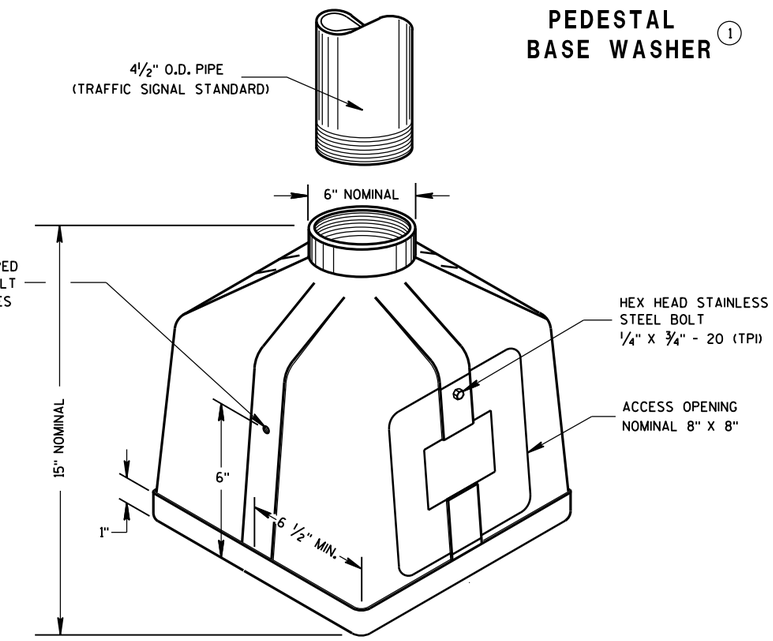

ISOMETRIC VIEW
PEDESTAL BASE

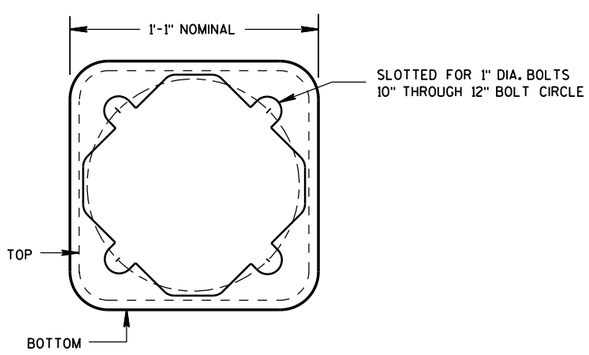

BOTTOM VIEW
(TRANSFORMER BASE)

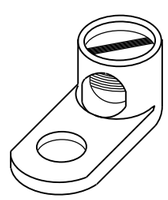

TYPICAL MECHANICAL CONNECTOR LUG

TO BE FURNISHED WITH EACH BASE

TRANSFORMER BASE

INTENDED FOR USE WITH TYPE 2, 3, 4, 5 & 6 POLES

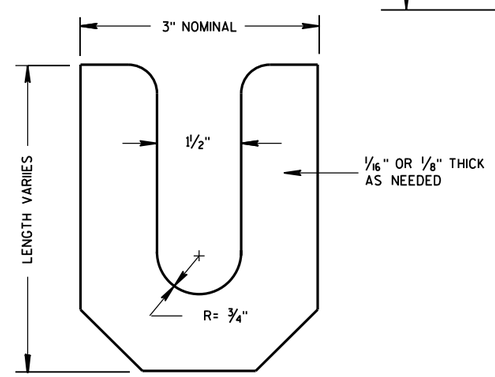

LEVELING SHIM

TRANSFORMER/PEDESTAL BASES	
STATE OF WISCONSIN DEPARTMENT OF TRANSPORTATION	
APPROVED Sept. 2014 DATE	/S/ Ahmet Demirbilek STATE ELECTRICAL
FHWA	

6

6

S.D.D. 9 C 3-4

S.D.D. 9 C 3-4

GENERAL NOTES

DETAILS OF CONSTRUCTION, MATERIALS AND WORKMANSHIP NOT SHOWN ON THIS DRAWING SHALL CONFORM TO THE PERTINENT REQUIREMENTS OF THE CONTRACT.

BASES SHALL BE EXCAVATED BY USE OF A CIRCULAR AUGER.

TOP SURFACES OF CONCRETE BASES SHALL BE TROWEL FINISHED AND LEVEL.

CONDUIT SIZES AND LOCATIONS SHALL BE AS SHOWN ON THE PLANS.

THE FINAL OR TERMINATING CONCRETE BASE IN A CONDUIT RUN SHALL HAVE A 6" EXIT STUB INSTALLED FOR FUTURE CABLING USE. THE EXIT STUB SHALL BE SIZED AS USED THROUGHOUT THE CONDUIT RUN AS SHOWN AT THE ENTRANCE OF THE BASE.

MINIMUM BENDING RADIUS OF CONDUIT IS EQUAL TO 6 X THE DIAMETER.

CONDUIT HEIGHT ABOVE CONCRETE BASES SHALL BE 4 INCHES. ALL METALLIC CONDUIT ENDS SHALL BE REAMED AND THREADED. NONMETALLIC CONDUIT SHALL HAVE BELL END INSTALLED. ALL CONDUIT SHALL BE SLOPED TO PULL BOX.

ALL CONDUIT ENDS AT THE TOP OF CONCRETE BASES SHALL BE CAPPED IF METALLIC OR PLUGGED IF NONMETALLIC IMMEDIATELY AFTER PLACEMENT AND BEFORE CONCRETE IS POURED. CONDUIT IN WHICH WIRE OR CABLE IS NOT INSTALLED SHALL REMAIN CAPPED OR PLUGGED.

BELL ENDS SHALL BE INSTALLED ON ALL PVC CONDUIT EXPOSED AT THE TOP OF CONCRETE BASES BEFORE INSTALLATION OF CABLE OR WIRE.

ENDS OF CONDUIT INSTALLED BELOW GRADE FOR FUTURE USE SHALL BE CAPPED IF METALLIC OR PLUGGED IF NONMETALLIC.

WHEN REQUIRED TO CONNECT NONMETALLIC CONDUIT TO METALLIC CONDUIT, ONLY ADAPTER FITTINGS, U.L. LISTED FOR ELECTRICAL USE, SHALL BE USED.

IF A BASE REQUIRES A DEEP FORM BECAUSE OF LOOSE DIRT OR FILL, THE FORM SHALL BE REMOVED BEFORE BACKFILLING AROUND THE BASE. BACKFILL SHALL BE TAMPED TIGHT AGAINST THE BARE CONCRETE BASE IN LAYERS OF 1 FOOT OR LESS.

A NO. 4 AWG, STRANDED COPPER EQUIPMENT GROUNDING CONDUCTOR SHALL BE EXOTHERMICALLY WELDED TO THE EQUIPMENT GROUNDING ELECTRODE (GROUND ROD).

THE EQUIPMENT GROUNDING CONDUCTOR SHALL ENTER THE BASE THROUGH A 1 INCH CONDUIT INSTALLED FOR GROUNDING PURPOSES, LEAVING A 4 FOOT COIL OF WIRE ABOVE THE CONCRETE BASE. THE EQUIPMENT GROUNDING CONDUCTOR SHALL BE NEATLY COILED AND THE COILS TIED TOGETHER.

WELDING OF THE ANCHOR RODS TO THE CAGE IS UNACCEPTABLE. TEMPLATES SHALL BE USED.

BAR STEEL REINFORCEMENT SHALL BE COATED WITH POWDERED EPOXY RESIN IN ACCORDANCE WITH SECTION 505 OF THE STANDARD SPECIFICATIONS (LATEST EDITION).

ANCHOR RODS SHALL BE INSTALLED WITH MISALIGNMENTS OF LESS THAN 1:40 FROM VERTICAL.

(1) THE MINIMUM DEPTH OF CONDUIT EXITING THE CONCRETE BASE AND INSTALLED BELOW THE TRAVELED WAY SHALL BE 24 INCHES. THE MINIMUM DEPTH OF CONDUIT EXITING THE CONCRETE BASE THAT IS NOT INSTALLED BELOW THE TRAVELED WAY SHALL BE 18 INCHES. THE MAXIMUM DEPTH OF ALL CONDUIT SHALL BE 36 INCHES, (GREATER THAN 36 INCHES IF INSTALLED IN BREAKER-RUN), EXCEPT WITH WRITTEN APPROVAL BY THE ENGINEER.

(2) (6) NO. 6 X 13'-7" BAR STEEL REINFORCEMENT.

(3) (21) NO. 5 X 7'-10" BAR STEEL REINFORCEMENT @ 8" MAX. C-C.

CONCRETE MASONRY	fc=3,500 p.s.i.
HIGH STRENGTH BAR STEEL REINFORCEMENT, GRADE 60	fy=60,000 p.s.i.
ANCHOR RODS, ASTM F1554 GRADE 55 (IN ACCORDANCE WITH SECTION 531.2.2 OF THE STANDARD SPECIFICATION)	fy=55,000 p.s.i.
TEMPLATES, ASTM, A709 GRADE 36	fy=36,000 p.s.i.

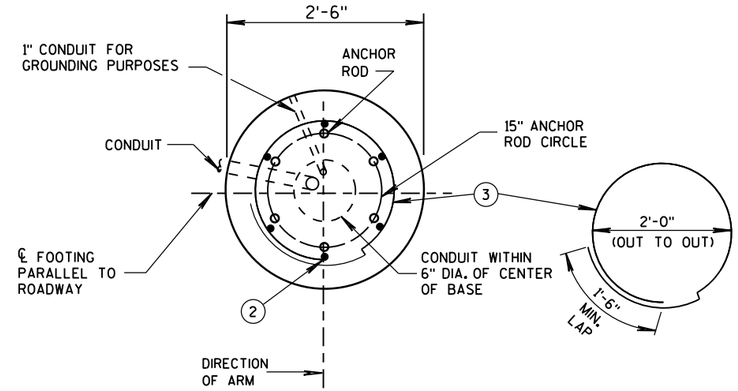

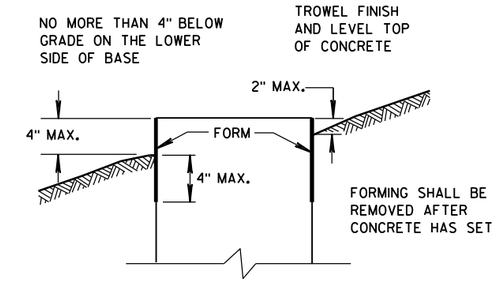

FORMING DETAIL

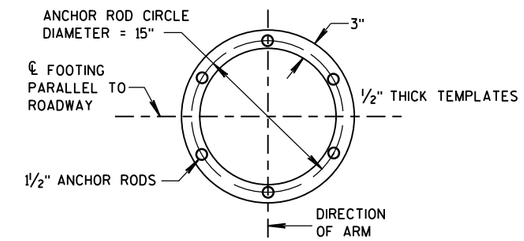

TOP AND BOTTOM TEMPLATES

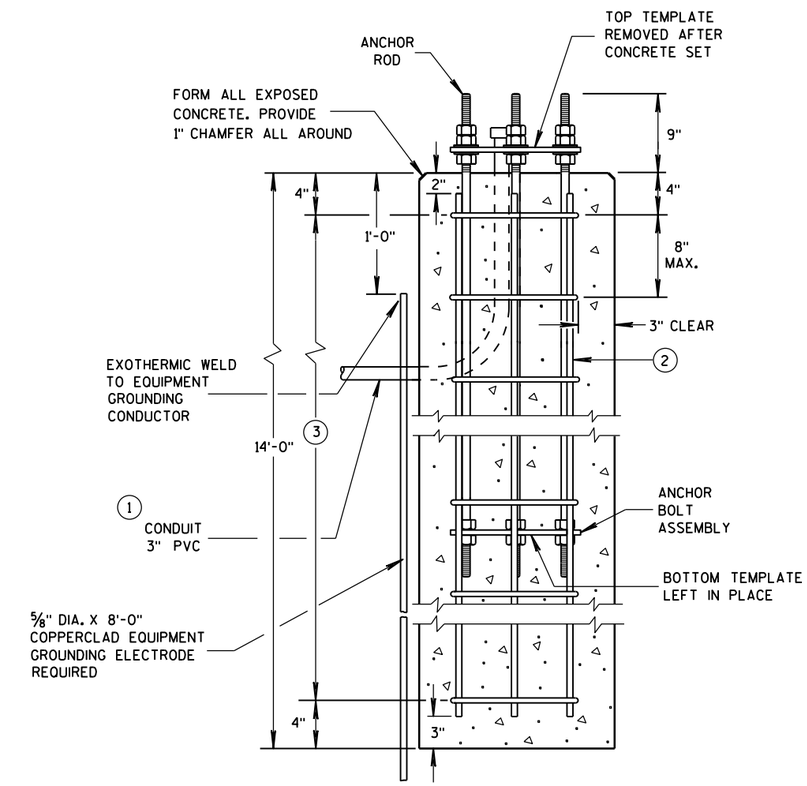

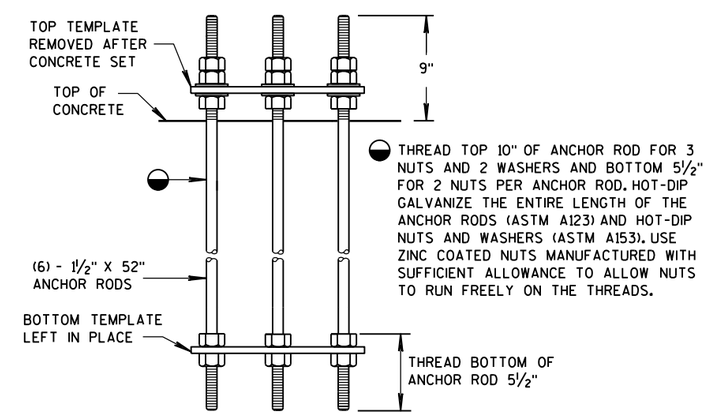

ANCHOR BOLT ASSEMBLY DETAIL

CONCRETE BASE TYPE 10 ANCHOR ASSEMBLY

CONCRETE BASE TYPE 10

(FOR TYPE 9 & 10 & OVER HEIGHT (OH) POLES)

TO BE USED WHEN GROUND ELEVATION AT BASE EQUALS OR IS GREATER THAN HIGH POINT OF ROADWAY ELEVATION. SEE S.D.D. 9C13-2 WHEN GROUND ELEVATION AT BASE IS LOWER THAN HIGH POINT OF ROADWAY ELEVATION.

QUANTITY REQUIREMENTS	
APPROX. CUBIC YARDS OF CONCRETE	2.5
LBS. OF HOOP BAR STEEL	172
LBS. OF VERTICAL BAR STEEL	122

CONCRETE BASE TYPE 10

STATE OF WISCONSIN
DEPARTMENT OF TRANSPORTATION

APPROVED
May 2017 — DATE
/S/ Ahmet Demirbilek — STATE ELECTRICAL
FHWA

6

S.D.D. 9 C 11-10

GENERAL NOTES

DETAILS OF CONSTRUCTION, MATERIALS AND WORKMANSHIP NOT SHOWN ON THIS DRAWING SHALL CONFORM TO THE PERTINENT REQUIREMENTS OF THE CONTRACT.

THE CONTRACTOR IS RESPONSIBLE FOR MAKING THEIR OWN DETERMINATION AS TO THE TYPE AND LOCATION OF UNDERGROUND UTILITIES AS MAY BE NECESSARY TO AVOID DAMAGE THERETO.

BASES (SHAFT) SHALL BE EXCAVATED BY THE USE OF A CIRCULAR AUGER. IF BASE REQUIRES A DEEP FORM BECAUSE OF LOOSE SOIL, THE FORM SHALL BE REMOVED BEFORE BACKFILLING. A STEEL CASING OR CORRUGATED METAL PIPE IS ALLOWED TO REMAIN. BACKFILL SHALL BE TAMPED TIGHT AGAINST THE BASE IN LAYERS OF ONE FOOT OR LESS.

TOP SURFACE OF THE CONCRETE BASE SHALL BE TROWEL FINISHED AND LEVEL.

ANY DAMAGE TO THE CONCRETE BASE AND ANCHOR RODS DURING CONSTRUCTION OPERATIONS SHALL BE REPAIRED AT THE ENGINEER'S DIRECTION, AT THE EXPENSE OF THE CONTRACTOR.

THE REINFORCEMENT AND ANCHOR RODS SHALL BE ADEQUATELY SUPPORTED IN THE PROPER POSITIONS SO NO MOVEMENT OCCURS DURING CONCRETE PLACEMENT.

ORIENT ANCHOR RODS IN FOOTING AND PROVIDE ANCHOR RODS STICK OUT ABOVE TOP OF CONCRETE FOOTING BASE PER THIS SHEET.

ANCHOR RODS SHALL BE INSTALLED WITH MISALIGNMENTS OF LESS THAN 1:40 FROM VERTICAL.

BAR STEEL REINFORCEMENT SHALL BE COATED WITH POWDERED EPOXY RESIN IN ACCORDANCE WITH SECTION 505 OF THE STANDARD SPECIFICATIONS (LATEST EDITION).

BENDING DIMENSIONS FOR REINFORCING BARS ARE OUT TO OUT.

WELDING OF ANCHOR RODS TO THE CAGE IS UNACCEPTABLE. TEMPLATES SHALL BE USED.

USE 3" CLEAR FOR ALL REINFORCEMENT UNLESS NOTED OTHERWISE.

FORM ALL EXPOSED CONCRETE CORNERS WITH 1" CHAMFER ALL AROUND. TOP OF THE CONCRETE BASE SHALL BE TROWEL FINISHED AND LEVEL.

CONDUIT SIZES AND LOCATIONS SHALL BE SHOWN ON THE PLANS.

MINIMUM BENDING RADIUS OF CONDUIT IS EQUAL TO 6 TIMES THE DIAMETER.

CONDUIT HEIGHT ABOVE CONCRETE BASES SHALL BE 4 ½" INCHES. ALL METALLIC CONDUIT ENDS SHALL BE REAMED AND THREADED. NON-METALLIC CONDUIT SHALL HAVE BELL ENDS INSTALLED. ALL CONDUIT SHALL SLOPE TO PULL BOX.

ALL CONDUIT ENDS AT THE TOP OF CONCRETE BASES SHALL BE CAPPED IF METALLIC OR PLUGGED IF NON-METALLIC IMMEDIATELY AFTER PLACEMENT AND BEFORE CONCRETE IS POURED. CONDUITS IN WHICH WIRE OR CABLE IS NOT INSTALLED SHALL REMAIN CAPPED OR PLUGGED.

BELL ENDS SHALL BE INSTALLED ON ALL PVC CONDUIT EXPOSED AT THE TOP OF CONCRETE BASES BEFORE INSTALLATION OF CABLE OR WIRE.

WHEN REQUIRED TO CONNECT NON-METALLIC CONDUIT TO METALLIC CONDUIT, ONLY ADAPTER FITTINGS, U.L. LISTED FOR ELECTRICAL USE, SHALL BE USED.

A NO. 4 AWG STRANDED COPPER EQUIPMENT GROUNDING CONDUCTOR SHALL BE EXOTHERMICALLY WELDED TO THE EQUIPMENT GROUNDING ELECTRODE (GROUND ROD).

THE EQUIPMENT GROUNDING CONDUCTOR SHALL BE FURNISHED AND INSTALLED TO ENTER THE BASE THROUGH A 1 INCH CONDUIT INSTALLED FOR GROUNDING PURPOSES, LEAVING A 4 FOOT COIL OF WIRE ABOVE THE CONCRETE BASE. THE EQUIPMENT GROUNDING CONDUCTOR SHALL BE NEATLY COILED AND THE COILS TIED TOGETHER.

THE FINAL OR TERMINATING CONCRETE BASE IN A CONDUIT RUN SHALL HAVE A 6" EXIT STUB INSTALLED FOR FUTURE CABLING USE. THE EXIT STUB SHALL BE SIZED AS USED THROUGHOUT THE CONDUIT RUN AS SHOWN A THE ENTRANCE OF THE BASE.

(1) THE MINIMUM DEPTH OF CONDUIT EXITING THE CONCRETE BASE AND INSTALLED BELOW THE TRAVELED WAY SHALL BE 24 INCHES. THE MINIMUM DEPTH OF CONDUIT EXITING THE CONCRETE BASE THAT IS NOT INSTALLED BELOW THE TRAVELED WAY SHALL BE 18 INCHES. THE MAXIMUM DEPTH OF ALL CONDUIT SHALL BE 36 INCHES (GREATER THAN 36 INCHES IF INSTALLED IN BREAKER RUN) EXCEPT WITH WRITTEN APPROVAL OF THE ENGINEER.

CONCRETE MASONRY.....fc = 3,500 p.s.i
HIGH STRENGTH BAR STEEL REINFORCEMENT, GRADE 60.....fy = 60,000 p.s.i.
ANCHOR RODS, ASTM F1554 GRADE 55 (IN ACCORDANCE .....fy = 55,000 p.s.i.
WITH SECTION 531.2.2 OF THE STANDARD SPECIFICATION)
TEMPLATES, ASTM A709, GRADE 36.....fy = 36,000 p.s.i.

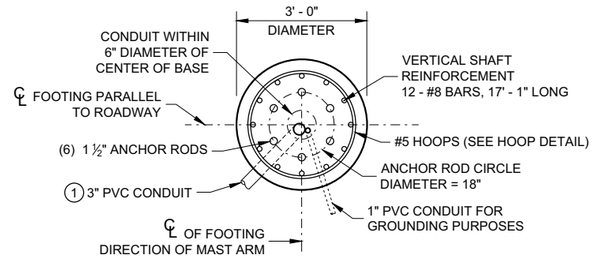

PLAN VIEW

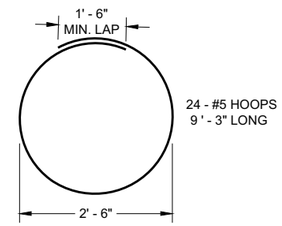

HOOP DETAIL

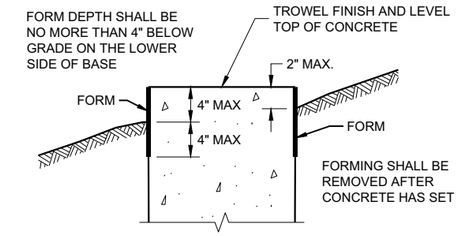

FORMING DETAIL

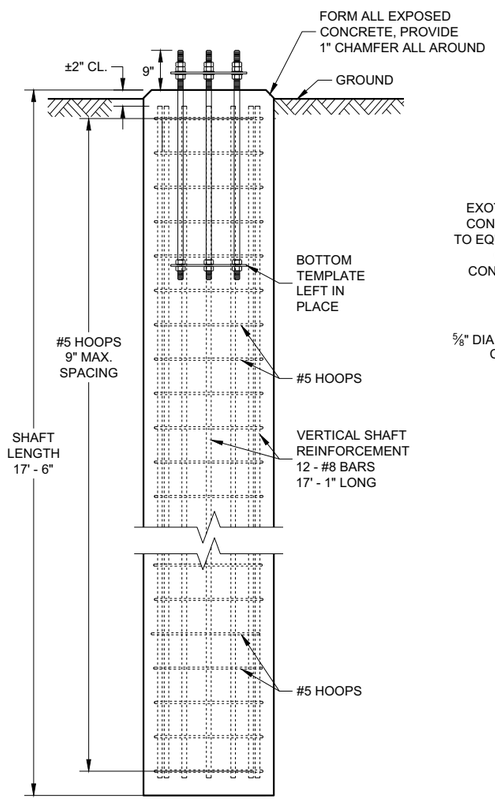

ELEVATION VIEW
(CONDUITS NOT SHOWN ON THIS VIEW FOR CLARITY)

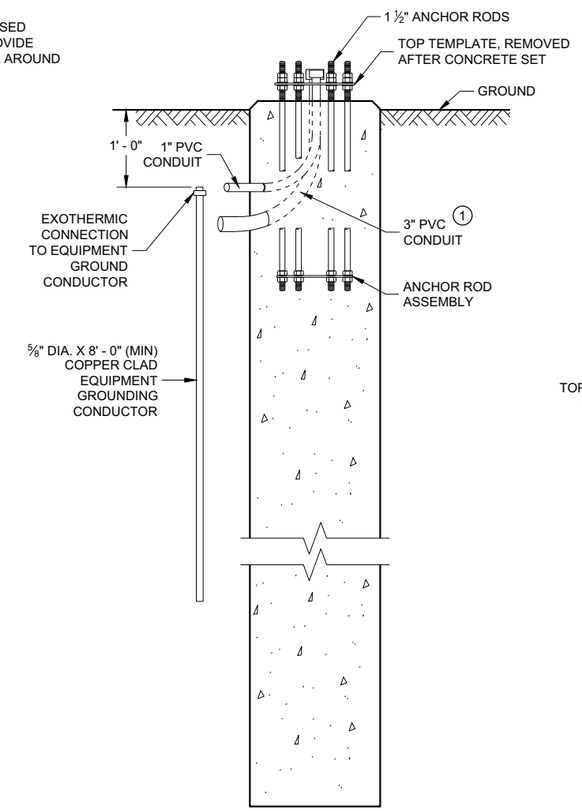

SIDE VIEW
(HOOPS AND VERTICAL SHAFT REINFORCEMENT NOT SHOWN ON THIS VIEW FOR CLARITY)

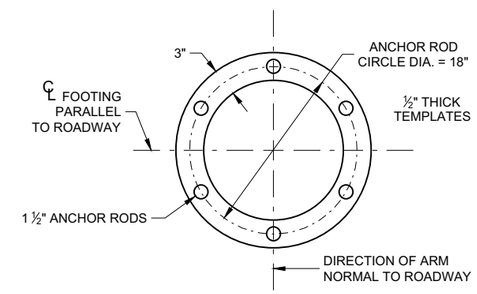

TOP AND BOTTOM TEMPLATE

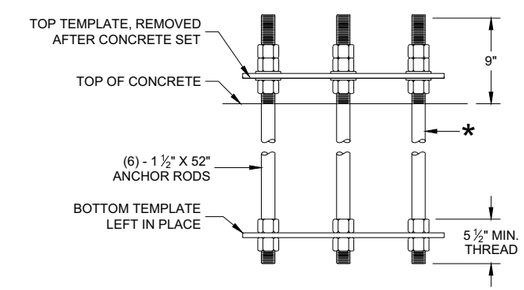

ANCHOR ROD ASSEMBLY DETAILS

* THREAD TOP 10" OF ANCHOR ROD FOR 3 NUTS AND 2 WASHERS AND BOTTOM 5 ½" FOR 2 NUTS PER ANCHOR ROD. HOT DIP GALVANIZE THE ENTIRE LENGTH OF THE ANCHOR ROD (ASTM A123) AND HOT DIP NUTS AND WASHERS (ASTM A153. USE ZINC COATED NUTS MANUFACTURED WITH SUFFICIENT ALLOWANCE TO ALLOW NUTS TO RUN FREELY ON THE THREADS.

CONCRETE BASE, TYPE 10 SPECIAL
(FOR TYPE 9 SPECIAL AND TYPE 10 SPECIAL POLES)

CONCRETE = 4.6 CUBIC YARD
H.S. REINFORCEMENT = 779 LBS.

FOR USE WHEN GROUND ELEVATION AT BASE EQUALS OR IS GREATER THAN HIGH POINT OF ROADWAY ELEVATION.

CONCRETE BASE TYPE 10 SPECIAL

STATE OF WISCONSIN
DEPARTMENT OF TRANSPORTATION

APPROVED
August 2020 — DATE
/S/ Alex Crabtree — WIND LOADED STRUCTU PROGRAM LEADER
FHWA

6

SDD 09C15 - 01

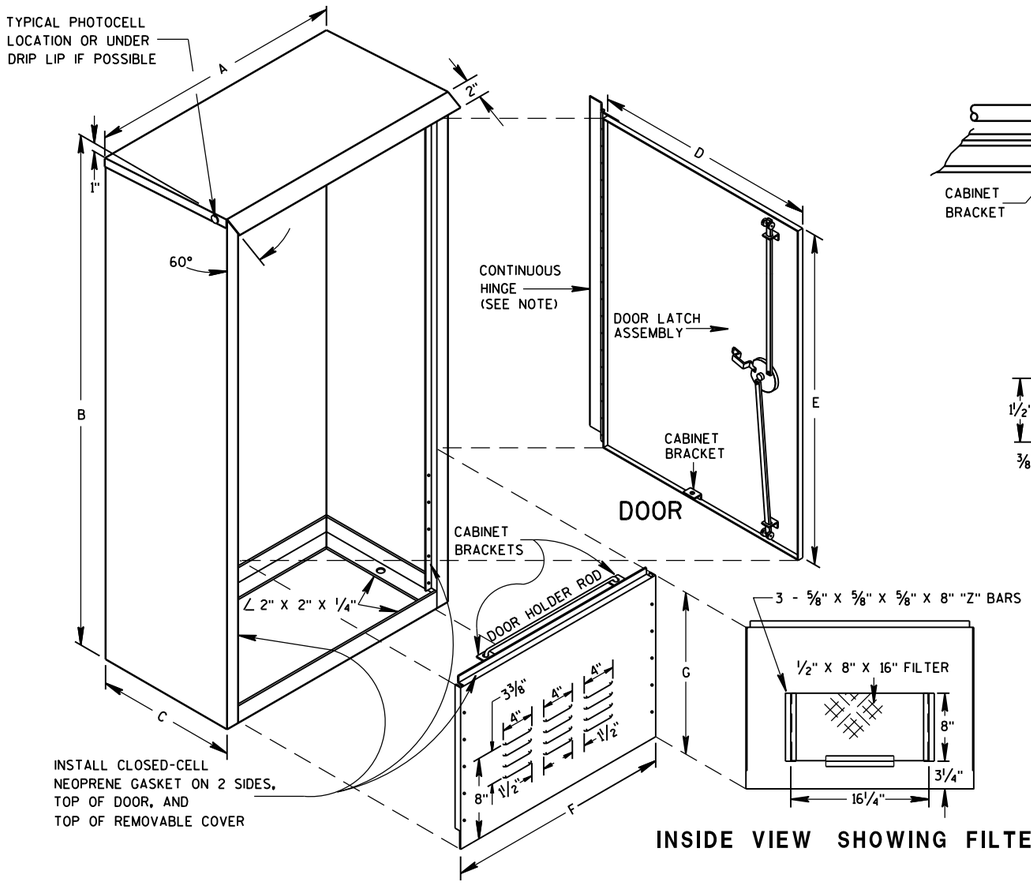

REMOVABLE COVER

INSIDE VIEW SHOWING FILTER

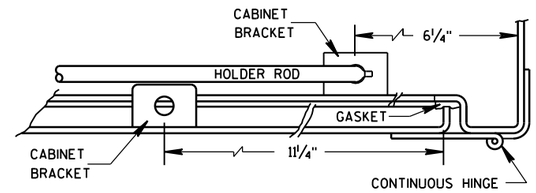

HINGE & DOOR HOLDER

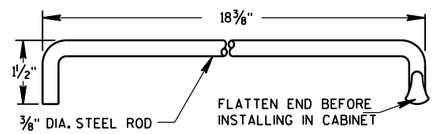

HOLDER ROD

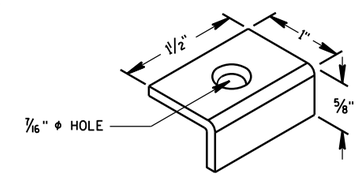

CABINET BRACKET

GENERAL NOTES

DETAILS OF CONSTRUCTION, MATERIALS AND WORKMANSHIP NOT SHOWN ON THIS DRAWING SHALL CONFORM TO THE PERTINENT REQUIREMENTS OF THE STANDARD SPECIFICATIONS AND APPLICABLE SPECIAL PROVISIONS.

PRIME WITH PHOSPHATE TREATMENT AND PRIMER.

FINISH EXTERIOR SURFACES WITH RUSTOLEUM #906 SILVER GRAY OR APPROVED EQUAL.

FINISH INTERIOR WITH RUSTOLEUM #2766 HIGH GLOSS WHITE ENAMEL OR APPROVED EQUAL.

ALL SHEET METAL PARTS SHALL BE .125 INCH THICK ALUMINUM.

ALL SEAMS SHALL BE CONTINUOUSLY WELDED.

ALUMINUM SHALL BE TYPE 5052-H32.

CONTINUOUS HINGE SHALL BE HEAVY GAUGE ALUMINUM WITH 1/4" DIAMETER STAINLESS STEEL HINGE PIN. HINGE IS SECURED WITH 1/4" X 20 TPI STAINLESS STEEL CARRIAGE BOLTS AND STAINLESS STEEL NYLOCK NUTS.

A SINGLE PHOTOCELL SHALL BE LOCATED ON THE NORTH-NORTHEAST SIDE OF THE CABINET UNLESS OTHERWISE CALLED FOR IN THE SPECIAL PROVISIONS. THE PHOTOCELL SHALL BE PLACED AS SHOWN AND SHALL BE LISTED ON THE DEPARTMENTS APPROVED PRODUCTS LIST.

DOOR LATCH ASSEMBLY TO BE PROVIDED WITH THREE-POINT LOCKING MECHANISM.

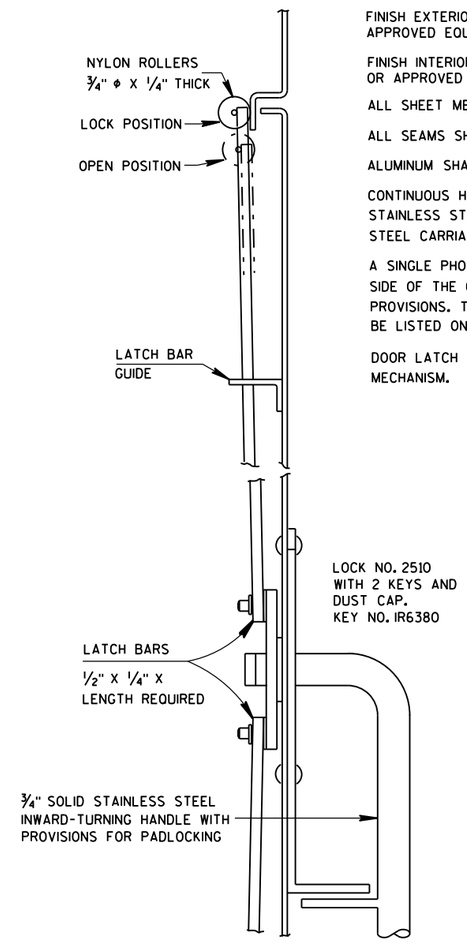

SIDE VIEW

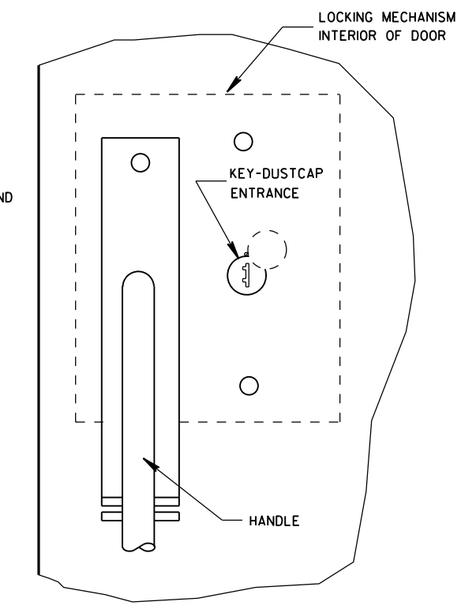

FRONT VIEW

LATCH ASSEMBLY

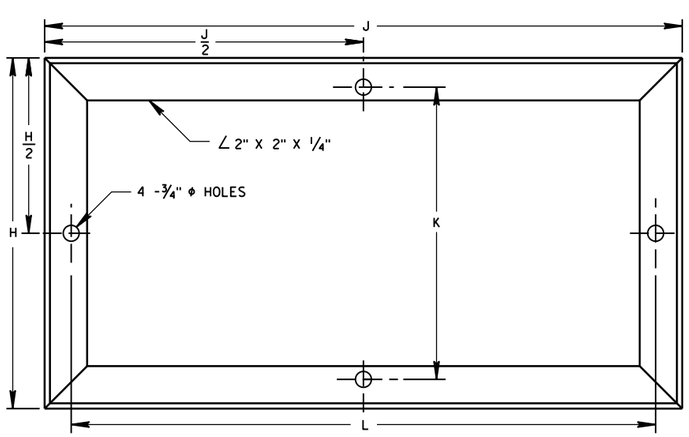

MOUNTING BASE

TABLE OF DIMENSIONS (INCHES)

MARK	CABINET TYPE		
	3060	3860	3866
A	30	38	38
B	60	60	66
C	16 1/2	16 1/2	24
D	26 1/2	34 3/4	33 3/4
E	38 3/4	38 3/4	38 3/4
F	26 1/2	34 3/4	33 3/4
G	19	19	25
H	16 1/2	16 1/2	24
H/2	8 1/4	8 1/4	12
J	30	38	38
J/2	15	19	19
K	13 3/4	13 3/4	21 1/4
L	27 1/2	35 1/2	35 1/2

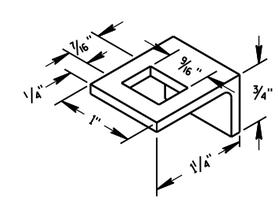

LATCH BAR GUIDE

SIGNAL CONTROL CABINET

STATE OF WISCONSIN
DEPARTMENT OF TRANSPORTATION

APPROVED
Sept. 2014
DATE
/S/ Ahmet Demirbilek
STATE ELECTRICAL
FHWA

6

S.D.D. 9 D 2-3

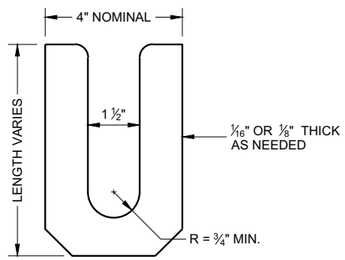

LEVELING SHIM (1)
SHALL BE ALUMINUM

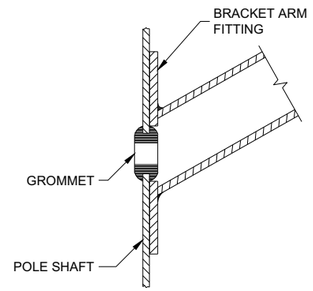

TYPICAL APPLICATION OF GROMMET IN POLE SHAFT

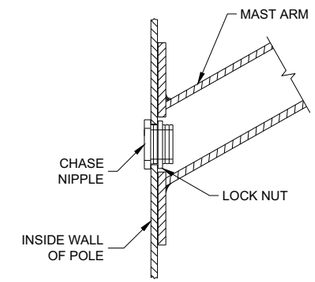

TYPICAL APPLICATION OF CHASE NIPPLE IN POLE SHAFT

GENERAL NOTES

CLAMP BOLT-NUT TIGHTENING TORQUE SHALL BE INDICATED BY INDENT STAMPING (1/2 INCH NUMERALS AND LETTERS) OR WEATHERPROOF PRINTING ON THE INSIDE OF THE CLAMP THAT IS WELDED TO THE ARM MEMBER.

(1) 4.5" I.D. FOR LUMINAIRE MAST ARM CLAMP. 6.625" I.D. FOR TROMBONE MAST ARM CLAMP.

(2) INDIVIDUAL BASE PLATE ANCHOR ROD COVERS. (4 REQUIRED)

(3) BASE PLATE SLOTTED TO ACCEPT 11" THROUGH 12" BOLT CIRCLE USING 1" DIAMETER ANCHOR RODS.

(4) LEVELING SHIMS, DESIGNED FOR THE PURPOSE, SHALL BE USED WHEN PLUMBING POLES. THE USE OF WASHERS IN LIEU OF PROPER LEVELING SHIMS IS NOT ACCEPTABLE. LEVELING SHIMS SHALL BE USED ONLY BETWEEN THE TOP OF THE CONCRETE BASE AND A METALLIC BASE PLATE.

SHIMS SHALL BE LONG ENOUGH AND WIDE ENOUGH TO COMPLETELY COVER THE AREA UNDER THE LENGTH AND WIDTH OF THE BASE MOUNTING FLANGE.

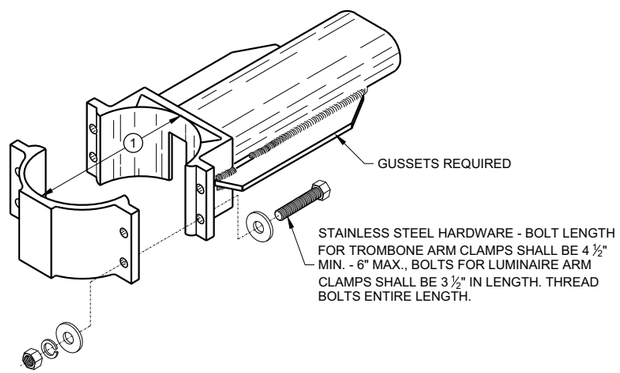

TYPICAL TROMBONE MAST ARM AND SINGLE LUMINAIRE MAST ARM MOUNTING CLAMP

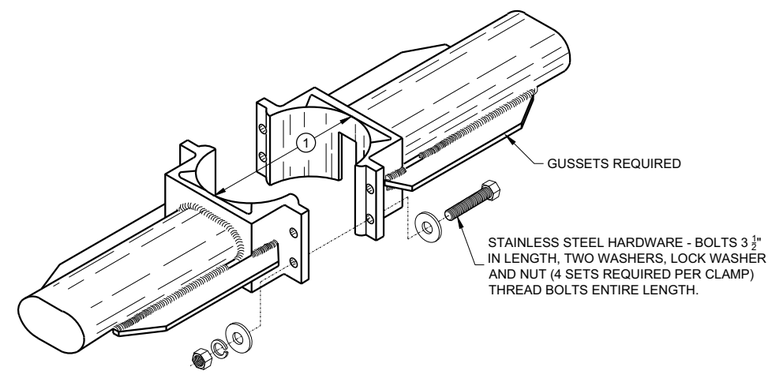

TYPICAL LUMINAIRE MAST ARM (DOUBLE) MOUNTING BRACKETS

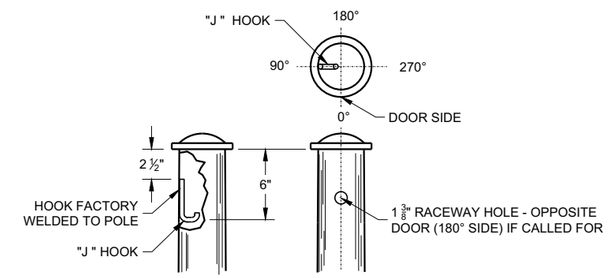

TYPICAL "J" HOOK LOCATION

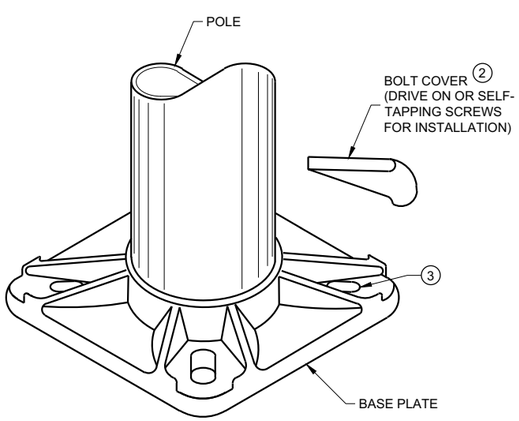

BASE PLATE

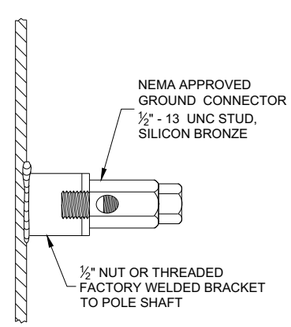

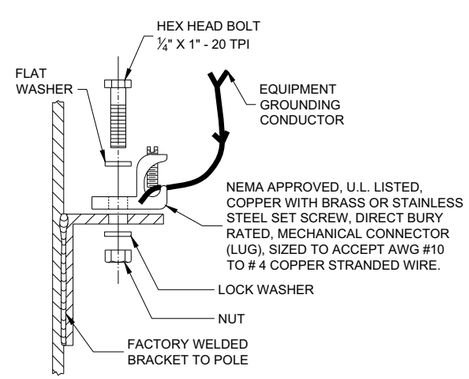

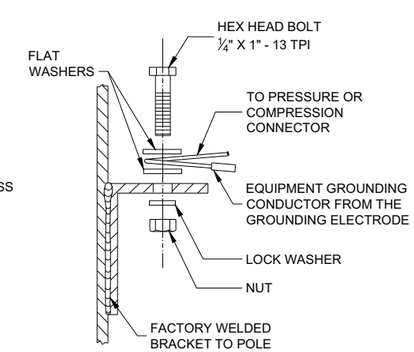

TYPICAL GROUNDING CONNECTIONS
NUT, BOLT AND WASHERS SHALL BE STAINLESS STEEL

HARDWARE DETAILS FOR POLE MOUNTING

STATE OF WISCONSIN
DEPARTMENT OF TRANSPORTATION

APPROVED
November 2018 /S/ Ahmet Demirbilek
DATE STATE ELECTRICAL ENGI 64
FHWA

6
SDD 09A01 - 15g

GENERAL NOTES

DETAILS OF CONSTRUCTION, MATERIALS AND WORKMANSHIP NOT SHOWN ON THIS DRAWING SHALL CONFORM TO THE PERTINENT REQUIREMENTS OF THE CONTRACT.

THE EQUIPMENT GROUND CONNECTOR SHALL BE TAPED WITH 3 WRAPS (MINIMUM) OF APPROVED RUBBER TAPE AND 3 WRAPS (MINIMUM) OF APPROVED VINYL TAPE TO COVER SHARP WIRE ENDS AFTER THE CONNECTION IS COMPLETED.

WHEN TRANSFORMER BASES ARE USED, ALL WIRING CONNECTIONS SHALL OCCUR WITHIN THE TRANSFORMER BASES.

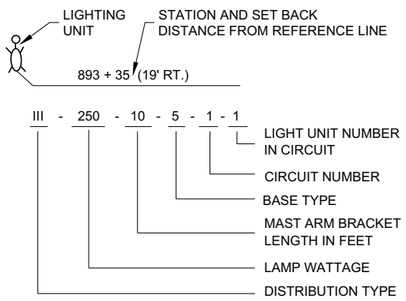

LIGHTING UNIT CODE
(TYPICAL)

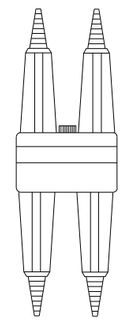

DETAIL "A"
BREAKAWAY DOUBLE POLE WITH WATERPROOF INSULATING BOOT

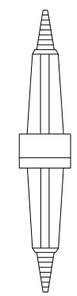

DETAIL "B"
BREAKAWAY SINGLE POLE WITH WATERPROOF INSULATING BOOT

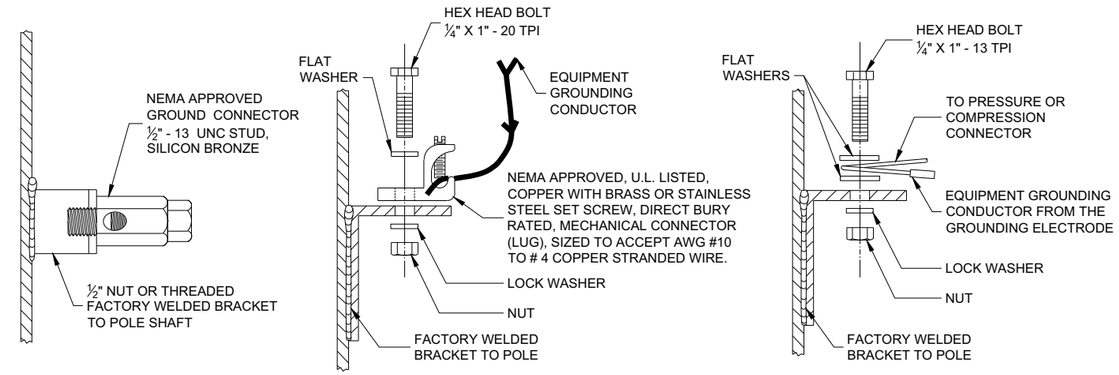

TYPICAL GROUNDING CONNECTIONS
NUT, BOLT AND WASHERS SHALL BE STAINLESS STEEL

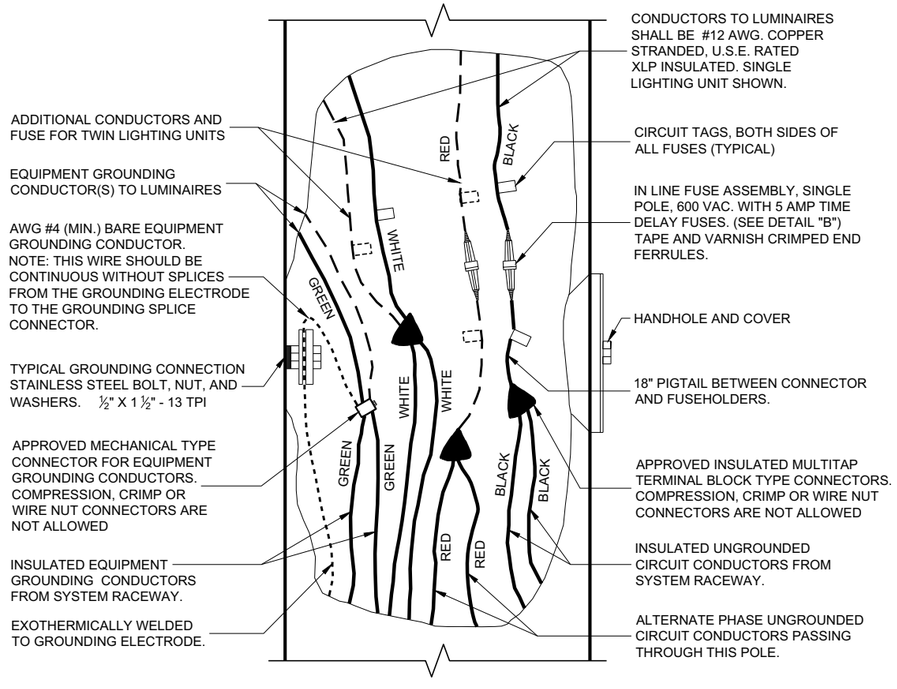

3 WIRE - 120, 240 OR 480 VAC (UNGROUNDED CONDUCTORS) WITH GROUNDING CONDUCTOR AND EQUIPMENT GROUNDING CONDUCTOR

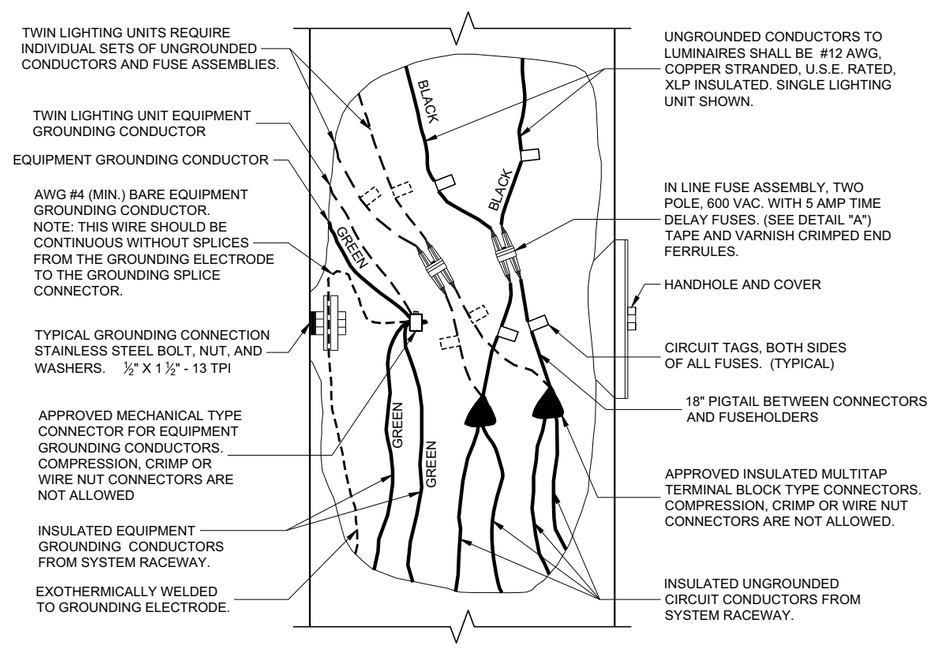

2 WIRE - 240 OR 480 VAC (UNGROUNDED CONDUCTORS) WITH EQUIPMENT GROUNDING CONDUCTOR

NON - FREEWAY LIGHTING UNIT POLE WIRING

STATE OF WISCONSIN
DEPARTMENT OF TRANSPORTATION

APPROVED
November 2018 /S/ Ahmet Demirbilek
DATE STATE ELECTRICAL ENGI
FHWA

6
SDD 09E03 - 06

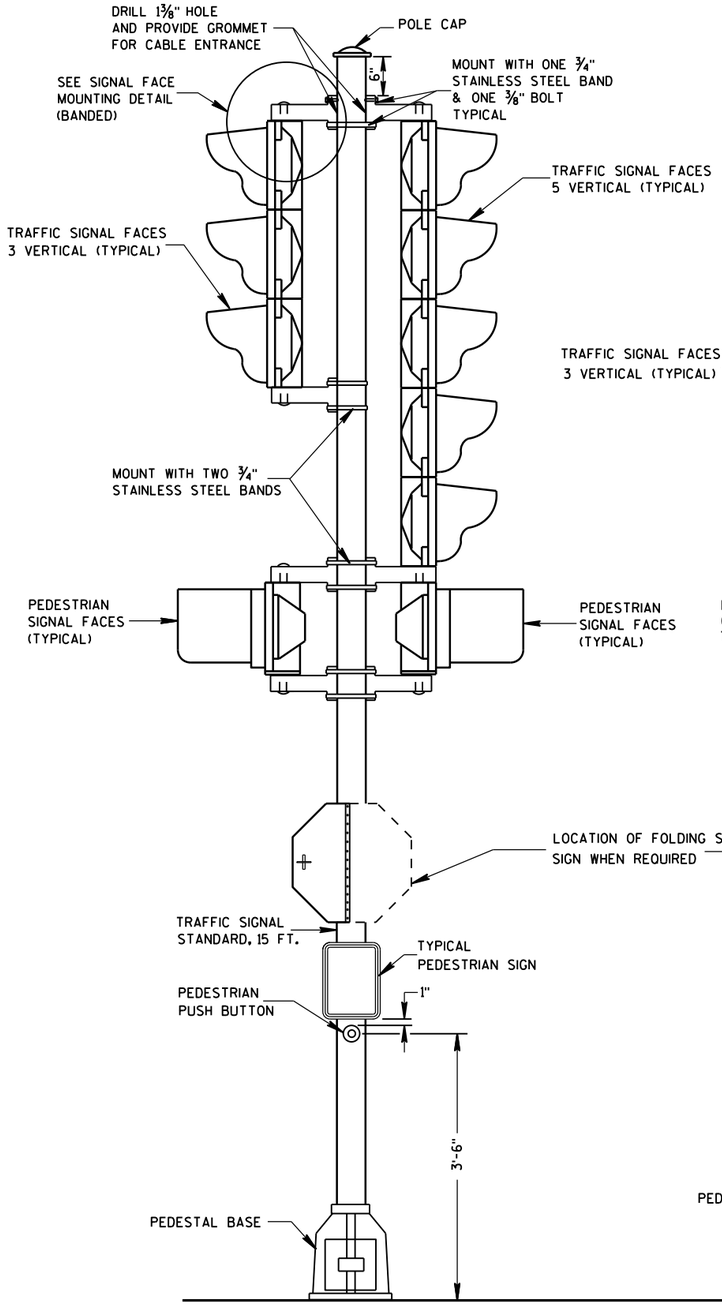

TRAFFIC SIGNAL STANDARD-15 FT.

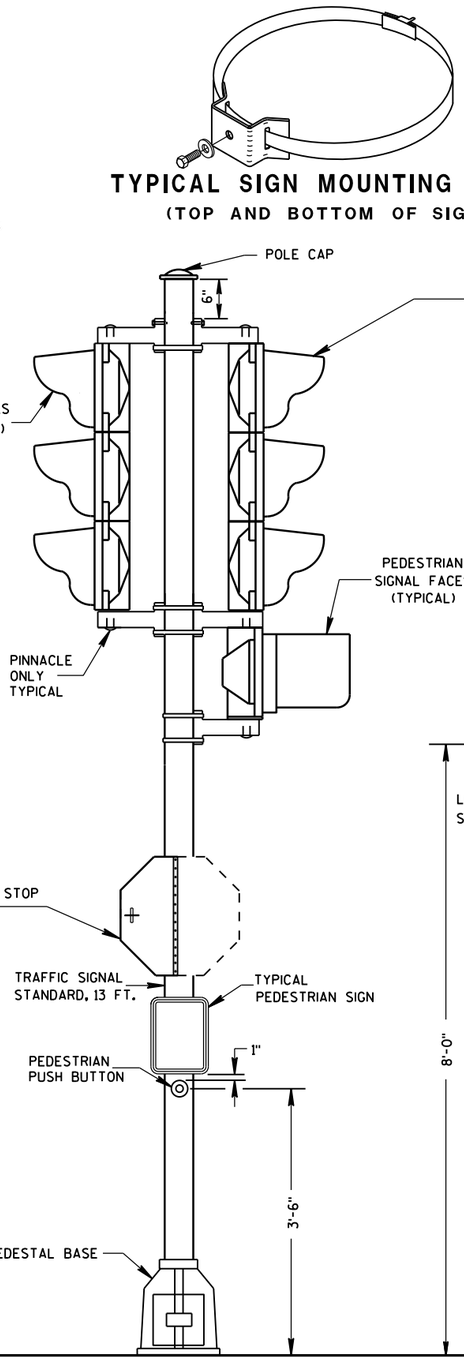

TRAFFIC SIGNAL STANDARD-13 FT.

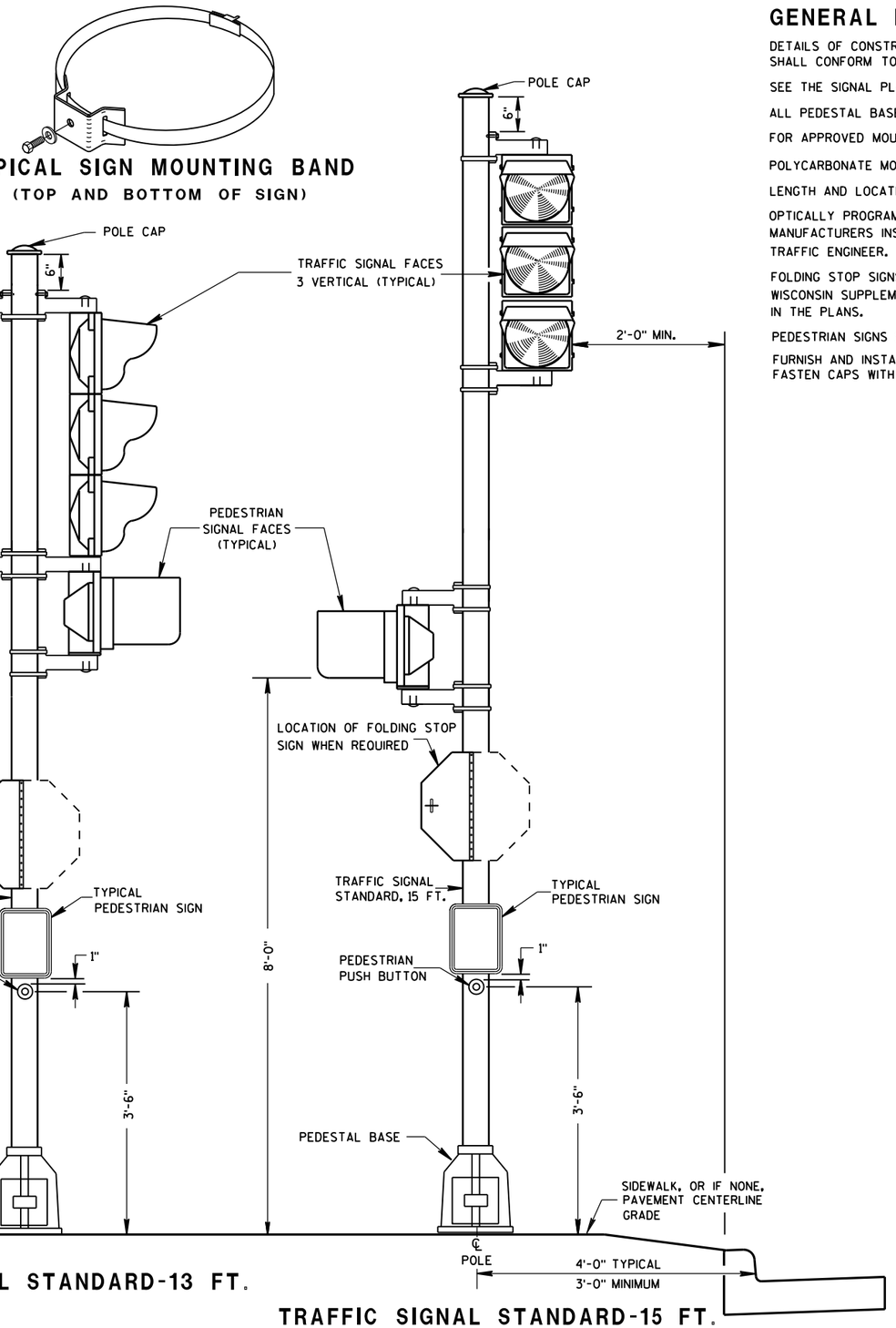

TRAFFIC SIGNAL STANDARD-15 FT.
3M MOUNTING (TYPICAL)

TYPICAL SIGN MOUNTING BAND
(TOP AND BOTTOM OF SIGN)

GENERAL NOTES

DETAILS OF CONSTRUCTION, MATERIALS AND WORKMANSHIP NOT SHOWN ON THIS DRAWING SHALL CONFORM TO THE PERTINENT REQUIREMENTS OF THE CONTRACT.

SEE THE SIGNAL PLAN FOR REQUIRED SIGNAL FACE SIZES.

ALL PEDESTAL BASES SHALL BE MOUNTED ON CONCRETE BASE - TYPE 1.

FOR APPROVED MOUNTING HARDWARE, SEE THE CONTRACT SPECIAL PROVISIONS.

POLYCARBONATE MOUNTING BRACKETS SHALL BE USED.

LENGTH AND LOCATION OF TRAFFIC SIGNAL STANDARDS SHALL BE AS SHOWN ON THE PLANS.

OPTICALLY PROGRAMMED SIGNAL FACES SHALL BE MASKED IN ACCORDANCE WITH MANUFACTURERS INSTRUCTIONS, AND UNDER THE DIRECTIONS OF THE REGION TRAFFIC ENGINEER.

FOLDING STOP SIGNS SHALL BE IN ACCORDANCE WITH THE MUTCD AND/OR THE LATEST WISCONSIN SUPPLEMENT. THE SIGNS SHALL BE SIZED AND LOCATED AS CALLED FOR IN IN THE PLANS.

PEDESTRIAN SIGNS SHALL BE AS DESIGNATED IN THE PLANS.

FURNISH AND INSTALL VENTILATED, CAST, METALLIC (ALUMINUM ALLOY) CAPS. FASTEN CAPS WITH ONE (1) ¼" X ¾" - 20 TPI STAINLESS STEEL, HEX HEAD BOLT.

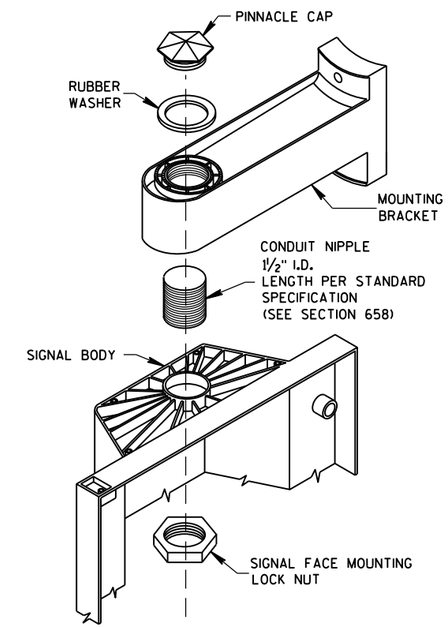

SIGNAL FACE MOUNTING DETAIL
(BANDED)

TRAFFIC SIGNAL STANDARD
POLY BRACKET MOUNTINGS
(TYPICAL) 13 FT. OR 15 FT.

STATE OF WISCONSIN
DEPARTMENT OF TRANSPORTATION

APPROVED
2/28/2013 — DATE
/S/ Ahmet Demirbilek — STATE ELECTRICAL
FHWA

6

S.D.D. 9 E 6-5

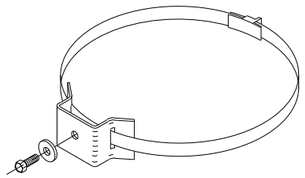

TYPICAL SIGN MOUNTING BAND
(TOP AND BOTTOM OF SIGN)

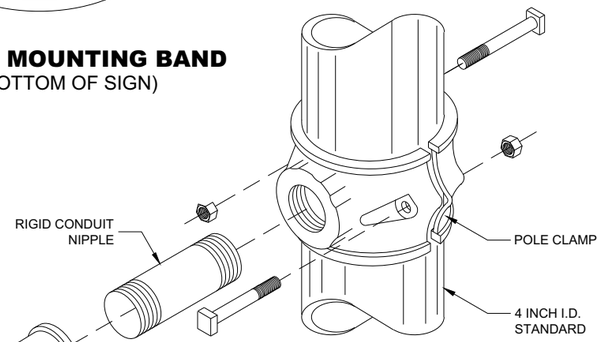

(ORNAMENTAL)

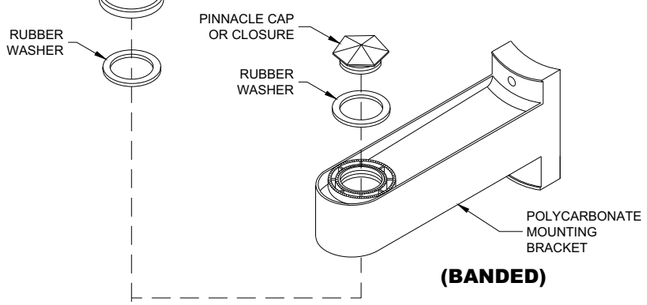

(BANDED)

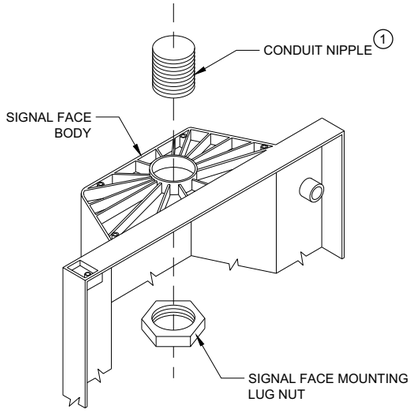

SIGNAL FACE MOUNTING DETAILS

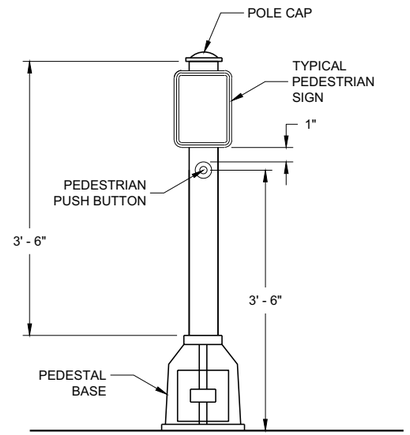

PEDESTRIAN PUSH BUTTON TYPICAL MOUNTING

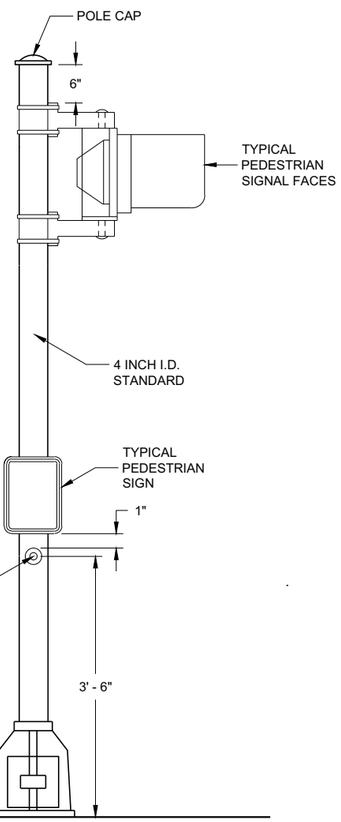

PEDESTRIAN FACE STANDARD - 10 FT.
(WALK - DON'T WALK)

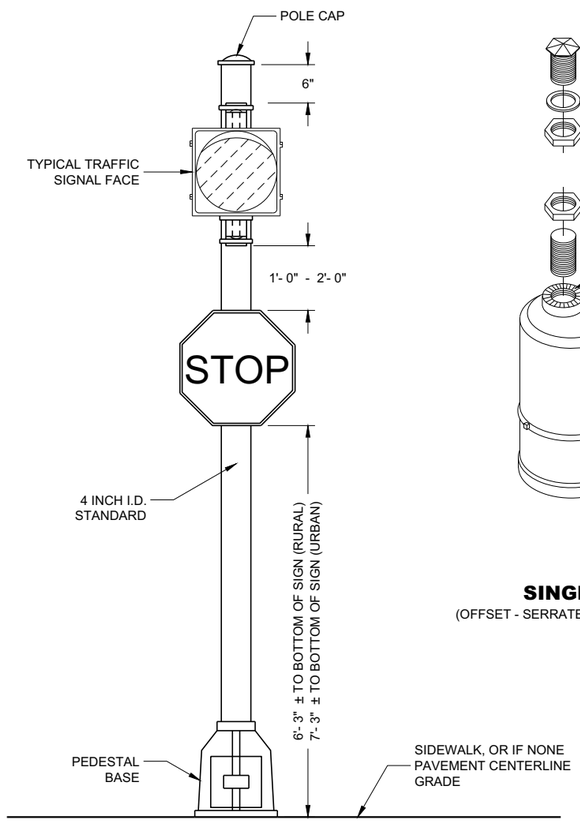

STANDARD FLASHER
10 FOOT, 13 FOOT OR 15 FOOT AS REQUIRED

GENERAL NOTES

DETAILS OF CONSTRUCTION, MATERIALS AND WORKMANSHIP NOT SHOWN ON THIS DRAWING SHALL CONFORM TO THE PERTINENT REQUIREMENTS OF THE CONTRACT.

SEE THE SIGNAL PLAN FOR REQUIRED SIGNAL FACE SIZES.

LOCATIONS SHALL BE AS SHOWN ON THE PLANS, UNLESS APPROVED BY THE ENGINEER IN THE FIELD.

ALL PEDESTAL BASES SHALL BE MOUNTED ON CONCRETE BASE - TYPE 1.

FOR APPROVED MOUNTING HARDWARE, SEE THE CONTRACT SPECIFICATIONS.

POLYCARBONATE SIGNAL FACE MOUNTING BRACKETS SHALL BE USED UNLESS ORNAMENTAL POLE CLAMPS ARE SPECIFIED.

LENGTH OF TRAFFIC STANDARDS SHALL BE AS SHOWN ON THE PLANS.

MOUNTINGS AND BRACKETS SHALL BE AS SHOWN ON THE PLANS OR DESCRIBED IN THE SPECIAL PROVISIONS (BY THE REGION TRAFFIC ENGINEER).

PEDESTRIAN SIGNS SHALL BE AS DESIGNATED IN THE PLANS.

FURNISH AND INSTALL VENTILATED, CAST, METALLIC (ALUMINUM ALLOY) CAPS. FASTEN CAPS WITH ONE (1) ¼" X ¾" - 20 TPI STAINLESS STEEL, HEX HEAD BOLT.

1 USE 1 ½" ID NIPPLES ZINC-COATED RIGID METAL CONDUIT, LONG ENOUGH TO ACCOMMODATE FULL DEPTH THREADING INTO THE HEAD MOUNTING LOCK NUT IN ORDER TO TIGHTEN THE FACE, BUT THAT DO NOT INTERFERE WITH REFLECTOR CLOSURE. THREAD THE NIPPLE INTO THE MOUNTING BRACKET/ELBOW UNTIL TIGHT. USE APPROVED PINNACLE TYPE HARDWARE FROM A DEPARTMENT APPROVED MANUFACTURER TO CLOSE THE UNUSED 1 ½" OPENING IN SIGNAL FACESAND BRACKET ENDS.

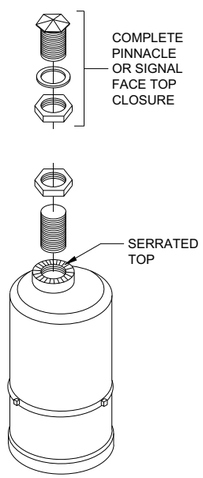

SINGLE
(OFFSET - SERRATED MOUNTING)

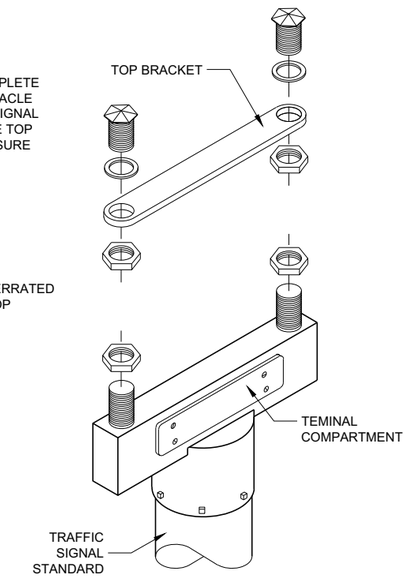

DOUBLE
(SERRATED MOUNTING)

SLIPFITTERS

TRAFFIC SIGNAL STANDARD PEDESTRIAN AND FLASHER TYPICAL MOUNTING DETAILS

STATE OF WISCONSIN
DEPARTMENT OF TRANSPORTATION

APPROVED
November 2018 /S/ Ahmet Demirbilek
DATE STATE ELECTRICAL ENGI
FHWA

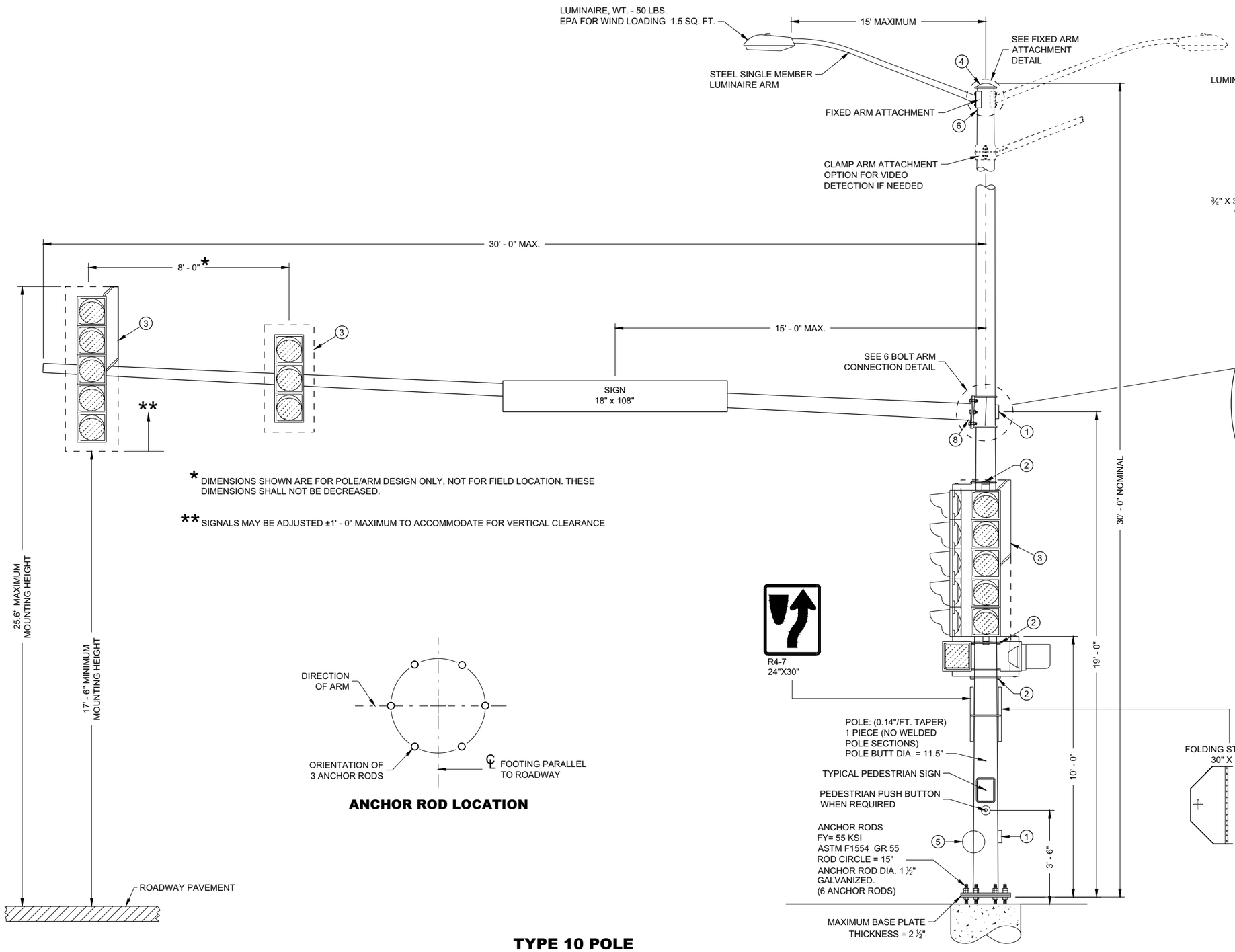

* DIMENSIONS SHOWN ARE FOR POLE/ARM DESIGN ONLY, NOT FOR FIELD LOCATION. THESE DIMENSIONS SHALL NOT BE DECREASED.

** SIGNALS MAY BE ADJUSTED ±1' - 0" MAXIMUM TO ACCOMMODATE FOR VERTICAL CLEARANCE

ANCHOR ROD LOCATION

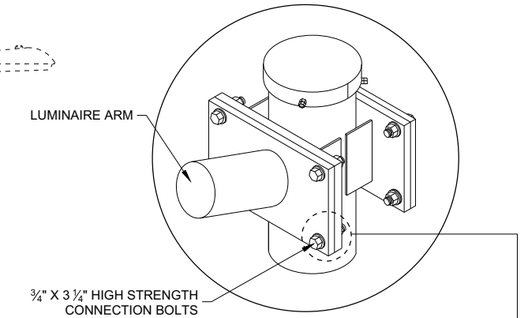

FIXED ARM ATTACHMENT DETAIL

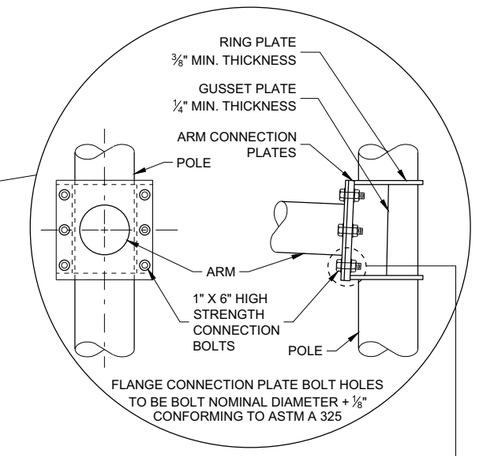

6 BOLT ARM CONNECTION DETAIL

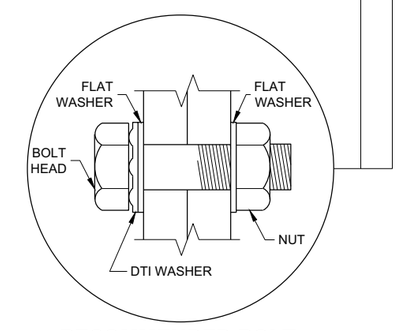

RECOMMENDED BOLT ASSEMBLY DETAIL

TYPE 10 POLE
15' - 30' MONOTUBE ARM
(MAXIMUM LOAD)

TYPE 10 POLE
15' - 30 MONOTUBE ARM

STATE OF WISCONSIN
DEPARTMENT OF TRANSPORTATION

APPROVED
August 2020 — DATE
/S/ Ahmet Demirbilek — STATE ELECTRICAL ENGI
FHWA

6

6

SDD 09E08 - 09e

SDD 09E08 - 09e

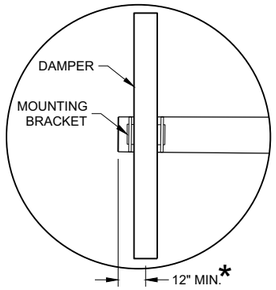

DUMBBELL VIBRATION DAMPER

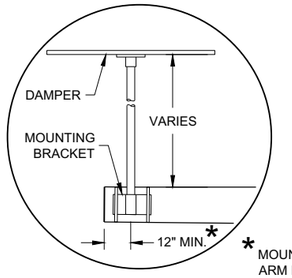

FLAT VIBRATION DAMPER

* MOUNT AS CLOSE TO END OF MAST ARM FOR MAXIMUM DAMPING PER MANUFACTURER'S RECOMMENDATIONS.

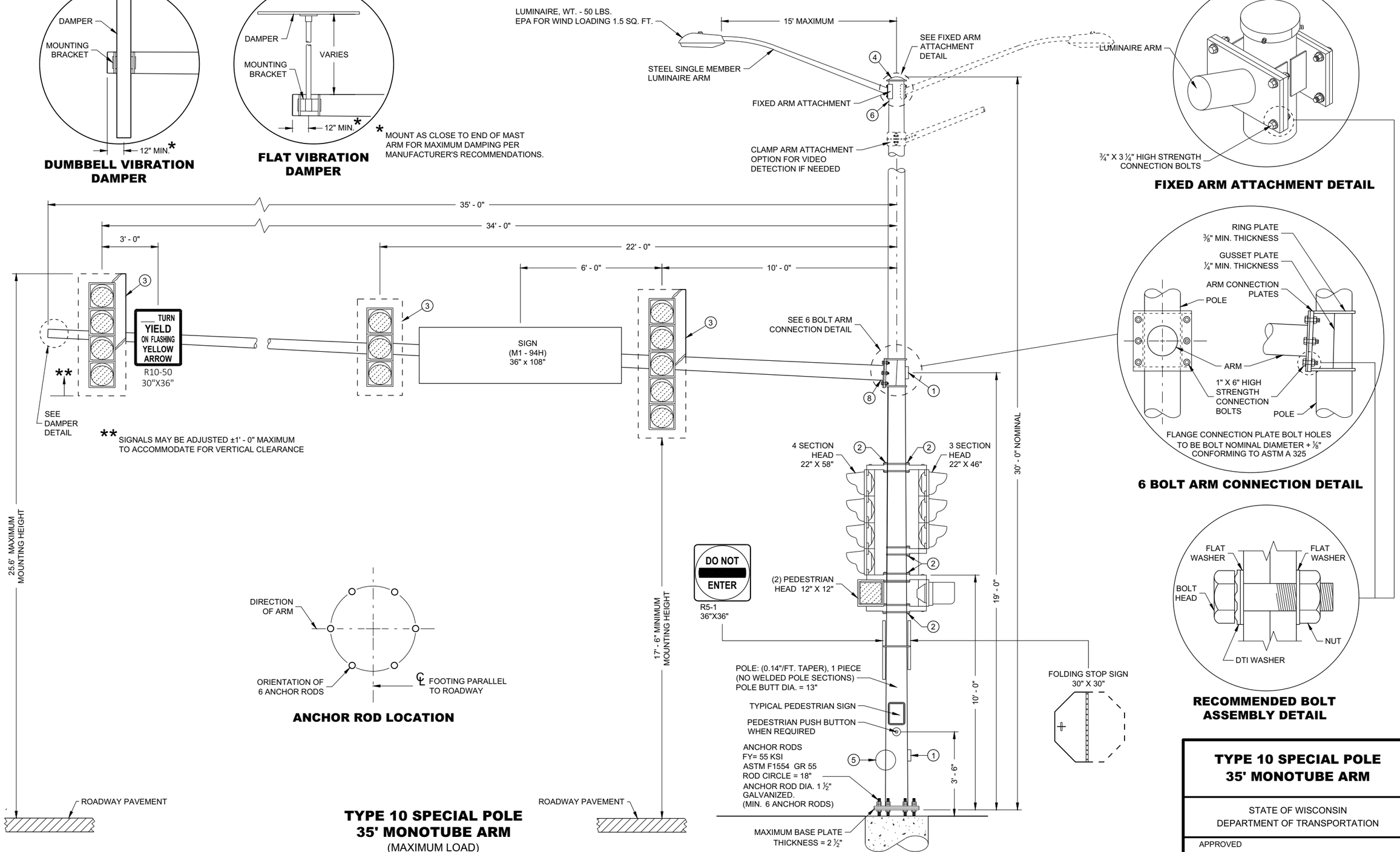

TYPE 10 SPECIAL POLE
35' MONOTUBE ARM
(MAXIMUM LOAD)

TYPE 10 SPECIAL POLE
35' MONOTUBE ARM

STATE OF WISCONSIN
DEPARTMENT OF TRANSPORTATION

APPROVED
August 2020 — DATE
/S/ Ahmet Demirbilek — STATE ELECTRICAL ENGI
FHWA

6

6

SDD 09E08 - 09f

SDD 09E08 - 09f

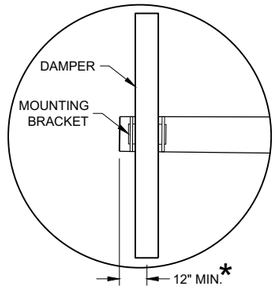

DUMBBELL VIBRATION DAMPER

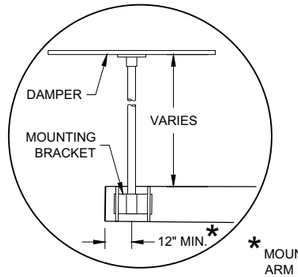

FLAT VIBRATION DAMPER

* MOUNT AS CLOSE TO END OF MAST ARM FOR MAXIMUM DAMPING PER MANUFACTURER'S RECOMMENDATIONS.

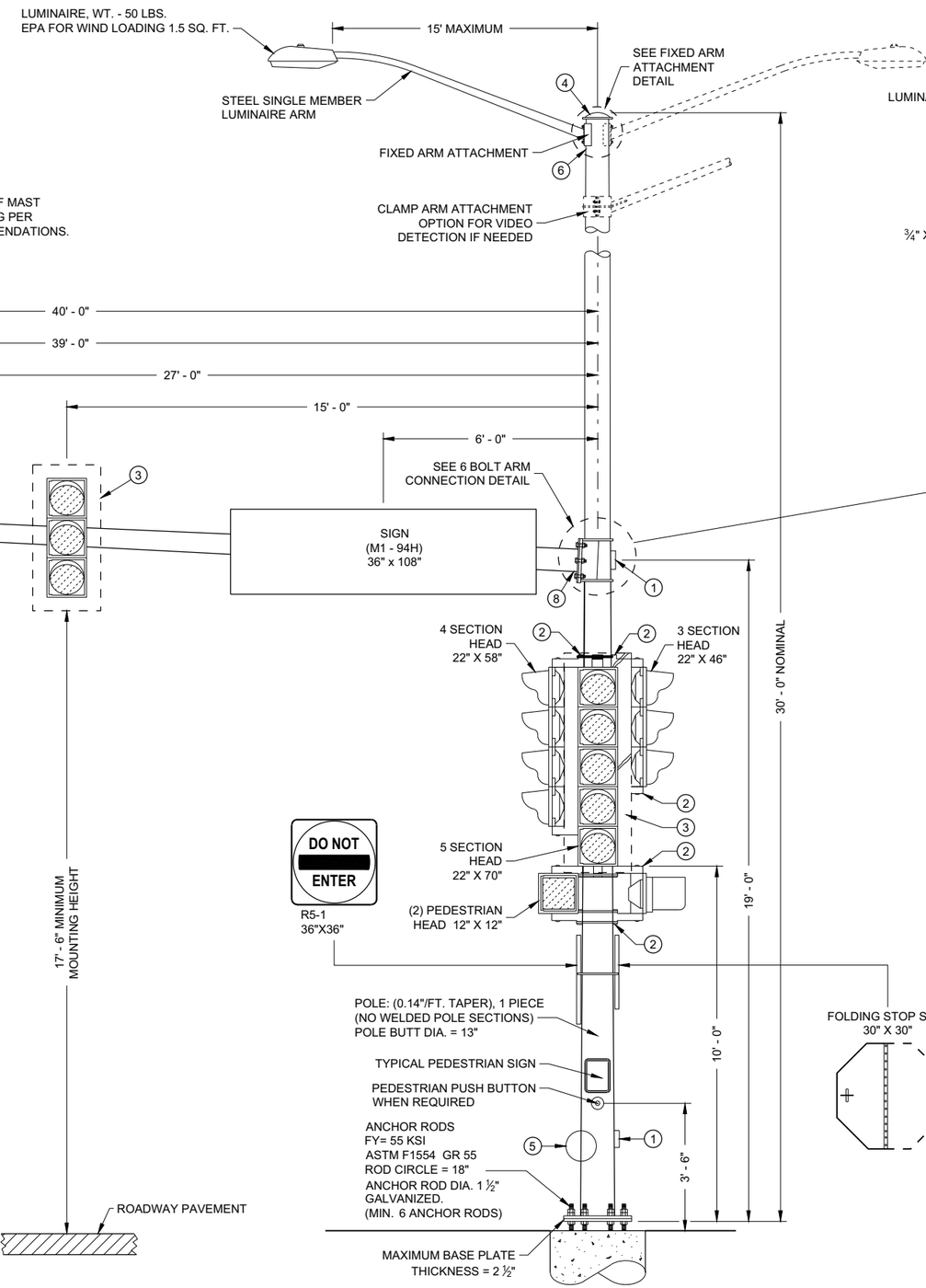

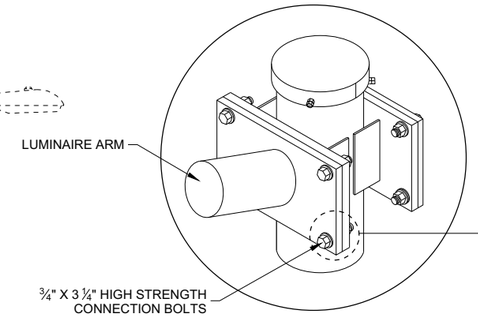

FIXED ARM ATTACHMENT DETAIL

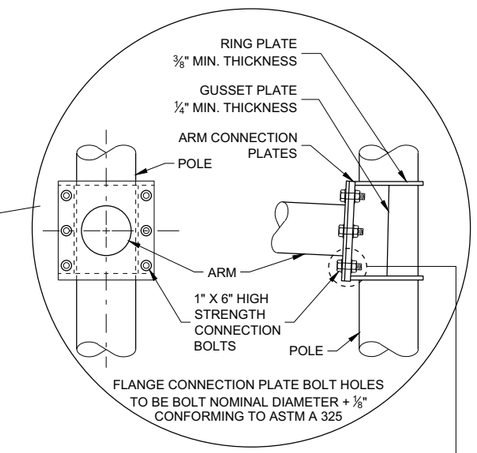

6 BOLT ARM CONNECTION DETAIL

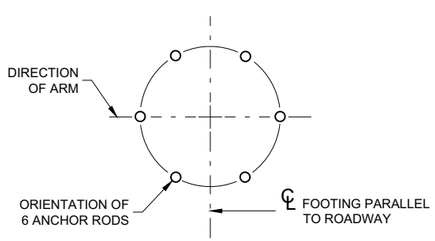

ANCHOR ROD LOCATION

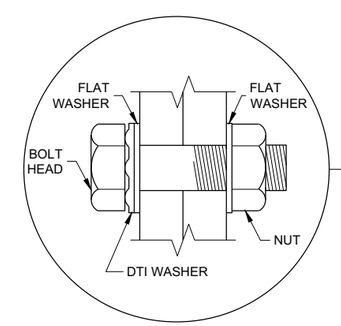

RECOMMENDED BOLT ASSEMBLY DETAIL

TYPE 10 SPECIAL POLE
40' MONOTUBE ARM
(MAXIMUM LOAD)

TYPE 10 SPECIAL POLE
40' MONOTUBE ARM

STATE OF WISCONSIN
DEPARTMENT OF TRANSPORTATION

APPROVED
August 2020 — DATE
/S/ Ahmet Demirbilek — STATE ELECTRICAL ENGI
FHWA

6

SDD 09E08 - 09g

GENERAL NOTES

DETAILS OF CONSTRUCTION NOT SHOWN ON THIS DRAWING SHALL CONFORM TO THE PERTINENT REQUIREMENTS OF THE CONTRACT.

POLE TYPES 9 AND 10 ARE FOR ARM LENGTHS 15 FOOT TO 30 FOOT.

POLE TYPES 9 SPECIAL AND 10 SPECIAL ARE FOR ARM LENGTHS 35 FOOT, 40 FOOT, AND 45 FOOT.

POLE TYPES 12 AND 13 ARE FOR ARM LENGTHS 35 FOOT TO 55 FOOT.

MONOTUBE POLES AND ARMS SHALL BE GALVANIZED STEEL.

RING STIFFENED BUILT UP BOX TYPE OF ATTACHMENT FOR TRAFFIC SIGNAL ARM.

ONE PIECE POLE CONSTRUCTION (NO WELDED POLE SECTIONS).

STANDARD STRAIGHT ARM DESIGN (3% ± RISE).

SECTION 657, POLES OF THE STANDARD SPECIFICATION SHALL APPLY TO THIS DRAWING.

PROVIDE WIREWAY THRU POLE WALL AND ARM CONNECTION PLATES. PROVIDE ROUND, SMOOTH INSIDE SURFACE.

MANUFACTURER'S SUBMITTED POLE DESIGNS AND DRAWINGS SHALL BE SIGNED AND STAMPED BY A REGISTERED PROFESSIONAL ENGINEER AND CERTIFIED AS BEING IN COMPLIANCE WITH THE AASHTO "LRFD SPECIFICATIONS FOR STRUCTURAL SUPPORTS FOR HIGHWAY SIGNS, LUMINAIRES AND TRAFFIC SIGNAL 2015 1ST EDITION (INCLUDING INTERIM REVISIONS)" AND ALL PERTINENT WISDOT SPECIFICATIONS AND DRAWINGS FOR THE LIGHTING STRUCTURES AS FOLLOWS:

CATEGORY III FATIGUE LOADS OF GALLOPING, TRUCK GUSTS (AT 45 MPH VEHICLE VELOCITY) AND NATURAL WIND GUSTS FOR DESIGN OF TYPE 9 AND TYPE 10 STRUCTURES.

CATEGORY II FATIGUE LOADS OF TRUCK GUSTS (AT 45 MPH VEHICLE VELOCITY) AND NATURAL WIND GUSTS FOR DESIGN OF TYPE 9 SPECIAL AND TYPE 10 SPECIAL STRUCTURES. IN LIEU OF DESIGNING FOR GALLOPING, A VIBRATION DAMPER MITIGATION DEVICE IS REQUIRED TO BE SUPPLIED AND INSTALLED AT THE END OF THE MAST ARM.

CATEGORY II FATIGUE FATIGUE LOADS OF GALLOPING, TRUCK GUSTS (AT 45 MPH VEHICLE VELOCITY) AND NATURAL WIND GUSTS FOR DESIGN OF TYPE12 AND TYPE 13 STRUCTURES.

115 MPH (700 YEAR MRI BASIC WIND SPEED).

SECURE THE OPENING BELOW THE BASE PLATE WITH STAINLESS STEEL OR GALVANIZED STEEL MESH AND SECURE THE MESH WITH ¾" STAINLESS STEEL BANDING AROUND THE LEVELING NUTS.

INDENT PRINT (NOMINAL ½" HIGH) THE POLE LENGTH AND FIRST TWO LETTERS OF THE MANUFACTURERS NAME ON TWO SIDES OF THE BASE PLATE 180 DEGREES APART, BEFORE GALVANIZING. THE ARM SHALL BE IDENTIFIED WITH THE SAME INFORMATION BY INDENT PRINT.

SIGNAL FACE SHALL BE MOUNTED 6 INCHES (NOMINAL) FROM THE END OF THE MONOTUBE ARM OR AS SHOWN ON THE PLAN CONSTRUCTION DETAIL OR A S DIRECTED BY THE PROJECT ENGINEER/ELECTRICAL OPERATIONS PERSONNEL. MOUNT ALL LIKE HEAD AT SAME ELEVATION.

SIGN MOUNTING BRACKETS SHALL BE FURNISHED IN ACCORDANCE WITH SECTION 637 OF THE STANDARD SPECIFICATIONS FOR HIGHWAY AND STRUCTURE CONSTRUCTION.

1. DESIGN FOR MAXIMUM ALLOWABLE HAND HOLE WITH COVER ASSEMBLY WITH TWO ¼" X ¾" - 20 TPI STAINLESS STEEL HEX HEAD BOLTS.
2. SIGNAL MOUNTING BRACKETS FOR POLE MOUNTING, MOUNT WITH CAP SCREW AND BANDING (SEE SPECIFICATION SECTION 658).
3. SECURELY MOUNT BACK PLATES, PROJECTING 5" BEYOND ALL SIDES OF THE SIGNAL FACE HOUSING, PER MANUFACTURERS RECOMMENDATIONS.
4. THE TOP OF THE POLE SHAFT AND THE MONOTUBE ARM SHALL BE EQUIPPED WITH A REMOVABLE, VENTILATED CAP HELD SECURELY IN PLACE WITH SET SCREWS.
5. FACTORY WELDED BRACKET FOR GROUNDING LUG, OPPOSITE HAND HOLD, (LUG AND HARDWARE PAID UNDER SEPARATE ITEM). PROVIDE HOLE IN BRACKET FOR ¼" X ¾" - 20 TPI STAINLESS STEEL HEX HEAD BOLT.
6. FACTORY WELDED "J" HOOK FOR STRAIN RELIEF FOR POLE LUMINAIRE WIRE.
7. INSTALL STRUCTURAL IDENTIFICATION PLAQUES.

   STRUCTURAL IDENTIFICATION PLAQUES SHALL BE PLACED ON THE POLES IN THE SAME DIRECTION AS THE ARM.

   MOUNTING HEIGHT SHALL BE 6' - 0" ABOVE THE CURB OR SHOULDER. ADJUST IF IT IS KNOWN THAT REQUIRED TRAFFIC SIGNS WILL BE OBSTRUCTED.
8. FACTORY DRILLED ½" DRAIN HOLE 2" FROM FLANGE CONNECTION PLATE.

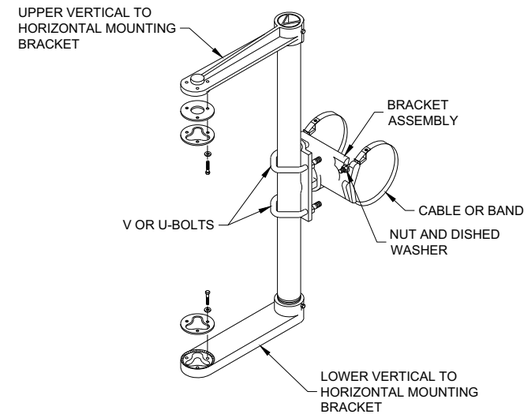

SIGNAL FACE MOUNTING BRACKET DETAIL FOR MONOTUBE ARM

(MOUNT PER MANFACTURER'S RECOMMENDATION)

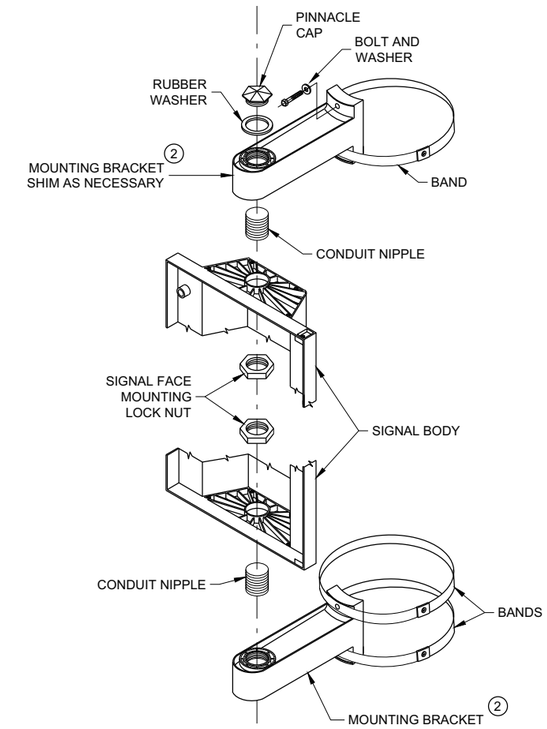

SIGNAL FACE VERTICAL MOUNTING DETAIL

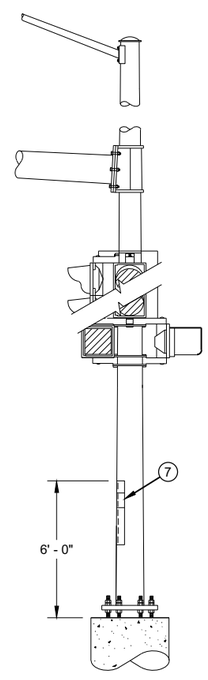

STRUCTURAL IDENTIFICATION PLAQUE PLACEMENT

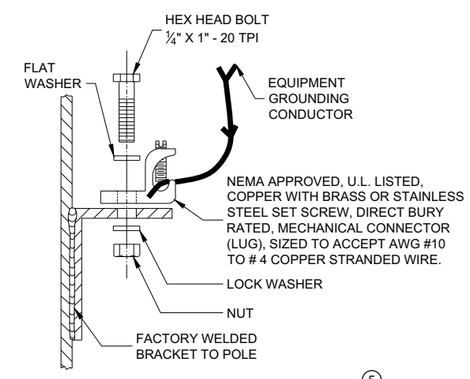

TYPICAL GROUNDING CONNECTIONS 5

NUT, BOLT AND WASHERS SHALL BE STAINLESS STEEL

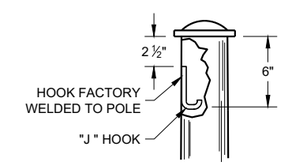

TYPICAL "J" HOOK WIRE SUPPORT 6

GENERAL NOTES AND HARDWARE FOR TYPES 9,10, 9/10 SPECIAL, 12 AND 13 POLES WITH MONOTUBE ARMS

STATE OF WISCONSIN
DEPARTMENT OF TRANSPORTATION

APPROVED
August 2020 — DATE
/S/ Ahmet Demirbilek — STATE ELECTRICAL ENGINEER
FHWA

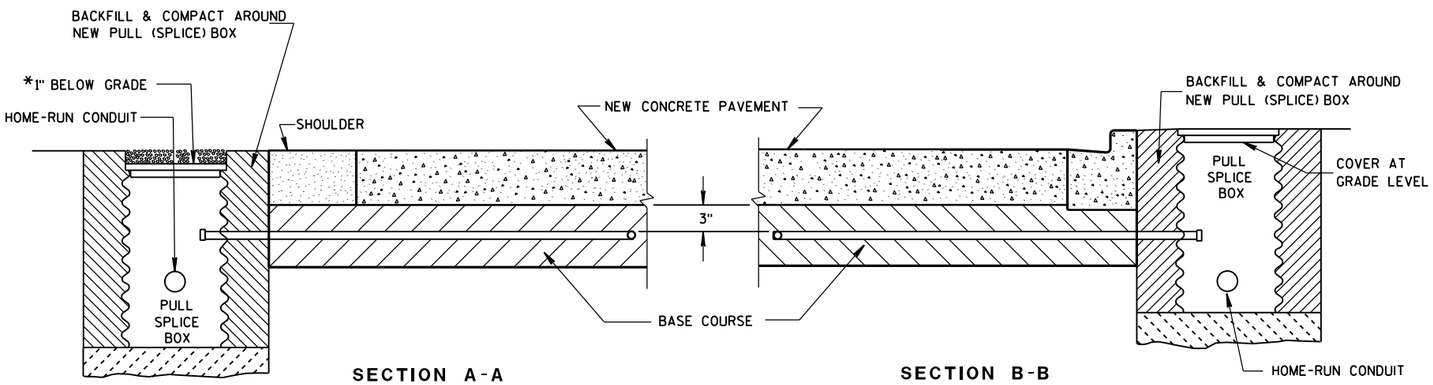

SECTION A-A
NO CURB & GUTTER

SECTION B-B
CURB & GUTTER

*RECESS PULL (SPLICE) BOX SO THAT THE COVER IS 3" BELOW GRADE IN SHOULDER AREAS OF CRUSHED AGGREGATE. BACKFILL OVER COVER WITH THE CRUSHED AGGREGATE TO BRING THE AREA TO GRADE LEVEL.

LOOP DETECTOR INSTALLATION DETAIL

GENERAL NOTES

DETAILS OF CONSTRUCTION, MATERIALS AND WORKMANSHIP NOT SHOWN ON THIS DRAWING SHALL CONFORM TO THE PERTINENT REQUIREMENTS OF THE CONTRACT.

LOOP SIZE, CONFIGURATION LOCATION, NUMBER OF TURNS OF WIRE AND ASSOCIATED SIGNAL PHASE SHALL BE AS SHOWN ON THE PLANS.

PITCH LEAD OUT CONDUIT TO DRAIN TO ROADSIDE PULL (SPLICE) BOX.

SPLICES SHALL BE INSTALLED BY USING CAST IN PLACE SPLICE KITS LISTED ON THE DEPARTMENTS APPROVED PRODUCTS LIST OR AN ENGINEER APPROVED EQUAL. NON-INSULATED BUTT SPLICES TO FIT #12 AWG STRANDED WIRE SHALL BE USED. SPLICES SHALL BE SOLDERED AND INSULATED FROM EACH OTHER AS PER INSTRUCTIONS INCLUDED IN THE SPLICE KIT.

MEASURE GROUND RESISTANCE USING A MEGGER. REPLACE LOOP WIRE NOT ATTAINING A READING OF INFINITY TO GROUND.

AFTER SPLICING THE LOOP WIRE TO THE LOOP LEAD-IN CABLE, THE CONTRACTOR SHALL MEASURE INDUCTANCE, GROUND RESISTANCE AND WIRE RESISTANCE AT THE CABINET END OF THE LEAD-IN CABLE AND FURNISH A COPY OF THE READINGS TO THE PROJECT ENGINEER FOR EVALUATION.

LOOP DETECTOR LEADS SHALL BE IDENTIFIED WITH THEIR ASSOCIATED LOOP BY USE OF WATERPROOF TAGS AT BOTH ENDS OF THE CABLE. A LISTING OF THE CABLE IDENTIFICATION PER INDIVIDUAL LOOP LEAD-IN SHALL BE PLACED IN THE CABINET.

THE #12 AWG. LOOP WIRE IN THE PULL (SPLICE) BOX SHALL BE HAND TWISTED AT LEAST 3 TWISTS PER FOOT BEFORE BEING SPLICED TO THE LOOP LEAD-IN CABLE.

SPLICES OF LOOP WIRE TO LEAD-IN CABLE SHALL BE MADE ONLY IN PULL (SPLICE) BOXES AT THE SIDE OF THE ROAD.

THE #12 AWG LOOP WIRE SHALL BE INSTALLED FROM THE ROADSIDE PULL (SPLICE) BOX THROUGH THE LOOP CONDUIT, BACK TO THE ROADSIDE PULL (SPLICE) BOX, AND BE INSTALLED IN ONE, NON-SPLICE CONTINUOUS LENGTH.

PROTECTION OF THE CONDUIT IN THE BASE COURSE, SHALL BE REQUIRED AFTER INSTALLATION AND BEFORE NEW PAVEMENT IS INSTALLED.

SHOULD INSTALLATION REPAIR BE REQUIRED, IT SHALL BE DONE UNDER THE DIRECTION OF THE PROJECT ENGINEER.

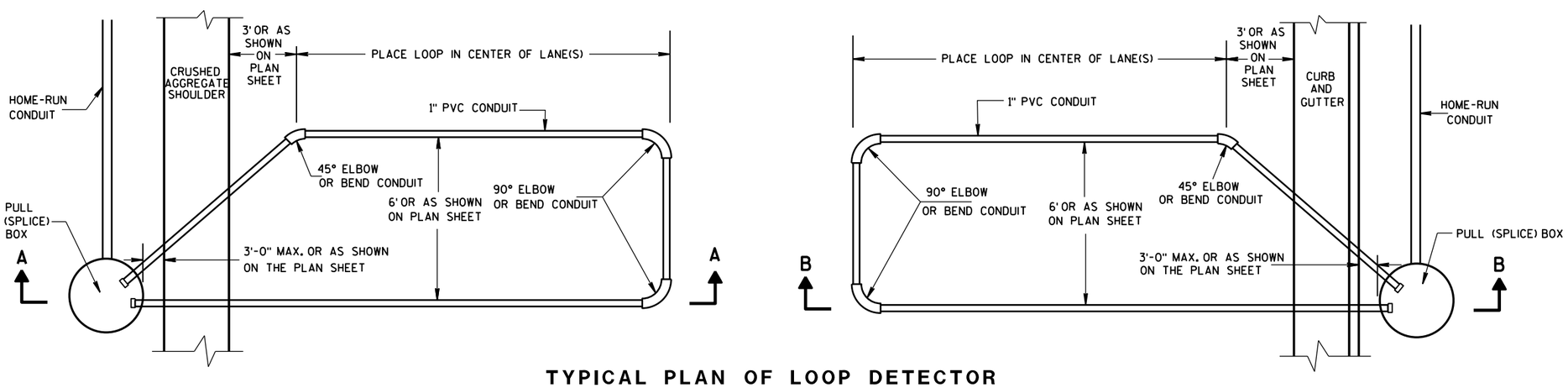

TYPICAL PLAN OF LOOP DETECTOR WITH 18" OR 24" PULL (SPLICE) BOX

LOOP DETECTOR INSTALLED IN BASE COURSE WITH PULL (SPLICE) BOX OFF ROADWAY (OPTION 1)

STATE OF WISCONSIN
DEPARTMENT OF TRANSPORTATION

APPROVED
Sept. 2014 — DATE
/S/ Ahmet Demirbilek — STATE ELECTRICAL
FHWA

MINIMUM POLE LENGTHS	CLASS	POLE BURIAL DEPTHS
25'	V	5'
30'	V	6'
35'	IV	7'
40'	IV	8'
45'	IV	9'

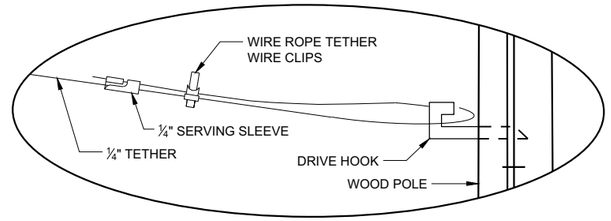

DETAIL "A"

GENERAL NOTES

DETAILS OF CONSTRUCTION, MATERIALS AND WORKMANSHIP NOT SHOWN ON THIS DRAWING SHALL CONFORM TO THE PERTINENT REQUIREMENTS OF THE CONTRACT.

1. WOOD POLES SHALL BE CLASS 4. LENGTH DETERMINED BY SIGNAL PLAN.

2. SIGNAL FACES:
   - A. ALL SECTIONS SHALL BE 12" AND POLYCARBONATE.
   - B. EACH SHALL CONTAIN A 5" WIDE DULL BLACK POLYCARBONATE BACKPLATE.
   - C. EACH SHALL BE WIRED FROM THE TOP SIGNAL MOUNTING BRACKET.
   - D. NEAR RIGHT SIGNAL FACE SUSPENDED ON THE TETHER (NO BACKPLATE) SHALL NOT BE OVER THE TRAVELED WAY. IF THE POLE IS WITHIN 5 FEET OF THE TRAVELED WAY MOUNT THE SIGNAL FACE ON THE WOOD POLE WITH BACKPLATE.
   - E. FAR INDICATION SHALL BE MAINTAINED OVER CENTER OF TRAFFIC LANE.

3. SPAN WIRE:
   - A. EACH SPAN WIRE SHALL BE INDIVIDUALLY DOWN GUYED
   - B. SIGNAL AND LIGHTING CABLES SHALL ONLY BE ATTACHED TO THE UPPER SPAN WIRE.
   - C. THE SIGNAL ASSEMBLY SHALL HAVE A 17' MIN. HEIGHT ABOVE THE ROADWAY. THIS SHALL BE MEASURED AFTER THE SPAN WIRE INSTALLATION IS COMPLETED WITH ALL CABLES AND SIGNAL FACES IN PLACE. MAINTAIN MINIMUM AND MAXIMUM HEIGHTS AS ROADWAY WORK PROGRESSES.

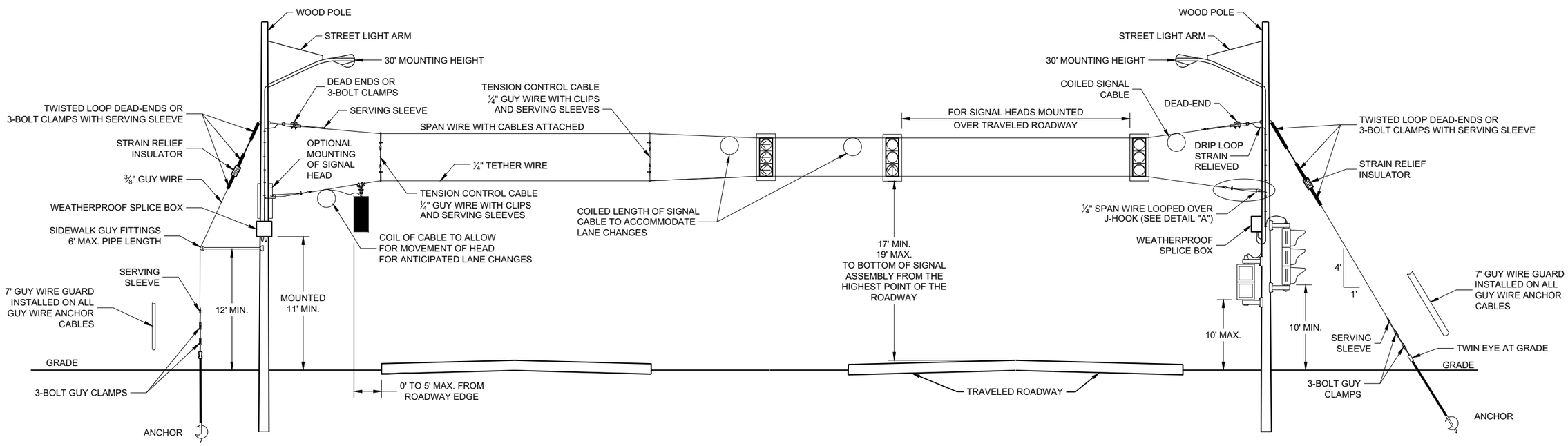

SPAN WIRE
TEMPORARY SIGNALS
4 LANE ROADWAYS

SPAN WIRE TEMPORARY TRAFFIC SIGNAL

STATE OF WISCONSIN
DEPARTMENT OF TRANSPORTATION

APPROVED
June 2015 — DATE
/S/ Ahmet Demerbilek — STATE ELECTRICAL ENGI

FHWA

6

SDD09G01 - 04b

6

SDD09G01 - 04b

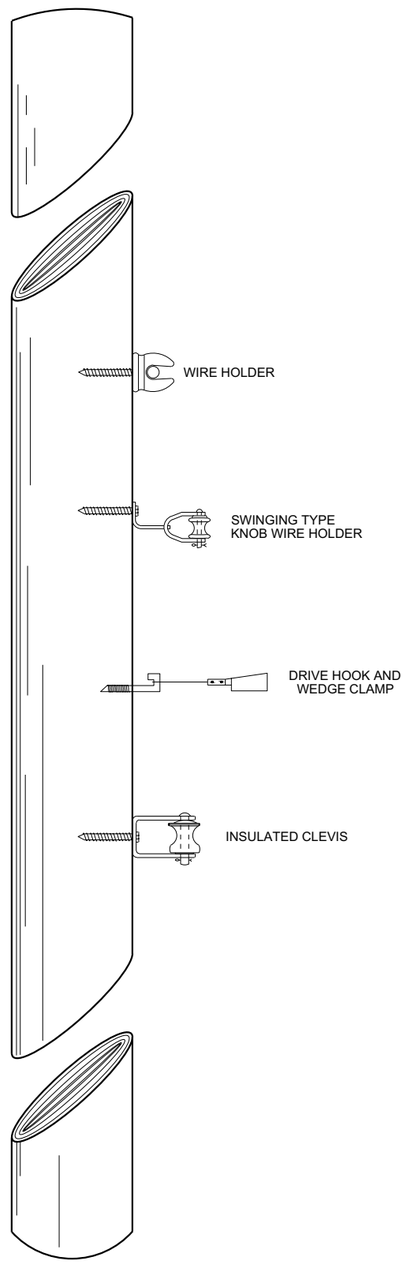

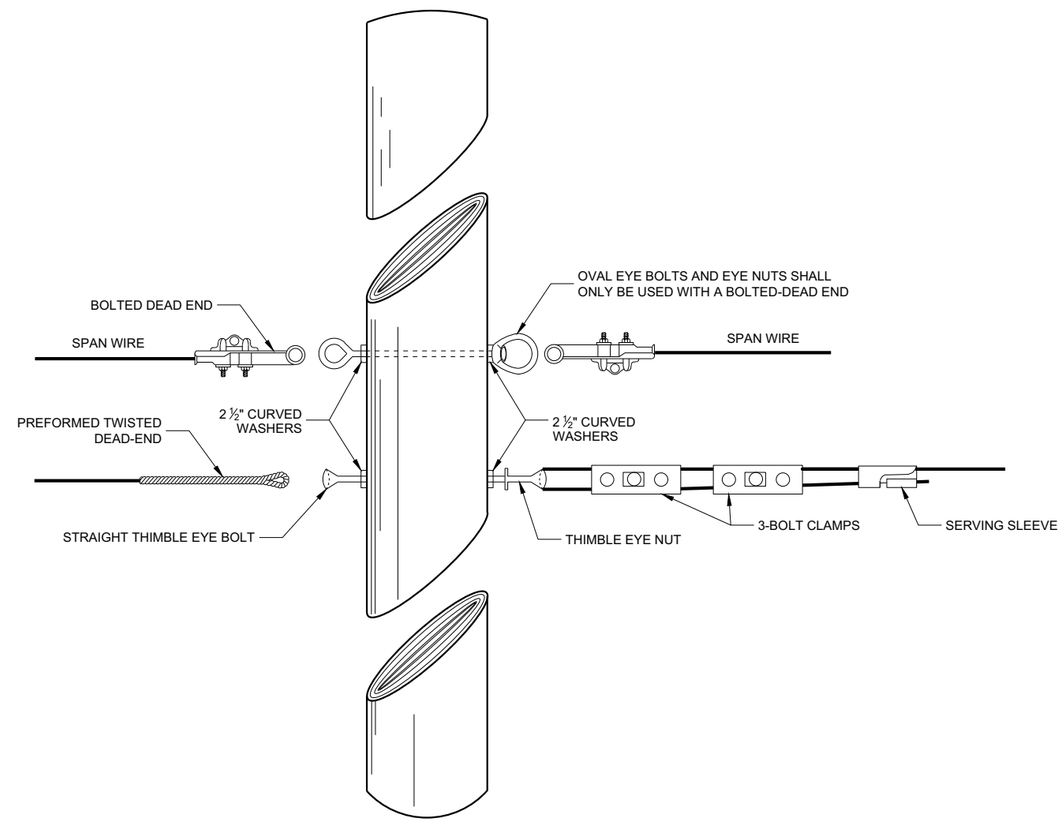

6

6

SPAN WIRE TEMPORARY TRAFFIC SIGNAL

STATE OF WISCONSIN
DEPARTMENT OF TRANSPORTATION

APPROVED
June 2015 — DATE
/S/ Ahmet Demerbilek — ROADWAY STANDARDS DEVE ENGINEER
FHWA

SDD 09G01 - 4d

SDD 09G01 - 4d

GENERAL NOTES

1. USE ¾" DRILL IN WOOD POLE TO PROVIDE FOR ⅝" BOLTS.
2. SAFETY LOOP REQUIRED ON EACH END OF ALL SPAN WIRES.

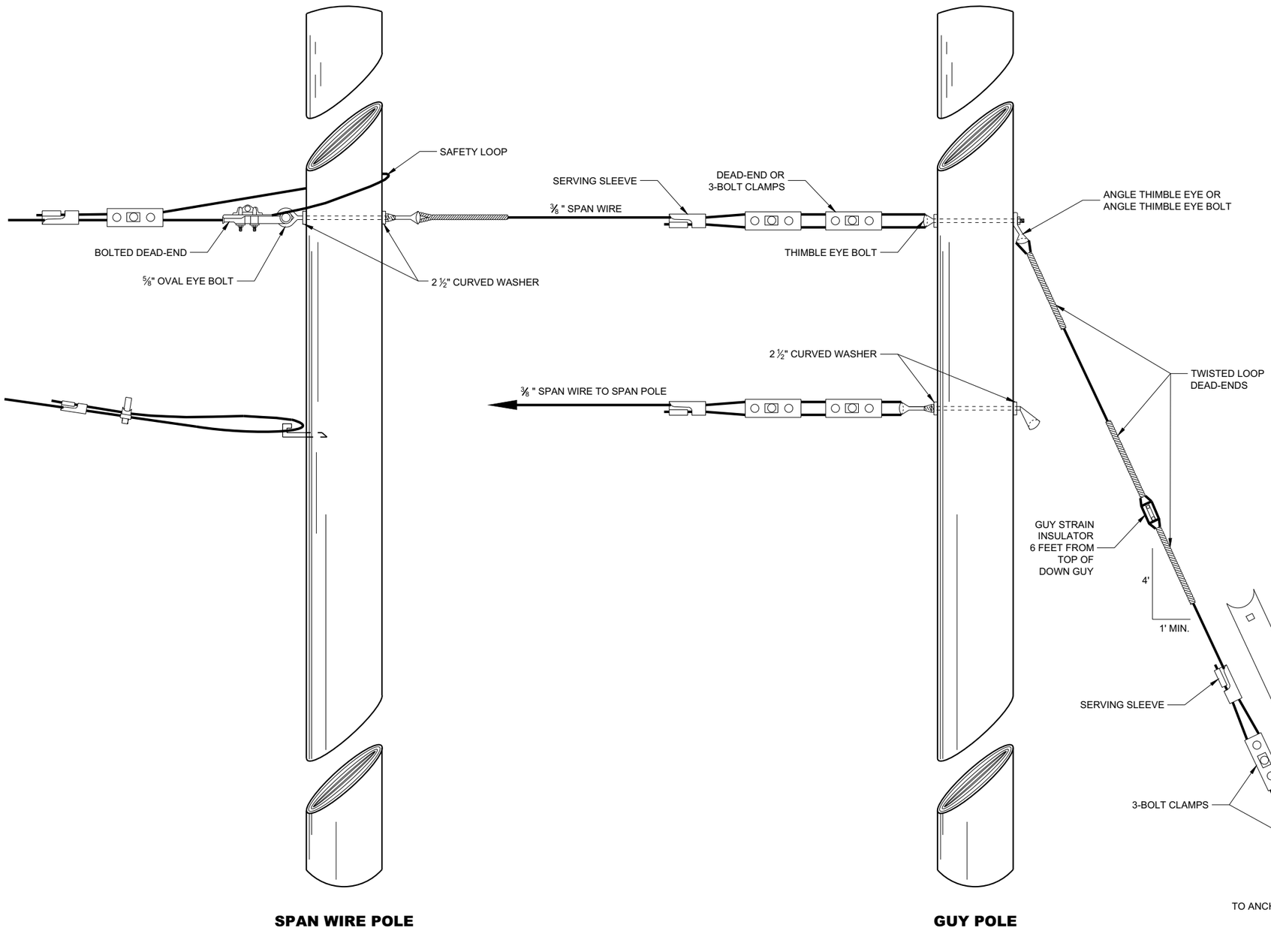

SPAN WIRE POLE

GUY POLE

TYPICAL DEAD-ENDINGS OR GUYING

SPAN WIRE TEMPORARY TRAFFIC SIGNAL

STATE OF WISCONSIN
DEPARTMENT OF TRANSPORTATION

APPROVED
June 2015 — DATE
/S/ Ahmet Demerbilek — ROADWAY STANDARDS DEVE ENGINEER
FHWA

6

SDD 09G01 - 4e

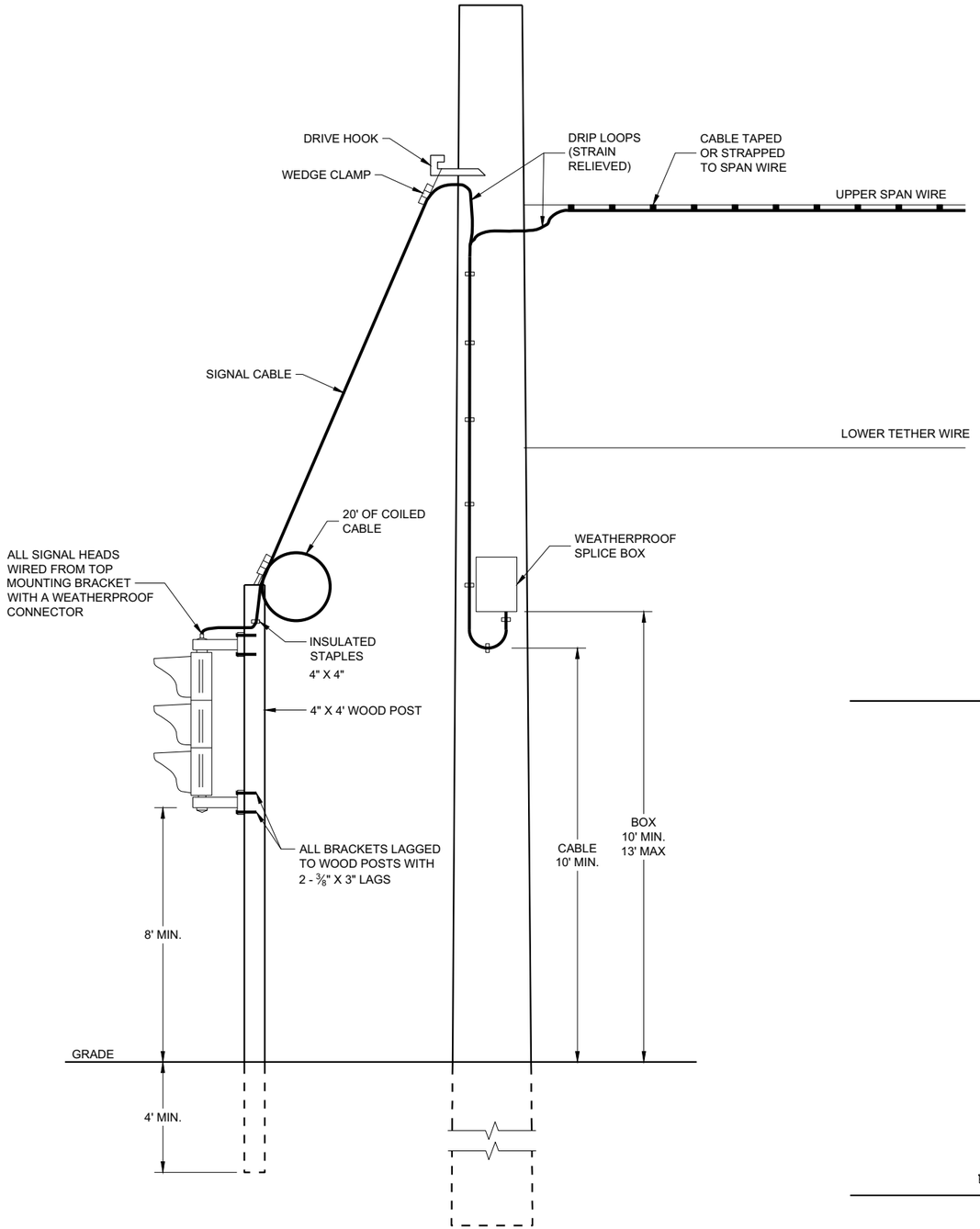

TYPICAL DROP TO TEMPORARY MOVEABLE SIGNAL

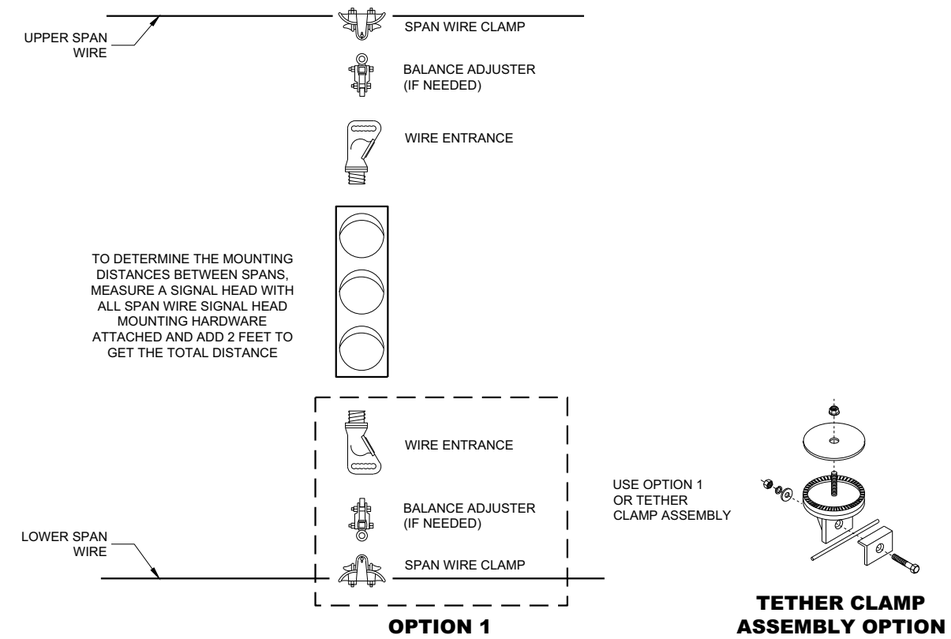

TYPICAL SPAN WIRE MOUNTING HARDWARE

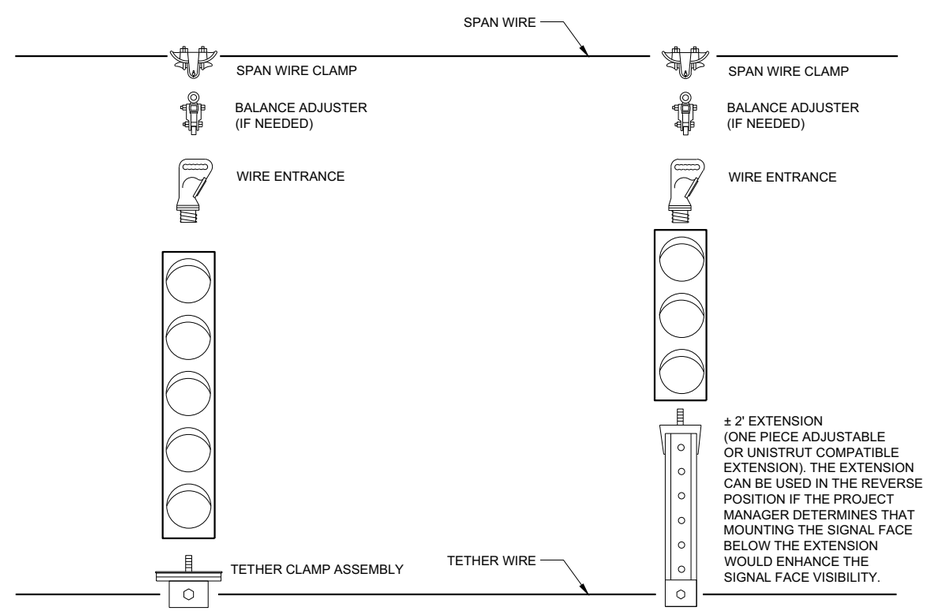

5 SECTION VERTICAL WITH 3 SECTION VERTICAL ON ONE SPAN WIRE

SPAN WIRE TEMPORARY TRAFFIC SIGNAL

STATE OF WISCONSIN
DEPARTMENT OF TRANSPORTATION

APPROVED
June 2015 — DATE
/S/ Ahmet Demerbilek — ROADWAY STANDARDS DEVE ENGINEER
FHWA

6

SDD 09G01 - 4f

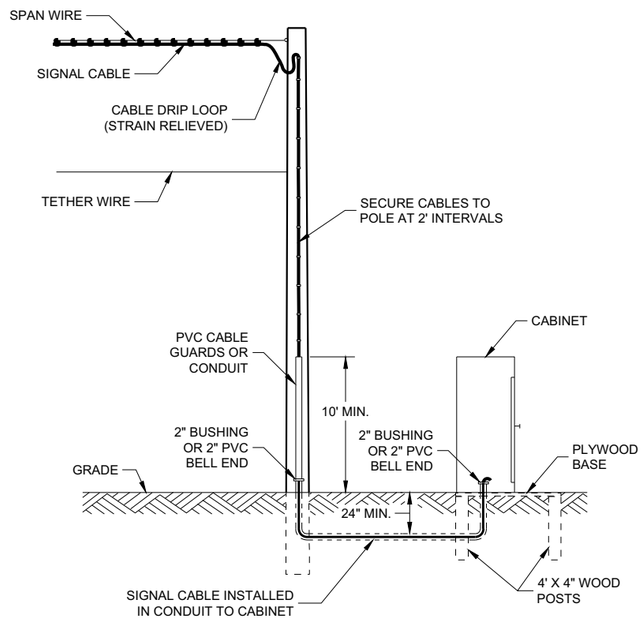

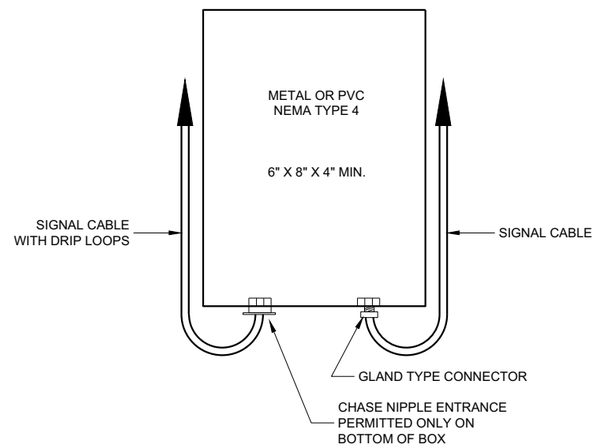

SPLICE BOX

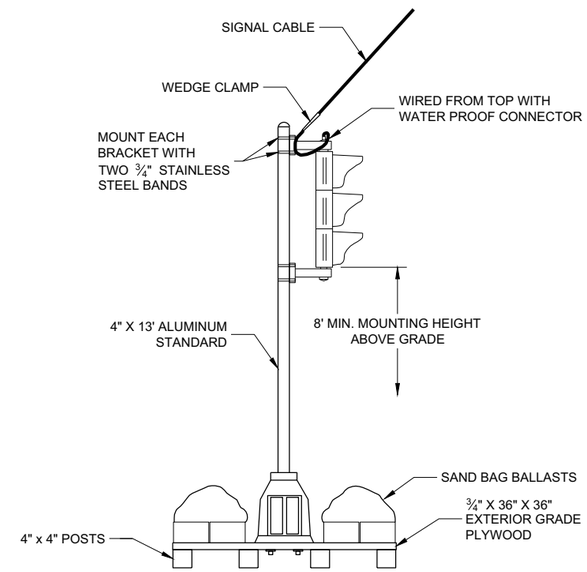

TYPICAL SKID TYPE TEMPORARY

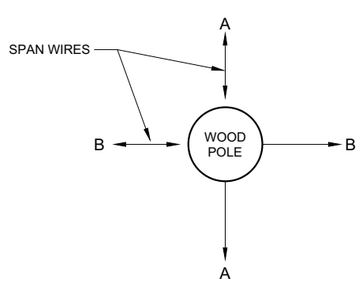

ALL DOWN OR SIDEWALK GUYS
SHALL BE INSTALLED IN THE
OPPOSITE DIRECTION OF THE
STRAIN OF THE SPAN WIRE

CORNER POLES

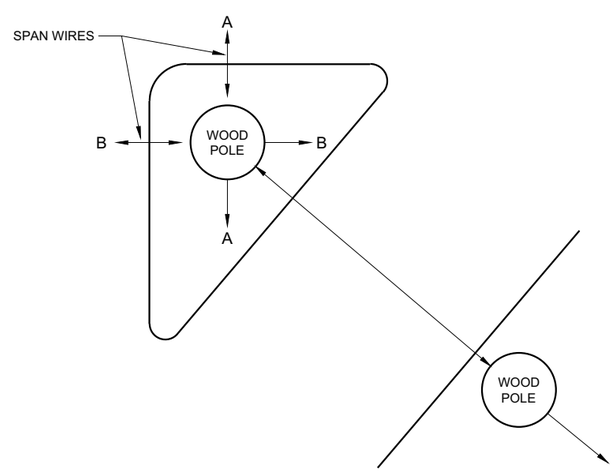

ISLAND POLES

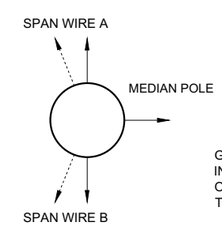

GUY AWAY FROM
INTERSECTION OR IN
OPPOSITE DIRECTION OF
THE SPAN LOADING

MEDIAN POLES

SPAN WIRE TEMPORARY TRAFFIC SIGNAL

STATE OF WISCONSIN
DEPARTMENT OF TRANSPORTATION

APPROVED
June 2015 — DATE
/S/ Ahmet Demerbilek — ROADWAY STANDARDS DEVE ENGINEER
FHWA

6

SDD 09G01 - 4g

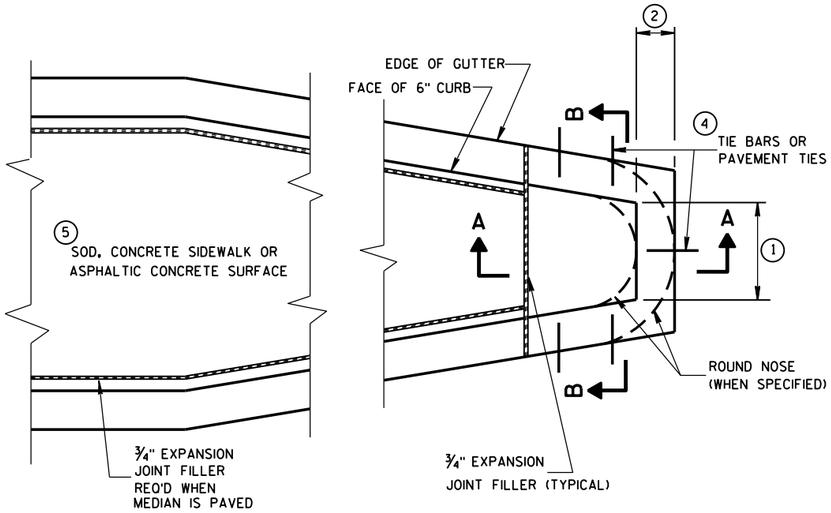

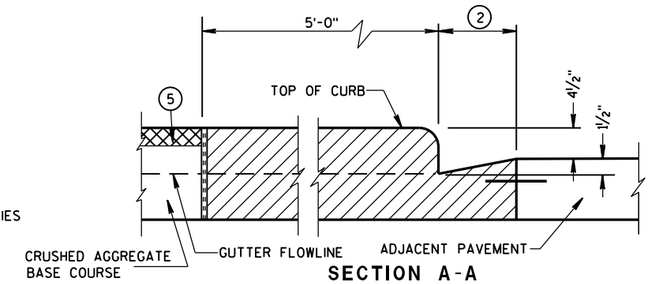

SECTION A-A

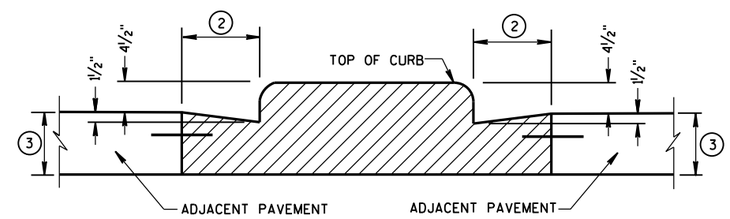

SECTION B-B

CONCRETE MEDIAN BLUNT NOSE DETAIL

GENERAL NOTES

DETAILS OF CONSTRUCTION, MATERIALS AND WORKMANSHIP NOT SHOWN ON THIS DRAWING SHALL CONFORM TO THE PERTINENT REQUIREMENTS OF THE STANDARD SPECIFICATIONS AND THE APPLICABLE SPECIAL PROVISIONS.

1. SEE PLAN FOR MEDIAN NOSE WIDTH AND RADIUS (FOR ROUND NOSE ALTERNATE).
2. WIDTH OF GUTTER TO MATCH EXISTING ADJACENT GUTTER OR AS SPECIFIED ELSEWHERE IN THE PLAN.
3. DEPTH EQUAL TO ADJACENT PAVEMENT. ADJACENT PAVEMENT STRUCTURE DETAILS ARE SHOWN ON THE PLAN. TYPICAL OPTIONS ARE:
   (1) NEW OR EXISTING CONCRETE PAVEMENT.
   (2) ASPHALTIC CONCRETE PAVEMENT OVER NEW OR EXISTING CONCRETE BASE COURSE.
   (3) ASPHALTIC CONCRETE PAVEMENT OVER CRUSHED AGGREGATE BASE COURSE.
4. TIE BARS OR PAVEMENT TIES REQUIRED IN NEW CONCRETE PAVEMENT OR CONCRETE BASE COURSE. TIE BARS SHALL BE NO. 4 X 2'-0" SPACED AT 2'-0" C-C.

   PAVEMENT TIES REQUIRED IN EXISTING CONCRETE BASE COURSE. PAVEMENT TIES SHALL BE NO. 6 X 1'-0" SPACED AT 3'-0" C-C INSTALLED ON A HORIZONTAL SKEW OF 6:1. THE DIRECTION OF SKEW SHALL ALTERNATE AFTER EVERY ONE OR TWO BARS.
5. SURFACE TYPE AND DETAILS ARE SHOWN ELSEWHERE IN THE PLAN.

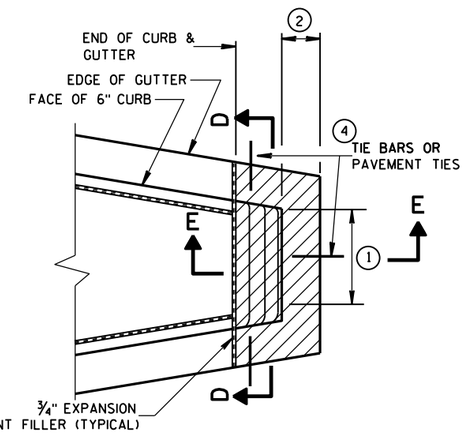

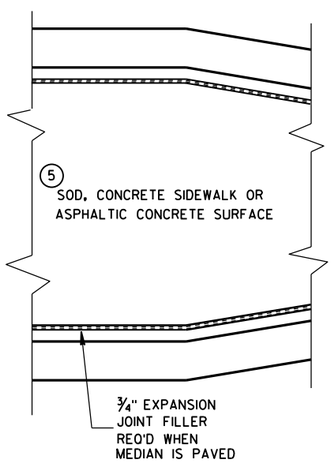

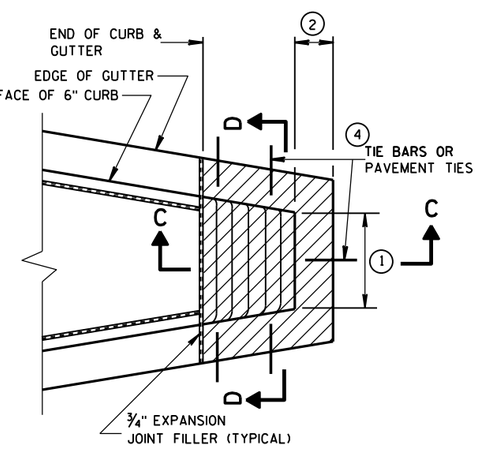

CONCRETE MEDIAN SLOPED NOSE TYPE 1

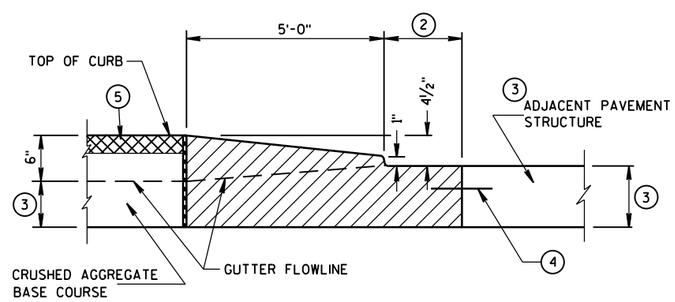

SECTION C-C

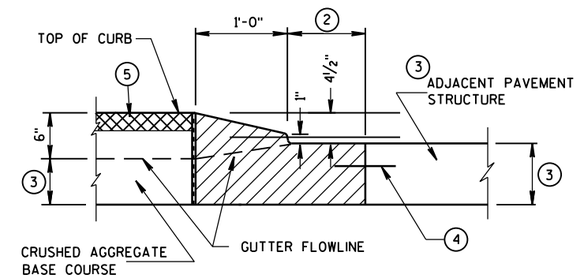

SECTION E-E

CONCRETE MEDIAN SLOPED NOSE TYPE 2

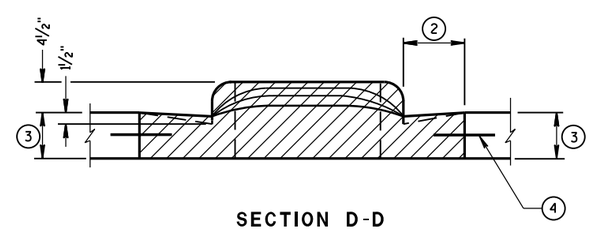

SECTION D-D

CONCRETE MEDIAN NOSE	
STATE OF WISCONSIN DEPARTMENT OF TRANSPORTATION	
APPROVED 6/8/2006 DATE	/S/ Jerry H. Zogg ROADWAY STANDARDS DEVELOPMENT ENGINEER
FHWA	

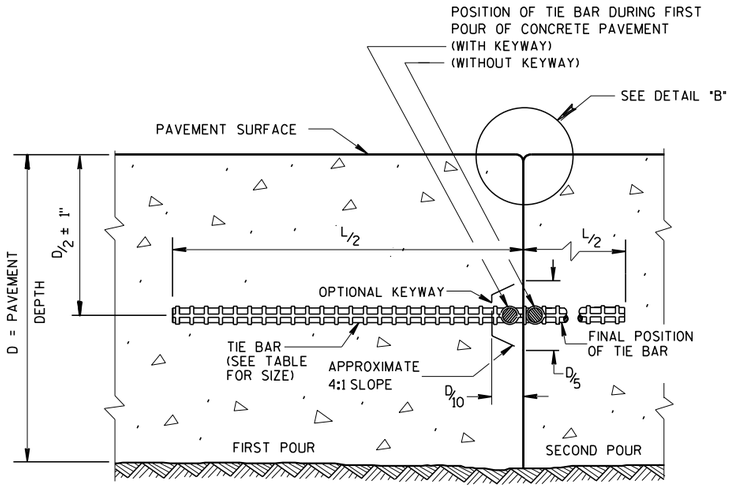

CONSTRUCTION JOINT

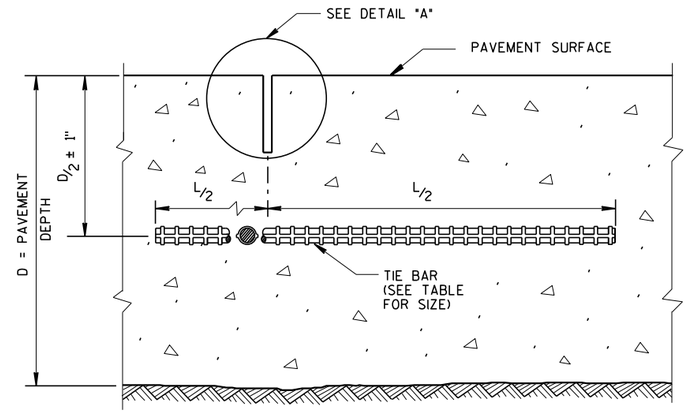

SAWED JOINT

GENERAL NOTES

CREATE A LONGITUDINAL JOINT FOR PAVEMENT WIDTHS GREATER THAN 15 FEET.

CORRELATE LONGITUDINAL JOINTS WITH LANE LINES WHEN POSSIBLE.

1. ANCHOR TIE BARS INTO DRILLED HOLES WITH AN EPOXY.
2. PAVEMENT THAT WAS IN PLACE PRIOR TO THE CONTRACT.

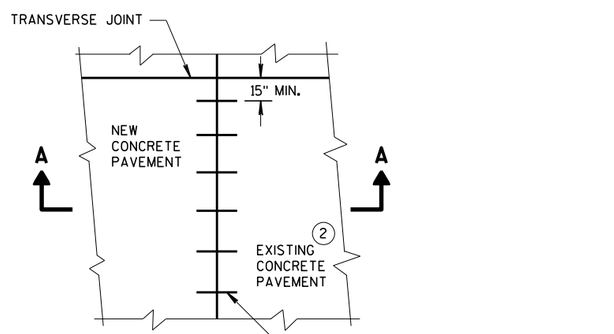

PLAN VIEW

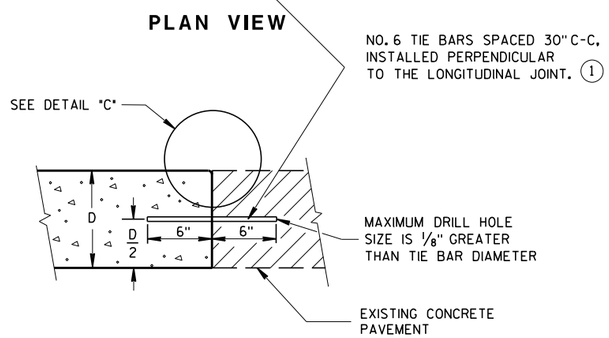

SECTION A-A
LONGITUDINAL CONSTRUCTION JOINT TIE BARS ANCHORED INTO EXISTING PAVEMENT

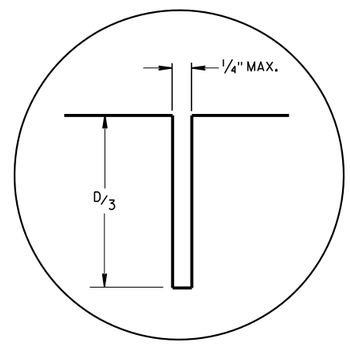

DETAIL "A"

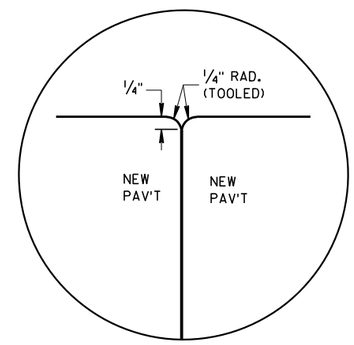

DETAIL "B"

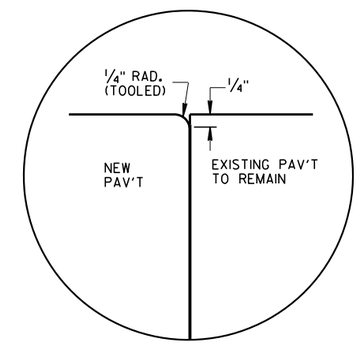

DETAIL "C"

TIE BAR TABLE

PAVEMENT DEPTH (D)	TIE BAR SIZE	TIE BAR LENGTH (L)	MAX. TIE BAR SPACING
< 10 1/2"	NO. 4	30"	36"
≥ 10 1/2"	NO. 5	36"	36"
	NO. 4 *	30"	24" **

* SUBSTITUTE BENT BARS AT LONGITUDINAL JOINTS WHEN EQUIPMENT LIMITATIONS DURING CONSTRUCTION WARRANT (e.g. AUXILIARY LANES OR TURN LANES)

** CONFORM TO 15" MINUMUM SPACING FROM TRANSVERSE JOINTS; SPACING BETWEEN TIE BARS WILL BE 30" AT TRANSVERSE JOINTS.

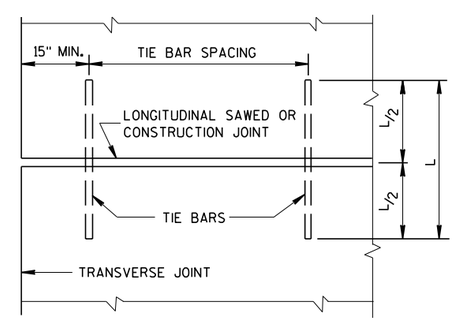

PLAN VIEW
SHOWING LOCATION OF TIE BARS

CONCRETE PAVEMENT
LONGITUDINAL JOINTS AND TIES

STATE OF WISCONSIN
DEPARTMENT OF TRANSPORTATION

APPROVED
March 2018 — DATE
/S/ Peter Kerr — PAVEMENT SUPE
FHWA

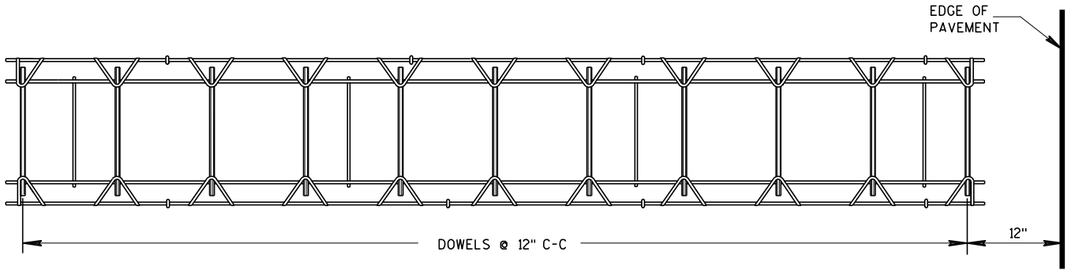

PLAN VIEW

SIDE VIEW

CONTRACTION JOINT DOWEL ASSEMBLY 1

PAVEMENT DEPTH, DOWEL BAR SIZE AND JOINT SPACING TABLE

PAVEMENT DEPTH (D)	DOWEL BAR DIAMETER	CONTRACTION JOINT SPACING
5 1/2", 6", 6 1/2"	NONE	12'
7", 7 1/2"	1"	14'
8", 8 1/2"	1 1/4"	15'
9", 9 1/2"	1 1/4"	15'
10" & ABOVE	1 1/2"	15'

GENERAL NOTES

CONTRACTION JOINTS

CONSTRUCT TRANSVERSE CONTRACTION JOINTS NORMAL TO THE CENTERLINE. SHOW THE LOCATION OF CONTRACTION JOINTS THROUGH INTERSECTIONS ON THE PLANS OR AS DIRECTED BY THE ENGINEER.

INSTALL DOWEL BARS PARALLEL TO THE PAVEMENT CENTERLINE AND PAVEMENT SURFACE.

FOR PAVEMENT SLABS OF VARYING WIDTHS, LOCATE THE OUTER MOST DOWEL BAR SO THAT THE CENTER OF THE BAR IS A MINIMUM OF 6 INCHES AND A MAXIMUM OF 18 INCHES FROM THE LONGITUDINAL JOINT AND THE FREE EDGE OF PAVEMENT.

CONSTRUCTION JOINTS

LOCATE CONSTRUCTION JOINTS A MINIMUM OF 6 FEET FROM THE NEAREST CONTRACTION JOINT AND ALIGN PARALLEL TO CONTRACTION JOINTS.

1. OBTAIN THE ENGINEER'S APPROVAL FOR THE USE OF ALTERNATIVE DESIGNS OF THE DOWEL ASSEMBLY. USE MECHANICAL DOWEL BAR INSERTERS OR DOWEL ASSEMBLIES WHEN CONSTRUCTING CONTRACTION JOINTS.
2. SECURE BASKETS WITH ANCHORS TO HOLD DOWEL BARS IN THE CORRECT POSITION AND ALIGNMENT. TYPE, LOCATION, NUMBER AND LENGTH OF ANCHORS ARE DEPENDENT UPON FIELD CONDITIONS.
3. FORM OR SAW CONSTRUCTION JOINTS. PROVIDE A 1/4-INCH RADIUS AT FORMED JOINTS.
4. PROVIDE A SMOOTH VERTICAL FACE FOR THE ENTIRE DEPTH OF THE PAVEMENT WHEN FORMING CONSTRUCTION JOINTS.
5. INSTALL DOWEL BARS AT CONSTRUCTION JOINTS BY FORMING OR DRILLING. INSTALL FORMED DOWEL BARS 12 INCHES C-C AND 12 INCHES FROM PAVEMENT EDGE. REMOVE EXCESS CONCRETE FROM THE FREE END OF THE DOWEL BAR IF DOWEL BARS ARE FORMED THROUGH A HEADER BOARD. INSTALL DRILLED DOWEL BARS ACCORDING TO *DRILLED DOWEL BAR CONSTRUCTION JOINT* DETAIL.
6. APPLY A THIN UNIFORM COATING OF SURFACE TREATMENT TO THE FREE END OF DOWEL BARS TO PREVENT BONDING.
7. ANCHOR DOWEL BARS INTO DRILLED HOLES WITH AN EPOXY. MAXIMUM DRILLED HOLE SIZE IS 1/8-INCH GREATER THAN DOWEL BAR DIAMETER, 9 INCHES IN LENGTH.

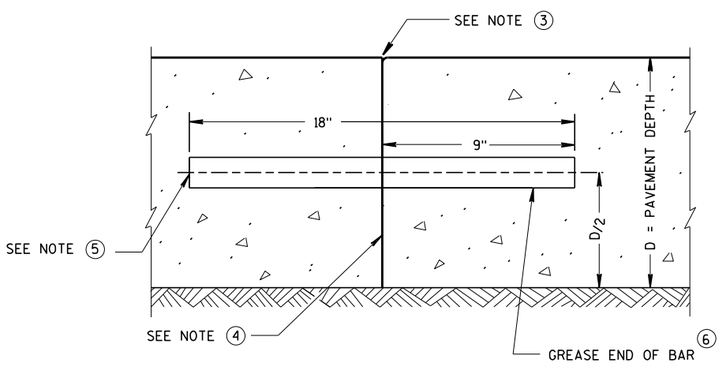

TRANSVERSE CONSTRUCTION JOINT

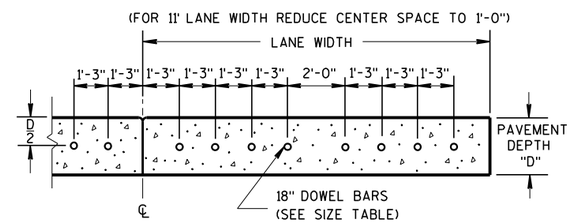

DRILLED DOWEL BAR CONSTRUCTION JOINT 7

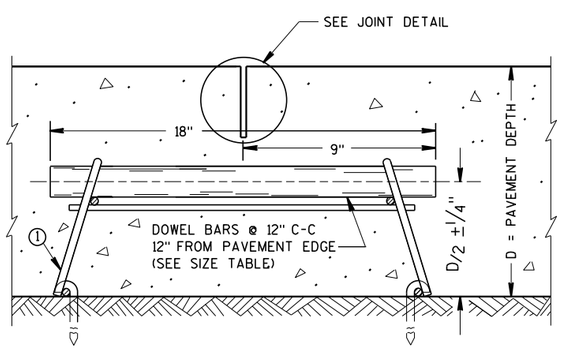

DOWELED CONTRACTION JOINT

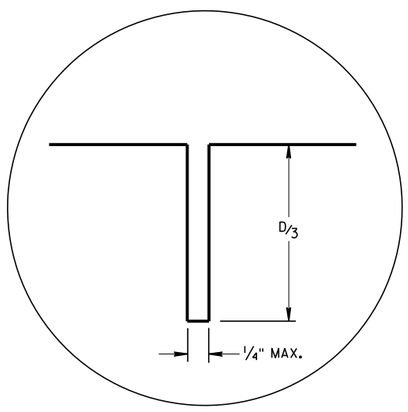

JOINT DETAIL

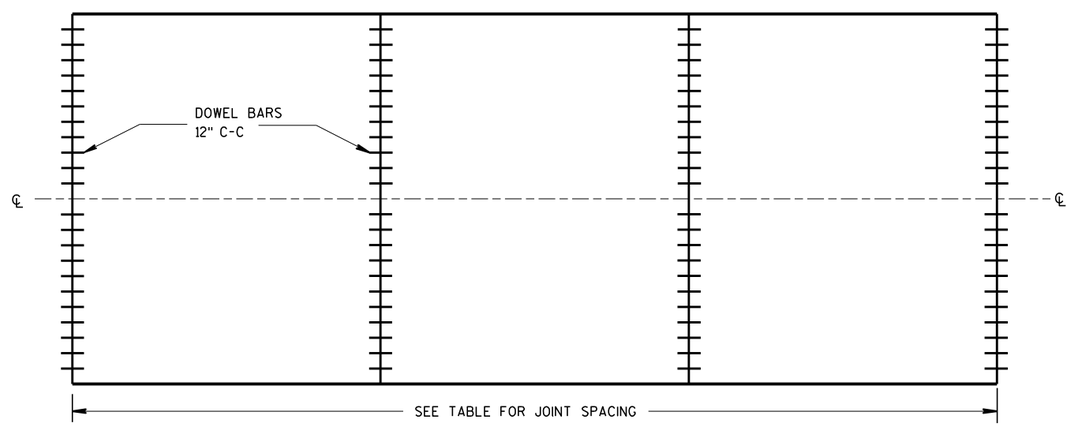

CONTRACTION JOINT LOCATIONS

URBAN DOWELED CONCRETE PAVEMENT

STATE OF WISCONSIN
DEPARTMENT OF TRANSPORTATION

APPROVED
March 2018 — DATE
/S/ Peter Kemp P.E. — PAVEMENT SUP 80
FHWA

6

S.D.D. 13 C 13-9

6

S.D.D. 13 C 13-9

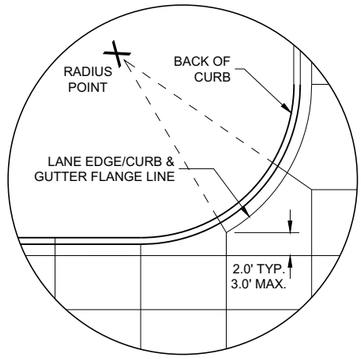

DETAIL "A"

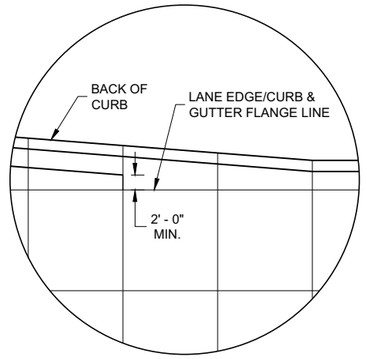

DETAIL "B"

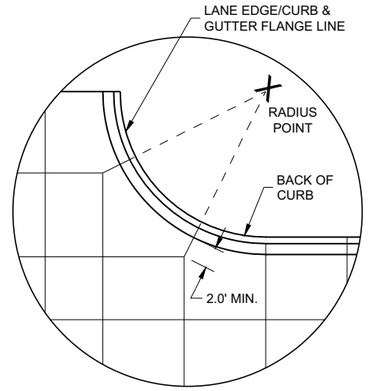

DETAIL "C"

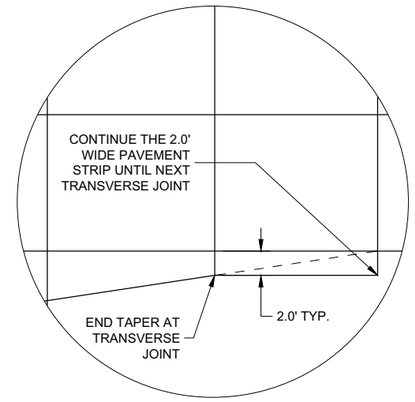

DETAIL "D"

GENERAL NOTES

THE PRIMARY ROADWAY CONTROLS THE TRANSVERSE JOINT PATTERN.

ALIGN NEW JOINTS WITH EXISTING JOINTS OR CRACKS.

CONSTRUCT TRANSVERSE JOINTS PERPENDICULAR TO THE ROADWAY.

ADJUST TRANSVERSE JOINTS TO ALIGN WITH UTILITY FIXTURES (E.G MANHOLES AND INLETS) IN THE PAVEMENT STRUCTURE WHEN POSSIBLE. WATER VALVES DO NOT REQUIRE JOINT ADJUSTMENT.

AVOID SLABS LESS THAN 2 FEET WIDE OR GREATER THAN 15 FEET WIDE.

SEE TABLE FOR TRANSVERSE JOINT SPACING. JOINT SPACING SPECIFIED IS MAXIMUM AND ACTUAL SPACING CAN BE ADJUSTED TO ACCOMMODATE INTERSECTIONS.

AVOID ANGLES LESS THAN 60° BY DOGLEGGING JOINTS THROUGH CURVE RADIUS POINTS. USE 90° ANGLES WHEN POSSIBLE.

CORRELATE LONGITUDINAL JOINTS WITH LANE LINES WHEN POSSIBLE.

1. PROVIDE TRANSVERSE JOINTS AT ALL PAVEMENT WIDTH CHANGES.
2. CONSTRUCT DOWELED EXPANSION JOINT ON THE SIDE ROAD OF AN INTERSECTION IF THE SIDE ROAD IS CONCRETE PAVEMENT AND GREATER THAN 300 FEET IN LENGTH. ALIGN EXPANSION JOINT WITHEDGE OF RADIUS.
3. THE ENGINEER MAY APPROVE SLIGHT VARIATIONS FROM THESE JOINTING DETAILS.

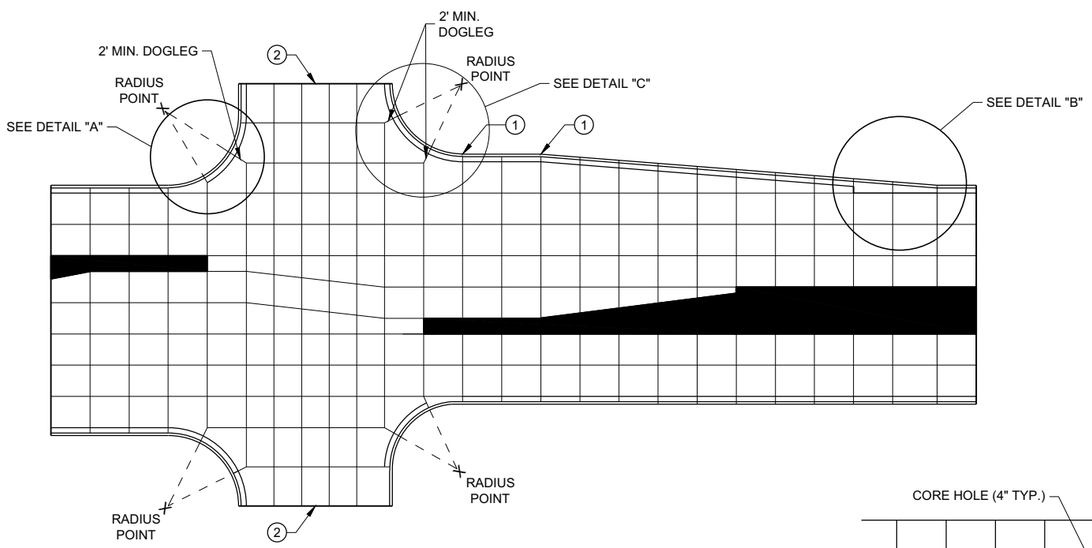

STANDARD INTERSECTION

PAVEMENT DEPTH AND JOINT SPACING TABLE

PAVEMENT DEPTH (D)	CONTRACTION JOINT SPACING
6", 6 ½"	12'
7", 7 ½"	14'
8" & ABOVE	15'

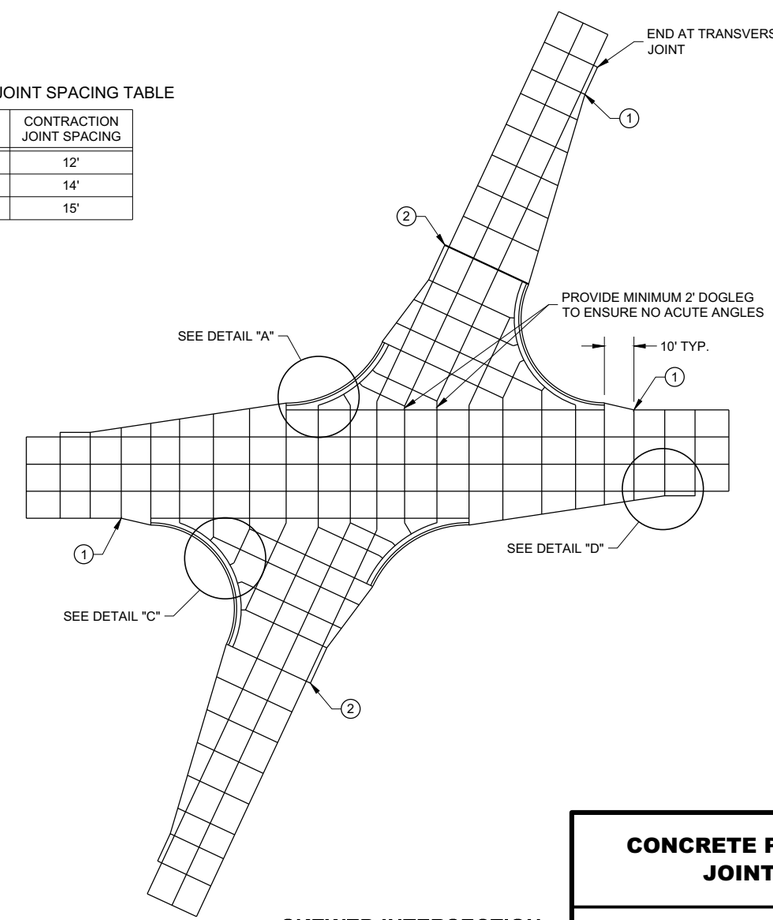

SKEWED INTERSECTION

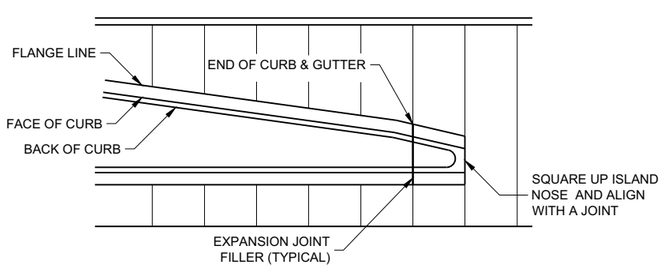

APPROACH TO MEDIAN

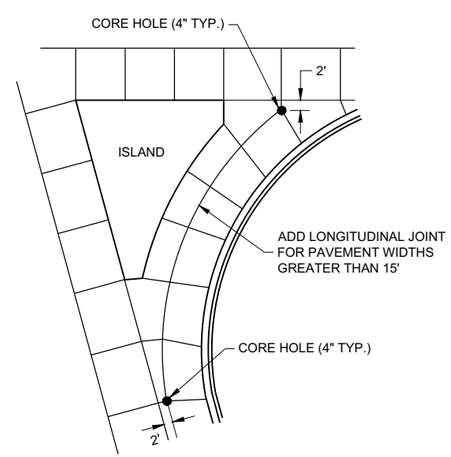

LARGE RIGHT TURN

CONCRETE PAVEMENT JOINTING

STATE OF WISCONSIN
DEPARTMENT OF TRANSPORTATION

6

SDD 13C18 - 07a

6

SDD 13C18 - 07a

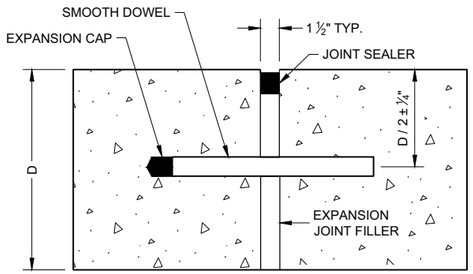

DOWELED TRANSVERSE (1)

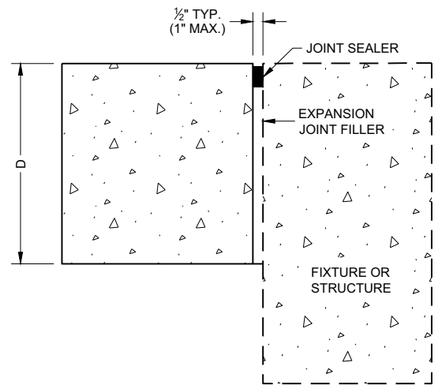

UNTIED - LONGITUDINAL

EXPANSION JOINTS

TIE BAR TABLE

PAVEMENT DEPTH (D)	TIE BAR SIZE	TIE BAR LENGTH (L)	MAX. TIE BAR SPACING
< 10 ½"	NO. 4	30"	36"
≥ 10 ½"	NO. 5	36"	36"
	NO. 4*	30"	24"**

* SUBSTITUTE BENT BARS AT LONGITUDINAL JOINTS WHEN EQUIPMENT LIMITATIONS DURING CONSTRUCTION WARRANT (e.g. AUXILIARY LANES OR TURN LANES)

** CONFORM TO 15" MINIMUM SPACING FROM TRANSVERSE JOINTS; SPACING BETWEEN TIE BARS WILL BE 30" AT TRANSVERSE JOINTS.

GENERAL NOTES

1. USE DOWELED EXPANSION JOINTS ON SIDE ROADS AT INTERSECTIONS (TO ISOLATETHE SIDE ROAD FROM THE THROUGH STREET) IF THE SIDE ROAD IS CONCRETE PAVEMENT AND GREATER THAN 300 FEET IN LENGTH.
2. SPACE CONTRACTION JOINTS IN ACCORDANCE WITH SDD 13C4, 13C11 OR 13C13.
3. LOCATE CONSTRUCTION JOINTS A MINIMUM OF 6 FEET FROM THE NEAREST CONTRACTION JOINT AND ALIGN PARALLEL TO CONTRACTION JOINTS.
4. CONSTRUCTION JOINTS CAN BE FORMED OR SAWED.
5. IF JOINT IS FORMED, PROVIDE A ¼" RADIUS.
6. ANCHOR TIE BARS INTO DRILLED HOLES WITH AN EPOXY.

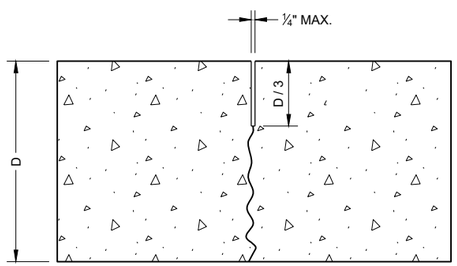

UNDOWELED TRANSVERSE

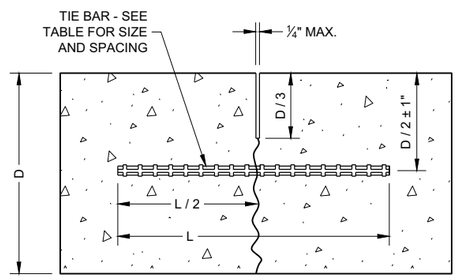

TIED LONGITUDINAL

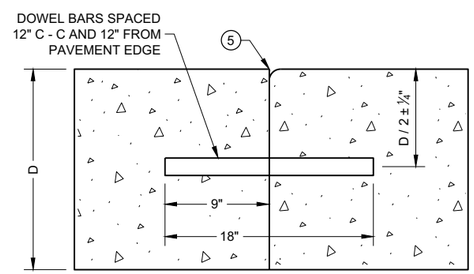

DOWELED TRANSVERSE (3)

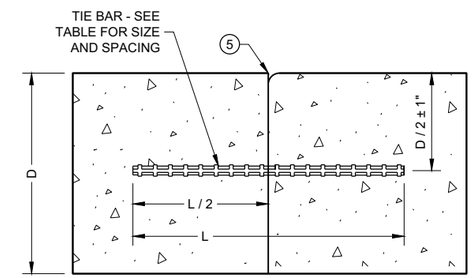

TIED LONGITUDINAL

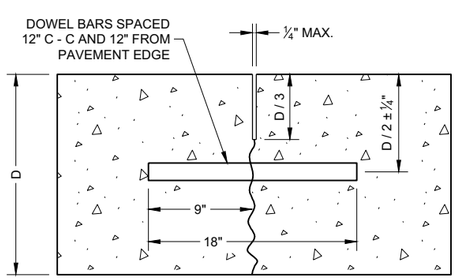

DOWELED TRANSVERSE

CONTRACTION JOINTS (2)

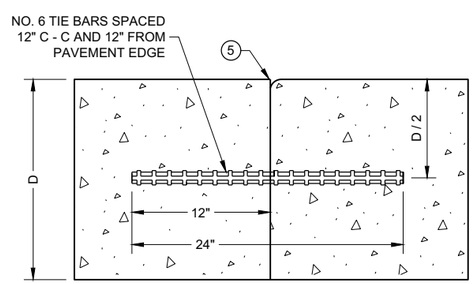

TIED TRANSVERSE (3)
(FOR USE ON NON-DOWELED PAVEMENTS ONLY)

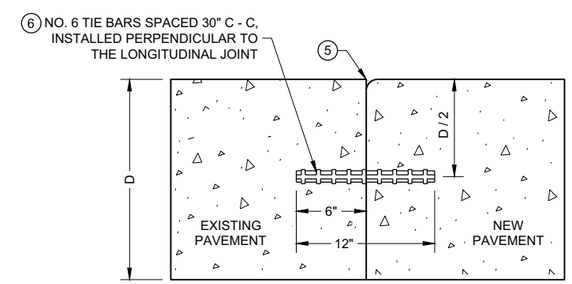

TIED LONGITUDINAL TO EXISTING

CONSTRUCTION JOINTS (4)

CONCRETE PAVEMENT JOINT TYPES

STATE OF WISCONSIN
DEPARTMENT OF TRANSPORTA

6

SDD 13C18 - 07c

GENERAL NOTES

1. USE BOXOUTS WHEN UTILITY STRUCTURE IS IN THE PATH OF CONSTRUCTION JOINTS. PROVIDE A 1 FOOT MINIMUM CLEARANCE BETWEEN THE EXTERIOR LIMIT OF THE STRUCTURE TO THE DIAMOND BOXOUT.
2. ADJUST TRANSVERSE JOINT TO INTERSECT MANHOLE IF POSSIBLE.
3. IF DISTANCE BETWEEN THE LONGITUDINAL JOINT AND THE EDGE OF MANHOLE IS 2 FEET OR LESS, DIVERT THE LONGITUDINAL JOINT AT A 2:1 TAPER RATE TO THE CENTER OF THE MANHOLE. IF THE DISTANCE IS GREATER THAN 2 FEET, DO NOT DIVERT THE JOINT AND SAW AS NORMAL. PLACE REINFORCEMENT REBAR AROUND THE MANHOLE.
4. IF THE DISTANCE FROM THE EDGE OF THE MANHOLE TO THE NEAREST TRANSVERSE JOINT IS LESS 4 FEET OR LESS, REDIRECT JOINT TO INTERSECT THE CENTER OF THE MANHOLE. IF DISTANCE IS GREATER THAN 4 FEET, DO NOT DIVERT THE JOINT AND SAW AS NORMAL. PLACE REINFORCEMENT REBAR AROUND THE MANHOLE.
5. ALIGN TRANSVERSE JOINT WITH ONE EDGE OF INLET WHEN PRACTICAL.

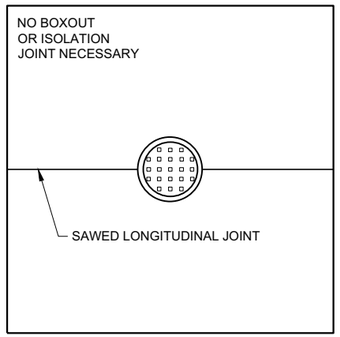

MANHOLE WITH LONGITUDINAL JOINT

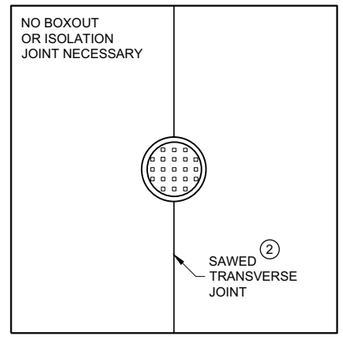

MANHOLE WITH TRANSVERSE JOINT

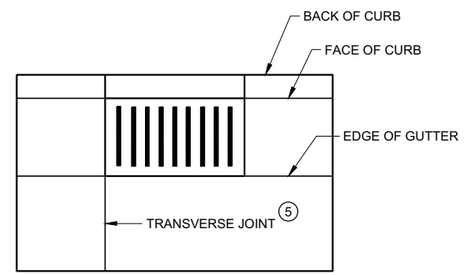

INLET WITH TRANSVERSE JOINT

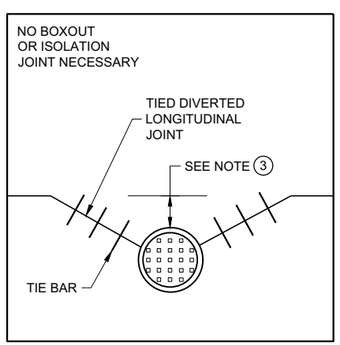

MANHOLE WITH DIVERTED LONGITUDINAL CONTRACTION JOINT

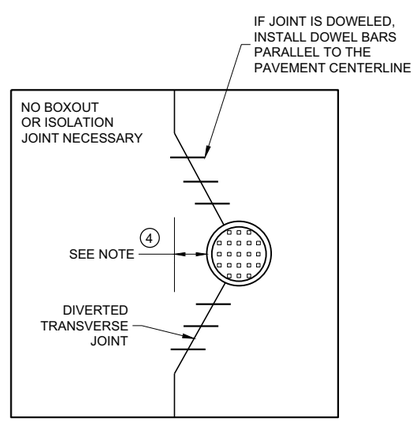

MANHOLE WITH DIVERTED TRANSVERSE CONTRACTION JOINT

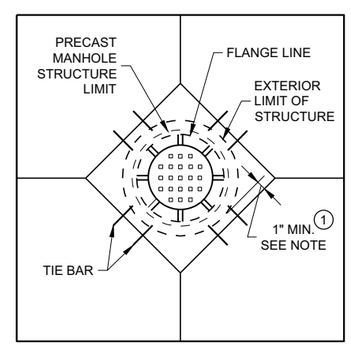

DIAGONAL MANHOLE BOXOUT FOR CONSTRUCTION JOINTS

CONCRETE PAVEMENT JOINTING AT UTILITY FIXTURES

STATE OF WISCONSIN
DEPARTMENT OF TRANSPORTATION

APPROVED
November 2018 /S/ Peter Kemp P.E.
DATE PAVEMENT SUPERVISO
FHWA

6

SDD 13C18 - 07d

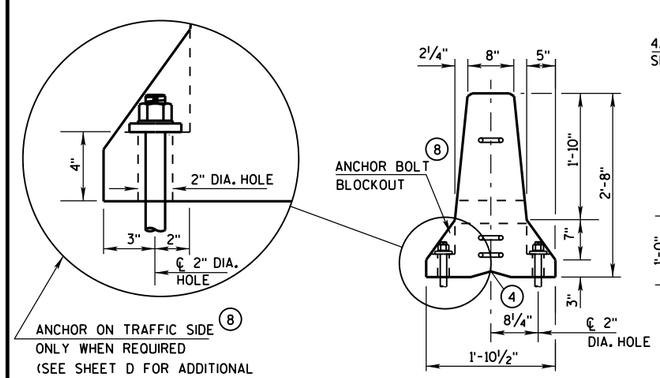

END VIEW

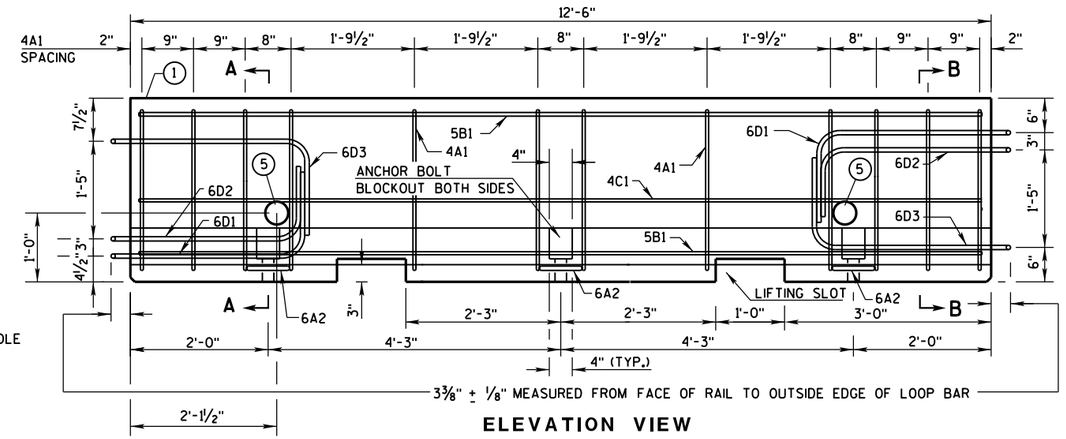

ELEVATION VIEW

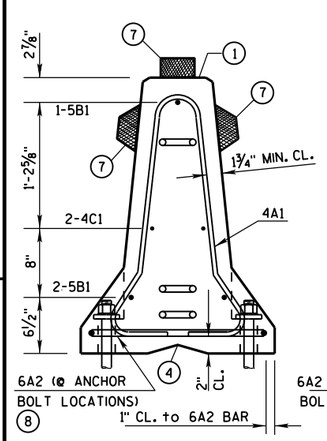

SECTION A-A
(STIRRUP PLACEMENT)

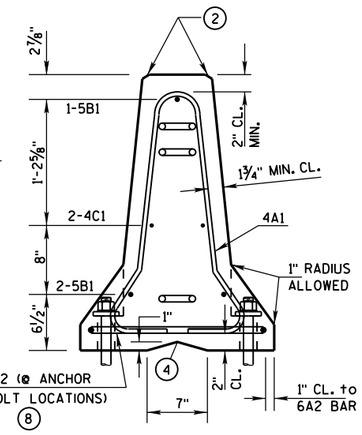

SECTION B-B
(STIRRUP PLACEMENT)

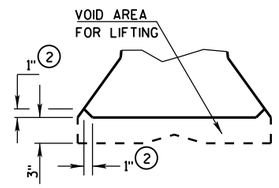

DETAIL "B"
LIFTING SLOT DETAIL

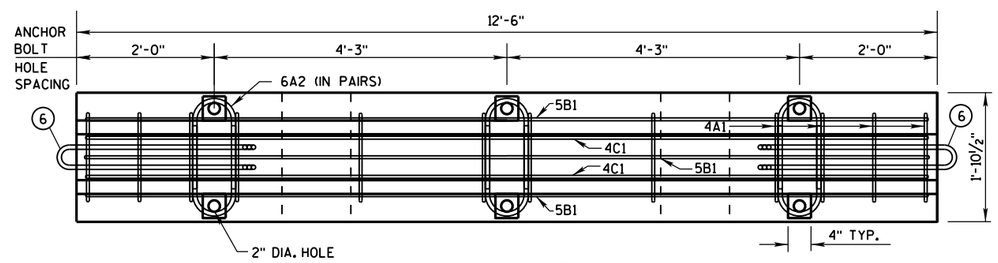

PLAN VIEW

DETAILS OF BARRIER SECTION

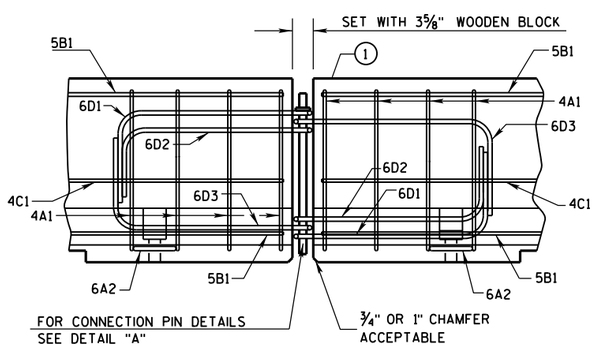

DETAILS OF BARRIER CONNECTION

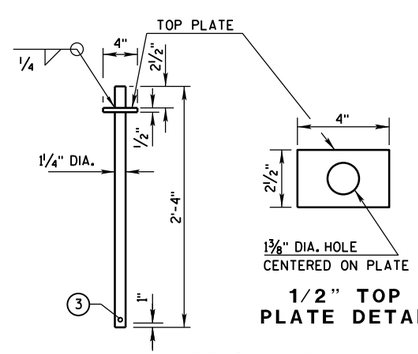

1/2" TOP PLATE DETAIL

DETAIL "A"
CONNECTION PIN
(A36 STEEL (10.9 LB EACH))

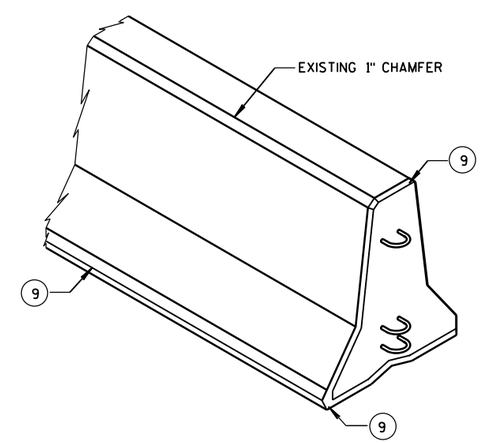

GENERAL NOTES

THESE GENERAL NOTES APPLY TO SHEETS 14B7-15(a) THRU 14B7-15(i).

DO NOT INTERMIX CONCRETE BARRIER TEMPORARY PRCAST, 12'-6" (CBTP12.5) WITH OTHER TEMPORARY CONCRETE BARRIERS.

USE ASTM A-615, GRADE 60, DEFORMED STEEL BARS FOR BARS 4A1, 6A2, 5B1 AND 4C1 IN THE BARRIER SECTION AND FOR 4V1, 4V2, 4V3, 4V4, 4V5, 4V6, 4F1, 4F2 AND 5F3 IN THE BARRIER TAPER SECTION.

LOOP BARS 6D1, 6D2 AND 6D3 SHALL BE ¾" SMOOTH STEEL BARS WITH A MINIMUM YIELD STRENGTH OF 60 KSI, A TENSILE STRENGTH OF NOT LESS THAN 1.25 TIMES THE YIELD STRENGTH BUT A MINIMUM OF 80 KSI, A MINIMUM 14% ELONGATION IN 8 INCHES AND PASSING A 180 DEGREE BEND TEST USING A 3-½" PIN BEND DIAMETER FOR BEND TESTS. THE LOOPS SHALL BE INSTALLED WITHIN ⅛" OF THE PLAN DIMENSION.

CONSTRUCT LIFTING SLOTS AS SPECIFIED ON THE PLANS TO FACILITATE THE DRAINAGE OF WATER AFTER INSTALLATION.

PLACE BARRIER ON A PAVED SURFACE. REMOVE ALL LOOSE DIRT AND SAND FROM THE ROADWAY SURFACE PRIOR TO PLACEMENT OF THE BARRIER.

INSTALL MECHANICAL OR ADHESIVE ANCHORS PER MANUFACTURER'S RECOMMENDATIONS. PROVIDE MANUFACTURER'S INFORMATION TO PROJECT ENGINEER.

1. MARK ONE END OF EACH BARRIER PERMANENTLY BY FORMING INTO THE BARRIER THE FOLLOWING INFORMATION:
   a. TYPE: WI CBTP
   b. MANUFACTURER
   c. DATE MANUFACTURED (MONTH AND YEAR)
2. 1" CHAMFER TO PREVENT SPALLING.
3. A ⅜" HOLE IN THE CONNECTION PIN, AT THE LOCATION SHOWN, IS ACCEPTABLE, BUT NOT REQUIRED..
4. "V" NOTCH IS OPTIONAL.
5. THE 4" DIAMETER, 11 GAUGE STEEL, ROUND MECHANICAL TUBING SLEEVE FOR LIFTING (OPTIONAL).
6. NEVER USE LOOP BARS (6D1, 6D2 OR 6D3) TO LIFT, MOVE OR REPOSITION THE BARRIER.
7. USE DELINEATORS CONFORMING TO SECTION 633 OF THE STANDARD SPECIFICATIONS. CONTRACTOR MAY USE ALTERNATE SHAPES AND HOUSING. INSTALL DELINEATORS ACCORDING TO MANUFACTURES INSTRUCTION. INSTALL YELLOW REFLECTORS WHEN BARRIER IS LOCATED TO THE LEFT OF TRAFFIC AND WHITE REFLECTORS WHEN BARRIER IS LOCATED TO THE RIGHT OF TRAFFIC. SPACE DELINEATORS A MAXIMUM OF 25 FEET APART. PROVIDE TOP MOUNTED DELINEATORS IN ADDITION TO THE SIDE MOUNTED DELINEATORS ON ALL BARRIER INSTALLATIONS LOCATED ON A CURVED ALIGNMENT LONGER THAN 200 FEET AND ON BARRIERS USED TO SEPARATE OPPOSING TRAFFIC.
8. SEE SHEET D FOR HOW TO ANCHOR BARRIER. SEE SHEET E FOR WHEN TO ANCHOR BARRIER.
9. 1" CHAMFER OPTIONAL.

f'c = 4,000 psi

CONCRETE BARRIER
TEMPORARY PRECAST, 12'-6"

STATE OF WISCONSIN
DEPARTMENT OF TRANSPO

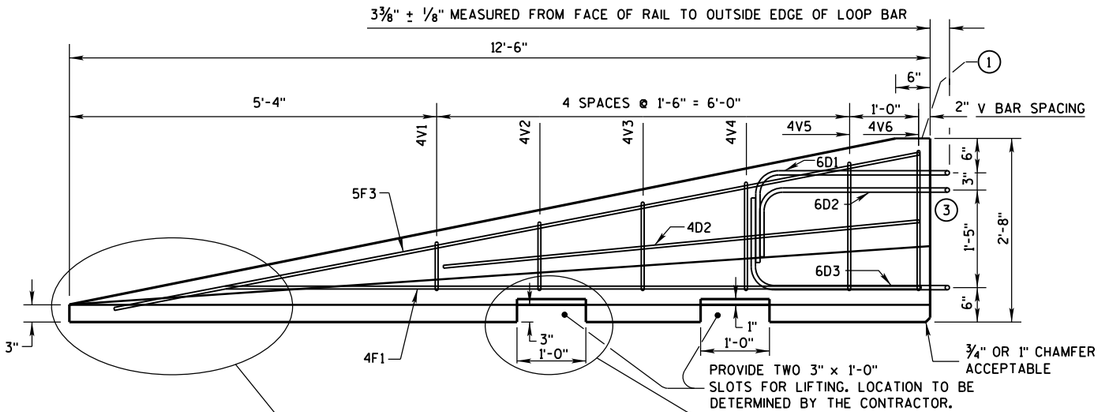

SIDE ELEVATION

(FOR CONNECTION TO LEFT END OF BARRIER)

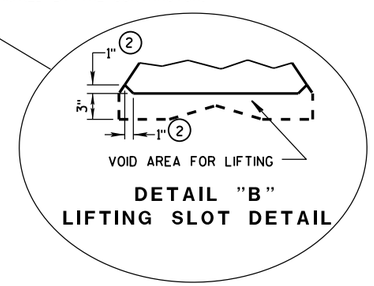

DETAIL "B"
LIFTING SLOT DETAIL

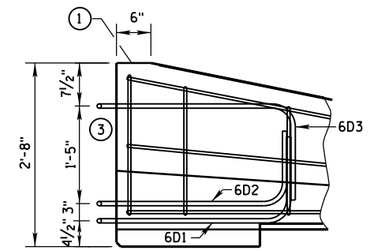

SIDE ELEVATION

LOOP BAR ASSEMBLY INVERTED
FOR OPPOSITE END.
(FOR CONNECTION TO RIGHT END OF BARRIER)

GENERAL NOTES

1. MARK ONE END OF EACH BARRIER PERMANENTLY BY FORMING INTO THE BARRIER THE FOLLOWING INFORMATION:
   a. TYPE WICBTP
   b. MANUFACTURER
   c. DATE MANUFACTURED (MONTH AND YEAR)
2. 1" CHAMFER TO PREVENT SPALLING.
3. NEVER USE LOOP BARS (6D1, 6D2 OR 6D3) TO LIFT, MOVE OR REPOSITION THE BARRIER.

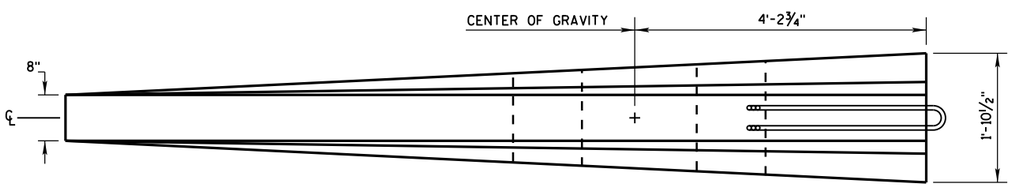

PLAN VIEW

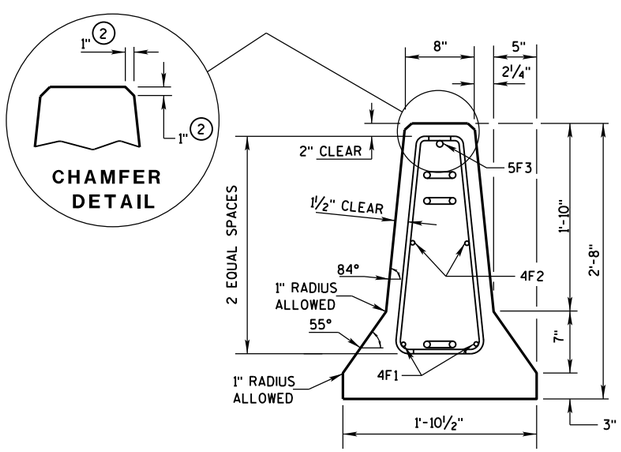

END SECTION

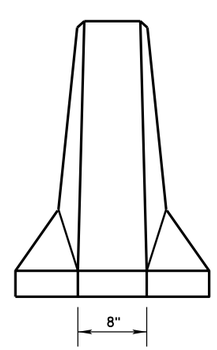

FRONT ELEVATION

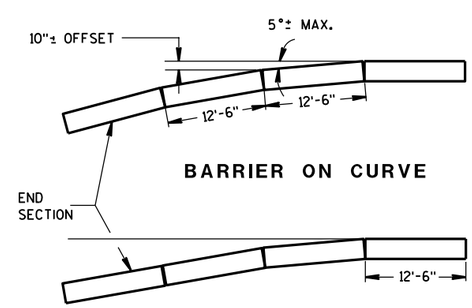

BARRIER ON CURVE

FLARE AT BARRIER END

POSTED SPEED, (MPH)	FLARE RATE
40 OR LESS	6:1
45 OR GREATER	8:1

DETAILS OF BARRIER TAPER SECTION

CONCRETE BARRIER
TEMPORARY PRECAST, 12'-6"

STATE OF WISCONSIN
DEPARTMENT OF TRANSPORTATION

6

S.D.D. 14 B 7-15b

GENERAL NOTES

(1) NEVER USE LOOP BARS (6D1, 6D2 OR 6D3) TO LIFT, MOVE OR REPOSITION THE BARRIER.

BARRIER TAPER SECTION BILL OF MATERIALS

(PER 12'-6" BARRIER TAPER SECTION)

BAR	BAR SIZE	NO. OF BARS	LENGTH FT.
4V1	4	2	1'-11"
4V2	4	2	2'-2"
4V3	4	2	2'-6"
4V4	4	2	2'-9"
4V5	4	2	3'-2"
4V6	4	2	3'-4"
4F1	4	2	12'-0"
4F2	4	2	7'-6"
5F3	5	1	11'-9"
LOOP ASSEMBLY			
6D1	6	1	8'-5"
6D2	6	1	7'-7"
6D3	6	1	8'-6"

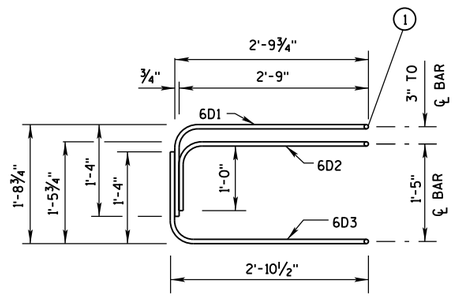

ELEVATION
LOOP BAR ASSEMBLY

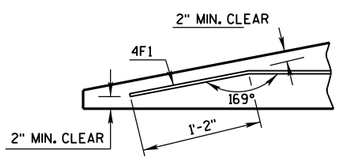

DETAIL "C"
BENT BAR DETAIL

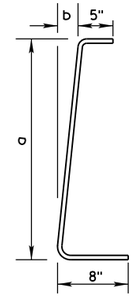

BAR	a	b
V1	10"	1"
V2	1'-1"	1¼"
V3	1'-5"	1⅝"
V4	1'-8"	1⅞"
V5	2'-0½"	2⅜"
V6	2'-3"	2¾"

4V BARS
2 AT EACH SIZE REQUIRED
FOR STIRRUP ASSEMBLY

TAPER BARRIER SECTION

BARRIER SECTION BILL OF MATERIALS

(PER 12'-6" BARRIER SECTION)

BAR	BAR SIZE	NO. OF BARS	LENGTH FT.
4A1	4	12	6'-0"
6A2	6	6	2'-11"
5B1	5	3	12'-2"
4C1	4	2	12'-2"
LOOP ASSEMBLY			
6D1	6	2	8'-5"
6D2	6	2	7'-7"
6D3	6	2	8'-6"

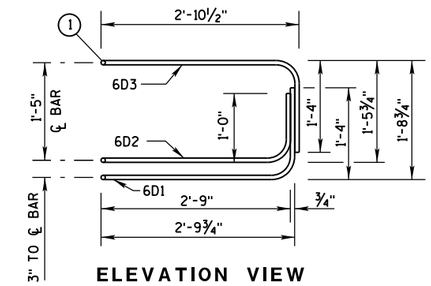

ELEVATION VIEW

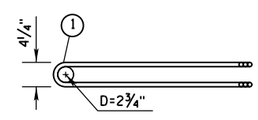

PLAN VIEW
LOOP BAR ASSEMBLY
(MARKED END SHOWN, INVERT FOR OTHER END)

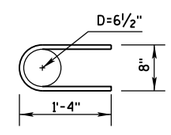

6A2

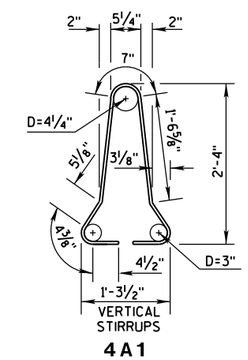

4A1

BARRIER SECTION

CONCRETE BARRIER
TEMPORARY PRECAST, 12'-6"

STATE OF WISCONSIN
DEPARTMENT OF TRANSPO

6

S.D.D. 14 B 7-15c

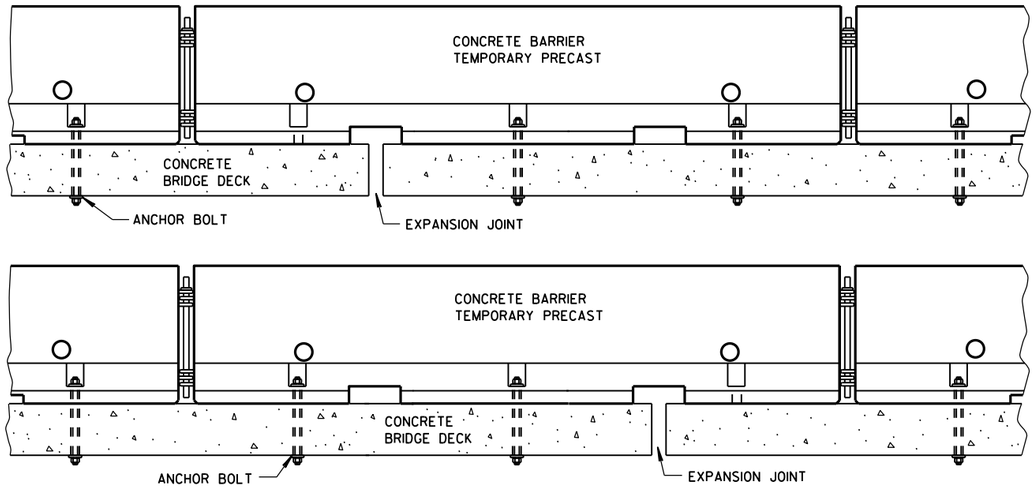

TREATMENT AT BRIDGE DECK EXPANSION JOINTS

(NO SINGLE CONCRETE BARRIER SECTION SHALL BE ANCHORED TO BOTH THE BRIDGE DECK AND THE APPROACH SLAB. ALL ANCHOR BOLT LOCATIONS SHALL BE ANCHORED TO THE DECK IN ACCORDANCE WITH THE DETAIL. NO MORE THAN ONE ANCHOR BOLT SHALL BE ELIMINATED FROM A BARRIER SECTION WHEN SPANNING AN EXPANSION JOINT.)

GENERAL NOTES

SEE SHEET E FOR WHEN TO ANCHOR. OTHER PARTS OF THE PLAN MAY SHOW ADDITIONAL LOCATIONS REQUIRING ANCHORING.

REMOVE ALL ANCHORS WHEN NO LONGER NEEDED. FILL CONCRETE PAVEMENTS, DECKS AND APPROACH SLABS WITH NON-SHRINK COMMERICAL GROUT FROM THE APPROVED PRODUCT LIST. FILL ASPHALT PAVEMENTS WITH ASTM D6690 TYPE II RUBBERIZED CRACK FILLER.

1. 1⅛" DIAMENTER A307 THREADED ROD, ½" X 3" X 3" SQUARE PLATE WASHER WITH ASTM A36 STEEL. ASTM A563A HEAVY HEX NUT.
2. ADHESIVE ANCHORS WITH A MINIMUM BOND STRENGTH OF 1,800 PSI AND 5¼" EMBEDMENT. SEE 603.2 AND 603.3.1.2 OF THE WISCONSIN STANDARD SPECIFICATIONS FOR MORE INFORMATION ON ADHESIVE ANCHORS.
3. ASPHALT SURFACE SHOWN. CONTRACTOR MAY DRILL THROUGH CONCRETE PAVEMENT AND THAN DRIVE ASPHALT ANCHOR PIN.

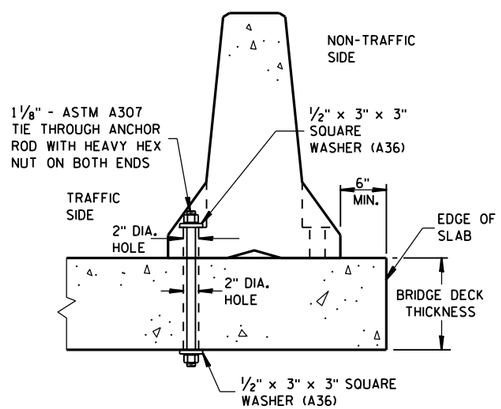

THROUGH BOLTED ANCHOR INSTALLATION ON BRIDGE DECK

(DO NOTUSE ON CONCRETE BRIDGE DECK WITH ASPHALT OVERLAY)

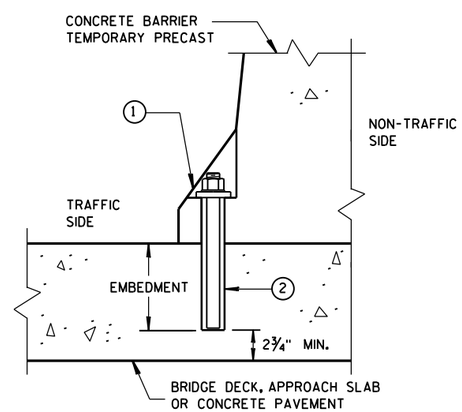

REMOVABLE ADHESIVE ANCHOR INSTALLATION ON CONCRETE BRIDGE DECK, CONCRETE APPROACH SLAB, OR CONCRETE PAVEMENT

(DO NOT USE ON CONCRETE WITH AN ASPHALTIC OVERLAY)

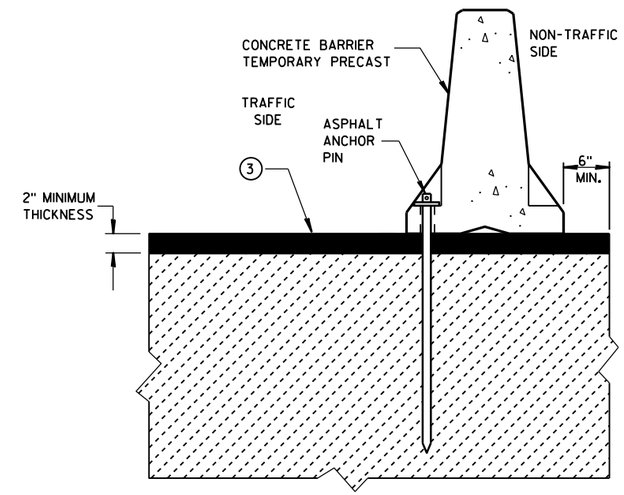

STAKE DOWN INSTALLATION FOR ASPHALTIC SURFACE

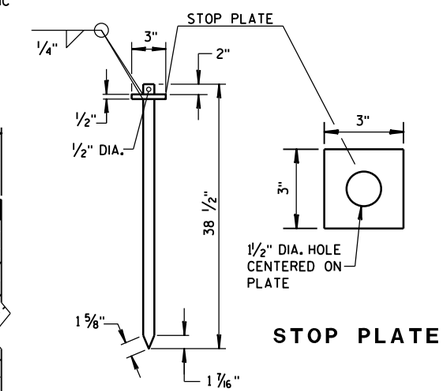

ASPHALT ANCHOR PIN

(ASTM A36 STEEL)

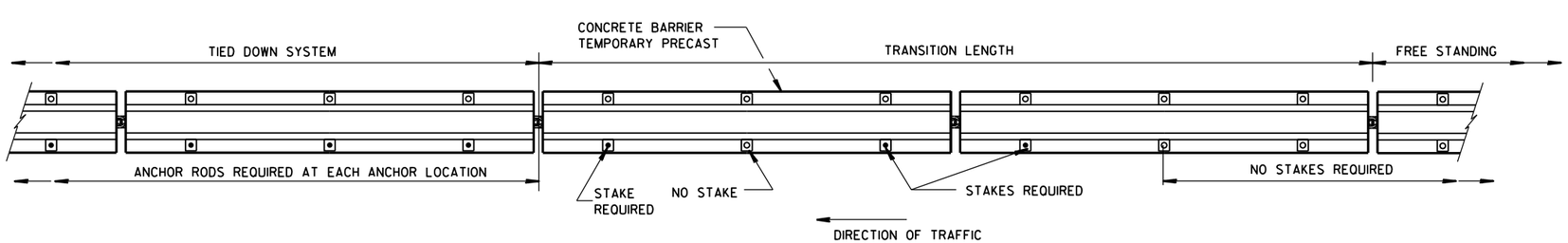

PLAN VIEW

FREE STANDING TRANSITION TO TIED-DOWN SYSTEM

(PLACE TRANSITION IN A TANGENT SECTION OF BARRIER PARALLEL TO THE ROADWAY. IF TRANSITION OCCURS ON STRUCTURAL SLAB, ANCHOR AS SHOWN.)

CONCRETE BARRIER
TEMPORARY PRECAST, 12'-6"

STATE OF WISCONSIN
DEPARTMENT OF TRANSPOI

6

S.D.D. 14 B 7-15d

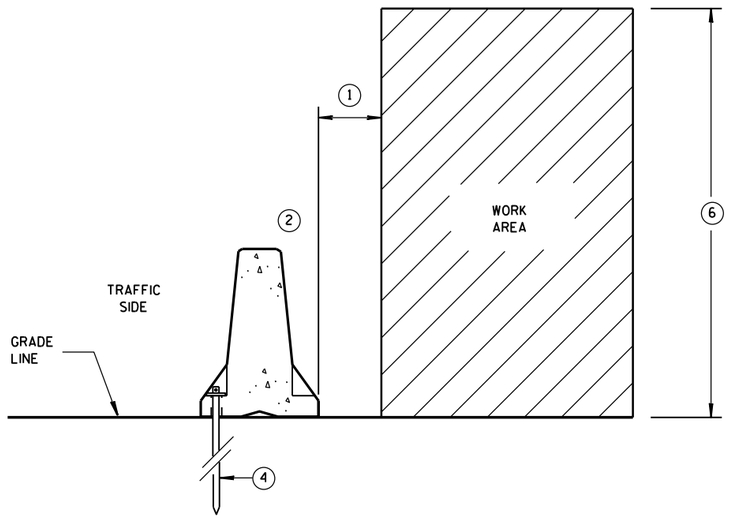

ANCHORED BARRIER SPACE REQUIREMENTS FOR HAZARDS EXTENDED ABOVE THE GRADE LINE

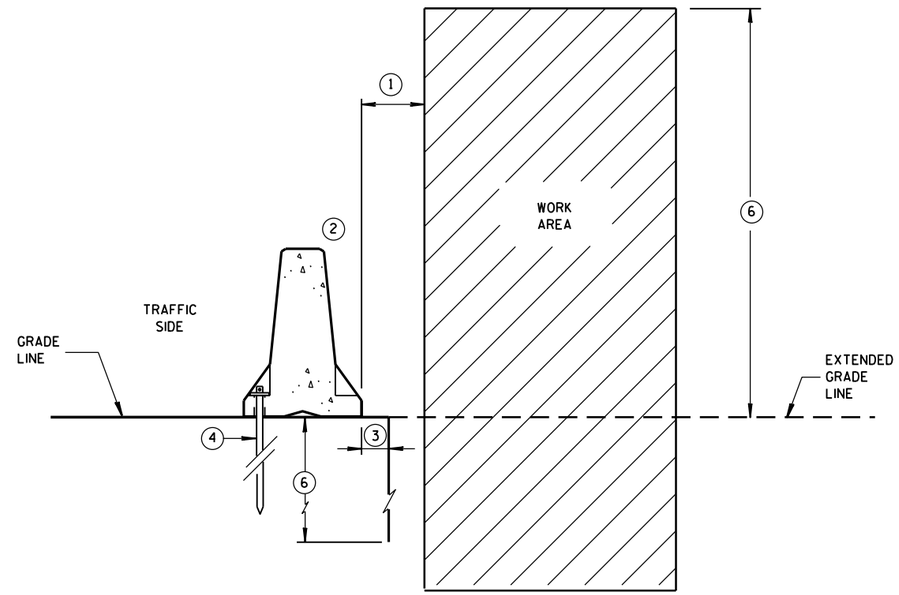

ANCHORED BARRIER SPACE REQUIREMENTS ON VERTICAL DROP OFFS

GENERAL NOTES

1. WHEN OBJECTS EXTEND ABOVE THE GRADE, A MINIMUM OF 1 FOOT IS REQUIRED FROM BACK OF BARRIER TO OBJECT. SEE OTHER DETAILS FOR FOR THE MINIMUM OFFSET FROM BACK OF BARRIER TO SLOPES OR VERTICAL DROPS.
2. OBJECTS ARE NOT TO BE PLACED ON, MOUNTED TO, OR LEANED AGAINST THE BARRIER WITHOUT PERMISSION OF THE PROJECT ENGINEER.
3. SEE OTHER DETAIL ON SHEET "D" FOR SPACE REQUIREMENTS.
4. SEE BOLT THROUGH DECK, REMOVABLE ADHESIVE ANCHOR, OR A STAKE DOWN FOR ASPHALTIC SURFACE TREATMENT DETAILS. ASPHALTIC ANCHOR SHOWN.
5. DEPTH OF 3 FEET OR MORE.
6. Y = 6'-6".

POSTED SPEED MPH	X
45 OR GREATER	4'
40 OR LESS	2'

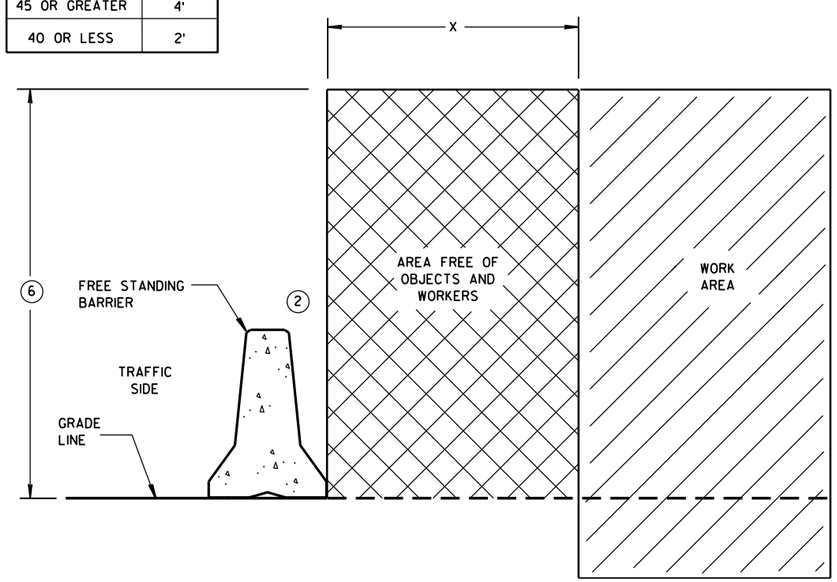

FREE STANDING BARRIER SPACE REQUIREMENTS

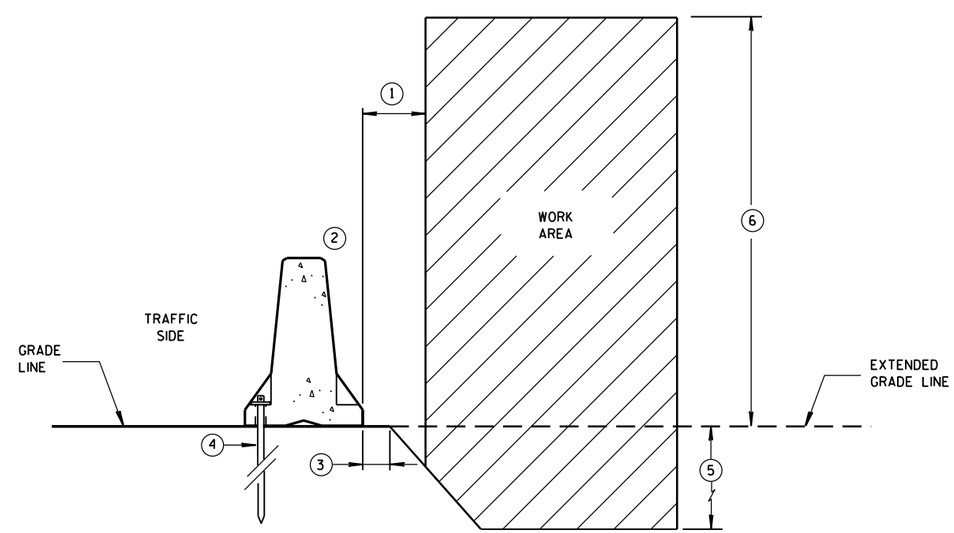

ANCHORED BARRIER SPACE REQUIREMENTS ON SLOPES

CONCRETE BARRIER
TEMPORARY PRECAST, 12'-6"

STATE OF WISCONSIN
DEPARTMENT OF TRANSPORTATION

6

S.D.D. 14 B 7-15e

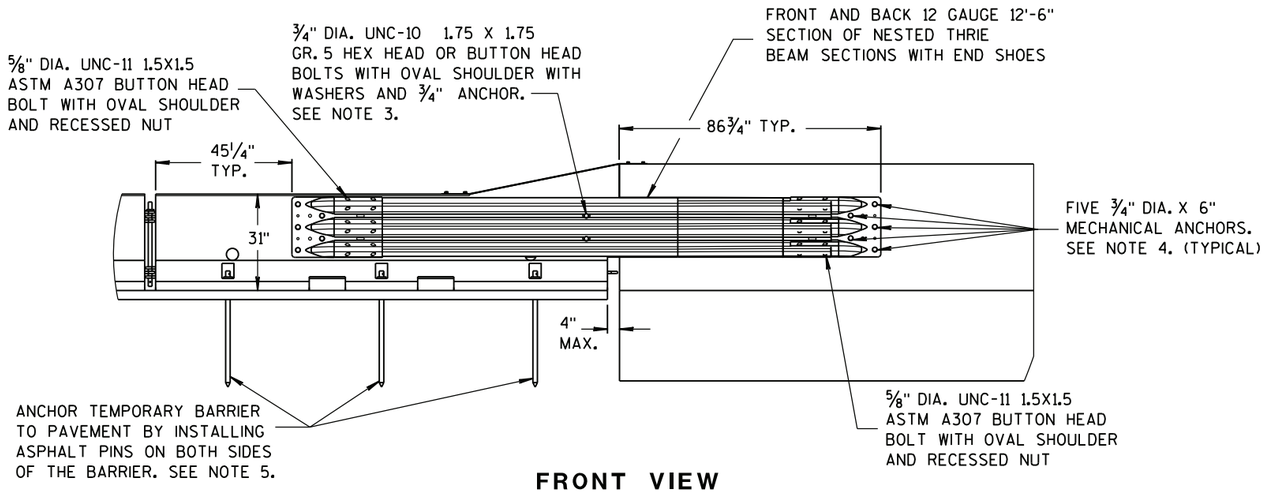

FRONT VIEW

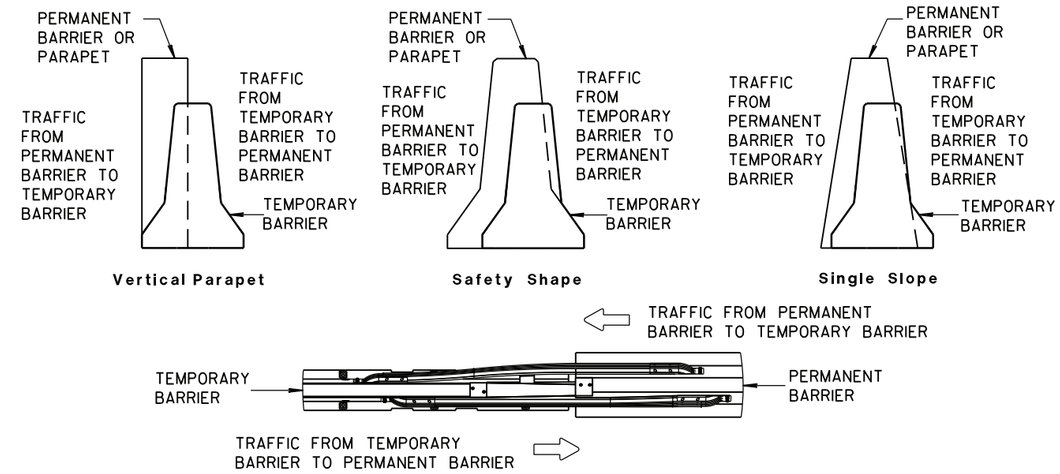

TEMPORARY BARRIER PLACEMENT FOR TRANSITION TO TIED DOWN SYSTEM

NOTES

NESTED THRIE BEAM IS REQUIRED ON BOTH SIDES OF THE TEMPORARY BARRIER FOR ALL INSTALLATIONS REGARDLESS OF TRAFFIC.

1. CAP END PLATE PLACED FLUSH WITH UPSTREAM END OF PERMANENT BARRIER OR PARAPET.
2. THRIE BEAM PIECES ARE OFFSET 15 1/4" TO PREVENT INTERFERENCE FROM THE ANCHORS ON OPPOSING SIDES.
3. MINIMUM MECHANICAL OR ADHESIVE ANCHOR STRENGTH REQUIREMENTS: ULTIMATE TENSILE LOAD 9.48 KIPS AND ULTIMATE SHEAR LOAD 10.48 KIPS.
4. MINIMUM MECHANICAL OR ADHESIVE ANCHOR STRENGTH REQUIREMENTS: ULTIMATE TENSILE LOAD 17.9 KIPS AND ULTIMATE SHEAR LOAD 21.96 KIPS.
5. MAY BE USED ON CONCRETE OR ASPHALT PAVEMENTS. ASPHALT OPTION SHOWN. FOR CONCRETE OPTION SEE OTHER DETAILS.
6. MINIMUM MECHANICAL OR ADHESIVE ANCHOR STRENGTH REQUIREMENTS: ULTIMATE TENSILE LOAD 12.14 KIPS AND ULTIMATE SHEAR LOAD 17.5 KIPS.

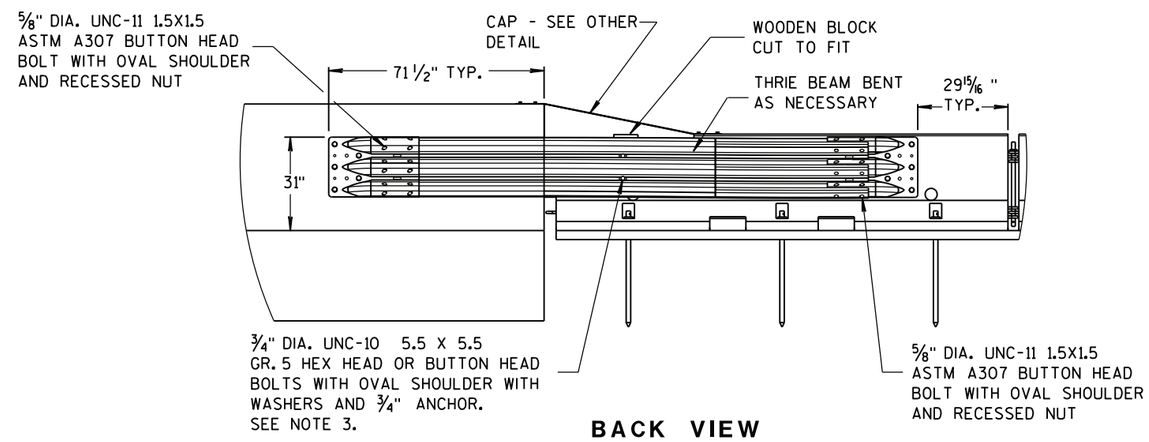

BACK VIEW

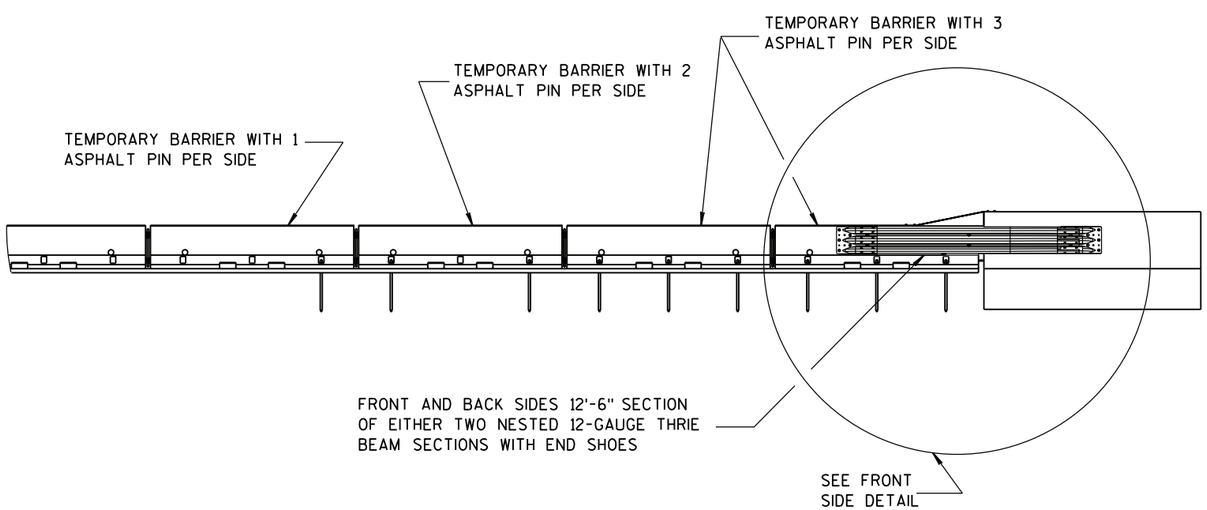

FRONT VIEW

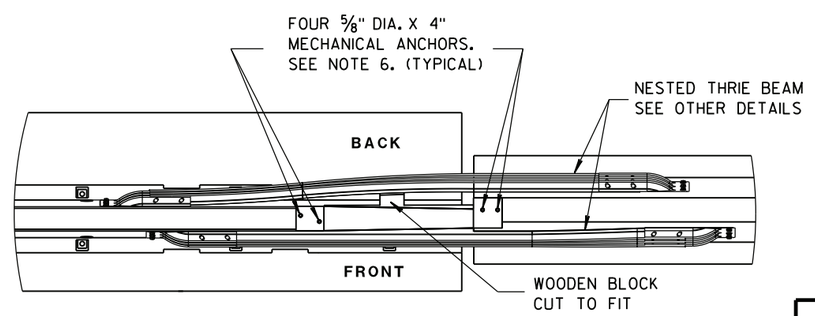

PLAN VIEW

TRANSITION TO TIED DOWN SYSTEM

CONCRETE BARRIER
TEMPORARY PRECAST, 12'-6"

STATE OF WISCONSIN
DEPARTMENT OF TRANSPO

6

S.D.D. 14 B 7-15f

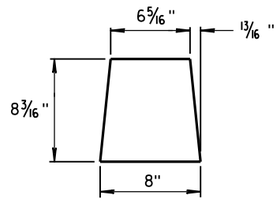

GUSSET 1

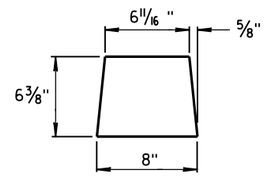

GUSSET 2

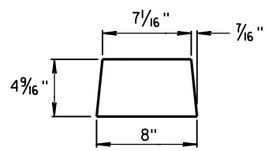

GUSSET 3

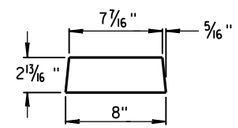

GUSSET 4

GUSSETS

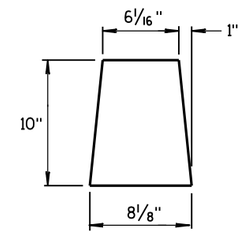

END PLATE

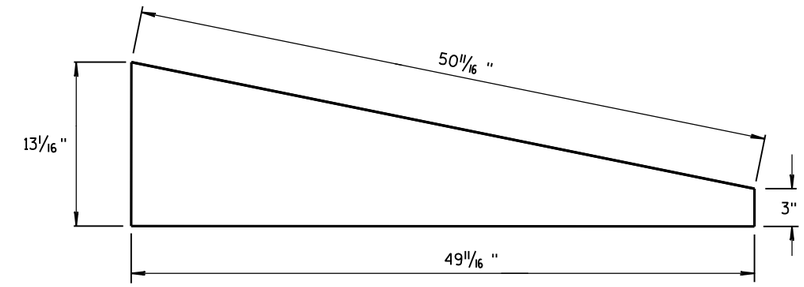

SIDE PLATE

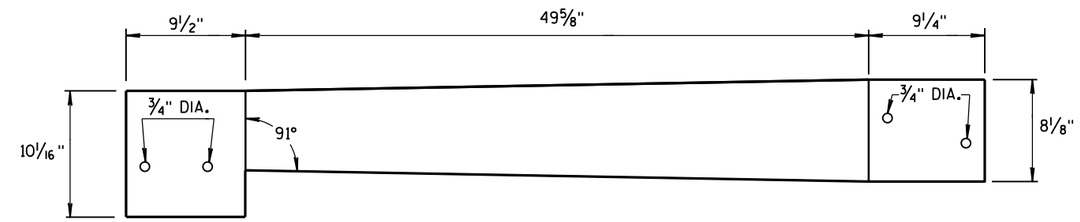

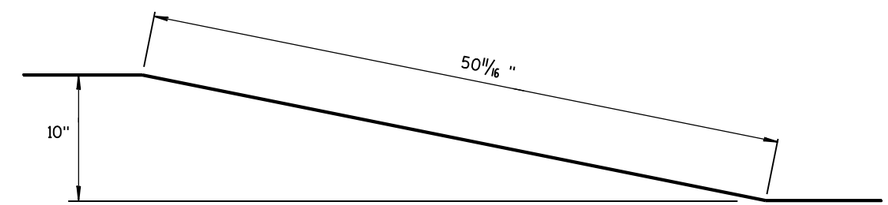

TOP PLATE

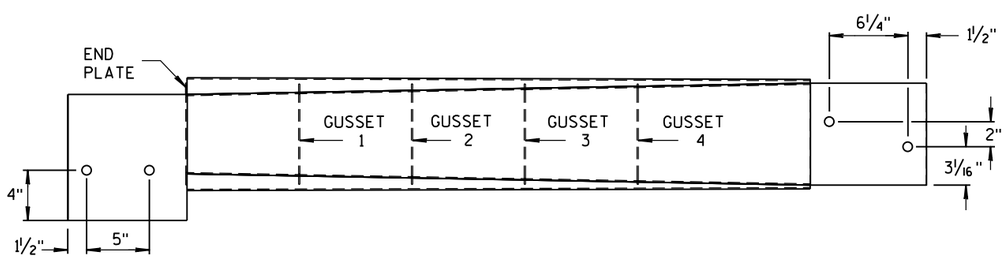

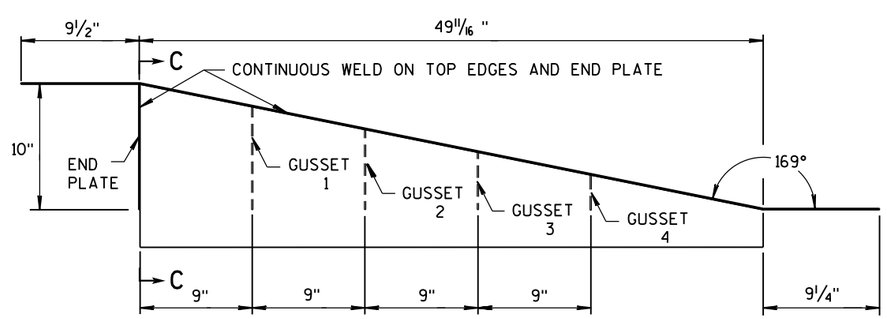

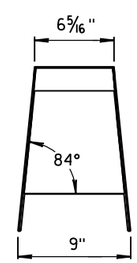

SECTION C-C

SIDE, TOP AND END PLATES FOR CAP FROM TEMPORARY CONCRETE BARRIER TO 42" PERMANENT CONCRETE BARRIER

SIDE PLATES, TOP PLATE, END PLATE AND GUSSETS ARE 12 GAUGE ASTM A36 GALVANIZED STEEL.

NOTES

1. FOUR GUSSETS AND END PLATE ARE STITCH WELDED ON THREE SIDES.
2. TWO TRIANGULAR SIDE PLATES ARE STITCH WELDED TO TOP PLATE, END PLATE, AND GUSSETS.

CAP DETAILS FOR TEMPORARY CONCRETE BARRIER TO 42" PERMANENT CONCRETE BARRIER

CONCRETE BARRIER
TEMPORARY PRECAST, 12'-6"

STATE OF WISCONSIN
DEPARTMENT OF TRANSPOR

6

S.D.D. 14 B 7-15g

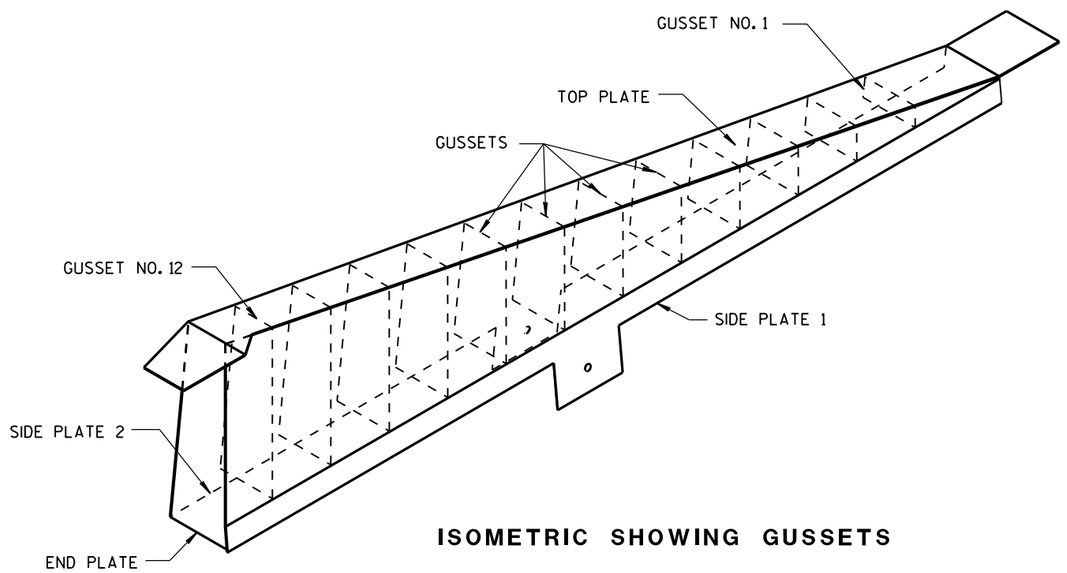

ISOMETRIC SHOWING GUSSETS

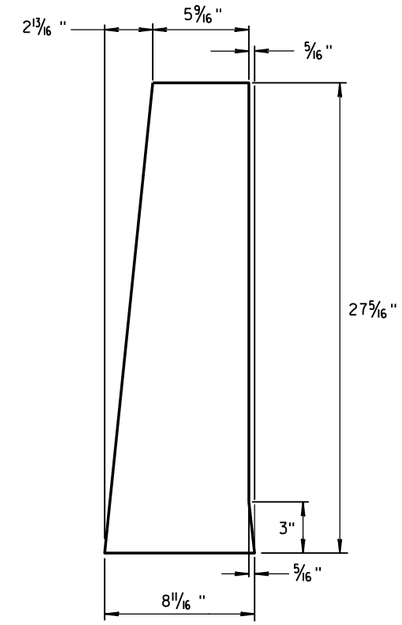

END PLATE

1/8" STEEL PLATE

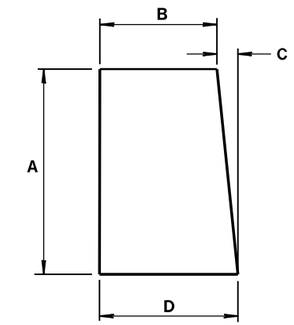

GUSSETS 1 - 12

ALL GUSSETS 1/8" STEEL PLATE

GUSSET DIMENSIONS				
GUSSET NO.	A	B	C	D
1	2 7/8"	7 3/4"	1/4"	8
2	4 11/16 "	7 9/16 "	1/2"	8
3	6 1/2"	7 3/8"	11/16 "	8 1/16 "
4	8 5/16 "	7 3/16 "	7/8"	8 1/16 "
5	10 1/8"	7"	1 1/16 "	8 1/16 "
6	11 15/16 "	6 13/16 "	1 1/4"	8 1/16 "
7	13 3/4"	6 5/8"	1 7/16 "	8 1/16 "
8	15 9/16 "	6 7/16 "	1 9/16 "	8 1/16 "
9	17 3/8"	6 1/4"	1 13/16 "	8 1/16 "
10	19 3/16 "	6 1/16 "	1 15/16 "	8 1/16 "
11	21"	5 7/8"	2 3/16 "	8 1/16 "
12	22 13/16 "	5 11/16 "	2 5/16 "	8 1/16 "

SIDE PLATES, TOP PLATE, END PLATE AND GUSSETS ARE 12 GAUGE ASTM A36 STEEL AND GALVANIZED.

GUSSETS AND END PLATE ARE STITCH WELDED ON 3 SIDES. TWO TRIANGULAR SIDE PLATES ARE STITCH WELDED TO TOP PLATE, END PLATE AND GUSSETS.

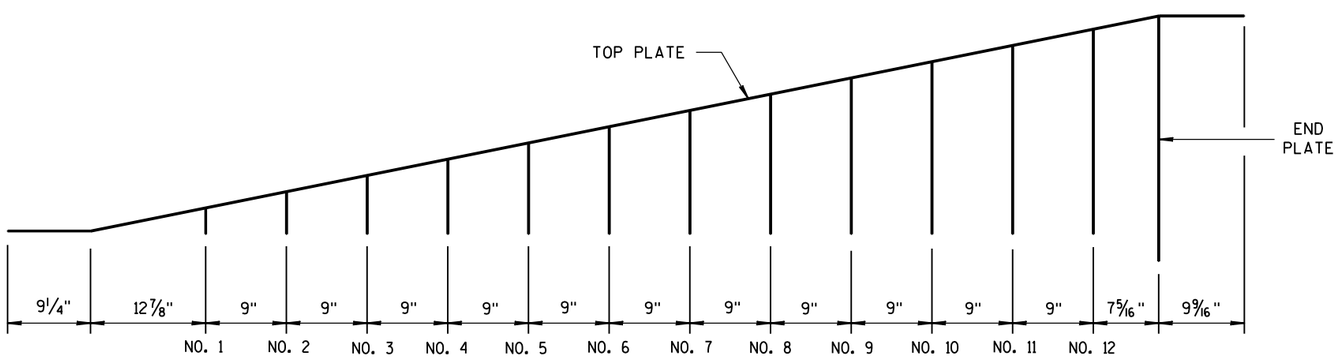

GUSSET LOCATION

CAP DETAILS FOR TEMPORARY CONCRETE BARRIER TO 56" PERMANENT CONCRETE BARRIER

CONCRETE BARRIER
TEMPORARY PRECAST, 12'-6"

STATE OF WISCONSIN
DEPARTMENT OF TRANSPOR

6

S.D.D. 14 B 7-15h

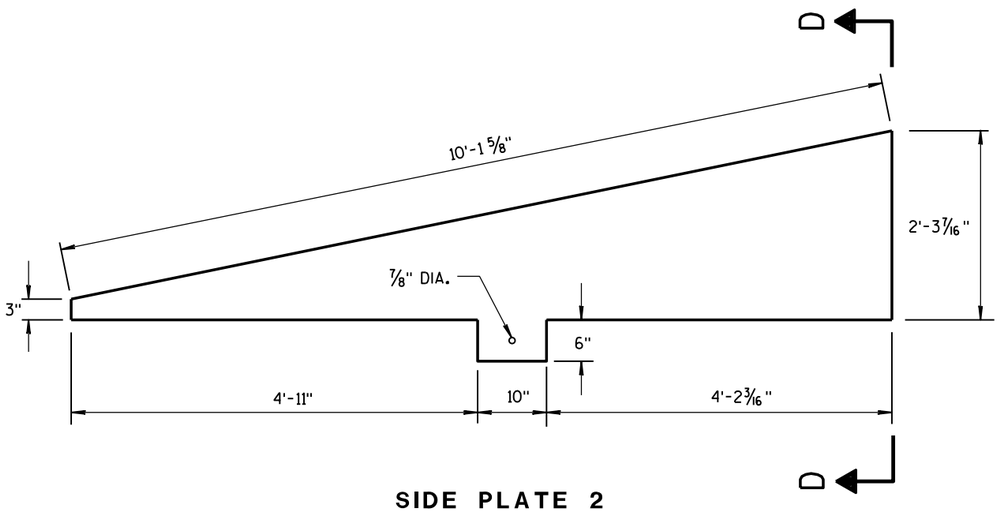

SIDE PLATE 2

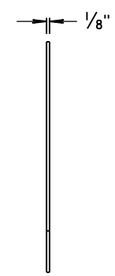

END VIEW

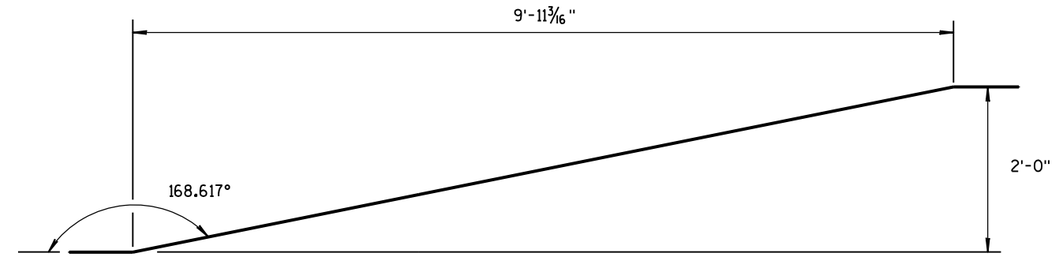

SIDE VIEW

TOP PLATE

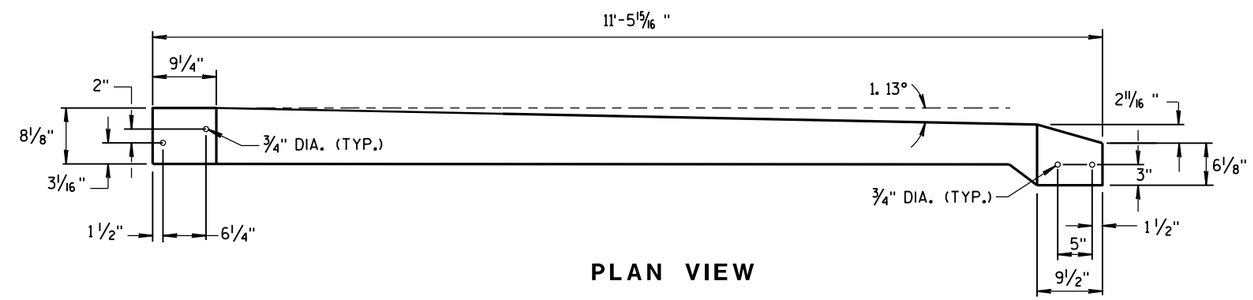

PLAN VIEW

TOP PLATE

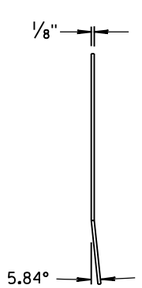

END VIEW

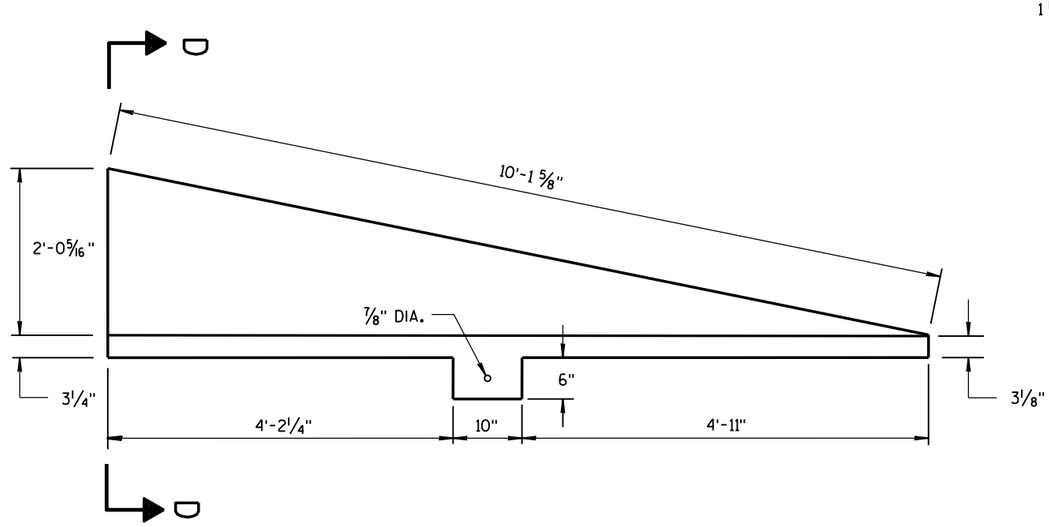

SIDE PLATE 1

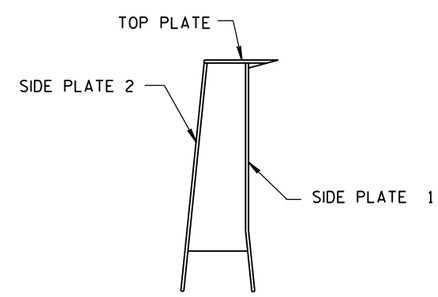

SECTION D-D

CAP DETAILS FOR TEMPORARY CONCRETE BARRIER TO 56" PERMANENT CONCRETE BARRIER

CONCRETE BARRIER
TEMPORARY PRECAST, 12'-6"

STATE OF WISCONSIN
DEPARTMENT OF TRANSPORTATION

APPROVED
June 2017 — DATE
/S/ Rodney Taylor — ROADWAY STANDARD UNIT SUPERV
FHWA

6

6

S.D.D. 14 B 7-15i

S.D.D. 14 B 7-15i

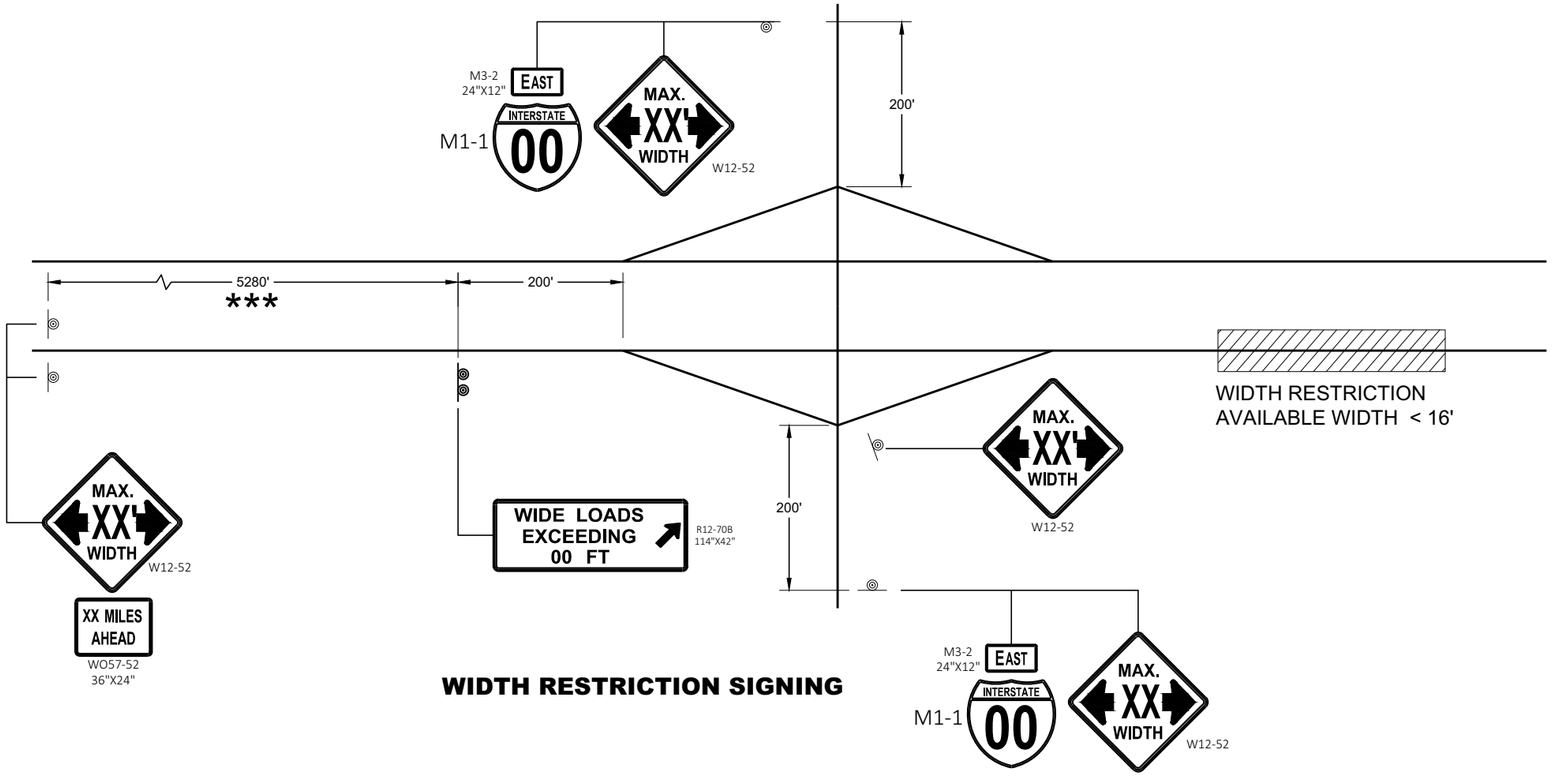

WIDTH RESTRICTION SIGNING

LEGEND

◎ SIGN ON PERMANENT SUPPORT

GENERAL NOTES

THE EXACT NUMBER, LOCATION AND SPACING OF ALL SIGNS SHALL BE ADJUSTED TO FIT FIELD CONDITIONS AS APPROVED BY THE ENGINEER.

THE SPACING BETWEEN SIGNS SHOULD BE ADJUSTED TO NOT CONFLICT WITH AND TO PROVIDE A DESIRABLE MINIMUM OF 200 FEET CLEARANCE TO EXISTING SIGNS THAT WILL REMAIN IN PLACE.

ANY SIGNS TEMPORARY OR EXISTING, WHICH CONFLICT WITH TRAFFIC CONTROL " IN USE" SHALL BE REMOVED OR COVERED AS NEEDED AND AS APPROVED BY THE ENGINEER.

ALL SIGNS ARE 48" X 48" UNLESS OTHERWISE NOTED.

"WO" SIGNS ARE THE SAME AS "W" SIGNS EXCEPT THE BACKGROUND IS ORANGE.

WIDTH ON SIGN TO BE APPROXIMATELY ONE FOOT LESS THAN AVAILABLE WIDTH.

* PLACE 500 FEET AFTER THE W20 - 1A AND 500 FEET BEFORE ADDITIONAL SIGNS FOR ROADWAYS WITH A PRE - CONSTRUCTION SPEED LIMIT OF 45 MPH OR MORE. FOR 35-40 MPH, USE 350 FOOT TYPICAL SPACING. FOR 25-30 MPH, USE 200 FOOT TYPICAL SPACING.

** SIGN SHALL BE VISIBLE FROM ROADWAY.

*** ADDITIONAL SIGNS NEEDED IF THERE IS AN ON RAMP BETWEEN SIGNS.

WIDTH ON SIGN TO BE APPROX. 1 - FOOT LESS THAN AVAILABLE WIDTH

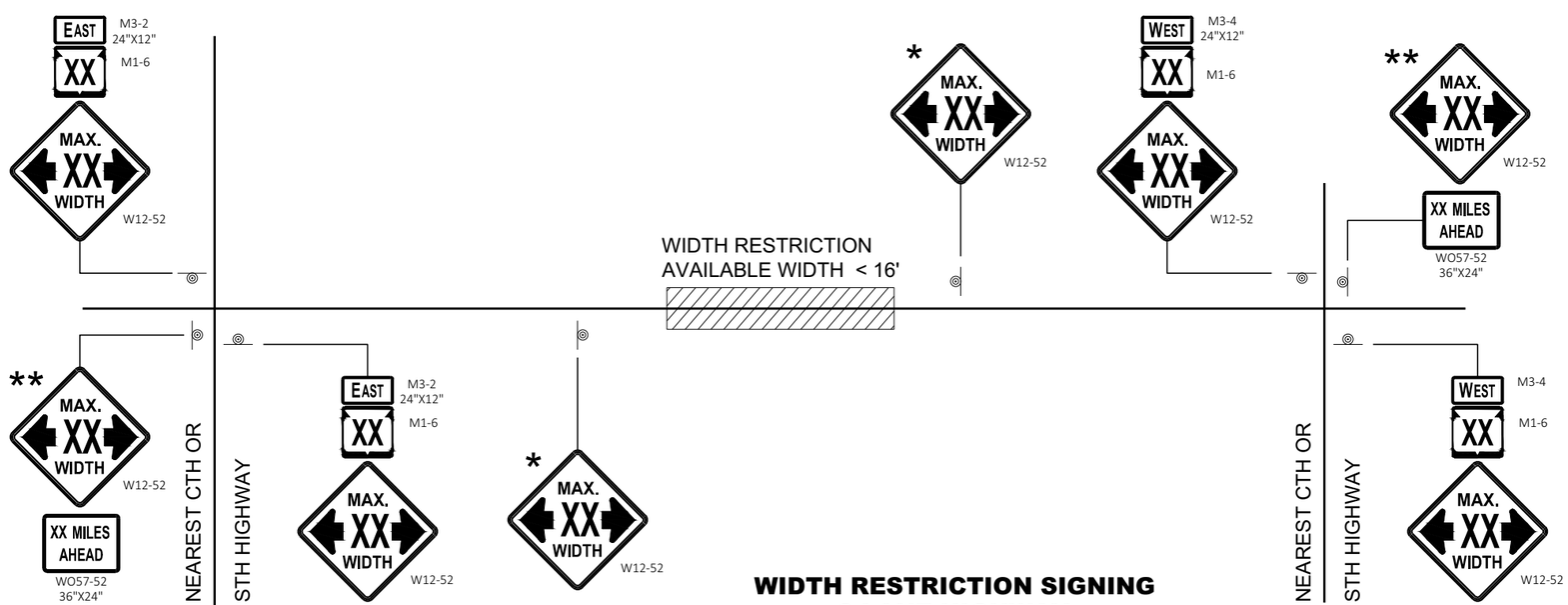

WIDTH RESTRICTION SIGNING
2 LANE HIGHWAY

ADVANCED WIDTH RESTRICTION SIGNING

STATE OF WISCONSIN
DEPARTMENT OF TRANSPORTATION

APPROVED
February 2020 — /S/ Andrew Heidtke
DATE — WORK ZONE ENGINEER

FHWA

6

SDD 15C02 - 08f

GENERAL NOTES

DETAILS OF INSTALLATION, MATERIALS AND WORKMANSHIP NOT SHOWN ON THIS DRAWING SHALL CONFORM TO THE PERTINENT REQUIREMENTS OF THE STANDARD SPECIFICATIONS AND APPLICABLE SPECIAL PROVISIONS.

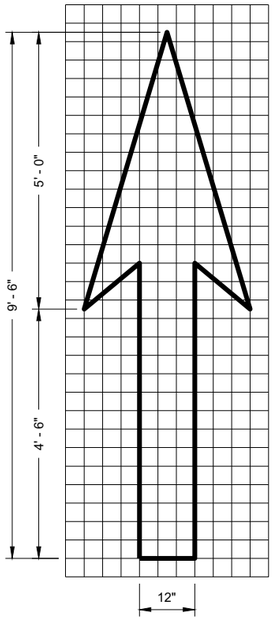

TYPE 1

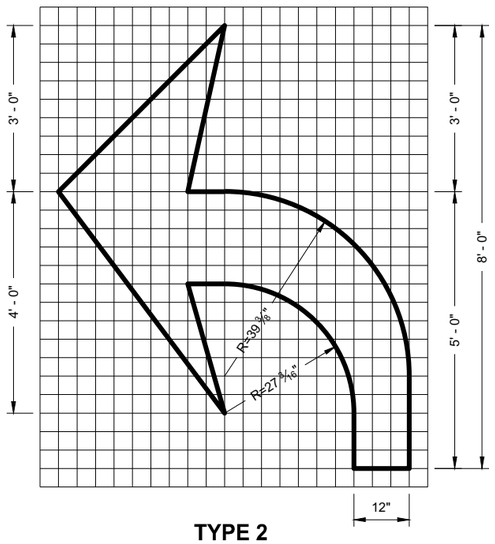

TYPE 2

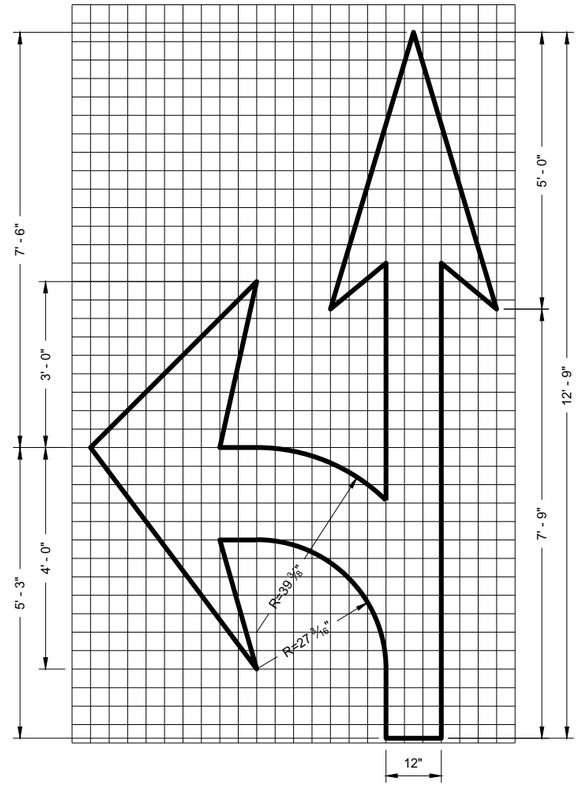

TYPE 3

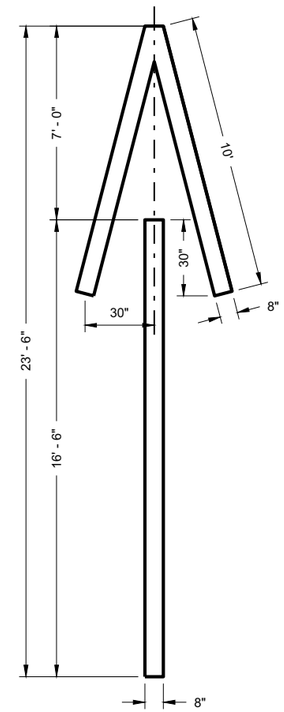

TYPE 4

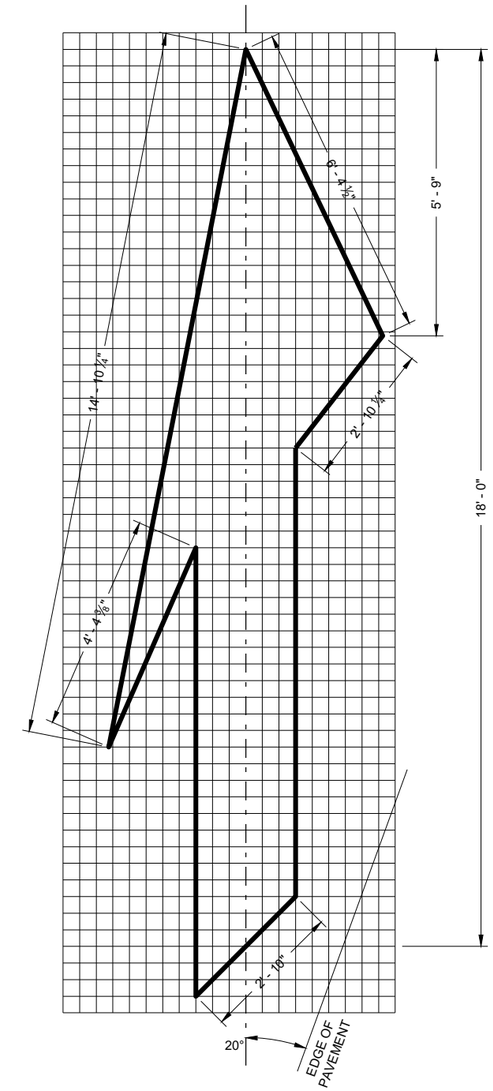

TYPE 5 LANE DROP ARROW

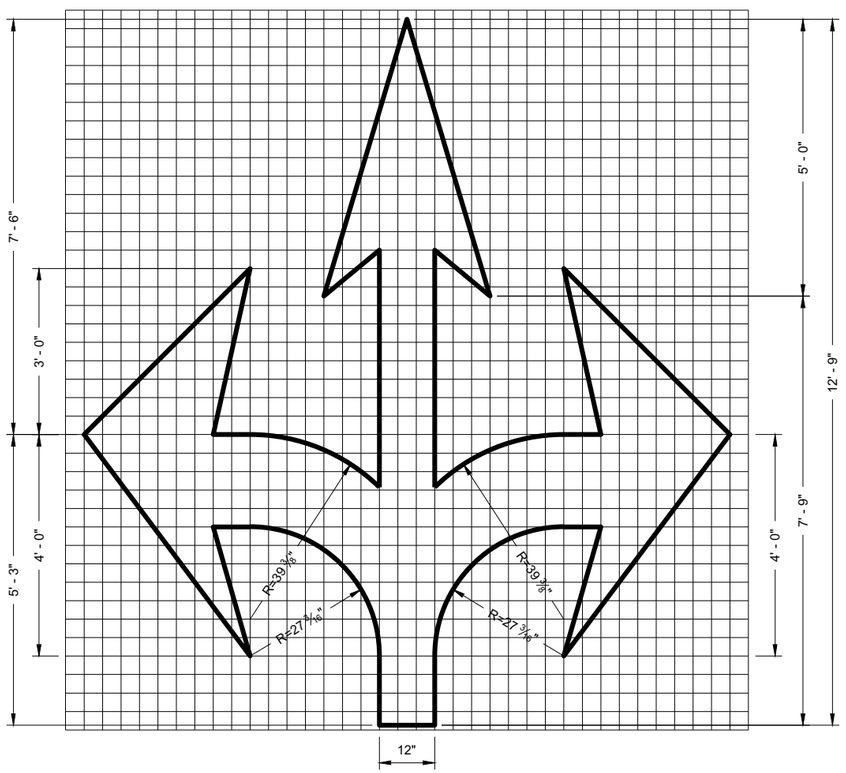

TYPE 6

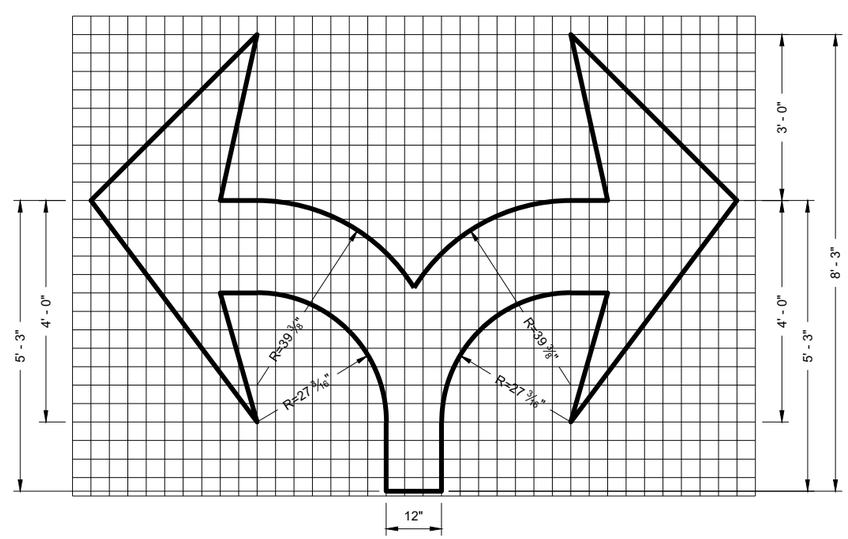

TYPE 7

PAVEMENT MARKING ARROWS

STATE OF WISCONSIN
DEPARTMENT OF TRANSPORTATION

APPROVED
November 2019 — DATE
/S/ Matthew Rauch — STATE SIGNING AND MAR ENGINEER
FHWA

6

SDD 15C07 - 15c

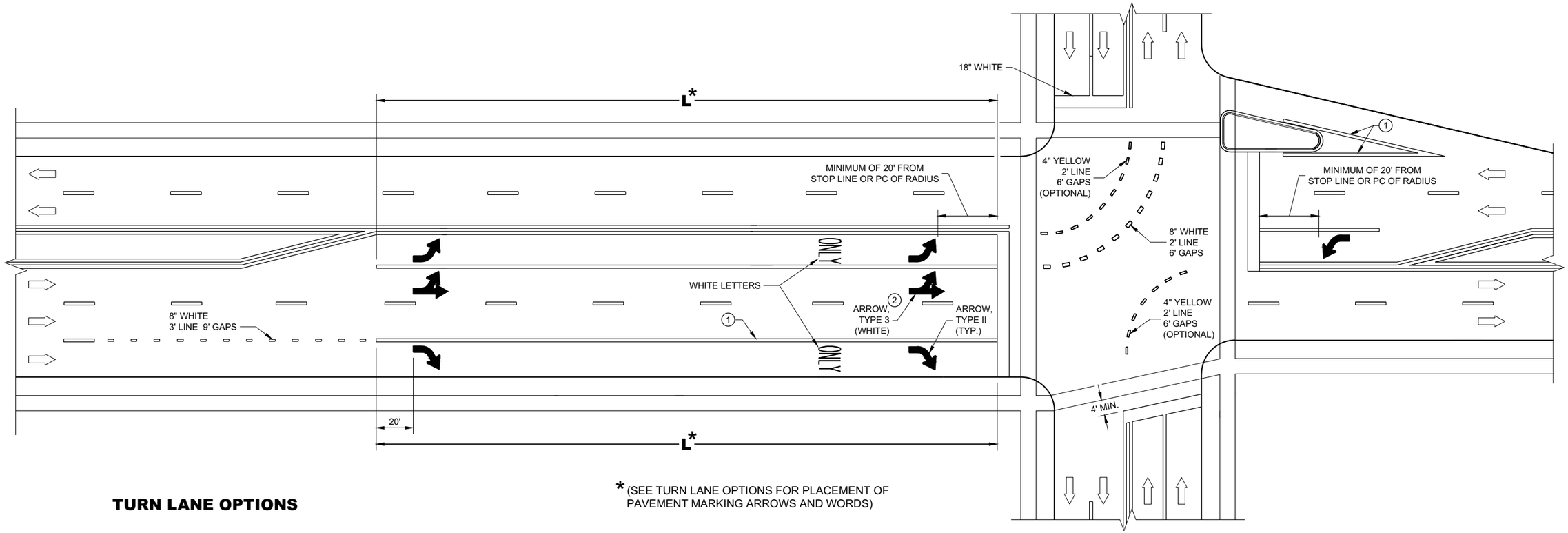

*(SEE TURN LANE OPTIONS FOR PLACEMENT OF PAVEMENT MARKING ARROWS AND WORDS)

TURN LANE OPTIONS

LENGTH OF TURN BAY (L) OF 0 - 47' DOES NOT REQUIRE PAVEMENT MARKING ARROWS OR WORDS

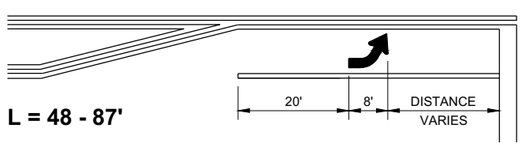

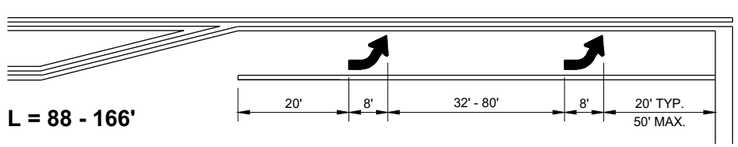

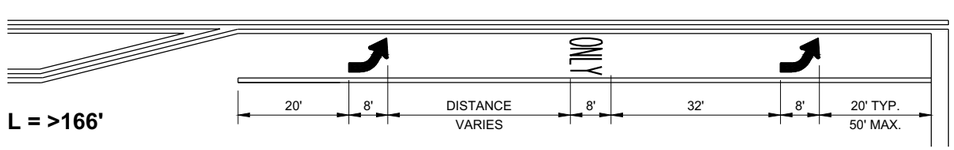

GENERAL NOTES

1. 8" WHITE
2. QUANTITY AND LOCATION OF TYPE 3 ARROWS ARE THE SAME AS THE TYPE II ARROWS IN THE ADJACENT TURN LANE. FOR TURN LANES WITH A PHYSICAL SEPARATION IN THE SAME DIRECTION OF TRAVEL, THE ARROWS AND "ONLY" MARKING MAY BE ELIMINATED.

⇨ DIRECTION OF TRAFFIC

L = LENGTH OF TURN BAY

PAVEMENT MARKING (TURN LANES)

STATE OF WISCONSIN
DEPARTMENT OF TRANSPORTAT

6

SDD 15C08 - 20c

GENERAL NOTES

1. REFLECTIVE SHEETING SHALL FOLLOW THE REQUIREMENTS IN THE APPROVED PRODUCTS LISTING FOR SIGN SHEETING.
2. LOCATION OF WARNING LIGHTS WHEN SHOWN ON THE PLAN.

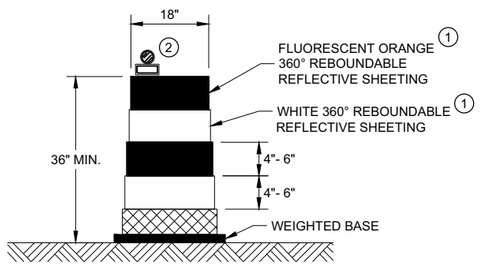

DRUM

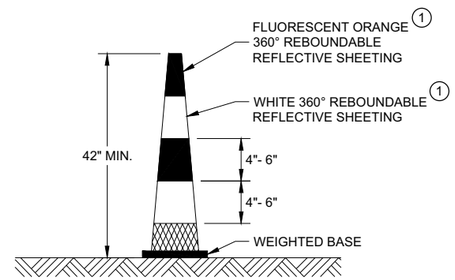

42" CONE

DO NOT USE IN TAPERS
½ SPACING OF DRUMS

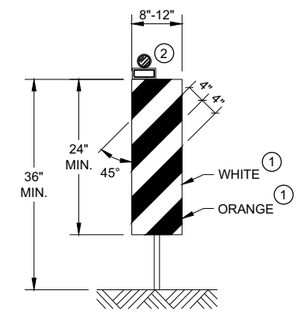

VERTICAL PANEL

THE STRIPES SHALL SLOPE DOWNWARD TO
THE TRAFFIC SIDE FOR CHANNELIZATION.

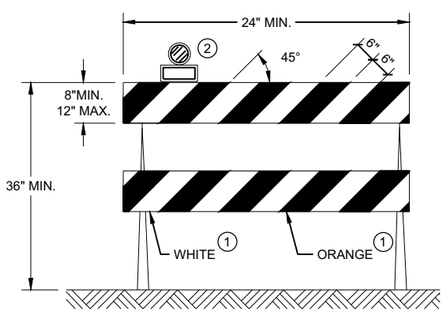

TYPE II BARRICADE

FOR RAILS LESS THAN 36" LONG, 4" WIDE STRIPES
MAY BE USED. ALL STRIPES SHALL SLOPE DOWNWARD
TO THE TRAFFIC SIDE FOR CHANNELIZATION.

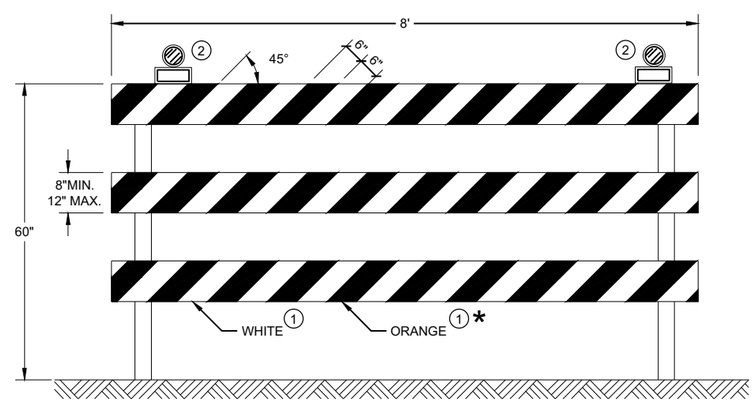

TYPE III BARRICADE

IF SIGN MOUNTED, DO NOT COVER MORE THAN 50% OF THE TOP
TWO RAILS OR 33% OF THE TOTAL AREA OF THE THREE RAILS.

* IF USED FOR A PERMANENT APPLICATION USE RED SHEETING.

CHANNELIZING DEVICES DRUMS, CONES, BARRICADES AND VERTICAL PANELS

STATE OF WISCONSIN
DEPARTMENT OF TRANSPORTATION

APPROVED
November 2020 — /S/ Andrew Heidtke
DATE — WORK ZONE ENGINEE
FHWA

6

SDD 15C11 - 08b

6

SDD 15C11 - 08b

GENERAL NOTES

STOP SIGN SHALL BE PLACED A MINIMUM OF 6 FEET TO A MAXIMUM OF 50 FEET FROM THE EDGELINE LOCATION.

1. 18-INCH STOP LINES MAY BE DELETED OR ADDED BY THE REGION MARKING ENGINEER BASED ON VISIBILITY AND SIGHT LINES.
2. NO STOP LINE IS REQUIRED IF STOP SIGN IS LESS THAN OR EQUAL TO 40 FEET FROM THE EDGELINE.
3. NO STOP LINE IS REQUIRED IF STOP SIGN IS LESS THAN OR EQUAL TO 30 FEET FROM THE FLANGELINE EXTENSION.
4. MOVE CLOSER TO THE EDGE OF TRAVEL LINE AS NEEDED FOR VISIBILITY AND SIGHT LINES (NO CLOSER THAN 4 FEET).
5. LADDER BAR CROSSWALKS SHOULD ONLY BE USED FOR MID BLOCK CROSSINGS. USE 2 - 6" TRANSVERSE LINES INSTEAD.

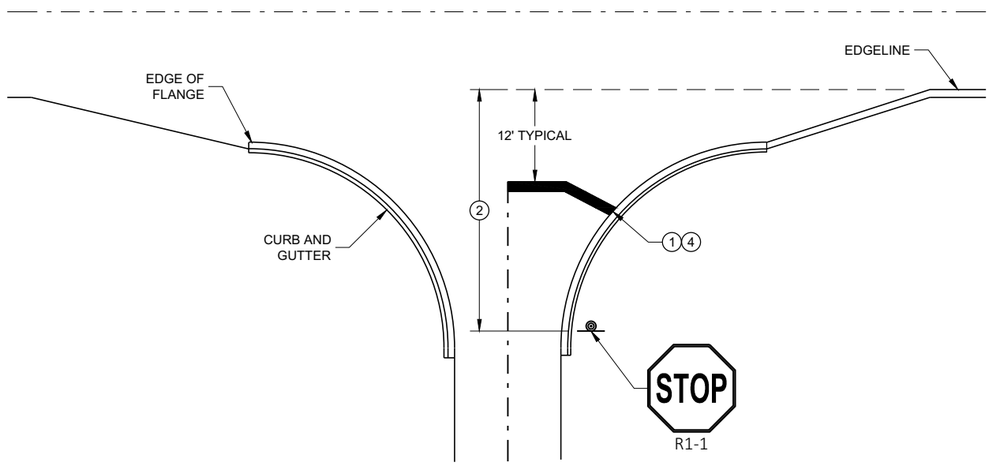

TYPICAL STOP LINE PAVEMENT MARKING WITH CURB AND GUTTER

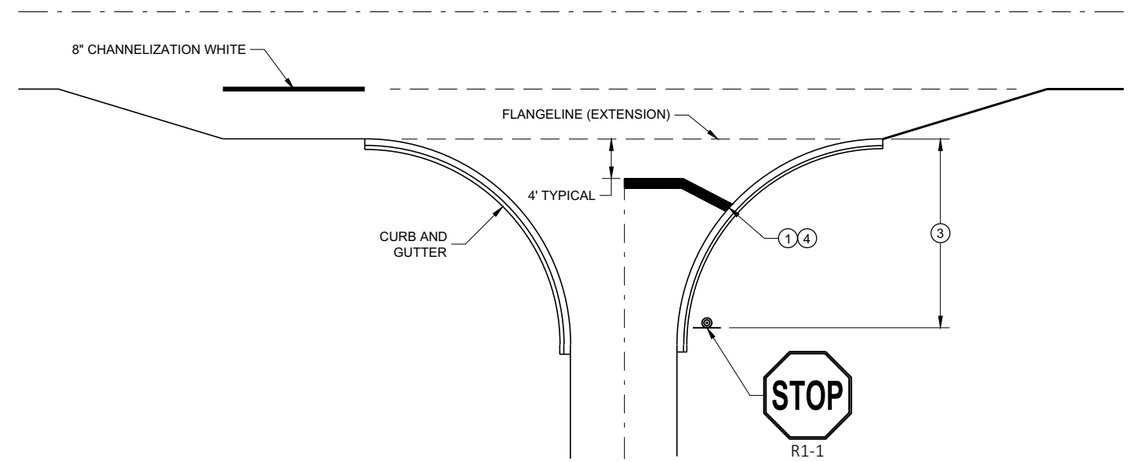

TYPICAL STOP LINE PAVEMENT MARKING FOR SIDEROADS WITH RIGHT TURN LANE

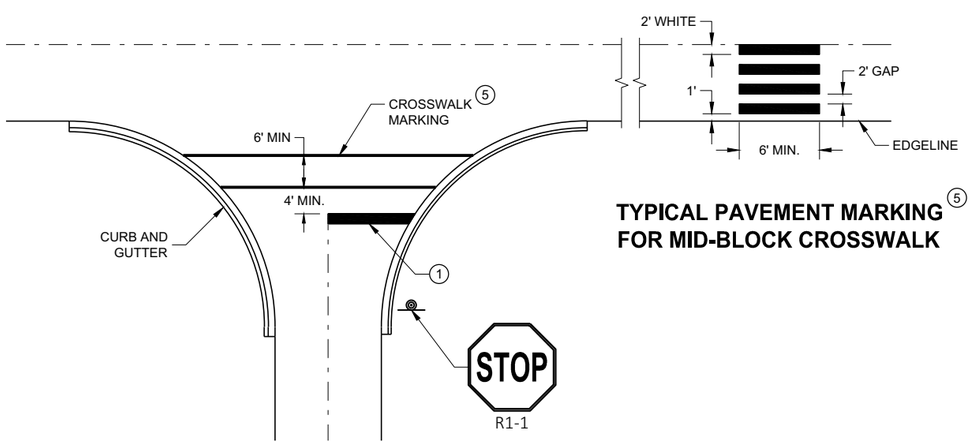

TYPICAL STOP LINE PAVEMENT MARKING FOR SIDEROADS WITH CROSSWALK MARKING

TYPICAL PAVEMENT MARKING 5 FOR MID-BLOCK CROSSWALK

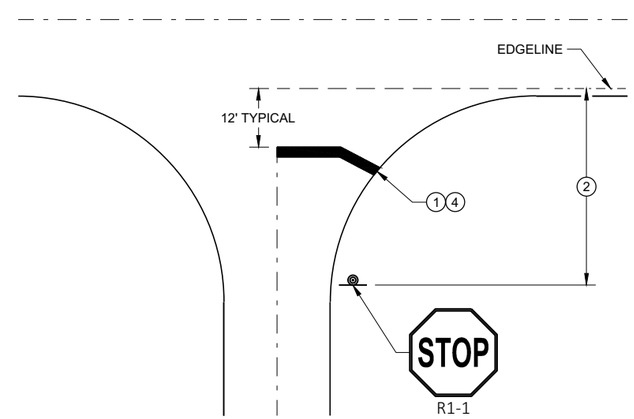

TYPICAL STOP LINE PAVEMENT MARKING WITHOUT CURB AND GUTTER

STOP LINE AND CROSSWALK PAVEMENT MARKING

STATE OF WISCONSIN
DEPARTMENT OF TRANSPORTATION

APPROVED
November 2019 — DATE
/S/ Matthew Rauch — STATE SIGNING AND MAF ENGINEER
FHWA

6

SDD 15C33 - 04

LEGEND

- SIGN ON PERMANENT SUPPORT
- TRAFFIC CONTROL DRUM
- TRAFFIC CONTROL DRUM WITH TYPE "C" STEADY BURN LIGHT
- TYPE III BARRICADE WITH ATTACHED SIGN
- TYPE "A" WARNING LIGHT (FLASHING)
- FLASHING ARROW BOARD
- DIRECTION OF TRAFFIC
- REMOVE PAVEMENT MARKING (SEE GENERAL NOTES)
- WORK AREA

GENERAL NOTES

THIS DETAIL MAY BE USED FOR ROADWAYS WITH EITHER TWO OR THREE LANES IN EACH DIRECTION.

ALL SIGNS ARE 48"X48" UNLESS OTHERWISE NOTED. IF NECESSARY DUE TO SPACE CONSTRAINTS IN URBAN AREAS, 36"X 36" SIGNS MAY BE USED IF APPROVED BY REGIONAL TRAFFIC UNIT.

"WO" SIGN IS THE SAME AS "W" SIGN EXCEPT THE BACKGROUND IS ORANGE.

ANY SIGNS TEMPORARY OR EXISTING, WHICH CONFLICT WITH THE TRAFFIC CONTROL "IN USE" SHALL BE REMOVED OR COVERED AS NEEDED AND AS APPROVED BY THE ENGINEER. NO WARNING LIGHTS SHALL BE WORKING ON COVERED OR "DOWNED" SIGNS.

SIGNS THAT WILL BE IN PLACE LESS THAN 7 CONTINUOUS DAYS AND NIGHTS OR THAT WILL BE PLACED IN A CLOSED LANE MAY BE MOUNTED ON TEMPORARY SUPPORTS.

THE EXACT NUMBER, LOCATION, AND SPACING OF ALL SIGNS AND DEVICES SHALL BE ADJUSTED TO FIT FIELD CONDITIONS AS APPROVED BY THE ENGINEER.

THE SPACING BETWEEN TRAFFIC CONTROL SIGNS SHOULD BE ADJUSTED TO NOT CONFLICT WITH AND TO PROVIDE A MINIMUM OF 200 FEET (500' DESIRABLE) DISTANCE TO EXISTING SIGNS THAT WILL REMAIN IN PLACE

W20-1A, G20-1 AND G20-2A SIGNS ARE NOT REQUIRED IF THE LANE CLOSURE IS WITHIN A LARGER WORK ZONE WHERE THESE SIGNS ARE ALREADY PRESENT.

REMOVE PAVEMENT MARKINGS AND PLACE TEMPORARY PAVEMENT MARKING, REMOVABLE TAPE IF LANE CLOSURE IS TO BE IN PLACE FOR 4 OR MORE CONTINUOUS DAYS AND NIGHTS.

CONSIDER GEOMETRICS WHEN LOCATING SIGNS AND ARROW BOARDS SO THE APPROACHING DRIVER HAS A CLEAR VIEW OF THE ARROW BOARDS AND LANE CLOSURE DRUMS FOR A MINIMUM 1500 FEET IN FRONT OF DRUMS.

BARRICADES IN A CLOSED LANE THAT MUST BE MOVED FOR A WORK OPERATION SHALL BE IMMEDIATELY REESTABLISHED UPON COMPLETION OF THE OPERATION, OR FOR CONTINUING OPERATIONS, AT THE END OF EACH WORKING DAY.

CHANNELIZING DEVICES PLACED ADJACENT TO WORK AREA SHALL BE PULLED BACK FROM THE TRAVEL LANE WHEN WORK IS NOT IN PROGRESS.

WARNING LIGHTS ARE NOT REQUIRED IF THE LANE CLOSURE IS A DAYTIME ONLY OPERATION.

(1) OMIT G20-1 SIGNS IF LENGTH OF WORK AREA IS 2 MILES OR LESS.

POSTED SPEED LIMIT PRIOR TO WORK STARTING (MPH)	ADVANCE WARNING SIGN SPACING (A) FEET	TAPER LENGTH (12 FT. LANE) (L) FEET	BUFFER SPACE (B) FEET
25	200'	125'	55'
30	200'	180'	85'
35	350'	245'	120'
40	350'	320'	170'
45	500'	540'	220'
50	500'	600'	280'
55	500'	660'	335'

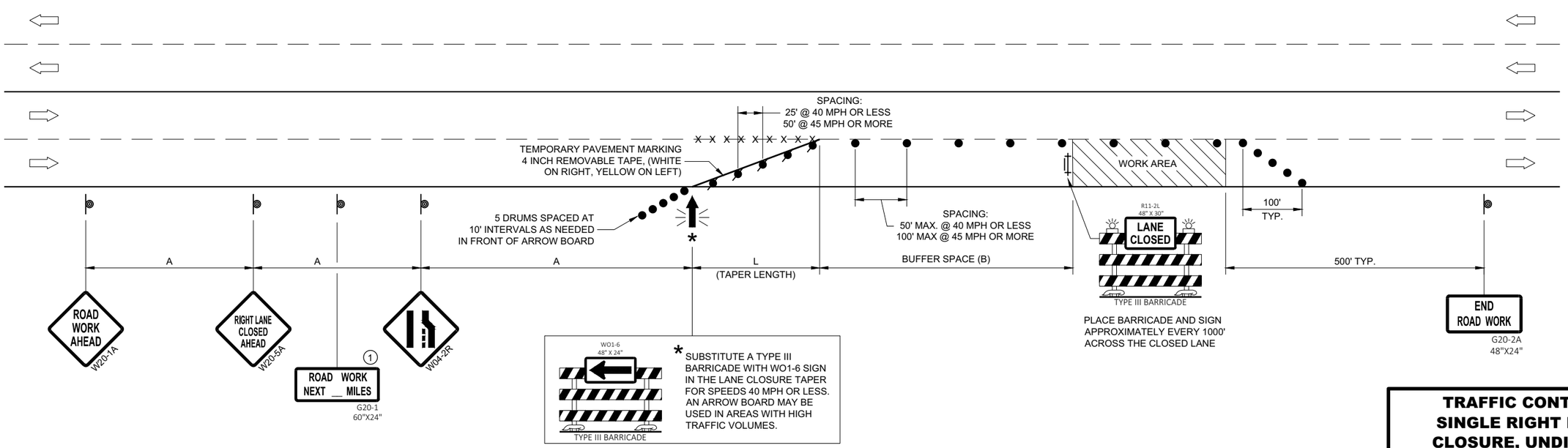

TRAFFIC CONTROL, SINGLE RIGHT LANE CLOSURE, UNDIVIDED NON-FREEWAY/EXPRESSWAY

STATE OF WISCONSIN
DEPARTMENT OF TRANSPORTATION

APPROVED
May 2020 — DATE
/S/ Andrew Heidtke — STATEWIDE WORK ZONE T SAFETY ENGINEER
FHWA

6

SDD 15D20 - 05b

LEGEND

- SIGN ON PERMANENT SUPPORT
- TRAFFIC CONTROL DRUM
- TRAFFIC CONTROL DRUM WITH TYPE "C" STEADY BURN LIGHT
- TYPE III BARRICADE WITH ATTACHED SIGN
- TYPE "A" WARNING LIGHT (FLASHING)
- FLASHING ARROW BOARD
- DIRECTION OF TRAFFIC
- REMOVE PAVEMENT MARKING (SEE GENERAL NOTES)
- WORK AREA

GENERAL NOTES

THIS DETAIL MAY BE USED FOR ROADWAYS WITH EITHER TWO OR THREE LANES IN EACH DIRECTION.

ALL SIGNS ARE 48"X48" UNLESS OTHERWISE NOTED. IF NECESSARY DUE TO SPACE CONSTRAINTS IN URBAN AREAS, 36"X 36" SIGNS MAY BE USED IF APPROVED BY REGIONAL TRAFFIC UNIT.

"WO" SIGN IS THE SAME AS "W" SIGN EXCEPT THE BACKGROUND IS ORANGE.

ANY SIGNS TEMPORARY OR EXISTING, WHICH CONFLICT WITH THE TRAFFIC CONTROL "IN USE" SHALL BE REMOVED OR COVERED AS NEEDED AND AS APPROVED BY THE ENGINEER. NO WARNING LIGHTS SHALL BE WORKING ON COVERED OR "DOWNED" SIGNS.

SIGNS THAT WILL BE IN PLACE LESS THAN 7 CONTINUOUS DAYS AND NIGHTS OR THAT WILL BE PLACED IN A CLOSED LANE MAY BE MOUNTED ON TEMPORARY SUPPORTS.

THE EXACT NUMBER, LOCATION, AND SPACING OF ALL SIGNS AND DEVICES SHALL BE ADJUSTED TO FIT FIELD CONDITIONS AS APPROVED BY THE ENGINEER.

THE SPACING BETWEEN TRAFFIC CONTROL SIGNS SHOULD BE ADJUSTED TO NOT CONFLICT WITH AND TO PROVIDE A MINIMUM OF 200 FEET (500' DESIRABLE) DISTANCE TO EXISTING SIGNS THAT WILL REMAIN IN PLACE.

W20-1A, G20-1 AND G20-2A SIGNS ARE NOT REQUIRED IF THE LANE CLOSURE IS WITHIN A LARGER WORK ZONE WHERE THESE SIGNS ARE ALREADY PRESENT.

REMOVE PAVEMENT MARKINGS AND PLACE TEMPORARY PAVEMENT MARKING, REMOVABLE TAPE IF LANE CLOSURE IS TO BE IN PLACE FOR 4 OR MORE CONTINUOUS DAYS AND NIGHTS.

CONSIDER GEOMETRICS WHEN LOCATING SIGNS AND ARROW BOARDS SO THE APPROACHING DRIVER HAS A CLEAR VIEW OF THE ARROW BOARDS AND LANE CLOSURE DRUMS FOR A MINIMUM 1500 FEET IN FRONT OF DRUMS.

DUE TO LACK OF SHOULDER/MEDIAN, ARROW BOARD IS PLACED AT THE THE END OF THE TAPER.

BARRICADES IN A CLOSED LANE THAT MUST BE MOVED FOR A WORK OPERATION SHALL BE IMMEDIATELY REESTABLISHED UPON COMPLETION OF THE OPERATION, OR FOR CONTINUING OPERATIONS, AT THE END OF EACH WORKING DAY.

CHANNELIZING DEVICES PLACED ADJACENT TO WORK AREA SHALL BE PULLED BACK FROM THE TRAVEL LANE WHEN WORK IS NOT IN PROGRESS.

WARNING LIGHTS ARE NOT REQUIRED IF THE LANE CLOSURE IS A DAYTIME ONLY OPERATION.

(1) OMIT G20-1 SIGNS IF LENGTH OF WORK AREA IS 2 MILES OR LESS.

(2) LANE MAY BE OPENED WHEN WORKERS ARE NOT PRESENT IN THE WORK AREA.

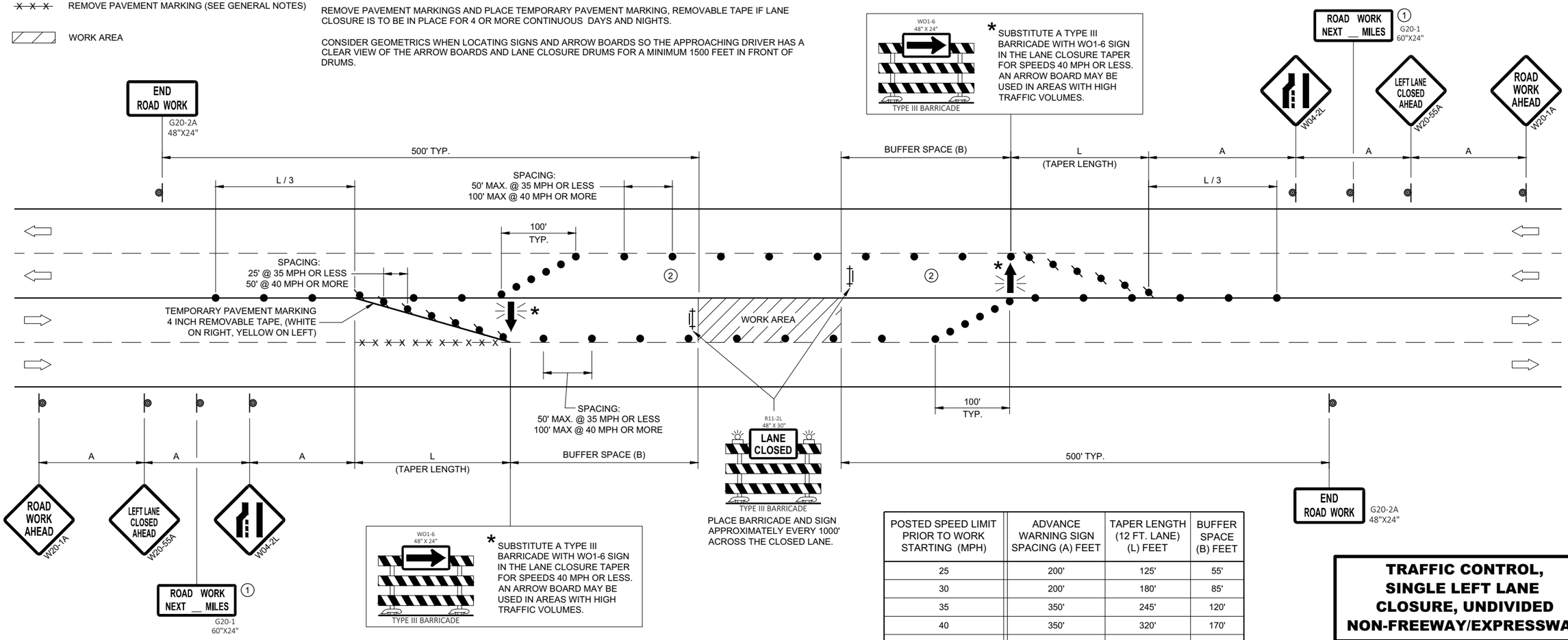

POSTED SPEED LIMIT PRIOR TO WORK STARTING (MPH)	ADVANCE WARNING SIGN SPACING (A) FEET	TAPER LENGTH (12 FT. LANE) (L) FEET	BUFFER SPACE (B) FEET
25	200'	125'	55'
30	200'	180'	85'
35	350'	245'	120'
40	350'	320'	170'
45	500'	540'	220'
50	500'	600'	280'
55	500'	660'	335'

TRAFFIC CONTROL, SINGLE LEFT LANE CLOSURE, UNDIVIDED NON-FREEWAY/EXPRESSWAY

STATE OF WISCONSIN
DEPARTMENT OF TRANSPORTATION

APPROVED
May 2020 — DATE
/S/ Andrew Heidtke — STATEWIDE WORK ZONE T SAFETY ENGINEER
FHWA

6

SDD 15D20 - 05c

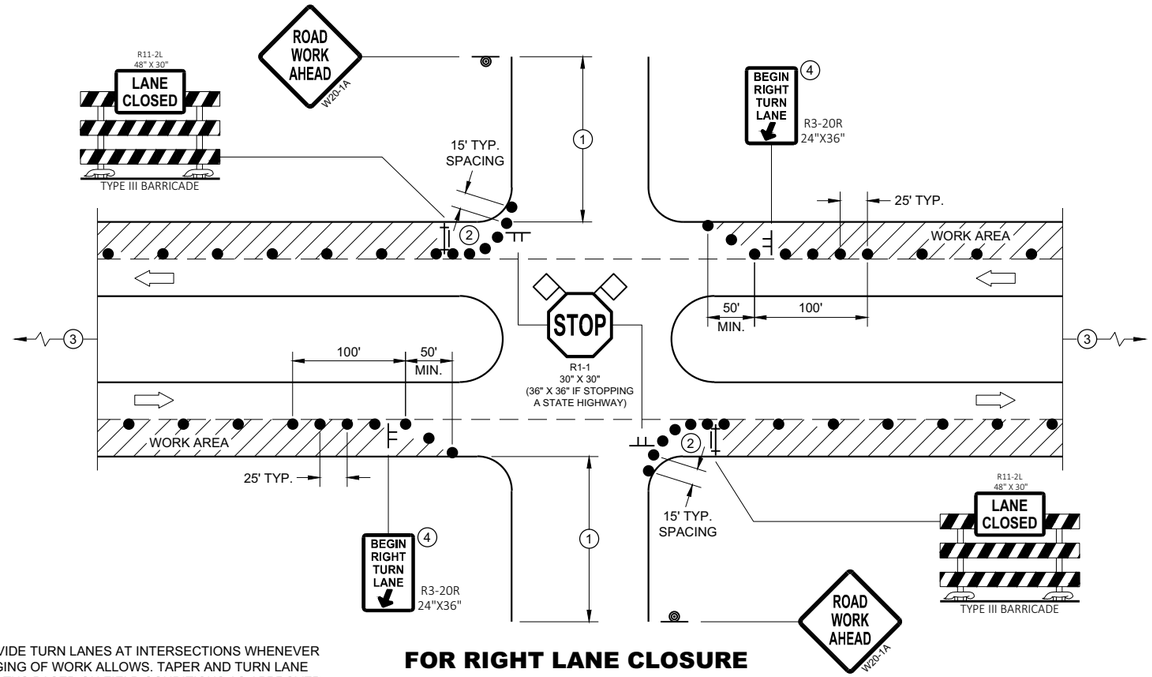

PROVIDE TURN LANES AT INTERSECTIONS WHENEVER STAGING OF WORK ALLOWS. TAPER AND TURN LANE LENGTHS BASED ON FIELD CONDITIONS AS APPROVED BY THE ENGINEER.

FOR RIGHT LANE CLOSURE AT INTERSECTION

GENERAL NOTES

ALL SIGNS ARE 48"X48" UNLESS OTHERWISE NOTED. IF NECESSARY DUE TO SPACE CONSTRAINTS IN URBAN AREAS, 36" X 36" MAY BE USED IF APPROVED BY THE DISTRICT TRAFFIC UNIT.

"WO" SIGN IS THE SAME AS "W" SIGN EXCEPT THE BACKGROUND IS ORANGE.

ANY SIGNS TEMPORARY OR EXISTING, WHICH CONFLICT WITH THE TRAFFIC CONTROL "IN USE" SHALL BE REMOVED OR COVERED AS NEEDED AND AS APPROVED BY THE ENGINEER. NO WARNING LIGHTS SHALL BE WORKING ON COVERED OR "DOWNED" SIGNS.

THE EXACT NUMBER, LOCATION, AND SPACING OF ALL SIGNS AND DEVICES SHALL BE ADJUSTED TO FIT FIELD CONDITIONS AS APPROVED BY THE ENGINEER.

THE SPACING BETWEEN TRAFFIC CONTROL SIGNS SHOULD BE ADJUSTED TO NOT CONFLICT WITH AND TO PROVIDE A MINIMUM OF 200 FEET (500' DESIRABLE) DISTANCE TO EXISTING SIGNS THAT WILL REMAIN IN PLACE

SIGN LAYOUTS SHALL BE IN ACCORDANCE WITH THE FHWA'S MANUAL OF STANDARD HIGHWAY SIGNS OR THE WISCONSIN STANDARD SIGN PLATES.

SIGNS THAT WILL REMAIN IN PLACE LESS THAN 7 CONTINUOUS DAYS AND NIGHTS OR THAT WILL BE PLACED IN A CLOSED LANE MAY BE MOUNTED ON PORTABLE SUPPORTS.

BARRICADES IN A CLOSED LANE THAT MUST BE MOVED FOR A WORK OPERATION SHALL BE IMMEDIATELY REESTABLISHED UPON COMPLETION OF THE OPERATION, OR FOR CONTINUING OPERATIONS, AT THE END OF EACH WORKING DAY.

CHANNELIZING DEVICES PLACED ADJACENT TO WORK AREA SHALL BE PULLED BACK FROM THE TRAVEL LANE WHEN WORK IS NOT IN PROGRESS.

1. 500' TYPICAL OR AT LAST INTERSECTION, WHICHEVER IS CLOSER.
   350' IF 35 - 40 MPH.
   200' IF 25 - 30 MPH.
2. ALSO USE BARRICADE AND 15 FOOT TYPICAL DRUM SPACING AT COMMERCIAL DRIVEWAYS
3. SEE SEPARATE LANE CLOSURE DETAIL FOR ADDITIONAL TRAFFIC CONTROL.
4. MINIMUM MOUNTING HEIGHT OF 5 FEET FROM EDGE OF PAVEMENT (AT EDGE LINE LOCATION) TO BOTTOM OF SIGN.

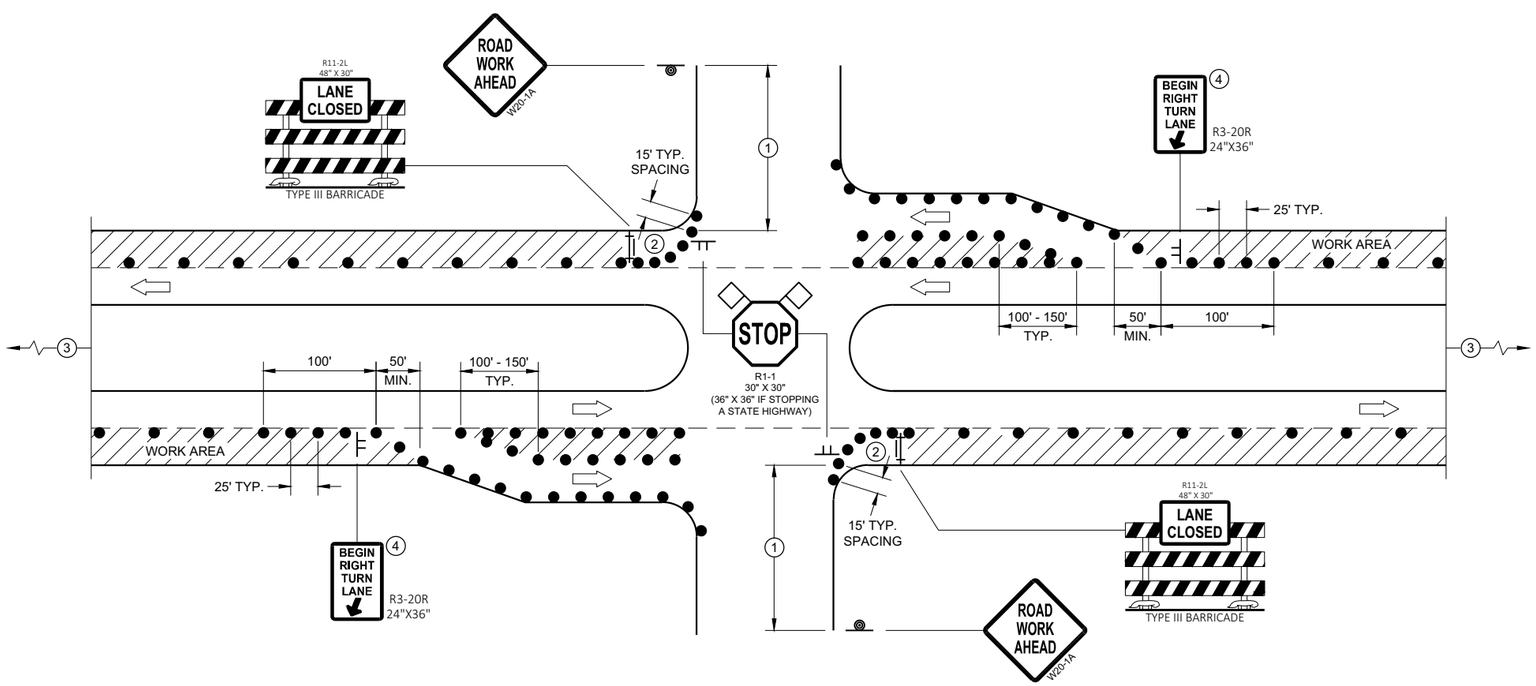

FOR RIGHT LANE CLOSURE AT INTERSECTION (WITH RIGHT TURN BAY OPEN)

LEGEND

- SIGN ON TEMPORARY SUPPORT
- SIGN ON PERMANENT SUPPORT
- TRAFFIC CONTROL DRUM
- TYPE III BARRICADE WITH ATTACHED SIGN
- DIRECTION OF TRAFFIC
- FLAGS, 16" X 16" MIN., ORANGE
- WORK AREA

TRAFFIC CONTROL, INTERSECTION WITHIN SINGLE RIGHT LANE CLOSURE

STATE OF WISCONSIN
DEPARTMENT OF TRANSPORTAT

6

SDD 15D21 - 07a

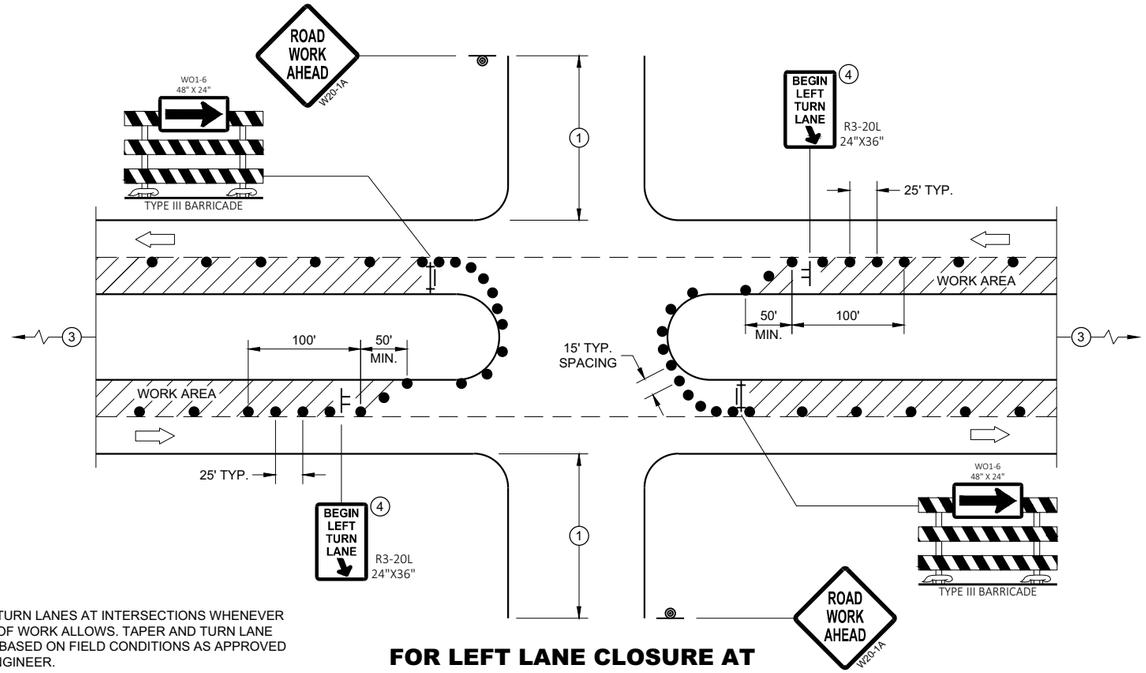

PROVIDE TURN LANES AT INTERSECTIONS WHENEVER STAGING OF WORK ALLOWS. TAPER AND TURN LANE LENGTHS BASED ON FIELD CONDITIONS AS APPROVED BY THE ENGINEER.

FOR LEFT LANE CLOSURE AT INTERSECTION OR MEDIAN OPENING

GENERAL NOTES

ALL SIGNS ARE 48"X48" UNLESS OTHERWISE NOTED. IF NECESSARY DUE TO SPACE CONSTRAINTS IN URBAN AREAS, 36" X 36" MAY BE USED IF APPROVED BY THE DISTRICT TRAFFIC UNIT.

"WO" SIGN IS THE SAME AS "W" SIGN EXCEPT THE BACKGROUND IS ORANGE.

ANY SIGNS TEMPORARY OR EXISTING, WHICH CONFLICT WITH THE TRAFFIC CONTROL "IN USE" SHALL BE REMOVED OR COVERED AS NEEDED AND AS APPROVED BY THE ENGINEER. NO WARNING LIGHTS SHALL BE WORKING ON COVERED OR "DOWNED" SIGNS.

THE EXACT NUMBER, LOCATION, AND SPACING OF ALL SIGNS AND DEVICES SHALL BE ADJUSTED TO FIT FIELD CONDITIONS AS APPROVED BY THE ENGINEER.

THE SPACING BETWEEN TRAFFIC CONTROL SIGNS SHOULD BE ADJUSTED TO NOT CONFLICT WITH AND TO PROVIDE A MINIMUM OF 200 FEET (500' DESIRABLE) DISTANCE TO EXISTING SIGNS THAT WILL REMAIN IN PLACE

SIGN LAYOUTS SHALL BE IN ACCORDANCE WITH THE FHWA'S MANUAL OF STANDARD HIGHWAY SIGNS OR THE WISCONSIN STANDARD SIGN PLATES.

SIGNS THAT WILL REMAIN IN PLACE LESS THAN 7 CONTINUOUS DAYS AND NIGHTS OR THAT WILL BE PLACED IN A CLOSED LANE MAY BE MOUNTED ON PORTABLE SUPPORTS.

BARRICADES IN A CLOSED LANE THAT MUST BE MOVED FOR A WORK OPERATION SHALL BE IMMEDIATELY REESTABLISHED UPON COMPLETION OF THE OPERATION, OR FOR CONTINUING OPERATIONS, AT THE END OF EACH WORKING DAY.

CHANNELIZING DEVICES PLACED ADJACENT TO WORK AREA SHALL BE PULLED BACK FROM THE TRAVEL LANE WHEN WORK IS NOT IN PROGRESS.

1. 500' TYPICAL OR AT LAST INTERSECTION, WHICHEVER IS CLOSER.
   350' IF 35 - 40 MPH.
   200' IF 25 - 30 MPH.
2. ALSO USE BARRICADE AND 15 FOOT TYPICAL DRUM SPACING AT COMMERCIAL DRIVEWAYS
3. SEE SEPARATE LANE CLOSURE DETAIL FOR ADDITIONAL TRAFFIC CONTROL.
4. MINIMUM MOUNTING HEIGHT OF 5 FEET FROM EDGE OF PAVEMENT (AT EDGE LINE LOCATION) TO BOTTOM OF SIGN.

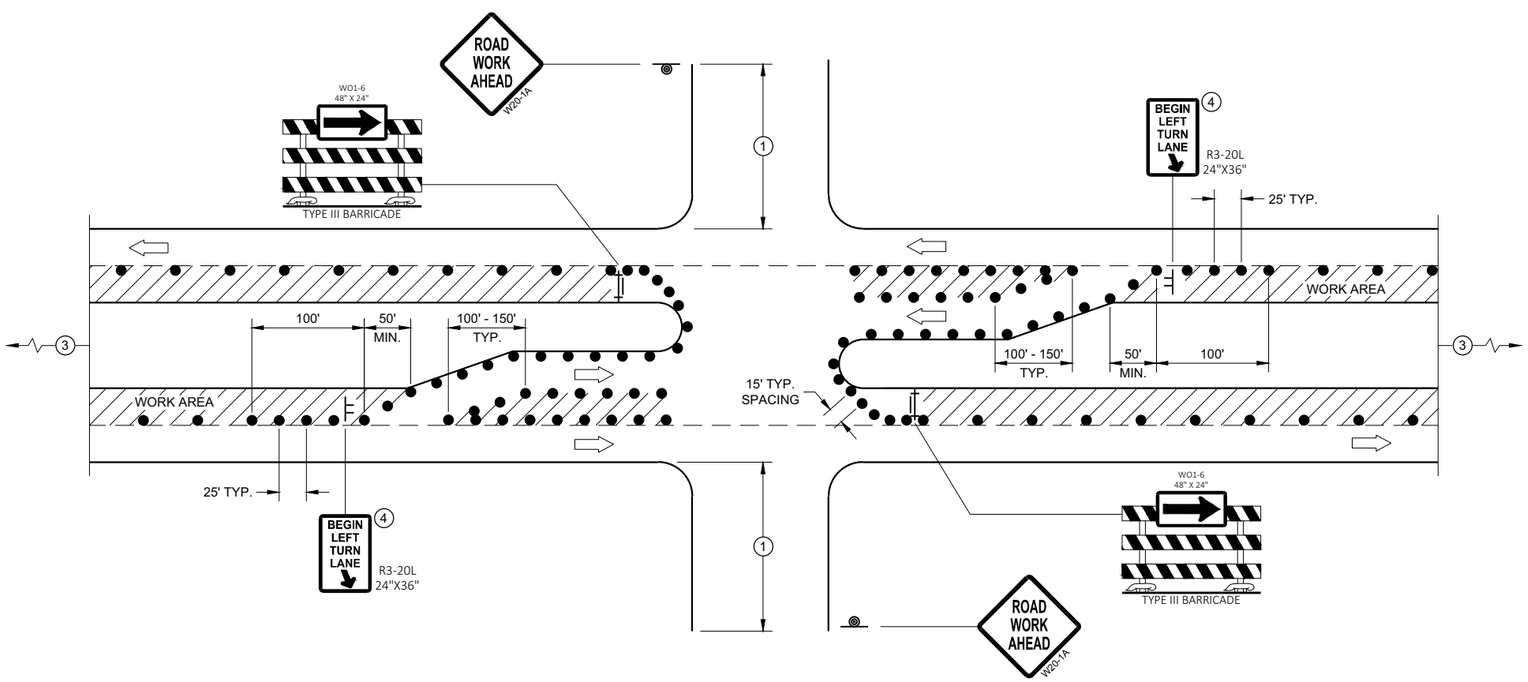

FOR LEFT LANE CLOSURE AT INTERSECTION OR MEDIAN OPENING (WITH LEFT TURN BAY OPEN)

LEGEND

- SIGN ON TEMPORARY SUPPORT
- SIGN ON PERMANENT SUPPORT
- TRAFFIC CONTROL DRUM
- TYPE III BARRICADE WITH ATTACHED SIGN
- DIRECTION OF TRAFFIC
- FLAGS, 16" X 16" MIN., ORANGE
- WORK AREA

TRAFFIC CONTROL, INTERSECTION WITHIN SINGLE LEFT LANE CLOSURE

STATE OF WISCONSIN
DEPARTMENT OF TRANSPORTATION

APPROVED
August 2020 — DATE
/S/ Andrew Heidtke — WORK ZONE ENGINEER
FHWA

NOTE: MAY BE USED ON ROADWAY WITH POSTED SPEED OF LESS THAN 40 MPH.

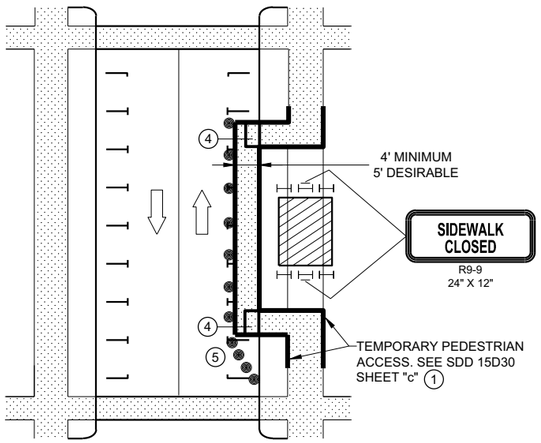

MID-BLOCK SIDEWALK CLOSURE IN PARKING LANE

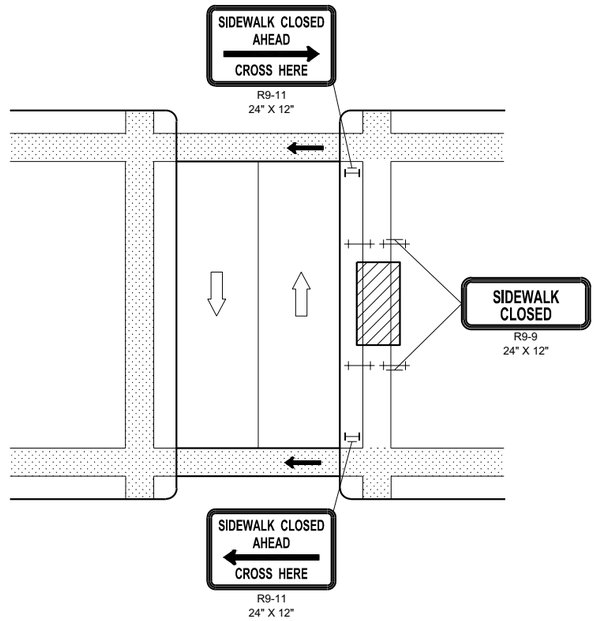

MID-BLOCK SIDEWALK CLOSURE

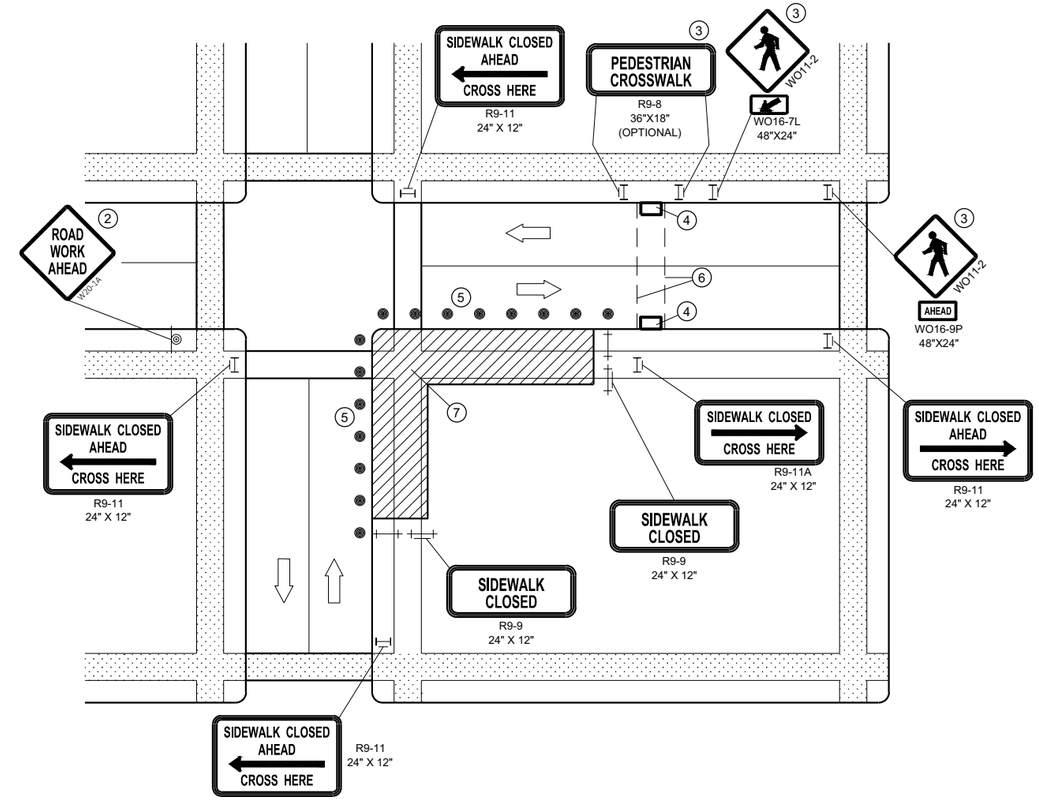

CORNER SIDEWALK CLOSURE WITH TEMPORARY CROSSWALK

NOTE: LAYOUT SAME AS ABOVE.

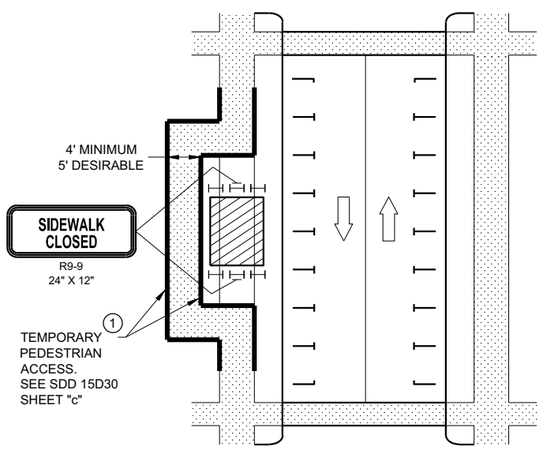

SIDEWALK DIVERSION

GENERAL NOTES

WHEN CLOSING OR RELOCATING CROSSWALKS OR SIDEWALKS, PROVIDE DETECABLE TEMPORARY FACILITIES AND INCLUDE ACCESSIBILITY FEATURES CONSISTENT WITH EXISTING PEDESTRIAN FACILITIES.

TEMPORARY TRAFFIC CONTROL DEVICES FOR PEDESTRIANS ARE SHOWN. OTHER DEVICES MAY BE NECESSARY TO CONTROL VEHICULAR TRAFFIC. STAGE WORK AS NECESSARY, TO PROVIDE A TEMPORARY PEDESTRIAN ACCESS ROUTE AT ALL TIMES. FOR ROADWAYS WITH NO AVAILABLE DETOURS, MAINTAIN ONE OPEN SIDEWALK AT ALL TIMES.

"WO" SIGN IS THE SAME AS "W" SIGN, EXCEPT THE BACKGROUND IS ORANGE.

FOR NIGHTIME CLOSURE, USE TYPE "A" FLASHING WARNING LIGHTS ON BARRICADES, SUPPORTING SIGNS AND CLOSING SIDEWALK. USE TYPE "C" STEADY BURN LIGHTS ON CHANNELIZING DEVICES SEPARATING THE WORK AREA FROM VEHICULAR TRAFFIC.

PEDESTRIAN TRAFFIC SIGNAL DISPLAY CONTROLLING CLOSED CROSSWALK SHALL BE COVERED OR DEACTIVATED.

POST MOUNTED SIGNS LOCATED ADJACENT TO A SIDEWALK SHALL HAVE A 7 FOOT MINIMUM CLEARANCE FROM THE BOTTOM OF THE SIGN TO THE SIDEWALK SURFACE.

ALTERNATE SIDEWALK WORK BETWEEK LEFT AND RIGHT SIDE OF ROADWAY TO MAINTAIN PEDESTRIAN ACCESS.

1. IF SIDEWALK CLOSURE AFFECTS AN ACCESSIBLE AND DETECTABLE FACILITY, MAINTAIN ACCESSIBILITY AND DETECTABILITY ALONG THE ALTERNATE PEDESTRIAN ROUTE
2. "ROAD WORK AHEAD" SIGNS ARE NOT REQUIRED IF THE SIDEWALK CLOSURE OCCURS WITHIN A LARGER WORK ZONE WHERE ADVANCE WARNING SIGNS ARE ALREADY PRESENT, OR IF THE WORK AREA AND EQUIPMENT ARE MORE THAN 2 FEET BEHIND THE CURB.
3. IF TEMPORARY PEDESTRIAN CROSSWALK IS NOT PROVIDED, OMIT R9-8 AND WO11-2 SIGN ASSEMBLIES. IF PROVIDED INCLUDE ON BOTH SIDES OF THE CROSSWALK.
4. TEMPORARY CURB RAMPS. SEE SDD 15D30 SHEET "b'.
5. DRUMS OR BARRICADES AT 25 FOOT SPACING. STREET PARKING SHALL BE PROHIBITED FOR AT LEAST 50 FEET IN ADVANCE OF THE MID-BLOCK CROSSWALK.
6. TEMPORARY PAVEMENT MARKING FOR CROSSWALK LINES.
7. LIMIT WORK TO ONE QUADRANT AT A TIME TO MINIMIZE PEDESTRIAN DISRUPTION.

LEGEND

- SIGN ON PERMANENT SUPPORT
- TRAFFIC CONTROL DRUM
- TYPE II BARRICADE WITH/WITHOUT SIGN (ALL WITH ONE WARNING LIGHT, TYPE A, LOW INTENSITY FLASHING)
- TYPE III BARRICADE WITH/WITHOUT SIGN (ALL WITH ONE WARNING LIGHT, TYPE A, LOW INTENSITY FLASHING)
- UNDER PEDESTRIAN TRAFFIC
- WORK AREA
- PEDESTRIAN CHANNELIZATION DEVICE
- DIRECTION OF TRAFFIC

TRAFFIC CONTROL, PEDESTRIAN ACCOMMODATION

STATE OF WISCONSIN
DEPARTMENT OF TRANSPORTAT

6

SDD15D30 - 06a

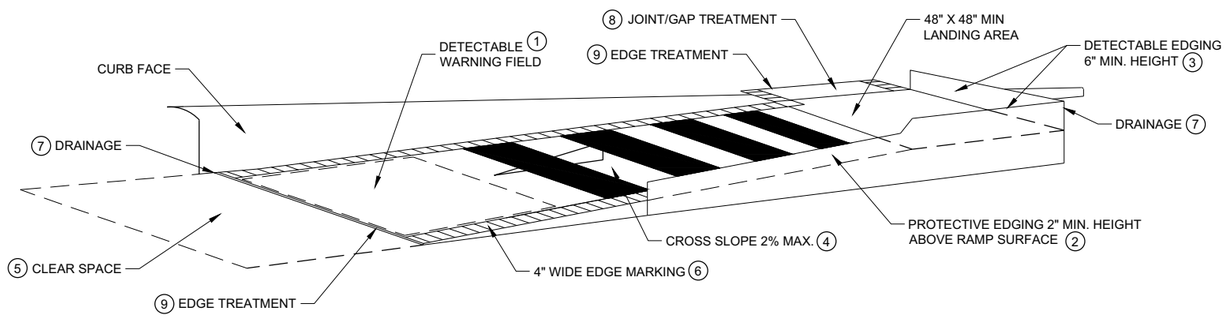

TEMPORARY CURB RAMP PARALLEL TO CURB

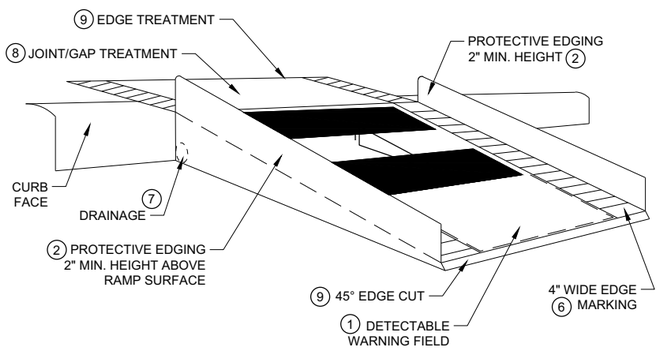

WITH PROTECTIVE EDGE

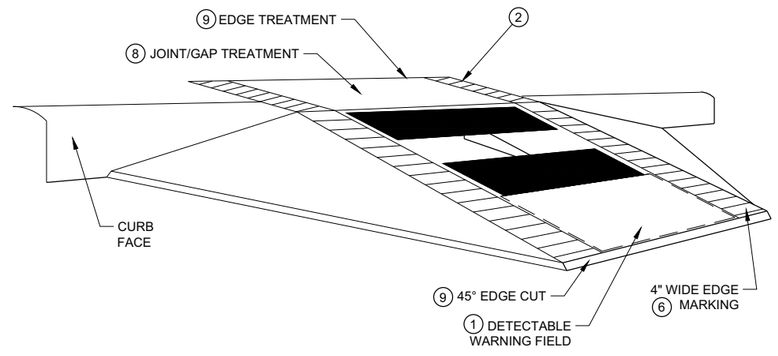

WITH SIDE APRON

TEMPORARY CURB RAMP PERPENDICULAR TO CURB

GENERAL NOTES

NOTIFY THE BUS COMPANY 7 DAYS IN ADVANCE OF THE BUS STOP RELOCATION.

ALTERNATE SIDEWALK WORK BETWEEN LEFT AND RIGHT SIDE OF ROADWAY TO MAINTAIN PEDESTRIAN ACCESS.

1. CURB RAMPS SHALL BE 48" MIN. WIDTH WITH A A FIRM, STABLE AND SLIP RESISTANT SURFACE. INSTALL CONTRASTING DETECTABLE WARNING FIELD AT PEDESTRIAN STREET CROSSINGS. REFER TO SDD 08D05, SHEET "e".
2. PROTECTIVE EDGING WITH A 2" MIN. HEIGHT SHALL BE INSTALLED WHEN A CURB RAMP OR LANDING PLATFORM HAS A VERTICAL DROP OF 6" OR GREATER OR HAS A SIDE APRON SLOPE STEEPER THAN 1:3 (33%). PROTECTIVE EDGING SHOULD BE CONSIDERED WHEN CURB RAMPS OR LANDING PLATFORMS HAVE A VERTICAL DROP OF 3" OR MORE.
3. DETECTABLE EDGING WITH 6" MIN. HEIGHT AND CONTRASTING COLOR SHALL BE INSTALLED ON ALL CURB RAMP LANDINGS WHERE THE WALKWAY CHANGES DIRECTION (TURNS).
4. CURB RAMPS AND LANDINGS SHALL HAVE A 1:50 (2%) MAX. CROSS-SLOPE.
5. CLEAR SPACE OF 48" X 48" SHALL BE PROVIDED ABOVE AND BELOW THE CURB RAMP.
6. THE CURB RAMP WALKWAY EDGE SHALL BE MARKED WITH A YELLOW COLOR, 4" WIDE MARKING, UNLESS A CONTRASTING DETECTABLE WARNING FIELD IS PROVIDED.
7. DO NOT RESTRICT WATER FLOW IN THE GUTTER SYSTEM.
8. LATERAL JOINTS OR GAPS BETWEEN SURFACES SHALL BE LESS THAN ½" WIDTH.
9. CHANGES BETWEEN SURFACE HEIGHTS SHALL NOT EXCEED ½". LATERAL EDGES SHALL BE VERTICAL UP TO ¼" HIGH AND BEVELED AT 1:2 BETWEEN ¼" AND ½".
10. 5" WIDE MIN. WITH PEDESTRIAN SAFETY BARRICADE, 10' WIDE MIN. WITHOUT PEDESTRIAN SAFETY BARRICADE.

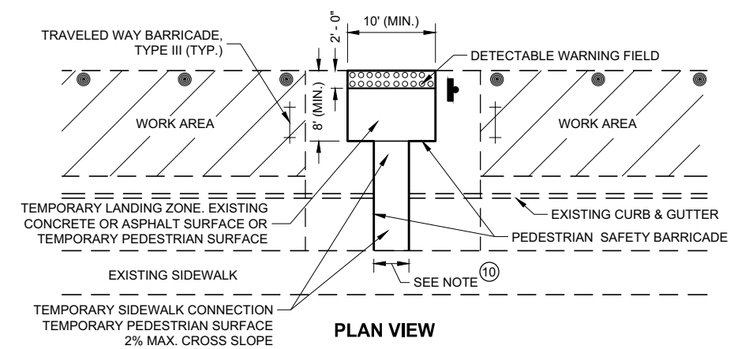

PLAN VIEW

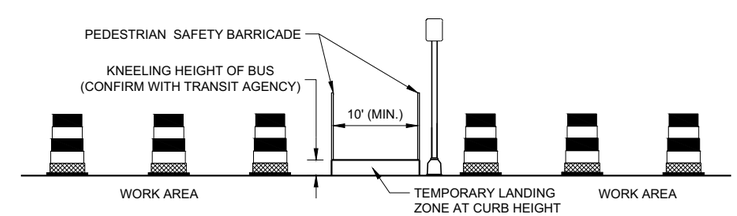

PROFILE VIEW

TEMPORARY BUS STOP PAD

LEGEND

- TRAFFIC CONTROL DRUM
- TYPE III BARRICADE
- WORK AREA

TRAFFIC CONTROL, PEDESTRIAN ACCOMMODATION

STATE OF WISCONSIN
DEPARTMENT OF TRANSPORTA

6

SDD 15D30 - 06b

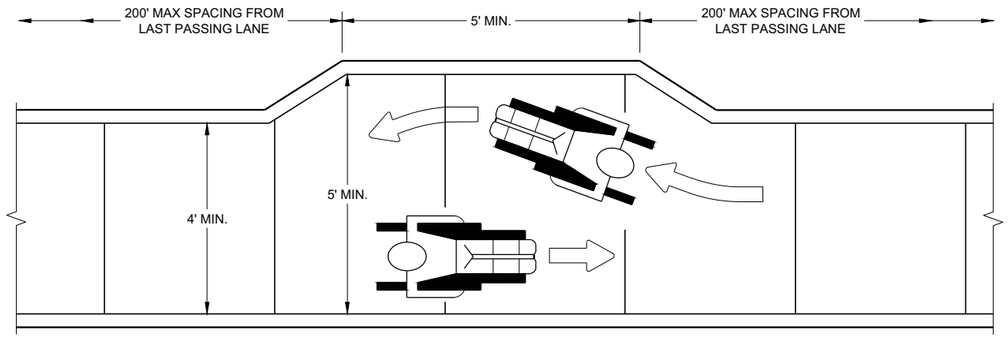

NARROW SIDEWALK PASSING DETAIL

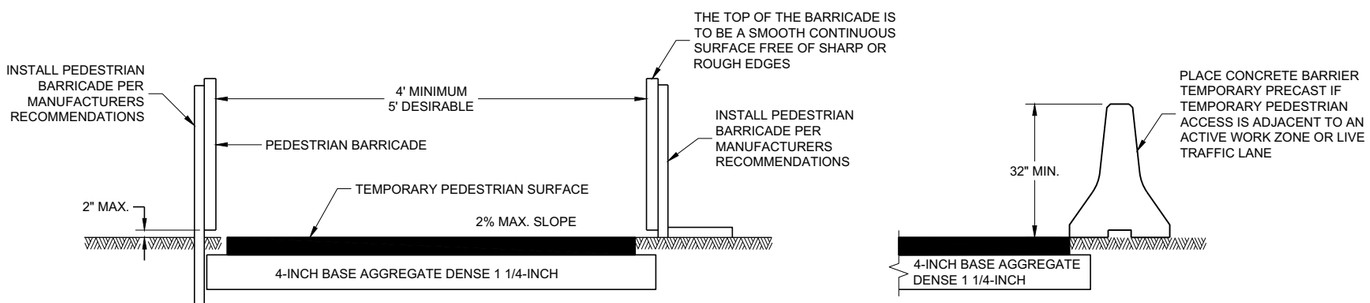

TEMPORARY PEDESTRIAN ACCESS

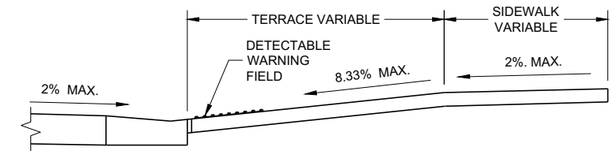

SECTION A - A

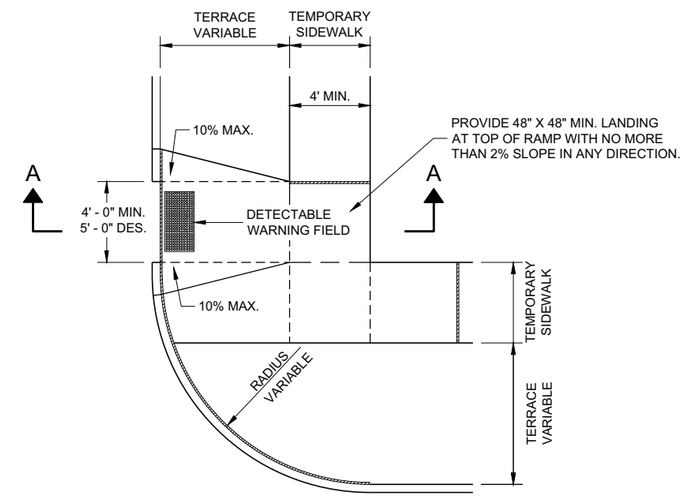

PLAN VIEW
TEMPORARY TYPE 3 RAMP
(OUTSIDE OF CROSSWALK AREA)

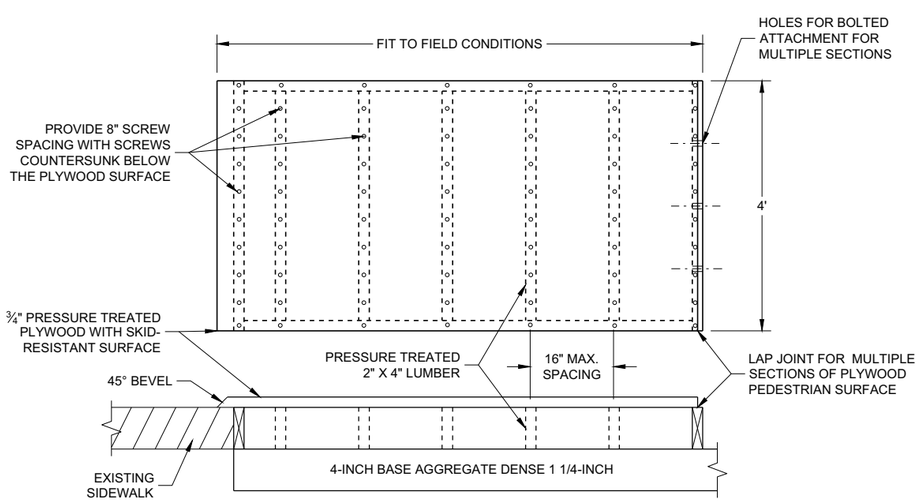

TEMPORARY PEDESTRIAN SURFACE PLYWOOD

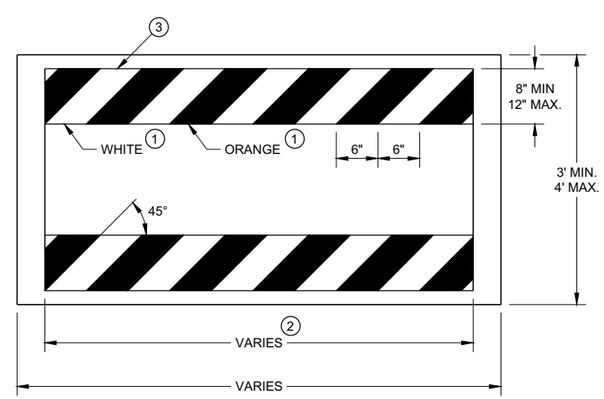

TEMPORARY PEDESTRIAN BARRICADE *

GENERAL NOTES

BARRICADE DEVICE SELECTED FROM APPROVED PRODUCT LIST

1. REFLECTIVE SHEETING SHALL FOLLOW THE REQUIREMENTS IN THE APPROVED PRODUCTS LISTING FOR SIGN SHEETING.
2. SHEETING REQUIRED ON MORE THAN 50% OF BARRICADE WIDTH.
3. PLACE SHEETING ON BOTH SIDES OF THE BARRICADE.

* USE THIS DETAIL FOR SHEETING PLACEMENT REFERENCE.

TRAFFIC CONTROL, PEDESTRIAN ACCOMMODATION

STATE OF WISCONSIN
DEPARTMENT OF TRANSPORTATION

APPROVED
November 2019 — DATE
/S/ Andrew Heidtke — WORK ZONE ENGINEE
FHWA

6

SDD 15D30 - 06c

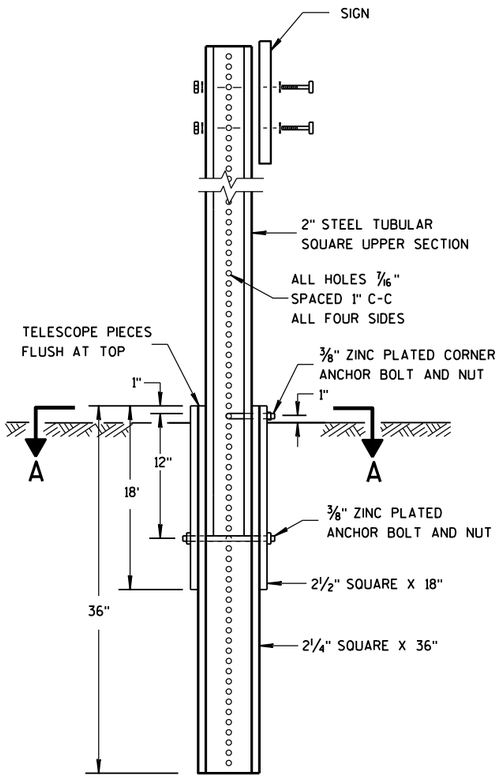

DETAIL OF TUBULAR STEEL SIGN POST

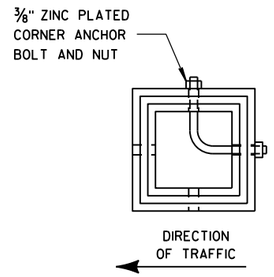

SECTION A-A

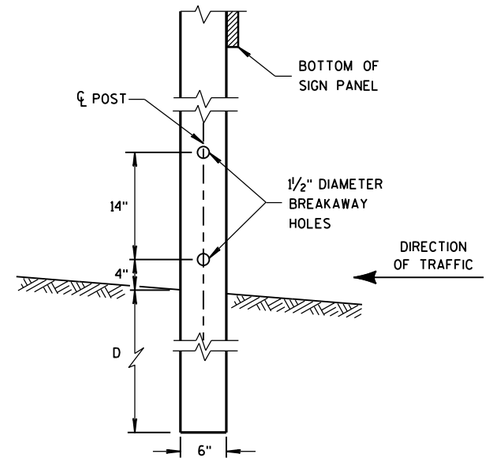

4"x6" WOOD POST MODIFICATION

GENERAL NOTES

1. 6 FEET FROM THE EDGE OF PAVEMENT (EDGE LINE LOCATION) UNLESS OTHERWISE DIRECTED BY THE PROJECT ENGINEER. LATERAL OFFSET SHOULD BE ADJUSTED TO AVOID THE DITCH FLOWLINE.
2. THE EXISTENCE OF CURB AND GUTTER DOES NOT IN ITSELF MANDATE THE VERTICAL CLEARANCE ILLUSTRATED. THAT HEIGHT IS TYPICALLY MEASURED WHERE THERE IS SIDEWALK ADJACENT TO THE ROADWAY OR PARKING IS PERMITTED. IN THE ABSENCE OF SIDEWALK, VERTICAL CLEARANCE IS MEASURED FROM THE TOP OF THE CURB. IF NO SIDEWALK AND NO PARKING, VERTICAL CLEARANCE MAY BE REDUCED TO 5 FOOT MINIMUM. OFFSET OF SIGNS IS MEASURED FROM THE CURB FLOWLINE.
3. FOR SIGNS REQUIRING 4 POSTS, SPACE INTERMEDIATE POSTS EVENLY.

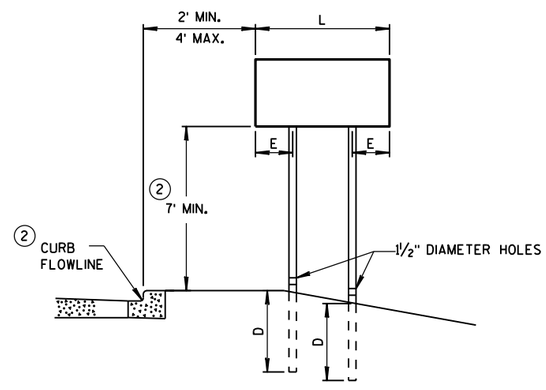

URBAN AREA

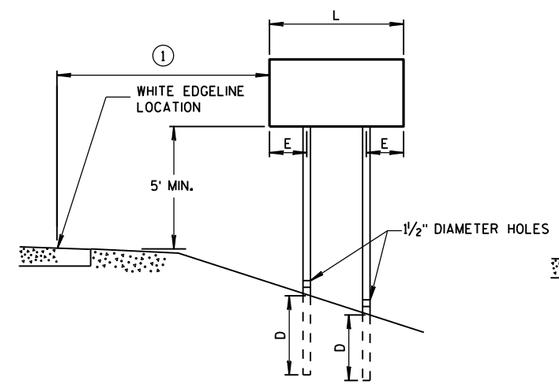

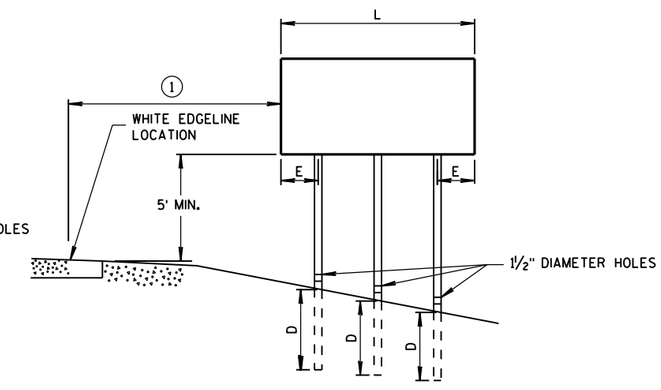

RURAL AREA

POST MOUNTING DETAIL FOR TEMPORARY TRAFFIC CONTROL FIXED MESSAGE SIGNS

TUBULAR STEEL POSTS

AREA OF SIGN INSTALLATION (SQ. FT.)	NUMBER OF REQUIRED TUBULAR STEEL POSTS
9 OR LESS	1
GREATER THAN 9 LESS THAN OR EQUAL TO 18	2
GREATER THAN 18 LESS THAN OR EQUAL TO 27	3

SIGNS WIDER THAN 3 FEET OR LARGER THAN 9 SQ. FT. SHALL BE MOUNTED ON MULTIPLE POSTS (SEE ABOVE TABLE).

SIGNS LARGER THAN 27 SQ. FT. SHALL NOT BE MOUNTED ON TUBULAR STEEL POSTS.

WOOD POST EMBEDMENT DEPTH

AREA OF SIGN INSTALLATION (SQ. FT.)	D (MIN)
20 OR LESS	4'
GREATER THAN 20	5'

4" X 6" WOOD POST

POST SPACING REQUIREMENTS		NUMBER OF WOOD POSTS REQUIRED
L	E	
48" OR LESS AND LESS THAN 20 SQ. FT.	-	1
LESS THAN 60"	12"	2
60" TO 120"	L/5	2
GREATER THAN 120" LESS THAN 168"	12"	3
168" AND GREATER	12"	4

SEE NOTE 3

TEMPORARY TRAFFIC CONTROL SIGN MOUNTING

STATE OF WISCONSIN
DEPARTMENT OF TRANSPO

6

S.D.D. 15 D 38-2a

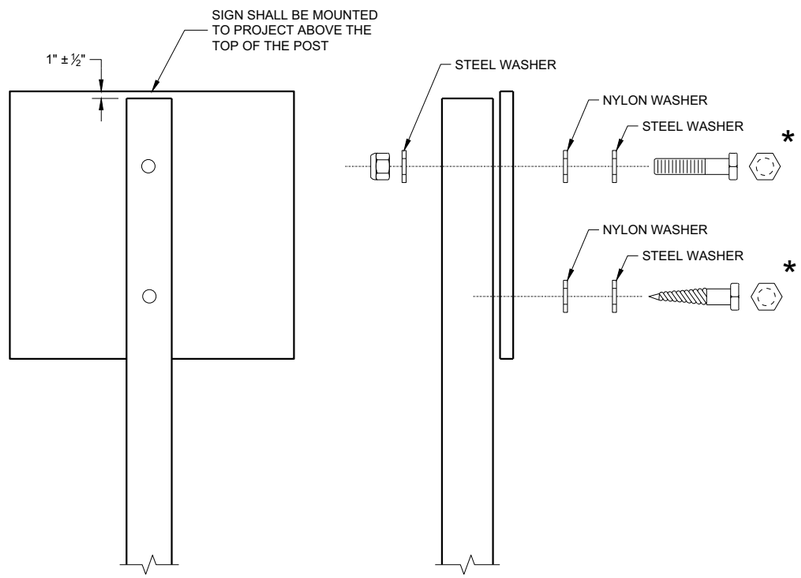

NUTS, BOLTS AND LAGS USED FOR MOUNTING SIGNS SHALL HAVE HEXAGONAL HEADS AND SHALL BE EITHER:

A. HOT DIP GALVANIZED IN ACCORDANCE WITH ASTM DESIGNATION: A 153, CLASS D, OR SC 3
B. ELECTRO-GALVANIZED IN ACCORDANCE WITH ASTM DESIGNATION: B 633, TYPE III, SC 3

THREADS ON BOLTS AND NUTS SHALL BE MANUFACTURED WITH SUFFICIENT ALLOWANCE FOR THE CADMIUM PLATE OR GALVANIZED COATING TO PERMIT THE NUTS TO RUN FREELY ON THE BOLTS.

WOOD POST (4" x 6")
LAG SCREWS - ⅜" x 3"
MACHINE BOLTS - 5/16" x 6 ½" OR 7" LENGTH W/NUTS

SQUARE STEEL POST (2" x 2")
MACHINE BOLTS - ⅜" x 3 ¼" LENGTH W/NUTS
RIVETS - 9/32" (6605-9-6) BULB-TITE, TRI-FOLD, ALUMINUM BODY/MANDREL O.D. FLANGE 0.720 - 0.765 INCH, GRIP RANGE 0.042 - 0.375 INCH

WASHERS (ALL POSTS) -
1 ¼" O.D. x ⅜" I.D. x 1/16" STEEL
1 ¼" O.D. x ⅜" I.D. x 0.080 NYLON

* TWO DIFFERENT FASTENING SYSTEMS ARE SHOWN FOR ILLUSTRATION PURPOSES. ON ANY INDIVIDUAL SIGN, EITHER ONE OR THE OTHER SYSTEM SHALL BE USED. ACTUAL NUMBER OF FASTENERS PER SIGN VARIES WITH THE SIGN AREA. FOR A SINGLE POST INSTALLATION, ALL SIGNS GREATER THAN 9 SQ. FT. REQUIRE THE USE OF 3 FASTENERS.

6

SDD 15D38 - 02b

ATTACHMENT OF SIGNS TO POSTS

STATE OF WISCONSIN
DEPARTMENT OF TRANSPORTATION

APPROVED
June 2017 — DATE
/S/ Andrew Heidtke — WORK ZONE ENGINEE
FHWA

6

SDD 15D38 - 02b

Notes

Wisconsin Department of Transportation

Dedicated people creating transportation solutions through innovation and exceptional service.

http://www.dot.wisconsin.gov