EAU

MAY 2021

PROJECT ID: 8944-00-77

WITH: N/A

COUNTY: ST. CROIX

30

ORDER OF SHEETS

Section No.	1	Title
Section No.	2	Typical Sections and Details
Section No.	3	Estimate of Quantities
Section No.	3	Miscellaneous Quantities
~~Section No.~~	~~4~~	~~Right-of-Way Plat~~
Section No.	5	Plan and Profile
Section No.	6	Standard Detail Drawings
Section No.	7	Sign Plates
~~Section No.~~	~~8~~	~~Structure Plans~~
~~Section No.~~	~~9~~	~~Computer Earthwork Data~~
~~Section No.~~	~~9~~	~~Cross Sections~~

TOTAL SHEETS = 48

STATE OF WISCONSIN
DEPARTMENT OF TRANSPORTATION

PLAN OF PROPOSED IMPROVEMENT

CTH A, HUDSON NEW RICHMOND

CTH U TO MACKIN ROAD

CTH A

ST. CROIX COUNTY

STATE PROJECT	FEDERAL PROJECT	
	PROJECT	CONTRACT
8944-00-77	WISC 2021320	1

STATE PROJECT NUMBER

8944-00-77

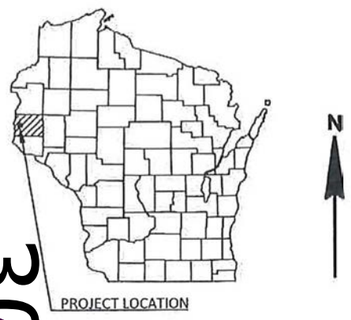

N

DESIGN DESIGNATION

A.A.D.T.	(2021)	=	12,100
A.A.D.T.	(2041)	=	12,250
D.H.V.		=	N/A
D.D.		=	50/50
T.		=	9%
DESIGN SPEED		=	VARIES
ESALS		=	N/A

BEGIN PROJECT
STA 18+05
Y= 348985.130
X= 531139.100

END PROJECT
STA 550+00

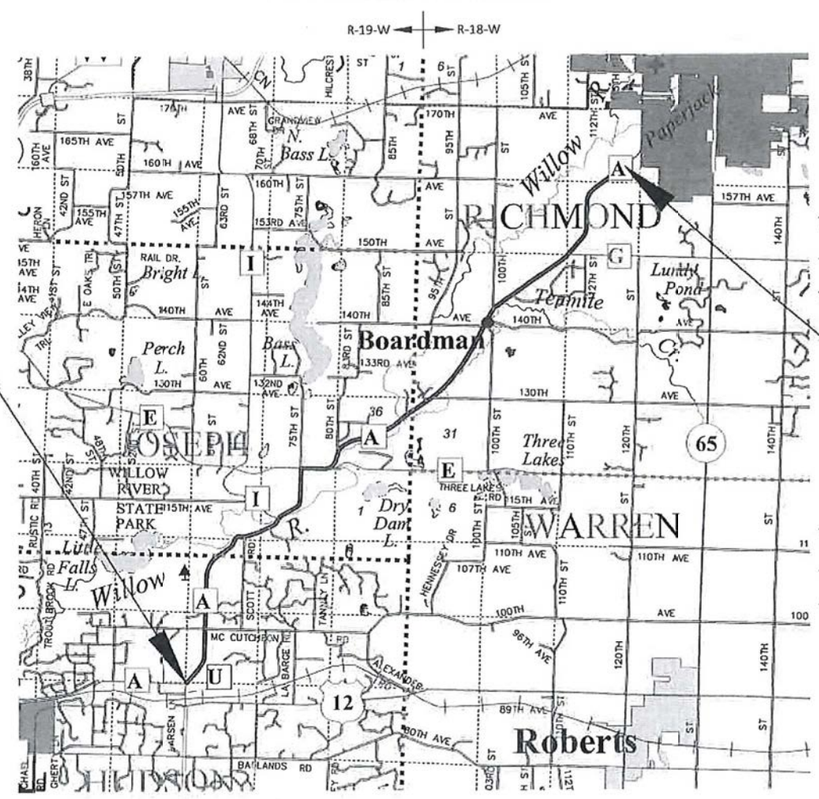

LAYOUT

SCALE 0 2 MI

TOTAL NET LENGTH OF CENTERLINE = 10.059 MI

HORIZONTAL POSITIONS SHOWN ON THIS PLAN ARE WISCONSIN COORDINATE REFERENCE SYSTEM (WISCRS), ST. CROIX COUNTY, NAD83 (2007), IN U.S. SURVEY FEET. POSITIONS SHOWN ARE GRID COORDINATES, GRID BEARINGS, AND GRID DISTANCES. GRID DISTANCES ARE THE SAME AS GROUND DISTANCES. ELEVATIONS ARE REFERENCED TO NAVD 88 (2007). GPS DERIVED ELEVATIONS ARE BASED ON GEOID 12A.

CONVENTIONAL SYMBOLS

PLAN
- CORPORATE LIMITS
- PROPERTY LINE
- LOT LINE
- LIMITED HIGHWAY EASEMENT
- EXISTING RIGHT OF WAY
- PROPOSED OR NEW R/W LINE
- SLOPE INTERCEPT
- REFERENCE LINE (300'R')
- EXISTING CULVERT
- PROPOSED CULVERT (Box or Pipe)
- COMBUSTIBLE FLUIDS (CAUTION)
- MARSH AREA
- WOODED OR SHRUB AREA

PROFILE
- GRADE LINE
- ORIGINAL GROUND
- MARSH OR ROCK PROFILE (To be noted as such) (ROCK)
- SPECIAL DITCH (LABEL)
- GRADE ELEVATION (95.36)
- CULVERT (Profile View)

UTILITIES
- ELECTRIC (E)
- FIBER OPTIC (FO)
- GAS (G)
- SANITARY SEWER (SAN)
- STORM SEWER (SS)
- TELEPHONE (T)
- WATER (W)
- UTILITY PEDESTAL
- POWER POLE
- TELEPHONE POLE

ACCEPTED FOR ST. CROIX COUNTY

DATE: 1/25/21 Robbie Vrujo (Signature)

Highway Commissioner (Title of Official)

ORIGINAL PLANS PREPARED BY

CORRE ENGINEERING

MADISON | OCONOMOWOC | EAU CLAIRE | GREEN BAY | WITTENBERG

WISCONSIN PROFESSIONAL ENGINEER
KEVIN L. MEYER
E-38309-006
ELK MOUND
WI

1/22/21

DATE: _____ (Signature)

STATE OF WISCONSIN
DEPARTMENT OF TRANSPORTATION

PREPARED BY

Surveyor	CORRE, INC.
Designer	CORRE, INC.
Regional Examiner	TOU YANG, PE
Regional Supervisor	ANDREW STENSLAND, PE
Local Program Project Manager	MATTHEW THORNSEN

APPROVED FOR THE DEPARTMENT

DATE: 01/26/2021 (Management Consultant Signature)

E

FILE NAME G:\SHARED DRIVES\PROJECTS\WI - NW REGION\8944-00-07_ST. CROIX CO_CTH A\500_CADD\501_C3D_2018\89440007\SHEETSPLAN\010101-TI.DWG PLOT DATE : 1/21/2021 4:10 PM PLOT BY ANDREW PETERSON, EIT PLOT NAME :

GENERAL NOTES

WHEN THE QUANTITY OF BASE AGGREGATE OR ASPHALTIC SURFACE IS MEASURED FOR PAYMENT BY THE TON OR CUBIC YARD, THE DEPTH OR THICKNESS OF THE LAYER SHOWN ON THE PLANS IS APPROXIMATE AND THE ACTUAL THICKNESS WILL DEPEND ON THE DISTRIBUTION OF THE MATERIAL AS DIRECTED BY THE ENGINEER.

NO TREES OR SHRUBS ARE TO BE REMOVED WITHOUT THE APPROVAL OF THE ENGINEER.

THE LOCATION OF EXISTING AND PROPOSED UTILITY INSTALLATIONS AS SHOWN ON THE PLANS IS APPROXIMATE. THERE MAY BE OTHER UTILITY INSTALLATIONS WITHIN THE PROJECT AREA THAT ARE NOT SHOWN.

ASPHALTIC SURFACE SHALL BE CONSTRUCTED WITH 1 LIFT CONSISTING OF 2 MT 58-34 S MIX DESIGN.

UTILITY CONTACTS

COMMUNICATION LINE

AT&T DISTRIBUTION
RICK PODOCAK
304 S DEWEY ST
EAU CLAIRE, WI 54701
PHONE: (715) 839-5565
EMAIL: RP4517@ATT.COM

COMMUNICATION LINE

BALDWIN TELECOM, INC.
MATT KNEGENDORF
930 MAPLE ST
BALDWIN, WI 54002
PHONE: (715) 688-1034
EMAIL: MKNEGENDORF@LSWI.NET

COMMUNICATION LINE

FRONTIER COMMUNICATIONS
CALVIN KLADE
1851 N 14TH AVE
WAUSAU, WI 54401
PHONE: (715) 847-1525
EMAIL: CALVIN.KLADE@FTR.COM

COMMUNICATION LINE

NORTHWEST COMMUNICATIONS
GREG CARDINAL
116 HARRIMAN AVE
AVERY, WI 54001
PHONE: (715) 268-3379
EMAIL: GREG.CARDINAL@AMERYTEL.NET

ELECTRICITY

DAIRYLAND POWER COOPERATIVE
ROB MALY
3200 EAST AVE S PO BOX 817
LA CROSSE, WI 54602
PHONE: (618) 518-2633
EMAIL: ROB.MALY@DAIRYLANDPOWER.COM

ELECTRICITY

ST. CROIX ELECTRIC COOPERATIVE
ROB DOOLEY
1925 RIDGEWAY ST
HAMMOND, WI 54015
PHONE: 715-796-5637
EMAIL: ROBD@SCECNET.NET

ELECTRICITY - TRANSMISSION

XCEL ENERGY, INC
MITCHELL DIENGER
414 NICOLLET MALL, 5TH FLOOR
MINNEAPOLIS, MN 55401
PHONE: (612) 321-3109
EMAIL: MITCHELL.A.DIENGER@XCELENERGY.COM

GAS/PETROLEUM

MIDWEST NATURAL GAS INC
RICK SCHERMERHORN
3600 HWY 157, STE 200
LA CROSSE, WI 54602-0429
PHONE: (608) 781-1011
EMAIL: RICKS@MIDWESTNATURALGAS.COM

DIGGERS HOTLINE

Dial 811 or (800)242-8511

www.DiggersHotline.com

COUNTY CONTACT

HIGHWAY DEPARTMENT
JEFF DURKEE
300 OAK RIDGE PARKWAY
BALDWIN, WI 54002
PHONE: (715) 245-4205
EMAIL: JEFFREY.DURKEE@SCCWI.GOV

DNR CONTACT

DNR WEST CENTRAL REGION HQ
AMY LESIK
1300 W CLAIREMONT AVE
EAU CLAIRE, WI 54701
PHONE: (715) 836-6571
EMAIL: AMYL.LESIK@WISCONSIN.GOV

DESIGN CONTACT

CORRE, INC.
KEVIN MEYER
1802 WARDEN ST
EAU CLAIRE, WI 54703
PHONE: (715) 299-1894
EMAIL: KMEYER@CORREINC.COM

2

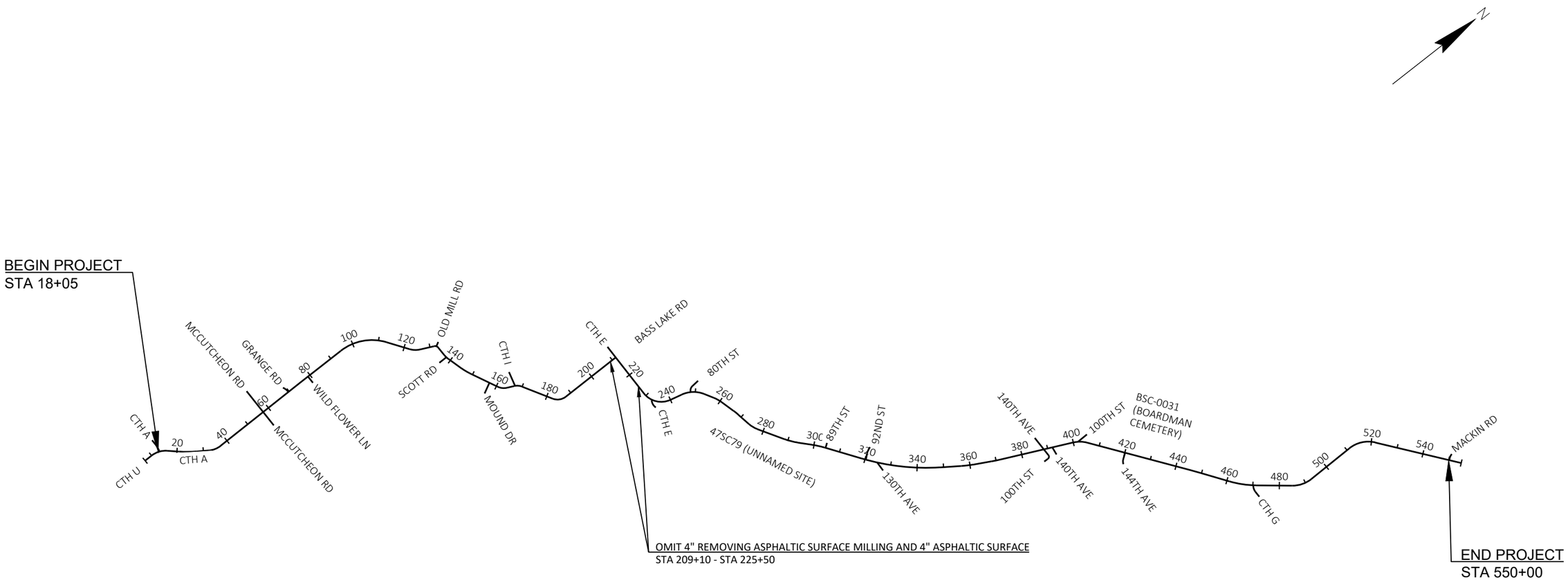

PROJECT NO: 8944-00-77	HWY: CTH A	COUNTY: ST. CROIX	PROJECT OVERVIEW	SHEET 3	E

FILE NAME : G:\SHARED DRIVES\PROJECTS\WI - NW REGION\8944-00-07_ST. CROIX CO_CTH A\500_CADD\501_C3D_2018\89440007\SHEETSPLAN\020201-PO.DWG
LAYOUT NAME - 020201-po
PLOT DATE : 1/26/2021 8:22 AM PLOT BY : ANDREW PETERSON, EIT PLOT NAME : PLOT SCALE : 1 IN:0.75 MI

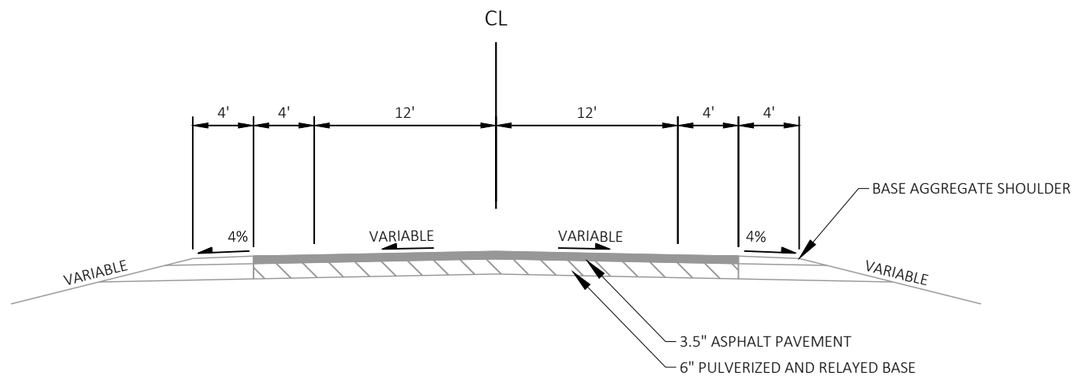

EXISTING TYPICAL SECTION

STA 18+05 - 137+46

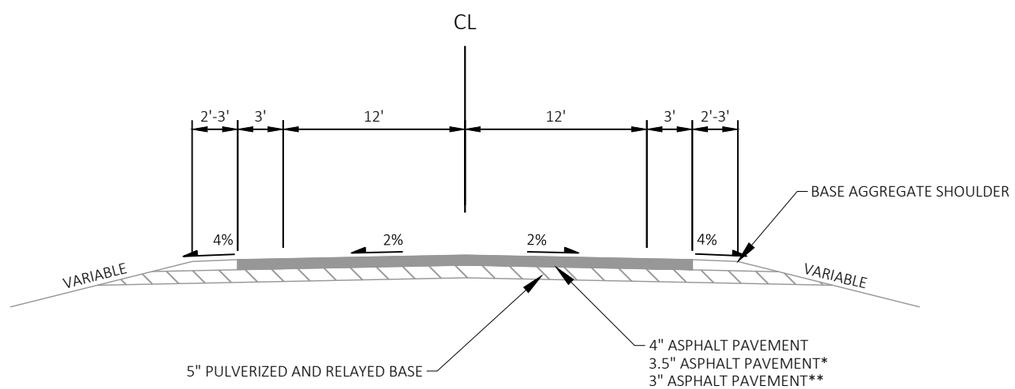

EXISTING TYPICAL SECTION

STA 137+46 - 211+30

*STA 211+30 - 296+82

**STA 296+82 - 389+10

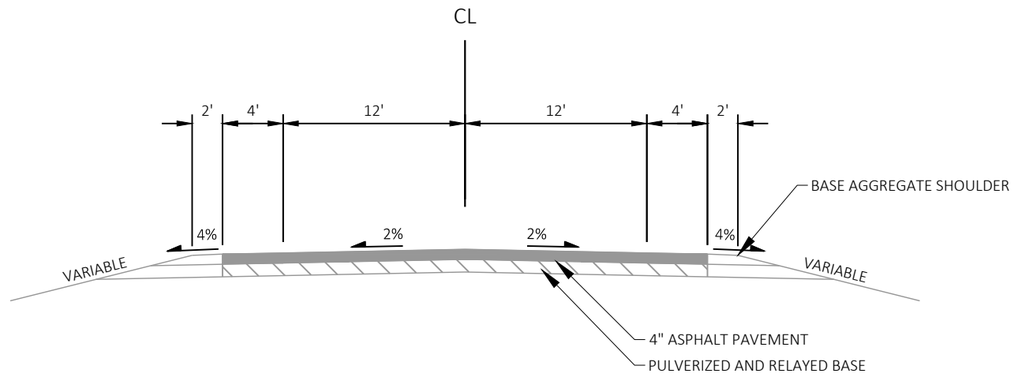

EXISTING TYPICAL SECTION

STA 389+10 - 472+77

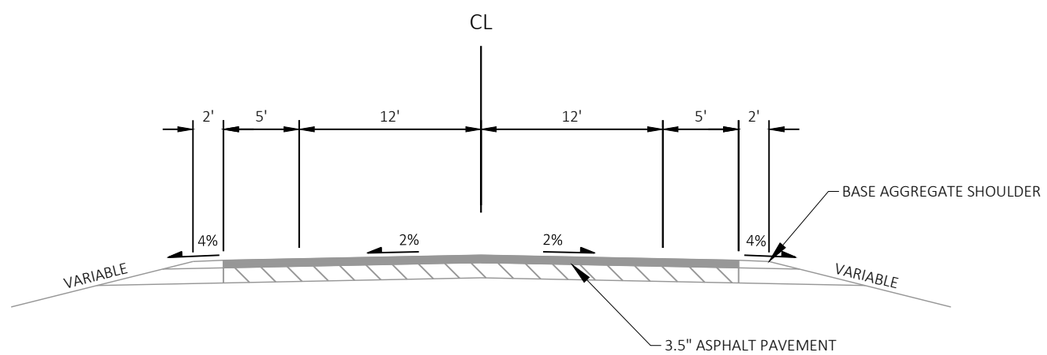

EXISTING TYPICAL SECTION

STA 472+77 - 550+00

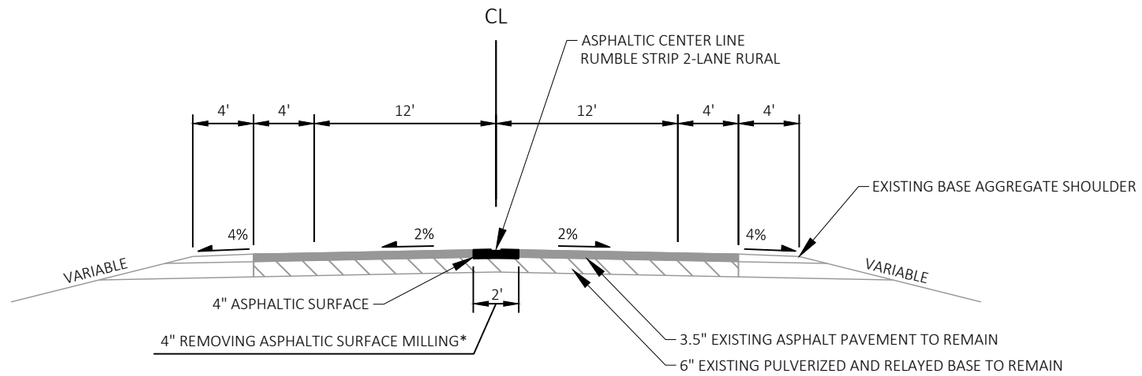

TYPICAL FINISHED SECTION

STA 18+05 - 137+46

* REMOVING ASPHALTIC SURFACE MILLING REQ'D AT ASPHALTIC CENTERLINE RUMBLE STRIPS 2-LANE RURAL LOCATIONS

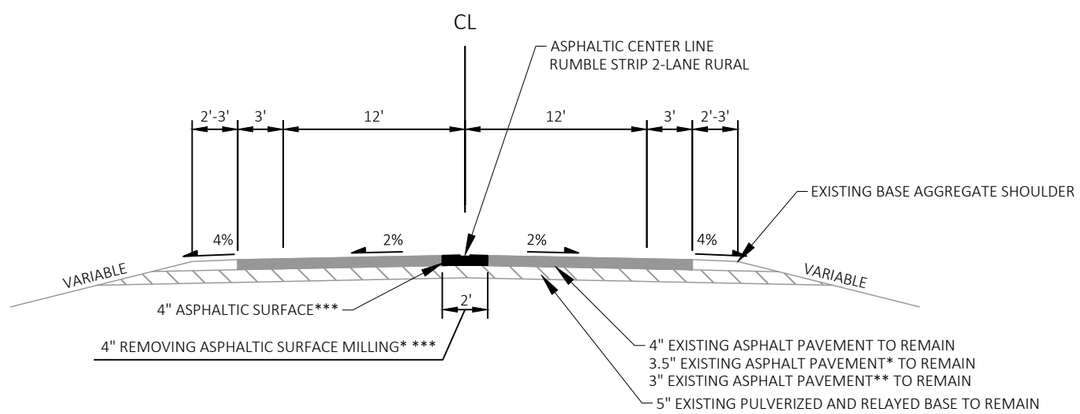

* REMOVING ASPHALTIC SURFACE MILLING REQ'D AT ASPHALTIC CENTERLINE RUMBLE STRIPS 2-LANE RURAL LOCATIONS

*** OMIT 4" REMOVING ASPHALTIC SURFACE MILLING AND 4" ASPHALTIC SURFACE BETWEEN STA 209+10 - STA 225+50

TYPICAL FINISHED SECTION

STA 137+46 - 211+30
*STA 211+30 - 296+82
**STA 296+82 - 389+10

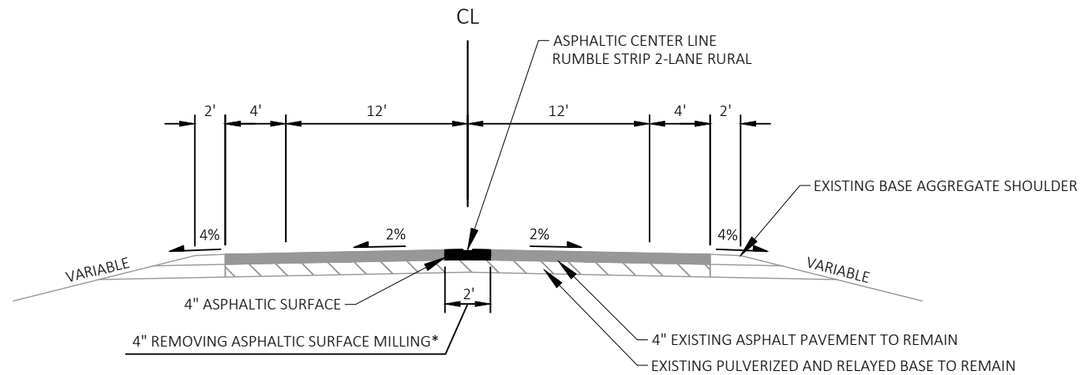

* REMOVING ASPHALTIC SURFACE MILLING REQ'D AT ASPHALTIC CENTERLINE RUMBLE STRIPS 2-LANE RURAL LOCATIONS

TYPICAL FINISHED SECTION

STA 389+10 - 472+77

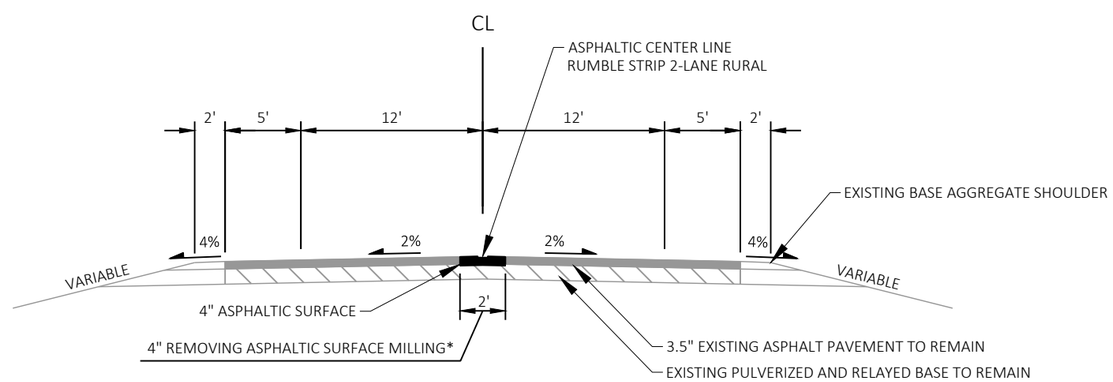

* REMOVING ASPHALTIC SURFACE MILLING REQ'D AT ASPHALTIC CENTERLINE RUMBLE STRIPS 2-LANE RURAL LOCATIONS

TYPICAL FINISHED SECTION

STA 472+77 - 550+00

Estimate Of Quantities

8944-00-77

Line	Item	Item Description	Unit	Total	Qty
0002	204.0120	Removing Asphaltic Surface Milling	SY	8,854.000	8,854.000
0004	213.0100	Finishing Roadway (project) 01. 8944-00-77	EACH	1.000	1.000
0006	455.0605	Tack Coat	GAL	537.000	537.000
0008	465.0105	Asphaltic Surface	TON	1,990.000	1,990.000
0010	465.0475	Asphalt Centerline Rumble Strips 2-Lane Rural	LF	39,805.000	39,805.000
0012	619.1000	Mobilization	EACH	1.000	1.000
0014	634.0614	Posts Wood 4x6-Inch X 14-FT	EACH	46.000	46.000
0016	634.0616	Posts Wood 4x6-Inch X 16-FT	EACH	58.000	58.000
0018	637.2230	Signs Type II Reflective F	SF	294.000	294.000
0020	638.2102	Moving Signs Type II	EACH	6.000	6.000
0022	638.2602	Removing Signs Type II	EACH	6.000	6.000
0024	638.3000	Removing Small Sign Supports	EACH	6.000	6.000
0026	642.5001	Field Office Type B	EACH	1.000	1.000
0028	643.0900	Traffic Control Signs	DAY	578.000	578.000
0030	643.5000	Traffic Control	EACH	1.000	1.000
0032	646.1020	Marking Line Epoxy 4-Inch	LF	70,301.000	70,301.000
0034	646.1040	Marking Line Grooved Wet Ref Epoxy 4-Inch	LF	103,600.000	103,600.000
0036	646.3040	Marking Line Grooved Wet Ref Epoxy 8-Inch	LF	1,325.000	1,325.000
0038	648.0100	Locating No-Passing Zones	MI	8.520	8.520
0040	649.0120	Temporary Marking Line Epoxy 4-Inch	LF	70,301.000	70,301.000
0042	650.8000	Construction Staking Resurfacing Reference	LF	53,195.000	53,195.000
0044	650.9910	Construction Staking Supplemental Control (project) 01. 8944-00-77	LS	1.000	1.000
0046	ASP.1T0A	On-the-Job Training Apprentice at $5.00/HR	HRS	150.000	150.000
0048	ASP.1T0G	On-the-Job Training Graduate at $5.00/HR	HRS	150.000	150.000

3

CATEGORY	STATION	TO	STATION	LOCATION	204.0120 REMOVING ASPHALTIC SURFACE MILLING SY	455.0605 TACK COAT GAL	465.0105 ASPHALTIC SURFACE TON	465.0475 ASPHALTIC CENTERLINE RUMBLE STRIPS 2-LANE RURAL LF
0010	18+05	-	55+45	ML	832	50	187	3,740
0010	59+45	-	67+60	ML	182	11	41	815
0010	71+60	-	77+05	ML	122	8	28	545
0010	81+05	-	89+95	ML	198	12	45	890
0010	93+95	-	107+85	ML	309	19	70	1,390
0010	109+85	-	121+38	ML	257	16	58	1,153
0010	170+10	-	209+10	ML	867	52	195	3,900
0010	225+50	-	230+88	ML	120	8	27	538
0010	234+88	-	246+20	ML	252	16	57	1,132
0010	250+20	-	296+57	ML	1,031	62	231	4,637
0010	298+54	-	302+48	ML	88	6	20	394
0010	306+48	-	318+30	ML	263	16	59	1,182
0010	327+70	-	387+25	ML	1,324	80	297	5,955
0010	405+35	-	418+10	ML	284	17	64	1,275
0010	422+10	-	468+21	ML	1,025	62	230	4,611
0010	472+70	-	549+18	ML	1,700	102	381	7,648
				TOTAL 0010	8,854	537	1,990	39,805

CATEGORY	LOCATION	SIGNS	DURATION DAYS	643.0900 TRAFFIC CONTROL SIGNS DAY
0010	PROJECT	34	17	578
			TOTAL 0010	578

CATEGORY	STATION	TO	STATION	LOCATION	648.0100 LOCATING NO-PASSING ZONES MI
0010	18+05	-	121+38	ML	1.96
0010	170+10	-	209+59	ML	0.75
0010	225+25	-	387+25	ML	3.07
0010	405+35	-	550+00	ML	2.74
				TOTAL 0010	8.52

CATEGORY	STATION	TO	STATION	LOCATION	650.8000 CONSTRUCTION STAKING RESURFACING REFERENCE LF	650.9910.01 CONSTRUCTION STAKING SUPPLEMENTAL CONTROL (PROJECT) (01. 8944-00-77) LS
0010	18+05	-	550+00	ML	53,195	1
				TOTAL 0010	53,195	1

3

CATEGORY	STATION	LOCATION	SIGN CODE	638.2102 MOVING SIGNS TYPE II EACH	638.2602 REMOVING SIGNS TYPE II EACH	638.3000 REMOVING SMALL SIGN SUPPORTS EACH	REMARKS
0010	240+00	RT	8-1M	1	-	1	ROAD CURVES RIGHT
0010	240+00	RT	8-1R	-	1	-	50 MPH
0010	254+69	RT	8-2M	1	-	1	ROAD CURVES RIGHT
0010	254+69	RT	8-2R	-	1	-	50 MPH
0010	256+72	LT	9-1M	1	-	1	ROAD CURVES LEFT
0010	256+72	LT	9-1R	-	1	-	50 MPH
0010	265+76	LT	9-2M	1	-	1	ROAD CURVES LEFT
0010	265+76	LT	9-2R	-	1	-	50 MPH
0010	269+80	RT	9-3M	1	-	1	ROAD CURVES LEFT
0010	269+80	RT	9-3R	-	1	-	50 MPH
0010	280+67	LT	9-4M	1	-	1	ROAD CURVES RIGHT
0010	280+67	LT	9-4R	-	1	-	50 MPH
			TOTAL 0010	6	6	6	

CATEGORY	STATION	TO	STATION	LOCATION	646.1020 MARKING LINE EPOXY 4-INCH LF	646.1040 MARKING LINE GROOVED WET REF EPOXY 4-INCH LF	646.3040 MARKING LINE GROOVED WET REF EPOXY 8-INCH LF	649.0120 TEMPORARY MARKING LINE EPOXY 4-INCH LF	REMARKS
0010	18+05	-	550+00	EDGELINE	-	103,600	-	-	LT/RT EDGELINE
0010	18+05	-	23+00	ML	990	-	-	990	C/L
0010	23+00	-	32+00	ML	1,125	-	-	1,125	NO PASSING/SKIPS
0010	32+00		50+00	ML	3,600			3,600	DOUBLE YELLOW
0010	50+00	-	58+40	ML	1,050	-	195	1,050	NO PASSING/SKIPS
0010	58+40	-	85+00	ML	665	-	200	665	SKIPS
0010	85+00	-	99+50	ML	1,813	-	110	1,813	NO PASSING/SKIPS
0010	99+50	-	121+38	ML	4,376	-	85	4,376	DOUBLE YELLOW
0010	170+10		209+59	ML	7,898			7,898	DOUBLE YELLOW
0010	225+25	-	387+25	ML	32,400	-	385	32,400	DOUBLE YELLOW
0010	405+35		414+00	ML	1,730			1,730	DOUBLE YELLOW
0010	414+00	-	425+00	ML	1,375	-	145	1,375	NO PASSING/SKIPS
0010	425+00	-	443+50	ML	463	-	-	463	SKIPS
0010	443+50		449+00	ML	688			688	NO PASSING/SKIPS
0010	449+00	-	450+75	ML	44	-	-	44	SKIPS
0010	450+75	-	465+00	ML	1,782	-	-	1,782	NO PASSING/SKIPS
0010	465+00	-	472+00	ML	1,400	-	205	1,400	DOUBLE YELLOW
0010	472+00	-	478+00	ML	750	-	-	750	NO PASSING/SKIPS
0010	478+00		481+00	ML	75			75	SKIPS
0010	481+00	-	488+00	ML	875	-	-	875	NO PASSING/SKIPS
0010	488+00	-	490+00	ML	400	-	-	400	DOUBLE YELLOW
0010	490+00	-	495+50	ML	688	-	-	688	NO PASSING/SKIPS
0010	495+50	-	505+75	ML	257	-	-	257	SKIPS
0010	505+75		512+50	ML	844			844	NO PASSING/SKIPS
0010	512+50	-	531+50	ML	3,800	-	-	3,800	DOUBLE YELLOW
0010	531+50	-	539+00	ML	938	-	-	938	NO PASSING/SKIPS
0010	539+00	-	550+00	ML	275	-	-	275	SKIPS
				TOTAL 0010	70,301	103,600	1,325	70,301	

3

CATEGORY	STATION	LOCATION	SIGN NO.	SIGN CODE	TYPE II SIGN SIZE W [IN.]	X H [IN.]	634.0614 POSTS WOOD 4X6-INCH X 14-FT EACH	634.0616 POSTS WOOD 4X6-INCH X 16-FT EACH	637.2230 SIGNS TYPE II REFLECTIVE F SF
0010	32+13	RT	1-1	W1-8	18	24	1	-	3.00
0010	32+13	RT	1-2	W1-8	18	24	1	-	3.00
0010	33+73	RT	1-3	W1-8	18	24	1	-	3.00
0010	33+73	RT	1-4	W1-8	18	24	1	-	3.00
0010	35+33	RT	1-5	W1-8	18	24	1	-	3.00
0010	35+33	RT	1-6	W1-8	18	24	1	-	3.00
0010	36+93	RT	1-7	W1-8	18	24	1	-	3.00
0010	36+93	RT	1-8	W1-8	18	24	1	-	3.00
0010	94+82	LT	3-1	W1-8	18	24	1	-	3.00
0010	94+82	LT	3-2	W1-8	18	24	1	-	3.00
0010	96+42	LT	3-3	W1-8	18	24	1	-	3.00
0010	96+42	LT	3-4	W1-8	18	24	1	-	3.00
0010	98+03	LT	3-5	W1-8	18	24	1	-	3.00
0010	98+03	LT	3-6	W1-8	18	24	1		3.00
0010	99+63	LT	3-7	W1-8	18	24	1	-	3.00
0010	99+63	LT	3-8	W1-8	18	24	1	-	3.00
0010	101+23	LT	3-9	W1-8	18	24	1	-	3.00
0010	101+23	LT	3-10	W1-8	18	24	1	-	3.00
0010	102+83	LT	3-11	W1-8	18	24	1		3.00
0010	102+83	LT	3-12	W1-8	18	24	1	-	3.00
0010	104+43	LT	4-1	W1-8	18	24	1	-	3.00
0010	104+43	LT	4-2	W1-8	18	24	1	-	3.00
0010	106+03	LT	4-3	W1-8	18	24	1	-	3.00
0010	106+03	LT	4-4	W1-8	18	24	1		3.00
0010	107+63	LT	4-5	W1-8	18	24	1	-	3.00
0010	107+63	LT	4-6	W1-8	18	24	1	-	3.00
0010	109+23	LT	4-7	W1-8	18	24	1	-	3.00
0010	109+23	LT	4-8	W1-8	18	24	1	-	3.00
0010	110+83	LT	4-9	W1-8	18	24	1		3.00
0010	110+83	LT	4-10	W1-8	18	24	1	-	3.00
0010	112+43	LT	4-11	W1-8	18	24	1	-	3.00
0010	112+43	LT	4-12	W1-8	18	24	1	-	3.00
0010	121+89	RT	4-13	W1-8	18	24	1	-	3.00
0010	121+89	RT	4-14	W1-8	18	24	1		3.00
0010	122+70	RT	4-15	W1-8	18	24	1	-	3.00
0010	122+70	RT	4-16	W1-8	18	24	1	-	3.00
0010	123+50	RT	4-17	W1-8	18	24	1	-	3.00
0010	123+50	RT	4-18	W1-8	18	24	1	-	3.00
0010	124+30	RT	4-19	W1-8	18	24	1		3.00
0010	124+30	RT	4-20	W1-8	18	24	1	-	3.00
0010	125+10	RT	4-21	W1-8	18	24	1	-	3.00
0010	125+10	RT	4-22	W1-8	18	24	1	-	3.00
0010	125+90	RT	4-23	W1-8	18	24	1	-	3.00
0010	125+90	RT	4-24	W1-8	18	24	1		3.00
0010	126+71	RT	4-25	W1-8	18	24	1	-	3.00
0010	126+71	RT	4-26	W1-8	18	24	1	-	3.00
0010	160+73	RT	5-1	W1-8	18	24	-	1	3.00
0010	160+75	RT	5-2	W1-8	18	24	-	1	3.00
0010	161+53	RT	5-3	W1-8	18	24	-	1	3.00
0010	161+53	RT	5-4	W1-8	18	24	-	1	3.00
0010	162+33	RT	5-5	W1-8	18	24	-	1	3.00
0010	162+33	RT	5-6	W1-8	18	24	-	1	3.00
0010	163+13	RT	5-7	W1-8	18	24	-	1	3.00
				SUBTOTAL 0010			46	7	159

3

CATEGORY	STATION	LOCATION	SIGN NO.	SIGN CODE	TYPE II SIGN SIZE W [IN.]	X H [IN.]	634.0614 POSTS WOOD 4X6-INCH X 14-FT EACH	634.0616 POSTS WOOD 4X6-INCH X 16-FT EACH	637.2230 SIGNS TYPE II REFLECTIVE F SF
0010	163+13	RT	5-8	W1-8	18	24	-	1	3.00
0010	163+93	RT	5-9	W1-8	18	24	-	1	3.00
0010	163+93	RT	5-10	W1-8	18	24	-	1	3.00
0010	166+64	LT	6-1	W1-8	18	24	-	1	3.00
0010	166+64	LT	6-2	W1-8	18	24	-	1	3.00
0010	167+64	LT	6-3	W1-8	18	24		1	3.00
0010	167+64	LT	6-4	W1-8	18	24	-	1	3.00
0010	168+85	LT	6-5	W1-8	18	24	-	1	3.00
0010	168+85	LT	6-6	W1-8	18	24	-	1	3.00
0010	170+05	LT	6-7	W1-8	18	24	-	1	3.00
0010	170+05	LT	6-8	W1-8	18	24	-	1	3.00
0010	240+00	RT	8-1M	-	-	-	-	1	-
0010	245+00	LT	8-1	W1-8	18	24	-	1	3.00
0010	245+00	LT	8-2	W1-8	18	24	-	1	3.00
0010	246+20	LT	8-3	W1-8	18	24	-	1	3.00
0010	246+20	LT	8-4	W1-8	18	24	-	1	3.00
0010	247+40	LT	8-5	W1-8	18	24		1	3.00
0010	247+40	LT	8-6	W1-8	18	24	-	1	3.00
0010	249+05	LT	8-7	W1-8	18	24	-	1	3.00
0010	249+05	LT	8-8	W1-8	18	24	-	1	3.00
0010	250+65	LT	8-9	W1-8	18	24	-	1	3.00
0010	250+65	LT	8-10	W1-8	18	24	-	1	3.00
0010	252+25	LT	8-11	W1-8	18	24		1	3.00
0010	252+25	LT	8-12	W1-8	18	24	-	1	3.00
0010	253+85	LT	8-13	W1-8	18	24	-	1	3.00
0010	253+85	LT	8-14	W1-8	18	24	-	1	3.00
0010	254+69	RT	8-2M	-	-	-	-	1	-
0010	256+72	LT	9-1M	-	-	-	-	1	-
0010	257+52	LT	9-1	W1-8	18	24	-	1	3.00
0010	257+52	LT	9-2	W1-8	18	24	-	1	3.00
0010	259+12	LT	9-3	W1-8	18	24		1	3.00
0010	259+12	LT	9-4	W1-8	18	24	-	1	3.00
0010	260+62	LT	9-5	W1-8	18	24	-	1	3.00
0010	260+62	LT	9-6	W1-8	18	24	-	1	3.00
0010	265+76	LT	9-2M	-	-	-	-	1	-
0010	269+80	RT	9-3M	-	-	-	-	1	-
0010	274+10	RT	9-7	W1-8	18	24		1	3.00
0010	274+10	RT	9-8	W1-8	18	24	-	1	3.00
0010	275+70	RT	9-9	W1-8	18	24	-	1	3.00
0010	275+70	RT	9-10	W1-8	18	24	-	1	3.00
0010	277+30	RT	9-11	W1-8	18	24	-	1	3.00
0010	277+30	RT	9-12	W1-8	18	24	-	1	3.00
0010	280+67	LT	9-4M	-	-	-	-	1	-
0010	288+60	RT	10-1	W1-8	18	24	-	1	3.00
0010	288+60	RT	10-2	W1-8	18	24	-	1	3.00
0010	290+20	RT	10-3	W1-8	18	24	-	1	3.00
0010	290+20	RT	10-4	W1-8	18	24	-	1	3.00
0010	291+80	RT	10-5	W1-8	18	24		1	3.00
0010	291+80	RT	10-6	W1-8	18	24	-	1	3.00
0010	293+40	RT	10-7	W1-8	18	24	-	1	3.00
0010	293+40	RT	10-8	W1-8	18	24	-	1	3.00
				SUBTOTAL 0010			0	51	135
				TOTAL 0010			46	58	294

5

5

PAVEMENT MARKING

A) MARKING LINE EPOXY 4-INCH (SKIPS)
B) MARKING LINE EPOXY 4-INCH (NO PASSING/SKIPS)
C) MARKING LINE EPOXY 4-INCH (DOUBLE YELLOW)

PROJECT NO: 8944-00-77	HWY: CTH A	COUNTY: ST. CROIX	PLAN SHEETS	SHEET 11	E

FILE NAME : C:\OD\CORRE, INC\PROJECTS - DOCUMENTS\WI - NW REGION\8944-00-07_ST. CROIX CO_CTH A\500_CADD\501_C3D_2018\89440007\SHEETSPLAN\050201-PN.DWG
LAYOUT NAME - 01
PLOT DATE : 2/22/2021 9:55 AM
PLOT BY : ANDREW PETERSON, EIT
PLOT NAME :
PLOT SCALE : 1 IN:100 FT
WISDOT/CADDS SHEET 44

5

5

PAVEMENT MARKING

A) MARKING LINE EPOXY 4-INCH (SKIPS)
B) MARKING LINE EPOXY 4-INCH (NO PASSING/SKIPS)
C) MARKING LINE EPOXY 4-INCH (DOUBLE YELLOW)

LEGEND

- EXISTING SIGN MOUNTED ON POST(S)
- PROPOSED SIGN MOUNTED ON POST(S)
- XXX DENOTES SIGN NUMBER
- ASPHALTIC CENTERLINE RUMBLE STRIP 2-LANE RURAL

PROJECT NO: 8944-00-77	HWY: CTH A	COUNTY: ST. CROIX	PLAN SHEETS	SHEET 12	E

5

5

PAVEMENT MARKING

A) MARKING LINE EPOXY 4-INCH (SKIPS)
B) MARKING LINE EPOXY 4-INCH (NO PASSING/SKIPS)
C) MARKING LINE EPOXY 4-INCH (DOUBLE YELLOW)

LEGEND

- EXISTING SIGN MOUNTED ON POST(S)
- PROPOSED SIGN MOUNTED ON POST(S)
- (XXX) DENOTES SIGN NUMBER
- ASPHALTIC CENTERLINE RUMBLE STRIP 2-LANE RURAL

PROJECT NO: 8944-00-77	HWY: CTH A	COUNTY: ST. CROIX	PLAN SHEETS	SHEET 13	E

5

5

PAVEMENT MARKING

A) MARKING LINE EPOXY 4-INCH (SKIPS)
B) MARKING LINE EPOXY 4-INCH (NO PASSING/SKIPS)
C) MARKING LINE EPOXY 4-INCH (DOUBLE YELLOW)

LEGEND

- EXISTING SIGN MOUNTED ON POST(S)
- PROPOSED SIGN MOUNTED ON POST(S)
- XXX DENOTES SIGN NUMBER
- ASPHALTIC CENTERLINE RUMBLE STRIP 2-LANE RURAL

PROJECT NO: 8944-00-77	HWY: CTH A	COUNTY: ST. CROIX	PLAN SHEETS	SHEET 14	E

FILE NAME : C:\OD\CORRE, INC\PROJECTS - DOCUMENTS\WI - NW REGION\8944-00-07_ST. CROIX CO_CTH A\500_CADD\501_C3D_2018\89440007\SHEETSPLAN\050201-PN.DWG
LAYOUT NAME - 04
PLOT DATE : 2/22/2021 9:55 AM PLOT BY : ANDREW PETERSON, EIT PLOT NAME : PLOT SCALE : 1 IN:100 FT

WISDOT/CADDS SHEET 44

5

5

PAVEMENT MARKING

A) MARKING LINE EPOXY 4-INCH (SKIPS)
B) MARKING LINE EPOXY 4-INCH (NO PASSING/SKIPS)
C) MARKING LINE EPOXY 4-INCH (DOUBLE YELLOW)

LEGEND

- EXISTING SIGN MOUNTED ON POST(S)
- PROPOSED SIGN MOUNTED ON POST(S)
- XXX DENOTES SIGN NUMBER
- ASPHALTIC CENTERLINE RUMBLE STRIP 2-LANE RURAL

PROJECT NO: 8944-00-77	HWY: CTH A	COUNTY: ST. CROIX	PLAN SHEETS	SHEET 15	E

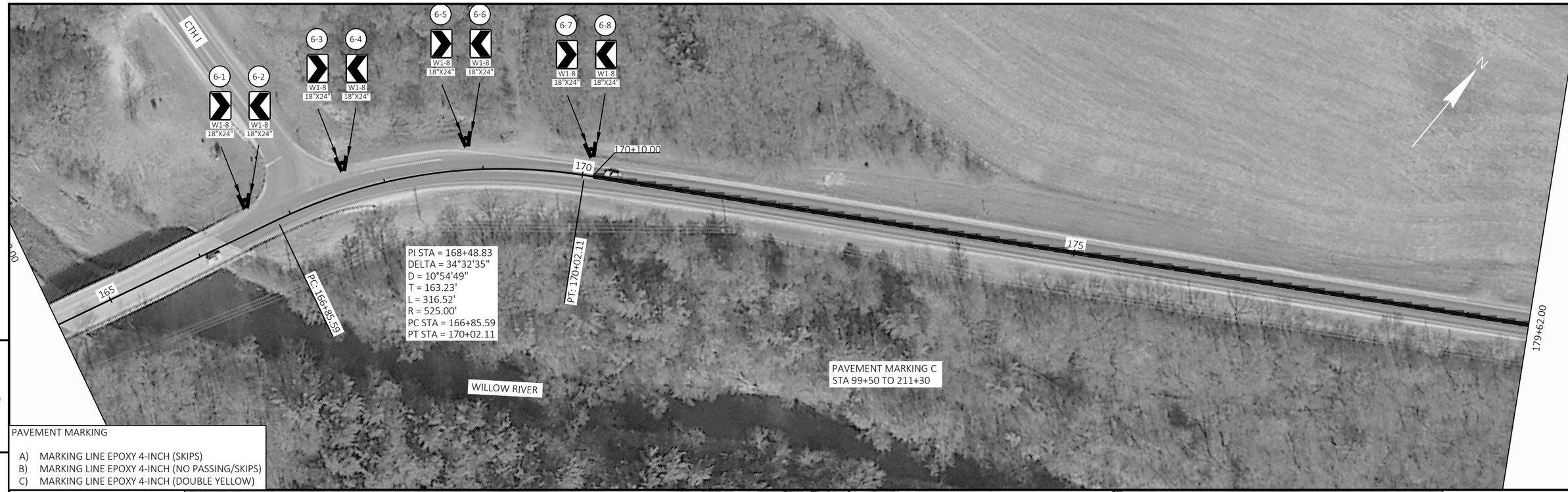

5

PAVEMENT MARKING

A) MARKING LINE EPOXY 4-INCH (SKIPS)
B) MARKING LINE EPOXY 4-INCH (NO PASSING/SKIPS)
C) MARKING LINE EPOXY 4-INCH (DOUBLE YELLOW)

5

LEGEND

- EXISTING SIGN MOUNTED ON POST(S)
- PROPOSED SIGN MOUNTED ON POST(S)
- XXX DENOTES SIGN NUMBER
- ASPHALTIC CENTERLINE RUMBLE STRIP 2-LANE RURAL

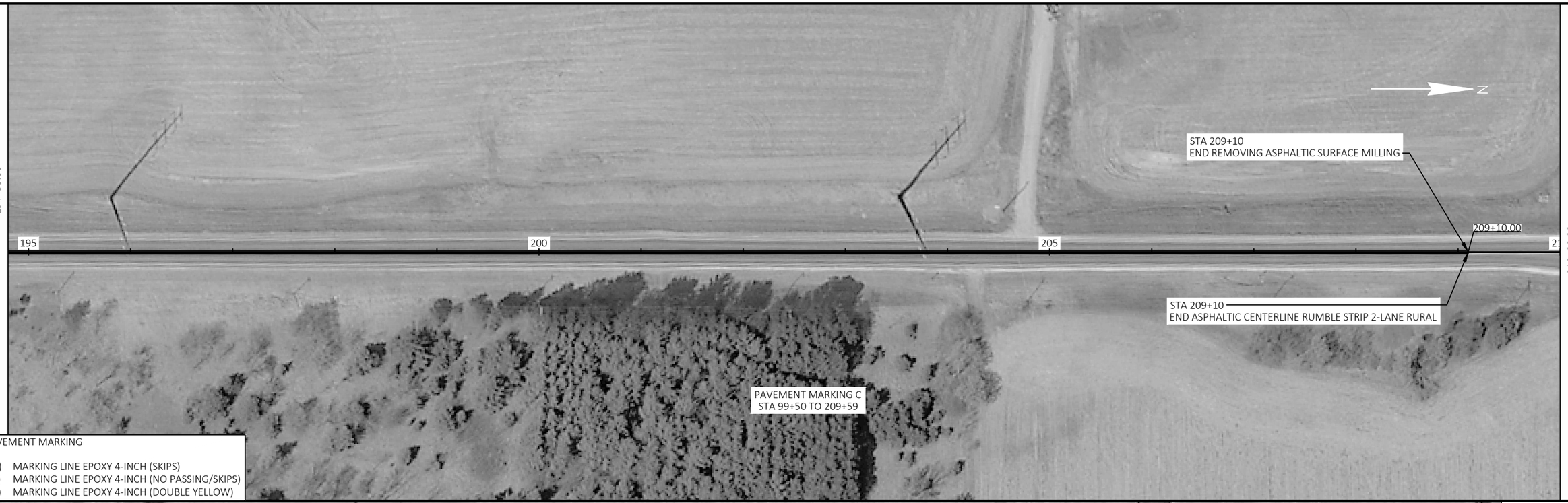

PAVEMENT MARKING

A) MARKING LINE EPOXY 4-INCH (SKIPS)
B) MARKING LINE EPOXY 4-INCH (NO PASSING/SKIPS)
C) MARKING LINE EPOXY 4-INCH (DOUBLE YELLOW)

LEGEND

- EXISTING SIGN MOUNTED ON POST(S)
- PROPOSED SIGN MOUNTED ON POST(S)
- (XXX) DENOTES SIGN NUMBER
- ASPHALTIC CENTERLINE RUMBLE STRIP 2-LANE RURAL

PROJECT NO: 8944-00-77	HWY: CTH A	COUNTY: ST. CROIX	PLAN SHEETS	SHEET 17	E

5

5

PROJECT NO: 8944-00-77	HWY: CTH A	COUNTY: ST. CROIX	PLAN SHEETS	SHEET 18	E

FILE NAME : C:\OD\CORRE, INC\PROJECTS - DOCUMENTS\WI - NW REGION\8944-00-07_ST. CROIX CO_CTH A\500_CADD\501_C3D_2018\89440007\SHEETSPLAN\050201-PN.DWG
LAYOUT NAME - 08
PLOT DATE : 2/22/2021 9:56 AM
PLOT BY : ANDREW PETERSON, EIT
PLOT NAME :
PLOT SCALE : 1 IN:100 FT
WISDOT/CADDS SHEET 44

5

5

PAVEMENT MARKING

A) MARKING LINE EPOXY 4-INCH (SKIPS)
B) MARKING LINE EPOXY 4-INCH (NO PASSING/SKIPS)
C) MARKING LINE EPOXY 4-INCH (DOUBLE YELLOW)

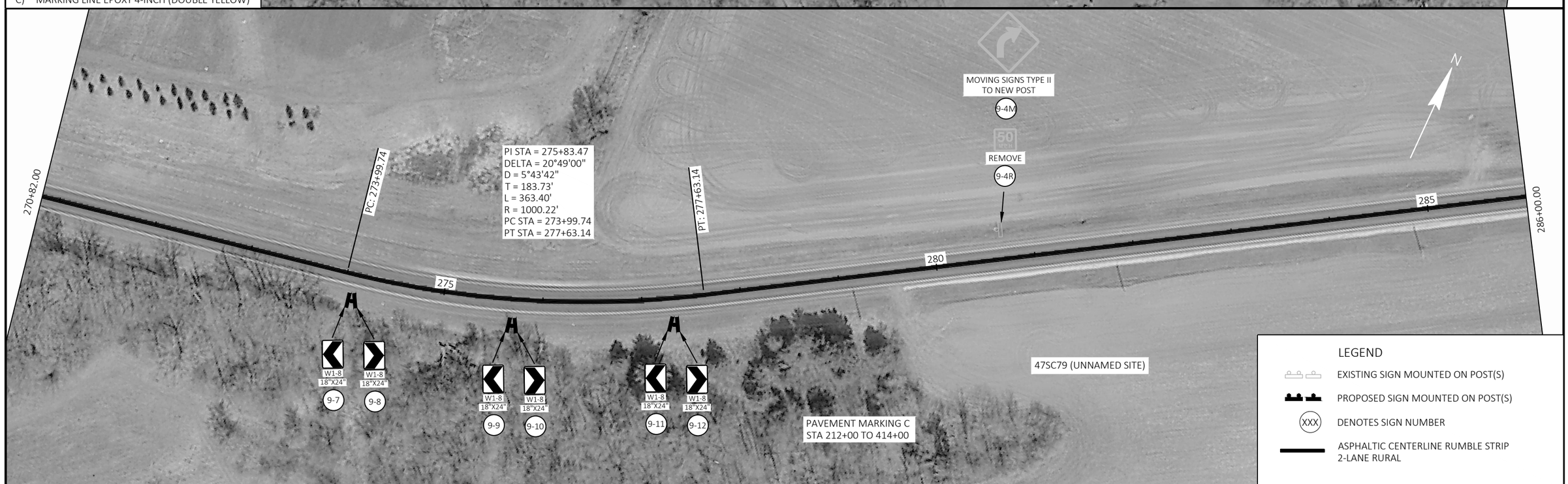

PROJECT NO: 8944-00-77	HWY: CTH A	COUNTY: ST. CROIX	PLAN SHEETS	SHEET 19	E

FILE NAME : C:\OD\CORRE, INC\PROJECTS - DOCUMENTS\WI - NW REGION\8944-00-07_ST. CROIX CO_CTH A\500_CADD\501_C3D_2018\89440007\SHEETSPLAN\050201-PN.DWG
LAYOUT NAME - 09
PLOT DATE : 2/22/2021 9:56 AM
PLOT BY : ANDREW PETERSON, EIT
PLOT NAME :
PLOT SCALE : 1 IN:100 FT
WISDOT/CADDS SHEET 44

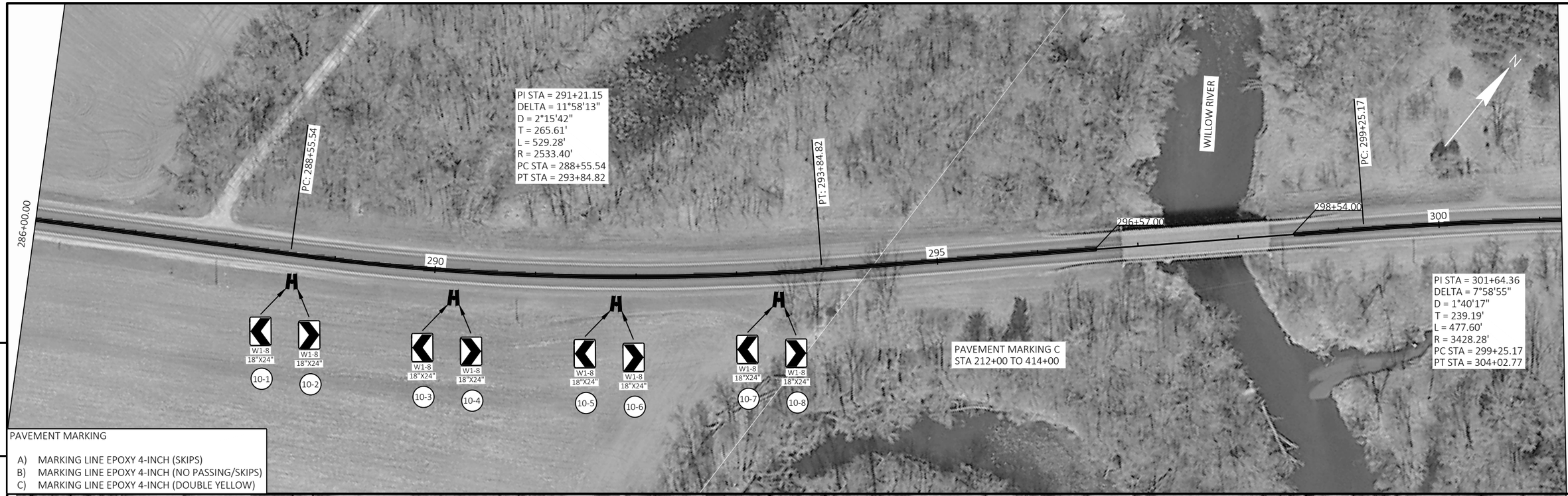

5

PAVEMENT MARKING

A) MARKING LINE EPOXY 4-INCH (SKIPS)
B) MARKING LINE EPOXY 4-INCH (NO PASSING/SKIPS)
C) MARKING LINE EPOXY 4-INCH (DOUBLE YELLOW)

5

LEGEND

- EXISTING SIGN MOUNTED ON POST(S)
- PROPOSED SIGN MOUNTED ON POST(S)
- (XXX) DENOTES SIGN NUMBER
- ASPHALTIC CENTERLINE RUMBLE STRIP 2-LANE RURAL

PROJECT NO: 8944-00-77	HWY: CTH A	COUNTY: ST. CROIX	PLAN SHEETS	SHEET 20	E

5

5

PAVEMENT MARKING

A) MARKING LINE EPOXY 4-INCH (SKIPS)
B) MARKING LINE EPOXY 4-INCH (NO PASSING/SKIPS)
C) MARKING LINE EPOXY 4-INCH (DOUBLE YELLOW)

PROJECT NO: 8944-00-77	HWY: CTH A	COUNTY: ST. CROIX	PLAN SHEETS	SHEET 21	E

5

5

PAVEMENT MARKING

A) MARKING LINE EPOXY 4-INCH (SKIPS)
B) MARKING LINE EPOXY 4-INCH (NO PASSING/SKIPS)
C) MARKING LINE EPOXY 4-INCH (DOUBLE YELLOW)

LEGEND

- EXISTING SIGN MOUNTED ON POST(S)
- PROPOSED SIGN MOUNTED ON POST(S)
- (XXX) DENOTES SIGN NUMBER
- ASPHALTIC CENTERLINE RUMBLE STRIP 2-LANE RURAL

PROJECT NO: 8944-00-77	HWY: CTH A	COUNTY: ST. CROIX	PLAN SHEETS	SHEET 22	E

5

PAVEMENT MARKING

A) MARKING LINE EPOXY 4-INCH (SKIPS)
B) MARKING LINE EPOXY 4-INCH (NO PASSING/SKIPS)
C) MARKING LINE EPOXY 4-INCH (DOUBLE YELLOW)

5

LEGEND

- EXISTING SIGN MOUNTED ON POST(S)
- PROPOSED SIGN MOUNTED ON POST(S)
- (XXX) DENOTES SIGN NUMBER
- ASPHALTIC CENTERLINE RUMBLE STRIP 2-LANE RURAL

PROJECT NO: 8944-00-77	HWY: CTH A	COUNTY: ST. CROIX	PLAN SHEETS	SHEET 24	E

FILE NAME : C:\OD\CORRE, INC\PROJECTS - DOCUMENTS\WI - NW REGION\8944-00-07_ST. CROIX CO_CTH A\500_CADD\501_C3D_2018\89440007\SHEETSPLAN\050201-PN.DWG
LAYOUT NAME - 14
PLOT DATE : 2/22/2021 9:57 AM
PLOT BY : ANDREW PETERSON, EIT
PLOT NAME :
PLOT SCALE : 1 IN:100 FT
WISDOT/CADDS SHEET 44

5

5

PAVEMENT MARKING

A) MARKING LINE EPOXY 4-INCH (SKIPS)
B) MARKING LINE EPOXY 4-INCH (NO PASSING/SKIPS)
C) MARKING LINE EPOXY 4-INCH (DOUBLE YELLOW)

LEGEND

- EXISTING SIGN MOUNTED ON POST(S)
- PROPOSED SIGN MOUNTED ON POST(S)
- XXX DENOTES SIGN NUMBER
- ASPHALTIC CENTERLINE RUMBLE STRIP 2-LANE RURAL

PROJECT NO: 8944-00-77	HWY: CTH A	COUNTY: ST. CROIX	PLAN SHEETS	SHEET 25	E

5

5

PAVEMENT MARKING

A) MARKING LINE EPOXY 4-INCH (SKIPS)
B) MARKING LINE EPOXY 4-INCH (NO PASSING/SKIPS)
C) MARKING LINE EPOXY 4-INCH (DOUBLE YELLOW)

LEGEND

- EXISTING SIGN MOUNTED ON POST(S)
- PROPOSED SIGN MOUNTED ON POST(S)
- (XXX) DENOTES SIGN NUMBER
- ASPHALTIC CENTERLINE RUMBLE STRIP 2-LANE RURAL

PROJECT NO: 8944-00-77	HWY: CTH A	COUNTY: ST. CROIX	PLAN SHEETS	SHEET 26	E

5

5

PAVEMENT MARKING

A) MARKING LINE EPOXY 4-INCH (SKIPS)
B) MARKING LINE EPOXY 4-INCH (NO PASSING/SKIPS)
C) MARKING LINE EPOXY 4-INCH (DOUBLE YELLOW)

LEGEND

- EXISTING SIGN MOUNTED ON POST(S)
- PROPOSED SIGN MOUNTED ON POST(S)
- XXX DENOTES SIGN NUMBER
- ASPHALTIC CENTERLINE RUMBLE STRIP 2-LANE RURAL

PROJECT NO: 8944-00-77	HWY: CTH A	COUNTY: ST. CROIX	PLAN SHEETS	SHEET 27	E

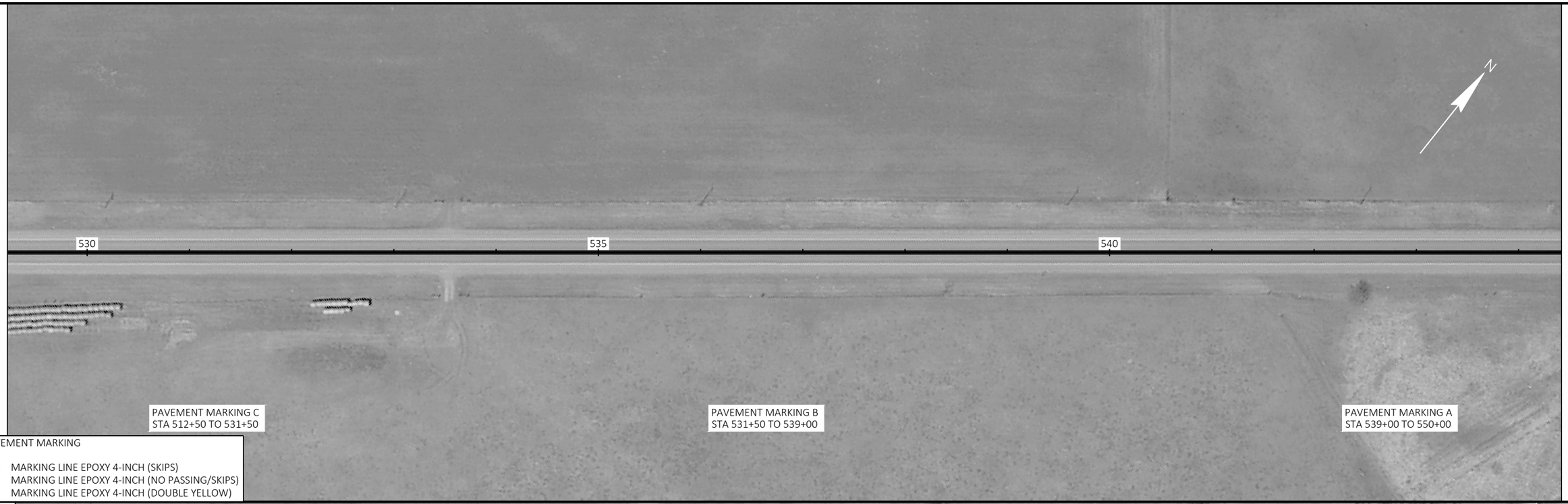

5

5

PAVEMENT MARKING

A) MARKING LINE EPOXY 4-INCH (SKIPS)
B) MARKING LINE EPOXY 4-INCH (NO PASSING/SKIPS)
C) MARKING LINE EPOXY 4-INCH (DOUBLE YELLOW)

PROJECT NO: 8944-00-77	HWY: CTH A	COUNTY: ST. CROIX	PLAN SHEETS	SHEET 28	E

FILE NAME : C:\OD\CORRE, INC\PROJECTS - DOCUMENTS\WI - NW REGION\8944-00-07_ST. CROIX CO_CTH A\500_CADD\501_C3D_2018\89440007\SHEETSPLAN\050201-PN.DWG
LAYOUT NAME - 18
PLOT DATE : 2/22/2021 9:57 AM
PLOT BY : ANDREW PETERSON, EIT
PLOT NAME :
PLOT SCALE : 1 IN:100 FT
WISDOT/CADDS SHEET 44

Standard Detail Drawing List

13A11-03A	2-LANE RURAL CENTER LINE RUMBLE STRIP, MILLING
13A11-03B	2-LANE RURAL CENTER LINE RUMBLE STRIP, MILLING
15C04-05	TRAFFIC CONTROL, ADVANCE WARNING SIGNS 45 M.P.H. OR GREATER TWO-WAY UNDIVIDED ROAD OPEN TO TRAFFIC
15C08-20A	LONGITUDINAL MARKING (MAINLINE)
15C12-07	TRAFFIC CONTROL FOR LANE CLOSURE WITH FLAGGING OPERATION
15C19-06A	MOVING PAVEMENT MARKING OPERATION TWO-LANE TWO-WAY ROADWAY
15C35-04A	PAVEMENT MARKING (INTERSECTIONS)
15D38-02A	TEMPORARY TRAFFIC CONTROL SIGN MOUNTING
15D38-02B	ATTACHMENT OF SIGNS TO POSTS

6

6

GENERAL NOTES

DETAILS OF CONSTRUCTION NO SHOWN ON THIS DRAWING SHALL CONFORM TO THE PERTINENT REQUIREMENTS OF THE STANDARD SPECIFICATIONS AND APPLICABLE SPECIAL PROVISIONS.

DO NOT MILL CENTERLINE GROOVES THROUGH ANY INTERSECTION, MARKED CROSSWALK, NON-MOTORIZED PATH CROSSING, OR SNOWMOBILE CROSSING.

INSTALL PAVEMENT MARKING AFTER THE GROOVES ARE INSTALLED.

SEE SIGNING PLAN FOR SIGN REQUIREMENTS THAT MAY BE NEEDED.

(1) CENTERLINE GROOVES MAY BE OMITTED IN AREAS WITH HIGH CONCENTRATIONS OF DRIVEWAYS. WHEN DIRECTED BY THE ENGINEER.

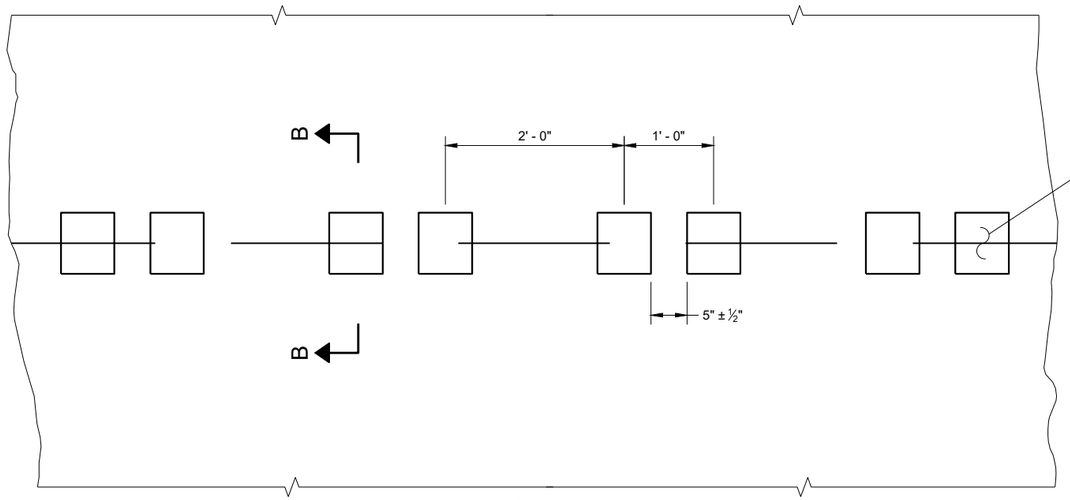

PLAN VIEW
SHOULDER WITH GROOVES

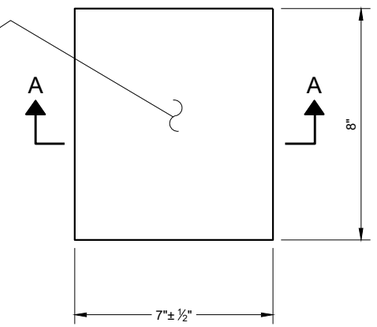

PLAN VIEW
(SINGLE GROOVE)

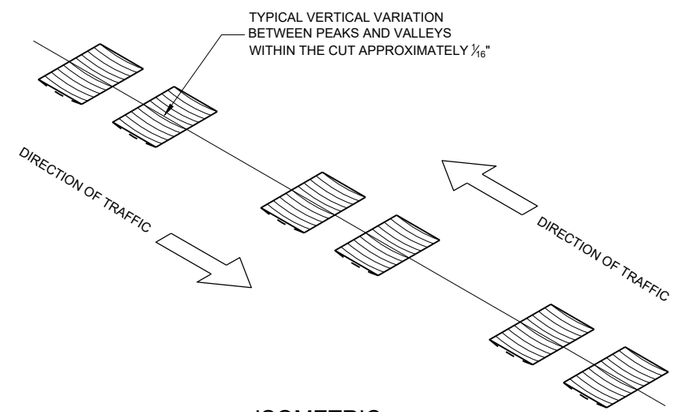

ISOMETRIC

PLACEMENT DETAIL FOR TYPE 1 MILLED RUMBLE STRIP

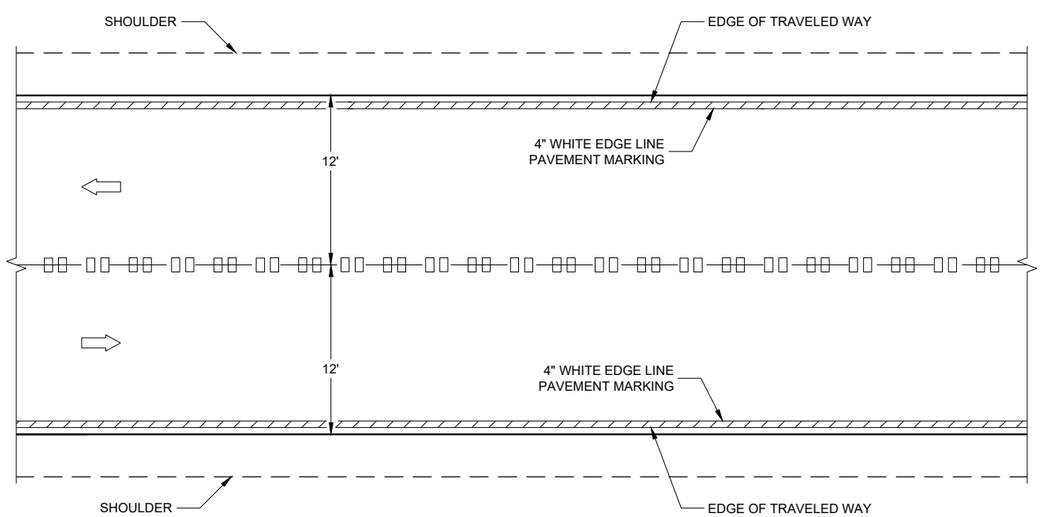

CENTERLINE GROOVES ON TWO-WAY ROADWAYS

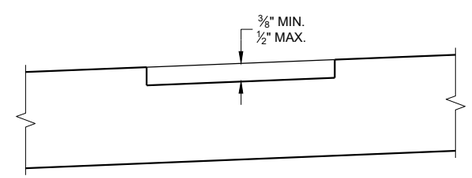

SECTION B - B
SUPERELEVATED ROADWAY

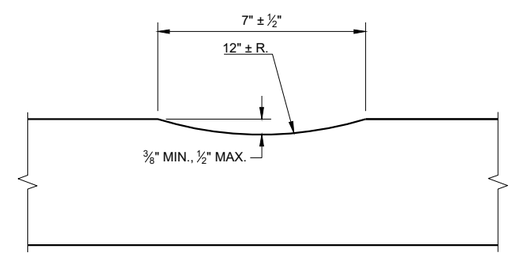

SECTION A - A

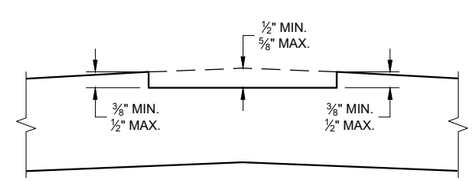

SECTION B - B
CROWNED ROADWAY

2-LANE RURAL
CENTER LINE RUMBLE STRIP, MILLING

STATE OF WISCONSIN
DEPARTMENT OF TRANSPORTAT

6

6

SDD 13A11 - 03a

SDD 13A11 - 03a

GENERAL NOTES

1. CENTERLINE GROOVES MAY BE OMITTED IN AREAS WITH HIGH CONCENTRATIONS OF DRIVEWAYS. WHEN DIRECTED BY THE ENGINEER.

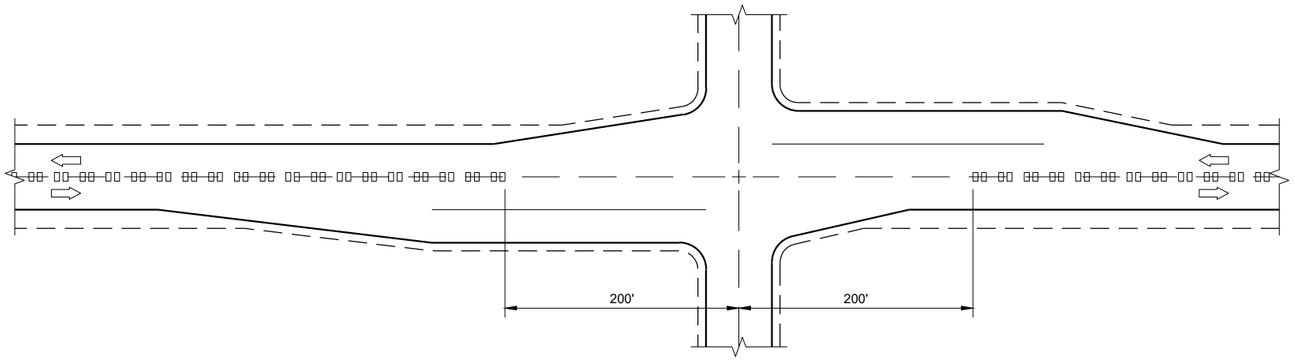

CENTERLINE GROOVES AT INTERSECTIONS

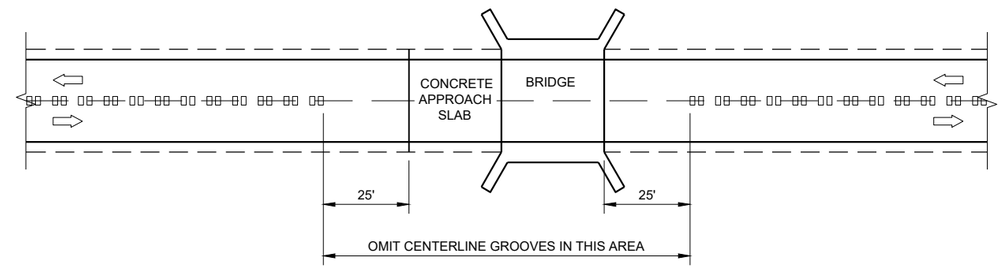

CENTERLINE GROOVES AT BRIDGES

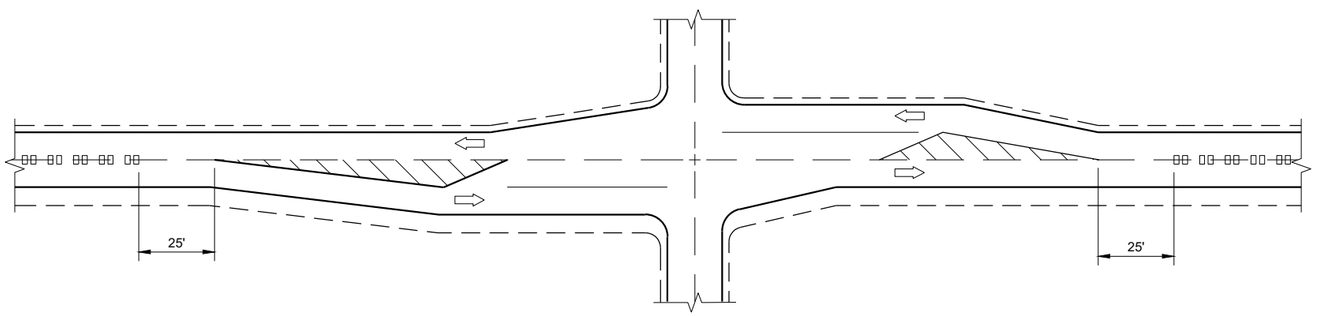

CENTERLINE GROOVES AT INTERSECTIONS (WITH LEFT TURN LANES)

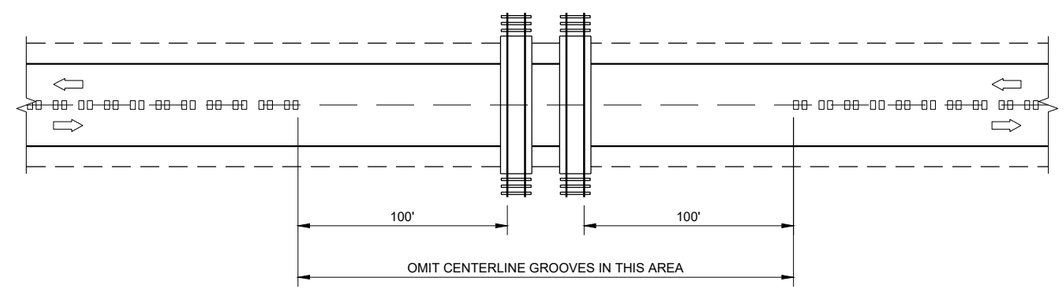

CENTERLINE GROOVES AT RAILROADS

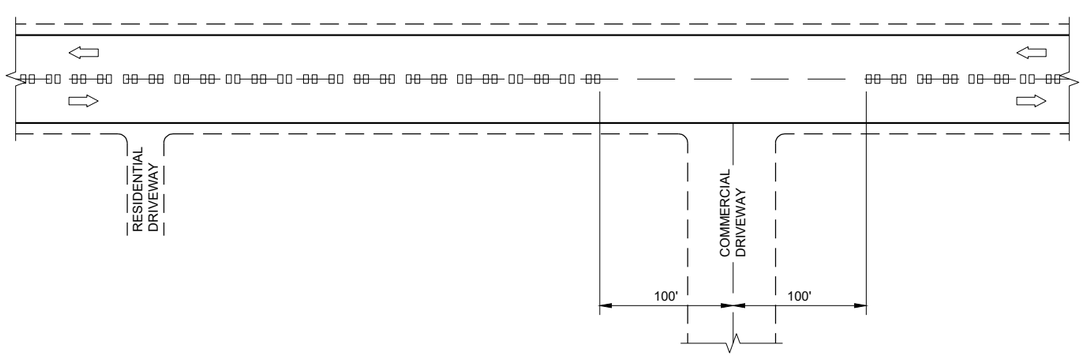

CENTERLINE GROOVES AT DRIVEWAYS (1)

6

6

SDD 13A11 - 03b

SDD 13A11 - 03b

2-LANE RURAL CENTERLINE RUMBLE STRIP, MILLING

STATE OF WISCONSIN
DEPARTMENT OF TRANSPORTATION

APPROVED

7/2018 — DATE

/S/ Rodney Taylor — ROADWAY STANDARDS DEVE ENGINEER

FHWA

GENERAL NOTES

THE EXACT NUMBER, LOCATION, AND SPACING OF ALL SIGNS AND DEVICES SHALL BE ADJUSTED TO FIT FIELD CONDITIONS.

THE SPACING BETWEEN TRAFFIC CONTROL SIGNS SHOULD BE ADJUSTED TO NOT CONFLICT WITH AND SHOULD PROVIDE A MINIMUM OF 200 FEET (500 FEET DESIRABLE) CLEARANCE TO EXISTING SIGNS THAT WILL REMAIN IN PLACE.

ALL SIGNS ARE 48" X 48" UNLESS OTHERWISE NOTED.

SIGNS THAT WILL BE IN PLACE LESS THAN SEVEN CONTINUOUS DAYS AND NIGHTS MAY BE MOUNTED ON PORTABLE SUPPORTS.

IF A "STOP" SIGN MUST BE REMOVED FOR A WORK OPERATION, A TEMPORARY "STOP" SIGN SHALL BE PLACED PRIOR TO THE SIGN REMOVAL, OR A FLAGGER SHALL BE PROVIDED UNTIL THE SIGN IS REESTABLISHED.

* OMIT G20-1 SIGNS IF LENGTH OF WORK AREA IS 2 MILES OR LESS

** PLACE AN ADDITIONAL W20-1A "ROAD WORK AHEAD" SIGN IF WORK AREA WITHIN THE PROJECT IS SEPARATED BY MORE THAN 2 MILES FROM PREVIOUS WORK AREA.

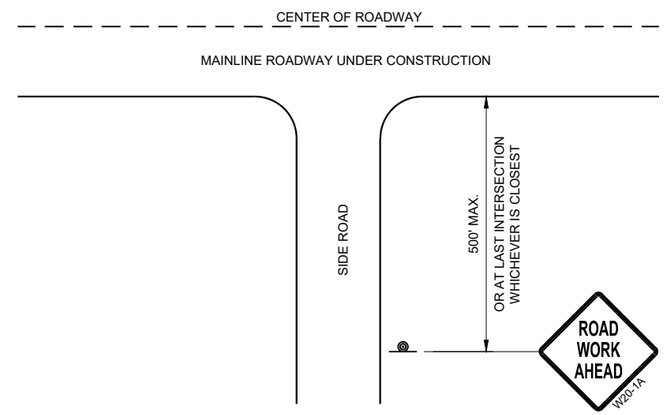

TYPICAL SIDE ROAD APPROACH WARNING SIGN DETAIL

LEGEND

- SIGN ON PERMANENT SUPPORT
- DIRECTION OF TRAFFIC
- WORK AREA

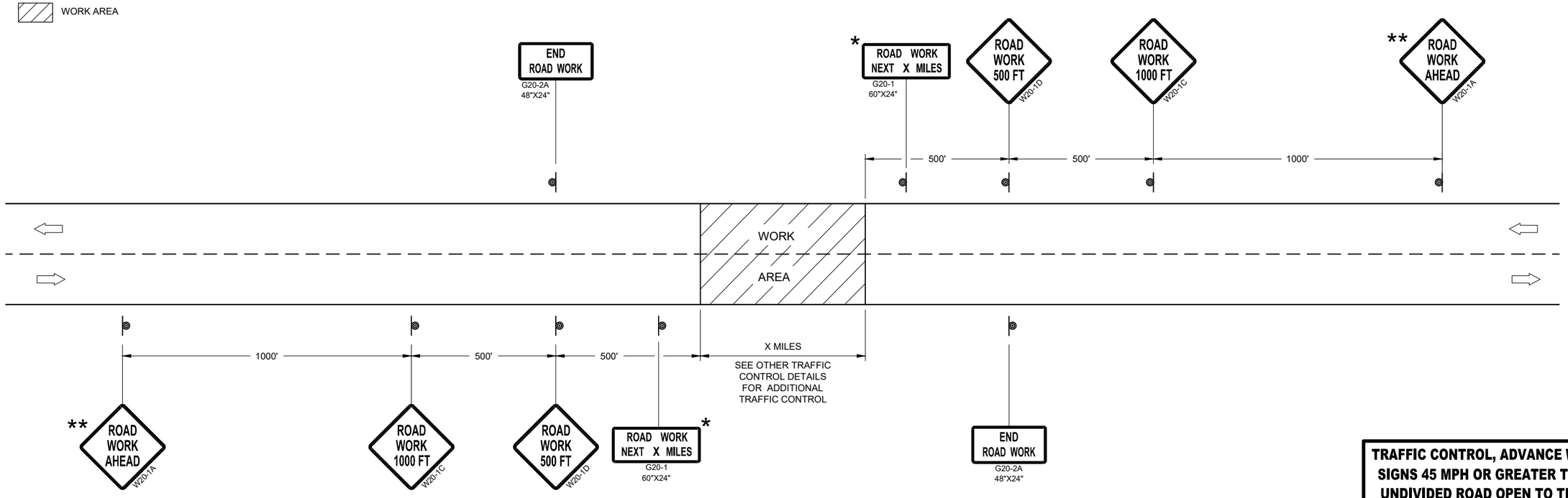

TRAFFIC CONTROL, ADVANCE WARNING SIGNS 45MPH OR GREATER

TRAFFIC CONTROL, ADVANCE WARNING SIGNS 45 MPH OR GREATER TWO-WAY UNDIVIDED ROAD OPEN TO TRAFFICE

STATE OF WISCONSIN
DEPARTMENT OF TRANSPORTATION

APPROVED
July 2018 — DATE
/S/ Andrew Heidtke — WORK ZONE ENGINEE
FHWA

6
SDD 15C04 - 05

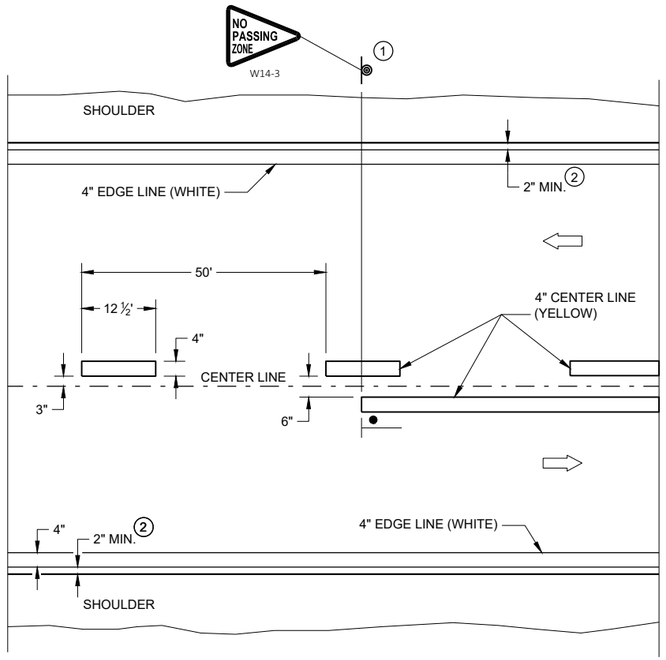

TWO WAY TRAFFIC

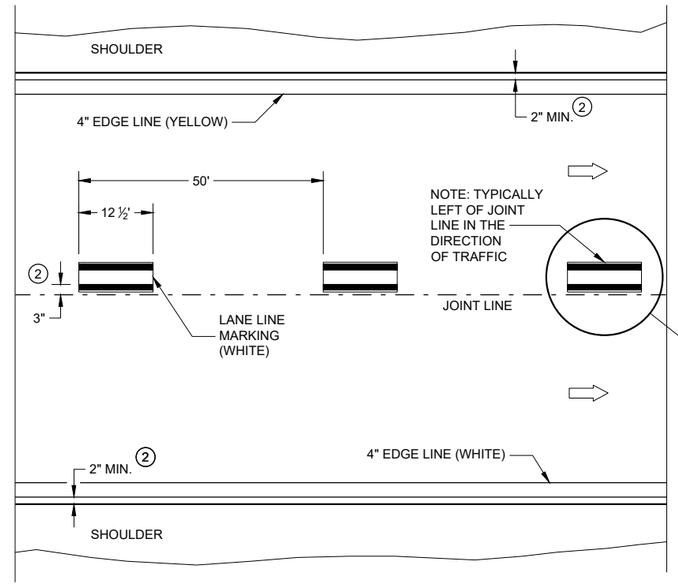

ONE WAY TRAFFIC

PERMANENT PAVEMENT MARKING

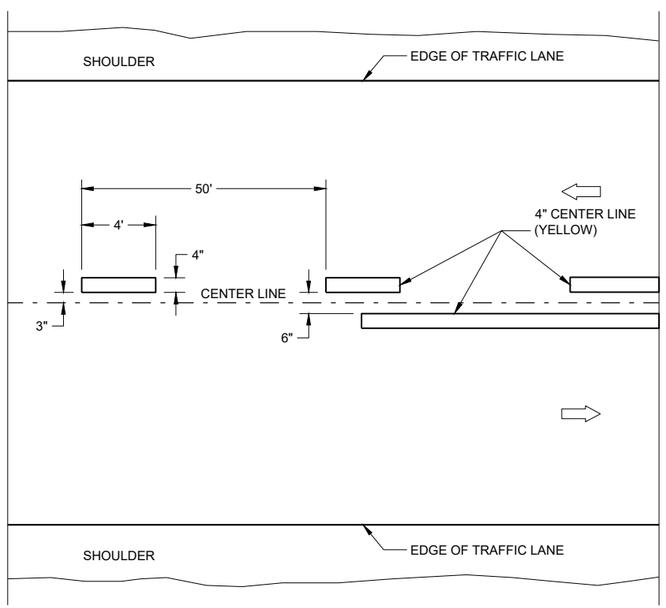

TWO WAY TRAFFIC

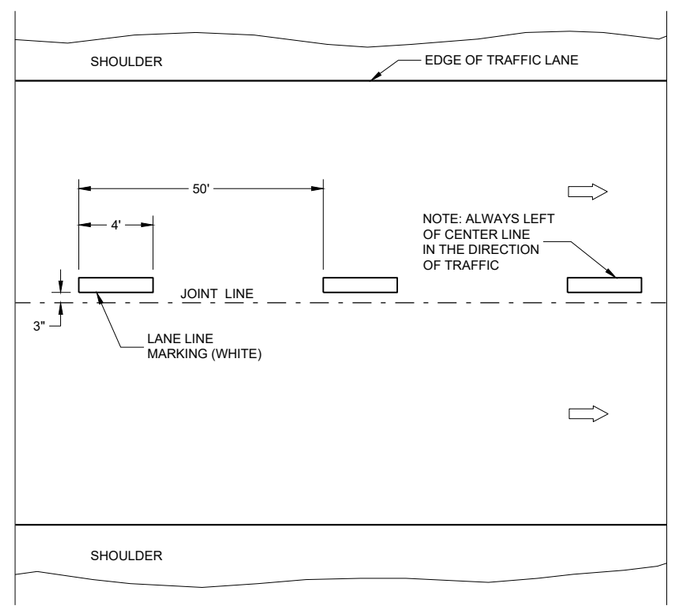

ONE WAY TRAFFIC

TEMPORARY PAVEMENT MARKING

GENERAL NOTES

DETAILS OF CONSTRUCTION NO SHOWN ON THIS DRAWING SHALL CONFORM TO STANDARD SPECIFICATIONS AND SPECIAL PROVISIONS.

1. LOCATE THE NO PASSING ZONE W14-3 SIGN WITH 50 FEET OF THE "T" MARKING
2. MEASURE FROM EDGE OF MARKING TO JOINT LINE. THIS DOES NOT INCLUDE SPACE NEEDED FOR GROOVING OPERATIONS.

LEGEND

- "T" MARKING
- SIGN ON PERMANENT SUPPORT
- DIRECTION OF TRAFFIC

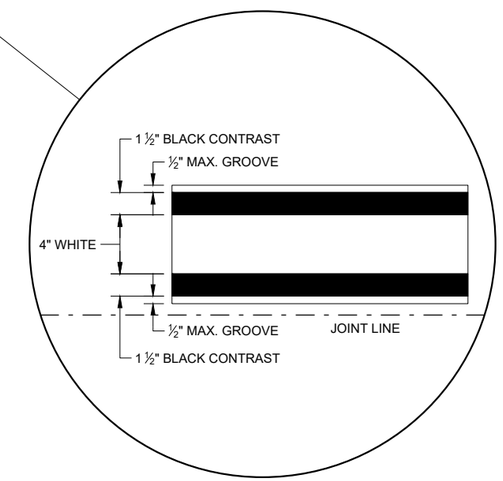

LONGITUDINAL MARKING (MAINLINE)

STATE OF WISCONSIN
DEPARTMENT OF TRANSPORTATION

APPROVED
February 2020 — DATE
/S/ Matthew Rauch — STATEWIDE SIGNING AND M ENGINEER
FHWA

6

SDD 15C08 - 20a

LEGEND

SIGN ON PORTABLE OR PERMANENT SUPPORT

TEMPORARY PORTABLE RUMBLE STRIP ARRAY

DIRECTION OF TRAFFIC

WORK AREA

FLAGGER, EQUIPPED WITH STOP/SLOW PADDLE FASTENED ON SUPPORT STAFF

GENERAL NOTES

DETAILS OF TRAFFIC CONTROL DEVICES AND INSTALLATION NOT SHOWN ON THIS DRAWING SHALL CONFORM TO THE PERTINENT REQUIREMENTS OF THE STANDARD SPECIFICATIONS, THE SPECIAL PROVISIONS, AND THE MANUAL ON UNIFORM TRAFFIC CONTROL DEVICES.

ALL SIGNS ARE 48" X 48" UNLESS OTHERWISE NOTED.

"WO" SIGNS ARE THE SAME AS "W" SIGNS EXCEPT THE BACKGROUND IS ORANGE.

THE EXACT NUMBER, LOCATION AND SPACING OF ALL SIGNS, DEVICES, AND LOCATION OF ALL FLAGGERS SHALL BE ADJUSTED TO FIT FIELD CONDITIONS AS APPROVED BY THE ENGINEER.

THE FIRST ADVANCE WARNING SIGN SHOULD TYPICALLY BE LOCATED IN ADVANCE OF THE ANTICIPATED TRAFFIC BACKUP OR QUEUE.

WHEN A SIDE ROAD OR RAMP INTERSECTS THE FACILITY ON WHICH THE WORK IS BEING PERFORMED, ADDITIONAL TRAFFIC CONTROLS SHALL BE PROVIDED AS SPECIFIED IN THE PLANS AND/OR THE SPECIAL PROVISIONS OR AS APPROVED BY THE ENGINEER.

FLAGGING

FLAGGERS SHALL BE IN SIGHT OF EACH OTHER OR IN DIRECT COMMUNICATION AT ALL TIMES. THEY SHALL BE EQUIPPED WITH STOP/SLOW PADDLES FASTENED ON SUPPORT STAFFS. WHEN THE FLAGGING OPERATION IS NOT IN EFFECT REMOVE TEMPORARY PORTABLE RUMBLE STRIPS PRIOR TO COVERING OR REMOVING ALL ADVANCE SIGNING.

(1) FOR MOVING WORK OPERATIONS, POST ADDITIONAL W20-7A FLAGGER SIGNS AT APPROXIMATELY 3,500' INTERVALS IN THE MOVING WORK OPERATION OR AS APPROVED BY THE ENGINEER.

(2) SIGN NOT REQUIRED IF FLAGGING OPERATION OCCURS WITHIN A SIGNED ROAD WORK ZONE AREA.

WHEN THE DISTANCE BETWEEN FLAGGERS EXCEEDS 2 MILES, A PILOT CAR IS REQUIRED. WHEN CURVES REDUCE SIGHT DISTANCE BELOW 400', A PILOT CAR IS REQUIRED.

TEMPORARY PORTABLE RUMBLE STRIPS

UTILIZE TEMPORARY PORTABLE RUMBLE STRIPS ON ALL FLAGGING OPERATIONS.

(3) EACH TEMPORARY PORTABLE RUMBLE STRIP ARRAY CONSISTS OF THREE RUMBLE STRIPS SPACED ACCORDING TO MANUFACTURER'S RECOMMENDATION, PLACED TRANSVERSE ACROSS THE LANE AT LOCATIONS SHOWN.

ONLY USE TEMPORARY PORTABLE RUMBLE STRIPS FOR THE APPROVED PRODUCTS LIST.

INSTALL TEMPORARY RUMBLE STRIPS PER MANUFACTURER'S RECOMMENDATIONS.

PLACE ADVANCE SIGNING PRIOR TO INSTALLING TEMPORARY RUMBLE STRIPS.

DO NOT INSTALL TEMPORARY PORTABLE RUMBLE STRIPS ON GRAVEL, MILLED SURFACES, OR ASPHALT THAT HAS BEEN PAVED LESS THAN 12 HOURS.

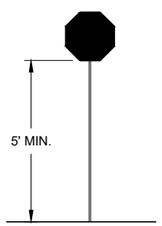

STOP/SLOW PADDLE ON SUPPORT STAFF

SIGN AND TEMPORARY RUMBLE STRIP ARRAY SPACING TABLE

SPEED LIMIT	SPACING "A"
25-30 MPH	200'
35-40 MPH	350'
45-55 MPH	500'

USE OF WO3-4 SIGN IS OPTIONAL. WHEN USED, THIS SIGN SHALL BE LOCATED BETWEEN THE W20-7A AND W20-4A SIGNS, USING SPACING "A".

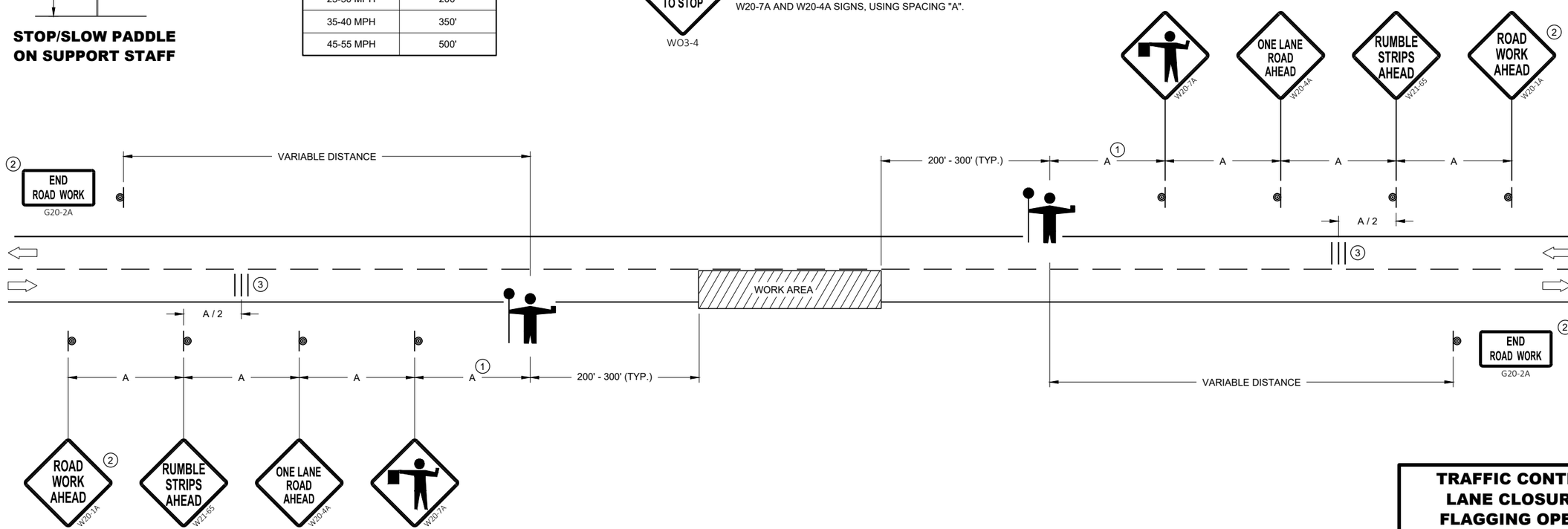

TRAFFIC CONTROL FOR LANE CLOSURE WITH FLAGGING OPERATION

TRAFFIC CONTROL FOR LANE CLOSURE WITH FLAGGING OPERATION

STATE OF WISCONSIN
DEPARTMENT OF TRANSPORTATION

APPROVED
May 2019 — DATE
/S/ Andrew Heidtke — WORK ZONE ENGINEE
FHWA

LEGEND

V1 LEAD VEHICLE

V2 MARKING VEHICLE

V3 SHADOW VEHICLE

TRUCK MOUNTED ATTENUATOR (TMA)

SIGN ON TEMPORARY SUPPORT

DIRECTION OF TRAFFIC

FLASHING ARROW PANEL (CAUTION)

GENERAL NOTES

ALL VEHICLES SHALL BE EQUIPPED WITH TWO 360 DEGREE HIGH INTENSITY YELLOW FLASHING LIGHTS OR STROBE LIGHTS AND OPERATED WITH HEADLIGHTS TURNED ON.

ALL VEHICLES SHALL BE EQUIPPED WITH REAR FACING TYPE B OR C FLASHING ARROW PANEL OPERATING IN CAUTION MODE. SIGNS PLACED ON VEHICLES MUST NOT OBSCURE THE ARROW PANEL.

ALL SIGNS ARE 48" X 48" UNLESS OTHERWISE SPECIFIED.

DISTANCE BETWEEN VEHICLES MAY VARY ACCORDING TO TERRAIN, SIGHT DISTANCE, PAINT DRYING TIME, AND OTHER FACTORS. WHENEVER ADEQUATE STOPPING SIGHT DISTANCE EXISTS TO THE REAR, SHADOW VEHICLES SHOULD MAINTAIN THE MINIMUM DISTANCE FROM THE WORK VEHICLE AND PROCEED AT THE SAME SPEED AS THE WORK VEHICLE. SHADOW VEHICLES SHOULD SLOW DOWN IN ADVANCE OF VERTICAL AND HORIZONTAL CURVES THAT RESTRICT SIGHT DISTANCE.

THE WORK AND SHADOW VEHICLES SHOULD PULL OVER PERIODICALLY TO ALLOW TRAFFIC TO PASS.

WHEN NO WORK ACTIVITY IS TAKING PLACE, REMOVE OR LAY STATIONARY SIGNS AND SUPPORTS FLAT ON THE GRADE WITH UPRIGHTS ORIENTED PARALLEL TO AND DOWNSTREAM FROM TRAFFIC.

CONES SHOULD BE USED BETWEEN THE MARKING AND SHADOW VEHICLE AT 100 FOOT SPACING. CONES MAY BE OMITTED ON PAINTED LINE IF APPROVED BY THE ENGINEER. CONSIDER PAVEMENT MARKING DRY OR CURE TIMES AND TRAFFIC VOLUME.

CONES SHALL BE A MINIMUM OF 18" FOR WET PAVEMENT MARKING .

(1) SIGNS SHALL BE REPEATED APPROXIMATELY EVERY THREE MILES.

(2) IF CONSTRUCTION WORK ZONE SIGNS ARE IN PLACE, W20-1A OR W21-63 ARE NOT REQUIRED.

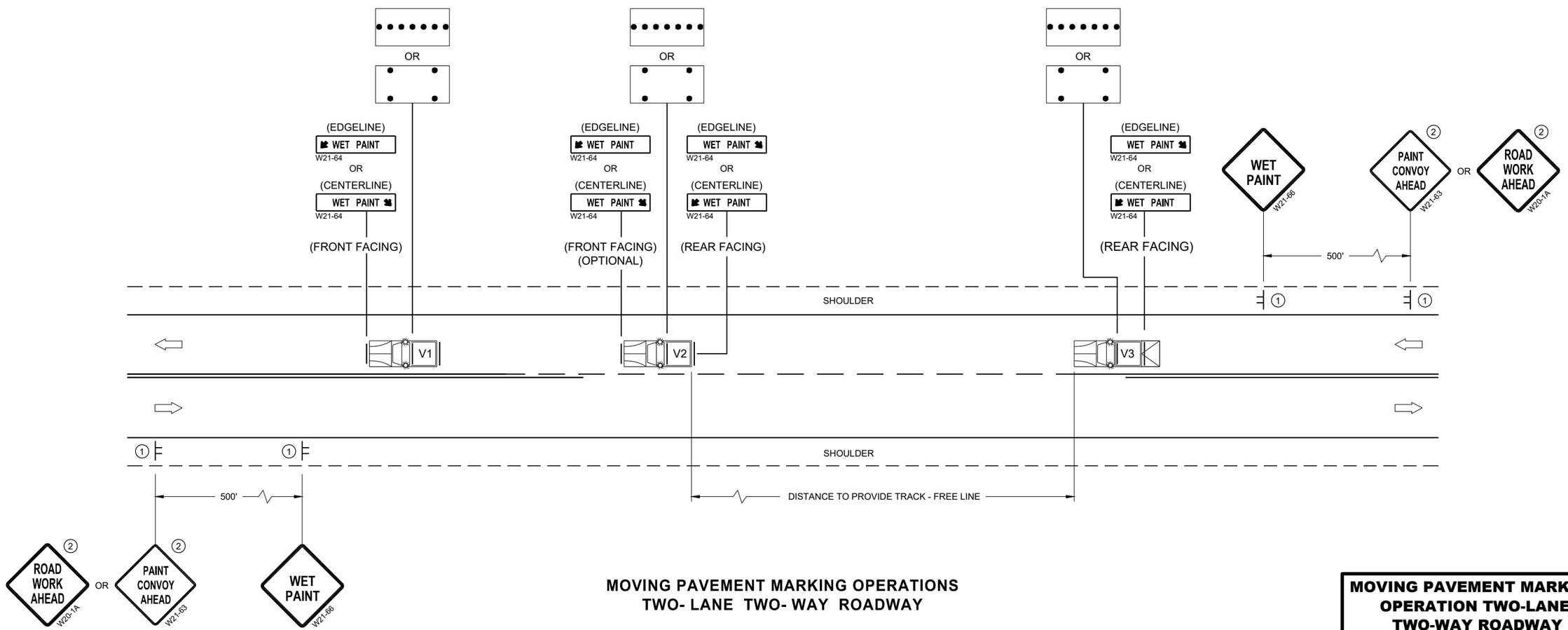

MOVING PAVEMENT MARKING OPERATIONS
TWO- LANE TWO- WAY ROADWAY

MOVING PAVEMENT MARKING OPERATION TWO-LANE TWO-WAY ROADWAY

STATE OF WISCONSIN
DEPARTMENT OF TRANSPORTATION

APPROVED
November 2019 — DATE
/S/ Andrew Heidtke — WORK ZONE ENGINEE
FHWA

6

SDD 15C19 - 06a

GENERAL NOTES

OMIT EDGE LINES THROUGH INTERSECTIONS. CONTINUE EDGE LINES THROUGH DRIVEWAYS.

1. WHEN DISTANCE "A" IS LESS THAN 250 FEET, OMIT LANE LINE.
2. WHEN DISTANCE "B" IS LESS THAN 100 FEET, OMIT CHANNELIZING LANE LINE.
3. BARRIER LINE ENDS AT SIDE ROAD PAVEMENT / SURFACE EDGE EXTENSION.
4. BARRIER LINE STARTS 500 FEET PRIOR TO THE BYPASS TAPER.

LEGEND

DIRECTION OF TRAVEL

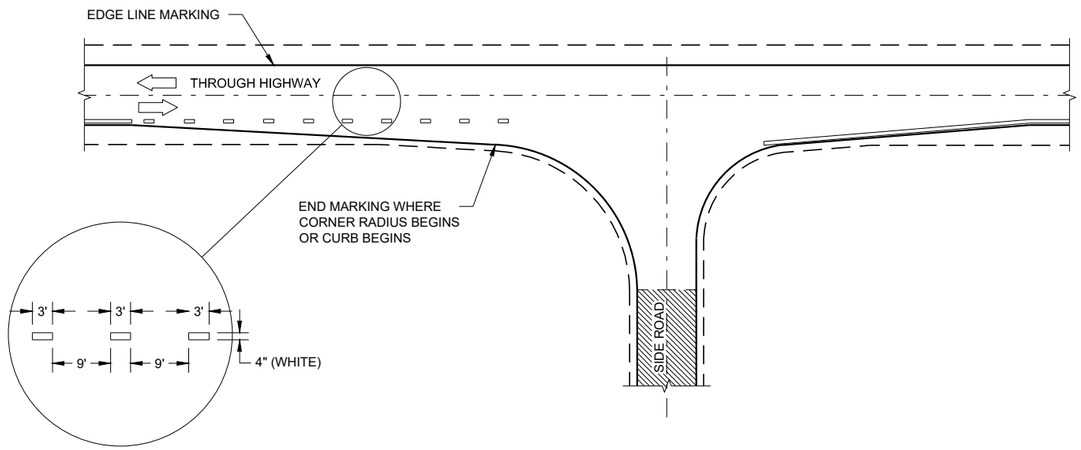

MINOR INTERSECTION

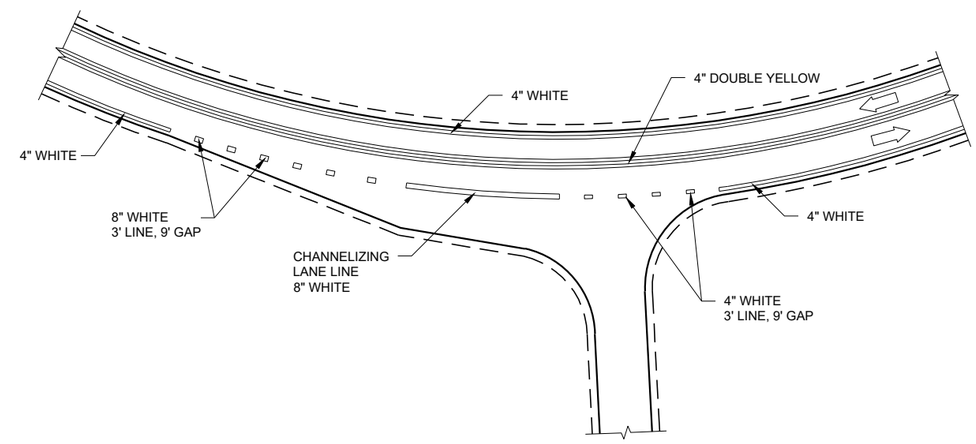

INTERSECTION ON OUTSIDE OF CURVE

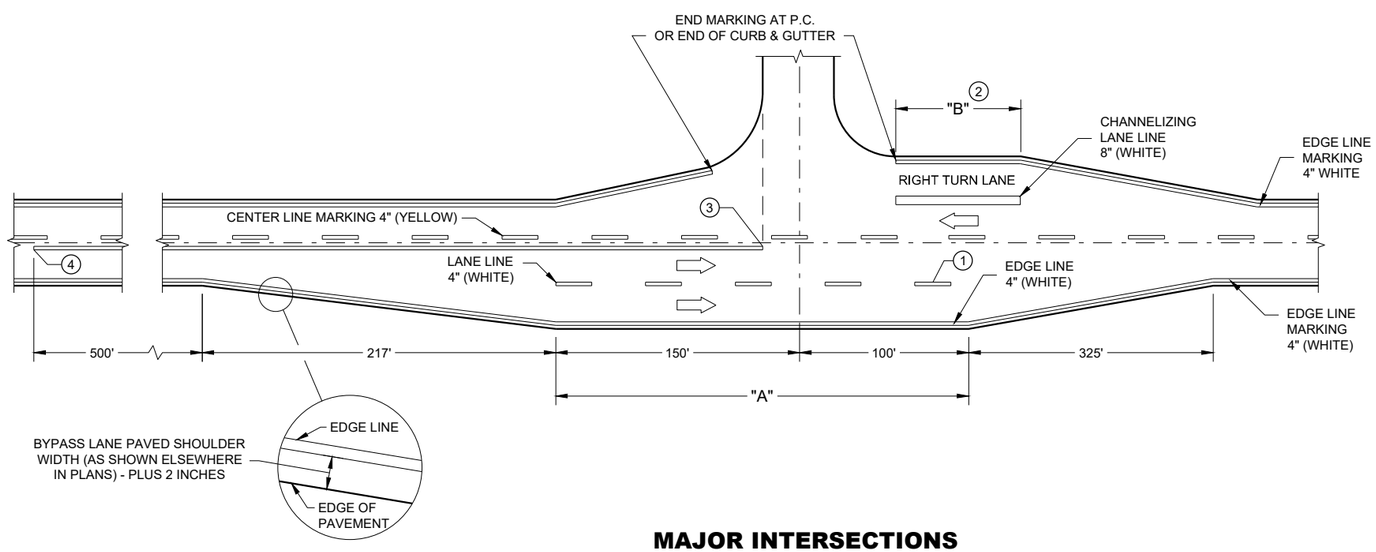

MAJOR INTERSECTIONS

(INTERSECTION WITH FULL RIGHT TURN LANE OR BYPASS LANE)

6

6

SDD 15C35 - 04a

SDD 15C35 - 04a

PAVEMENT MARKING (INTERSECTIONS)

STATE OF WISCONSIN
DEPARTMENT OF TRANSPORTAT

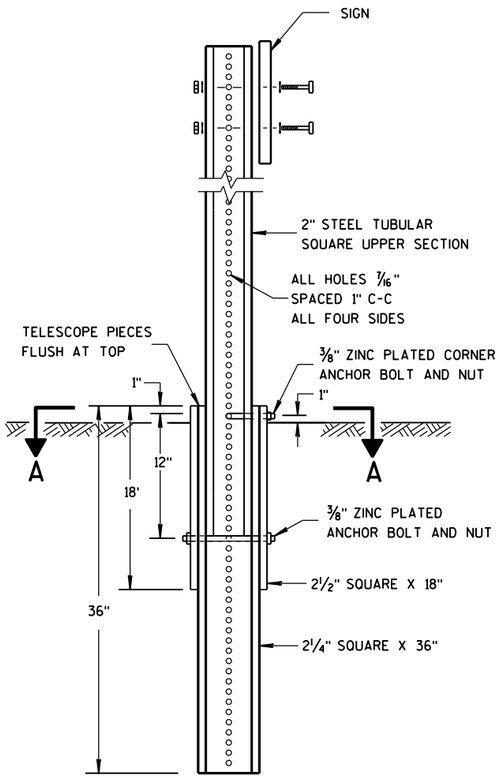

DETAIL OF TUBULAR STEEL SIGN POST

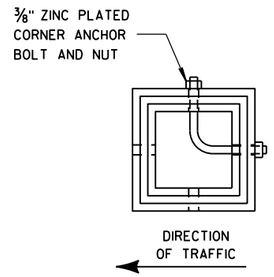

SECTION A-A

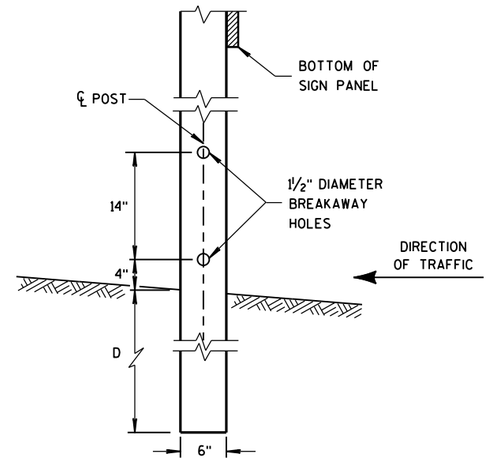

4"x6" WOOD POST MODIFICATION

GENERAL NOTES

1. 6 FEET FROM THE EDGE OF PAVEMENT (EDGE LINE LOCATION) UNLESS OTHERWISE DIRECTED BY THE PROJECT ENGINEER. LATERAL OFFSET SHOULD BE ADJUSTED TO AVOID THE DITCH FLOWLINE.
2. THE EXISTENCE OF CURB AND GUTTER DOES NOT IN ITSELF MANDATE THE VERTICAL CLEARANCE ILLUSTRATED. THAT HEIGHT IS TYPICALLY MEASURED WHERE THERE IS SIDEWALK ADJACENT TO THE ROADWAY OR PARKING IS PERMITTED. IN THE ABSENCE OF SIDEWALK, VERTICAL CLEARANCE IS MEASURED FROM THE TOP OF THE CURB. IF NO SIDEWALK AND NO PARKING, VERTICAL CLEARANCE MAY BE REDUCED TO 5 FOOT MINIMUM. OFFSET OF SIGNS IS MEASURED FROM THE CURB FLOWLINE.
3. FOR SIGNS REQUIRING 4 POSTS, SPACE INTERMEDIATE POSTS EVENLY.

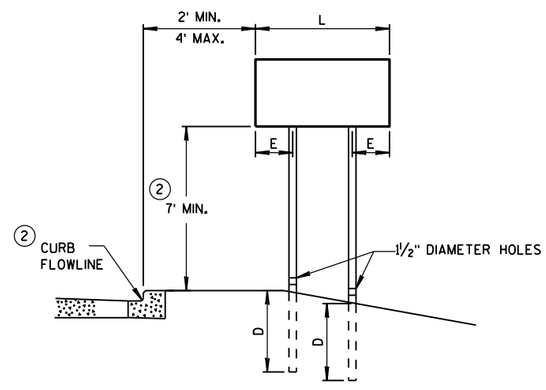

URBAN AREA

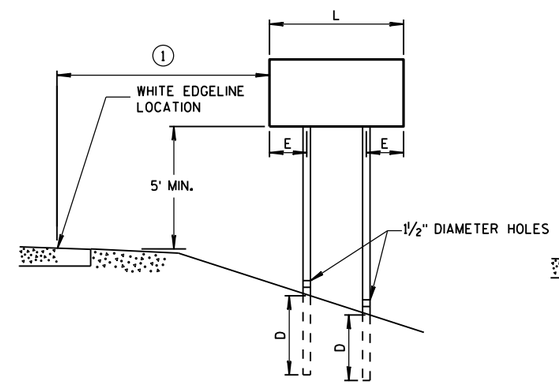

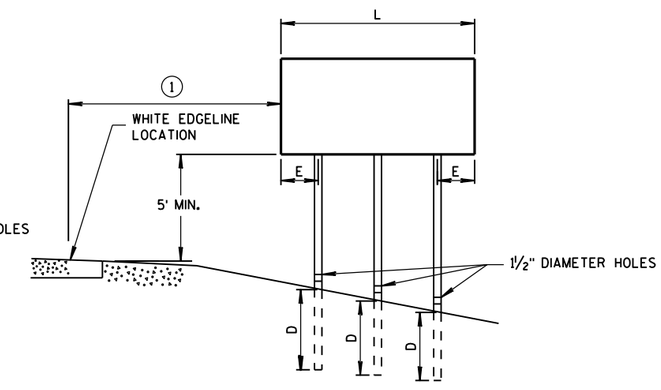

RURAL AREA

POST MOUNTING DETAIL FOR TEMPORARY TRAFFIC CONTROL FIXED MESSAGE SIGNS

TUBULAR STEEL POSTS

AREA OF SIGN INSTALLATION (SQ. FT.)	NUMBER OF REQUIRED TUBULAR STEEL POSTS
9 OR LESS	1
GREATER THAN 9 LESS THAN OR EQUAL TO 18	2
GREATER THAN 18 LESS THAN OR EQUAL TO 27	3

SIGNS WIDER THAN 3 FEET OR LARGER THAN 9 SQ. FT. SHALL BE MOUNTED ON MULTIPLE POSTS (SEE ABOVE TABLE).

SIGNS LARGER THAN 27 SQ. FT. SHALL NOT BE MOUNTED ON TUBULAR STEEL POSTS.

WOOD POST EMBEDMENT DEPTH

AREA OF SIGN INSTALLATION (SQ. FT.)	D (MIN)
20 OR LESS	4'
GREATER THAN 20	5'

4" X 6" WOOD POST

POST SPACING REQUIREMENTS		NUMBER OF WOOD POSTS REQUIRED
L	E	
48" OR LESS AND LESS THAN 20 SQ. FT.	-	1
LESS THAN 60"	12"	2
60" TO 120"	L/5	2
GREATER THAN 120" LESS THAN 168"	12"	3
168" AND GREATER	12"	4

SEE NOTE 3

TEMPORARY TRAFFIC CONTROL SIGN MOUNTING

STATE OF WISCONSIN
DEPARTMENT OF TRANSPO

6

S.D.D. 15 D 38-2a

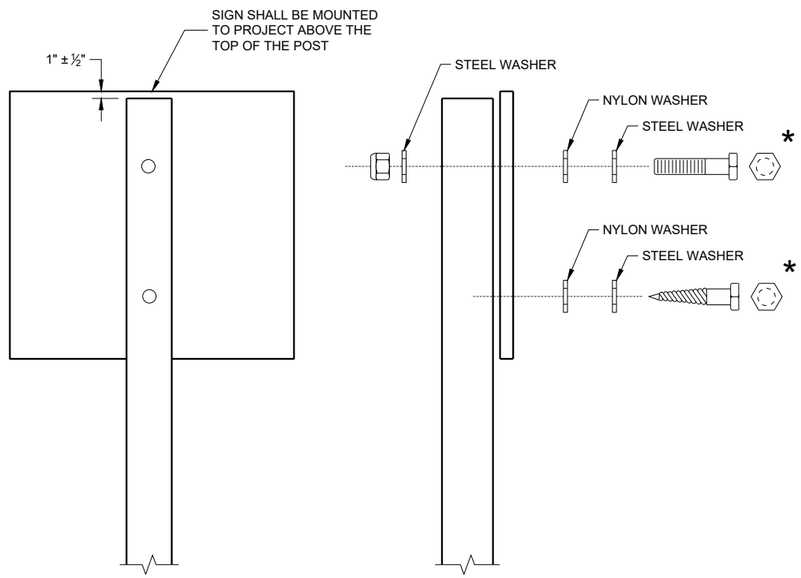

NUTS, BOLTS AND LAGS USED FOR MOUNTING SIGNS SHALL HAVE HEXAGONAL HEADS AND SHALL BE EITHER:

A. HOT DIP GALVANIZED IN ACCORDANCE WITH ASTM DESIGNATION: A 153, CLASS D, OR SC 3
B. ELECTRO-GALVANIZED IN ACCORDANCE WITH ASTM DESIGNATION: B 633, TYPE III, SC 3

THREADS ON BOLTS AND NUTS SHALL BE MANUFACTURED WITH SUFFICIENT ALLOWANCE FOR THE CADMIUM PLATE OR GALVANIZED COATING TO PERMIT THE NUTS TO RUN FREELY ON THE BOLTS.

WOOD POST (4" x 6")
LAG SCREWS - ⅜" x 3"
MACHINE BOLTS - 5/16" x 6 ½" OR 7" LENGTH W/NUTS

SQUARE STEEL POST (2" x 2")
MACHINE BOLTS - ⅜" x 3 ¼" LENGTH W/NUTS
RIVETS - 9/32" (6605-9-6) BULB-TITE, TRI-FOLD, ALUMINUM BODY/MANDREL O.D. FLANGE 0.720 - 0.765 INCH, GRIP RANGE 0.042 - 0.375 INCH

WASHERS (ALL POSTS) -
1 ¼" O.D. x ⅜" I.D. x 1/16" STEEL
1 ¼" O.D. x ⅜" I.D. x 0.080 NYLON

* TWO DIFFERENT FASTENING SYSTEMS ARE SHOWN FOR ILLUSTRATION PURPOSES. ON ANY INDIVIDUAL SIGN, EITHER ONE OR THE OTHER SYSTEM SHALL BE USED. ACTUAL NUMBER OF FASTENERS PER SIGN VARIES WITH THE SIGN AREA. FOR A SINGLE POST INSTALLATION, ALL SIGNS GREATER THAN 9 SQ. FT. REQUIRE THE USE OF 3 FASTENERS.

6

6

SDD 15D38 - 02b

ATTACHMENT OF SIGNS TO POSTS

STATE OF WISCONSIN
DEPARTMENT OF TRANSPORTATION

APPROVED
June 2017 — DATE
/S/ Andrew Heidtke — WORK ZONE ENGINEE
FHWA

SDD 15D38 - 02b

URBAN AREA

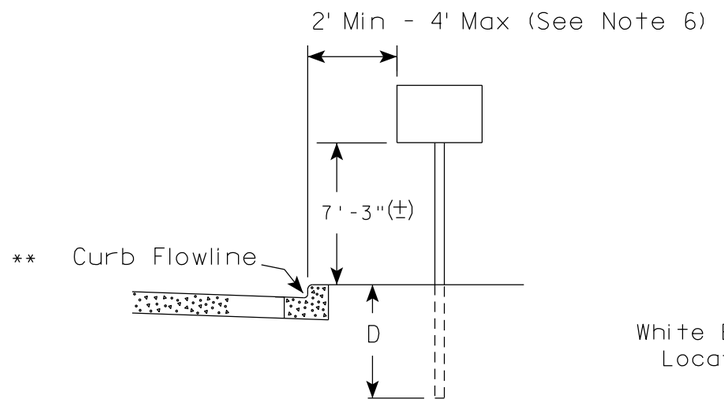

RURAL AREA (See Note 2)

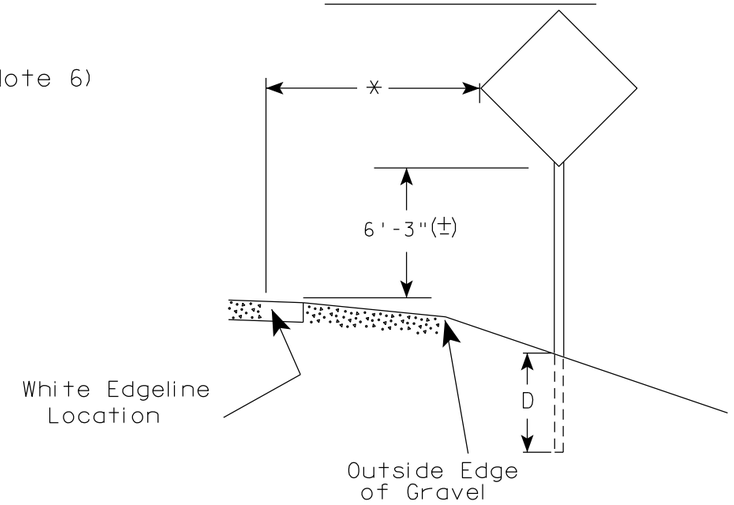

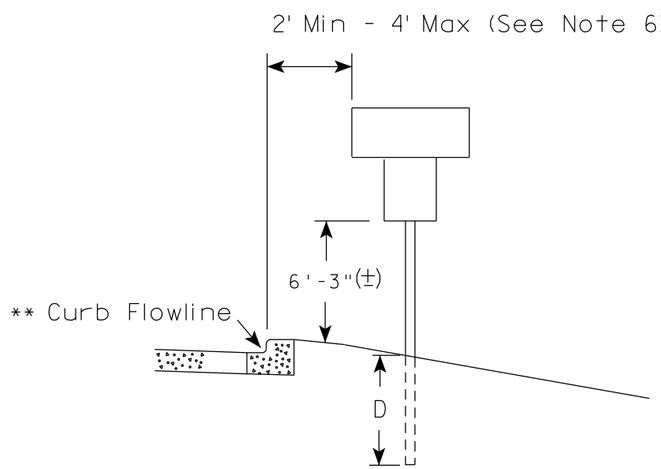

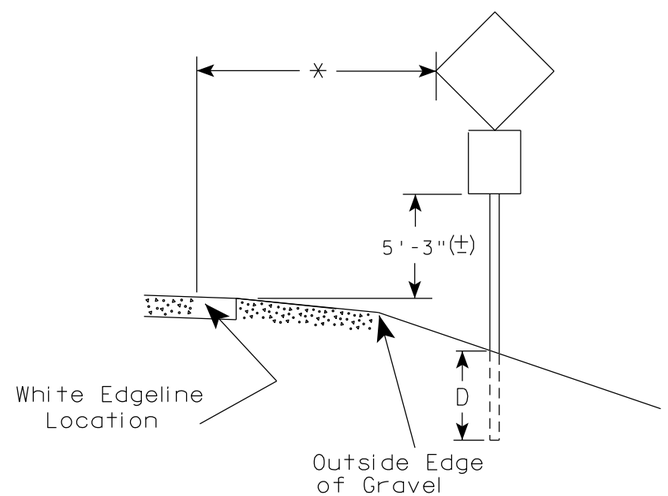

** The existence of curb and gutter does not in itself mandate the vertical clearance illustrated. That height is typically measured where there is sidewalk adjacent to the roadway or parking is permitted. In the absence of sidewalk vertical clearance is measured from the top of the curb. Offset of signs is measured from the flow line.

* 6 feet from edge of a paved shoulder or 12 feet from the edge of pavement (edge line location) or 2 feet from outside edge of gravel, whichever is greater unless directed by project engineer.

GENERAL NOTES

1. Signs wider than 4 feet or 20 sq.ft or larger, shall be mounted on multiple posts. Refer to plate A4-4.
2. If signs are mounted on or behind barrier wall, see A4-10 sign plate.
   The Double Arrow sign (W12-1D) shall be mounted at a height of 2'-3" (±). The Chevron sign (W1-8), Roundabout Chevron panel (R6-4B), Enhanced Reference Markers, Clearance Markers (W5-52), Mile Markers (D10 series), In Road Object Markers (W5-54) & End of Road Markers (W5-56) shall be mounted at a height of 4'-3" (±).
3. For expressways and freeways, mounting height is 7'- 3" (±) or 6'-3" (±) depending upon existence of a sub-sign.
4. Minimum mounting height for signs mounted on traffic signal poles is 5'- 3" (±).
5. Offset distance shall be consistent with existing signs or consistent throughout length of project.
6. The (±) tolerance for mounting height is 3 inches.
7. Folding signs shall be mounted at a height of 5'-3" (±) or as directd by the Engineer.

POST EMBEDMENT DEPTH

Area of Sign Installation (Sq.Ft.)	D (Min)
20 or Less	4'
Greater than 20	5'

TYPICAL INSTALLATION OF PERMANENT TYPE II SIGNS ON SINGLE POSTS

WISCONSIN DEPT OF TRANSPORTATION

APPROVED Matthew R Rauch for State Traffic Engineer

DATE 5/13/2020 PLATE NO. A4-3.22

7 7

PROJECT NO:	HWY:	COUNTY:		SHEET NO: 39	E

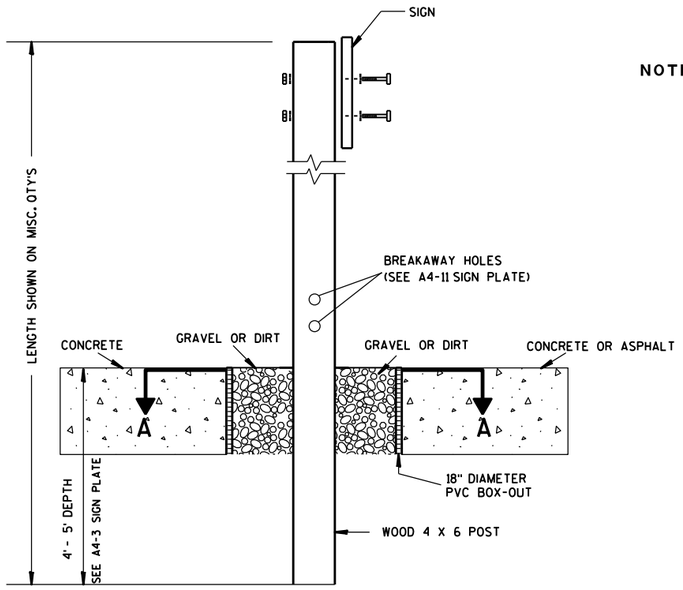

ELEVATION VIEW

DETAIL OF WOOD 4 X 6 SIGN POST IN BOX-OUT

NOTES:
1. ALL MATERIAL TO BE APPROVED BY ENGINEER PRIOR TO INSTALLATION
2. SEE SIGN PLATE A4-8 FOR SIGN HARDWARE REQUIREMENTS
3. 18 INCH X 18 INCH SQUARE BOX-OUTS MAY BE USED FOR INSTALLATIONS IN EXISTING CONCRETE OR ASPHALT LOCATIONS.

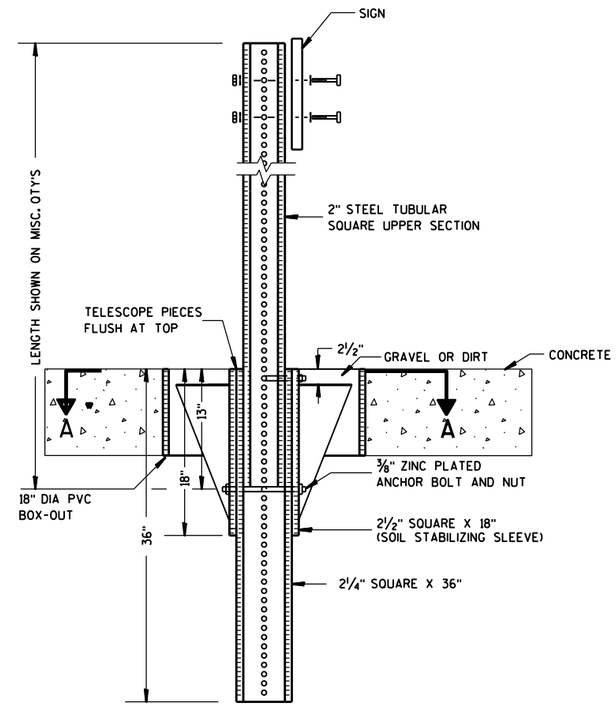

ELEVATION VIEW

DETAIL OF STEEL 2 X 2 SIGN POST IN BOX-OUT

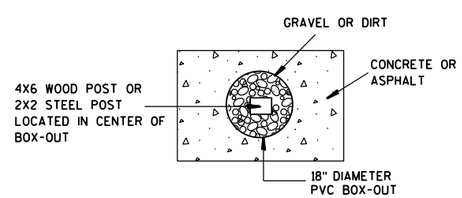

PLAN VIEW

FOR NEW CONCRETE/ASPHALT INSTALLATIONS

SIGN POST
BOX-OUTS
A4-3B

WISCONSIN DEPT OF TRANSPORTATION

APPROVED Matthew R Rauch
for State Traffic Engineer

DATE 1/27/14 PLATE NO. A4-3B.1

PROJECT NO:	HWY:	COUNTY:		SHEET NO:	E

URBAN AREA

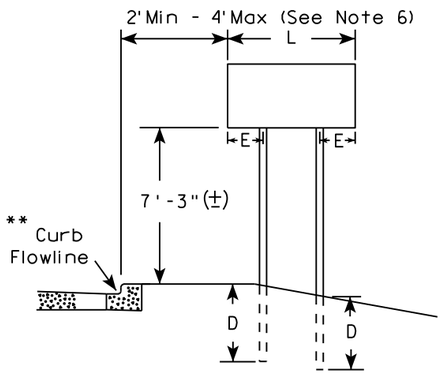

RURAL AREA (See Note 3)

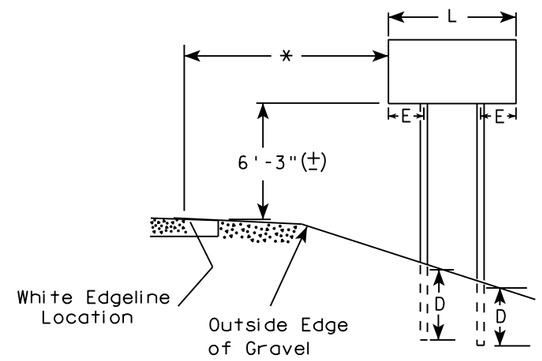

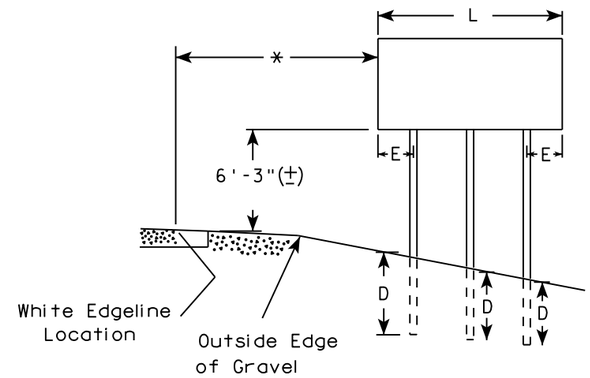

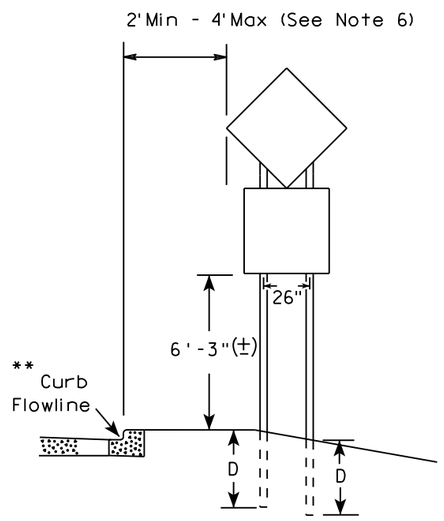

48" DIAMOND WARNING SIGN

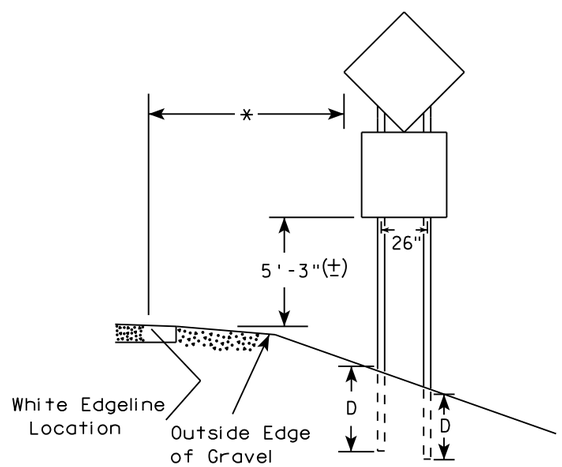

48" DIAMOND WARNING SIGN

SIGN SHAPE OTHER THAN DIAMOND (TWO POSTS REQUIRED)	
L	E
*** Greater than 48" Less than 60"	12"
60" to 108"	L/5

SIGN SHAPE OTHER THAN DIAMOND (THREE POSTS REQUIRED)	
L	E
Greater than 108" to 144"	12"

GENERAL NOTES

1. For 3 or 4 post installations, individual post spacing shall be greater than 3'-6".
2. See tables below for required number of posts.
3. For expressways and freeways, mounting height is 7'-3" (±) or 6'-3" (±) depending upon existence of sub-sign.
4. The (±) tolerance for mounting height is 3 inches.
5. J-Assemblies are considered to be one sign for mounting height.
6. Offset distance shall be consistent with existing signs or consistent throughout length of project.
7. Folding signs shall be mounted at a height of 5'-3" (±) or as directed by the engineer.
8. The Double Arrow sign (W12-1) shall be mounted at a height of 2'-3" (±). The Chevron sign (W1-8), Roundabout Chevron panel (R6-4B), Clearance Markers (W5-52), Mile Markers (D10 series), In Road Object Markers (W5-54) & End of Road Markers (W5-56) shall be mounted at a height of 4"-3" (±).

* 6 feet from edge of a paved shoulder or 12 feet from the edge of pavement (edge line location) or 2 feet from outside edge of gravel, whichever is greater unless directed by project engineer.

** The existence of curb and gutter does not in itself mandate the vertical clearance illustrated. That height is typically measured where there is sidewalk adjacent to the roadway or parking is permitted. In the absence of sidewalk vertical clearance is measured from the top of the curb. Offset of signs is measured from the flow line.

*** See A4-3 sign plate for signs 4' or less in width and less than 20 S.F. in area.

POST EMBEDMENT DEPTH

Area of Sign Installation (Sq. Ft.)	D (Min)
20 or Less	4'
Greater than 20	5'

TYPICAL INSTALLATION OF TYPE II SIGNS ON MULTIPLE POSTS

WISCONSIN DEPT OF TRANSPORTATION

APPROVED Matthew R Rauch
For State Traffic Engineer

DATE 8/21/17 PLATE NO. A4-4.15

7

7

PROJECT NO:	HWY:	COUNTY:		SHEET NO: 41	E

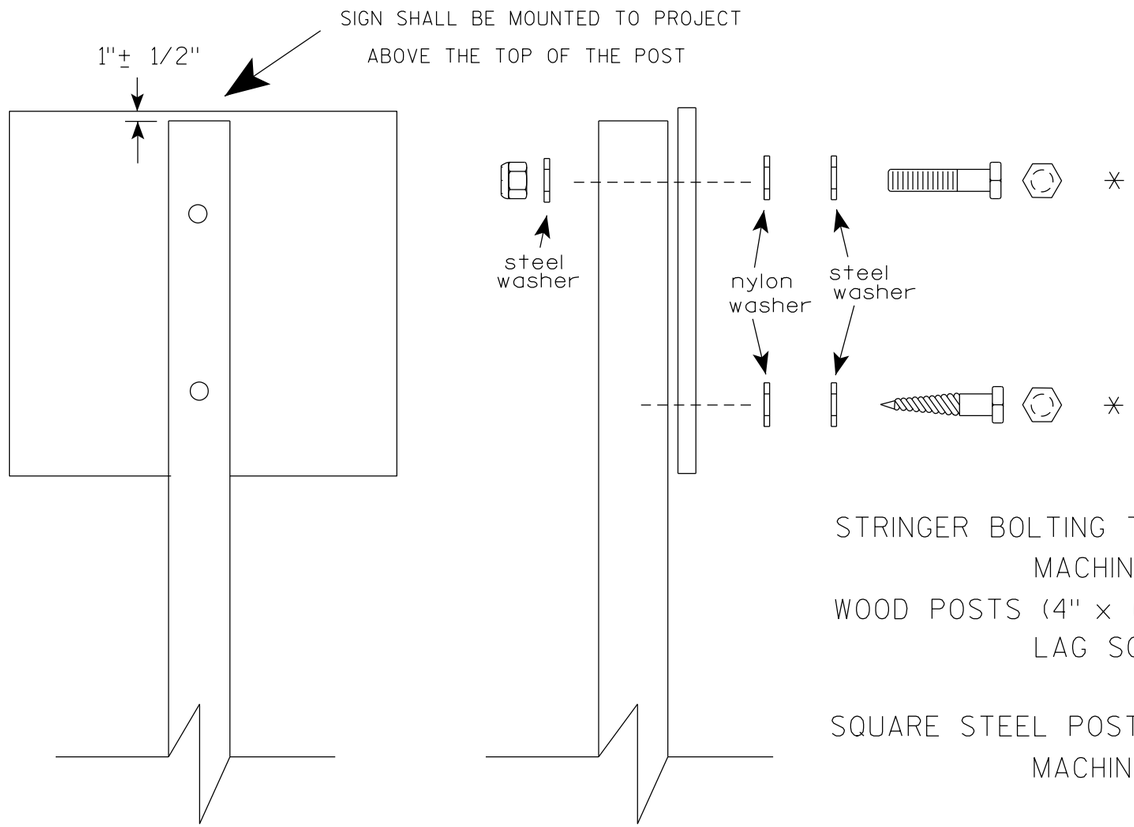

Nuts, bolts and lags used for mounting signs shall have hexagonal heads and shall be either :

a. Hot dip galvanized in accordance with ASTM Designation: A 153, Class D, or SC 3

b. Electro-galvanized in accordance with ASTM Designation : B 633, TYPE III, SC 3.

Threads on bolts and nuts shall be manufactured with sufficient allowance for the cadmium plate or galvanized coating to permit the nuts to run freely on the bolts.

STRINGER BOLTING TO ALUMINUM SIGNS (SEE SIGN PLATE A4-18)

MACHINE BOLTS - 5/16" X 1-3/4" Length w/ lock nuts

WOOD POSTS (4" x 6")

LAG SCREWS - 3/8" X 3" (NO STRINGERS ON BACK OF SIGN)
3/8" X 4" (STRINGERS ON BACK OF SIGN)

SQUARE STEEL POSTS (2" x 2")

MACHINE BOLTS - 3/8" X 3-1/4" Length w/ nuts (NO STRINGER ON BACK OF SIGN)
3/8" X 5" Length w/ nuts (STRINGERS ON BACK OF SIGN)

RIVETS - 9/32 " (6605-9-6) BULB-TITE, TRI-FOLD, ALUMINUM BODY/MANDREL
O.D. FLANGE .720-.765 INCH, GRIP RANGE .042-.375 INCH

WASHERS (ALL POSTS) -

1-1/4" O.D. X 3/8" I.D. X 1/16" STEEL
1-1/4" O.D. X 3/8" I.D. X .080 NYLON

* Two different fastening systems are shown for illustration purposes. On any individual sign, either one or the other system shall be used. Actual number of fasteners per sign varies with the sign area, but normally there are two. For a single post installation, all signs greater than 9 sq. ft. require the use of 3 fasteners.

ATTACHMENT OF SIGNS TO POSTS

WISCONSIN DEPT OF TRANSPORTATION

APPROVED Matthew R Rauch
for State Traffic Engineer

DATE 4/1/2020 PLATE NO. A4-8.9

TELESCOPIC TUBING ANCHORS
TWO PIECE SYSTEM

2 1/4" SQUARE
12 GAUGE
PERFORATED
GALVANIZED FINISH

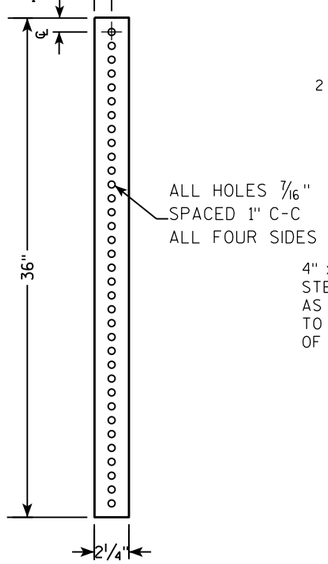

2 1/2" SQUARE
12 GAUGE
OMNI-DIRECTIONAL
PERFORATED
SOIL STABILIZING SLEEVE
GALVANIZED FINISH

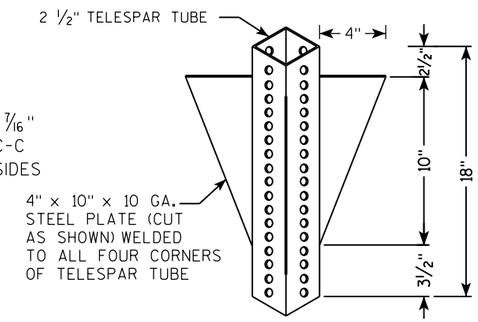

DETAIL OF TUBULAR STEEL SIGN POST
(IN POURED CONCRETE OR ASPHALT)

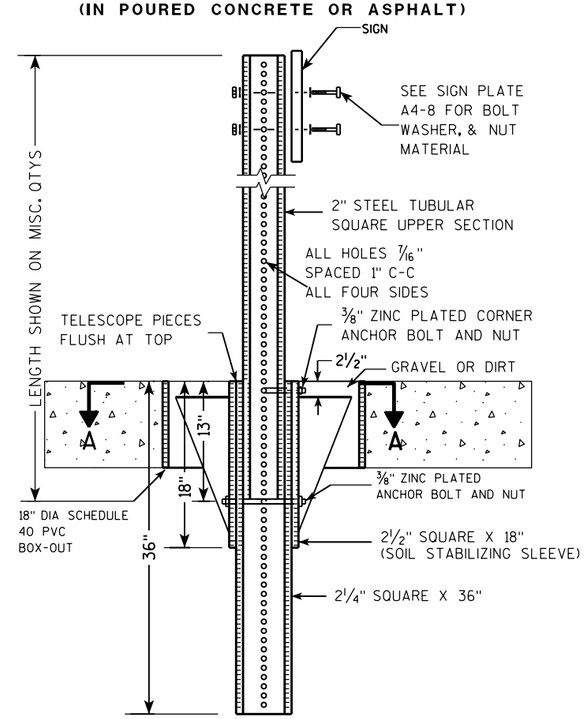

DETAIL OF TUBULAR STEEL SIGN POST
(IN LOCATIONS OTHER THAN POURED CONCRETE OR ASPHALT)

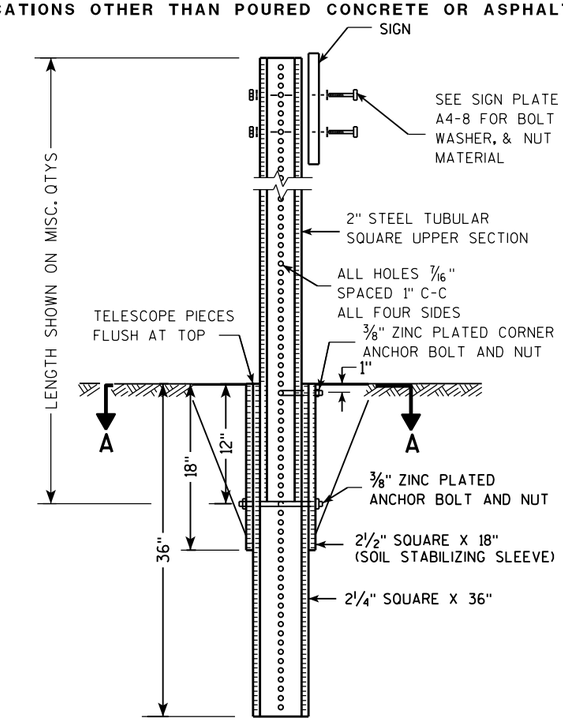

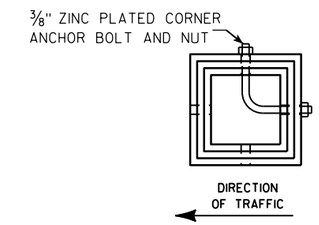

SECTION A-A

Area of Sign Installation (Sq. Ft.)	Number of Required Posts
9 or less	1
Greater than 9 less than or equal to 18	2
Greater than 18 less than or equal to 27	3

Signs wider than 3 feet or larger than 9 sq. ft shall be mounted on multiple posts (see above table).

TUBULAR STEEL
SIGN POST
A4-9

WISCONSIN DEPT OF TRANSPORTATION

APPROVED Matthew R Rauch
for State Traffic Engineer

DATE 2/05/15 PLATE A4-9.9

7 7

PROJECT NO:	HWY:	COUNTY:		SHEET NO:	E

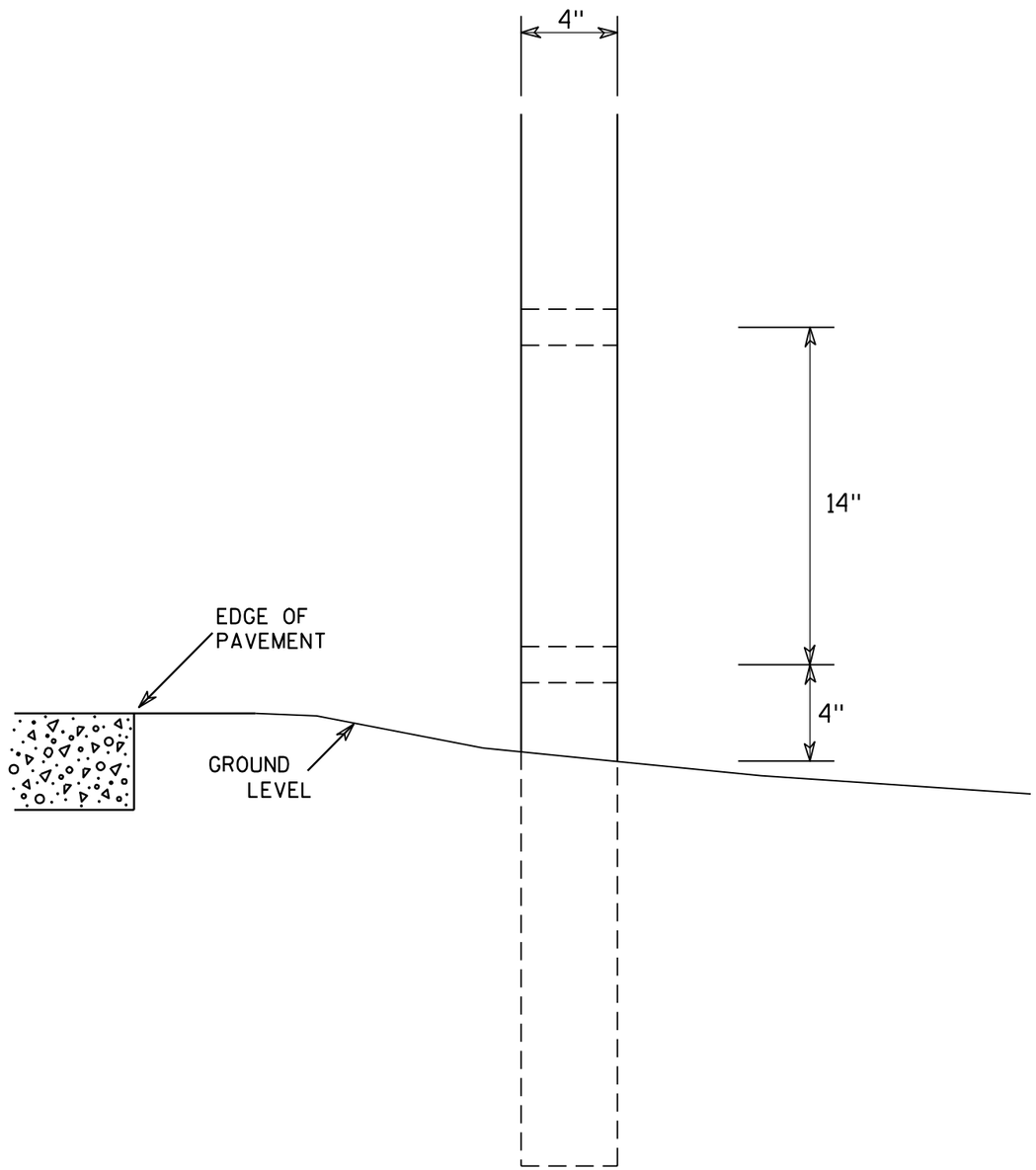

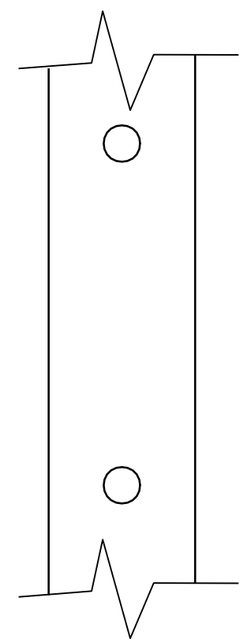

SIDE VIEW

GENERAL NOTES

1. All 4 x 6 Wood Posts shall be modified by having two 1½" diameter holes drilled perpendicular to the roadway centerline.

7

7

4 X 6 WOOD POST MODIFICATIONS

WISCONSIN DEPT OF TRANSPORTATION

APPROVED Chester J Spang for State Traffic Engineer

DATE 3/27/97 PLATE NO. A4-11.2

PROJECT NO:	HWY:	COUNTY:		SHEET NO: 44	E

BANDING

SINGLE SIGN

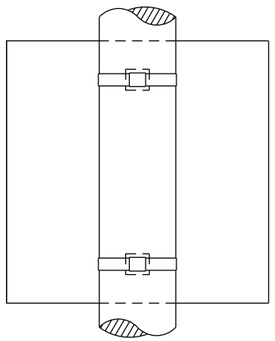

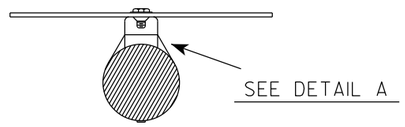

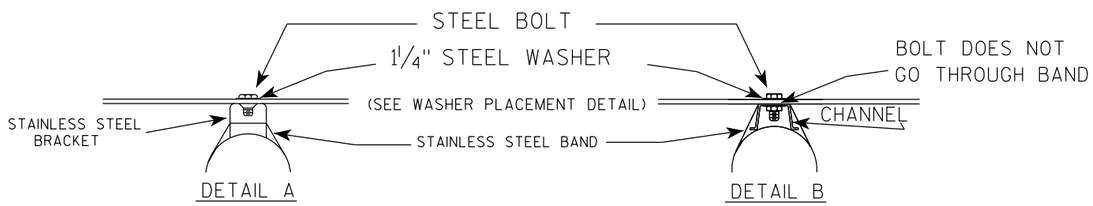

WASHER PLACEMENT

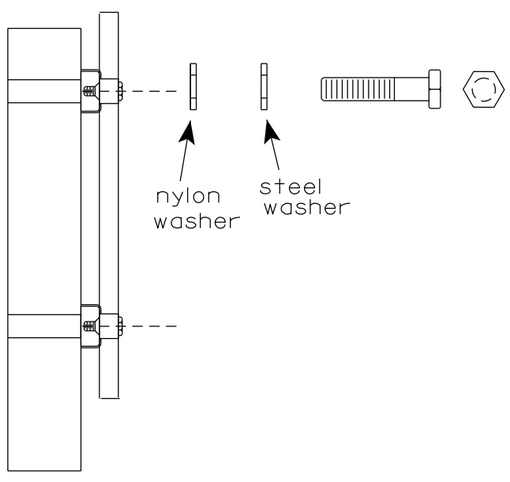

WASHERS (ALL POSTS) -
1-1/4" O.D. X 3/8" I.D. X 1/16" STEEL
1-1/4" O.D. X 3/8" I.D. X .080 NYLON
FOR ALL TYPE H SIGNS

GENERAL NOTES

1. Any sign over 3 feet in width shall use the V-Block banding method. See A5-10 standard plate.
2. Signs 3 feet or greater in height shall have three bracket bands installed. Signs less than 3 feet in height shall have two bracket bands installed.
3. Banding and assembly bracket shall be stainless steel. All bands shall be ¾" in width and 0.025" thickness.
4. ALL SIGN MOUNTING BOLTS AND WASHERS SHALL BE EITHER:
   a. Hot dip or mechanically galvanized in accordance with ASTM Designation: A 153, Class D
   b. Electro-galvanized in accordance with ASTM designation: B 633, Type III, SC 3

"J" ASSEMBLY

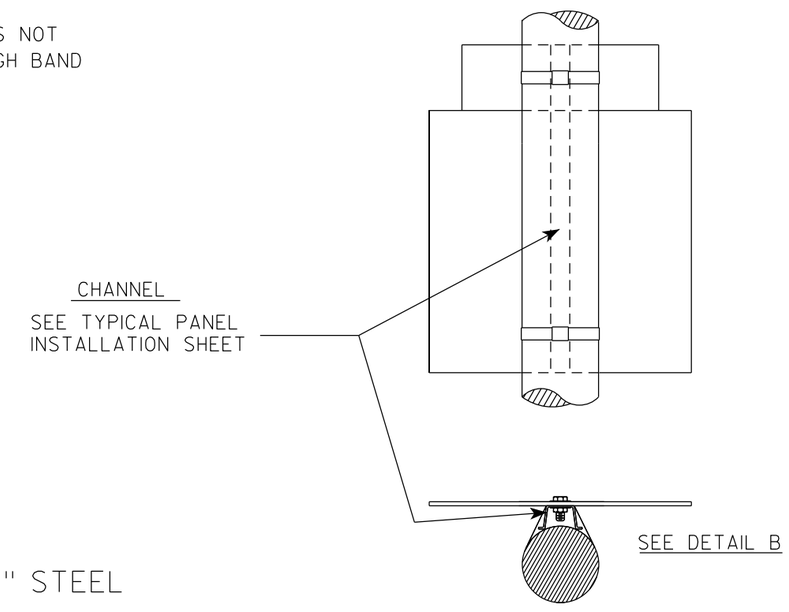

STANDARD SIGN
SIGN BANDING DETAILS

WISCONSIN DEPT OF TRANSPORTATION

APPROVED Matthew R Rauch for State Traffic Engineer

DATE 6/10/19 PLATE NO. A5-9.4

PROJECT NO:	HWY:	COUNTY:		SHEET NO: 45	E

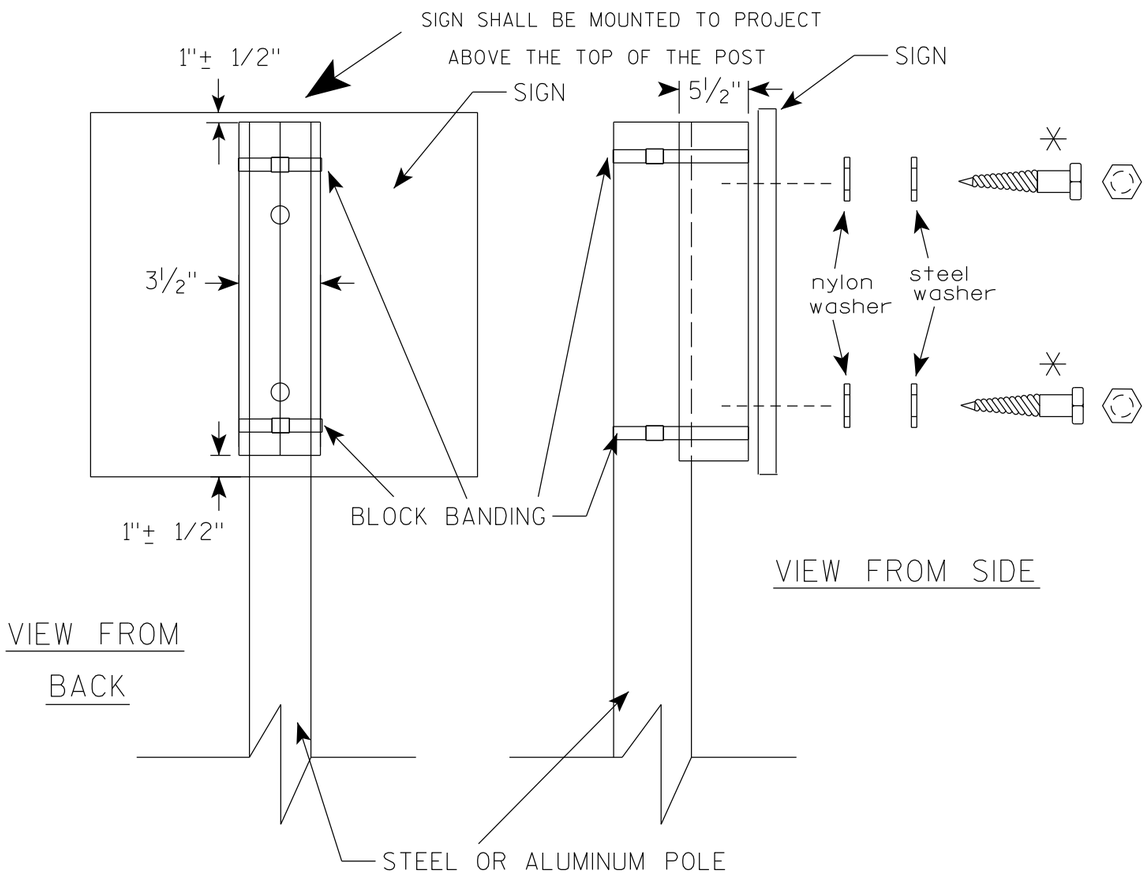

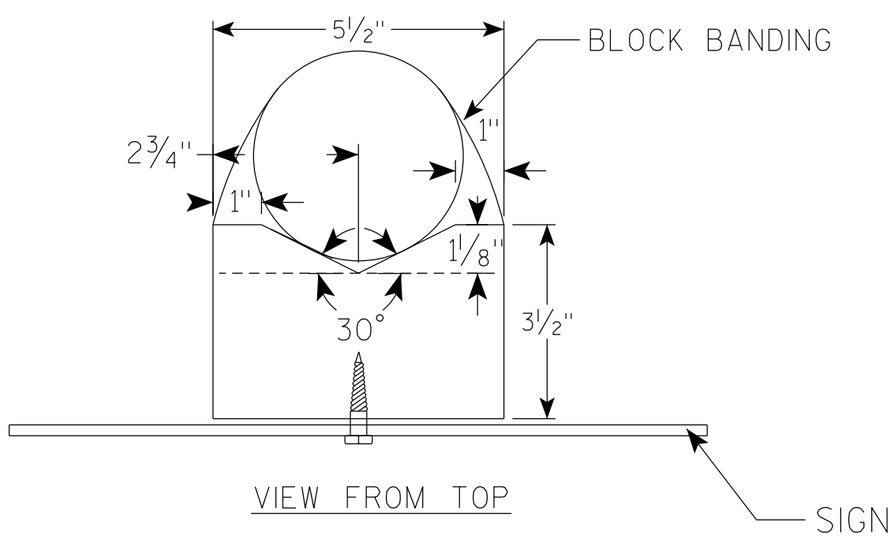

GENERAL NOTES

1. WOOD 4"X6" POST MATERIAL SHALL CONFORM TO 507.2.2 OF THE WisDOT STANDARD SPECIFICATIONS
2. BLOCK BANDING AND CLIPS SHALL BE STAINLESS STEEL, ¾" WIDTH AND 0.025" THICKNESS
3. SIGNS 3' OR GREATER IN HEIGHT SHALL UTILIZE 3 BLOCK BANDS. SIGNS UNDER 3' IN HEIGHT SHALL UTILIZE 2 BLOCK BANDS
4. ACTUAL NUMBER OF FASTENERS PER SIGN VARIES WITH THE SIGN AREA, BUT NORNALLY THERE ARE TWO. FOR SIGNS GREATER THAN 9 S.F. 3 FASTENERS SHALL BE USED.
5. ALL SIGN MOUNTING BOLTS AND WASHERS SHALL BE EITHER:
   a. Hot dip or mechanically galvanized in accordance with ASTM Designation: A 153, Class D
   b. Electro-galvanized in accordance with ASTM Designation : B 633, TYPE III, SC 3
6. ALL BOLTS SHALL HAVE HEXAGONAL HEADS.
7. STEEL WASHERS SHALL BE 1¼" O.D. X ⅜" I.D. X 1/16"
8. NYLON WASHERS SHALL BE 1¼" O.D. X ⅜" I.D. X .080 FOR TYPE H OR TYPE F FACE SIGN

✳ LAG BOLTS SHALL BE ⅜" X 2½"

BLOCK BANDING DETAIL
(V-BLOCK OPTION)

WISCONSIN DEPT OF TRANSPORTATION

APPROVED Matthew R Rauch
For State Traffic Engineer

DATE 6/10/19 PLATE NO. A5-10.2

PROJECT NO:				SHEET NO: 46	E

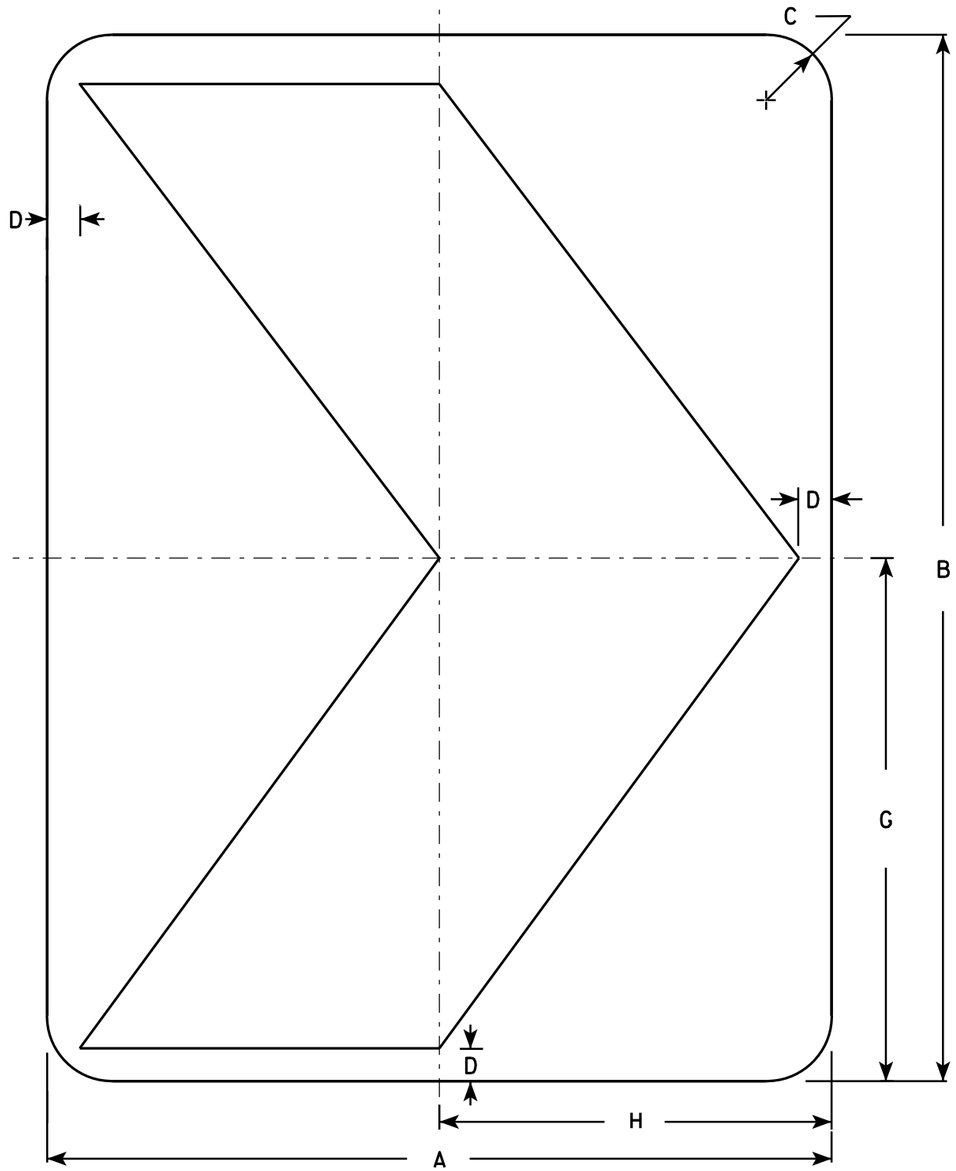

W1-8

NOTES

1. Sign is Type II - Type F Reflective - reference WIS DOT Standard Specification for HIGHWAY and STRUCTURE CONSTRUCTION latest edition.
2. Color:
   Background - Yellow
   Message - Black
3. Corners may be square or rounded when base material is plywood but borders shall be rounded as shown. When base material is metal, the corners and borders shall be rounded.

SIZE	A	B	C	D	E	F	G	H	I	J	K	L	M	N	O	P	Q	R	S	T	U	V	W	X	Y	Z	Area sq. ft.
1	12	18	1 1/2	1/2			9	6																			1.5
2S	18	24	1 1/2	3/4			12	9																			3.0
2M	18	24	1 1/2	3/4			12	9																			3.0
3	24	30	1 1/2	1			15	12																			5.0
4	30	36	1 7/8	1 1/4			18	15																			7.5
5	36	48	2 1/4	1 1/2			24	18																			12.0

STANDARD SIGN
W1-8

WISCONSIN DEPT OF TRANSPORTATION

APPROVED Matthew R Rauch for State Traffic Engineer

DATE 6/7/10 PLATE NO. W1-8.6

PROJECT NO:

SHEET NO: 47 E

Wisconsin Department of Transportation

Dedicated people creating transportation solutions through innovation and exceptional service.

http://www.dot.wisconsin.gov