WIS

PROJECT ID: 6425-00-70

WITH: N/A

COUNTY: GREEN LAKE

25

FEBRUARY 2021

ORDER OF SHEETS



TOTAL SHEETS = 162

# STATE OF WISCONSIN
# DEPARTMENT OF TRANSPORTATION

PLAN OF PROPOSED IMPROVEMENT

# PRINCETON - BERLIN

STH 23 TO OLD SAINT MARIE ROAD

## CTH D

## GREEN LAKE COUNTY

| STATE PROJECT | FEDERAL PROJECT | |
|---|---|---|
| | PROJECT | CONTRACT |
| 6425-00-70 | WISC 2021183 | 1 |

STATE PROJECT NUMBER

**6425-00-70**

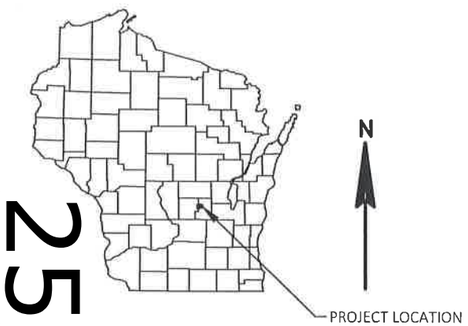


DESIGN DESIGNATION 6425-00-70

| | | | |
|---|---|---|---|
| A.A.D.T. | 2020 | = | 649 |
| A.A.D.T. | 2040 | = | 717 |
| D.H.V. | | = | 105 |
| D.D. | | = | 60/40 |
| T. | | = | 10% |
| DESIGN SPEED | | = | 30 MPH |
| ESALS | | = | 140,000 |

CONVENTIONAL SYMBOLS

PLAN

CORPORATE LIMITS
PROPERTY LINE
LOT LINE
LIMITED HIGHWAY EASEMENT
EXISTING RIGHT OF WAY
PROPOSED OR NEW R/W LINE
SLOPE INTERCEPT
REFERENCE LINE (300'EB')
EXISTING CULVERT
PROPOSED CULVERT (Box or Pipe)
COMBUSTIBLE FLUIDS (CAUTION)
MARSH AREA
WOODED OR SHRUB AREA

PROFILE

GRADE LINE
ORIGINAL GROUND
MARSH OR ROCK PROFILE (To be noted as such) (ROCK)
SPECIAL DITCH (LABEL)
GRADE ELEVATION (95.36)
CULVERT (Profile View)

UTILITIES

ELECTRIC (E)
FIBER OPTIC (FO)
GAS (G)
SANITARY SEWER (SAN)
STORM SEWER (SS)
TELEPHONE (T)
WATER (W)
UTILITY PEDESTAL
POWER POLE
TELEPHONE POLE

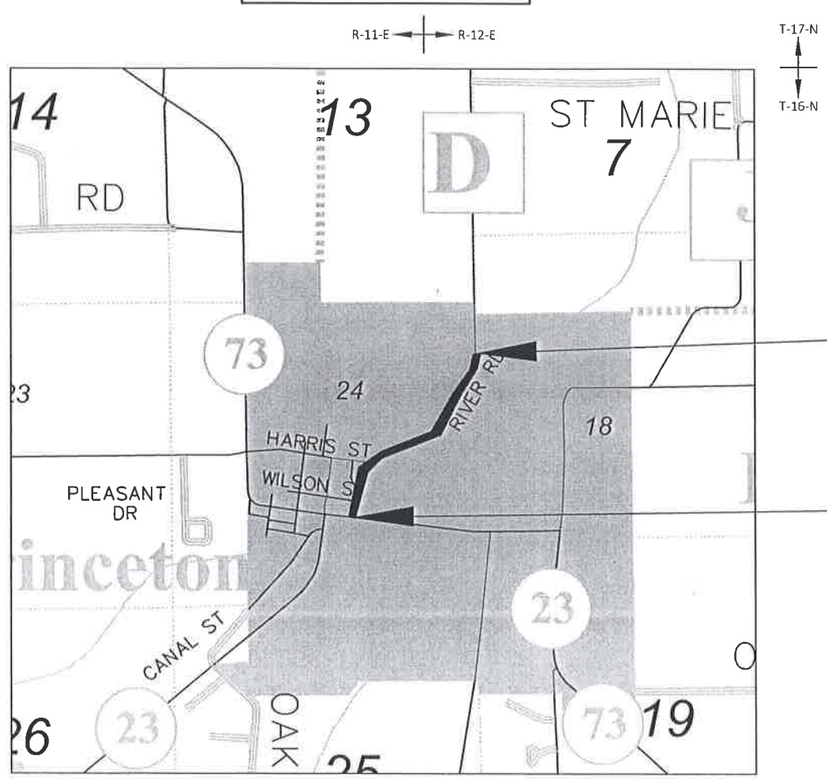


END PROJECT
STA 47+80
Y = 278,745.16
X = 525,029.38

BEGIN PROJECT
STA 10+48.46
Y = 276,105.79
X = 522,790.98

LAYOUT

SCALE 0 — 0.5 MI

TOTAL NET LENGTH OF CENTERLINE = 0.707 MI

HORIZONTAL POSITIONS SHOWN ON THIS PLAN ARE WISCONSIN COORDINATE REFERENCE SYSTEM (WISCRS), GREEN LAKE COUNTY, NAD83 ( 2011 ), IN U.S. SURVEY FEET. POSITIONS SHOWN ARE GRID COORDINATES, GRID BEARINGS, AND GRID DISTANCES. GRID DISTANCES ARE THE SAME AS GROUND DISTANCES. ELEVATIONS ARE REFERENCED TO NAVD 88 ( 2012 ). GPS DERIVED ELEVATIONS ARE BASED ON GEOID 12A.

ACCEPTED FOR

COUNTY OF GREEN LAKE

Date 10-14-2020 (Signature)

Highway Commissioner (Title of Official)

ORIGINAL PLANS PREPARED BY

MSA
ENGINEERING | ARCHITECTURE | SURVEYING
FUNDING | PLANNING | ENVIRONMENTAL
www.msa-ps.com

WISCONSIN
BOBBI L. MAXWELL
39012-006
BARABOO
WI
PROFESSIONAL ENGINEER

Bobbi L. Maxwell 10-12-20

STATE OF WISCONSIN
DEPARTMENT OF TRANSPORTATION

PREPARED BY

| | |
|---|---|
| Surveyor | MSA PROFESSIONAL SERVICES, INC. |
| Designer | MSA PROFESSIONAL SERVICES, INC. |
| Regional Examiner | JASON SCHAEFFER |
| Regional Supervisor | DAN ERVA, P.E. |

APPROVED FOR THE DEPARTMENT

DATE: 10/19/2020 (Signature)

E

## GENERAL NOTES

MISCELLANEOUS

THE LOCATIONS OF EXISTING AND PROPOSED UTILITY INSTALLATIONS AS SHOWN ON THE PLANS ARE APPROXIMATE. THERE MAY BE OTHER UTILITY INSTALLATIONS WITHIN THE PROJECT AREA THAT ARE NOT SHOWN.

PIPE ELEVATIONS, LENGTHS AND LOCATIONS AS SHOWN ON THE PLANS MAY BE ADJUSTED TO FIT EXISTING FIELD CONDITIONS AS APPROVED BY THE ENGINEER.

REMOVALS

NO TREES OR SHRUBS ARE TO BE REMOVED WITHOUT APPROVAL OF THE ENGINEER.

GRADING AND EROSION CONTROL

DISTURBED AREAS WITHIN THE RIGHT-OF-WAY ARE TO BE FERTILIZED, PERMANENT SEEDED, TEMPORARILY SEEDED AND MULCH OR EMAT PLACED AS DIRECTED BY THE ENGINEER.

THE EROSION CONTROL ITEMS SHOWN ON THE PLANS ARE AT SUGGESTED LOCATIONS. THE ENGINEER WILL DETERMINE THE EXACT LOCATION OF EROSION CONTROL ITEMS. ALL EROSION CONTROL MEASURES SHALL BE MAINTAINED UNTIL SUCH TIME AS THE ENGINEER DETERMINES THE MEASURE IS NO LONGER NECESSARY. REMOVE ITEMS AT ENGINEER'S DIRECTION.

FILL EXPANSION IS ESTIMATED AT 1.25.

PAVING

CURVE DATA BASED ON ARC DEFINITION.

RADII DIMENSIONS FOR THE CURB AND GUTTER ARE TO THE FLAG LINE.

EXPANSION JOINTS SHALL BE CONSTRUCTED AT ALL RADII POINTS IN CURB AND GUTTER.

HMA WEIGHT CALCULATIONS BASED ON 112 LBS/SY/IN.

UNLESS OTHERWISE SHOWN ON THE PLAN, ALL MATCHING DRIVEWAYS AND STREETS SHALL BE SAWCUT. COST OF CUTTING IS TO BE PAID FOR UNDER "SAWING ASPHALT" FOR ASPHALT PAVEMENT OR "SAWING CONCRETE" FOR CONCRETE PAVEMENT.

STORM SEWER

INLET OFFSETS GIVEN TO THE CENTER OF THE STRUCTURE.

WHERE TYING INTO EXISTING STRUCTURES OR PIPES, VERIFY EXISTING ELEVATIONS AND DIMENSIONS PRIOR TO ORDERING MATERIALS.

## SECTION 2 ORDER OF SHEETS



## ABBREVIATIONS

| | |
|---|---|
| AC | ACRES |
| AC | ASPHALT CEMENT |
| AEW | APRON ENDWALL |
| ASP | ASPHALT |
| AVG | AVERAGE |
| ADT | AVERAGE DAILY TRAFFIC |
| BAD | BASE AGGREGATE DENSE |
| BM | BENCHMARK |
| CL | CENTERLINE |
| CC | CENTER TO CENTER |
| CMP | CORRUGATED METAL PIPE |
| CONC | CONCRETE |
| CPRC | CULVERT PIPE REINFORCED CONCRETE |
| CSCP | CORRUGATED STEEL CULVERT PIPE |
| CSM | CERTIFIED SURVEY MAP |
| CTH | COUNTY TRUNK HIGHWAY |
| CULV | CULVERT |
| CP | CULVERT PIPE |
| C&G | CURB & GUTTER |
| D | DEGREE OF CURVE |
| DHV | DESIGN HOURLY VOLUME |
| DIA | DIAMETER |
| DWY | DRIVEWAY |
| E | EAST |
| X | EAST GRID COORDINATE |
| ELEV | ELEVATION |
| EW | ENDWALL |
| ENT | ENTRANCE |
| ESALS | EQUIVALENT SINGLE AXLE LOADS |
| EXC | EXCAVATION |
| EBS | EXCAVATION BELOW SUBGRADE |
| EXIST | EXISTING |
| FF | FACE TO FACE |
| FERT | FERTILIZER |
| FE | FIELD ENTRANCE |
| FG | FINISHED GRADE |
| FT | FOOT |
| G.V. | GAS VALVE |
| INV | INVERT |
| IP | IRON PIPE |
| JCT | JUNCTION |
| LHF | LEFT HAND FORWARD |
| L | LENGTH |
| LS | LUMP SUM |
| NC | NORMAL CROWN |
| N | NORTH |
| Y | NORTH GRID COORDINATE |
| PACS | PIPE ARCH CORRUGATED STEEL |
| PT | POINT |
| PC | POINT OF CURVATURE |
| PI | POINT OF INTERSECTION |
| PT | POINT OF TANGENCY |
| PL | PROPERTY LINE |
| PE | PRIVATE ENTRANCE |
| R | RADIUS |
| REQ'D | REQUIRED |
| R/W | RIGHT-OF-WAY |
| RHF | RIGHT HAND FORWARD |
| SALV | SALVAGED |
| SHLDR | SHOULDER |
| SDD | STANDARD DETAIL DRAWING |
| STA | STATION |
| SE | SUPERELEVATION |
| TAN | TANGENT |
| TLE | TEMPORARY LIMITED EASEMENT |
| T | TRUCKS |
| TYP | TYPICAL |
| VERT | VERTICAL |
| VC | VERTICAL CURVE |
| VOL | VOLUME |
| WV | WATER VALVE |
| W | WELL |

## UTILITIES

*WATER/SANITARY/ELECTRIC:
CITY OF PRINCETON
ATTN: LEE WILLIAMS
531 SOUTH FULTON STREET
PRINCETON, WI 54968
OFFICE: 920-299-6037
EMAIL: LWILLIAMS@CITYOFPRINCETONWI.COM

GAS:
WE ENERGIES
ATTN: TRAVIS KAHL
1921 8TH STREET SOUTH
WISCONSIN RAPIDS, WI 54494
OFFICE: 715-421-7256
CELL: 715-498-6180
EMAIL: TRAVIS.KAHL@WE-ENERGIES.COM

ELECTRIC:
ALLIANT ENERGY
ATTN: MARY MONTGOMERY
200 FIRST STREET
CEDAR RAPIDS, IA 52401
OFFICE: 319-786-4768
EMAIL: MARYMONTGOMERY@ALLIANTENERGY.COM

COMMUNICATION:
CHARTER COMMUNICATIONS
ATTN: NICK FRASE
1515 W. WASHINGTON STREET
WEST BEND, WI 53095
CELL: 920-304-6797
EMAIL: NICK.FRASE@CHARTER.COM

COMMUNICATION:
LUMEN
ATTN: STEVE BISHOP
130 4TH STREET
BARABOO, WI 53913
OFFICE: 608-355-7501
CELL: 608-963-8594
EMAIL: STEVEN.BISHOP@LUMEN.COM

*NOT A DIGGERS HOTLINE MEMBER

DIGGERS HOTLINE
Dial 811 or (800)242-8511
www.DiggersHotline.com

## DNR LIAISON

WISCONSIN DEPARMENT OF NATURAL RESOURCES
ATTN: JAY SCHIEFELBEIN
ENVIRONMENTAL ANALYSIS & REVIEW SPECIALIST
DNR NORTHEAST REGIONAL HEADQUARTERS
2984 SHAWANO AVE.
GREEN BAY, WI 54313
OFFICE: 920-360-3784
EMAIL: JEREMIAH.SCHIEFELBEIN@WISCONSIN.GOV

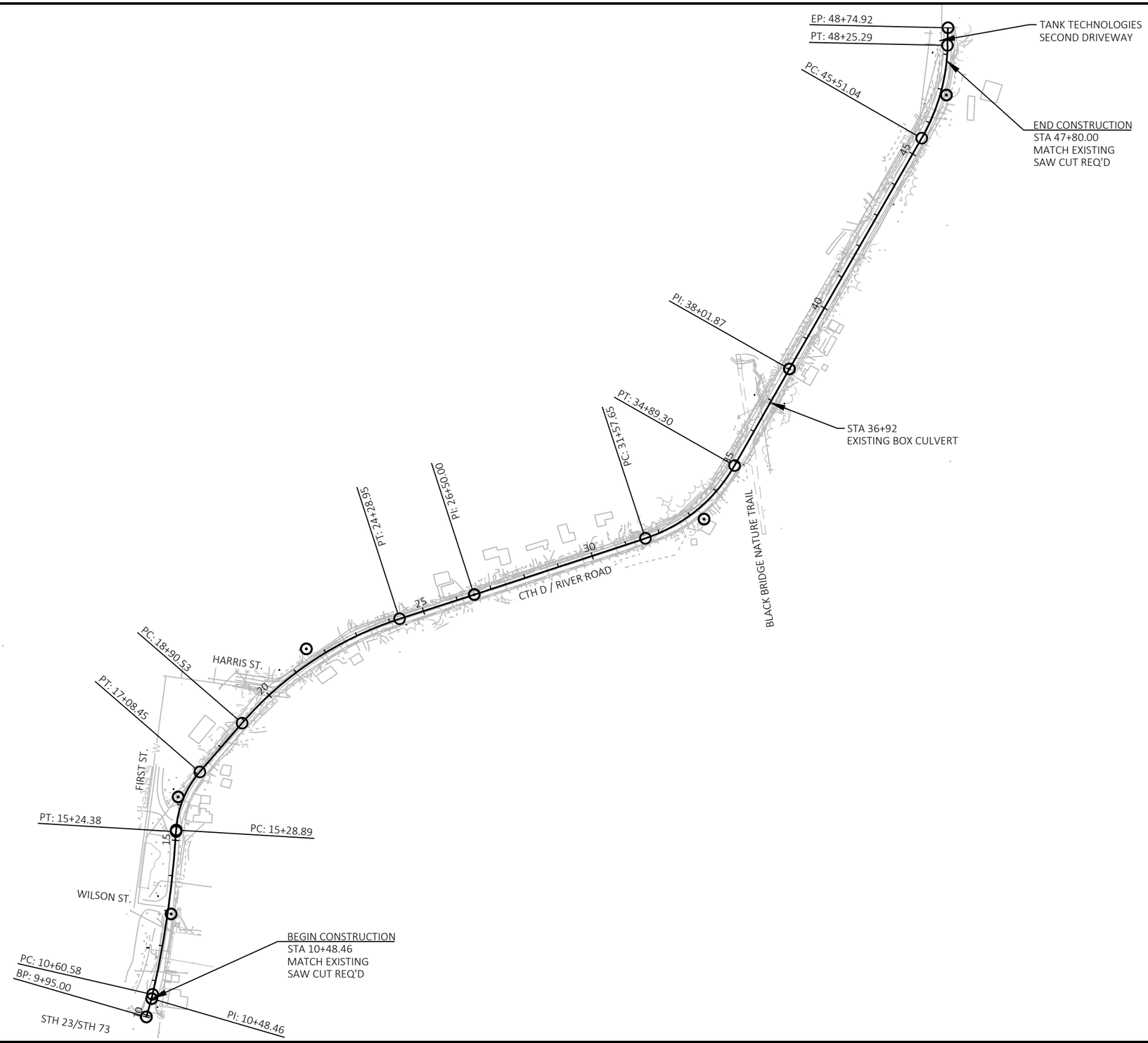




| PROJECT NO: 6425-00-70 | HWY: CTH D | COUNTY: GREEN LAKE | PROJECT OVERVIEW | SHEET 3 | E |
|---|---|---|---|---|---|

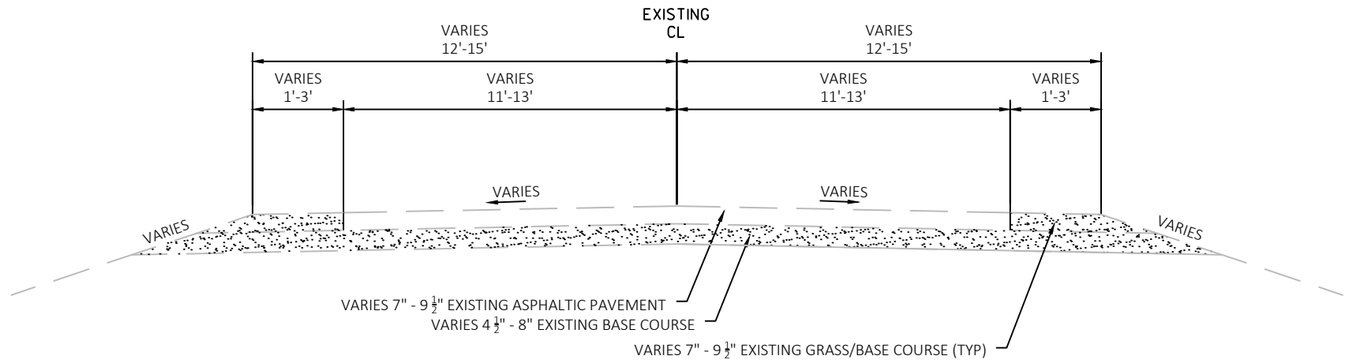


EXISTING TYPICAL SECTION

CTH D
STA 10+48.46 - STA 47+80

2

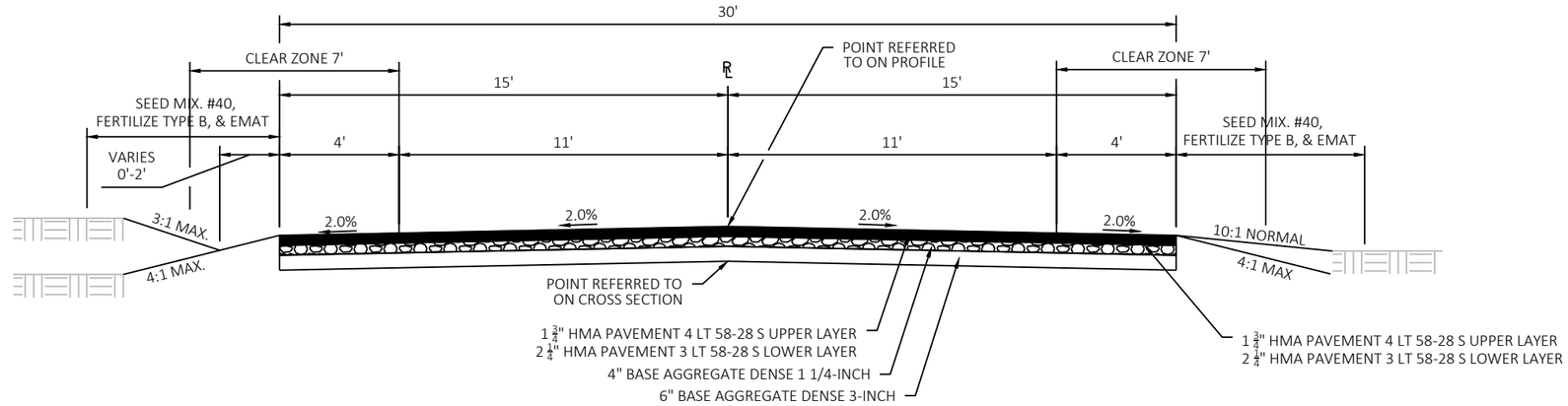


FINISHED TYPICAL SECTION

CTH D
STA 10+48.46 - STA 13+68.88

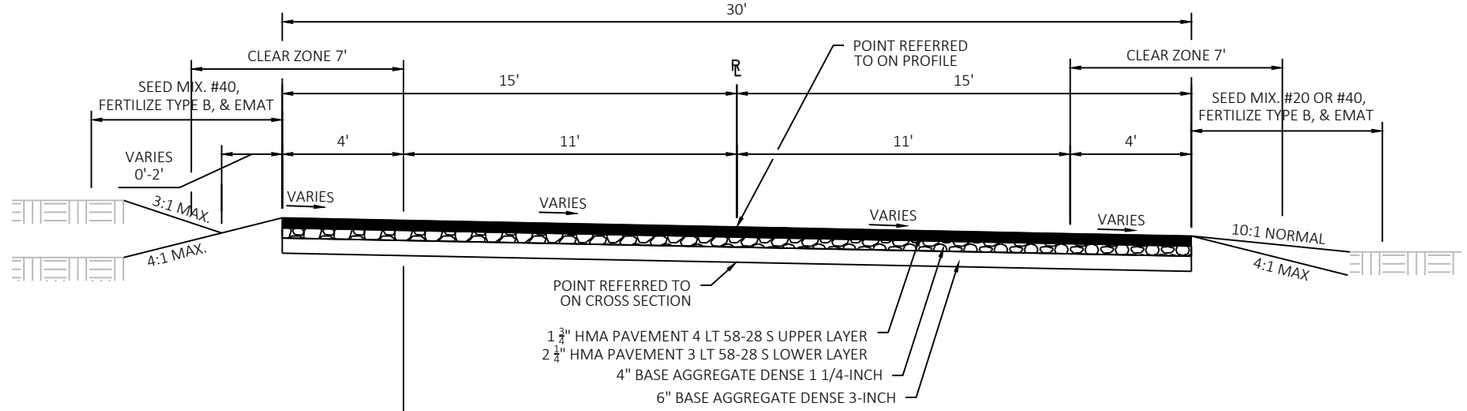


FINISHED SUPERELEVATED TYPICAL SECTION

CTH D
STA 13+68.88 - STA 14+50
STA 14+50 - STA 14+85 (RT)

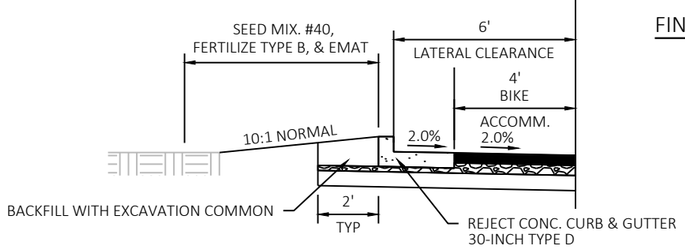


FINISHED TYPICAL SECTION

CTH D
STA 14+50 - STA 14+85 (LT)

NOTE:
SEED #40 WILL BE USED IN AREAS OF LAWNS WITH EMAT.
SEED #20 WILL BE USED WITH TEMPORARY SEED & MULCH IN AREAS WITH NO LAWNS.

| PROJECT NO: 6425-00-70 | HWY: CTH D | COUNTY: GREEN LAKE | TYPICAL SECTION | SHEET 5 | E |
|---|---|---|---|---|---|

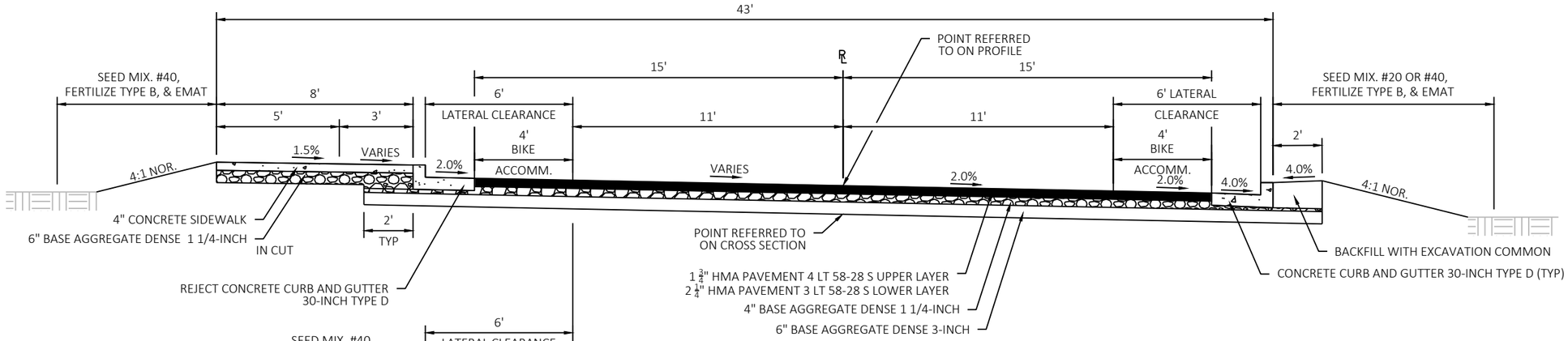


## FINISHED SUPERELEVATED TYPICAL SECTION

CTH D
STA 14+85 - 15+00 (RT)
STA 15+00 - STA 15+95

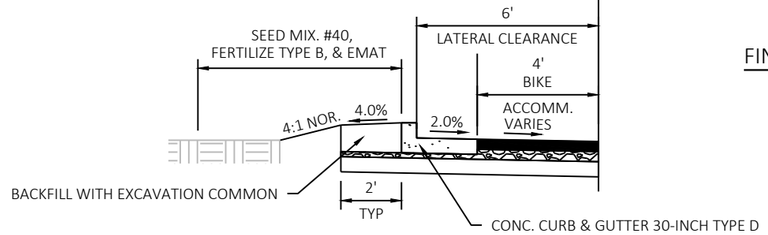


## FINISHED TYPICAL SECTION

CTH D
STA 14+85 - STA 15+00 (LT)

NOTE:
SEED #40 WILL BE USED IN AREAS OF LAWNS WITH EMAT.
SEED #20 WILL BE USED WITH TEMPORARY SEED & MULCH IN AREAS WITH NO LAWNS.

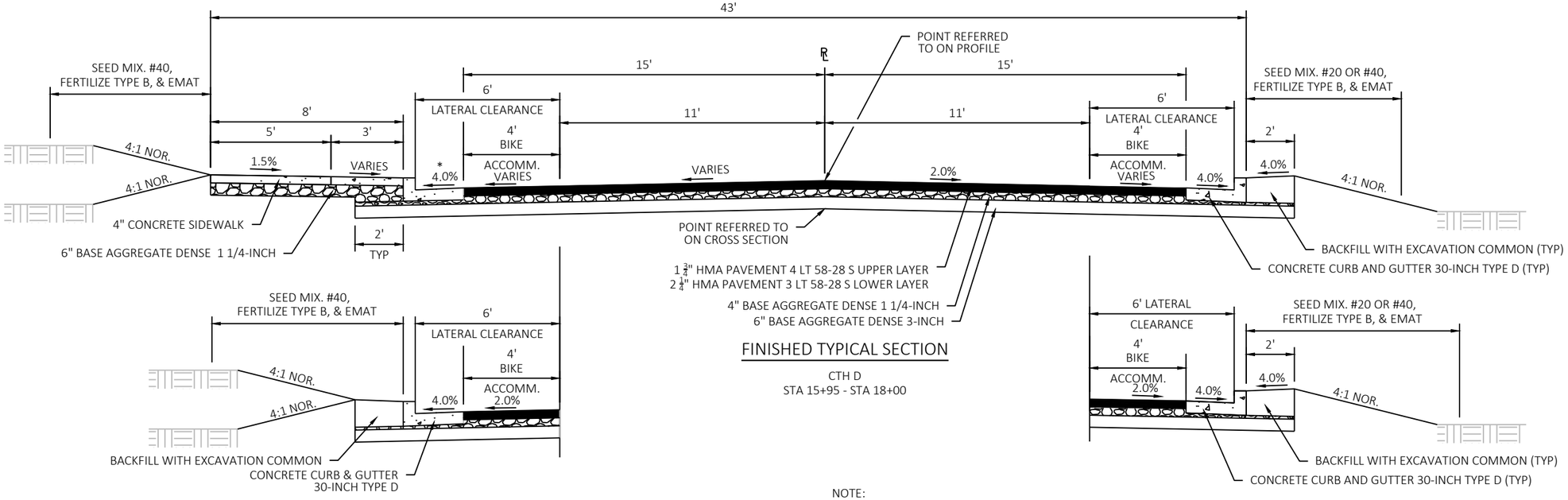


## FINISHED TYPICAL SECTION

CTH D
STA 15+95 - STA 18+00




## FINISHED TYPICAL SECTION

CTH D
STA 21+25 - STA 23+25 (LT)

NOTE:

* REJECT CURB FROM STA 15+95 TO STA 17+36.01 (LT)




## FINISHED TYPICAL SECTION

CTH D
STA 21+25 - STA 23+25 (RT)

| PROJECT NO: 6425-00-70 | HWY: CTH D | COUNTY: GREEN LAKE | TYPICAL SECTION | SHEET 6 | E |
|---|---|---|---|---|---|

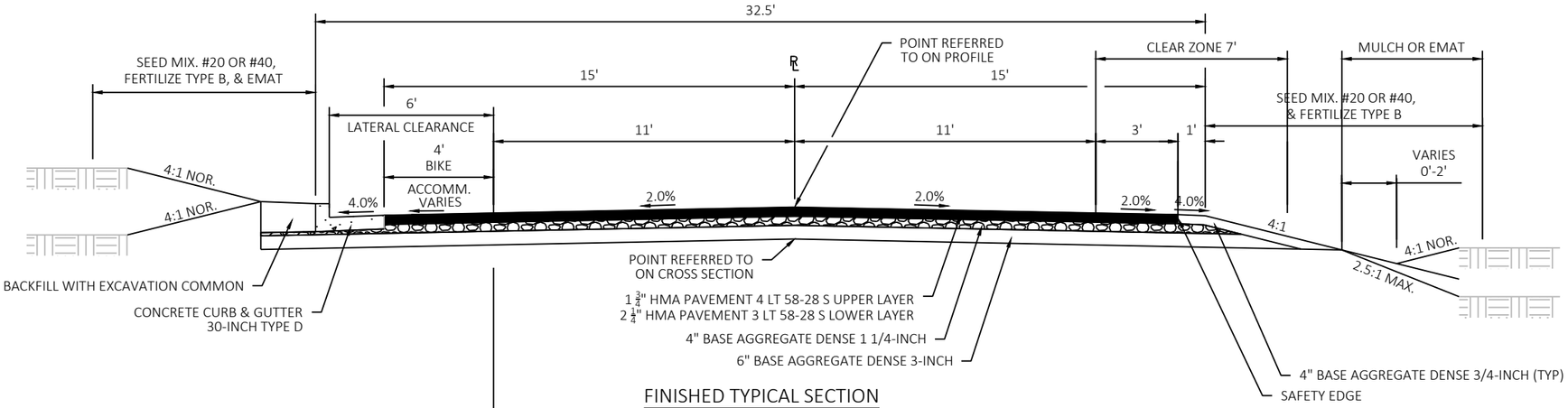


FINISHED TYPICAL SECTION

CTH D
STA 18+00 - STA 19+92 (RT)
STA 19+92 - STA 21+25
STA 23+25 - STA 30+98
STA 35+49 - STA 36+50

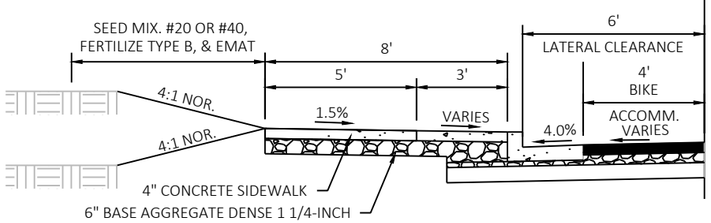


FINISHED TYPICAL SECTION

CTH D
STA 18+00 - STA 19+92 (LT)

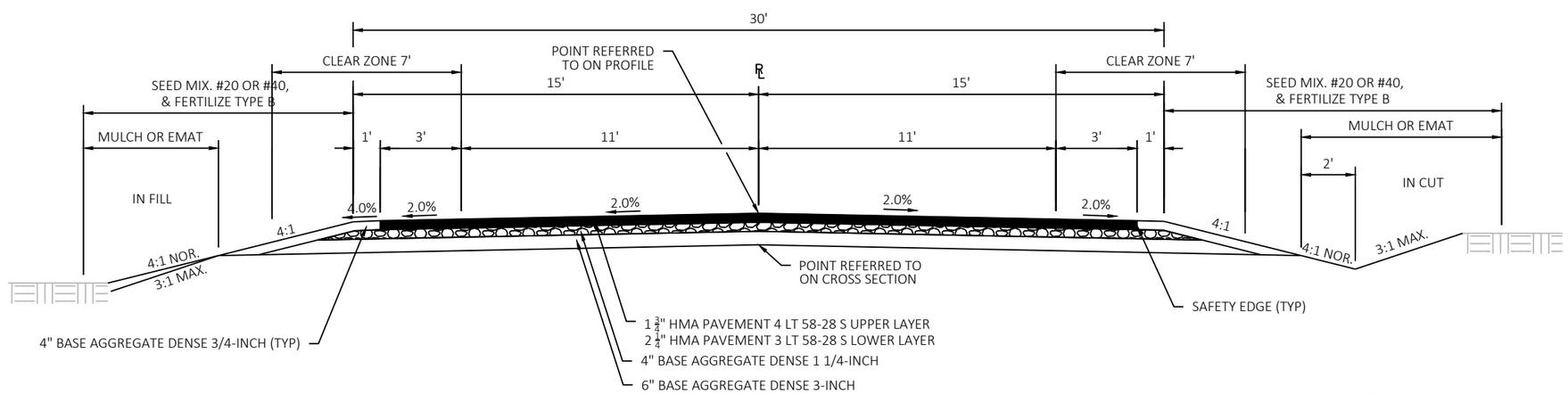


FINISHED TYPICAL SECTION

CTH D
STA 36+50 - STA 44+91.04

NOTE:
SEED #40 WILL BE USED IN AREAS OF LAWNS WITH EMAT.
SEED #20 WILL BE USED WITH TEMPORARY SEED & MULCH
IN AREAS WITH NO LAWNS.

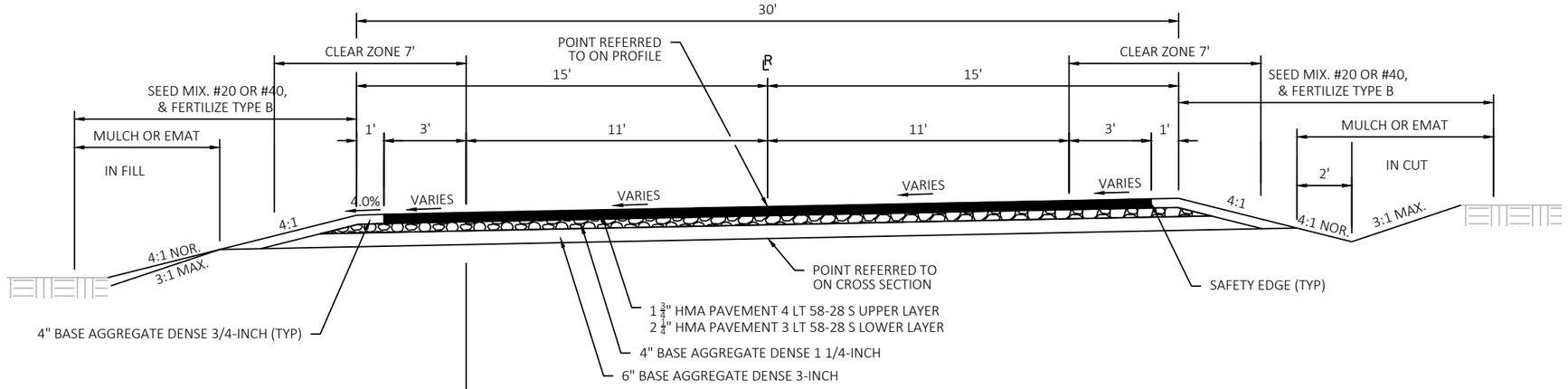


FINISHED SUPERELEVATED TYPICAL SECTION

CTH D
STA 44+91 - STA 47+80

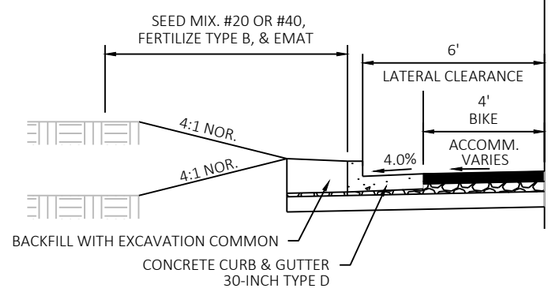


FINISHED TYPICAL SECTION

CTH D
STA 30+98 - STA 35+49

NOTE:
SEED #40 WILL BE USED IN AREAS OF LAWNS WITH EMAT.
SEED #20 WILL BE USED WITH TEMPORARY SEED & MULCH IN AREAS WITH NO LAWNS.

2

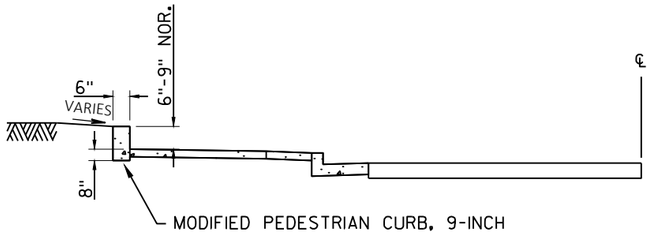


NOTE:
CURB HEIGHT MAY BE ADJUSTED TO MATCH EXISTING GROUND

## MODIFIED PEDESTRIAN CURB, 9-INCH

STA 17+86 - STA 18+35 LT

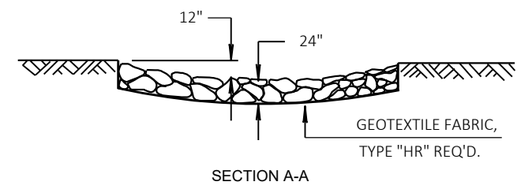


SECTION A-A

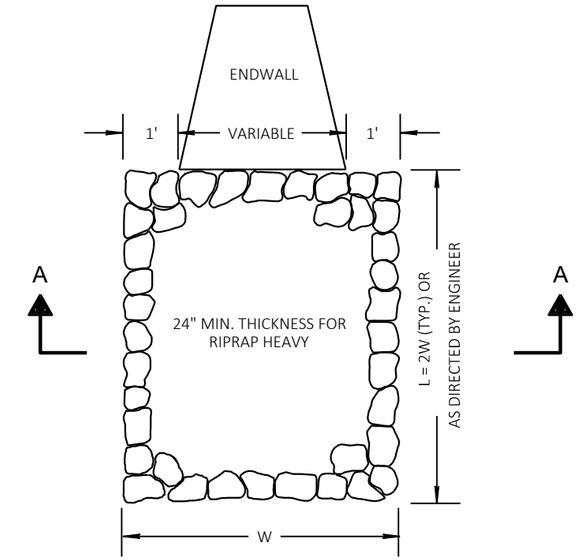


## RIPRAP HEAVY TREATMENT AT CULVERTS

2

## RUNOFF COEFFICIENT TABLE

| A | HYDROLOGIC SOIL GROUP | | | | | | | | | | | |
|---|---|---|---|---|---|---|---|---|---|---|---|---|
| | B | | C | | | | | | | D | | |
| | SLOPE RANGE (PERCENT) | | | SLOPE RANGE (PERCENT) | | | SLOPE RANGE (PERCENT) | | | SLOPE RANGE (PERCENT) | | |
| LAND USE: | 0-2 | 2-6 | 6 & OVER | 0-2 | 2-6 | 6 & OVER | 0-2 | 2-6 | 6 & OVER | 0-2 | 2-6 | 6 & OVER |
| ROW CROPS | .08<br>.22 | .16<br>.30 | .22<br>.38 | .12<br>.26 | .20<br>.34 | .27<br>.44 | .15<br>.30 | .24<br>.37 | .33<br>.50 | .19<br>.34 | .28<br>.41 | .38<br>.56 |
| MEDIAN STRIP-TURF | .19<br>.24 | .20<br>.26 | .24<br>.30 | .19<br>.25 | .22<br>.28 | .26<br>.33 | .20<br>.26 | .23<br>.30 | .30<br>.37 | .20<br>.27 | .25<br>.32 | .30<br>.40 |
| SIDE SLOPE: TURF | | | .25<br>.32 | | | .27<br>.34 | | | .28<br>.36 | | | .30<br>.38 |
| PAVEMENT: | | | | | | | | | | | | |
| ASPHALT | .70 - .95 | | | | | | | | | | | |
| CONCRETE | .80 - .95 | | | | | | | | | | | |
| BRICK | .70 - .80 | | | | | | | | | | | |
| DRIVES, WALKS | .75 - .85 | | | | | | | | | | | |
| ROOFS | .75 - .95 | | | | | | | | | | | |
| GRAVEL ROADS, SHOULDERS | .40 - .60 | | | | | | | | | | | |

TOTAL PROJECT AREA = 4.50 ACRES
TOTAL AREA EXPECTED TO BE DISTURBED BY CONSTRUCTION ACTIVITIES = 4.39 ACRES

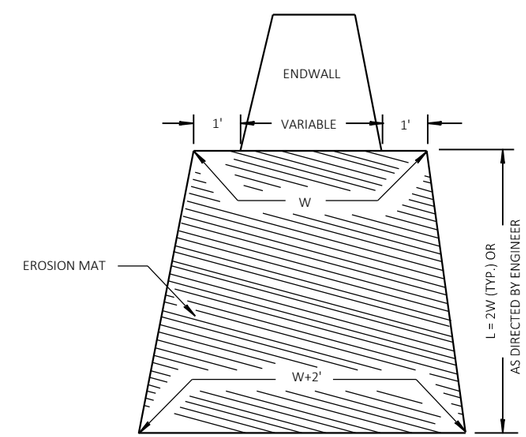


## EROSION MAT TREATMENT AT CULVERTS

2

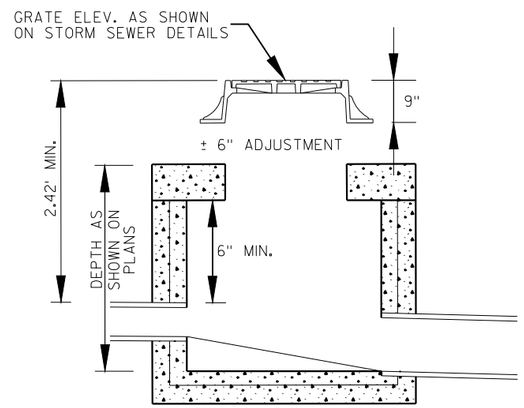


DETAIL FOR COMPUTING MANHOLE ELEVATIONS

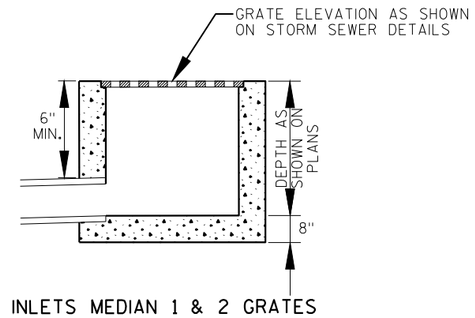


INLETS MEDIAN 1 & 2 GRATES

DETAIL FOR COMPUTING INLET ELEVATIONS

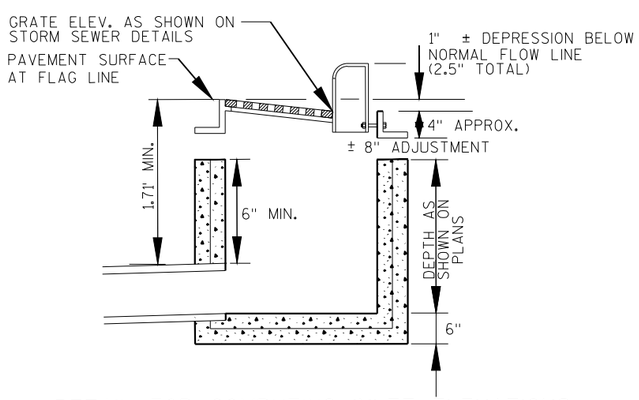


DETAIL FOR COMPUTING INLET ELEVATIONS

INLET COVERS - H

2

| PROJECT NO: 6425-00-70 | HWY: CTH D | COUNTY: GREEN LAKE | CONSTRUCTION DETAILS | SHEET 10 | E |
|---|---|---|---|---|---|

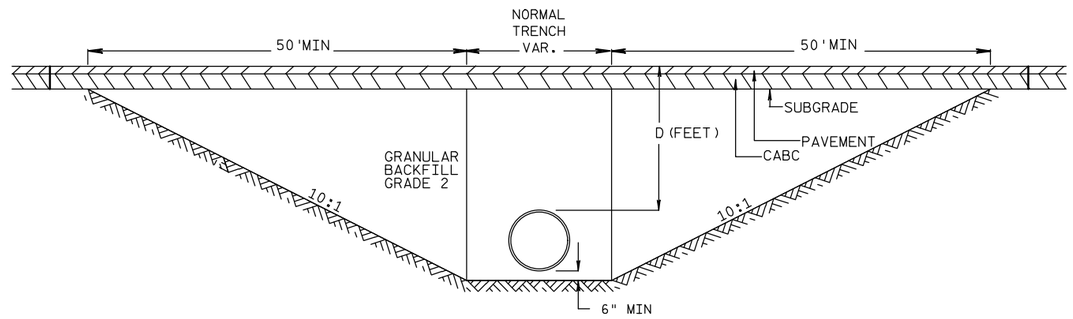


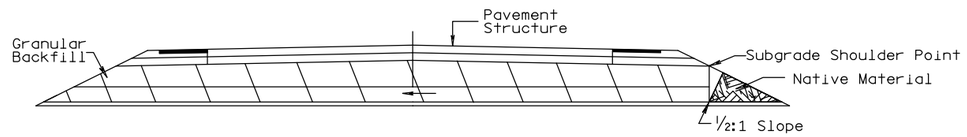


CROSS DRAIN INSTALLATION DETAIL

FOR D ≤ 5'

STA 36+94
STA 43+94

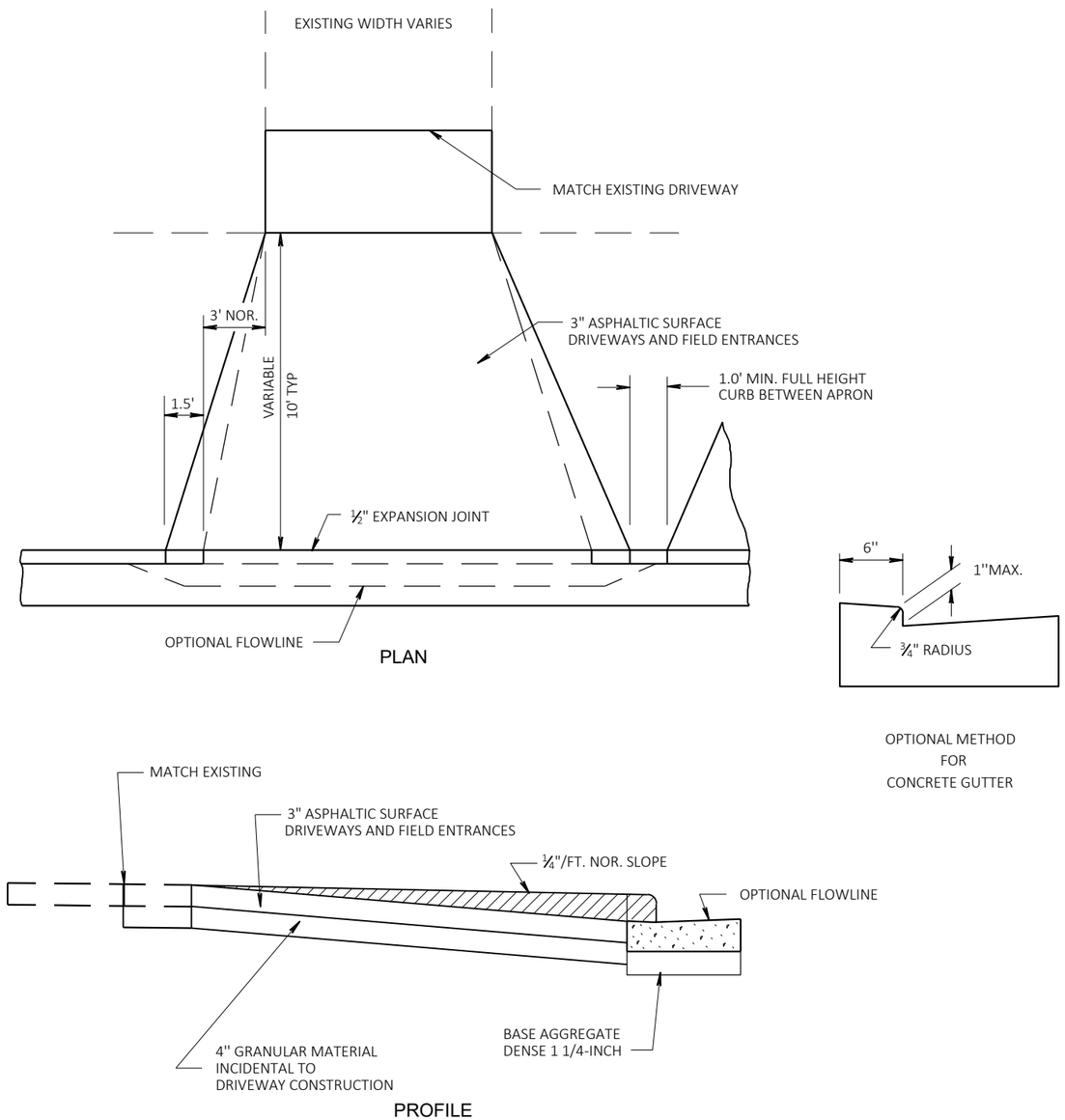


RURAL DRIVEWAY DETAIL WITH CURB AND GUTTER

(AREAS WITHOUT SIDEWALK)

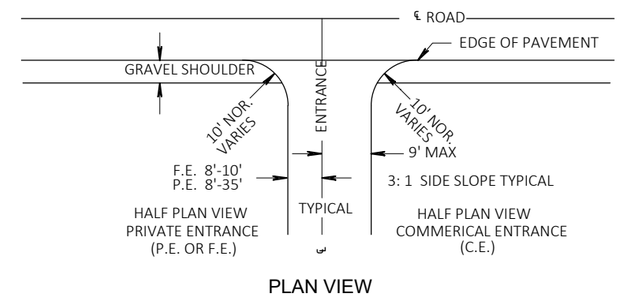


PLAN VIEW

RURAL DRIVEWAY DETAIL

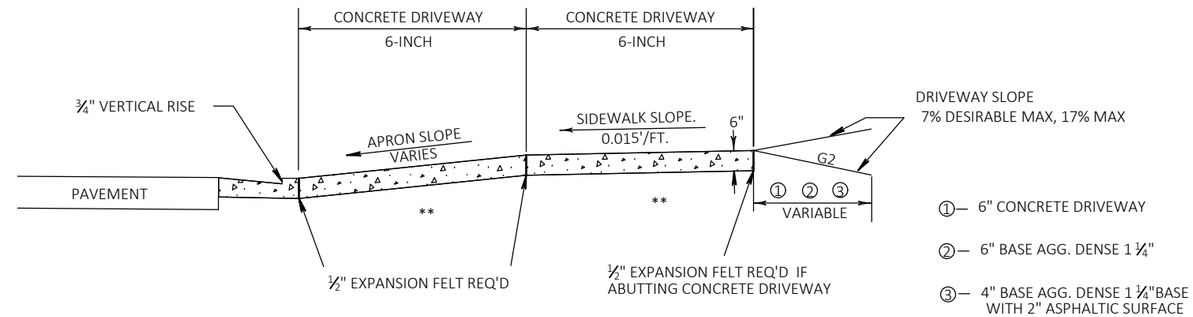


① — 6" CONCRETE DRIVEWAY

② — 6" BASE AGG. DENSE 1 ¼"

③ — 4" BASE AGG. DENSE 1 ¼"BASE WITH 2" ASPHALTIC SURFACE

** = 6" BASE AGG. DENSE 1 ¼" REQ'D UNDER CONCRETE DRWY

TYPICAL SIDEWALK SECTION

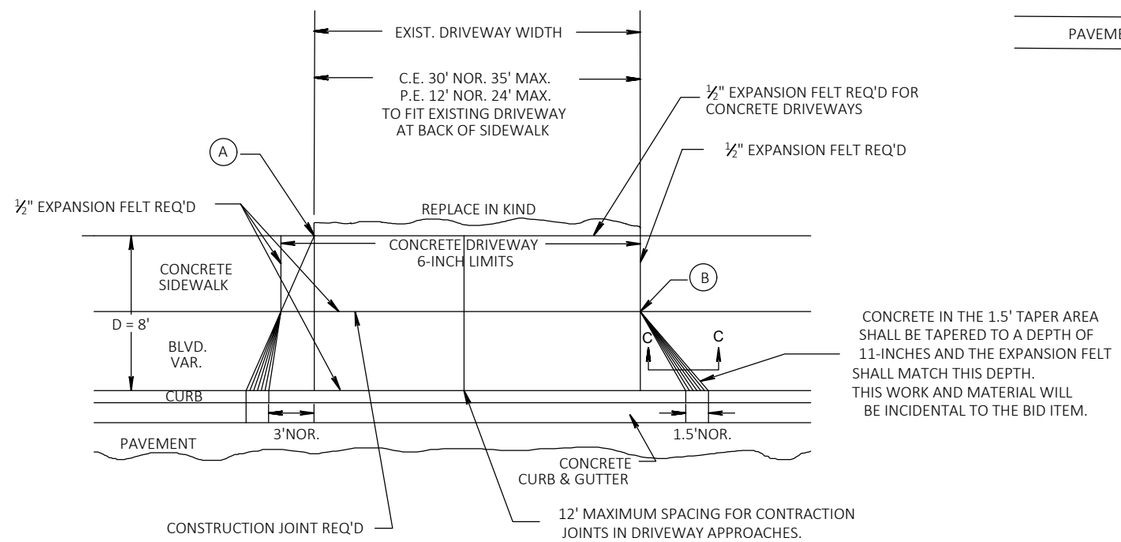


CONCRETE IN THE 1.5' TAPER AREA SHALL BE TAPERED TO A DEPTH OF 11-INCHES AND THE EXPANSION FELT SHALL MATCH THIS DEPTH. THIS WORK AND MATERIAL WILL BE INCIDENTAL TO THE BID ITEM.

PLAN VIEW

(A) WHEN "D" IS 13' OR LESS, ALIGN TAPER WITH BACK OF SIDEWALK

(B) WHEN "D" IS GREATER THAN 13', ALIGN TAPER WITH FRONT OF SIDEWALK

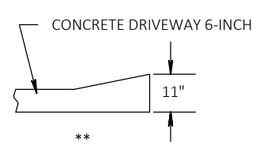


SECTION C-C

DRIVEWAY ENTRANCE DETAIL WITH SIDEWALK, CURB & GUTTER

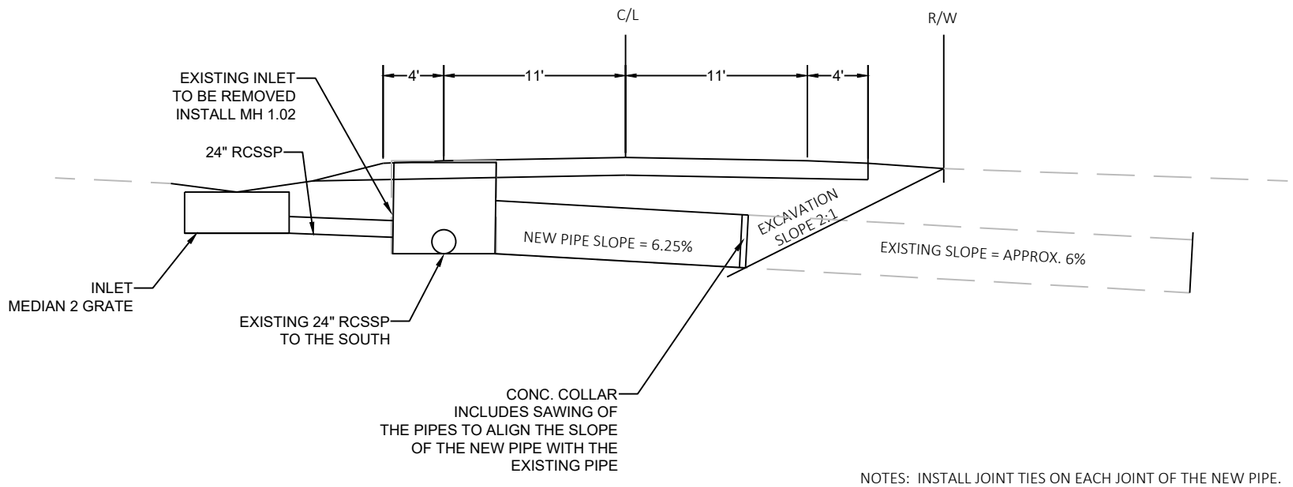


NOTES: INSTALL JOINT TIES ON EACH JOINT OF THE NEW PIPE.

## CONCRETE COLLAR DETAIL

STA 11+67

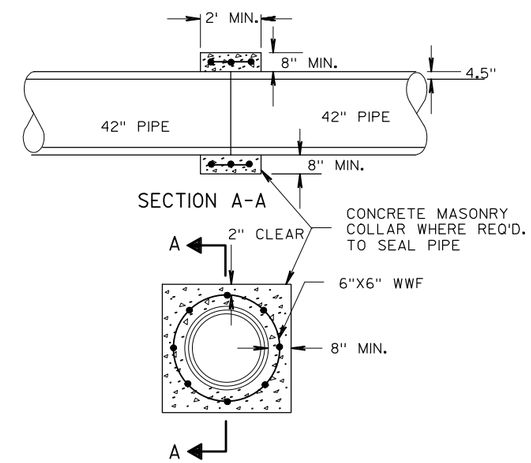


## CONCRETE COLLAR DETAIL

*WWF = WELDED WIRE FABRIC

2

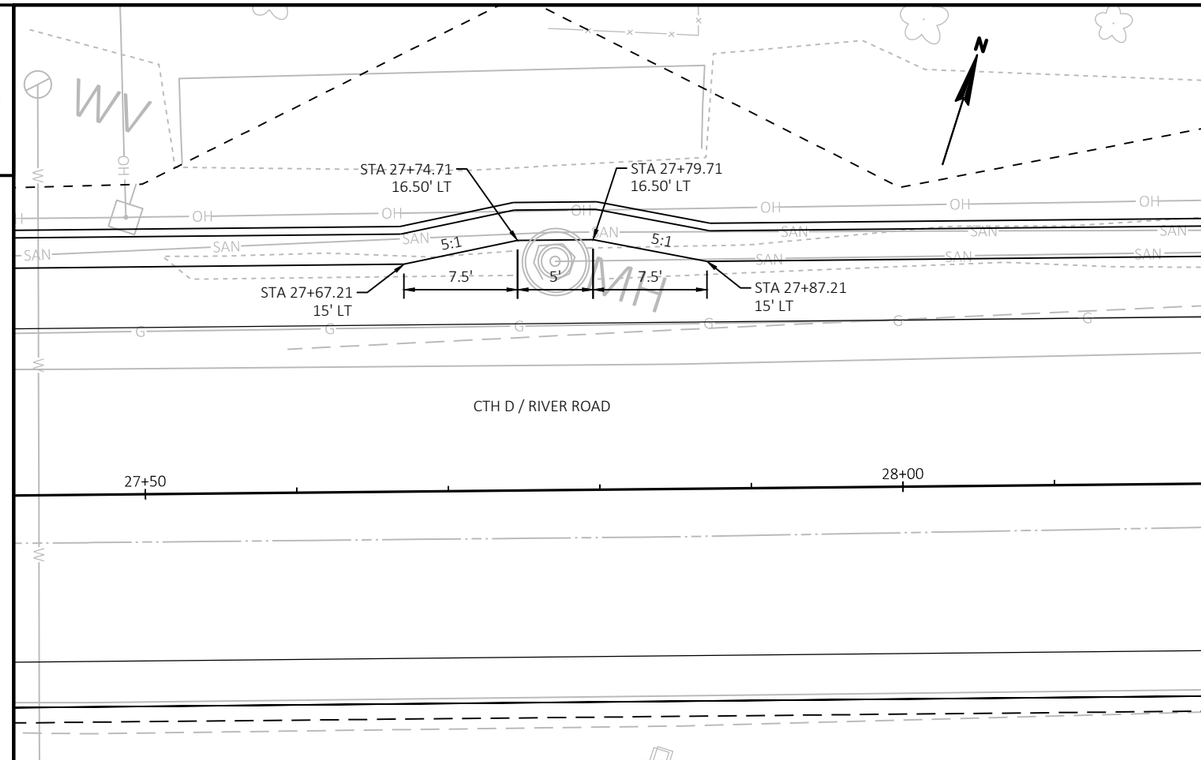


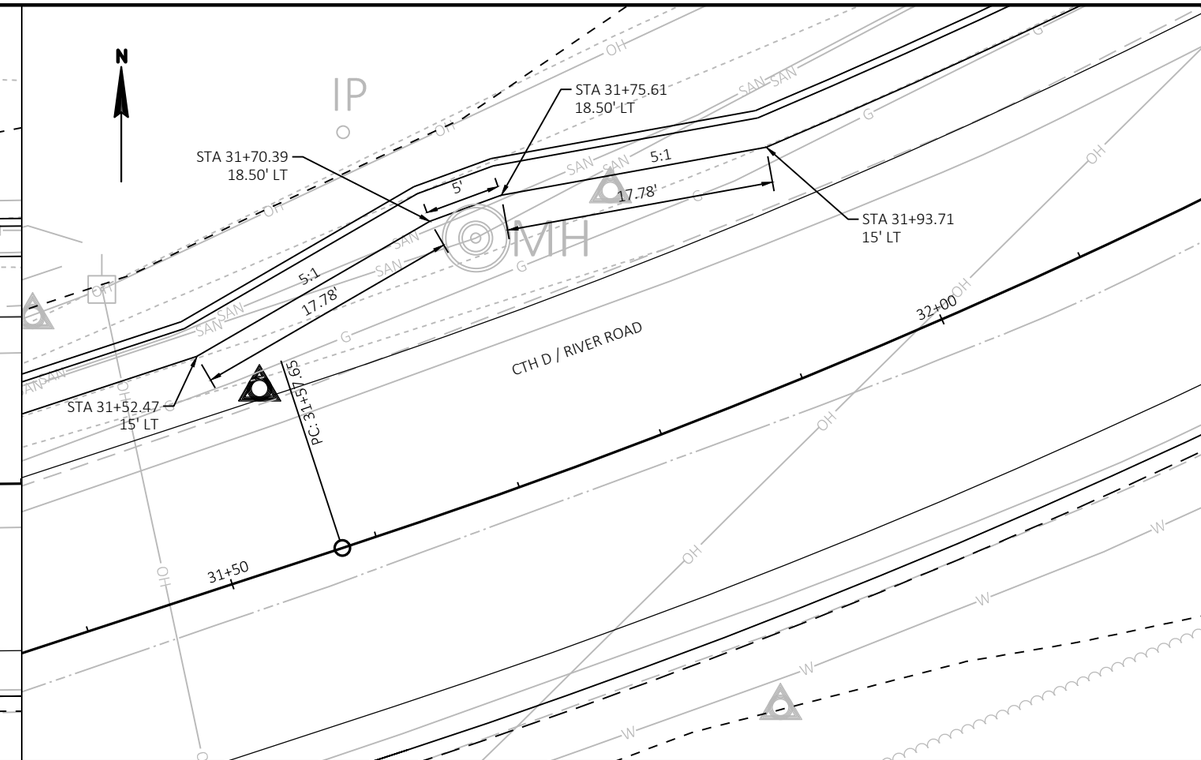


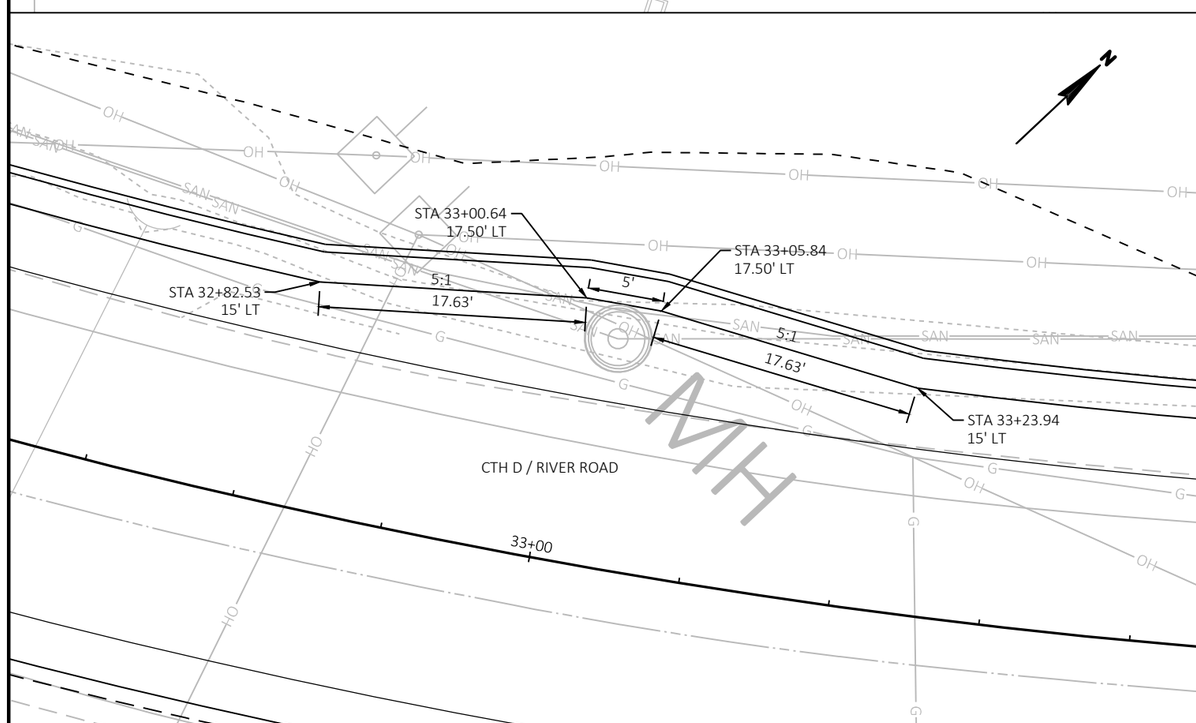


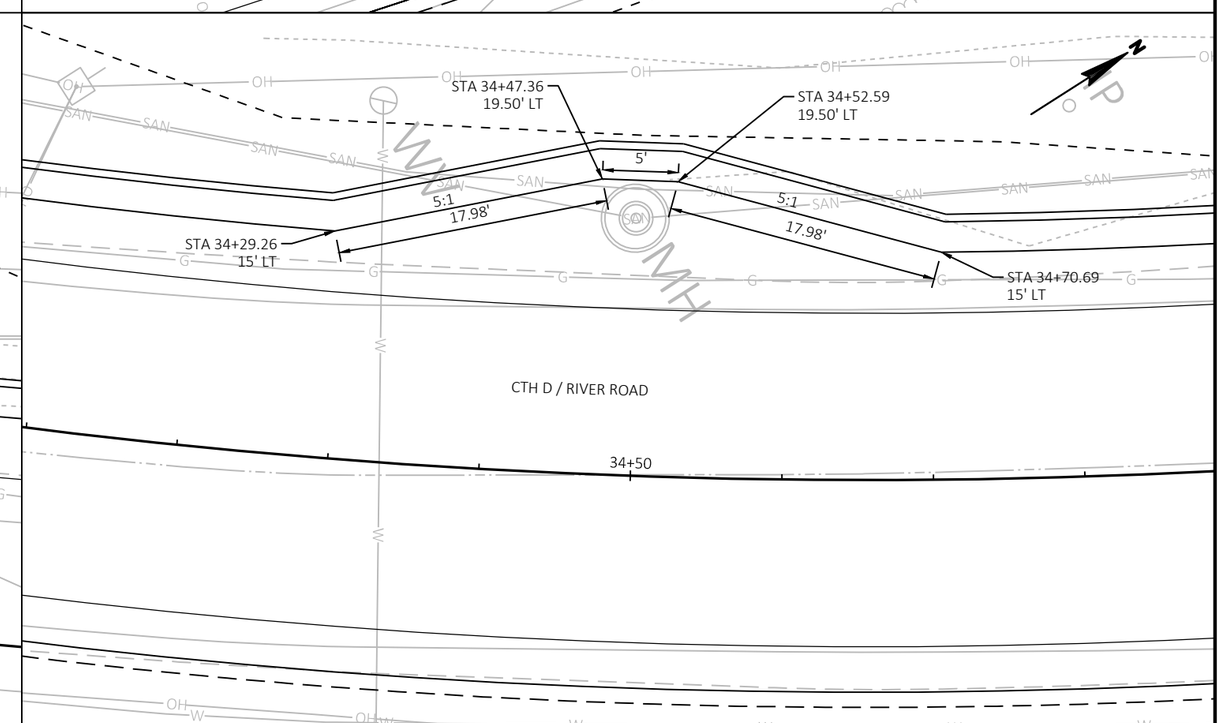


2

| PROJECT NO: 6425-00-70 | HWY: CTH D | COUNTY: GREEN LAKE | CONSTRUCTION DETAILS | SHEET 15 | E |
|---|---|---|---|---|---|

| POINT | STATION | OFFSET | NORTHING | EASTING | ELEVATION |
|---|---|---|---|---|---|
| 1 | 12+74.03 | 11.00 LT | 276328.92 | 522822.47 | 782.25 |
| 2 | 12+74.03 | 31.00 LT | 276331.89 | 522802.69 | --- |
| 3 | 12+90.89 | 20.00 LT | 276346.82 | 522816.00 | 782.24 |
| 4 | 13+33.99 | 20.00 LT | 276389.22 | 522821.79 | 782.20 |
| 5 | 13+57.69 | 46.00 LT | 276415.68 | 522798.90 | --- |
| 6 | 13+57.69 | 11.00 LT | 276411.50 | 522833.64 | 782.29 |

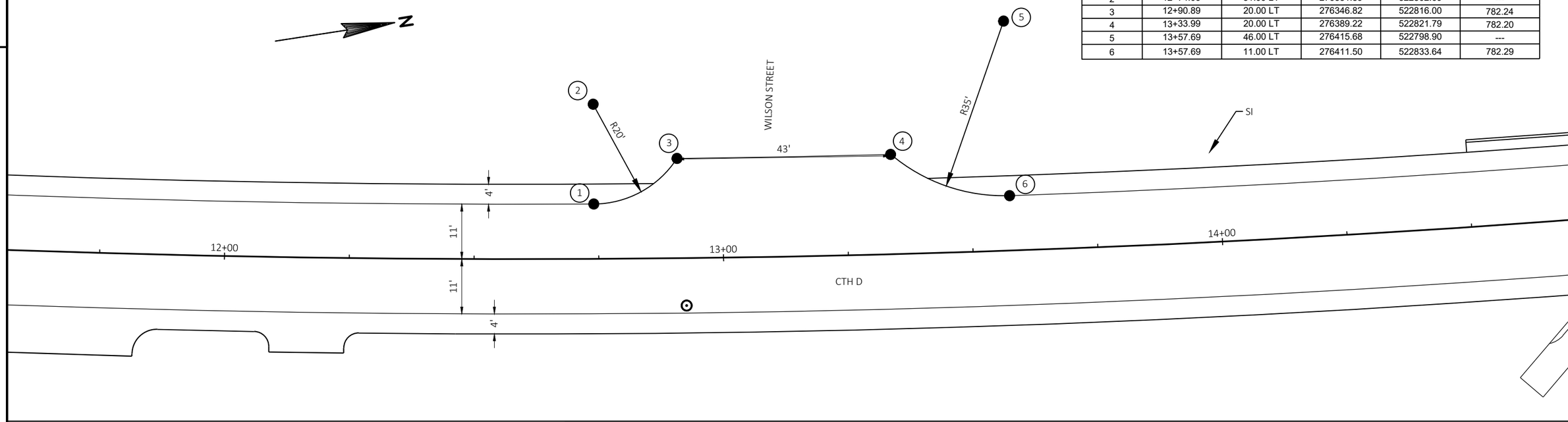


| POINT | STATION | OFFSET | NORTHING | EASTING | ELEVATION |
|---|---|---|---|---|---|
| 7 | 14+99.94 | 20.50 LT | 276553.21 | 522837.54 | 783.24 |
| 8 | 15+02.29 | 25.50 LT | 276555.88 | 522832.72 | 783.12 |
| 9 | 15+07.91 | 25.50 LT | 276561.43 | 522833.09 | 783.08 |
| 10 | 15+22.94 | 25.50 LT | 276576.30 | 522834.04 | 783.18 |
| 11 | 15+31.74 | 15.00 LT | 276584.59 | 522845.08 | 783.09 |
| 12 | 15+31.74 | 45.00 LT | 276586.72 | 522815.16 | --- |
| 13 | 15+54.56 | 29.87 LT | 276610.77 | 522833.09 | 783.69 |
| 14 | 15+61.45 | 45.72 LT | 276621.13 | 522818.76 | 783.69 |
| 15 | 15+98.52 | 46.93 LT | 276663.40 | 522828.16 | 784.78 |
| 16 | 15+94.77 | 35.03 LT | 276655.69 | 522838.20 | 784.42 |
| 17 | 16+12.52 | 35.00 LT | 276674.59 | 522844.76 | --- |
| 18 | 16+12.52 | 15.00 LT | 276667.45 | 522863.44 | 783.550 |

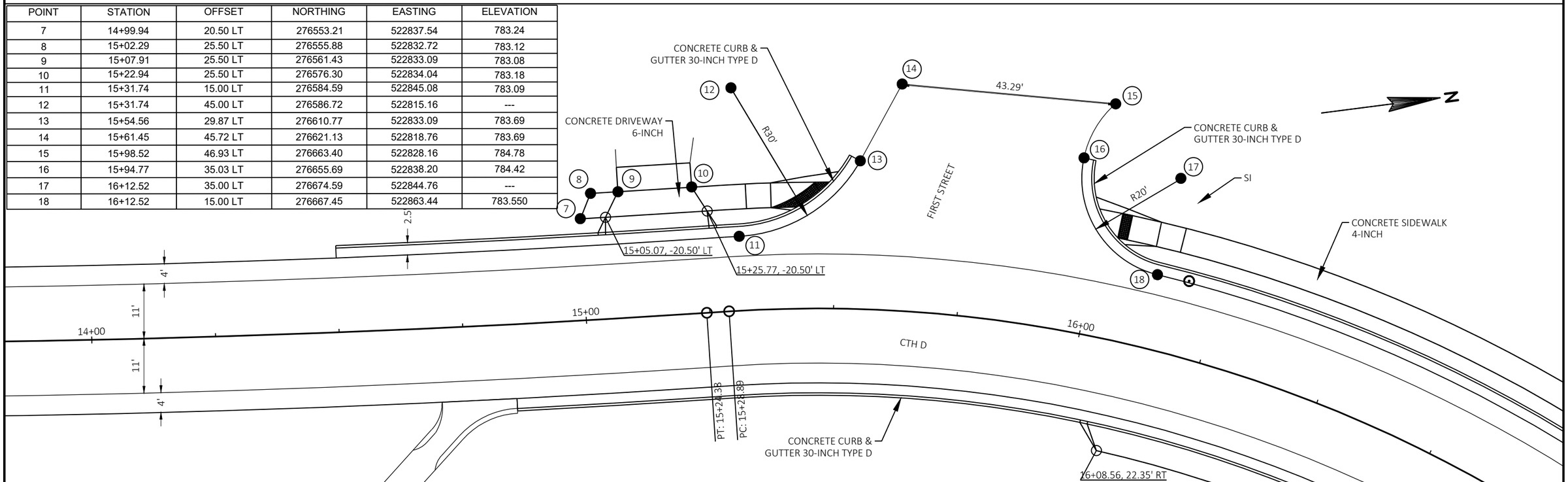


| PROJECT NO: 6425-00-70 | HWY: CTH D | COUNTY: GREEN LAKE | INTERSECTION DETAILS | SHEET 16 | E |
|---|---|---|---|---|---|

| POINT | STATION | OFFSET | NORTHING | EASTING | ELEVATION |
|---|---|---|---|---|---|
| 19 | 19+78.17 | 15.00 LT | 276956.05 | 523095.47 | 785.29 |
| 20 | 19+78.17 | 30.00 LT | 276966.83 | 523085.04 | --- |
| 21 | 19+92.24 | 26.04 LT | 276973.95 | 523098.25 | 786.51 |
| 22 | 19+90.12 | 38.50 LT | 276981.52 | 523088.11 | --- |
| 23 | 20+07.85 | 48.71 LT | 277001.59 | 523094.74 | --- |
| 24 | 20+19.69 | 33.91 LT | 276998.83 | 523113.81 | 787.27 |
| 25 | 20+30.97 | 38.42 LT | 277009.95 | 523119.62 | 787.91 |
| 26 | 20+26.39 | 25.55 LT | 276997.14 | 523124.52 | 786.73 |
| 27 | 20+38.01 | 30.18 LT | 277008.45 | 523130.52 | 787.68 |
| 28 | 20+48.45 | 15.00 LT | 277003.78 | 523148.48 | 786.33 |
| 29 | 20+48.45 | 45' LT | 277026.77 | 523129.21 | --- |

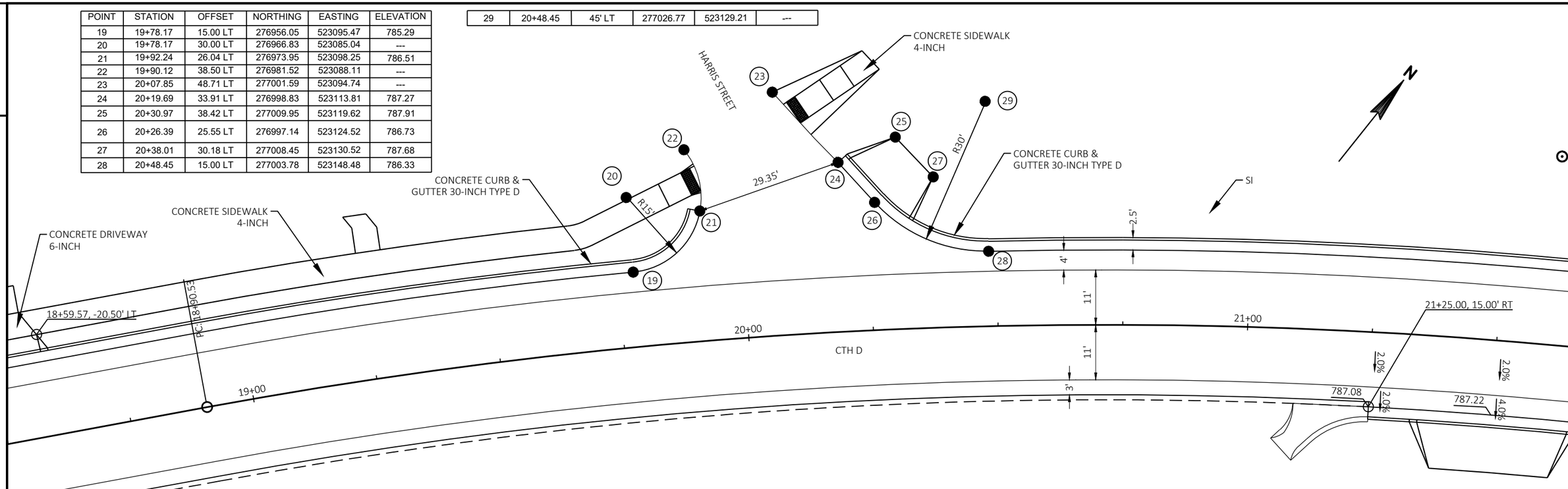


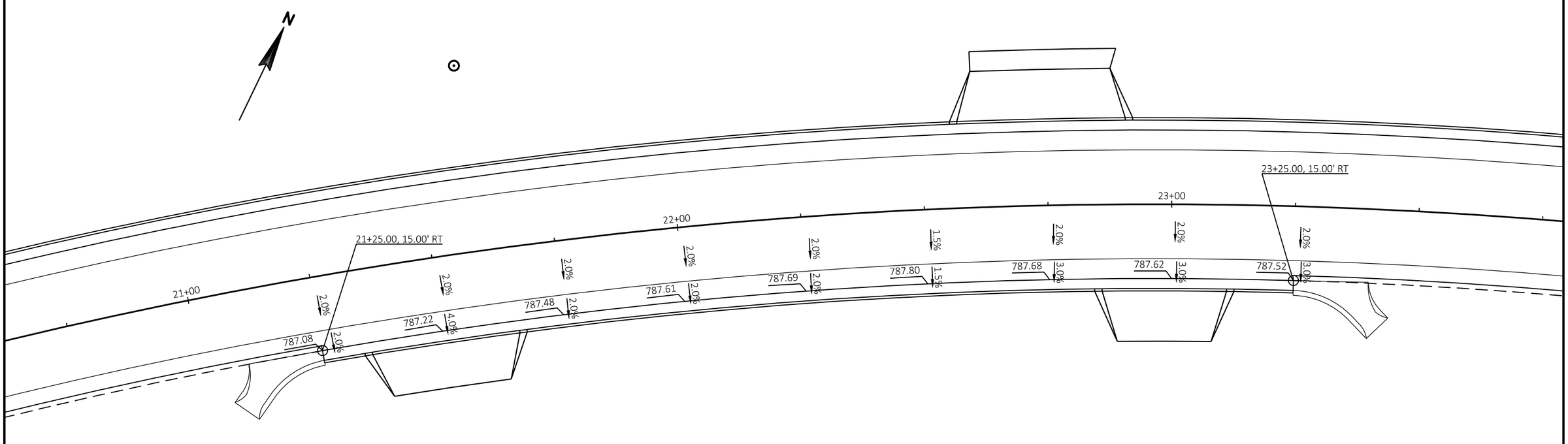


| PROJECT NO: 6425-00-70 | HWY: CTH D | COUNTY: GREEN LAKE | INTERSECTION DETAILS | SHEET 17 | E |
|---|---|---|---|---|---|

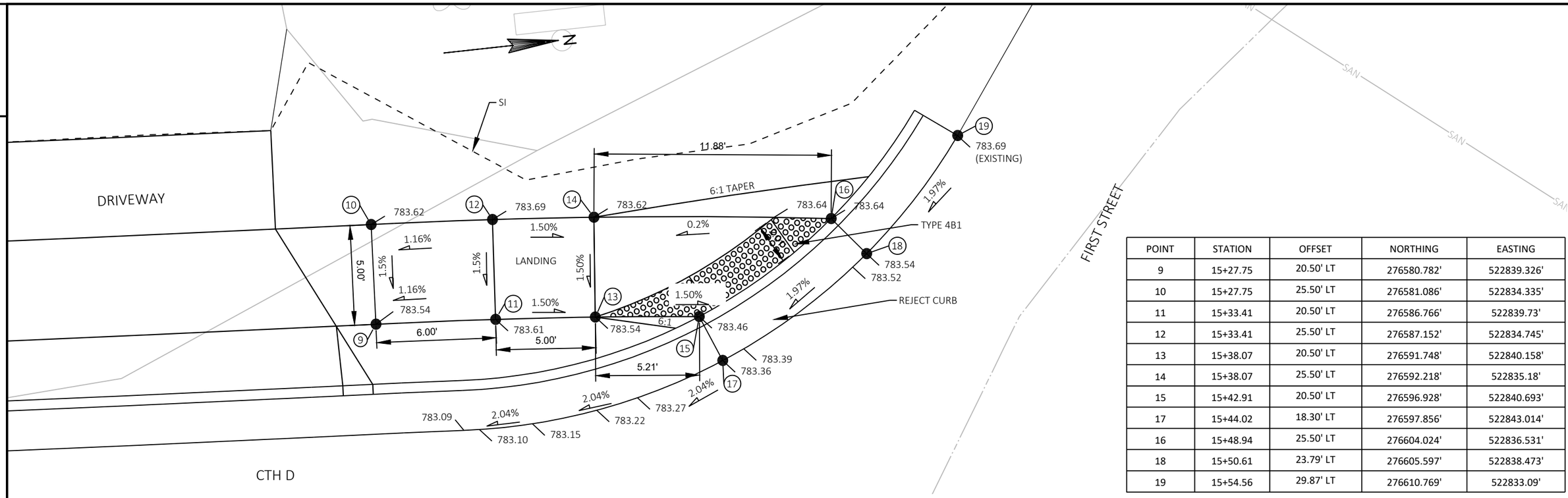


| POINT | STATION | OFFSET | NORTHING | EASTING |
|---|---|---|---|---|
| 9 | 15+27.75 | 20.50' LT | 276580.782' | 522839.326' |
| 10 | 15+27.75 | 25.50' LT | 276581.086' | 522834.335' |
| 11 | 15+33.41 | 20.50' LT | 276586.766' | 522839.73' |
| 12 | 15+33.41 | 25.50' LT | 276587.152' | 522834.745' |
| 13 | 15+38.07 | 20.50' LT | 276591.748' | 522840.158' |
| 14 | 15+38.07 | 25.50' LT | 276592.218' | 522835.18' |
| 15 | 15+42.91 | 20.50' LT | 276596.928' | 522840.693' |
| 17 | 15+44.02 | 18.30' LT | 276597.856' | 522843.014' |
| 16 | 15+48.94 | 25.50' LT | 276604.024' | 522836.531' |
| 18 | 15+50.61 | 23.79' LT | 276605.597' | 522838.473' |
| 19 | 15+54.56 | 29.87' LT | 276610.769' | 522833.09' |

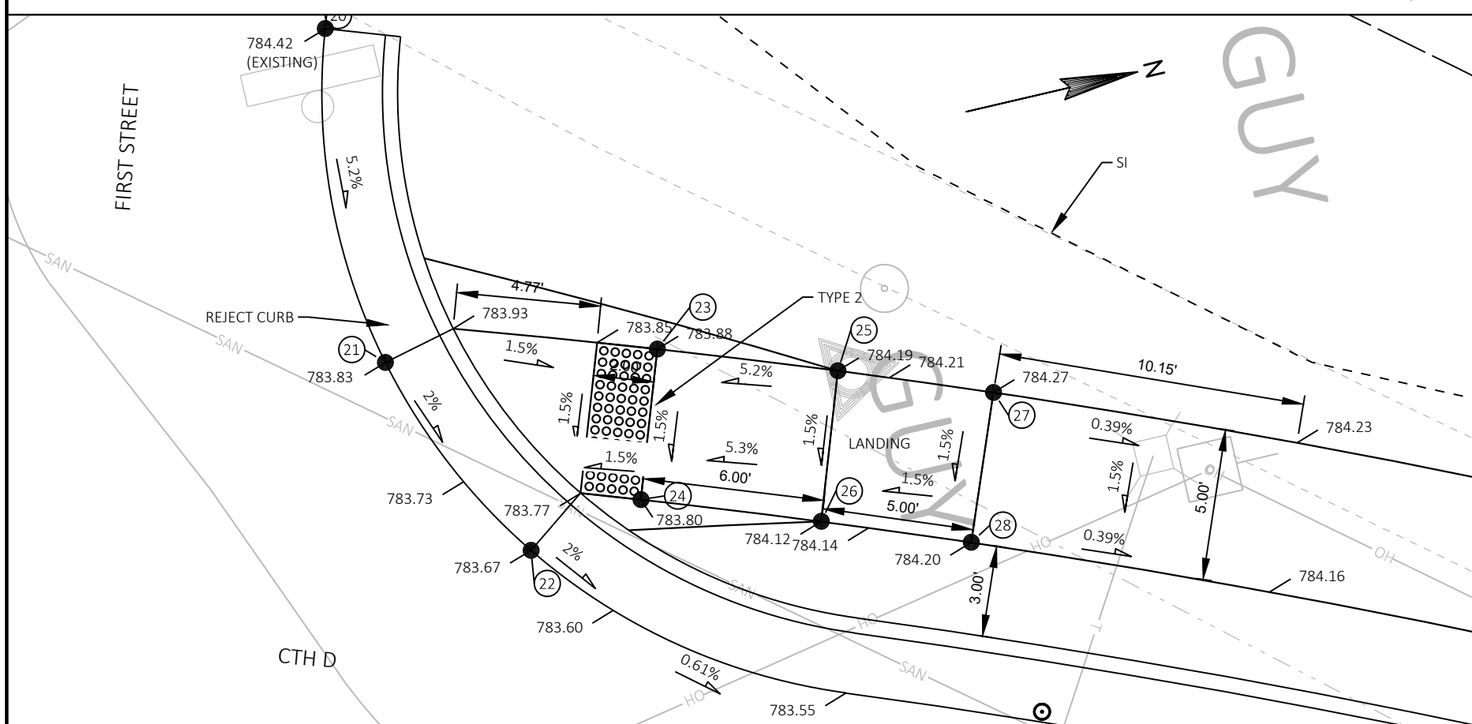


| POINT | STATION | OFFSET | NORTHING | EASTING |
|---|---|---|---|---|
| 20 | 15+94.77 | 35.03' LT | 276655.693' | 522838.199' |
| 21 | 15+97.31 | 24.20' LT | 276655.127' | 522849.372' |
| 22 | 16+02.27 | 18.46' LT | 276658.399' | 522856.502' |
| 23 | 16+05.47 | 25.50' LT | 276663.968' | 522850.981' |
| 24 | 16+05.47 | 20.50' LT | 276662.311' | 522855.693' |
| 25 | 16+10.96 | 25.50' LT | 276669.608' | 522853.03' |
| 26 | 16+11.05 | 20.50' LT | 276667.944' | 522857.746' |
| 27 | 16+15.7 | 25.50' LT | 276674.444' | 522854.894' |
| 28 | 16+15.7 | 20.50' LT | 276672.606' | 522859.543' |

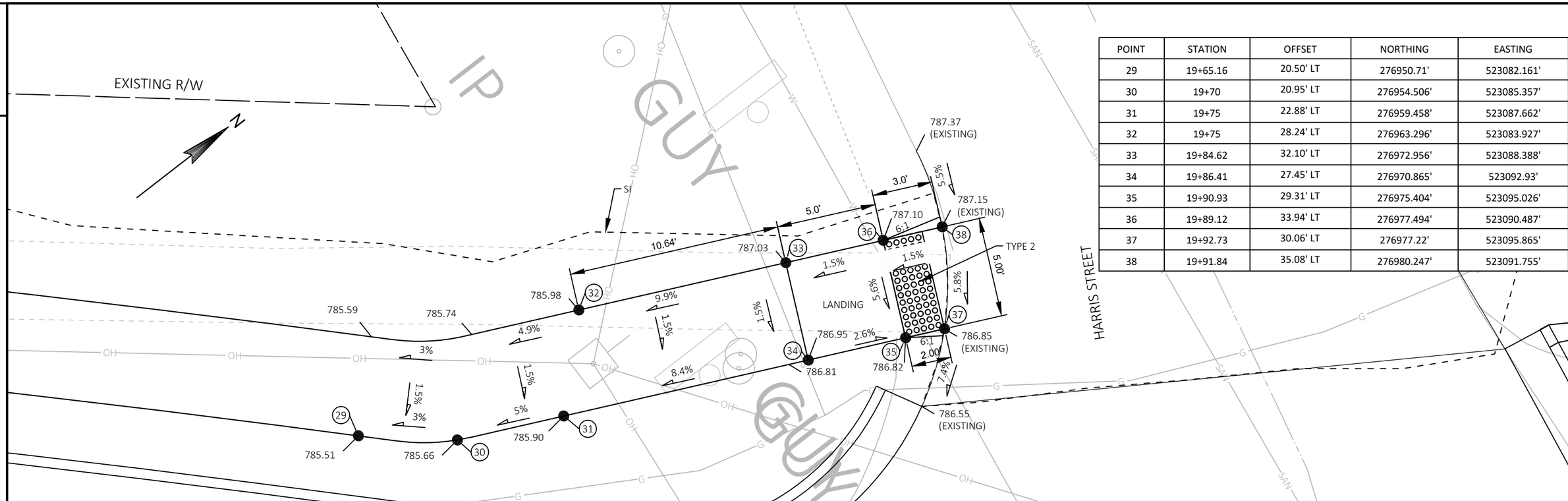


| POINT | STATION | OFFSET | NORTHING | EASTING |
|---|---|---|---|---|
| 29 | 19+65.16 | 20.50' LT | 276950.71' | 523082.161' |
| 30 | 19+70 | 20.95' LT | 276954.506' | 523085.357' |
| 31 | 19+75 | 22.88' LT | 276959.458' | 523087.662' |
| 32 | 19+75 | 28.24' LT | 276963.296' | 523083.927' |
| 33 | 19+84.62 | 32.10' LT | 276972.956' | 523088.388' |
| 34 | 19+86.41 | 27.45' LT | 276970.865' | 523092.93' |
| 35 | 19+90.93 | 29.31' LT | 276975.404' | 523095.026' |
| 36 | 19+89.12 | 33.94' LT | 276977.494' | 523090.487' |
| 37 | 19+92.73 | 30.06' LT | 276977.22' | 523095.865' |
| 38 | 19+91.84 | 35.08' LT | 276980.247' | 523091.755' |

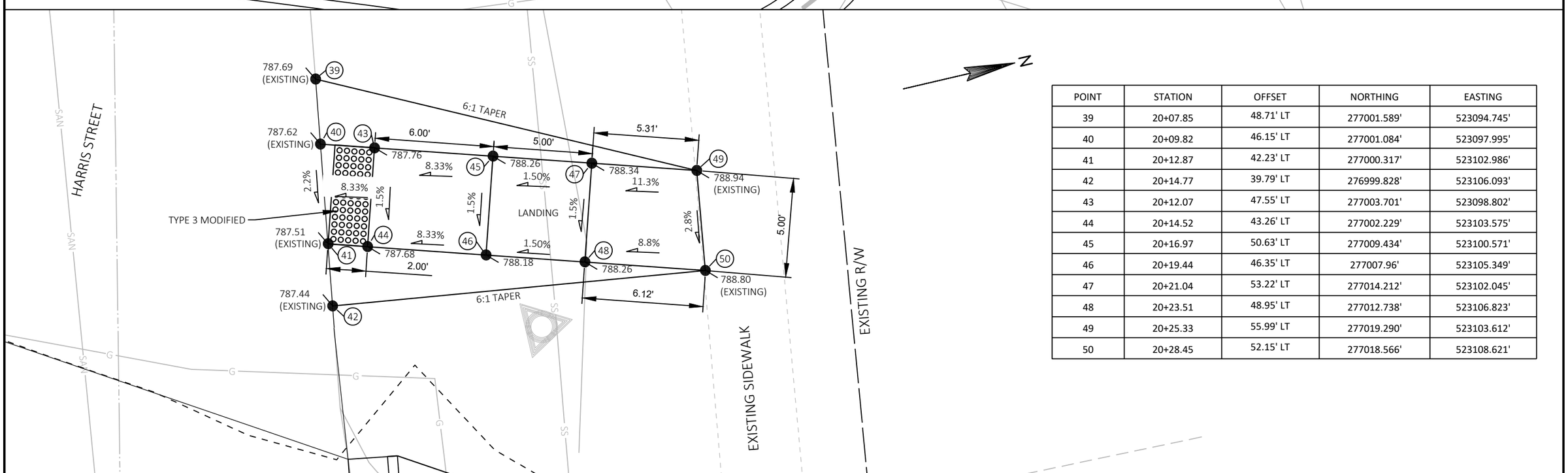


| POINT | STATION | OFFSET | NORTHING | EASTING |
|---|---|---|---|---|
| 39 | 20+07.85 | 48.71' LT | 277001.589' | 523094.745' |
| 40 | 20+09.82 | 46.15' LT | 277001.084' | 523097.995' |
| 41 | 20+12.87 | 42.23' LT | 277000.317' | 523102.986' |
| 42 | 20+14.77 | 39.79' LT | 276999.828' | 523106.093' |
| 43 | 20+12.07 | 47.55' LT | 277003.701' | 523098.802' |
| 44 | 20+14.52 | 43.26' LT | 277002.229' | 523103.575' |
| 45 | 20+16.97 | 50.63' LT | 277009.434' | 523100.571' |
| 46 | 20+19.44 | 46.35' LT | 277007.96' | 523105.349' |
| 47 | 20+21.04 | 53.22' LT | 277014.212' | 523102.045' |
| 48 | 20+23.51 | 48.95' LT | 277012.738' | 523106.823' |
| 49 | 20+25.33 | 55.99' LT | 277019.290' | 523103.612' |
| 50 | 20+28.45 | 52.15' LT | 277018.566' | 523108.621' |

2

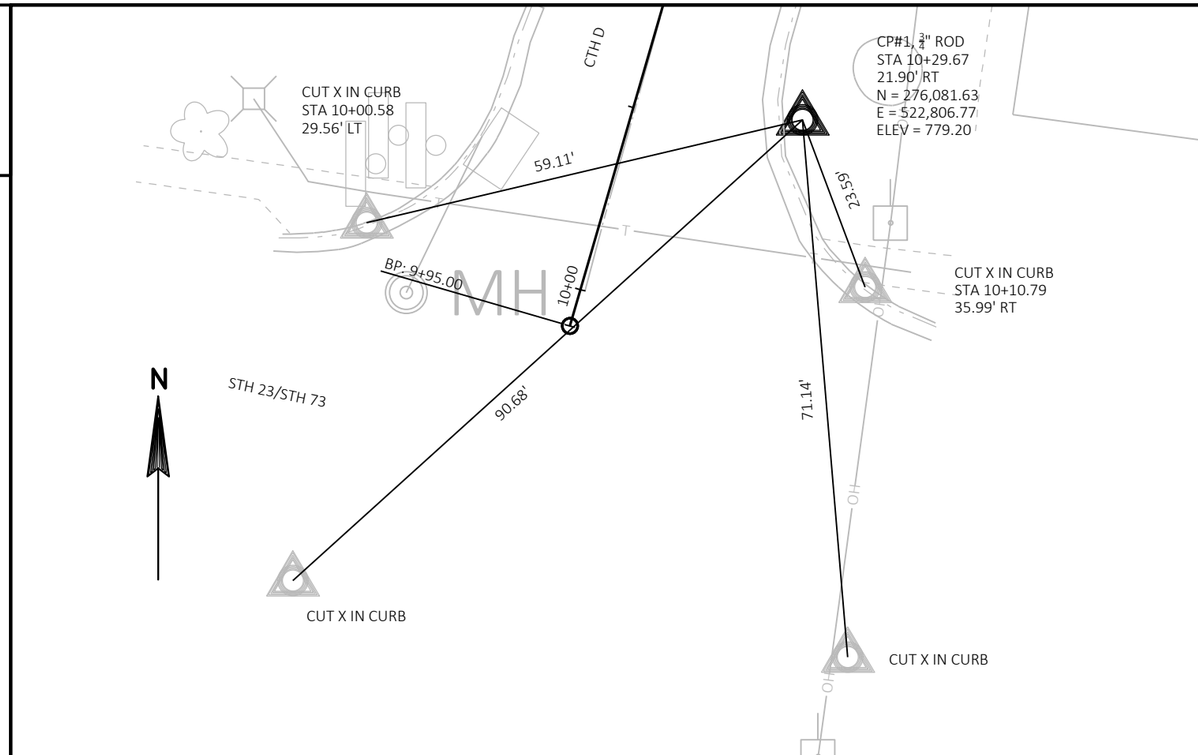


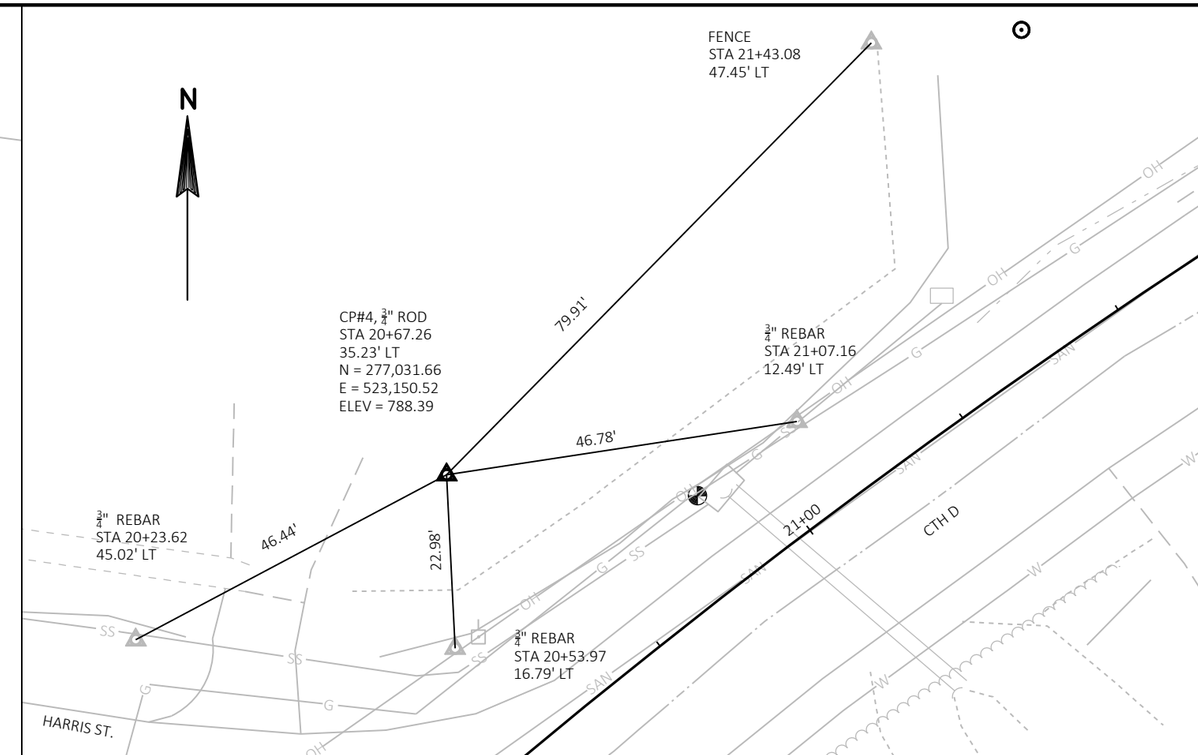


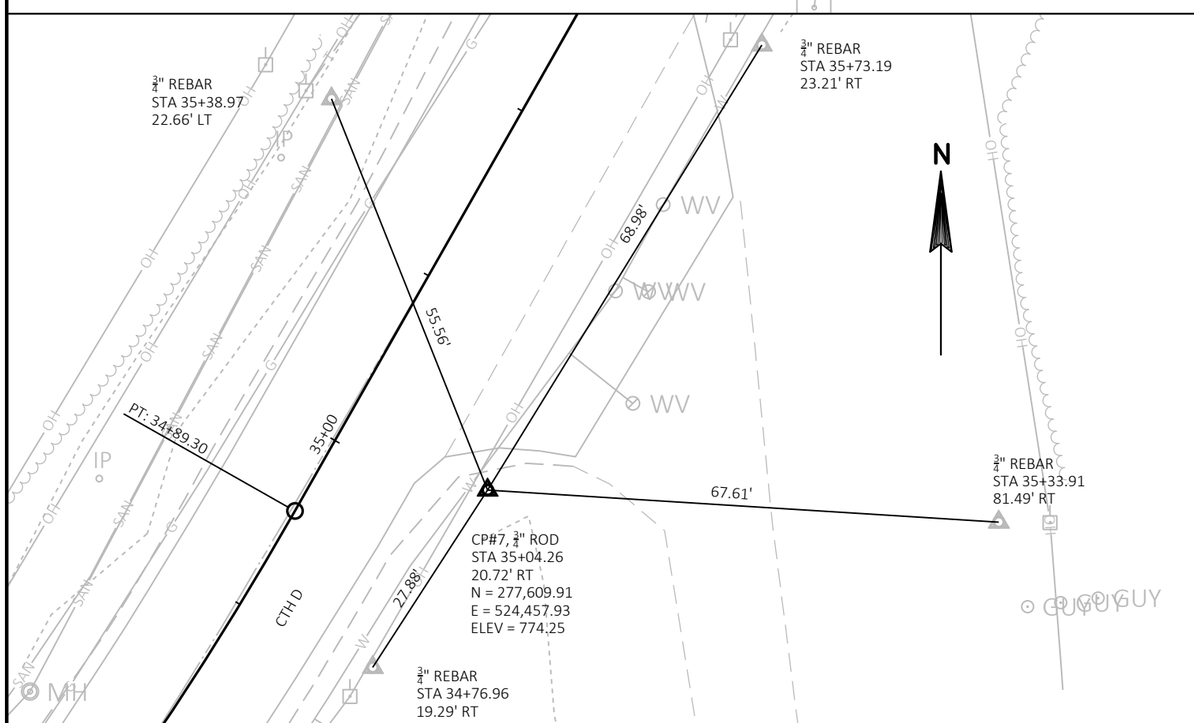


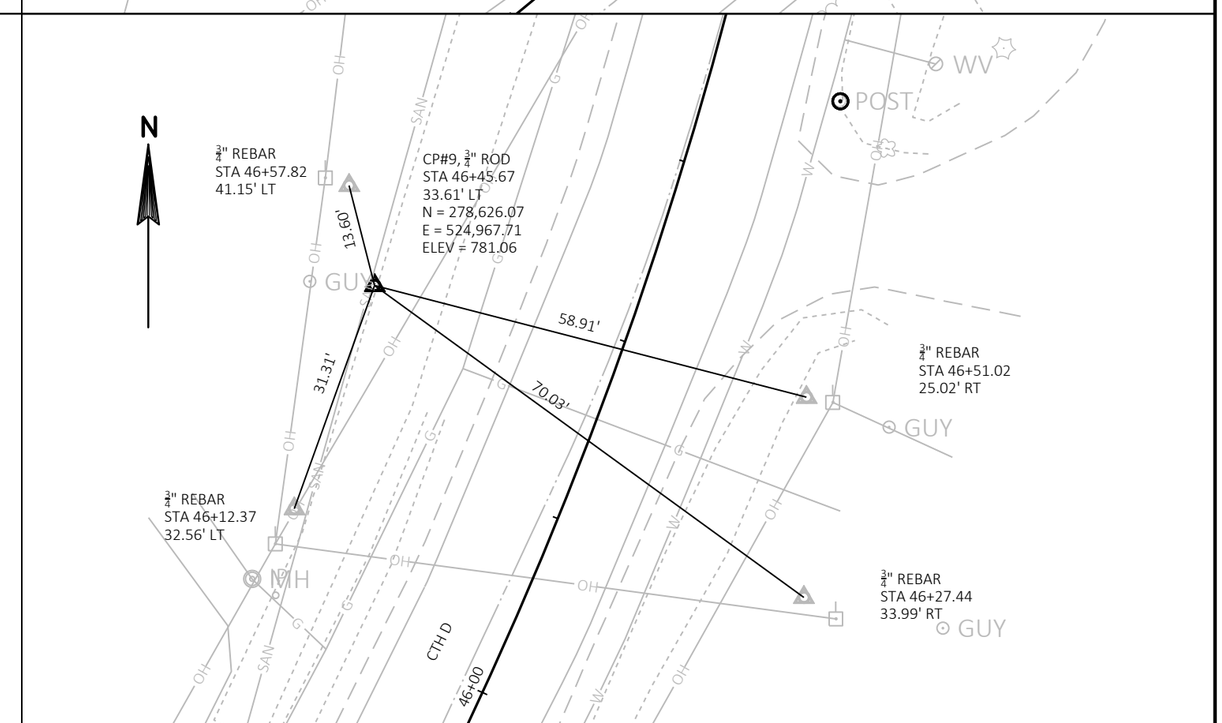


| PROJECT NO: 6425-00-70 | HWY: CTH D | COUNTY: GREEN LAKE | CONTROL POINTS | SHEET 20 | E |
|---|---|---|---|---|---|

2

BP: 9+95.00
PI: 10+48.46
PC: 10+60.58
WILSON ST.
PT: 15+24.38
PC: 15+28.89
1ST ST.
MATCHLINE STA 16+00
11+00
12+00
13+00
14+00
15+00
CTH D / RIVER RD.
BEGIN PROJECT
STA 10+48.46
EXISTING R/W
TLE
RIPRAP HEAVY
WITH GEOTEXTILE TYPE HR
R/W
ASPH

## LEGEND

| | |
|---|---|
| × × × × × × | EROSION MAT URBAN CLASS I, TYPE B |
| # # # # # # | EROSION MAT CLASS 1 |
| —•—•— | SILT FENCE |
| — — | SLOPE INTERCEPT |
| ASPH | ASPHALTIC FLUME |
| ⊠ | INLET PROTECTION |
| △△△ | TEMPORARY DITCH CHECK |
| ○○○ | CULVERT PIPE DITCH CHECK |
| ~→ | SURFACE WATER FLOW |

PT: 17+08.45
EXISTING R/W
PC: 18+90.53
HARRIS ST.
17+00
18+00
19+00
20+00
21+00
CTH D / RIVER RD.
MATCHLINE STA 16+00
TLE
EXISTING R/W
RIPRAP HEAVY
WITH GEOTEXTILE TYPE HR
R/W
RIPRAP HEAVY
WITH GEOTEXTILE TYPE HR
R/W
ASPH
MATCHLINE STA 22+00

| PROJECT NO: 6425-00-70 | HWY: CTH D | COUNTY: GREEN LAKE | EROSION CONTROL | SHEET 21 | E |
|---|---|---|---|---|---|

FILE NAME : P:\11500S\11500S\11507\11507006\CADD\SHEETSPLAN\022001-EC.DWG
LAYOUT NAME - 1
PLOT DATE : 10/30/2020 11:20 AM
PLOT BY : BOBBI MAXWELL
PLOT NAME :
PLOT SCALE : 1 IN:40 FT
WISDOT/CADDS SHEET 44

2

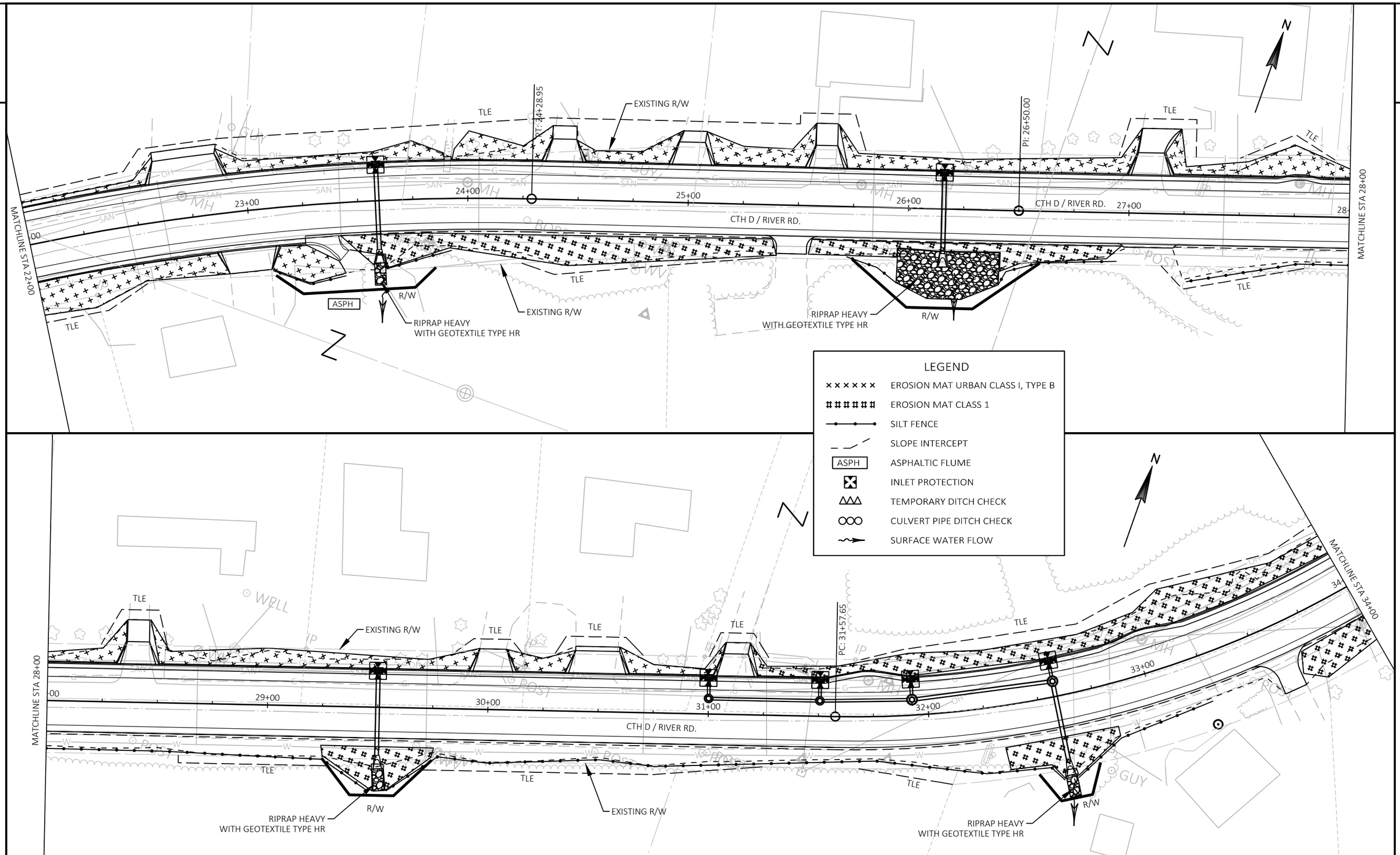


2

| PROJECT NO: 6425-00-70 | HWY: CTH D | COUNTY: GREEN LAKE | EROSION CONTROL | SHEET 22 | E |
|---|---|---|---|---|---|

FILE NAME : P:\11500S\11500S\11507\11507006\CADD\SHEETSPLAN\022001-EC.DWG
LAYOUT NAME - 2
PLOT DATE : 10/30/2020 11:20 AM
PLOT BY : BOBBI MAXWELL
PLOT NAME :
PLOT SCALE : 1 IN:40 FT
WISDOT/CADDS SHEET 44

2

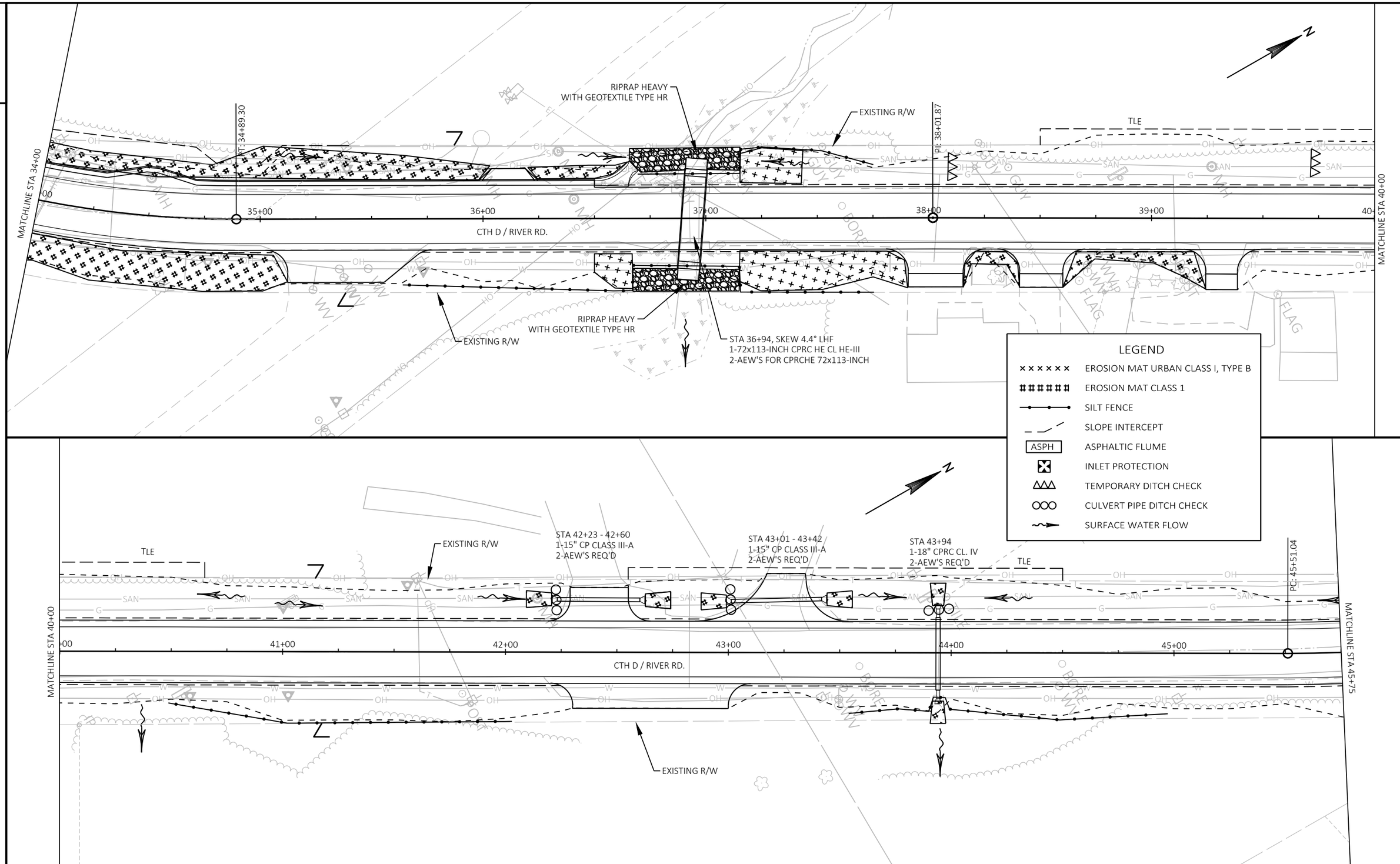


2

| PROJECT NO: 6425-00-70 | HWY: CTH D | COUNTY: GREEN LAKE | EROSION CONTROL | SHEET 23 | E |
|---|---|---|---|---|---|

FILE NAME : P:\11500S\11500S\11507\11507006\CADD\SHEETSPLAN\022001-EC.DWG
LAYOUT NAME - 3
PLOT DATE : 10/30/2020 11:20 AM
PLOT BY : BOBBI MAXWELL
PLOT NAME :
PLOT SCALE : 1 IN:40 FT
WISDOT/CADDS SHEET 44

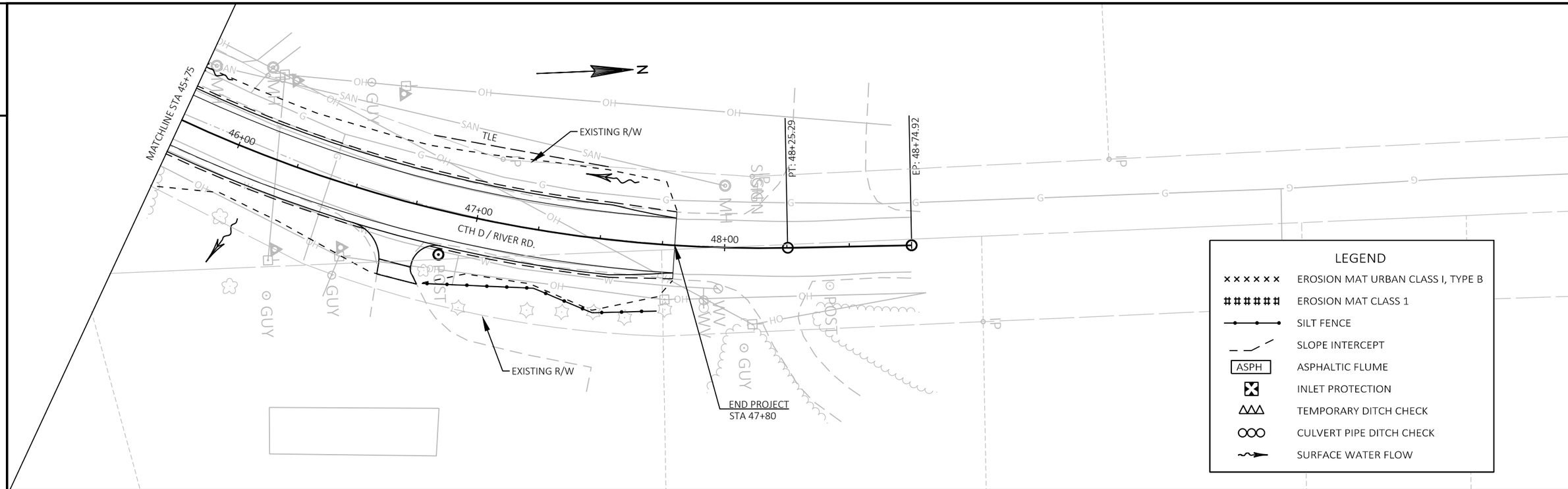
MATCHLINE STA 45+75
46+00
47+00
48+00
CTH D / RIVER RD.
EXISTING R/W
EXISTING R/W
END PROJECT
STA 47+80
PT: 48+25.29
EP: 48+74.92
N
LEGEND
EROSION MAT URBAN CLASS I, TYPE B
EROSION MAT CLASS 1
SILT FENCE
SLOPE INTERCEPT
ASPH
ASPHALTIC FLUME
INLET PROTECTION
TEMPORARY DITCH CHECK
CULVERT PIPE DITCH CHECK
SURFACE WATER FLOW

2

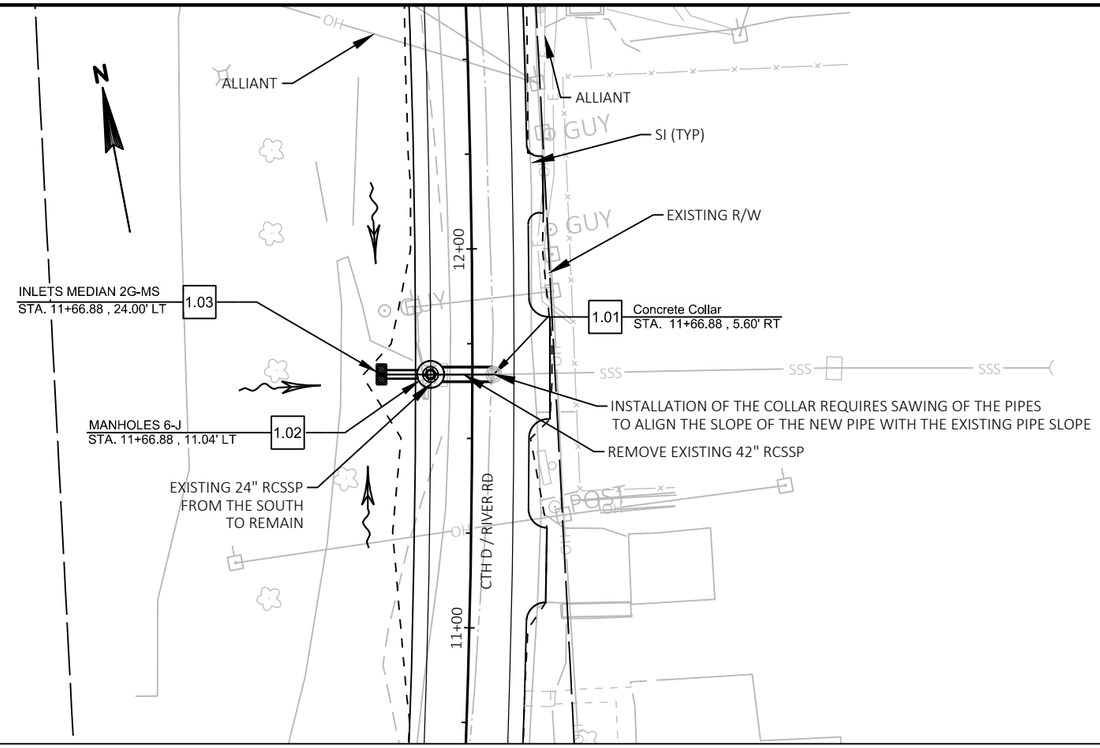


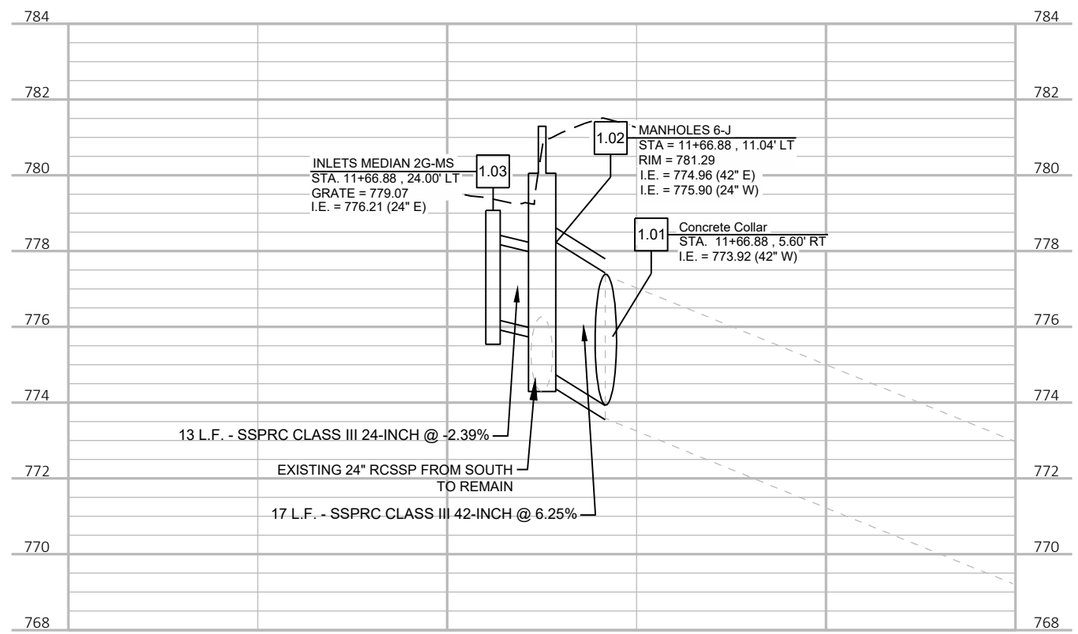


2

| PROJECT NO: 6425-00-70 | HWY: CTH D | COUNTY: GREEN LAKE | STORM SEWER | SHEET 25 | E |
|---|---|---|---|---|---|

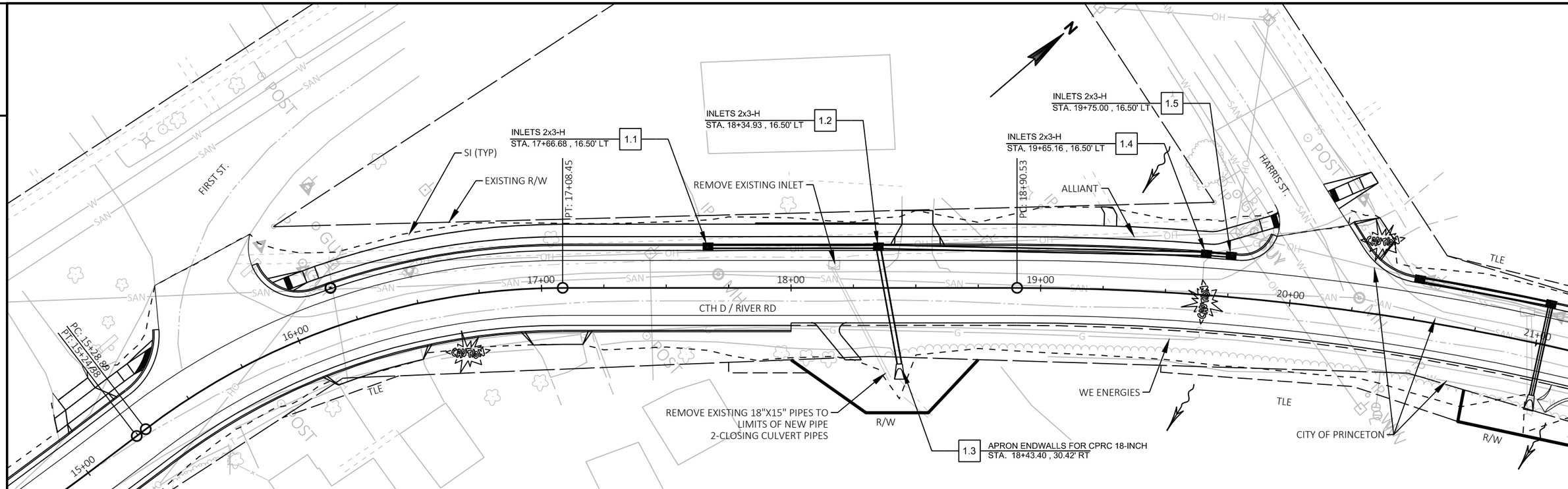


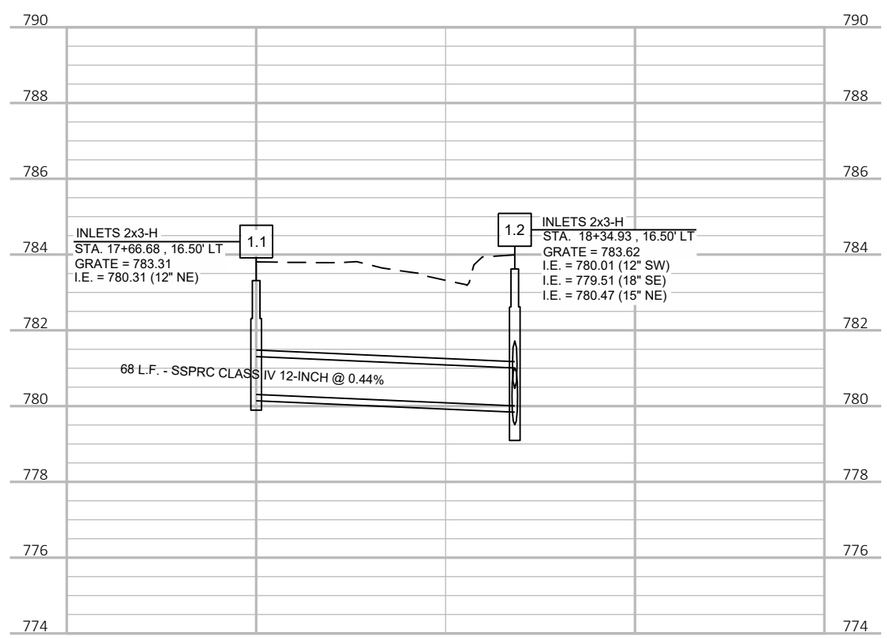


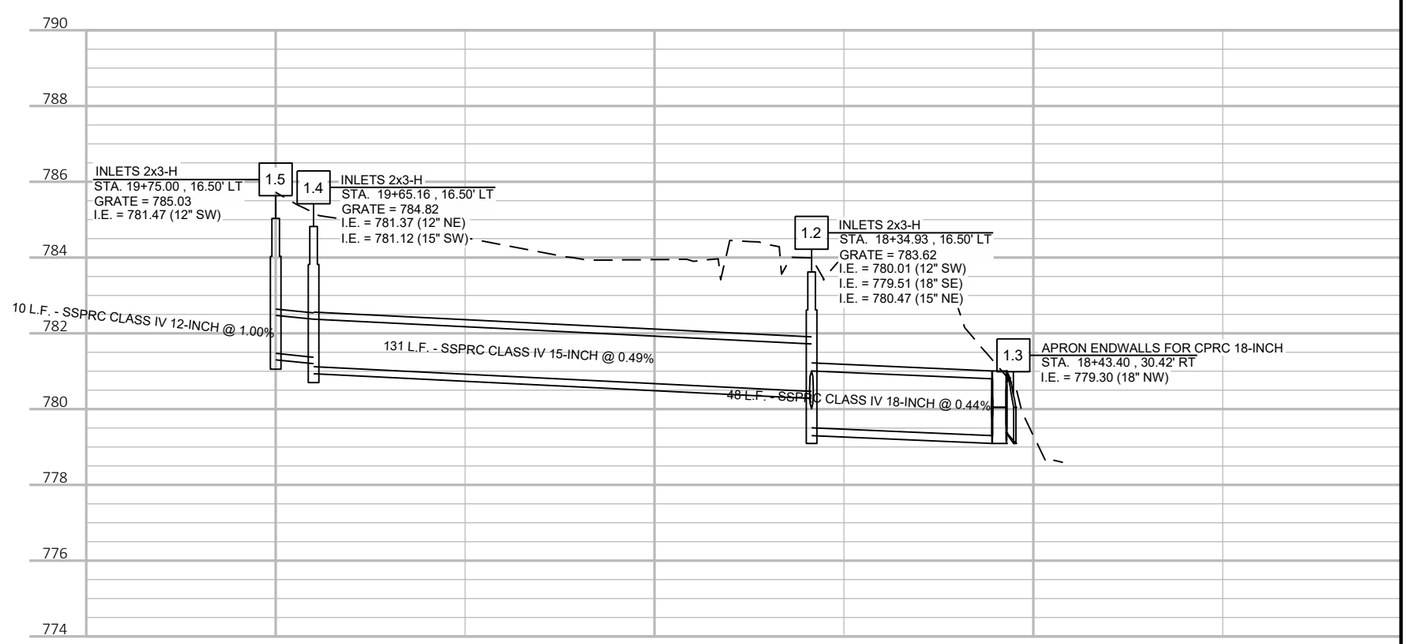


| PROJECT NO: 6425-00-70 | HWY: CTH D | COUNTY: GREEN LAKE | STORM SEWER | SHEET 26 | E |
|---|---|---|---|---|---|

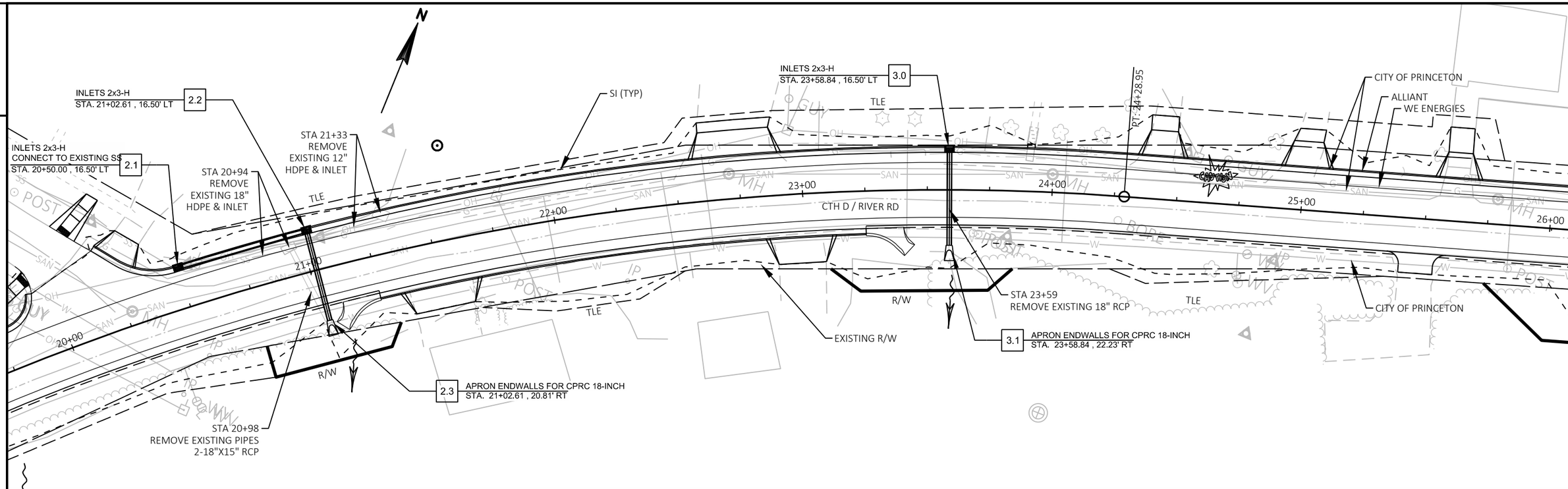


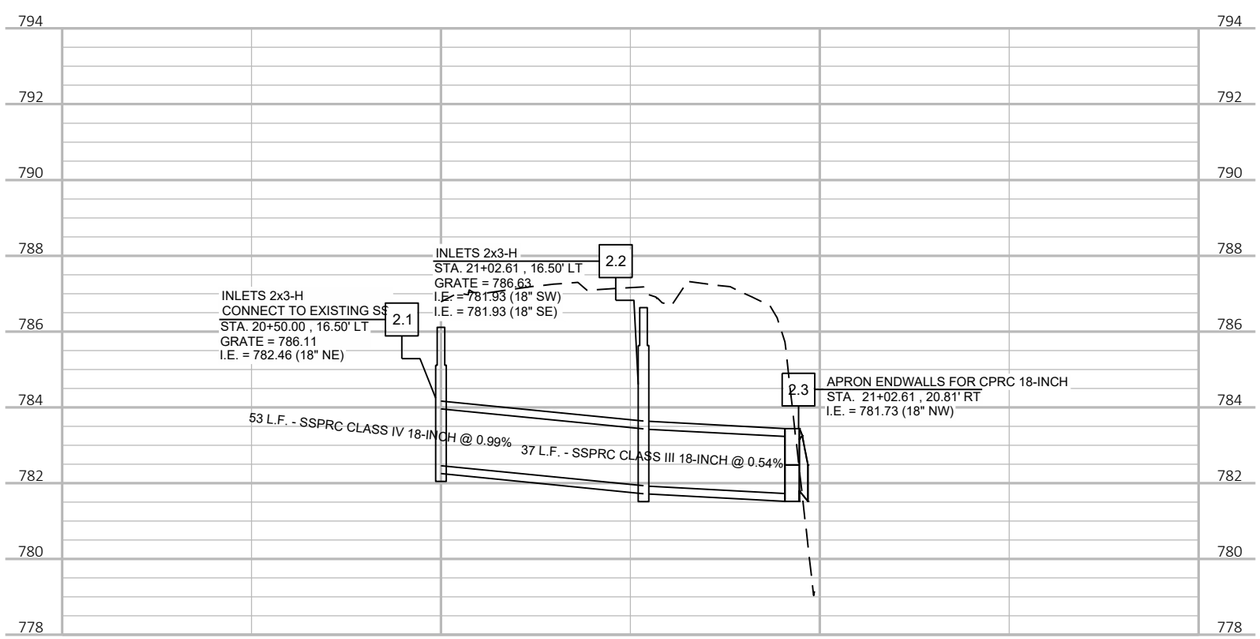


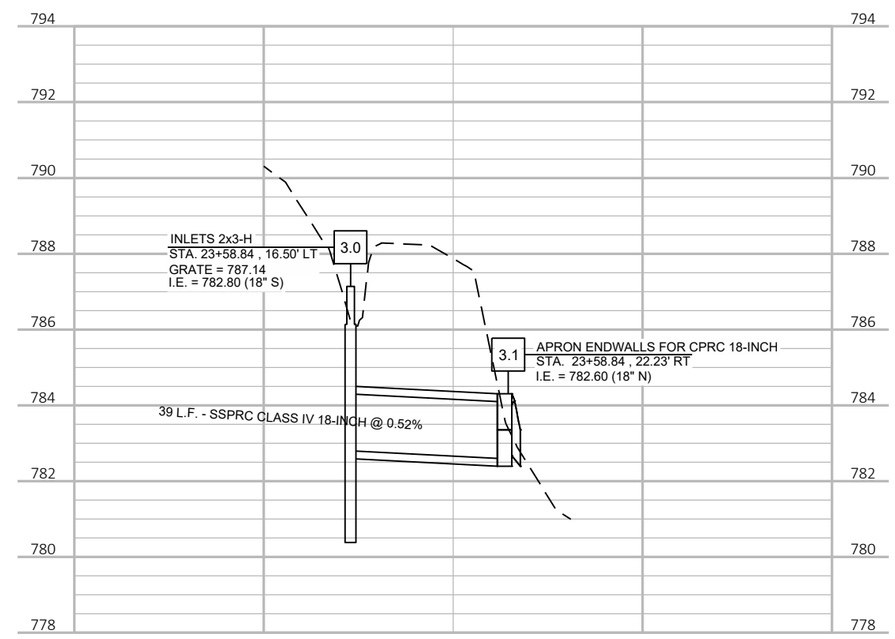


| PROJECT NO: 6425-00-70 | HWY: CTH D | COUNTY: GREEN LAKE | STORM SEWER | SHEET 27 | E |
|---|---|---|---|---|---|

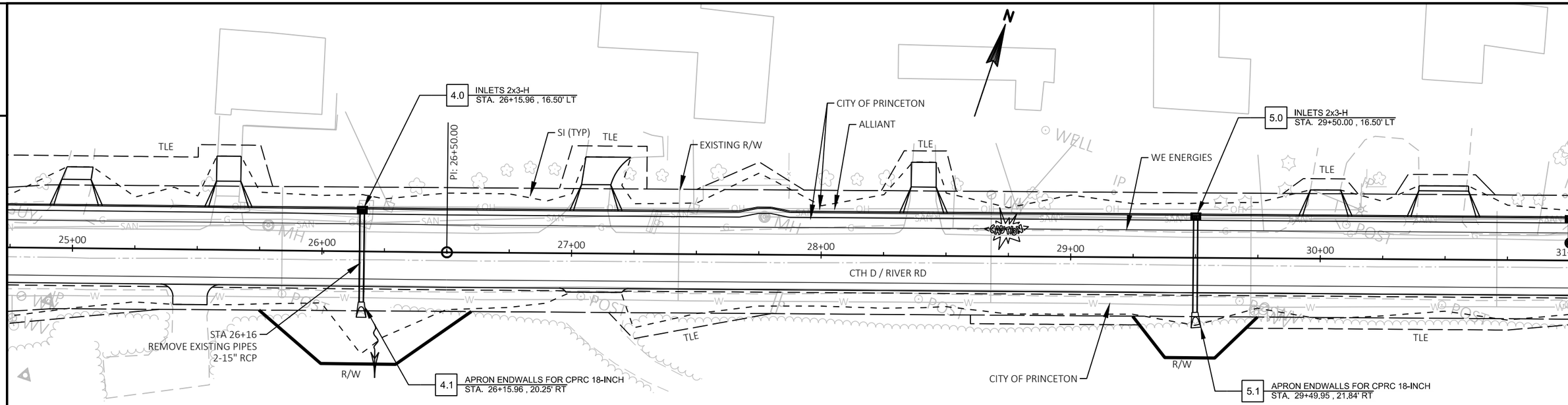


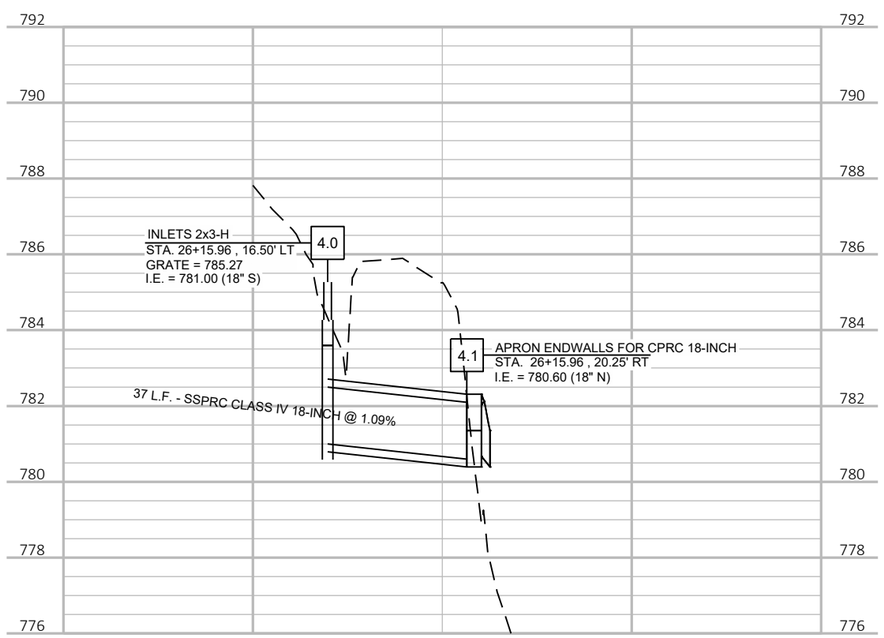


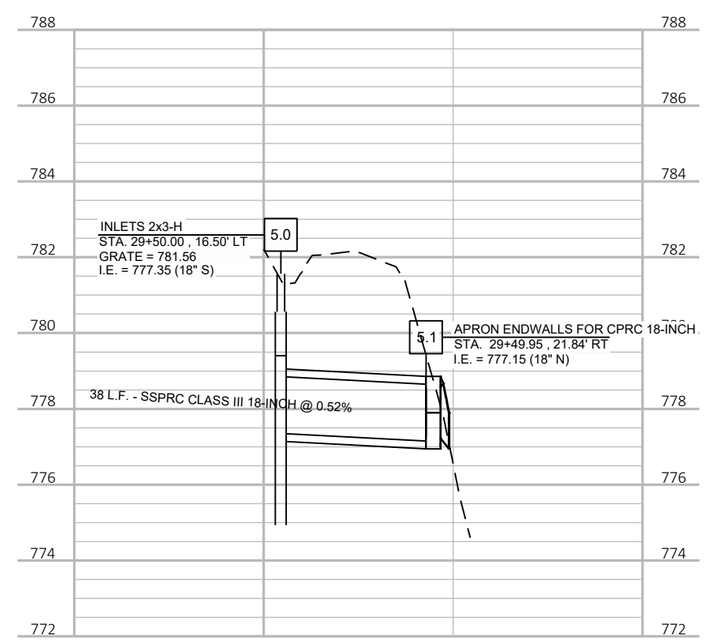


| PROJECT NO: 6425-00-70 | HWY: CTH D | COUNTY: GREEN LAKE | STORM SEWER | SHEET 28 | E |
|---|---|---|---|---|---|

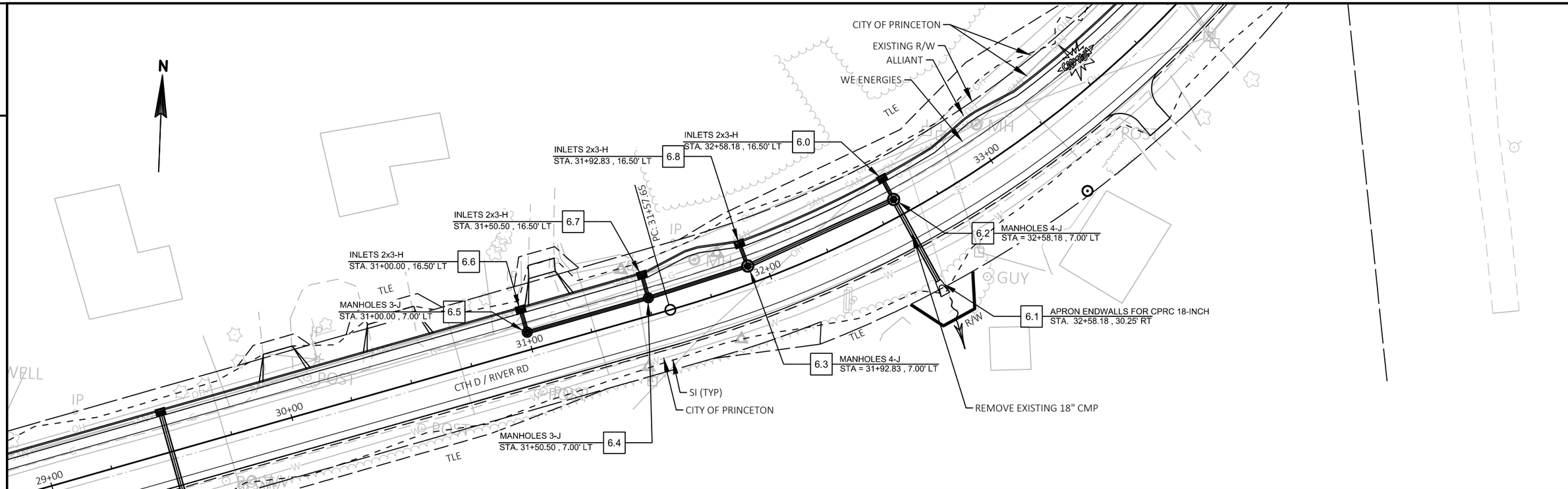


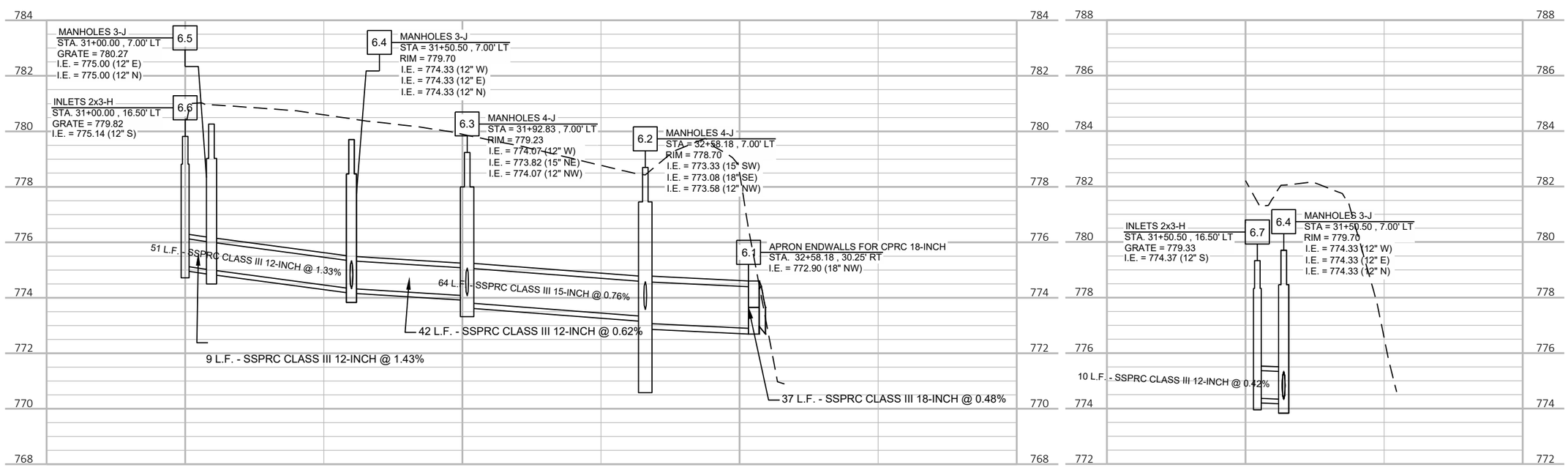


| PROJECT NO: 6425-00-70 | HWY: CTH D | COUNTY: GREEN LAKE | STORM SEWER | SHEET 29 | E |
|---|---|---|---|---|---|

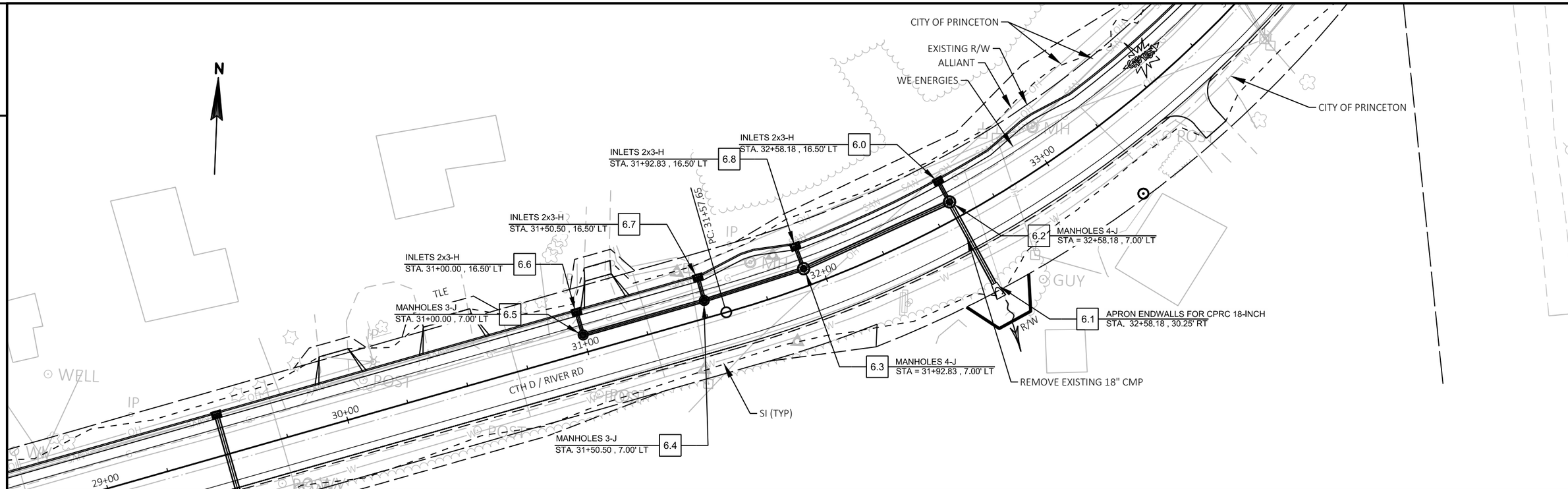


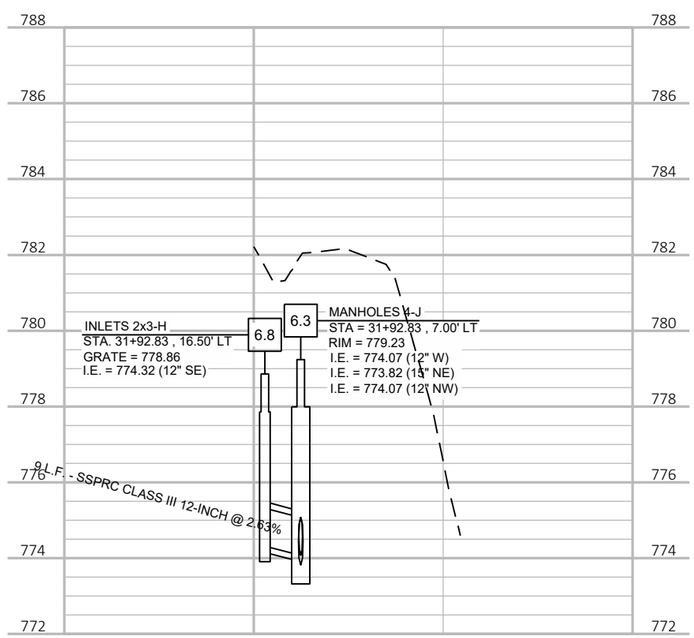


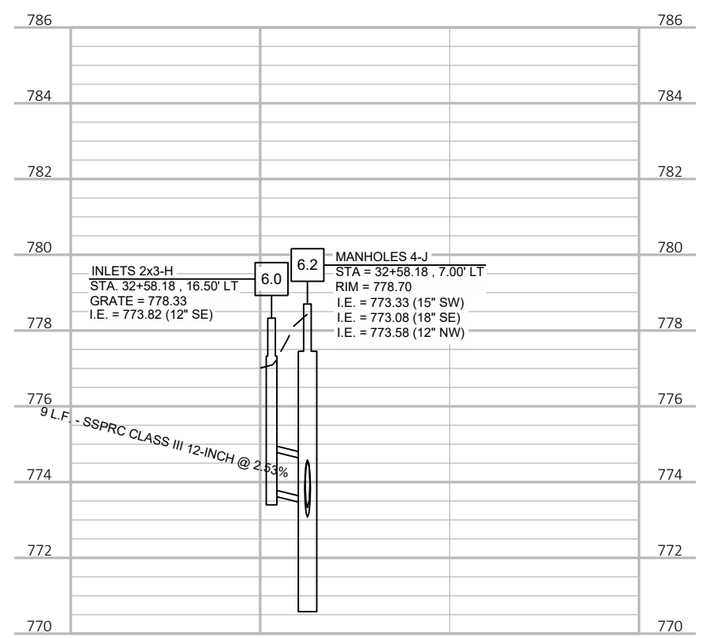


| PROJECT NO: 6425-00-70 | HWY: CTH D | COUNTY: GREEN LAKE COUNTY | STORM SEWER | SHEET 30 | E |
|---|---|---|---|---|---|

FILE NAME : P:\11500S\11500S\11507\11507006\CADD\SHEETSPLAN\022501-SS.DWG
LAYOUT NAME - 6
PLOT DATE : 12/14/2020 1:09 PM PLOT BY : BOBBI MAXWELL PLOT NAME : PLOT SCALE : 1 IN:40 FT
WISDOT/CADDS SHEET 41

2

NOTES:
THE SIDEWALK ON CTH D FROM FIRST STREET TO HARRIS STREET WILL BE CLOSED TO PEDESTRIANS FOR CONSTRUCTION OF THE NEW SIDEWALK. PEDESTRIANS WILL USE FIRST STREET AND HARRIS STREET AS AN ALTERNATE ROUTE. ALL PROPERTIES ON CTH D FROM STA 16+00 LT TO STA 20+00 LT HAVE ACCESS DIRECTLY TO EITHER FIRST ST. OR HARRIS ST.

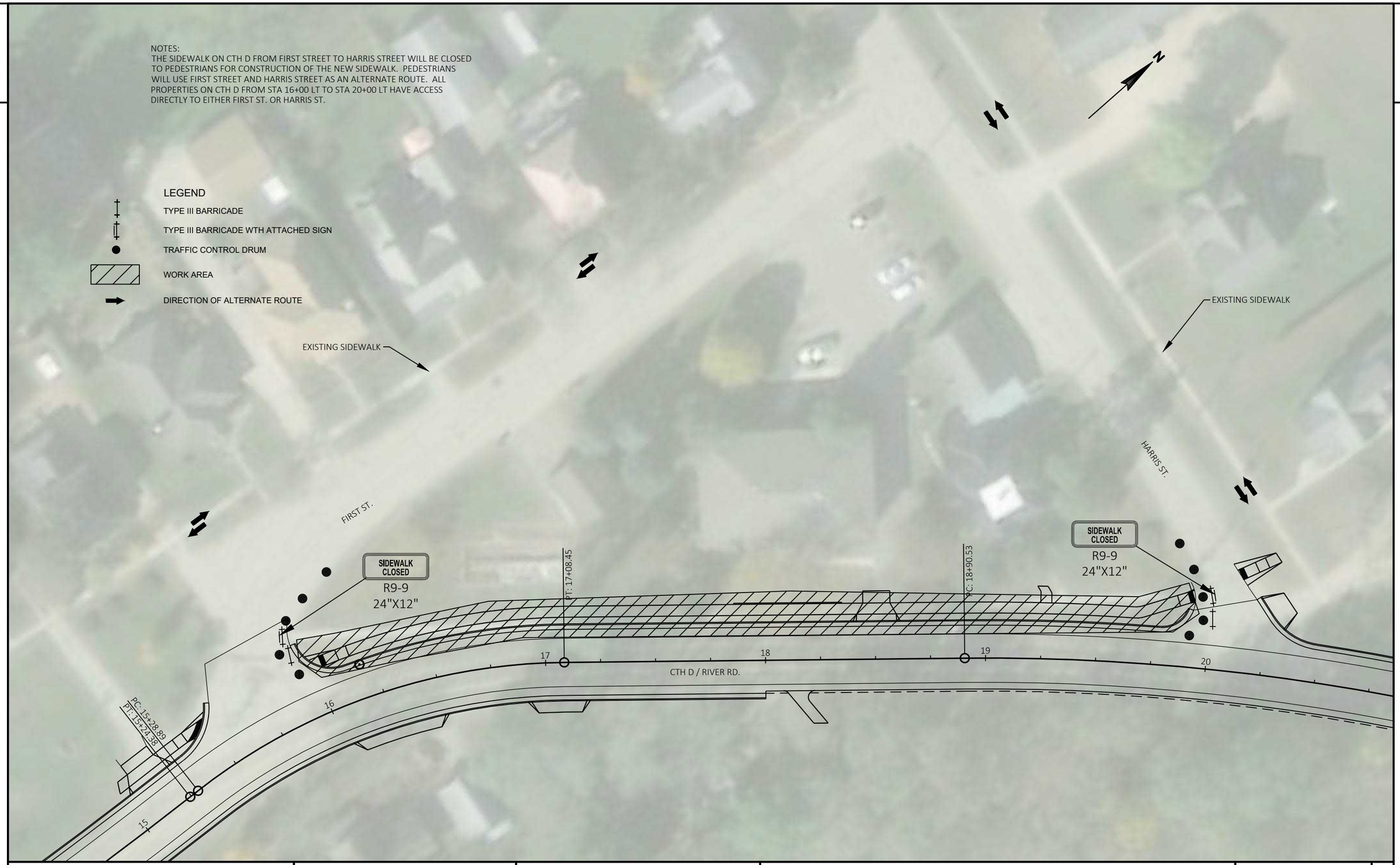


2

| PROJECT NO: 6425-00-70 | HWY: CTH D | COUNTY: GREEN LAKE | PEDESTRIAN - ALTERNATE ROUTE | SHEET 31 | E |
|---|---|---|---|---|---|

FILE NAME : P:\11500S\11500S\11507\11507006\CADD\SHEETSPLAN\027001-DT.DWG
LAYOUT NAME - 01
PLOT DATE : 10/22/2020 10:21 AM PLOT BY : BOBBI MAXWELL PLOT NAME : PLOT SCALE : 1 IN:40 FT
WISDOT/CADDS SHEET 42

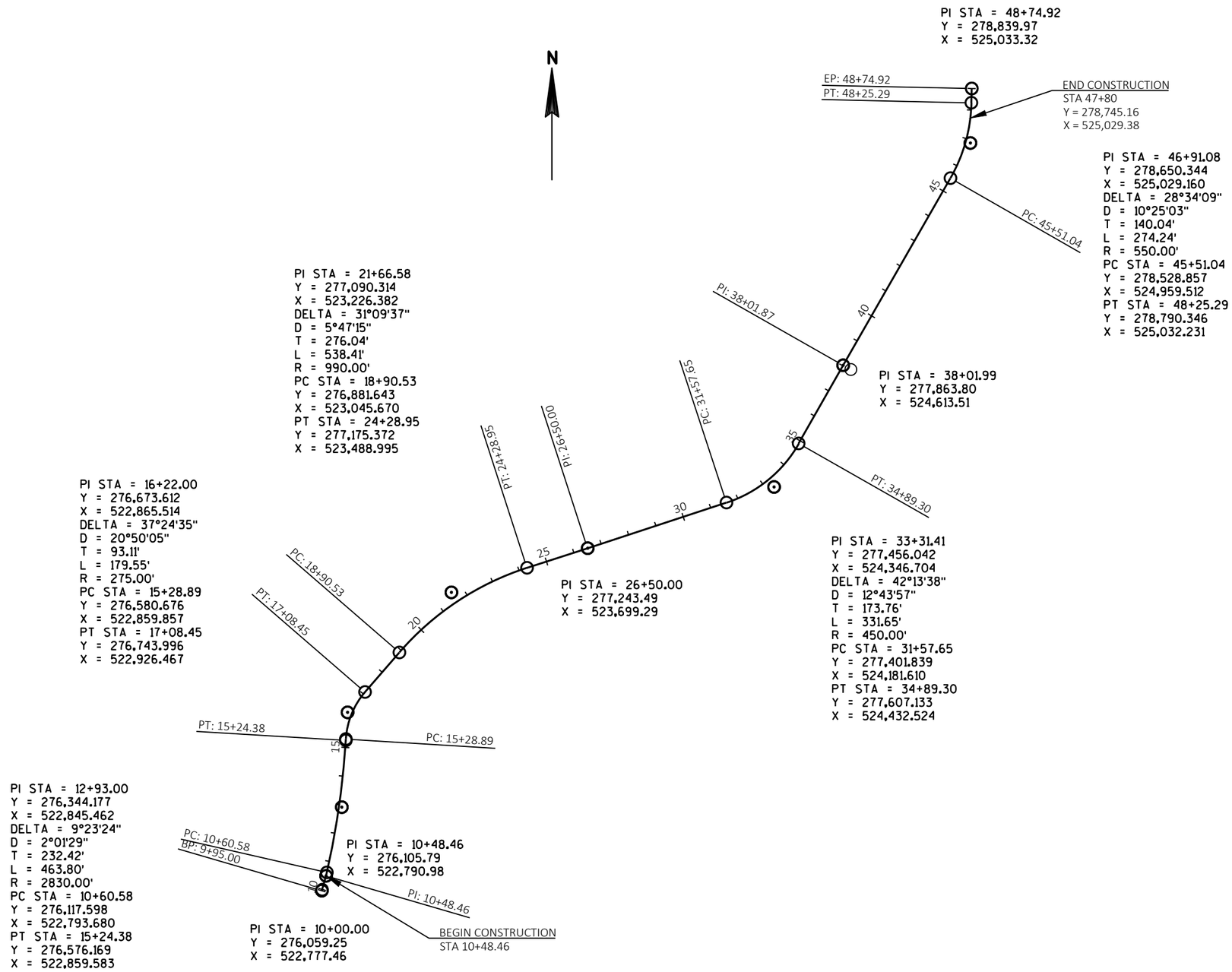


| PROJECT NO: 6425-00-70 | HWY: CTH D | COUNTY: GREEN LAKE COUNTY | ALIGNMENT DIAGRAM | SHEET 32 | E |
|---|---|---|---|---|---|

# Superelevation

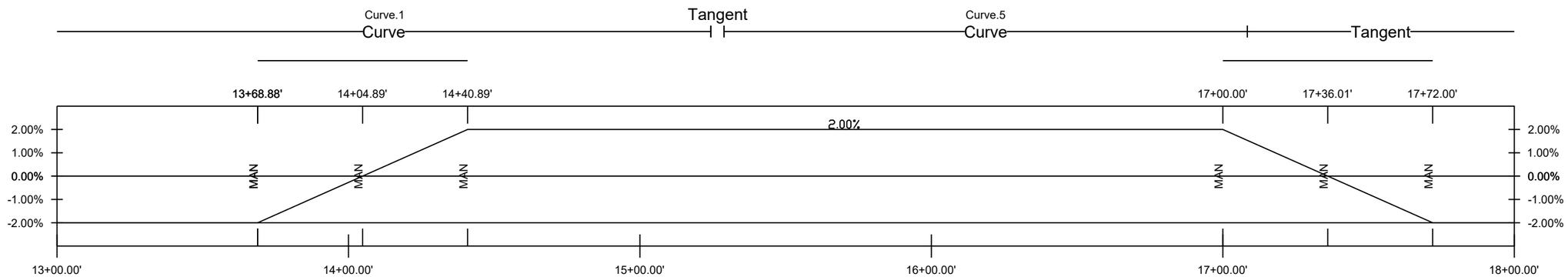


| PROJECT NO: 6425-00-70 | HWY: CTH D | COUNTY: GREEN LAKE COUNTY | SUPERELEVATION DIAGRAM | SHEET 33 | E |
|---|---|---|---|---|---|

FILE NAME : P:\11500S\11500S\11507\11507006\CADD\SHEETSPLAN\027301-XX 2013.DWG
LAYOUT NAME - 01
PLOT DATE : 8/14/2020 9:39 AM
PLOT BY : BOBBI MAXWELL
PLOT NAME :
PLOT SCALE : 1 IN:40 FT
WISDOT/CADDS SHEET 42

# Superelevation

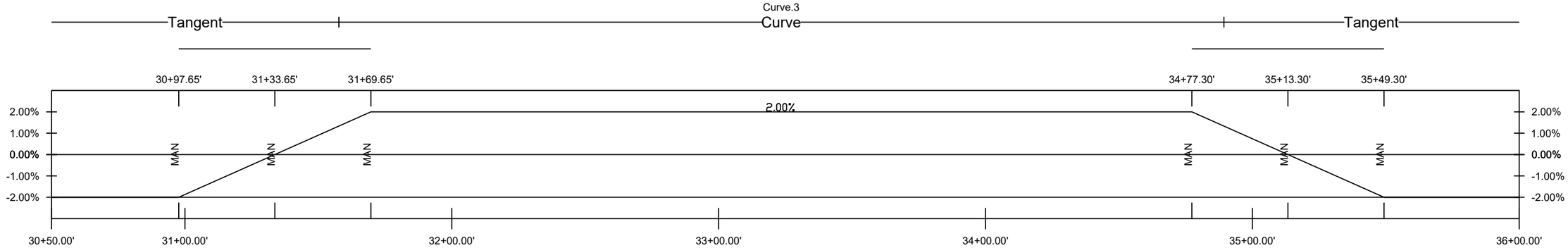


# Superelevation

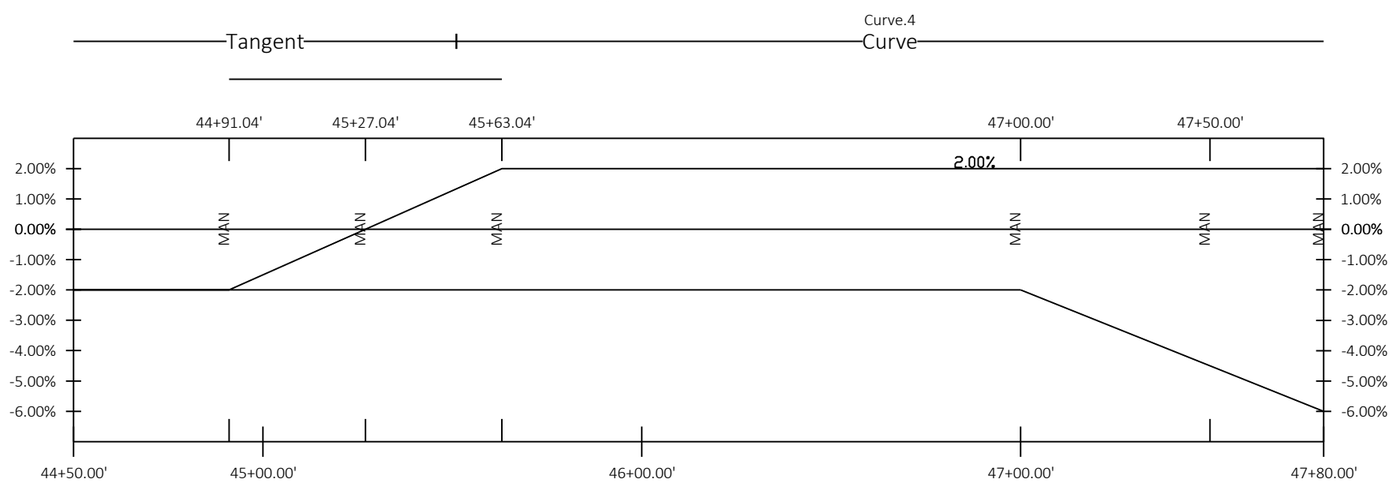


| PROJECT NO: 6425-00-70 | HWY: CTH D | COUNTY: GREEN LAKE COUNTY | SUPERELEVATION DIAGRAM | SHEET 34 | E |
|---|---|---|---|---|---|

## Estimate Of Quantities

6425-00-70

| Line | Item | Item Description | Unit | Total | Qty |
|---|---|---|---|---|---|
| 0002 | 201.0105 | Clearing | STA | 26.000 | 26.000 |
| 0004 | 201.0205 | Grubbing | STA | 26.000 | 26.000 |
| 0006 | 203.0100 | Removing Small Pipe Culverts | EACH | 10.000 | 10.000 |
| 0008 | 203.0200 | Removing Old Structure (station) 01. Station 36+92 | LS | 1.000 | 1.000 |
| 0010 | 204.0100 | Removing Concrete Pavement | SY | 4.000 | 4.000 |
| 0012 | 204.0110 | Removing Asphaltic Surface | SY | 10,473.000 | 10,473.000 |
| 0014 | 204.0155 | Removing Concrete Sidewalk | SY | 184.000 | 184.000 |
| 0016 | 204.0165 | Removing Guardrail | LF | 194.000 | 194.000 |
| 0018 | 204.0220 | Removing Inlets | EACH | 4.000 | 4.000 |
| 0020 | 204.0245 | Removing Storm Sewer (size) 01. 12-Inch | LF | 35.000 | 35.000 |
| 0022 | 204.0245 | Removing Storm Sewer (size) 02. 18-Inch | LF | 43.000 | 43.000 |
| 0024 | 204.0245 | Removing Storm Sewer (size) 03. 18x15-Inch | LF | 179.000 | 179.000 |
| 0026 | 204.0245 | Removing Storm Sewer (size) 04. 42-Inch | LF | 19.000 | 19.000 |
| 0028 | 204.0275 | Closing Culvert Pipes | EACH | 2.000 | 2.000 |
| 0030 | 204.9090.S | Removing (item description) 01. Railing | LF | 12.000 | 12.000 |
| 0032 | 205.0100 | Excavation Common | CY | 7,460.000 | 7,460.000 |
| 0034 | 209.2500 | Backfill Granular Grade 2 | TON | 2,750.000 | 2,750.000 |
| 0036 | 213.0100 | Finishing Roadway (project) 01. 6425-00-70 | EACH | 1.000 | 1.000 |
| 0038 | 305.0110 | Base Aggregate Dense 3/4-Inch | TON | 627.000 | 627.000 |
| 0040 | 305.0120 | Base Aggregate Dense 1 1/4-Inch | TON | 4,432.000 | 4,432.000 |
| 0042 | 305.0130 | Base Aggregate Dense 3-Inch | TON | 7,632.000 | 7,632.000 |
| 0044 | 416.0160 | Concrete Driveway 6-Inch | SY | 63.000 | 63.000 |
| 0046 | 455.0605 | Tack Coat | GAL | 1,712.000 | 1,712.000 |
| 0048 | 460.2000 | Incentive Density HMA Pavement | DOL | 1,760.000 | 1,760.000 |
| 0050 | 460.5223 | HMA Pavement 3 LT 58-28 S | TON | 1,540.000 | 1,540.000 |
| 0052 | 460.5224 | HMA Pavement 4 LT 58-28 S | TON | 1,198.000 | 1,198.000 |
| 0054 | 465.0120 | Asphaltic Surface Driveways and Field Entrances | TON | 149.000 | 149.000 |
| 0056 | 465.0315 | Asphaltic Flumes | SY | 57.000 | 57.000 |
| 0058 | 520.1015 | Apron Endwalls for Culvert Pipe 15-Inch | EACH | 4.000 | 4.000 |
| 0060 | 520.3315 | Culvert Pipe Class III-A 15-Inch | LF | 80.000 | 80.000 |
| 0062 | 520.8000 | Concrete Collars for Pipe | EACH | 1.000 | 1.000 |
| 0064 | 522.0418 | Culvert Pipe Reinforced Concrete Class IV 18-Inch | LF | 34.000 | 34.000 |
| 0066 | 522.1018 | Apron Endwalls for Culvert Pipe Reinforced Concrete 18-Inch | EACH | 8.000 | 8.000 |
| 0068 | 601.0411 | Concrete Curb & Gutter 30-Inch Type D | LF | 2,670.000 | 2,670.000 |
| 0070 | 602.0405 | Concrete Sidewalk 4-Inch | SF | 3,530.000 | 3,530.000 |
| 0072 | 602.0505 | Curb Ramp Detectable Warning Field Yellow | SF | 40.000 | 40.000 |
| 0074 | 606.0300 | Riprap Heavy | CY | 185.000 | 185.000 |
| 0076 | 608.0312 | Storm Sewer Pipe Reinforced Concrete Class III 12-Inch | LF | 130.000 | 130.000 |

6425-00-70

| Line | Item | Item Description | Unit | Total | Qty |
|---|---|---|---|---|---|
| 0078 | 608.0315 | Storm Sewer Pipe Reinforced Concrete Class III 15-Inch | LF | 64.000 | 64.000 |
| 0080 | 608.0318 | Storm Sewer Pipe Reinforced Concrete Class III 18-Inch | LF | 74.000 | 74.000 |
| 0082 | 608.0324 | Storm Sewer Pipe Reinforced Concrete Class III 24-Inch | LF | 13.000 | 13.000 |
| 0084 | 608.0342 | Storm Sewer Pipe Reinforced Concrete Class III 42-Inch | LF | 17.000 | 17.000 |
| 0086 | 608.0412 | Storm Sewer Pipe Reinforced Concrete Class IV 12-Inch | LF | 78.000 | 78.000 |
| 0088 | 608.0415 | Storm Sewer Pipe Reinforced Concrete Class IV 15-Inch | LF | 131.000 | 131.000 |
| 0090 | 608.0418 | Storm Sewer Pipe Reinforced Concrete Class IV 18-Inch | LF | 215.000 | 215.000 |
| 0092 | 611.0530 | Manhole Covers Type J | EACH | 5.000 | 5.000 |
| 0094 | 611.0624 | Inlet Covers Type H | EACH | 13.000 | 13.000 |
| 0096 | 611.0642 | Inlet Covers Type MS | EACH | 2.000 | 2.000 |
| 0098 | 611.2003 | Manholes 3-FT Diameter | EACH | 2.000 | 2.000 |
| 0100 | 611.2004 | Manholes 4-FT Diameter | EACH | 2.000 | 2.000 |
| 0102 | 611.2006 | Manholes 6-FT Diameter | EACH | 1.000 | 1.000 |
| 0104 | 611.3230 | Inlets 2x3-FT | EACH | 13.000 | 13.000 |
| 0106 | 611.3902 | Inlets Median 2 Grate | EACH | 1.000 | 1.000 |
| 0108 | 619.1000 | Mobilization | EACH | 1.000 | 1.000 |
| 0110 | 623.0200 | Dust Control Surface Treatment | SY | 14,928.000 | 14,928.000 |
| 0112 | 624.0100 | Water | MGAL | 198.000 | 198.000 |
| 0114 | 625.0500 | Salvaged Topsoil | SY | 7,822.000 | 7,822.000 |
| 0116 | 627.0200 | Mulching | SY | 3,560.000 | 3,560.000 |
| 0118 | 628.1504 | Silt Fence | LF | 1,723.000 | 1,723.000 |
| 0120 | 628.1520 | Silt Fence Maintenance | LF | 1,723.000 | 1,723.000 |
| 0122 | 628.1905 | Mobilizations Erosion Control | EACH | 2.000 | 2.000 |
| 0124 | 628.1910 | Mobilizations Emergency Erosion Control | EACH | 2.000 | 2.000 |
| 0126 | 628.2004 | Erosion Mat Class I Type B | SY | 2,578.000 | 2,578.000 |
| 0128 | 628.2008 | Erosion Mat Urban Class I Type B | SY | 4,516.000 | 4,516.000 |
| 0130 | 628.7005 | Inlet Protection Type A | EACH | 1.000 | 1.000 |
| 0132 | 628.7015 | Inlet Protection Type C | EACH | 13.000 | 13.000 |
| 0134 | 628.7504 | Temporary Ditch Checks | LF | 40.000 | 40.000 |
| 0136 | 628.7555 | Culvert Pipe Checks | EACH | 8.000 | 8.000 |
| 0138 | 629.0210 | Fertilizer Type B | CWT | 5.000 | 5.000 |
| 0140 | 630.0120 | Seeding Mixture No. 20 | LB | 143.510 | 143.510 |
| 0142 | 630.0140 | Seeding Mixture No. 40 | LB | 44.740 | 44.740 |
| 0144 | 630.0200 | Seeding Temporary | LB | 73.600 | 73.600 |

6425-00-70

| Line | Item | Item Description | Unit | Total | Qty |
|---|---|---|---|---|---|
| 0146 | 630.0500 | Seed Water | MGAL | 177.000 | 177.000 |
| 0148 | 633.5100 | Markers Row | EACH | 20.000 | 20.000 |
| 0150 | 633.5200 | Markers Culvert End | EACH | 14.000 | 14.000 |
| 0152 | 634.0614 | Posts Wood 4x6-Inch X 14-FT | EACH | 10.000 | 10.000 |
| 0154 | 634.0616 | Posts Wood 4x6-Inch X 16-FT | EACH | 1.000 | 1.000 |
| 0156 | 634.0618 | Posts Wood 4x6-Inch X 18-FT | EACH | 1.000 | 1.000 |
| 0158 | 637.2210 | Signs Type II Reflective H | SF | 38.540 | 38.540 |
| 0160 | 637.2230 | Signs Type II Reflective F | SF | 40.250 | 40.250 |
| 0162 | 638.2602 | Removing Signs Type II | EACH | 17.000 | 17.000 |
| 0164 | 638.3000 | Removing Small Sign Supports | EACH | 17.000 | 17.000 |
| 0166 | 642.5001 | Field Office Type B | EACH | 1.000 | 1.000 |
| 0168 | 643.0300 | Traffic Control Drums | DAY | 2,150.000 | 2,150.000 |
| 0170 | 643.0420 | Traffic Control Barricades Type III | DAY | 2,540.000 | 2,540.000 |
| 0172 | 643.0705 | Traffic Control Warning Lights Type A | DAY | 2,940.000 | 2,940.000 |
| 0174 | 643.0900 | Traffic Control Signs | DAY | 1,470.000 | 1,470.000 |
| 0176 | 643.5000 | Traffic Control | EACH | 1.000 | 1.000 |
| 0178 | 644.1420 | Temporary Pedestrian Surface Plywood | SF | 144.000 | 144.000 |
| 0180 | 644.1601 | Temporary Pedestrian Curb Ramp | DAY | 55.000 | 55.000 |
| 0182 | 645.0120 | Geotextile Type HR | SY | 426.000 | 426.000 |
| 0184 | 646.1020 | Marking Line Epoxy 4-Inch | LF | 14,715.000 | 14,715.000 |
| 0186 | 646.7420 | Marking Crosswalk Epoxy Transverse Line 6-Inch | LF | 170.000 | 170.000 |
| 0188 | 650.4000 | Construction Staking Storm Sewer | EACH | 19.000 | 19.000 |
| 0190 | 650.4500 | Construction Staking Subgrade | LF | 3,735.000 | 3,735.000 |
| 0192 | 650.5000 | Construction Staking Base | LF | 3,735.000 | 3,735.000 |
| 0194 | 650.5500 | Construction Staking Curb Gutter and Curb & Gutter | LF | 2,720.000 | 2,720.000 |
| 0196 | 650.6000 | Construction Staking Pipe Culverts | EACH | 2.000 | 2.000 |
| 0198 | 650.9000 | Construction Staking Curb Ramps | EACH | 4.000 | 4.000 |
| 0200 | 650.9910 | Construction Staking Supplemental Control (project) 01. 6425-00-70 | LS | 1.000 | 1.000 |
| 0202 | 650.9920 | Construction Staking Slope Stakes | LF | 3,735.000 | 3,735.000 |
| 0204 | 690.0150 | Sawing Asphalt | LF | 472.000 | 472.000 |
| 0206 | 690.0250 | Sawing Concrete | LF | 18.000 | 18.000 |
| 0208 | 740.0440 | Incentive IRI Ride | DOL | 2,828.000 | 2,828.000 |
| 0210 | ASP.1T0A | On-the-Job Training Apprentice at $5.00/HR | HRS | 1,200.000 | 1,200.000 |
| 0212 | ASP.1T0G | On-the-Job Training Graduate at $5.00/HR | HRS | 600.000 | 600.000 |
| 0214 | SPV.0035 | Special 01. Excavation Waste | CY | 4,907.000 | 4,907.000 |
| 0216 | SPV.0060 | Special 01. Apron Endwalls For Culvert Pipe Reinforced Concrete HE 72x113-Inch | EACH | 2.000 | 2.000 |
| 0218 | SPV.0060 | Special 02. Adjust Ex. Sanitary Manhole | EACH | 7.000 | 7.000 |
| 0220 | SPV.0060 | Special 03. Adjust Ex. Sanitary Manhole Cone | EACH | 2.000 | 2.000 |

6425-00-70

| Line | Item | Item Description | Unit | Total | Qty |
|---|---|---|---|---|---|
| 0222 | SPV.0060 | Special 04. Reconstruct Ex. Sanitary Manhole | EACH | 2.000 | 2.000 |
| 0224 | SPV.0060 | Special 05. Adjust Ex. Water Valve Box | EACH | 9.000 | 9.000 |
| 0226 | SPV.0060 | Special 06. Adjust Ex. Water Curb Stop Box | EACH | 7.000 | 7.000 |
| 0228 | SPV.0090 | Special 01. Culvert Pipe Reinforced Concrete HE Class HE-III 72x113-Inch | LF | 40.000 | 40.000 |
| 0230 | SPV.0090 | Special 02. Joint Ties | LF | 17.000 | 17.000 |
| 0232 | SPV.0090 | Special 03. Modified Pedestrian Curb, 9-Inch | LF | 50.000 | 50.000 |
| 0234 | SPV.0105 | Special 01. Administration of CDBG Requirements | LS | 1.000 | 1.000 |

3

## CLEARING AND GRUBBING

| CATEGORY | STATION | TO | STATION | LOCATION | 201.0105 CLEARING STA | 201.0205 GRUBBING STA | REMARKS |
|---|---|---|---|---|---|---|---|
| 0010 | 17+00 | - | 18+00 | LT | 1 | 1 | |
| 0010 | 17+00 | - | 22+00 | RT | 5 | 5 | |
| 0010 | 23+00 | - | 25+00 | RT | 2 | 2 | |
| 0010 | 23+00 | - | 26+00 | LT | 3 | 3 | SAVE TREE AT 23+32 LT |
| 0010 | 26+00 | - | 28+00 | RT | 2 | 2 | |
| 0010 | 27+00 | - | 31+00 | LT | 4 | 4 | |
| 0010 | 29+00 | - | 30+00 | RT | 1 | 1 | |
| 0010 | 32+00 | - | 33+00 | RT | 1 | 1 | |
| 0010 | 35+00 | - | 36+00 | LT | 1 | 1 | |
| 0010 | 37+00 | - | 38+00 | RT | 1 | 1 | |
| 0010 | 38+00 | - | 42+00 | LT | 3 | 3 | |
| 0010 | 41+00 | - | 42+00 | RT | 1 | 1 | |
| 0010 | 45+00 | - | 46+00 | RT | 1 | 1 | |
| | | | | TOTAL 0010 | 26 | 26 | |

## REMOVING PAVEMENT

| CATEGORY | STATION | TO | STATION | LOCATION | 204.0100 REMOVING CONCRETE PAVEMENT SY | 204.0110 REMOVING ASPHALTIC SURFACE SY |
|---|---|---|---|---|---|---|
| 0010 | 23+36 | - | 23+49 | LT | 4 | --- |
| 0010 | 10+48 | - | 47+80 | ROADWAY | --- | 10,473 |
| | | | | TOTAL 0010 | 4 | 10,473 |

## REMOVING SIDEWALK

| CATEGORY | STATION | TO | STATION | LOCATION | 204.0155 REMOVING CONCRETE SIDEWALK SY | 204.9090.S.01 REMOVING (01. RAILING) LF |
|---|---|---|---|---|---|---|
| 0010 | 15+90 | - | 18+44 | LT | 119 | --- |
| 0010 | 18+56 | - | 19+93 | LT | 61 | --- |
| 0010 | 19+23 | - | 19+31 | LT | 4 | --- |
| 0010 | 18+11 | - | 18+23 | LT | --- | 12 |
| 0010 | 33+48 | - | -- | RT | --- | --- |
| 0010 | 33+76 | - | -- | RT | --- | --- |
| | | | | TOTAL 0010 | 184 | 12 |

## REMOVING GUARDRAIL

| CATEGORY | STATION | TO | STATION | LOCATION | 204.0165 REMOVING GUARDRAIL LF |
|---|---|---|---|---|---|
| 0010 | 36+48 | - | 37+44 | LT | 96 |
| 0010 | 36+43 | - | 37+41 | RT | 98 |
| | | | | TOTAL 0010 | 194 |

## REMOVING CULVERTS

| CATEGORY | STATION | TO | STATION | LOCATION | 203.0100 REMOVING SMALL PIPE CULVERTS EACH | REMARKS |
|---|---|---|---|---|---|---|
| 0010 | 18+42 | - | 18+61 | LT | 1 | 12" CMP |
| 0010 | 23+59 | - | 23+59 | LT & RT | 1 | 18" CMP |
| 0010 | 26+16 | - | 26+16 | LT & RT | 1 | 15" CMP |
| 0010 | 26+17 | - | 26+17 | LT & RT | 1 | 15" CMP |
| 0010 | 26+19 | - | 26+62 | LT | 1 | 12" CMP |
| 0010 | 29+88 | - | 30+11 | LT | 1 | 12" CMP |
| 0010 | 30+34 | - | 30+62 | LT | 1 | 12" CMP |
| 0010 | 30+99 | - | 31+19 | LT | 1 | 12" CMP |
| 0010 | 32+58 | - | 32+70 | LT & RT | 1 | 18" CMP |
| 0010 | 43+94 | - | 43+94 | LT & RT | 1 | 18" CMP |
| | | | | TOTAL 0010 | 10 | |

## REMOVING STORM SEWER

| CATEGORY | STATION | TO | STATION | LOCATION | 204.0220 REMOVING INLETS EACH | 204.0245.01 REMOVING STORM SEWER (SIZE) (01. 12-INCH) LF | 204.0245.02 REMOVING STORM SEWER (SIZE) (02. 18-INCH) LF | 204.0245.03 REMOVING STORM SEWER (SIZE) (03. 18X15-INCH) LF | 204.0245.04 REMOVING STORM SEWER (SIZE) (04. 42-INCH) LF | 204.0275 CLOSING CULVERT PIPES EACH | REMARKS |
|---|---|---|---|---|---|---|---|---|---|---|---|
| 0010 | 11+67 | - | 11+67 | LT & RT | 1 | --- | --- | --- | 19 | --- | 42" SSPRC |
| 0010 | 18+17 | - | 18+17 | LT | 1 | --- | --- | --- | --- | --- | |
| 0010 | 18+16 | - | 18+39 | LT & RT | --- | --- | --- | 51 | --- | --- | 18"X15" SSPRC |
| 0010 | 18+18 | - | 18+40 | LT & RT | --- | --- | --- | 49 | --- | --- | 18"X15" SSPRC |
| 0010 | 18+39 | - | 18+39 | RT | --- | --- | --- | --- | --- | 1 | *AT END OF R/W |
| 0010 | 18+40 | - | 18+40 | RT | --- | --- | --- | --- | --- | 1 | *AT END OF R/W |
| 0010 | 20+50 | - | 20+91 | LT | --- | --- | 43 | --- | --- | --- | 18" HDPE |
| 0010 | 20+94 | - | 20+94 | LT | 1 | --- | --- | --- | --- | --- | |
| 0010 | 20+94 | - | 21+03 | LT & RT | --- | --- | --- | 39 | --- | --- | 18"X15" SSPRC |
| 0010 | 20+96 | - | 21+05 | LT & RT | --- | --- | --- | 40 | --- | --- | 18"X15" SSPRC |
| 0010 | 20+97 | - | 21+31 | LT | --- | 35 | --- | --- | --- | --- | 12" HDPE |
| 0010 | 21+33 | - | 21+33 | LT | 1 | --- | --- | --- | --- | --- | |
| | | | | TOTAL 0010 | 4 | 35 | 43 | 179 | 19 | 2 | |

* EXISTING OUTFALL NOT FOUND. UTILIZE THIS ITEM IF EXISTING PIPE END GOES PAST R/W.

## REMOVING STRUCTURE

| CATEGORY | STATION | LOCATION | 203.0200.01 REMOVING OLD STRUCTURE (STATION) (01. STA 36+92) LS | REMARKS |
|---|---|---|---|---|
| 0010 | 36+92 | BOX CULVERT | 1 | 7.9'X5.9' BOX CULVERT |
| | | TOTAL 0010 | 1 | |

3

3

| Division | From/To Station | Location | 205.0100 Common Excavation (1) | | Salvaged/Unusable Pavement Material (4) | Available Material (5) | Unexpanded Fill | Expanded Fill (13) | Mass Ordinate +/- (14) | Waste | SPV.0035.01 |
|---|---|---|---|---|---|---|---|---|---|---|---|
| | | | Cut (2) | EBS Excavation | | | | Factor 1.25 | | | Excavation Waste |
| Division 1 | | | | | | | | | | | |
| EWKDetail-CtyD2.xml | 10+50/47+80 | ROADWAY | 7,460 | 0 | 2,037 | 5,423 | 412 | 515 | 4,907 | 4,907 | 4,907 |
| Division 1 Subtotal | | | 7,460 | 0 | 2,037 | 5,423 | 412 | 515 | 4,907 | 4,907 | 4,907 |
| Grand Total | | | 7,460 | 0 | 2,037 | 5,423 | 412 | 515 | 4,907 | 4,907 | 4,907 |
| Total Common Exc | | | 7,460 | | | | | | | | |

Notes:
(1) Common Excavation is the sum of the Cut and EBS Excavation columns. Item number 205.0100
(2) Salvaged/Unsuable Pavement Material is included in Cut.
(4) Salvaged/Unusable Pavement Material
5) Available Material = Cut - Salvaged/Unusuable Pavement Material
(13) Expanded Fill Factor = 1.25
Formula: **Expanded Fill = Unexpanded Fill * Fill Factor**
(14) The Mass Ordinate + or - Qty calculated for the Division. Plus quantity indicates an excess of material within the Division. Minus indicates a shortage of material within the Division.

BASE AGGREGATE

| CATEGORY | STATION | TO | STATION | LOCATION | 209.2500 BACKFILL GRANULAR GRADE 2 TON | 305.0110 BASE AGGREGATE DENSE 3/4-INCH TON | 305.0120 BASE AGGREGATE DENSE 1 1/4-INCH TON | 305.0130 BASE AGGREGATE DENSE 3-INCH TON | 623.0200 DUST CONTROL SURFACE TREATMENT SY | 624.0100 WATER MGAL | 650.5000 CONSTRUCTION STAKING BASE LF |
|---|---|---|---|---|---|---|---|---|---|---|---|
| 0010 | 10+48 | - | 47+80 | ROADWAY, DRIVEWAYS | -- | 522 | 3,545 | 6,360 | 12,440 | 165 | 3,735 |
| | 36+94 | - | -- | CROSSDRAIN | 2,361 | -- | -- | -- | -- | -- | -- |
| | 43+94 | - | -- | CROSSDRAIN | 389 | -- | -- | -- | -- | -- | -- |
| 0010 | UNDISTRIBUTED | - | -- | -- | -- | 105 | 887 | 1,272 | 2,488 | 33 | -- |
| | | | | TOTAL 0010 | 2,750 | 627 | 4,432 | 7,632 | 14,928 | 198 | 3,735 |

ASPHALT FLUMES

| CATEGORY | STATION | TO | STATION | LOCATION | 465.0315 ASPHALTIC FLUMES SY |
|---|---|---|---|---|---|
| 0010 | 14+58 | - | 14+85 | RT | 20 |
| 0010 | 21+05 | - | 21+25 | RT | 12 |
| 0010 | 23+25 | - | 23+45 | RT | 12 |
| 0010 | 36+50 | | 36+70 | LT | 13 |
| | | | | TOTAL 0010 | 57 |

ASPHALT PAVEMENT ITEMS

| CATEGORY | STATION | TO | STATION | LOCATION | THICKNESS INCHES | 455.0605 TACK COAT GAL | 460.5223 HMA PAVEMENT 3 LT 58-28 S TON | 460.5224 HMA PAVEMENT 4 LT 58-28 S TON |
|---|---|---|---|---|---|---|---|---|
| 0010 | 10+48 | - | 47+80 | LOWER LAYER | 2.25 | 856 | 1,540 | --- |
| 0010 | 10+48 | - | 47+80 | UPPER LAYER | 1.75 | 856 | --- | 1,198 |
| | | | | TOTAL 0010 | | 1,712 | 1,540 | 1,198 |

NOTE: TACK COAT CALCULATED AT 0.07 GALLONS PER SQUARE YARD FOR BOTH LAYERS

3

## DRIVEWAYS

| CATEGORY | STATION | LOCATION | 416.0160 CONCRETE DRIVEWAY 6-INCH SY | 465.0120 ASPHALTIC SURFACE DRIVEWAYS AND FIELD ENTRANCES TON |
|---|---|---|---|---|
| 0010 | 11+15 | RT | --- | 2 |
| 0010 | 11+69 | RT | --- | 3 |
| 0010 | 12+17 | RT | --- | 2 |
| 0010 | 15+17 | LT | 19 | 2 |
| 0010 | 16+25 | RT | --- | 4 |
| 0010 | 17+00 | RT | --- | 3 |
| 0010 | 18+20 | RT | --- | --- |
| 0010 | 18+50 | LT | 17 | 2 |
| 0010 | 20+25 | LT | --- | 3 |
| 0010 | 21+50 | RT | --- | 5 |
| 0010 | 22+75 | LT | --- | 6 |
| 0010 | 23+00 | RT | --- | 5 |
| 0010 | 24+43 | LT | --- | 3 |
| 0010 | 25+00 | LT | --- | 3 |
| 0010 | 25+50 | RT | --- | 3 |
| 0010 | 25+62 | LT | 27 | --- |
| 0010 | 27+10 | RT | --- | 1 |
| 0010 | 27+10 | LT | --- | 6 |
| 0010 | 28+41 | LT | --- | 5 |
| 0010 | 30+00 | LT | --- | 4 |
| 0010 | 30+50 | LT | --- | 5 |
| 0010 | 31+12 | LT | --- | 3 |
| 0010 | 33+60 | RT | --- | 4 |
| 0010 | 35+25 | RT | --- | 15 |
| 0010 | 36+13 | LT | --- | 2 |
| 0010 | 38+00 | RT | --- | 9 |
| 0010 | 38+50 | RT | --- | 5 |
| 0010 | 39+39 | RT | --- | 4 |
| 0010 | 42+41 | LT | --- | 8 |
| 0010 | 42+65 | RT | --- | 16 |
| 0010 | 43+25 | LT | --- | 12 |
| 0010 | 46+72 | RT | --- | 4 |
| | | TOTAL 0010 | 63 | 149 |

* ADDITIONAL QUANTITIES LISTED ELSEWHERE
BASE AGGREGATE DRIVEWAYS AND BASE AGGREGATE UNDER ASPHALT DRIVEWAYS ARE I
UNDER THE BASE AGGREGATE TABLE.

## CULVERTS

| CATEGORY | STATION | LOCATION | THICKNESS STEEL | THICKNESS ALUMINUM | 520.1015 APRON ENDWALLS FOR CULVERT PIPE 15-INCH EACH | 520.3315 CULVERT PIPE CLASS III-A 15-INCH LF | 522.0418 CULVERT PIPE REINFORCED CONCRETE CLASS IV 18-INCH LF | * 522.1018 APRON ENDWALLS FOR CULVERT PIPE REINFORCED CONCRETE 18-INCH EACH | * 633.5200 MARKERS CULVERT END EACH | 650.6000 CONSTRUCTION STAKING PIPE CULVERTS EACH | SPV.0060.01 APRON ENDWALLS FOR CULVERT PIPE REINFORCED CONCRETE HE 72x113-INCH EACH | SPV.0090.01 CULVERT PIPE REINFORCED CONCRETE HE CLASS HE-III 72x113-INCH LF |
|---|---|---|---|---|---|---|---|---|---|---|---|---|
| 0010 | 36+94 | ROADWAY | --- | --- | --- | --- | --- | --- | --- | 1 | --- | 40 |
| 0010 | 36+93 | 19.5' RT | --- | --- | --- | --- | --- | --- | 1 | --- | 1 | --- |
| 0010 | 36+95 | 18.8' LT | --- | --- | --- | --- | --- | --- | 1 | --- | 1 | --- |
| 0010 | 42+41 | LT | 0.064 | 0.060 | --- | 38 | --- | --- | --- | --- | --- | --- |
| 0010 | 42+23 | 23.7' LT | --- | --- | 1 | --- | --- | --- | 1 | --- | --- | --- |
| 0010 | 42+60 | 23.5' LT | --- | --- | 1 | --- | --- | --- | 1 | --- | --- | --- |
| 0010 | 43+25 | LT | 0.064 | 0.060 | --- | 42 | --- | --- | --- | --- | --- | --- |
| 0010 | 43+01 | 23.0' LT | --- | --- | 1 | --- | --- | --- | 1 | --- | --- | --- |
| 0010 | 43+42 | 24.0' LT | --- | --- | 1 | --- | --- | --- | 1 | --- | --- | --- |
| 0010 | 43+94 | ROADWAY | --- | --- | --- | --- | 34 | --- | --- | 1 | --- | --- |
| 0010 | 43+94 | 15.8' LT | --- | --- | --- | --- | --- | 1 | 1 | --- | --- | --- |
| 0010 | 43+94 | 16.8' RT | --- | --- | --- | --- | --- | 1 | 1 | --- | --- | --- |
| | | TOTAL 0010 | | | 4 | 80 | 34 | 2 | 8 | 2 | 2 | 40 |

* ADDITIONAL QUANTITIES LISTED ELSEWHERE

## CURB & GUTTER

| CATEGORY | STATION | TO | STATION | LOCATION | 601.0411 CONCRETE CURB & GUTTER 30-INCH TYPE D LF | 650.5500 CONSTRUCTION STAKING CURB GUTTER AND CURB & GUTTER LF | SPV.0090.03 SPECIAL (03. MODIFIED PEDESTRIAN CURB, 9-INCH) LF |
|---|---|---|---|---|---|---|---|
| 0010 | 14+50 | - | 15+55 | LT | 110 | 110 | --- |
| 0010 | 14+85 | - | 18+00 | RT | 305 | 305 | --- |
| 0010 | 15+95 | - | 19+92 | LT | 420 | 420 | --- |
| 0010 | 20+21 | - | 36+50 | LT | 1,635 | 1,635 | --- |
| 0010 | 21+25 | - | 23+25 | RT | 200 | 200 | --- |
| 0010 | 17+86 | - | 18+35 | LT | --- | 50 | 50 |
| | | | | TOTAL 0010 | 2,670 | 2,720 | 50 |

## STORM SEWER ENDWALLS

| CATEGORY | STATION | LOCATION | 520.8000 CONCRETE COLLARS FOR PIPE EACH | * 522.1018 APRON ENDWALLS FOR CULVERT PIPE REINFORCED CONCRETE 18-INCH EACH | * 633.5200 MARKERS CULVERT END EACH | REMARKS |
|---|---|---|---|---|---|---|
| 0010 | 11+67 | 5.60' RT | 1 | --- | --- | 42-INCH (STRUCTURE 1.01) |
| 0010 | 18+43 | 30.4' RT | --- | 1 | 1 | |
| 0010 | 21+03 | 20.8' RT | --- | 1 | 1 | |
| 0010 | 23+59 | 22.2' RT | --- | 1 | 1 | |
| 0010 | 26+16 | 20.3' RT | --- | 1 | 1 | |
| 0010 | 29+50 | 21.8' RT | --- | 1 | 1 | |
| 0010 | 32+58 | 30.3' RT | --- | 1 | 1 | |
| | | TOTAL 0010 | 1 | 6 | 6 | |

* ADDITIONAL QUANTITIES LISTED ELSEWHERE

3

3

SIDEWALK

| CATEGORY | STATION | TO | STATION | LOCATION | 602.0405 CONCRETE SIDEWALK 4-INCH SF | 602.0505 CURB RAMP DETECTABLE WARNING FIELD YELLOW SF | 650.9000 CONSTRUCTION STAKING CURB RAMPS EACH |
|---|---|---|---|---|---|---|---|
| 0010 | 15+00 | - | 15+05 | LT | 32 | --- | --- |
| 0010 | 15+26 | - | 15+49 | LT | 162 | 10 | 1 |
| 0010 | 15+99 | - | 18+42 | LT | 1,985 | 10 | 1 |
| 0010 | 18+60 | - | 19+93 | LT | 1,190 | 10 | 1 |
| 0010 | 20+08 | - | 20+28 | LT | 156 | 10 | 1 |
| 0010 | 23+90 | - | 23+93 | LT | 5 | --- | --- |
| | | | | TOTAL 0010 | 3,530 | 40 | 4 |

* ADDITIONAL QUANTITIES LISTED ELSEWHERE

RIPRAP

| CATEGORY | STATION | TO | STATION | LOCATION | 606.0300 RIPRAP HEAVY CY | 645.0120 GEOTEXTILE TYPE HR SY |
|---|---|---|---|---|---|---|
| 0010 | 14+58 | - | 14+65 | RT | 3 | 9 |
| 0010 | 18+40 | - | 18+46 | RT | 4 | 13 |
| 0010 | 20+79 | - | 21+21 | RT | 36 | 83 |
| 0010 | 23+56 | - | 23+61 | RT | 4 | 13 |
| 0010 | 25+96 | - | 26+42 | RT | 65 | 128 |
| 0010 | 29+48 | - | 29+54 | RT | 4 | 13 |
| 0010 | 32+56 | - | 32+62 | RT | 4 | 13 |
| 0010 | 36+67 | - | 37+16 | RT | 32 | 76 |
| 0010 | 36+67 | - | 37+16 | LT | 33 | 78 |
| | | | | TOTAL 0010 | 185 | 426 |

3

STORM SEWER PIPES

| CATEGORY | STRUCTURE | TO | STRUCTURE | STATION | 608.0312 STORM SEWER PIPE REINFORCED CONCRETE CLASS III 12-INCH LF | 608.0315 STORM SEWER PIPE REINFORCED CONCRETE CLASS III 15-INCH LF | 608.0318 STORM SEWER PIPE REINFORCED CONCRETE CLASS III 18-INCH LF | 608.0324 STORM SEWER PIPE REINFORCED CONCRETE CLASS III 24-INCH LF | 608.0342 STORM SEWER PIPE REINFORCED CONCRETE CLASS III 42-INCH LF | 608.0412 STORM SEWER PIPE REINFORCED CONCRETE CLASS IV 12-INCH LF | 608.0415 STORM SEWER PIPE REINFORCED CONCRETE CLASS IV 15-INCH LF | 608.0418 STORM SEWER PIPE REINFORCED CONCRETE CLASS IV 18-INCH LF | SPV.0090.02 SPECIAL (02. JOINT TIES) LF |
|---|---|---|---|---|---|---|---|---|---|---|---|---|---|
| 0010 | 1.03 | - | 1.02 | 11+67 | --- | --- | --- | 13 | --- | --- | --- | --- | --- |
| 0010 | 1.02 | - | 1.01 | 11+67 | --- | --- | --- | --- | 17 | --- | --- | --- | 17 |
| 0010 | 1.1 | - | 1.2 | 18+00 | --- | --- | --- | --- | --- | 68 | --- | --- | --- |
| 0010 | 1.2 | - | 1.3 | 18+40 | --- | --- | --- | --- | --- | --- | --- | 48 | --- |
| 0010 | 1.2 | - | 1.4 | 19+00 | --- | --- | --- | --- | --- | --- | 131 | --- | --- |
| 0010 | 1.4 | - | 1.5 | 19+70 | --- | --- | --- | --- | --- | 10 | --- | --- | --- |
| 0010 | 2.1 | - | 2.2 | 20+75 | --- | --- | --- | --- | --- | --- | --- | 53 | --- |
| 0010 | 2.2 | - | 2.3 | 21+03 | --- | --- | 37 | --- | --- | --- | --- | --- | --- |
| 0010 | 3.0 | - | 3.1 | 23+59 | --- | --- | --- | --- | --- | --- | --- | 39 | --- |
| 0010 | 4.0 | - | 4.1 | 26+16 | --- | --- | --- | --- | --- | --- | --- | 37 | --- |
| 0010 | 5.0 | - | 5.1 | 29+50 | --- | --- | --- | --- | --- | --- | --- | 38 | --- |
| 0010 | 6.6 | - | 6.5 | 31+00 | 9 | --- | --- | --- | --- | --- | --- | --- | --- |
| 0010 | 6.5 | - | 6.4 | 31+25 | 51 | --- | --- | --- | --- | --- | --- | --- | --- |
| 0010 | 6.7 | - | 6.4 | 31+51 | 10 | --- | --- | --- | --- | --- | --- | --- | --- |
| 0010 | 6.4 | - | 6.3 | 31+75 | 42 | --- | --- | --- | --- | --- | --- | --- | --- |
| 0010 | 6.8 | - | 6.3 | 31+93 | 9 | --- | --- | --- | --- | --- | --- | --- | --- |
| 0010 | 6.3 | - | 6.2 | 32+25 | --- | 64 | --- | --- | --- | --- | --- | --- | --- |
| 0010 | 6.0 | - | 6.2 | 32+58 | 9 | --- | --- | --- | --- | --- | --- | --- | --- |
| 0010 | 6.2 | - | 6.1 | 32+58 | --- | --- | 37 | --- | --- | | | | --- |
| | | | | TOTAL 0010 | 130 | 64 | 74 | 13 | 17 | 78 | 131 | 215 | 17 |

NOTE: TIE ALL SECTIONS OF PIPE AT STA 11+67

3

STORM SEWER STRUCTURES

| CATEGORY | STRUCTURE | STATION | LOCATION | GRATE / RIM ELEV. | TOP OF STRUCTURE ELEV. | INVERT ELEV. | STRUCTURE DEPTH | 611.0530 MANHOLE COVERS TYPE J EACH | 611.0624 INLET COVERS TYPE H EACH | 611.0642 INLET COVERS TYPE MS EACH | 611.2003 MANHOLES 3-FT DIAMETER EACH | 611.2004 MANHOLES 4-FT DIAMETER EACH | 611.2006 MANHOLES 6-FT DIAMETER EACH | 611.3230 INLETS 2X3-FT EACH | 611.3902 INLETS MEDIAN 2 GRATE EACH | 650.4000 CONSTRUCTION STAKING STORM SEWER EACH |
|---|---|---|---|---|---|---|---|---|---|---|---|---|---|---|---|---|
| 0010 | 1.02 | 11+67 | 11.04' LT | 781.29 | 780.04 | 774.96 | 5.08 | 1 | --- | --- | --- | --- | 1 | --- | --- | 1 |
| 0010 | 1.03 | 11+67 | 24.0' LT | 779.07 | 779.07 | 776.21 | 2.86 | --- | --- | 2 | --- | --- | --- | --- | 1 | 1 |
| 0010 | 1.1 | 17+67 | 16.5' LT | 783.31 | 782.31 | 780.31 | 2.00 | --- | 1 | --- | --- | --- | --- | 1 | --- | 1 |
| 0010 | 1.2 | 18+35 | 16.5' LT | 783.62 | 782.62 | 779.51 | 3.11 | --- | 1 | --- | --- | --- | --- | 1 | --- | 1 |
| 0010 | 1.4 | 19+65 | 16.5' LT | 784.82 | 783.82 | 781.12 | 2.70 | --- | 1 | --- | --- | --- | --- | 1 | --- | 1 |
| 0010 | 1.5 | 19+75 | 16.5' LT | 785.03 | 784.03 | 781.47 | 2.56 | --- | 1 | --- | --- | --- | --- | 1 | --- | 1 |
| 0010 | 2.1 | 20+50 | 16.5' LT | 786.11 | 785.11 | 782.46 | 2.65 | --- | 1 | --- | --- | --- | --- | 1 | --- | 1 |
| 0010 | 2.2 | 21+03 | 16.5' LT | 786.63 | 785.63 | 781.93 | 3.70 | --- | 1 | --- | --- | --- | --- | 1 | --- | 1 |
| 0010 | 3.0 | 23+59 | 16.5' LT | 787.14 | 786.14 | 782.80 | 3.34 | --- | 1 | --- | --- | --- | --- | 1 | --- | 1 |
| 0010 | 4.0 | 26+16 | 16.5' LT | 785.27 | 784.27 | 781.00 | 3.27 | --- | 1 | --- | --- | --- | --- | 1 | --- | 1 |
| 0010 | 5.0 | 29+50 | 16.5' LT | 781.56 | 780.56 | 777.35 | 3.21 | --- | 1 | --- | --- | --- | --- | 1 | --- | 1 |
| 0010 | 6.6 | 31+00 | 16.5' LT | 779.82 | 778.82 | 775.14 | 3.68 | --- | 1 | --- | --- | --- | --- | 1 | --- | 1 |
| 0010 | 6.5 | 31+00 | 7.0' LT | 780.27 | 779.02 | 775.00 | 4.02 | 1 | --- | --- | 1 | --- | --- | --- | --- | 1 |
| 0010 | 6.4 | 31+51 | 7.0' LT | 779.70 | 778.45 | 774.33 | 4.12 | 1 | --- | --- | 1 | --- | --- | --- | --- | 1 |
| 0010 | 6.7 | 31+51 | 16.5' LT | 779.33 | 778.33 | 774.37 | 3.96 | --- | 1 | --- | --- | --- | --- | 1 | --- | 1 |
| 0010 | 6.3 | 31+93 | 7.0' LT | 779.23 | 777.98 | 773.82 | 4.16 | 1 | --- | --- | --- | 1 | --- | --- | --- | 1 |
| 0010 | 6.8 | 31+93 | 16.5' LT | 778.86 | 777.86 | 774.32 | 3.54 | --- | 1 | --- | --- | --- | --- | 1 | --- | 1 |
| 0010 | 6.2 | 32+58 | 7.0' LT | 778.70 | 777.45 | 773.08 | 4.37 | 1 | --- | --- | --- | 1 | --- | --- | --- | 1 |
| 0010 | 6.0 | 32+58 | 16.5' LT | 778.33 | 777.33 | 773.82 | 3.51 | --- | 1 | --- | --- | --- | --- | 1 | --- | 1 |
| | | | | | TOTAL 0010 | | | 5 | 13 | 2 | 2 | 2 | 1 | 13 | 1 | 19 |

3

3

RESTORATION ITEMS

| CATEGORY | STATION | TO | STATION | LOCATION | 625.0500 SALVAGED TOPSOIL SY | 627.0200 MULCHING SY | 629.0210 FERTILIZER TYPE B CWT | 630.0120 SEEDING MIXTURE NO. 20 LB | 630.0140 SEEDING MIXTURE NO. 40 LB | 630.0200 SEEDING TEMPORARY LB | 630.0500 SEED WATER MGAL |
|---|---|---|---|---|---|---|---|---|---|---|---|
| 0010 | 10+75 | - | 12+91 | LT | 145 | 0 | 0.10 | 0.00 | 2.61 | 0.0 | 3.3 |
| 0010 | 10+84 | - | 11+02 | RT | 9 | 0 | 0.01 | 0.00 | 0.16 | 0.0 | 0.2 |
| 0010 | 11+25 | - | 11+50 | RT | 6 | 6 | 0.01 | 0.16 | 0.00 | 0.1 | 0.2 |
| 0010 | 11+81 | - | 12+10 | RT | 12 | 12 | 0.01 | 0.32 | 0.00 | 0.2 | 0.3 |
| 0010 | 12+26 | - | 13+13 | RT | 8 | 8 | 0.01 | 0.22 | 0.00 | 0.2 | 0.2 |
| 0010 | 13+10 | - | 14+69 | RT | 152 | 0 | 0.10 | 0.00 | 2.74 | 0.0 | 3.4 |
| 0010 | 13+37 | - | 15+08 | LT | 81 | 0 | 0.06 | 0.00 | 1.45 | 0.0 | 1.8 |
| 0010 | 14+67 | - | 15+38 | RT | 38 | 38 | 0.03 | 1.03 | 0.00 | 0.6 | 0.9 |
| 0010 | 14+85 | - | 16+03 | RT | 52 | 0 | 0.04 | 0.00 | 0.92 | 0.0 | 1.2 |
| 0010 | 15+23 | - | 15+61 | LT | 32 | 0 | 0.02 | 0.00 | 0.56 | 0.0 | 0.7 |
| 0010 | 15+94 | - | 18+44 | LT | 128 | 0 | 0.09 | 0.00 | 2.29 | 0.0 | 2.9 |
| 0010 | 16+47 | - | 16+96 | RT | 19 | 0 | 0.02 | 0.00 | 0.33 | 0.0 | 0.5 |
| 0010 | 17+16 | - | 21+09 | RT | 488 | 0 | 0.31 | 0.00 | 8.78 | 0.0 | 10.9 |
| 0010 | 18+57 | - | 19+25 | LT | 50 | 0 | 0.04 | 0.00 | 0.90 | 0.0 | 1.2 |
| 0010 | 19+29 | - | 19+92 | LT | 34 | 0 | 0.03 | 0.00 | 0.60 | 0.0 | 0.8 |
| 0010 | 20+09 | - | 20+36 | LT | 23 | 0 | 0.02 | 0.00 | 0.40 | 0.0 | 0.5 |
| 0010 | 20+34 | - | 22+60 | LT | 104 | 0 | 0.07 | 0.00 | 1.87 | 0.0 | 2.4 |
| 0010 | 21+12 | - | 21+38 | RT | 19 | 0 | 0.02 | 0.00 | 0.33 | 0.0 | 0.5 |
| 0010 | 21+62 | - | 22+89 | RT | 162 | 0 | 0.11 | 0.00 | 2.91 | 0.0 | 3.7 |
| 0010 | 22+88 | - | 23+90 | LT | 61 | 0 | 0.04 | 0.00 | 1.09 | 0.0 | 1.4 |
| 0010 | 23+09 | - | 23+42 | RT | 34 | 0 | 0.03 | 0.00 | 0.61 | 0.0 | 0.8 |
| 0010 | 23+40 | - | 25+41 | RT | 225 | 0 | 0.15 | 6.07 | 0.00 | 3.1 | 5.1 |
| 0010 | 23+93 | - | 24+38 | LT | 47 | 0 | 0.03 | 0.00 | 0.85 | 0.0 | 1.1 |
| 0010 | 24+49 | - | 24+98 | LT | 32 | 0 | 0.02 | 0.00 | 0.57 | 0.0 | 0.8 |
| 0010 | 25+08 | - | 25+58 | LT | 52 | 0 | 0.04 | 0.00 | 0.94 | 0.0 | 1.2 |
| 0010 | 25+54 | - | 26+98 | RT | 93 | 0 | 0.06 | 2.51 | 0.00 | 1.3 | 2.1 |
| 0010 | 25+68 | - | 27+05 | LT | 100 | 0 | 0.07 | 0.00 | 1.79 | 0.0 | 2.3 |
| 0010 | 27+16 | - | 28+35 | LT | 70 | 0 | 0.05 | 0.00 | 1.25 | 0.0 | 1.6 |
| 0010 | 28+46 | - | 29+96 | LT | 114 | 0 | 0.08 | 0.00 | 2.05 | 0.0 | 2.6 |
| 0010 | 29+25 | - | 29+75 | RT | 66 | 0 | 0.05 | 1.77 | 0.00 | 0.9 | 1.5 |
| 0010 | 29+75 | - | 32+30 | RT | 198 | 198 | 0.13 | 5.33 | 0.00 | 2.7 | 4.5 |
| 0010 | 30+08 | - | 30+39 | LT | 23 | 0 | 0.02 | 0.00 | 0.41 | 0.0 | 0.6 |
| 0010 | 30+59 | - | 31+08 | LT | 25 | 0 | 0.02 | 0.00 | 0.45 | 0.0 | 0.6 |
| 0010 | 31+19 | - | 36+04 | LT | 474 | 0 | 0.30 | 12.80 | 0.00 | 6.4 | 10.6 |
| 0010 | 32+32 | - | 32+82 | RT | 70 | 0 | 0.05 | 1.88 | 0.00 | 1.0 | 1.6 |
| 0010 | 32+83 | | 33+53 | RT | 53 | 53 | 0.04 | 1.41 | 0.00 | 0.8 | 1.2 |
| 0010 | 33+65 | - | 35+12 | RT | 249 | 0 | 0.16 | 6.71 | 0.00 | 3.4 | 5.6 |
| 0010 | 35+56 | | 36+50 | RT | 116 | 116 | 0.08 | 3.13 | 0.00 | 1.6 | 2.6 |
| 0010 | 36+19 | - | 36+65 | LT | 23 | 0 | 0.02 | 0.00 | 0.42 | 0.0 | 0.6 |
| 0010 | 36+50 | - | 36+67 | RT | 26 | 0 | 0.02 | 0.70 | 0.00 | 0.4 | 0.6 |
| 0010 | 37+15 | - | 37+43 | LT | 47 | 0 | 0.03 | 1.26 | 0.00 | 0.7 | 1.1 |
| 0010 | 37+15 | - | 37+90 | RT | 129 | 0 | 0.09 | 3.48 | 0.00 | 1.8 | 2.9 |
| 0010 | 37+43 | | 42+30 | LT | 893 | 893 | 0.57 | 24.09 | 0.00 | 12.1 | 20.0 |
| 0010 | 38+15 | - | 38+41 | RT | 17 | 0 | 0.02 | 0.44 | 0.00 | 0.3 | 0.4 |
| 0010 | 38+60 | - | 39+24 | RT | 45 | 0 | 0.03 | 1.21 | 0.00 | 0.7 | 1.0 |
| 0010 | 39+39 | - | 42+30 | RT | 423 | 423 | 0.27 | 11.40 | 0.00 | 5.7 | 9.5 |
| 0010 | 42+55 | - | 43+16 | LT | 90 | 90 | 0.06 | 2.42 | 0.00 | 1.3 | 2.0 |
| 0010 | 42+62 | - | 42+75 | LT | 9 | 0 | 0.01 | 0.23 | 0.00 | 0.2 | 0.2 |
| 0010 | 43+00 | - | 46+67 | RT | 389 | 389 | 0.25 | 10.48 | 0.00 | 5.3 | 8.7 |
| 0010 | 43+33 | - | 47+80 | LT | 627 | 627 | 0.40 | 16.91 | 0.00 | 8.5 | 14.0 |
| 0010 | 43+45 | - | 43+55 | LT | 9 | 0 | 0.01 | 0.23 | 0.00 | 0.2 | 0.2 |
| 0010 | 43+94 | - | 43+99 | RT & LT | 14 | 0 | 0.01 | 0.36 | 0.00 | 0.2 | 0.3 |
| 0010 | 46+78 | | 47+80 | RT | 113 | 113 | 0.08 | 3.04 | 0.00 | 1.6 | 2.6 |
| 0010 | UNDISTRIBUTED | | -- | -- | 1,304 | 594 | 0.88 | 23.92 | 7.46 | 12.3 | 29.5 |
| | | | | TOTAL 0010 | 7,822 | 3,560 | 5 | 143.51 | 44.74 | 73.60 | 177 |

SILT FENCE

| CATEGORY | STATION | TO | STATION | LOCATION | 628.1504 SILT FENCE LF | 628.1520 SILT FENCE MAINTENANCE LF |
|---|---|---|---|---|---|---|
| 0010 | 14+37 | - | 14+96 | RT | 59 | 59 |
| 0010 | 17+80 | - | 18+85 | RT | 105 | 105 |
| 0010 | 20+63 | - | 21+37 | RT | 75 | 75 |
| 0010 | 23+09 | - | 23+41 | RT | 35 | 35 |
| 0010 | 23+42 | - | 23+93 | RT | 50 | 50 |
| 0010 | 25+72 | - | 25+95 | RT | 26 | 26 |
| 0010 | 26+42 | | 26+95 | RT | 58 | 58 |
| 0010 | 27+25 | - | 29+47 | RT | 225 | 225 |
| 0010 | 29+56 | - | 32+55 | RT | 300 | 300 |
| 0010 | 32+62 | - | 33+26 | RT | 65 | 65 |
| 0010 | 35+64 | - | 37+76 | RT | 215 | 215 |
| 0010 | 36+69 | - | 37+76 | LT | 110 | 110 |
| 0010 | 40+49 | - | 42+05 | RT | 160 | 160 |
| 0010 | 43+53 | - | 44+96 | RT | 145 | 145 |
| 0010 | 46+82 | - | 47+74 | RT | 95 | 95 |
| | | | | TOTAL 0010 | 1,723 | 1,723 |

MOBILIZATIONS EROSION CONTROL

| CATEGORY | STATION | TO | STATION | LOCATION | 628.1905 MOBILIZATIONS EROSION CONTROL EACH | 628.1910 MOBILIZATIONS EMERGENCY EROSION CONTROL EACH |
|---|---|---|---|---|---|---|
| 0010 | 10+48 | - | 47+80 | PROJECT | 2 | 2 |
| | | | | TOTAL 0010 | 2 | 2 |

3

3

## EROSION CONTROL

| CATEGORY | STATION | TO | STATION | LOCATION | 628.2004 EROSION MAT CLASS I TYPE B SY | 628.2008 EROSION MAT URBAN CLASS I TYPE B SY | 628.7504 TEMPORARY DITCH CHECKS LF | 628.7555 CULVERT PIPE CHECKS EACH |
|---|---|---|---|---|---|---|---|---|
| 0010 | 10+75 | - | 12+91 | LT | --- | 145 | --- | --- |
| 0010 | 10+84 | - | 11+02 | RT | --- | 9 | --- | --- |
| 0010 | 13+10 | - | 14+69 | RT | --- | 152 | --- | --- |
| 0010 | 13+37 | - | 15+08 | LT | --- | 81 | --- | --- |
| 0010 | 14+85 | - | 16+03 | RT | --- | 52 | --- | --- |
| 0010 | 15+23 | - | 15+61 | LT | --- | 32 | --- | --- |
| 0010 | 15+94 | - | 18+44 | LT | --- | 128 | --- | --- |
| 0010 | 16+47 | - | 16+96 | RT | --- | 19 | --- | --- |
| 0010 | 17+16 | - | 21+09 | RT | --- | 488 | --- | --- |
| 0010 | 18+57 | - | 19+25 | LT | --- | 50 | --- | --- |
| 0010 | 19+29 | - | 19+92 | LT | --- | 34 | --- | --- |
| 0010 | 20+09 | - | 20+36 | LT | --- | 23 | --- | --- |
| 0010 | 20+34 | - | 22+60 | LT | --- | 104 | --- | --- |
| 0010 | 21+12 | - | 21+38 | RT | --- | 19 | --- | --- |
| 0010 | 21+62 | - | 22+89 | RT | --- | 162 | --- | --- |
| 0010 | 22+88 | - | 23+90 | LT | --- | 61 | --- | --- |
| 0010 | 23+09 | - | 23+42 | RT | --- | 34 | --- | --- |
| 0010 | 23+40 | - | 25+41 | RT | 225 | --- | --- | --- |
| 0010 | 23+93 | - | 24+38 | LT | --- | 47 | --- | --- |
| 0010 | 24+49 | - | 24+98 | LT | --- | 32 | --- | --- |
| 0010 | 25+08 | - | 25+58 | LT | --- | 52 | --- | --- |
| 0010 | 25+54 | - | 26+98 | RT | 93 | --- | --- | --- |
| 0010 | 25+68 | - | 27+05 | LT | --- | 100 | --- | --- |
| 0010 | 27+16 | - | 28+35 | LT | --- | 70 | --- | --- |
| 0010 | 28+46 | - | 29+96 | LT | --- | 114 | --- | --- |
| 0010 | 29+25 | - | 29+75 | RT | 66 | --- | --- | --- |
| 0010 | 30+08 | - | 30+39 | LT | --- | 23 | --- | --- |
| 0010 | 30+59 | - | 31+08 | LT | --- | 25 | --- | --- |
| 0010 | 31+19 | - | 36+04 | LT | 474 | --- | --- | --- |
| 0010 | 32+32 | - | 32+82 | RT | 70 | --- | --- | --- |
| 0010 | 33+65 | - | 35+12 | RT | 249 | --- | --- | --- |
| 0010 | 36+19 | - | 36+65 | LT | --- | --- | --- | --- |
| 0010 | 36+50 | - | 36+67 | RT | --- | 26 | --- | --- |
| 0010 | 37+15 | - | 37+43 | LT | --- | 47 | --- | --- |
| 0010 | 37+15 | - | 37+90 | RT | --- | 129 | --- | --- |
| 0010 | 38+15 | - | 38+41 | RT | 17 | --- | --- | --- |
| 0010 | 38+60 | - | 39+24 | RT | 45 | --- | --- | --- |
| 0010 | 42+62 | - | --- | LT | 9 | --- | --- | --- |
| 0010 | 43+45 | - | --- | LT | 9 | --- | --- | --- |
| 0010 | 43+94 | - | --- | RT & LT | 14 | --- | --- | 2 |
| 0010 | 42+22 | - | --- | LT | 9 | --- | --- | 2 |
| 0010 | 43+01 | - | --- | LT | 9 | --- | --- | 2 |
| 0010 | 38+10 | - | --- | LT | --- | --- | 10 | --- |
| 0010 | 39+72 | - | --- | LT | --- | --- | 10 | --- |
| | UNDISTRIBUTED | - | --- | | 1,289 | 2,258 | 20 | 2 |
| | | | | TOTAL 0010 | 2,578 | 4,516 | 40 | 8 |

## INLET PROTECTION

| CATEGORY | STATION | LOCATION | 628.7005 INLET PROTECTION TYPE A EACH | 628.7015 INLET PROTECTION TYPE C EACH |
|---|---|---|---|---|
| 0010 | 11+67 | LT | 1 | --- |
| 0010 | 17+67 | LT | --- | 1 |
| 0010 | 18+35 | LT | --- | 1 |
| 0010 | 19+65 | LT | --- | 1 |
| 0010 | 19+75 | LT | --- | 1 |
| 0010 | 20+50 | LT | --- | 1 |
| 0010 | 21+03 | LT | --- | 1 |
| 0010 | 23+59 | LT | --- | 1 |
| 0010 | 26+16 | LT | --- | 1 |
| 0010 | 29+50 | LT | --- | 1 |
| 0010 | 31+00 | LT | --- | 1 |
| 0010 | 31+51 | LT | --- | 1 |
| 0010 | 31+93 | LT | --- | 1 |
| 0010 | 32+58 | LT | --- | 1 |
| | | TOTAL 0010 | 1 | 13 |

## MARKERS ROW

| CATEGORY | POINT | STATION | LOCATION | 633.5100 MARKERS ROW EACH |
|---|---|---|---|---|
| 0010 | 106 | 18+00 | 28.77' RT | 1 |
| 0010 | 107 | 18+30 | 50.00' RT | 1 |
| 0010 | 108 | 18+55 | 50.00' RT | 1 |
| 0010 | 109 | 18+75 | 28.72' RT | 1 |
| 0010 | 111 | 20+75 | 24.08' RT | 1 |
| 0010 | 112 | 20+75 | 37.00' RT | 1 |
| 0010 | 113 | 21+25 | 37.00' RT | 1 |
| 0010 | 114 | 21+31 | 28.28' RT | 1 |
| 0010 | 122 | 25+75 | 23.92' RT | 1 |
| 0010 | 123 | 26+00 | 45.00' RT | 1 |
| 0010 | 124 | 26+30 | 45.00' RT | 1 |
| 0010 | 125 | 26+60 | 23.60' RT | 1 |
| 0010 | 126 | 29+25 | 23.51' RT | 1 |
| 0010 | 127 | 29+38 | 40.00' RT | 1 |
| 0010 | 128 | 29+58 | 40.00' RT | 1 |
| 0010 | 129 | 29+75 | 23.50' RT | 1 |
| 0010 | 133 | 32+44.92 | 33.32' RT | 1 |
| 0010 | 134 | 32+52 | 47.00' RT | 1 |
| 0010 | 135 | 32+65 | 47.00' RT | 1 |
| 0010 | 136 | 32+71.19 | 33.65' RT | 1 |
| | | | TOTAL 0010 | 20 |

NOTE: INSTALL AS DIRECTED BY THE ENGINEER.

3

3

PERMANENT SIGNING

| CATEGORY | STATION | LOCATION | SIGN CODE | IN | | IN | 634.0614 POSTS WOOD 4X6-INCH X 14-FT EACH | 634.0616 POSTS WOOD 4X6-INCH X 16-FT EACH | 634.0618 POSTS WOOD 4X6-INCH X 18-FT EACH | 637.2210 SIGNS TYPE II REFLECTIVE H SF | 637.2230 SIGNS TYPE II REFLECTIVE F SF | REMARKS |
|---|---|---|---|---|---|---|---|---|---|---|---|---|
| 0010 | 11+43 | RT | W11-55 | 30 | X | 30 | 1 | -- | -- | -- | 6.25 | PLAYGROUND |
| 0010 | 12+88 | LT | R1-1 | 30 | X | 30 | 1 | -- | -- | 5.18 | -- | STOP |
| 0010 | 13+26 | RT | R2-1 | 24 | X | 30 | 1 | -- | -- | 5.00 | -- | SPEED LIMIT 25 MPH |
| 0010 | 13+70 | LT | J1-2 | 48 | X | 39 | -- | -- | 1 | 13.00 | -- | -- |
| 0010 | --- | LT | M2-1 | 21 | X | 15 | -- | -- | -- | -- | -- | 2-JCT |
| 0010 | --- | LT | M1-6 | 24 | X | 24 | -- | -- | -- | -- | -- | STH 23, STH 73 |
| 0010 | 14+65 | LT | W3-1 | 36 | X | 36 | -- | 1 | -- | -- | 9.00 | STOP AHEAD |
| 0010 | 15+47 | LT | R1-1 | 30 | X | 30 | 1 | -- | -- | 5.18 | -- | STOP |
| 0010 | 16+52 | LT | W11-55 | 30 | X | 30 | 1 | -- | -- | -- | 6.25 | PLAYGROUND |
| 0010 | 19+82 | LT | R1-1 | 30 | X | 30 | 1 | -- | -- | 5.18 | -- | STOP |
| 0010 | 27+35 | LT | R2-1 | 24 | X | 30 | 1 | -- | -- | 5.00 | -- | SPEED LIMIT 25 MPH |
| 0010 | 27+84 | RT | W1-2L | 30 | X | 30 | 1 | -- | -- | -- | 6.25 | CURVE LEFT |
| 0010 | 40+55 | RT | W1-2L | 30 | X | 30 | 1 | -- | -- | -- | 6.25 | CURVE LEFT |
| 0010 | 43+90 | LT | W1-2R | 30 | X | 30 | 1 | -- | -- | -- | 6.25 | CURVE RIGHT |
| | | | | TOTAL 0010 | | | 10 | 1 | 1 | 38.54 | 40.25 | |

REMOVING SIGNS

| CATEGORY | STATION | LOCATION | 638.2602 REMOVING SIGNS TYPE II EACH | 638.3000 REMOVING SMALL SIGN SUPPORTS EACH | REMARKS |
|---|---|---|---|---|---|
| 0010 | 11+43 | RT | 1 | 1 | PLAYGROUND |
| 0010 | 12+88 | LT | 1 | 1 | STOP |
| 0010 | 13+26 | RT | 1 | 1 | SPEED LIMIT 25 MPH |
| 0010 | 13+70 | LT | 1 | 1 | JCT STH 23, STH 73 |
| 0010 | 14+30 | RT | 1 | 1 | NARROW SHOULDER |
| 0010 | 14+65 | LT | 1 | 1 | STOP AHEAD |
| 0010 | 15+37 | LT | 1 | 1 | STOP |
| 0010 | 16+52 | LT | 1 | 1 | PLAYGROUND |
| 0010 | 19+82 | LT | 1 | 1 | STOP |
| 0010 | 27+35 | LT | 1 | 1 | SPEED LIMIT 25 MPH |
| 0010 | 27+84 | RT | 1 | 1 | CURVE LEFT |
| 0010 | 36+80 | LT & RT | 1 | 1 | OBJECT MARKER |
| 0010 | 37+05 | RT | 1 | 1 | OBJECT MARKER |
| 0010 | 37+06 | LT | 1 | 1 | OBJECT MARKER |
| 0010 | 38+86 | LT | 1 | 1 | NARROW SHOULDER |
| 0010 | 40+55 | RT | 1 | 1 | CURVE LEFT |
| 0010 | 43+90 | LT | 1 | 1 | CURVE RIGHT |
| | | TOTAL 0010 | 17 | 17 | |

3

TRAFFIC CONTROL

| CATEGORY | STATION | TO | STATION | LOCATION | DAYS | EACH | 643.0300 TRAFFIC CONTROL DRUMS DAY | EACH | 643.0420 TRAFFIC CONTROL BARRICADES TYPE III DAY | EACH | 643.0705 TRAFFIC CONTROL WARNING LIGHTS TYPE A DAY | EACH | 643.0900 TRAFFIC CONTROL SIGNS DAY | REMARKS |
|---|---|---|---|---|---|---|---|---|---|---|---|---|---|---|
| 0010 | -- | | -- | STH 23/STH 73 | 80 | --- | --- | --- | --- | --- | --- | 4 | 320 | W20-1A, G20-3A |
| 0010 | 10+25 | - | 10+25 | BEGINNING OF PROJECT | 80 | --- | --- | 5 | 400 | 6 | 480 | 1 | 80 | R11-4 |
| 0010 | 13+10 | - | -- | WILSON ST. | 80 | --- | --- | 5 | 400 | 6 | 480 | 2 | 160 | W20-3A, R11-4 |
| 0010 | 15+75 | - | -- | FIRST ST. | 80 | --- | --- | 5 | 400 | 6 | 480 | 2 | 160 | W20-3A, R11-4 |
| 0010 | 20+10 | - | -- | HARRIS ST. | 80 | --- | --- | 5 | 400 | 6 | 480 | 2 | 160 | W20-3A, R11-4 |
| 0010 | 47+80 | - | 47+80 | END OF PROJECT | 80 | --- | --- | 9 | 720 | 10 | 800 | 6 | 480 | W20-3A, R11-3, W20-3C, W20-3D, R11-4 |
| 0010 | 16+00 | - | -- | FIRST ST. (PEDESTRIANS) | 55 | 5 | 275 | 2 | 110 | 2 | 110 | 1 | 55 | R9-9 |
| 0010 | 20+00 | - | -- | HARRIS ST. (PEDESTRIANS) | 55 | 5 | 275 | 2 | 110 | 2 | 110 | 1 | 55 | R9-9 |
| 0010 | -- | - | -- | UNDISTRIBUTED | 80 | 20 | 1,600 | --- | --- | --- | --- | --- | --- | |
| | | | | TOTAL 0010 | | | 2,150 | | 2,540 | | 2,940 | | 1,470 | |

SEE SDD"BARRICADES AND SIGNS FOR MAINLINE CLOSURES", DETAIL C
SEE SDD"BARRICADES AND SIGNS FOR SIDEROAD CLOSURES"
SEE SDD"TRAFFIC CONTROL, PEDESTRIAN ACCOMMODATION"

3

## TEMPORARY PEDESTRIAN ACCESS

| CATEGORY | LOCATION | 644.1420 TEMPORARY PEDESTRIAN SURFACE PLYWOOD SF | 644.1601 TEMPORARY PEDESTRIAN CURB RAMP DAY |
|---|---|---|---|
| 0010 | UNDISTRIBUTED | 144 | 55 |
| | TOTAL 0010 | 144 | 55 |

NOTE: SEE "TRAFFIC" SPECIAL PROVISIONS.

## PAVEMENT MARKING

| CATEGORY | STATION | TO | STATION | LOCATION | 646.1020 MARKING LINE EPOXY 4-INCH LF | 646.7420 MARKING CROSSWALK EPOXY TRANSVERSE LINE 6-INCH LF | REMARKS |
|---|---|---|---|---|---|---|---|
| 0010 | 10+48 | - | 47+80 | CENTERLINE | 7,465 | -- | DOUBLE YELLOW |
| 0010 | 10+48 | - | 47+80 | RT | 3,735 | -- | EDGELINE WHITE |
| 0010 | 10+48 | - | 12+75 | LT | 230 | -- | EDGELINE WHITE |
| 0010 | 13+55 | - | 15+32 | LT | 180 | -- | EDGELINE WHITE |
| 0010 | 16+12 | - | 19+78 | LT | 370 | -- | EDGELINE WHITE |
| 0010 | 20+48 | - | 47+80 | LT | 2,735 | -- | EDGELINE WHITE |
| 0010 | 15+44 | - | 16+00 | FIRST ST. | -- | 120 | WHITE |
| 0010 | 19+92 | - | 20+15 | HARRIS ST. | -- | 50 | WHITE |
| | | | | TOTAL 0010 | 14,715 | 170 | |

SEE SDD "LONGITUDINAL MARKING (MAINLINE)"

## CONSTRUCTION STAKING

| CATEGORY | STATION | TO | STATION | LOCATION | 650.4500 CONSTRUCTION STAKING SUBGRADE LF | 650.9910.01 CONSTRUCTION STAKING SUPPLEMENTAL CONTROL (6425-00-70) LS | 650.9920 CONSTRUCTION STAKING SLOPE STAKES LF |
|---|---|---|---|---|---|---|---|
| 0010 | 10+48 | - | 47+80 | CTH D | 3,735 | 1 | 3,735 |
| | | | | TOTAL 0010 | 3,735 | 1 | 3,735 |

## SAWING

| CATEGORY | STATION | TO | STATION | LOCATION | 690.0150 SAWING ASPHALT LF | 690.0250 SAWING CONCRETE LF |
|---|---|---|---|---|---|---|
| 0010 | 10+48 | - | -- | ROADWAY | 30 | -- |
| 0010 | 11+07 | - | 11+27 | RT | 20 | -- |
| 0010 | 11+55 | - | 11+82 | RT | 27 | -- |
| 0010 | 12+09 | - | 12+24 | RT | 15 | -- |
| 0010 | 12+90 | - | 13+34 | LT | 43 | -- |
| 0010 | 15+08 | - | 15+24 | LT | 24 | -- |
| 0010 | 15+54 | - | 15+99 | LT | 61 | -- |
| 0010 | 16+09 | - | 16+47 | RT | 35 | -- |
| 0010 | 16+96 | - | 17+17 | RT | 20 | -- |
| 0010 | 18+44 | - | 18+57 | LT | 13 | -- |
| 0010 | 19+23 | - | 19+28 | LT | -- | 5 |
| 0010 | 19+92 | - | 20+20 | LT | 30 | -- |
| 0010 | 20+31 | - | 20+38 | LT | 11 | -- |
| 0010 | 23+89 | - | 23+93 | LT | -- | 3 |
| 0010 | 25+57 | - | 25+67 | LT | -- | 10 |
| 0010 | 27+05 | - | 27+24 | LT | 18 | -- |
| 0010 | 28+36 | - | 28+46 | LT | 10 | -- |
| 0010 | 35+12 | - | 35+56 | RT | 43 | -- |
| 0010 | 42+29 | - | 42+55 | LT | 27 | -- |
| 0010 | 43+16 | - | 43+33 | LT | 18 | -- |
| 0010 | 47+80 | - | -- | ROADWAY | 27 | -- |
| | | | | TOTAL 0010 | 472 | 18 |

3

3

## ADJUST EXISTING SANITARY STRUCTURE

| CATEGORY | STATION | LOCATION | SPV 0060.02 ADJUST EX. SANITARY MANHOLE EACH | SPV 0060.03 ADJUST EX. SANITARY MANHOLE CONE EACH | SPV 0060.04 RECONSTRUCT EX. SANITARY MANHOLE EACH | COMMENTS |
|---|---|---|---|---|---|---|
| 0020 | 17+70.5 | 5.50 LT | 1 | - | - | |
| | 20+27.3 | 5.50 LT | 1 | - | - | |
| | 22+71.2 | 10.00 LT | 1 | - | - | |
| | 25+78.4 | 10.00 LT | 1 | - | - | |
| | 27+77.2 | 15.09 LT | 1 | - | - | |
| | 31+72.9 | 16.43 LT | - | - | 1 | 1.5' BARREL EXTENSION NEEDED (FIELD VERIFY) |
| | 33+03.2 | 15.20 LT | - | - | 1 | 2.0' BARREL EXTENSION NEEDED (FIELD VERIFY) |
| | 34+49.8 | 16.98 LT | 1 | - | - | |
| | 36+40.8 | 8.65 LT | 1 | - | - | |
| | 39+27.0 | 23.11 LT | - | 1 | - | |
| | 42+14.2 | 24.16 LT | - | 1 | - | |
| TOTAL PROJECT 6425-00-70 | | | 7 | 2 | 2 | |

## ADJUST EXISTING WATER STRUCTURE

| CATEGORY | STATION | OFFSET DIST. | OFFSET DIR. | SPV 0060.05 ADJUST EX. WATER VALVE BOX EACH | SPV 0060.06 ADJUST EX. WATER CURB STOP BOX EACH |
|---|---|---|---|---|---|
| 0020 | 21+87.3 | 29.1 | RT. | - | 1 |
| | 22+61.1 | 18.8 | LT. | - | 1 |
| | 24+79.8 | 19.4 | RT. | 1 | - |
| | 29+77.8 | 19.6 | RT. | 1 | - |
| | 30+70.7 | 19.6 | LT. | - | 1 |
| | 34+67.5 | 28.0 | RT. | - | 1 |
| | 35+35.4 | 22.4 | RT. | 1 | - |
| | 35+37.5 | 26.3 | RT. | 1 | - |
| | 35+48.5 | 22.3 | RT. | 1 | - |
| | 37+82.6 | 24.3 | RT. | - | 1 |
| | 38+76.2 | 16.3 | RT. | 1 | - |
| | 39+21.4 | 26.2 | RT. | - | 1 |
| | 42+82.5 | 27.6 | LT. | - | 1 |
| | 43+49.6 | 21.0 | RT. | 1 | - |
| | 43+51.8 | 15.7 | RT. | 1 | - |
| | 47+98.0 | 16.5 | RT. | 1 | - |
| TOTAL PROJECT 6425-00-70 | | | | 9 | 7 |

| R/W PROJECT NUMBER 6425-00-00 | SHEET NUMBER | TOTAL SHEETS |
|---|---|---|
| R/W PROJECT NUMBER 6425-00-00 | 4.01 | 8 |

PLAT OF RIGHT OF WAY REQUIRED FOR

# CITY OF PRINCETON, CTH D
# STH 23 - SAINT MARIE ROAD

| CTH D | GREEN LAKE COUNTY |
|---|---|

COPY

## CONVENTIONAL SYMBOLS

SECTION LINE
QUARTER LINE
SIXTEENTH LINE
NEW REFERENCE LINE
NEW R/W LINE
EXISTING R/W LINE
PROPERTY LINE (PL)
LOT, TIE, AND OTHER MINOR LINES
SLOPE INTERCEPT
CORPORATE LIMITS
UNDERGROUND FACILITY (COMMUNICATIONS, ELECTRIC, ETC) (W) (TYPE)
FEE ACQUISITION AREA (HATCHING VARIES BY OWNER)
TEMP. LIMITED EASEMENT AREA
EASEMENT AREA (HIGHWAY, PERMANENT LIMITED, OR RESTRICTED DEVELOPMENT)
TRANSMISSION STRUCTURES
BUILDING
BUILDING (TO BE REMOVED)
BRIDGE

PARCEL NUMBER (25)
UTILITY NUMBER (40)
SECTION CORNER (18 / 21 24 / 16 15 / 9)
NOTATION FOR COMBUSTABLE FLUIDS (CAUTION)
NOTATION FOR HIGH VOLTAGE TRANSMISSION LINES (CAUTION)
R/W MONUMENT
NON-MONUMENTED R/W POINT
FOUND IRON PIN (IP)
VALVE (GAS, WATER, ETC.) (TYPE)
SIGN
OFF-PREMISE SIGN (#1-25) SIGN

ACCESS CONTROLLED BY ACQUISITION
NO ACCESS (BY STATUTORY AUTHORITY)
ACCESS RESTRICTED (BY PREVIOUS PROJECT OR CONTROL)
NO ACCESS (NEW HIGHWAY)
NATIONAL GEODETIC SURVEY MONUMENT
SIXTEENTH CORNER MONUMENT
PARALLEL OFFSETS

## CONVENTIONAL UTILITY SYMBOLS

WATER (W)
GAS (G)
TELEPHONE (T)
OVERHEAD TRANSMISSION LINES (OH)
ELECTRIC (E)
CABLE TELEVISION (TV)
FIBER OPTIC (FO)
SANITARY SEWER (SAN)
STORM SEWER (SS)
ELECTRIC TOWER

| | NON-COMPENSABLE | COMPENSABLE |
|---|---|---|
| POWER POLE | | |
| TELEPHONE POLE | | |
| TELEPHONE PEDESTAL | | |

## CURVE DATA ABBREVIATIONS

| | |
|---|---|
| LONG CHORD | LCH |
| LONG CHORD BEARING | LCB |
| RADIUS | R |
| DEGREE OF CURVE | D |
| CENTRAL ANGLE | Δ/DELTA |
| LENGTH OF CURVE | L |
| TANGENT | T |
| DIRECTION AHEAD | DA |
| DIRECTION BACK | DB |

## CONVENTIONAL ABBREVIATIONS

| | | | |
|---|---|---|---|
| ACCESS RIGHTS | AR | NUMBER | NO |
| ACRES | AC | OUTLOT | OL |
| AHEAD | AH | PAGE | P |
| ALUMINUM | ALUM | POINT OF TANGENCY | PT |
| AND OTHERS | ET AL | PROPERTY LINE | PL |
| BACK | BK | RECORDED AS | (100') |
| BLOCK | BLK | REEL / IMAGE | R/I |
| BUILDING | BLD | REFERENCE LINE | R/L |
| CENTERLINE | C/L | PERMANENT LIMITED EASEMENT | PLE |
| CERTIFIED SURVEY MAP | CSM | POINT OF BEGINNING | POB |
| CONCRETE | CONC | POINT OF CURVATURE | PC |
| COUNTY | CO | POINT OF COMPOUND CURVE | PCC |
| COUNTY TRUNK HIGHWAY | CTH | POINT OF INTERSECTION | PI |
| DISTANCE | DIST | REMAINING | REM |
| CORNER | COR | RESTRICTIVE DEVELOPMENT EASEMENT | RDE |
| DOCUMENT NUMBER | DOC | RIGHT | RT |
| EASEMENT | EASE | RIGHT OF WAY | R/W |
| EXISTING | EX | SECTION | SEC |
| GARAGE | GRG | SEPTIC VENT | SEPV |
| GAS VALVE | GV | SQUARE FEET | SF |
| GRID NORTH | GN | STATE TRUNK HIGHWAY | STH |
| HIGHWAY EASEMENT | HE | STATION | STA |
| HOUSE | HSE | TELEPHONE PEDESTAL | TP |
| IDENTIFICATION | ID | TEMPORARY LIMITED EASEMENT | TLE |
| LAND CONTRACT | LC | TRANSPORTATION PROJECT PLAT | TPP |
| LEFT | LT | UNITED STATES HIGHWAY | USH |
| MONUMENT | MON | VOLUME | V |
| NATIONAL GEODETIC SURVEY | NGS | | |

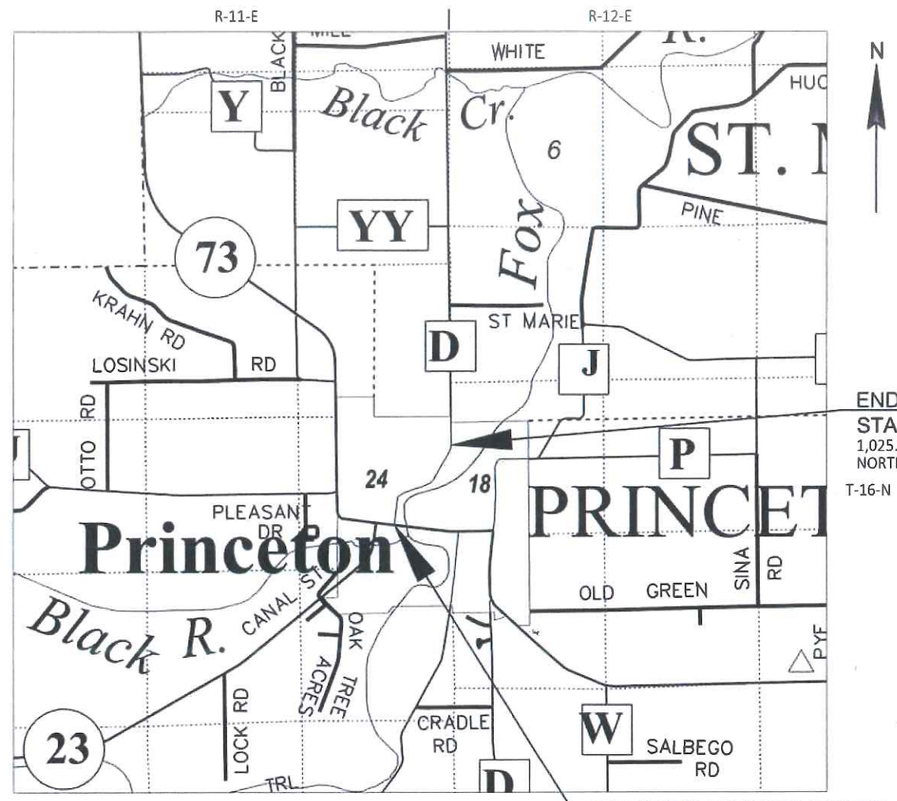


END RELOCATION ORDER
STA 47+80.00
1,025.93' SOUTH OF AND 0.48' WEST OF THE NORTHEAST CORNER OF SEC. 24, T-16-N, R-11-E

T-16-N

BEGIN RELOCATION ORDER
STA 10+11.22
1,029.07' SOUTH OF AND 408.76' EAST OF THE CENTER MON. OF SEC. 24, T-16-N, R-11-E

LAYOUT
SCALE 0 — 1 MILE

TOTAL NET LENGTH OF CENTERLINE = 0.714 MI

### CAUTION:
THIS PLAT IS FOR ILLUSTRATIVE PURPOSES ONLY. DEEDS MUST BE CHECKED TO DETERMINE PROPERTY BOUNDARIES.

### NOTES:
POSITIONS SHOWN ON THIS PLAT ARE WISCONSIN COORDINATE REFERENCE SYSTEM COORDINATES (WISCRS), GREEN LAKE COUNTY, NAD83 (2011) IN US SURVEY FEET. VALUES SHOWN ARE GRID COORDINATES, GRID BEARINGS, AND GRID DISTANCES. GRID DISTANCES MAY BE USED AS GROUND DISTANCES.

RIGHT-OF-WAY MONUMENTS ARE TYPE 2 AND ARE PLACED PRIOR TO OR AT THE TIME OF LAND TITLE TRANSFER.

RIGHT-OF-WAY BOUNDARIES ARE DEFINED WITH COURSES OF THE PERIMETER OF THE HIGHWAY LANDS REFERENCED TO THE U.S. PUBLIC LAND SURVEY SYSTEM OR OTHER "SURVEYS" OF PUBLIC RECORD.

EXISTING HIGHWAY RIGHT-OF-WAY ESTABLISHED FROM FLINT & TREAT ADDITION PLAT, CERTIFIED SURVEY MAPS, AND PREVIOUS ROADWAY RECORDS.

DIMENSIONS FOR THE NEW RIGHT-OF-WAY IS MEASURED ALONG AND PERPENDICULAR TO THE NEW REFERENCE LINES.

A TEMPORARY LIMITED EASEMENT (TLE) IS A RIGHT FOR CONSTRUCTION PURPOSES, AS DEFINED HEREIN, INCLUDING THE RIGHT TO OPERATE NECESSARY EQUIPMENT THEREON, THE RIGHT OF INGRESS AND EGRESS, AS LONG AS REQUIRED FOR SUCH PUBLIC PURPOSE, INCLUDING THE RIGHT TO PRESERVE, PROTECT, REMOVE, OR PLANT THEREON ANY VEGETATION THAT THE HIGHWAY AUTHORITIES MAY DEEM DESIRABLE. ALL (TLES) ON THIS PLAT EXPIRE AT THE COMPLETION OF THE CONSTRUCTION PROJECT FOR WHICH THIS INSTRUMENT IS GIVEN.

ACCEPTED FOR
CITY OF PRINCETON
DATE: 12/27/19 (Signature)

ACCEPTED FOR
GREEN LAKE COUNTY
DATE: 12/16/19 (Highway Commissioner)

RECEIVED DEC 27 2019 GREEN LAKE COUNTY CLERK

ORIGINAL PLAT PREPARED BY
MSA
ENGINEERING | ARCHITECTURE | SURVEYING
FUNDING | PLANNING | ENVIRONMENTAL
1230 SOUTH BOULEVARD, BARABOO, WI 53913
(608) 356-2771 www.msa-ps.com
© MSA Professional Services, Inc

WISCONSIN KEVIN C. LORD S-2645 MADISON, WIS. LAND SURVEYOR
DATE: 12-5-19 (Registered L)

REVISION DATE



FILE NAME : P:\11500S\11500S\11507\11507006\CADD\RW\040101-RP.DWG PLOT DATE : 10/30/2019 7:52 AM PLOT BY : BRAD LEE PLOT NAME :

4

## SCHEDULE OF LANDS AND INTEREST

| PARCEL NUMBER | SHEET NUMBER | OWNER (S) | INTEREST REQUIRED | R/W NEW SF | R/W EXISTING SF | R/W TOTAL SF | TLE SF |
|---|---|---|---|---|---|---|---|
| 1 | 4.04 | WISCONSIN POWER & LIGHT | FEE & TLE | 1,180 SF | --- | 1,180 SF | 542 SF |
| 2 | 4.04 | MICHAEL K & MARIE I GATES | TLE | --- | --- | --- | 168 SF |
| 3 | 4.05 | RICHARD LABUMBARD III | FEE & TLE | 571 SF | --- | 571 SF | 137 SF |
| 4 | 4.05 | MANWEILER LIVING TRUST | FEE & TLE | 542 SF | --- | 542 SF | 587 SF |
| 6 | 4.05 | STEVEN D & ANITA L ROEHL | TLE | --- | --- | --- | 147 SF |
| 7 | 4.05 | KAREN BASS | FEE & TLE | 557 SF | --- | 557 SF | 549 SF |
| 8 | 4.05 | JANE MARIE VINING | TLE | --- | --- | --- | 1,006 SF |
| 9 | 4.05 | JUSTIN J POWER | FEE & TLE | 541 SF | --- | 541 SF | 414 SF |
| 11 | 4.05 | ANDREW SHURPIT | TLE | --- | --- | --- | 1,080 SF |
| 12 | 4.05 & 4.06 | JOSEPH T KURUC | FEE & TLE | --- | 3,170 SF | 3,170 SF | 1,890 SF |
| 13 | 4.05 & 4.06 | KENNETH R UHL | FEE & TLE | 1,800 SF | --- | 1,800 SF | 1,165 SF |
| 14 | 4.06 | KEVIN J LASHOCK | FEE & TLE | --- | 4,010 SF | 4,010 SF | 975 SF |
| 16 | 4.06 | LAURA MILFORD | FEE & TLE | --- | 3,331 SF | 3,331 SF | 793 SF |
| 17 | 4.06 | RICHARD TIDYMAN | FEE & TLE | --- | 3,054 SF | 3,054 SF | 377 SF |
| 18 | 4.06 | JEFFERY C SCHEUERS, LINDA M SCHILLING, & LORI K KIES | FEE & TLE | --- | 2,480 SF | 2,480 SF | 141 SF |
| 19 | 4.06 | DANIEL D & LINDA M SCHILLING | FEE & TLE | --- | 1,924 SF | 1,924 SF | 267 SF |
| 21 | 4.06 | PAUL D & CYNTHIA L GUNDERSON | TLE | --- | --- | --- | 242 SF |
| 22 | 4.06 | BRUCE & CAROL DREYMILLER | FEE | 287 SF | --- | 287 SF | --- |
| 23 | 4.06 & 4.07 | RONALD J DISTERHAFT | FEE & TLE | --- | 9,735 SF | 9,735 SF | 2,845 SF |
| 24 | 4.07 & 4.08 | SUSAN WOLLITZ | TLE | --- | --- | --- | 1,763 SF |
| 26 | 4.08 | TANK TECHNOLOGY INC | TLE | --- | --- | --- | 1,017 SF |
| 50 | 4.04, 4.05, 4.07, & 4.08 | ALLIANT ENERGY - ELECTRIC | RELEASE OF RIGHTS | --- | --- | --- | --- |
| 51 | 4.04 & 4.08 | CENTURYLINK | RELEASE OF RIGHTS | --- | --- | --- | --- |
| 52 | 4.04 | WE ENERGIES | RELEASE OF RIGHTS | --- | --- | --- | --- |
| 53 | 4.05 | CITY OF PRINCETON - WATER | RELEASE OF RIGHTS | --- | --- | --- | --- |
| 54 | 4.07 | CITY OF PRINCETON - SANITARY | RELEASE OF RIGHTS | --- | --- | --- | --- |

4

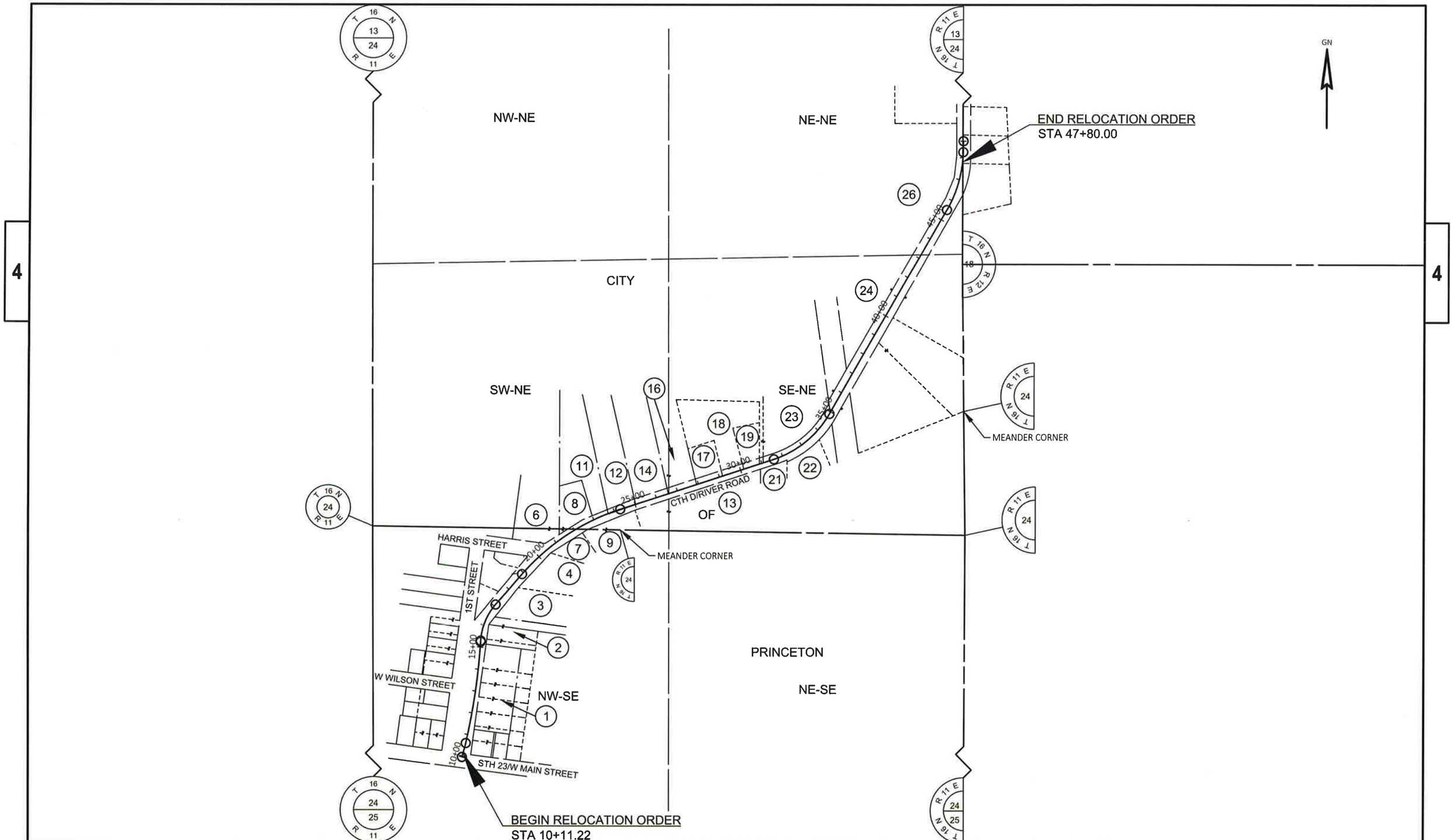


| REVISION DATE | DATE October 4, 2019 | SCALE, FEET 0 200 400 | HWY: CTH D | STATE R/W PROJECT NUMBER 6425-00-00 | PLAT SHEET 4.03 | |
|---|---|---|---|---|---|---|
| | | | COUNTY: GREEN LAKE | CONSTRUCTION PROJECT NUMBER 6425-00-70 | PS&E SHEET 51 | E |

FILE NAME : 040101-RP.DWG
LAYOUT NAME - 040103-rp
PLOT DATE : 10/30/2019 7:52 AM PLOT BY : BRAD LEE PLOT NAME : PLOT SCALE : 1 IN:400 FT
WISDOT/CADDS SHEET 75

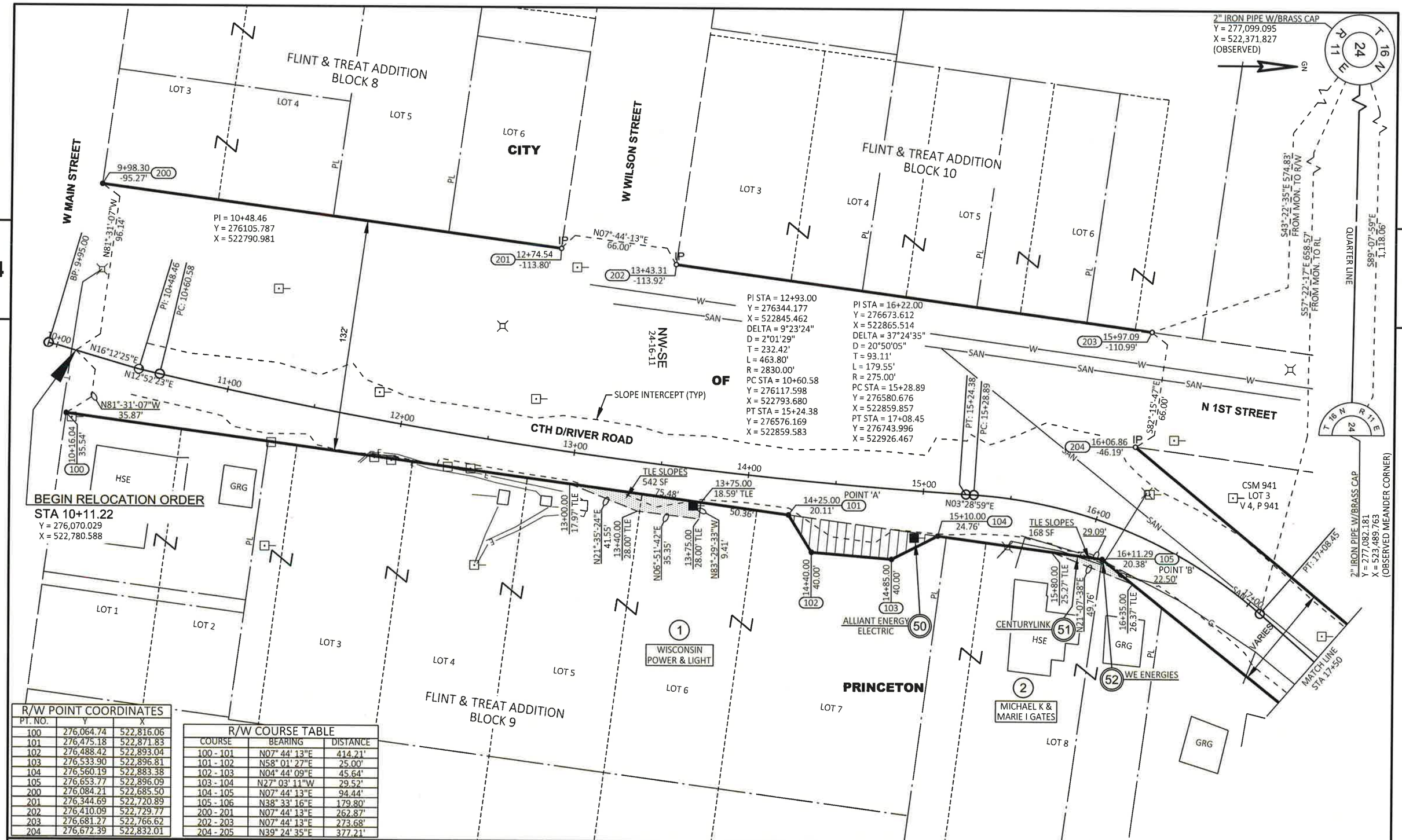


| R/W POINT COORDINATES | | |
|---|---|---|
| PT. NO. | Y | X |
| 100 | 276,064.74 | 522,816.06 |
| 101 | 276,475.18 | 522,871.83 |
| 102 | 276,488.42 | 522,893.04 |
| 103 | 276,533.90 | 522,896.81 |
| 104 | 276,560.19 | 522,883.38 |
| 105 | 276,653.77 | 522,896.09 |
| 200 | 276,084.21 | 522,685.50 |
| 201 | 276,344.69 | 522,720.89 |
| 202 | 276,410.09 | 522,729.77 |
| 203 | 276,681.27 | 522,766.62 |
| 204 | 276,672.39 | 522,832.01 |

| R/W COURSE TABLE | | |
|---|---|---|
| COURSE | BEARING | DISTANCE |
| 100 - 101 | N07° 44' 13"E | 414.21' |
| 101 - 102 | N58° 01' 27"E | 25.00' |
| 102 - 103 | N04° 44' 09"E | 45.64' |
| 103 - 104 | N27° 03' 11"W | 29.52' |
| 104 - 105 | N07° 44' 13"E | 94.44' |
| 105 - 106 | N38° 33' 16"E | 179.80' |
| 200 - 201 | N07° 44' 13"E | 262.87' |
| 202 - 203 | N07° 44' 13"E | 273.68' |
| 204 - 205 | N39° 24' 35"E | 377.21' |

REVISION DATE

DATE October 4, 2019

SCALE, FEET 0 25 50

HWY: CTH D

COUNTY: GREEN LAKE

STATE R/W PROJECT NUMBER 6425-00-00

CONSTRUCTION PROJECT NUMBER 6425-00-70

PLAT SHEET 4.04

PS&E SHEET 52

E

FILE NAME : 040101-RP.DWG
LAYOUT NAME - 040104-rp

PLOT DATE : 10/30/2019 7:52 AM PLOT BY : BRAD LEE PLOT NAME : PLOT SCALE : 1 IN:50 FT

WISDOT/CADDS SHEET 75

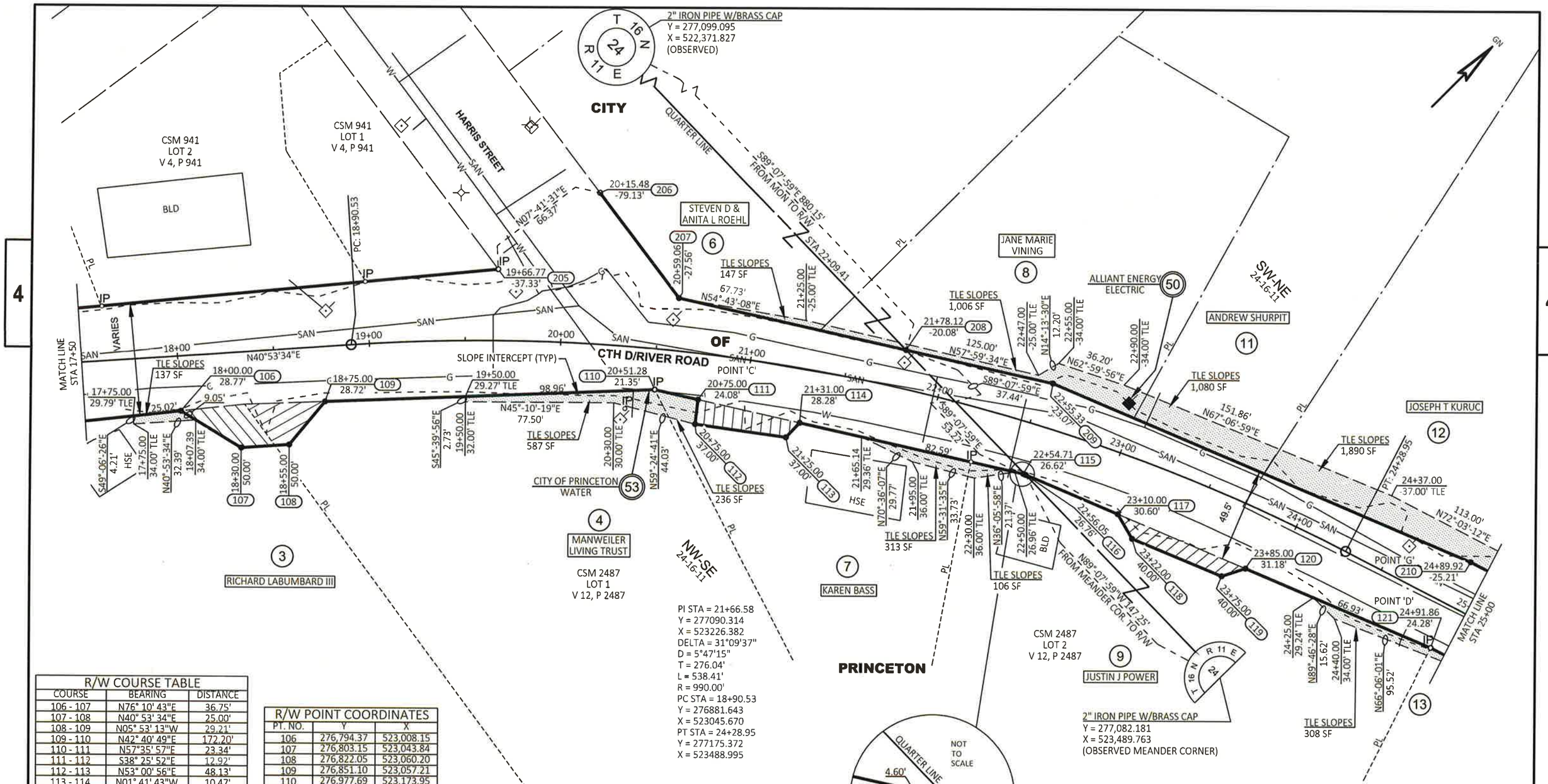


| R/W COURSE TABLE | | |
|---|---|---|
| COURSE | BEARING | DISTANCE |
| 106 - 107 | N76° 10' 43"E | 36.75' |
| 107 - 108 | N40° 53' 34"E | 25.00' |
| 108 - 109 | N05° 53' 13"W | 29.21' |
| 109 - 110 | N42° 40' 49"E | 172.20' |
| 110 - 111 | N57°35' 57"E | 23.34' |
| 111 - 112 | S38° 25' 52"E | 12.92' |
| 112 - 113 | N53° 00' 56"E | 48.13' |
| 113 - 114 | N01° 41' 43"W | 10.47' |
| 114 - 115 | N57° 35' 57"E | 120.21' |
| 115 - 116 | N67° 47' 59"E | 1.31' |
| 116 - 117 | N67° 47' 59"E | 52.52' |
| 117 - 118 | S75° 22' 58"E | 14.91' |
| 118 - 119 | N67° 23' 51"E | 50.85' |
| 119 - 120 | N26° 45' 47"E | 13.07' |
| 120 - 121 | N67° 47' 59"E | 105.76' |
| 206 - 207 | S82° 18' 29"E | 69.05' |
| 207 - 208 | N57° 35' 57"E | 122.08' |
| 208 - 209 | N57° 35' 57"E | 78.93' |
| 209 - 210 | N67° 47' 59"E | 238.38' |

| R/W POINT COORDINATES | | |
|---|---|---|
| PT. NO. | Y | X |
| 106 | 276,794.37 | 523,008.15 |
| 107 | 276,803.15 | 523,043.84 |
| 108 | 276,822.05 | 523,060.20 |
| 109 | 276,851.10 | 523,057.21 |
| 110 | 276,977.69 | 523,173.95 |
| 111 | 276,990.20 | 523,193.65 |
| 112 | 276,980.08 | 523,201.68 |
| 113 | 277,009.03 | 523,240.13 |
| 114 | 277,019.50 | 523,239.82 |
| 115 | 277,083.91 | 523,341.32 |
| 116 | 277,084.41 | 523,342.53 |
| 117 | 277,104.25 | 523,391.15 |
| 118 | 277,100.49 | 523,405.58 |
| 119 | 277,120.03 | 523,452.53 |
| 120 | 277,131.70 | 523,458.41 |
| 121 | 277,171.66 | 523,556.33 |

| R/W POINT COORDINATES | | |
|---|---|---|
| PT. NO. | Y | X |
| 205 | 276,963.83 | 523,071.49 |
| 206 | 277,029.61 | 523,080.38 |
| 207 | 277,020.36 | 523,148.80 |
| 208 | 277,085.78 | 523,251.88 |
| 209 | 277,128.07 | 523,318.52 |
| 210 | 277,218.15 | 523,539.23 |

REVISION DATE

DATE October 4, 2019

SCALE, FEET 0 25 50

HWY: CTH D

COUNTY: GREEN LAKE

STATE R/W PROJECT NUMBER 6425-00-00

CONSTRUCTION PROJECT NUMBER 6425-00-70

PLAT SHEET 4.05

PS&E SHEET 53

E

FILE NAME : 040101-RP.DWG
LAYOUT NAME - 040105-rp

PLOT DATE : 10/30/2019 7:52 AM PLOT BY : BRAD LEE PLOT NAME : PLOT SCALE : 1 IN:50 FT

WISDOT/CADDS SHEET 75

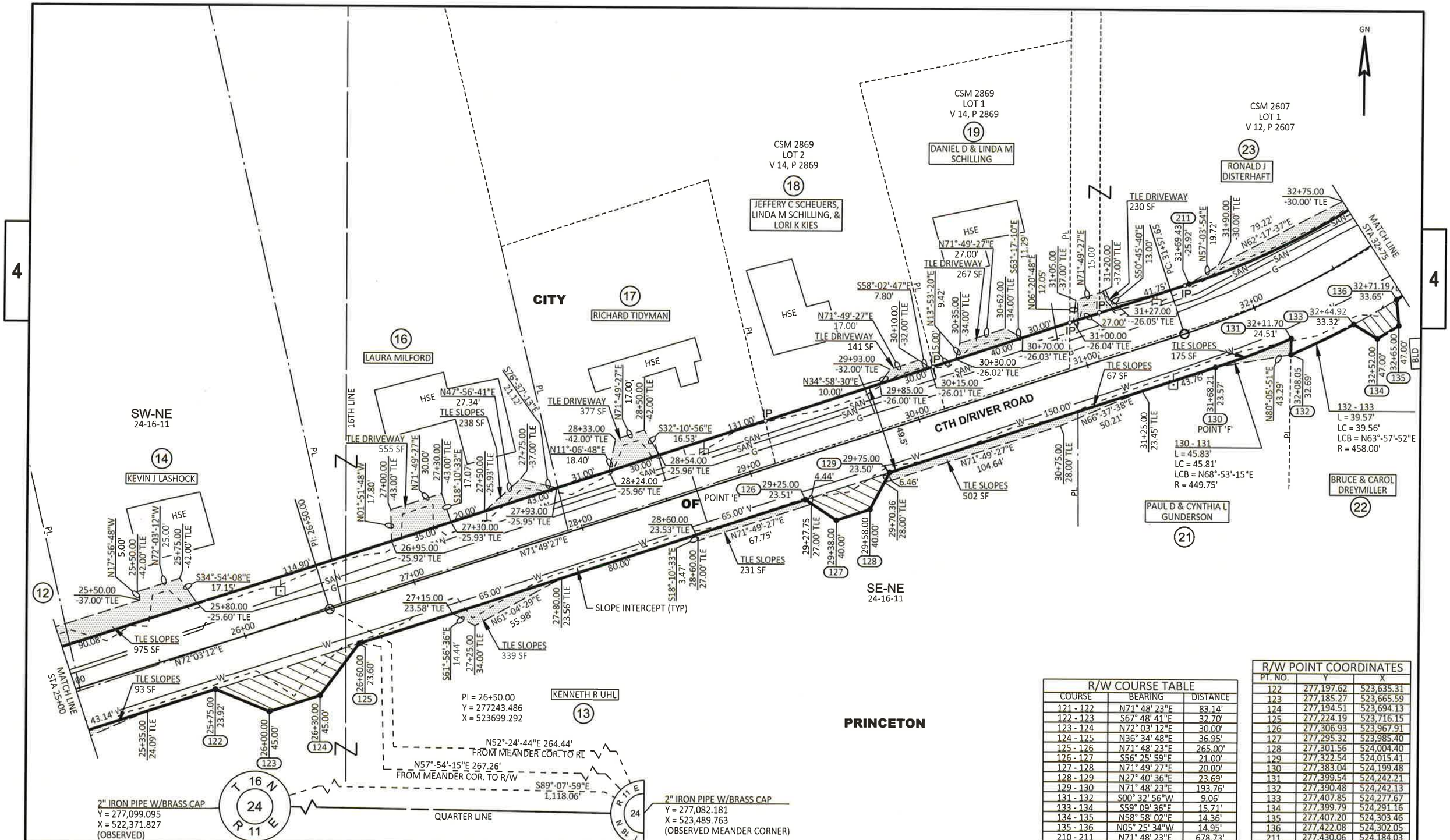


| R/W COURSE TABLE | | |
|---|---|---|
| COURSE | BEARING | DISTANCE |
| 121 - 122 | N71° 48' 23"E | 83.14' |
| 122 - 123 | S67° 48' 41"E | 32.70' |
| 123 - 124 | N72° 03' 12"E | 30.00' |
| 124 - 125 | N36° 34' 48"E | 36.95' |
| 125 - 126 | N71° 48' 23"E | 265.00' |
| 126 - 127 | S56° 25' 59"E | 21.00' |
| 127 - 128 | N71° 49' 27"E | 20.00' |
| 128 - 129 | N27° 40' 36"E | 23.69' |
| 129 - 130 | N71° 48' 23"E | 193.76' |
| 131 - 132 | S00° 32' 56"W | 9.06' |
| 133 - 134 | S59° 09' 36"E | 15.71' |
| 134 - 135 | N58° 58' 02"E | 14.36' |
| 135 - 136 | N05° 25' 34"W | 14.95' |
| 210 - 211 | N71° 48' 23"E | 678.73' |

| R/W POINT COORDINATES | | |
|---|---|---|
| PT. NO. | Y | X |
| 122 | 277,197.62 | 523,635.31 |
| 123 | 277,185.27 | 523,665.59 |
| 124 | 277,194.51 | 523,694.13 |
| 125 | 277,224.19 | 523,716.15 |
| 126 | 277,306.93 | 523,967.91 |
| 127 | 277,295.32 | 523,985.40 |
| 128 | 277,301.56 | 524,004.40 |
| 129 | 277,322.54 | 524,015.41 |
| 130 | 277,383.04 | 524,199.48 |
| 131 | 277,399.54 | 524,242.21 |
| 132 | 277,390.48 | 524,242.13 |
| 133 | 277,407.85 | 524,277.67 |
| 134 | 277,399.79 | 524,291.16 |
| 135 | 277,407.20 | 524,303.46 |
| 136 | 277,422.08 | 524,302.05 |
| 211 | 277,430.06 | 524,184.03 |

| | | | | |
|---|---|---|---|---|
| REVISION DATE | DATE October 4, 2019 | SCALE, FEET 0 25 50 | HWY: CTH D | STATE R/W PROJECT NUMBER 6425-00-00 | PLAT SHEET 4.06 |
| | | | COUNTY: GREEN LAKE | CONSTRUCTION PROJECT NUMBER 6425-00-70 | PS&E SHEET 54 | E |

FILE NAME : 040101-RP.DWG
LAYOUT NAME - 040106-rp
PLOT DATE : 10/30/2019 7:52 AM PLOT BY : BRAD LEE PLOT NAME : PLOT SCALE : 1 IN:50 FT
WISDOT/CADDS SHEET 75

| R/W COURSE TABLE | | |
|---|---|---|
| COURSE | BEARING | DISTANCE |
| 137 - 138 | N29° 41' 24"E | 528.00' |
| 212 - 213 | N29° 41' 24"E | 48.49' |
| 213 - 214 | N08° 13' 01"W | 13.43' |
| 214 - 215 | N29° 41' 24"E | 469.19' |

| R/W POINT COORDINATES | | |
|---|---|---|
| PT. NO. | Y | X |
| 137 | 277,583.45 | 524,456.93 |
| 138 | 278,042.13 | 524,718.45 |
| 212 | 277,612.06 | 524,406.76 |
| 213 | 277,654.18 | 524,430.78 |
| 214 | 277,667.47 | 524,428.86 |
| 215 | 278,075.06 | 524,661.25 |

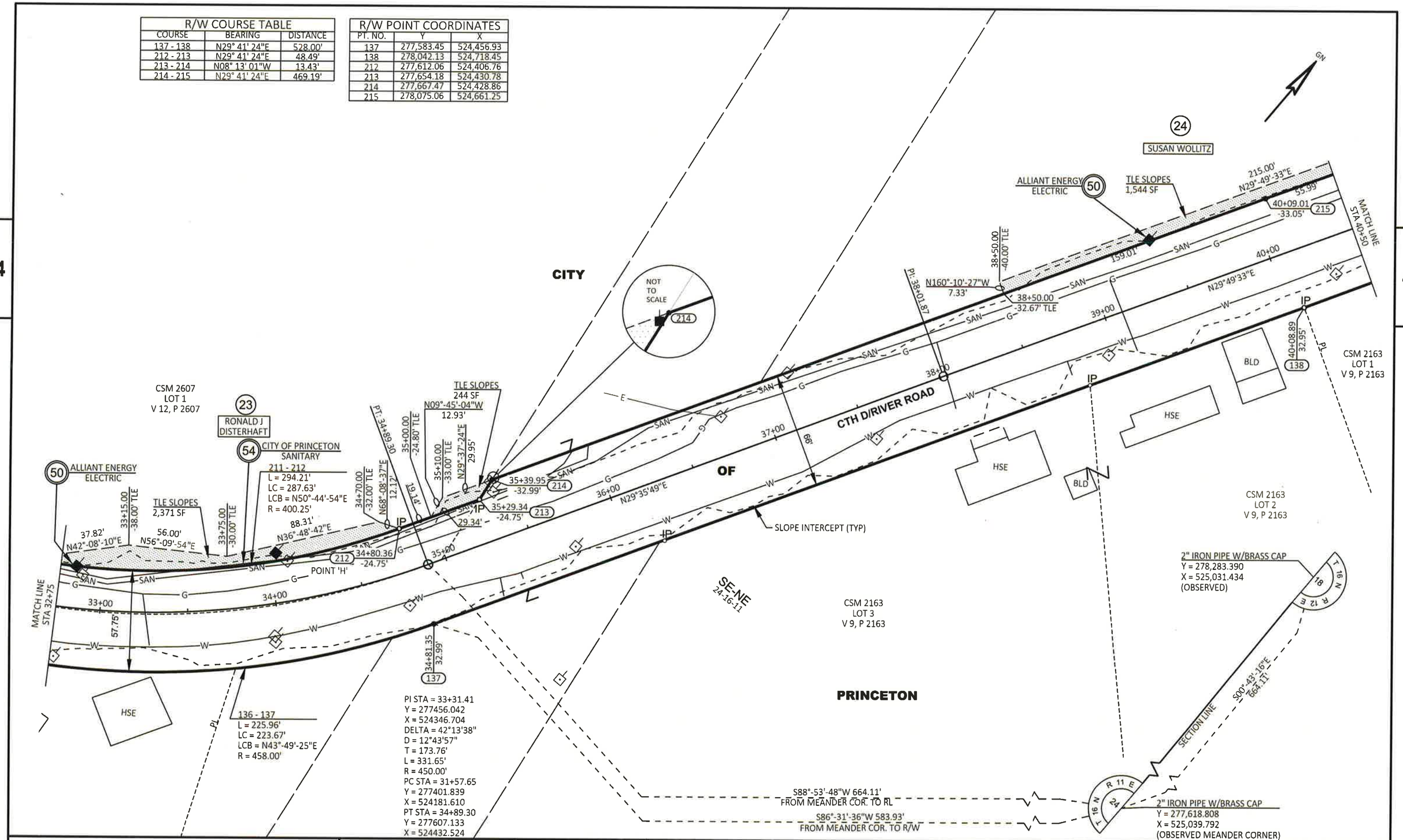


| REVISION DATE | DATE October 4, 2019 | SCALE, FEET 0 25 50 | HWY: CTH D | STATE R/W PROJECT NUMBER 6425-00-00 | PLAT SHEET 4.07 | |
|---|---|---|---|---|---|---|
| | | | COUNTY: GREEN LAKE | CONSTRUCTION PROJECT NUMBER 6425-00-70 | PS&E SHEET 55 | E |

FILE NAME : 040101-RP.DWG
LAYOUT NAME - 040107-rp

PLOT DATE : 10/30/2019 7:52 AM PLOT BY : BRAD LEE PLOT NAME : PLOT SCALE : 1 IN:50 FT

WISDOT/CADDS SHEET 75

| R/W COURSE TABLE | | |
|---|---|---|
| COURSE | BEARING | DISTANCE |
| 138 - 139 | N29° 23' 40"E | 635.41' |
| 141 - 142 | N00° 12' 20"W | 2.36' |
| 215 - 216 | N29° 54' 45"E | 588.49' |
| 216 - 217 | N22° 01' 45"E | 100.00' |
| 217 - 218 | N06° 15' 45"E | 70.81' |

| R/W POINT COORDINATES | | |
|---|---|---|
| PT. NO. | Y | X |
| 139 | 278,595.74 | 525,030.32 |
| 140 | 278,597.55 | 525,031.10 |
| 141 | 278,739.03 | 525,065.49 |
| 142 | 278,741.38 | 525,065.48 |
| 216 | 278,585.15 | 524,954.72 |
| 217 | 278,677.85 | 524,992.23 |
| 218 | 278,748.24 | 524,999.95 |

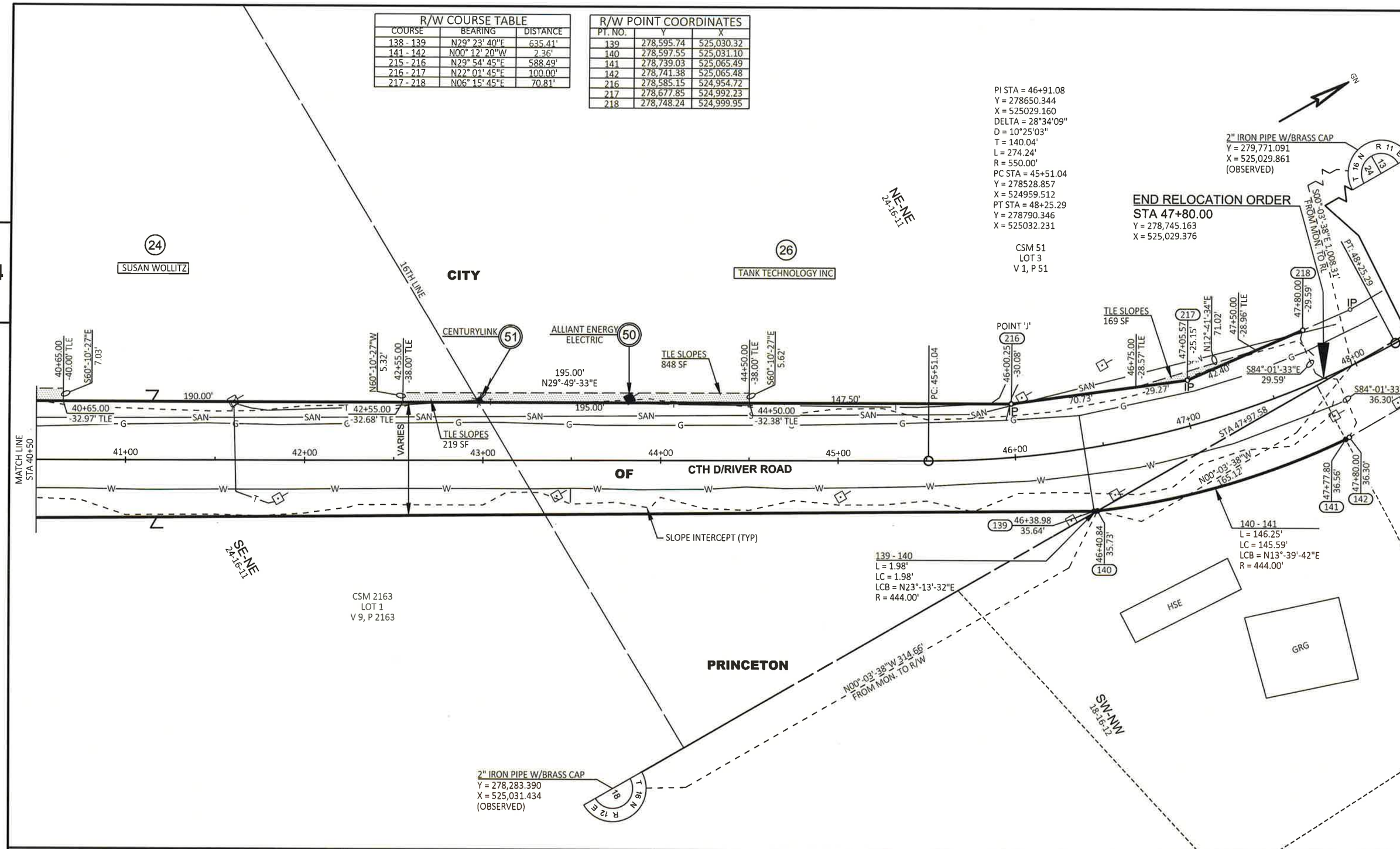


| REVISION DATE | DATE October 4, 2019 | SCALE, FEET 0 25 50 | HWY: CTH D | STATE R/W PROJECT NUMBER 6425-00-00 | PLAT SHEET 4.08 | |
|---|---|---|---|---|---|---|
| | | | COUNTY: GREEN LAKE | CONSTRUCTION PROJECT NUMBER 6425-00-70 | PS&E SHEET 56 | E |

FILE NAME : 040101-RP.DWG
LAYOUT NAME - 040108-rp
PLOT DATE : 10/30/2019 7:52 AM PLOT BY : BRAD LEE PLOT NAME : PLOT SCALE : 1 IN:50 FT
WISDOT/CADDS SHEET 75

| BENCHMARKS | | | |
|---|---|---|---|
| NO. | STATION | ELEV. | DESCRIPTION |
| #1 | 11+64.53 | 781.018 | CUT-IN X ON CULVERT |

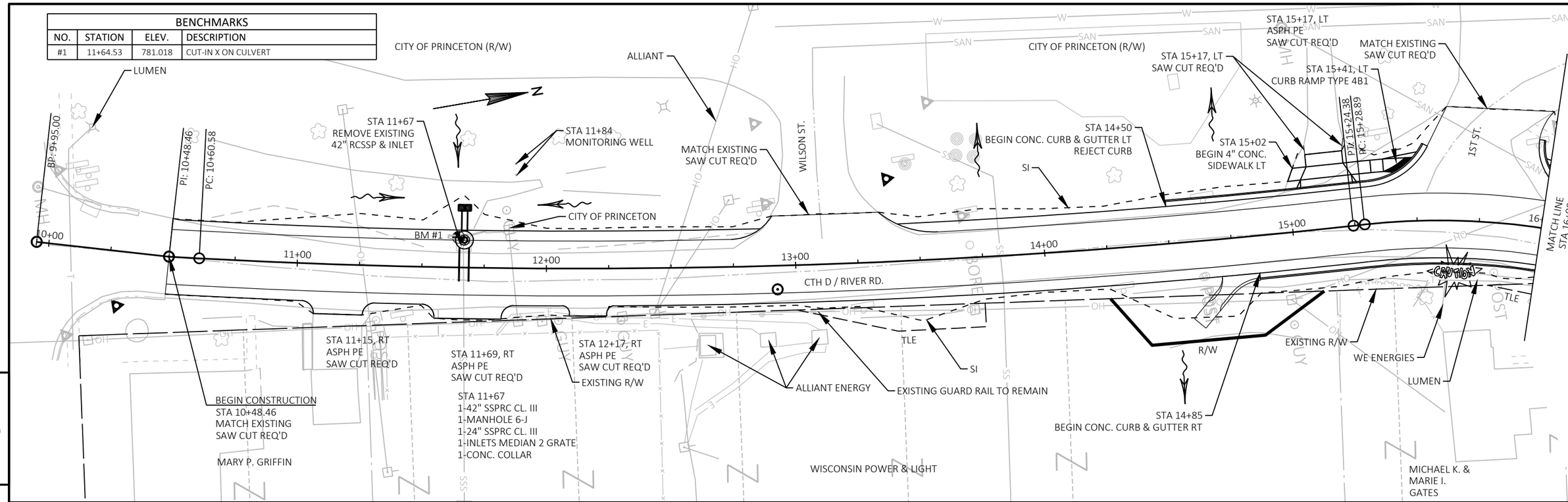


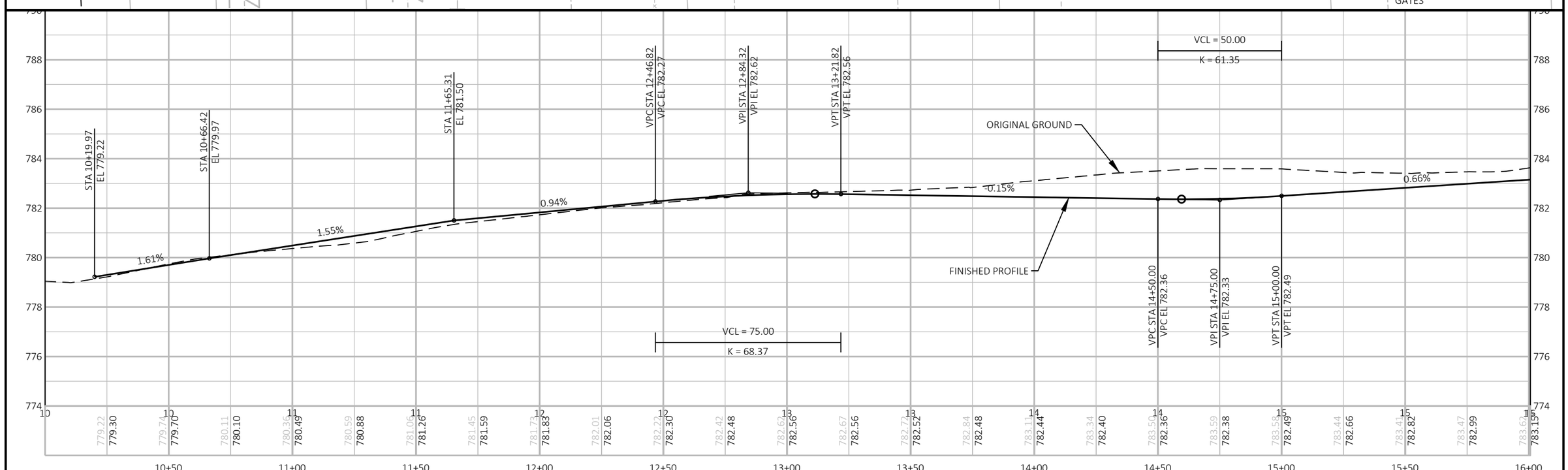


| PROJECT NO: 6425-00-70 | HWY: CTH D | COUNTY: GREEN LAKE | PLAN AND PROFILE: CTH D | SHEET 57 | E |
|---|---|---|---|---|---|

FILE NAME : P:\11500S\11500S\11507\11507006\CADD\SHEETSPLAN\050101-PP.DWG
LAYOUT NAME - 1
PLOT DATE : 12/1/2020 11:28 AM
PLOT BY : BOBBI MAXWELL
PLOT NAME :
PLOT SCALE : 1 IN:40 FT
WISDOT/CADDS SHEET 44

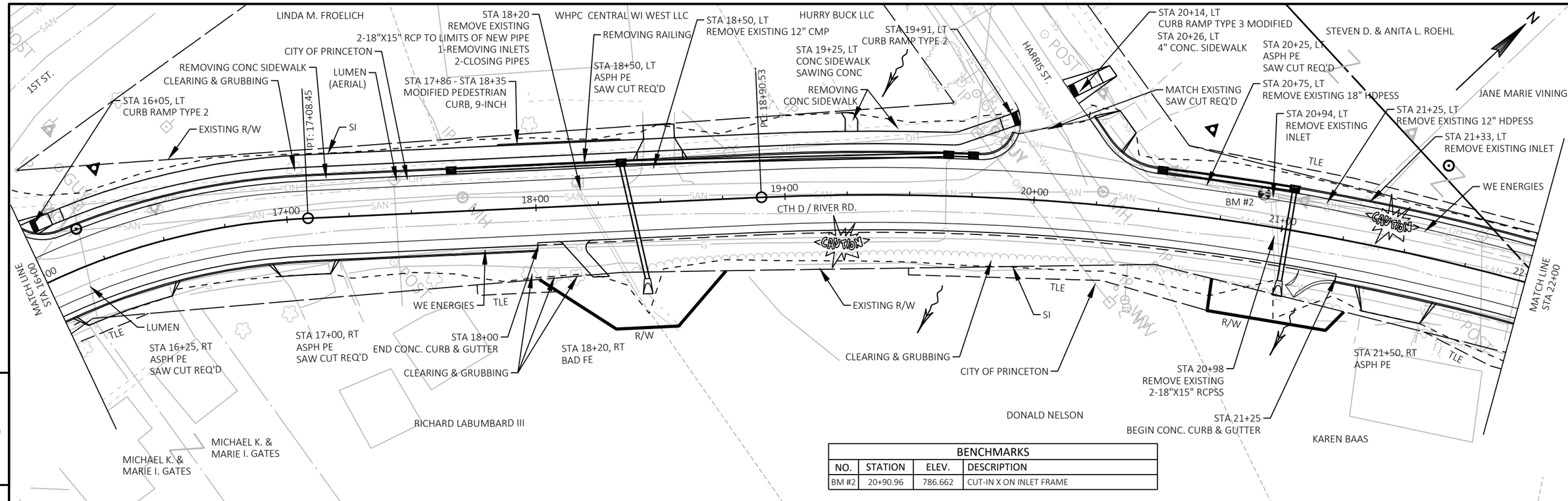


| BENCHMARKS | | | |
|---|---|---|---|
| NO. | STATION | ELEV. | DESCRIPTION |
| BM #2 | 20+90.96 | 786.662 | CUT-IN X ON INLET FRAME |

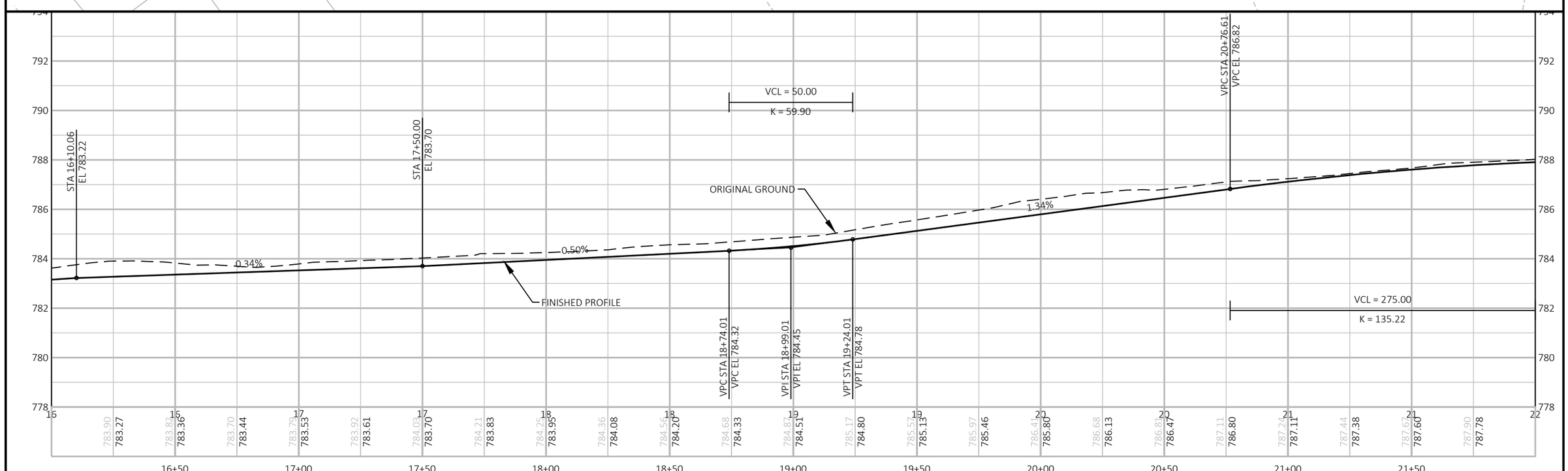


| PROJECT NO: 6425-00-70 | HWY: CTH D | COUNTY: GREEN LAKE | PLAN AND PROFILE: CTH D | SHEET 58 | E |
|---|---|---|---|---|---|

FILE NAME : P:\11500S\11500S\11507\11507006\CADD\SHEETSPLAN\050101-PP.DWG
LAYOUT NAME - 2
PLOT DATE : 12/1/2020 11:28 AM
PLOT BY : BOBBI MAXWELL
PLOT NAME :
PLOT SCALE : 1 IN:40 FT
WISDOT/CADDS SHEET 44

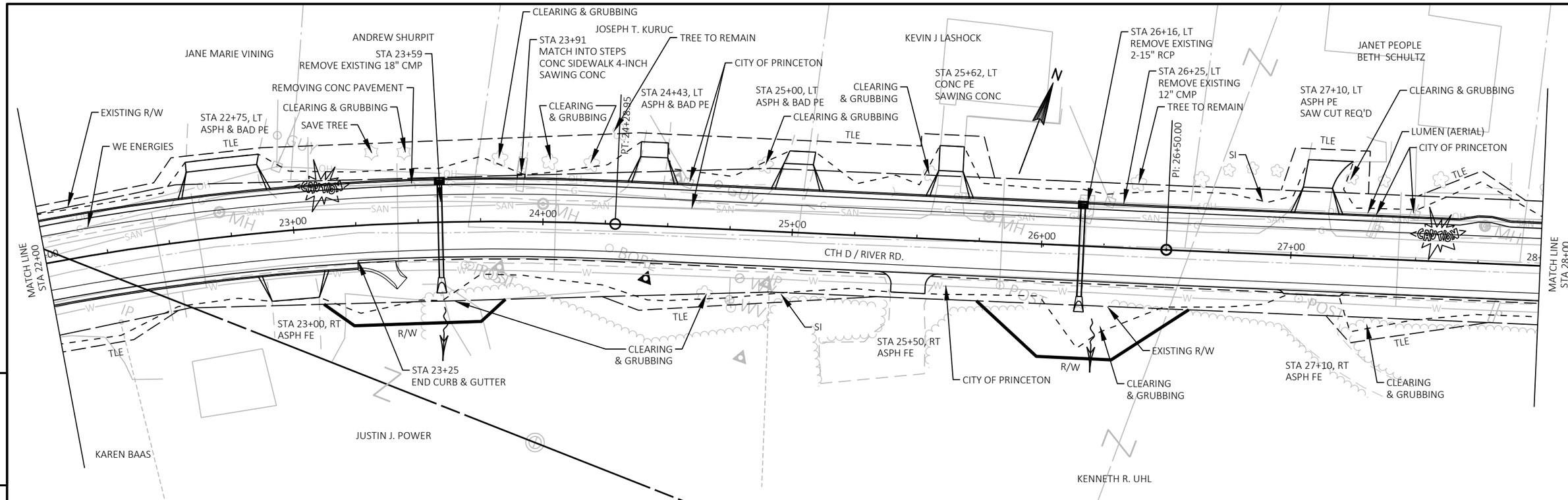


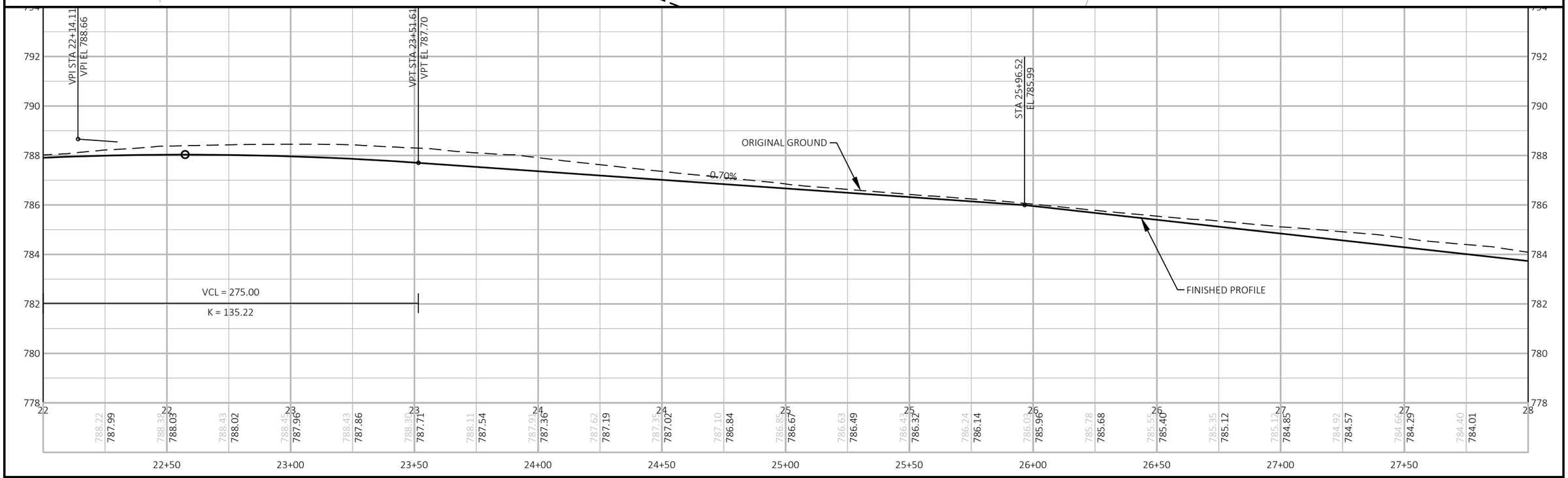


| PROJECT NO: 6425-00-70 | HWY: CTH D | COUNTY: GREEN LAKE | PLAN AND PROFILE: CTH D | SHEET 59 | E |
|---|---|---|---|---|---|

FILE NAME : P:\11500S\11500S\11507\11507006\CADD\SHEETSPLAN\050101-PP.DWG
LAYOUT NAME - 3
PLOT DATE : 12/1/2020 11:28 AM
PLOT BY : BOBBI MAXWELL
PLOT NAME :
PLOT SCALE : 1 IN:40 FT
WISDOT/CADDS SHEET 44

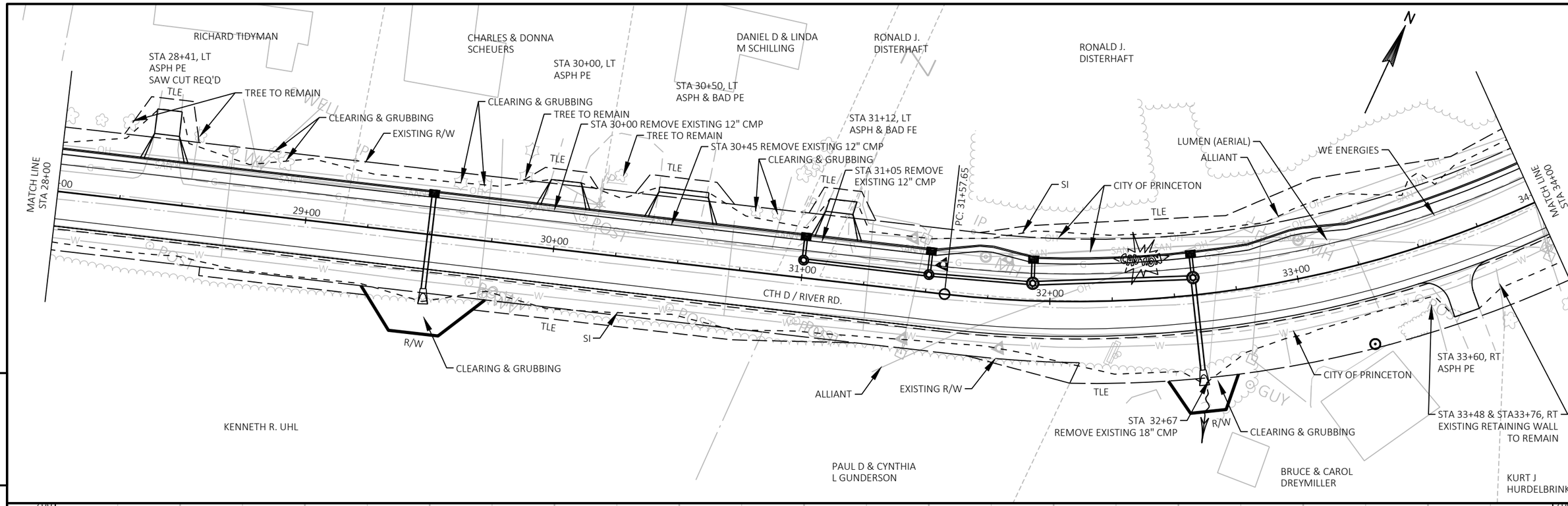


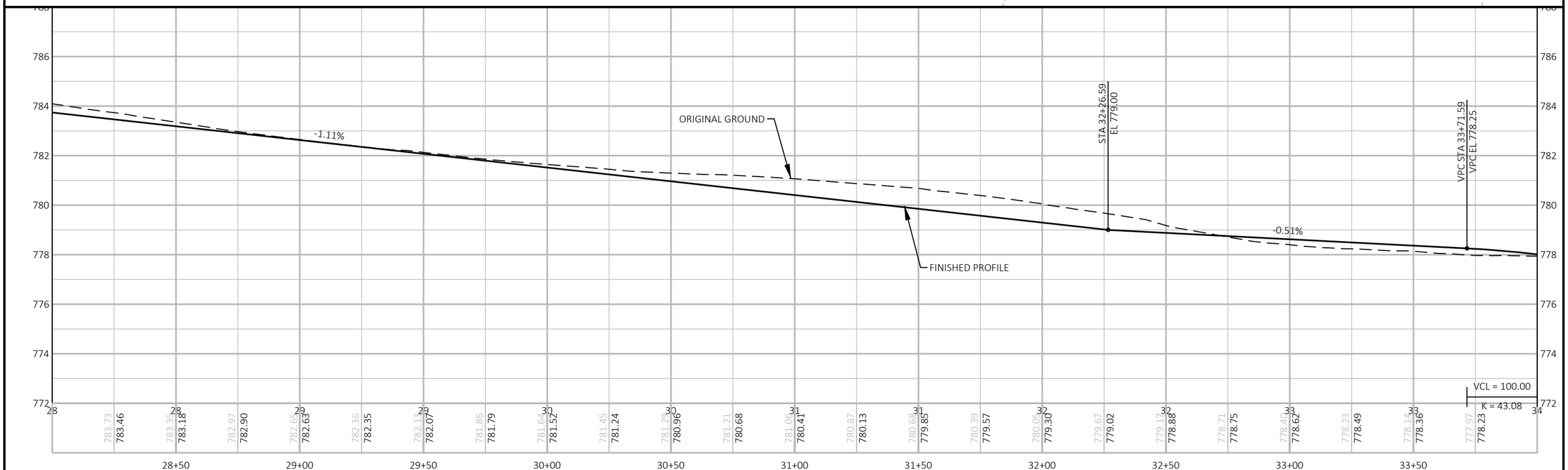


| PROJECT NO: 6425-00-70 | HWY: CTH D | COUNTY: GREEN LAKE | PLAN AND PROFILE: CTH D | SHEET 60 | E |
|---|---|---|---|---|---|

FILE NAME : P:\11500S\11500S\11507\11507006\CADD\SHEETSPLAN\050101-PP.DWG
LAYOUT NAME - 4
PLOT DATE : 12/1/2020 11:28 AM
PLOT BY : BOBBI MAXWELL
PLOT NAME :
PLOT SCALE : 1 IN:40 FT
WISDOT/CADDS SHEET 44

| BENCHMARKS | | | |
|---|---|---|---|
| NO. | STATION | ELEV. | DESCRIPTION |
| BM #4 | 36+85.14 | 771.684 | CUT-IN X ON CULVERT |

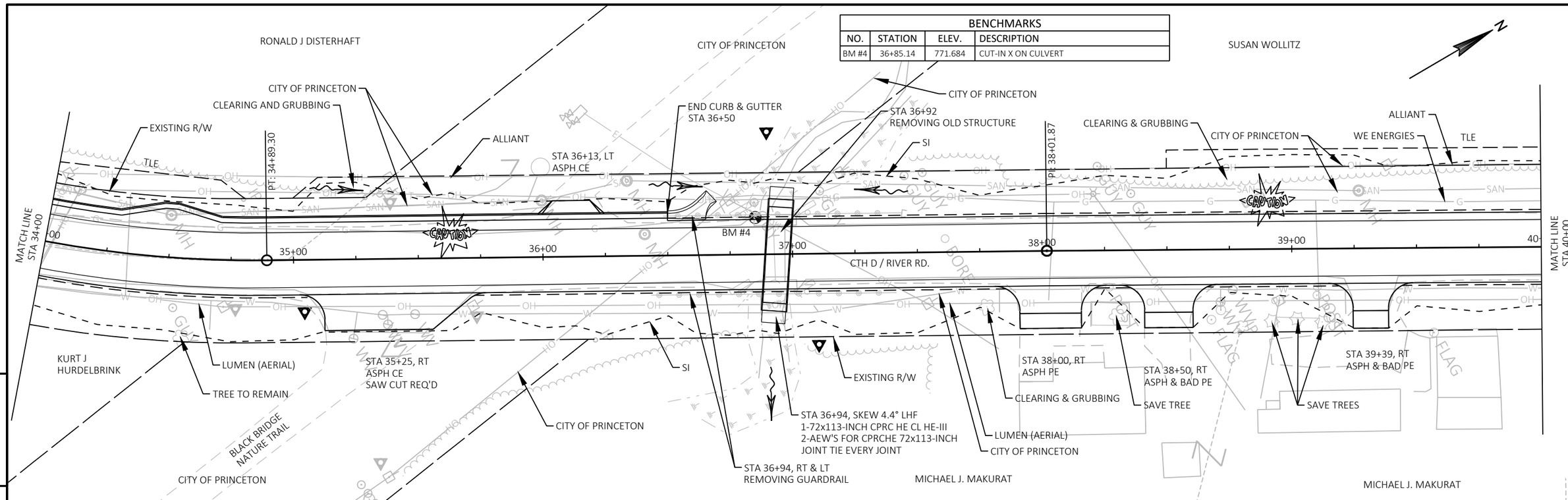


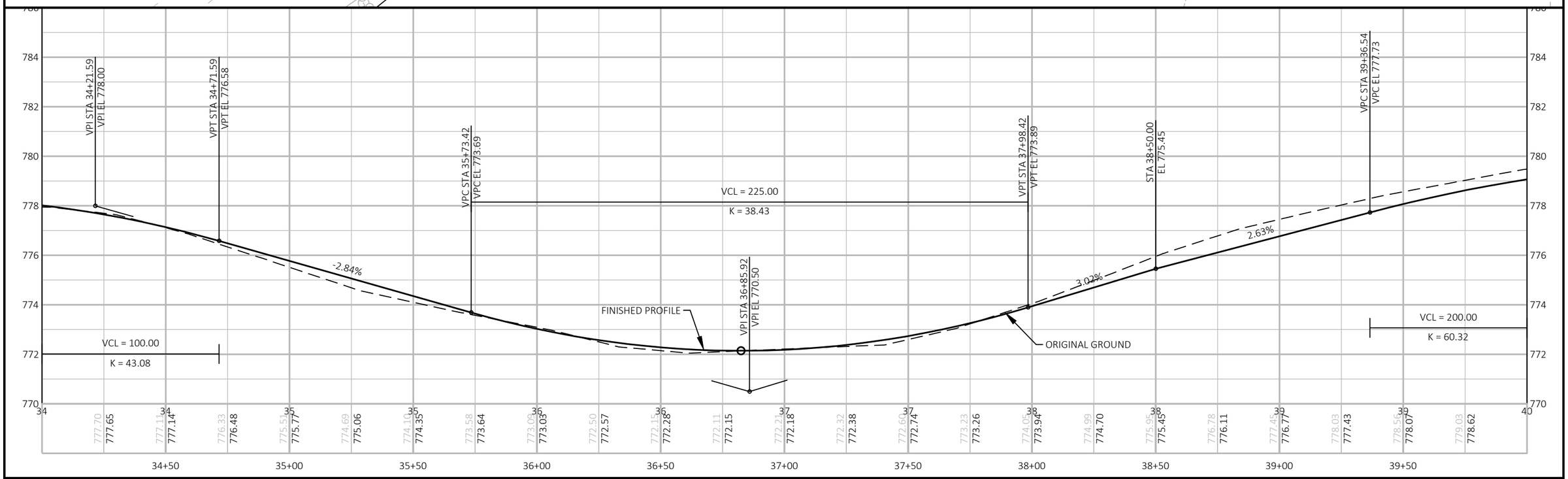


| PROJECT NO: 6425-00-70 | HWY: CTH D | COUNTY: GREEN LAKE | PLAN AND PROFILE: CTH D | SHEET 61 | E |
|---|---|---|---|---|---|

FILE NAME : P:\11500S\11500S\11507\11507006\CADD\SHEETSPLAN\050101-PP.DWG
LAYOUT NAME - 5
PLOT DATE : 12/1/2020 11:28 AM
PLOT BY : BOBBI MAXWELL
PLOT NAME :
PLOT SCALE : 1 IN:40 FT

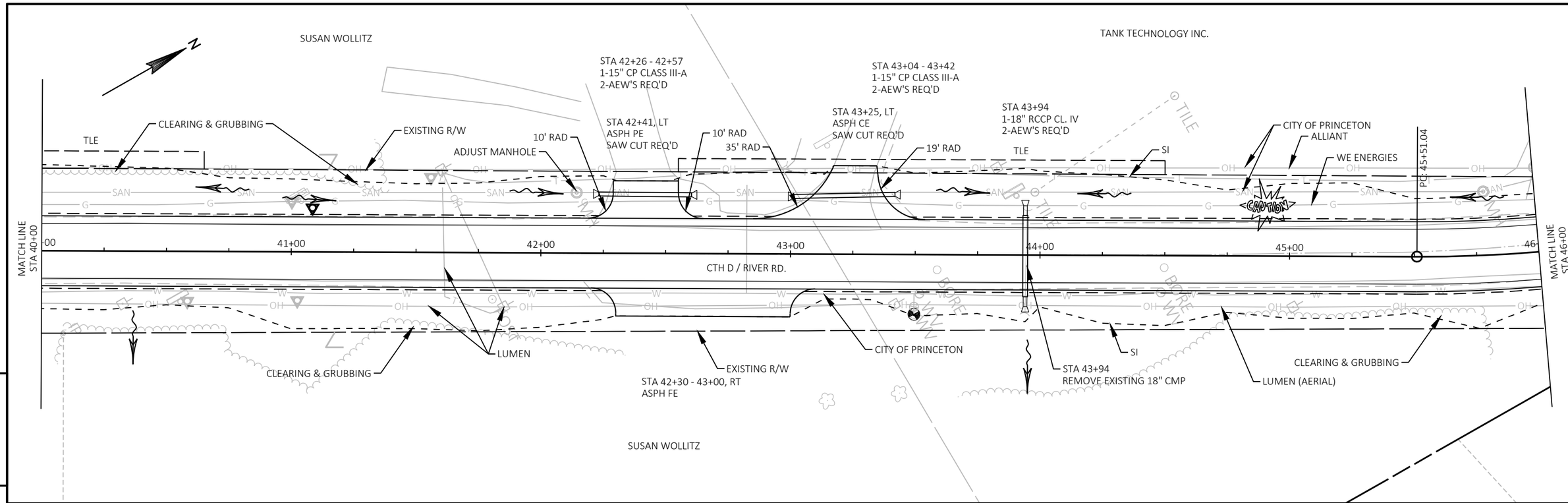


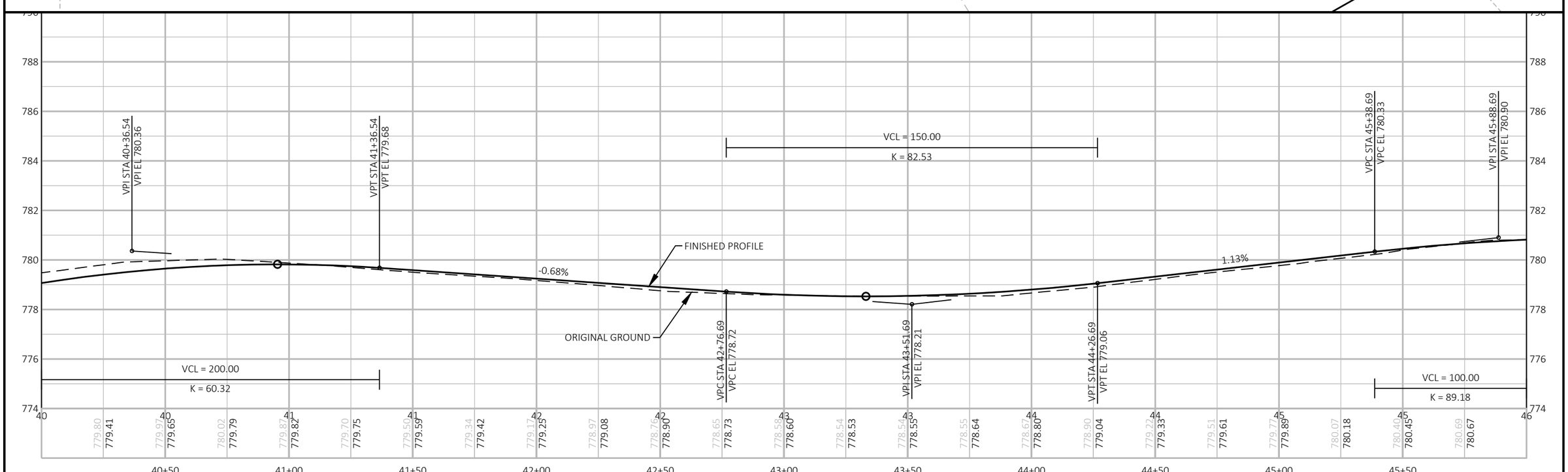


| PROJECT NO: 6425-00-70 | HWY: CTH D | COUNTY: GREEN LAKE | PLAN AND PROFILE: CTH D | SHEET 62 | E |
|---|---|---|---|---|---|

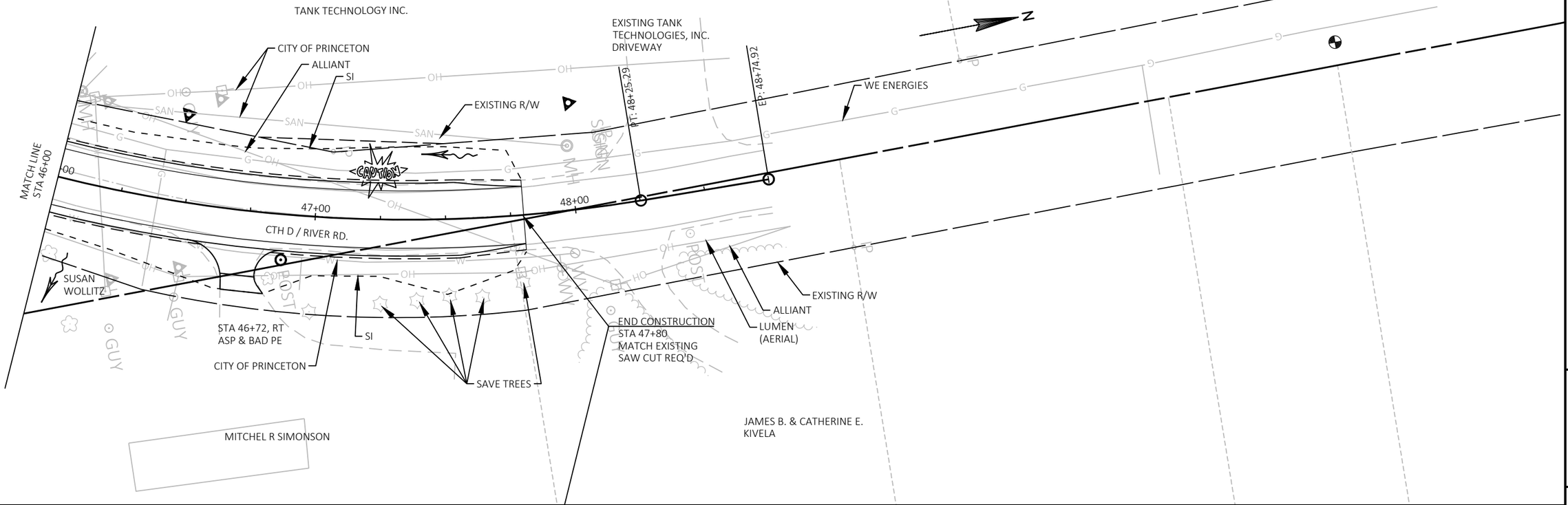


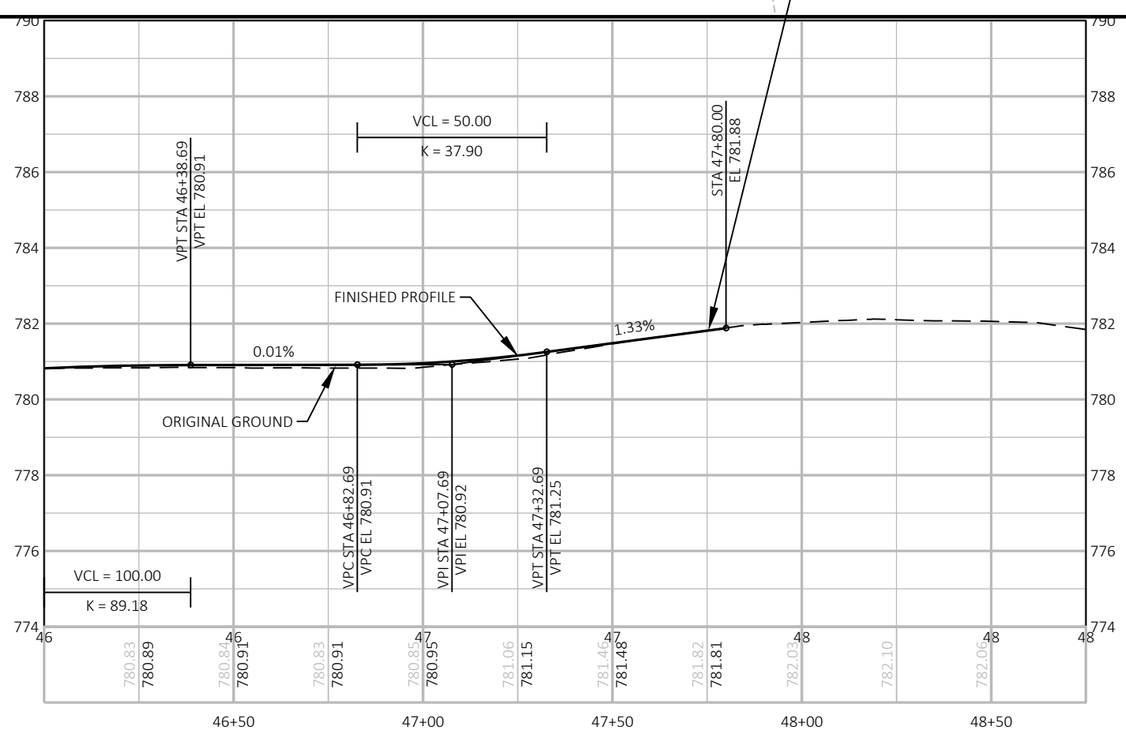


| PROJECT NO: 6425-00-70 | HWY: CTH D | COUNTY: GREEN LAKE | PLAN AND PROFILE: CTH D | SHEET 63 | E |
|---|---|---|---|---|---|

FILE NAME : P:\11500S\11500S\11507\11507006\CADD\SHEETSPLAN\050101-PP.DWG
LAYOUT NAME - 7
PLOT DATE : 12/1/2020 11:28 AM PLOT BY : BOBBI MAXWELL PLOT NAME : PLOT SCALE : 1 IN:40 FT
WISDOT/CADDS SHEET 44

# Standard Detail Drawing List

| | |
|---|---|
| 08A05-19A | INLET COVERS TYPE A, H, A-S, H-S & Z |
| 08A05-19B | INLET COVERS TYPE B, B-A, C, MS, MS-A, & WM |
| 08A05-19D | INLET COVER TYPE BW, MANHOLE COVERS, TYPE K, J, J-S, L & M |
| 08B09-02 | MANHOLES 3-FT, 4-FT, 5-FT, 6-FT, 7-FT AND 8-FT DIAMETER |
| 08C07-02 | INLETS 2X2-FT, 2X2.5-FT, 2X3-FT AND 2.5X3-FT |
| 08C08-02 | INLETS MEDIAN 1 AND 2 GRATE |
| 08D01-21A | CONCRETE CURB & GUTTER |
| 08D01-21B | CONCRETE CURB, TIES AND CURB AND GUTTER APPLICATIONS |
| 08D04-05 | CONCRETE SURFACE DRAINS & ASPHALTIC FLUMES |
| 08D05-20A | CURB RAMPS TYPES 1 AND 1-A |
| 08D05-20B | CURB RAMPS TYPES 2 AND 3 |
| 08D05-20C | CURB RAMPS TYPES 4A AND 4A1 |
| 08D05-20D | CURB RAMPS TYPE 4B AND 4B1 |
| 08D05-20E | CURB RAMPS TYPES 5, 6, 7A, 7B & 8 |
| 08D05-20F | CURB RAMPS RADIAL DETECTABLE WARNING FIELD APPLICATIONS |
| 08D05-20G | CURB RAMPS RECTANGULAR AND RADIAL DETECTABLE WARNING PLATES |
| 08E08-03 | TYPICAL INSTALLATIONS OF EROSION BALES / TEMPORARY DITCH CHECKS |
| 08E09-06 | SILT FENCE |
| 08E10-02 | INLET PROTECTION TYPE A, B, C AND D |
| 08E15-01 | CULVERT PIPE CHECK |
| 08F01-11 | APRON ENDWALLS FOR CULVERT PIPE |
| 08F02-01 | APRON ENDWALLS FOR PIPE ARCH AND ELLIPTICAL PIPE |
| 08F04-07 | JOINT TIES FOR CONCRETE PIPE AND CONCRETE COLLAR DETAIL |
| 13C19-02 | HMA LONGITUDINAL JOINTS |
| 14B29-01 | SAFETY EDGE |
| 15A01-13A | MARKER POST FOR RIGHT-OF-WAY |
| 15A01-13B | FLEXIBLE MARKER POST FOR RIGHT-OF-WAY |
| 15A03-02A | FLEXIBLE MARKER POST FOR CULVERT END |
| 15A03-02B | FLEXIBLE MARKER POST FOR CULVERT END |
| 15C02-08A | BARRICADES AND SIGNS FOR MAINLINE CLOSURES |
| 15C02-08B | BARRICADES AND SIGNS FOR VARIOUS CLOSURES |
| 15C03-05 | BARRICADES AND SIGNS FOR SIDEROAD CLOSURES |
| 15C04-05 | TRAFFIC CONTROL, ADVANCE WARNING SIGNS 45 M.P.H. OR GREATER TWO-WAY UNDIVIDED ROAD OPEN TO TRAFFIC |
| 15C08-20A | LONGITUDINAL MARKING (MAINLINE) |
| 15C11-07B | CHANNELIZING DEVICES DRUMS, CONES, BARRICADES AND VERTICAL PANELS |
| 15C33-04 | STOP LINE AND CROSSWALK PAVEMENT MARKING |
| 15D30-06A | TRAFFIC CONTROL, PEDESTRIAN ACCOMMODATION |
| 15D30-06B | TRAFFIC CONTROL, TEMPORARY ADA COMPLIANT PEDESTRIAN ACCOMMODATION |
| 15D30-06C | TRAFFIC CONTROL, PEDESTRIAN ACCOMMODATION |
| 15D38-02A | TEMPORARY TRAFFIC CONTROL SIGN MOUNTING |
| 15D38-02B | ATTACHMENT OF SIGNS TO POSTS |



6

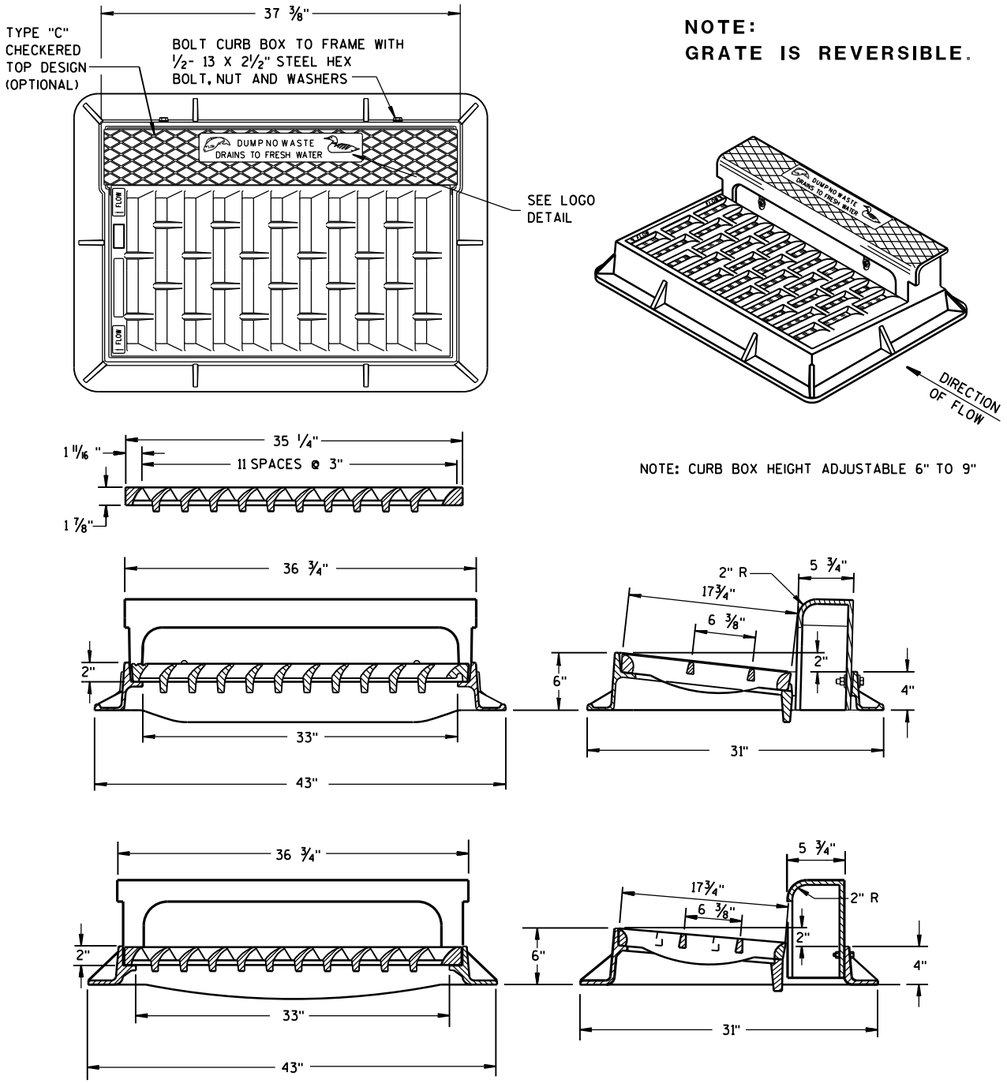


NOTE:
GRATE IS REVERSIBLE.

NOTE: CURB BOX HEIGHT ADJUSTABLE 6" TO 9"

## TYPE "H"

NOTE: EITHER CASTING IS ACCEPTABLE

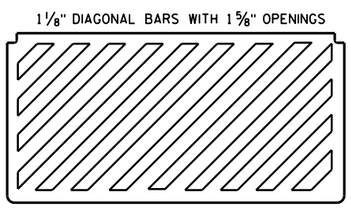


## SPECIAL GRATE FOR TYPE "H" COVER

(MEASURES 35 1/4" X 17 3/4" X 2")

(NOTED AS TYPE H-S ON DRAINAGE TABLE)

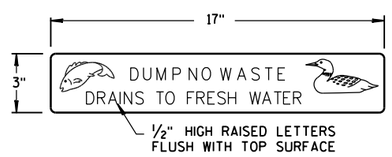


## LOGO DETAIL

## GENERAL NOTES

DETAILS OF CONSTRUCTION, MATERIALS AND WORKMANSHIP NOT SHOWN ON THIS DRAWING SHALL CONFORM TO THE PERTINENT REQUIREMENTS OF THE STANDARD SPECIFICATIONS AND THE APPLICABLE SPECIAL PROVISIONS.

DETAIL DRAWINGS FOR PROPOSED ALTERNATE DESIGNS FOR CATCH BASIN, MANHOLE AND INLET COVERS SHALL BE SUBMITTED TO THE ENGINEER FOR APPROVAL PROVIDING THAT SUCH ALTERNATE DESIGNS MAKE PROVISION FOR EQUIVALENT CAPACITY AND STRENGTH.

ROUND FRAMES AND COVERS SHALL HAVE CONTINUOUSLY MACHINED BEARING SURFACES TO PREVENT ROCKING AND RATTLING.

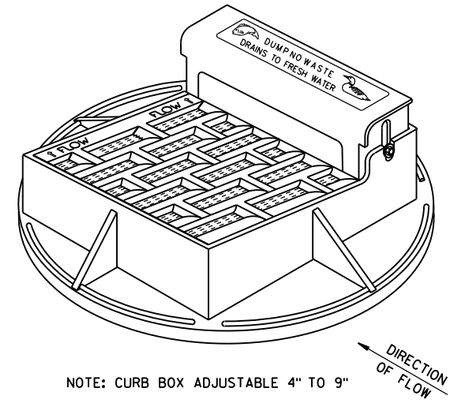


NOTE: CURB BOX ADJUSTABLE 4" TO 9"

NOTE:
GRATE IS REVERSIBLE.

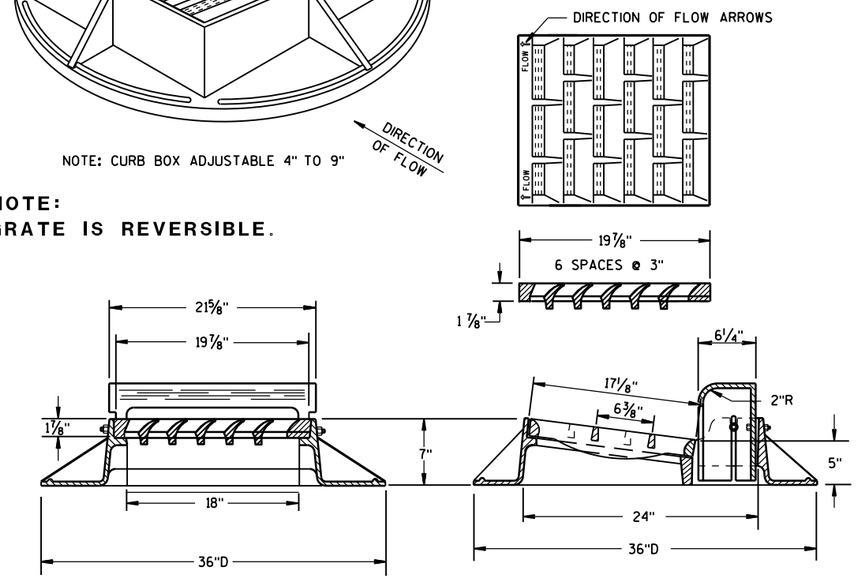


## TYPE "A"

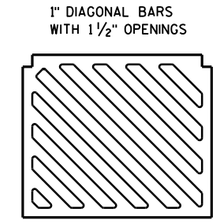


## SPECIAL GRATE FOR TYPE "A" COVER

(MEASURES 19 3/4" X 17" X 1 7/8")

(NOTED AS TYPE A-S ON DRAINAGE TABLE)

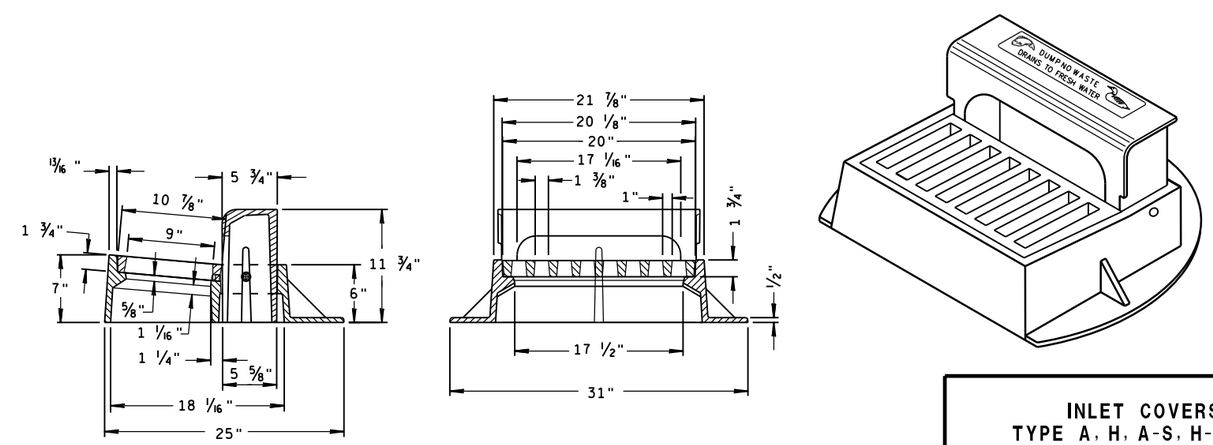


## TYPE "Z"

INLET COVERS
TYPE A, H, A-S, H-S & Z

STATE OF WISCONSIN
DEPARTMENT OF TRANSPORTATION

APPROVED
11-27-13 /S/ Jerry H. Zogg
DATE ROADWAY STANDARDS DEVELOPMENT ENGINEER
FHWA

6

S.D.D. 8 A 5-19a

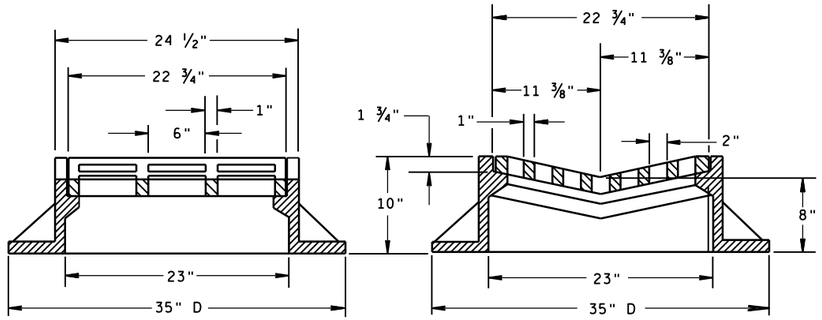


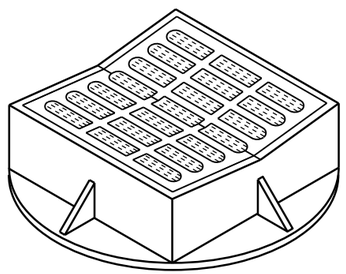

TYPE "B"

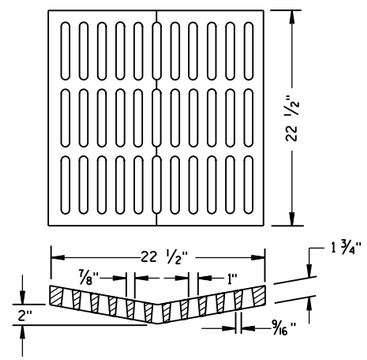


ALTERNATIVE GRATE FOR TYPE "B" COVER

USE WHERE PEDESTRIAN OR BICYCLE TRAFFIC IS POSSIBLE.

**NOTED AS TYPE B-A ON THE DRAINAGE TABLE**

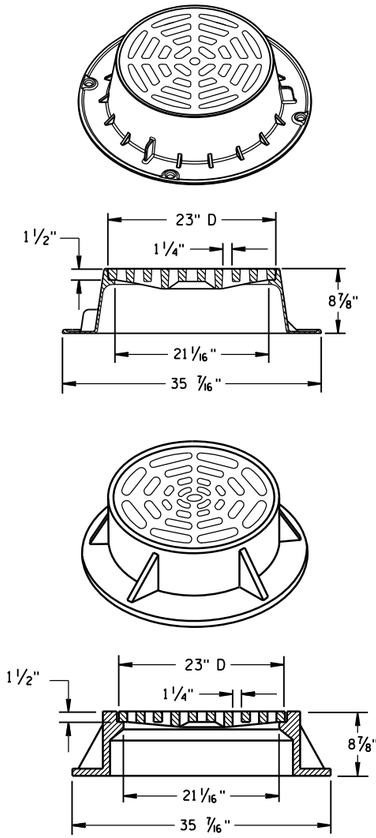


TYPE "C"

NOTE: EITHER CASTING IS ACCEPTABLE

## GENERAL NOTES

DETAILS OF CONSTRUCTION, MATERIALS AND WORKMANSHIP NOT SHOWN ON THIS DRAWING SHALL CONFORM TO THE PERTINENT REQUIREMENTS OF THE STANDARD SPECIFICATIONS AND THE APPLICABLE SPECIAL PROVISIONS.

DETAIL DRAWINGS FOR PROPOSED ALTERNATE DESIGNS FOR CATCH BASIN, MANHOLE AND INLET COVERS SHALL BE SUBMITTED TO THE ENGINEER FOR APPROVAL PROVIDING THAT SUCH ALTERNATE DESIGNS MAKE PROVISION FOR EQUIVALENT CAPACITY AND STRENGTH.

ROUND FRAMES AND COVERS SHALL HAVE CONTINUOUSLY MACHINED BEARING SURFACES TO PREVENT ROCKING AND RATTLING.

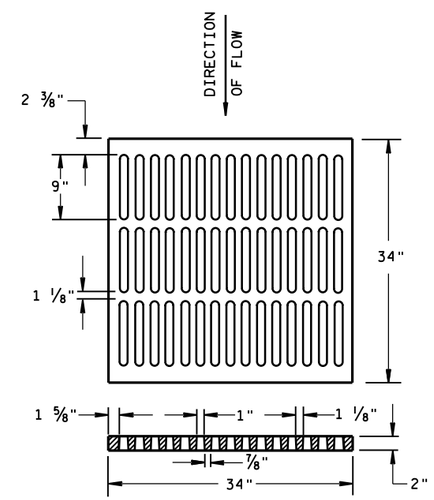


ALTERNATIVE TYPE "MS"

USE WHERE PEDESTRIAN OR BICYCLE TRAFFIC IS PERMITTED

**NOTED AS TYPE MS-A ON THE DRAINAGE TABLE**

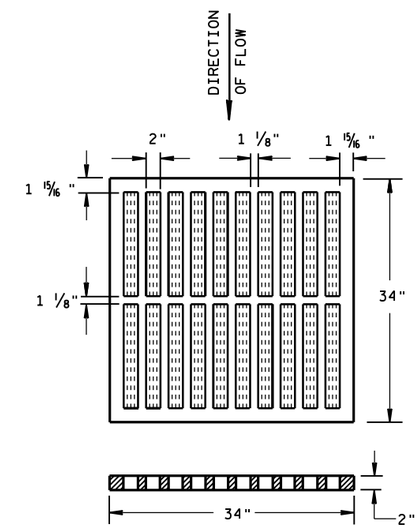


TYPE "MS"

USE ON FREEWAYS AND EXPRESSWAYS

**NOTED AS TYPE MS ON DRAINAGE TABLE**

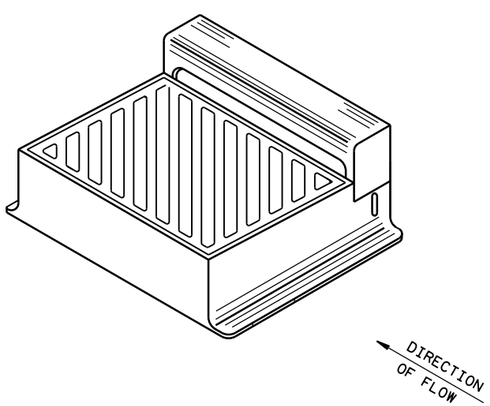


DIAGONAL SLOTS, SHALL BE ORIENTED TO THE DIRECTION OF FLOW AS ILLUSTRATED. GRATES ARE MANUFACTURED TO BE REVERSIBLE.

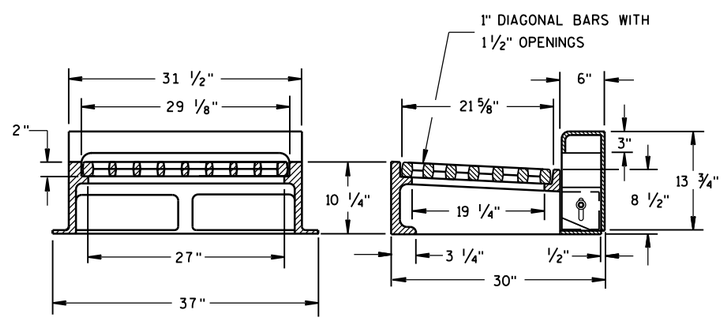


NOTE: CURB BOX HEIGHT ADJUSTABLE 6" TO 9"

TYPE "WM"

6

6

S.D.D. 8 A 5-19b

S.D.D. 8 A 5-19b

INLET COVERS
TYPE B, B-A, C,
MS, MS-A, & WM

STATE OF WISCONSIN
DEPARTMENT OF TRANSPORTATION

APPROVED

11/27/2013 — DATE

/S/ Jerry H. Zogg — ROADWAY STANDARDS DEVELOPMENT ENGINEER

FHWA

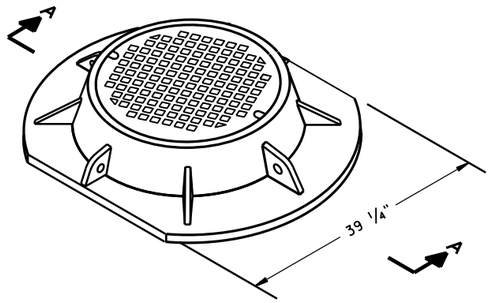


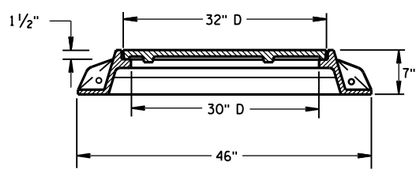


SECTION A-A
TYPE "K"

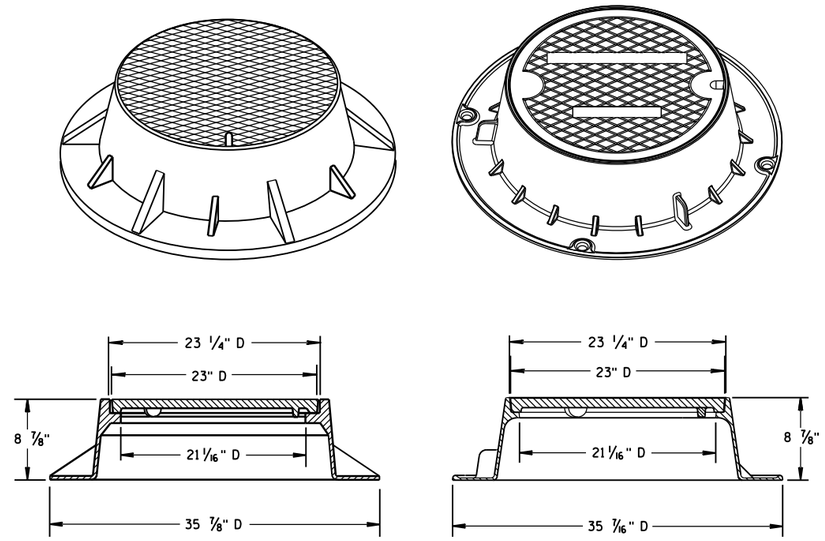


TYPE "J"
NOTE: EITHER CASTING IS ACCEPTABLE

## GENERAL NOTES

DETAILS OF CONSTRUCTION, MATERIALS AND WORKMANSHIP NOT SHOWN ON THIS DRAWING SHALL CONFORM TO THE PERTINENT REQUIREMENTS OF THE STANDARD SPECIFICATIONS AND THE APPLICABLE SPECIAL PROVISIONS.

DETAIL DRAWINGS FOR PROPOSED ALTERNATE DESIGNS FOR MANHOLE COVERS SHALL BE SUBMITTED TO THE ENGINEER FOR APPROVAL PROVIDING THAT SUCH ALTERNATE DESIGNS MAKE PROVISION FOR EQUIVALENT CAPACITY AND STRENGTH.

ROUND FRAMES AND COVERS SHALL HAVE CONTINUOUSLY MACHINED BEARING SURFACES TO PREVENT ROCKING AND RATTLING.

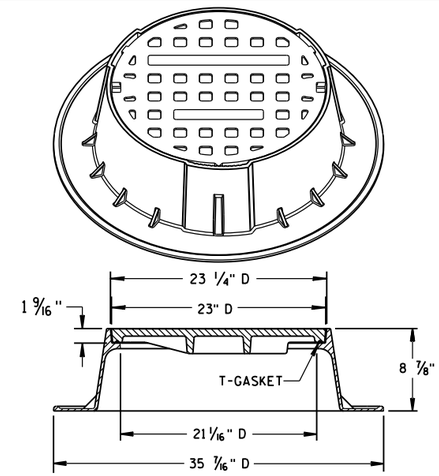


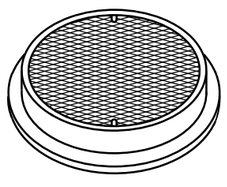

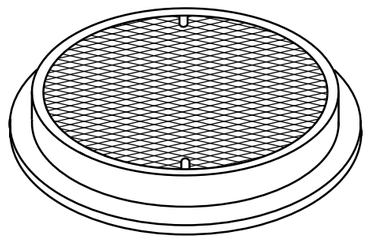

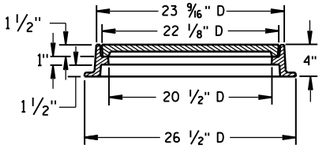


TYPE "L"

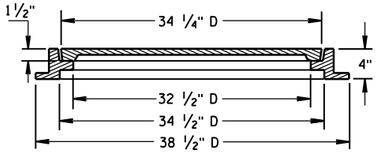


TYPE "M"

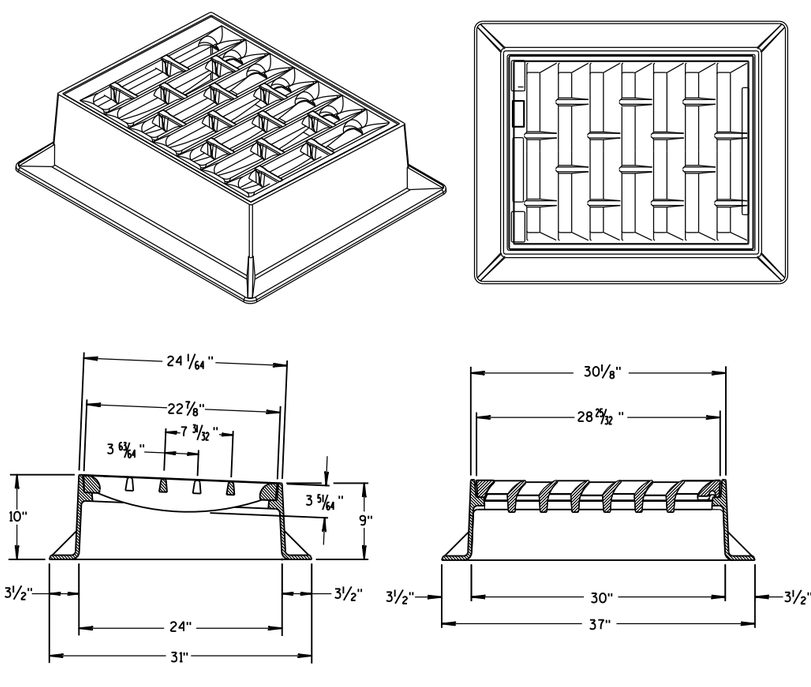


INLET COVER TYPE "BW"

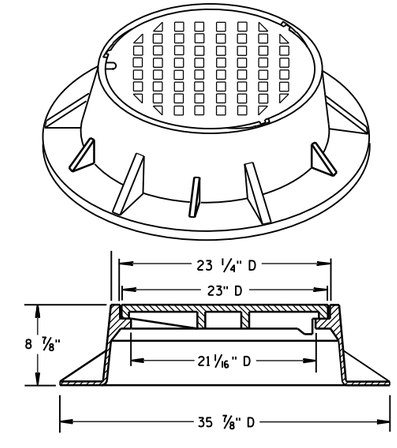


TYPE "J" SPECIAL
TYPE "B" NON-ROCKING SELF-SEAL LID
(NOTED AS TYPE J-S ON THE DRAINAGE TABLE)
NOTE: EITHER CASTING IS ACCEPTABLE

| | |
|---|---|
| INLET COVER TYPE BW MANHOLE COVERS, TYPE K, J, J-S, L & M | |
| STATE OF WISCONSIN DEPARTMENT OF TRANSPORTATION | |
| APPROVED 11/27/2013 DATE FHWA | /S/ Jerry H. Zogg ROADWAY STANDARDS DEVELOPMENT ENGINEER |

6

6

S.D.D. 8 A 5-19d

S.D.D. 8 A 5-19d

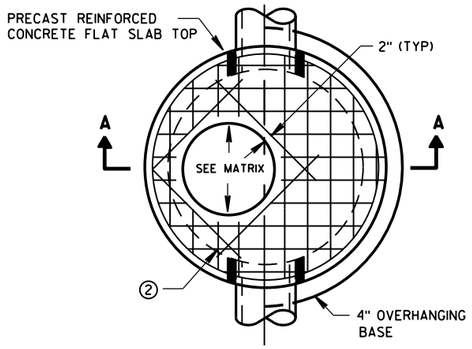


PLAN VIEW CIRCULAR OPENING

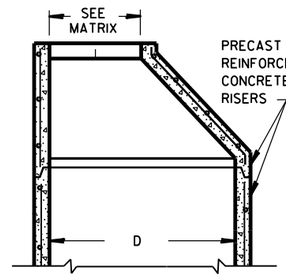


OPTIONAL PRECAST REINFORCED CONCRETE ECCENTRIC TOP

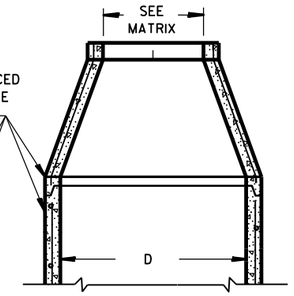


OPTIONAL PRECAST REINFORCED CONCRETE CONCENTRIC TOP

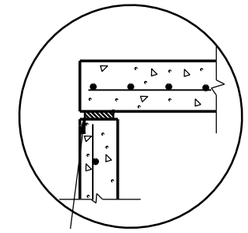

TOP WITH PLAIN END JOINT

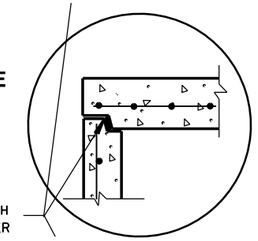

JOINTS TO BE SEALED WITH A BUTYL RUBBER SEAL PER SEALANT MANUFACTURERS RECOMMENDATIONS CONFORMING TO ASTM C990 (TYP)

TOP WITH TONGUE AND GROOVE JOINT

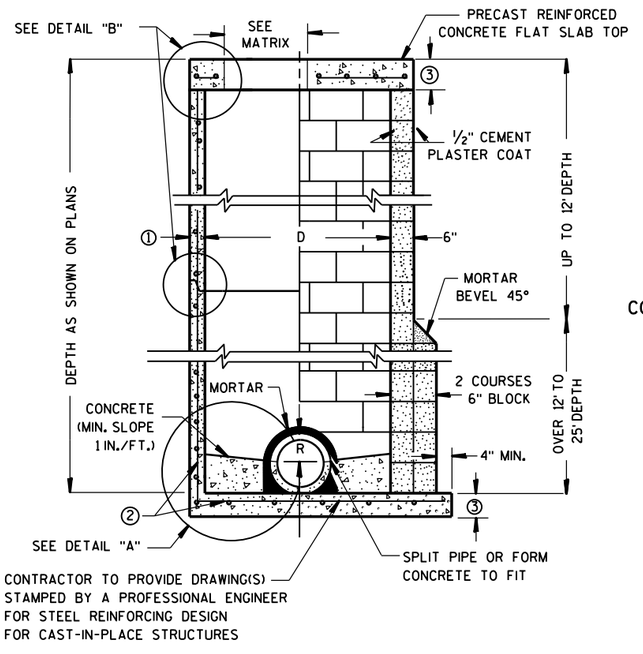


PRECAST REINFORCED CONCRETE WITH MONOLITHIC BASE

CONCRETE BLOCK WITH CAST-IN-PLACE OR PRECAST REINFORCED CONCRETE BASE ②

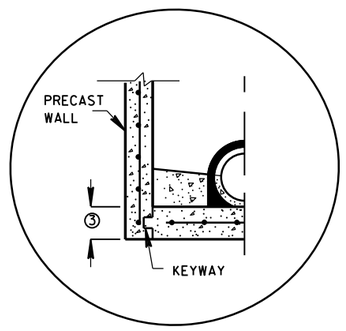


PRECAST REINFORCED CONCRETE WITH INTEGRAL BASE OPTION

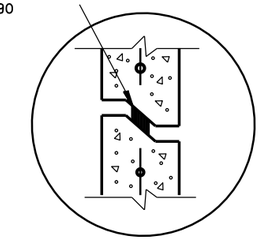

RISER WITH TONGUE AND GROOVE JOINT

DETAIL "B"

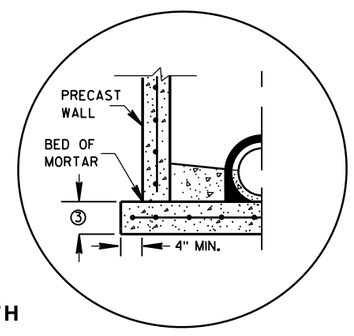


SEPARATE PRECAST REINFORCED CONCRETE BASE OPTION

DETAIL "A"

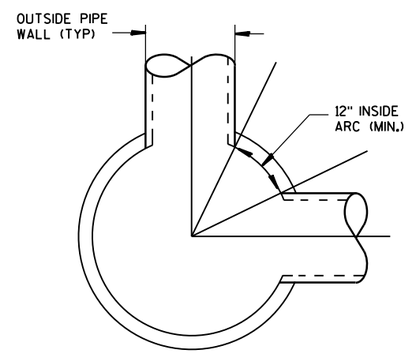


DETAIL "C"

## GENERAL NOTES

DETAILS OF CONSTRUCTION, MATERIALS AND WORKMANSHIP NOT SHOWN ON THIS DRAWING SHALL CONFORM TO THE PERTINENT REQUIREMENTS OF THE STANDARD SPECIFICATIONS AND THE APPLICABLE SPECIAL PROVISIONS.

UNLESS OTHERWISE AUTHORIZED IN WRITING BY THE ENGINEER, THE CONTRACTOR SHALL NOT ORDER AND DELIVER PRECAST MANHOLE UNITS REQUIRED FOR THE PROJECT UNTIL A LIST OF SIZES IS FURNISHED BY THE ENGINEER.

DETAILED DRAWINGS FOR PROPOSED ALTERNATE DESIGNS FOR UNDERGROUND DRAINAGE STRUCTURES SHALL BE SUBMITTED TO THE ENGINEER FOR APPROVAL PROVIDING THAT SUCH ALTERNATE DESIGNS MAKE PROVISION FOR EQUIVALENT CAPACITY AND STRENGTH.

ALL DRAINAGE STRUCTURES ARE DESIGNATED ON THE PLANS AS "MANHOLES 3X3-L", "CATCH BASINS 4-B", "INLETS 2X3-H", ETC. THE FIRST NUMBERS DESIGNATE THE SIZE OF THE STRUCTURE, AND THE FOLLOWING LETTER DESIGNATES THE TYPE OF COVER TO BE USED TO COMPRISE THE COMPLETE UNIT.

BASES SHALL BE PLACED ON A BED OF MATERIAL AT LEAST 6 INCHES IN DEPTH, WHICH MEETS THE REQUIREMENTS OF FOUNDATION BACKFILL. THIS BEDDING SHALL BE COMPACTED AND PROVIDE UNIFORM SUPPORT FOR THE ENTIRE AREA OF THE BASE.

PRECAST REINFORCED CONE TOPS (ECCENTRIC OR CONCENTRIC) OR PRECAST REINFORCED FLAT SLAB TOPS MAY BE USED ON CONCRETE BLOCK STRUCTURES.

ECCENTRIC CONE TOPS MAY BE USED ON ALL STRUCTURES, AND CONCENTRIC CONE TOPS SHALL BE USED ONLY ON STRUCTURES 5 FEET OR LESS IN DEPTH, UNLESS OTHERWISE DIRECTED BY THE ENGINEER.

STEPS MEETING AASHTO M199 AND THE FOLLOWING REQUIREMENTS SHALL BE INSTALLED IN ALL STRUCTURES OVER 5 FEET IN DEPTH: 16 INCH C-C MAXIMUM SPACING; PROJECT A MINIMUM CLEAR DISTANCE OF 4 INCHES FROM THE WALL AT THE POINT OF EMBEDMENT; MINIMUM LENGTH OF 10 INCHES; MINIMUM WALL EMBEDMENT OF 3 INCHES. FERROUS METAL STEPS NOT PAINTED OR TREATED TO RESIST CORROSION SHALL HAVE A MINIMUM CROSS SECTIONAL DIMENSION OF 1 INCH.

STEPS OF APPROVED POLYPROPYLENE PLASTIC COATED REINFORCEMENT BAR ARE ACCEPTABLE. REINFORCING BAR MUST BE A MINIMUM OF ½" AND MEET THE REQUIREMENTS OF ASTM A615.

CERTIFICATION SHALL BE PROVIDED THAT INSTALLED STEPS WHEN TESTED IN ACCORDANCE WITH SECTION 10 OF AASHTO T280 CAN WITHSTAND A VERTICAL LOAD OF 800 LBS. AND A HORIZONTAL LOAD OF 400 LBS.

ALL BAR STEEL REINFORCEMENT SHALL BE EMBEDDED 2 INCHES CLEAR UNLESS OTHERWISE SHOWN OR NOTED.

CONCRETE BLOCK WILL NOT BE PERMITED FOR STRUCTURES GREATER THAN 4 FEET IN DIAMETER.

PRECAST REINFORCED RISERS SHALL HAVE A TONGUE AND GROOVE JOINT WITH TONGUE UP OR DOWN.

ALL PRECAST MANHOLE UNITS SHALL CONFORM TO THE PERTINENT REQUIREMENTS OF AASHTO DESIGNATION M 199.

4" OVERHANGING BASES ARE REQUIRED FOR ALL CONCRETE BLOCK INSTALLATIONS. 4" OVERHANG IS REQUIRED WHEN SEPARATE PRECAST BASE IS PROVIDED. OVERHANG IS NOT REQUIRED ON PRECAST STRUCTURES WITH AN INTEGRAL OR MONOLITHIC BASE.

FOR ADDITIONAL CONFIGURATIONS, MAINTAIN A MINIMUM OF 12 INCHES AS MEASURED FROM THE INSIDE OF THE STRUCTURE WALL BETWEEN THE OUTSIDE PIPE WALLS OF ADJACENT PIPES. SEE DETAIL "C".

① MINIMUM WALL THICKNESS SHALL BE 4 INCHES FOR 3-FT, 5 INCHES FOR 4-FT, 6 INCHES FOR 5-FT, 7 INCHES FOR 6-FT, 8 INCHES FOR 7-FT AND 9 INCHES FOR 8-FT DIAMETER PRECAST MANHOLES.

② FOR PRECAST MANHOLES PROVIDE REINFORCING STEEL IN ACCORDANCE TO AASHTO M199.

③ PRECAST FLAT SLAB TOPS AND BASES WITH A DIAMETER OF 48" AND LESS SHALL HAVE A MINIMUM THICKNESS OF 6". PRECAST FLAT SLAB TOPS AND BASES WITH A DIAMETER LARGER THAN 48" SHALL HAVE A MINIMUM THICKNESS OF 8".

## MANHOLE COVER OPENING MATRIX

| MANHOLE COVER TYPE | C | ALL J'S | K | L | M |
|---|---|---|---|---|---|
| OPENING SIZE (FT) | | | | | |
| 2 DIA. | X | X | | X | |
| 3 DIA. | | | X | | X |

## PIPE MATRIX

| MANHOLE SIZE | MAXIMUM INSIDE PIPE DIAMETER FOR TWO PIPES | |
|---|---|---|
| | 180° SEPARATION (IN) | 90° SEPARATION (IN) |
| 3-FT | 15 | 12 |
| 4-FT | 24 | 18 |
| 5-FT | 36 | 24 |
| 6-FT | 42 | 36 |
| 7-FT | 48 | 36 |
| 8-FT | 60 | 42 |

MANHOLES 3-FT, 4-FT, 5-FT, 6-FT, 7-FT AND 8-FT DIAMETER

STATE OF WISCONSIN
DEPARTMENT OF TRANSPORTATION

APPROVED
Sept., 2016 — DATE
/S/ Rodney Taylor — ROADWAY STANDARDS DEVELOPMENT UNIT SUPERV
FHWA

MANHOLES 3-FT, 4-FT, 5-FT, 6-FT, 7-FT AND 8-FT DIAMETER




6

S.D.D. 8 B 9-2

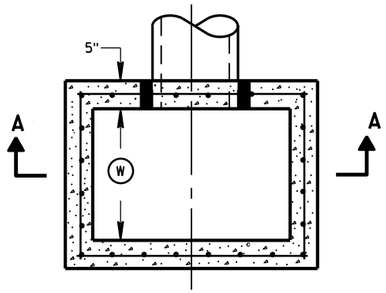


PLAN VIEW

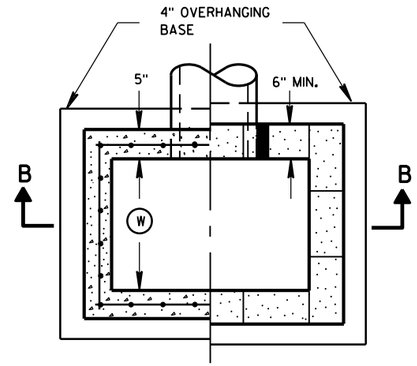


PLAN VIEW

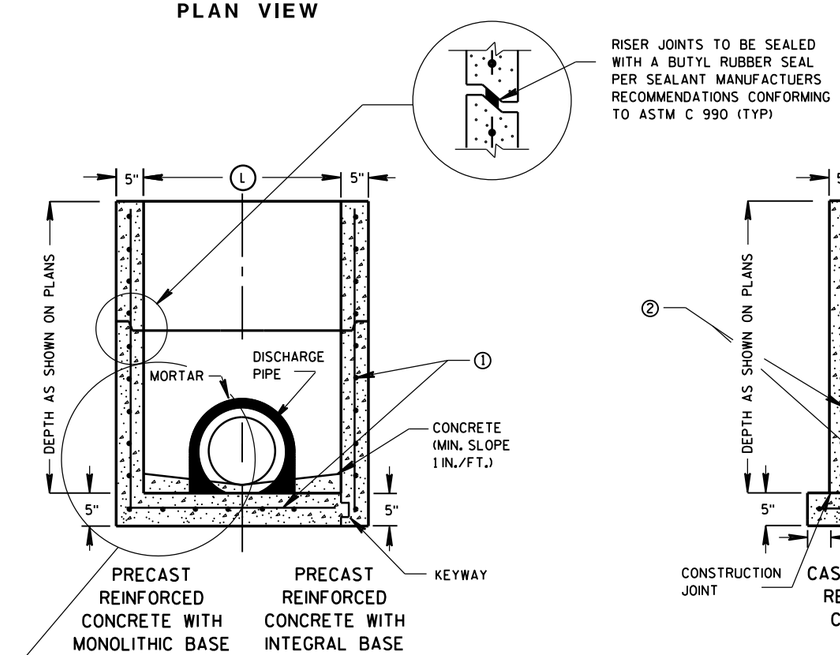


SECTION A-A

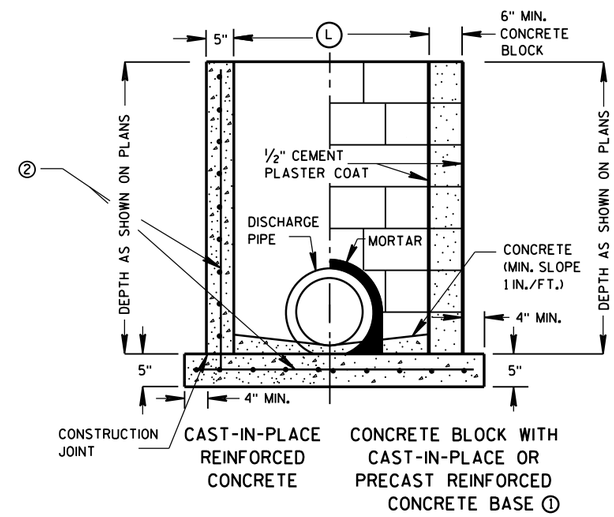


SECTION B-B

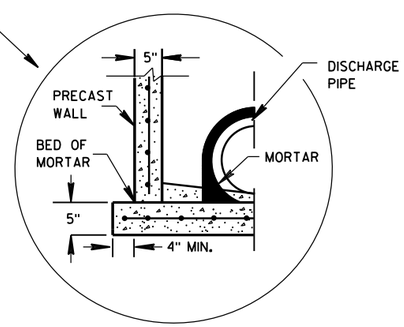


SEPARATE PRECAST REINFORCED CONCRETE BASE OPTION

## GENERAL NOTES

DETAILS OF CONSTRUCTION, MATERIALS AND WORKMANSHIP NOT SHOWN ON THIS DRAWING SHALL CONFORM TO THE PERTINENT REQUIREMENTS OF THE STANDARD SPECIFICATIONS AND THE APPLICABLE SPECIAL PROVISIONS.

UNLESS OTHERWISE AUTHORIZED IN WRITING BY THE ENGINEER, THE CONTRACTOR SHALL NOT ORDER AND DELIVER PRECAST INLET UNITS REQUIRED FOR THE PROJECT UNTIL A LIST OF SIZES IS FURNISHED BY THE ENGINEER.

DETAILED DRAWINGS FOR PROPOSED ALTERNATE DESIGNS FOR UNDERGROUND DRAINAGE STRUCTURES SHALL BE SUBMITTED TO THE ENGINEER FOR APPROVAL PROVIDING THAT SUCH ALTERNATE DESIGNS MAKE PROVISION FOR EQUIVALENT CAPACITY AND STRENGTH.

ALL PRECAST INLET UNITS SHALL CONFORM TO THE PERTINENT REQUIREMENTS OF ASTM C 913.

ALL DRAINAGE STRUCTURES ARE DESIGNATED ON THE PLANS AS "MANHOLES 3X3-L", "CATCH BASINS 4-B", "INLETS 2X3-H", ETC. THE FIRST NUMBERS DESIGNATES THE SIZE OF THE STRUCTURE, AND THE FOLLOWING LETTER DESIGNATES THE TYPE OF COVER TO BE USED TO COMPRISE THE COMPLETE UNIT.

BASES SHALL BE PLACED ON A BED OF MATERIAL AT LEAST 6 INCHES IN DEPTH, WHICH MEETS THE REQUIREMENTS OF FOUNDATION BACKFILL. THIS BEDDING SHALL BE COMPACTED AND PROVIDE UNIFORM SUPPORT FOR THE ENTIRE AREA OF THE BASE.

ALL BAR STEEL REINFORCEMENT SHALL BE EMBEDDED 2 INCHES CLEAR UNLESS OTHERWISE SHOWN OR NOTED.

PRECAST REINFORCED RISERS SHALL HAVE A TONGUE AND GROOVE JOINT WITH TONGUE UP OR DOWN.

4" OVERHANGING BASES ARE REQUIRED FOR CAST-IN-PLACE REINFORCED CONCRETE AND CONCRETE BLOCK INSTALLATIONS.
4" OVERHANG IS REQUIRED WHEN SEPARATE PRECAST BASE IS PROVIDED.
OVERHANG IS NOT REQUIRED ON PRECAST STRUCTURES WITH AN INTEGRAL OR MONOLITHIC BASE.

MAXIMUM INSIDE PIPE DIAMETER DETERMINED BY 3 INCH CLEARANCE ON EACH SIDE OF THE OUTSIDE WALL OF THE PIPE. SEE DETAIL "A". ASSUMES PIPE ENTERS PERPENDICULAR TO THE STRUCTURE.

① FOR PRECAST INLETS PROVIDE REINFORCING STEEL IN ACCORDANCE TO ASTM C 913.

② CONTRACTOR TO PROVIDE DRAWING(S) STAMPED BY A PROFESSIONAL ENGINEER FOR STEEL REINFORCING DESIGN FOR CAST-IN-PLACE STRUCTURES.

## INLET COVER MATRIX

| INLET SIZE | | INLET COVER TYPE | ALL A'S | ALL B'S | BW | F | ALL H'S | S | T | V | WM |
|---|---|---|---|---|---|---|---|---|---|---|---|
| | WIDTH (W) (FT) | LENGTH (L) (FT) | | | | | | | | | |
| 2X2-FT | 2 | 2 | X | X | | | | X | | X | |
| 2X2.5-FT | 2 | 2.5 | | | X | | | X | X | X | X |
| 2X3-FT | 2 | 3 | | | | | X | | | | |
| 2.5X3-FT | 2.5 | 3 | | | | X | | | | | |

## PIPE MATRIX

| INLET SIZE | MAXIMUM INSIDE PIPE DIAMETER | |
|---|---|---|
| | WIDTH (IN) | LENGTH (IN) |
| 2X2-FT | 12 | 12 |
| 2X2.5-FT | 12 | 18 |
| 2X3-FT | 12 | 24 |
| 2.5X3-FT | 18 | 24 |

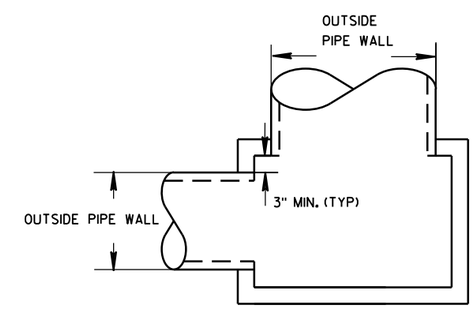


DETAIL "A"

INLETS 2X2-FT, 2X2.5-FT, 2X3-FT AND 2.5X3-FT

INLETS 2X2-FT, 2X2.5-FT, 2X3-FT AND 2.5X3-FT

STATE OF WISCONSIN
DEPARTMENT OF TRANSPORTATION

APPROVED
Sept., 2016 — DATE
/S/ Rodney Taylor
ROADWAY STANDARDS D IT
UNIT SUPERVIS
FHWA

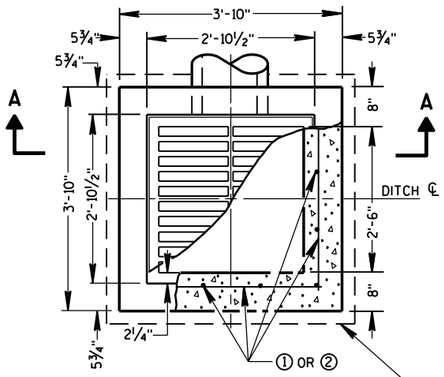


PLAN VIEW

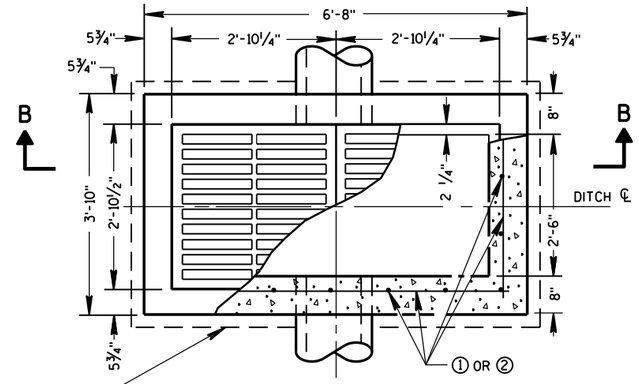


PLAN VIEW

4" OVERHANGING BASE ON REINFORCED CAST-IN-PLACE CONCRETE INLETS

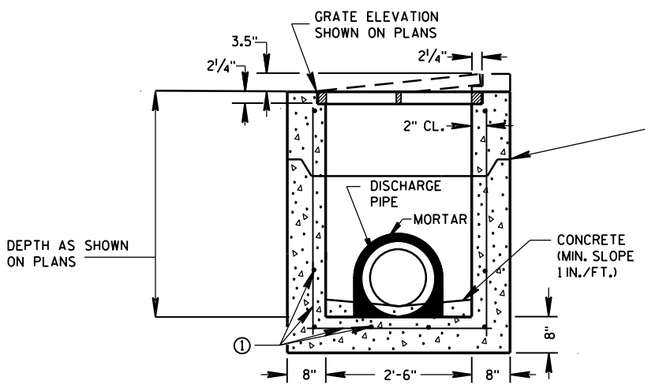


PRECAST REINFORCED CONCRETE SECTION A-A

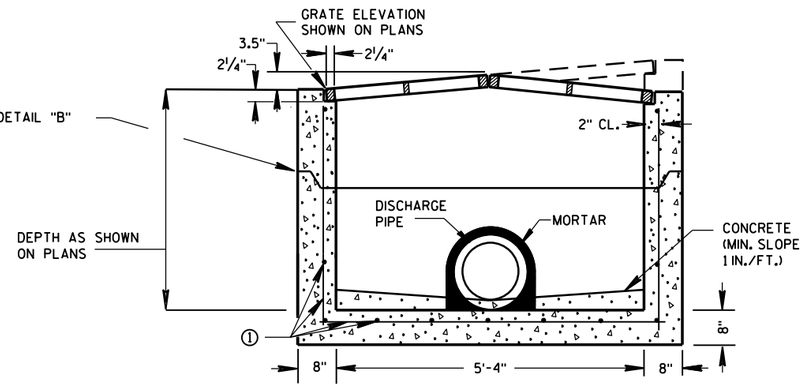


PRECAST REINFORCED CONCRETE SECTION B-B

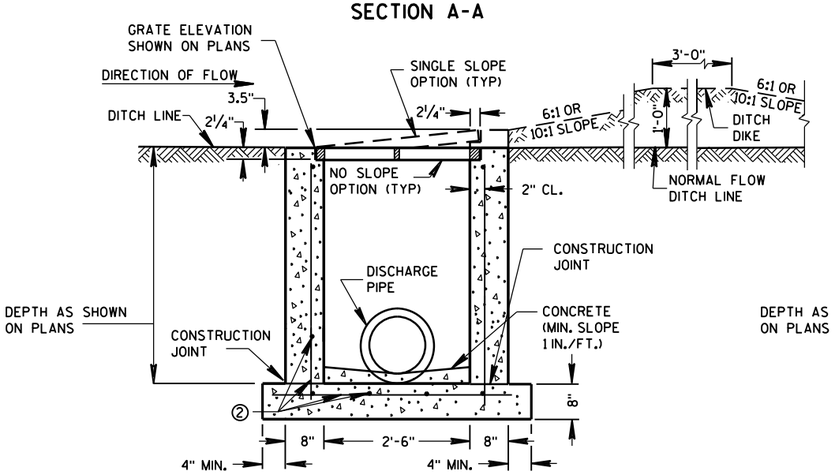


REINFORCED CAST-IN-PLACE CONCRETE SECTION A-A

## INLETS MEDIAN 1 GRATE

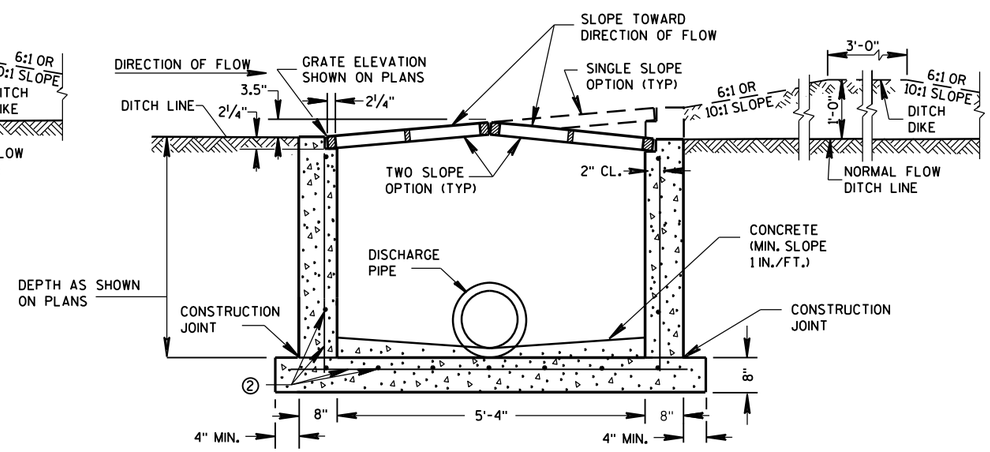


REINFORCED CAST-IN-PLACE CONCRETE SECTION B-B

## INLETS MEDIAN 2 GRATE

## GENERAL NOTES

DETAILS OF CONSTRUCTION, MATERIALS AND WORKMANSHIP NOT SHOWN ON THIS DRAWING SHALL CONFORM TO THE PERTINENT REQUIREMENTS OF THE STANDARD SPECIFICATIONS AND THE APPLICABLE SPECIAL PROVISIONS.

UNLESS OTHERWISE AUTHORIZED IN WRITING BY THE ENGINEER, THE CONTRACTOR SHALL NOT ORDER AND DELIVER PRECAST INLET UNITS REQUIRED FOR THE PROJECT UNTIL A LIST OF SIZES IS FURNISHED BY THE ENGINEER.

DETAILED DRAWINGS FOR PROPOSED ALTERNATE DESIGNS FOR INLETS WHICH MAY INCLUDE PRECAST REINFORCED CONCRETE INLETS, SHALL BE SUBMITTED TO THE ENGINEER FOR APPROVAL PROVIDING THAT SUCH ALTERNATE DESIGNS MAKE PROVISION FOR EQUIVALENT CAPACITY AND STRENGTH.

ALL MEDIAN INLETS ARE DESIGNATED ON THE PLANS AS "INLETS, 1G-MS", ETC. THE FIRST NUMBER AND LETTER DESIGNATE THE TYPE OF STRUCTURE, AND THE FOLLOWING LETTERS DESIGNATE THE TYPE OF COVER TO BE USED TO COMPRISE THE COMPLETE UNIT.

BASES SHALL BE PLACED ON A BED OF MATERIAL AT LEAST 6 INCHES IN DEPTH, WHICH MEETS THE REQUIREMENTS OF FOUNDATION BACKFILL. THIS BEDDING SHALL BE COMPACTED AND PROVIDE UNIFORM SUPPORT FOR THE ENTIRE AREA OF THE BASE.

ALL BAR STEEL REINFORCEMENT SHALL BE EMBEDDED 2 INCHES CLEAR UNLESS OTHERWISE SHOWN OR NOTED.

PRECAST REINFORCED RISERS SHALL HAVE A TONGUE AND GROOVE JOINT WITH TONGUE UP OR DOWN.

ALL PRECAST INLET UNITS SHALL CONFORM TO THE PERTINENT REQUIREMENTS OF ASTM C 913.

MAXIMUM INSIDE PIPE DIAMETER DETERMINED BY 3" CLEARANCE ON EACH SIDE OF THE OUTSIDE WALL OF THE PIPE. SEE DETAIL "A". ASSUMES PIPE ENTERS PERPENDICULAR TO THE STRUCTURE.

① FOR PRECAST INLETS PROVIDE REINFORCING STEEL IN ACCORDANCE TO ASTM C 913.

② CONTRACTOR TO PROVIDE DRAWING(S) STAMPED BY A PROFESSIONAL ENGINEER FOR STEEL REINFORCING DESIGN FOR CAST-IN-PLACE STRUCTURES.

### PIPE MATRIX

| | MAXIMUM INSIDE PIPE DIAMETER | |
|---|---|---|
| INLET SIZE | WIDTH (IN) | LENGTH (IN) |
| 1 GRATE | 18 | 18 |
| 2 GRATE | 18 | 42 |

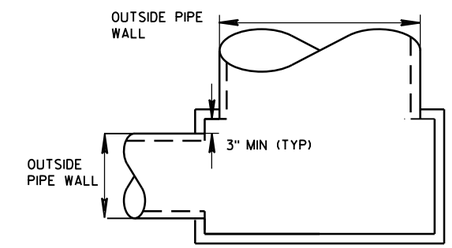


DETAIL "A"

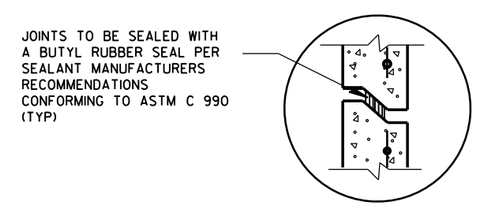


DETAIL "B"

INLETS MEDIAN 1 AND 2 GRATE

STATE OF WISCONSIN
DEPARTMENT OF TRANSPORTATION

APPROVED
Sept., 2016 — DATE
/S/ Rodney Taylor — ROADWAY STANDARDS UNIT SUPERVI
FHWA
ENT




6

S.D.D. 8 C 8-2

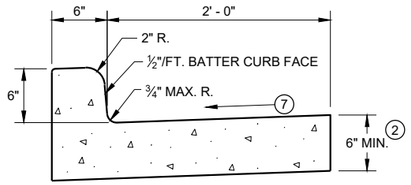


TYPES A(1) & D

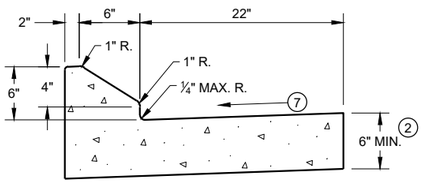


6" SLOPED CURB TYPES G(1) & J

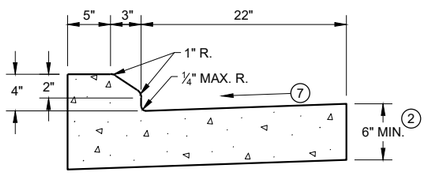


4" SLOPED CURB TYPES G(1) & J

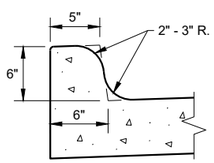


TYPES K(1) & L
(OPTIONAL CURB SHAPE)

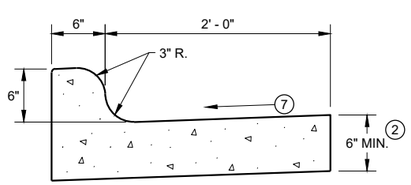


TYPES K(1) & L

## CONCRETE CURB AND GUTTER 30"

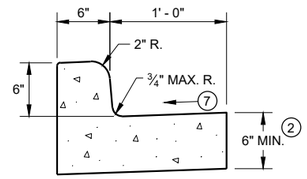


TYPES A(1) & D

## CONCRETE CURB AND GUTTER 18"

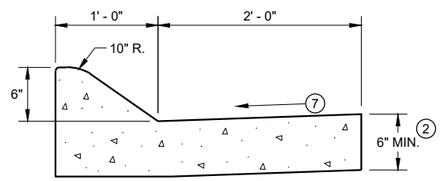


6" SLOPED CURB TYPES A(1) & D

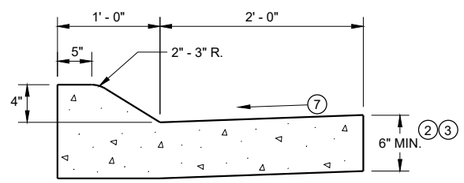


4" SLOPED CURB TYPES A(1) & D

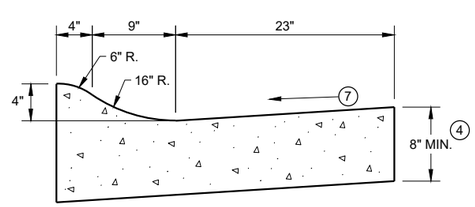


4" SLOPED CURB TYPES R(1) & T(5)

## CONCRETE CURB AND GUTTER 36"

| TBT & TBTT | X |
|---|---|
| 30" | 22" |
| 36" | 28" |

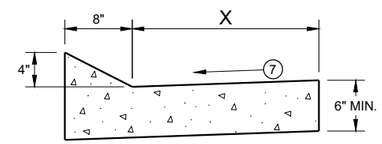


TYPES TBT & TBTT(1)

## CONCRETE CURB AND GUTTER

## PAVEMENT THICKNESS AND MAXIMUM CONCRETE PANEL WIDTH TABLE

| PAVEMENT THICKNESS | MAXIMUM PANEL WIDTH |
|---|---|
| LESS THAN 10" | 12' |
| 10" & ABOVE | 15' |

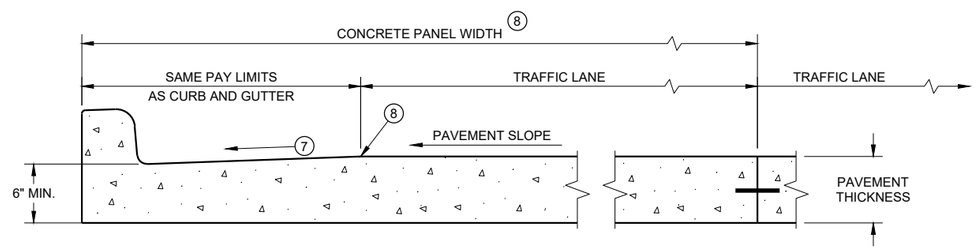


## PARTIAL SECTION OF PAVEMENT * WITH INTEGRAL CURB AND GUTTER

* BIKE LANE IS NOT SHOWN

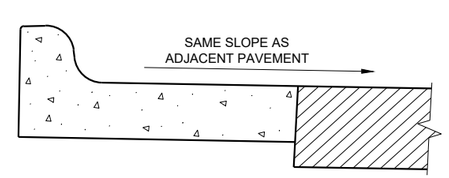


## REVERSE SLOPE GUTTER(6)

(TYPICAL FOR ALL CURB & GUTTER TYPES)

## GENERAL NOTES

DETAILS OF CONSTRUCTION AND WORKMANSHIP NOT SHOWN ON THIS DRAWING SHALL CONFORM TO THE PERTINENT REQUIREMENTS OF THE CONTRACT.

PAVEMENT TIES AND TIE BARS SHALL BE EPOXY COATED IN CONFORMANCE WITH SUBSECTION 505.2.6.2 OF THE STANDARD SPECIFICATIONS.

INTEGRAL CURB AND GUTTER SHALL CONFORM TO THE DETAILS SHOWN FOR CONCRETE CURB AND GUTTER INCLUDING THE TRANSVERSE GUTTER SLOPE.

UNLESS OTHERWISE SHOWN ON THE TYPICAL CROSS SECTIONS, THE BASE AGGREGATE AND COMMON EXCAVATION LIMITS ARE 2' - 0" BEHIND THE BACK OF CURBS.

1. TIE BARS ARE REQUIRED FOR CURB AND GUTTERS TYPES A, G, K, R, AND TBTT.
2. THE BOTTOM OF CURB AND GUTTER MAY BE CONSTRUCTED EITHER LEVEL OR PARALLEL TO THE SLOPE OF THE SUBGRADE OR BASE AGGREGATE PROVIDED A 6" MINIMUM GUTTER THICKNESS IS MAINTAINED.
3. USE 8" MINIMUM GUTTER THICKNESS WHEN USED WITH AN ADJACENT CONCRETE TRUCK APRON PLACED BEHIND BACK OF CURB.
4. THE BOTTOM OF CURB AND GUTTER MAY BE CONSTRUCTED EITHER LEVEL OR PARALLEL TO THE SLOPE OF THE SUBGRADE OR BASE AGGREGATE PROVIDED A 8" MINIMUM GUTTER THICKNESS IS MAINTAINED.
5. THE FACE OF CURB IS 6" FROM THE BACK OF CURB.
6. WHEN REVERSE SLOPE GUTTER IS REQUIRED, THE LOCATION(S) WILL BE SHOWN ELSEWHERE IN THE PLAN.
7. USE 4% GUTTER CROSS SLOPE UNLESS OTHERWISE NOTED IN THE PLANS.
8. INCLUDE LONGITUDINAL JOINT AND TIE BARS ALONG LANE EDGE WHEN CONCRETE PANEL WIDTH EXCEEDS THE MAXIMUM WIDTH PER TABLE BELOW. LONGITUDINAL JOINT(S) ARE NOT ALLOWED WITHIN TRAFFIC LANES AND BIKE LANES. LONGITUDINAL JOINT MAY BE SAWED.

**CONCRETE CURB AND GUTTER**

STATE OF WISCONSIN
DEPARTMENT OF TRANSPORTATION


6

SDD 08D01 - 21a

## GENERAL NOTES

DETAILS OF CONSTRUCTION AND WORKMANSHIP NOT SHOWN ON THIS DRAWING SHALL CONFORM TO THE PERTINENT REQUIREMENTS OF THE CONTRACT.

PAVEMENT TIES AND TIE BARS SHALL BE EPOXY COATED IN CONFORMANCE WITH SUBSECTION 505.2.6.2 OF THE STANDARD SPECIFICATIONS.

UNLESS OTHERWISE SHOWN ON THE TYPICAL CROSS SECTIONS, THE BASE AGGREGATE AND COMMON EXCAVATION LIMITS ARE 2' - 0" BEHIND THE BACK OF CURBS.

(1) TIE BARS ARE REQUIRED FOR CURB AND GUTTERS TYPES A, G, K, R, AND TBTT.

(2) THE BOTTOM OF CURB AND GUTTER MAY BE CONSTRUCTED EITHER LEVEL OR PARALLEL TO THE SLOPE OF THE SUBGRADE OR BASE AGGREGATE PROVIDED A 6" MINIMUM GUTTER THICKNESS IS MAINTAINED.

(9) REFER TO SDD 08D18 AND 08D19 FOR ADDITIONAL DRIVEWAY ENTRANCE CURB DETAILS.

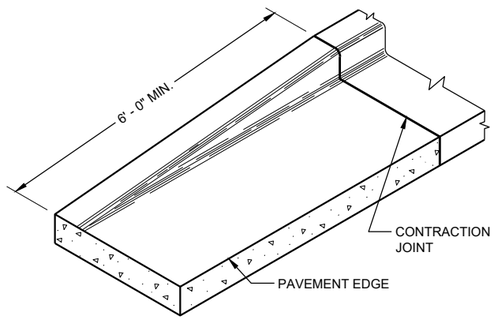


**END SECTIONCURB AND GUTTER**

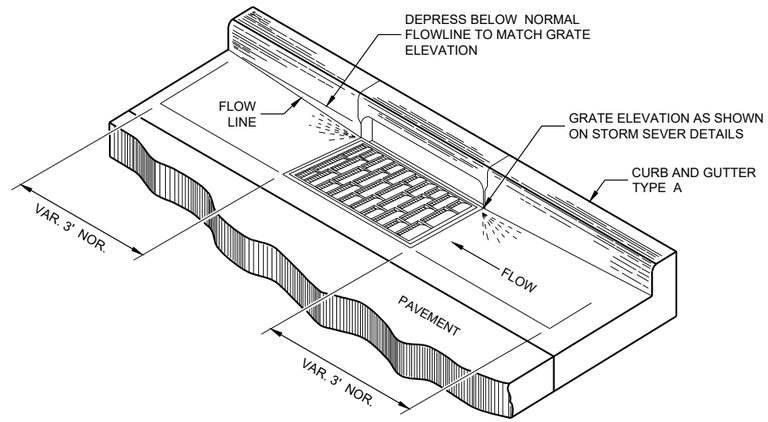


**DETAIL OF CURB AND GUTTER AT INLETS**
(TYPICAL H INLET COVER SHOWN)

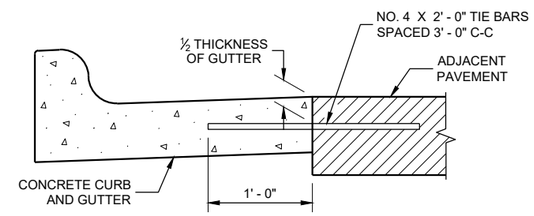


**TYPICAL TIE BAR LOCATION (1)**

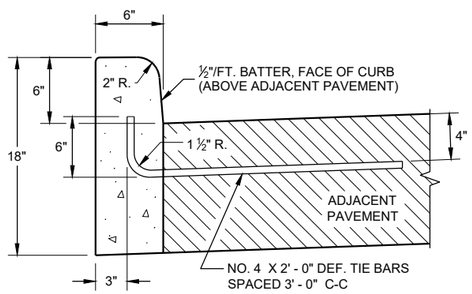


**TYPES A (1) & D**

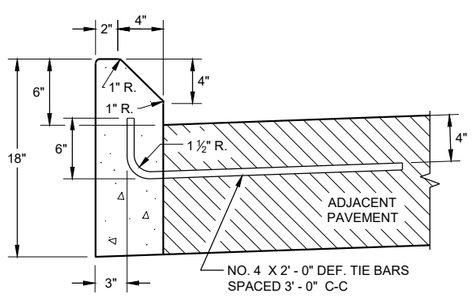


**TYPES G (1) & J**

**CONCRETE CURB**

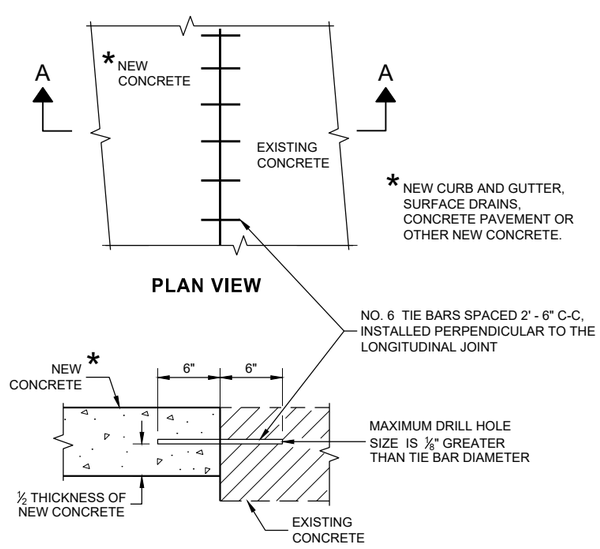


**PLAN VIEW**

**SECTION A - A**

**TIE BARS DRILLED INTO EXISTING PAVEMENT**

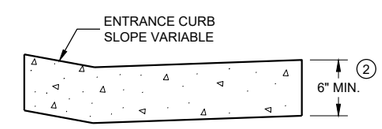


**DRIVEWAY ENTRANCE CURB (9)**
(WHEN DIRECTED BY THE ENGINEER)

**CONCRETE CURB, TIES AND CURB AND GUTTER APPLICATIONS**

STATE OF WISCONSIN
DEPARTMENT OF TRANSPORTATION

APPROVED
February 2020 — DATE
/S/ Rodney Taylor — ROADWAY STANDARDS DEVE ENGINEER
FHWA

## GENERAL NOTES

DETAILS OF CONSTRUCTION, MATERIALS AND WORKMANSHIP NOT SHOWN ON THIS DRAWING SHALL CONFORM TO PERTINENT REQUIREMENTS OF THE STANDARD SPECIFICATIONS AND APPLICABLE SPECIAL PROVISIONS.

WELDED STEEL WIRE FABRIC SHALL BE IN ACCORDANCE WITH AASHTO SPECIFICATION M55.

① JOINTS SHALL BE 1/8 TO 1/4 INCH WIDE BY 1 1/2 INCHES DEEP AND SPACED AT UNIFORM INTERVALS OF APPROXIMATELY 4 FEET.

② GEOTEXTILE FABRIC TYPE "R" SHALL UNDERLAY THE FULL LENGTH AND WIDTH OF THE CONCRETE SURFACE DRAIN AND RIPRAP.

③ CONCRETE SURFACE DRAIN WITHOUT CURB AND GUTTER MAY BE USED ON BACKSLOPES WHEN SPECIFIED

## ASPHALTIC FLUME

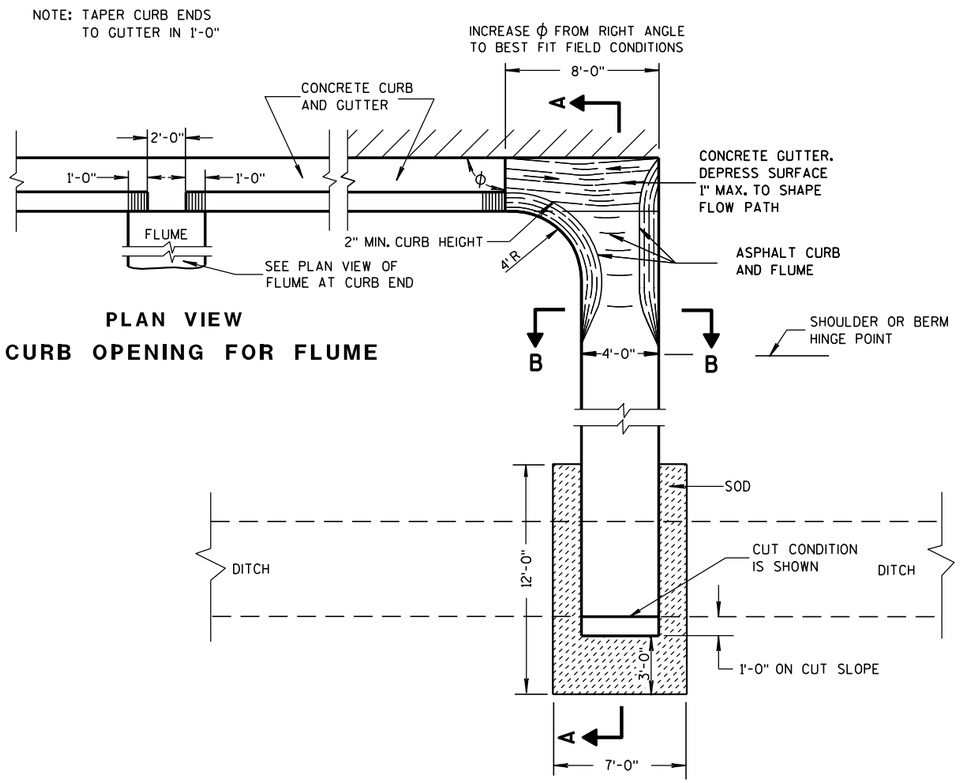


PLAN VIEW
CURB OPENING FOR FLUME

PLAN VIEW
FLUME AT CURB END

## ③ CONCRETE SURFACE DRAIN

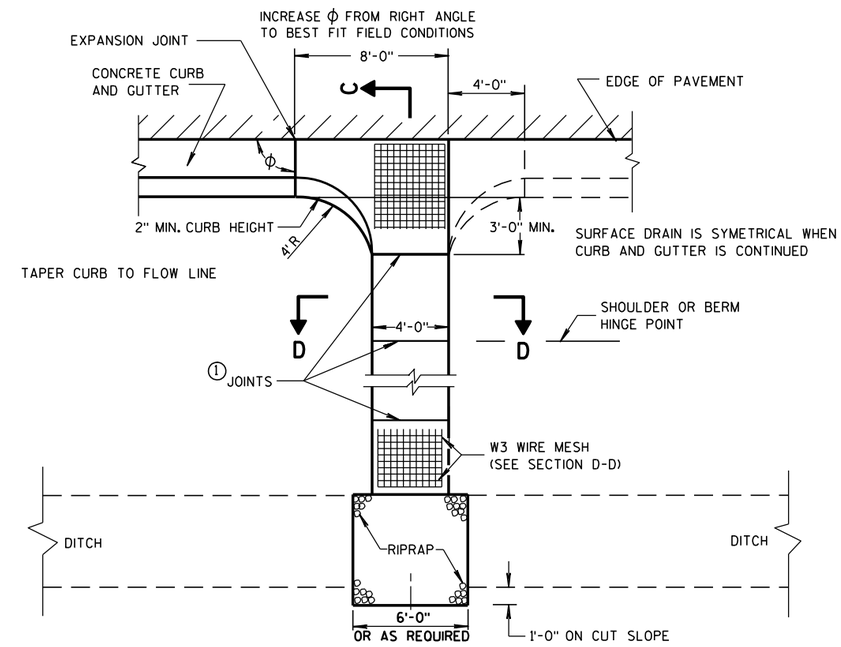


PLAN VIEW

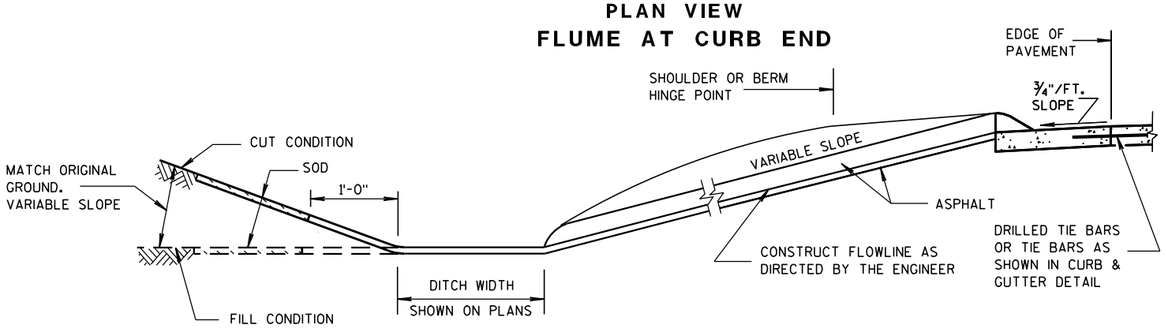


SECTION A-A

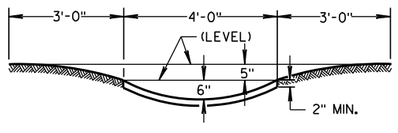


SECTION B-B

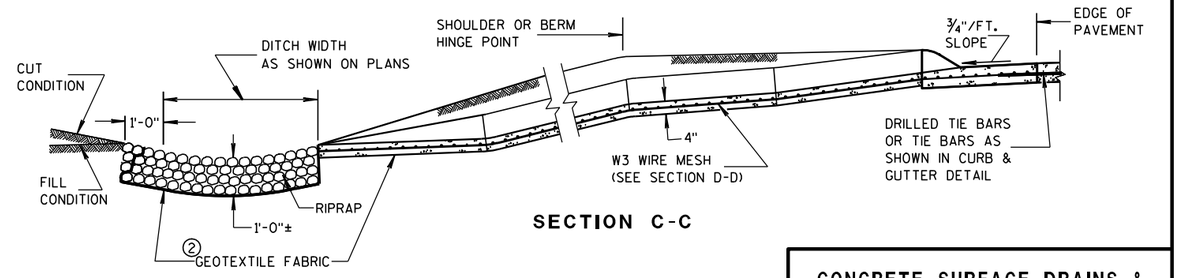


SECTION C-C

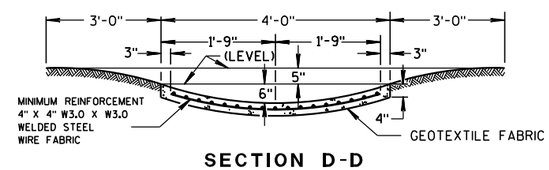


SECTION D-D

CONCRETE SURFACE DRAINS & ASPHALTIC FLUMES

STATE OF WISCONSIN
DEPARTMENT OF TRANSPORTATION

APPROVED
9-4-08 /S/ Jerry H. Zogg
DATE ROADWAY STANDARDS ENGINEER
FHWA

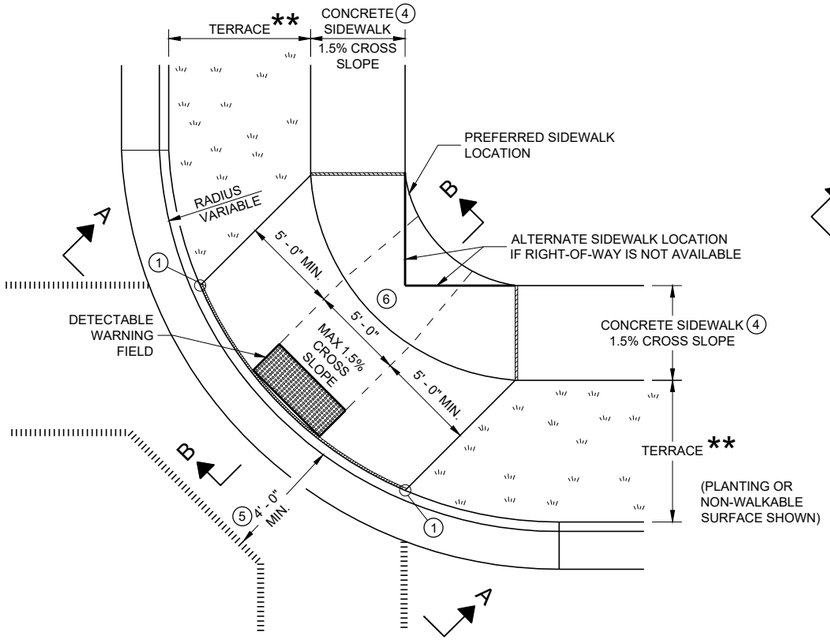


**PLAN VIEW**

## CURB RAMP TYPE 1

**(CENTER OF CORNER RADIUS)**

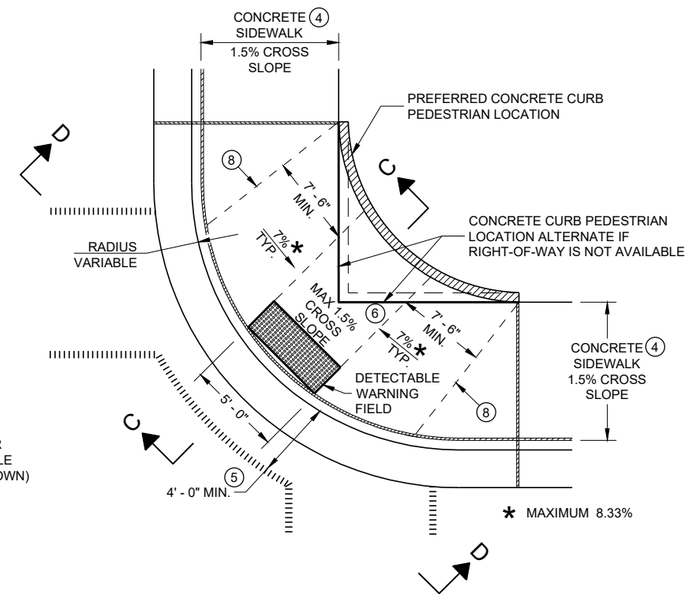


**PLAN VIEW**

## CURB RAMP TYPE 1 - A

**(NO TERRACE)**

## GENERAL NOTES

AVOID PLACING DRAINAGE STRUCTURES, JUNCTION BOXES OR OTHER OBSTRUCTIONS IN FRONT OF RAMP ACCESS AREAS.

DETAILS OF CONSTRUCTION, MATERIALS AND WORKMANSHIP NOT SHOWN ON THIS DRAWING SHALL CONFORM TO THE PERTINENT REQUIREMENTS OF THE STANDARD SPECIFICATIONS AND THE APPLICABLE SPECIAL PROVISIONS.

WHEN NECESSARY, THE SIDEWALK ELEVATION MAY BE LOWERED TO MEET THE HIGH POINT ON THE RAMP.

TYPE 1 CURB RAMPS SHALL HAVE A NORMAL SIDEWALK APRON AND CURB ON BOTH SIDES OF RAMP.

DETECTABLE WARNING FILED SHALL BE MEASURED AND PAID BY THE SQUARE FOOT AS "CURB RAMP DETECTABLE WARNING FIELD". THE CONCRETE PEDESTRIAN CURB, IF NEEDED, SHALL BE MEASURED AND PAID BY THE LINEAR FOOT AS "CONCRETE CURB PEDESTRIAN". CONCRETE SIDEWALK IN THE CURB RAMP AREA SHALL BE MEASURED AND PAID BY THE SQUARE FOOT AS CONCRETE SIDEWALK, INCLUDING THE AREA UNDER THE DETECTABLE WARNING FIELD.

SELECT CURB RAMP DETECTABLE WARNING FIELD MATERIALS AND DEVICES FROM THE DEPARTMENT'S APPROVED MATERIALS LIST. THE COLOR OF THE DETECTABLE WARNING FIELD IS SPECIFIED ELSEWHERE AND IS INCIDENTAL TO THE BID ITEM OF "CURB RAMP DETECTABLE WARNING FIELD"

DETECTABLE WARNING FIELDS THAT ARE INSTALLED AS A GROUP OR SIDE BY SIDE, SHALL BE FROM THE SAME MANUFACTURER.

SURFACE TEXTURE OF THE RAMP SHALL BE OBTAINED BY COARSE BROOMING TRANSVERSE TO THE SLOPE OF THE RAMP.

(1) THIS POINT IS AN EXTENSION OF OUTSIDE EDGE OF APPROACHING SIDEWALK WHERE IT MEETS THE BACK OF CONCRETE CURB. POINT LOCATION MAY BE ADJUSTED TO ALIGN WITH BEGINNING OF FULL-HEIGHT CURB IF THIS DISTANCE IS SHORT.

(2) GRADE CHANGE BETWEEN GUTTER FLAG SLOPE AND THE CURB RAMP SLOPE SHALL NOT EXCEED 11%. MAXIMUM GUTTER FLAG SLOPE IS 4%. PROVIDE LONGITUDINAL DRAINAGE AROUND CURB AND AWAY FROM CURB RAMP. NO VERTICAL LIPS OR DISCONTINUITIES GREATER THAN ¼ - INCH ARE ALLOWED. SLOPE OF CURB HEAD OPENING SHALL MATCH THE RAMP SLOPE, MINIMALLY 1.5% AND NOT TO EXCEED 7%. WHEN ADJACENT TO 1.5% LANDING, CONSTRUCT CURB HEAD OPENING AT 1.5% IN THE DIRECTION OF PEDESTRIAN TRAVEL.

(3) MAXIMUM 8.33% CURB RAMP SLOPE IS ALLOWABLE WITH FLATTENED GUTTER FLAG SLOPE AND NOT TO EXCEED 11% GRADE CHANGE.

(4) ±0.5% CONSTRUCTION TOLERANCE IN SIDEWALK CROSS SLOPE. THE SIDEWALK CROSS SLOPE SHALL NOT EXCEED 2% WITHOUT PRIOR APPROVAL FROM THE ENGINEER.

(5) PROVIDE A LEVEL LANDING IN THE STREET AND GUTTER AREA (2% MAXIMUM SLOPE IN ANY DIRECTION). WHEN THE GUTTER SLOPE EXCEEDS 2%, CONSTRUCT THE LEVEL LANDING IN THE STREET AREA.

(6) PROVIDE A LEVEL LANDING (MAXIMUM 2% SLOPE) IN ANY DIRECTION OF PEDESTRIAN TRAVEL. STANDARD LEVEL LANDING SIZE IS 5 FEET BY 5 FEET.

(8) PROVIDE GRADE BREAK PERPENDICULAR TO DIRECTION OF WHEELCHAIR TRAVEL.

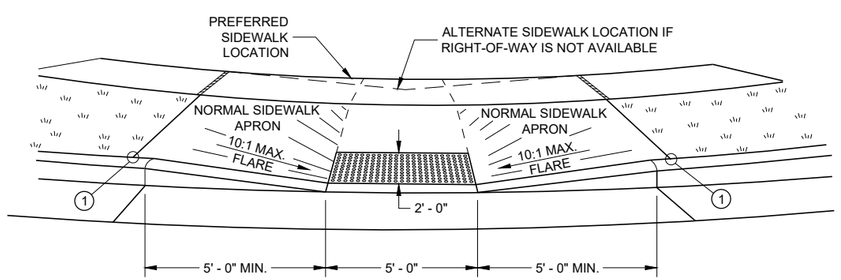


**VIEW A - A FOR TYPE 1**

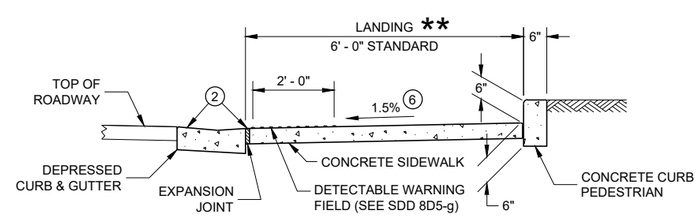


**SECTION C - C FOR TYPE 1 - A**

## LEGEND

- ½" EXPANSION JOINT SIDEWALK
- CONTRACTION JOINT FIELD LOCATED
- PAVEMENT MARKING CROSSWALK (WHITE)

** WIDTH SHOWN ELSEWHERE IN THE PLANS

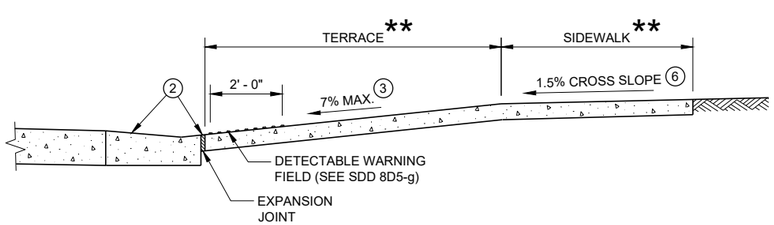


**SECTION B - B FOR TYPE 1**

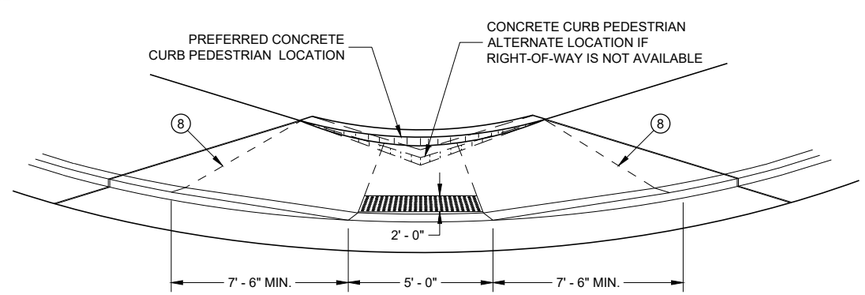


**VIEW D - D FOR TYPE 1 - A**

**CURB RAMPS TYPE 1 AND 1-A**

STATE OF WISCONSIN
DEPARTMENT OF TRANSPORTATION

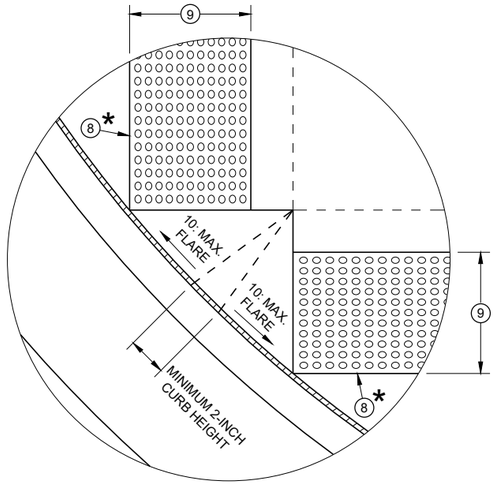


**DETAIL A**

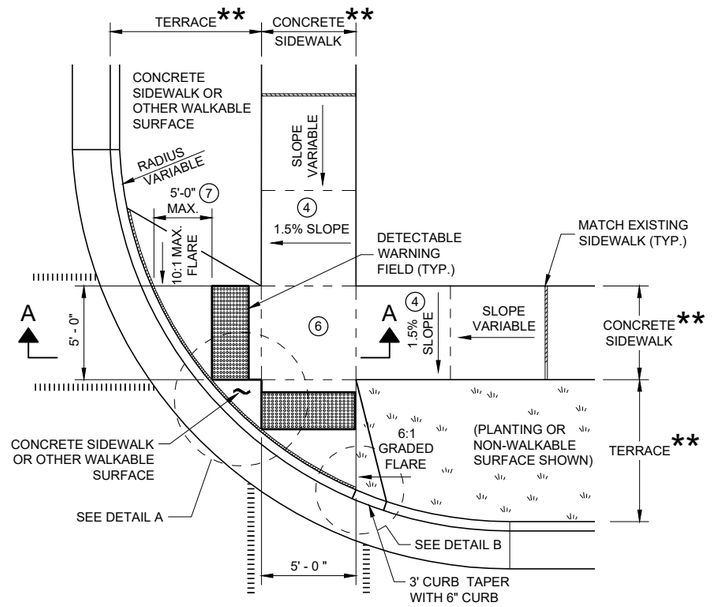


**PLAN VIEW**
**CURB RAMP TYPE 2**
**(CENTER OF CORNER RADIUS)**

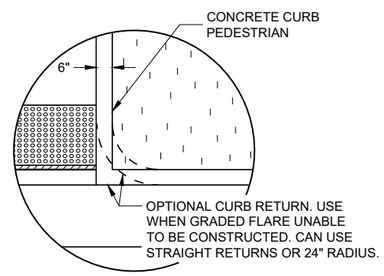


**DETAIL B**

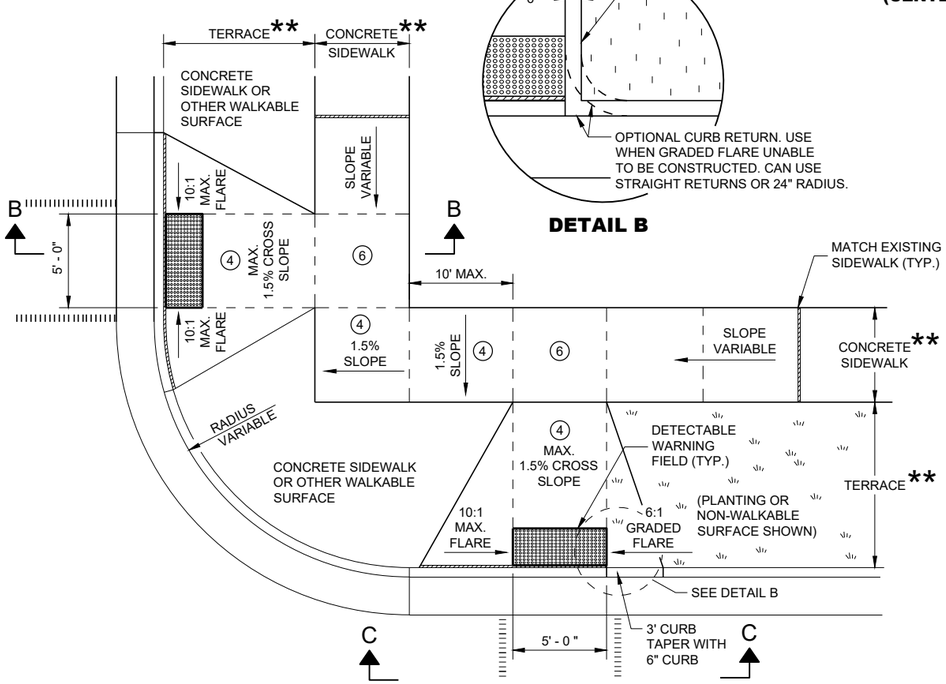


**PLAN VIEW**
**CURB RAMP TYPE 3**
**(OUTSIDE OF CROSSWALK AREA)**

## GENERAL NOTES

AVOID PLACING DRAINAGE STRUCTURES, JUNCTION BOXES OR OTHER OBSTRUCTIONS IN FRONT OF RAMP ACCESS AREAS.

DETAILS OF CONSTRUCTION, MATERIALS AND WORKMANSHIP NOT SHOWN ON THIS DRAWING SHALL CONFORM TO THE PERTINENT REQUIREMENTS OF THE STANDARD SPECIFICATIONS AND THE APPLICABLE SPECIAL PROVISIONS.

DETECTABLE WARNING FIELDS THAT ARE INSTALLED AS A GROUP OR SIDE BY SIDE SHALL BE FROM THE SAME MANUFACTURER.

(2) GRADE CHANGE BETWEEN GUTTER FLAG SLOPE AND THE CURB RAMP SLOPE SHALL NOT EXCEED 11%. MAXIMUM GUTTER FLAG SLOPE IS 4%. PROVIDE LONGITUDINAL DRAINAGE AROUND CURB AND AWAY FROM CURB RAMP. NO VERTICAL LIPS OR DISCONTINUITIES GREATER THAN ¼ - INCH ARE ALLOWED. SLOPE OF CURB HEAD OPENING SHALL MATCH THE RAMP SLOPE, MINIMALLY 1.5% AND NOT TO EXCEED 7%. WHEN ADJACENT TO 1.5% LANDING, CONSTRUCT CURB HEAD OPENING AT 1.5% IN THE DIRECTION OF PEDESTRIAN TRAVEL.

(3) AN 8.33% CURB RAMP SLOPE IS ALLOWABLE WITH FLATTENED GUTTER FLAG SLOPE (2.67% OR LESS) AND NOT TO EXCEED 11% GRADE CHANGE.

(4) ±0.5% CONSTRUCTION TOLERANCE IN SIDEWALK CROSS SLOPE. THE SIDEWALK CROSS SLOPE SHALL NOT EXCEED 2% WITHOUT PRIOR APPROVAL FROM THE ENGINEER.

(6) PROVIDE A LEVEL LANDING (MAXIMUM 2% SLOPE) IN ANY DIRECTION OF PEDESTRIAN TRAVEL. STANDARD LEVEL LANDING SIZE IS 5 FEET X 5 FEET.

(7) WHEN GRADE BREAK DISTANCE EXCEEDS 5 FEET, USE RADIAL DETECTABLE WARNING FIELD PER SDD 8D5-f.

(8) PROVIDE GRADE BREAK PERPENDICULAR TO DIRECTION OF WHEELCHAIR TRAVEL.

(9) WHEN DISTANCE IS LESS THAN 6' - 0", IT MAY BE DIFFICULT TO ACHIEVE A 7% SLOPE OR FLATTER ALONG THE RAMP. REDUCE CURB HEIGHT IN TRIANGLE AREA TO ACHIEVE 7% SLOPE OR FLATTER ON RAMP. CONSTRUCT 2-INCH MINIMUM CURB HEIGHT BETWEEN 10:1 FLARES.

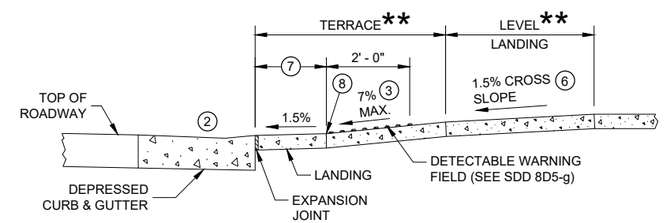


**SECTION A - A FOR TYPE 2**

* MAXIMUM 2.0% SLOPE IN ALL DIRECTIONS IN FRONT OF GRADE BREAK

** WIDTH SHOWN ELSEWHERE IN THE PLANS

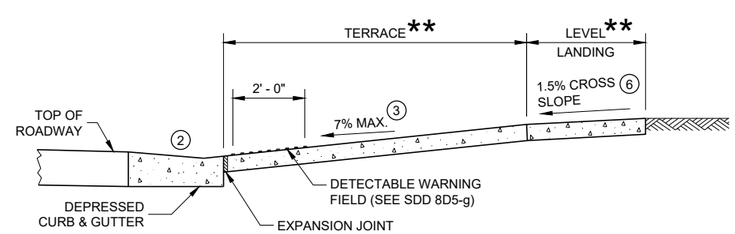


**SECTION B - B FOR TYPE 3**

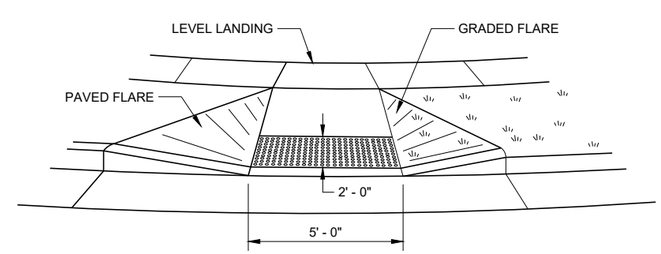


**VIEW C - C FOR TYPE 3**

## LEGEND

- ½" EXPANSION JOINT SIDEWALK
- CONTRACTION JOINT SIDEWALK
- PAVEMENT MARKING CROSSWALK (WHITE)

**CURB RAMPS TYPE 2 AND 3**

STATE OF WISCONSIN
DEPARTMENT OF TRANSPORTATION




6


SDD 08D05 - 20b

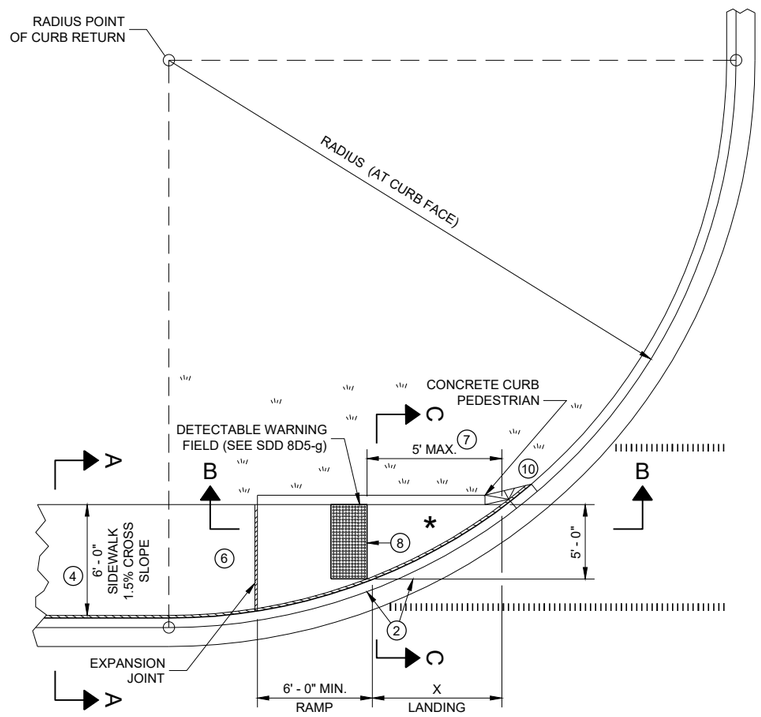


**PLAN VIEW**

**CURB RAMP TYPE 4A**

| RADIUS (AT CURB FACE) | X |
|---|---|
| 10 FEET | 4' - 7" |
| 15 FEET | 6' - 5½" |

INTERMEDIATE RADII CAN BE INTERPOLATED

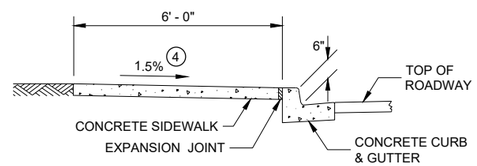


**SECTION A - A FOR TYPE 4A**

## GENERAL NOTES

AVOID PLACING DRAINAGE STRUCTURES, JUNCTION BOXES OR OTHER OBSTRUCTIONS IN FRONT OF RAMP ACCESS AREAS.

DETAILS OF CONSTRUCTION, MATERIALS AND WORKMANSHIP NOT SHOWN ON THIS DRAWING SHALL CONFORM TO THE PERTINENT REQUIREMENTS OF THE STANDARD SPECIFICATIONS AND THE APPLICABLE SPECIAL PROVISIONS.

DETECTABLE WARNING FIELDS THAT ARE INSTALLED AS A GROUP OR SIDE BY SIDE, SHALL BE FROM THE SAME MANUFACTURER.

2 GRADE CHANGE BETWEEN GUTTER FLAG SLOPE AND THE CURB RAMP SLOPE SHALL NOT EXCEED 11%. MAXIMUM GUTTER FLAG SLOPE IS 4%. PROVIDE LONGITUDINAL DRAINAGE AROUND CURB AND AWAY FROM CURB RAMP. NO VERTICAL LIPS OR DISCONTINUITIES GREATER THAN ¼ - INCH ARE ALLOWED. SLOPE OF CURB HEAD OPENING SHALL MATCH THE RAMP SLOPE, MINIMALLY 1.5% AND NOT TO EXCEED 7%. WHEN ADJACENT TO 1.5% LANDING, CONSTRUCT CURB HEAD OPENING AT 1.5% IN THE DIRECTION OF PEDESTRIAN TRAVEL.

3 AN 8.33% CURB RAMP SLOPE IS ALLOWABLE WITH FLATTENED GUTTER FLAG SLOPE AND NOT TO EXCEED 11% GRADE CHANGE.

4 ±0.5% CONSTRUCTION TOLERANCE IN SIDEWALK CROSS SLOPE. THE SIDEWALK CROSS SLOPE SHALL NOT EXCEED 2% WITHOUT PRIOR APPROVAL FROM THE ENGINEER.

6 PROVIDE A LEVEL LANDING (MAXIMUM 2% SLOPE) IN ANY DIRECTION OF PEDESTRIAN TRAVEL. STANDARD LEVEL LANDING SIZE IS 5 FEET BY 5 FEET.

7 WHEN THIS GRADE BREAK DISTANCE EXCEEDS 5 FEET, USE RADIAL DETECTABLE WARNING FIELD PER SDD 8D5-f.

8 PROVIDE GRADE BREAK PERPENDICULAR TO DIRECTION OF WHEELCHAIR TRAVEL.

10 INSTALL TRANSITION NOSE (INCIDENTAL TO OTHER PAY ITEMS). DO NOT MARK TRANSITION NOSE.

## LEGEND

½" EXPANSION JOINT SIDEWALK

CONTRACTION JOINT SIDEWALK

PAVEMENT MARKING CROSSWALK (WHITE)

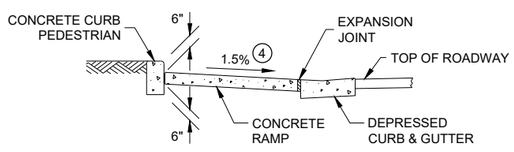


**SECTION C - C FOR TYPE 4A**

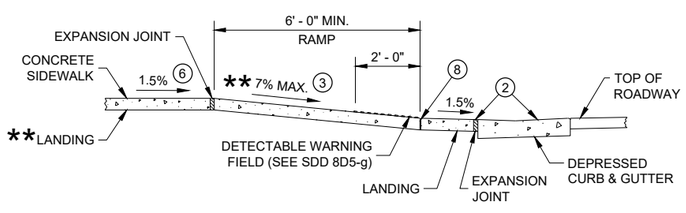


** IF RAMP SLOPE IS LESS THAN 5.0%, THEN NO ADJACENT UPHILL LANDING IS REQUIRED

**SECTION B - B FOR TYPE 4A AND TYPE 4A1**

* MAXIMUM 2.0% SLOPE IN ALL DIRECTIONS IF FRONT OF GRADE BREAK

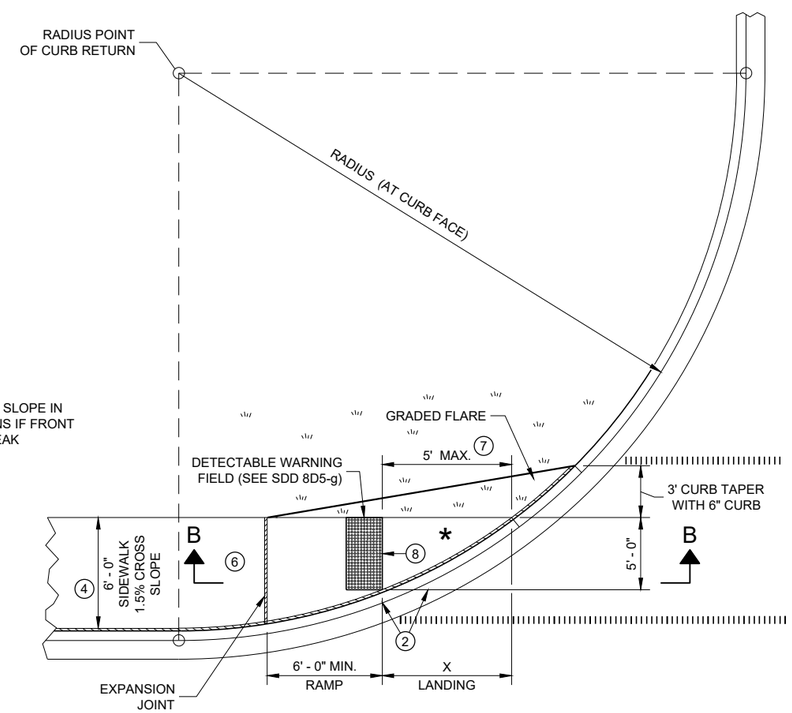


**PLAN VIEW**

**CURB RAMP TYPE 4A1**

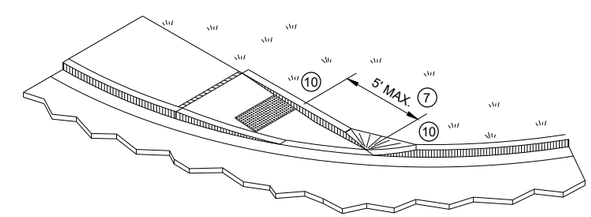


**ISOMETRIC VIEW FOR TYPE 4A**

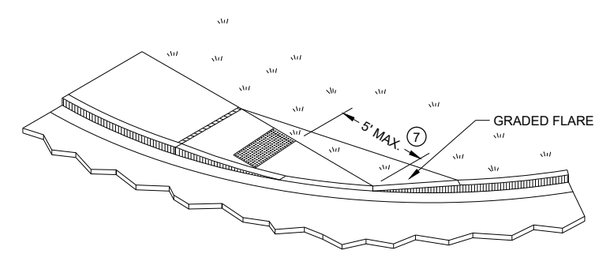


**ISOMETRIC VIEW FOR TYPE 4A1**

**CURB RAMPS**
**TYPE 4A AND 4A1**

STATE OF WISCONSIN
DEPARTMENT OF TRANSPORTATION

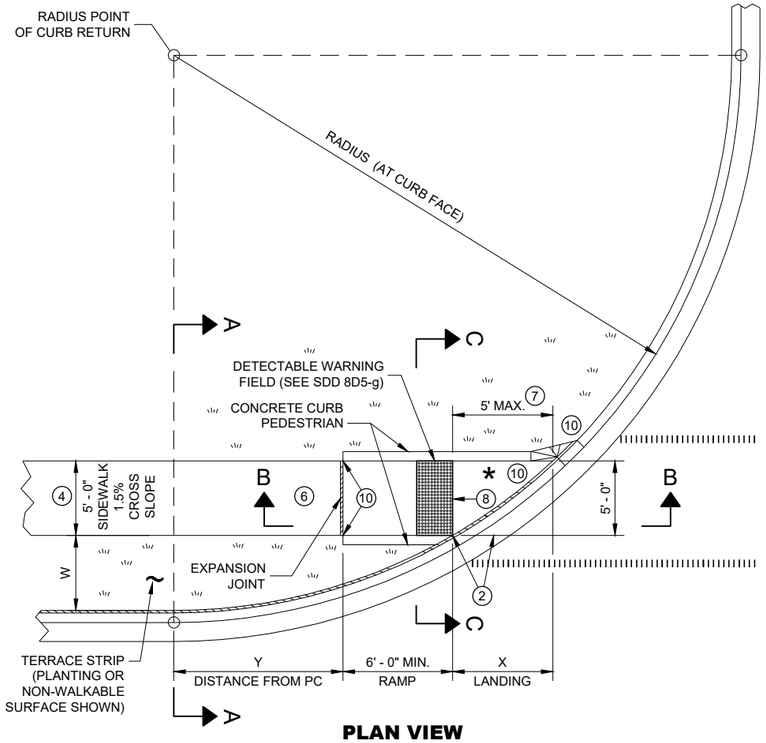


**PLAN VIEW**

**CURB RAMP TYPE 4B**

| RADIUS (AT CURB FACE) | W = 3' - 0" | | W = 4' - 0" | | W = 5' - 0" | | W = 6' - 0" | | W = 7' - 0" | | W = 8' - 0" | | W = 9' - 0" | | W = 10' - 0" | |
|---|---|---|---|---|---|---|---|---|---|---|---|---|---|---|---|---|
| | X | Y | X | Y | X | Y | X | Y | X | Y | X | Y | X | Y | X | Y |
| 10 FEET | 2' - 10 ¼" | 0' - 5" | 2' - 1" | 1' - 4 ½" | 1' - 5" | 2' - 1" | 0' - 10" | 2' - 7 ½" | 0' - 3 ¼" | 3' - 0 ¼" | | | | | | |
| 15 FEET | 4' - 6 ¾" | 2' - 1 ¾" | 3' - 9" | 3' - 5 ¾" | 3' - 1 ¼" | 4' - 6" | 2' - 6 ¾" | 5' - 4 ½" | 2' - 1" | 6' - 1" | 1' - 8" | 6' - 8 ½" | 1' - 3 ¼" | 7' - 2 ½" | 0' - 10 ¾" | 7' - 7 ¼" |
| 20 FEET | 5' - 9 ¾" | 3' - 6 ½" | 4' - 11 ½" | 5' - 1 ¾" | 4' - 3 ¼" | 6' - 5 ½" | 3' - 8 ¾" | 7' - 7" | 3' - 3" | 8' - 6 ½" | 2' - 10" | 9' - 4 ½" | 2' - 5 ½" | 10' - 1 ¼" | 2' - 1 ¼" | 10' - 9" |
| 30 FEET | | | 6' - 9 ¼" | 7' - 11 ¼" | 6' - 0 ¼" | 9' - 8" | 5' - 5" | 11' - 1 ¾" | 4' - 10 ¾" | 12' - 5 ¾" | 4' - 5 ½" | 13' - 7 ¾" | 4' - 0 ¾" | 14' - 8 ½" | 3' - 8 ½" | 15' - 8 ¼" |
| 40 FEET | | | | | | | | | 6' - 1 ¾" | 15' - 8 ½" | 5' - 8" | 17' - 2" | 5' - 3" | 18' - 5 ¾" | 4' - 10 ¾" | 19' - 8 ¼" |
| 50 FEET | | | | | | | | | | | | | | | 5' - 10 ¼" | 23' - 2" |

INTERMEDIATE RADII CAN BE INTERPOLATED
DIMENSION "Y" IS CALCULATED BASED ON 6'-0" RAMP LENGTH
DIMENSION "X" IS CALCULATED BASED ON 5'-0" SIDEWALK WIDTH

## LEGEND

- ½" EXPANSION JOINT SIDEWALK
- CONTRACTION JOINT SIDEWALK
- PAVEMENT MARKING CROSSWALK (WHITE)

## GENERAL NOTES

AVOID PLACING DRAINAGE STRUCTURES, JUNCTION BOXES OR OTHER OBSTRUCTIONS IN FRONT OF RAMP ACCESS AREAS.

DETAILS OF CONSTRUCTION, MATERIALS AND WORKMANSHIP NOT SHOWN ON THIS DRAWING SHALL CONFORM TO THE PERTINENT REQUIREMENTS OF THE STANDARD SPECIFICATIONS AND THE APPLICABLE SPECIAL PROVISIONS.

DETECTABLE WARNING FIELDS THAT ARE INSTALLED AS A GROUP OR SIDE BY SIDE, SHALL BE FROM THE SAME MANUFACTURER.

(2) GRADE CHANGE BETWEEN GUTTER FLAG SLOPE AND THE CURB RAMP SLOPE SHALL NOT EXCEED 11%. MAXIMUM GUTTER FLAG SLOPE IS 4%. PROVIDE LONGITUDINAL DRAINAGE AROUND CURB AND AWAY FROM CURB RAMP. NO VERTICAL LIPS OR DISCONTINUITIES GREATER THAN ¼ - INCH ARE ALLOWED. SLOPE OF CURB HEAD OPENING SHALL MATCH THE RAMP SLOPE, MINIMALLY 1.5% AND NOT TO EXCEED 7%. WHEN ADJACENT TO 1.5% LANDING, CONSTRUCT CURB HEAD OPENING AT 1.5% IN THE DIRECTION OF PEDESTRIAN TRAVEL.

(3) AN 8.33% CURB RAMP SLOPE IS ALLOWABLE WITH FLATTENED GUTTER FLAG SLOPE AND NOT TO EXCEED 11% GRADE CHANGE.

(4) ±0.5% CONSTRUCTION TOLERANCE IN SIDEWALK CROSS SLOPE. THE SIDEWALK CROSS SLOPE SHALL NOT EXCEED 2% WITHOUT PRIOR APPROVAL FROM THE ENGINEER.

(6) PROVIDE A LEVEL LANDING (MAXIMUM 2% SLOPE) IN ANY DIRECTION OF PEDESTRIAN TRAVEL. STANDARD LEVEL LANDING SIZE IS 5 FEET BY 5 FEET.

(7) WHEN THIS GRADE BREAK DISTANCE EXCEEDS 5 FEET, USE RADIAL DETECTABLE WARNING FIELD PER SDD 8D5-f.

(8) PROVIDE GRADE BREAK PERPENDICULAR TO DIRECTION OF WHEELCHAIR TRAVEL.

(10) INSTALL TRANSITION NOSE (INCIDENTAL TO OTHER PAY ITEMS). DO NOT MARK TRANSITION NOSE.

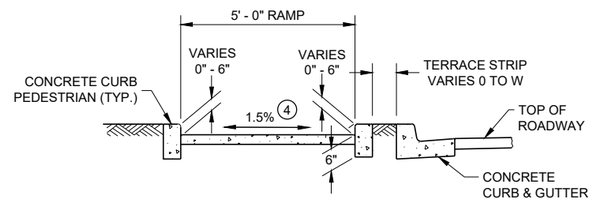


**SECTION C - C FOR TYPE 4B**

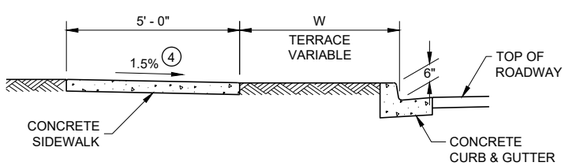


**SECTION A - A FOR TYPE 4B**

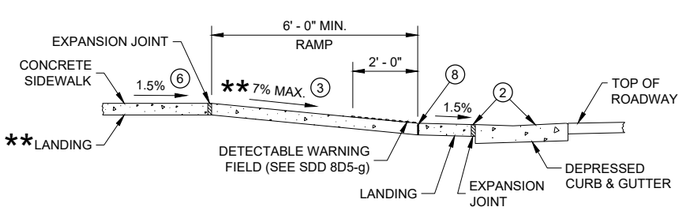


** IF RAMP SLOPE IS LESS THAN 5.0%, THEN NO ADJACENT UPHILL LANDING IS REQUIRED

**SECTION B - B FOR TYPE 4B AND TYPE 4B1**

* MAXIMUM 2.0% SLOPE IN ALL DIRECTIONS IF FRONT OF GRADE BREAK

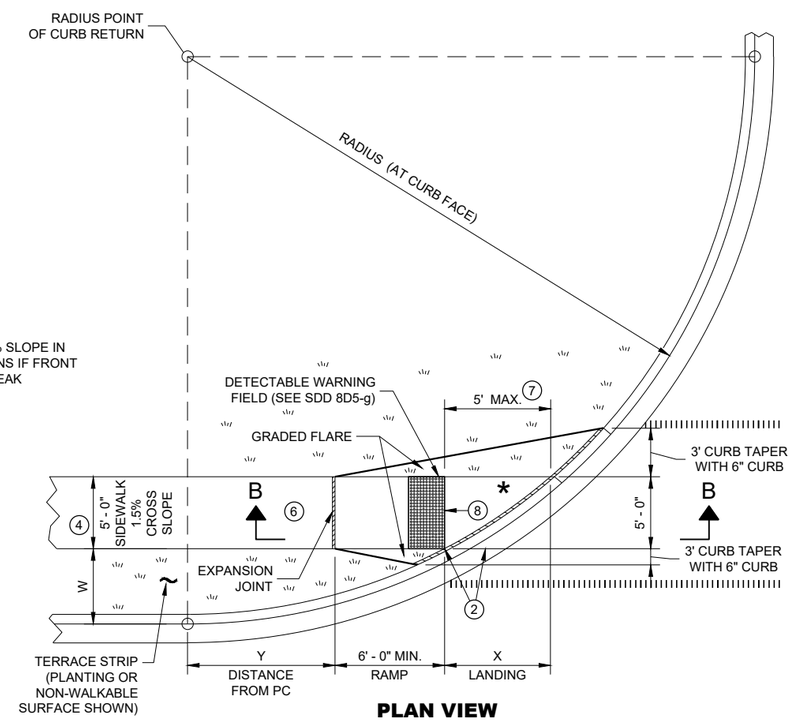


**PLAN VIEW**

**CURB RAMP TYPE 4B1**

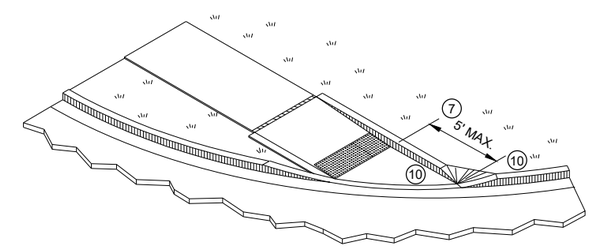


**ISOMETRIC VIEW FOR TYPE 4B**

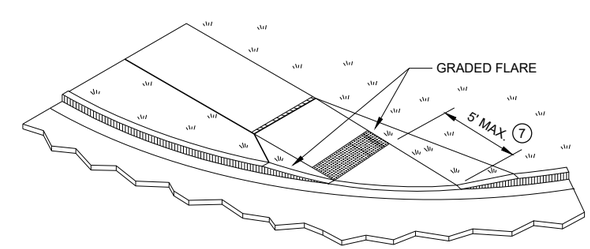


**ISOMETRIC VIEW FOR TYPE 4B1**

**CURB RAMPS TYPE 4B AND 4B1**

STATE OF WISCONSIN
DEPARTMENT OF TRANSPORTATION





6



SDD 08D05 - 20d

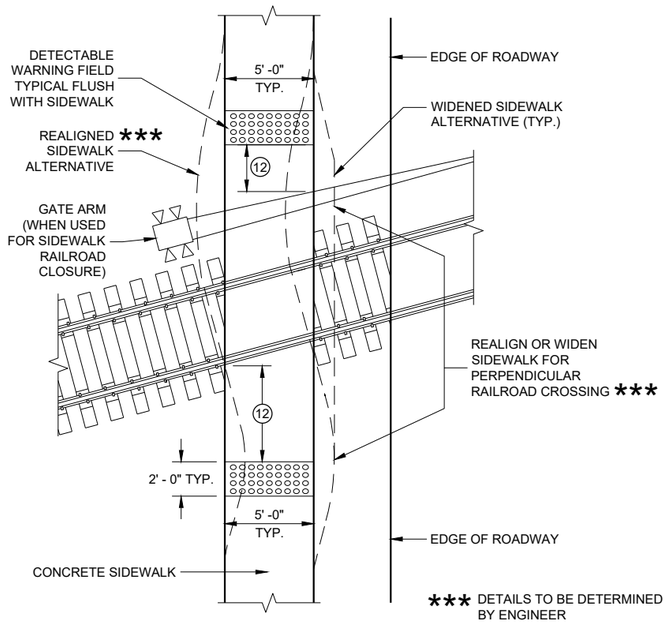


## CURB RAMP TYPE 8

### DETECTABLE WARNINGS AT RAILROAD CROSSING

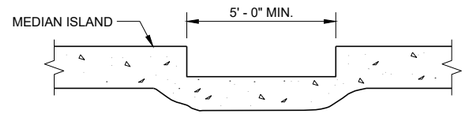


## SECTION A - A FOR TYPE 5

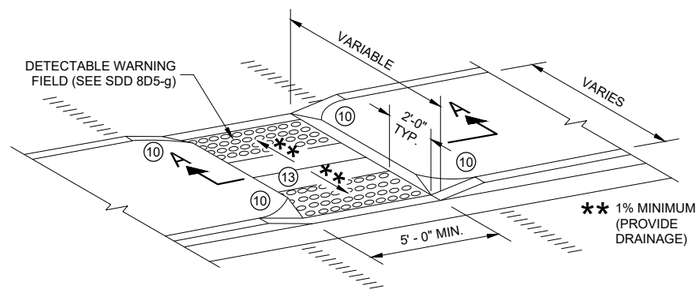


## CURB RAMP TYPE 5

### MEDIAN ISLAND NON-ELEVATED PEDESTRIAN CROSSING

## GENERAL NOTES

AVOID PLACING DRAINAGE STRUCTURES, JUNCTION BOXES OR OTHER OBSTRUCTIONS IN FRONT OF RAMP ACCESS AREAS.

DETAILS OF CONSTRUCTION, MATERIALS AND WORKMANSHIP NOT SHOWN ON THIS DRAWING SHALL CONFORM TO THE PERTINENT REQUIREMENTS OF THE STANDARD SPECIFICATIONS AND THE APPLICABLE SPECIAL PROVISIONS.

SIDEWALK CROSS SLOPE SHALL NOT EXCEED 2%.

DETECTABLE WARNING FIELDS THAT ARE INSTALLED AS A GROUP OR SIDE BY SIDE, SHALL BE FROM THE SAME MANUFACTURER.

(2) GRADE CHANGE BETWEEN GUTTER FLAG SLOPE AND THE CURB RAMP SLOPE SHALL NOT EXCEED 11%. MAXIMUM GUTTER FLAG SLOPE IS 4%. PROVIDE LONGITUDINAL DRAINAGE AROUND CURB AND AWAY FROM CURB RAMP. NO VERTICAL LIPS OR DISCONTINUITIES GREATER THAN ¼ - INCH ARE ALLOWED. SLOPE OF CURB HEAD OPENING SHALL MATCH THE RAMP SLOPE, MINIMALLY 1.5% AND NOT TO EXCEED 7%. WHEN ADJACENT TO 1.5% LANDING, CONSTRUCT CURB HEAD OPENING AT 1.5% IN THE DIRECTION OF PEDESTRIAN TRAVEL.

(3) AN 8.33% CURB RAMP SLOPE IS ALLOWABLE WITH FLATTENED GUTTER FLAG SLOPE AND NOT TO EXCEED 11% GRADE CHANGE.

(4) ±0.5% CONSTRUCTION TOLERANCE IN SIDEWALK CROSS SLOPE. THE SIDEWALK CROSS SLOPE SHALL NOT EXCEED 2% WITHOUT PRIOR APPROVAL FROM THE ENGINEER.

(6) PROVIDE A LEVEL LANDING (MAXIMUM 2% SLOPE) IN ANY DIRECTION OF PEDESTRIAN TRAVEL. STANDARD LEVEL LANDING SIZE IS 5 FEET BY 5 FEET.

(10) INSTALL TRANSITION NOSE (INCIDENTAL TO OTHER PAY ITEMS). DO NOT MARK TRANSITION NOSE.

(11) SLOPE SIDEWALK TOWARD LANDING AS SHOWN WHERE THERE IS NO TERRACE OR WHERE THE TERRACE WIDTH IS LESS THAN 6 FEET WIDE.

(12) THE EDGE OF THE DETECTABLE WARNING FIELD NEAREST TO A RAILROAD CROSSING SHALL BE 1.5 FEET ±0.1' FROM THE FACE OF THE GATE ARM IF THE GATE ARM EXTENDS ACROSS THE SIDEWALK. WHERE THERE IS NO PEDESTRIAN GATE, THE EDGE OF THE DETECTABLE WARNING FIELD NEAREST TO THE RAILROAD CROSSING SHALL BE 15 FEET FROM THE NEAREST RAIL.

(13) DO NOT INSTALL DETECTABLE WARNING FIELDS AT THE EDGES OF STEET-LEVEL PEDESTRIAN REFUGE ISLANDS IF A MINIMUM 2 FOOT CONCRETE SURFACE WITHOUT DETECTABLE WARNINGS (MEASURED IN THE DIRECTION OF PEDESTRIAN TRAVEL) CANNOT BE ACHIEVED.

## LEGEND

- ½" EXPANSION JOINT SIDEWALK
- CONTRACTION JOINT FIELD LOCATED
- PAVEMENT MARKING CROSSWALK (WHITE)

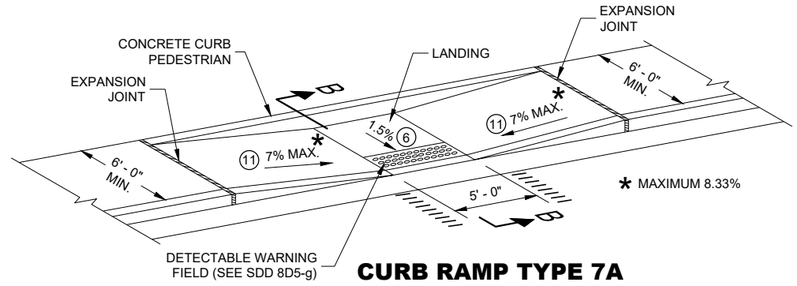


## CURB RAMP TYPE 7A

### MID BLOCK CROSSING

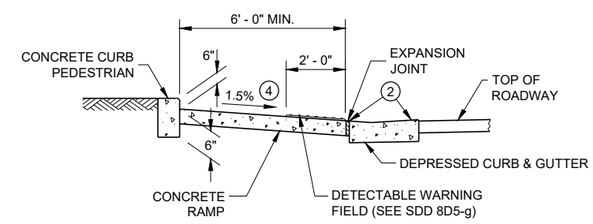


## SECTION B - B FOR TYPE 7A

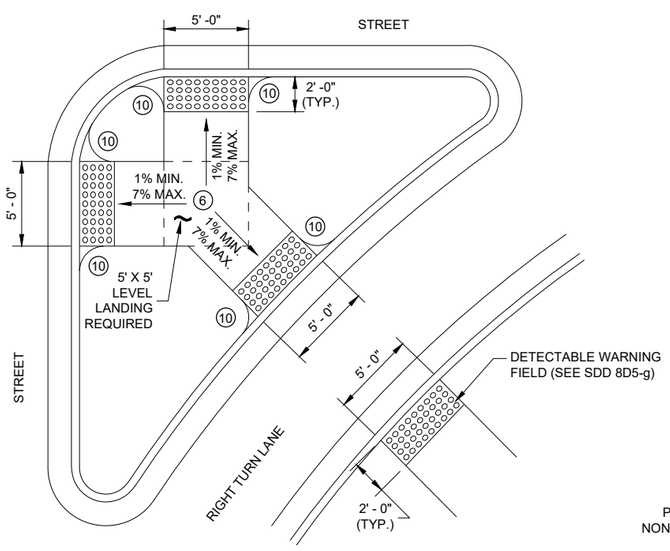


## CURB RAMP TYPE 6

### DETECTABLE WARNING AT ISLANDS

REFER TO GENERAL NOTES (2) AND (3) FOR ALL ISLAND CURB RAMPS

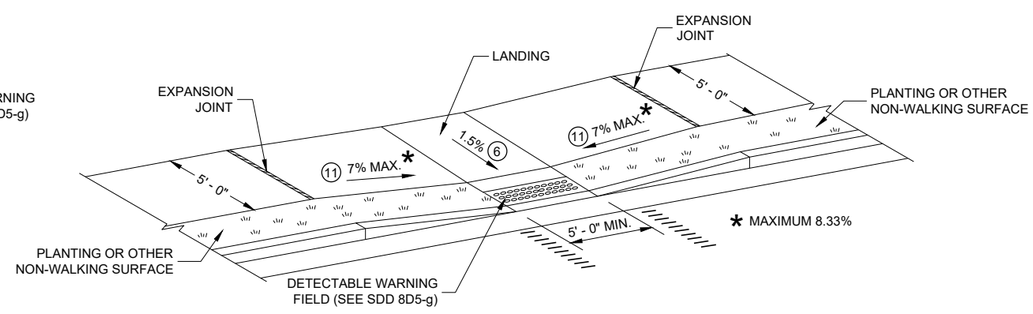


## CURB RAMP TYPE 7B

### MID BLOCK CROSSING

NOTE: THESE PARALLEL AND PARALLEL/PERPENDICULAR CURB RAMPS MAY BE USED AT INTERSECTIONS AND MID BLOCK LOCATIONS.

**CURB RAMPS TYPE 5, 6, 7A, 7B & 8**

STATE OF WISCONSIN
DEPARTMENT OF TRANSPORTATION





6



SDD 08D05 - 20e

**RADIAL DETECTABLE WARNING FIELD PLACEMENT WHEN 5 FOOT GRADE BREAK DISTANCE PER SDD 8D5-c IS EXCEEDED**

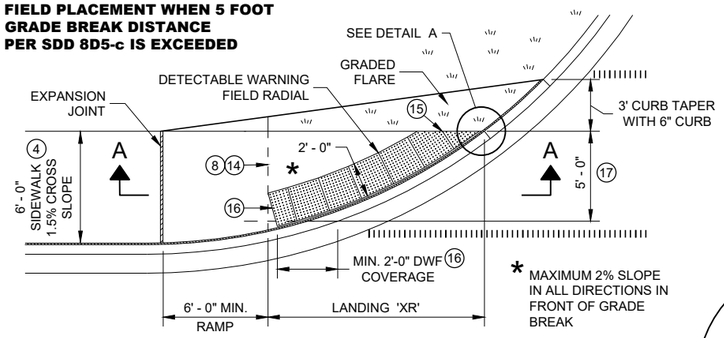


**PLAN VIEW**

## CURB RAMP TYPE 4A1

**(GRADE BREAK DISTANCE GREATER THAN 5 FEET)**

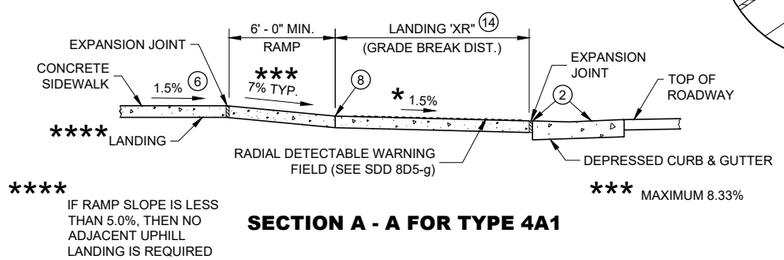


**SECTION A - A FOR TYPE 4A1**

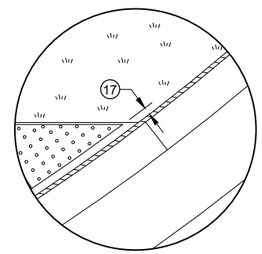

**DETAIL A**

## LEGEND

- ½" EXPANSION JOINT SIDEWALK
- CONTRACTION JOINT SIDEWALK
- PAVEMENT MARKING CROSSWALK (WHITE)

## GENERAL NOTES

AVOID PLACING DRAINAGE STRUCTURES, JUNCTION BOXES OR OTHER OBSTRUCTIONS IN FRONT OF RAMP ACCESS AREAS.

DETAILS OF CONSTRUCTION, MATERIALS AND WORKMANSHIP NOT SHOWN ON THIS DRAWING SHALL CONFORM TO THE PERTINENT REQUIREMENTS OF THE STANDARD SPECIFICATIONS AND THE APPLICABLE SPECIAL PROVISIONS.

DETECTABLE WARNING FIELDS THAT ARE INSTALLED AS A GROUP OR SIDE BY SIDE, SHALL BE FROM THE SAME MANUFACTURER.

APPLY RADIAL DETECTABLE WARNING PLACEMENT SIMILARLY FOR TYPE 4A AND 4A1 CURB RAMPS AND SIMILARLY FOR TYPE 4B AND 4B1 CURB RAMPS. TYPE 4A AND 4B CURB RAMPS ARE NOT SHOWN.

REFER TO SDD 8D5-g FOR ADDITIONAL RADIAL PLATE REQUIREMENTS.

FIELD CUTS AT INTERMEDIATE JOINTS WITHIN THE RADIAL DETECTABLE WARNING FILED ARE PROHIBITED.

DETERMINE FINAL RADIAL WARNING FIELD CONFIGURATION AD ITS INDIVIDUAL PLATE LOCATIONS. PERFORM PRE-LAYOUT PRIOR TO PLACEMENT IN PLASTIC CONCRETE. FOLLOW MANUFACTURER'S PRODUCT LIST AND INSTALLATION RECOMMENDATIONS.

(2) GRADE CHANGE BETWEEN GUTTER FLAG SLOPE AND THE CURB RAMP SLOPE SHALL NOT EXCEED 11%. MAXIMUM GUTTER FLAG SLOPE IS 4%. PROVIDE LONGITUDINAL DRAINAGE AROUND CURB AND AWAY FROM CURB RAMP. NO VERTICAL LIPS OR DISCONTINUITIES GREATER THAN ¼ - INCH ARE ALLOWED. SLOPE OF CURB HEAD OPENING SHALL MATCH THE RAMP SLOPE, MINIMALLY 1.5% AND NOT TO EXCEED 7%. WHEN ADJACENT TO 1.5% LANDING, CONSTRUCT CURB HEAD OPENING AT 1.5% IN THE DIRECTION OF PEDESTRIAN TRAVEL.

(3) AN 8.33% CURB RAMP SLOPE IS ALLOWABLE WITH FLATTENED GUTTER FLAG SLOPE AND NOT TO EXCEED 11% GRADE CHANGE.

(4) ±0.5% CONSTRUCTION TOLERANCE IN SIDEWALK CROSS SLOPE. THE SIDEWALK CROSS SLOPE SHALL NOT EXCEED 2% WITHOUT PRIOR APPROVAL FROM THE ENGINEER.

(6) PROVIDE A LEVEL LANDING (MAXIMUM 2% SLOPE) IN ANY DIRECTION OF PEDESTRIAN TRAVEL. STANDARD LANDING SIZE IS 5 FEET BY 5 FEET.

(8) PROVIDE GRADE BREAK PERPENDICULAR TO DIRECTION OF WHEELCHAIR TRAVEL.

(14) CONSULT ENGINEER IF GRADE BREAK LOCATION (END OF LANDING DIMENSION "XR") REQUIRES FIELD ADJUSTMENT WHEN ESTABLISHING FINAL RADIAL DETECTABLE WARNING FIELD LOCATION.

(15) FIELD SAW CUTS ALONG RADIAL DETECTABLE WARNING PLATES WILL BE NECESSARY TO MATCH EACH CURB RAMP EDGE. AVOID CUTTING THROUGH DOMES WHENEVER POSSIBLE. MAKE FIELD CUTS TRUE TO LINE AND WITHIN ⅛" DEVIATION. SMOOTH EDGES OF FIELD CUT PLATES.

(16) USE 1' X 2" RECTANGULAR END PLATE AT END OF TYPE 4A1 RAMP AND PROVIDE MINIMUM 2' - 0" DETECTABLE WARNING FIELD COVERAGE (IN DIRECTION OF PEDESTRIAN TRAVEL) ALONG THE ENTIRE CURB RAMP WIDTH.

(17) A MAXIMUM 3 INCH CONCRETE BORDER WITH IS ALLOWABLE IN FROM OF RADIAL DETECTABLE WARNING FIELD FOR CONSTRUCTABILITY PURPOSES. CONCRETE BORDER WIDTH MAY VARY UP TO 1 INCH.

**RADIAL DETECTABLE WARNING FIELD PLACEMENT WHEN 5 FOOT GRADE BREAK DISTANCE PER SDD 8D5-d IS EXCEEDED**

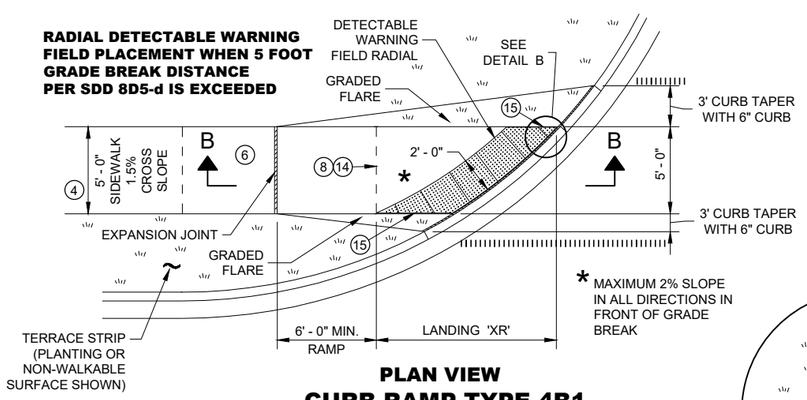


**PLAN VIEW**

## CURB RAMP TYPE 4B1

**(GRADE BREAK DISTANCE GREATER THAN 5 FEET)**

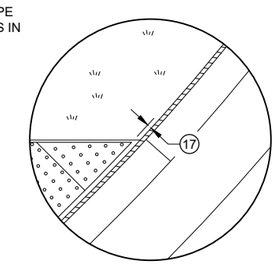

**DETAIL B**

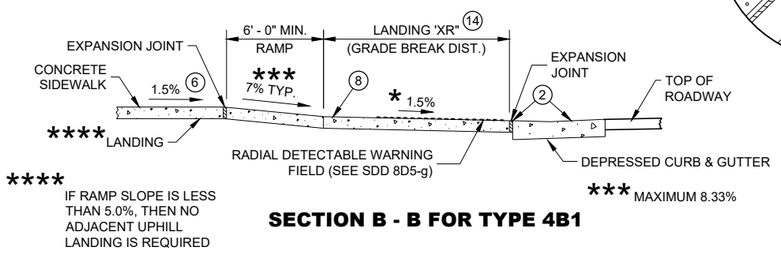


**SECTION B - B FOR TYPE 4B1**

**RADIAL DETECTABLE WARNING FIELD PLACEMENT WHEN 5 FOOT GRADE BREAK DISTANCE PER SDD 8D5-b IS EXCEEDED**

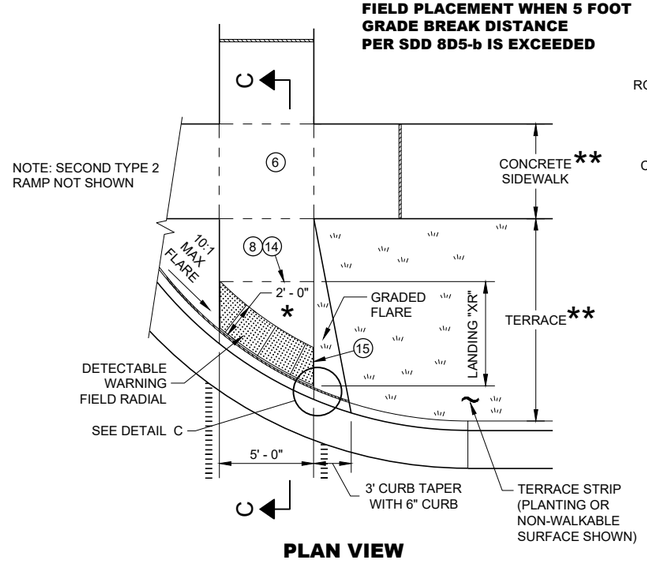


**PLAN VIEW**

## CURB RAMP TYPE 2

**(GRADE BREAK DISTANCE GREATER THAN 5 FEET)**

**(ON LINE WITH SIDEWALK)**

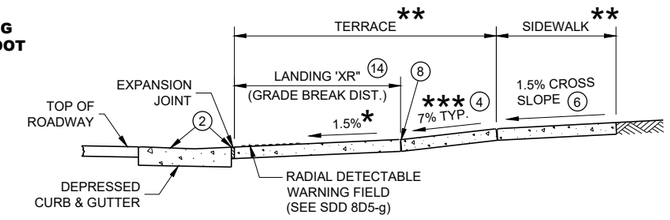


**SECTION C - C FOR TYPE 2**

* MAXIMUM 2% SLOPE IN ALL DIRECTIONS IN FRONT OF GRADE BREAK

** WIDTH SHOWN ELSEWHERE IN THE PLANS

*** MAXIMUM 8.33%

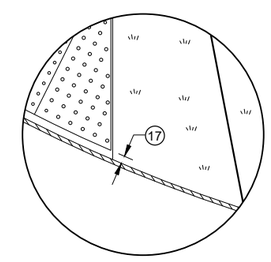

**DETAIL C**

**CURB RAMPS**
**RADIAL DETECTABLE WARNING FIELD APPLICATIONS**

STATE OF WISCONSIN
DEPARTMENT OF TRANSPORTATION

6

6

SDD 08D05 - 20f

SDD 08D05 - 20f

| | MIN. | MAX. |
|---|---|---|
| A | 1.6" | 2.4" |
| B | 0.65" | 1.5" |
| C | * | * |
| D | 0.9" | 1.4" |

* THE C DIMENSION IS 50% TO 65% OF THE D DIMENSION.

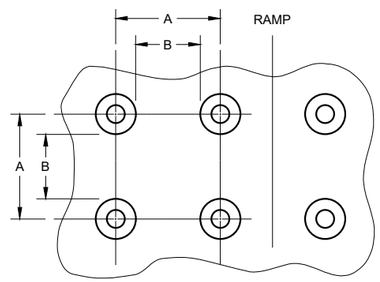


**PLAN VIEW**


**ELEVATION VIEW**

## TRUNCATED DOMES
### DETECTABLE WARNING PATTERN DETAIL

## GENERAL NOTES

DETECTABLE WARNING FIELDS THAT ARE INSTALLED AT A CURB RAMP SHALL BE FROM THE SAME MANUFACTURER.

PLACE ALL DETECTABLE WARNING FIELD SYSTEMS IN ACCORDANCE TO THE MANUFACTURER'S RECOMMENDATION.

FIELD CUTS AT INTERMEDIATE JOINTS WITHIN THE RADIAL DETECTABLE WARNING FILED ARE PROHIBITED.

DETERMINE FINAL RADIAL WARNING FIELD CONFIGURATION AND ITS INDIVIDUAL PLATE LOCATIONS. PERFORM PRE-LAYOUT PRIOR TO PLACEMENT IN PLASTIC CONCRETE. FOLLOW MANUFACTURER'S PRODUCT LIST AND INSTALLATION RECOMMENDATIONS.

FOR RADIAL DETECTABLE WARNING FIELD APPLICATIONS WHERE STANDARD RADIAL PLATES ARE NOT AVAILABLE AT AN INTERSECTION CURB RADIUS, A COMBINATION OF SQUARE OR RECTANGULAR PLATES AND RADIAL PLATES MAY BE USED TO FORM RADIAL CONFIGURATION. RADIAL WEDGE PLATES IN COMBINATION WITH SQUARE PLATES ARE ALSO ACCEPTABLE. FOLLOW MANUFACTURER'S RECOMMENDATIONS.

REFER TO CONTRACT AND STANDARD SPECIFICATIONS FOR FIELD CUTTING REQUIREMENTS.

DO NOT EMBED IN CONCRETE ANY FIELD-CUT PLATES WITH CUT EDGES SHORTER THAN 6 INCHES. CONSULT WITH MANUFACTURER FOR RE-DRILLING AND ANCHORING REQUIREMENTS OF FIELD-CUT PLATES.

(15) FIELD SAW CUTS ALONG RADIAL DETECTABLE WARNING PLATES WILL BE NECESSARY TO MATCH EACH CURB RAMP EDGE. AVOID CUTTING THROUGH DOMES WHENEVER POSSIBLE. MAKE FIELD CUTS TRUE TO LINE AND WITHIN 1/8" DEVIATION. SMOOTH EDGES OF FIELD CUT PLATES.

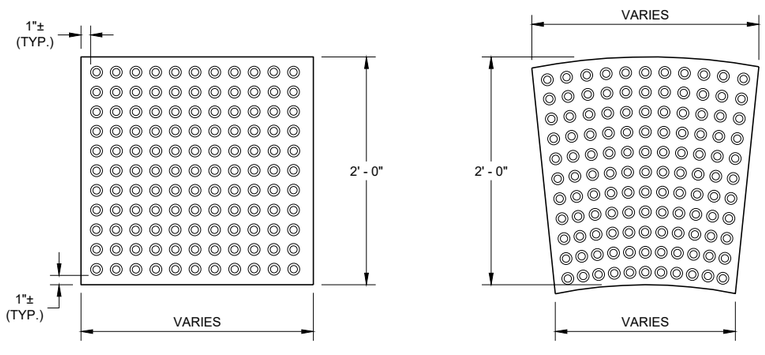


**RECTANGULAR PLATES** **RADIAL PLATES**

**PLAN VIEW**
## DETECTABLE WARNING FIELDS (TYPICAL)

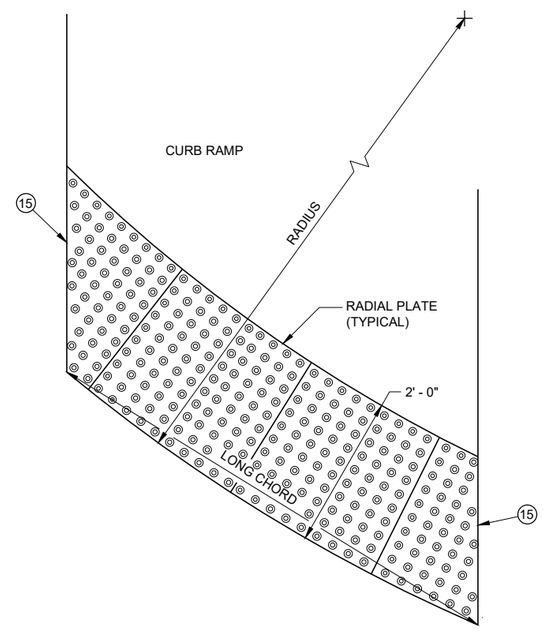


**PLAN VIEW**
## RADIAL DETECTABLE WARNING FIELD ATTRIBUTES

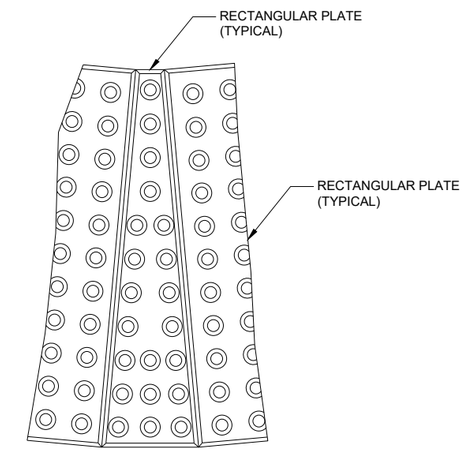


**PLAN VIEW**
## RADIAL WEDGE PLATE CONNECTION DETAIL

6

6

SDD 08D05 - 20g

SDD 08D05 - 20g

**CURB RAMPS RECTANGULAR AND RADIAL DETECTABLE WARNING PLATES**

STATE OF WISCONSIN
DEPARTMENT OF TRANSPORTATION

APPROVED
May 2019 — DATE
/S/ Rodney Taylor — ROADWAY STANDARDS DEVE UNIT SUPERVISOR
FHWA

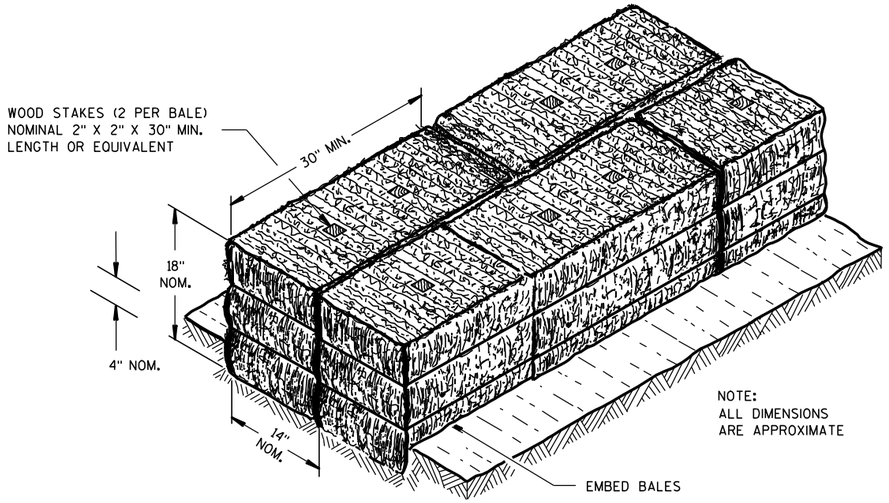


**SECTION A-A**

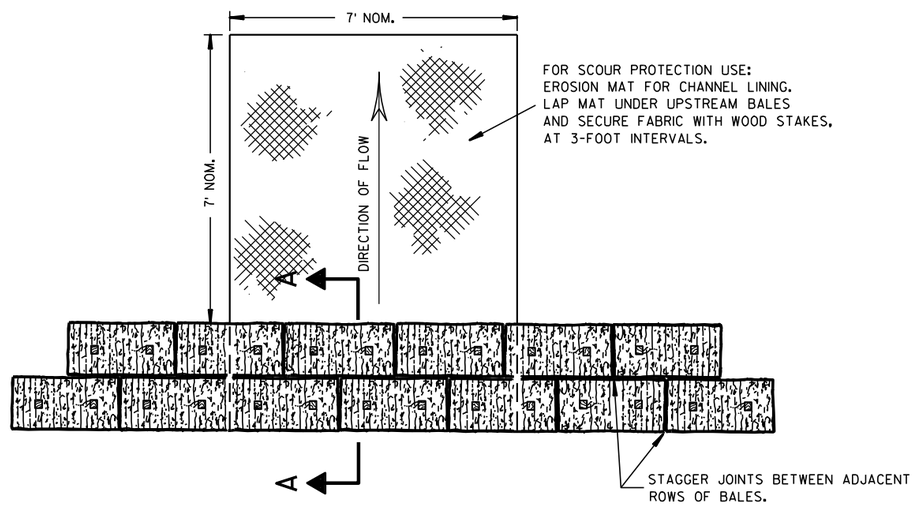


**PLAN VIEW**

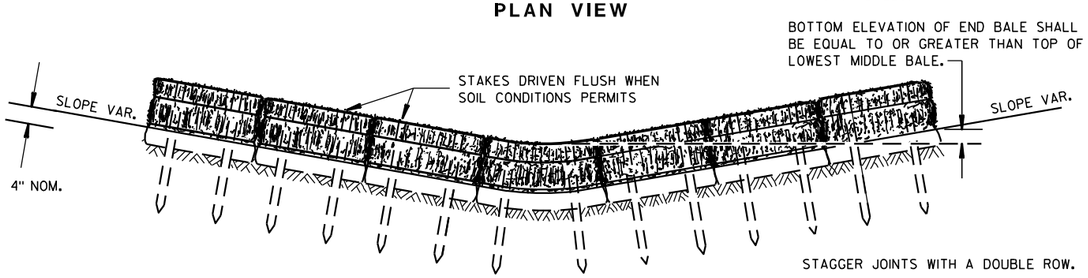


**FRONT ELEVATION**

**TEMPORARY DITCH CHECK USING EROSION BALES ①**

## GENERAL NOTES

DETAILS OF CONSTRUCTION, MATERIALS AND WORKMANSHIP NOT SHOWN ON THIS DRAWING SHALL CONFORM TO THE PERTINENT REQUIREMENTS OF THE STANDARD SPECIFICATIONS AND THE APPLICABLE SPECIAL PROVISIONS.

① TEMPORARY DITCH CHECKS EITHER EROSION BALES OR MANUFACTURED SHALL BE PAID FOR UNDER THE BID ITEM OF TEMPORARY DITCH CHECK. THE DEPARTMENT WILL NOT PAY FOR TEMPORARY DITCH CHECKS CONSTRUCTED OF A SINGLE ROW OF EROSION BALES.

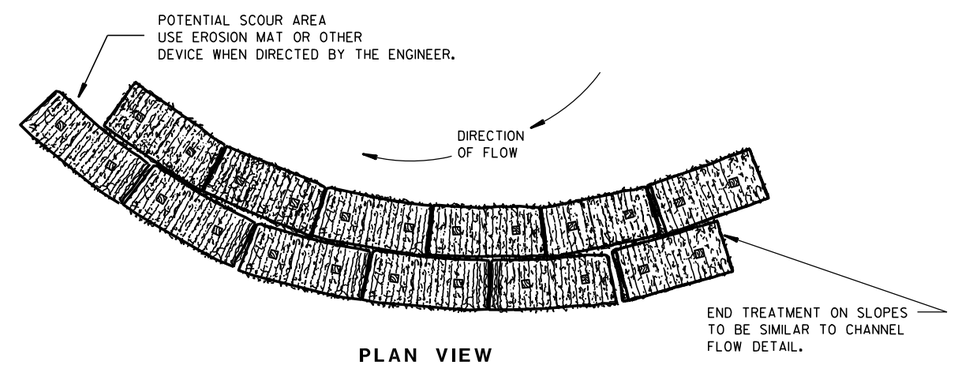


**PLAN VIEW**

WHEN ALTERING THE DIRECTION OF FLOW

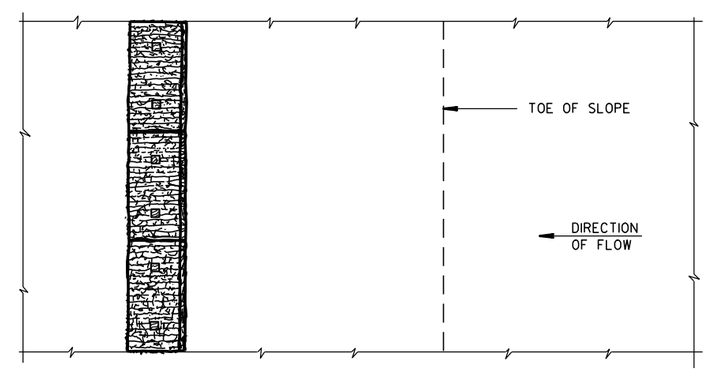


**PLAN VIEW**

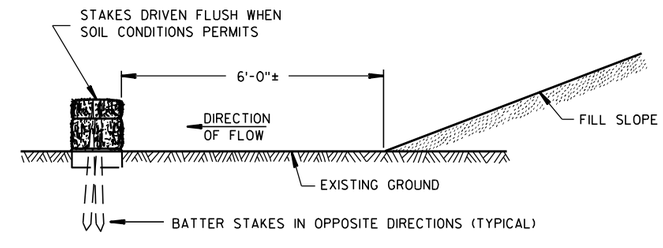


**FRONT ELEVATION**

WHEN EXISTING GROUND SLOPES AWAY FROM FILL SLOPE

**EROSION BALES FOR SHEET FLOW**

**TYPICAL INSTALLATIONS OF EROSION BALES / TEMPORARY DITCH CHECKS**

STATE OF WISCONSIN
DEPARTMENT OF TRANSPORTATION

APPROVED
6/04/02 — DATE
/S/ Beth Cann — CHIEF ROADWAY DEVELOPMENT ENGINEER
FHWA

6

6

S.D.D. 8 E 8-3

S.D.D. 8 E 8-3

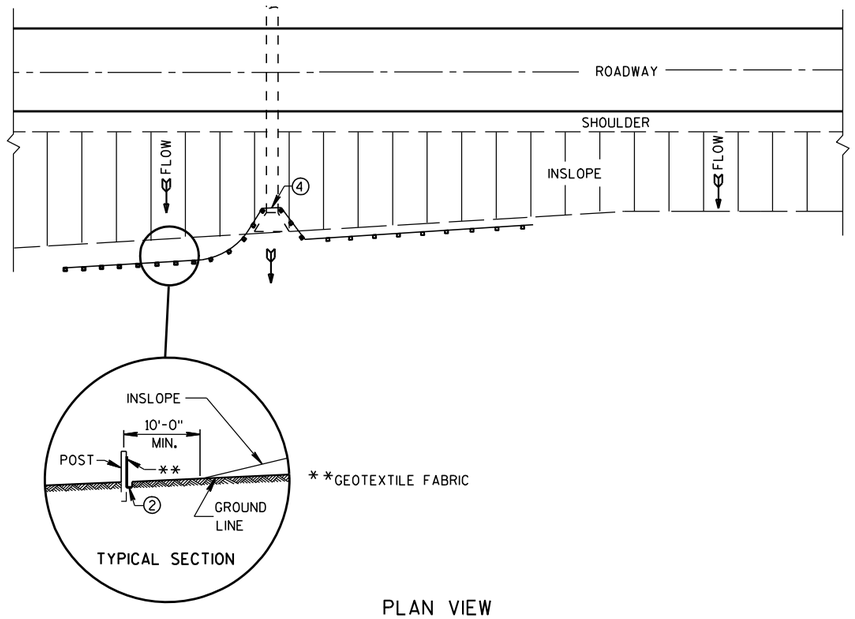


PLAN VIEW

## TYPICAL APPLICATION OF SILT FENCE

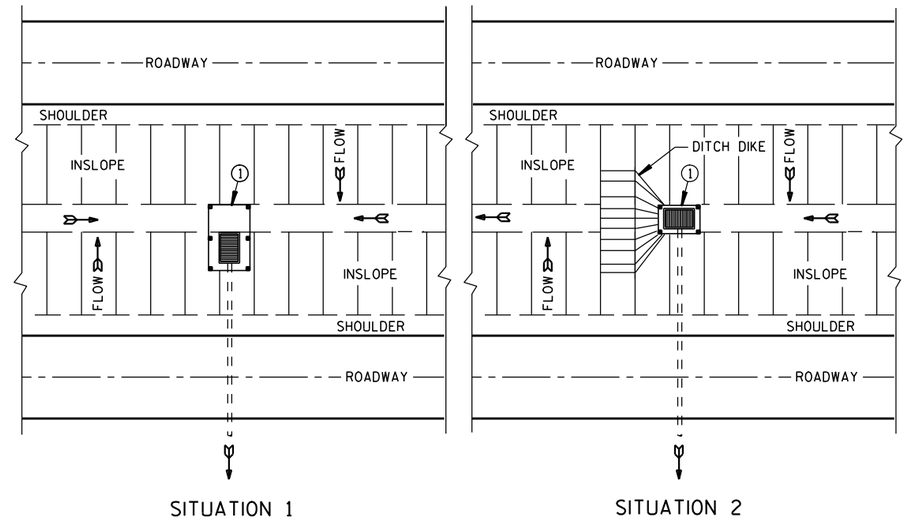


PLAN VIEW

## SILT FENCE AT MEDIAN SURFACE DRAINS

## GENERAL NOTES

DETAILS OF CONSTRUCTION NOT SHOWN ON THIS DRAWING SHALL CONFORM TO THE PERTINENT REQUIREMENTS OF THE STANDARD SPECIFICATIONS AND APPLICABLE SPECIAL PROVISIONS.

① HORIZONTAL BRACE REQUIRED WITH 2" X 4" WOODEN FRAME OR EQUIVALENT AT TOP OF POSTS.

② FOR MANUAL INSTALLATIONS THE TRENCH SHALL BE A MINIMUM OF 4" WIDE & 6" DEEP TO BURY AND ANCHOR THE GEOTEXTILE FABRIC. FOLD MATERIAL TO FIT TRENCH AND BACKFILL & COMPACT TRENCH WITH EXCAVATED SOIL.

③ WOOD POSTS SHALL BE A MINIMUM SIZE OF 1⅛" X 1⅛" OF OAK OR HICKORY.

④ SILT FENCE TO EXTEND ACROSS THE TOP OF THE PIPE.

⑤ CONSTRUCT SILT FENCE FROM A CONTINUOUS ROLL IF POSSIBLE BY CUTTING LENGTHS TO AVOID JOINTS. IF A JOINT IS NECESSARY USE ONE OF THE FOLLOWING TWO METHODS; A) OVERLAP THE END POSTS AND TWIST, OR ROTATE, AT LEAST 180 DEGREES. B) HOOK THE END OF EACH SILT FENCE LENGTH.

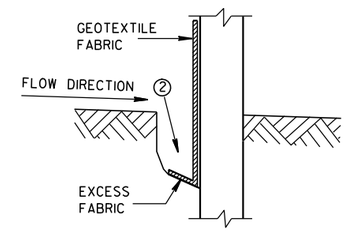


## TRENCH DETAIL

NOTE: ADDITIONAL POST DEPTH OR TIE BACKS MAY BE REQUIRED IN UNSTABLE SOILS

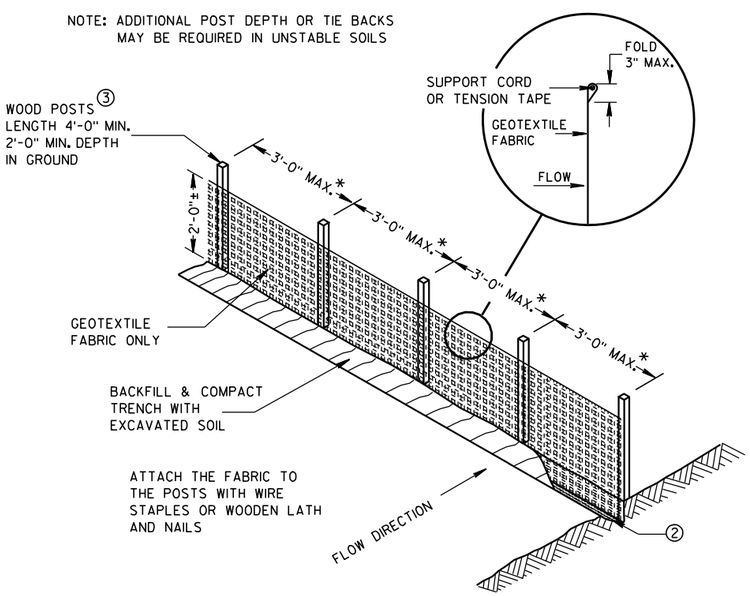


*NOTE: 8'-0" POST SPACING ALLOWED IF A WOVEN GEOTEXTILE FABRIC IS USED.

## SILT FENCE

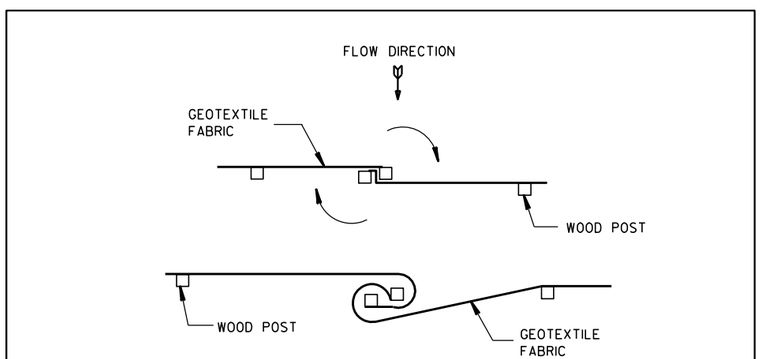


TWIST METHOD

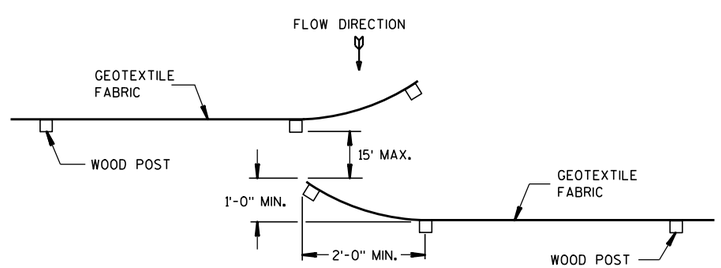


HOOK METHOD

## JOINING TWO LENGTHS OF SILT FENCE ⑤

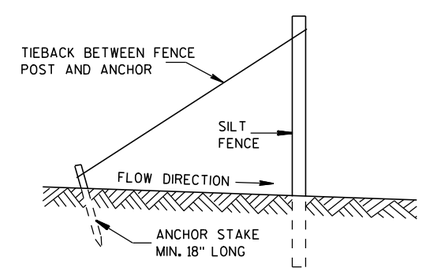


## SILT FENCE TIE BACK

(WHEN REQUIRED BY THE ENGINEER)

| SILT FENCE |
|---|
| STATE OF WISCONSIN<br>DEPARTMENT OF TRANSPORTATION |
| APPROVED<br>4-29-05 /S/ Beth Cann-----<br>DATE CHIEF ROADWAY DEVELOP ENGINEER<br>FHWA |

6

6

S.D.D. 8 E 9-6

S.D.D. 8 E 9-6

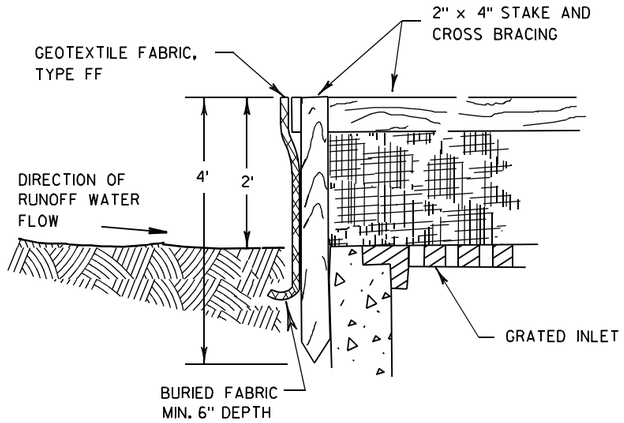


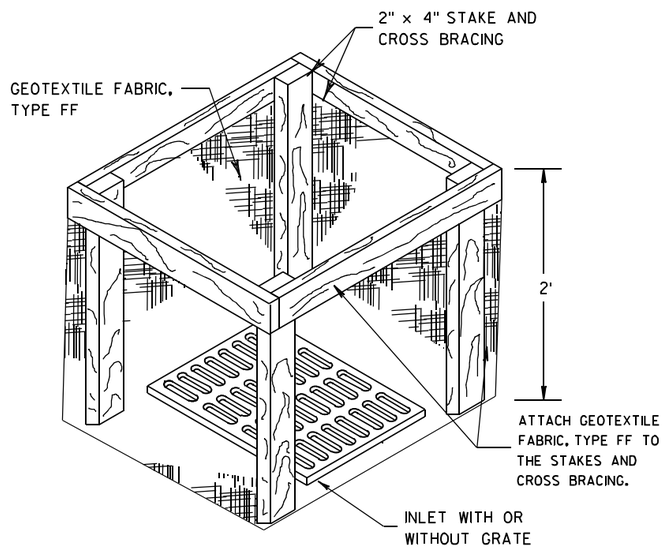


## INLET PROTECTION, TYPE A

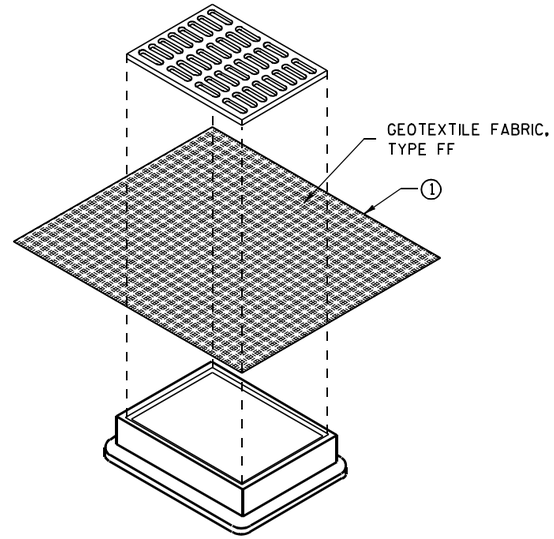


## INLET PROTECTION, TYPE B (WITHOUT CURB BOX)

(CAN BE INSTALLED IN ANY INLET WITHOUT A CURB BOX)

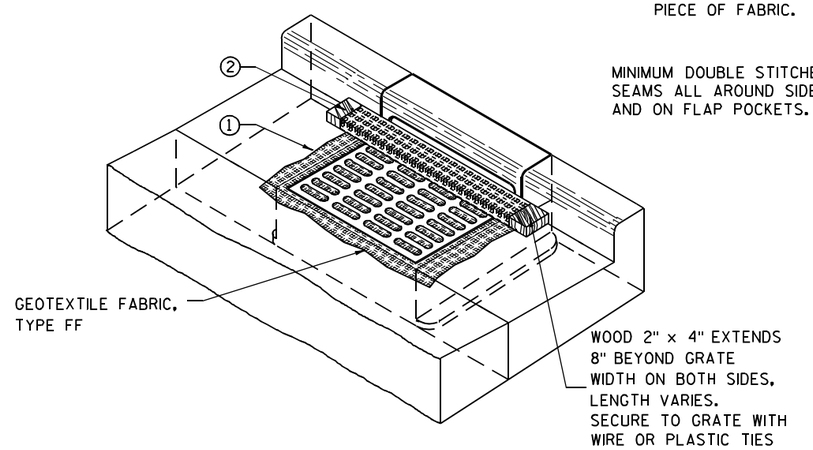


## INLET PROTECTION, TYPE C (WITH CURB BOX)

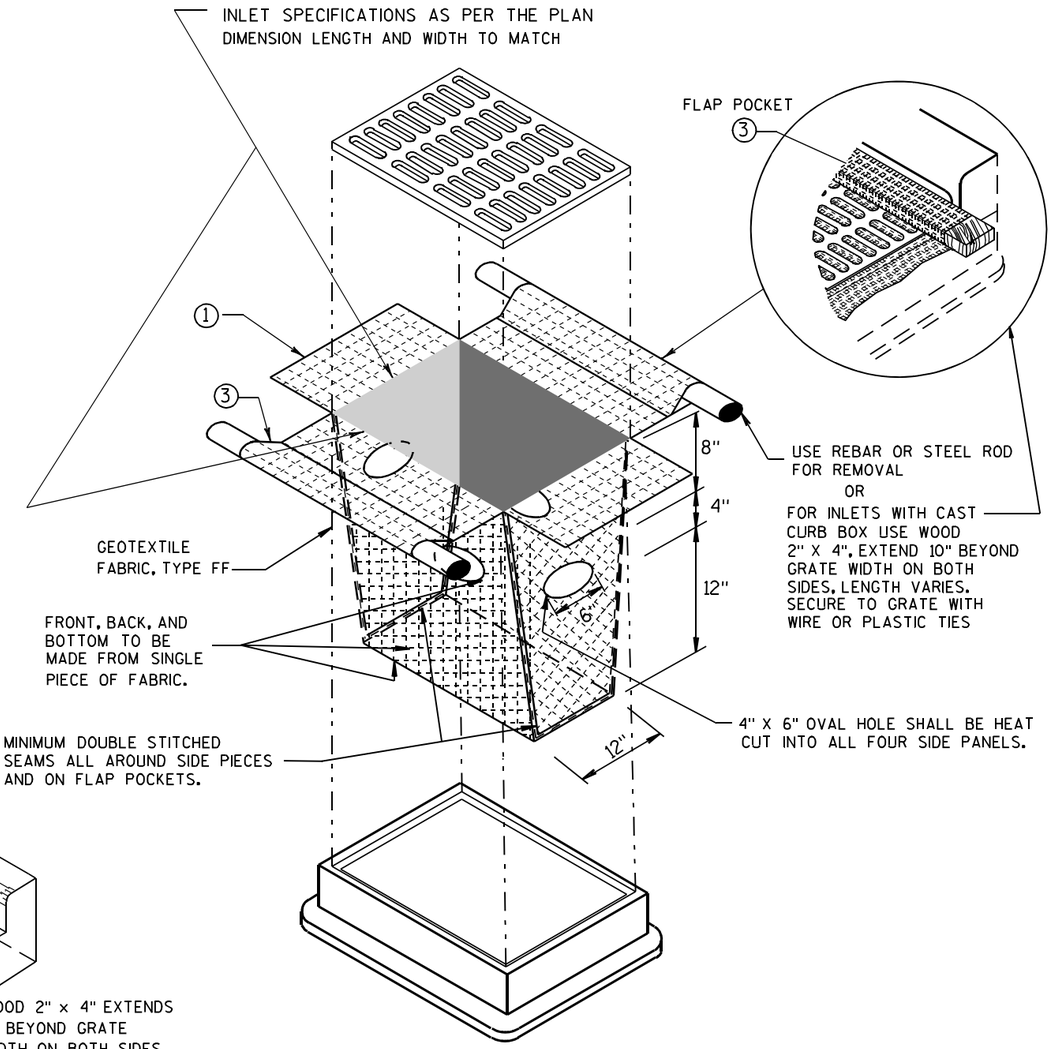


## INLET PROTECTION, TYPE D

(CAN BE INSTALLED IN ANY INLET TYPE WITH OR WITHOUT A CURB BOX AS PER NOTE ② )

## GENERAL NOTES

INLET PROTECTION DEVICES SHALL BE MAINTAINED OR REPLACED AT THE DIRECTION OF THE ENGINEER.

MANUFACTURED ALTERNATIVES APPROVED AND LISTED ON THE DEPARTMENT'S EROSION CONTROL PRODUCT ACCEPTABILITY LIST MAY BE SUBSTITUTED.

WHEN REMOVING OR MAINTAINING INLET PROTECTION, CARE SHALL BE TAKEN SO THAT THE SEDIMENT TRAPPED ON THE GEOTEXTILE FABRIC DOES NOT FALL INTO THE INLET. ANY MATERIAL FALLING INTO THE INLET SHALL BE REMOVED IMMEDIATELY.

① FINISHED SIZE, INCLUDING FLAP POCKETS WHERE REQUIRED, SHALL EXTEND A MINIMUM OF 10" AROUND THE PERIMETER TO FACILITATE MAINTENANCE OR REMOVAL.

② FOR INLET PROTECTION, TYPE C (WITH CURB BOX), AN ADDITIONAL 18" OF FABRIC IS WRAPPED AROUND THE WOOD AND SECURED WITH STAPLES. THE WOOD SHALL NOT BLOCK THE ENTIRE HEIGHT OF THE CURB BOX OPENING.

③ FLAP POCKETS SHALL BE LARGE ENOUGH TO ACCEPT WOOD 2X4.

## INSTALLATION NOTES

### TYPE B & C

TRIM EXCESS FABRIC IN THE FLOW LINE TO WITHIN 3" OF THE GRATE.

THE CONTRACTOR SHALL DEMONSTRATE A METHOD OF MAINTENANCE, USING A SEWN FLAP, HAND HOLDS OR OTHER METHOD TO PREVENT ACCUMULATED SEDIMENT FROM ENTERING THE INLET.

### TYPE D

DO NOT INSTALL INLET PROTECTION TYPE D IN INLETS SHALLOWER THAN 30", MEASURED FROM THE BOTTOM OF THE INLET TO THE TOP OF THE GRATE.

TRIM EXCESS FABRIC IN THE FLOW LINE TO WITHIN 3" OF THE GRATE.

THE INSTALLED BAG SHALL HAVE A MINIMUM SIDE CLEARANCE, BETWEEN THE INLET WALLS AND THE BAG, MEASURED AT THE BOTTOM OF THE OVERFLOW HOLES, OF 3". WHERE NECESSARY THE CONTRACTOR SHALL CINCH THE BAG, USING PLASTIC ZIP TIES, TO ACHIEVE THE 3" CLEARANCE. THE TIES SHALL BE PLACED AT A MAXIMUM OF 4" FROM THE BOTTOM OF THE BAG.

**INLET PROTECTION**
**TYPE A, B, C, AND D**

STATE OF WISCONSIN
DEPARTMENT OF TRANSPORTATION

APPROVED
10/16/02 — DATE
/S/ Beth Cannon
CHIEF ROADWAY DEVELOPMENT ENGINEER
FHWA

6

S.D.D. 8 E 10-2

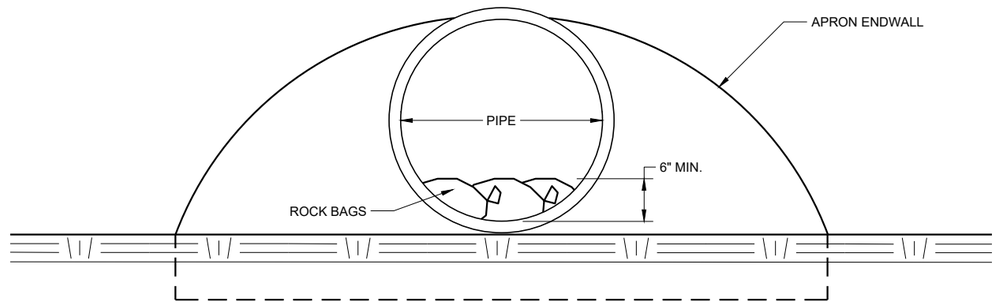


**END VIEW**

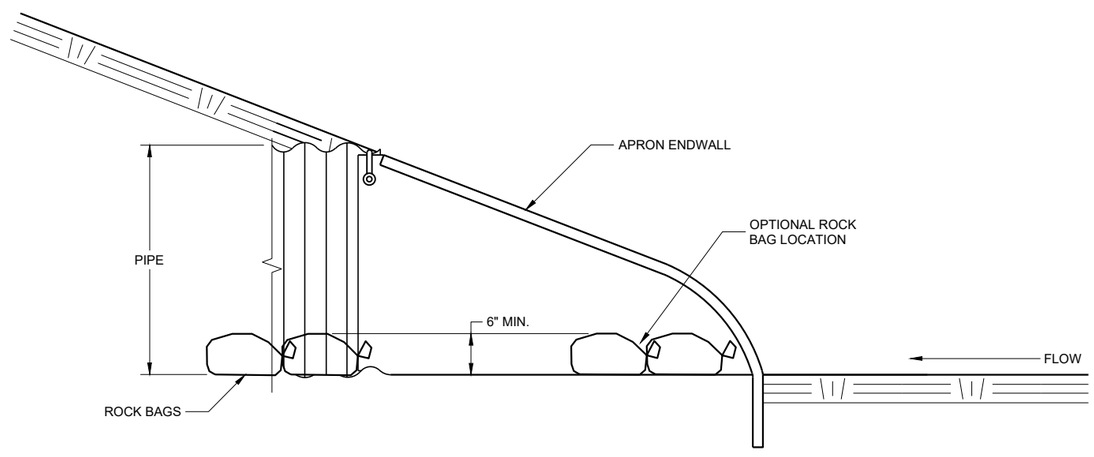


**SIDE VIEW**

## CULVERT PIPE CHECK

(INSTALL ON INLET END ONLY)

**CULVERT PIPE CHECK**

STATE OF WISCONSIN
DEPARTMENT OF TRANSPORTATION

APPROVED
May 2019 — DATE
/S/ Daniel Schave — EROSION CONTROL ENGI
FHWA

6

6

SDD 08E15 - 01

SDD 08E15 - 01

## METAL APRON ENDWALLS

| PIPE DIA. (IN.) | MIN. THICK. (Inches) STEEL | MIN. THICK. (Inches) ALUM. | DIMENSIONS (Inches) A (±1") | B (MAX.) | H (±1") | L (±1 1/2") | L1 ① | L2 ① | W (±2") | APPROX. SLOPE | BODY |
|---|---|---|---|---|---|---|---|---|---|---|---|
| 12 | .064 | .060 | 6 | 6 | 6 | 21 | 12 | 17 1/2 | 24 | 2 1/2 to 1 | 1 Pc. |
| 15 | .064 | .060 | 7 | 8 | 6 | 26 | 14 | 21 3/4 | 30 | 2 1/2 to 1 | 1 Pc. |
| 18 | .064 | .060 | 8 | 10 | 6 | 31 | 15 | 28 1/4 | 36 | 2 1/2 to 1 | 1 Pc. |
| 21 | .064 | .060 | 9 | 12 | 6 | 36 | 18 | 29 5/8 | 42 | 2 1/2 to 1 | 1 Pc. |
| 24 | .064 | .075 | 10 | 13 | 6 | 41 | 18 | 37 1/4 | 48 | 2 1/2 to 1 | 1 Pc. |
| 30 | .079 | .075 | 12 | 16 | 8 | 51 | 18 | 52 1/4 | 60 | 2 1/2 to 1 | 1 Pc. |
| 36 | .079 | .105 | 14 | 19 | 9 | 60 | 24 | 59 3/4 | 72 | 2 1/2 to 1 | 2 Pc. |
| 42 | .109 | .105 | 16 | 22 | 11 | 69 | 24 | 75 5/8 | 84 | 2 1/2 to 1 | 2 Pc. |
| 48 | .109 | .105 | 18 | 27 | 12 | 78 | 24 | 81 | 90 | 2 1/4 to 1 | 3 Pc. |
| 54 | .109 | .105 | 18 | 30 | 12 | 84 | 30 | 85 1/2 | 102 | 2 1/4 to 1 | 3 Pc. |
| 60 | .109× | .105× | 18 | 33 | 12 | 87 | — | — | 114 | 2 to 1 | 3 Pc. |
| 66 | .109× | .105× | 18 | 36 | 12 | 87 | — | — | 120 | 2 to 1 | 3 Pc. |
| 72 | .109× | .105× | 18 | 39 | 12 | 87 | — | — | 126 | 2 to 1 | 3 Pc. |
| 78 | .109× | .105× | 18 | 42 | 12 | 87 | — | — | 132 | 1 1/2 to 1 | 3 Pc. |
| 84 | .109× | .105× | 18 | 45 | 12 | 87 | — | — | 138 | 1 1/2 to 1 | 3 Pc. |
| 90 | .109× | .105× | 18 | 37 | 12 | 87 | — | — | 144 | 1 1/2 to 1 | 3 Pc. |
| 96 | .109× | .105× | 18 | 35 | 12 | 87 | — | — | 150 | 1 1/2 to 1 | 3 Pc. |

× EXCEPT CENTER PANEL
SEE GENERAL NOTES

## REINFORCED CONCRETE APRON ENDWALLS

| PIPE DIA. (IN.) | DIMENSIONS (Inches) T | A | B | C | D | E | G | APPROX. SLOPE |
|---|---|---|---|---|---|---|---|---|
| 12 | 2 | 4 | 24 | 48 7/8 | 72 7/8 | 24 | 2 | 3 to 1 |
| 15 | 2 1/4 | 6 | 27 | 46 | 73 | 30 | 2 1/4 | 3 to 1 |
| 18 | 2 1/2 | 9 | 27 | 46 | 73 | 36 | 2 1/2 | 3 to 1 |
| 21 | 2 3/4 | 9 | 36 | 37 1/2 | 73 1/2 | 42 | 2 3/4 | 3 to 1 |
| 24 | 3 | 9 1/2 | 43 1/2 | 30 | 73 1/2 | 48 | 3 | 3 to 1 |
| 27 | 3 1/4 | 10 1/2 | 49 1/2 | 24 | 73 1/2 | 54 | 3 1/4 | 3 to 1 |
| 30 | 3 1/2 | 12 | 54 | 19 3/4 | 73 1/2 | 60 | 3 1/2 | 3 to 1 |
| 36 | 4 | 15 | 63 | 34 3/4 | 97 3/4 | 72 | 4 | 3 to 1 |
| 42 | 4 1/2 | 21 | 63 | 35 | 98 | 78 | 4 1/2 | 3 to 1 |
| 48 | 5 | 24 | 72 | 26 | 98 | 84 | 5 | 3 to 1 |
| 54 | 5 1/2 | 27 | 65 | *33 1/4-**35 | *98 1/4-**100 | 90 | 5 1/2 | 2 2/5 to 1 |
| 60 | 6 | *30-**35 | 60 | 39 | 99 | 96 | 5 | 2 to 1 |
| 66 | 6 1/2 | *24-**30 | *72-**78 | *21-**27 | 99 | 102 | 5 1/2 | 2 to 1 |
| 72 | 7 | *24-**36 | 78 | 21 | 99 | 108 | 6 | 2 to 1 |
| 78 | 7 1/2 | *24-**36 | 78 | 21 | 99 | 114 | 6 1/2 | 2 to 1 |
| 84 | 8 | 36 | 90 1/2 | 21 | 111 1/2 | 120 | 6 1/2 | 1 1/2 to 1 |
| 90 | 8 1/2 | 41 | 87 1/2 | 24 | 111 1/2 | 132 | 6 1/2 | 1 1/2 to 1 |

*MINIMUM
**MAXIMUM

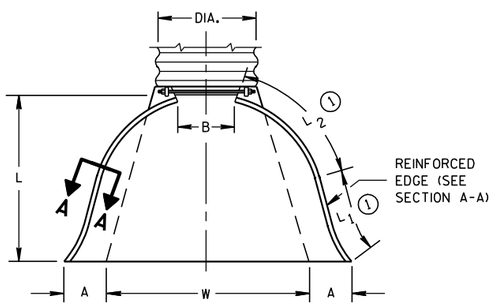


PLAN VIEW

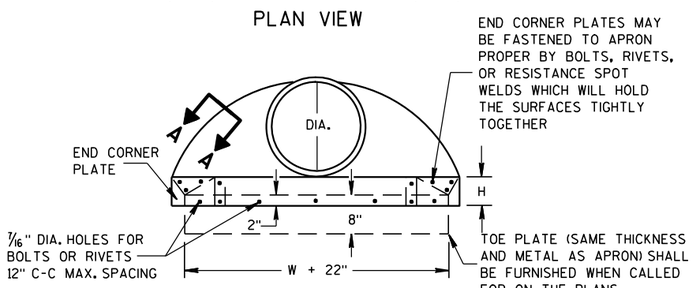


END VIEW

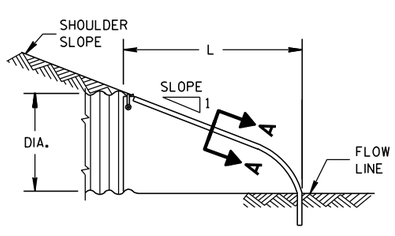


SIDE ELEVATION

## METAL ENDWALLS

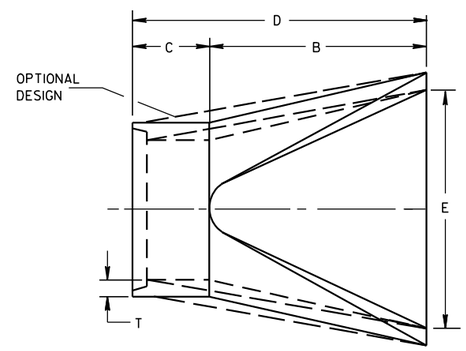


PLAN

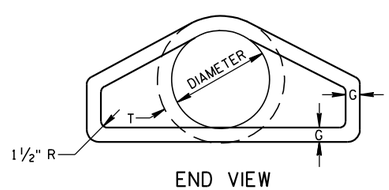


END VIEW

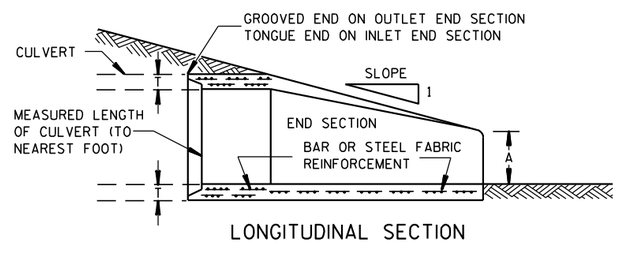


LONGITUDINAL SECTION

## CONCRETE ENDWALLS

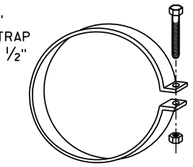


ALTERNATE FOR TYPE 1 CONNECTION

## END SECTION CONNECTOR STRAP

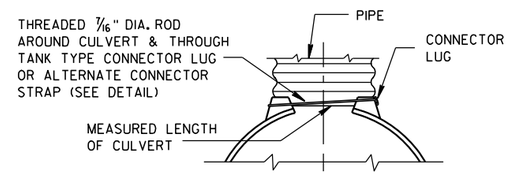


TYPE 1
FOR 12" THRU 24" CORR. PIPE

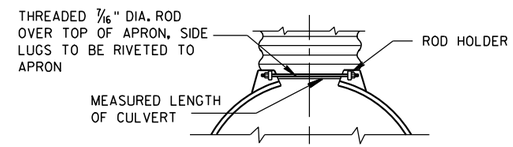


TYPE 2
FOR 30" THRU 96" CORR. PIPE

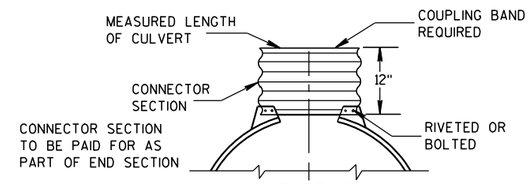


TYPE 3
FOR 42" THRU 96" CORR. PIPE

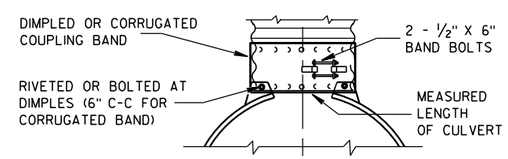


TYPE 5
ALTERNATE FOR:
ALL SIZES CORRUGATED CIRCULAR PIPE

NOTE: DIMPLED BAND FITS OVER OUTSIDE OF ENDWALL, AND CORRUGATED BAND FITS INSIDE ENDWALL. DIMPLED BAND MAY BE USED WITH HELICALLY CORRUGATED PIPE.

FOR CIRCUMFERENTIALLY CORRUGATED PIPE USE ENDWALL CONNECTION DETAILS 1, 2, 3 OR 5 AS APPLICABLE.

FOR HELICALLY CORRUGATED PIPE USE ENDWALL CONNECTION DETAILS 1, 2 OR 5.

FOR HELICALLY CORRUGATED PIPES WITH TWO CIRCUMFERENTIAL CORRUGATIONS AT EACH END USE ENDWALL CONNECTION DETAILS 1, 2 OR 3.

## CONNECTION DETAILS

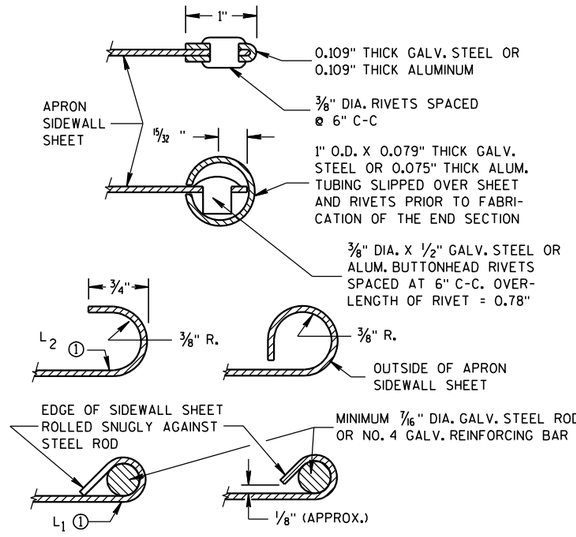


## SECTION A-A

## GENERAL NOTES

DETAILS OF CONSTRUCTION, MATERIALS AND WORKMANSHIP NOT SHOWN ON THIS DRAWING SHALL CONFORM TO THE PERTINENT REQUIREMENTS OF THE STANDARD SPECIFICATIONS AND THE APPLICABLE SPECIAL PROVISIONS.

CONCRETE CULVERT ENDWALLS MAY NOT BE USED WITH GALVANIZED STEEL OR ALUMINUM CULVERT PIPE OR VISE VERSA. GALVANIZED STEEL OR ALUMINUM ENDWALLS SHALL NORMALLY BE INSTALLED ON CULVERT PIPE OF THE SAME METAL.

ALL THREE PIECE STEEL APRON ENDWALLS FOR 60" DIAMETER PIPE AND LARGER SHALL HAVE 0.109" SIDES AND 0.138" CENTER PANELS. ALL THREE PIECE ALUMINUM APRON ENDWALLS FOR 60" DIAMETER PIPE AND LARGER SHALL HAVE 0.105" SIDES AND 0.134" CENTER PANELS. THE WIDTH OF CENTER PANELS SHALL BE GREATER THAN 20 PERCENT OF THE PIPE PERIMETER.

LAP SEAMS SHALL BE TIGHTLY JOINED BY GALVANIZED RIVETS OR BOLTS FOR STEEL UNITS AND ALUMINUM RIVETS AND BOLTS FOR ALUMINUM UNITS. FOR THE 60" THROUGH 96" DIAMETER APRON ENDWALL SIZES, THE REINFORCED EDGES AND CENTER PANEL SEAMS SHALL BE FURTHER REINFORCED WITH GALVANIZED STEEL OR ALUMINUM STIFFENER ANGLES. THE ANGLES SHALL BE ATTACHED BY GALVANIZED NUTS AND BOLTS FOR STEEL UNITS AND ALUMINUM NUTS AND BOLTS FOR ALUMINUM UNITS.

WHERE TWO OR MORE PIPES WITH APRON ENDWALLS ARE LAID ADJACENT TO EACH OTHER, THEY SHALL BE SEPARATED BY A DISTANCE SUFFICIENT TO PROVIDE A MINIMUM CLEARANCE OF 6 INCHES BETWEEN APRON ENDWALLS.

① FOR PIPE SIZES UP TO 60" DIAMETER, A 180° ROLLED EDGE MAY BE USED INSTEAD OF STEEL ROD REINFORCEMENT. SEE SECTION A-A.

**APRON ENDWALLS FOR CULVERT PIPE**

STATE OF WISCONSIN
DEPARTMENT OF TRANSPORTATION

APPROVED
11/30/94 — DATE
/S/ Rory L. Rhinesmith — CHIEF ROADWAY DEVELOPMENT ENGINEER
FHWA


6
S.D.D. 8 F 1-11

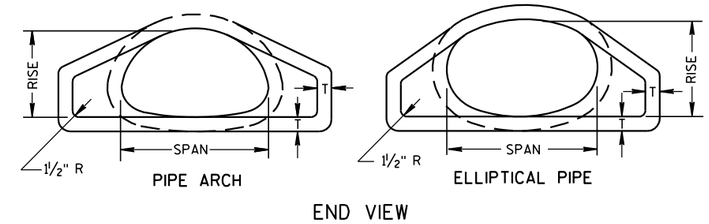


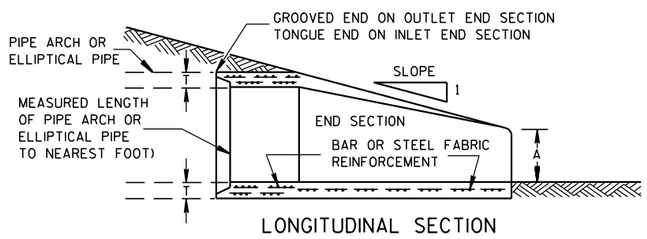


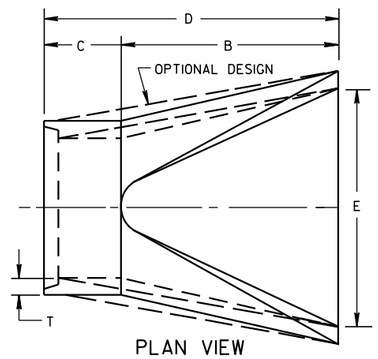


## CONCRETE ENDWALLS

| 2- ⅔" X ½" CORRUGATIONS | | | | | | | | | | | | | | |
|---|---|---|---|---|---|---|---|---|---|---|---|---|---|---|
| EQUIV. DIA. (Inches) | (Inches) | | MIN. THICK. (Inches) | | DIMENSIONS (Inches) | | | | | | | APPROX. SLOPE | BODY |
| | SPAN | RISE | STEEL | ALUM. | A (±1") | B (MAX.) | H (±1") | L (±1½") | L1 ① | L2 ① | W (±2") | | |
| 15 | 17 | 13 | .064 | .060 | 7 | 9 | 6 | 19 | 14 | 16 | 30 | 2½ to 1 | 1 Pc. |
| 18 | 21 | 15 | .064 | .060 | 7 | 10 | 6 | 23 | 14 | 19⅜ | 36 | 2½ to 1 | 1 Pc. |
| 21 | 24 | 18 | .064 | .060 | 8 | 12 | 6 | 28 | 18 | 21¾ | 42 | 2½ to 1 | 1 Pc. |
| 24 | 28 | 20 | .064 | .060 | 9 | 14 | 6 | 32 | 18 | 27½ | 48 | 2½ to 1 | 1 Pc. |
| 30 | 35 | 24 | .079 | .075 | 10 | 16 | 6 | 39 | 18 | 37⅝ | 60 | 2½ to 1 | 1 Pc. |
| 36 | 42 | 29 | .079 | .075 | 12 | 18 | 8 | 46 | 24 | 45⅜ | 75 | 2½ to 1 | 1 Pc. |
| 42 | 49 | 33 | .109 | .105 | 13 | 21 | 9 | 53 | 24 | 54¾ | 85 | 2½ to 1 | 2 Pc. |
| 48 | 57 | 38 | .109 | .105 | 18 | 26 | 12 | 63 | 24 | 68 | 90 | 2½ to 1 | 3 Pc. |
| 54 | 64 | 43 | .109 | .105 | 18 | 30 | 12 | 70 | 24 | 72¾ | 102 | 2¼ to 1 | 3 Pc. |
| 60 | 71 | 47 | .109* | .105* | 18 | 33 | 12 | 77 | 30 | 82¼ | 114 | 2¼ to 1 | 3 Pc. |
| 66 | 77 | 52 | .109* | .105* | 18 | 36 | 12 | 77 | — | — | 126 | 2 to 1 | 3 Pc. |
| 72 | 83 | 57 | .109* | .105* | 18 | 39 | 12 | 77 | — | — | 138 | 2 to 1 | 3 Pc. |

| 3" X 1" CORRUGATIONS | | | | | | | | | | | | | | |
|---|---|---|---|---|---|---|---|---|---|---|---|---|---|---|
| EQUIV. DIA. (Inches) | (Inches) | | MIN. THICK. (Inches) | | DIMENSIONS (Inches) | | | | | | | APPROX. SLOPE | BODY |
| | SPAN | RISE | STEEL | ALUM. | A (±1") | B (MAX.) | H (±1") | L (±1½") | L1 ① | L2 ① | W (±2") | | |
| 48 | 53 | 41 | .109 | .105 | 18 | 26 | 12 | 63 | 24 | 72¾ | 90 | 2½ to 1 | 2 Pc. |
| 54 | 60 | 46 | .109 | .105 | 18 | 30 | 12 | 70 | 30 | 82¼ | 102 | 2 to 1 | 2 Pc. |
| 60 | 66 | 51 | .109* | .105* | 18 | 33 | 12 | 77 | — | — | 114 | 1½ to 1 | 3 Pc. |
| 66 | 73 | 55 | .109* | .105* | 18 | 36 | 12 | 77 | — | — | 126 | 1½ to 1 | 3 Pc. |
| 72 | 81 | 59 | .109* | .105* | 18 | 39 | 12 | 77 | — | — | 138 | 2 to 1 | 3 Pc. |
| 78 | 87 | 63 | .109* | .105* | 22 | 38 | 12 | 77 | — | — | 148 | 1½ to 1 | 3 Pc. |
| 84 | 95 | 67 | .109* | .105* | 22 | 34 | 12 | 77 | — | — | 162 | 1½ to 1 | 3 Pc. |
| 90 | 103 | 71 | .109* | .105* | 22 | 38 | 12 | 77 | — | — | 174 | 1½ to 1 | 3 Pc. |
| 96 | 112 | 75 | .109* | .105* | 24 | 40 | 12 | 77 | — | — | 174 | 1½ to 1 | 3 Pc. |

NOTE: ALL SPLICES TO BE LAP RIVETED OR BOLTED.

* EXCEPT CENTER PANEL SEE GENERAL NOTES

| REINFORCED CONCRETE PIPE ARCH | | | | | | | | | |
|---|---|---|---|---|---|---|---|---|---|
| EQUIV. DIA. (Inches) | DIMENSIONS (Inches) | | | | | | | | APPROX. SLOPE |
| | ** SPAN | ** RISE | T | A | B | C | D | E | |
| 24 | 29 | 18 | 3 | 8½ | 39 | 33 | 72 | 48 | 3 to 1 |
| 30 | 36 | 22 | 3½ | 9½ | 50 | 46 | 96 | 60 | 3 to 1 |
| 36 | 44 | 27 | 4 | 11⅛ | 60 | 36 | 96 | 72 | 3 to 1 |
| 42 | 51 | 31 | 4½ | 15 13/16 | 60 | 36 | 96 | 78 | 3 to 1 |
| 48 | 58 | 36 | 5 | 21 | 60 | 36 | 96 | 84 | 3 to 1 |
| 54 | 65 | 40 | 5½ | 25½ | 60 | 36 | 96 | 90 | 3 to 1 |
| 60 | 73 | 45 | 6 | 31 | 60 | 36 | 96 | 96 | 3 to 1 |
| 72 | 88 | 54 | 7 | 31 | 60 | 39 | 99 | 120 | 2 to 1 |
| 84 | 102 | 62 | 8 | 28½ | 83 | 19 | 102 | 144 | 2 to 1 |

| REINFORCED CONCRETE ELLIPTICAL PIPE | | | | | | | | | |
|---|---|---|---|---|---|---|---|---|---|
| EQUIV. DIA. (Inches) | DIMENSIONS (Inches) | | | | | | | | APPROX. SLOPE |
| | ** SPAN | ** RISE | T | A | B | C | D | E | |
| 24 | 30 | 19 | 3¼ | 8½ | 39 | 33 | 72 | 48 | 3 to 1 |
| 30 | 38 | 24 | 3¾ | 9½ | 54 | 18 | 72 | 60 | 3 to 1 |
| 36 | 45 | 29 | 4½ | 11⅛ | 60 | 24 | 84 | 72 | 2½ to 1 |
| 42 | 53 | 34 | 5 | 15¾ | 60 | 36 | 96 | 78 | 2½ to 1 |
| 48 | 60 | 38 | 5½ | 21 | 60 | 36 | 96 | 84 | 2½ to 1 |
| 54 | 68 | 43 | 6 | 25½ | 60 | 36 | 96 | 90 | 2½ to 1 |
| 60 | 76 | 48 | 6½ | 30 | 60 | 36 | 96 | 96 | 2½ to 1 |

**NOMINAL SIZE

## GENERAL NOTES

DETAILS OF CONSTRUCTION, MATERIALS AND WORKMANSHIP NOT SHOWN ON THIS DRAWING SHALL CONFORM TO THE PERTINENT REQUIREMENTS OF THE STANDARD SPECIFICATIONS AND THE APPLICABLE SPECIAL PROVISIONS.

CONCRETE APRON ENDWALLS MAY NOT BE USED WITH GALVANIZED STEEL OR ALUMINUM CULVERT PIPE OR VISE VERSA. GALVANIZED STEEL OR ALUMINUM APRON ENDWALLS SHALL NORMALLY BE INSTALLED ON CULVERT PIPE OF THE SAME METAL.

ALL THREE PIECE STEEL APRON ENDWALLS FOR 66" X 51" PIPE ARCH AND LARGER SHALL HAVE 0.109" SIDES AND 0.138" CENTER PANELS. ALL THREE PIECE ALUMINUM APRON ENDWALLS FOR 66" X 51" PIPE ARCH AND LARGER SHALL HAVE 0.105" SIDES AND 0.134" CENTER PANELS. THE WIDTH OF CENTER PANELS SHALL BE GREATER THAN 20 PERCENT OF THE PIPE ARCH PERIMETER.

LAP SEAMS SHALL BE TIGHTLY JOINED BY GALVANIZED RIVETS OR BOLTS FOR STEEL UNITS AND ALUMINUM RIVETS AND BOLTS FOR ALUMINUM UNITS. FOR THE 77" X 52" THROUGH 112" X 75" APRON ENDWALL SIZES, THE REINFORCED EDGES AND CENTER PANEL SEAMS SHALL BE FURTHER REINFORCED WITH GALVANIZED STEEL OR ALUMINUM STIFFENER ANGLES. THE ANGLES SHALL BE ATTACHED BY GALVANIZED NUTS AND BOLTS FOR STEEL UNITS AND ALUMINUM NUTS AND BOLTS FOR ALUMINUM UNITS.

WHERE TWO OR MORE PIPES WITH APRON ENDWALLS ARE LAID ADJACENT TO EACH OTHER, THEY SHALL BE SEPARATED BY A DISTANCE SUFFICIENT TO PROVIDE A MINIMUM CLEARANCE OF 6 INCHES BETWEEN APRON ENDWALLS.

① FOR PIPE ARCH SIZES UP TO 73" X 55" A 180° ROLLED EDGE MAY BE USED INSTEAD OF STEEL ROD REINFORCEMENT. SEE SECTION A-A.

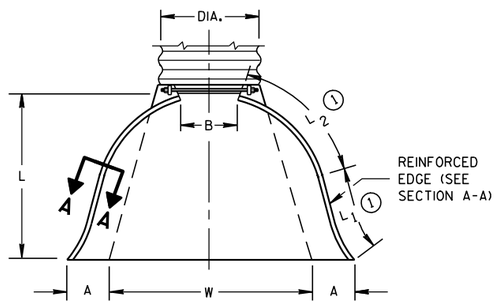


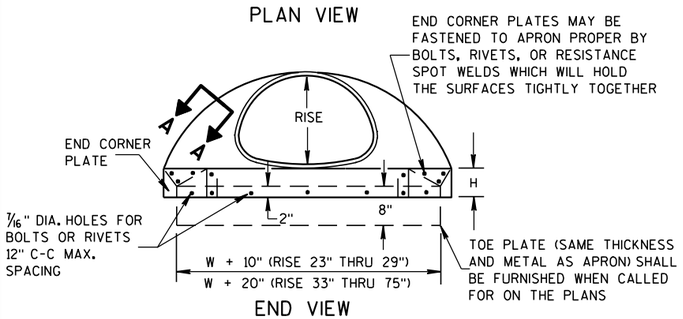


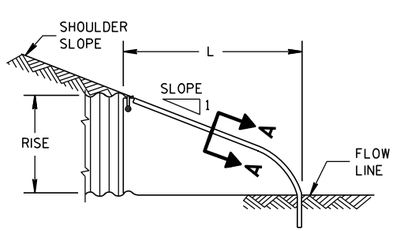


SIDE ELEVATION

## METAL ENDWALLS

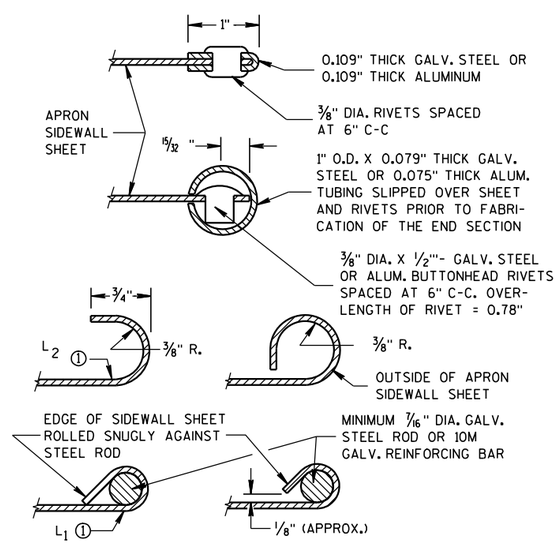


## SECTION A-A

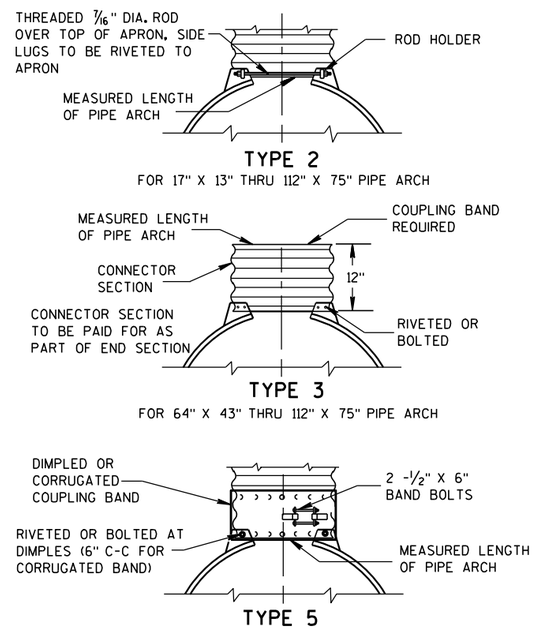


NOTE: DIMPLED BAND FITS OVER OUTSIDE OF ENDWALL, AND CORRUGATED BAND FITS INSIDE ENDWALL.

## CONNECTION DETAILS

**APRON ENDWALLS FOR PIPE ARCH AND ELLIPTICAL PIPE**

STATE OF WISCONSIN
DEPARTMENT OF TRANSPORTATION

APPROVED

11/30/94 — DATE

/S/ Rory L. Rhinesmith — CHIEF ROADWAY DEVELOPMENT ENGINEER

FHWA

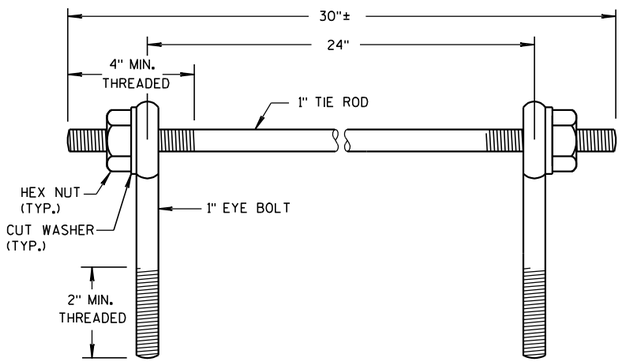


EYE BOLTS AND TIE ROD

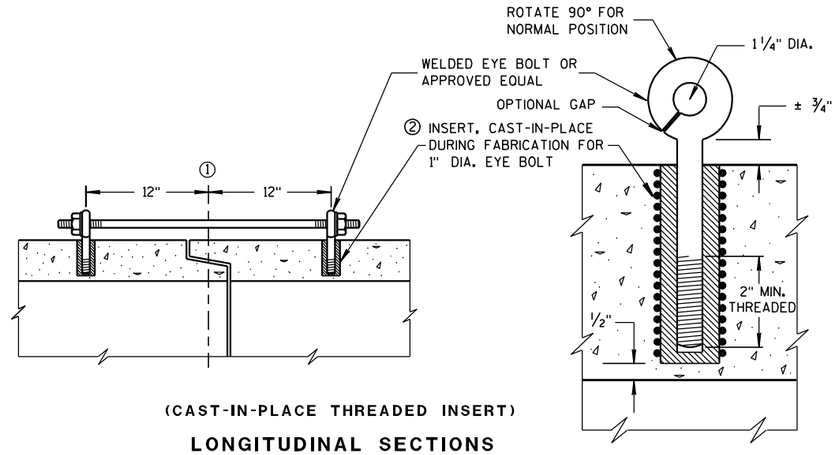


(CAST-IN-PLACE THREADED INSERT)

LONGITUDINAL SECTIONS

## EYE BOLT AND TIE ROD ASSEMBLY (ALTERNATE NO. 1)

## GENERAL NOTES

DETAILS OF CONSTRUCTION, MATERIALS, AND WORKMANSHIP NOT SHOWN ON THIS DRAWING SHALL CONFORM TO THE PERTINENT REQUIREMENTS OF THE STANDARD SPECIFICATIONS AND APPLICABLE SPECIAL PROVISIONS.

CONCRETE CULVERT AND STORM SEWER PIPE SHALL BE TIED TOGETHER IN THE MANNER ILLUSTRATED BY THIS DETAIL AT LOCATIONS DESIGNATED IN THE STANDARD SPECIFICATIONS AND THE PLAN. THE CONTRACTOR MAY USE EITHER ALTERNATE 1, 2 OR 3 FOR DRAINAGE STRUCTURES. ONLY ALTERNATE 1 AND 3 MAY BE USED FOR CATTLE PASSES, UNLESS OTHERWISE STATED IN THE CONTRACT. THE MATERIALS, FABRICATION AND WORK NECESSARY TO TIE THE PIPE BY THIS DETAIL WILL BE CONSIDERED INCIDENTAL TO THE PIPE AND APRON ENDWALLS IF REQUIRED.

DETAILED DRAWINGS FOR PROPOSED ALTERNATE DESIGNS FOR JOINT TIES SHALL BE SUBMITTED TO THE ENGINEER FOR APPROVAL.

JOINT TIES TO BE HOT-DIP GALVANIZED PER ASTM A 153.

① ℄ OF TONGUE AND GROOVE OR BELL AND SPIGOT JOINTS.

② THE INSIDE OF THE THREADED INSERTS SHALL BE CLEAN TO ALLOW THE INSERTION OF THREADED EYE BOLTS.

③ HOLES SHALL BE CAST-IN-PLACE OR DRILLED 12 INCHES FROM ℄ OF TONGUE AND GROOVE.

④ BOLT PROJECTION INSIDE OF PIPE SHALL NOT EXCEED 2 INCHES.

⑤ OPENING TO BE ROD DIAMETER PLUS 1 INCH.

⑥ LENGTH ADEQUATE TO EXTEND TO WITHIN 1/2 INCH OF THE INNER SURFACE OF THE PIPE.

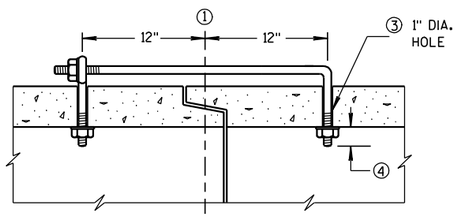


(TONGUE & GROOVE PIPE)

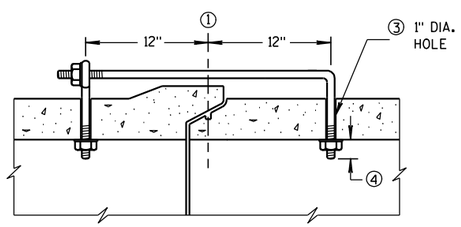


(MODIFIED BELL PIPE)

LONGITUDINAL SECTION

### EYE BOLT DIMENSION TABLE

| PIPE SIZE | L = LENGTH | |
|---|---|---|
| | TONGUE & GROOVE PIPE | MODIFIED BELL PIPE |
| 18" TO 24" | 4 1/2" | 6 1/4" |
| 30" | 5" | 7" |
| 36" | 5 1/2" | 7" |
| 42" | 6" | |
| 48" | 6 1/2" | |
| 60" | 7 1/2" | |
| 66" | 8" | |

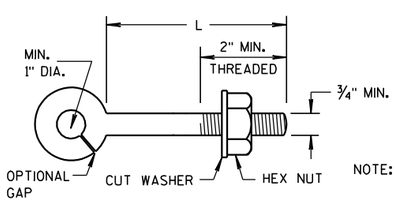


EYE BOLT

NOTE:

NOTE: TWO EYE BOLTS MAY BE USED WITH A 30" LONG THREADED ROD IN LIEU OF THE 90° BENT TIE ROD.

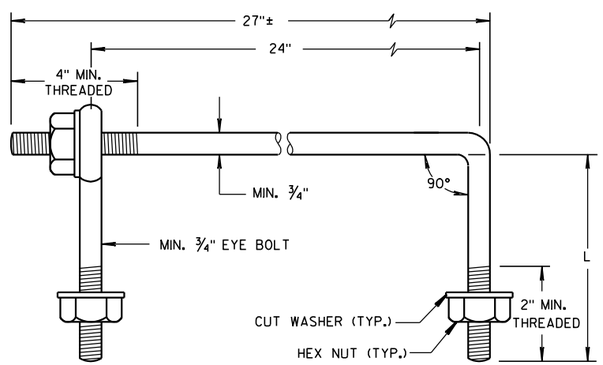


EYE BOLT AND TIE ROD

(JOINT TIES FOR 18" TO 66" DIA. CONCRETE PIPE)

## EYE BOLT AND TIE ROD ASSEMBLY (ALTERNATE NO. 2)

### ADJUSTABLE TIE ROD TABLE

| PIPE DIAMETER | TIE ROD DIAMETER | D | $L_1$ | N |
|---|---|---|---|---|
| 12-60 | 5/8 | 5/8 | 5 | 1/2 |
| 66-84 | 3/4 | 3/4 | 5 | 1/2 |
| 90-108 | 1 | 1 | 7 | 1 7/16 |

DIMENSIONS SHOWN ARE IN INCHES

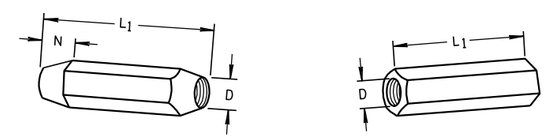


TAPERED PLAIN

RIGHT AND LEFT THREADS

SLEEVE NUTS

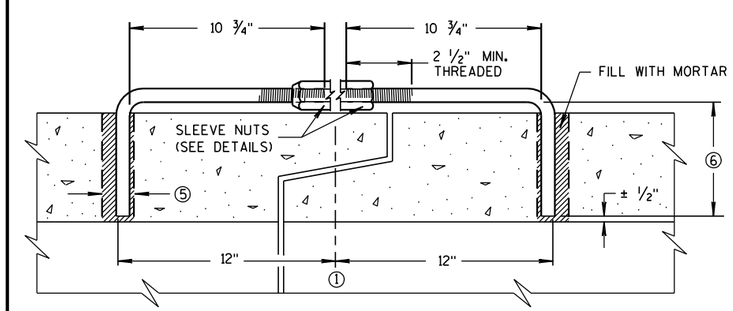


LONGITUDINAL SECTION

(JOINT TIES FOR 12" TO 108" DIA. CONCRETE PIPE)

## ADJUSTABLE TIE ROD (ALTERNATE NO. 3)

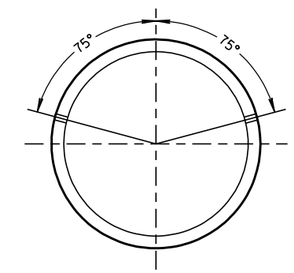


PLACEMENT OF (2) CAST-IN-PLACE INSERTS OR HOLES DURING FABRICATION FOR PIPE SECTIONS REQUIRING TIE RODS

TRANSVERSE SECTION

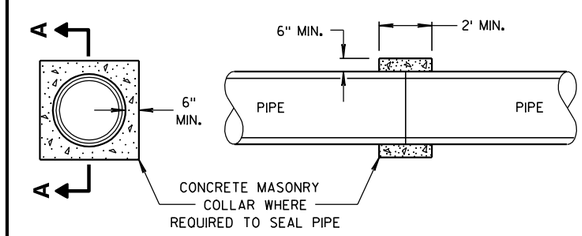


SECTION A-A

## CONCRETE COLLAR DETAIL

JOINT TIES FOR CONCRETE PIPE AND CONCRETE COLLAR DETAIL

STATE OF WISCONSIN
DEPARTMENT OF TRANSPORTATION

APPROVED
6/5/2012 /S/ Jerry H. Zogg
DATE ROADWAY STANDARDS DEVELOPMENT ENGINEER
FHWA

6

6

S.D.D. 8 F 4-7

S.D.D. 8 F 4-7

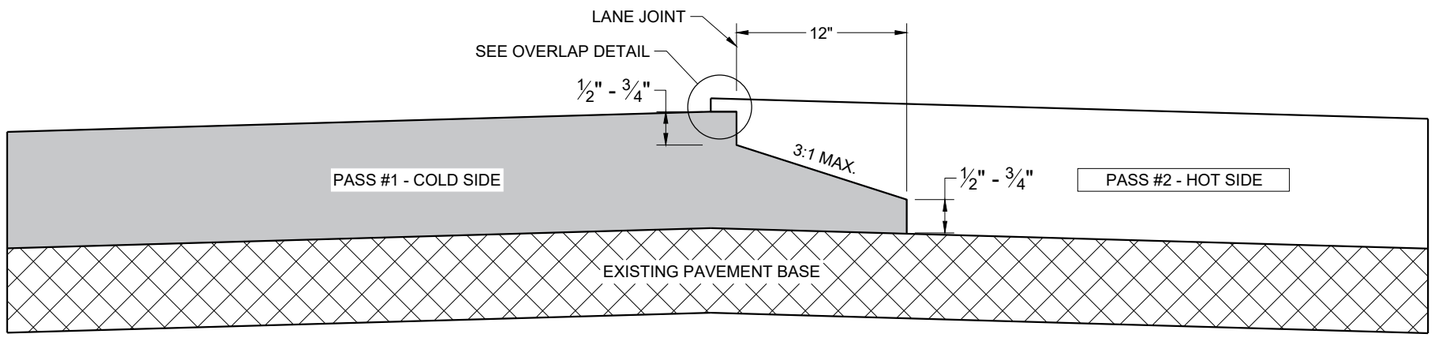


**TYPICAL PAVEMENT CROSS SECTION OF NOTCHED WEDGE LONGITUDINAL JOINT**

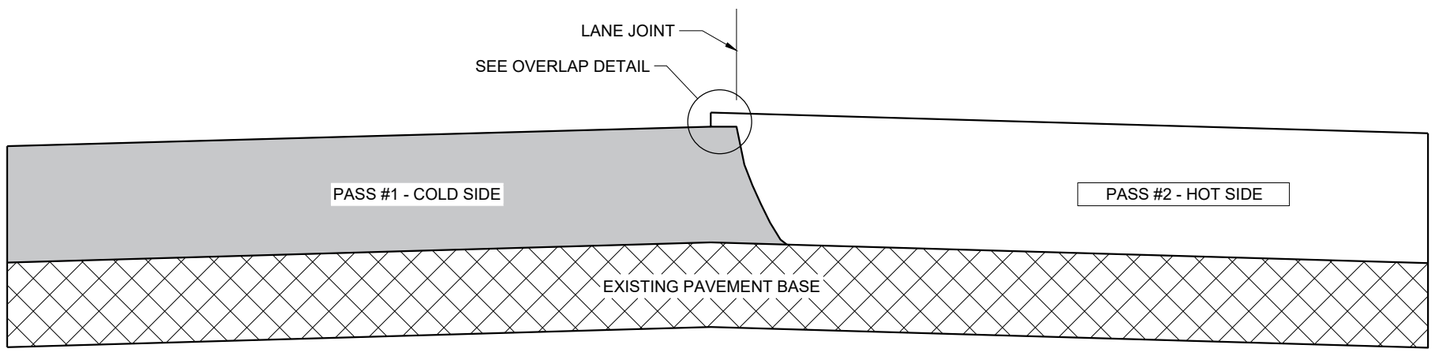


**TYPICAL PAVEMENT CROSS SECTION VERTICAL LONGITUDINAL JOINT**

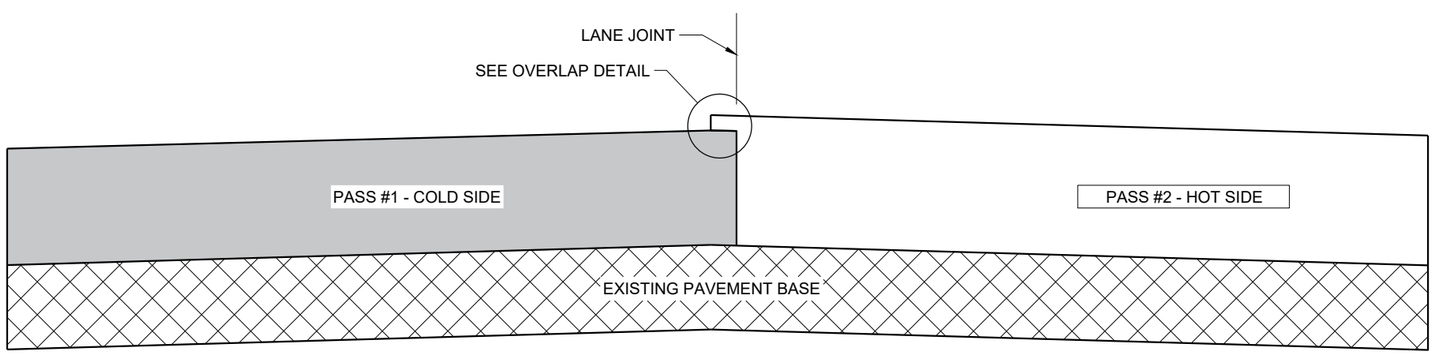


**TYPICAL PAVEMENT CROSS SECTION OF MILLED LONGITUDINAL JOINT**

## GENERAL NOTES

IN ADDITION TO THE DETAILS PROVIDED IN THIS DRAWING, CONFORM TO STANDARD SPECIFICATION 450.3.2.8 FOR WHEN A NOTCHED WEDGE JOINT IS REQUIRED AND FOR GENERAL JOINT CONSTRUCTION REQUIREMENTS.

FOR ALL LONGITUDINAL JOINTS, ENSURE THE PAVER SCREED OVERLAPS THE PREVIOUSLY PLACED PAVEMENT BY 1" ± 0.5" AND THE HOT SIDE OF THE JOINT REMAINS HIGHER THAN THE COLD SIDE BY APPROXIMATELY 0.1" AFTER FINAL COMPACTION.

ONLY REMOVE THE LONGITUDINAL NOTCHED WEDGE JOINT FOR SMA PAVEMENT OR AS DIRECTED BY THE ENGINEER TO ADDRESS SPECIFIC LENGTHS OF JOINT DAMAGED BY TRAFFIC.

WHEN MILLING BACK OR REMOVING ANY LONGITUDINAL JOINT, LIMIT THE MATERIAL REMOVED TO 2" FROM THE TOP NOTCH OR FROM THE VERTICAL JOINT EDGE ON THE COLD SIDE OF THE JOINT.

USE LONGITUDINAL MILLED JOINT AS PLANS SHOW OR THE AS THE ENGINEER DIRECTS.

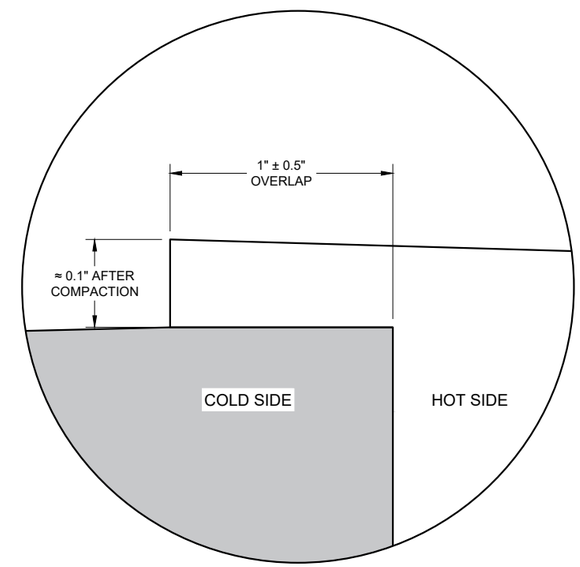


**OVERLAP DETAIL (TYPICAL)**

6

6

SDD 13C19 - 02

SDD 13C19 - 02

**HMA LONGITUDINAL JOINTS**

STATE OF WISCONSIN
DEPARTMENT OF TRANSPORTATION

APPROVED
February 2020 /S/ Steven Hefel
DATE HMA PAVEMENT ENGIN

FHWA

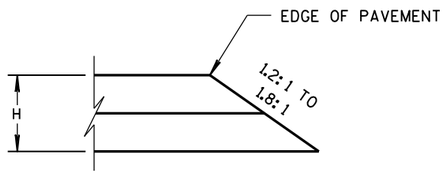


CONSTRUCTED WITH FINAL TWO LAYERS

FOR H 5" OR LESS

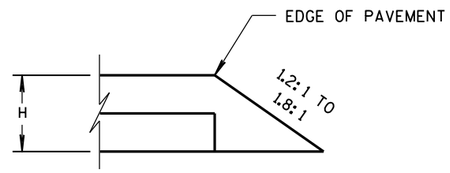


CONSTRUCTED WITH FINAL LAYER

FOR H 5" OR LESS

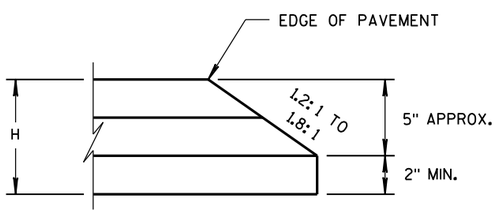


CONSTRUCTED WITH FINAL TWO LAYERS

FOR H GREATER THAN 5"

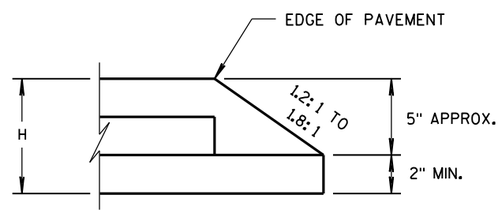


CONSTRUCTED WITH FINAL LAYER

FOR H GREATER THAN 5"

## HMA PAVEMENT AND HMA OVERLAYS

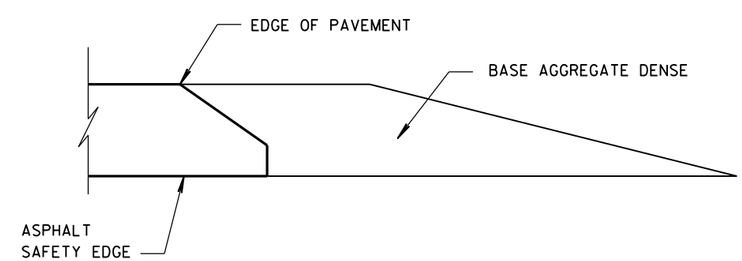


## FINISHED SHOULDER AGGREGATE PLACEMENT

6

6

S.D.D. 14 B 29-1

S.D.D. 14 B 29-1

SAFETY EDGE SM

STATE OF WISCONSIN
DEPARTMENT OF TRANSPORTATION

APPROVED

11/30/2012 — DATE

/S/ Jerry H. Zogg — ROADWAY STANDARDS DEVELOPMENT ENGINEER

FHWA

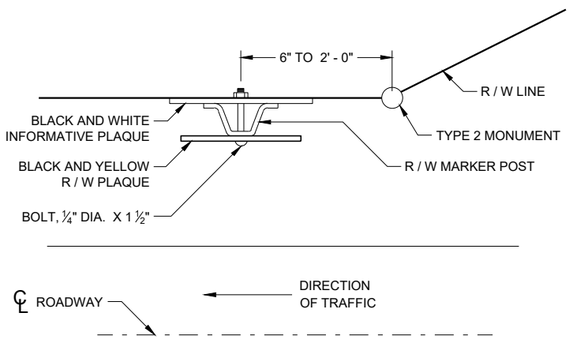


**PLAN VIEW**
**STEEL MARKER POST**

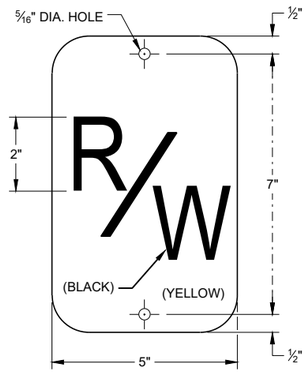


**R / W PLAQUE**

THE RIGHT-OF-WAY PLAQUE AND INFORMATIVE PLAQUE WILL BE FURNISHED BY THE WISCONSIN DEPARTMENT OF TRANSPORTATION.

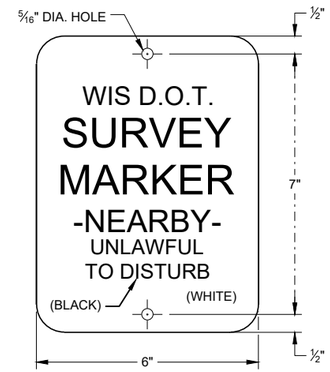


**INFORMATIVE PLAQUE**

## GENERAL NOTES

DETAILS OF CONSTRUCTION NOT SHOWN ON THIS DRAWING SHALL CONFORM TO THE PERTINENT REQUIREMENTS OF THE STANDARD SPECIFICATIONS AND THE APPLICABLE SPECIAL PROVISIONS.

A STEEL MARKER POST FOR RIGHT -OF-WAY SHALL BE PLACED IN THE RIGHT-OF-WAY WITH THE BACK OF THE POST ON THE LONGER RIGHT-OF-WAY TANGENT, 6 INCHES TO 24 INCHES FROM EACH TYPE 2 MONUMENT TO SERVE AS A GUARD POST, AND AT OTHER LOCATIONS AS SHOWN ON THE PLANS OR AS DIRECTED BY THE ENGINEER.

THE "R/W" PLAQUE SHALL FACE THE ROADWAY AND THE INFROMATIVE PLAQUE SHALL FACE AWAY FROM THE ROADWAY. "R/W" AND INFORMATIVE PLAQUES WILL BE FURNISHED BY THE WISCONSIN DEPARTMENT OF TRANSPORTATION.

STEEL MARKER POSTS SHALL MEET THE MINIMUM MATERIAL REQUIREMENTS FOR STEEL DELINEATOR POSTS; EXCEPT POSTS PAINTED WITH FEDERAL YELLOW ENAMEL NEED NOT BE ZINC COATED.

(1) IN AREAS OF SOLID ROCK, DRILL A BORE HOLE 2" GREATER THAN THE WIDEST DIMENSION OF THE POST CROSS SECTION INTO THE ROCK A MINIMUM DEPTH OF 12 INCHES. CUT OR SPLICE THE POST SO THAT A MINIMUM LENGTH OF 3' - 10" PROTRUDES ABOVE THE GROUND. BLOW OUT THE BORE HOLE IN THE ROCK USING COMPRESSED AIR. FILL THE BORE HOLE WITH CEMENT GROUT OR EQUIVALENT, DEPENDING ON THE STABILITY OF THE ROCK.

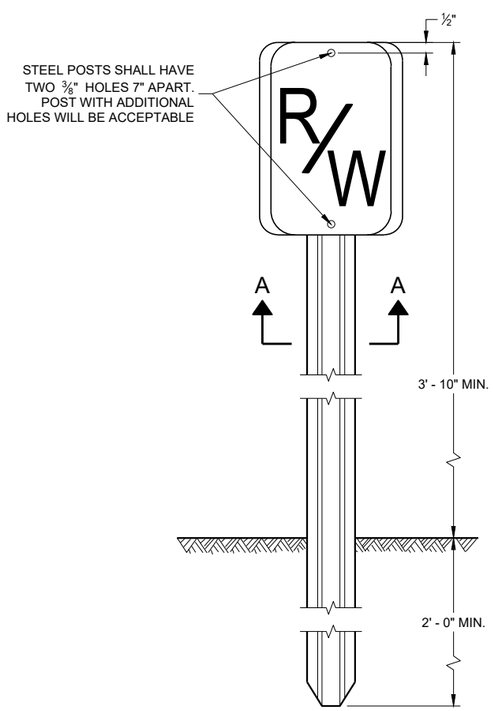


**FRONT VIEW**
**STEEL MARKER POST**

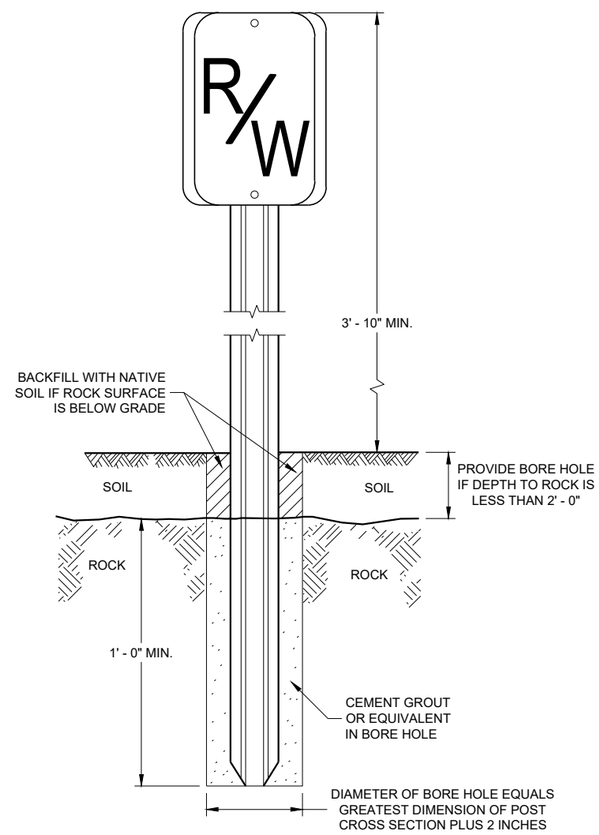


**FRONT VIEW**
**ROCK INSTALLATION** (1)

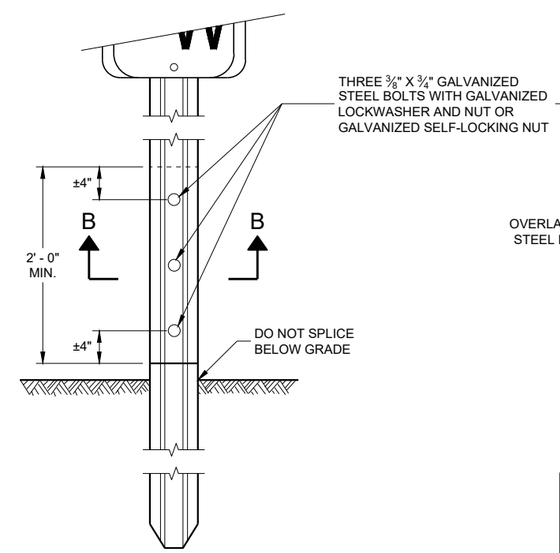


**FRONT VIEW**
**SPLICE DETAIL**

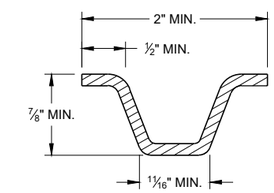


MIN. WEIGHT 1.12 LB./FT.
**SECTION A - A**

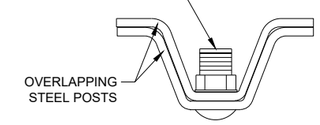


**SECTION B - B**

**MARKER POST**
**FOR RIGHT - OF - WAY**

STATE OF WISCONSIN
DEPARTMENT OF TRANSPORTATION

APPROVED
2/18/2016 — DATE
/S/ Ray Kumapayi — CHIEF SURVEYING AND MA ENGINEER
FHWA

6

6

SDD 15A01 - 13a

SDD 15A01 - 13a

## GENERAL NOTES

DETAILS OF CONSTRUCTION NOT SHOWN ON THIS DRAWING SHALL CONFORM TO THE PERTINENT REQUIREMENTS OF THE STANDARD SPECIFICATIONS AND THE APPLICABLE SPECIAL PROVISIONS.

A FLEXIBLE MARKER POST FOR RIGHT -OF-WAY SHALL BE PLACED IN THE RIGHT-OF-WAY WITH THE BACK OF THE POST ON THE LONGER RIGHT-OF-WAY TANGENT, 6 INCHES TO 24 INCHES FROM EACH TYPE 2 MONUMENT TO SERVE AS A GUARD POST, AND AT OTHER LOCATIONS AS SHOWN ON THE PLANS OR AS DIRECTED BY THE ENGINEER.

THE RIGHT-OF-WAY STICKER DIMENSIONS SHALL BE 2 ¼" X 17" AND THE STICKER SHALL BE MADE OF A NON-RELECTIVE VINYL MATERIAL. THE RIGHT-OF-WAY STICKER SHALL FACE THE ROADWAY.

INSTALL PER DEPTH OF MANUFACTURER'S RECOMMENDATION BUT NOT LESS THAN 18 INCHES BELOW GRADE FROM THE BOTTOM OF THE METAL U-CHANNEL ANCHOR.

1. FLEXIBLE MARKER POSTS SHALL BE INCLUDED IN THE APPROVED PRODUCTS LIST FOR MARKER POSTS AND SHALL BE FEDERAL YELLOW IN COLOR.
2. IN AREAS OF SOLID ROCK, DRILL A BORE HOLE 2" GREATER THAN THE WIDEST DIMENSION OF THE POST CROSS SECTION INTO THE ROCK A MINIMUM DEPTH OF 12 INCHES. CUT OR SPLICE THE POST SO THAT A MINIMUM LENGTH OF 4' - 0" PROTRUDES ABOVE THE GROUND. BLOW OUT THE BORE HOLE IN THE ROCK USING COMPRESSED AIR.

   FILL THE BORE HOLE WITH CEMENT GROUT OR EQUIVALENT, DEPENDING ON THE STABILITY OF THE ROCK.

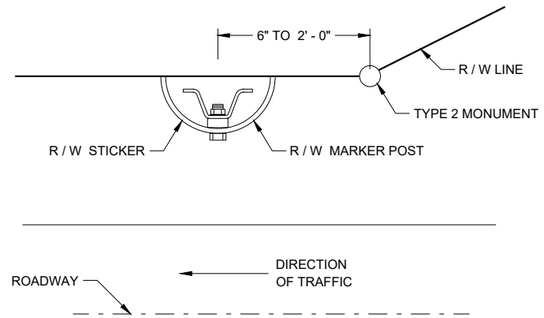


**PLAN VIEW**

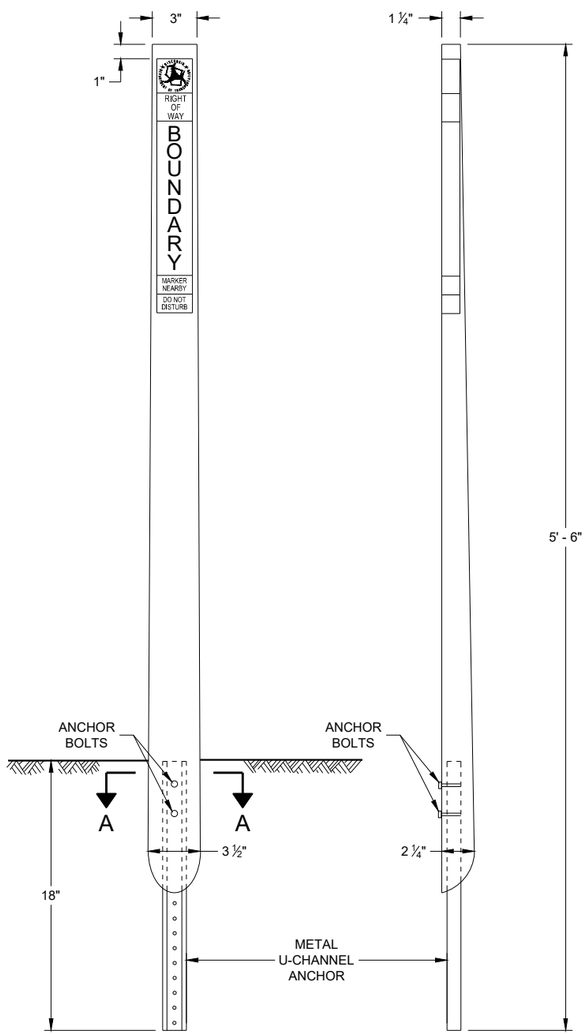


**FRONT VIEW** **SIDE VIEW**

**FLEXIBLE MARKER POST FOR (1) RIGHT-OF-WAY**

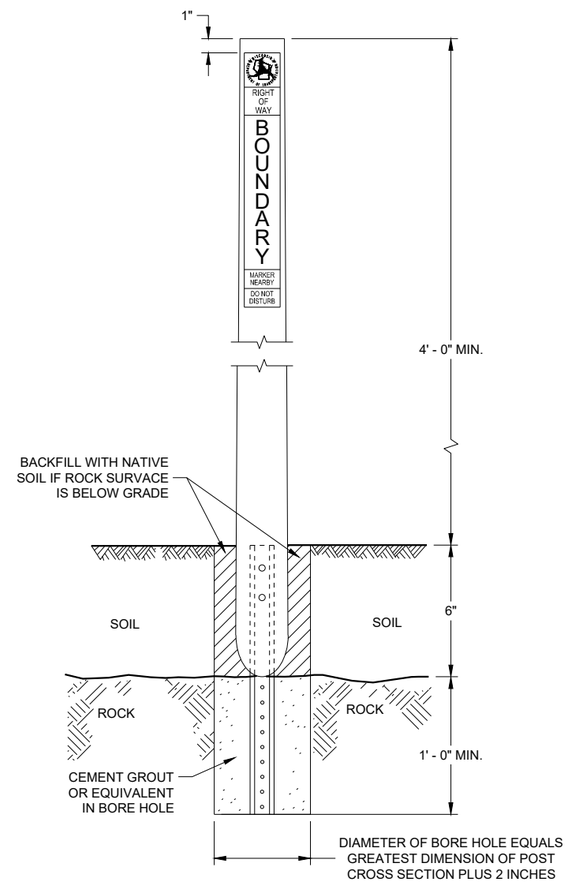


**FRONT VIEW** (1)(2)
**ROCK INSTALLATION**

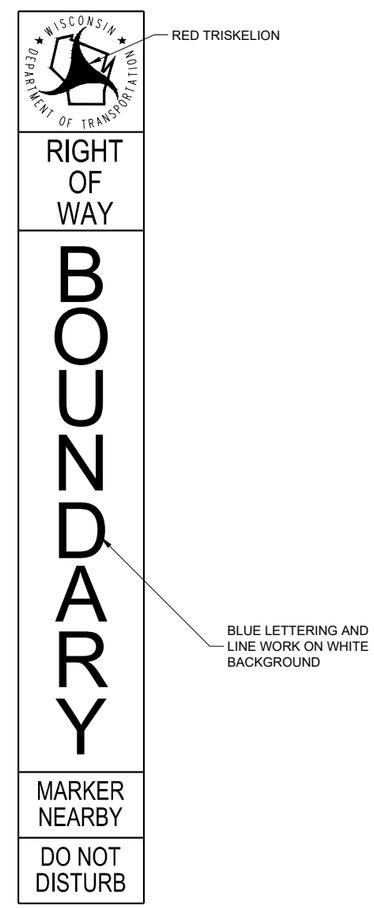


**RIGHT-OF-WAY STICKER**

THE RIGHT-OF-WAY STICKER SHALL BE ATTACHED 1" FROM THE TOP OF THE RIGHT-OF-WAY POST PRIOR TO DELIVERY.

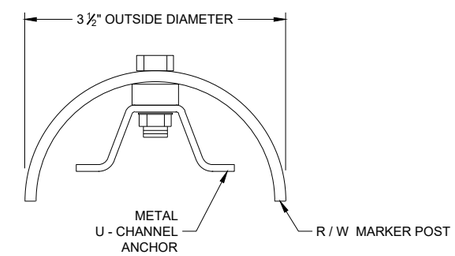


**SECTION A - A**

**FLEXIBLE MARKER POST FOR RIGHT - OF -WAY**

STATE OF WISCONSIN
DEPARTMENT OF TRANSPORTATION

APPROVED
00-00-00 — DATE
/S/ <AUTHOR> — CHIEF SURVEYING AND MA ENGINEER
FHWA

6

SDD 15A01 - 13b

## GENERAL NOTES

DETAILS OF CONSTRUCTION, MATERIALS AND WORKMANSHIP NOT SHOWN ON THIS DRAWING SHALL CONFORM TO THE PERTINENT REQUIREMENTS OF THE STANDARD SPECIFICATIONS AND THE APPLICABLE SPECIAL PROVISIONS.

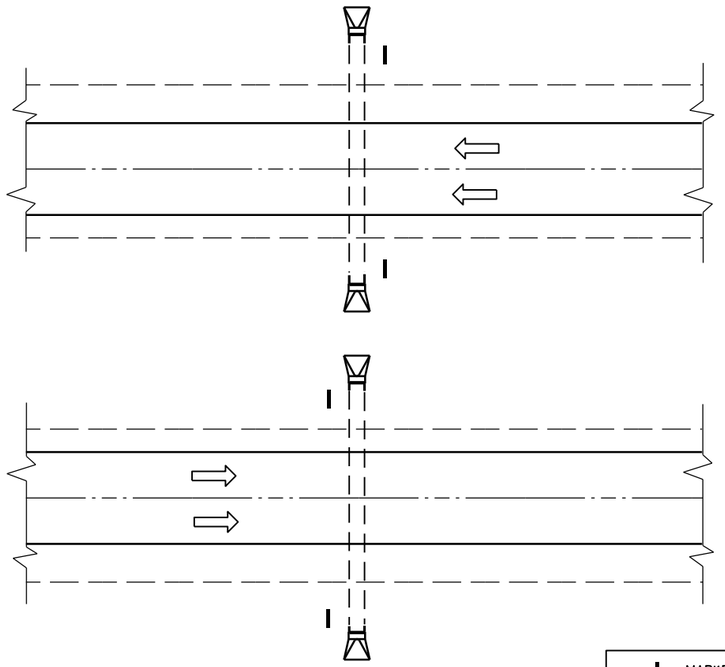

PLAN VIEW

**DIVIDED HIGHWAY**

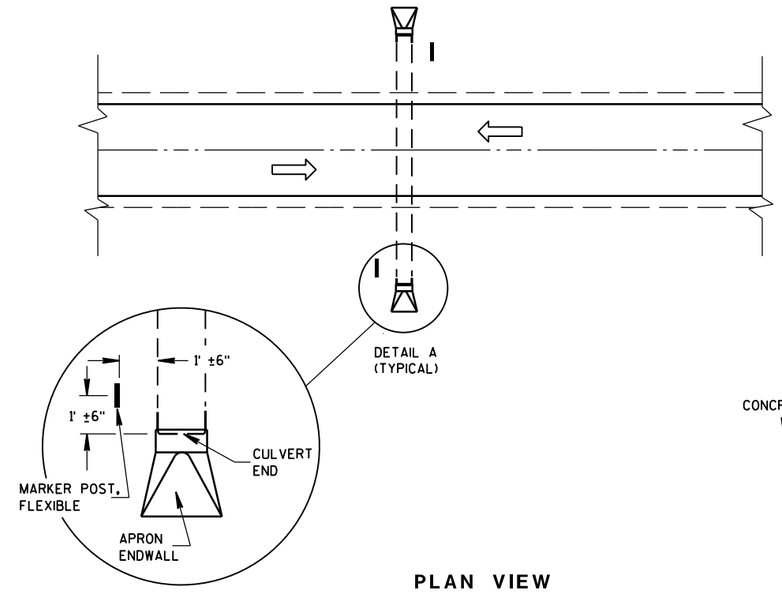


DETAIL A
(TYPICAL)

PLAN VIEW

**UNDIVIDED HIGHWAY**

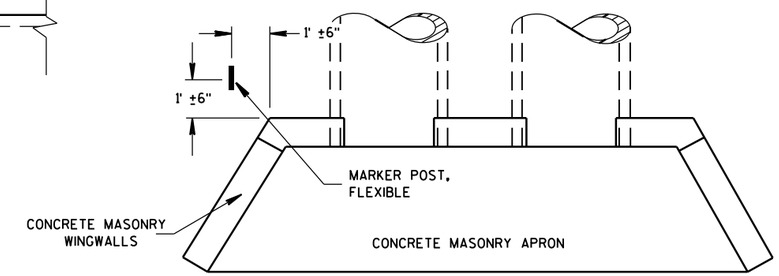


PLAN VIEW

**CONCRETE MASONRY ENDWALLS FOR CULVERT PIPE AND PIPE ARCH**

MARKER POST, FLEXIBLE

DIRECTION OF TRAFFIC FLOW

## FLEXIBLE MARKER POST LOCATION

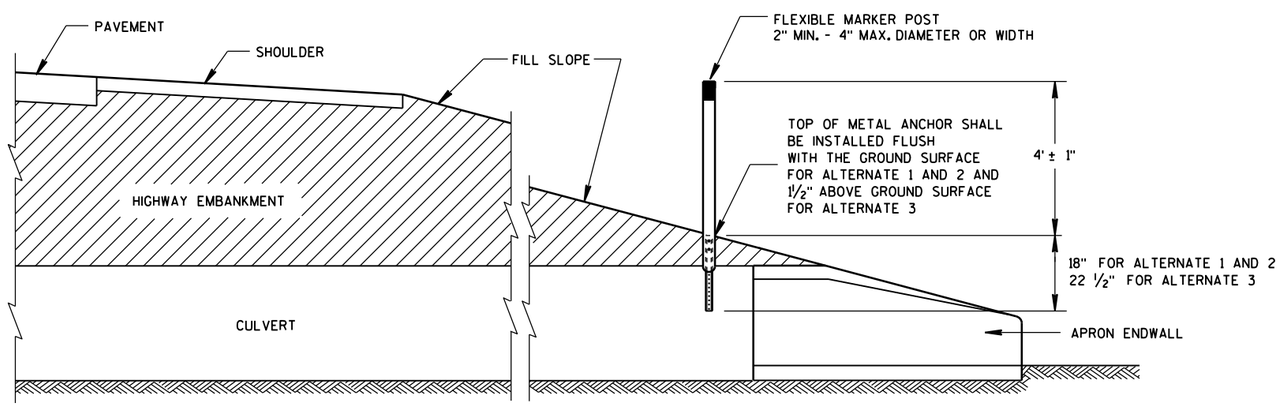


CROSS SECTION

**FLEXIBLE MARKER POST**

**FLEXIBLE MARKER POST FOR CULVERT END**

STATE OF WISCONSIN
DEPARTMENT OF TRANSPOR

6

S.D.D. 15 A 3-2a

6

S.D.D. 15 A 3-2a

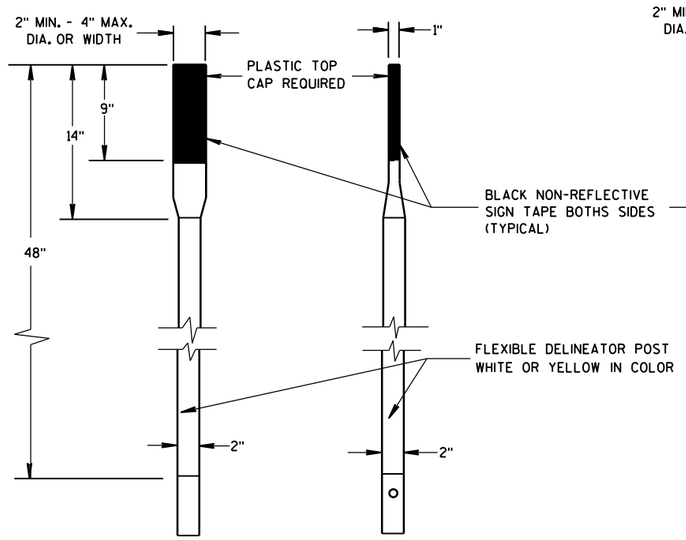


FRONT VIEW SIDE VIEW

ALTERNATE 1

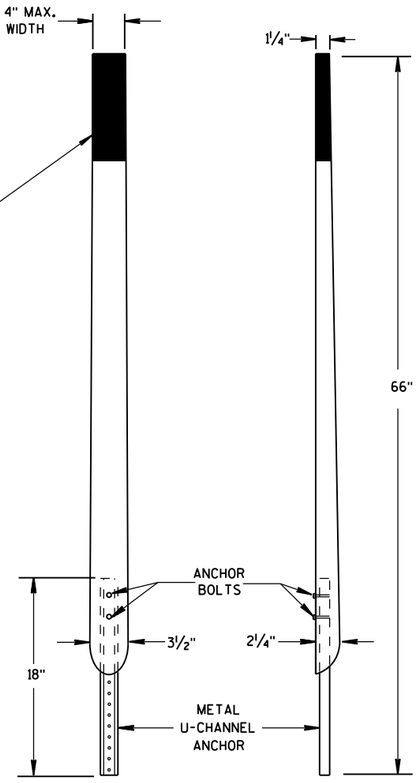


FRONT VIEW SIDE VIEW

ALTERNATE 2

## FLEXIBLE MARKER POSTS

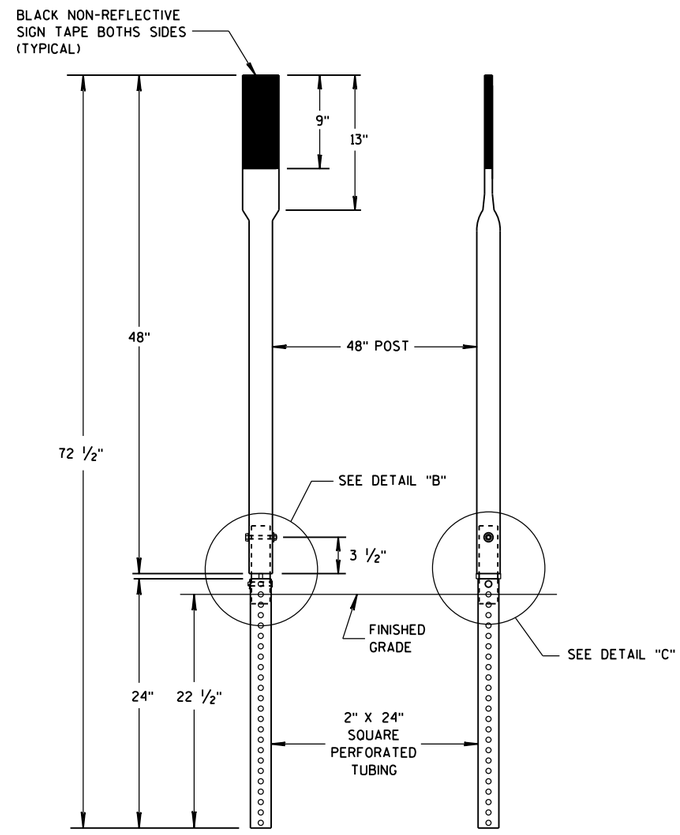


FRONT VIEW SIDE VIEW

ALTERNATE 3

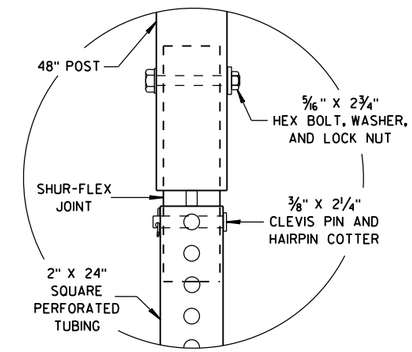


DETAIL B

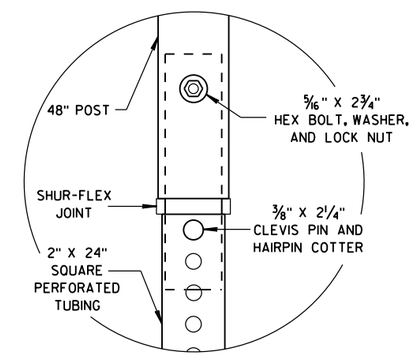


DETAIL C

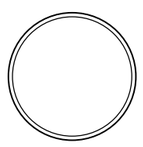

SECTION A-A

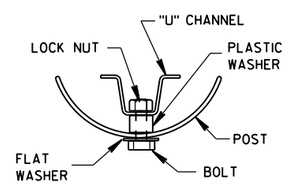


SECTION B-B

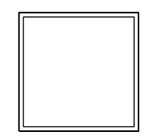

SECTION C-C

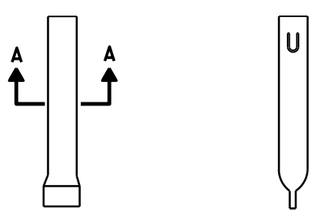


FRONT VIEW SIDE VIEW

ALTERNATE 1

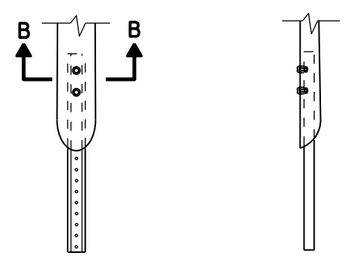


FRONT VIEW SIDE VIEW

ALTERNATE 2

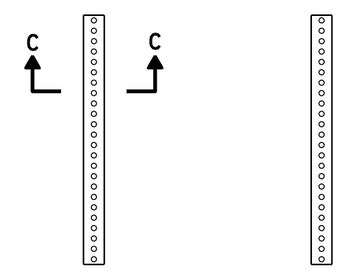


FRONT VIEW SIDE VIEW

ALTERNATE 3

## FLEXIBLE MARKER POST ANCHORS

FLEXIBLE MARKER POST
FOR CULVERT END

STATE OF WISCONSIN
DEPARTMENT OF TRANSPORTATION

APPROVED
10/1/2012 /S/ Travis Feltes
DATE STATE TRAFFIC ENGINEER
FHWA

6

6

S.D.D. 15 A 3-2b

S.D.D. 15 A 3-2b

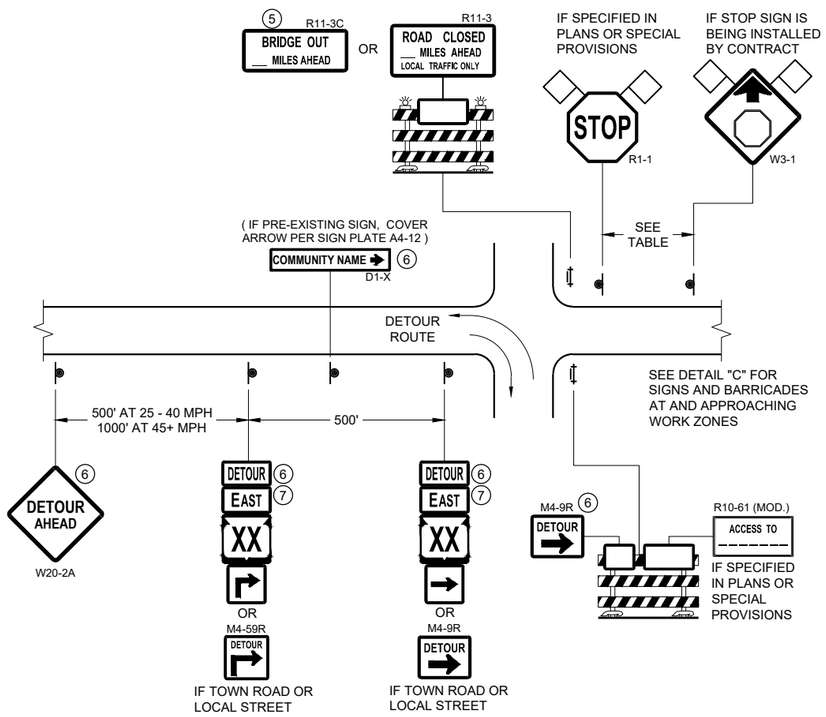


**DETAIL A**
**MAINLINE CLOSURE WITH POSTED DETOUR**
WORK ZONE GREATER THAN OR EQUAL TO ½ MILE FROM DETOUR ROUTE ( 1000 FEET IF URBAN )

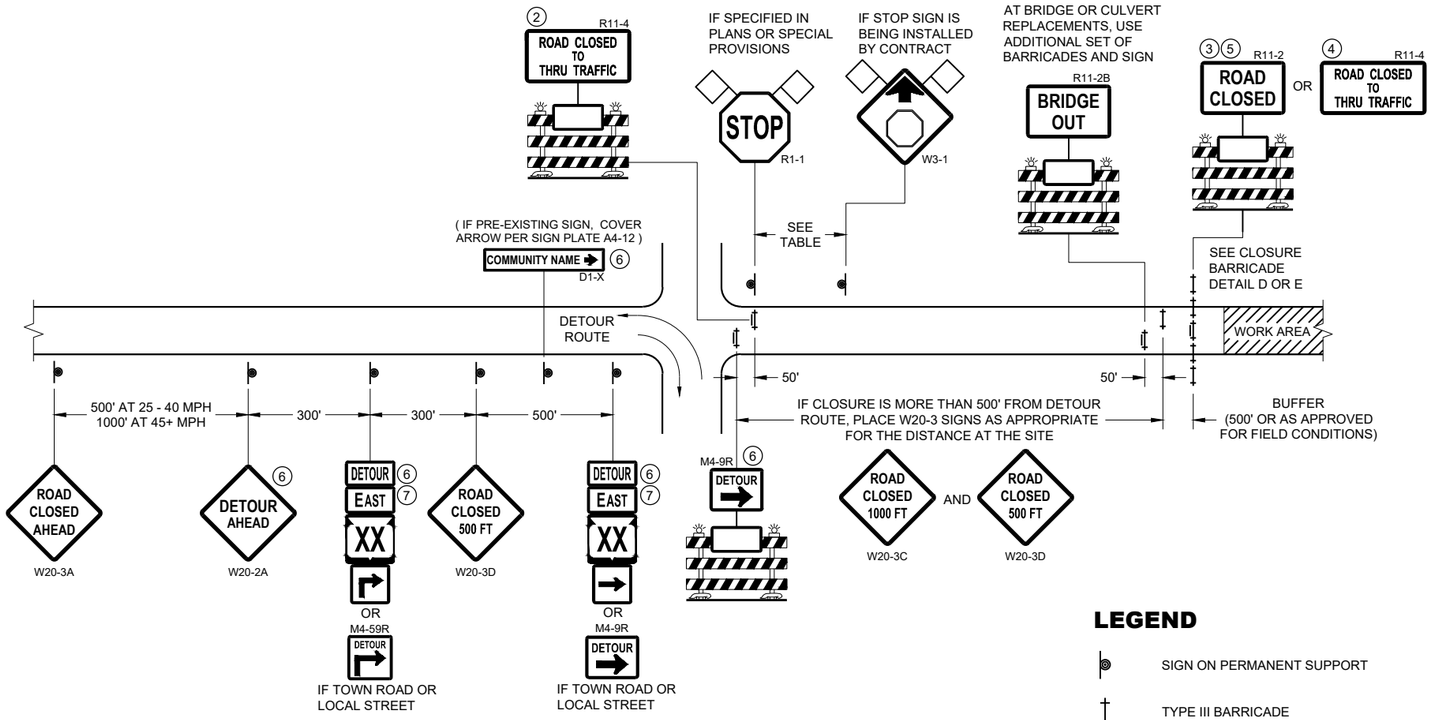


**DETAIL B**
**MAINLINE CLOSURE WITH POSTED DETOUR**
WORK ZONE LESS THAN ½ MILE FROM DETOUR ROUTE ( 1000 FEET IF URBAN )

## LEGEND

- SIGN ON PERMANENT SUPPORT
- TYPE III BARRICADE
- TYPE III BARRICADE WITH ATTACHED SIGN
- TYPE "A" WARNING LIGHT (FLASHING)
- WORK AREA
- FLAGS, 16" X 16" MIN. (ORANGE)
- DETOUR — M4 - 8
- EAST — M3 - X
- XX (M1 - 4) OR XX (M1 - 6) OR COUNTY X (M1 - 5A)
- M05 - 1 OR M06 - 1

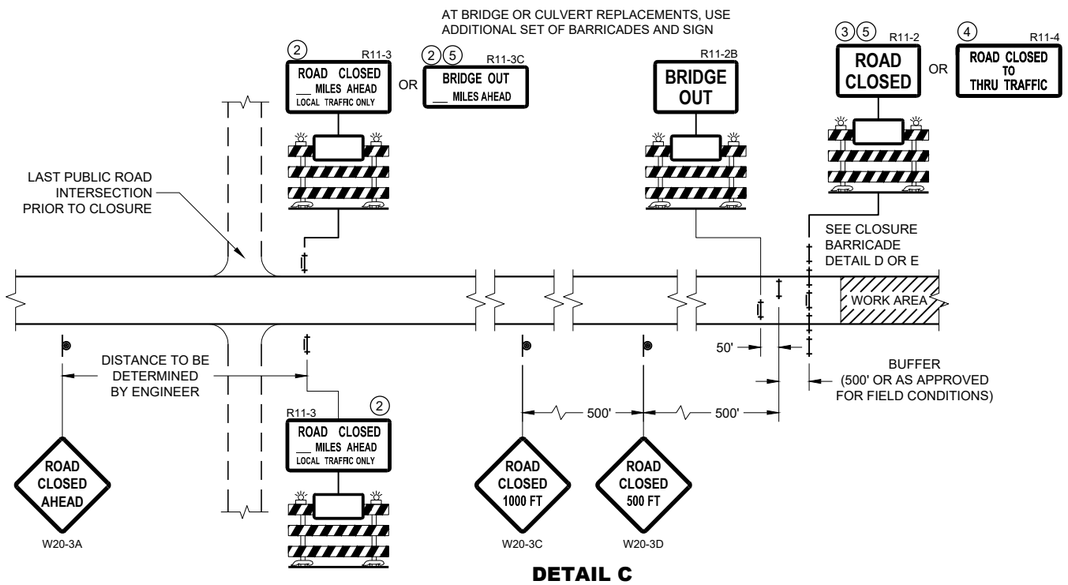


**DETAIL C**
**MAINLINE CLOSURE, NO POSTED DETOUR**

| SPEED LIMIT (MPH) | "STOP AHEAD" ADVANCE WARNING DISTANCE (FT) |
|---|---|
| 25 | 200 |
| 30 | 200 |
| 35 | 350 |
| 40 | 350 |
| 45 | 500 |
| 50 | 550 |
| 55 | 750 |

SEE SDD 15C2-SHEET "b" FOR GENERAL NOTES AND FOOTNOTES 1 THROUGH 7

**BARRICADES AND SIGNS FOR MAINLINE CLOSURES**

STATE OF WISCONSIN
DEPARTMENT OF TRANSPORTATION

APPROVED
February 2020 /S/ Andrew Heidtke
DATE WORK ZONE ENGINEER
FHWA




6


SDD 15C02 - 08a

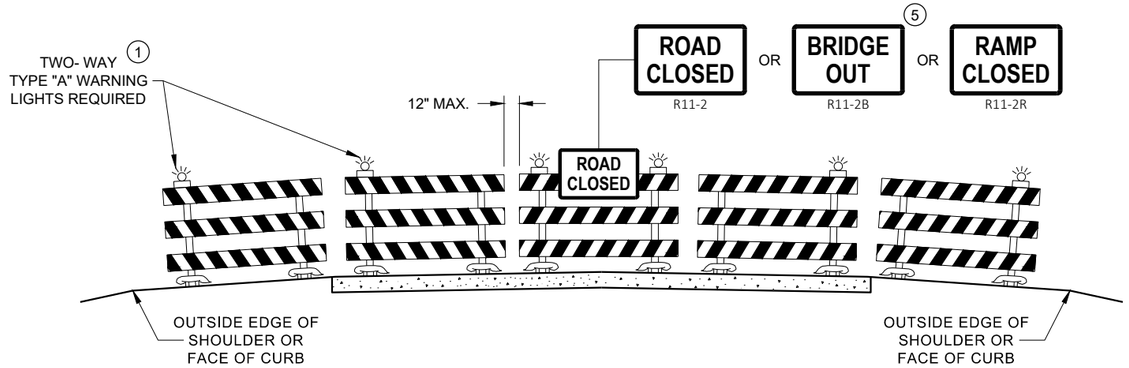


**DETAIL D**
**ROAD CLOSURE BARRICADE DETAIL**
**APPROACH VIEW**

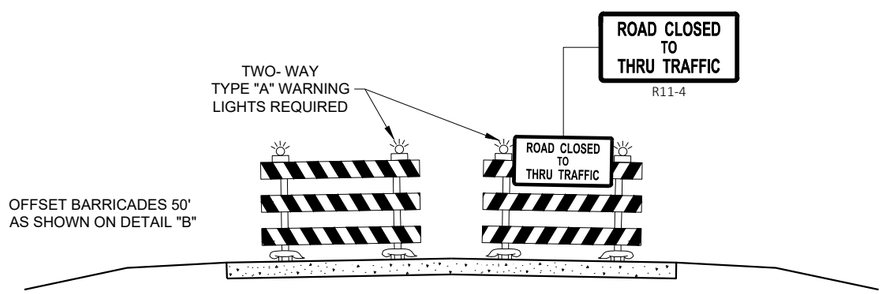


**DETAIL E**
**LANE CLOSURE BARRICADE DETAIL**
**APPROACH VIEW**

SEE SDD 15C2 - SHEET "a" FOR LEGEND

## GENERAL NOTES

THE EXACT NUMBER, LOCATION, AND SPACING OF ALL SIGNS AND BARRICADES SHALL BE ADJUSTED TO FIT FIELD CONDITIONS AS APPROVED BY THE ENGINEER.

ANY SIGNS TEMPORARY OR EXISTING, WHICH CONFLICT WITH TRAFFIC CONTROL "IN USE", SHALL BE REMOVED OR COVERED AS NEEDED AND AS APPROVED BY THE ENGINEER.

THE SPACING BETWEEN TRAFFIC CONTROL SIGNS SHOULD BE ADJUSTED TO NOT CONFLICT WITH AND SHOULD PROVIDE A DESIRABLE MINIMUM OF 200 FEET CLEARANCE TO EXISTING SIGNS THAT WILL REMAIN IN PLACE.

BARRICADES THAT MUST BE MOVED FOR A WORK OPERATION SHALL BE IMMEDIATELY RE-ESTABLISHED UPON COMPLETION OF THE OPERATION, OR FOR CONTINUING OPERATIONS, AT THE END OF EACH WORKING DAY.

SIGNS THAT WILL BE IN PLACE LESS THAN 7 CONTINUOUS DAYS AND NIGHTS MAY BE MOUNTED ON PORTABLE SUPPORTS.

ALL TYPE III BARRICADES SHALL HAVE RAILS REFLECTORIZED ON BOTH FACES. STRIPES SHALL BE PROPERLY SLOPED DOWN TOWARD THE TRAFFIC SIDE OR AS SHOWN IN THE ROAD CLOSURE BARRICADE DETAIL "D" FOR FULL ROAD CLOSURES.

TYPE "A" LOW - INTENSITY FLASHING WARNING LIGHTS SHALL BE VISIBLE ON BOTH SIDES OF THE BARRICADE.

THE R11 - 2, R11 - 3, M4 - 9, R11 - 4, AND R10 - 61 SIGNS PLACED ON THE BARRICADES SHALL COVER NO MORE THAN THE TOP RAIL. THE SIGNS SHALL NOT COVER ANY PORTION OF THE MIDDLE RAIL OR BOTTOM RAILS.

"WO" AND "MO" SIGNS ARE THE SAME AS "W" AND "M" SIGNS EXCEPT THE BACKGROUND IS ORANGE.

ALL SIGNS SHALL BE 48" X 48" UNLESS OTHERWISE NOTED BELOW:
- R11 - 2 SHALL BE 48" X 30"
- R11 - 3 SHALL, R11 - 4 AND R10 - 61 SHALL BE 60 " X 30"
- M4 - 9 SHALL BE 30" X 24"
- M3 - X SHALL BE 24" X 12" (36" X 18" IF NEEDED TO MATCH EXISTING SIGNS)
- M4 - 8 SHALL BE 24" X 12" (36" X 18" IF NEEDED TO MATCH EXISTING SIGNS)
- M1 - 4, M1 - 5A AND M1 - 6 SHALL BE 24" X 24" (36" X 36" IF NEEDED TO MATCH EXISTING SIGNS)
- MO5 - 1 AND MO6 - 1 SHALL BE 21" X 21" (30" X 30" IF NEEDED TO MATCH EXISTING SIGNS)
- D1 - X SHALL BE AS SHOWN ON SPECIFIC PROJECT SIGNING DETAIL SHEETS.
- R1 - 1 SHALL BE 36" X 36"

1. TWO WARNING LIGHTS SHALL BE PROVIDED ON THE CENTER BARRICADE AND A MINIMUM OF ONE WARNING LIGHT SHALL BE PROVIDED ON EACH OF THE OTHER BARRICADES WITHIN THE ROADWAY LIMITS. SPACING OF THE WARNING LIGHTS SHALL BE UNIFORM TO THE EDGE OF ROADWAY AS SHOWN (APPROX. 8 FOOT LIGHT SPACING.
2. THESE SIGNS AND BARRICADES ARE NOT REQUIRED IF ROAD CLOSURE BEGINS AT AN INTERSECTION.
3. FOR ROAD CLOSURE WITHOUT LOCAL ACCESS TO PROJECT, SEE ROAD CLOSURE BARRICADE DETAIL "D".
4. FOR ROAD CLOSURE WITH LOCAL ACCESS TO PROJECT, SEE ROAD CLOSURE BARRICADE DETAIL "E".
5. FOR BRIDGE OR CULVERT REPLACEMENTS, SUBSTITUTE "BRIDGE OUT" INSTEAD OF "ROAD CLOSED" ON R11 - 2 AND R11 - 3 SIGNS.
6. INSTALL DETOUR AND COMMUNITY GUIDE SIGNS AND ARROWS ONLY IF SPECIFIED IN THE CONTRACT. IF THERE ARE EXISTING ROUTE MARKER ASSEMBLIES THAT WILL REMAIN IN PLACE, ADJUST THE LOCATION OF THE DETOUR ROUTE SIGNS TO CORRESPOND WITH THE EXISTING ASSEMBLIES. MODIFY EXISTING SIGNS WHERE POSSIBLE. SEE SPECIFIC PROJECT DETOUR SIGNING DETAIL SHEETS. IF DETOUR SIGNS ARE BEING INSTALLED BY OTHERS, PLACE THE CONTRACTED TRAFFIC CONTROL SIGNS TO ALLOW FOR PLACEMENT OF ALL WARNING, DETOUR AND GUIDE SIGNS AS SHOWN.
7. "EAST" CARDINAL DIRECTION MARKERS AND RIGHT TURN ARROWS ARE SHOWN. USE OTHER CARDINAL DIRECTIONS AND ARROWS AS APPROPRIATE.

**BARRICADES AND SIGNS FOR VARIOUS CLOSURES**

STATE OF WISCONSIN
DEPARTMENT OF TRANSPORTATION

APPROVED
February 2020 — DATE
/S/ Andrew Heidtke — WORK ZONE ENGINEE
FHWA




6


SDD 15C02 - 08b

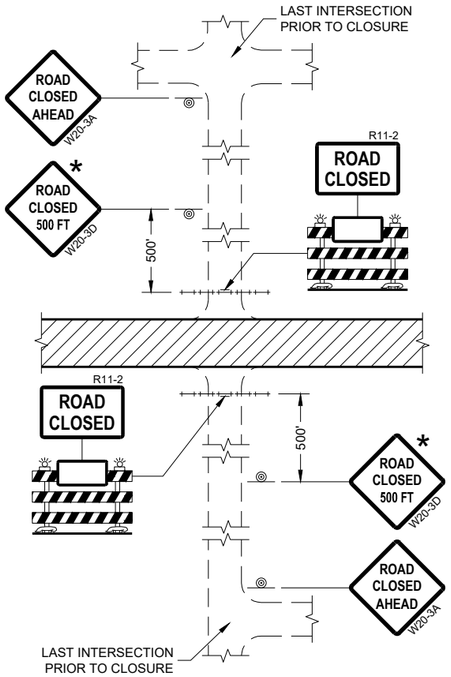


**DETAIL 1**
(NO ACCESS TO PROJECT)

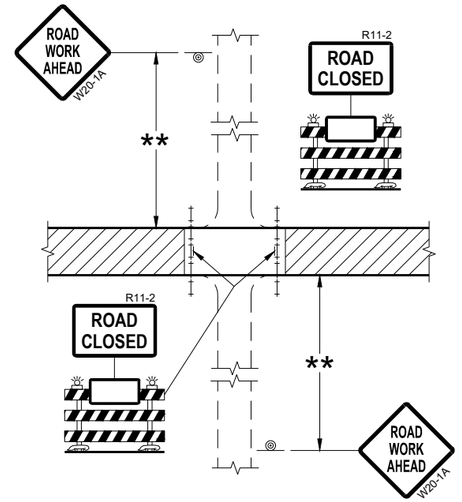


**DETAIL 2**
(PUBLIC CROSS-TRAFFIC MAINTAINED.
NO ACCESS TO PROJECT)

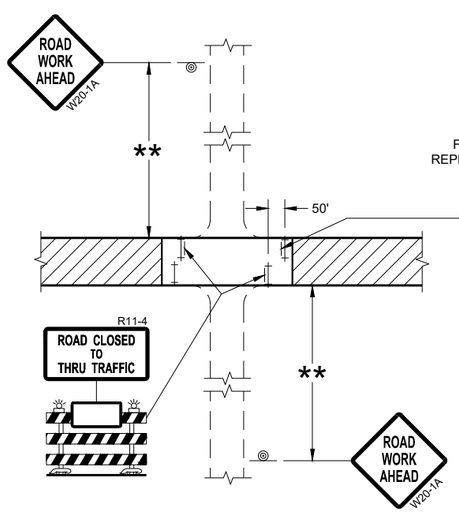


**DETAIL 3**
(PUBLIC CROSS-TRAFFIC MAINTAINED.
CONTRACTOR, LOCAL BUSINESS AND
RESIDENT ACCESS TO PROJECT)

FOR BRIDGE OR CULVERT
REPLACEMENT, USE ADDITIONAL
SIGN ON BARRICADE

BRIDGE OUT
XX MILES AHEAD
R11-3C

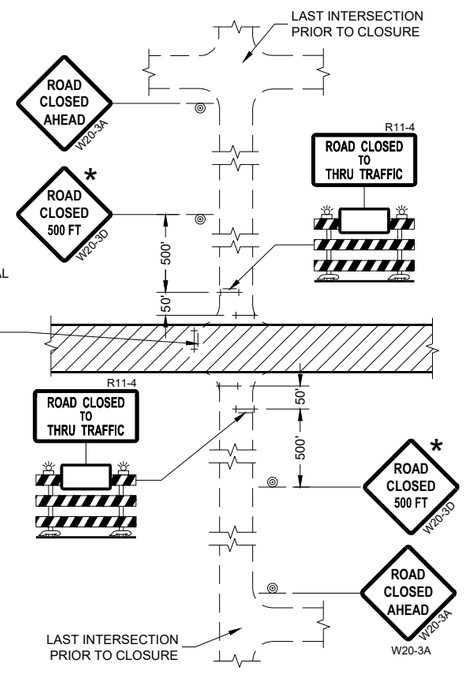


**DETAIL 4**
(CONTRACTOR, LOCAL BUSINESS AND
RESIDENT ACCESS TO PROJECT)

## GENERAL NOTES

THE EXACT NUMBER, LOCATION, AND SPACING OF ALL SIGNS AND BARRICADES SHALL BE ADJUSTED TO FIT FIELD CONDITIONS AS APPROVED BY THE ENGINEER.

ANY SIGNS TEMPORARY OR EXISTING, WHICH CONFLICT WITH TRAFFIC CONTROL "IN USE" SHALL BE REMOVED OR COVERED AS NEEDED AND AS APPROVED BY THE ENGINEER.

THE SPACING BETWEEN TRAFFIC CONTROL SIGNS SHOULD BE ADJUSTED TO NOT CONFLICT WITH AND SHOULD PROVIDE A DESIRABLE MINIMUM OF 200 FEET CLEARANCE (500 FEET DESIRABLE) TO EXISTING SIGNS THAT WILL REMAIN IN PLACE.

IF A "STOP" SIGN MUST BE REMOVED FOR A WORK OPERATION, A TEMPORARY "STOP" SIGN SHALL BE PLACED PRIOR TO THE SIGN REMOVAL, OR A FLAGGER SHALL BE PROVIDED UNTIL THE SIGN IS REESTABLISHED.

BARRICADES THAT MUST BE MOVED FOR A WORK OPERATION SHALL BE IMMEDIATELY REESTABLISHED UPON COMPLETION OF THE OPERATION OR FOR CONTINUING OPERATIONS, AT THE END OF EACH WORKING DAY.

SIGNS THAT WILL BE IN PLACE LESS THAN SEVEN CONTINUOUS DAYS AND NIGHTS MAY BE MOUNTED ON PORTABLE SUPPORTS.

ALL TYPE III BARRICADES SHALL HAVE RAILS REFLECTORIZED ON BOTH FACES. STRIPES SHALL BE PROPERLY SLOPED DOWN TOWARD THE TRAFFIC SIDE OR AS SHOWN IN THE ROAD CLOSURE BARRICADE DETAIL "D" FOR FULL ROAD CLOSURES.

TYPE "A" LOW-INTENSITY FLASHING WARNING LIGHTS SHALL BE VISIBLE ON BOTH SIDES OF THE BARRICADE.

THE R11-2, R11-3, AND R11-4 SIGNS PLACED ON BARRICADES SHALL COVER NO MORE THAN THE TOP RAIL. THE SIGNS SHALL NOT COVER ANY PORTION OF THE MIDDLE OR BOTTOM RAILS.

ALL SIGNS SHALL BE 48" X 48" UNLESS OTHERWISE NOTED BELOW:
R11-2 SHALL BE 48" X 30".
R11-4 AND R11-3 SHALL BE 60" X 30".

* OMIT THE "ROAD CLOSED 500 FT." SIGN IF THE LAST INTERSECTION IS 500 FEET OR LESS FROM THE WORK ZONE.

** 500' MAX. OR AT LAST INTERSECTION, WHICHEVER IS CLOSEST.

## LEGEND

- SIGN ON PERMANENT SUPPORT
- TYPE III BARRICADE
- TYPE III BARRICADE WITH ATTACHED SIGN
- TYPE "A" WARNING LIGHT (FLASHING)
- WORK AREA

6

6

SDD 15C03 - 05

SDD 15C03 - 05

**BARRICADES AND SIGNS FOR SIDEROAD CLOSURES**

STATE OF WISCONSIN
DEPARTMENT OF TRANSPORTATION

APPROVED
July 2018 — DATE
/S/ Andrew Heidtke — WORK ZONE ENGINEE
FHWA

## GENERAL NOTES

THE EXACT NUMBER, LOCATION, AND SPACING OF ALL SIGNS AND DEVICES SHALL BE ADJUSTED TO FIT FIELD CONDITIONS.

THE SPACING BETWEEN TRAFFIC CONTROL SIGNS SHOULD BE ADJUSTED TO NOT CONFLICT WITH AND SHOULD PROVIDE A MINIMUM OF 200 FEET (500 FEET DESIRABLE) CLEARANCE TO EXISTING SIGNS THAT WILL REMAIN IN PLACE.

ALL SIGNS ARE 48" X 48" UNLESS OTHERWISE NOTED.

SIGNS THAT WILL BE IN PLACE LESS THAN SEVEN CONTINUOUS DAYS AND NIGHTS MAY BE MOUNTED ON PORTABLE SUPPORTS.

IF A "STOP" SIGN MUST BE REMOVED FOR A WORK OPERATION, A TEMPORARY "STOP" SIGN SHALL BE PLACED PRIOR TO THE SIGN REMOVAL, OR A FLAGGER SHALL BE PROVIDED UNTIL THE SIGN IS REESTABLISHED.

* OMIT G20-1 SIGNS IF LENGTH OF WORK AREA IS 2 MILES OR LESS

** PLACE AN ADDITIONAL W20-1A "ROAD WORK AHEAD" SIGN IF WORK AREA WITHIN THE PROJECT IS SEPARATED BY MORE THAN 2 MILES FROM PREVIOUS WORK AREA.

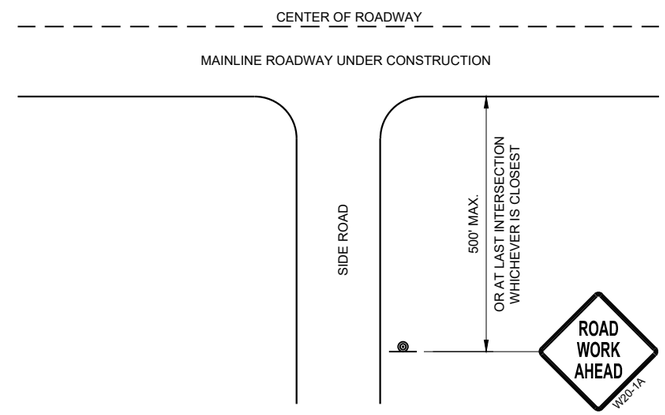


**TYPICAL SIDE ROAD APPROACH WARNING SIGN DETAIL**

## LEGEND

- SIGN ON PERMANENT SUPPORT
- DIRECTION OF TRAFFIC
- WORK AREA

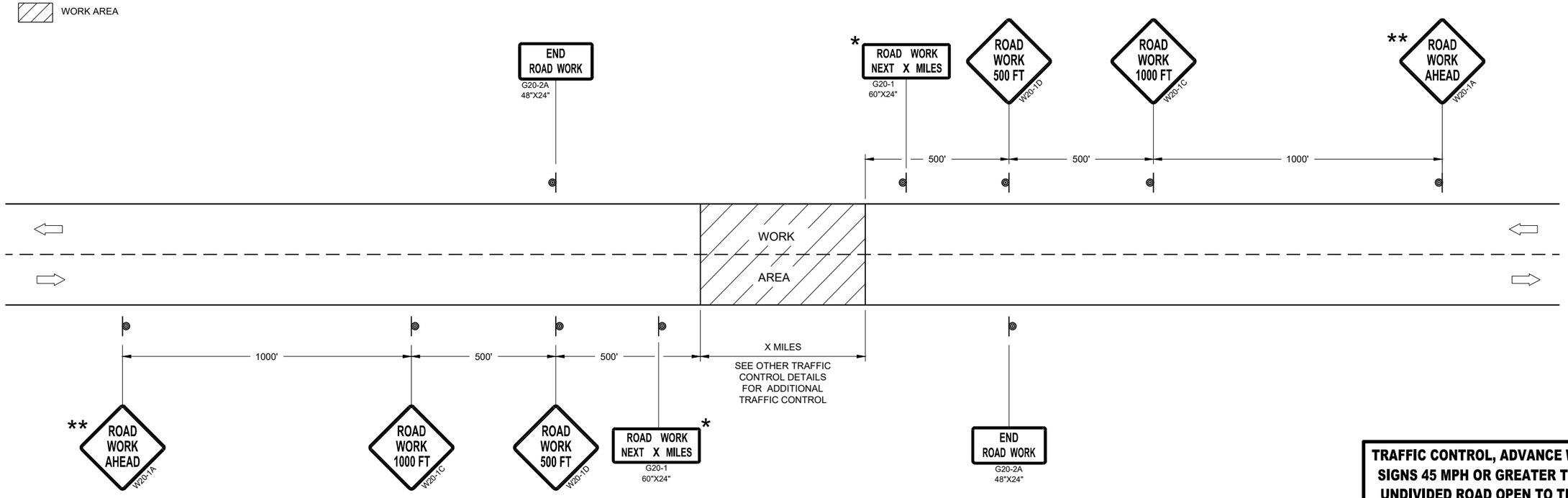


**TRAFFIC CONTROL, ADVANCE WARNING SIGNS 45MPH OR GREATER**

**TRAFFIC CONTROL, ADVANCE WARNING SIGNS 45 MPH OR GREATER TWO-WAY UNDIVIDED ROAD OPEN TO TRAFFICE**

STATE OF WISCONSIN
DEPARTMENT OF TRANSPORTATION

APPROVED
July 2018 — DATE
/S/ Andrew Heidtke — WORK ZONE ENGINEE
FHWA



6
SDD 15C04 - 05

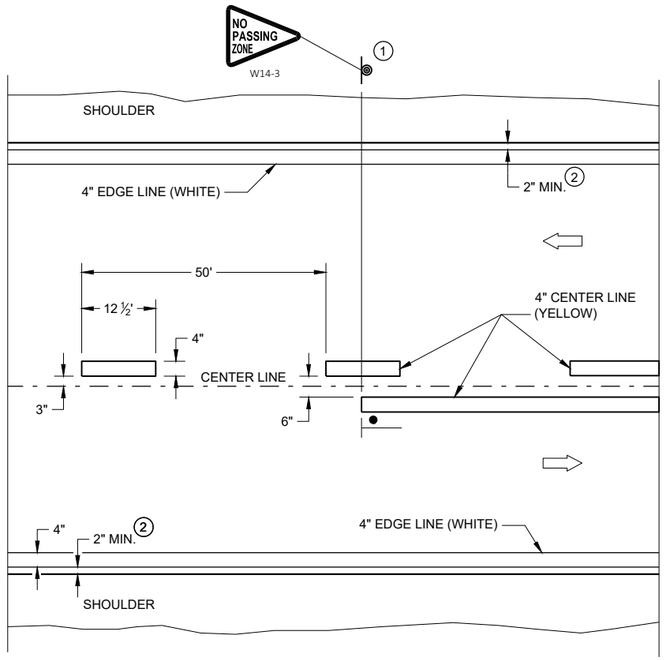


**TWO WAY TRAFFIC**

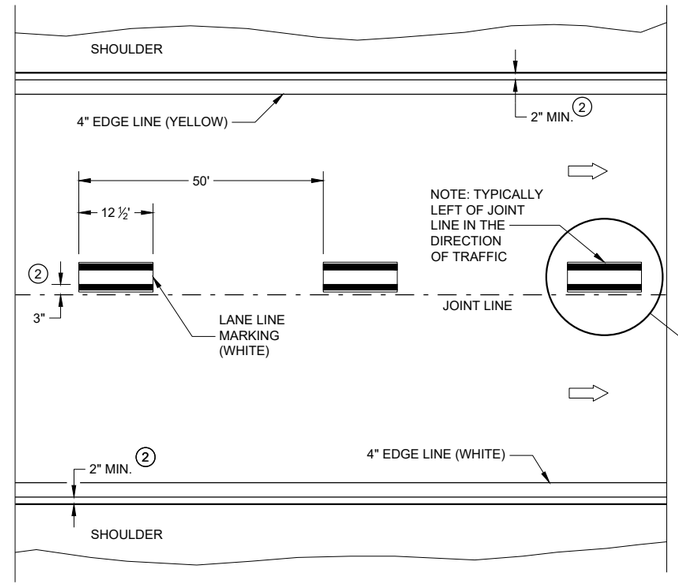


**ONE WAY TRAFFIC**

**PERMANENT PAVEMENT MARKING**

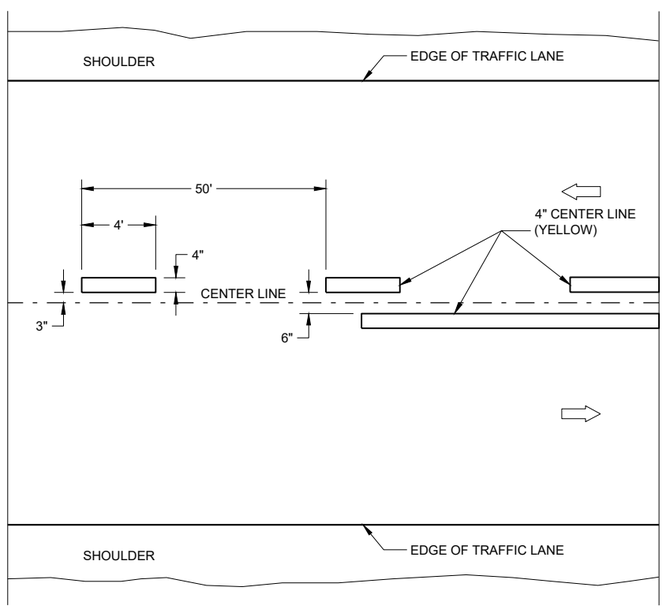


**TWO WAY TRAFFIC**

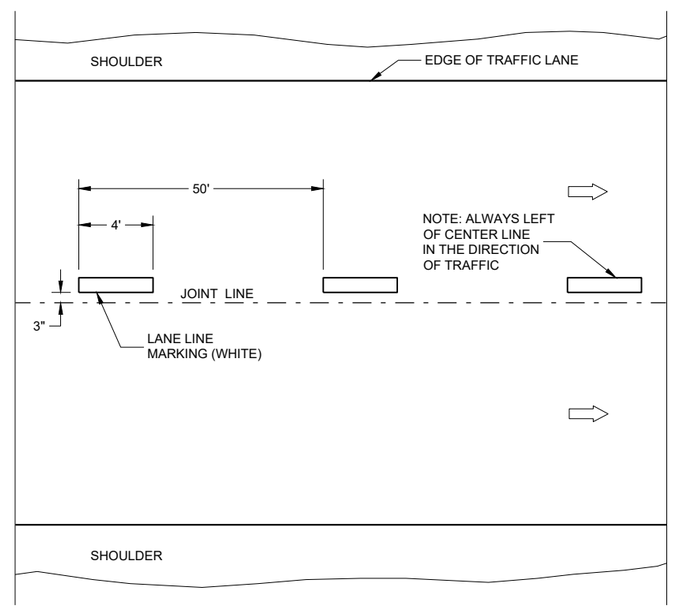


**ONE WAY TRAFFIC**

**TEMPORARY PAVEMENT MARKING**

## GENERAL NOTES

DETAILS OF CONSTRUCTION NO SHOWN ON THIS DRAWING SHALL CONFORM TO STANDARD SPECIFICATIONS AND SPECIAL PROVISIONS.

1. LOCATE THE NO PASSING ZONE W14-3 SIGN WITH 50 FEET OF THE "T" MARKING
2. MEASURE FROM EDGE OF MARKING TO JOINT LINE. THIS DOES NOT INCLUDE SPACE NEEDED FOR GROOVING OPERATIONS.

## LEGEND

"T" MARKING

SIGN ON PERMANENT SUPPORT

DIRECTION OF TRAFFIC

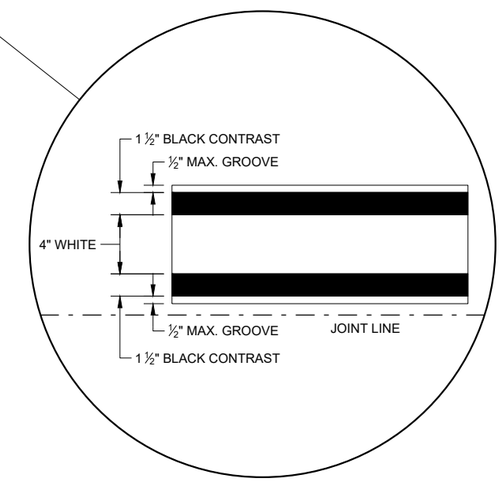


**LONGITUDINAL MARKING (MAINLINE)**

STATE OF WISCONSIN
DEPARTMENT OF TRANSPORTATION

APPROVED
February 2020 — DATE
/S/ Matthew Rauch — STATEWIDE SIGNING AND M ENGINEER
FHWA



6

SDD 15C08 - 20a

## GENERAL NOTES

1. REFLECTIVE SHEETING SHALL FOLLOW THE REQUIREMENTS IN THE APPROVED PRODUCTS LISTING FOR SIGN SHEETING.
2. LOCATION OF WARNING LIGHTS WHEN SHOWN ON THE PLAN.

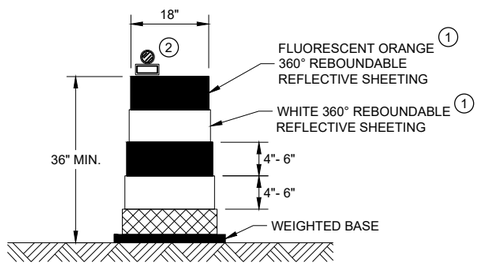


### DRUM

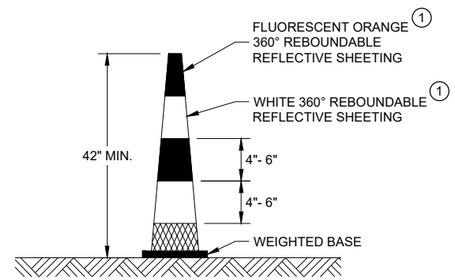


### 42" CONE

DO NOT USE IN TAPERS
½ SPACING OF DRUMS

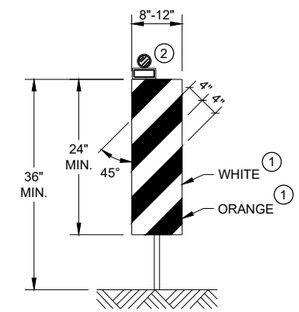


### VERTICAL PANEL

THE STRIPES SHALL SLOPE DOWNWARD TO
THE TRAFFIC SIDE FOR CHANNELIZATION.

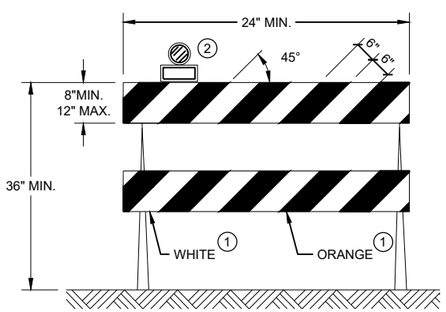


### TYPE II BARRICADE

FOR RAILS LESS THAN 36" LONG, 4" WIDE STRIPES
MAY BE USED. ALL STRIPES SHALL SLOPE DOWNWARD
TO THE TRAFFIC SIDE FOR CHANNELIZATION.

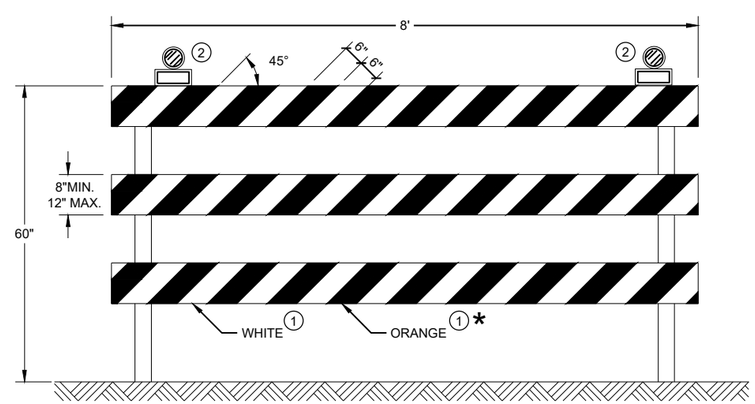


### TYPE III BARRICADE

IF SIGN MOUNTED, DO NOT COVER MORE THAN 50% OF THE TOP
TWO RAILS OR 33% OF THE TOTAL AREA OF THE THREE RAILS.

* IF USED FOR A PERMANENT APPLICATION USE RED SHEETING.

**CHANNELIZING DEVICES DRUMS, CONES, BARRICADES AND VERTICAL PANELS**

STATE OF WISCONSIN
DEPARTMENT OF TRANSPORTATION

APPROVED
June 2017 — DATE
/S/ Andrew Heidtke — WORK ZONE ENGINEE
FHWA



6
SDD 15C11 - 07b

## GENERAL NOTES

STOP SIGN SHALL BE PLACED A MINIMUM OF 6 FEET TO A MAXIMUM OF 50 FEET FROM THE EDGELINE LOCATION.

1. 18-INCH STOP LINES MAY BE DELETED OR ADDED BY THE REGION MARKING ENGINEER BASED ON VISIBILITY AND SIGHT LINES.
2. NO STOP LINE IS REQUIRED IF STOP SIGN IS LESS THAN OR EQUAL TO 40 FEET FROM THE EDGELINE.
3. NO STOP LINE IS REQUIRED IF STOP SIGN IS LESS THAN OR EQUAL TO 30 FEET FROM THE FLANGELINE EXTENSION.
4. MOVE CLOSER TO THE EDGE OF TRAVEL LINE AS NEEDED FOR VISIBILITY AND SIGHT LINES (NO CLOSER THAN 4 FEET).
5. LADDER BAR CROSSWALKS SHOULD ONLY BE USED FOR MID BLOCK CROSSINGS. USE 2 - 6" TRANSVERSE LINES INSTEAD.

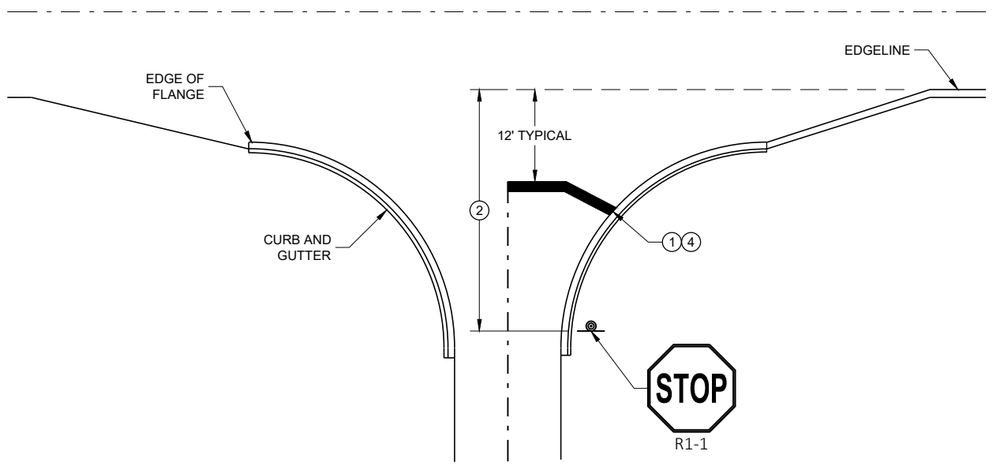


**TYPICAL STOP LINE PAVEMENT MARKING WITH CURB AND GUTTER**

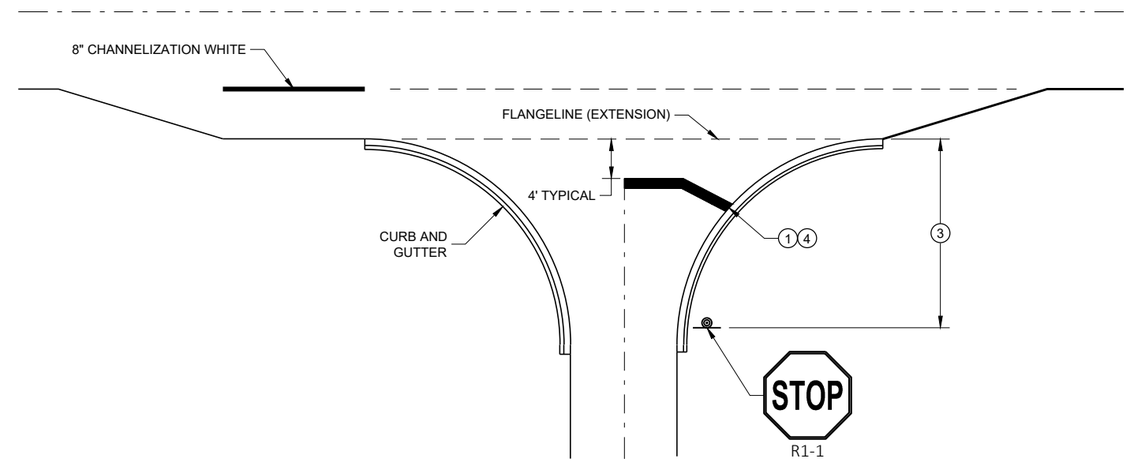


**TYPICAL STOP LINE PAVEMENT MARKING FOR SIDEROADS WITH RIGHT TURN LANE**

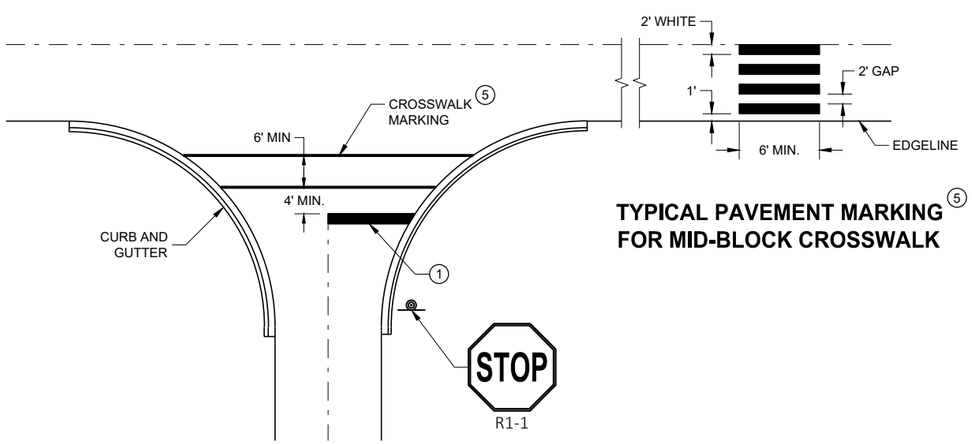


**TYPICAL PAVEMENT MARKING FOR MID-BLOCK CROSSWALK** 5

**TYPICAL STOP LINE PAVEMENT MARKING FOR SIDEROADS WITH CROSSWALK MARKING**

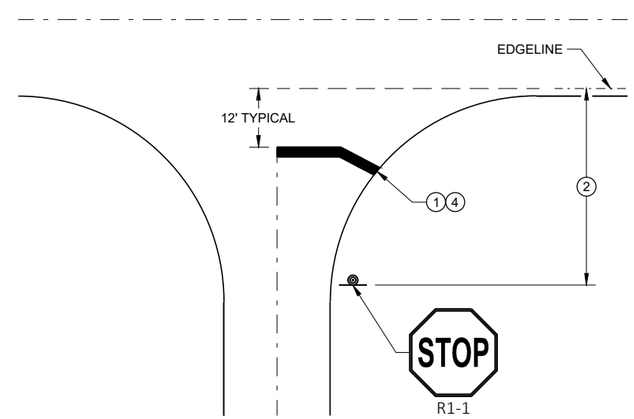


**TYPICAL STOP LINE PAVEMENT MARKING WITHOUT CURB AND GUTTER**

**STOP LINE AND CROSSWALK PAVEMENT MARKING**

STATE OF WISCONSIN
DEPARTMENT OF TRANSPORTATION

APPROVED
November 2019 — DATE
/S/ Matthew Rauch — STATE SIGNING AND MAF ENGINEER
FHWA




6


SDD 15C33 - 04

NOTE: MAY BE USED ON ROADWAY WITH POSTED SPEED OF LESS THAN 40 MPH.

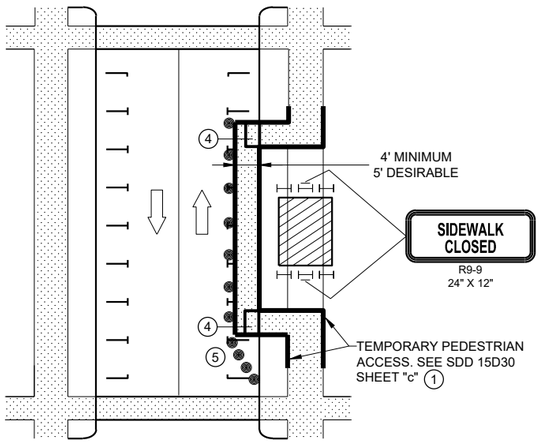


## MID-BLOCK SIDEWALK CLOSURE IN PARKING LANE

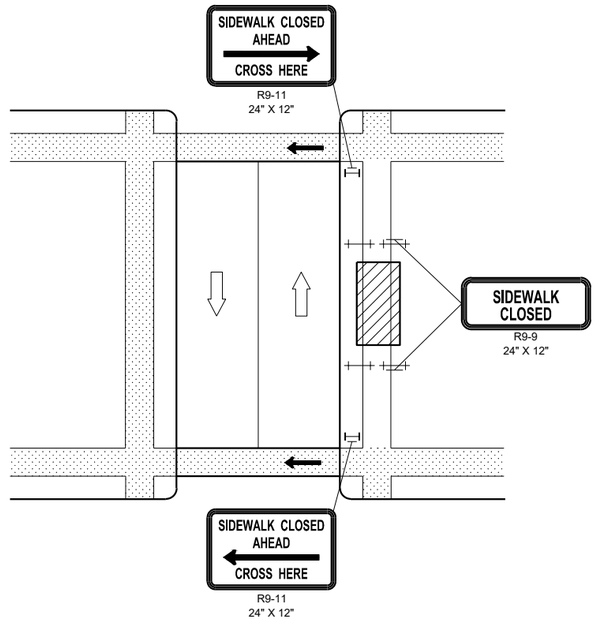


## MID-BLOCK SIDEWALK CLOSURE

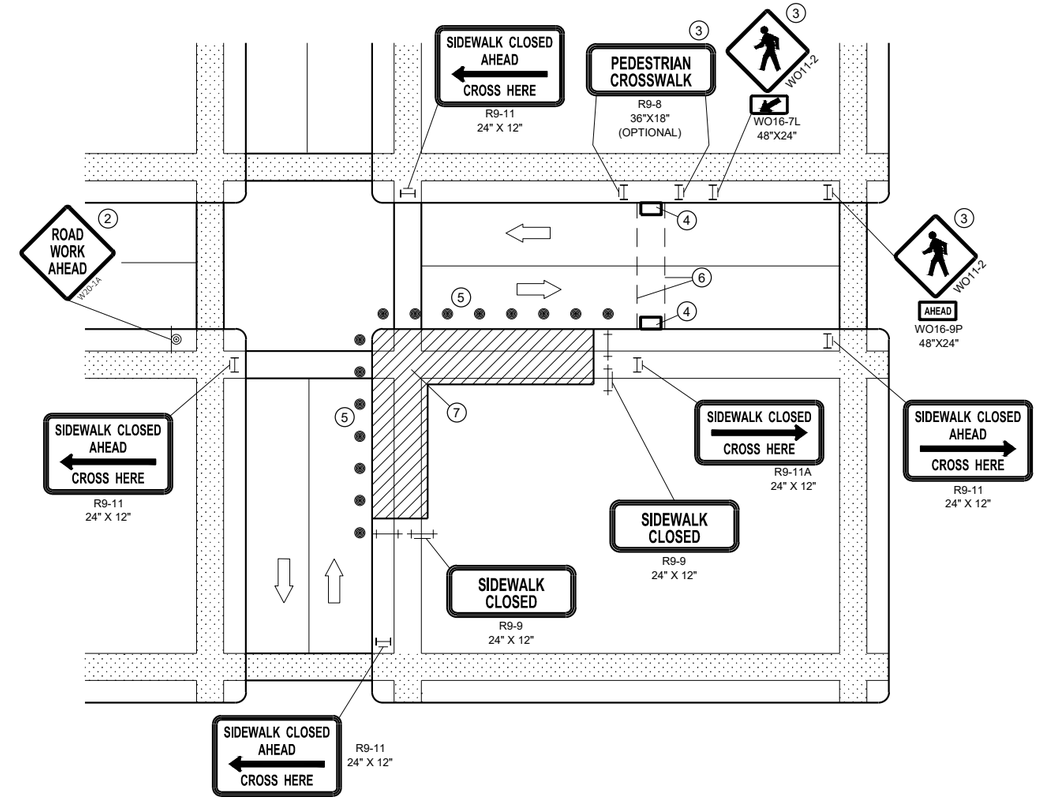


## CORNER SIDEWALK CLOSURE WITH TEMPORARY CROSSWALK

NOTE: LAYOUT SAME AS ABOVE.

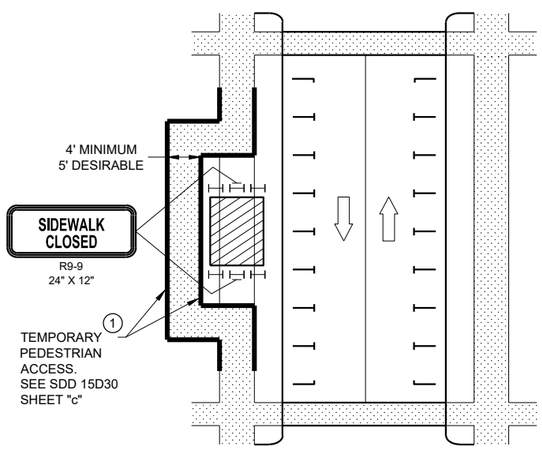


## SIDEWALK DIVERSION

## GENERAL NOTES

WHEN CLOSING OR RELOCATING CROSSWALKS OR SIDEWALKS, PROVIDE DETECABLE TEMPORARY FACILITIES AND INCLUDE ACCESSIBILITY FEATURES CONSISTENT WITH EXISTING PEDESTRIAN FACILITIES.

TEMPORARY TRAFFIC CONTROL DEVICES FOR PEDESTRIANS ARE SHOWN. OTHER DEVICES MAY BE NECESSARY TO CONTROL VEHICULAR TRAFFIC. STAGE WORK AS NECESSARY, TO PROVIDE A TEMPORARY PEDESTRIAN ACCESS ROUTE AT ALL TIMES. FOR ROADWAYS WITH NO AVAILABLE DETOURS, MAINTAIN ONE OPEN SIDEWALK AT ALL TIMES.

"WO" SIGN IS THE SAME AS "W" SIGN, EXCEPT THE BACKGROUND IS ORANGE.

FOR NIGHTIME CLOSURE, USE TYPE "A" FLASHING WARNING LIGHTS ON BARRICADES, SUPPORTING SIGNS AND CLOSING SIDEWALK. USE TYPE "C" STEADY BURN LIGHTS ON CHANNELIZING DEVICES SEPARATING THE WORK AREA FROM VEHICULAR TRAFFIC.

PEDESTRIAN TRAFFIC SIGNAL DISPLAY CONTROLLING CLOSED CROSSWALK SHALL BE COVERED OR DEACTIVATED.

POST MOUNTED SIGNS LOCATED ADJACENT TO A SIDEWALK SHALL HAVE A 7 FOOT MINIMUM CLEARANCE FROM THE BOTTOM OF THE SIGN TO THE SIDEWALK SURFACE.

ALTERNATE SIDEWALK WORK BETWEEK LEFT AND RIGHT SIDE OF ROADWAY TO MAINTAIN PEDESTRIAN ACCESS.

1. IF SIDEWALK CLOSURE AFFECTS AN ACCESSIBLE AND DETECTABLE FACILITY, MAINTAIN ACCESSIBILITY AND DETECTABILITY ALONG THE ALTERNATE PEDESTRIAN ROUTE
2. "ROAD WORK AHEAD" SIGNS ARE NOT REQUIRED IF THE SIDEWALK CLOSURE OCCURS WITHIN A LARGER WORK ZONE WHERE ADVANCE WARNING SIGNS ARE ALREADY PRESENT, OR IF THE WORK AREA AND EQUIPMENT ARE MORE THAN 2 FEET BEHIND THE CURB.
3. IF TEMPORARY PEDESTRIAN CROSSWALK IS NOT PROVIDED, OMIT R9-8 AND WO11-2 SIGN ASSEMBLIES. IF PROVIDED INCLUDE ON BOTH SIDES OF THE CROSSWALK.
4. TEMPORARY CURB RAMPS. SEE SDD 15D30 SHEET "b'.
5. DRUMS OR BARRICADES AT 25 FOOT SPACING. STREET PARKING SHALL BE PROHIBITED FOR AT LEAST 50 FEET IN ADVANCE OF THE MID-BLOCK CROSSWALK.
6. TEMPORARY PAVEMENT MARKING FOR CROSSWALK LINES.
7. LIMIT WORK TO ONE QUADRANT AT A TIME TO MINIMIZE PEDESTRIAN DISRUPTION.

## LEGEND

- SIGN ON PERMANENT SUPPORT
- TRAFFIC CONTROL DRUM
- TYPE II BARRICADE WITH/WITHOUT SIGN (ALL WITH ONE WARNING LIGHT, TYPE A, LOW INTENSITY FLASHING)
- TYPE III BARRICADE WITH/WITHOUT SIGN (ALL WITH ONE WARNING LIGHT, TYPE A, LOW INTENSITY FLASHING)
- UNDER PEDESTRIAN TRAFFIC
- WORK AREA
- PEDESTRIAN CHANNELIZATION DEVICE
- DIRECTION OF TRAFFIC

**TRAFFIC CONTROL, PEDESTRIAN ACCOMMODATION**

STATE OF WISCONSIN
DEPARTMENT OF TRANSPORTAT




6


SDD 15D30 - 06a

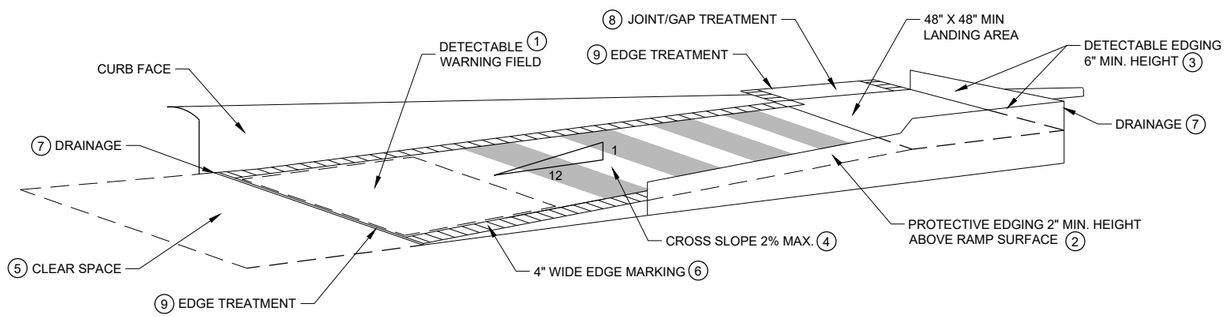


## TEMPORARY CURB RAMP PARALLEL TO CURB

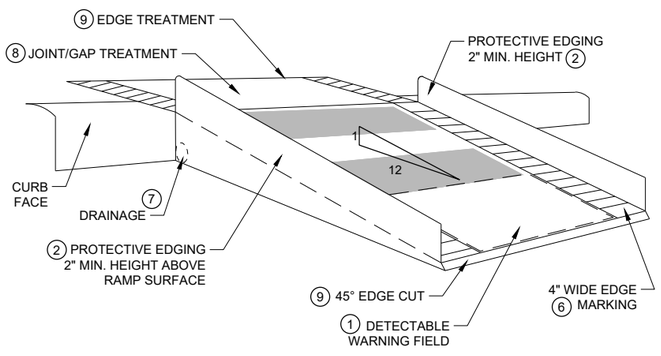


**WITH PROTECTIVE EDGE**

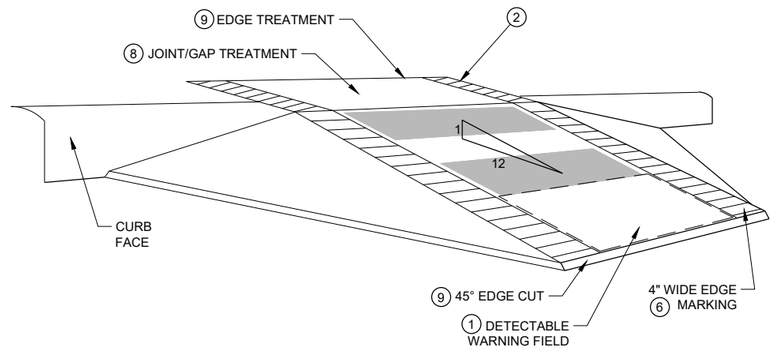


**WITH SIDE APRON**

## TEMPORARY CURB RAMP PERPENDICULAR TO CURB

## GENERAL NOTES

NOTIFY THE BUS COMPANY 7 DAYS IN ADVANCE OF THE BUS STOP RELOCATION.

ALTERNATE SIDEWALK WORK BETWEEN LEFT AND RIGHT SIDE OF ROADWAY TO MAINTAIN PEDESTRIAN ACCESS.

1. CURB RAMPS SHALL BE 48" MIN. WIDTH WITH A A FIRM, STABLE AND SLIP RESISTANT SURFACE. INSTALL CONTRASTING DETECTABLE WARNING FIELD AT PEDESTRIAN STREET CROSSINGS. REFER TO SDD 08D05, SHEET "e".
2. PROTECTIVE EDGING WITH A 2" MIN. HEIGHT SHALL BE INSTALLED WHEN A CURB RAMP OR LANDING PLATFORM HAS A VERTICAL DROP OF 6" OR GREATER OR HAS A SIDE APRON SLOPE STEEPER THAN 1:3 (33%). PROTECTIVE EDGING SHOULD BE CONSIDERED WHEN CURB RAMPS OR LANDING PLATFORMS HAVE A VERTICAL DROP OF 3" OR MORE.
3. DETECTABLE EDGING WITH 6" MIN. HEIGHT AND CONTRASTING COLOR SHALL BE INSTALLED ON ALL CURB RAMP LANDINGS WHERE THE WALKWAY CHANGES DIRECTION (TURNS).
4. CURB RAMPS AND LANDINGS SHALL HAVE A 1:50 (2%) MAX. CROSS-SLOPE.
5. CLEAR SPACE OF 48" X 48" SHALL BE PROVIDED ABOVE AND BELOW THE CURB RAMP.
6. THE CURB RAMP WALKWAY EDGE SHALL BE MARKED WITH A YELLOW COLOR, 4" WIDE MARKING, UNLESS A CONTRASTING DETECTABLE WARNING FIELD IS PROVIDED.
7. DO NOT RESTRICT WATER FLOW IN THE GUTTER SYSTEM.
8. LATERAL JOINTS OR GAPS BETWEEN SURFACES SHALL BE LESS THAN ½" WIDTH.
9. CHANGES BETWEEN SURFACE HEIGHTS SHALL NOT EXCEED ½". LATERAL EDGES SHALL BE VERTICAL UP TO ¼" HIGH AND BEVELED AT 1:2 BETWEEN ¼" AND ½".
10. 5" WIDE MIN. WITH PEDESTRIAN SAFETY BARRICADE, 10' WIDE MIN. WITHOUT PEDESTRIAN SAFETY BARRICADE.

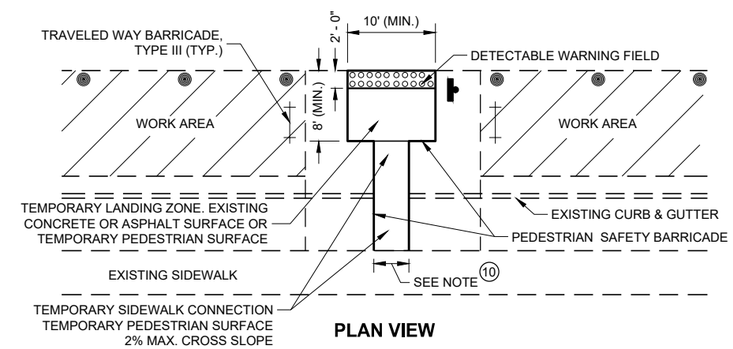


**PLAN VIEW**

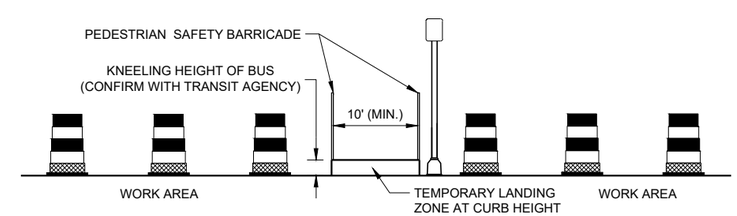


**PROFILE VIEW**

## TEMPORARY BUS STOP PAD

### LEGEND

- TRAFFIC CONTROL DRUM
- TYPE III BARRICADE
- WORK AREA

**TRAFFIC CONTROL, PEDESTRIAN ACCOMMODATION**

STATE OF WISCONSIN
DEPARTMENT OF TRANSPORTA



6

SDD 15D30 - 06b

6

SDD 15D30 - 06b

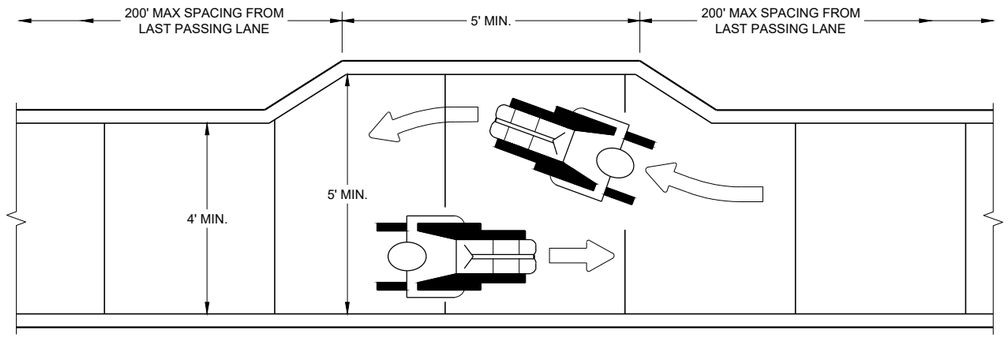


## NARROW SIDEWALK PASSING DETAIL

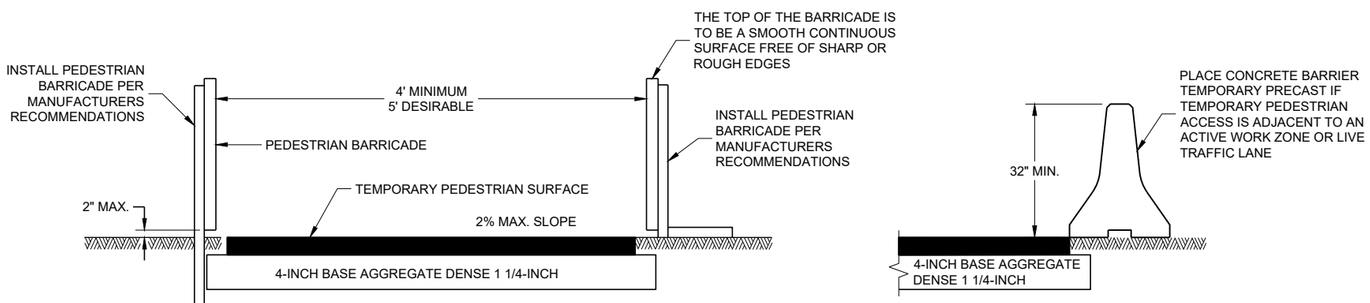


## TEMPORARY PEDESTRIAN ACCESS

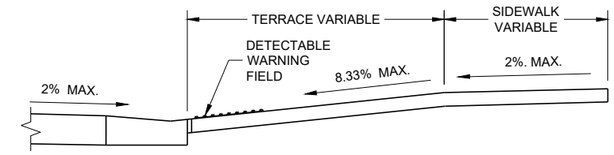


## SECTION A - A

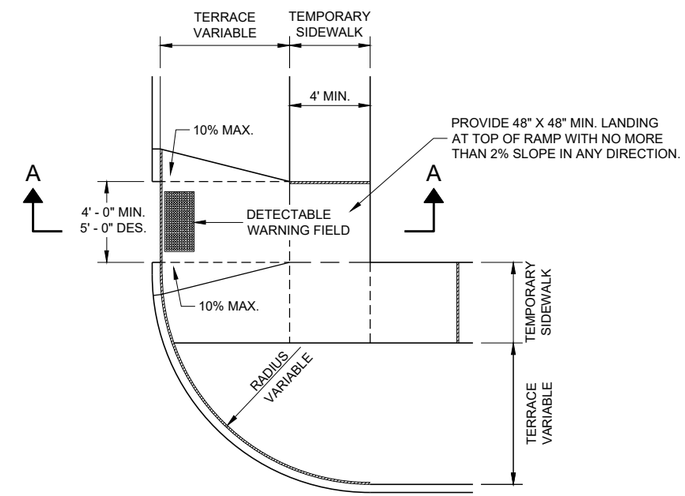


## PLAN VIEW
## TEMPORARY TYPE 3 RAMP
(OUTSIDE OF CROSSWALK AREA)

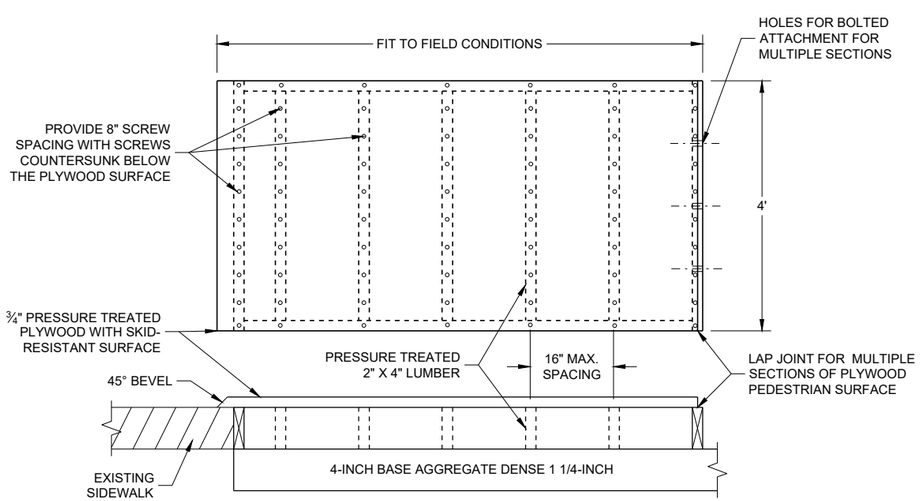


## TEMPORARY PEDESTRIAN SURFACE PLYWOOD

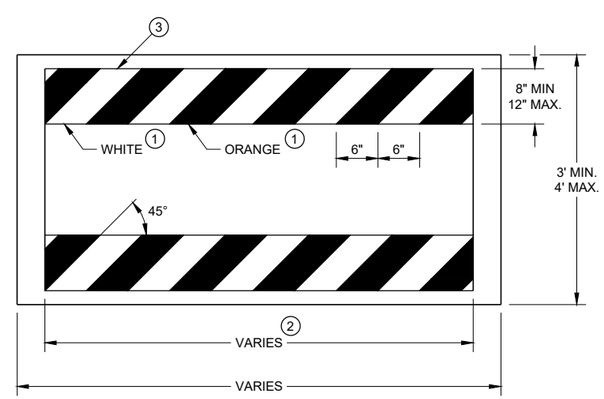


## TEMPORARY PEDESTRIAN BARRICADE *

## GENERAL NOTES

BARRICADE DEVICE SELECTED FROM APPROVED PRODUCT LIST

1. REFLECTIVE SHEETING SHALL FOLLOW THE REQUIREMENTS IN THE APPROVED PRODUCTS LISTING FOR SIGN SHEETING.
2. SHEETING REQUIRED ON MORE THAN 50% OF BARRICADE WIDTH.
3. PLACE SHEETING ON BOTH SIDES OF THE BARRICADE.

* USE THIS DETAIL FOR SHEETING PLACEMENT REFERENCE.

**TRAFFIC CONTROL, PEDESTRIAN ACCOMMODATION**

STATE OF WISCONSIN
DEPARTMENT OF TRANSPORTATION

APPROVED
November 2019 — DATE
/S/ Andrew Heidtke — WORK ZONE ENGINEE
FHWA

6

SDD 15D30 - 06c

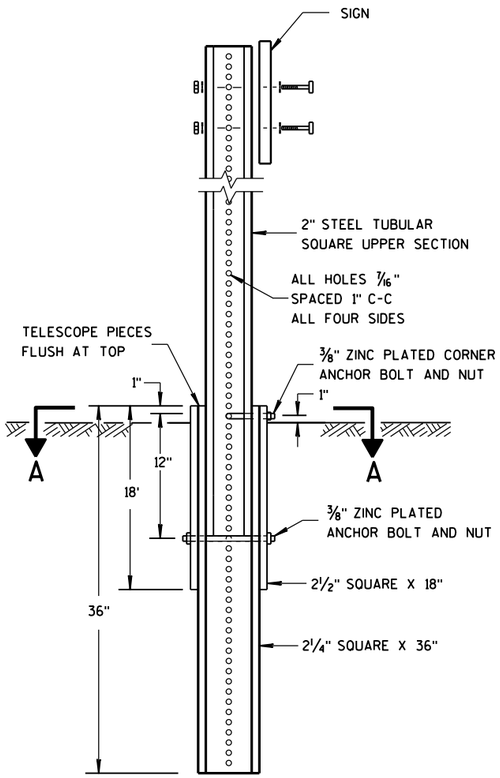


## DETAIL OF TUBULAR STEEL SIGN POST

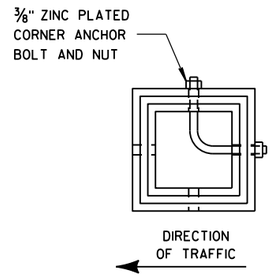


## SECTION A-A

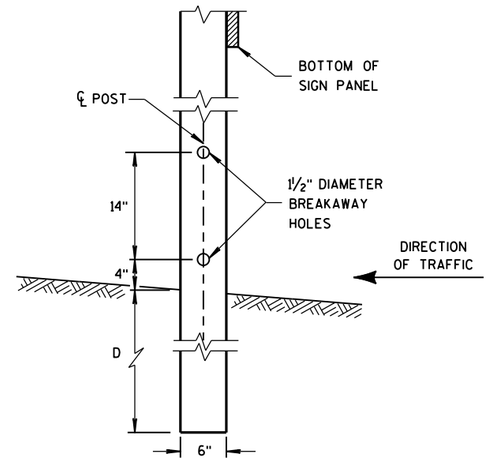


## 4"x6" WOOD POST MODIFICATION

## GENERAL NOTES

1. 6 FEET FROM THE EDGE OF PAVEMENT (EDGE LINE LOCATION) UNLESS OTHERWISE DIRECTED BY THE PROJECT ENGINEER. LATERAL OFFSET SHOULD BE ADJUSTED TO AVOID THE DITCH FLOWLINE.
2. THE EXISTENCE OF CURB AND GUTTER DOES NOT IN ITSELF MANDATE THE VERTICAL CLEARANCE ILLUSTRATED. THAT HEIGHT IS TYPICALLY MEASURED WHERE THERE IS SIDEWALK ADJACENT TO THE ROADWAY OR PARKING IS PERMITTED. IN THE ABSENCE OF SIDEWALK, VERTICAL CLEARANCE IS MEASURED FROM THE TOP OF THE CURB. IF NO SIDEWALK AND NO PARKING, VERTICAL CLEARANCE MAY BE REDUCED TO 5 FOOT MINIMUM. OFFSET OF SIGNS IS MEASURED FROM THE CURB FLOWLINE.
3. FOR SIGNS REQUIRING 4 POSTS, SPACE INTERMEDIATE POSTS EVENLY.

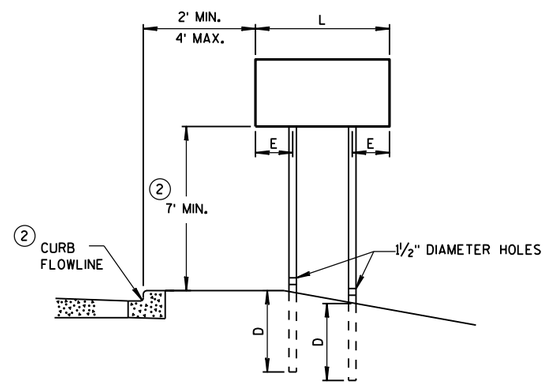


## URBAN AREA

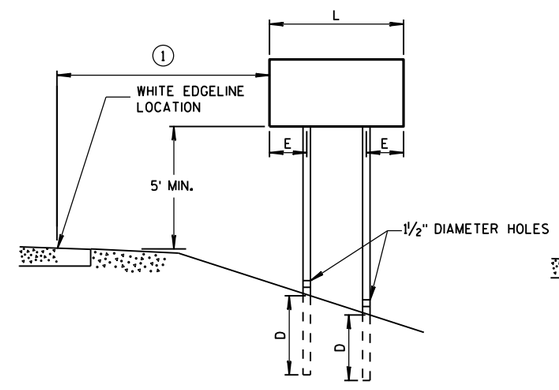


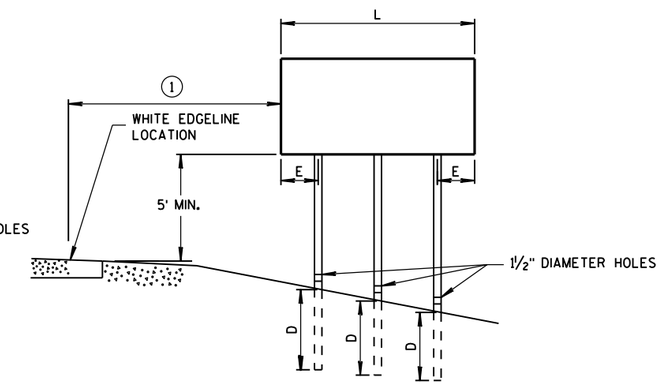


## RURAL AREA

## POST MOUNTING DETAIL FOR TEMPORARY TRAFFIC CONTROL FIXED MESSAGE SIGNS

### TUBULAR STEEL POSTS

| AREA OF SIGN INSTALLATION (SQ. FT.) | NUMBER OF REQUIRED TUBULAR STEEL POSTS |
|---|---|
| 9 OR LESS | 1 |
| GREATER THAN 9 LESS THAN OR EQUAL TO 18 | 2 |
| GREATER THAN 18 LESS THAN OR EQUAL TO 27 | 3 |

SIGNS WIDER THAN 3 FEET OR LARGER THAN 9 SQ. FT. SHALL BE MOUNTED ON MULTIPLE POSTS (SEE ABOVE TABLE).

SIGNS LARGER THAN 27 SQ. FT. SHALL NOT BE MOUNTED ON TUBULAR STEEL POSTS.

### WOOD POST EMBEDMENT DEPTH

| AREA OF SIGN INSTALLATION (SQ. FT.) | D (MIN) |
|---|---|
| 20 OR LESS | 4' |
| GREATER THAN 20 | 5' |

### 4" X 6" WOOD POST

| POST SPACING REQUIREMENTS | | NUMBER OF WOOD POSTS REQUIRED |
|---|---|---|
| L | E | |
| 48" OR LESS AND LESS THAN 20 SQ. FT. | - | 1 |
| LESS THAN 60" | 12" | 2 |
| 60" TO 120" | L/5 | 2 |
| GREATER THAN 120" LESS THAN 168" | 12" | 3 |
| 168" AND GREATER | 12" | 4 |

SEE NOTE 3

TEMPORARY TRAFFIC CONTROL SIGN MOUNTING

STATE OF WISCONSIN
DEPARTMENT OF TRANSPO







6

S.D.D. 15 D 38-2a

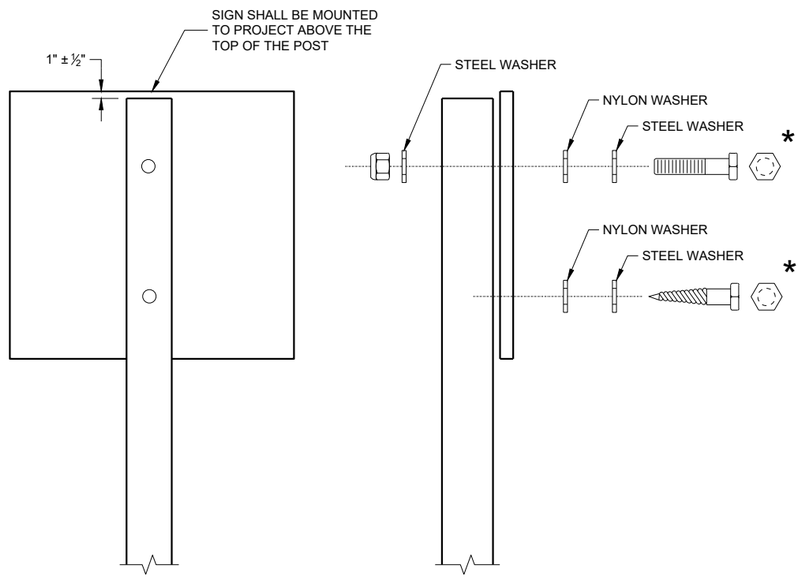


NUTS, BOLTS AND LAGS USED FOR MOUNTING SIGNS SHALL HAVE HEXAGONAL HEADS AND SHALL BE EITHER:

A. HOT DIP GALVANIZED IN ACCORDANCE WITH ASTM DESIGNATION: A 153, CLASS D, OR SC 3
B. ELECTRO-GALVANIZED IN ACCORDANCE WITH ASTM DESIGNATION: B 633, TYPE III, SC 3

THREADS ON BOLTS AND NUTS SHALL BE MANUFACTURED WITH SUFFICIENT ALLOWANCE FOR THE CADMIUM PLATE OR GALVANIZED COATING TO PERMIT THE NUTS TO RUN FREELY ON THE BOLTS.

WOOD POST (4" x 6")
LAG SCREWS - ⅜" x 3"
MACHINE BOLTS - 5/16" x 6 ½" OR 7" LENGTH W/NUTS

SQUARE STEEL POST (2" x 2")
MACHINE BOLTS - ⅜" x 3 ¼" LENGTH W/NUTS
RIVETS - 9/32" (6605-9-6) BULB-TITE, TRI-FOLD, ALUMINUM BODY/MANDREL O.D. FLANGE 0.720 - 0.765 INCH, GRIP RANGE 0.042 - 0.375 INCH

WASHERS (ALL POSTS) -
1 ¼" O.D. x ⅜" I.D. x 1/16" STEEL
1 ¼" O.D. x ⅜" I.D. x 0.080 NYLON

* TWO DIFFERENT FASTENING SYSTEMS ARE SHOWN FOR ILLUSTRATION PURPOSES. ON ANY INDIVIDUAL SIGN, EITHER ONE OR THE OTHER SYSTEM SHALL BE USED. ACTUAL NUMBER OF FASTENERS PER SIGN VARIES WITH THE SIGN AREA. FOR A SINGLE POST INSTALLATION, ALL SIGNS GREATER THAN 9 SQ. FT. REQUIRE THE USE OF 3 FASTENERS.

6

6

SDD 15D38 - 02b

**ATTACHMENT OF SIGNS TO POSTS**

STATE OF WISCONSIN
DEPARTMENT OF TRANSPORTATION

APPROVED
June 2017 — DATE
/S/ Andrew Heidtke — WORK ZONE ENGINEE
FHWA

SDD 15D38 - 02b

## URBAN AREA

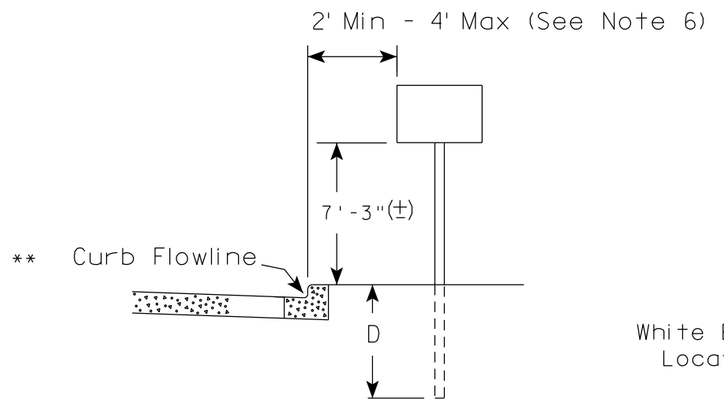


## RURAL AREA (See Note 2)

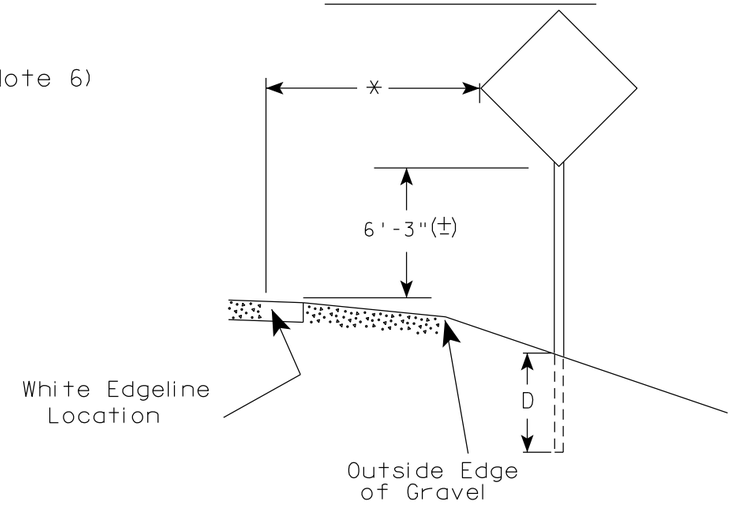


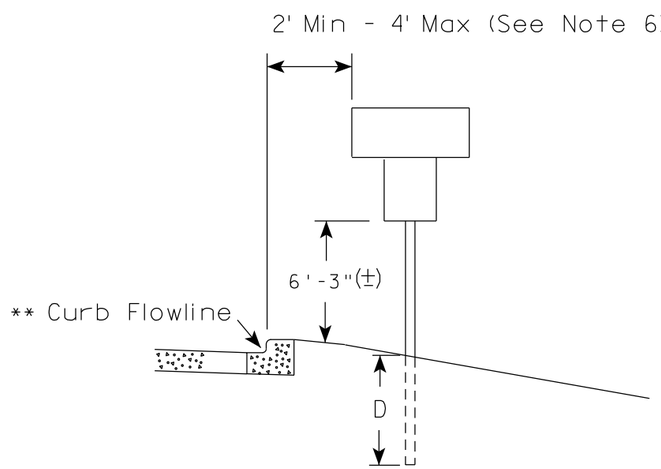


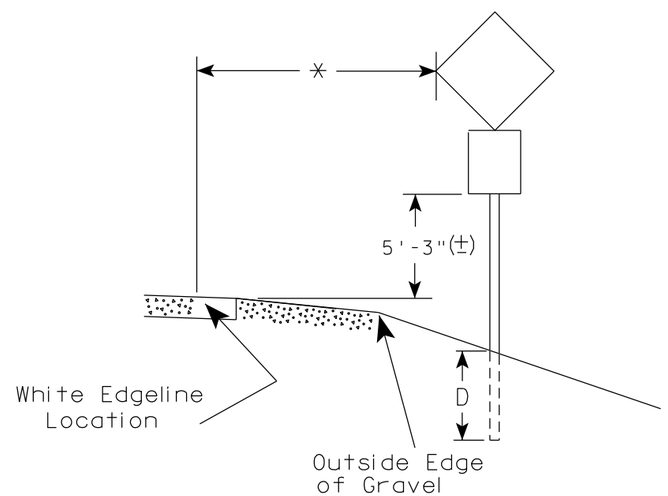


** The existence of curb and gutter does not in itself mandate the vertical clearance illustrated. That height is typically measured where there is sidewalk adjacent to the roadway or parking is permitted. In the absence of sidewalk vertical clearance is measured from the top of the curb. Offset of signs is measured from the flow line.

* 6 feet from edge of a paved shoulder or 12 feet from the edge of pavement (edge line location) or 2 feet from outside edge of gravel, whichever is greater unless directed by project engineer.

### GENERAL NOTES

1. Signs wider than 4 feet or 20 sq.ft or larger, shall be mounted on multiple posts. Refer to plate A4-4.
2. If signs are mounted on or behind barrier wall, see A4-10 sign plate.
   The Double Arrow sign (W12-1D) shall be mounted at a height of 2'-3" (±). The Chevron sign (W1-8), Roundabout Chevron panel (R6-4B), Enhanced Reference Markers, Clearance Markers (W5-52), Mile Markers (D10 series), In Road Object Markers (W5-54) & End of Road Markers (W5-56) shall be mounted at a height of 4'-3" (±).
3. For expressways and freeways, mounting height is 7'- 3" (±) or 6'-3" (±) depending upon existence of a sub-sign.
4. Minimum mounting height for signs mounted on traffic signal poles is 5'- 3" (±).
5. Offset distance shall be consistent with existing signs or consistent throughout length of project.
6. The (±) tolerance for mounting height is 3 inches.
7. Folding signs shall be mounted at a height of 5'-3" (±) or as directd by the Engineer.

### POST EMBEDMENT DEPTH

| Area of Sign Installation ( Sq.Ft.) | D ( Min ) |
|---|---|
| 20 or Less | 4' |
| Greater than 20 | 5' |

TYPICAL INSTALLATION OF PERMANENT TYPE II SIGNS ON SINGLE POSTS

WISCONSIN DEPT OF TRANSPORTATION

APPROVED Matthew R Rauch for State Traffic Engineer

DATE 5/13/2020 PLATE NO. A4-3.22

7

7

| PROJECT NO: | HWY: | COUNTY: | | SHEET NO: 106 | E |
|---|---|---|---|---|---|

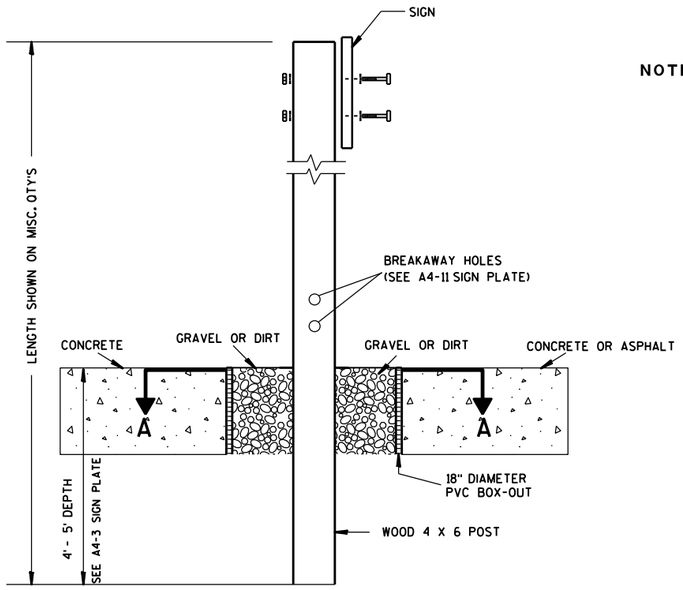


**ELEVATION VIEW**

**DETAIL OF WOOD 4 X 6 SIGN POST IN BOX-OUT**

NOTES:
1. ALL MATERIAL TO BE APPROVED BY ENGINEER PRIOR TO INSTALLATION
2. SEE SIGN PLATE A4-8 FOR SIGN HARDWARE REQUIREMENTS
3. 18 INCH X 18 INCH SQUARE BOX-OUTS MAY BE USED FOR INSTALLATIONS IN EXISTING CONCRETE OR ASPHALT LOCATIONS.

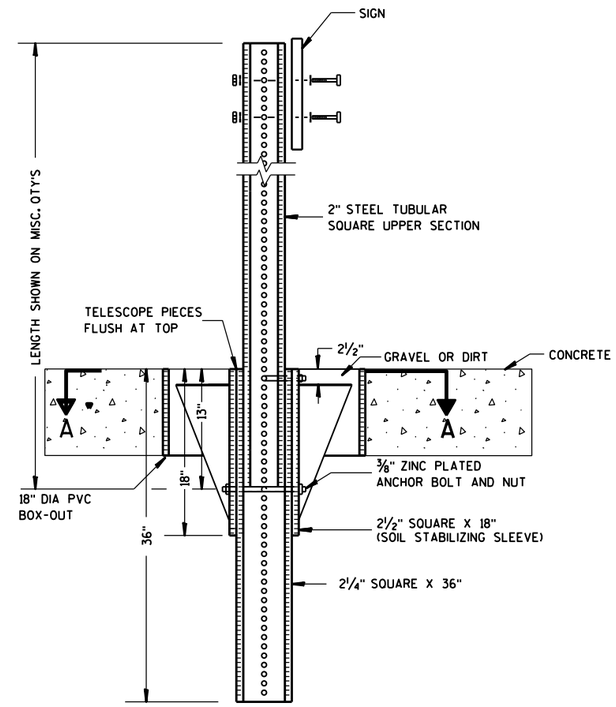


**ELEVATION VIEW**

**DETAIL OF STEEL 2 X 2 SIGN POST IN BOX-OUT**

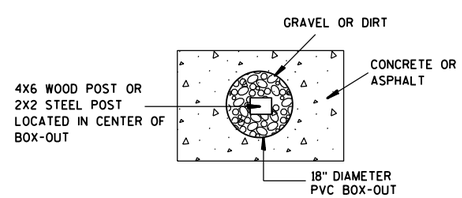


**PLAN VIEW**

**FOR NEW CONCRETE/ASPHALT INSTALLATIONS**

SIGN POST
BOX-OUTS
A4-3B

WISCONSIN DEPT OF TRANSPORTATION

APPROVED Matthew R Rauch
for State Traffic Engineer

DATE 1/27/14 PLATE NO. A4-3B.1

| PROJECT NO: | HWY: | COUNTY: | | SHEET NO: | E |
|---|---|---|---|---|---|

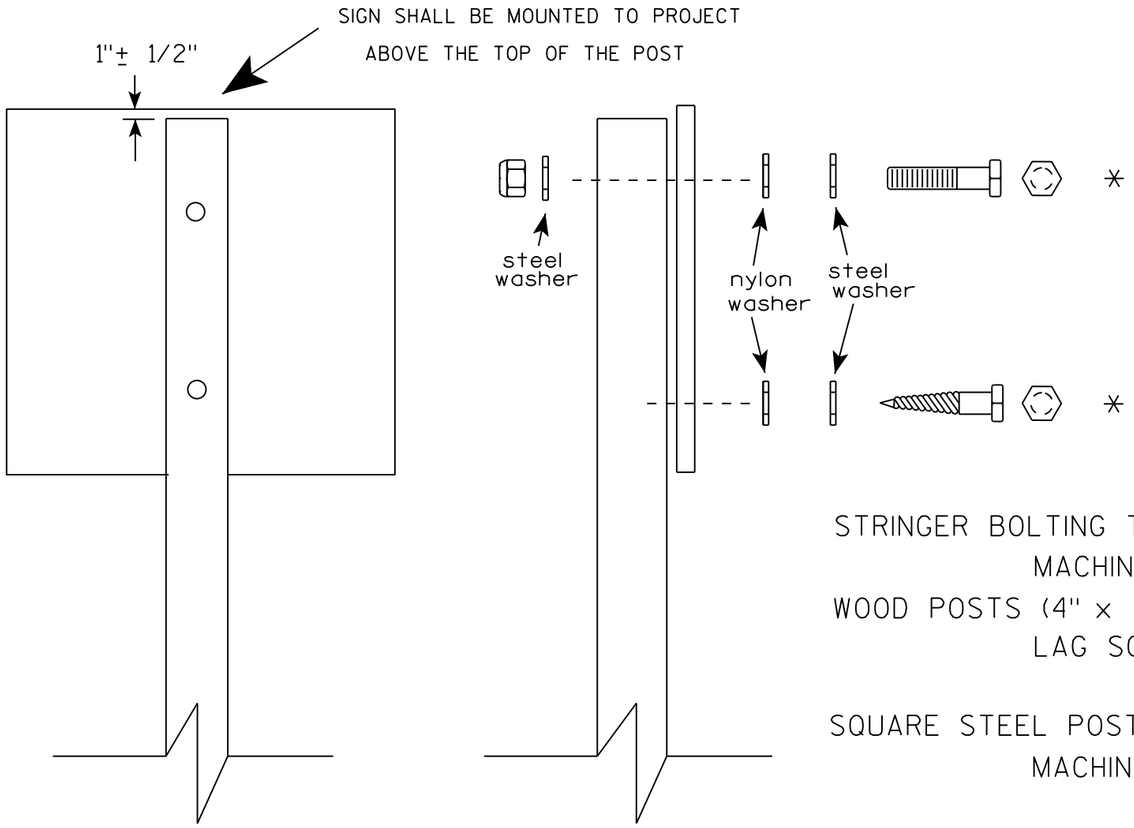


Nuts, bolts and lags used for mounting signs shall have hexagonal heads and shall be either :

a. Hot dip galvanized in accordance with ASTM Designation: A 153, Class D, or SC 3

b. Electro-galvanized in accordance with ASTM Designation : B 633, TYPE III, SC 3.

Threads on bolts and nuts shall be manufactured with sufficient allowance for the cadmium plate or galvanized coating to permit the nuts to run freely on the bolts.

STRINGER BOLTING TO ALUMINUM SIGNS (SEE SIGN PLATE A4-18)

MACHINE BOLTS - 5/16" X 1-3/4" Length w/ lock nuts

WOOD POSTS (4" x 4" or 4" x 6")

LAG SCREWS - 3/8" X 3" (NO STRINGERS ON BACK OF SIGN)

3/8" X 4" (STRINGERS ON BACK OF SIGN)

SQUARE STEEL POSTS (2" x 2")

MACHINE BOLTS - 3/8" X 3-1/4" Length w/ nuts (NO STRINGER ON BACK OF SIGN)

3/8" X 5" Length w/ nuts (STRINGERS ON BACK OF SIGN)

RIVETS - 9/32 " (6605-9-6) BULB-TITE, TRI-FOLD, ALUMINUM BODY/MANDREL

O.D. FLANGE .720-.765 INCH, GRIP RANGE .042-.375 INCH

WASHERS (ALL POSTS) -

1-1/4" O.D. X 3/8" I.D. X 1/16" STEEL

1-1/4" O.D. X 3/8" I.D. X .080 NYLON

* Two different fastening systems are shown for illustration purposes. On any individual sign, either one or the other system shall be used. Actual number of fasteners per sign varies with the sign area, but normally there are two. For a single post installation, all signs greater than 9 sq. ft. require the use of 3 fasteners.

ATTACHMENT OF SIGNS TO POSTS

WISCONSIN DEPT OF TRANSPORTATION

APPROVED Matthew R Rauch for State Traffic Engineer

DATE 8/11/16 PLATE NO. A4-8.8



PROJECT NO: SHEET NO: E

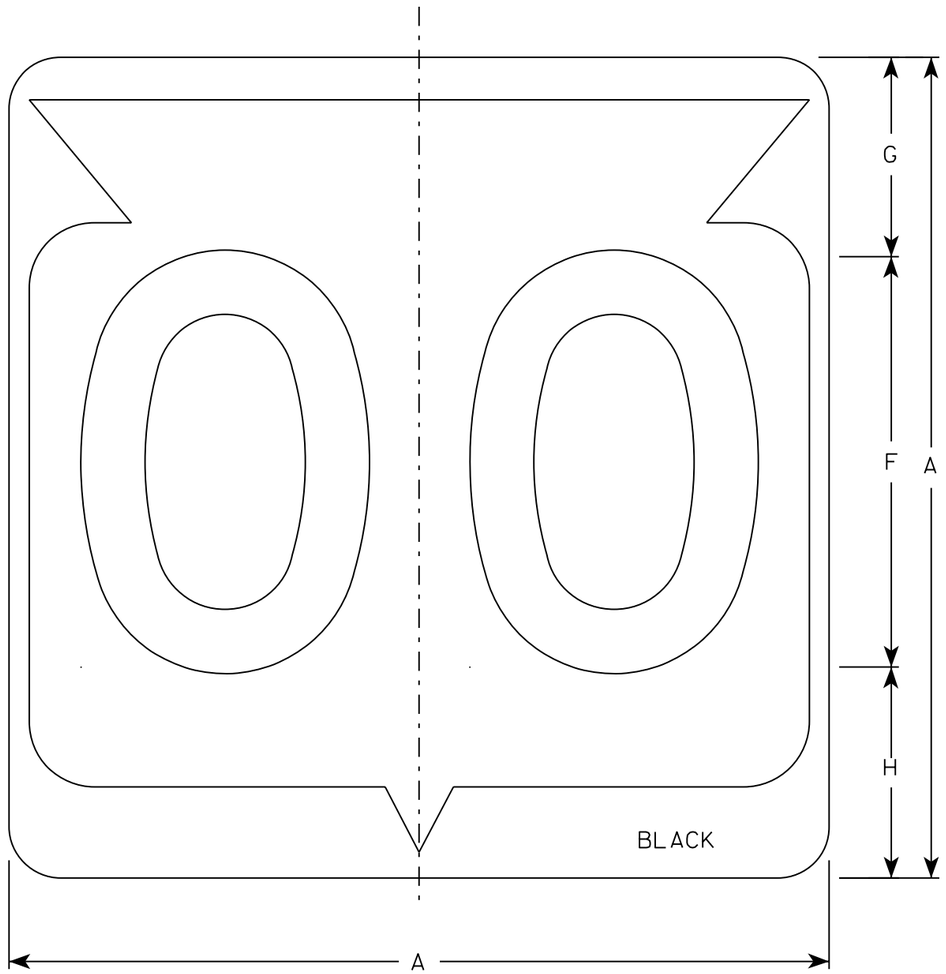


M1-6

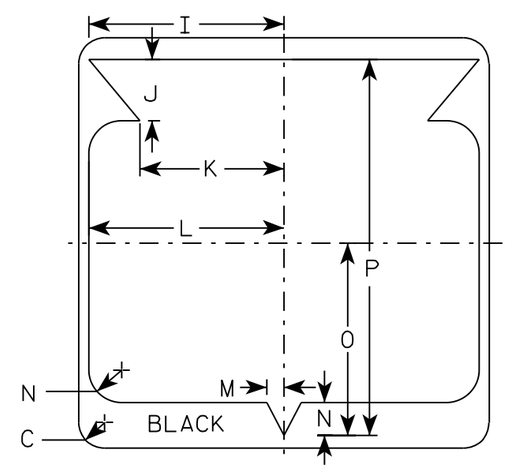


NOTES

1. Sign is Type II - Type H Reflective
2. Color:
   Background - White
   Message - Black
3. Message Series - D except 3 number signs Series C
4. Corners may be square or rounded when base material is plywood but borders shall be rounded as shown. When base material is metal, the corners and borders shall be rounded.

| SIZE | A | B | C | D | E | F | G | H | I | J | K | L | M | N | O | P | Q | R | S | T | U | V | W | X | Y | Z | Area sq. ft. |
|---|---|---|---|---|---|---|---|---|---|---|---|---|---|---|---|---|---|---|---|---|---|---|---|---|---|---|---|
| 1 | | | | | | | | | | | | | | | | | | | | | | | | | | | |
| 2 | 24 | | 1 1/2 | | | 12 | 5 1/2 | 6 1/2 | 10 1/4 | 2 1/2 | 8 7/8 | 11 1/2 | 1 | 1 7/8 | 11 1/4 | 21 7/8 | | | | | | | | | | | 4.0 |
| 3 | 36 | | 2 1/4 | | | 18 | 8 3/4 | 9 1/4 | 15 3/8 | 5 3/8 | 12 5/8 | 17 1/8 | 1 1/2 | 2 7/8 | 16 7/8 | 33 | | | | | | | | | | | 9.0 |
| 4 | 36 | | 2 1/4 | | | 18 | 8 3/4 | 9 1/4 | 15 3/8 | 5 3/8 | 12 5/8 | 17 1/8 | 1 1/2 | 2 7/8 | 16 7/8 | 33 | | | | | | | | | | | 9.0 |
| 5 | 36 | | 2 1/4 | | | 18 | 8 3/4 | 9 1/4 | 15 3/8 | 5 3/8 | 12 5/8 | 17 1/8 | 1 1/2 | 2 7/8 | 16 7/8 | 33 | | | | | | | | | | | 9.0 |

STATE ROUTE MARKER
M1-6 FOR ASSEMBLIES

WISCONSIN DEPT OF TRANSPORTATION

APPROVED Matthew R Rauch
for State Traffic Engineer

DATE 3/16/18 PLATE NO. M1-6.10

PROJECT NO: | HWY: | COUNTY: | SHEET NO: 109 | E

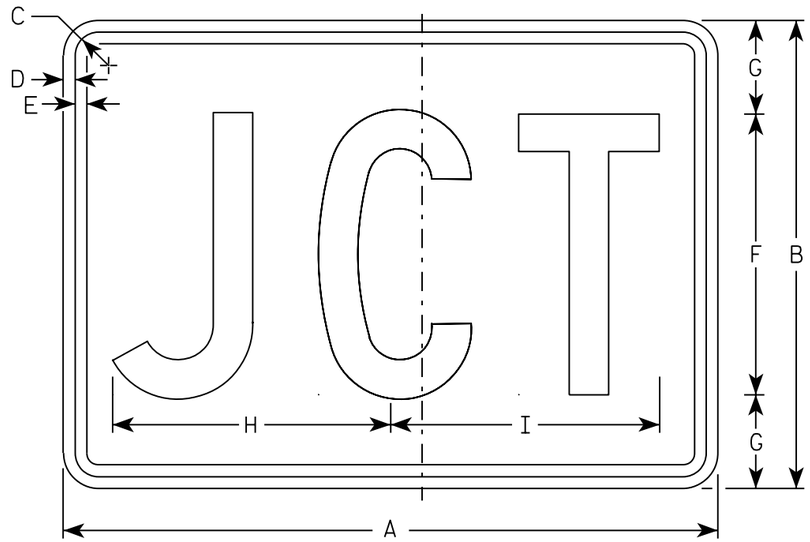


M2-1
MM2-1
MP2-1

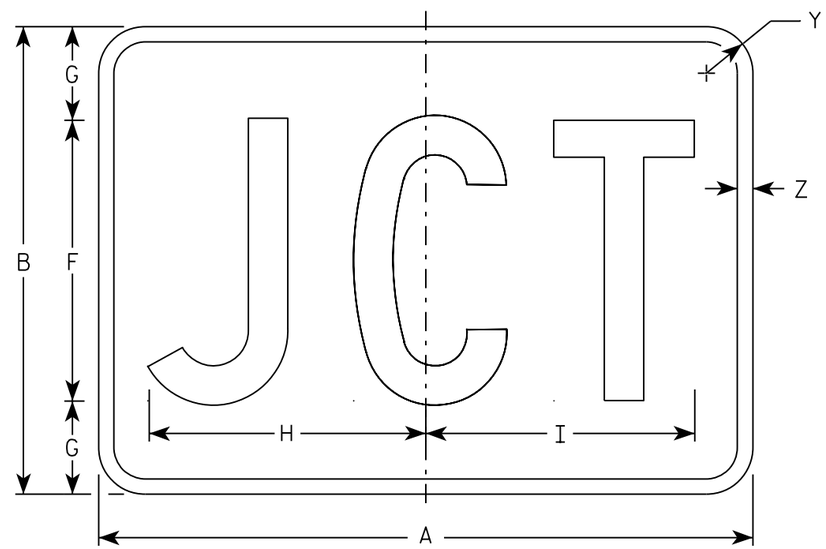


MB2-1
MK2-1
MN2-1
MR2-1

NOTES

1. Sign is Type II - Type H
2. Color:
   Background - See note 5
   Message - See note 5
3. Message Series - C
4. Corners may be square or rounded when base material is plywood but borders shall be rounded as shown. When base material is metal, the corners and borders shall be rounded.
5. M2-1 Background - White
   Message - Black
   MB2-1 Background - Blue
   Message - White
   MK2-1 Background - Green
   Message - White
   MM2-1 Background - White
   Message - Green
   MN2-1 Background - Brown
   Message - White
   MP2-1 Background - White
   Message - Blue
   MR2-1 Background - Brown
   Message - Yellow

| SIZE | A | B | C | D | E | F | G | H | I | J | K | L | M | N | O | P | Q | R | S | T | U | V | W | X | Y | Z | Area sq. ft. |
|---|---|---|---|---|---|---|---|---|---|---|---|---|---|---|---|---|---|---|---|---|---|---|---|---|---|---|---|
| 1 | | | | | | | | | | | | | | | | | | | | | | | | | | | |
| 2 | 21 | 15 | 1 1/8 | 3/8 | 3/8 | 9 | 3 | 8 7/8 | 8 5/8 | | | | | | | | | | | | | | | | 1 1/2 | 1/2 | 2.20 |
| 3 | 30 | 21 | 1 1/8 | 3/8 | 3/8 | 13 | 4 | 12 7/8 | 12 3/8 | | | | | | | | | | | | | | | | 1 1/2 | 1/2 | 4.40 |
| 4 | 30 | 21 | 1 1/8 | 3/8 | 3/8 | 13 | 4 | 12 7/8 | 12 3/8 | | | | | | | | | | | | | | | | 1 1/2 | 1/2 | 4.40 |
| 5 | 30 | 21 | 1 1/8 | 3/8 | 3/8 | 13 | 4 | 12 7/8 | 12 3/8 | | | | | | | | | | | | | | | | 1 1/2 | 1/2 | 4.40 |

STANDARD SIGN
M2-1

WISCONSIN DEPT OF TRANSPORTATION

APPROVED Matthew R Rauch
for State Traffic Engineer

DATE 10/15/15 PLATE 110 2-1.12

PROJECT NO: | HWY: | COUNTY: | SHEET NO: | E

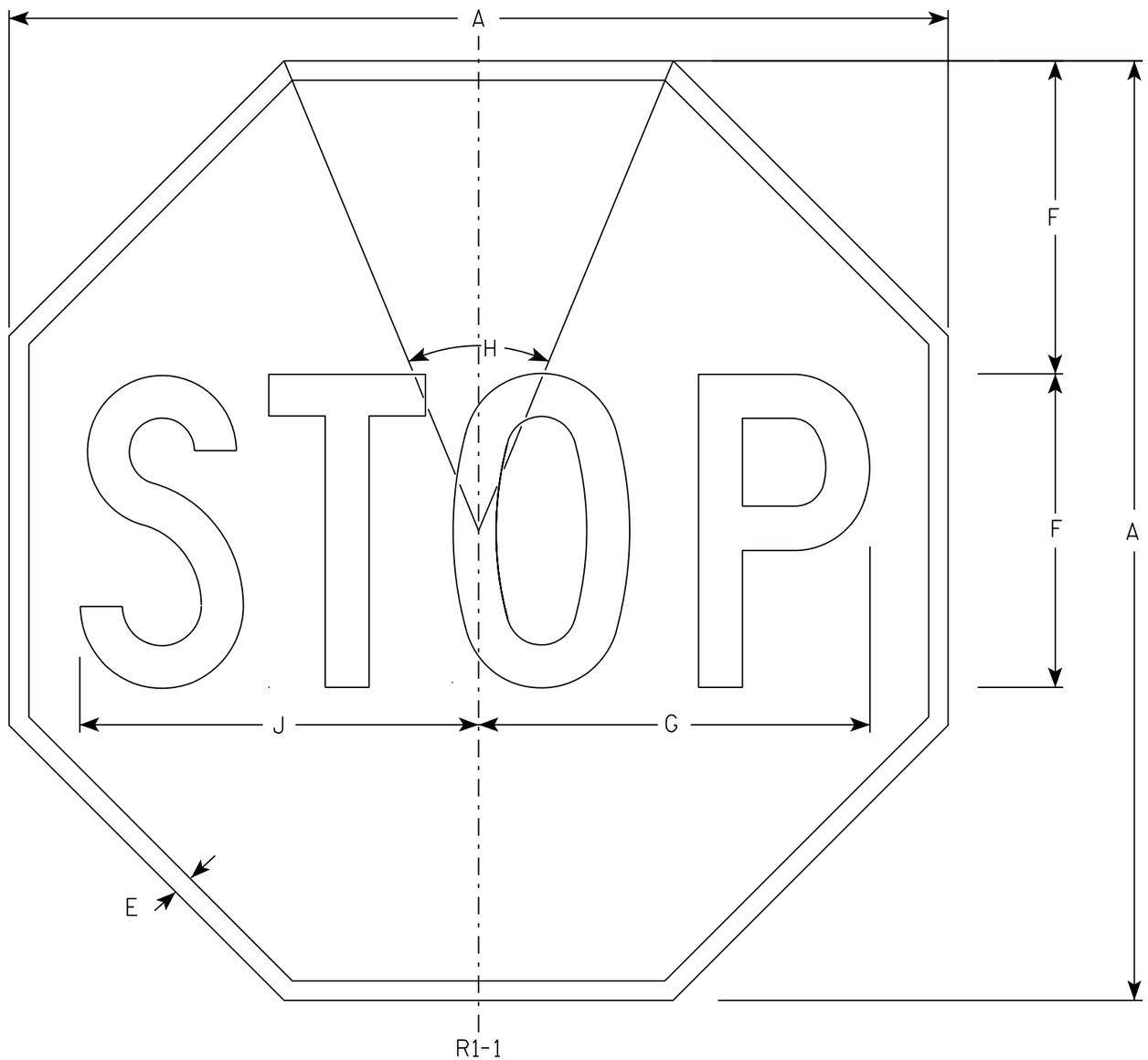


NOTES

1. Sign is Type II - Type H Reflective - reference WIS DOT Standard Specification for HIGHWAY and STRUCTURE CONSTRUCTION latest edition.
2. Color:
   Background - Red
   Message - White
3. Message Series - C

| SIZE | A | B | C | D | E | F | G | H | I | J | K | L | M | N | O | P | Q | R | S | T | U | V | W | X | Y | Z | Area sq. ft. |
|---|---|---|---|---|---|---|---|---|---|---|---|---|---|---|---|---|---|---|---|---|---|---|---|---|---|---|---|
| 1 | 30 | | | | 5/8 | 10 | 12 1/2 | 45° | | 12 3/4 | | | | | | | | | | | | | | | | | 5.18 |
| 2S | 30 | | | | 5/8 | 10 | 12 1/2 | 45° | | 12 3/4 | | | | | | | | | | | | | | | | | 5.18 |
| 2M | 36 | | | | 3/4 | 12 | 15 | 45° | | 15 3/8 | | | | | | | | | | | | | | | | | 7.46 |
| 3 | 36 | | | | 3/4 | 12 | 15 | 45° | | 15 3/8 | | | | | | | | | | | | | | | | | 7.46 |
| 4 | 48 | | | | 1 | 16 | 20 | 45° | | 20 1/2 | | | | | | | | | | | | | | | | | 13.25 |
| 5 | 48 | | | | 1 | 16 | 20 | 45° | | 20 1/2 | | | | | | | | | | | | | | | | | 13.25 |
| 6 | 18 | | | | 3/8 | 6 | 7 3/4 | 45° | | 7 3/4 | | | | | | | | | | | | | | | | | 1.86 |
| 7 | 12 | | | | 1/4 | 4 | 5 | 45° | | 5 1/8 | | | | | | | | | | | | | | | | | 0.78 |

STANDARD SIGN
R1-1

WISCONSIN DEPT OF TRANSPORTATION

APPROVED Matthew R Rauch
for State Traffic Engineer

DATE 11/12/15 PLATE NO. R1-1.13

PROJECT NO: | HWY: | COUNTY: | SHEET NO: 111 | E

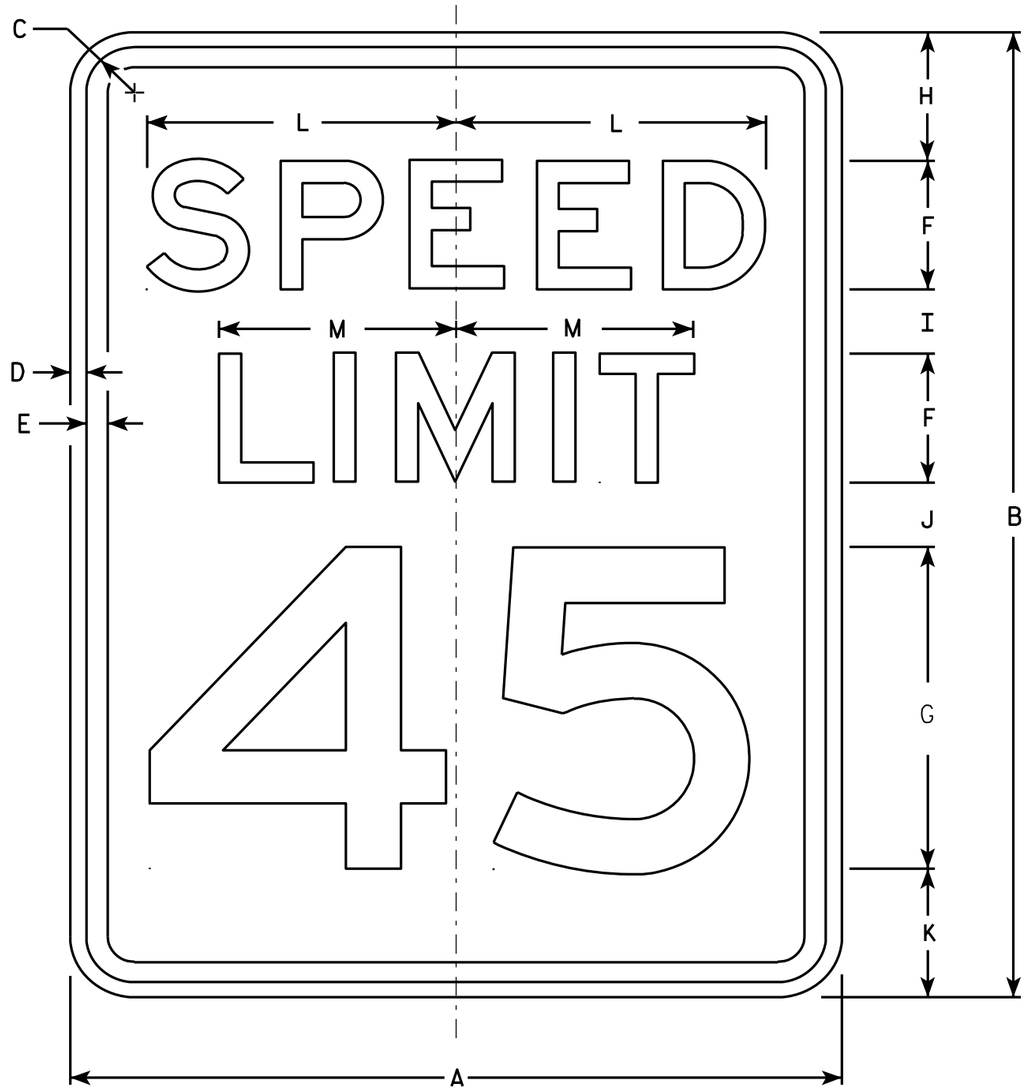


R2-1

NOTES

1. Sign is Type II - Type H Reflective - reference WIS DOT Standard Specification for HIGHWAY and STRUCTURE CONSTRUCTION latest edition.
2. Color:
   Background - White
   Message - Black
3. Message Series - E
4. Corners may be square or rounded when base material is plywood but borders shall be rounded as shown. When base material is metal, the corners and borders shall be rounded.
5. Substitute appropriate numerals and optically adjust spacing to achieve proper balance.

| SIZE | A | B | C | D | E | F | G | H | I | J | K | L | M | N | O | P | Q | R | S | T | U | V | W | X | Y | Z | Area sq. ft. |
|---|---|---|---|---|---|---|---|---|---|---|---|---|---|---|---|---|---|---|---|---|---|---|---|---|---|---|---|
| 1 | 18 | 24 | 1 1/8 | 3/8 | 1/2 | 3 | 8 | 3 | 2 | 2 | 3 | 7 1/4 | 5 1/2 | | | | | | | | | | | | | | 3.0 |
| 2S | 24 | 30 | 1 1/8 | 3/8 | 1/2 | 4 | 10 | 3 | 2 1/4 | 3 3/8 | 3 3/8 | 9 5/8 | 7 3/8 | | | | | | | | | | | | | | 5.0 |
| 2M | 30 | 36 | 1 3/8 | 1/2 | 5/8 | 5 | 12 | 5 | 2 1/2 | 2 1/2 | 4 | 12 | 9 1/4 | | | | | | | | | | | | | | 7.5 |
| 3 | 36 | 48 | 1 3/8 | 1/2 | 5/8 | 6 | 14 | 6 | 5 | 5 | 6 | 14 3/8 | 11 | | | | | | | | | | | | | | 12.0 |
| 4 | 36 | 48 | 1 3/8 | 1/2 | 5/8 | 6 | 14 | 6 | 5 | 5 | 6 | 14 3/8 | 11 | | | | | | | | | | | | | | 12.0 |
| 5 | 48 | 60 | 2 1/4 | 3/4 | 1 | 8 | 20 | 6 | 4 1/2 | 6 3/4 | 6 3/4 | 19 1/4 | 14 5/8 | | | | | | | | | | | | | | 20.0 |

STANDARD SIGN
R2-1

WISCONSIN DEPT OF TRANSPORTATION

APPROVED Matthew R Rauch
for State Traffic Engineer

DATE 5/26/10 PLATE NO. R2-1.13

PROJECT NO: | HWY: | COUNTY: | SHEET NO: 112 | E

## NOTES

1. Sign is Type II - Type F Reflective - reference WIS DOT Standard Specification for HIGHWAY and STRUCTURE CONSTRUCTION latest edition.
2. Color:
   Background - Yellow
   Message - Black
3. Corners may be square or rounded when base material is plywood but borders shall be rounded as shown. When base material is metal, the corners and borders shall be rounded.
4. W1-2L is the same as W1-2R except the arrow is reversed along the vertical centerline.

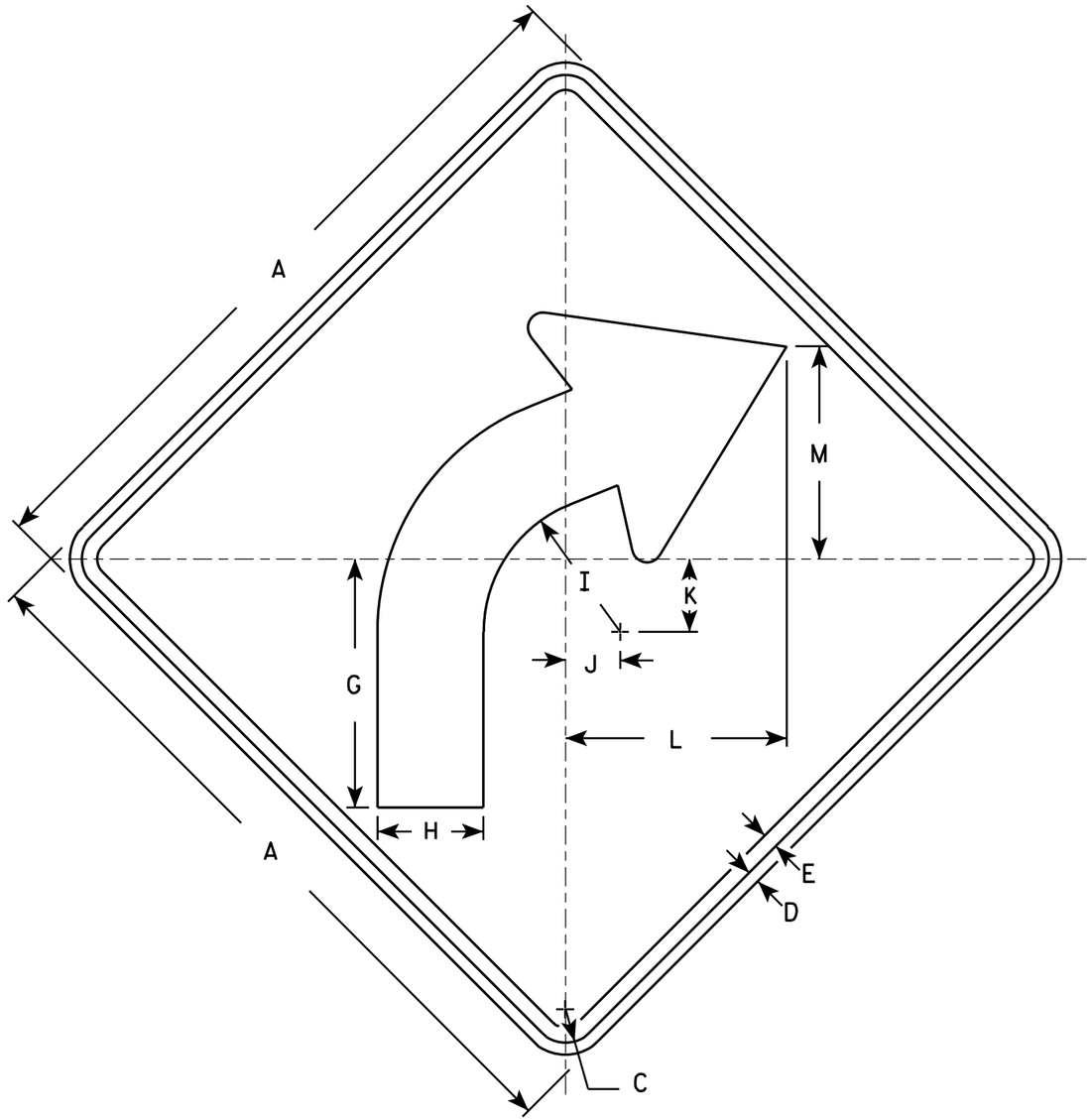


W1-2R

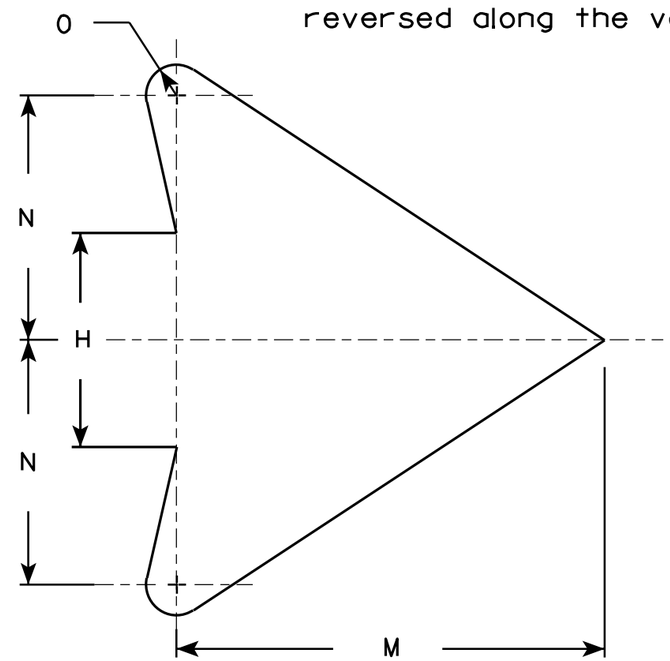


ARROW DETAIL

| SIZE | A | B | C | D | E | F | G | H | I | J | K | L | M | N | O | P | Q | R | S | T | U | V | W | X | Y | Z | Area sq. ft. |
|---|---|---|---|---|---|---|---|---|---|---|---|---|---|---|---|---|---|---|---|---|---|---|---|---|---|---|---|
| 1 | 24 | | 1 1/8 | 3/8 | 1/2 | | 8 1/4 | 3 1/2 | 4 1/2 | 1 3/4 | 2 3/8 | 7 1/4 | 7 | 4 | 1/2 | | | | | | | | | | | | 4.0 |
| 2S | 30 | | 1 3/8 | 1/2 | 5/8 | | 10 1/4 | 4 3/8 | 5 5/8 | 2 1/4 | 3 | 9 1/8 | 8 3/4 | 5 | 5/8 | | | | | | | | | | | | 6.25 |
| 2M | 36 | | 1 5/8 | 5/8 | 3/4 | | 12 3/8 | 5 1/4 | 6 3/4 | 2 5/8 | 3 1/2 | 10 7/8 | 10 1/2 | 6 | 3/4 | | | | | | | | | | | | 9.0 |
| 3 | 36 | | 1 5/8 | 5/8 | 3/4 | | 12 3/8 | 5 1/4 | 6 3/4 | 2 5/8 | 3 1/2 | 10 7/8 | 10 1/2 | 6 | 3/4 | | | | | | | | | | | | 9.0 |
| 4 | 36 | | 1 5/8 | 5/8 | 3/4 | | 12 3/8 | 5 1/4 | 6 3/4 | 2 5/8 | 3 1/2 | 10 7/8 | 10 1/2 | 6 | 3/4 | | | | | | | | | | | | 9.0 |
| 5 | 48 | | 2 1/4 | 3/4 | 1 | | 16 1/2 | 7 | 9 | 3 1/2 | 4 5/8 | 14 1/2 | 14 | 8 | 1 | | | | | | | | | | | | 16.0 |

STANDARD SIGN
W1-2

WISCONSIN DEPT OF TRANSPORTATION

APPROVED Matthew R Rauch
for State Traffic Engineer

DATE 5/15/12 PLATE NO. W1-2.10

PROJECT NO: | HWY: | COUNTY: | SHEET NO: 113 | E

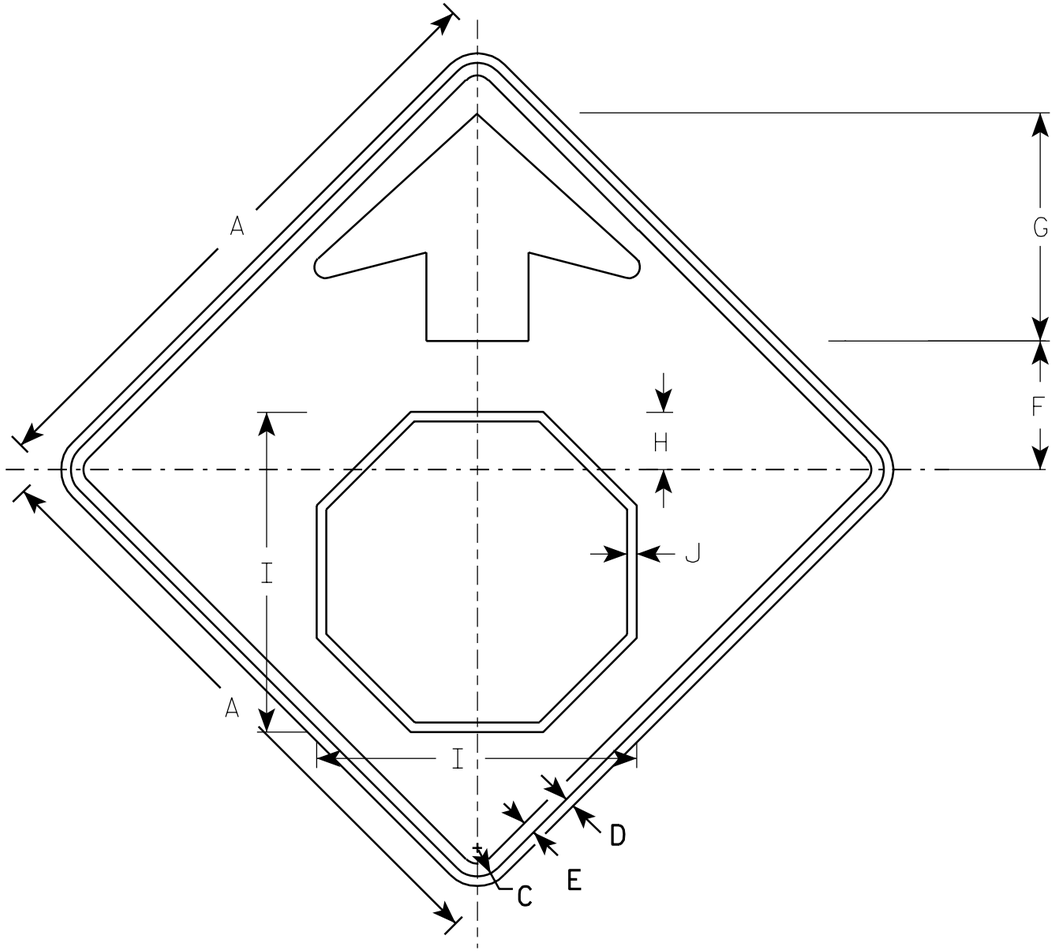


W3-1

## NOTES

1. All Signs Type II - Type F Reflective - reference WIS DOT Standard Specification for HIGHWAY and STRUCTURE CONSTRUCTION latest edition.
2. Color:
   - Background - YELLOW
   - Arrow & Border - BLACK
   - Stop Symbol - WHITE BORDER ON RED BACKGROUND

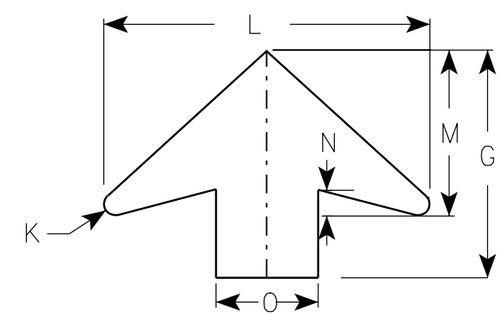


ARROW DETAIL

| SIZE | A | B | C | D | E | F | G | H | I | J | K | L | M | N | O | P | Q | R | S | T | U | V | W | X | Y | Z | Area sq. ft. |
|---|---|---|---|---|---|---|---|---|---|---|---|---|---|---|---|---|---|---|---|---|---|---|---|---|---|---|---|
| 1 | 30 | | 1 3/8 | 1/2 | 5/8 | 6 1/4 | 11 1/4 | 2 7/8 | 15 3/4 | 1/2 | 1/2 | 16 | 8 | 1 1/4 | 5 | | | | | | | | | | | | 6.25 |
| 2S | 36 | | 1 5/8 | 5/8 | 3/4 | 7 1/2 | 13 1/2 | 3 1/2 | 19 | 5/8 | 5/8 | 19 1/4 | 9 3/4 | 1 5/8 | 6 | | | | | | | | | | | | 9.0 |
| 2M | 36 | | 1 5/8 | 5/8 | 3/4 | 7 1/2 | 13 1/2 | 3 1/2 | 19 | 5/8 | 5/8 | 19 1/4 | 9 3/4 | 1 5/8 | 6 | | | | | | | | | | | | 9.0 |
| 3 | 36 | | 1 5/8 | 5/8 | 3/4 | 7 1/2 | 13 1/2 | 3 1/2 | 19 | 5/8 | 5/8 | 19 1/4 | 9 3/4 | 1 5/8 | 6 | | | | | | | | | | | | 9.0 |
| 4 | 48 | | 2 1/4 | 3/4 | 1 | 10 | 17 7/8 | 4 1/2 | 25 1/8 | 3/4 | 7/8 | 25 5/8 | 13 | 2 | 8 | | | | | | | | | | | | 16.0 |
| 5 | 48 | | 2 1/4 | 3/4 | 1 | 10 | 17 7/8 | 4 1/2 | 25 1/8 | 3/4 | 7/8 | 25 5/8 | 13 | 2 | 8 | | | | | | | | | | | | 16.0 |

STANDARD SIGN
W3-1

WISCONSIN DEPT OF TRANSPORTATION

APPROVED Matthew R Rauch
for State Traffic Engineer

DATE 6/7/10 PLATE NO. W3-1.12

PROJECT NO:

SHEET NO: 114 E

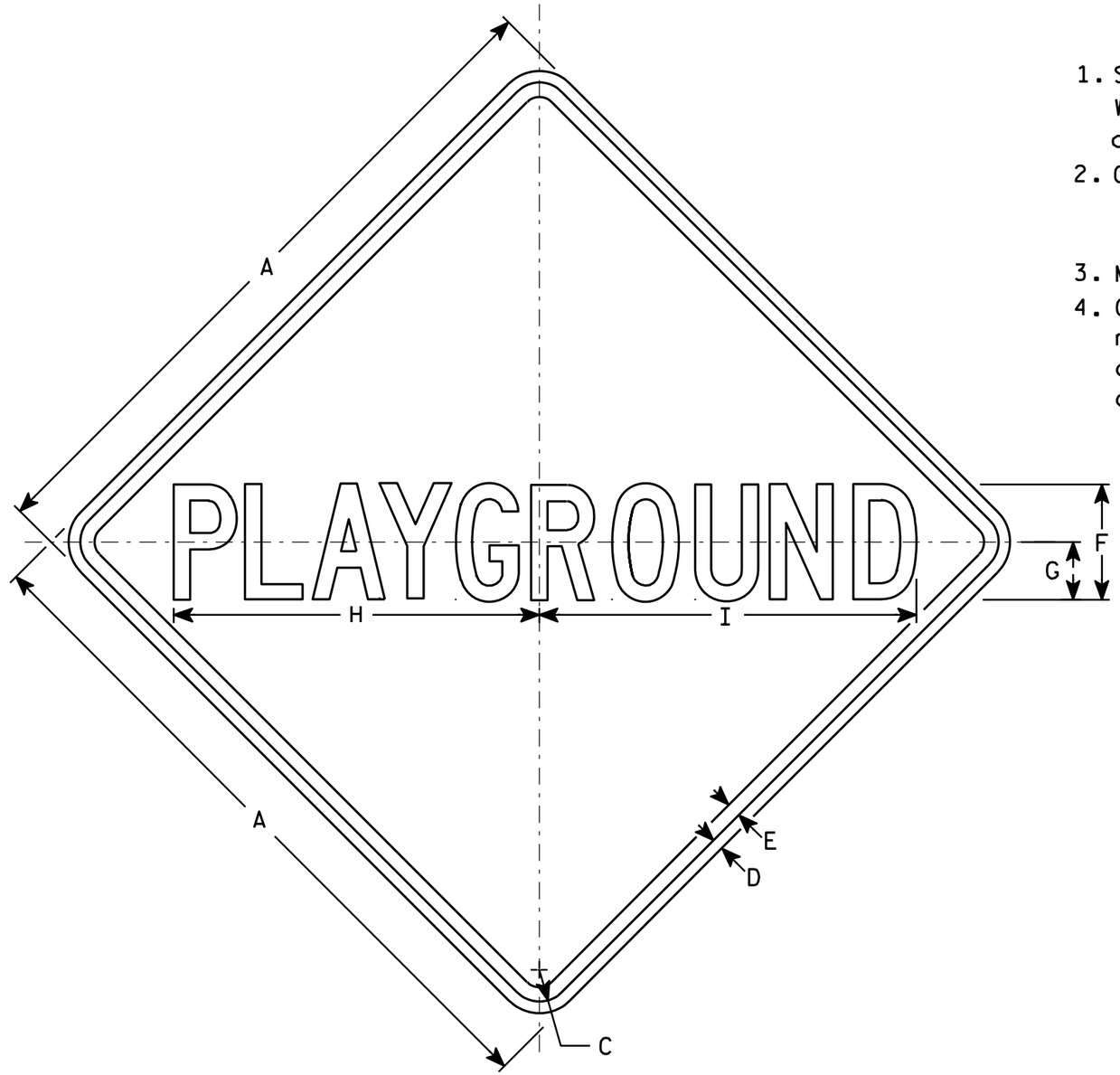


W11-55

NOTES

1. Sign is Type II - Type F Reflective - reference WIS DOT Standard Specification for HIGHWAY and STRUCTURE CONSTRUCTION latest edition.
2. Color:
   Background - Yellow
   Message - Black
3. Message Series - C
4. Corners may be square or rounded when base material is plywood but borders shall be rounded as shown. When base material is metal, the corners and borders shall be rounded.

| SIZE | A | B | C | D | E | F | G | H | I | J | K | L | M | N | O | P | Q | R | S | T | U | V | W | X | Y | Z | Area sq. ft. |
|---|---|---|---|---|---|---|---|---|---|---|---|---|---|---|---|---|---|---|---|---|---|---|---|---|---|---|---|
| 1 | 30 | | 1 3/8 | 1/2 | 5/8 | 5 | 2 1/2 | 15 7/8 | 16 3/8 | | | | | | | | | | | | | | | | | | 6.25 |
| 2S | 30 | | 1 3/8 | 1/2 | 5/8 | 5 | 2 1/2 | 15 7/8 | 16 3/8 | | | | | | | | | | | | | | | | | | 6.25 |
| 2M | 30 | | 1 3/8 | 1/2 | 5/8 | 5 | 2 1/2 | 15 7/8 | 16 3/8 | | | | | | | | | | | | | | | | | | 6.25 |
| 3 | | | | | | | | | | | | | | | | | | | | | | | | | | | |
| 4 | | | | | | | | | | | | | | | | | | | | | | | | | | | |
| 5 | | | | | | | | | | | | | | | | | | | | | | | | | | | |

STANDARD SIGN
W11-55

WISCONSIN DEPT OF TRANSPORTATION

APPROVED Matthew R Rauch
for State Traffic Engineer

DATE 3/13/13 PLATE NO. W11-55.7

PROJECT NO: | HWY: | COUNTY: | SHEET NO: 115 | E

| Notes: | |
|---|---|
| 1 - Cut | Cut includes Salvaged/Unusable Pavement material |
| 2 - Salvaged/Unusable Pavement Material | This does not show up in cross sections |
| 3 - Fill | Does not include Unusable Pavement Exc volume |

Division 1 - Cty-D

| | | | AREA (SF) | | | Incremental Vol (CY) (Unadjusted) | | | Cumulative Vol (CY) | | |
|---|---|---|---|---|---|---|---|---|---|---|---|
| STATION | Real Station | Distance | Cut | Salvaged/Unusable Pavement Material | Fill | Cut Note 1 | Salvaged/Unusable Pavement Material Note 2 | Fill Note 3 | Cut 1.00 Note 1 | Expanded Fill 1.25 | Mass Ordinate |
| 10+50 | 1050.00 | 0.00 | 35.65 | 16.92 | 0.00 | 0 | 0 | 0 | 0 | 0 | 0 |
| 10+75 | 1075.00 | 25.00 | 35.30 | 16.92 | 0.00 | 33 | 16 | 0 | 33 | 0 | 17 |
| 10+81.88 | 1081.88 | 6.88 | 34.45 | 16.33 | 0.05 | 9 | 4 | 0 | 42 | 0 | 22 |
| 11+00 | 1100.00 | 18.12 | 31.67 | 15.17 | 0.39 | 22 | 11 | 0 | 64 | 0 | 33 |
| 11+25 | 1125.00 | 25.00 | 30.18 | 14.00 | 1.00 | 29 | 14 | 1 | 93 | 1 | 48 |
| 11+50 | 1150.00 | 25.00 | 29.73 | 13.42 | 1.23 | 28 | 13 | 1 | 120 | 2 | 61 |
| 11+66.17 | 1166.17 | 16.17 | 36.74 | 13.42 | 9.56 | 20 | 8 | 3 | 140 | 6 | 69 |
| 11+66.88 | 1166.88 | 0.71 | 36.52 | 13.42 | 9.46 | 1 | 0 | 0 | 141 | 7 | 69 |
| 11+75 | 1175.00 | 8.12 | 39.61 | 13.42 | 3.90 | 11 | 4 | 2 | 153 | 9 | 74 |
| 12+00 | 1200.00 | 25.00 | 33.89 | 13.42 | 0.11 | 34 | 12 | 2 | 187 | 11 | 94 |
| 12+16.67 | 1216.67 | 16.67 | 39.21 | 13.42 | 0.08 | 23 | 8 | 0 | 209 | 12 | 108 |
| 12+25 | 1225.00 | 8.33 | 33.98 | 13.42 | 0.19 | 11 | 4 | 0 | 220 | 12 | 115 |
| 12+50 | 1250.00 | 25.00 | 32.40 | 13.42 | 0.28 | 31 | 12 | 0 | 251 | 12 | 133 |
| 12+75 | 1275.00 | 25.00 | 33.25 | 13.42 | 0.16 | 30 | 12 | 0 | 282 | 12 | 151 |
| 13+00 | 1300.00 | 25.00 | 43.94 | 19.83 | 0.11 | 36 | 15 | 0 | 317 | 12 | 171 |
| 13+09.71 | 1309.71 | 9.71 | 43.28 | 19.83 | 0.39 | 16 | 7 | 0 | 333 | 12 | 179 |
| 13+25 | 1325.00 | 15.29 | 44.46 | 19.83 | 0.27 | 25 | 11 | 0 | 358 | 13 | 193 |
| 13+50 | 1350.00 | 25.00 | 38.04 | 12.83 | 1.78 | 38 | 15 | 1 | 396 | 14 | 215 |
| 13+75 | 1375.00 | 25.00 | 45.59 | 12.83 | 0.28 | 39 | 12 | 1 | 435 | 15 | 240 |
| 14+00 | 1400.00 | 25.00 | 48.96 | 12.83 | 0.03 | 44 | 12 | 0 | 479 | 15 | 272 |
| 14+25 | 1425.00 | 25.00 | 56.31 | 12.83 | 0.00 | 49 | 12 | 0 | 527 | 15 | 309 |
| 14+50 | 1450.00 | 25.00 | 72.81 | 12.83 | 0.01 | 60 | 12 | 0 | 587 | 15 | 357 |
| 14+50.01 | 1450.01 | 0.01 | 74.33 | 12.83 | 0.01 | 0 | 0 | 0 | 587 | 15 | 357 |
| 14+75 | 1475.00 | 24.99 | 88.15 | 12.83 | 0.19 | 75 | 12 | 0 | 662 | 15 | 420 |
| 14+85.16 | 1485.16 | 10.16 | 82.81 | 15.75 | 0.04 | 32 | 5 | 0 | 694 | 15 | 447 |
| 14+85.17 | 1485.17 | 0.01 | 82.81 | 15.75 | 0.16 | 0 | 0 | 0 | 694 | 15 | 447 |
| 15+00 | 1500.00 | 14.83 | 77.29 | 15.75 | 2.06 | 44 | 9 | 1 | 738 | 16 | 481 |
| 15+05 | 1505.00 | 5.00 | 79.35 | 20.42 | 3.14 | 15 | 3 | 0 | 753 | 17 | 492 |
| 15+07.91 | 1507.91 | 2.91 | 85.07 | 20.42 | 2.56 | 9 | 2 | 0 | 762 | 17 | 498 |
| 15+16.71 | 1516.71 | 8.80 | 79.82 | 20.42 | 1.88 | 27 | 7 | 1 | 789 | 18 | 517 |
| 15+25 | 1525.00 | 8.29 | 73.63 | 20.42 | 1.82 | 24 | 6 | 1 | 812 | 19 | 534 |
| 15+35 | 1535.00 | 10.00 | 74.03 | 24.50 | 1.50 | 27 | 8 | 1 | 840 | 20 | 552 |
| 15+40 | 1540.00 | 5.00 | 74.69 | 28.00 | 1.53 | 14 | 5 | 0 | 853 | 20 | 561 |
| 15+45 | 1545.00 | 5.00 | 76.77 | 29.17 | 0.88 | 14 | 5 | 0 | 867 | 20 | 569 |
| 15+50 | 1550.00 | 5.00 | 81.25 | 30.33 | 0.36 | 15 | 6 | 0 | 882 | 20 | 578 |
| 15+54.56 | 1554.56 | 4.56 | 83.63 | 31.50 | 0.21 | 14 | 5 | 0 | 896 | 20 | 587 |
| 15+54.57 | 1554.57 | 0.01 | 83.66 | 31.50 | 0.22 | 0 | 0 | 0 | 896 | 20 | 587 |
| 15+55 | 1555.00 | 0.43 | 85.22 | 31.50 | 0.16 | 1 | 1 | 0 | 897 | 20 | 588 |
| 15+60 | 1560.00 | 5.00 | 98.72 | 33.25 | 0.08 | 17 | 6 | 0 | 914 | 20 | 599 |
| 15+65 | 1565.00 | 5.00 | 101.76 | 33.25 | 0.19 | 19 | 6 | 0 | 933 | 20 | 611 |
| 15+70 | 1570.00 | 5.00 | 101.99 | 34.42 | 0.15 | 19 | 6 | 0 | 952 | 20 | 624 |
| 15+75 | 1575.00 | 5.00 | 96.09 | 35.00 | 0.12 | 18 | 6 | 0 | 970 | 20 | 635 |
| 15+80 | 1580.00 | 5.00 | 92.04 | 35.00 | 0.12 | 17 | 6 | 0 | 988 | 21 | 646 |
| 15+85 | 1585.00 | 5.00 | 89.83 | 35.00 | 0.56 | 17 | 6 | 0 | 1,004 | 21 | 657 |
| 15+90 | 1590.00 | 5.00 | 90.71 | 35.58 | 0.46 | 17 | 7 | 0 | 1,021 | 21 | 667 |
| 15+94.77 | 1594.77 | 4.77 | 86.18 | 18.08 | 0.45 | 16 | 5 | 0 | 1,037 | 21 | 678 |
| 15+94.78 | 1594.78 | 0.01 | 86.32 | 17.50 | 0.42 | 0 | 0 | 0 | 1,037 | 21 | 678 |
| 16+00 | 1600.00 | 5.22 | 75.17 | 16.92 | 0.02 | 16 | 3 | 0 | 1,052 | 21 | 690 |
| 16+05 | 1605.00 | 5.00 | 68.10 | 15.17 | 0.74 | 13 | 3 | 0 | 1,066 | 21 | 700 |
| 16+12.52 | 1612.52 | 7.52 | 64.48 | 15.75 | 1.68 | 18 | 4 | 0 | 1,084 | 21 | 714 |
| 16+25 | 1625.00 | 12.48 | 67.08 | 15.17 | 1.27 | 30 | 7 | 1 | 1,114 | 22 | 736 |
| 16+50 | 1650.00 | 25.00 | 60.34 | 15.17 | 1.32 | 59 | 14 | 1 | 1,173 | 24 | 780 |
| 16+75 | 1675.00 | 25.00 | 55.41 | 15.17 | 2.95 | 54 | 14 | 2 | 1,227 | 26 | 817 |
| 17+00 | 1700.00 | 25.00 | 60.60 | 12.83 | 1.10 | 54 | 13 | 2 | 1,281 | 29 | 855 |
| 17+25 | 1725.00 | 25.00 | 59.50 | 12.83 | 1.59 | 56 | 12 | 1 | 1,336 | 30 | 897 |
| 17+50 | 1750.00 | 25.00 | 62.50 | 12.83 | 1.59 | 56 | 12 | 1 | 1,393 | 32 | 940 |
| 17+66.68 | 1766.68 | 16.68 | 63.38 | 12.83 | 3.05 | 39 | 8 | 1 | 1,432 | 34 | 969 |
| 17+75 | 1775.00 | 8.32 | 63.53 | 12.83 | 4.73 | 20 | 4 | 1 | 1,451 | 35 | 983 |
| 17+85.71 | 1785.71 | 10.71 | 60.69 | 12.83 | 7.63 | 25 | 5 | 2 | 1,476 | 38 | 1,000 |
| 18+00 | 1800.00 | 14.29 | 61.07 | 12.83 | 2.30 | 32 | 7 | 3 | 1,508 | 42 | 1,022 |
| 18+00.01 | 1800.01 | 0.01 | 61.18 | 12.83 | 2.30 | 0 | 0 | 0 | 1,508 | 42 | 1,022 |
| 18+17.07 | 1817.07 | 17.06 | 51.30 | 12.83 | 12.85 | 36 | 8 | 5 | 1,544 | 48 | 1,043 |
| 18+25 | 1825.00 | 7.93 | 55.93 | 12.83 | 0.97 | 16 | 4 | 2 | 1,559 | 50 | 1,053 |
| 18+34.93 | 1834.93 | 9.93 | 63.55 | 12.83 | 3.46 | 22 | 5 | 1 | 1,581 | 51 | 1,069 |
| 18+43.4 | 1843.40 | 8.47 | 66.74 | 27.42 | 5.62 | 20 | 6 | 1 | 1,602 | 53 | 1,081 |
| 18+50 | 1850.00 | 6.60 | 83.84 | 27.42 | 3.00 | 18 | 7 | 1 | 1,620 | 54 | 1,092 |
| 18+75 | 1875.00 | 25.00 | 71.28 | 12.83 | 0.47 | 72 | 19 | 2 | 1,692 | 56 | 1,143 |
| 19+00 | 1900.00 | 25.00 | 73.10 | 12.83 | 0.72 | 67 | 12 | 1 | 1,759 | 57 | 1,197 |
| 19+25 | 1925.00 | 25.00 | 80.10 | 12.83 | 0.00 | 71 | 12 | 0 | 1,830 | 57 | 1,256 |
| 19+50 | 1950.00 | 25.00 | 75.97 | 13.42 | 1.81 | 72 | 12 | 1 | 1,902 | 58 | 1,315 |
| 19+65.16 | 1965.16 | 15.16 | 75.31 | 14.00 | 0.56 | 42 | 8 | 1 | 1,945 | 59 | 1,349 |
| 19+70.53 | 1970.53 | 5.37 | 79.06 | 14.00 | 0.40 | 15 | 3 | 0 | 1,960 | 59 | 1,361 |
| 19+75 | 1975.00 | 4.47 | 82.58 | 15.17 | 0.20 | 13 | 2 | 0 | 1,973 | 59 | 1,372 |
| 19+85 | 1985.00 | 10.00 | 97.28 | 21.58 | 0.35 | 33 | 7 | 0 | 2,007 | 60 | 1,399 |
| 19+92.24 | 1992.24 | 7.24 | 94.93 | 25.67 | 0.00 | 26 | 6 | 0 | 2,032 | 60 | 1,418 |
| 19+92.25 | 1992.25 | 0.01 | 93.30 | 25.67 | 0.00 | 0 | 0 | 0 | 2,032 | 60 | 1,418 |
| 19+95 | 1995.00 | 2.75 | 95.39 | 26.25 | 0.03 | 10 | 3 | 0 | 2,042 | 60 | 1,425 |
| 20+00 | 2000.00 | 5.00 | 97.02 | 26.25 | 0.02 | 18 | 5 | 0 | 2,060 | 60 | 1,438 |
| 20+05 | 2005.00 | 5.00 | 96.75 | 26.83 | 0.00 | 18 | 5 | 0 | 2,078 | 60 | 1,451 |
| 20+10 | 2010.00 | 5.00 | 94.55 | 27.42 | 0.00 | 18 | 5 | 0 | 2,096 | 60 | 1,464 |
| 20+15 | 2015.00 | 5.00 | 100.73 | 29.17 | 0.01 | 18 | 5 | 0 | 2,114 | 60 | 1,476 |
| 20+19.24 | 2019.24 | 4.24 | 76.46 | 29.17 | 0.21 | 14 | 5 | 0 | 2,127 | 60 | 1,486 |
| 20+19.69 | 2019.69 | 0.45 | 112.37 | 29.75 | 0.27 | 2 | 0 | 0 | 2,129 | 60 | 1,487 |
| 20+25 | 2025.00 | 5.31 | 111.87 | 30.92 | 0.11 | 22 | 6 | 0 | 2,151 | 60 | 1,503 |
| 20+30 | 2030.00 | 5.00 | 107.84 | 30.92 | 0.02 | 20 | 6 | 0 | 2,171 | 60 | 1,517 |
| 20+40 | 2040.00 | 10.00 | 78.24 | 17.50 | 0.07 | 34 | 9 | 0 | 2,206 | 60 | 1,543 |
| 20+48.45 | 2048.45 | 8.45 | 77.22 | 16.33 | 0.03 | 24 | 5 | 0 | 2,230 | 60 | 1,562 |
| 20+50 | 2050.00 | 1.55 | 80.04 | 15.17 | 0.00 | 5 | 1 | 0 | 2,235 | 60 | 1,566 |
| 20+75 | 2075.00 | 25.00 | 75.63 | 12.83 | 0.00 | 72 | 13 | 0 | 2,307 | 60 | 1,625 |
| 21+00 | 2100.00 | 25.00 | 50.02 | 12.83 | 0.00 | 58 | 12 | 0 | 2,365 | 60 | 1,671 |
| 21+02.61 | 2102.61 | 2.61 | 50.39 | 12.83 | 12.27 | 5 | 1 | 1 | 2,370 | 60 | 1,674 |
| 21+24.99 | 2124.99 | 22.38 | 46.20 | 12.83 | 0.06 | 40 | 11 | 5 | 2,410 | 67 | 1,697 |
| 21+25 | 2125.00 | 0.01 | 46.18 | 12.83 | 0.06 | 0 | 0 | 0 | 2,410 | 67 | 1,697 |
| 21+50 | 2150.00 | 25.00 | 59.20 | 12.83 | 0.01 | 49 | 12 | 0 | 2,459 | 67 | 1,734 |
| 21+75 | 2175.00 | 25.00 | 56.40 | 12.83 | 5.82 | 54 | 12 | 3 | 2,512 | 70 | 1,772 |
| 22+00 | 2200.00 | 25.00 | 51.55 | 12.83 | 11.70 | 50 | 12 | 8 | 2,562 | 80 | 1,800 |
| 22+25 | 2225.00 | 25.00 | 52.58 | 12.83 | 9.61 | 48 | 12 | 10 | 2,610 | 93 | 1,824 |
| 22+50 | 2250.00 | 25.00 | 61.54 | 12.83 | 3.21 | 53 | 12 | 6 | 2,663 | 100 | 1,857 |
| 22+75 | 2275.00 | 25.00 | 74.50 | 12.83 | 2.53 | 63 | 12 | 3 | 2,726 | 103 | 1,905 |
| 23+00 | 2300.00 | 25.00 | 71.59 | 12.83 | 0.69 | 68 | 12 | 1 | 2,794 | 105 | 1,959 |
| 23+25 | 2325.00 | 25.00 | 61.65 | 12.83 | 14.00 | 62 | 12 | 7 | 2,856 | 114 | 2,000 |
| 23+25.01 | 2325.01 | 0.01 | 61.80 | 12.83 | 1.63 | 0 | 0 | 0 | 2,856 | 114 | 2,000 |
| 23+50 | 2350.00 | 24.99 | 64.89 | 12.83 | 5.08 | 59 | 12 | 3 | 2,914 | 118 | 2,043 |

CONTINUED ON NEXT PAGE

CONTINUED FROM PREVIOUS PAGE

Division 1 - Cty-D

| STATION | Real Station | Distance | AREA (SF) Cut | AREA (SF) Salvaged/Unusable Pavement Material | AREA (SF) Fill | Incremental Vol (CY) (Unadjusted) Cut Note 1 | Incremental Vol (CY) (Unadjusted) Salvaged/Unusable Pavement Material Note 2 | Incremental Vol (CY) (Unadjusted) Fill Note 3 | Cumulative Vol (CY) Cut 1.00 Note 1 | Cumulative Vol (CY) Expanded Fill 1.25 | Cumulative Vol (CY) Mass Ordinate |
|---|---|---|---|---|---|---|---|---|---|---|---|
| 23+58.84 | 2358.84 | 8.84 | 53.73 | 12.83 | 8.36 | 19 | 4 | 2 | 2,934 | 120 | 2,056 |
| 23+75 | 2375.00 | 16.16 | 62.67 | 12.83 | 0.00 | 35 | 8 | 3 | 2,968 | 124 | 2,080 |
| 23+92.02 | 2392.02 | 17.02 | 64.08 | 12.83 | 0.00 | 40 | 8 | 0 | 3,008 | 124 | 2,112 |
| 24+00 | 2400.00 | 7.98 | 66.34 | 12.83 | 0.00 | 19 | 4 | 0 | 3,028 | 124 | 2,127 |
| 24+25 | 2425.00 | 25.00 | 64.02 | 12.83 | 0.04 | 60 | 12 | 0 | 3,088 | 124 | 2,176 |
| 24+43.35 | 2443.35 | 18.35 | 90.40 | 12.83 | 0.00 | 52 | 9 | 0 | 3,140 | 124 | 2,219 |
| 24+50 | 2450.00 | 6.65 | 69.43 | 12.83 | 0.00 | 20 | 3 | 0 | 3,160 | 124 | 2,236 |
| 24+75 | 2475.00 | 25.00 | 64.33 | 12.83 | 0.00 | 62 | 12 | 0 | 3,222 | 124 | 2,286 |
| 25+00 | 2500.00 | 25.00 | 78.50 | 12.83 | 0.00 | 66 | 12 | 0 | 3,288 | 124 | 2,340 |
| 25+25 | 2525.00 | 25.00 | 50.80 | 12.83 | 0.37 | 60 | 12 | 0 | 3,348 | 124 | 2,388 |
| 25+40.46 | 2540.46 | 15.46 | 44.41 | 12.83 | 2.13 | 27 | 7 | 1 | 3,375 | 125 | 2,407 |
| 25+50 | 2550.00 | 9.54 | 49.82 | 12.83 | 0.49 | 17 | 5 | 0 | 3,392 | 125 | 2,418 |
| 25+62.39 | 2562.39 | 12.39 | 78.36 | 23.92 | 0.00 | 29 | 8 | 0 | 3,421 | 125 | 2,439 |
| 25+75 | 2575.00 | 12.61 | 57.50 | 12.83 | 0.00 | 32 | 9 | 0 | 3,453 | 125 | 2,462 |
| 26+00 | 2600.00 | 25.00 | 56.50 | 12.83 | 0.03 | 53 | 12 | 0 | 3,506 | 125 | 2,503 |
| 26+15.96 | 2615.96 | 15.96 | 32.85 | 12.83 | 51.13 | 26 | 8 | 15 | 3,532 | 144 | 2,503 |
| 26+25 | 2625.00 | 9.04 | 51.55 | 12.83 | 10.24 | 14 | 4 | 10 | 3,546 | 157 | 2,500 |
| 26+50 | 2650.00 | 25.00 | 55.60 | 12.83 | 0.67 | 50 | 12 | 5 | 3,596 | 164 | 2,532 |
| 26+75 | 2675.00 | 25.00 | 50.73 | 12.83 | 2.59 | 49 | 12 | 2 | 3,645 | 165 | 2,567 |
| 26+90 | 2690.00 | 15.00 | 50.61 | 12.83 | 0.42 | 28 | 7 | 1 | 3,673 | 166 | 2,587 |
| 27+00 | 2700.00 | 10.00 | 59.58 | 19.83 | 0.00 | 20 | 6 | 0 | 3,694 | 167 | 2,601 |
| 27+09.53 | 2709.53 | 9.53 | 84.98 | 30.33 | 0.02 | 26 | 9 | 0 | 3,719 | 167 | 2,618 |
| 27+19.96 | 2719.96 | 10.43 | 59.46 | 12.83 | 0.76 | 28 | 8 | 0 | 3,747 | 167 | 2,637 |
| 27+25 | 2725.00 | 5.04 | 54.71 | 12.83 | 3.99 | 11 | 2 | 0 | 3,758 | 167 | 2,645 |
| 27+50 | 2750.00 | 25.00 | 56.36 | 12.83 | 1.26 | 51 | 12 | 2 | 3,809 | 170 | 2,681 |
| 27+75 | 2775.00 | 25.00 | 53.33 | 12.83 | 0.00 | 51 | 12 | 1 | 3,860 | 171 | 2,720 |
| 28+00 | 2800.00 | 25.00 | 53.54 | 12.83 | 0.00 | 49 | 12 | 0 | 3,910 | 171 | 2,757 |
| 28+25 | 2825.00 | 25.00 | 53.20 | 12.83 | 0.01 | 49 | 12 | 0 | 3,959 | 171 | 2,795 |
| 28+40.91 | 2840.91 | 15.91 | 87.24 | 29.75 | 0.00 | 41 | 13 | 0 | 4,000 | 171 | 2,824 |
| 28+50 | 2850.00 | 9.09 | 53.89 | 12.83 | 0.40 | 24 | 7 | 0 | 4,024 | 171 | 2,840 |
| 28+75 | 2875.00 | 25.00 | 46.40 | 12.83 | 0.50 | 46 | 12 | 0 | 4,071 | 172 | 2,874 |
| 29+00 | 2900.00 | 25.00 | 46.75 | 12.83 | 0.50 | 43 | 12 | 0 | 4,114 | 172 | 2,905 |
| 29+25 | 2925.00 | 25.00 | 44.86 | 12.83 | 0.52 | 42 | 12 | 0 | 4,156 | 173 | 2,935 |
| 29+50 | 2950.00 | 25.00 | 41.97 | 12.83 | 4.96 | 40 | 12 | 3 | 4,196 | 176 | 2,960 |
| 29+75 | 2975.00 | 25.00 | 42.90 | 12.83 | 0.95 | 39 | 12 | 3 | 4,236 | 179 | 2,984 |
| 30+00 | 3000.00 | 25.00 | 62.22 | 12.83 | 1.72 | 49 | 12 | 1 | 4,284 | 181 | 3,019 |
| 30+25 | 3025.00 | 25.00 | 46.41 | 12.83 | 0.57 | 50 | 12 | 1 | 4,335 | 182 | 3,056 |
| 30+50 | 3050.00 | 25.00 | 69.28 | 12.83 | 0.00 | 54 | 12 | 0 | 4,388 | 183 | 3,098 |
| 30+75 | 3075.00 | 25.00 | 57.54 | 12.83 | 1.45 | 59 | 12 | 1 | 4,447 | 183 | 3,144 |
| 31+00 | 3100.00 | 25.00 | 69.43 | 12.83 | 0.41 | 59 | 12 | 1 | 4,506 | 185 | 3,189 |
| 31+12.06 | 3112.06 | 12.06 | 94.33 | 12.83 | 0.00 | 37 | 6 | 0 | 4,542 | 185 | 3,220 |
| 31+25 | 3125.00 | 12.94 | 67.55 | 12.83 | 0.00 | 39 | 6 | 0 | 4,581 | 185 | 3,253 |
| 31+50 | 3150.00 | 25.00 | 60.09 | 12.83 | 0.55 | 59 | 12 | 0 | 4,640 | 185 | 3,300 |
| 31+75 | 3175.00 | 25.00 | 59.97 | 12.83 | 0.30 | 56 | 12 | 0 | 4,696 | 185 | 3,343 |
| 31+92.83 | 3192.83 | 17.83 | 58.41 | 12.83 | 5.35 | 39 | 8 | 2 | 4,735 | 188 | 3,371 |
| 32+00 | 3200.00 | 7.17 | 62.52 | 12.83 | 5.96 | 16 | 3 | 2 | 4,751 | 190 | 3,382 |
| 32+25 | 3225.00 | 25.00 | 71.82 | 12.83 | 5.84 | 62 | 12 | 5 | 4,813 | 197 | 3,425 |
| 32+50 | 3250.00 | 25.00 | 62.40 | 12.83 | 6.06 | 62 | 12 | 6 | 4,875 | 203 | 3,469 |
| 32+58.18 | 3258.18 | 8.18 | 67.59 | 12.83 | 7.33 | 20 | 4 | 2 | 4,895 | 206 | 3,482 |
| 32+75 | 3275.00 | 16.82 | 43.03 | 12.83 | 13.57 | 34 | 8 | 7 | 4,929 | 214 | 3,500 |
| 32+90.59 | 3290.59 | 15.59 | 38.60 | 12.83 | 1.94 | 24 | 7 | 4 | 4,953 | 220 | 3,511 |
| 33+00 | 3300.00 | 9.41 | 37.76 | 12.83 | 2.46 | 13 | 4 | 1 | 4,966 | 221 | 3,519 |
| 33+15.87 | 3315.87 | 15.87 | 29.89 | 12.83 | 4.52 | 20 | 8 | 2 | 4,986 | 223 | 3,529 |
| 33+25 | 3325.00 | 9.13 | 27.62 | 12.83 | 5.70 | 10 | 4 | 2 | 4,996 | 225 | 3,532 |
| 33+50 | 3350.00 | 25.00 | 28.73 | 12.83 | 3.33 | 26 | 12 | 4 | 5,022 | 231 | 3,541 |
| 33+54.87 | 3354.87 | 4.87 | 34.65 | 12.83 | 3.40 | 6 | 2 | 1 | 5,028 | 231 | 3,543 |
| 33+59.73 | 3359.73 | 4.86 | 30.86 | 12.83 | 3.62 | 6 | 2 | 1 | 5,033 | 232 | 3,546 |
| 33+64.68 | 3364.68 | 4.95 | 33.27 | 12.83 | 1.75 | 6 | 2 | 0 | 5,039 | 233 | 3,549 |
| 33+75 | 3375.00 | 10.32 | 33.96 | 12.83 | 3.72 | 13 | 5 | 1 | 5,052 | 234 | 3,556 |
| 34+00 | 3400.00 | 25.00 | 39.97 | 12.83 | 3.72 | 34 | 12 | 3 | 5,086 | 238 | 3,574 |
| 34+25 | 3425.00 | 25.00 | 46.57 | 12.83 | 0.26 | 40 | 12 | 2 | 5,126 | 241 | 3,600 |
| 34+50 | 3450.00 | 25.00 | 37.97 | 12.83 | 0.79 | 39 | 12 | 0 | 5,166 | 241 | 3,626 |
| 34+75 | 3475.00 | 25.00 | 42.79 | 12.83 | 0.00 | 37 | 12 | 0 | 5,203 | 242 | 3,651 |
| 35+00 | 3500.00 | 25.00 | 30.99 | 12.83 | 0.00 | 34 | 12 | 0 | 5,237 | 242 | 3,674 |
| 35+11.11 | 3511.11 | 11.11 | 29.19 | 22.17 | 2.69 | 12 | 7 | 1 | 5,250 | 242 | 3,678 |
| 35+25 | 3525.00 | 13.89 | 33.85 | 22.75 | 1.84 | 16 | 12 | 1 | 5,266 | 244 | 3,681 |
| 35+50 | 3550.00 | 25.00 | 34.99 | 22.75 | 0.01 | 32 | 21 | 1 | 5,298 | 245 | 3,691 |
| 35+63.15 | 3563.15 | 13.15 | 35.53 | 20.42 | 0.71 | 17 | 11 | 0 | 5,315 | 245 | 3,697 |
| 35+75 | 3575.00 | 11.85 | 40.83 | 12.83 | 0.75 | 17 | 7 | 0 | 5,332 | 246 | 3,707 |
| 36+00 | 3600.00 | 25.00 | 42.30 | 12.83 | 2.72 | 38 | 12 | 2 | 5,370 | 248 | 3,731 |
| 36+12.84 | 3612.84 | 12.84 | 44.24 | 12.83 | 2.71 | 21 | 6 | 1 | 5,391 | 249 | 3,744 |
| 36+25 | 3625.00 | 12.16 | 37.69 | 12.83 | 7.89 | 18 | 6 | 2 | 5,409 | 252 | 3,754 |
| 36+50 | 3650.00 | 25.00 | 33.72 | 12.83 | 1.15 | 33 | 12 | 4 | 5,442 | 257 | 3,770 |
| 36+60 | 3660.00 | 10.00 | 30.42 | 12.83 | 23.00 | 12 | 5 | 4 | 5,454 | 263 | 3,771 |
| 36+61 | 3661.00 | 1.00 | 31.18 | 12.83 | 9.26 | 1 | 0 | 1 | 5,455 | 264 | 3,771 |
| 36+75 | 3675.00 | 14.00 | 32.88 | 14.58 | 31.92 | 17 | 7 | 11 | 5,472 | 277 | 3,767 |
| 36+85 | 3685.00 | 10.00 | 31.91 | 12.83 | 97.83 | 12 | 5 | 24 | 5,484 | 307 | 3,744 |
| 36+92.75 | 3692.75 | 7.75 | 31.78 | 12.83 | 135.88 | 9 | 4 | 34 | 5,493 | 349 | 3,708 |
| 37+00 | 3700.00 | 7.25 | 32.67 | 12.83 | 90.12 | 9 | 3 | 30 | 5,502 | 387 | 3,675 |
| 37+10 | 3710.00 | 10.00 | 27.58 | 12.83 | 28.68 | 11 | 5 | 22 | 5,513 | 414 | 3,654 |
| 37+25 | 3725.00 | 15.00 | 26.33 | 12.83 | 28.30 | 15 | 7 | 16 | 5,528 | 434 | 3,642 |
| 37+50 | 3750.00 | 25.00 | 25.94 | 12.83 | 18.16 | 24 | 12 | 22 | 5,552 | 461 | 3,627 |
| 37+75 | 3775.00 | 25.00 | 43.45 | 12.83 | 0.00 | 32 | 12 | 8 | 5,584 | 472 | 3,637 |
| 37+90.79 | 3790.79 | 15.79 | 58.07 | 12.83 | 0.00 | 30 | 8 | 0 | 5,614 | 472 | 3,659 |
| 38+00 | 3800.00 | 9.21 | 58.64 | 12.83 | 0.00 | 20 | 4 | 0 | 5,634 | 472 | 3,675 |
| 38+25 | 3825.00 | 25.00 | 57.95 | 12.83 | 0.01 | 54 | 12 | 0 | 5,688 | 472 | 3,717 |
| 38+50 | 3850.00 | 25.00 | 79.31 | 12.83 | 0.49 | 64 | 12 | 0 | 5,751 | 472 | 3,768 |
| 38+75 | 3875.00 | 25.00 | 84.12 | 12.83 | 0.00 | 76 | 12 | 0 | 5,827 | 472 | 3,832 |
| 39+00 | 3900.00 | 25.00 | 86.33 | 12.83 | 0.00 | 79 | 12 | 0 | 5,906 | 472 | 3,899 |
| 39+25 | 3925.00 | 25.00 | 91.90 | 21.00 | 0.00 | 83 | 16 | 0 | 5,988 | 472 | 3,966 |
| 39+38.6 | 3938.60 | 13.60 | 67.47 | 21.00 | 0.00 | 40 | 11 | 0 | 6,028 | 472 | 3,995 |
| 39+50 | 3950.00 | 11.40 | 71.29 | 12.83 | 0.00 | 29 | 7 | 0 | 6,058 | 472 | 4,017 |
| 39+75 | 3975.00 | 25.00 | 72.17 | 12.83 | 0.04 | 66 | 12 | 0 | 6,124 | 472 | 4,072 |
| 40+00 | 4000.00 | 25.00 | 70.12 | 12.83 | 0.05 | 66 | 12 | 0 | 6,190 | 472 | 4,126 |
| 40+25 | 4025.00 | 25.00 | 67.53 | 12.83 | 0.00 | 64 | 12 | 0 | 6,254 | 472 | 4,178 |
| 40+50 | 4050.00 | 25.00 | 59.10 | 12.83 | 0.65 | 59 | 12 | 0 | 6,312 | 473 | 4,224 |
| 40+75 | 4075.00 | 25.00 | 51.36 | 12.83 | 0.64 | 51 | 12 | 1 | 6,363 | 473 | 4,262 |
| 41+00 | 4100.00 | 25.00 | 43.05 | 12.83 | 0.82 | 44 | 12 | 1 | 6,407 | 474 | 4,293 |
| 41+25 | 4125.00 | 25.00 | 39.27 | 12.83 | 4.38 | 38 | 12 | 2 | 6,445 | 477 | 4,317 |
| 41+50 | 4150.00 | 25.00 | 40.20 | 12.83 | 4.59 | 37 | 12 | 4 | 6,482 | 483 | 4,336 |
| 41+75 | 4175.00 | 25.00 | 43.29 | 12.83 | 4.67 | 39 | 12 | 4 | 6,521 | 488 | 4,358 |
| 42+00 | 4200.00 | 25.00 | 54.38 | 12.83 | 0.00 | 45 | 12 | 2 | 6,566 | 491 | 4,388 |
| 42+25 | 4225.00 | 25.00 | 43.75 | 19.83 | 0.18 | 45 | 15 | 0 | 6,611 | 491 | 4,419 |
| 42+30.12 | 4230.12 | 5.12 | 51.55 | 27.42 | 0.00 | 9 | 4 | 0 | 6,620 | 491 | 4,423 |
| 42+40.92 | 4240.92 | 10.79 | 50.84 | 29.17 | 0.36 | 20 | 11 | 0 | 6,641 | 491 | 4,432 |
| 42+50 | 4250.00 | 9.08 | 53.25 | 29.17 | 0.00 | 18 | 10 | 0 | 6,658 | 491 | 4,440 |
| 42+55.04 | 4251.71 | 1.71 | 32.27 | 29.17 | 0.00 | 3 | 2 | 0 | 6,661 | 491 | 4,441 |
| 42+60 | 4260.00 | 8.29 | 62.02 | 29.17 | 0.02 | 14 | 9 | 0 | 6,676 | 491 | 4,446 |
| 42+75 | 4275.00 | 15.00 | 64.06 | 22.17 | 0.00 | 35 | 14 | 0 | 6,711 | 491 | 4,467 |
| 43+00 | 4300.00 | 25.00 | 49.62 | 23.33 | 0.99 | 53 | 21 | 0 | 6,763 | 491 | 4,498 |
| 43+13.53 | 4313.53 | 13.53 | 52.92 | 26.83 | 1.31 | 26 | 13 | 1 | 6,789 | 492 | 4,510 |

CONTINUED ON NEXT PAGE

CONTINUED FROM PREVIOUS PAGE

Division 1 - Cty-D

| STATION | Real Station | Distance | AREA (SF) Cut | AREA (SF) Salvaged/Unusable Pavement Material | AREA (SF) Fill | Incremental Vol (CY) (Unadjusted) Cut Note 1 | Incremental Vol (CY) (Unadjusted) Salvaged/Unusable Pavement Material Note 2 | Incremental Vol (CY) (Unadjusted) Fill Note 3 | Cumulative Vol (CY) Cut 1.00 Note 1 | Cumulative Vol (CY) Expanded Fill 1.25 | Cumulative Vol (CY) Mass Ordinate |
|---|---|---|---|---|---|---|---|---|---|---|---|
| 43+25 | 4325.00 | 11.47 | 56.97 | 32.67 | 1.44 | 23 | 13 | 1 | 6,812 | 493 | 4,520 |
| 43+32.57 | 4332.57 | 7.57 | 56.06 | 15.75 | 1.09 | 16 | 7 | 0 | 6,828 | 493 | 4,529 |
| 43+50 | 4350.00 | 17.43 | 58.46 | 12.83 | 0.55 | 37 | 9 | 1 | 6,865 | 494 | 4,556 |
| 43+75 | 4375.00 | 25.00 | 48.35 | 12.83 | 0.03 | 49 | 12 | 0 | 6,914 | 494 | 4,593 |
| 43+94.11 | 4394.11 | 19.11 | 36.49 | 12.83 | 3.66 | 30 | 9 | 1 | 6,944 | 496 | 4,613 |
| 44+00 | 4400.00 | 5.89 | 32.66 | 12.83 | 1.03 | 8 | 3 | 1 | 6,952 | 497 | 4,617 |
| 44+25 | 4425.00 | 25.00 | 33.93 | 12.83 | 0.74 | 31 | 12 | 1 | 6,983 | 498 | 4,635 |
| 44+50 | 4450.00 | 25.00 | 35.29 | 12.83 | 2.06 | 32 | 12 | 1 | 7,015 | 499 | 4,653 |
| 44+75 | 4475.00 | 25.00 | 34.46 | 12.83 | 0.59 | 32 | 12 | 1 | 7,047 | 501 | 4,672 |
| 45+00 | 4500.00 | 25.00 | 34.52 | 12.83 | 2.20 | 32 | 12 | 1 | 7,079 | 502 | 4,690 |
| 45+25 | 4525.00 | 25.00 | 33.03 | 14.67 | 3.50 | 31 | 13 | 3 | 7,110 | 506 | 4,706 |
| 45+50 | 4550.00 | 25.00 | 37.62 | 14.67 | 0.36 | 33 | 14 | 2 | 7,143 | 508 | 4,723 |
| 45+75 | 4575.00 | 25.00 | 43.22 | 14.67 | 0.20 | 37 | 14 | 0 | 7,181 | 508 | 4,746 |
| 46+00 | 4600.00 | 25.00 | 39.69 | 14.67 | 0.69 | 38 | 14 | 0 | 7,219 | 509 | 4,770 |
| 46+25 | 4625.00 | 25.00 | 37.55 | 14.67 | 1.02 | 36 | 14 | 1 | 7,255 | 510 | 4,792 |
| 46+50 | 4650.00 | 25.00 | 33.10 | 14.67 | 0.88 | 33 | 14 | 1 | 7,287 | 511 | 4,810 |
| 46+64.26 | 4664.26 | 14.26 | 46.27 | 14.67 | 0.03 | 21 | 8 | 0 | 7,308 | 511 | 4,823 |
| 46+75 | 4675.00 | 10.74 | 43.56 | 14.67 | 0.56 | 18 | 6 | 0 | 7,326 | 511 | 4,834 |
| 46+78.81 | 4678.81 | 3.81 | 32.72 | 14.67 | 0.00 | 5 | 2 | 0 | 7,332 | 511 | 4,838 |
| 47+00 | 4700.00 | 21.19 | 31.35 | 14.67 | 0.05 | 25 | 12 | 0 | 7,357 | 511 | 4,851 |
| 47+25 | 4725.00 | 25.00 | 36.56 | 14.67 | 0.00 | 31 | 14 | 0 | 7,388 | 511 | 4,869 |
| 47+50 | 4750.00 | 25.00 | 37.26 | 14.67 | 3.05 | 34 | 14 | 1 | 7,422 | 513 | 4,888 |
| 47+75 | 4775.00 | 25.00 | 32.06 | 14.67 | 0.51 | 32 | 14 | 2 | 7,454 | 515 | 4,904 |
| 47+79 | 4779.00 | 4.00 | 31.37 | 14.67 | 0.00 | 5 | 2 | 0 | 7,459 | 515 | 4,907 |
| 47+80 | 4780.00 | 1.00 | 31.37 | 14.67 | 0.00 | 1 | 1 | 0 | 7,460 | 515 | 4,907 |
| | | | | | | 7,460 | 2,037 | 412 | | | |

PROJECT NO: 6425-00-70 | HWY: CTH D | COUNTY: GREEN LAKE | EARTHWORK | SHEET:

PLOT DATE : June 14, 1911 | PLOT BY : A.R.H. | PLOT NAME : | PLOT SCALE : 1:1

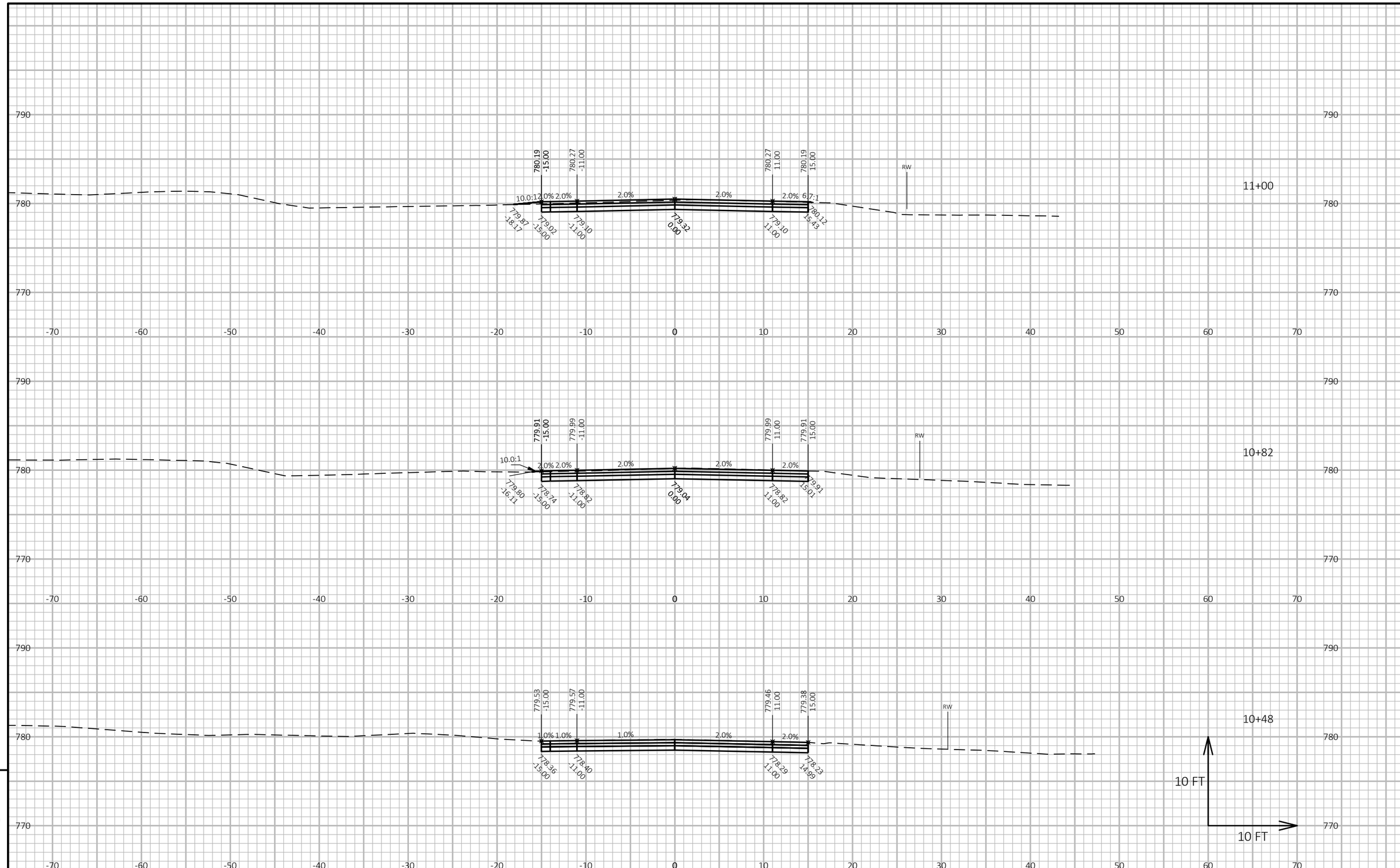


9

9

| PROJECT NO: 6425-00-70 | HWY: CTH D | COUNTY: GREEN LAKE | CROSS SECTIONS: CTH D | SHEET 119 | E |
|---|---|---|---|---|---|

FILE NAME : P:\11500S\11500S\11507\11507006\CADD\SHEETSPLAN\090201-XS.DWG
LAYOUT NAME - 1

PLOT DATE : 10/28/2020 3:25 PM PLOT BY : BOBBI MAXWELL PLOT NAME : PLOT SCALE : 1 IN:10 FT HORZ. / 1 IN:10 FT VERT.

WISDOT/CADDS SHEET 49

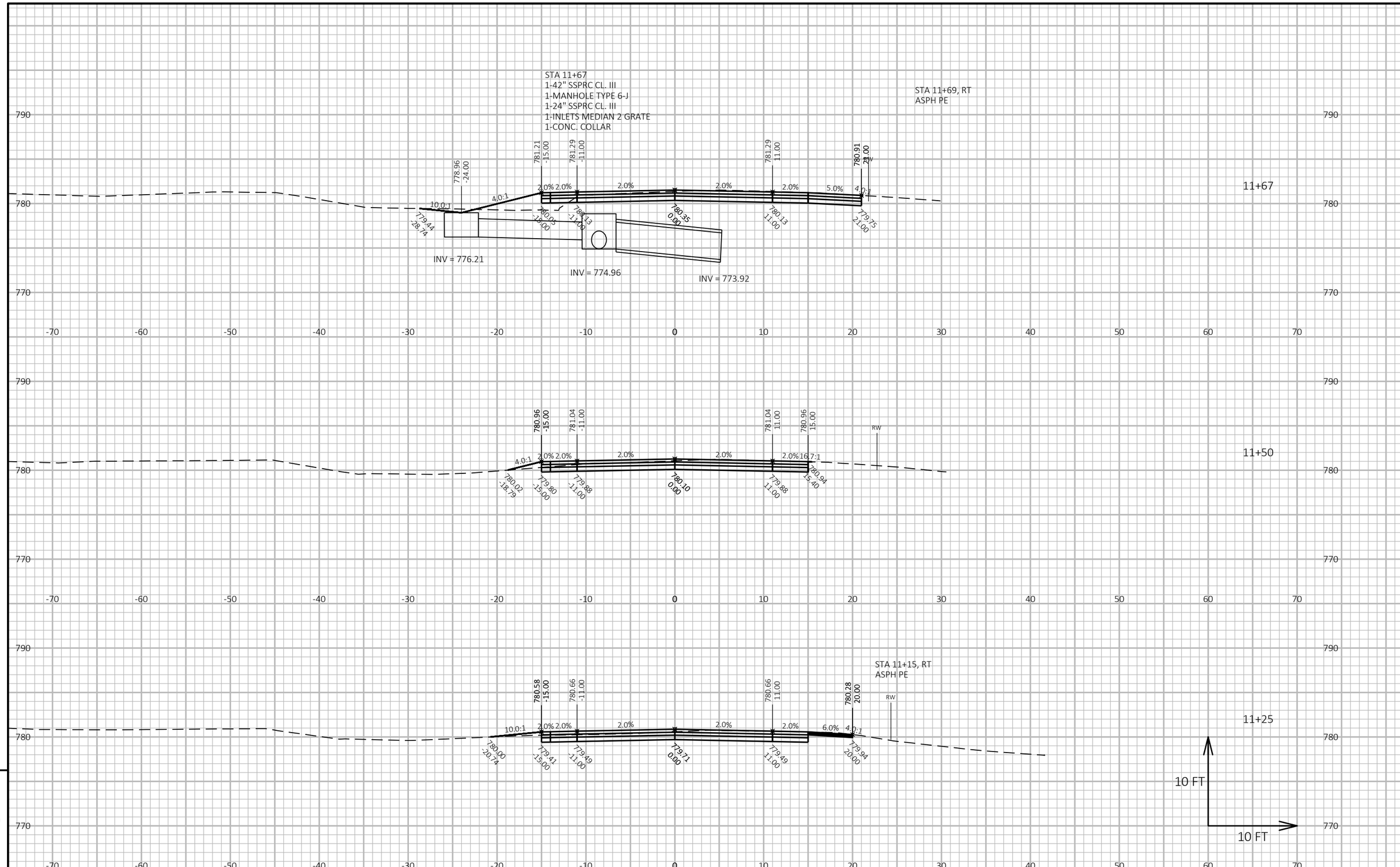


| PROJECT NO: 6425-00-70 | HWY: CTH D | COUNTY: GREEN LAKE | CROSS SECTIONS: CTH D | SHEET 120 | E |
|---|---|---|---|---|---|

FILE NAME : P:\11500S\11500S\11507\11507006\CADD\SHEETSPLAN\090201-XS.DWG
LAYOUT NAME - 2
PLOT DATE : 10/28/2020 3:25 PM
PLOT BY : BOBBI MAXWELL
PLOT NAME :
PLOT SCALE : 1 IN:10 FT HORZ. / 1 IN:10 FT VERT.
WISDOT/CADDS SHEET 49

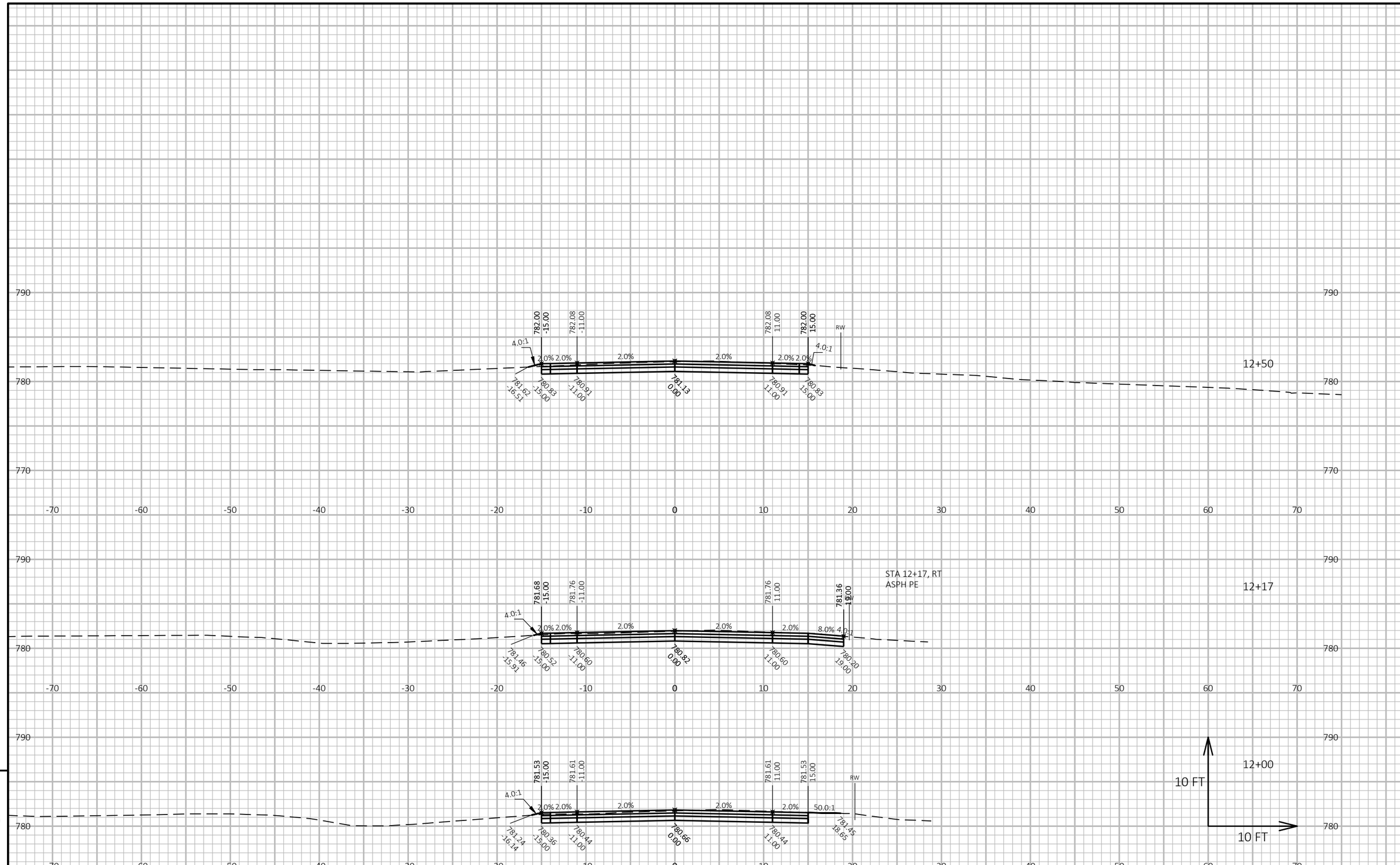


9

9

| PROJECT NO: 6425-00-70 | HWY: CTH D | COUNTY: GREEN LAKE | CROSS SECTIONS: CTH D | SHEET 121 | E |
|---|---|---|---|---|---|

FILE NAME : P:\11500S\11500S\11507\11507006\CADD\SHEETSPLAN\090201-XS.DWG
LAYOUT NAME - 3
PLOT DATE : 10/28/2020 3:26 PM
PLOT BY : BOBBI MAXWELL
PLOT NAME :
PLOT SCALE : 1 IN:10 FT HORZ. / 1 IN:10 FT VERT.
WISDOT/CADDS SHEET 49

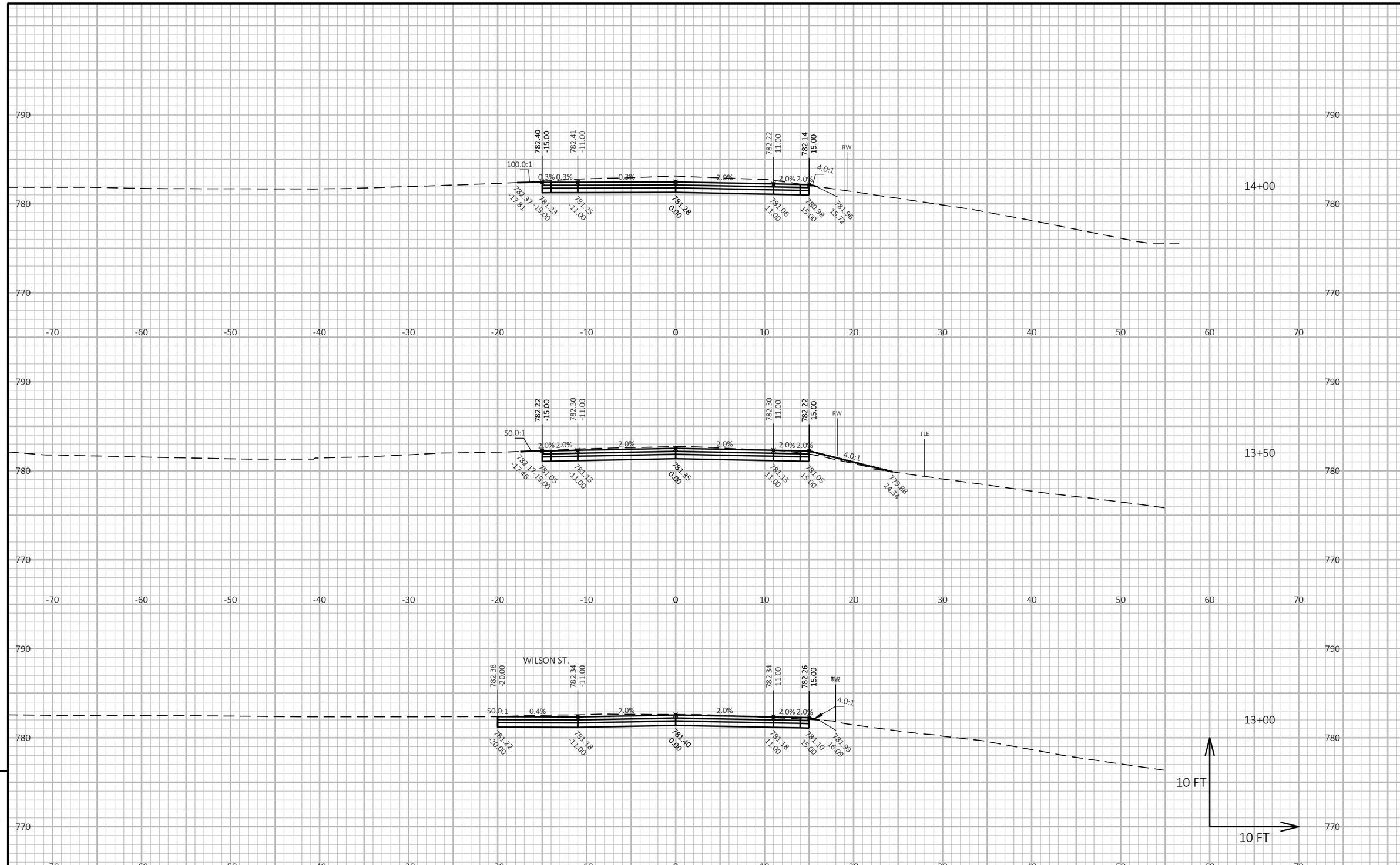


9

9

| PROJECT NO: 6425-00-70 | HWY: CTH D | COUNTY: GREEN LAKE | CROSS SECTIONS: CTH D | SHEET 122 | E |
|---|---|---|---|---|---|

FILE NAME : P:\11500S\11500S\11507\11507006\CADD\SHEETSPLAN\090201-XS.DWG
LAYOUT NAME - 4

PLOT DATE : 10/28/2020 3:26 PM PLOT BY : BOBBI MAXWELL PLOT NAME : PLOT SCALE : 1 IN:10 FT HORZ. / 1 IN:10 FT VERT.

WISDOT/CADDS SHEET 49

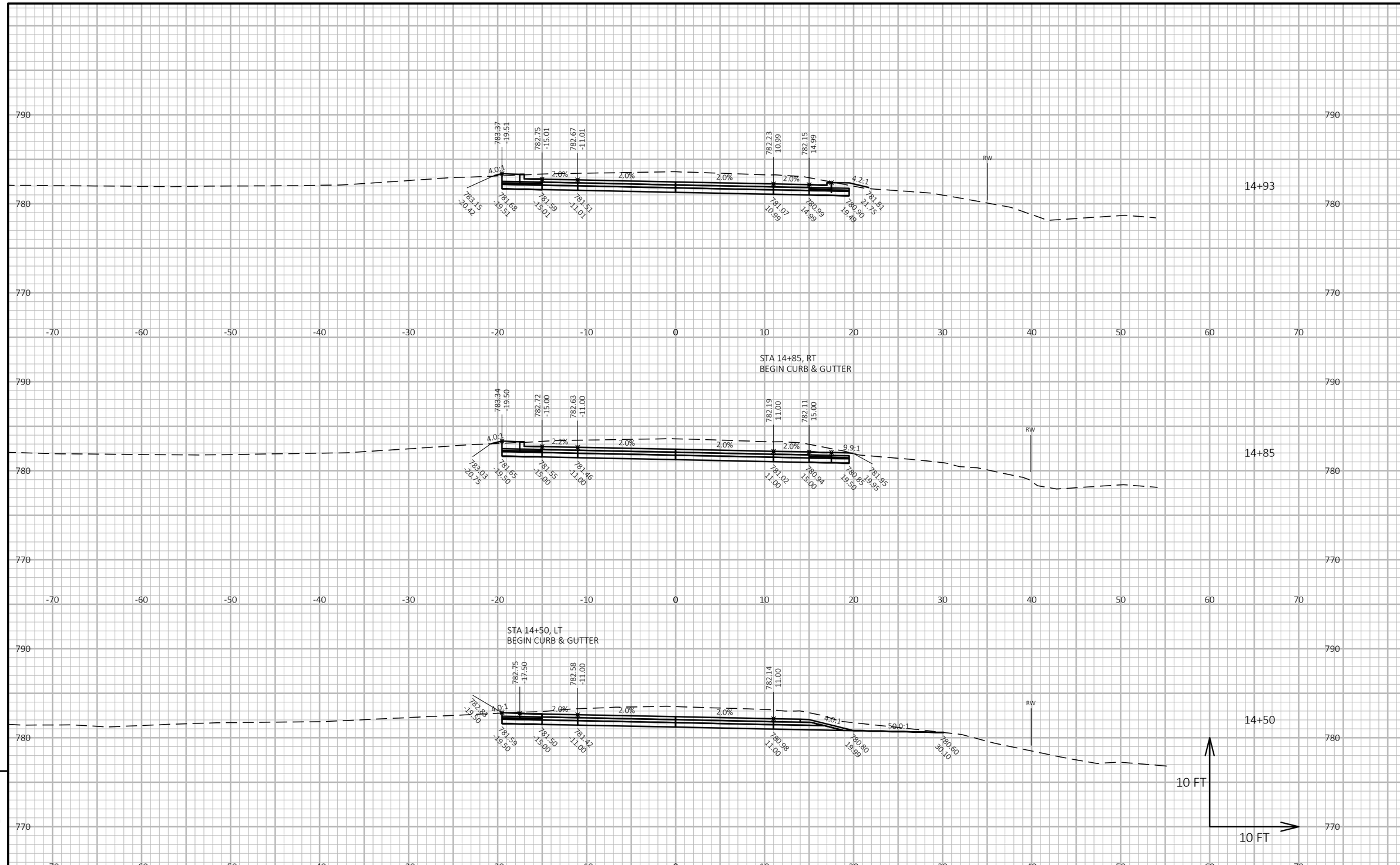


9

9

| PROJECT NO: 6425-00-70 | HWY: CTH D | COUNTY: GREEN LAKE | CROSS SECTIONS: CTH D | SHEET 123 | E |
|---|---|---|---|---|---|

FILE NAME : P:\11500S\11500S\11507\11507006\CADD\SHEETSPLAN\090201-XS.DWG
LAYOUT NAME - 5

PLOT DATE : 10/28/2020 3:26 PM PLOT BY : BOBBI MAXWELL PLOT NAME : **PLOT SCALE :** 1 IN:10 FT HORZ. / 1 IN:10 FT VERT.

WISDOT/CADDS SHEET 49

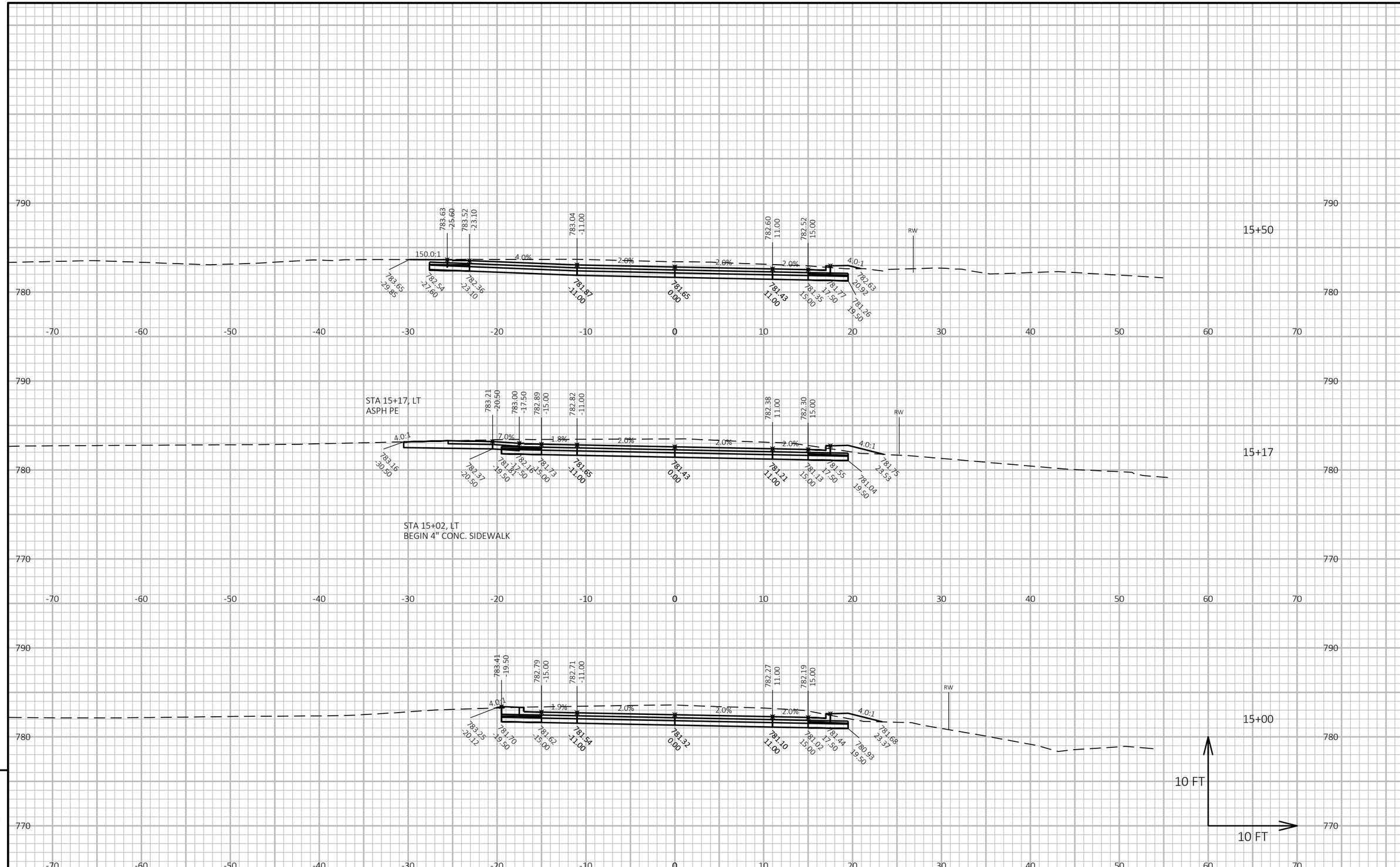


9

9

| PROJECT NO: 6425-00-70 | HWY: CTH D | COUNTY: GREEN LAKE | CROSS SECTIONS: CTH D | SHEET 124 | E |
|---|---|---|---|---|---|

FILE NAME : P:\11500S\11500S\11507\11507006\CADD\SHEETSPLAN\090201-XS.DWG
LAYOUT NAME - 6

PLOT DATE : 10/28/2020 3:26 PM PLOT BY : BOBBI MAXWELL PLOT NAME : **PLOT SCALE :** 1 IN:10 FT HORZ. / 1 IN:10 FT VERT.

WISDOT/CADDS SHEET 49

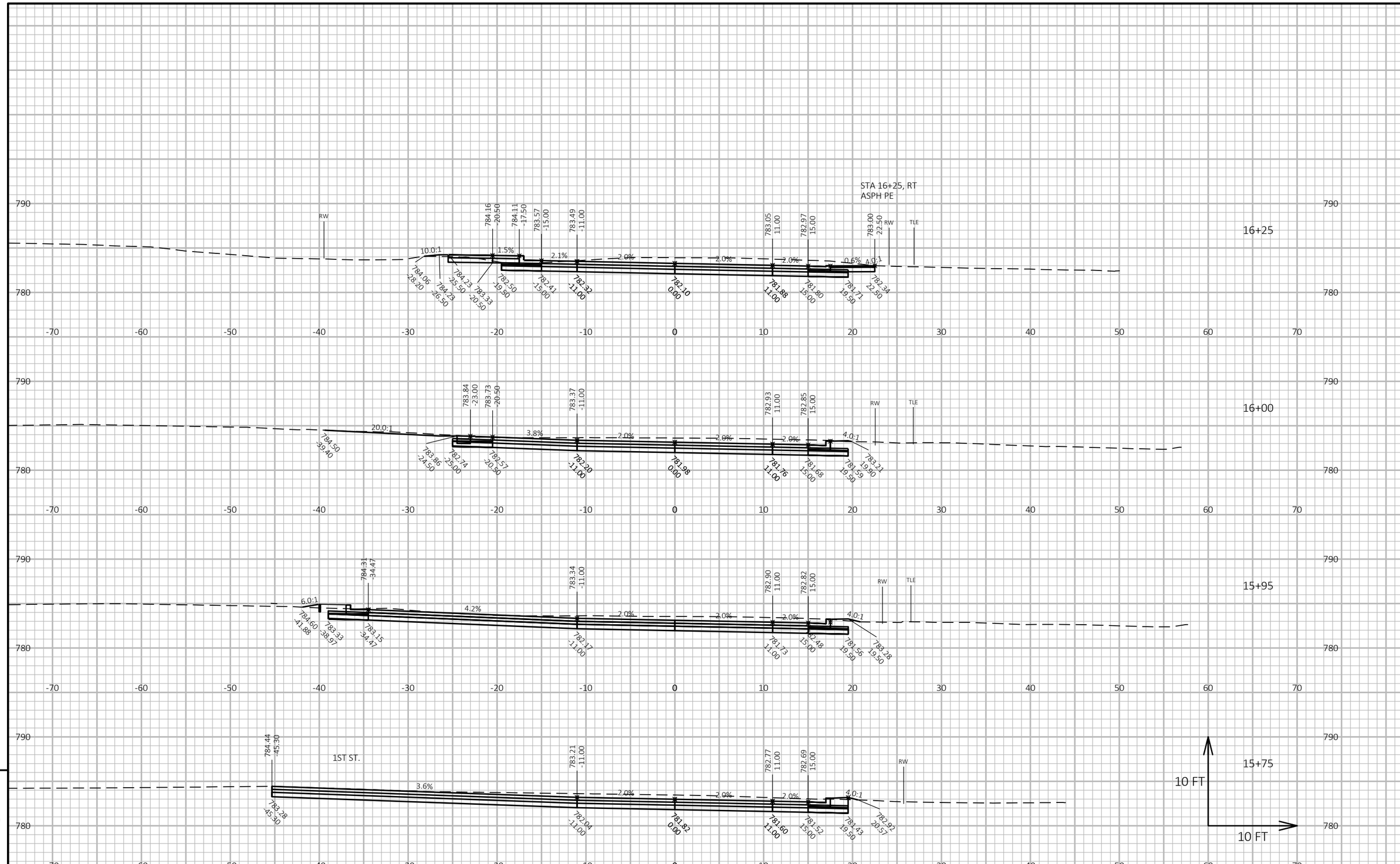


9

9

| PROJECT NO: 6425-00-70 | HWY: CTH D | COUNTY: GREEN LAKE | CROSS SECTIONS: CTH D | SHEET 125 | E |
|---|---|---|---|---|---|

FILE NAME : P:\11500S\11500S\11507\11507006\CADD\SHEETSPLAN\090201-XS.DWG
LAYOUT NAME - 7

PLOT DATE : 10/28/2020 3:26 PM PLOT BY : BOBBI MAXWELL PLOT NAME : **PLOT SCALE :** 1 IN:10 FT HORZ. / 1 IN:10 FT VERT.

WISDOT/CADDS SHEET 49

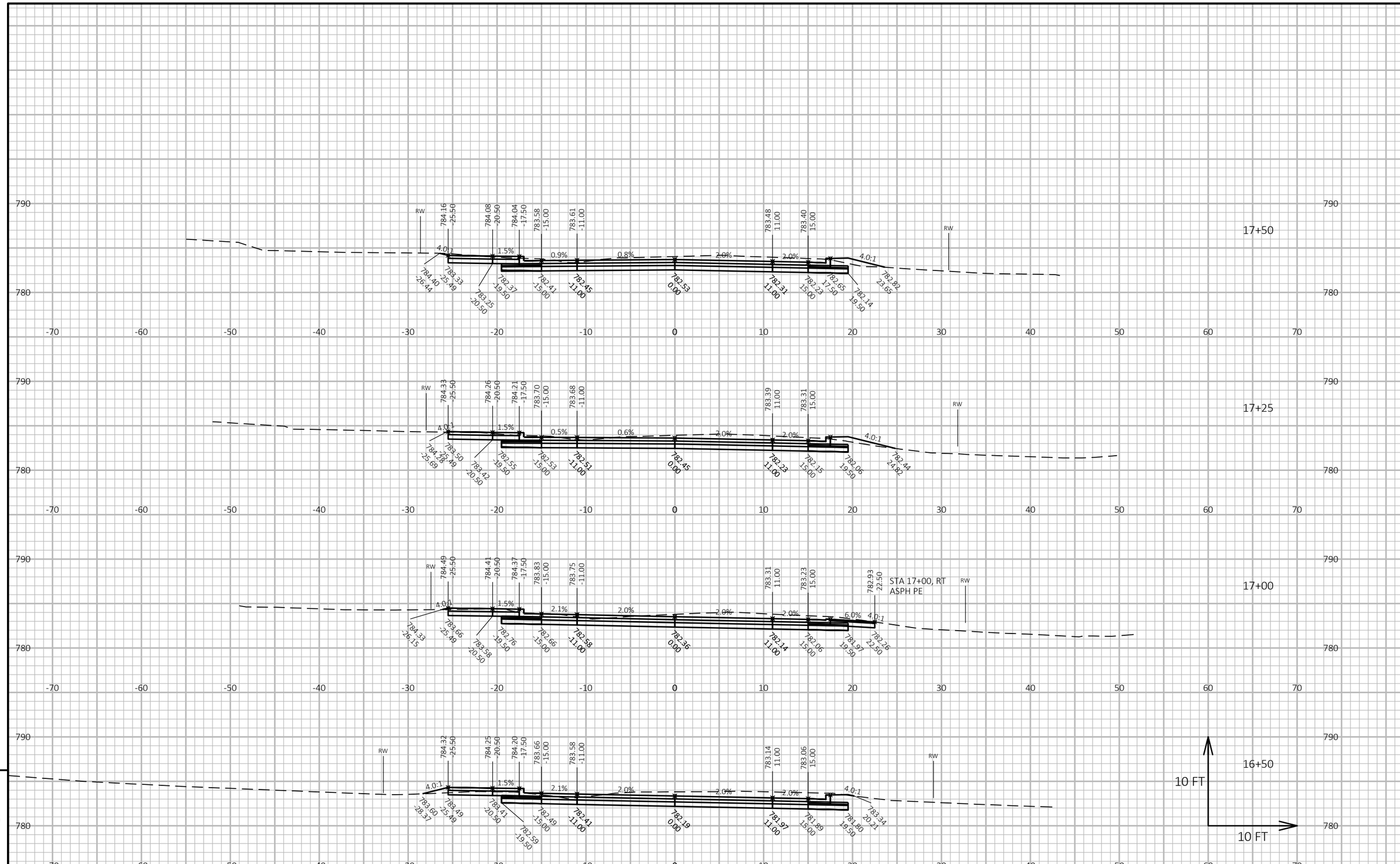


| PROJECT NO: 6425-00-70 | HWY: CTH D | COUNTY: GREEN LAKE | CROSS SECTIONS: CTH D | SHEET 126 | E |
|---|---|---|---|---|---|

FILE NAME : P:\11500S\11500S\11507\11507006\CADD\SHEETSPLAN\090201-XS.DWG
LAYOUT NAME - 8
PLOT DATE : 10/28/2020 3:26 PM
PLOT BY : BOBBI MAXWELL
PLOT NAME :
**PLOT SCALE :** 1 IN:10 FT HORZ. / 1 IN:10 FT VERT.
WISDOT/CADDS SHEET 49

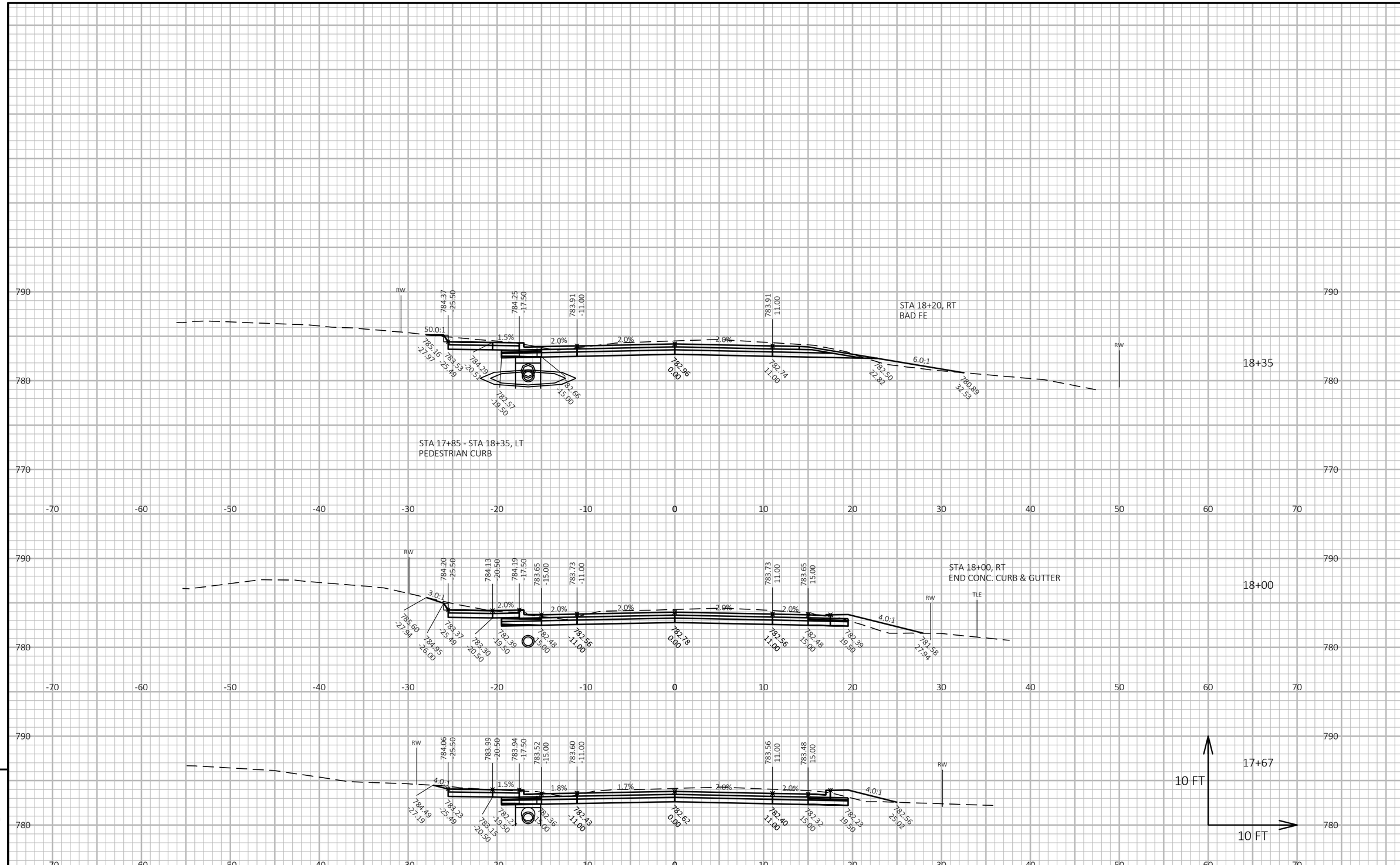


| PROJECT NO: 6425-00-70 | HWY: CTH D | COUNTY: GREEN LAKE | CROSS SECTIONS: CTH D | SHEET 127 | E |
|---|---|---|---|---|---|

FILE NAME : P:\11500S\11500S\11507\11507006\CADD\SHEETSPLAN\090201-XS.DWG
LAYOUT NAME - 9

PLOT DATE : 10/28/2020 3:26 PM PLOT BY : BOBBI MAXWELL PLOT NAME : PLOT SCALE : 1 IN:10 FT HORZ. / 1 IN:10 FT VERT.

WISDOT/CADDS SHEET 49

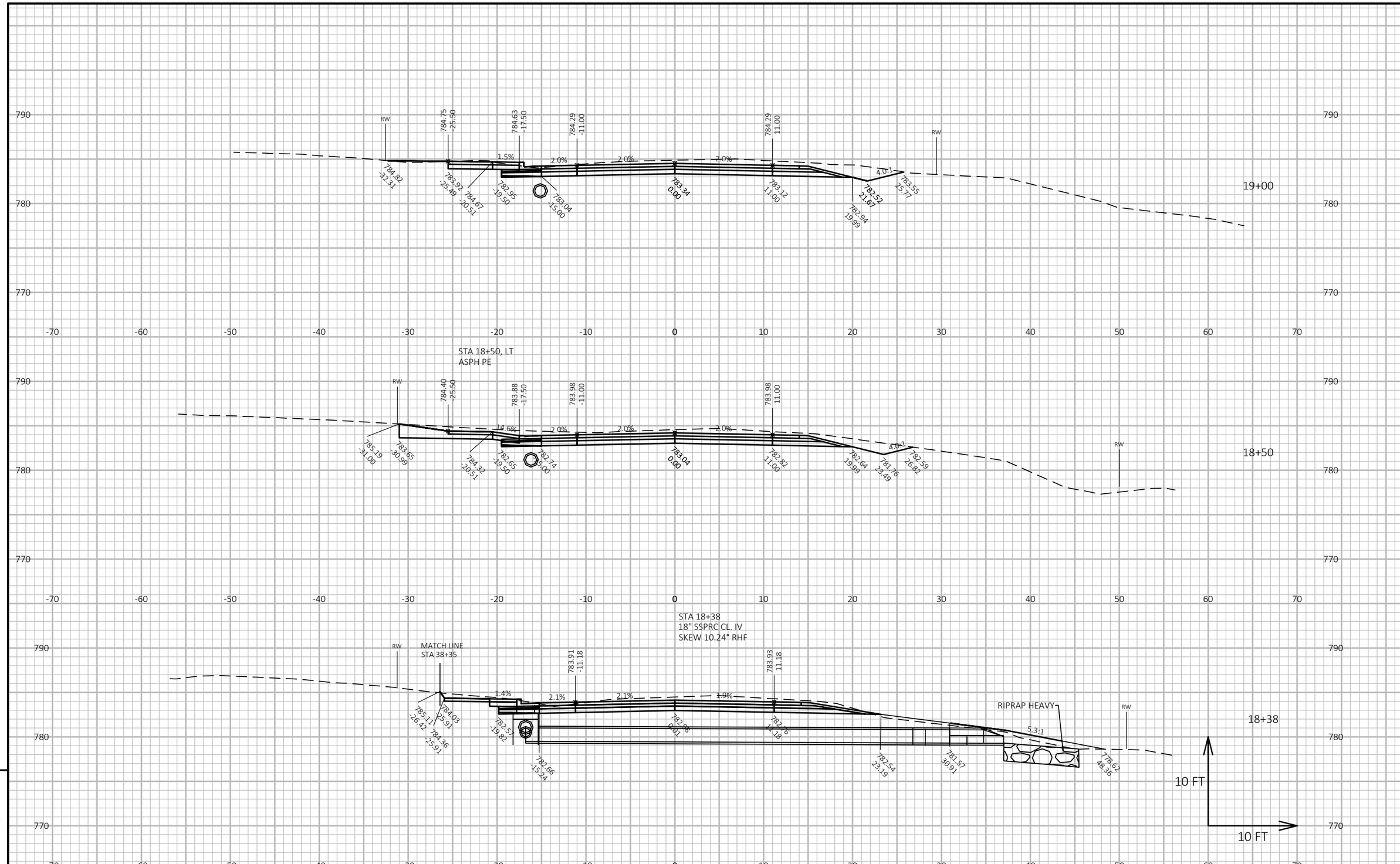


9

9

| PROJECT NO: 6425-00-70 | HWY: CTH D | COUNTY: GREEN LAKE | CROSS SECTIONS: CTH D | SHEET 128 | E |
|---|---|---|---|---|---|

FILE NAME : P:\11500S\11500S\11507\11507006\CADD\SHEETSPLAN\090201-XS.DWG
LAYOUT NAME - 10

PLOT DATE : 10/28/2020 3:26 PM PLOT BY : BOBBI MAXWELL PLOT NAME : **PLOT SCALE :** 1 IN:10 FT HORZ. / 1 IN:10 FT VERT.

WISDOT/CADDS SHEET 49

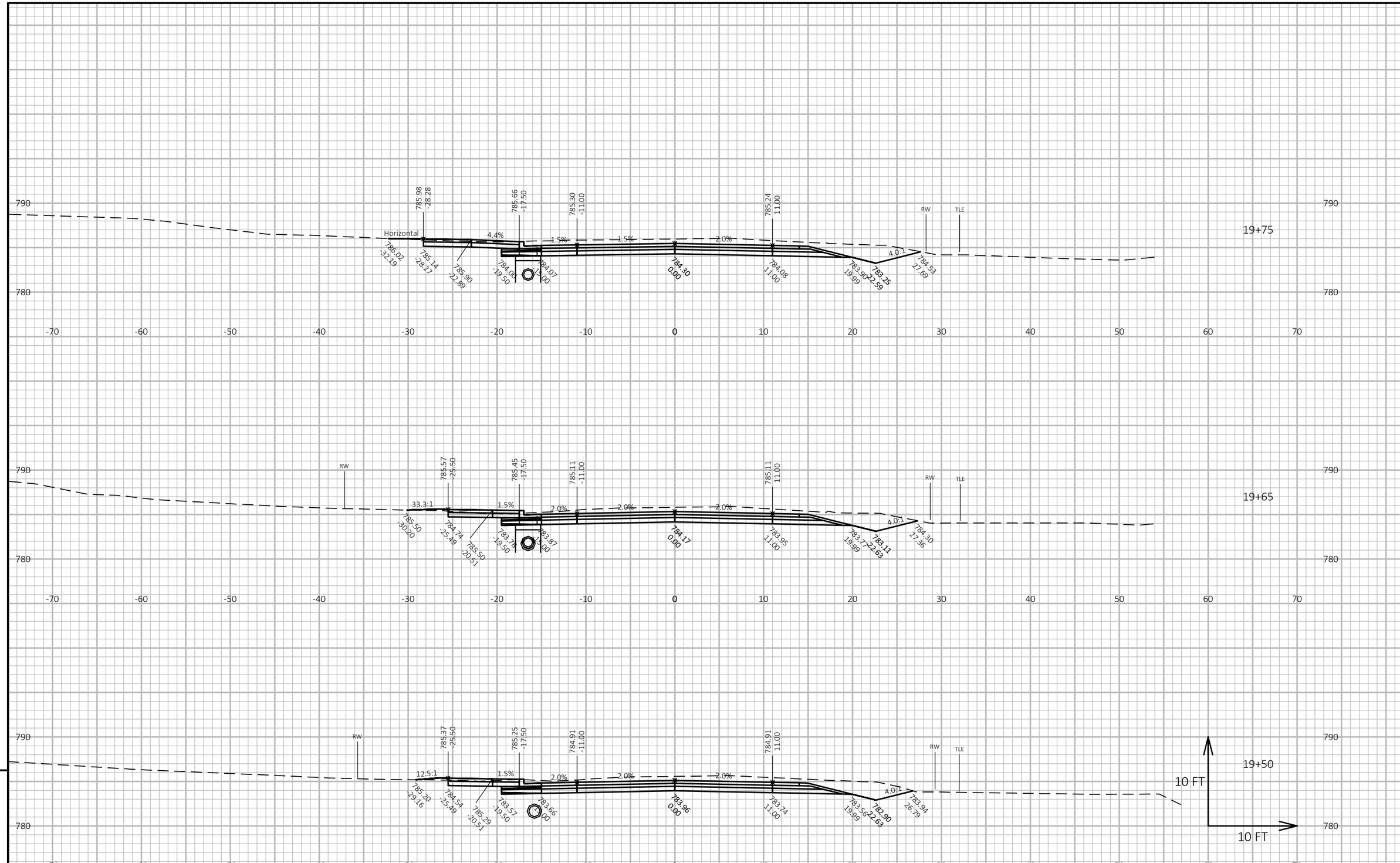


9

9

| PROJECT NO: 6425-00-70 | HWY: CTH D | COUNTY: GREEN LAKE | CROSS SECTIONS: CTH D | SHEET 129 | E |
|---|---|---|---|---|---|

FILE NAME : P:\11500S\11500S\11507\11507006\CADD\SHEETSPLAN\090201-XS.DWG
LAYOUT NAME - 11

PLOT DATE : 10/28/2020 3:26 PM PLOT BY : BOBBI MAXWELL PLOT NAME : PLOT SCALE : 1 IN:10 FT HORZ. / 1 IN:10 FT VERT.

WISDOT/CADDS SHEET 49

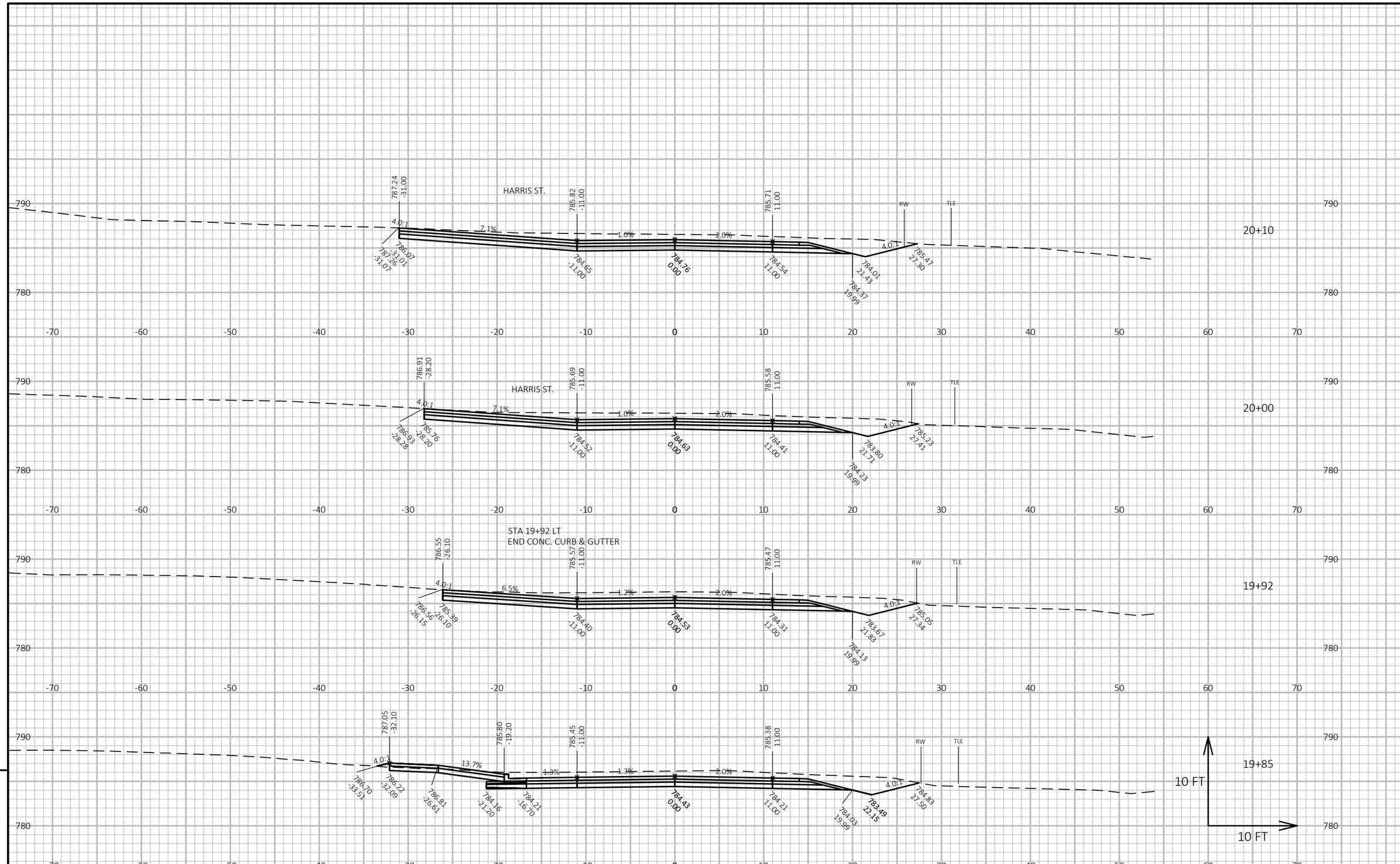


9

9

| PROJECT NO: 6425-00-70 | HWY: CTH D | COUNTY: GREEN LAKE | CROSS SECTIONS: CTH D | SHEET 130 | E |
|---|---|---|---|---|---|

FILE NAME : P:\11500S\11500S\11507\11507006\CADD\SHEETSPLAN\090201-XS.DWG
LAYOUT NAME - 12

PLOT DATE : 10/28/2020 3:27 PM PLOT BY : BOBBI MAXWELL PLOT NAME : **PLOT SCALE :** 1 IN:10 FT HORZ. / 1 IN:10 FT VERT.

WISDOT/CADDS SHEET 49

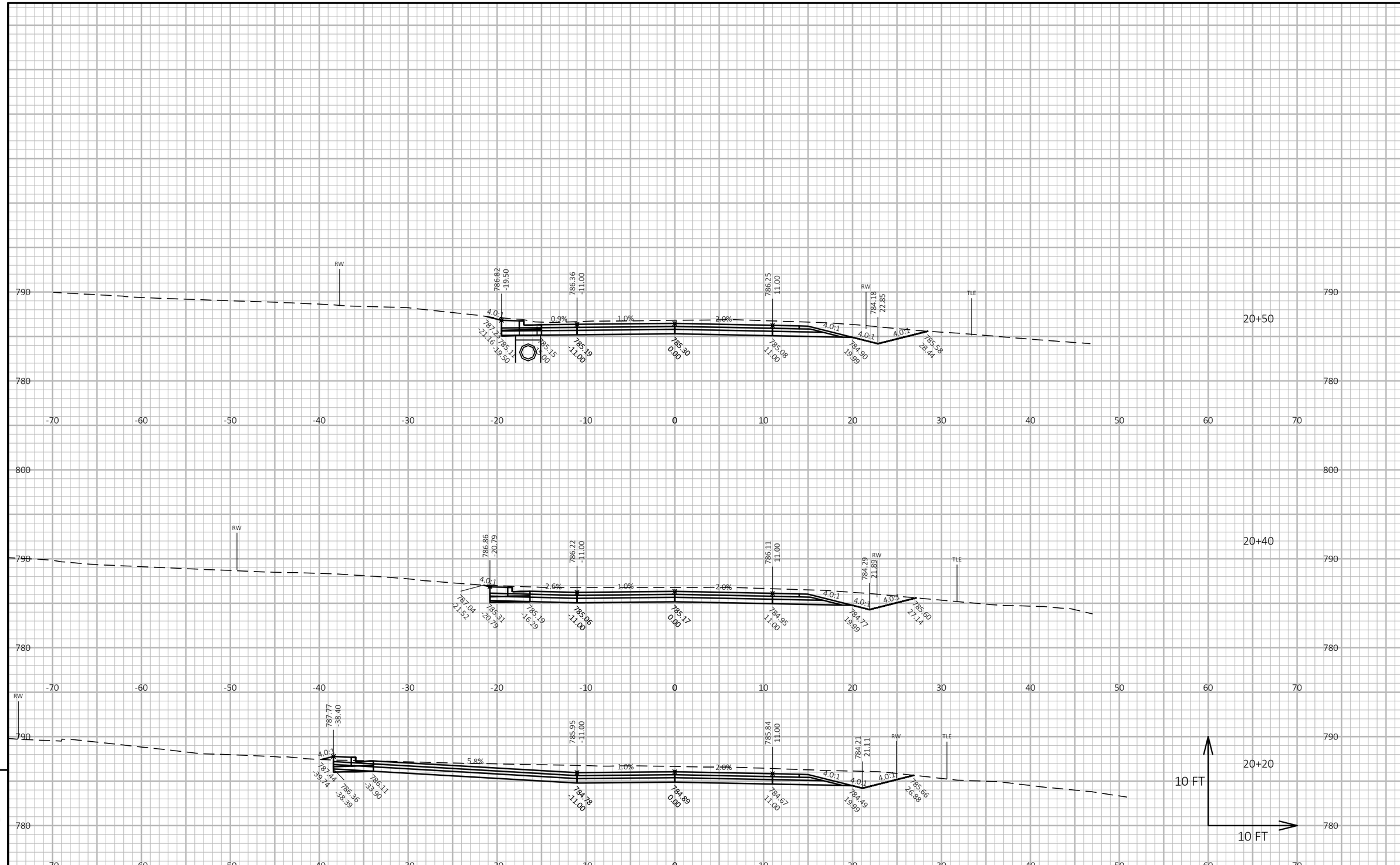


9

9

| PROJECT NO: 6425-00-70 | HWY: CTH D | COUNTY: GREEN LAKE | CROSS SECTIONS: CTH D | SHEET 131 | E |
|---|---|---|---|---|---|

FILE NAME : P:\11500S\11500S\11507\11507006\CADD\SHEETSPLAN\090201-XS.DWG
LAYOUT NAME - 13

PLOT DATE : 10/28/2020 3:27 PM PLOT BY : BOBBI MAXWELL PLOT NAME : PLOT SCALE : 1 IN:10 FT HORZ. / 1 IN:10 FT VERT.

WISDOT/CADDS SHEET 49

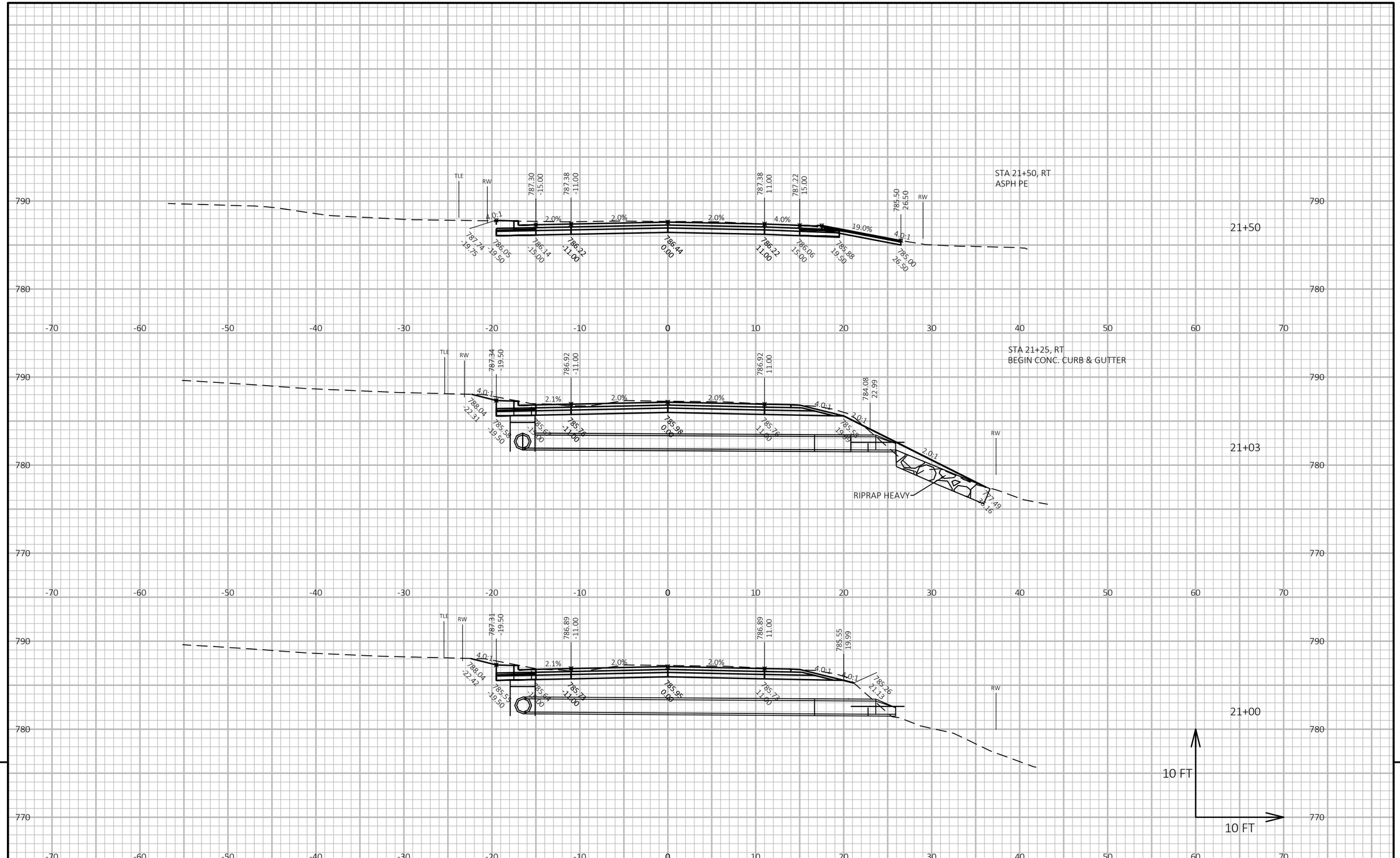


9

9

| PROJECT NO: 6425-00-70 | HWY: CTH D | COUNTY: GREEN LAKE | CROSS SECTIONS: CTH D | SHEET 132 | E |
|---|---|---|---|---|---|

FILE NAME : P:\11500S\11500S\11507\11507006\CADD\SHEETSPLAN\090201-XS.DWG
LAYOUT NAME - 14

PLOT DATE : 10/28/2020 3:27 PM PLOT BY : BOBBI MAXWELL PLOT NAME : **PLOT SCALE :** 1 IN:10 FT HORZ. / 1 IN:10 FT VERT.

WISDOT/CADDS SHEET 49

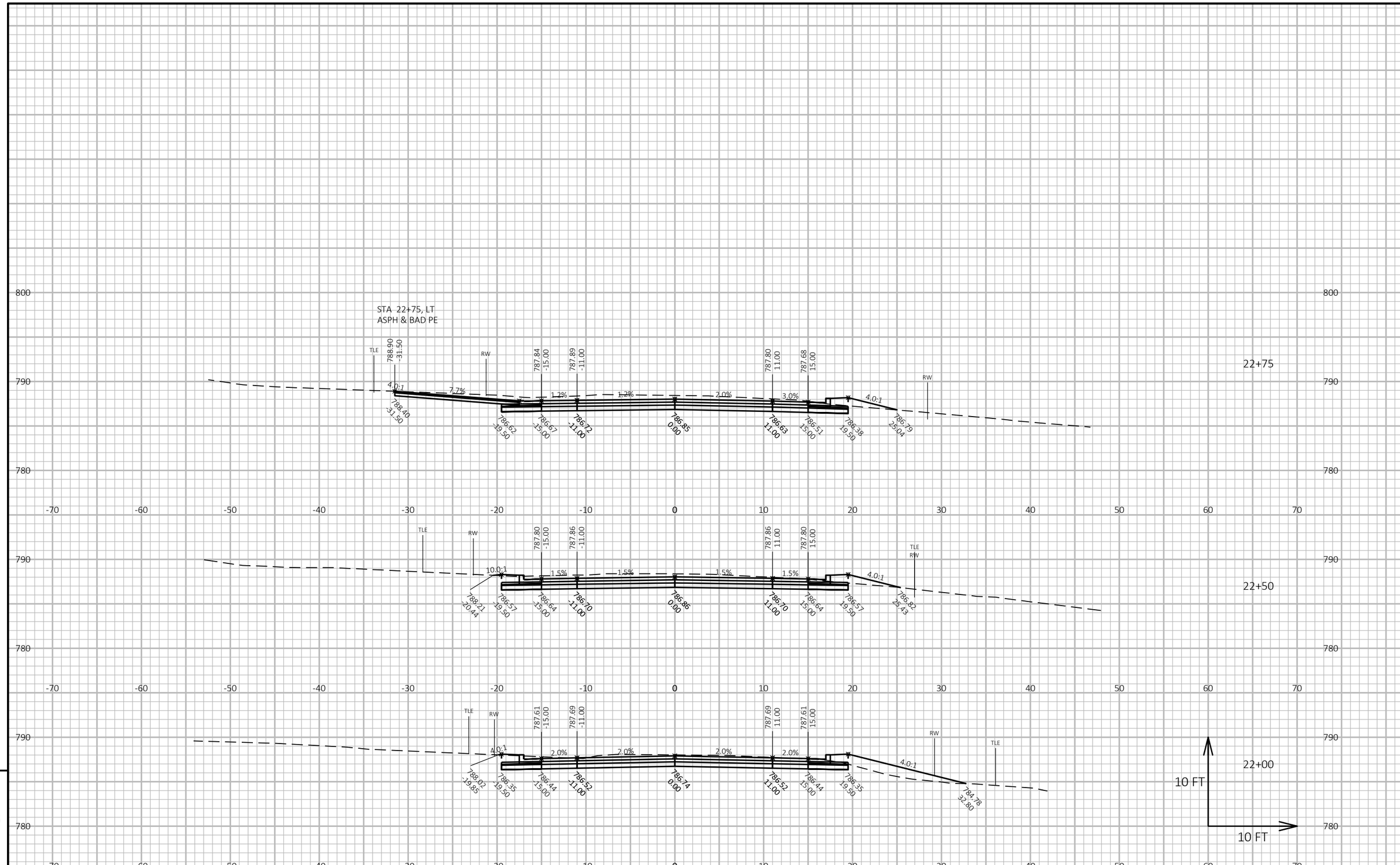


9

9

| PROJECT NO: 6425-00-70 | HWY: CTH D | COUNTY: GREEN LAKE | CROSS SECTIONS: CTH D | SHEET 133 | E |
|---|---|---|---|---|---|

FILE NAME : P:\11500S\11500S\11507\11507006\CADD\SHEETSPLAN\090201-XS.DWG
LAYOUT NAME - 15
PLOT DATE : 10/28/2020 3:27 PM
PLOT BY : BOBBI MAXWELL
PLOT NAME :
PLOT SCALE : 1 IN:10 FT HORZ. / 1 IN:10 FT VERT.
WISDOT/CADDS SHEET 49

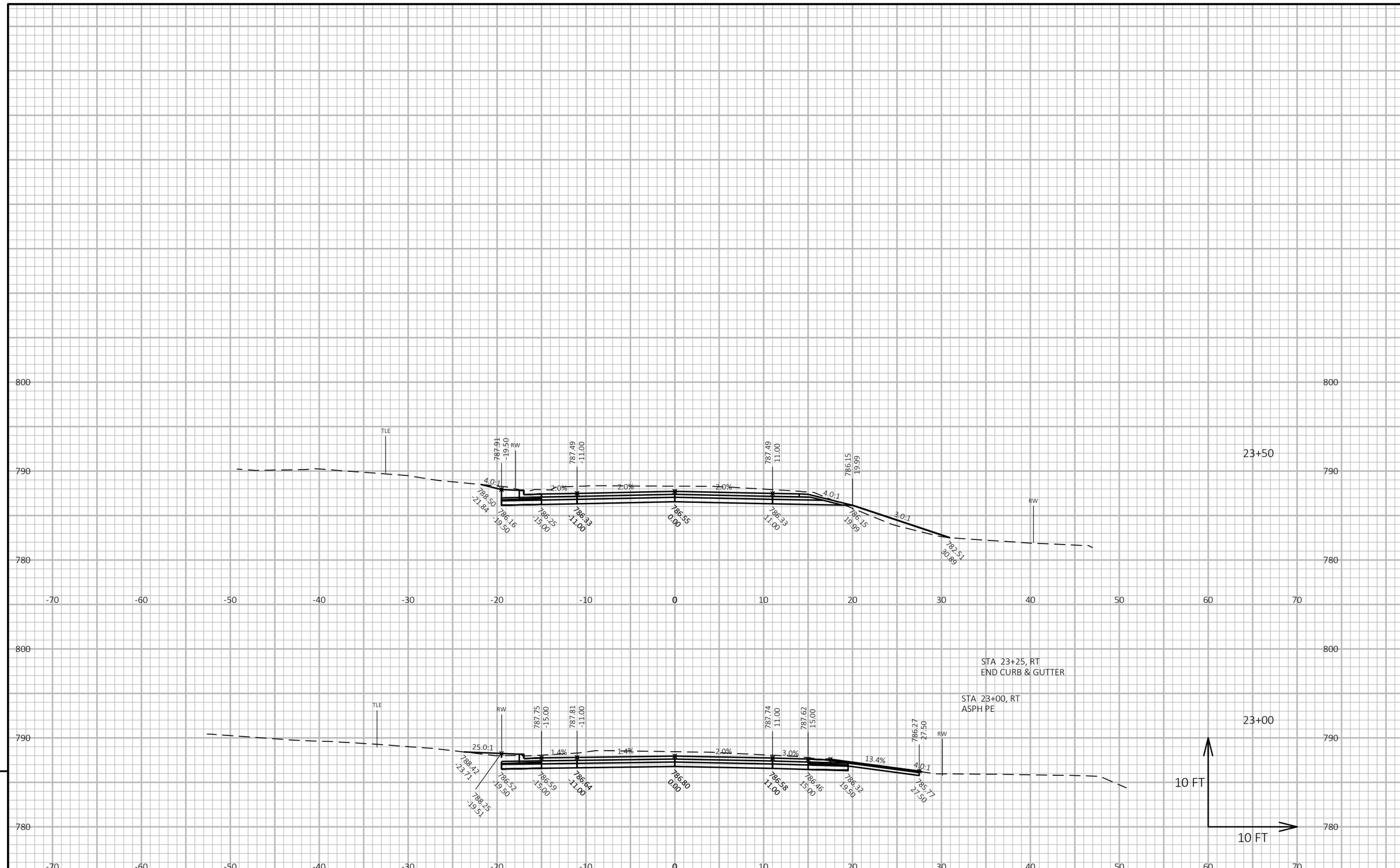


9

9

| PROJECT NO: 6425-00-70 | HWY: CTH D | COUNTY: GREEN LAKE | CROSS SECTIONS: CTH D | SHEET 134 | E |
|---|---|---|---|---|---|

FILE NAME : P:\11500S\11500S\11507\11507006\CADD\SHEETSPLAN\090201-XS.DWG
LAYOUT NAME - 16

PLOT DATE : 10/28/2020 3:27 PM PLOT BY : BOBBI MAXWELL PLOT NAME : **PLOT SCALE :** 1 IN:10 FT HORZ. / 1 IN:10 FT VERT.

WISDOT/CADDS SHEET 49

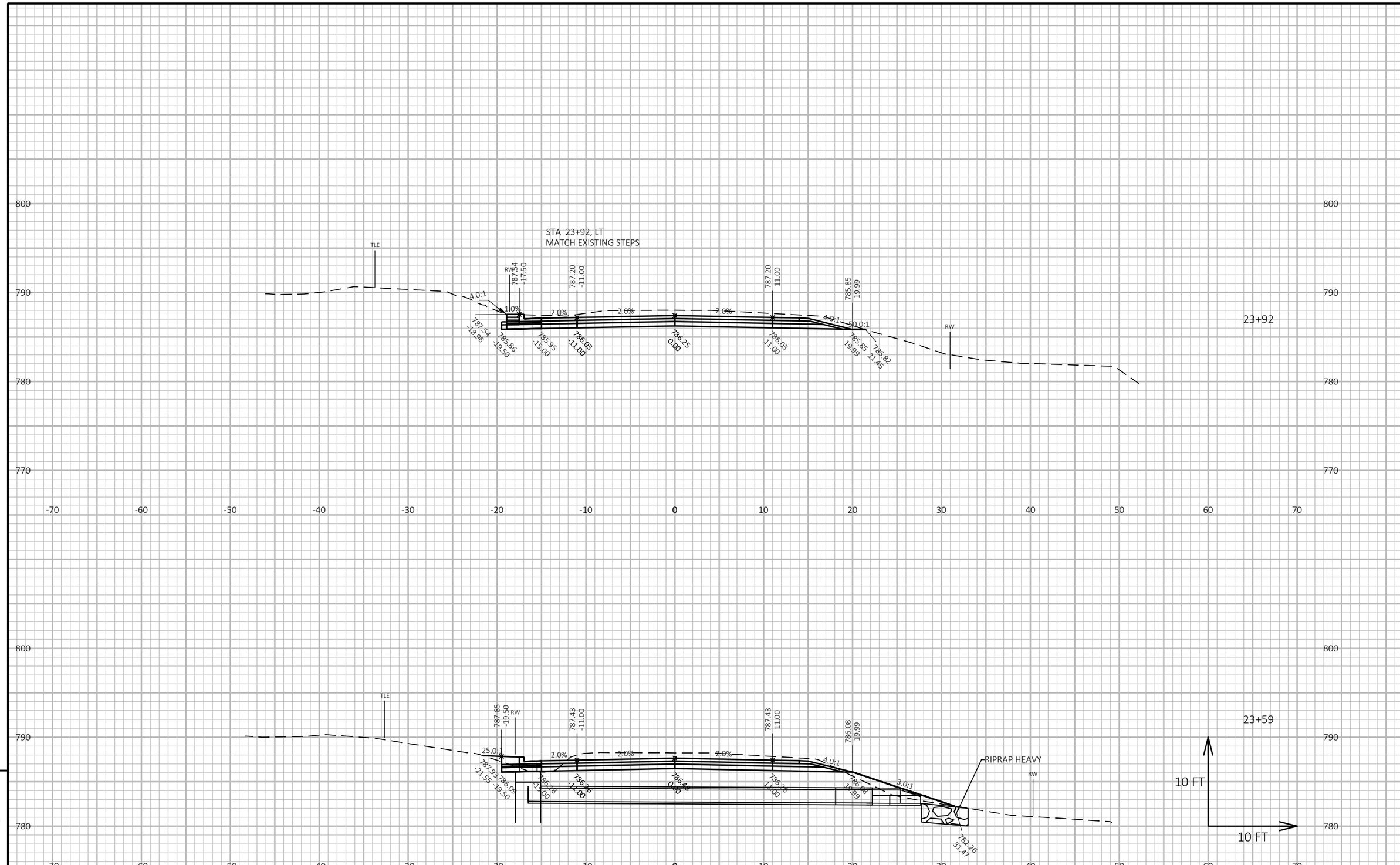


9

9

| PROJECT NO: 6425-00-70 | HWY: CTH D | COUNTY: GREEN LAKE | CROSS SECTIONS: CTH D | SHEET 135 | E |
|---|---|---|---|---|---|

FILE NAME : P:\11500S\11500S\11507\11507006\CADD\SHEETSPLAN\090201-XS.DWG
LAYOUT NAME - 17

PLOT DATE : 10/28/2020 3:27 PM PLOT BY : BOBBI MAXWELL PLOT NAME : PLOT SCALE : 1 IN:10 FT HORZ. / 1 IN:10 FT VERT.

WISDOT/CADDS SHEET 49

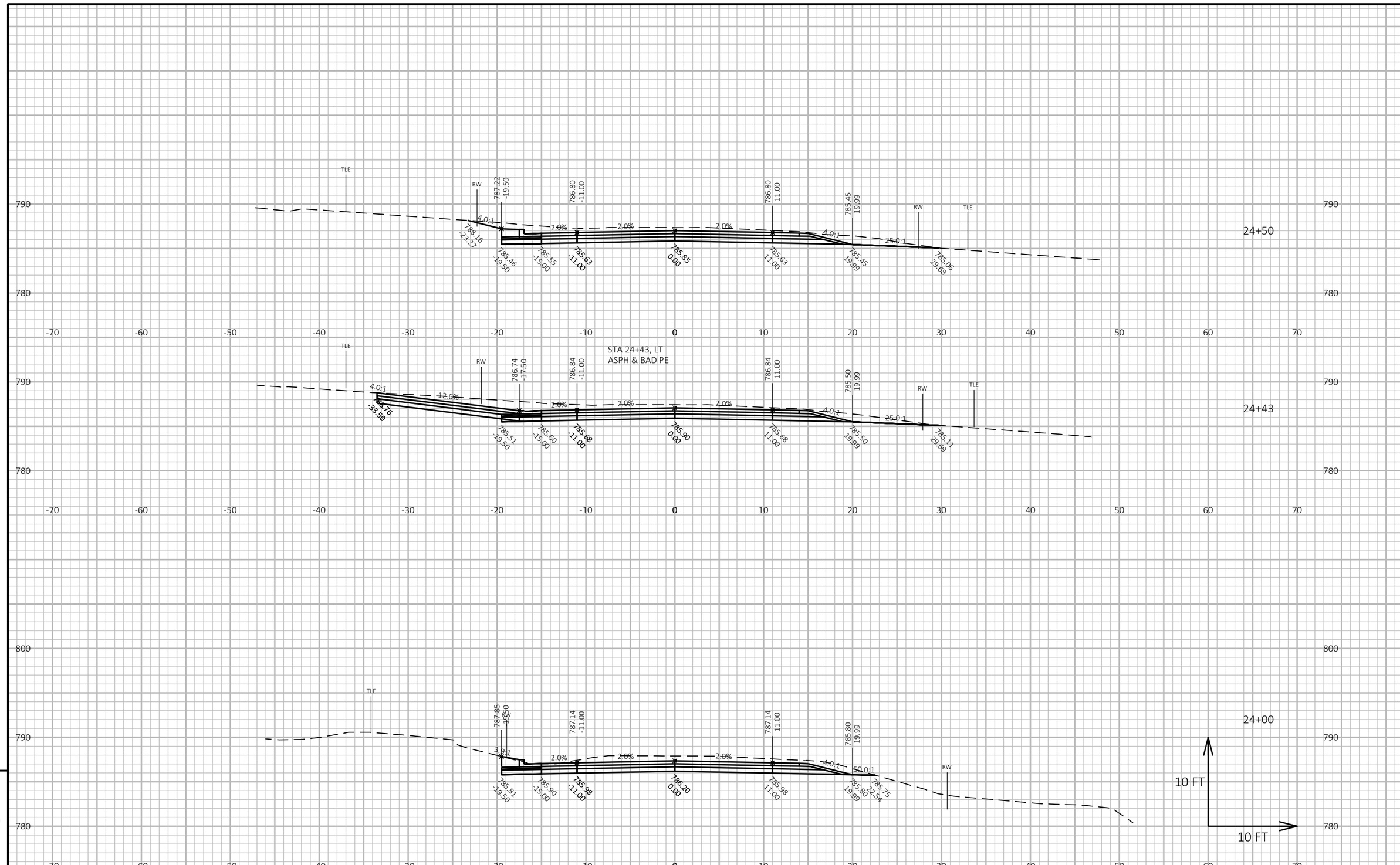


9

9

| PROJECT NO: 6425-00-70 | HWY: CTH D | COUNTY: GREEN LAKE | CROSS SECTIONS: CTH D | SHEET 136 | E |
|---|---|---|---|---|---|

FILE NAME : P:\11500S\11500S\11507\11507006\CADD\SHEETSPLAN\090201-XS.DWG
LAYOUT NAME - 18

PLOT DATE : 10/28/2020 3:27 PM PLOT BY : BOBBI MAXWELL PLOT NAME : PLOT SCALE : 1 IN:10 FT HORZ. / 1 IN:10 FT VERT.

WISDOT/CADDS SHEET 49

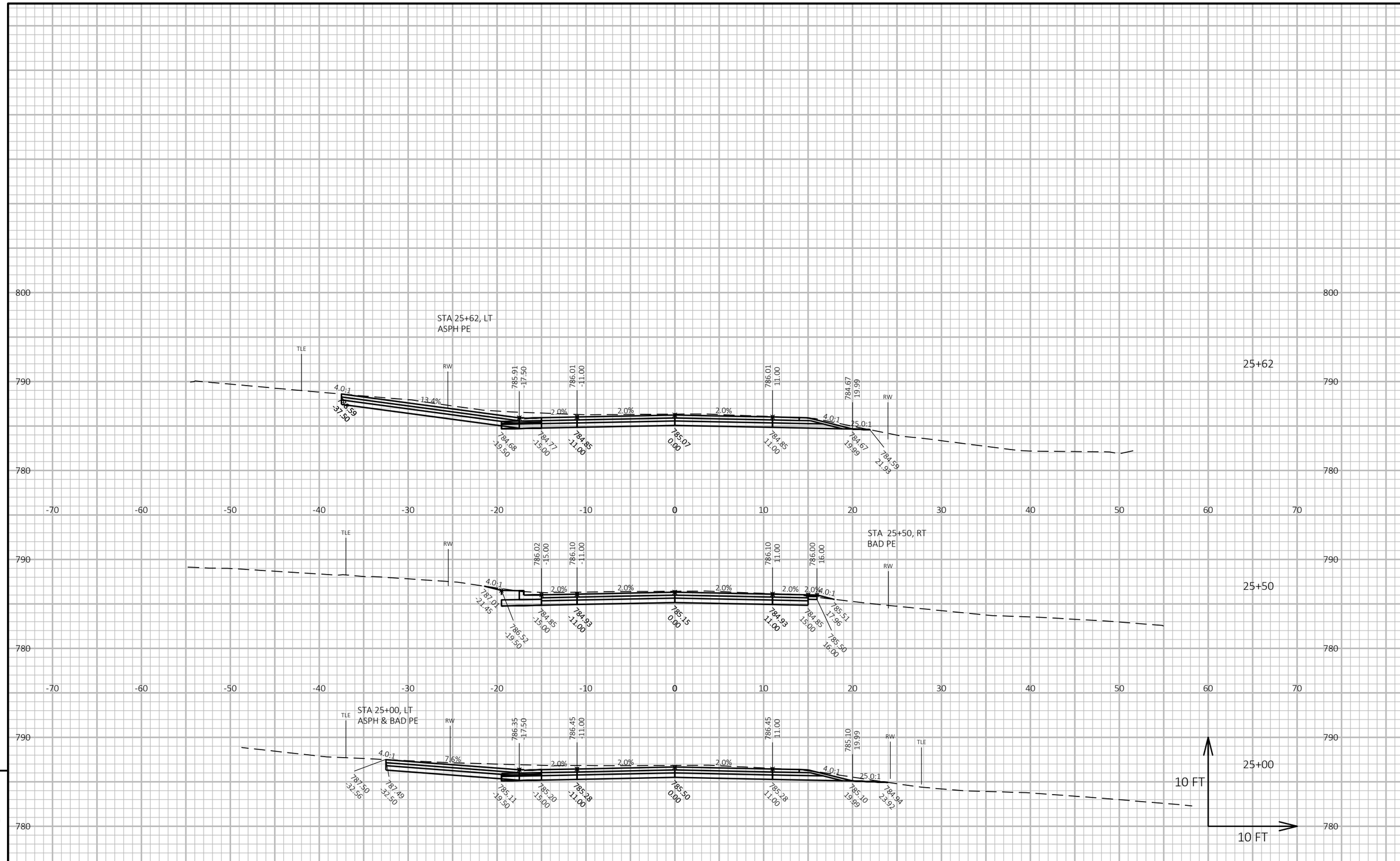


9

9

| PROJECT NO: 6425-00-70 | HWY: CTH D | COUNTY: GREEN LAKE | CROSS SECTIONS: CTH D | SHEET 137 | E |
|---|---|---|---|---|---|

FILE NAME : P:\11500S\11500S\11507\11507006\CADD\SHEETSPLAN\090201-XS.DWG
LAYOUT NAME - 19

PLOT DATE : 10/28/2020 3:27 PM PLOT BY : BOBBI MAXWELL PLOT NAME : PLOT SCALE : 1 IN:10 FT HORZ. / 1 IN:10 FT VERT.

WISDOT/CADDS SHEET 49

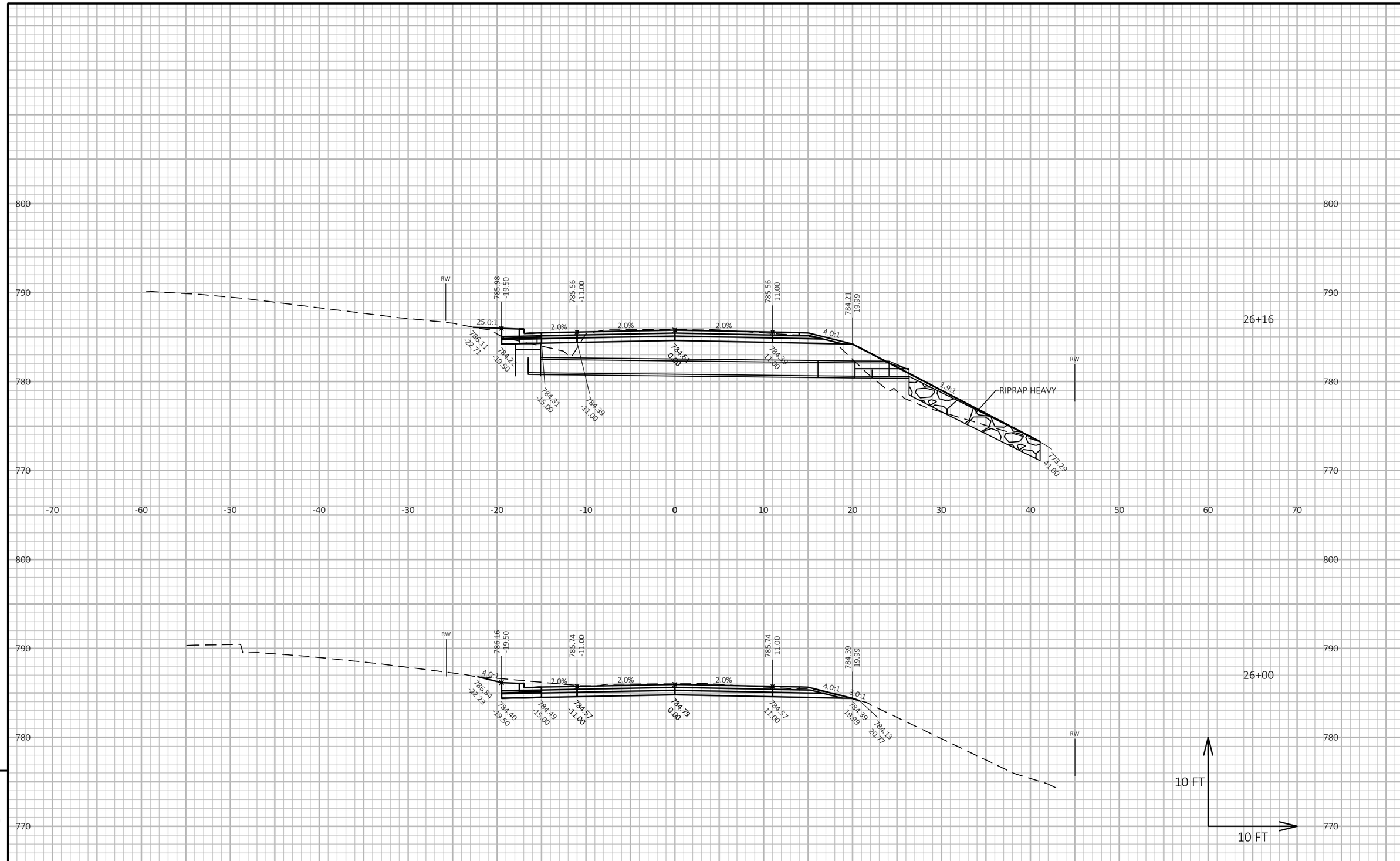


| PROJECT NO: 6425-00-70 | HWY: CTH D | COUNTY: GREEN LAKE | CROSS SECTIONS: CTH D | SHEET 138 | E |
|---|---|---|---|---|---|

FILE NAME : P:\11500S\11500S\11507\11507006\CADD\SHEETSPLAN\090201-XS.DWG
LAYOUT NAME - 20
PLOT DATE : 10/28/2020 3:28 PM
PLOT BY : BOBBI MAXWELL
PLOT NAME :
PLOT SCALE : 1 IN:10 FT HORZ. / 1 IN:10 FT VERT.
WISDOT/CADDS SHEET 49

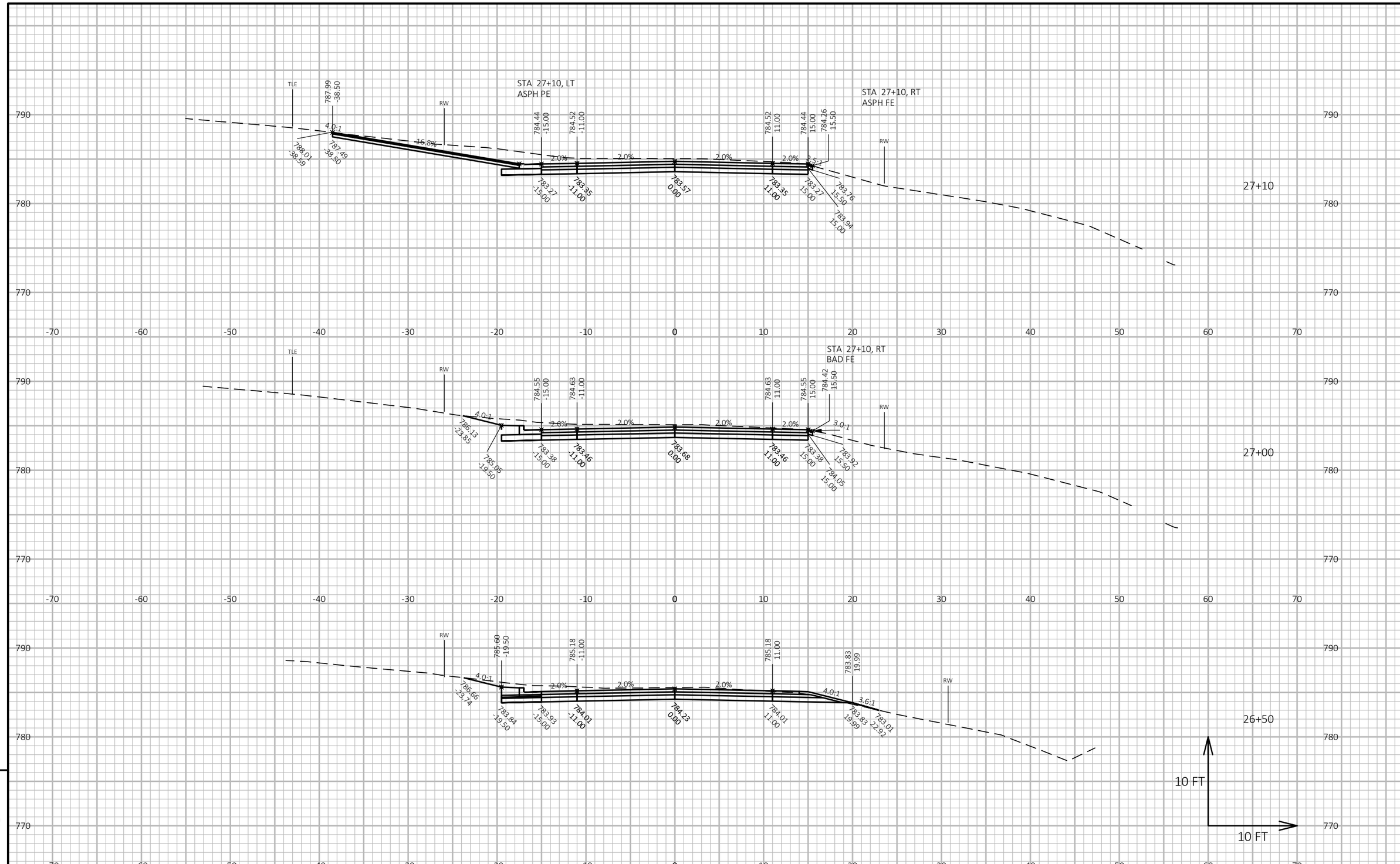


| PROJECT NO: 6425-00-70 | HWY: CTH D | COUNTY: GREEN LAKE | CROSS SECTIONS: CTH D | SHEET 139 | E |
|---|---|---|---|---|---|

FILE NAME : P:\11500S\11500S\11507\11507006\CADD\SHEETSPLAN\090201-XS.DWG
LAYOUT NAME - 21
PLOT DATE : 10/28/2020 3:28 PM
PLOT BY : BOBBI MAXWELL
PLOT NAME :
**PLOT SCALE :** 1 IN:10 FT HORZ. / 1 IN:10 FT VERT.
WISDOT/CADDS SHEET 49

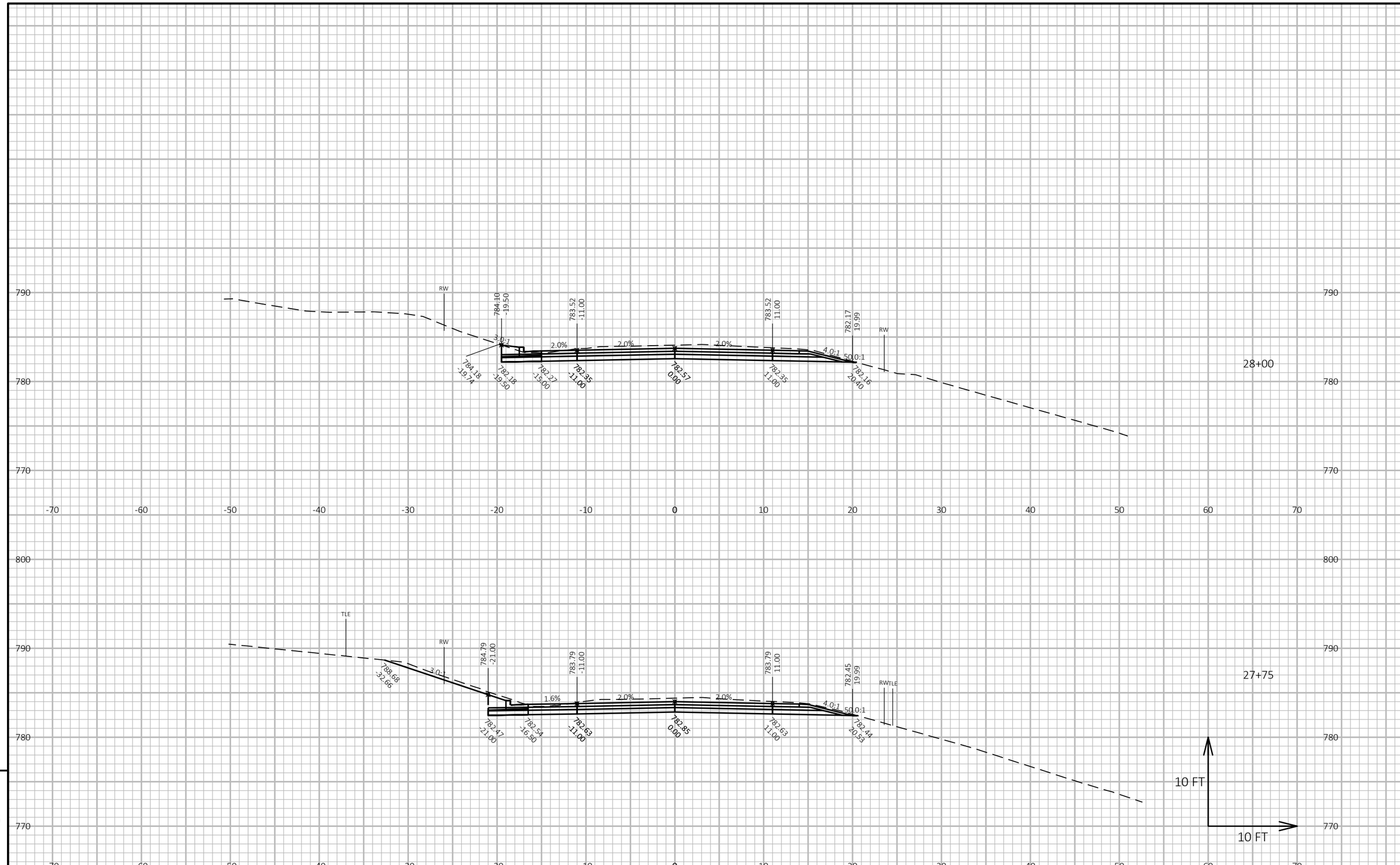


| PROJECT NO: 6425-00-70 | HWY: CTH D | COUNTY: GREEN LAKE | CROSS SECTIONS: CTH D | SHEET 140 | E |
|---|---|---|---|---|---|

FILE NAME : P:\11500S\11500S\11507\11507006\CADD\SHEETSPLAN\090201-XS.DWG
LAYOUT NAME - 22
PLOT DATE : 10/28/2020 3:28 PM
PLOT BY : BOBBI MAXWELL
PLOT NAME :
PLOT SCALE : 1 IN:10 FT HORZ. / 1 IN:10 FT VERT.
WISDOT/CADDS SHEET 49

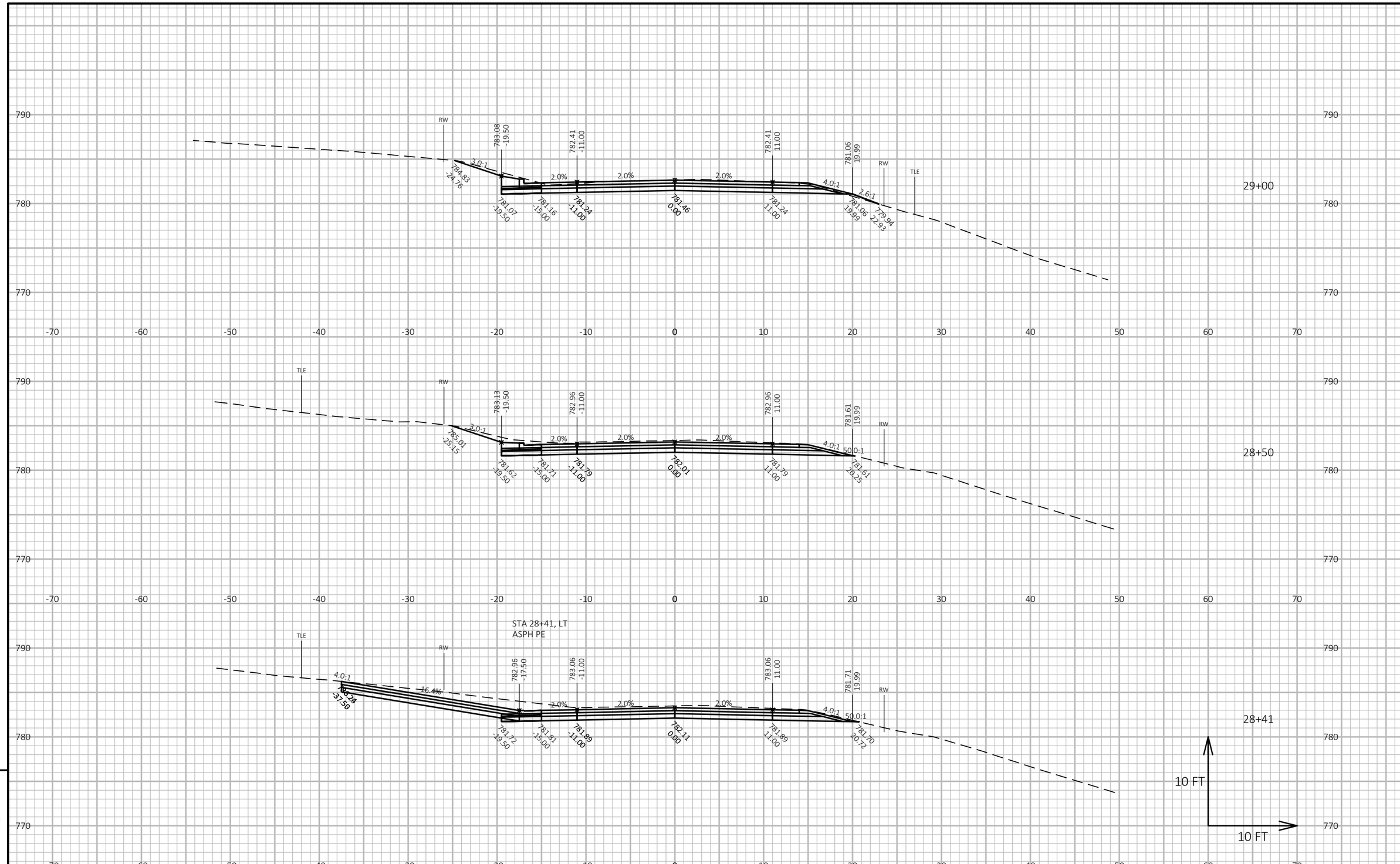


9

9

| PROJECT NO: 6425-00-70 | HWY: CTH D | COUNTY: GREEN LAKE | CROSS SECTIONS: CTH D | SHEET 141 | E |
|---|---|---|---|---|---|

FILE NAME : P:\11500S\11500S\11507\11507006\CADD\SHEETSPLAN\090201-XS.DWG
LAYOUT NAME - 23

PLOT DATE : 10/28/2020 3:28 PM PLOT BY : BOBBI MAXWELL PLOT NAME : **PLOT SCALE :** 1 IN:10 FT HORZ. / 1 IN:10 FT VERT.

WISDOT/CADDS SHEET 49

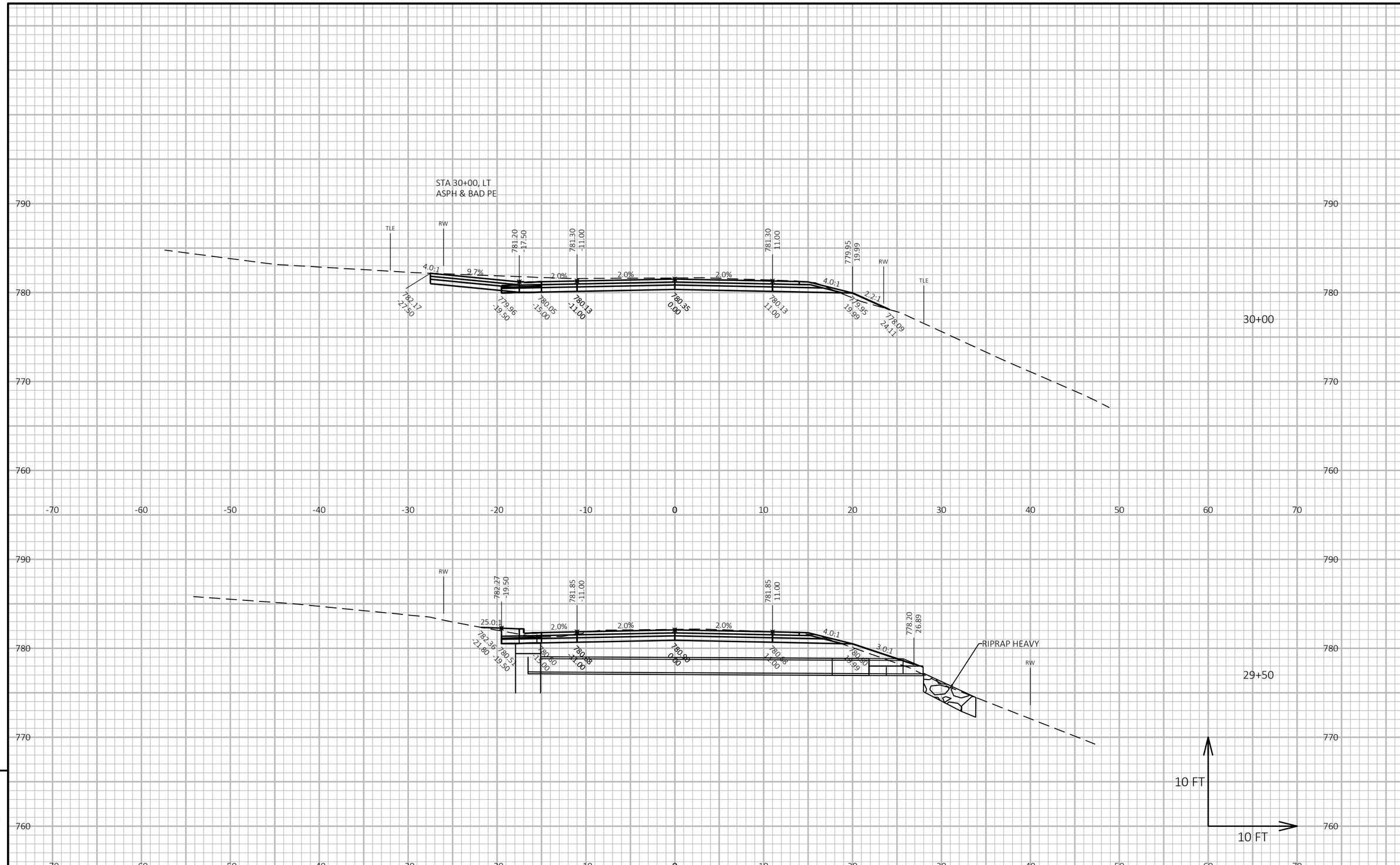


9

9

| PROJECT NO: 6425-00-70 | HWY: CTH D | COUNTY: GREEN LAKE | CROSS SECTIONS: CTH D | SHEET 142 | E |
|---|---|---|---|---|---|

FILE NAME : P:\11500S\11500S\11507\11507006\CADD\SHEETSPLAN\090201-XS.DWG
LAYOUT NAME - 24

PLOT DATE : 10/28/2020 3:28 PM PLOT BY : BOBBI MAXWELL PLOT NAME : **PLOT SCALE :** 1 IN:10 FT HORZ. / 1 IN:10 FT VERT.

WISDOT/CADDS SHEET 49

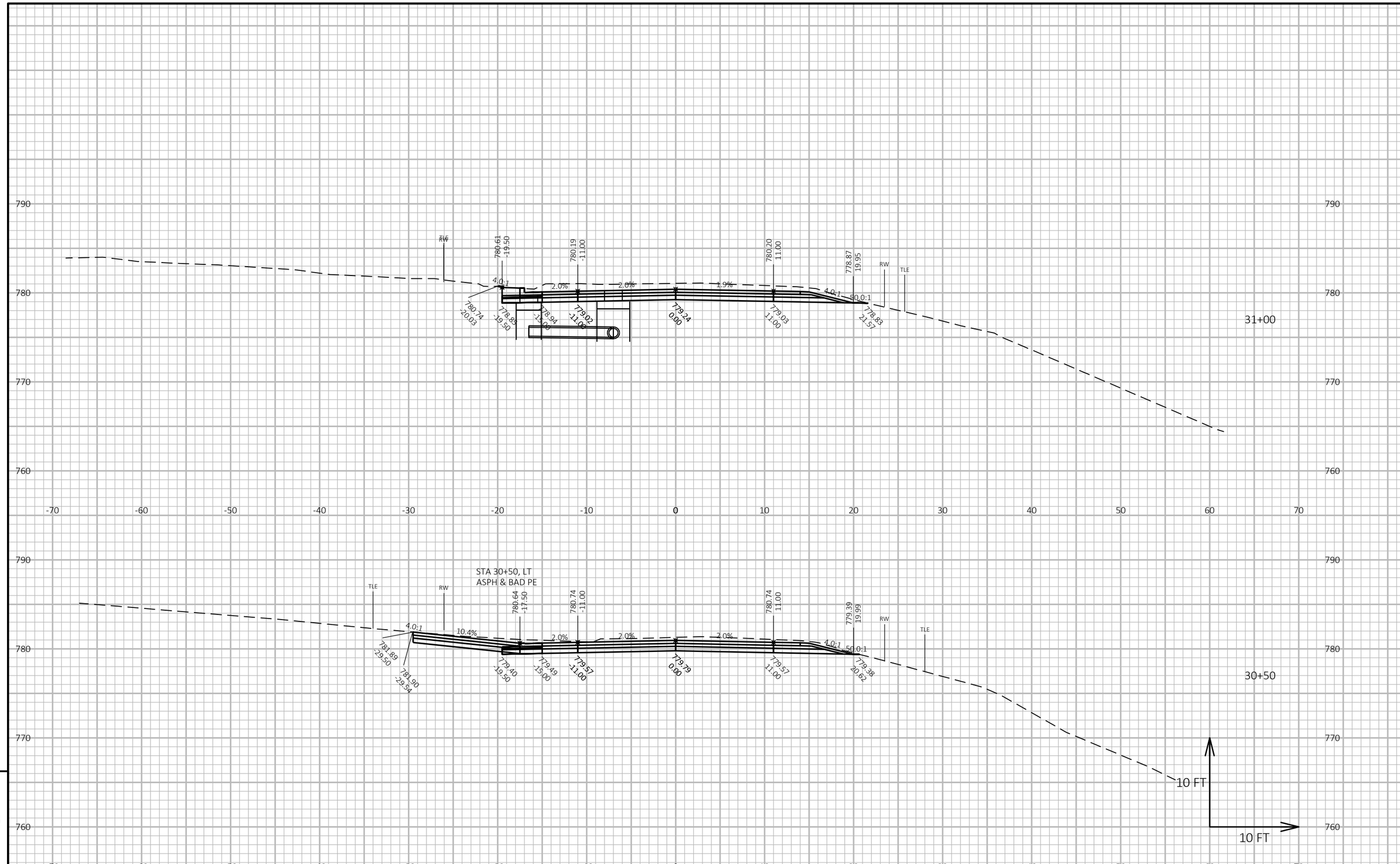


9

9

| PROJECT NO: 6425-00-70 | HWY: CTH D | COUNTY: GREEN LAKE | CROSS SECTIONS: CTH D | SHEET 143 | E |
|---|---|---|---|---|---|

FILE NAME : P:\11500S\11500S\11507\11507006\CADD\SHEETSPLAN\090201-XS.DWG
LAYOUT NAME - 25

PLOT DATE : 10/28/2020 3:28 PM PLOT BY : BOBBI MAXWELL PLOT NAME : PLOT SCALE : 1 IN:10 FT HORZ. / 1 IN:10 FT VERT.

WISDOT/CADDS SHEET 49

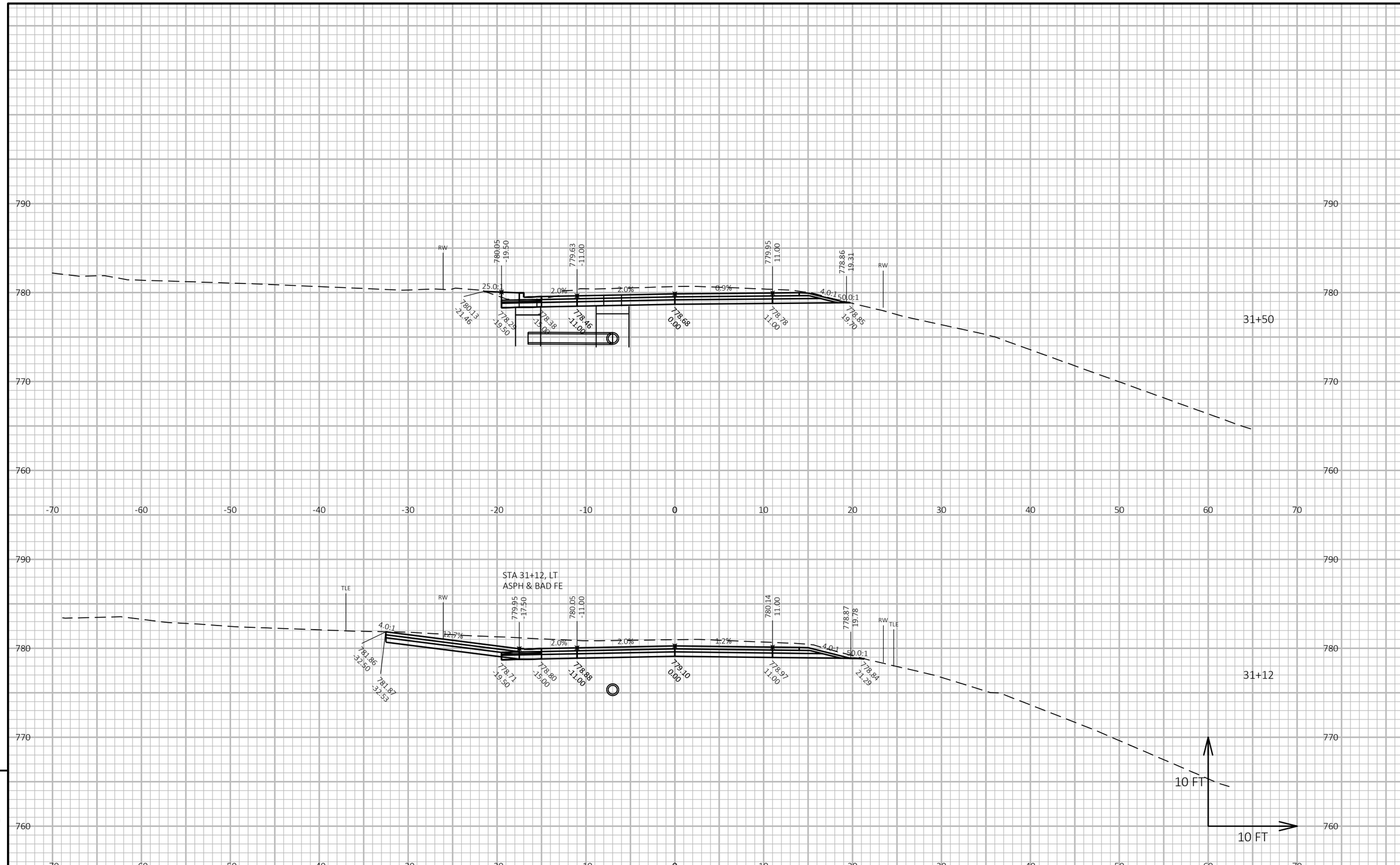


9

9

| PROJECT NO: 6425-00-70 | HWY: CTH D | COUNTY: GREEN LAKE | CROSS SECTIONS: CTH D | SHEET 144 | E |
|---|---|---|---|---|---|

FILE NAME : P:\11500S\11500S\11507\11507006\CADD\SHEETSPLAN\090201-XS.DWG
LAYOUT NAME - 26

PLOT DATE : 10/28/2020 3:28 PM PLOT BY : BOBBI MAXWELL PLOT NAME : PLOT SCALE : 1 IN:10 FT HORZ. / 1 IN:10 FT VERT.

WISDOT/CADDS SHEET 49

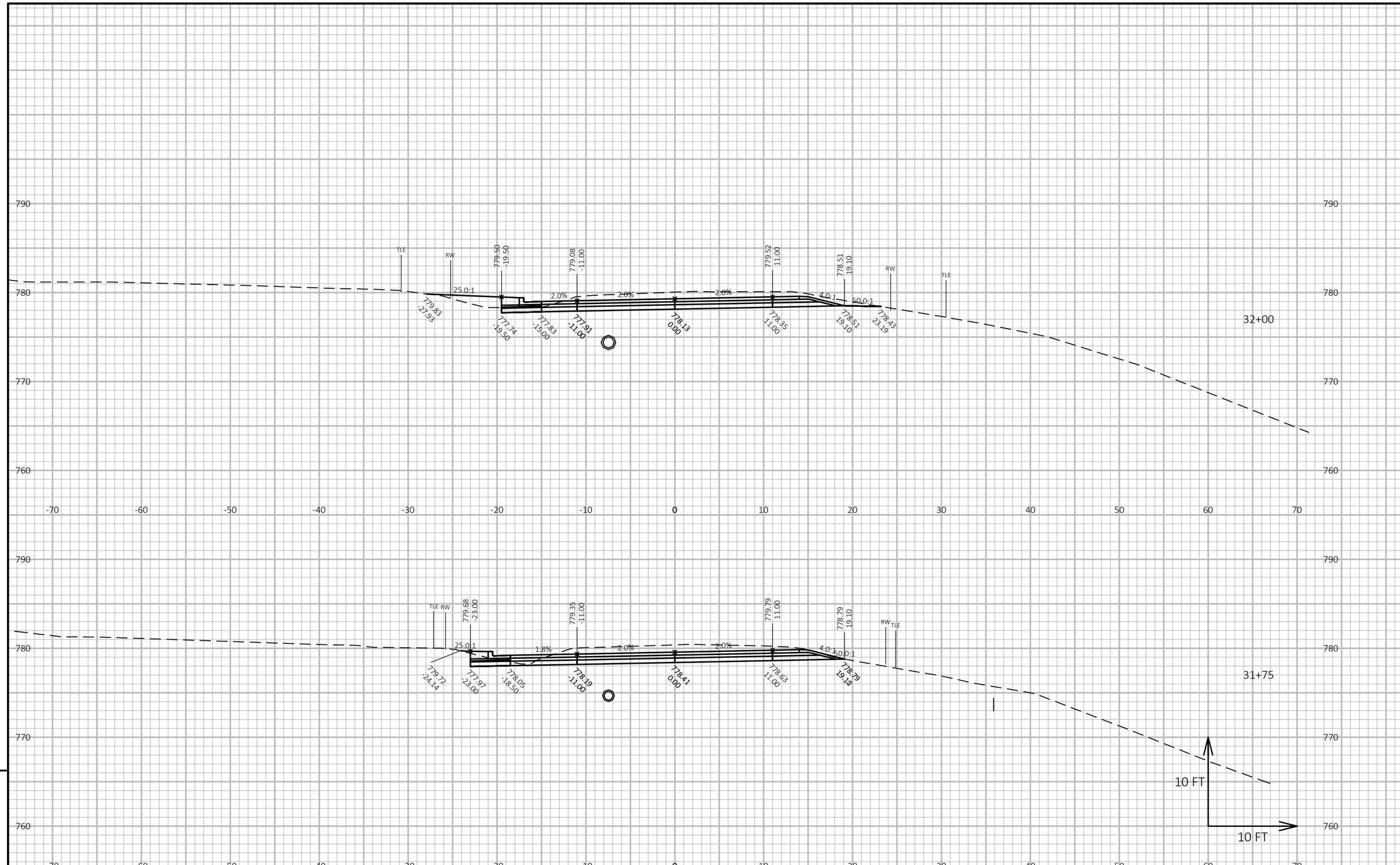


| PROJECT NO: 6425-00-70 | HWY: CTH D | COUNTY: GREEN LAKE | CROSS SECTIONS: CTH D | SHEET 145 | E |
|---|---|---|---|---|---|

FILE NAME : P:\11500S\11500S\11507\11507006\CADD\SHEETSPLAN\090201-XS.DWG
LAYOUT NAME - 27
PLOT DATE : 10/28/2020 3:28 PM
PLOT BY : BOBBI MAXWELL
PLOT NAME :
PLOT SCALE : 1 IN:10 FT HORZ. / 1 IN:10 FT VERT.
WISDOT/CADDS SHEET 49

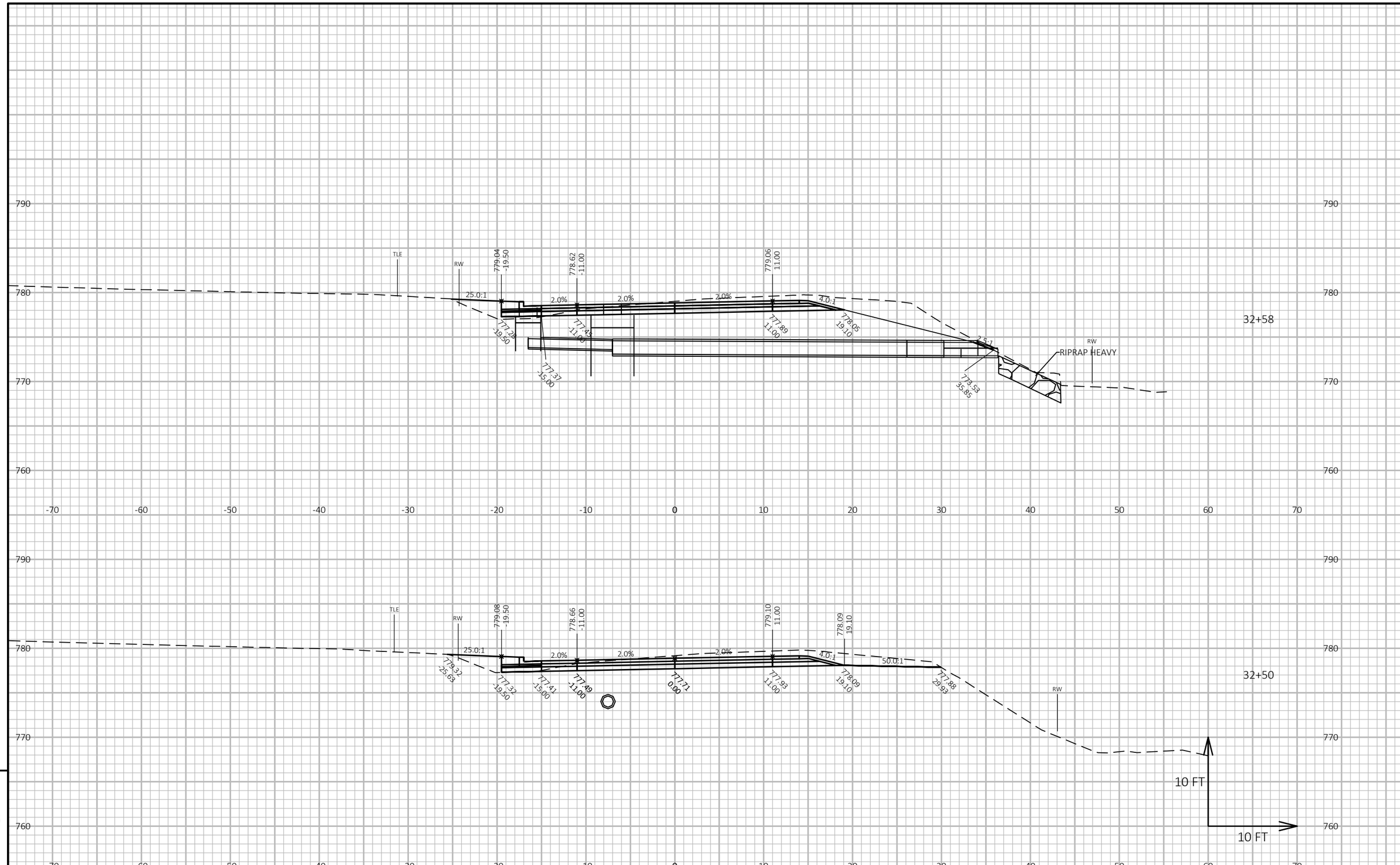


9

9

| PROJECT NO: 6425-00-70 | HWY: CTH D | COUNTY: GREEN LAKE | CROSS SECTIONS: CTH D | SHEET 146 | E |
|---|---|---|---|---|---|

FILE NAME : P:\11500S\11500S\11507\11507006\CADD\SHEETSPLAN\090201-XS.DWG
LAYOUT NAME - 28
PLOT DATE : 10/28/2020 3:28 PM
PLOT BY : BOBBI MAXWELL
PLOT NAME :
PLOT SCALE : 1 IN:10 FT HORZ. / 1 IN:10 FT VERT.
WISDOT/CADDS SHEET 49

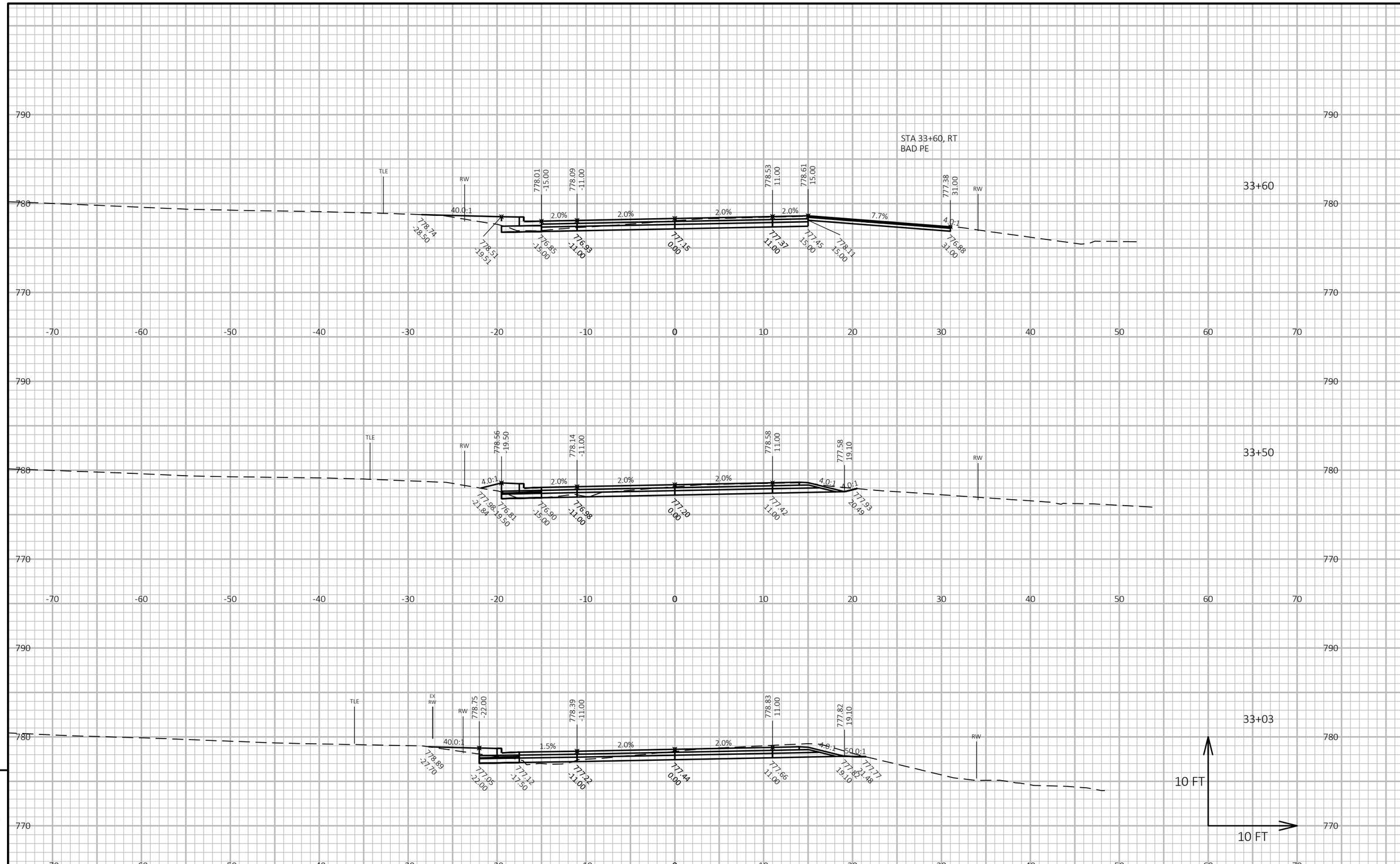


9

9

| PROJECT NO: 6425-00-70 | HWY: CTH D | COUNTY: GREEN LAKE | CROSS SECTIONS: CTH D | SHEET 147 | E |
|---|---|---|---|---|---|

FILE NAME : P:\11500S\11500S\11507\11507006\CADD\SHEETSPLAN\090201-XS.DWG
LAYOUT NAME - 29

PLOT DATE : 10/28/2020 3:29 PM PLOT BY : BOBBI MAXWELL PLOT NAME : PLOT SCALE : 1 IN:10 FT HORZ. / 1 IN:10 FT VERT.

WISDOT/CADDS SHEET 49

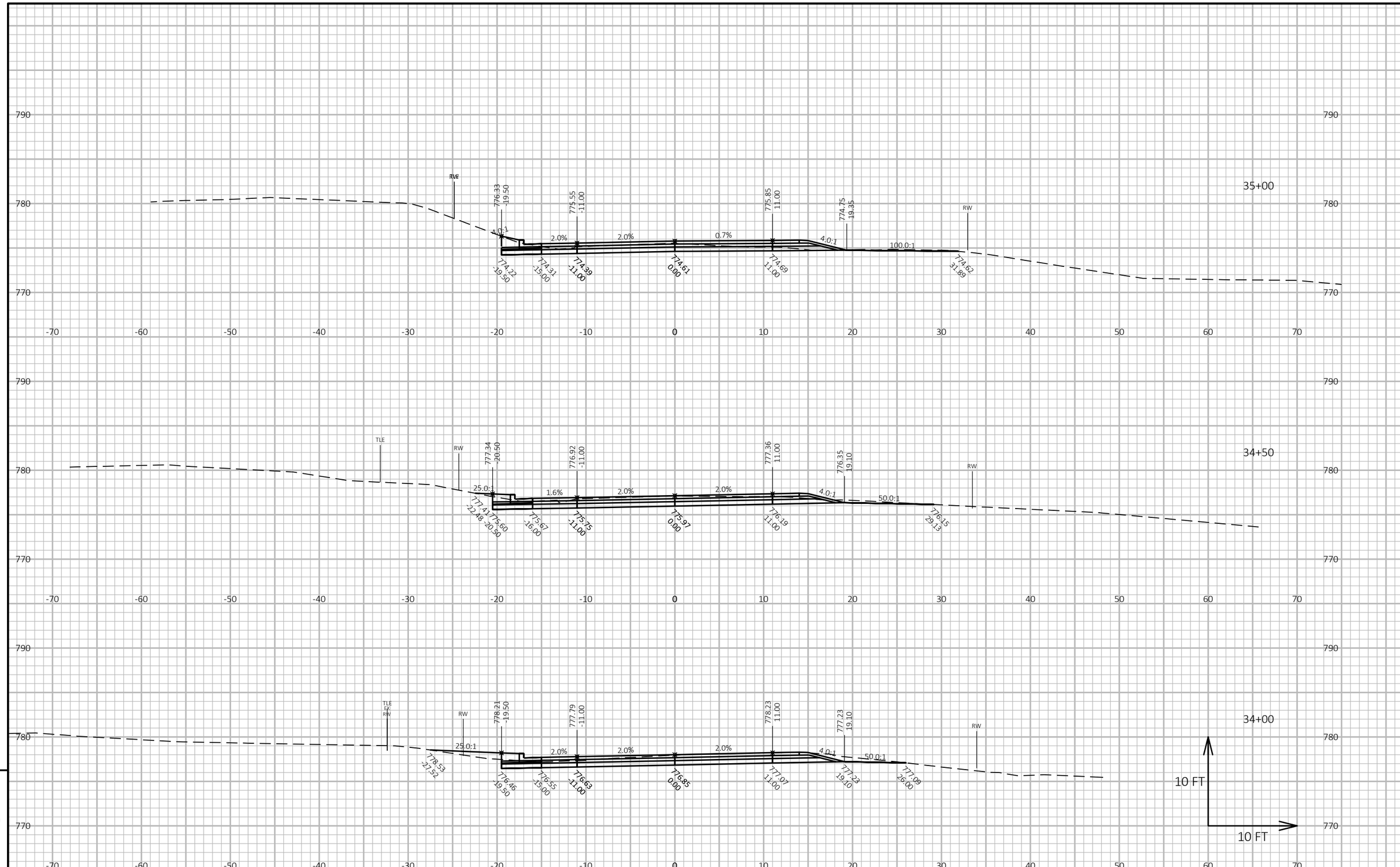


9

9

| PROJECT NO: 6425-00-70 | HWY: CTH D | COUNTY: GREEN LAKE | CROSS SECTIONS: CTH D | SHEET 148 | E |
|---|---|---|---|---|---|

FILE NAME : P:\11500S\11500S\11507\11507006\CADD\SHEETSPLAN\090201-XS.DWG
LAYOUT NAME - 30

PLOT DATE : 10/28/2020 3:29 PM PLOT BY : BOBBI MAXWELL PLOT NAME : **PLOT SCALE :** 1 IN:10 FT HORZ. / 1 IN:10 FT VERT.

WISDOT/CADDS SHEET 49

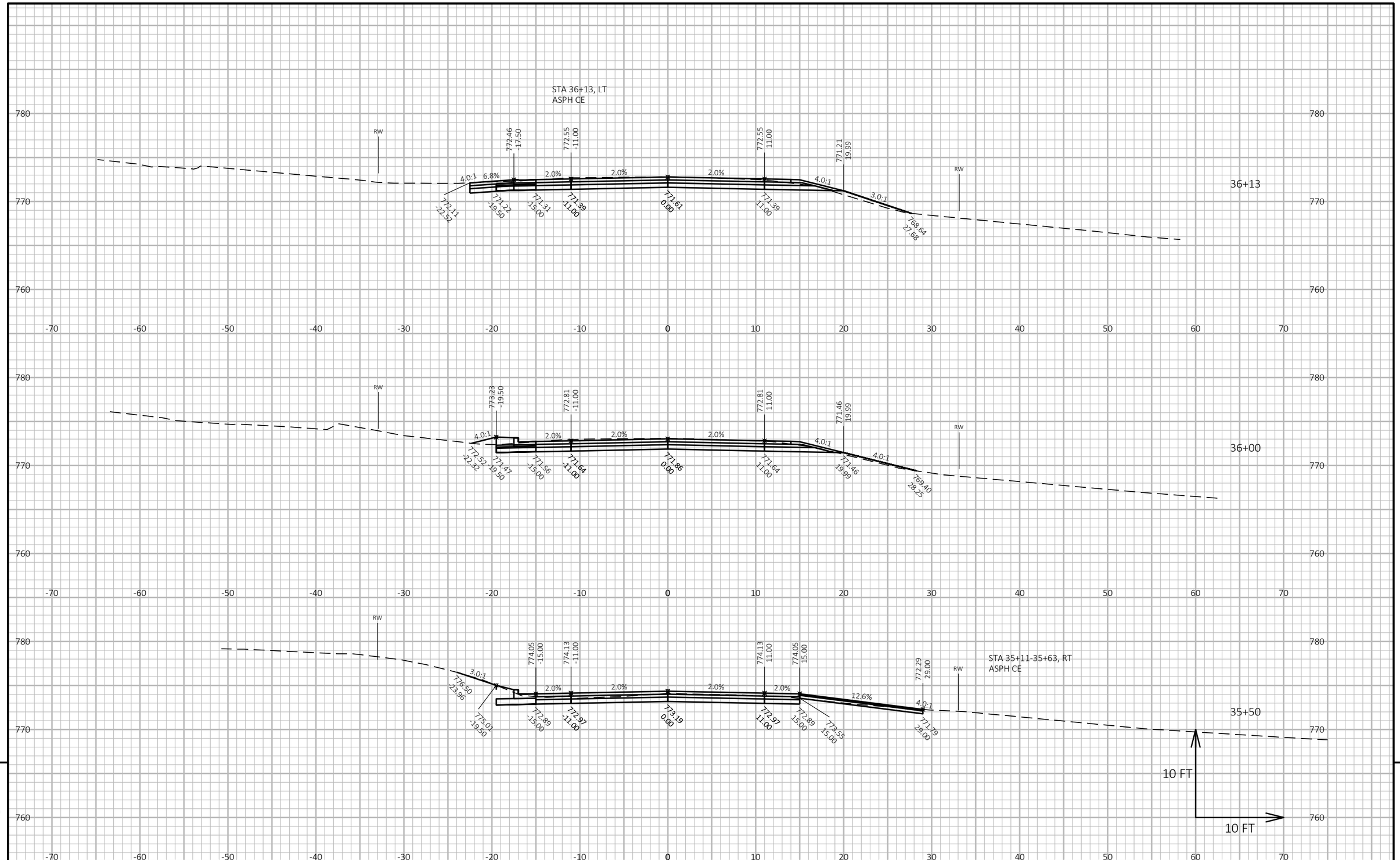


9

9

| PROJECT NO: 6425-00-70 | HWY: CTH D | COUNTY: GREEN LAKE | CROSS SECTIONS: CTH D | SHEET 149 | E |
|---|---|---|---|---|---|

FILE NAME : P:\11500S\11500S\11507\11507006\CADD\SHEETSPLAN\090201-XS.DWG
LAYOUT NAME - 31

PLOT DATE : 10/28/2020 3:29 PM PLOT BY : BOBBI MAXWELL PLOT NAME : PLOT SCALE : 1 IN:10 FT HORZ. / 1 IN:10 FT VERT.

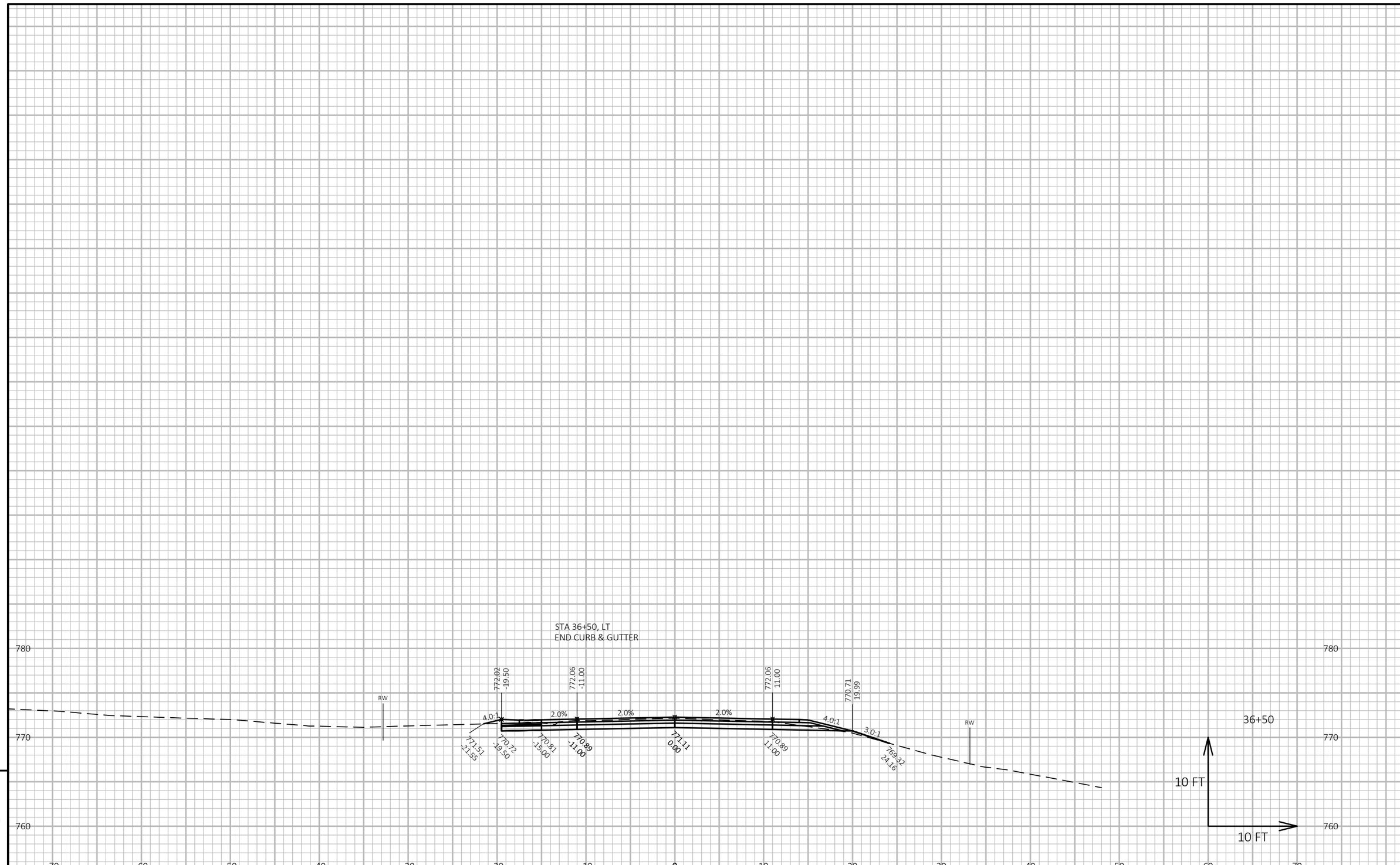


9

9

| PROJECT NO: 6425-00-70 | HWY: CTH D | COUNTY: GREEN LAKE | CROSS SECTIONS: CTH D | SHEET 150 | E |
|---|---|---|---|---|---|

FILE NAME : P:\11500S\11500S\11507\11507006\CADD\SHEETSPLAN\090201-XS.DWG
LAYOUT NAME - 32

PLOT DATE : 10/28/2020 3:29 PM PLOT BY : BOBBI MAXWELL PLOT NAME : PLOT SCALE : 1 IN:10 FT HORZ. / 1 IN:10 FT VERT.

WISDOT/CADDS SHEET 49

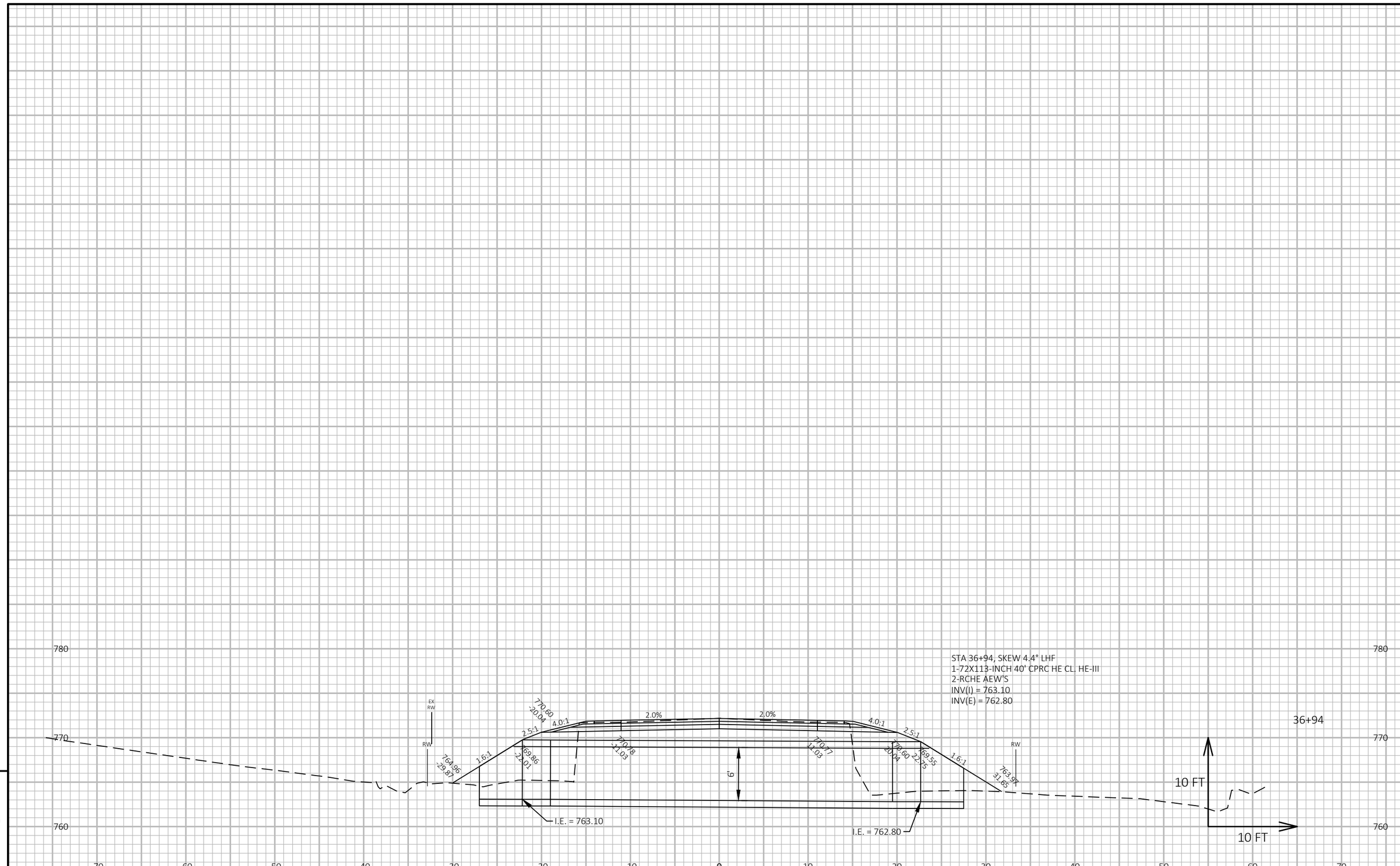


9

9

| PROJECT NO: 6425-00-70 | HWY: CTH D | COUNTY: GREEN LAKE | CROSS SECTIONS: CTH D | SHEET 151 | E |
|---|---|---|---|---|---|

FILE NAME : P:\11500S\11500S\11507\11507006\CADD\SHEETSPLAN\090201-XS.DWG
LAYOUT NAME - Pipe 36+90(1)
PLOT DATE : 10/28/2020 3:29 PM
PLOT BY : BOBBI MAXWELL
PLOT NAME :
PLOT SCALE : 1 IN:10 FT HORZ. / 1 IN:10 FT VERT.
WISDOT/CADDS SHEET 49

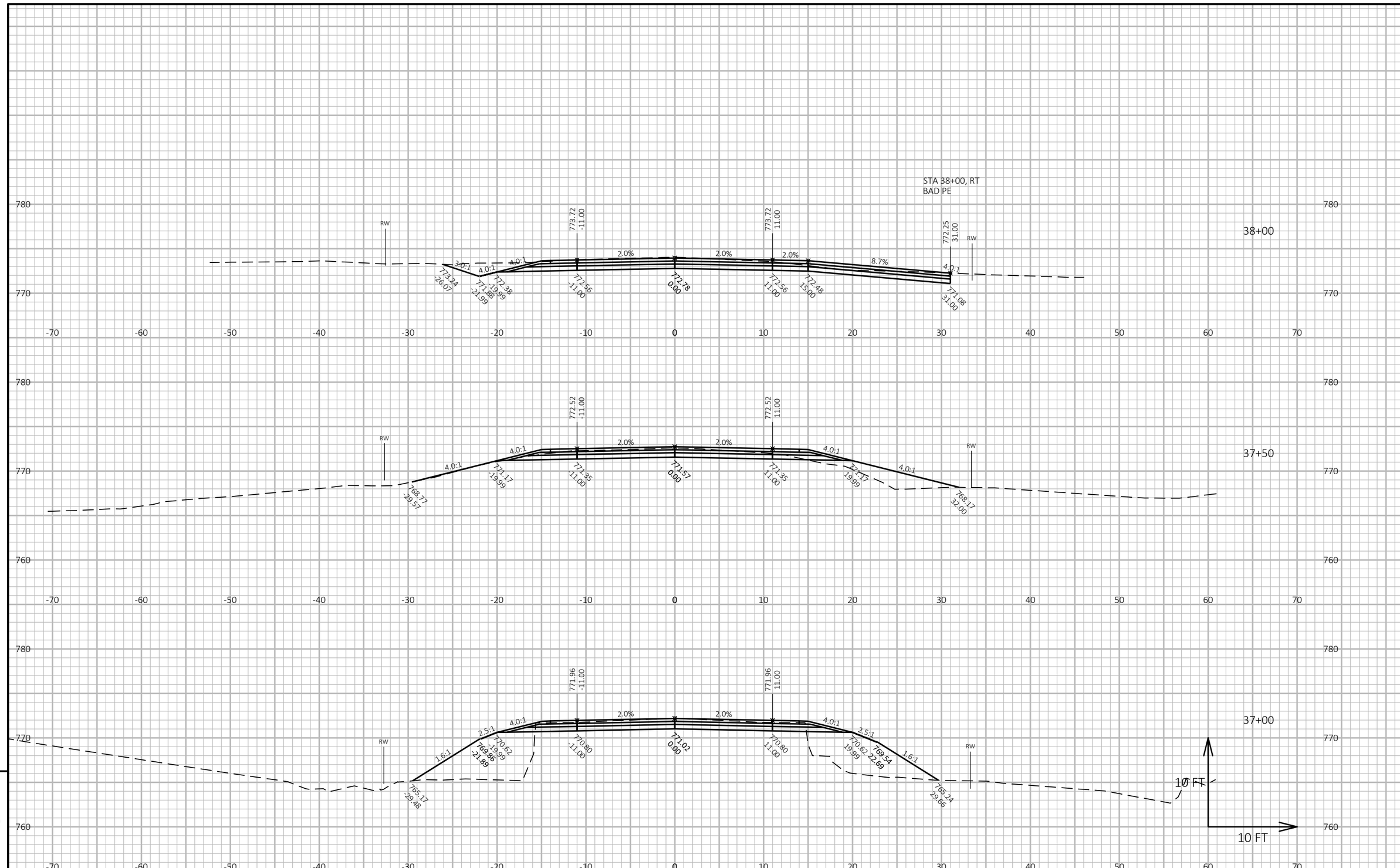


9

9

| PROJECT NO: 6425-00-70 | HWY: CTH D | COUNTY: GREEN LAKE | CROSS SECTIONS: CTH D | SHEET 152 | E |
|---|---|---|---|---|---|

FILE NAME : P:\11500S\11500S\11507\11507006\CADD\SHEETSPLAN\090201-XS.DWG
LAYOUT NAME - 34

PLOT DATE : 10/28/2020 3:29 PM PLOT BY : BOBBI MAXWELL PLOT NAME : **PLOT SCALE :** 1 IN:10 FT HORZ. / 1 IN:10 FT VERT.

WISDOT/CADDS SHEET 49

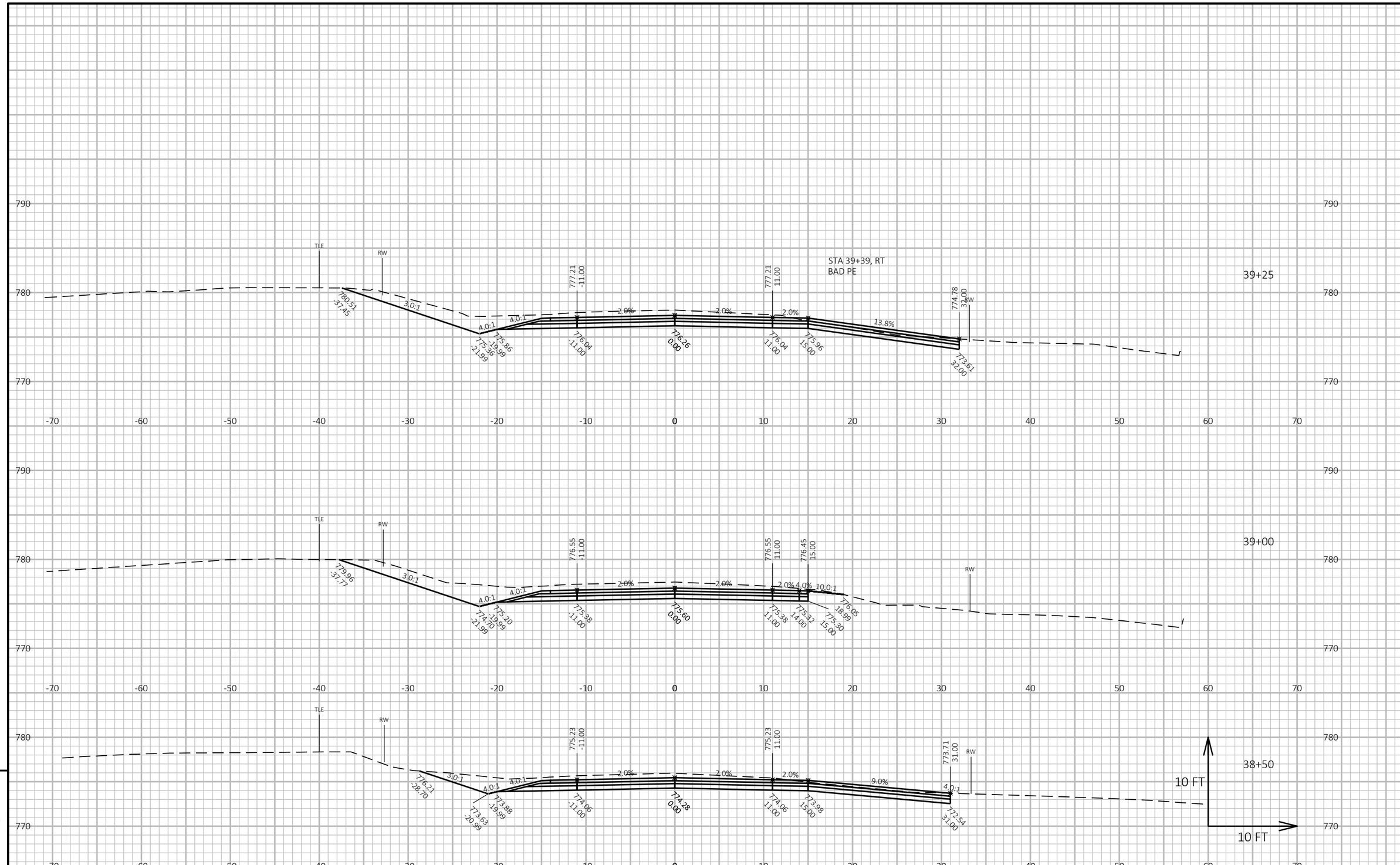


| PROJECT NO: 6425-00-70 | HWY: CTH D | COUNTY: GREEN LAKE | CROSS SECTIONS: CTH D | SHEET 153 | E |
|---|---|---|---|---|---|

FILE NAME : P:\11500S\11500S\11507\11507006\CADD\SHEETSPLAN\090201-XS.DWG
LAYOUT NAME - 35
PLOT DATE : 10/28/2020 3:29 PM
PLOT BY : BOBBI MAXWELL
PLOT NAME :
PLOT SCALE : 1 IN:10 FT HORZ. / 1 IN:10 FT VERT.

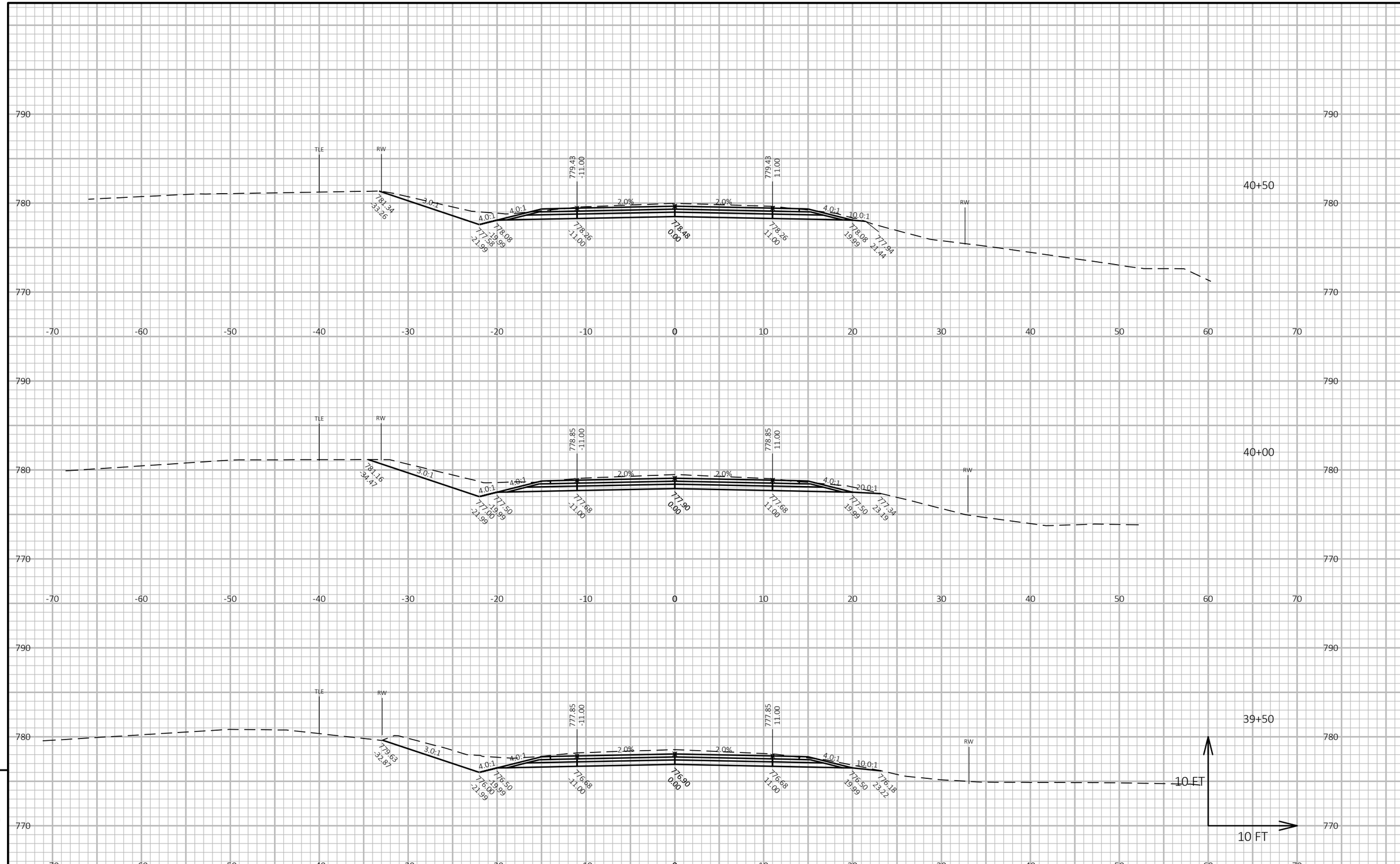


9

9

| PROJECT NO: 6425-00-70 | HWY: CTH D | COUNTY: GREEN LAKE | CROSS SECTIONS: CTH D | SHEET 154 | E |
|---|---|---|---|---|---|

FILE NAME : P:\11500S\11500S\11507\11507006\CADD\SHEETSPLAN\090201-XS.DWG
LAYOUT NAME - 36

PLOT DATE : 10/28/2020 3:29 PM PLOT BY : BOBBI MAXWELL PLOT NAME : PLOT SCALE : 1 IN:10 FT HORZ. / 1 IN:10 FT VERT.

WISDOT/CADDS SHEET 49

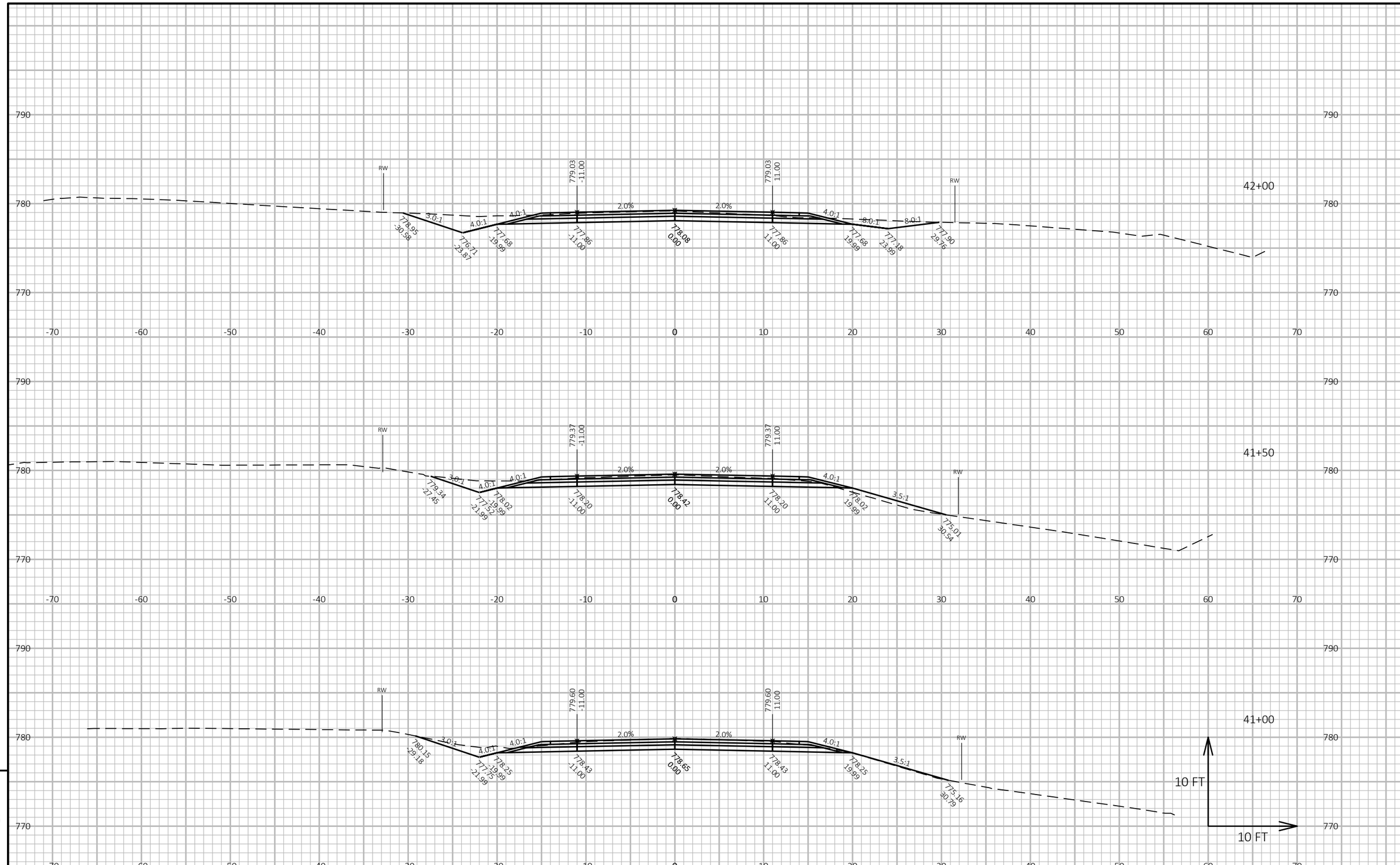


9

9

| PROJECT NO: 6425-00-70 | HWY: CTH D | COUNTY: GREEN LAKE | CROSS SECTIONS: CTH D | SHEET 155 | E |
|---|---|---|---|---|---|

FILE NAME : P:\11500S\11500S\11507\11507006\CADD\SHEETSPLAN\090201-XS.DWG
LAYOUT NAME - 37

PLOT DATE : 10/28/2020 3:30 PM PLOT BY : BOBBI MAXWELL PLOT NAME : **PLOT SCALE :** 1 IN:10 FT HORZ. / 1 IN:10 FT VERT.

WISDOT/CADDS SHEET 49

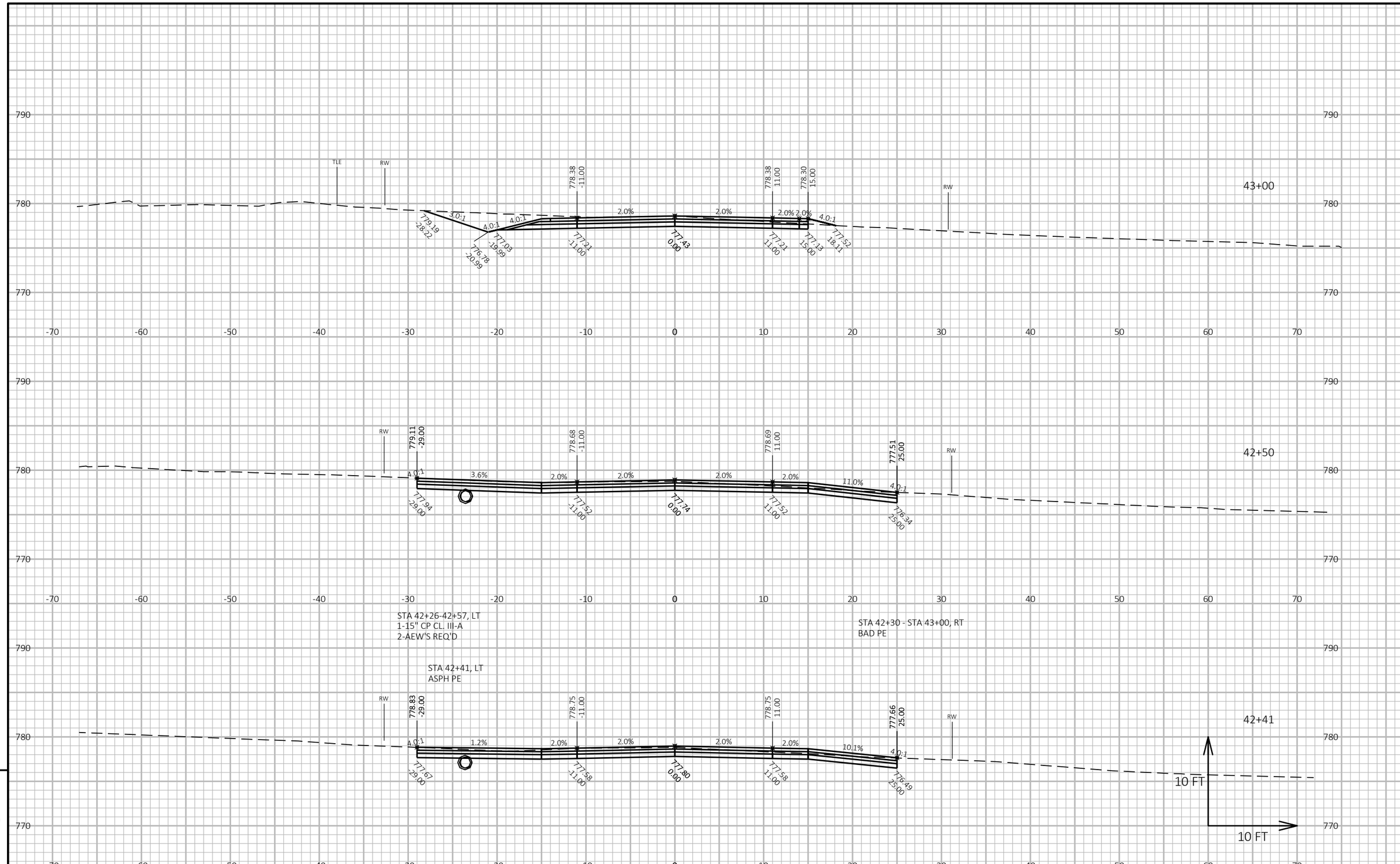


9

9

| PROJECT NO: 6425-00-70 | HWY: CTH D | COUNTY: GREEN LAKE | CROSS SECTIONS: CTH D | SHEET 156 | E |
|---|---|---|---|---|---|

FILE NAME : P:\11500S\11500S\11507\11507006\CADD\SHEETSPLAN\090201-XS.DWG
LAYOUT NAME - 38

PLOT DATE : 10/28/2020 3:30 PM PLOT BY : BOBBI MAXWELL PLOT NAME : PLOT SCALE : 1 IN:10 FT HORZ. / 1 IN:10 FT VERT.

WISDOT/CADDS SHEET 49

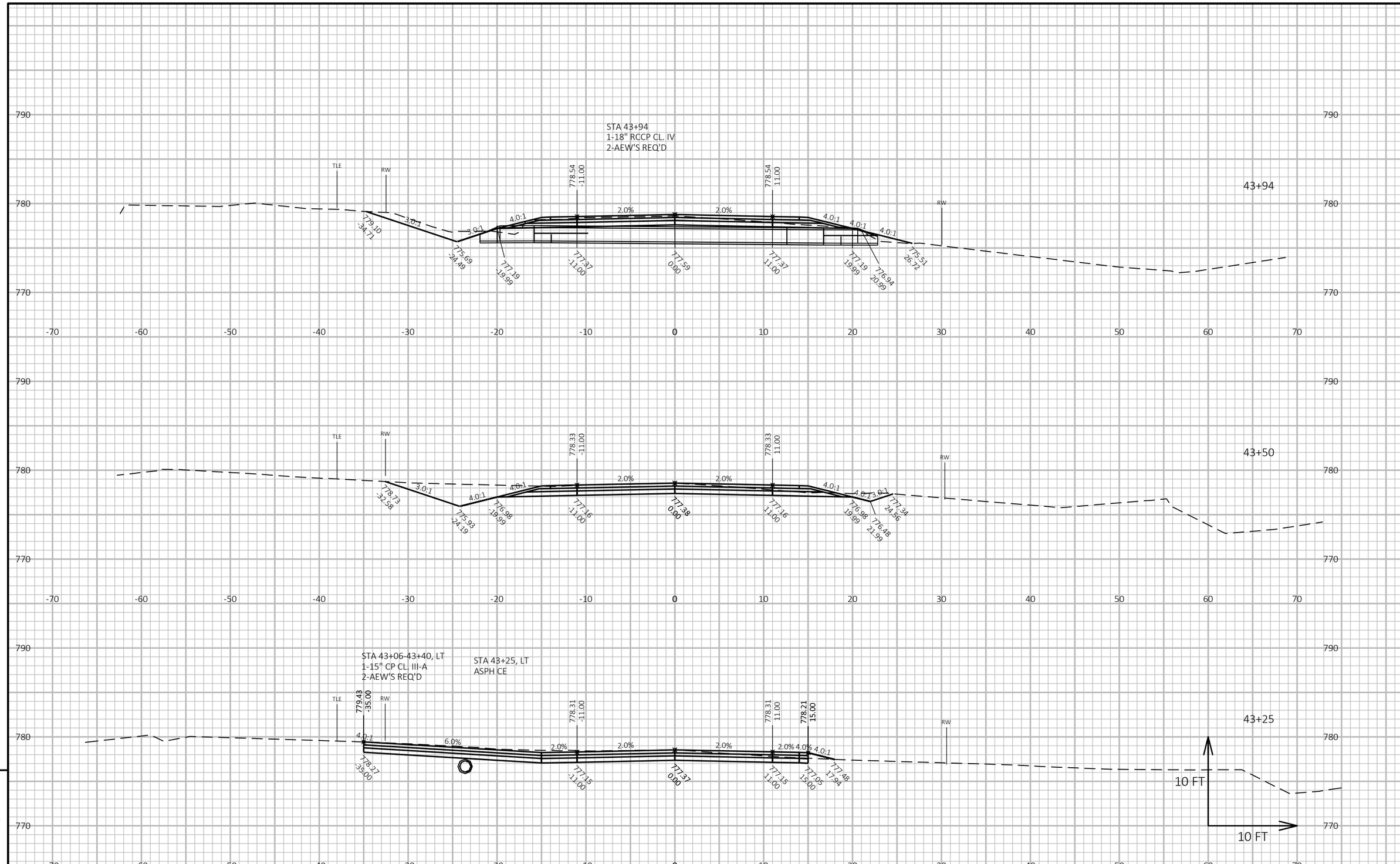


9

9

| PROJECT NO: 6425-00-70 | HWY: CTH D | COUNTY: GREEN LAKE | CROSS SECTIONS: CTH D | SHEET 157 | E |
|---|---|---|---|---|---|

FILE NAME : P:\11500S\11500S\11507\11507006\CADD\SHEETSPLAN\090201-XS.DWG
LAYOUT NAME - 39
PLOT DATE : 10/28/2020 3:30 PM
PLOT BY : BOBBI MAXWELL
PLOT NAME :
PLOT SCALE : 1 IN:10 FT HORZ. / 1 IN:10 FT VERT.
WISDOT/CADDS SHEET 49

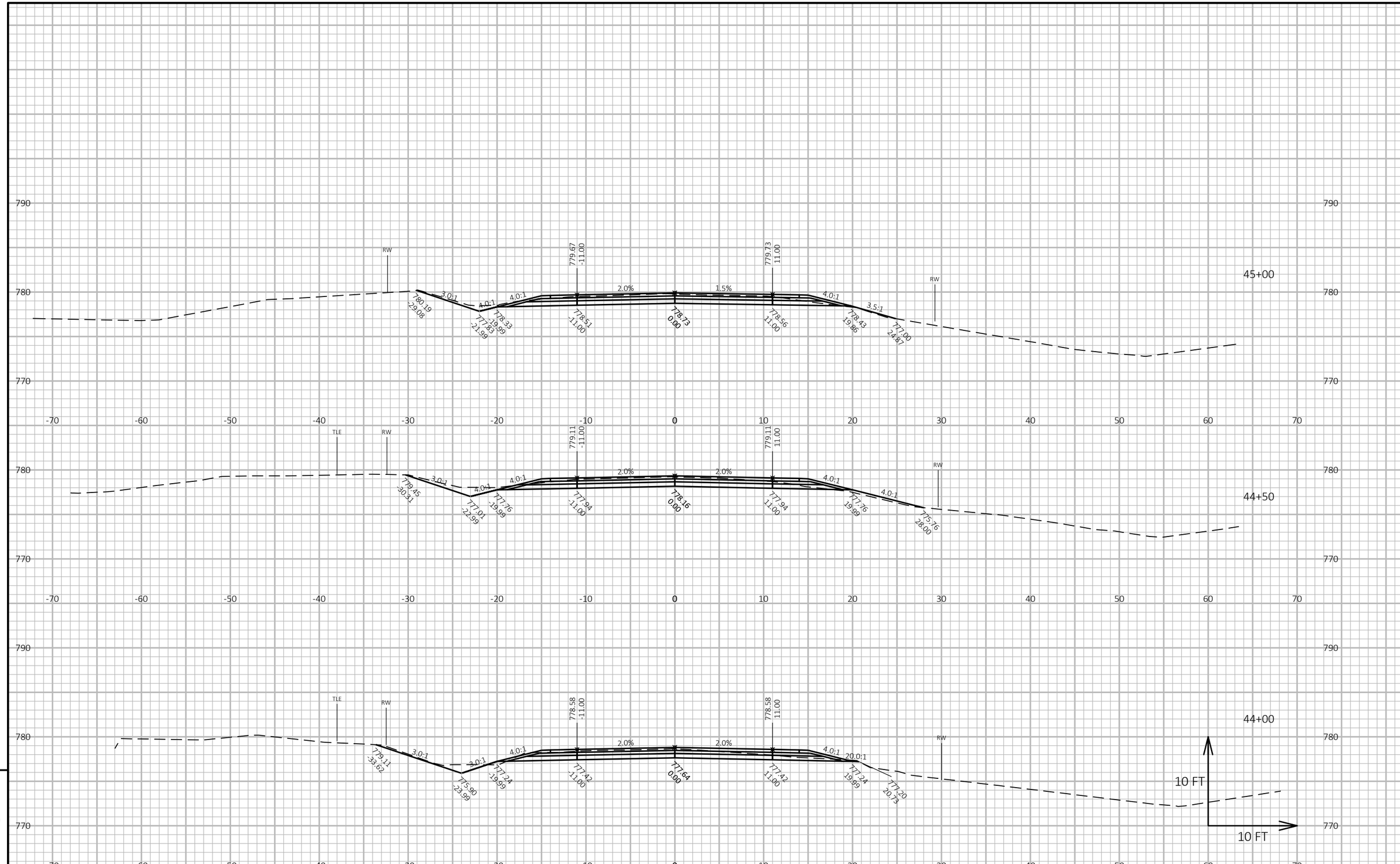


| PROJECT NO: 6425-00-70 | HWY: CTH D | COUNTY: GREEN LAKE | CROSS SECTIONS: CTH D | SHEET 158 | E |
|---|---|---|---|---|---|

FILE NAME : P:\11500S\11500S\11507\11507006\CADD\SHEETSPLAN\090201-XS.DWG
LAYOUT NAME - 40

PLOT DATE : 10/28/2020 3:30 PM PLOT BY : BOBBI MAXWELL PLOT NAME : **PLOT SCALE :** 1 IN:10 FT HORZ. / 1 IN:10 FT VERT.

WISDOT/CADDS SHEET 49

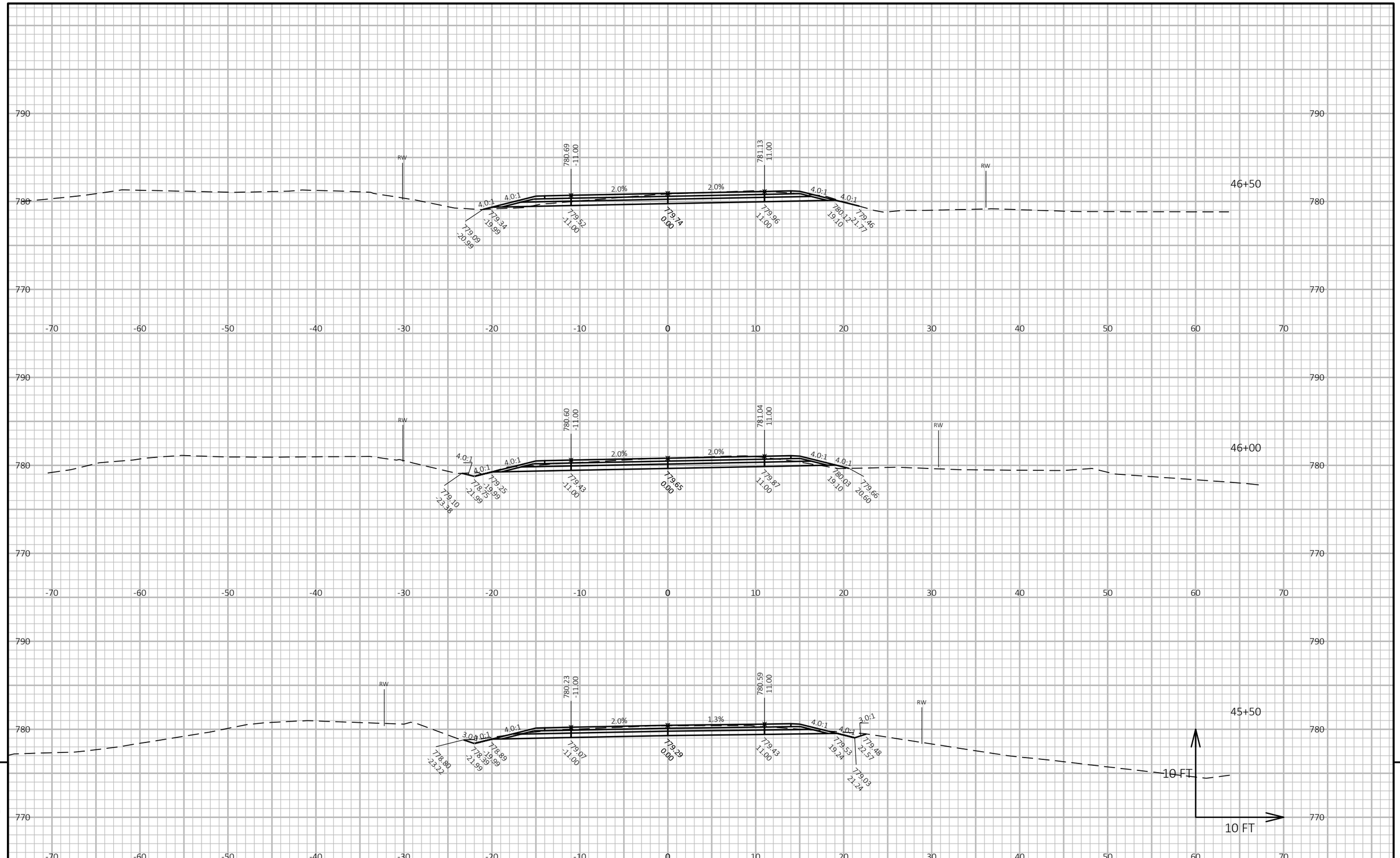


| PROJECT NO: 6425-00-70 | HWY: CTH D | COUNTY: GREEN LAKE | CROSS SECTIONS: CTH D | SHEET 159 | E |
|---|---|---|---|---|---|

FILE NAME : P:\11500S\11500S\11507\11507006\CADD\SHEETSPLAN\090201-XS.DWG
LAYOUT NAME - 41
PLOT DATE : 10/28/2020 3:30 PM
PLOT BY : BOBBI MAXWELL
PLOT NAME :
**PLOT SCALE :** 1 IN:10 FT HORZ. / 1 IN:10 FT VERT.

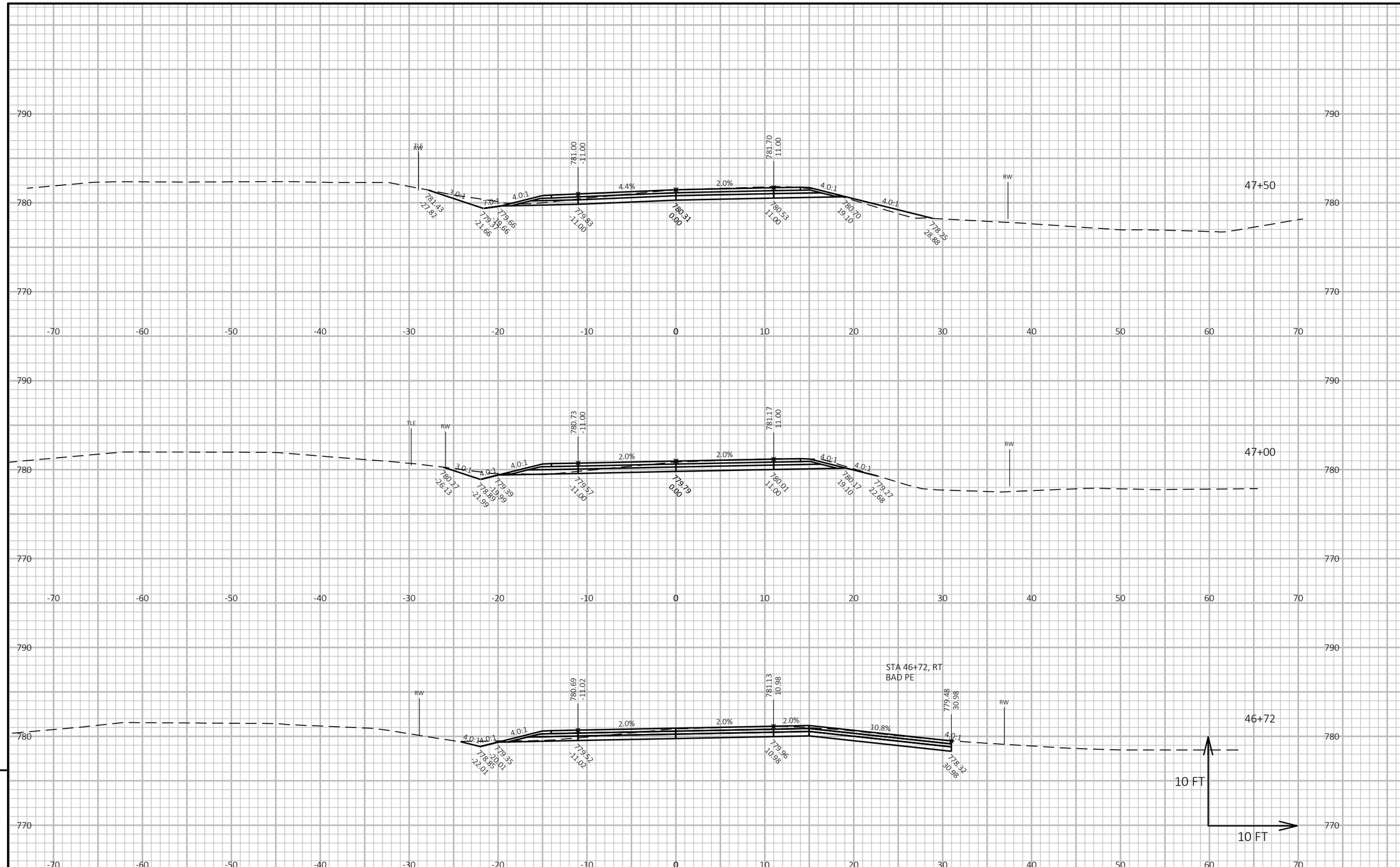


9

9

| PROJECT NO: 6425-00-70 | HWY: CTH D | COUNTY: GREEN LAKE | CROSS SECTIONS: CTH D | SHEET 160 | E |
|---|---|---|---|---|---|

FILE NAME : P:\11500S\11500S\11507\11507006\CADD\SHEETSPLAN\090201-XS.DWG
LAYOUT NAME - 42

PLOT DATE : 10/28/2020 3:30 PM PLOT BY : BOBBI MAXWELL PLOT NAME : **PLOT SCALE :** 1 IN:10 FT HORZ. / 1 IN:10 FT VERT.

WISDOT/CADDS SHEET 49

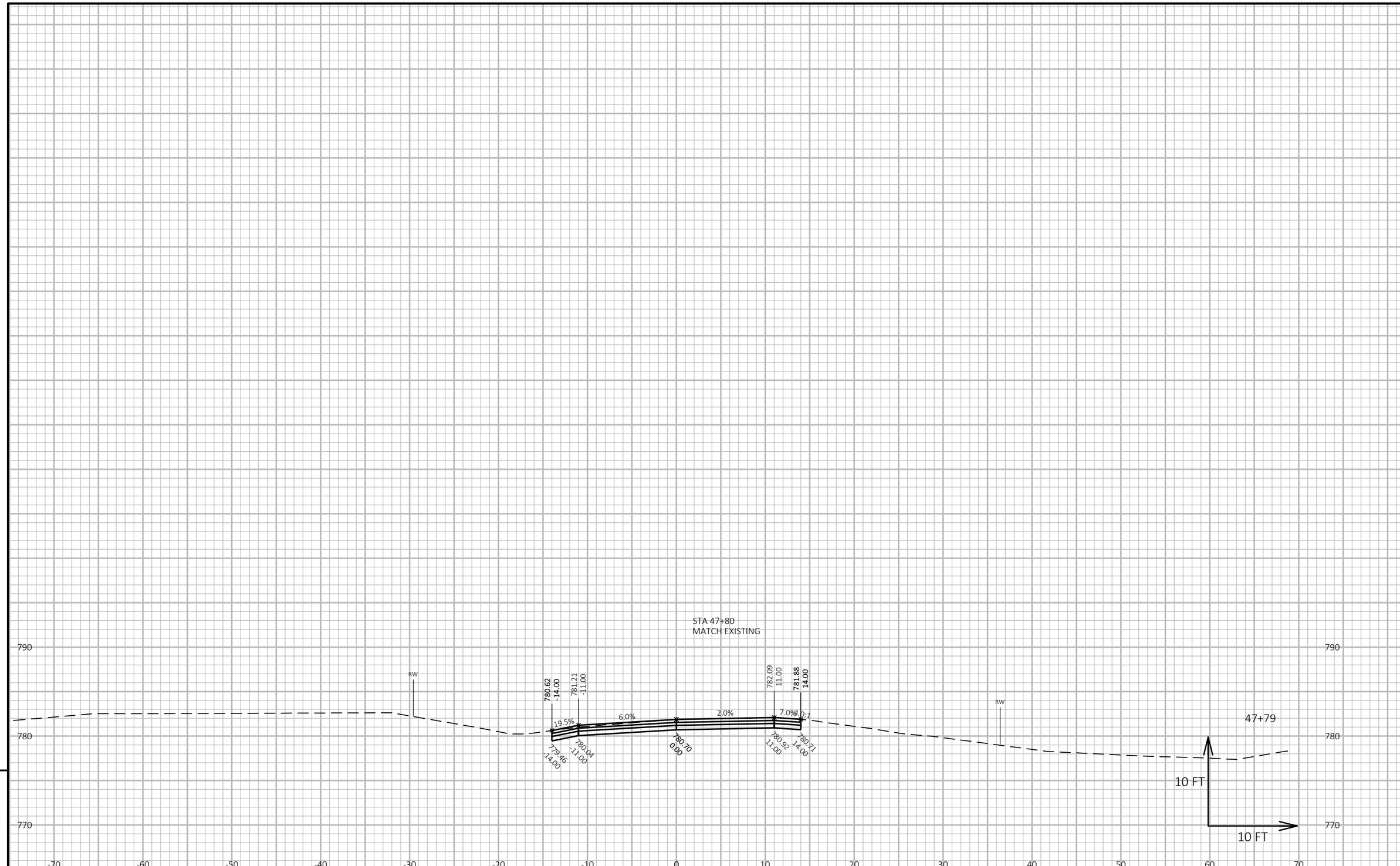


9

9

| PROJECT NO: 6425-00-70 | HWY: CTH D | COUNTY: GREEN LAKE | CROSS SECTIONS: CTH D | SHEET 161 | E |
|---|---|---|---|---|---|

FILE NAME : P:\11500S\11500S\11507\11507006\CADD\SHEETSPLAN\090201-XS.DWG
LAYOUT NAME - 43

PLOT DATE : 10/28/2020 3:30 PM PLOT BY : BOBBI MAXWELL PLOT NAME : PLOT SCALE : 1 IN:10 FT HORZ. / 1 IN:10 FT VERT.

WISDOT/CADDS SHEET 49

**Wisconsin Department of Transportation**

Dedicated people creating transportation solutions through innovation and exceptional service.

http://www.dot.wisconsin.gov