LAX

FEBRUARY 2021

PROJECT ID: 1706-00-74

WITH: N/A

COUNTY: GRANT

04

ORDER OF SHEETS

Section No.	1	Title
Section No.	2	Typical Sections and Details
Section No.	3	Estimate of Quantities
Section No.	3	Miscellaneous Quantities
Section No.	4	Right of Way Plat
Section No.	5	Plan and Profile
Section No.	6	Standard Detail Drawings
Section No.	7	Sign Plates
~~Section No.~~	~~8~~	~~Structure Plans~~
Section No.	9	Computer Earthwork Data
Section No.	9	Cross Sections

TOTAL SHEETS = 196

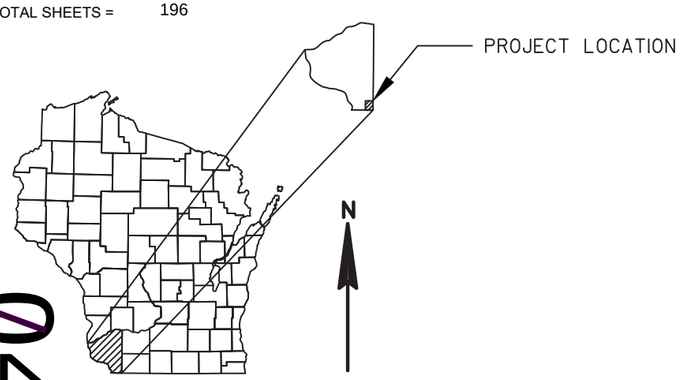

DESIGN DESIGNATION

			STH 80	STH 11
A A.D.T.	(2020)	=	3800	3200
A A.D.T.	(2040)	=	4400	4000
D.H.V.		=	500	456
D.D.		=	60/40	60/40
T.		=	17 2%	22.4%
DESIGN SPEED		=	60 MPH	
ESALS		=	1,300,000	

CONVENTIONAL SYMBOLS

PLAN

CORPORATE LIMITS
PROPERTY LINE
LOT LINE
LIMITED HIGHWAY EASEMENT
EXISTING RIGHT OF WAY
PROPOSED OR NEW R/W LINE
SLOPE INTERCEPT
REFERENCE LINE (300'EB')
EXISTING CULVERT
PROPOSED CULVERT (Box or Pipe)
COMBUSTIBLE FLUIDS (CAUTION)
MARSH AREA
WOODED OR SHRUB AREA

PROFILE

GRADE LINE
ORIGINAL GROUND
MARSH OR ROCK PROFILE (To be noted as such) (ROCK)
SPECIAL DITCH (LABEL)
GRADE ELEVATION (95.36)
CULVERT (Profile View)

UTILITIES

ELECTRIC (E)
FIBER OPTIC (FO)
GAS (G)
SANITARY SEWER (SAN)
STORM SEWER (SS)
TELEPHONE (T)
WATER (W)
UTILITY PEDESTAL
POWER POLE
TELEPHONE POLE

STATE OF WISCONSIN
DEPARTMENT OF TRANSPORTATION

PLAN OF PROPOSED IMPROVEMENT

DUBUQUE - SHULLSBURG

STH 80 INTERSECTION (EAST JUNCTION)

STH 11
GRANT COUNTY

STATE PROJECT NUMBER
1706-00-74

STATE PROJECT	FEDERAL PROJECT	
	PROJECT	CONTRACT
1706-00-74	WISC 2021137	1

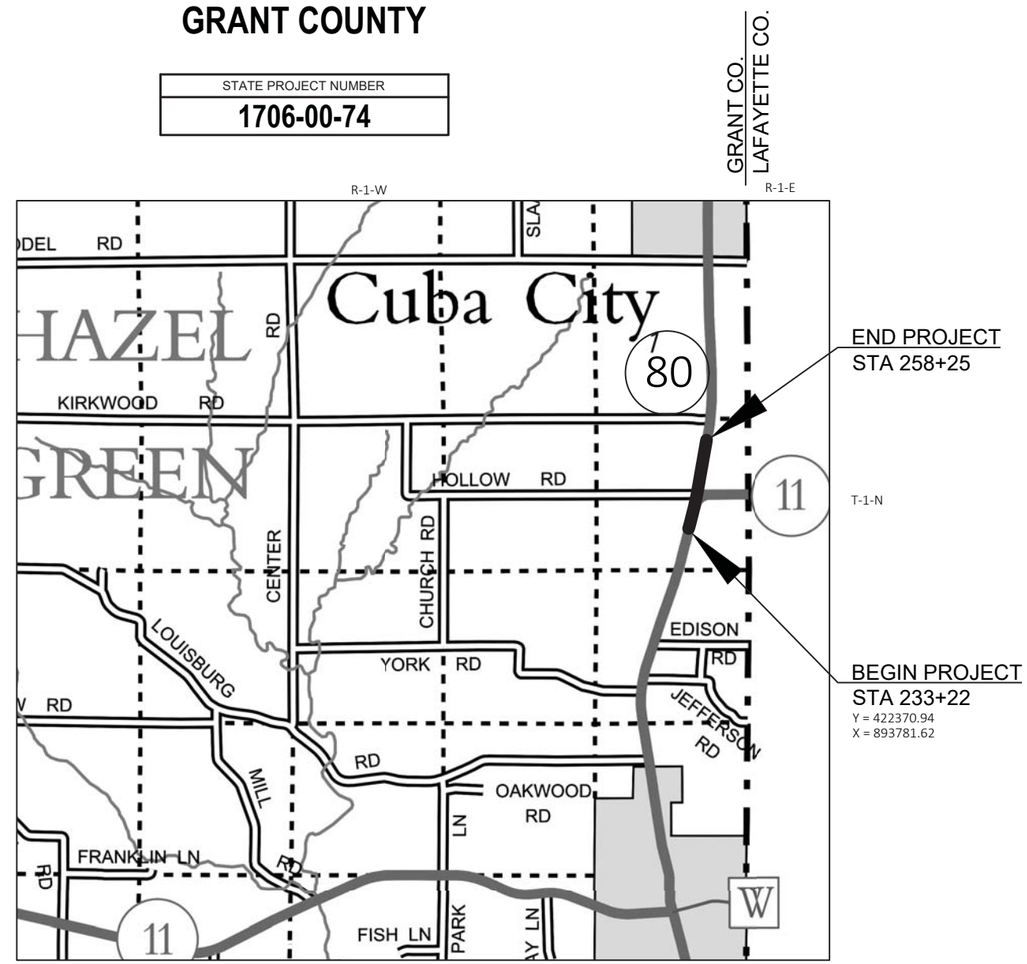

LAYOUT

SCALE 0 — 1 MI

TOTAL NET LENGTH OF CENTERLINE = 0.474 MI.

HORIZONTAL POSITIONS SHOWN ON THIS PLAN ARE WISCONSIN COUNTY COORDINATES, GRANT COUNTY, NAD83 (2011), N U.S. SURVEY FEET. VALUES ARE GR D COORD NATES, GRID BEARINGS, AND GR D DISTANCES. GR D DISTANCES MAY BE USED AS GROUND DISTANCES.

ELEVATION SHOWN ON THIS PLAN ARE REFERENCE TO THE NORTH AMERICAN VERTICAL DATUM OF 1988, NAVD88 (2012).

ORIGINAL PLANS PREPARED BY

KNIGHT
831 Critter Court
Suite 400
Onalaska, WI 54650
Engineers & Architects Phone: (608) 519-1455

WISCONSIN RYAN B. McKANE E-37669 HOLMEN WI. PROFESSIONAL ENGINEER

1/27/2020 (Date) (Signature)

STATE OF WISCONSIN
DEPARTMENT OF TRANSPORTATION

PREPARED BY

Surveyor	WISDOT/JEWELL
Designer	KNIGHT E/A
Project Manager	CRAIG FISHER
Regional Examiner	SW REGION
Regional Supervisor	OSCAR WINGER

APPROVED FOR THE DEPARTMENT

DATE: 10/6/2020 (Signature)

E

GENERAL NOTES

- ALL RADII ARE MEASURED TO EDGE OF PAVEMENT UNLESS OTHERWISE SHOWN OR NOTED ON THE PLAN.
- ALL SIGN LOCATIONS SHALL BE REVIEWED BY THE ENGINEER PRIOR TO INSTALLATION. ANY CONFLICTING SIGNS SHALL BE REMOVED.
- TYPICAL SECTIONS SHOW THE GENERAL FEATURES THROUGHOUT THE PROJECT. PAVEMENT SLOPES, TERRACE SLOPES, ETC., MAY VARY WITHIN THE LIMITS OF THE SECTION.
- NO TREES OR SHRUBS SHALL BE REMOVED UNLESS SUCH TREES OR SHRUBS HAVE BEEN DESIGNATED FOR REMOVAL BY THE ENGINEER.
- DISTURBED AREAS WITHIN THE RIGHT OF WAY ARE TO BE SALVAGED TOPSOILED, FERTILIZED, SEEDED, AND MULCHED OR E-MAT AS DIRECTED BY THE ENGINEER.
- CONTRACTOR SHALL MAINTAIN ACCESS TO ALL DRIVEWAYS AT ALL TIMES. IN SITUATIONS WHEN SIGNIFICANT WORK OPERATIONS ARE IMMEDIATELY IN FRONT OF DRIVEWAY, OWNER SHOULD BE CONTACTED PRIOR TO REMOVAL SO ARRANGEMENTS CAN BE MADE.
- WHEN PORTIONS OF EXISTING ASPHALTIC SURFACES ARE TO BE REMOVED TO ACCOMMODATE NEW CONSTRUCTION, THE LINE OF SUCH REMOVAL SHALL BE NEATLY DELINEATED WITH A SAW CUT JOINT THROUGH THE ASPHALTIC SURFACE SO THAT REMOVAL OF THE ASPHALT SHALL BE ACCOMPLISHED WITHOUT DAMAGE TO REMAINING PORTIONS. THE LOCATION OF SAW JOINTS AND THE AMOUNT REMOVED AT SIDE ROADS WILL BE DETERMINED IN THE FIELD BY THE ENGINEER.
- CROSS SLOPES AS SHOWN ON THE TYPICAL SECTION WILL VARY AT THE INTERSECTIONS.
- THE LOCATIONS OF EXISTING AND PROPOSED UTILITY INSTALLATIONS AS SHOWN ON THE PLANS ARE APPROXIMATE. THERE MAY BE OTHER UTILITY INSTALLATIONS WITHIN THE PROJECT AREA THAT ARE NOT SHOWN.
- WHEN THE QUANTITY OF BASE AGGREGATE IS MEASURED FOR PAYMENT BY THE TON OR CUBIC YARD, THE DEPTH OR THICKNESS OF THE LAYER SHOWN ON THE PLANS IS APPROXIMATE AND THE ACTUAL THICKNESS WILL DEPEND ON THE DISTRIBUTION OF THE MATERIAL AS DIRECTED BY THE ENGINEER.
- THE CONTRACTOR'S PAVING OPERATIONS SHALL BE CONSISTENT WITH THE PLAN TYPICAL SECTIONS AND CONSTRUCTED TO PREVENT HMA LONGITUDINAL JOINTS FROM BEING LOCATED WITHIN A DRIVING, TURNING, PASSING OR PARKING LANE.
- TACK COAT CALCULATIONS ARE BASED ON 0.05 gal/SY FOR RECONSTRUCT AREAS AND 0.07gal/SY FOR MILLING AREAS
- HMA PAVEMENT WEIGHT CALCULATIONS ARE BASED ON 112 LB/SY/IN.
- 5" HMA PAVEMENT SHALL BE PLACED IN TWO LAYERS, A 2" UPPER LAYER AND A 3" LOWER LAYER.
- CONTRACTOR TO PROTECT DH5013 GPS AND KEEP CONSTRUCTION EQUIPMENT AT LEAST 10 FEET AWAY. NOTIFY JACOB ROCKWEILER IMMEDIATELY IF DH5013 GPS IS DISTURBED, BUMPED OR MOVED DURING CONSTRUCTION OPERATIONS.JACOB ROCKWEILER, P.E., WISCONSIN HEIGHT MODERNIZATION PROGRAM MANAGER WITH THE WISDOT AT (608) 516-6362 AND EMAIL JACOB.ROCKWEILER@DOT.WI.GOV

STANDARD ABBREVIATIONS

AC	ACRE	INV	INVERT
AGG	AGGREGATE	JCT	JUNCTION
AADT	ANNUAL AVERAGE DAILY TRAFFIC	LT	LEFT
ASPH	ASPHALTIC	L	LENGTH OF CURVE
BK	BACK	LIN FT or LF	LINEAR FOOT
BAD	BASE AGGREGATE DENSE	LS	LUMP SUM
BM	BENCH MARK	NC	NORMAL CROWN
CL or C/L	CENTER LINE	NGS	NATIONAL GEODETIC SURVEY
CE	COMMERCIAL ENTRANCE	N	NORTH
CONC	CONCRETE	NB	NORTHBOUND
CABC	CRUSHED AGGREGATE BASE COURSE	NO	NUMBER
CWT	HUNDREDWEIGHT	PT	POINT
CY or CUYD	CUBIC YARD	PC	POINT OF CURVATURE
CULV	CULVERT	PI	POINT OF INTERSECTION
CP	CULVERT PIPE	PT	POINT OF TANGENCY
C & G	CURB AND GUTTER	LB	POUND
D	DEGREE OF CURVE	R	RADIUS
DIA	DIAMETER	RL or R/L	REFERENCE LINE
DISCH	DISCHARGE	RT	RIGHT
E	EAST	R/W	RIGHT-OF-WAY
EB	EASTBOUND	RD	ROAD
EL or ELEV	ELEVATION	SHLDR	SHOULDER
EW	ENDWALL	SB	SOUTHBOUND
ENT	ENTRANCE	SF or SQ FT	SQUARE FEET
EXC	EXCAVATION	SY or SQ YD	SQUARE YARD
EX	EXISTING	SDD	STANDARD DETAIL DRAWINGS
FERT	FERTILIZER	STH	STATE TRUNK HIGHWAYS
FE	FIELD ENTRANCE	SE	SUPERELEVATION
FT	FOOT	UG	UNDERGROUND
HMA	HOT MIX ASPHALT	VC	VERTICAL CURVE
INL	INLET	WB	WESTBOUND

ORDER OF DETAIL SHEETS

1. GENERAL NOTES
2. PROJECT OVERVIEW
3. TYPICAL SECTIONS
4. CONSTRUCTION DETAILS
5. REMOVAL PLAN
6. INTERSECTION DETAIL
7. EROSION CONTROL STAGE 1-4
8. PERMANENT SIGNING
9. PAVEMENT MARKING
10. TRAFFIC CONTROL STAGE 1 - 4
11. ALIGNMENT DETAIL

AREA CONTACTS

WISDOT PROJECT MANAGER
CRAIG FISHER, PE – PROJECT MANAGER
3550 MORMON COULEE ROAD
LA CROSSE, WI 54601
(608) 785-9946
CRAIG.FISHER@DOT.WI.GOV

DESIGN CONTACT
KNIGHT E/A, INC.
RYAN MCKANE
831 CRITTER COURT
ONALASKA, WI 54650
(608) 519-1455
RMCKANE@KNIGHTEA.COM

WIDNR
ANDY BARTA
3911 FISH HATCHERY ROAD
FITCHBURG, WI 53711
(608) 275-3308
ANDY.BARTA@WISCONSIN.GOV

UTILITY CONTACTS

WE ENERGIES
ADAM MARING
N3025 14th AVE.
MONROE, WI 53566
(608) 328-5679
ADAM.MARING@WECENERGYGROUP.COM

ALLIANT ENERGY
MARY MONTGOMERY
200 FIRST ST
CEDAR RAPIDS, IA 52401
(319) 786-4768
MARYMONTGOMERY@ALLIANTENERGY.COM

CUBA CITY TELEPHONE EXCHANGE COMPANY
DEBBIE EGLI
121 NORTH WASHINGTON STREET
CUBA CITY, WI 53807
(563) 345-9088
DEB@CSTECH.COM

CENTURYLINK
RYAN NIEMEIER
333 N FRONT ST
LA CROSSE, WI 54601
(608) 796-5190
RYAN.NIEMEIER@CENTURYLINK.COM

MEDIACOM WISCONSIN LLC
CHRIS MINARD
6925 GARDEN PRAIRIE RD
GARDEN PRAIRIE, IL 61038
(815) 597-5103
CMINARD@MEDIACOMCC.COM

DIGGERS HOTLINE
Dial 811 or (800) 242-8511
www.DiggersHotline.com

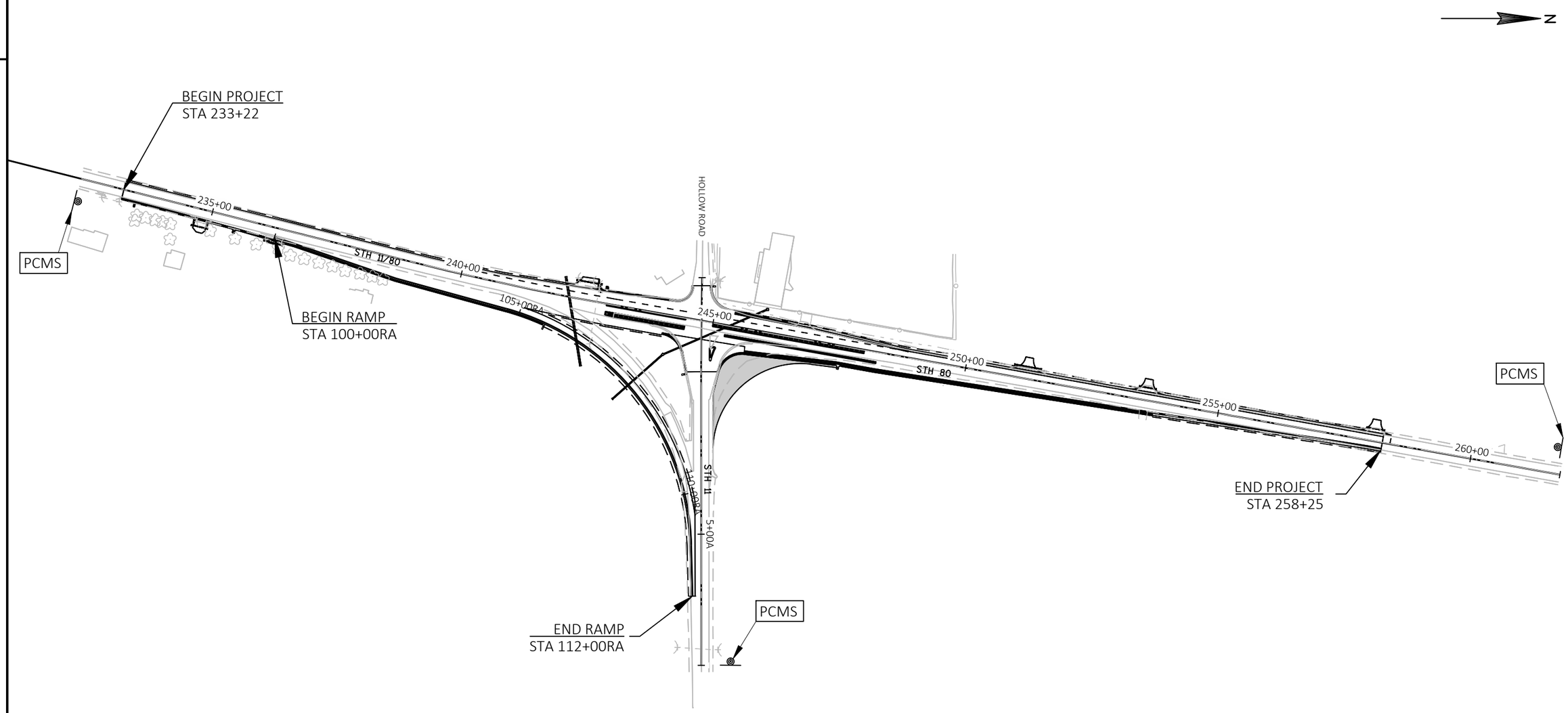

NOTES:
PCMS POSITIONS TO BE 500 FEET FROM PROJECT LIMITS NORTH AND SOUTH ON STH 80 AND 500 FEET FROM PROJECT LIMITS EAST ON STH 11.
PCMS IS REQ'D ON EACH SIDE OF FLAGGING OPERATIONS.

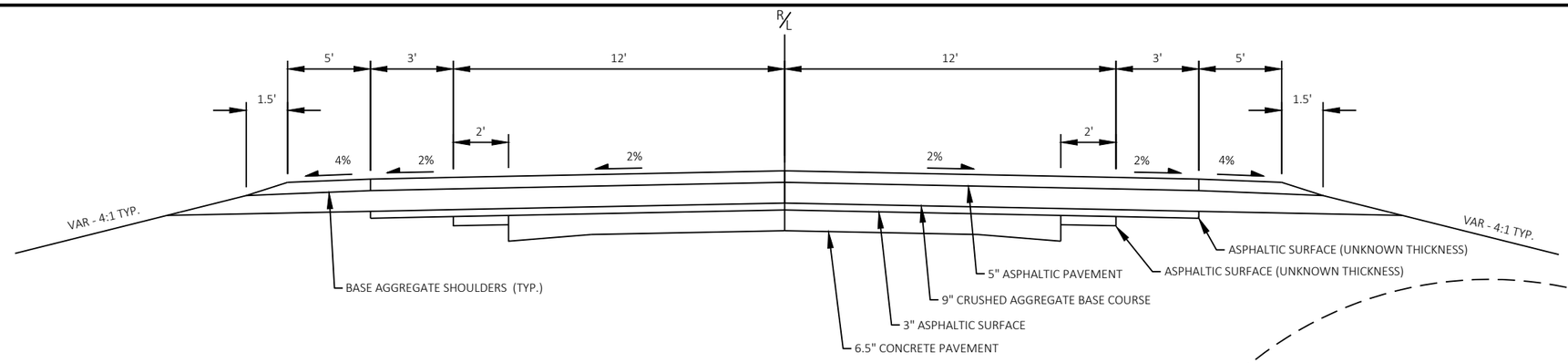

TYPICAL EXISTING SECTION - STH 80/STH 11

STA. 233+22 - STA. 240+00

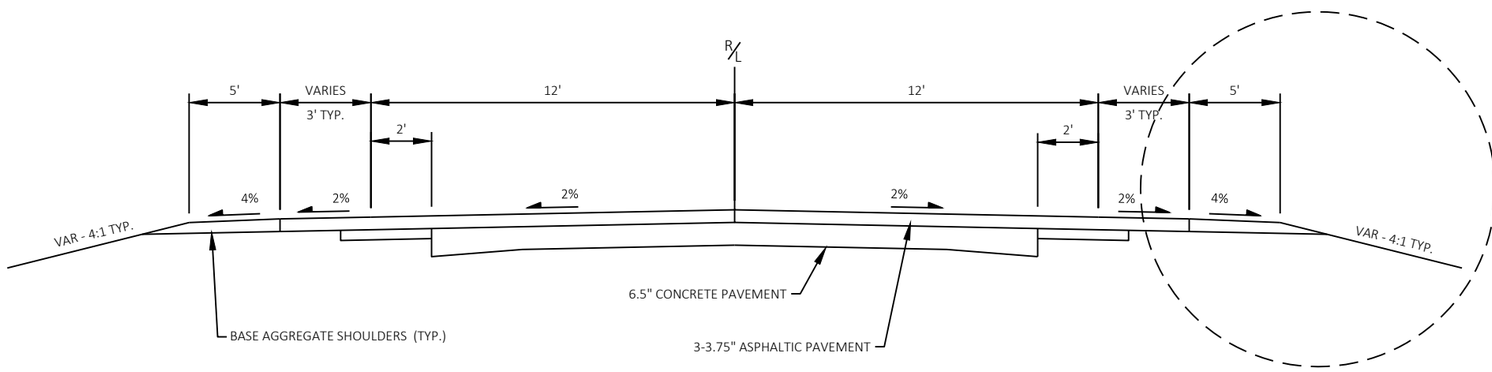

TYPICAL EXISTING SECTION - STH 80/STH 11

STA. 240+00 - STA. 248+26.90

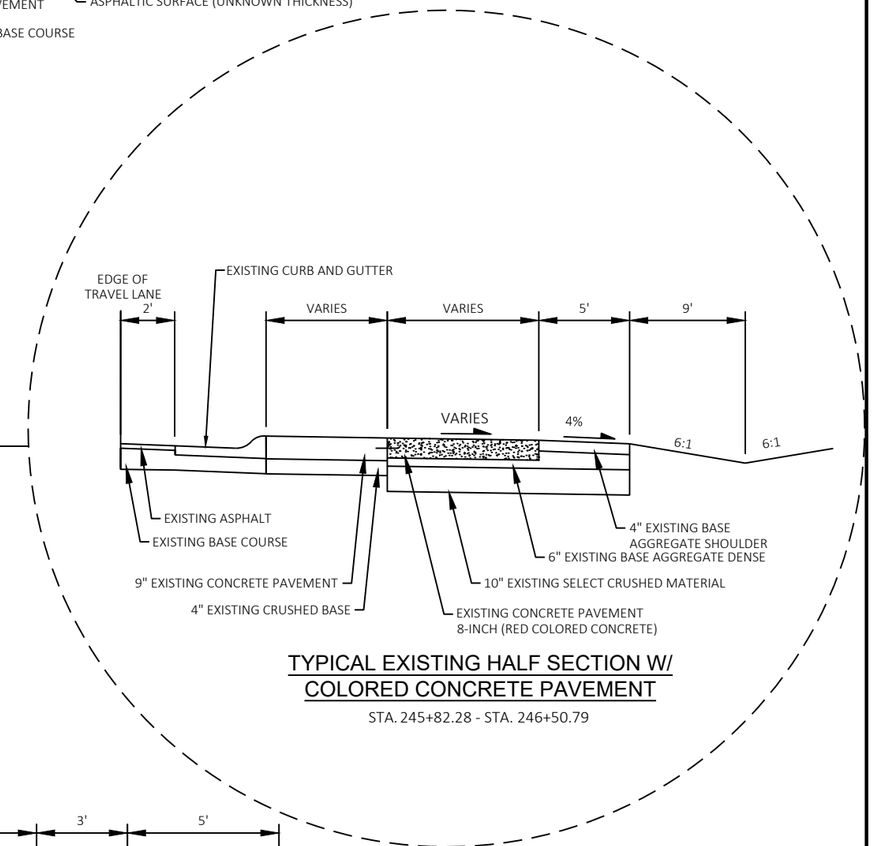

TYPICAL EXISTING HALF SECTION W/ COLORED CONCRETE PAVEMENT

STA. 245+82.28 - STA. 246+50.79

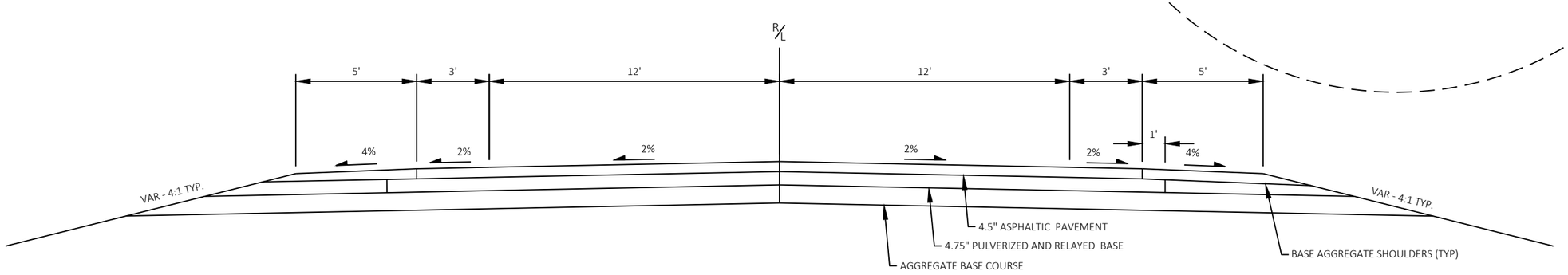

TYPICAL EXISTING SECTION - STH 80

STA. 248+26.90 - STA 258+25

PROJECT NO: 1706-00-74	HWY: STH 11	COUNTY: GRANT	TYPICAL SECTIONS	SHEET 5	E

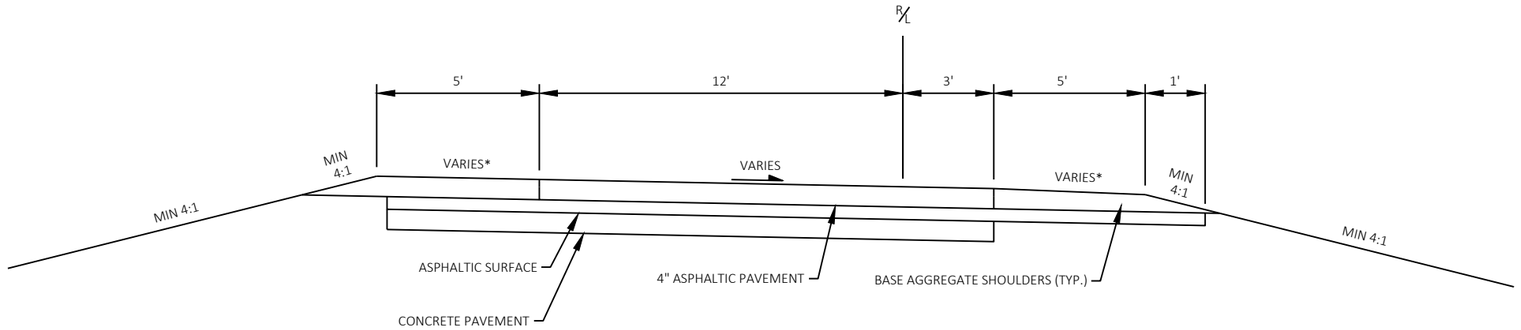

*SHOULDER SLOPE 4% ON TANGENT OR EQUAL TO SUPERELEVATION ON CURVES

TYPICAL EXISTING SECTION - RAMP

STA. 104+85RA - STA. 112+00RA

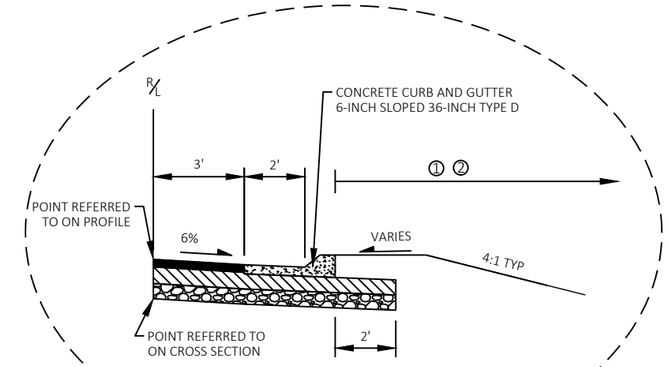

TYPICAL FINISHED SHOULDER - RAMP

STA. 104+85RA - STA. 105+50RA

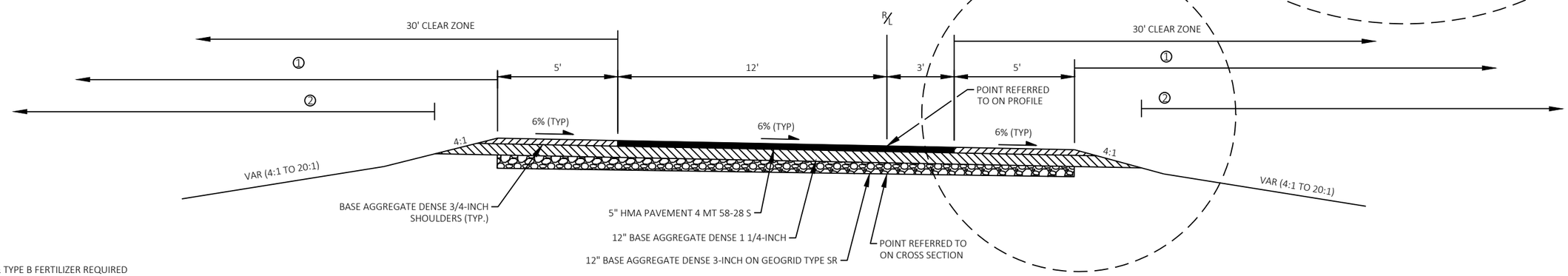

① #20 SEED & TYPE B FERTILIZER REQUIRED
10' PAST SLOPE INTERCEPT

② SALVAGED TOPSOIL, MULCH, AND EMAT REQ'D
5' PAST SLOPE INTERCEPT

③ SALVAGED TOPSOIL, TEMPORARY SEED, TYPE B FERTILIZER, MULCH REQUIRED
5' PAST SLOPE INTERCEPT

TYPICAL FINISHED SECTION - RAMP

STA. 104+85RA - STA. 112+00RA

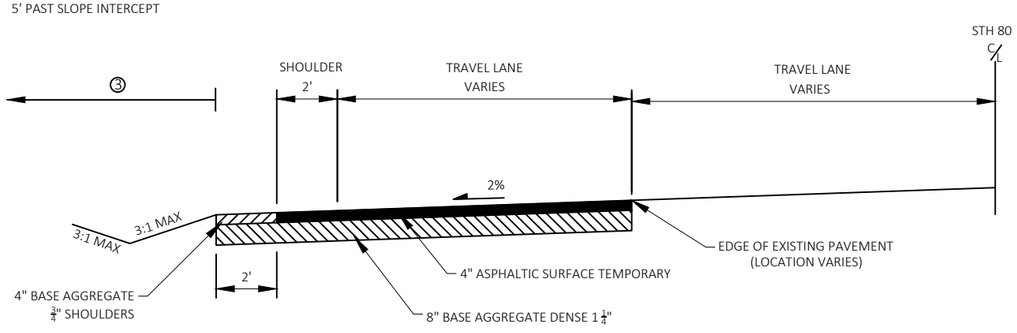

TYPICAL TEMPORARY LANE WIDENED SECTION

STA. 238+00 - STA. 260+50

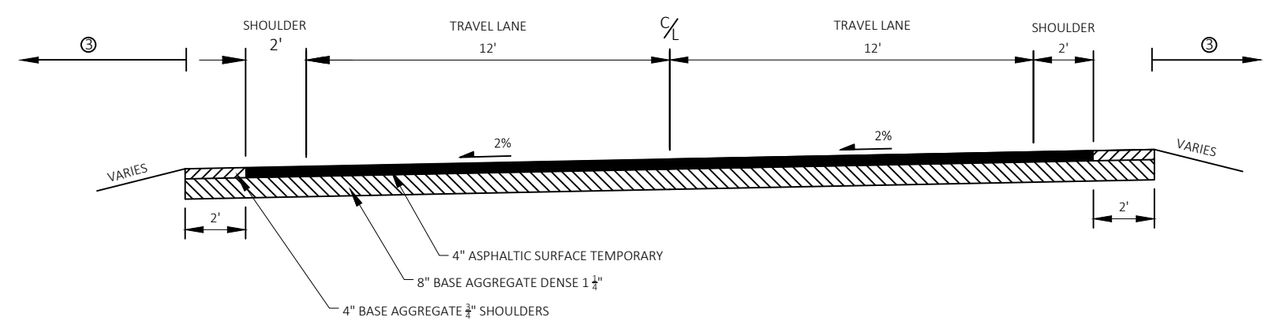

TYPICAL TEMPORARY BYPASS

STA. 1+00A - STA. 3+00A

PROJECT NO: 1706-00-74	HWY: STH 11	COUNTY: GRANT	TYPICAL SECTIONS	SHEET 6	E

FILE NAME : W:\7390_05\CAD\1706-00-04\SHEETSPLAN\020301_TS.DWG
LAYOUT NAME - 2
PLOT DATE : 10/5/2020 10:28 AM PLOT BY : METRY, ALEXANDER PLOT NAME : PLOT SCALE : ##########

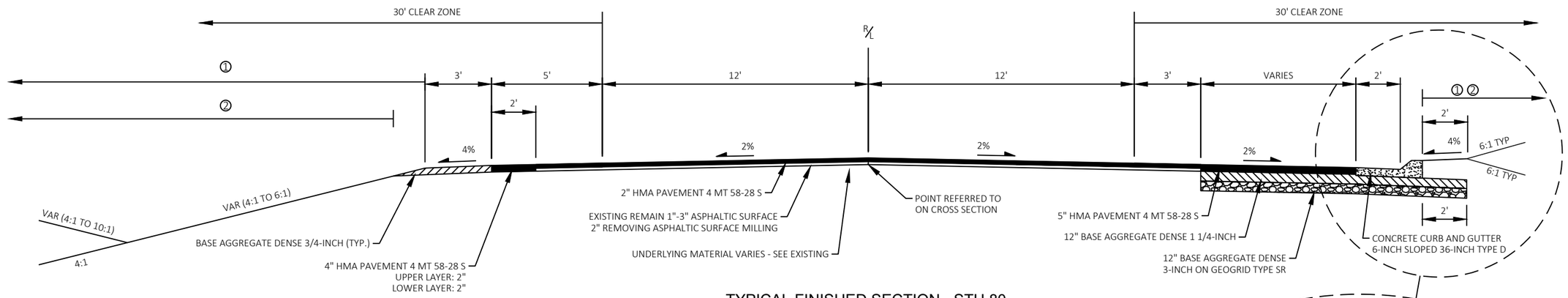

TYPICAL FINISHED SECTION - STH 80

STA. 233+22 - STA. 238+78
STA. 248+26 - STA. 258+25

① #20 SEED & TYPE B FERTILIZER REQUIRED
10' PAST SLOPE INTERCEPT

② SALVAGED TOPSOIL, MULCH, AND EMAT REQ'D
5' PAST SLOPE INTERCEPT

③ EDGE OF PAVED SHOULDER

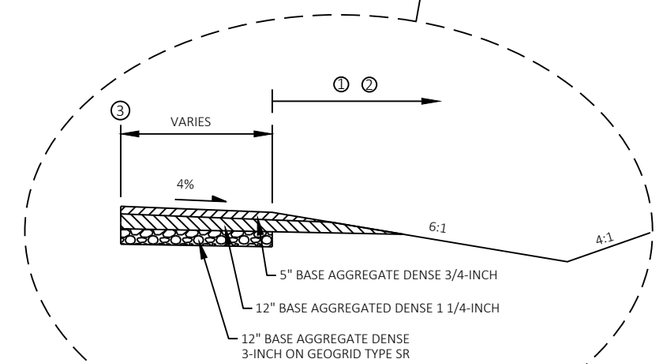

TYPICAL FINISHED SHOULDER- STH 80

STA. 253+75 - STA. 258+25

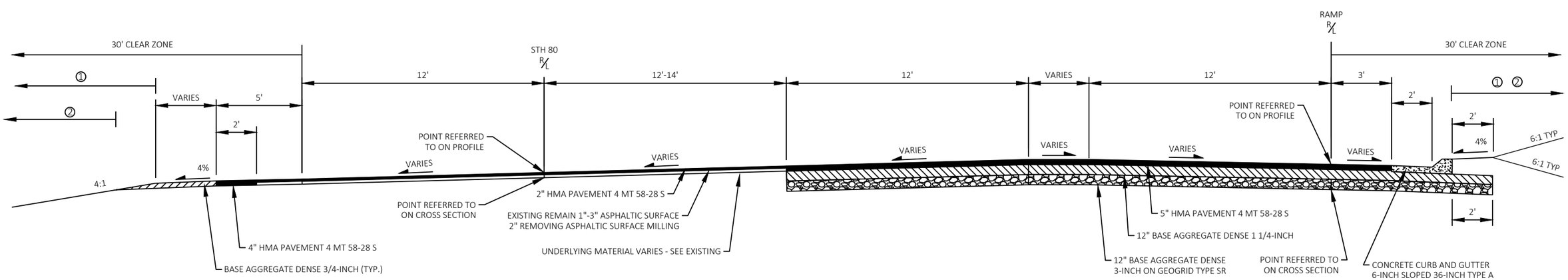

TYPICAL FINISHED SECTION - STH 80

STA. 238+78 - STA. 242+96

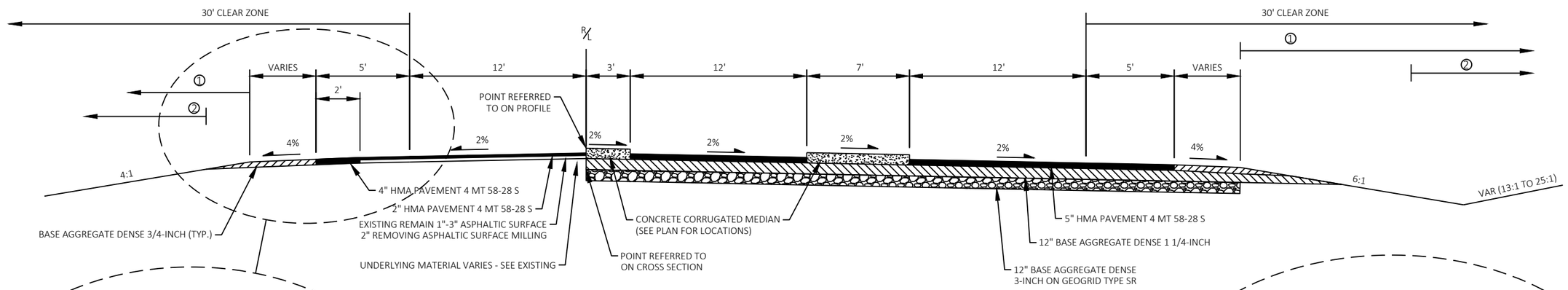

TYPICAL FINISHED SECTION - STH 80

STA. 242+96 - STA. 244+46

① #20 SEED & TYPE B FERTILIZER REQUIRED
10' PAST SLOPE INTERCEPT

② SALVAGED TOPSOIL, MULCH, AND EMAT REQ'D
5' PAST SLOPE INTERCEPT

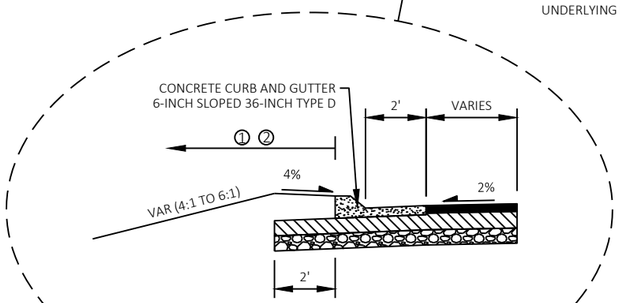

TYPICAL FINISHED SHOULDER - STH 80

STA. 242+54 - STA. 244+51
STA. 245+83 - STA. 246+50

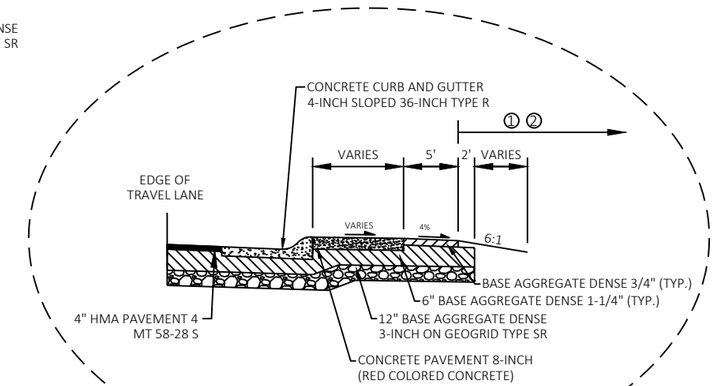

TYPICAL PROPOSED HALF SECTION W/ COLORED CONCRETE PAVEMENT

STA. 245+82.28 - STA. 246+50.79

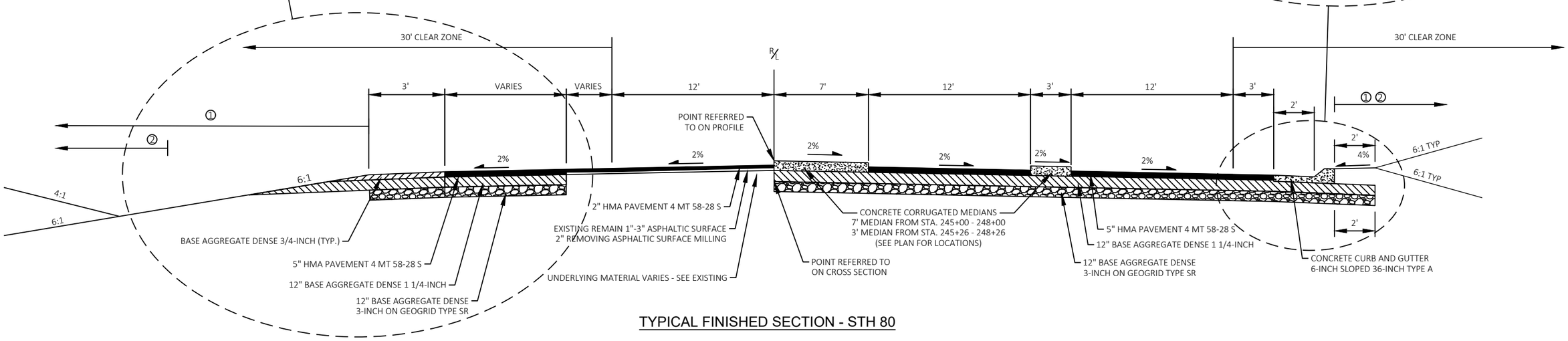

TYPICAL FINISHED SECTION - STH 80

STA. 245+00- STA. 248+26

PROJECT NO: 1706-00-74	HWY: STH 11	COUNTY: GRANT	TYPICAL SECTIONS	SHEET 8	E

2

RUNOFF COEFFICIENT TABLE

A	HYDROLOGIC SOIL GROUP											
	B		C							D		
	SLOPE RANGE (PERCENT)			SLOPE RANGE (PERCENT)			SLOPE RANGE (PERCENT)			SLOPE RANGE (PERCENT)		
LAND USE:	0-2	2-6	6 & OVER	0-2	2-6	6 & OVER	0-2	2-6	6 & OVER	0-2	2-6	6 & OVER
ROW CROPS	.08 .22	.16 .30	.22 .38	.12 .26	.20 .34	.27 .44	.15 .30	.24 .37	.33 .50	.19 .34	.28 .41	.38 .56
MEDIAN STRIP-TURF	.19 .24	.20 .26	.24 .30	.19 .25	.22 .28	.26 .33	.20 .26	.23 .30	.30 .37	.20 .27	.25 .32	.30 .40
SIDE SLOPE: TURF			.25 .32			.27 .34			.28 .36			.30 .38
PAVEMENT:												
ASPHALT	.70 - .95											
CONCRETE	.80 - .95											
BRICK	.70 - .80											
DRIVES, WALKS	.75 - .85											
ROOFS	.75 - .95											
GRAVEL ROADS, SHOULDERS	.40 - .60											

TOTAL PROJECT AREA = 8.70 ACRES
TOTAL AREA EXPECTED TO BE DISTURBED BY CONSTRUCTION ACTIVITIES = 6.38 ACRES

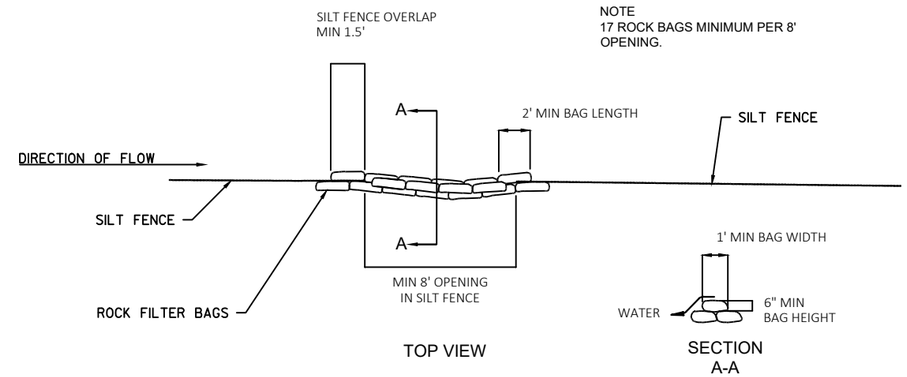

ROCK BAGS USED FOR SILT FENCE RELIEF

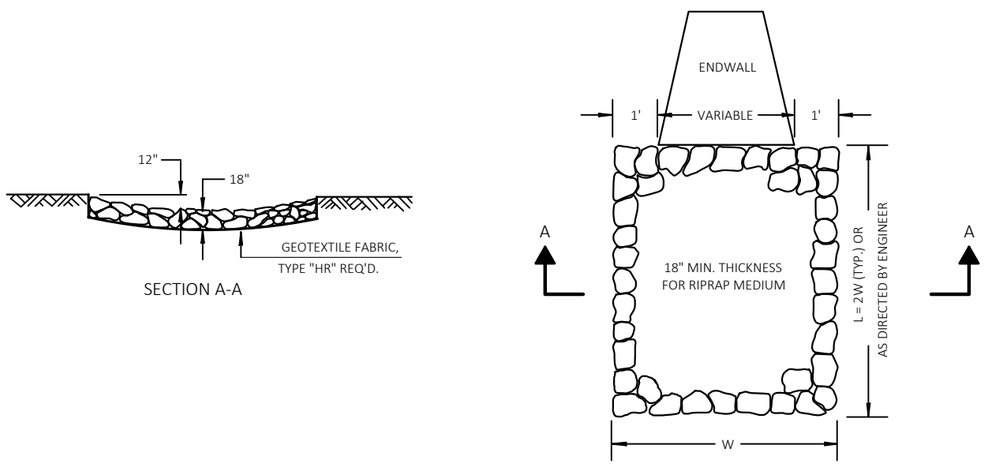

RIPRAP AND GEOTEXTILE FABRIC DETAIL AT APRON ENDWALLS

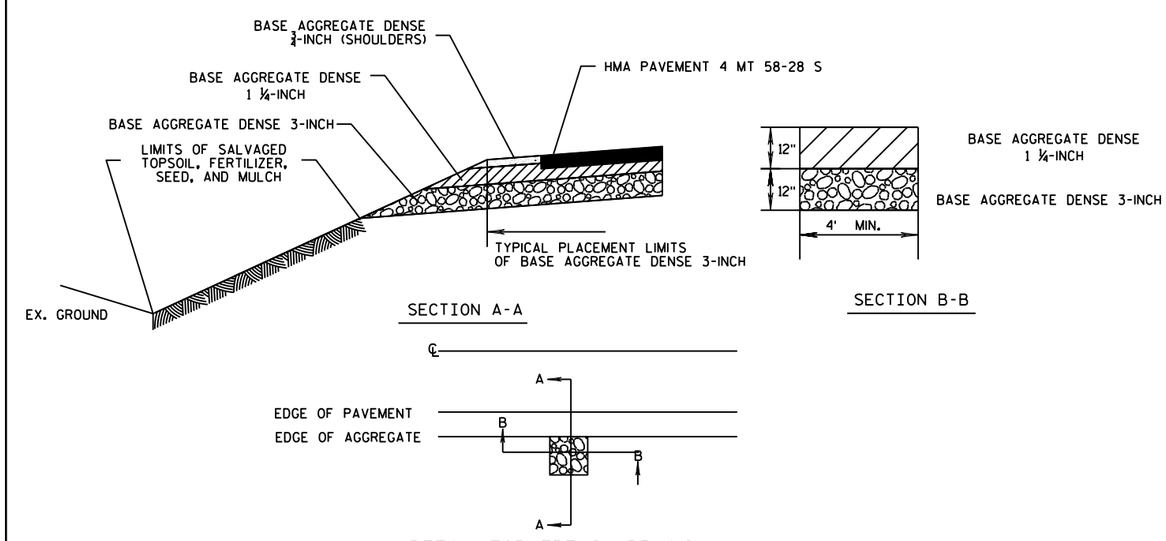

DETAIL FOR FRENCH DRAINS

DRAINS ARE TO BE CONSTRUCTED AT LEAST EVERY 250'
AND AT EACH SAG VERTICAL CURVE (STA. 244+00) IN THE PROFILE.

(LOCATIONS TO BE DETERMINED IN THE FIELD BY THE ENGINEER)

EXCAVATION REQUIRED TO CONSTRUCT FRENCH DRAINS SHALL
BE CONSIDERED INCIDENTAL TO THE ITEM COMMON EXCAVATION

BASE AGGREGATE DENSE 3-INCH MATERIAL REQUIRED TO CONSTRUCT FRENCH DRAINS
SHALL BE CONSIDERED INCIDENTAL TO THE ITEM BASE AGGREGATE DENSE 3-INCH.

2

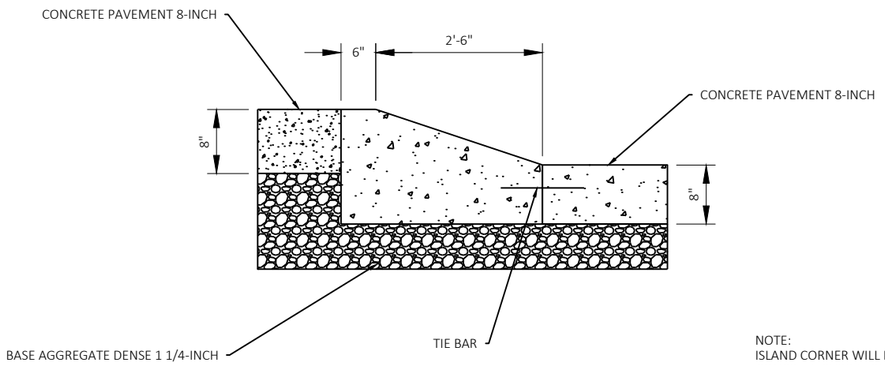

NOTE:
ISLAND CORNER WILL BE PAID FOR AS CONCRETE CURB & GUTTER 6-INCH SLOPED 36-INCH

ISLAND CORNER DETAIL

PROFILE VIEW

NOTE: ALL STATIONS, OFFSETS, AND ELEVATIONS ARE TO FLAG OF CURB/EDGE OF PAVEMENT

STATION & OFFSET TABLE

POINT	STATION	OFFSET	STATION	OFFSET	Y COORDS	X COORDS	RADIUS
A1	245+12.53 - STH 80	50.025 RT	1+38.93 - STH 11	27.048 LT	423523.50	894092.49	
A2	245+09.03 - STH 80	46.238 RT	1+34.60 - STH 11	24.219 LT	423520.70	894088.15	
A3	245+03.85 - STH 80	47.351 RT	1+34.84 - STH 11	18.932 LT	423515.42	894088.35	
A4	245+01.53 - STH 80	50.806 RT	1+37.87 - STH 11	16.067 LT	423512.53	894091.34	
A5	245+05.55 - STH 80	73.577 RT	1+61.07 - STH 11	16.198 LT	423512.53	894114.47	
A6	245+08.52 - STH 80	73.517 RT	1+61.52 - STH 11	19.128 LT	423515.46	894114.92	
A7	245+09.02 - STH 80	67.362 RT	1+55.51 - STH 11	20.667 LT	423517.02	894108.95	
A8	245+04.59 - STH 80	68.143 RT	1+55.53 - STH 11	16.177 LT	423512.53	894108.95	
R1	245+04.48 - STH 80	50.284 RT	1+37.85 - STH 11	19.067 LT	423515.53	894091.34	3
R2	245+09.66 - STH 80	49.171 RT	1+37.61 - STH 11	24.354 LT	423520.82	894091.15	3
R3	245+07.03 - STH 80	73.316 RT	1+61.06 - STH 11	17.698 LT	423514.03	894114.47	1.5
R4	246+08.62 - STH 80	78.320 RT	1+83.93 - STH 11	116.636 LT	423612.95	894137.19	100

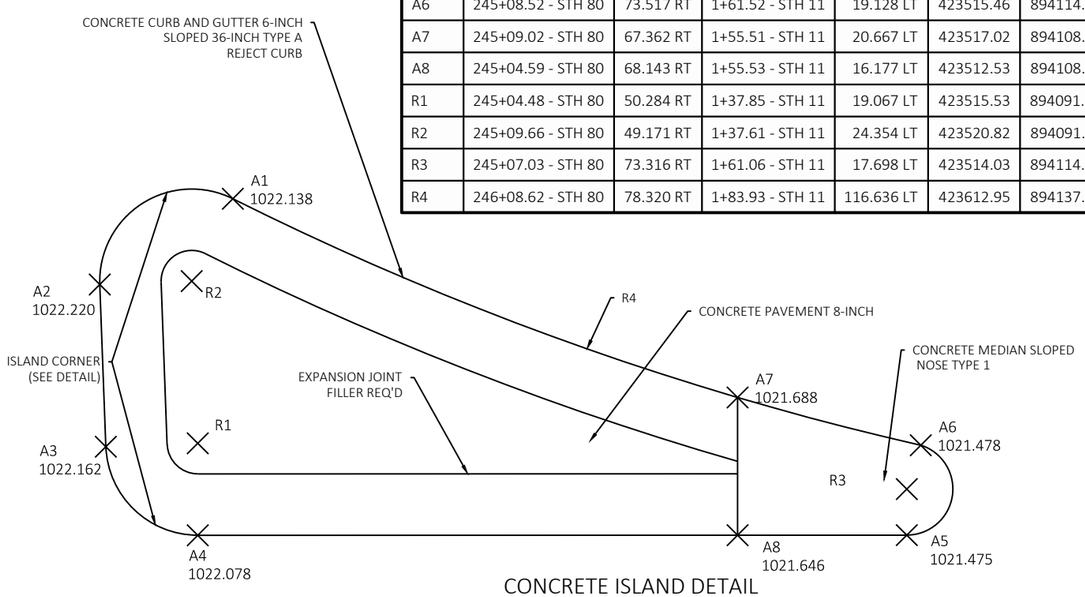

CONCRETE ISLAND DETAIL

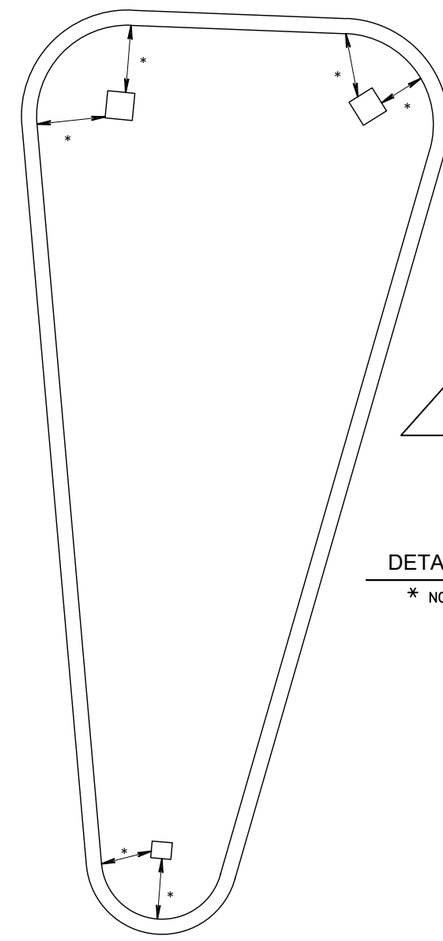

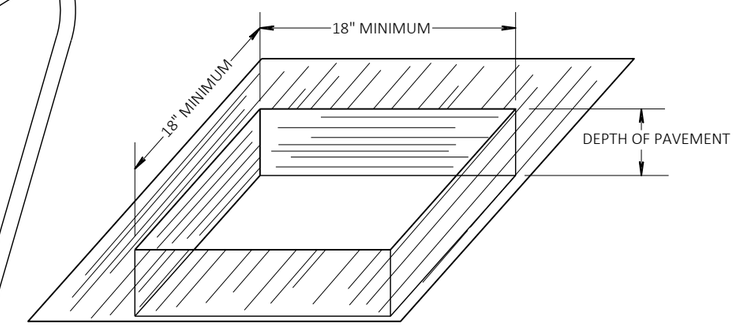

DETAIL OF OPENINGS IN ISLAND FOR SIGN PLACEMENT

* NOTE: ALL SQUARED OPENINGS IN ISLAND FOR SIGN PLACEMENTS SHALL BE DETERMINED BY SIGN SIZE AND NUMBER. A 2" MINIMUM FROM BACK OF CURB IS REQUIRED.

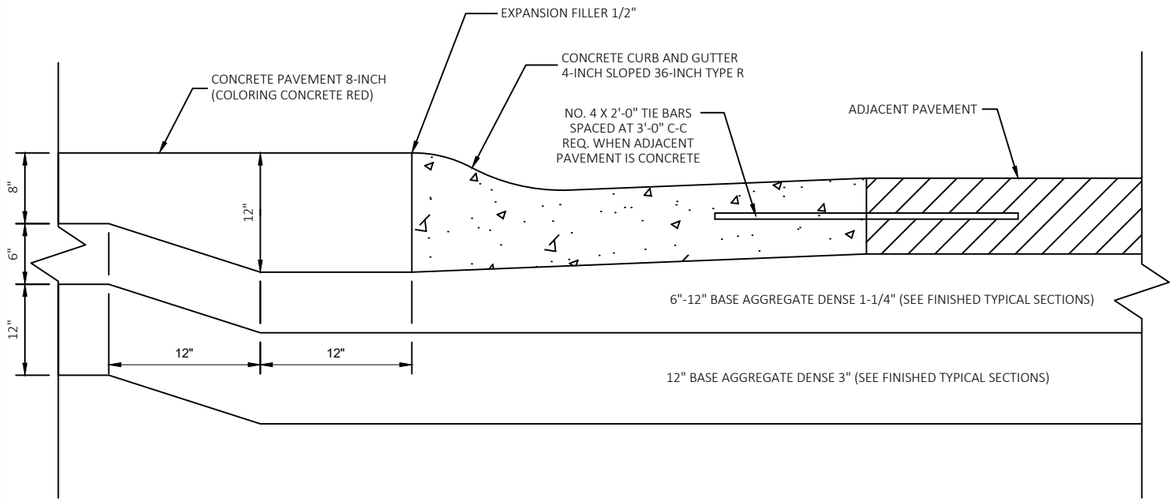

TRUCK APRON DETAIL

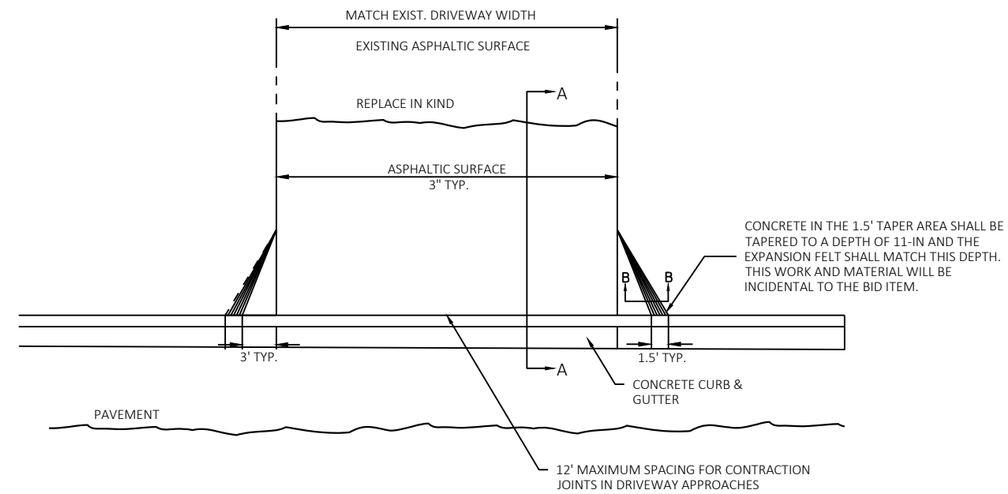

PLAN VIEW

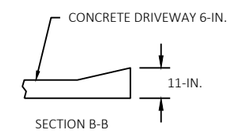

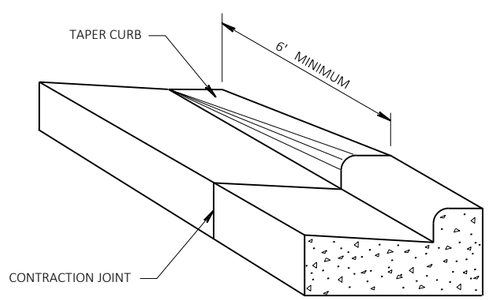

DETAIL OF CURB & GUTTER TERMINI

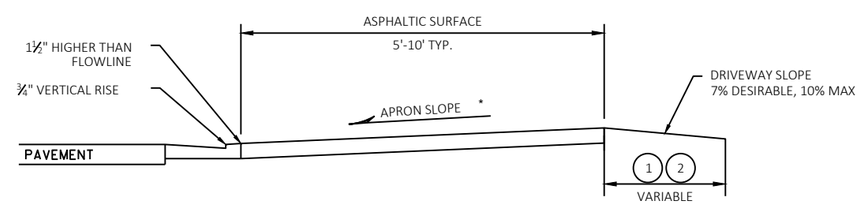

TYPICAL SECTION

SECTION A-A

* SEE CROSS SECTIONS AT DRIVEWAY LOCATIONS

1 3" BASE AGG. DENSE ¾-INCH
3" BASE AGG. DENSE 1¼-INCH

2 3" ASPHALTIC SURFACE OVER
6" BASE AGG. DENSE 1¼ -INCH BASE

DRIVEWAY ENTRANCE DETAIL WITH CURB & GUTTER

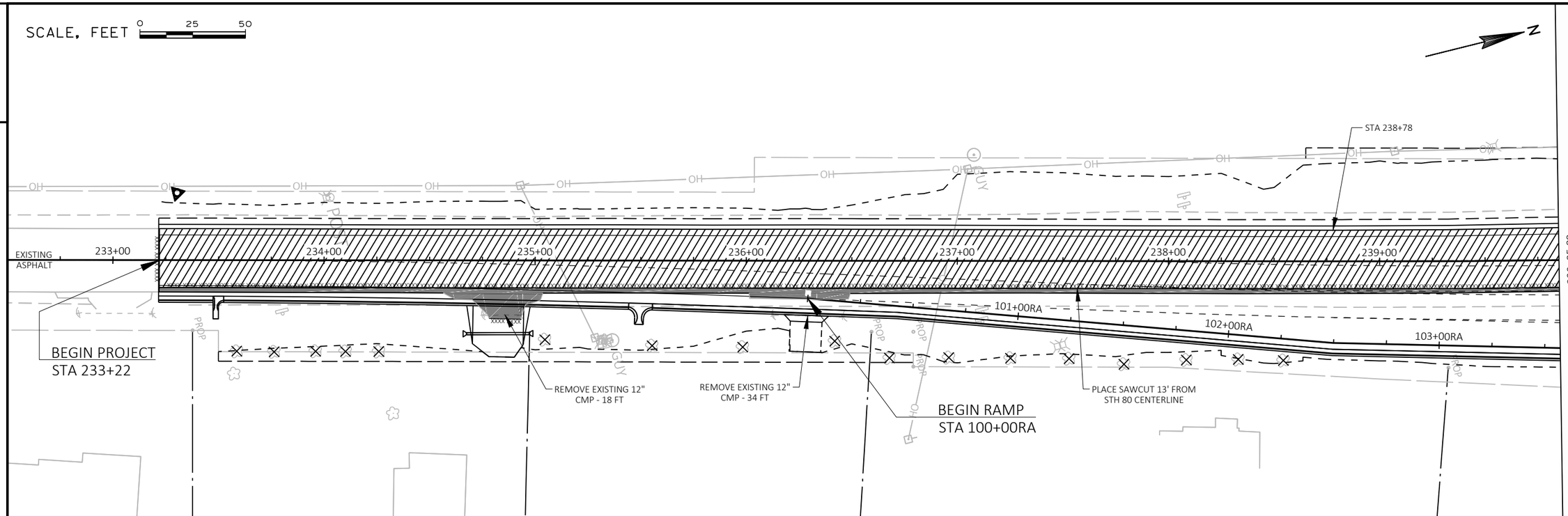

- REMOVING ASPHALTIC SURFACE (PAID AS COMMON EXCAVATION)
- REMOVING ASPHALTIC SURFACE MILLING
- REMOVING CURB AND GUTTER
- REMOVING PAVEMENT
- SAWCUT
- CLEARING AND GRUBBING

2

2

N

EXISTING ASPHALT

STA 0+16A - STH 11

STA 245+36

REMOVE EXISTING 15" CMP - 31 FT

STA 242+96

STA 244+46

PLACE SAWCUT 2' FROM PAVEMENT EDGE

239+85.00

240+00

241+00

242+00

243+00

244+00

245+00

246+00

246+75.00

29'

15'

1+00A

10'

104+00RA

105+00RA

106+00RA

107+00RA

108+00RA

109+00RA

110+00RA

PLACE SAWCUT 13' FROM STH 80 CENTERLINE

REMOVE EXISTING 24" RCCP - 113 FT

STA 245+70

2+00A

EXISTING CONCRETE

STA 1+84A - STH 11

STA 1+84A - STA 3+11A

3+00A

4+00A

STA. 110+00RA

STA. 110+00RA

5+00A

6+00A

111+00RA

GUY

OH

END RAMP
STA 112+00RA

REMOVING ASPHALTIC SURFACE (PAID AS COMMON EXCAVATION)

REMOVING ASPHALTIC SURFACE MILLING

REMOVING CURB AND GUTTER

REMOVING PAVEMENT

SAWCUT

CLEARING AND GRUBBING

SCALE, FEET 0 25 50

PROJECT NO: 1706-00-74	HWY: STH 11	COUNTY: GRANT	REMOVAL PLAN	SHEET 13	E

2

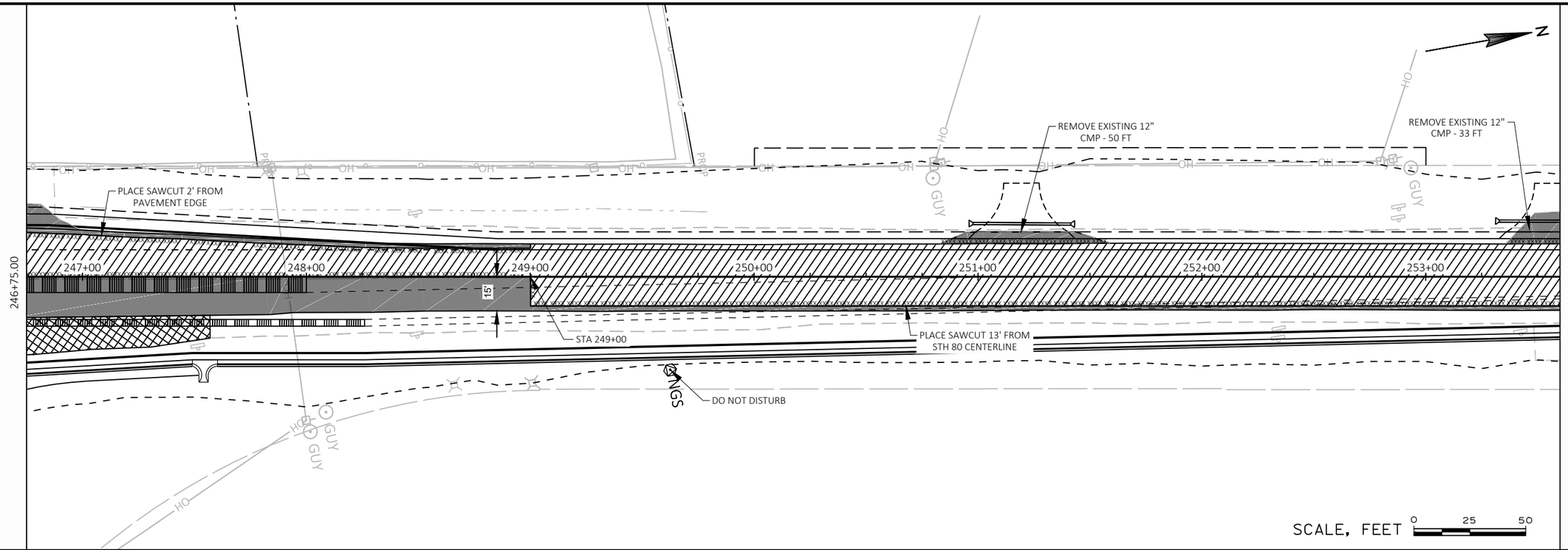

2

REMOVING ASPHALTIC SURFACE (PAID AS COMMON EXCAVATION)

REMOVING ASPHALTIC SURFACE MILLING

REMOVING CURB AND GUTTER

REMOVING PAVEMENT

SAWCUT

CLEARING AND GRUBBING

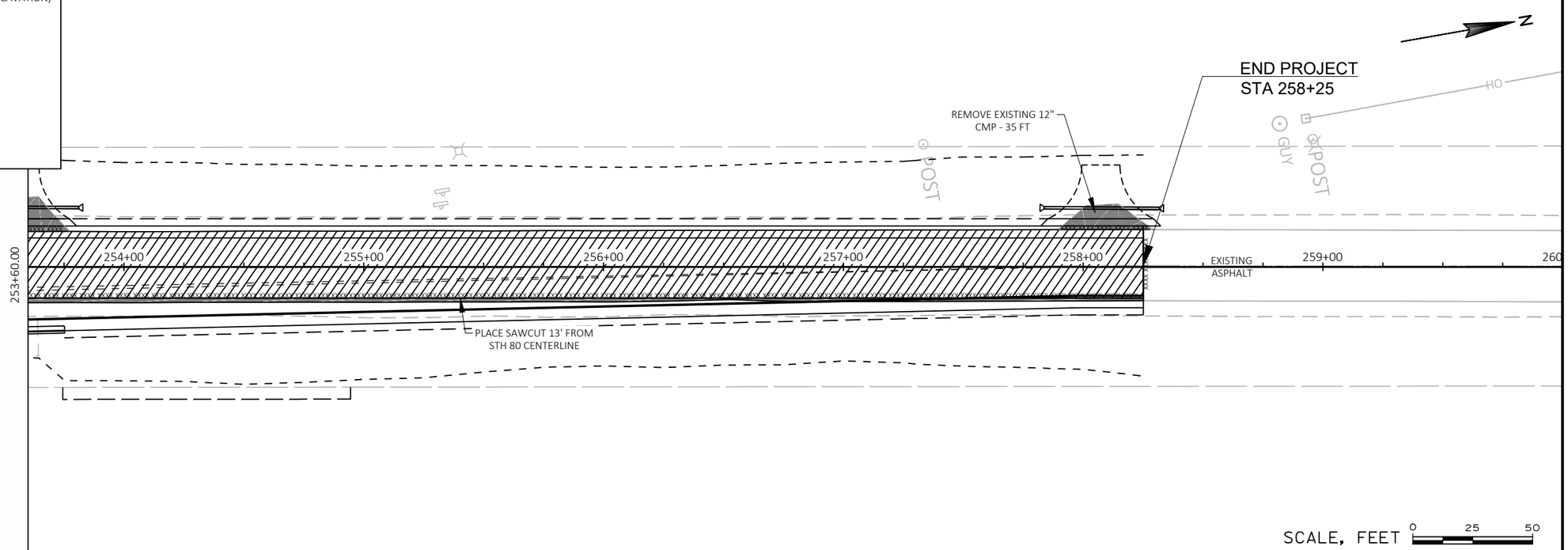

PROJECT NO: 1706-00-74	HWY: STH 11	COUNTY: GRANT	REMOVAL PLAN	SHEET 14	E

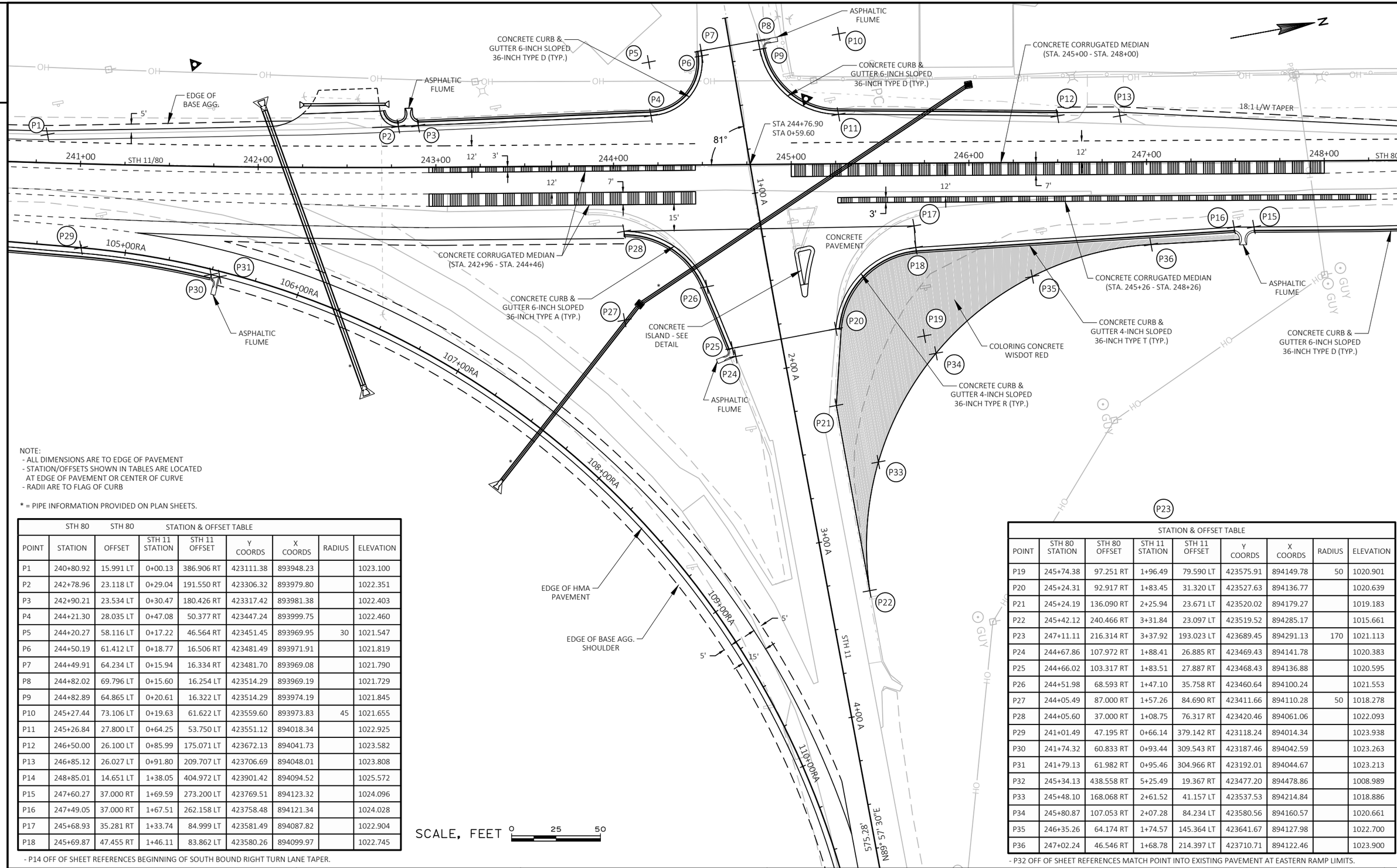

NOTE:
- ALL DIMENSIONS ARE TO EDGE OF PAVEMENT
- STATION/OFFSETS SHOWN IN TABLES ARE LOCATED AT EDGE OF PAVEMENT OR CENTER OF CURVE
- RADII ARE TO FLAG OF CURB

* = PIPE INFORMATION PROVIDED ON PLAN SHEETS.

STATION & OFFSET TABLE

POINT	STH 80 STATION	STH 80 OFFSET	STH 11 STATION	STH 11 OFFSET	Y COORDS	X COORDS	RADIUS	ELEVATION
P1	240+80.92	15.991 LT	0+00.13	386.906 RT	423111.38	893948.23		1023.100
P2	242+78.96	23.118 LT	0+29.04	191.550 RT	423306.32	893979.80		1022.351
P3	242+90.21	23.534 LT	0+30.47	180.426 RT	423317.42	893981.38		1022.403
P4	244+21.30	28.035 LT	0+47.08	50.377 RT	423447.24	893999.75		1022.460
P5	244+20.27	58.116 LT	0+17.22	46.564 RT	423451.45	893969.95	30	1021.547
P6	244+50.19	61.412 LT	0+18.77	16.506 RT	423481.49	893971.91		1021.819
P7	244+49.91	64.234 LT	0+15.94	16.334 RT	423481.70	893969.08		1021.790
P8	244+82.02	69.796 LT	0+15.60	16.254 LT	423514.29	893969.19		1021.729
P9	244+82.89	64.865 LT	0+20.61	16.322 LT	423514.29	893974.19		1021.845
P10	245+27.44	73.106 LT	0+19.63	61.622 LT	423559.60	893973.83	45	1021.655
P11	245+26.84	27.800 LT	0+64.25	53.750 LT	423551.12	894018.34		1022.925
P12	246+50.00	26.100 LT	0+85.99	175.071 LT	423672.13	894041.73		1023.582
P13	246+85.12	26.027 LT	0+91.80	209.707 LT	423706.69	894048.01		1023.808
P14	248+85.01	14.651 LT	1+38.05	404.972 LT	423901.42	894094.52		1025.572
P15	247+60.27	37.000 RT	1+69.59	273.200 LT	423769.51	894123.32		1024.096
P16	247+49.05	37.000 RT	1+67.51	262.158 LT	423758.48	894121.34		1024.028
P17	245+68.93	35.281 RT	1+33.74	84.999 LT	423581.49	894087.82		1022.904
P18	245+69.87	47.455 RT	1+46.11	83.862 LT	423580.26	894099.97		1022.745

- P14 OFF OF SHEET REFERENCES BEGINNING OF SOUTH BOUND RIGHT TURN LANE TAPER.

STATION & OFFSET TABLE

POINT	STH 80 STATION	STH 80 OFFSET	STH 11 STATION	STH 11 OFFSET	Y COORDS	X COORDS	RADIUS	ELEVATION
P19	245+74.38	97.251 RT	1+96.49	79.590 LT	423575.91	894149.78	50	1020.901
P20	245+24.31	92.917 RT	1+83.45	31.320 LT	423527.63	894136.77		1020.639
P21	245+24.19	136.090 RT	2+25.94	23.671 LT	423520.02	894179.27		1019.183
P22	245+42.12	240.466 RT	3+31.84	23.097 LT	423519.52	894285.17		1015.661
P23	247+11.11	216.314 RT	3+37.92	193.023 LT	423689.45	894291.13	170	1021.113
P24	244+67.86	107.972 RT	1+88.41	26.885 RT	423469.43	894141.78		1020.383
P25	244+66.02	103.317 RT	1+83.51	27.887 RT	423468.43	894136.88		1020.595
P26	244+51.98	68.593 RT	1+47.10	35.758 RT	423460.64	894100.24		1021.553
P27	244+05.49	87.000 RT	1+57.26	84.690 RT	423411.66	894110.28	50	1018.278
P28	244+05.60	37.000 RT	1+08.75	76.317 RT	423420.46	894061.06		1022.093
P29	241+01.49	47.195 RT	0+66.14	379.142 RT	423118.24	894014.34		1023.938
P30	241+74.32	60.833 RT	0+93.44	309.543 RT	423187.46	894042.59		1023.263
P31	241+79.13	61.982 RT	0+95.46	304.966 RT	423192.01	894044.67		1023.213
P32	245+34.13	438.558 RT	5+25.49	19.367 RT	423477.20	894478.86		1008.989
P33	245+48.10	168.068 RT	2+61.52	41.157 LT	423537.53	894214.84		1018.886
P34	245+80.87	107.053 RT	2+07.28	84.234 LT	423580.56	894160.57		1020.661
P35	246+35.26	64.174 RT	1+74.57	145.364 LT	423641.67	894127.98		1022.700
P36	247+02.24	46.546 RT	1+68.78	214.397 LT	423710.71	894122.46		1023.900

- P32 OFF OF SHEET REFERENCES MATCH POINT INTO EXISTING PAVEMENT AT EASTERN RAMP LIMITS.

PROJECT NO: 1706-00-74	HWY: STH 11	COUNTY: GRANT	INTERSECTION DETAIL STH 11 & STH 80 INTERSECTION	SHEET 15	E

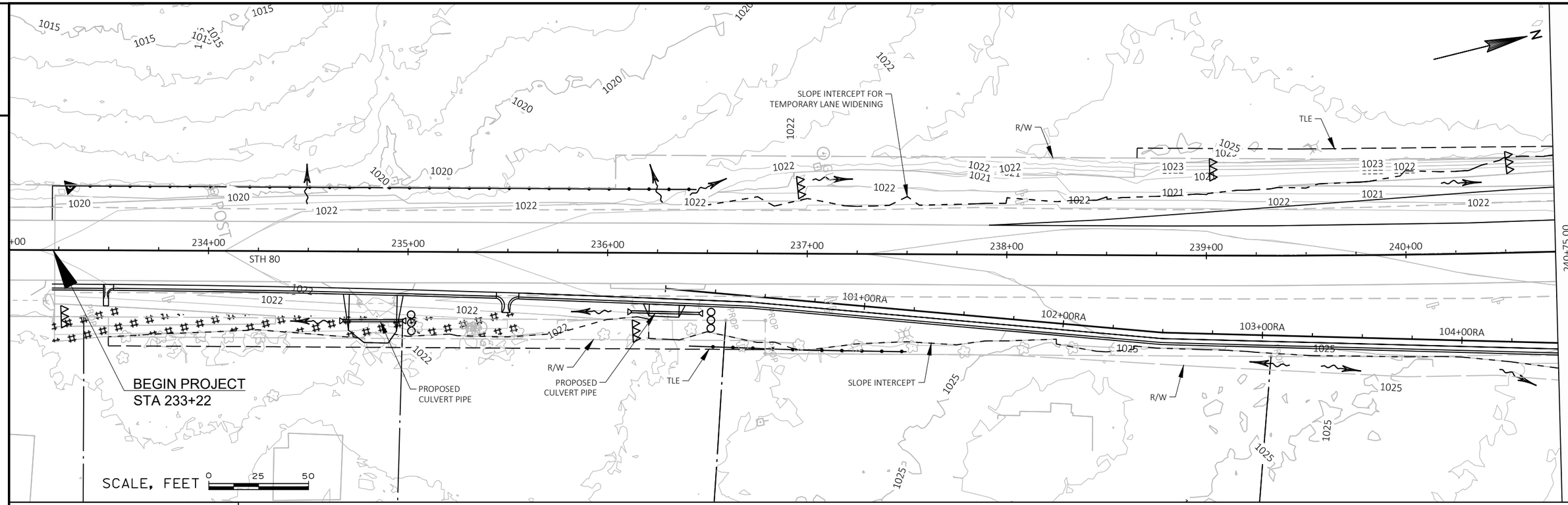

ROCK BAGS

CULVERT PIPE CHECKS

DIRECTION OF DRAINAGE FLOW

EROSION MAT CLASS I TYPE B

INLET PROTECTION TYPE A

RIPRAP

SILT FENCE

TEMPORARY DITCH CHECKS

NOTES:
- DISTURBED AREAS NOT SHOWING EROSION MAT ARE TO BE SEEDED AND MULCHED.
- ALL CONTOURS DISPLAYED ARE EXISTING CONDITIONS

PROJECT NO: 1706-00-74	HWY: STH 11	COUNTY: GRANT	EROSION CONTROL STAGE 1	SHEET 16	E

2

EXISTING PIPE TO BE REINSTALLED DURING STAGE 1 IN TEMPORARY DITCH LINE

EXISTING PIPE TO BE REMOVED DURING STAGE 1

TLE

R/W

SLOPE INTERCEPT FOR TEMPORARY LANE WIDENING

240+75.00

241+00 242+00 243+00 244+00 245+00 246+00 247+00 248+00

248+30.00

105+00RA 106+00RA 107+00RA 108+00RA 109+00RA 110+00RA

1+00A 2+00A 3+00A 4+00A

CULVERT PIPE
CPRC HORIZONTAL ELLIPTICAL
CLASS HE-IV 19X30-INCH

CULVERT PIPE
CPRC CLASS-IV 18-INCH

SILT FENCE RELIEF REQ'D. SEE DETAILS.

SLOPE INTERCEPT

NOTES:
- DISTURBED AREAS NOT SHOWING EROSION MAT ARE TO BE SEEDED AND MULCHED.
- ALL CONTOURS DISPLAYED ARE EXISTING CONDITIONS

ROCK BAGS
CULVERT PIPE CHECKS
DIRECTION OF DRAINAGE FLOW
EROSION MAT CLASS I TYPE B
INLET PROTECTION TYPE A
RIPRAP
SILT FENCE
TEMPORARY DITCH CHECKS

SCALE, FEET 0 25 50

2

PROJECT NO: 1706-00-74	HWY: STH 11	COUNTY: GRANT	EROSION CONTROL STAGE 1	SHEET 17	E

2

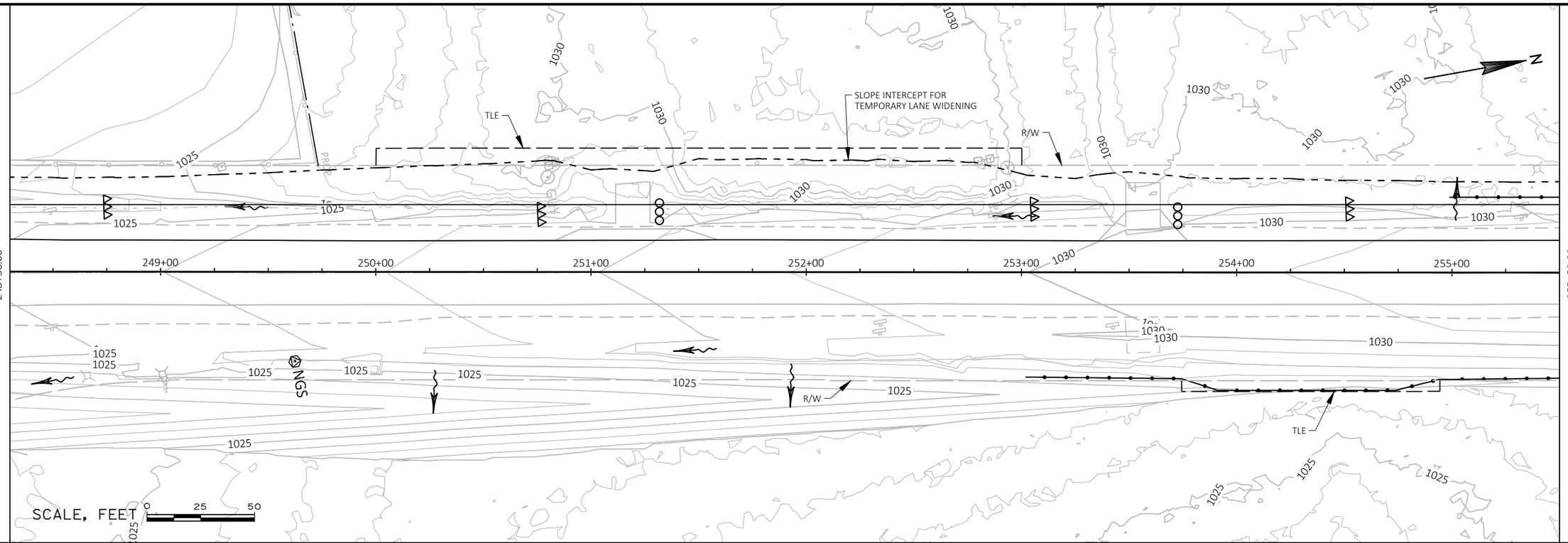

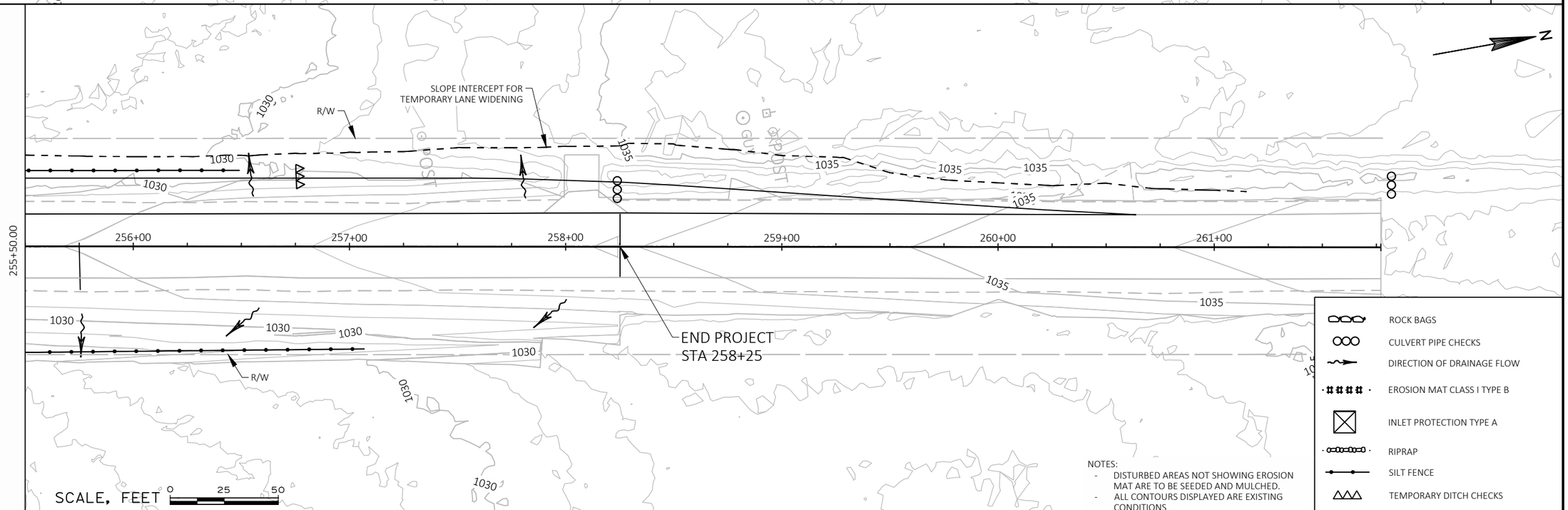

NOTES:
- DISTURBED AREAS NOT SHOWING EROSION MAT ARE TO BE SEEDED AND MULCHED.
- ALL CONTOURS DISPLAYED ARE EXISTING CONDITIONS

ROCK BAGS
CULVERT PIPE CHECKS
DIRECTION OF DRAINAGE FLOW
EROSION MAT CLASS I TYPE B
INLET PROTECTION TYPE A
RIPRAP
SILT FENCE
TEMPORARY DITCH CHECKS

PROJECT NO: 1706-00-74	HWY: STH 11	COUNTY: GRANT	EROSION CONTROL STAGE 1	SHEET 18	E

2

TLE
EXISTING PIPE REMOVED DURING STAGE 1
R/W
SLOPE INTERCEPT FOR TEMPORARY LANE WIDENING
R/W
N
240+75.00
241+00
242+00
243+00
244+00
245+00
246+00
247+00
248+00
248+30.00
1+00A
105+00RA
106+00RA
107+00RA
108+00RA
109+00RA
110+00RA
CONTRACTOR TO DIVERT WATER ACROSS RAMP DURING STAGE 2
CULVERT PIPE
CPRC HORIZONTAL ELLIPTICAL
CLASS HE-IV 19X30-INCH
R/W
CULVERT PIPE
SSPRC CLASS-IV 18-INCH
2+00A
SLOPE INTERCEPT
SILT FENCE RELIEF REQ'D. SEE DETAILS.
CONTRACTOR TO DIVERT WATER ACROSS STH 11 DURING STAGE 2
3+00A
SILT FENCE RELIEF REQ'D. SEE DETAILS.
R/W
SLOPE INTERCEPT
4+00A
SCALE, FEET 0 25 50

NOTES:
- DISTURBED AREAS NOT SHOWING EROSION MAT ARE TO BE SEEDED AND MULCHED.
- ALL CONTOURS DISPLAYED ARE EXISTING CONDITIONS

ROCK BAGS
CULVERT PIPE CHECKS
DIRECTION OF DRAINAGE FLOW
EROSION MAT CLASS I TYPE B
INLET PROTECTION TYPE A
RIPRAP
SILT FENCE
TEMPORARY DITCH CHECKS

PROJECT NO: 1706-00-74	HWY: STH 11	COUNTY: GRANT	EROSION CONTROL STAGE 2	SHEET 19	E

2

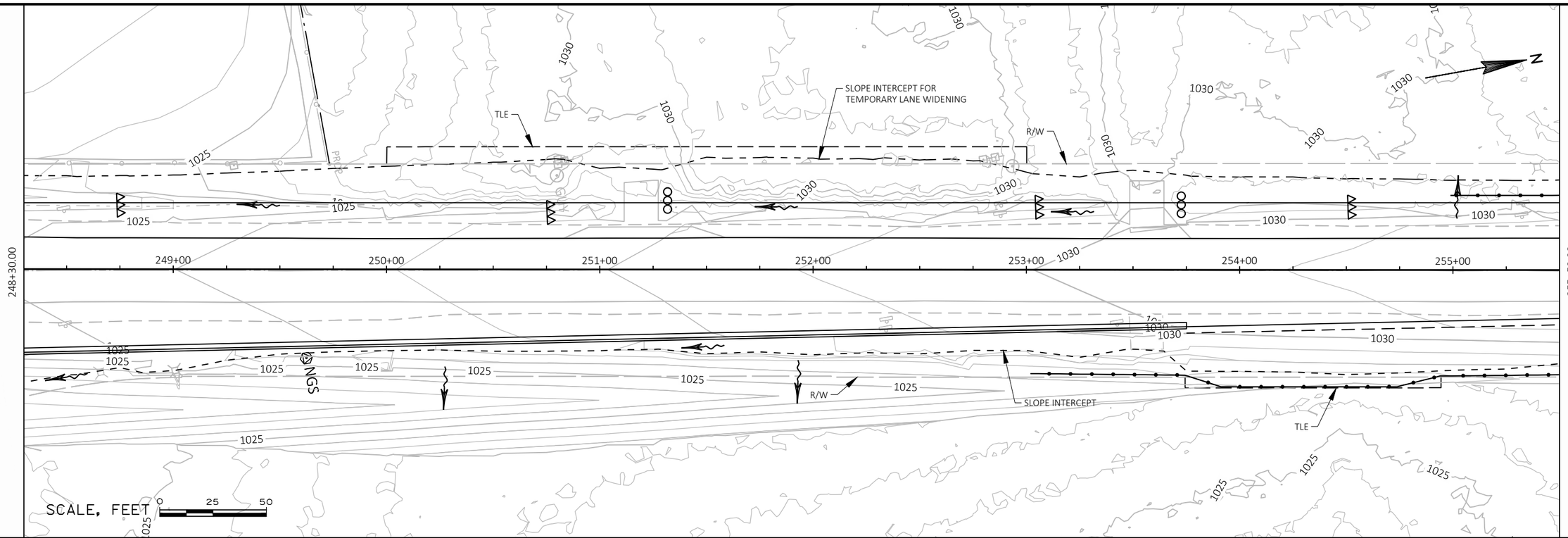

2

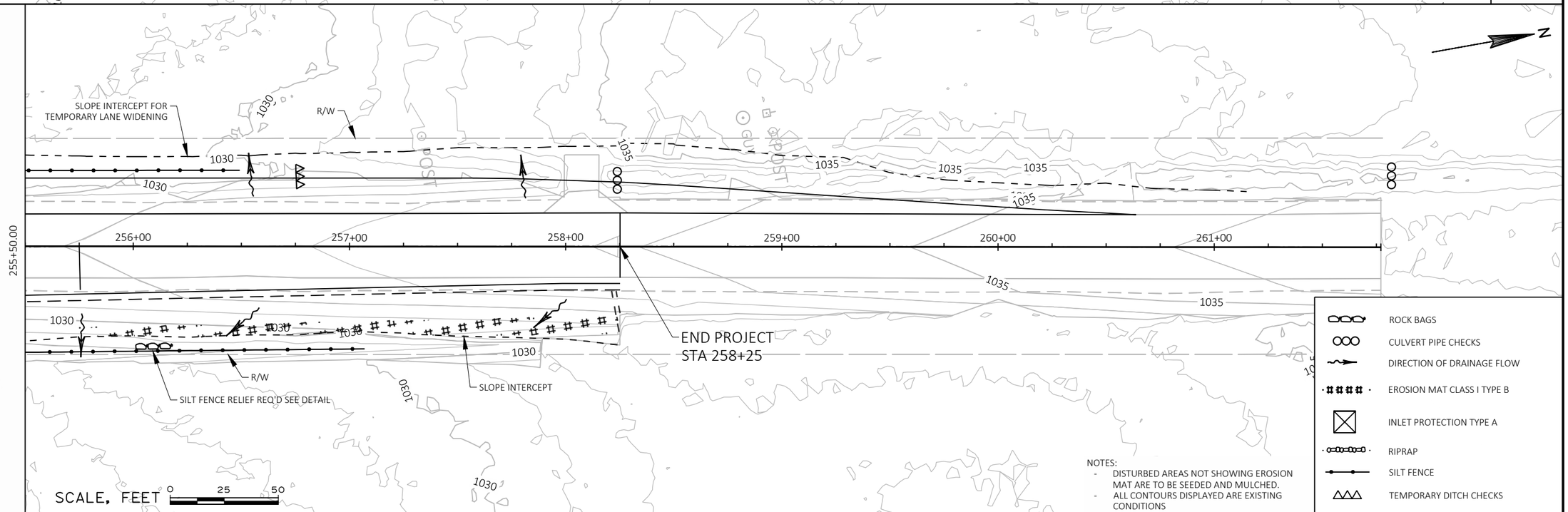

NOTES:
- DISTURBED AREAS NOT SHOWING EROSION MAT ARE TO BE SEEDED AND MULCHED.
- ALL CONTOURS DISPLAYED ARE EXISTING CONDITIONS

ROCK BAGS
CULVERT PIPE CHECKS
DIRECTION OF DRAINAGE FLOW
EROSION MAT CLASS I TYPE B
INLET PROTECTION TYPE A
RIPRAP
SILT FENCE
TEMPORARY DITCH CHECKS

PROJECT NO: 1706-00-74	HWY: STH 11	COUNTY: GRANT	EROSION CONTROL STAGE 2	SHEET 20	E

2

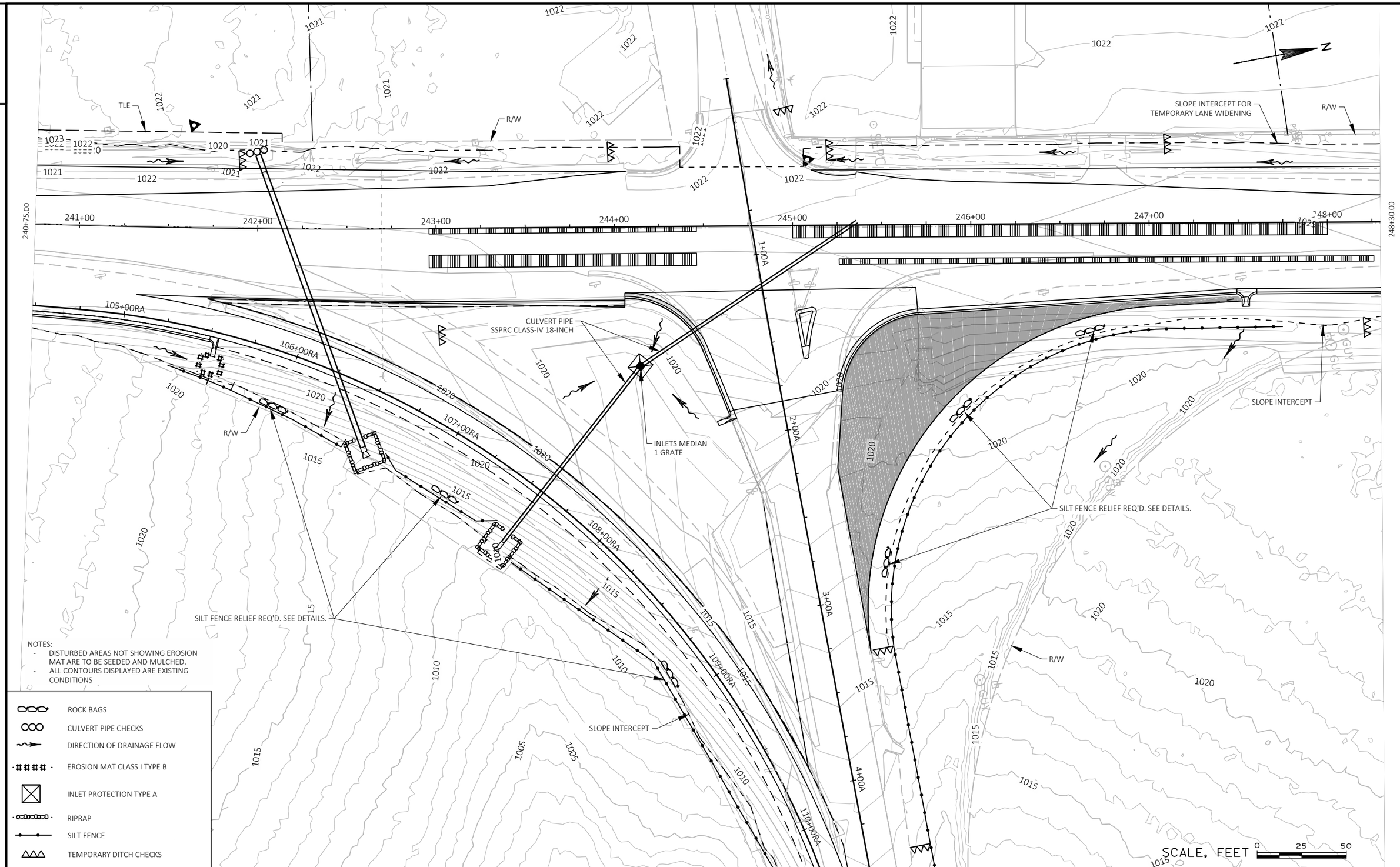

NOTES:
- DISTURBED AREAS NOT SHOWING EROSION MAT ARE TO BE SEEDED AND MULCHED.
- ALL CONTOURS DISPLAYED ARE EXISTING CONDITIONS

ROCK BAGS
CULVERT PIPE CHECKS
DIRECTION OF DRAINAGE FLOW
EROSION MAT CLASS I TYPE B
INLET PROTECTION TYPE A
RIPRAP
SILT FENCE
TEMPORARY DITCH CHECKS

PROJECT NO: 1706-00-74	HWY: STH 11	COUNTY: GRANT	EROSION CONTROL STAGE 3	SHEET 21	E

FILE NAME : W:\7390_05\CAD\!1706-00-04\SHEETSPLAN\022003_EC.DWG
LAYOUT NAME - 2
PLOT DATE : 10/22/2020 12:48 PM
PLOT BY : KAKACEK, JOHN
PLOT NAME :
PLOT SCALE : 1 IN:50 FT
WISDOT/CADDS SHEET 42

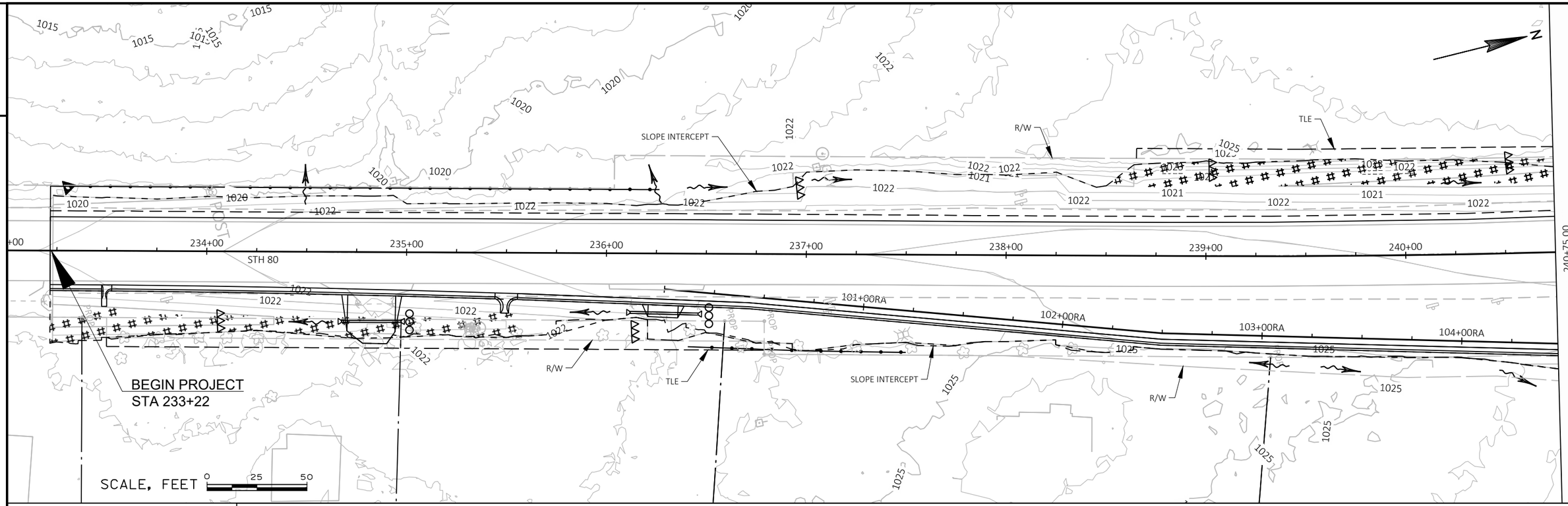

ROCK BAGS

CULVERT PIPE CHECKS

DIRECTION OF DRAINAGE FLOW

EROSION MAT CLASS I TYPE B

INLET PROTECTION TYPE A

RIPRAP

SILT FENCE

TEMPORARY DITCH CHECKS

NOTES:
- DISTURBED AREAS NOT SHOWING EROSION MAT ARE TO BE SEEDED AND MULCHED.
- ALL CONTOURS DISPLAYED ARE EXISTING CONDITIONS

PROJECT NO: 1706-00-74	HWY: STH 11	COUNTY: GRANT	EROSION CONTROL STAGE 4	SHEET 22	E

2

CULVERT PIPE
CPRC HORIZONTAL ELLIPTICAL
CLASS HE-IV 19X30-INCH

SLOPE INTERCEPT

TLE

PROPOSED
CULVERT PIPE

R/W

INLETS MEDIAN 1 GRATE

CULVERT PIPE
SSPRC CLASS-IV 18-INCH

SLOPE INTERCEPT

R/W

N

240+75.00

241+00 242+00 243+00 244+00 245+00 246+00 247+00 248+00

248+30.00

1+00A 2+00A 3+00A 4+00A

105+00RA 106+00RA 107+00RA 108+00RA 109+00RA 110+00RA

R/W

SILT FENCE RELIEF REQ'D. SEE DETAILS.

SLOPE INTERCEPT

SILT FENCE RELIEF REQ'D. SEE DETAILS.

SLOPE INTERCEPT

R/W

GUY

NOTES:
- DISTURBED AREAS NOT SHOWING EROSION MAT ARE TO BE SEEDED AND MULCHED.
- ALL CONTOURS DISPLAYED ARE EXISTING CONDITIONS

ROCK BAGS
CULVERT PIPE CHECKS
DIRECTION OF DRAINAGE FLOW
EROSION MAT CLASS I TYPE B
INLET PROTECTION TYPE A
RIPRAP
SILT FENCE
TEMPORARY DITCH CHECKS

SCALE, FEET 0 25 50

PROJECT NO: 1706-00-74	HWY: STH 11	COUNTY: GRANT	EROSION CONTROL STAGE 4	SHEET 23	E

FILE NAME : W:\7390_05\CAD\!1706-00-04\SHEETSPLAN\022004_EC.DWG
LAYOUT NAME - 2
PLOT DATE : 12/1/2020 8:17 AM
PLOT BY : KAKACEK, JOHN
PLOT NAME :
PLOT SCALE : 1 IN:50 FT
WISDOT/CADDS SHEET 42

2

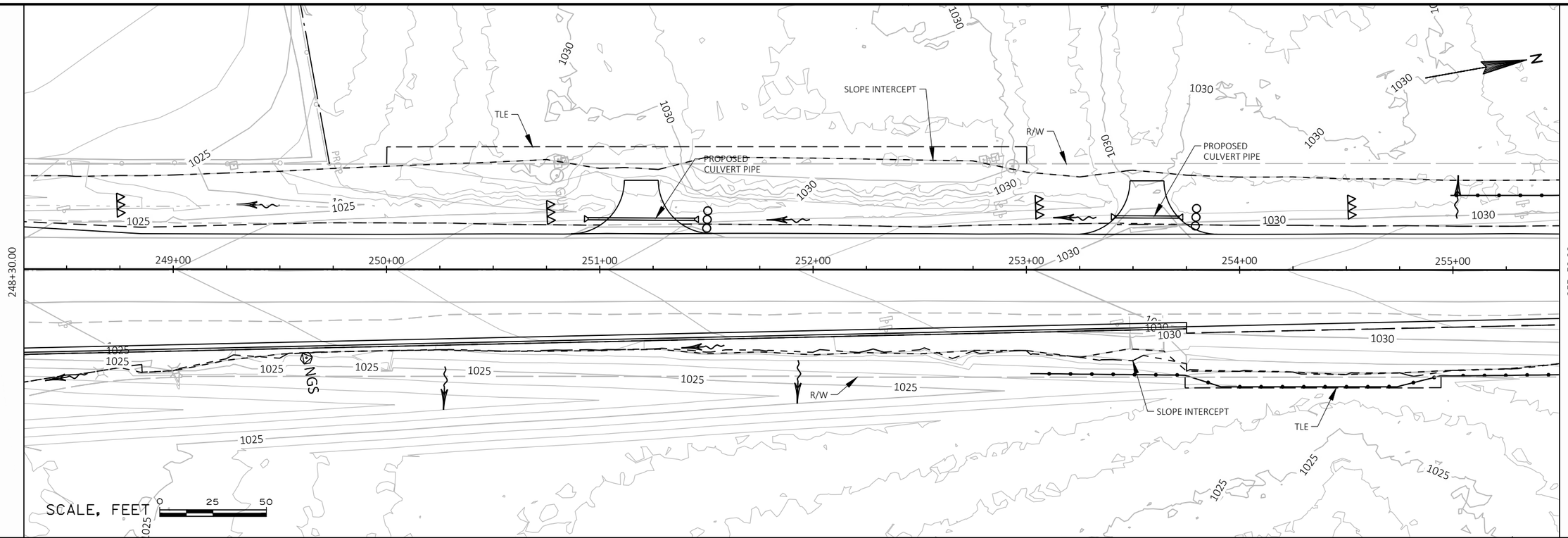

2

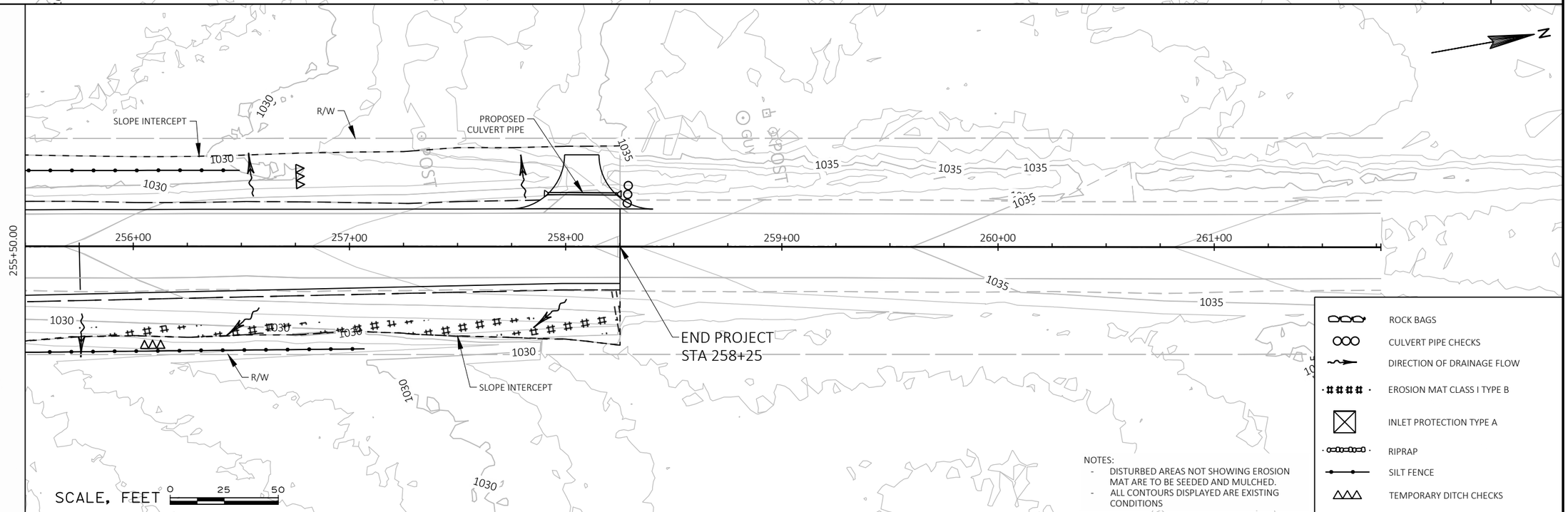

NOTES:
- DISTURBED AREAS NOT SHOWING EROSION MAT ARE TO BE SEEDED AND MULCHED.
- ALL CONTOURS DISPLAYED ARE EXISTING CONDITIONS

ROCK BAGS	
CULVERT PIPE CHECKS	
DIRECTION OF DRAINAGE FLOW	
EROSION MAT CLASS I TYPE B	
INLET PROTECTION TYPE A	
RIPRAP	
SILT FENCE	
TEMPORARY DITCH CHECKS	

PROJECT NO: 1706-00-74	HWY: STH 11	COUNTY: GRANT	EROSION CONTROL STAGE 4	SHEET 24	E

2

EXISTING SIGN ON WOOD POST(S)

PROPOSED SIGN ON WOOD POST(S)

XXX SIGN NUMBER

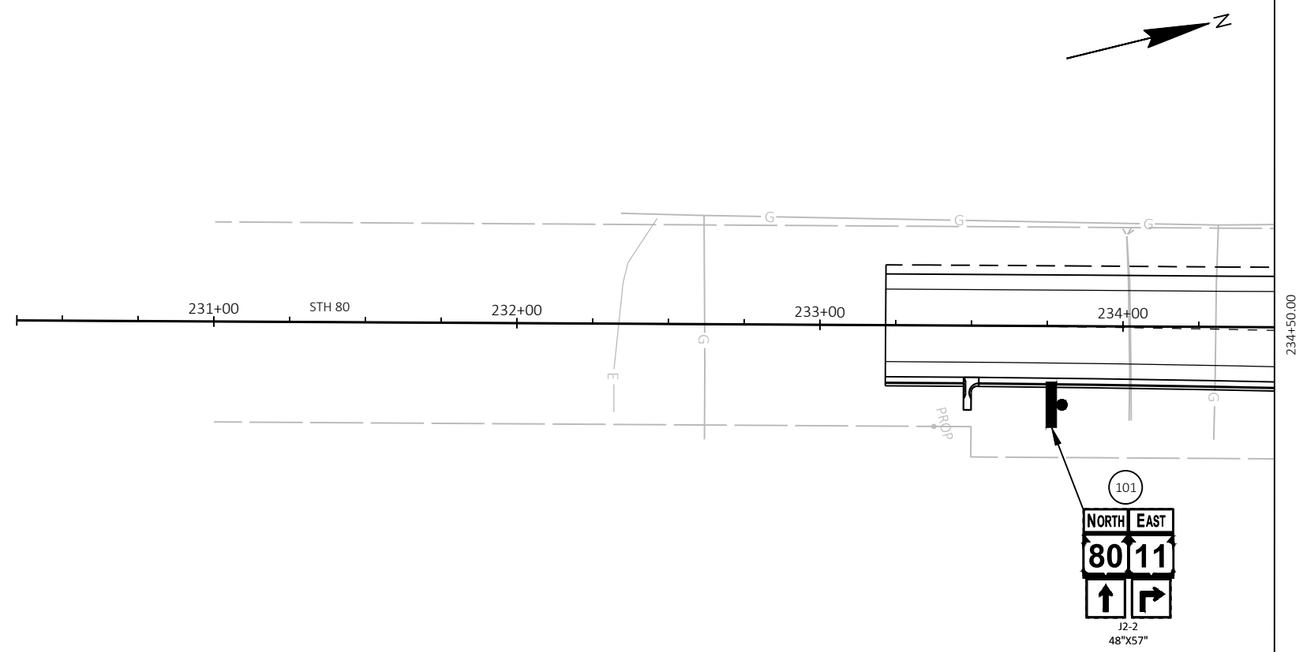

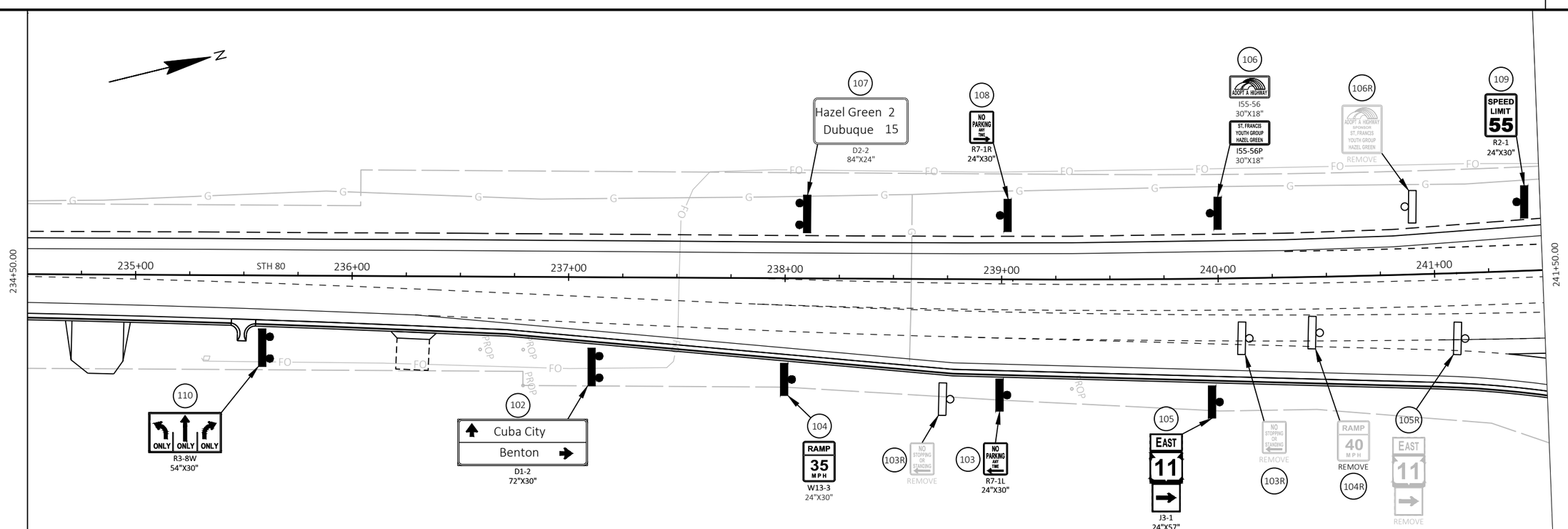

PROJECT NO: 1706-00-74	HWY: STH 11	COUNTY: GRANT	PERMANENT SIGNING	SHEET 25	E

FILE NAME : W:\7390_05\CAD\!1706-00-04\SHEETSPLAN\023201_PS DWG
LAYOUT NAME - 1
PLOT DATE : 2/4/2020 12:10 PM
PLOT BY : KAKACEK, JOHN
PLOT NAME :
PLOT SCALE : 1 IN:50 FT

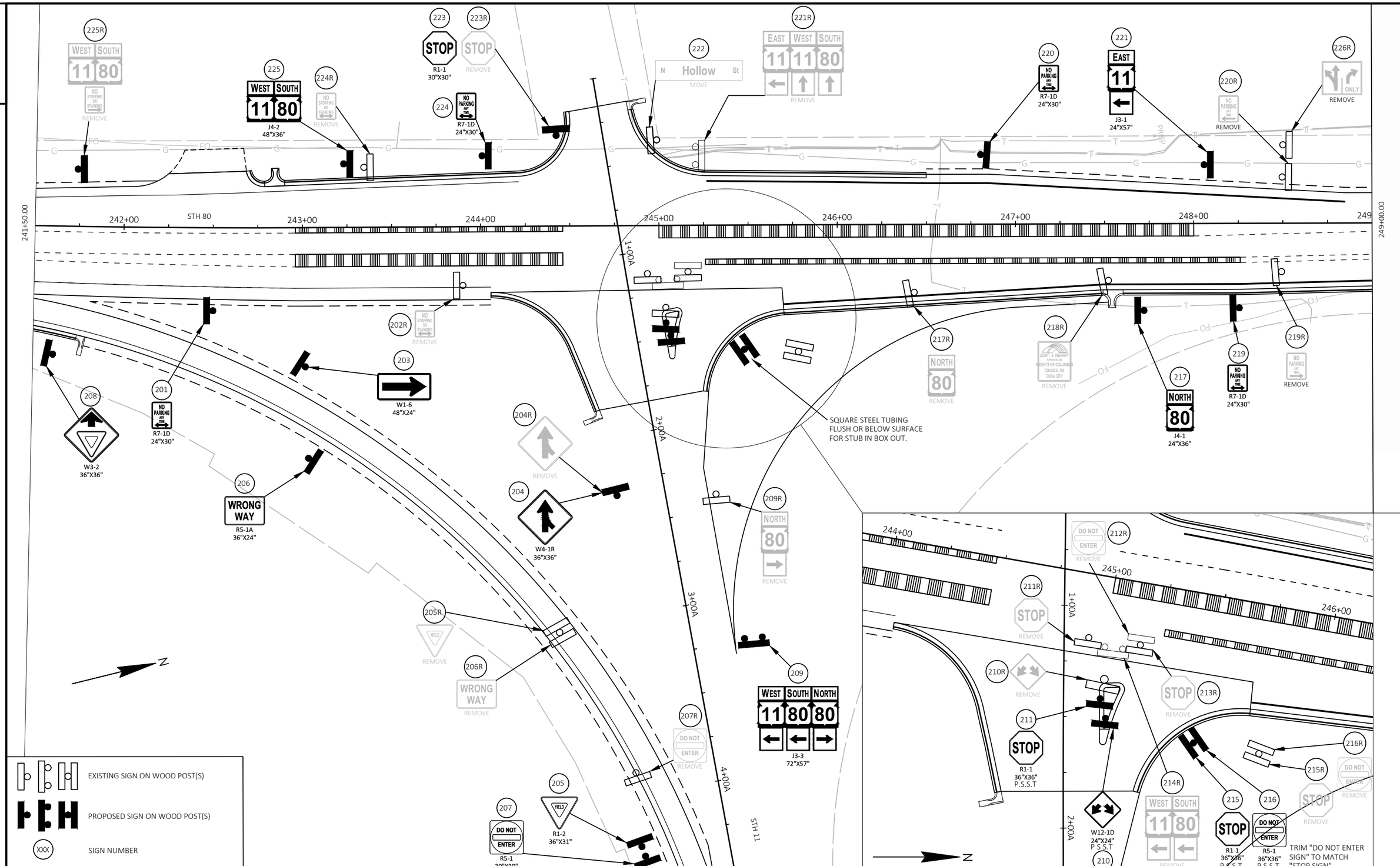

PROJECT NO: 1706-00-74	HWY: STH 11	COUNTY: GRANT	PERMANENT SIGNING	SHEET 26	E

FILE NAME : W:\7390_05\CAD\!1706-00-04\SHEETSPLAN\023201_PS DWG
LAYOUT NAME - 2
PLOT DATE : 2/4/2020 12:10 PM
PLOT BY : KAKACEK, JOHN
PLOT NAME :
PLOT SCALE : ##########

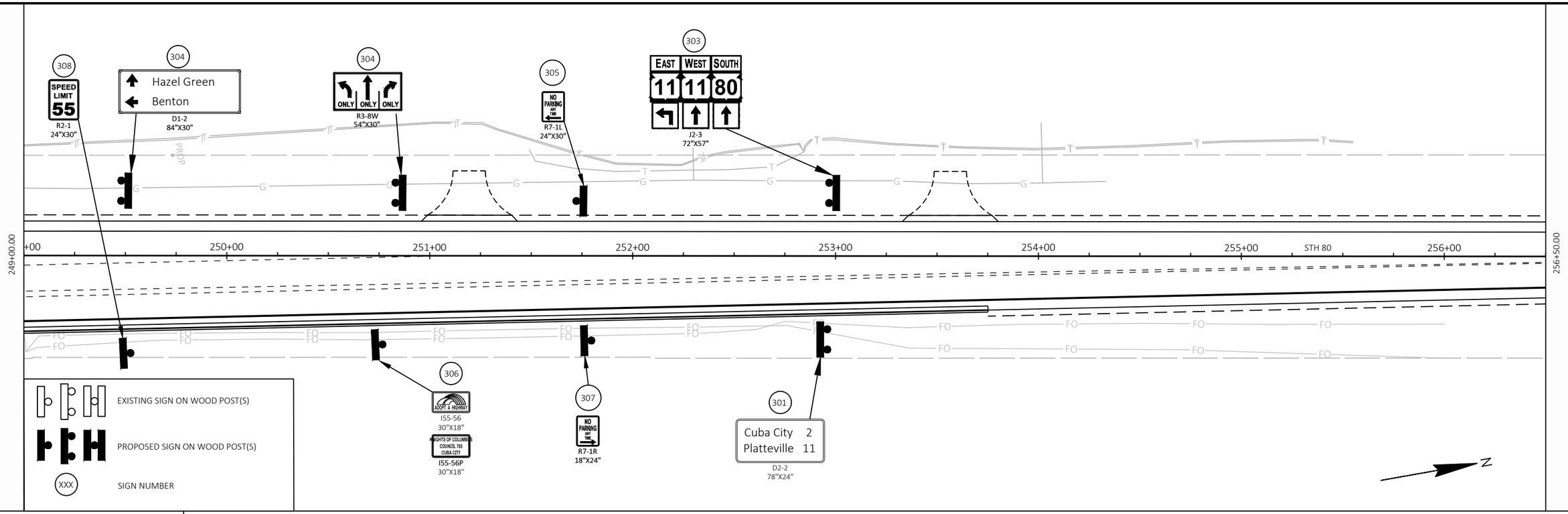

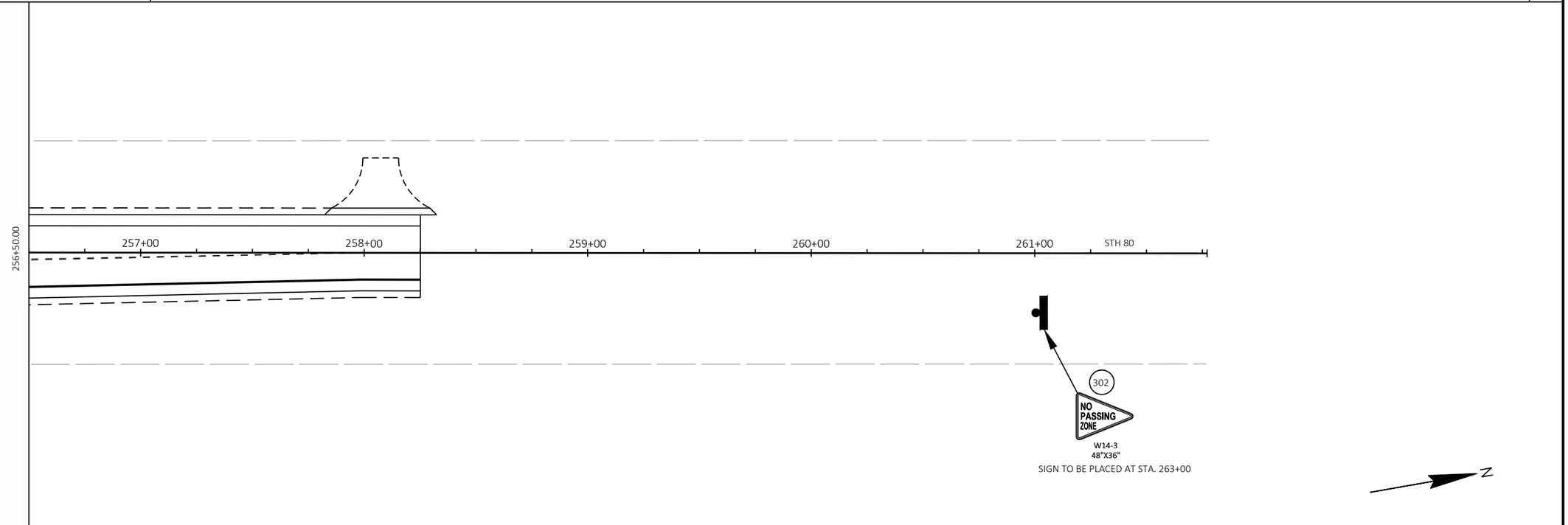

PROJECT NO: 1706-00-74	HWY: STH 11	COUNTY: GRANT	PERMANENT SIGNING	SHEET 27	E

2

MARKING ARROW EPOXY, WHITE

ONLY MARKING WORDS EPOXY, WHITE

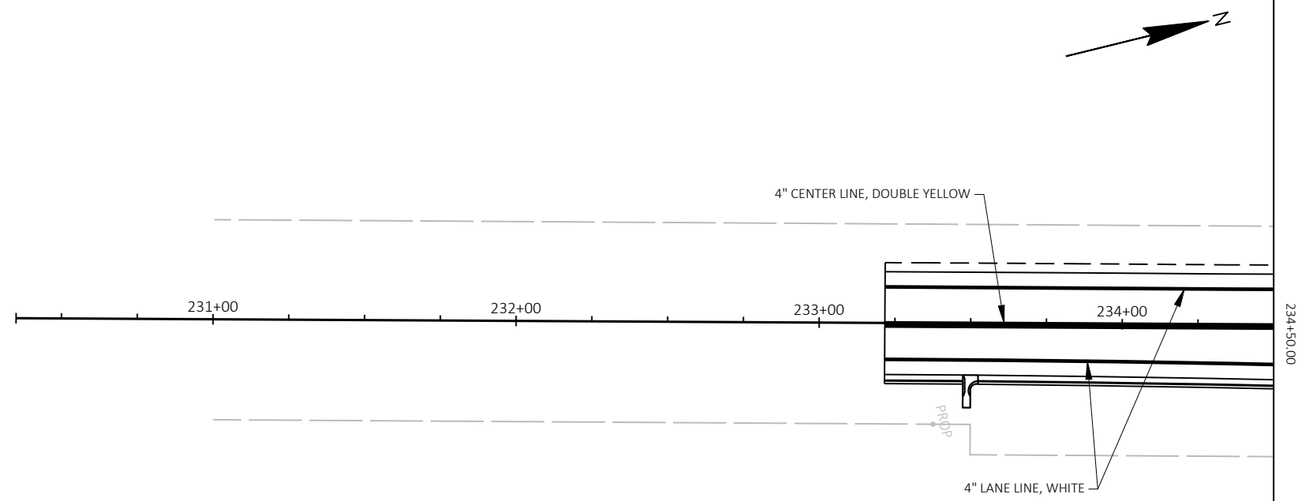

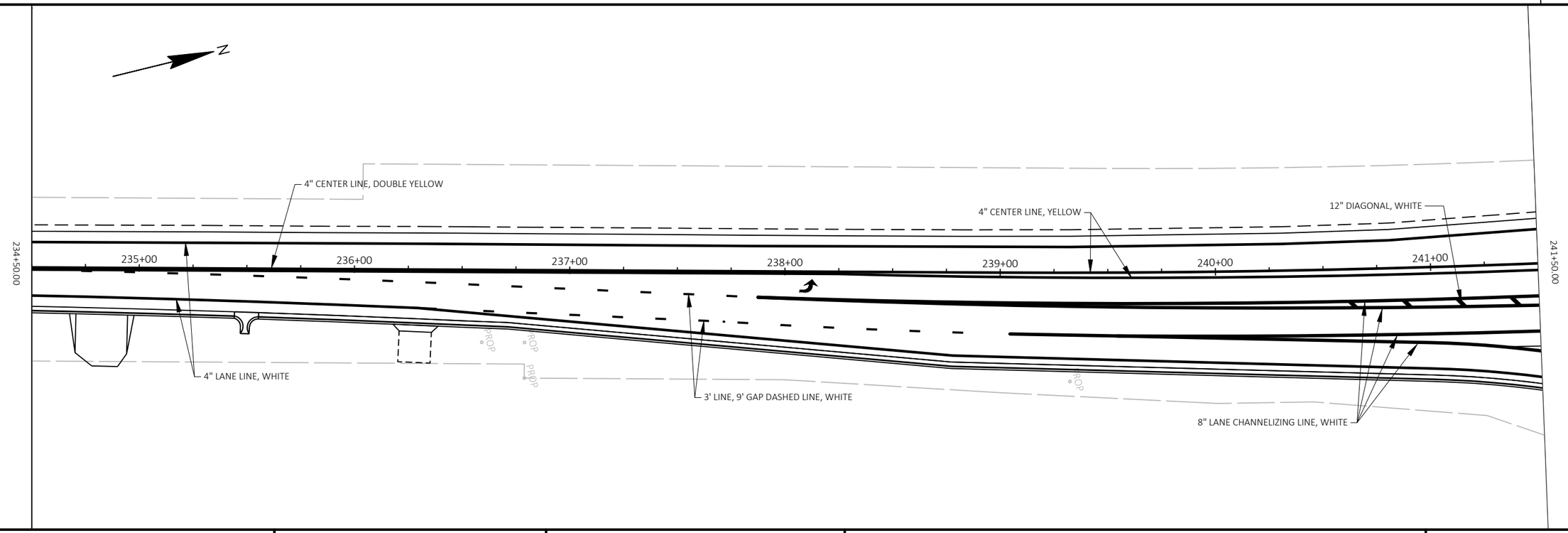

2

PROJECT NO: 1706-00-74	HWY: STH 11	COUNTY: GRANT	PAVEMENT MARKING	SHEET 28	E

FILE NAME : W:\7390_05\CAD\!1706-00-04\SHEETSPLAN\024501_PM DWG
LAYOUT NAME - 1

PLOT DATE : 1/28/2020 3:47 PM PLOT BY : METRY, ALEXANDER PLOT NAME : PLOT SCALE : 1 IN:50 FT

WISDOT/CADDS SHEET 44

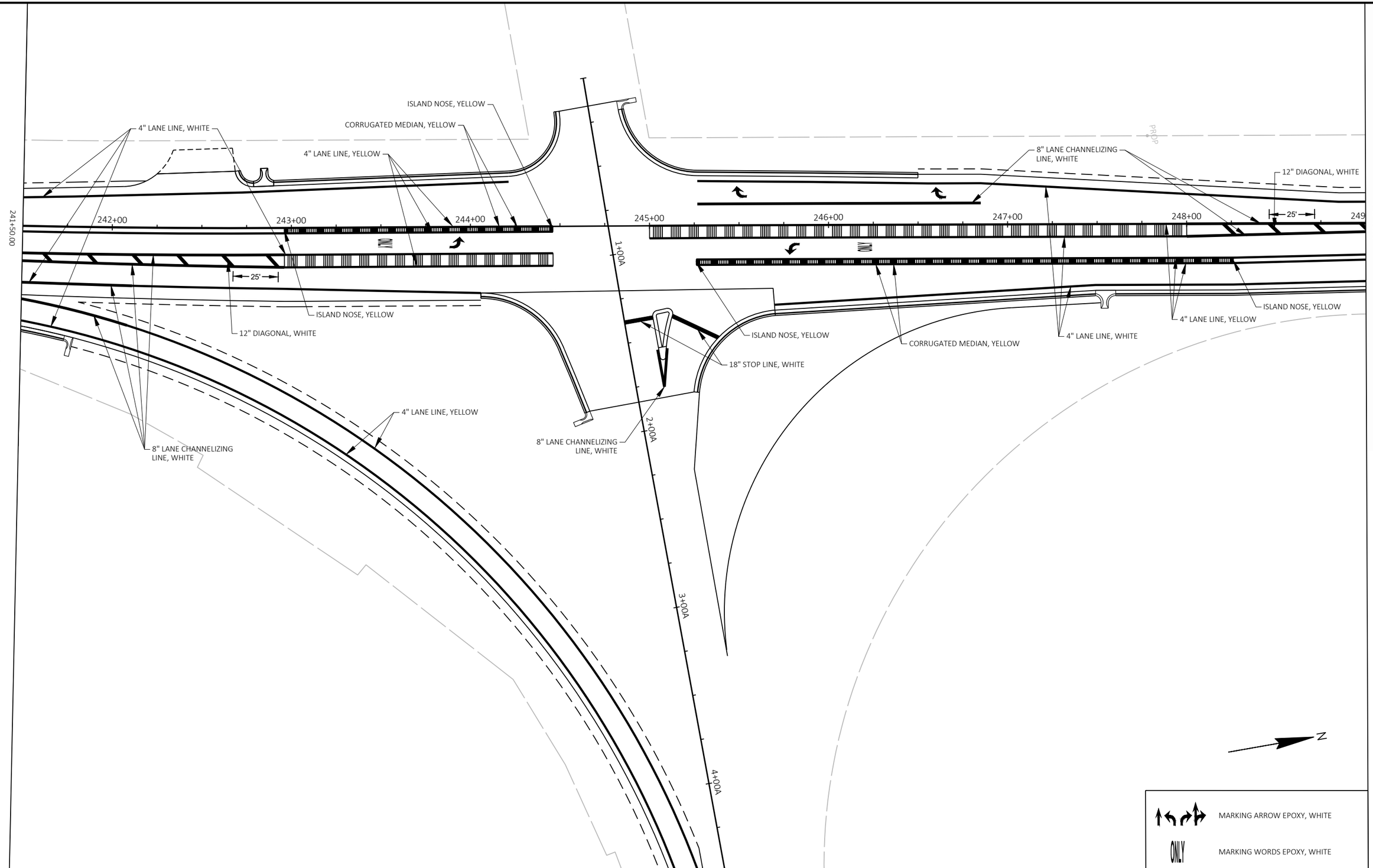

PROJECT NO: 1706-00-74	HWY: STH 11	COUNTY: GRANT	PAVEMENT MARKING	SHEET 29	E

2

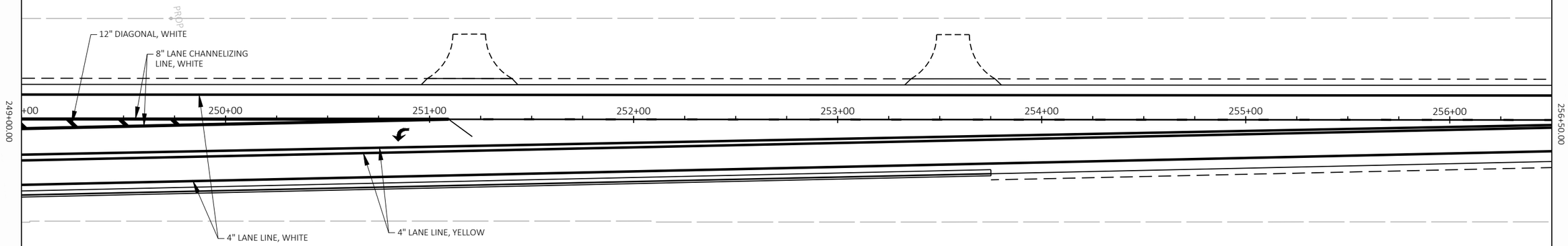

MARKING ARROW EPOXY, WHITE

ONLY MARKING WORDS EPOXY, WHITE

N

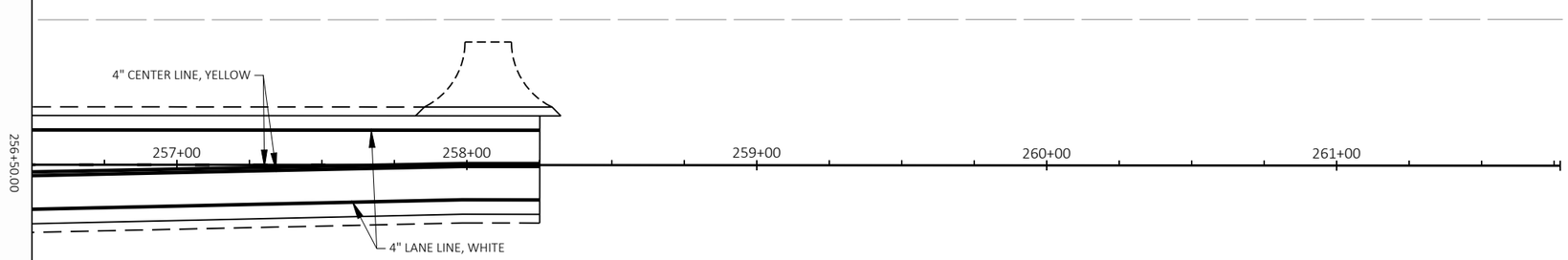

N

PROJECT NO: 1706-00-74	HWY: STH 11	COUNTY: GRANT	PAVEMENT MARKING	SHEET 30	E

FILE NAME : W:\7390_05\CAD\!1706-00-04\SHEETSPLAN\024501_PM DWG
LAYOUT NAME - 3
PLOT DATE : 1/28/2020 3:48 PM
PLOT BY : METRY, ALEXANDER
PLOT NAME :
PLOT SCALE : ##########

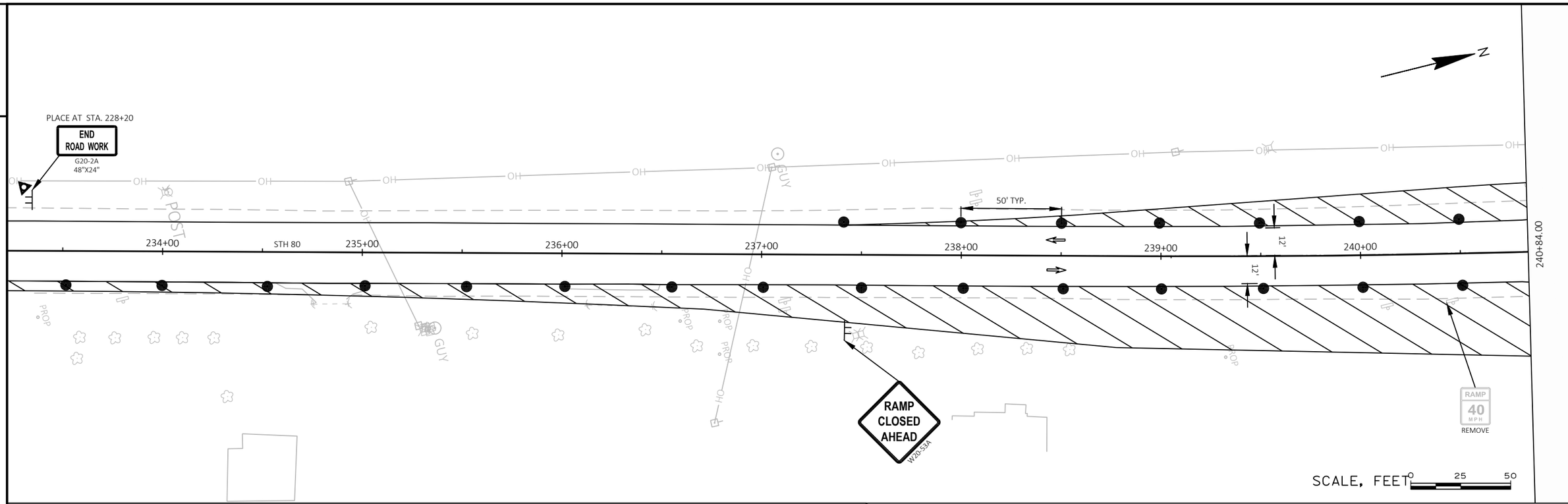

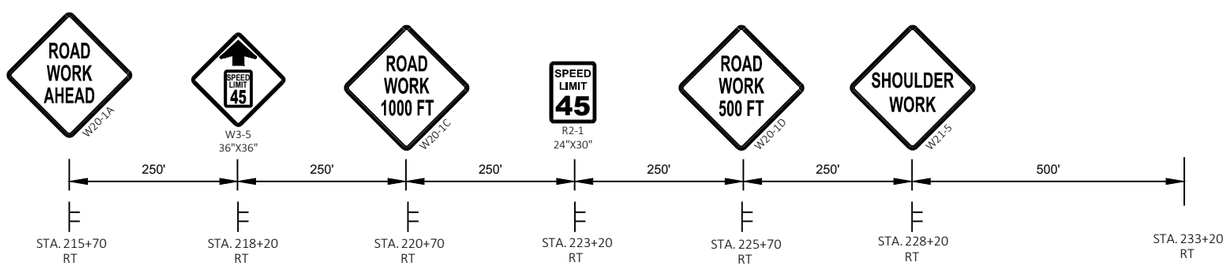

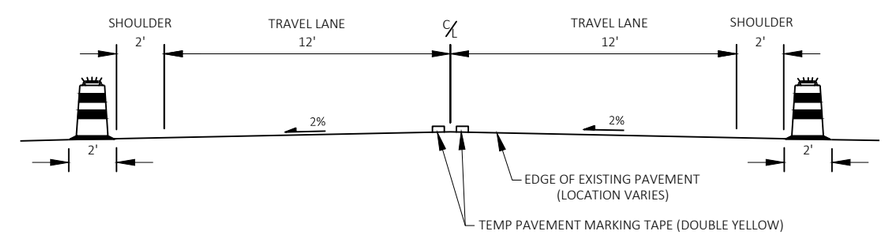

CROSS SECTION DETAIL- TRAFFIC CONTROL

LEGEND

- TYPE III BARRICADE
- TYPE III BARRICADE WITH ATTACHED SIGN
- TRAFFIC CONTROL DRUM
- TRAFFIC CONTROL DRUM WITH TYPE C STEADY BURN LIGHT
- DIRECTION OF TRAFFIC
- NEW SINGLE SIGN ON SUPPORT(S) (P = PERMANENT SIGN)
- SIGN ON TEMPORARY SUPPORT
- WORK AREA
- AREA CLOSED TO TRAFFIC
- TEMPORARY ASPHALT

PROJECT NO: 1706-00-74	HWY: STH 11	COUNTY: GRANT	TRAFFIC CONTROL - STAGE 1	SHEET 31	E

ROAD WORK AHEAD
W20-1A

500' FROM STH 11 / STH 80
INTERSECTION - RT
ON TEMPORARY SIGN SUPPORT

PIPE TO BE INSTALLED
UNDER STAGE 1 CLOSURES

50' TYP.

25'

240+84.00

241+00

242+00

STH 80

243+00

244+00

245+00

246+00

247+00

248+00

248+21.00

25'

EAST
11

MOVE TO STA 243+75 RT FOR
STAGE 1

STAGE 1 CONSTRUCTION AREA

STH 11

TYPE III BARRICADE

* REFER TO SDD 15C04 FOR ADVANCED
WARNING SIGN LOCATIONS FOR WB STH 11.

LEGEND

- TYPE III BARRICADE
- TYPE III BARRICADE WITH ATTACHED SIGN
- TRAFFIC CONTROL DRUM
- TRAFFIC CONTROL DRUM WITH TYPE C STEADY BURN LIGHT
- DIRECTION OF TRAFFIC
- NEW SINGLE SIGN ON SUPPORT(S) (P = PERMANENT SIGN)
- SIGN ON TEMPORARY SUPPORT
- WORK AREA
- AREA CLOSED TO TRAFFIC
- TEMPORARY ASPHALT

SCALE, FEET 0 25 50

PROJECT NO: 1706-00-74	HWY: STH 11	COUNTY: GRANT	TRAFFIC CONTROL - STAGE 1	SHEET 32	E

2

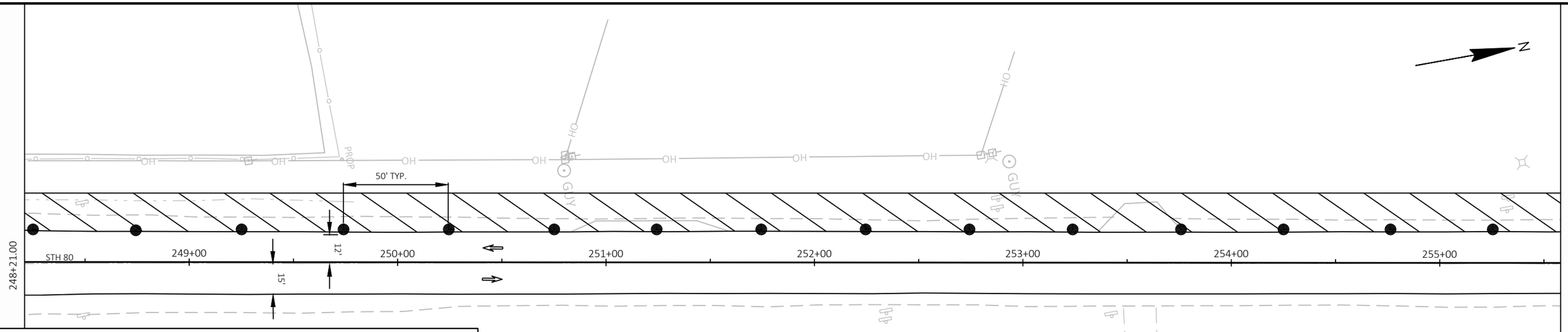

LEGEND

- TYPE III BARRICADE
- TYPE III BARRICADE WITH ATTACHED SIGN
- TRAFFIC CONTROL DRUM
- TRAFFIC CONTROL DRUM WITH TYPE C STEADY BURN LIGHT
- DIRECTION OF TRAFFIC
- NEW SINGLE SIGN ON SUPPORT(S) (P = PERMANENT SIGN)
- SIGN ON TEMPORARY SUPPORT
- WORK AREA
- AREA CLOSED TO TRAFFIC
- TEMPORARY ASPHALT

SCALE, FEET 0 25 50

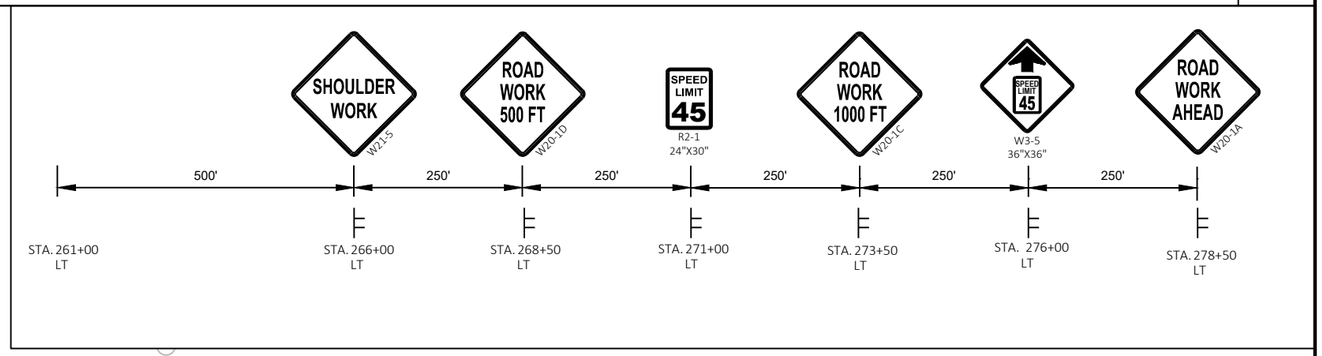

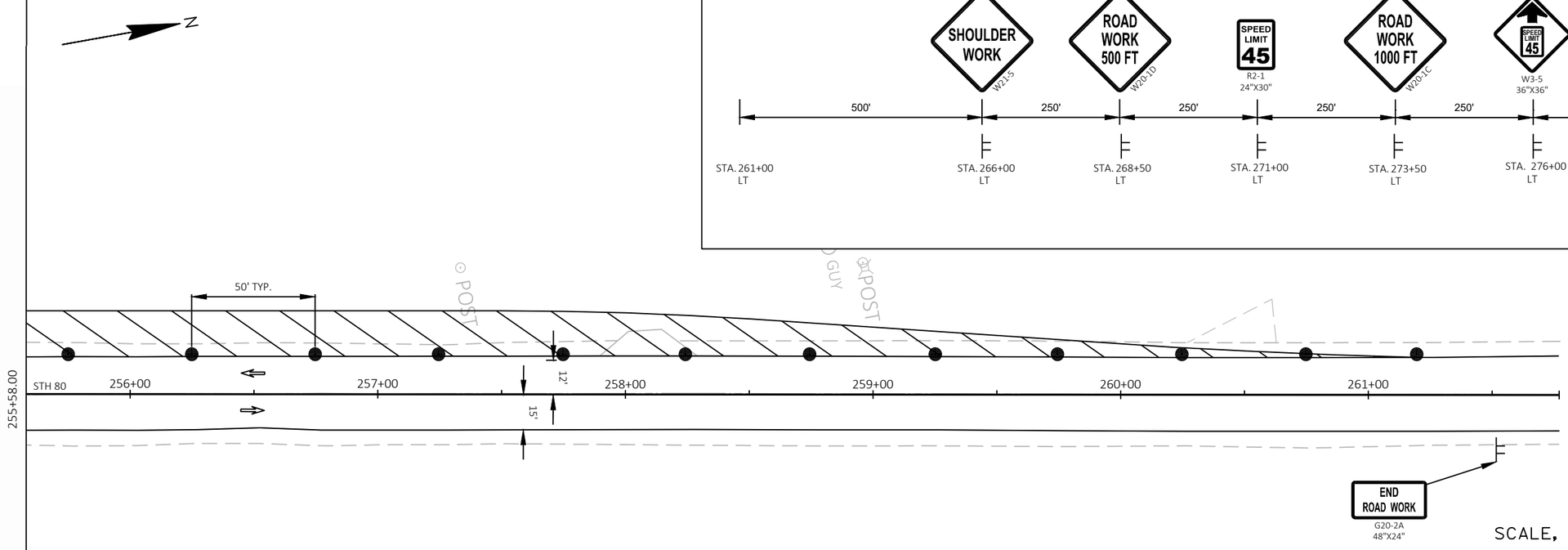

SCALE, FEET 0 25 50

PROJECT NO: 1706-00-74	HWY: STH 11	COUNTY: GRANT	TRAFFIC CONTROL - STAGE 1	SHEET 33	E

FILE NAME : W:\7390_05\CAD\!1706-00-04\SHEETSPLAN\026001_S1 DWG
LAYOUT NAME - 3
PLOT DATE : 10/13/2020 8:41 AM PLOT BY : KAKACEK, JOHN PLOT NAME : PLOT SCALE : ##########

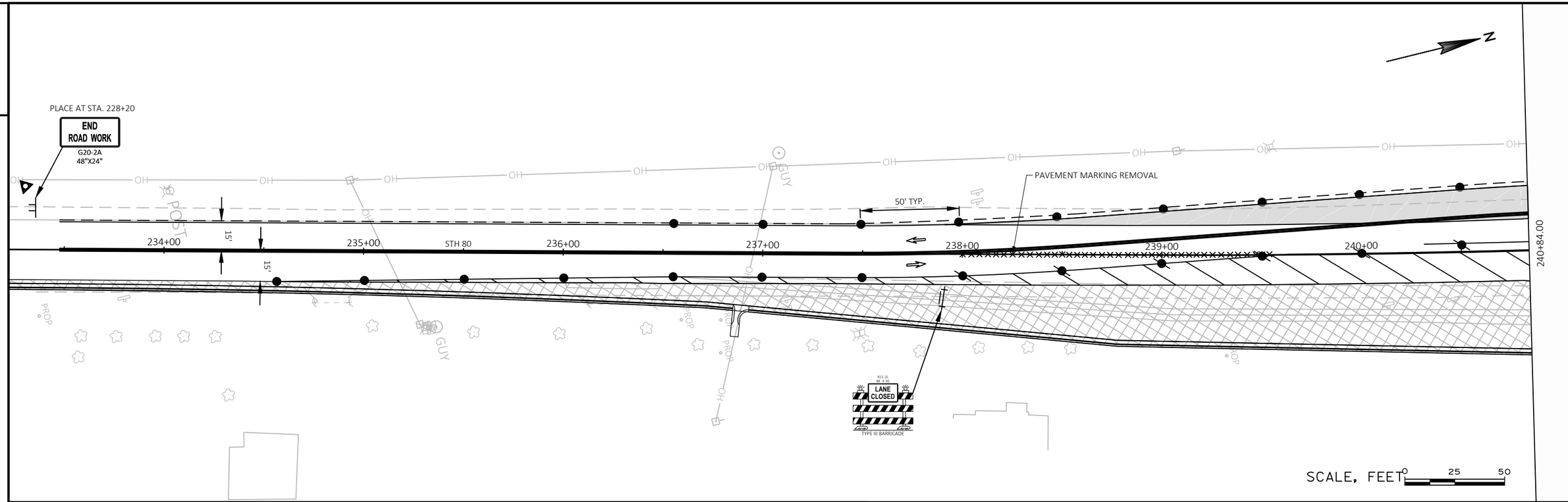

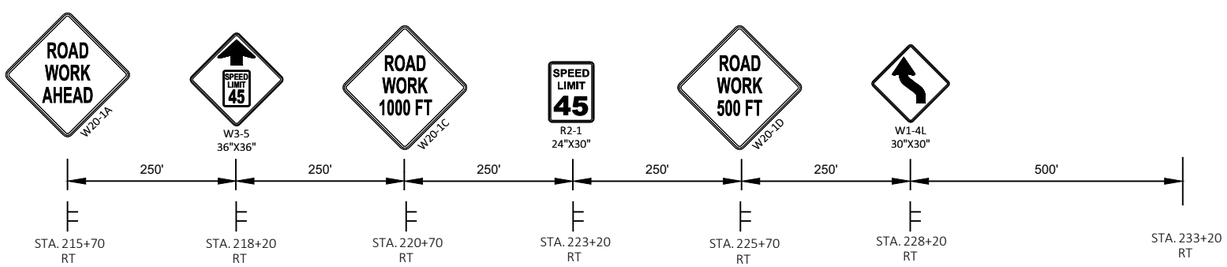

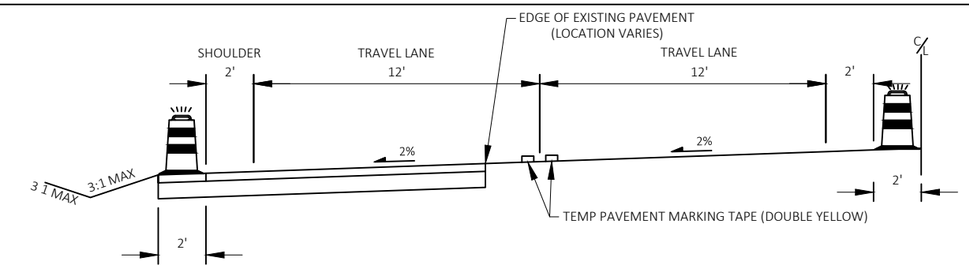

CROSS SECTION DETAIL- TRAFFIC CONTROL

LEGEND

- TYPE III BARRICADE
- TYPE III BARRICADE WITH ATTACHED SIGN
- TRAFFIC CONTROL DRUM
- TRAFFIC CONTROL DRUM WITH TYPE C STEADY BURN LIGHT
- DIRECTION OF TRAFFIC
- NEW SINGLE SIGN ON SUPPORT(S) (P = PERMANENT SIGN)
- SIGN ON TEMPORARY SUPPORT
- WORK AREA
- AREA CLOSED TO TRAFFIC
- TEMPORARY ASPHALT

PROJECT NO: 1706-00-74	HWY: STH 11	COUNTY: GRANT	TRAFFIC CONTROL - STAGE 2	SHEET 34	E

2

500' FROM STH 11 / STH 80
INTERSECTION - RT
ON TEMPORARY SIGN SUPPORT

ROAD WORK AHEAD
W20-1A

W1-4L
30"X30"

STOP
R1-1
30"X30"

WEST 11
J3-1
24"X57"

EAST WEST SOUTH
11 11 80

MOVE TO STA 244+00 LT
FOR STAGE 2

24-INCH STOP BAR

TYPE III BARRICADE

50'

STH 80

240+84.00

243+00

244+00

245+00

246+00

247+00

248+00

248+21.00

25'

28'

23'

50' TYP

NORTH 80

TEMP. MOVE TO ROADWAY EDGE

STOP
R1-1
30"X30"

EAST 11
J3-1
24"X57"
MOVE TO STA 242+50 RT
FOR STAGE 2

TEMPORARY MARKING LINE REMOVABLE TAPE 4-INCH (DOUBLE YELLOW)

LANE CLOSED
TYPE III BARRICADE

TYPE III BARRICADE

TYPE III BARRICADE

STA. 5+50 RT ON
TEMPORARY SIGN
SUPPORT

W1-4L
30"X30"

* REFER TO SDD 15C04 FOR ADVANCED
WARNING SIGN LOCATIONS FOR WB STH 11.

SCALE, FEET 0 25 50

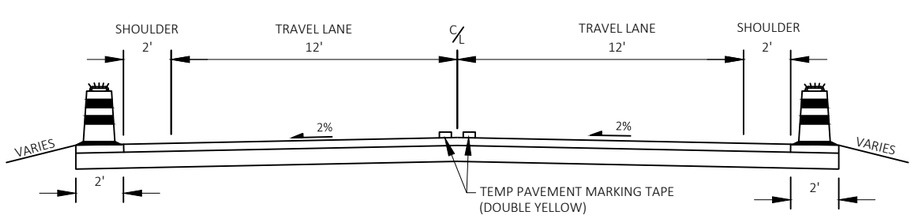

CROSS SECTION DETAIL- TRAFFIC CONTROL

LEGEND

- TYPE III BARRICADE
- TYPE III BARRICADE WITH ATTACHED SIGN
- TRAFFIC CONTROL DRUM
- TRAFFIC CONTROL DRUM WITH TYPE C STEADY BURN LIGHT
- DIRECTION OF TRAFFIC
- NEW SINGLE SIGN ON SUPPORT(S) (P = PERMANENT SIGN)
- SIGN ON TEMPORARY SUPPORT
- WORK AREA
- AREA CLOSED TO TRAFFIC
- TEMPORARY ASPHALT

PROJECT NO: 1706-00-74	HWY: STH 11	COUNTY: GRANT	TRAFFIC CONTROL - STAGE 2	SHEET 35	E

FILE NAME : W:\7390_05\CAD\!1706-00-04\SHEETSPLAN\026001_S2 DWG
LAYOUT NAME - 2
PLOT DATE : 1/28/2020 3:52 PM
PLOT BY : METRY, ALEXANDER
PLOT NAME :
PLOT SCALE : ##########

2

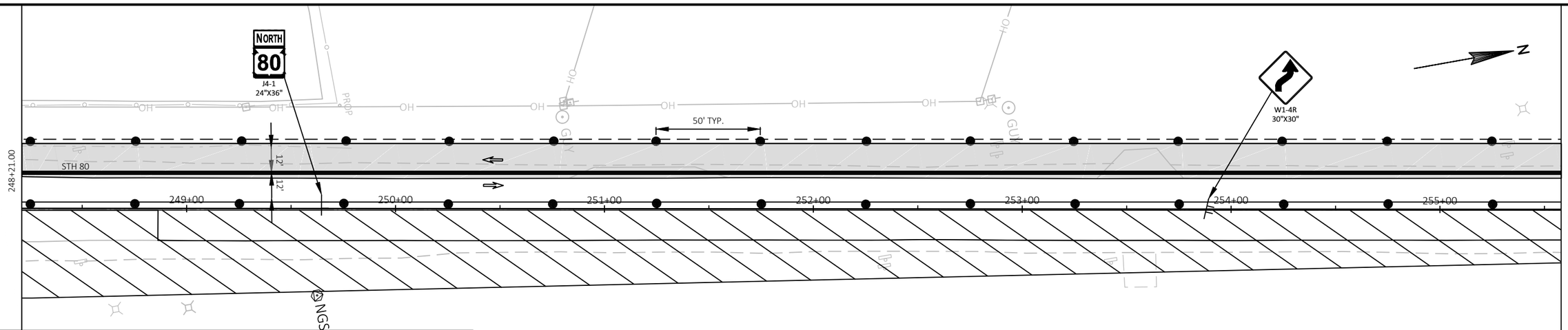

LEGEND

- TYPE III BARRICADE
- TYPE III BARRICADE WITH ATTACHED SIGN
- TRAFFIC CONTROL DRUM
- TRAFFIC CONTROL DRUM WITH TYPE C STEADY BURN LIGHT
- DIRECTION OF TRAFFIC
- NEW SINGLE SIGN ON SUPPORT(S) (P = PERMANENT SIGN)
- SIGN ON TEMPORARY SUPPORT
- WORK AREA
- AREA CLOSED TO TRAFFIC
- TEMPORARY ASPHALT

SCALE, FEET 0 25 50

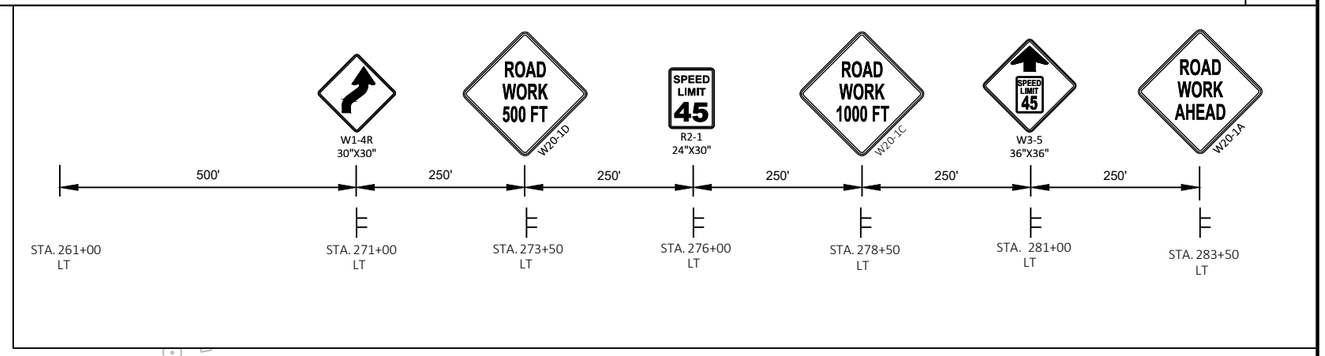

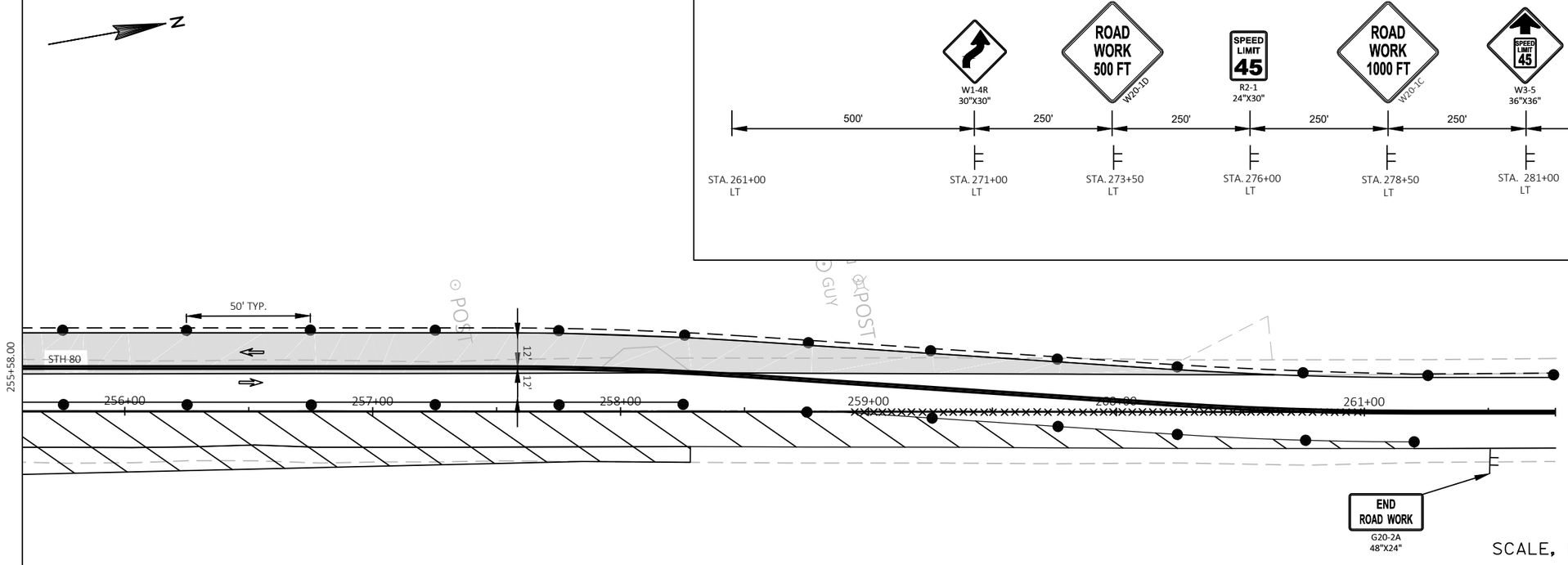

SCALE, FEET 0 25 50

2

PROJECT NO: 1706-00-74	HWY: STH 11	COUNTY: GRANT	TRAFFIC CONTROL - STAGE 2	SHEET 36	E

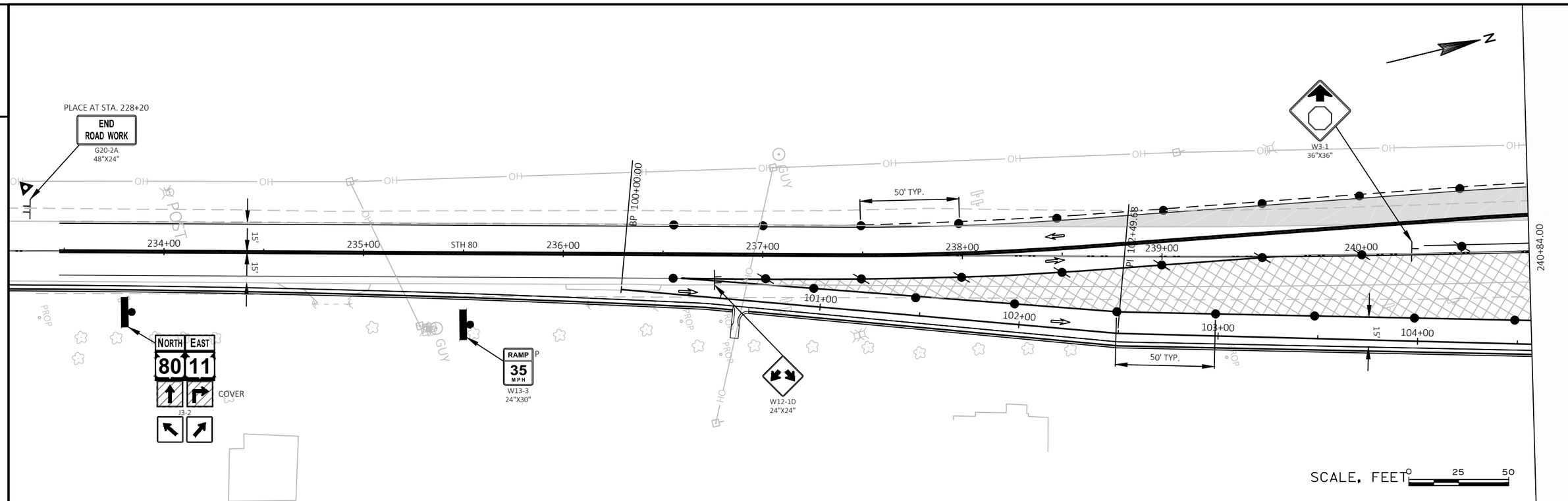

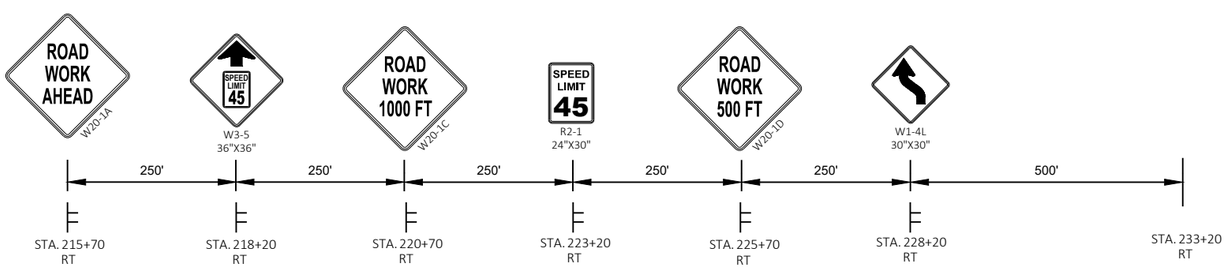

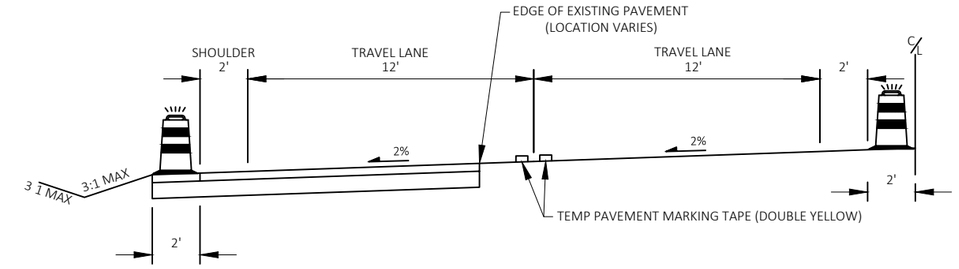

CROSS SECTION DETAIL- TRAFFIC CONTROL

LEGEND

- TYPE III BARRICADE
- TYPE III BARRICADE WITH ATTACHED SIGN
- TRAFFIC CONTROL DRUM
- TRAFFIC CONTROL DRUM WITH TYPE C STEADY BURN LIGHT
- DIRECTION OF TRAFFIC
- NEW SINGLE SIGN ON SUPPORT(S) (P = PERMANENT SIGN)
- SIGN ON TEMPORARY SUPPORT
- WORK AREA
- AREA CLOSED TO TRAFFIC
- TEMPORARY ASPHALT

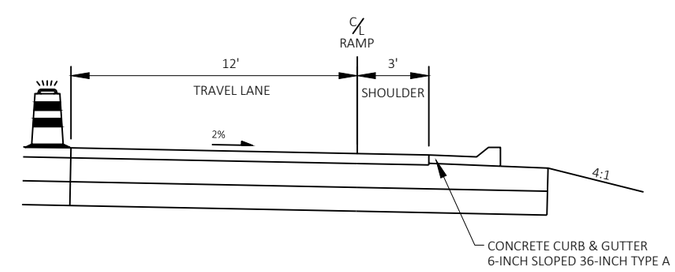

RAMP CROSS SECTION DETAIL- TRAFFIC CONTROL

PROJECT NO: 1706-00-74	HWY: STH 11	COUNTY: GRANT	TRAFFIC CONTROL - STAGE 3	SHEET 37	E

2

500' FROM STH 11 / STH 80
INTERSECTION - RT
ON TEMPORARY SIGN SUPPORT

ROAD WORK AHEAD
W20-1A

W1-4L
30"X30"

STOP
R1-1
30"X30"
ALL WAY
R1-3P
18"X6"

WEST SOUTH EAST
11 80 11
J3-3
72"X57"

N

50' TYP.

240+84.00

STH 80

PC 10+73.52

241+00 242+00 243+00 244+00 245+00 246+00 247+00 248+00

248+21.00

25'

25'

105+00

106+00

107+00

108+00

109+00

110+00

W12-1D
24"X24"

P

TEMPORARY MARKING LINE REMOVABLE TAPE 4-INCH (DOUBLE YELLOW)

50' TYP.

STH 11

W4-1R
36"X36"

GUY

HO

OH

* REFER TO SDD 15C04 FOR ADVANCED
WARNING SIGN LOCATIONS FOR WB STH 11.

WRONG WAY
R5-1A
36"X24"

YIELD
R1-2
36"X31"

DO NOT ENTER
R5-1
30"X30"

LEGEND

- TYPE III BARRICADE
- TYPE III BARRICADE WITH ATTACHED SIGN
- TRAFFIC CONTROL DRUM
- TRAFFIC CONTROL DRUM WITH TYPE C STEADY BURN LIGHT
- DIRECTION OF TRAFFIC
- NEW SINGLE SIGN ON SUPPORT(S) (P = PERMANENT SIGN)
- SIGN ON TEMPORARY SUPPORT
- WORK AREA
- AREA CLOSED TO TRAFFIC
- TEMPORARY ASPHALT

SCALE, FEET 0 25 50

2

PROJECT NO: 1706-00-74	HWY: STH 11	COUNTY: GRANT	TRAFFIC CONTROL - STAGE 3	SHEET 38	E

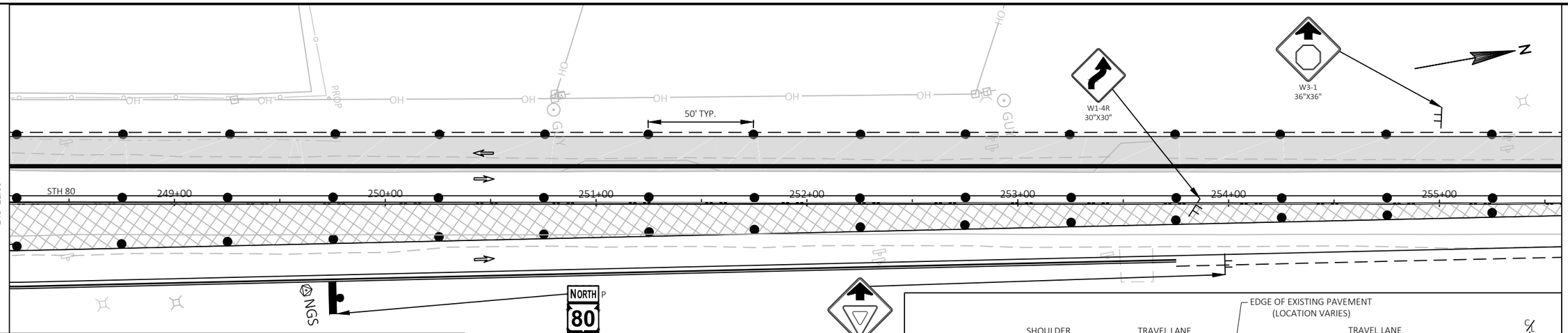

LEGEND

- TYPE III BARRICADE
- TYPE III BARRICADE WITH ATTACHED SIGN
- TRAFFIC CONTROL DRUM
- TRAFFIC CONTROL DRUM WITH TYPE C STEADY BURN LIGHT
- DIRECTION OF TRAFFIC
- NEW SINGLE SIGN ON SUPPORT(S) (P = PERMANENT SIGN)
- SIGN ON TEMPORARY SUPPORT
- WORK AREA
- AREA CLOSED TO TRAFFIC
- TEMPORARY ASPHALT

SCALE, FEET 0 25 50

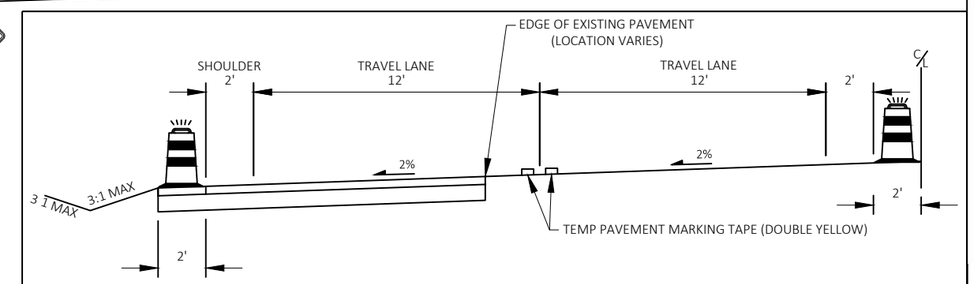

CROSS SECTION DETAIL- TRAFFIC CONTROL

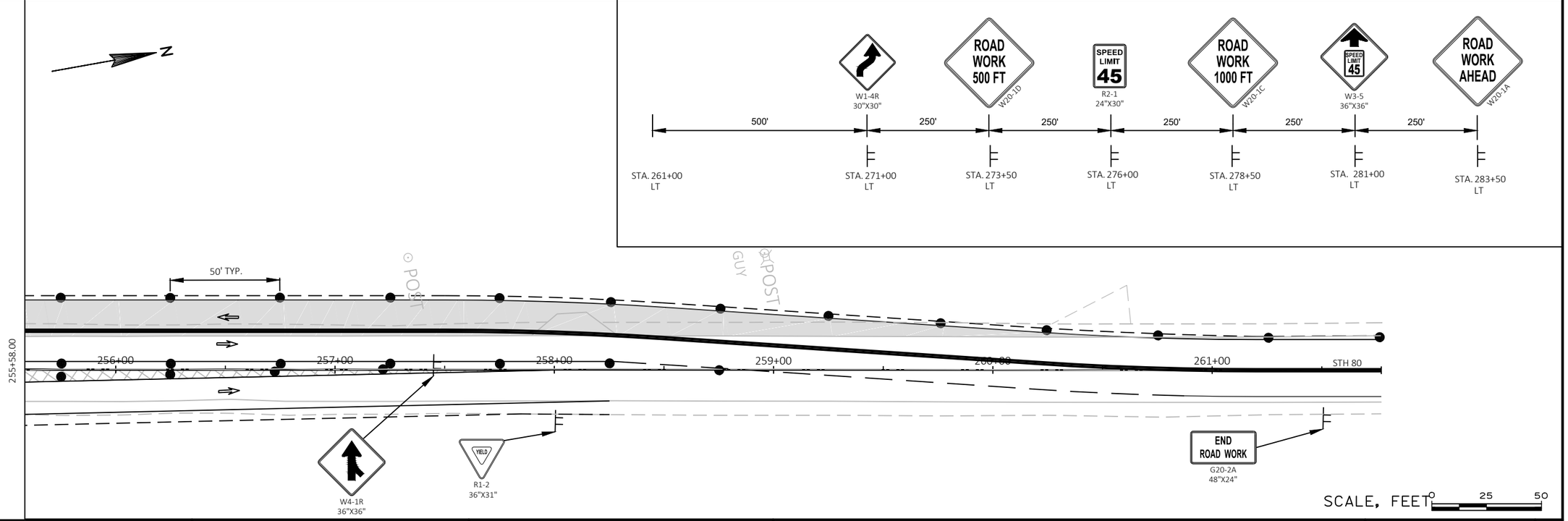

SCALE, FEET 0 25 50

PROJECT NO: 1706-00-74	HWY: STH 11	COUNTY: GRANT	TRAFFIC CONTROL - STAGE 3	SHEET 39	E

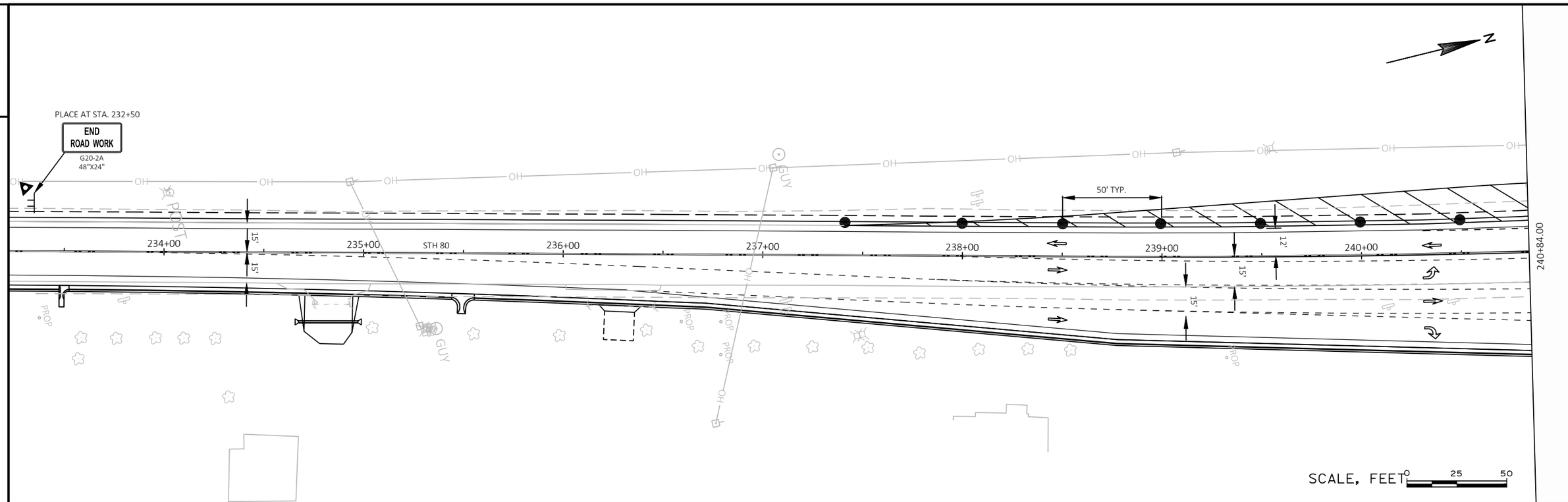

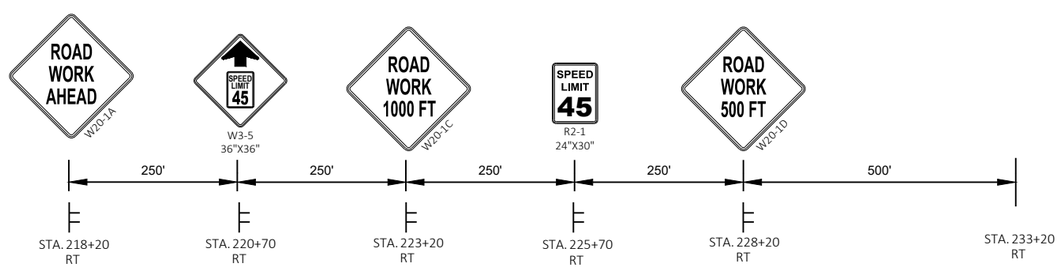

LEGEND

- TYPE III BARRICADE
- TYPE III BARRICADE WITH ATTACHED SIGN
- TRAFFIC CONTROL DRUM
- TRAFFIC CONTROL DRUM WITH TYPE C STEADY BURN LIGHT
- DIRECTION OF TRAFFIC
- NEW SINGLE SIGN ON SUPPORT(S) (P = PERMANENT SIGN)
- SIGN ON TEMPORARY SUPPORT
- WORK AREA
- AREA CLOSED TO TRAFFIC
- TEMPORARY ASPHALT

PROJECT NO: 1706-00-74	HWY: STH 11	COUNTY: GRANT	TRAFFIC CONTROL - STAGE 4	SHEET 40	E

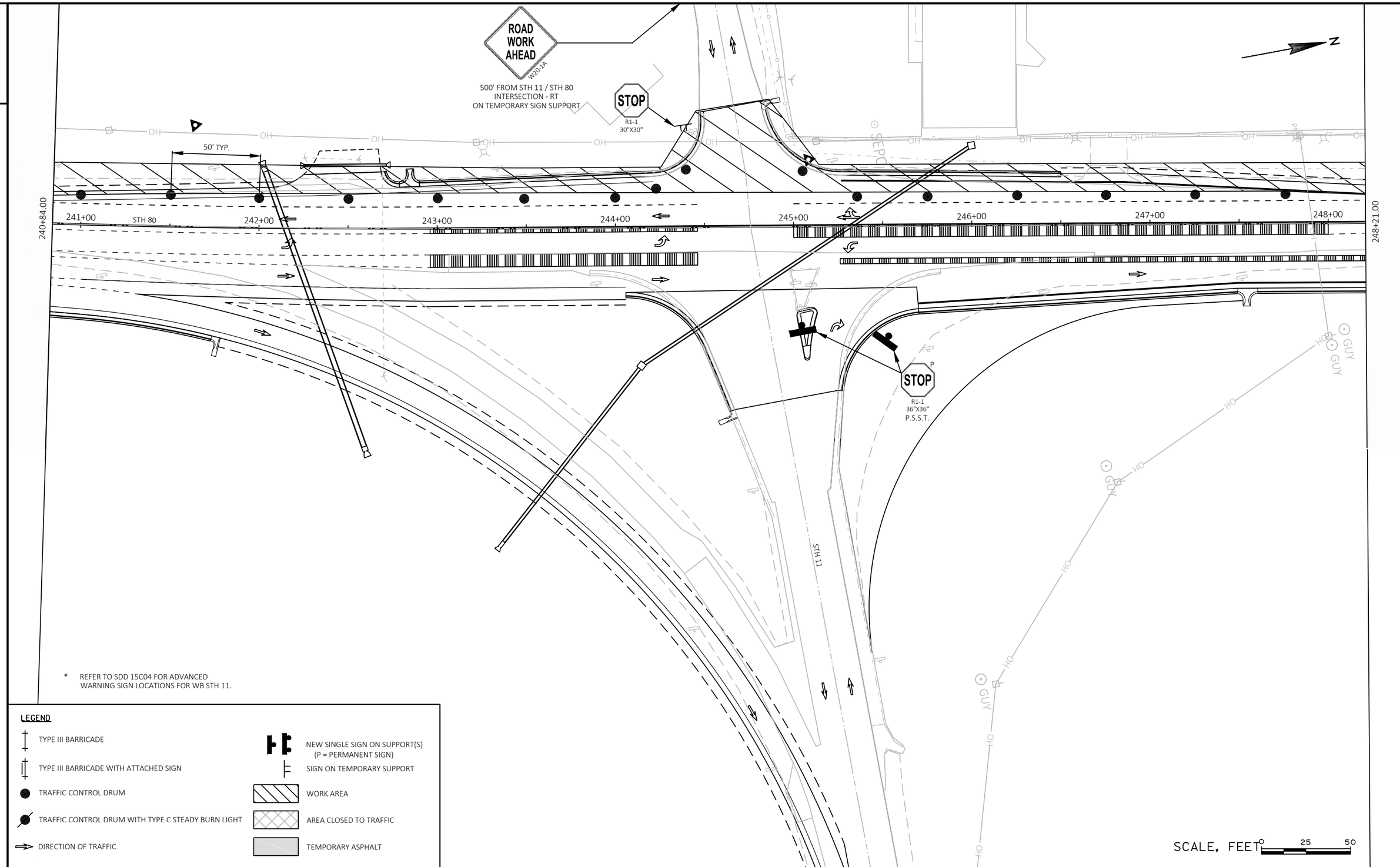

* REFER TO SDD 15C04 FOR ADVANCED WARNING SIGN LOCATIONS FOR WB STH 11.

LEGEND

- TYPE III BARRICADE
- TYPE III BARRICADE WITH ATTACHED SIGN
- TRAFFIC CONTROL DRUM
- TRAFFIC CONTROL DRUM WITH TYPE C STEADY BURN LIGHT
- DIRECTION OF TRAFFIC
- NEW SINGLE SIGN ON SUPPORT(S) (P = PERMANENT SIGN)
- SIGN ON TEMPORARY SUPPORT
- WORK AREA
- AREA CLOSED TO TRAFFIC
- TEMPORARY ASPHALT

PROJECT NO: 1706-00-74	HWY: STH 11	COUNTY: GRANT	TRAFFIC CONTROL - STAGE 4	SHEET 41	E

2

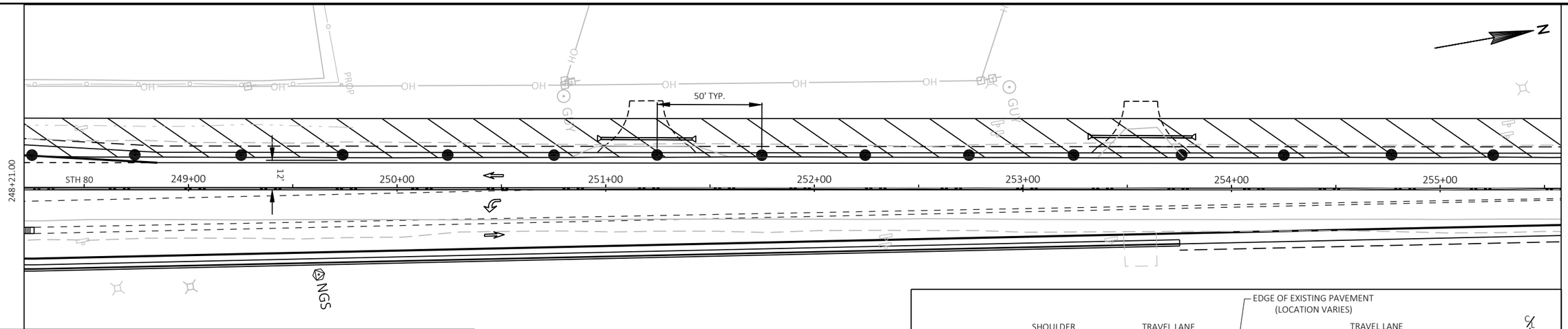

2

LEGEND

- TYPE III BARRICADE
- TYPE III BARRICADE WITH ATTACHED SIGN
- TRAFFIC CONTROL DRUM
- TRAFFIC CONTROL DRUM WITH TYPE C STEADY BURN LIGHT
- DIRECTION OF TRAFFIC
- NEW SINGLE SIGN ON SUPPORT(S) (P = PERMANENT SIGN)
- SIGN ON TEMPORARY SUPPORT
- WORK AREA
- AREA CLOSED TO TRAFFIC
- TEMPORARY ASPHALT

SCALE, FEET 0 25 50

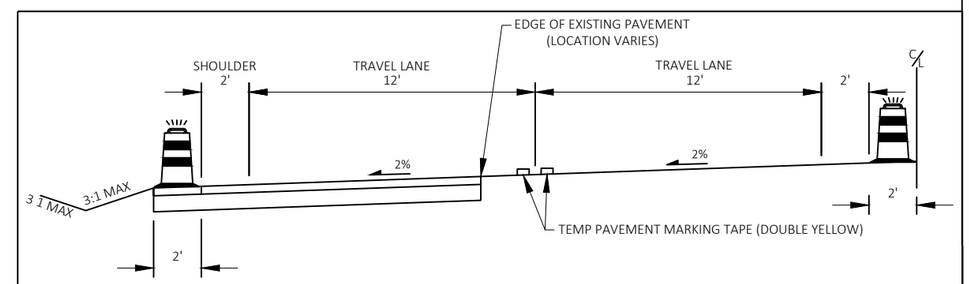

CROSS SECTION DETAIL- TRAFFIC CONTROL

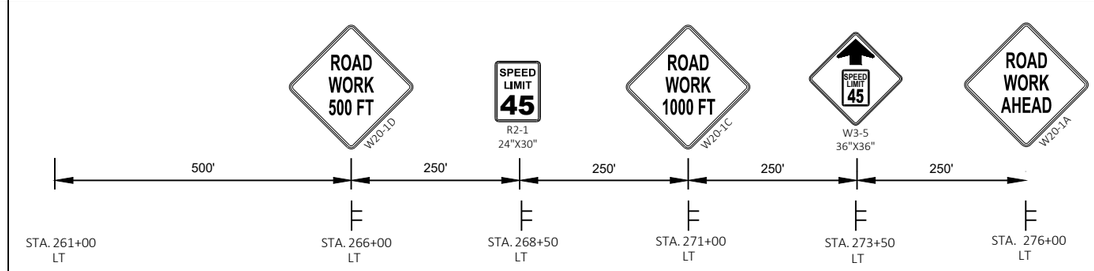

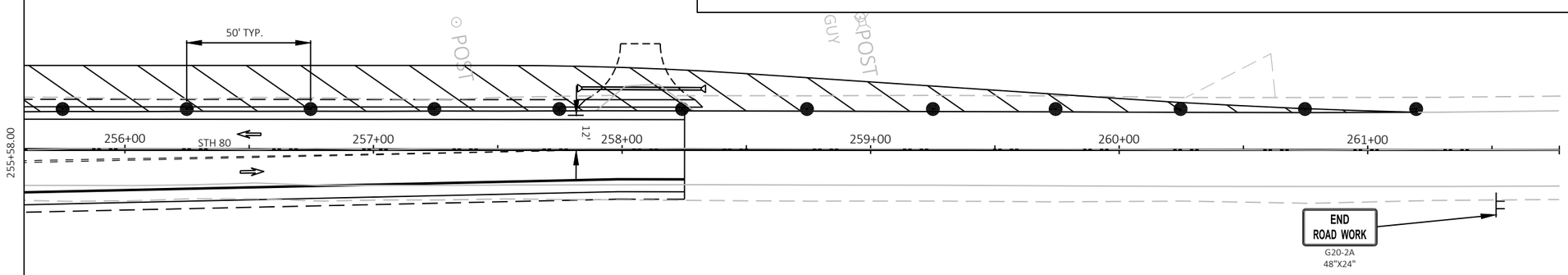

SCALE, FEET 0 25 50

PROJECT NO: 1706-00-74	HWY: STH 11	COUNTY: GRANT	TRAFFIC CONTROL - STAGE 4	SHEET 42	E

STH 80 CURVE 1

PI STA = 241+00.12
Y = 423125.904
X = 893971.470
DELTA = 4°05'59"
D = 0°30'00"
T = 205.09'
L = 410.00'
R = 5730.00'
PC STA = 238+95.04
Y = 422927.009
X = 893921.454
PT STA = 243+05.04
Y = 423327.866
X = 894007.139
BK = N14°06'55.4"E
AH = N10°00'56.5"E
SE = 2.7%

BEGIN PROJECT
STA 233+22
Y: 422371 27
X: 893781.71

CP 1

PI STA 233+47.51
Y: 422396.01
X: 893787.93

BEGIN RAMP CONST.
STA 100+00RA
Y: 422664 80
X: 893873.92

PI STA 102+50 20RA
Y: 422901.13
X: 893956.05

CP 2

BP STA 0+00A
Y: 423498.25
X: 893953.36

PI STA 233+47 51
Y: 422396 01
X: 893787.93

CP 3

RAMP CURVE 1

PI STA = 108+37.47RA
Y = 423467.857
X = 894110.313
DELTA = 73°12'20"
D = 5°50'47"
T = 363.94'
L = 626.06'
R = 490.00'
PC STA = 104+73.52RA
Y = 423116.895
X = 894013.980
PT STA = 110+99.58RA
Y = 423477.040
X = 894474.139
BK = N15°20'55.3"E
AH = N88°33'14.9"E
SE = 6.0%

STH 11 CURVE 1

PI STA = 1+44.36A
Y = 423496.285
X = 894097.705
DELTA = 0°49'15"
D = 0°34'23"
T = 35.81'
L = 71.62'
R = 5000.00'
PC STA = 1+08.54A
Y = 423496.772
X = 894061.896
PT STA = 1+80.17A
Y = 423496.311
X = 894133.518
BK = S89°13'15.4"E
AH = N89°57'29.9"E

NGS 1

END PROJECT
STA 258+25
Y: 424824 05
X: 894275 03

END RAMP CONST.
STA 112+00RA
Y: 423478.55
X: 894574 22

CP 4

EP STA 7+55.45A
Y: 423496.73
X: 894708.80

STH 80 | 235+00 | N14°06'55"E 547.53' | 240+00 | N18°53'04"E 249.68' | 105+00RA | N10°00'56"E 242.47' | 245+00 | 250+00 | N10°10'37"E 1629.59' | 255+00 | 260+00

STH 11 | S89°13'15"E 108.54' | 110+00RA | 5+00A | N89°57'30"E 575.28'

SUPERELEVATION DATA STH 80 RAMP CURVE											
					IN			OUT			60 MPH
	CURVE NO.	PC	PT	D	NORMAL SECTION	2% SUPER	FULL SUPER	FULL SUPER	2% SUPER	NORMAL SECTION	SUPER RATE (%)
FINISHED	1	104+73.52	110+99.58	5°50'47"	103+47.92	104+30.42	105+12.92	110+63.30	111+45.80	112+28.30	6.0

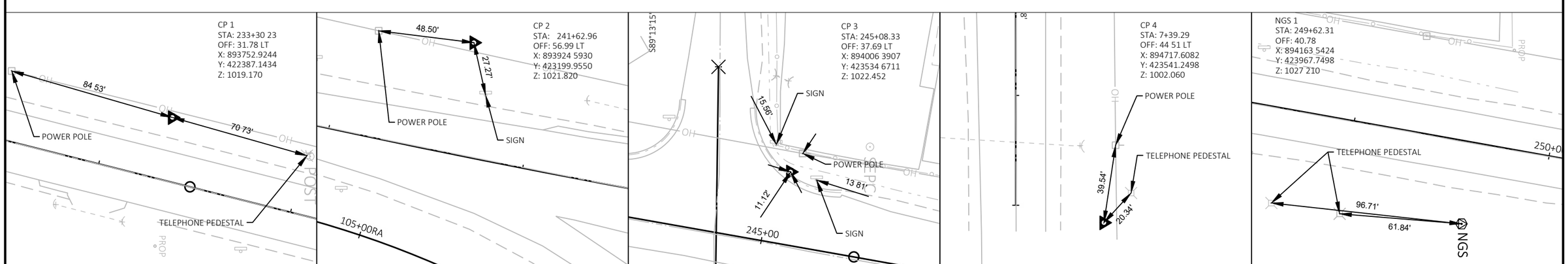

PROJECT NO: 1706-00-74	HWY: STH 11	COUNTY: GRANT	ALIGNMENT DETAILS	SHEET 43	E

Estimate Of Quantities

1706-00-74

Line	Item	Item Description	Unit	Total	Qty
0002	201.0105	Clearing	STA	6.000	6.000
0004	201.0205	Grubbing	STA	6.000	6.000
0006	203.0100	Removing Small Pipe Culverts	EACH	7.000	7.000
0008	204.0100	Removing Concrete Pavement	SY	2,282.000	2,282.000
0010	204.0120	Removing Asphaltic Surface Milling	SY	7,699.000	7,699.000
0012	204.0150	Removing Curb & Gutter	LF	353.000	353.000
0014	205.0100	Excavation Common	CY	9,315.000	9,315.000
0016	208.0100	Borrow	CY	1,059.000	1,059.000
0018	213.0100	Finishing Roadway (project) 01. 1706-00-74	EACH	1.000	1.000
0020	305.0110	Base Aggregate Dense 3/4-Inch	TON	675.000	675.000
0022	305.0120	Base Aggregate Dense 1 1/4-Inch	TON	9,924.000	9,924.000
0024	305.0130	Base Aggregate Dense 3-Inch	TON	8,330.000	8,330.000
0026	405.0100	Coloring Concrete WisDOT Red	CY	193.000	193.000
0028	415.0080	Concrete Pavement 8-Inch	SY	1,517.000	1,517.000
0030	415.5110.S	Concrete Pavement Joint Layout	LS	1.000	1.000
0032	416.0620	Drilled Dowel Bars	EACH	58.000	58.000
0034	455.0605	Tack Coat	GAL	1,054.000	1,054.000
0036	460.2000	Incentive Density HMA Pavement	DOL	1,670.000	1,670.000
0038	460.6224	HMA Pavement 4 MT 58-28 S	TON	2,596.000	2,596.000
0040	465.0120	Asphaltic Surface Driveways and Field Entrances	TON	19.000	19.000
0042	465.0125	Asphaltic Surface Temporary	TON	904.000	904.000
0044	465.0315	Asphaltic Flumes	SY	54.000	54.000
0046	520.1012	Apron Endwalls for Culvert Pipe 12-Inch	EACH	8.000	8.000
0048	520.1015	Apron Endwalls for Culvert Pipe 15-Inch	EACH	2.000	2.000
0050	521.3112	Culvert Pipe Corrugated Steel 12-Inch	LF	170.000	170.000
0052	521.3115	Culvert Pipe Corrugated Steel 15-Inch	LF	46.000	46.000
0054	522.0418	Culvert Pipe Reinforced Concrete Class IV 18-Inch	LF	124.000	124.000
0056	522.1018	Apron Endwalls for Culvert Pipe Reinforced Concrete 18-Inch	EACH	1.000	1.000
0058	522.2419	Culvert Pipe Reinforced Concrete Horizontal Elliptical Class HE-IV 19x30-Inch	LF	174.000	174.000
0060	522.2619	Apron Endwalls for Culvert Pipe Reinforced Concrete Horizontal Elliptical 19x30-Inch	EACH	2.000	2.000
0062	524.0112	Culvert Pipe Salvaged 12-Inch	LF	120.000	120.000
0064	524.0115	Culvert Pipe Salvaged 15-Inch	LF	30.000	30.000
0066	601.0555	Concrete Curb & Gutter 6-Inch Sloped 36-Inch Type A	LF	164.000	164.000
0068	601.0557	Concrete Curb & Gutter 6-Inch Sloped 36-Inch Type D	LF	1,844.000	1,844.000
0070	601.0580	Concrete Curb & Gutter 4-Inch Sloped 36-Inch Type R	LF	67.000	67.000
0072	601.0582	Concrete Curb & Gutter 4-Inch Sloped 36-Inch Type T	LF	180.000	180.000
0074	606.0200	Riprap Medium	CY	7.000	7.000

1706-00-74

Line	Item	Item Description	Unit	Total	Qty
0076	608.0418	Storm Sewer Pipe Reinforced Concrete Class IV 18-Inch	LF	220.000	220.000
0078	611.0642	Inlet Covers Type MS	EACH	2.000	2.000
0080	611.3901	Inlets Median 1 Grate	EACH	2.000	2.000
0082	618.0100	Maintenance And Repair of Haul Roads (project) 01. 1706-00-74	EACH	1.000	1.000
0084	619.1000	Mobilization	EACH	1.000	1.000
0086	620.0100	Concrete Corrugated Median	SF	4,500.000	4,500.000
0088	624.0100	Water	MGAL	199.000	199.000
0090	625.0500	Salvaged Topsoil	SY	13,199.000	13,199.000
0092	627.0200	Mulching	SY	9,184.000	9,184.000
0094	628.1504	Silt Fence	LF	2,202.000	2,202.000
0096	628.1520	Silt Fence Maintenance	LF	2,202.000	2,202.000
0098	628.1905	Mobilizations Erosion Control	EACH	5.000	5.000
0100	628.1910	Mobilizations Emergency Erosion Control	EACH	4.000	4.000
0102	628.2004	Erosion Mat Class I Type B	SY	1,968.000	1,968.000
0104	628.7005	Inlet Protection Type A	EACH	2.000	2.000
0106	628.7504	Temporary Ditch Checks	LF	120.000	120.000
0108	628.7555	Culvert Pipe Checks	EACH	8.000	8.000
0110	628.7570	Rock Bags	EACH	280.000	280.000
0112	629.0210	Fertilizer Type B	CWT	12.600	12.600
0114	630.0120	Seeding Mixture No. 20	LB	328.000	328.000
0116	630.0200	Seeding Temporary	LB	108.000	108.000
0118	630.0500	Seed Water	MGAL	410.000	410.000
0120	633.5200	Markers Culvert End	EACH	3.000	3.000
0122	634.0616	Posts Wood 4x6-Inch X 16-FT	EACH	36.000	36.000
0124	634.0816	Posts Tubular Steel 2x2-Inch X 16-FT	EACH	3.000	3.000
0126	637.2210	Signs Type II Reflective H	SF	290.810	290.810
0128	637.2230	Signs Type II Reflective F	SF	23.560	23.560
0130	638.2102	Moving Signs Type II	EACH	7.000	7.000
0132	638.2602	Removing Signs Type II	EACH	30.000	30.000
0134	638.3000	Removing Small Sign Supports	EACH	33.000	33.000
0136	638.4000	Moving Small Sign Supports	EACH	1.000	1.000
0138	642.5001	Field Office Type B	EACH	1.000	1.000
0140	643.0300	Traffic Control Drums	DAY	10,650.000	10,650.000
0142	643.0420	Traffic Control Barricades Type III	DAY	236.000	236.000
0144	643.0715	Traffic Control Warning Lights Type C	DAY	420.000	420.000
0146	643.0900	Traffic Control Signs	DAY	2,248.000	2,248.000
0148	643.1050	Traffic Control Signs PCMS	DAY	21.000	21.000
0150	643.5000	Traffic Control	EACH	1.000	1.000

1706-00-74

Line	Item	Item Description	Unit	Total	Qty
0152	645.0120	Geotextile Type HR	SY	32.000	32.000
0154	645.0220	Geogrid Type SR	SY	12,419.000	12,419.000
0156	646.1020	Marking Line Epoxy 4-Inch	LF	11,898.000	11,898.000
0158	646.3020	Marking Line Epoxy 8-Inch	LF	2,407.000	2,407.000
0160	646.5020	Marking Arrow Epoxy	EACH	6.000	6.000
0162	646.5120	Marking Word Epoxy	EACH	2.000	2.000
0164	646.6120	Marking Stop Line Epoxy 18-Inch	LF	45.000	45.000
0166	646.7120	Marking Diagonal Epoxy 12-Inch	LF	115.000	115.000
0168	646.8020	Marking Corrugated Median Epoxy	SF	516.000	516.000
0170	646.8220	Marking Island Nose Epoxy	EACH	4.000	4.000
0172	646.9000	Marking Removal Line 4-Inch	LF	362.000	362.000
0174	649.0150	Temporary Marking Line Removable Tape 4-Inch	LF	13,553.000	13,553.000
0176	649.0850	Temporary Marking Stop Line Removable Tape 18-Inch	LF	51.000	51.000
0178	650.4500	Construction Staking Subgrade	LF	8,627.000	8,627.000
0180	650.5000	Construction Staking Base	LF	8,627.000	8,627.000
0182	650.5500	Construction Staking Curb Gutter and Curb & Gutter	LF	2,257.000	2,257.000
0184	650.6000	Construction Staking Pipe Culverts	EACH	12.000	12.000
0186	650.7000	Construction Staking Concrete Pavement	LF	392.000	392.000
0188	650.8000	Construction Staking Resurfacing Reference	LF	2,503.000	2,503.000
0190	650.9910	Construction Staking Supplemental Control (project) 01. 1706-00-74	LS	1.000	1.000
0192	650.9920	Construction Staking Slope Stakes	LF	8,627.000	8,627.000
0194	690.0150	Sawing Asphalt	LF	3,268.000	3,268.000
0196	690.0250	Sawing Concrete	LF	314.000	314.000
0198	715.0415	Incentive Strength Concrete Pavement	DOL	500.000	500.000
0200	ASP.1T0A	On-the-Job Training Apprentice at $5.00/HR	HRS	1,200.000	1,200.000
0202	ASP.1T0G	On-the-Job Training Graduate at $5.00/HR	HRS	600.000	600.000

3

CLEARING & GRUBBING

STAGE	STATION	TO	STATION	LOCATION	CLEARING 201.0105 STA	GRUBBING 201.0205 STA	REMARKS
1	233+00	-	239+00	STH 80 RT	6	6	
				PROJECT TOTAL =	**6**	**6**	

REMOVING CURB & GUTTER

STAGE	STATION	TO	STATION	LOCATION	204.0150 LF	REMARKS
2	243+85	-	244+65	STH 80 INTERSECTION SE	122	
2	245+26	-	245+82	STH 80 INTERSECTION NE	98	
4	244+08	-	244+49	STH 80 INTERSECTION SW	63	
4	244+84	-	245+36	STH 80 INTERSECTION NW	70	
				PROJECT TOTAL =	**353**	

REMOVING SMALL PIPE CULVERTS

STAGE	STATION	TO	STATION	LOCATION	203.0100 EACH	REMARKS
1	234+66	-	234+99	STH 80 RT	1	12" CMP - 18 FT
1	236+10	-	236+48	STH 80 RT	1	12" CMP - 34 FT
1	242+69	-	242+69	STH 80 LT	1	24" RCCP - 113 FT
4	242+23	-	242+74	STH 80 LT	1	15" CMP - 31 FT
4	250+93	-	251+46	STH 80 LT	1	12" CMP - 50 FT
4	253+40	-	253+73	STH 80 LT	1	12" CMP - 33 FT
4	257+90	-	258+26	STH 80 LT	1	12" CMP - 35 FT
				PROJECT TOTALS =	**7**	

PAVEMENT REMOVAL SUMMARY

STAGE	STATION	TO	STATION	LOCATION	REMOVING PAVEMENT 204.0100 SY	REMOVING ASPHALTIC SURFACE MILLING 204.0120 SY	REMARKS
1	105+83RA	-	112+00RA	STH 80 RAMP	518	-	RAMP/STH 11
2	236+08	-	242+00	STH 80	-	507	MAINLINE
2	243+88	-	247+50	STH 80 INTERSECTION RT	1,673	-	CONCRETE SECTION
2	249+00	-	258+25	STH 80	-	1,284	MAINLINE
3	242+00	-	242+96	STH 80	-	152	MAINLINE
3	243+06	-	243+88	STH 80 INTERSECTION RT	91	-	CONCRETE SECTION
4	233+22	-	258+25	STH 80	-	5,756	MAINLINE
				PROJECT TOTALS =	**2,282**	**7,699**	

BASE AGGREGATE SUMMARY

STAGE	STATION	TO	STATION	LOCATION	BAD 1 1/4-INCH 305.0120 TON	BAD 3/4-INCH 305.0110 TON	BAD 3-INCH 305.0130 TON	WATER 624.0100 MGAL	GEOGRID TYPE SR 645.0220 SY	REMARKS
1	105+75RA	-	112+00RA	RAMP	1616	227	1202	32	1803	
1	233+22	-	242+00	STH 80 RT	1159	-	1159	23	1739	
1	233+22	-	242+00	STH 80 RT (SHOULDER)	304	-	304	6	456	
1	234+77	-	234+94	DRIVEWAYS RT	28	4	-	1	-	
2	241+06	-	242+00	STH 80 RT	43	-	43	1	65	
2	244+06	-	258+25	STH 80 RT	3045	-	3045	61	4567	
2	245+24	-	258+25	STH 80 RT (SHOULDER)	356	-	356	7	534	
2	253+75	-	258+25	STH 80 RT (SHOULDER)	195	56	-	4	-	
2	1+20A	-	1+85A	STH 11 (CONCRETE)	285	-	-	6	-	
2	1+49A	-	3+32A	TRUCK APRON EXTENSION	313	-	626	6	939	
3	242+00	-	244+06	STH 80 RT	630	-	630	13	945	
3	242+00	-	244+06	STH 80 RT (SHOULDER)	81	28	81	2	121	
3	242+00	-	258+25	STH 80 RT (SHOULDER)	98	-	-	2	-	
4	233+22	-	242+59	STH 80 LT (SHOULDER)	383	-	-	8	-	
4	233+22	-	244+50	STH 80 LT (SHOULDER)	284	80	284	6	425	
4	244+82	-	258+25	STH 80 LT (SHOULDER)	383	-	383	8	575	
4	245+43	-	248+91	STH 80 LT	166	-	166	3	249	
4	246+50	-	258+25	STH 80 LT (SHOULDER)	510	236	-	10	-	
4	242+14	-	258+35	DRIVEWAYS LT	43	43	-	1	-	
4	PROJECT LIMITS			FRENCH DRAINS	-	-	50	-	-	
				PROJECT TOTALS =	**9,924**	**675**	**8,330**	**199**	**12,419**	

3

Division	From/To Station	Location	205.0100 Common Excavation (1)		Available Material (4)	Unexpanded Fill	Expanded Fill (5)	Mass Ordinate +/- (6)	Waste	208.0100 Borrow	Comment:
			Cut (2)	EBS Excavation (3)			Factor 1.30				
Stage 1			5,121	0	5,121	2,337	3,038	2,083	2,083	598	
STH 80/11 Mainline	233+22 - 258+25		4,390	0	4,390	1,315	1,710	2,681	2,681	0	
STH 80/11 Ramp	104+85RA - 112+00RA		731	0	731	1,022	1,329	-598	-598	598	
Stage 2			2,883	0	2,883	287	373	2,510	2,510	0	
STH 80/11 Mainline	233+22 - 258+25		2,883	0	2,883	287	373	2,510	2,510	0	
STH 80/11 Ramp	104+85RA - 112+00RA		0	0	0	0	0	0	0	0	
Stage 3			600	0	600	248	322	278	278	0	
STH 80/11 Mainline	233+22 - 258+25		194	0	194	65	85	110	110	0	
STH 80/11 Ramp	104+85RA - 112+00RA		406	0	406	183	238	168	168	0	
Stage 4			711	0	711	902	1,173	-462	-462	462	
STH 80/11 Mainline	233+22 - 258+25		711	0	711	902	1,173	-462	-462	462	
STH 80/11 Ramp	104+85RA - 112+00RA		0	0	0	0	0	0	0	0	
Grand Total			9,315	0	9,315	3,774	4,906	4,409	4,409	1,059	
Total Common Exc			9,315								

Notes:

(1) Common Excavation is the sum of the Cut and EBS Excavation columns. Item number 205.0100

(2) Salvaged/Unsuable Pavement Material is included in Cut.

(3) EBS Excavation to be backfilled with Select Borrow material. Note: this is designers choice, can be backfilled with Borrow, or Cut as well.

(4) Available Material = Cut - Salvaged/Unusuable Pavement Material

(5) Expanded Fill Factor = 1.3

Depending on selections: **Expanded Fill = (Unexpanded Fill - Rock* Rock Factor - Reduced Marsh - Reduced EBS) * Fill Factor**

Or Expanded Fill = (Unexpanded Fill - Rock * Rock Factor - Reduced EBS) * Fill Factor

Or Expanded Fill = (Unexpanded Fill - Rock * Rock Factor - Reduced Marsh) * Fill Factor

Or Expanded Fill = (Unexpanded Fill - Rock * Rock Factor) * Fill Factor

(6) The Mass Ordinate + or - Qty calculated for the Division. Plus quantity indicates an excess of material within the Division. Minus indicates a shortage of material within the Division.

3

CONCRETE PAVEMENT

STAGE	STATION	TO	STATION	LOCATION	CONCRETE PAVEMENT 8-INCH 415.0080 SY	COLORING CONCRETE 405.0100 CY	DRILLED DOWEL BARS 416.0620 EACH	REMARKS
2	244+06	-	245+69	STH 11	643	-	58	
2	245+27	-	246+05	STH 80 INTERSECTION	866	193	-	
2	1+11A	-	1+39A	STH 11	8	-	-	ISLAND
				PROJECT TOTALS =	**1,517**	**193**	**58**	

ASPHALTIC SURFACE DRIVEWAYS AND FIELD ENTRANCES

STAGE	STATION	LOCATION	465.0120 TON	REMARKS
1	234+86	STH 80, RT	10	DRIVEWAY
1	236+28	STH 80, RT	1	DRIVEWAY
4	242+40	STH 80, LT	8	DRIVEWAY
		PROJECT TOTALS =	**19**	

ASPHALTIC SURFACE TEMPORARY

STAGE	STATION	TO	STATION	LOCATION	465.0125 TON	REMARKS
1	238+00	-	260+50	STH 80	673	TEMPORARY WIDENING
1	1+00A	-	3+00A	STH 11	231	TEMPORARY BYPASS STH 11
				PROJECT TOTALS =	**904**	

ASPHALTIC ITEMS

STAGE	STATION	TO	STATION	LOCATION	TACK COAT 455.0605 GAL	HMA PAVEMENT 4 MT 58-28 S 460.6224 TON	INCENTIVE DENSITY HMA PAVEMENT 460.2000	REMARKS
1	233+22	-	241+09	STH 80	78	434	280	NEW PVMT S. ML RT
1	241+09	-	242+00	STH 80 NB	10	54	35	ML & RT TURN LANE
1	105+76RA	-	112+00RA	STH 80 RAMP	57	316	203	RAMP
2	235+20	-	242+00	STH 80 NB	37	52	34	S. LT TURN LANE MILL
2	241+09	-	242+00	STH 80 NB	4	19	13	ML RT
2	244+46	-	258+25	STH 80	130	182	117	ML & N. LT TURN LANE
2	249+00	-	258+25	STH 80 NB	103	144	93	ML RT MILL
2	249+00	-	258+25	STH 80 NB	67	370	237	ML RT
3	242+00	-	242+96	STH 80 NB	13	17	11	S. LT TURN LANE MILL
3	242+00	-	244+46	STH 80 NB	39	219	141	ML & S. LT TURN LANE
4	233+22	-	258+25	STH 80	516	723	463	SB & NB MILL LT
4	233+22	-	258+25	STH 80	-	66	43	SB & NB LT
				PROJECT TOTALS =	**1,054**	**2,596**	**1,670**	

ASPHALTIC FLUMES

STAGE	STATION	LOCATION	465.0315 SY	REMARKS
1	233+50	STH 80 RT	6	
1	235+50	STH 80 RT	12	
1	241+77	STH 80 RT	6	
2	244+67	STH 80 RT	6	
2	247+55	STH 80 RT	12	
4	242+53	STH 80 LT	6	
4	244+82	STH 80 LT	6	
		PROJECT TOTAL =	**54**	

CULVERT SUMMARY

STAGE	STATION	TO	STATION	LOCATION	APRON ENDWALLS FOR CULVERT PIPE STEEL 12-INCH 520.1012 EACH	APRON ENDWALLS FOR CULVERT PIPE 15-INCH 520.1015 EACH	CULVERT PIPE CORRUGATED STEEL 12-INCH 521.3112 LF	CULVERT PIPE CORRUGATED STEEL 15-INCH 521.3115 LF	CULVERT PIPE REINFORCED CONCRETE CLASS IV 18-INCH 522.0418 LF	APRON ENDWALLS FOR CULVERT PIPE REINFORCED CONCRETE 18-INCH 522.1018 EACH	CULVERT PIPE REINFORCED CONCRETE HORIZONTAL ELLIPTICAL CLASS HE-IV 19X30-INCH 522.2419 LF	APRON ENDWALLS FOR CULVERT PIPE REINFORCED CONCRETE HORIZONTAL ELLIPTICAL 19X30-INCH 522.2619 LF	CULVERT PIPE SALVAGED 12-INCH 524.0112 LF	CULVERT PIPE SALVAGED 15-INCH 524.0115 LF	STORM SEWER PIPE REINFORCED CONCRETE CLASS IV 18-INCH 608.0418 LF	INLETS MEDIAN 1 GRATE 611.3901 EACH	INLET COVERS TYPE MS 611.0642 EACH	MARKERS CULVERT END 633.5200 EACH	REMARKS
1	234+66	-	234+99	STH 80 RT	2	-	30	-	-	-	-	-	-	-	-	-	-	-	PIPE THICKNESS = 0.064"
1	236+10	-	236+48	STH 80 RT	-	-	-	-	-	-	-	-	-	-	-	-	-	-	
1,3,4	242+00	-	242+61	STH 80	-	-	-	-	-	-	174	2	-	-	-	-	-	2	
1	242+69	-	242+69	STH 80 LT	-	-	-	-	-	-	-	-	-	30	-	-	-	-	
1,3	243+32	-	244+14	STH 80	-	-	-	-	124	1	-	-	-	-	-	1	1	1	INLET 2.2, RIM 1018.00
2,3,4	244+14	-	246+00	STH 80	-	-	-	-	-	-	-	-	-	-	220	1	1	-	INLET 2.1, RIM 1021.23
4	242+23	-	242+74	STH 80 LT	-	2	-	46	-	-	-	-	-	-	-	-	-	-	PIPE THICKNESS = 0.064"
4	250+93	-	251+46	STH 80 LT	2	-	44	-	-	-	-	-	40	-	-	-	-	-	PIPE THICKNESS = 0.064"
4	253+40	-	253+73	STH 80 LT	2	-	48	-	-	-	-	-	40	-	-	-	-	-	PIPE THICKNESS = 0.064"
4	257+90	-	258+26	STH 80 LT	2	-	48	-	-	-	-	-	40	-	-	-	-	-	PIPE THICKNESS = 0.064"
				PROJECT TOTALS =	**8**	**2**	**170**	**46**	**124**	**1**	**174**	**2**	**120**	**30**	**220**	**2**	**2**	**3**	

3

CURB & GUTTER SUMMARY

STAGE	STATION	TO	STATION	LOCATION	CONCRETE CURB & GUTTER 6-INCH SLOPED 36-INCH TYPE A 601.0555 LF	CONCRETE CURB & GUTTER 6-INCH SLOPED 36-INCH TYPE D 601.0557 LF	CONCRETE CURB & GUTTER 4-INCH SLOPED 36-INCH TYPE R 601.0580 LF	CONCRETE CURB & GUTTER 4-INCH SLOPED 36-INCH TYPE T 601.0580 LF	REMARKS
1	233+22	-	241+74	STH 80 NB	-	841	-	-	
2	244+06	-	244+66	SE QUADRANT	95	-	-	-	
2	245+24	-	253+75	NE QUADRANT	-	616	67	180	
2	1+11A	-	1+39A	STH 11 (ISLAND)	69	-	-	-	
4	242+64	-	244+50	SW QUADRANT	-	204	-	-	
4	244+83	-	246+50	NW QUADRANT	-	183	-	-	
				PROJECT TOTALS =	**164**	**1,844**	**67**	**180**	

MOBILIZATION EROSION CONTROL

LOCATION	MOBILIZATIONS EROSION CONTROL 628.1905 EACH	MOBILIZATIONS EMERGENCY EROSION CONTROL 628.1910 EACH
PROJECT	5	4
PROJECT TOTAL =	**5**	**4**

3

CONCRETE CORRUGATED MEDIAN

STAGE	STATION	TO	STATION	LOCATION	620.0100 SF	REMARKS
2	245+00	-	248+00	STH 80 RT	2,100	7 FT MEDIAN
2	245+26	-	244+54	STH 80 RT	900	3 FT MEDIAN
3	242+89	-	244+46	STH 80 RT	450	3 FT MEDIAN
3	242+89	-	244+46	STH 80 RT	1,050	7 FT MEDIAN
				PROJECT TOTALS =	**4,500**	

SILT FENCE SUMMARY

STAGE	STATION	TO	STATION	LOCATION	SILT FENCE 628.1504 LF	SILT FENCE MAINTENANCE 628.1520 LF	REMARKS
1	236+40	-	237+50	STH 80 RT	109	109	
1	232+22	-	236+44	STH 80 LT	323	323	
1	254+99	-	256+49	STH 80 LT	150	150	
1	105+29RA	-	106+44RA	E RAMP	108	108	
1	106+69RA	-	107+47RA	E RAMP	77	77	
1	107+69RA	-	111+99RA	E RAMP	412	412	
2	245+45	-	247+75	STH 11 LT	616	616	
2	253+02	-	257+07	STH 80 RT	407	407	
				PROJECT TOTALS =	**2,202**	**2,202**	

FINISHING ITEMS

STAGE	STATION	TO	STATION	LOCATION	SALVAGED TOPSOIL 625.0500 SY	MULCHING 627.0200 SY	EROSION MAT CLASS I TYPE B 628.2004 SY	FERTILIZER TYPE B 629.0210 CWT	SEEDING MIXTURE NO. 20 630.0120 LBS	SEEDING TEMPORARY 630.0200 LBS	SEED WATER 630.0500 MGAL	REMARKS
1	233+22	-	245+50	STH 80	1093	548	544	1.3	37	55	46	
1	233+22	-	245+50	RAMP	767	1136	-	1.0	28	43	36	
2	245+50	-	258+25	STH 80 RT	923	1046	222	1.5	42	-	52	
3	241+50	-	245+50	STH 80 RT	2575	-	-	1.7	47	-	58	
4	233+22	-	258+25	STH 80 LT	6641	5619	1023	5.0	144	-	180	
				UNDISTRIBUTED	1200	835	179	2	30	10	38	
				PROJECT TOTALS =	**13,199**	**9,184**	**1,968**	**12.6**	**328**	**108**	**410**	

3

EROSION CONTROL SUMMARY

STAGE	STATION	LOCATION	CULVERT PIPE CHECKS 628.7555 EACH	INLET PROTECTION TYPE A 628.7005 EACH	RIPRAP MEDIUM 606.0200 CY	GEOTEXTILE TYPE HR 645.0120 SY	TEMPORARY DITCH CHECKS 628.7504 LF	ROCK BAGS 628.7570 EACH	REMARKS
1	233+25	STH 80 RT	-	-	-	-	4	-	
1	235+00	STH 80 RT	1	-	-	-	-	-	
1	236+15	STH 80 RT	-	-	-	-	5	-	
1	236+50	STH 80 RT	1	-	-	-	-	-	
1	237+00	STH 80 LT	-	-	-	-	8	-	
1	239+00	STH 80 LT	-	-	-	-	8	-	
1	240+50	STH 80 LT	-	-	-	-	7	-	
1	242+00	STH 80 LT	1	-	-	-	7	-	
1	244+00	STH 80 LT	-	-	-	-	5	-	
1	245+00	STH 80 LT	-	-	-	-	5	-	
1	245+25	STH 80 LT	-	-	-	-	5	-	
1	247+15	STH 80 LT	-	-	-	-	5	-	
1	248+75	STH 80 LT	-	-	-	-	5	-	
1	250+75	STH 80 LT	-	-	-	-	5	-	
1	253+00	STH 80 LT	-	-	-	-	5	-	
1	256+75	STH 80 LT	-	-	-	-	5	-	
1	106+50RA	RAMP RT	-	-	4	18	-	-	
1	107+50RA	RAMP RT	-	-	3	14	-	-	
1,2	VARIES	RAMP, STH 80 RT	-	-	-	-	-	255	7 LOCATIONS
2	3+30A	STH 11	-	-	-	-	5	-	
2	4+40A	STH 11	-	-	-	-	5	-	
2	248+15	STH 80 RT	-	-	-	-	5	-	
2	256+25	STH 80 RT	-	-	-	-	5	-	
3	244+15	STH 80 RT	-	1	-	-	-	-	
4	242+50	STH 80 LT	1	-	-	-	-	-	
4	243+00	STH 80 GORE	-	-	-	-	5	-	
4	246+00	STH 80 LT	-	1	-	-	-	-	
		UNDISTRIBUTED	4	-	-	-	16	25	
		PROJECT TOTALS =	**8**	**2**	**7**	**32**	**120**	**280**	

TEMPORARY MARKING AND REMOVAL SUMMARY

STAGE	LOCATION	TEMPORARY MARKING LINE REMOVABLE TAPE 4-INCH 649.0150 LF	TEMPORARY MARKING STOP LINE REMOVABLE TAPE 18-INCH 649.0850 LF	MARKING REMOVAL LINE 4-INCH 646.9000 LF
1	PROJECT LIMITS	0	0	0
2	PROJECT LIMITS	7,428	23	362
3	PROJECT LIMITS	6,125	28	0
4	PROJECT LIMITS	0	0	0
	PROJECT TOTALS =	**13,553**	**51**	**362**

3

SAWING ASPHALT

STAGE	STATION	TO	STATION	LOCATION	690.0150 LF	REMARKS
1	233+22	-	242+07	S. RECONSTRUCTION RT	881	
1	234+78	-	234+93	DWY RT	34	
1	2+93A	-	3+53A	STH 11 RT	54	
2	244+46	-	249+00	N. RECONSTRUCTION RT	454	
2	249+00	-	258+25	N. RECONSTRUCTION RT	925	
3	242+96	-	244+46	S. RECONSTRUCTION RT	246	
4	233+22	-	233+22	STH 80 BOP	28	
4	242+06	-	242+61	DWY LT	55	
4	244+50	-	244+83	STH 11 LT	36	
4	245+36	-	249+00	SB RT TURN LANE	368	
4	250+82	-	251+59	DWY LT	76	
4	253+34	-	253+77	DWY LT	42	
4	257+90	-	258+29	DWY LT	39	
4	258+25	-	258+25	STH 80 EOP	30	
				PROJECT TOTAL =	**3,268**	

TRAFFIC CONTROL SUMMARY

STAGE	DURATION CALENDAR DAYS	TRAFFIC CONTROL DRUMS 643.0300 DAY	TRAFFIC CONTROL BARRICADES TYPE III 643.0420 DAY	TRAFFIC CONTROL WARNING LIGHTS TYPE C 643.0715 DAY	TRAFFIC CONTROL SIGNS 643.0900 DAY	TRAFFIC CONTROL SIGNS PCMS 643.1050 DAYS	REMARKS
1	26	2,210	26	0	468	21	3 SIGNS
2	30	4,260	210	240	870	-	
3	18	2,970	0	180	558	-	
4	22	1,210	0	0	352	-	
	PROJECT TOTALS =	**10,650**	**236**	**420**	**2,248**	**21**	

SAWING CONCRETE

STAGE	STATION	TO	STATION	LOCATION	690.0250 LF	REMARKS
1	3+53A	-	5+97A	STH 11	252	
2	244+63	-	245+27	STH 11	62	
2	1+85A	-	3+11A	STH 11 LT	130	
				PROJECT TOTAL =	**314**	

3

PAVEMENT MARKING SUMMARY

STAGE	STATION	TO	STATION	LOCATION	MARKING LINE EPOXY 4-INCH 646.1020 LF	MARKING LINE EPOXY 8-INCH 646.3020 LF	MARKING ARROW EPOXY 646.5020 EACH	MARKING WORD EPOXY 646.5120 EACH	MARKING ISLAND NOSE EPOXY 646.8220 EACH	MARKING CORRUGATED MEDIAN EPOXY 646.8020 SF	MARKING DIAGONAL EPOXY 12-INCH 646.7120 LF	MARKING STOP LINE EPOXY 18-INCH 646.6120 LF	REMARKS
4	233+22	-	244+46	CL	1124	-	-	-	-	-	-	-	S.B. CENTERLINE - YELLOW
4	233+22	-	244+46	CL	1125	-	-	-	-	-	-	-	N.B. CENTERLINE - YELLOW
4	233+22	-	244+21	LT	1099	-	-	-	-	-	-	-	S.B. LANE EDGE - WHITE
4	233+22	-	245+55	RT	1507	-	-	-	-	-	-	-	N.B. LANE EDGE - WHITE
4	234+49	-	237+87	RT	85	-	-	-	-	-	-	-	N.B. DASHED LANE DIVIDER - WHITE
4	236+29	-	239+04	RT	69	-	-	-	-	-	-	-	N.B. DASHED LANE DIVIDER - WHITE
4	237+87	-	242+96	RT	-	510	-	-	-	-	-	-	N.B. LANE DIVIDER - WHITE
4	237+87	-	242+96	RT	-	510	-	-	-	-	-	-	N.B. LANE DIVIDER - WHITE
4	238+07	-	250+89	LT/RT	-	-	6	-	-	-	-	-	ARROWS - WHITE
4	239+11	-	250+10	LT/RT	-	-	-	2	-	-	-	-	WORDS - WHITE
4	239+04	-	242+11	RT	-	309	-	-	-	-	-	-	N.B. LANE DIVIDER - WHITE
4	239+54	-	242+09	RT	-	259	-	-	-	-	-	-	N.B. LANE DIVIDER - WHITE
4	240+62	-	249+77	LT/RT	-	-	-	-	-	-	115	-	DIAGONAL CHANNELIZING STRIPES - WHITE
4	105+82RA	-	110+45RA	RT	475	-	-	-	-	-	-	-	RAMP OUTSIDE LANE EDGE - YELLOW
4	242+11	-	244+06	RT	195	-	-	-	-	-	-	-	N.B. LANE EDGE - WHITE
4	242+96	-	244+46	RT	150	-	-	-	-	-	-	-	N.B. MEDIAN MARKINGS - WHITE
4	242+96	-	244+46	RT	150	-	-	-	-	-	-	-	N.B. MEDIAN MARKINGS - YELLOW
4	242+96	-	248+26	RT	-	-	-	-	4	-	-	-	ISLAND NOSE - YELLOW
4	243+04	-	248+18	RT	-	-	-	-	-	516	-	-	CORRUGATED MEDIAN EPOXY - YELLOW
4	244+86	-	245+39	RT	-	-	-	-	-	-	-	45	STOP LINE - WHITE
4	1+32A	-	1+54A	RT	-	43	-	-	-	-	-	-	STH 11 PORK CHOP ISLAND - WHITE
4	245+00	-	248+00	LT	300	-	-	-	-	-	-	-	S.B. MEDIAN MARKINGS - YELLOW
4	245+00	-	248+00	LT	300	-	-	-	-	-	-	-	S.B. MEDIAN MARKIGNS - WHITE
4	245+26	-	258+25	CL	1299	-	-	-	-	-	-	-	S.B. CENTERLINE - YELLOW
4	245+26	-	258+25	CL	1299	-	-	-	-	-	-	-	N.B. CENTERLINE - YELLOW
4	245+27	-	246+85	LT	-	158	-	-	-	-	-	-	S.B. LANE DIVIDER - WHITE
4	245+25	-	258+25	LT	1299	-	-	-	-	-	-	-	S.B. LANE EDGE - WHITE
4	245+70	-	258+25	RT	1256	-	-	-	-	-	-	-	N.B. LANE EDGE - WHITE
4	248+00	-	251+09	LT	-	309	-	-	-	-	-	-	S.B. LANE DIVIDER - WHITE
4	248+00	-	251+09	LT	-	309	-	-	-	-	-	-	S.B. LANE DIVIDER - WHITE
4	251+09	-	257+73	LT	166	-	-	-	-	-	-	-	S.B. DASHED LANE DIVIDER -WHITE
				PROJECT TOTALS =	**11,898**	**2,407**	**6**	**2**	**4**	**516**	**115**	**45**	

3

3

PERMANENT SIGNING SUMMARY

SIGN NO.	STATION	DIR	LOC	SIGN CODE	DESCRIPTION	SIZE IN	SIZE X IN	COMMENTS	POSTS WOOD 4X6-INCH X 16-FT 634.0616 EACH	POSTS TUBULAR STEEL 2X2-INCH X 1.5-FT 634.0801 EACH	SIGNS TYPE II REFLECTIVE H 637.2210 SF	SIGNS TYPE II REFLECTIVE F 637.2230 SF	MOVING SIGNS TYPE II 638.2101 EACH	REMOVING SIGNS TYPE II 638.2602 EACH	REMOVING SMALL SIGNS SUPPORTS 638.3000 EACH	MOVING SMALL SIGN SUPPORTS 638.4000 EACH	REMARKS
101	233+80	NB	RT	J2-2	Directional Assembly (2 Headed Route Pane	48	57	North East 80 11 [UA] [RT]	1	-	19.00	-	-	-	-	-	
101	233+80	NB	RT	M3-1	North Cardinal Route Marker	-	-	North	-	-	-	-	-	-	-	-	
101	233+80	NB	RT	M3-2	East Cardinal Route Marker	-	-	East	-	-	-	-	-	-	-	-	
101	233+80	NB	RT	M1-6	State Route Marker	-	-	80	-	-	-	-	-	-	-	-	
101	233+80	NB	RT	M1-6	State Route Marker	-	-	11	-	-	-	-	-	-	-	-	
101	233+80	NB	RT	M6-1	Up Arrow	-	-	[UA]	-	-	-	-	-	-	-	-	
101	233+80	NB	RT	M5-1-R	Advance Arrow RT Turn	-	-	[RT]	-	-	-	-	-	-	-	-	
102	237+14	NB	RT	D1-2	Two Destinations (Arrows)	72	30	[UA] Cuba City Benton [RA]	2	-	15.00	-	-	1	2	-	
103	239+03	NB	RT	R7-1-L	No Parking Any Time - LT Arrow	24	30		1	-	5.00	-	-	-	-	-	
104	238+03	NB	RT	W13-3	Ramp Speed _ MPH	24	30	35	1	-	-	5.00	-	-	-	-	
103R	238+76	NB	RT	R7-4-L	No Stopping or Standing - LT Arrow	18	24		-	-	-	-	-	1	1	-	
104R	240+45	NB	RT	W13-3	Ramp Speed _ MPH	24	30	40	-	-	-	-	-	1	1	-	
105	240+00	NB	RT	J4-1	Route Turn Assembly (1 Headed Panel)	24	57	East 11 [RA]	1	-	9.50	-	-	-	-	-	
105	240+00	NB	RT	M3-2	East Cardinal Route Marker	-	-	East	-	-	-	-	-	-	-	-	
105	240+00	NB	RT	M1-6	State Route Marker	-	-	11	-	-	-	-	-	-	-	-	
105	240+00	NB	RT	M6-1	RT Arrow	-	-	[RA]	-	-	-	-	-	-	-	-	
105R	241+12	NB	RT	J4-1	Route Turn Assembly (1 Headed Panel)	24	57	East 11 [RA]	-	-	-	-	2	1	1	-	MOVE FOR TC STAGES 1 & 2
106	239+96	NB	LT	I55-56	Adopt-A-Highway	30	18		1	-	3.75	-	-	-	-	-	
106	239+96	NB	LT	I55-56P	Adopt-A-Highway [Sponsor]	30	18	St. Francis Youth Group Hazel Green	-	-	3.75	-	-	-	-	-	
106R	240+87	NB	LT	I55-56	Adopt-A-Highway [Sponsor]	30	36	St. Francis Youth Group Hazel Green	-	-	-	-	-	1	1	-	
107	238+06	NB	LT	D2-2	Destination/Distance (Two) with Die Cut L	84	24	Hazel Green 2 Dubuque 15	2	-	14.00	-	-	-	-	-	
108	238+99	NB	LT	R7-1R	No Parking Any Time - RT Arrow	24	30		1	-	5.00	-	-	-	-	-	
109	241+39	NB	LT	R2-1	Speed Limit __	24	30	55	1	-	5.00	-	-	-	-	-	
110	235+62	NB	RT	R3-8W	Various Onlys	54	30		2	-	11.25	-	-	-	-	-	
201	242+50	NB	RT	R7-1-D	No Parking Any Time - Double Arrows	24	30		1	-	5.00	-	-	-	-	-	
202R	243+88	NB	RT	R7-4-D	No Stopping or Standing - Double Arrows	18	24		-	-	-	-	-	1	1	-	
203	243+01	NB	RT	W1-6	Large Arrow (RT)	48	24		1	-	8.00	-	-	-	-	-	
205R	244+43	NB	Ramp	R1-2	Yield	30	26		-	-	-	-	-	1	-	-	
206R	244+43	NB	Ramp	R5-1A	Wrong Way	36	24		-	-	-	-	-	1	1	-	
206	243+03	NB	Ramp	R5-1A	Wrong Way	36	24		1	-	6.00	-	-	-	-	-	
205	244+89	NB	Ramp	R1-2	Yield	36	31		1	-	7.75	-	-	-	-	-	
204R	244+76	NB	Ramp	W4-1R	Merging Traffic Symbol (RT)	36	36		-	-	-	-	-	1	1	-	
204	244+76	NB	Ramp	W4-1R	Merging Traffic Symbol (RT)	36	36		1	-	-	9.00	-	-	-	-	
207R	244+85	NB	Ramp	R5-1	Do Not Enter	30	30		-	-	-	-	-	1	1	-	
207	244+90	NB	Ramp	R5-1	Do Not Enter	30	30		1	-	6.25	-	-	-	-	-	
208	241+61	NB	Ramp	W3-2	Yield Ahead	36	36		1	-	9.00	-	-	-	-	-	
211	245+03	NB	RT	R1-1	Stop	36	36		-	1	7.46	-	-	-	-	-	
211R	244+93	NB	RT	R1-1	Stop	30	30		-	-	-	-	-	1	1	-	
210R	245+03	NB	RT	W12-1-D	Double Down Arrows	24	24		-	-	-	-	-	1	1	-	
212R	245+16	NB	RT	R5-1	Do Not Enter	30	30		-	-	-	-	-	1	-	-	
214R	245+05	NB	RT	J2-2	Route Turn Assembly (2 Headed Route Panel	48	57	West South 11 80 [LA] [LA]	-	-	-	-	-	1	2	-	
210	245+07	NB	RT	W12-1-D	Double Down Arrows	24	24		-	1	-	4.00	-	-	-	-	
213R	245+16	NB	RT	R1-1	Stop	30	30		-	-	-	-	1	1	1	-	MOVE FOR TC STAGE 2
209R	245+31	NB	RT	J3-1	Directional Assembly (1 Headed Route Pane	24	57	North 80 [TR]	-	-	-	-	2	1	1	-	MOVE FOR TC STAGE 2 & 3
209	245+34	NB	RT	J3-3	Directional Assembly (3 Headed Route Pane	72	57	West South Nort 11 80 80 [LA] [LA] [TF	2	-	28.50	-	-	-	-	-	
209	245+34	NB	RT	M3-4	West Cardinal Route Marker	-	-	West	-	-	-	-	-	-	-	-	
209	245+34	NB	RT	M3-3	South Cardinal Route Marker	-	-	South	-	-	-	-	-	-	-	-	
209	245+34	NB	RT	M3-1	North Cardinal Route Marker	-	-	North	-	-	-	-	-	-	-	-	
209	245+34	NB	RT	M1-6	State Route Marker	-	-	11	-	-	-	-	-	-	-	-	
209	245+34	NB	RT	M1-6	State Route Marker	-	-	80	-	-	-	-	-	-	-	-	
209	245+34	NB	RT	M1-6	State Route Marker	-	-	80	-	-	-	-	-	-	-	-	
209	245+34	NB	RT	M6-1	LT Arrow	-	-	[LA]	-	-	-	-	-	-	-	-	
209	245+34	NB	RT	M6-1	LT Arrow	-	-	[LA]	-	-	-	-	-	-	-	-	
209	245+34	NB	RT	M6-2	Arrow Tilt RT	-	-	[TR]	-	-	-	-	-	-	-	-	
215	245+47	NB	RT	R1-1	Stop	36	36		-	1	7.46	-	-	-	-	-	
216	245+47	NB	RT	R5-1	Do Not Enter	36	36		-	-	7.46	-	-	-	-	-	
215R	245+77	NB	RT	R1-1	Stop	30	30		-	-	-	-	-	1	1	-	
216R	245+77	NB	RT	R5-1	Do Not Enter	30	30		-	-	-	-	-	1	-	-	
217R	246+41	NB	RT	J4-1	Reassurance Assembly (1 Headed Route Pane	24	36	North 80	-	-	-	-	1	1	1	-	MOVE FOR TC STAGE 2
217	246+69	NB	RT	J4-1	Reassurance Assembly (1 Headed Route Pane	24	36	North 80	1	-	6.00	-	-	-	-	-	
217	246+69	NB	RT	M3-1	North Cardinal Route Marker	-	-	North	-	-	-	-	-	-	-	-	
								SUBTOTAL #1=	**23**	**3**	**190.13**	**18.00**	**6**	**19**	**18**	**0**	

3

PERMANENT SIGNING SUMMARY (CONTINUED)

SIGN NO.	STATION	IRECTIO	OCATION	SIGN CODE	DESCRIPTION	SIZE IN	SIZE X IN	COMMENTS	POSTS WOOD 4X6-INCH X 16-FT 634.0616 EACH	POSTS TUBULAR STEEL 2X2-INCH X 1.5-FT 634.0801 EACH	SIGNS TYPE II REFLECTIVE H 637.2210 SF	SIGNS TYPE II REFLECTIVE F 637.2230 SF	MOVING SIGNS TYPE II 638.2101 EACH	REMOVING SIGNS TYPE II 638.2602 EACH	REMOVING SMALL SIGNS SUPPORTS 638.3000 EACH	MOVING SMALL SIGN SUPPORTS 638.4000 EACH	REMARKS
217	246+69	NB	RT	M1-6	State Route Marker	-	-	80	-	-	-	-	-	-	-	-	
218R	247+50	NB	RT	I-55-56	Adopt-A-Highway [Sponsor]	30	36	Knights of Colu Council 765 Cuba City	-	-	-	-	-	1	1	-	
219	248+25	NB	RT	R7-4-D	No Stopping or Standing - Double Arrows	24	30		1	-	5.00	-	-	-	-	-	
219R	248+48	NB	RT	R7-4-D	No Stopping or Standing - RT Arrow	18	24		-	-	-	-	-	1	1	-	
220R	248+50	SB	RT	R7-4-D	No Parking Any Time - LT Arrow	18	24		-	-	-	-	-	1	1	-	
220	246+81	SB	RT	R7-4-D	No Parking Any Time - Double Arrows	24	30		1	-	5.00	-	-	-	-	-	
221	248+06	SB	RT	J3-1	Directional Assembly (3 Headed Panel)	24	57	East 11 [LA] [UA] [U	1	-	9.50	-	-	-	-	-	
221	248+06	SB	RT	M3-2	East Cardinal Route Marker	-	-	East	-	-	-	-	-	-	-	-	
221	248+06	SB	RT	M1-6	State Route Marker	-	-	11	-	-	-	-	-	-	-	-	
221	248+06	SB	RT	M6-1	LT Arrow	-	-	[LA]	-	-	-	-	-	-	-	-	
221R	245+24	SB	RT	J3-3	Directional Assembly (3 Headed Panel)	72	57	East West South 11 11 80 [LA] [UA] [U	-	-	-	-	-	1	2	-	
222	244+99	SB	RT	-	Street Name Sign	-	-	N Hollow St	-	-	-	-	1	-	-	1	
223	244+43	SB	RT	R1-1	Stop	30	30		1	-	5.18	-	-	-	-	-	
223R	244+43	SB	RT	R1-1	Stop	30	30		-	-	-	-	-	1	1	-	
224	244+01	SB	RT	R7-1D	No Parking Any Time - Double Arrows	24	30		1	-	5.00	-	-	-	-	-	
224R	243+36	SB	RT	R7-1D	No Parking Any Time - Double Arrows	18	24		-	-	-	-	-	1	1	-	
225	243+23	SB	RT	J4-2	Reassurance Assembly (2 Headed Route Pane	48	36	West South 11 80	1	-	12.00	-	-	-	-	-	
225	243+23	SB	RT	M3-4	West Cardinal Route Marker	-	-	West	-	-	-	-	-	-	-	-	
225	243+23	SB	RT	M3-3	South Cardinal Route Marker	-	-	South	-	-	-	-	-	-	-	-	
225	243+23	SB	RT	M1-6	State Route Marker	-	-	11	-	-	-	-	-	-	-	-	
225	243+23	SB	RT	M1-6	State Route Marker	-	-	80	-	-	-	-	-	-	-	-	
225R	241+75	SB	RT	J4-2	Reassurance Assembly (2 Headed Route Pane	48	36		-	-	-	-	-	1	1	-	
226R	248+52	SB	RT	R3-8	LT/Thru & RT Only	36	30		-	-	-	-	-	1	1	-	
301	252+96	NB	RT	D2-2	Destination/Distance (Two) with Die Cut L	78	24	Cuba City 2 Platteville 11	2	-	13.00	-	-	1	2	-	
302	263+00	SB	LT	W14-3	No Passing Zone	48	36		1	-	-	5.56	-	-	-	-	
303	252+97	SB	RT	J3-3	Directional Assembly (3 Headed Panel)	72	57	East West South 11 11 80 [LT] [UA] [U	2	-	28.50	-	-	1	2	-	
303	252+97	SB	RT	M3-2	East Cardinal Route Marker	-	-	East	-	-	-	-	-	-	-	-	
303	252+97	SB	RT	M3-4	West Cardinal Route Marker	-	-	West	-	-	-	-	-	-	-	-	
303	252+97	SB	RT	M3-3	South Cardinal Route Marker	-	-	South	-	-	-	-	-	-	-	-	
303	252+97	SB	RT	M1-6	State Route Marker	-	-	11	-	-	-	-	-	-	-	-	
303	252+97	SB	RT	M1-6	State Route Marker	-	-	11	-	-	-	-	-	-	-	-	
303	252+97	SB	RT	M1-6	State Route Marker	-	-	80	-	-	-	-	-	-	-	-	
303	252+97	SB	RT	M5-1-L	Advance Arrow LT Turn	-	-	[LT]	-	-	-	-	-	-	-	-	
303	252+97	SB	RT	M6-1	Up Arrow	-	-	[UA]	-	-	-	-	-	-	-	-	
303	252+97	SB	RT	M6-1	Up Arrow	-	-	[UA]	-	-	-	-	-	-	-	-	
304	249+48	SB	RT	D1-2	Two Destinations (Arrows)	84	30	[UA] Hazel Gree [LA] Benton	2	-	17.50	-	-	1	2	-	
305	251+72	SB	RT	R7-1L	No Parking Any Time - LT Arrow	24	30		1	-	5.00	-	-	-	-	-	
306	250+77	SB	RT	I55-56	Adopt-A-Highway	30	18		1	-	3.75	-	-	-	-	-	
306	250+77	NB	RT	I55-56P	Adopt-A-Highway [Sponsor]	30	18	Knights of Colu Council 765 Cuba City	-	-	3.75	-	-	-	-	-	
307	351+80	NB	RT	R7-1R	No Parking Any Time - RT Arrow	18	24		1	-	3.00	-	-	-	-	-	
308	252+97	NB	RT	R2-1	Speed Limit __	24	30	55	1	-	5.00	-	-	-	-	-	
								SUBTOTAL #2=	**13**	**0**	**100.68**	**5.56**	**1**	**11**	**15**	**1**	
								SUBTOTAL #1=	**23**	**3**	**190.13**	**18.00**	**6**	**19**	**18**	**0**	
								+	+	+	+	+	+	+	+	+	
								SUBTOTAL #2=	**13**	**0**	**100.68**	**5.56**	**1**	**11**	**15**	**1**	
								PROJECT TOTALS =	**36**	**3**	**290.81**	**23.56**	**7**	**30**	**33**	**1**	

3

CONSTRUCTION STAKING SUMMARY

STAGE	STATION	TO	STATION	LOCATION	CONSTRUCTION STAKING SUBGRADE 650.4500 LF	CONSTRUCTION STAKING BASE 650.5000 LF	CONSTRUCTION STAKING CURB GUTTER AND CURB & GUTTER 650.5500 LF	CONSTRUCTION STAKING PIPE CULVERTS 650.6000 EACH	CONSTRUCTION STAKING CONCRETE PAVEMENT 650.7000 LF	CONSTRUCTION STAKING RESURFACING REFERENCE 650.8000 LF	CONSTRUCTION STAKING SLOPE STAKES 650.9920 LF
1	104+83RA	-	112+00RA	RAMP	717	717	-	-	-	-	717
1	238+00	-	260+00	STH 80 LT, TEMP ROAD	2200	2200	-	-	-	-	2200
1	233+22	-	242+00	STH 80 RT	878	878	-	-	-	-	878
1	233+22	-	241+74	STH 80 NB C&G	-	-	841	-	-	-	-
1	234+76	-	234+96	DRIVEWAY	-	-	-	1	-	-	-
1	242+30	-	242+59	CULVERT	-	-	-	1	-	-	-
1	243+36	-	244+14	CULVERT	-	-	-	1	-	-	-
2	244+46	-	248+50	STH 80 RT	404	404	-	-	-	-	404
2	244+06	-	244+66	SE QUADRANT	-	-	95	-	-	-	-
2	244+06	-	245+70	CONCRETE INTERSECTION	-	-	-	-	164	-	-
2	244+06	-	245+70	CONCRETE ISLAND	-	-	69	-	-	-	-
2	244+14	-	245+72	CULVERT	-	-	-	1	-	-	-
2	245+24	-	247+52	CONCRETE APRON	-	-	-	-	228	-	-
2	245+24	-	253+75	NE QUADRANT	-	-	862	-	-	-	-
2	248+50	-	258+25	STH 80 RT	975	975	-	-	-	-	975
2	253+75	-	258+25	STH 80 SHLD RT	450	450	-	-	-	-	450
3	241+09	-	244+06	STH 80 SHLD RT	297	297	-	-	-	-	297
3	242+00	-	244+46	STH 80 RT	246	246	-	-	-	-	246
3	242+07	-	242+30	CULVERT	-	-	-	1	-	-	-
4	233+22	-	242+59	STH 80 SHLD LT	937	937	-	-	-	-	937
4	242+03	-	242+07	CULVERT	-	-	-	1	-	-	-
4	242+12	-	242+52	DRIVEWAY	-	-	-	1	-	-	-
4	242+64	-	244+50	SW QUADRANT	-	-	207	-	-	-	-
4	244+83	-	246+50	NW QUADRANT	-	-	183	-	-	-	-
4	245+43	-	248+91	STH 80 LT	348	348	-	-	-	-	348
4	245+72	-	246+00	CULVERT	-	-	-	1	-	-	-
4	246+50	-	258+25	STH 80 SHLD LT	1175	1175	-	-	-	-	1175
4	246+64	-	246+84	DRIVEWAY	-	-	-	1	-	-	-
4	251+09	-	251+29	DRIVEWAY	-	-	-	1	-	-	-
4	253+46	-	253+66	DRIVEWAY	-	-	-	1	-	-	-
4	257+98	-	258+18	DRIVEWAY	-	-	-	1	-	-	-
4	233+22		258+25	STH 80	-	-	-	-	-	2503	-
				PROJECT TOTALS =	**8,627**	**8,627**	**2,257**	**12**	**392**	**2,503**	**8,627**

3

STATE OF WISCONSIN
DEPARTMENT OF TRANSPORTATION
TRANSPORTATION PROJECT PLAT TITLE SHEET
1706-00-24
DUBUQUE - SHULLSBURG
STH 80 INTERSECTION (EAST JUNCTION)
STH 11
GRANT COUNTY

4

CONVENTIONAL SYMBOLS

SECTION LINE
QUARTER LINE
SIXTEENTH LINE
NEW REFERENCE LINE
NEW R/W LINE
EXISTING R/W OR HE LINE
PROPERTY LINE
LOT, TIE & OTHER MINOR LINES
SLOPE INTERCEPT
CORPORATE LIMITS
UNDERGROUND FACILITY (COMMUNICATIONS ELECTRIC ETC)
NEW R/W (FEE OR HE) (HATCHING VARIES BY OWNER)
TEMPORARY LIMITED EASEMENT
EASEMENT AREA (PERMANENT LIMITED OR RESTRICTED DEVELOPMENT)
TRANSMISSION STRUCTURES
BUILDING
TO BE REMOVED
BRIDGE

SECTION CORNER SYMBOL
SECTION CORNER MONUMENT
GEODETIC SURVEY MONUMENT
SIXTEENTH CORNER MONUMENT
SIGN
OFF-PREMISE SIGN
R/W MONUMENT (TO BE SET)
NON-MONUMENTED R/W POINT
FOUND IRON PIN (3/4-INCH UNLESS NOTED)
PARCEL NUMBER
UTILITY NUMBER
PARALLEL OFFSETS

	COMPENSABLE	NON-COMPENSABLE
ELECTRIC POLE		
TELEPHONE POLE		
PEDESTAL (LABEL TYPE) (TV, TEL, ELEC, ETC)		

ACCESS RESTRICTED BY ACQUISITION
NO ACCESS (BY STATUTORY AUTHORITY)
ACCESS RESTRICTED (BY PREVIOUS PROJECT OR CONTROL)
NO ACCESS (NEW HIGHWAY)

THE NOTES,CONVENTIONAL SIGNS, AND ABBREVIATIONS ARE ASSOCIATED WITH EACH TRANSPORTATION PROJECT PLAT FOR PROJECT 1706-00-24

POSITIONS SHOWN ON THIS PLAT ARE WISCONSIN COORDINATE REFERENCE SYSTEM COORDINATES (WISCRS), GRANT COUNTY, NAD83 (2011) IN US SURVEY FEET. VALUES SHOWN ARE GRID COORDINATES, GRID BEARINGS, AND GRID DISTANCES. GRID DISTANCES MAY BE USED AS GROUND DISTANCES.

NGS CONTROL POINT UTILIZED: PID: DH5013, DESIGNATION: HAZEL GREEN E GPS, GRANT COUNTY, WI.

ALL NEW RIGHT-OF-WAY MONUMENTS WILL BE TYPE 2 (TYPICALLY ¾" X 24" IRON REBARS), UNLESS OTHERWISE NOTED, AND WILL BE PLACED PRIOR TO THE COMPLETION OF THE PROJECT.

ALL RIGHT-OF-WAY LINES DEPICTED IN THE NON-ACQUISITION AREAS ARE INTENDED TO RE-ESTABLISH EXISTING RIGHT-OF-WAY LINES AS DETERMINED FROM PREVIOUS PROJECTS, OTHER RECORDED DOCUMENTS, OR FROM CENTERLINE OF EXISTING PAVEMENTS.

RIGHT-OF-WAY BOUNDARIES ARE DEFINED WITH COURSES OF THE PERIMETER OF THE HIGHWAY LANDS REFERENCED TO THE U.S. PUBLIC LAND SURVEY SYSTEM OR OTHER "SURVEYS" OF PUBLIC RECORD.

DIMENSIONING FOR THE NEW RIGHT-OF-WAY IS MEASURED ALONG AND PERPENDICULAR TO THE NEW REFERENCE LINES.

A TEMPORARY LIMITED EASEMENT (TLE) IS A RIGHT FOR CONSTRUCTION PURPOSES, AS DEFINED HEREIN, INCLUDING THE RIGHT TO OPERATE NECESSARY EQUIPMENT THEREON, THE RIGHT OF INGRESS AND EGRESS, AS LONG AS REQUIRED FOR SUCH PUBLIC PURPOSE, INCLUDING THE RIGHT TO PRESERVE, PROTECT, REMOVE, OR PLANT THEREON ANY VEGETATION THAT THE HIGHWAY AUTHORITIES MAY DEEM DESIRABLE. ALL (TLES) ON THIS PLAT EXPIRE AT THE COMPLETION OF THE CONSTRUCTION PROJECT FOR WHICH THIS INSTRUMENT IS GIVEN.

A PERMANENT LIMITED EASEMENT (PLE) IS A RIGHT FOR CONSTRUCTION AND MAINTENANCE PURPOSES, AS DEFINED HEREIN, INCLUDING THE RIGHT TO OPERATE NECESSARY EQUIPMENT THEREON AND THE RIGHT OF INGRESS AND EGRESS, AS LONG AS REQUIRED FOR SUCH PUBLIC PURPOSE, INCLUDING THE RIGHT TO PRESERVE, PROTECT, REMOVE, OR PLANT THEREON ANY VEGETATION THAT THE HIGHWAY AUTHORITIES MAY DEEM DESIRABLE, BUT WITHOUT PREJUDICE TO THE OWNER'S RIGHTS TO MAKE OR CONSTRUCT IMPROVEMENTS ON SAID LANDS OR TO FLATTEN THE SLOPES, PROVIDING SAID ACTIVITIES WILL NOT IMPAIR OR OTHERWISE ADVERSELY AFFECT THE HIGHWAY FACILITIES.

AN EASEMENT FOR HIGHWAY PURPOSES (HE), AS LONG AS SO USED, INCLUDING THE RIGHT TO PRESERVE, PROTECT, REMOVE, OR PLANT THEREON ANY VEGETATION THAT THE HIGHWAY AUTHORITIES MAY DEEM DESIRABLE.

PROPERTY LINES SHOWN ON THIS PLAT ARE DRAWN FROM DATA DERIVED FROM MAPS AND DOCUMENTS OF PUBLIC RECORD AND/OR EXISTING OCCUPATIONAL LINES. THIS PLAT MAY NOT BE A TRUE REPRESENTATION OF EXISTING PROPERTY LINES, EXCLUDING RIGHT-OF-WAY, AND SHOULD NOT BE USED AS A SUBSTITUTE FOR AN ACCURATE FIELD SURVEY.

PARCEL IDENTIFICATION NUMBERS MAY NOT POINT TO ALL AREAS OF ACQUISITION, AS NOTED ON THE SCHEDULE OF LANDS & INTERESTS REQUIRED.

FOR EXISTING HIGHWAY RIGHT-OF-WAY AND ACCESS CONTROL POINTS OF REFERENCE SEE INDIVIDUAL TPP DETAIL PAGES

CONVENTIONAL ABBREVIATIONS

ACCESS RIGHTS	AR	POINT OF INTERSECTION	PI
ACRES	AC	PROPERTY LINE	PL
AHEAD	AH	RECORDED AS	(100')
ALUMINUM	ALUM	REEL / IMAGE	R/I
AND OTHERS	ET AL	REFERENCE LINE	R/L
BACK	BK	REMAINING	REM
BLOCK	BLK	RESTICTIVE DEVELOPMENT EASEMENT	RDE
CENTERLINE	C/L	RIGHT	RT
CERTIFIED SURVEY MAP	CSM	RIGHT OF WAY	R/W
CONCRETE	CONC	SECTION	SEC
COUNTY	CO	SEPTIC VENT	SEPV
COUNTY TRUNK HIGHWAY	CTH	SQUARE FEET	SF
DISTANCE	DIST	STATE TRUNK HIGHWAY	STH
CORNER	COR	STATION	STA
DOCUMENT NUMBER	DOC	TELEPHONE PEDESTAL	TP
EASEMENT	EASE	TEMPORARY LIMITED EASEMENT	TLE
EXISTING	EX	TRANSPORTATION PROJECT PLAT	TPP
GAS VALVE	GV	UNITED STATES HIGHWAY	USH
GRID NORTH	GN	VOLUME	V
HIGHWAY EASEMENT	HE		
IDENTIFICATION	ID		
LAND CONTRACT	LC		
LEFT	LT		
MONUMENT	MON		
NATIONAL GEODETIC SURVEY	NGS		
NUMBER	NO		
OUTLOT	OL		
PAGE	P		
POINT OF TANGENCY	PT		
PERMANENT LIMITED EASEMENT	PLE		
POINT OF BEGINNING	PB		
POINT OF ENDING	EP		
POINT OF CURVATURE	PC		
POINT OF COMPOUND CURVE	PCC		

CURVE DATA

LONG CHORD	LCH
LONG CHORD BEARING	LCB
RADIUS	R
DEGREE OF CURVE	D
CENTRAL ANGLE	Δ/DELTA
LENGTH OF CURVE	L
TANGENT	T
DIRECTION AHEAD	DA
DIRECTION BACK	DB

CONVENTIONAL UTILITY SYMBOLS

W	WATER
G	GAS
T	TELEPHONE
OH	OVERHEAD TRANSMISSION LINES
E	ELECTRIC
TV	CABLE TELEVISION
FO	FIBER OPTIC
SAN	SANITARY SEWER
SS	STORM SEWER

RESERVED FOR REGISTER OF DEEDS
PROJECT NUMBER 1706-00-24 - 4.01
SHEET 2 OF 2

FILE NAME : N:\PDS\C3D\17060004\RW\RWPLAT\PLAT DEVELOPMENT\C3D\1706-00-24 TPP-2 DWG
LAYOUT NAME: TPP Title 34x22
PLOT DATE : 9/16/2015 3:04 PM PLOT BY : FELDBINDER, JOERG
APPRAISAL PLAT DATE : 11/13/2018

799816

TRANSPORTATION PROJECT PLAT NO: 1706-00-24 - 4.01

PART OF THE NW 1/4 OF THE SE 1/4 OF SECTION 12, RANGE 1 WEST, TOWNSHIP 1 NORTH, TOWN OF HAZEL GREEN, GRANT COUNTY, WISCONSIN.

RELOCATION ORDER STH 11, DUBUQUE - SHULLSBURG, GRANT COUNTY (STH 80 INTERSECTION (EAST JUNCTION))

TO PROPERLY ESTABLISH, LAY OUT, WIDEN, ENLARGE, EXTEND, CONSTRUCT, RECONSTRUCT, IMPROVE, OR MAINTAIN A PORTION OF THE HIGHWAY DESIGNATED ABOVE, THE STATE OF WISCONSIN DEPARTMENT OF TRANSPORTATION DEEMS IT NECESSARY TO RELOCATE OR CHANGE SAID HIGHWAY AND ACQUIRE CERTAIN LANDS AND INTERESTS OR RIGHTS IN LANDS FOR THE ABOVE PROJECT

TO EFFECT THIS CHANGE, PURSUANT TO AUTHORITY GRANTED UNDER SECTION 84 02 (3), 84 09, AND 84 30, WISCONSIN STATUTES, THE DEPARTMENT OF TRANSPORTATION HEREBY ORDERS THAT:
1 THAT PORTION OF SAID HIGHWAY AS SHOWN ON THIS PLAT IS LAID OUT AND ESTABLISHED TO THE LINES AND WIDTHS AS SO SHOWN FOR THE ABOVE PROJECT
2 THE LANDS OR INTERESTS OR RIGHTS IN LANDS AS SHOWN ON THIS PLAT ARE REQUIRED BY THE DEPARTMENT FOR THE ABOVE PROJECT AND SHALL BE ACQUIRED IN THE NAME OF THE STATE OF WISCONSIN, PURSUANT TO THE PROVISIONS OF SECTION 84 09 (1) OR (2), WISCONSIN STATUTES

GRANT COUNTY, WI
REGISTER OF DEEDS
FEB 1 - 2019
at 1:30 P.M. & recorded in Vol. C Records Page 98+98a
MARILYN PIERCE, REGISTER
Pages 2

RESERVED FOR REGISTER OF DEEDS
PROJECT NUMBER 1706-00-24 - 4.01
SHEET 1 OF 2

LAYOUT SCALE 0 1 MI.

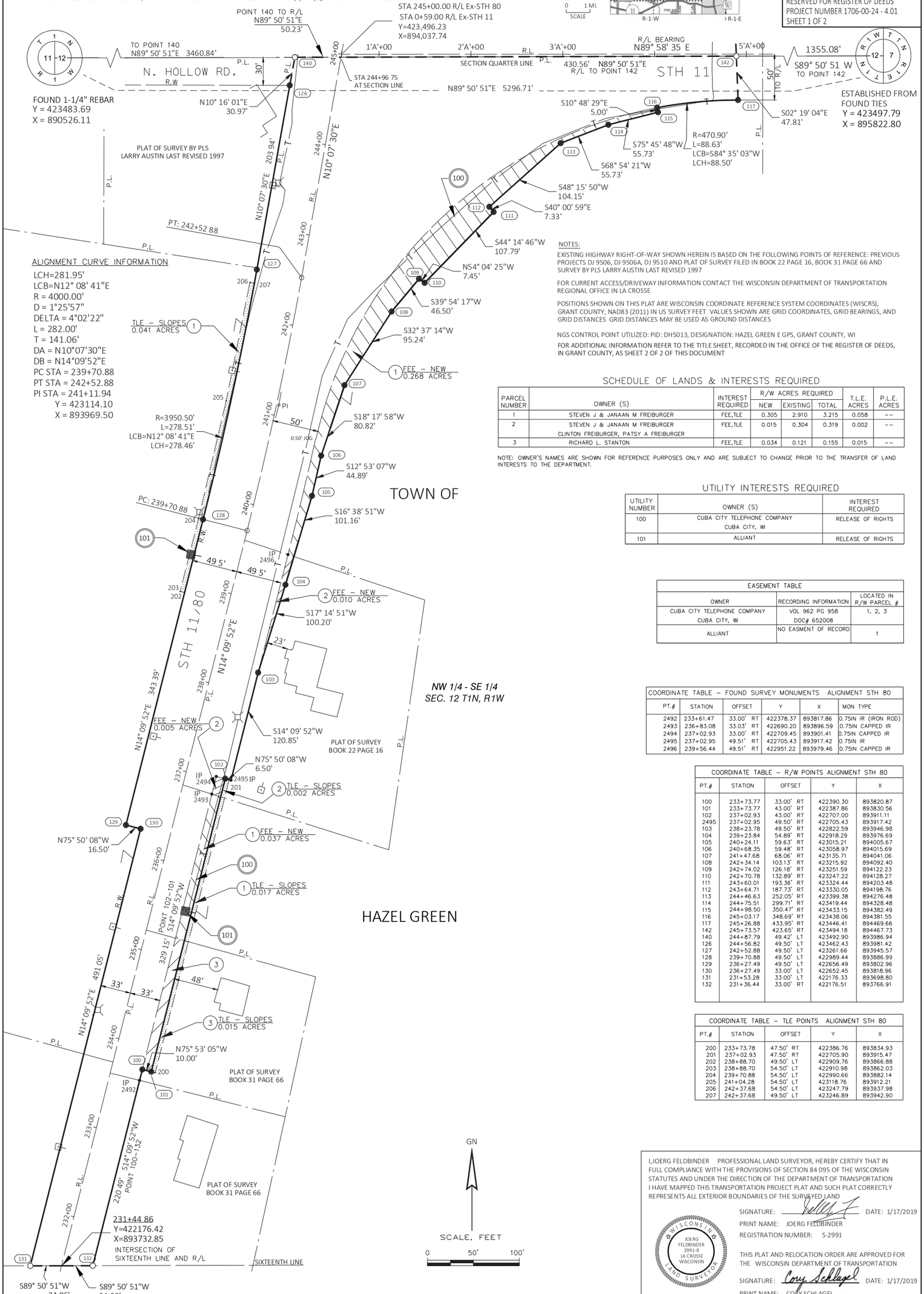

NOTES:

EXISTING HIGHWAY RIGHT-OF-WAY SHOWN HEREIN IS BASED ON THE FOLLOWING POINTS OF REFERENCE: PREVIOUS PROJECTS DJ 9506, DJ 9506A, DJ 9510 AND PLAT OF SURVEY FILED IN BOOK 22 PAGE 16, BOOK 31 PAGE 66 AND SURVEY BY PLS LARRY AUSTIN LAST REVISED 1997

FOR CURRENT ACCESS/DRIVEWAY INFORMATION CONTACT THE WISCONSIN DEPARTMENT OF TRANSPORTATION REGIONAL OFFICE IN LA CROSSE

POSITIONS SHOWN ON THIS PLAT ARE WISCONSIN COORDINATE REFERENCE SYSTEM COORDINATES (WISCRS), GRANT COUNTY, NAD83 (2011) IN US SURVEY FEET VALUES SHOWN ARE GRID COORDINATES, GRID BEARINGS, AND GRID DISTANCES GRID DISTANCES MAY BE USED AS GROUND DISTANCES

NGS CONTROL POINT UTILIZED: PID: DH5013, DESIGNATION: HAZEL GREEN E GPS, GRANT COUNTY, WI

FOR ADDITIONAL INFORMATION REFER TO THE TITLE SHEET, RECORDED IN THE OFFICE OF THE REGISTER OF DEEDS, IN GRANT COUNTY, AS SHEET 2 OF 2 OF THIS DOCUMENT

SCHEDULE OF LANDS & INTERESTS REQUIRED

PARCEL NUMBER	OWNER (S)	INTEREST REQUIRED	R/W ACRES REQUIRED NEW	EXISTING	TOTAL	T.L.E. ACRES	P.L.E. ACRES
1	STEVEN J & JANAAN M FREIBURGER	FEE,TLE	0.305	2.910	3.215	0.058	--
2	STEVEN J & JANAAN M FREIBURGER CLINTON FREIBURGER, PATSY A FREIBURGER	FEE,TLE	0.015	0.304	0.319	0.002	--
3	RICHARD L. STANTON	FEE,TLE	0.034	0.121	0.155	0.015	--

NOTE: OWNER'S NAMES ARE SHOWN FOR REFERENCE PURPOSES ONLY AND ARE SUBJECT TO CHANGE PRIOR TO THE TRANSFER OF LAND INTERESTS TO THE DEPARTMENT.

UTILITY INTERESTS REQUIRED

UTILITY NUMBER	OWNER (S)	INTEREST REQUIRED
100	CUBA CITY TELEPHONE COMPANY CUBA CITY, WI	RELEASE OF RIGHTS
101	ALLIANT	RELEASE OF RIGHTS

EASEMENT TABLE

OWNER	RECORDING INFORMATION	LOCATED IN R/W PARCEL #
CUBA CITY TELEPHONE COMPANY CUBA CITY, WI	VOL 962 PG 958 DOC# 652008	1, 2, 3
ALLIANT	NO EASMENT OF RECORD	1

COORDINATE TABLE – FOUND SURVEY MONUMENTS ALIGNMENT STH 80

PT.#	STATION	OFFSET	Y	X	MON TYPE
2492	233+61.47	33.00' RT	422378.37	893817.86	0.75IN IR (IRON ROD)
2493	236+83.08	33.03' RT	422690.20	893896.59	0.75IN CAPPED IR
2494	237+02.93	33.00' RT	422709.45	893901.41	0.75IN CAPPED IR
2495	237+02.95	49.51' RT	422705.43	893917.42	0.75IN IR
2496	239+56.44	49.51' RT	422951.22	893979.46	0.75IN CAPPED IR

COORDINATE TABLE – R/W POINTS ALIGNMENT STH 80

PT.#	STATION	OFFSET	Y	X
100	233+73.77	33.00' RT	422390.30	893820.87
101	233+73.77	43.00' RT	422387.86	893830.56
102	237+02.93	43.00' RT	422707.00	893911.11
2495	237+02.95	49.50' RT	422705.43	893917.42
103	238+23.78	49.50' RT	422822.59	893946.98
104	239+23.84	54.89' RT	422918.29	893976.69
105	240+24.11	59.63' RT	423015.21	894005.67
106	240+68.35	59.48' RT	423058.97	894015.69
107	241+47.68	68.06' RT	423135.71	894041.06
108	242+34.14	103.13' RT	423215.92	894092.40
109	242+74.02	126.18' RT	423251.59	894122.23
110	242+70.78	132.89' RT	423247.22	894128.27
111	243+60.01	193.36' RT	423324.44	894203.48
112	243+64.71	187.73' RT	423330.05	894198.76
113	244+46.63	252.05' RT	423399.38	894276.48
114	244+75.51	299.71' RT	423419.44	894328.48
115	244+98.50	350.47' RT	423433.15	894382.49
116	245+03.17	348.69' RT	423438.06	894381.55
117	245+26.88	433.95' RT	423446.41	894469.66
142	245+73.57	423.65' RT	423494.18	894467.73
140	244+87.79	49.42' LT	423492.90	893986.94
126	244+56.82	49.50' LT	423462.43	893981.42
127	242+52.88	49.50' LT	423261.66	893945.57
128	239+70.88	49.50' LT	422989.44	893886.99
129	236+27.49	49.50' LT	422656.49	893802.96
130	236+27.49	33.00' LT	422652.45	893818.96
131	231+53.28	33.00' LT	422176.33	893698.80
132	231+36.44	33.00' RT	422176.51	893766.91

COORDINATE TABLE – TLE POINTS ALIGNMENT STH 80

PT.#	STATION	OFFSET	Y	X
200	233+73.78	47.50' RT	422386.76	893834.93
201	237+02.93	47.50' RT	422705.90	893915.47
202	238+88.70	49.50' LT	422909.76	893866.88
203	238+88.70	54.50' LT	422910.98	893862.03
204	239+70.88	54.50' LT	422990.66	893882.14
205	241+04.28	54.50' LT	423118.76	893912.21
206	242+37.68	54.50' LT	423247.79	893937.98
207	242+37.68	49.50' LT	423246.89	893942.90

I,JOERG FELDBINDER PROFESSIONAL LAND SURVEYOR, HEREBY CERTIFY THAT IN FULL COMPLIANCE WITH THE PROVISIONS OF SECTION 84 095 OF THE WISCONSIN STATUTES AND UNDER THE DIRECTION OF THE DEPARTMENT OF TRANSPORTATION I HAVE MAPPED THIS TRANSPORTATION PROJECT PLAT AND SUCH PLAT CORRECTLY REPRESENTS ALL EXTERIOR BOUNDARIES OF THE SURVEYED LAND

WISCONSIN JOERG FELDBINDER 2991-8 LA CROSSE WISCONSIN LAND SURVEYOR

SIGNATURE: DATE: 1/17/2019
PRINT NAME: JOERG FELDBINDER
REGISTRATION NUMBER: S-2991

THIS PLAT AND RELOCATION ORDER ARE APPROVED FOR THE WISCONSIN DEPARTMENT OF TRANSPORTATION

SIGNATURE: Cory Schlagel DATE: 1/17/2019
PRINT NAME: CORY SCHLAGEL

FILE NAME : N:\PDS\C3D\17060004\RW\RWPLAT\PLAT DEVELOPMENT\C3D\1706-00-24 TPP-2 DWG
APPRAISAL PLAT DATE : 11/13/2018

PLOT DATE : 1/29/2019 12:38 PM
PLOT BY : FELDBINDER, JOERG
PLOT SCALE : 1 IN:100 FT

1706-00-24 - 4.01
57

TRANSPORTATION PROJECT PLAT NO: 1706-00-24 - 4.02

PART OF THE SW 1/4 OF THE NE 1/4 OF SECTION 12, RANGE 1 WEST, TOWNSHIP 1 NORTH, TOWN OF HAZEL GREEN, GRANT COUNTY, WISCONSIN.

RELOCATION ORDER STH 11, DUBUQUE - SHULLSBURG, GRANT COUNTY (STH 80 INTERSECTION (EAST JUNCTION))

TO PROPERLY ESTABLISH, LAY OUT, WIDEN, ENLARGE, EXTEND, CONSTRUCT, RECONSTRUCT, IMPROVE, OR MAINTAIN A PORTION OF THE HIGHWAY DESIGNATED ABOVE, THE STATE OF WISCONSIN DEPARTMENT OF TRANSPORTATION DEEMS IT NECESSARY TO RELOCATE OR CHANGE SAID HIGHWAY AND ACQUIRE CERTAIN LANDS AND INTERESTS OR RIGHTS IN LANDS FOR THE ABOVE PROJECT

TO EFFECT THIS CHANGE, PURSUANT TO AUTHORITY GRANTED UNDER SECTION 84 02 (3), 84 09, AND 84 30, WISCONSIN STATUTES, THE DEPARTMENT OF TRANSPORTATION HEREBY ORDERS THAT:
1 THAT PORTION OF SAID HIGHWAY AS SHOWN ON THIS PLAT IS LAID OUT AND ESTABLISHED TO THE LINES AND WIDTHS AS SO SHOWN FOR THE ABOVE PROJECT
2 THE LANDS OR INTERESTS OR RIGHTS IN LANDS AS SHOWN ON THIS PLAT ARE REQUIRED BY THE DEPARTMENT FOR THE ABOVE PROJECT AND SHALL BE ACQUIRED IN THE NAME OF THE STATE OF WISCONSIN, PURSUANT TO THE PROVISIONS OF SECTION 84 09 (1) OR (2), WISCONSIN STATUTES

NOTES:

EXISTING HIGHWAY RIGHT-OF-WAY SHOWN HEREIN IS BASED ON THE FOLLOWING POINTS OF REFERENCE: PREVIOUS PROJECTS DJ 9506, DJ 9506A, DJ 9510 AND PLAT OF SURVEY BY PLS MICHAEL LAROSA 1997

FOR CURRENT ACCESS/DRIVEWAY INFORMATION CONTACT THE WISCONSIN DEPARTMENT OF TRANSPORTATION REGIONAL OFFICE IN LA CROSSE

POSITIONS SHOWN ON THIS PLAT ARE WISCONSIN COORDINATE REFERENCE SYSTEM COORDINATES (WISCRS), GRANT COUNTY, NAD83 (2011) IN US SURVEY FEET VALUES SHOWN ARE GRID COORDINATES, GRID BEARINGS, AND GRID DISTANCES GRID DISTANCES MAY BE USED AS GROUND DISTANCES

NGS CONTROL POINT UTILIZED: PID: DH5013, DESIGNATION: HAZEL GREEN E GPS, GRANT COUNTY, WI

FOR ADDITIONAL INFORMATION REFER TO THE TITLE SHEET, RECORDED IN THE OFFICE OF THE REGISTER OF DEEDS, IN GRANT COUNTY, AS SHEET 2 OF 2 OF DOCUMENT #XXXX AND FILES IN XXX PAGE XXX

RESERVED FOR REGISTER OF DEEDS
PROJECT NUMBER 1706-00-24 - 4.02

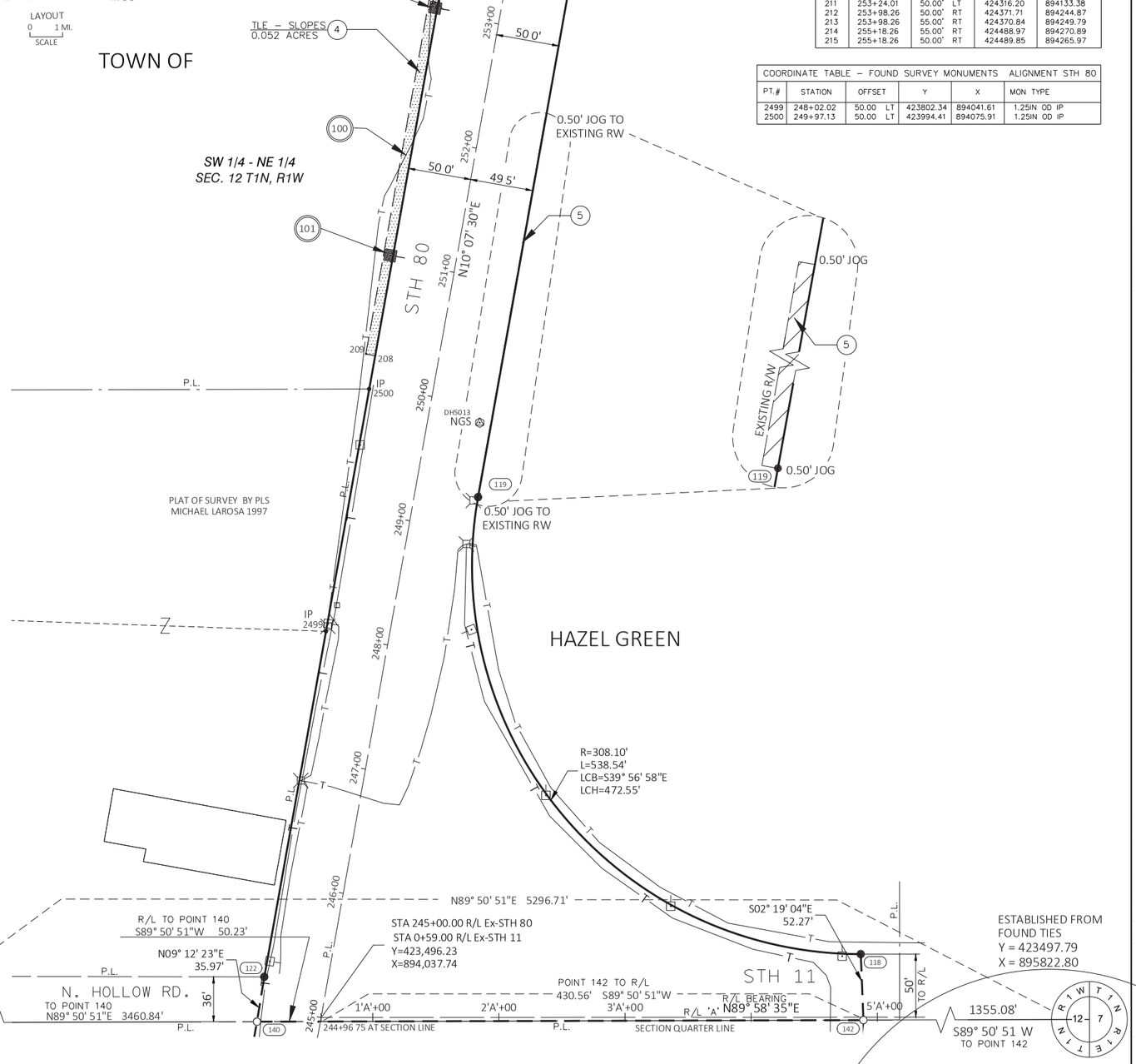

COORDINATE TABLE – R/W POINTS ALIGNMENT STH 80					
PT.#	STATION	OFFSET		Y	X
118	246+24.61	412.39'	RT	423546.41	894465.61
142	245+73.57	423.65'	RT	423494.18	894467.73
119	249+27.89	50.00'	RT	423908.67	894162.18
120	258+52.26	50.00'	RT	424818.65	894324.68
121	258+34.13	50.00'	LT	424818.38	894223.05
122	245+23.75	50.00'	LT	423528.41	893992.70
140	244+87.79	49.42'	LT	423492.90	893986.94

COORDINATE TABLE – TLE POINTS ALIGNMENT STH 80					
PT.#	STATION	OFFSET		Y	X
208	250+24.00	50.00'	LT	424020.86	894080.64
209	250+24.00	57.50'	LT	424022.19	894073.25
210	253+24.01	57.50'	LT	424317.51	894125.99
211	253+24.01	50.00'	LT	424316.20	894133.38
212	253+98.26	50.00'	RT	424371.71	894244.87
213	253+98.26	55.00'	RT	424370.84	894249.79
214	255+18.26	55.00'	RT	424488.97	894270.89
215	255+18.26	50.00'	RT	424489.85	894265.97

COORDINATE TABLE – FOUND SURVEY MONUMENTS ALIGNMENT STH 80					
PT.#	STATION	OFFSET	Y	X	MON TYPE
2499	248+02.02	50.00 LT	423802.34	894041.61	1.25IN OD IP
2500	249+97.13	50.00 LT	423994.41	894075.91	1.25IN OD IP

FOUND 1-1/4" REBAR
Y = 423483.69
X = 890526.11

SCHEDULE OF LANDS & INTERESTS REQUIRED

PARCEL NUMBER	OWNER (S)	INTEREST REQUIRED	R/W ACRES REQUIRED NEW	EXISTING	TOTAL	T.L.E. ACRES	P.L.E. ACRES
4	LEONARD F & CAROLINE P FELDMANN	TLE	--	--	--	0.052	--
5	DONALD F FELDMANN	FEE,TLE	0.003	2.693	2.696	0.014	--

NOTE: OWNER'S NAMES ARE SHOWN FOR REFERENCE PURPOSES ONLY AND ARE SUBJECT TO CHANGE PRIOR TO THE TRANSFER OF LAND INTERESTS TO THE DEPARTMENT.

UTILITY INTERESTS REQUIRED

UTILITY NUMBER	OWNER (S)	INTEREST REQUIRED
100	CUBA CITY TELEPHONE COMPANY CUBA CITY, WI	RELEASE OF RIGHTS
101	ALLIANT	RELEASE OF RIGHTS

EASEMENT TABLE		
OWNER	RECORDING INFORMATION	LOCATED IN R/W PARCEL #
CUBA CITY TELEPHONE COMPANY CUBA CITY, WI	NO EASMENT OF RECORD	4
ALLIANT	NO EASMENT OF RECORD	4

I,JOERG FELDBINDER PROFESSIONAL LAND SURVEYOR, HEREBY CERTIFY THAT IN FULL COMPLIANCE WITH THE PROVISIONS OF SECTION 84 095 OF THE WISCONSIN STATUTES AND UNDER THE DIRECTION OF THE DEPARTMENT OF TRANSPORTATION I HAVE MAPPED THIS TRANSPORTATION PROJECT PLAT AND SUCH PLAT CORRECTLY REPRESENTS ALL EXTERIOR BOUNDARIES OF THE SURVEYED LAND

WISCONSIN JOERG FELDBINDER 2991-8 LA CROSSE WISCONSIN LAND SURVEYOR

SIGNATURE: _____ DATE:

PRINT NAME: JOERG FELDBINDER

REGISTRATION NUMBER: S-2991

THIS PLAT AND RELOCATION ORDER ARE APPROVED FOR THE WISCONSIN DEPARTMENT OF TRANSPORTATION

SIGNATURE: _____ DATE:

PRINT NAME: CORY SCHLAGEL

1706-00-24 - 4.02
58
PLOT SCALE : 1 IN:100 FT
PLOT BY : FELDBINDER, JOERG
PLOT DATE : 1/29/2019 12:38 PM
FILE NAME : N:\PDS\C3D\17060004\RW\RWPLAT\PLAT DEVELOPMENT\C3D\1706-00-24 TPP-2.DWG
APPRAISAL PLAT DATE : 11/13/2018

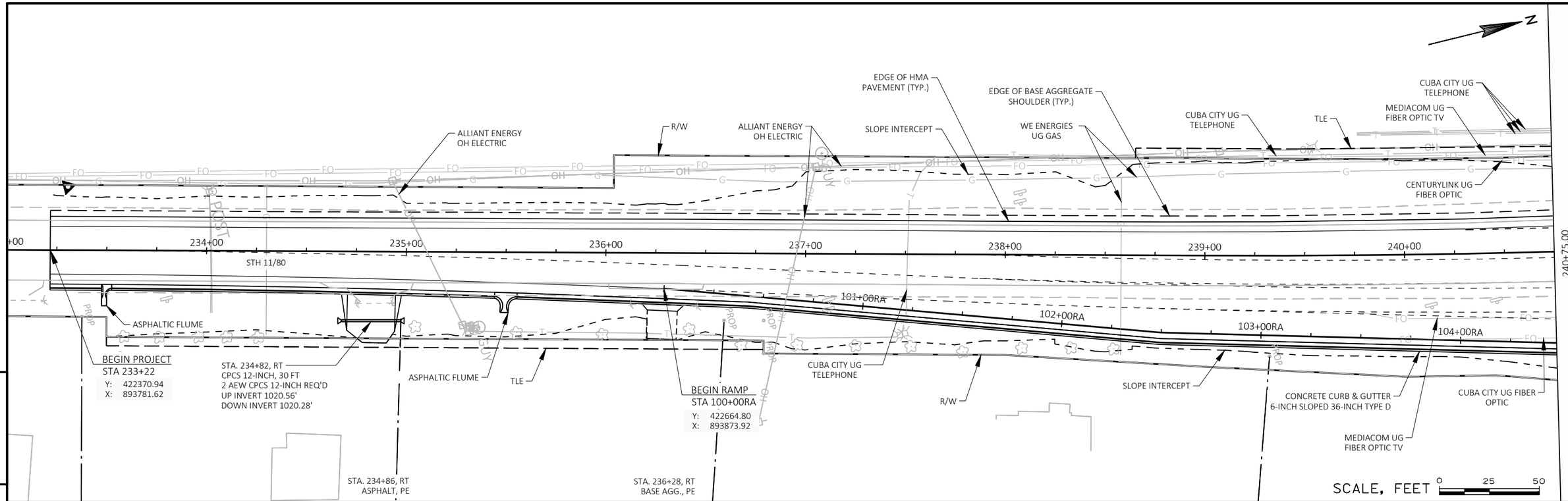

PROJECT NO: 1706-00-74	HWY: STH 11	COUNTY: GRANT	PLAN	SHEET 59	E

FILE NAME : W:\7390_05\CAD\!1706-00-04\SHEETSPLAN\050201_PN.DWG
LAYOUT NAME - 1
PLOT DATE : 11/30/2020 4:46 PM
PLOT BY : KAKACEK, JOHN
PLOT NAME :
PLOT SCALE : 1 IN:50 FT
WISDOT/CADDS SHEET 44

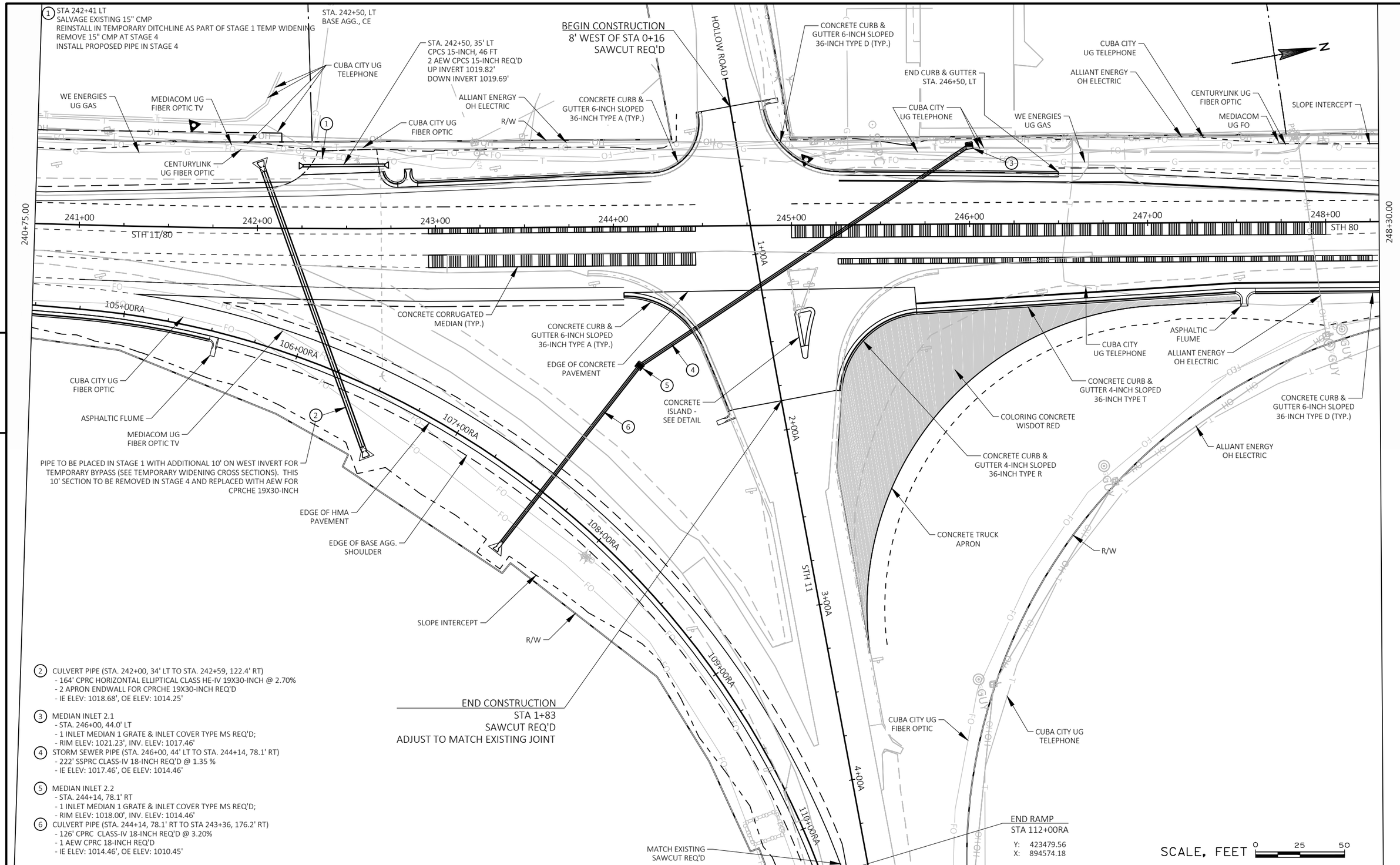

2 CULVERT PIPE (STA. 242+00, 34' LT TO STA. 242+59, 122.4' RT)
- 164' CPRC HORIZONTAL ELLIPTICAL CLASS HE-IV 19X30-INCH @ 2.70%
- 2 APRON ENDWALL FOR CPRCHE 19X30-INCH REQ'D
- IE ELEV: 1018.68', OE ELEV: 1014.25'

3 MEDIAN INLET 2.1
- STA. 246+00, 44.0' LT
- 1 INLET MEDIAN 1 GRATE & INLET COVER TYPE MS REQ'D;
- RIM ELEV: 1021.23', INV. ELEV: 1017.46'

4 STORM SEWER PIPE (STA. 246+00, 44' LT TO STA. 244+14, 78.1' RT)
- 222' SSPRC CLASS-IV 18-INCH REQ'D @ 1.35 %
- IE ELEV: 1017.46', OE ELEV: 1014.46'

5 MEDIAN INLET 2.2
- STA. 244+14, 78.1' RT
- 1 INLET MEDIAN 1 GRATE & INLET COVER TYPE MS REQ'D;
- RIM ELEV: 1018.00', INV. ELEV: 1014.46'

6 CULVERT PIPE (STA. 244+14, 78.1' RT TO STA 243+36, 176.2' RT)
- 126' CPRC CLASS-IV 18-INCH REQ'D @ 3.20%
- 1 AEW CPRC 18-INCH REQ'D
- IE ELEV: 1014.46', OE ELEV: 1010.45'

PROJECT NO: 1706-00-74	HWY: STH 11	COUNTY: GRANT	PLAN	SHEET 60	E

FILE NAME : W:\7390_05\CAD\!1706-00-04\SHEETSPLAN\050201_PN.DWG
LAYOUT NAME - 2
PLOT DATE : 11/30/2020 4:46 PM
PLOT BY : KAKACEK, JOHN
PLOT NAME :
PLOT SCALE : 1 IN:50 FT

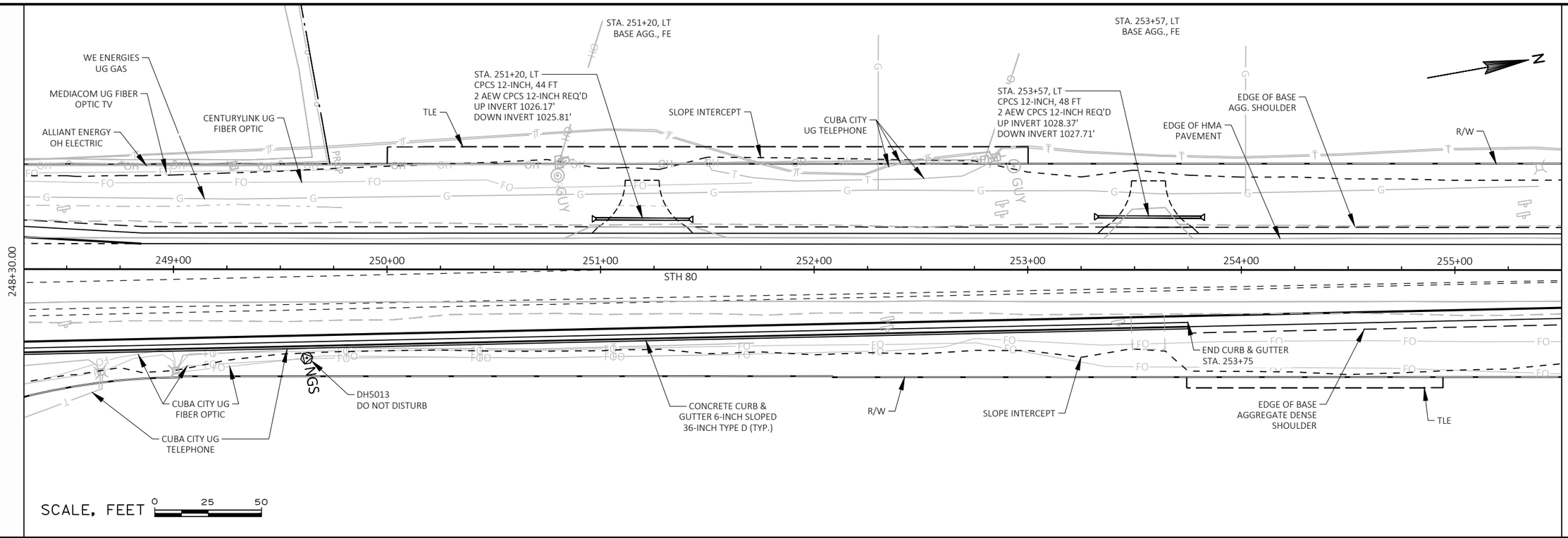

5

5

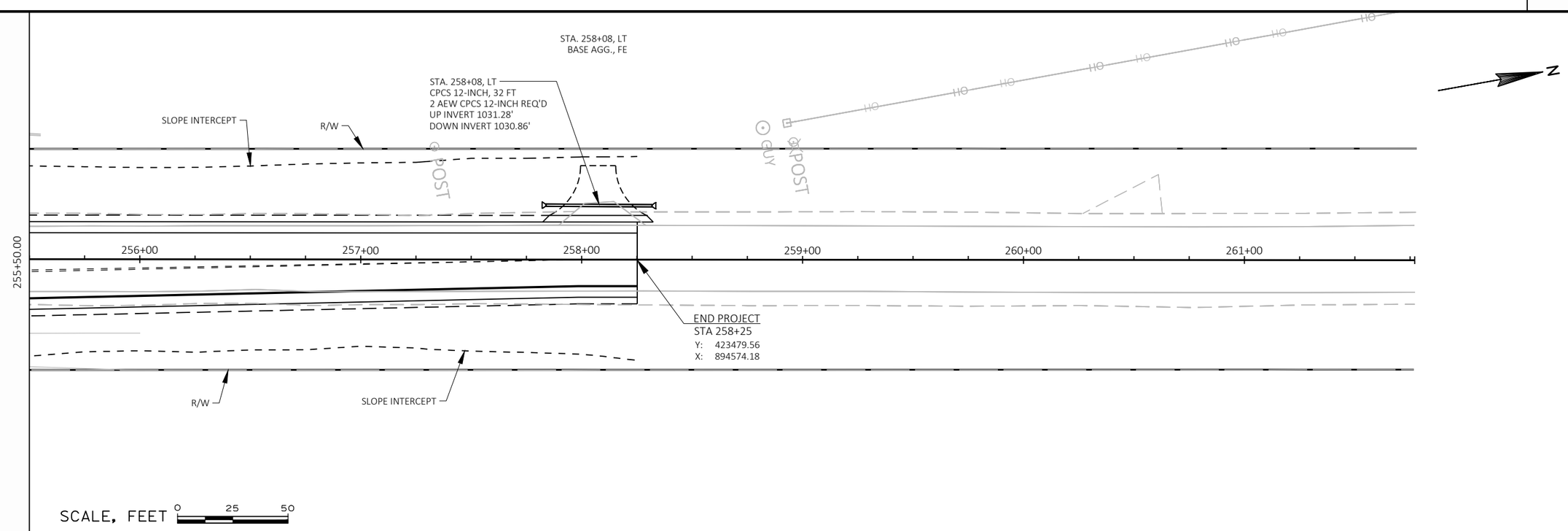

PROJECT NO: 1706-00-74	HWY: STH 11	COUNTY: GRANT	PLAN	SHEET 61	E

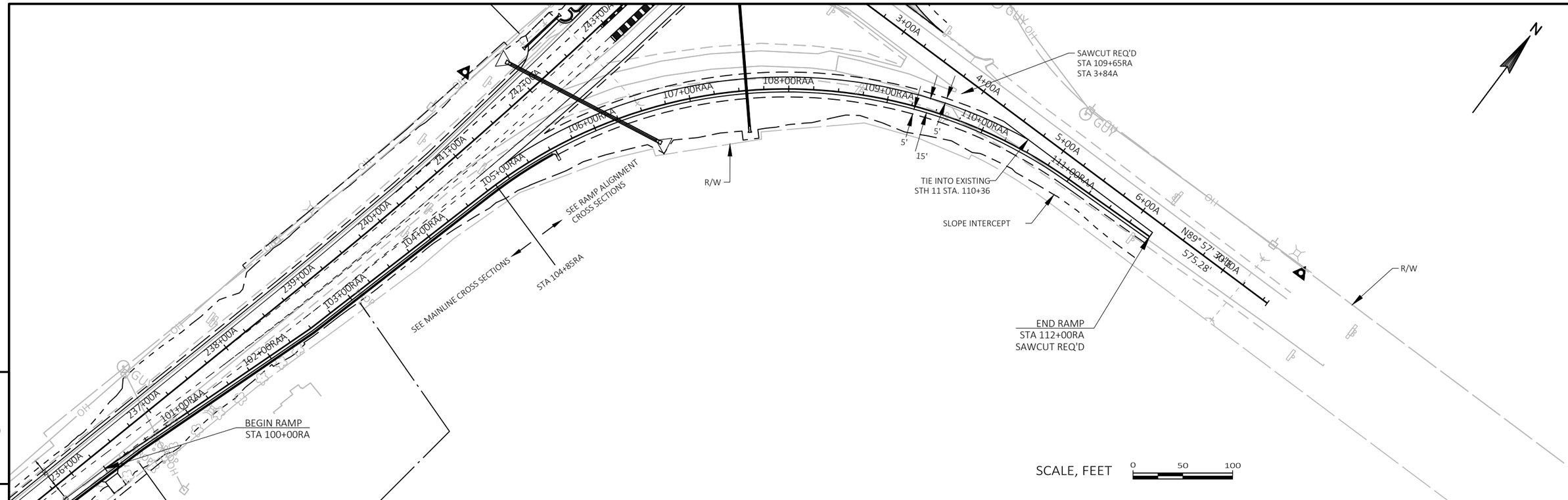

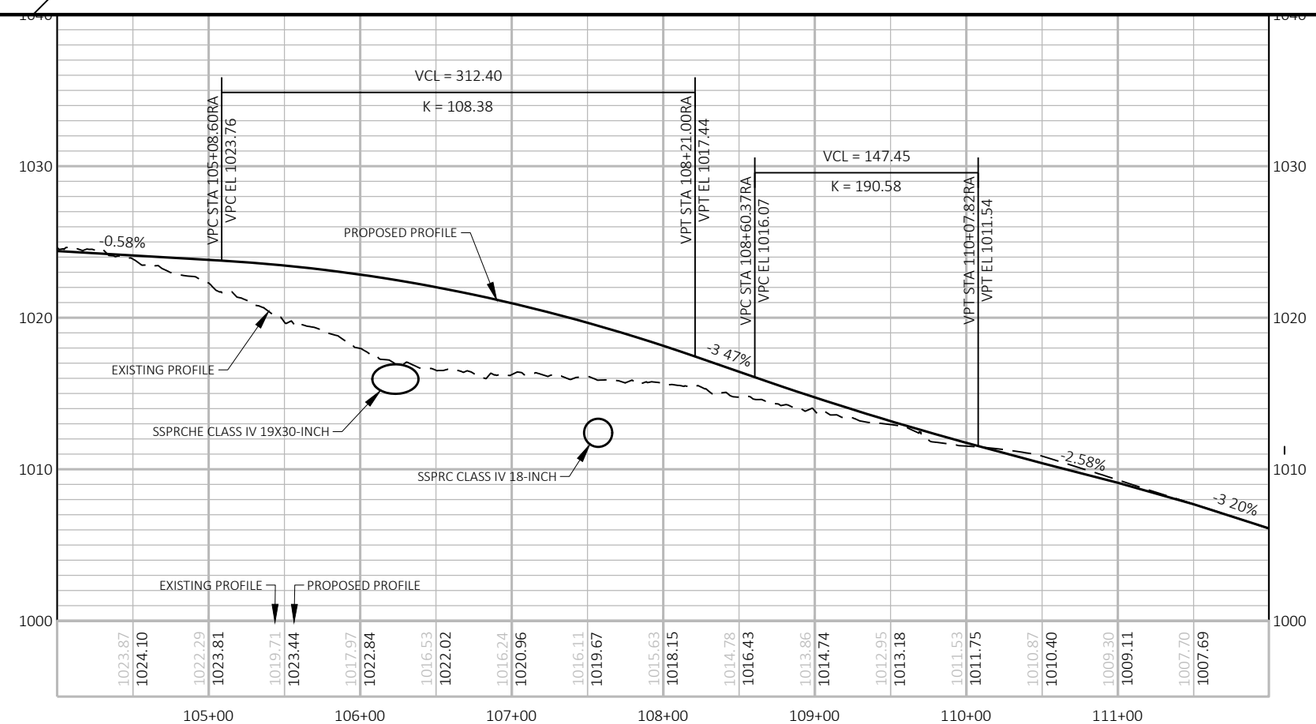

PROJECT NO: 1706-00-74	HWY: STH 11	COUNTY: GRANT	PLAN AND PROFILE: RAMP ALIGNMENT	SHEET 62	E

Standard Detail Drawing List

08A05-19B	INLET COVERS TYPE B, B-A, C, MS, MS-A, & WM
08C08-02	INLETS MEDIAN 1 AND 2 GRATE
08D01-21A	CONCRETE CURB & GUTTER
08D01-21B	CONCRETE CURB, TIES AND CURB AND GUTTER APPLICATIONS
08D04-05	CONCRETE SURFACE DRAINS & ASPHALTIC FLUMES
08D21-01	DRIVEWAYS WITHOUT CURB & GUTTER
08D22-01	DRIVEWAYS WITHOUT CURB & GUTTER RESURFACING PROJECTS RURAL
08E08-03	TYPICAL INSTALLATIONS OF EROSION BALES / TEMPORARY DITCH CHECKS
08E09-06	SILT FENCE
08E10-02	INLET PROTECTION TYPE A, B, C AND D
08E15-01	CULVERT PIPE CHECK
08F01-11	APRON ENDWALLS FOR CULVERT PIPE
08F02-01	APRON ENDWALLS FOR PIPE ARCH AND ELLIPTICAL PIPE
08F04-07	JOINT TIES FOR CONCRETE PIPE AND CONCRETE COLLAR DETAIL
09A01-13A	AT-GRADE SIDE ROAD INTERSECTION, TYPES "B1", "B2", "C" AND D AND TEE INTERSECTION BYPASS LANE
11B01-05	CONCRETE CORRUGATED MEDIAN
13C01-19	CONCRETE PAVEMENT LONGITUDINAL JOINTS AND TIES
13C19-02	HMA LONGITUDINAL JOINTS
15A03-02A	FLEXIBLE MARKER POST FOR CULVERT END
15A03-02B	FLEXIBLE MARKER POST FOR CULVERT END
15C02-08F	ADVANCED WIDTH RESTRICTION SIGNING
15C04-05	TRAFFIC CONTROL, ADVANCE WARNING SIGNS 45 M.P.H. OR GREATER TWO-WAY UNDIVIDED ROAD OPEN TO TRAFFIC
15C05-05	TRAFFIC CONTROL, ADVANCE WARNING SIGNS 40 M.P.H. OR LESS
15C07-15B	PAVEMENT MARKING WORDS
15C07-15C	PAVEMENT MARKING ARROWS
15C08-20A	LONGITUDINAL MARKING (MAINLINE)
15C08-20B	PAVEMENT MARKING (TURN LANES)
15C08-20C	PAVEMENT MARKING (TURN LANES)
15C18-04	MEDIAN ISLAND MARKING
15C31-03C	PAVEMENT MARKING FOR PARALLEL ON-RAMP AND PARALLEL OFF-RAMP
15D38-02A	TEMPORARY TRAFFIC CONTROL SIGN MOUNTING
15D38-02B	ATTACHMENT OF SIGNS TO POSTS

6

6

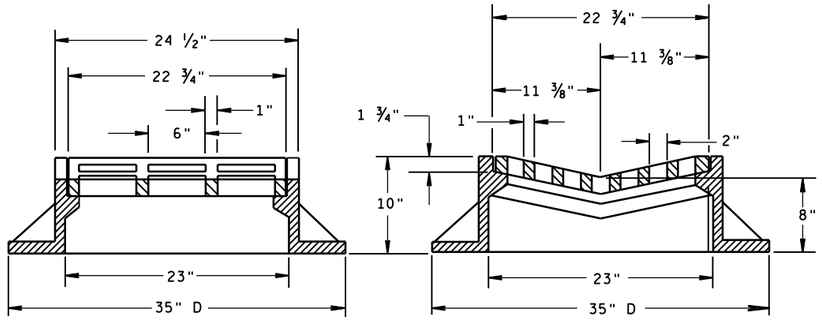

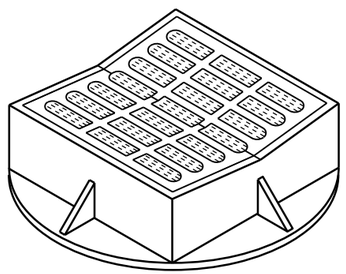

TYPE "B"

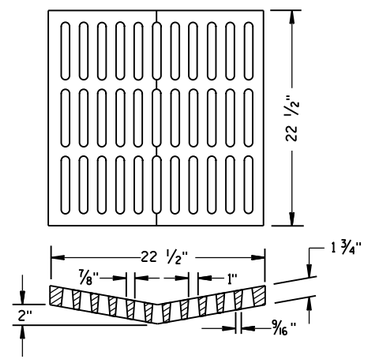

ALTERNATIVE GRATE FOR TYPE "B" COVER

USE WHERE PEDESTRIAN OR BICYCLE TRAFFIC IS POSSIBLE.

NOTED AS TYPE B-A ON THE DRAINAGE TABLE

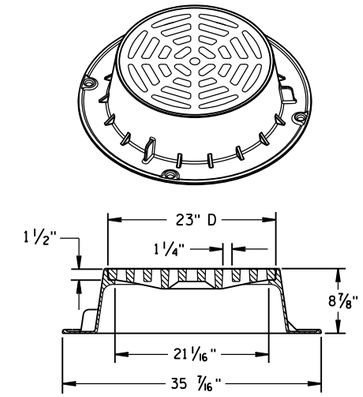

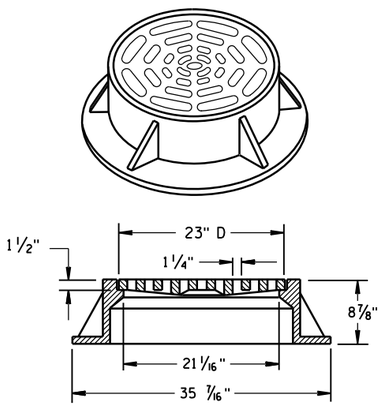

TYPE "C"

NOTE: EITHER CASTING IS ACCEPTABLE

GENERAL NOTES

DETAILS OF CONSTRUCTION, MATERIALS AND WORKMANSHIP NOT SHOWN ON THIS DRAWING SHALL CONFORM TO THE PERTINENT REQUIREMENTS OF THE STANDARD SPECIFICATIONS AND THE APPLICABLE SPECIAL PROVISIONS.

DETAIL DRAWINGS FOR PROPOSED ALTERNATE DESIGNS FOR CATCH BASIN, MANHOLE AND INLET COVERS SHALL BE SUBMITTED TO THE ENGINEER FOR APPROVAL PROVIDING THAT SUCH ALTERNATE DESIGNS MAKE PROVISION FOR EQUIVALENT CAPACITY AND STRENGTH.

ROUND FRAMES AND COVERS SHALL HAVE CONTINUOUSLY MACHINED BEARING SURFACES TO PREVENT ROCKING AND RATTLING.

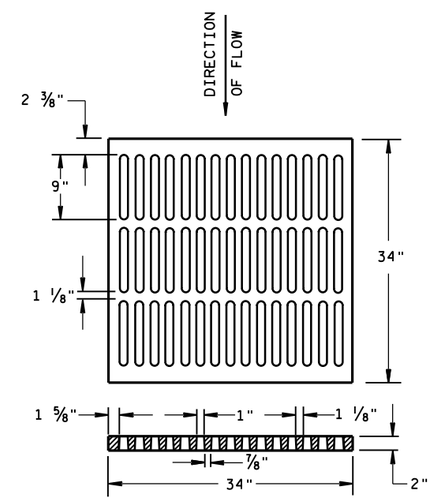

ALTERNATIVE TYPE "MS"

USE WHERE PEDESTRIAN OR BICYCLE TRAFFIC IS PERMITTED

NOTED AS TYPE MS-A ON THE DRAINAGE TABLE

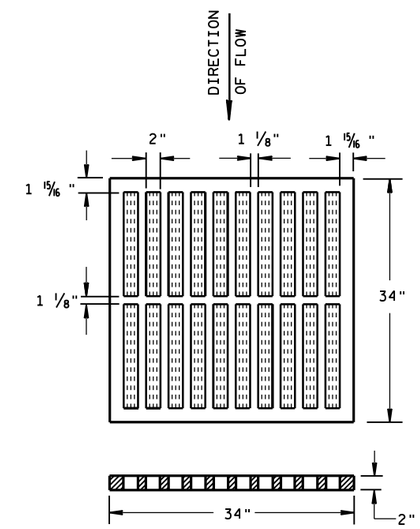

TYPE "MS"

USE ON FREEWAYS AND EXPRESSWAYS

NOTED AS TYPE MS ON DRAINAGE TABLE

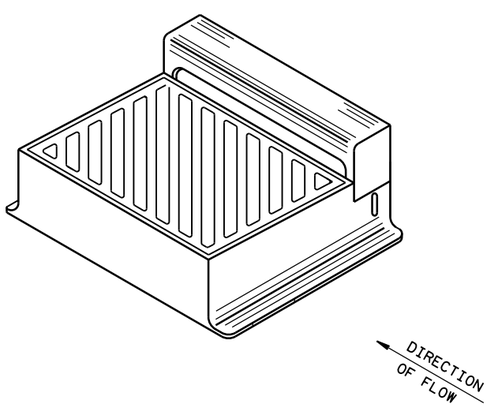

DIAGONAL SLOTS, SHALL BE ORIENTED TO THE DIRECTION OF FLOW AS ILLUSTRATED. GRATES ARE MANUFACTURED TO BE REVERSIBLE.

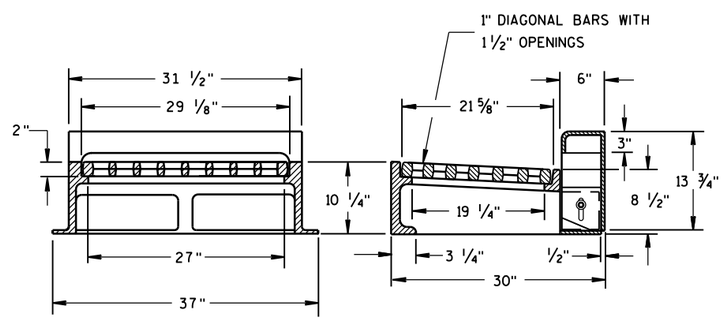

NOTE: CURB BOX HEIGHT ADJUSTABLE 6" TO 9"

TYPE "WM"

6

6

S.D.D. 8 A 5-19b

S.D.D. 8 A 5-19b

INLET COVERS
TYPE B, B-A, C, MS, MS-A, & WM

STATE OF WISCONSIN
DEPARTMENT OF TRANSPORTATION

APPROVED

11/27/2013 — DATE

/S/ Jerry H. Zogg — ROADWAY STANDARDS DEVELOPMENT ENGINEER

FHWA

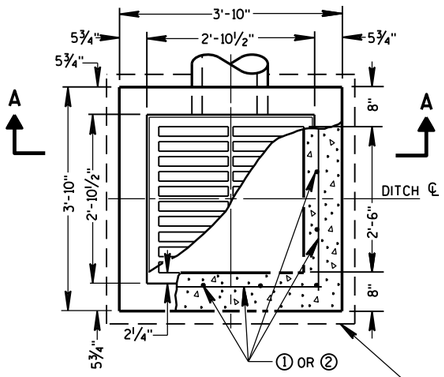

PLAN VIEW

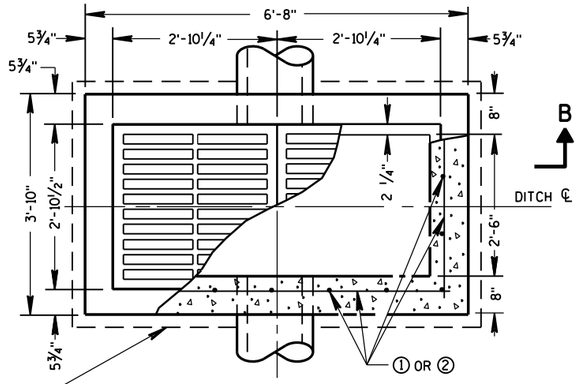

PLAN VIEW

4" OVERHANGING BASE ON REINFORCED CAST-IN-PLACE CONCRETE INLETS

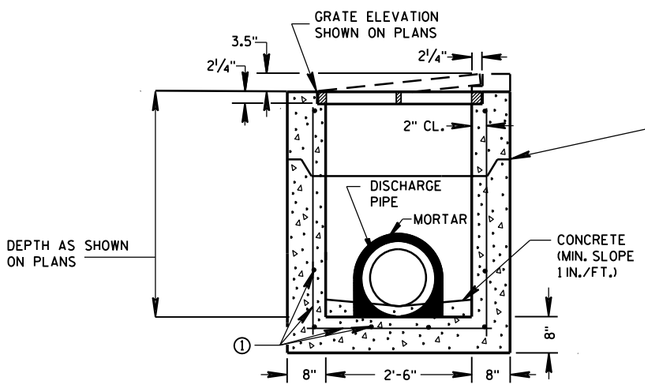

PRECAST REINFORCED CONCRETE SECTION A-A

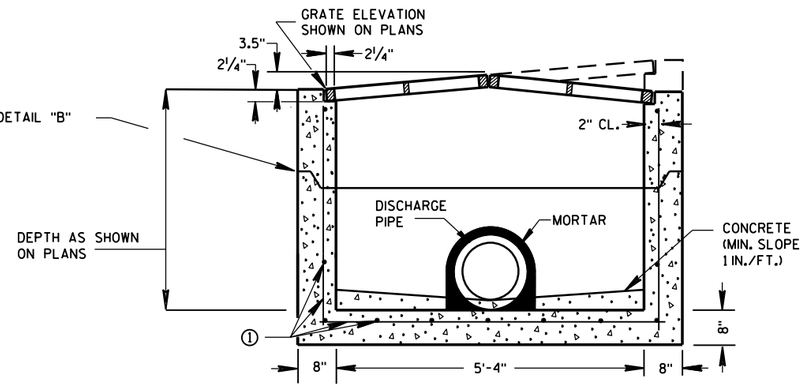

PRECAST REINFORCED CONCRETE SECTION B-B

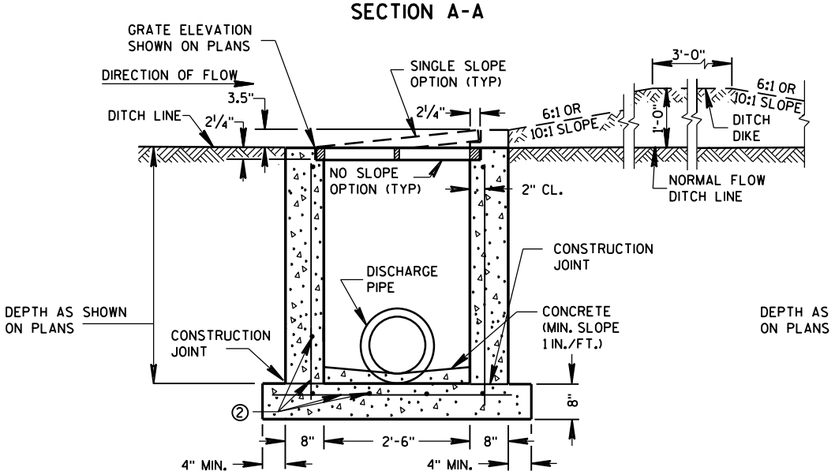

REINFORCED CAST-IN-PLACE CONCRETE SECTION A-A

INLETS MEDIAN 1 GRATE

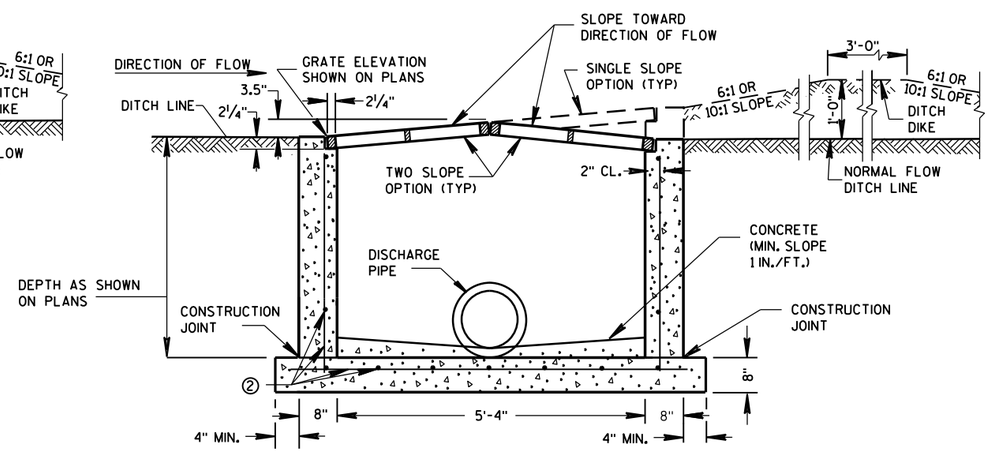

REINFORCED CAST-IN-PLACE CONCRETE SECTION B-B

INLETS MEDIAN 2 GRATE

GENERAL NOTES

DETAILS OF CONSTRUCTION, MATERIALS AND WORKMANSHIP NOT SHOWN ON THIS DRAWING SHALL CONFORM TO THE PERTINENT REQUIREMENTS OF THE STANDARD SPECIFICATIONS AND THE APPLICABLE SPECIAL PROVISIONS.

UNLESS OTHERWISE AUTHORIZED IN WRITING BY THE ENGINEER, THE CONTRACTOR SHALL NOT ORDER AND DELIVER PRECAST INLET UNITS REQUIRED FOR THE PROJECT UNTIL A LIST OF SIZES IS FURNISHED BY THE ENGINEER.

DETAILED DRAWINGS FOR PROPOSED ALTERNATE DESIGNS FOR INLETS WHICH MAY INCLUDE PRECAST REINFORCED CONCRETE INLETS, SHALL BE SUBMITTED TO THE ENGINEER FOR APPROVAL PROVIDING THAT SUCH ALTERNATE DESIGNS MAKE PROVISION FOR EQUIVALENT CAPACITY AND STRENGTH.

ALL MEDIAN INLETS ARE DESIGNATED ON THE PLANS AS "INLETS, 1G-MS", ETC. THE FIRST NUMBER AND LETTER DESIGNATE THE TYPE OF STRUCTURE, AND THE FOLLOWING LETTERS DESIGNATE THE TYPE OF COVER TO BE USED TO COMPRISE THE COMPLETE UNIT.

BASES SHALL BE PLACED ON A BED OF MATERIAL AT LEAST 6 INCHES IN DEPTH, WHICH MEETS THE REQUIREMENTS OF FOUNDATION BACKFILL. THIS BEDDING SHALL BE COMPACTED AND PROVIDE UNIFORM SUPPORT FOR THE ENTIRE AREA OF THE BASE.

ALL BAR STEEL REINFORCEMENT SHALL BE EMBEDDED 2 INCHES CLEAR UNLESS OTHERWISE SHOWN OR NOTED.

PRECAST REINFORCED RISERS SHALL HAVE A TONGUE AND GROOVE JOINT WITH TONGUE UP OR DOWN.

ALL PRECAST INLET UNITS SHALL CONFORM TO THE PERTINENT REQUIREMENTS OF ASTM C 913.

MAXIMUM INSIDE PIPE DIAMETER DETERMINED BY 3" CLEARANCE ON EACH SIDE OF THE OUTSIDE WALL OF THE PIPE. SEE DETAIL "A". ASSUMES PIPE ENTERS PERPENDICULAR TO THE STRUCTURE.

① FOR PRECAST INLETS PROVIDE REINFORCING STEEL IN ACCORDANCE TO ASTM C 913.

② CONTRACTOR TO PROVIDE DRAWING(S) STAMPED BY A PROFESSIONAL ENGINEER FOR STEEL REINFORCING DESIGN FOR CAST-IN-PLACE STRUCTURES.

PIPE MATRIX

	MAXIMUM INSIDE PIPE DIAMETER	
INLET SIZE	WIDTH (IN)	LENGTH (IN)
1 GRATE	18	18
2 GRATE	18	42

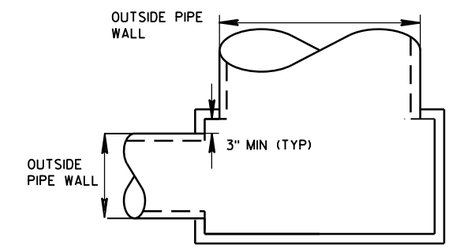

DETAIL "A"

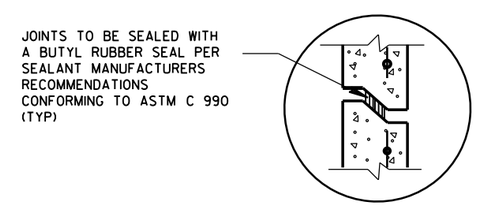

DETAIL "B"

INLETS MEDIAN 1 AND 2 GRATE

STATE OF WISCONSIN
DEPARTMENT OF TRANSPORTATION

APPROVED
Sept., 2016 — DATE
/S/ Rodney Taylor — ROADWAY STANDARDS UNIT SUPERVI
FHWA

6

S.D.D. 8 C 8-2

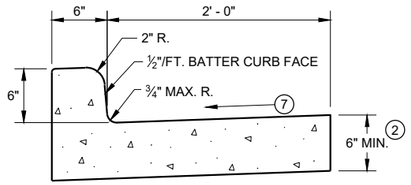

TYPES A(1) & D

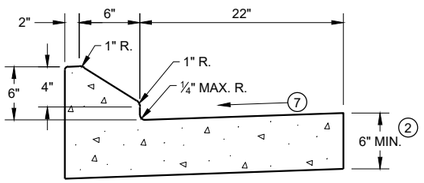

6" SLOPED CURB TYPES G(1) & J

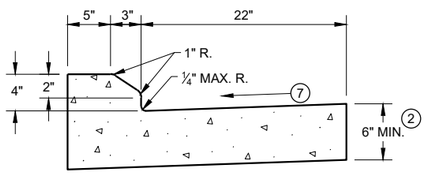

4" SLOPED CURB TYPES G(1) & J

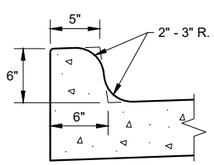

TYPES K(1) & L
(OPTIONAL CURB SHAPE)

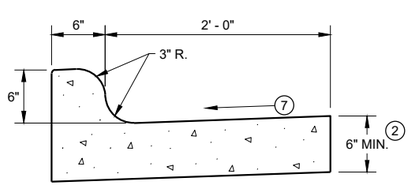

TYPES K(1) & L

CONCRETE CURB AND GUTTER 30"

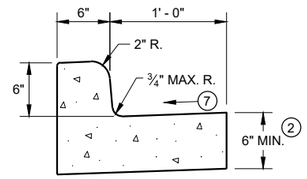

TYPES A(1) & D

CONCRETE CURB AND GUTTER 18"

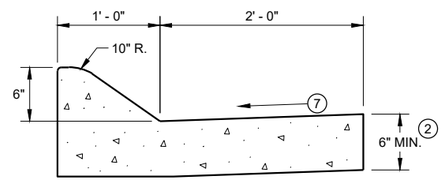

6" SLOPED CURB TYPES A(1) & D

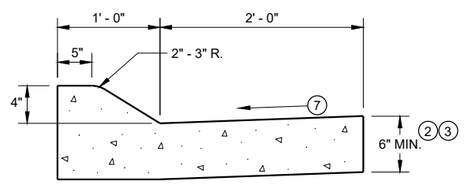

4" SLOPED CURB TYPES A(1) & D

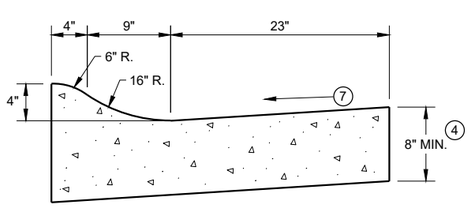

4" SLOPED CURB TYPES R(1) & T(5)

CONCRETE CURB AND GUTTER 36"

TBT & TBTT	X
30"	22"
36"	28"

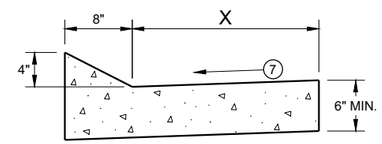

TYPES TBT & TBTT(1)

CONCRETE CURB AND GUTTER

PAVEMENT THICKNESS AND MAXIMUM CONCRETE PANEL WIDTH TABLE

PAVEMENT THICKNESS	MAXIMUM PANEL WIDTH
LESS THAN 10"	12'
10" & ABOVE	15'

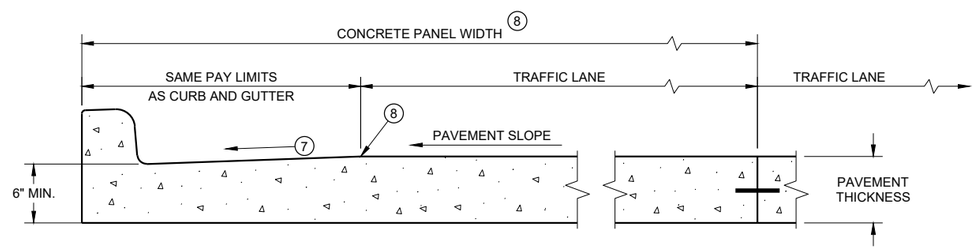

PARTIAL SECTION OF PAVEMENT * WITH INTEGRAL CURB AND GUTTER

* BIKE LANE IS NOT SHOWN

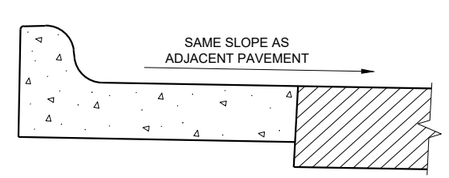

REVERSE SLOPE GUTTER(6)
(TYPICAL FOR ALL CURB & GUTTER TYPES)

GENERAL NOTES

DETAILS OF CONSTRUCTION AND WORKMANSHIP NOT SHOWN ON THIS DRAWING SHALL CONFORM TO THE PERTINENT REQUIREMENTS OF THE CONTRACT.

PAVEMENT TIES AND TIE BARS SHALL BE EPOXY COATED IN CONFORMANCE WITH SUBSECTION 505.2.6.2 OF THE STANDARD SPECIFICATIONS.

INTEGRAL CURB AND GUTTER SHALL CONFORM TO THE DETAILS SHOWN FOR CONCRETE CURB AND GUTTER INCLUDING THE TRANSVERSE GUTTER SLOPE.

UNLESS OTHERWISE SHOWN ON THE TYPICAL CROSS SECTIONS, THE BASE AGGREGATE AND COMMON EXCAVATION LIMITS ARE 2' - 0" BEHIND THE BACK OF CURBS.

1. TIE BARS ARE REQUIRED FOR CURB AND GUTTERS TYPES A, G, K, R, AND TBTT.
2. THE BOTTOM OF CURB AND GUTTER MAY BE CONSTRUCTED EITHER LEVEL OR PARALLEL TO THE SLOPE OF THE SUBGRADE OR BASE AGGREGATE PROVIDED A 6" MINIMUM GUTTER THICKNESS IS MAINTAINED.
3. USE 8" MINIMUM GUTTER THICKNESS WHEN USED WITH AN ADJACENT CONCRETE TRUCK APRON PLACED BEHIND BACK OF CURB.
4. THE BOTTOM OF CURB AND GUTTER MAY BE CONSTRUCTED EITHER LEVEL OR PARALLEL TO THE SLOPE OF THE SUBGRADE OR BASE AGGREGATE PROVIDED A 8" MINIMUM GUTTER THICKNESS IS MAINTAINED.
5. THE FACE OF CURB IS 6" FROM THE BACK OF CURB.
6. WHEN REVERSE SLOPE GUTTER IS REQUIRED, THE LOCATION(S) WILL BE SHOWN ELSEWHERE IN THE PLAN.
7. USE 4% GUTTER CROSS SLOPE UNLESS OTHERWISE NOTED IN THE PLANS.
8. INCLUDE LONGITUDINAL JOINT AND TIE BARS ALONG LANE EDGE WHEN CONCRETE PANEL WIDTH EXCEEDS THE MAXIMUM WIDTH PER TABLE BELOW. LONGITUDINAL JOINT(S) ARE NOT ALLOWED WITHIN TRAFFIC LANES AND BIKE LANES. LONGITUDINAL JOINT MAY BE SAWED.

CONCRETE CURB AND GUTTER

STATE OF WISCONSIN
DEPARTMENT OF TRANSPORTATION

6

SDD 08D01 - 21a

GENERAL NOTES

DETAILS OF CONSTRUCTION AND WORKMANSHIP NOT SHOWN ON THIS DRAWING SHALL CONFORM TO THE PERTINENT REQUIREMENTS OF THE CONTRACT.

PAVEMENT TIES AND TIE BARS SHALL BE EPOXY COATED IN CONFORMANCE WITH SUBSECTION 505.2.6.2 OF THE STANDARD SPECIFICATIONS.

UNLESS OTHERWISE SHOWN ON THE TYPICAL CROSS SECTIONS, THE BASE AGGREGATE AND COMMON EXCAVATION LIMITS ARE 2' - 0" BEHIND THE BACK OF CURBS.

(1) TIE BARS ARE REQUIRED FOR CURB AND GUTTERS TYPES A, G, K, R, AND TBTT.

(2) THE BOTTOM OF CURB AND GUTTER MAY BE CONSTRUCTED EITHER LEVEL OR PARALLEL TO THE SLOPE OF THE SUBGRADE OR BASE AGGREGATE PROVIDED A 6" MINIMUM GUTTER THICKNESS IS MAINTAINED.

(9) REFER TO SDD 08D18 AND 08D19 FOR ADDITIONAL DRIVEWAY ENTRANCE CURB DETAILS.

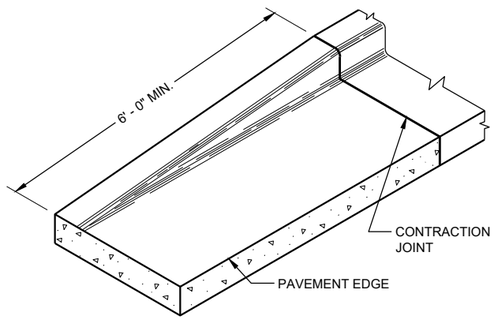

END SECTIONCURB AND GUTTER

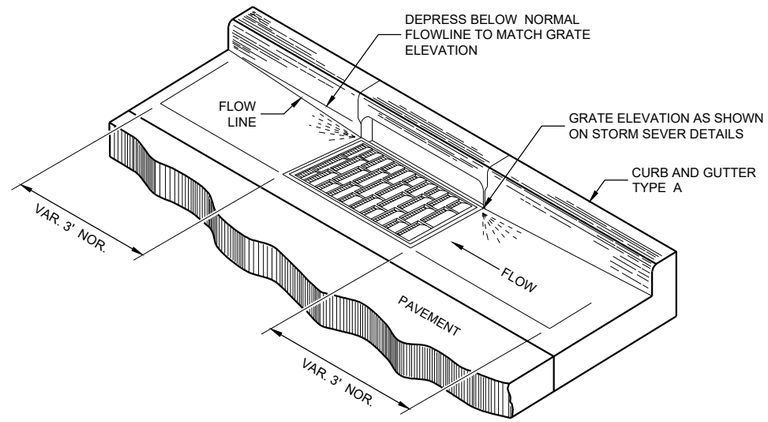

DETAIL OF CURB AND GUTTER AT INLETS
(TYPICAL H INLET COVER SHOWN)

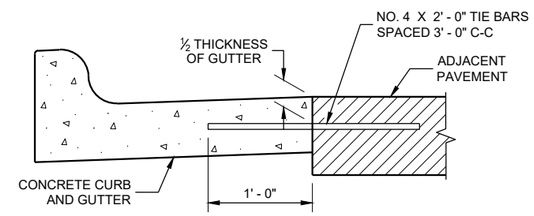

TYPICAL TIE BAR LOCATION (1)

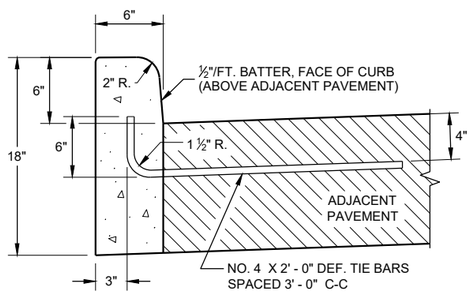

TYPES A (1) & D

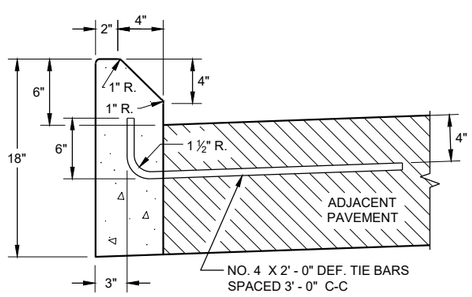

TYPES G (1) & J

CONCRETE CURB

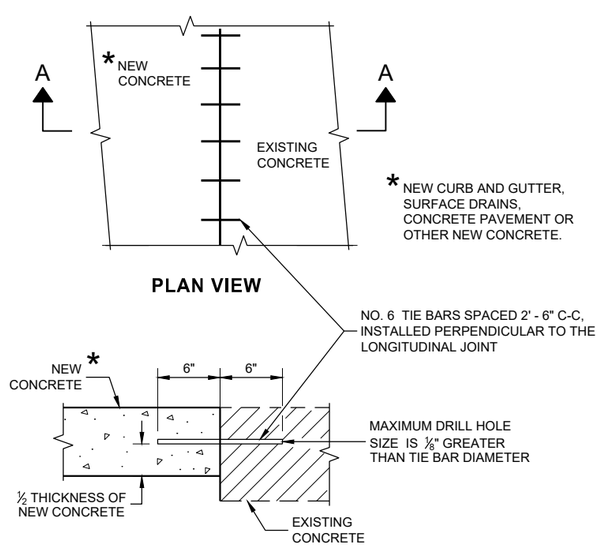

PLAN VIEW

SECTION A - A

TIE BARS DRILLED INTO EXISTING PAVEMENT

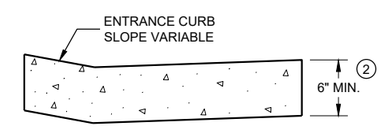

DRIVEWAY ENTRANCE CURB (9)
(WHEN DIRECTED BY THE ENGINEER)

CONCRETE CURB, TIES AND CURB AND GUTTER APPLICATIONS

STATE OF WISCONSIN
DEPARTMENT OF TRANSPORTATION

APPROVED
February 2020 — DATE
/S/ Rodney Taylor — ROADWAY STANDARDS DEVE ENGINEER
FHWA

6
SDD 08D01 - 21b

GENERAL NOTES

DETAILS OF CONSTRUCTION, MATERIALS AND WORKMANSHIP NOT SHOWN ON THIS DRAWING SHALL CONFORM TO PERTINENT REQUIREMENTS OF THE STANDARD SPECIFICATIONS AND APPLICABLE SPECIAL PROVISIONS.

WELDED STEEL WIRE FABRIC SHALL BE IN ACCORDANCE WITH AASHTO SPECIFICATION M55.

① JOINTS SHALL BE 1/8 TO 1/4 INCH WIDE BY 1 1/2 INCHES DEEP AND SPACED AT UNIFORM INTERVALS OF APPROXIMATELY 4 FEET.

② GEOTEXTILE FABRIC TYPE "R" SHALL UNDERLAY THE FULL LENGTH AND WIDTH OF THE CONCRETE SURFACE DRAIN AND RIPRAP.

③ CONCRETE SURFACE DRAIN WITHOUT CURB AND GUTTER MAY BE USED ON BACKSLOPES WHEN SPECIFIED

ASPHALTIC FLUME

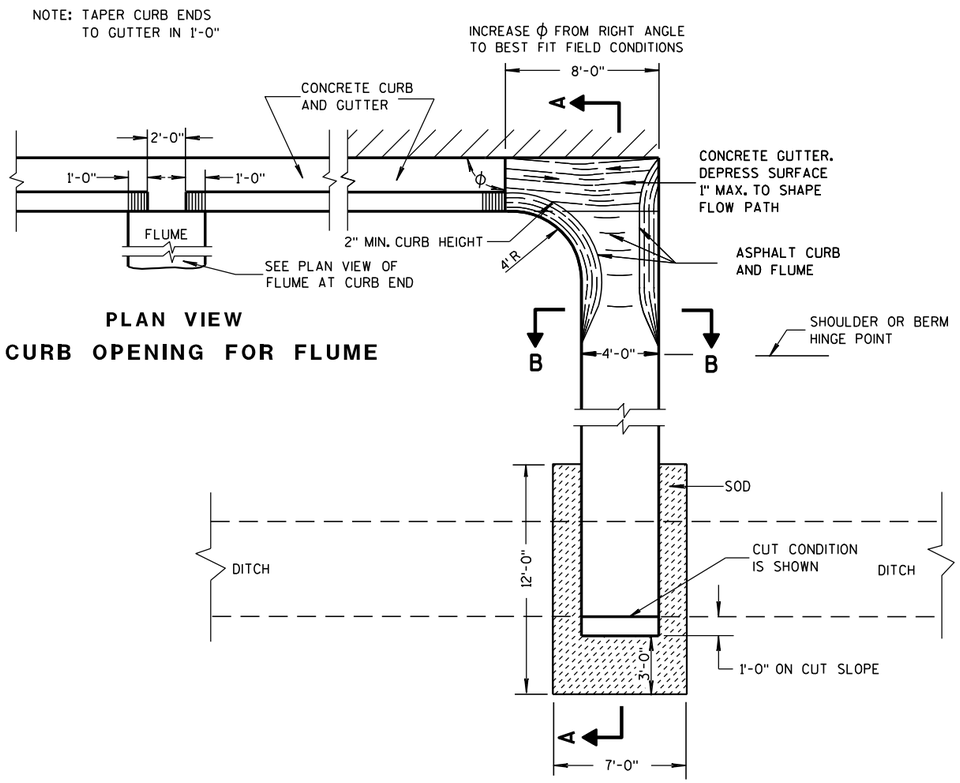

PLAN VIEW
CURB OPENING FOR FLUME

PLAN VIEW
FLUME AT CURB END

③ CONCRETE SURFACE DRAIN

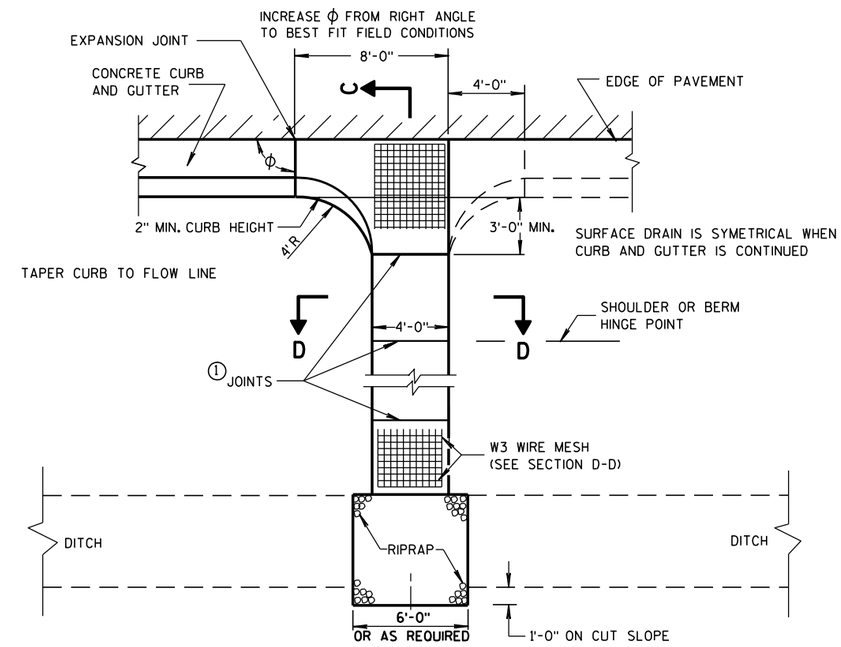

PLAN VIEW

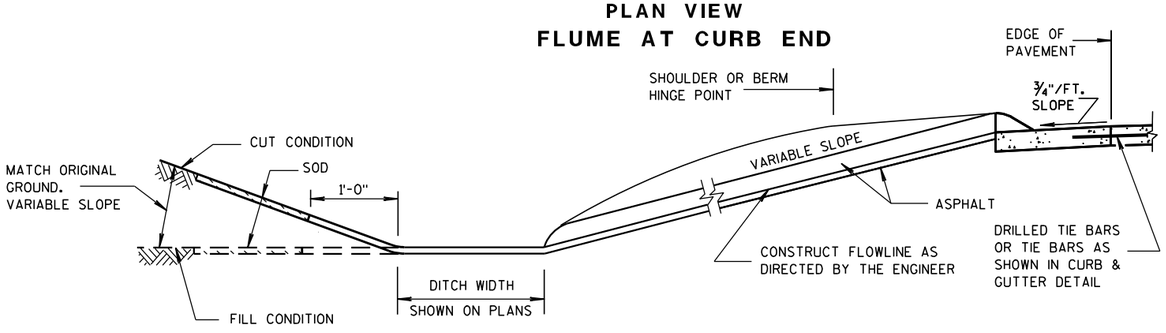

SECTION A-A

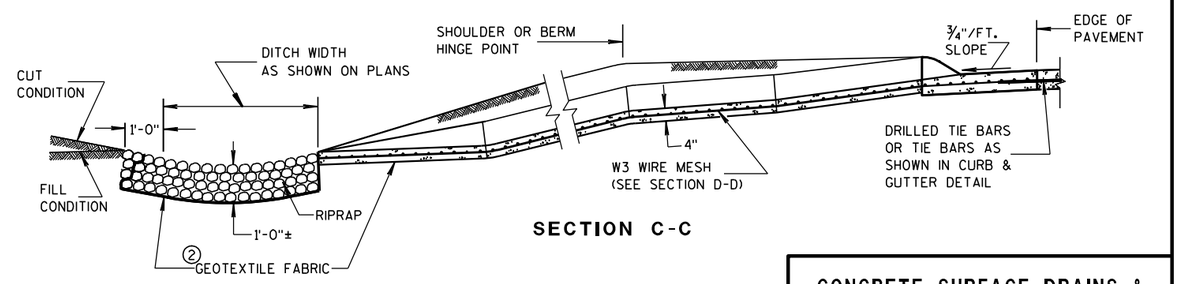

SECTION C-C

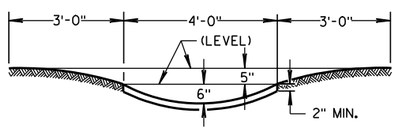

SECTION B-B

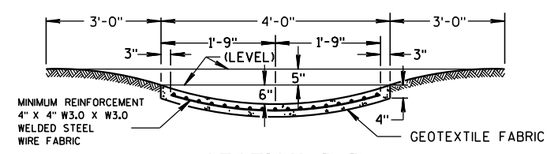

SECTION D-D

CONCRETE SURFACE DRAINS & ASPHALTIC FLUMES

STATE OF WISCONSIN
DEPARTMENT OF TRANSPORTATION

APPROVED
9-4-08 /S/ Jerry H. Zogg
DATE ROADWAY STANDARDS ENGINEER
FHWA

6

S.D.D. 8 D 4-5

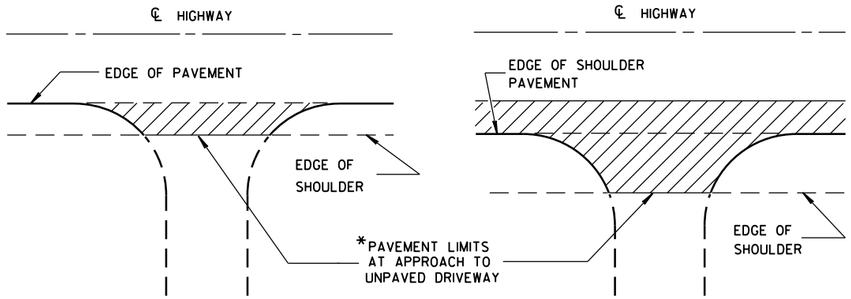

*WHERE DRIVEWAY IS PAVED, APPROACH PAVEMENT SHOULD BE EXTENDED TO MATCH DRIVEWAY PAVEMENT.

PLAN VIEW
(UNPAVED SHOULDER ON HIGHWAY)

PLAN VIEW
(PAVED SHOULDER ON HIGHWAY)

RURAL DRIVEWAY INTERSECTION DETAIL
(NO CURB & GUTTER OR SIDEWALK)

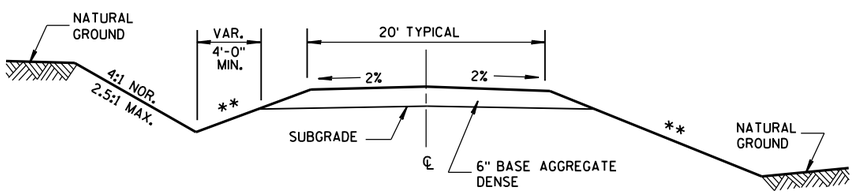

IN CUT IN FILL

TYPICAL CROSS SECTION FOR PRIVATE DRIVE OR FIELD ENTRANCE AGGREGATE SURFACE

** SLOPE CAN VARY WITH SPEED. SEE 11-45-2.6.2.

POSTED SPEED MPH	MAX. SLOPE
<35	4:1
≥35 TO <60	6:1
≥60	10:1

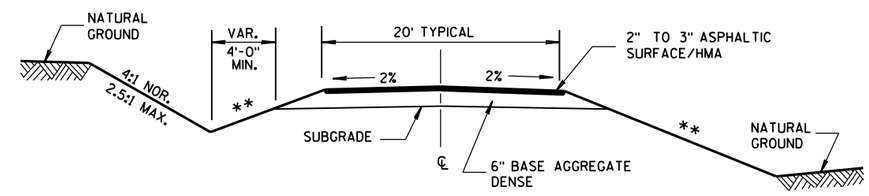

IN CUT IN FILL

TYPICAL CROSS SECTION FOR PRIVATE DRIVE OR FIELD ENTRANCE ASPHALTIC SURFACE

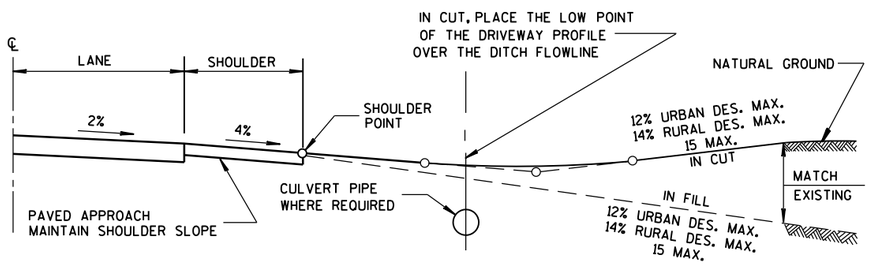

TYPICAL DRIVEWAY PROFILES

DRIVEWAYS WITHOUT CURB & GUTTER

STATE OF WISCONSIN
DEPARTMENT OF TRANSPORTATION

APPROVED
December, 2016 /S/ Rodney Taylor
DATE ROADWAY STANDARDS UNIT SUPERV ENT
FHWA

W MIN. = 16'
W MAX. = 24'

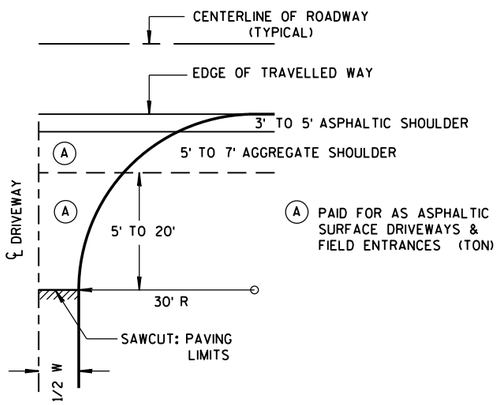

PLAN VIEW
HALF SECTION

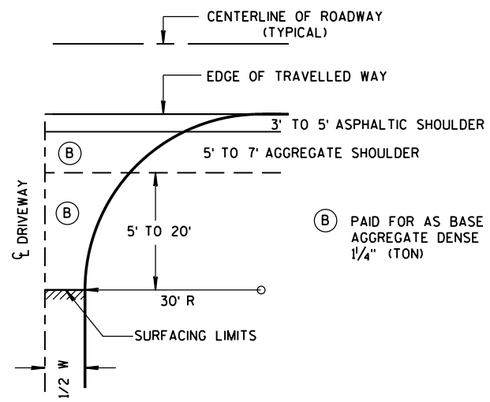

PLAN VIEW
HALF SECTION

GENERAL NOTES

1. DESIGN WILL DETERMINE FINAL DRIVEWAY ASPHALTIC THICKNESS BASED ON TYPE OF USAGE AND LOADINGS.

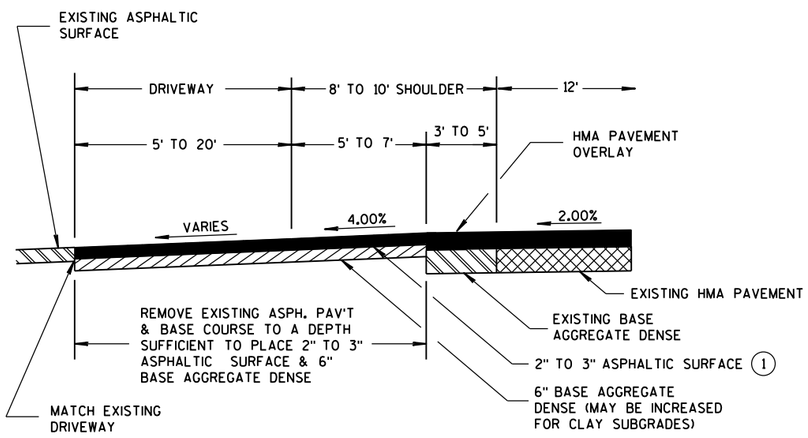

PROFILE VIEW

RURAL ENTRANCE WITH ASPHALTIC SURFACE

RESURFACING PROJECTS

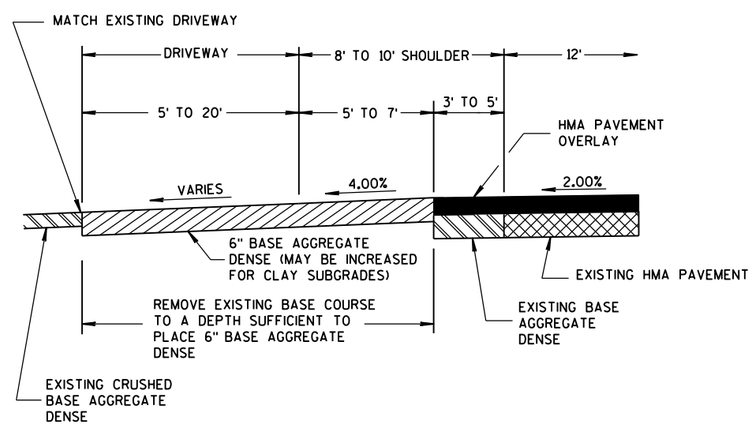

PROFILE VIEW

RURAL ENTRANCE WITH AGGREGATE SURFACE

6" BASE AGGREGATE DENSE
RESURFACING PROJECTS

DRIVEWAYS WITHOUT CURB & GUTTER RESURFACING PROJECTS RURAL	
STATE OF WISCONSIN DEPARTMENT OF TRANSPORTATION	
APPROVED December, 2016 /S/ Rodney Taylor	
DATE	ROADWAY STANDARDS UNIT SUPERV.
FHWA	ENT

6
S.D.D. 8 D 22-1

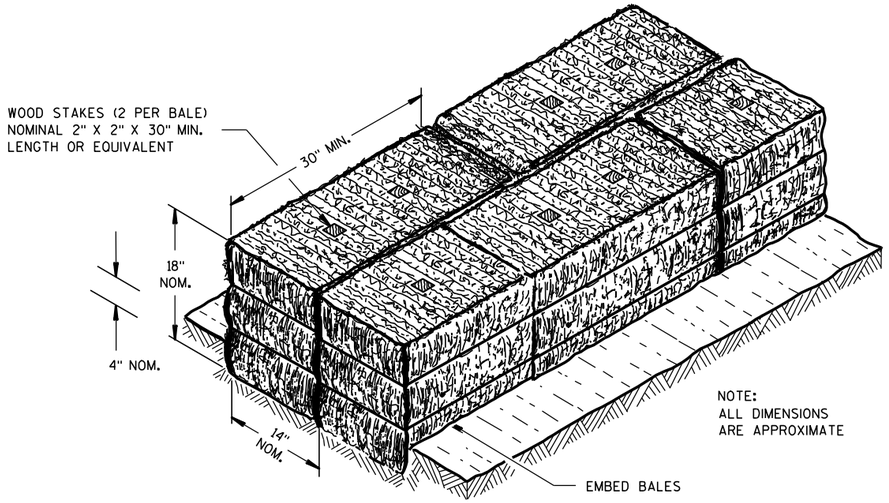

SECTION A-A

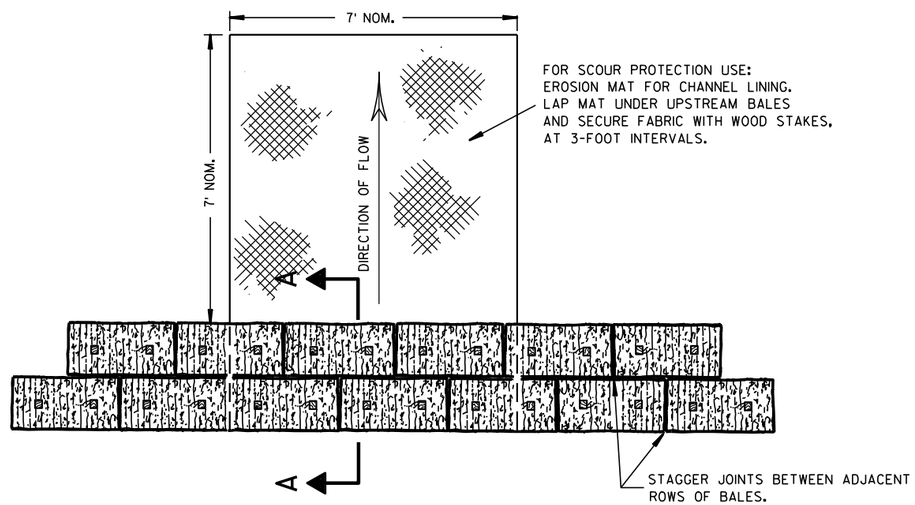

PLAN VIEW

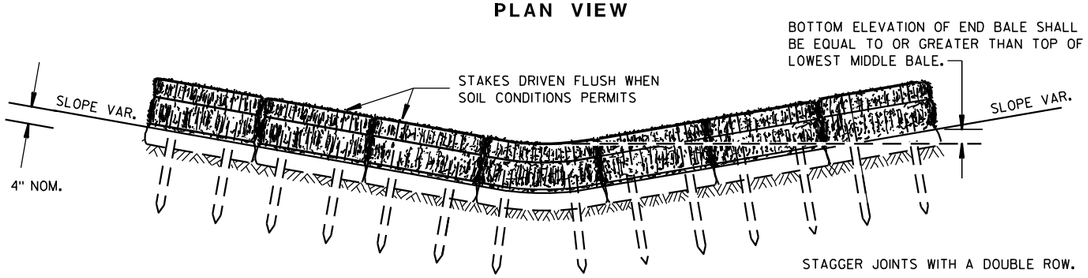

FRONT ELEVATION

TEMPORARY DITCH CHECK USING EROSION BALES ①

GENERAL NOTES

DETAILS OF CONSTRUCTION, MATERIALS AND WORKMANSHIP NOT SHOWN ON THIS DRAWING SHALL CONFORM TO THE PERTINENT REQUIREMENTS OF THE STANDARD SPECIFICATIONS AND THE APPLICABLE SPECIAL PROVISIONS.

① TEMPORARY DITCH CHECKS EITHER EROSION BALES OR MANUFACTURED SHALL BE PAID FOR UNDER THE BID ITEM OF TEMPORARY DITCH CHECK. THE DEPARTMENT WILL NOT PAY FOR TEMPORARY DITCH CHECKS CONSTRUCTED OF A SINGLE ROW OF EROSION BALES.

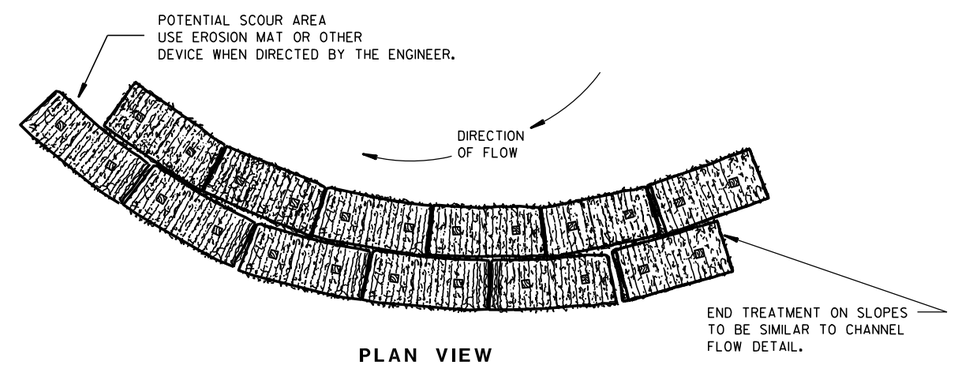

PLAN VIEW

WHEN ALTERING THE DIRECTION OF FLOW

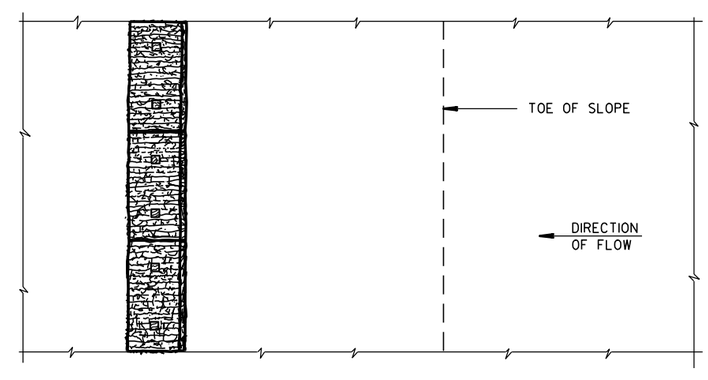

PLAN VIEW

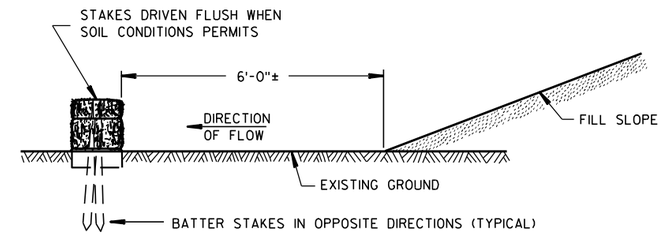

FRONT ELEVATION

WHEN EXISTING GROUND SLOPES AWAY FROM FILL SLOPE

EROSION BALES FOR SHEET FLOW

TYPICAL INSTALLATIONS OF EROSION BALES / TEMPORARY DITCH CHECKS

STATE OF WISCONSIN
DEPARTMENT OF TRANSPORTATION

APPROVED

6/04/02 — DATE

/S/ Beth Cann — CHIEF ROADWAY DEVELOPMENT ENGINEER

FHWA

6

6

S.D.D. 8 E 8-3

S.D.D. 8 E 8-3

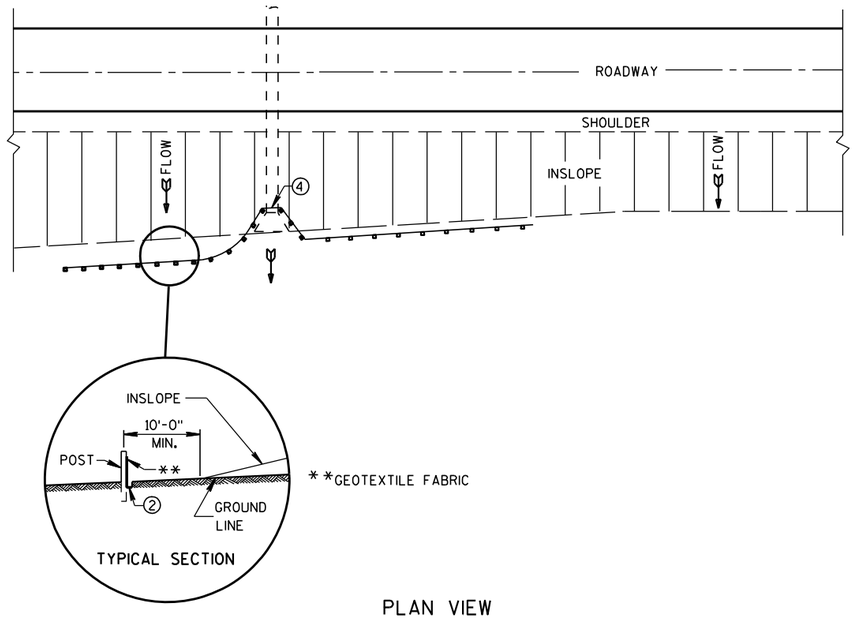

PLAN VIEW

TYPICAL APPLICATION OF SILT FENCE

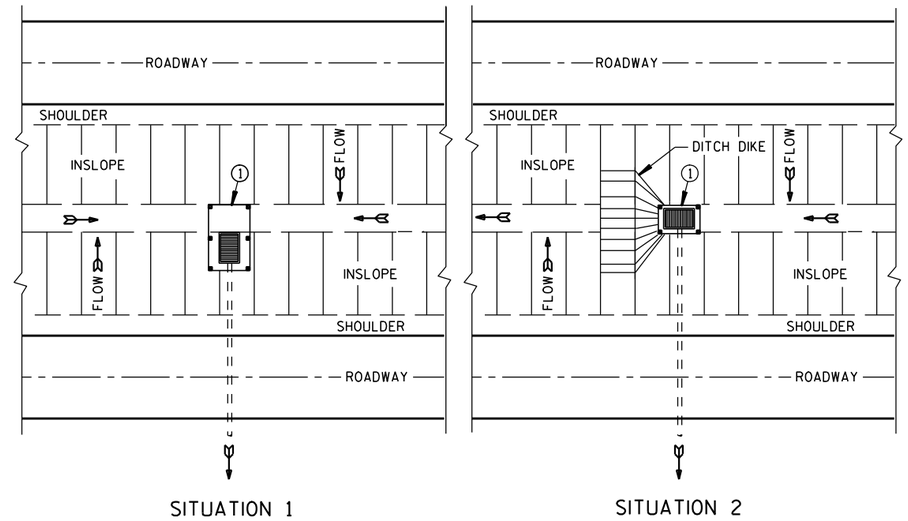

PLAN VIEW

SILT FENCE AT MEDIAN SURFACE DRAINS

GENERAL NOTES

DETAILS OF CONSTRUCTION NOT SHOWN ON THIS DRAWING SHALL CONFORM TO THE PERTINENT REQUIREMENTS OF THE STANDARD SPECIFICATIONS AND APPLICABLE SPECIAL PROVISIONS.

① HORIZONTAL BRACE REQUIRED WITH 2" X 4" WOODEN FRAME OR EQUIVALENT AT TOP OF POSTS.

② FOR MANUAL INSTALLATIONS THE TRENCH SHALL BE A MINIMUM OF 4" WIDE & 6" DEEP TO BURY AND ANCHOR THE GEOTEXTILE FABRIC. FOLD MATERIAL TO FIT TRENCH AND BACKFILL & COMPACT TRENCH WITH EXCAVATED SOIL.

③ WOOD POSTS SHALL BE A MINIMUM SIZE OF 1⅛" X 1⅛" OF OAK OR HICKORY.

④ SILT FENCE TO EXTEND ACROSS THE TOP OF THE PIPE.

⑤ CONSTRUCT SILT FENCE FROM A CONTINUOUS ROLL IF POSSIBLE BY CUTTING LENGTHS TO AVOID JOINTS. IF A JOINT IS NECESSARY USE ONE OF THE FOLLOWING TWO METHODS; A) OVERLAP THE END POSTS AND TWIST, OR ROTATE, AT LEAST 180 DEGREES. B) HOOK THE END OF EACH SILT FENCE LENGTH.

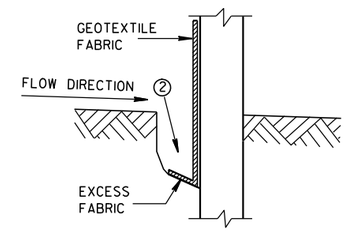

TRENCH DETAIL

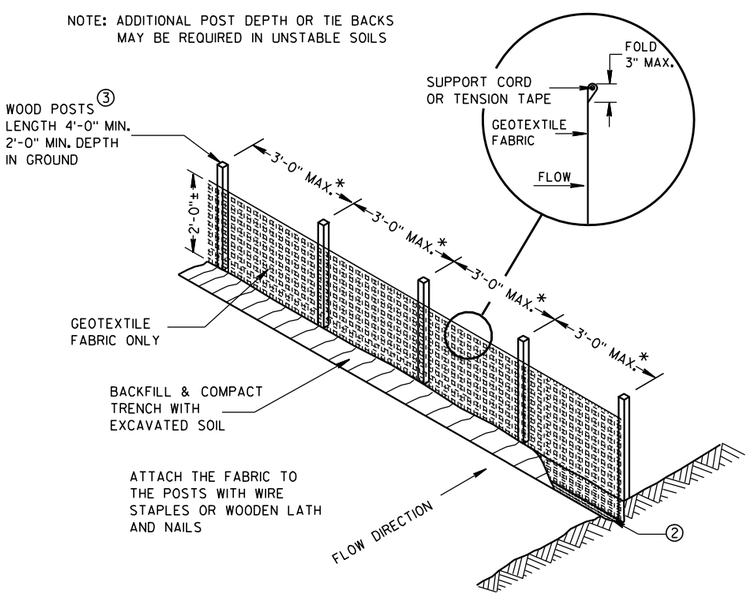

*NOTE: 8'-0" POST SPACING ALLOWED IF A WOVEN GEOTEXTILE FABRIC IS USED.

SILT FENCE

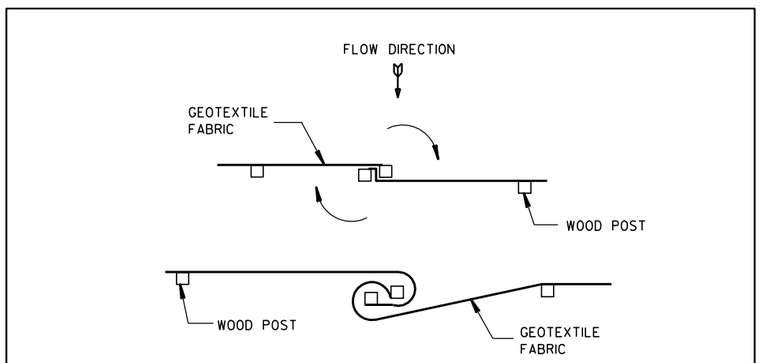

TWIST METHOD

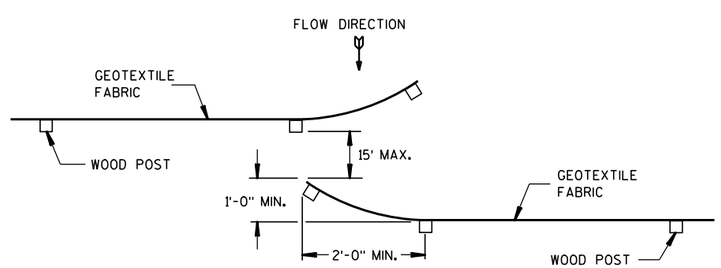

HOOK METHOD

JOINING TWO LENGTHS OF SILT FENCE ⑤

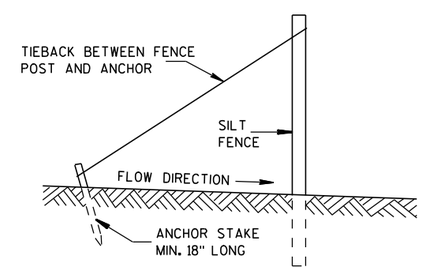

SILT FENCE TIE BACK

(WHEN REQUIRED BY THE ENGINEER)

SILT FENCE
STATE OF WISCONSIN DEPARTMENT OF TRANSPORTATION
APPROVED 4-29-05 /S/ Beth Cann----- DATE CHIEF ROADWAY DEVELOP ENGINEER FHWA

6

6

S.D.D. 8 E 9-6

S.D.D. 8 E 9-6

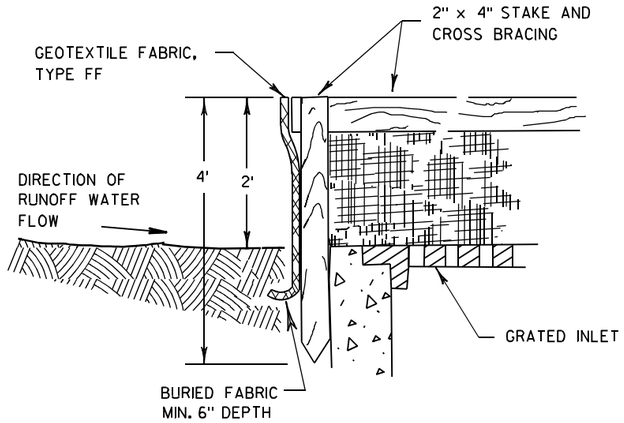

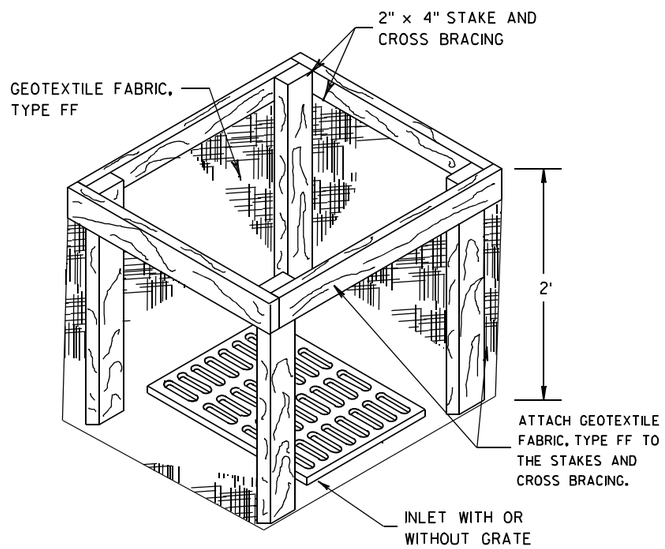

INLET PROTECTION, TYPE A

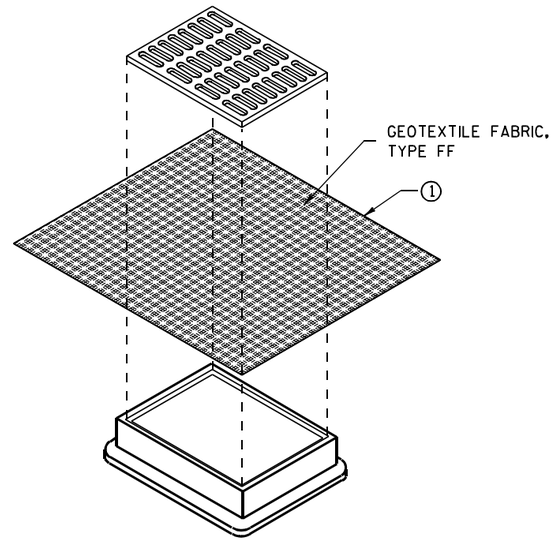

INLET PROTECTION, TYPE B (WITHOUT CURB BOX)

(CAN BE INSTALLED IN ANY INLET WITHOUT A CURB BOX)

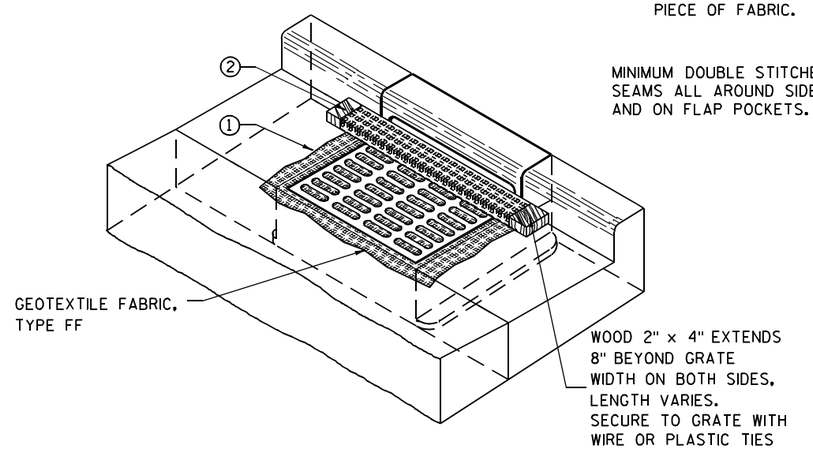

INLET PROTECTION, TYPE C (WITH CURB BOX)

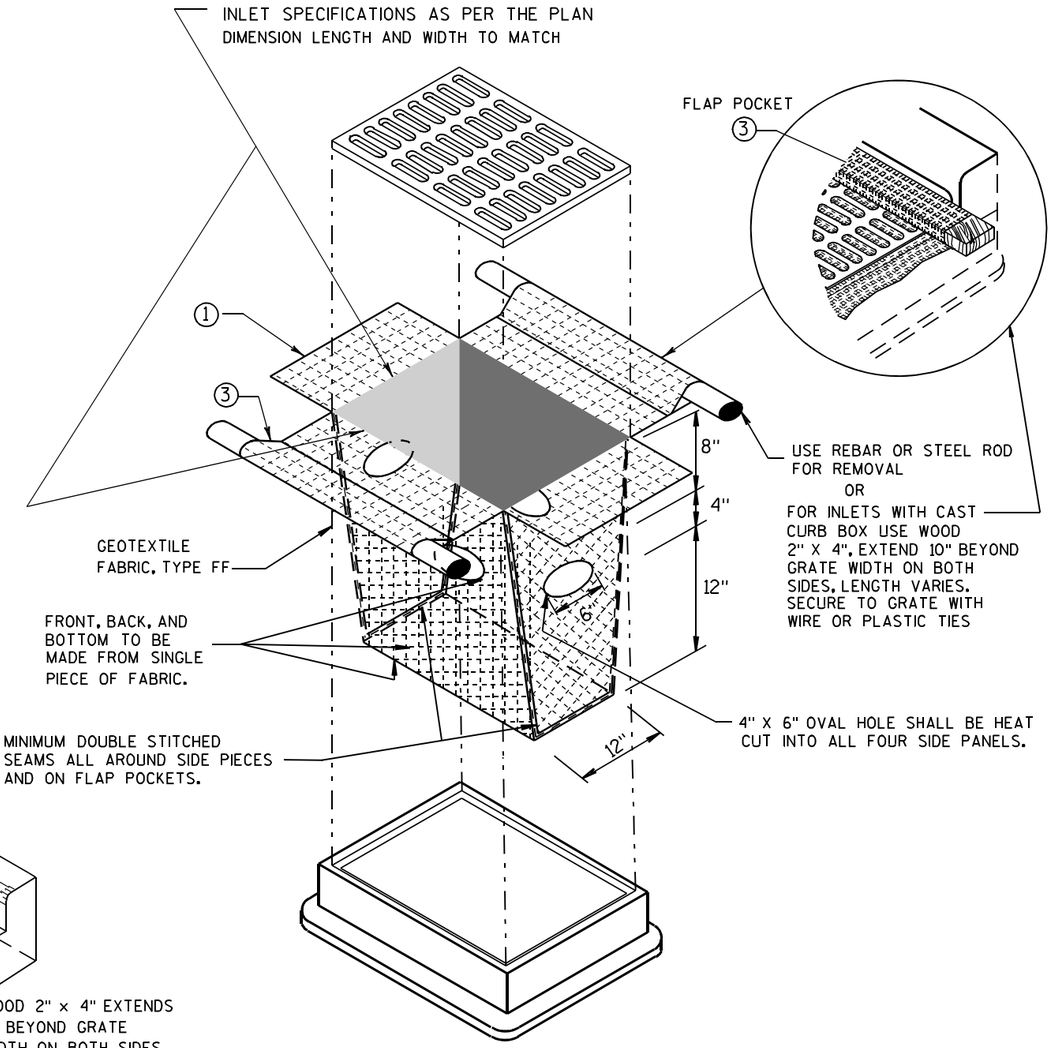

INLET PROTECTION, TYPE D

(CAN BE INSTALLED IN ANY INLET TYPE WITH OR WITHOUT A CURB BOX AS PER NOTE ②)

GENERAL NOTES

INLET PROTECTION DEVICES SHALL BE MAINTAINED OR REPLACED AT THE DIRECTION OF THE ENGINEER.

MANUFACTURED ALTERNATIVES APPROVED AND LISTED ON THE DEPARTMENT'S EROSION CONTROL PRODUCT ACCEPTABILITY LIST MAY BE SUBSTITUTED.

WHEN REMOVING OR MAINTAINING INLET PROTECTION, CARE SHALL BE TAKEN SO THAT THE SEDIMENT TRAPPED ON THE GEOTEXTILE FABRIC DOES NOT FALL INTO THE INLET. ANY MATERIAL FALLING INTO THE INLET SHALL BE REMOVED IMMEDIATELY.

① FINISHED SIZE, INCLUDING FLAP POCKETS WHERE REQUIRED, SHALL EXTEND A MINIMUM OF 10" AROUND THE PERIMETER TO FACILITATE MAINTENANCE OR REMOVAL.

② FOR INLET PROTECTION, TYPE C (WITH CURB BOX), AN ADDITIONAL 18" OF FABRIC IS WRAPPED AROUND THE WOOD AND SECURED WITH STAPLES. THE WOOD SHALL NOT BLOCK THE ENTIRE HEIGHT OF THE CURB BOX OPENING.

③ FLAP POCKETS SHALL BE LARGE ENOUGH TO ACCEPT WOOD 2X4.

INSTALLATION NOTES

TYPE B & C

TRIM EXCESS FABRIC IN THE FLOW LINE TO WITHIN 3" OF THE GRATE.

THE CONTRACTOR SHALL DEMONSTRATE A METHOD OF MAINTENANCE, USING A SEWN FLAP, HAND HOLDS OR OTHER METHOD TO PREVENT ACCUMULATED SEDIMENT FROM ENTERING THE INLET.

TYPE D

DO NOT INSTALL INLET PROTECTION TYPE D IN INLETS SHALLOWER THAN 30", MEASURED FROM THE BOTTOM OF THE INLET TO THE TOP OF THE GRATE.

TRIM EXCESS FABRIC IN THE FLOW LINE TO WITHIN 3" OF THE GRATE.

THE INSTALLED BAG SHALL HAVE A MINIMUM SIDE CLEARANCE, BETWEEN THE INLET WALLS AND THE BAG, MEASURED AT THE BOTTOM OF THE OVERFLOW HOLES, OF 3". WHERE NECESSARY THE CONTRACTOR SHALL CINCH THE BAG, USING PLASTIC ZIP TIES, TO ACHIEVE THE 3" CLEARANCE. THE TIES SHALL BE PLACED AT A MAXIMUM OF 4" FROM THE BOTTOM OF THE BAG.

INLET PROTECTION
TYPE A, B, C, AND D

STATE OF WISCONSIN
DEPARTMENT OF TRANSPORTATION

APPROVED
10/16/02 — DATE
/S/ Beth Cannestra
CHIEF ROADWAY DEVELOPMENT ENGINEER
FHWA

6

S.D.D. 8 E 10-2

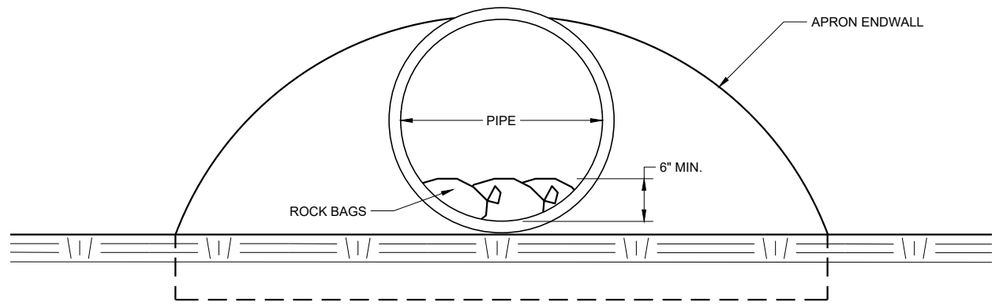

END VIEW

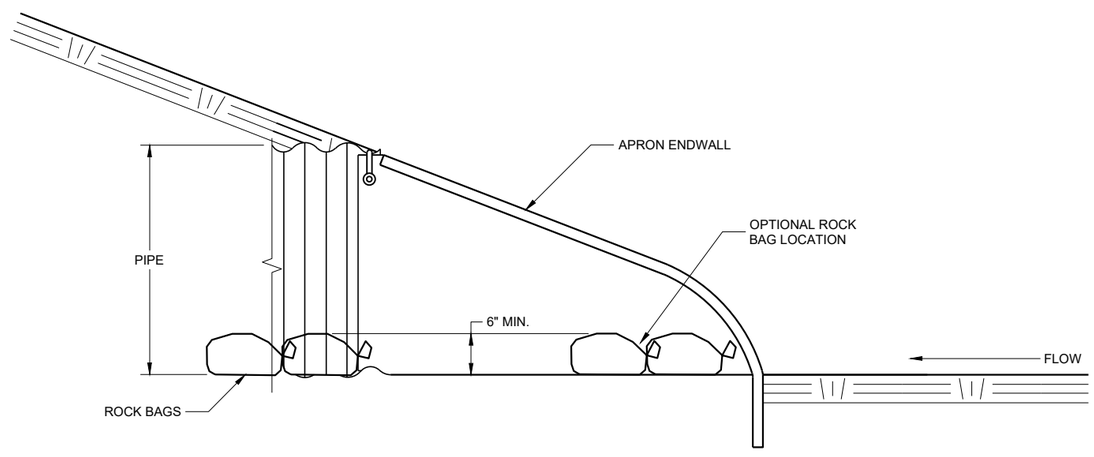

SIDE VIEW

CULVERT PIPE CHECK

(INSTALL ON INLET END ONLY)

CULVERT PIPE CHECK

STATE OF WISCONSIN
DEPARTMENT OF TRANSPORTATION

APPROVED
May 2019 — DATE
/S/ Daniel Schave — EROSION CONTROL ENGI
FHWA

6

6

SDD 08E15 - 01

SDD 08E15 - 01

METAL APRON ENDWALLS

PIPE DIA. (IN.)	MIN. THICK. (Inches) STEEL	MIN. THICK. (Inches) ALUM.	DIMENSIONS (Inches) A (±1")	B (MAX.)	H (±1")	L (±1 1/2")	L1 ①	L2 ①	W (±2")	APPROX. SLOPE	BODY
12	.064	.060	6	6	6	21	12	17 1/2	24	2 1/2 to 1	1 Pc.
15	.064	.060	7	8	6	26	14	21 3/4	30	2 1/2 to 1	1 Pc.
18	.064	.060	8	10	6	31	15	28 1/4	36	2 1/2 to 1	1 Pc.
21	.064	.060	9	12	6	36	18	29 5/8	42	2 1/2 to 1	1 Pc.
24	.064	.075	10	13	6	41	18	37 1/4	48	2 1/2 to 1	1 Pc.
30	.079	.075	12	16	8	51	18	52 1/4	60	2 1/2 to 1	1 Pc.
36	.079	.105	14	19	9	60	24	59 3/4	72	2 1/2 to 1	2 Pc.
42	.109	.105	16	22	11	69	24	75 5/8	84	2 1/2 to 1	2 Pc.
48	.109	.105	18	27	12	78	24	81	90	2 1/4 to 1	3 Pc.
54	.109	.105	18	30	12	84	30	85 1/2	102	2 1/4 to 1	3 Pc.
60	.109×	.105×	18	33	12	87	—	—	114	2 to 1	3 Pc.
66	.109×	.105×	18	36	12	87	—	—	120	2 to 1	3 Pc.
72	.109×	.105×	18	39	12	87	—	—	126	2 to 1	3 Pc.
78	.109×	.105×	18	42	12	87	—	—	132	1 1/2 to 1	3 Pc.
84	.109×	.105×	18	45	12	87	—	—	138	1 1/2 to 1	3 Pc.
90	.109×	.105×	18	37	12	87	—	—	144	1 1/2 to 1	3 Pc.
96	.109×	.105×	18	35	12	87	—	—	150	1 1/2 to 1	3 Pc.

× EXCEPT CENTER PANEL
SEE GENERAL NOTES

REINFORCED CONCRETE APRON ENDWALLS

PIPE DIA. (IN.)	DIMENSIONS (Inches) T	A	B	C	D	E	G	APPROX. SLOPE
12	2	4	24	48 7/8	72 7/8	24	2	3 to 1
15	2 1/4	6	27	46	73	30	2 1/4	3 to 1
18	2 1/2	9	27	46	73	36	2 1/2	3 to 1
21	2 3/4	9	36	37 1/2	73 1/2	42	2 3/4	3 to 1
24	3	9 1/2	43 1/2	30	73 1/2	48	3	3 to 1
27	3 1/4	10 1/2	49 1/2	24	73 1/2	54	3 1/4	3 to 1
30	3 1/2	12	54	19 3/4	73 1/2	60	3 1/2	3 to 1
36	4	15	63	34 3/4	97 3/4	72	4	3 to 1
42	4 1/2	21	63	35	98	78	4 1/2	3 to 1
48	5	24	72	26	98	84	5	3 to 1
54	5 1/2	27	65	*33 1/4-**35	*98 1/4-**100	90	5 1/2	2 2/5 to 1
60	6	*30-**35	60	39	99	96	5	2 to 1
66	6 1/2	*24-**30	*72-**78	*21-**27	99	102	5 1/2	2 to 1
72	7	*24-**36	78	21	99	108	6	2 to 1
78	7 1/2	*24-**36	78	21	99	114	6 1/2	2 to 1
84	8	36	90 1/2	21	111 1/2	120	6 1/2	1 1/2 to 1
90	8 1/2	41	87 1/2	24	111 1/2	132	6 1/2	1 1/2 to 1

*MINIMUM
**MAXIMUM

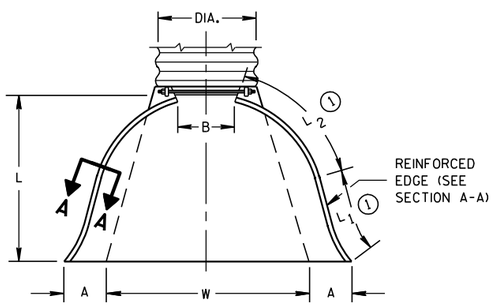

PLAN VIEW

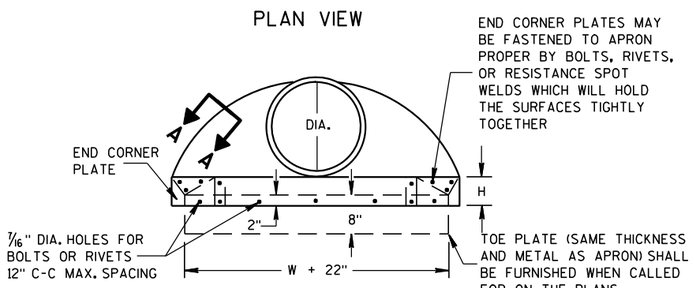

END VIEW

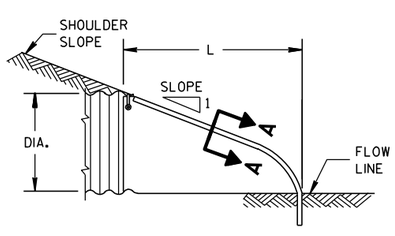

SIDE ELEVATION

METAL ENDWALLS

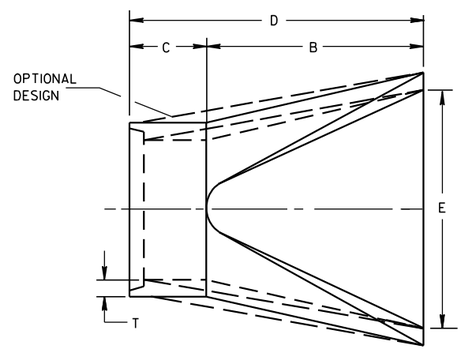

PLAN

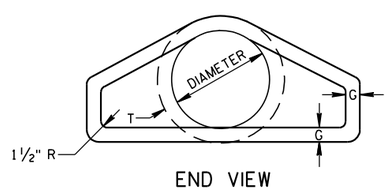

END VIEW

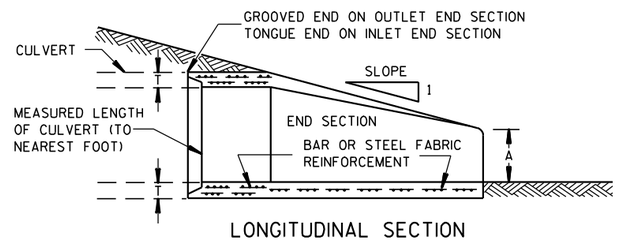

LONGITUDINAL SECTION

CONCRETE ENDWALLS

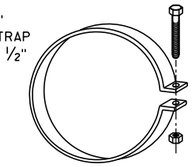

ALTERNATE FOR TYPE 1 CONNECTION

END SECTION CONNECTOR STRAP

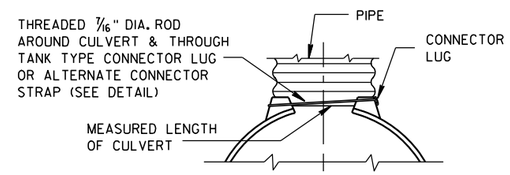

TYPE 1
FOR 12" THRU 24" CORR. PIPE

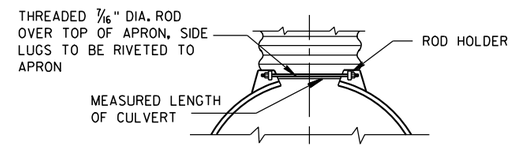

TYPE 2
FOR 30" THRU 96" CORR. PIPE

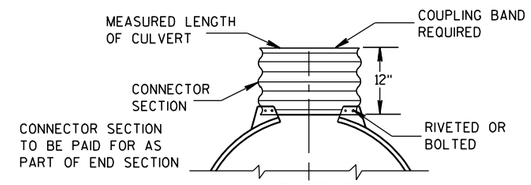

TYPE 3
FOR 42" THRU 96" CORR. PIPE

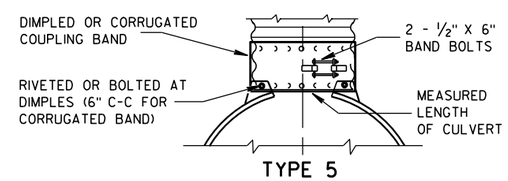

TYPE 5
ALTERNATE FOR:
ALL SIZES CORRUGATED CIRCULAR PIPE

NOTE: DIMPLED BAND FITS OVER OUTSIDE OF ENDWALL, AND CORRUGATED BAND FITS INSIDE ENDWALL. DIMPLED BAND MAY BE USED WITH HELICALLY CORRUGATED PIPE.

FOR CIRCUMFERENTIALLY CORRUGATED PIPE USE ENDWALL CONNECTION DETAILS 1, 2, 3 OR 5 AS APPLICABLE.

FOR HELICALLY CORRUGATED PIPE USE ENDWALL CONNECTION DETAILS 1, 2 OR 5.

FOR HELICALLY CORRUGATED PIPES WITH TWO CIRCUMFERENTIAL CORRUGATIONS AT EACH END USE ENDWALL CONNECTION DETAILS 1, 2 OR 3.

CONNECTION DETAILS

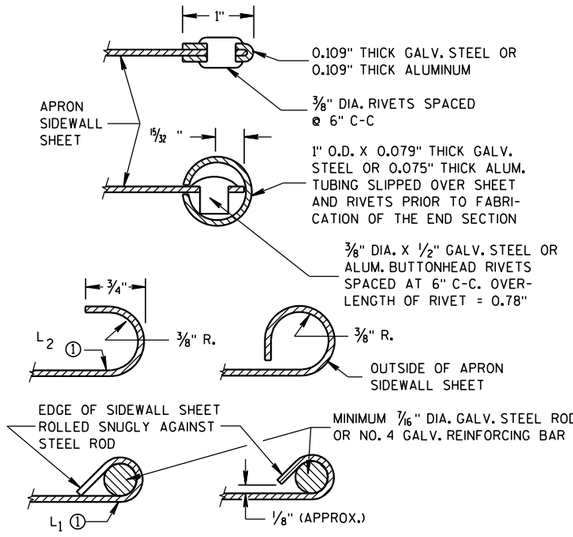

SECTION A-A

GENERAL NOTES

DETAILS OF CONSTRUCTION, MATERIALS AND WORKMANSHIP NOT SHOWN ON THIS DRAWING SHALL CONFORM TO THE PERTINENT REQUIREMENTS OF THE STANDARD SPECIFICATIONS AND THE APPLICABLE SPECIAL PROVISIONS.

CONCRETE CULVERT ENDWALLS MAY NOT BE USED WITH GALVANIZED STEEL OR ALUMINUM CULVERT PIPE OR VISE VERSA. GALVANIZED STEEL OR ALUMINUM ENDWALLS SHALL NORMALLY BE INSTALLED ON CULVERT PIPE OF THE SAME METAL.

ALL THREE PIECE STEEL APRON ENDWALLS FOR 60" DIAMETER PIPE AND LARGER SHALL HAVE 0.109" SIDES AND 0.138" CENTER PANELS. ALL THREE PIECE ALUMINUM APRON ENDWALLS FOR 60" DIAMETER PIPE AND LARGER SHALL HAVE 0.105" SIDES AND 0.134" CENTER PANELS. THE WIDTH OF CENTER PANELS SHALL BE GREATER THAN 20 PERCENT OF THE PIPE PERIMETER.

LAP SEAMS SHALL BE TIGHTLY JOINED BY GALVANIZED RIVETS OR BOLTS FOR STEEL UNITS AND ALUMINUM RIVETS AND BOLTS FOR ALUMINUM UNITS. FOR THE 60" THROUGH 96" DIAMETER APRON ENDWALL SIZES, THE REINFORCED EDGES AND CENTER PANEL SEAMS SHALL BE FURTHER REINFORCED WITH GALVANIZED STEEL OR ALUMINUM STIFFENER ANGLES. THE ANGLES SHALL BE ATTACHED BY GALVANIZED NUTS AND BOLTS FOR STEEL UNITS AND ALUMINUM NUTS AND BOLTS FOR ALUMINUM UNITS.

WHERE TWO OR MORE PIPES WITH APRON ENDWALLS ARE LAID ADJACENT TO EACH OTHER, THEY SHALL BE SEPARATED BY A DISTANCE SUFFICIENT TO PROVIDE A MINIMUM CLEARANCE OF 6 INCHES BETWEEN APRON ENDWALLS.

① FOR PIPE SIZES UP TO 60" DIAMETER, A 180° ROLLED EDGE MAY BE USED INSTEAD OF STEEL ROD REINFORCEMENT. SEE SECTION A-A.

APRON ENDWALLS FOR CULVERT PIPE

STATE OF WISCONSIN
DEPARTMENT OF TRANSPORTATION

APPROVED
11/30/94 — DATE
/S/ Rory L. Rhinesmith — CHIEF ROADWAY DEVELOPMENT ENGINEER
FHWA

6
S.D.D. 8 F 1-11

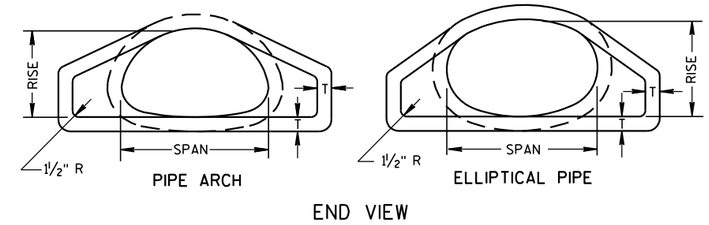

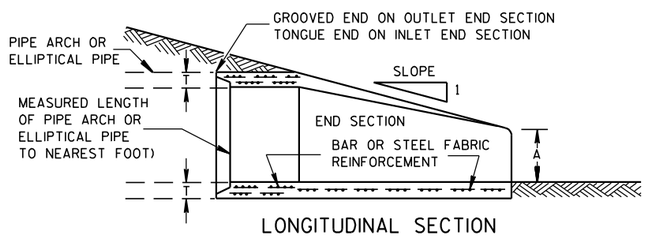

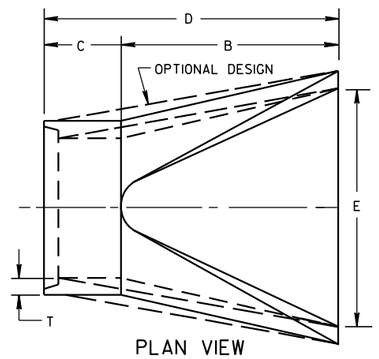

CONCRETE ENDWALLS

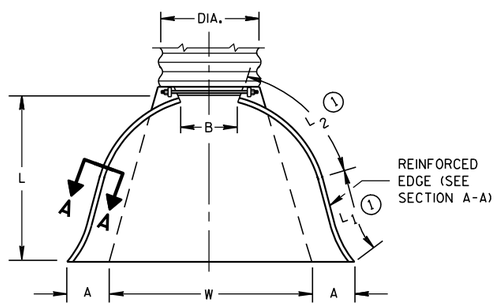

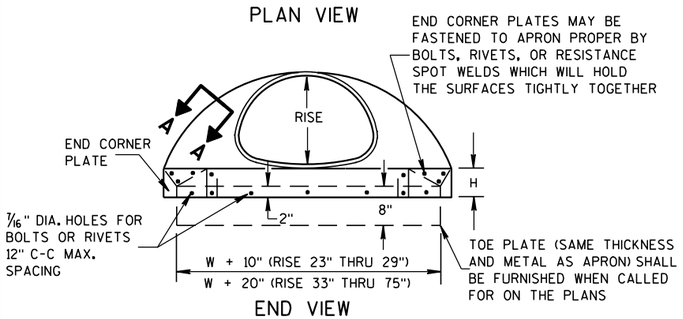

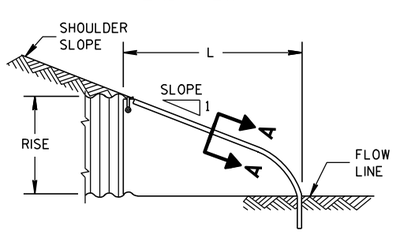

SIDE ELEVATION

METAL ENDWALLS

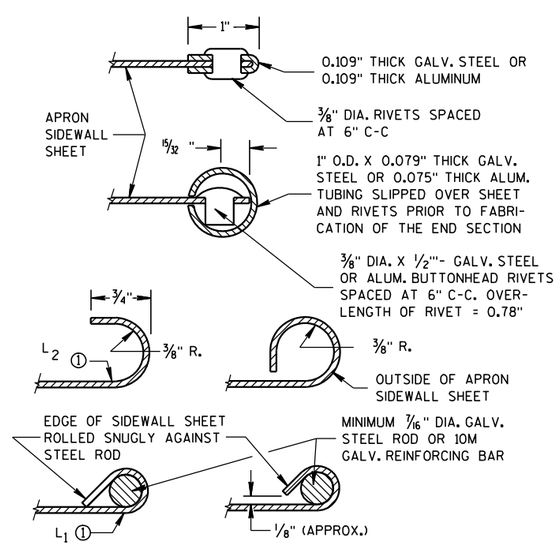

SECTION A-A

2- 2/3" X 1/2" CORRUGATIONS														
EQUIV. DIA. (Inches)	(Inches)		MIN. THICK. (Inches)		DIMENSIONS (Inches)							APPROX. SLOPE	BODY
	SPAN	RISE	STEEL	ALUM.	A (±1")	B (MAX.)	H (±1")	L (±1 1/2")	L1 ①	L2 ①	W (±2")		
15	17	13	.064	.060	7	9	6	19	14	16	30	2½ to 1	1 Pc.
18	21	15	.064	.060	7	10	6	23	14	19⅜	36	2½ to 1	1 Pc.
21	24	18	.064	.060	8	12	6	28	18	21¾	42	2½ to 1	1 Pc.
24	28	20	.064	.060	9	14	6	32	18	27½	48	2½ to 1	1 Pc.
30	35	24	.079	.075	10	16	6	39	18	37⅝	60	2½ to 1	1 Pc.
36	42	29	.079	.075	12	18	8	46	24	45⅜	75	2½ to 1	1 Pc.
42	49	33	.109	.105	13	21	9	53	24	54¾	85	2½ to 1	2 Pc.
48	57	38	.109	.105	18	26	12	63	24	68	90	2½ to 1	3 Pc.
54	64	43	.109	.105	18	30	12	70	24	72¾	102	2¼ to 1	3 Pc.
60	71	47	.109*	.105*	18	33	12	77	30	82¼	114	2¼ to 1	3 Pc.
66	77	52	.109*	.105*	18	36	12	77	—	—	126	2 to 1	3 Pc.
72	83	57	.109*	.105*	18	39	12	77	—	—	138	2 to 1	3 Pc.

3" X 1" CORRUGATIONS													
EQUIV. DIA. (Inches)	(Inches)		MIN. THICK. (Inches)		DIMENSIONS (Inches)							APPROX. SLOPE	BODY
	SPAN	RISE	STEEL	ALUM.	A (±1")	B (MAX.)	H (±1")	L (±1 1/2")	L1 ①	L2 ①	W (±2")		
48	53	41	.109	.105	18	26	12	63	24	72¾	90	2½ to 1	2 Pc.
54	60	46	.109	.105	18	30	12	70	30	82¼	102	2 to 1	2 Pc.
60	66	51	.109*	.105*	18	33	12	77	—	—	114	1½ to 1	3 Pc.
66	73	55	.109*	.105*	18	36	12	77	—	—	126	1½ to 1	3 Pc.
72	81	59	.109*	.105*	18	39	12	77	—	—	138	2 to 1	3 Pc.
78	87	63	.109*	.105*	22	38	12	77	—	—	148	1½ to 1	3 Pc.
84	95	67	.109*	.105*	22	34	12	77	—	—	162	1½ to 1	3 Pc.
90	103	71	.109*	.105*	22	38	12	77	—	—	174	1½ to 1	3 Pc.
96	112	75	.109*	.105*	24	40	12	77	—	—	174	1½ to 1	3 Pc.

NOTE: ALL SPLICES TO BE LAP RIVETED OR BOLTED.

* EXCEPT CENTER PANEL SEE GENERAL NOTES

REINFORCED CONCRETE PIPE ARCH									
EQUIV. DIA. (Inches)	DIMENSIONS (Inches)								APPROX. SLOPE
	** SPAN	** RISE	T	A	B	C	D	E	
24	29	18	3	8½	39	33	72	48	3 to 1
30	36	22	3½	9½	50	46	96	60	3 to 1
36	44	27	4	11⅛	60	36	96	72	3 to 1
42	51	31	4½	15 13/16	60	36	96	78	3 to 1
48	58	36	5	21	60	36	96	84	3 to 1
54	65	40	5½	25½	60	36	96	90	3 to 1
60	73	45	6	31	60	36	96	96	3 to 1
72	88	54	7	31	60	39	99	120	2 to 1
84	102	62	8	28½	83	19	102	144	2 to 1

REINFORCED CONCRETE ELLIPTICAL PIPE									
EQUIV. DIA. (Inches)	DIMENSIONS (Inches)								APPROX. SLOPE
	** SPAN	** RISE	T	A	B	C	D	E	
24	30	19	3¼	8½	39	33	72	48	3 to 1
30	38	24	3¾	9½	54	18	72	60	3 to 1
36	45	29	4½	11⅛	60	24	84	72	2½ to 1
42	53	34	5	15¾	60	36	96	78	2½ to 1
48	60	38	5½	21	60	36	96	84	2½ to 1
54	68	43	6	25½	60	36	96	90	2½ to 1
60	76	48	6½	30	60	36	96	96	2½ to 1

**NOMINAL SIZE

GENERAL NOTES

DETAILS OF CONSTRUCTION, MATERIALS AND WORKMANSHIP NOT SHOWN ON THIS DRAWING SHALL CONFORM TO THE PERTINENT REQUIREMENTS OF THE STANDARD SPECIFICATIONS AND THE APPLICABLE SPECIAL PROVISIONS.

CONCRETE APRON ENDWALLS MAY NOT BE USED WITH GALVANIZED STEEL OR ALUMINUM CULVERT PIPE OR VISE VERSA. GALVANIZED STEEL OR ALUMINUM APRON ENDWALLS SHALL NORMALLY BE INSTALLED ON CULVERT PIPE OF THE SAME METAL.

ALL THREE PIECE STEEL APRON ENDWALLS FOR 66" X 51" PIPE ARCH AND LARGER SHALL HAVE 0.109" SIDES AND 0.138" CENTER PANELS. ALL THREE PIECE ALUMINUM APRON ENDWALLS FOR 66" X 51" PIPE ARCH AND LARGER SHALL HAVE 0.105" SIDES AND 0.134" CENTER PANELS. THE WIDTH OF CENTER PANELS SHALL BE GREATER THAN 20 PERCENT OF THE PIPE ARCH PERIMETER.

LAP SEAMS SHALL BE TIGHTLY JOINED BY GALVANIZED RIVETS OR BOLTS FOR STEEL UNITS AND ALUMINUM RIVETS AND BOLTS FOR ALUMINUM UNITS. FOR THE 77" X 52" THROUGH 112" X 75" APRON ENDWALL SIZES, THE REINFORCED EDGES AND CENTER PANEL SEAMS SHALL BE FURTHER REINFORCED WITH GALVANIZED STEEL OR ALUMINUM STIFFENER ANGLES. THE ANGLES SHALL BE ATTACHED BY GALVANIZED NUTS AND BOLTS FOR STEEL UNITS AND ALUMINUM NUTS AND BOLTS FOR ALUMINUM UNITS.

WHERE TWO OR MORE PIPES WITH APRON ENDWALLS ARE LAID ADJACENT TO EACH OTHER, THEY SHALL BE SEPARATED BY A DISTANCE SUFFICIENT TO PROVIDE A MINIMUM CLEARANCE OF 6 INCHES BETWEEN APRON ENDWALLS.

① FOR PIPE ARCH SIZES UP TO 73" X 55" A 180° ROLLED EDGE MAY BE USED INSTEAD OF STEEL ROD REINFORCEMENT. SEE SECTION A-A.

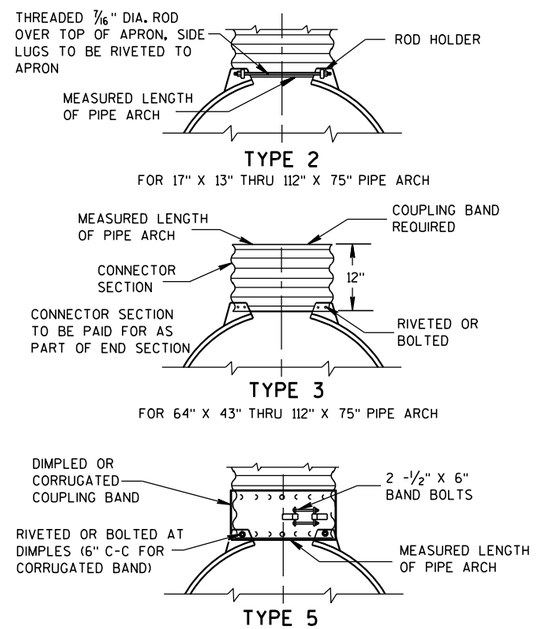

NOTE: DIMPLED BAND FITS OVER OUTSIDE OF ENDWALL, AND CORRUGATED BAND FITS INSIDE ENDWALL.

CONNECTION DETAILS

APRON ENDWALLS FOR PIPE ARCH AND ELLIPTICAL PIPE

STATE OF WISCONSIN
DEPARTMENT OF TRANSPORTATION

APPROVED
11/30/94 — DATE
/S/ Rory L. Rhinesmith — CHIEF ROADWAY DEVELOPMENT ENGINEER
FHWA

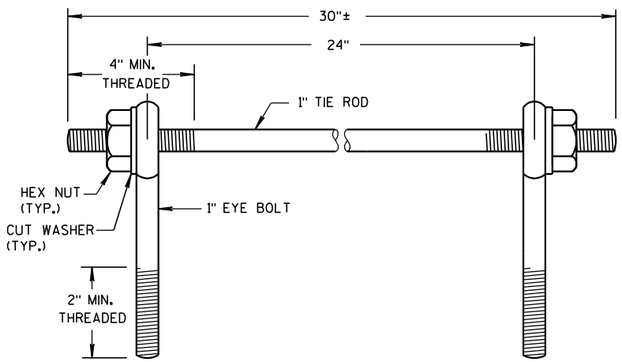

EYE BOLTS AND TIE ROD

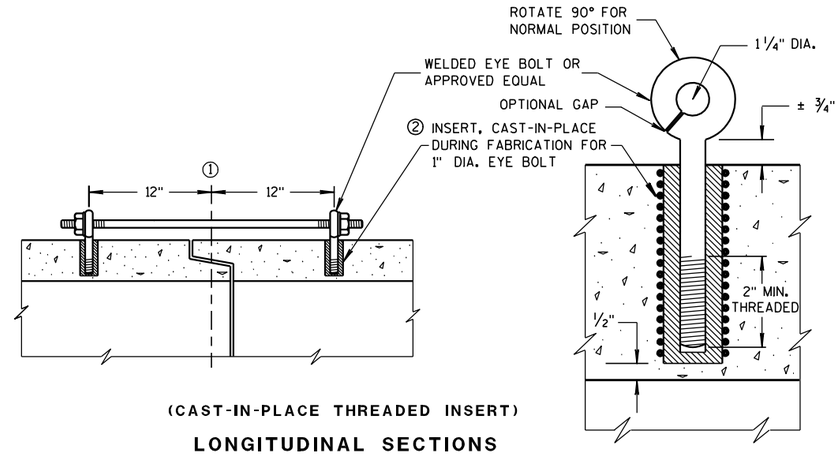

(CAST-IN-PLACE THREADED INSERT)

LONGITUDINAL SECTIONS

EYE BOLT AND TIE ROD ASSEMBLY (ALTERNATE NO. 1)

GENERAL NOTES

DETAILS OF CONSTRUCTION, MATERIALS, AND WORKMANSHIP NOT SHOWN ON THIS DRAWING SHALL CONFORM TO THE PERTINENT REQUIREMENTS OF THE STANDARD SPECIFICATIONS AND APPLICABLE SPECIAL PROVISIONS.

CONCRETE CULVERT AND STORM SEWER PIPE SHALL BE TIED TOGETHER IN THE MANNER ILLUSTRATED BY THIS DETAIL AT LOCATIONS DESIGNATED IN THE STANDARD SPECIFICATIONS AND THE PLAN. THE CONTRACTOR MAY USE EITHER ALTERNATE 1, 2 OR 3 FOR DRAINAGE STRUCTURES. ONLY ALTERNATE 1 AND 3 MAY BE USED FOR CATTLE PASSES, UNLESS OTHERWISE STATED IN THE CONTRACT. THE MATERIALS, FABRICATION AND WORK NECESSARY TO TIE THE PIPE BY THIS DETAIL WILL BE CONSIDERED INCIDENTAL TO THE PIPE AND APRON ENDWALLS IF REQUIRED.

DETAILED DRAWINGS FOR PROPOSED ALTERNATE DESIGNS FOR JOINT TIES SHALL BE SUBMITTED TO THE ENGINEER FOR APPROVAL.

JOINT TIES TO BE HOT-DIP GALVANIZED PER ASTM A 153.

① ℄ OF TONGUE AND GROOVE OR BELL AND SPIGOT JOINTS.

② THE INSIDE OF THE THREADED INSERTS SHALL BE CLEAN TO ALLOW THE INSERTION OF THREADED EYE BOLTS.

③ HOLES SHALL BE CAST-IN-PLACE OR DRILLED 12 INCHES FROM ℄ OF TONGUE AND GROOVE.

④ BOLT PROJECTION INSIDE OF PIPE SHALL NOT EXCEED 2 INCHES.

⑤ OPENING TO BE ROD DIAMETER PLUS 1 INCH.

⑥ LENGTH ADEQUATE TO EXTEND TO WITHIN 1/2 INCH OF THE INNER SURFACE OF THE PIPE.

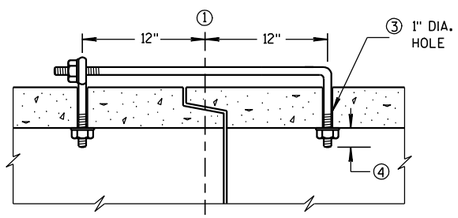

(TONGUE & GROOVE PIPE)

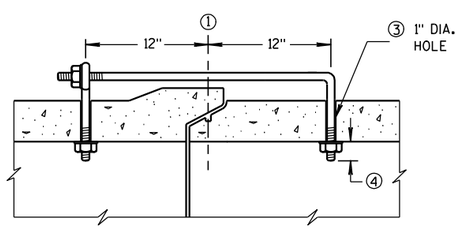

(MODIFIED BELL PIPE)

LONGITUDINAL SECTION

EYE BOLT DIMENSION TABLE

PIPE SIZE	L = LENGTH	
	TONGUE & GROOVE PIPE	MODIFIED BELL PIPE
18" TO 24"	4 1/2"	6 1/4"
30"	5"	7"
36"	5 1/2"	7"
42"	6"	
48"	6 1/2"	
60"	7 1/2"	
66"	8"	

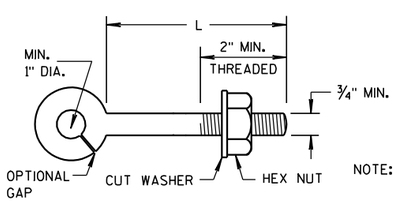

EYE BOLT

NOTE:

NOTE: TWO EYE BOLTS MAY BE USED WITH A 30" LONG THREADED ROD IN LIEU OF THE 90° BENT TIE ROD.

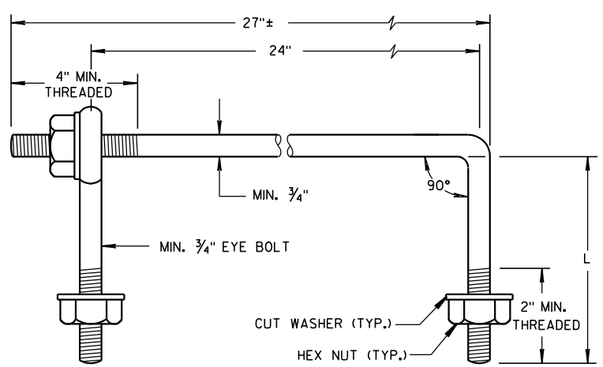

EYE BOLT AND TIE ROD

(JOINT TIES FOR 18" TO 66" DIA. CONCRETE PIPE)

EYE BOLT AND TIE ROD ASSEMBLY (ALTERNATE NO. 2)

ADJUSTABLE TIE ROD TABLE

PIPE DIAMETER	TIE ROD DIAMETER	D	L_1	N
12-60	5/8	5/8	5	1/2
66-84	3/4	3/4	5	1/2
90-108	1	1	7	1 7/16

DIMENSIONS SHOWN ARE IN INCHES

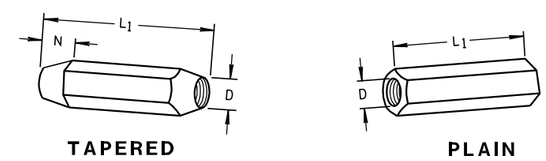

TAPERED PLAIN

RIGHT AND LEFT THREADS

SLEEVE NUTS

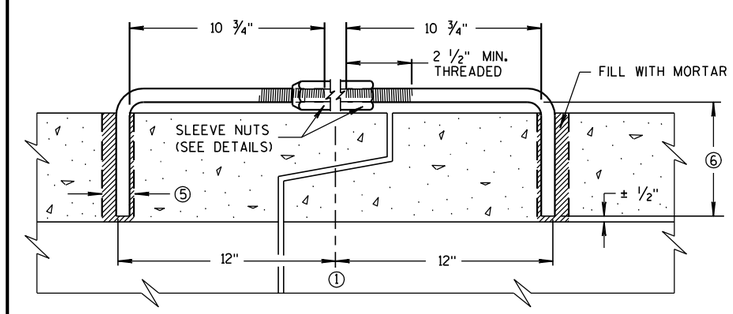

LONGITUDINAL SECTION

(JOINT TIES FOR 12" TO 108" DIA. CONCRETE PIPE)

ADJUSTABLE TIE ROD (ALTERNATE NO. 3)

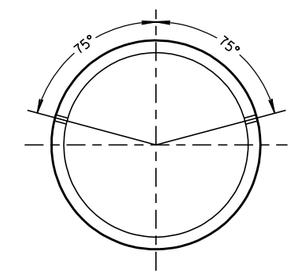

PLACEMENT OF (2) CAST-IN-PLACE INSERTS OR HOLES DURING FABRICATION FOR PIPE SECTIONS REQUIRING TIE RODS

TRANSVERSE SECTION

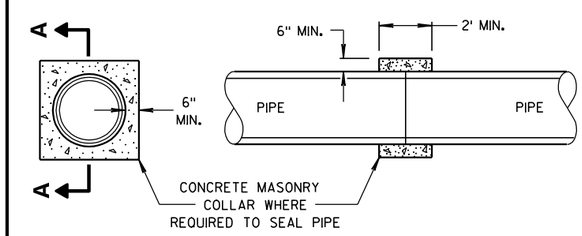

SECTION A-A

CONCRETE COLLAR DETAIL

JOINT TIES FOR CONCRETE PIPE AND CONCRETE COLLAR DETAIL

STATE OF WISCONSIN
DEPARTMENT OF TRANSPORTATION

APPROVED
6/5/2012 — DATE
/S/ Jerry H. Zogg — ROADWAY STANDARDS DEVELOPMENT ENGINEER
FHWA

6

6

S.D.D. 8 F 4-7

S.D.D. 8 F 4-7

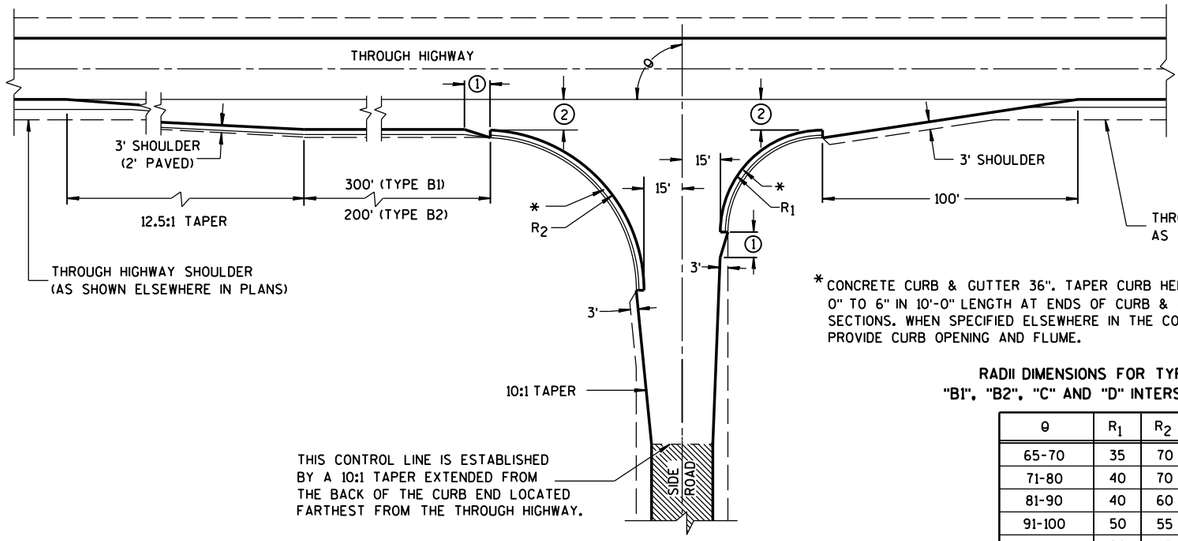

TYPE "B1" AND "B2"

*CONCRETE CURB & GUTTER 36". TAPER CURB HEIGHT 0" TO 6" IN 10'-0" LENGTH AT ENDS OF CURB & GUTTER SECTIONS. WHEN SPECIFIED ELSEWHERE IN THE CONTRACT, PROVIDE CURB OPENING AND FLUME.

RADII DIMENSIONS FOR TYPES "B1", "B2", "C" AND "D" INTERSECTIONS

θ	R_1	R_2
65-70	35	70
71-80	40	70
81-90	40	60
91-100	50	55
101-110	60	45

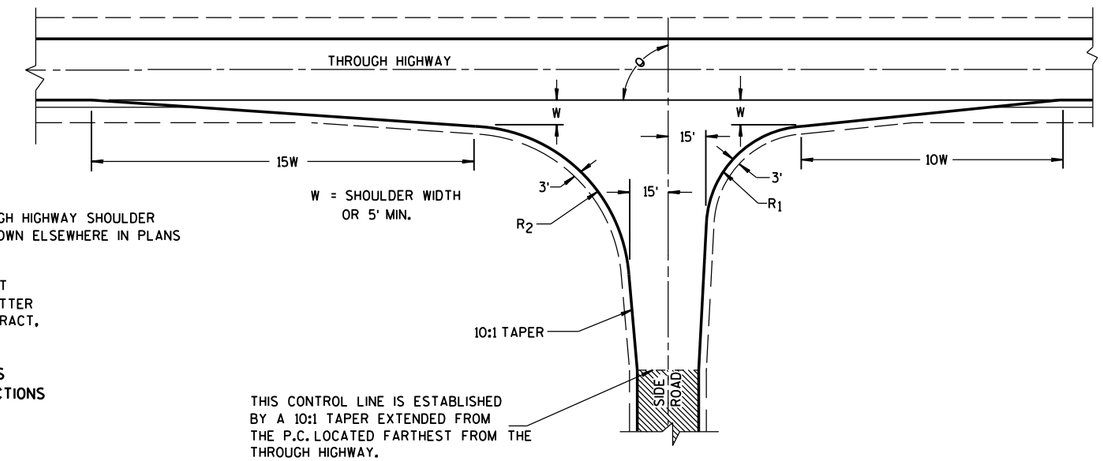

TYPE "C"

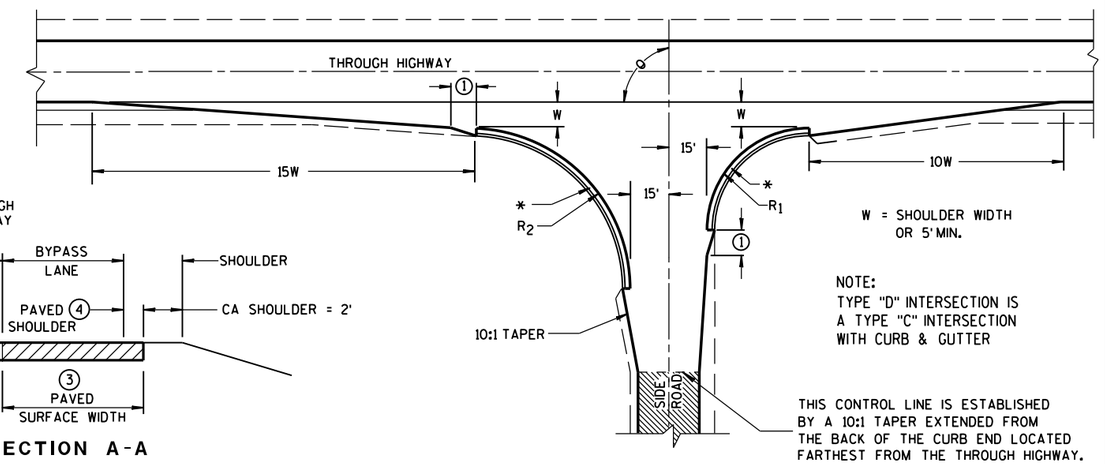

TYPE "D"

GENERAL NOTES

DESIGNS MAY BE USED INTERCHANGEABLY IN COMBINATION OR SEPARATELY FOR ANY ONE COMPLETE INTERSECTION DEPENDING UPON INTERSECTION ANGLE AND SURFACING OF EACH APPROACH ROADWAY.

SIDE ROAD SURFACING NOTE

WHEN THE SIDE ROAD IS NOT PRESENTLY PAVED, PAVEMENT SHALL BE PLACED TO THE LIMITS SHOWN UNLESS OTHERWISE PROVIDED IN THE CONTRACT. WHERE THE CONSTRUCTION LIMITS ARE BEYOND THE PAVING LIMITS, CRUSHED AGGREGATE SURFACING SHALL BE PLACED BETWEEN THE PAVING LIMITS AND CONSTRUCTION LIMITS.

WHEN THE SIDE ROAD IS PRESENTLY PAVED, NEW PAVEMENT SHALL BE PLACED TO THE LIMITS OF DESIGN AS SHOWN AND BEYOND, IF NECESSARY, TO MEET EXISTING PAVEMENT.

WHEN THE SIDE ROAD IS THE CONSTRUCTION PROJECT, THE INTERSECTION SURFACING SHALL BE THE SAME AS FOR THE PROJECT.

EXISTING PAVED SURFACE

BYPASS LANE

(1) 10-FT TYPICAL.

(2) 12-FT** PLUS ADDITIONAL WIDTH FOR BIKE LANE IF SHOWN ELSEWHERE IN THE PLAN.

**10-FT MAY BE USED ON TYPE B2 ON RESURFACING PROJECTS IF SPECIFIED IN THE CONTRACT.

(3) BYPASS LANE PAVED SURFACE WIDTH OUTSIDE OF TRAVEL LANE
-ASPHALT = 12-FT PLUS PAVED SHOULDER WIDTH.
-PC CPNCRETE = 13-FT PLUS PAVED SHOULDER WIDTH.

(4) BYPASS LANE PAVED SHOULDER WIDTH = THE GREATER OF 1-FT OR THE PAVED SHOULDER WIDTH OF THE THROUGH HIGHWAY.

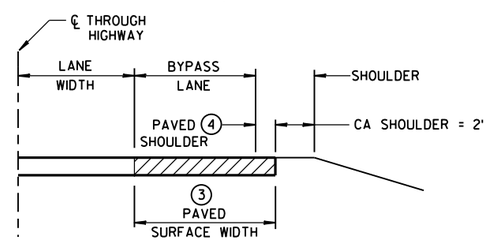

SECTION A-A
(SHOWING BYPASS LANE AND SHOULDER)

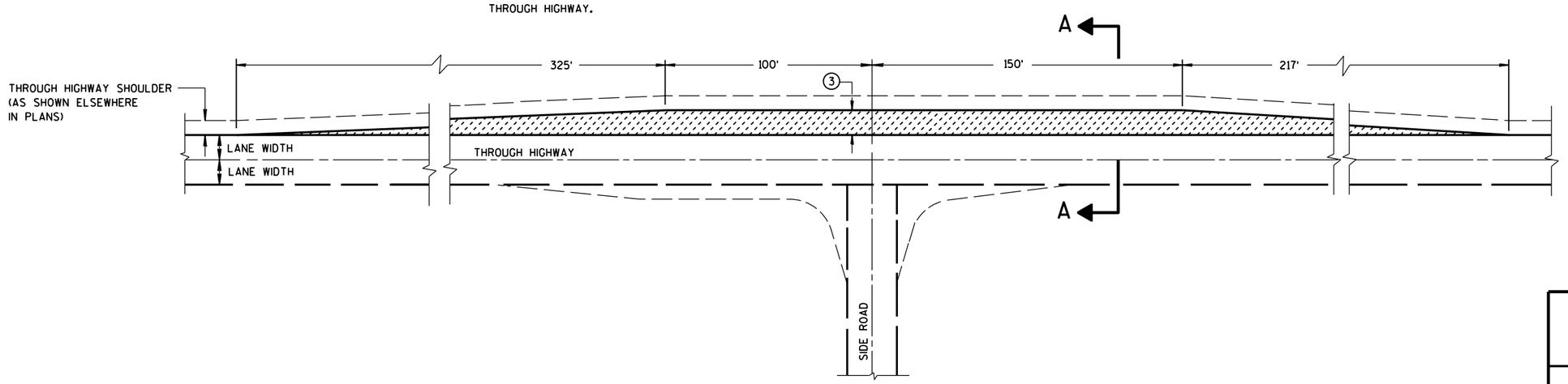

TEE INTERSECTION BYPASS LANE DETAIL

AT-GRADE SIDE ROAD INTERSECTION, TYPES "B1", "B2", "C" AND "D" AND TEE INTERSECTION BYPASS LANE

STATE OF WISCONSIN
DEPARTMENT OF TRANSPO

6

S.D.D. 9 A 1-13a

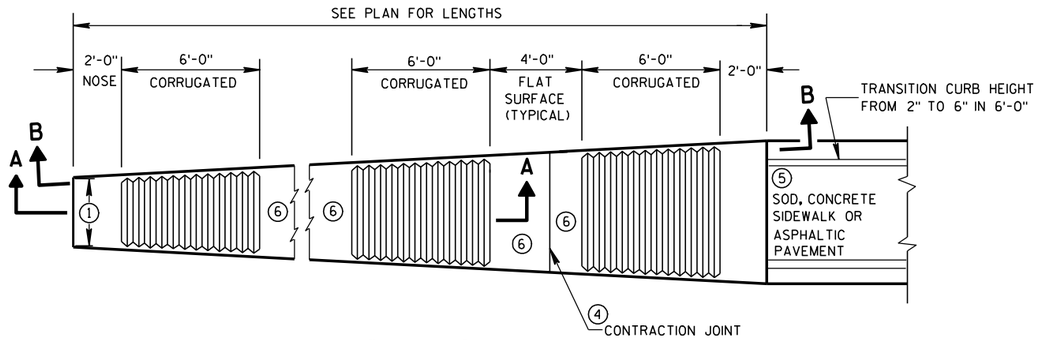

PLAN VIEW

VARIABLE WIDTH CONCRETE CORRUGATED MEDIAN

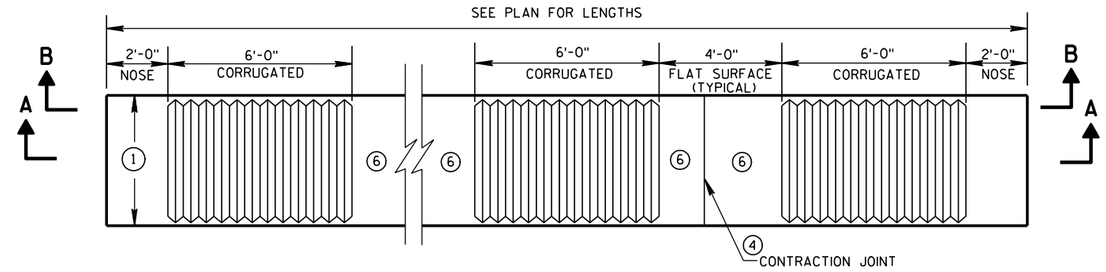

PLAN VIEW

UNIFORM WIDTH CONCRETE CORRUGATED MEDIAN

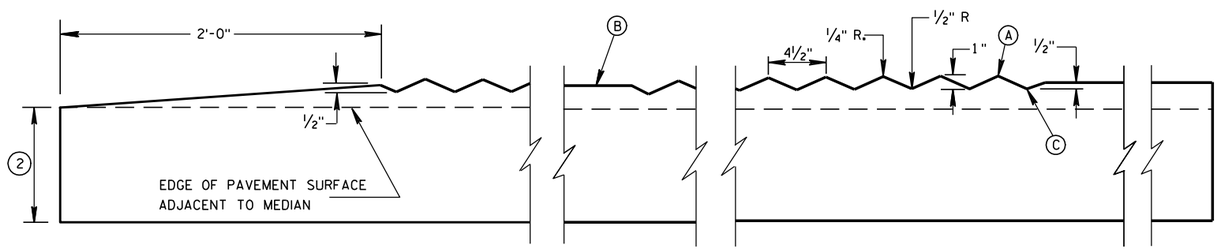

SECTION A-A

LONGITUDINAL SECTION

GENERAL NOTES

1. SEE PLANS FOR CONSTANT OR VARIABLE WIDTH.
2. THE DEPTH OF THE CONCRETE CORRUGATED MEDIAN SHALL BE 9-INCHES UNLESS SHOWN OTHERWISE IN THE PLAN.
   ADJACENT PAVEMENT STRUCTURE DETAILS ARE SHOWN IN THE PLAN. TYPICAL OPTIONS ARE:
   (1) NEW OR EXISTING CONCRETE PAVEMENT.
   (2) ASPHALTIC CONCRETE OVER NEW OR EXISTING CONCRETE BASE COURSE, OR PAVEMENT.
   (3) ASPHALTIC PAVEMENT OVER BASE AGGREGATE DENSE.
3. TIE BARS OR PAVEMENT TIES REQUIRED IN NEW CONCRETE PAVEMENT OR CONCRETE BASE COURSE. TIE BARS SHALL BE NO. 4 X 2'-0" SPACED AT 2'-0" C-C.
   INSTALL TIE BARS TO MAINTAIN A MINIMUM OF 3-INCHES OF COVER BETWEEN THE TIE BAR AND THE CONCRETE SURFACE (BOTTOM AND TOP).
   PAVEMENT TIES REQUIRED IN EXISTING CONCRETE PAVEMENT OR CONCRETE BASE COURSE, PAVEMENT TIES SHALL BE NO. 6 X 1'-0" SPACED AT 3'-0" C-C INSTALLED ON A HORIZONTAL SKEW OF 6:1. THE DIRECTION OF SKEW SHALL ALTERNATE AFTER EVERY ONE OR TWO BARS.
4. CONCRETE CORRUGATED MEDIAN CONTRACTION JOINTS SHALL BE CONSTRUCTED TO MATCH THE JOINTS IN ADJACENT CONCRETE PAVEMENT. WHERE ADJACENT PAVEMENT IS ASPHALT WITH BASE AGGREGATE DENSE. TRANSVERSE CONTRACTION JOINTS SHALL BE PROVIDED AT 20 FOOT INTERVALS.
5. SURFACE TYPE AND DETAILS ARE DEFINED ELSEWHERE IN THE PLAN.
6. YELLOW MARKING ON FLAT SURFACE WHEN MEDIAN SEPARATES OPPOSING TRAFFIC.

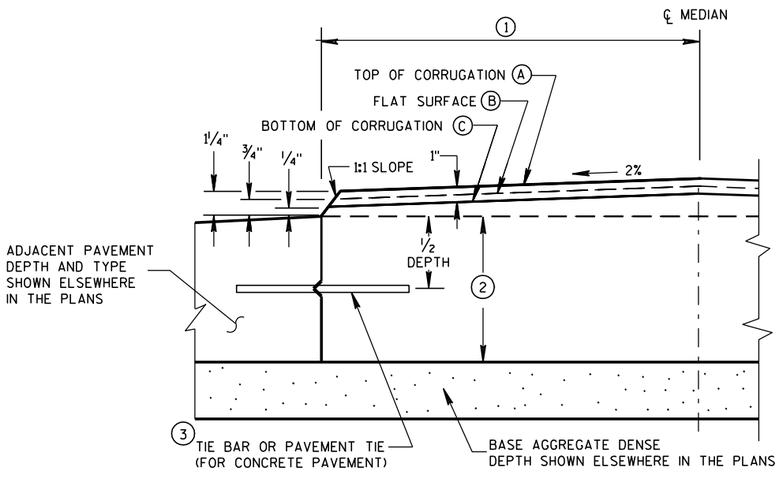

HALF CROSS SECTION

CONCRETE CORRUGATED MEDIAN AND ADJACENT PAVEMENT

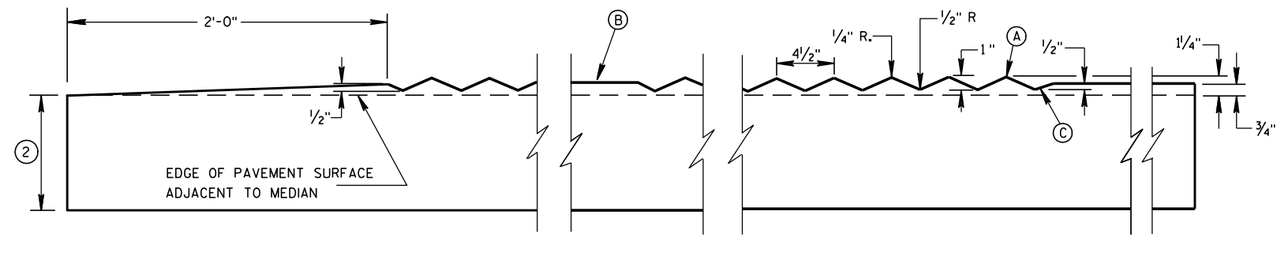

SECTION B-B

LONGITUDINAL SECTION

CONCRETE CORRUGATED MEDIAN

STATE OF WISCONSIN
DEPARTMENT OF TRANSPORTATION

APPROVED

12/17/07 — DATE

/S/ Jerry H. Zogg — ROADWAY STANDARDS DEVELOPMENT ENGINEER

FHWA

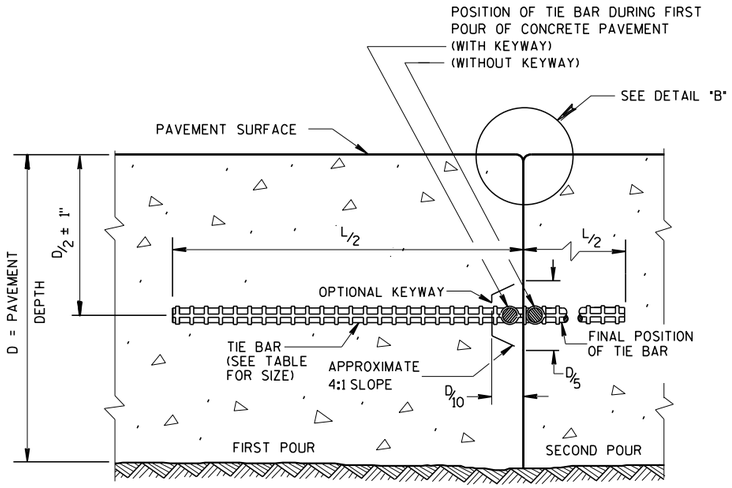

CONSTRUCTION JOINT

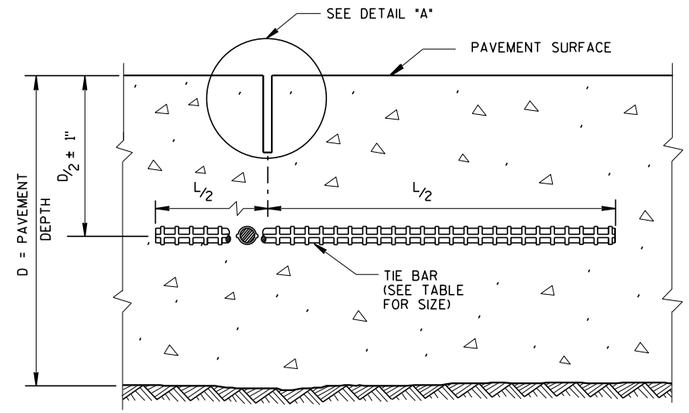

SAWED JOINT

GENERAL NOTES

CREATE A LONGITUDINAL JOINT FOR PAVEMENT WIDTHS GREATER THAN 15 FEET.

CORRELATE LONGITUDINAL JOINTS WITH LANE LINES WHEN POSSIBLE.

1. ANCHOR TIE BARS INTO DRILLED HOLES WITH AN EPOXY.
2. PAVEMENT THAT WAS IN PLACE PRIOR TO THE CONTRACT.

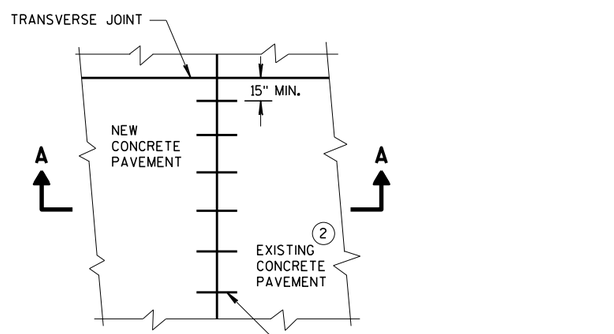

PLAN VIEW

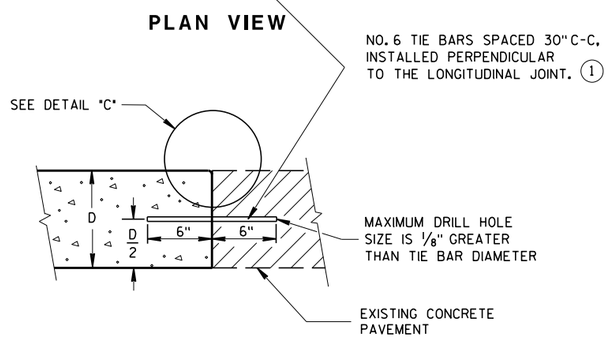

SECTION A-A
LONGITUDINAL CONSTRUCTION JOINT TIE BARS ANCHORED INTO EXISTING PAVEMENT

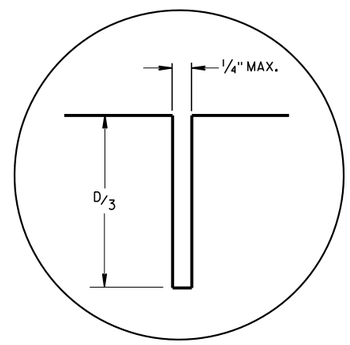

DETAIL "A"

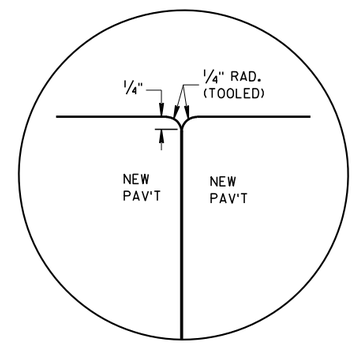

DETAIL "B"

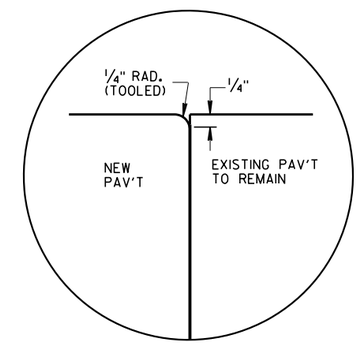

DETAIL "C"

TIE BAR TABLE

PAVEMENT DEPTH (D)	TIE BAR SIZE	TIE BAR LENGTH (L)	MAX. TIE BAR SPACING
< 10 1/2"	NO. 4	30"	36"
≥ 10 1/2"	NO. 5	36"	36"
	NO. 4 *	30"	24" **

* SUBSTITUTE BENT BARS AT LONGITUDINAL JOINTS WHEN EQUIPMENT LIMITATIONS DURING CONSTRUCTION WARRANT (e.g. AUXILIARY LANES OR TURN LANES)

** CONFORM TO 15" MINUMUM SPACING FROM TRANSVERSE JOINTS; SPACING BETWEEN TIE BARS WILL BE 30" AT TRANSVERSE JOINTS.

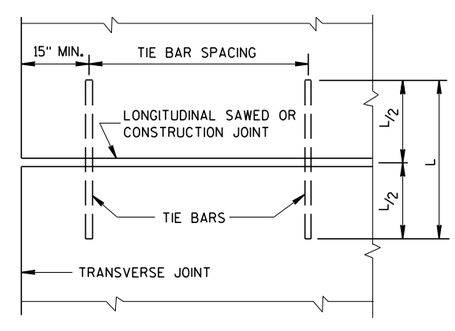

PLAN VIEW
SHOWING LOCATION OF TIE BARS

CONCRETE PAVEMENT
LONGITUDINAL JOINTS AND TIES

STATE OF WISCONSIN
DEPARTMENT OF TRANSPORTATION

APPROVED
March 2018 — DATE
/S/ Peter Kerr — PAVEMENT SUPE
FHWA

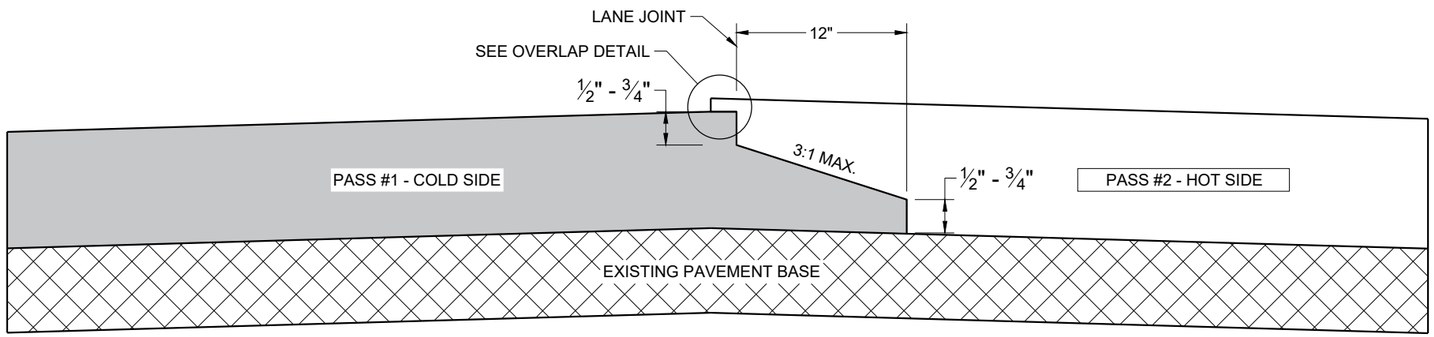

TYPICAL PAVEMENT CROSS SECTION OF NOTCHED WEDGE LONGITUDINAL JOINT

GENERAL NOTES

IN ADDITION TO THE DETAILS PROVIDED IN THIS DRAWING, CONFORM TO STANDARD SPECIFICATION 450.3.2.8 FOR WHEN A NOTCHED WEDGE JOINT IS REQUIRED AND FOR GENERAL JOINT CONSTRUCTION REQUIREMENTS.

FOR ALL LONGITUDINAL JOINTS, ENSURE THE PAVER SCREED OVERLAPS THE PREVIOUSLY PLACED PAVEMENT BY 1" ± 0.5" AND THE HOT SIDE OF THE JOINT REMAINS HIGHER THAN THE COLD SIDE BY APPROXIMATELY 0.1" AFTER FINAL COMPACTION.

ONLY REMOVE THE LONGITUDINAL NOTCHED WEDGE JOINT FOR SMA PAVEMENT OR AS DIRECTED BY THE ENGINEER TO ADDRESS SPECIFIC LENGTHS OF JOINT DAMAGED BY TRAFFIC.

WHEN MILLING BACK OR REMOVING ANY LONGITUDINAL JOINT, LIMIT THE MATERIAL REMOVED TO 2" FROM THE TOP NOTCH OR FROM THE VERTICAL JOINT EDGE ON THE COLD SIDE OF THE JOINT.

USE LONGITUDINAL MILLED JOINT AS PLANS SHOW OR THE AS THE ENGINEER DIRECTS.

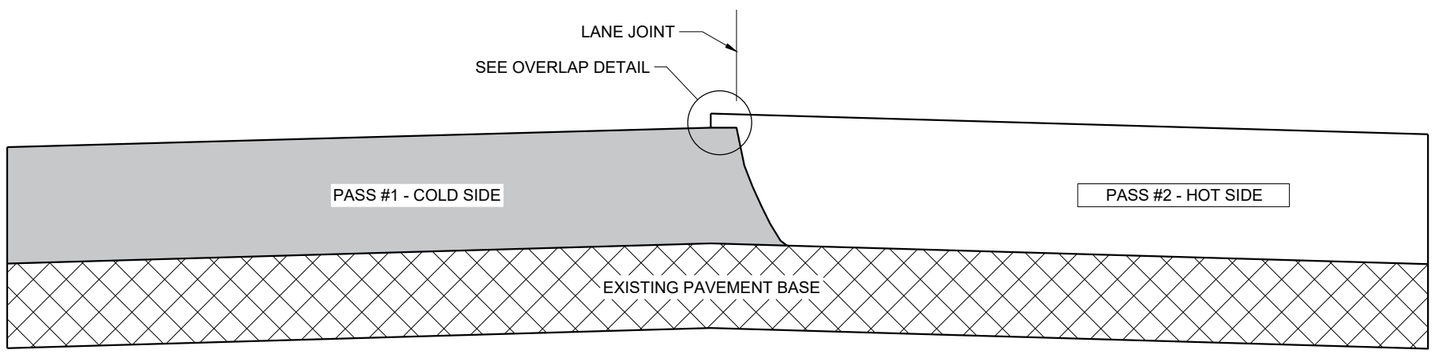

TYPICAL PAVEMENT CROSS SECTION VERTICAL LONGITUDINAL JOINT

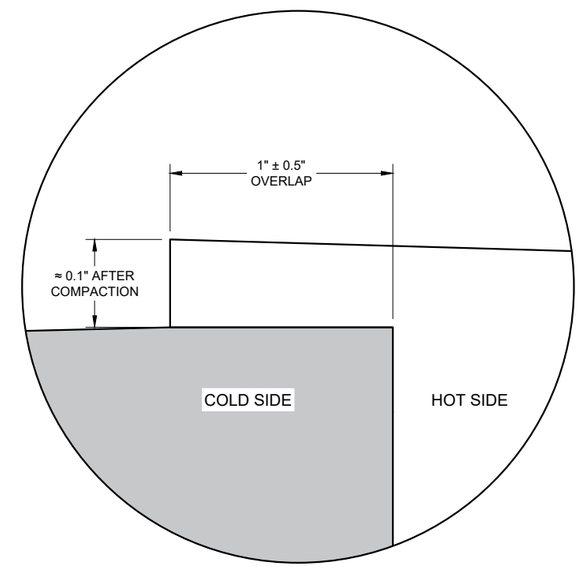

OVERLAP DETAIL (TYPICAL)

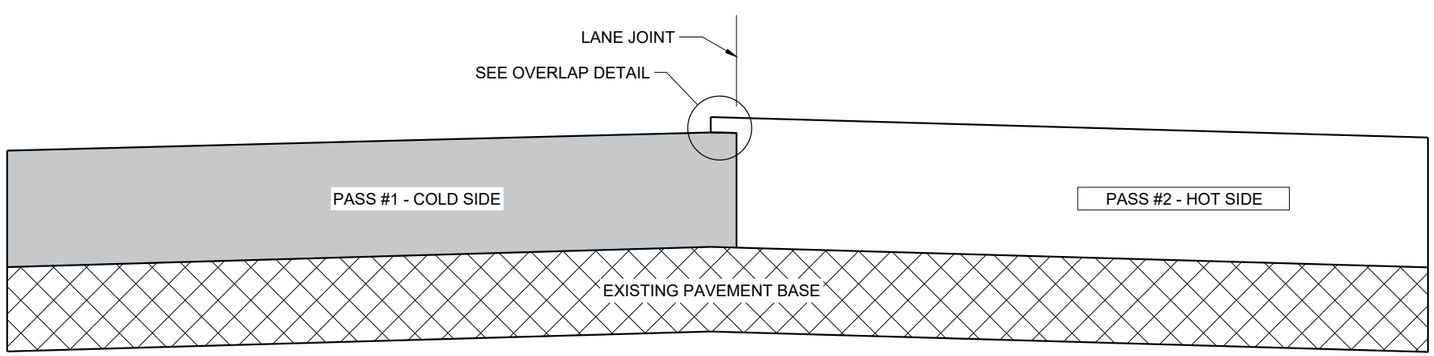

TYPICAL PAVEMENT CROSS SECTION OF MILLED LONGITUDINAL JOINT

6

6

SDD 13C19 - 02

SDD 13C19 - 02

HMA LONGITUDINAL JOINTS

STATE OF WISCONSIN
DEPARTMENT OF TRANSPORTATION

APPROVED
February 2020 /S/ Steven Hefel
DATE HMA PAVEMENT ENGIN

FHWA

GENERAL NOTES

DETAILS OF CONSTRUCTION, MATERIALS AND WORKMANSHIP NOT SHOWN ON THIS DRAWING SHALL CONFORM TO THE PERTINENT REQUIREMENTS OF THE STANDARD SPECIFICATIONS AND THE APPLICABLE SPECIAL PROVISIONS.

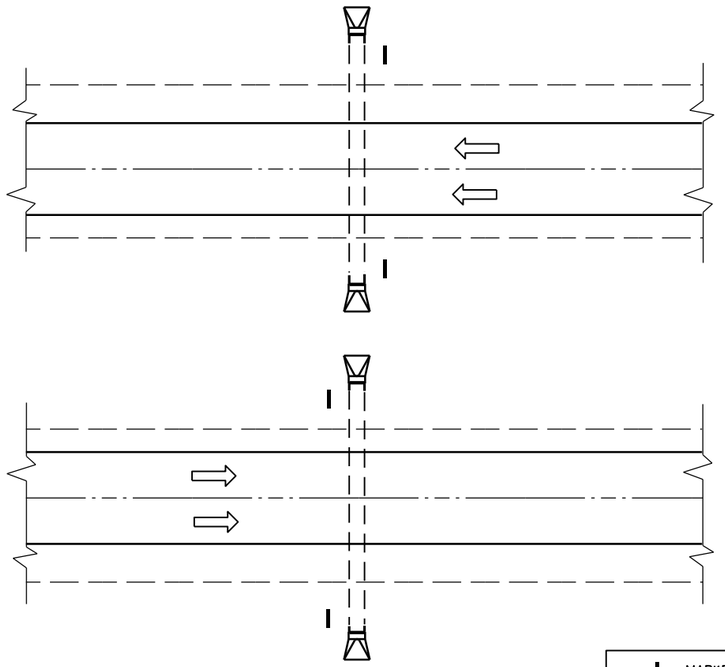

PLAN VIEW

DIVIDED HIGHWAY

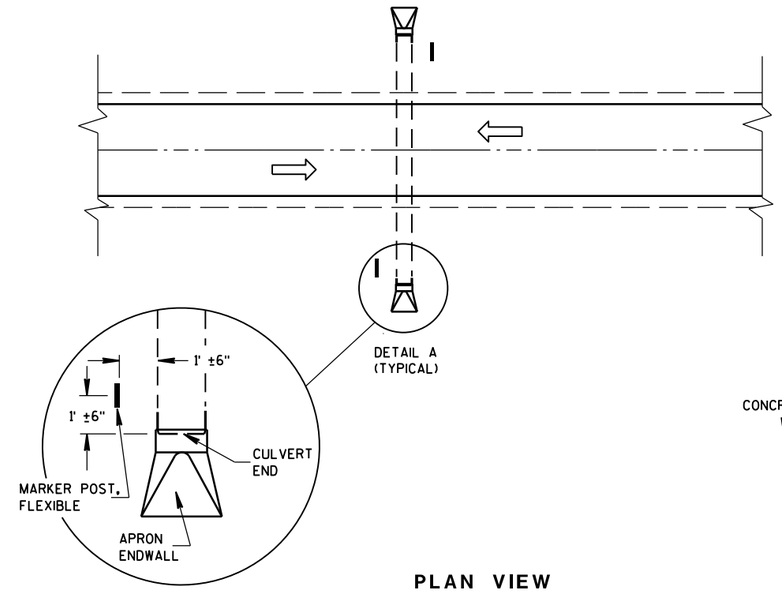

DETAIL A
(TYPICAL)

PLAN VIEW

UNDIVIDED HIGHWAY

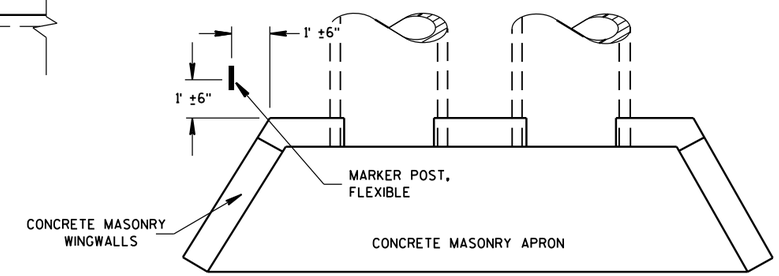

PLAN VIEW

CONCRETE MASONRY ENDWALLS FOR CULVERT PIPE AND PIPE ARCH

MARKER POST, FLEXIBLE

DIRECTION OF TRAFFIC FLOW

FLEXIBLE MARKER POST LOCATION

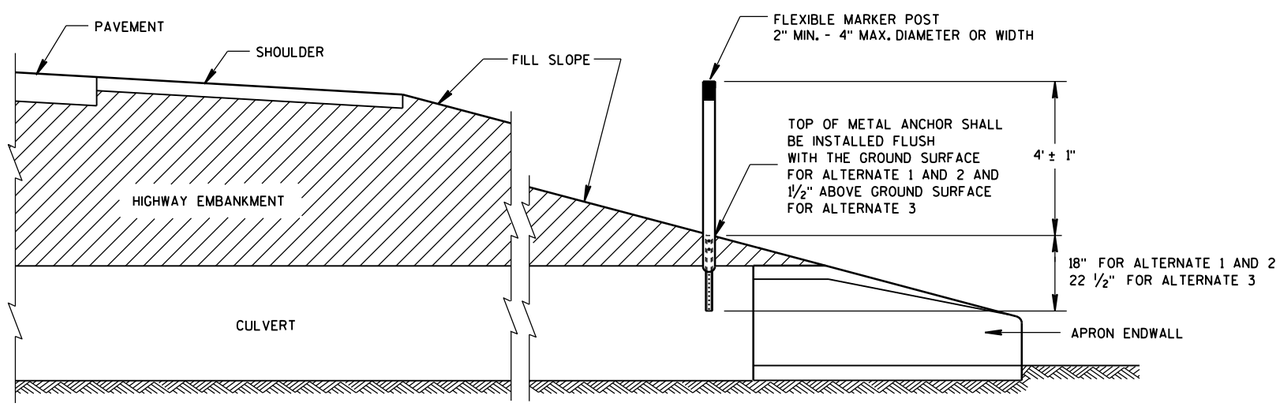

CROSS SECTION

FLEXIBLE MARKER POST

FLEXIBLE MARKER POST FOR CULVERT END

STATE OF WISCONSIN
DEPARTMENT OF TRANSPORTATION

6

S.D.D. 15 A 3-2a

6

S.D.D. 15 A 3-2a

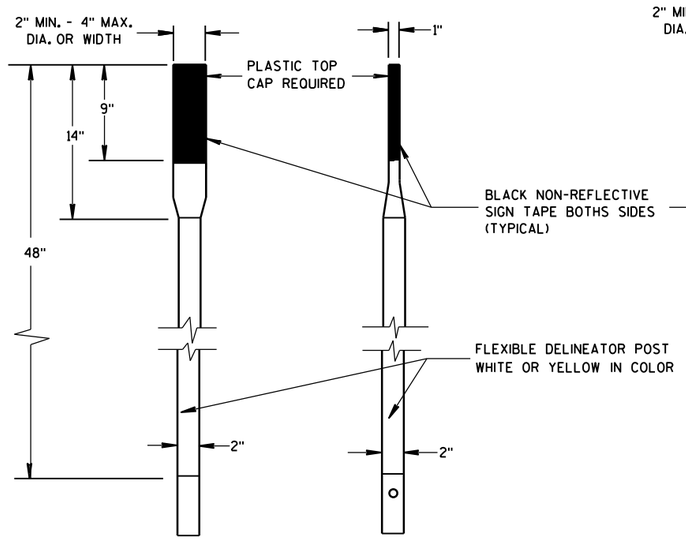

FRONT VIEW SIDE VIEW

ALTERNATE 1

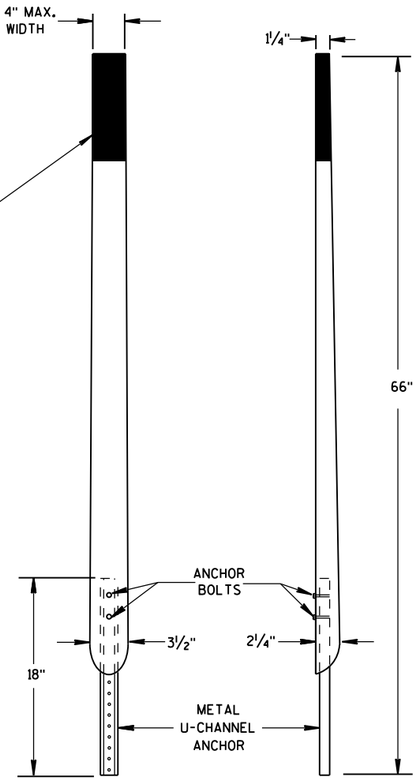

FRONT VIEW SIDE VIEW

ALTERNATE 2

FLEXIBLE MARKER POSTS

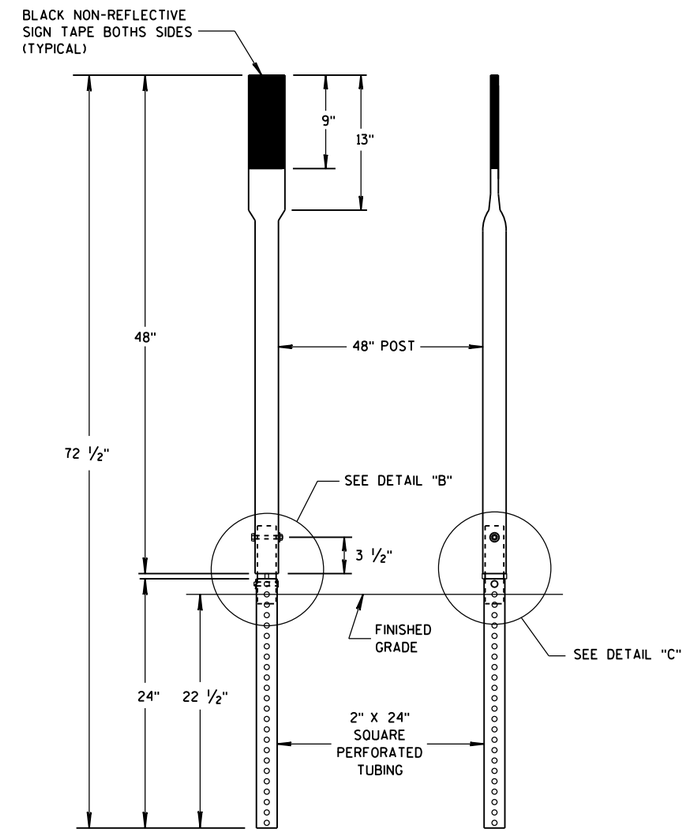

FRONT VIEW SIDE VIEW

ALTERNATE 3

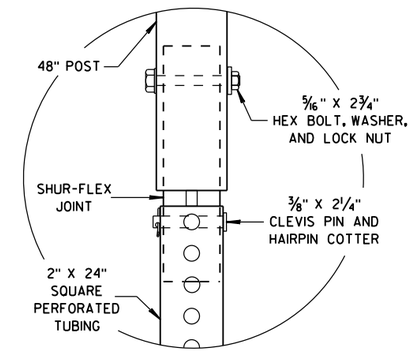

DETAIL B

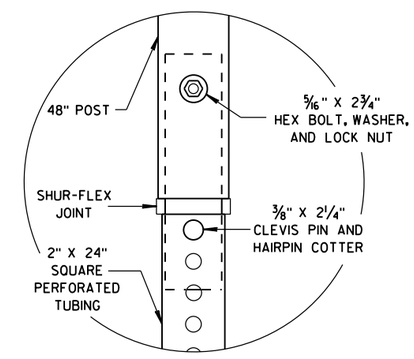

DETAIL C

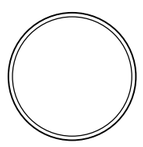

SECTION A-A

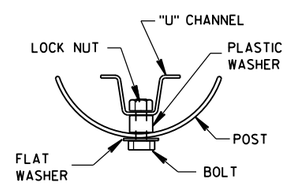

SECTION B-B

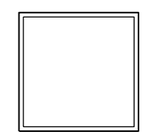

SECTION C-C

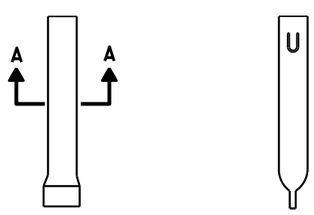

FRONT VIEW SIDE VIEW

ALTERNATE 1

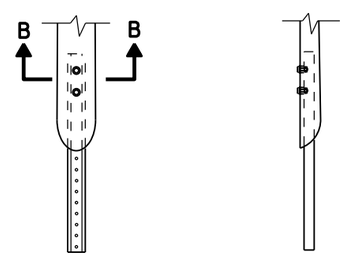

FRONT VIEW SIDE VIEW

ALTERNATE 2

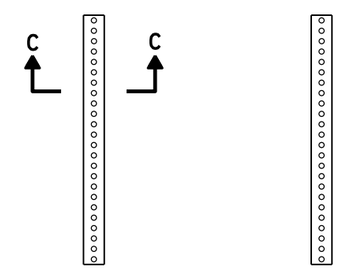

FRONT VIEW SIDE VIEW

ALTERNATE 3

FLEXIBLE MARKER POST ANCHORS

FLEXIBLE MARKER POST
FOR CULVERT END

STATE OF WISCONSIN
DEPARTMENT OF TRANSPORTATION

APPROVED
10/1/2012 /S/ Travis Feltes
DATE STATE TRAFFIC ENGINEER
FHWA

6

6

S.D.D. 15 A 3-2b

S.D.D. 15 A 3-2b

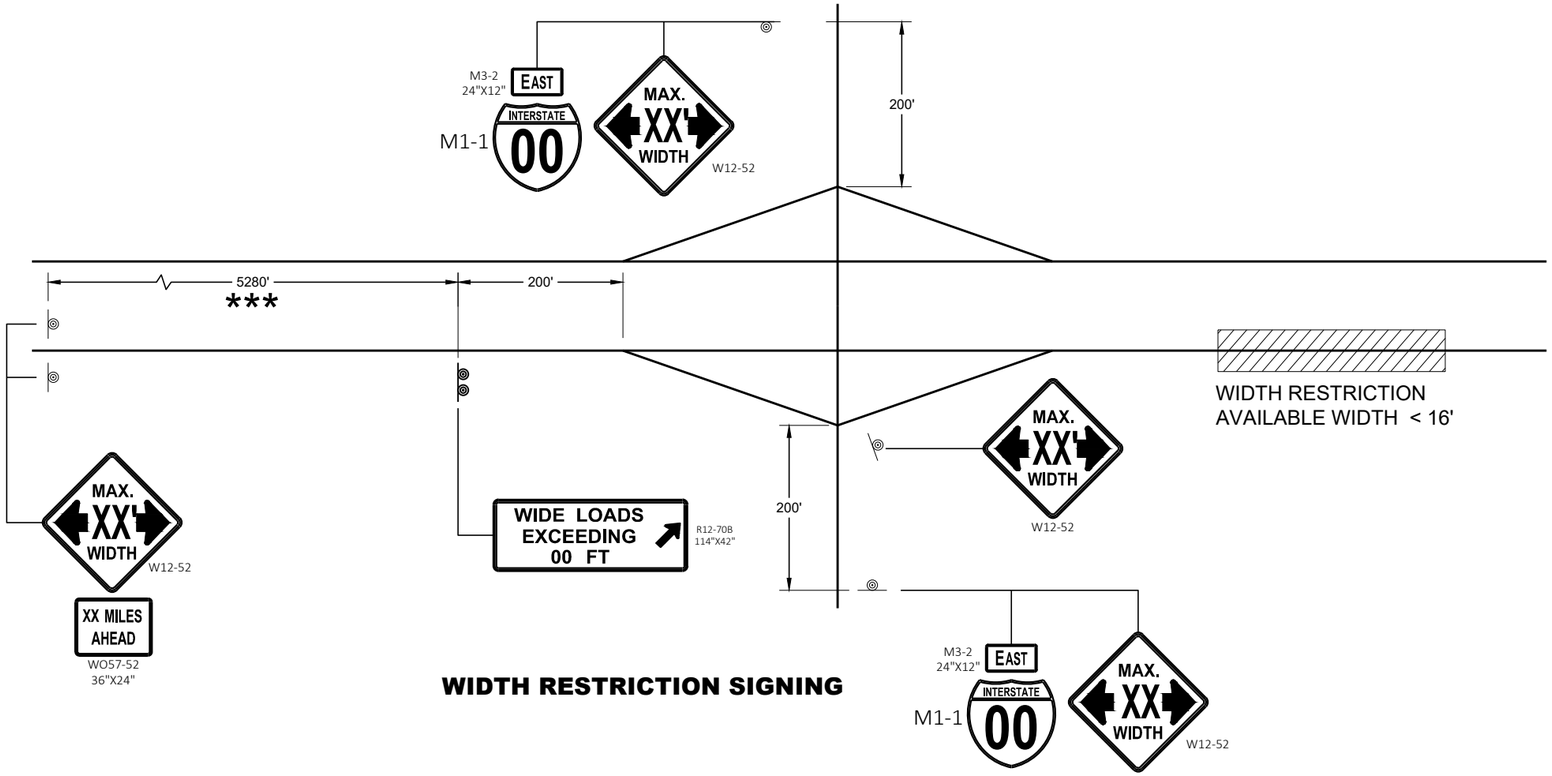

WIDTH RESTRICTION SIGNING

LEGEND

◎ SIGN ON PERMANENT SUPPORT

GENERAL NOTES

THE EXACT NUMBER, LOCATION AND SPACING OF ALL SIGNS SHALL BE ADJUSTED TO FIT FIELD CONDITIONS AS APPROVED BY THE ENGINEER.

THE SPACING BETWEEN SIGNS SHOULD BE ADJUSTED TO NOT CONFLICT WITH AND TO PROVIDE A DESIRABLE MINIMUM OF 200 FEET CLEARANCE TO EXISTING SIGNS THAT WILL REMAIN IN PLACE.

ANY SIGNS TEMPORARY OR EXISTING, WHICH CONFLICT WITH TRAFFIC CONTROL " IN USE" SHALL BE REMOVED OR COVERED AS NEEDED AND AS APPROVED BY THE ENGINEER.

ALL SIGNS ARE 48" X 48" UNLESS OTHERWISE NOTED.

"WO" SIGNS ARE THE SAME AS "W" SIGNS EXCEPT THE BACKGROUND IS ORANGE.

WIDTH ON SIGN TO BE APPROXIMATELY ONE FOOT LESS THAN AVAILABLE WIDTH.

* PLACE 500 FEET BEFORE THE W20 - 1A AND 500 FEET BEFORE ADDITIONAL SIGNS FOR ROADWAYS WITH A PRE - CONSTRUCTION SPEED LIMIT OF 45 MPH OR MORE. FOR 35-40 MPH, USE 350 FOOT TYPICAL SPACING. FOR 25-30 MPH, USE 200 FOOT TYPICAL SPACING.

** SIGN SHALL BE VISIBLE FROM ROADWAY.

*** ADDITIONAL SIGNS NEEDED IF THERE IS AN ON RAMP BETWEEN SIGNS.

WIDTH ON SIGN TO BE APPROX. 1 - FOOT LESS THAN AVAILABLE WIDTH

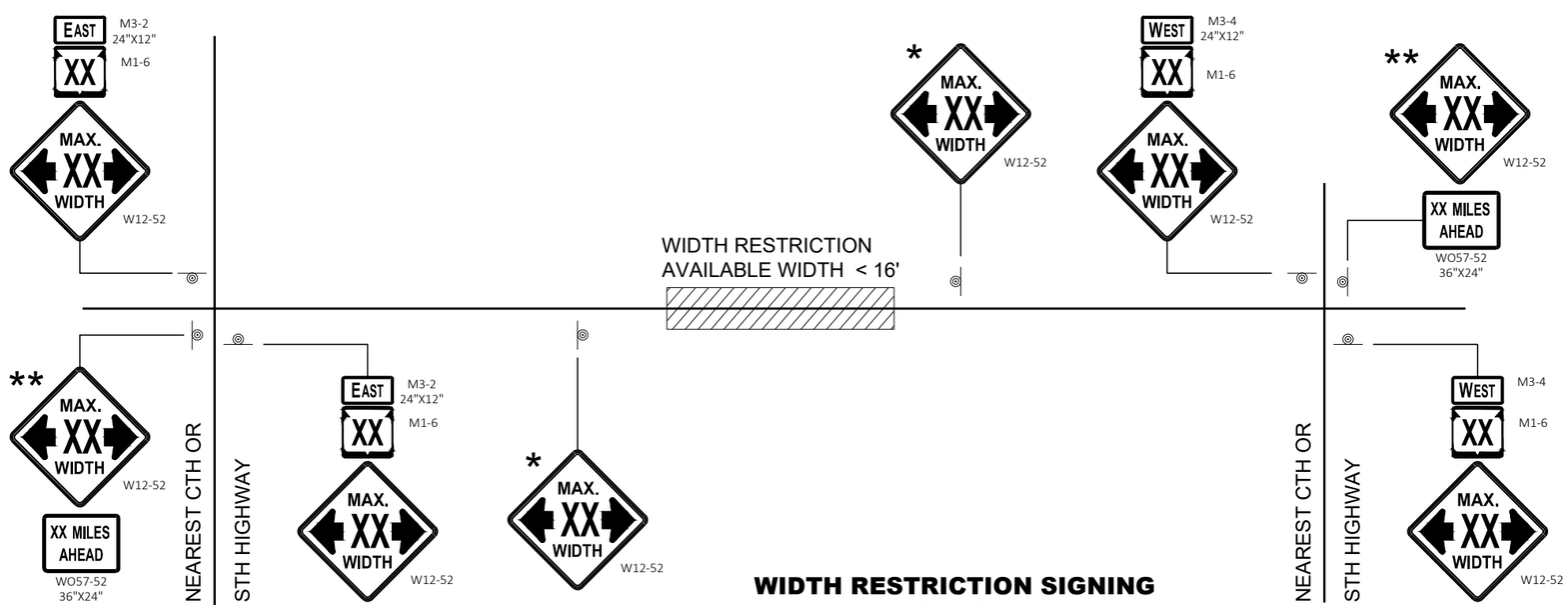

WIDTH RESTRICTION SIGNING
2 LANE HIGHWAY

ADVANCED WIDTH RESTRICTION SIGNING

STATE OF WISCONSIN
DEPARTMENT OF TRANSPORTATION

APPROVED
February 2020 — /S/ Andrew Heidtke
DATE — WORK ZONE ENGINEER

FHWA

6

SDD 15C02 - 08f

GENERAL NOTES

THE EXACT NUMBER, LOCATION, AND SPACING OF ALL SIGNS AND DEVICES SHALL BE ADJUSTED TO FIT FIELD CONDITIONS.

THE SPACING BETWEEN TRAFFIC CONTROL SIGNS SHOULD BE ADJUSTED TO NOT CONFLICT WITH AND SHOULD PROVIDE A MINIMUM OF 200 FEET (500 FEET DESIRABLE) CLEARANCE TO EXISTING SIGNS THAT WILL REMAIN IN PLACE.

ALL SIGNS ARE 48" X 48" UNLESS OTHERWISE NOTED.

SIGNS THAT WILL BE IN PLACE LESS THAN SEVEN CONTINUOUS DAYS AND NIGHTS MAY BE MOUNTED ON PORTABLE SUPPORTS.

IF A "STOP" SIGN MUST BE REMOVED FOR A WORK OPERATION, A TEMPORARY "STOP" SIGN SHALL BE PLACED PRIOR TO THE SIGN REMOVAL, OR A FLAGGER SHALL BE PROVIDED UNTIL THE SIGN IS REESTABLISHED.

* OMIT G20-1 SIGNS IF LENGTH OF WORK AREA IS 2 MILES OR LESS

** PLACE AN ADDITIONAL W20-1A "ROAD WORK AHEAD" SIGN IF WORK AREA WITHIN THE PROJECT IS SEPARATED BY MORE THAN 2 MILES FROM PREVIOUS WORK AREA.

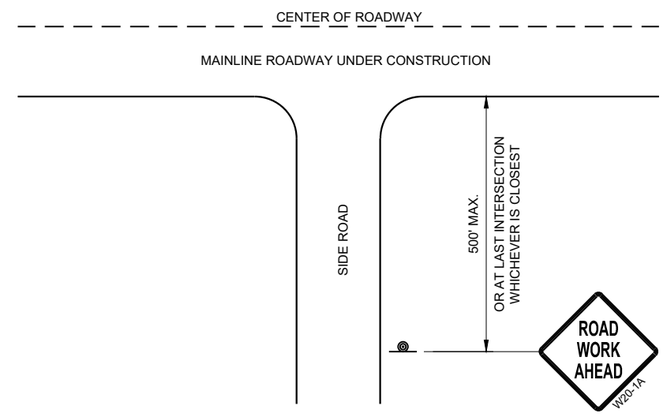

TYPICAL SIDE ROAD APPROACH WARNING SIGN DETAIL

LEGEND

- SIGN ON PERMANENT SUPPORT
- DIRECTION OF TRAFFIC
- WORK AREA

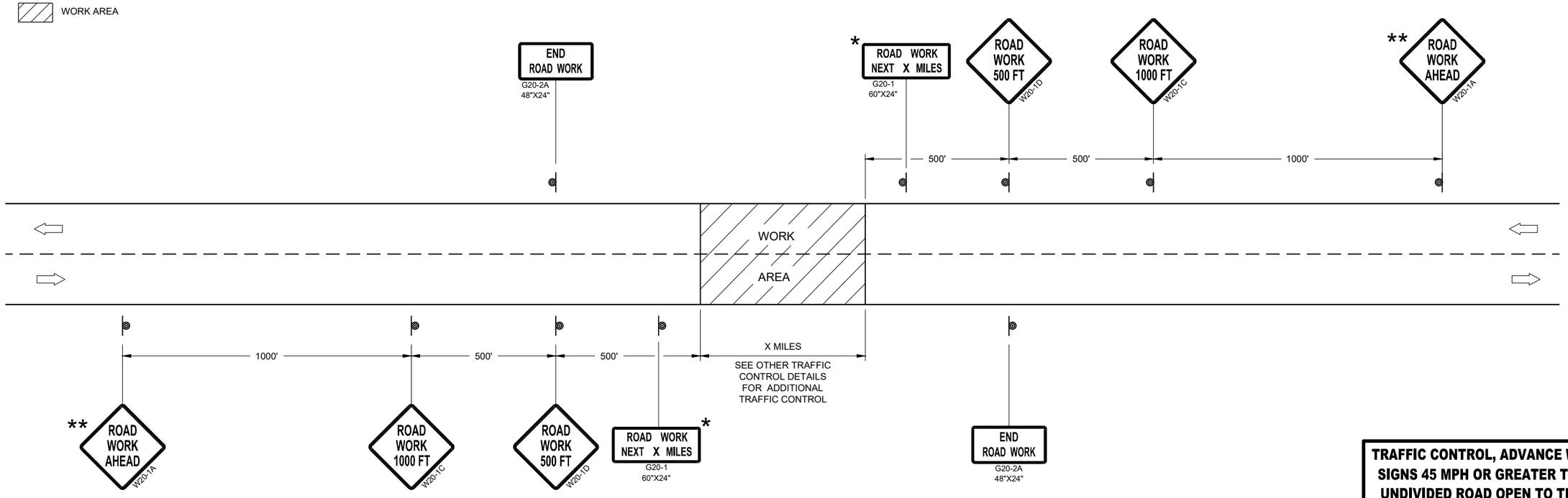

TRAFFIC CONTROL, ADVANCE WARNING SIGNS 45MPH OR GREATER

TRAFFIC CONTROL, ADVANCE WARNING SIGNS 45 MPH OR GREATER TWO-WAY UNDIVIDED ROAD OPEN TO TRAFFICE

STATE OF WISCONSIN
DEPARTMENT OF TRANSPORTATION

APPROVED
July 2018 — DATE
/S/ Andrew Heidtke — WORK ZONE ENGINEE
FHWA

6
SDD 15C04 - 05

GENERAL NOTES

THE EXACT NUMBER, LOCATION, AND SPACING OF ALL SIGNS AND DEVICES SHALL BE ADJUSTED TO FIT FIELD CONDITIONS.

THE SPACING BETWEEN TRAFFIC CONTROL SIGNS SHOULD BE ADJUSTED TO NOT CONFLICT WITH AND SHOULD PROVIDE A MINIMUM OF 200 FEET (500 FEET DESIRABLE) CLEARANCE TO EXISTING SIGNS THAT WILL REMAIN IN PLACE.

ALL SIGNS ARE 48" X 48" UNLESS OTHERWISE NOTED. IF NECESSARY DUE TO SPACE CONSTRAINTS, 36"X36" SIGNS MAY BE USED INSTEAD OF 48" X 48" SIGNS.

SIGNS THAT WILL BE IN PLACE LESS THAN SEVEN CONTINUOUS DAYS AND NIGHTS MAY BE MOUNTED ON PORTABLE SUPPORTS.

IF A "STOP" SIGN MUST BE REMOVED FOR A WORK OPERATION, A TEMPORARY "STOP" SIGN SHALL BE PLACED PRIOR TO THE SIGN REMOVAL, OR A FLAGGER SHALL BE PROVIDED UNTIL THE SIGN IS REESTABLISHED.

* THE THIRD W20-1 SIGN IS REQUIRED ONLY IF THERE IS AN INTERSECTION BETWEEN THE "ROAD WORK 500 FEET" SIGN AND THE WORK ZONE. ADJUST THE PLACEMENT OF THIS SIGN BASED ON INTERSECTION LOCATION AND OTHER FIELD CONDITIONS.

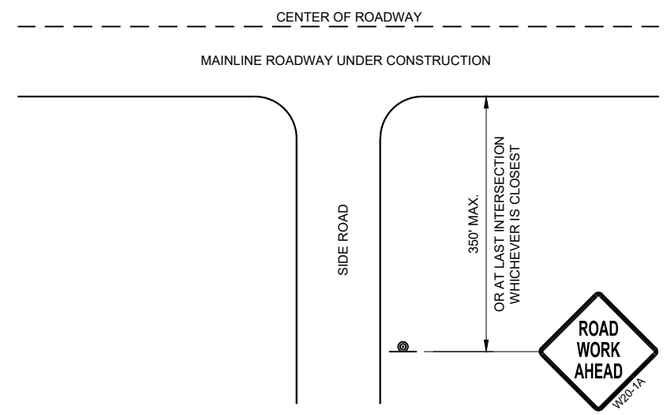

TYPICAL SIDE ROAD APPROACH WARNING SIGN DETAIL

LEGEND

- SIGN ON PERMANENT SUPPORT
- DIRECTION OF TRAFFIC
- WORK AREA

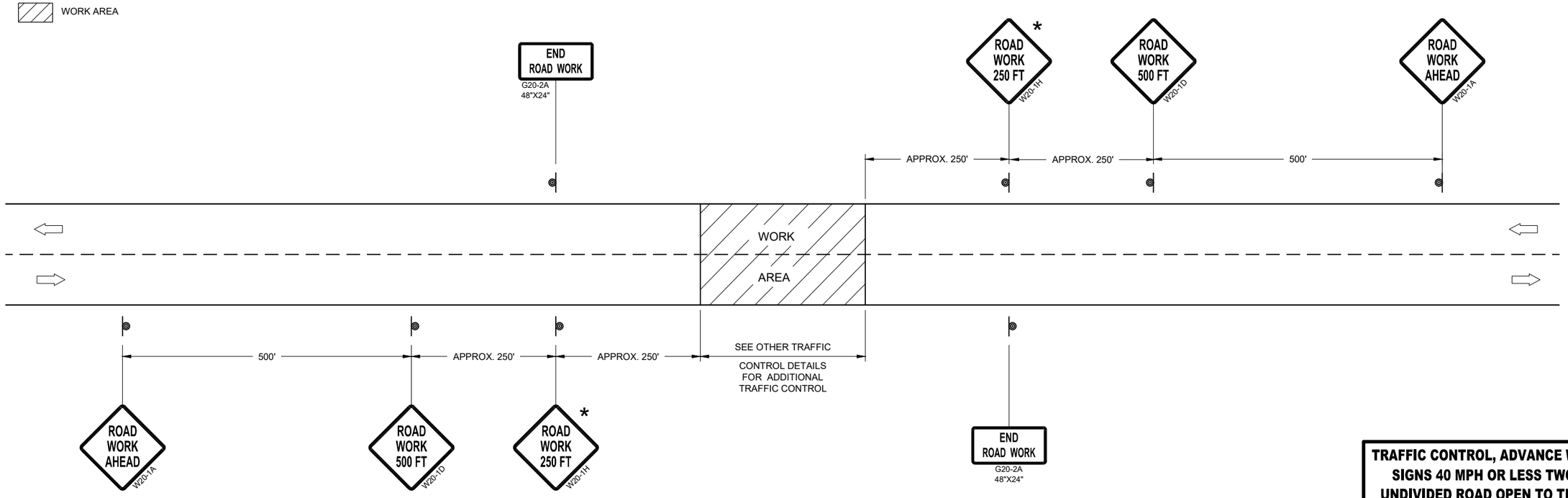

TRAFFIC CONTROL, ADVANCE WARNING SIGNS 40MPH OR LESS

TRAFFIC CONTROL, ADVANCE WARNING SIGNS 40 MPH OR LESS TWO-WAY UNDIVIDED ROAD OPEN TO TRAFFICE

STATE OF WISCONSIN
DEPARTMENT OF TRANSPORTATION

APPROVED
July 2018 — DATE
/S/ Andrew Heidtke — WORK ZONE ENGINEE
FHWA

6

SDD 15C05 - 05

6

SDD 15C05 - 05

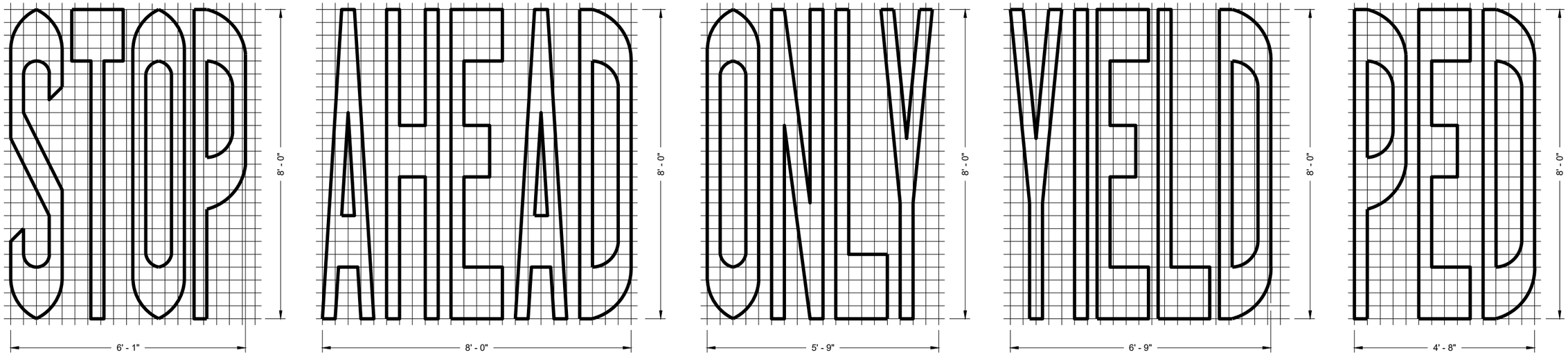

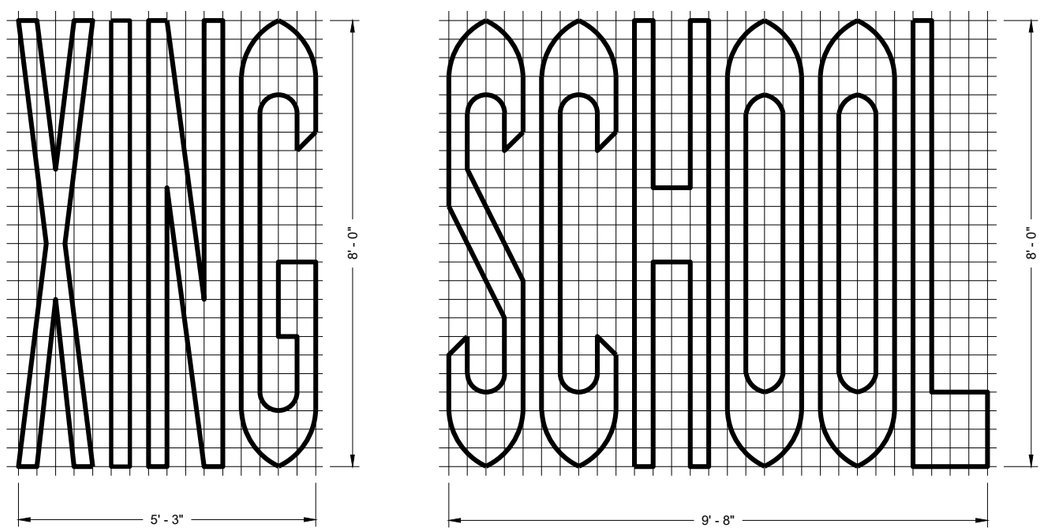

SINGLE LANE

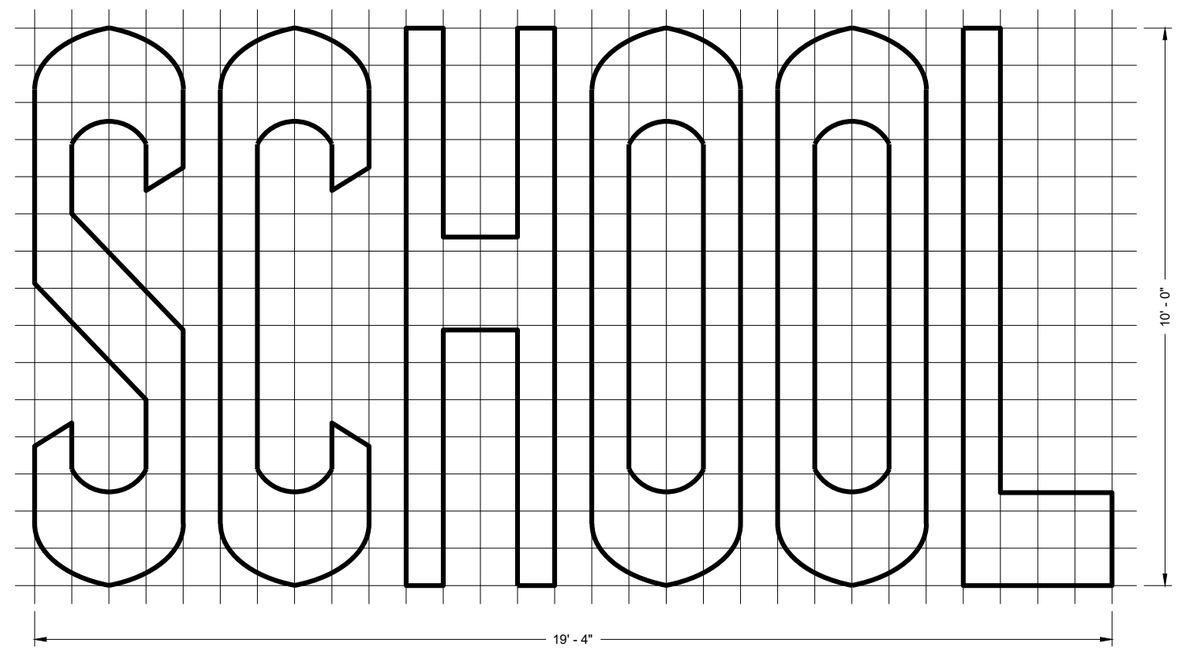

TWO - LANE

6

6

GENERAL NOTES

DETAILS OF INSTALLATION, MATERIALS AND WORKMANSHIP NOT SHOWN ON THIS DRAWING SHALL CONFORM TO THE PERTINENT REQUIREMENTS OF THE STANDARD SPECIFICATIONS AND APPLICABLE SPECIAL PROVISIONS.

PAVEMENT MARKING WORDS

STATE OF WISCONSIN
DEPARTMENT OF TRANSPORTATION

APPROVED

November 2019 — DATE

/S/ Matthew Rauch — STATE SIGNING AND MAF ENGINEER

FHWA

SDD 15C07 - 15b

GENERAL NOTES

DETAILS OF INSTALLATION, MATERIALS AND WORKMANSHIP NOT SHOWN ON THIS DRAWING SHALL CONFORM TO THE PERTINENT REQUIREMENTS OF THE STANDARD SPECIFICATIONS AND APPLICABLE SPECIAL PROVISIONS.

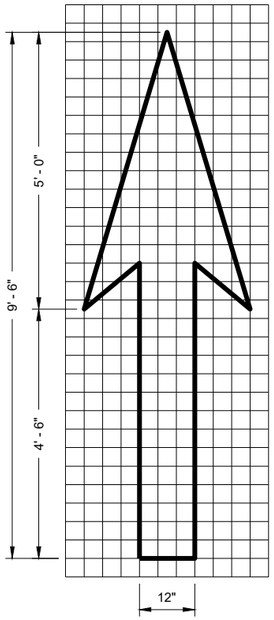

TYPE 1

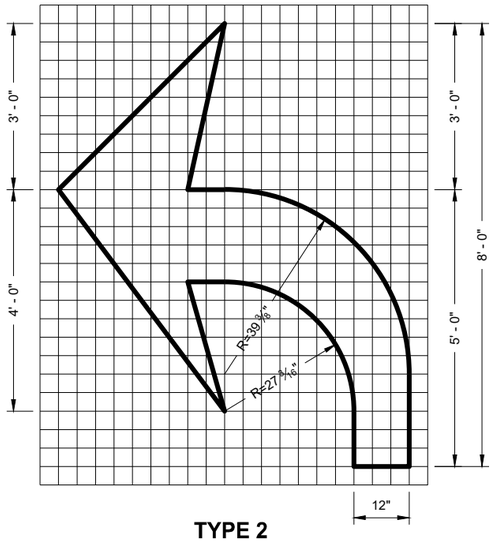

TYPE 2

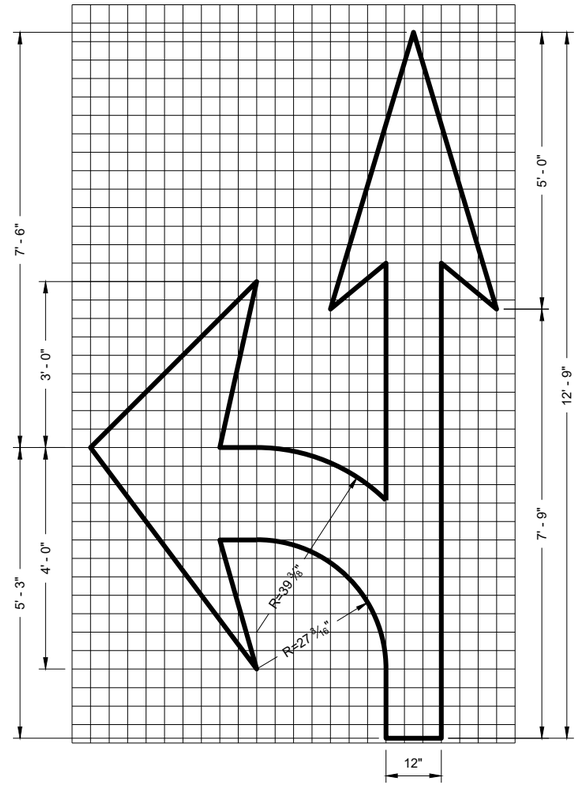

TYPE 3

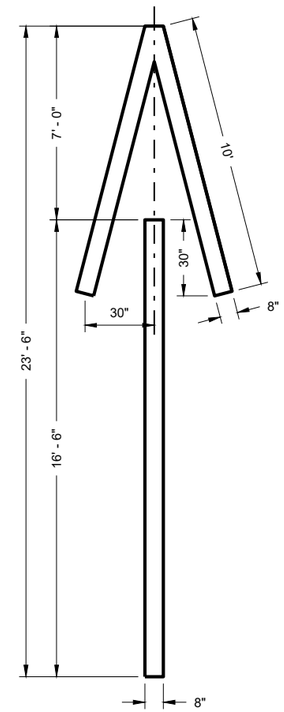

TYPE 4

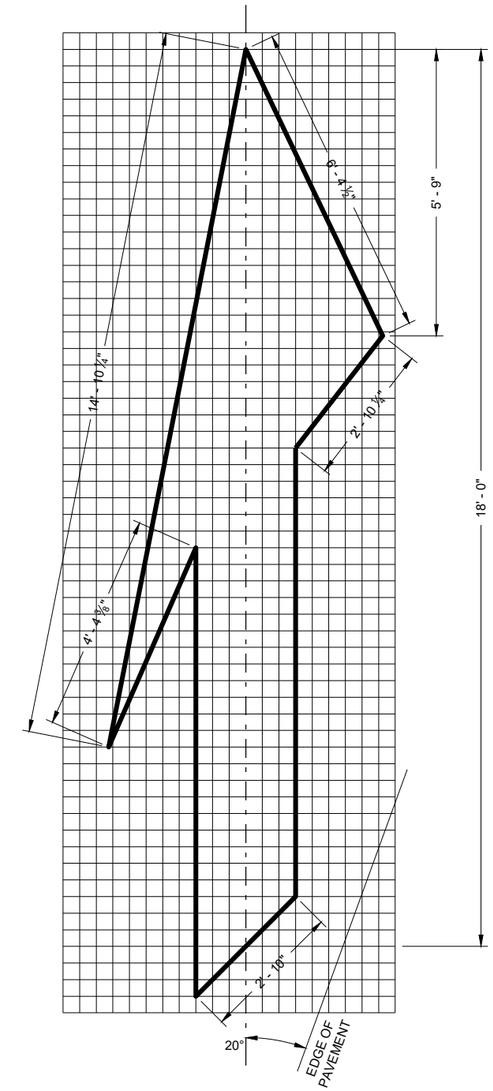

TYPE 5 LANE DROP ARROW

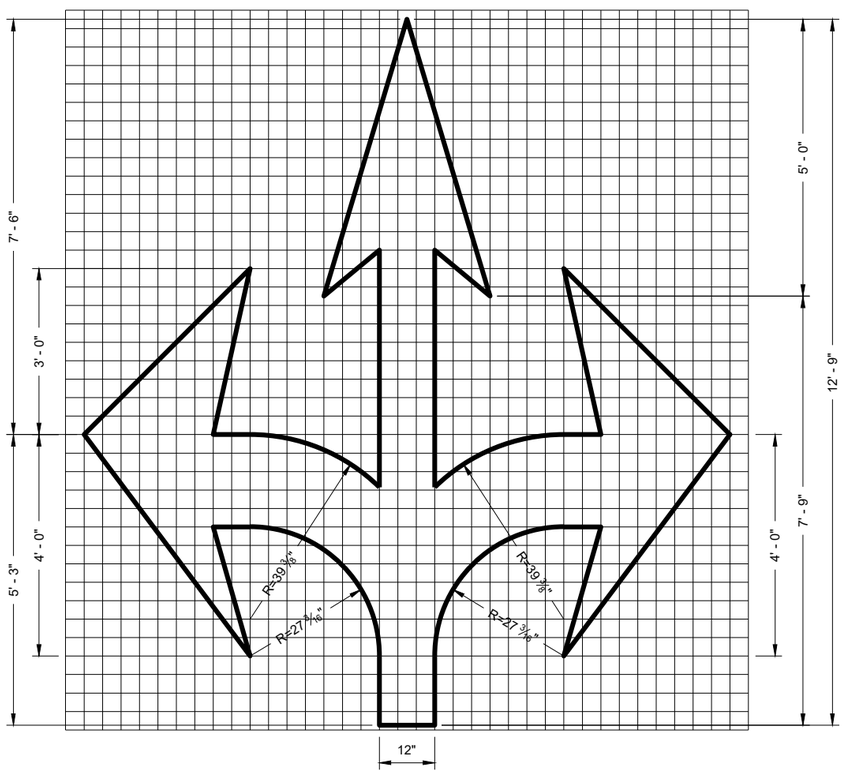

TYPE 6

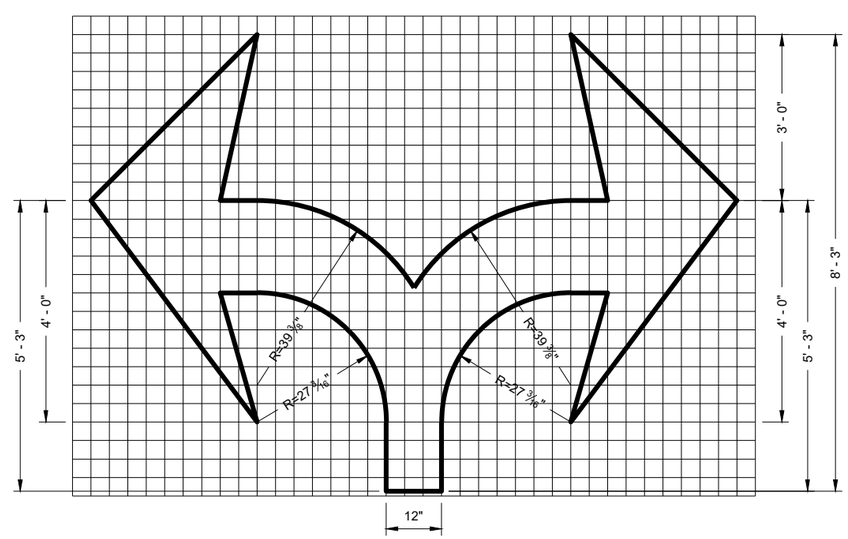

TYPE 7

6

6

PAVEMENT MARKING ARROWS

STATE OF WISCONSIN
DEPARTMENT OF TRANSPORTATION

APPROVED
November 2019 — DATE
/S/ Matthew Rauch — STATE SIGNING AND MAR ENGINEER
FHWA

SDD 15C07 - 15c

SDD 15C07 - 15c

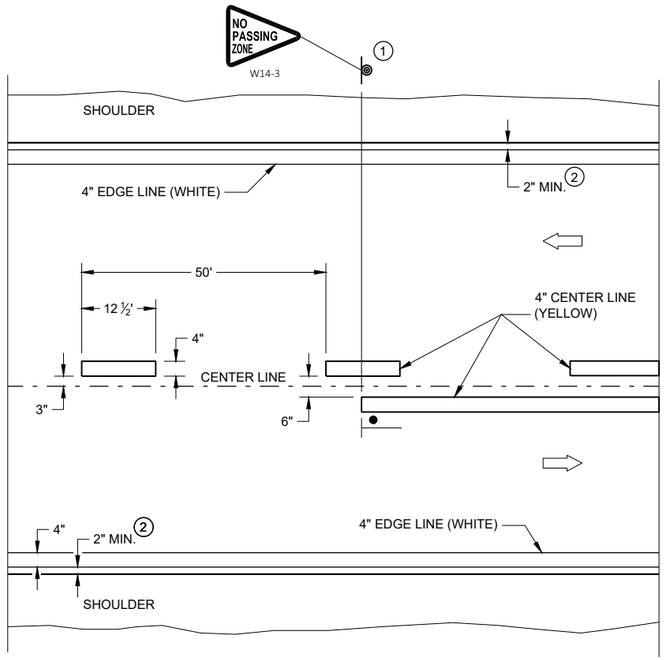

TWO WAY TRAFFIC

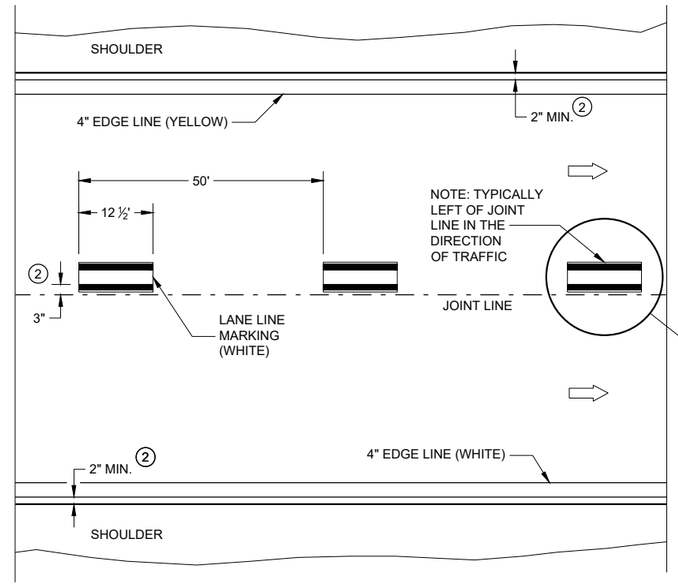

ONE WAY TRAFFIC

PERMANENT PAVEMENT MARKING

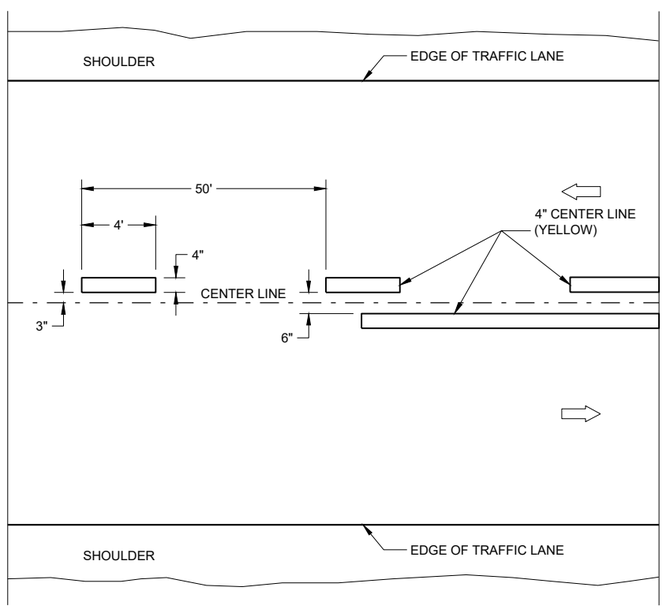

TWO WAY TRAFFIC

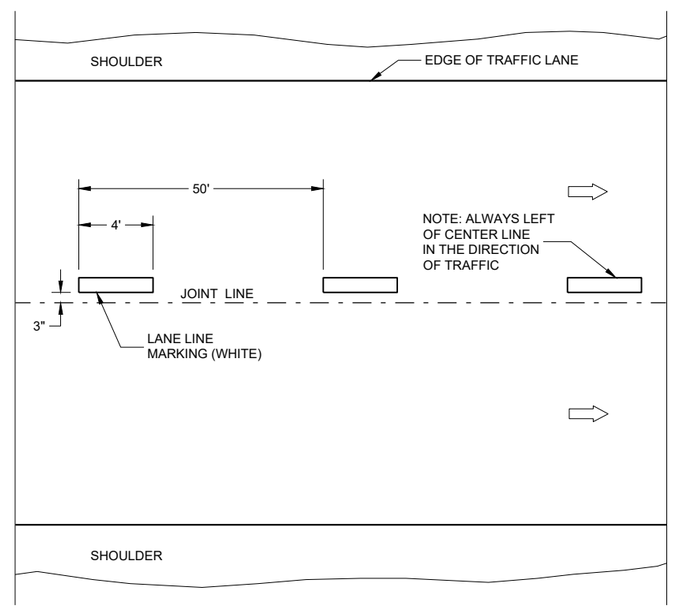

ONE WAY TRAFFIC

TEMPORARY PAVEMENT MARKING

GENERAL NOTES

DETAILS OF CONSTRUCTION NO SHOWN ON THIS DRAWING SHALL CONFORM TO STANDARD SPECIFICATIONS AND SPECIAL PROVISIONS.

1. LOCATE THE NO PASSING ZONE W14-3 SIGN WITH 50 FEET OF THE "T" MARKING
2. MEASURE FROM EDGE OF MARKING TO JOINT LINE. THIS DOES NOT INCLUDE SPACE NEEDED FOR GROOVING OPERATIONS.

LEGEND

- "T" MARKING
- SIGN ON PERMANENT SUPPORT
- DIRECTION OF TRAFFIC

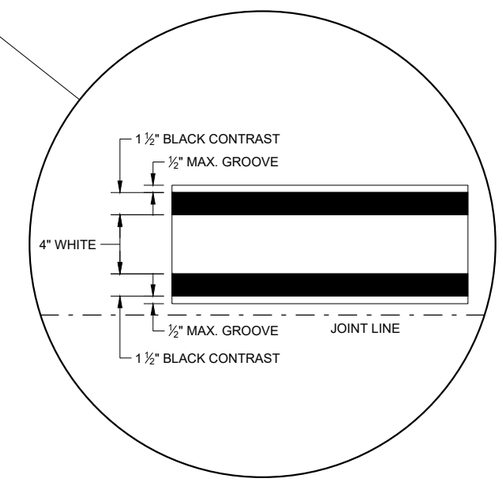

LONGITUDINAL MARKING (MAINLINE)

STATE OF WISCONSIN
DEPARTMENT OF TRANSPORTATION

APPROVED
February 2020 — DATE
/S/ Matthew Rauch — STATEWIDE SIGNING AND M ENGINEER
FHWA

6

SDD 15C08 - 20a

GENERAL NOTES

1. A SET OF ARROWS IS REQUIRED EVERY 400 FEET OR NEAR INTERSECTIONS OR DRIVEWAYS WITH TURNING TRAFFIC.
2. 8" WHITE
3. TURN BAY LENGTH OF LESS THAN 48' DOES NOT REQUIRE PAVEMENT ARROWS OR TEXT.

DIRECTION OF TRAFFIC

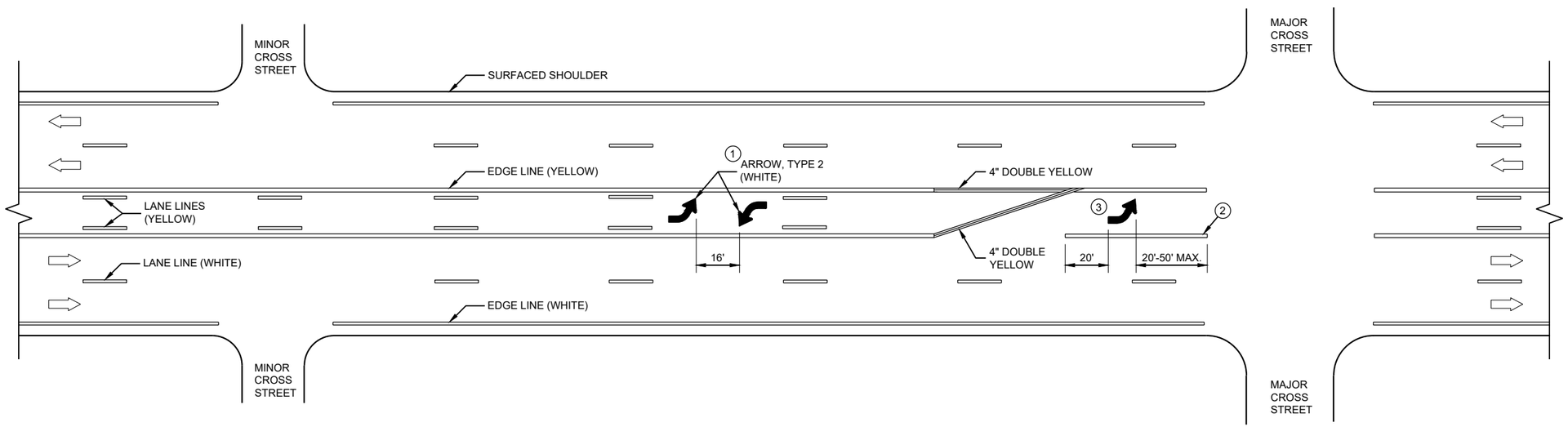

TWO WAY LEFT TURN LANE

6

6

SDD 15C08 - 20b

SDD 15C08 - 20b

PAVEMENT MARKING (TURN LANES)

STATE OF WISCONSIN
DEPARTMENT OF TRANSPORTAT

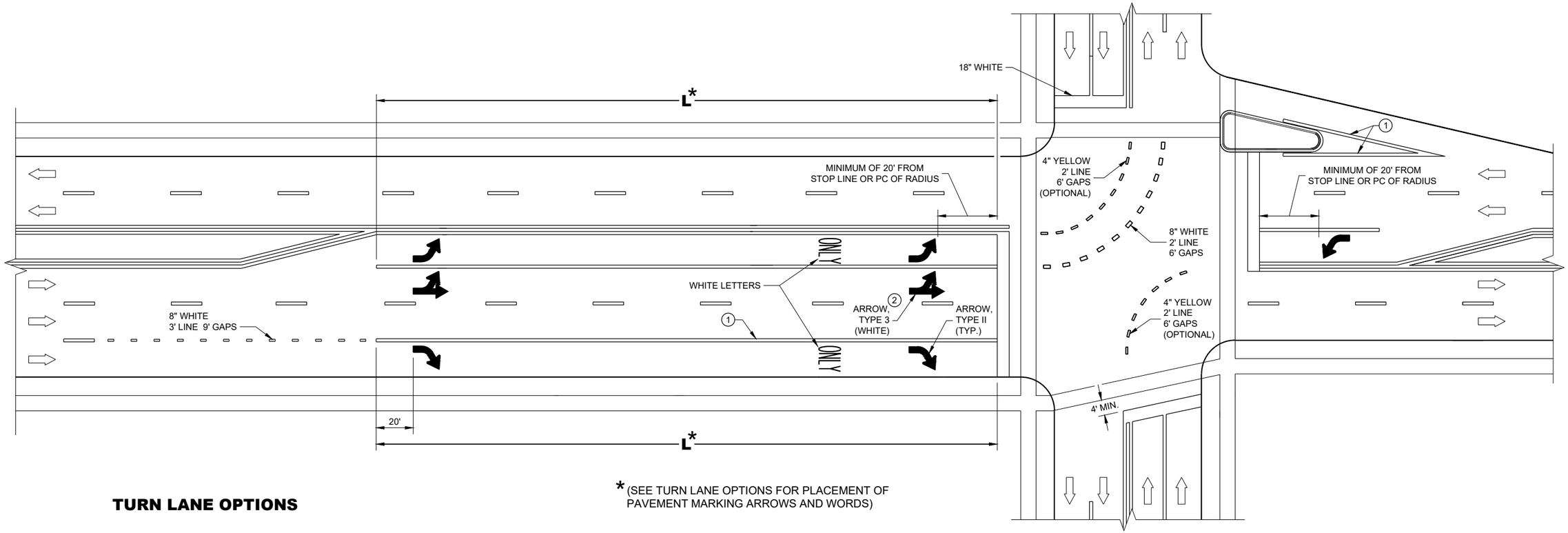

*(SEE TURN LANE OPTIONS FOR PLACEMENT OF PAVEMENT MARKING ARROWS AND WORDS)

TURN LANE OPTIONS

LENGTH OF TURN BAY (L) OF 0 - 47' DOES NOT REQUIRE PAVEMENT MARKING ARROWS OR WORDS

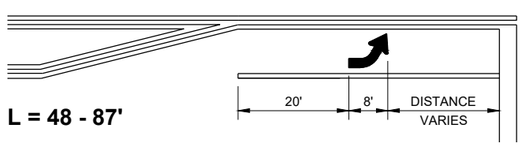

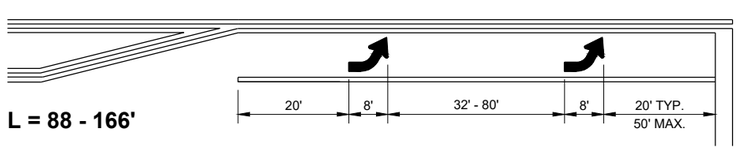

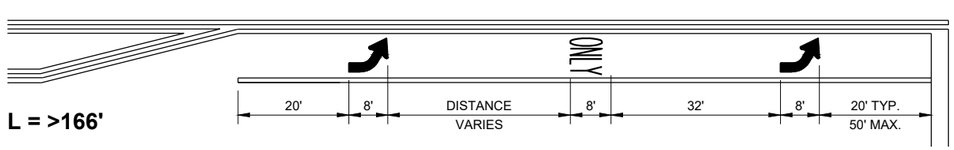

GENERAL NOTES

1. 8" WHITE
2. QUANTITY AND LOCATION OF TYPE 3 ARROWS ARE THE SAME AS THE TYPE II ARROWS IN THE ADJACENT TURN LANE. FOR TURN LANES WITH A PHYSICAL SEPARATION IN THE SAME DIRECTION OF TRAVEL, THE ARROWS AND "ONLY" MARKING MAY BE ELIMINATED.

⇨ DIRECTION OF TRAFFIC

L = LENGTH OF TURN BAY

PAVEMENT MARKING (TURN LANES)

STATE OF WISCONSIN
DEPARTMENT OF TRANSPORTAT

6

SDD 15C08 - 20c

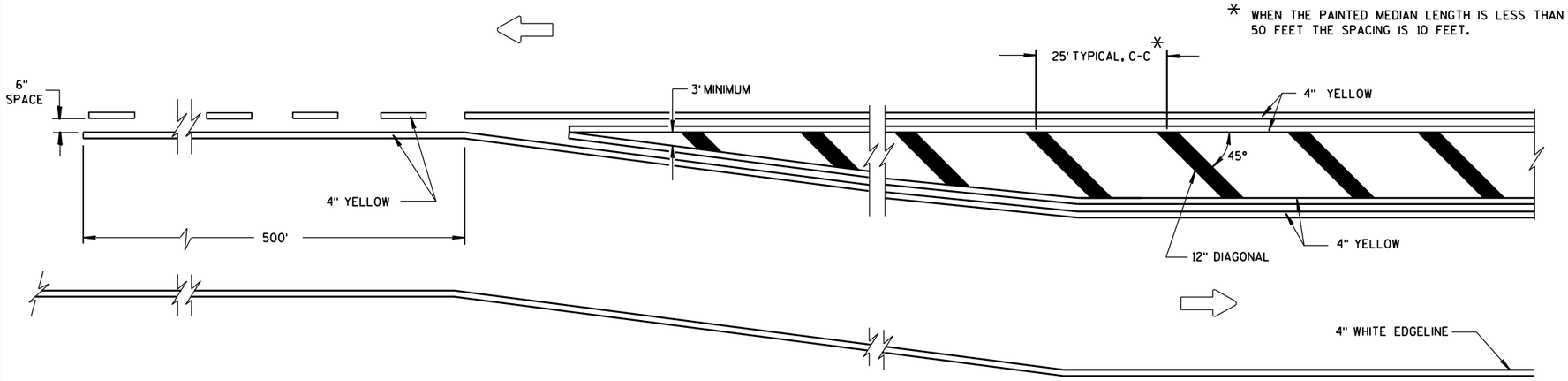

MEDIAN ISLAND DETAIL

GENERAL NOTE

DIAGONALS ARE OPTIONAL WHEN PAINTED ISLAND IS LESS THAN 6 FEET AT WIDEST POINT.

DIRECTION OF TRAVEL

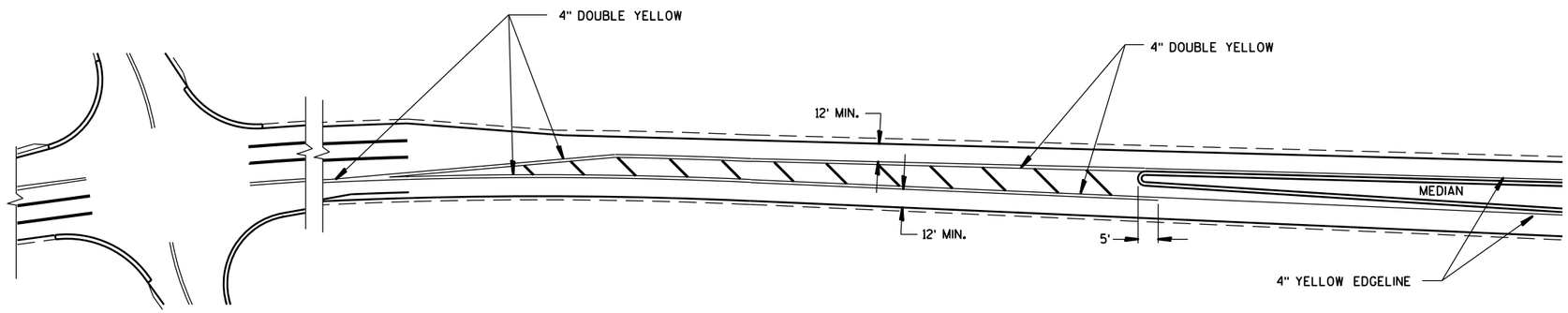

APPROACH MARKINGS FOR OTHER MEDIAN TYPES

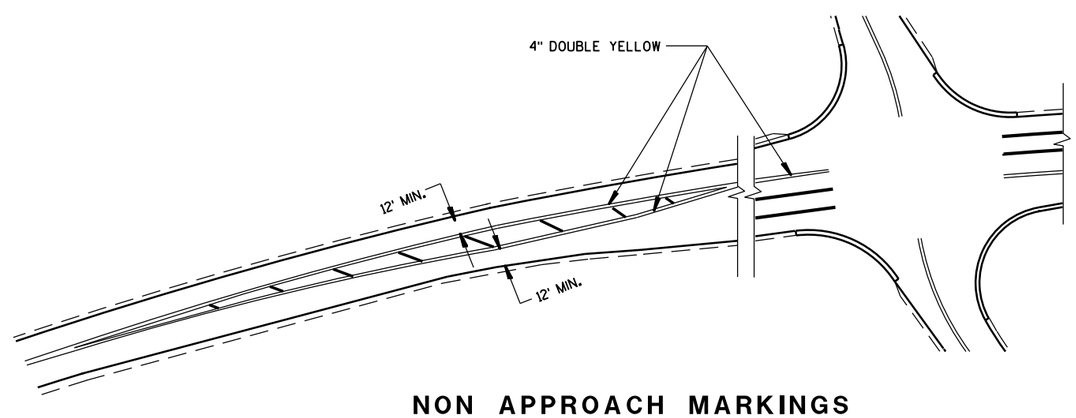

NON APPROACH MARKINGS

MEDIAN ISLAND MARKING

STATE OF WISCONSIN
DEPARTMENT OF TRANSPORTATION

APPROVED
June 2017 /S/ Matthew Rauch
DATE STATE SIGNING AND MARK ER
FHWA

GENERAL NOTES

PLACE GROOVE 3 INCHES LEFT OF JOINT.

① ½ LENGTH OF FULL WIDTH ACCELERATION LANE.

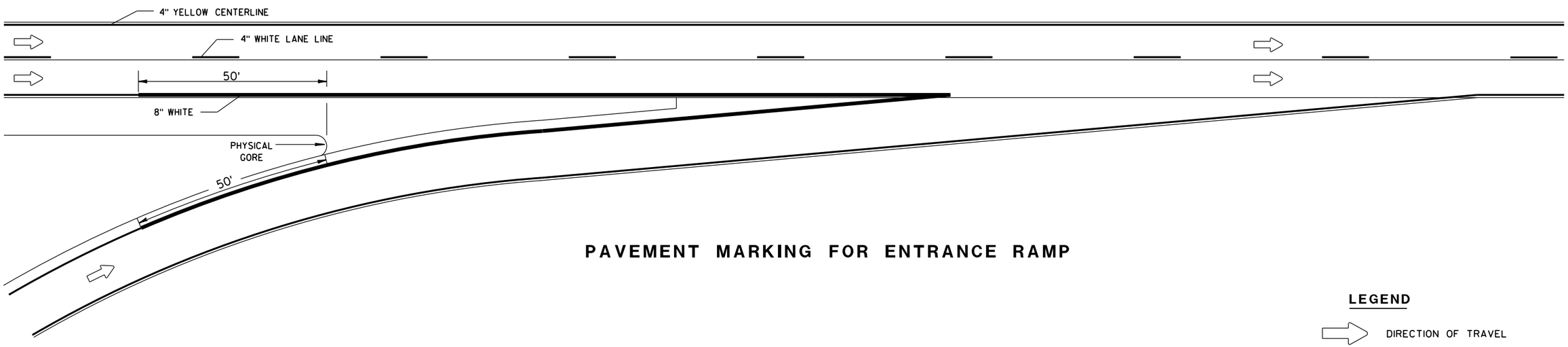

PAVEMENT MARKING FOR ENTRANCE RAMP

LEGEND

DIRECTION OF TRAVEL

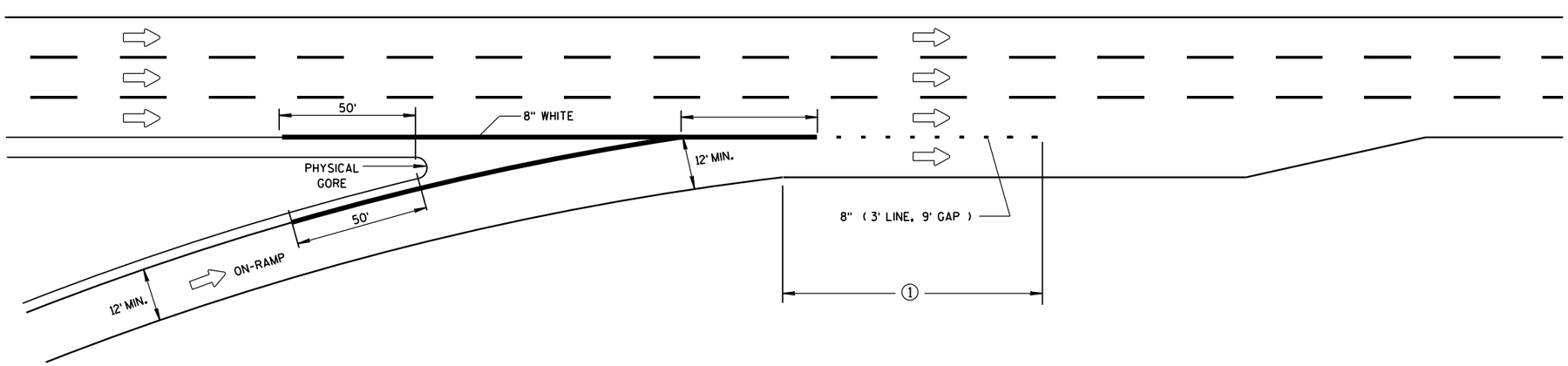

SERVICE INTERCHANGE PAVEMENT MARKING FOR PARALLEL ENTRANCE-RAMP

PAVEMENT MARKING FOR PARALLEL ON-RAMP AND PARALLEL OFF-RAMP
STATE OF WISCONSIN DEPARTMENT OF TRANSPORTATION
APPROVED Sept., 2017 DATE — /S/ Matthew R. Rauch STATE SIGNING AND MAR NEER — FHWA

6

6

S.D.D. 15 C 31-3c

S.D.D. 15 C 31-3c

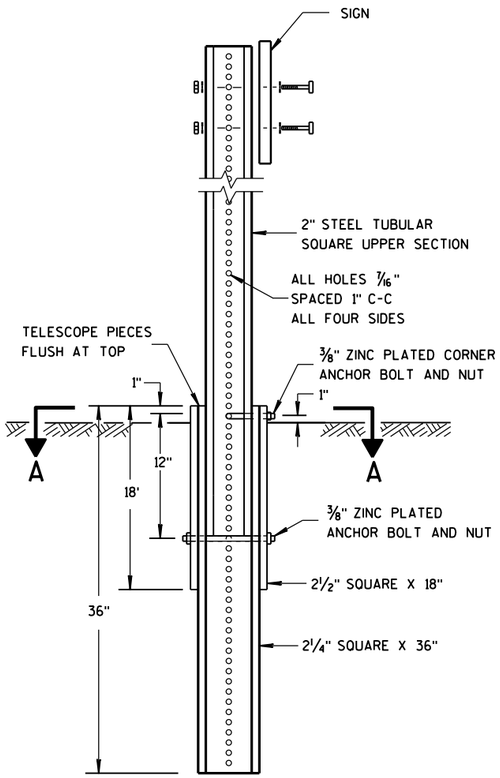

DETAIL OF TUBULAR STEEL SIGN POST

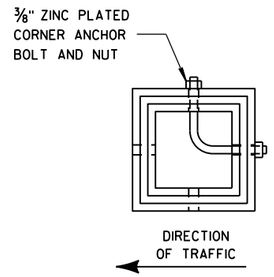

SECTION A-A

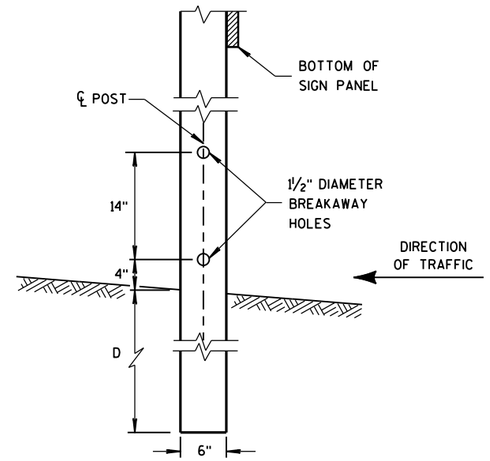

4"x6" WOOD POST MODIFICATION

GENERAL NOTES

1. 6 FEET FROM THE EDGE OF PAVEMENT (EDGE LINE LOCATION) UNLESS OTHERWISE DIRECTED BY THE PROJECT ENGINEER. LATERAL OFFSET SHOULD BE ADJUSTED TO AVOID THE DITCH FLOWLINE.
2. THE EXISTENCE OF CURB AND GUTTER DOES NOT IN ITSELF MANDATE THE VERTICAL CLEARANCE ILLUSTRATED. THAT HEIGHT IS TYPICALLY MEASURED WHERE THERE IS SIDEWALK ADJACENT TO THE ROADWAY OR PARKING IS PERMITTED. IN THE ABSENCE OF SIDEWALK, VERTICAL CLEARANCE IS MEASURED FROM THE TOP OF THE CURB. IF NO SIDEWALK AND NO PARKING, VERTICAL CLEARANCE MAY BE REDUCED TO 5 FOOT MINIMUM. OFFSET OF SIGNS IS MEASURED FROM THE CURB FLOWLINE.
3. FOR SIGNS REQUIRING 4 POSTS, SPACE INTERMEDIATE POSTS EVENLY.

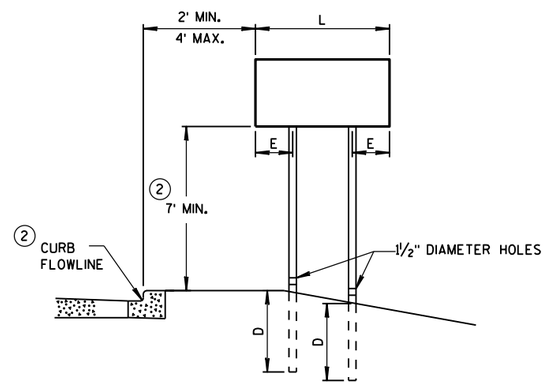

URBAN AREA

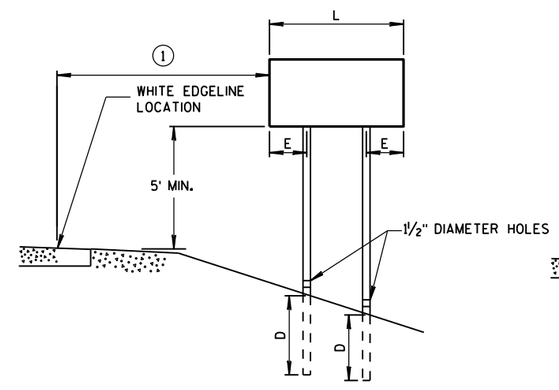

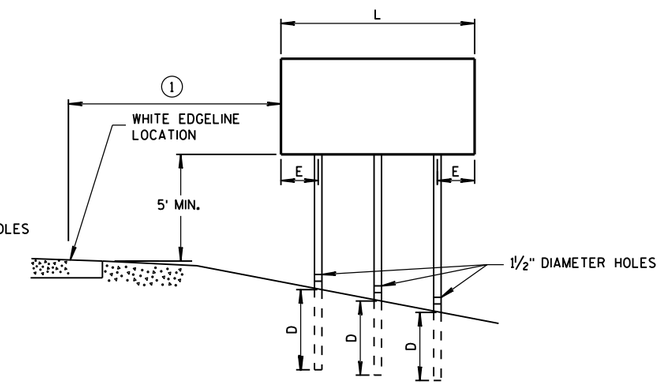

RURAL AREA

POST MOUNTING DETAIL FOR TEMPORARY TRAFFIC CONTROL FIXED MESSAGE SIGNS

TUBULAR STEEL POSTS

AREA OF SIGN INSTALLATION (SQ. FT.)	NUMBER OF REQUIRED TUBULAR STEEL POSTS
9 OR LESS	1
GREATER THAN 9 LESS THAN OR EQUAL TO 18	2
GREATER THAN 18 LESS THAN OR EQUAL TO 27	3

SIGNS WIDER THAN 3 FEET OR LARGER THAN 9 SQ. FT. SHALL BE MOUNTED ON MULTIPLE POSTS (SEE ABOVE TABLE).

SIGNS LARGER THAN 27 SQ. FT. SHALL NOT BE MOUNTED ON TUBULAR STEEL POSTS.

WOOD POST EMBEDMENT DEPTH

AREA OF SIGN INSTALLATION (SQ. FT.)	D (MIN)
20 OR LESS	4'
GREATER THAN 20	5'

4" X 6" WOOD POST

POST SPACING REQUIREMENTS		NUMBER OF WOOD POSTS REQUIRED
L	E	
48" OR LESS AND LESS THAN 20 SQ. FT.	-	1
LESS THAN 60"	12"	2
60" TO 120"	L/5	2
GREATER THAN 120" LESS THAN 168"	12"	3
168" AND GREATER	12"	4

SEE NOTE 3

TEMPORARY TRAFFIC CONTROL SIGN MOUNTING

STATE OF WISCONSIN
DEPARTMENT OF TRANSPO

6

S.D.D. 15 D 38-2a

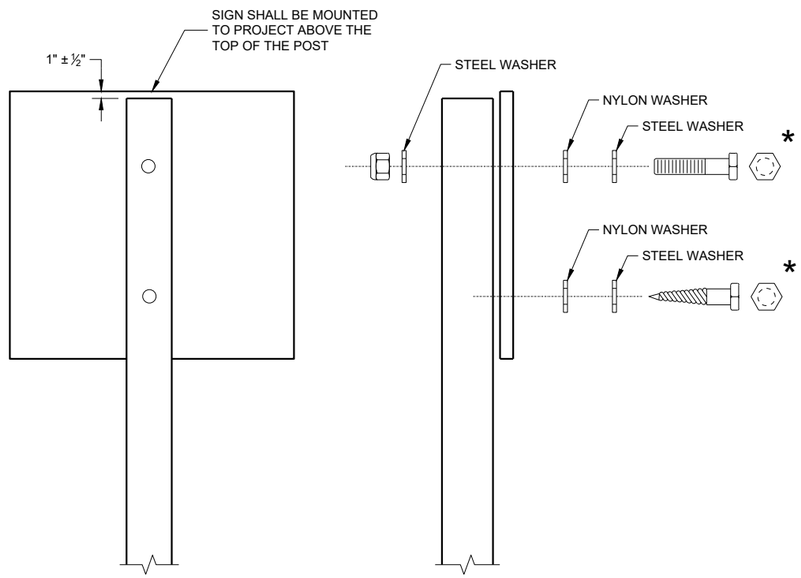

NUTS, BOLTS AND LAGS USED FOR MOUNTING SIGNS SHALL HAVE HEXAGONAL HEADS AND SHALL BE EITHER:

A. HOT DIP GALVANIZED IN ACCORDANCE WITH ASTM DESIGNATION: A 153, CLASS D, OR SC 3
B. ELECTRO-GALVANIZED IN ACCORDANCE WITH ASTM DESIGNATION: B 633, TYPE III, SC 3

THREADS ON BOLTS AND NUTS SHALL BE MANUFACTURED WITH SUFFICIENT ALLOWANCE FOR THE CADMIUM PLATE OR GALVANIZED COATING TO PERMIT THE NUTS TO RUN FREELY ON THE BOLTS.

WOOD POST (4" x 6")
LAG SCREWS - ⅜" x 3"
MACHINE BOLTS - 5/16" x 6 ½" OR 7" LENGTH W/NUTS

SQUARE STEEL POST (2" x 2")
MACHINE BOLTS - ⅜" x 3 ¼" LENGTH W/NUTS
RIVETS - 9/32" (6605-9-6) BULB-TITE, TRI-FOLD, ALUMINUM BODY/MANDREL O.D. FLANGE 0.720 - 0.765 INCH, GRIP RANGE 0.042 - 0.375 INCH

WASHERS (ALL POSTS) -
1 ¼" O.D. x ⅜" I.D. x 1/16" STEEL
1 ¼" O.D. x ⅜" I.D. x 0.080 NYLON

* TWO DIFFERENT FASTENING SYSTEMS ARE SHOWN FOR ILLUSTRATION PURPOSES. ON ANY INDIVIDUAL SIGN, EITHER ONE OR THE OTHER SYSTEM SHALL BE USED. ACTUAL NUMBER OF FASTENERS PER SIGN VARIES WITH THE SIGN AREA. FOR A SINGLE POST INSTALLATION, ALL SIGNS GREATER THAN 9 SQ. FT. REQUIRE THE USE OF 3 FASTENERS.

6

6

SDD 15D38 - 02b

ATTACHMENT OF SIGNS TO POSTS

STATE OF WISCONSIN
DEPARTMENT OF TRANSPORTATION

APPROVED
June 2017 — DATE
/S/ Andrew Heidtke — WORK ZONE ENGINEE
FHWA

SDD 15D38 - 02b

NOTES

1. All Signs Type II - Type H Reflective
2. Color:
   Background - Green
   Message - White
3. Message Series - E

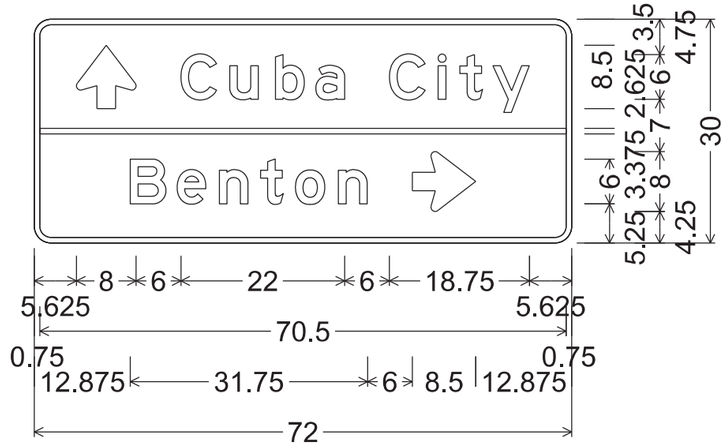

D1-2; 2.250" Radius, 0.750" Border

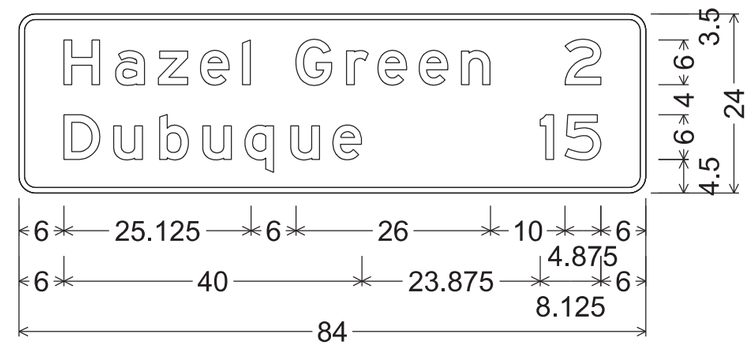

D2-2; 2.250" Radius, 0.750" Border

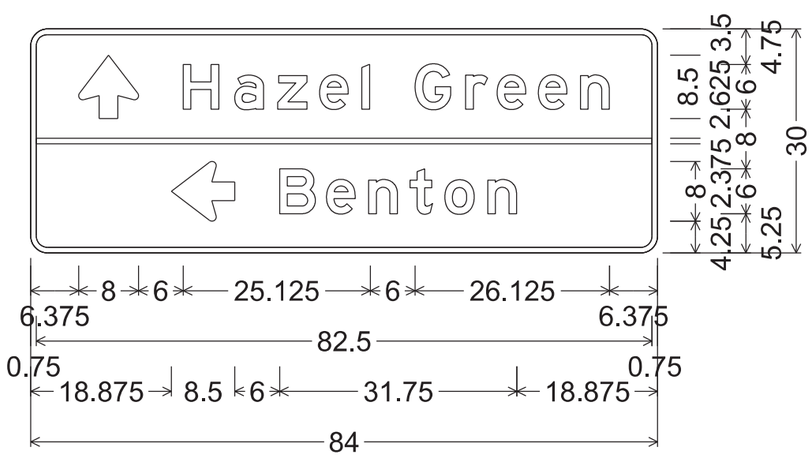

D1-2; 2.250" Radius, 0.750" Border

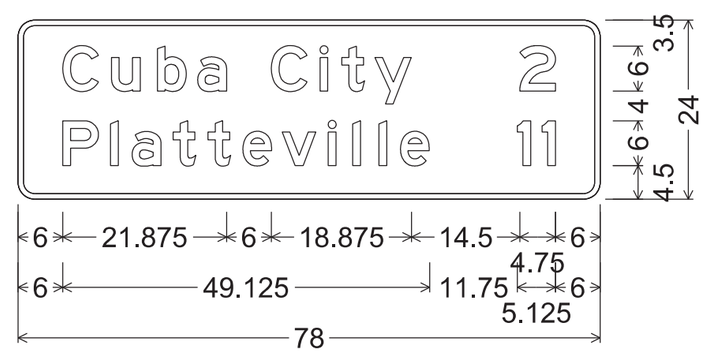

D2-2;
2.250" Radius, 0.750" Border

7

7

PROJECT NO:1706-00-74	HWY:STH 11	COUNTY:GRANT	SIGN PLATES	SHEET NO: 96	E

TYPICAL ASSEMBLIES

J1-1

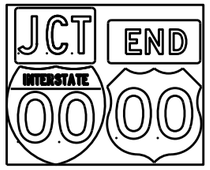

J1-2

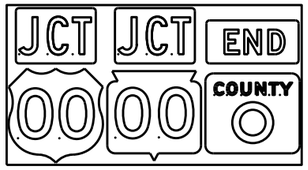

J1-3

J2-1

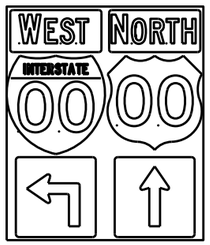

J2-2

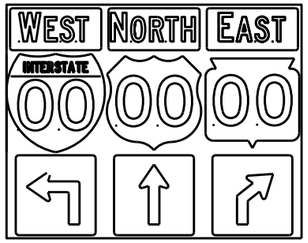

J2-3

JV

(Typical Vertical J-Assembly
See Note 10 and 11)

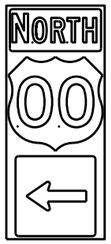

J3-1

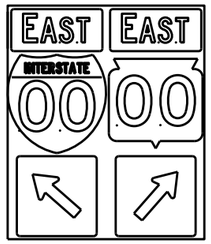

J3-2

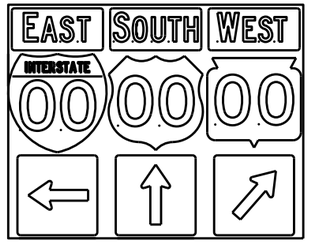

J3-3

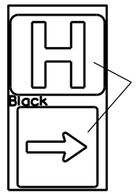

Blue Background

JH-1

J4-1

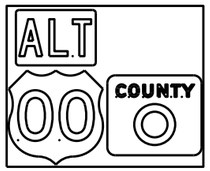

J4-2

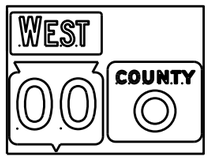

J4-2

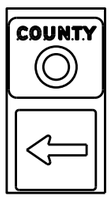

J13-1

J12-1

J32-1

J33-1

J23-1

J22-1

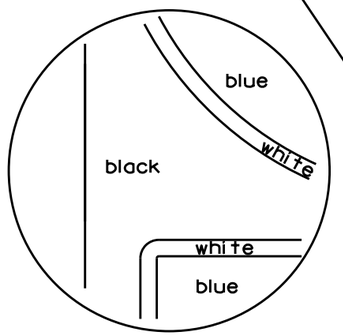

[blue background with interstate]

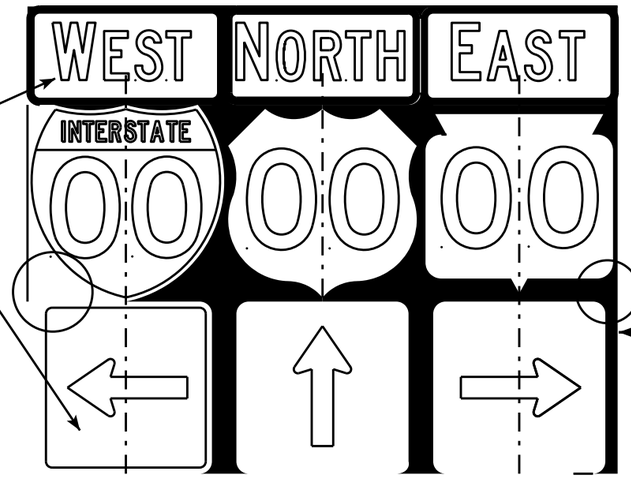

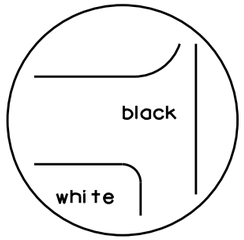

[black background]

NOTES

1. Signs are Type II - Type H Reflective - reference WIS DOT Standard Specification for HIGHWAY and STRUCTURE CONSTRUCTION latest edition.
2. Color:
   Background - Black Non-reflective
   Message - see Note 5
3. Message Series - See Note 5
4. Corners shall be square or rounded if base material is plywood. If base material is metal the corners shall be rounded.
5. The colors and message spacing on each marker shall be according to the applicable route marker panel specifications.
6. Certain marker heads require the component pieces to be the same color. As an example, all the components used with an M1-1 Interstate marker shall be blue.
7. Single panel j-assemblies shall only be used with route marker shields that are same size. If the route marker shields are different size use multiple piece component.
8. Route assemblies that have 24 inch route shields and have dimensions greater than 48 inches (both vertical and horizontal) shall have one horizontal splice between the arrows and route shields. Vertical splices shall not be used on route assemblies with a horizontal dimension of 144 inches or less. The contractor shall not use more than one vertical joint per sign and the joint shall be between route shields.
9. Route assemblies that have 36 inch shields and have dimensions greater than 48 inchs (both vertical and horizontal) shall have two horizontal splices. One horizontal splice shall be between the cardinal direction and route shields and the other horizontal splice shall be between the arrows and route shields. Vertical splices shall not be used on route assemblies with a horizontal dimension of 144 or less. The contractor shall not use more than one vertical joint per sign and the joint shall be between route shields.
10. All Vertical J Assemblies are given a Sign Code of JV
11. For JV Assemblies that have a mixture of Interstate and non Interstate shields, arrows and cardinals shall be white on blue.

ROUTE MARKERS & COMPONENTS IN TYPICAL ASSEMBLIES

WISCONSIN DEPT OF TRANSPORTATION

APPROVED Matthew R Rauch
for State Traffic Engineer

DATE 2/06/14 PLATE A2-1S.8

PROJECT NO: | SHEET NO: E

URBAN AREA

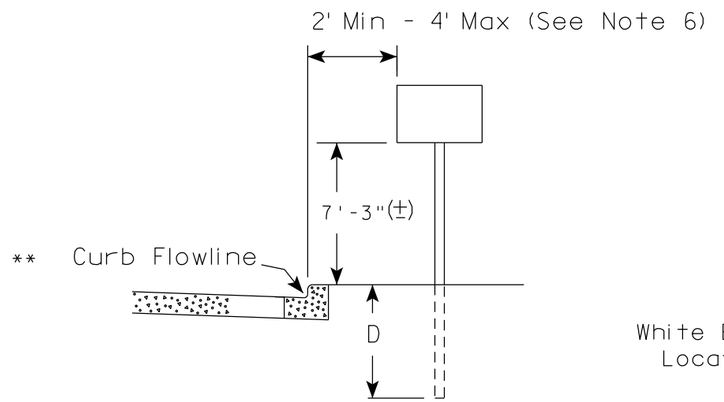

RURAL AREA (See Note 2)

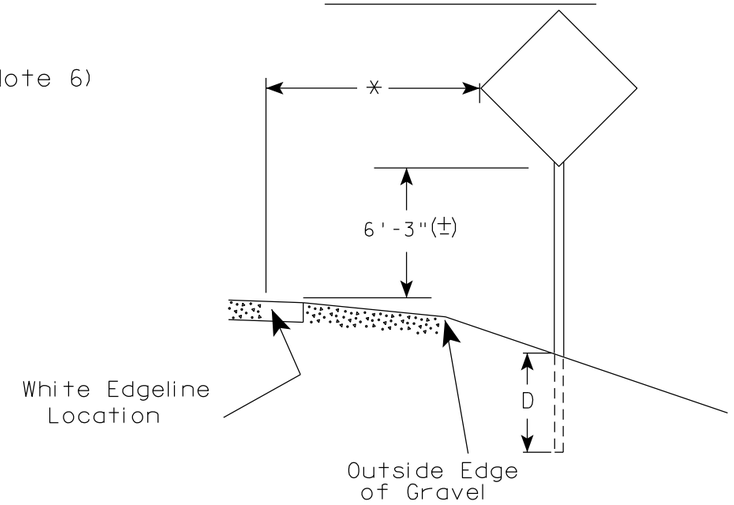

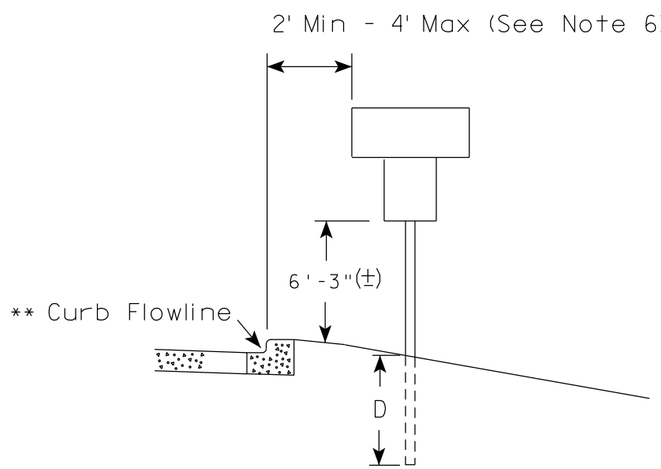

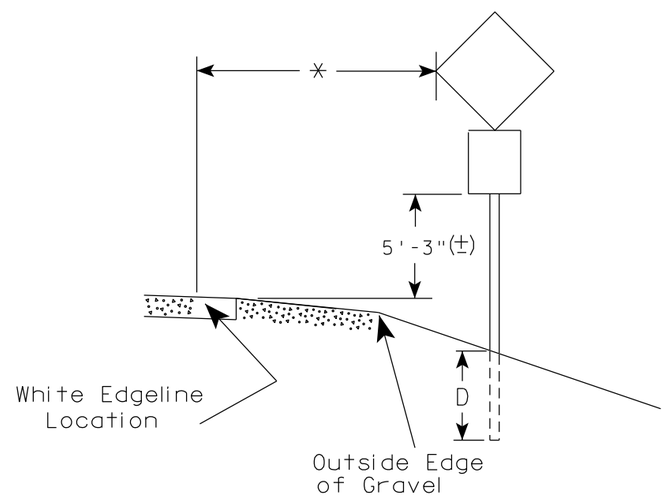

** The existence of curb and gutter does not in itself mandate the vertical clearance illustrated. That height is typically measured where there is sidewalk adjacent to the roadway or parking is permitted. In the absence of sidewalk vertical clearance is measured from the top of the curb. Offset of signs is measured from the flow line.

* 6 feet from edge of a paved shoulder or 12 feet from the edge of pavement (edge line location) or 2 feet from outside edge of gravel, whichever is greater unless directed by project engineer.

GENERAL NOTES

1. Signs wider than 4 feet or 20 sq.ft or larger, shall be mounted on multiple posts. Refer to plate A4-4.
2. If signs are mounted on or behind barrier wall, see A4-10 sign plate.
   The Double Arrow sign (W12-1D) shall be mounted at a height of 2'-3" (±). The Chevron sign (W1-8), Roundabout Chevron panel (R6-4B), Enhanced Reference Markers, Clearance Markers (W5-52), Mile Markers (D10 series), In Road Object Markers (W5-54) & End of Road Markers (W5-56) shall be mounted at a height of 4'-3" (±).
3. For expressways and freeways, mounting height is 7'- 3" (±) or 6'-3" (±) depending upon existence of a sub-sign.
4. Minimum mounting height for signs mounted on traffic signal poles is 5'- 3" (±).
5. Offset distance shall be consistent with existing signs or consistent throughout length of project.
6. The (±) tolerance for mounting height is 3 inches.
7. Folding signs shall be mounted at a height of 5'-3" (±) or as directd by the Engineer.

POST EMBEDMENT DEPTH

Area of Sign Installation (Sq.Ft.)	D (Min)
20 or Less	4'
Greater than 20	5'

TYPICAL INSTALLATION OF PERMANENT TYPE II SIGNS ON SINGLE POSTS

WISCONSIN DEPT OF TRANSPORTATION

APPROVED Matthew R Rauch for State Traffic Engineer

DATE 5/13/2020 PLATE NO. A4-3.22

7 7

PROJECT NO:	HWY:	COUNTY:		SHEET NO: 98	E

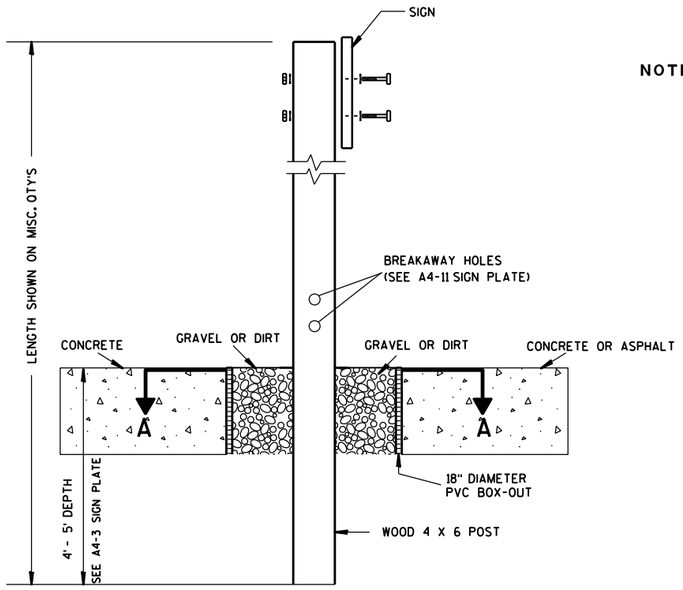

ELEVATION VIEW

DETAIL OF WOOD 4 X 6 SIGN POST IN BOX-OUT

NOTES:
1. ALL MATERIAL TO BE APPROVED BY ENGINEER PRIOR TO INSTALLATION
2. SEE SIGN PLATE A4-8 FOR SIGN HARDWARE REQUIREMENTS
3. 18 INCH X 18 INCH SQUARE BOX-OUTS MAY BE USED FOR INSTALLATIONS IN EXISTING CONCRETE OR ASPHALT LOCATIONS.

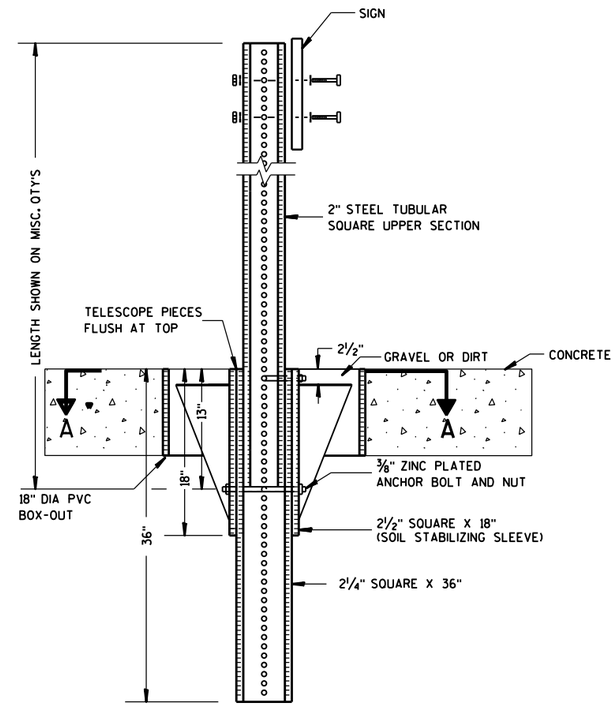

ELEVATION VIEW

DETAIL OF STEEL 2 X 2 SIGN POST IN BOX-OUT

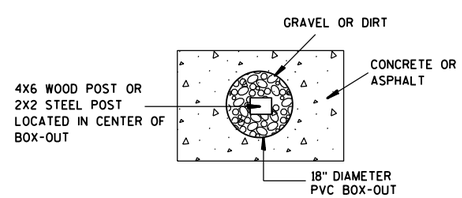

PLAN VIEW

FOR NEW CONCRETE/ASPHALT INSTALLATIONS

SIGN POST
BOX-OUTS
A4-3B

WISCONSIN DEPT OF TRANSPORTATION

APPROVED Matthew R Rauch
for State Traffic Engineer

DATE 1/27/14 PLATE NO. A4-3B.1

PROJECT NO:	HWY:	COUNTY:		SHEET NO:	E

URBAN AREA

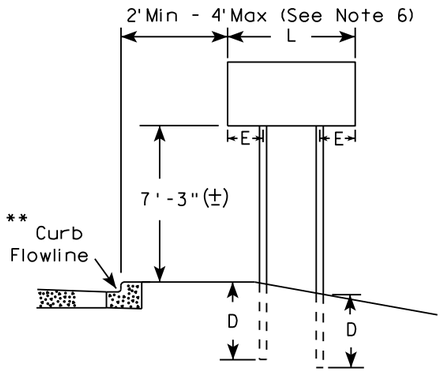

RURAL AREA (See Note 3)

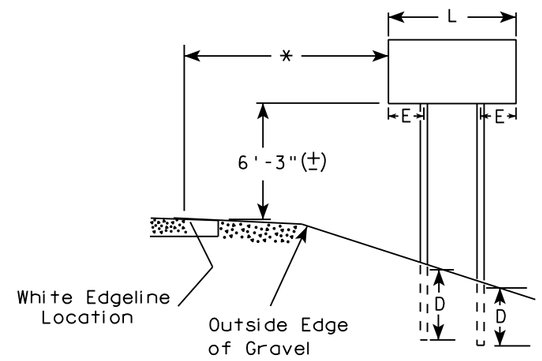

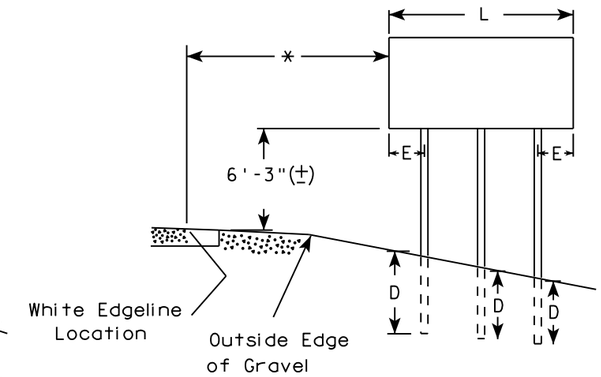

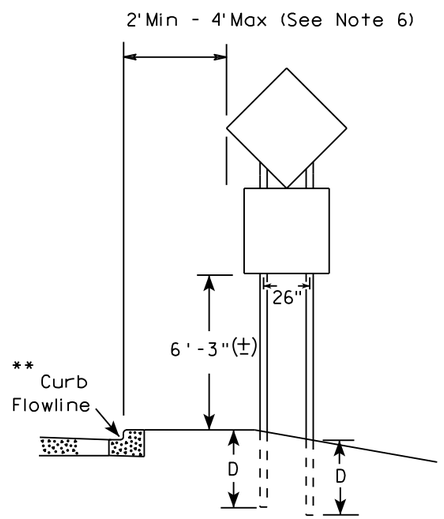

48" DIAMOND WARNING SIGN

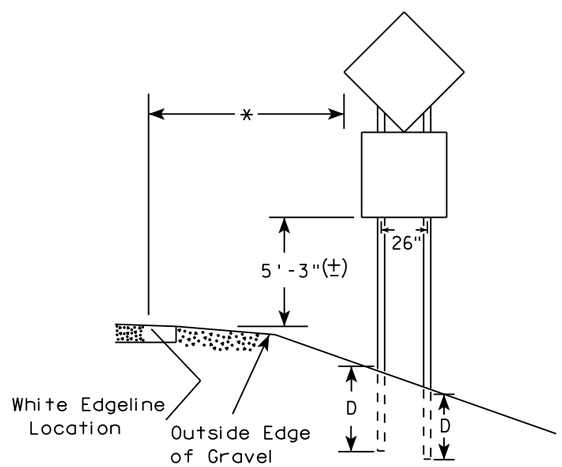

48" DIAMOND WARNING SIGN

SIGN SHAPE OTHER THAN DIAMOND (TWO POSTS REQUIRED)	
L	E
*** Greater than 48" Less than 60"	12"
60" to 108"	L/5

SIGN SHAPE OTHER THAN DIAMOND (THREE POSTS REQUIRED)	
L	E
Greater than 108" to 144"	12"

GENERAL NOTES

1. For 3 or 4 post installations, individual post spacing shall be greater than 3'-6".
2. See tables below for required number of posts.
3. For expressways and freeways, mounting height is 7'-3" (±) or 6'-3" (±) depending upon existence of sub-sign.
4. The (±) tolerance for mounting height is 3 inches.
5. J-Assemblies are considered to be one sign for mounting height.
6. Offset distance shall be consistent with existing signs or consistent throughout length of project.
7. Folding signs shall be mounted at a height of 5'-3" (±) or as directed by the engineer.
8. The Double Arrow sign (W12-1) shall be mounted at a height of 2'-3" (±). The Chevron sign (W1-8), Roundabout Chevron panel (R6-4B), Clearance Markers (W5-52), Mile Markers (D10 series), In Road Object Markers (W5-54) & End of Road Markers (W5-56) shall be mounted at a height of 4"-3" (±).

* 6 feet from edge of a paved shoulder or 12 feet from the edge of pavement (edge line location) or 2 feet from outside edge of gravel, whichever is greater unless directed by project engineer.

** The existence of curb and gutter does not in itself mandate the vertical clearance illustrated. That height is typically measured where there is sidewalk adjacent to the roadway or parking is permitted. In the absence of sidewalk vertical clearance is measured from the top of the curb. Offset of signs is measured from the flow line.

*** See A4-3 sign plate for signs 4' or less in width and less than 20 S.F. in area.

POST EMBEDMENT DEPTH

Area of Sign Installation (Sq. Ft.)	D (Min)
20 or Less	4'
Greater than 20	5'

TYPICAL INSTALLATION OF TYPE II SIGNS ON MULTIPLE POSTS

WISCONSIN DEPT OF TRANSPORTATION

APPROVED Matthew R Rauch
For State Traffic Engineer

DATE 8/21/17 PLATE NO. A4-4.15

7

7

PROJECT NO:	HWY:	COUNTY:		SHEET NO: 100	E

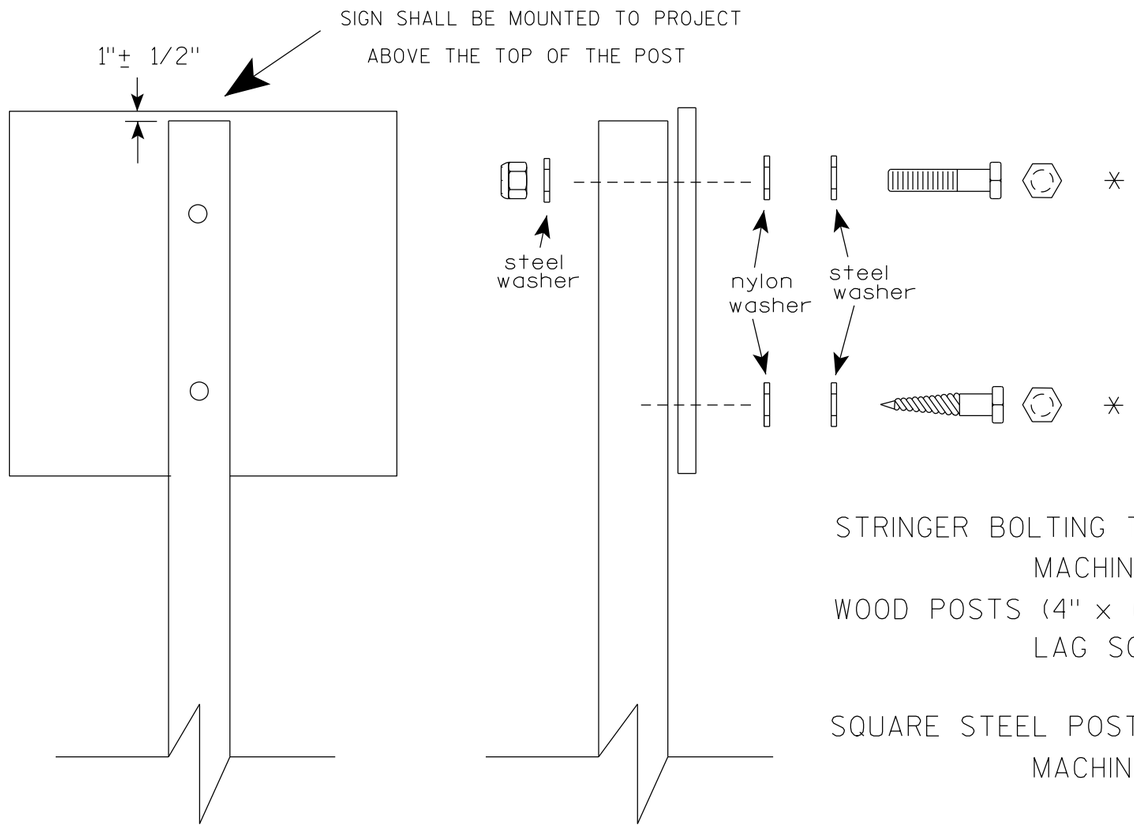

Nuts, bolts and lags used for mounting signs shall have hexagonal heads and shall be either :

a. Hot dip galvanized in accordance with ASTM Designation: A 153, Class D, or SC 3

b. Electro-galvanized in accordance with ASTM Designation : B 633, TYPE III, SC 3.

Threads on bolts and nuts shall be manufactured with sufficient allowance for the cadmium plate or galvanized coating to permit the nuts to run freely on the bolts.

STRINGER BOLTING TO ALUMINUM SIGNS (SEE SIGN PLATE A4-18)

MACHINE BOLTS - 5/16" X 1-3/4" Length w/ lock nuts

WOOD POSTS (4" x 6")

LAG SCREWS - 3/8" X 3" (NO STRINGERS ON BACK OF SIGN)
3/8" X 4" (STRINGERS ON BACK OF SIGN)

SQUARE STEEL POSTS (2" x 2")

MACHINE BOLTS - 3/8" X 3-1/4" Length w/ nuts (NO STRINGER ON BACK OF SIGN)
3/8" X 5" Length w/ nuts (STRINGERS ON BACK OF SIGN)

RIVETS - 9/32 " (6605-9-6) BULB-TITE, TRI-FOLD, ALUMINUM BODY/MANDREL
O.D. FLANGE .720-.765 INCH, GRIP RANGE .042-.375 INCH

WASHERS (ALL POSTS) -

1-1/4" O.D. X 3/8" I.D. X 1/16" STEEL
1-1/4" O.D. X 3/8" I.D. X .080 NYLON

* Two different fastening systems are shown for illustration purposes. On any individual sign, either one or the other system shall be used. Actual number of fasteners per sign varies with the sign area, but normally there are two. For a single post installation, all signs greater than 9 sq. ft. require the use of 3 fasteners.

ATTACHMENT OF SIGNS TO POSTS

WISCONSIN DEPT OF TRANSPORTATION

APPROVED Matthew R Rauch
for State Traffic Engineer

DATE 4/1/2020 PLATE NO. A4-8.9

TELESCOPIC TUBING ANCHORS
TWO PIECE SYSTEM

2 1/4" SQUARE
12 GAUGE
PERFORATED
GALVANIZED FINISH

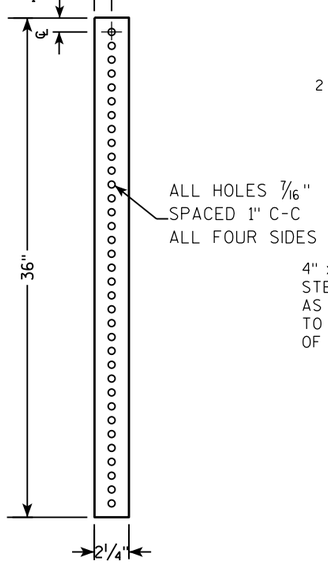

2 1/2" SQUARE
12 GAUGE
OMNI-DIRECTIONAL
PERFORATED
SOIL STABILIZING SLEEVE
GALVANIZED FINISH

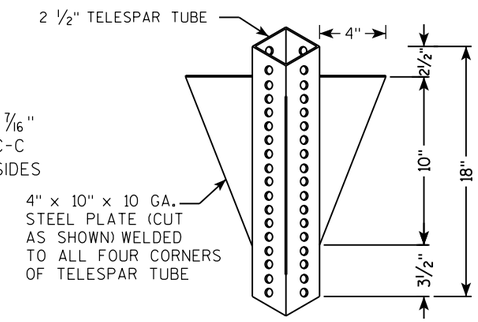

DETAIL OF TUBULAR STEEL SIGN POST
(IN POURED CONCRETE OR ASPHALT)

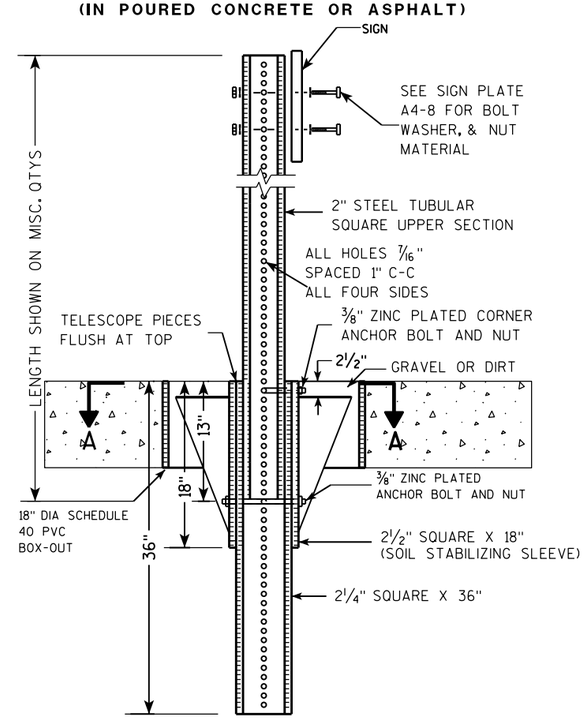

DETAIL OF TUBULAR STEEL SIGN POST
(IN LOCATIONS OTHER THAN POURED CONCRETE OR ASPHALT)

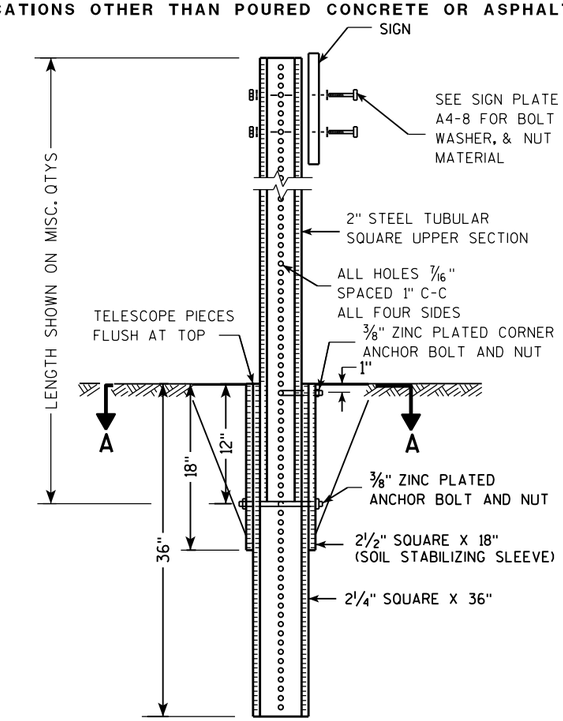

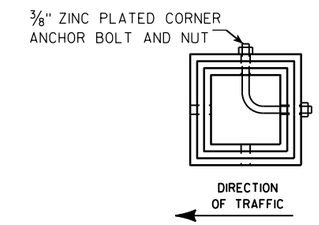

SECTION A-A

Area of Sign Installation (Sq. Ft.)	Number of Required Posts
9 or less	1
Greater than 9 less than or equal to 18	2
Greater than 18 less than or equal to 27	3

Signs wider than 3 feet or larger than 9 sq. ft shall be mounted on multiple posts (see above table).

TUBULAR STEEL
SIGN POST
A4-9

WISCONSIN DEPT OF TRANSPORTATION

APPROVED Matthew R Rauch
for State Traffic Engineer

DATE 2/05/15 PLATE A4-9.9

7 7

PROJECT NO:	HWY:	COUNTY:		SHEET NO:	E

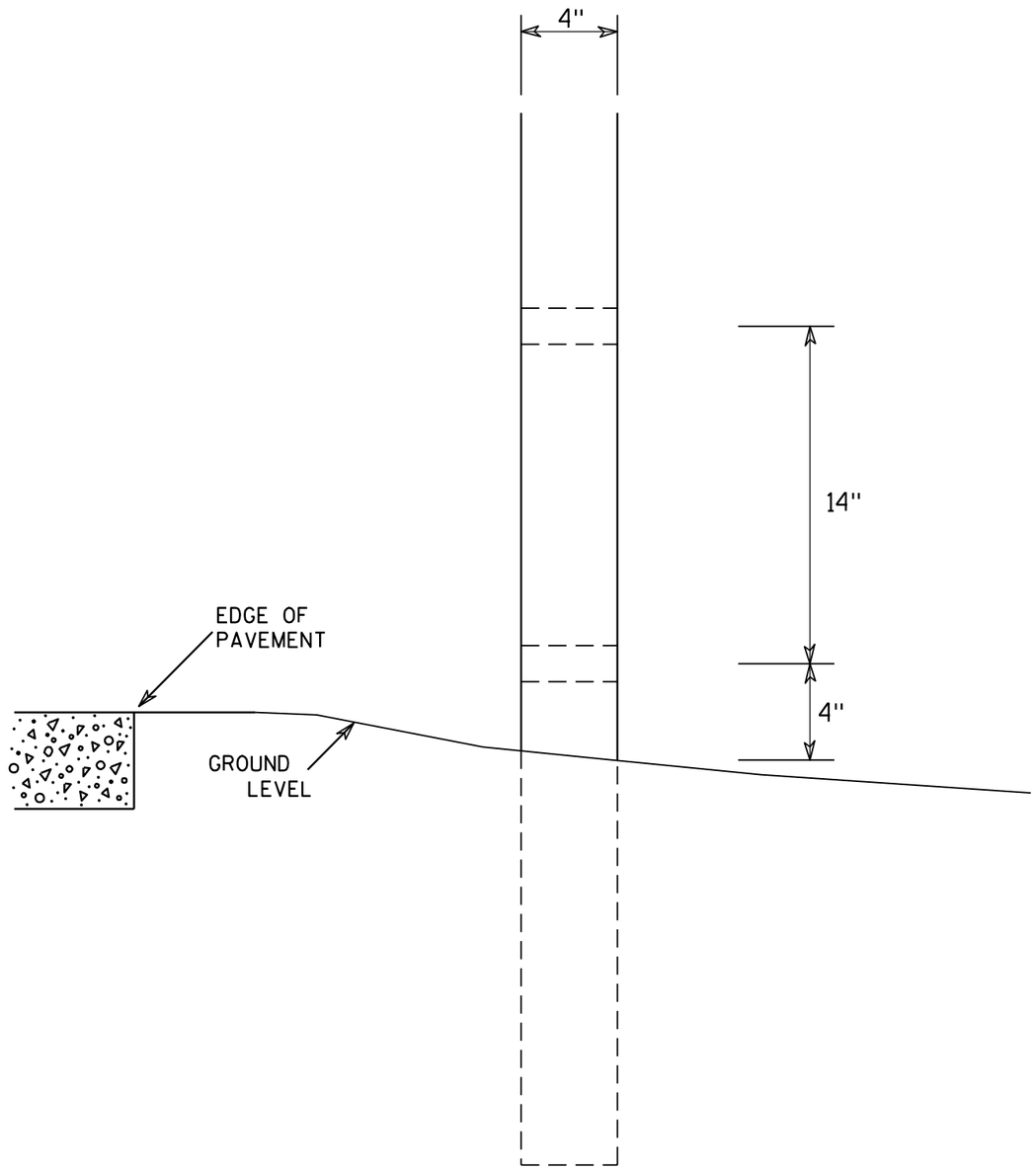

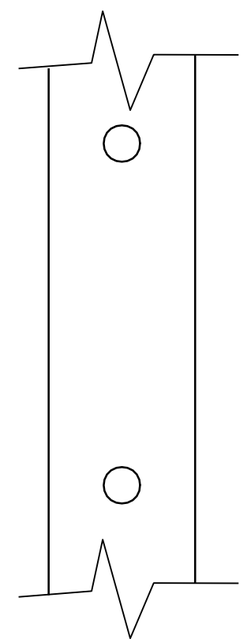

SIDE VIEW

GENERAL NOTES

1. All 4 x 6 Wood Posts shall be modified by having two 1½" diameter holes drilled perpendicular to the roadway centerline.

7

7

4 X 6 WOOD POST MODIFICATIONS

WISCONSIN DEPT OF TRANSPORTATION

APPROVED Chester J Spang for State Traffic Engineer

DATE 3/27/97 PLATE NO. A4-11.2

PROJECT NO:	HWY:	COUNTY:		SHEET NO: 103	E

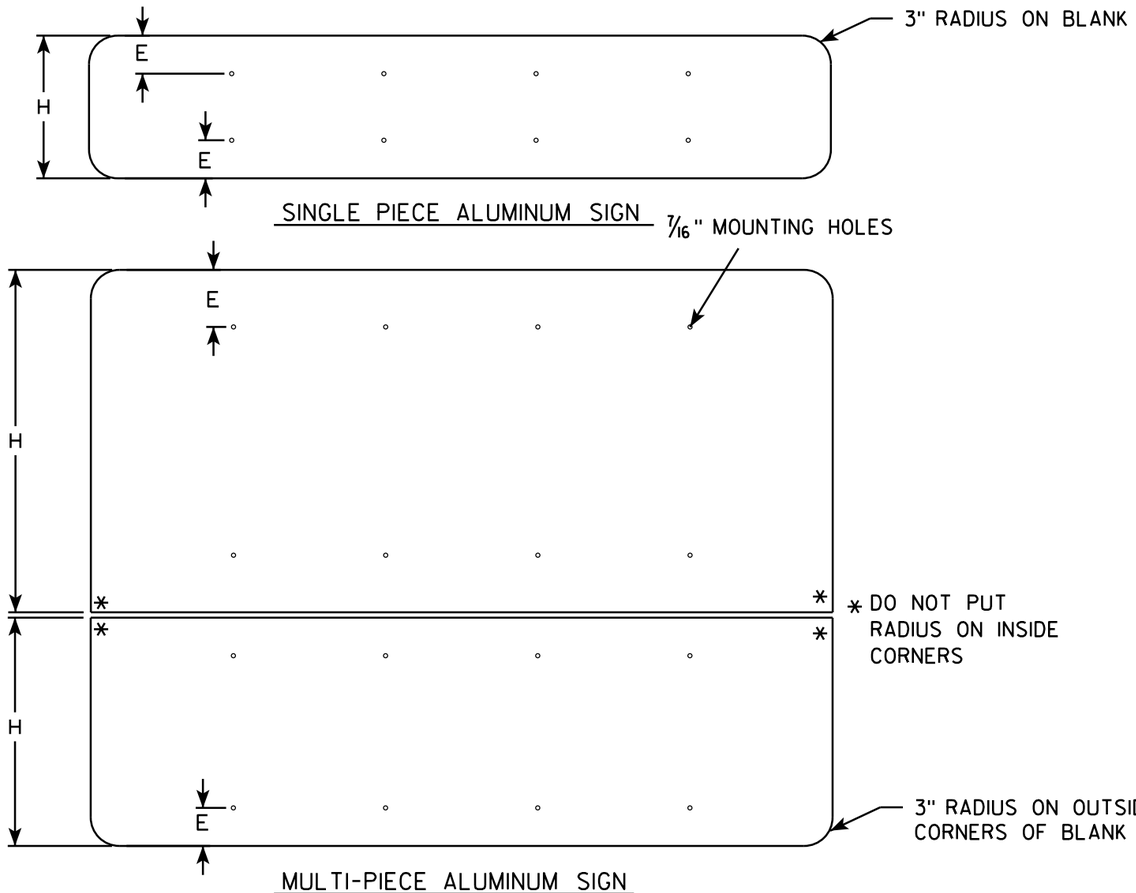

GENERAL NOTES

- ALL SIGNS OVER 60" IN WIDTH SHALL HAVE A 3" RADIUS ON THE OUTSIDE CORNERS OF THE ALUMINUM BLANK.
- MOUNTING HOLES SHALL BE 7/16" DIAMETER.
- SEE CHART FOR HOLE SPACING REQUIREMENTS
- FOR SIGN PANELS WITH DIMENSION (H) 36" AND OVER, DIMENSION E SHALL BE 6"
- FOR SIGN PANELS WITH DIMENSION (H) UNDER 36", DIMENSION E SHALL BE 4"
- SIGN STRINGER MATERIAL SHALL CONSIST OF STEEL CHANNEL POST SECTIONS, WEIGHING 1.12 LBS/FT IN ACCORDANCE WITH SECTION 633.2.1 OF THE STANDARD SPECIFICATIONS FOR HIGHWAY AND STRUCTURE CONSTRUCTION.
- SEE SIGN PLATE A4-8 FOR SIGN STRINGER BOLTING REQUIREMENTS.

SIGN WIDTH	STRINGER WIDTH	POSTS	HOLE SPACING	MOUNTING HOLES						
78"	72"	2	16"	15"	31"	47"	63"			
84"	72"	2	17"	16 1/2"	33 1/2"	50 1/2"	67 1/2"			
90"	72"	2	18"	18"	36"	54"	72"			
96"	90"	2	19"	19 1/2"	38 1/2"	57 1/2"	76 1/2"			
102"	90"	2	20"	21"	41"	61"	81"			
108"	90"	2	21"	22 1/2"	43 1/2"	64 1/2"	85 1/2"			
114"	108"	3	15"	12"	27"	42"	57"	72"	87"	102"
120"	108"	3	16"	12"	28"	44"	60"	76"	92"	108"
126"	108"	3	17"	12"	29"	46"	63"	80"	97"	114"
132"	126"	3	18"	12"	30"	48"	66"	84"	102"	120"
138"	126"	3	19"	12"	31"	50"	69"	88"	107"	126"
144"	126"	3	20"	12"	32"	52"	72"	92"	112"	132"

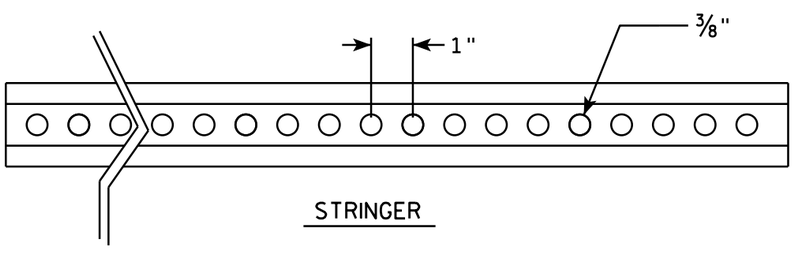

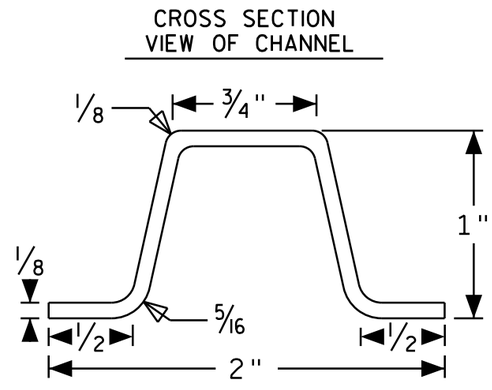

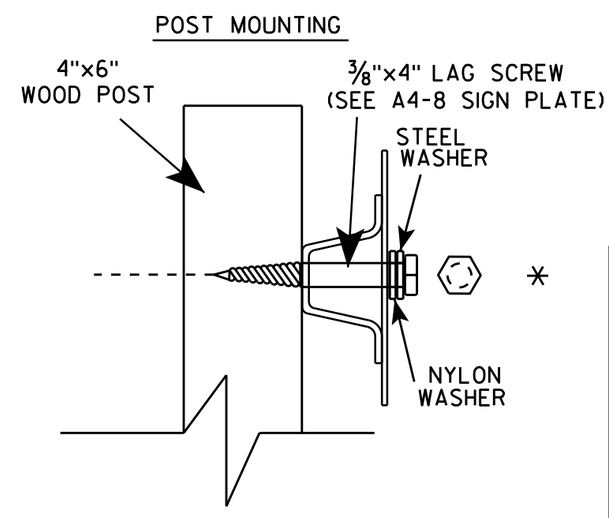

SIGN STRINGER MOUNTING REQUIREMENTS

WISCONSIN DEPT OF TRANSPORTATION

APPROVED Matthew R Rauch
for State Traffic Engineer

DATE 4/26/16 PLATE NO A4-18.1

PROJECT NO:	HWY:	COUNTY:		SHEET NO:	E

BANDING

SINGLE SIGN

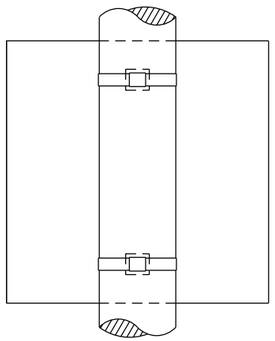

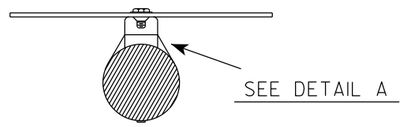

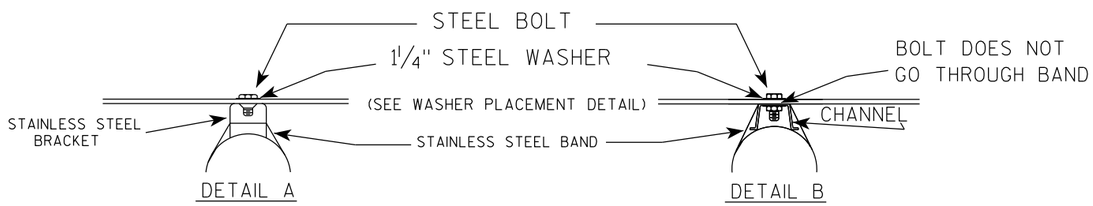

WASHER PLACEMENT

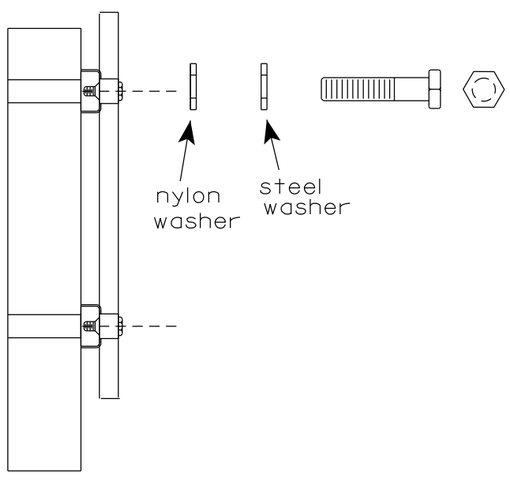

WASHERS (ALL POSTS) -
1-1/4" O.D. X 3/8" I.D. X 1/16" STEEL
1-1/4" O.D. X 3/8" I.D. X .080 NYLON
FOR ALL TYPE H SIGNS

GENERAL NOTES

1. Any sign over 3 feet in width shall use the V-Block banding method. See A5-10 standard plate.
2. Signs 3 feet or greater in height shall have three bracket bands installed. Signs less than 3 feet in height shall have two bracket bands installed.
3. Banding and assembly bracket shall be stainless steel. All bands shall be 3/4" in width and 0.025" thickness.
4. ALL SIGN MOUNTING BOLTS AND WASHERS SHALL BE EITHER:
   a. Hot dip or mechanically galvanized in accordance with ASTM Designation: A 153, Class D
   b. Electro-galvanized in accordance with ASTM designation: B 633, Type III, SC 3

"J" ASSEMBLY

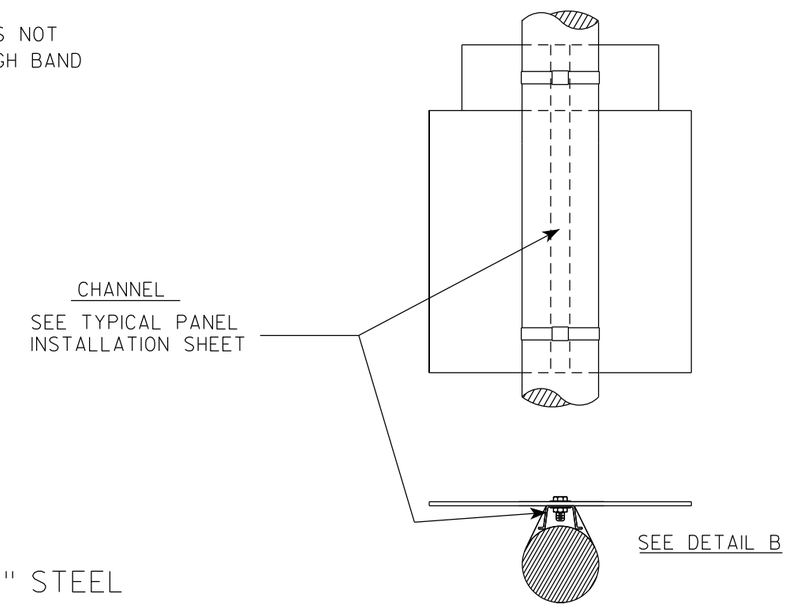

STANDARD SIGN
SIGN BANDING DETAILS

WISCONSIN DEPT OF TRANSPORTATION

APPROVED Matthew R Rauch for State Traffic Engineer

DATE 6/10/19 PLATE NO. A5-9.4

PROJECT NO:	HWY:	COUNTY:		SHEET NO: 105	E

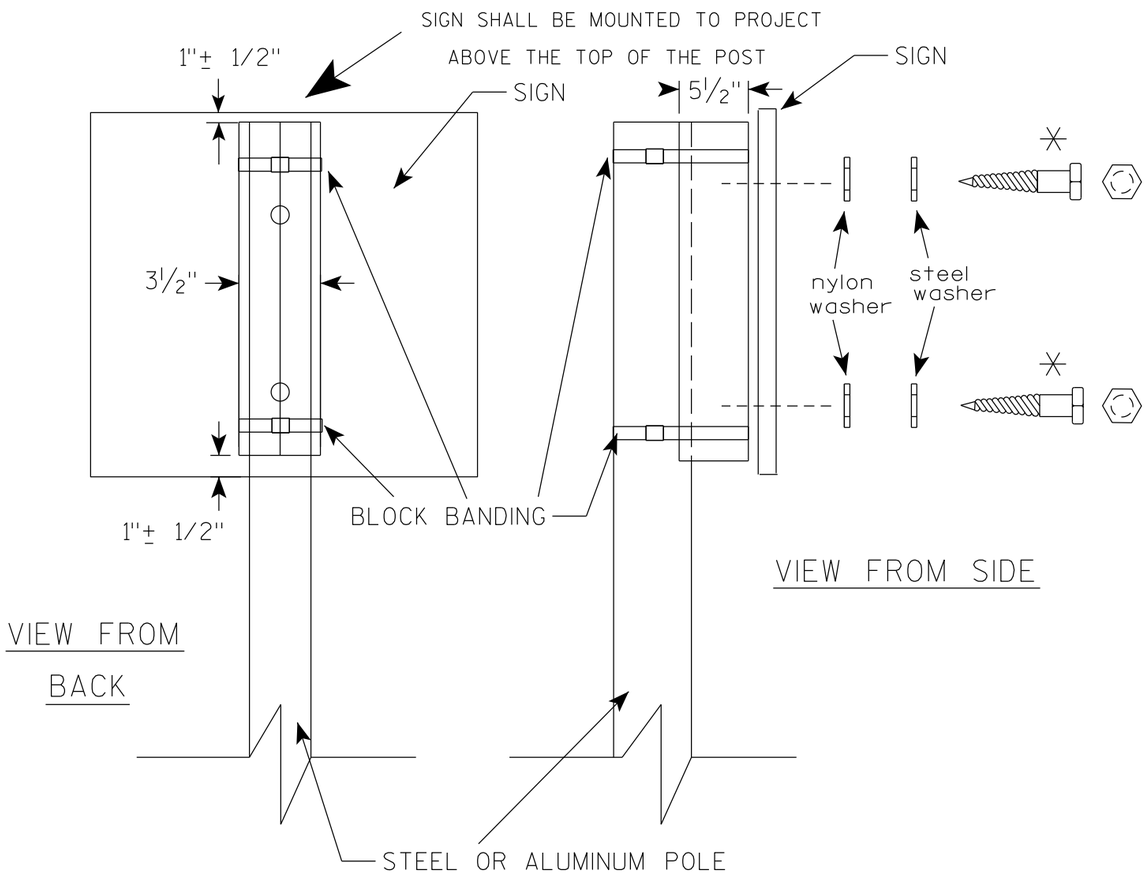

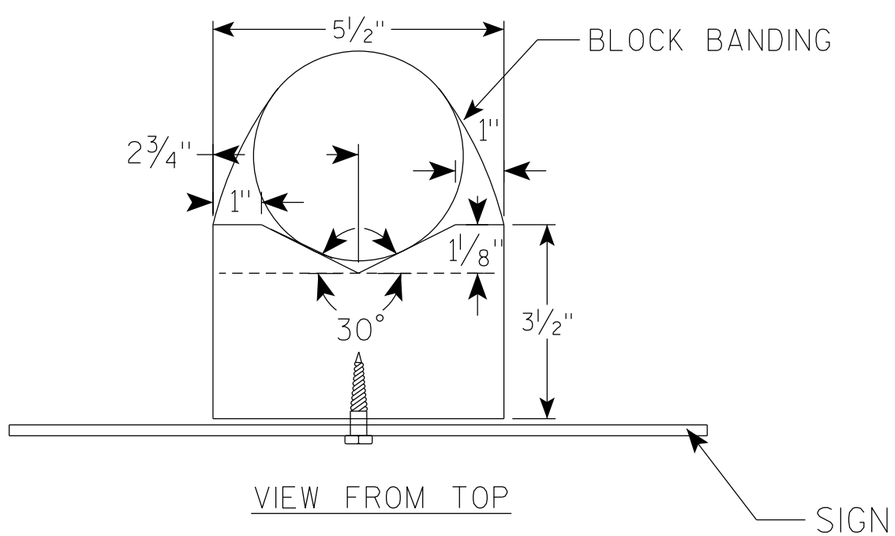

GENERAL NOTES

1. WOOD 4"X6" POST MATERIAL SHALL CONFORM TO 507.2.2 OF THE WisDOT STANDARD SPECIFICATIONS
2. BLOCK BANDING AND CLIPS SHALL BE STAINLESS STEEL, ¾" WIDTH AND 0.025" THICKNESS
3. SIGNS 3' OR GREATER IN HEIGHT SHALL UTILIZE 3 BLOCK BANDS. SIGNS UNDER 3' IN HEIGHT SHALL UTILIZE 2 BLOCK BANDS
4. ACTUAL NUMBER OF FASTENERS PER SIGN VARIES WITH THE SIGN AREA, BUT NORNALLY THERE ARE TWO. FOR SIGNS GREATER THAN 9 S.F. 3 FASTENERS SHALL BE USED.
5. ALL SIGN MOUNTING BOLTS AND WASHERS SHALL BE EITHER:
   a. Hot dip or mechanically galvanized in accordance with ASTM Designation: A 153, Class D
   b. Electro-galvanized in accordance with ASTM Designation : B 633, TYPE III, SC 3
6. ALL BOLTS SHALL HAVE HEXAGONAL HEADS.
7. STEEL WASHERS SHALL BE 1¼" O.D. X ⅜" I.D. X 1/16"
8. NYLON WASHERS SHALL BE 1¼" O.D. X ⅜" I.D. X .080 FOR TYPE H OR TYPE F FACE SIGN

✳ LAG BOLTS SHALL BE ⅜" X 2½"

BLOCK BANDING DETAIL
(V-BLOCK OPTION)

WISCONSIN DEPT OF TRANSPORTATION

APPROVED Matthew R Rauch
For State Traffic Engineer

DATE 6/10/19 PLATE NO. A5-10.2

PROJECT NO:				SHEET NO: 106	E

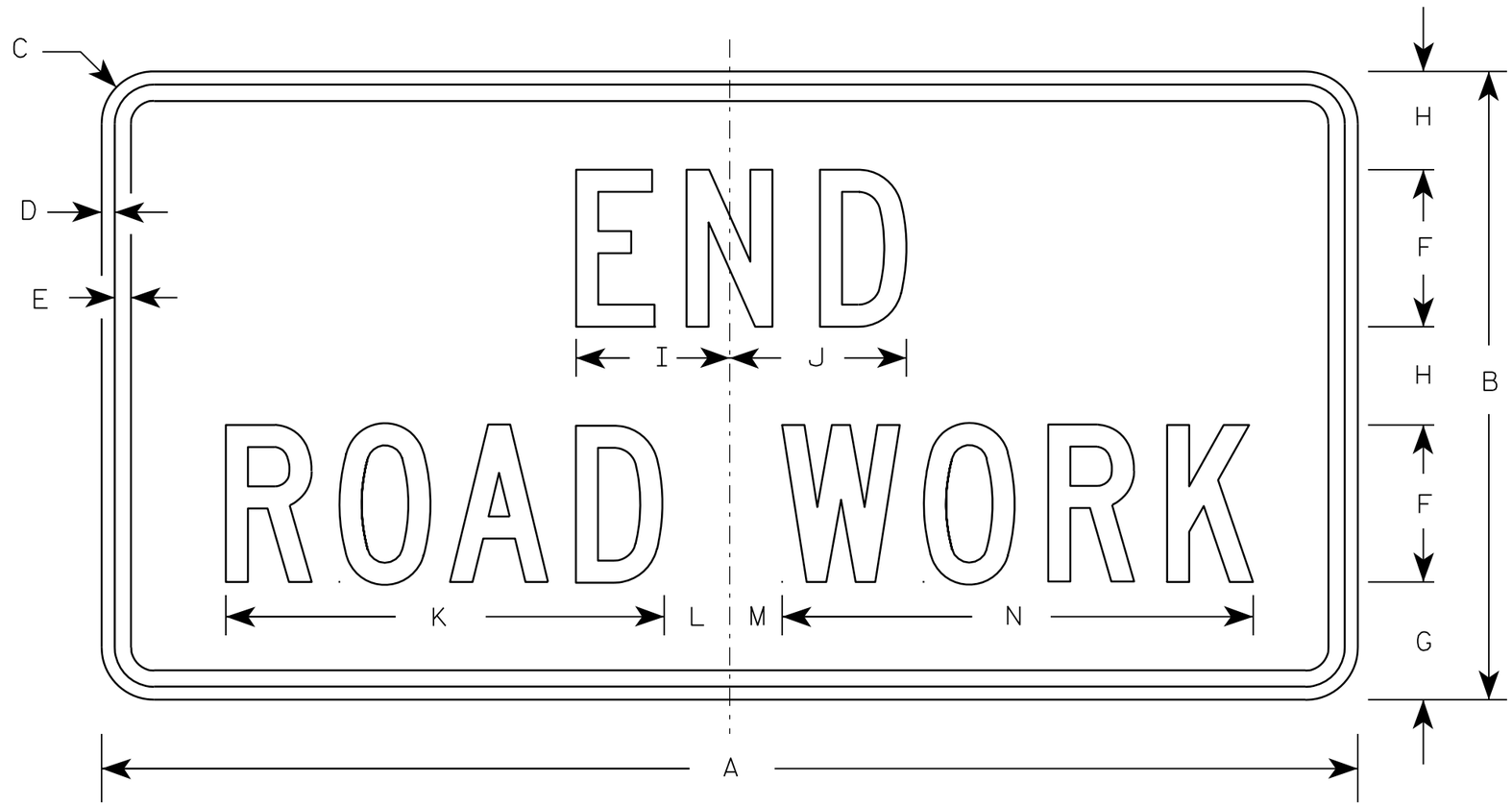

G20-2A

NOTES

1. Sign is Type II - Type F Reflective - reference WIS DOT Standard Specification for HIGHWAY and STRUCTURE CONSTRUCTION latest edition.
2. Color:
   Background - Orange
   Message - Black
3. Message Series - C
4. Corners may be square or rounded when base material is plywood but borders shall be rounded as shown. When base material is metal, the corners and borders shall be rounded.

Metric equivalent for this sign is:

SIZE	
1	900 mm X 450 mm
2	1200 mm X 600 mm
3	1200 mm X 600 mm
4	1200 mm X 600 mm
5	1200 mm X 600 mm

SIZE	A	B	C	D	E	F	G	H	I	J	K	L	M	N	O	P	Q	R	S	T	U	V	W	X	Y	Z	Area sq. ft.	Area m2
1	36	18	1 1/8	3/8	1/2	4	3 3/4	2 1/2	4 1/8	4 1/8	11 1/8	2	1	12 1/8													4.5	0.41
2	48	24	1 1/2	1/2	5/8	6	4 1/2	3 3/4	5 7/8	6 3/4	16 3/4	2 1/2	1 3/4	18 1/2													8.0	0.72
3	48	24	1 1/2	1/2	5/8	6	4 1/2	3 3/4	5 7/8	6 3/4	16 3/4	2 1/2	1 3/4	18 1/2													8.0	0.72
4	48	24	1 1/2	1/2	5/8	6	4 1/2	3 3/4	5 7/8	6 3/4	16 3/4	2 1/2	1 3/4	18 1/2													8.0	0.72
5	48	24	1 1/2	1/2	5/8	6	4 1/2	3 3/4	5 7/8	6 3/4	16 3/4	2 1/2	1 3/4	18 1/2													8.0	0.72

STANDARD SIGN

G20-2A

WISCONSIN DEPT OF TRANSPORTATION

APPROVED Matthew R Rauch
for State Traffic Engineer

DATE 9/30/09 PLATE NO. G20-2A.8

PROJECT NO:	HWY:	COUNTY:		SHEET NO: 107	E

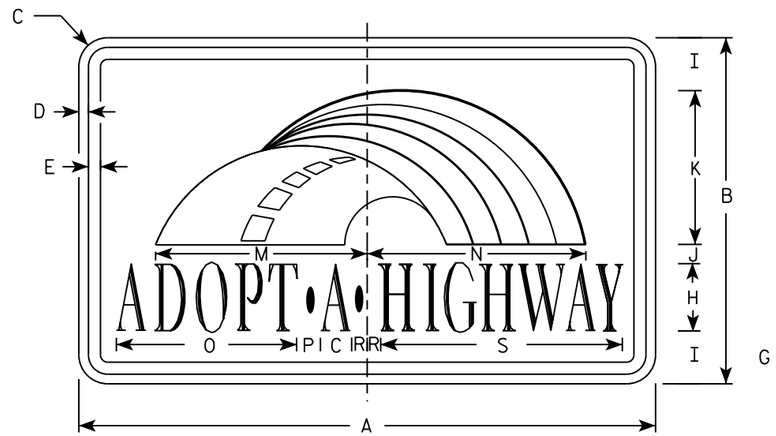

I55-56

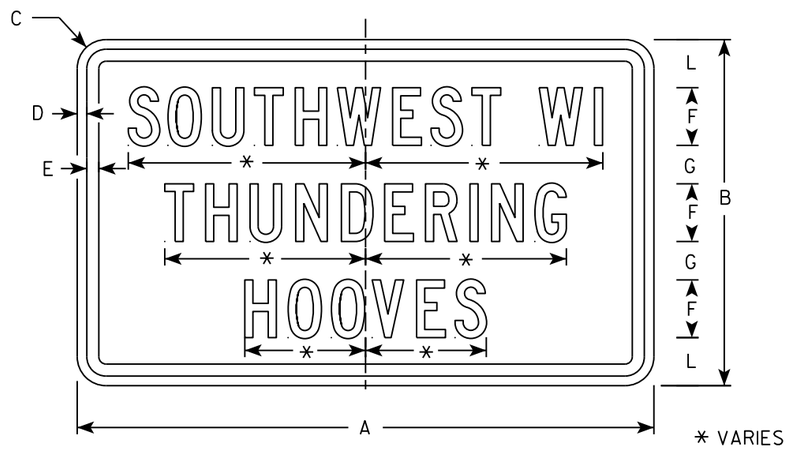

I55-56P

* VARIES

Background Colors of Symbol*

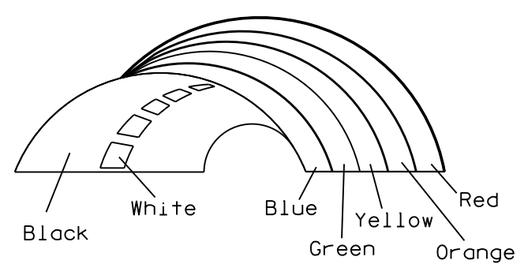

*1/4" Black Border between each color of rainbow and border of rainbow

NOTES

1. Sign is Type II - Type H Reflective
2. Color:
   Background - White
   Message - (See Note 4)
3. Message Series - (See Note 5)
4. Border - Blue
   Adopt a Highway - Red
   All other Text - Blue
5. Adopt a Highway - Dutch 8011L
   All other Text - Series C
6. Contractor shall provide and install a new post bracket in accordance with the I55-56B sign detail.

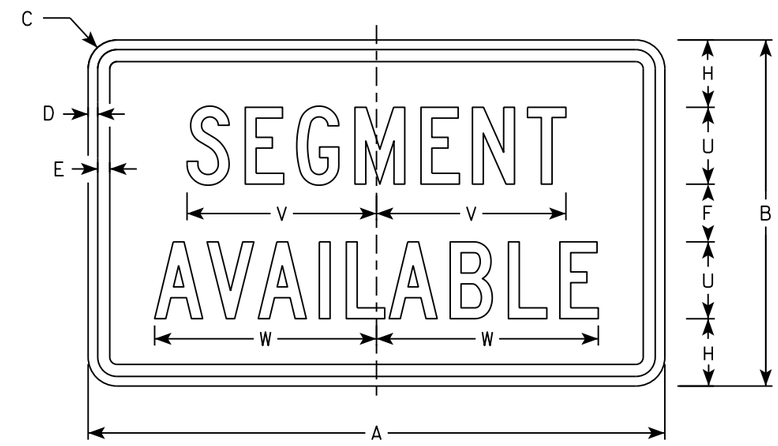

I55-56S

SIZE	A	B	C	D	E	F	G	H	I	J	K	L	M	N	O	P	Q	R	S	T	U	V	W	X	Y	Z	Area sq. ft.
1																											
2	30	18	1 1/2	1/2	5/8	3	2	3 1/2	2 3/4	1	8	2 1/2	11 1/4	11 1/8	9 3/8	1 1/4		3/4	12 5/8	7 1/2	4	9 7/8	11 1/2				3.75
3																											
4																											
5																											

STANDARD SIGN
I55-56

WISCONSIN DEPT OF TRANSPORTATION

APPROVED Matthew R Rauch
for State Traffic Engineer

DATE 2/20/18 PLATE NO. I55-56.4

PROJECT NO: | HWY: | COUNTY: | SHEET NO: 108 | E

ISOMETRIC VIEW

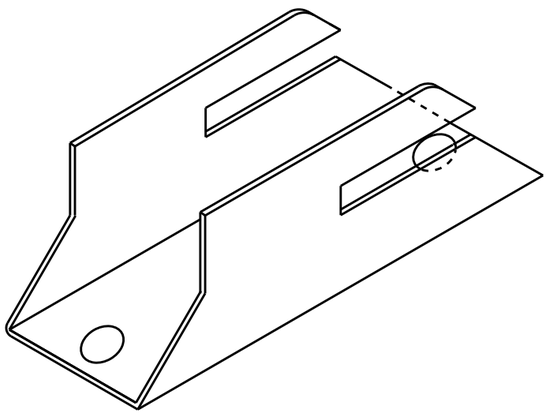

TOP VIEW

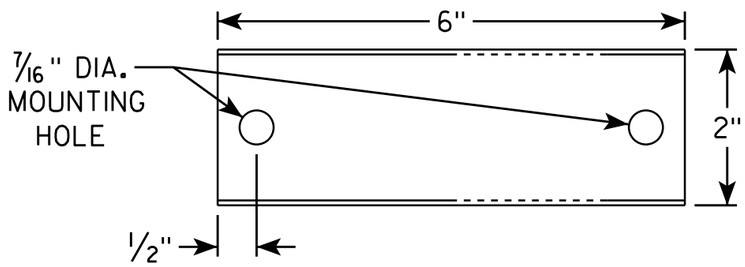

SIDE VIEW

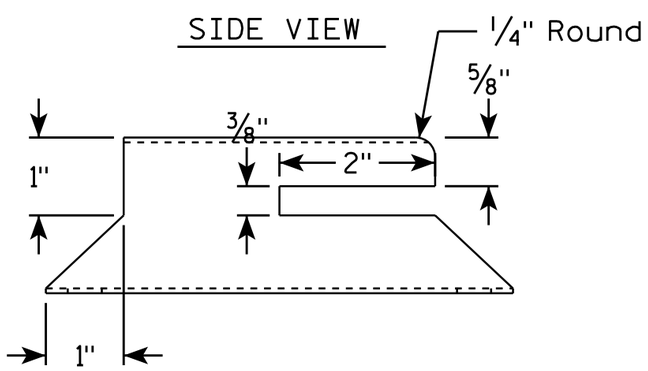

END VIEW

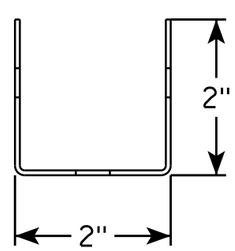

NOTES

1. Must be capable of permanent attachment to a wood or steel channel sign post utilizing the fastening hardware specified on the A4-8 sign plate.
2. Shall be entirely primed and painted with two coats of a black powder coated enamel paint.
3. Shall be made with 12 gauge steel, and incorporate no welds, no hinged components, no threaded lock-type components, and no parts which are loose or can be separated from the main body.
4. Shall have rounded edges with at least 1/8" radii.
5. Shall not have unrounded and uncoated metal edges which can contact the back surface of the roll-up sign.
6. Top of bracket shall be mounted 2' below the bottom of the I55-56 sign.
7. Cost of bracket and fastening hardware shall be incidental to the I55-56 sign.

SIDE VIEW

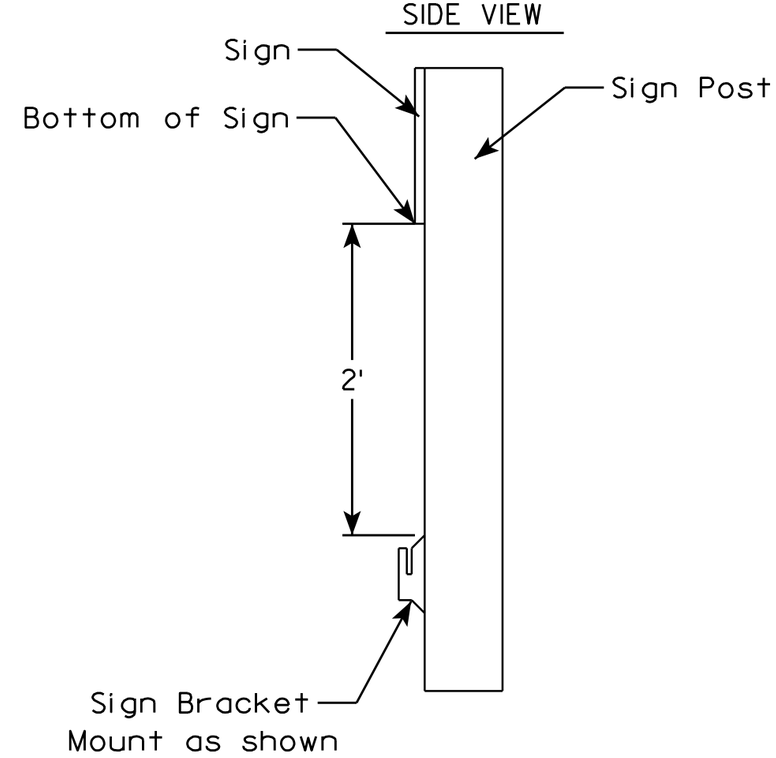

ROLLUP SIGN BRACKET
I55-56B

WISCONSIN DEPT OF TRANSPORTATION

APPROVED Matthew R Rauch
for State Traffic Engineer

DATE 4/26/16 PLATE I55-56B.2

PROJECT NO:	HWY:	COUNTY:		SHEET NO:	E

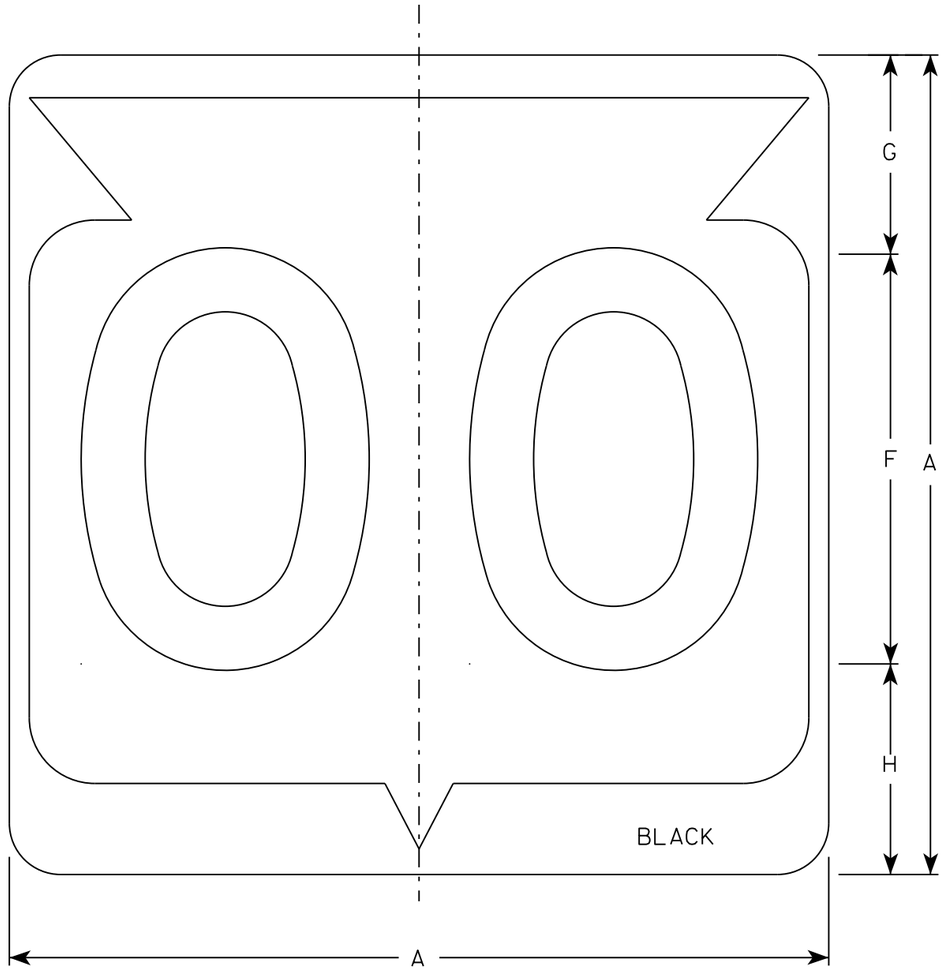

M1-6

NOTES

1. Sign is Type II - Type H Reflective
2. Color:
   Background - White
   Message - Black
3. Message Series - D except 3 number signs Series C
4. Corners may be square or rounded when base material is plywood but borders shall be rounded as shown. When base material is metal, the corners and borders shall be rounded.

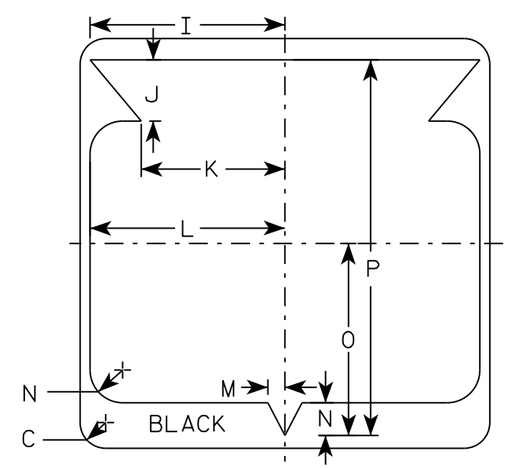

SIZE	A	B	C	D	E	F	G	H	I	J	K	L	M	N	O	P	Q	R	S	T	U	V	W	X	Y	Z	Area sq. ft.
1																											
2	24		1 1/2			12	5 1/2	6 1/2	10 1/4	2 1/2	8 7/8	11 1/2	1	1 7/8	11 1/4	21 7/8											4.0
3	36		2 1/4			18	8 3/4	9 1/4	15 3/8	5 3/8	12 5/8	17 1/8	1 1/2	2 7/8	16 7/8	33											9.0
4	36		2 1/4			18	8 3/4	9 1/4	15 3/8	5 3/8	12 5/8	17 1/8	1 1/2	2 7/8	16 7/8	33											9.0
5	36		2 1/4			18	8 3/4	9 1/4	15 3/8	5 3/8	12 5/8	17 1/8	1 1/2	2 7/8	16 7/8	33											9.0

STATE ROUTE MARKER
M1-6 FOR ASSEMBLIES

WISCONSIN DEPT OF TRANSPORTATION

APPROVED Matthew R Rauch
for State Traffic Engineer

DATE 3/16/18 PLATE NO. M1-6.10

PROJECT NO: | HWY: | COUNTY: | SHEET NO: 110 | E

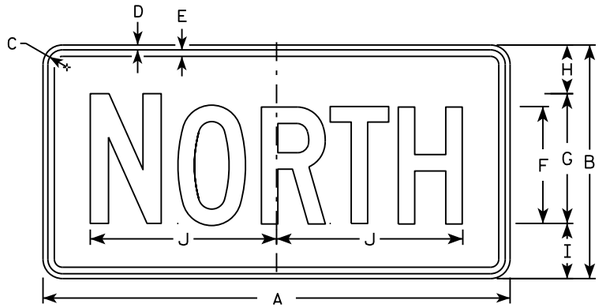

M3-1
MM3-1
MP3-1

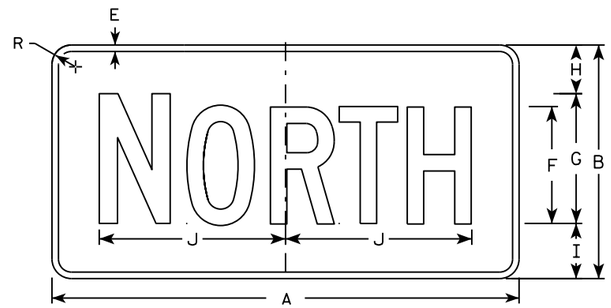

MB3-1
MK3-1
MN3-1

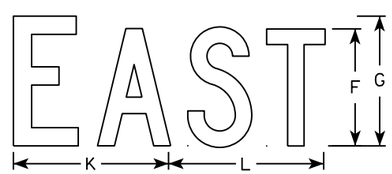

M3-2
MM3-2
MP3-2

MB3-2
MK3-2
MN3-2

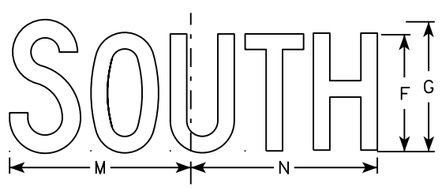

M3-3
MM3-3
MP3-3

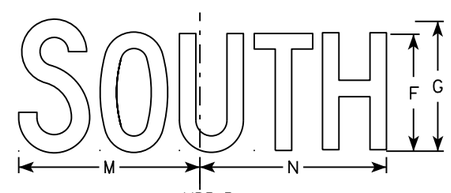

MB3-3
MK3-3
MN3-3

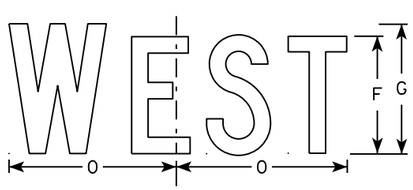

M3-4
MM3-4
MP3-4

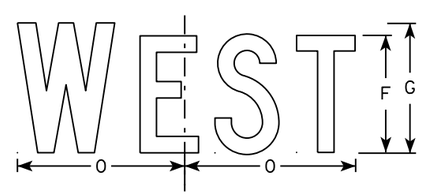

MB3-4
MK3-4
MN3-4

NOTES

1. All Signs Type II - Type H
2. Color:
   Background - See note 5
   Message - See note 5
3. Message Series - C
4. Corners may be square or rounded when base material is plywood but borders shall be rounded as shown. When base material is metal, the corners and borders shall be rounded.
5. M3-1 thru M3-4 Background - White
   Message - Black
   MB3-1 thru MB3-4 Background - Blue
   Message - White
   MK3-1 thru MK3-4 Background - Green
   Message - White
   MM3-1 thru MM3-4 Background - White
   Message - Green
   MN3-1 thru MN3-4 Background - Brown
   Message - White
   MP3-1 thru MP3-4 Background - White
   Message - Blue
6. Note the first letter of each direction is larger than the remainder of the message.

SIZE	A	B	C	D	E	F	G	H	I	J	K	L	M	N	O	P	Q	R	S	T	U	V	W	X	Y	Z	Area sq. ft.
1																											
2	24	12	1 1/8	3/8	3/8	6	7	2 1/4	2 3/4	10 1/4	7 7/8	8 3/8	10 1/4	9 3/4	8 3/4			1 1/2									2.00
3	36	18	1 1/8	3/8	1/2	9	10	3 3/4	4 1/4	14 3/8	12	12 1/8	14	14 1/8	13			1 1/2									4.5
4	36	18	1 1/8	3/8	1/2	9	10	3 3/4	4 1/4	14 3/8	12	12 1/8	14	14 1/8	13			1 1/2									4.5
5	36	18	1 1/8	3/8	1/2	9	10	3 3/4	4 1/4	14 3/8	12	12 1/8	14	14 1/8	13			1 1/2									4.5

STANDARD SIGNS
M3-1 thur M3-4
SERIES

WISCONSIN DEPT OF TRANSPORTATION

APPROVED Matthew R Rauch
for State Traffic Engineer

DATE 10/15/15 PLATE NO M3-1.14

PROJECT NO: | HWY: | COUNTY: | SHEET NO: | E

FILE NAME : C:\CAEfiles\Projects\tr_stdplate\M31.DGN PLOT DATE : 01-DEC-2015 17:54 PLOT BY : $$ plotuser $$ PLOT NAME : PLOT SCALE : 11.675051:1.000000

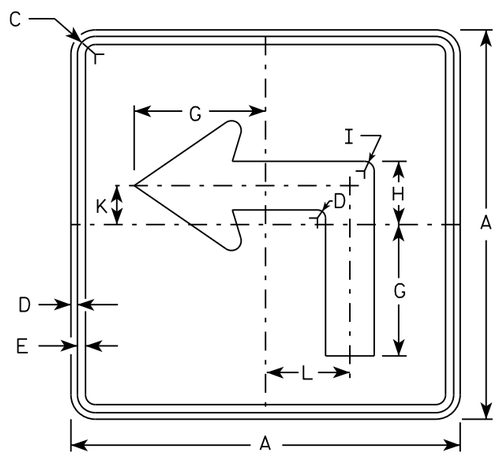

M5-1L
MM5-1L
MO5-1L
MP5-1L

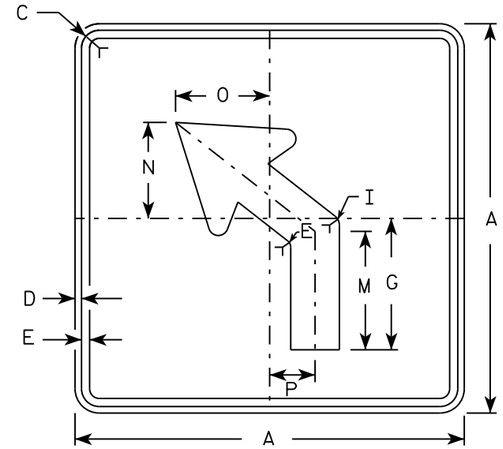

M5-2L
MM5-2L
MO5-2L
MP5-2L

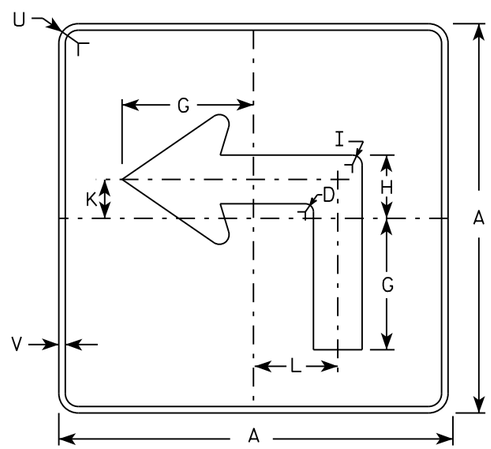

MB5-1L
MK5-1L
MN5-1L
MR5-1L

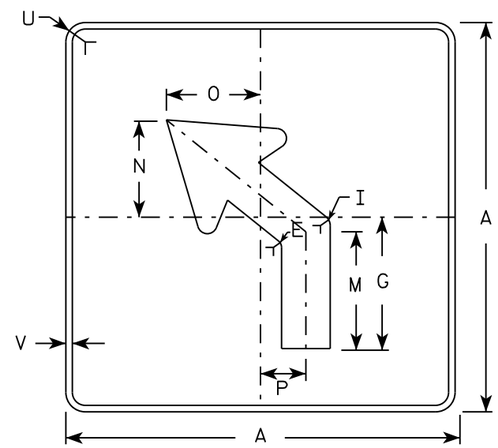

MB5-2L
MK5-2L
MN5-2L
MR5-2L

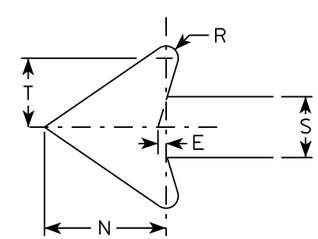

NOTES

1. Signs are Type II - Type H reflective except as shown
2. Color:
   Background - See note 4
   Message - See note 4
3. Corners may be square or rounded when base material is plywood but borders shall be rounded as shown. When base material is metal, the corners and borders shall be rounded.
4. M5-1 and M5-2 Background - White
   Message - Black
   MB5-1 and MB5-2 Background - Blue
   Message - White
   MK5-1 and MK5-2 Background - Green
   Message - White
   MM5-1 and MM5-2 Background - White
   Message - Green
   MN5-1 and MN5-2 Background - Brown
   Message - White
   MO5-1 and MO5-2 Background - Orange - Type F Reflective
   Message - Black
   MP5-1 and MP5-2 Background - White - Type H Reflective
   Message - Blue
   MR5-1 and MR5-2 Background - Brown
   Message - Yellow
5. M5-1R same as M5-1L except arrow points right.
6. M5-2R same as M5-2L except arrow tilts right.

SIZE	A	B	C	D	E	F	G	H	I	J	K	L	M	N	O	P	Q	R	S	T	U	V	W	X	Y	Z	Area sq. ft.
1																											
2	21		1 1/8	3/8	3/8		7	3 3/8	5/8		2 1/8	4 1/2	6 3/8	5 1/4	5	2 1/2		1/2	2 5/8	3	1 1/2	1/2					3.06
3	30		1 3/8	1/2	5/8		10 1/8	4 7/8	7/8		3	6 1/2	9 1/8	7 1/2	7 1/4	3 1/2		3/4	3 3/4	4 1/4	1 7/8	1/2					6.25
4	30		1 3/8	1/2	5/8		10 1/8	4 7/8	7/8		3	6 1/2	9 1/8	7 1/2	7 1/4	3 1/2		3/4	3 3/4	4 1/4	1 7/8	1/2					6.25
5	30		1 3/8	1/2	5/8		10 1/8	4 7/8	7/8		3	6 1/2	9 1/8	7 1/2	7 1/4	3 1/2		3/4	3 3/4	4 1/4	1 7/8	1/2					6.25

STANDARD SIGN
M5-1 & M5-2

WISCONSIN DEPT OF TRANSPORTATION

APPROVED Matthew R Rauch
for State Traffic Engineer

DATE 10/15/15 PLATE NO. M5-1.13

PROJECT NO: | HWY: | COUNTY: | SHEET NO: E

FILE NAME : C:\CAEfiles\Projects\tr stdplate\M51.DGN PLOT DATE : 01-DEC-2015 18:07 PLOT BY : $$ plotuser $$ PLOT NAME : PLOT SCALE : 11.675051:1.000000

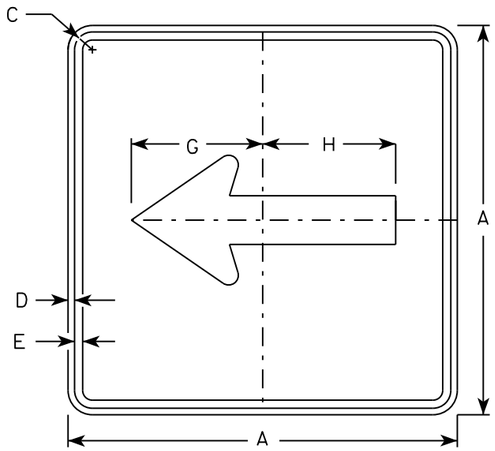

M6-1
MM6-1
MO6-1
MP6-1

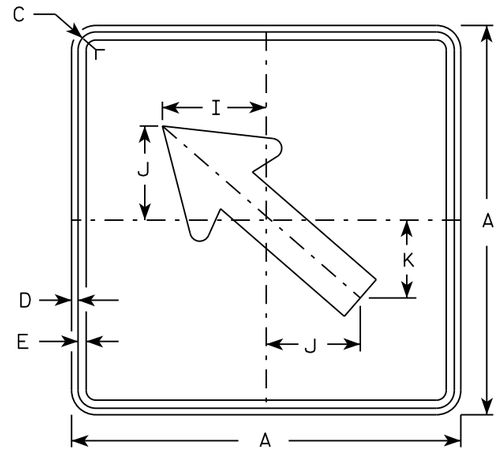

M6-2
MM6-2
MO6-2
MP6-2

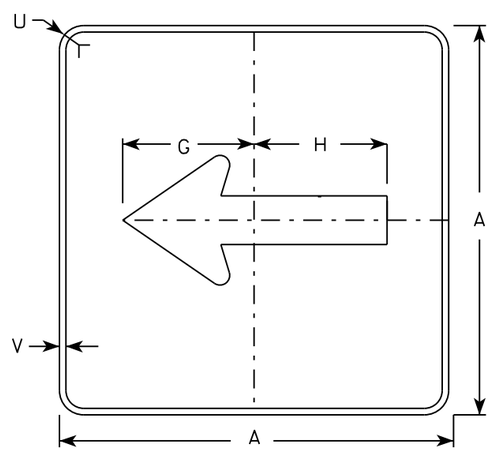

MB6-1
MK6-1
MN6-1
MR6-1

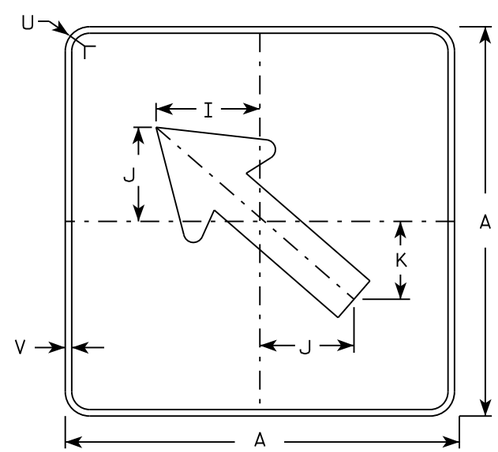

MB6-2
MK6-2
MN6-2
MR6-2

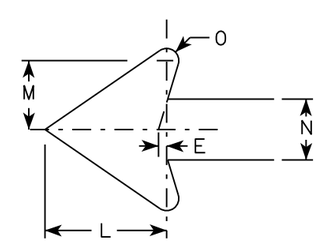

NOTES

1. Signs are Type II - Type H except as Shown
2. Color:
   Background - See note 4
   Message - See note 4
3. Corners may be square or rounded when base material is plywood but borders shall be rounded as shown. When base material is metal, the corners and borders shall be rounded.
4. M6-1 and M6-2 Background - White
   Message - Black
   MB6-1 and MB6-2 Background - Blue
   Message - White
   MK6-1 and MK6-2 Background - Green
   Message - White
   MM6-1 and MM6-2 Background - White
   Message - Green
   MN6-1 and MN6-2 Background - Brown
   Message - White
   MO6-1 and MO6-2 Background - Orange - Type F Reflective
   Message - Black
   MP6-1 and MP6-2 Background - White
   Message - Blue
   MR6-1 and MR6-2 Background - Brown
   Message - Yellow

SIZE	A	B	C	D	E	F	G	H	I	J	K	L	M	N	O	P	Q	R	S	T	U	V	W	X	Y	Z	Area sq. ft.
1																											
2	21		1 1/8	3/8	3/8		7 1/2	7 1/8	5 5/8	5	4 1/4	5 1/4	3	2 5/8	1/2						1 1/2	1/2					3.06
3	30		1 3/8	1/2	5/8		10 3/4	10 1/4	8	7 1/4	6	7 1/2	4 1/4	3 3/4	3/4						1 7/8	1/2					6.25
4	30		1 3/8	1/2	5/8		10 3/4	10 1/4	8	7 1/4	6	7 1/2	4 1/4	3 3/4	3/4						1 7/8	1/2					6.25
5	30		1 3/8	1/2	5/8		10 3/4	10 1/4	8	7 1/4	6	7 1/2	4 1/4	3 3/4	3/4						1 7/8	1/2					6.25

STANDARD SIGN
M6-1 & M6-2
SERIES

WISCONSIN DEPT OF TRANSPORTATION

APPROVED Matthew R Rauch
for State Traffic Engineer

DATE 10/15/15 PLATE 113 M6-1.15

PROJECT NO: | HWY: | COUNTY: | SHEET NO: | E

FILE NAME : C:\CAEfiles\Projects\tr stdplate\M61.DGN PLOT DATE : 01-DEC-2015 17:57 PLOT BY : $$ plotuser $$ PLOT NAME : PLOT SCALE : 11.675051:1.000000

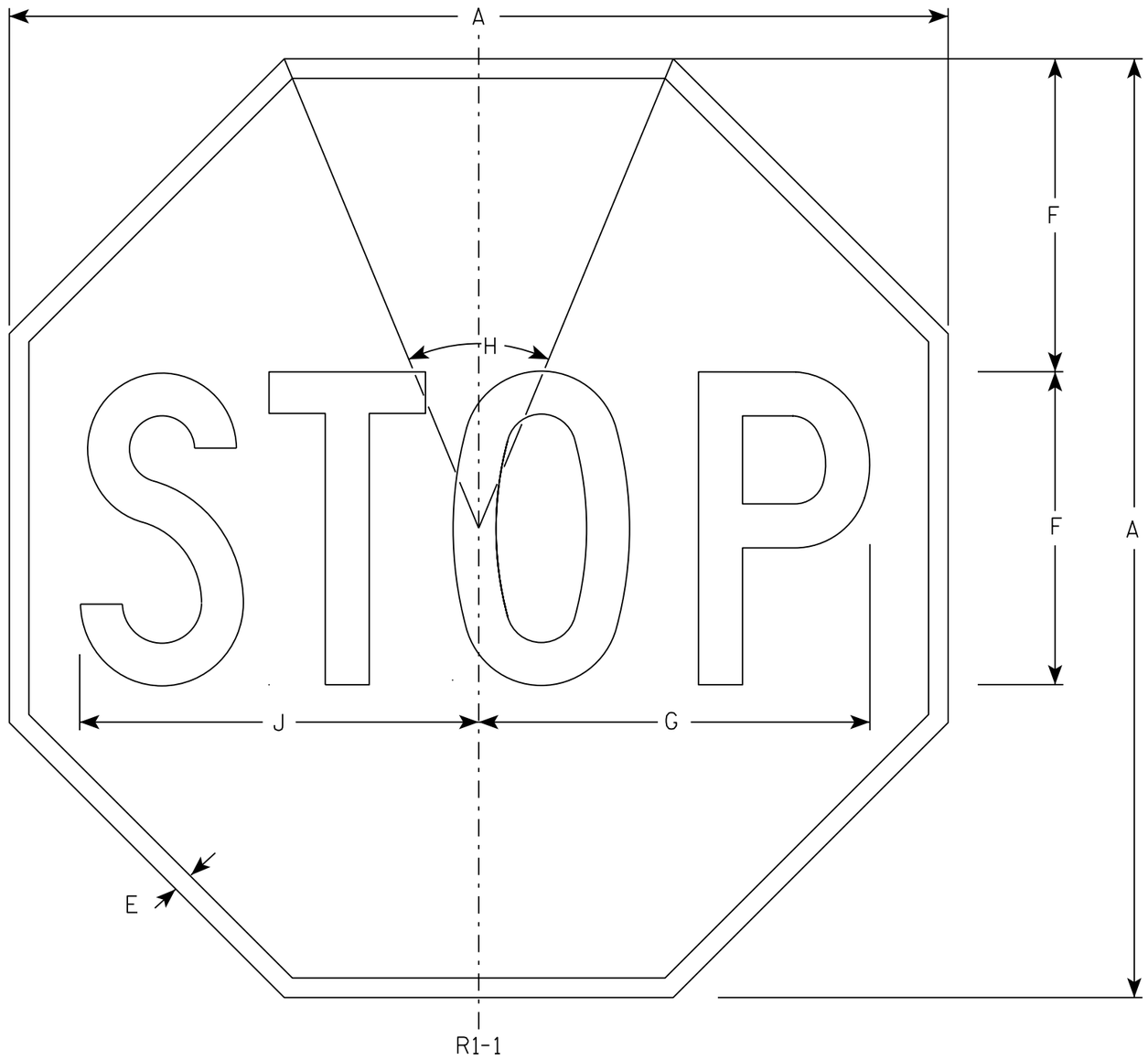

NOTES

1. Sign is Type II - Type H Reflective - reference WIS DOT Standard Specification for HIGHWAY and STRUCTURE CONSTRUCTION latest edition.
2. Color:
   Background - Red
   Message - White
3. Message Series - C

SIZE	A	B	C	D	E	F	G	H	I	J	K	L	M	N	O	P	Q	R	S	T	U	V	W	X	Y	Z	Area sq. ft.
1	30				5/8	10	12 1/2	45°		12 3/4																	5.18
2S	30				5/8	10	12 1/2	45°		12 3/4																	5.18
2M	36				3/4	12	15	45°		15 3/8																	7.46
3	36				3/4	12	15	45°		15 3/8																	7.46
4	48				1	16	20	45°		20 1/2																	13.25
5	48				1	16	20	45°		20 1/2																	13.25
6	18				3/8	6	7 3/4	45°		7 3/4																	1.86
7	12				1/4	4	5	45°		5 1/8																	0.78

STANDARD SIGN
R1-1

WISCONSIN DEPT OF TRANSPORTATION

APPROVED Matthew R Rauch
for State Traffic Engineer

DATE 11/12/15 PLATE NO. R1-1.13

PROJECT NO: | HWY: | COUNTY: | SHEET NO: 114 | E

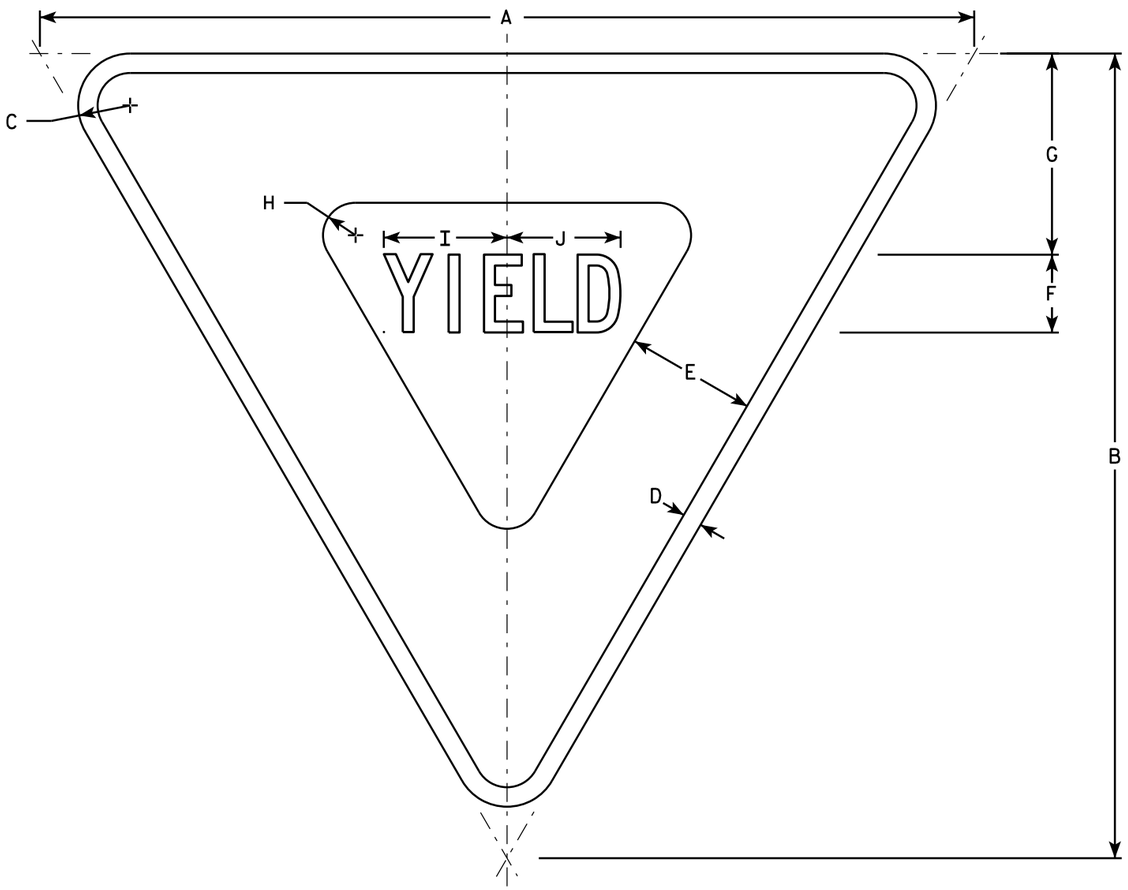

R1-2

NOTES

1. Sign is Type II - Type H Reflective - reference WIS DOT Standard Specification for HIGHWAY and STRUCTURE CONSTRUCTION latest edition.
2. Color:
   Background - White
   Message - See note 5
3. Message Series - C
4. Corners may be square or rounded when base material is plywood but borders shall be rounded as shown. When base material is metal, the corners and borders shall be rounded.
5. The border strip and word message are reflectorized red.

SIZE	A	B	C	D	E	F	G	H	I	J	K	L	M	N	O	P	Q	R	S	T	U	V	W	X	Y	Z	Area sq. ft.
1	30	26	1 1/2	5/8	4	2 1/2	6 3/8	7/8	4	3 5/8																	2.71
2S	36	31	2	3/4	5	3	7 3/4	1 1/4	4 3/4	4 3/8																	3.88
2M	48	42	3	1	6	4	9 3/4	2	6 1/4	5 7/8																	7.00
3	48	42	3	1	6	4	9 3/4	2	6 1/4	5 7/8																	7.00
4	48	42	3	1	6	4	9 3/4	2	6 1/4	5 7/8																	7.00
5	60	52	3	1 1/2	8	5	13	2 1/2	7 7/8	7 1/4																	10.83
6																											
7	18	15 1/2	1	3/8	2 1/2	1 1/2	3 7/8	5/8	2 3/8	2 1/4																	0.97

STANDARD SIGN
R1-2

WISCONSIN DEPT OF TRANSPORTATION

APPROVED Matthew R Rauch
for State Traffic Engineer

DATE 10/13/14 PLATE R1-2.12

PROJECT NO: | HWY: | COUNTY: | SHEET NO: E

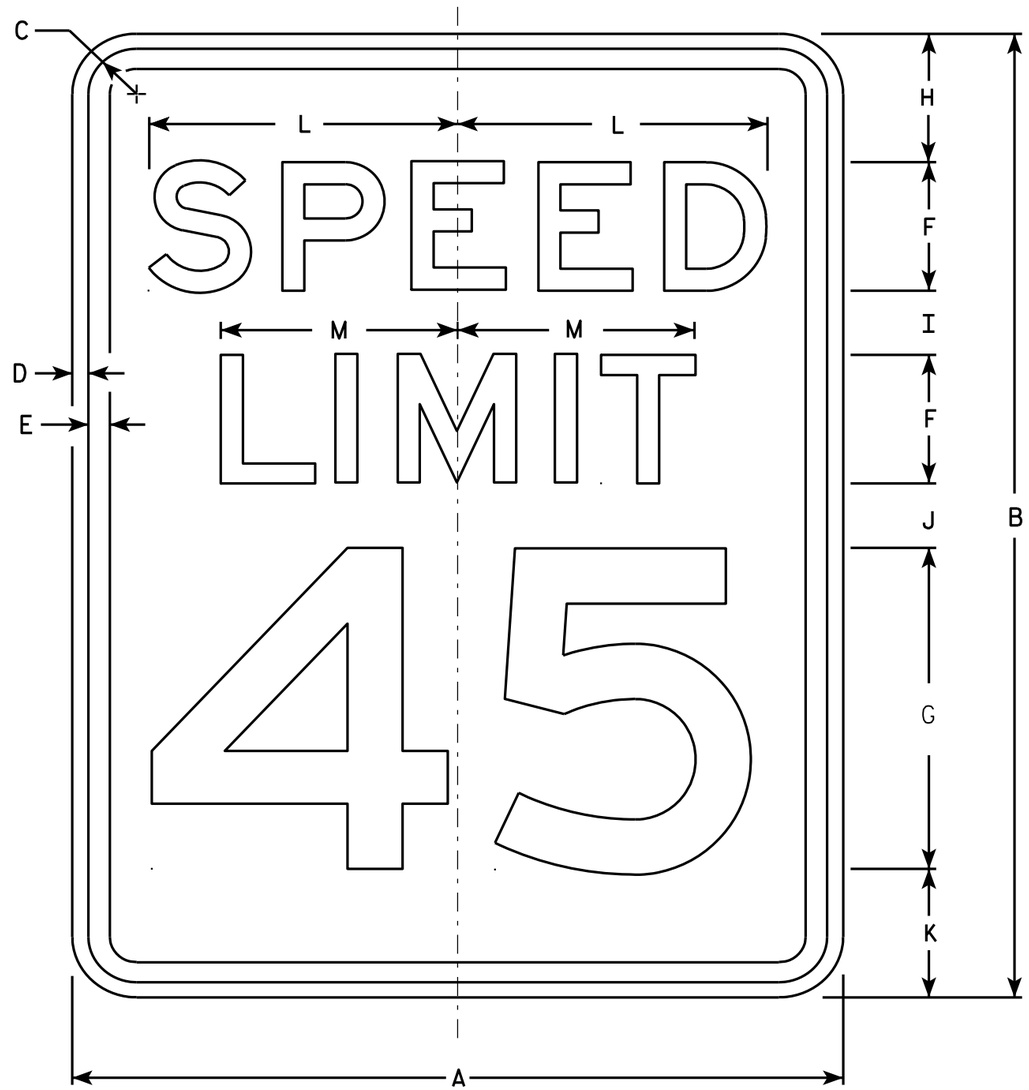

R2-1

NOTES

1. Sign is Type II - Type H Reflective - reference WIS DOT Standard Specification for HIGHWAY and STRUCTURE CONSTRUCTION latest edition.
2. Color:
   Background - White
   Message - Black
3. Message Series - E
4. Corners may be square or rounded when base material is plywood but borders shall be rounded as shown. When base material is metal, the corners and borders shall be rounded.
5. Substitute appropriate numerals and optically adjust spacing to achieve proper balance.

SIZE	A	B	C	D	E	F	G	H	I	J	K	L	M	N	O	P	Q	R	S	T	U	V	W	X	Y	Z	Area sq. ft.
1	18	24	1 1/8	3/8	1/2	3	8	3	2	2	3	7 1/4	5 1/2														3.0
2S	24	30	1 1/8	3/8	1/2	4	10	3	2 1/4	3 3/8	3 3/8	9 5/8	7 3/8														5.0
2M	30	36	1 3/8	1/2	5/8	5	12	5	2 1/2	2 1/2	4	12	9 1/4														7.5
3	36	48	1 3/8	1/2	5/8	6	14	6	5	5	6	14 3/8	11														12.0
4	36	48	1 3/8	1/2	5/8	6	14	6	5	5	6	14 3/8	11														12.0
5	48	60	2 1/4	3/4	1	8	20	6	4 1/2	6 3/4	6 3/4	19 1/4	14 5/8														20.0

STANDARD SIGN
R2-1

WISCONSIN DEPT OF TRANSPORTATION

APPROVED Matthew R Rauch
for State Traffic Engineer

DATE 5/26/10 PLATE NO. R2-1.13

PROJECT NO: | HWY: | COUNTY: | SHEET NO: 116 | E

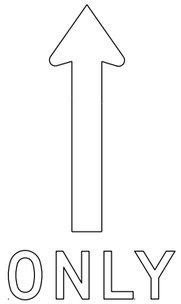

(A)

(B)

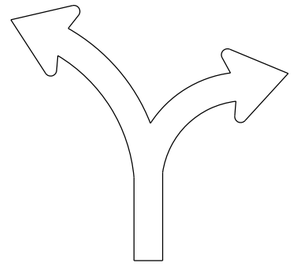

(C)

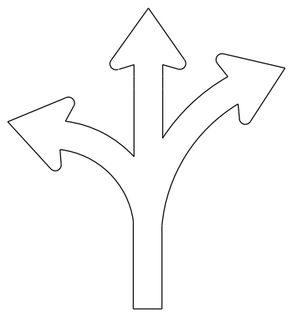

(D)

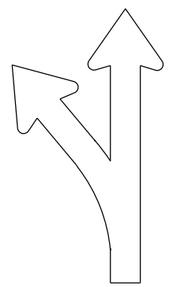

(E)

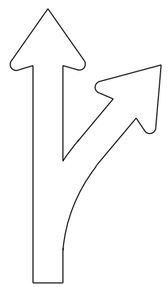

(F)

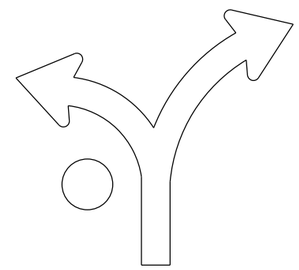

(G)

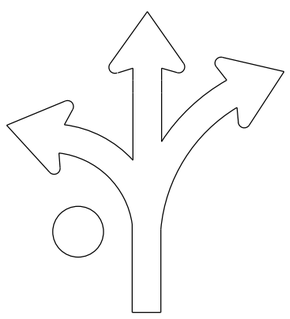

(H)

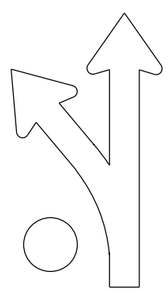

(I)

(L)

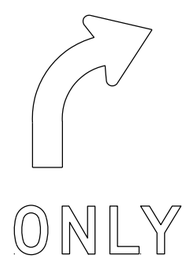

(R)

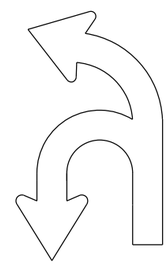

(U)

NOTES

1. Sigs are Type II - Type H Reflective
2. Color:
   Background - White
   Message - Black
3. Message Series - D
4. Use appropriate Letter for Sign Code
   Each letter added makes sign wider. Example R3-8EAR
5. Square footage of sign varies by letters

1 Letter =	3.75 sq ft for Size 2	
	6.0 sq ft for Size 3	
	10.0 sq ft for Size 4 or 5	
2 Letters =	7.5 sq ft for Size 2	
	12.0 sq ft for Size 3	
	20.0 sq ft for Size 4 or 5	
3 Letters =	11.25 sq ft for Size 2	
	18.0 sq ft for Size 3	
	30.0 sq ft for Size 4 or 5	
4 Letters =	15.0 sq ft for Size 2	
	24.0 sq ft for Size 3	
	40.0 sq ft for Size 4 or 5	
5 Letters =	18.75 sq ft for Size 2	
	30.0 sq ft for Size 3	
	50.0 sq ft for Size 4 or 5	
6 Letters =	22.5 sq ft for Size 2	
	36.0 sq ft for Size 3	
	60.0 sq ft for Size 4 or 5	

6. When letters C,D,G,H are used on the Left or Right end of the sign the Sq. Ft. changes.
   Add the amounts when these letters are used:
   1.25 sq ft for Size 2
   1.5 sq ft for Size 3
   2.0 sq ft for Size 4 or 5

STANDARD SIGN
R3-8 Series

WISCONSIN DEPT OF TRANSPORTATION

APPROVED Matthew R Rauch
for State Traffic Engineer

DATE 5/21/19 PLATE NO. R3-8.1

7

7

PROJECT NO:

SHEET NO: 117 E

NOTES

1. Sign is Type II - Type H Reflective
2. Color:
   Background - White
   Message - Black
3. Message Series - D

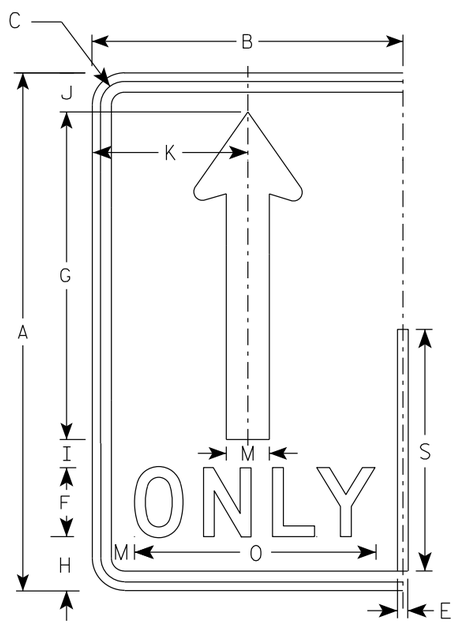

(A)

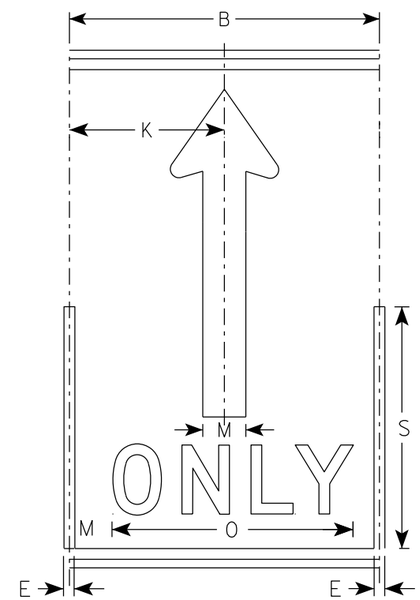

(A)

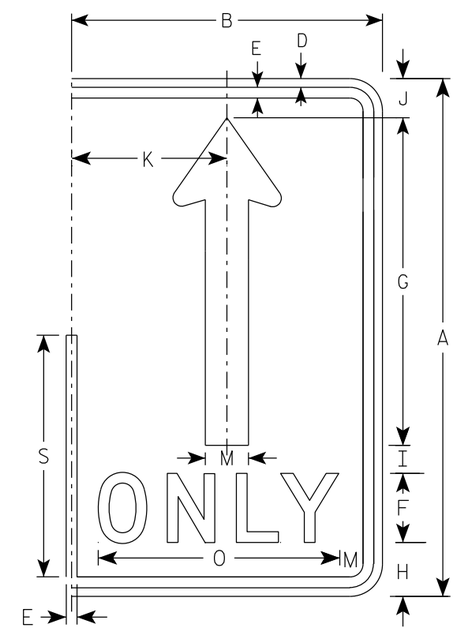

(A)

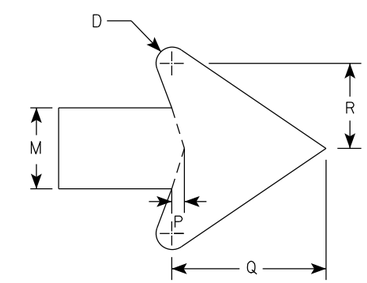

ARROW DETAIL

SIZE	A	B	C	D	E	F	G	H	I	J	K	L	M	N	O	P	Q	R	S	T	U	V	W	X	Y	Z	Area sq. ft.
1																											
2S	30	18	1 3/8	1/2	5/8	4	19	3 1/8	1 5/8	2 1/4	9		2 1/2		14	3/8	4 3/4	2 5/8	14								3.75
2M	30	18	1 3/8	1/2	5/8	4	19	3 1/8	1 5/8	2 1/4	9		2 1/2		14	3/8	4 3/4	2 5/8	14								3.75
3	36	24	1 3/8	1/2	5/8	5	22 3/4	3 3/4	1 3/4	2 3/4	12		3		17 5/8	1/2	5 3/4	3 1/8	16 3/4								6.0
4	48	30	2 1/4	3/4	1	6	30 3/8	5 1/8	2 7/8	3 5/8	15		4		21 3/4	5/8	7 5/8	4 1/4	22 3/8								10.0
5	48	30	2 1/4	3/4	1	6	30 3/8	5 1/8	2 7/8	3 5/8	15		4		21 3/4	5/8	7 5/8	4 1/4	22 3/8								10.0

STANDARD SIGN
R3-8 (A) Arrow

WISCONSIN DEPT OF TRANSPORTATION

APPROVED Matthew R Rauch
for State Traffic Engineer

DATE 5/21/19 PLATE NO. R3-8.1

PROJECT NO: | HWY: | COUNTY: | SHEET NO: 118 | E

NOTES

1. Sign is Type II - Type H Reflective
2. Color:
   Background - White
   Message - Black
   Message Series - D

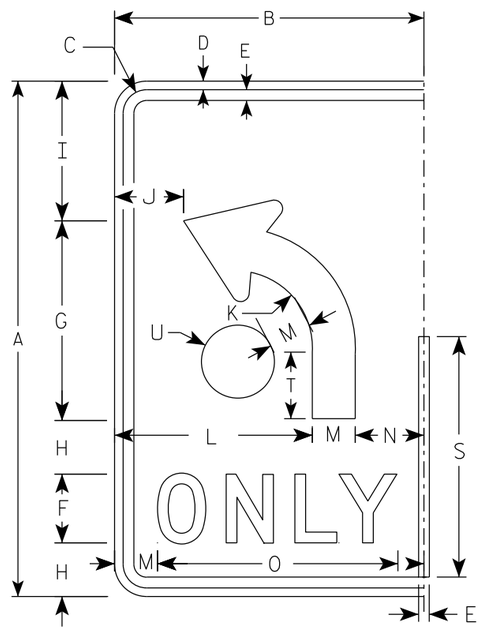

(B)

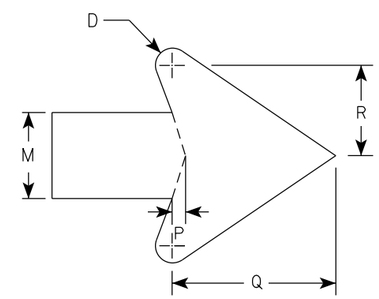

ARROW DETAIL

SIZE	A	B	C	D	E	F	G	H	I	J	K	L	M	N	O	P	Q	R	S	T	U	V	W	X	Y	Z	Area sq. ft.
1																											
2S	30	18	1 3/8	1/2	5/8	4	11 5/8	3 1/8	8 1/8	4	4 1/2	11 1/2	2 1/2	4	14	3/8	4 3/4	2 5/8	14	3 7/8	2 1/8						3.75
2M	30	18	1 3/8	1/2	5/8	4	11 5/8	3 1/8	8 1/8	4	4 1/2	11 1/2	2 1/2	4	14	3/8	4 3/4	2 5/8	14	3 7/8	2 1/8						3.75
3	36	24	1 3/8	1/2	5/8	5	14	3 1/2	9 3/4	6	5 3/8	15	3	6	17 5/8	1/2	5 3/4	3 1/8	16 3/4	4 5/8	2 1/2						6.0
4	48	30	2 1/4	3/4	1	6	18 5/8	5 1/8	13 1/8	6 1/8	7 1/4	18	4	8	21 3/4	5/8	7 5/8	4 1/4	22 3/8	6 1/4	3 3/8						10.0
5	48	30	2 1/4	3/4	1	6	18 5/8	5 1/8	13 1/8	6 1/8	7 1/4	18	4	8	21 3/4	5/8	7 5/8	4 1/4	22 3/8	6 1/4	3 3/8						10.0

STANDARD SIGN

R3-8 (B) Arrow

WISCONSIN DEPT OF TRANSPORTATION

APPROVED Matthew R Rauch
for State Traffic Engineer

DATE 5/21/19 PLATE NO. R3-8.1

PROJECT NO:

SHEET NO: 119 E

NOTES

1. Sign is Type II - Type H Reflective
2. Color:
   Background - White
   Message - Black
3. Message Series - None

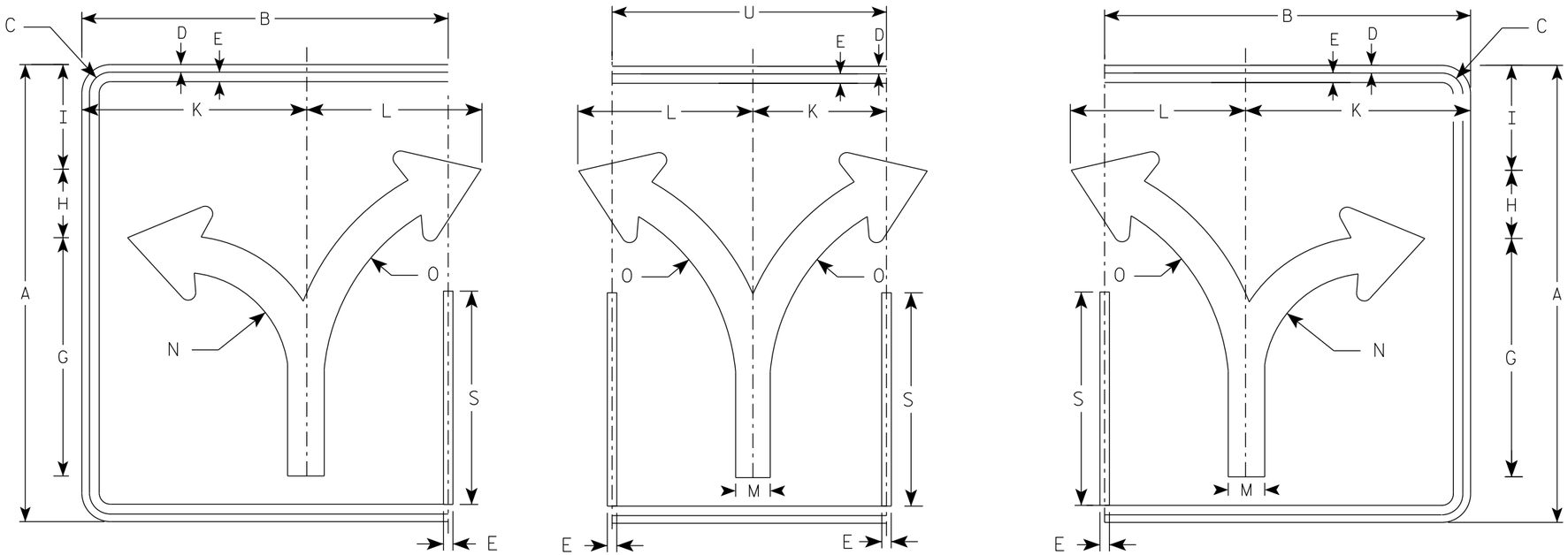

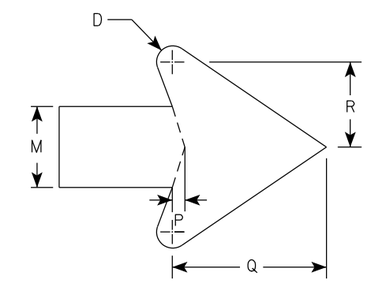

ARROW DETAIL

SIZE	A	B	C	D	E	F	G	H	I	J	K	L	M	N	O	P	Q	R	S	T	U	V	W	X	Y	Z	ENDS Area sq. ft.	MIDDLE Area sq. ft.
1																												
2S	30	24	1 3/8	1/2	5/8		15 5/8	4 1/2	6 7/8		14 3/4	11 1/2	2 3/8	7	13 1/4	3/8	4 1/2	2 1/2	14		18						5.0	3.75
2M	30	24	1 3/8	1/2	5/8		15 5/8	4 1/2	6 7/8		14 3/4	11 1/2	2 3/8	7	13 1/4	3/8	4 1/2	2 1/2	14		18						5.0	3.75
3	36	30	1 3/8	1/2	5/8		18 3/4	5 1/2	8 1/4		17 1/4	17 1/4	2 7/8	8 3/8	16	1/2	5 1/2	3	16 3/4		24						7.5	6.0
4	48	36	2 1/4	3/4	1		24 7/8	7 1/4	11		23 1/8	18	3 3/4	11 1/8	21 1/4	5/8	7 1/8	4	22 3/8		30						12.0	10.0
5	48	36	2 1/4	3/4	1		24 7/8	7 1/4	11		23 1/8	18	3 3/4	11 1/8	21 1/4	5/8	7 1/8	4	22 3/8		30						12.0	10.0

STANDARD SIGN
R3-8 (C) Arrow

WISCONSIN DEPT OF TRANSPORTATION

APPROVED Matthew R Rauch
for State Traffic Engineer

DATE 5/21/19 PLATE NO. R3-8.1

PROJECT NO: | HWY: | COUNTY: | SHEET NO: 120 | E

NOTES

1. Sign is Type II - Type H Reflective
2. Color:
   Background - White
   Message - Black
3. Message Series - None

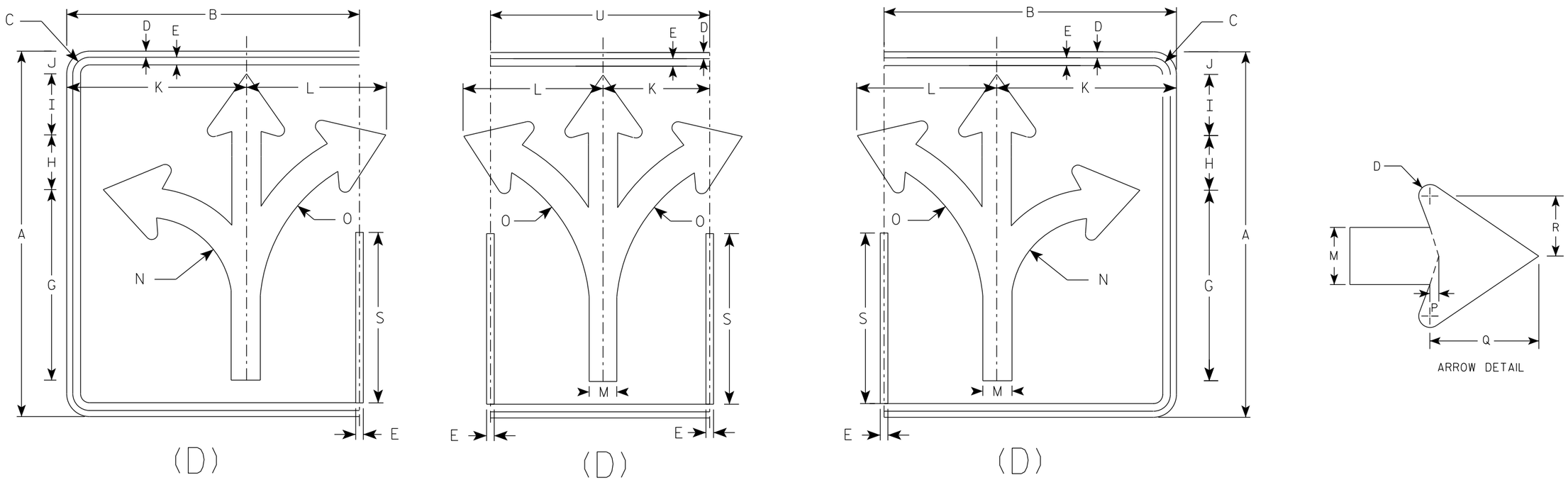

SIZE	A	B	C	D	E	F	G	H	I	J	K	L	M	N	O	P	Q	R	S	T	U	V	W	X	Y	Z	ENDS Area sq. ft.	MIDDLE Area sq. ft.
1																												
2S	30	24	1 3/8	1/2	5/8		15 5/8	4 1/2	5	1 7/8	14 3/4	11 1/2	2 3/8	7	13 1/4	3/8	4 1/2	2 1/2	14		18						5.0	3.75
2M	30	24	1 3/8	1/2	5/8		15 5/8	4 1/2	5	1 7/8	14 3/4	11 1/2	2 3/8	7	13 1/4	3/8	4 1/2	2 1/2	14		18						5.0	3.75
3	36	30	1 3/8	1/2	5/8		18 3/4	5 1/2	6	2 1/4	17 1/4	17 1/4	2 7/8	8 3/8	16	1/2	5 1/2	3	16 3/4		24						7.5	6.0
4	48	36	2 1/4	3/4	1		24 7/8	7 1/4	7 7/8	3 1/8	23 1/8	18	3 3/4	11 1/8	21 1/4	5/8	7 1/8	4	22 3/8		30						12.0	10.0
5	48	36	2 1/4	3/4	1		24 7/8	7 1/4	7 7/8	3 1/8	23 1/8	18	3 3/4	11 1/8	21 1/4	5/8	7 1/8	4	22 3/8		30						12.0	10.0

STANDARD SIGN
R3-8 (D) Arrow

WISCONSIN DEPT OF TRANSPORTATION

APPROVED Matthew R Rauch
for State Traffic Engineer

DATE 5/21/19 PLATE NO. R3-8.1

PROJECT NO: | HWY: | COUNTY: | SHEET NO: 121 | E

NOTES

1. Sign is Type II - Type H Reflective
2. Color:
   Background - White
   Message - Black
3. Message Series - None

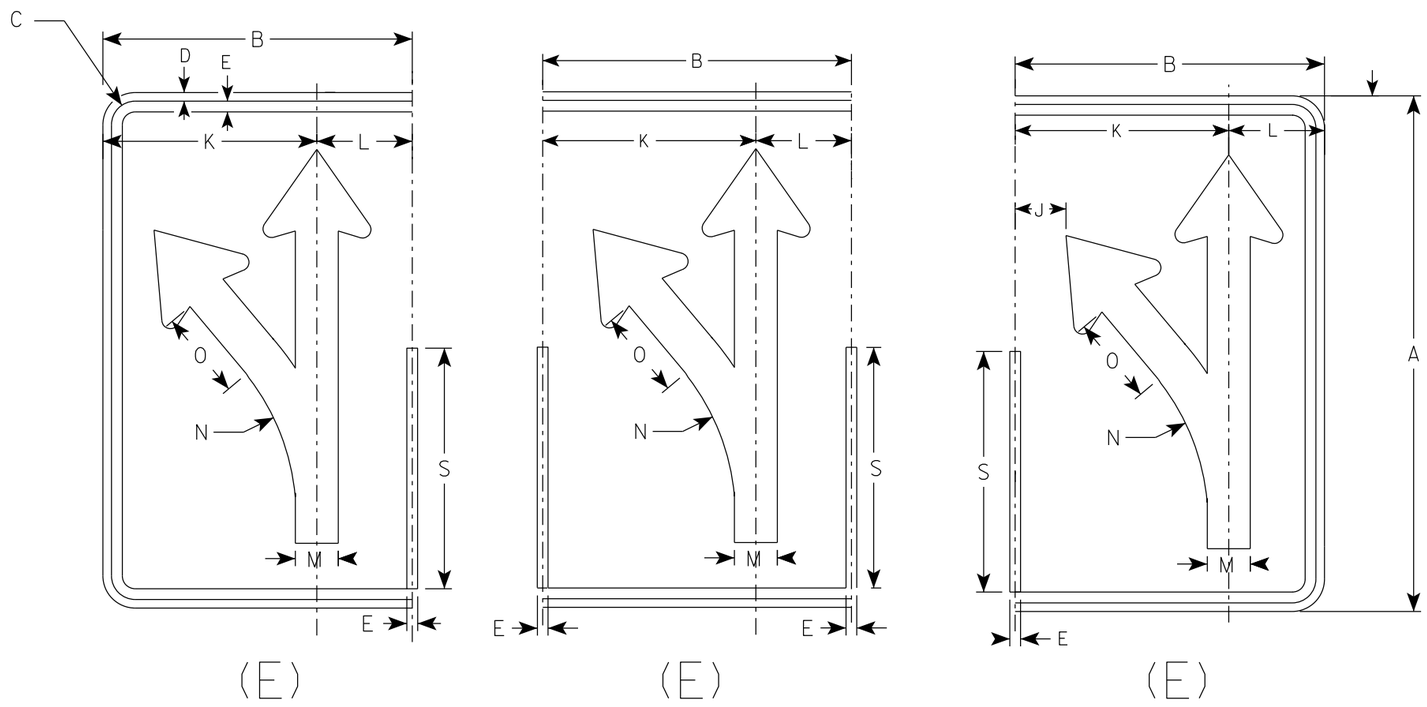

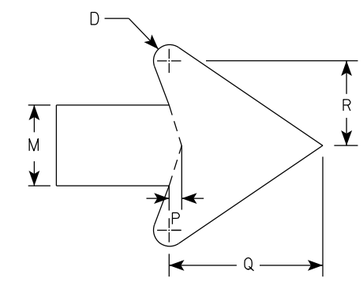

ARROW DETAIL

SIZE	A	B	C	D	E	F	G	H	I	J	K	L	M	N	O	P	Q	R	S	T	U	V	W	X	Y	Z	Area sq. ft.
1																											
2S	30	18	1 3/8	1/2	5/8		18 1/4	4 3/4	3 1/4	3	12 1/2	5 1/2	2 1/2	13 1/4	5 1/8	3/8	4 3/4	2 5/8	14								3.75
2M	30	18	1 3/8	1/2	5/8		18 1/4	4 3/4	3 1/4	3	12 1/2	5 1/2	2 1/2	13 1/4	5 1/8	3/8	4 3/4	2 5/8	14								3.75
3	36	24	1 3/8	1/2	5/8		21 7/8	5 5/8	4	4 7/8	16 1/8	7 3/4	3	15 7/8	6 1/8	1/2	5 3/4	3 1/8	16 3/4								6.0
4	48	30	2 1/4	3/4	1		29 1/8	7 1/2	5 1/4	5 3/8	20 1/2	9 1/2	4	21 1/4	8 1/4	5/8	7 5/8	4 1/4	22 3/8								10.0
5	48	30	2 1/4	3/4	1		29 1/8	7 1/2	5 1/4	5 3/8	20 1/2	9 1/2	4	21 1/4	8 1/4	5/8	7 5/8	4 1/4	22 3/8								10.0

STANDARD SIGN
R3-8 (E) Arrow

WISCONSIN DEPT OF TRANSPORTATION

APPROVED Matthew R Rauch
For State Traffic Engineer

DATE 5/21/19 PLATE NO. R3-8.1

PROJECT NO: | HWY: | COUNTY: | SHEET NO: 122 | E

NOTES

1. Sign is Type II - Type H Reflective
2. Color:
   Background - White
   Message - Black
3. Message Series - None

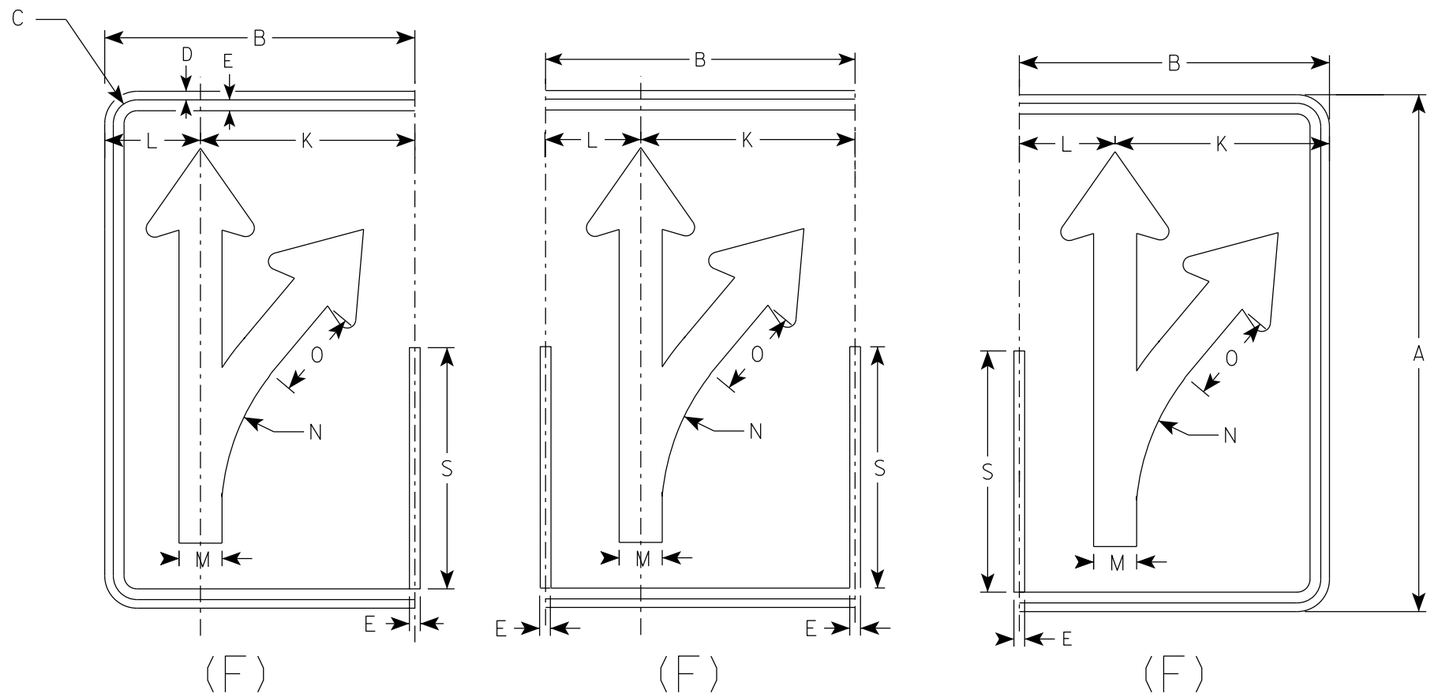

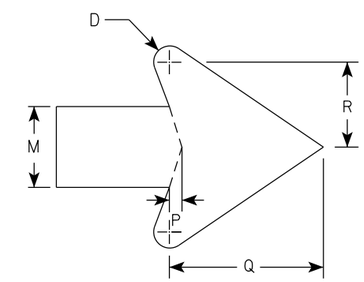

ARROW DETAIL

SIZE	A	B	C	D	E	F	G	H	I	J	K	L	M	N	O	P	Q	R	S	T	U	V	W	X	Y	Z	Area sq. ft.
1																											
2S	30	18	1 3/8	1/2	5/8		18 1/4	4 3/4	3 1/4	3	12 1/2	5 1/2	2 1/2	13 1/4	5 1/8	3/8	4 3/4	2 5/8	14								3.75
2M	30	18	1 3/8	1/2	5/8		18 1/4	4 3/4	3 1/4	3	12 1/2	5 1/2	2 1/2	13 1/4	5 1/8	3/8	4 3/4	2 5/8	14								3.75
3	36	24	1 3/8	1/2	5/8		21 7/8	5 5/8	4	4 7/8	16 1/8	7 3/4	3	15 7/8	6 1/8	1/2	5 3/4	3 1/8	16 3/4								6.0
4	48	30	2 1/4	3/4	1		29 1/8	7 1/2	5 1/4	5 3/8	20 1/2	9 1/2	4	21 1/4	8 1/4	5/8	7 5/8	4 1/4	22 3/8								10.0
5	48	30	2 1/4	3/4	1		29 1/8	7 1/2	5 1/4	5 3/8	20 1/2	9 1/2	4	21 1/4	8 1/4	5/8	7 5/8	4 1/4	22 3/8								10.0

STANDARD SIGN
R3-8 (F) Arrow

WISCONSIN DEPT OF TRANSPORTATION

APPROVED Matthew R Rauch
for State Traffic Engineer

DATE 5/21/19 PLATE NO. R3-8.1

PROJECT NO: | HWY: | COUNTY: | SHEET NO: 123 | E

NOTES

1. Sign is Type II - Type H Reflective
2. Color:
   Background - White
   Message - Black
3. Message Series - None

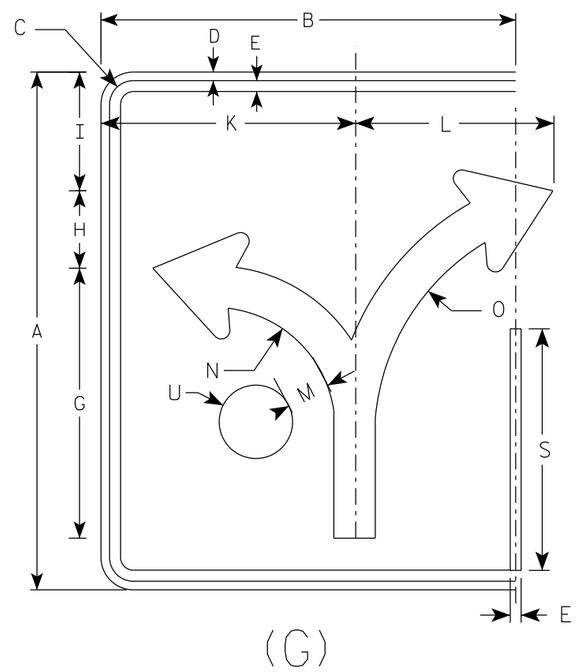

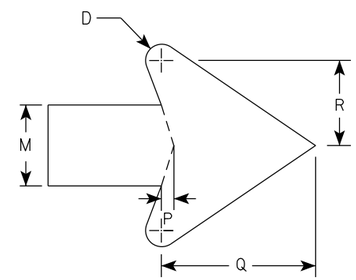

ARROW DETAIL

SIZE	A	B	C	D	E	F	G	H	I	J	K	L	M	N	O	P	Q	R	S	T	U	V	W	X	Y	Z	Area sq. ft.
1																											
2S	30	24	1 3/8	1/2	5/8		15 5/8	4 1/2	6 7/8		14 3/4	11 1/2	2 3/8	7	13 1/4	3/8	4 1/2	2 1/2	14		2 1/8						5.0
2M	30	24	1 3/8	1/2	5/8		15 5/8	4 1/2	6 7/8		14 3/4	11 1/2	2 3/8	7	13 1/4	3/8	4 1/2	2 1/2	14		2 1/8						5.0
3	36	30	1 3/8	1/2	5/8		18 3/4	5 1/2	8 1/4		17 1/4	17 1/4	2 7/8	8 3/8	16	1/2	5 1/2	3	16 3/4		2 1/2						7.5
4	48	36	2 1/4	3/4	1		24 7/8	7 1/4	11		23 1/8	18	3 3/4	11 1/8	21 1/4	5/8	7 1/8	4	22 3/8		3 3/8						12.0
5	48	36	2 1/4	3/4	1		24 7/8	7 1/4	11		23 1/8	18	3 3/4	11 1/8	21 1/4	5/8	7 1/8	4	22 3/8		3 3/8						12.0

STANDARD SIGN
R3-8 (G) Arrow

WISCONSIN DEPT OF TRANSPORTATION

APPROVED Matthew R Rauch
for State Traffic Engineer

DATE 5/21/19 PLATE NO. R3-8.1

PROJECT NO: | HWY: | COUNTY: | SHEET NO: 124 | E

NOTES

1. Sign is Type II - Type H Reflective
2. Color:
   Background - White
   Message - Black
3. Message Series - None

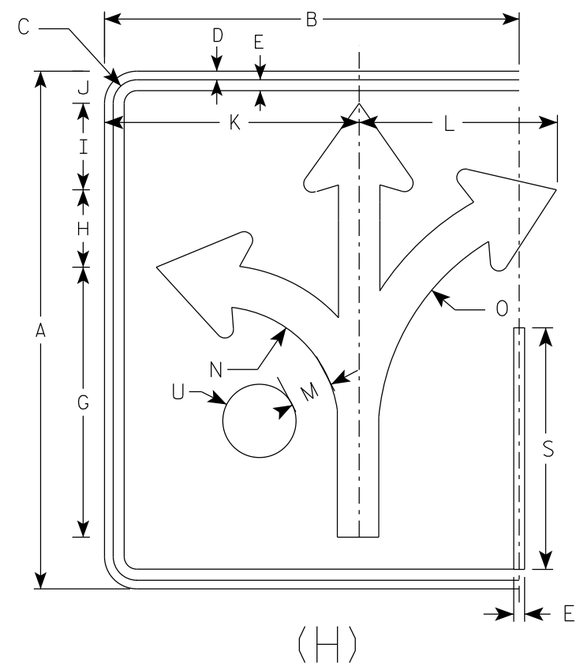

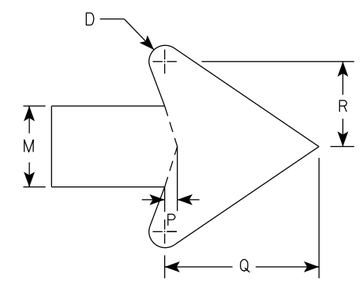

ARROW DETAIL

SIZE	A	B	C	D	E	F	G	H	I	J	K	L	M	N	O	P	Q	R	S	T	U	V	W	X	Y	Z	Area sq. ft.
1																											
2S	30	24	1 3/8	1/2	5/8		15 5/8	4 1/2	5	1 7/8	14 3/4	11 1/2	2 3/8	7	13 1/4	3/8	4 1/2	2 1/2	14		2 1/8						5.0
2M	30	24	1 3/8	1/2	5/8		15 5/8	4 1/2	5	1 7/8	14 3/4	11 1/2	2 3/8	7	13 1/4	3/8	4 1/2	2 1/2	14		2 1/8						5.0
3	36	30	1 3/8	1/2	5/8		18 3/4	5 1/2	6	3 1/8	17 1/4	17 1/4	2 7/8	8 3/8	16	1/2	5 1/2	3	16 3/4		2 1/2						7.5
4	48	36	2 1/4	3/4	1		24 7/8	7 1/4	7 7/8	3 1/8	23 1/8	18	3 3/4	11 1/8	21 1/4	5/8	7 1/8	4	22 3/8		3 3/8						12.0
5	48	36	2 1/4	3/4	1		24 7/8	7 1/4	7 7/8	3 1/8	23 1/8	18	3 3/4	11 1/8	21 1/4	5/8	7 1/8	4	22 3/8		3 3/8						12.0

STANDARD SIGN
R3-8 (H) Arrow

WISCONSIN DEPT OF TRANSPORTATION

APPROVED Matthew R Rauch
for State Traffic Engineer

DATE 5/21/19 PLATE NO. R3-8.1

PROJECT NO: | HWY: | COUNTY: | SHEET NO: 125 | E

NOTES

1. Sign is Type II - Type H Reflective
2. Color:
   Background - White
   Message - Black
3. Message Series - None

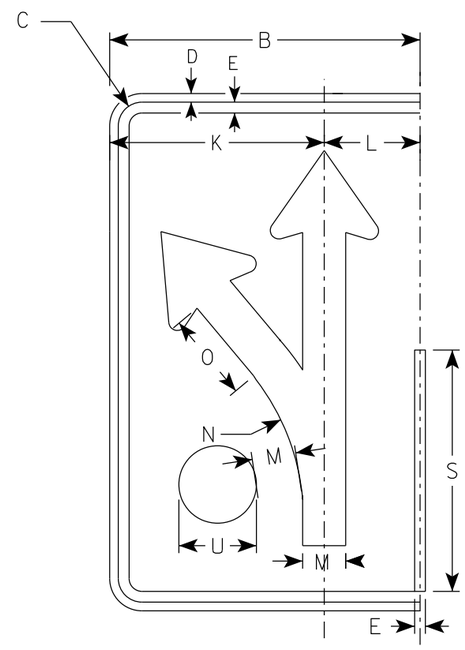

(I)

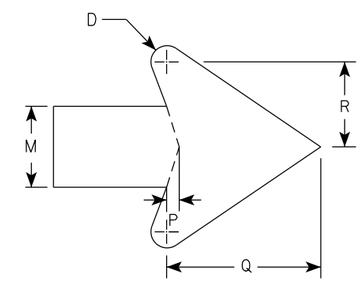

ARROW DETAIL

SIZE	A	B	C	D	E	F	G	H	I	J	K	L	M	N	O	P	Q	R	S	T	U	V	W	X	Y	Z	Area sq. ft.
1																											
2S	30	18	1 3/8	1/2	5/8		18 1/4	4 3/4	3 1/4	3	12 1/2	5 1/2	2 1/2	13 1/4	5 1/8	3/8	4 3/4	2 5/8	14		2 1/8						3.75
2M	30	18	1 3/8	1/2	5/8		18 1/4	4 3/4	3 1/4	3	12 1/2	5 1/2	2 1/2	13 1/4	5 1/8	3/8	4 3/4	2 5/8	14		2 1/8						3.75
3	36	24	1 3/8	1/2	5/8		21 7/8	5 5/8	4	4 7/8	16 1/8	7 3/4	3	15 7/8	6 1/8	1/2	5 3/4	3 1/8	16 3/4		2 1/2						6.0
4	48	30	2 1/4	3/4	1		29 1/8	7 1/2	5 1/4	5 3/8	20 1/2	9 1/2	4	21 1/4	8 1/4	5/8	7 5/8	4 1/4	22 3/8		3 3/8						10.0
5	48	30	2 1/4	3/4	1		29 1/8	7 1/2	5 1/4	5 3/8	20 1/2	9 1/2	4	21 1/4	8 1/4	5/8	7 5/8	4 1/4	22 3/8		3 3/8						10.0

STANDARD SIGN
R3-8 (I) Arrow

WISCONSIN DEPT OF TRANSPORTATION

APPROVED Matthew R Rauch
For State Traffic Engineer

DATE 5/21/19 PLATE NO. R3-8.1

PROJECT NO: | HWY: | COUNTY: | SHEET NO: 126 | E

NOTES

1. Sign is Type II - Type H Reflective
2. Color:
   Background - White
   Message - Black
3. Message Series - D

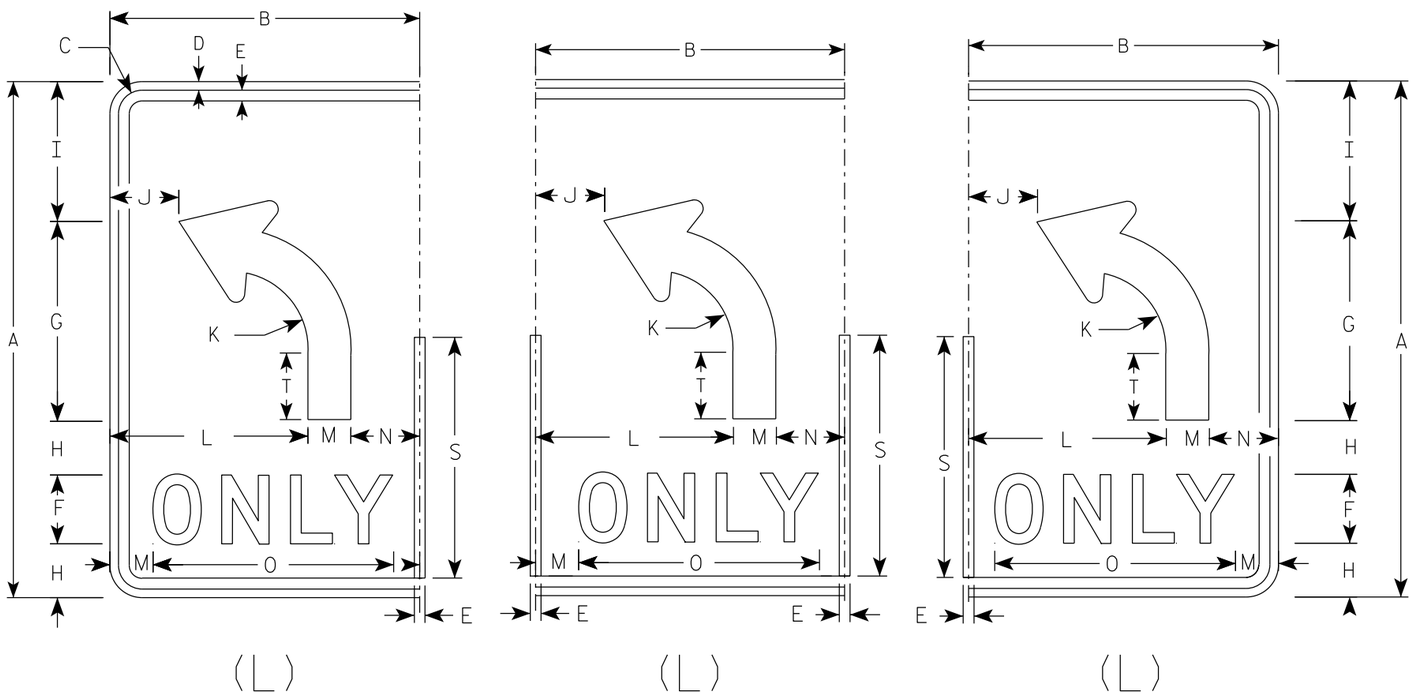

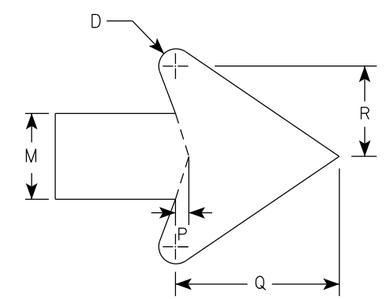

ARROW DETAIL

SIZE	A	B	C	D	E	F	G	H	I	J	K	L	M	N	O	P	Q	R	S	T	U	V	W	X	Y	Z	Area sq. ft.
1																											
2S	30	18	1 3/8	1/2	5/8	4	11 5/8	3 1/8	8 1/8	4	4 1/2	11 1/2	2 1/2	4	14	3/8	4 3/4	2 5/8	14	3 7/8							3.75
2M	30	18	1 3/8	1/2	5/8	4	11 5/8	3 1/8	8 1/8	4	4 1/2	11 1/2	2 1/2	4	14	3/8	4 3/4	2 5/8	14	3 7/8							3.75
3	36	24	1 3/8	1/2	5/8	5	14	3 1/2	9 3/4		5 3/8	15	3	6	17 5/8	1/2	5 3/4	3 1/8	16 3/4	4 5/8							6.0
4	48	30	2 1/4	3/4	1	6	18 5/8	5 1/8	13 1/8	6 1/8	7 1/4	18	4	8	21 3/4	5/8	7 5/8	4 1/4	22 3/8	6 1/4							10.0
5	48	30	2 1/4	3/4	1	6	18 5/8	5 1/8	13 1/8	6 1/8	7 1/4	18	4	8	21 3/4	5/8	7 5/8	4 1/4	22 3/8	6 1/4							10.0

STANDARD SIGN

R3-8 (L) Arrow

WISCONSIN DEPT OF TRANSPORTATION

APPROVED Matthew R Rauch
for State Traffic Engineer

DATE 5/21/19 PLATE NO. R3-8.1

PROJECT NO:

SHEET NO: 127 E

NOTES

1. Sign is Type II - Type H Reflective
2. Color:
   Background - White
   Message - Black
3. Message Series - D

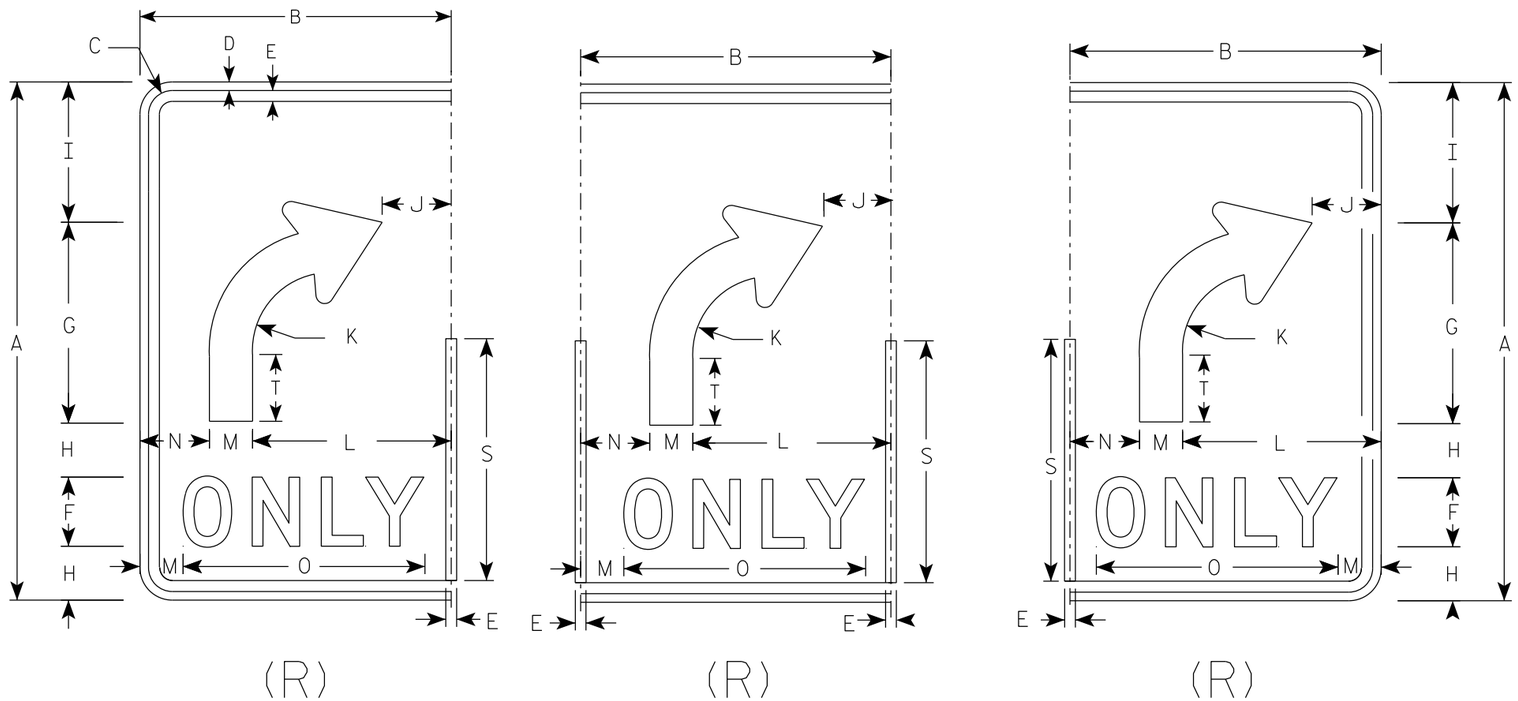

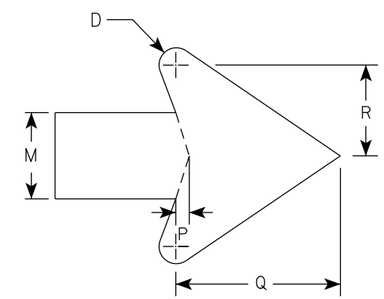

ARROW DETAIL

SIZE	A	B	C	D	E	F	G	H	I	J	K	L	M	N	O	P	Q	R	S	T	U	V	W	X	Y	Z	Area sq. ft.
1																											
2S	30	18	1 3/8	1/2	5/8	4	11 5/8	3 1/8	8 1/8	4	4 1/2	11 1/2	2 1/2	4	14	3/8	4 3/4	2 5/8	14	3 7/8							3.75
2M	30	18	1 3/8	1/2	5/8	4	11 5/8	3 1/8	8 1/8	4	4 1/2	11 1/2	2 1/2	4	14	3/8	4 3/4	2 5/8	14	3 7/8							3.75
3	36	24	1 3/8	1/2	5/8	5	14	3 1/2	9 3/4	6	5 3/8	15	3	6	17 5/8	1/2	5 3/4	3 1/8	16 3/4	4 5/8							6.0
4	48	30	2 1/4	3/4	1	6	18 5/8	5 1/8	13 1/8	6 1/8	7 1/4	18	4	8	21 3/4	5/8	7 5/8	4 1/4	22 3/8	6 1/4							10.0
5	48	30	2 1/4	3/4	1	6	18 5/8	5 1/8	13 1/8	6 1/8	7 1/4	18	4	8	21 3/4	5/8	7 5/8	4 1/4	22 3/8	6 1/4							10.0

STANDARD SIGN

R3-8 (R) Arrow

WISCONSIN DEPT OF TRANSPORTATION

APPROVED Matthew R Rauch
for State Traffic Engineer

DATE 5/21/19 PLATE NO. R3-8.1

PROJECT NO:

SHEET NO: 128 **E**

NOTES

1. Sign is Type II - Type H Reflective
2. Color:
   Background - White
   Message - Black
3. Message Series - None

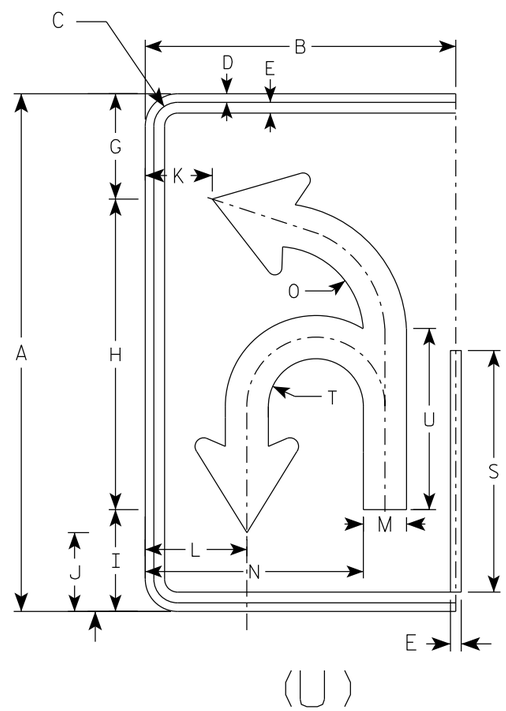

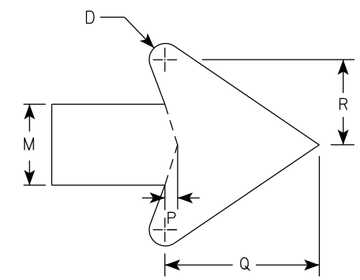

ARROW DETAIL

SIZE	A	B	C	D	E	F	G	H	I	J	K	L	M	N	O	P	Q	R	S	T	U	V	W	X	Y	Z	Area sq. ft.
1																											
2S	30	18	1 3/8	1/2	5/8		6 1/8	18	5 7/8	4 5/8	3 7/8	5 7/8	2 1/2	12 5/8	5 1/8	3/8	4 3/4	2 5/8	14	2 3/4	10 1/2						3.75
2M	30	18	1 3/8	1/2	5/8		6 1/8	18	5 7/8	4 5/8	3 7/8	5 7/8	2 1/2	12 5/8	5 1/8	3/8	4 3/4	2 5/8	14	2 3/4	10 1/2						3.75
3	36	24	1 3/8	1/2	5/8		21 7/8	21 5/8	7 1/8	5 1/2	5 7/8	8 1/4	3	16 3/8	6 1/8	1/2	5 3/4	3 1/8	16 3/4	3 1/4	12 5/8						6.0
4	48	30	2 1/4	3/4	1		29 1/8	28 3/4	9 3/8	7 1/4	6 7/8	10	4	20 7/8	8 1/8	5/8	7 5/8	4 1/4	22 3/8	4 3/8	16 3/4						10.0
5	48	30	2 1/4	3/4	1		29 1/8	28 3/4	9 3/8	7 1/4	6 7/8	10	4	20 7/8	8 1/8	5/8	7 5/8	4 1/4	22 3/8	4 3/8	16 3/4						10.0

STANDARD SIGN
R3-8 (U) Arrow

WISCONSIN DEPT OF TRANSPORTATION

APPROVED Matthew R Rauch
for State Traffic Engineer

DATE 5/21/19 PLATE NO. R3-8.1

PROJECT NO: | HWY: | COUNTY: | SHEET NO: 129 | E

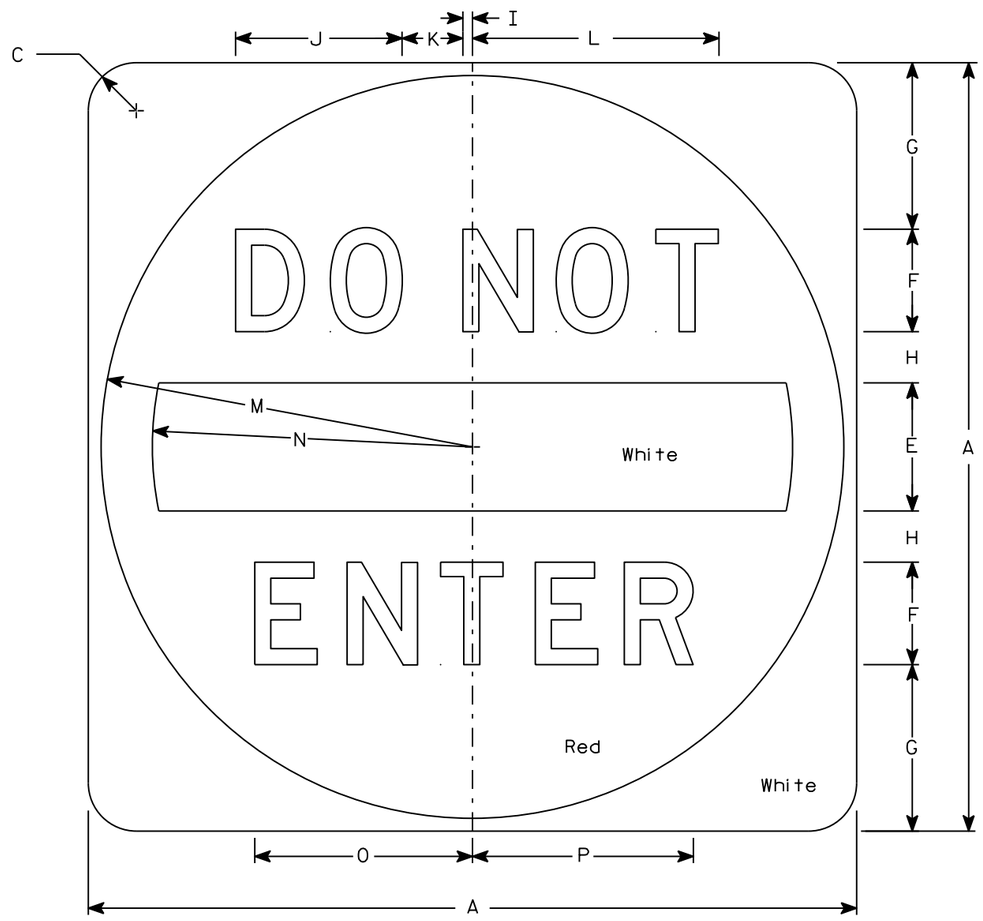

R5-1

NOTES

1. Sign is Type II - Type H Reflective
2. Color:
   Background - See detail
   Message - White
3. Message Series - D

SIZE	A	B	C	D	E	F	G	H	I	J	K	L	M	N	O	P	Q	R	S	T	U	V	W	X	Y	Z	Area sq. ft.
1																											
2S	30		1 7/8		5	4	6 1/2	2	3/8	6 1/2	2 3/8	9 5/8	14 1/2	12 1/2	8 1/2	8 5/8											6.25
2M	36		2 1/4		6	5	7 1/2	2 1/2	1/2	8 1/8	3	12 1/8	17 1/2	15	10 5/8	10 3/4											9.0
3	36		2 1/4		6	5	7 1/2	2 1/2	1/2	8 1/8	3	12 1/8	17 1/2	15	10 5/8	10 3/4											9.0
4	36		2 1/4		6	5	7 1/2	2 1/2	1/2	8 1/8	3	12 1/8	17 1/2	15	10 5/8	10 3/4											9.0
5	48		3		8	6	11	3	5/8	9 3/4	3 5/8	14 1/2	23 1/2	20	12 3/4	12 7/8											16.0

STANDARD SIGN
R5-1

WISCONSIN DEPT OF TRANSPORTATION

APPROVED Matthew R Rauch
for State Traffic Engineer

DATE 3/15/18 PLATE NO. R5-1.16

PROJECT NO: | HWY: | COUNTY: | SHEET NO: 130 | E

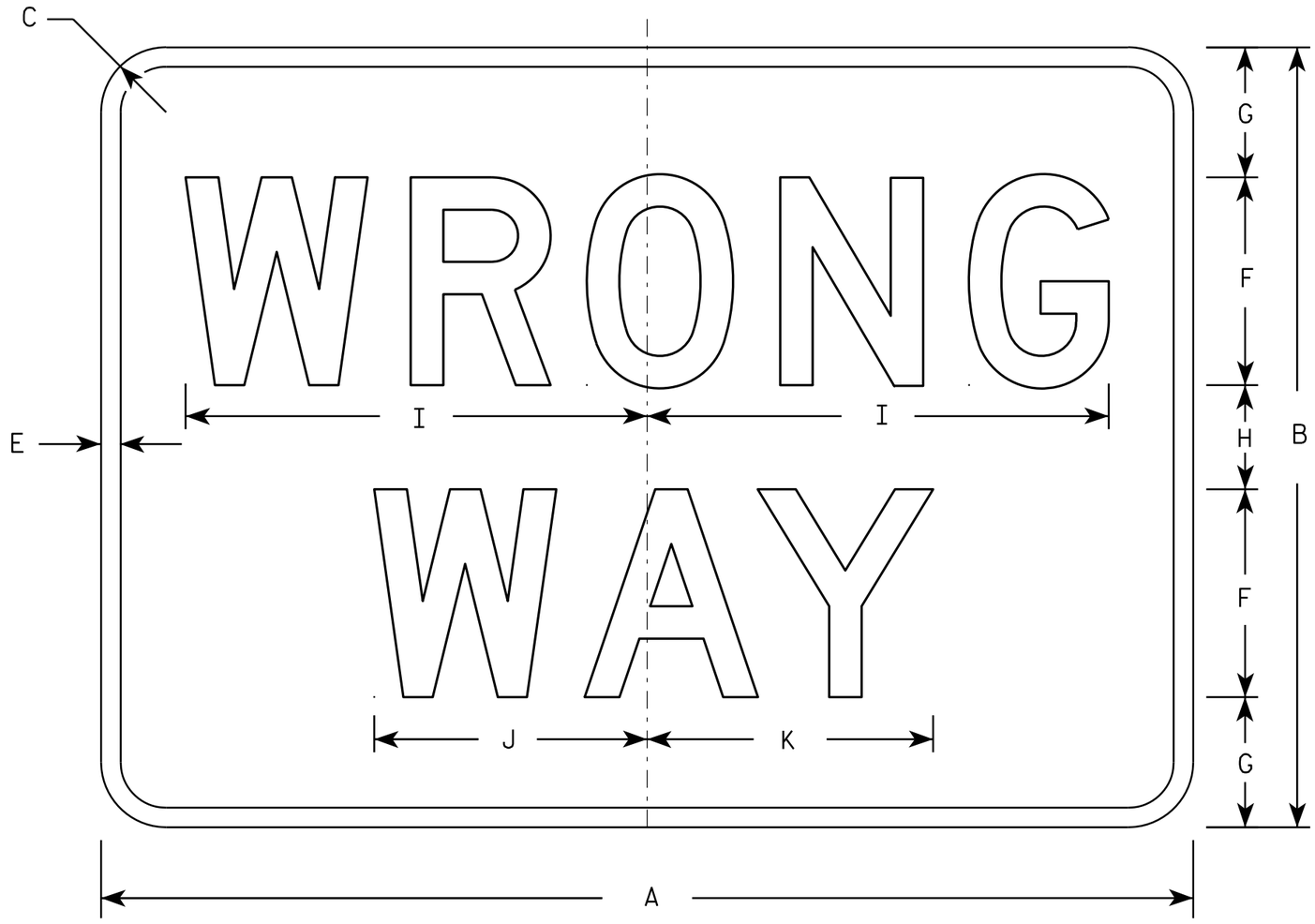

R5-1A

NOTES

1. Sign is Type II - Type H Reflective - reference WIS DOT Standard Specification for HIGHWAY and STRUCTURE CONSTRUCTION latest edition.
2. Color:
   Background - Red
   Message - White
3. Message Series - D
4. Corners may be square or rounded when base material is plywood but borders shall be rounded as shown. When base material is metal, the corners and borders shall be rounded.

SIZE	A	B	C	D	E	F	G	H	I	J	K	L	M	N	O	P	Q	R	S	T	U	V	W	X	Y	Z	Area sq. ft.
1	30	18	1 1/2		1/2	5	3	2	11	6 1/2	6 7/8																3.75
2S	36	24	2		5/8	6	4 1/2	3	13 1/4	7 7/8	8 1/4																6.00
2M	42	30	2 1/2		3/4	8	5	4	17 3/4	10 1/2	11																8.75
3	42	30	2 1/2		3/4	8	5	4	17 3/4	10 1/2	11																8.75
4	42	30	2 1/2		3/4	8	5	4	17 3/4	10 1/2	11																8.75
5	42	30	2 1/2		3/4	8	5	4	17 3/4	10 1/2	11																8.75

STANDARD SIGN
R5-1A

WISCONSIN DEPT OF TRANSPORTATION

APPROVED Matthew R Rauch
for State Traffic Engineer

DATE 12/17/10 PLATE NO. R5-1A.2

PROJECT NO: | HWY: | COUNTY: | SHEET NO: 131 | E

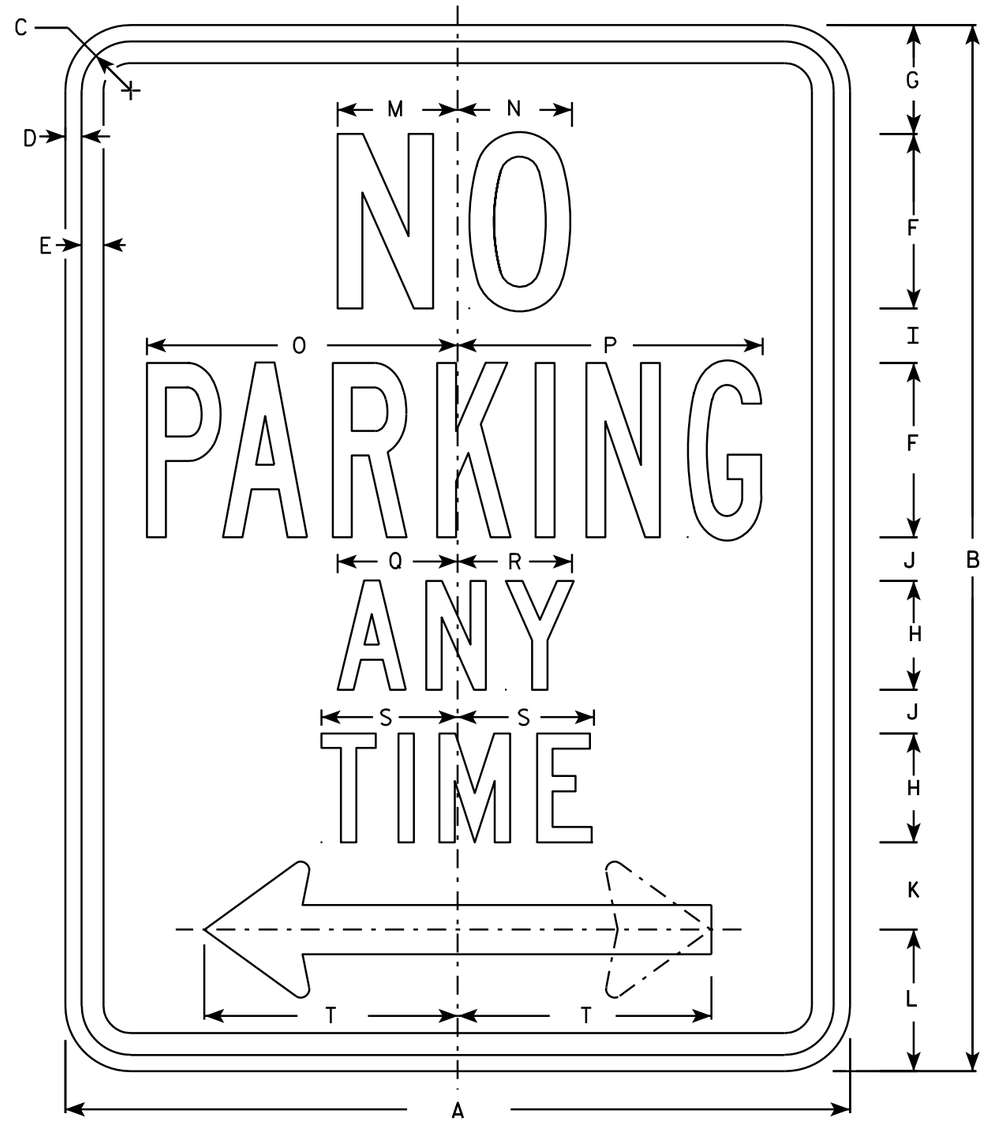

R7-1

NOTES

1. Sign is Type II - Type H Reflective - reference WIS DOT Standard Specification for HIGHWAY and STRUCTURE CONSTRUCTION latest edition.
2. Color:
   Background - White
   Message - Red
3. Message Series - See Note 5
4. Corners may be square or rounded when base material is plywood but borders shall be rounded as shown. When base material is metal, the corners and borders shall be rounded.
5. Lines 1, 3 and 4 are series C, line 2 is series B.
6. R7-1D (double arrow)
   R7-1L (left arrow)
   R7-1R (right arrow)

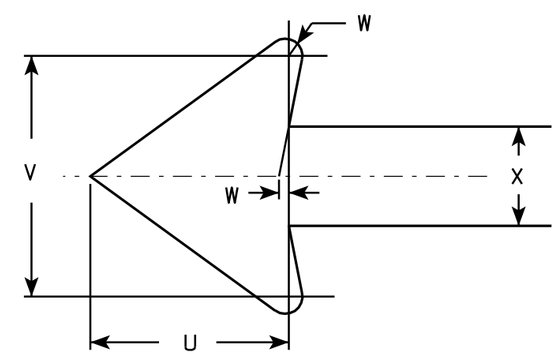

SIZE	A	B	C	D	E	F	G	H	I	J	K	L	M	N	O	P	Q	R	S	T	U	V	W	X	Y	Z	Area sq. ft.
1	12	18	1 1/8	3/8	3/8	3	1 7/8	2	7/8	5/8	1 1/2	2 1/2	2	2	4 7/8	4 7/8	2 1/4	2 1/8	2 1/2	3 7/8	1 1/2	1 3/4	1/8	3/4			1.5
2S	18	24	1 1/8	3/8	1/2	4	2 1/2	2 1/2	1 1/4	1	2	3 1/4	2 3/4	2 5/8	7 1/8	7	2 3/4	2 5/8	3 1/8	5 7/8	2 1/4	2 5/8	1/4	1 1/8			3.0
2M	24	30	1 1/8	3/8	1/2	5	3	3	2	1 1/4	2 1/2	4	3 1/4	3 3/8	9 1/4	9 1/4	3 1/4	3 1/4	3 3/4	7 3/4	3	3 1/2	1/4	1 1/2			5.0
3	24	30	1 1/8	3/8	1/2	5	3	3	2	1 1/4	2 1/2	4	3 1/4	3 3/8	9 1/4	9 1/4	3 1/4	3 1/4	3 3/4	7 3/4	3	3 1/2	1/4	1 1/2			5.0
4																											
5																											

STANDARD SIGN
R7-1

WISCONSIN DEPT OF TRANSPORTATION

APPROVED Matthew R Rauch
for State Traffic Engineer

DATE 3/31/2011 PLATE NO. R7-1.9

PROJECT NO:	HWY:	COUNTY:		SHEET NO: 132	E

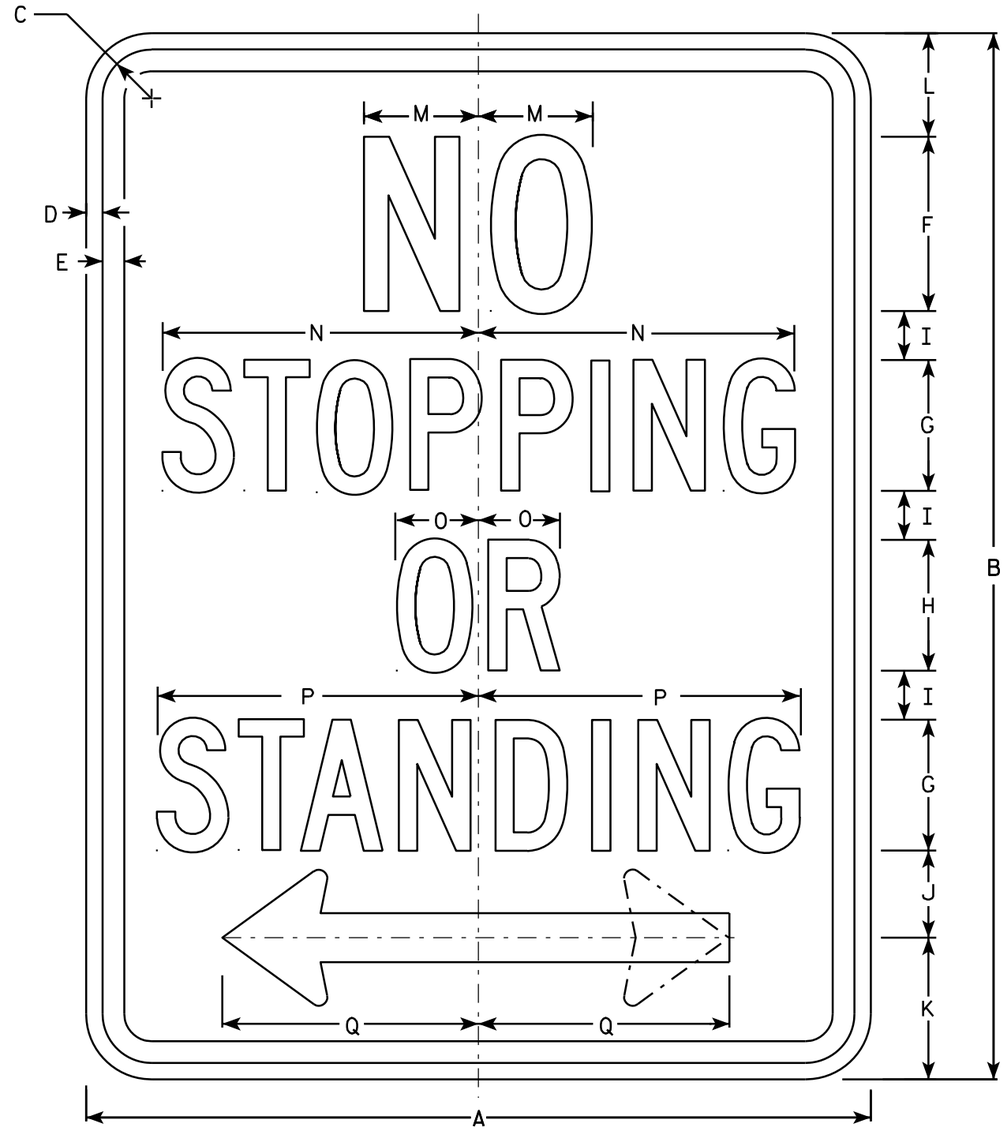

R7-4

NOTES

1. Sign is Type II - Type H Reflective - reference WIS DOT Standard Specification for HIGHWAY and STRUCTURE CONSTRUCTION latest edition.
2. Color:
   Background - White
   Message - Red
3. Message Series - C
4. Corners may be square or rounded when base material is plywood but borders shall be rounded as shown. When base material is metal, the corners and borders shall be rounded.
5. R7-4L (left arrow)
   R7-4R (right arrow)
   R7-4D (double arrow)

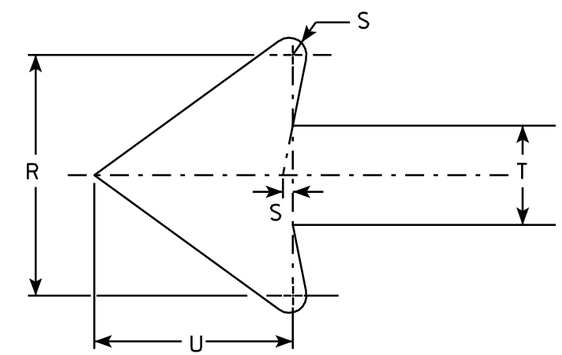

ARROW DETAIL

SIZE	A	B	C	D	E	F	G	H	I	J	K	L	M	N	O	P	Q	R	S	T	U	V	W	X	Y	Z	Area sq. ft.
1	12	18	1 1/8	3/8	3/8	3	2	2	1	1 1/2	2 1/2	2	2	4 7/8	1 1/4	4 7/8	3 7/8	1 3/4	1/8	3/4	1 1/2						1.5
2S	18	24	1 1/8	3/8	1/2	4	3	3	1 1/8	2	3 1/4	2 3/8	2 5/8	7 1/4	1 7/8	7 3/8	5 7/8	2 5/8	1/4	1 1/8	2 1/4						3.0
2M	24	30	1 1/8	3/8	1/2	5	4	3	1 1/2	3	4	2 1/2	3 3/8	10	2 1/2	10 1/4	7 3/4	3 1/2	1/4	1 1/2	3						5.0
3	24	30	1 1/8	3/8	1/2	5	4	3	1 1/2	3	4	2 1/2	3 3/8	10	2 1/2	10 1/4	7 3/4	3 1/2	1/4	1 1/2	3						5.0
4																											
5																											

STANDARD SIGN
R7-4

WISCONSIN DEPT OF TRANSPORTATION

APPROVED Matthew R Rauch
for State Traffic Engineer

DATE 3/31/2011 PLATE NO. R7-4.8

PROJECT NO: | HWY: | COUNTY: | SHEET NO: 133 | E

NOTES

1. Sign is Type II - Type F Reflective - reference WIS DOT Standard Specification for HIGHWAY and STRUCTURE CONSTRUCTION latest edition.
2. Color:
   Background - Yellow
   Message - Black
3. Corners may be square or rounded when base material is plywood but borders shall be rounded as shown. When base material is metal, the corners and borders shall be rounded.

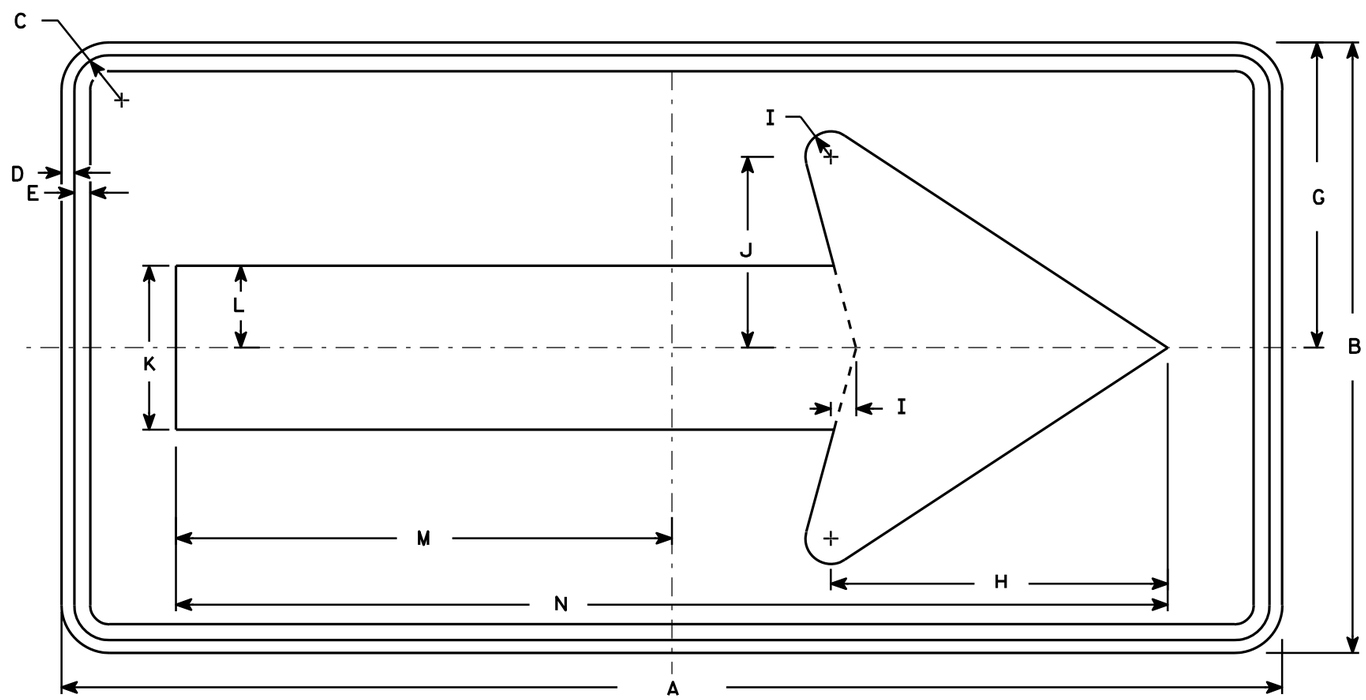

W1-6

SIZE	A	B	C	D	E	F	G	H	I	J	K	L	M	N	O	P	Q	R	S	T	U	V	W	X	Y	Z	Area sq. ft.
1	36	18	1 1/8	3/8	3/8		9	10	3/4	5 5/8	4 3/4	2 3/8	14 5/8	29 1/4													4.5
2S	48	24	1 3/8	1/2	5/8		12	13 1/4	1	7 1/2	6 1/2	3 1/4	19 1/2	39													8.0
2M	48	24	1 3/8	1/2	5/8		12	13 1/4	1	7 1/2	6 1/2	3 1/4	19 1/2	39													8.0
3	60	30	1 3/8	1/2	5/8		15	16 1/4	1 1/4	9 1/4	8	4	24 3/8	48 3/4													12.5
4	60	30	1 3/8	1/2	5/8		15	16 1/4	1 1/4	9 1/4	8	4	24 3/8	48 3/4													12.5
5	96	48	2 1/4	3/4	1		24	26 1/2	2	15	13	6 1/2	39	78													32.0

STANDARD SIGN
W1-6

WISCONSIN DEPT OF TRANSPORTATION

APPROVED Matthew R Rauch
for State Traffic Engineer

DATE 6/7/10 PLATE NO. W1-6.8

PROJECT NO: | HWY: | COUNTY: | SHEET NO: 134 | E

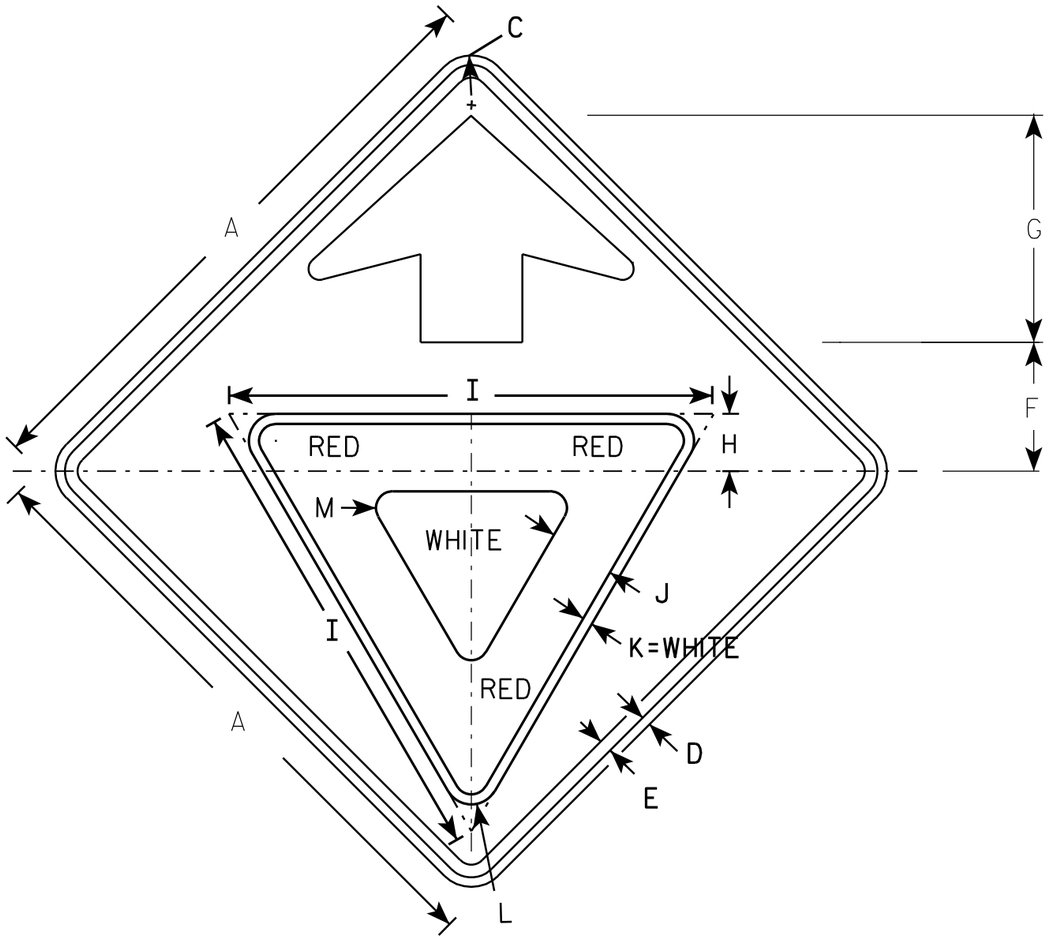

W3-2

NOTES

1. All Signs Type II - Type F Reflective - reference WIS DOT Standard Specification for HIGHWAY and STRUCTURE CONSTRUCTION latest edition.
2. Color:
   - Background - YELLOW
   - Arrow & Border - BLACK
   - Yield Symbol - WHITE BORDER ON RED BACKGROUND

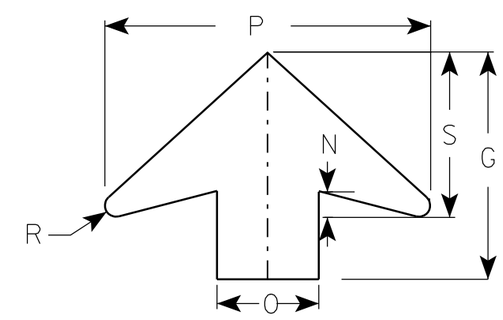

ARROW DETAIL

SIZE	A	B	C	D	E	F	G	H	I	J	K	L	M	N	O	P	Q	R	S	T	U	V	W	X	Y	Z	Area sq. ft.
1	30		1 3/8	1/2	5/8	6 1/4	11 1/4	3	25	3 3/8	1/2	1 3/8	7/8	1 1/4	5	16		1/2	8								6.25
2S	36		1 5/8	5/8	3/4	7 1/2	13 1/2	3 3/8	28	3 3/4	5/8	1 1/2	1	1 5/8	6	19 1/4		5/8	9 3/4								9.0
2M	36		1 5/8	5/8	3/4	7 1/2	13 1/2	3 3/8	28	3 3/4	5/8	1 1/2	1	1 5/8	6	19 1/4		5/8	9 3/4								9.0
3	36		1 5/8	5/8	3/4	7 1/2	13 1/2	3 3/8	28	3 3/4	5/8	1 1/2	1	1 5/8	6	19 1/4		5/8	9 3/4								9.0
4	48		2 1/4	3/4	1	10	17 7/8	4 1/2	38	5	3/4	2 1/8	1 3/8	2	8	25 5/8		7/8	13								16.0
5	48		2 1/4	3/4	1	10	17 7/8	4 1/2	38	5	3/4	2 1/8	1 3/8	2	8	25 5/8		7/8	13								16.0

STANDARD SIGN
W3-2

WISCONSIN DEPT OF TRANSPORTATION

APPROVED Matthew R Rauch
for State Traffic Engineer

DATE 6/7/10 PLATE NO. W3-2..9

PROJECT NO:

SHEET NO: 135 E

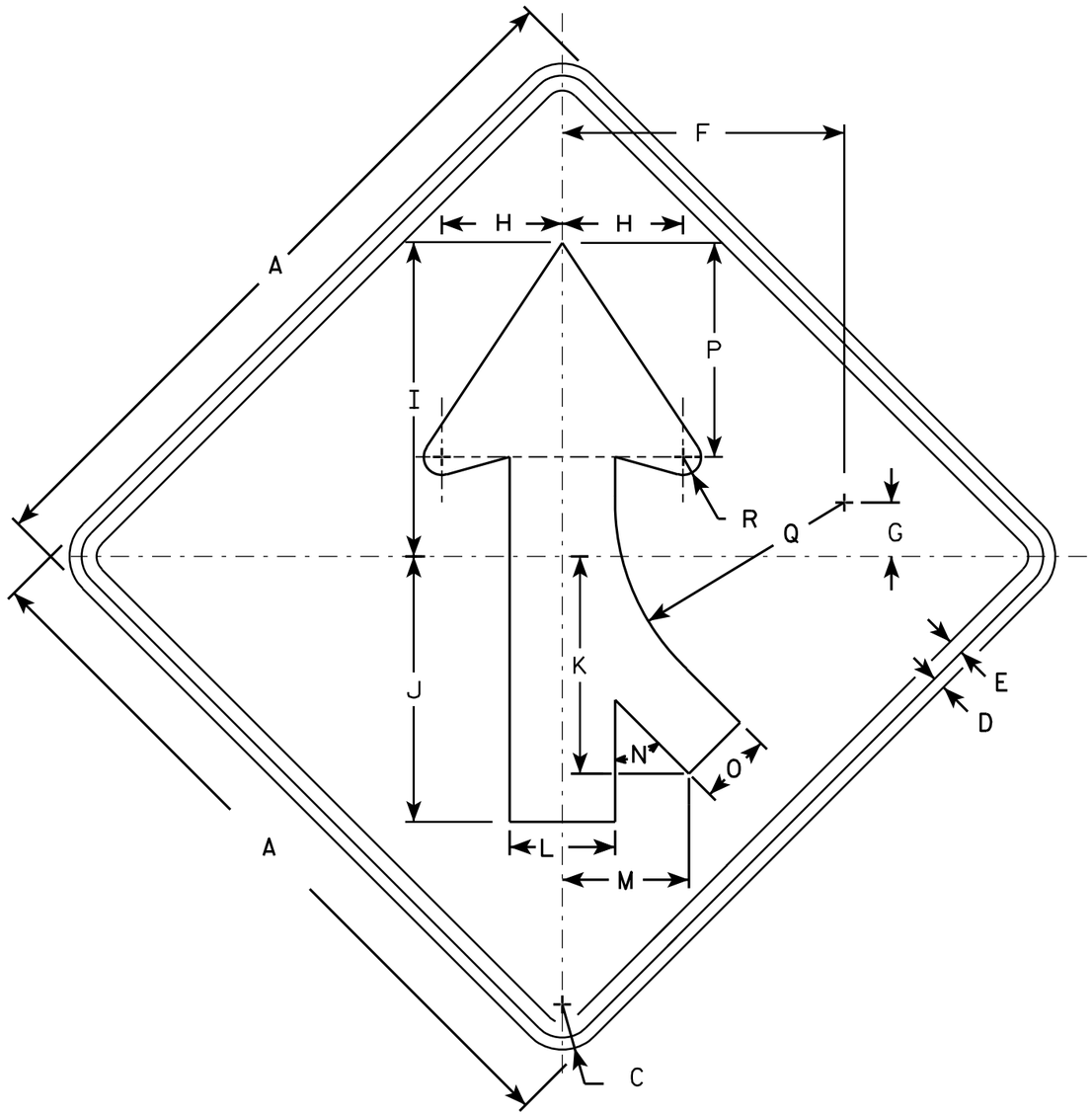

W4-1 R

NOTES

1. Sign is Type II - Type F Reflective - reference WIS DOT Standard Specification for HIGHWAY and STRUCTURE CONSTRUCTION latest edition.
2. Color:
   Background - Yellow
   Message - Black
3. Corners may be square or rounded when base material is plywood but borders shall be rounded as shown. When base material is metal, the corners and borders shall be rounded.
4. W4-1L is the same as W4-1R except the arrow is reversed along the vertical centerline.

SIZE	A	B	C	D	E	F	G	H	I	J	K	L	M	N	O	P	Q	R	S	T	U	V	W	X	Y	Z	Area sq. ft.
1	30		1 3/8	1/2	5/8	11 5/8	2 1/2	5	13	11	9	4 3/8	5 1/4	45°	3	8 7/8	9 1/2	3/4									6.25
2S	36		1 5/8	5/8	3/4	14	2 3/4	6	15 3/4	13 1/4	10 1/4	5 1/4	6 3/8	45°	3 5/8	10 5/8	11 3/8	7/8									9.0
2M	36		1 5/8	5/8	3/4	14	2 3/4	6	15 3/4	13 1/4	10 1/4	5 1/4	6 3/8	45°	3 5/8	10 5/8	11 3/8	7/8									9.0
3	36		1 5/8	5/8	3/4	14	2 3/4	6	15 3/4	13 1/4	10 1/4	5 1/4	6 3/8	45°	3 5/8	10 5/8	11 3/8	7/8									9.0
4	48		2 1/4	3/4	1	18 3/4	3 5/8	8	20 1/2	17 1/2	14 3/8	7	8 3/8	45°	4 3/4	14 1/4	15 1/4	1 1/4									16.0
5	48		2 1/4	3/4	1	18 3/4	3 5/8	8	20 1/2	17 1/2	14 3/8	7	8 3/8	45°	4 3/4	14 1/4	15 1/4	1 1/4									16.0

STANDARD SIGN
W4-1

WISCONSIN DEPT OF TRANSPORTATION

APPROVED Matthew R Rauch
for State Traffic Engineer

DATE 03/12/13 PLATE NO. W4-1.14

PROJECT NO: | HWY: | COUNTY: | SHEET NO: 136 | E

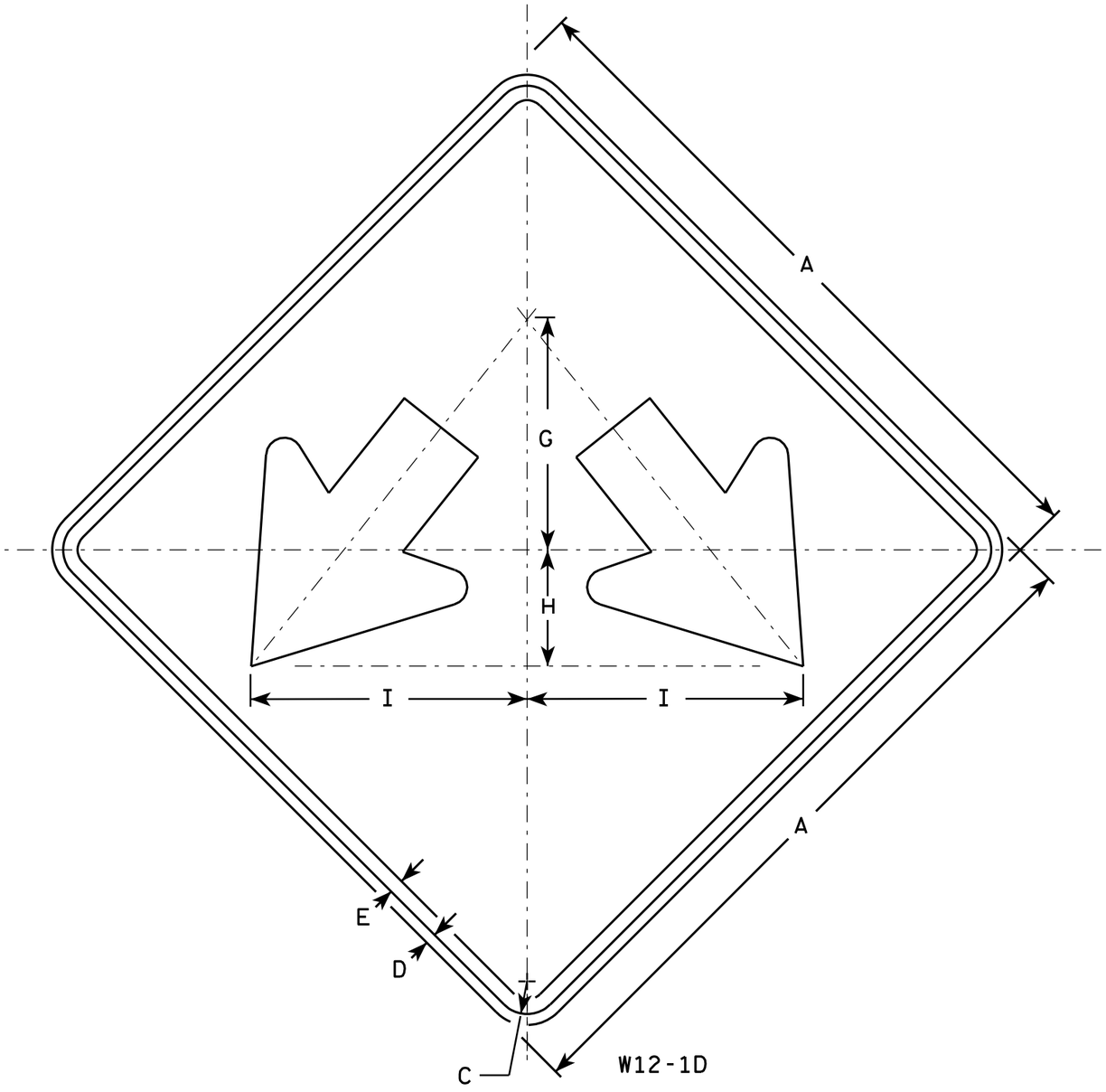

NOTES

1. Sign is Type II - Type F Reflective - reference WIS DOT Standard Specification for HIGHWAY and STRUCTURE CONSTRUCTION latest edition.
2. Color:
   Background - Yellow
   Message - Black
3. Corners may be square or rounded when base material is plywood but borders shall be rounded as shown. When base material is metal, the corners and borders shall be rounded.

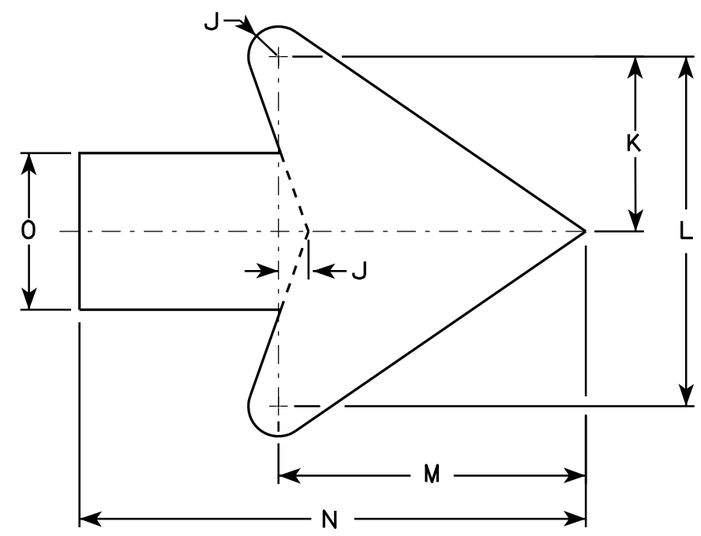

Arrow Detail

SIZE	A	B	C	D	E	F	G	H	I	J	K	L	M	N	O	P	Q	R	S	T	U	V	W	X	Y	Z	Area sq. ft.
1																											
2S	24		1 1/8	1/2	3/8		8	4	9 1/2	3/8	3 3/8	7 1/4	6 3/8	10 3/8	3 1/4												4.0
2M	24		1 1/8	1/2	3/8		8	4	9 1/2	3/8	3 3/8	7 1/4	6 3/8	10 3/8	3 1/4												4.0
3	30		1 3/8	1/2	5/8		10	5	11 7/8	3/4	4 1/2	9	7 7/8	13	4												6.25
4	36		1 3/8	1/2	5/8		12	6	14 1/4	1	5 1/2	10 7/8	9 5/8	15 3/4	4 3/4												9.0
5	48		2 1/4	3/4	1		16	8	19	1 1/4	7 1/4	14 1/2	12 3/4	21	6 1/4												16.0

STANDARD SIGN
W12-1D

WISCONSIN DEPT OF TRANSPORTATION

APPROVED Matthew R Rauch
for State Traffic Engineer

DATE 3/13/13 PLATE NO. W12-1D.15

PROJECT NO: | HWY: | COUNTY: | SHEET NO: 137 | E

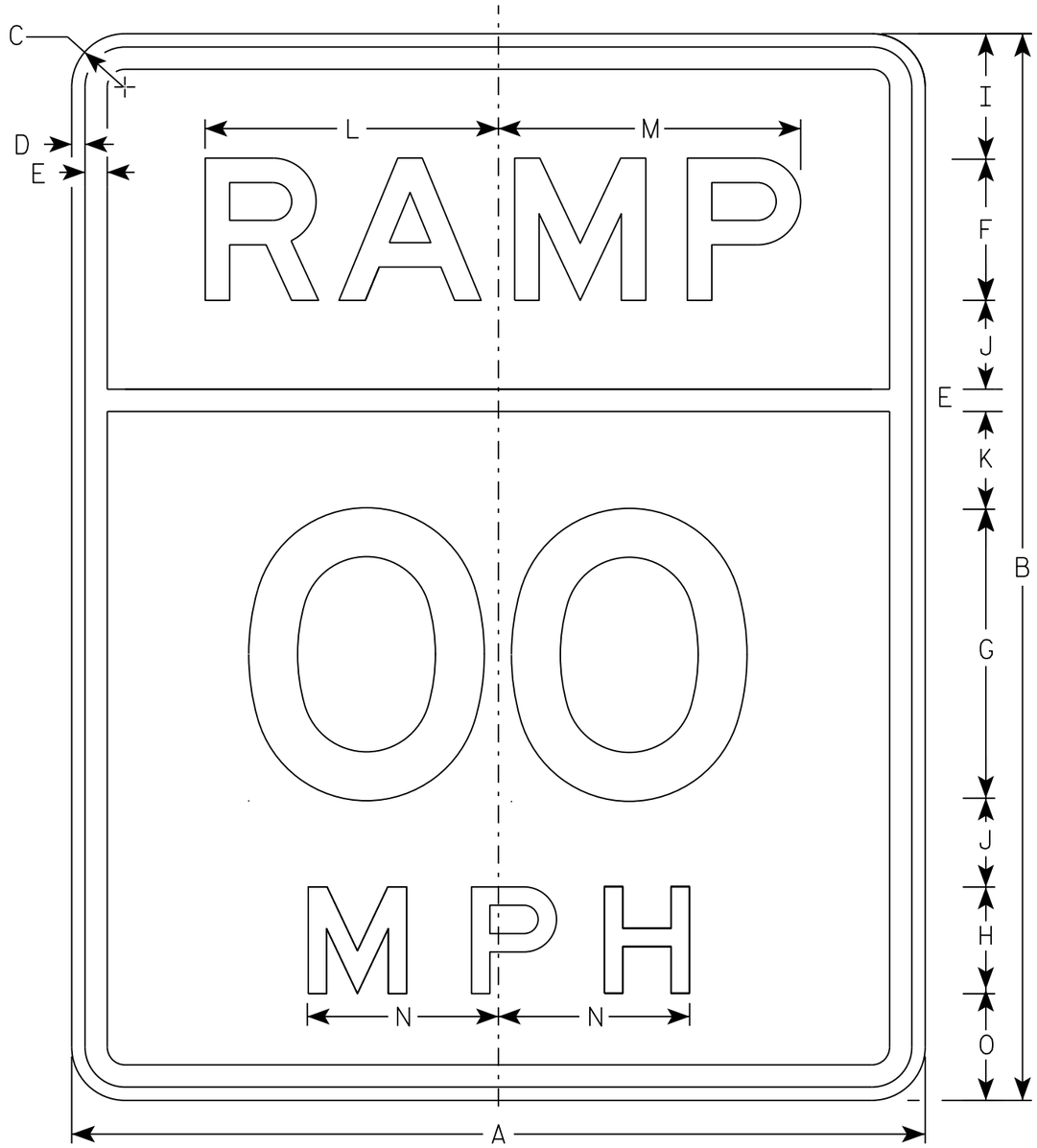

W13-3

NOTES

1. Sign is Type II - Type F Reflective
2. Color:
   Background - Yellow
   Message - Black
3. Message Series - E
4. Substitute appropriate numerals and optically space about centerline to achieve proper balance.

SIZE	A	B	C	D	E	F	G	H	I	J	K	L	M	N	O	P	Q	R	S	T	U	V	W	X	Y	Z	Area sq. ft.
1	24	30	1 1/8	3/8	5/8	4	8	3	3 1/2	2 1/2	2 7/8	8 1/4	8 1/2	5 3/8	3												5.0
2S	24	30	1 1/8	3/8	5/8	4	8	3	3 1/2	2 1/2	2 7/8	8 1/4	8 1/2	5 3/8	3												5.0
2M	24	30	1 1/8	3/8	5/8	4	8	3	3 1/2	2 1/2	2 7/8	8 1/4	8 1/2	5 3/8	3												5.0
3	36	48	1 5/8	5/8	7/8	6	12	4	6	4 1/8	5 1/8	13 1/2	13 5/8	7 1/8	6												12.0
4	36	48	1 5/8	5/8	7/8	6	12	4	6	4 1/8	5 1/8	13 1/2	13 5/8	7 1/8	6												12.0
5	48	60	2 1/4	3/4	1 1/4	8	16	6	7	5	5 3/4	16 1/2	17	10 5/8	6												20.0

STANDARD SIGN
W13-3

WISCONSIN DEPT OF TRANSPORTATION

APPROVED Matthew R Rauch
For State Traffic Engineer

DATE 8/1/16 PLATE NO W13-3.10

PROJECT NO: | HWY: | COUNTY: | SHEET NO: E

FILE NAME : C:\CAEfiles\Projects\tr stdplate\W133.DGN PLOT DATE : 01-AUG-2016 09:57 PLOT BY : $$ plotuser $$ PLOT NAME : PLOT SCALE : 4.086268:1.000000

NOTES

1. Sign is Type II- Type F Reflective
2. Color:
   Background - Yellow
   Message - Black
3. Message Series - Lines 1 and 2 are Series D.
   Line 3 is series C.
4. Corners and borders shall be rounded on all base materials for this sign.

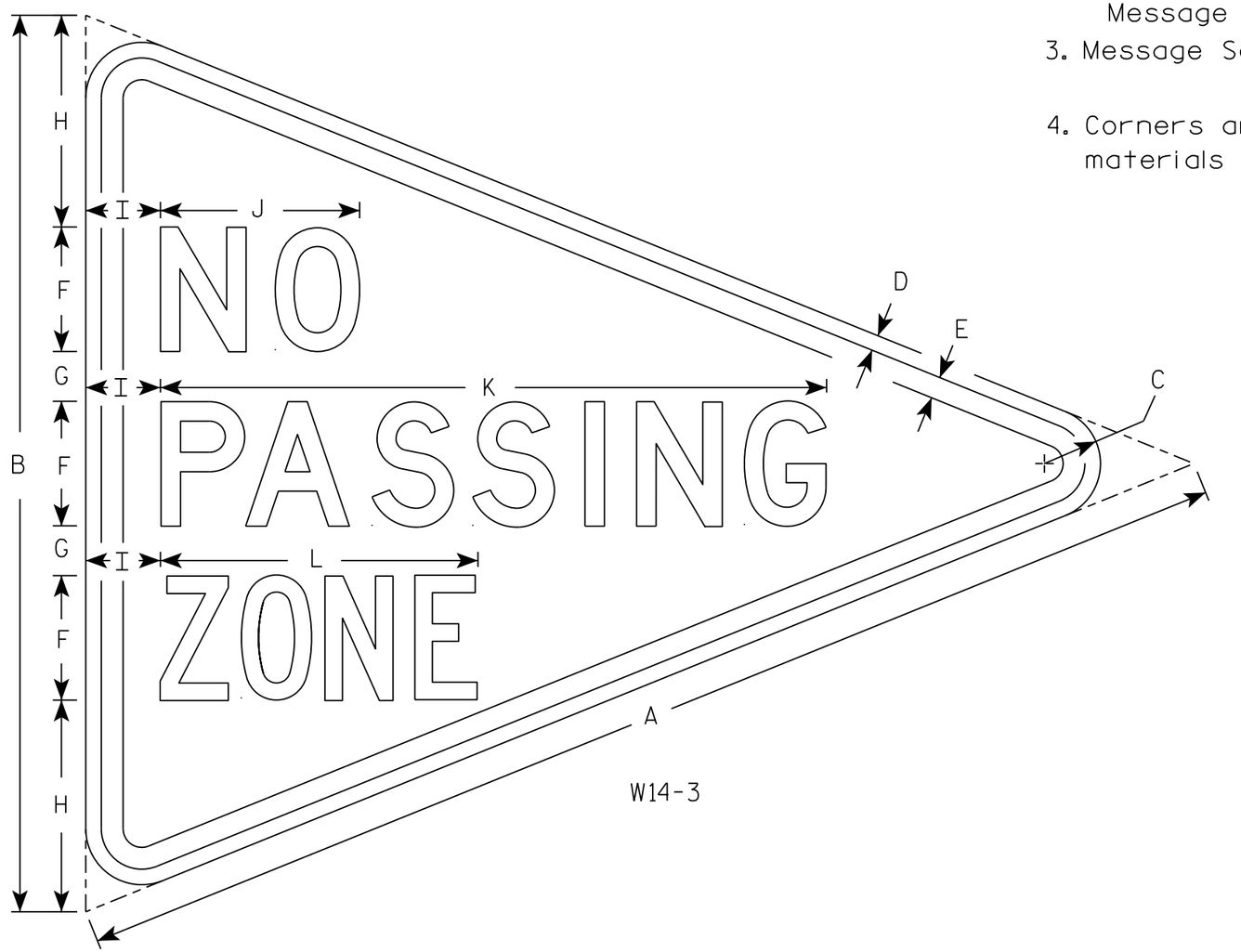

W14-3

SIZE	A	B	C	D	E	F	G	H	I	J	K	L	M	N	O	P	Q	R	S	T	U	V	W	X	Y	Z	Area sq. ft.
1																											
2S	48	36	2 1/4	5/8	7/8	5	2	8 1/2	3	8	26 3/4	12 3/4															5.56
2M																											
3																											
4																											
5																											

STANDARD SIGN
W14-3

WISCONSIN DEPT OF TRANSPORTATION

APPROVED Matthew R Rauch
for State Traffic Engineer
DATE 3/21/17 PLATE NO. W14-3.10

PROJECT NO: | HWY: | COUNTY: | SHEET NO: 139 | E

NOTES

1. Sign is Type II - Type F Reflective
2. Color:
   Background - Orange
   Message - Black
3. Message Series - C
4. Corners may be square or rounded when base material is plywood but borders shall be rounded as shown. When base material is metal, the corners and borders shall be rounded.

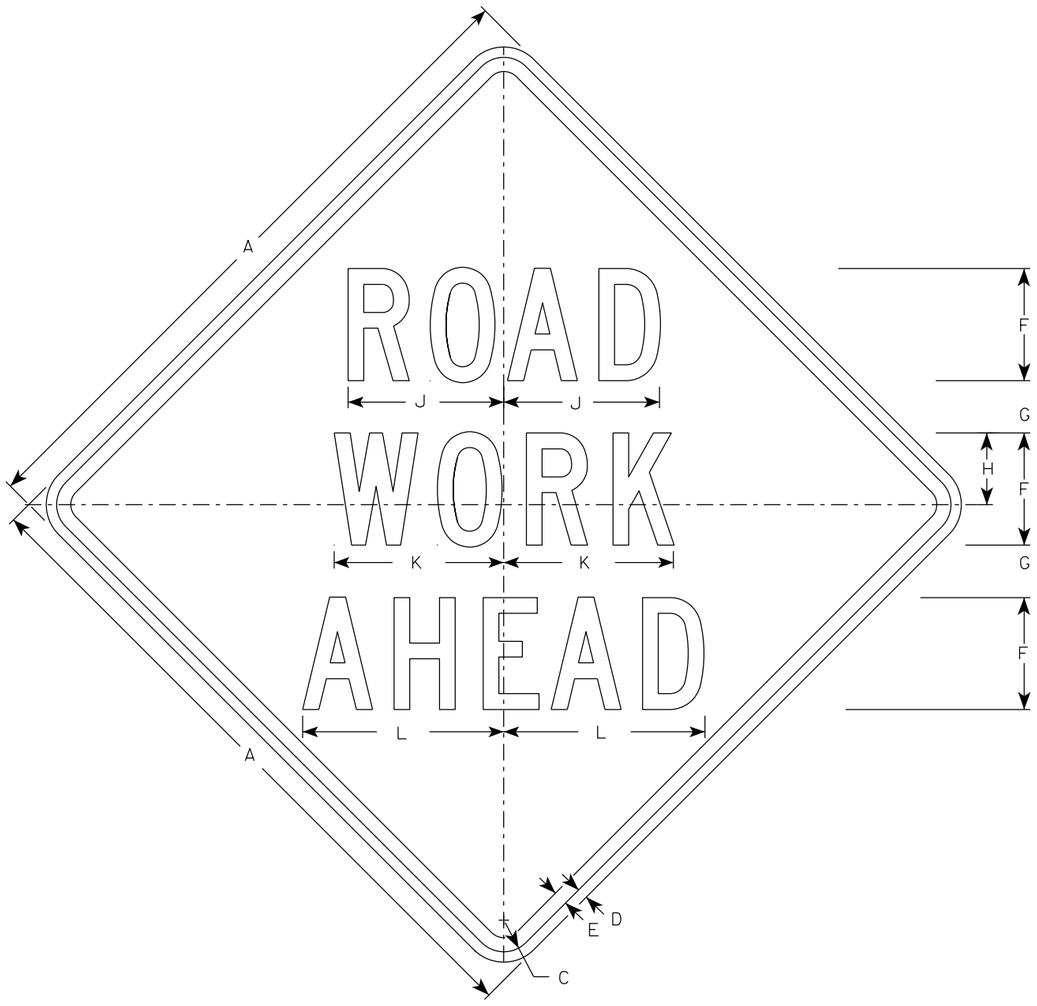

W20-1A

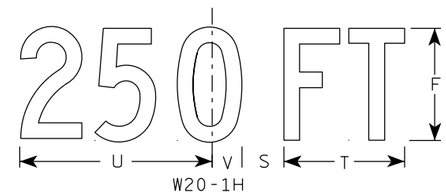

W20-1H

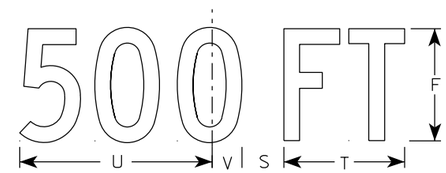

W20-1D

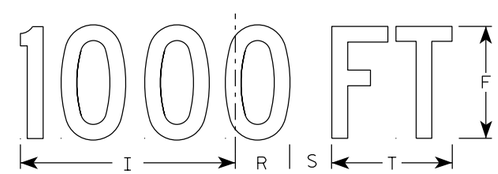

W20-1C

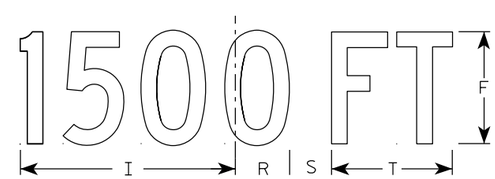

W20-1B

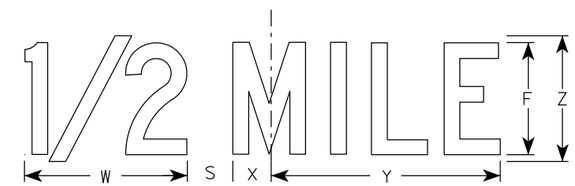

W20-1G

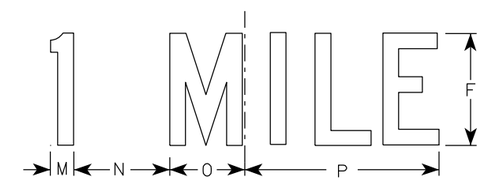

W20-1F

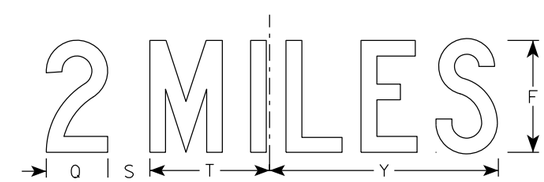

W20-1E

SIZE	A	B	C	D	E	F	G	H	I	J	K	L	M	N	O	P	Q	R	S	T	U	V	W	X	Y	Z	Area sq. ft.
1	36		1 5/8	5/8	3/4	5	2 5/8	3 1/4	10 1/8	7	7 5/8	8 7/8	1 1/8	4 1/2	3 1/2	9	3 1/4	2 1/2	2 1/4	5 5/8	9	1 3/8	8	1 3/4	10 3/4	6	9.0
2S	48		2 1/4	3/4	1	8	3 3/4	5 1/8	15 3/8	11 1/8	12 1/8	14 3/8	1 5/8	6 7/8	5 3/8	13 7/8	4 3/8	3 7/8	3	8 5/8	13 3/4	2 1/8	11 7/8	2 3/4	16 3/8	9	16.0
2M	48		2 1/4	3/4	1	8	3 3/4	5 1/8	15 3/8	11 1/8	12 1/8	14 3/8	1 5/8	6 7/8	5 3/8	13 7/8	4 3/8	3 7/8	3	8 5/8	13 3/4	2 1/8	11 7/8	2 3/4	16 3/8	9	16.0
3	48		2 1/4	3/4	1	8	3 3/4	5 1/8	15 3/8	11 1/8	12 1/8	14 3/8	1 5/8	6 7/8	5 3/8	13 7/8	4 3/8	3 7/8	3	8 5/8	13 3/4	2 1/8	11 7/8	2 3/4	16 3/8	9	16.0
4	48		2 1/4	3/4	1	8	3 3/4	5 1/8	15 3/8	11 1/8	12 1/8	14 3/8	1 5/8	6 7/8	5 3/8	13 7/8	4 3/8	3 7/8	3	8 5/8	13 3/4	2 1/8	11 7/8	2 3/4	16 3/8	9	16.0
5	48		2 1/4	3/4	1	8	3 3/4	5 1/8	15 3/8	11 1/8	12 1/8	14 3/8	1 5/8	6 7/8	5 3/8	13 7/8	4 3/8	3 7/8	3	8 5/8	13 3/4	2 1/8	11 7/8	2 3/4	16 3/8	9	16.0

STANDARD SIGN
W20-1A, B, C, D, E, F, G & H

WISCONSIN DEPT OF TRANSPORTATION

APPROVED Matthew R Rauch
For State Traffic Engineer
DATE 3/25/2020 PLATE NO. W20-1.11

PROJECT NO:

SHEET NO: 140 E

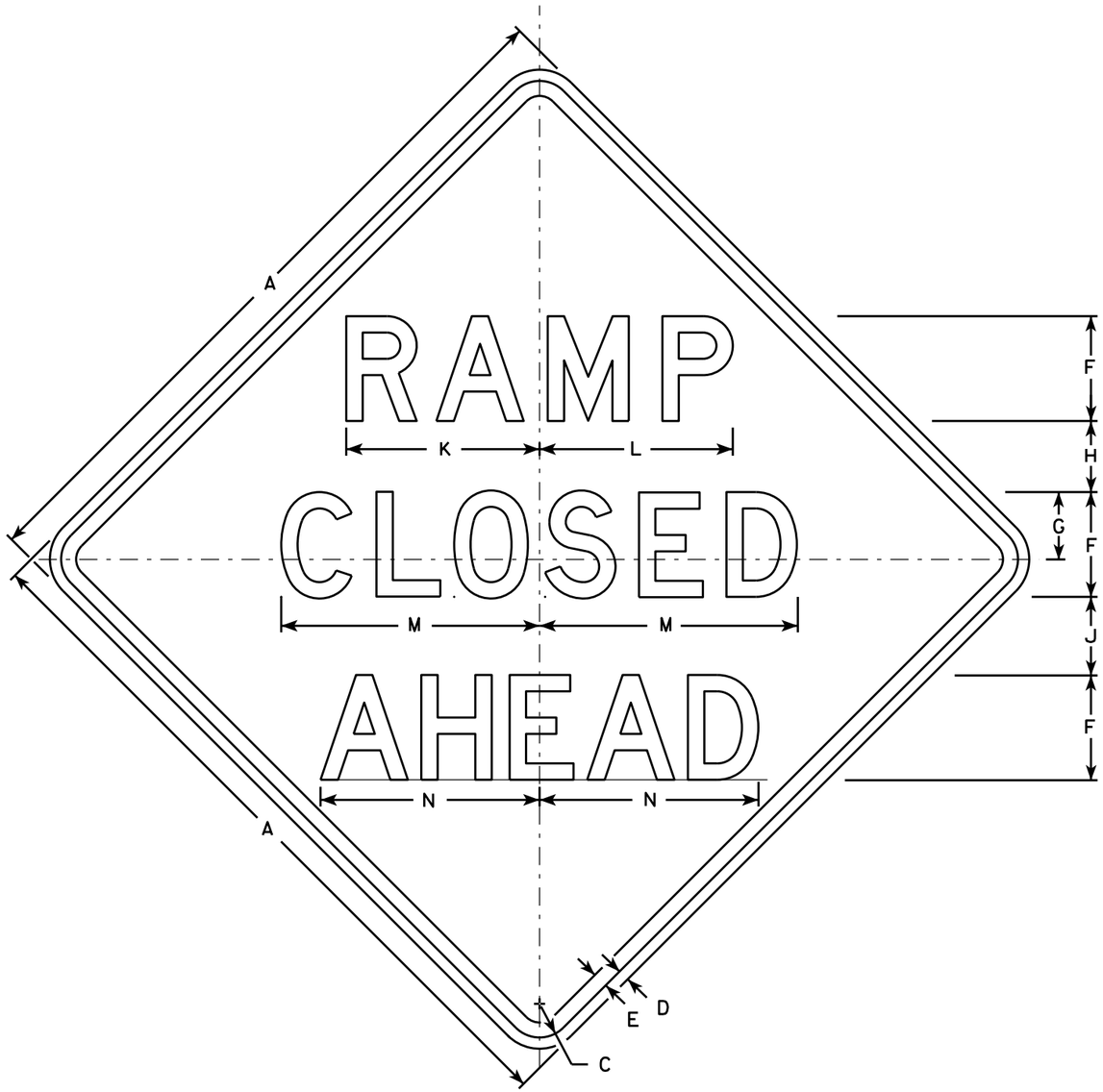

W20-53A

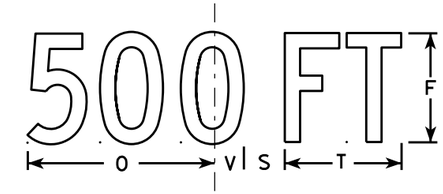

W20-53D

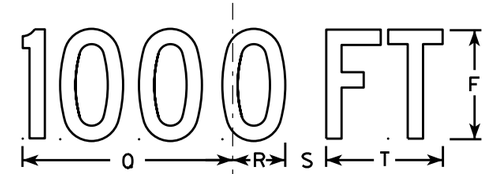

W20-53C

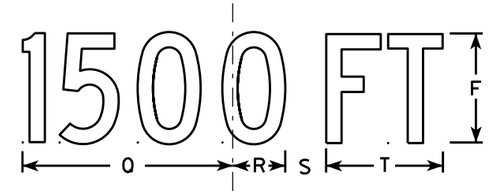

W20-53B

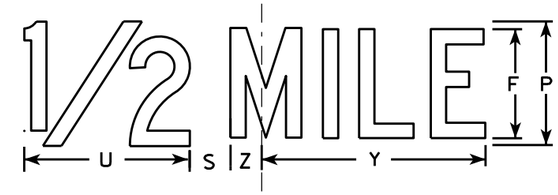

W20-53G

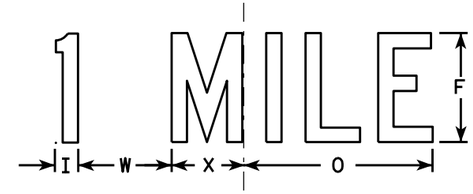

W20-53F

NOTES

1. Sign is Type II - Type F Reflective - reference WIS DOT Standard Specification for HIGHWAY and STRUCTURE CONSTRUCTION latest edition.
2. Color:
   Background - Orange
   Message - Black
3. Message Series - see note 5
4. Corners may be square or rounded when base material is plywood but borders shall be rounded as shown. When base material is metal, the corners and borders shall be rounded.
5. Lines 1 and 2 are Series D.
   Line 3 is Series D for AHEAD and Series C for all other distances.

SIZE	A	B	C	D	E	F	G	H	I	J	K	L	M	N	O	P	Q	R	S	T	U	V	W	X	Y	Z	Area sq. ft.
1	36		1 5/8	5/8	3/4	5	3 3/8	3 1/2	1 1/8	4	9 1/4	9 1/4	12 1/2	11	9	6	10 1/8	2 1/2	1 7/8	5 5/8	8	1 3/8	4 1/2	3 1/2	10 3/4	1 3/4	9.0
2S	48		2 1/4	3/4	1	7	4 1/2	4 3/4	1 1/2	5 1/4	12 7/8	12 7/8	17 1/4	14 5/8	12	8	13 1/2	3 3/8	2 5/8	7 1/2	10 5/8	1 7/8	6	4 5/8	14 3/8	2 3/8	16.0
2M	48		2 1/4	3/4	1	7	4 1/2	4 3/4	1 1/2	5 1/4	12 7/8	12 7/8	17 1/4	14 5/8	12	8	13 1/2	3 3/8	2 5/8	7 1/2	10 5/8	1 7/8	6	4 5/8	14 3/8	2 3/8	16.0
3	48		2 1/4	3/4	1	7	4 1/2	4 3/4	1 1/2	5 1/4	12 7/8	12 7/8	17 1/4	14 5/8	12	8	13 1/2	3 3/8	2 5/8	7 1/2	10 5/8	1 7/8	6	4 5/8	14 3/8	2 3/8	16.0
4	48		2 1/4	3/4	1	7	4 1/2	4 3/4	1 1/2	5 1/4	12 7/8	12 7/8	17 1/4	14 5/8	12	8	13 1/2	3 3/8	2 5/8	7 1/2	10 5/8	1 7/8	6	4 5/8	14 3/8	2 3/8	16.0
5	48		2 1/4	3/4	1	7	4 1/2	4 3/4	1 1/2	5 1/4	12 7/8	12 7/8	17 1/4	14 5/8	12	8	13 1/2	3 3/8	2 5/8	7 1/2	10 5/8	1 7/8	6	4 5/8	14 3/8	2 3/8	16.0

STANDARD SIGN
W20-53A,B,C,D,F,G

WISCONSIN DEPT OF TRANSPORTATION

APPROVED Matthew R Rauch
for State Traffic Engineer
DATE 5/27/15 PLATE NO. W20-53.1

PROJECT NO: | HWY: | COUNTY: | SHEET NO: | E

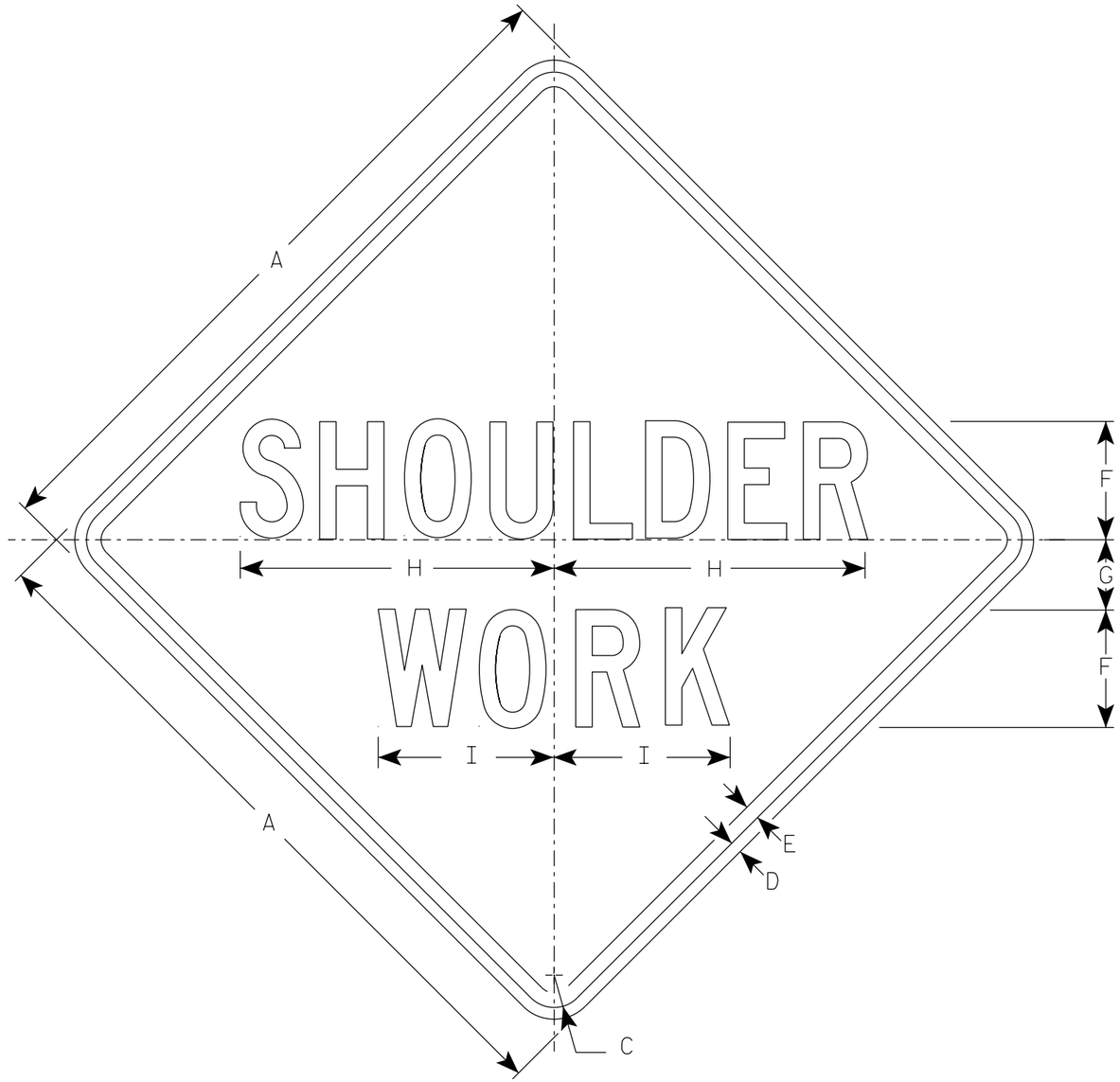

W21-5

NOTES

1. Sign is Type II - Type F Reflective
2. Color:
   Background - Orange
   Message - Black
3. Message Series - C
4. Corners may be square or rounded when base material is plywood but borders shall be rounded as shown. When base material is metal, the corners and borders shall be rounded.

SIZE	A	B	C	D	E	F	G	H	I	J	K	L	M	N	O	P	Q	R	S	T	U	V	W	X	Y	Z	Area sq. ft.
1	36		1 5/8	5/8	3/4	6	3 1/2	16	9																		9.0
2S	48		2 1/4	3/4	1	8	5	21 3/8	11 1/4																		16.0
2M	48		2 1/4	3/4	1	8	5	21 3/8	11 1/4																		16.0
3	48		2 1/4	3/4	1	8	5	21 3/8	11 1/4																		16.0
4	48		2 1/4	3/4	1	8	5	21 3/8	11 1/4																		16.0
5	48		2 1/4	3/4	1	8	5	21 3/8	11 1/4																		16.0

STANDARD SIGN
W21-5

WISCONSIN DEPT OF TRANSPORTATION

APPROVED Matthew R Rauch
for State Traffic Engineer
DATE 4/30/2020 PLATE NO. W21-5.6

PROJECT NO: | HWY: | COUNTY: | SHEET NO: 142 | E

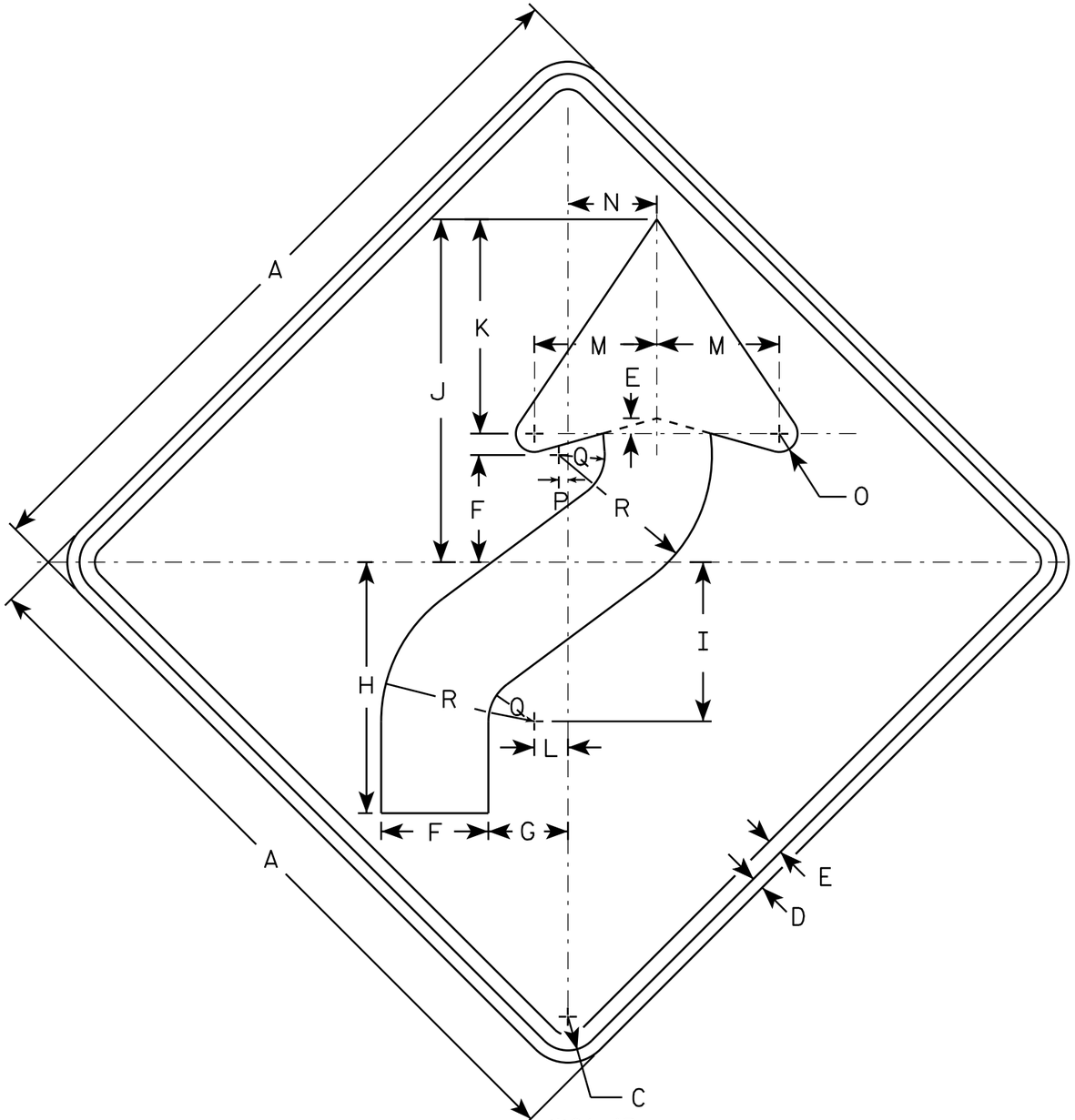

W01-4R

NOTES

1. Sign is Type II - Type F Reflective - reference WIS DOT Standard Specification for HIGHWAY and STRUCTURE CONSTRUCTION latest edition.
2. Color:
   Background - Orange
   Message - Black
3. Corners may be square or rounded when base material is plywood but borders shall be rounded as shown. When base material is metal, the corners and borders shall be rounded.
4. W01-4L is the same as W01-4R except the arrow is reversed along the vertical centerline.

SIZE	A	B	C	D	E	F	G	H	I	J	K	L	M	N	O	P	Q	R	S	T	U	V	W	X	Y	Z	Area sq. ft.
1	36		1 5/8	5/8	3/4	5 1/4	4	12 3/8	7 7/8	16 7/8	10 1/2	1 5/8	6	4 1/2	1	1/2	2 1/4	7 1/2									9.0
2S	48		2 1/4	3/4	1	7	5 1/4	16 1/2	10 1/2	22 1/2	14	2 1/4	8	6	1 1/4	5/8	3	10									16.0
2M	48		2 1/4	3/4	1	7	5 1/4	16 1/2	10 1/2	22 1/2	14	2 1/4	8	6	1 1/4	5/8	3	10									16.0
3	48		2 1/4	3/4	1	7	5 1/4	16 1/2	10 1/2	22 1/2	14	2 1/4	8	6	1 1/4	5/8	3	10									16.0
4	48		2 1/4	3/4	1	7	5 1/4	16 1/2	10 1/2	22 1/2	14	2 1/4	8	6	1 1/4	5/8	3	10									16.0
5	48		2 1/4	3/4	1	7	5 1/4	16 1/2	10 1/2	22 1/2	14	2 1/4	8	6	1 1/4	5/8	3	10									16.0

STANDARD SIGN
W01-4

WISCONSIN DEPT OF TRANSPORTATION

APPROVED Matthew R Rauch
for State Traffic Engineer

DATE 11/18/13 PLATE NO W01-4.1

PROJECT NO:	HWY:	COUNTY:		SHEET NO:	E

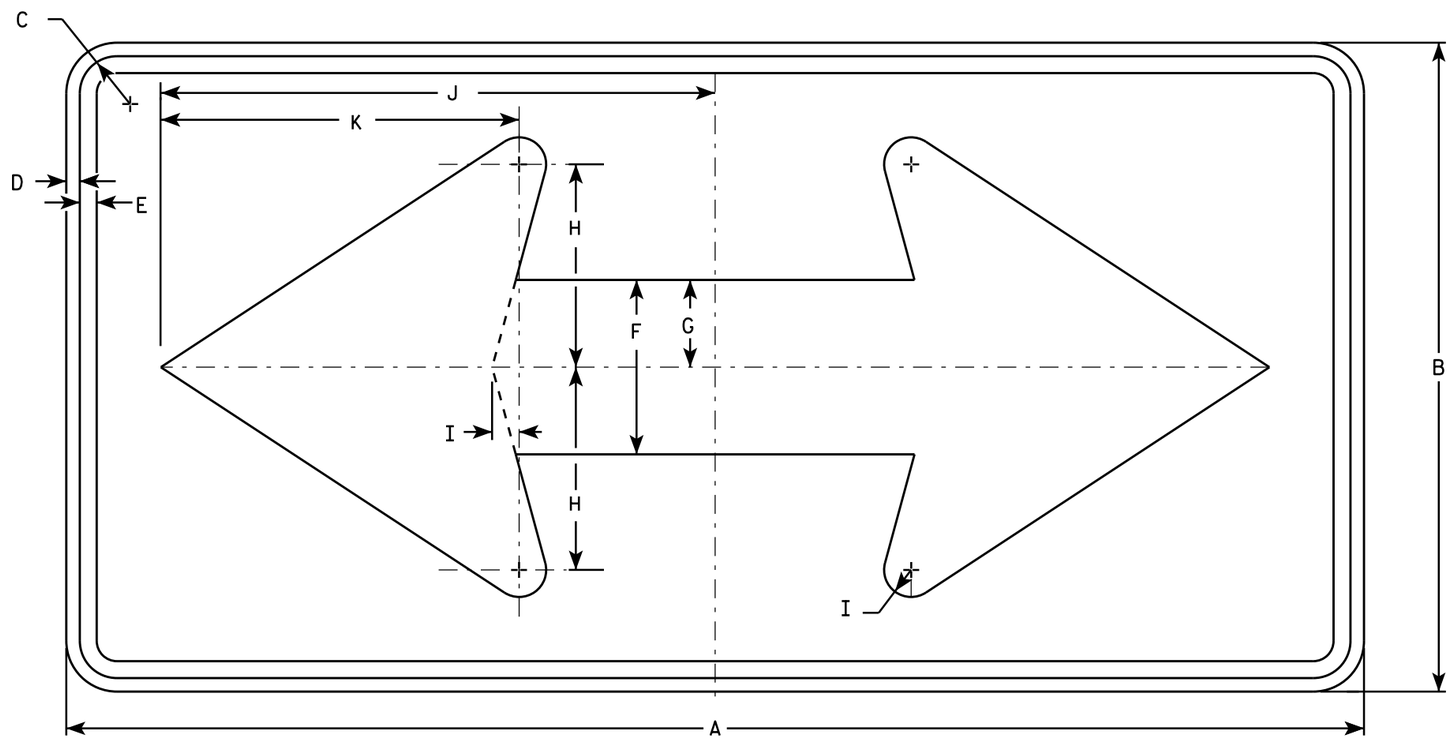

W01-7

NOTES

1. Sign is Type II - Type F Reflective - reference WIS DOT Standard Specification for HIGHWAY and STRUCTURE CONSTRUCTION latest edition.
2. Color:
   Background - Orange
   Message - Black
3. Corners may be square or rounded when base material is plywood but borders shall be rounded as shown. When base material is metal, the corners and borders shall be rounded.

SIZE	A	B	C	D	E	F	G	H	I	J	K	L	M	N	O	P	Q	R	S	T	U	V	W	X	Y	Z	Area sq. ft.
1																											
2S	48	24	1 3/8	1/2	5/8	6 1/2	3 1/4	7 1/2	1	20 1/2	13 1/4																8.0
2M	48	24	1 3/8	1/2	5/8	6 1/2	3 1/4	7 1/2	1	20 1/2	13 1/4																8.0
3	60	30	1 3/8	1/2	5/8	8	4	9 1/4	1 1/4	25 3/8	16 1/4																12.5
4	60	30	1 3/8	1/2	5/8	8	4	9 1/4	1 1/4	25 3/8	16 1/4																12.5
5	60	30	1 3/8	1/2	5/8	8	4	9 1/4	1 1/4	25 3/8	16 1/4																12.5

STANDARD SIGN
W01-7

WISCONSIN DEPT OF TRANSPORTATION

APPROVED Matthew R Rauch
for State Traffic Engineer

DATE 11/18/13 PLATE 144 W01-7.1

PROJECT NO: | HWY: | COUNTY: | SHEET NO: | E

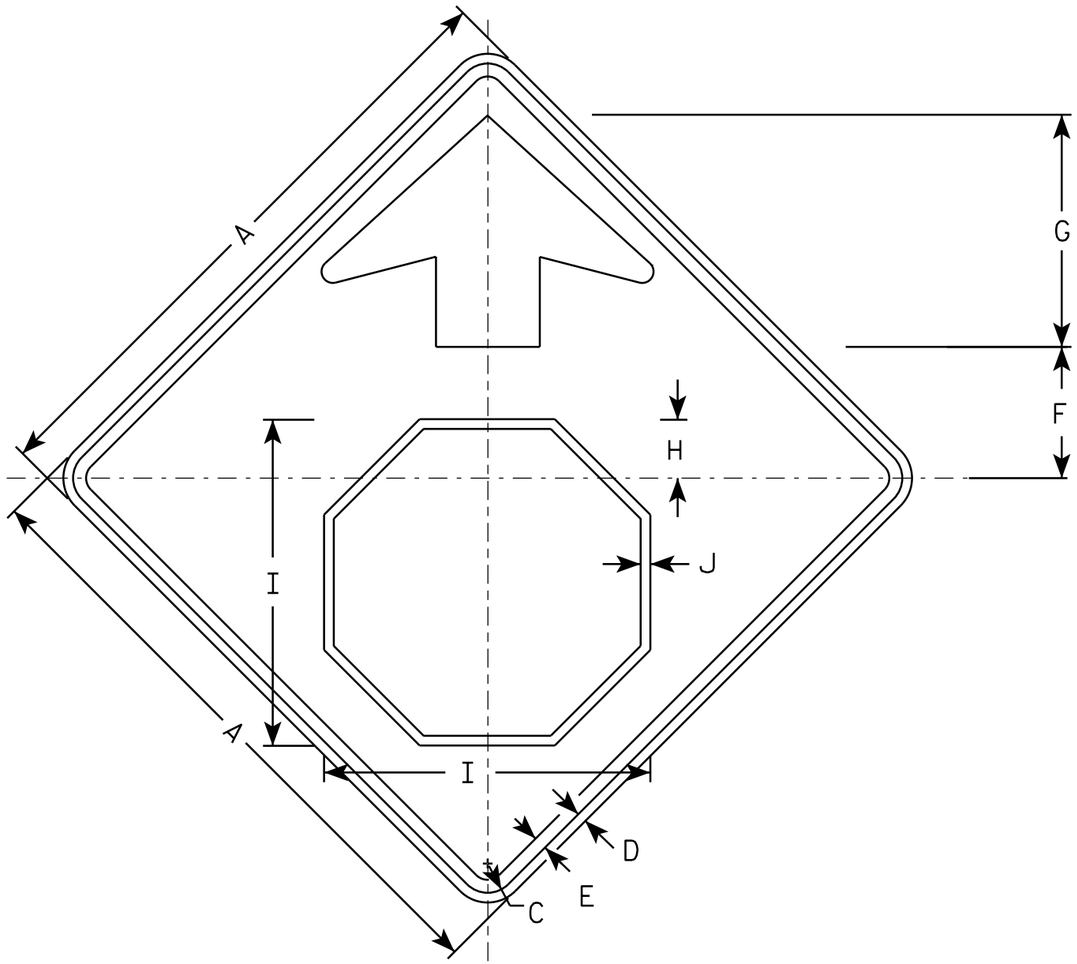

W03-1

NOTES

1. All Signs Type II - Type F Reflective - reference WIS DOT Standard Specification for HIGHWAY and STRUCTURE CONSTRUCTION latest edition.
2. Color:
   Background - ORANGE
   Arrow & Border - BLACK
   Stop Symbol - WHITE BORDER ON RED BACKGROUND

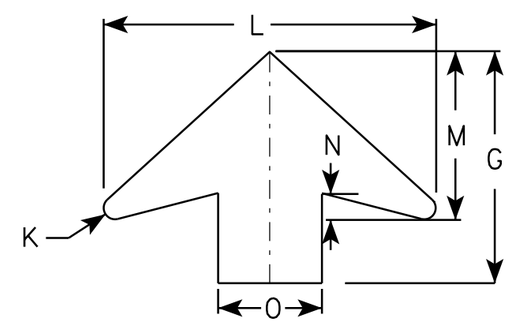

ARROW DETAIL

SIZE	A	B	C	D	E	F	G	H	I	J	K	L	M	N	O	P	Q	R	S	T	U	V	W	X	Y	Z	Area sq. ft.
1	36		1 5/8	5/8	3/4	7 1/2	13 1/2	3 1/2	19	5/8	5/8	19 1/4	9 3/4	1 5/8	6												9.0
2S	48		2 1/4	3/4	1	10	17 7/8	4 1/2	25 1/8	3/4	7/8	25 5/8	13	2	8												16.0
2M	48		2 1/4	3/4	1	10	17 7/8	4 1/2	25 1/8	3/4	7/8	25 5/8	13	2	8												16.0
3	48		2 1/4	3/4	1	10	17 7/8	4 1/2	25 1/8	3/4	7/8	25 5/8	13	2	8												16.0
4	48		2 1/4	3/4	1	10	17 7/8	4 1/2	25 1/8	3/4	7/8	25 5/8	13	2	8												16.0
5	48		2 1/4	3/4	1	10	17 7/8	4 1/2	25 1/8	3/4	7/8	25 5/8	13	2	8												16.0

STANDARD SIGN
W03-1

WISCONSIN DEPT OF TRANSPORTATION

APPROVED Matthew R Rauch
for State Traffic Engineer

DATE 11/20/13 PLATE 03-1.1

PROJECT NO:

SHEET NO: E

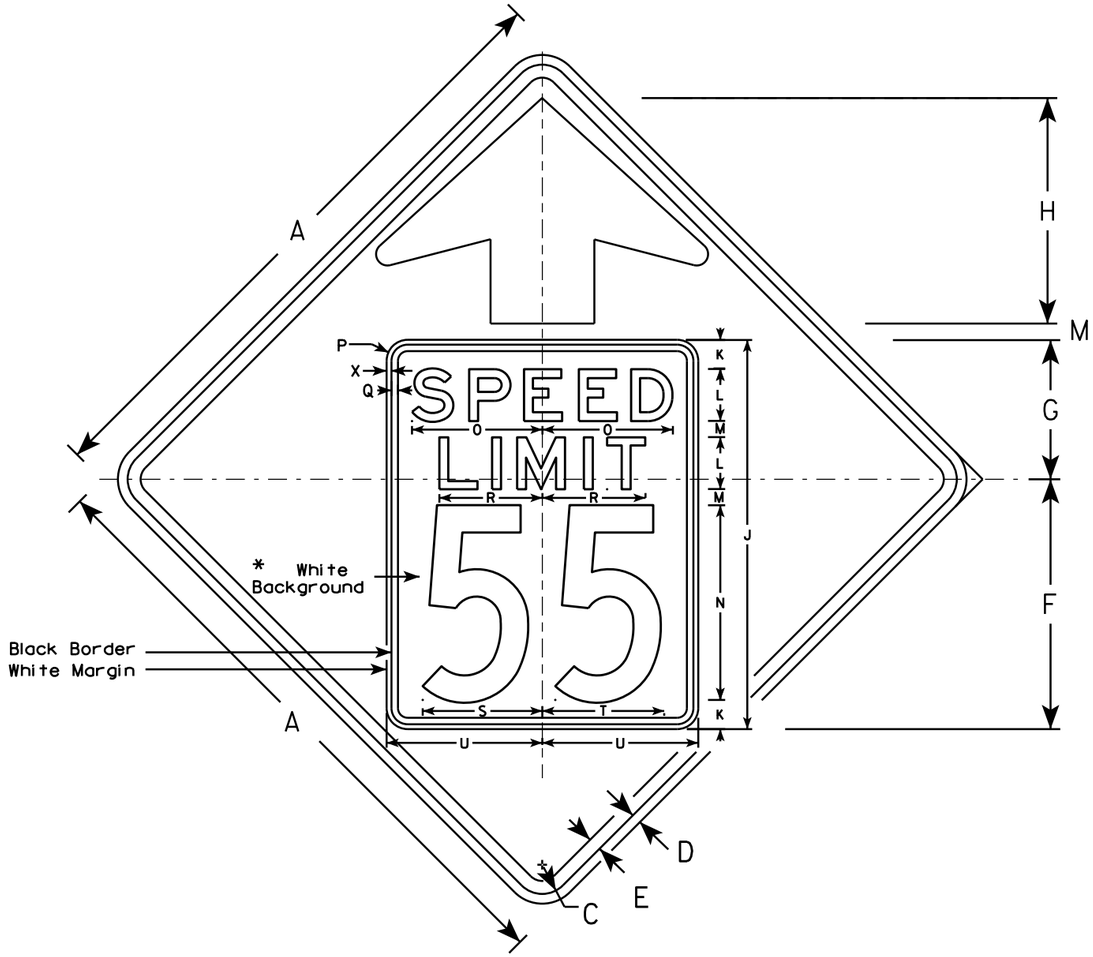

W03-5

NOTES

1. Sign is Type II - Type F Reflective - reference WIS DOT Standard Specification for HIGHWAY and STRUCTURE CONSTRUCTION latest edition.
2. Color: *
   Background - ORANGE*
   Message - BLACK
3. Message Series - C for numbers Series E for wording
4. Substitute appropriate numerals and optically adjust spacing to achieve proper balance

*Speed Limit Sign shall have a White Background

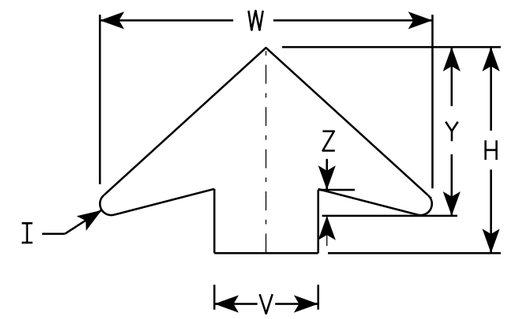

ARROW DETAIL

SIZE	A	B	C	D	E	F	G	H	I	J	K	L	M	N	O	P	Q	R	S	T	U	V	W	X	Y	Z	Area sq. ft.
1	36		1 5/8	5/8	3/4	14 1/2	9 1/2	11 1/2	5/8	24	2	3	1	12	7 1/8	1 1/2	3/8	5 3/4	7 1/4	7 1/8	9	6	19 1/4	3/8	9 3/4	1 5/8	9.0
2S	48		2 1/4	3/4	1	19 1/4	10 3/4	17 3/8	7/8	30	2 1/4	4	1 1/4	15	10	1 5/8	1/2	8	9 1/4	9 3/8	12	8	25 5/8	3/8	13	2	16.0
2M	48		2 1/4	3/4	1	19 1/4	10 3/4	17 3/8	7/8	30	2 1/4	4	1 1/4	15	10	1 5/8	1/2	8	9 1/4	9 3/8	12	8	25 5/8	3/8	13	2	16.0
3	48		2 1/4	3/4	1	19 1/4	10 3/4	17 3/8	7/8	30	2 1/4	4	1 1/4	15	10	1 5/8	1/2	8	9 1/4	9 3/8	12	8	25 5/8	3/8	13	2	16.0
4	48		2 1/4	3/4	1	19 1/4	10 3/4	17 3/8	7/8	30	2 1/4	4	1 1/4	15	10	1 5/8	1/2	8	9 1/4	9 3/8	12	8	25 5/8	3/8	13	2	16.0
5	48		2 1/4	3/4	1	19 1/4	10 3/4	17 3/8	7/8	30	2 1/4	4	1 1/4	15	10	1 5/8	1/2	8	9 1/4	9 3/8	12	8	25 5/8	3/8	13	2	16.0

STANDARD SIGN
W03-5

WISCONSIN DEPT OF TRANSPORTATION

APPROVED Matthew R Rauch
for State Traffic Engineer

DATE 11/20/13 PLATE W03-5.1

PROJECT NO: SHEET NO: E

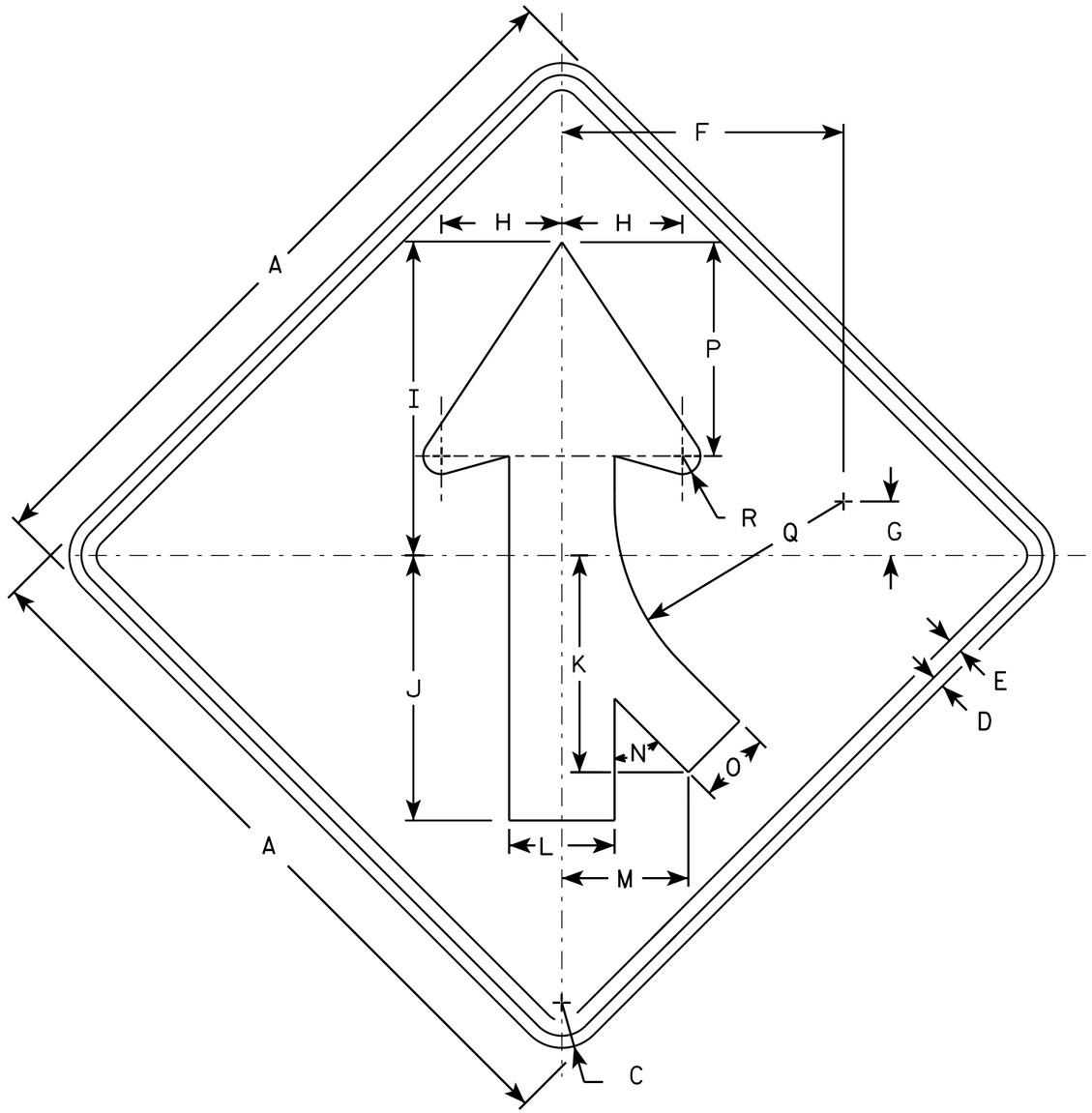

W04-1R

NOTES

1. Sign is Type II - Type F Reflective - reference WIS DOT Standard Specification for HIGHWAY and STRUCTURE CONSTRUCTION latest edition.
2. Color:
   Background - Orange
   Message - Black
3. Corners may be square or rounded when base material is plywood but borders shall be rounded as shown. When base material is metal, the corners and borders shall be rounded.
4. W4-1L is the same as W4-1R except the arrow is reversed along the vertical centerline.

SIZE	A	B	C	D	E	F	G	H	I	J	K	L	M	N	O	P	Q	R	S	T	U	V	W	X	Y	Z	Area sq. ft.
1	36		1 5/8	5/8	3/4	14	2 3/4	6	15 3/4	13 1/4	10 1/4	5 1/4	6 3/8	45°	3 5/8	10 5/8	11 3/8	7/8									9.0
2S	48		2 1/4	3/4	1	18 3/4	3 5/8	8	20 1/2	17 1/2	14 3/8	7	8 3/8	45°	4 3/4	14 1/4	15 1/4	1 1/4									16.0
2M	48		2 1/4	3/4	1	18 3/4	3 5/8	8	20 1/2	17 1/2	14 3/8	7	8 3/8	45°	4 3/4	14 1/4	15 1/4	1 1/4									16.0
3	48		2 1/4	3/4	1	18 3/4	3 5/8	8	20 1/2	17 1/2	14 3/8	7	8 3/8	45°	4 3/4	14 1/4	15 1/4	1 1/4									16.0
4	48		2 1/4	3/4	1	18 3/4	3 5/8	8	20 1/2	17 1/2	14 3/8	7	8 3/8	45°	4 3/4	14 1/4	15 1/4	1 1/4									16.0
5	48		2 1/4	3/4	1	18 3/4	3 5/8	8	20 1/2	17 1/2	14 3/8	7	8 3/8	45°	4 3/4	14 1/4	15 1/4	1 1/4									16.0

STANDARD SIGN
W04-1

WISCONSIN DEPT OF TRANSPORTATION

APPROVED Matthew R Rauch
for State Traffic Engineer

DATE 11/20/13 PLATE NO. W04-1.1

PROJECT NO: | HWY: | COUNTY: | SHEET NO: | E

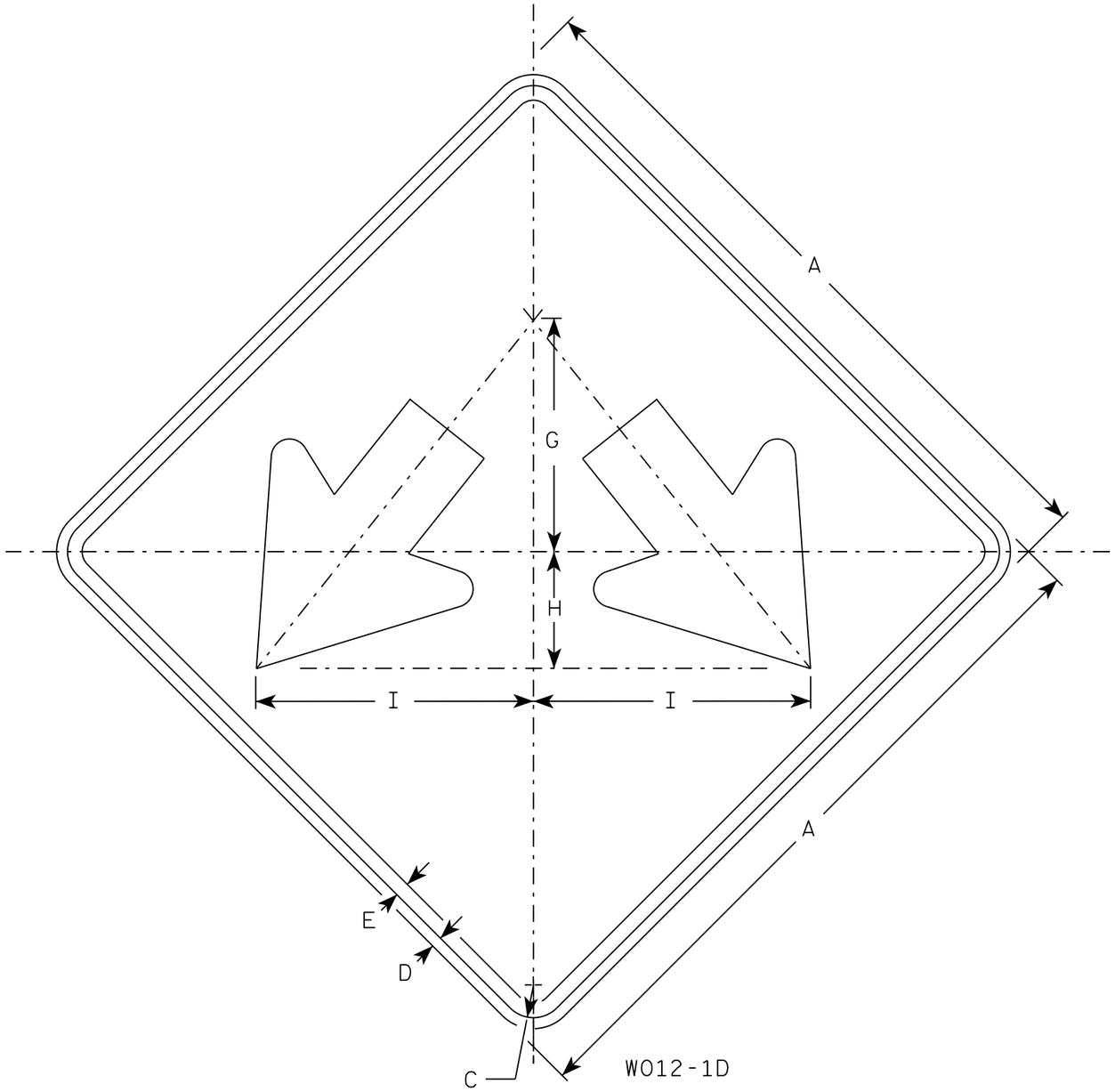

NOTES

1. Sign is Type II - Type F Reflective
2. Color:
   Background - Orange
   Message - Black
3. Corners may be square or rounded when base material is plywood but borders shall be rounded as shown. When base material is metal, the corners and borders shall be rounded.

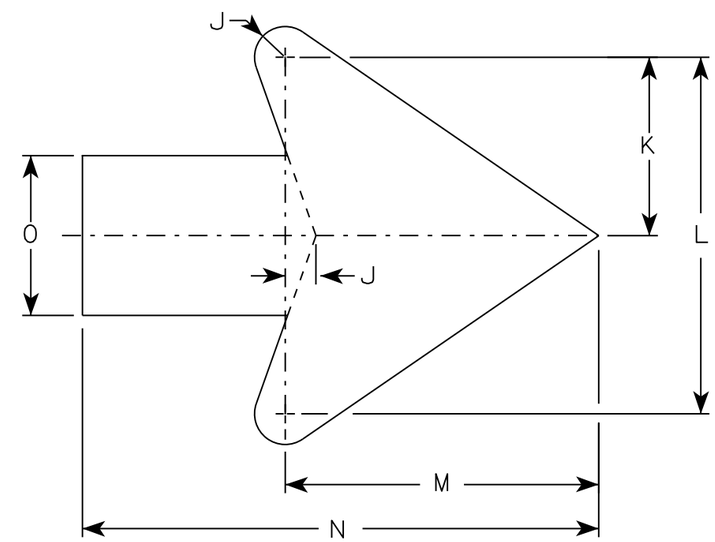

Arrow Detail

SIZE	A	B	C	D	E	F	G	H	I	J	K	L	M	N	O	P	Q	R	S	T	U	V	W	X	Y	Z	Area sq. ft.
1	24		1 1/8	1/2	3/8		8	4	9 1/2	3/8	3 3/8	7 1/4	6 3/8	10 3/8	3 1/4												4.0
2S	24		1 1/8	1/2	3/8		8	4	9 1/2	3/8	3 3/8	7 1/4	6 3/8	10 3/8	3 1/4												4.0
2M	24		1 1/8	1/2	3/8		8	4	9 1/2	3/8	3 3/8	7 1/4	6 3/8	10 3/8	3 1/4												4.0
3	30		1 3/8	1/2	5/8		10	5	11 7/8	3/4	4 1/2	9	7 7/8	13	4												6.25
4	36		1 3/8	1/2	5/8		12	6	14 1/4	1	5 1/2	10 7/8	9 5/8	15 3/4	4 3/4												9.0
5	36		1 3/8	1/2	5/8		12	6	14 1/4	1	5 1/2	10 7/8	9 5/8	15 3/4	4 3/4												9.0

STANDARD SIGN
W012-1D

WISCONSIN DEPT OF TRANSPORTATION

APPROVED Matthew R Rauch
for State Traffic Engineer

DATE 7/28/16 PLATE NO W012-1D.2

PROJECT NO: | HWY: | COUNTY: | SHEET NO: E

FILE NAME : C:\CAEfiles\Projects\tr_stdplate\W0121D.DGN PLOT DATE : 11-AUG-2016 11:28 PLOT BY : $$ plotuser $$ PLOT NAME : PLOT SCALE : 4.621375:1.000000

Division	From/To Station	Location	205.0100 Common Excavation (1)		Available Material (4)	Unexpanded Fill	Expanded Fill (5)	Mass Ordinate +/- (6)	Waste	208.0100 Borrow	Comment:
			Cut (2)	EBS Excavation (3)			Factor 1.30				
Stage 1			5,121	0	5,121	2,337	3,038	2,083	2,083	598	
STH 80/11 Mainline	233+22 - 258+25		4,390	0	4,390	1,315	1,710	2,681	2,681	0	
STH 80/11 Ramp	104+85RA - 112+00RA		731	0	731	1,022	1,329	-598	-598	598	
Stage 2			2,883	0	2,883	287	373	2,510	2,510	0	
STH 80/11 Mainline	233+22 - 258+25		2,883	0	2,883	287	373	2,510	2,510	0	
STH 80/11 Ramp	104+85RA - 112+00RA		0	0	0	0	0	0	0	0	
Stage 3			600	0	600	248	322	278	278	0	
STH 80/11 Mainline	233+22 - 258+25		194	0	194	65	85	110	110	0	
STH 80/11 Ramp	104+85RA - 112+00RA		406	0	406	183	238	168	168	0	
Stage 4			711	0	711	902	1,173	-462	-462	462	
STH 80/11 Mainline	233+22 - 258+25		711	0	711	902	1,173	-462	-462	462	
STH 80/11 Ramp	104+85RA - 112+00RA		0	0	0	0	0	0	0	0	
Grand Total			9,315	0	9,315	3,774	4,906	4,409	4,409	1,059	
Total Common Exc			9,315								

Notes:
(1) Common Excavation is the sum of the Cut and EBS Excavation columns. Item number 205.0100
(2) Salvaged/Unsuable Pavement Material is included in Cut.
(3) EBS Excavation to be backfilled with Select Borrow material. Note: this is designers choice, can be backfilled with Borrow, or Cut as well.
(4) Available Material = Cut - Salvaged/Unusuable Pavement Material
(5) Expanded Fill Factor = 1.3
Depending on selections: **Expanded Fill = (Unexpanded Fill - Rock* Rock Factor - Reduced Marsh - Reduced EBS) * Fill Factor**
Or Expanded Fill = (Unexpanded Fill - Rock * Rock Factor - Reduced EBS) * Fill Factor
Or Expanded Fill = (Unexpanded Fill - Rock * Rock Factor - Reduced Marsh) * Fill Factor
Or Expanded Fill = (Unexpanded Fill - Rock * Rock Factor) * Fill Factor
(6) The Mass Ordinate + or - Qty calculated for the Division. Plus quantity indicates an excess of material within the Division. Minus indicates a shortage of material within the Division.

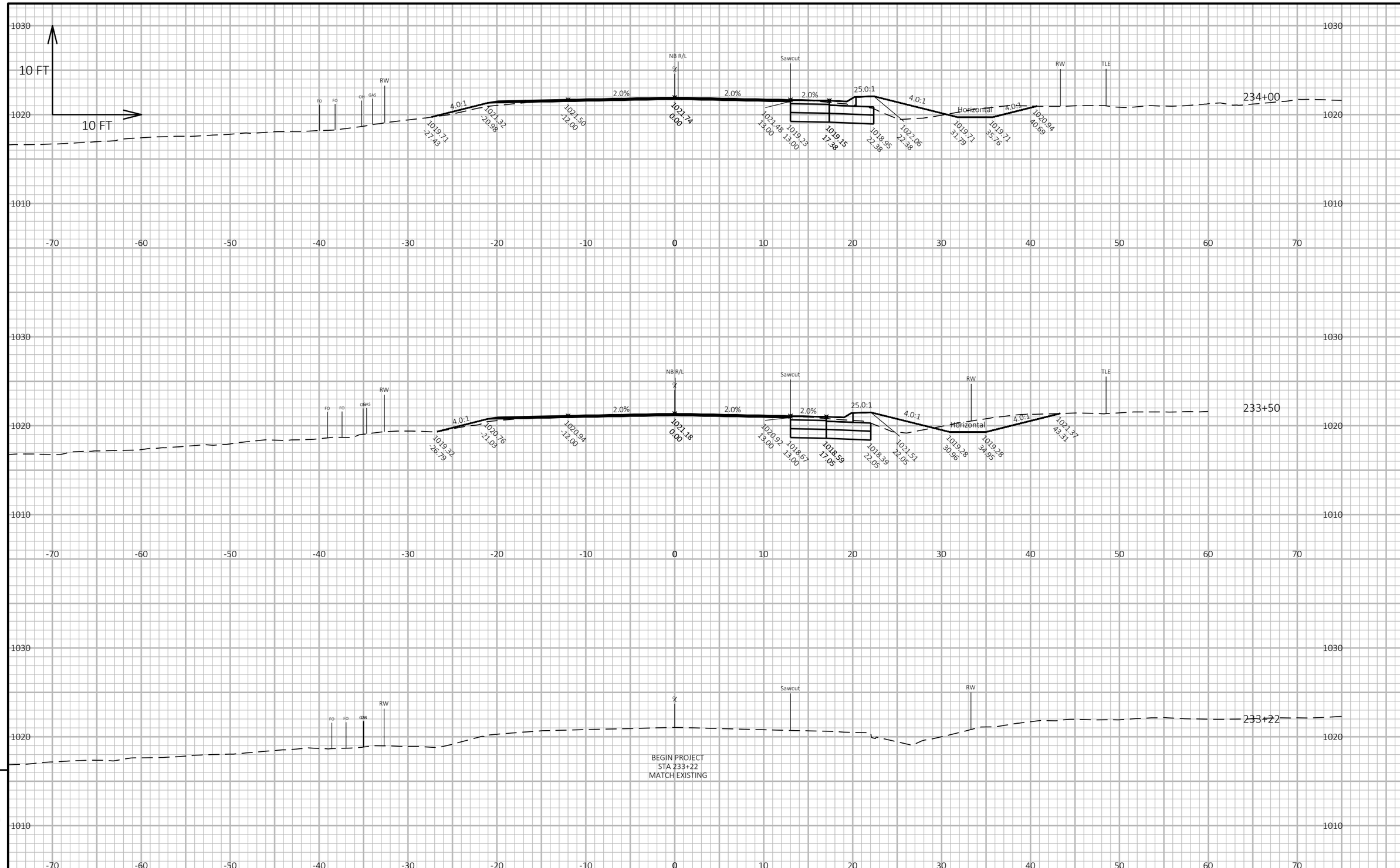

9

9

PROJECT NO: 1706-00-74	HWY: STH 11	COUNTY: GRANT	CROSS SECTIONS	SHEET 150	E

FILE NAME : W:\7390_05\CAD\!1706-00-04\SHEETSPLAN\090201_XS.DWG
LAYOUT NAME - 1

PLOT DATE : 11/30/2020 3:58 PM PLOT BY : KAKACEK, JOHN PLOT NAME : **PLOT SCALE :** 1 IN:10 FT HORZ. / 1 IN:10 FT VERT.

WISDOT/CADDS SHEET 49

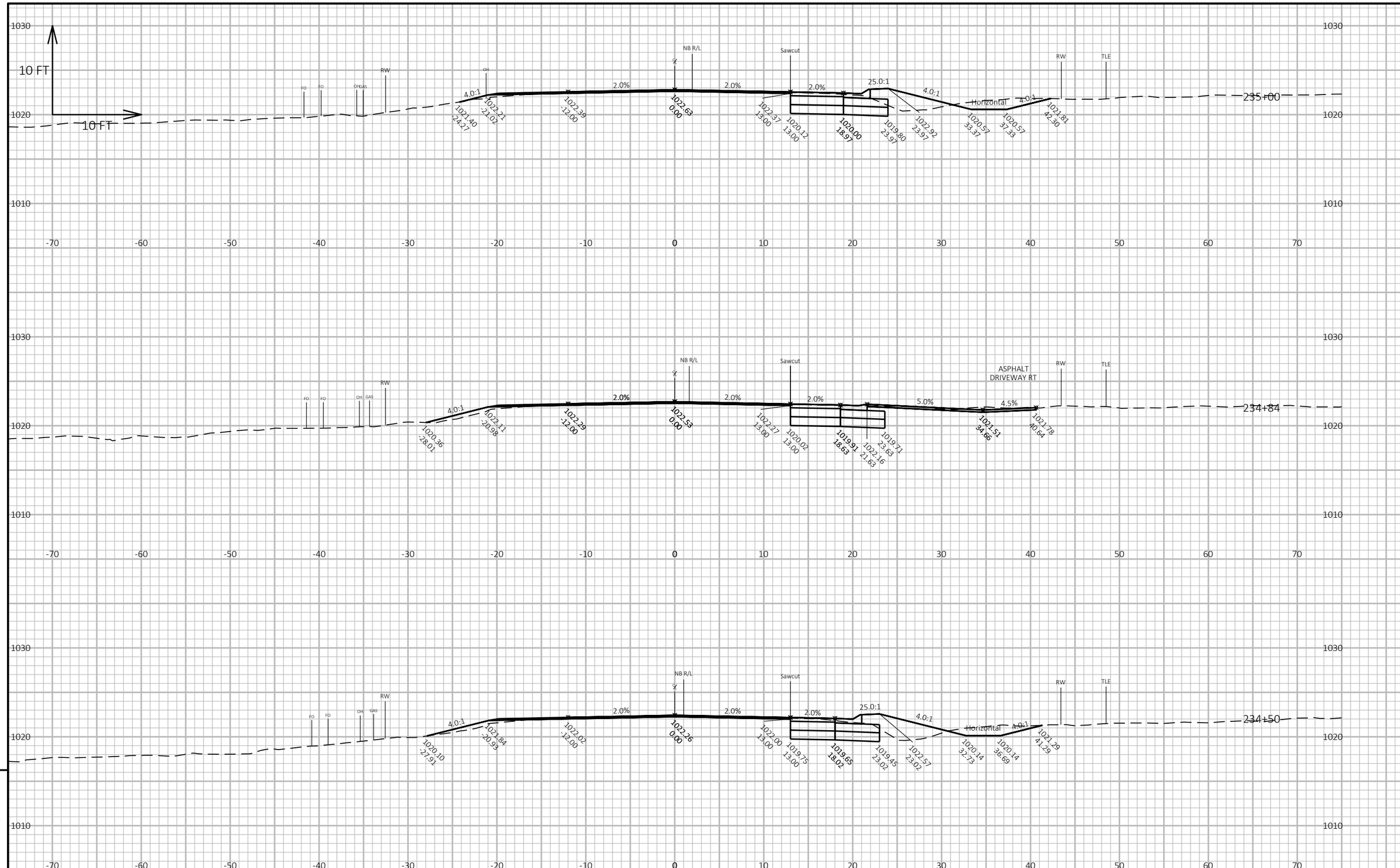

9

9

PROJECT NO: 1706-00-74	HWY: STH 11	COUNTY: GRANT	CROSS SECTIONS	SHEET 151	E

FILE NAME : W:\7390_05\CAD\!1706-00-04\SHEETSPLAN\090201_XS.DWG
LAYOUT NAME - 2

PLOT DATE : 11/30/2020 3:58 PM PLOT BY : KAKACEK, JOHN PLOT NAME : **PLOT SCALE :** 1 IN:10 FT HORZ. / 1 IN:10 FT VERT.

WISDOT/CADDS SHEET 49

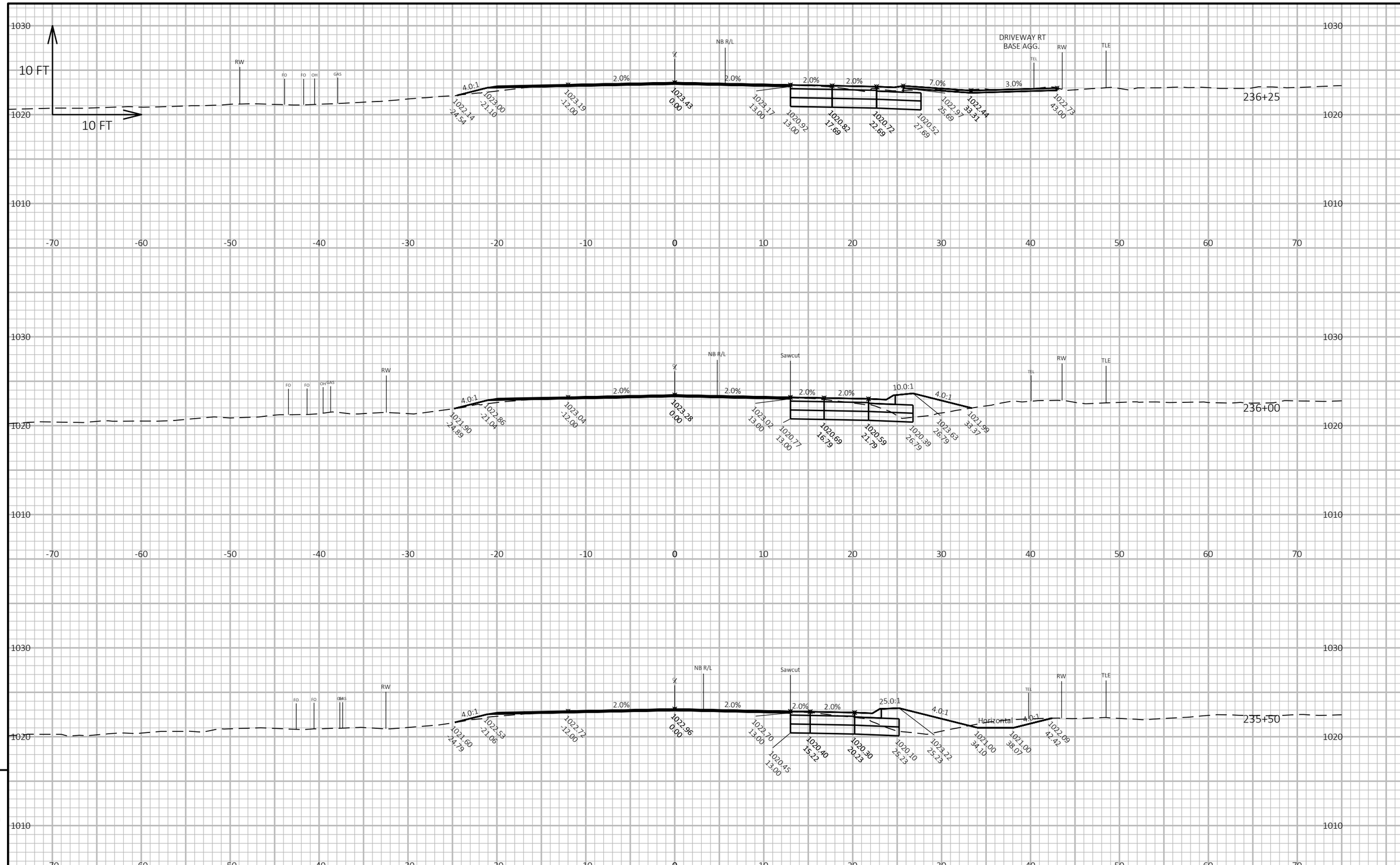

9

9

PROJECT NO: 1706-00-74	HWY: STH 11	COUNTY: GRANT	CROSS SECTIONS	SHEET 152	E

FILE NAME : W:\7390_05\CAD\!1706-00-04\SHEETSPLAN\090201_XS.DWG
LAYOUT NAME - 3

PLOT DATE : 11/30/2020 3:59 PM

PLOT BY : KAKACEK, JOHN

PLOT NAME :

PLOT SCALE : 1 IN:10 FT HORZ. / 1 IN:10 FT VERT.

WISDOT/CADDS SHEET 49

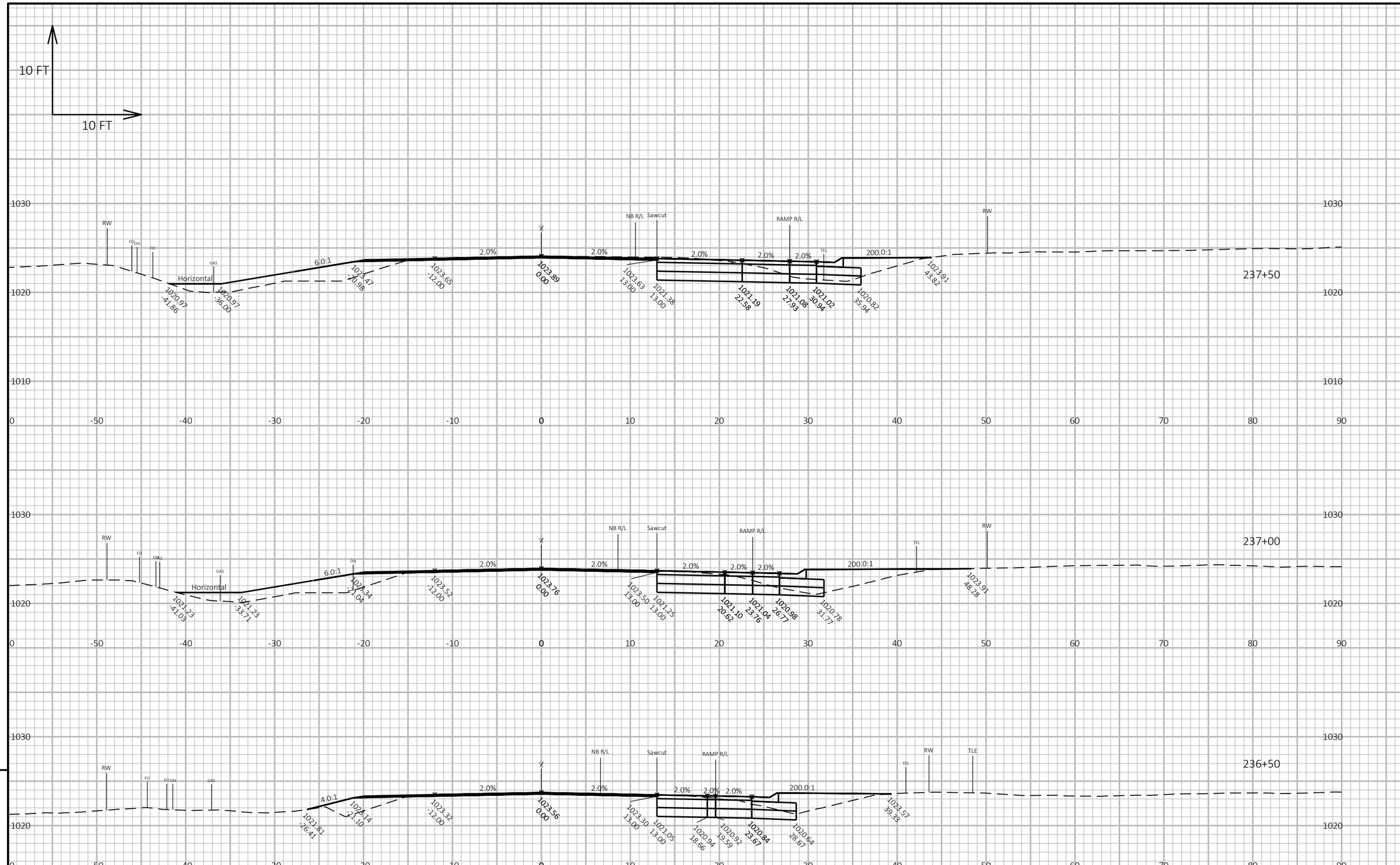

9

9

PROJECT NO: 1706-00-74	HWY: STH 11	COUNTY: GRANT	CROSS SECTIONS	SHEET 153	E

FILE NAME : W:\7390_05\CAD\!1706-00-04\SHEETSPLAN\090201_XS.DWG
LAYOUT NAME - 5
PLOT DATE : 11/30/2020 3:59 PM
PLOT BY : KAKACEK, JOHN
PLOT NAME :
PLOT SCALE : 1 IN:10 FT HORZ. / 1 IN:10 FT VERT.
WISDOT/CADDS SHEET 49

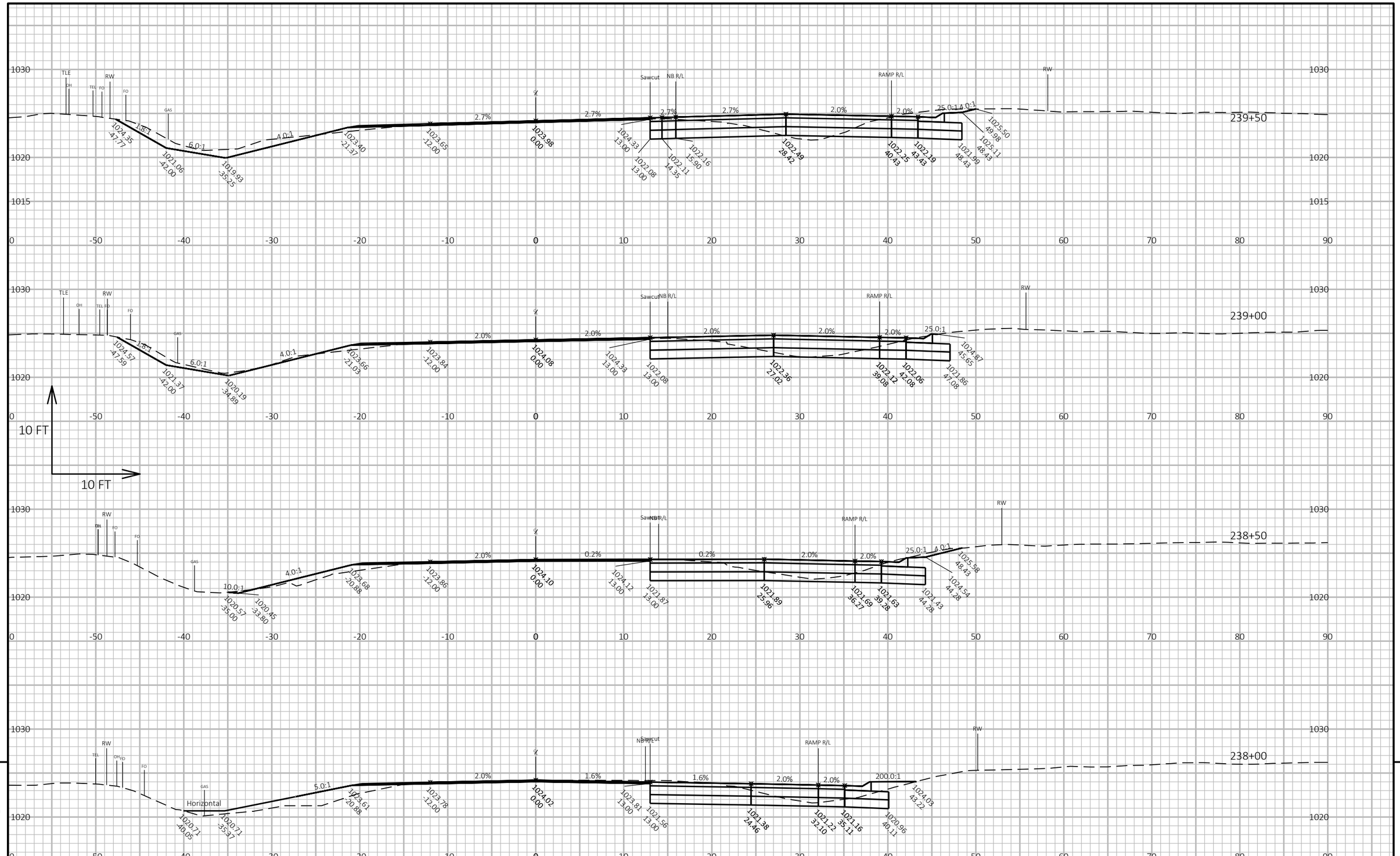

9

9

PROJECT NO: 1706-00-74	HWY: STH 11	COUNTY: GRANT	CROSS SECTIONS	SHEET 154	E

FILE NAME : W:\7390_05\CAD\!1706-00-04\SHEETSPLAN\090201_XS.DWG
LAYOUT NAME - 6

PLOT DATE : 11/30/2020 4:00 PM PLOT BY : KAKACEK, JOHN PLOT NAME : **PLOT SCALE :** 1 IN:10 FT HORZ. / 1 IN:10 FT VERT.

WISDOT/CADDS SHEET 49

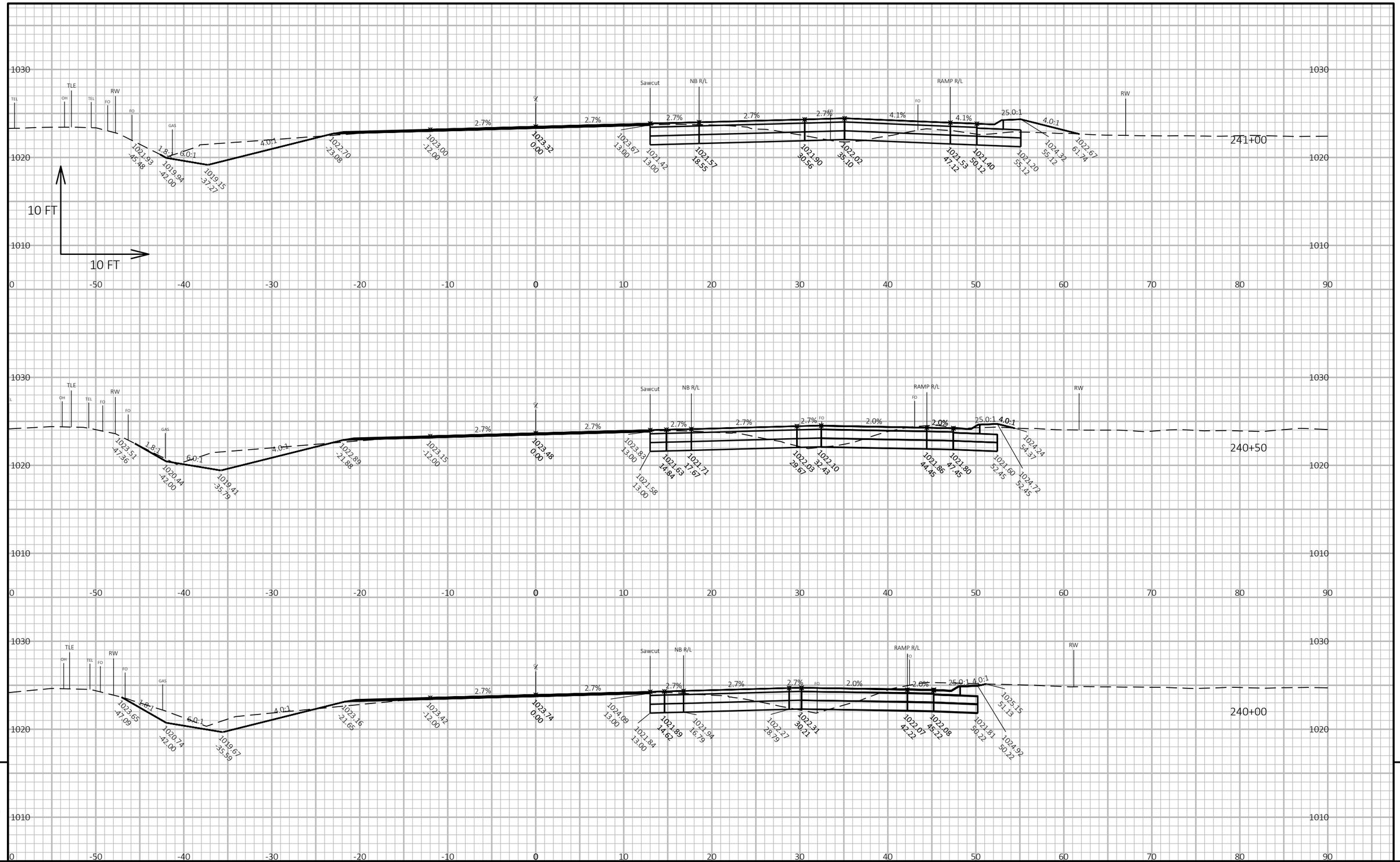

PROJECT NO: 1706-00-74	HWY: STH 11	COUNTY: GRANT	CROSS SECTIONS	SHEET 155	E

FILE NAME : W:\7390_05\CAD\!1706-00-04\SHEETSPLAN\090201_XS.DWG
LAYOUT NAME - 7
PLOT DATE : 11/30/2020 4:00 PM
PLOT BY : KAKACEK, JOHN
PLOT NAME :
PLOT SCALE : 1 IN:10 FT HORZ. / 1 IN:10 FT VERT.
WISDOT/CADDS SHEET 49

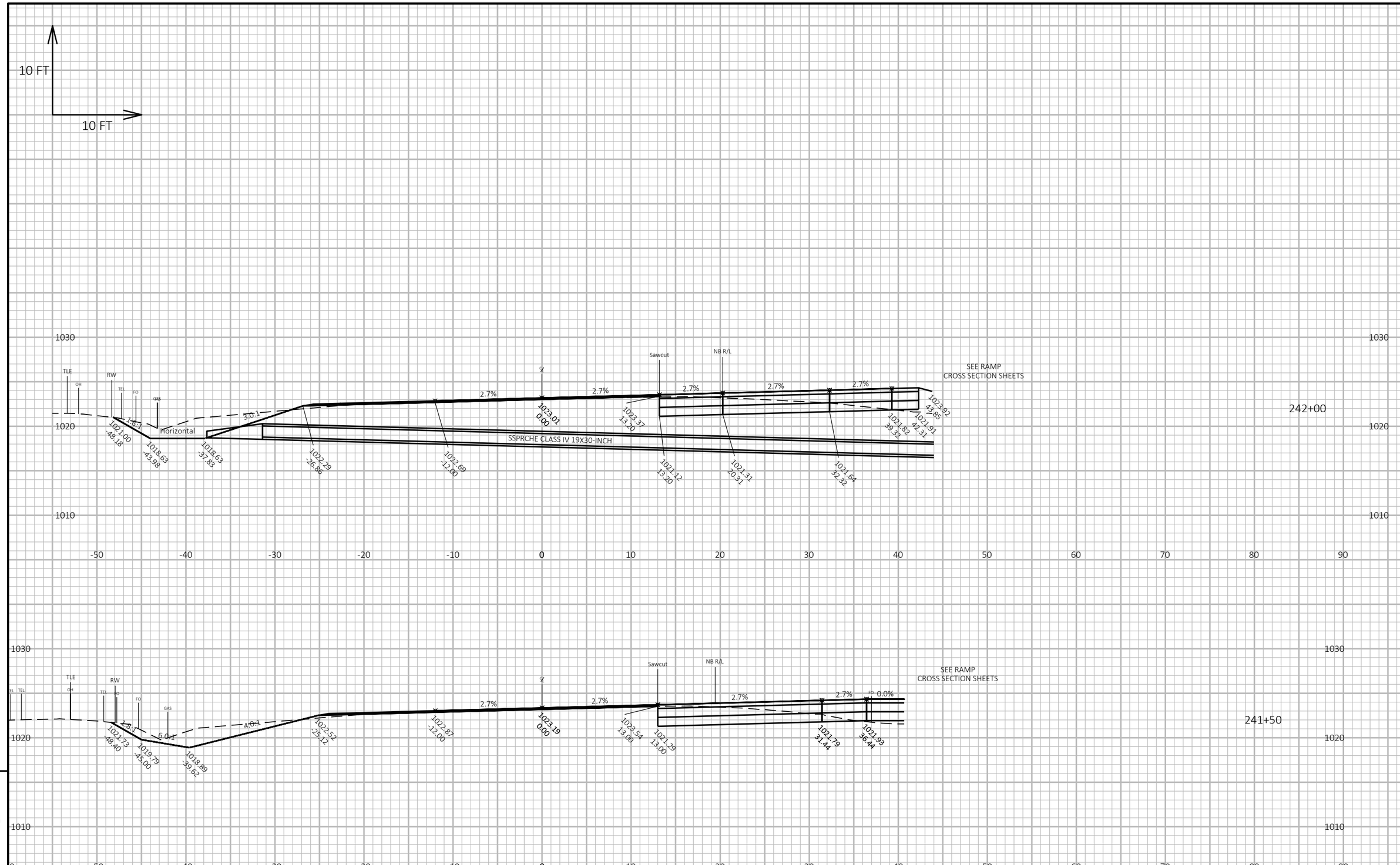

PROJECT NO: 1706-00-74	HWY: STH 11	COUNTY: GRANT	CROSS SECTIONS	SHEET 156	E

FILE NAME : W:\7390_05\CAD\!1706-00-04\SHEETSPLAN\090201_XS.DWG
LAYOUT NAME - 8
PLOT DATE : 11/30/2020 4:00 PM
PLOT BY : KAKACEK, JOHN
PLOT NAME :
PLOT SCALE : 1 IN:10 FT HORZ. / 1 IN:10 FT VERT.
WISDOT/CADDS SHEET 49

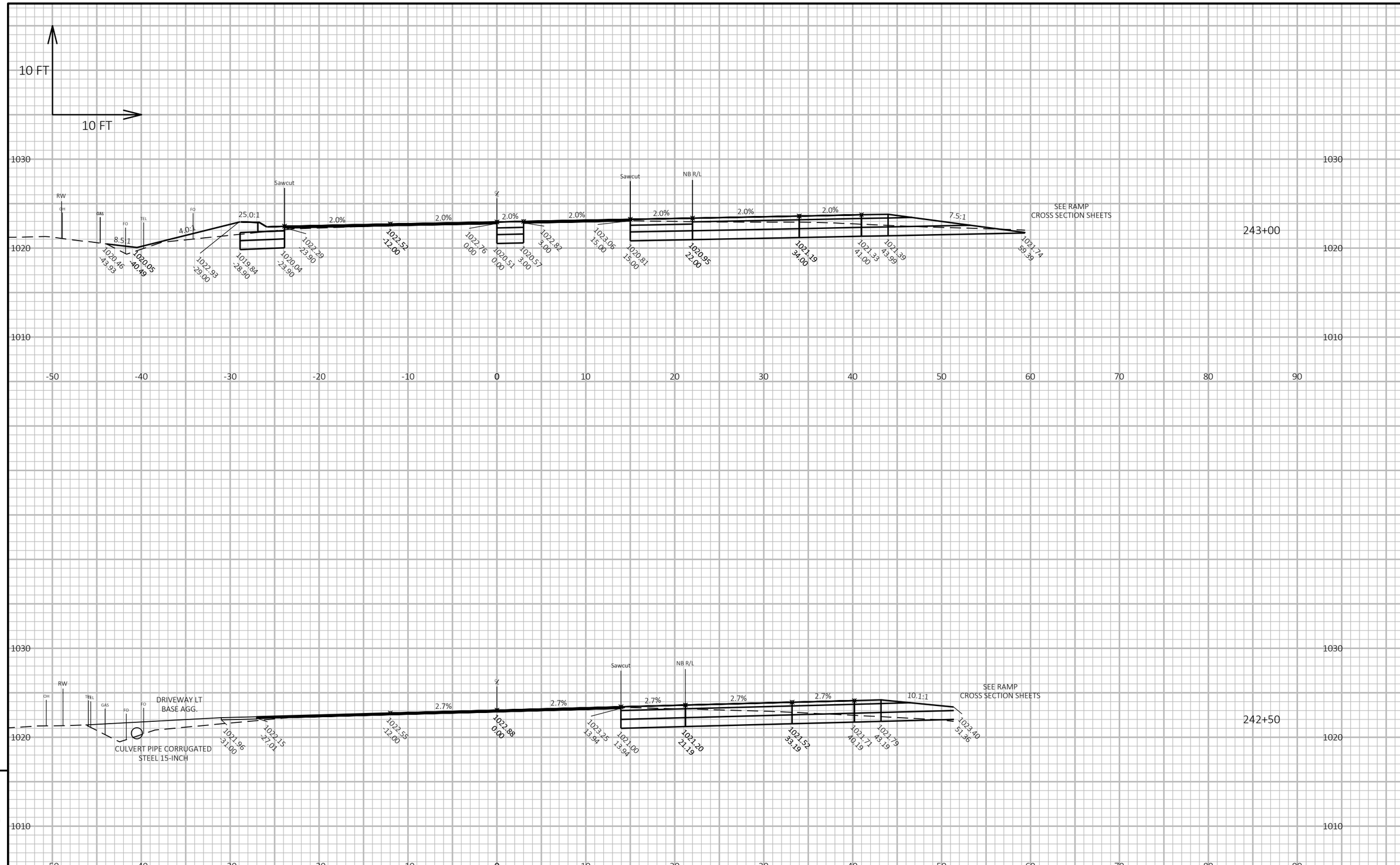

9

9

PROJECT NO: 1706-00-74	HWY: STH 11	COUNTY: GRANT	CROSS SECTIONS	SHEET 157	E

FILE NAME : W:\7390_05\CAD\!1706-00-04\SHEETSPLAN\090201_XS.DWG
LAYOUT NAME - 9
PLOT DATE : 11/30/2020 4:01 PM
PLOT BY : KAKACEK, JOHN
PLOT NAME :
PLOT SCALE : 1 IN:10 FT HORZ. / 1 IN:10 FT VERT.
WISDOT/CADDS SHEET 49

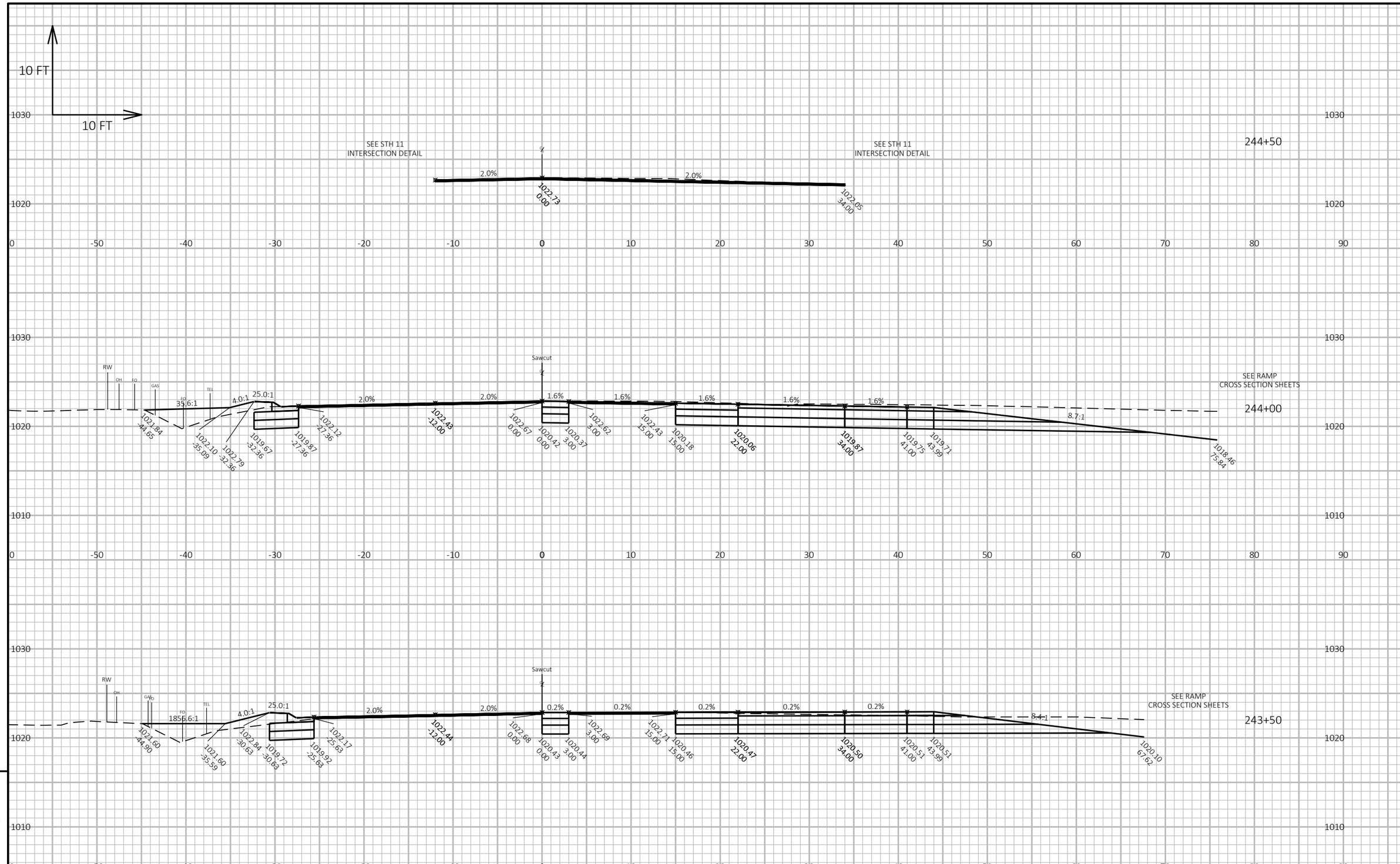

9

9

PROJECT NO: 1706-00-74	HWY: STH 11	COUNTY: GRANT	CROSS SECTIONS	SHEET 158	E

FILE NAME : W:\7390_05\CAD\!1706-00-04\SHEETSPLAN\090201_XS.DWG
LAYOUT NAME - 10

PLOT DATE : 11/30/2020 4:01 PM PLOT BY : KAKACEK, JOHN PLOT NAME : **PLOT SCALE :** 1 IN:10 FT HORZ. / 1 IN:10 FT VERT.

WISDOT/CADDS SHEET 49

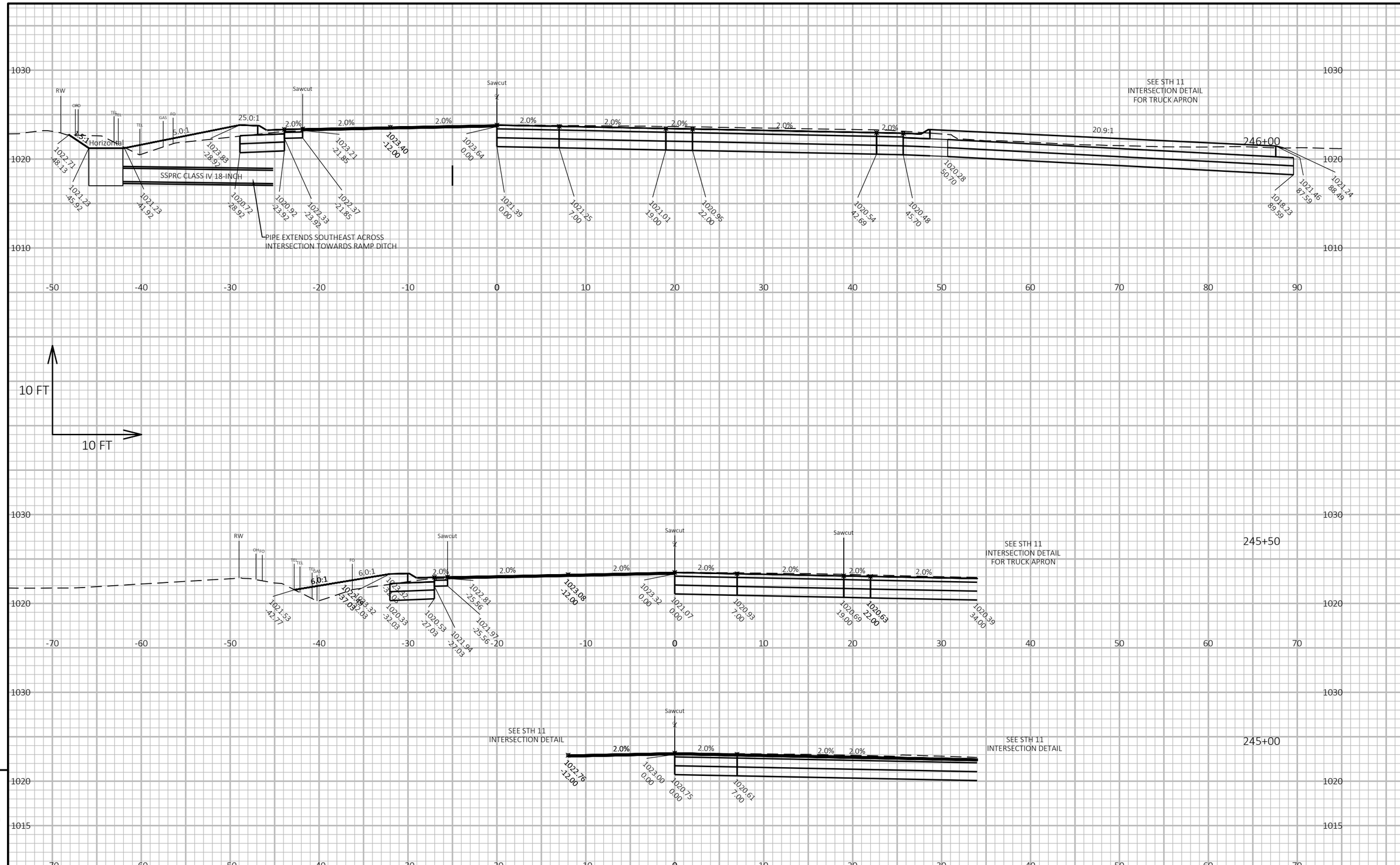

9

9

PROJECT NO: 1706-00-74	HWY: STH 11	COUNTY: GRANT	CROSS SECTIONS	SHEET 159	E

FILE NAME : W:\7390_05\CAD\!1706-00-04\SHEETSPLAN\090201_XS.DWG
LAYOUT NAME - 11
PLOT DATE : 11/30/2020 4:01 PM
PLOT BY : KAKACEK, JOHN
PLOT NAME :
PLOT SCALE : 1 IN:10 FT HORZ. / 1 IN:10 FT VERT.
WISDOT/CADDS SHEET 49

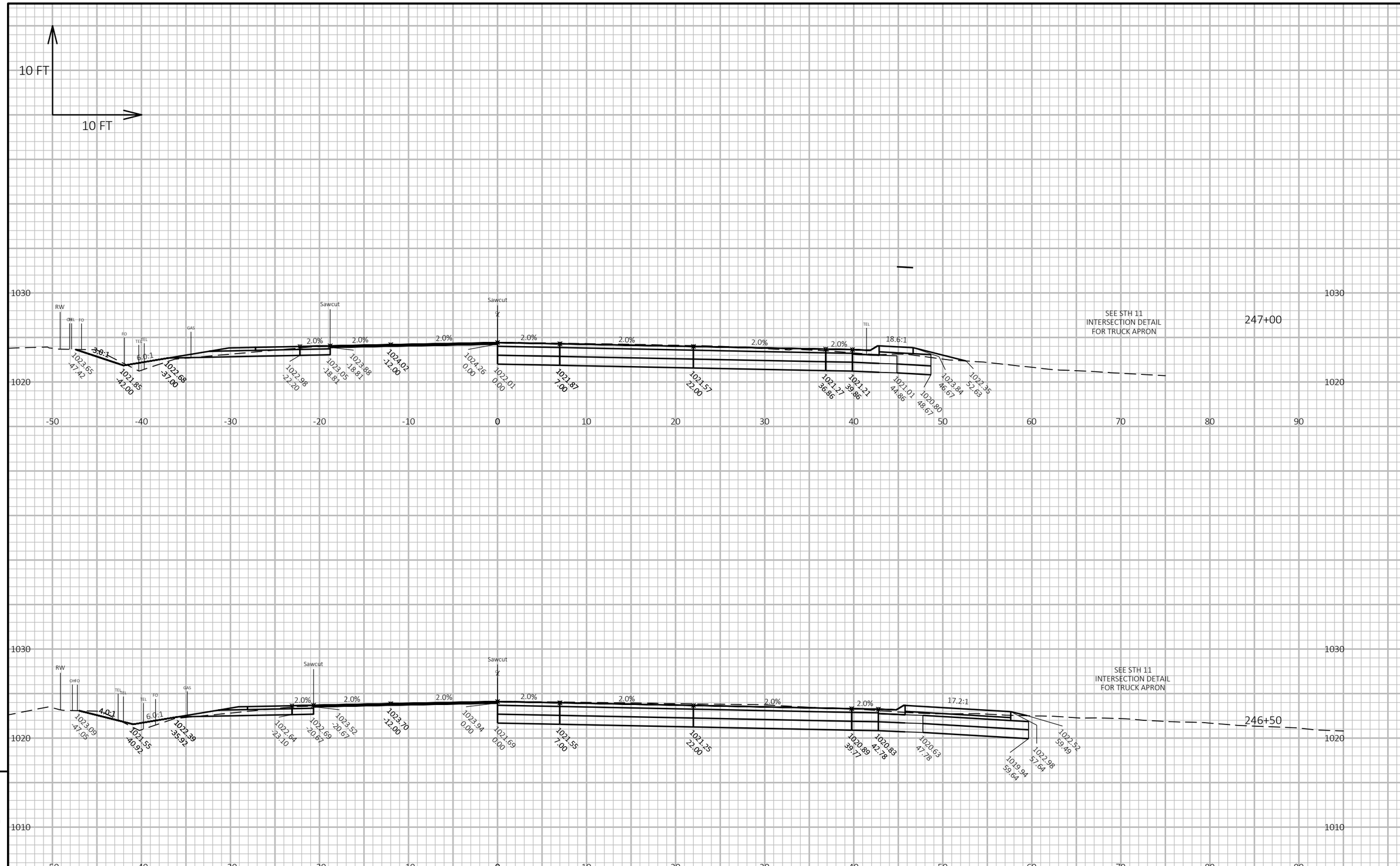

9

9

PROJECT NO: 1706-00-74	HWY: STH 11	COUNTY: GRANT	CROSS SECTIONS	SHEET 160	E

FILE NAME : W:\7390_05\CAD\!1706-00-04\SHEETSPLAN\090201_XS.DWG
LAYOUT NAME - 12

PLOT DATE : 11/30/2020 4:02 PM

PLOT BY : KAKACEK, JOHN

PLOT NAME :

PLOT SCALE : 1 IN:10 FT HORZ. / 1 IN:10 FT VERT.

WISDOT/CADDS SHEET 49

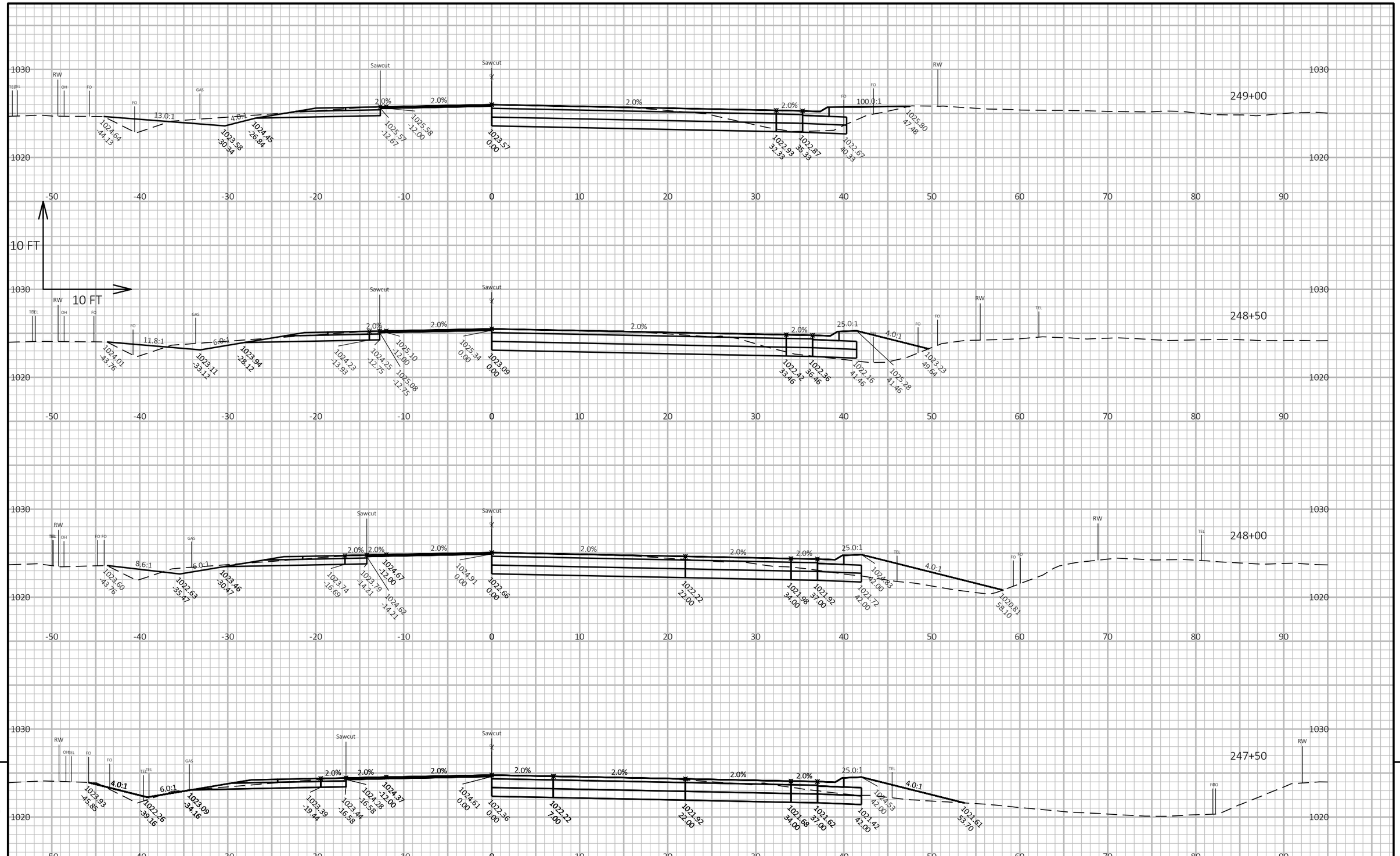

9

9

PROJECT NO: 1706-00-74	HWY: STH 11	COUNTY: GRANT	CROSS SECTIONS	SHEET 161	E

FILE NAME : W:\7390_05\CAD\!1706-00-04\SHEETSPLAN\090201_XS.DWG
LAYOUT NAME - 13
PLOT DATE : 11/30/2020 4:02 PM
PLOT BY : KAKACEK, JOHN
PLOT NAME :
PLOT SCALE : 1 IN:10 FT HORZ. / 1 IN:10 FT VERT.
WISDOT/CADDS SHEET 49

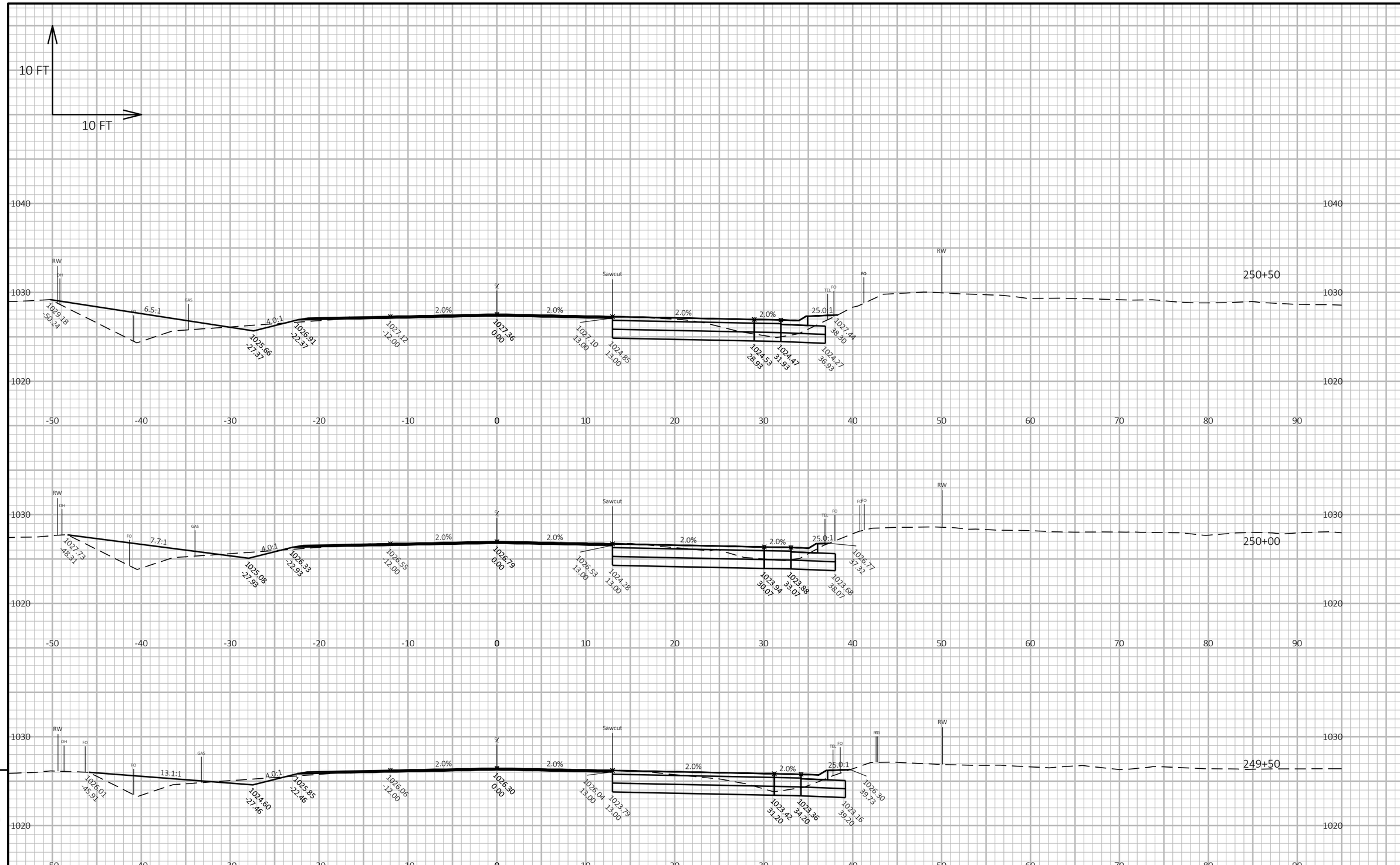

9

9

PROJECT NO: 1706-00-74	HWY: STH 11	COUNTY: GRANT	CROSS SECTIONS	SHEET 162	E

FILE NAME : W:\7390_05\CAD\!1706-00-04\SHEETSPLAN\090201_XS.DWG
LAYOUT NAME - 14
PLOT DATE : 11/30/2020 4:03 PM
PLOT BY : KAKACEK, JOHN
PLOT NAME :
PLOT SCALE : 1 IN:10 FT HORZ. / 1 IN:10 FT VERT.

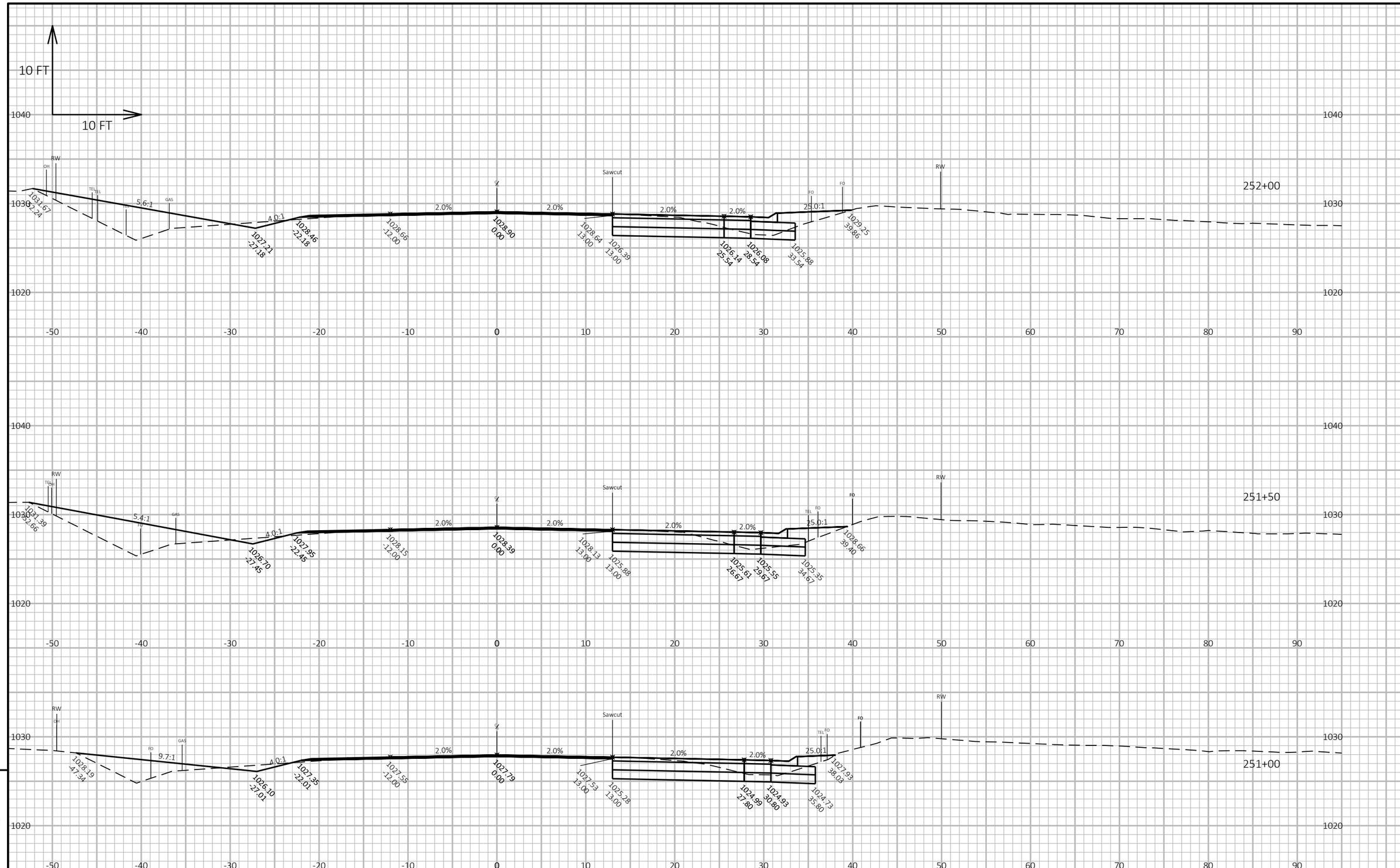

PROJECT NO: 1706-00-74	HWY: STH 11	COUNTY: GRANT	CROSS SECTIONS	SHEET 163	E

FILE NAME : W:\7390_05\CAD\!1706-00-04\SHEETSPLAN\090201_XS.DWG
LAYOUT NAME - 15
PLOT DATE : 11/30/2020 4:03 PM
PLOT BY : KAKACEK, JOHN
PLOT NAME :
PLOT SCALE : 1 IN:10 FT HORZ. / 1 IN:10 FT VERT.
WISDOT/CADDS SHEET 49

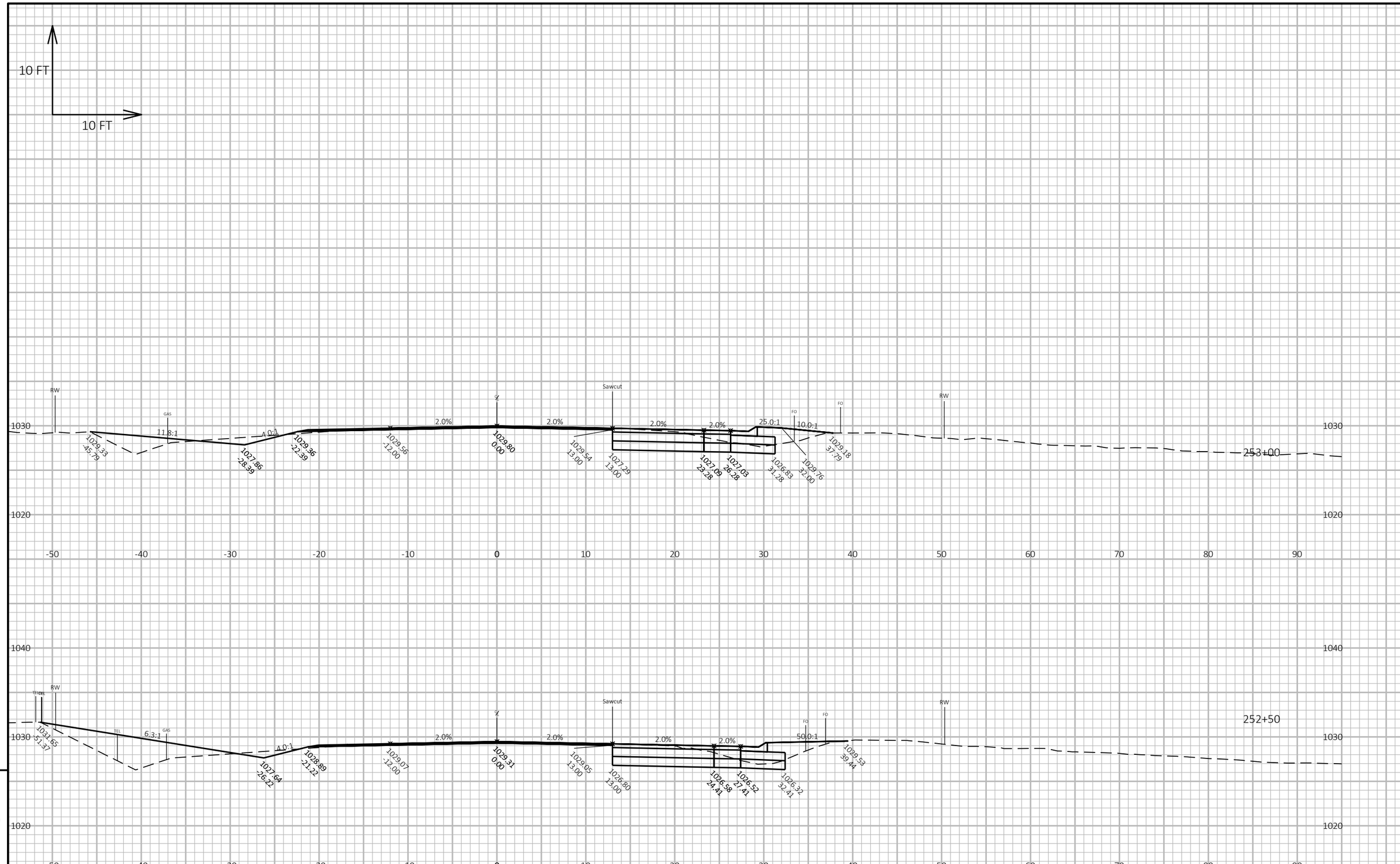

9

9

PROJECT NO: 1706-00-74	HWY: STH 11	COUNTY: GRANT	CROSS SECTIONS	SHEET 164	E

FILE NAME : W:\7390_05\CAD\!1706-00-04\SHEETSPLAN\090201_XS.DWG
LAYOUT NAME - 16

PLOT DATE : 11/30/2020 4:03 PM PLOT BY : KAKACEK, JOHN PLOT NAME : **PLOT SCALE :** 1 IN:10 FT HORZ. / 1 IN:10 FT VERT.

WISDOT/CADDS SHEET 49

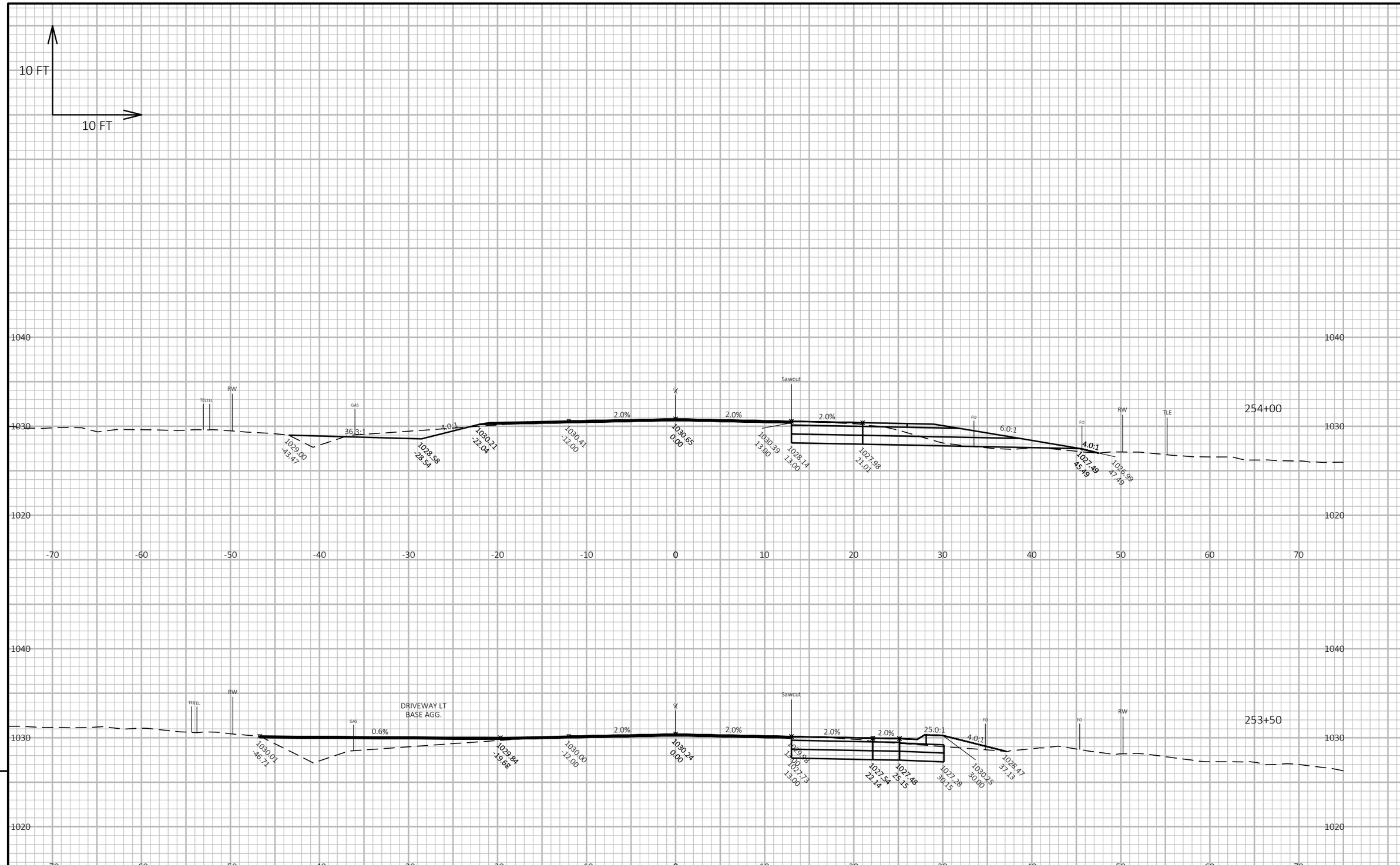

PROJECT NO: 1706-00-74	HWY: STH 11	COUNTY: GRANT	CROSS SECTIONS	SHEET 165	E

FILE NAME : W:\7390_05\CAD\!1706-00-04\SHEETSPLAN\090201_XS.DWG
LAYOUT NAME - 17
PLOT DATE : 11/30/2020 4:04 PM
PLOT BY : KAKACEK, JOHN
PLOT NAME :
PLOT SCALE : 1 IN:10 FT HORZ. / 1 IN:10 FT VERT.
WISDOT/CADDS SHEET 49

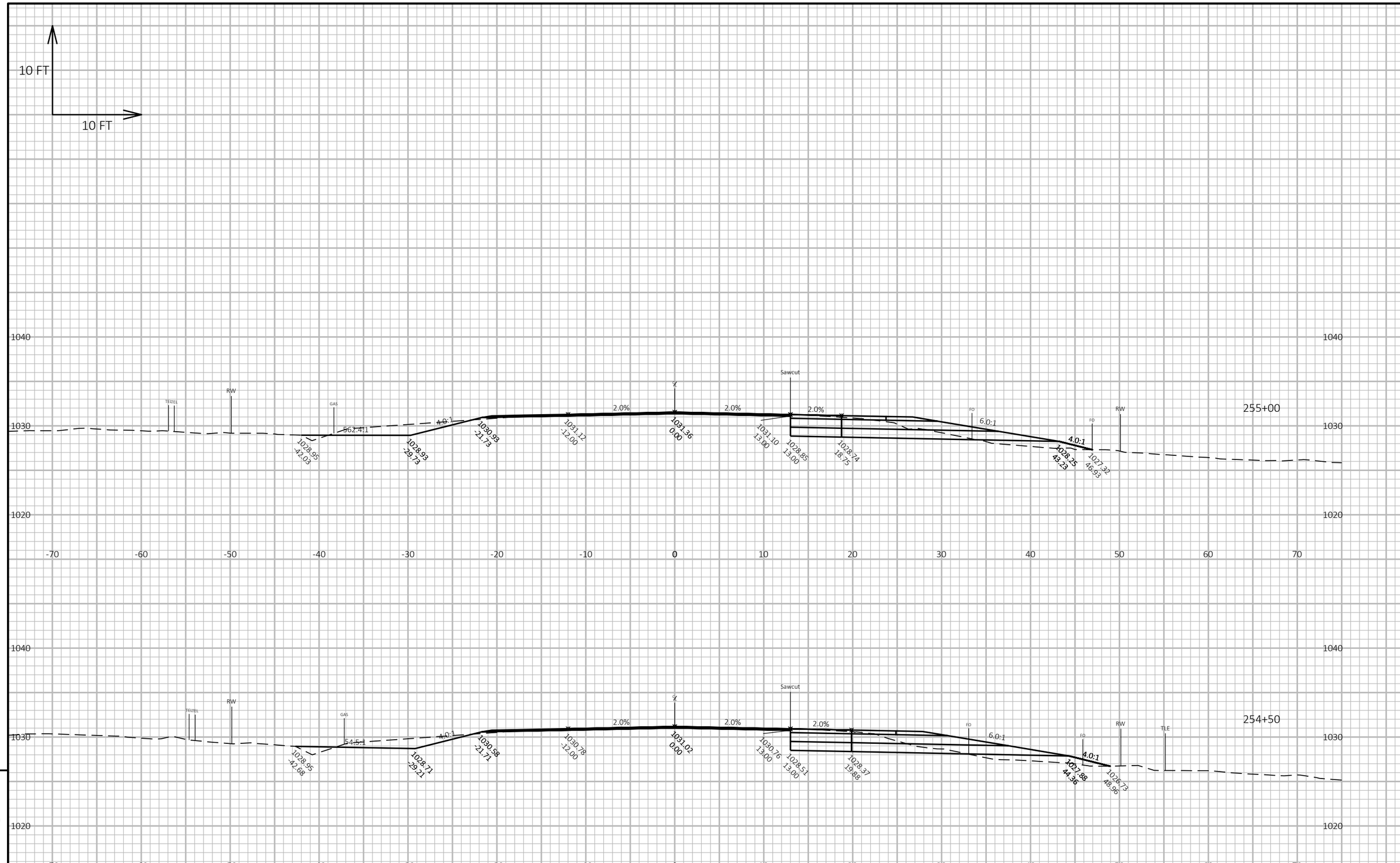

PROJECT NO: 1706-00-74	HWY: STH 11	COUNTY: GRANT	CROSS SECTIONS	SHEET 166	E

FILE NAME : W:\7390_05\CAD\!1706-00-04\SHEETSPLAN\090201_XS.DWG
LAYOUT NAME - 18
PLOT DATE : 11/30/2020 4:04 PM
PLOT BY : KAKACEK, JOHN
PLOT NAME :
PLOT SCALE : 1 IN:10 FT HORZ. / 1 IN:10 FT VERT.
WISDOT/CADDS SHEET 49

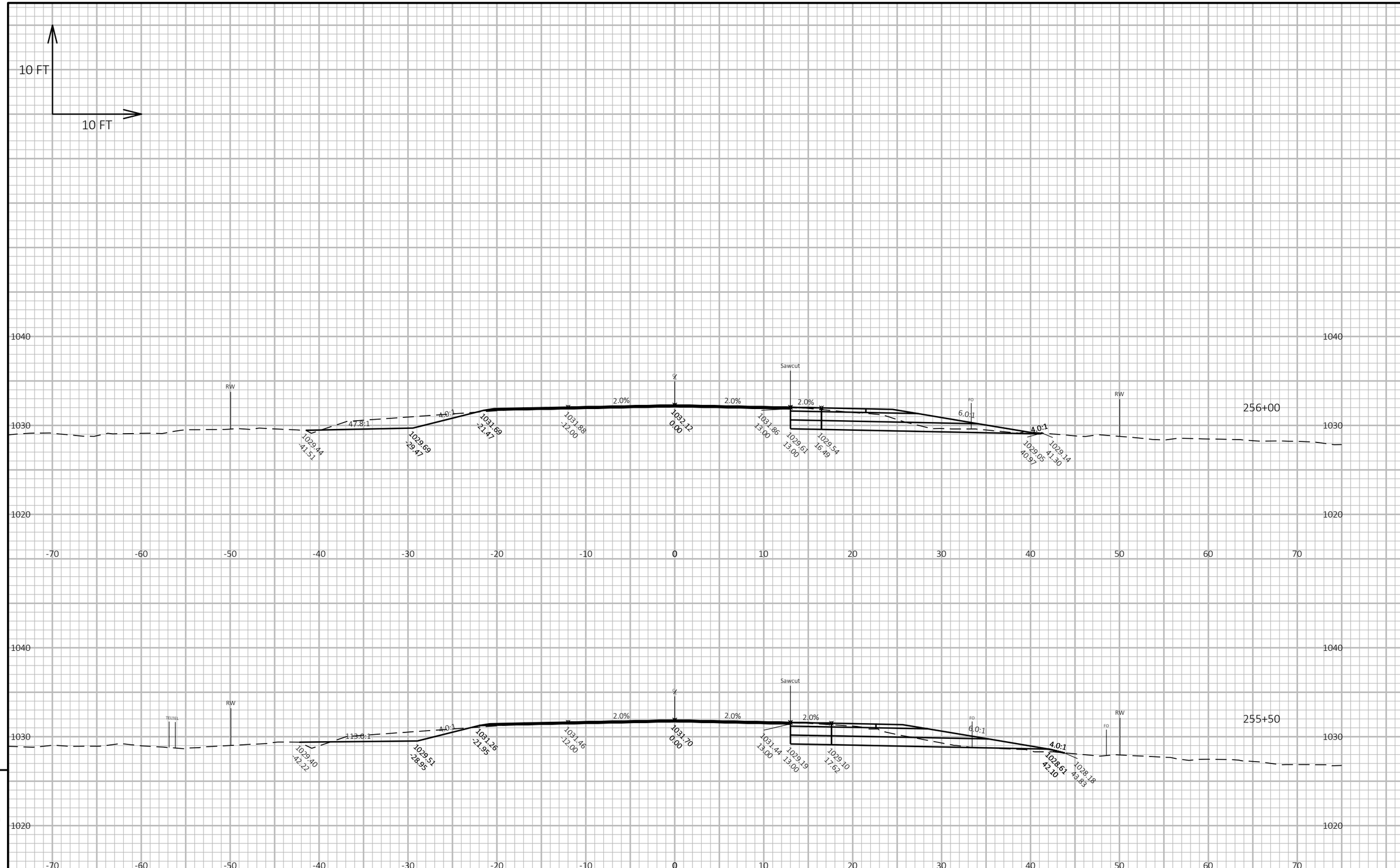

9

9

PROJECT NO: 1706-00-74	HWY: STH 11	COUNTY: GRANT	CROSS SECTIONS	SHEET 167	E

FILE NAME : W:\7390_05\CAD\!1706-00-04\SHEETSPLAN\090201_XS.DWG
LAYOUT NAME - 19

PLOT DATE : 11/30/2020 4:04 PM PLOT BY : KAKACEK, JOHN PLOT NAME : **PLOT SCALE :** 1 IN:10 FT HORZ. / 1 IN:10 FT VERT.

WISDOT/CADDS SHEET 49

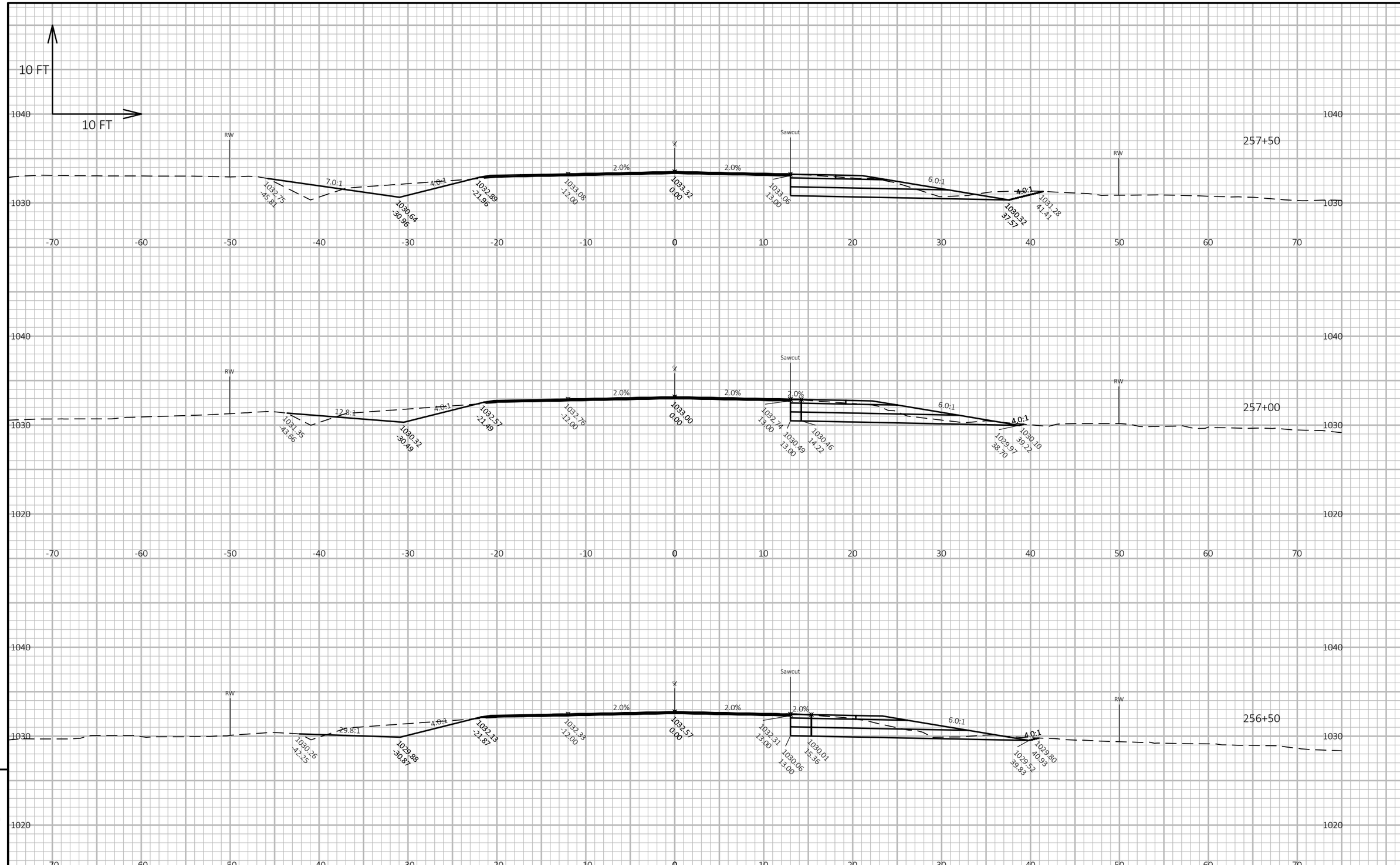

9

9

PROJECT NO: 1706-00-74	HWY: STH 11	COUNTY: GRANT	CROSS SECTIONS	SHEET 168	E

FILE NAME : W:\7390_05\CAD\!1706-00-04\SHEETSPLAN\090201_XS.DWG
LAYOUT NAME - 20

PLOT DATE : 11/30/2020 4:05 PM PLOT BY : KAKACEK, JOHN PLOT NAME : **PLOT SCALE :** 1 IN:10 FT HORZ. / 1 IN:10 FT VERT.

WISDOT/CADDS SHEET 49

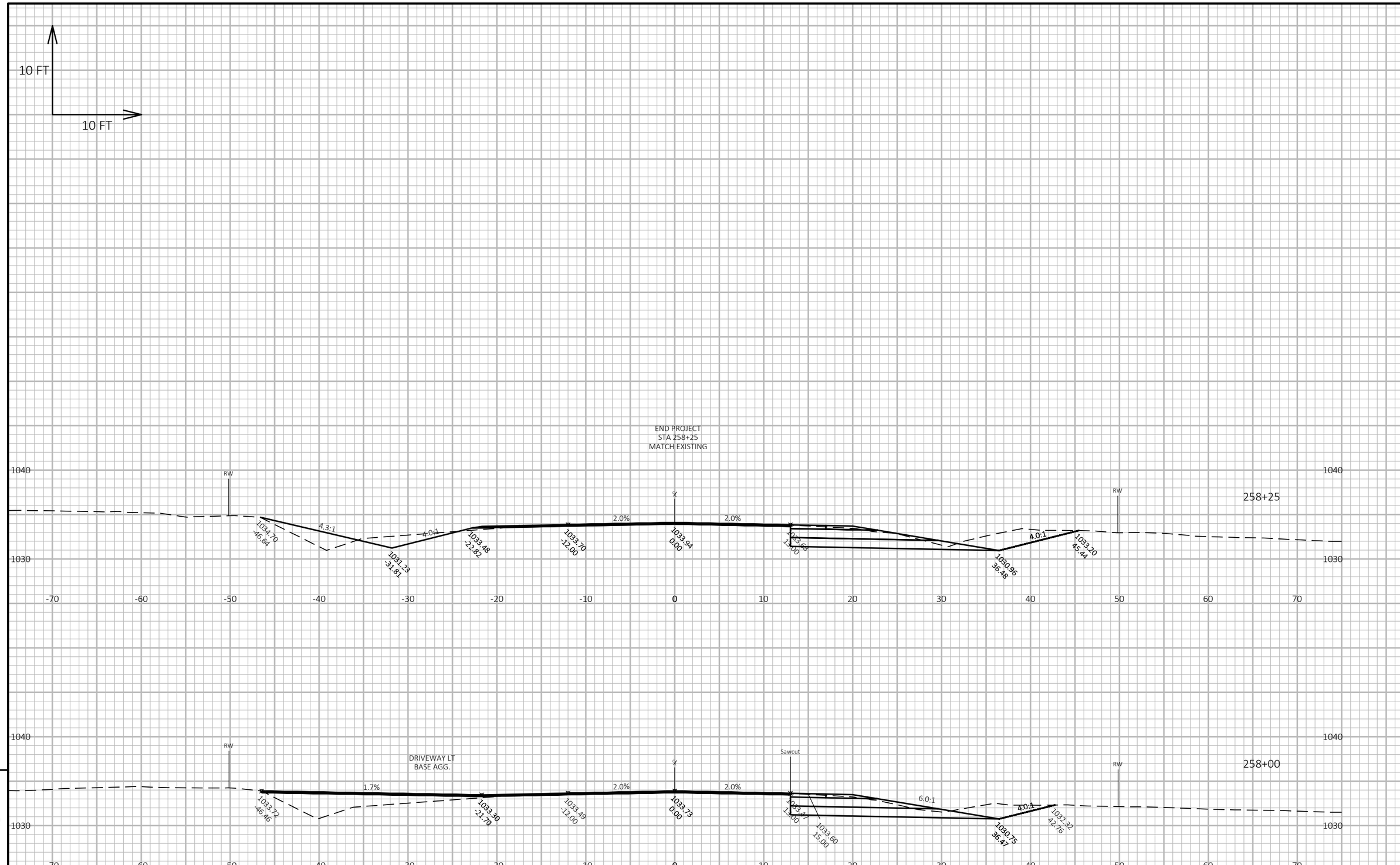

9

9

PROJECT NO: 1706-00-74	HWY: STH 11	COUNTY: GRANT	CROSS SECTIONS	SHEET 169	E

FILE NAME : W:\7390_05\CAD\!1706-00-04\SHEETSPLAN\090201_XS.DWG
LAYOUT NAME - 21
PLOT DATE : 11/30/2020 4:05 PM
PLOT BY : KAKACEK, JOHN
PLOT NAME :
PLOT SCALE : 1 IN:10 FT HORZ. / 1 IN:10 FT VERT.
WISDOT/CADDS SHEET 49

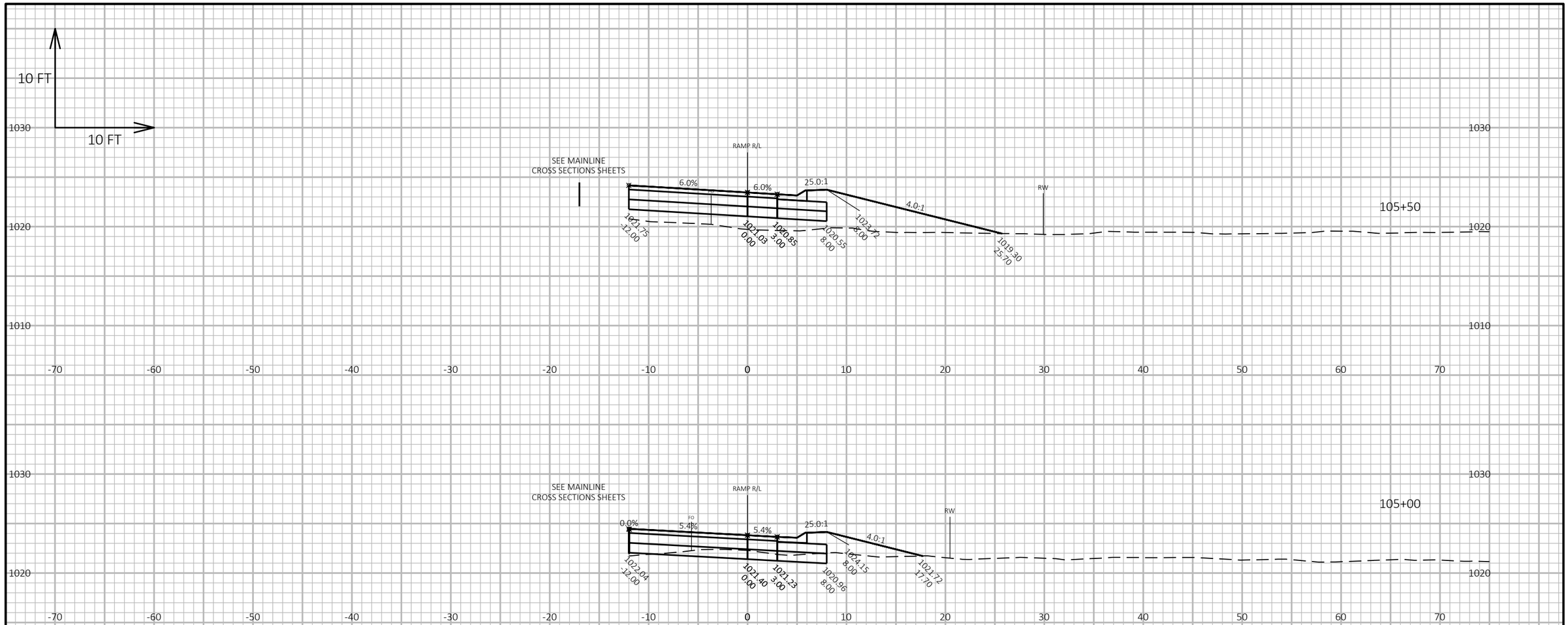

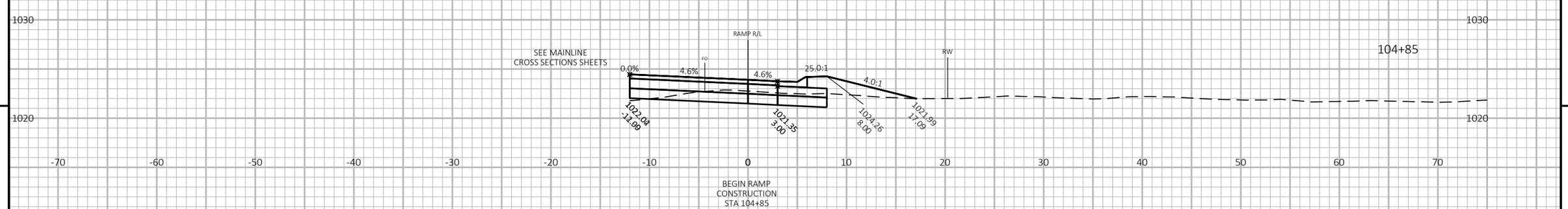

9

9

PROJECT NO: 1706-00-74	HWY: STH 11	COUNTY: GRANT	CROSS SECTIONS RAMP ALIGNMENT	SHEET 170	E

FILE NAME : W:\7390_05\CAD\!1706-00-04\SHEETSPLAN\090201_XS.DWG
LAYOUT NAME - Ramp - (1)
PLOT DATE : 11/30/2020 4:06 PM
PLOT BY : KAKACEK, JOHN
PLOT NAME :
PLOT SCALE : 1 IN:10 FT HORZ. / 1 IN:10 FT VERT.
WISDOT/CADDS SHEET 49

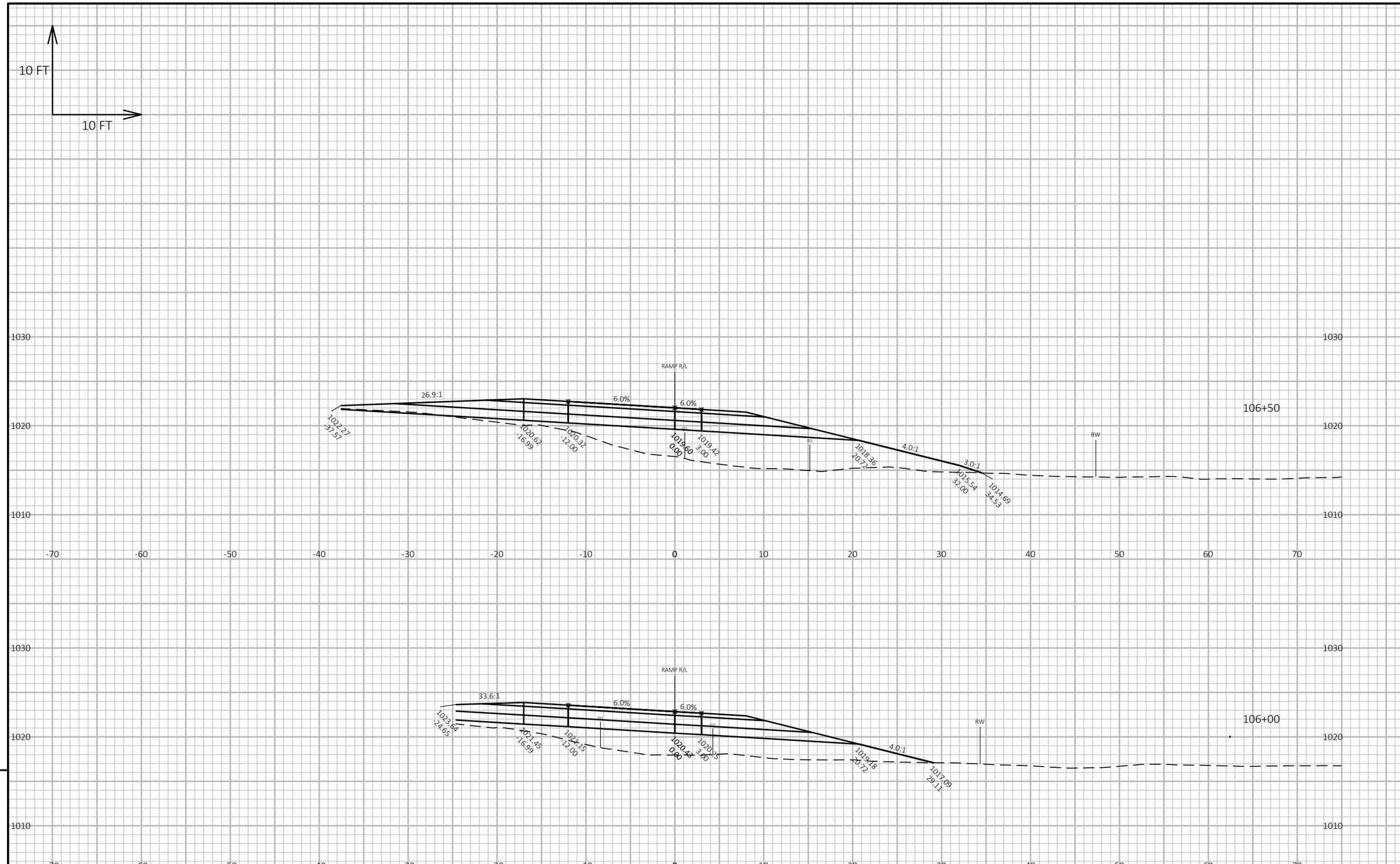

9

9

PROJECT NO: 1706-00-74	HWY: STH 11	COUNTY: GRANT	CROSS SECTIONS RAMP ALIGNMENT	SHEET 171	E

FILE NAME : W:\7390_05\CAD\!1706-00-04\SHEETSPLAN\090201_XS.DWG
LAYOUT NAME - Ramp - (2)

PLOT DATE : 11/30/2020 4:06 PM PLOT BY : KAKACEK, JOHN PLOT NAME : **PLOT SCALE :** 1 IN:10 FT HORZ. / 1 IN:10 FT VERT.

WISDOT/CADDS SHEET 49

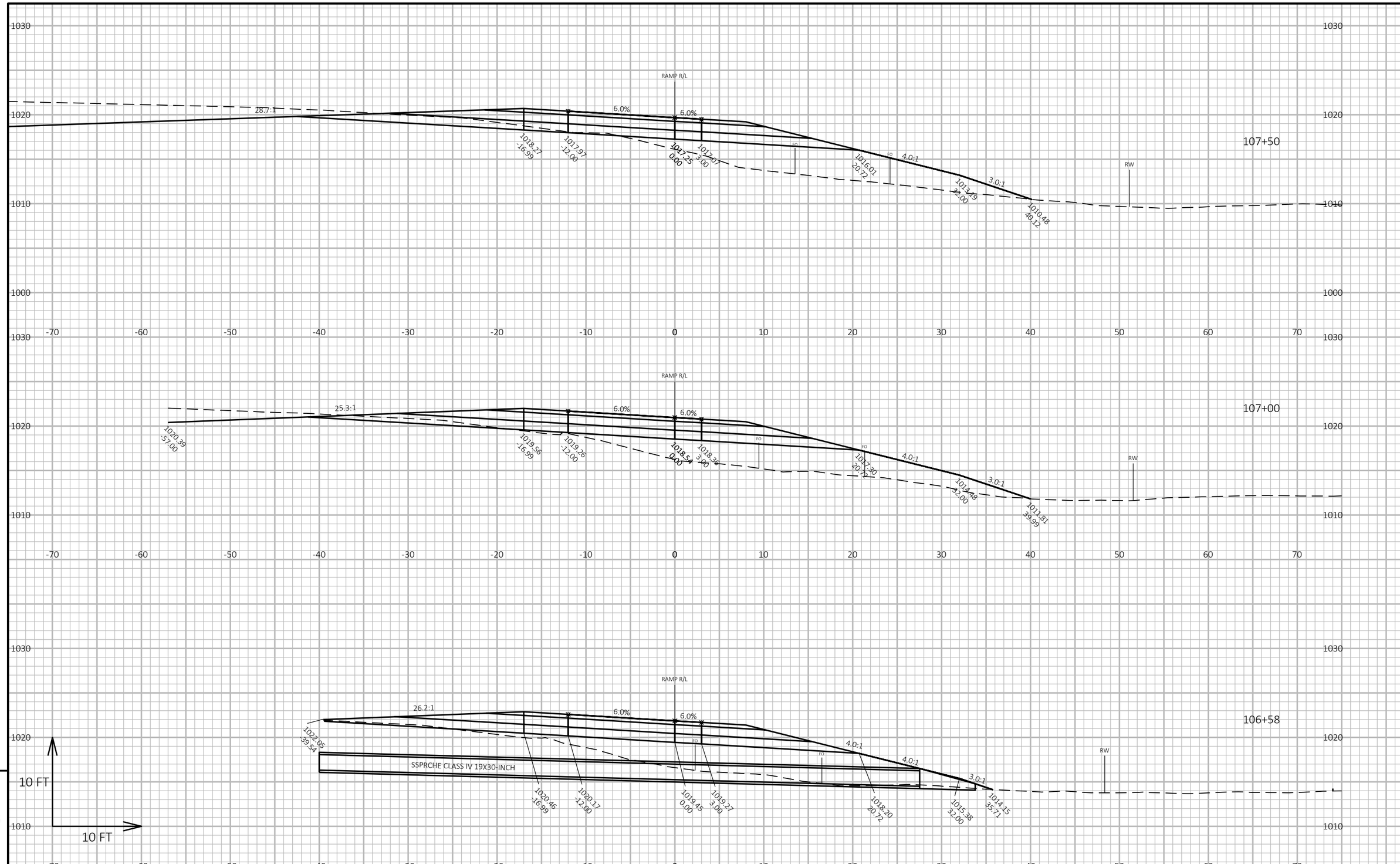

9

9

PROJECT NO: 1706-00-74	HWY: STH 11	COUNTY: GRANT	CROSS SECTIONS RAMP ALIGNMENT	SHEET 172	E

FILE NAME : W:\7390_05\CAD\!1706-00-04\SHEETSPLAN\090201_XS.DWG
LAYOUT NAME - Ramp - (3)

PLOT DATE : 11/30/2020 4:06 PM PLOT BY : KAKACEK, JOHN PLOT NAME : **PLOT SCALE :** 1 IN:10 FT HORZ. / 1 IN:10 FT VERT.

WISDOT/CADDS SHEET 49

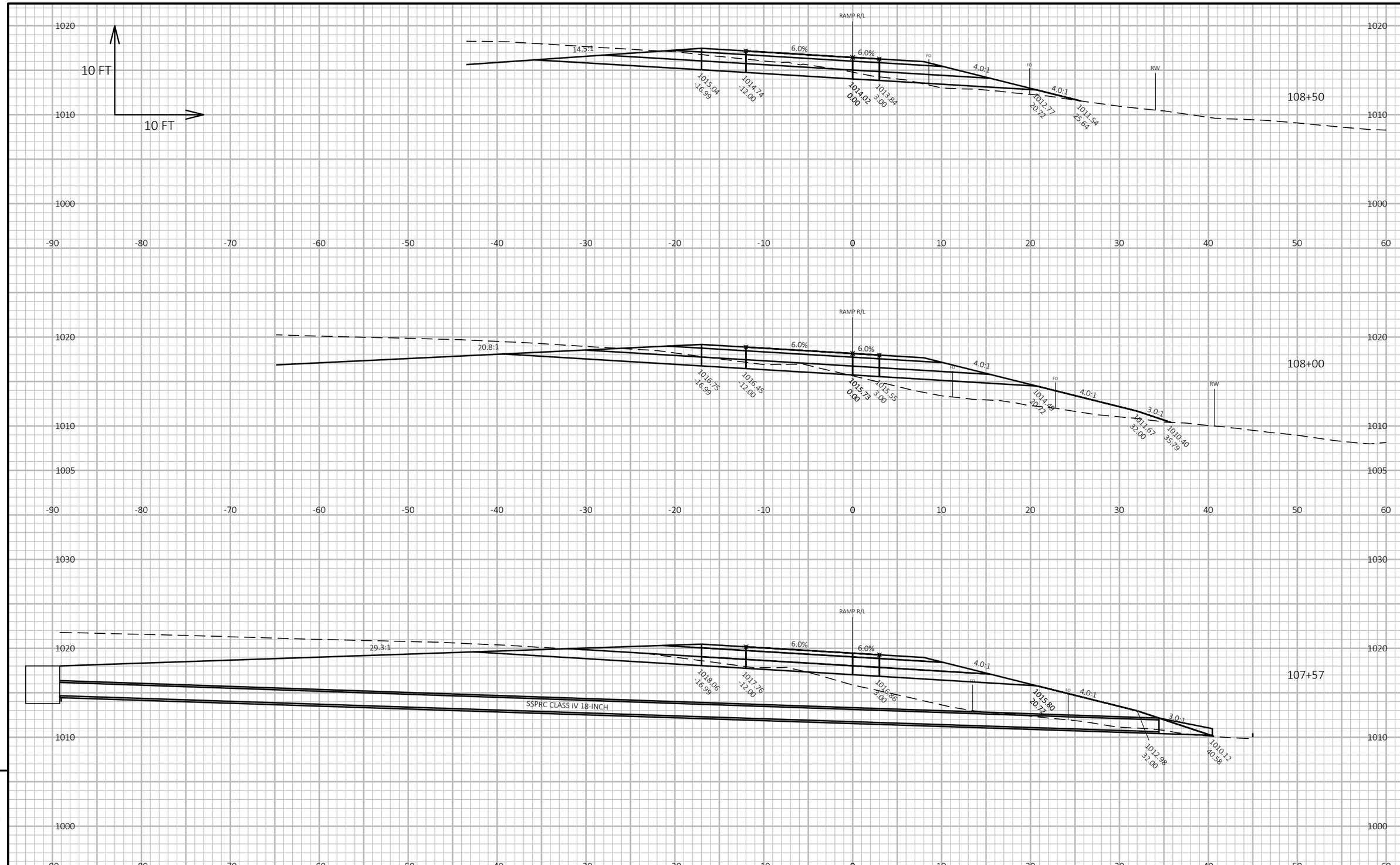

9

9

PROJECT NO: 1706-00-74	HWY: STH 11	COUNTY: GRANT	CROSS SECTIONS RAMP ALIGNMENT	SHEET 173	E

FILE NAME : W:\7390_05\CAD\!1706-00-04\SHEETSPLAN\090201_XS.DWG
LAYOUT NAME - Ramp - (4)
PLOT DATE : 11/30/2020 4:07 PM
PLOT BY : KAKACEK, JOHN
PLOT NAME :
PLOT SCALE : 1 IN:10 FT HORZ. / 1 IN:10 FT VERT.
WISDOT/CADDS SHEET 49

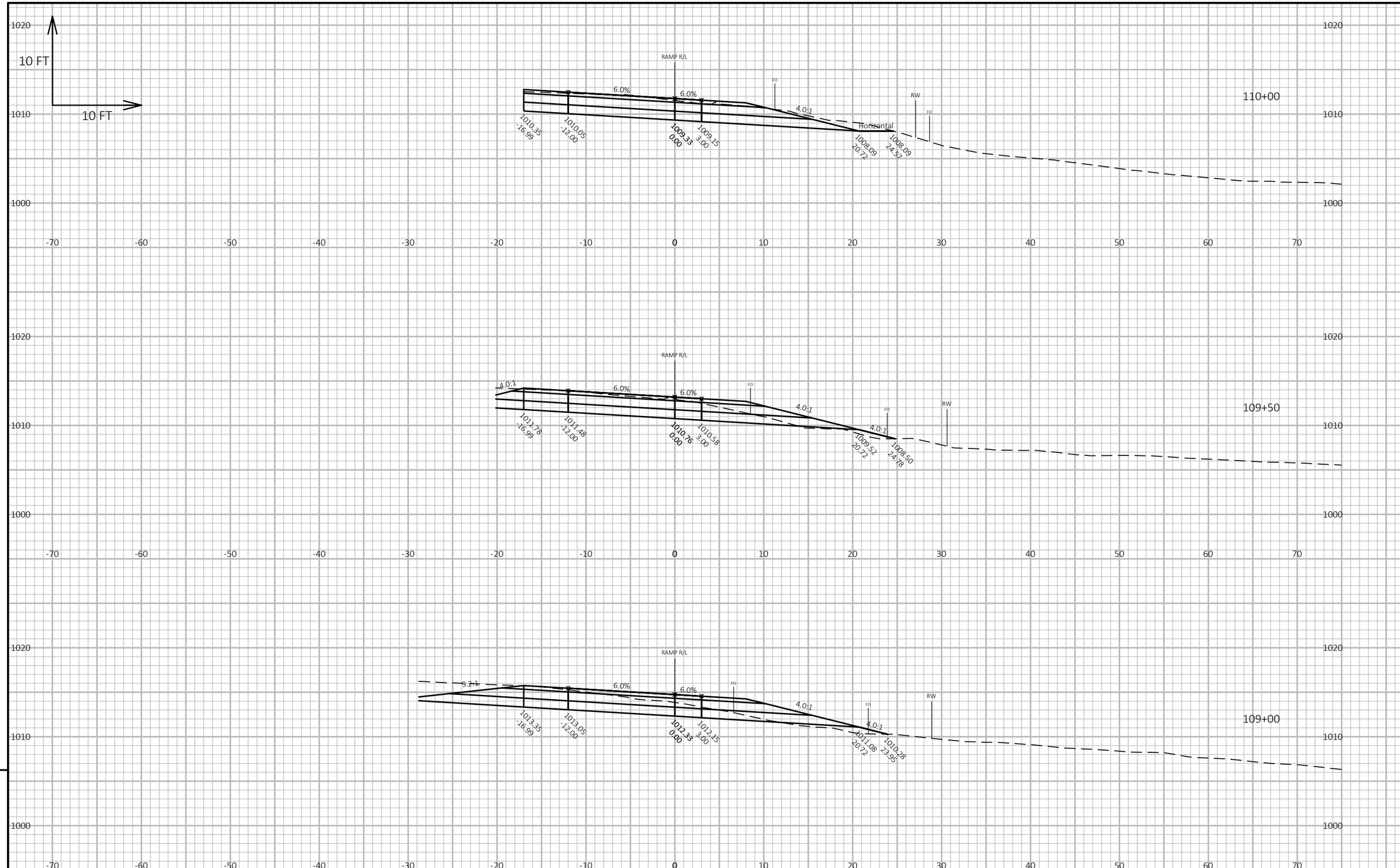

9

9

PROJECT NO: 1706-00-74	HWY: STH 11	COUNTY: GRANT	CROSS SECTIONS RAMP ALIGNMENT	SHEET 174	E

FILE NAME : W:\7390_05\CAD\!1706-00-04\SHEETSPLAN\090201_XS.DWG
LAYOUT NAME - Ramp - (5)

PLOT DATE : 11/30/2020 4:07 PM PLOT BY : KAKACEK, JOHN PLOT NAME : **PLOT SCALE :** 1 IN:10 FT HORZ. / 1 IN:10 FT VERT.

WISDOT/CADDS SHEET 49

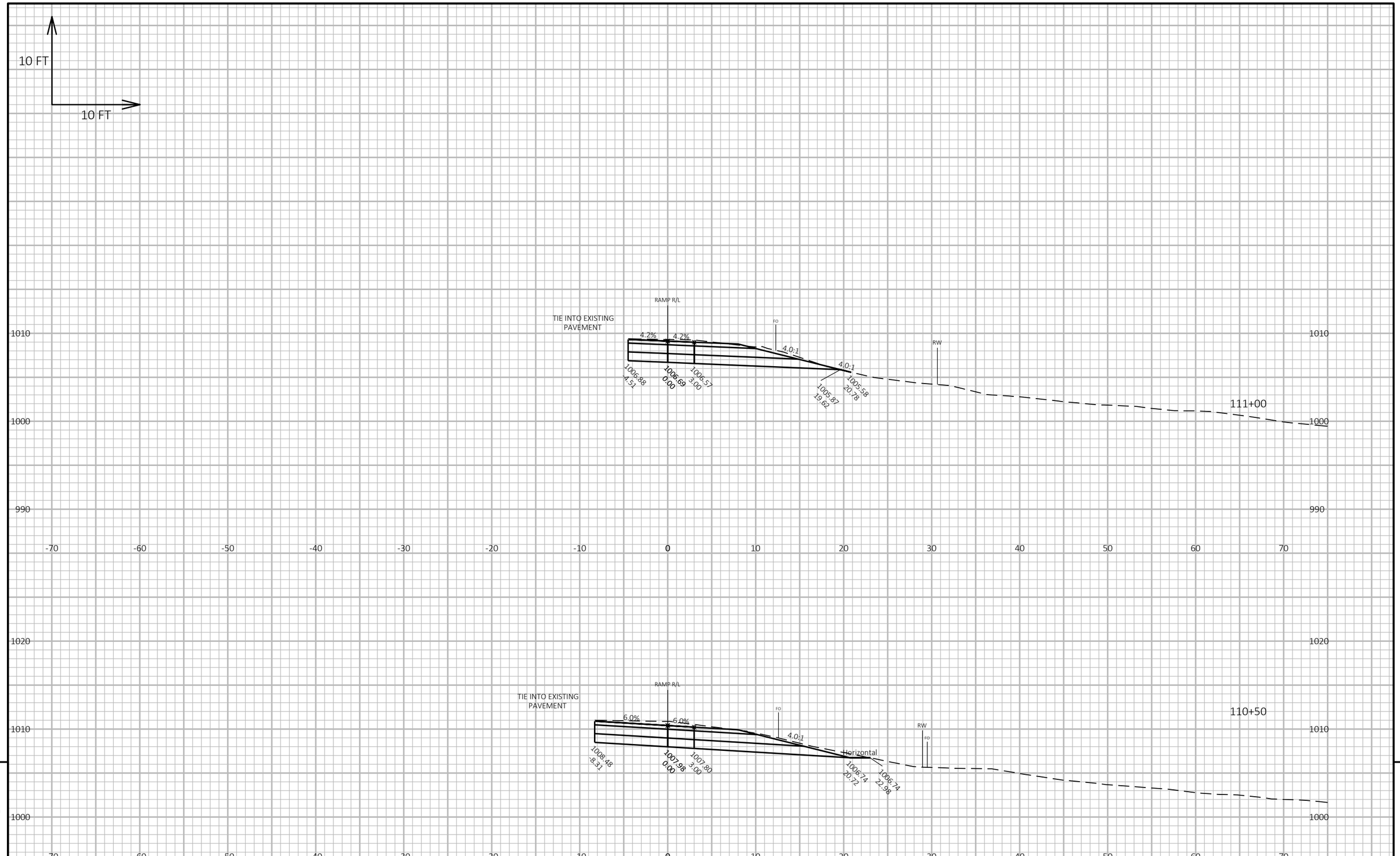

PROJECT NO: 1706-00-74	HWY: STH 11	COUNTY: GRANT	CROSS SECTIONS RAMP ALIGNMENT	SHEET 175	E

FILE NAME : W:\7390_05\CAD\!1706-00-04\SHEETSPLAN\090201_XS.DWG
LAYOUT NAME - Ramp - (6)
PLOT DATE : 11/30/2020 4:08 PM
PLOT BY : KAKACEK, JOHN
PLOT NAME :
PLOT SCALE : 1 IN:10 FT HORZ. / 1 IN:10 FT VERT.
WISDOT/CADDS SHEET 49

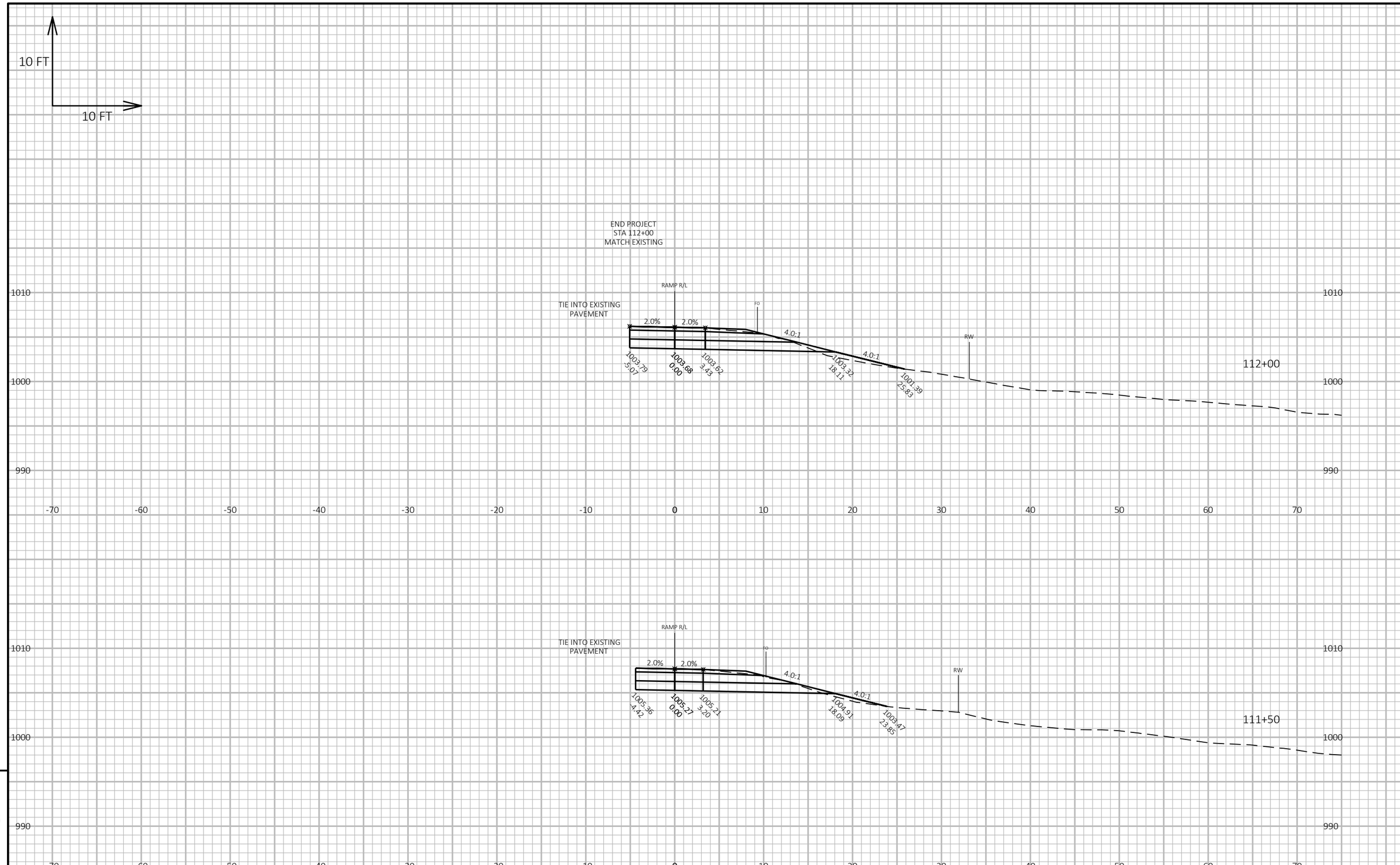

9

9

PROJECT NO: 1706-00-74	HWY: STH 11	COUNTY: GRANT	CROSS SECTIONS RAMP ALIGNMENT	SHEET 176	E

FILE NAME : W:\7390_05\CAD\!1706-00-04\SHEETSPLAN\090201_XS.DWG
LAYOUT NAME - Ramp - (7)

PLOT DATE : 11/30/2020 4:08 PM PLOT BY : KAKACEK, JOHN PLOT NAME : **PLOT SCALE :** 1 IN:10 FT HORZ. / 1 IN:10 FT VERT.

WISDOT/CADDS SHEET 49

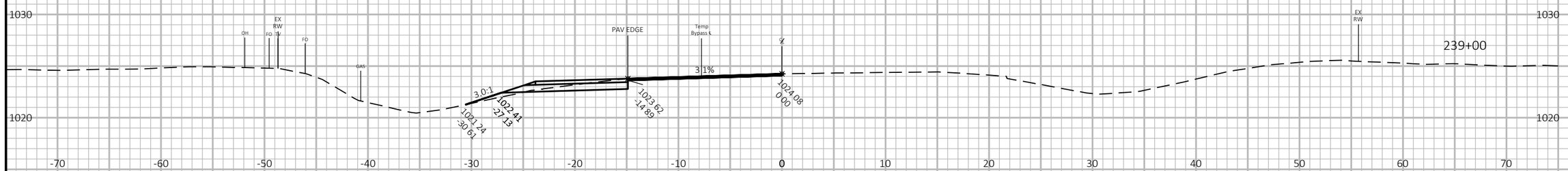

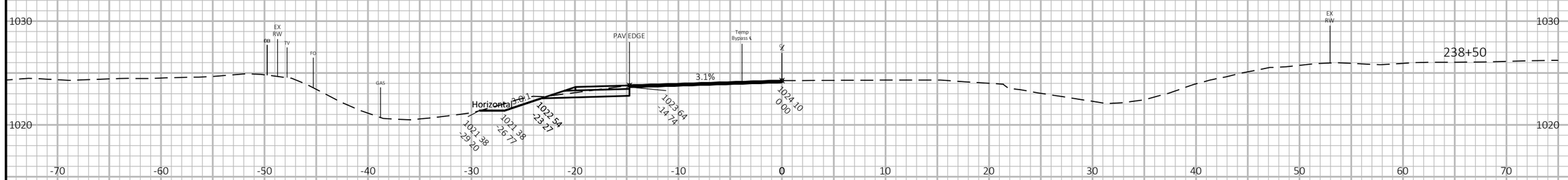

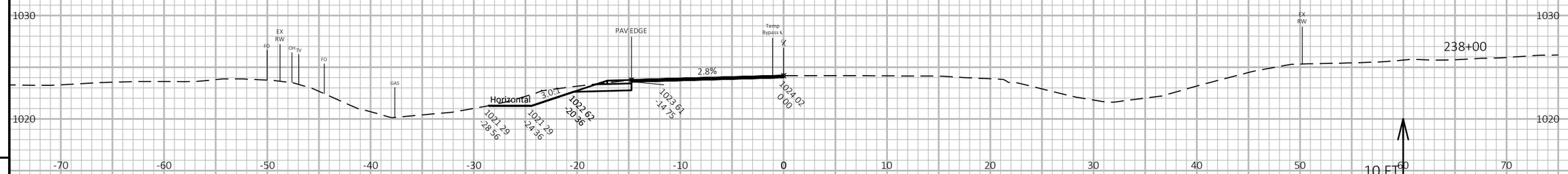

BEGIN TEMPORARY
WIDENING STA. 237+50
MATCH INTO EXISTING
PAVEMENT

9

9

PROJECT NO: 1706-00-74	HWY: STH 11	COUNTY: GRANT	CROSS SECTIONS: TEMPORARY LANE WIDENING	SHEET 177	E

FILE NAME : W:\7390_05\CAD\!1706-00-04\SHEETSPLAN\090202_XS DWG
LAYOUT NAME - (2)
PLOT DATE : 10/2/2020 10:02 AM
PLOT BY : MARZOLF, ROBBI
PLOT NAME :
PLOT SCALE : 1 IN:10 FT HORZ / 1 IN:10 FT VERT
WISDOT/CADDS SHEET 49

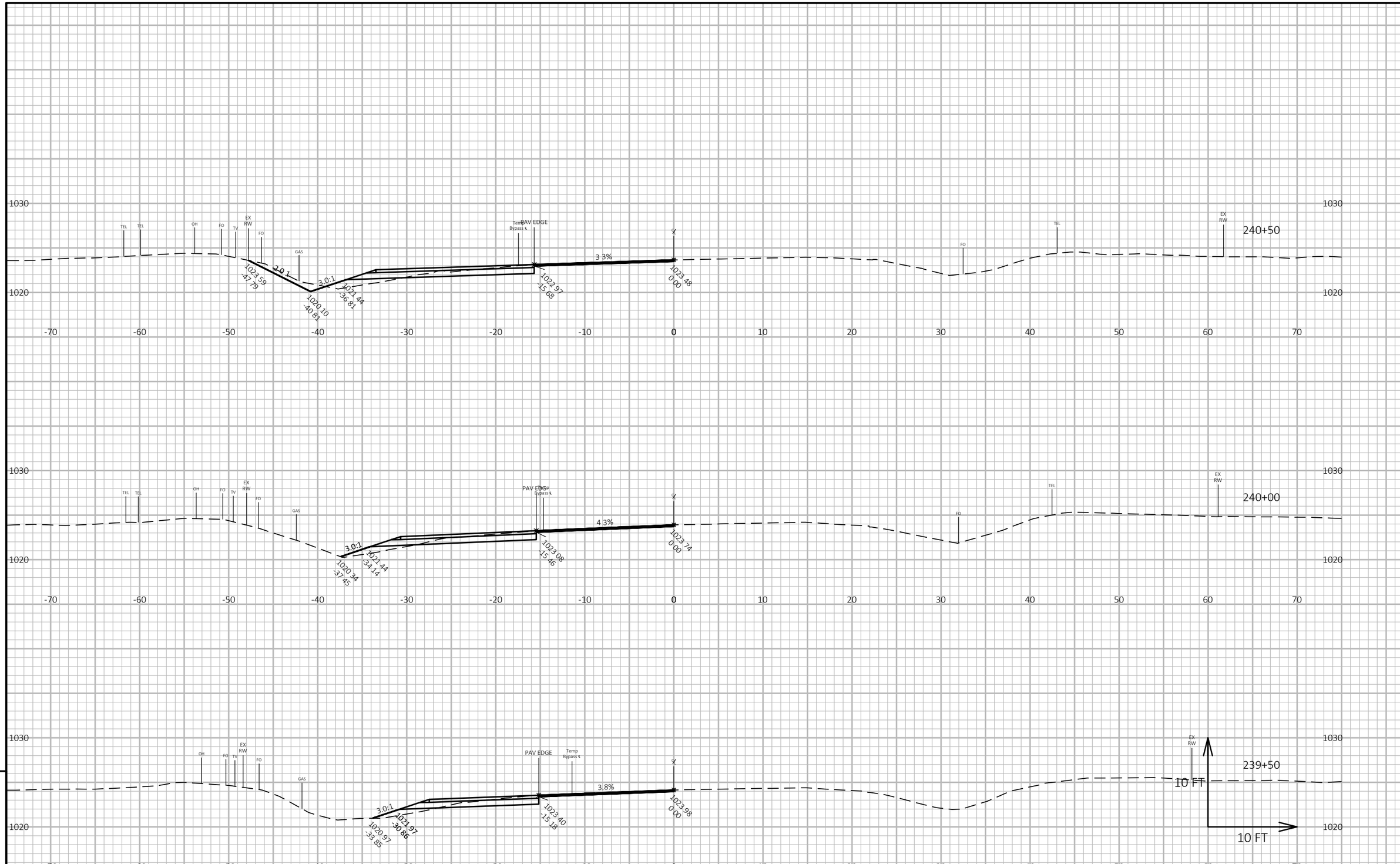

9

9

PROJECT NO: 1706-00-74	HWY: STH 11	COUNTY: GRANT	CROSS SECTIONS: TEMPORARY LANE WIDENING	SHEET 178	E

FILE NAME : W:\7390_05\CAD\!1706-00-04\SHEETSPLAN\090202_XS DWG
LAYOUT NAME - (3)
PLOT DATE : 10/2/2020 10:02 AM
PLOT BY : MARZOLF, ROBBI
PLOT NAME :
PLOT SCALE : 1 IN:10 FT HORZ / 1 IN:10 FT VERT

WISDOT/CADDS SHEET 49

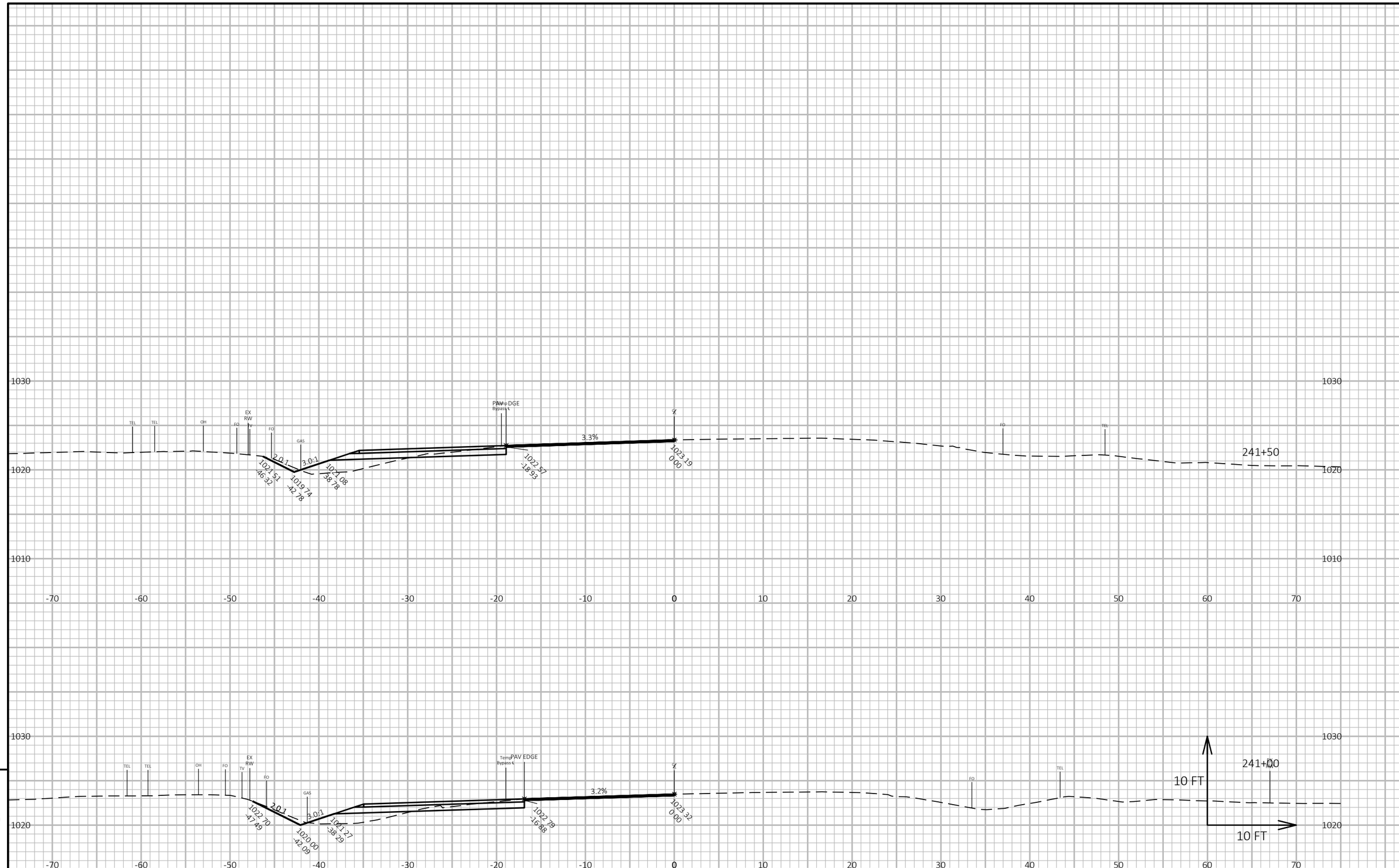

9

9

PROJECT NO: 1706-00-74	HWY: STH 11	COUNTY: GRANT	CROSS SECTIONS: TEMPORARY LANE WIDENING	SHEET 179	E

FILE NAME : W:\7390_05\CAD\!1706-00-04\SHEETSPLAN\090202_XS DWG
LAYOUT NAME - (4)

PLOT DATE : 10/2/2020 10:02 AM PLOT BY : MARZOLF, ROBBI PLOT NAME : **PLOT SCALE :** 1 IN:10 FT HORZ / 1 IN:10 FT VERT

WISDOT/CADDS SHEET 49

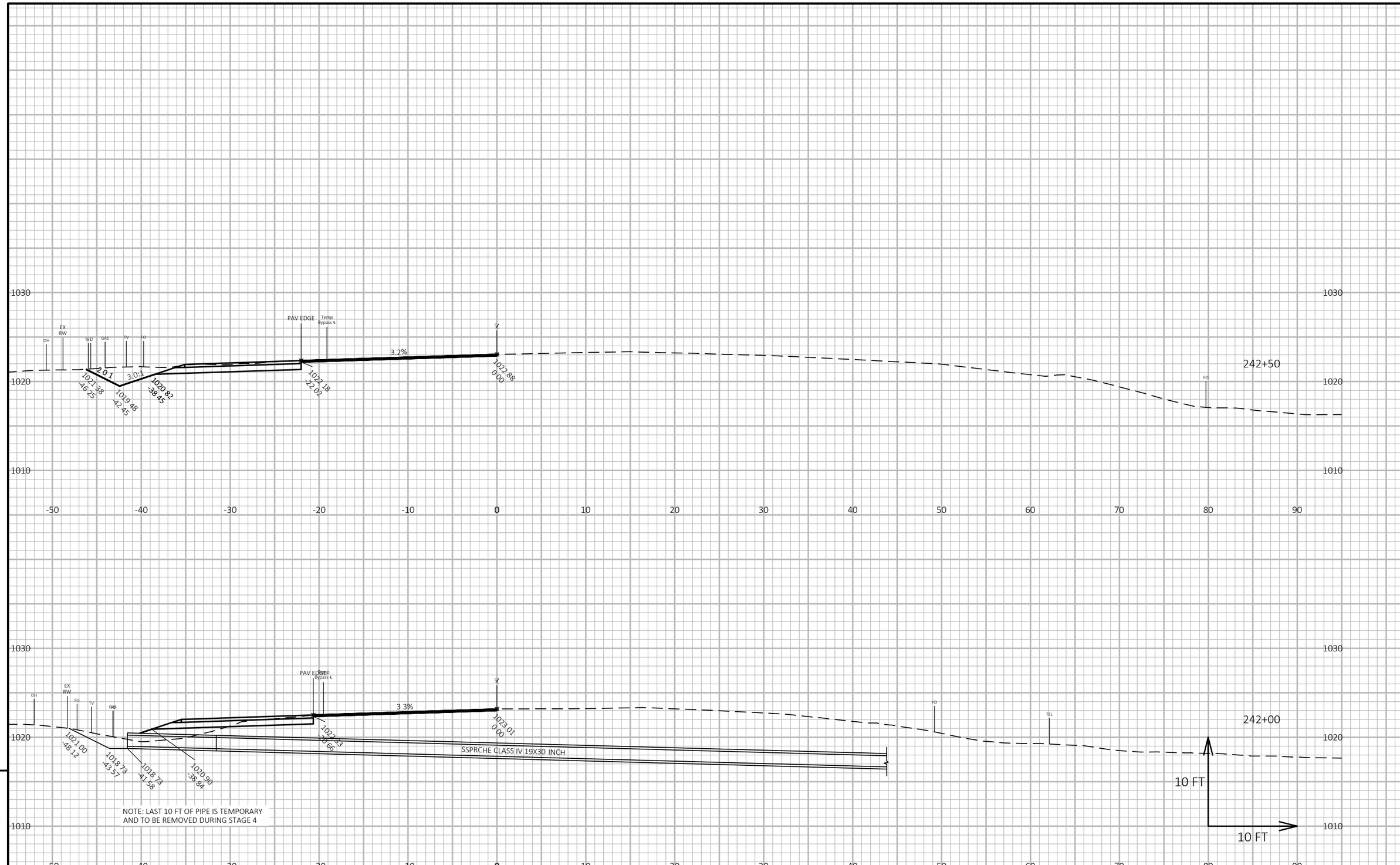

9

9

PROJECT NO: 1706-00-74	HWY: STH 11	COUNTY: GRANT	CROSS SECTIONS: TEMPORARY LANE WIDENING	SHEET 180	E

FILE NAME : W:\7390_05\CAD\!1706-00-04\SHEETSPLAN\090202_XS DWG
LAYOUT NAME - (5)

PLOT DATE : 10/2/2020 10:03 AM PLOT BY : MARZOLF, ROBBI PLOT NAME : **PLOT SCALE :** 1 IN:10 FT HORZ / 1 IN:10 FT VERT

WISDOT/CADDS SHEET 49

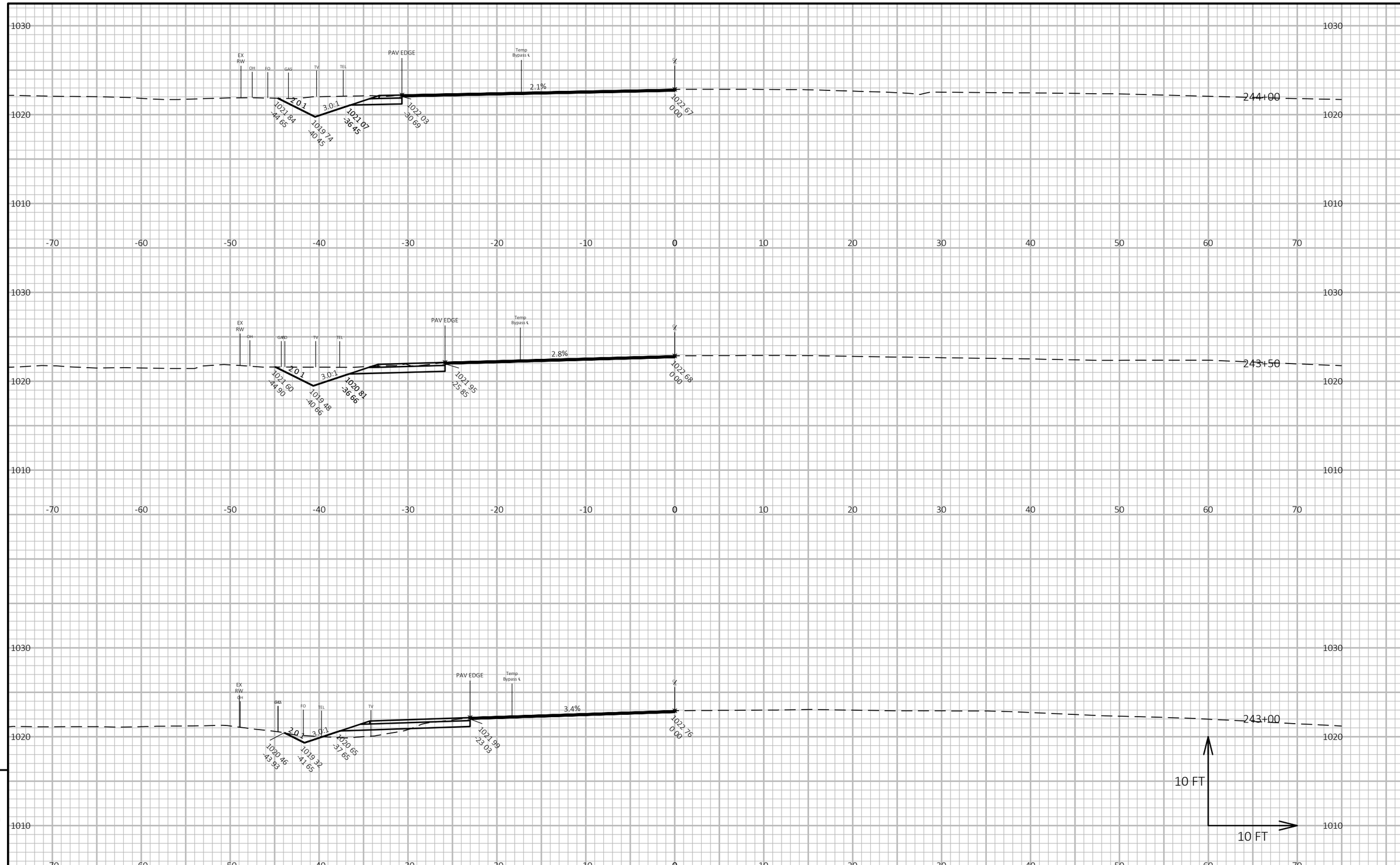

9

9

PROJECT NO: 1706-00-74	HWY: STH 11	COUNTY: GRANT	CROSS SECTIONS: TEMPORARY LANE WIDENING	SHEET 181	E

FILE NAME : W:\7390_05\CAD\!1706-00-04\SHEETSPLAN\090202_XS DWG
LAYOUT NAME - (6)

PLOT DATE : 10/2/2020 10:02 AM PLOT BY : MARZOLF, ROBBI PLOT NAME : **PLOT SCALE :** 1 IN:10 FT HORZ / 1 IN:10 FT VERT

WISDOT/CADDS SHEET 49

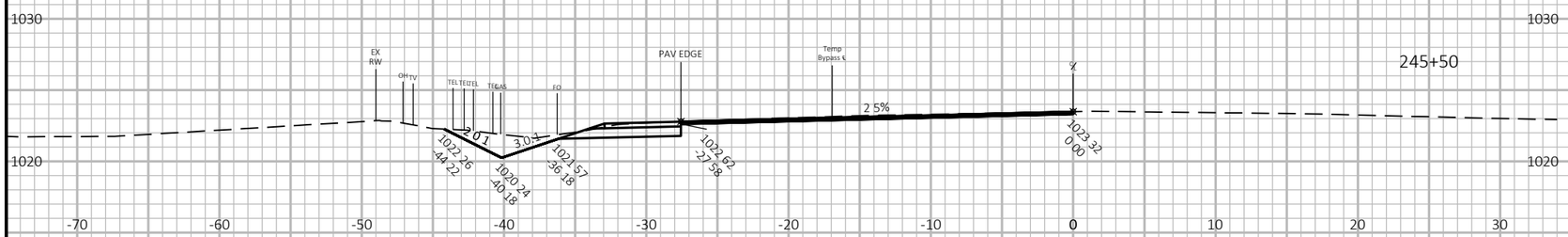

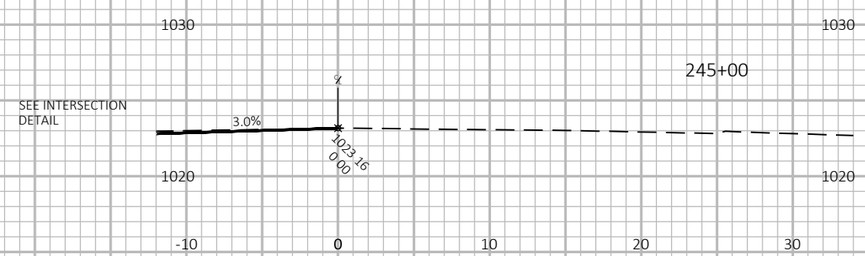

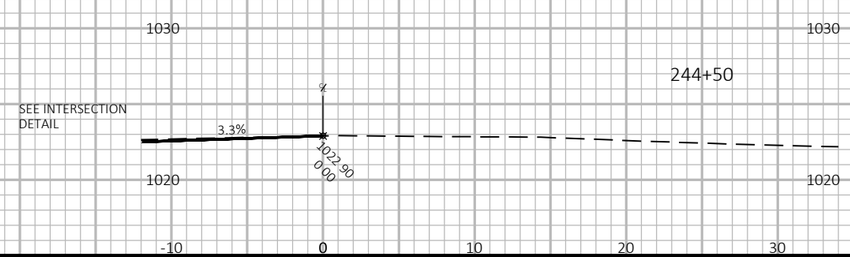

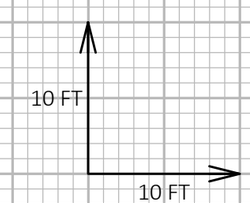

9

9

PROJECT NO: 1706-00-74	HWY: STH 11	COUNTY: GRANT	CROSS SECTIONS: TEMPORARY LANE WIDENING	SHEET 182	E

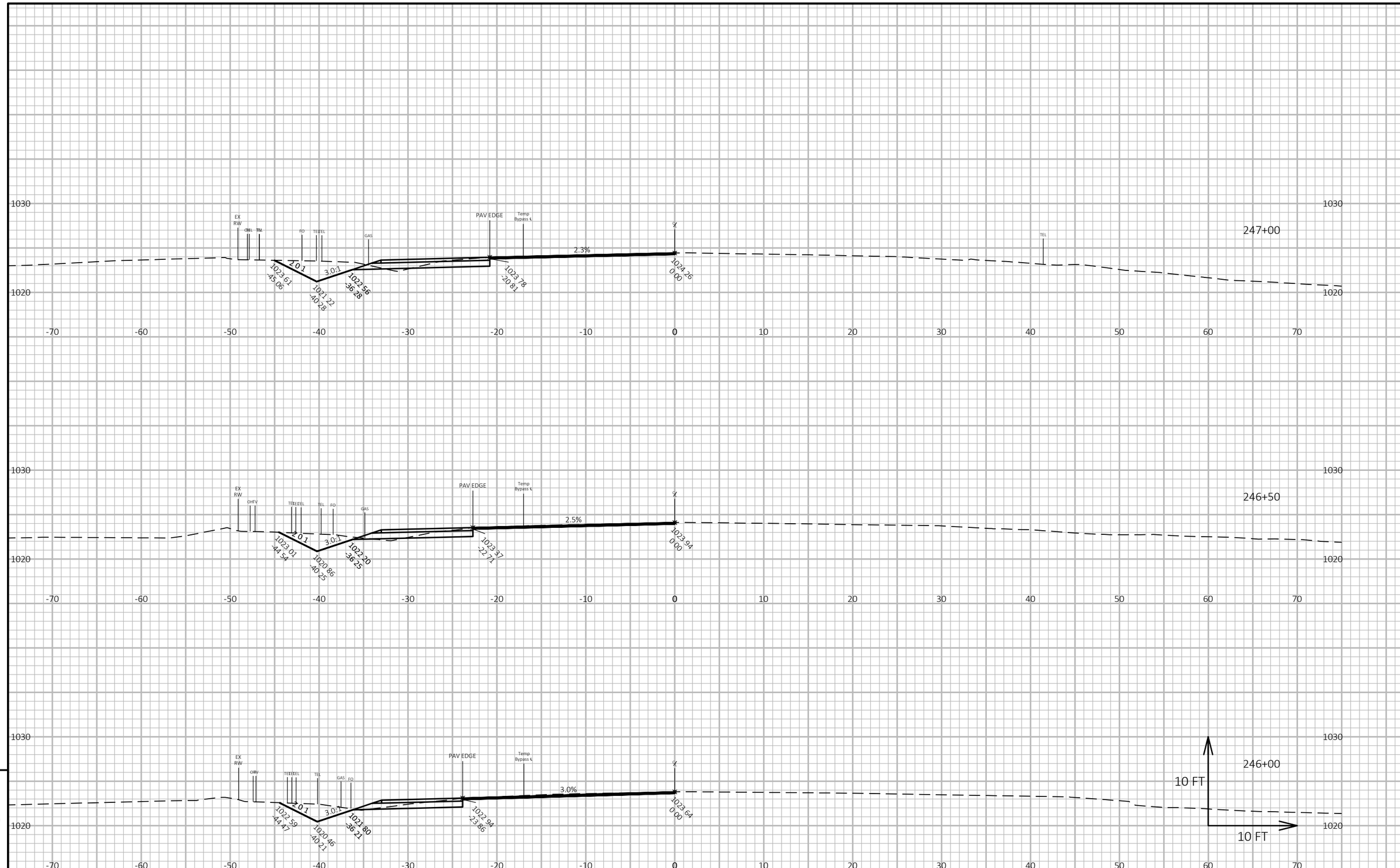

9

9

PROJECT NO: 1706-00-74	HWY: STH 11	COUNTY: GRANT	CROSS SECTIONS: TEMPORARY LANE WIDENING	SHEET 183	E

FILE NAME : W:\7390_05\CAD\!1706-00-04\SHEETSPLAN\090202_XS DWG
LAYOUT NAME - (8)
PLOT DATE : 10/2/2020 10:02 AM
PLOT BY : MARZOLF, ROBBI
PLOT NAME :
PLOT SCALE : 1 IN:10 FT HORZ / 1 IN:10 FT VERT
WISDOT/CADDS SHEET 49

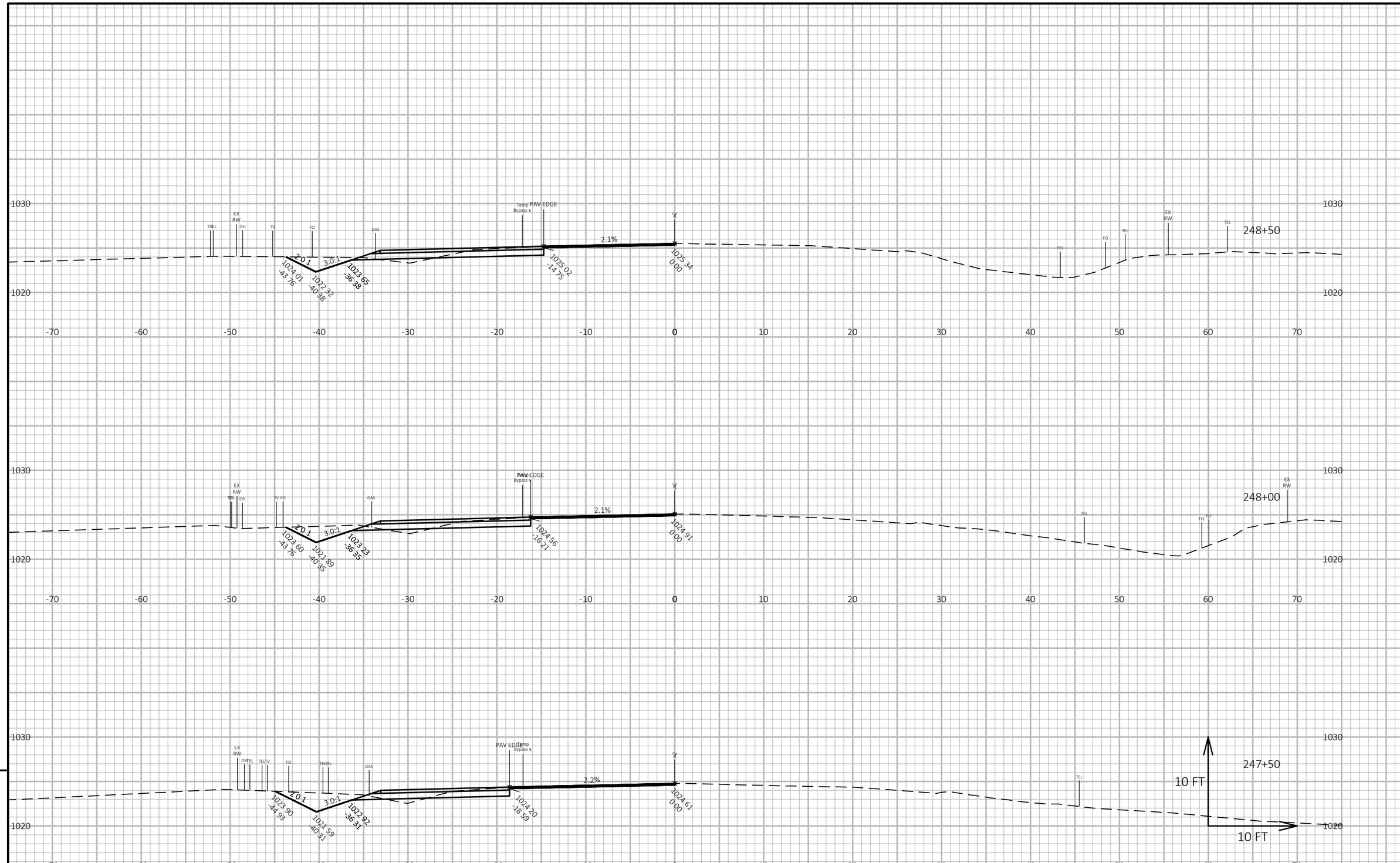

PROJECT NO: 1706-00-74	HWY: STH 11	COUNTY: GRANT	CROSS SECTIONS: TEMPORARY LANE WIDENING	SHEET 184	E

FILE NAME : W:\7390_05\CAD\!1706-00-04\SHEETSPLAN\090202_XS DWG
LAYOUT NAME - (9)
PLOT DATE : 10/2/2020 10:02 AM
PLOT BY : MARZOLF, ROBBI
PLOT NAME :
PLOT SCALE : 1 IN:10 FT HORZ / 1 IN:10 FT VERT

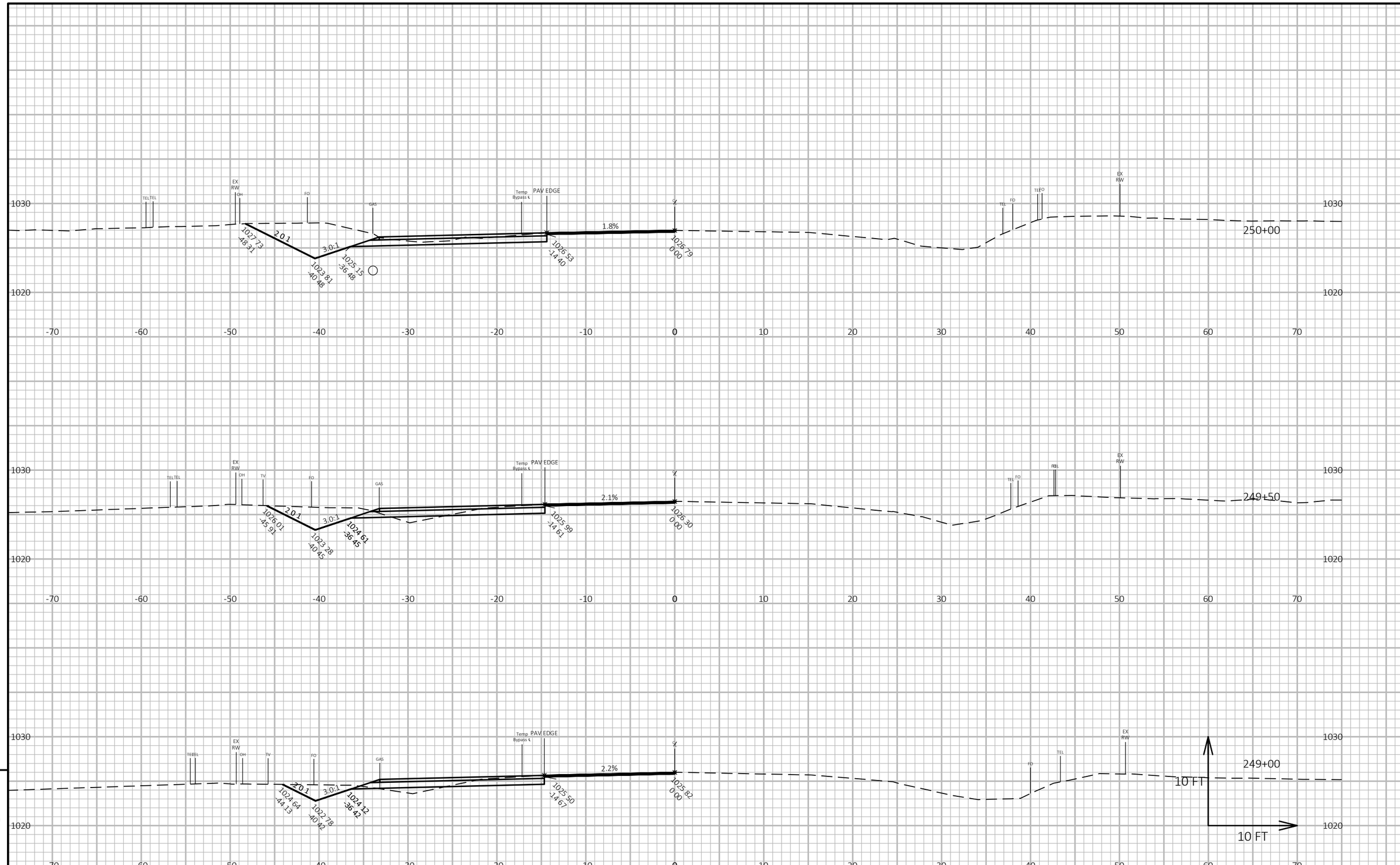

PROJECT NO: 1706-00-74	HWY: STH 11	COUNTY: GRANT	CROSS SECTIONS: TEMPORARY LANE WIDENING	SHEET 185	E

FILE NAME : W:\7390_05\CAD\!1706-00-04\SHEETSPLAN\090202_XS DWG
LAYOUT NAME - (10)
PLOT DATE : 10/2/2020 10:02 AM
PLOT BY : MARZOLF, ROBBI
PLOT NAME :
PLOT SCALE : 1 IN:10 FT HORZ / 1 IN:10 FT VERT

WISDOT/CADDS SHEET 49

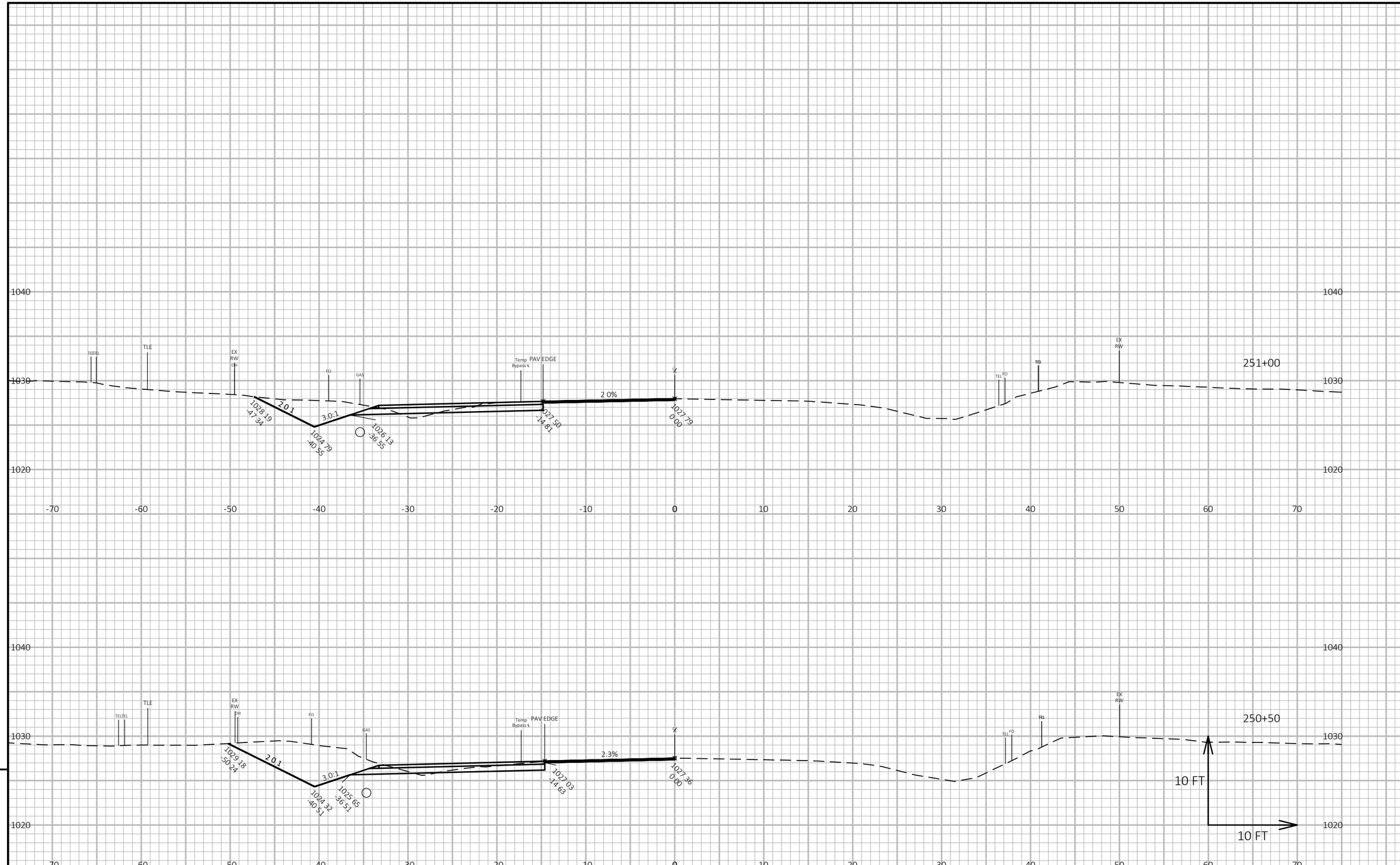

9

9

PROJECT NO: 1706-00-74	HWY: STH 11	COUNTY: GRANT	CROSS SECTIONS: TEMPORARY LANE WIDENING	SHEET 186	E

FILE NAME : W:\7390_05\CAD\!1706-00-04\SHEETSPLAN\090202_XS DWG
LAYOUT NAME - (11)

PLOT DATE : 10/2/2020 10:02 AM PLOT BY : MARZOLF, ROBBI PLOT NAME : **PLOT SCALE :** 1 IN:10 FT HORZ / 1 IN:10 FT VERT

WISDOT/CADDS SHEET 49

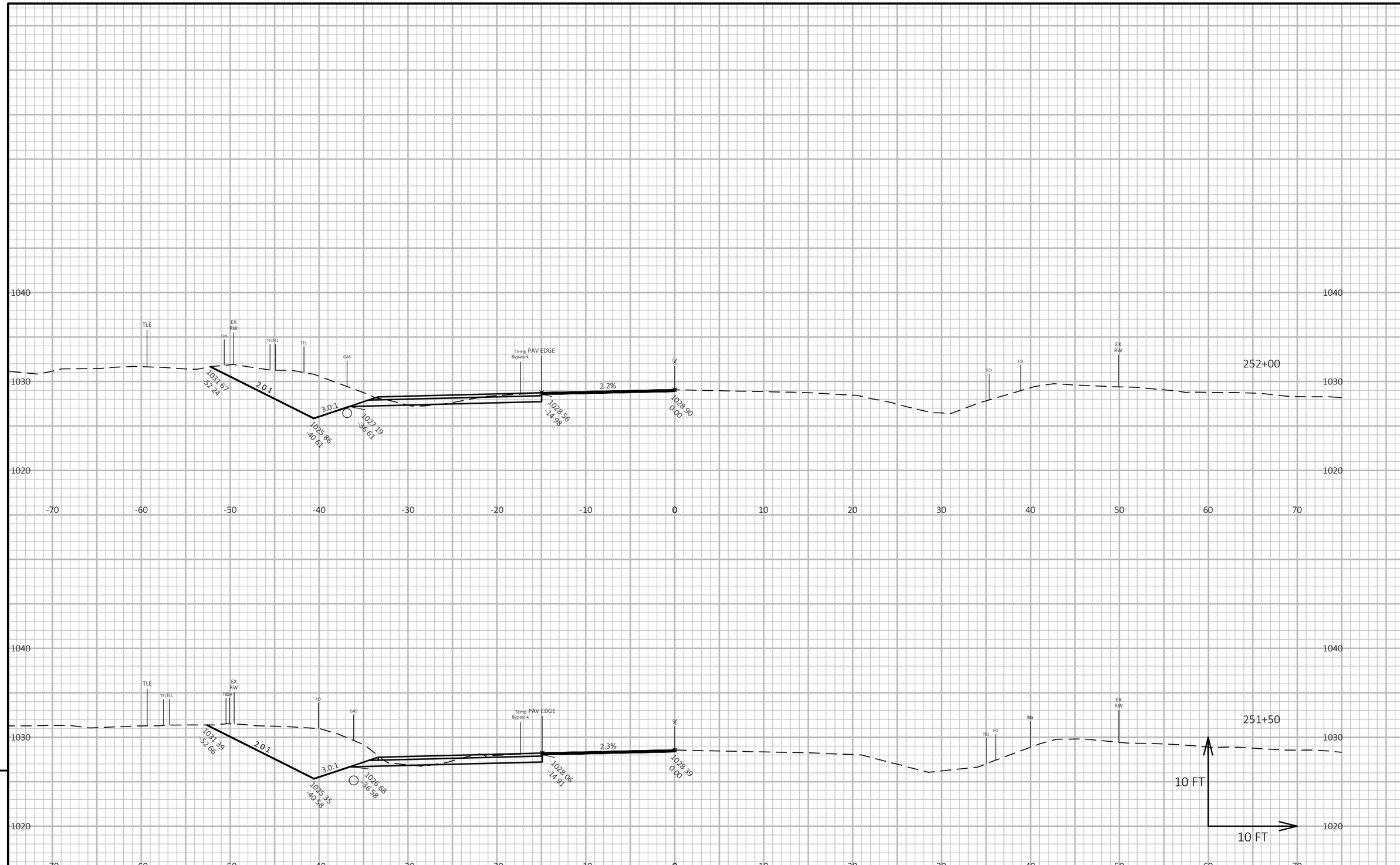

9

9

PROJECT NO: 1706-00-74	HWY: STH 11	COUNTY: GRANT	CROSS SECTIONS: TEMPORARY LANE WIDENING	SHEET 187	E

FILE NAME : W:\7390_05\CAD\!1706-00-04\SHEETSPLAN\090202_XS DWG
LAYOUT NAME - (12)

PLOT DATE : 10/2/2020 10:02 AM PLOT BY : MARZOLF, ROBBI PLOT NAME : **PLOT SCALE :** 1 IN:10 FT HORZ / 1 IN:10 FT VERT

WISDOT/CADDS SHEET 49

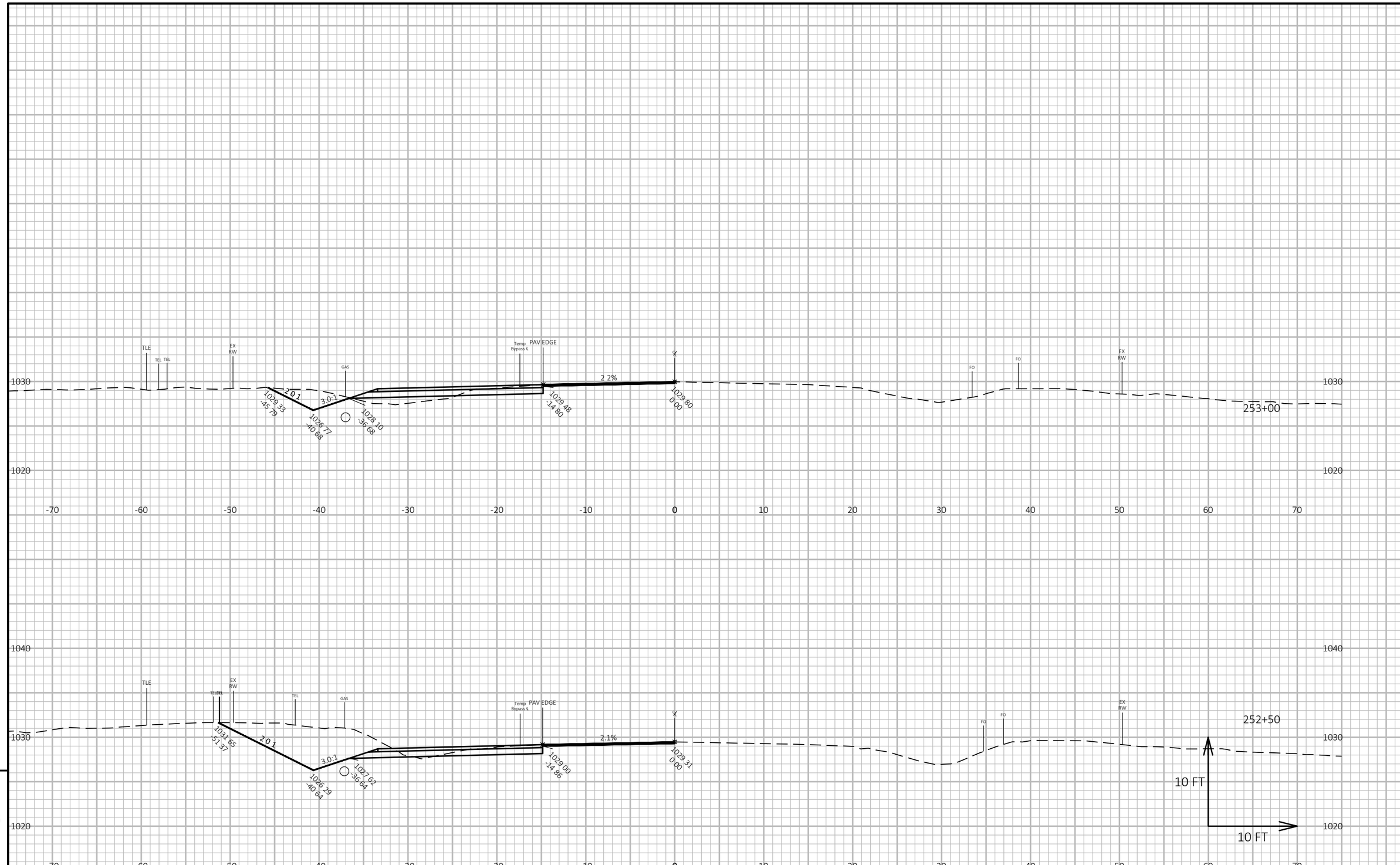

9

9

PROJECT NO: 1706-00-74	HWY: STH 11	COUNTY: GRANT	CROSS SECTIONS: TEMPORARY LANE WIDENING	SHEET 188	E

FILE NAME : W:\7390_05\CAD\!1706-00-04\SHEETSPLAN\090202_XS DWG
LAYOUT NAME - (13)

PLOT DATE : 10/2/2020 10:02 AM PLOT BY : MARZOLF, ROBBI PLOT NAME : **PLOT SCALE :** 1 IN:10 FT HORZ / 1 IN:10 FT VERT

WISDOT/CADDS SHEET 49

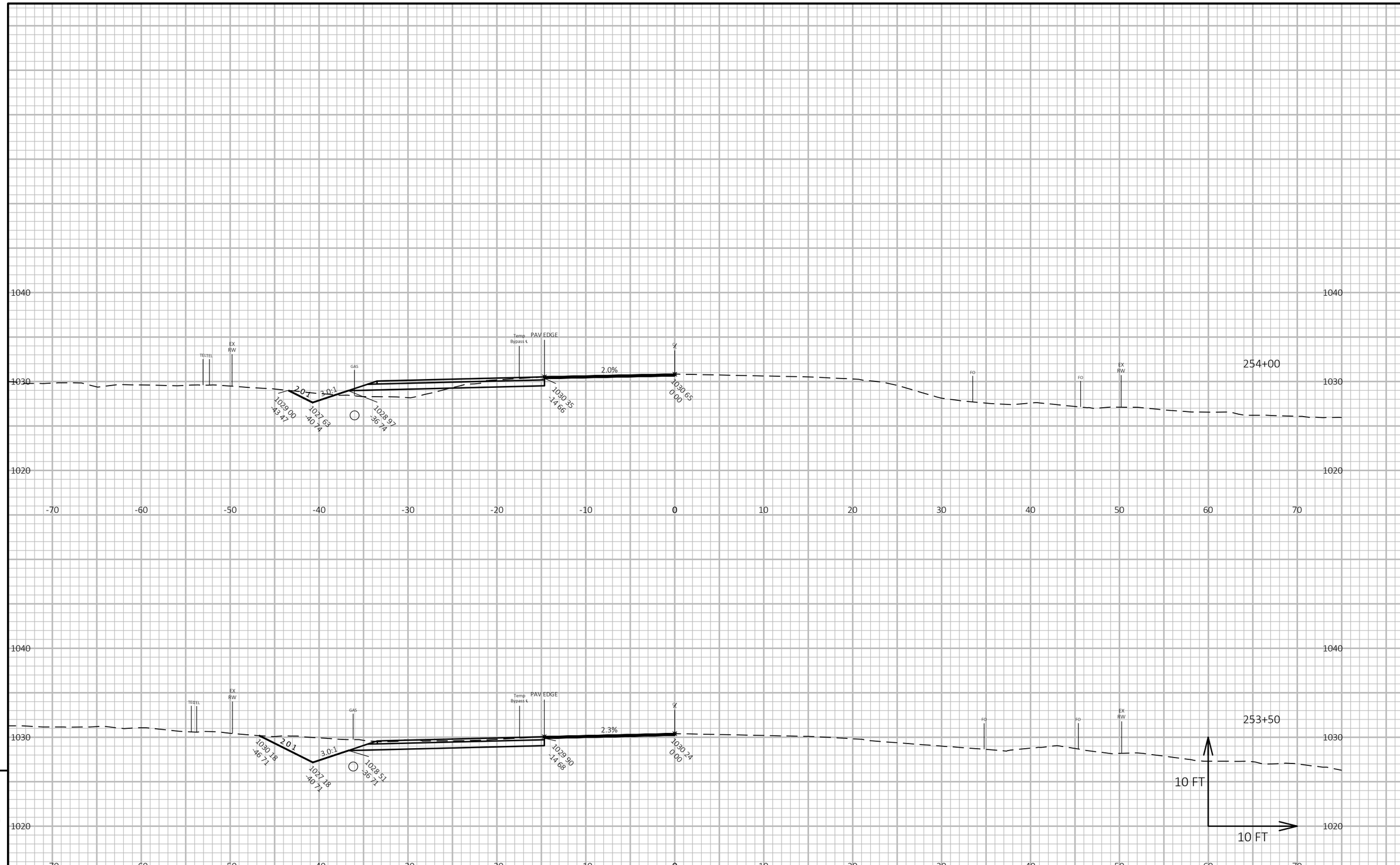

9

9

PROJECT NO: 1706-00-74	HWY: STH 11	COUNTY: GRANT	CROSS SECTIONS: TEMPORARY LANE WIDENING	SHEET 189	E

FILE NAME : W:\7390_05\CAD\!1706-00-04\SHEETSPLAN\090202_XS DWG
LAYOUT NAME - (14)

PLOT DATE : 10/2/2020 10:02 AM PLOT BY : MARZOLF, ROBBI PLOT NAME : PLOT SCALE : 1 IN:10 FT HORZ / 1 IN:10 FT VERT

WISDOT/CADDS SHEET 49

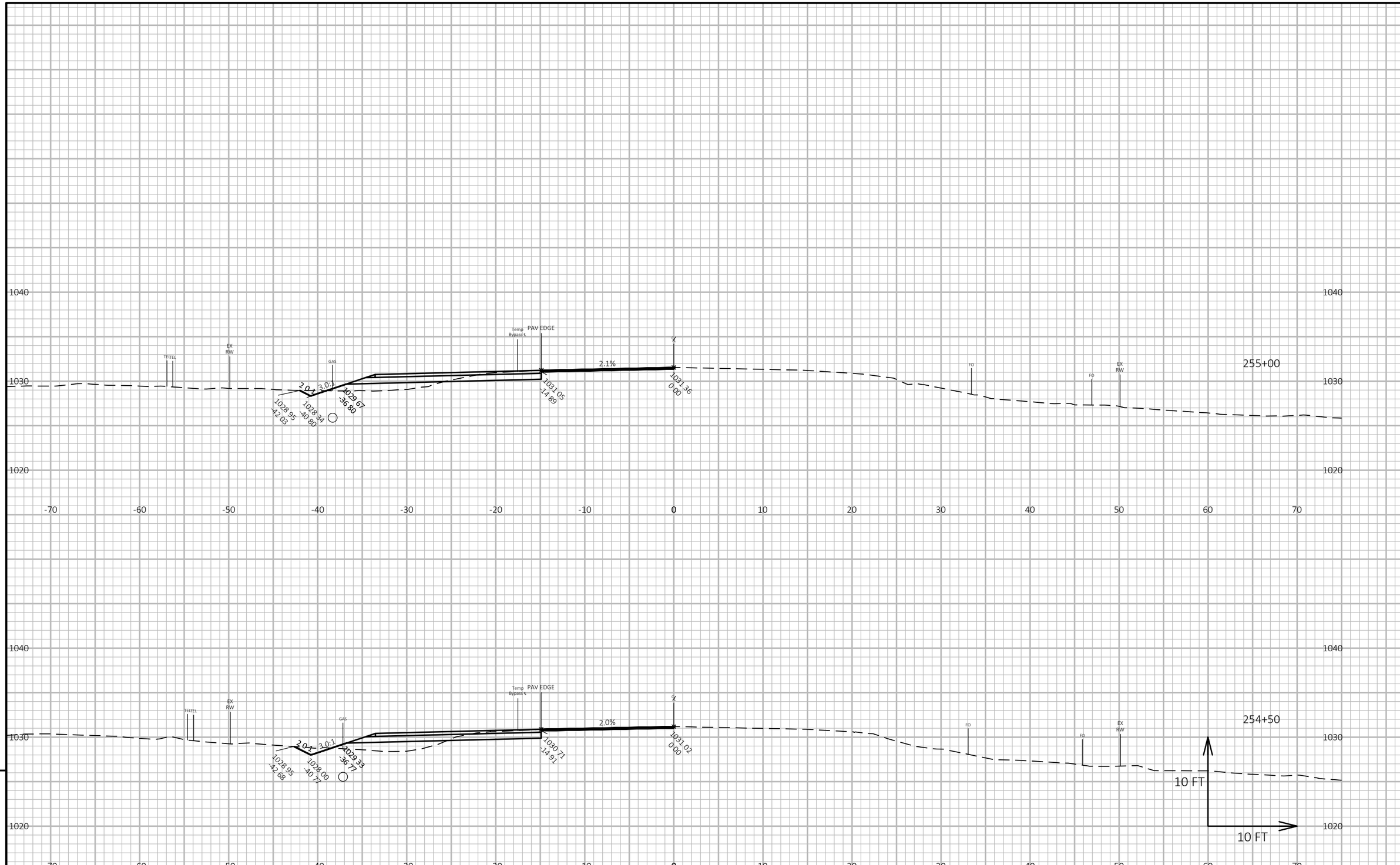

9

9

PROJECT NO: 1706-00-74	HWY: STH 11	COUNTY: GRANT	CROSS SECTIONS: TEMPORARY LANE WIDENING	SHEET 190	E

FILE NAME : W:\7390_05\CAD\!1706-00-04\SHEETSPLAN\090202_XS DWG
LAYOUT NAME - (15)
PLOT DATE : 10/2/2020 10:02 AM
PLOT BY : MARZOLF, ROBBI
PLOT NAME :
PLOT SCALE : 1 IN:10 FT HORZ / 1 IN:10 FT VERT
WISDOT/CADDS SHEET 49

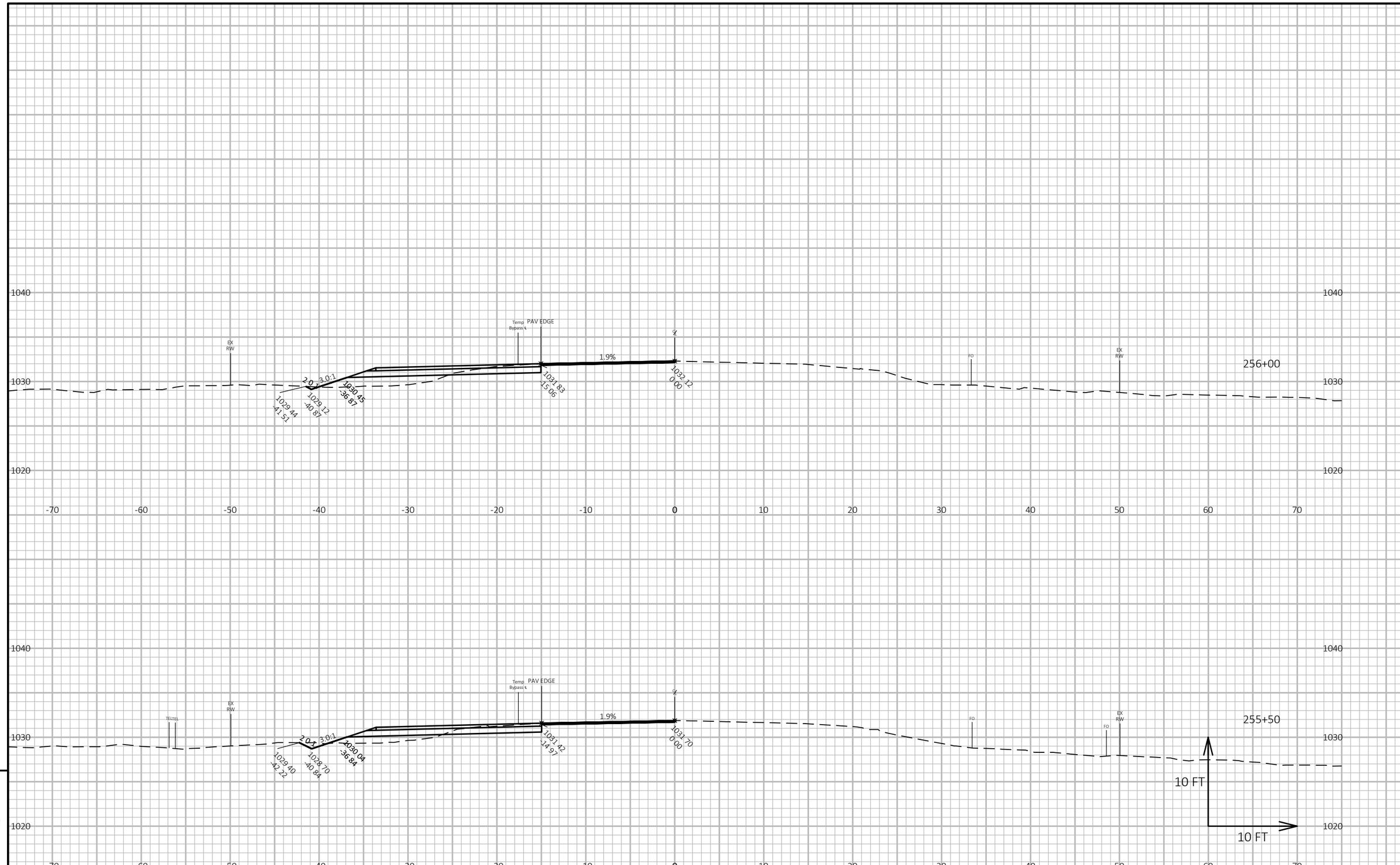

9

9

PROJECT NO: 1706-00-74	HWY: STH 11	COUNTY: GRANT	CROSS SECTIONS: TEMPORARY LANE WIDENING	SHEET 191	E

FILE NAME : W:\7390_05\CAD\!1706-00-04\SHEETSPLAN\090202_XS DWG
LAYOUT NAME - (16)
PLOT DATE : 10/2/2020 10:02 AM
PLOT BY : MARZOLF, ROBBI
PLOT NAME :
PLOT SCALE : 1 IN:10 FT HORZ / 1 IN:10 FT VERT
WISDOT/CADDS SHEET 49

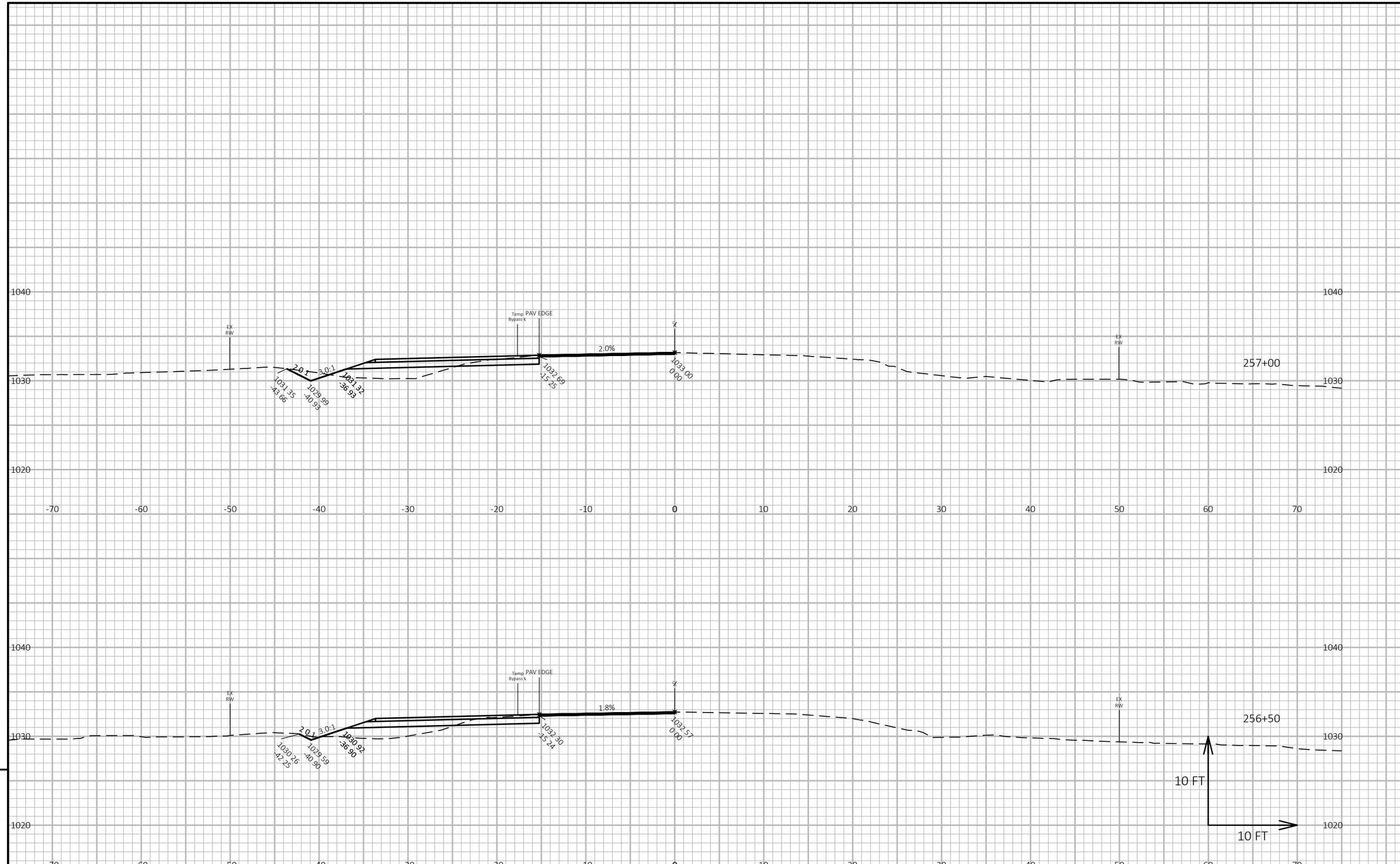

9

9

PROJECT NO: 1706-00-74	HWY: STH 11	COUNTY: GRANT	CROSS SECTIONS: TEMPORARY LANE WIDENING	SHEET 192	E

FILE NAME : W:\7390_05\CAD\!1706-00-04\SHEETSPLAN\090202_XS DWG
LAYOUT NAME - (17)

PLOT DATE : 10/2/2020 10:02 AM PLOT BY : MARZOLF, ROBBI PLOT NAME : PLOT SCALE : 1 IN:10 FT HORZ / 1 IN:10 FT VERT

WISDOT/CADDS SHEET 49

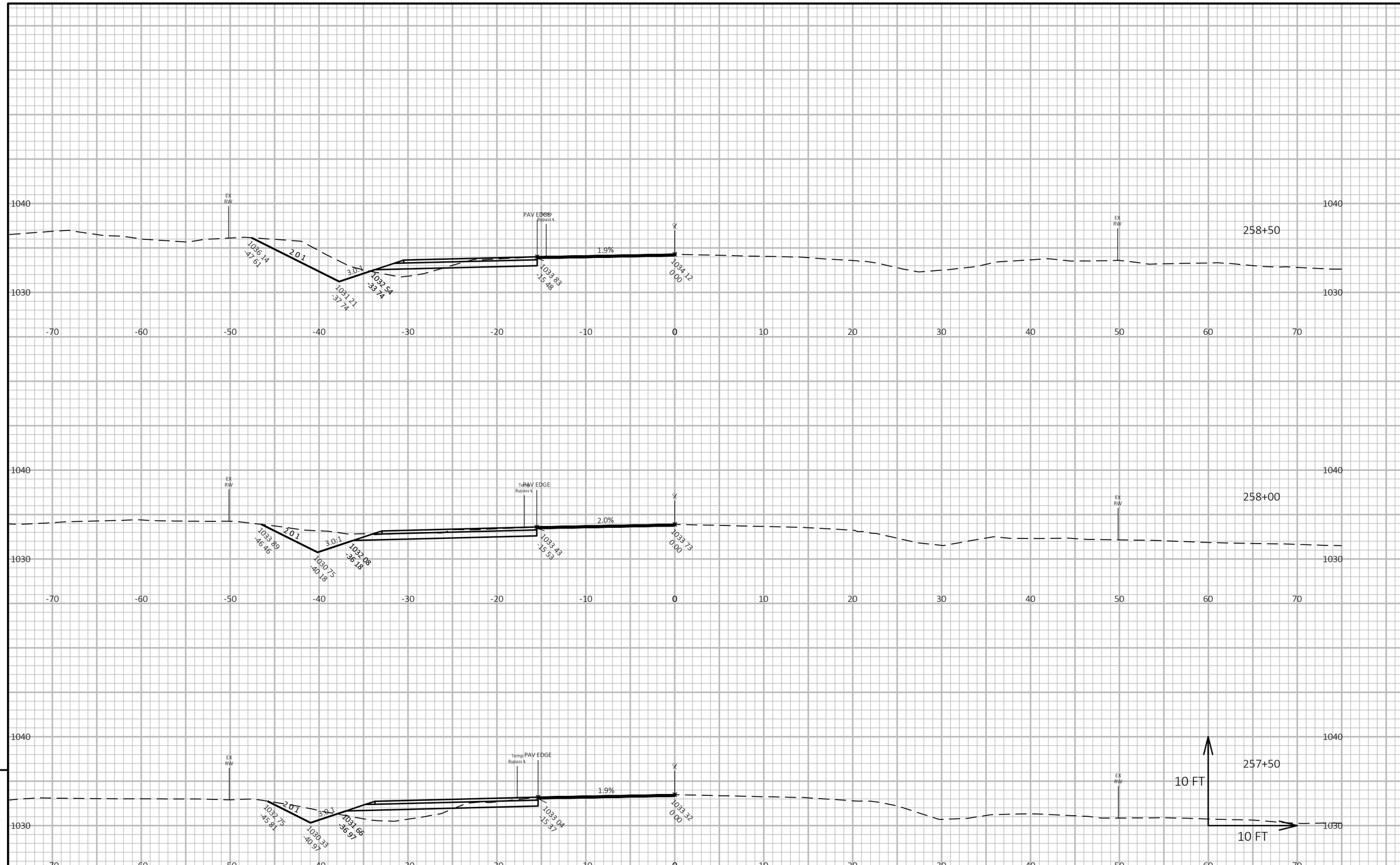

9

9

PROJECT NO: 1706-00-74	HWY: STH 11	COUNTY: GRANT	CROSS SECTIONS: TEMPORARY LANE WIDENING	SHEET 193	E

FILE NAME : W:\7390_05\CAD\!1706-00-04\SHEETSPLAN\090202_XS DWG
LAYOUT NAME - (18)
PLOT DATE : 10/2/2020 10:02 AM
PLOT BY : MARZOLF, ROBBI
PLOT NAME :
PLOT SCALE : 1 IN:10 FT HORZ / 1 IN:10 FT VERT
WISDOT/CADDS SHEET 49

END TEMPORARY
WIDENING STA. 260+50
MATCH INTO EXISTING
PAVEMENT

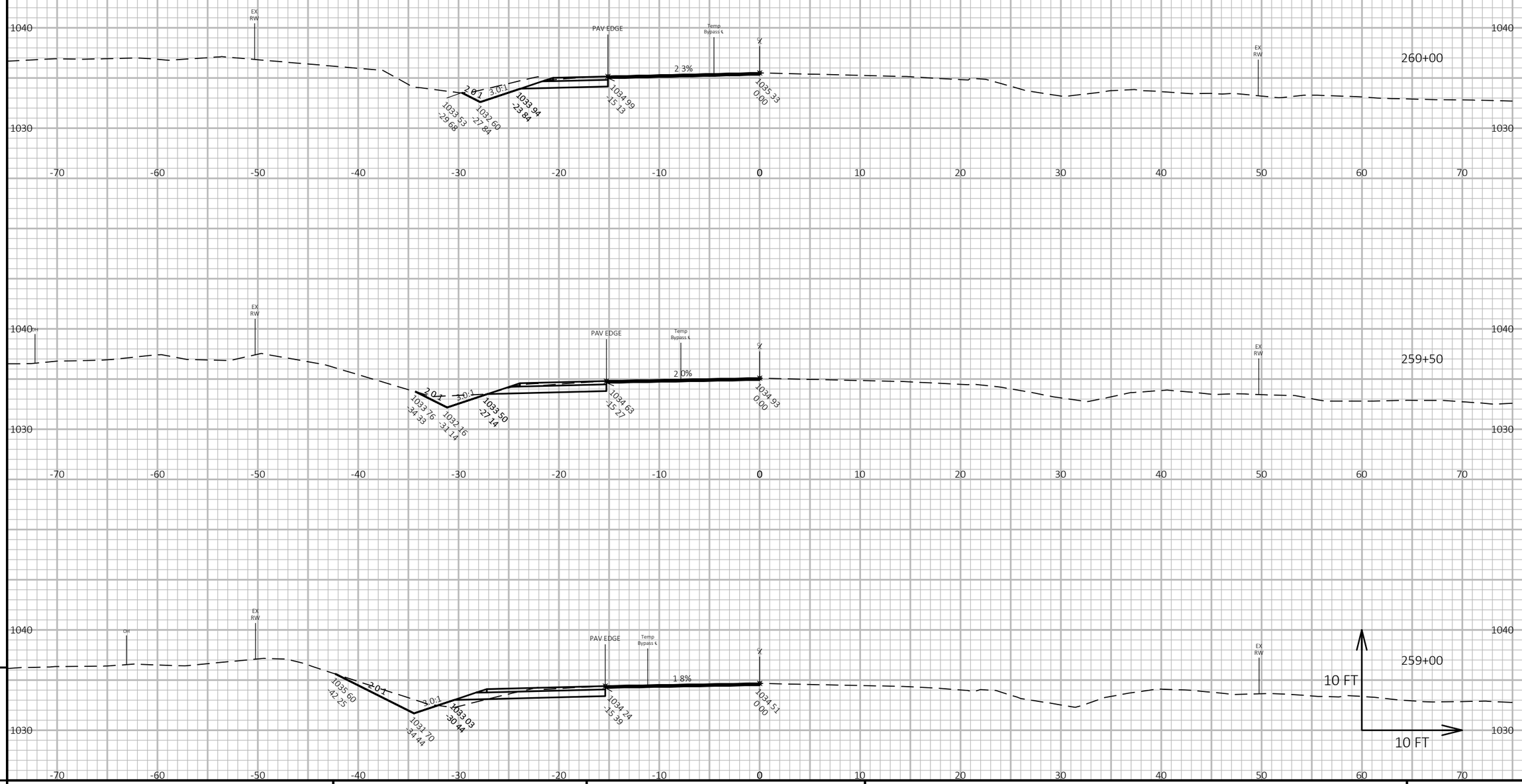

9

9

PROJECT NO: 1706-00-74	HWY: STH 11	COUNTY: GRANT	CROSS SECTIONS: TEMPORARY LANE WIDENING	SHEET 194	E

FILE NAME : W:\7390_05\CAD\!1706-00-04\SHEETSPLAN\090202_XS DWG
LAYOUT NAME - (19)
PLOT DATE : 10/2/2020 10:02 AM
PLOT BY : MARZOLF, ROBBI
PLOT NAME :
PLOT SCALE : 1 IN:10 FT HORZ / 1 IN:10 FT VERT
WISDOT/CADDS SHEET 49

Notes

Wisconsin Department of Transportation

Dedicated people creating transportation solutions through innovation and exceptional service.

http://www.dot.wisconsin.gov