RHI

SEPTEMBER 2020

PROJECT ID: 9140-12-71 & 9140-12-74

WITH: N/A

COUNTY: LANGLADE

ORDER OF SHEETS

TOTAL SHEETS = 194

STATE PROJECT	FEDERAL PROJECT	
	PROJECT	CONTRACT
9140-12-71	WISC 2020424	1
9140-12-74	WISC 2020426	1

STATE OF WISCONSIN
DEPARTMENT OF TRANSPORTATION

PLAN OF PROPOSED IMPROVEMENT

ANTIGO - LANGLADE
WOLF RIVER CROSSING B-34-0383

STH 64

LANGLADE

STATE PROJECT NUMBER

9140-12-71

ANTIGO - LANGLADE
CTH P TO OCONTO COUNTY LINE

STH 64

LANGLADE

STATE PROJECT NUMBER

9140-12-74

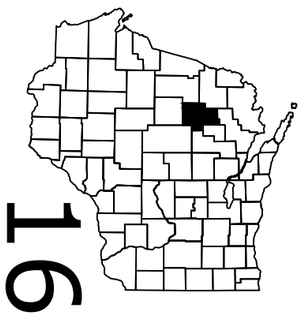

16

N

STRUCTURE B-34-838

BEGIN PROJECT 9140-12-74
STA 20+00
Y=350,551.075
X=699,392.212

END PROJECT 9140-12-74
STA 591+01.82

END CONSTRUCTION 9140-12-71
BEGIN CONSTRUCTION 9140-12-74
STA 341+71.33

END CONSTRUCTION 9140-12-74
BEGIN CONSTRUCTION 9140-12-71
STA 340+18.64

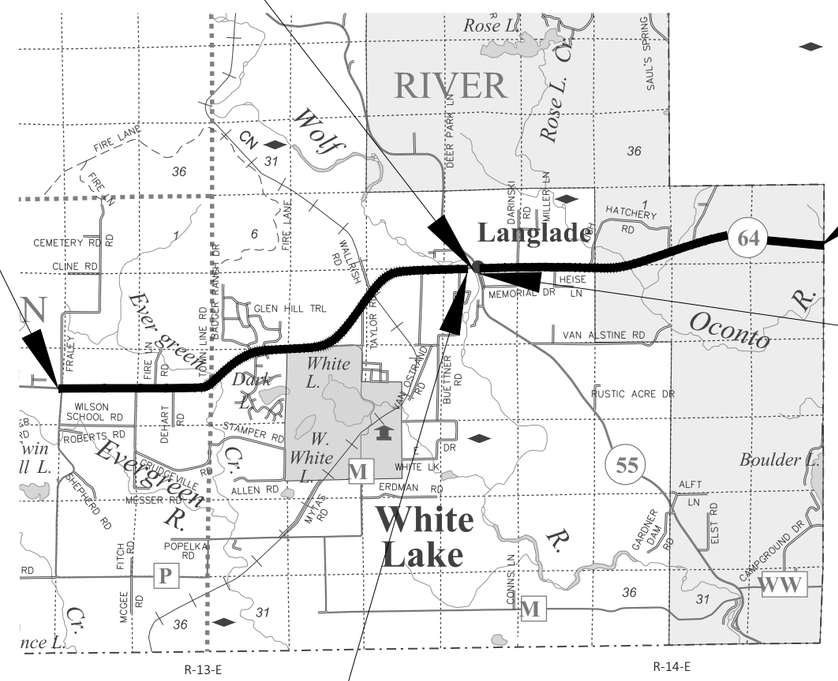

DESIGN DESIGNATION			DESIGN_DESIG_PROJECT#
A.A.D.T.	2020	=	1,600
A.A.D.T.	2020	=	1,900
D.H.V.		=	251
D.D.		=	61/39
T.		=	20.6%
DESIGN SPEED		=	60 MPH
ESALS		=	1,000,000

CONVENTIONAL SYMBOLS

PLAN

CORPORATE LIMITS
PROPERTY LINE
LOT LINE
LIMITED HIGHWAY EASEMENT
EXISTING RIGHT OF WAY
PROPOSED OR NEW R/W LINE
SLOPE INTERCEPT
REFERENCE LINE (300'EB')
EXISTING CULVERT
PROPOSED CULVERT (Box or Pipe)
COMBUSTIBLE FLUIDS (CAUTION)
MARSH AREA
WOODED OR SHRUB AREA

PROFILE

GRADE LINE
ORIGINAL GROUND
MARSH OR ROCK PROFILE (To be noted as such) (ROCK)
SPECIAL DITCH (LABEL)
GRADE ELEVATION (95.36)
CULVERT (Profile View)

UTILITIES

ELECTRIC (E)
FIBER OPTIC (FO)
GAS (G)
SANITARY SEWER (SAN)
STORM SEWER (SS)
TELEPHONE (T)
WATER (W)
UTILITY PEDESTAL
POWER POLE
TELEPHONE POLE

LAYOUT

SCALE 0 SCALE

TOTAL NET LENGTH OF CENTERLINE = 10.787 MI

HORIZONTAL POSITIONS SHOWN ON THIS PLAN ARE WISCONSIN COORDINATE REFERENCE SYSTEM (WISCRS), LANGLADE COUNTY, NAD83 (2007), IN U.S. SURVEY FEET. POSITIONS SHOWN ARE GRID COORDINATES, GRID BEARINGS, AND GRID DISTANCES. GRID DISTANCES ARE THE SAME AS GROUND DISTANCES. ELEVATIONS ARE REFERENCED TO NAVD 88 (2007). GPS DERIVED ELEVATIONS ARE BASED ON GEOID 12A.

ORIGINAL PLANS PREPARED BY
AECOM

WISCONSIN PROFESSIONAL ENGINEER
MICHELLE M. GUOIN
E-37165
WAUSAU, WI

DATE: 1-28-20 (Professional Engineer Signature)

STATE OF WISCONSIN
DEPARTMENT OF TRANSPORTATION

PREPARED BY

Surveyor	AECOM
Designer	AECOM
Project Manager	JIM VOLKMANN
Regional Examiner	CHERYL SIMON
Regional Supervisor	JED PETERS

APPROVED FOR THE DEPARTMENT

DATE: 01/30/2020 (Signature)

E

FILE NAME : C:\USERS\JESSICA.LANCELLE\AECOM DIRECTORY\NEMEC, ELIZABETH - 60600222-STH64_LANGLADE\900_CAD_GIS\910_CAD\SHEETS\74\010101-TI.DWG PLOT DATE : 7/6/2020 5:01 PM PLOT BY : LANCELLE, JESSICA PLOT NAME :

GENERAL NOTES:

THE LOCATIONS OF EXISTING AND PROPOSED UTILITY INSTALLATIONS AS SHOWN ON THE PLANS ARE APPROXIMATE. THERE MAY BE OTHER UTILITY INSTALLATIONS WITHIN THE PROJECT AREA THAT ARE NOT SHOWN.

THE CONTRACTOR SHALL NOTIFY DIGGERS HOTLINE AND AFFECTED UTILTIIES PRIOR TO THE START OF WORK. ANY LOCAL MUNICIPAL UTILITY WHICH IS NOT A MEMBER OF DIGGERS HOTLINE MUST BE CONTACTED SEPARATELY.

RIGHT OF WAY INFORMATION, AS SHOWN ON THE PLANS, IS APPROXIMATE.

SECTION 2 SHEETS

UTILITIES

GAS

WISCONSIN PUBLIC SERVICE CORPORATION - GAS/PETROLEUM
RORY TAMMINGA
1717 10TH AVENUE
MEONOMINEE, MI 49858
T: 906-863-4328
C: 262-909-0645
RORY.TAMMINGA@WISCONSINPUBLICSERVICE.COM

ELECTRIC

ALLIANT ENERGY - ELECTRICITY
STEVEN CYCHOSZ
708 NE 7TH STREET
MARION, WI 54950
T: 715-754-4323
C: 920-290-4102
STEVENCYCHOSZ@ALLIANTENERGY.COM

COMMUNICATIONS

FRONTIER COMMUNICATIONS OF WI LLC
CALVIN KLADE
1851 N 14TH AVENUE
WAUSAU, WI 54401
T: 715-847-1525
C: 715-573-2110
CALVIN.KLADE@FTR.COM

COMMUNICATIONS

WITTENBERG TELEPHONE COMPANY
SCOTT SICKLER
PO BOX 160
104 WEST WALKER STREET
WITTENBERG, WI 54499
T: 715-253-2111
C: 715-881-0302
SCOTT@WITTELCO.COM

COMMUNICATIONS

CENTURYLINK (OCONTO COUNTY ONLY)
PETER JOHNSON
2425 MARY STREET
MARRINETTE, WI 54143
T: 715-735-0059
C: 715-938-1480
PETER.S.JOHNSON@CENTURYLINK.COM

PROJECT CONTACTS

WDNR

WENDY HENNIGES
107 SUTLIFF AVENUE
RHINELANDER, WI 54501
715-365-8916
WENDY.HENNIGES@WISCONSIN.GOV

RUNOFF COEFFICIENT TABLE

	HYDROLOGIC SOIL GROUP											
	A			B			C			D		
	SLOPE RANGE (PERCENT)			SLOPE RANGE (PERCENT)			SLOPE RANGE (PERCENT)			SLOPE RANGE (PERCENT)		
LAND USE:	0-2	2-6	6 & OVER	0-2	2-6	6 & OVER	0-2	2-6	6 & OVER	0-2	2-6	6 & OVER
ROW CROPS	.08 .22	.16 .30	.22 .38	.12 .26	.20 .34	.27 .44	.15 .30	.24 .37	.33 .50	.19 .34	.28 .41	.38 .56
MEDIAN STRIP-TURF	.19 .24	.20 .26	.24 .30	.19 .25	.22 .28	.26 .33	.20 .26	.23 .30	.30 .37	.20 .27	.25 .32	.30 .40
SIDE SLOPE-TURF			.25 .32			.27 .34			.28 .36			.30 .38
PAVEMENT:												
ASPHALT	.70 - .95											
CONCRETE	.80 - .95											
BRICK	.70 - .80											
DRIVES, WALKS	.75 - .85											
ROOFS	.75 - .95											
GRAVEL ROADS, SHOULDERS	.40 - .60											

TOTAL PROJECT AREA = 40.588 ACRES
TOTAL AREA EXPECTED TO BE DISTURBED BY CONSTRUCTION ACTIVITIES = 2.074 ACRES

DIGGERS HOTLINE
Dial 811 or (800)242-8511
www.DiggersHotline.com

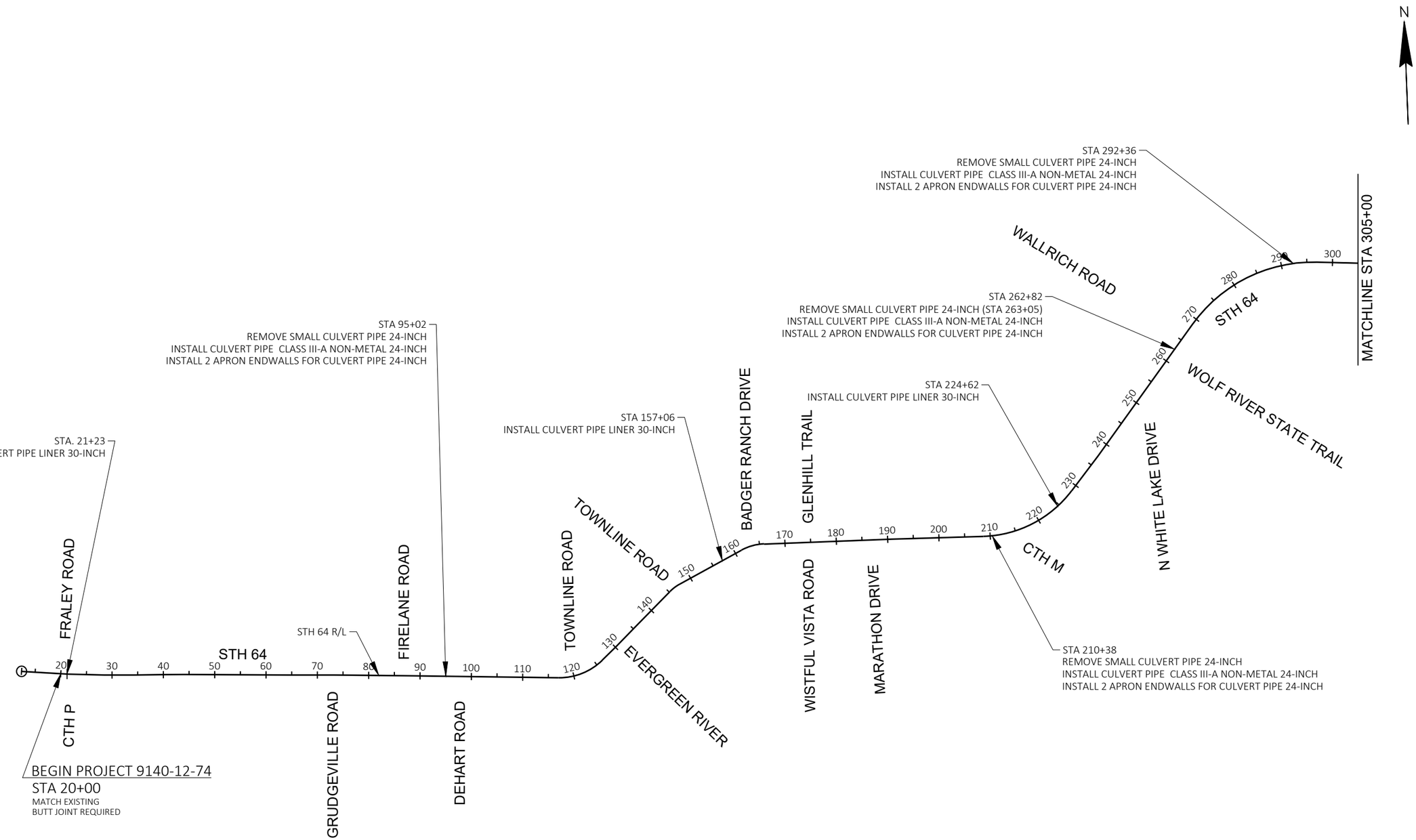

PROJECT NO: 9140-12-74	HWY: STH 64	COUNTY: LANGLADE	PROJECT OVERVIEW	SHEET 3	E

FILE NAME : C:\USERS\JESSICA.LANCELLE\AECOM DIRECTORY\NEMEC, ELIZABETH - 60600222-STH64_LANGLADE\900_CAD_GIS\910_CAD\SHEETS\74\020201-PO.DWG
LAYOUT NAME - PO-1
PLOT DATE : 7/7/2020 8:19 AM PLOT BY : LANCELLE, JESSICA PLOT NAME : PLOT SCALE : ##########

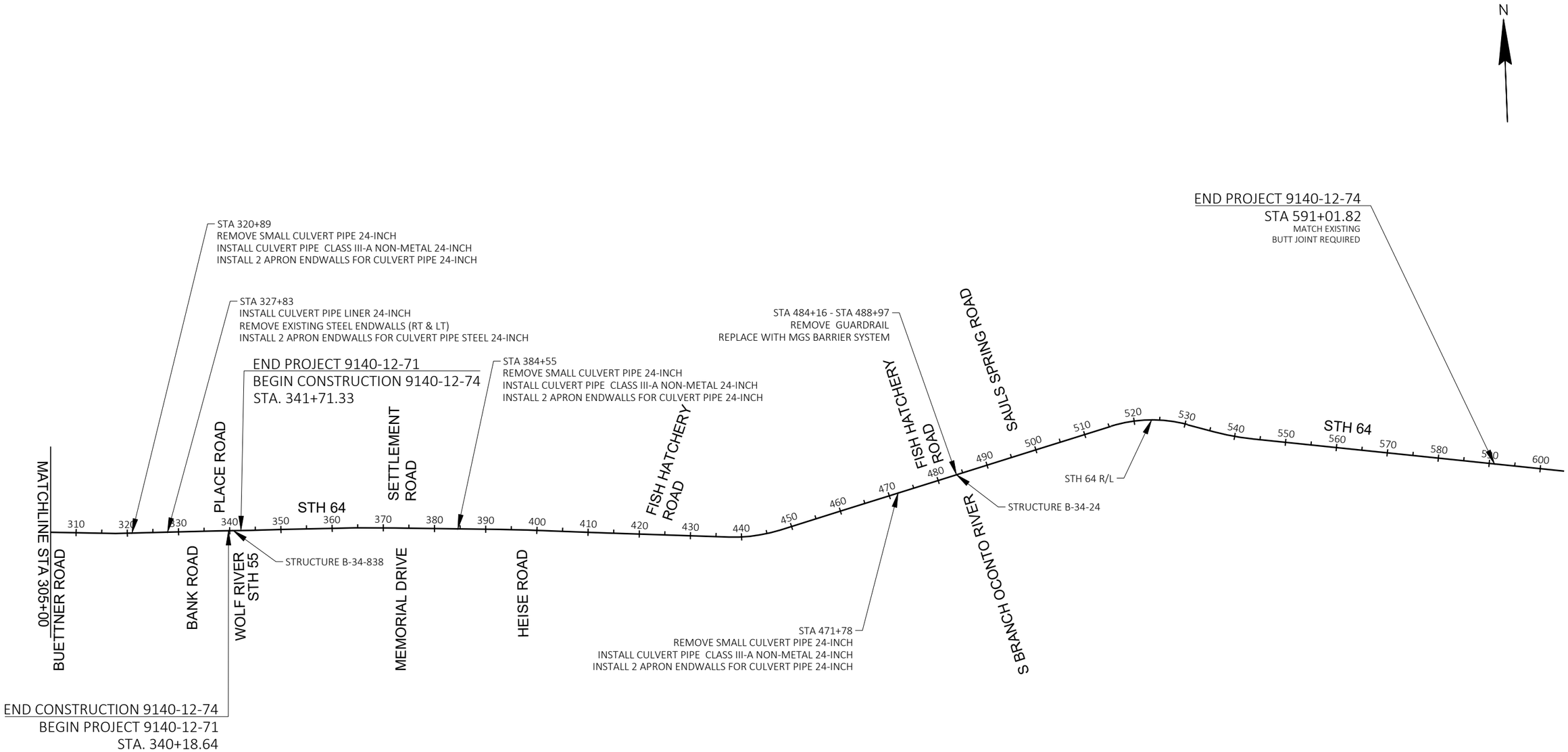
N
END PROJECT 9140-12-74
STA 591+01.82
MATCH EXISTING
BUTT JOINT REQUIRED
STA 320+89
REMOVE SMALL CULVERT PIPE 24-INCH
INSTALL CULVERT PIPE CLASS III-A NON-METAL 24-INCH
INSTALL 2 APRON ENDWALLS FOR CULVERT PIPE 24-INCH
STA 327+83
INSTALL CULVERT PIPE LINER 24-INCH
REMOVE EXISTING STEEL ENDWALLS (RT & LT)
INSTALL 2 APRON ENDWALLS FOR CULVERT PIPE STEEL 24-INCH
END PROJECT 9140-12-71
BEGIN CONSTRUCTION 9140-12-74
STA. 341+71.33
STA 384+55
REMOVE SMALL CULVERT PIPE 24-INCH
INSTALL CULVERT PIPE CLASS III-A NON-METAL 24-INCH
INSTALL 2 APRON ENDWALLS FOR CULVERT PIPE 24-INCH
STA 484+16 - STA 488+97
REMOVE GUARDRAIL
REPLACE WITH MGS BARRIER SYSTEM
MATCHLINE STA 305+00
BUETTNER ROAD
BANK ROAD
PLACE ROAD
WOLF RIVER
STH 55
SETTLEMENT ROAD
MEMORIAL DRIVE
HEISE ROAD
FISH HATCHERY ROAD
FISH HATCHERY ROAD
SAULS SPRING ROAD
S BRANCH OCONTO RIVER
STH 64
STH 64
STH 64 R/L
STRUCTURE B-34-838
STRUCTURE B-34-24
STA 471+78
REMOVE SMALL CULVERT PIPE 24-INCH
INSTALL CULVERT PIPE CLASS III-A NON-METAL 24-INCH
INSTALL 2 APRON ENDWALLS FOR CULVERT PIPE 24-INCH
310
320
330
340
350
360
370
380
390
400
410
420
430
440
450
460
470
480
490
500
510
520
530
540
550
560
570
580
590
600
END CONSTRUCTION 9140-12-74
BEGIN PROJECT 9140-12-71
STA. 340+18.64

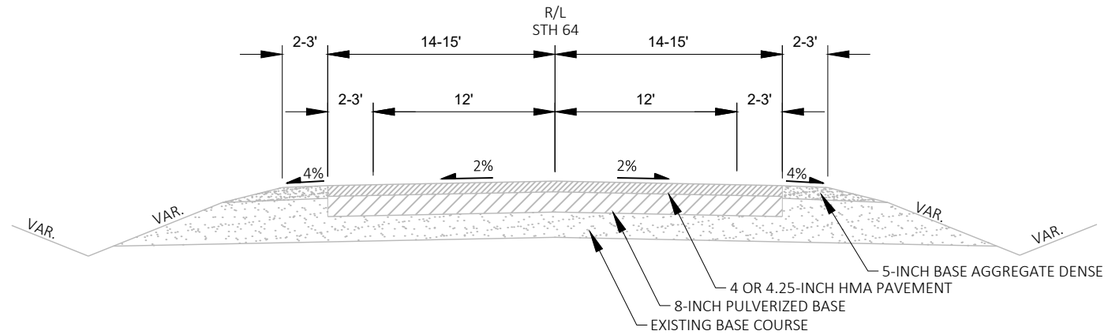

EXISTING TYPICAL SECTION

STA 20+00 - STA 340+16 (3' SHOULDERS)
STA 340+16 - STA 591+01 (2' SHOULDERS)

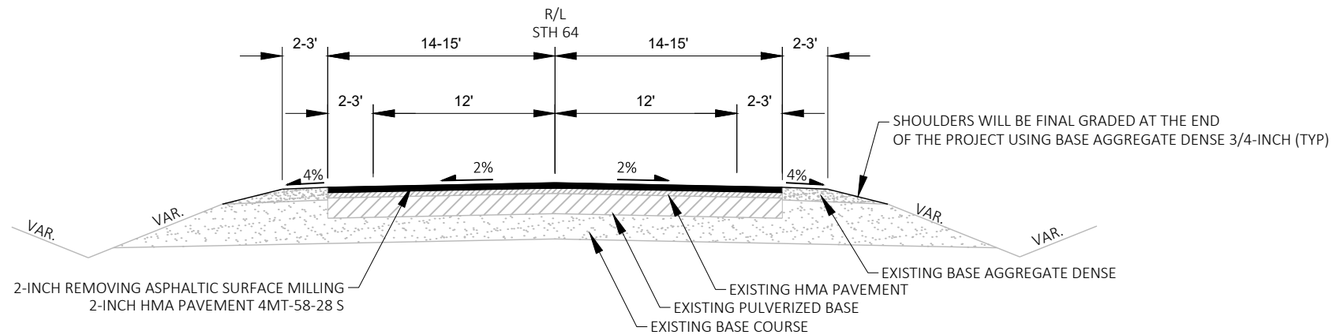

PROPOSED TYPICAL SECTION

STA 20+00 - STA 339+74 (3' SHOULDERS)
STA 342+16 - STA 591+01 (2' SHOULDERS)

2

NOTE:
WORK AT WEST ABUTMENT SHOWN. USE MIRRORED DETAIL FOR EAST ABUTMENT,

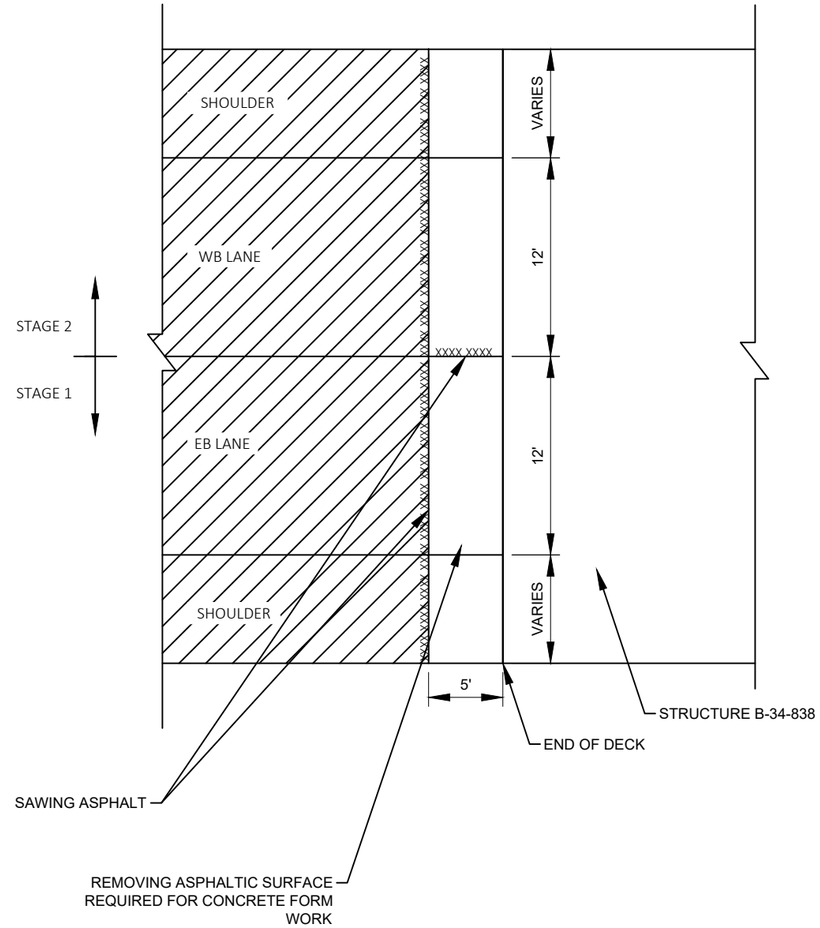

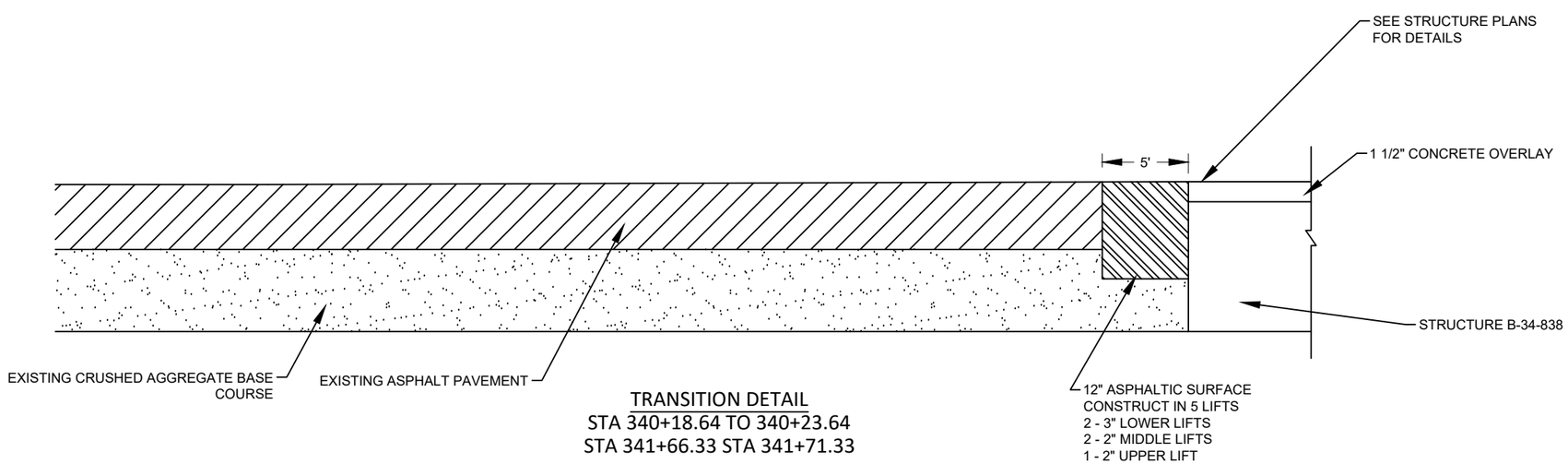

TRANSITION DETAIL
STA 340+18.64 TO 340+23.64
STA 341+66.33 STA 341+71.33

PROJECT NO:9140-12-71	HWY:STH 64	COUNTY:LANGLADE	CONSTRUCTION DETAILS	SHEET 6	E

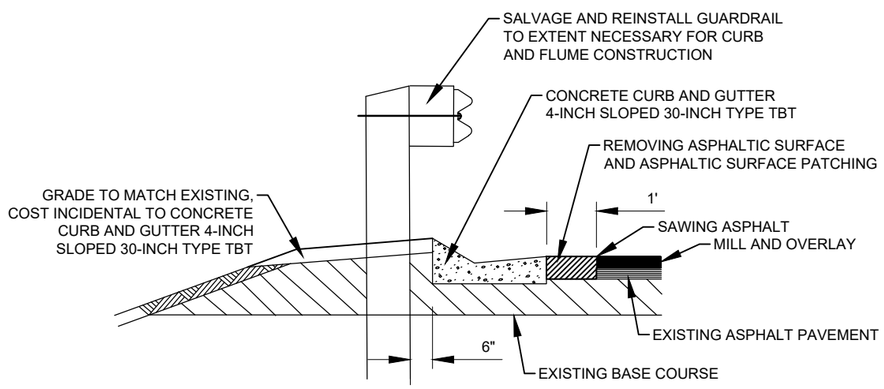

CURB INSTALLATION AT BEAMGUARD
SECTION A-A

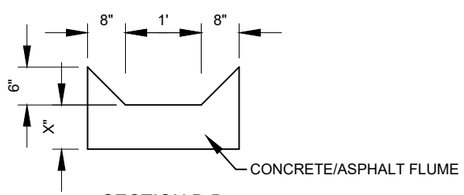

SECTION B-B

X = 6" MIN. CONCRETE, 4" MIN. ASPHALT
OR AS DIRECTED BY THE ENGINEER

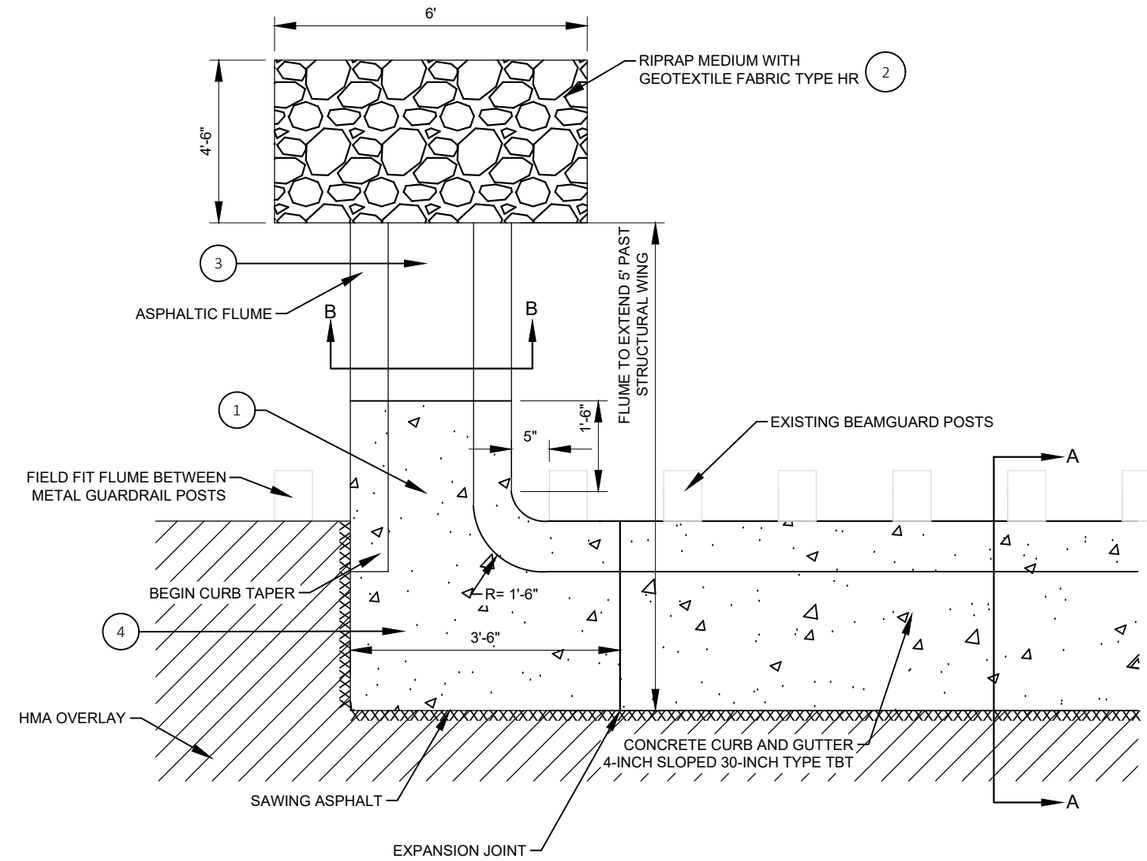

FLUME INSTALLATION AT CURB END
PLAN VIEW

NOTE:
PLACE FLUME BETWEEN SPACING OF FIRST TWO METAL POSTS IN SW QUADRANT. PLACE BETWEEN FOURTH SPACING OF METAL POSTS ON THE NW SIDE TO AVOID WINGWALL.

DETAILS OF CONSTRUCTION, MATERIALS AND WORKMANSHIP NOT SHOWN ON THIS DRAWING SHALL CONFORM TO PERTINENT REQUIREMENTS OF THE STANDARD SPECIFICATIONS AND APPLICABLE SPECIAL PROVISIONS.

WELDED STEEL WIRE FABRIC SHALL BE IN ACCORDANCE WITH AASHTO SPECIFICATION M55.

CONCRETE TRANSITION BTEWEEN CURB AND GUTTER AND ASPHALT FLUME TO BE PAID FOR AS "CONCRETE CURB AND GUTTER 4-INCH SLOPED 30-INCH TYPE TBT"

1. WELDED STEEL FABRIC REQUIRED FROM THE EDGE OF THE SURFACE DRAIN TO THE EDGE OF THE CONCRETE FLUME. MINIMUM REINFORCEMENT 4"X4" W3.0XW3.0 WELDED STEEL WIRE FABRIC.
2. GEOTEXTILE FABRIC SPLICES MUST BE HAND SEWN TOGETHER OR ELIMINATED.
3. CONSTRUCT FLUME FLOW LINE AS INSTRUCTED BY THE ENGINEER.
4. SURFACE DRAIN INLET SHALL BE SLOPED AT $\frac{3}{4}$"/FT

2

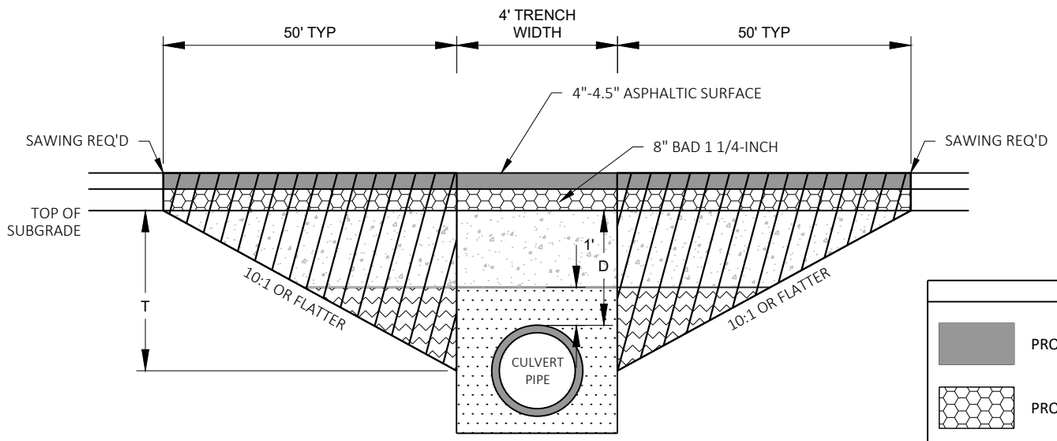

TRANSITION CUT DEPTH (T) = THE LESSER OF DEPTH TO CENTER OF PIPE OR 5 FT.
DO NOT EXTEND TRANSITION CUT BELOW HORIZONTAL CENTER OF PIPE.

DEPTH D < 6 FT

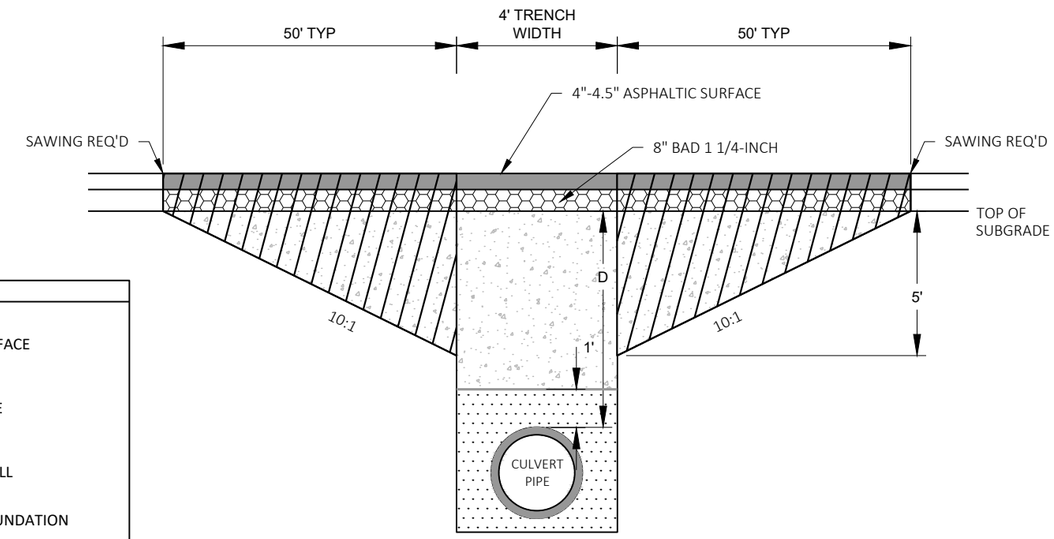

DEPTH D ≥ 6 FT

KEY

- PROPOSED SURFACE
- PROPOSED BASE
- TRENCH BACKFILL
- TRENCH OR FOUNDATION BACKFILL
- FOUNDATION BACKFILL
- TRANSITION CUT

NOTES

TRANSITION CUT IS PAID AS EXCAVATION COMMON.
TRANSITION CUT WIDTH IS FROM SUBGRADE SHOULDER POINT TO SUBGRADE SHOULDER POINT.
BACKFILL THE TRANSITION CUT AREAS WITH FOUNDATION AND TRENCH BACKFILL AS SPECIFIED IN STANDARD SPEC 520.
PERFORM CULVERT PIPE INSTALLATION BEFORE MILLING AND PAVING.

CULVERT PIPE TRANSITION

ROUTE	STA (CL)	DEPTH D (FT)	PIPE DIA (IN)	COMMON EXC (CY)
STH 64	95+02	4.4	24	445
STH 64	210+38	4.6	24	460
STH 64	262+82	4.1	24	425
STH 64	292+36	4.0	24	420
STH 64	320+89	2.0	24	275
STH 64	384+55	2.7	24	305
STH 64	471+78	8.8	24	420

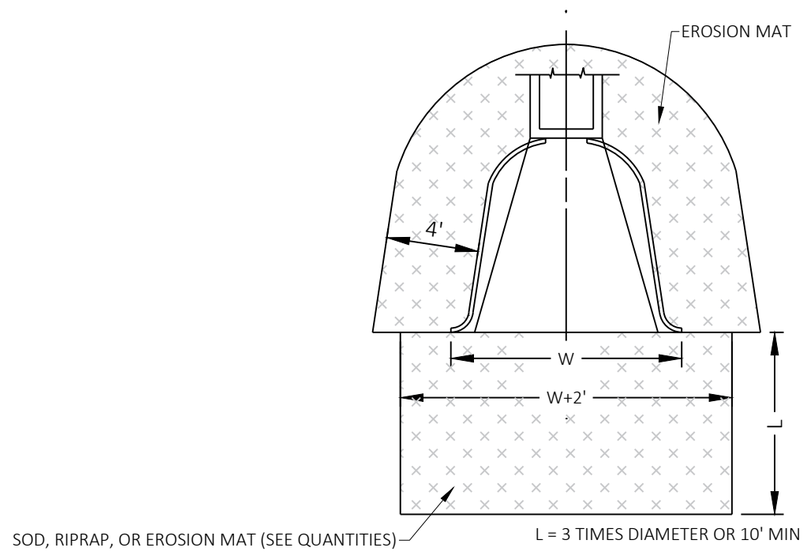

EROSION MAT AT PIPE END

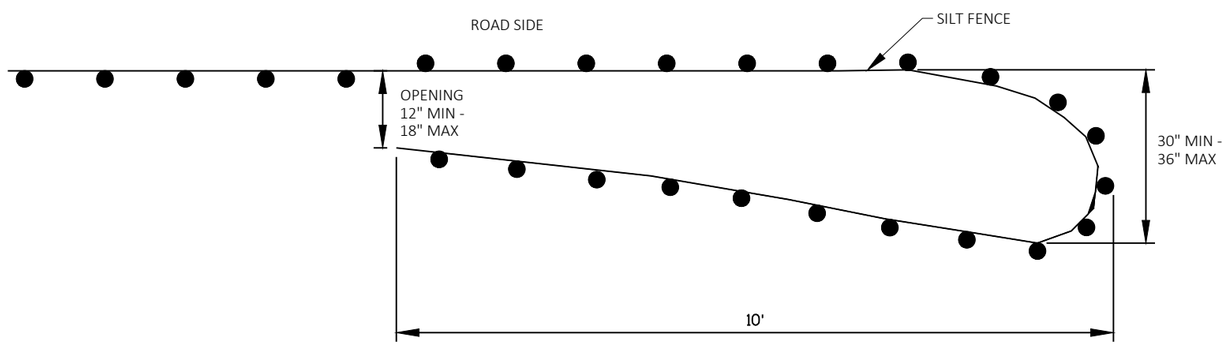

PLAN VIEW

GENERAL NOTES:
SILT FENCE POSTS FOR THE TURN-AROUND SHOULD BE ON THE OUTSIDE OF THE TURN-AROUND. AND TRENCHED IN ACCORDING TO SILT FENCE REQUIREMENTS.

SEE PLANS FOR SILT FENCE LOCATIONS. INSTALL TURN-AROUND AT END OF SHOWN FENCING.

ROADSIDE OFFSETS DEPENDENT ON LOCATION.

TEMPORARY SMALL ANIMAL TURN-AROUND

STRUCTURE B-34-24

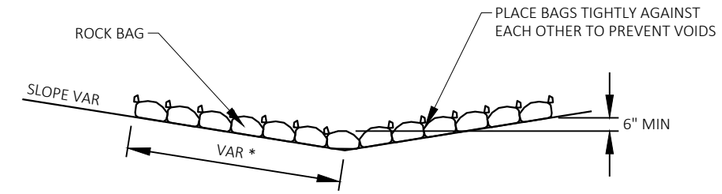

SIDE VIEW (SINGLE LAYER)

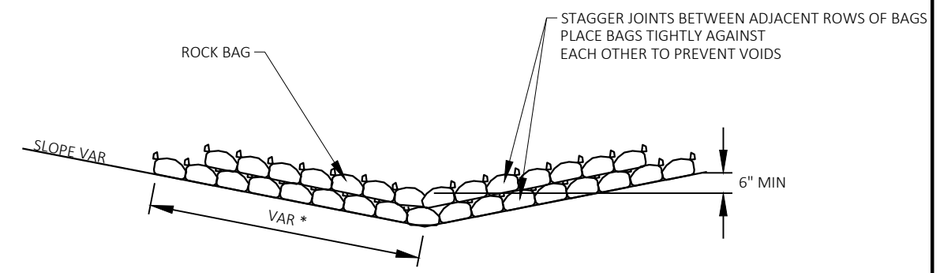

* LENGTH AND NUMBER OF BAGS MAY VARY
DEPENDING ON DESIRED DEPTH OF WATER POOL

SIDE VIEW (MULTIPLE LAYER)

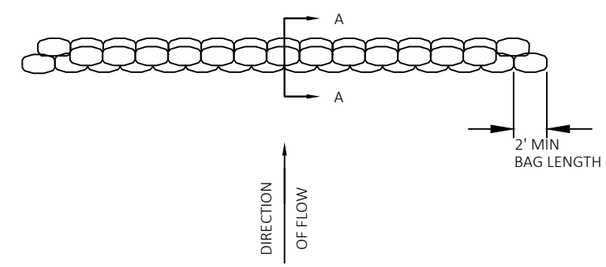

TOP VIEW (MULTIPLE LAYER)

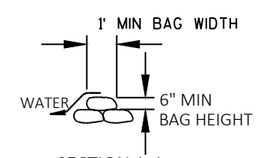

SECTION A-A

ROCK BAGS USED FOR DITCH CHECKS

2

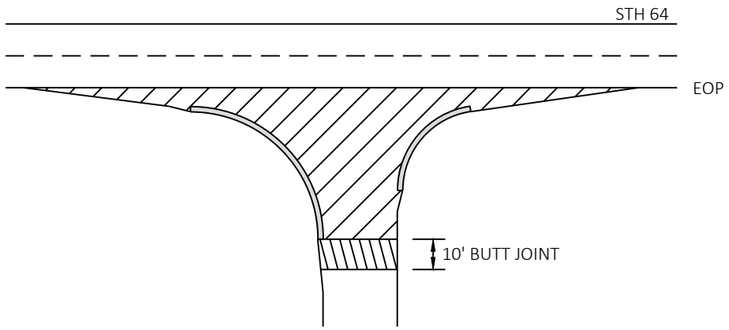

REMOVING ASPHALTIC SURFACE MILLING 2-INCH

REMOVING ASPHALTIC SURFACE BUTT JOINTS
SEE BUTT JOINT DETAIL

NOTE: WHEN MATCHING TO AN UNPAVED SURFACE
BUTT JOINT IS NOT REQUIRED

SIDE ROADS

WITH CURB AND GUTTER

CTH P
CTH M
N. WHITE LAKE DR.
STH 55

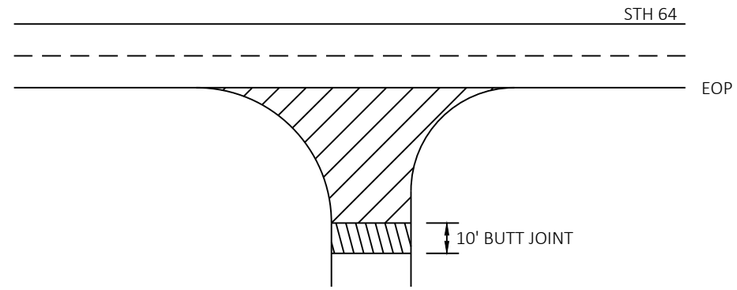

REMOVING ASPHALTIC SURFACE MILLING 2-INCH

REMOVING ASPHALTIC SURFACE BUTT JOINTS
SEE BUTT JOINT DETAIL

NOTE: WHEN MATCHING TO AN UNPAVED SURFACE
BUTT JOINT IS NOT REQUIRED

SIDE ROADS

WITHOUT CURB AND GUTTER

FRALEY RD.
GRUDGEVILLE RD.
FIRELANE RD.
DEHART RD.
BADGER RANCH DR.
GLEN HILL TRAIL
WISTFUL VISTA RD.
MARATHON DR.

WALLRICH RD.
BUETTNER RD.
BANK RD.
MEMORIAL DR.
SETTLEMENT RD.
HEISE RD.
FISH HATCHERY RD.
SAULS SPRING RD.

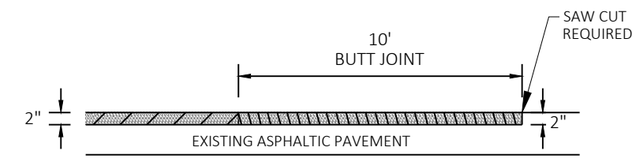

HMA PAVEMENT

REMOVING ASPHALTIC SURFACE MILLING

REMOVING ASPHALTIC SURFACE BUTT JOINTS

BUTT JOINT

MAINLINE AND SIDE ROADS

2

PROJECT NO: 9140-12-74	HWY: STH 64	COUNTY: LANGLADE	CONSTRUCTION DETAIL	SHEET 11	E

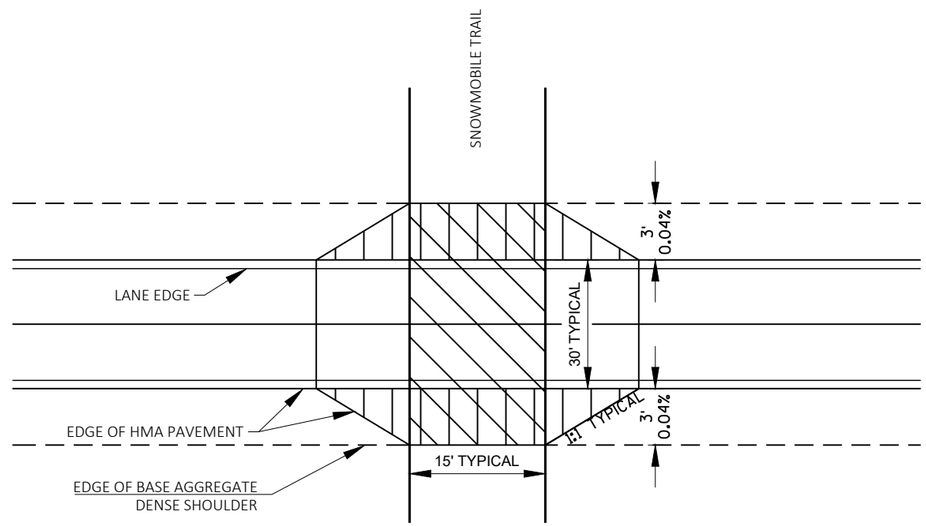

PROTECTIVE THERMOPLASTIC COATING
AT SNOWMOBILE TRAIL CROSSING

HMA TYPE 4MT 58-28S PAVEMENT WIDENING
4-INCHES FOR SNOWMOBILE TRAIL CROSSING

NOTE:A: PREPARATION FOR PAVEMENT WIDENING
FALLS UNDER PREPARE FOUNDATION
FOR ASPHALTIC SHOULDERS.

EXACT LOCATIONS TO BE MARKED
IN THE FIELD BY THE PROJECT PERSONAL.

SNOWMOBILE TRAIL CROSSING

STA 263+85
STA 382+00
STA 462+50
(NOTE: ALL LOCATIONS ARE APPROXIMATE.
ACTUAL LOCATIONS TO BE FIELD VERIFIED)

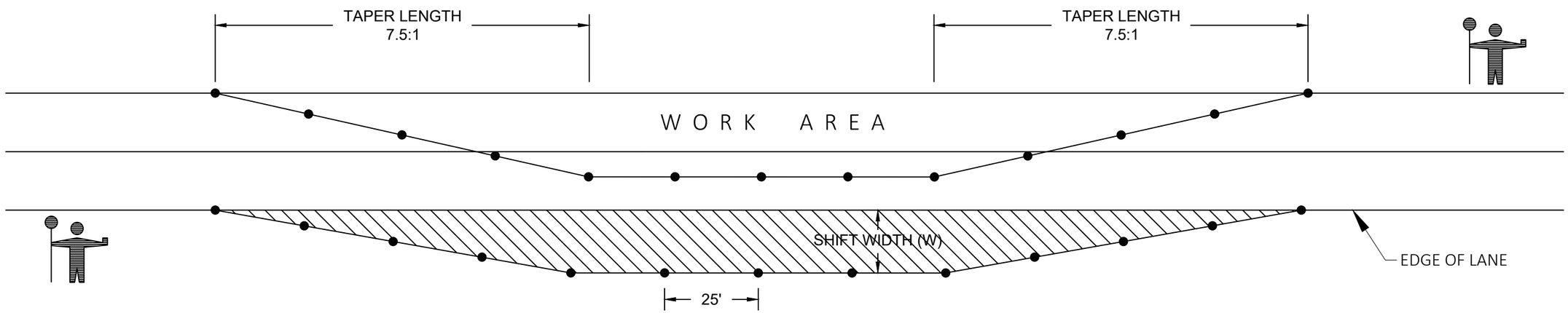

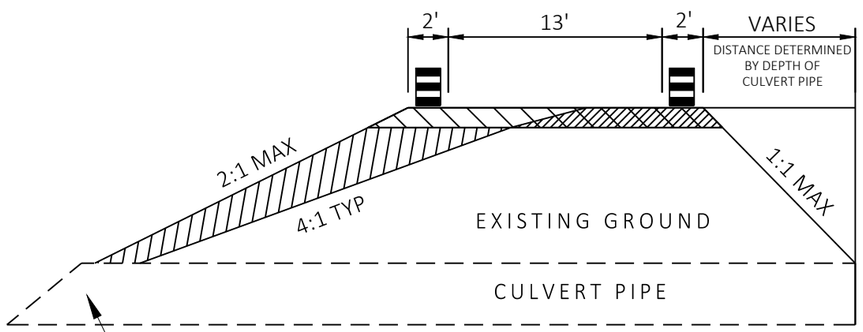

WHERE WIDENING EXTENDS PAST CULVERT END, TEMPORARILY FILL PIPE, AS APPROVED BY THE ENGINEER.

NOTES

1. EXTEND TAPERS ACROSS THE SHOULDER
   UNLESS DOING SO WOULD GREATLY CONFLICT WITH THE WORK OPERATION

2. WHEN WORK IS NOT IN PROGRESS:
   - REMOVE OR COVER ALL LANE CLOSURE SIGNS
   - MOVE ALL DEVICES A SAFE DISTANCE OUTSIDE THE SHOULDER
   - RESTORE LANES TO A SAFE OPERATING CONDITION

3. USE WITH SDD "TRAFFIC CONTROL FOR LANE CLOSURE WITH FLAGGING OPERATION"

KEY

- ● TRAFFIC CONTROL DRUM
- EXISTING PAVE SURFACE
  -OR-
  6" BASE AGGREGATE DENSE 1 1/4 INCH
  - INCIDENTAL TO LANE SHIFT SYSTEM
- 6" BASE AGGREGATE DENSE 1 1/4 INCH
  - INCIDENTAL TO LANE SHIFT SYSTEM
- FILL
  - INCIDENTAL TO LANE SHIFT SYSTEM

LANE SHIFT DETAIL

STATION	W	BASE AGG. (TON)	FILL (CY)
STA 95+02	12' RT	87	59
STA 210+38	14' LT	109	177
STA 262+82	2.5' LT	5	0
STA 292+36	12' LT	82	108
STA 320+89	7.5' LT	5	32
STA 384+55	11' LT	62	66
STA 471+78	12.5' LT/10' RT	158	230

2

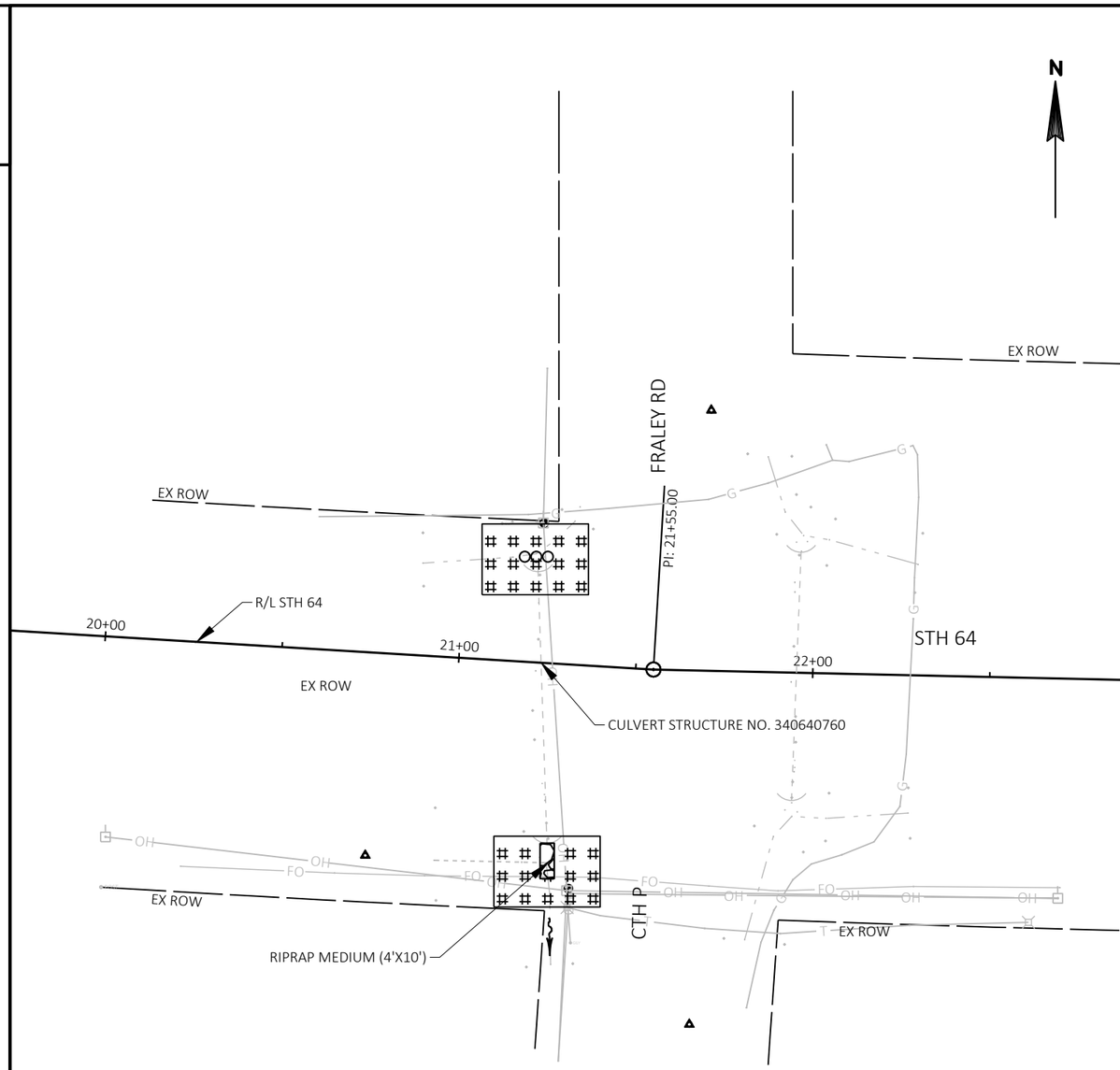

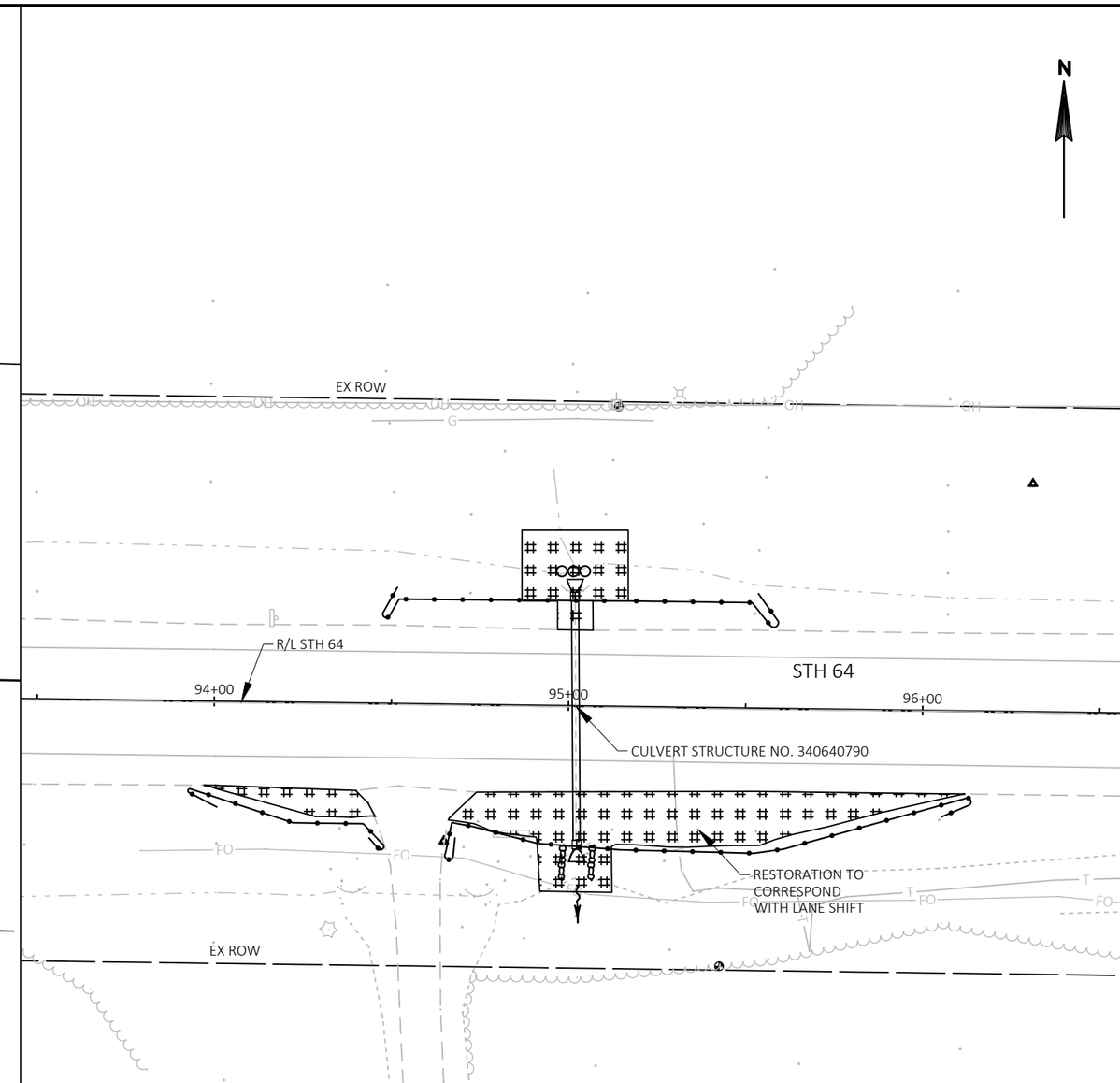

2

LEGEND

- EROSION MAT, FERTILIZE, TOPSOIL, AND SEED
- SILT FENCE
- RIP RAP
- ROCK BAGS
- SLOPE INTERCEPT
- CULVERT PIPE DITCH CHECK
- SURFACE WATER FLOW

PROJECT NO: 9140-12-74	HWY: STH 64	COUNTY: LANGLADE	EROSION CONTROL	SHEET 14	E

FILE NAME : C:\USERS\JESSICA.LANCELLE\AECOM DIRECTORY\NEMEC, ELIZABETH - 60600222-STH64_LANGLADE\900_CAD_GIS\910_CAD\SHEETS\74\022001_EC.DWG
LAYOUT NAME - 0220-01-ec
PLOT DATE : 7/7/2020 8:37 AM PLOT BY : LANCELLE, JESSICA PLOT NAME : PLOT SCALE : 1 IN:40 FT

WISDOT/CADDS SHEET 42

2

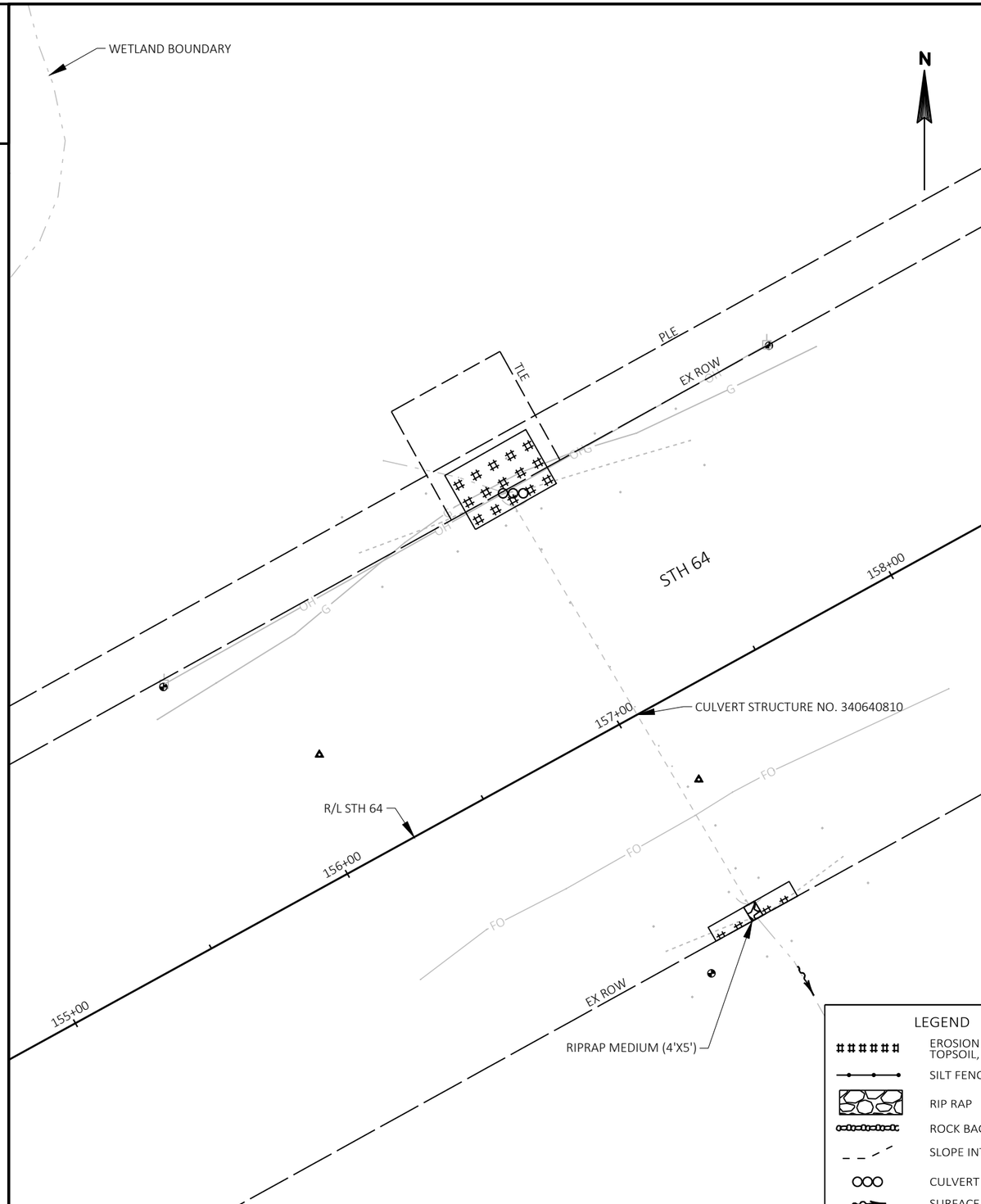

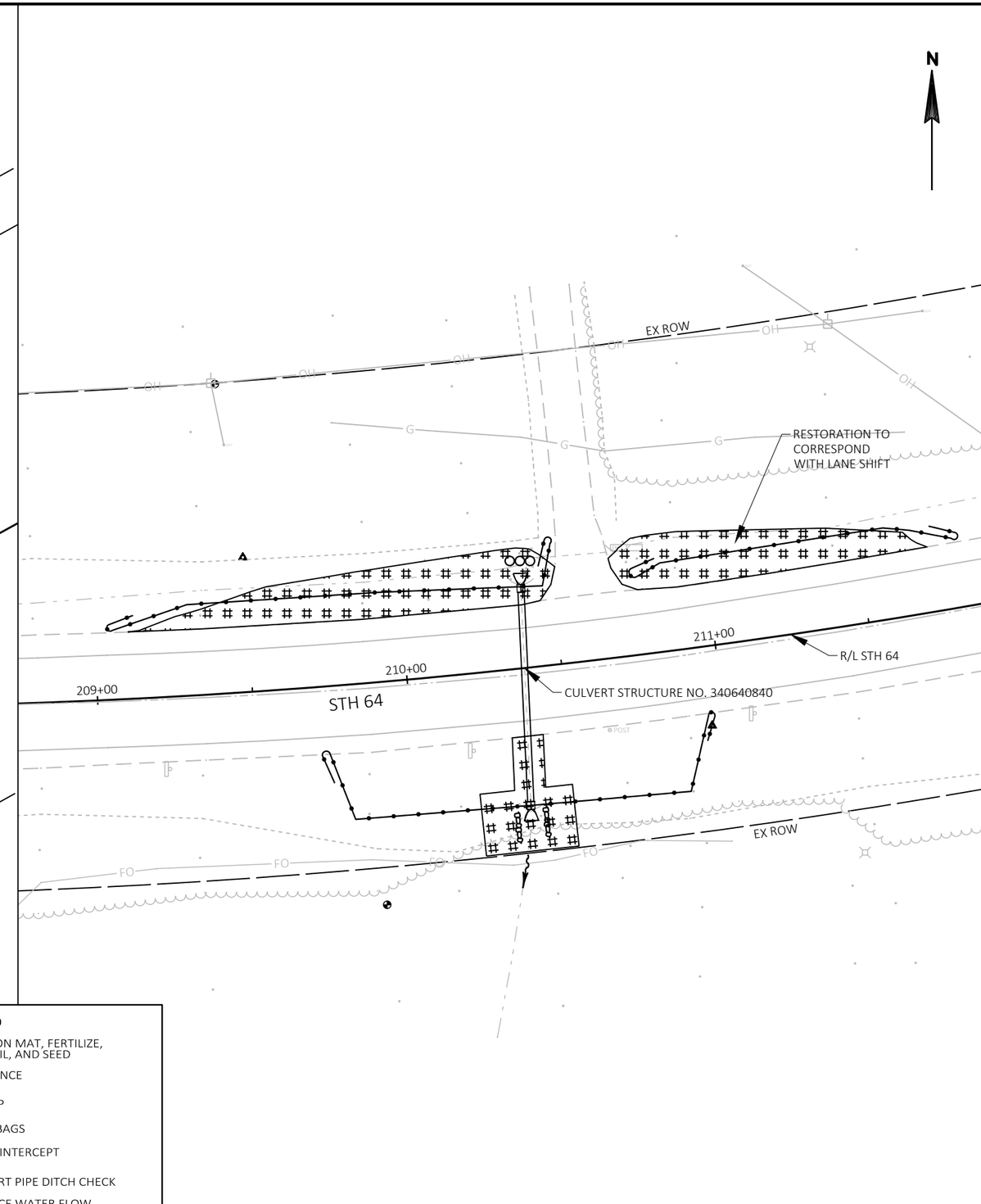

LEGEND

- EROSION MAT, FERTILIZE, TOPSOIL, AND SEED
- SILT FENCE
- RIP RAP
- ROCK BAGS
- SLOPE INTERCEPT
- CULVERT PIPE DITCH CHECK
- SURFACE WATER FLOW

2

PROJECT NO: 9140-12-74	HWY: STH 64	COUNTY: LANGLADE	EROSION CONTROL	SHEET 15	E

FILE NAME : C:\USERS\JESSICA.LANCELLE\AECOM DIRECTORY\NEMEC, ELIZABETH - 60600222-STH64_LANGLADE\900_CAD_GIS\910_CAD\SHEETS\74\022001_EC.DWG
LAYOUT NAME - 0220-02-ec
PLOT DATE : 7/7/2020 8:37 AM PLOT BY : LANCELLE, JESSICA PLOT NAME : PLOT SCALE : 1 IN:40 FT

WISDOT/CADDS SHEET 42

2

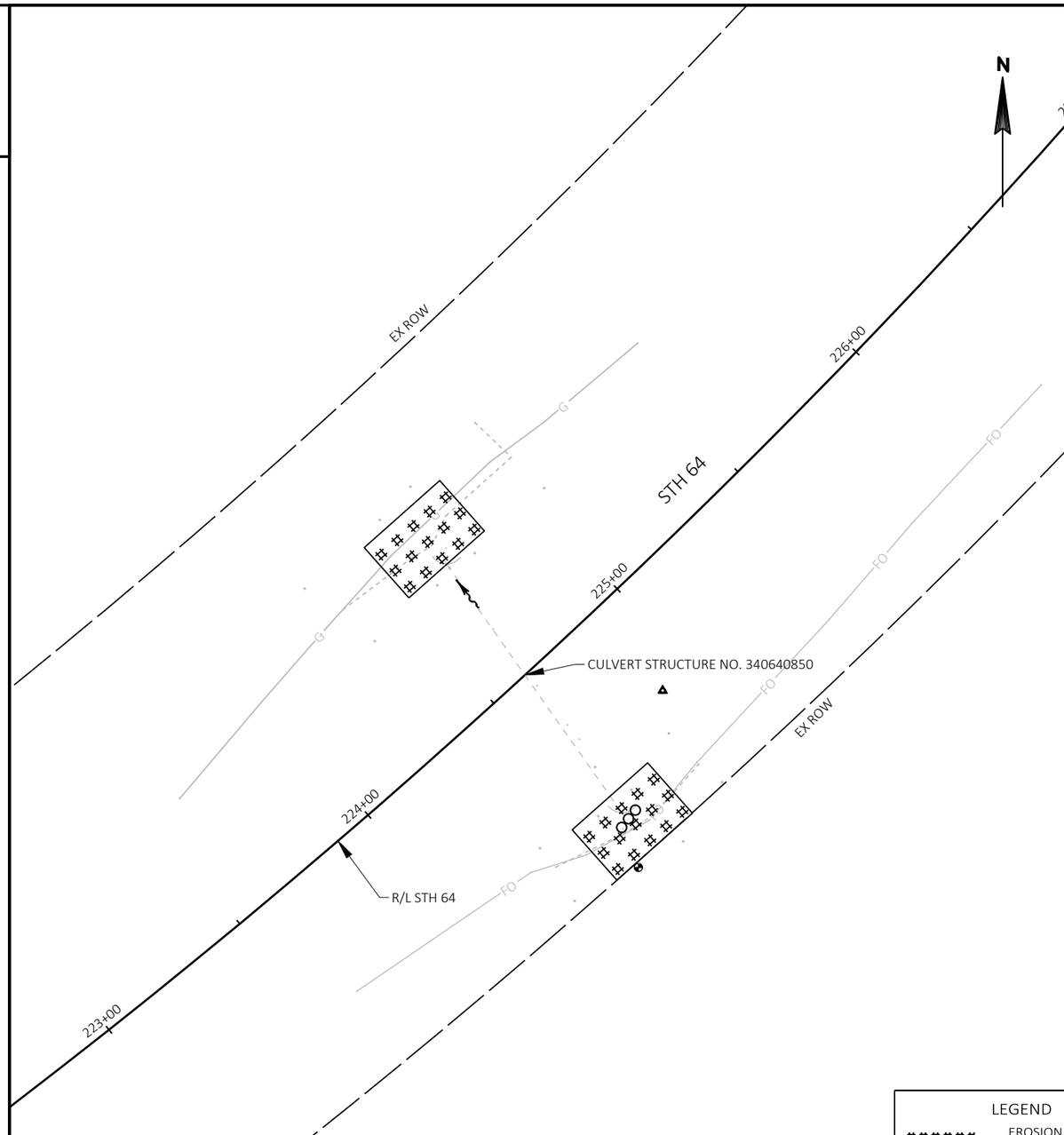

2

LEGEND

- EROSION MAT, FERTILIZE, TOPSOIL, AND SEED
- SILT FENCE
- RIP RAP
- ROCK BAGS
- SLOPE INTERCEPT
- CULVERT PIPE DITCH CHECK
- SURFACE WATER FLOW

PROJECT NO: 9140-12-74	HWY: STH 64	COUNTY: LANGLADE	EROSION CONTROL	SHEET 16	E

2

N

EX ROW

RESTORATION TO CORRESPOND WITH LANE SHIFT

STH 64

293+00

292+00

291+00

CULVERT STRUCTURE NO. 340640890

R/L STH 64

EX ROW

N

2

BLDG

BLDG

RESTORATION TO CORRESPOND WITH LANE SHIFT

EX ROW

STH 64

320+00

321+00

322+00

CULVERT STRUCTURE NO. 340640900

R/L STH 64

EX ROW

LEGEND

# # # # # #	EROSION MAT, FERTILIZE, TOPSOIL, AND SEED
	SILT FENCE
	RIP RAP
	ROCK BAGS
	SLOPE INTERCEPT
	CULVERT PIPE DITCH CHECK
	SURFACE WATER FLOW

PROJECT NO: 9140-12-74	HWY: STH 64	COUNTY: LANGLADE	EROSION CONTROL	SHEET 17	E

FILE NAME : C:\USERS\JESSICA.LANCELLE\AECOM DIRECTORY\NEMEC, ELIZABETH - 60600222-STH64_LANGLADE\900_CAD_GIS\910_CAD\SHEETS\74\022001_EC.DWG
LAYOUT NAME - 0220-04-ec

PLOT DATE : 7/7/2020 8:37 AM PLOT BY : LANCELLE, JESSICA PLOT NAME : PLOT SCALE : 1 IN:40 FT

WISDOT/CADDS SHEET 42

2

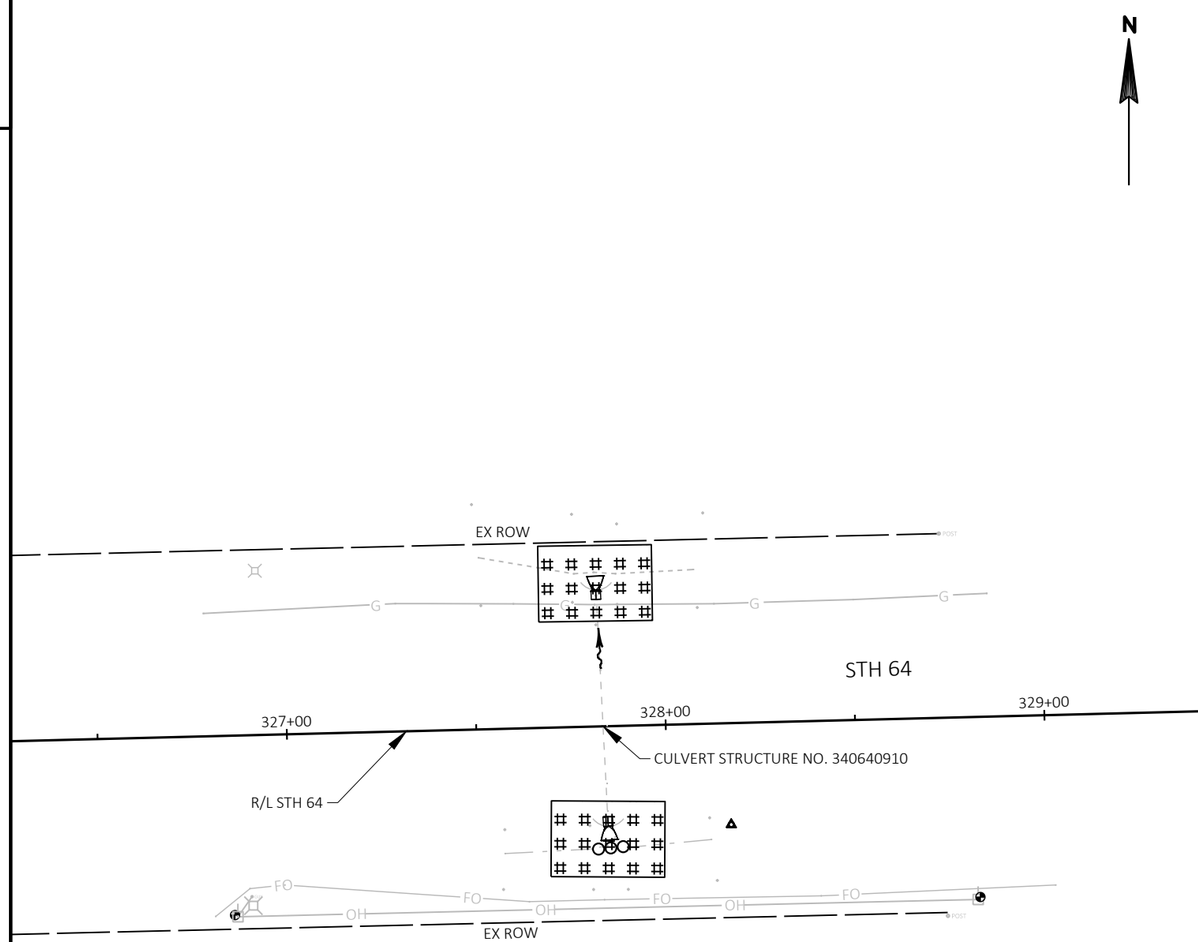

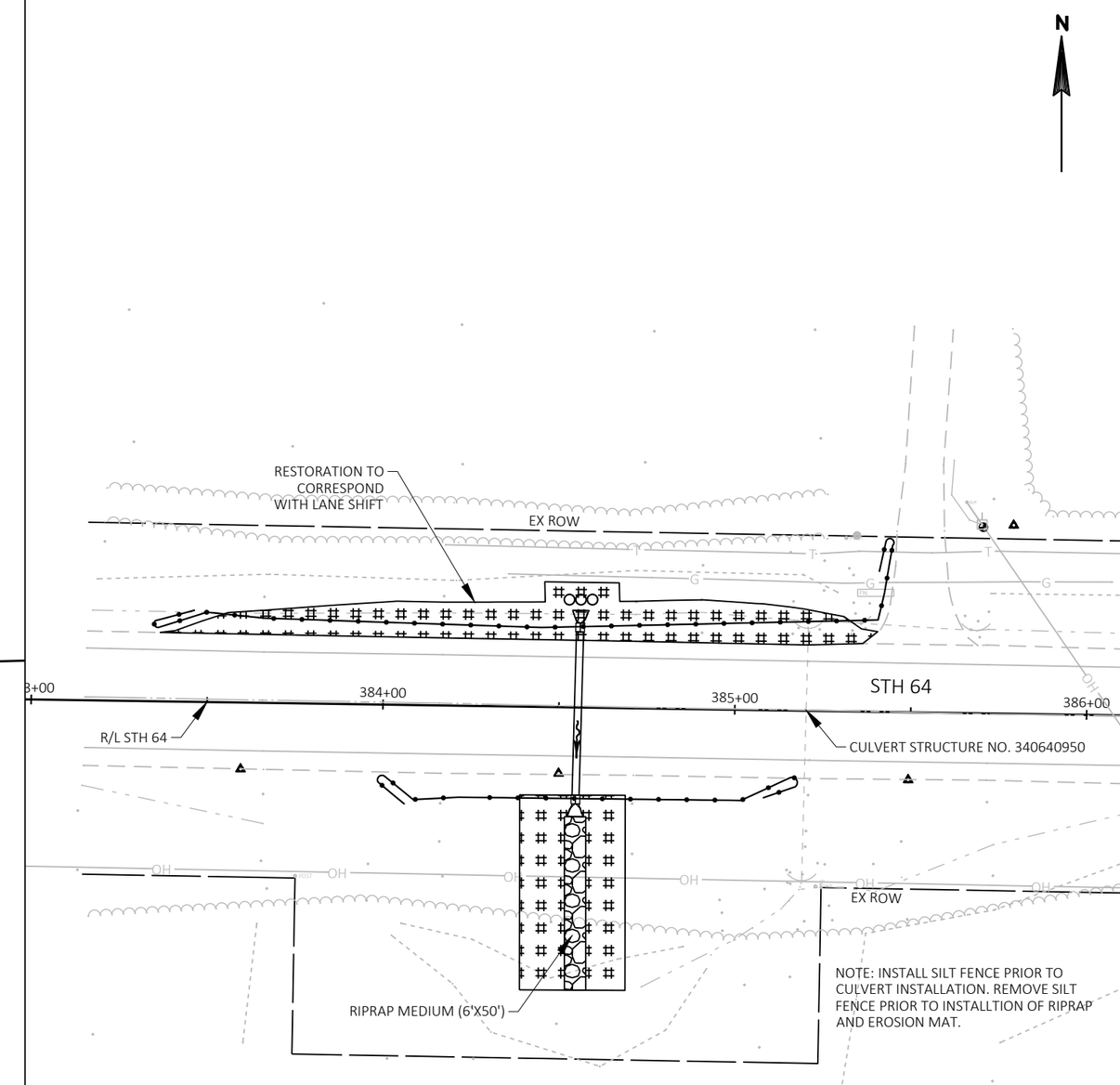

2

LEGEND

- EROSION MAT, FERTILIZE, TOPSOIL, AND SEED
- SILT FENCE
- RIP RAP
- ROCK BAGS
- SLOPE INTERCEPT
- CULVERT PIPE DITCH CHECK
- SURFACE WATER FLOW

PROJECT NO: 9140-12-74	HWY: STH 64	COUNTY: LANGLADE	EROSION CONTROL	SHEET 18	E

2

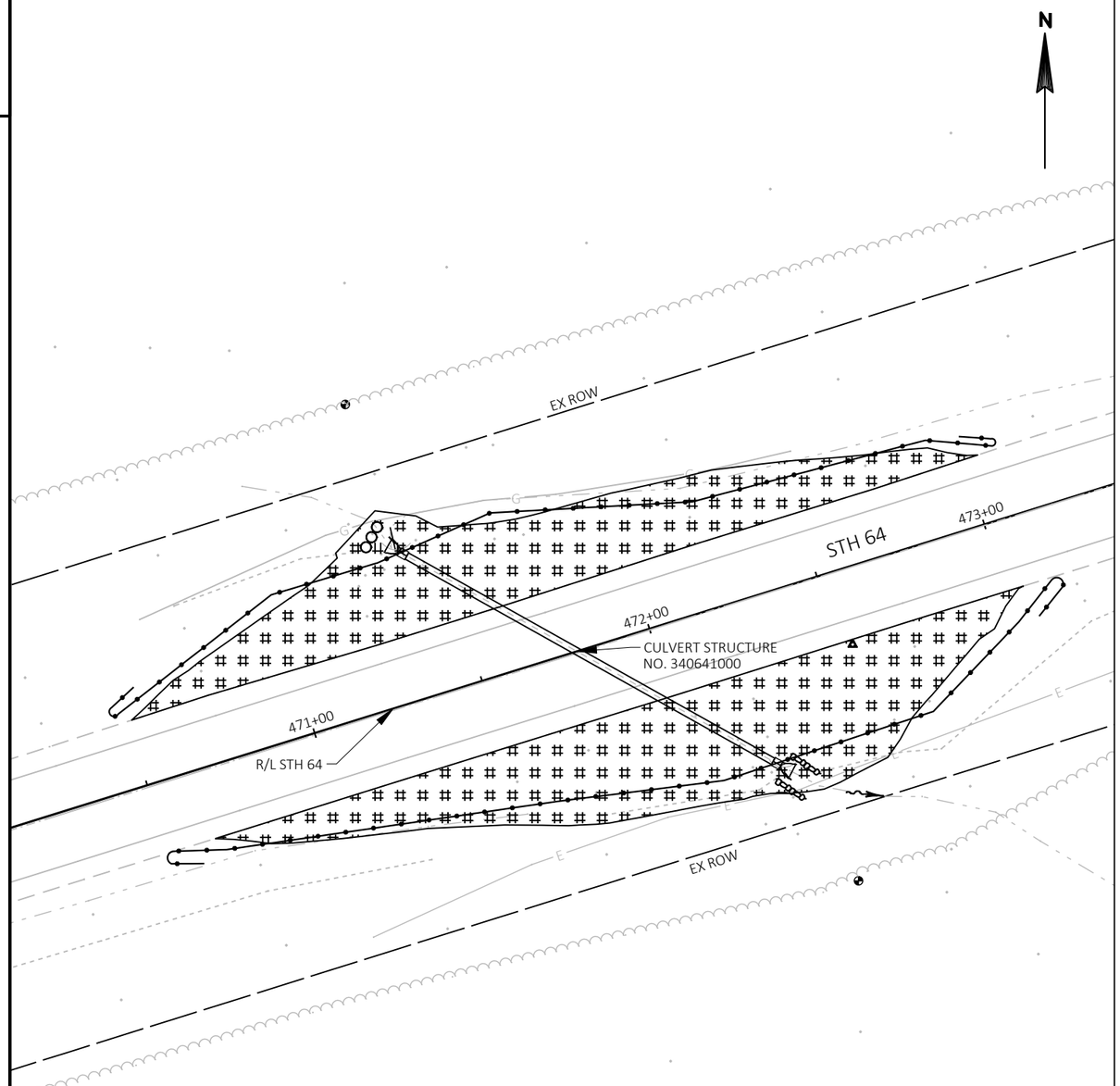

LEGEND

- EROSION MAT, FERTILIZE, TOPSOIL, AND SEED
- SILT FENCE
- RIP RAP
- ROCK BAGS
- SLOPE INTERCEPT
- CULVERT PIPE DITCH CHECK
- SURFACE WATER FLOW

2

PROJECT NO: 9140-12-74	HWY: STH 64	COUNTY: LANGLADE	EROSION CONTROL	SHEET 19	E

FILE NAME : C:\USERS\JESSICA.LANCELLE\AECOM DIRECTORY\NEMEC, ELIZABETH - 60600222-STH64_LANGLADE\900_CAD_GIS\910_CAD\SHEETS\74\022001_EC.DWG
LAYOUT NAME - 0220-06-ec
PLOT DATE : 7/7/2020 8:38 AM PLOT BY : LANCELLE, JESSICA PLOT NAME : PLOT SCALE : 1 IN:40 FT

WISDOT/CADDS SHEET 42

2

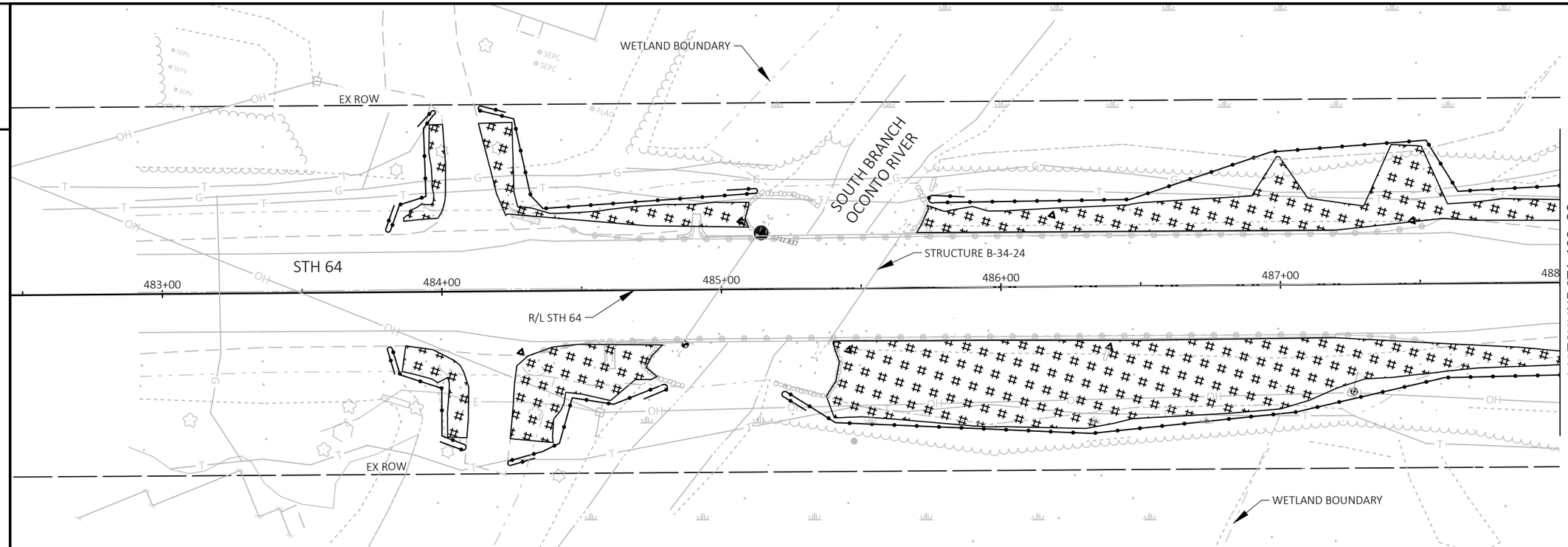

2

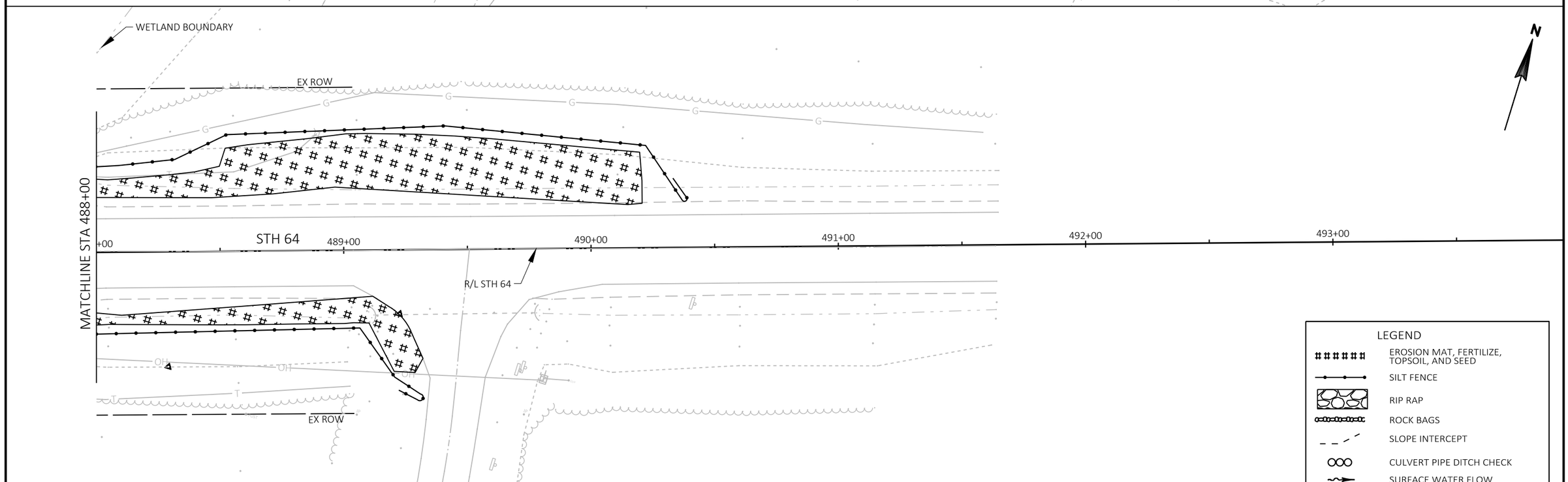

PROJECT NO: 9140-12-74	HWY: STH 64	COUNTY: LANGLADE	EROSION CONTROL	SHEET 20	E

FILE NAME : C:\USERS\JESSICA.LANCELLE\AECOM DIRECTORY\NEMEC, ELIZABETH - 60600222-STH64_LANGLADE\900_CAD_GIS\910_CAD\SHEETS\74\022001_EC.DWG
LAYOUT NAME - 0220-06-ec (2)
PLOT DATE : 7/7/2020 8:38 AM PLOT BY : LANCELLE, JESSICA PLOT NAME : PLOT SCALE : 1 IN:40 FT

WISDOT/CADDS SHEET 42

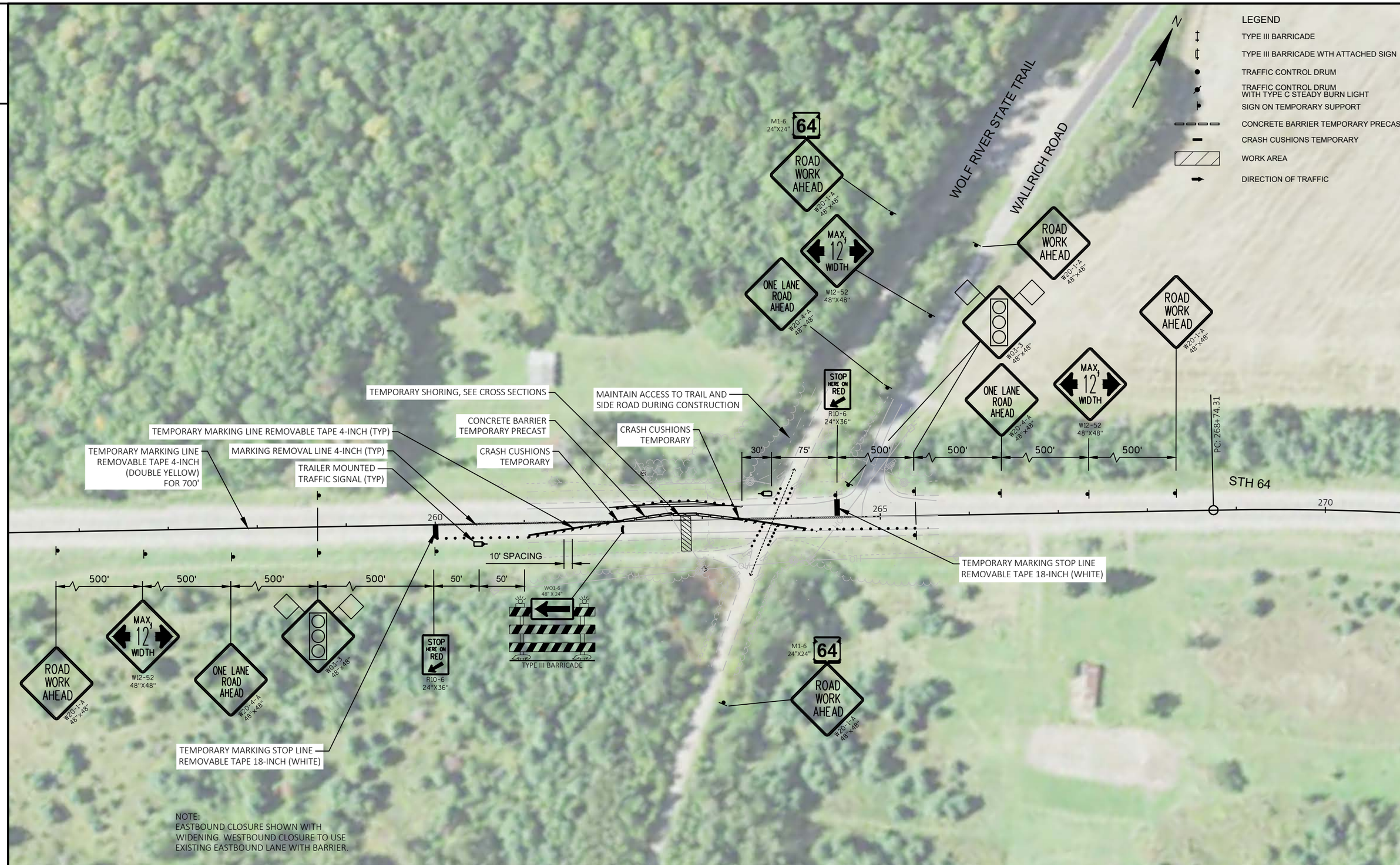

PROJECT NO: 9140-12-74	HWY: STH 64	COUNTY: LANGLADE	TRAFFIC CONTROL	SHEET 21	E

FILE NAME : \\USSTV1FP001\DATA\PROJECTS\60600222\900_CAD_GIS\910_CAD\SHEETS\74\025100-TC.DWG
LAYOUT NAME - RR TC
PLOT DATE : 1/28/2020 3:05 PM
PLOT BY : LANCELLE, JESSICA
PLOT NAME :
PLOT SCALE : 1 IN:100 FT
WISDOT/CADDS SHEET 42

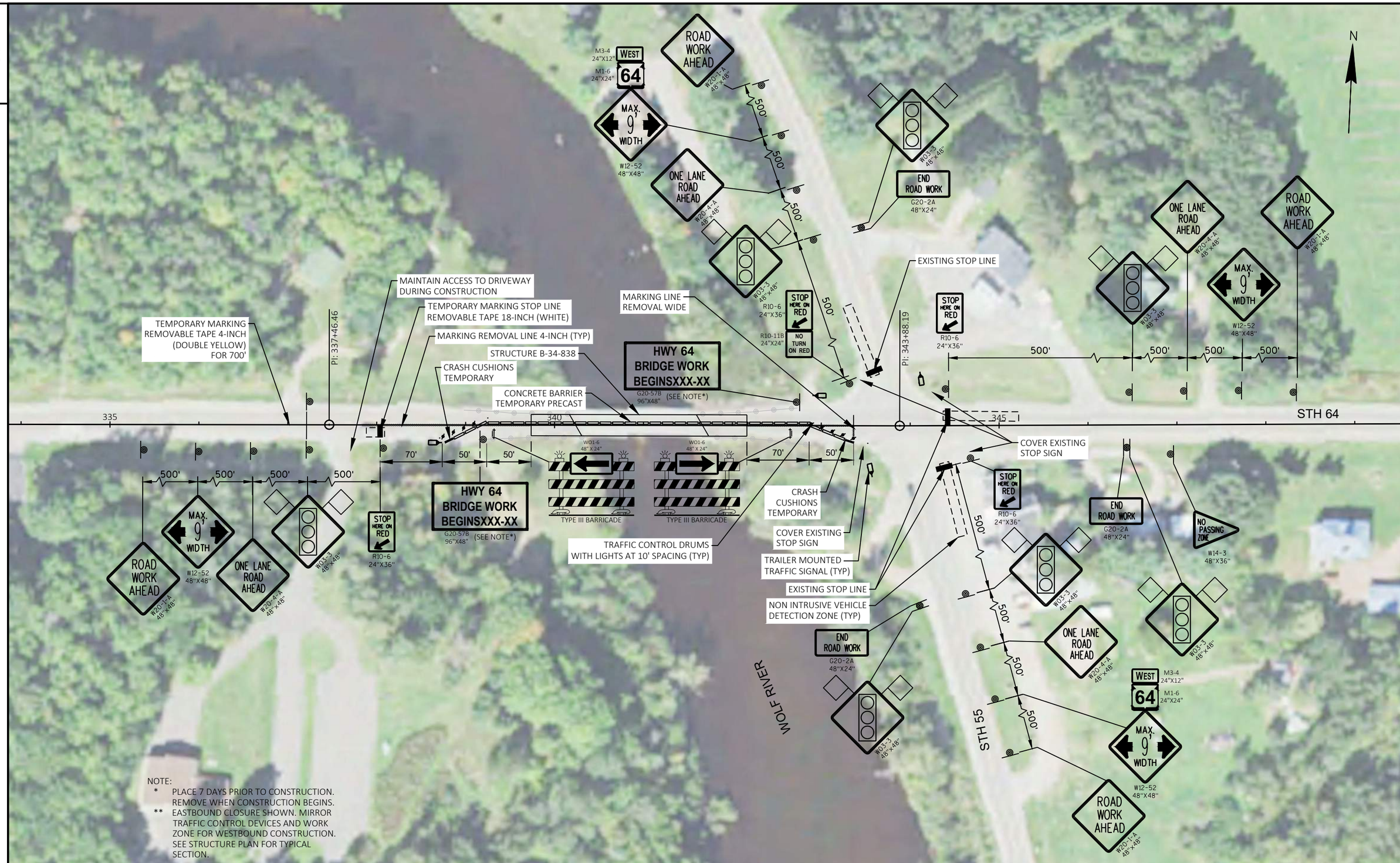

PROJECT NO: 9140-12-71	HWY: STH 64	COUNTY: LANGLADE	TRAFFIC CONTROL	SHEET 22	E

FILE NAME : C:\USERS\JESSICA.LANCELLE\AECOM DIRECTORY\NEMEC, ELIZABETH - 60600222-STH64_LANGLADE\900_CAD_GIS\910_CAD\SHEETS\74\025101_TC.DWG
LAYOUT NAME - B34838 TC
PLOT DATE : 4/7/2020 1:53 PM PLOT BY : LANCELLE, JESSICA PLOT NAME : PLOT SCALE : 1 IN:100 FT

WISDOT/CADDS SHEET 42

NOTES

ALL ASSEMBLIES TO BE PLACED ON NEW POSTS.

THE EXACT NUMBER, LOCATION AND SPACING OF DEVICES SHALL BE ADJUSTED TO FIT FIELD CONDITIONS AS DIRECTED BY THE ENGINEER.

* PLACE 7 DAYS PRIOR TO CONSTRUCTION. REMOVE WHEN CONSTRUCTION BEGINS.

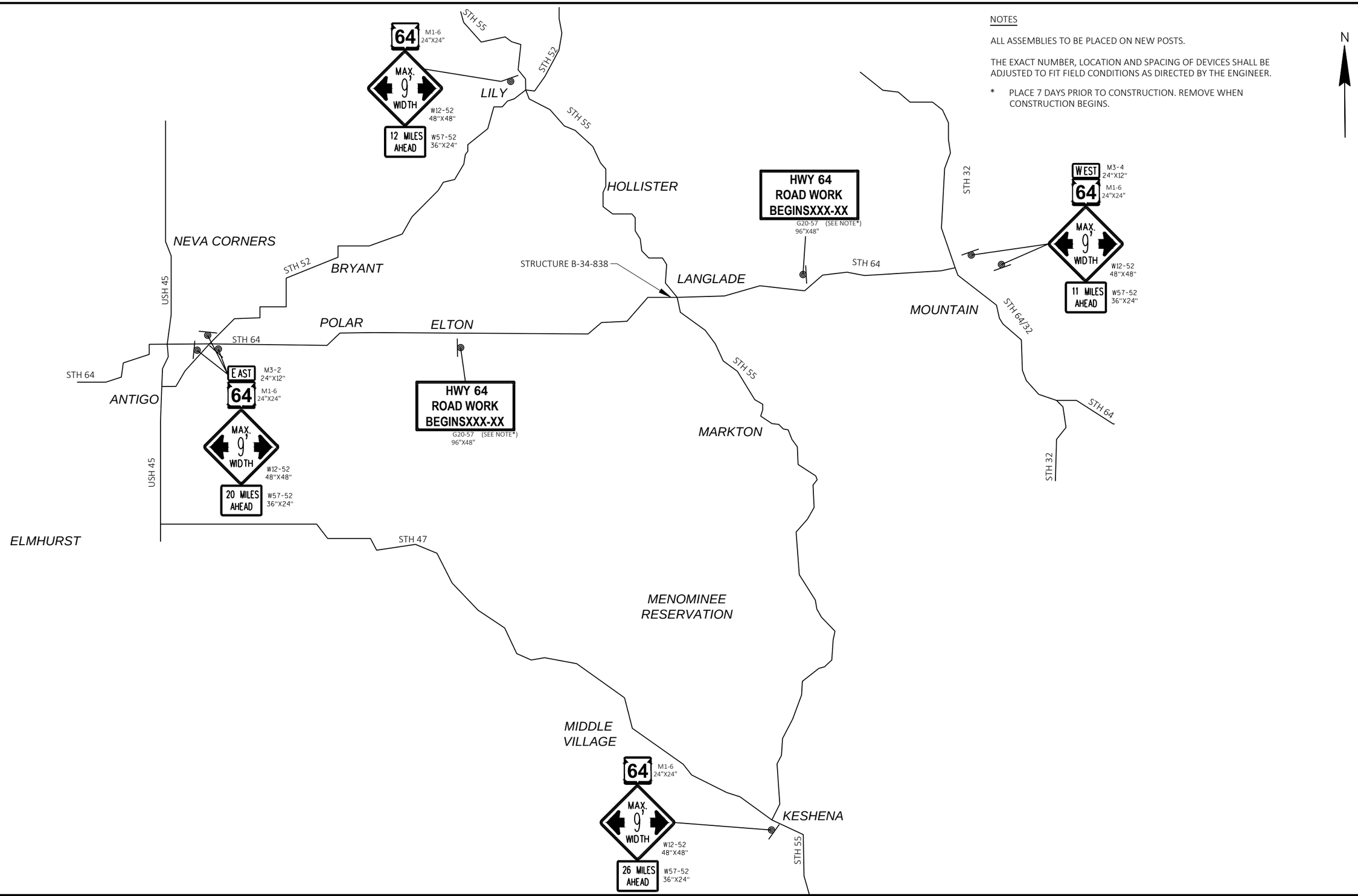

PROJECT NO: 9140-12-71, 9140-12-74	HWY: STH 64	COUNTY: LANGLADE	TRAFFIC CONTROL ADVANCE SIGNING	SHEET 23	E

2

N

SEQUENCE OF OPERATION

	PHASE 1 ⟹			PHASE 2 ⟸				PHASE 3 ⇩ ⇧			
EB STH 64 SIGNALS	G	Y	R	R	R	R		R	R	R	
WB STH 64 SIGNALS	R	R	R	G	Y	R		R	R	R	
NB/SB STH 55 SIGNALS	R	R	R	R	R	R		G	Y	R	
DURATION (S)	-	4	18	-	4	18*	2***	-	4	18*	2**
MINIMUM GREEN TIME (S)	10	-	-	10	-	-		10	-	-	
MAXIMUM GREEN TIME (S)	40	-	-	40	-	-		20	-	-	
EXTENSION TIME (S/VEH)	3	-	-	3	-	-		3	-	-	
DELAY (S)	3	-	-	-	-	-		-	-	-	

* CLEARANCE TO PHASE 1
** CLEARANCE TO PHASE 2
*** CLEARANCE TO PHASE 3

NOTES:

1. THE CONTRACTOR SHALL MONITOR TRAFFIC AND INCREASE THE ALL RED TIME IF VEHICLES FAIL TO CLEAR THE WORK ZONE DURING THE ALL RED TIME.
2. PHASE 1, PHASE 2, AND PHASE 3 WILL EACH ACTIVATE ONLY WHEN CALLED.
3. PHASE 1, PHASE 2, AND PHASE 3 WILL EACH REST IN RED WHEN NO DEMAND IS PRESENT.

TEMPORARY TRAFFIC SIGNALS - SIGNAL TIMING - B-34-838

650-FT WORK ZONE LENGTH

2

N

SEQUENCE OF OPERATION
6:00 AM TO 8:00 PM

	PHASE 1 ⇨			PHASE 2 ⇦		
EB STH 64 SIGNALS	G	Y	R	R	R	R
WB STH 64 SIGNALS	R	R	R	G	Y	R
DURATION (S)	15	5	17	15	5	17

SEQUENCE OF OPERATION
8:00 PM TO 6:00 AM

	PHASE 1 ⇨			PHASE 2 ⇦		
EB STH 64 SIGNALS	G	Y	R	R	R	R
WB STH 64 SIGNALS	R	R	R	G	Y	R
DURATION (S)	12	5	17	12	5	17

NOTES:

1. THE CONTRACTOR SHALL MONITOR TRAFFIC AND INCREASE THE ALL RED TIME IF VEHICLES FAIL TO CLEAR THE WORK ZONE DURING THE ALL RED TIME.

TEMPORARY TRAFFIC SIGNALS - SIGNAL TIMING - WOLF RIVER STATE TRAIL

450-FT WORK ZONE LENGTH

Estimate Of Quantities

Line	Item	Item Description	Unit	Total	9140-12-71 Qty	9140-12-74 Qty
0002	201.0105	Clearing	STA	6.000		6.000
0004	201.0205	Grubbing	STA	6.000		6.000
0006	203.0100	Removing Small Pipe Culverts	EACH	5.000		5.000
0008	204.0110	Removing Asphaltic Surface	SY	36.000	36.000	
0010	204.0115	Removing Asphaltic Surface Butt Joints	SY	883.000		883.000
0012	204.0120	Removing Asphaltic Surface Milling	SY	184,990.000		184,990.000
0014	204.0165	Removing Guardrail	LF	537.000		537.000
0016	204.0180	Removing Delineators and Markers	EACH	14.000		14.000
0018	204.0270	Abandoning Culvert Pipes	EACH	2.000		2.000
0020	205.0100	Excavation Common	CY	3,271.000		3,271.000
0022	208.0100	Borrow	CY	45.000		45.000
0024	211.0100	Prepare Foundation for Asphaltic Paving (project) 01. 9140-12-74	LS	1.000		1.000
0026	211.0400	Prepare Foundation for Asphaltic Shoulders	STA	6.000		6.000
0028	213.0100	Finishing Roadway (project) 01. 9140-12-71	EACH	1.000	1.000	
0030	213.0100	Finishing Roadway (project) 02. 9140-12-74	EACH	1.000		1.000
0032	305.0110	Base Aggregate Dense 3/4-Inch	TON	5,590.000		5,590.000
0034	305.0120	Base Aggregate Dense 1 1/4-Inch	TON	1,240.000		1,240.000
0036	450.4000	HMA Cold Weather Paving	TON	5,420.000		5,420.000
0038	455.0605	Tack Coat	GAL	13,421.000	14.000	13,407.000
0040	460.0105.S	HMA Percent Within Limits (PWL) Test Strip Volumetrics	EACH	1.000		1.000
0042	460.0110.S	HMA Percent Within Limits (PWL) Test Strip Density	EACH	1.000		1.000
0044	460.2005	Incentive Density PWL HMA Pavement	DOL	17,860.000		17,860.000
0046	460.2007	Incentive Density HMA Pavement Longitudinal Joints	DOL	22,780.000		22,780.000
0048	460.2010	Incentive Air Voids HMA Pavement	DOL	22,190.000		22,190.000
0050	460.6224	HMA Pavement 4 MT 58-28 S	TON	22,189.000		22,189.000
0052	465.0105	Asphaltic Surface	TON	724.000	24.000	700.000
0054	465.0110	Asphaltic Surface Patching	TON	227.000	5.000	222.000
0056	465.0120	Asphaltic Surface Driveways and Field Entrances	TON	146.000		146.000
0058	465.0315	Asphaltic Flumes	SY	8.000	8.000	
0060	465.0450	Asphaltic Intersection Rumble Strips	SY	180.000		180.000
0062	465.0475	Asphalt Centerline Rumble Strips 2-Lane Rural	LF	48,220.000		48,220.000
0064	502.3101	Expansion Device	LF	66.000	66.000	
0066	502.3200	Protective Surface Treatment	SY	405.000	405.000	
0068	502.3210	Pigmented Surface Sealer	SY	115.000	115.000	
0070	502.4205	Adhesive Anchors No. 5 Bar	EACH	68.000	68.000	
0072	505.0400	Bar Steel Reinforcement HS Structures	LB	2,200.000	2,200.000	
0074	505.0904	Bar Couplers No. 4	EACH	8.000	8.000	
0076	505.0905	Bar Couplers No. 5	EACH	20.000	20.000	
0078	509.0301	Preparation Decks Type 1	SY	45.000	45.000	

Line	Item	Item Description	Unit	Total	9140-12-71 Qty	9140-12-74 Qty
0080	509.0302	Preparation Decks Type 2	SY	20.000	20.000	
0082	509.0505.S	Cleaning Decks to Reapply Concrete Masonry Overlay	SY	405.000	405.000	
0084	509.1000	Joint Repair	SY	34.000	34.000	
0086	509.1500	Concrete Surface Repair	SF	60.000	60.000	
0088	509.2000	Full-Depth Deck Repair	SY	5.000	5.000	
0090	509.2500	Concrete Masonry Overlay Decks	CY	50.000	50.000	
0092	509.9005.S	Removing Concrete Masonry Deck Overlay (structure) 01. B-34-838	SY	405.000	405.000	
0094	509.9050.S	Cleaning Parapets	LF	286.000	286.000	
0096	511.1100	Temporary Shoring	SF	530.000		530.000
0098	517.3000.S	Structure Overcoating Cleaning and Priming (structure) 01. B-34-838	LS	1.000	1.000	
0100	517.4000.S	Containment and Collection of Waste Materials (structure) 01. B-34-838	LS	1.000	1.000	
0102	517.6001.S	Portable Decontamination Facility	EACH	1.000	1.000	
0104	520.1018	Apron Endwalls for Culvert Pipe 18-Inch	EACH	2.000		2.000
0106	520.1024	Apron Endwalls for Culvert Pipe 24-Inch	EACH	14.000		14.000
0108	520.3424	Culvert Pipe Class III-A Non-metal 24-Inch	LF	475.000		475.000
0110	520.9700.S	Culvert Pipe Liners (size) 01. 24-Inch	LF	62.000		62.000
0112	520.9700.S	Culvert Pipe Liners (size) 02. 30-Inch	LF	308.000		308.000
0114	520.9750.S	Cleaning Culvert Pipes for Liner Verification	EACH	4.000		4.000
0116	601.0584	Concrete Curb & Gutter 4-Inch Sloped 30-Inch Type TBT	LF	102.000	102.000	
0118	603.8000	Concrete Barrier Temporary Precast Delivered	LF	588.000	450.000	138.000
0120	603.8125	Concrete Barrier Temporary Precast Installed	LF	1,176.000	900.000	276.000
0122	606.0200	Riprap Medium	CY	26.000	4.000	22.000
0124	614.0905	Crash Cushions Temporary	EACH	8.000	4.000	4.000
0126	614.2300	MGS Guardrail 3	LF	500.000		500.000
0128	614.2350	MGS Guardrail Short Radius	LF	32.500		32.500
0130	614.2500	MGS Thrie Beam Transition	LF	155.500		155.500
0132	614.2610	MGS Guardrail Terminal EAT	EACH	2.000		2.000
0134	614.2630	MGS Guardrail Short Radius Terminal	EACH	2.000		2.000
0136	618.0100	Maintenance And Repair of Haul Roads (project) 01. 9140-12-71	EACH	1.000	1.000	
0138	618.0100	Maintenance And Repair of Haul Roads (project) 02. 9140-12-74	EACH	1.000		1.000
0140	619.1000	Mobilization	EACH	1.000	0.350	0.650
0142	624.0100	Water	MGAL	69.000		69.000
0144	625.0100	Topsoil	SY	6,604.000	34.000	6,570.000
0146	628.1504	Silt Fence	LF	4,600.000	265.000	4,335.000
0148	628.1520	Silt Fence Maintenance	LF	4,600.000	265.000	4,335.000

Line	Item	Item Description	Unit	Total	9140-12-71 Qty	9140-12-74 Qty
0150	628.1905	Mobilizations Erosion Control	EACH	10.000	2.000	8.000
0152	628.1910	Mobilizations Emergency Erosion Control	EACH	10.000	2.000	8.000
0154	628.2006	Erosion Mat Urban Class I Type A	SY	5,544.000	34.000	5,510.000
0156	628.7015	Inlet Protection Type C	EACH	8.000	8.000	
0158	628.7555	Culvert Pipe Checks	EACH	39.000		39.000
0160	628.7570	Rock Bags	EACH	100.000		100.000
0162	629.0210	Fertilizer Type B	CWT	5.040	0.040	5.000
0164	630.0120	Seeding Mixture No. 20	LB	0.200	0.200	
0166	630.0130	Seeding Mixture No. 30	LB	120.000		120.000
0168	630.0500	Seed Water	MGAL	252.000	2.000	250.000
0170	633.5200	Markers Culvert End	EACH	14.000		14.000
0172	642.5001	Field Office Type B	EACH	1.000	0.350	0.650
0174	643.0300	Traffic Control Drums	DAY	2,330.000	860.000	1,470.000
0176	643.0420	Traffic Control Barricades Type III	DAY	196.000	172.000	24.000
0178	643.0705	Traffic Control Warning Lights Type A	DAY	392.000	344.000	48.000
0180	643.0715	Traffic Control Warning Lights Type C	DAY	1,100.000	860.000	240.000
0182	643.0900	Traffic Control Signs	DAY	7,308.000	2,580.000	4,728.000
0184	643.0920	Traffic Control Covering Signs Type II	EACH	4.000	4.000	
0186	643.1000	Traffic Control Signs Fixed Message	SF	128.000	64.000	64.000
0188	643.5000	Traffic Control	EACH	1.000	0.350	0.650
0190	645.0120	Geotextile Type HR	SY	82.000	14.000	68.000
0192	646.1020	Marking Line Epoxy 4-Inch	LF	81,150.000		81,150.000
0194	646.1040	Marking Line Grooved Wet Ref Epoxy 4-Inch	LF	114,300.000		114,300.000
0196	646.6120	Marking Stop Line Epoxy 18-Inch	LF	120.000		120.000
0198	646.6464	Cold Weather Marking Epoxy 4-Inch	LF	48,900.000		48,900.000
0200	646.9000	Marking Removal Line 4-Inch	LF	599.000		599.000
0202	646.9200	Marking Removal Line Wide	LF	20.000		20.000
0204	648.0100	Locating No-Passing Zones	MI	10.790		10.790
0206	649.0105	Temporary Marking Line Paint 4-Inch	LF	75,410.000		75,410.000
0208	649.0120	Temporary Marking Line Epoxy 4-Inch	LF	75,410.000		75,410.000
0210	649.0150	Temporary Marking Line Removable Tape 4-Inch	LF	3,040.000	1,640.000	1,400.000
0212	649.0850	Temporary Marking Stop Line Removable Tape 18-Inch	LF	49.000	14.000	35.000
0214	650.6000	Construction Staking Pipe Culverts	EACH	7.000		7.000
0216	650.9910	Construction Staking Supplemental Control (project) 01. 9140-12-74	LS	1.000		1.000
0218	650.9920	Construction Staking Slope Stakes	LF	460.000		460.000
0220	661.0100	Temporary Traffic Signals for Bridges (structure) 01. B-34-838	LS	1.000	1.000	
0222	661.0100	Temporary Traffic Signals for Bridges (structure) 02.Culvert STA. 262+82	LS	1.000		1.000

Line	Item	Item Description	Unit	Total	9140-12-71 Qty	9140-12-74 Qty
0224	690.0150	Sawing Asphalt	LF	551.000	139.000	412.000
0226	740.0440	Incentive IRI Ride	DOL	43,150.000		43,150.000
0228	SPV.0060	Special 01. Lane Shift	EACH	8.000		8.000
0230	SPV.0105	Special 01. Salvage and Reinstall Guardrail	LS	1.000	1.000	
0232	SPV.0105	Special 02. Temporary Vehicle Detection B-34-838	LS	1.000	1.000	
0234	SPV.0180	Special 01. Protective Thermoplastic Coating at Snowmobile Trail Crossings	SY	180.000		180.000

3

CLEARING AND GRUBBING

STA	-	STA	201.0105 CLEARING STA	201.0205 GRUBBING STA
483+95	-	484+25	1	1
157+06			1	1
210+38			1	1
224+62			1	1
327+83			1	1
384+55			1	1
PROJECT 9140-12-74 T			**6**	**6**

REMOVING PIPE

STATION	-	STATION	OFFSET	SIZE (IN)	TYPE	LENGTH (FT)	203.0100 REMOVING SMALL PIPE CULVERTS EACH	204.0270 ABANDONING CULVERT PIPES EACH
95+02			32.1' LT, 40.3' RT	24	CMCP	72	1	---
210+35	-	210+40	26.9' LT, 45.5' RT	24	CMCP	72	1	---
263+07			28.3' LT, 27.5' RT	24	CMCP	56	---	1
292+36			40.6' LT, 35.7' RT	24	CMCP	76	1	---
320+89	-	320+91	30.3' LT, 27.8' RT	24	CMCP	58	1	---
385+20			23.4' LT, 48.3' RT	24	CMCP	72	---	1
471+38	-	472+25	42.9' LT, 49.1' RT	24	CMCP	127	1	---
PROJECT 9140-12-74 TOTAL							**5**	**2**

REMOVING ASPHALTIC SURFACE MILLING

STATION	-	STATION	OFFSET	LOCATION	204.0115 REMOVING ASPHALTIC SURFACE BUTT JOINTS SY	204.0120 REMOVING ASPHALTIC SURFACE MILLING SY
20+00	-	340+24	-	STH 64, 2.00" DEPTH	---	106800
341+65	-	591+01	-	STH 64, 2.00" DEPTH	---	77500
21+00	-	22+14	LT/RT	FRALEY RD/CO RD P	74	420
72+53	-	73+80	RT	GRUDGEVILLE RD	33	270
86+15	-	87+08	LT	FIRELANE RD	40	140
98+74	-	99+79	RT	DEHART RD	32	230
162+79	-	163+59	LT	BADGER RANCH DR	40	140
172+02	-	173+18	LT/RT	GLEN HILL TRAIL/WISTFUL VISTA RD	66	350
187+42	-	188+43	RT	MARATHON DR	33	170
214+11	-	215+59	RT	CO RD M	62	330
252+40	-	253+87	RT	N WHITE LAKE DR	60	310
264+61	-	265+25	LT	WALLRICH RD	37	90
305+10	-	306+33	RT	BUETTNER RD	37	200
331+75	-	332+55	RT	BANK RD	29	100
340+09	-	340+19	-	B-34-838	27	---
341+71	-	341+81	-	B-34-838	27	---
342+98	-	344+54	LT/RT	STH 55	108	880
371+62	-	372+62	LT/RT	SETTLEMENT RD/MEMORIAL DR	61	280
398+02	-	398+73	RT	HEISE RD	27	70
420+32	-	421+33	LT	FISH HATCHERY RD	39	160
479+57	-	480+34	LT	FISH HATCHERY RD	26	120
497+17	-	497+93	LT	SAULS SPRING RD	25	110
PROJECT 9140-12-74 TOTAL					**883**	**184,990**

3

REMOVING GUARDRAIL

STATION	-	STATION	OFFSET	204.0165 REMOVING GUARDRAIL LF
484+31	-	485+02	RT	73
484+43	-	485+02	LT	60
485+54	-	487+58	RT	202
485+54	-	487+58	LT	202
PROJECT 9140-12-74 TOTAL				**537**

REMOVING ASPHALT SURFACE

STATION	-	STATION	STAGE	204.0110 REMOVING ASPHALTIC SURFACE SY
340+19	-	340+24	STAGE 1	9
340+19	-	340+24	STAGE 2	9
341+66	-	341+71	STAGE 1	9
341+66	-	341+71	STAGE 2	9
PROJECT 9140-12-71 TOTAL				**36**

REMOVING DELINEATORS AND MARKERS

STATION	LOCATION	204.0180 REMOVING DELINEATORS AND MARKERS EACH
95+02	STH 64, CROSS	2
210+38	STH 64, CROSS	2
262+81	STH 64, CROSS	2
292+36	STH 64, CROSS	2
320+89	STH 64, CROSS	2
384+55	STH 64, CROSS	2
471+78	STH 64, CROSS	2
PROJECT 9140-12-74 TOTAL		**14**

3

EARTHWORK

DIVISION	FROM/TO STATION	205.0100 COMMON EXCAVATION (1)		SALVAGED/ UNUSABLE PAVEMENT MATERIAL	AVAILABLE MATERIAL (5)	UNEXPANDED FILL	EXPANDED FILL (13)	MASS ORDINATE +/- (14)	208.0100 BORROW
		CUT	EBS EXCAVATION				FACTOR 1.25		
DIVISION 1									
MGS	483+50 - 490+50	521	0	106	415	368	460	-45	45
DIVISION 1 SUBTOTAL		521	0	106	415	368	460	-45	45
DIVISION 2									
PIPE REPLACEMENT	95+02	445	0	0	445	0	0	0	0
PIPE REPLACEMENT	210+38	460	0	0	460	0	0	0	0
PIPE REPLACEMENT	262+82	425	0	0	425	0	0	0	0
PIPE REPLACEMENT	292+36	420	0	0	420	0	0	0	0
PIPE REPLACEMENT	320+89	275	0	0	275	0	0	0	0
PIPE REPLACEMENT	384+55	305	0	0	305	0	0	0	0
PIPE REPLACEMENT	471+78	420	0	0	420	0	0	0	0
DIVISION 2 SUBTOTAL		2,750	0	0	2,750	0	0	0	0
GRAND TOTAL		3,271	0	106	3,165	368	460	-45	45
TOTAL COMMON EXC		3,271							

NOTES:
(1) COMMON EXCAVATION IS THE SUM OF THE CUT AND EBS EXCAVATION COLUMNS. ITEM NUMBER 205.0100
(5) AVAILABLE MATERIAL = CUT - SALVAGED/UNUSUABLE PAVEMENT MATERIAL
(13) EXPANDED FILL FACTOR = 1.25
(14) THE MASS ORDINATE + OR - QTY CALCULATED FOR THE DIVISION. PLUS QUANTITY INDICATES AN EXCESS OF MATERIAL WITHIN THE DIVISION. MINUS INDICATES A SHORTAGE OF MATERIAL WITHIN THE DIVISION.

PREPARE FOUNDATION

STATION		STATION	LOCATION	211.0100 PREPARE FOUNDATION FOR ASPHALTIC PAVING (9140-12-74) LS	211.0400 PREPARE FOUNDATION FOR ASPHALTIC SHOULDERS STA
20+00	-	591+00	UNDISTRIBUTED	1	---
263+74	-	263+96	LT	---	1
263+74	-	263+96	RT	---	1
381+89	-	382+11	LT	---	1
381+89	-	382+11	RT	---	1
462+39	-	462+61	LT	---	1
462+39	-	462+61	RT	---	1
PROJECT 9140-12-74 TOTAL				1	6

3

FINISHING ROADWAY

PROJECT	213.0100 FINISHING ROADWAY EACH
9140-12-71	1
9140-12-74	1
PROJECT 9140-12-71 TOTAL	1
PROJECT 9140-12-74 TOTAL	1

BASE AGGREGATE DENSE

STATION	-	STATION	LOCATION	305.0110 3/4-INCH TON	305.0120 1 1/4-INCH TON	624.0100 WATER MGAL
94+49	-	95+55	STH 64, MAINLINE	---	160	1.6
209+85	-	210+91	STH 64, MAINLINE	---	160	1.6
262+28	-	263+34	STH 64, MAINLINE	---	160	1.6
291+83	-	292+89	STH 64, MAINLINE	---	160	1.6
320+36	-	321+42	STH 64, MAINLINE	---	160	1.6
384+02	-	385+08	STH 64, MAINLINE	---	160	1.6
471+25	-	472+31	STH 64, MAINLINE	---	160	1.6
20+00	-	339+73	STH 64, SHOULDERS	2490	---	24.9
342+16	-	344+00	STH 64, SHOULDERS	15	---	0.2
344+00	-	591+00	STH 64, SHOULDERS	2570	---	25.7
9140-12-74			UNDISTRIBUTED	508	112	6.2
PROJECT 9140-12-74 TOTAL				5,590	1,240	69

PERCENT WITHIN LIMITS

PROJECT	460.0105.S HMA PERCENT WITHIN LIMITS (PWL) TEST STRIP VOLUMETRICS EACH	460.0110.S HMA PERCENT WITHIN LIMITS (PWL) TEST STRIP DENSITY EACH
9140-12-74	1	1
PROJECT 9140-12-74 TOTAL	1	1

3

ASPHALTIC ITEMS

STATION	-	STATION	LOCATION	450.4000 HMA COLD WEATHER PAVING TON	455.0605 TACK COAT GAL	460.6224 HMA PAVEMENT 4 MT 58-28 S TON	465.0105 ASPHALTIC SURFACE TON	465.0110 ASPHALTIC SURFACE PATCHING TON	465.0120 ASPHALTIC SURFACE DRIVEWAYS AND FIELD ENTRANCES TON	PROJECT ID	REMARKS
20+00	-	340+24	STH 64, MAINLINE	3,140	7,480	12,490	---	---	---	9140-12-74	
341+66	-	591+00	STH 64, MAINLINE	2,280	5,440	9,090	---	---	---	9140-12-74	
24+42	-	24+69	STH 64, DRIVEWAY	---	---	---	---	---	6	9140-12-74	
21+00	-	22+14	FRALEY RD/CO RD P	---	29	50	---	---	---	9140-12-74	
39+03	-	39+51	STH 64, DRIVEWAY	---	---	---	---	---	5	9140-12-74	
71+31	-	71+46	STH 64, DRIVEWAY	---	---	---	---	---	3	9140-12-74	
72+53	-	73+80	GRUDGEVILLE RD	---	19	40	---	---	---	9140-12-74	
86+15	-	87+08	FIRELANE RD	---	10	20	---	---	---	9140-12-74	
94+40	-	94+75	STH 64, DRIVEWAY	---	---	---	---	---	3	9140-12-74	
94+49	-	95+55	STH 64, MAINLINE	---	25	---	100	---	---	9140-12-74	CULVERT
98+30	-	98+61	STH 64, DRIVEWAY	---	---	---	---	---	3	9140-12-74	
98+74	-	99+79	DEHART RD	---	16	30	---	---	---	9140-12-74	
105+26	-	105+50	STH 64, DRIVEWAY	---	---	---	---	---	3	9140-12-74	
105+73	-	105+98	STH 64, DRIVEWAY	---	---	---	---	---	3	9140-12-74	
107+31	-	107+53	STH 64, DRIVEWAY	---	---	---	---	---	3	9140-12-74	
109+02	-	109+30	STH 64, DRIVEWAY	---	---	---	---	---	5	9140-12-74	
117+20	-	117+62	STH 64, DRIVEWAY	---	---	---	---	---	5	9140-12-74	
144+68	-	144+93	STH 64, DRIVEWAY	---	---	---	---	---	3	9140-12-74	
147+94	-	148+25	STH 64, DRIVEWAY	---	---	---	---	---	4	9140-12-74	
162+79	-	163+59	BADGER RANCH DR	---	10	20	---	---	---	9140-12-74	
172+02	-	173+18	GLEN HILL TRAIL/WISTFUL VISTA RD	---	25	50	---	---	---	9140-12-74	
187+42	-	188+43	MARATHON DR	---	12	20	---	---	---	9140-12-74	
209+85	-	210+91	STH 64, MAINLINE	---	25	---	100	---	---	9140-12-74	CULVERT
210+45	-	210+75	STH 64, DRIVEWAY	---	---	---	---	---	3	9140-12-74	
214+11	-	215+59	CO RD M	---	23	40	---	---	---	9140-12-74	
216+20	-	216+50	STH 64, DRIVEWAY	---	---	---	---	---	3	9140-12-74	
234+04	-	234+29	STH 64, DRIVEWAY	---	---	---	---	---	3	9140-12-74	
239+18	-	239+42	STH 64, DRIVEWAY	---	---	---	---	---	3	9140-12-74	
252+40	-	253+87	N WHITE LAKE DR	---	22	40	---	---	---	9140-12-74	
262+28	-	263+34	STH 64, MAINLINE	---	25	---	100	---	---	9140-12-74	CULVERT
263+74	-	263+96	STH 64, SHOULDERS		1	3	---	---	---	9140-12-74	SNOWMOBILE CROSSING
264+61	-	265+25	WALLRICH RD	---	7	20	---	---	---	9140-12-74	
277+24	-	277+51	STH 64, DRIVEWAY	---	---	---	---	---	3	9140-12-74	
282+17	-	282+39	STH 64, DRIVEWAY	---	---	---	---	---	3	9140-12-74	
287+75	-	287+96	STH 64, DRIVEWAY	---	---	---	---	---	3	9140-12-74	
290+54	-	290+77	STH 64, DRIVEWAY	---	---	---	---	---	3	9140-12-74	
291+83	-	292+89	STH 64, MAINLINE	---	25	---	100	---	---	9140-12-74	CULVERT
294+91	-	295+17	STH 64, DRIVEWAY	---	---	---	---	---	3	9140-12-74	
298+72	-	298+95	STH 64, DRIVEWAY	---	---	---	---	---	3	9140-12-74	
305+10	-	306+33	BUETTNER RD	---	14	30	---	---	---	9140-12-74	

ASPHALTIC ITEMS (CONT.)

STATION	-	STATION	LOCATION	450.4000 HMA COLD WEATHER PAVING TON	455.0605 TACK COAT GAL	460.6224 HMA PAVEMENT 4 MT 58-28 S TON	465.0105 ASPHALTIC SURFACE TON	465.0110 ASPHALTIC SURFACE PATCHING TON	465.0120 ASPHALTIC SURFACE DRIVEWAYS AND FIELD ENTRANCES TON	PROJECT ID	REMARKS
320+36	-	321+42	STH 64, MAINLINE	---	25	---	100	---	---	9140-12-74	CULVERT
329+53		329+69	STH 64, DRIVEWAY	---	---	---	---	---	3	9140-12-74	
331+75	-	332+55	BANK RD	---	7	20	---	---	---	9140-12-74	
333+77		334+04	STH 64, DRIVEWAY	---	---	---	---	---	4	9140-12-74	
336+95		337+20	STH 64, DRIVEWAY	---	---	---	---	---	3	9140-12-74	
337+37		337+71	STH 64, DRIVEWAY	---	---	---	---	---	4	9140-12-74	
339+81	-	340+18	STH 64, MAINLINE (LT)	---	1	---	---	3	---	9140-12-71	CURB & GUTTER PATCH
340+02	-	340+30	STH 64, MAINLINE (RT)	---	1	---	---	2	---	9140-12-71	CURB & GUTTER PATCH
340+19	-	340+24	STH 64, MAINLINE	---	3	---	6	---	---	9140-12-71	B-34-838 JOINT - STAGE 1
340+19	-	340+24	STH 64, MAINLINE	---	3	---	6	---	---	9140-12-71	B-34-838 JOINT - STAGE 2
341+66	-	341+71	STH 64, MAINLINE	---	3	---	6	---	---	9140-12-71	B-34-838 JOINT - STAGE 1
341+66	-	341+71	STH 64, MAINLINE	---	3	---	6	---	---	9140-12-71	B-34-838 JOINT - STAGE 2
342+98	-	344+54	STH 55	---	62	110	---	---	---	9140-12-74	
347+23		347+52	STH 64, DRIVEWAY	---	---	---	---	---	4	9140-12-74	
349+70		349+98	STH 64, DRIVEWAY	---	---	---	---	---	4	9140-12-74	
355+84		356+03	STH 64, DRIVEWAY	---	---	---	---	---	3	9140-12-74	
359+90		360+10	STH 64, DRIVEWAY	---	---	---	---	---	3	9140-12-74	
361+10		361+29	STH 64, DRIVEWAY	---	---	---	---	---	3	9140-12-74	
371+62	-	372+62	SETTLEMENT RD/MEMORIAL DR	---	20	40	---	---	---	9140-12-74	
381+89	-	382+11	STH 64, SHOULDERS	---	1	3	---	---	---	9140-12-74	SNOWMOBILE CROSSING
384+02	-	385+08	STH 64, MAINLINE	---	25	---	100	---	---	9140-12-74	CULVERT
385+36		385+60	STH 64, DRIVEWAY	---	---	---	---	---	3	9140-12-74	
389+64		389+85	STH 64, DRIVEWAY	---	---	---	---	---	3	9140-12-74	
398+02	-	398+73	HEISE RD	---	5	10	---	---	---	9140-12-74	
420+32	-	421+33	FISH HATCHERY RD	---	12	20	---	---	---	9140-12-74	
445+63	-	445+94	STH 64, DRIVEWAY	---	---	---	---	---	4	9140-12-74	
462+20		462+46	STH 64, DRIVEWAY	---	---	---	---	---	3	9140-12-74	
462+39	-	462+61	STH 64, SHOULDERS	---	1	3	---	---	---	9140-12-74	SNOWMOBILE CROSSING
471+25	-	472+31	STH 64, MAINLINE	---	25	---	100	---	---	9140-12-74	CULVERT
479+57	-	480+34	FISH HATCHERY RD	---	8	20	---	---	---	9140-12-74	
482+55		482+89	STH 64, DRIVEWAY	---	---	---	---	---	5	9140-12-74	
483+93		484+27	STH 64, DRIVEWAY	---	---	---	---	---	8	9140-12-74	
489+21		489+71	STH 64, DRIVEWAY	---	---	---	---	---	4	9140-12-74	
492+95		493+17	STH 64, DRIVEWAY	---	---	---	---	---	3	9140-12-74	
497+17	-	497+93	SAULS SPRING RD	---	8	20	---	---	---	9140-12-74	
519+95		520+28	STH 64, DRIVEWAY	---	---	---	---	---	3	9140-12-74	
520+62		520+80	STH 64, DRIVEWAY	---	---	---	---	---	3	9140-12-74	
UNDISTRIBUTED				---	---	---	---	222	---	9140-12-74	MINOR REPAIRS
PROJECT 9140-12-71 TOTAL				**0**	**14**	**0**	**24**	**5**	**0**		
PROJECT 9140-12-74 TOTAL				**5,420**	**13,407**	**22,189**	**700**	**222**	**146**		

3

PWL MIXTURE USE TABLE

STATION	-	STATION	LOCATION	PROJECT I.D.	MIXTURE USE	UNDERLYING SURFACE	BID ITEM	TONS	THICKNESS (INCHES)	MIXTURE ACCEPTANCE (SEE NOTES BELOW)	DENSITY ACCEPTANCE (SEE NOTES BELOW)
20+00	-	340+24	STH 64, MAINLINE	9140-12-74	UPPER LAYER	EXISTING HMA	460.6224	12,490	2	(1)	(4)
341+66	-	591+00	STH 64, MAINLINE	9140-12-74	UPPER LAYER	EXISTING HMA	460.6224	9,090	2	(1)	(4)
24+42	-	24+69	STH 64, DRIVEWAY	9140-12-74	UPPER LAYER	EXISTING HMA	465.0120	6	2	(3)	(6)
21+00	-	22+14	FRALEY RD/CO RD P	9140-12-74	UPPER LAYER	EXISTING HMA	460.6224	50	2	(1)	(5)
39+03	-	39+51	STH 64, DRIVEWAY	9140-12-74	UPPER LAYER	EXISTING HMA	465.0120	5	2	(3)	(6)
71+31	-	71+46	STH 64, DRIVEWAY	9140-12-74	UPPER LAYER	EXISTING HMA	465.0120	3	2	(3)	(6)
72+53	-	73+80	GRUDGEVILLE RD	9140-12-74	UPPER LAYER	EXISTING HMA	460.6224	40	2	(1)	(5)
86+15	-	87+08	FIRELANE RD	9140-12-74	UPPER LAYER	EXISTING HMA	460.6224	20	2	(1)	(5)
94+40	-	94+75	STH 64, DRIVEWAY	9140-12-74	UPPER LAYER	EXISTING HMA	465.0120	3	2	(3)	(6)
94+49	-	95+55	STH 64, MAINLINE	9140-12-74	LOWER LAYER	BASE AGGREGATE	465.0105	50	2.5	(3)	(6)
94+49	-	95+55	STH 64, MAINLINE	9140-12-74	UPPER LAYER	ASPHALTIC SURFACE	465.0105	50	2	(3)	(6)
98+30	-	98+61	STH 64, DRIVEWAY	9140-12-74	UPPER LAYER	EXISTING HMA	465.0120	3	2	(3)	(6)
98+74	-	99+79	DEHART RD	9140-12-74	UPPER LAYER	EXISTING HMA	460.6224	30	2	(1)	(5)
105+26	-	105+50	STH 64, DRIVEWAY	9140-12-74	UPPER LAYER	EXISTING HMA	465.0120	3	2	(3)	(6)
105+73	-	105+98	STH 64, DRIVEWAY	9140-12-74	UPPER LAYER	EXISTING HMA	465.0120	3	2	(3)	(6)
107+31	-	107+53	STH 64, DRIVEWAY	9140-12-74	UPPER LAYER	EXISTING HMA	465.0120	3	2	(3)	(6)
109+02	-	109+30	STH 64, DRIVEWAY	9140-12-74	UPPER LAYER	EXISTING HMA	465.0120	5	2	(3)	(6)
117+20	-	117+62	STH 64, DRIVEWAY	9140-12-74	UPPER LAYER	EXISTING HMA	465.0120	5	2	(3)	(6)
144+68	-	144+93	STH 64, DRIVEWAY	9140-12-74	UPPER LAYER	EXISTING HMA	465.0120	3	2	(3)	(6)
147+94	-	148+25	STH 64, DRIVEWAY	9140-12-74	UPPER LAYER	EXISTING HMA	465.0120	4	2	(3)	(6)
162+79	-	163+59	BADGER RANCH DR	9140-12-74	UPPER LAYER	EXISTING HMA	460.6224	20	2	(1)	(5)
172+02	-	173+18	GLEN HILL TRAIL/WISTFUL VISTA RD	9140-12-74	UPPER LAYER	EXISTING HMA	460.6224	50	2	(1)	(5)
187+42	-	188+43	MARATHON DR	9140-12-74	UPPER LAYER	EXISTING HMA	460.6224	20	2	(1)	(5)
209+85	-	210+91	STH 64, MAINLINE	9140-12-74	LOWER LAYER	BASE AGGREGATE	465.0105	50	2.5	(3)	(6)
209+85	-	210+91	STH 64, MAINLINE	9140-12-74	UPPER LAYER	ASPHALTIC SURFACE	465.0105	50	2	(3)	(6)
210+45	-	210+75	STH 64, DRIVEWAY	9140-12-74	UPPER LAYER	EXISTING HMA	465.0120	3	2	(3)	(6)
214+11	-	215+59	CO RD M	9140-12-74	UPPER LAYER	EXISTING HMA	460.6224	40	2	(1)	(5)
216+20	-	216+50	STH 64, DRIVEWAY	9140-12-74	UPPER LAYER	EXISTING HMA	465.0120	3	2	(3)	(6)
234+04	-	234+29	STH 64, DRIVEWAY	9140-12-74	UPPER LAYER	EXISTING HMA	465.0120	3	2	(3)	(6)
239+18	-	239+42	STH 64, DRIVEWAY	9140-12-74	UPPER LAYER	EXISTING HMA	465.0120	3	2	(3)	(6)
252+40	-	253+87	N WHITE LAKE DR	9140-12-74	UPPER LAYER	EXISTING HMA	460.6224	40	2	(1)	(5)
262+28	-	263+34	STH 64, MAINLINE	9140-12-74	LOWER LAYER	BASE AGGREGATE	465.0105	50	2.5	(3)	(6)
262+28	-	263+34	STH 64, MAINLINE	9140-12-74	UPPER LAYER	ASPHALTIC SURFACE	465.0105	50	2	(3)	(6)
263+74	-	263+96	STH 64, SHOULDERS	9140-12-74	LOWER LAYER	BASE AGGREGATE	460.6224	1.5	2	(1)	(5)
263+74	-	263+96	STH 64, SHOULDERS	9140-12-74	UPPER LAYER	4 MT 58-28 S	460.6224	1.5	2	(1)	(5)
264+61	-	265+25	WALLRICH RD	9140-12-74	UPPER LAYER	EXISTING HMA	460.6224	20	2	(1)	(5)
277+24	-	277+51	STH 64, DRIVEWAY	9140-12-74	UPPER LAYER	EXISTING HMA	465.0120	3	2	(3)	(6)
282+17	-	282+39	STH 64, DRIVEWAY	9140-12-74	UPPER LAYER	EXISTING HMA	465.0120	3	2	(3)	(6)
287+75	-	287+96	STH 64, DRIVEWAY	9140-12-74	UPPER LAYER	EXISTING HMA	465.0120	3	2	(3)	(6)
290+54	-	290+77	STH 64, DRIVEWAY	9140-12-74	UPPER LAYER	EXISTING HMA	465.0120	3	2	(3)	(6)

NOTES:

(1) 460.2010 PWL INCENTIVE AIR VOIDS HMA PAVEMENT
(2) QMP AS PER STANDARD SPECIFICATIONS SECTION 460
(3) QMP AS PER STANDARD SPECIFICATIONS SECTION 465
(4) 460.2005 INCENTIVE DENSITY PWL HMA PAVEMENT
(5) ACCEPTANCE TESTING BY THE DEPARTMENT; NOT ELIGIBLE FOR INCENTIVE
(6) ACCEPTANCE BY ORDINARY COMPACTION

3

PWL MIXTURE USE TABLE (CONT.)

STATION	-	STATION	LOCATION	PROJECT I.D.	MIXTURE USE	UNDERLYING SURFACE	BID ITEM	TONS	THICKNESS (INCHES)	MIXTURE ACCEPTANCE (SEE NOTES BELOW)	DENSITY ACCEPTANCE (SEE NOTES BELOW)
291+83	-	292+89	STH 64, MAINLINE	9140-12-74	LOWER LAYER	BASE AGGREGATE	465.0105	50	2.5	(3)	(6)
291+83	-	292+89	STH 64, MAINLINE	9140-12-74	UPPER LAYER	ASPHALTIC SURFACE	465.0105	50	2	(3)	(6)
294+91	-	295+17	STH 64, DRIVEWAY	9140-12-74	UPPER LAYER	EXISTING HMA	465.0120	3	2	(3)	(6)
298+72	-	298+95	STH 64, DRIVEWAY	9140-12-74	UPPER LAYER	EXISTING HMA	465.0120	3	2	(3)	(6)
305+10	-	306+33	BUETTNER RD	9140-12-74	UPPER LAYER	EXISTING HMA	460.6224	30	2	(1)	(5)
320+36	-	321+42	STH 64, MAINLINE	9140-12-74	LOWER LAYER	BASE AGGREGATE	465.0105	50	2.5	(3)	(6)
320+36	-	321+42	STH 64, MAINLINE	9140-12-74	UPPER LAYER	ASPHALTIC SURFACE	465.0105	50	2	(3)	(6)
329+53		329+69	STH 64, DRIVEWAY	9140-12-74	UPPER LAYER	EXISTING HMA	465.0120	3	2	(3)	(6)
331+75	-	332+55	BANK RD	9140-12-74	UPPER LAYER	EXISTING HMA	460.6224	20	2	(1)	(5)
333+77		334+04	STH 64, DRIVEWAY	9140-12-74	UPPER LAYER	EXISTING HMA	465.0120	4	2	(3)	(6)
336+95		337+20	STH 64, DRIVEWAY	9140-12-74	UPPER LAYER	EXISTING HMA	465.0120	3	2	(3)	(6)
337+37		337+71	STH 64, DRIVEWAY	9140-12-74	UPPER LAYER	EXISTING HMA	465.0120	4	2	(3)	(6)
339+81	-	340+18	STH 64, MAINLINE (LT)	9140-12-71	LOWER LAYER	BASE AGGREGATE	465.0110	2	2	(3)	(6)
339+81	-	340+18	STH 64, MAINLINE (LT)	9140-12-71	UPPER LAYER	ASPHALTIC SURFACE	465.0110	2	2	(3)	(6)
340+02	-	340+30	STH 64, MAINLINE (RT)	9140-12-71	LOWER LAYER	BASE AGGREGATE	465.0110	1	2	(3)	(6)
340+02	-	340+30	STH 64, MAINLINE (RT)	9140-12-71	UPPER LAYER	ASPHALTIC SURFACE	465.0110	1	2	(3)	(6)
340+19	-	340+24	STH 64, MAINLINE	9140-12-71	LOWER LAYER	BASE AGGREGATE	465.0110	1.5	3	(3)	(6)
340+19	-	340+24	STH 64, MAINLINE	9140-12-71	MIDDLE LAYER	ASPHALTIC SURFACE	465.0110	1.5	3	(3)	(6)
340+19	-	340+24	STH 64, MAINLINE	9140-12-71	MIDDLE LAYER	ASPHALTIC SURFACE	465.0110	1.0	2	(3)	(6)
340+19	-	340+24	STH 64, MAINLINE	9140-12-71	MIDDLE LAYER	ASPHALTIC SURFACE	465.0110	1.0	2	(3)	(6)
340+19	-	340+24	STH 64, MAINLINE	9140-12-71	UPPER LAYER	ASPHALTIC SURFACE	465.0110	1.0	2	(3)	(6)
340+19	-	340+24	STH 64, MAINLINE	9140-12-71	LOWER LAYER	BASE AGGREGATE	465.0110	1.5	3	(3)	(6)
340+19	-	340+24	STH 64, MAINLINE	9140-12-71	MIDDLE LAYER	ASPHALTIC SURFACE	465.0110	1.5	3	(3)	(6)
340+19	-	340+24	STH 64, MAINLINE	9140-12-71	MIDDLE LAYER	ASPHALTIC SURFACE	465.0110	1.0	2	(3)	(6)
340+19	-	340+24	STH 64, MAINLINE	9140-12-71	MIDDLE LAYER	ASPHALTIC SURFACE	465.0110	1.0	2	(3)	(6)
340+19	-	340+24	STH 64, MAINLINE	9140-12-71	UPPER LAYER	ASPHALTIC SURFACE	465.0110	1.0	2	(3)	(6)
341+66	-	341+71	STH 64, MAINLINE	9140-12-71	LOWER LAYER	BASE AGGREGATE	465.0110	1.5	3	(3)	(6)
341+66	-	341+71	STH 64, MAINLINE	9140-12-71	MIDDLE LAYER	ASPHALTIC SURFACE	465.0110	1.5	3	(3)	(6)
341+66	-	341+71	STH 64, MAINLINE	9140-12-71	MIDDLE LAYER	ASPHALTIC SURFACE	465.0110	1.0	2	(3)	(6)
341+66	-	341+71	STH 64, MAINLINE	9140-12-71	MIDDLE LAYER	ASPHALTIC SURFACE	465.0110	1.0	2	(3)	(6)
341+66	-	341+71	STH 64, MAINLINE	9140-12-71	UPPER LAYER	ASPHALTIC SURFACE	465.0110	1.0	2	(3)	(6)
341+66	-	341+71	STH 64, MAINLINE	9140-12-71	LOWER LAYER	BASE AGGREGATE	465.0110	1.5	3	(3)	(6)
341+66	-	341+71	STH 64, MAINLINE	9140-12-71	MIDDLE LAYER	ASPHALTIC SURFACE	465.0110	1.5	3	(3)	(6)
341+66	-	341+71	STH 64, MAINLINE	9140-12-71	MIDDLE LAYER	ASPHALTIC SURFACE	465.0110	1.0	2	(3)	(6)
341+66	-	341+71	STH 64, MAINLINE	9140-12-71	MIDDLE LAYER	ASPHALTIC SURFACE	465.0110	1.0	2	(3)	(6)
341+66	-	341+71	STH 64, MAINLINE	9140-12-71	UPPER LAYER	ASPHALTIC SURFACE	465.0110	1.0	2	(3)	(6)
342+98	-	344+54	STH 55	9140-12-74	UPPER LAYER	EXISTING HMA	460.6224	110	2	(1)	(5)
347+23		347+52	STH 64, DRIVEWAY	9140-12-74	UPPER LAYER	EXISTING HMA	465.0120	4	2	(3)	(6)
349+70		349+98	STH 64, DRIVEWAY	9140-12-74	UPPER LAYER	EXISTING HMA	465.0120	4	2	(3)	(6)
355+84		356+03	STH 64, DRIVEWAY	9140-12-74	UPPER LAYER	EXISTING HMA	465.0120	3	2	(3)	(6)

NOTES:

(1) 460.2010 PWL INCENTIVE AIR VOIDS HMA PAVEMENT
(2) QMP AS PER STANDARD SPECIFICATIONS SECTION 460
(3) QMP AS PER STANDARD SPECIFICATIONS SECTION 465
(4) 460.2005 INCENTIVE DENSITY PWL HMA PAVEMENT
(5) ACCEPTANCE TESTING BY THE DEPARTMENT; NOT ELIGIBLE FOR INCENTIVE
(6) ACCEPTANCE BY ORDINARY COMPACTION

3

PWL MIXTURE USE TABLE (CONT.)

STATION	-	STATION	LOCATION	PROJECT I.D.	MIXTURE USE	UNDERLYING SURFACE	BID ITEM	TONS	THICKNESS (INCHES)	MIXTURE ACCEPTANCE (SEE NOTES BELOW)	DENSITY ACCEPTANCE (SEE NOTES BELOW)
359+90		360+10	STH 64, DRIVEWAY	9140-12-74	UPPER LAYER	EXISTING HMA	465.0120	3	2	(3)	(6)
361+10		361+29	STH 64, DRIVEWAY	9140-12-74	UPPER LAYER	EXISTING HMA	465.0120	3	2	(3)	(6)
371+62	-	372+62	SETTLEMENT RD/MEMORIAL DR	9140-12-74	UPPER LAYER	EXISTING HMA	460.6224	40	2	(1)	(5)
381+89	-	382+11	STH 64, SHOULDERS	9140-12-74	LOWER LAYER	BASE AGGREGATE	460.6224	1.5	2	(1)	(5)
381+89	-	382+11	STH 64, SHOULDERS	9140-12-74	UPPER LAYER	4 MT 58-28 S	460.6224	1.5	2	(1)	(5)
384+02	-	385+08	STH 64, MAINLINE	9140-12-74	LOWER LAYER	BASE AGGREGATE	465.0105	50	2.5	(3)	(6)
384+02	-	385+08	STH 64, MAINLINE	9140-12-74	UPPER LAYER	ASPHALTIC SURFACE	465.0105	50	2	(3)	(6)
385+36		385+60	STH 64, DRIVEWAY	9140-12-74	UPPER LAYER	EXISTING HMA	465.0120	3	2	(3)	(6)
389+64		389+85	STH 64, DRIVEWAY	9140-12-74	UPPER LAYER	EXISTING HMA	465.0120	3	2	(3)	(6)
398+02	-	398+73	HEISE RD	9140-12-74	UPPER LAYER	EXISTING HMA	460.6224	10	2	(1)	(5)
420+32	-	421+33	FISH HATCHERY RD	9140-12-74	UPPER LAYER	EXISTING HMA	460.6224	20	2	(1)	(5)
445+63	-	445+94	STH 64, DRIVEWAY	9140-12-74	UPPER LAYER	EXISTING HMA	465.0120	4	2	(3)	(6)
462+20		462+46	STH 64, DRIVEWAY	9140-12-74	UPPER LAYER	EXISTING HMA	465.0120	3	2	(3)	(6)
462+39	-	462+61	STH 64, SHOULDERS	9140-12-74	LOWER LAYER	BASE AGGREGATE	460.6224	1.5	2	(1)	(5)
462+39	-	462+61	STH 64, SHOULDERS	9140-12-74	UPPER LAYER	4 MT 58-28 S	460.6224	1.5	2	(1)	(5)
479+57	-	480+34	FISH HATCHERY RD	9140-12-74	UPPER LAYER	EXISTING HMA	460.6224	20	2	(1)	(5)
482+55		482+89	STH 64, DRIVEWAY	9140-12-74	UPPER LAYER	EXISTING HMA	465.0120	5	2	(3)	(6)
483+93		484+27	STH 64, DRIVEWAY	9140-12-74	UPPER LAYER	EXISTING HMA	465.0120	8	2	(3)	(6)
489+21		489+71	STH 64, DRIVEWAY	9140-12-74	UPPER LAYER	EXISTING HMA	465.0120	4	2	(3)	(6)
492+95		493+17	STH 64, DRIVEWAY	9140-12-74	UPPER LAYER	EXISTING HMA	465.0120	3	2	(3)	(6)
497+17	-	497+93	SAULS SPRING RD	9140-12-74	UPPER LAYER	EXISTING HMA	460.6224	20	2	(1)	(5)
471+25	-	472+31	STH 64, MAINLINE	9140-12-74	LOWER LAYER	BASE AGGREGATE	465.0105	50	2.5	(3)	(6)
471+25	-	472+31	STH 64, MAINLINE	9140-12-74	UPPER LAYER	ASPHALTIC SURFACE	465.0105	50	2	(3)	(6)
519+95		520+28	STH 64, DRIVEWAY	9140-12-74	UPPER LAYER	EXISTING HMA	465.0120	3	2	(3)	(6)
520+62		520+80	STH 64, DRIVEWAY	9140-12-74	UPPER LAYER	EXISTING HMA	465.0120	3	2	(3)	(6)

NOTES:

(1) 460.2010 PWL INCENTIVE AIR VOIDS HMA PAVEMENT
(2) QMP AS PER STANDARD SPECIFICATIONS SECTION 460
(3) QMP AS PER STANDARD SPECIFICATIONS SECTION 465
(4) 460.2005 INCENTIVE DENSITY PWL HMA PAVEMENT
(5) ACCEPTANCE TESTING BY THE DEPARTMENT; NOT ELIGIBLE FOR INCENTIVE
(6) ACCEPTANCE BY ORDINARY COMPACTION

3

ASPHALTIC RUMBLE STRIPS

STATION	-	STATION	LOCATION	465.0450 ASPHALTIC INTERSECTION RUMBLE STRIPS SY	465.0475 ASPHALTIC CENTERLINE RUMBLE STRIPS 2-LANE RURAL LF
25+55	-	38+23	STH 64	---	1,270
40+23	-	71+30	STH 64	---	3,110
75+31	-	84+65	STH 64	---	940
88+65	-	97+26	STH 64	---	870
101+26	-	119+36	STH 64	---	1,810
123+29	-	125+27	STH 64	---	200
129+27	-	146+19	STH 64	---	1,700
150+18	-	161+20	STH 64	---	1,110
165+19	-	170+63	STH 64	---	550
174+63	-	185+92	STH 64	---	1,130
189+92	-	212+86	STH 64	---	2,300
216+84	-	251+13	STH 64	---	3,430
255+13	-	262+93	STH 64	---	780
266+93	-	303+71	STH 64	---	3,680
307+71	-	330+15	STH 64	---	2,250
334+15	-	339+73	STH 64	---	560
345+92	-	370+09	STH 64	---	2,420
374+09	-	396+38	STH 64	---	2,230
400+38	-	418+83	STH 64	---	1,850
422+83	-	477+95	STH 64	---	5,520
481+95	-	495+55	STH 64	---	1,360
499+55	-	591+01	STH 64	---	9,150
333+84	-	334+09	STH 64, RT	30	---
337+34	-	337+59	STH 64, RT	30	---
339+59	-	339+84	STH 64, RT	30	---
347+89	-	348+14	STH 64, LT	30	---
350+14	-	350+39	STH 64, LT	30	---
353+64	-	353+89	STH 64, LT	30	---
PROJECT 9140-12-74 TOTAL				**180**	**48,220**

ASPHALTIC FLUMES

STATION	OFFSET	LOCATION	465.0315 ASPHALTIC FLUMES SY
339+83	LT	STH 64	4
340+04	RT	STH 64	4
PROJECT 9140-12-71 TOTAL			**8**

3

TEMPORARY SHORING

STATION	-	STATION	LOCATION	511.1100 TEMPORARY SHORING SF
262+30	-	263+34	STH 64	530
PROJECT 9140-12-74 TOTAL				**530**

CONCRETE CURB & GUTTER

STATION	-	STATION	LOCATION	OFFSET	601.0584 CONCRETE CURB & GUTTER 4-INCH SLOPED 30-INCH TBT LF
339+83	-	340+18	STH 64	LT	35
340+04	-	340+31	STH 64	RT	27
341+59	-	341+79	STH 64	LT	20
341+74	-	341+94	STH 64	RT	20
PROJECT 9140-12-71 TOTAL					**102**

3

CULVERT PIPES

STATION	-	STATION	OFFSET	520.1018 APRON ENDWALLS FOR CULVERT PIPE 18-INCH EACH	520.1024 APRON ENDWALLS FOR CULVERT PIPE 24-INCH EACH	520.3424 * CULVERT PIPE CLASS III-A NON-METAL 24-INCH LF	520.9700.S01 CULVERT PIPE LINERS 24-INCH LF	520.9700.S02 CULVERT PIPE LINERS 30-INCH LF	520.9750.S CLEANING CULVERT PIPES FOR LINER VERIFICATION EACH	INLET ELEVATION	DISCHARGE ELEVATION	SLOPE %
21+21	-	21+28	25.6' LT, 50.8' RT	---	---	---	---	76	1	1370.453	1368.398	2.70%
	95+02		35.8' LT, 43.9' RT	---	2	67	---	---	---	1329.18	1328.85	0.49%
157+04	-	157+09	77.9' LT, 70.9' RT	---	---	---	---	148	1	1315.43	1314.91	0.35%
210+35	-	210+40	30.5' LT, 49.1' RT	---	2	67	---	---	---	1379.68	1378.84	1.25%
224+56	-	224+68	40.0' LT, 49.6' RT	---	---	---	---	84	1	1399.06	1398.01	1.25%
	262+81		32.0' LT, 32.0' RT	---	2	52	---	---	---	1338.67	1337.81	1.65%
	292+36		43.2' LT, 39.3' RT	---	2	70	---	---	---	1319.77	1319.38	0.56%
320+89	-	320+91	33.9' LT, 31.4' RT	---	2	53	---	---	---	1272.82	1272.10	1.36%
	327+83		39.7' LT, 30.0' RT	2	---	---	62	---	1	1266.14	1263.25	4.67%
	384+55		27.6' RT, 31.0' RT	---	2	46	---	---	---	1307.60	1306.06	3.35%
471+38	-	472+25	45.1' LT, 51.0' RT	---	2	120	---	---	---	1217.00	1215.00	1.67%
PROJECT 9140-12-74 TOTAL				**2**	**14**	**475**	**62**	**308**	**4**			

***Class III-A pipe lengths were estimated using reinforced concrete as the default material for both the culvert pipe and apron endwalls. Adjust accordingly if other pipe material is used. Station and offset information is given to the end of the endwalls.**

CONCRETE BARRIER

STATION	-	STATION	LOCATION	603.8000 CONCRETE BARRIER TEMPORARY PRECAST DELIVERED LF	603.8125 CONCRETE BARRIER TEMPORARY PRECAST INSTALLED LF	NOTES	PROJECT ID
262+07	-	263+41	STH 64	138	138	STAGE 1 CULVERT REPLACEMENT	9140-12-74
262+07	-	263+41	STH 64	---	138	STAGE 2 CULVERT REPLACEMENT	9140-12-74
338+85	-	343+27	STH 64	450	450	STAGE 1 B-34-838 WORK	9140-12-71
338+85	-	343+27	STH 64	---	450	STAGE 2 B-34-838 WORK	9140-12-71
PROJECT 9140-12-71 TOTAL				**450**	**900**		
PROJECT 9140-12-74 TOTAL				**138**	**276**		

RIPRAP & GEOTEXTILE

STATION	-	STATION	LOCATION	LOCATION	606.0200 RIPRAP MEDIUM CY	645.0120 GEOTEXTILE TYPE HR SY	PROJECT ID
21+13	-	21+43	RT	STH 64	3	10	9140-12-74
156+94	-	157+24	RT	STH 64	2	6	9140-12-74
339+83	-	---	LT	STH 64	2	7	9140-12-71
340+04	-	---	RT	STH 64	2	7	9140-12-71
384+39	-	384+69	RT	STH 64	17	52	9140-12-74
PROJECT 9140-12-71 TOTAL					**4**	**14**	
PROJECT 9140-12-74 TOTAL					**22**	**68**	

3

CONCRETE BARRIER

STATION	STAGE	LOCATION	614.0905 CRASH CUSHION TEMPORARY EACH	BACK WIDTH FT	OBJECT MARKING PATTERN	CRASH TEST LEVEL	TRAFFIC DIRECTION	TRAFFIC LOCATION	CRASH CUSHION SHIELDS	NOTES	PROJECT ID
262+07	1	STH 64	1	2	OM-3R (WO5-58R)	TL-3	UNIDIRECTIONAL	LT	TEMP BARRIER	STAGE 1 CULVERT REPLACEMENT	9140-12-74
263+41	1	STH 64	1	2	OM-3L (WO5-58L)	TL-3	UNIDIRECTIONAL	RT	TEMP BARRIER	STAGE 1 CULVERT REPLACEMENT	9140-12-74
262+07	2	STH 64	1	2	OM-3L (WO5-58L)	TL-3	UNIDIRECTIONAL	RT	TEMP BARRIER	STAGE 2 CULVERT REPLACEMENT	9140-12-74
263+41	2	STH 64	1	2	OM-3R (WO5-58R)	TL-3	UNIDIRECTIONAL	LT	TEMP BARRIER	STAGE 2 CULVERT REPLACEMENT	9140-12-74
338+85	1	STH 64	1	2	OM-3R (WO5-58R)	TL-3	UNIDIRECTIONAL	LT	TEMP BARRIER	STAGE 1 B-34-838 WORK	9140-12-71
343+27	1	STH 64	1	2	OM-3L (WO5-58L)	TL-3	UNIDIRECTIONAL	RT	TEMP BARRIER	STAGE 1 B-34-838 WORK	9140-12-71
338+85	2	STH 64	1	2	OM-3L (WO5-58L)	TL-3	UNIDIRECTIONAL	RT	TEMP BARRIER	STAGE 2 B-34-838 WORK	9140-12-71
343+27	2	STH 64	1	2	OM-3R (WO5-58R)	TL-3	UNIDIRECTIONAL	LT	TEMP BARRIER	STAGE 2 B-34-838 WORK	9140-12-71
PROJECT 9140-12-71 TOTAL			**4**								
PROJECT 9140-12-74 TOTAL			**4**								

GUARDRAIL

STATION - STATION	OFFSET	614.2300 MGS GUARDRAIL 3 LF	614.2350 MGS GUARDRAIL SHORT RADIUS LF	614.2500 MGS THRIE BEAM TRANSITION LF	614.2610 MGS GUARDRAIL TERMINAL EAT EACH	614.2630 MGS GUARDRAIL SHORT RADIUS TERMINAL EACH
484+16	LT	---	---	---	---	---
484+26	RT	---	---	---	---	---
484+16 - 484+23	LT	---	---	---	---	1
484+23 - 484+37	LT	---	20	---	---	---
484+26 - 484+28	RT	---	---	---	---	1
484+28 - 484+36	RT	---	12.5	---	---	---
484+36 - 484+49	RT	12.5	---	---	---	---
484+37 - 484+74	LT	37.5	---	---	---	---
484+49 - 484+87	RT	---	---	38.875	---	---
484+75 - 485+13	LT	---	---	38.875	---	---
485+39 - 487+77	RT	---	---	38.875	---	---
485+63 - 486+02	LT	---	---	38.875	---	---
485+77 - 487+78	RT	200	---	---	---	---
486+02 - 488+52	LT	250	---	---	---	---
487+78 - 488+28	RT	---	---	---	1	---
488+52 - 489+02	LT	---	---	---	1	---
PROJECT 9140-12-74 TOTAL		**500**	**32.5**	**155.5**	**2**	**2**

MAINTENANCE AND REPAIR OF HAUL ROADS

PROJECT	618.0100 MAINTENANCE AND REPAIR OF HAUL ROADS EACH
9140-12-71	1
9140-12-74	1
PROJECT 9140-12-71 TOTAL	1
PROJECT 9140-12-74 TOTAL	1

LANDSCAPING

STATION	-	STATION	LOCATION	625.0100 TOPSOIL SY	628.2006 EROSION MAT URBAN CLASS I TYPE A SY	629.0210 FERTILIZER TYPE B CWT	630.0120 SEEDING MIXTURE NO. 20 LB	630.0130 SEEDING MIXTURE NO. 30 LB	630.0500 SEED WATER MGAL	PROJECT ID
21+06	-	21+36	LT	67	67	0.04	---	1.2	2	9140-12-74
21+13	-	21+43	RT	67	67	0.04	---	1.2	3	9140-12-74
94+86	-	95+16	LT	76	76	0.05	---	1.4	4	9140-12-74
93+97	-	96+12	RT	235	235	0.15	---	0.1	11	9140-12-74
156+90	-	157+20	LT	67	67	0.04	---	1.2	3	9140-12-74
156+94	-	157+24	RT	18	18	0.01	---	0.4	1	9140-12-74
209+11	-	211+73	LT	340	340	0.21	---	6.1	16	9140-12-74
210+20	-	210+50	RT	90	90	0.05	---	1.6	4	9140-12-74
224+53	-	224+83	LT	67	67	0.04	---	1.2	3	9140-12-74
224+42	-	224+72	RT	67	67	0.04	---	1.2	3	9140-12-74
262+71	-	262+92	LT	35	35	0.02	---	0.7	2	9140-12-74
262+67	-	262+97	RT	72	72	0.05	---	1.3	4	9140-12-74
291+24	-	293+49	LT	337	337	0.21	---	6.1	16	9140-12-74
292+20	-	292+50	RT	67	67	0.04	---	1.2	3	9140-12-74
320+00	-	321+89	LT	142	142	0.09	---	2.6	7	9140-12-74
320+76	-	321+06	RT	71	71	0.04	---	1.3	4	9140-12-74
327+67	-	327+97	LT	67	67	0.04	---	1.2	3	9140-12-74
327+69	-	328+00	RT	67	67	0.04	---	1.2	3	9140-12-74
339+83	-	340+17	LT	17	17	0.02	0.1	---	1	9140-12-71
340+04	-	340+31	RT	17	17	0.02	0.1	---	1	9140-12-71
383+36	-	385+40	LT	220	220	0.14	---	4.0	10	9140-12-74
384+39	-	384+69	RT	185	185	0.12	---	3.4	9	9140-12-74
470+51	-	473+04	LT	497	497	0.31	---	9.0	23	9140-12-74
470+64	-	473+05	RT	587	587	0.37	---	10.6	27	9140-12-74
483+86	-	485+10	LT	104	104	0.07	---	1.9	5	9140-12-74
483+86	-	484+79	RT	155	155	0.10	---	2.8	7	9140-12-74
485+70	-	490+21	LT	759	759	0.48	---	13.7	35	9140-12-74
485+37	-	489+32	RT	779	779	0.49	---	14.1	35	9140-12-74
9140-12-74			UNDISTRIBUTED	1,324	263	1.50	---	22.3	0	9140-12-74
PROJECT 9140-12-71 TOTAL				**34**	**34**	**0.04**	**0.2**	**0**	**2**	
PROJECT 9140-12-74 TOTAL				**6,570**	**5,510**	**5.0**	**0**	**120**	**250**	

3

EROSION CONTROL

STATION	-	STATION	OFFSET	628.1504 SILT FENCE LF	628.1520 SILT FENCE MAINTENANCE LF	628.7015 INLET PROTECTION TYPE C EACH	628.7555 CULVERT PIPE CHECKS EACH	628.7570 ROCK BAGS EACH	PROJECT ID	REMARKS
20+96	-	21+41	LT	---	---	---	5	---	9140-12-74	
21+06	-	21+48	RT	---	---	---	---	10	9140-12-74	
94+47	-	95+59	LT	138	138	---	3	---	9140-12-74	
93+93	-	96+14	RT	254	254	---	---	10	9140-12-74	
156+83	-	157+30	LT	---	---	---	5	---	9140-12-74	
156+80	-	157+30	RT	---	---	---	---	10	9140-12-74	
209+04	-	211+83	LT	309	309	---	3	---	9140-12-74	
209+71	-	210+97	RT	182	182	---	---	10	9140-12-74	
224+45	-	224+93	LT	---	---	---	---	10	9140-12-74	
224+34	-	224+77	RT	---	---	---	5	---	9140-12-74	
262+13	-	263+42	LT	153	153	---	3	---	9140-12-74	
262+13	-	263+44	RT	157	157	---	---	10	9140-12-74	
291+13	-	293+54	LT	271	271	---	---	10	9140-12-74	
291+81	-	292+90	RT	111	111	---	3	---	9140-12-74	
319+99	-	321+93	LT	250	250	---	---	10	9140-12-74	
320+27	-	321+52	RT	156	156	---	3	---	9140-12-74	
327+57	-	328+05	LT	---	---	---	---	10	9140-12-74	
327+63	-	328+06	RT	---	---	---	3	---	9140-12-74	
339+64	-	339+96	LT	60	60	---	---	---	9140-12-71	B-34-838 NW QUADRANT
339+67	-	340+24	RT	75	75	---	---	---	9140-12-71	B-34-838 SW QUADRANT
340+24		341+66	LT	---	---	4	---	---	9140-12-71	B-34-838
340+24		341+66	RT	---	---	4	---	---	9140-12-71	B-34-838
341+60	-	342+25	LT	80	80	---	---	---	9140-12-71	B-34-838 NE QUADRANT
341+88	-	342+29	RT	50	50	---	---	---	9140-12-71	B-34-838 SE QUADRANT
383+35	-	385+41	LT	254	254	---	3	---	9140-12-74	
383+99	-	385+18	RT	147	147	---	---	---	9140-12-74	
470+46	-	473+10	LT	294	294	---	3	---	9140-12-74	
470+59	-	473+08	RT	303	303	---	---	10	9140-12-74	
483+80	-	485+13	LT	219	219	---	---	---	9140-12-74	
483+80	-	484+80	RT	168	168	---	---	---	9140-12-74	
485+75	-	490+39	LT	518	518	---	---	---	9140-12-74	
485+21	-	489+32	RT	451	451	---	---	---	9140-12-74	
PROJECT 9140-12-71 TOTAL				**265**	**265**	**8**	**0**	**0**		
PROJECT 9140-12-74 TOTAL				**4,335**	**4,335**	**0**	**39**	**100**		

EROSION CONTROL MOBILIZATION

PROJECT	628.1905 MOBILIZATIONS EROSION CONTROL EACH	628.1910 MOBILIZATION EMERGENCY EROSION CONTROL EACH
9140-12-71	2	2
9140-12-74	8	8
PROJECT 9140-12-71 TOTAL	**2**	**2**
PROJECT 9140-12-74 TOTAL	**8**	**8**

MARKERS

STATION	LOCATION	633.5200 MARKERS CULVERT END EACH
95+02	STH 64, CROSS	2
210+38	STH 64, CROSS	2
262+81	STH 64, CROSS	2
292+36	STH 64, CROSS	2
320+89	STH 64, CROSS	2
384+55	STH 64, CROSS	2
471+78	STH 64, CROSS	2
PROJECT 9140-12-74 TOTAL		**14**

3

TRAFFIC CONTROL

LOCATION	DAYS IN SERVICE	643.0300 TRAFFIC CONTROL DRUMS NO.	DAY	643.0420 TRAFFIC CONTROL BARRICADES TYPE III NO.	DAY	643.0705 TRAFFIC CONTROL WARNING LIGHTS TYPE A NO.	DAY	643.0715 TRAFFIC CONTROL WARNING LIGHTS TYPE C NO.	DAY	643.0900 TRAFFIC CONTROL SIGNS NO.	DAY	643.1000 TRAFFIC CONTROL SIGNS FIXED MESSAGE SF	PROJECT I.D.
PROJECT ADVANCE WARNING	128	---	---	---	---	---	---	---	---	35	4,480	64	9140-14-74
CULVERT STA. 21+23	2	15	30	---	---	---	---	---	---	1	2	---	9140-14-74
CULVERT STA. 95+02	3	30	90	---	---	---	---	---	---	---	---	---	9140-14-74
CULVERT STA. 157+06	2	15	30	---	---	---	---	---	---	1	2	---	9140-14-74
CULVERT STA. 210+38	3	30	90	---	---	---	---	---	---	---	---	---	9140-14-74
CULVERT STA. 224+62	2	15	30	---	---	---	---	---	---	1	2	---	9140-14-74
CULVERT STA. 262+82	12	65	780	2	24	4	48	20	240	20	240	---	9140-14-74
CULVERT STA. 292+36	3	30	90	---	---	---	---	---	---	---	---	---	9140-14-74
CULVERT STA. 320+89	3	30	90	---	---	---	---	---	---	---	---	---	9140-14-74
CULVERT STA. 327+83	2	15	30	---	---	---	---	---	---	1	2	---	9140-14-74
B-34-838	86	10	860	2	172	4	344	10	860	30	2,580	64	9140-12-71
CULVERT STA. 384+56	3	30	90	---	---	---	---	---	---	---	---	---	9140-14-74
CULVERT STA. 471+78	4	30	120	---	---	---	---	---	---	---	---	---	9140-14-74
PROJECT 9140-12-71 TOTAL			**860**		**172**		**344**		**860**		**2,580**	**64**	
PROJECT 9140-12-74 TOTAL			**1,470**		**24**		**48**		**240**		**4,728**	**64**	

TRAFFIC CONTROL COVERING SIGNS

STATION	LOCATION	PLAN SHEET	SIGN COVERED	NO. OF COVERING CYCLES	643.0920 TRAFFIC CONTROL COVERING SIGNS TYPE II EACH
343+40	STH 55	TRAFFIC CONTROL	STOP	1	1
343+47	STH 64	TRAFFIC CONTROL	STOP	1	1
344+26	STH 64	TRAFFIC CONTROL	STOP	1	1
344+67	STH 55	TRAFFIC CONTROL	STOP	1	1
PROJECT 9140-12-71 TOTAL					**4**

3

PAVEMENT MARKING ITEMS

STATION	-	STATION	TYPE	646.1020 MARKING LINE EPOXY 4-INCH YELLOW LF	646.1040 MARKING LINE GROOVED WET REF EPOXY 4-INCH WHITE LF	646.6120 MARKING STOP LINE EPOXY 18-INCH WHITE LF	646.6464 COLD WEATHER MARKING EPOXY 4-INCH LF	646.9000 MARKING REMOVAL LINE 4-INCH LF	646.9200 MARKING REMOVAL LINE WIDE LF
20+00	-	591+02	EDGELINE (SOLID)	---	114,300	---	---	---	---
20+00	-	65+00	CENTERLINE (DOUBLE SOLID)	9,000	---	---	---	---	---
21+55			STOP BAR	---	---	20	---	---	---
65+00	-	105+00	CENTERLINE (DASHED/SOLID)	5,000	---	---	---	---	---
105+00	-	123+00	CENTERLINE (DOUBLE SOLID)	3,600	---	---	---	---	---
123+00	-	149+00	CENTERLINE (DASHED/SOLID)	3,250	---	---	---	---	---
149+00	-	165+00	CENTERLINE (DOUBLE SOLID)	3,200	---	---	---	---	---
165+00	-	175+00	CENTERLINE (DASHED/SOLID)	1,250	---	---	---	---	---
175+00	-	181+00	CENTERLINE (DASHED)	150	---	---	---	---	---
181+00	-	188+00	CENTERLINE (DASHED/SOLID)	875	---	---	---	---	---
188+00	-	245+00	CENTERLINE (DOUBLE SOLID)	11,400	---	---	---	---	---
215+00			STOP BAR	---	---	20	---	---	---
245+00	-	266+00	CENTERLINE (DASHED/SOLID)	2,625	---	---	---	---	---
261+03	-	262+07	CENTERLINE	---	---	---	---	105	---
263+42	-	264+45	CENTERLINE	---	---	---	---	105	---
266+00	-	298+00	CENTERLINE (DOUBLE SOLID)	6,400	---	---	---	---	---
298+00	-	311+00	CENTERLINE (DASHED/SOLID)	1,625	---	---	---	---	---
311+00	-	337+83	CENTERLINE (DASHED)	671	---	---	---	---	---
337+83	-	340+25	CENTERLINE (DASHED/SOLID)	303	---	---	---	219	---
340+25	-	341+75	CENTERLINE (DOUBLE SOLID)	300	---	---	---	---	---
341+75	-	343+36	CENTERLINE (DASHED/SOLID)	201	---	---	---	170	---
343+36			STOP BAR	---	---	20	---	---	20
343+69			STOP BAR	---	---	20	---	---	---
344+05			STOP BAR	---	---	20	---	---	---
344+33			STOP BAR	---	---	20	---	---	---
345+00	-	350+00	CENTERLINE (DOUBLE SOLID)	1,000	---	---	---	---	---
350+00	-	358+00	CENTERLINE (DASHED/SOLID)	1,000	---	---	---	---	---
358+00	-	370+00	CENTERLINE (DOUBLE SOLID)	2,400	---	---	---	---	---
370+00	-	380+00	CENTERLINE (DASHED/SOLID)	1,250	---	---	---	---	---
380+00	-	387+00	CENTERLINE (DASHED)	175	---	---	---	---	---
387+00	-	398+00	CENTERLINE (DASHED/SOLID)	1,375	---	---	---	---	---
398+00	-	413+00	CENTERLINE (DOUBLE SOLID)	3,000	---	---	---	---	---
413+00	-	486+00	CENTERLINE (DASHED/SOLID)	9,125	---	---	---	---	---
486+00	-	498+00	CENTERLINE (DASHED)	300	---	---	---	---	---
498+00	-	505+00	CENTERLINE (DASHED/SOLID)	875	---	---	---	---	---
505+00	-	535+00	CENTERLINE (DOUBLE SOLID)	6,000	---	---	---	---	---
535+00	-	548+00	CENTERLINE (DASHED/SOLID)	1,625	---	---	---	---	---
548+00	-	570+00	CENTERLINE (DASHED)	550	---	---	---	---	---
570+00	-	591+00	CENTERLINE (DASHED/SOLID)	2,625	---	---	---	---	---
UNDISTRIBUTED				---	---	---	48,900	---	---
PROJECT 9140-12-74 TOTAL				**81,150**	**114,300**	**120**	**48,900**	**599**	**20**

3

3

TEMPORARY PAVEMENT MARKING ITEMS

STATION	-	STATION	TYPE	649.0105 * TEMPORARY MARKING LINE PAINT 4-INCH YELLOW LF	649.0120 TEMPORARY MARKING LINE EPOXY 4-INCH YELLOW LF	649.0150 TEMPORARY MARKING LINE REMOVABLE TAPE 4-INCH YELLOW LF	649.0850 TEMPORARY MARKING STOP LINE REMOVABLE TAPE 18-INCH WHITE LF	PROJECT ID	REMARKS
20+00	-	65+00	CENTERLINE (DOUBLE SOLID)	9,000	9,000	---	---	9140-12-74	
65+00	-	105+00	CENTERLINE (DASHED/SOLID)	4,320	4,320	---	---	9140-12-74	
105+00	-	123+00	CENTERLINE (DOUBLE SOLID)	3,600	3,600	---	---	9140-12-74	
123+00	-	149+00	CENTERLINE (DASHED/SOLID)	2,808	2,808	---	---	9140-12-74	
149+00	-	165+00	CENTERLINE (DOUBLE SOLID)	3,200	3,200	---	---	9140-12-74	
165+00	-	175+00	CENTERLINE (DASHED/SOLID)	1,080	1,080	---	---	9140-12-74	
175+00	-	181+00	CENTERLINE (DASHED)	48	48	---	---	9140-12-74	
181+00	-	188+00	CENTERLINE (DASHED/SOLID)	756	756	---	---	9140-12-74	
188+00	-	245+00	CENTERLINE (DOUBLE SOLID)	11,400	11,400	---	---	9140-12-74	
245+00	-	266+00	CENTERLINE (DASHED/SOLID)	2,268	2,268	---	---	9140-12-74	
259+00	-	266+00	CENTERLINE (DOUBLE SOLID YELLOW)	---	---	1,400	---	9140-12-74	
261+03			STOP BAR	---	---	---	15	9140-12-74	
264+45			STOP BAR	---	---	---	20	9140-12-74	
266+00	-	298+00	CENTERLINE (DOUBLE SOLID)	6,400	6,400	---	---	9140-12-74	
298+00	-	311+00	CENTERLINE (DASHED/SOLID)	1,404	1,404	---	---	9140-12-74	
311+00	-	337+83	CENTERLINE (DASHED)	215	215	---	---	9140-12-74	
337+82	-	340+25	CENTERLINE (DASHED/SOLID)	261	261	---	---	9140-12-74	
337+82	-	339+72	CENTERLINE (DOUBLE SOLID YELLOW)	---	---	700	---	9140-12-71	
338+04			STOP BAR	---	---	---	14	9140-12-71	
338+74	-	334+36	EDGELINE (WHITE)	---	---	470	---	9140-12-71	STAGE 1
338+74	-	334+36	EDGELINE (WHITE)	---	---	470	---	9140-12-71	STAGE 2
340+25	-	341+75	CENTERLINE (DOUBLE SOLID)	300	300	---	---	9140-12-74	
341+75	-	343+36	CENTERLINE (DASHED/SOLID)	174	174	---	---	9140-12-74	
345+00	-	350+00	CENTERLINE (DOUBLE SOLID)	1,000	1,000	---	---	9140-12-74	
350+00	-	358+00	CENTERLINE (DASHED/SOLID)	864	864	---	---	9140-12-74	
358+00	-	370+00	CENTERLINE (DOUBLE SOLID)	2,400	2,400	---	---	9140-12-74	
370+00	-	380+00	CENTERLINE (DASHED/SOLID)	1,080	1,080	---	---	9140-12-74	
380+00	-	387+00	CENTERLINE (DASHED)	56	56	---	---	9140-12-74	
387+00	-	398+00	CENTERLINE (DASHED/SOLID)	1,188	1,188	---	---	9140-12-74	
398+00	-	413+00	CENTERLINE (DOUBLE SOLID)	3,000	3,000	---	---	9140-12-74	
413+00	-	486+00	CENTERLINE (DASHED/SOLID)	7,884	7,884	---	---	9140-12-74	
486+00	-	498+00	CENTERLINE (DASHED)	96	96	---	---	9140-12-74	
498+00	-	505+00	CENTERLINE (DASHED/SOLID)	756	756	---	---	9140-12-74	
505+00	-	535+00	CENTERLINE (DOUBLE SOLID)	6,000	6,000	---	---	9140-12-74	
535+00	-	548+00	CENTERLINE (DASHED/SOLID)	1,404	1,404	---	---	9140-12-74	
548+00	-	570+00	CENTERLINE (DASHED)	176	176	---	---	9140-12-74	
570+00	-	591+00	CENTERLINE (DASHED/SOLID)	2,268	2,268	---	---	9140-12-74	
PROJECT 9140-12-71 TOTAL				**0**	**0**	**1,640**	**14**		
PROJECT 9140-12-74 TOTAL				**75,410**	**75,410**	**1,400**	**35**		

* USE TEMPORARY PAINT ON MILLED SURFACES. ALL FINIISHED SURFACES SHOULD USE EPOXY.

3

3

LOCATING NO-PASSING ZONES

STATION	-	STATION	648.0100 LOCATING NO-PASSING ZONES MI
20+00	-	591+01	10.79
PROJECT 9140-12-74 TOTAL			**10.79**

TEMPORARY TRAFFIC SIGNALS

STRUCTURE	LOCATION	661.0100 TEMPORARY TRAFFIC SIGNALS FOR BRIDGES (STRUCTURE) 01. B-34-838 LS	661.0100 TEMPORARY TRAFFIC SIGNALS FOR BRIDGES (STRUCTURE) 02. CULVERT STA. 262+82 LS	SPV.0105.02 TEMPORARY VEHICLE DETECTION B-34-838 LS	PROJECT ID
CULV. STA. 262+82	STH 64	---	1	---	9140-12-74
B-37-838	STH 64	1	---	1	9140-12-71
PROJECT 9140-12-71 TOTAL		**1**	**---**	**1**	
PROJECT 9140-12-74 TOTAL		**---**	**1**	**---**	

3

CONSTRUCTION STAKING

STATION	-	STATION	650.6000 CONSTRUCTION STAKING PIPE CULVERTS EACH	650.9910 CONSTRUCTION STAKING SUPPLEMENTAL CONTROL 9140-12-74 LS	650.9920 CONSTRUCTION STAKING SLOPE STAKES LF
93+97	-	96+12	1	---	---
209+11	-	211+73	1	---	---
262+81			1	---	---
291+24	-	293+49	1	---	---
320+00	-	321+89	1	---	---
383+36	-	385+40	1	---	---
470+51	-	473+05	1	---	---
484+15	-	485+12	---	---	97
485+39	-	489+02	---	---	363
UNDISTRIBUTED			---	1	---
PROJECT 9140-12-74 TOTAL			**7**	**1**	**460**

3

SAWING

STATION - STATION	OFFSET	LOCATION	690.0150 SAWING ASPHALT LF	PROJECT ID	REMARKS
94+49	RT/LT	STH 64	30	9140-12-74	CULVERT
95+55	RT/LT	STH 64	30	9140-12-74	CULVERT
209+85	RT/LT	STH 64	30	9140-12-74	CULVERT
210+91	RT/LT	STH 64	30	9140-12-74	CULVERT
262+28	RT/LT	STH 64	30	9140-12-74	CULVERT
263+34	RT/LT	STH 64	30	9140-12-74	CULVERT
291+83	RT/LT	STH 64	30	9140-12-74	CULVERT
292+89	RT/LT	STH 64	30	9140-12-74	CULVERT
320+36	RT/LT	STH 64	30	9140-12-74	CULVERT
321+42	RT/LT	STH 64	30	9140-12-74	CULVERT
339+81 - 340+18	LT	STH 64	39	9140-12-71	CURB & GUTTER
340+02 - 340+30	RT	STH 64	30	9140-12-71	CURB & GUTTER
340+12 - 340+26	RT/LT	STH 64	35	9140-12-71	B-34-838 JOINT
341+64 - 341+79	RT/LT	STH 64	35	9140-12-71	B-34-838 JOINT
384+02	RT/LT	STH 64	28	9140-12-74	CULVERT
385+08	RT/LT	STH 64	28	9140-12-74	CULVERT
472+25	RT/LT	STH 64	28	9140-12-74	CULVERT
471+31	RT/LT	STH 64	28	9140-12-74	CULVERT
PROJECT 9140-12-71 TOTAL			**139**		
PROJECT 9140-12-74 TOTAL			**412**		

LANE SHIFT

STATION	LOCATION	SPV.0060.01 LANE SHIFT EACH
95+02	STH 64	1
210+38	STH 64	1
262+81	STH 64	1
292+36	STH 64	1
320+89	STH 64	1
384+55	STH 64	1
471+78	STH 64	2
PROJECT 9140-12-74 TOTAL		**8**

SPECIAL PROVISIONS

STATION	LOCATION	SPV.0105.01 SALVAGE AND REINSTALL GUARDRAIL LS	SPV.0180.01 PROTECTIVE THERMOPLASTIC COATING AT SNOWMOBILE TRAIL CROSSINGS SY
263+82	STH 64	---	60
382+00	STH 64	---	60
462+50	STH 64	---	60
	B-34-838	1	---
PROJECT 9140-12-71 TOTAL		**1**	---
PROJECT 9140-12-74 TOTAL		---	**180**

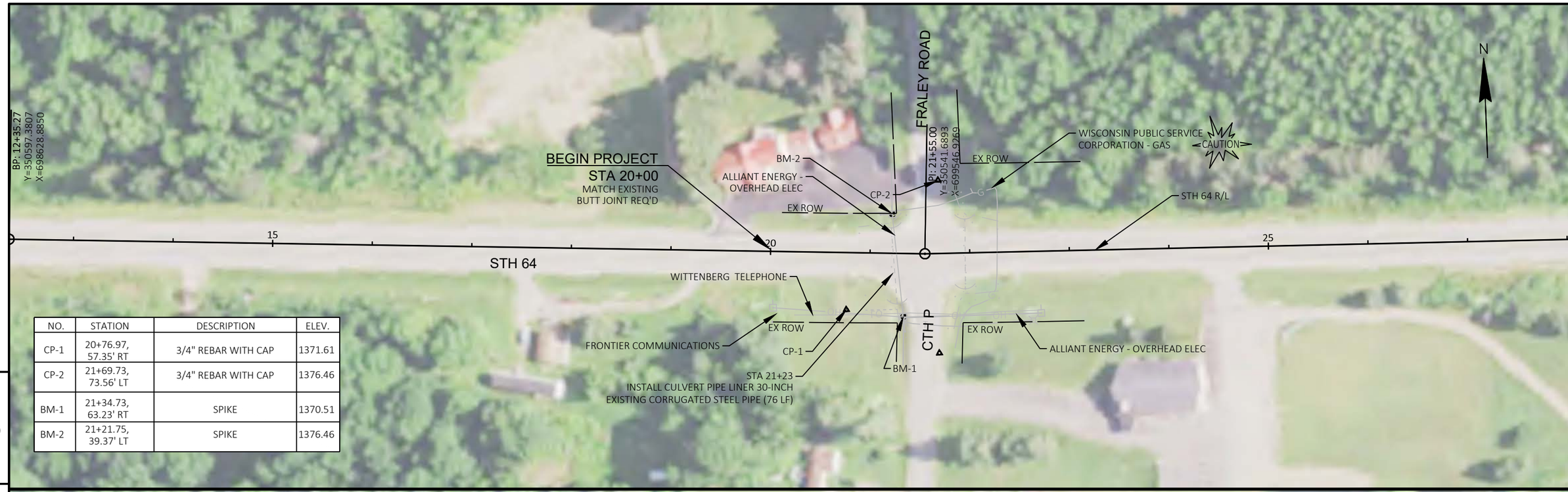

NO.	STATION	DESCRIPTION	ELEV.
CP-1	20+76.97, 57.35' RT	3/4" REBAR WITH CAP	1371.61
CP-2	21+69.73, 73.56' LT	3/4" REBAR WITH CAP	1376.46
BM-1	21+34.73, 63.23' RT	SPIKE	1370.51
BM-2	21+21.75, 39.37' LT	SPIKE	1376.46

5

5

PROJECT NO: 9140-12-74	HWY: STH 64	COUNTY: LANGLADE	PLAN	SHEET 47	E

FILE NAME : C:\USERS\JESSICA.LANCELLE\AECOM DIRECTORY\NEMEC, ELIZABETH - 60600222-STH64_LANGLADE\900_CAD_GIS\910_CAD\SHEETS\74\050201-PN.DWG
LAYOUT NAME - Sheet - (1)
PLOT DATE : 4/20/2020 3:10 PM PLOT BY : LANCELLE, JESSICA PLOT NAME : PLOT SCALE : 1 IN:100 FT
WISDOT/CADDS SHEET 44

PROJECT NO: 9140-12-74	HWY: STH 64	COUNTY: LANGLADE	PLAN	SHEET 48	E

FILE NAME : C:\USERS\JESSICA.LANCELLE\AECOM DIRECTORY\NEMEC, ELIZABETH - 60600222-STH64_LANGLADE\900_CAD_GIS\910_CAD\SHEETS\74\050201-PN.DWG
LAYOUT NAME - Sheet - (2)
PLOT DATE : 4/20/2020 3:10 PM PLOT BY : LANCELLE, JESSICA PLOT NAME : PLOT SCALE : 1 IN:100 FT

NO.	STATION	DESCRIPTION	ELEV.
CP-5	94+65.30, 38.58 RT	3/4" REBAR WITH CAP	1334.15
CP-6	105+79.28, 44.58' LT	3/4" REBAR WITH CAP	1347.15
BM-7	95+43.50, 72.92' RT	SPIKE	1327.48
BM-5	95+13.12, 84.64' LT	SPIKE	1335.87

NOTE:
SEE LANE SHIFT CONSTRUCTION DETAIL FOR TRAFFIC CONTROL DURING CULVERT REPLACEMENT.

PROJECT NO: 9140-12-74	HWY: STH 64	COUNTY: LANGLADE	PLAN	SHEET 49	E

FILE NAME : C:\USERS\JESSICA.LANCELLE\AECOM DIRECTORY\NEMEC, ELIZABETH - 60600222-STH64_LANGLADE\900_CAD_GIS\910_CAD\SHEETS\74\050201-PN.DWG
LAYOUT NAME - Sheet - (3)
PLOT DATE : 4/20/2020 3:10 PM PLOT BY : LANCELLE, JESSICA PLOT NAME : PLOT SCALE : 1 IN:100 FT

PROJECT NO: 9140-12-74	HWY: STH 64	COUNTY: LANGLADE	PLAN	SHEET 50	E

FILE NAME : C:\USERS\JESSICA.LANCELLE\AECOM DIRECTORY\NEMEC, ELIZABETH - 60600222-STH64_LANGLADE\900_CAD_GIS\910_CAD\SHEETS\74\050201-PN.DWG
LAYOUT NAME - Sheet - (4)
PLOT DATE : 4/20/2020 3:10 PM
PLOT BY : LANCELLE, JESSICA
PLOT NAME :
PLOT SCALE : 1 IN:100 FT
WISDOT/CADDS SHEET 44

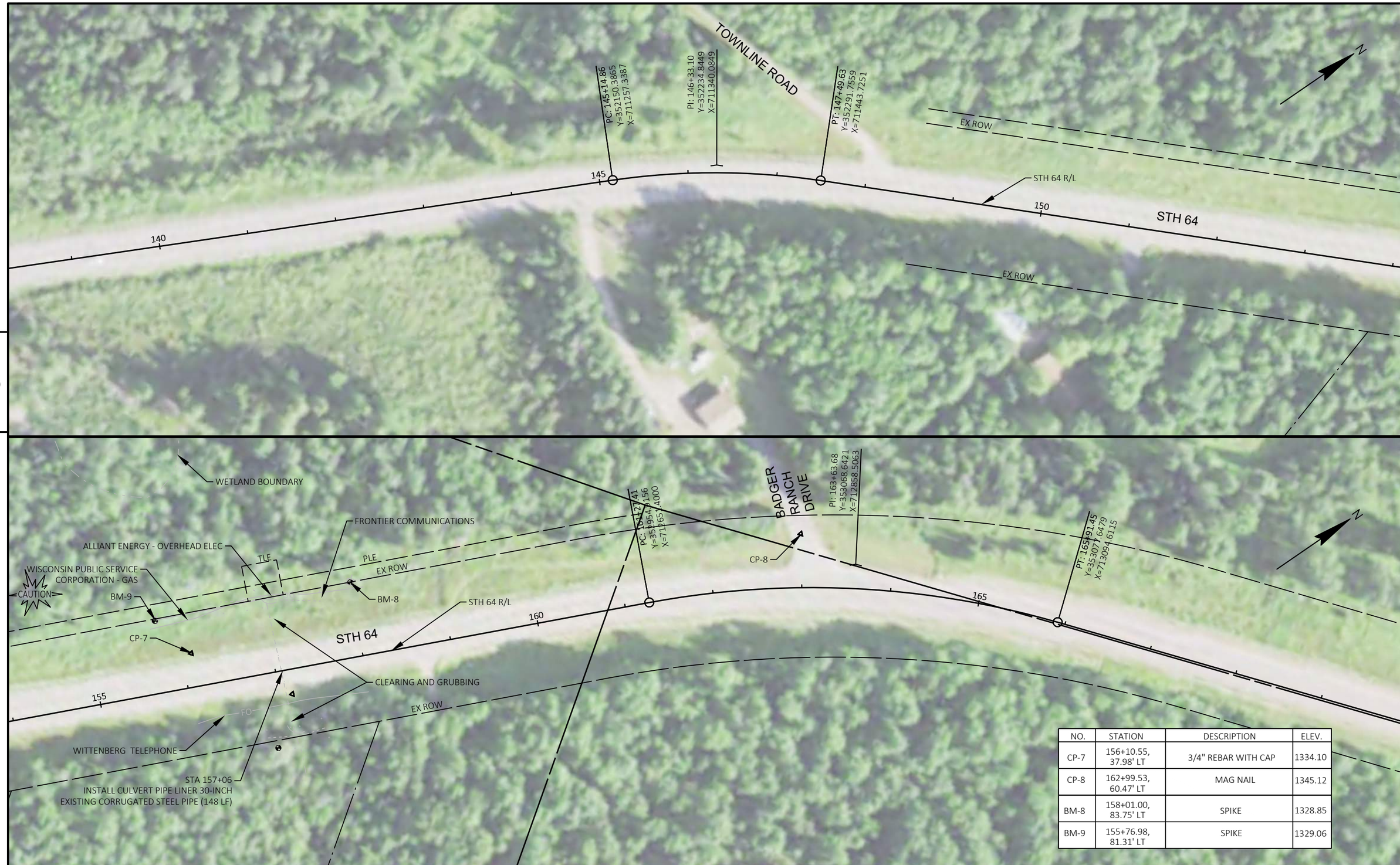

NO.	STATION	DESCRIPTION	ELEV.
CP-7	156+10.55, 37.98' LT	3/4" REBAR WITH CAP	1334.10
CP-8	162+99.53, 60.47' LT	MAG NAIL	1345.12
BM-8	158+01.00, 83.75' LT	SPIKE	1328.85
BM-9	155+76.98, 81.31' LT	SPIKE	1329.06

PROJECT NO: 9140-12-74	HWY: STH 64	COUNTY: LANGLADE	PLAN	SHEET 51	E

FILE NAME : C:\USERS\JESSICA.LANCELLE\AECOM DIRECTORY\NEMEC, ELIZABETH - 60600222-STH64_LANGLADE\900_CAD_GIS\910_CAD\SHEETS\74\050201-PN.DWG
LAYOUT NAME - Sheet - (5)
PLOT DATE : 4/20/2020 3:11 PM PLOT BY : LANCELLE, JESSICA PLOT NAME : PLOT SCALE : 1 IN:100 FT

WISDOT/CADDS SHEET 44

PROJECT NO: 9140-12-74	HWY: STH 64	COUNTY: LANGLADE	PLAN	SHEET 52	E

FILE NAME : C:\USERS\JESSICA.LANCELLE\AECOM DIRECTORY\NEMEC, ELIZABETH - 60600222-STH64_LANGLADE\900_CAD_GIS\910_CAD\SHEETS\74\050201-PN.DWG
LAYOUT NAME - Sheet - (6)
PLOT DATE : 4/20/2020 3:11 PM PLOT BY : LANCELLE, JESSICA PLOT NAME : PLOT SCALE : 1 IN:100 FT

WISDOT/CADDS SHEET 44

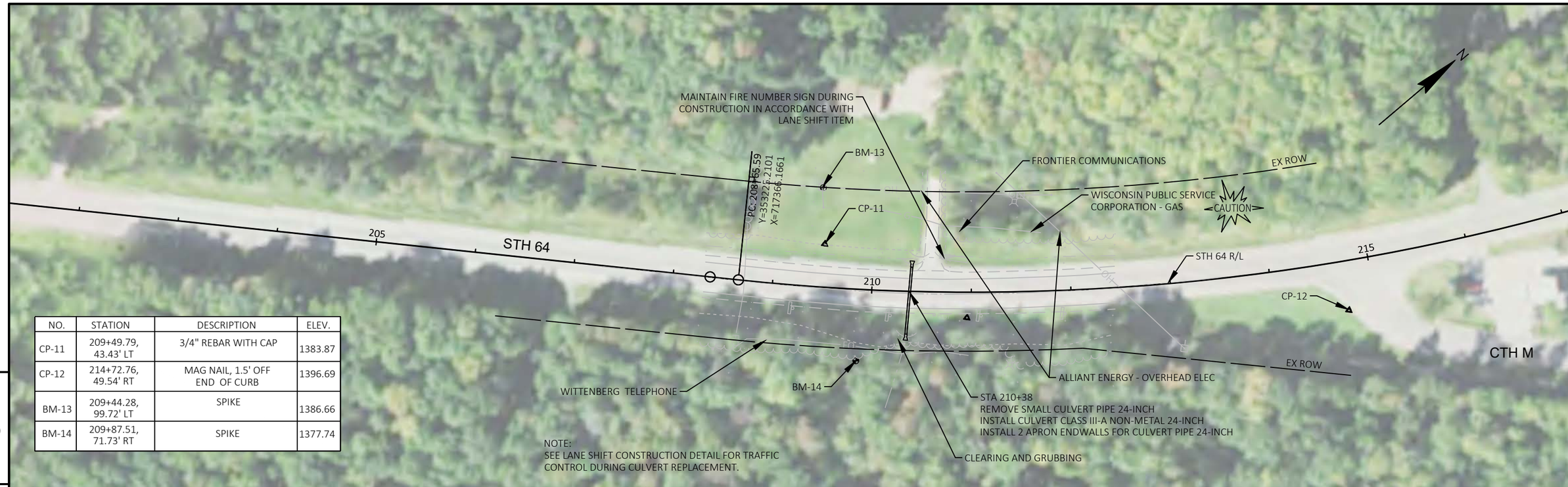

NO.	STATION	DESCRIPTION	ELEV.
CP-11	209+49.79, 43.43' LT	3/4" REBAR WITH CAP	1383.87
CP-12	214+72.76, 49.54' RT	MAG NAIL, 1.5' OFF END OF CURB	1396.69
BM-13	209+44.28, 99.72' LT	SPIKE	1386.66
BM-14	209+87.51, 71.73' RT	SPIKE	1377.74

NOTE:
SEE LANE SHIFT CONSTRUCTION DETAIL FOR TRAFFIC CONTROL DURING CULVERT REPLACEMENT.

5

5

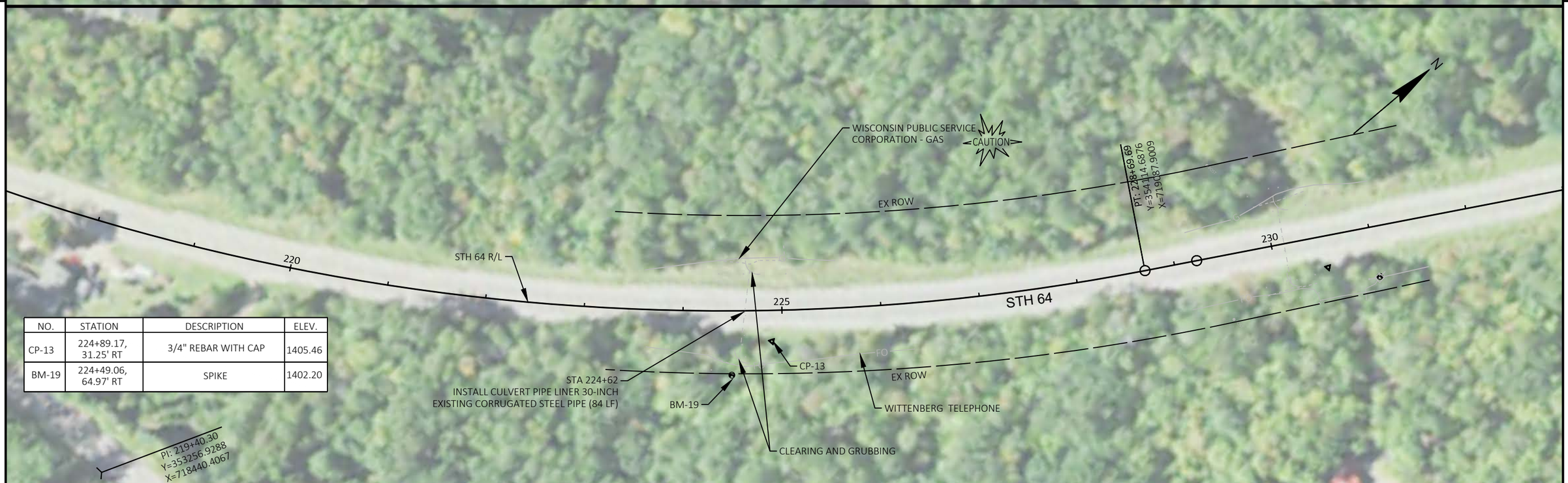

NO.	STATION	DESCRIPTION	ELEV.
CP-13	224+89.17, 31.25' RT	3/4" REBAR WITH CAP	1405.46
BM-19	224+49.06, 64.97' RT	SPIKE	1402.20

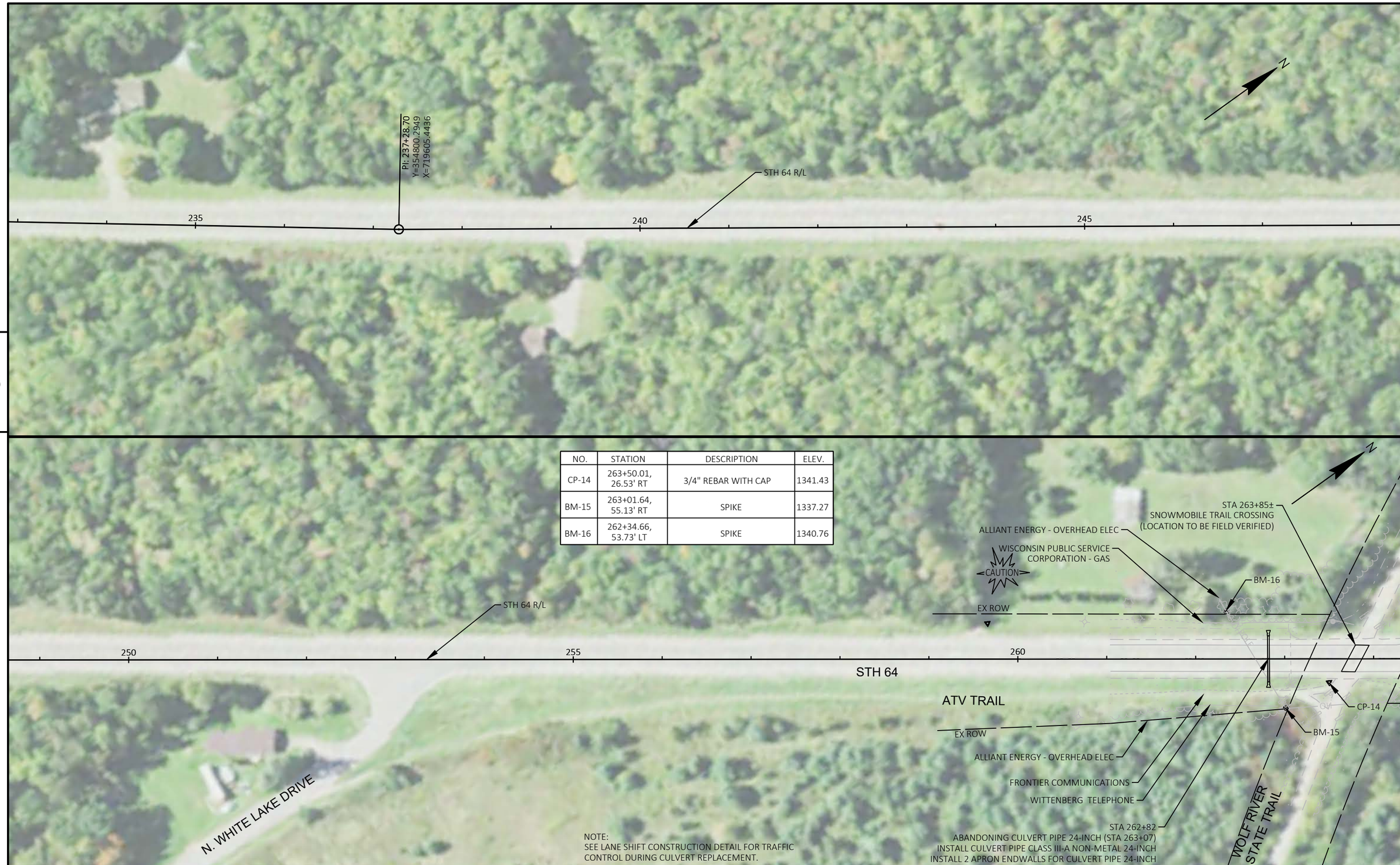

NO.	STATION	DESCRIPTION	ELEV.
CP-14	263+50.01, 26.53' RT	3/4" REBAR WITH CAP	1341.43
BM-15	263+01.64, 55.13' RT	SPIKE	1337.27
BM-16	262+34.66, 53.73' LT	SPIKE	1340.76

PROJECT NO: 9140-12-74	HWY: STH 64	COUNTY: LANGLADE	PLAN	SHEET 54	E

FILE NAME : C:\USERS\JESSICA.LANCELLE\AECOM DIRECTORY\NEMEC, ELIZABETH - 60600222-STH64_LANGLADE\900_CAD_GIS\910_CAD\SHEETS\74\050201-PN.DWG
LAYOUT NAME - Sheet - (8)
PLOT DATE : 4/20/2020 3:11 PM PLOT BY : LANCELLE, JESSICA PLOT NAME : PLOT SCALE : 1 IN:100 FT

5

5

NO.	STATION	DESCRIPTION	ELEV.
CP-16	292+70.84, 23.42' RT	3/4" REBAR WITH CAP	1324.82
BM-21	291+56.56, 46.54' RT	SPIKE	1322.64
BM-22	293+49.15, 45.75' RT	SPIKE	1320.75

NOTE:
SEE LANE SHIFT CONSTRUCTION DETAIL FOR TRAFFIC CONTROL DURING CULVERT REPLACEMENT.

NO.	STATION	DESCRIPTION	ELEV.
CP-18	321+24.66, 23.27' RT	3/4" REBAR WITH CAP	1275.18
BM-23	320+79.05, 43.78' RT	SPIKE	1274.12
BM-25	326+85.10, 47.37' RT	SPIKE	1270.56

NOTE:
SEE LANE SHIFT CONSTRUCTION DETAIL FOR TRAFFIC CONTROL DURING CULVERT REPLACEMENT.

5 5

PROJECT NO: 9140-12-74	HWY: STH 64	COUNTY: LANGLADE	PLAN	SHEET 56	E

FILE NAME : C:\USERS\JESSICA.LANCELLE\AECOM DIRECTORY\NEMEC, ELIZABETH - 60600222-STH64_LANGLADE\900_CAD_GIS\910_CAD\SHEETS\74\050201-PN.DWG
LAYOUT NAME - Sheet - (10)
PLOT DATE : 4/20/2020 3:12 PM PLOT BY : LANCELLE, JESSICA PLOT NAME : PLOT SCALE : 1 IN:100 FT

NO.	STATION	DESCRIPTION	ELEV.
CP-19	328+16.65, 26.78' RT	3/4" REBAR WITH CAP	1267.51
BM-26	328+81.89, 47.54' RT	SPIKE	1269.79

PROJECT NO: 9140-12-74	HWY: STH 64	COUNTY: LANGLADE	PLAN	SHEET 57	E

FILE NAME : C:\USERS\JESSICA.LANCELLE\AECOM DIRECTORY\NEMEC, ELIZABETH - 60600222-STH64_LANGLADE\900_CAD_GIS\910_CAD\SHEETS\74\050201-PN.DWG
LAYOUT NAME - Sheet - (11)
PLOT DATE : 4/20/2020 3:12 PM PLOT BY : LANCELLE, JESSICA PLOT NAME : PLOT SCALE : 1 IN:100 FT

NO.	STATION	DESCRIPTION	ELEV.
CP-21	385+49.55, 19.19' RT	3/4" REBAR WITH CAP	1311.82
BM-27	385+69.93, 52.85' LT	SPIKE	1314.36
BM-28	386+41.82, 48.86' RT	SPIKE	1313.53

PROJECT NO: 9140-12-74	HWY: STH 64	COUNTY: LANGLADE	PLAN	SHEET 58	E

FILE NAME : C:\USERS\JESSICA.LANCELLE\AECOM DIRECTORY\NEMEC, ELIZABETH - 60600222-STH64_LANGLADE\900_CAD_GIS\910_CAD\SHEETS\74\050201-PN.DWG
LAYOUT NAME - Sheet - (12)
PLOT DATE : 7/30/2020 4:40 PM PLOT BY : LANCELLE, JESSICA PLOT NAME : PLOT SCALE : 1 IN:100 FT

NO.	STATION	DESCRIPTION	ELEV.
CP-6J35	394+21.89, 40.50' RT	DISK IN CONCRETE	1310.30

5

5

PROJECT NO: 9140-12-74	HWY: STH 64	COUNTY: LANGLADE	PLAN	SHEET 59	E

FILE NAME : C:\USERS\JESSICA.LANCELLE\AECOM DIRECTORY\NEMEC, ELIZABETH - 60600222-STH64_LANGLADE\900_CAD_GIS\910_CAD\SHEETS\74\050201-PN.DWG
LAYOUT NAME - Sheet - (13)
PLOT DATE : 4/20/2020 3:12 PM PLOT BY : LANCELLE, JESSICA PLOT NAME : PLOT SCALE : 1 IN:100 FT

WISDOT/CADDS SHEET 44

PROJECT NO: 9140-12-74	HWY: STH 64	COUNTY: LANGLADE	PLAN	SHEET 60	E

FILE NAME : C:\USERS\JESSICA.LANCELLE\AECOM DIRECTORY\NEMEC, ELIZABETH - 60600222-STH64_LANGLADE\900_CAD_GIS\910_CAD\SHEETS\74\050201-PN.DWG
LAYOUT NAME - Sheet - (14)
PLOT DATE : 4/20/2020 3:12 PM PLOT BY : LANCELLE, JESSICA PLOT NAME : PLOT SCALE : 1 IN:100 FT

WISDOT/CADDS SHEET 44

NO.	STATION	DESCRIPTION	ELEV.
CP-23	472+53.96, 21.51' RT	3/4" REBAR WITH CAP	1226.03
BM-17	472+35.53, 86.30' RT	SPIKE	1218.70
BM-18	471+36.16, 86.82 LT	SPIKE	1219.39

PROJECT NO: 9140-12-74	HWY: STH 64	COUNTY: LANGLADE	PLAN	SHEET 61	E

FILE NAME : C:\USERS\JESSICA.LANCELLE\AECOM DIRECTORY\NEMEC, ELIZABETH - 60600222-STH64_LANGLADE\900_CAD_GIS\910_CAD\SHEETS\74\050201-PN.DWG
LAYOUT NAME - Sheet - (15)
PLOT DATE : 4/20/2020 3:13 PM PLOT BY : LANCELLE, JESSICA PLOT NAME : PLOT SCALE : 1 IN:100 FT
WISDOT/CADDS SHEET 44

NO.	STATION	DESCRIPTION	ELEV.
BM-30	485+14.36, 20.06' LT	DISK IN CONCRETE	1212.86

PROJECT NO: 9140-12-74	HWY: STH 64	COUNTY: LANGLADE	PLAN	SHEET 62	E

FILE NAME : C:\USERS\JESSICA.LANCELLE\AECOM DIRECTORY\NEMEC, ELIZABETH - 60600222-STH64_LANGLADE\900_CAD_GIS\910_CAD\SHEETS\74\050201-PN.DWG
LAYOUT NAME - Sheet - (16)
PLOT DATE : 4/20/2020 3:13 PM PLOT BY : LANCELLE, JESSICA PLOT NAME : PLOT SCALE : 1 IN:100 FT

WISDOT/CADDS SHEET 44

5

5

PROJECT NO: 9140-12-74	HWY: STH 64	COUNTY: LANGLADE	PLAN	SHEET 63	E

FILE NAME : C:\USERS\JESSICA.LANCELLE\AECOM DIRECTORY\NEMEC, ELIZABETH - 60600222-STH64_LANGLADE\900_CAD_GIS\910_CAD\SHEETS\74\050201-PN.DWG
LAYOUT NAME - Sheet - (17)
PLOT DATE : 4/20/2020 3:13 PM PLOT BY : LANCELLE, JESSICA PLOT NAME : PLOT SCALE : 1 IN:100 FT

WISDOT/CADDS SHEET 44

PROJECT NO: 9140-12-74	HWY: STH 64	COUNTY: LANGLADE	PLAN	SHEET 64	E

FILE NAME : C:\USERS\JESSICA.LANCELLE\AECOM DIRECTORY\NEMEC, ELIZABETH - 60600222-STH64_LANGLADE\900_CAD_GIS\910_CAD\SHEETS\74\050201-PN.DWG
LAYOUT NAME - Sheet - (18)
PLOT DATE : 4/20/2020 3:13 PM PLOT BY : LANCELLE, JESSICA PLOT NAME : PLOT SCALE : 1 IN:100 FT

WISDOT/CADDS SHEET 44

5

5

PROJECT NO: 9140-12-74	HWY: STH 64	COUNTY: LANGLADE	PLAN	SHEET 65	E

FILE NAME : C:\USERS\JESSICA.LANCELLE\AECOM DIRECTORY\NEMEC, ELIZABETH - 60600222-STH64_LANGLADE\900_CAD_GIS\910_CAD\SHEETS\74\050201-PN.DWG
LAYOUT NAME - Sheet - (19)
PLOT DATE : 4/20/2020 3:13 PM PLOT BY : LANCELLE, JESSICA PLOT NAME : PLOT SCALE : 1 IN:100 FT

WISDOT/CADDS SHEET 44

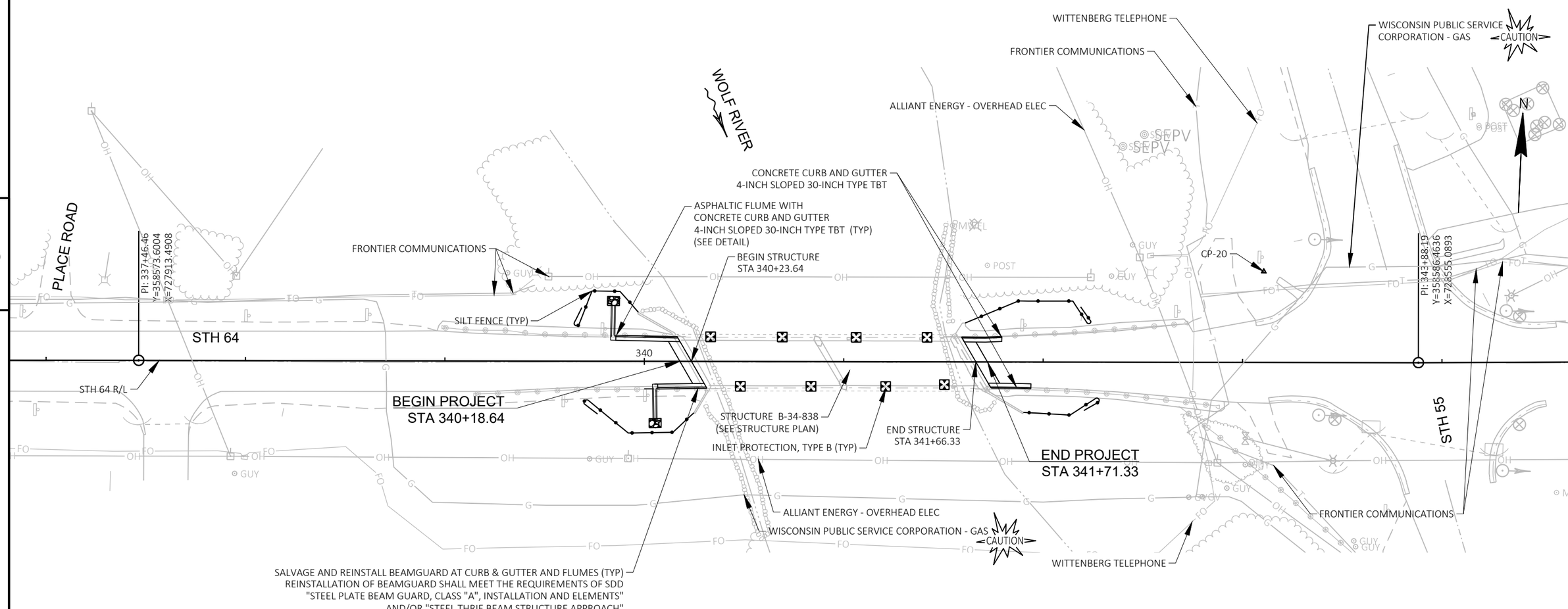

NO.	STATION	DESCRIPTION	ELEV.
CP-20	343+10.59, 45.59' LT	3/4 -INCH REBAR WITH CAP	1257.08

Standard Detail Drawing List

08D01-21A	CONCRETE CURB & GUTTER
08D01-21B	CONCRETE CURB, TIES AND CURB AND GUTTER APPLICATIONS
08E09-06	SILT FENCE
08E10-02	INLET PROTECTION TYPE A, B, C AND D
08E15-01	CULVERT PIPE CHECK
08F01-11	APRON ENDWALLS FOR CULVERT PIPE
08F04-07	JOINT TIES FOR CONCRETE PIPE AND CONCRETE COLLAR DETAIL
09G02-05A	BRIDGE TEMPORARY TRAFFIC SIGNAL INSTALLATION
09G02-05C	BRIDGE TEMPORARY TRAFFIC SIGNAL INSTALLATION
13A11-03A	2-LANE RURAL CENTER LINE RUMBLE STRIP, MILLING
13A11-03B	2-LANE RURAL CENTER LINE RUMBLE STRIP, MILLING
13C19-02	HMA LONGITUDINAL JOINTS
14B07-15A	CONCRETE BARRIER TEMPORARY PRECAST, 12'-6"
14B07-15B	CONCRETE BARRIER TEMPORARY PRECAST, 12'-6"
14B07-15C	CONCRETE BARRIER TEMPORARY PRECAST, 12'-6"
14B07-15D	CONCRETE BARRIER TEMPORARY PRECAST, 12'-6"
14B07-15E	CONCRETE BARRIER TEMPORARY PRECAST, 12'-6"
14B07-15F	CONCRETE BARRIER TEMPORARY PRECAST, 12'-6"
14B07-15G	CONCRETE BARRIER TEMPORARY PRECAST, 12'-6"
14B07-15H	CONCRETE BARRIER TEMPORARY PRECAST, 12'-6"
14B07-15I	CONCRETE BARRIER TEMPORARY PRECAST, 12'-6"
14B08-02A	CRASH CUSHION/SAND BARREL ARRAY AND OTHER TEMPORARY BARRIER LAYOUT DETAILS
14B08-02B	CRASH CUSHION/SAND BARREL ARRAY AND OTHER TEMPORARY BARRIER LAYOUT DETAILS
14B08-02C	CRASH CUSHION/SAND BARREL ARRAY AND OTHER TEMPORARY BARRIER LAYOUT DETAILS
14B08-02D	CRASH CUSHION/SAND BARREL ARRAY AND OTHER TEMPORARY BARRIER LAYOUT DETAILS
14B08-02E	CRASH CUSHION/SAND BARREL ARRAY AND OTHER TEMPORARY BARRIER LAYOUT DETAILS
14B15-11A	STEEL PLATE BEAM GUARD, CLASS "A" INSTALLATION & ELEMENTS
14B15-11B	STEEL PLATE BEAM GUARD, CLASS "A" INSTALLATION & ELEMENTS
14B15-11C	STEEL PLATE BEAM GUARD, CLASS "A", INSTALLATION & ELEMENTS
14B20-11A	STEEL THRIE BEAM STRUCTURE APPROACH
14B20-11D	STEEL THRIE BEAM STRUCTURE APPROACH, CONNECTION TO SLOPED END PARAPETS
14B42-06A	MIDWEST GUARDRAIL SYSTEM (MGS) GUARDRAIL
14B42-06B	MIDWEST GUARDRAIL SYSTEM (MGS) GUARDRAIL
14B42-06C	MIDWEST GUARDRAIL SYSTEM (MGS) GUARDRAIL
14B42-06D	MIDWEST GUARDRAIL SYSTEM (MGS) GUARDRAIL
14B44-04A	MIDWEST GUARDRAIL SYSTEM ENERGY ABSORBING TERMINAL (MGS)
14B44-04B	MIDWEST GUARDRAIL SYSTEM ENERGY ABSORBING TERMINAL (MGS)
14B44-04C	MIDWEST GUARDRAIL SYSTEM ENERGY ABSORBING TERMINAL (MGS)
14B45-05A	MIDWEST GUARDRAIL SYSTEM THRIE BEAM TRANSITION (MGS)
14B45-05B	MIDWEST GUARDRAIL SYSTEM THRIE BEAM TRANSITION (MGS)
14B45-05C	MIDWEST GUARDRAIL SYSTEM THRIE BEAM TRANSITION (MGS)
14B45-05G	MIDWEST GUARDRAIL SYSTEM THRIE BEAM TRANSITION (MGS)
14B53-01A	SHORT RADIUS BEAM GUARD (MGS) SHORT RADIUS TERMINAL (MGS)
14B53-01B	SHORT RADIUS BEAM GUARD (MGS) SHORT RADIUS TERMINAL (MGS)
14B53-01C	SHORT RADIUS BEAM GUARD (MGS) SHORT RADIUS TERMINAL (MGS)
14B53-01D	SHORT RADIUS BEAM GUARD (MGS) SHORT RADIUS TERMINAL (MGS)
14B53-01E	SHORT RADIUS BEAM GUARD (MGS) SHORT RADIUS TERMINAL (MGS)
14B53-01F	SHORT RADIUS BEAM GUARD (MGS) SHORT RADIUS TERMINAL (MGS)
14B53-01G	SHORT RADIUS BEAM GUARD (MGS) SHORT RADIUS TERMINAL (MGS)
14B53-01H	SHORT RADIUS BEAM GUARD (MGS) SHORT RADIUS TERMINAL (MGS)
14B53-01I	SHORT RADIUS BEAM GUARD (MGS) SHORT RADIUS TERMINAL (MGS)
15A03-02A	FLEXIBLE MARKER POST FOR CULVERT END
15A03-02B	FLEXIBLE MARKER POST FOR CULVERT END
15C02-08F	ADVANCED WIDTH RESTRICTION SIGNING
15C04-05	TRAFFIC CONTROL, ADVANCE WARNING SIGNS 45 M.P.H. OR GREATER TWO-WAY UNDIVIDED ROAD OPEN TO TRAFFIC
15C08-20A	LONGITUDINAL MARKING (MAINLINE)
15C11-07B	CHANNELIZING DEVICES DRUMS, CONES, BARRICADES AND VERTICAL PANELS
15C12-07	TRAFFIC CONTROL FOR LANE CLOSURE WITH FLAGGING OPERATION
15C19-06A	MOVING PAVEMENT MARKING OPERATION TWO-LANE TWO-WAY ROADWAY
15C33-04	STOP LINE AND CROSSWALK PAVEMENT MARKING
15C35-04A	PAVEMENT MARKING (INTERSECTIONS)
15D28-03	TRAFFIC CONTROL, WORK ON SHOULDER OR PARKING LANE, UNDIVIDED ROADWAY
15D33-06	TRAFFIC CONTROL, ONE LANE ROAD WITH TEMPORARY SIGNALS
15D38-02A	TEMPORARY TRAFFIC CONTROL SIGN MOUNTING
15D38-02B	ATTACHMENT OF SIGNS TO POSTS
15D39-02	TRAFFIC CONTROL, DROP-OFF SIGNING
15D44-02	TRAFFIC CONTROL, SIGNING ON ROADWAYS WITH MILLED SURFACES

6

Standard Detail Drawing List

15D45-02 TRAFFIC CONTROL, SIGNING ON ROADWAYS WITH LOOSE GRAVEL

6

6

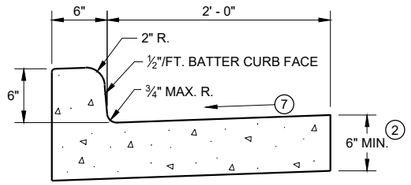

TYPES A(1) & D

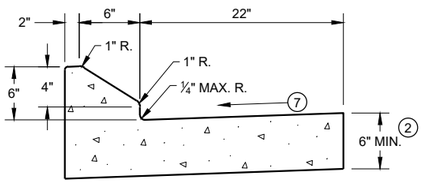

6" SLOPED CURB TYPES G(1) & J

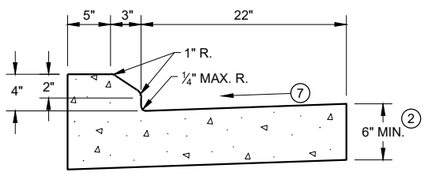

4" SLOPED CURB TYPES G(1) & J

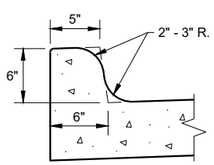

TYPES K(1) & L
(OPTIONAL CURB SHAPE)

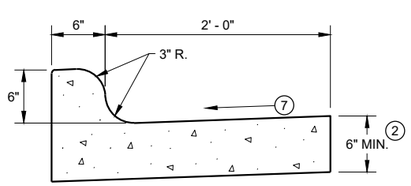

TYPES K(1) & L

CONCRETE CURB AND GUTTER 30"

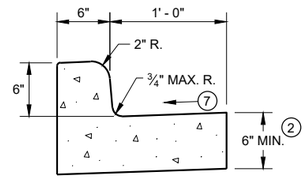

TYPES A(1) & D

CONCRETE CURB AND GUTTER 18"

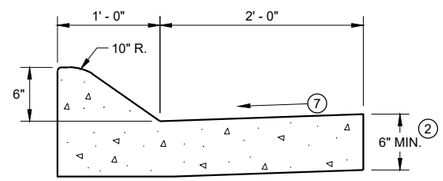

6" SLOPED CURB TYPES A(1) & D

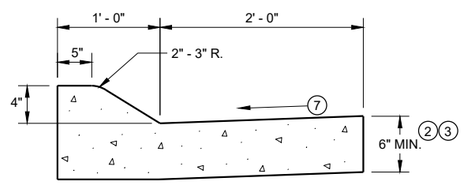

4" SLOPED CURB TYPES A(1) & D

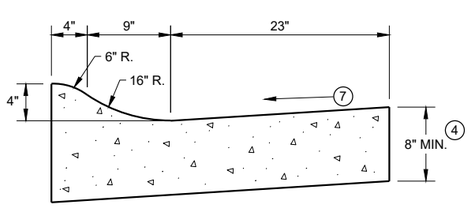

4" SLOPED CURB TYPES R(1) & T(5)

CONCRETE CURB AND GUTTER 36"

TBT & TBTT	X
30"	22"
36"	28"

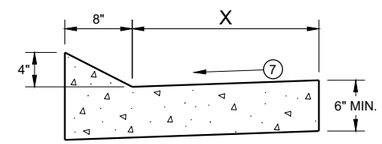

TYPES TBT & TBTT(1)

CONCRETE CURB AND GUTTER

PAVEMENT THICKNESS AND MAXIMUM CONCRETE PANEL WIDTH TABLE

PAVEMENT THICKNESS	MAXIMUM PANEL WIDTH
LESS THAN 10"	12'
10" & ABOVE	15'

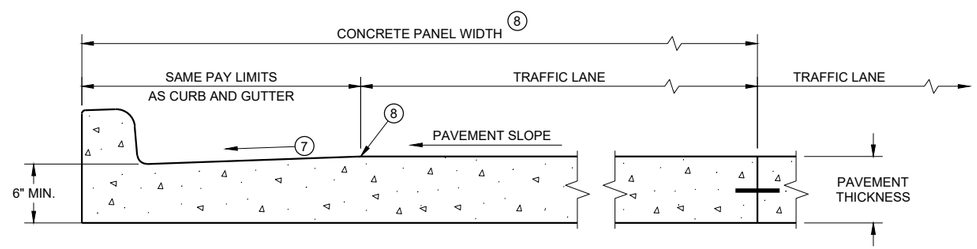

PARTIAL SECTION OF PAVEMENT * WITH INTEGRAL CURB AND GUTTER

* BIKE LANE IS NOT SHOWN

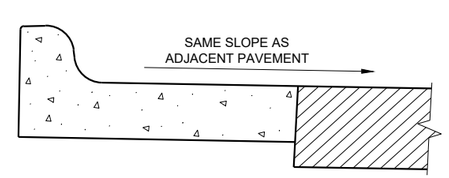

REVERSE SLOPE GUTTER(6)

(TYPICAL FOR ALL CURB & GUTTER TYPES)

GENERAL NOTES

DETAILS OF CONSTRUCTION AND WORKMANSHIP NOT SHOWN ON THIS DRAWING SHALL CONFORM TO THE PERTINENT REQUIREMENTS OF THE CONTRACT.

PAVEMENT TIES AND TIE BARS SHALL BE EPOXY COATED IN CONFORMANCE WITH SUBSECTION 505.2.6.2 OF THE STANDARD SPECIFICATIONS.

INTEGRAL CURB AND GUTTER SHALL CONFORM TO THE DETAILS SHOWN FOR CONCRETE CURB AND GUTTER INCLUDING THE TRANSVERSE GUTTER SLOPE.

UNLESS OTHERWISE SHOWN ON THE TYPICAL CROSS SECTIONS, THE BASE AGGREGATE AND COMMON EXCAVATION LIMITS ARE 2' - 0" BEHIND THE BACK OF CURBS.

1. TIE BARS ARE REQUIRED FOR CURB AND GUTTERS TYPES A, G, K, R, AND TBTT.
2. THE BOTTOM OF CURB AND GUTTER MAY BE CONSTRUCTED EITHER LEVEL OR PARALLEL TO THE SLOPE OF THE SUBGRADE OR BASE AGGREGATE PROVIDED A 6" MINIMUM GUTTER THICKNESS IS MAINTAINED.
3. USE 8" MINIMUM GUTTER THICKNESS WHEN USED WITH AN ADJACENT CONCRETE TRUCK APRON PLACED BEHIND BACK OF CURB.
4. THE BOTTOM OF CURB AND GUTTER MAY BE CONSTRUCTED EITHER LEVEL OR PARALLEL TO THE SLOPE OF THE SUBGRADE OR BASE AGGREGATE PROVIDED A 8" MINIMUM GUTTER THICKNESS IS MAINTAINED.
5. THE FACE OF CURB IS 6" FROM THE BACK OF CURB.
6. WHEN REVERSE SLOPE GUTTER IS REQUIRED, THE LOCATION(S) WILL BE SHOWN ELSEWHERE IN THE PLAN.
7. USE 4% GUTTER CROSS SLOPE UNLESS OTHERWISE NOTED IN THE PLANS.
8. INCLUDE LONGITUDINAL JOINT AND TIE BARS ALONG LANE EDGE WHEN CONCRETE PANEL WIDTH EXCEEDS THE MAXIMUM WIDTH PER TABLE BELOW. LONGITUDINAL JOINT(S) ARE NOT ALLOWED WITHIN TRAFFIC LANES AND BIKE LANES. LONGITUDINAL JOINT MAY BE SAWED.

CONCRETE CURB AND GUTTER

STATE OF WISCONSIN
DEPARTMENT OF TRANSPORTAT

6

SDD 08D01 - 21a

GENERAL NOTES

DETAILS OF CONSTRUCTION AND WORKMANSHIP NOT SHOWN ON THIS DRAWING SHALL CONFORM TO THE PERTINENT REQUIREMENTS OF THE CONTRACT.

PAVEMENT TIES AND TIE BARS SHALL BE EPOXY COATED IN CONFORMANCE WITH SUBSECTION 505.2.6.2 OF THE STANDARD SPECIFICATIONS.

UNLESS OTHERWISE SHOWN ON THE TYPICAL CROSS SECTIONS, THE BASE AGGREGATE AND COMMON EXCAVATION LIMITS ARE 2' - 0" BEHIND THE BACK OF CURBS.

(1) TIE BARS ARE REQUIRED FOR CURB AND GUTTERS TYPES A, G, K, R, AND TBTT.

(2) THE BOTTOM OF CURB AND GUTTER MAY BE CONSTRUCTED EITHER LEVEL OR PARALLEL TO THE SLOPE OF THE SUBGRADE OR BASE AGGREGATE PROVIDED A 6" MINIMUM GUTTER THICKNESS IS MAINTAINED.

(9) REFER TO SDD 08D18 AND 08D19 FOR ADDITIONAL DRIVEWAY ENTRANCE CURB DETAILS.

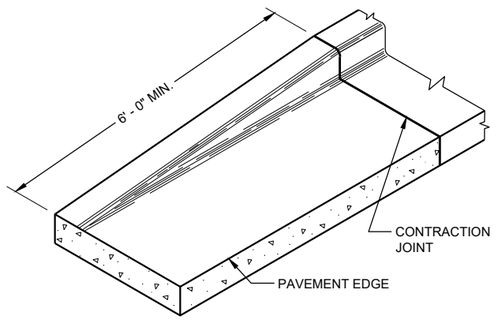

END SECTIONCURB AND GUTTER

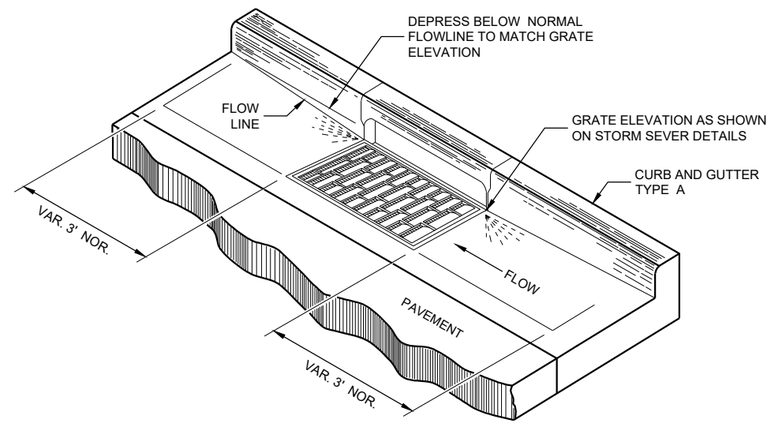

DETAIL OF CURB AND GUTTER AT INLETS
(TYPICAL H INLET COVER SHOWN)

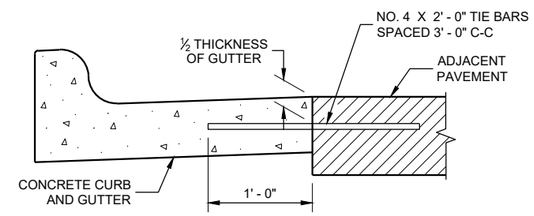

TYPICAL TIE BAR LOCATION (1)

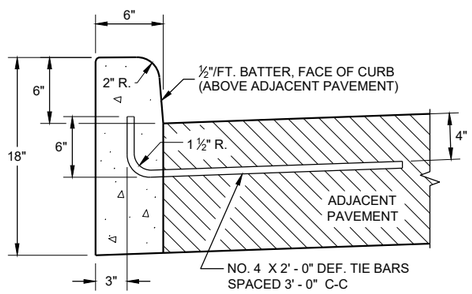

TYPES A (1) & D

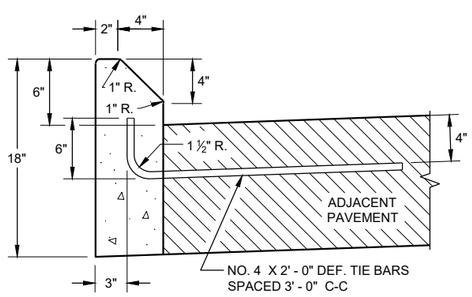

TYPES G (1) & J

CONCRETE CURB

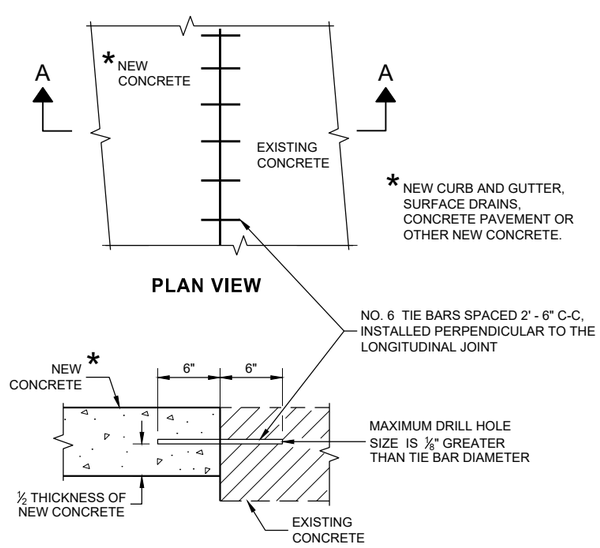

PLAN VIEW

SECTION A - A

TIE BARS DRILLED INTO EXISTING PAVEMENT

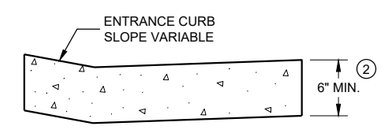

DRIVEWAY ENTRANCE CURB (9)
(WHEN DIRECTED BY THE ENGINEER)

CONCRETE CURB, TIES AND CURB AND GUTTER APPLICATIONS

STATE OF WISCONSIN
DEPARTMENT OF TRANSPORTATION

APPROVED
February 2020 — DATE
/S/ Rodney Taylor — ROADWAY STANDARDS DEVE ENGINEER

FHWA

6

SDD 08D01 - 21b

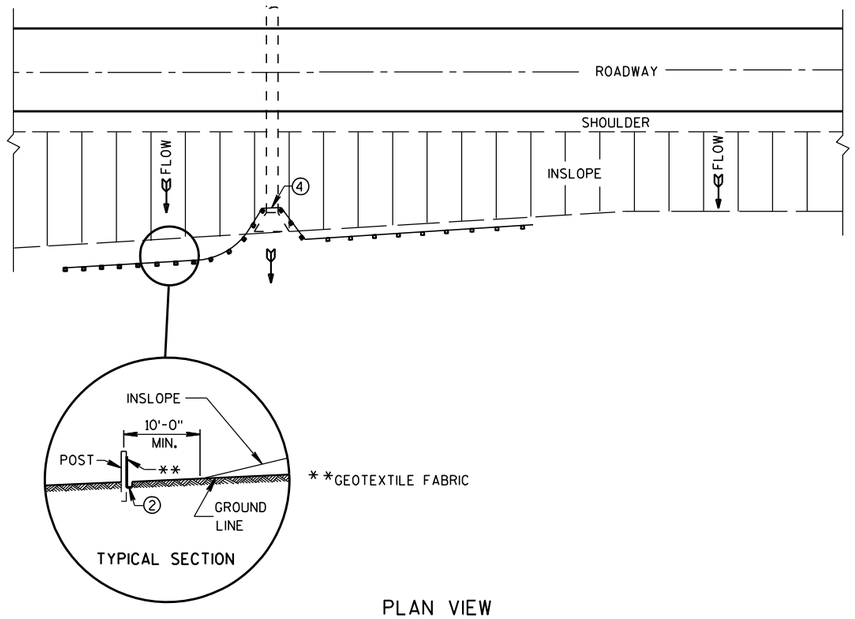

PLAN VIEW

TYPICAL APPLICATION OF SILT FENCE

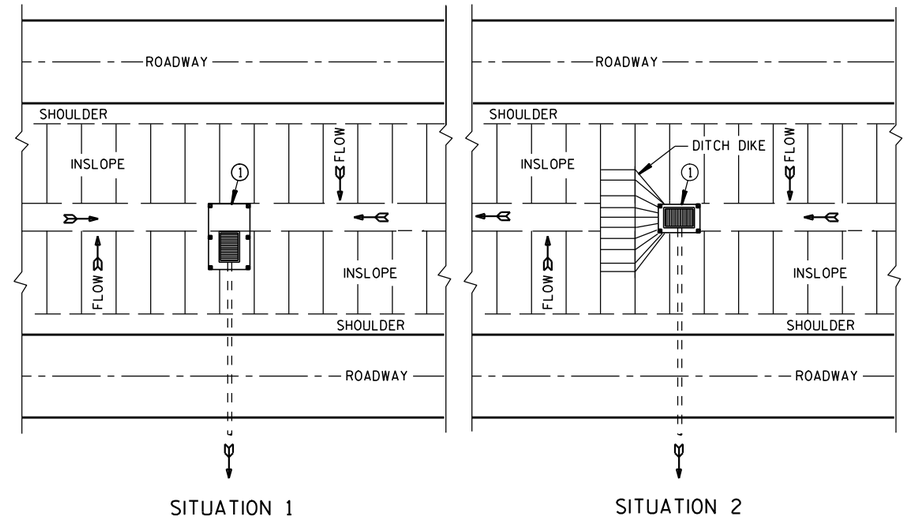

PLAN VIEW

SILT FENCE AT MEDIAN SURFACE DRAINS

GENERAL NOTES

DETAILS OF CONSTRUCTION NOT SHOWN ON THIS DRAWING SHALL CONFORM TO THE PERTINENT REQUIREMENTS OF THE STANDARD SPECIFICATIONS AND APPLICABLE SPECIAL PROVISIONS.

① HORIZONTAL BRACE REQUIRED WITH 2" X 4" WOODEN FRAME OR EQUIVALENT AT TOP OF POSTS.

② FOR MANUAL INSTALLATIONS THE TRENCH SHALL BE A MINIMUM OF 4" WIDE & 6" DEEP TO BURY AND ANCHOR THE GEOTEXTILE FABRIC. FOLD MATERIAL TO FIT TRENCH AND BACKFILL & COMPACT TRENCH WITH EXCAVATED SOIL.

③ WOOD POSTS SHALL BE A MINIMUM SIZE OF 1⅛" X 1⅛" OF OAK OR HICKORY.

④ SILT FENCE TO EXTEND ACROSS THE TOP OF THE PIPE.

⑤ CONSTRUCT SILT FENCE FROM A CONTINUOUS ROLL IF POSSIBLE BY CUTTING LENGTHS TO AVOID JOINTS. IF A JOINT IS NECESSARY USE ONE OF THE FOLLOWING TWO METHODS; A) OVERLAP THE END POSTS AND TWIST, OR ROTATE, AT LEAST 180 DEGREES. B) HOOK THE END OF EACH SILT FENCE LENGTH.

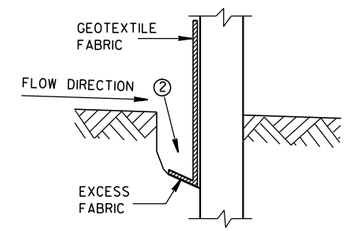

TRENCH DETAIL

NOTE: ADDITIONAL POST DEPTH OR TIE BACKS MAY BE REQUIRED IN UNSTABLE SOILS

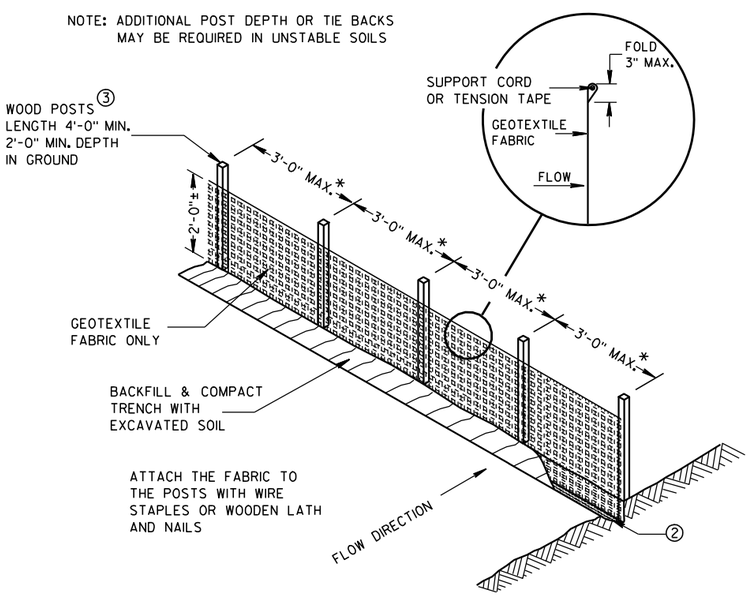

*NOTE: 8'-0" POST SPACING ALLOWED IF A WOVEN GEOTEXTILE FABRIC IS USED.

SILT FENCE

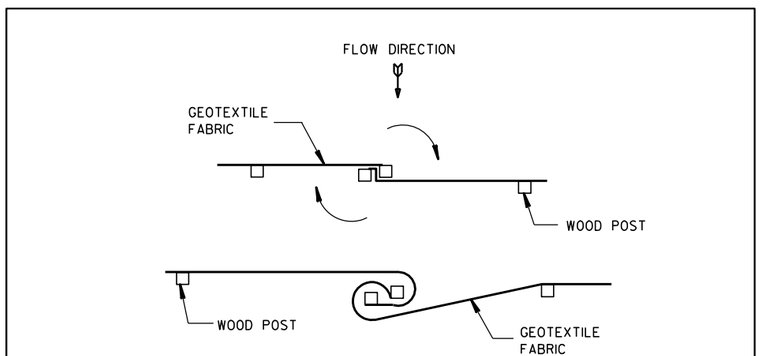

TWIST METHOD

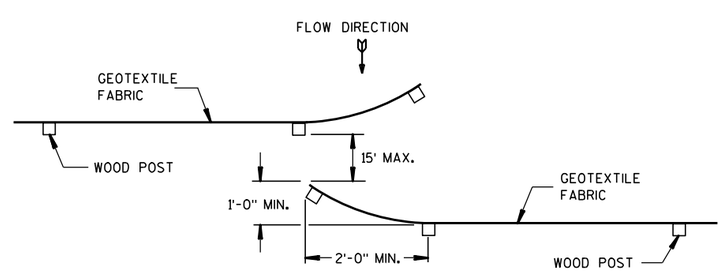

HOOK METHOD

JOINING TWO LENGTHS OF SILT FENCE ⑤

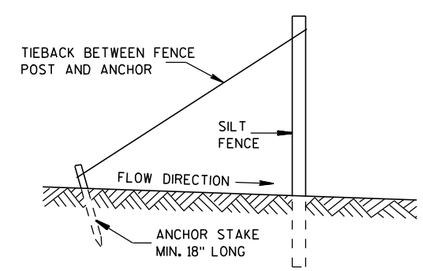

SILT FENCE TIE BACK

(WHEN REQUIRED BY THE ENGINEER)

SILT FENCE
STATE OF WISCONSIN DEPARTMENT OF TRANSPORTATION
APPROVED 4-29-05 /S/ Beth Cann----- DATE CHIEF ROADWAY DEVELOP ENGINEER FHWA

6

6

S.D.D. 8 E 9-6

S.D.D. 8 E 9-6

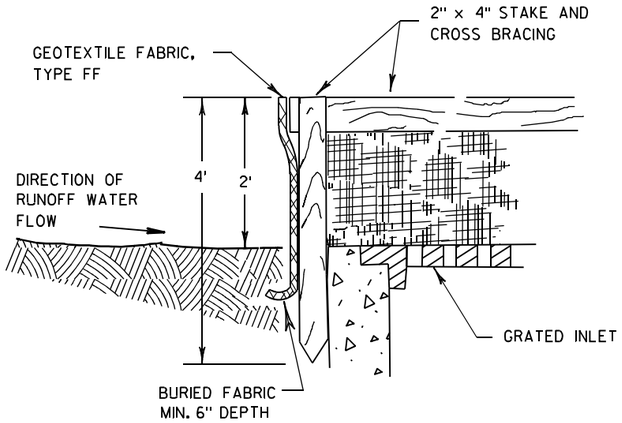

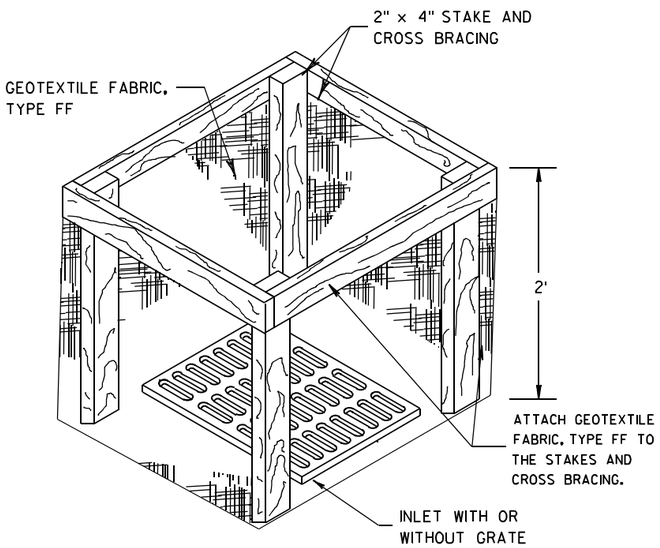

INLET PROTECTION, TYPE A

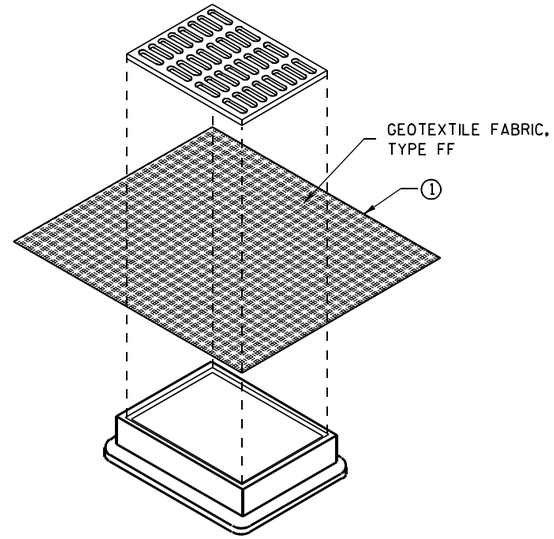

INLET PROTECTION, TYPE B (WITHOUT CURB BOX)

(CAN BE INSTALLED IN ANY INLET WITHOUT A CURB BOX)

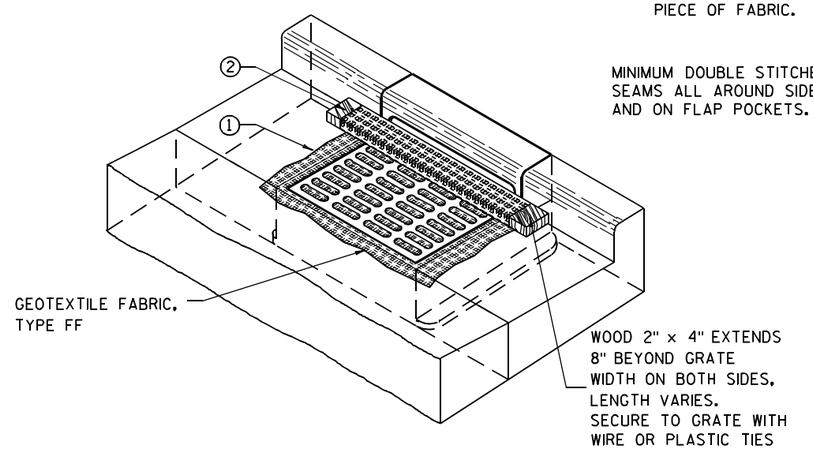

INLET PROTECTION, TYPE C (WITH CURB BOX)

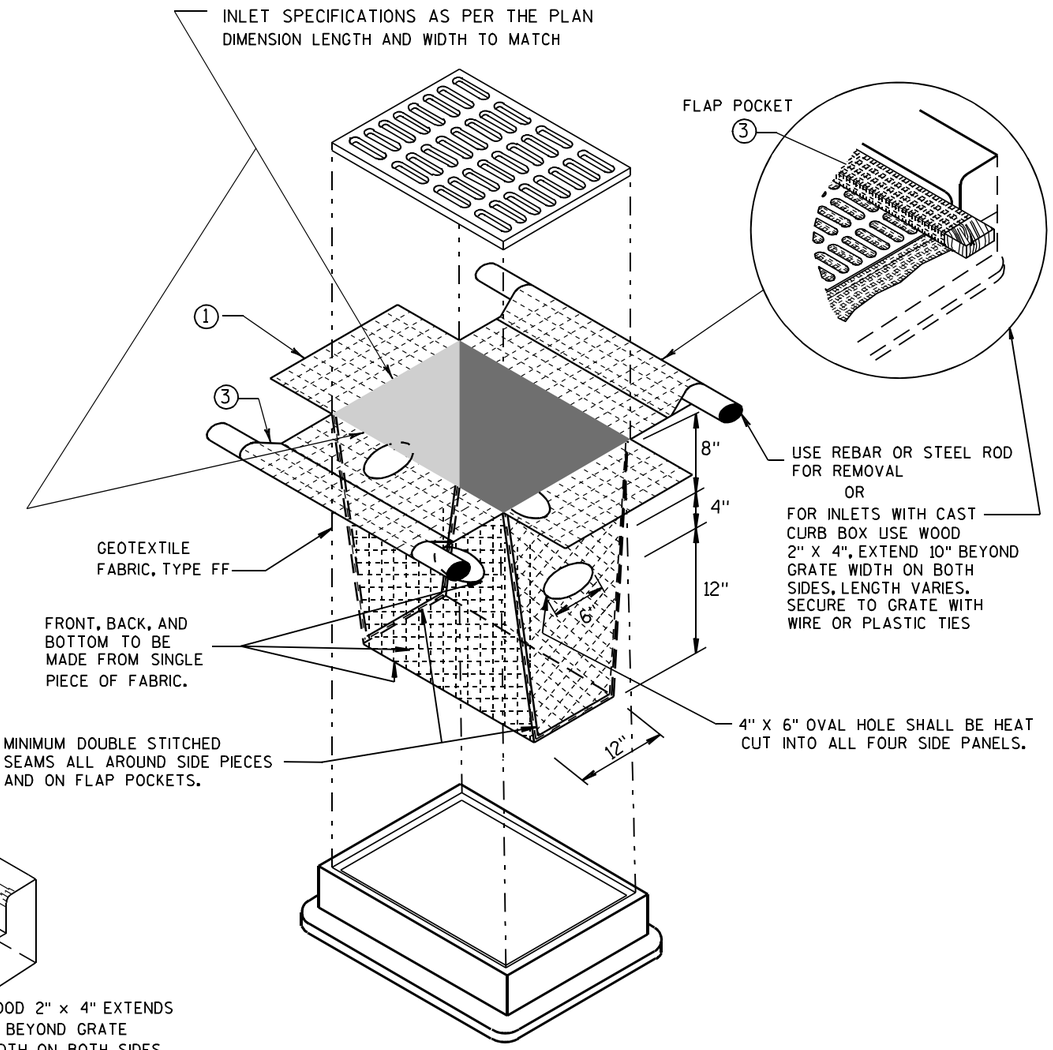

INLET PROTECTION, TYPE D

(CAN BE INSTALLED IN ANY INLET TYPE WITH OR WITHOUT A CURB BOX AS PER NOTE ②)

GENERAL NOTES

INLET PROTECTION DEVICES SHALL BE MAINTAINED OR REPLACED AT THE DIRECTION OF THE ENGINEER.

MANUFACTURED ALTERNATIVES APPROVED AND LISTED ON THE DEPARTMENT'S EROSION CONTROL PRODUCT ACCEPTABILITY LIST MAY BE SUBSTITUTED.

WHEN REMOVING OR MAINTAINING INLET PROTECTION, CARE SHALL BE TAKEN SO THAT THE SEDIMENT TRAPPED ON THE GEOTEXTILE FABRIC DOES NOT FALL INTO THE INLET. ANY MATERIAL FALLING INTO THE INLET SHALL BE REMOVED IMMEDIATELY.

① FINISHED SIZE, INCLUDING FLAP POCKETS WHERE REQUIRED, SHALL EXTEND A MINIMUM OF 10" AROUND THE PERIMETER TO FACILITATE MAINTENANCE OR REMOVAL.

② FOR INLET PROTECTION, TYPE C (WITH CURB BOX), AN ADDITIONAL 18" OF FABRIC IS WRAPPED AROUND THE WOOD AND SECURED WITH STAPLES. THE WOOD SHALL NOT BLOCK THE ENTIRE HEIGHT OF THE CURB BOX OPENING.

③ FLAP POCKETS SHALL BE LARGE ENOUGH TO ACCEPT WOOD 2X4.

INSTALLATION NOTES

TYPE B & C

TRIM EXCESS FABRIC IN THE FLOW LINE TO WITHIN 3" OF THE GRATE.

THE CONTRACTOR SHALL DEMONSTRATE A METHOD OF MAINTENANCE, USING A SEWN FLAP, HAND HOLDS OR OTHER METHOD TO PREVENT ACCUMULATED SEDIMENT FROM ENTERING THE INLET.

TYPE D

DO NOT INSTALL INLET PROTECTION TYPE D IN INLETS SHALLOWER THAN 30", MEASURED FROM THE BOTTOM OF THE INLET TO THE TOP OF THE GRATE.

TRIM EXCESS FABRIC IN THE FLOW LINE TO WITHIN 3" OF THE GRATE.

THE INSTALLED BAG SHALL HAVE A MINIMUM SIDE CLEARANCE, BETWEEN THE INLET WALLS AND THE BAG, MEASURED AT THE BOTTOM OF THE OVERFLOW HOLES, OF 3". WHERE NECESSARY THE CONTRACTOR SHALL CINCH THE BAG, USING PLASTIC ZIP TIES, TO ACHIEVE THE 3" CLEARANCE. THE TIES SHALL BE PLACED AT A MAXIMUM OF 4" FROM THE BOTTOM OF THE BAG.

INLET PROTECTION
TYPE A, B, C, AND D

STATE OF WISCONSIN
DEPARTMENT OF TRANSPORTATION

APPROVED
10/16/02 — DATE
/S/ Beth Cann[illegible] — CHIEF ROADWAY DEVELOPM[illegible] ENGINEER
FHWA

6

S.D.D. 8 E 10-2

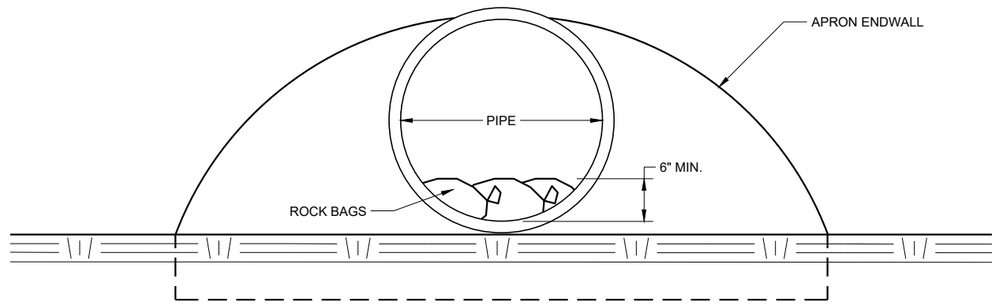

END VIEW

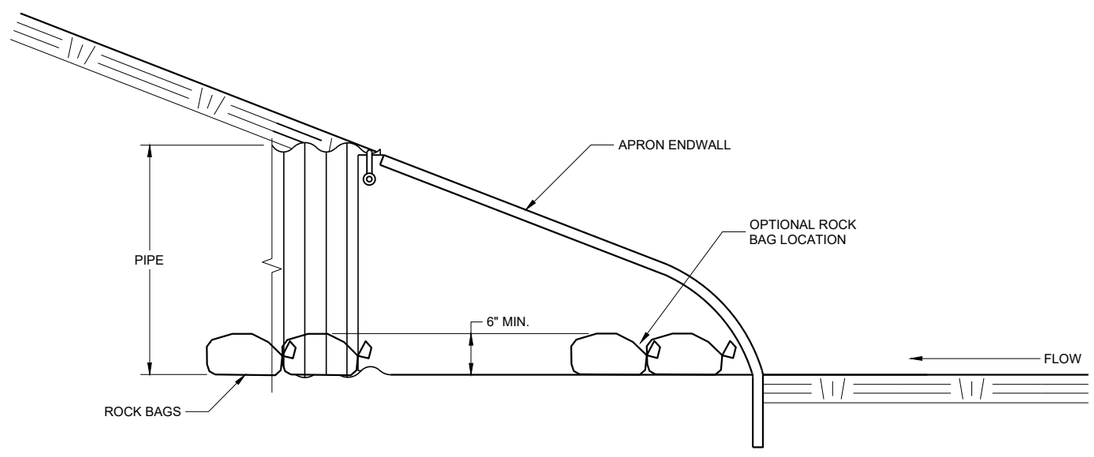

SIDE VIEW

CULVERT PIPE CHECK

(INSTALL ON INLET END ONLY)

CULVERT PIPE CHECK

STATE OF WISCONSIN
DEPARTMENT OF TRANSPORTATION

APPROVED
May 2019 — DATE
/S/ Daniel Schave — EROSION CONTROL ENGI
FHWA

6

6

SDD 08E15 - 01

SDD 08E15 - 01

METAL APRON ENDWALLS

PIPE DIA. (IN.)	MIN. THICK. (Inches) STEEL	MIN. THICK. (Inches) ALUM.	DIMENSIONS (Inches) A (±1")	B (MAX.)	H (±1")	L (±1 1/2")	L1 ①	L2 ①	W (±2")	APPROX. SLOPE	BODY
12	.064	.060	6	6	6	21	12	17 1/2	24	2 1/2 to 1	1 Pc.
15	.064	.060	7	8	6	26	14	21 3/4	30	2 1/2 to 1	1 Pc.
18	.064	.060	8	10	6	31	15	28 1/4	36	2 1/2 to 1	1 Pc.
21	.064	.060	9	12	6	36	18	29 5/8	42	2 1/2 to 1	1 Pc.
24	.064	.075	10	13	6	41	18	37 1/4	48	2 1/2 to 1	1 Pc.
30	.079	.075	12	16	8	51	18	52 1/4	60	2 1/2 to 1	1 Pc.
36	.079	.105	14	19	9	60	24	59 3/4	72	2 1/2 to 1	2 Pc.
42	.109	.105	16	22	11	69	24	75 5/8	84	2 1/2 to 1	2 Pc.
48	.109	.105	18	27	12	78	24	81	90	2 1/4 to 1	3 Pc.
54	.109	.105	18	30	12	84	30	85 1/2	102	2 1/4 to 1	3 Pc.
60	.109×	.105×	18	33	12	87	—	—	114	2 to 1	3 Pc.
66	.109×	.105×	18	36	12	87	—	—	120	2 to 1	3 Pc.
72	.109×	.105×	18	39	12	87	—	—	126	2 to 1	3 Pc.
78	.109×	.105×	18	42	12	87	—	—	132	1 1/2 to 1	3 Pc.
84	.109×	.105×	18	45	12	87	—	—	138	1 1/2 to 1	3 Pc.
90	.109×	.105×	18	37	12	87	—	—	144	1 1/2 to 1	3 Pc.
96	.109×	.105×	18	35	12	87	—	—	150	1 1/2 to 1	3 Pc.

× EXCEPT CENTER PANEL
SEE GENERAL NOTES

REINFORCED CONCRETE APRON ENDWALLS

PIPE DIA. (IN.)	DIMENSIONS (Inches) T	A	B	C	D	E	G	APPROX. SLOPE
12	2	4	24	48 7/8	72 7/8	24	2	3 to 1
15	2 1/4	6	27	46	73	30	2 1/4	3 to 1
18	2 1/2	9	27	46	73	36	2 1/2	3 to 1
21	2 3/4	9	36	37 1/2	73 1/2	42	2 3/4	3 to 1
24	3	9 1/2	43 1/2	30	73 1/2	48	3	3 to 1
27	3 1/4	10 1/2	49 1/2	24	73 1/2	54	3 1/4	3 to 1
30	3 1/2	12	54	19 3/4	73 1/2	60	3 1/2	3 to 1
36	4	15	63	34 3/4	97 3/4	72	4	3 to 1
42	4 1/2	21	63	35	98	78	4 1/2	3 to 1
48	5	24	72	26	98	84	5	3 to 1
54	5 1/2	27	65	*33 1/4-**35	*98 1/4-**100	90	5 1/2	2 2/5 to 1
60	6	*30-**35	60	39	99	96	5	2 to 1
66	6 1/2	*24-**30	*72-**78	*21-**27	99	102	5 1/2	2 to 1
72	7	*24-**36	78	21	99	108	6	2 to 1
78	7 1/2	*24-**36	78	21	99	114	6 1/2	2 to 1
84	8	36	90 1/2	21	111 1/2	120	6 1/2	1 1/2 to 1
90	8 1/2	41	87 1/2	24	111 1/2	132	6 1/2	1 1/2 to 1

*MINIMUM
**MAXIMUM

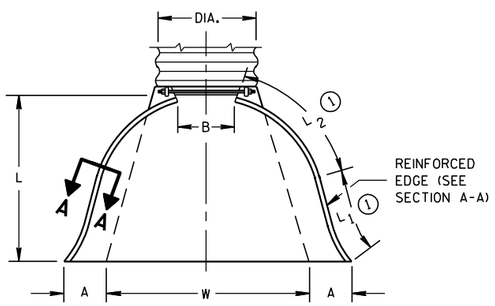

PLAN VIEW

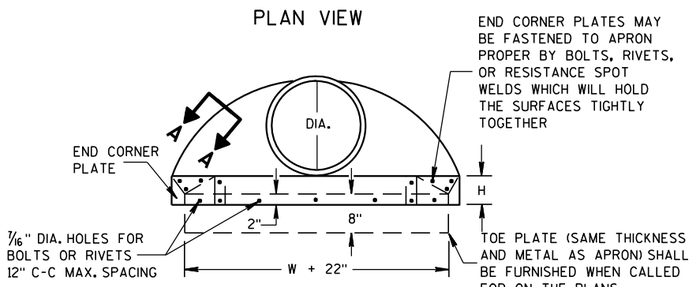

END VIEW

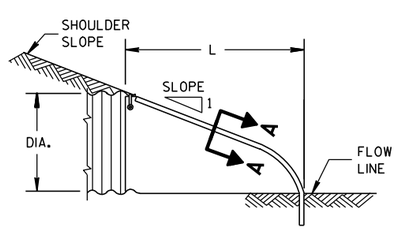

SIDE ELEVATION

METAL ENDWALLS

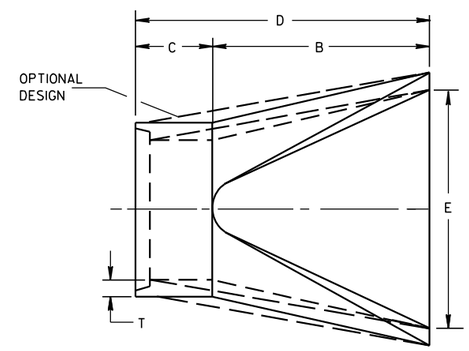

PLAN

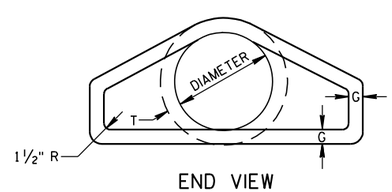

END VIEW

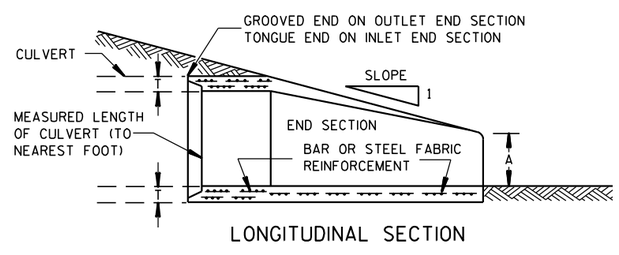

LONGITUDINAL SECTION

CONCRETE ENDWALLS

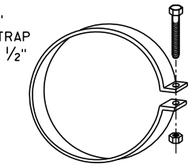

ALTERNATE FOR TYPE 1 CONNECTION

END SECTION CONNECTOR STRAP

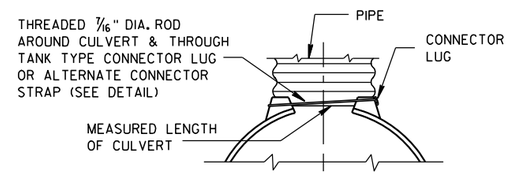

TYPE 1
FOR 12" THRU 24" CORR. PIPE

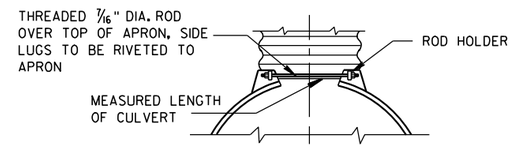

TYPE 2
FOR 30" THRU 96" CORR. PIPE

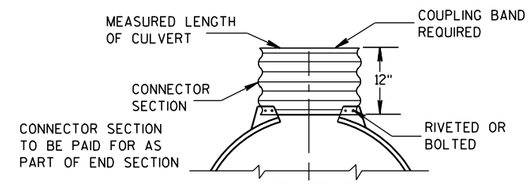

TYPE 3
FOR 42" THRU 96" CORR. PIPE

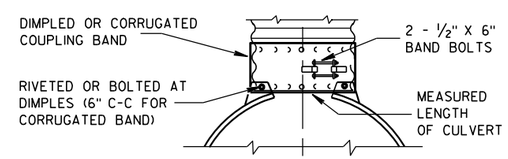

TYPE 5
ALTERNATE FOR:
ALL SIZES CORRUGATED CIRCULAR PIPE

NOTE: DIMPLED BAND FITS OVER OUTSIDE OF ENDWALL, AND CORRUGATED BAND FITS INSIDE ENDWALL. DIMPLED BAND MAY BE USED WITH HELICALLY CORRUGATED PIPE.

FOR CIRCUMFERENTIALLY CORRUGATED PIPE USE ENDWALL CONNECTION DETAILS 1, 2, 3 OR 5 AS APPLICABLE.

FOR HELICALLY CORRUGATED PIPE USE ENDWALL CONNECTION DETAILS 1, 2 OR 5.

FOR HELICALLY CORRUGATED PIPES WITH TWO CIRCUMFERENTIAL CORRUGATIONS AT EACH END USE ENDWALL CONNECTION DETAILS 1, 2 OR 3.

CONNECTION DETAILS

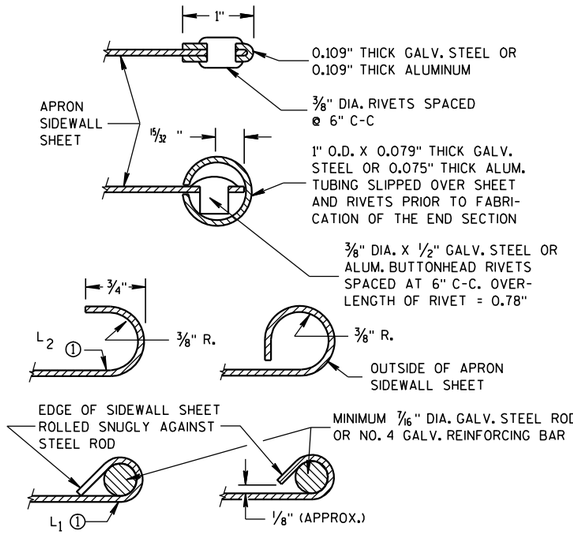

SECTION A-A

GENERAL NOTES

DETAILS OF CONSTRUCTION, MATERIALS AND WORKMANSHIP NOT SHOWN ON THIS DRAWING SHALL CONFORM TO THE PERTINENT REQUIREMENTS OF THE STANDARD SPECIFICATIONS AND THE APPLICABLE SPECIAL PROVISIONS.

CONCRETE CULVERT ENDWALLS MAY NOT BE USED WITH GALVANIZED STEEL OR ALUMINUM CULVERT PIPE OR VISE VERSA. GALVANIZED STEEL OR ALUMINUM ENDWALLS SHALL NORMALLY BE INSTALLED ON CULVERT PIPE OF THE SAME METAL.

ALL THREE PIECE STEEL APRON ENDWALLS FOR 60" DIAMETER PIPE AND LARGER SHALL HAVE 0.109" SIDES AND 0.138" CENTER PANELS. ALL THREE PIECE ALUMINUM APRON ENDWALLS FOR 60" DIAMETER PIPE AND LARGER SHALL HAVE 0.105" SIDES AND 0.134" CENTER PANELS. THE WIDTH OF CENTER PANELS SHALL BE GREATER THAN 20 PERCENT OF THE PIPE PERIMETER.

LAP SEAMS SHALL BE TIGHTLY JOINED BY GALVANIZED RIVETS OR BOLTS FOR STEEL UNITS AND ALUMINUM RIVETS AND BOLTS FOR ALUMINUM UNITS. FOR THE 60" THROUGH 96" DIAMETER APRON ENDWALL SIZES, THE REINFORCED EDGES AND CENTER PANEL SEAMS SHALL BE FURTHER REINFORCED WITH GALVANIZED STEEL OR ALUMINUM STIFFENER ANGLES. THE ANGLES SHALL BE ATTACHED BY GALVANIZED NUTS AND BOLTS FOR STEEL UNITS AND ALUMINUM NUTS AND BOLTS FOR ALUMINUM UNITS.

WHERE TWO OR MORE PIPES WITH APRON ENDWALLS ARE LAID ADJACENT TO EACH OTHER, THEY SHALL BE SEPARATED BY A DISTANCE SUFFICIENT TO PROVIDE A MINIMUM CLEARANCE OF 6 INCHES BETWEEN APRON ENDWALLS.

① FOR PIPE SIZES UP TO 60" DIAMETER, A 180° ROLLED EDGE MAY BE USED INSTEAD OF STEEL ROD REINFORCEMENT. SEE SECTION A-A.

APRON ENDWALLS FOR CULVERT PIPE

STATE OF WISCONSIN
DEPARTMENT OF TRANSPORTATION

APPROVED
11/30/94 — DATE
/S/ Rory L. Rhinesmith — CHIEF ROADWAY DEVELOPMENT ENGINEER
FHWA

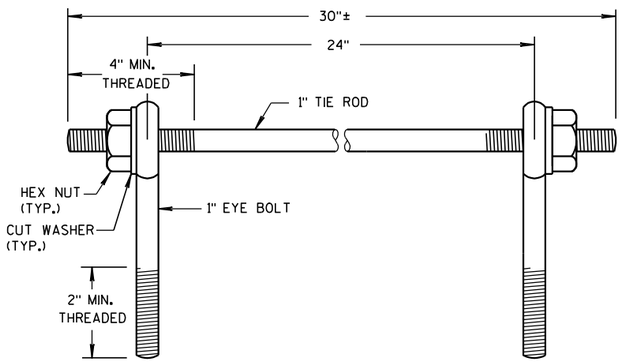

EYE BOLTS AND TIE ROD

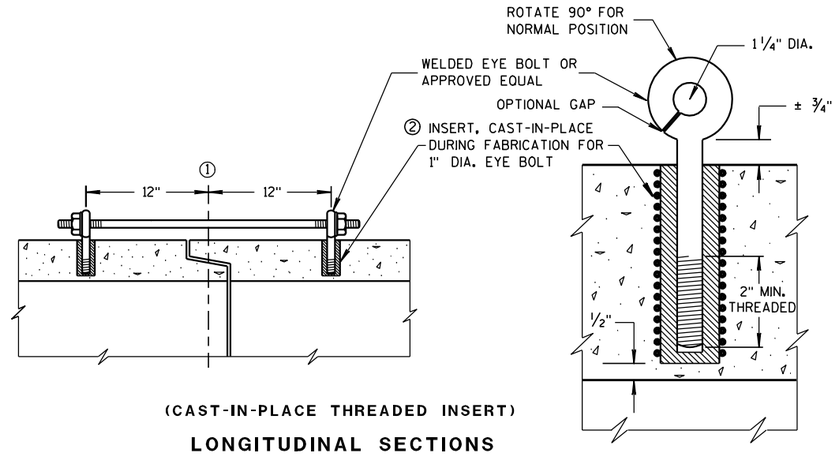

(CAST-IN-PLACE THREADED INSERT)

LONGITUDINAL SECTIONS

EYE BOLT AND TIE ROD ASSEMBLY (ALTERNATE NO. 1)

GENERAL NOTES

DETAILS OF CONSTRUCTION, MATERIALS, AND WORKMANSHIP NOT SHOWN ON THIS DRAWING SHALL CONFORM TO THE PERTINENT REQUIREMENTS OF THE STANDARD SPECIFICATIONS AND APPLICABLE SPECIAL PROVISIONS.

CONCRETE CULVERT AND STORM SEWER PIPE SHALL BE TIED TOGETHER IN THE MANNER ILLUSTRATED BY THIS DETAIL AT LOCATIONS DESIGNATED IN THE STANDARD SPECIFICATIONS AND THE PLAN. THE CONTRACTOR MAY USE EITHER ALTERNATE 1, 2 OR 3 FOR DRAINAGE STRUCTURES. ONLY ALTERNATE 1 AND 3 MAY BE USED FOR CATTLE PASSES, UNLESS OTHERWISE STATED IN THE CONTRACT. THE MATERIALS, FABRICATION AND WORK NECESSARY TO TIE THE PIPE BY THIS DETAIL WILL BE CONSIDERED INCIDENTAL TO THE PIPE AND APRON ENDWALLS IF REQUIRED.

DETAILED DRAWINGS FOR PROPOSED ALTERNATE DESIGNS FOR JOINT TIES SHALL BE SUBMITTED TO THE ENGINEER FOR APPROVAL.

JOINT TIES TO BE HOT-DIP GALVANIZED PER ASTM A 153.

① ℄ OF TONGUE AND GROOVE OR BELL AND SPIGOT JOINTS.

② THE INSIDE OF THE THREADED INSERTS SHALL BE CLEAN TO ALLOW THE INSERTION OF THREADED EYE BOLTS.

③ HOLES SHALL BE CAST-IN-PLACE OR DRILLED 12 INCHES FROM ℄ OF TONGUE AND GROOVE.

④ BOLT PROJECTION INSIDE OF PIPE SHALL NOT EXCEED 2 INCHES.

⑤ OPENING TO BE ROD DIAMETER PLUS 1 INCH.

⑥ LENGTH ADEQUATE TO EXTEND TO WITHIN 1/2 INCH OF THE INNER SURFACE OF THE PIPE.

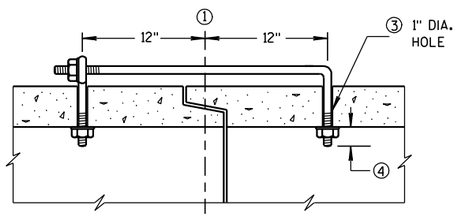

(TONGUE & GROOVE PIPE)

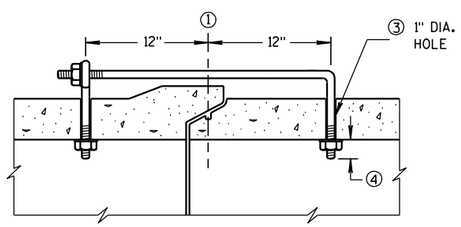

(MODIFIED BELL PIPE)

LONGITUDINAL SECTION

EYE BOLT DIMENSION TABLE

PIPE SIZE	L = LENGTH	
	TONGUE & GROOVE PIPE	MODIFIED BELL PIPE
18" TO 24"	4 1/2"	6 1/4"
30"	5"	7"
36"	5 1/2"	7"
42"	6"	
48"	6 1/2"	
60"	7 1/2"	
66"	8"	

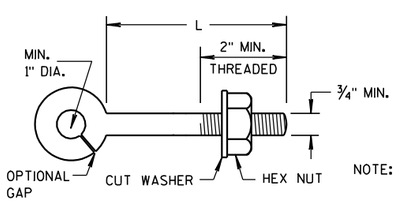

EYE BOLT

NOTE:

NOTE: TWO EYE BOLTS MAY BE USED WITH A 30" LONG THREADED ROD IN LIEU OF THE 90° BENT TIE ROD.

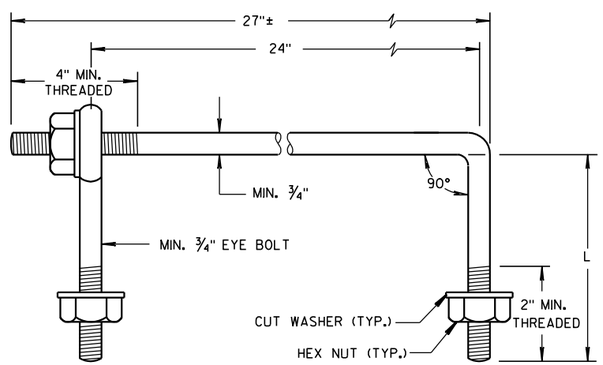

EYE BOLT AND TIE ROD

(JOINT TIES FOR 18" TO 66" DIA. CONCRETE PIPE)

EYE BOLT AND TIE ROD ASSEMBLY (ALTERNATE NO. 2)

ADJUSTABLE TIE ROD TABLE

PIPE DIAMETER	TIE ROD DIAMETER	D	L_1	N
12-60	5/8	5/8	5	1/2
66-84	3/4	3/4	5	1/2
90-108	1	1	7	1 7/16

DIMENSIONS SHOWN ARE IN INCHES

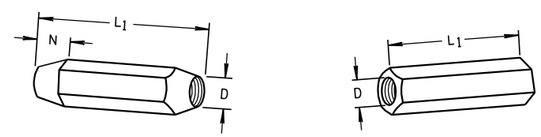

TAPERED PLAIN

RIGHT AND LEFT THREADS

SLEEVE NUTS

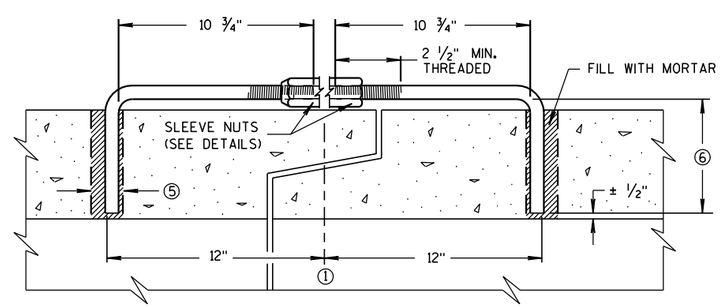

LONGITUDINAL SECTION

(JOINT TIES FOR 12" TO 108" DIA. CONCRETE PIPE)

ADJUSTABLE TIE ROD (ALTERNATE NO. 3)

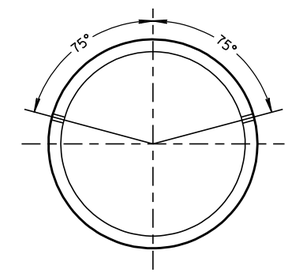

PLACEMENT OF (2) CAST-IN-PLACE INSERTS OR HOLES DURING FABRICATION FOR PIPE SECTIONS REQUIRING TIE RODS

TRANSVERSE SECTION

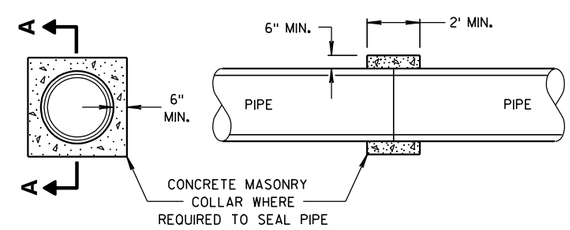

SECTION A-A

CONCRETE COLLAR DETAIL

JOINT TIES FOR CONCRETE PIPE AND CONCRETE COLLAR DETAIL

STATE OF WISCONSIN
DEPARTMENT OF TRANSPORTATION

APPROVED
6/5/2012 /S/ Jerry H. Zogg
DATE ROADWAY STANDARDS DEVELOPMENT ENGINEER
FHWA

6

6

S.D.D. 8 F 4-7

S.D.D. 8 F 4-7

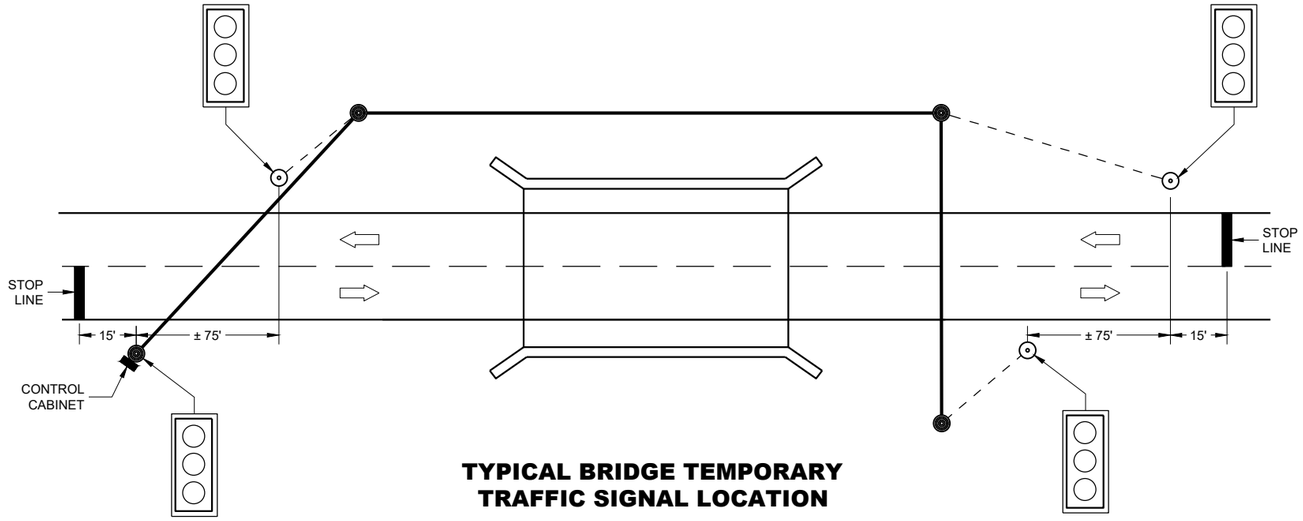

TYPICAL BRIDGE TEMPORARY TRAFFIC SIGNAL LOCATION

LEGEND

- WOOD POLE (NON-BREAKAWAY)
- WOOD POST (BREADAWAY)
- SIGNAL CABLE
- SIGNAL CABLE W/MESSENGER
- DIRECTION OF TRAFFIC
- LED TRAFFIC SIGNAL WITH BACKPLATE (3-12")

GENERAL NOTES

DETAILS OF CONSTRUCTION, MATERIALS AND WORKMANSHIP NOT SHOWN ON THIS DRAWING SHALL CONFORM TO THE PERTINENT REQUIREMENTS OF THE CONTRACT.

POLE MOUNTED TRAFFIC SIGNAL CONTROL CABINET MAY BE MOUNTED ON THE SERVICE POLE IF THE ELECTRICAL UTILITY ALLOWS THE INSTALLATION.

WHEN UTILITY POLES ARE USED TO SPAN THE TEMPORARY OVERHEAD CABLE, WRITTEN PERMISSION MUST BE OBTAINED FROM THE OWNER OF THE POLES AND GIVEN TO THE PROJECT MANAGER. ALL PERTINENT UTILITY AND CODE CLEARANCES SHALL BE MAINTAINED.

WOOD POLES (NON-BREAKAWAY) SHALL BE NO CLOSER TO EDGE OF PAVEMENT THAN OFFSET DISTANCE CHART ALLOWS OR 4 FEET BEHIND PROTECTIVE BARRIER (BEAM GUARD, ETC.).

WOOD POSTS (BREAKAWAY) SHALL BE NO CLOSER THAN 2 FEET OUTSIDE OF SHOULDER.

VERTICAL CLEARANCE ETC. PER NEC.

TRAFFIC SIGNAL FACES SHALL BE TYPICALLY PLACED 12 FEET FROM EDGE OF PAVEMENT.

EACH TRAFFIC SIGNAL SHALL HAVE A BACKPLATE.

SIGNING, PAVEMENT MARKING AND LANE CONTROL REQUIREMENTS SHALL CONFORM TO STANDARD DETAIL DRAWING 15D33.

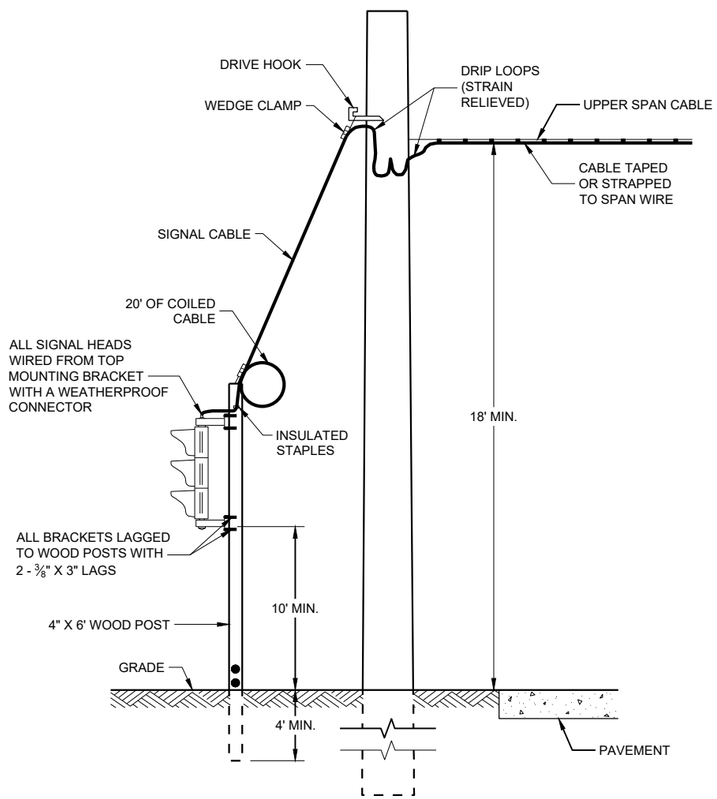

TYPICAL DROP TO TRAFFIC SIGNAL FACE

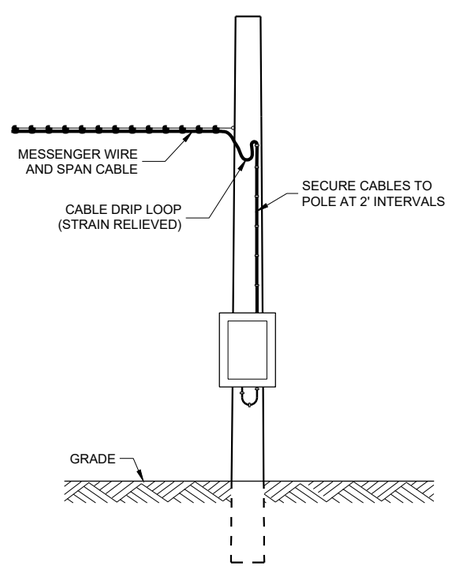

POLE MOUNT CABINET INSTALLATION

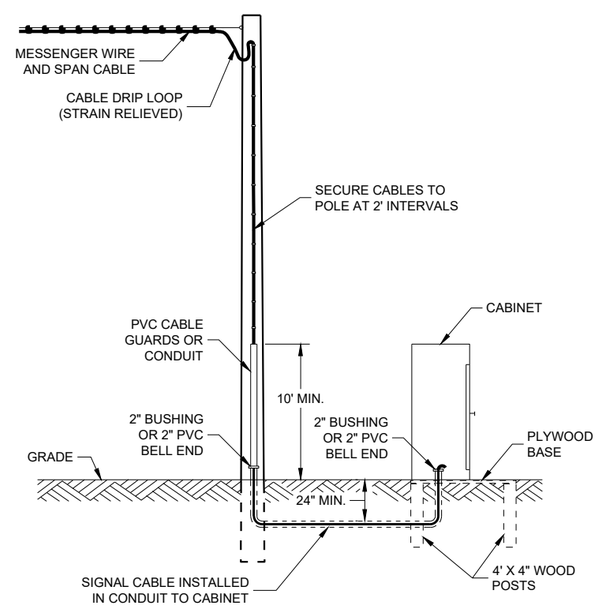

GROUND MOUNT CABINET INSTALLATION

MINIMUM POLE LENGTHS	CLASS	POLE BURIAL DEPTHS
25'	V	5'
30'	V	6'
35'	IV	7'
40'	IV	8'
45'	IV	9'

OFFSET DISTANCES FOR TEMPORARY NON-BREAKAWAY POLES	
SPEED LIMIT	OFFSET DISTANCE*
GREATER THAN 45 MPH	18 FT
45 MPH OR LESS	12 FT
45 MPH OR LESS W/CURBS	2 FT

* NOTE: OFFSET MEASURED FROM OUTER EDGE OF OUTSIDE THRU LANE.

BRIDGE TEMPORARY TRAFFIC SIGNAL INSTALLATION

STATE OF WISCONSIN
DEPARTMENT OF TRANSPORTATION

APPROVED
March 2018 — DATE
/S/ Ahmet Demirbilek — ROADWAY STANDARDS DEVE ENGINEER
FHWA

6

SDD09G02 - 05a

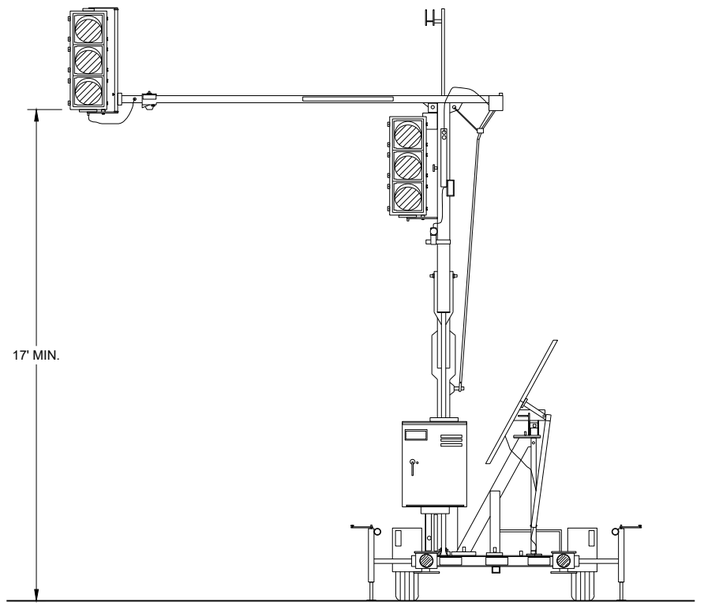

TRAILER MOUNTED TRAFFIC SIGNAL

GENERAL NOTES

DETAIL OF CONSTRUCTION, MATERIALS AND WORKMANSHIP NOT SHOWN ON THIS DRAWING SHALL CONFORM TO THE PERTINENT REQUIREMENTS OF THE CONTRACT.

SIGNING, PAVEMENT MARKING AND LANE CONTROL REQUIREMENTS SHALL CONFORM TO STANDARD DETAIL DRAWING 15D33.

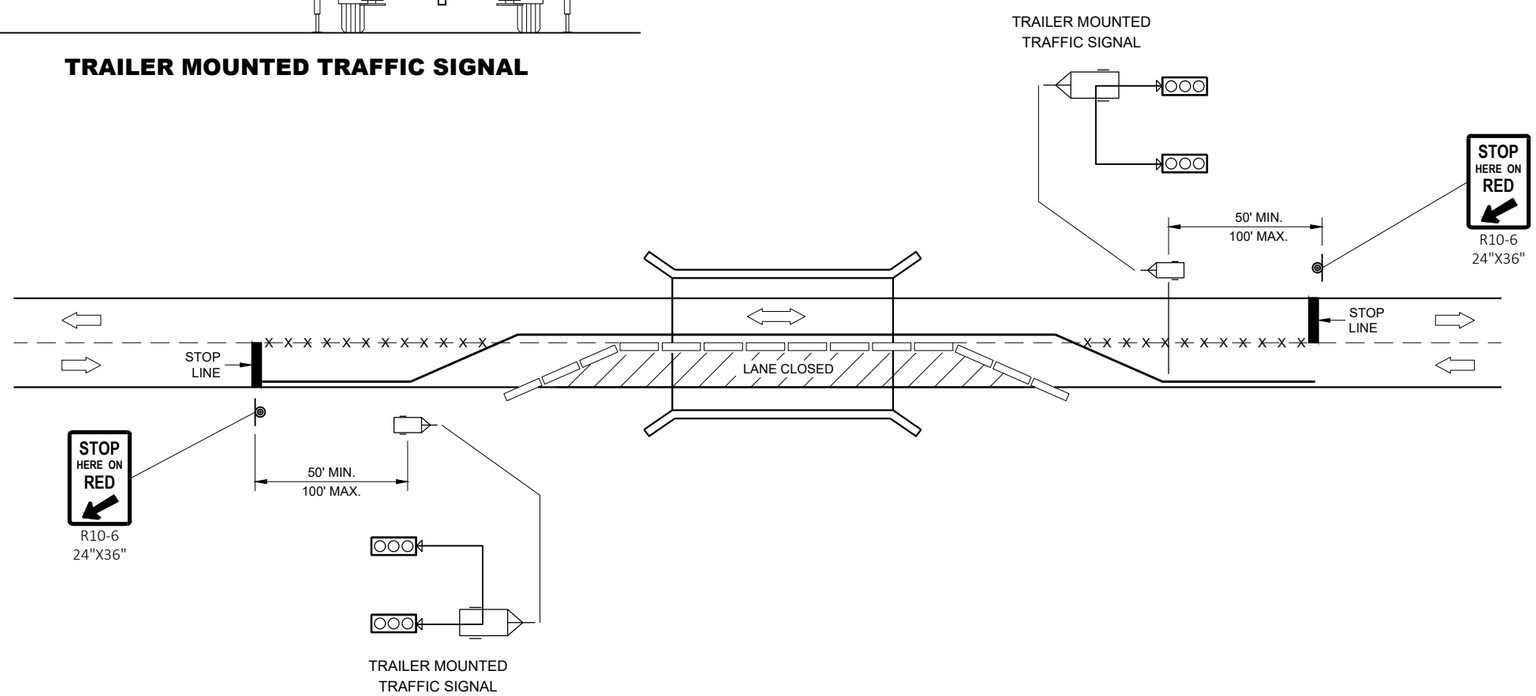

TYPICAL TRAILER MOUNTED TRAFFIC SIGNAL LOCATION

LEGEND

- POST MOUNTED SIGN
- TEMPORARY PRECAST CONCRETE BARRIER
- TRAILER MOUNTED TRAFFIC SIGNAL
- REMOVE PAVEMENT MARKINGS
- DIRECTION OF TRAFFIC

BRIDGE TEMPORARY TRAFFIC SIGNAL INSTALLATION

STATE OF WISCONSIN
DEPARTMENT OF TRANSPORTATION

APPROVED
June 2015 — DATE
/S/ Ahmet Demerbilek — ROADWAY STANDARDS DEVE ENGINEER
FHWA

6

SDD 09G02 - 05c

GENERAL NOTES

DETAILS OF CONSTRUCTION NO SHOWN ON THIS DRAWING SHALL CONFORM TO THE PERTINENT REQUIREMENTS OF THE STANDARD SPECIFICATIONS AND APPLICABLE SPECIAL PROVISIONS.

DO NOT MILL CENTERLINE GROOVES THROUGH ANY INTERSECTION, MARKED CROSSWALK, NON-MOTORIZED PATH CROSSING, OR SNOWMOBILE CROSSING.

INSTALL PAVEMENT MARKING AFTER THE GROOVES ARE INSTALLED.

SEE SIGNING PLAN FOR SIGN REQUIREMENTS THAT MAY BE NEEDED.

(1) CENTERLINE GROOVES MAY BE OMITTED IN AREAS WITH HIGH CONCENTRATIONS OF DRIVEWAYS. WHEN DIRECTED BY THE ENGINEER.

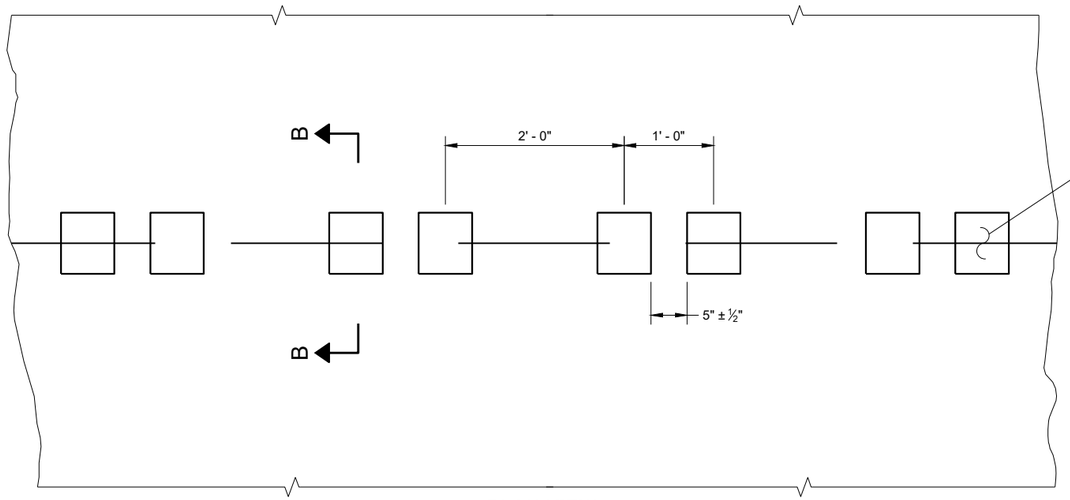

PLAN VIEW
SHOULDER WITH GROOVES

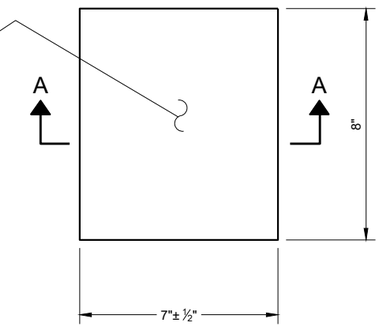

PLAN VIEW
(SINGLE GROOVE)

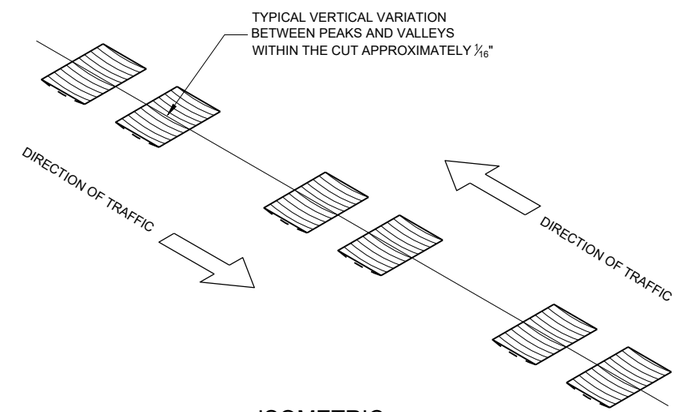

ISOMETRIC

PLACEMENT DETAIL FOR TYPE 1 MILLED RUMBLE STRIP

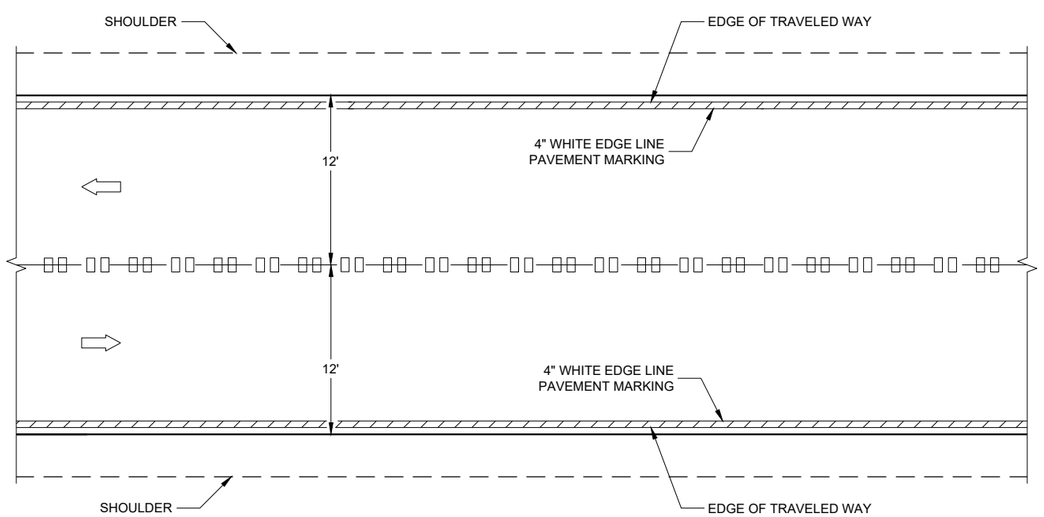

CENTERLINE GROOVES ON TWO-WAY ROADWAYS

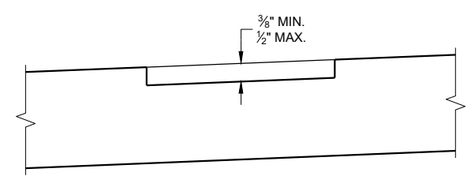

SECTION B - B
SUPERELEVATED ROADWAY

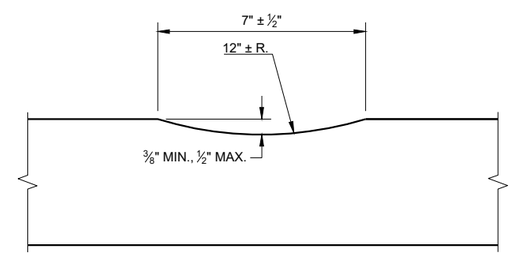

SECTION A - A

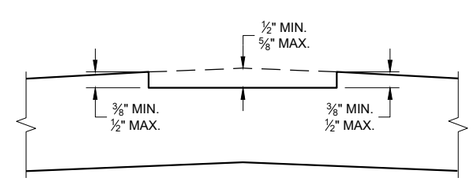

SECTION B - B
CROWNED ROADWAY

2-LANE RURAL
CENTER LINE RUMBLE STRIP, MILLING

STATE OF WISCONSIN
DEPARTMENT OF TRANSPORTAT

6

6

SDD 13A11 - 03a

SDD 13A11 - 03a

GENERAL NOTES

1. CENTERLINE GROOVES MAY BE OMITTED IN AREAS WITH HIGH CONCENTRATIONS OF DRIVEWAYS. WHEN DIRECTED BY THE ENGINEER.

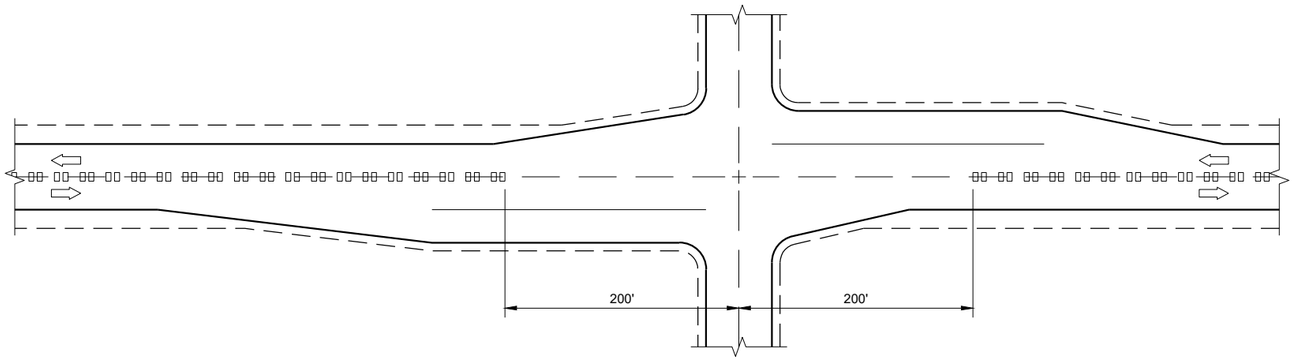

CENTERLINE GROOVES AT INTERSECTIONS

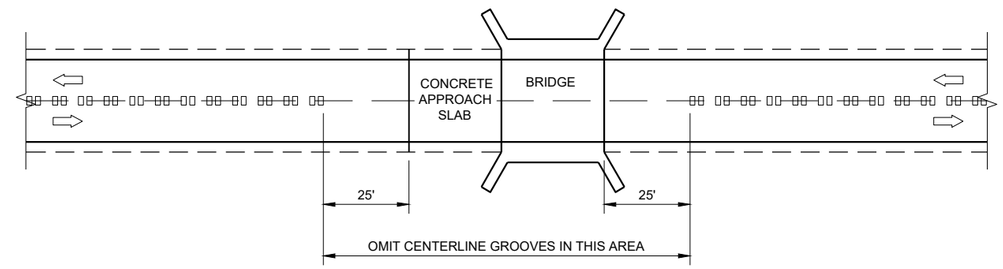

CENTERLINE GROOVES AT BRIDGES

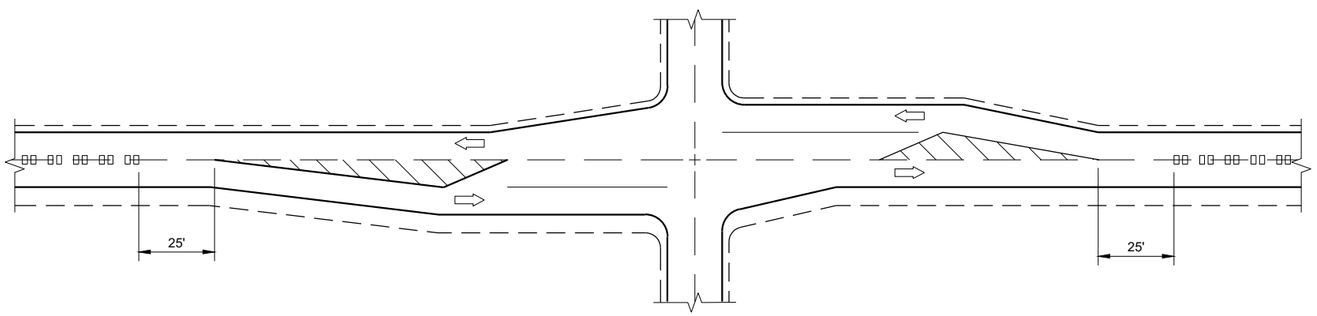

CENTERLINE GROOVES AT INTERSECTIONS (WITH LEFT TURN LANES)

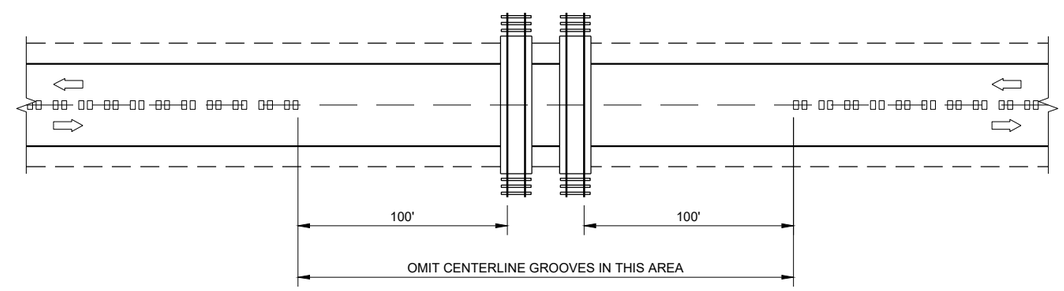

CENTERLINE GROOVES AT RAILROADS

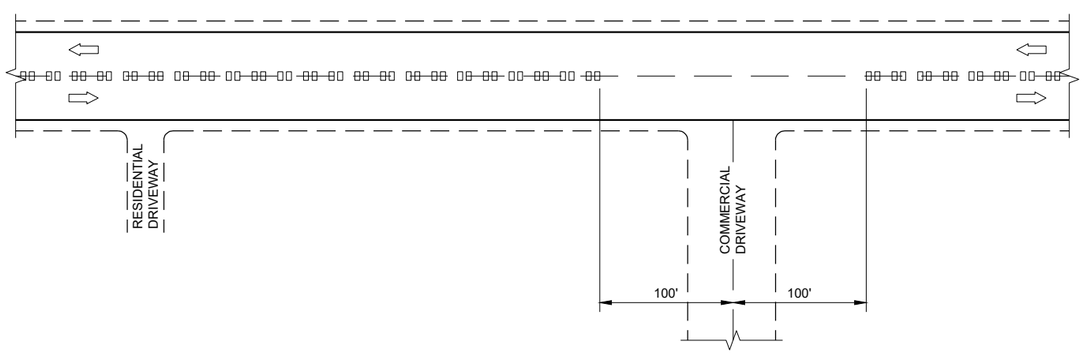

CENTERLINE GROOVES AT DRIVEWAYS (1)

6

6

SDD 13A11 - 03b

SDD 13A11 - 03b

2-LANE RURAL CENTERLINE RUMBLE STRIP, MILLING

STATE OF WISCONSIN
DEPARTMENT OF TRANSPORTATION

APPROVED

7/2018 — DATE

/S/ Rodney Taylor — ROADWAY STANDARDS DEVE ENGINEER

FHWA

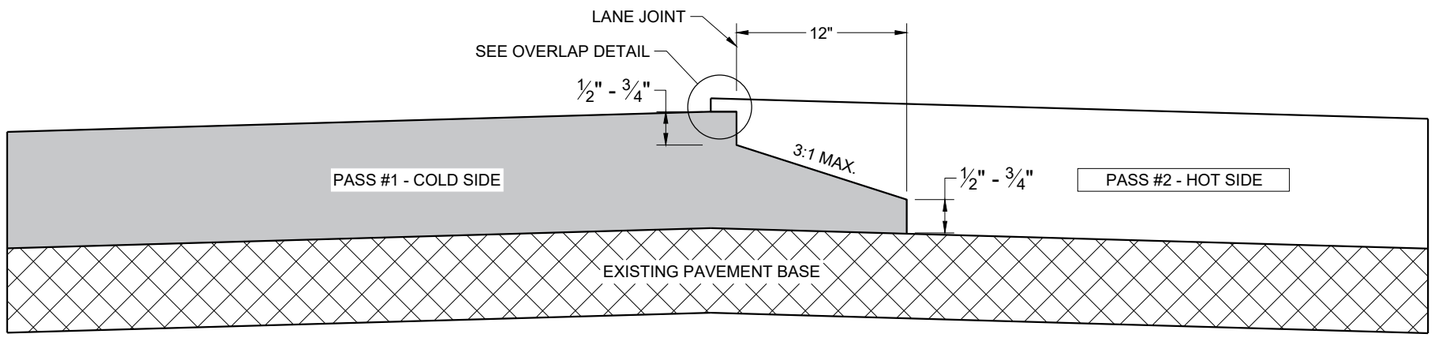

TYPICAL PAVEMENT CROSS SECTION OF NOTCHED WEDGE LONGITUDINAL JOINT

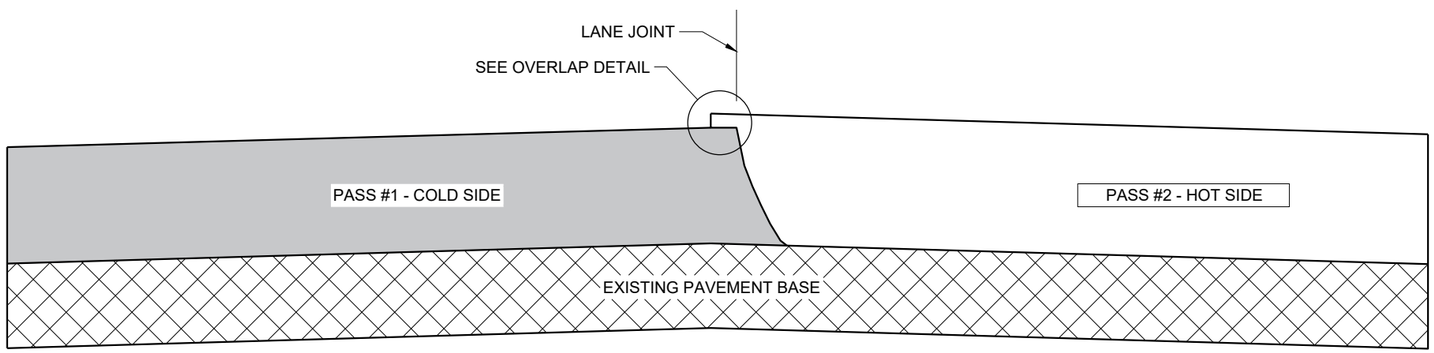

TYPICAL PAVEMENT CROSS SECTION VERTICAL LONGITUDINAL JOINT

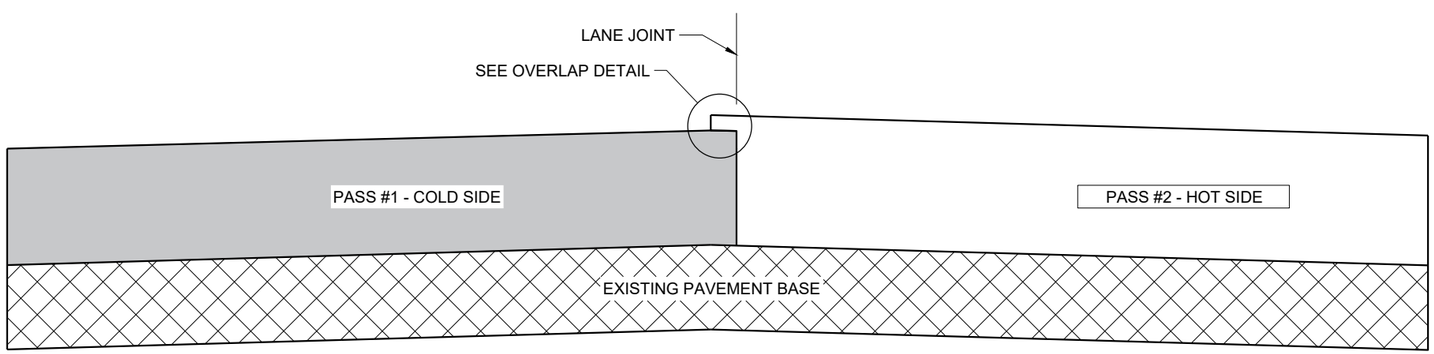

TYPICAL PAVEMENT CROSS SECTION OF MILLED LONGITUDINAL JOINT

GENERAL NOTES

IN ADDITION TO THE DETAILS PROVIDED IN THIS DRAWING, CONFORM TO STANDARD SPECIFICATION 450.3.2.8 FOR WHEN A NOTCHED WEDGE JOINT IS REQUIRED AND FOR GENERAL JOINT CONSTRUCTION REQUIREMENTS.

FOR ALL LONGITUDINAL JOINTS, ENSURE THE PAVER SCREED OVERLAPS THE PREVIOUSLY PLACED PAVEMENT BY 1" ± 0.5" AND THE HOT SIDE OF THE JOINT REMAINS HIGHER THAN THE COLD SIDE BY APPROXIMATELY 0.1" AFTER FINAL COMPACTION.

ONLY REMOVE THE LONGITUDINAL NOTCHED WEDGE JOINT FOR SMA PAVEMENT OR AS DIRECTED BY THE ENGINEER TO ADDRESS SPECIFIC LENGTHS OF JOINT DAMAGED BY TRAFFIC.

WHEN MILLING BACK OR REMOVING ANY LONGITUDINAL JOINT, LIMIT THE MATERIAL REMOVED TO 2" FROM THE TOP NOTCH OR FROM THE VERTICAL JOINT EDGE ON THE COLD SIDE OF THE JOINT.

USE LONGITUDINAL MILLED JOINT AS PLANS SHOW OR THE AS THE ENGINEER DIRECTS.

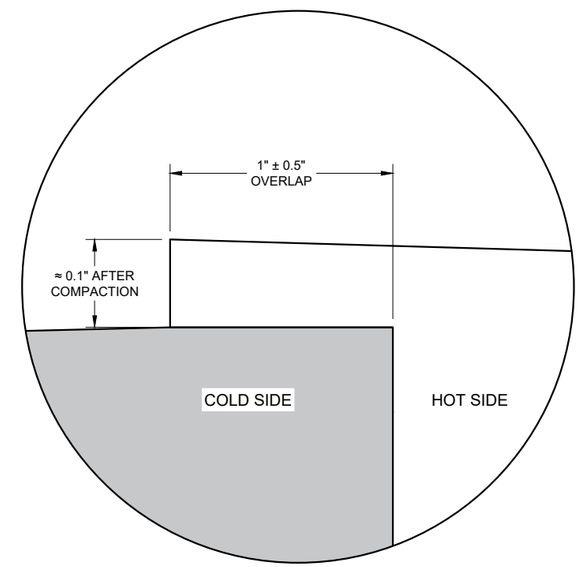

OVERLAP DETAIL (TYPICAL)

6

6

SDD 13C19 - 02

SDD 13C19 - 02

HMA LONGITUDINAL JOINTS

STATE OF WISCONSIN
DEPARTMENT OF TRANSPORTATION

APPROVED
February 2020 /S/ Steven Hefel
DATE HMA PAVEMENT ENGIN

FHWA

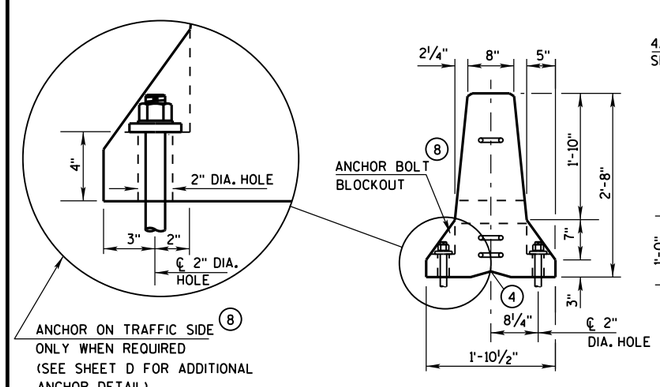

END VIEW

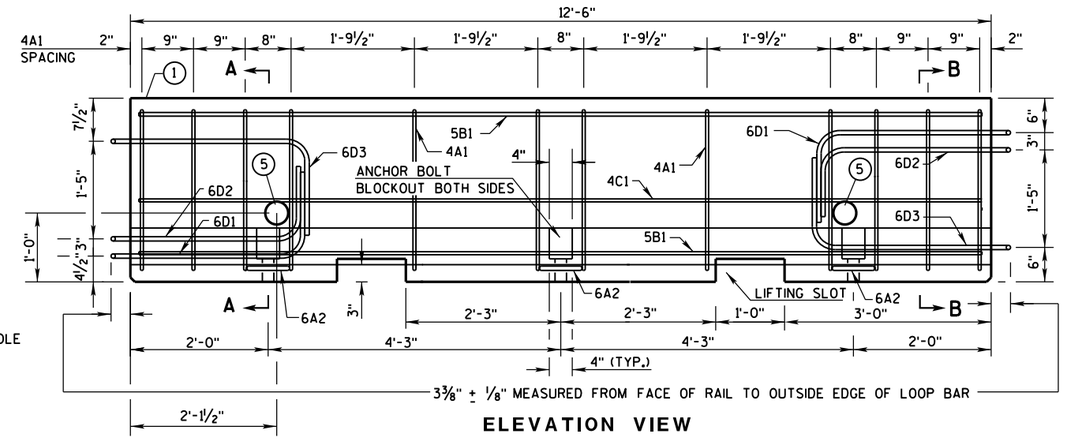

ELEVATION VIEW

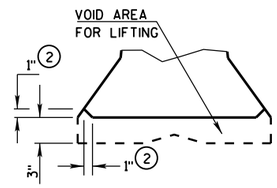

DETAIL "B"
LIFTING SLOT DETAIL

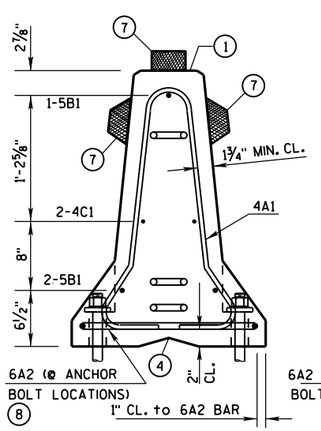

SECTION A-A
(STIRRUP PLACEMENT)

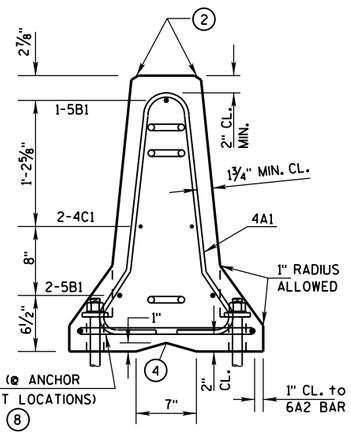

SECTION B-B
(STIRRUP PLACEMENT)

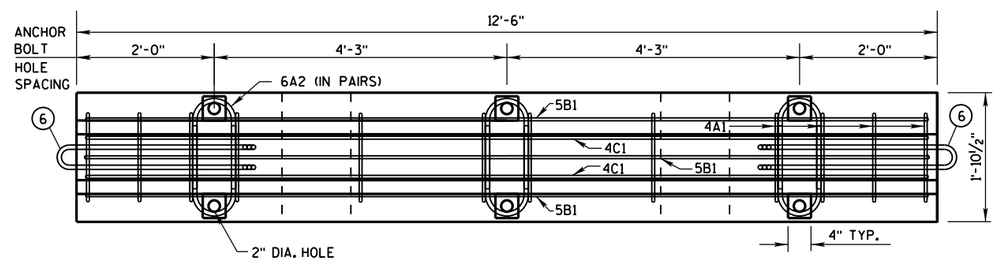

PLAN VIEW

DETAILS OF BARRIER SECTION

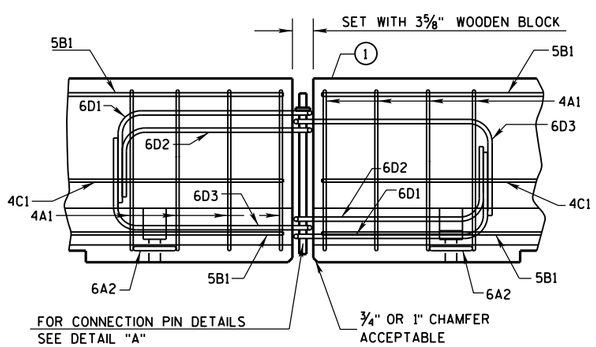

DETAILS OF BARRIER CONNECTION

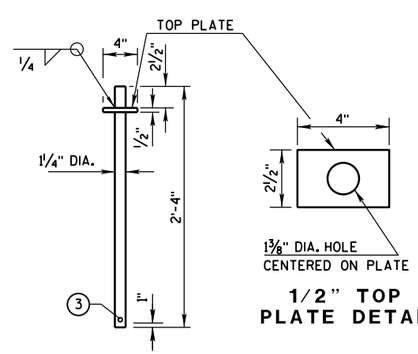

1/2" TOP PLATE DETAIL

DETAIL "A"
CONNECTION PIN
(A36 STEEL (10.9 LB EACH))

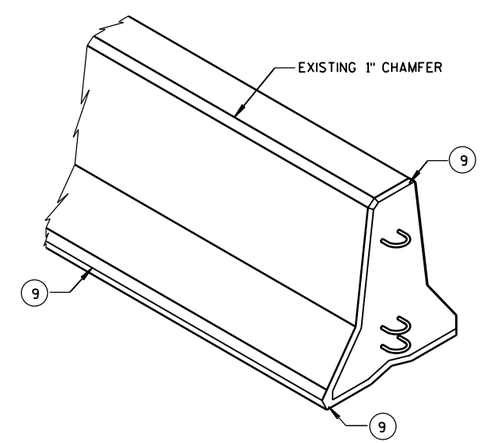

GENERAL NOTES

THESE GENERAL NOTES APPLY TO SHEETS 14B7-15(a) THRU 14B7-15(i).

DO NOT INTERMIX CONCRETE BARRIER TEMPORARY PRCAST, 12'-6" (CBTP12.5) WITH OTHER TEMPORARY CONCRETE BARRIERS.

USE ASTM A-615, GRADE 60, DEFORMED STEEL BARS FOR BARS 4A1, 6A2, 5B1 AND 4C1 IN THE BARRIER SECTION AND FOR 4V1, 4V2, 4V3, 4V4, 4V5, 4V6, 4F1, 4F2 AND 5F3 IN THE BARRIER TAPER SECTION.

LOOP BARS 6D1, 6D2 AND 6D3 SHALL BE ¾" SMOOTH STEEL BARS WITH A MINIMUM YIELD STRENGTH OF 60 KSI, A TENSILE STRENGTH OF NOT LESS THAN 1.25 TIMES THE YIELD STRENGTH BUT A MINIMUM OF 80 KSI, A MINIMUM 14% ELONGATION IN 8 INCHES AND PASSING A 180 DEGREE BEND TEST USING A 3-½" PIN BEND DIAMETER FOR BEND TESTS. THE LOOPS SHALL BE INSTALLED WITHIN ⅛" OF THE PLAN DIMENSION.

CONSTRUCT LIFTING SLOTS AS SPECIFIED ON THE PLANS TO FACILITATE THE DRAINAGE OF WATER AFTER INSTALLATION.

PLACE BARRIER ON A PAVED SURFACE. REMOVE ALL LOOSE DIRT AND SAND FROM THE ROADWAY SURFACE PRIOR TO PLACEMENT OF THE BARRIER.

INSTALL MECHANICAL OR ADHESIVE ANCHORS PER MANUFACTURER'S RECOMMENDATIONS. PROVIDE MANUFACTURER'S INFORMATION TO PROJECT ENGINEER.

1. MARK ONE END OF EACH BARRIER PERMANENTLY BY FORMING INTO THE BARRIER THE FOLLOWING INFORMATION:
   a. TYPE: WI CBTP
   b. MANUFACTURER
   c. DATE MANUFACTURED (MONTH AND YEAR)
2. 1" CHAMFER TO PREVENT SPALLING.
3. A ⅜" HOLE IN THE CONNECTION PIN, AT THE LOCATION SHOWN, IS ACCEPTABLE, BUT NOT REQUIRED..
4. "V" NOTCH IS OPTIONAL.
5. THE 4" DIAMETER, 11 GAUGE STEEL, ROUND MECHANICAL TUBING SLEEVE FOR LIFTING (OPTIONAL).
6. NEVER USE LOOP BARS (6D1, 6D2 OR 6D3) TO LIFT, MOVE OR REPOSITION THE BARRIER.
7. USE DELINEATORS CONFORMING TO SECTION 633 OF THE STANDARD SPECIFICATIONS. CONTRACTOR MAY USE ALTERNATE SHAPES AND HOUSING. INSTALL DELINEATORS ACCORDING TO MANUFACTURES INSTRUCTION. INSTALL YELLOW REFLECTORS WHEN BARRIER IS LOCATED TO THE LEFT OF TRAFFIC AND WHITE REFLECTORS WHEN BARRIER IS LOCATED TO THE RIGHT OF TRAFFIC. SPACE DELINEATORS A MAXIMUM OF 25 FEET APART. PROVIDE TOP MOUNTED DELINEATORS IN ADDITION TO THE SIDE MOUNTED DELINEATORS ON ALL BARRIER INSTALLATIONS LOCATED ON A CURVED ALIGNMENT LONGER THAN 200 FEET AND ON BARRIERS USED TO SEPARATE OPPOSING TRAFFIC.
8. SEE SHEET D FOR HOW TO ANCHOR BARRIER. SEE SHEET E FOR WHEN TO ANCHOR BARRIER.
9. 1" CHAMFER OPTIONAL.

f'c = 4,000 psi

CONCRETE BARRIER
TEMPORARY PRECAST, 12'-6"

STATE OF WISCONSIN
DEPARTMENT OF TRANSPO

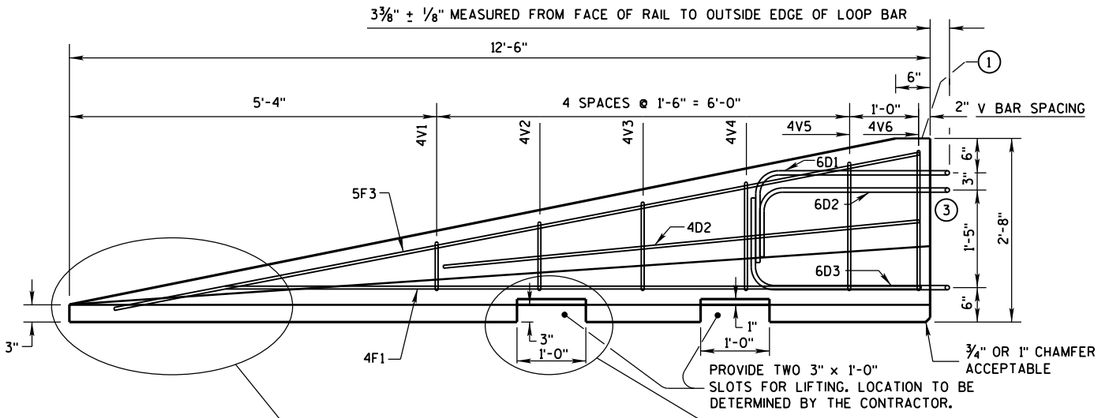

SIDE ELEVATION

(FOR CONNECTION TO LEFT END OF BARRIER)

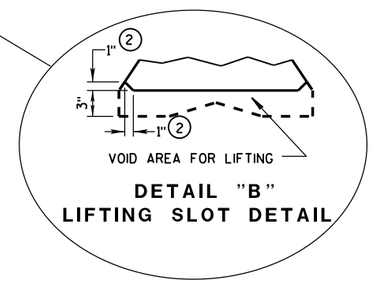

DETAIL "B"
LIFTING SLOT DETAIL

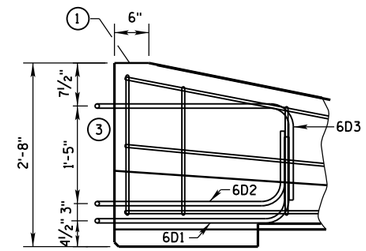

SIDE ELEVATION

LOOP BAR ASSEMBLY INVERTED
FOR OPPOSITE END.
(FOR CONNECTION TO RIGHT END OF BARRIER)

GENERAL NOTES

1. MARK ONE END OF EACH BARRIER PERMANENTLY BY FORMING INTO THE BARRIER THE FOLLOWING INFORMATION:
   a. TYPE WICBTP
   b. MANUFACTURER
   c. DATE MANUFACTURED (MONTH AND YEAR)
2. 1" CHAMFER TO PREVENT SPALLING.
3. NEVER USE LOOP BARS (6D1, 6D2 OR 6D3) TO LIFT, MOVE OR REPOSITION THE BARRIER.

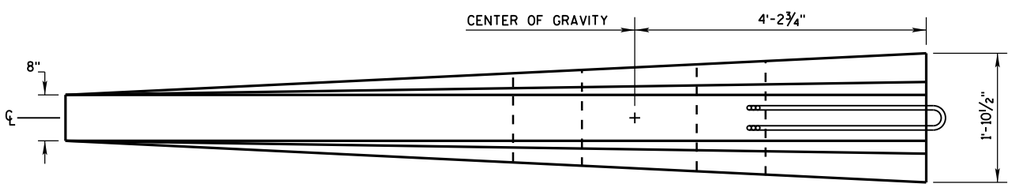

PLAN VIEW

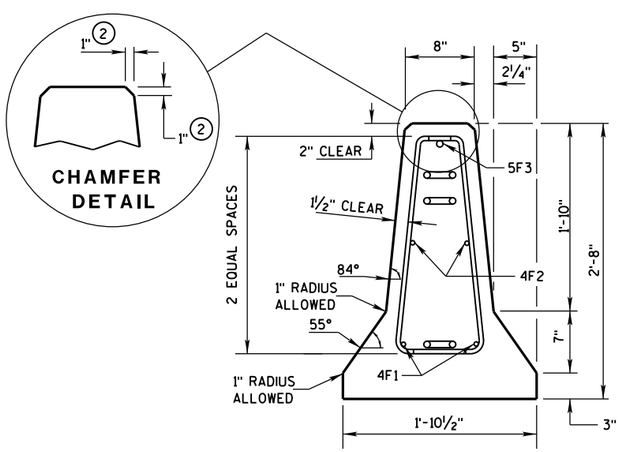

END SECTION

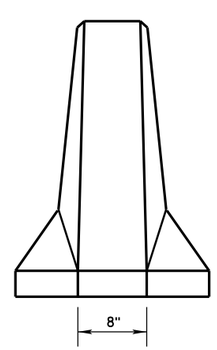

FRONT ELEVATION

DETAILS OF BARRIER TAPER SECTION

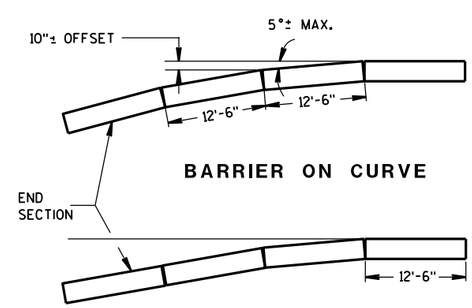

BARRIER ON CURVE

FLARE AT BARRIER END

POSTED SPEED, (MPH)	FLARE RATE
40 OR LESS	6:1
45 OR GREATER	8:1

CONCRETE BARRIER
TEMPORARY PRECAST, 12'-6"

STATE OF WISCONSIN
DEPARTMENT OF TRANSPORTATION

6

S.D.D. 14 B 7-15b

GENERAL NOTES

(1) NEVER USE LOOP BARS (6D1, 6D2 OR 6D3) TO LIFT, MOVE OR REPOSITION THE BARRIER.

BARRIER TAPER SECTION BILL OF MATERIALS

(PER 12'-6" BARRIER TAPER SECTION)

BAR	BAR SIZE	NO. OF BARS	LENGTH FT.
4V1	4	2	1'-11"
4V2	4	2	2'-2"
4V3	4	2	2'-6"
4V4	4	2	2'-9"
4V5	4	2	3'-2"
4V6	4	2	3'-4"
4F1	4	2	12'-0"
4F2	4	2	7'-6"
5F3	5	1	11'-9"
LOOP ASSEMBLY			
6D1	6	1	8'-5"
6D2	6	1	7'-7"
6D3	6	1	8'-6"

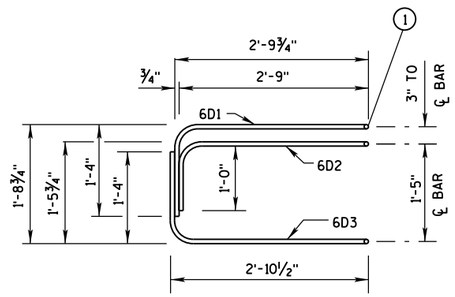

ELEVATION
LOOP BAR ASSEMBLY

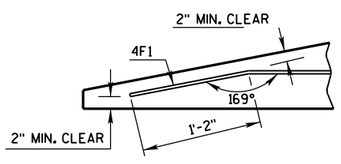

DETAIL "C"
BENT BAR DETAIL

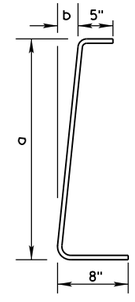

BAR	a	b
V1	10"	1"
V2	1'-1"	1¼"
V3	1'-5"	1⅝"
V4	1'-8"	1⅞"
V5	2'-0½"	2⅜"
V6	2'-3"	2¾"

4V BARS
2 AT EACH SIZE REQUIRED
FOR STIRRUP ASSEMBLY

TAPER BARRIER SECTION

BARRIER SECTION BILL OF MATERIALS

(PER 12'-6" BARRIER SECTION)

BAR	BAR SIZE	NO. OF BARS	LENGTH FT.
4A1	4	12	6'-0"
6A2	6	6	2'-11"
5B1	5	3	12'-2"
4C1	4	2	12'-2"
LOOP ASSEMBLY			
6D1	6	2	8'-5"
6D2	6	2	7'-7"
6D3	6	2	8'-6"

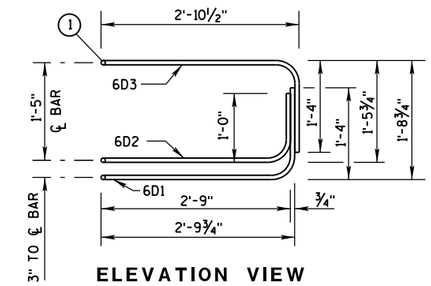

ELEVATION VIEW

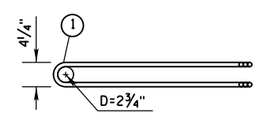

PLAN VIEW
LOOP BAR ASSEMBLY
(MARKED END SHOWN, INVERT FOR OTHER END)

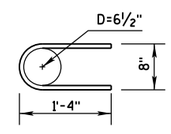

6A2

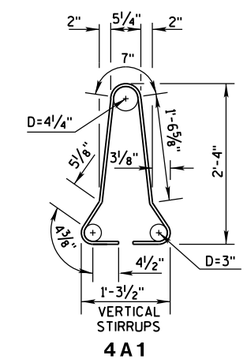

4A1

BARRIER SECTION

CONCRETE BARRIER
TEMPORARY PRECAST, 12'-6"

STATE OF WISCONSIN
DEPARTMENT OF TRANSPO

6

S.D.D. 14 B 7-15c

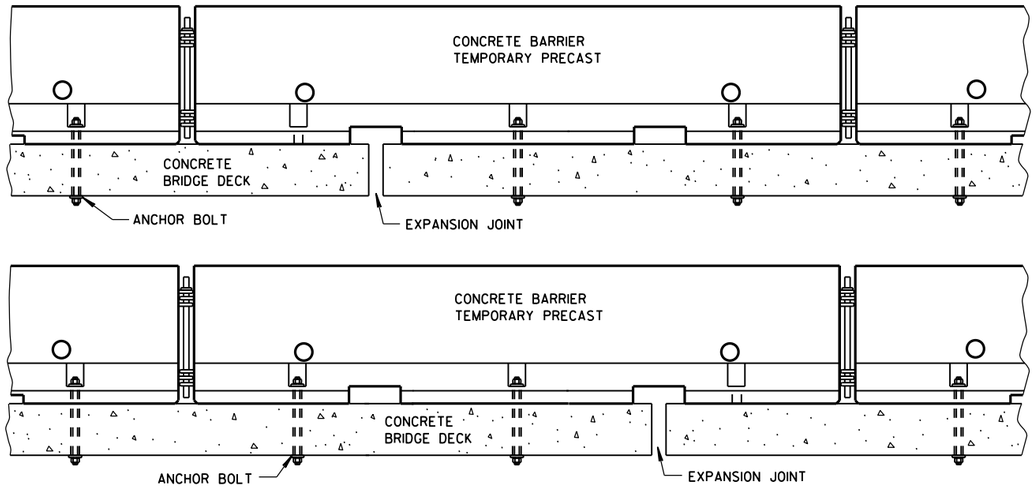

TREATMENT AT BRIDGE DECK EXPANSION JOINTS

(NO SINGLE CONCRETE BARRIER SECTION SHALL BE ANCHORED TO BOTH THE BRIDGE DECK AND THE APPROACH SLAB. ALL ANCHOR BOLT LOCATIONS SHALL BE ANCHORED TO THE DECK IN ACCORDANCE WITH THE DETAIL. NO MORE THAN ONE ANCHOR BOLT SHALL BE ELIMINATED FROM A BARRIER SECTION WHEN SPANNING AN EXPANSION JOINT.)

GENERAL NOTES

SEE SHEET E FOR WHEN TO ANCHOR. OTHER PARTS OF THE PLAN MAY SHOW ADDITIONAL LOCATIONS REQUIRING ANCHORING.

REMOVE ALL ANCHORS WHEN NO LONGER NEEDED. FILL CONCRETE PAVEMENTS, DECKS AND APPROACH SLABS WITH NON-SHRINK COMMERICAL GROUT FROM THE APPROVED PRODUCT LIST. FILL ASPHALT PAVEMENTS WITH ASTM D6690 TYPE II RUBBERIZED CRACK FILLER.

1. 1⅛" DIAMENTER A307 THREADED ROD, ½" X 3" X 3" SQUARE PLATE WASHER WITH ASTM A36 STEEL. ASTM A563A HEAVY HEX NUT.
2. ADHESIVE ANCHORS WITH A MINIMUM BOND STRENGTH OF 1,800 PSI AND 5¼" EMBEDMENT. SEE 603.2 AND 603.3.1.2 OF THE WISCONSIN STANDARD SPECIFICATIONS FOR MORE INFORMATION ON ADHESIVE ANCHORS.
3. ASPHALT SURFACE SHOWN. CONTRACTOR MAY DRILL THROUGH CONCRETE PAVEMENT AND THAN DRIVE ASPHALT ANCHOR PIN.

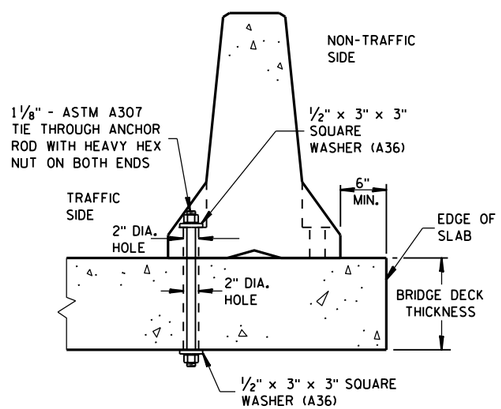

THROUGH BOLTED ANCHOR INSTALLATION ON BRIDGE DECK

(DO NOTUSE ON CONCRETE BRIDGE DECK WITH ASPHALT OVERLAY)

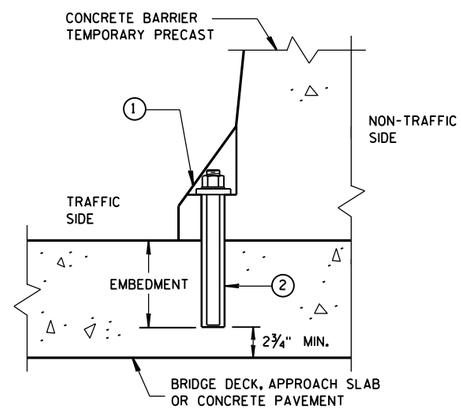

REMOVABLE ADHESIVE ANCHOR INSTALLATION ON CONCRETE BRIDGE DECK, CONCRETE APPROACH SLAB, OR CONCRETE PAVEMENT

(DO NOT USE ON CONCRETE WITH AN ASPHALTIC OVERLAY)

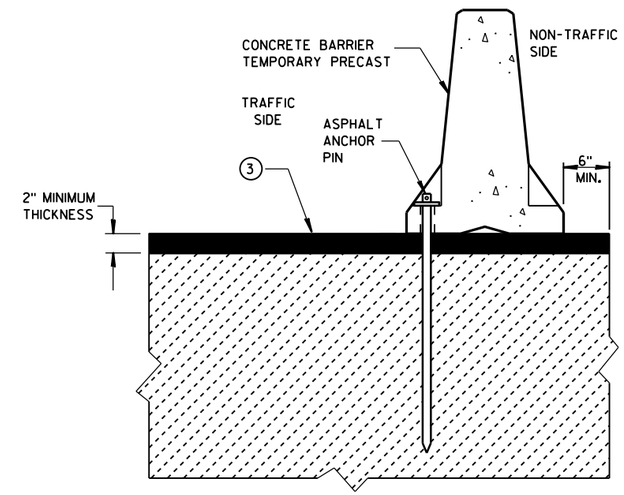

STAKE DOWN INSTALLATION FOR ASPHALTIC SURFACE

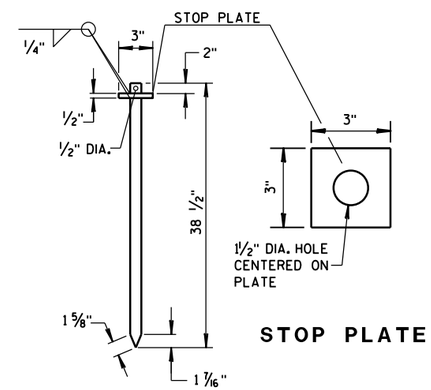

ASPHALT ANCHOR PIN

(ASTM A36 STEEL)

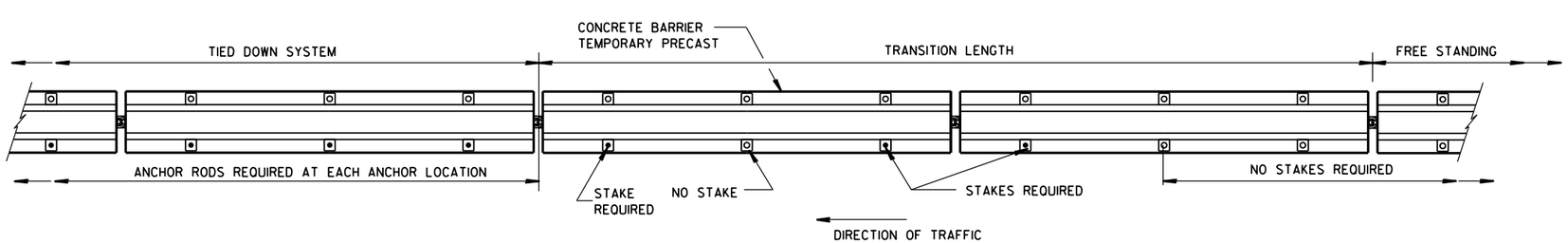

PLAN VIEW

FREE STANDING TRANSITION TO TIED-DOWN SYSTEM

(PLACE TRANSITION IN A TANGENT SECTION OF BARRIER PARALLEL TO THE ROADWAY. IF TRANSITION OCCURS ON STRUCTURAL SLAB, ANCHOR AS SHOWN.)

CONCRETE BARRIER
TEMPORARY PRECAST, 12'-6"

STATE OF WISCONSIN
DEPARTMENT OF TRANSPOI

6

S.D.D. 14 B 7-15d

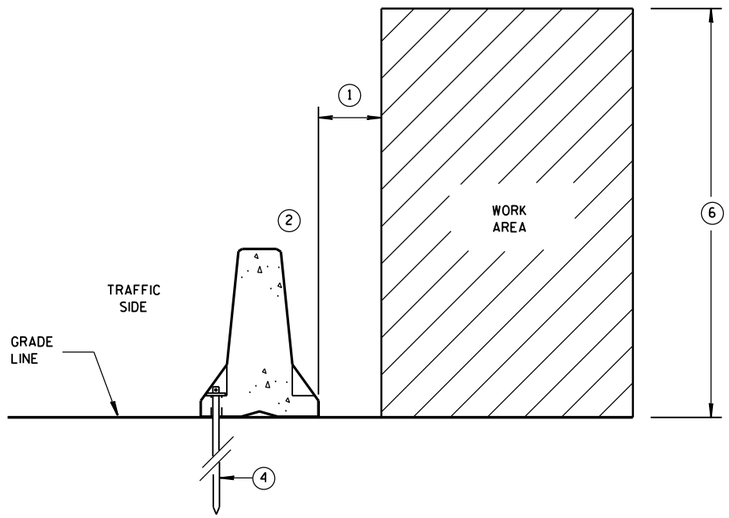

ANCHORED BARRIER SPACE REQUIREMENTS FOR HAZARDS EXTENDED ABOVE THE GRADE LINE

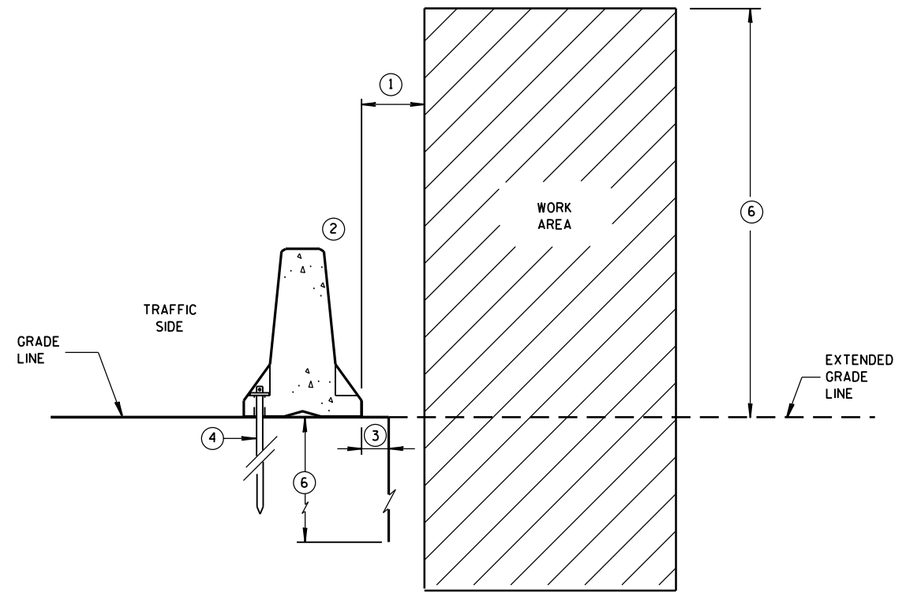

ANCHORED BARRIER SPACE REQUIREMENTS ON VERTICAL DROP OFFS

GENERAL NOTES

1. WHEN OBJECTS EXTEND ABOVE THE GRADE, A MINIMUM OF 1 FOOT IS REQUIRED FROM BACK OF BARRIER TO OBJECT. SEE OTHER DETAILS FOR FOR THE MINIMUM OFFSET FROM BACK OF BARRIER TO SLOPES OR VERTICAL DROPS.
2. OBJECTS ARE NOT TO BE PLACED ON, MOUNTED TO, OR LEANED AGAINST THE BARRIER WITHOUT PERMISSION OF THE PROJECT ENGINEER.
3. SEE OTHER DETAIL ON SHEET "D" FOR SPACE REQUIREMENTS.
4. SEE BOLT THROUGH DECK, REMOVABLE ADHESIVE ANCHOR, OR A STAKE DOWN FOR ASPHALTIC SURFACE TREATMENT DETAILS. ASPHALTIC ANCHOR SHOWN.
5. DEPTH OF 3 FEET OR MORE.
6. Y = 6'-6".

POSTED SPEED MPH	X
45 OR GREATER	4'
40 OR LESS	2'

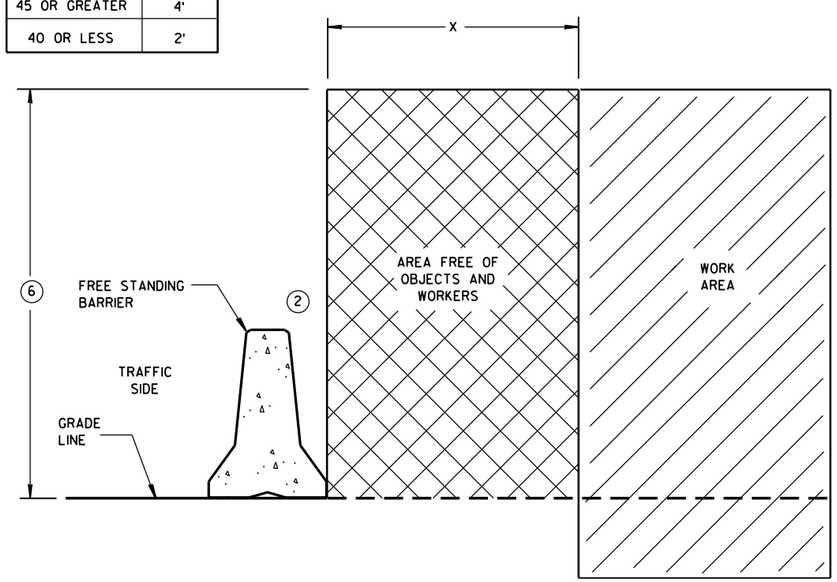

FREE STANDING BARRIER SPACE REQUIREMENTS

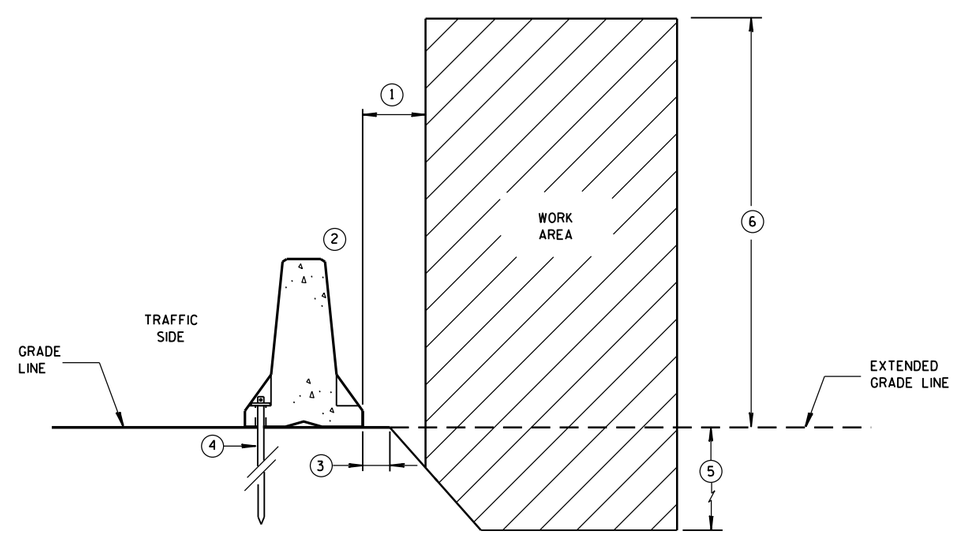

ANCHORED BARRIER SPACE REQUIREMENTS ON SLOPES

CONCRETE BARRIER
TEMPORARY PRECAST, 12'-6"

STATE OF WISCONSIN
DEPARTMENT OF TRANSPORTATION

6

S.D.D. 14 B 7-15e

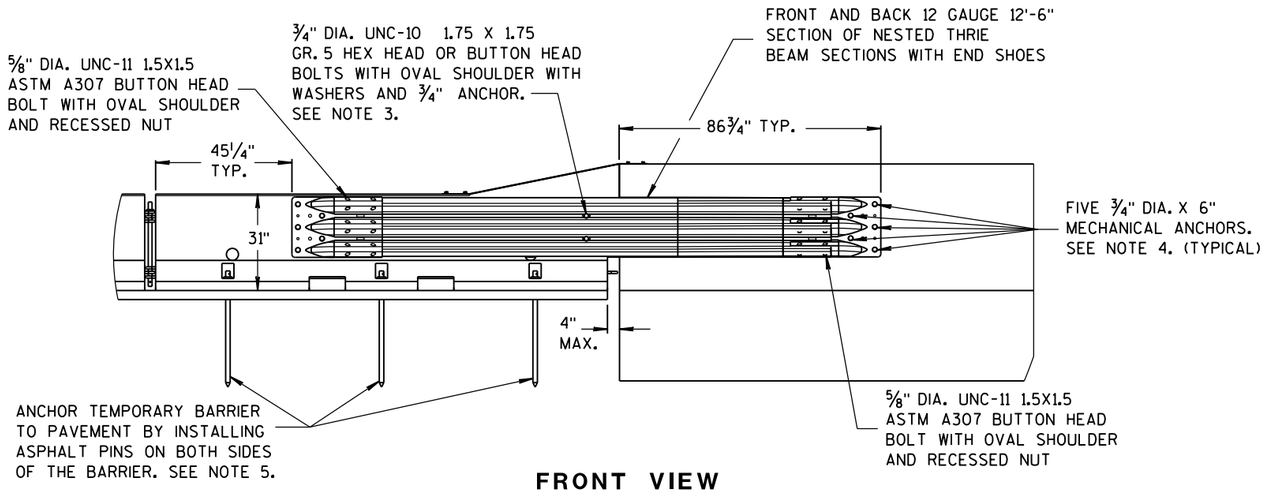

FRONT VIEW

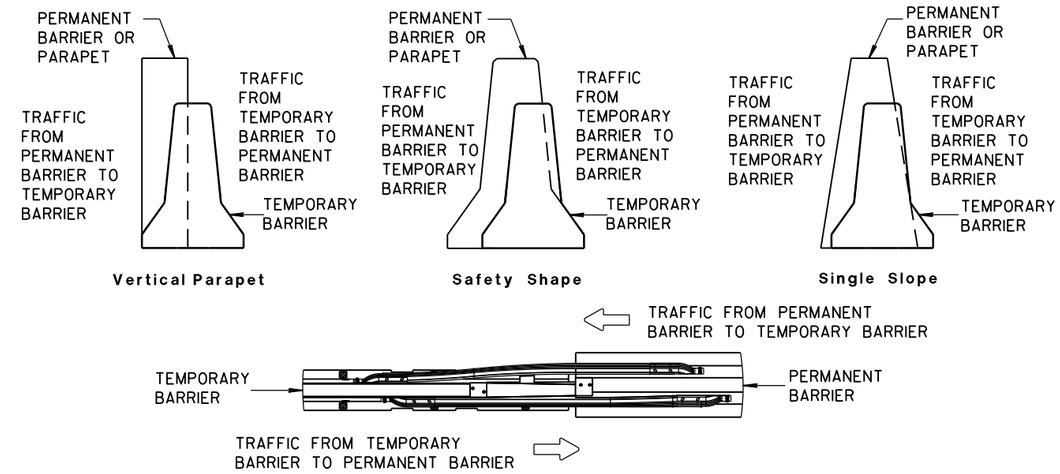

TEMPORARY BARRIER PLACEMENT FOR BI-DIRECTIONAL TRANSITION TO TIED-DOWN SYSTEM

NOTES

NESTED THRIE BEAM IS REQUIRED ON BOTH SIDES OF THE TEMPORARY BARRIER FOR ALL INSTALLATIONS REGARDLESS OF TRAFFIC.

1. CAP END PLATE PLACED FLUSH WITH UPSTREAM END OF PERMANENT BARRIER OR PARAPET.
2. THRIE BEAM PIECES ARE OFFSET 15 1/4" TO PREVENT INTERFERENCE FROM THE ANCHORS ON OPPOSING SIDES.
3. MINIMUM MECHANICAL OR ADHESIVE ANCHOR STRENGTH REQUIREMENTS: ULTIMATE TENSILE LOAD 9.48 KIPS AND ULTIMATE SHEAR LOAD 10.48 KIPS.
4. MINIMUM MECHANICAL OR ADHESIVE ANCHOR STRENGTH REQUIREMENTS: ULTIMATE TENSILE LOAD 17.9 KIPS AND ULTIMATE SHEAR LOAD 21.96 KIPS.
5. MAY BE USED ON CONCRETE OR ASPHALT PAVEMENTS. ASPHALT OPTION SHOWN. FOR CONCRETE OPTION SEE OTHER DETAILS.
6. MINIMUM MECHANICAL OR ADHESIVE ANCHOR STRENGTH REQUIREMENTS: ULTIMATE TENSILE LOAD 12.14 KIPS AND ULTIMATE SHEAR LOAD 17.5 KIPS.

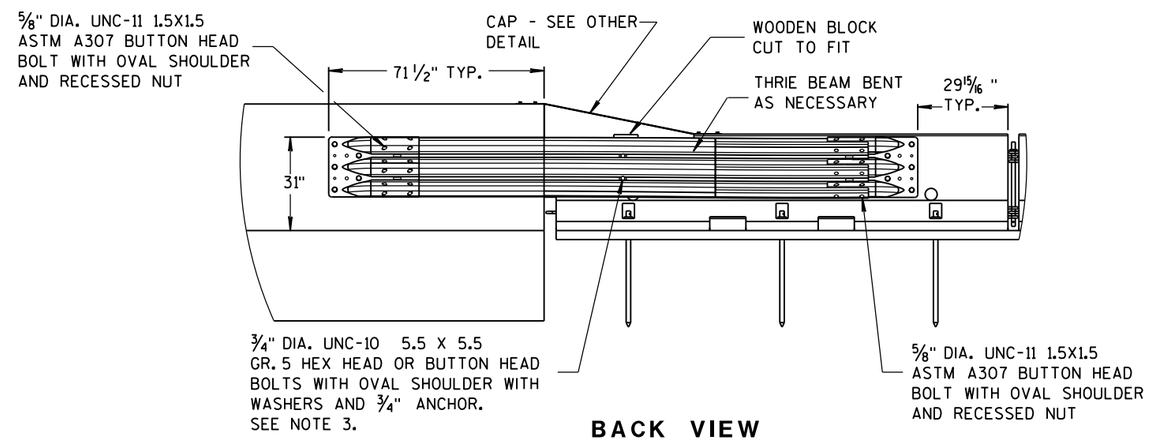

BACK VIEW

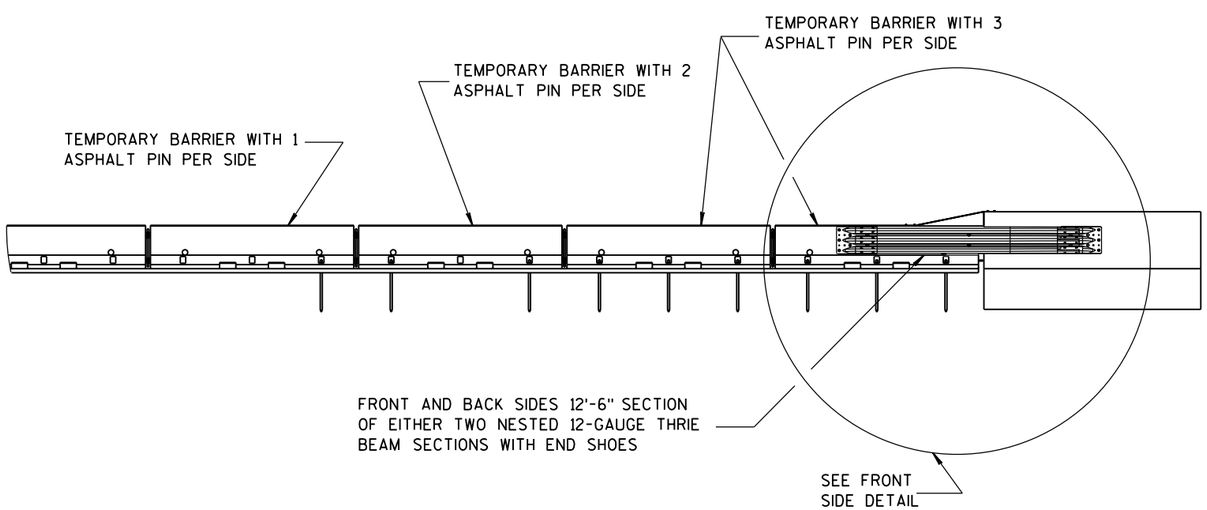

FRONT VIEW

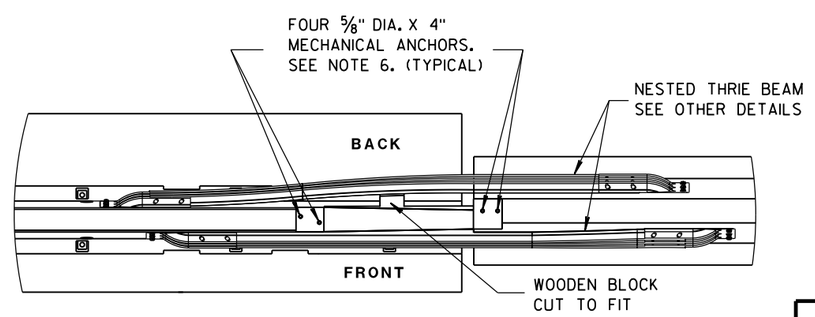

PLAN VIEW

BI-DIRECTIONAL TRANSITION TO TIED-DOWN SYSTEM

CONCRETE BARRIER
TEMPORARY PRECAST, 12'-6"

STATE OF WISCONSIN
DEPARTMENT OF TRANSPO

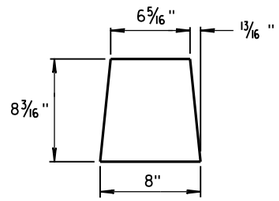

GUSSET 1

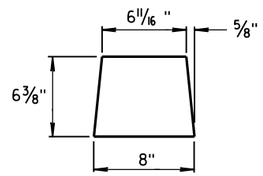

GUSSET 2

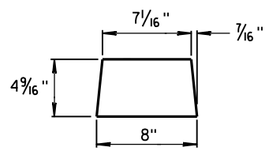

GUSSET 3

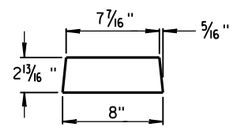

GUSSET 4

GUSSETS

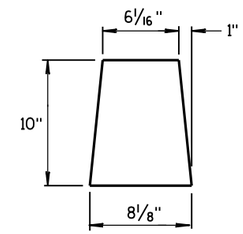

END PLATE

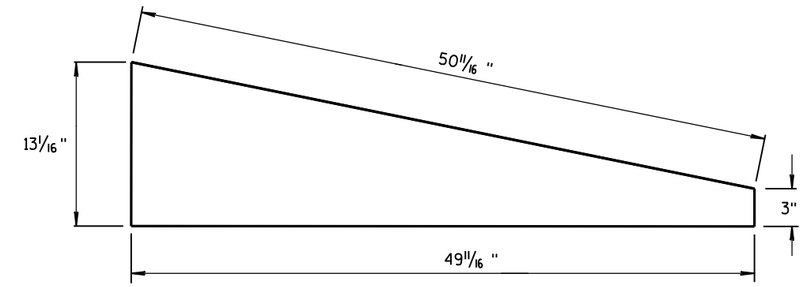

SIDE PLATE

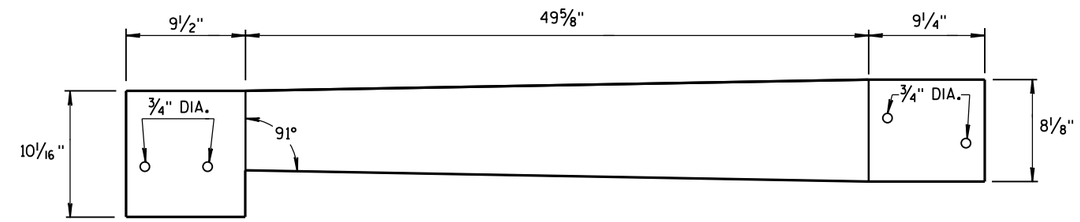

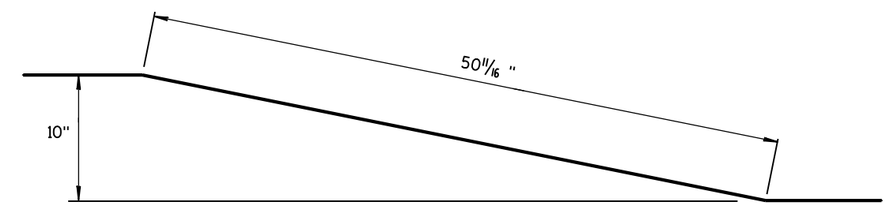

TOP PLATE

SIDE, TOP AND END PLATES FOR CAP FROM TEMPORARY CONCRETE BARRIER TO 42" PERMANENT CONCRETE BARRIER

SIDE PLATES, TOP PLATE, END PLATE AND GUSSETS ARE 12 GAUGE ASTM A36 GALVANIZED STEEL.

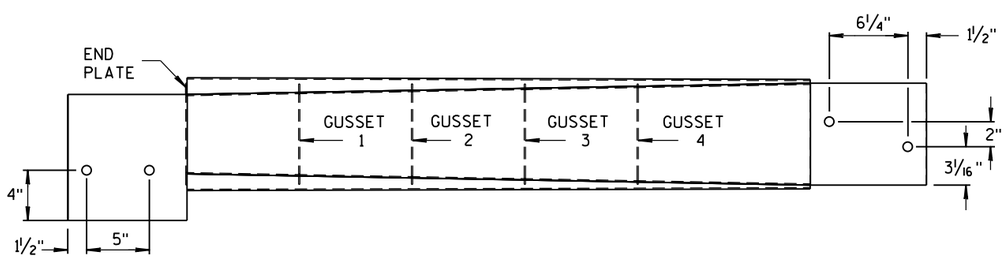

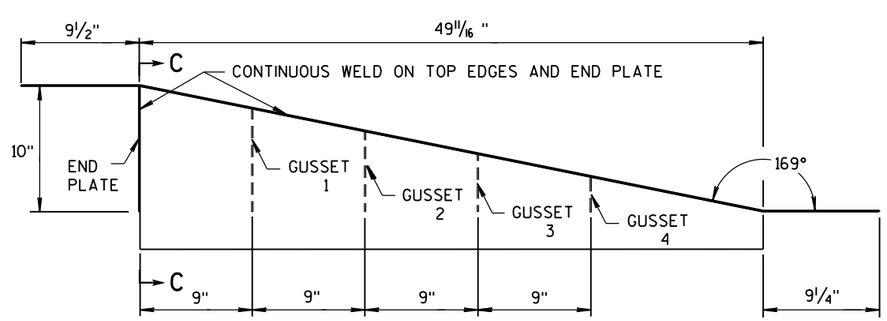

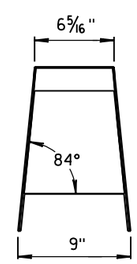

SECTION C-C

NOTES

1. FOUR GUSSETS AND END PLATE ARE STITCH WELDED ON THREE SIDES.
2. TWO TRIANGULAR SIDE PLATES ARE STITCH WELDED TO TOP PLATE, END PLATE, AND GUSSETS.

CAP DETAILS FOR TEMPORARY CONCRETE BARRIER TO 42" PERMANENT CONCRETE BARRIER

CONCRETE BARRIER
TEMPORARY PRECAST, 12'-6"

STATE OF WISCONSIN
DEPARTMENT OF TRANSPOR

6

S.D.D. 14 B 7-15g

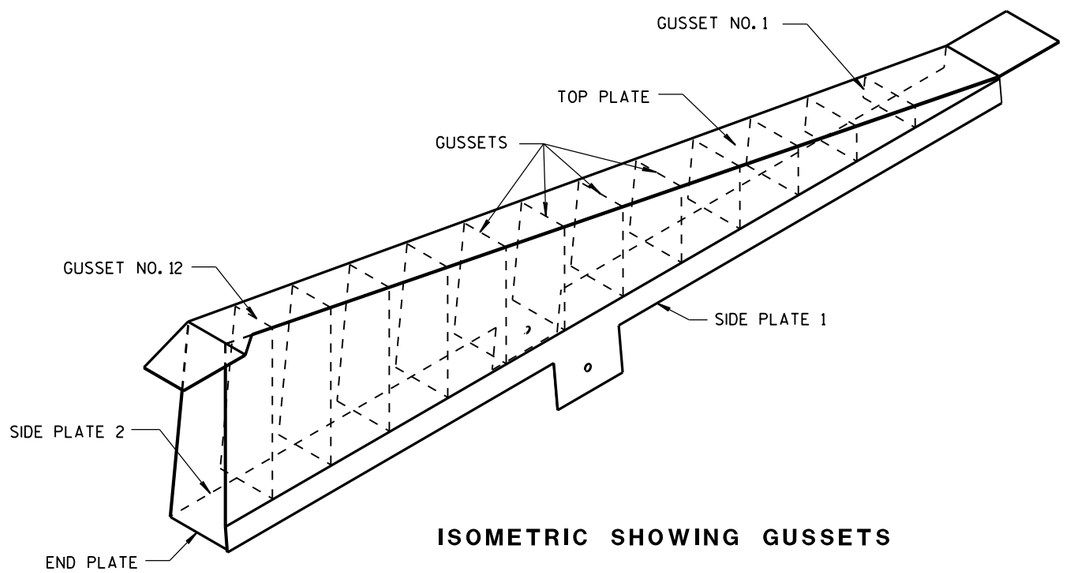

ISOMETRIC SHOWING GUSSETS

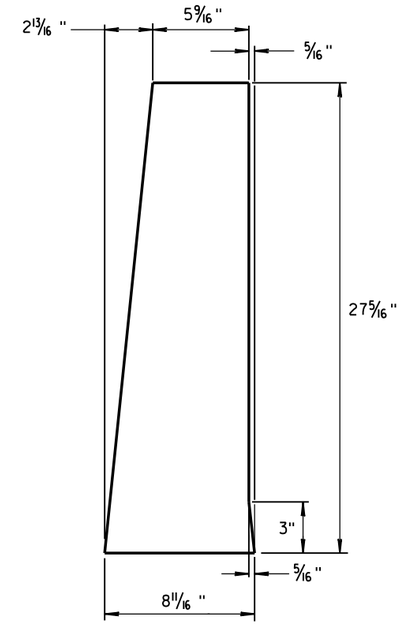

END PLATE

1/8" STEEL PLATE

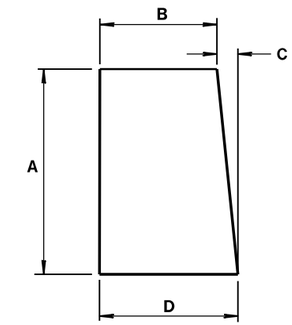

GUSSETS 1 - 12

ALL GUSSETS 1/8" STEEL PLATE

GUSSET DIMENSIONS				
GUSSET NO.	A	B	C	D
1	2 7/8"	7 3/4"	1/4"	8
2	4 11/16 "	7 9/16 "	1/2"	8
3	6 1/2"	7 3/8"	11/16 "	8 1/16 "
4	8 5/16 "	7 3/16 "	7/8"	8 1/16 "
5	10 1/8"	7"	1 1/16 "	8 1/16 "
6	11 15/16 "	6 13/16 "	1 1/4"	8 1/16 "
7	13 3/4"	6 5/8"	1 7/16 "	8 1/16 "
8	15 9/16 "	6 7/16 "	1 9/16 "	8 1/16 "
9	17 3/8"	6 1/4"	1 13/16 "	8 1/16 "
10	19 3/16 "	6 1/16 "	1 15/16 "	8 1/16 "
11	21"	5 7/8"	2 3/16 "	8 1/16 "
12	22 13/16 "	5 11/16 "	2 5/16 "	8 1/16 "

SIDE PLATES, TOP PLATE, END PLATE AND GUSSETS ARE 12 GAUGE ASTM A36 STEEL AND GALVANIZED.

GUSSETS AND END PLATE ARE STITCH WELDED ON 3 SIDES. TWO TRIANGULAR SIDE PLATES ARE STITCH WELDED TO TOP PLATE, END PLATE AND GUSSETS.

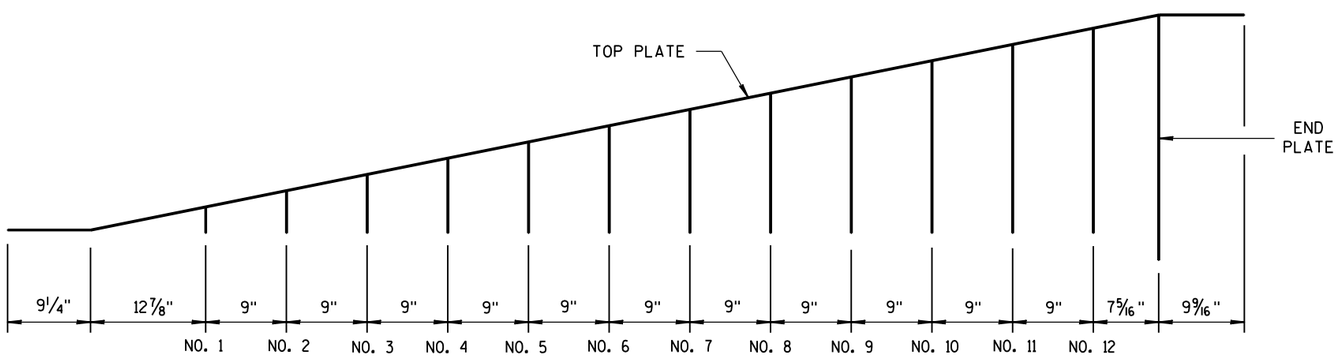

GUSSET LOCATION

CAP DETAILS FOR TEMPORARY CONCRETE BARRIER TO 56" PERMANENT CONCRETE BARRIER

CONCRETE BARRIER
TEMPORARY PRECAST, 12'-6"

STATE OF WISCONSIN
DEPARTMENT OF TRANSPOR 88

6
S.D.D. 14 B 7-15h

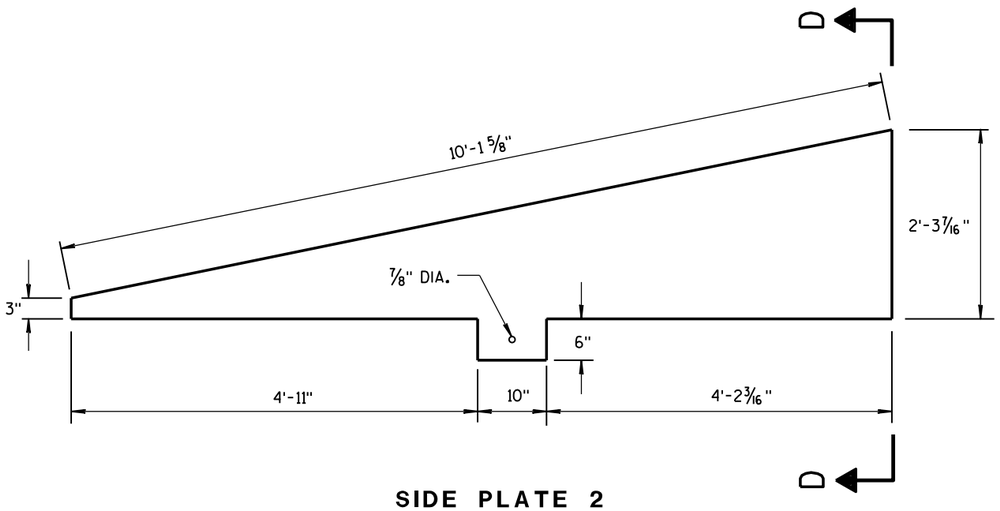

SIDE PLATE 2

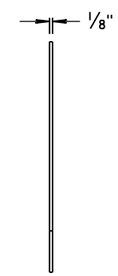

END VIEW

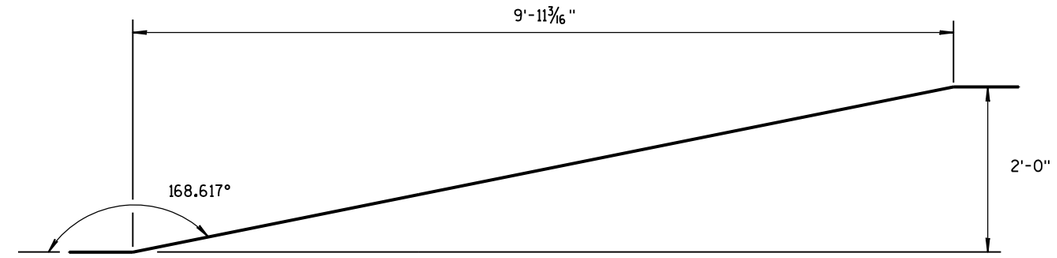

SIDE VIEW

TOP PLATE

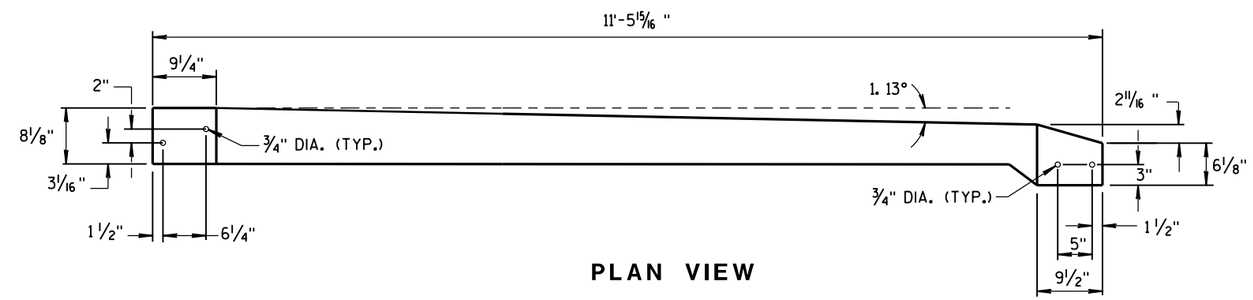

PLAN VIEW

TOP PLATE

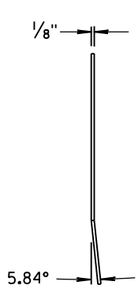

END VIEW

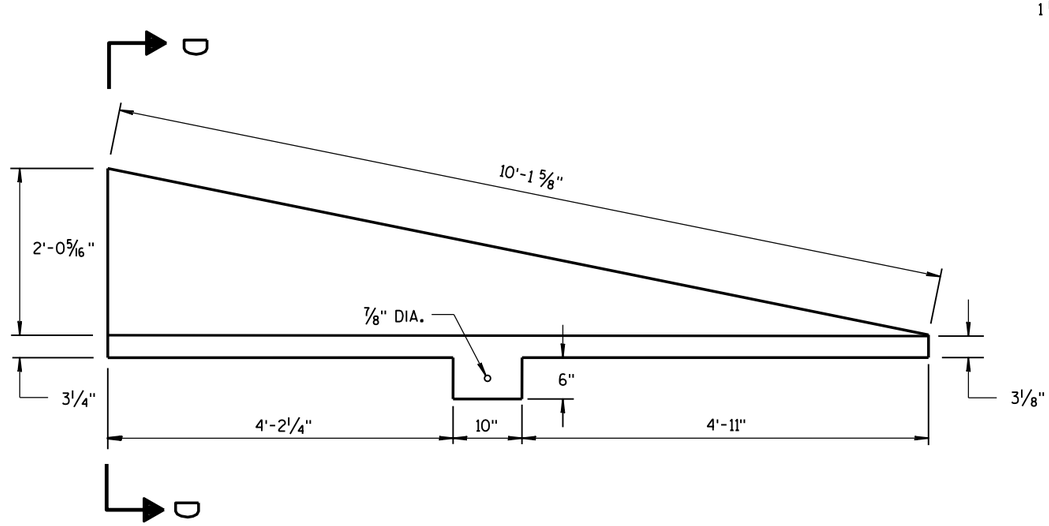

SIDE PLATE 1

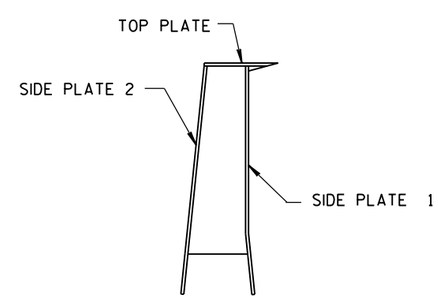

SECTION D-D

CAP DETAILS FOR TEMPORARY CONCRETE BARRIER TO 56" PERMANENT CONCRETE BARRIER

CONCRETE BARRIER
TEMPORARY PRECAST, 12'-6"

STATE OF WISCONSIN
DEPARTMENT OF TRANSPORTATION

APPROVED
June 2017 — DATE
/S/ Rodney Taylor — ROADWAY STANDARD UNIT SUPERV
FHWA

6
S.D.D. 14 B 7-15i

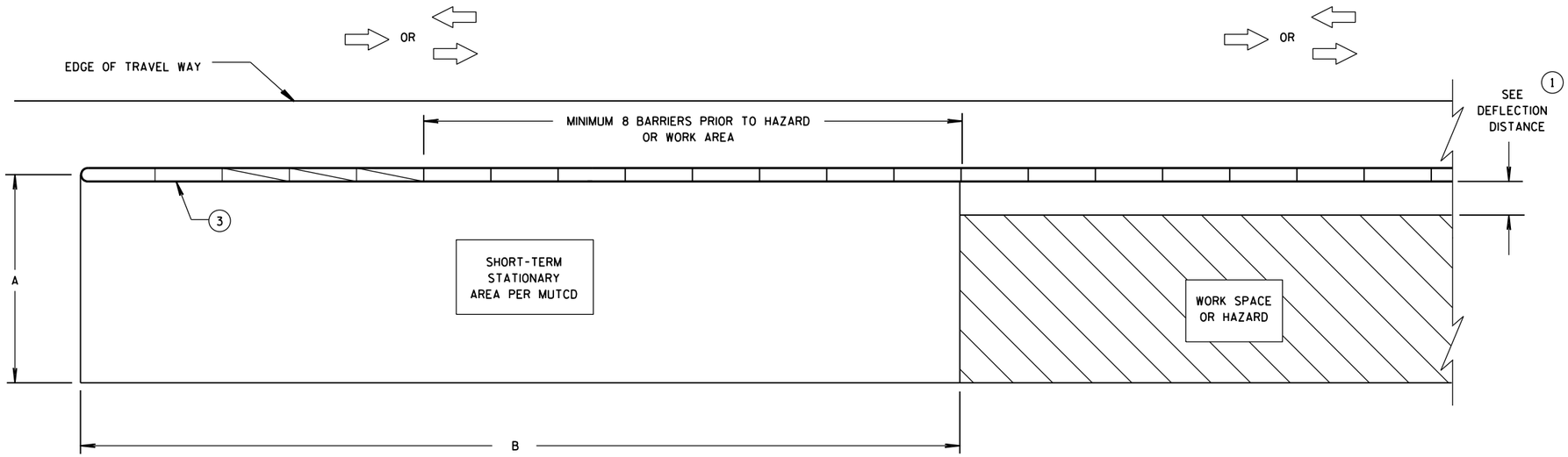

CRASH CUSHION/SAND BARREL ARRAY AND TEMPORARY BARRIER INSTALLATION FOR TRAFFIC ON ONE SIDE OF BARRIER

DIMENSION A TABLE (2)

FACILITY	POSTED SPEED MPH	DIMENSION A MIN. FT	DIMENSION A MAX. FT
FREEWAY/EXPRESSWAY	ALL	15	20
NON-FREEWAY/EXPRESSWAY	GREATER THAN OR EQUAL TO 45	10	15
NON-FREEWAY/EXPRESSWAY	LESS THAN 45	8	10
AADT LESS THAN 1,500	ALL	8	10

DIMENSION B TABLE (2)

POSTED SPEEDS MPH	DIMENSION B FT
20	115
25	155
30	200
35	250
40	305
45	360
50	425
55	495
60	570
65	645

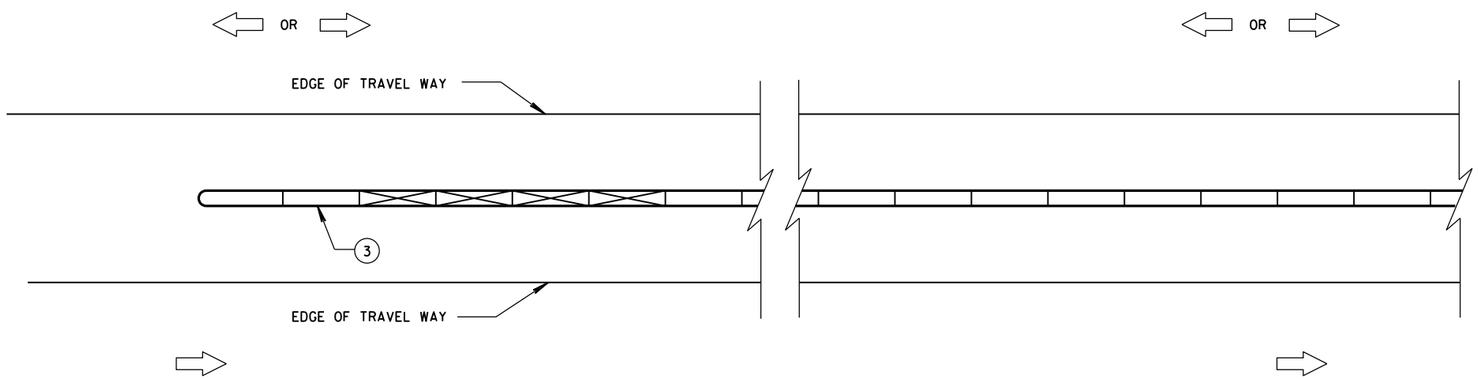

CRASH CUSHION/SAND BARREL ARRAY AND TEMPORARY BARRIER INSTALLATION FOR TRAFFIC ON BOTH SIDES OF BARRIER

LEGEND

- DIRECTION OF TRAVEL
- CRASH CUSHION OR SAND BARREL ARRAY
- SEE FREE STANDING TRANSITION TO TIED-DOWN SYSTEM DETAILS
- SEE BI-DIRECTIONAL TRANSITION TO TIED-DOWN SYSTEM DETAILS
- 3 PINS PLACED ON TRAFFIC SIDE OF BARRIER
- PERMANENT CONCRETE BARRIER OR CONCRETE PARAPET
- FREE STANDING TEMPORARY BARRIER

GENERAL NOTES

SEE STANDARD DETAIL DRAWING 14B7 FOR MORE INFORMATION.

DETAILS PROVIDE A GENERAL LAYOUT OF TEMPORARY CONCRETE BARRIER, CRASH CUSHIONS, SAND BARREL ARRAYS AND TIE DOWN TRANSITIONS. DETAILS PROVIDED MAY NOT FIT ALL POSSIBLE SITUATIONS OR SITE CONDITIONS. SEE OTHER SECTIONS OF THE CONTRACT OR PROJECT ENGINEER FOR MORE DETAILS.

ADDITIONAL TEMPORARY BARRIER MAY BE REQUIRED TO PROTECT TRAVELING PUBLIC FROM HAZARDS, CONTRACTOR'S OPERATIONS OR TO CONTROL TRAFFIC.

TEMPORARY BARRIER MAY BE REQUIRED TO BE ANCHORED TO PAVEMENT OR BRIDGE DECK.

FOR DETAILS ON CRASH CUSHION OR SAND BARREL ARRAYS SEE OTHER SECTIONS OF THE PLAN AND MANUFACTURE'S DETAILS.

SLOPES LEADING TO TEMPORARY BARRIER, CRASH CUSHION OR SAND BARREL ARRAY ARE 10:1 OR LESS.

(1) FOR DEFLECTION INFORMATION SEE STANDARD DETAIL DRAWING 14B7.

(2) VALUES PROVIDED MAY NOT FIT ALL POSSIBLE SITUATIONS OR SITE CONDITIONS. SEE OTHER SECTIONS OF THE CONTRACT OR PROJECT ENGINEER FOR MORE DETAILS.

(3) ANCHOR TEMPORARY BARRIER ACCORDING TO CRASH CUSHION OR SAND BARREL MANUFACTURER'S RECOMMENDATIONS. IF MANUFACTURER'S RECOMMENDATIONS ARE NOT PROVIDED, ANCHOR 3 PINS ON TRAFFIC SIDE.

CRASH CUSHION/SAND BARREL ARRAY AND OTHER TEMPORARY BARRIER LAYOUT DETAILS

STATE OF WISCONSIN
DEPARTMENT OF TRANSPOR

6

S.D.D. 14 B 8-2a

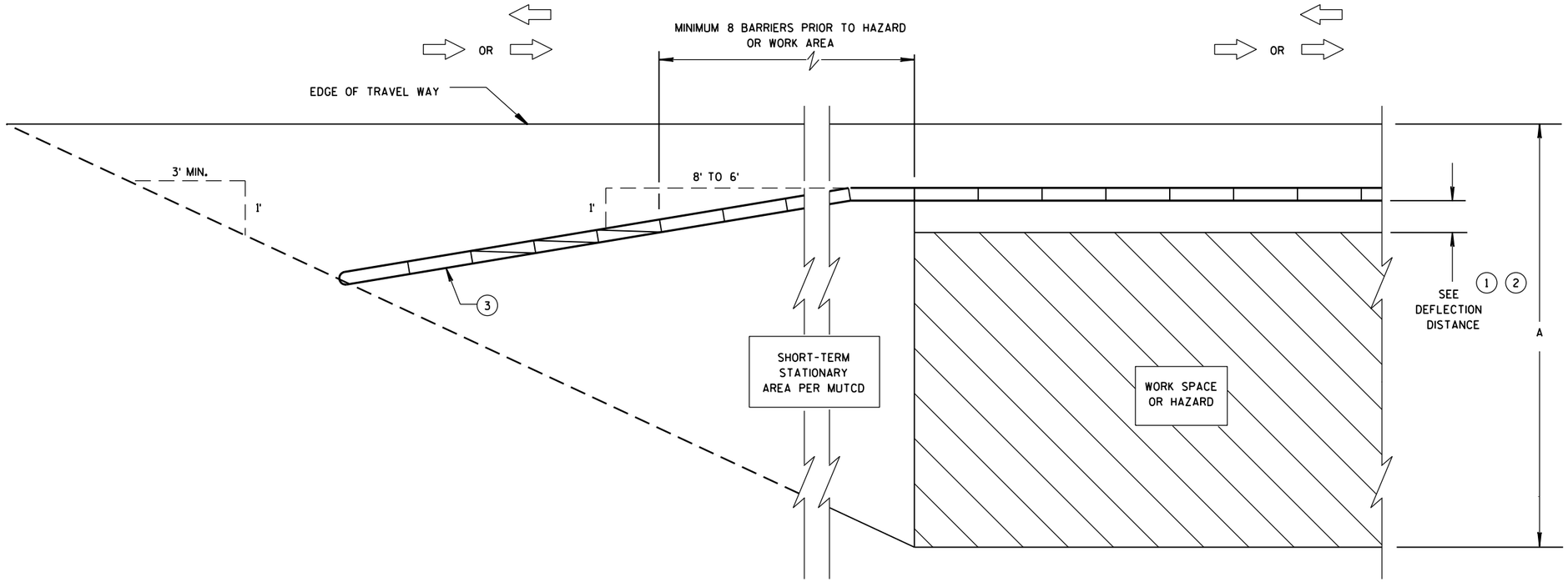

CRASH CUSHION/SAND BARREL ARRAY AND TEMPORARY BARRIER INSTALLATION FOR TRAFFIC ON ONE SIDE - FLARED INSTALLATION

6

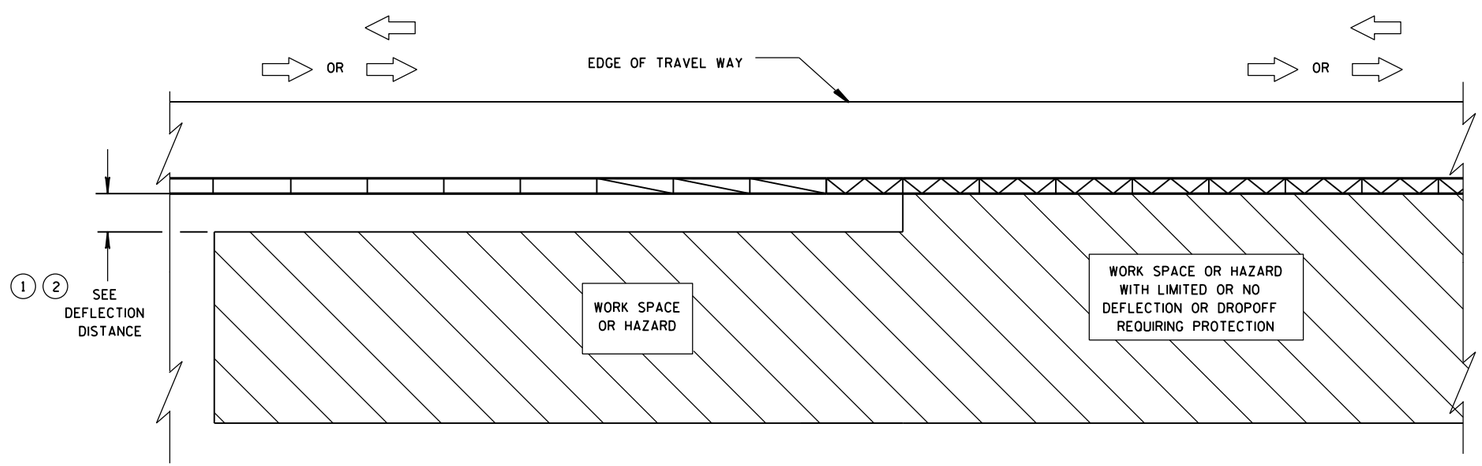

TRANSITION FROM FREE STANDING TEMPORARY BARRIER TO ANCHORED BARRIER

LEGEND

- DIRECTION OF TRAVEL
- CRASH CUSHION OR SAND BARREL ARRAY
- SEE FREE STANDING TRANSITION TO TIED-DOWN SYSTEM DETAILS
- SEE BI-DIRECTIONAL TRANSITION TO TIED-DOWN SYSTEM DETAILS
- 3 PINS PLACED ON TRAFFIC SIDE OF BARRIER
- PERMANENT CONCRETE BARRIER OR CONCRETE PARAPET
- FREE STANDING TEMPORARY BARRIER

CRASH CUSHION/SAND BARREL ARRAY AND OTHER TEMPORARY BARRIER LAYOUT DETAILS

STATE OF WISCONSIN
DEPARTMENT OF TRANSPOR

S.D.D. 14 B 8-2b

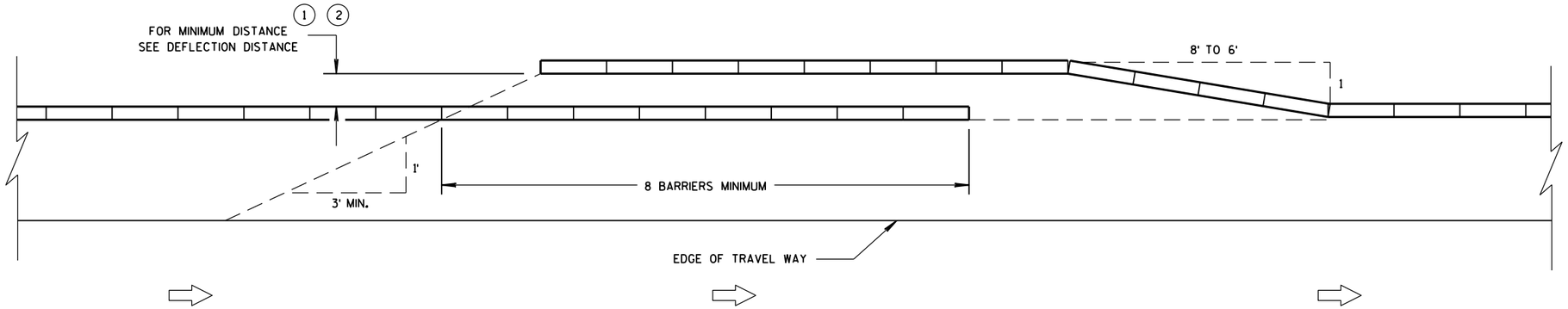

TEMPORARY BARRIER OVERLAP - ONE-WAY TRAFFIC

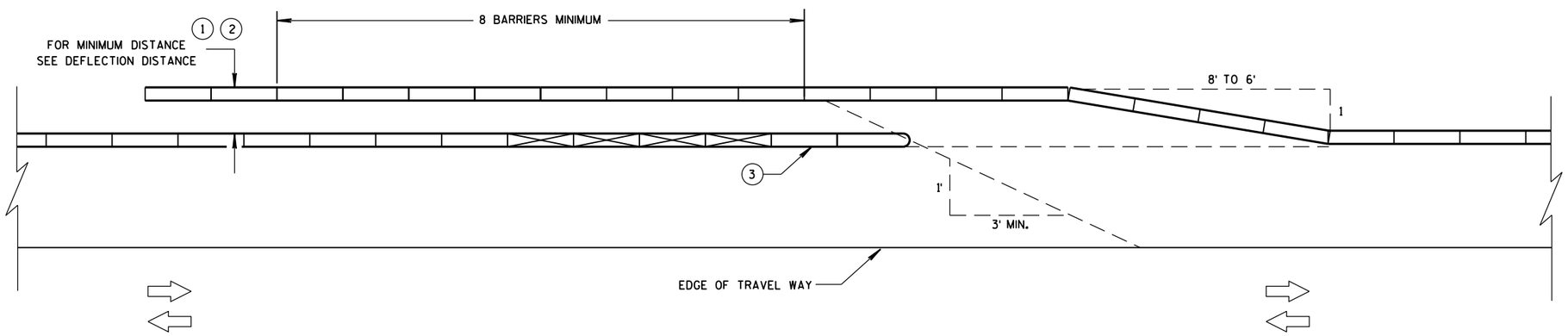

TEMPORARY BARRIER OVERLAP - TWO-WAY TRAFFIC

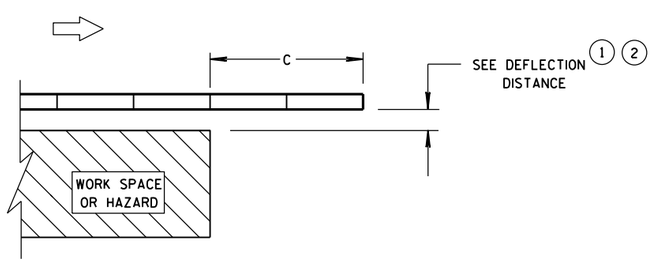

ENDING TEMPORARY BARRIER DOWNSTREAM - UNANCHORED

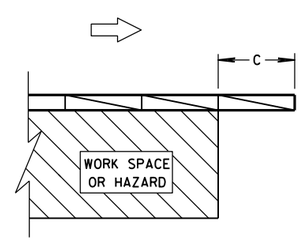

ENDING TEMPORARY BARRIER DOWNSTREAM - ANCHORED

LEGEND

- DIRECTION OF TRAVEL
- CRASH CUSHION OR SAND BARREL ARRAY
- SEE FREE STANDING TRANSITION TO TIED-DOWN SYSTEM DETAILS
- SEE BI-DIRECTIONAL TRANSITION TO TIED-DOWN SYSTEM DETAILS
- 3 PINS PLACED ON TRAFFIC SIDE OF BARRIER
- PERMANENT CONCRETE BARRIER OR CONCRETE PARAPET
- FREE STANDING TEMPORARY BARRIER

CRASH CUSHION/SAND BARREL ARRAY AND OTHER TEMPORARY BARRIER LAYOUT DETAILS

STATE OF WISCONSIN
DEPARTMENT OF TRANSPOR

6

6

S.D.D. 14 B 8-2c

S.D.D. 14 B 8-2c

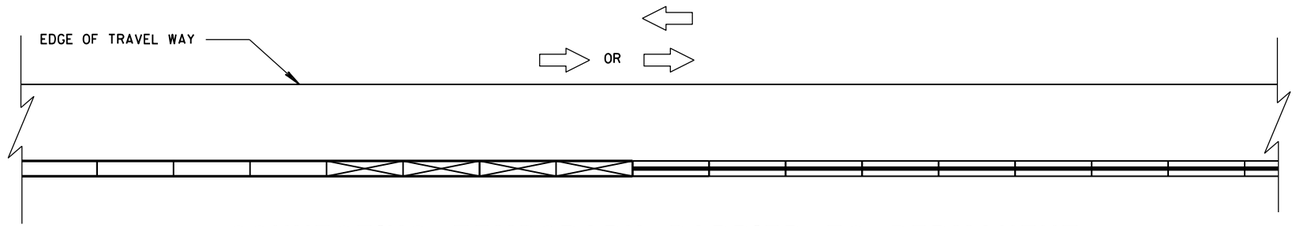

CONNECTING TEMPORARY BARRIER TO PERMANENT
CONCRETE BARRIER-TRAFFIC ON ONE SIDE

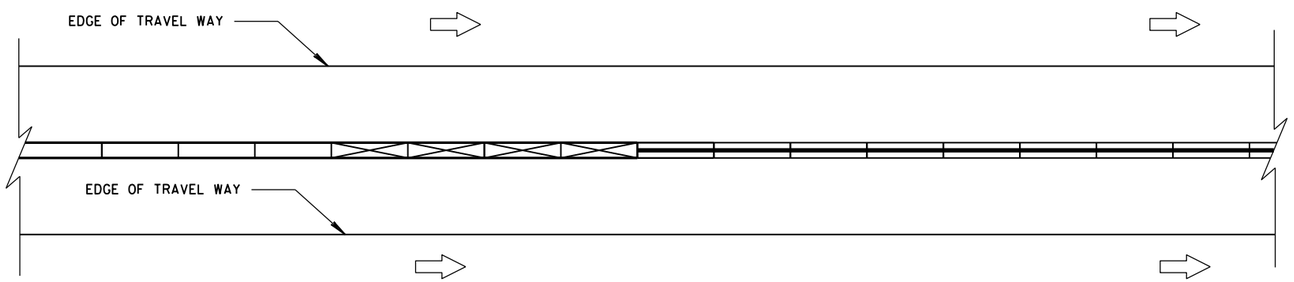

CONNECTING TEMPORARY BARRIER TO PERMANENT
CONCRETE BARRIER-TRAFFIC ON BOTH SIDES

LEGEND

DIRECTION OF TRAVEL

CRASH CUSHION OR
SAND BARREL ARRAY

SEE FREE STANDING TRANSITION
TO TIED-DOWN SYSTEM DETAILS

SEE BI-DIRECTIONAL TRANSITION
TO TIED-DOWN SYSTEM DETAILS

3 PINS PLACED ON
TRAFFIC SIDE OF BARRIER

PERMANENT CONCRETE BARRIER
OR CONCRETE PARAPET

FREE STANDING TEMPORARY
BARRIER

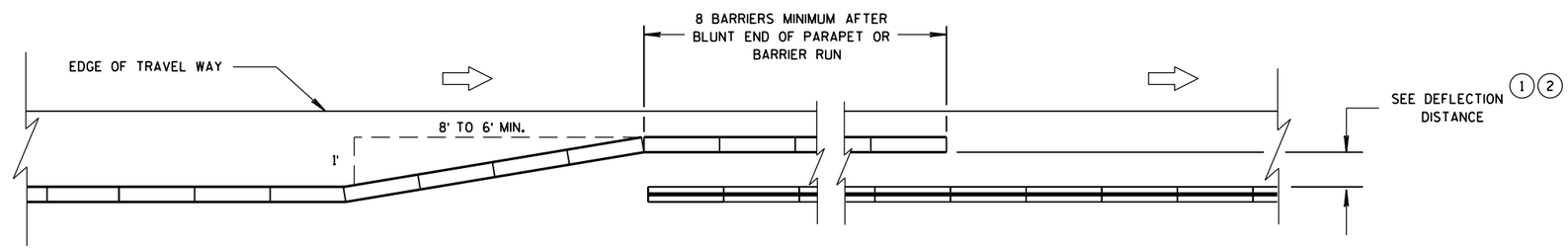

OVERLAPPING TEMPORARY BARRIER AND PERMANENT BARRIER -
ONE WAY TRAFFIC

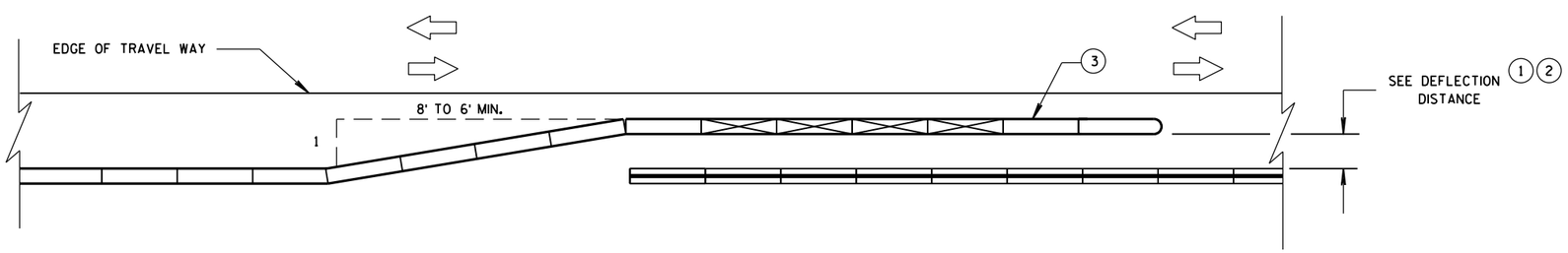

OVERLAPPING TEMPORARY BARRIER AND PERMANENT BARRIER -
TWO WAY TRAFFIC

CRASH CUSHION/SAND BARREL
ARRAY AND OTHER TEMPORARY
BARRIER LAYOUT DETAILS

STATE OF WISCONSIN
DEPARTMENT OF TRANSPOR

6
S.D.D. 14 B 8-2d

LEGEND

DIRECTION OF TRAVEL

CRASH CUSHION OR SAND BARREL ARRAY

SEE FREE STANDING TRANSITION TO TIED-DOWN SYSTEM DETAILS

SEE BI-DIRECTIONAL TRANSITION TO TIED-DOWN SYSTEM DETAILS

3 PINS PLACED ON TRAFFIC SIDE OF BARRIER

PERMANENT CONCRETE BARRIER OR CONCRETE PARAPET

FREE STANDING TEMPORARY BARRIER

DIMENSION C TABLE (2)

AVAILABLE DEFLECTION DISTANCE	MINIMUM LENGTH OF BARRIER BEYOND HAZARD FT
GREATER THAN 8'	12.5
LESS THAN OR EQUAL TO 8' BUT GREATER THAN 4'	50
LESS THAN OR EQUAL TO 4'	100

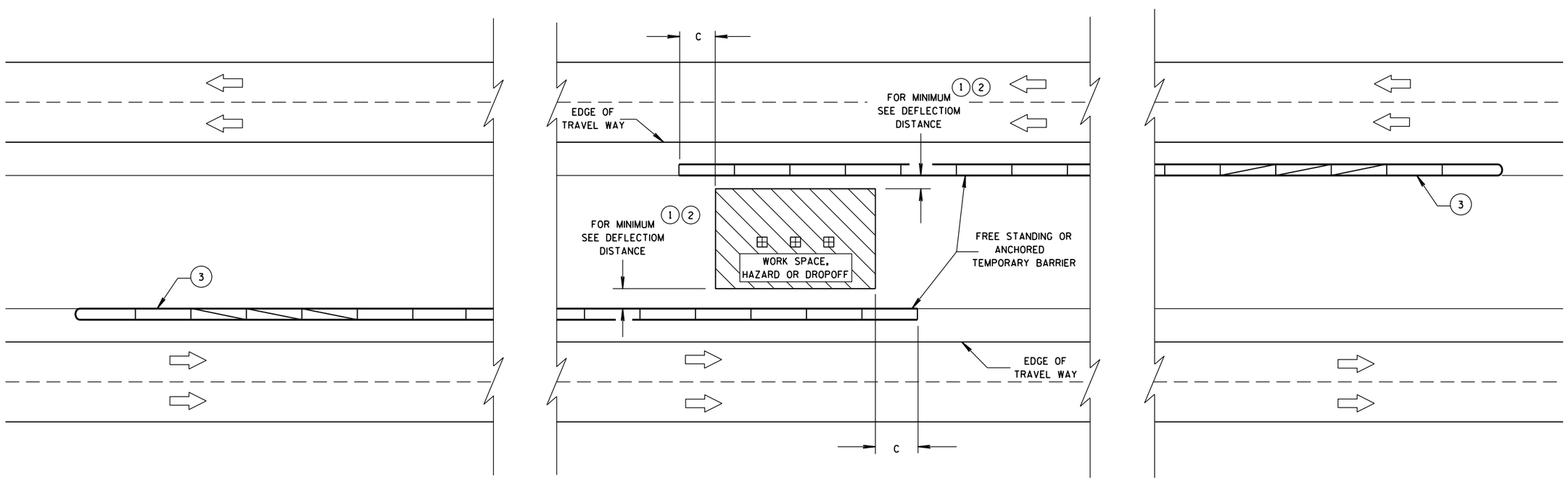

CRASH CUSHION/SAND BARREL ARRAY AND OTHER TEMPORARY BARRIER LAYOUT DETAILS

STATE OF WISCONSIN
DEPARTMENT OF TRANSPORTATION

APPROVED
June, 2015 — DATE
/S/ Jerry H. Zogg — ROADWAY STANDARDS DEVELOPMENT ENGINEER
FHWA

6
S.D.D. 14 B 8-2e

GENERAL NOTES

1. W6 X 9 OR W6 X 8.5 STEEL POSTS AND NOTCHED PLASTIC BLOCKOUTS ARE ACCEPTABLE ALTERNATIVES FOR 6" X 8" WOOD POSTS WITH WOOD OR PLASTIC BLOCKOUTS. USE APPROVED NOTCHED PLASTIC BLOCKOUTS WITH STEEL POSTS. APPROVED PLASTIC BLOCKOUT DESIGNS MAY VARY FROM THIS TYPICAL DETAIL WHEN USED IN CONJUNCTION WITH STEEL POSTS.

   DO NOT MIX STEEL POSTS AND WOOD POSTS IN A SINGLE INSTALLATION.
2. USE STRUCTURAL STEEL POSTS CONFORMING TO ASTM A 36. GALVANIZED POSTS ACCORDING TO AASHTO M 111. EITHER SET THE POSTS IN DRILLED HOLES OR DRIVE TO GRADE. REMOVE MUSHROOMING CAUSED BY DRIVING AND REPAIR DAMAGED SPELTER COATING ON GALVANIZED POSTS.
3. INSTALL STEEL POSTS WITH HOLES ON APPROACHING TRAFFIC SIDE.
4. USE EITHER WOOD OR APPROVED PLASTIC BLOCKOUTS ON WOOD POSTS.
5. IF THE DISTANCE FROM BACK OF POST TO SHOULDER HINGE POINT IS LESS THAN 2 FEET INSTALL LONGER POST AT HALF POST SPACING, W BEAM (LHW).
6. IF ROCK IS ENCOUNTERED DURING EXCAVATION, THE ENGINEER MAY APPROVE USING A 12 INCH DIAMETER POST HOLE EXTENDING 20 INCHES DEEP INTO THE ROCK. PLACE GRANULAR MATERIAL IN THE BOTTOM OF THE HOLE APPROXIMATELY 2½ INCHES DEEP. CUT THE POSTS TO LENGTH AND PLACE IN YHE HOLE. BACKFILL WITH MATERIAL EXCAVATED FROM THE HOLE AND COMPACT ADEQUATEY.
7. WHEN USING STEEL POSTS AND WOOD BLOCKOUTS INSTALL FOUR 16D GALVANIZED NAILS. INSTALL NAILS AT THE BACK CORNERS OF THE BLOCK AND BEND THE NAILS OVER THE FLANGE OF THE STEEL POST.

INSTALL BEAM GUARD SECTIONS AND ALL NECESSARY HARDWARE ACCORDING TO THE APPLICABLE PLAN AND CURRENT STANDARD AND SUPPLEMENTAL SPECIFICATIONS.

ALL DIMENSIONS ARE SUBJECT TO MANUFACTURER'S TOLERANCES EXCEPT WHERE ALLOWABLE TOLERANCES ARE SHOWN.

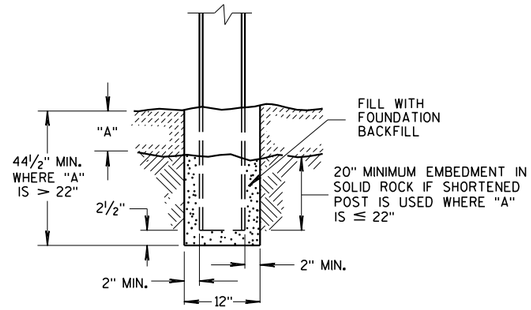

END VIEW
SETTING STEEL OR WOOD POST IN ROCK (6)

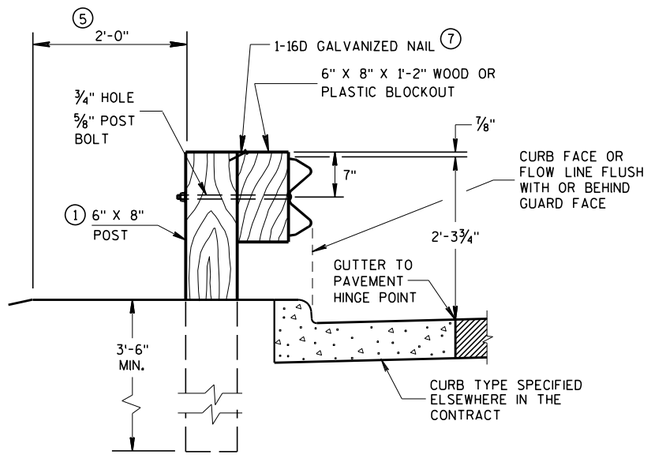

END VIEW
LOCATED ALONG A CURBED ROADWAY

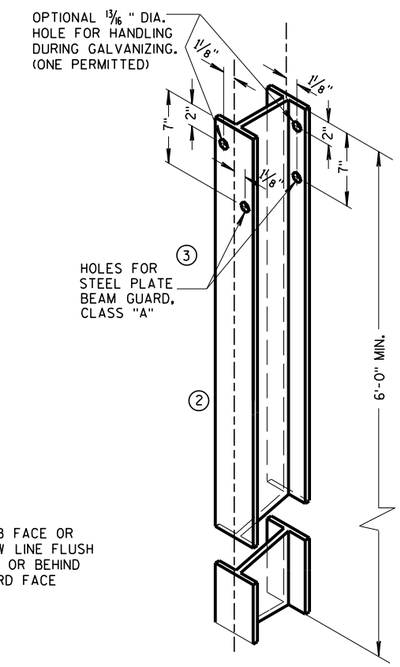

STEEL POST &
HOLE PUNCHING DETAIL
(W6 X 9) (1)

ALL HOLES 13/16" DIAMETER EXCEPT AS NOTED

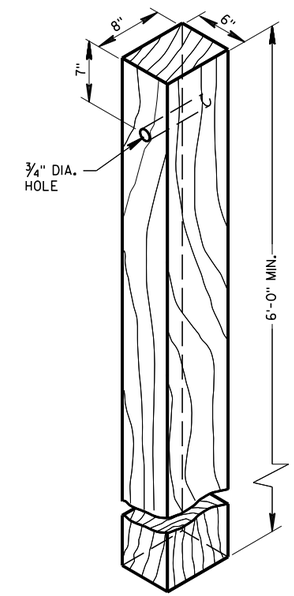

WOOD POST
(6"X8") NOMINAL

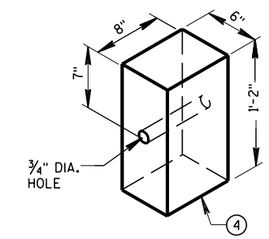

WOOD OR PLASTIC
BLOCKOUT FOR
WOOD POSTS

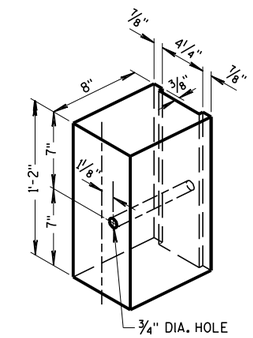

TYPICAL NOTCHED (1)
PLASTIC BLOCKOUT
FOR STEEL POSTS

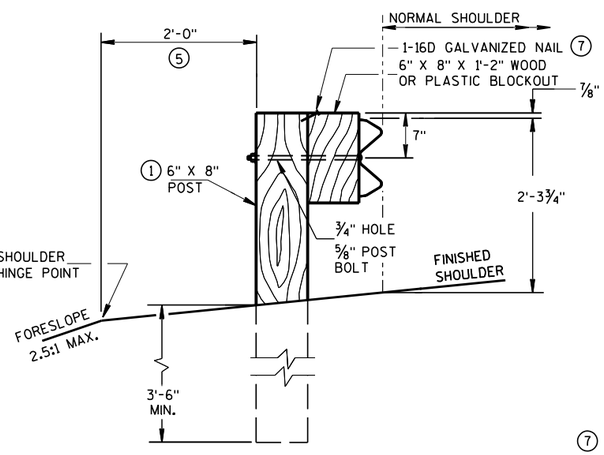

END VIEW
LOCATED ALONG A ROADWAY SHOULDER
STANDARD INSTALLATION

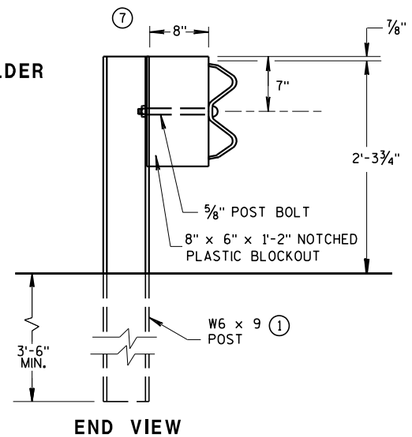

END VIEW
STEEL POST & NOTCHED
PLASTIC BLOCKOUT ALTERNATIVE
STANDARD INSTALLATION

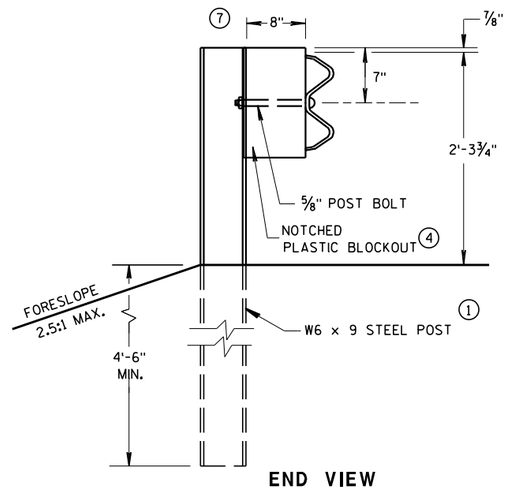

END VIEW
LONGER POST AT HALF
POST SPACING W BEAM
(LHW)

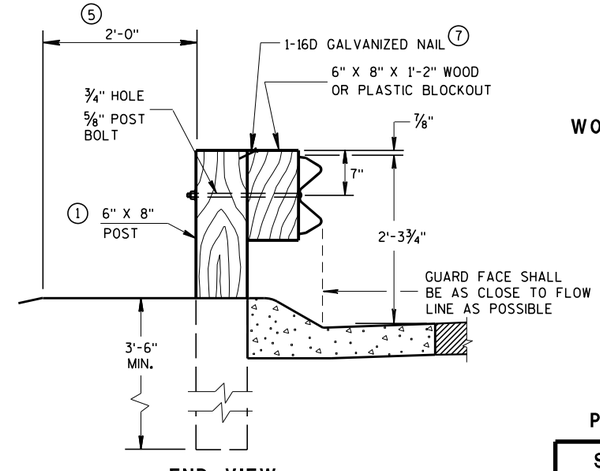

END VIEW
LOCATED ALONG A
MOUNTABLE CURBED ROADWAY

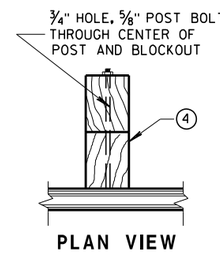

PLAN VIEW
WOOD POST, BLOCKOUT & BEAM

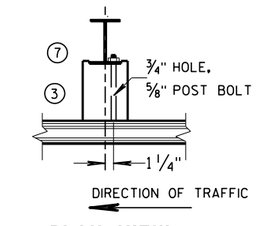

PLAN VIEW
STEEL POST, NOTCHED
PLASTIC BLOCKOUT & BEAM

TYPICAL INSTALLATION OF STEEL PLATE BEAM GUARD

STEEL PLATE BEAM GUARD,
CLASS "A"
INSTALLATION & ELEMENTS

STATE OF WISCONSIN
DEPARTMENT OF TRANSPORTATION

6

6

S.D.D. 14 B 15-11a

S.D.D. 14 B 15-11a

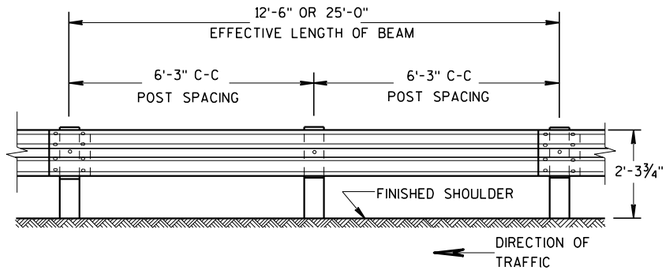

FRONT VIEW

POST SPACING STANDARD INSTALLATION

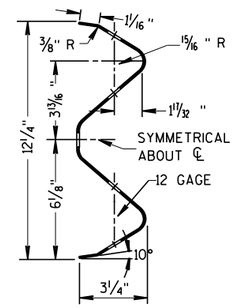

SECTION THRU W BEAM

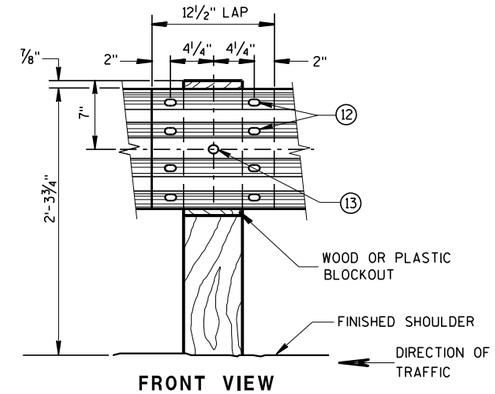

FRONT VIEW

BEAM SPLICE AT WOOD POST AND POST MOUNTING DETAIL

GENERAL NOTES

FURNISH GUARDRAIL DEFLECTORS FROM APPROVED PRODUCTS LIST.

(9) DO NOT INSTALL REFLECTORS ON THE FIRST 50 FEET OF THE APPROACH END OF THE ENERGY ABSORBING TERMINA. START REFLECTORS AT POST #9 AND SPACE EVENLY EVERY 100 FEET (MAX.) TO THE END OF GUARDRAIL RUN, USING A MINIMUM OF 3 REFLECTORS.

(12) 8 -5/8" Φ X 2" BUTTON HEAD BOLTS WITH OVAL SHOULDERS & RECESS NUTS.

(13) 5/8" DIA. BUTTON HEAD BOLT AND RECESS NUT WITH 5/8" DIA. F844 FLAT WASHER UNDER NUT.

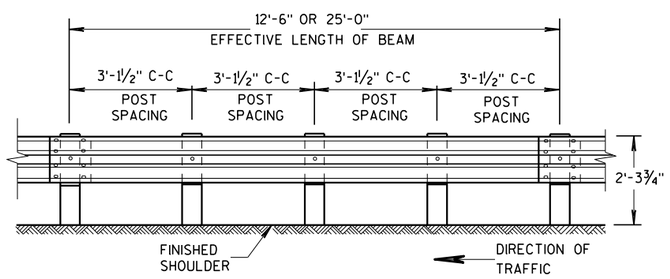

FRONT VIEW

POST SPACING FOR LONGER POST AT HALF POST SPACING W BEAM (LHW)

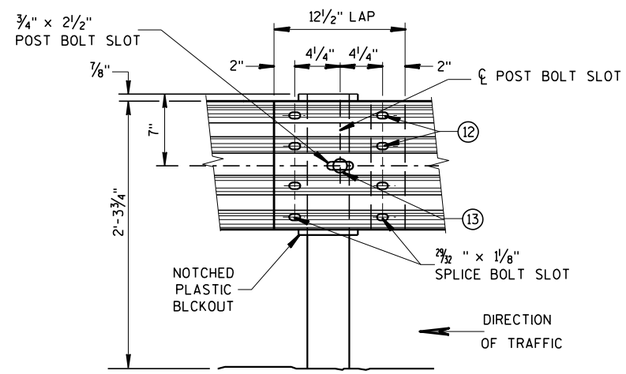

FRONT VIEW
BEAM SPLICE AT STEEL POST

TYPICAL SPLICING DETAILS OF STEEL PLATE BEAM GUARD

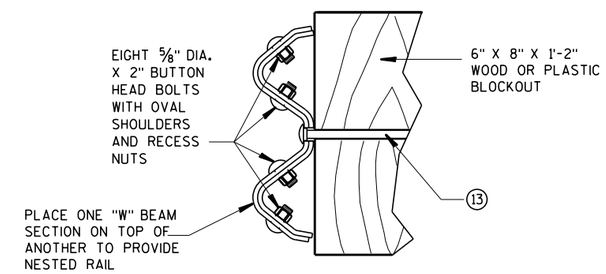

NESTED W BEAM (NW)

USE ALL OTHER STANDARD BEAM GUARD DETAILS FOR CONSTRUCTING NESTED W BEAM (NW)

* USE DOUBLE SIDED WHITE GUADRAIL REFLECTORS ON ROADWAYS WITH BI-DIRECTIONAL TRAFFIC (NO MEDIAN). USE SINGLE SIDED WHITE (RIGHT SIDE) AND SINGLE SIDED YELLOW (LEFT SIDE) ON ROADWAYS WITH MEDIAN SEPARATION.

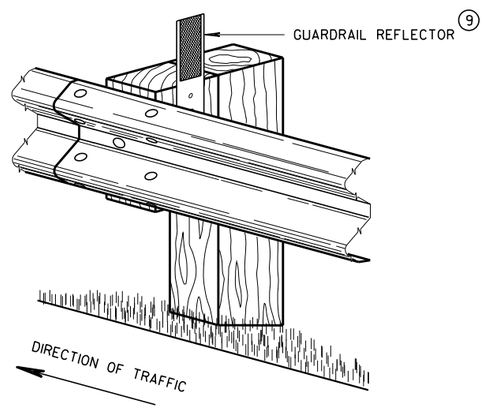

4" X 12" GUARDRAIL REFLECTOR DETAIL AND TYPICAL INSTALLATION *

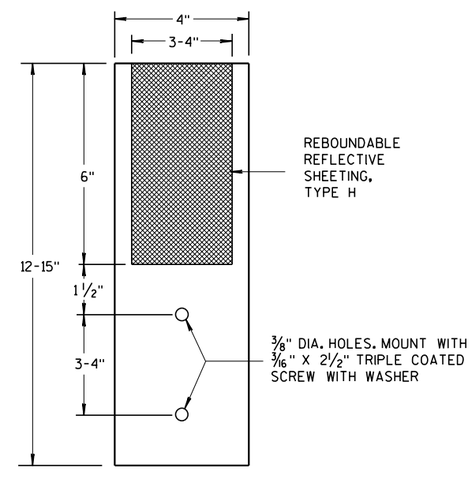

4"x 12" GUARDRAIL REFLECTOR

STEEL PLATE BEAM GUARD, CLASS "A", INSTALLATION & ELEMENTS

STATE OF WISCO 96
DEPARTMENT OF TRANSPORTATION

6

6

S.D.D. 14 B 15-11b

S.D.D. 14 B 15-11b

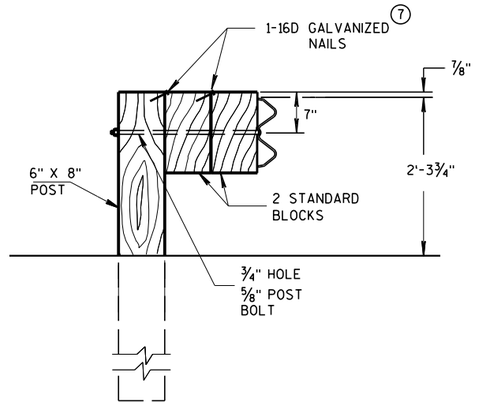

DETAIL FOR DOUBLE BLOCKS

THE NUMBER OF DOUBLE BLOCK POSTS WITHIN A BARRIER RUN IS UNLIMITED

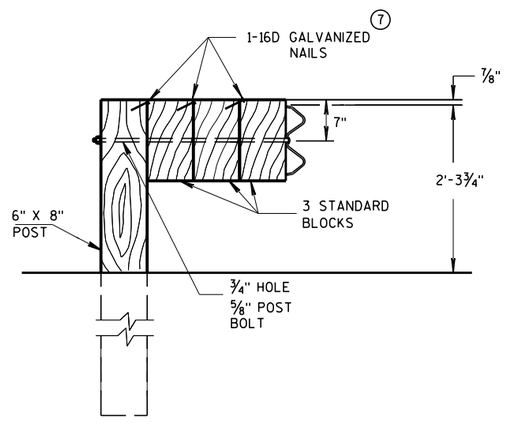

DETAIL FOR TRIPLE BLOCKS

TRIPLE BLOCK DETAIL IS LIMITED TO ONE LOCATION WITHIN A BEAM GUARD RUN.

NOTES: USE DOUBLE OR TRIPLE BLOCKS WHEN UNDERGROUND OBSTACLES PREVENT THE POST FROM BEING INSTALLED.

DO NOT USE EXTRA BLOCKOUTS IF IT CAUSES THE POST TO BE DRIVEN BEYOND SHOULDER HINGE POINT OR CAUSES A FIXED OBJECT TO BE WITHIN THE DEFLECTION DISTANCE OF THE BARRIER.

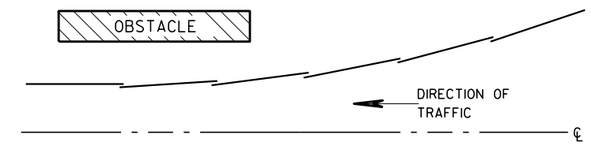

PLAN VIEW
BEAM LAPPING DETAIL

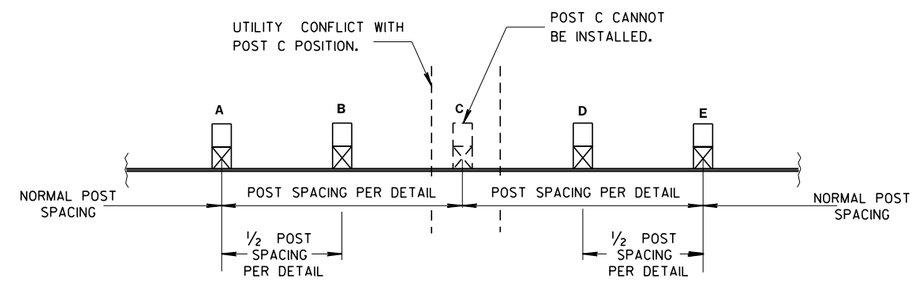

POST DRIVING FOR CONTINUOUS UNDERGROUND OBSTRUCTION

6

6

S.D.D. 14 B 15-11c

S.D.D. 14 B 15-11c

STEEL PLATE BEAM GUARD, CLASS "A", INSTALLATION & ELEMENTS

STATE OF WISCONSIN
DEPARTMENT OF TRANSPORTATION

APPROVED
June 2017 — DATE
/S/ Rodney Taylor — ROADWAY STANDARDS DEVELOPMENT UNIT SUPERVISOR
FHWA

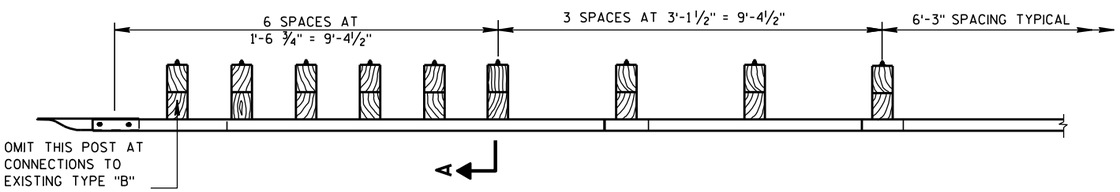

PLAN VIEW

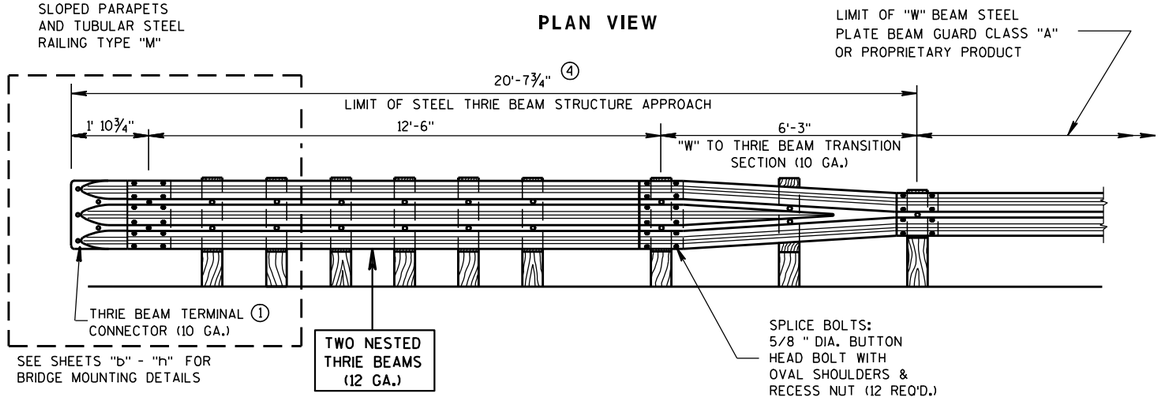

FRONT VIEW

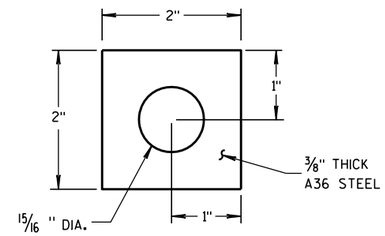

PLATE WASHER DETAIL

GENERAL NOTES

BOLT THE THRIE BEAM TO ALL POSTS AND BLOCKOUTS. DRILL OR PUNCH BOLT HOLES IN THE BEAM IF THE POST SPACING IS LESS THAN 6'-3".

DO NOT USE STEEL POSTS AND NOTCHED PLASTIC BLOCKOUTS IN THE STEEL THRIE BEAM STRUCTURAL APPROACH AND THE TRANSITION SECTION OF STEEL PLATE BEAM GUARD, CLASS "A" INSTALLATIONS.

IF ROCK IS ENCOUNTERED, REMOVE ROCK TO FULL DEPTH OF POST PLUS 2 1/2", AND 12" DIAMETER AROUND POST. SEE 14B15 FOR MORE DETAILS.

① BRIDGE RAILING TYPE "W" DOES NOT REQUIRE A TERMINAL CONNECTOR.

② MINIMUM EMBEDMENT SHALL BE 4'-0". WHERE EXISTING CONDITIONS DO NOT PERMIT THE APPROPRIATE EARTHWORK SHOWN ON THE PLAN TYPICAL SECTIONS OR DETAILS, THE ENGINEER MAY ALLOW THE REDUCTION OR ELIMINATION OF THE 2 FOOT DISTANCE TO THE HINGE POINT. OTHERWISE BUILD AS THE PLAN SHOWS OR AS THE ENGINEER DIRECTS. IF THE 2 FOOT DISTANCE TO THE HINGE POINT IS REDUCED OR ELIMINATED, INCREASE THE POST EMBEDMENT DEPTH TO 4'-6" OR MORE.

③ POST BOLTS ARE 5/8" DIAMETER ASTM A307 BUTTON HEAD BOLT. A POST BOLT REQUIRES A 5/8" DIAMETER A563A DOUBLE RECESSED (DR) HEAVY HEX AND A 5/8" DIAMETER F844 FLAT WASHER. LENGTH OF POST BOLT MAY VARY.

④ ALL WOOD POSTS MUST BE 6" X 8" AND AT LEAST 7'-0" LONG.

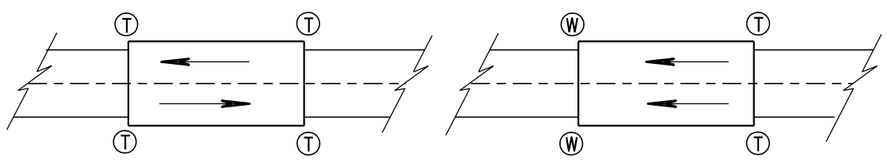

TWO WAY TRAFFIC

ONE WAY TRAFFIC

Ⓣ THRIE BEAM CONNECTION

Ⓦ W-BEAM CONNECTION WHEN REQUIRED

TYPICAL LOCATIONS OF THRIE BEAM AND W-BEAM CONNECTIONS TO BRIDGE

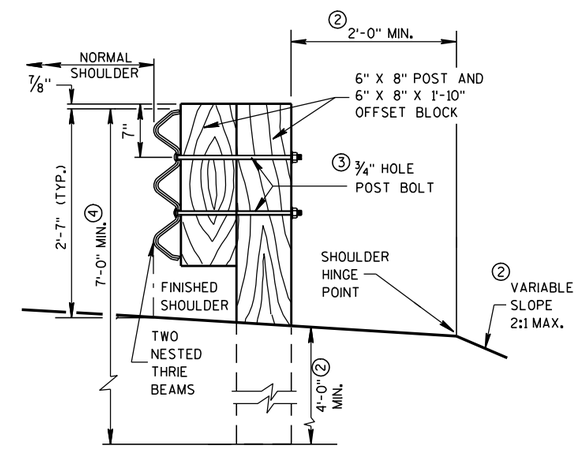

SECTION A-A

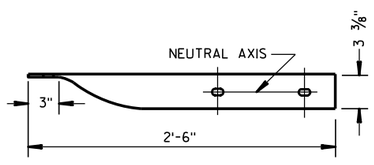

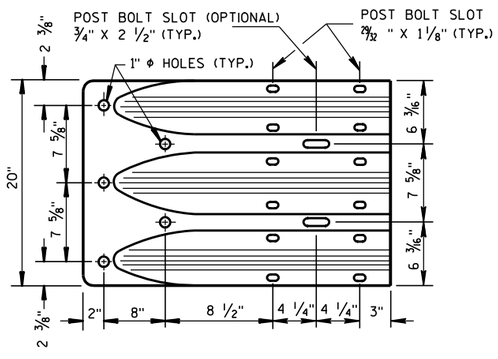

THRIE BEAM TERMINAL CONNECTOR

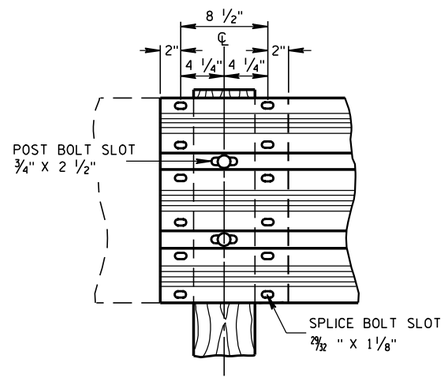

THRIE BEAM SPLICE

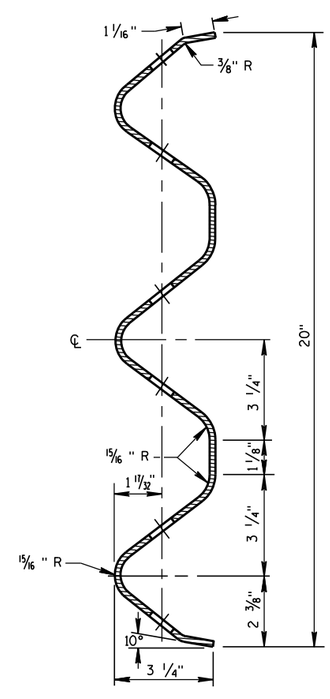

SECTION THRU THRIE BEAM RAIL ELEMENT

STEEL THRIE BEAM STRUCTURE APPROACH

STATE OF WISCONSIN
DEPARTMENT OF TRANSPORTATION

APPROVED

8/31/2012 — DATE

/S/ Jerry H. Zogg — ROADWAY STANDARDS DEVELOPMENT ENGINEER

FHWA

6

6

S.D.D. 14 B 20-11a

S.D.D. 14 B 20-11a

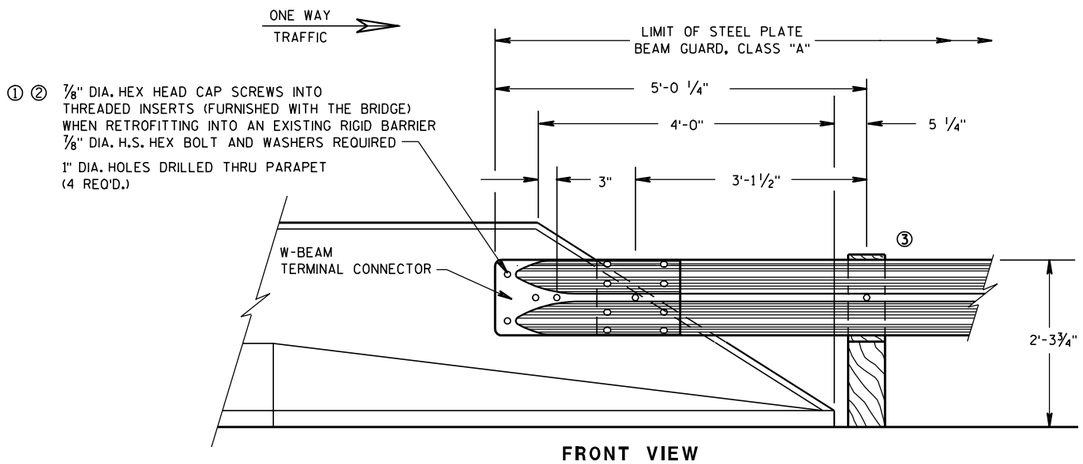

FRONT VIEW

W BEAM CONNECTION TO PARAPETS WITH SLOPED ENDS

(USE ONLY AT TRAFFIC EXIT END OF ONE WAY BRIDGE)

GENERAL NOTES

THESE ARE TYPICAL CONNECTION DETAILS. ADJUST THE POSTION OF CONNECTIONS TO EXISTING BRIDGES TO FIT THE ACTUAL BRIDGE AND SITE DIMENSIONS.

BOLTS, NUTS AND WASHERS SHALL CONFORM TO ASTM A325, A449 AND GALVANIZED PER STANDARD SPECIFICATIONS 614.

① DRILLING BOLT HOLES THROUGH THE PARAPET, BOLTS, NUTS, WASHERS AND REPAIRING DAMAGED CONCRETE ARE INCIDENTAL TO THE CONTRACT.

② BOLTS MAY BE A325 BOLTS OR A449 BOLTS. BOLT LENGTH AND THREADING LENGTH ARE TO ALLOW FOR A TIGHT CONNECTION BETWEEN RIGID BARRIER AND THRIE BEAM CONNECTION PLATE. CONTRACTOR IS TO FIELD VERIFY BOLT LENGTH AND THREAD LENGTH. ONE ROUND WASHER REQUIRED BETWEEN BOLT HEAD AND THRIE BEAM TERMINAL CONNECTOR. BOLTS THAT EXTEND THROUGH THE PARAPET AND OUT THE BACK FACE REQUIRE A HARDENED ROUND STEEL WASHER THAT IS 2" O.D. X 5/8" THICK AND ONE PLATE WASHER. REPAIR ANY DAMAGED CONCRETE FROM BOLT INSTALLATION.

③ W6 X 9 OR W6 X 8.5 STEEL POSTS AND NOTCHED PLASTIC BLOCKOUTS ARE ACCEPTABLE ALTERNATIVES FOR 6" X 8" WOOD POST WITH WOOD OR PLASTIC BLOCKOUTS. USE APPROVED NOTCHED PLASTIC BLOCKOUTS WITH STEEL POSTS.

DO NOT USE STEEL POSTS AND NOTCHED PLASTIC BLOCKOUTS IN THE STEEL THRIE BEAM STRUCTURAL APPROACH AND THE TRANSITION SECTION OF STEEL PLATE BEAM GUARD, CLASS "A" INSTALLATIONS.

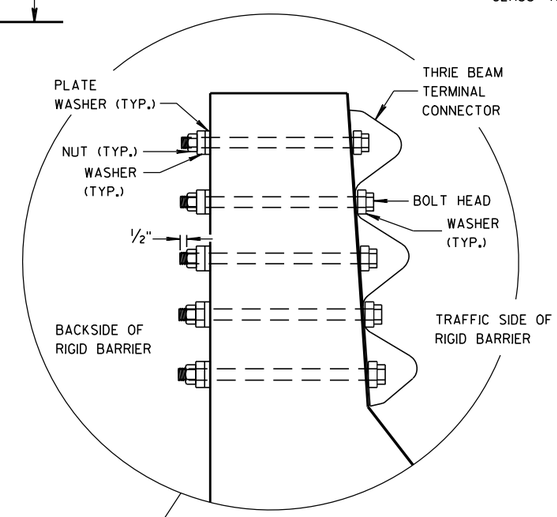

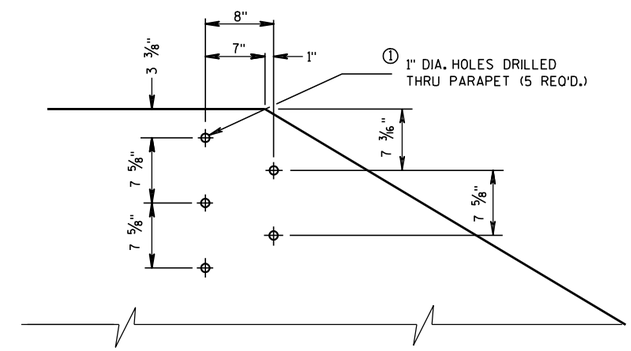

DRILL HOLE LOCATION AND PATTERN FOR THRIE BEAM CONNECTION

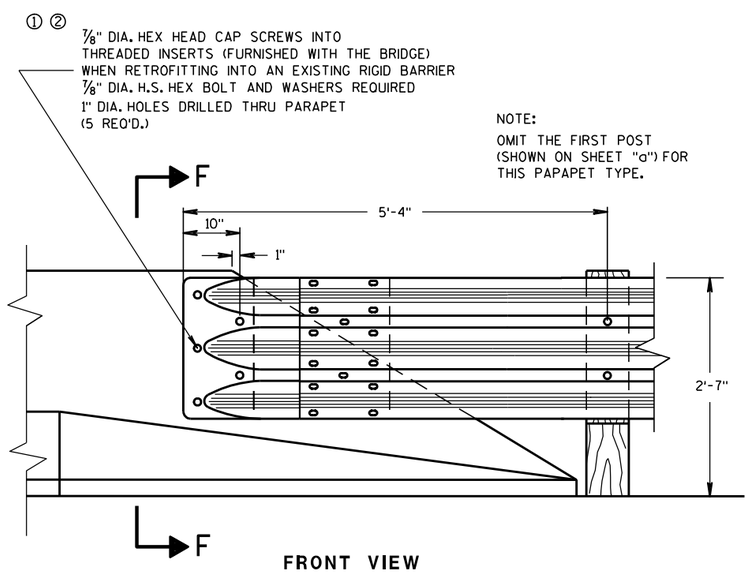

FRONT VIEW

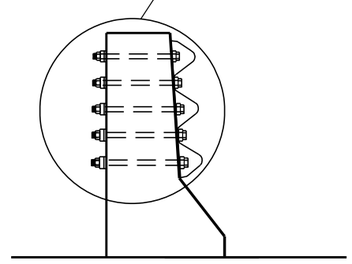

SECTION F-F

THRIE BEAM CONNECTION TO BRIDGE PARAPETS WITH SLOPED ENDS

STEEL THRIE BEAM STRUCTURE APPROACH, CONNECTION TO SLOPED END PARAPETS

STATE OF WISCONSIN
DEPARTMENT OF TRANSPORTATION

APPROVED
8/31/2012 — DATE
/S/ Jerry H. [illegible] — ROADWAY STANDARDS DEVELOPMENT ENGINEER
FHWA

6

S.D.D. 14 B 20-11d

6

S.D.D. 14 B 20-11d

1. WOOD OR STEEL POSTS (w6X9 OR w6X8.5) MAY BE USED. DO NOT INTERMIX WOOD AND STEEL POSTS. INSTALL STEEL POSTS WITH HOLES ON APPROACHING TRAFFIC SIDE.
2. USE WOOD OR APPROVED PLASTIC BLOCKOUTS. WOOD BLOCKOUTS MAY BE CONSTRUCTED OUT OF TWO OR MORE WOOD BLOCKOUTS. SEE ALTERNATE WOOD BLOCKOUT DETAIL. DIMENSIONS OF APPROVED PLASTIC BLOCKOUTS MAY VARY.
3. IF ROCK IS ENCOUNTERED DURING EXCAVATION, PROVIDE A HOLE 12 INCHES IN DIAMETER EXTENDING 20 INCHES DEEP INTO THE ROCK. PLACE APPROXIMATELY 2 1/2" INCHES OF GRANULAR MATERIAL IN THE BOTTOM OF THE HOLE. CUT THE POSTS THE TO LENGTH AMD INSTALL. BACKFILL WITH EXCAVATED MATERIAL AND COMPACT. BACKFILL IS TO BE FREE OF LARGE ROCKS.
4. WHEN THE DISTANCE FROM BACK OF POST TO SHOULDER HINGE POINT IS LESS THAN 2 FEET INSTALL LONGER POST AT HALF POST SPACING (K).
5. FOR NEW MGS INSTALLATION TOP OF W-BEAM RAIL TOLERANCE IS +1". FOR EXISTING MGS INSTALLATION TOP OF W-BEAM IS BETWEEN 27 ¾" TO 32".
6. WHEN USING STEEL POST AND WOOD BLOCKOUTS INSTALL FOUR 16D GALVANIZED NAILS. INSTALL NAILS AT THE BACK CORNERS OF THE BLOCK AND BEND THE NAILS OVER THE FLANGE OF THE STEEL POST.
7. TOTAL POST LENGTH FOR TYPE K IS 7' - 0". TOTAL POST LENGTH FOR OTHER MGS TYPES IS 6' - 0".

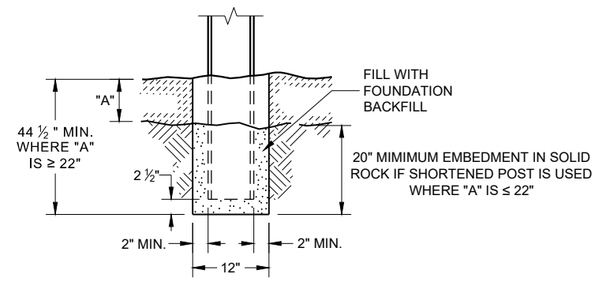

END VIEW
SETTING STEEL OR WOOD POST IN ROCK (3)

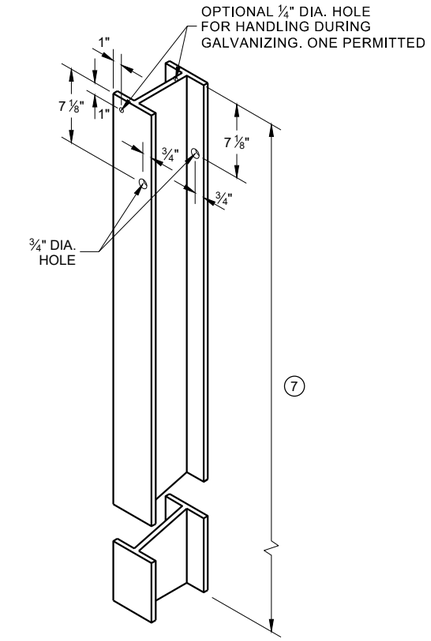

STEEL POST & HOLE PUNCHING DETAIL (W 6 X 9) (1)

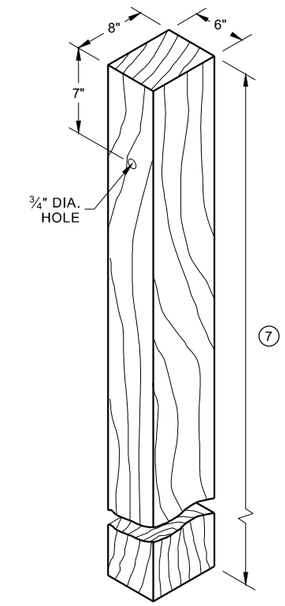

WOOD POST (6" X 8") NOMINAL (1)

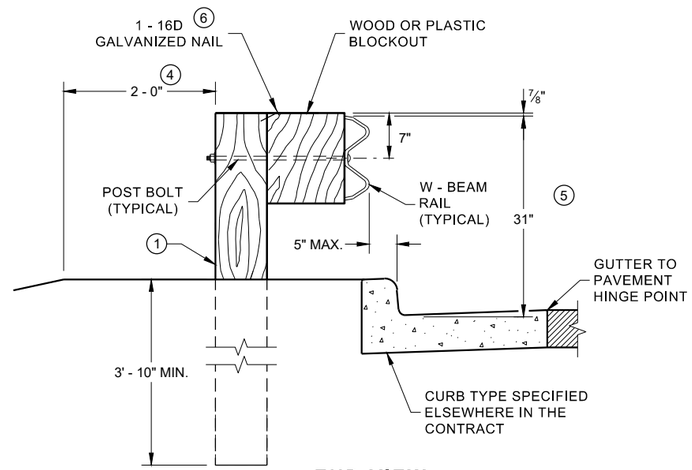

END VIEW
LOCATED ALONG A CURBED ROADWAY

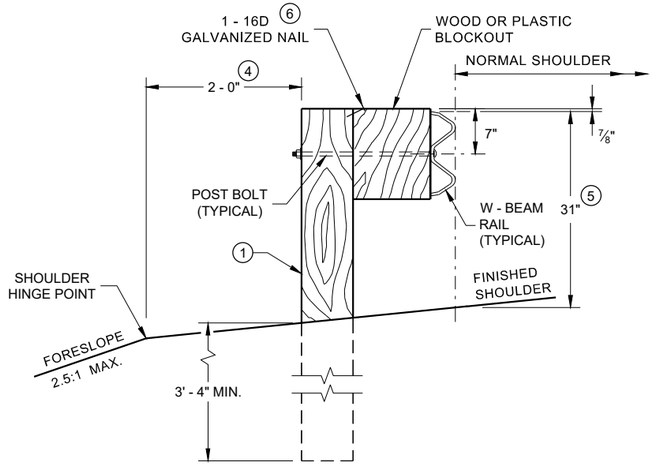

END VIEW
LOCATED ALONG A ROADWAY SHOULDER STANDARD INSTALLATION

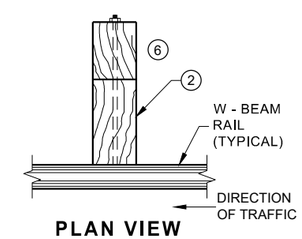

PLAN VIEW
WOOD POST, BLOCKOUT & BEAM

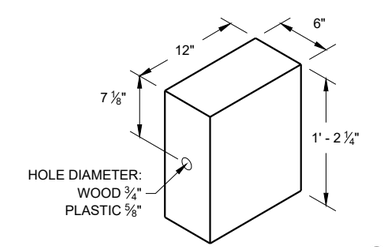

WOOD OR PLASTIC BLOCKOUT (2)

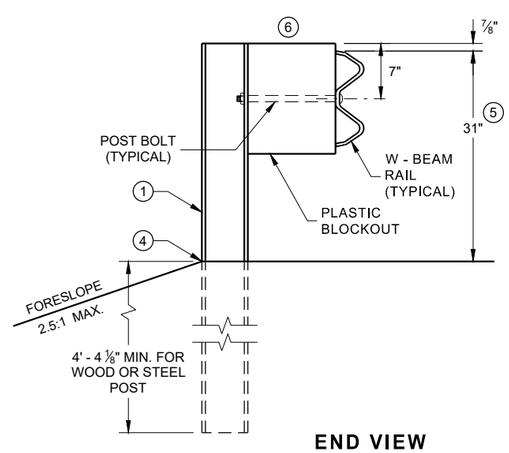

END VIEW
MGS LONGER POST AT HALFPOST SPACING W BEAM (K)

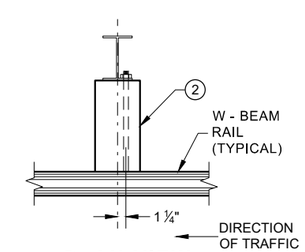

PLAN VIEW
STEEL POST, PLASTIC BLOCKOUT & BEAM

MIDWEST GUARDRAIL SYSTEM (MGS) GUARDRAIL

STATE OF WISCONSIN
DEPARTMENT OF TRANSPORTA

6

SDD 14B42 - 06a

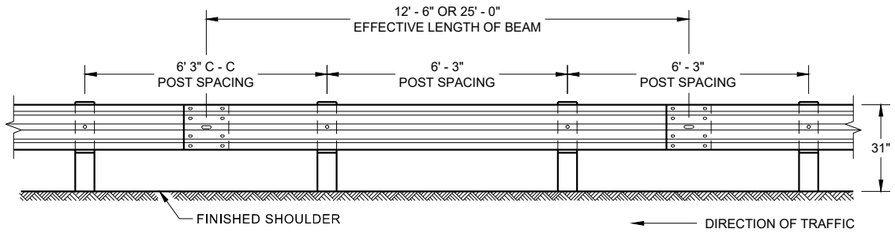

FRONT VIEW
POST SPACING STANDARD INSTALLATION

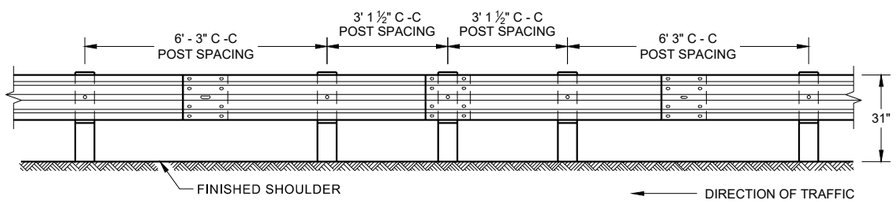

FRONT VIEW
HALF POST SPACING (HS) AND HALF POST SPACING WITH LONGER POSTS (K)

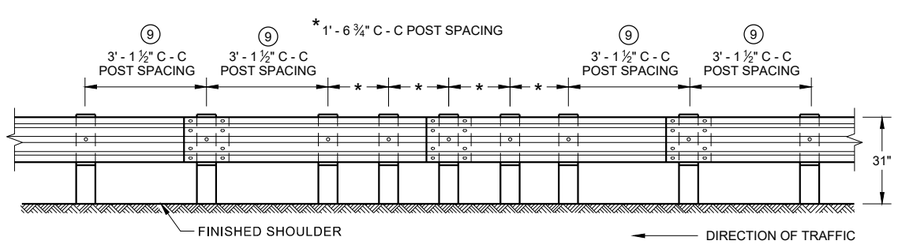

FRONT VIEW
QUARTER POST SPACING (QS)

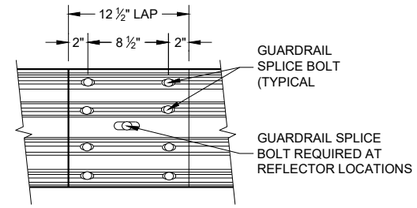

FRONT VIEW
MID-SPAN BEAM SPLICE

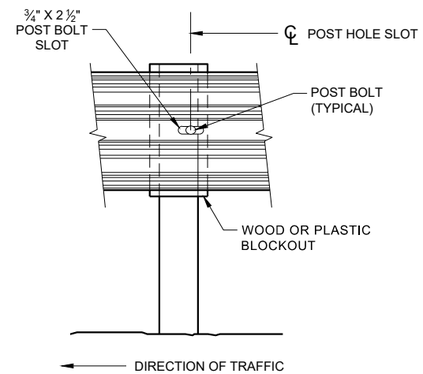

FRONT VIEW AT STEEL POST

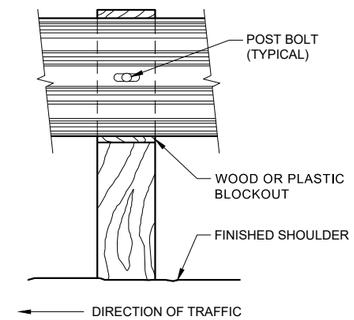

FRONT VIEW AT WOOD POST

GENERAL NOTES

8. DO NOT INSTALL REFLECTORS ON THE FIRST 50 FEET OF THE APPROACH END OF THE ENERGY ABSORBING TERMINAL.

9. 25 FEET OF HALF POST SPACING IS REQUIRED ON APPROACH AND DEPARTURE ENDS OF QUARTER POST SPACING.

POST BOLTS ARE A ⅝" DIAMETER ASTM A307 GUARDRAIL BOLT. A POST BOLT REQUIRES ⅝" DIAMETER A563A DOUBLE RECESSED (DR) HEAVY HEX NUT AND ⅝" DIAMETER F844 FLAT WASHER. POST BOLTS MAY BE LONGER IF MULTIPLE BLOCKOUTS ARE BEING USED.

GUARD RAIL SPLICE BOLTS ARE A ⅝" DIAMETER ASTM A307 GUARDRAIL HEAD BOLT. A GUARDRAIL SPLICE BOLT REQUIRES ⅝" DIAMETER A563A DOUBLE RECESSED (DR) HEAVY HEX NUT.

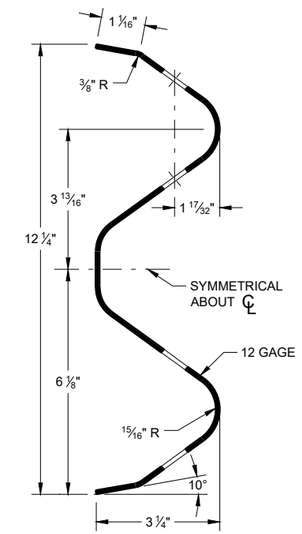

SECTION THRU W-BEAM RAIL

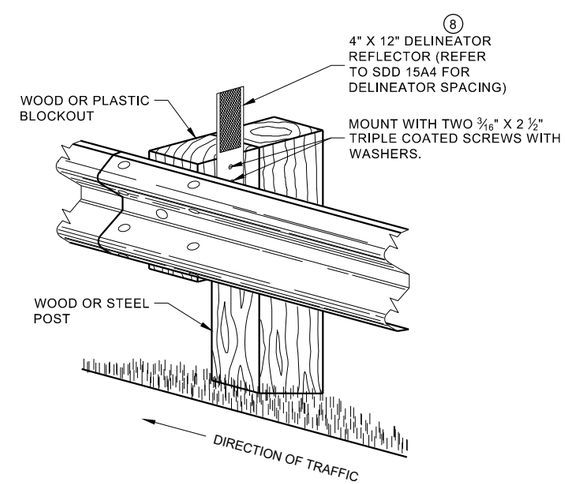

ONE SIDED REFLECTOR DETAIL AND TYPICAL INSTALLATION

MIDWEST GUARDRAIL SYSTEM (MGS) GUARDRAIL

STATE OF WISCONSIN
DEPARTMENT OF TRANSPORTA

6

SDD 14B42 - 06b

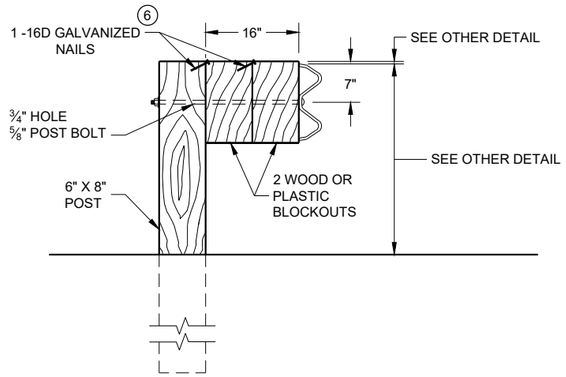

DETAIL FOR 16" BLOCKOUT DEPTH

IT IS ACCEPTABLE TO USE BLOCKOUTS UP TO 16" DEEP TO INCREASE THE POST OFFSET TO AVOID UNDERGROUND OBSTACLES. THERE IS NO LIMIT TO THE NUMBER OF POSTS THAT CAN HAVE ADDITIONAL BLOCKOUTS UP TO 16" DEEP.

NOTE:

1. ALL FILLETS SHALL HAVE A MINIMUM RADIUS OF 3/16".
2. IF THE BOLT EXTENDS MORE THAN ¼" FROM THE NUT THE BOLT SHOULD BE TRIMMED BACK.

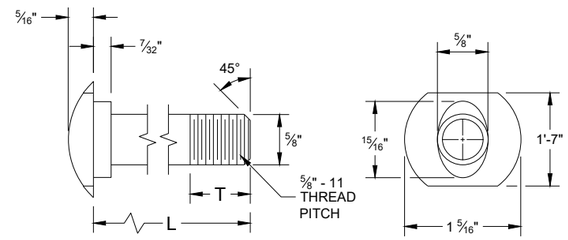

POST BOLT TABLE

L	T (MIN.)
1 ¼"	1 ⅛"
2"	1 ¾"
10"	4"
14"	4 1/16"
18"	4"
21"	4 1/16"
25"	4"

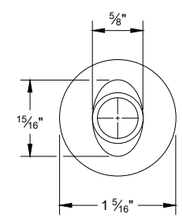

ALTERNATE BOLT HEAD

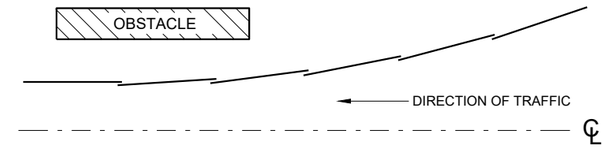

PLAN VIEW
BEAM LAPPING DETAIL

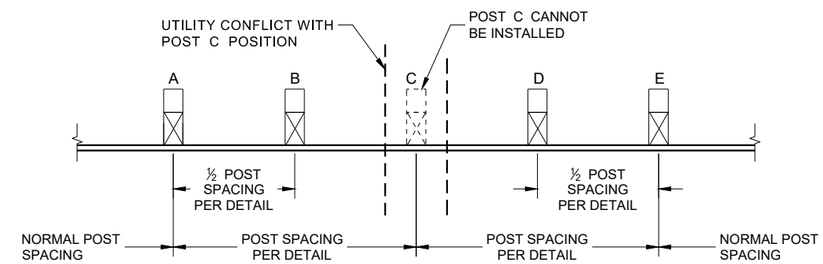

POST DRIVING FOR CONTINUOUS UNDERGROUND OBSTRUCTION

6

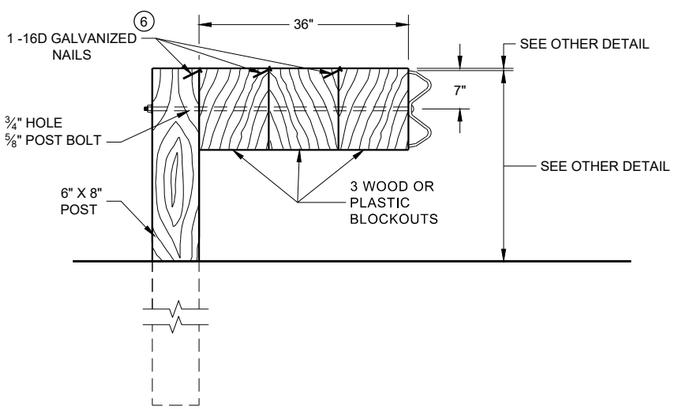

DETAIL FOR 36" BLOCKOUT DEPTH

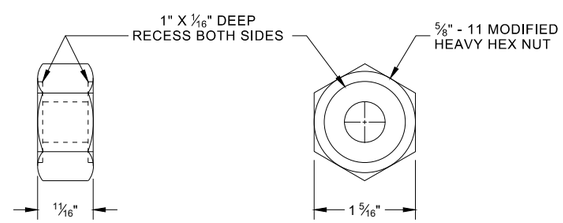

POST BOLT, SPLICE BOLT AND RECESS NUT

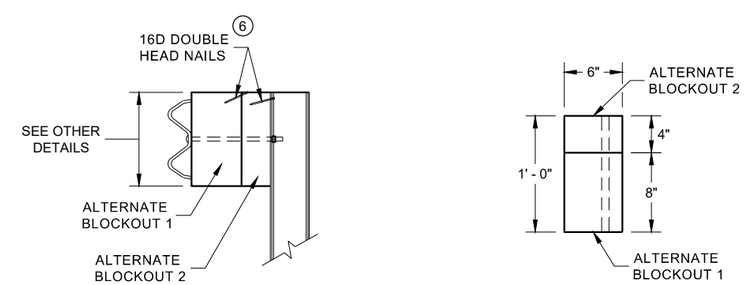

SIDE VIEW

PLAN VIEW

ALTERNATE WOOD BLOCKOUT DETAIL

NOTES: UNDER SPECIAL CIRCUMSTANCES, SUCH AS AVOIDING OBSTACLES THAT ARE NOT RELOCATED, IT IS ACCEPTABLE TO INSTALL ADDITIONAL BLOCKOUTS TO OBTAIN UP TO 36" DEPTH FOR ONE OR TWO POSTS IN A SECTION OF GUARDRAIL.

DO NOT USE 16" OR 36" BLOCKOUTS IF IT CAUSES THE POST TO BE DRIVEN BEYOND SHOULDER HINGE POINT OR CAUSES A FIXED OBJECT TO BE WITHIN THE DEFLECTION DISTANCE OF THE BARRIER.

(6) WHEN USING STEEL POST AD WOOD BLOCKOUTS, INSTALL FOUR 16D GALVANIZED NAILS. INSTALL NAILS AT THE BACK CORNERS OF THE BLOCK AND BEND THE NAILS OVER THE FLANGE OF THE STEEL POST.

MIDWEST GUARDRAIL SYSTEM (MGS) GUARDRAIL

STATE OF WISCONSIN
DEPARTMENT OF TRANSPORTA

SDD 14B42 - 06c

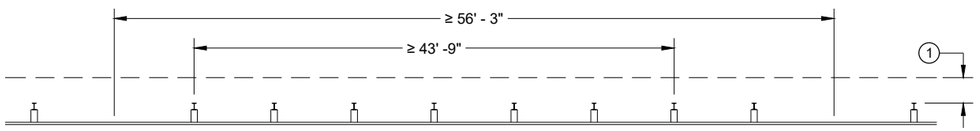

MISSING POST IN NORMAL BEAM GUARD RUN

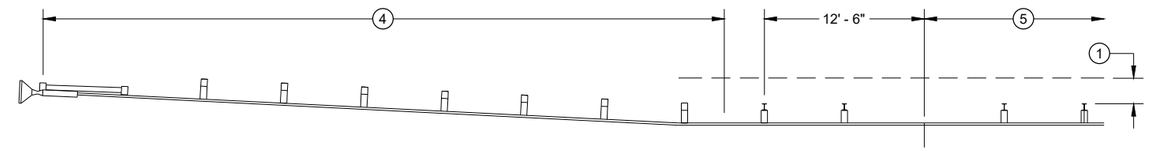

MISSING POST IN NORMAL BEAM GUARD RUN NEAR EAT

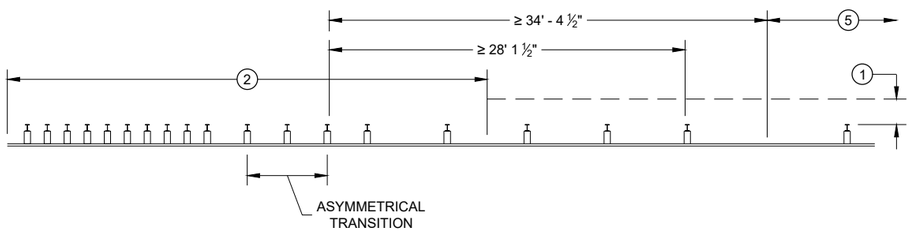

MISSING POST NEAR APPROACH THRIE BEAM TRANSITION

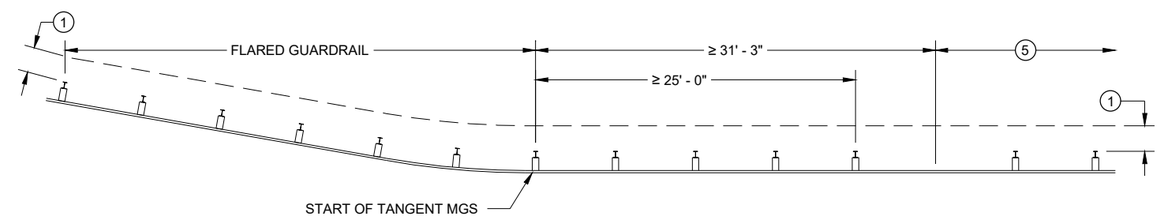

MISSING POST IN NORMAL BEAM GUARD RUN NEAR FLARED BEAM GUARD

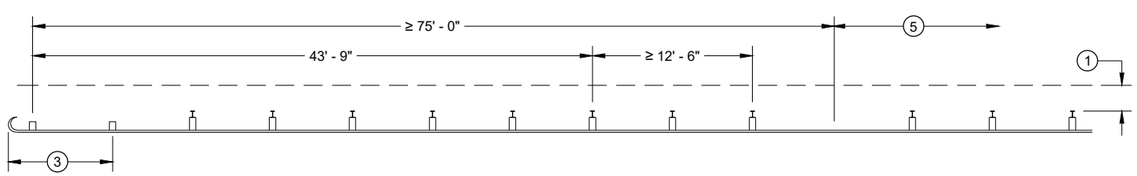

MISSING POST IN NORMAL BEAM GUARD RUN NEAR TYPE 2 TERMINAL

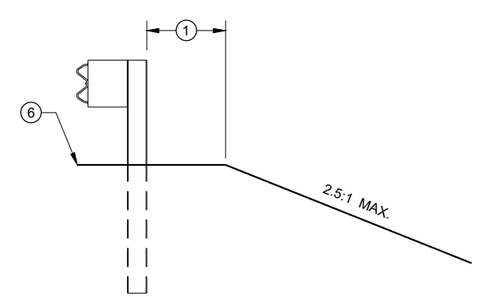

CROSS SECTION VIEW

1. MINIMUM OF 2 FEET OF GRADING BEHIND POST.
2. SEE SDD 14B45 FOR MORE DETAILS.
3. SEE SDD 14B47 FOR MORE DETAILS.
4. SEE SDD 14B44 FOR MORE DETAILS.
5. SEE MISSING POST IN NORMAL BEAM GUARD RUN FOR DISTANCE TO NEXT MISSING POST AND AREA FOR WELL DRAINED, COMPACTED SOILS.
6. SEE PLAN FOR SHOULDER DESIGN.

MIDWEST GUARDRAIL SYSTEM (MGS) GUARDRAIL

STATE OF WISCONSIN
DEPARTMENT OF TRANSPORTATION

APPROVED
7/2018 — DATE
/S/ Rodney Taylor — ROADWAY STANDARDS DEVE UNIT SUPERVISOR
FHWA

6

SDD 14B42 - 06d

GENERAL NOTES

(A) THE SLOPE IN THE AREA BOUNDED BY THE GRADELINE, THE HINGE POINT LINE (HPL) AND THE CLEAR ZONE LIMITS (CZL) SHALL BE 4:1 OR FLATTER.

(B) AFTER FINAL ASSEMBLY, RECHECK CABLE TO BE SURE IT IS TAUT AND HAS NOT RELAXED

(C) DIFFERENT MANUFACTURERS REQUIRE DIFFERENT PERFORATED W - BEAM RAIL END PANELS. SEE MANUFACTURER'S INFORMATION.

(D) ATTACH ALUMINUM SHEET TO E.A.T. HEAD USING 4 STAINLESS STEEL SELF - TAPPING SCREWS. ONE SCREW PER CORNER.

(E) HARDWARE MAY VARY BETWEEN MANUFACTURER. SEE MANUFACTURER'S DRAWING FOR INFORMATION.

DIMENSIONS MAY VARY, MANUFACTURER'S INFORMATION.

SEE SDD 14B42 FOR MORE INFORMATION.

* DO NOT ATTACH BLOCKOUTS TO POST 1 AND 2.

DO NOT INSTALL REFLECTORS ON THE FIRST 50 FEET OF THE APPROACH END OF THE ENERGY ABSORBING TERMINAL.

SEE MANUFACTURER'S DRAWING FOR SPLICE LOCATION, HARDWARE DIMENSIONS AND INSTALLATION INSTRUCTIONS.

THE CENTER OF THE UPPER 3 ½" DIAMETER HOLE ON POST NUMBER 3 THROUGH POST 9 IS TO BE FLUSH WITH THE GROUND LINE UP TO A MAXIMUM OF 2" ABOVE GROUND LINE. WOOD BLOCKS ON POSTS NUMBERED 3 THROUGH 9 MAY BE ADJUSTED UP TO 3" ABOVE THE TOP OF POST.

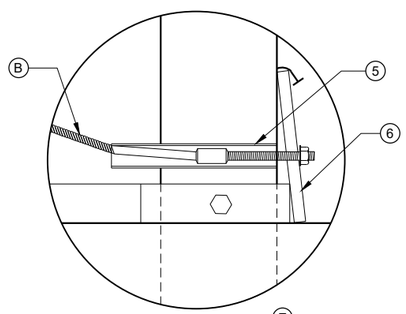

DETAIL "A" (E)

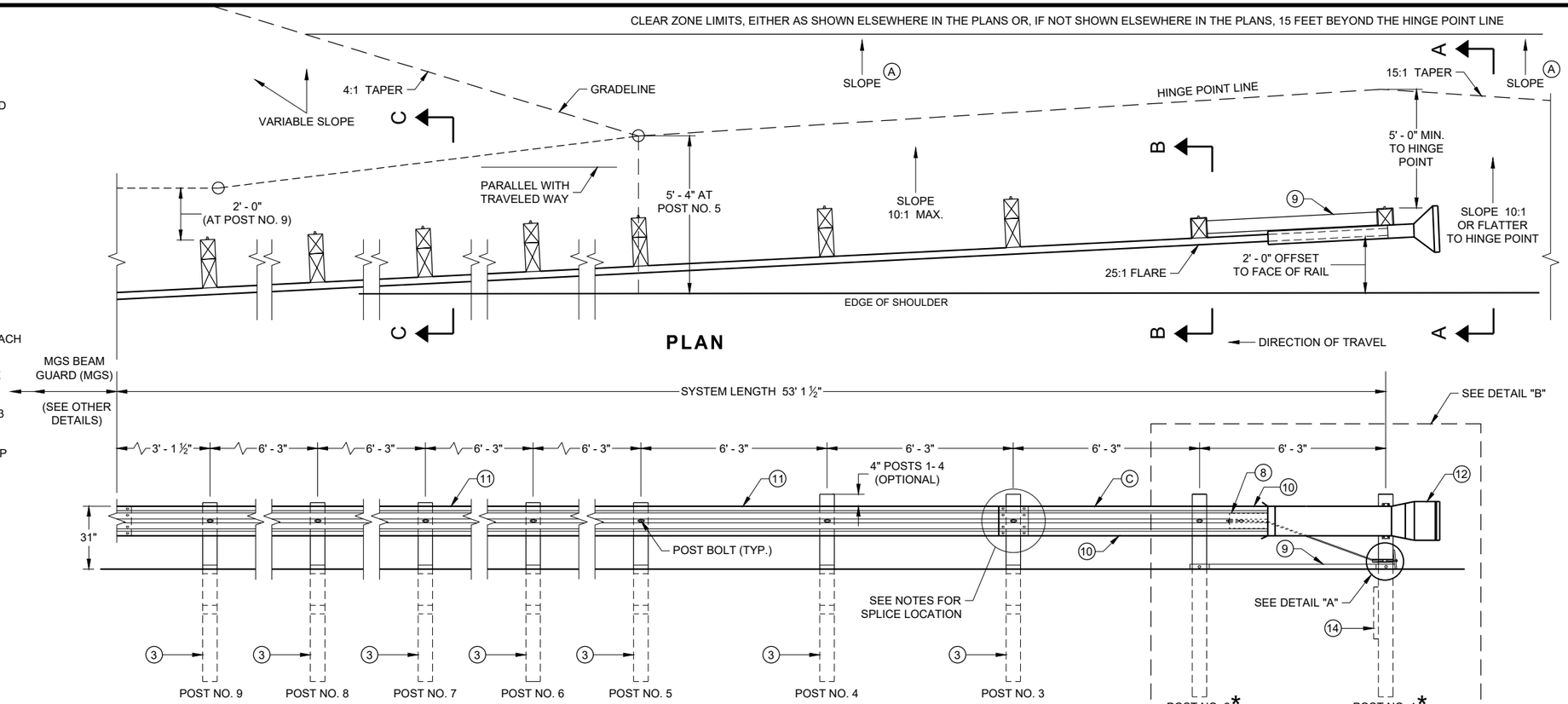

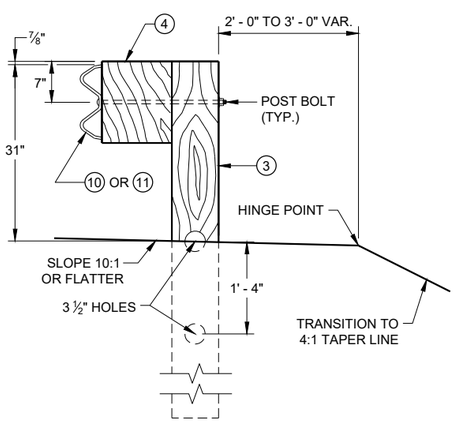

SECTION C - C
TYPICAL AT POST NOS. 3 - 9

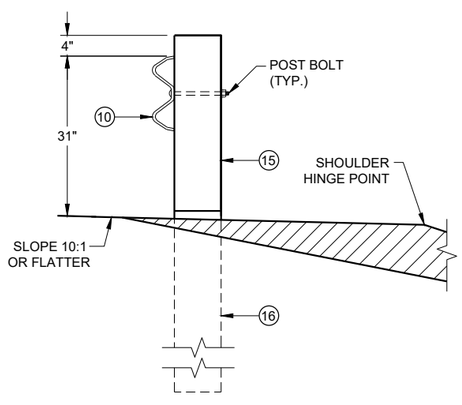

SECTION B - B
TYPICAL AT POST NO. 2*

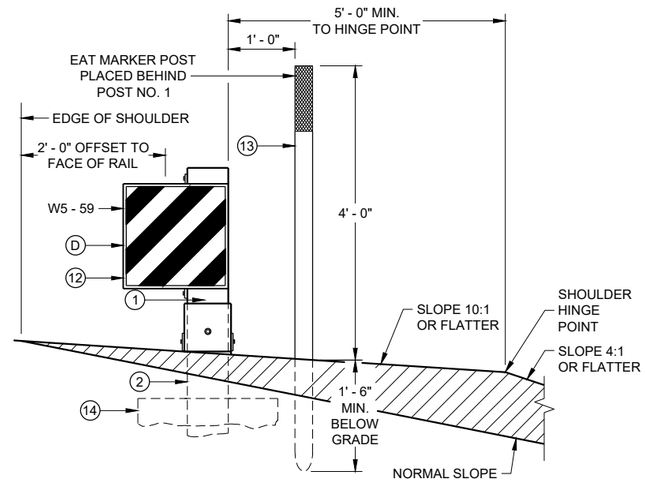

SECTION A - A
TYPICAL AT POST NO. 1*

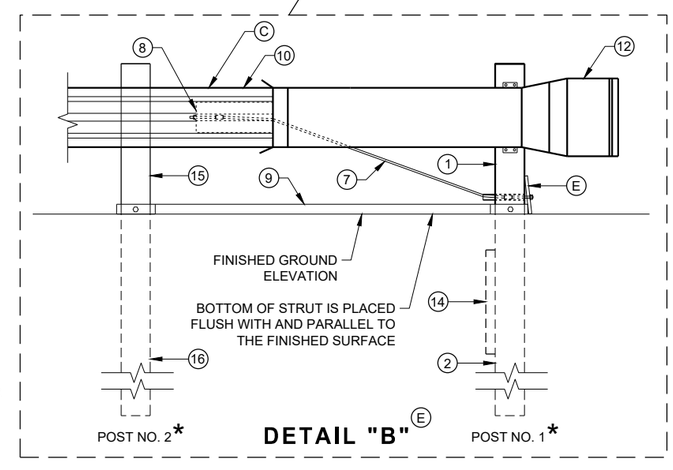

DETAIL "B" (E)

MIDWEST GUARDRAIL SYSTEM ENERGY ABSORBING TERMINAL (MGS)

STATE OF WISCONSIN
DEPARTMENT OF TRANSPORTATION

6

6

SDD 14B44 - 04a

SDD 14B44 - 04a

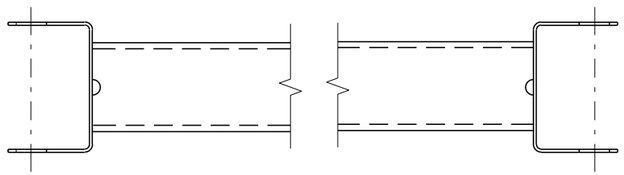

GENERIC GROUND STRUT (9)(E)

BILL OF MATERIALS

PART NO.	DESCRIPTION MATERIALS PROVIDED BY MGS EAT MANUFACTURER. SEE MANUGACTURER'S DETAILS FOR MORE INFORMATION.
1	UPPER POST NO. 1 6" X 6" TUBE
2	LOWER POST NO. 1
3	WOOD CRT
4	WOOD BLOCKOUT
5	PIPE SLEEVE
6	BEARING PLATE
7	BCT CABLE ASSEMBLY
8	ANCHOR CABLE BOX
9	GROUND STRUT
10	PERFORATED W-BEAM RAIL END PANEL, 12'-6" LONG.
11	STANDARD W-BEAM RAIL. MULTIPLE SECTIONS REQUIRED. SECTIONS VARY IN LENGTH.
12	IMPACT HEAD
13	EAT MARKER POST - YELLOW (SEE APPROVED PRODUCTS LIST)
14	SOIL PLATE
15	UPPER POST NO. 2
16	LOWER POST NO. 2

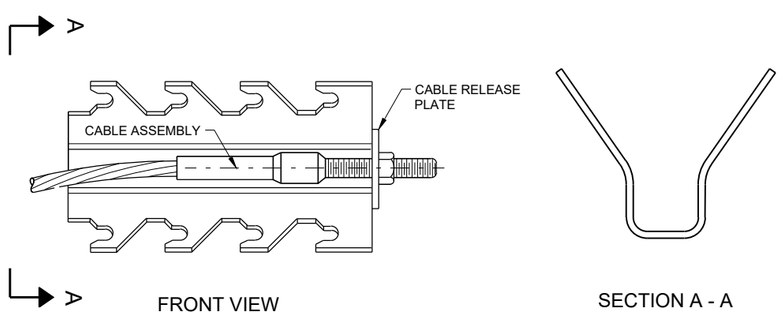

GENERIC ANCHOR CABLE BOX (9)(E)

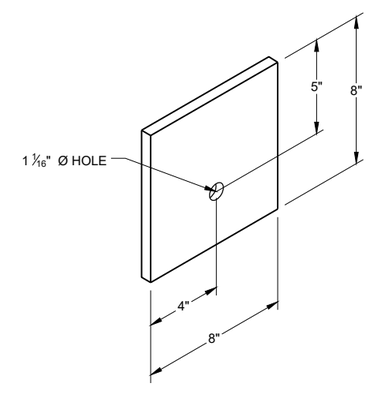

BEARING PLATE (6)(E)

MIDWEST GUARDRAIL SYSTEM ENERGY ABSORBING TERMINAL (MGS)

STATE OF WISCONSIN
DEPARTMENT OF TRANSPORTAT

6

6

SDD 14B44 - 04b

SDD 14B44 - 04b

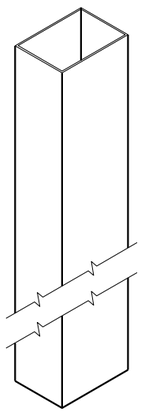

UPPER POST NO. 1 (1) (E)

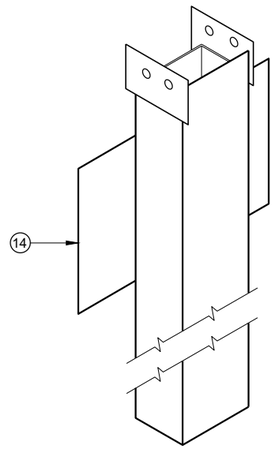

LOWER POST NO. 1 (2) (E)

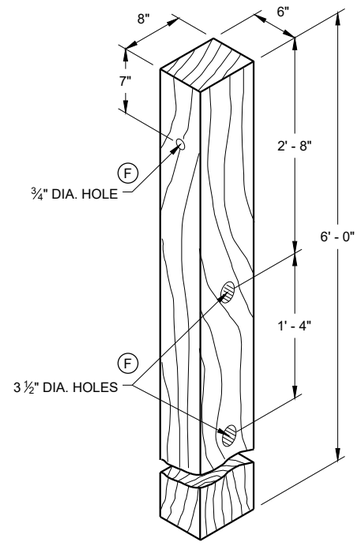

WOOD CRT POST (3) (E)

POSTS NUMBER 3-9

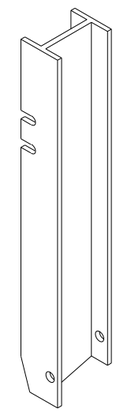

UPPER POST NO. 2 (15) (E)

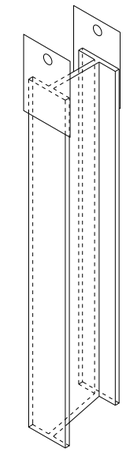

LOWER POST NO. 2 (16) (E)

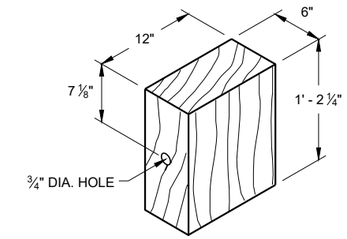

WOOD BLOCKOUT (4)

REQ'D. AT ALL POSTS EXCEPT POST NO'S 1 & 2

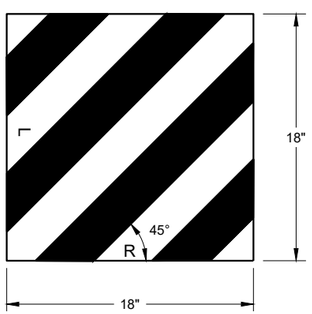

W5 - 59

REFLECTIVE SHEETING DETAIL (E)

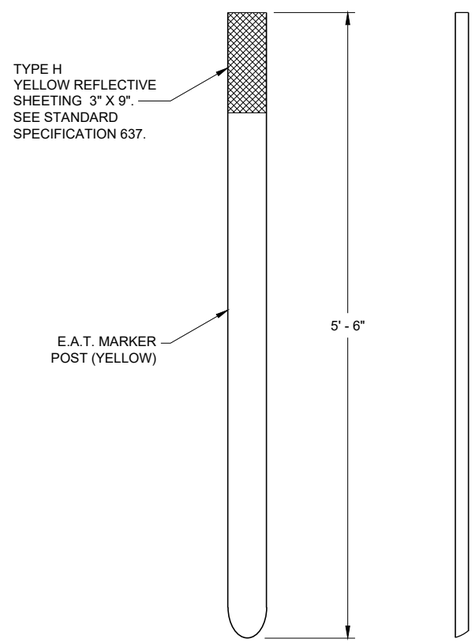

FRONT VIEW SIDE VIEW

E.A.T. MARKER POST (13)

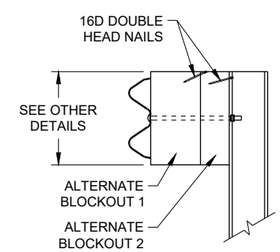

SIDE VIEW

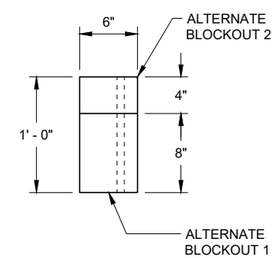

TOP VIEW

ALTERNATE WOOD BLOCKOUT DETAIL

6

6

SDD 14B44 - 04c

SDD 14B44 - 04c

MIDWEST GUARDRAIL SYSTEM ENERGY ABSORBING TERMINAL (MGS)

STATE OF WISCONSIN
DEPARTMENT OF TRANSPORTATION

APPROVED

7/2018 — DATE

/S/ Rodney Taylor — ROADWAY STANDARDS DEVE UNIT SUPERVISOR

FHWA

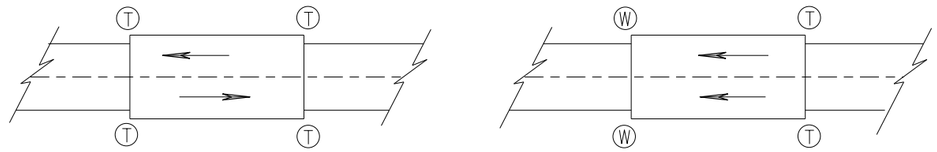

TWO WAY TRAFFIC **ONE WAY TRAFFIC**

(T) THRIE BEAM CONNECTION

(W) W-BEAM CONNECTION WHEN REQUIRED

TYPICAL LOCATIONS OF THRIE BEAM AND W-BEAM CONNECTIONS TO BRIDGE

GENERAL NOTES

IF ROCK IS ENCOUNTERED, REMOVE ROCK TO FULL DEPTH OF POST PLUS 2½", AND 12" DIAMETER AROUND POST. SEE 14B42 FOR MORE DETAILS.

TRANSITION USES STEEL POSTS ONLY.

SEE STANDARD DETAIL DRAWING 14 B 42 FOR MORE INFORMATION.

POST 2 THROUGH 17 USES STEEL POST ONLY

(1) BRIDGE RAILING TYPE "W" DOES NOT REQUIRE A TERMINAL CONNECTOR.

(2) OPTIONAL CURB AND GUTTER OR DRAINAGE FEATURE SEE PLAN FOR INFORMATION.

(13) STEEL OR WOOD POST IS ACCEPTABLE AT POST 1. SEE SDD14B42

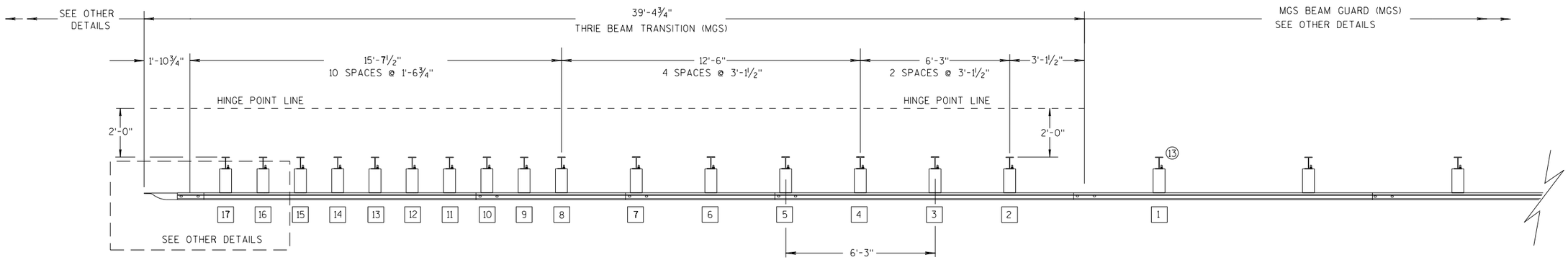

PLAN VIEW

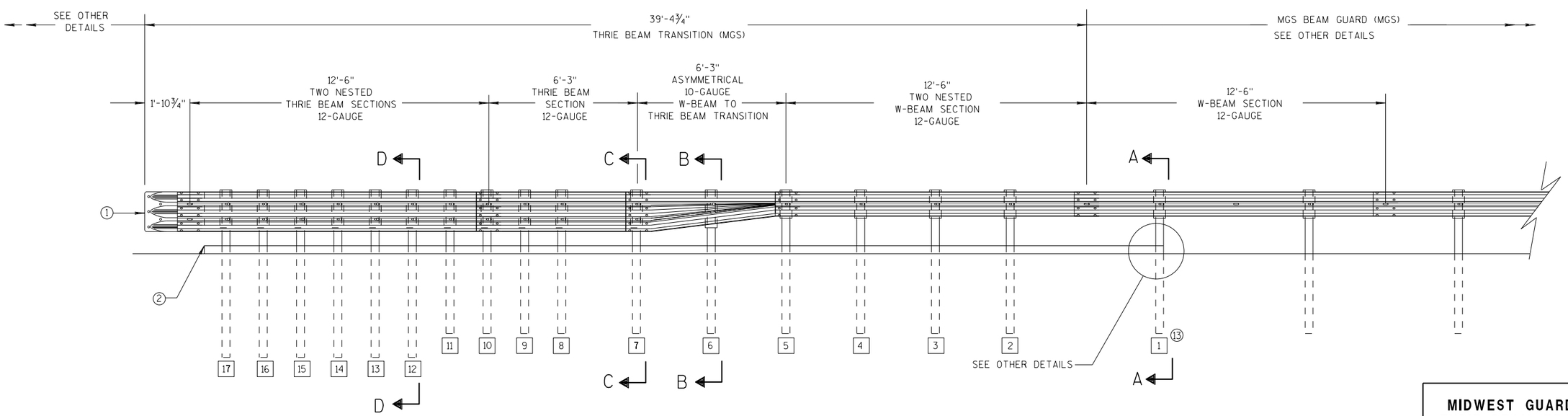

ELEVATION VIEW

MIDWEST GUARDRAIL SYSTEM THRIE BEAM TRANSITION

MIDWEST GUARDRAIL SYSTEM THRIE BEAM TRANSITION (MGS)

STATE OF WISCONSIN
DEPARTMENT OF TRANSPOR

6

S.D.D. 14 B 45-5a

GENERAL NOTES

(2) OPTIONAL CURB AND GUTTER OR DRAINAGE FEATURE SEE PLAN FOR INFORMATION.

(3) WHEN USING STEEL POSTS AND WOOD BLOCKOUTS INSTALL FOUR 10D GALVANIZED NAILS. INSTALL NAILS AT THE BACK CORNERS OF THE BLOCK AND BEND THE NAILS OVER THE FLANGE OF THE STEEL POST.

(4) TOLERANCE FOR TOP OF W-BEAM RAIL IS ± 1".

(13) STEEL OR WOOD POST IS ACCEPTABLE AT POST 1. SEE SDD 14B42

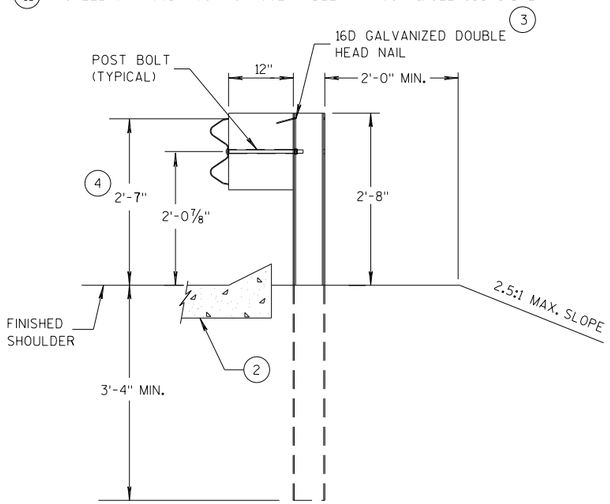

SECTION A-A (13)

POSTS 1-5

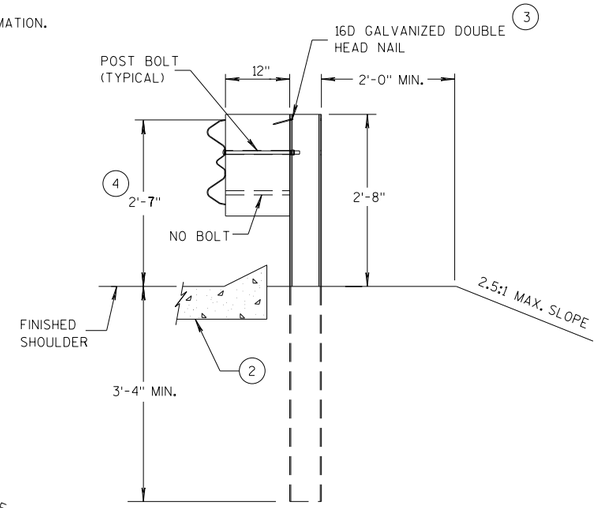

SECTION B-B

POST 6

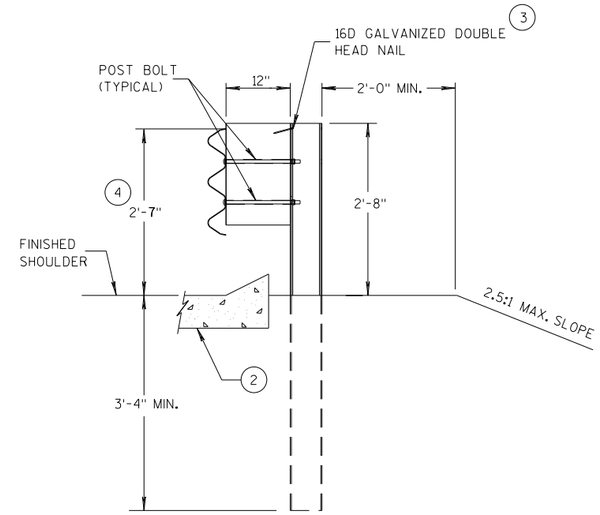

SECTION C-C

POSTS 7-11

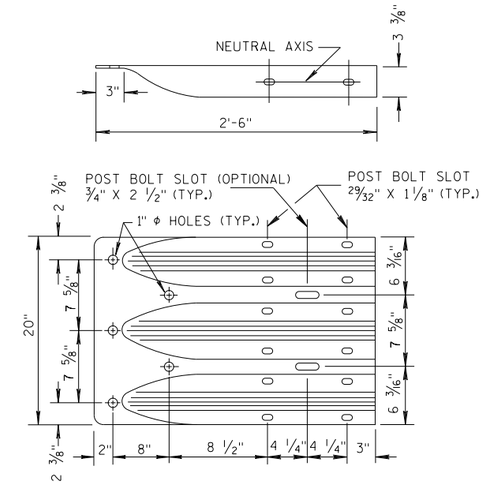

THRIE BEAM TERMINAL CONNECTOR

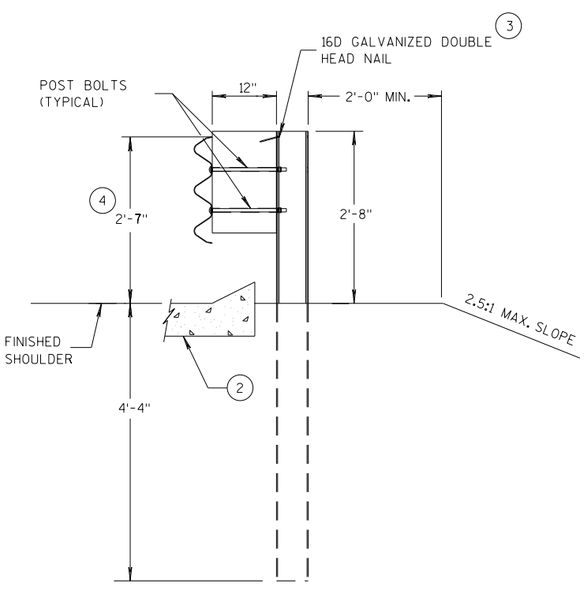

SECTION D-D

POSTS 12-17

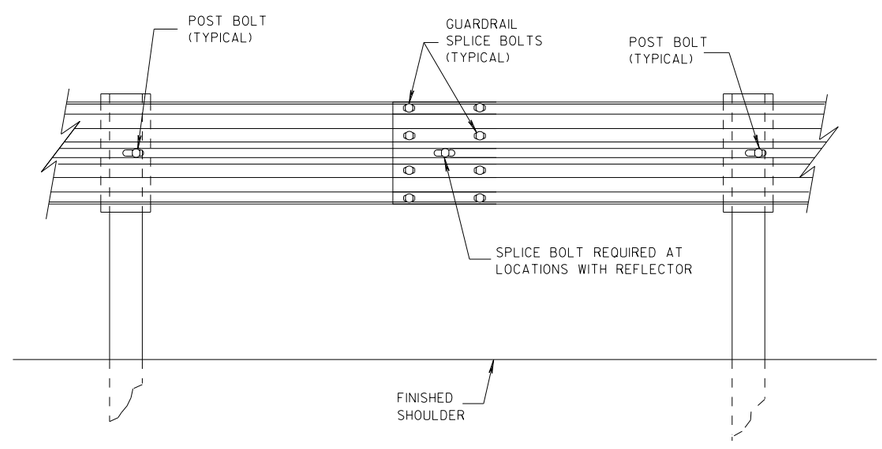

SPLICE DETAIL

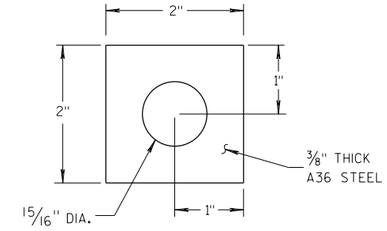

PLATE WASHER DETAIL

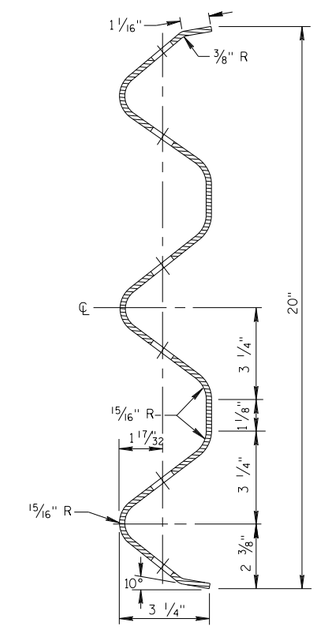

SECTION THRU THRIE BEAM RAIL ELEMENT

MIDWEST GUARDRAIL SYSTEM
THRIE BEAM TRANSITION (MGS)

STATE OF WISCONSIN
DEPARTMENT OF TRANSPOR

6

S.D.D. 14 B 45-5b

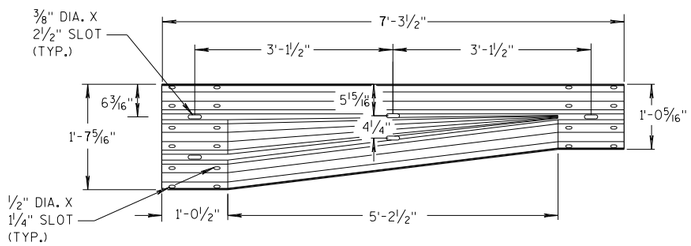

W-BEAM TO THRIE BEAM TRANSITION SECTION

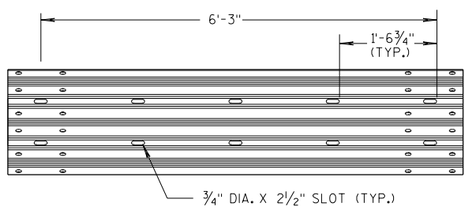

6'-3" THRIE BEAM SECTION

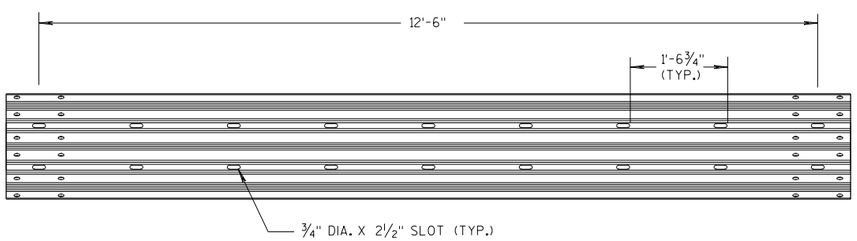

12'-6" THRIE BEAM SECTION

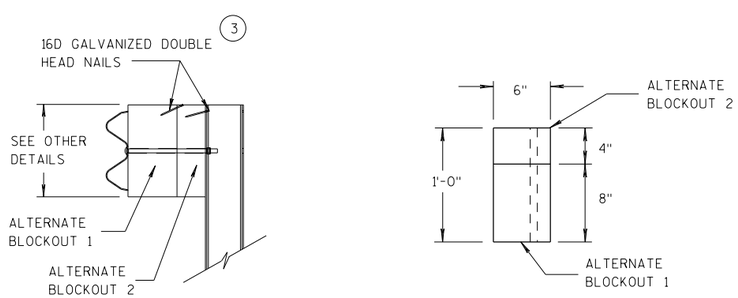

SIDE VIEW TOP VIEW

ALTERNATE WOOD BLOCKOUT DETAIL

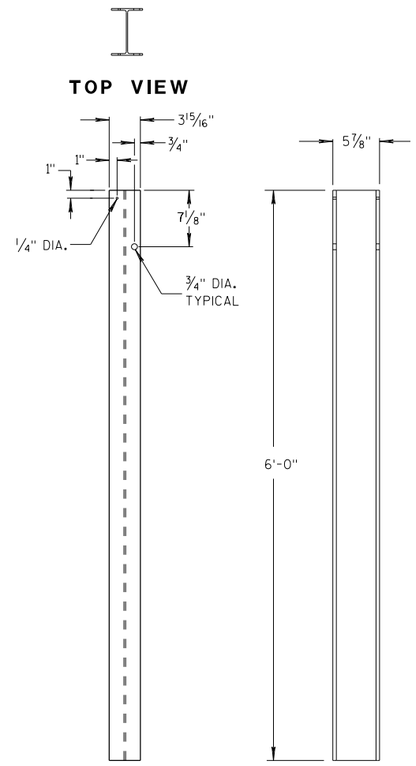

STEEL POSTS 1-5 (13)

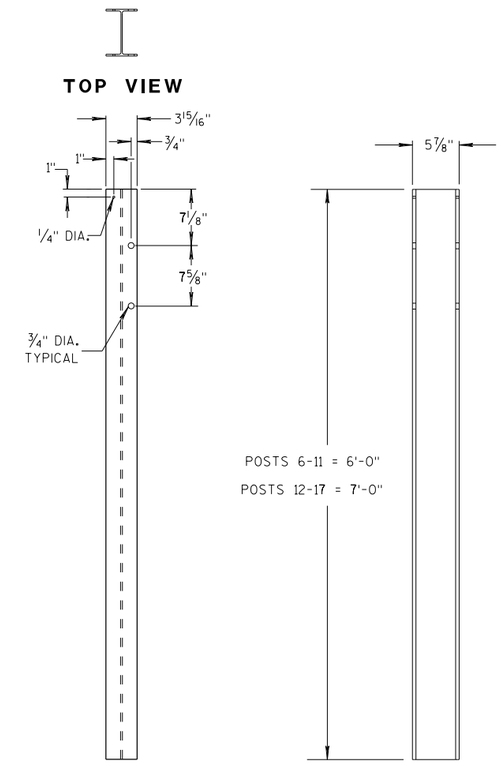

STEEL POSTS 6-17

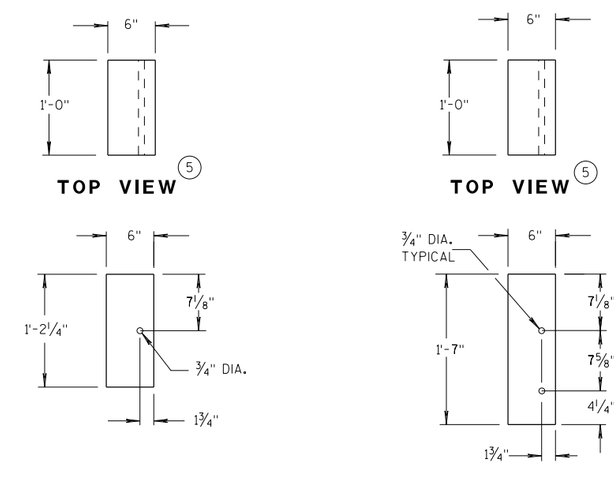

BLOCKOUT POSTS 1-5

BLOCKOUT POSTS 6-17

GENERAL NOTES

STEEL POSTS ARE W6X9 OR W6X8.5.

BOLT HOLES FOR POST ARE ON FRONT AND OF SIDE OF POST.

(3) WHEN USING STEEL POSTS AND WOOD BLOCKOUTS INSTALL FOUR 16D GALVANIZED NAILS. INSTALL NAILS AT THE BACK CORNERS OF THE BLOCK AND BEND THE NAILS OVER THE FLANGE OF THE STEEL POST.

(5) WOOD BLOCKS MAY BE CONSTRUCTED OUT OF 2 WOOD BLOCKS. SEE ALTERNATE WOOD BLOCK DETAIL.

(13) STEEL OR WOOD POST IS ACCEPTABLE AT POST 1. SEE SDD 14B42.

MIDWEST GUARDRAIL SYSTEM
THRIE BEAM TRANSITION (MGS)

STATE OF WISCONSIN
DEPARTMENT OF TRANSPOR

6

S.D.D. 14 B 45-5c

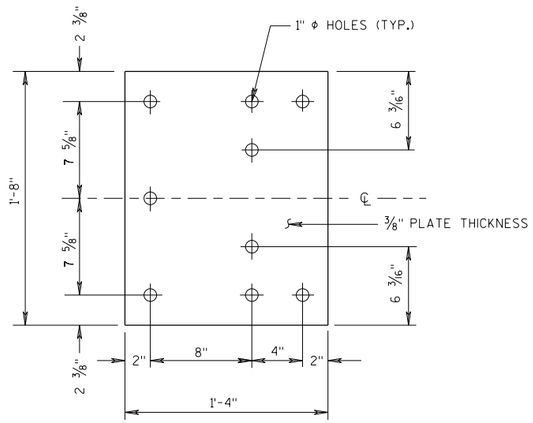

BACK-UP PLATE DETAIL

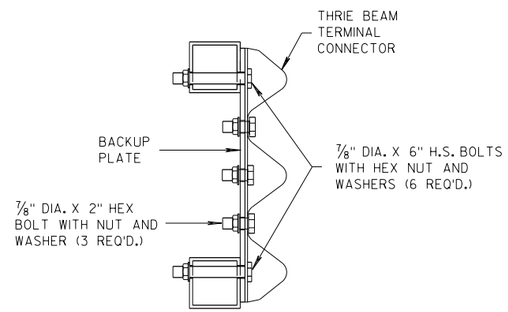

SECTION J-J

GENERAL NOTES

(4) TOLERANCE FOR TOP OF BEAM IS ± 1".

(6) DRILLING HOLES THROUGH THE PAPRPET, BOLTS, NUTS, WASHERS AND REPAIRING DAMAGED CONCRETE ARE INCIDENTAL TO THE CONTRACT.

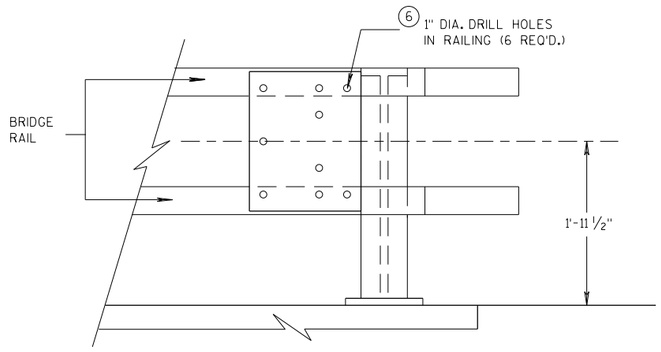

BACK-UP PLATE MOUNTING ONTO BRIDGE RAILING

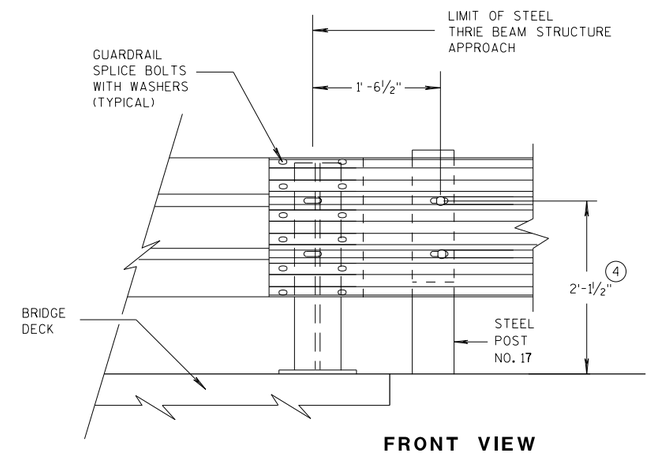

FRONT VIEW

THRIE BEAM CONNECTION TO STEEL RAILING TYPE "W"

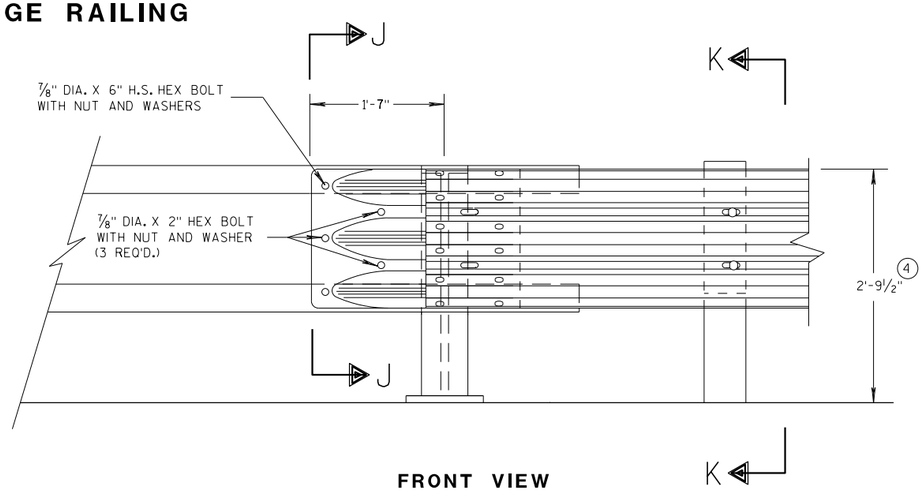

FRONT VIEW

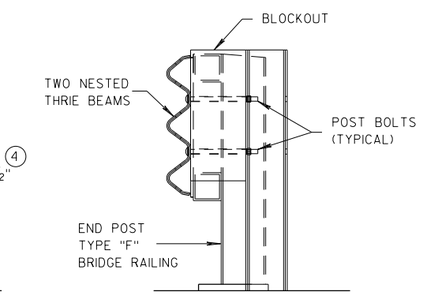

SECTION K-K

THRIE BEAM CONNECTION TO TUBULAR RAILING TYPE "F"

MIDWEST GUARDRAIL SYSTEM THRIE BEAM TRANSITION (MGS)

STATE OF WISCONSIN
DEPARTMENT OF TRANSPORTATION

APPROVED 07/2018 — DATE — FHWA

/S/ Rodney Taylor — ROADWAY STANDARDS DEVELOPMENT UNIT SUPERVISOR

6

S.D.D. 14 B 45-5g

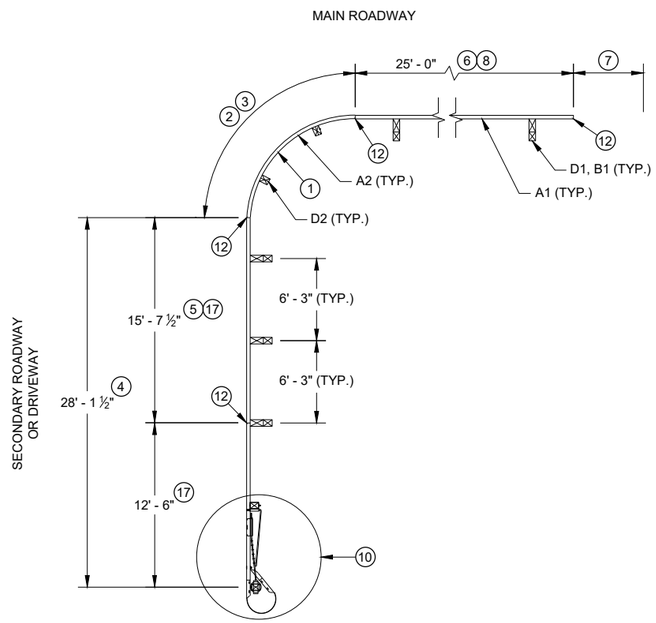

PLAN VIEW

SHORT RADIUS BEAM GUARD WITH SHORT RADIUS TERMINAL ON SECONDARY ROAD OR DRIVEWAY

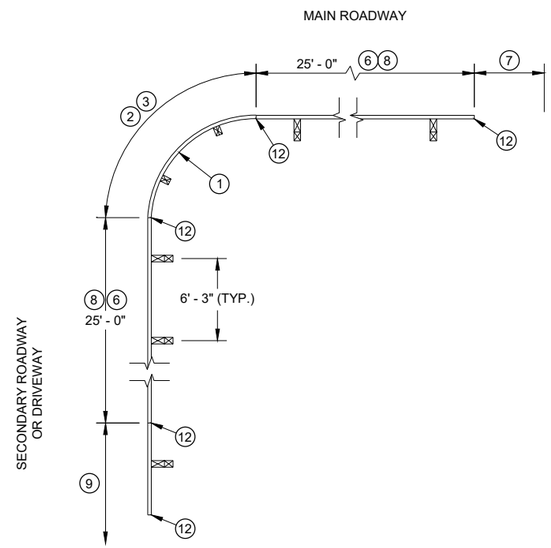

PLAN VIEW

SHORT RADIUS BEAM GUARD WITH EAT, ADDITIONAL BEAM GUARD OR TRANSITION TO RIGID BARRIER ON SECONDARY ROAD OR DRIVEWAY

TABLE FOR RADIUS OF 32' AND LESS

RADIUS (FT)	LENGTH (FT)	WIDTH (FT)
8	25	15
16	30	15
24	40	20
32	50	30

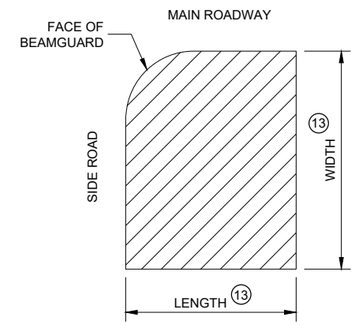

AREA FREE OF FIXED OBJECTS FOR RADIUS 32' AND LESS 16

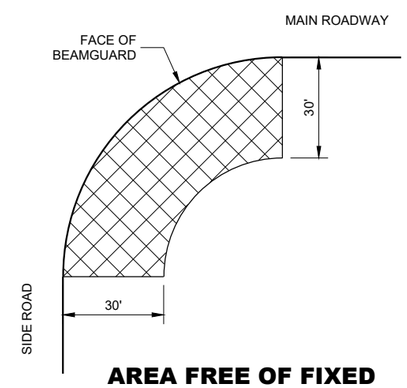

AREA FREE OF FIXED OBJECTS FOR RADIUS GREATER THAN 32'

GENERAL NOTES

SEE PLANS FOR OTHER BARRIER SYSTEM AND LOCATION SPECIFICS.

SEE SDD 14B42 FOR MORE INFORMATION ON BEAM GUARD INSTALLATION, PARTS, MATERIALS, AND INSTALLATION INFORMATION.

GALVANIZE PARTS AFTER FABRICATION.

WELDING TO FOLLOW CURRENT REQUIREMENTS OF THE AMERICAN WELDING SOCIETY STRUCTURAL WELDING CODE ANSI / AWS D1.1.

UNLESS NOTED OTHERWISE, ALL PLATES ARE FLAT AND FREE OF WARP.

UNLESS NOTED OTHERWISE, ALL EDGES ARE SMOOTH, STRAIGHT AND VERTICAL.

ALL CUTS AND HOLES, EXCEPT IN BEAM GUARD RAIL ARE TO BE MACHINED OR MACHINE FLAME CUT.

UNLESS NOTED OTHERWISE, CUT OR PROVIDE BOLTS THAT ARE ¼" TO ½" BEYOND THE NUT.

DRAWINGS ARE NOT TO SCALE.

1. RADIUS MEASURE FROM INSIDE OF RAIL. LENGTH OF BEAM GUARD SHORT RADIUS GUARD MEASURED ALONG TRAFFIC SIDE OF RAIL. RADIUS BETWEEN 8 FEET TO 150 FEET. SEE PLAN FOR REQUIRED RADIUS. BEAM GUARD RAIL IN RADIUS IS SHOP BENT. ODD RAIL LENGTH OR FIELD CUTS MAY BE REQUIRED.
2. CONTROLLED RELEASE TERMINAL (CRT) POSTS ARE USED IN THE RADIUS. CONTROLLED RELEASE TERMINAL (CRT) POSTS ARE SPACED 6' - 3". SEE PLAN FOR NUMBER OF CONTROLLED RELEASE (CRT) POSTS.
3. WITHIN RADIUS BEAM GUARD RAILS ARE NOT BOLTED TO POSTS. BEAM GUARD RAIL IS RESTED ON TOP OF LAG SCREW.
4. MINIMUM LENGTH OF BEAM GUARD ALONG SIDE ROAD OR DRIVEWAY TO INSTALL SHORT RADIUS TERMINAL. BEAM GUARD IS PAID WITH BEAM GUARD ITEM.
5. ODD LENGTH OF BEAM GUARD REQUIRED TO INSTALL SHORT RADIUS TERMINAL.
6. MINIMUM AMOUNT OF BEAM GUARD TO BE INSTALLED PRIOR TO TRANSITION TO RIGID BARRIER. ADDITIONAL BEAM GUARD, OR EAT. BEAM GUARD PAID FOR WITH BEAM GUARD ITEM. SEE PLANS FOR MORE DETAIL.
7. BEAM GUARD, EAT, OR TRANSITION TO RIGID BARRIER. SEE PLAN.
8. TOP OF BEAM GUARD BY THE RADIUS IS 27". HEIGHT OF BEAM GUARD IS 31" BY TRANSITION TO RIGID BARRIER, ADDITIONAL BEAM GUARD OR EAT.
9. ADDITIONAL BEAM GUARD, EAT OR TRANSITION TO RIGID BARRIER. BEAM GUARD SHOWN. SEE PLAN FOR DETAILS.
10. SHORT RADIUS TERMINAL (SEE OTHER DETAILS).
11. HEIGHT VARIES. SEE NOTE 8 AND 8.
12. BEAM GUARD RAIL SPLICE LOCATION. SPLICE LOCATION REQUIRES PART F1 AND F2. SEE SDD 14B42 FOR DETAILS.
13. SEE TABLE FOR VALUES.
14. MAXIMUM HEIGHT FOR CENTER OF HOLE IS ¾" ABOVE FINISHED GROUND ±1".
15. DRILL POST $^{15}/_{64}$" DIA. PILOT HOLE. DO NOT HAMMER LAG SCREW INTO POST.
16. SMALL SIGNS ON BREAKAWAY HARDWARE ARE ACCEPTABLE.
17. TOP OF RAIL HEIGHT IS 27" WHEN USING A SHORT RADIUS TERMINAL (CRT).

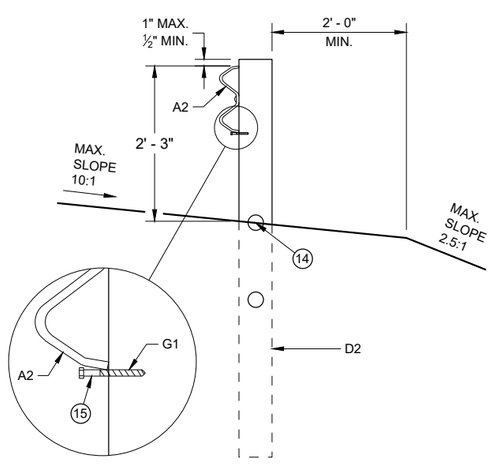

CONTROLLED RELEASE TERMINAL POST (CRT) IN RADIUS

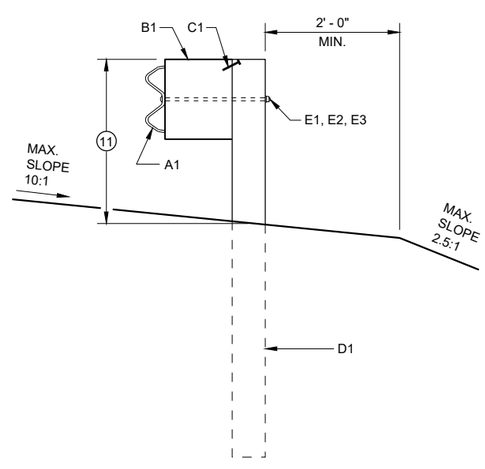

BEAM GUARD POSTS IN HEIGHT TRANSITION

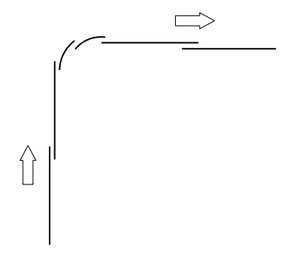

LAP SPLICE DETAIL

SHORT RADIUS BEAM GUARD (MGS) SHORT RADIUS TERMINAL (MGS)

STATE OF WISCONSIN
DEPARTMENT OF TRANSPORTA

6

SDD 14B53 - 01a

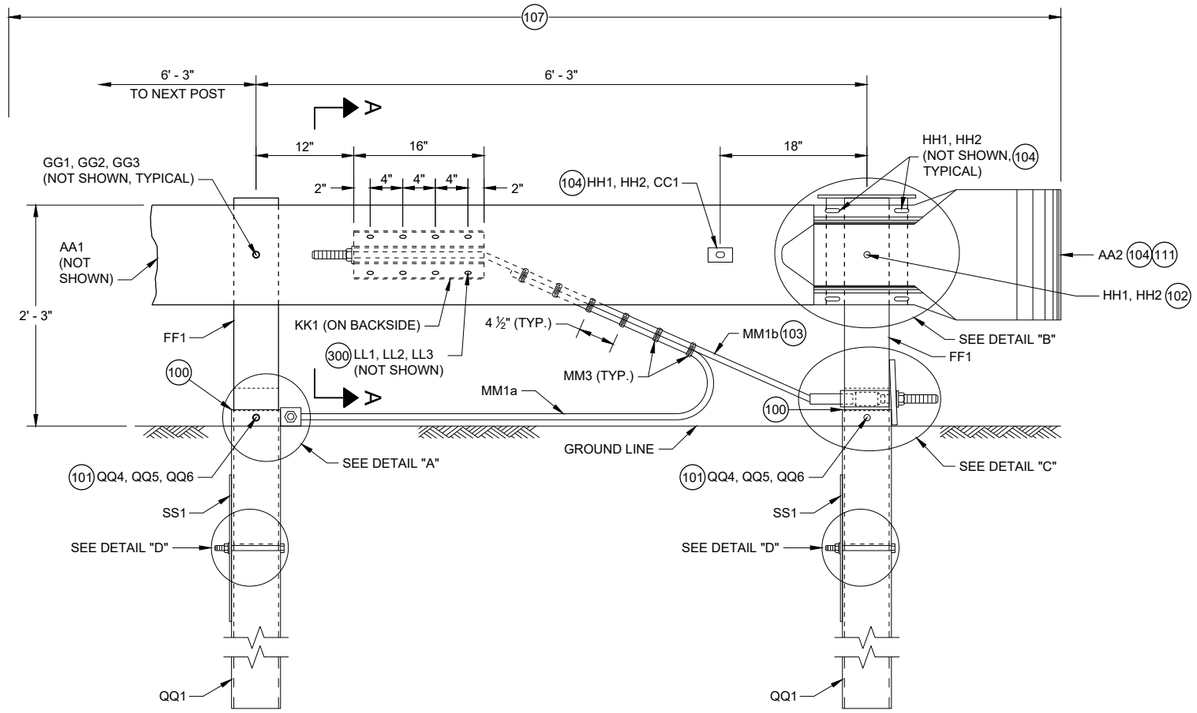

PROFILE VIEW

SHORT RADIUS TERMINAL

GENERAL NOTES

100 TOP OF FOUNDATION TUBE 2 INCHES MAXIMUM ABOVE FINISHED GROUND.

101 WASHERS REQUIRED BETWEEN BOLT HEAD AND FOUNDATION TUBE AND BETWEEN NUT AND FOUNDATION TUBE.

102 SPLICE BOLT AND NUT CONNECTS BEAM GUARD RAIL, W-BEAM SECTION BUFFER, AND STEEL PIPE ASSEMBLY. NO WASHER REQUIRED. SEE DETAIL "B".

103 CABLE IS TAUT.

104 ADJUST AA2 AND BB1 TO FIT.

105 BREAK POINT OF SHOULDER.

106 TACK WELD CABLE CONNECTOR TUBE PLATE TO CABLE CONNECTION TUBE. SEE DETAIL "A" PROFILE VIEW.

107 PAY LIMIT FOR BEAM GUARD.

108 SQUARE WASHER BETWEEN HEAD OF BOLT AND TRAFFIC FACE OF BEAM GUARD. ROUND WASHER REQUIRED BETWEEN NUT AND BB1.

109 CUT OR PROVIDE THREADED STUD THAT IS FLUSH WITH FACE OF BEAM GUARD RAIL KK1 (PLUS OR MINUS ½" TOLERANCE). DEBURR AFTER CUTTING.

110 SEE STEEL PIPE ASSEMBLY DETAILS.

111 ATTACH UU2 WITH UU3. SHOP APPLY UU1 TO UU2.

112 FOUR (4) HH1 AND HH2 REQUIRED TO ATTACH AA1 TO AA2.

113 FOUR (4) HH1 AND HH2 REQUIRED TO ATTACH AA2 TO BB1.

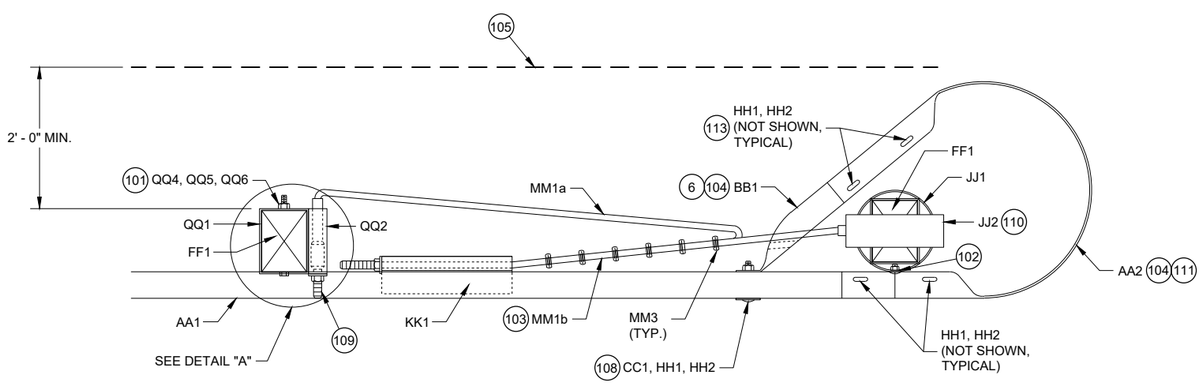

TOP VIEW

SHORT RADIUS TERMINAL

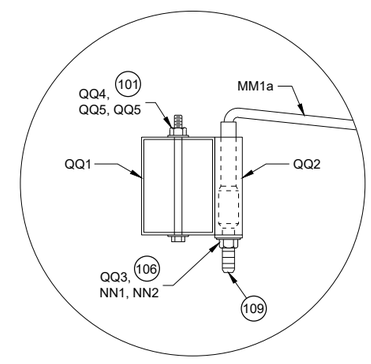

TOP VIEW

DETAIL "A"

(WOOD BREAKAWAY AND BEAM GUARD RAIL POSTS NOT SHOWN)

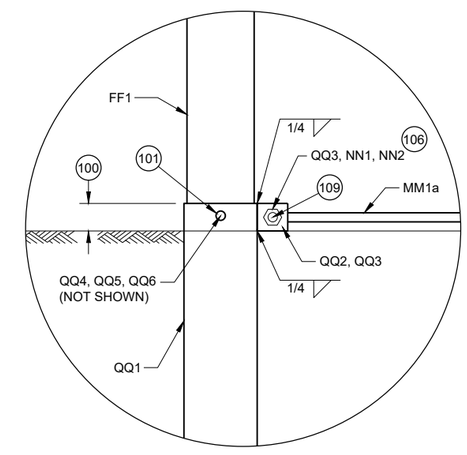

PROFILE VIEW

DETAIL "A"

6

6

SDD 14B53 - 01b

SDD 14B53 - 01b

SHORT RADIUS BEAM GUARD (MGS) SHORT RADIUS TERMINAL (MGS)

STATE OF WISCONSIN
DEPARTMENT OF TRANSPORTAT

GENERAL NOTES

(200) TWO (2) NAILS SPACED 4 INCHES CENTER TO CENTER.

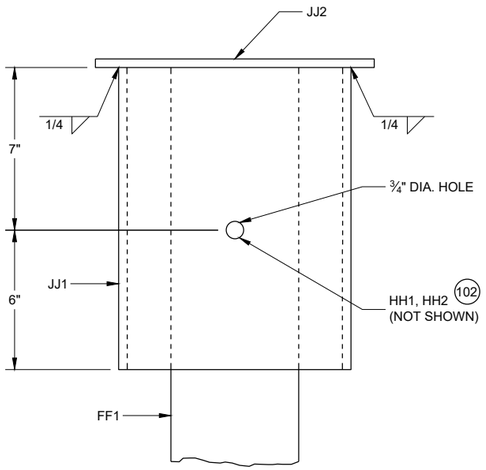

PROFILE VIEW

DETAIL "B"
STEEL PIPE ASSEMBLY
(BEAM GUARD AND W BEAM END SECTION NOT SHOWN)

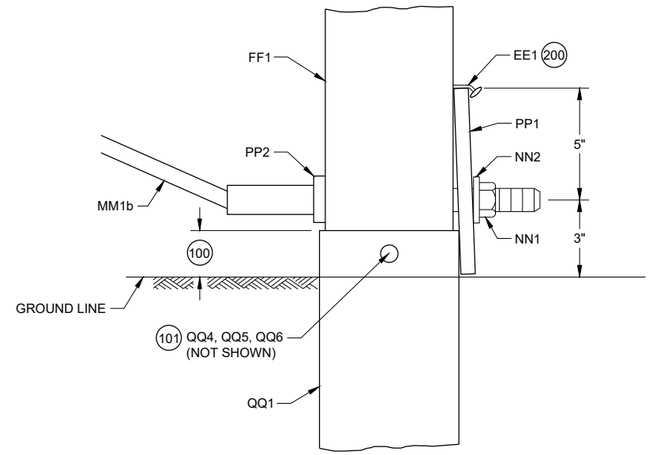

PROFILE VIEW

DETAIL "C"

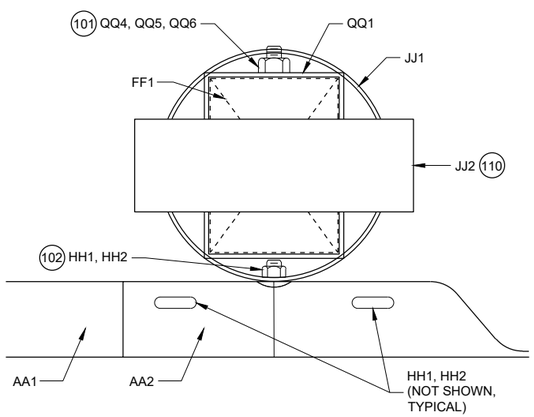

PLAN VIEW

DETAIL "B"
STEEL PIPE ASSEMBLY

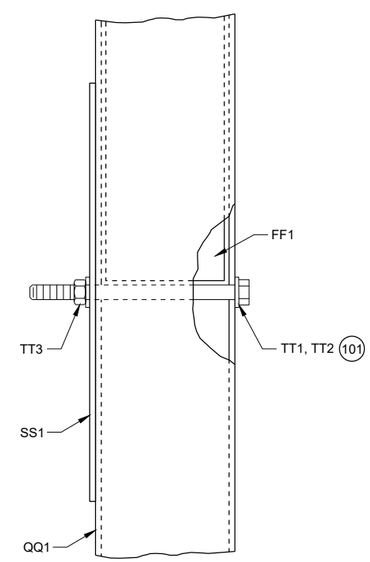

PROFILE VIEW

DETAIL "D"

SHORT RADIUS BEAM GUARD (MGS) SHORT RADIUS TERMINAL (MGS)

STATE OF WISCONSIN
DEPARTMENT OF TRANSPORTAT

6

6

SDD 14B53 - 01c

SDD 14B53 - 01c

GENERAL NOTES

300 WASHERS REQUIRED BETWEEN BOLT HEAD AND BEAM GUARD RAIL AND BETWEEN NUT AND ANCHOR BRACKET. EIGHT (8) LL1 AND LL3 REQUIRED. SIXTEEN (16) LL2 REQUIRED.

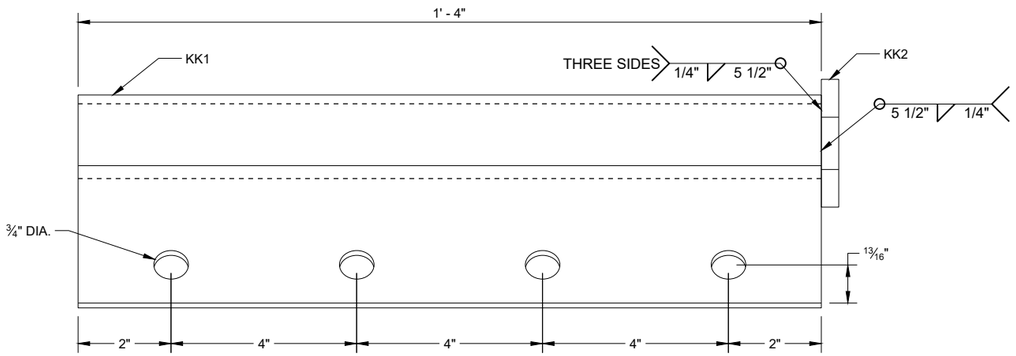

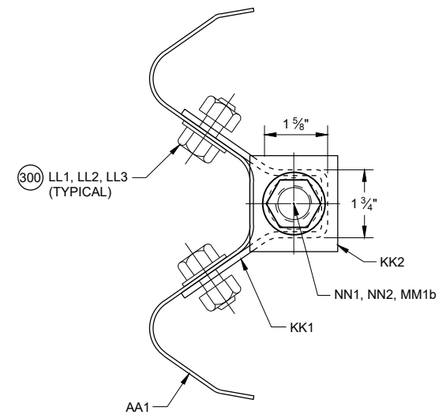

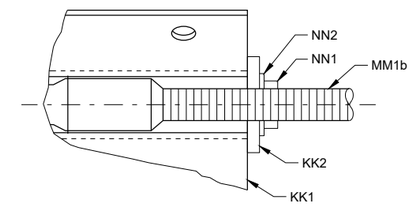

SECTION A - A

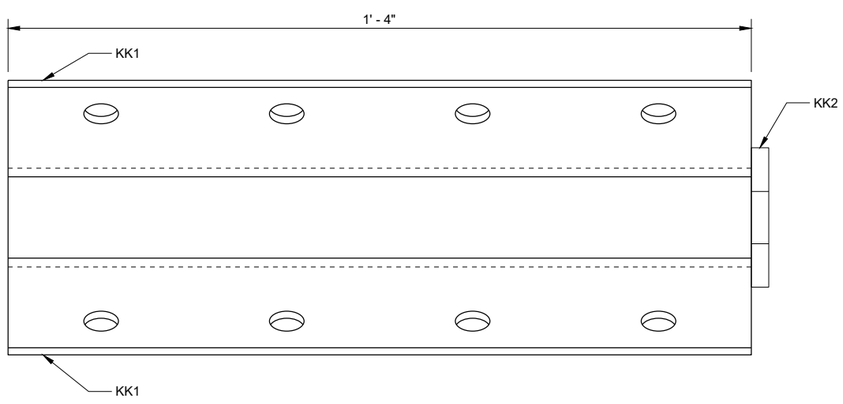

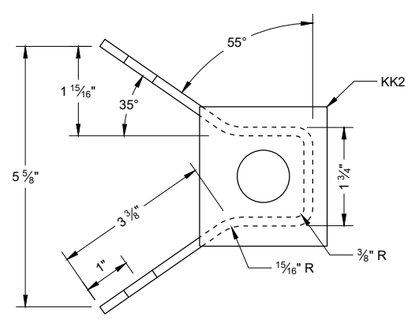

ANCHOR BRACKET (KK1, KK2)

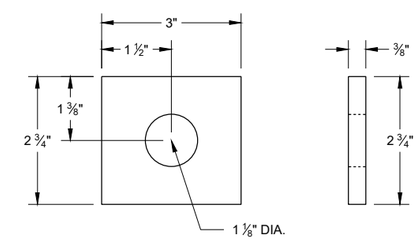

ANCHOR BRACKET BEARING PLATE (KK2)

6

6

SDD 14B53 - 01d

SDD 14B53 - 01d

SHORT RADIUS BEAM GUARD (MGS) SHORT RADIUS TERMINAL (MGS)

STATE OF WISCONSIN
DEPARTMENT OF TRANSPORTAT

GENERAL NOTES

(400) CROSS SECTION OF PART IS TO FIT OVER AA1 .

(401) CROSS SECTION OF PART IS TO FIT OVER OR UNDER AA1 .

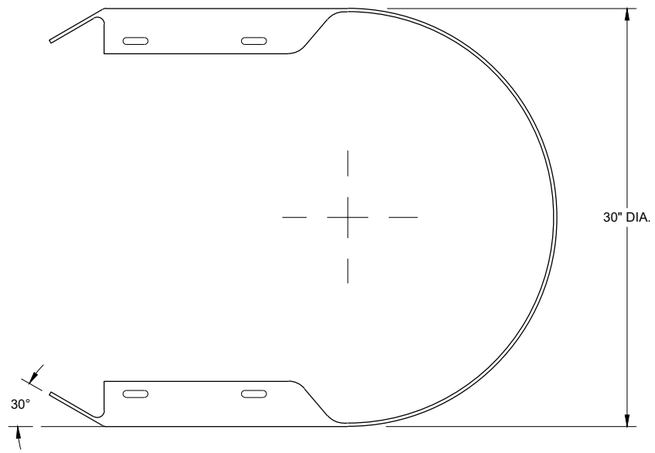

TOP VIEW

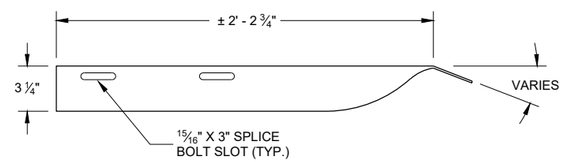

TOP VIEW

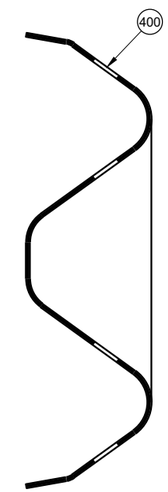

SECTION B -B

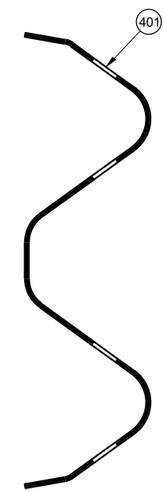

SECTION C -C

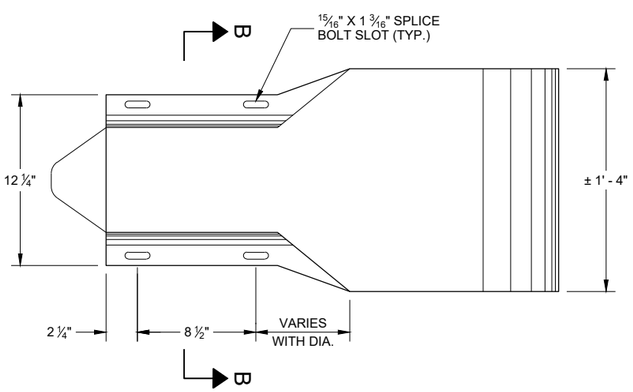

PROFILE VIEW

W BEAM
END SECTION BUFFER (AA2)

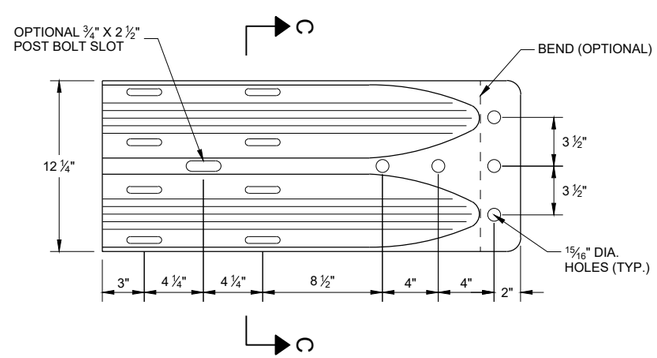

PROFILE VIEW

W BEAM
TERMINAL CONNECTOR (BB1)

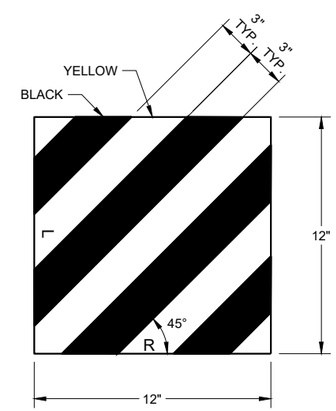

REFLECTIVE SHEETING (UU1, UU2)

SHORT RADIUS BEAM GUARD (MGS) SHORT RADIUS TERMINAL (MGS)

STATE OF WISCONSIN
DEPARTMENT OF TRANSPORTAT

6

6

SDD 14B53 - 01e

SDD 14B53 - 01e

GENERAL NOTES

500 SEE DETAIL "D" FOR LOCATION AND ATTACHMENT OF SS1.

501 FOR MM1a THREADED STUD ONLY REQUIRED ON ONE END. SWAGED FITTING REQUIRED.

502 LOCATE HOLES ON THE CENTERLINE OF THE SIDE OF THE POST.

503 MM1a MAY HAVE ONE THREADED STUD 4 INCHES LONG. SEE NOTE 109.

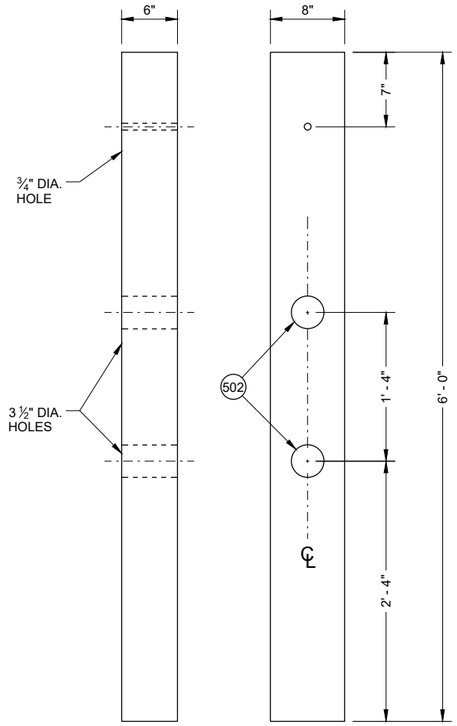

FRONT VIEW SIDE VIEW

CONTROLLED RELEASE POST (CRT) (DD2)

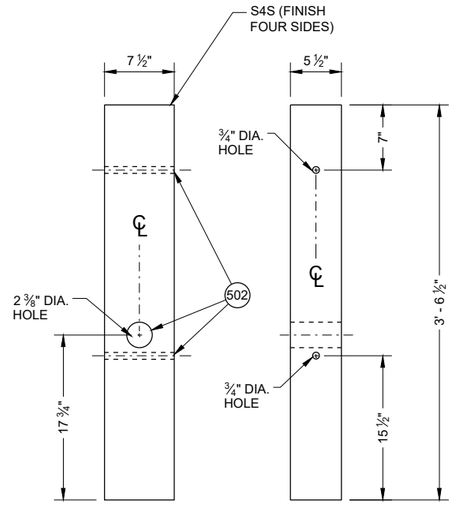

FRONT VIEW SIDE VIEW

WOOD BREAKAWAY POST (FF1)

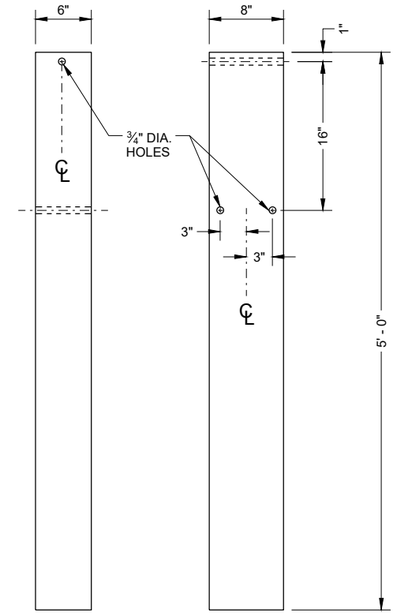

FRONT VIEW SIDE VIEW

FOUNDATION TUBE (QQ1) 500

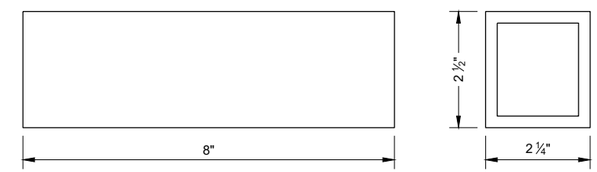

FOUNDATION TUBE - ANCHOR CABLE TUBE (QQ2)

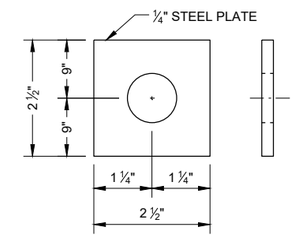

ANCHOR CABLE TUBE END PLATE (QQ3)

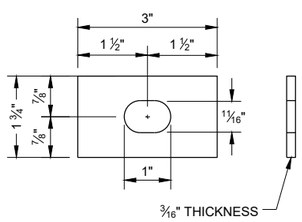

RECTANGULAR PLATE WASHER (CC1)

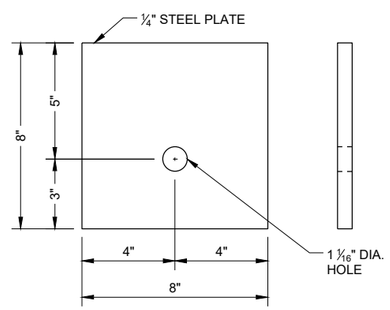

BEARING PLATE (PP1)

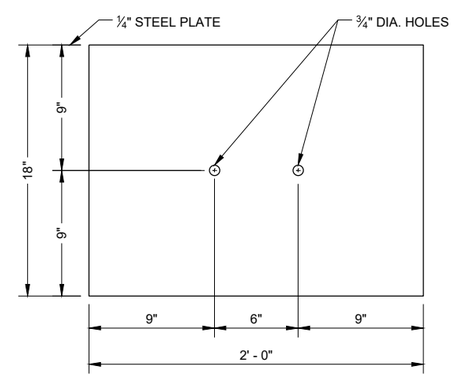

SOIL PLATE (SS1)

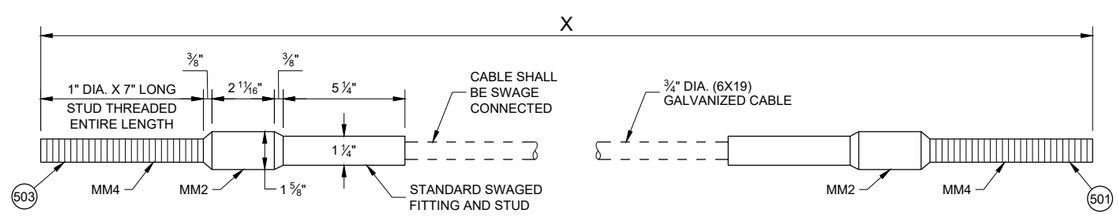

CABLE ASSEMBLY (MM1a, MM1b)

"X" LENGTH

MM1b	9' - 0"
MM1b	6' - 8"

SHORT RADIUS BEAM GUARD (MGS) SHORT RADIUS TERMINAL (MGS)

STATE OF WISCONSIN
DEPARTMENT OF TRANSPORTAT

SDD 14B53 - 01f

BILL OF MATERIALS - SHORT RADIUS BEAM GUARD (MGS)

PART	DESCRIPTION	MATERIALS SPECIFICATIONS	NOTES
A1	BEAM GUARD RAIL	AASHTO M180, CLASS A, TYPE 2	
		APPROVED PRODUCER	
A2	BEAM GUARD RAIL - SHOP BENT	INDICATE ON BACK OF RAIL THE RADIUS THAT RAIL WAS BENT TO. SHOP BEND RADIUS IS TO THE NEAREST FOOT. FOLLOW AASHTO M180 ON HOW TO MARK RADIUS INFORMATION.	
		AASHTO M180, CLASS A, TYPE 2	
		APPROVED PRODUCER	
B1	BLOCK - WOOD	WISDOT SPEC. 614	SEE SDD 14B42
C1	NAIL	ASTM A153 HOT DIP CLASS D	
		ASTM F1667 TYPE 1 STYLE 12 (16 DOUBLE HEAD)	
D1	POST-STRONG POST-WOOD	WISDOT SPEC. 614	SEE SDD 14B42
D2	POST-CRT-WOOD	WISDOT SPEC. 614	
E1	POST BOLT	ASTM A307 GRADE A OR SAE J429 GRADE 2	5/8" DIA. SEE SDD 14B42 FOR BOLT GEOMETRY
		AASHTO M180	
		GALV. HOT DIP TO AASHTO M232 CLASS C / ASTM A153 CLASS C / ASTM F2329 OR GALV. MECHANICALLY TO AASHTO M298 CLASS 50, TYPE 1 / ASTM B695 CLASS 50, TYPE 1	
		UNC	
E2	POST BOLT - WASHER	ASTM F436 TYPE 1 (HARDEN TYPICALLY USED WITH STEEL) OR ASTM F844 (UNHARDENED TYPICALLY WITH WOOD)	5/8" DIA.
		GALV. AASHTO M111 / ASTM A 123 OR GALV. HOT DIP. TO AASHTO M232 CLASS C / ASTM A153 CLASS C / ASTM F2329	
E3	POST BOLT - NUT	AASHTO M180 DOUBLE RECESSED HEAVY HEX HEAD	5/8" DIA. SEE SDD 14B42 FOR BOLT GEOMETRY
		GALV. HOT DIP TO AASHTO M232 CLASS C / ASTM A153 CLASS C / ASTM F2329 OR GALV. MECHANICALLY TO AASHTO M298 CLASS 50, TYPE 1 / ASTM B695 CLASS 50, TYPE 1	
		UNC	
		OVER TAPPED NUTS OVER-SIZE AS SPECIFIED IN AASHTO 291 / ASTM A 563	
		ASTM A563 GRADE A HEAVY HEX HEAD	
F1	SPLICE BOLT	GALV. HOT DIP TO AASHTO M232 CLASS C / ASTM A153 CLASS C / ASTM F2329 OR GALV. MECHANICALLY TO AASHTO M298 CLASS 50, TYPE 1 / ASTM B695 CLASS 50, TYPE 1	5/8" DIA. SEE SDD 14B42 FOR BOLT GEOMETRY
		ASTM A307 GRADE A OR SAE J429 GRADE 2	
		UNC	
		AASHTO M180	

PART	DESCRIPTION	MATERIALS SPECIFICATIONS	NOTES
F2	SPLICE BOLT - NUT	ASTM A563 GRADE A	5/8" DIA. SEE SDD 14B42 FOR BOLT GEOMETRY
		AASHTO M180 DOUBLE RECESSED HEAVY HEX HEAD	
		GALV. HOT DIP TO AASHTO M232 CLASS C/ASTM A153 CLASS C/ASTM F2329 OR GALV. MECHANICALLY TO AASHTO M298 CLASS 50, TYPE 1/ASTM B695 CLASS 50, TYPE 1	
		OVER TAPPED NUTS OVER-SIZE AS SPECIFIED IN AASHTO 291 / ASTM A 563	
		UNC	
G1	LAG SCREW	ASTM A308 GRADE A ASTM A153 CLASS D	1/2" DIA. 6" LONG
H1	DELINEATOR - BEAM GUARD		SEE SDD 14B42 FOR MORE INFORMATION
H2	DELINEATION - SHEETING	YELLOW OR WHITE	
		WISDOT SPEC 637 TYPE SH	
		APPROVED PRODUCT LIST	
J1	FOUNDATION BACKFILL	STANDARD SPEC. 614	
AA1	BEAM GUARD RAIL - PUNCHED	AASHTO M180, CLASS A, TYPE 2	
		APPROVED PRODUCER	
AA2	BEAM GUARD RAIL - END SECTION BUFFER	AASHTO M180, CLASS A, TYPE 2	
		APPROVED PRODUCER	
BB1	BEAM GUARD RAIL - TERMINAL CONNECTOR MODIFIED	AASHTO M180, CLASS A, TYPE 2	
		APPROVED PRODUCER	
CC1	SHORT RADIUS - SQUARE WASHER	AASHTO M180	
		GALV. AASHTO M111 / ASTM A123	
EE1	NAIL	ASTM A153 HOT DIP CLASS D	
		ASTM F1667 TYPE 1 STYLE 12 (16 DOUBLE HEADED)	
FF1	POST - BCT - WOOD	S4S FINISH ON 4 SIDES	
		WISDOT SPEC. 614	
GG1	POST BOLT	ASTM A307 GRADE A OR SAE J429 GRADE 2	3/8" DIA. SEE SDD 14B42 FOR BOLT GEOMETRY
		AASHTO M180	
		GALV. HOT DIP TO AASHTO M232 CLASS C/ASTM A153 CLASS C/ASTM F2329 OR GALV. MECHANICALLY TO AASHTO M298 CLASS 50, TYPE 1/ASTM B695 CLASS 50, TYPE 1	
		UNC	
GG2	POST BOLT - WASHER	ASTM F436 TYPE 1 (HARDEN TYPICALLY USED WITH STEEL) OR ASTM F844 (UNHARDENED TYPICALLY WITH WOOD)	3/8" DIA.
		GALV. AASHTO M111 / ASTM A 123 OR GALV. HOT DIP. TO AASHTO M232 CLASS C/ASTM A153 CLASS C / ASTM F2329	

SHORT RADIUS BEAM GUARD (MGS) SHORT RADIUS TERMINAL (MGS)

STATE OF WISCONSIN
DEPARTMENT OF TRANSPORTAT

BILL OF MATERIALS - SHORT RADIUS BEAM GUARD (MGS)

PART	DESCRIPTION	MATERIALS SPECIFICATIONS	NOTES
GG3	POST BOLT - NUT	ASTM A563 GRADE A	⅜" DIA. SEE 14B42 FOR GEOMETRY
		AASHTO M180 DOUBLE RECESSED HEAVY HEX HEAD	
		GALV. HOT DIP TO AASHTO M232 CLASS C / ASTM A153 CLASS C / ASTM F2329 OR GALV. MECHANICALLY TO AASHTO M298 CLASS 50, TYPE 1 / ASTM B695 CLASS 50, TYPE 1	
		UNC	
		OVER TAPPED NUTS OVER-SIZE AS SPECIFIED IN AASHTO 291 / ASTM A 563	
		ASTM A563 GRADE A HEAVY HEX HEAD	
HH1	SPLICE BOLT	GALV. HOT DIP TO AASHTO M232 CLASS C / ASTM A153 CLASS C / ASTM F2329 OR GALV. MECHANICALLY TO AASHTO M298 CLASS 50, TYPE 1 / ASTM B695 CLASS 50, TYPE 1	⅜" DIA. SEE SDD 14B42 FOR BOLT GEOMETRY
		ASTM A307 GRADE A OR SAE J429 GRADE 2	
		UNC	
		AASHTO M180 HEAD GEOMETRY	
HH2	SPLICE BOLT - NUT	ASTM A563 GRADE A	⅜" DIA. SEE SDD 14B42 FOR BOLT GEOMETRY
		AASHTO M180 DOUBLE RECESSED HEAVY HEX HEAD	
		GALV. HOT DIP TO AASHTO M232 CLASS C / ASTM A153 CLASS C / ASTM F2329 OR GALV. MECHANICALLY TO AASHTO M298 CLASS 50, TYPE 1 / ASTM B695 CLASS 50, TYPE 1	
		OVER TAPPED NUTS OVER-SIZE AS SPECIFIED IN AASHTO 291 / ASTM A 563	
		UNC	
JJ1	PIPE - STEEL	ASTM A53 GALVANIZED GRADE B SCHEDULE 40	10" O.D.
JJ2	TOP PLATE	ASTM A36 MIN. STRENGTH 36 KSI, OR ASTM A529 MAX. STRENGTH 50 KSI, OR ASTM A572 MAX STRENGTH 50 KSI OR ASTM A709 MAX STRENGTH 50 KSI OR ASTM A992 MAX STRENGTH 50 KSI	DIMENSIONS ⅜" X 4" X 1' - 0"
		GALV. AASHTO M111 / ASTM A123	
KK1	ANCHOR BRACKET	ASTM A36 MIN. STRENGTH 36 KSI, OR ASTM A529 MAX. STRENGTH 50 KSI, OR ASTM A572 MAX STRENGTH 50 KSI OR ASTM A709 MAX STRENGTH 50 KSI OR ASTM A992 MAX STRENGTH 50 KSI	
		GALV. AASHTO M111 / ASTM A123	
KK2	ANCHOR BRACKET - BEARING PLATE	ASTM A36 MIN. STRENGTH 36 KSI, OR ASTM A529 MAX. STRENGTH 50 KSI, OR ASTM A572 MAX STRENGTH 50 KSI OR ASTM A709 MAX STRENGTH 50 KSI OR ASTM A992 MAX STRENGTH 50 KSI	
		GALV. AASHTO M111 / ASTM A123	
LL1	ANCHOR BRACKET - BOLT	ASTM A307 GRADE B HEAVY HEX HEAD OR SAE J429 GRADE 2 HEAVY HEX HEAD	⅝" DIA.
		GALV. HOT DIP TO AASHTO M232 CLASS C / ASTM A153 CLASS C / ASTM F2329 OR GALV. MECHANICALLY TO AASHTO M298 CLASS 50, TYPE 1 / ASTM B695 CLASS 50, TYPE 1	
		UNC	

PART	DESCRIPTION	MATERIALS SPECIFICATIONS	NOTES
LL2	ANCHOR BRACKET - WASHER	ASTM F436 TYPE 1 (HARDEN WASHER ONLY)	⅝" DIA.
		GALV. AASHTO M111 / ASTM A123 OR GALV. HOT DIP TO AASHTO M232 CLASS C / ASTM A153 CLASS C / ASTM F2329	
LL3	ANCHOR BRACKET - NUT	ASTM A563 GRADE A	⅝" DIA.
		GALV. HOT DIP TO AASHTO M232 CLASS C / ASTM A153 CLASS C / ASTM F2329 OR GALV. MECHANICALLY TO AASHTO M298 CLASS 50, TYPE 1 / ASTM B695 CLASS 50, TYPE 1	
		OVER TAPPED NUTS OVER-SIZE AS SPECIFIED IN AASHTO 291 / ASTM A 563	
		UNC	
MM1a	ANCHOR CABLE	AASHTO M30 / ASTM A741 INDEPENDENT WIRE CORE (IWRC) OR WIRE STRAND CORE (WCS), IMPROVED PLOW STEEL (IPS), 6X19, TYPE II OR IIc CLASS C ZINC COATED	
MM1b	ANCHOR CABLE	AASHTO M30 / ASTM A741 INDEPENDENT WIRE CORE (IWRC) OR WIRE STRAND CORE (WCS), IMPROVED PLOW STEEL (IPS), 6X19, TYPE II OR IIc CLASS C ZINC COATED	
MM2	ANCHOR CABLE - SWAGE FITTING	ASTM A576 GRADE 1035	
		SWAGE FITTINGS ARE TO BE FACTORY SWEDGED. WITH A BREAKING STRENGTH 40,000 LBS.	
		GALV. AASHTO M111 / ASTM A123	
		ASME B30.26 FORGED, CAST, OR DIE STAMPED WITH THE FOLLOWING INTO CONNECTION: NAME OF MANUFACTURER OR TRADEMARK OF CONNECTION'S MANUFACTURER, SIZE OR RATED LOAD, GRADE.	
MM3	WIRE ROPE CABLE CLAMPS	FF-C-450D TYPE 1 CLASS 1	¾"
		ASTM A153 HOT DIP CLASS D	
MM4	ANCHOR CABLE - SWAGE FITTING - STUD	ASTM F3125 GRADE A325 TYPE 1 OR SAE GRADE 5 OR ASTM A449 TYPE 1 HEAVY HEX HEAD	
		GALV. HOT DIP TO AASHTO M232 CLASS C / ASTM A153 CLASS C / ASTM F2329 OR GALV. MECHANICALLY TO AASHTO M298 CLASS 50, TYPE 1 / ASTM B695 CLASS 50, TYPE 1	
		UNC	
NN1	ANCHOR CABLE - NUT	ASTM A563 GRADE A	1" DIA.
		AASHTO M180 DOUBLE RECESSED HEAVY HEX HEAD	
		GALV. HOT DIP TO AASHTO M232 CLASS C / ASTM A153 CLASS C / ASTM F2329 OR GALV. MECHANICALLY TO AASHTO M298 CLASS 50, TYPE 1 / ASTM B695 CLASS 50, TYPE 1	
		OVER TAPPED NUTS OVER-SIZE AS SPECIFIED IN AASHTO 291 / ASTM A 563	
		UNC	
NN2	ANCHOR CABLE - NUT - WASHER	ASTM F436 TYPE 1 (HARDEN WASHER ONLY)	1" DIA.
		GALV. AASHTO M111 / ASTM A123 OR GALV. HOT DIP TO AASHTO M232 CLASS C / ASTM A153 CLASS C / ASTM F2329	

6

SDD 14B53 - 01h

SHORT RADIUS BEAM GUARD (MGS) SHORT RADIUS TERMINAL (MGS)

STATE OF WISCONSIN
DEPARTMENT OF TRANSPORTAT

6

SDD 14B53 - 01h

BILL OF MATERIALS - SHORT RADIUS BEAM GUARD (MGS)

PART	DESCRIPTION	MATERIALS SPECIFICATIONS	NOTES
PP1	BEARING PLATE AT POST	ASTM A36 MIN. STRENGTH 36 KSI, OR ASTM A529 MAX. STRENGTH 50 KSI, OR ASTM A572 MAX STRENGTH 50 KSI OR ASTM A709 MAX STRENGTH 50 KSI OR ASTM A992 MAX STRENGTH 50 KSI	
		GALV. AASHTO M111 / ASTM A123	
PP2	PIPE - STEEL	ASTM A53 GALVANIZED GRADE B SCHEDULE 40	2" DIA. x 6" LONG
QQ1	FOUNDATION TUBE	ASTM A500 GRADE B	8" X 6" X 3/16"
		GALV. AASHTO M111 / ASTM A123	
QQ2	SHORT RADIUS - FOUNDATION TUBE - ANCHOR CABLE - TUBE	ASTM A500 GRADE B	DIMENSIONS 2 1/2" X 2 1/4" X 1/4" X 8"
		GALV. AASHTO M111 / ASTM A123	
QQ3	SHORT RADIUS - SOIL TUBE - ANCHOR CABLE - TUBE - END PLATE	ASTM A36 MIN. STRENGTH 36 KSI, OR ASTM A529 MAX. STRENGTH 50 KSI, OR ASTM A572 MAX STRENGTH 50 KSI OR ASTM A709 MAX STRENGTH 50 KSI OR ASTM A992 MAX STRENGTH 50 KSI	DIMENSIONS 2 1/2" X 2 1/2" X 1/4"
		GALV. AASHTO M111 / ASTM A123	
QQ4	GROUND STRUT AND YOKE - BOLT	GALV. HOT DIP TO AASHTO M232 CLASS C / ASTM A153 CLASS C / ASTM F2329 OR GALV. MECHANICALLY TO AASHTO M298 CLASS 50, TYPE 1 / ASTM B695 CLASS 50, TYPE 1	5/8 DIA.
		ASTM A307 GRADE B HEAVY HEX HEAD OR SAE J429 GRADE 2 HEAVY HEX HEAD	
		UNC	
QQ5	GROUND PLATE AND YOKE - WASHER	ASTM F436 TYPE 1 (HARDEN WASHER ONLY)	5/8 DIA.
		GALV. AASHTO M111 / ASTM A123 OR GALV. HOT DIP TO AASHTO M232 CLASS C / ASTM A153 CLASS C / ASTM F2329	
QQ6	GROUND STRUT AND YOKE - NUT	HEAVY HEX	5/8 DIA.
		UNC	
		ASTM A563 GRADE A	
		OVER TAPPED NUTS AS SPECIFIED IN AASHTO 291 / ASTM A 563	
		GALV. HOT DIP TO AASHTO M232 CLASS C / ASTM A153 CLASS C / ASTM F2329 OR GALV. MECHANICALLY TO AASHTO M298 CLASS 50, TYPE 1 / ASTM B695 CLASS 50, TYPE 1	

PART	DESCRIPTION	MATERIALS SPECIFICATIONS	NOTES
SS1	SOIL PLATE	ASTM A36 MIN. STRENGTH 36 KSI, OR ASTM A529 MAX. STRENGTH 50 KSI, OR ASTM A572 MAX STRENGTH 50 KSI OR ASTM A709 MAX STRENGTH 50 KSI OR ASTM A992 MAX STRENGTH 50 KSI	
		GALV. AASHTO M111 / A123	
TT1	SOIL PLATE - BOLT	ASTM A307 GRADE B HEAVY HEX HEAD OR SAE J429 GRADE 2 HEAVY HEX HEAD	5/8 DIA.
		GALV. HOT DIP TO AASHTO M232 CLASS C / ASTM A153 CLASS C / ASTM F2329 OR GALV. MECHANICALLY TO AASHTO M298 CLASS 50, TYPE 1 / ASTM B695 CLASS 50, TYPE 1	
		UNC	
TT2	SOIL PLATE - WASHER	ASTM F436 TYPE 1 (HARDEN WASHER ONLY)	5/8 DIA.
		GALV. AASHTO M111 / ASTM A123 OR GALV. HOT DIP TO AASHTO M232 CLASS C / ASTM A153 CLASS C / ASTM F2329	
TT3	SOIL PLATE - NUT	GALV. HOT DIP TO AASHTO M232 CLASS C / ASTM A153 CLASS C / ASTM F2329 OR GALV. MECHANICALLY TO AASHTO M298 CLASS 50, TYPE 1 / ASTM B695 CLASS 50, TYPE 1	5/8 DIA.
UU1	OBJECT MARKER - SHEETING	MUTCD / WISDOT OBJECT MARKER TYPE 3	PATTERN AND COLOR FOR SHEETING. SHEETING TYPE FOR MARKER.
		WISDOT SPEC 637 TYPE F	
		APPROVED PRODUCT LIST	
UU2	OBJECT MARKER - ALUMINUM PLATE	WISDOT SPEC 637 ALUMINUM PLATE	MATERIAL AND THICKNESS OF MATERIALS
UU3	OBJECT MARKER - SCREWS	STAINLESS SELF-TAPPING SCREWS	
VV1	FOUNDATION BACKFILL	WISDOT SPEC 614	

SHORT RADIUS BEAM GUARD (MGS) SHORT RADIUS TERMINAL (MGS)

STATE OF WISCONSIN
DEPARTMENT OF TRANSPORTATION

APPROVED
June 2017 — DATE
/S/ Rodney Taylor — ROADWAY STANDARDS DEVE ENGINEER
FHWA

6
SDD 14B53 - 01i

GENERAL NOTES

DETAILS OF CONSTRUCTION, MATERIALS AND WORKMANSHIP NOT SHOWN ON THIS DRAWING SHALL CONFORM TO THE PERTINENT REQUIREMENTS OF THE STANDARD SPECIFICATIONS AND THE APPLICABLE SPECIAL PROVISIONS.

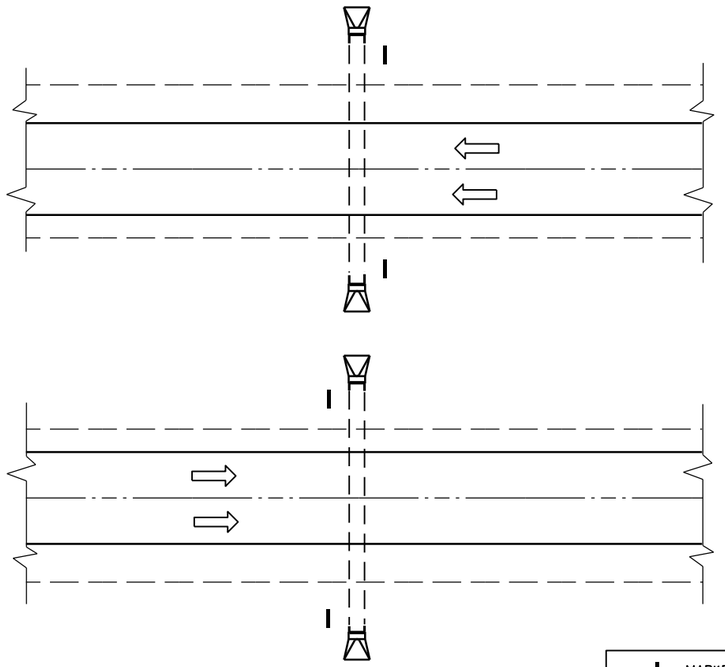

PLAN VIEW

DIVIDED HIGHWAY

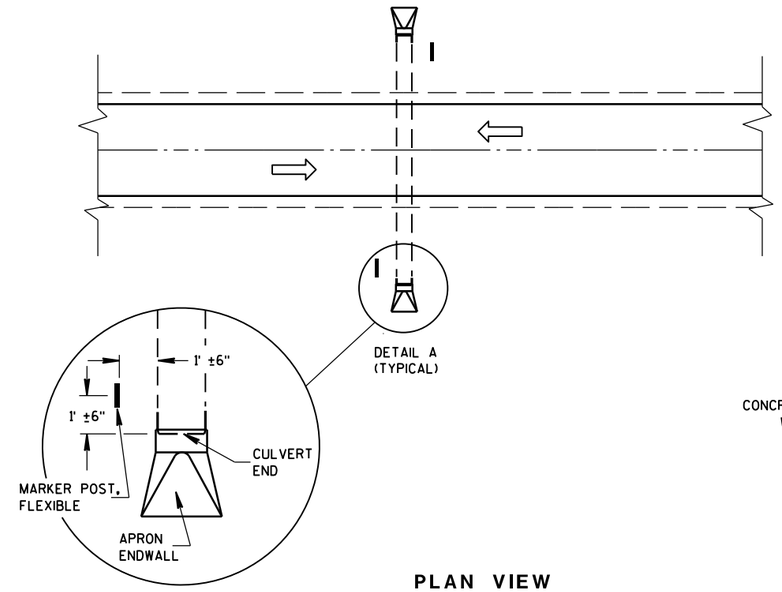

DETAIL A
(TYPICAL)

PLAN VIEW

UNDIVIDED HIGHWAY

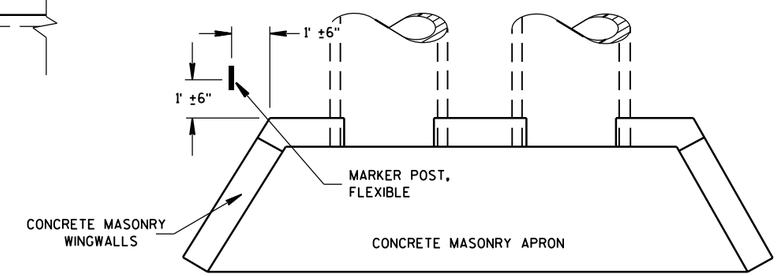

PLAN VIEW

CONCRETE MASONRY ENDWALLS FOR CULVERT PIPE AND PIPE ARCH

MARKER POST, FLEXIBLE

DIRECTION OF TRAFFIC FLOW

FLEXIBLE MARKER POST LOCATION

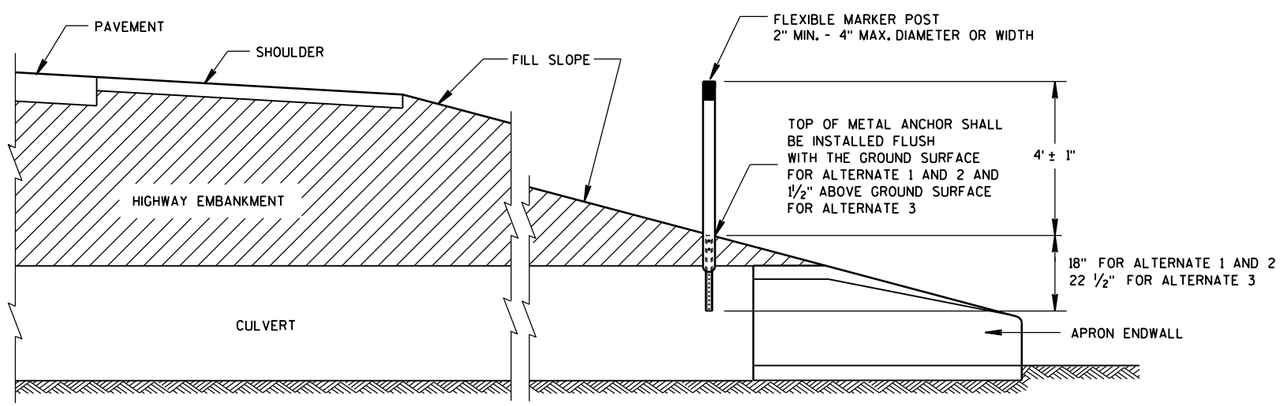

CROSS SECTION

FLEXIBLE MARKER POST

FLEXIBLE MARKER POST FOR CULVERT END

STATE OF WISCONSIN
DEPARTMENT OF TRANSPOR

6

6

S.D.D. 15 A 3-2a

S.D.D. 15 A 3-2a

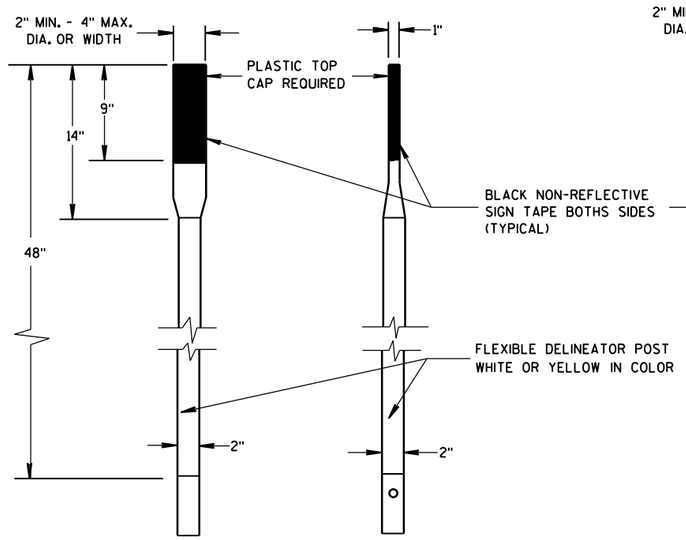

FRONT VIEW SIDE VIEW

ALTERNATE 1

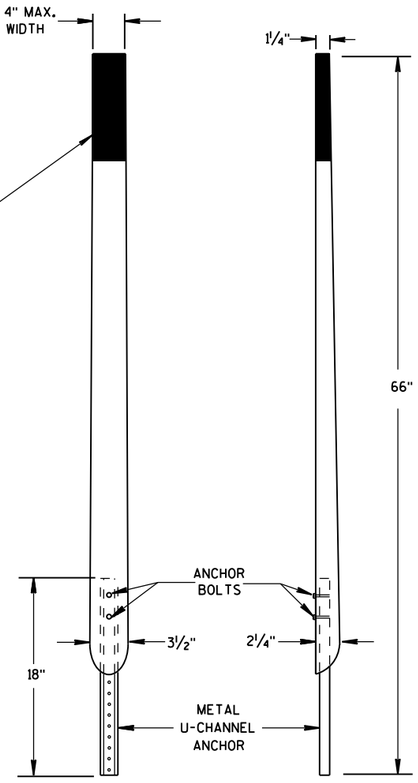

FRONT VIEW SIDE VIEW

ALTERNATE 2

FLEXIBLE MARKER POSTS

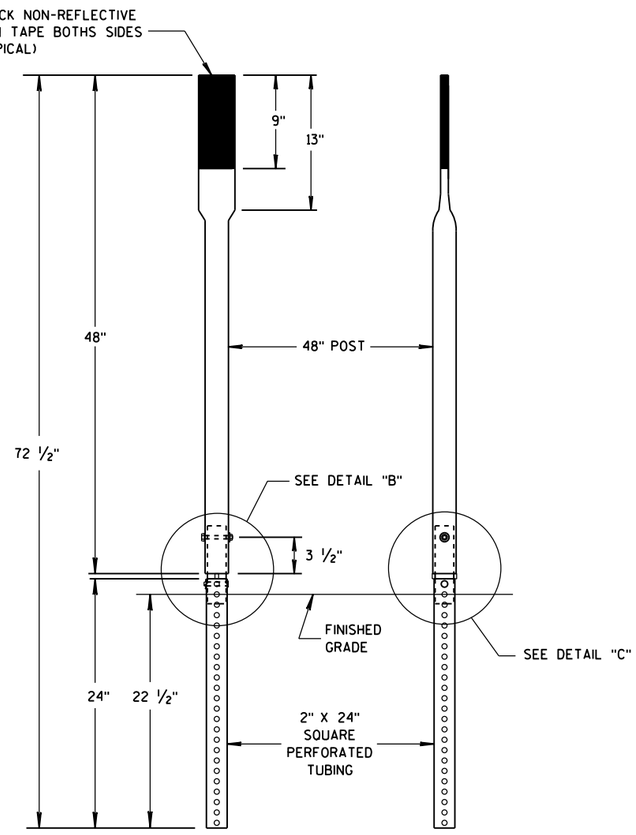

FRONT VIEW SIDE VIEW

ALTERNATE 3

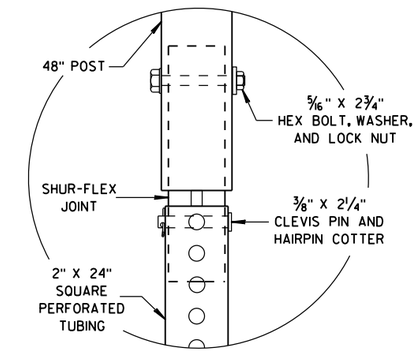

DETAIL B

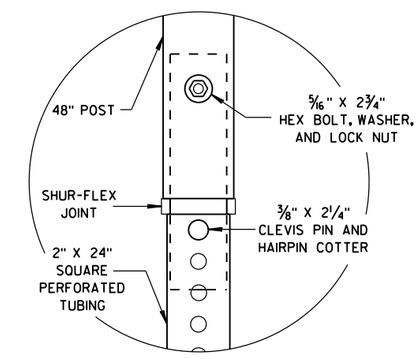

DETAIL C

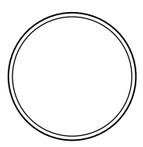

SECTION A-A

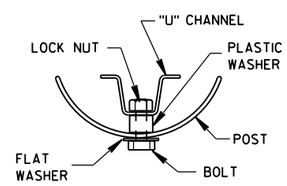

SECTION B-B

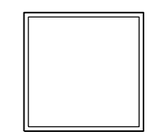

SECTION C-C

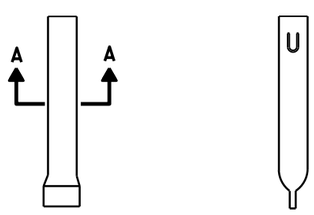

FRONT VIEW SIDE VIEW

ALTERNATE 1

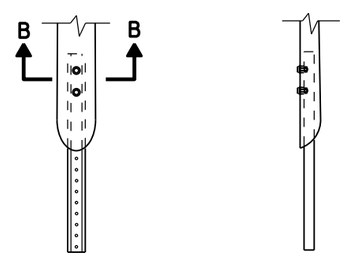

FRONT VIEW SIDE VIEW

ALTERNATE 2

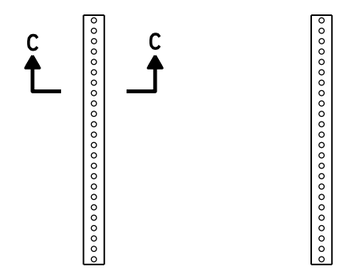

FRONT VIEW SIDE VIEW

ALTERNATE 3

FLEXIBLE MARKER POST ANCHORS

FLEXIBLE MARKER POST
FOR CULVERT END

STATE OF WISCONSIN
DEPARTMENT OF TRANSPORTATION

APPROVED
10/1/2012 /S/ Travis Feltes
DATE STATE TRAFFIC ENGINEER
FHWA

6

6

S.D.D. 15 A 3-2b

S.D.D. 15 A 3-2b

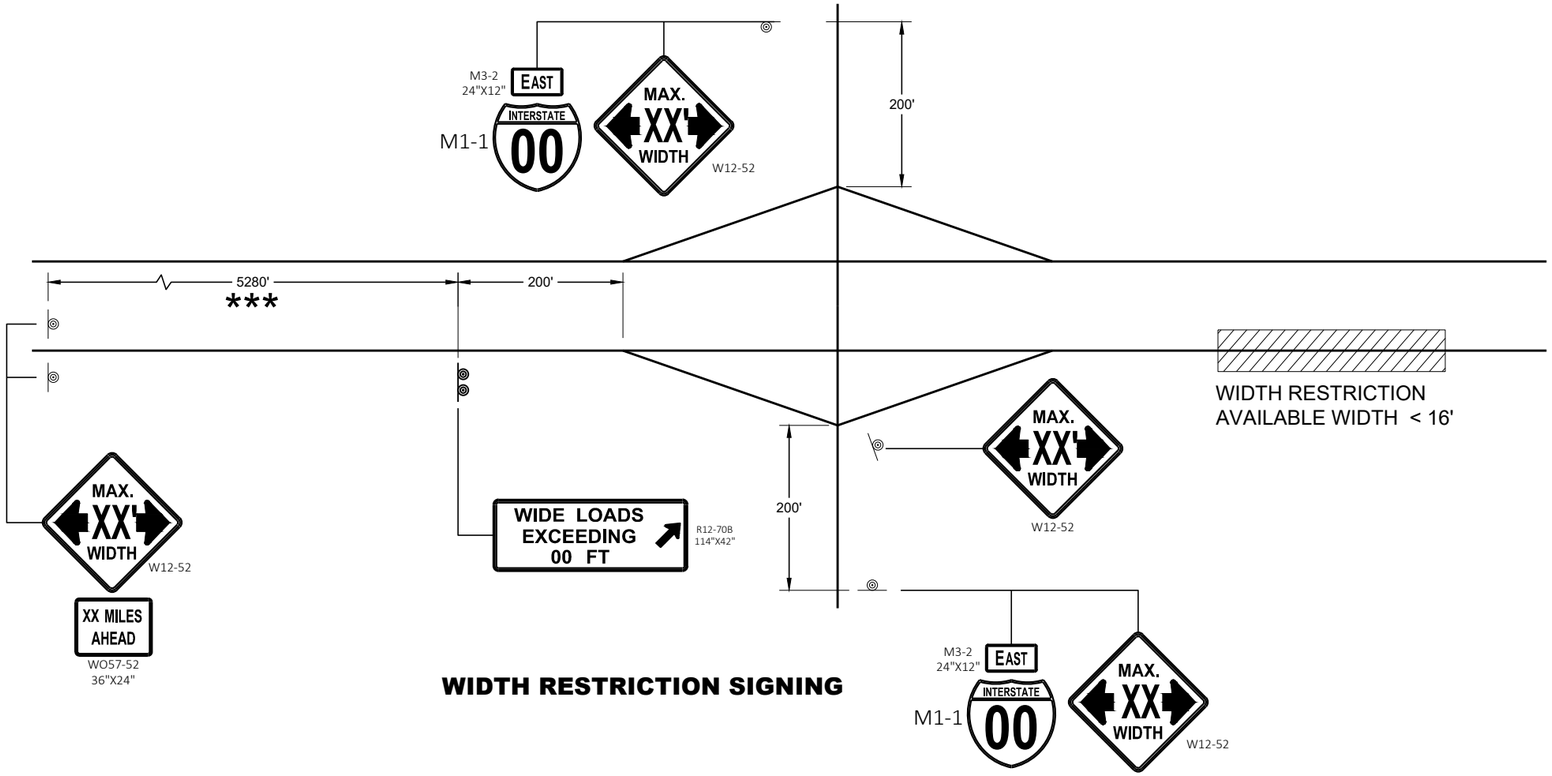

WIDTH RESTRICTION SIGNING

LEGEND

◎ SIGN ON PERMANENT SUPPORT

GENERAL NOTES

THE EXACT NUMBER, LOCATION AND SPACING OF ALL SIGNS SHALL BE ADJUSTED TO FIT FIELD CONDITIONS AS APPROVED BY THE ENGINEER.

THE SPACING BETWEEN SIGNS SHOULD BE ADJUSTED TO NOT CONFLICT WITH AND TO PROVIDE A DESIRABLE MINIMUM OF 200 FEET CLEARANCE TO EXISTING SIGNS THAT WILL REMAIN IN PLACE.

ANY SIGNS TEMPORARY OR EXISTING, WHICH CONFLICT WITH TRAFFIC CONTROL " IN USE" SHALL BE REMOVED OR COVERED AS NEEDED AND AS APPROVED BY THE ENGINEER.

ALL SIGNS ARE 48" X 48" UNLESS OTHERWISE NOTED.

"WO" SIGNS ARE THE SAME AS "W" SIGNS EXCEPT THE BACKGROUND IS ORANGE.

WIDTH ON SIGN TO BE APPROXIMATELY ONE FOOT LESS THAN AVAILABLE WIDTH.

* PLACE 500 FEET BEFORE THE W20 - 1A AND 500 FEET BEFORE ADDITIONAL SIGNS FOR ROADWAYS WITH A PRE - CONSTRUCTION SPEED LIMIT OF 45 MPH OR MORE. FOR 35-40 MPH, USE 350 FOOT TYPICAL SPACING. FOR 25-30 MPH, USE 200 FOOT TYPICAL SPACING.

** SIGN SHALL BE VISIBLE FROM ROADWAY.

*** ADDITIONAL SIGNS NEEDED IF THERE IS AN ON RAMP BETWEEN SIGNS.

WIDTH ON SIGN TO BE APPROX. 1 - FOOT LESS THAN AVAILABLE WIDTH

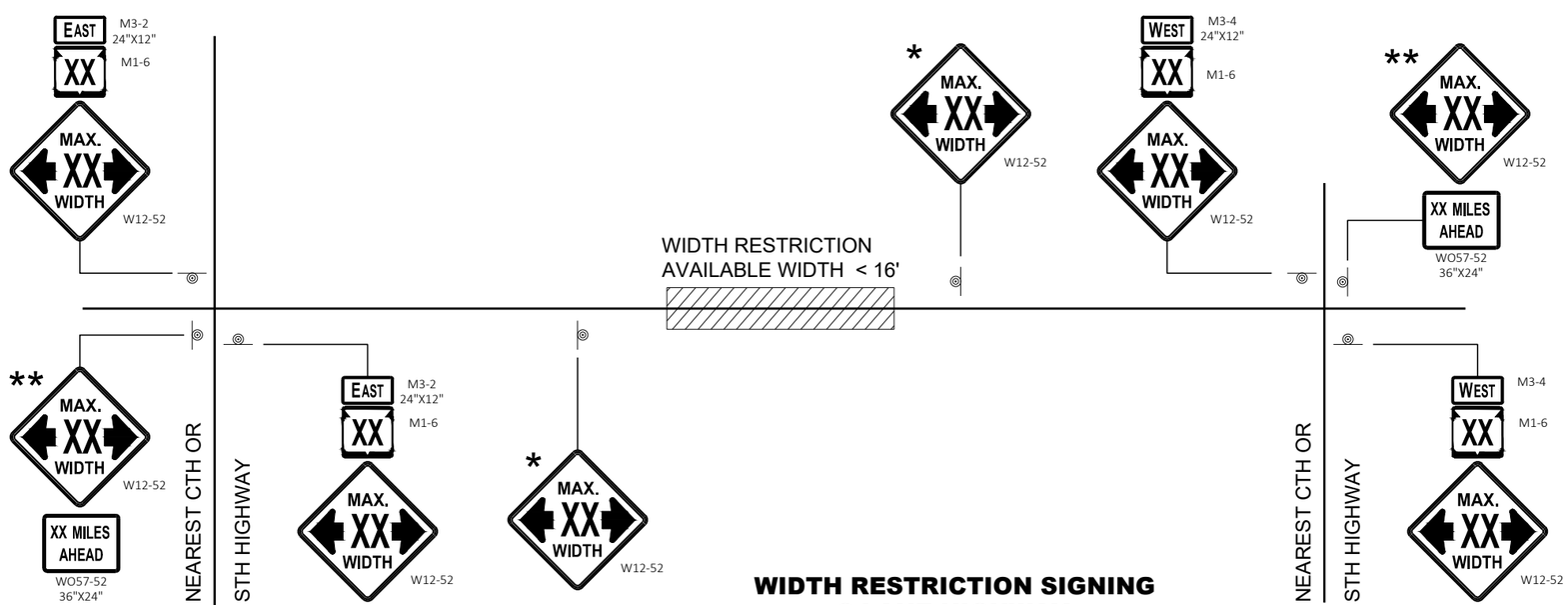

WIDTH RESTRICTION SIGNING
2 LANE HIGHWAY

ADVANCED WIDTH RESTRICTION SIGNING

STATE OF WISCONSIN
DEPARTMENT OF TRANSPORTATION

APPROVED
February 2020 — DATE
/S/ Andrew Heidtke — WORK ZONE ENGINEER
FHWA

6

SDD 15C02 - 08f

6

SDD 15C02 - 08f

GENERAL NOTES

THE EXACT NUMBER, LOCATION, AND SPACING OF ALL SIGNS AND DEVICES SHALL BE ADJUSTED TO FIT FIELD CONDITIONS.

THE SPACING BETWEEN TRAFFIC CONTROL SIGNS SHOULD BE ADJUSTED TO NOT CONFLICT WITH AND SHOULD PROVIDE A MINIMUM OF 200 FEET (500 FEET DESIRABLE) CLEARANCE TO EXISTING SIGNS THAT WILL REMAIN IN PLACE.

ALL SIGNS ARE 48" X 48" UNLESS OTHERWISE NOTED.

SIGNS THAT WILL BE IN PLACE LESS THAN SEVEN CONTINUOUS DAYS AND NIGHTS MAY BE MOUNTED ON PORTABLE SUPPORTS.

IF A "STOP" SIGN MUST BE REMOVED FOR A WORK OPERATION, A TEMPORARY "STOP" SIGN SHALL BE PLACED PRIOR TO THE SIGN REMOVAL, OR A FLAGGER SHALL BE PROVIDED UNTIL THE SIGN IS REESTABLISHED.

* OMIT G20-1 SIGNS IF LENGTH OF WORK AREA IS 2 MILES OR LESS

** PLACE AN ADDITIONAL W20-1A "ROAD WORK AHEAD" SIGN IF WORK AREA WITHIN THE PROJECT IS SEPARATED BY MORE THAN 2 MILES FROM PREVIOUS WORK AREA.

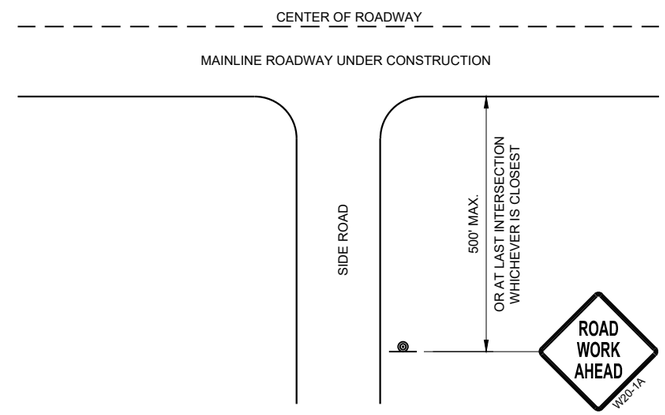

TYPICAL SIDE ROAD APPROACH WARNING SIGN DETAIL

LEGEND

- SIGN ON PERMANENT SUPPORT
- DIRECTION OF TRAFFIC
- WORK AREA

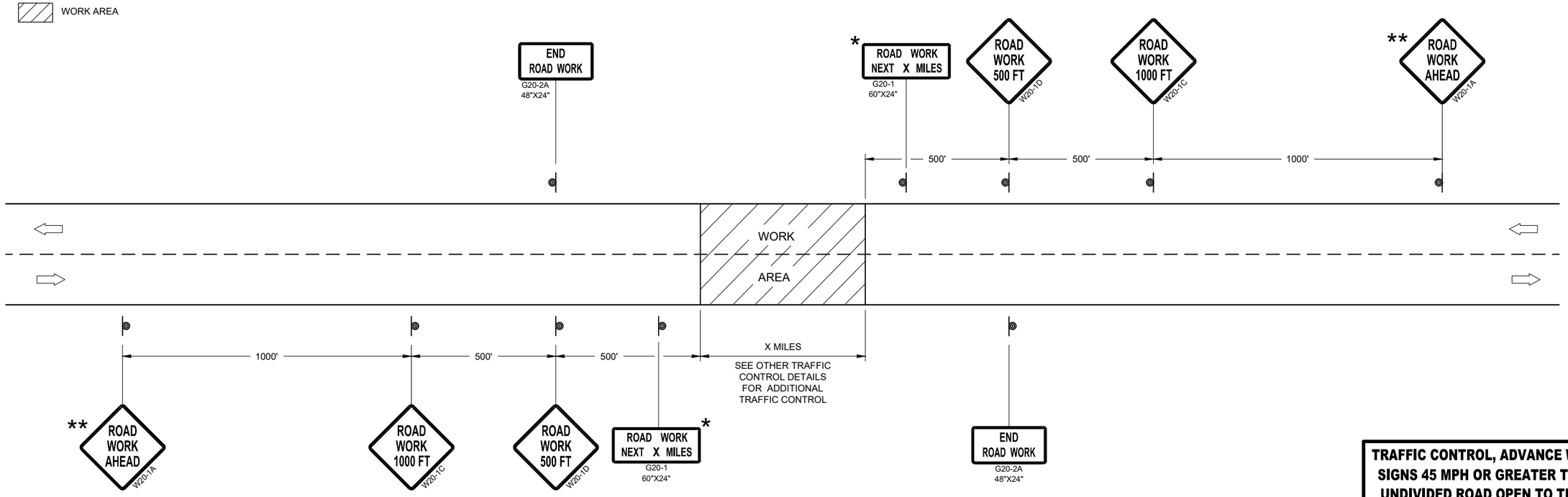

TRAFFIC CONTROL, ADVANCE WARNING SIGNS 45MPH OR GREATER

TRAFFIC CONTROL, ADVANCE WARNING SIGNS 45 MPH OR GREATER TWO-WAY UNDIVIDED ROAD OPEN TO TRAFFICE

STATE OF WISCONSIN
DEPARTMENT OF TRANSPORTATION

APPROVED
July 2018 — DATE
/S/ Andrew Heidtke — WORK ZONE ENGINEE
FHWA

6
SDD 15C04 - 05

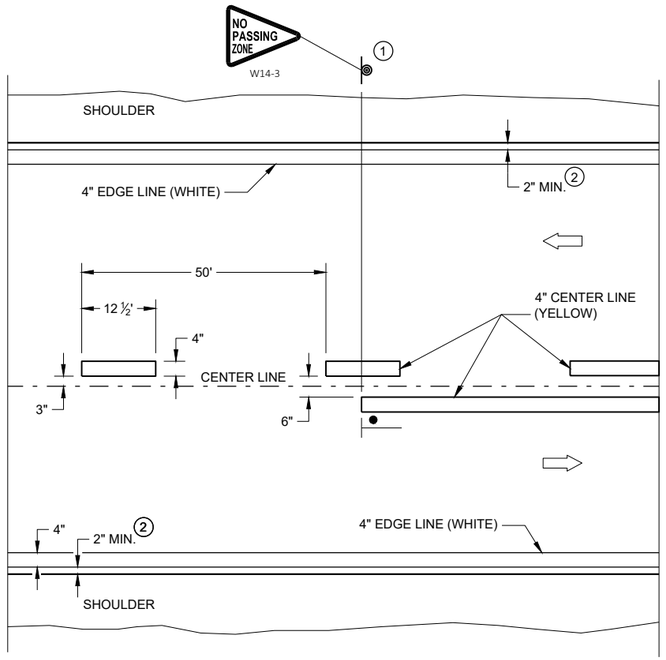

TWO WAY TRAFFIC

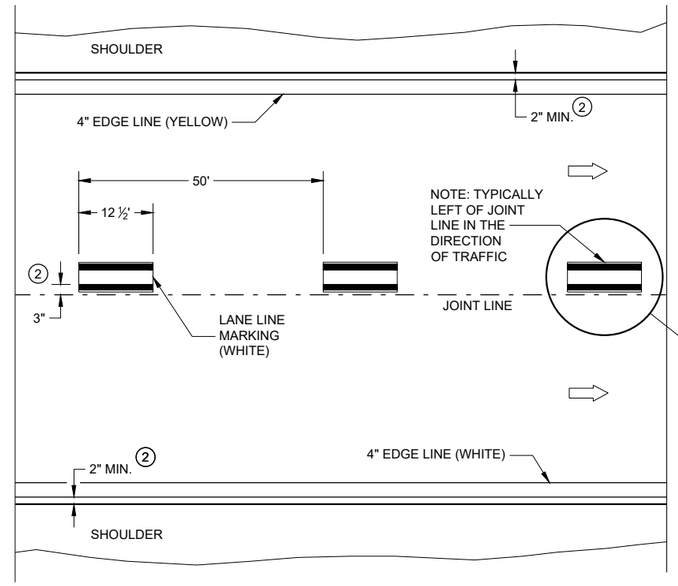

ONE WAY TRAFFIC

PERMANENT PAVEMENT MARKING

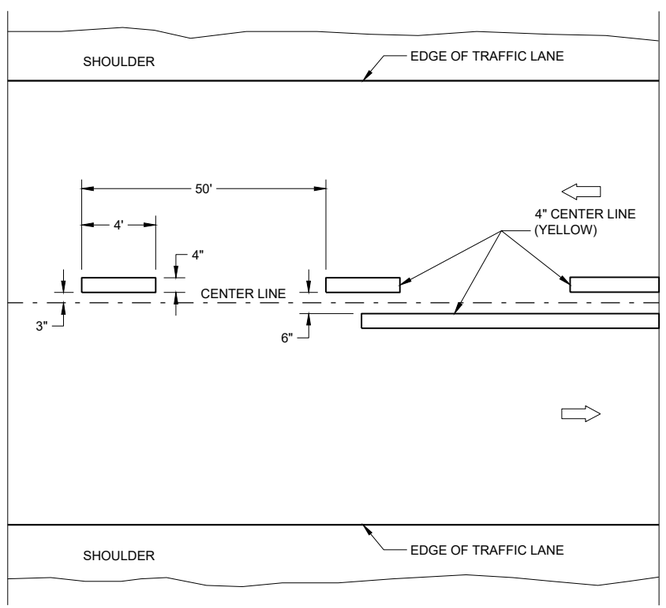

TWO WAY TRAFFIC

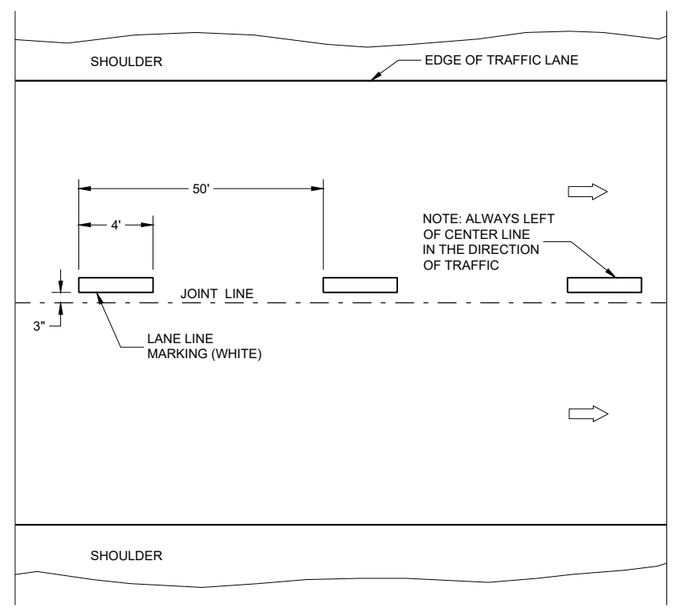

ONE WAY TRAFFIC

TEMPORARY PAVEMENT MARKING

GENERAL NOTES

DETAILS OF CONSTRUCTION NO SHOWN ON THIS DRAWING SHALL CONFORM TO STANDARD SPECIFICATIONS AND SPECIAL PROVISIONS.

1. LOCATE THE NO PASSING ZONE W14-3 SIGN WITH 50 FEET OF THE "T" MARKING
2. MEASURE FROM EDGE OF MARKING TO JOINT LINE. THIS DOES NOT INCLUDE SPACE NEEDED FOR GROOVING OPERATIONS.

LEGEND

"T" MARKING

SIGN ON PERMANENT SUPPORT

DIRECTION OF TRAFFIC

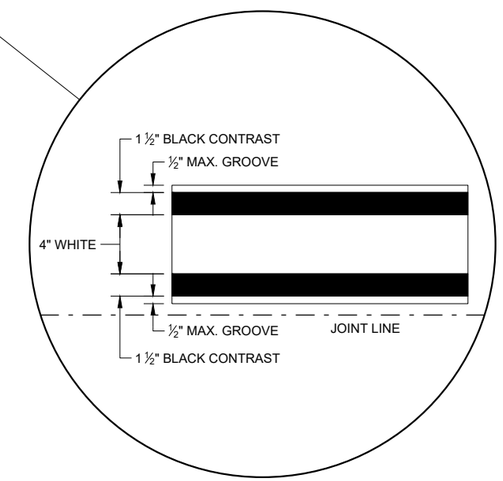

LONGITUDINAL MARKING (MAINLINE)

STATE OF WISCONSIN
DEPARTMENT OF TRANSPORTATION

APPROVED
February 2020 — DATE
/S/ Matthew Rauch — STATEWIDE SIGNING AND M ENGINEER
FHWA

6

SDD 15C08 - 20a

GENERAL NOTES

1. REFLECTIVE SHEETING SHALL FOLLOW THE REQUIREMENTS IN THE APPROVED PRODUCTS LISTING FOR SIGN SHEETING.
2. LOCATION OF WARNING LIGHTS WHEN SHOWN ON THE PLAN.

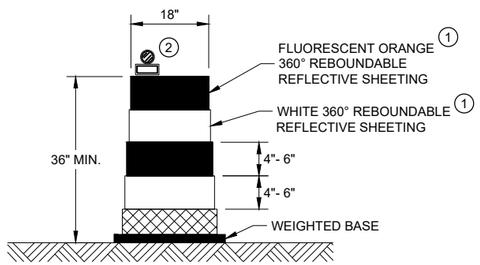

DRUM

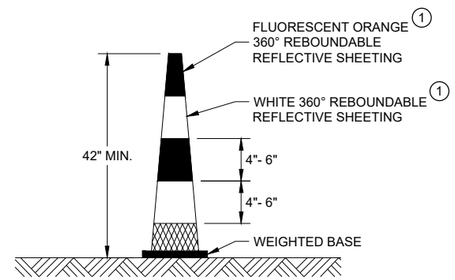

42" CONE

DO NOT USE IN TAPERS
½ SPACING OF DRUMS

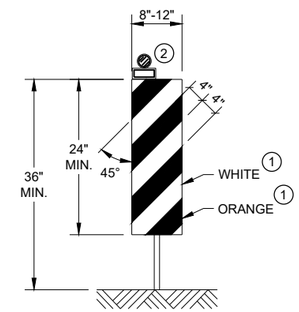

VERTICAL PANEL

THE STRIPES SHALL SLOPE DOWNWARD TO
THE TRAFFIC SIDE FOR CHANNELIZATION.

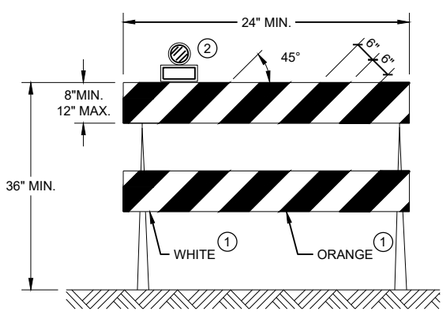

TYPE II BARRICADE

FOR RAILS LESS THAN 36" LONG, 4" WIDE STRIPES
MAY BE USED. ALL STRIPES SHALL SLOPE DOWNWARD
TO THE TRAFFIC SIDE FOR CHANNELIZATION.

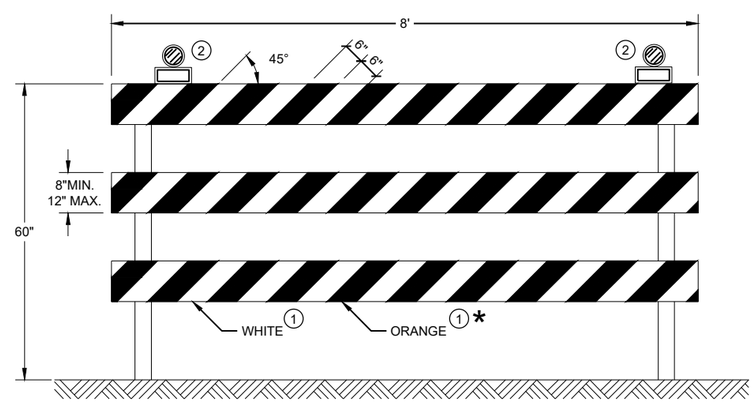

TYPE III BARRICADE

IF SIGN MOUNTED, DO NOT COVER MORE THAN 50% OF THE TOP
TWO RAILS OR 33% OF THE TOTAL AREA OF THE THREE RAILS.

* IF USED FOR A PERMANENT APPLICATION USE RED SHEETING.

CHANNELIZING DEVICES DRUMS, CONES, BARRICADES AND VERTICAL PANELS

STATE OF WISCONSIN
DEPARTMENT OF TRANSPORTATION

APPROVED
June 2017 — DATE
/S/ Andrew Heidtke — WORK ZONE ENGINEE
FHWA

6

6

SDD 15C11 - 07b

SDD 15C11 - 07b

LEGEND

SIGN ON PORTABLE OR PERMANENT SUPPORT

TEMPORARY PORTABLE RUMBLE STRIP ARRAY

DIRECTION OF TRAFFIC

WORK AREA

FLAGGER, EQUIPPED WITH STOP/SLOW PADDLE FASTENED ON SUPPORT STAFF

GENERAL NOTES

DETAILS OF TRAFFIC CONTROL DEVICES AND INSTALLATION NOT SHOWN ON THIS DRAWING SHALL CONFORM TO THE PERTINENT REQUIREMENTS OF THE STANDARD SPECIFICATIONS, THE SPECIAL PROVISIONS, AND THE MANUAL ON UNIFORM TRAFFIC CONTROL DEVICES.

ALL SIGNS ARE 48" X 48" UNLESS OTHERWISE NOTED.

"WO" SIGNS ARE THE SAME AS "W" SIGNS EXCEPT THE BACKGROUND IS ORANGE.

THE EXACT NUMBER, LOCATION AND SPACING OF ALL SIGNS, DEVICES, AND LOCATION OF ALL FLAGGERS SHALL BE ADJUSTED TO FIT FIELD CONDITIONS AS APPROVED BY THE ENGINEER.

THE FIRST ADVANCE WARNING SIGN SHOULD TYPICALLY BE LOCATED IN ADVANCE OF THE ANTICIPATED TRAFFIC BACKUP OR QUEUE.

WHEN A SIDE ROAD OR RAMP INTERSECTS THE FACILITY ON WHICH THE WORK IS BEING PERFORMED, ADDITIONAL TRAFFIC CONTROLS SHALL BE PROVIDED AS SPECIFIED IN THE PLANS AND/OR THE SPECIAL PROVISIONS OR AS APPROVED BY THE ENGINEER.

FLAGGING

FLAGGERS SHALL BE IN SIGHT OF EACH OTHER OR IN DIRECT COMMUNICATION AT ALL TIMES. THEY SHALL BE EQUIPPED WITH STOP/SLOW PADDLES FASTENED ON SUPPORT STAFFS. WHEN THE FLAGGING OPERATION IS NOT IN EFFECT REMOVE TEMPORARY PORTABLE RUMBLE STRIPS PRIOR TO COVERING OR REMOVING ALL ADVANCE SIGNING.

(1) FOR MOVING WORK OPERATIONS, POST ADDITIONAL W20-7A FLAGGER SIGNS AT APPROXIMATELY 3,500' INTERVALS IN THE MOVING WORK OPERATION OR AS APPROVED BY THE ENGINEER.

(2) SIGN NOT REQUIRED IF FLAGGING OPERATION OCCURS WITHIN A SIGNED ROAD WORK ZONE AREA.

WHEN THE DISTANCE BETWEEN FLAGGERS EXCEEDS 2 MILES, A PILOT CAR IS REQUIRED. WHEN CURVES REDUCE SIGHT DISTANCE BELOW 400', A PILOT CAR IS REQUIRED.

TEMPORARY PORTABLE RUMBLE STRIPS

UTILIZE TEMPORARY PORTABLE RUMBLE STRIPS ON ALL FLAGGING OPERATIONS.

(3) EACH TEMPORARY PORTABLE RUMBLE STRIP ARRAY CONSISTS OF THREE RUMBLE STRIPS SPACED ACCORDING TO MANUFACTURER'S RECOMMENDATION, PLACED TRANSVERSE ACROSS THE LANE AT LOCATIONS SHOWN.

ONLY USE TEMPORARY PORTABLE RUMBLE STRIPS FOR THE APPROVED PRODUCTS LIST.

INSTALL TEMPORARY RUMBLE STRIPS PER MANUFACTURER'S RECOMMENDATIONS.

PLACE ADVANCE SIGNING PRIOR TO INSTALLING TEMPORARY RUMBLE STRIPS.

DO NOT INSTALL TEMPORARY PORTABLE RUMBLE STRIPS ON GRAVEL, MILLED SURFACES, OR ASPHALT THAT HAS BEEN PAVED LESS THAN 12 HOURS.

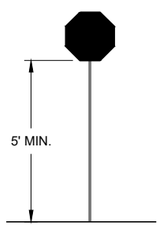

STOP/SLOW PADDLE ON SUPPORT STAFF

SIGN AND TEMPORARY RUMBLE STRIP ARRAY SPACING TABLE

SPEED LIMIT	SPACING "A"
25-30 MPH	200'
35-40 MPH	350'
45-55 MPH	500'

USE OF WO3-4 SIGN IS OPTIONAL. WHEN USED, THIS SIGN SHALL BE LOCATED BETWEEN THE W20-7A AND W20-4A SIGNS, USING SPACING "A".

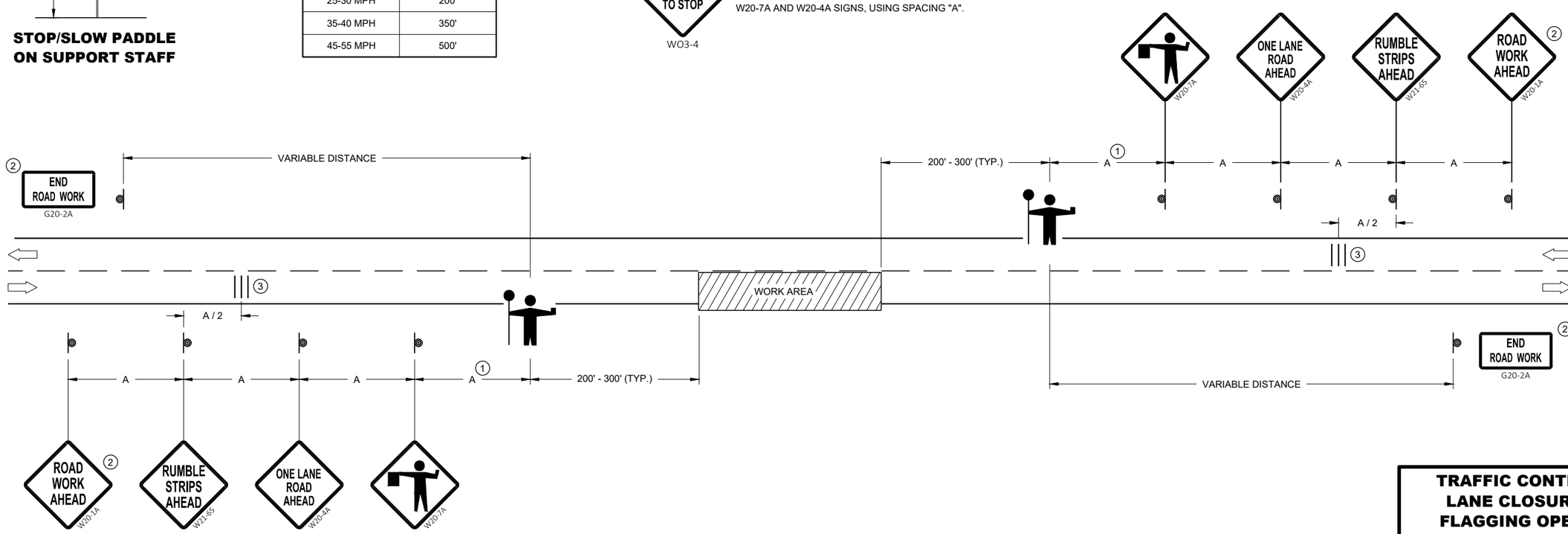

TRAFFIC CONTROL FOR LANE CLOSURE WITH FLAGGING OPERATION

TRAFFIC CONTROL FOR LANE CLOSURE WITH FLAGGING OPERATION

STATE OF WISCONSIN
DEPARTMENT OF TRANSPORTATION

APPROVED
May 2019 — DATE
/S/ Andrew Heidtke — WORK ZONE ENGINEE
FHWA

6

SDD 15C12 - 07

6

SDD 15C12 - 07

LEGEND

V1 LEAD VEHICLE

V2 MARKING VEHICLE

V3 SHADOW VEHICLE

TRUCK MOUNTED ATTENUATOR (TMA)

SIGN ON TEMPORARY SUPPORT

DIRECTION OF TRAFFIC

FLASHING ARROW PANEL (CAUTION)

GENERAL NOTES

ALL VEHICLES SHALL BE EQUIPPED WITH TWO 360 DEGREE HIGH INTENSITY YELLOW FLASHING LIGHTS OR STROBE LIGHTS AND OPERATED WITH HEADLIGHTS TURNED ON.

ALL VEHICLES SHALL BE EQUIPPED WITH REAR FACING TYPE B OR C FLASHING ARROW PANEL OPERATING IN CAUTION MODE. SIGNS PLACED ON VEHICLES MUST NOT OBSCURE THE ARROW PANEL.

ALL SIGNS ARE 48" X 48" UNLESS OTHERWISE SPECIFIED.

DISTANCE BETWEEN VEHICLES MAY VARY ACCORDING TO TERRAIN, SIGHT DISTANCE, PAINT DRYING TIME, AND OTHER FACTORS. WHENEVER ADEQUATE STOPPING SIGHT DISTANCE EXISTS TO THE REAR, SHADOW VEHICLES SHOULD MAINTAIN THE MINIMUM DISTANCE FROM THE WORK VEHICLE AND PROCEED AT THE SAME SPEED AS THE WORK VEHICLE. SHADOW VEHICLES SHOULD SLOW DOWN IN ADVANCE OF VERTICAL AND HORIZONTAL CURVES THAT RESTRICT SIGHT DISTANCE.

THE WORK AND SHADOW VEHICLES SHOULD PULL OVER PERIODICALLY TO ALLOW TRAFFIC TO PASS.

WHEN NO WORK ACTIVITY IS TAKING PLACE, REMOVE OR LAY STATIONARY SIGNS AND SUPPORTS FLAT ON THE GRADE WITH UPRIGHTS ORIENTED PARALLEL TO AND DOWNSTREAM FROM TRAFFIC.

CONES SHOULD BE USED BETWEEN THE MARKING AND SHADOW VEHICLE AT 100 FOOT SPACING. CONES MAY BE OMITTED ON PAINTED LINE IF APPROVED BY THE ENGINEER. CONSIDER PAVEMENT MARKING DRY OR CURE TIMES AND TRAFFIC VOLUME.

CONES SHALL BE A MINIMUM OF 18" FOR WET PAVEMENT MARKING .

(1) SIGNS SHALL BE REPEATED APPROXIMATELY EVERY THREE MILES.

(2) IF CONSTRUCTION WORK ZONE SIGNS ARE IN PLACE, W20-1A OR W21-63 ARE NOT REQUIRED.

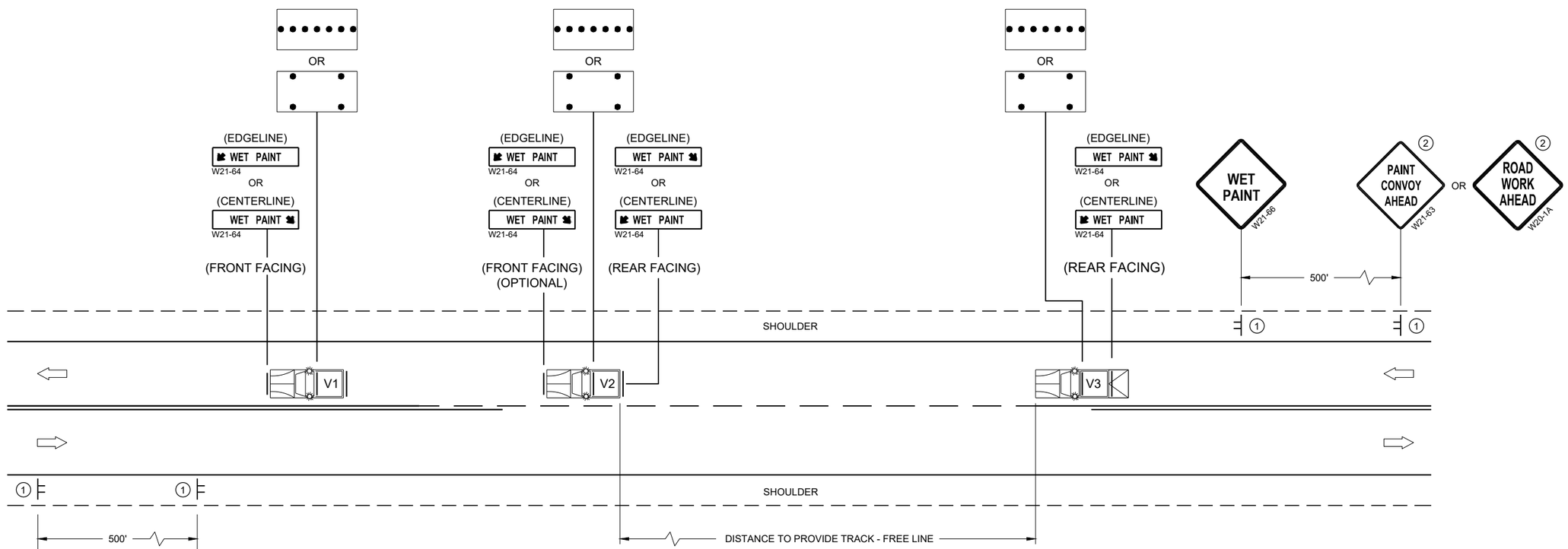

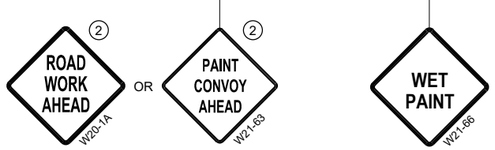

MOVING PAVEMENT MARKING OPERATIONS
TWO- LANE TWO- WAY ROADWAY

MOVING PAVEMENT MARKING OPERATION TWO-LANE TWO-WAY ROADWAY

STATE OF WISCONSIN
DEPARTMENT OF TRANSPORTATION

APPROVED
November 2019 /S/ Andrew Heidtke
DATE WORK ZONE ENGINEE
FHWA

6

SDD 15C19 - 06a

6

SDD 15C19 - 06a

GENERAL NOTES

STOP SIGN SHALL BE PLACED A MINIMUM OF 6 FEET TO A MAXIMUM OF 50 FEET FROM THE EDGELINE LOCATION.

1. 18-INCH STOP LINES MAY BE DELETED OR ADDED BY THE REGION MARKING ENGINEER BASED ON VISIBILITY AND SIGHT LINES.
2. NO STOP LINE IS REQUIRED IF STOP SIGN IS LESS THAN OR EQUAL TO 40 FEET FROM THE EDGELINE.
3. NO STOP LINE IS REQUIRED IF STOP SIGN IS LESS THAN OR EQUAL TO 30 FEET FROM THE FLANGELINE EXTENSION.
4. MOVE CLOSER TO THE EDGE OF TRAVEL LINE AS NEEDED FOR VISIBILITY AND SIGHT LINES (NO CLOSER THAN 4 FEET).
5. LADDER BAR CROSSWALKS SHOULD ONLY BE USED FOR MID BLOCK CROSSINGS. USE 2 - 6" TRANSVERSE LINES INSTEAD.

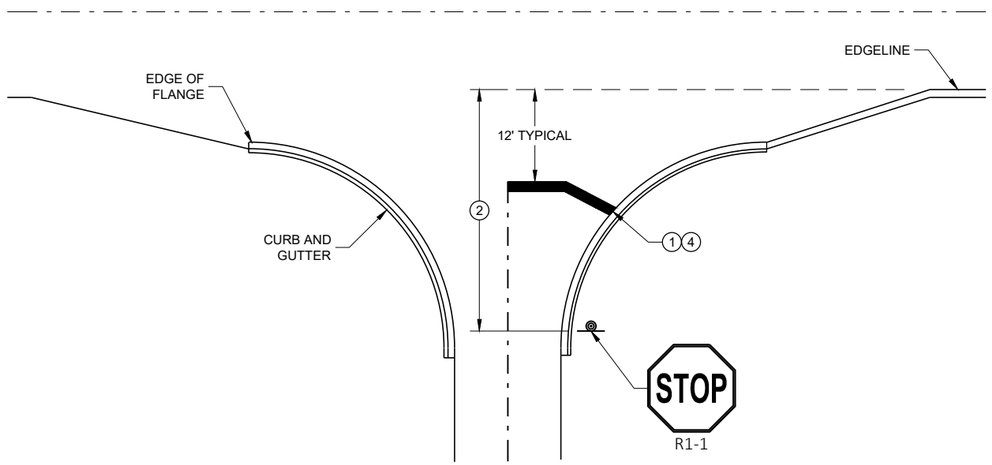

TYPICAL STOP LINE PAVEMENT MARKING WITH CURB AND GUTTER

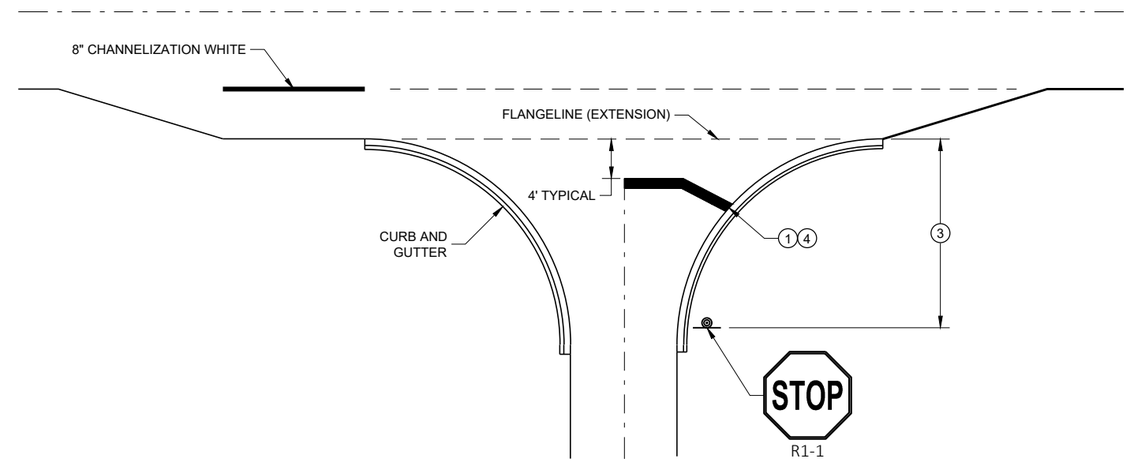

TYPICAL STOP LINE PAVEMENT MARKING FOR SIDEROADS WITH RIGHT TURN LANE

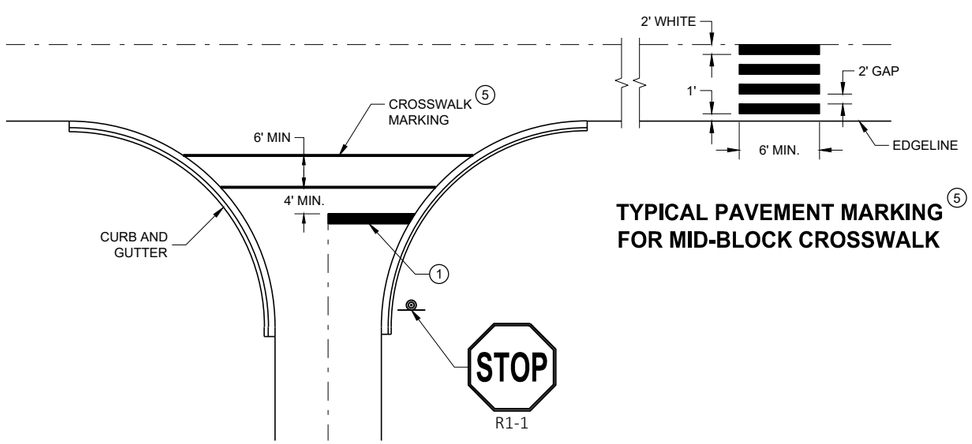

TYPICAL STOP LINE PAVEMENT MARKING FOR SIDEROADS WITH CROSSWALK MARKING

TYPICAL PAVEMENT MARKING 5 FOR MID-BLOCK CROSSWALK

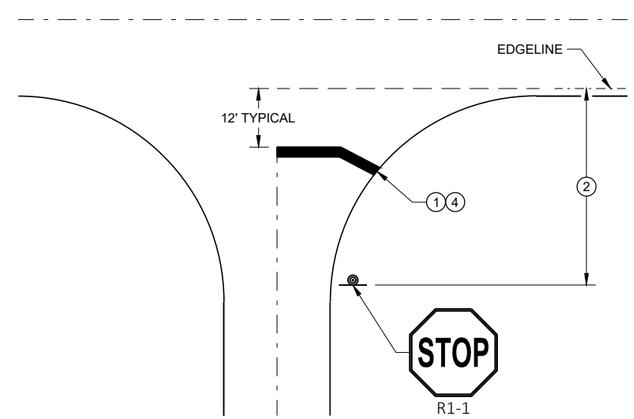

TYPICAL STOP LINE PAVEMENT MARKING WITHOUT CURB AND GUTTER

STOP LINE AND CROSSWALK PAVEMENT MARKING

STATE OF WISCONSIN
DEPARTMENT OF TRANSPORTATION

APPROVED
November 2019 — DATE
/S/ Matthew Rauch — STATE SIGNING AND MAF ENGINEER
FHWA

6

SDD 15C33 - 04

GENERAL NOTES

OMIT EDGE LINES THROUGH INTERSECTIONS. CONTINUE EDGE LINES THROUGH DRIVEWAYS.

1. WHEN DISTANCE "A" IS LESS THAN 250 FEET, OMIT LANE LINE.
2. WHEN DISTANCE "B" IS LESS THAN 100 FEET, OMIT CHANNELIZING LANE LINE.
3. BARRIER LINE ENDS AT SIDE ROAD PAVEMENT / SURFACE EDGE EXTENSION.
4. BARRIER LINE STARTS 500 FEET PRIOR TO THE BYPASS TAPER.

LEGEND

DIRECTION OF TRAVEL

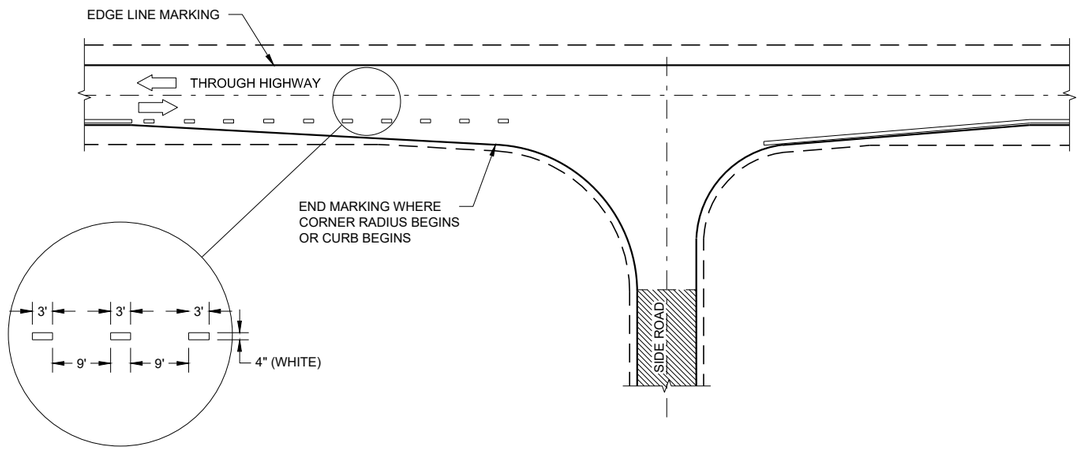

MINOR INTERSECTION

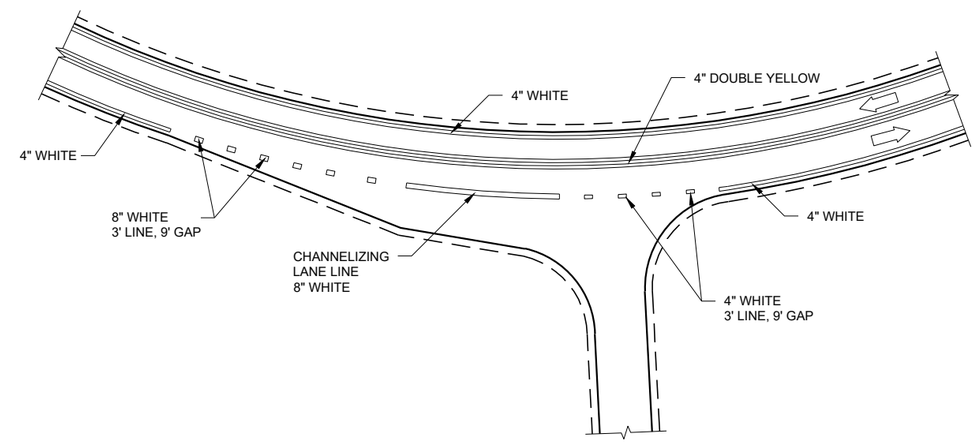

INTERSECTION ON OUTSIDE OF CURVE

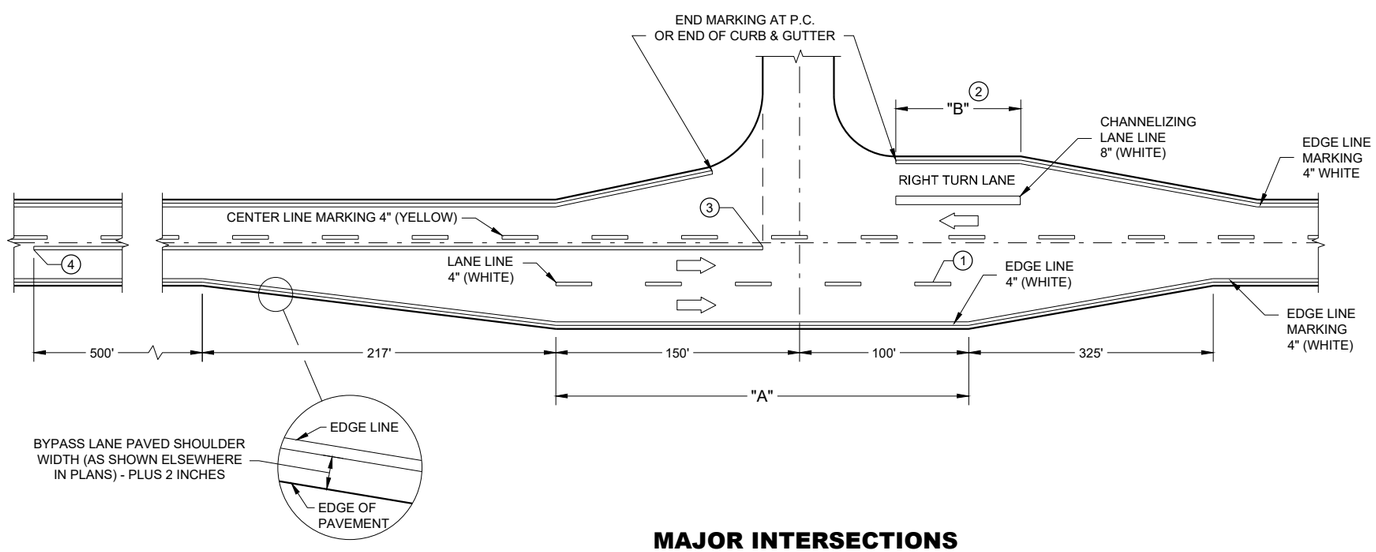

MAJOR INTERSECTIONS

(INTERSECTION WITH FULL RIGHT TURN LANE OR BYPASS LANE)

6

6

SDD 15C35 - 04a

SDD 15C35 - 04a

PAVEMENT MARKING (INTERSECTIONS)

STATE OF WISCONSIN
DEPARTMENT OF TRANSPORTAT

LEGEND

- SIGN ON PERMANENT SUPPORT
- TRAFFIC CONTROL DRUM
- DIRECTION OF TRAFFIC
- WORK ZONE

TABLE A

S \ W	SHOULDER TAPER LENGTH (FEET) 4	6	8	10	BUFFER SPACE (FEET)
30	20	30	40	50	200
35	30	45	55	70	250
40	40	55	75	90	305
45	60	90	120	150	360
50	70	100	135	170	425
55	75	110	150	185	495

W = SHOULDER WIDTH (FEET
S = NON-CONSTRUCTION SPEED LIMIT (MPH)

TAPER LENGTH

L= WS AT 45 MPH OR GREATER
L = WS^2 / 60 AT 40 MPH OR LESS

SHOULDER TAPER LENGTH = 1/3L

GENERAL NOTES

ALL SIGNS ARE 48"X48" UNLESS OTHERWISE NOTED. IF NECESSARY DUE TO SPACE CONSTRAINTS IN URBAN AREAS, 36" X 36" SIGNS MAY BE USED IF APPROVED BY THE REGIONAL TRAFFIC UNIT.

"WO" IS THE SAME AS "W" EXCEPT THE BACKGROUND IS ORANGE.

ANY SIGNS TEMPORARY OR EXISTING, WHICH CONFLICT WITH THE TRAFFIC CONTROL "IN USE" SHALL BE REMOVED OR COVERED AS NEEDED AND AS APPROVED BY THE ENGINEER.

THE EXACT NUMBER, LOCATION, AND SPACING OF ALL SIGNS AND DEVICES SHALL BE ADJUSTED TO FIT FIELD CONDITIONS AS APPROVED BY THE ENGINEER.

CHANNELIZING DEVICES PLACED ADJACENT TO WORK AREA SHALL BE PULLED BACK FROM THE TRAVEL LANE WHEN WORK IS NOT IN PROGRESS.

SIGNS THAT WILL BE IN PLACE LESS THAN 7 CONTINUOUS DAYS AND NIGHTS MAY BE MOUNTED ON PORTABLE SUPPORTS.

W20-1A AND G20-2A SIGNS ARE NOT REQUIRED IF THE WORK AREA IS WITHN A LARGER WORK ZONE WHERE THESE SIGNS ARE ALREADY RESENT. G20-2A SIGNS MAY ALSO BE OMITTED IF DURATION OF WORK IS LESS THAN 7 CONTINUOUS DAYS AND NIGHTS.

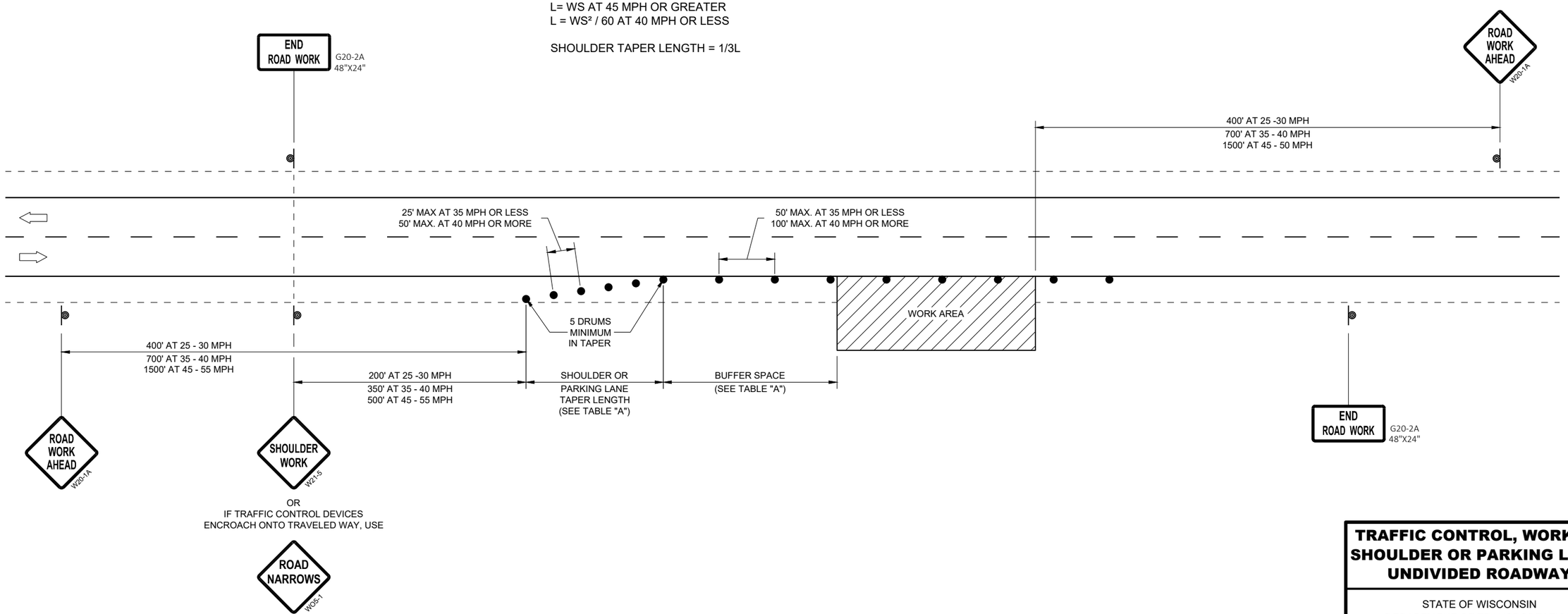

TRAFFIC CONTROL, WORK ON SHOULDER OR PARKING LANE, UNDIVIDED ROADWAY

STATE OF WISCONSIN
DEPARTMENT OF TRANSPORTATION

APPROVED
August 2019 — DATE
/S/ Andrew Heidtke — STATEWIDE WORK ZONE T SAFETY ENGINEER
FHWA

6

SDD 15D28 - 03

LEGEND

- TYPE III BARRICADE WITH ATTACHED SIGN
- SIGN ON PERMANENT SUPPORT
- TRAFFIC CONTROL DRUM WITH TYPE "C" STEADY BURN LIGHT
- TRAFFIC CONTROL DRUM
- FLAGS, 16" X 16" MIN. (ORANGE)
- REMOVING PAVEMENT MARKING
- DIRECTION OF TRAFFIC
- ASPHALTIC PAVEMENT WIDENING
- CONCRETE BARRIER TEMPORARY PRECAST
- TEMPORARY SIGNAL. SEE SDD 09G02 FOR EXACT PLACEMENT

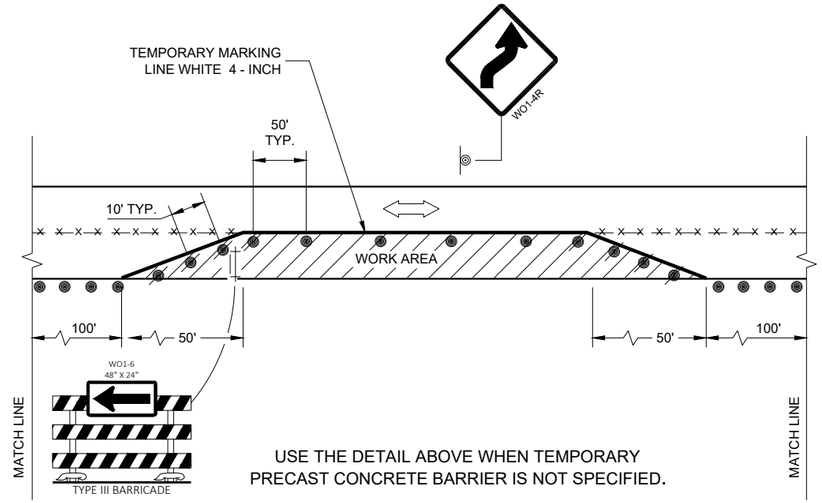

USE THE DETAIL ABOVE WHEN TEMPORARY PRECAST CONCRETE BARRIER IS NOT SPECIFIED.

GENERAL NOTES

THE EXACT NUMBER, LOCATION, AND SPACING OF ALL SIGNS AND DEVICES SHALL BE ADJUSTED TO FIT FIELD CONDITIONS AS APPROVED BY THE ENGINEER.

THE SPACING BETWEEN TRAFFIC CONTROL SIGNS SHOULD BE ADJUSTED TO NOT CONFLICT WITH AND TO PROVIDE A MINIMUM OF 200 FEET (500 FEET DESIRABLE) CLEARANCE TO EXISTING SIGNS THAT WILL REMAIN IN PLACE..

THIS LANE CLOSURE IS TYPICAL FOR CLOSING RIGHT LANE - REVERSE FOR CLOSING LEFT LANE.

ALL SIGNS ARE 48" x 48" UNLESS OTHERWISE NOTED.

"WO" IS THE SAME AS "W" EXCEPT THE BACKGROUND IS ORANGE.

ANY SIGNS TEMPORARY OR EXISTING, WHICH CONFLICT WITH TRAFFIC CONTROL "IN USE" SHALL BE REMOVED OR COVERED AS NEEDED OR AS APPROVED BY THE ENGINEER.

PLACE TEMPORARY PAVEMENT MARKING EDGELINE AND CENTERLINE AND REMOVE EXISTING PAVEMENT MARKINGS IF LANE CLOSURE IS TO BE IN PLACE 4 OR MORE CONTINUOUS DAYS AND NIGHTS OR AS NOTED ON DETAIL.

1. 500 FOOT SPACING SHOWN IS FOR ROADWAYS WITH A PRE-CONSTRUCTION REGULATORY SPEED LIMIT OF 45 MPH OR MORE. FOR 35 - 40 MPH, USE 350 FOOT TYPICAL SPACING. FOR 25 - 30 MPH, USE 200 FOOT TYPICAL SPACING.
2. USE 300 FOOT SPACING IF THE PRE - CONSTRUCTION REGULATORY SPEED IS 35 MPH OR LESS.
3. DIMENSION DETERMINED BY CBTP TAPER FROM EDGE LINE TO TANGENT SECTION OF THE ROAD.
4. TEMPORARY MARKING STOP LINE REMOVABLE TAPE 18 - INCH.
5. 700 FOOT TEMPORARY MARKING LINE, DOUBLE YELLOW 4 - INCH . WHEN THE DISTANCE FOR THE PRECEDING NO - PASSING ZONE IS LESS THAN THE MINIMUM DISTANCE BETWEEN ZONES AS INDICATED IN THE SPECIFICATIONS, THE TWO ZONES SHALL BE CONNECTED.
6. SEE SDD 15C02 - SHEET "F" FOR ADVANCED WIDTH RESTRICTION SIGNING.

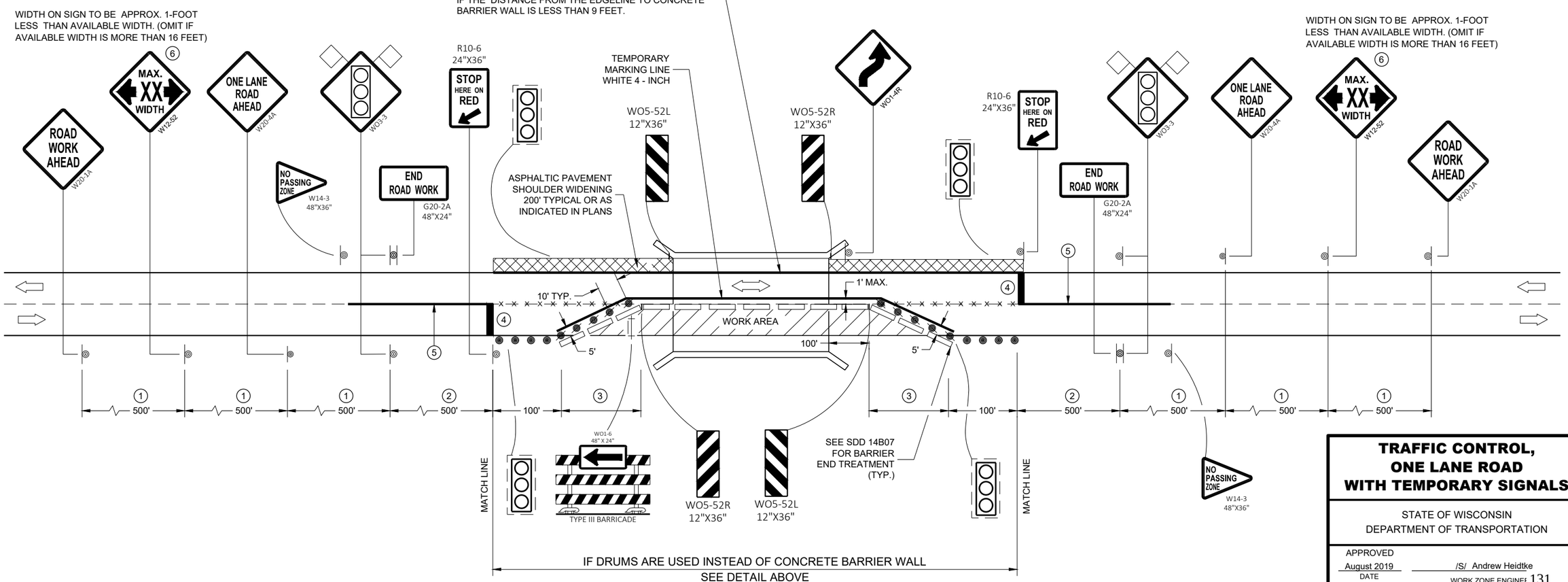

TRAFFIC CONTROL, ONE LANE ROAD WITH TEMPORARY SIGNALS

STATE OF WISCONSIN
DEPARTMENT OF TRANSPORTATION

APPROVED
August 2019 — DATE
/S/ Andrew Heidtke — WORK ZONE ENGINEER
FHWA

6

SDD 15D33 - 06

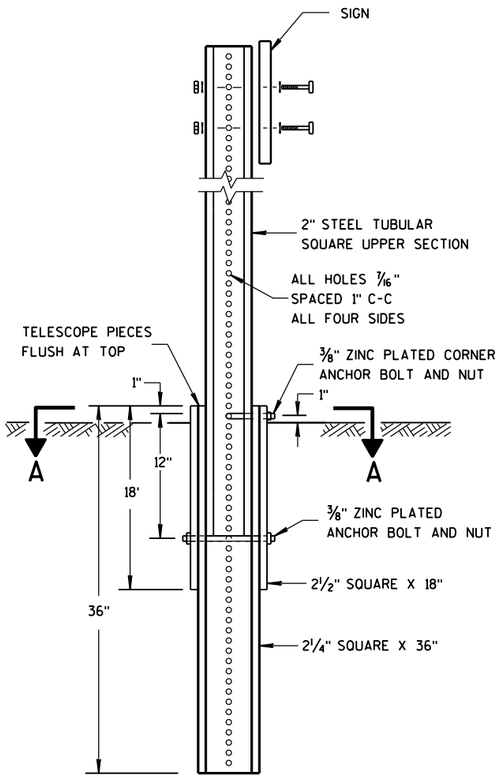

DETAIL OF TUBULAR STEEL SIGN POST

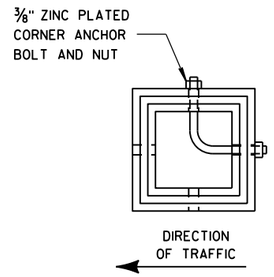

SECTION A-A

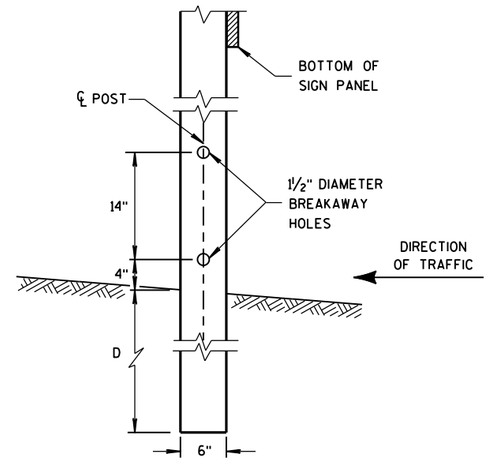

4"x6" WOOD POST MODIFICATION

GENERAL NOTES

1. 6 FEET FROM THE EDGE OF PAVEMENT (EDGE LINE LOCATION) UNLESS OTHERWISE DIRECTED BY THE PROJECT ENGINEER. LATERAL OFFSET SHOULD BE ADJUSTED TO AVOID THE DITCH FLOWLINE.
2. THE EXISTENCE OF CURB AND GUTTER DOES NOT IN ITSELF MANDATE THE VERTICAL CLEARANCE ILLUSTRATED. THAT HEIGHT IS TYPICALLY MEASURED WHERE THERE IS SIDEWALK ADJACENT TO THE ROADWAY OR PARKING IS PERMITTED. IN THE ABSENCE OF SIDEWALK, VERTICAL CLEARANCE IS MEASURED FROM THE TOP OF THE CURB. IF NO SIDEWALK AND NO PARKING, VERTICAL CLEARANCE MAY BE REDUCED TO 5 FOOT MINIMUM. OFFSET OF SIGNS IS MEASURED FROM THE CURB FLOWLINE.
3. FOR SIGNS REQUIRING 4 POSTS, SPACE INTERMEDIATE POSTS EVENLY.

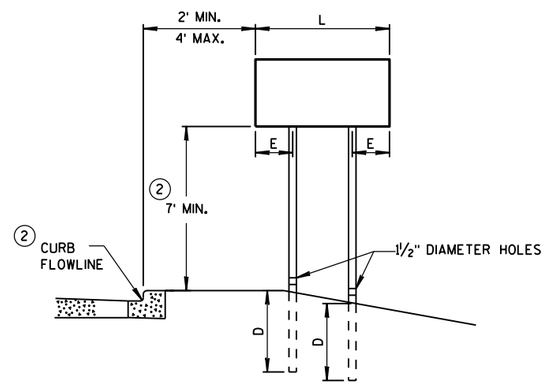

URBAN AREA

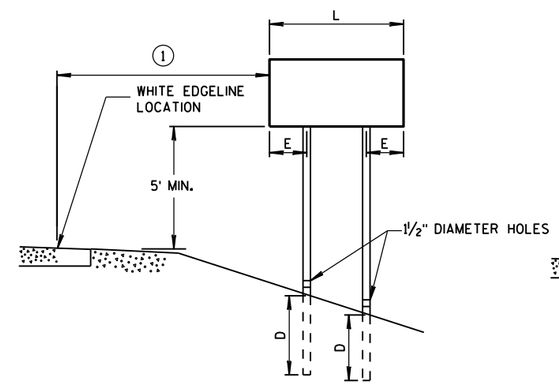

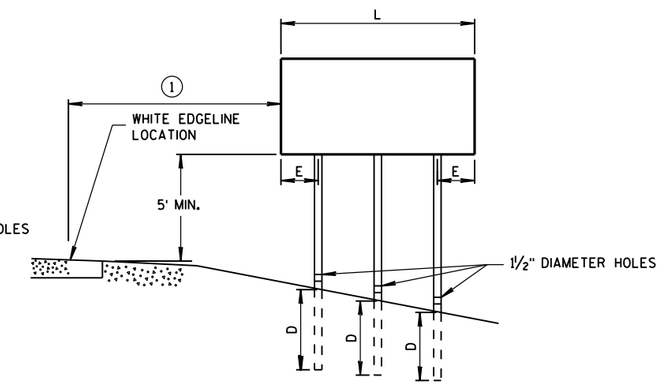

RURAL AREA

POST MOUNTING DETAIL FOR TEMPORARY TRAFFIC CONTROL FIXED MESSAGE SIGNS

TUBULAR STEEL POSTS

AREA OF SIGN INSTALLATION (SQ. FT.)	NUMBER OF REQUIRED TUBULAR STEEL POSTS
9 OR LESS	1
GREATER THAN 9 LESS THAN OR EQUAL TO 18	2
GREATER THAN 18 LESS THAN OR EQUAL TO 27	3

SIGNS WIDER THAN 3 FEET OR LARGER THAN 9 SQ. FT. SHALL BE MOUNTED ON MULTIPLE POSTS (SEE ABOVE TABLE).

SIGNS LARGER THAN 27 SQ. FT. SHALL NOT BE MOUNTED ON TUBULAR STEEL POSTS.

WOOD POST EMBEDMENT DEPTH

AREA OF SIGN INSTALLATION (SQ. FT.)	D (MIN)
20 OR LESS	4'
GREATER THAN 20	5'

4" X 6" WOOD POST

POST SPACING REQUIREMENTS		NUMBER OF WOOD POSTS REQUIRED
L	E	
48" OR LESS AND LESS THAN 20 SQ. FT.	-	1
LESS THAN 60"	12"	2
60" TO 120"	L/5	2
GREATER THAN 120" LESS THAN 168"	12"	3
168" AND GREATER	12"	4

SEE NOTE 3

TEMPORARY TRAFFIC CONTROL SIGN MOUNTING

STATE OF WISCONSIN
DEPARTMENT OF TRANSPO

6

S.D.D. 15 D 38-2a

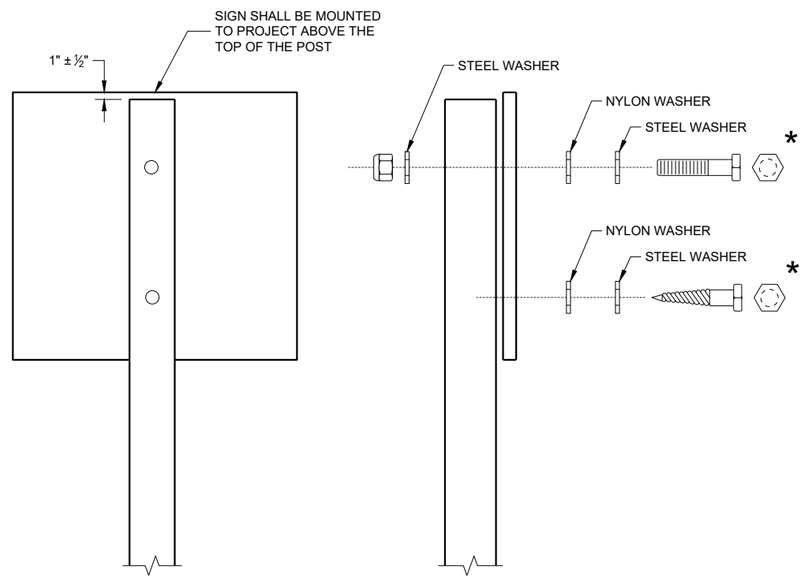

NUTS, BOLTS AND LAGS USED FOR MOUNTING SIGNS SHALL HAVE HEXAGONAL HEADS AND SHALL BE EITHER:

A. HOT DIP GALVANIZED IN ACCORDANCE WITH ASTM DESIGNATION: A 153, CLASS D, OR SC 3
B. ELECTRO-GALVANIZED IN ACCORDANCE WITH ASTM DESIGNATION: B 633, TYPE III, SC 3

THREADS ON BOLTS AND NUTS SHALL BE MANUFACTURED WITH SUFFICIENT ALLOWANCE FOR THE CADMIUM PLATE OR GALVANIZED COATING TO PERMIT THE NUTS TO RUN FREELY ON THE BOLTS.

WOOD POST (4" x 6")
LAG SCREWS - ⅜" x 3"
MACHINE BOLTS - 5/16" x 6 ½" OR 7" LENGTH W/NUTS

SQUARE STEEL POST (2" x 2")
MACHINE BOLTS - ⅜" x 3 ¼" LENGTH W/NUTS
RIVETS - 9/32" (6605-9-6) BULB-TITE, TRI-FOLD, ALUMINUM BODY/MANDREL O.D. FLANGE 0.720 - 0.765 INCH, GRIP RANGE 0.042 - 0.375 INCH

WASHERS (ALL POSTS) -
1 ¼" O.D. x ⅜" I.D. x 1/16" STEEL
1 ¼" O.D. x ⅜" I.D. x 0.080 NYLON

* TWO DIFFERENT FASTENING SYSTEMS ARE SHOWN FOR ILLUSTRATION PURPOSES. ON ANY INDIVIDUAL SIGN, EITHER ONE OR THE OTHER SYSTEM SHALL BE USED. ACTUAL NUMBER OF FASTENERS PER SIGN VARIES WITH THE SIGN AREA. FOR A SINGLE POST INSTALLATION, ALL SIGNS GREATER THAN 9 SQ. FT. REQUIRE THE USE OF 3 FASTENERS.

6

SDD 15D38 - 02b

ATTACHMENT OF SIGNS TO POSTS

STATE OF WISCONSIN
DEPARTMENT OF TRANSPORTATION

APPROVED
June 2017 — DATE
/S/ Andrew Heidtke — WORK ZONE ENGINEE
FHWA

6

SDD 15D38 - 02b

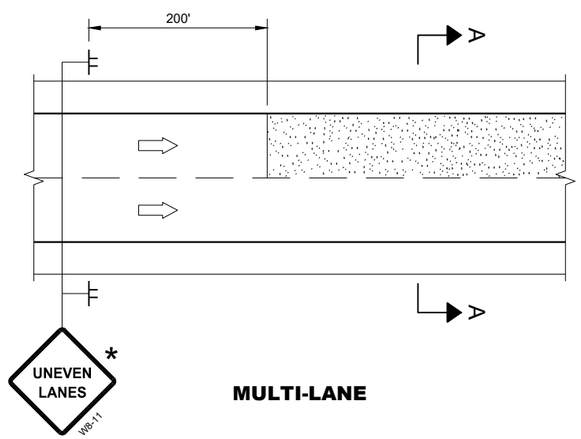

MULTI-LANE

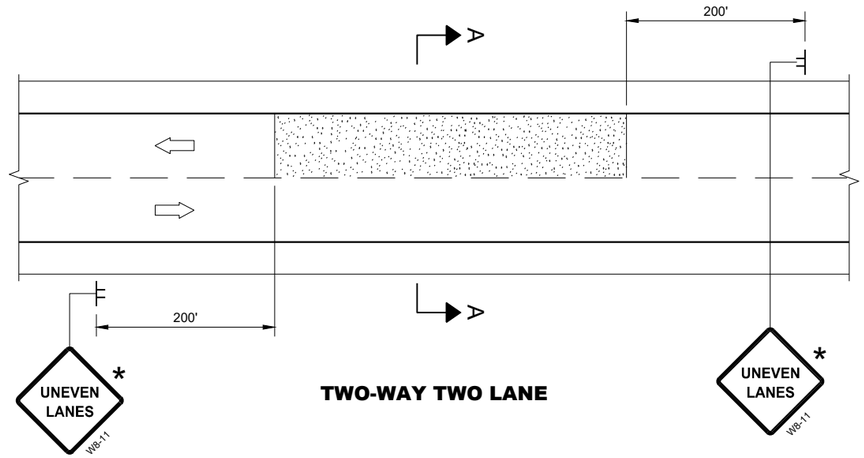

TWO-WAY TWO LANE

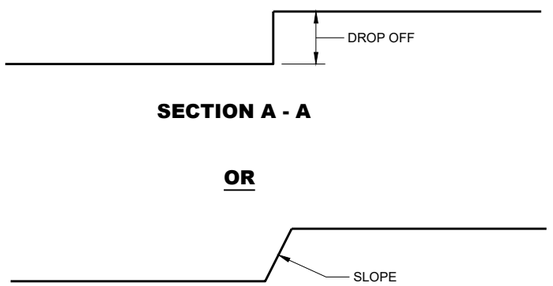

SECTION A - A

OR

SECTION A - A

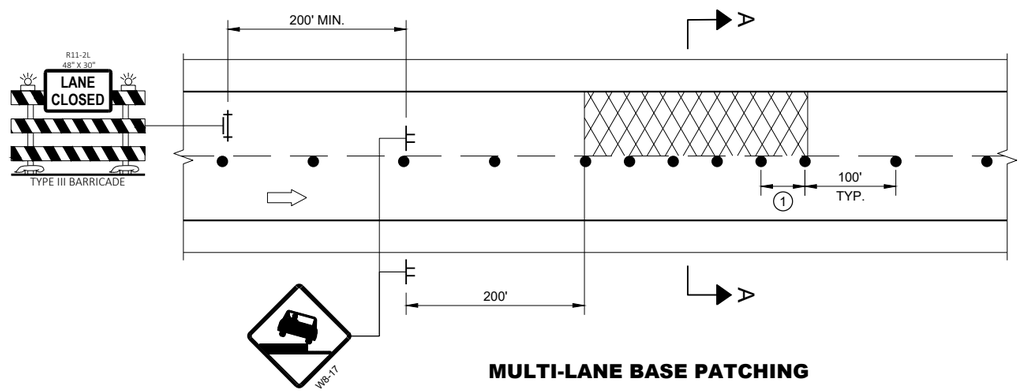

MULTI-LANE BASE PATCHING

ADJACENT LANE DROP-OFFS

GENERAL NOTES

FOR SPOT LOCATIONS USE ENGINEERING JUDGEMENT WHEN PLACING ADDITIONAL SIGNS.

ALL SIGNS ARE 48" X 48" UNLESS OTHERWISE NOTED.

"WO" SIGNS ARE THE SAME AS "W" SIGNS EXCEPT THE BACKGROUND IS ORANGE.

WARNING LIGHTS ARE NOT REQUIRED IF THE LANE CLOSURE IS A DAYTIME ONLY OPERATION.

* IF THE DROP-OFF IS CONTINUOUS ALONG THE PROJECT, PLACE ADDITIONAL SIGNS EVERY 1 MILE AND AFTER EVERY ENTRANCE RAMP.

(1) USE CLOSER SPACING WHEN DELINEATING DROP-OFF.

LEGEND

- SIGN ON TEMPORARY SUPPORT
- TRAFFIC CONTROL DRUM
- TYPE III BARRICADE WITH ATTACHED SIGN
- TYPE "A" WARNING LIGHT (FLASHING)
- DIRECTION OF TRAFFIC
- WORK AREA WITH DROP-OFF
- MILLED SURFACE

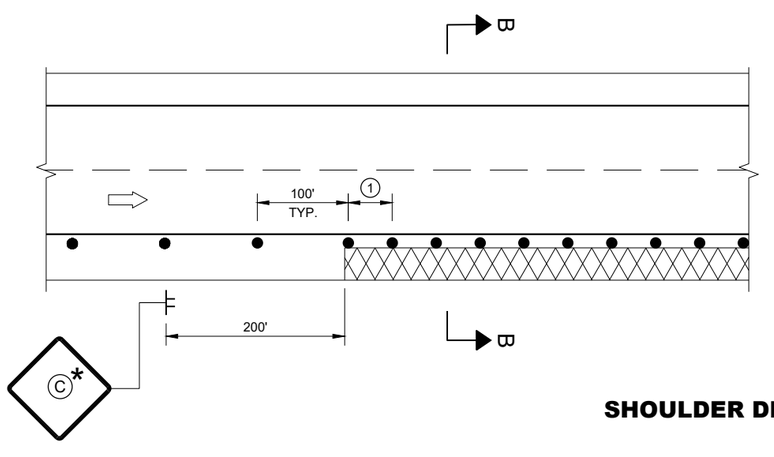

SHOULDER DROP-OFFS

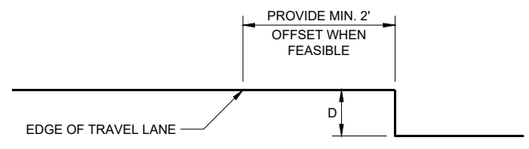

SECTION B - B

D	SIGN (C)
< 2" WITH A SLOPE STEEPER THAN 3:1	LOW SHOULDER WO8-9
2" < 6" WITH A SLOPE STEEPER THAN 3:1	SHOULDER DROP - OFF W8-9A PROVIDE A 3:1 OR FLATTER SLOPE OF MATERIAL ADJACENT TO THE PAVEMENT

TRAFFIC CONTROL, DROP-OFF SIGNING

STATE OF WISCONSIN
DEPARTMENT OF TRANSPORTATION

APPROVED
March 2018 — DATE
/S/ Andrew Heidtke — WORK ZONE ENGINEE
FHWA

GENERAL NOTES

DRAWING NOT TO SCALE. ALL SIGNS AND POSTS ON THIS SHEET SHALL BE PAID FOR WITH 'TRAFFIC CONTROL SIGNS' BID ITEM. ALL SIDE ROADS WHICH ARE UNDER CONSTRUCTION OF CURB AND GUTTER AND/OR GRADING SHALL BE ADEQUATELY SIGNED.

ALL SIGNS AND DEVICES SHALL BE IN CONFORMANCE WITH THE WISCONSIN MANUAL OF UNIFORM TRAFFIC CONTROL DEVICES (WMUTCD). SIGN LAYOUTS SHALL BE IN ACCORDANCE WITH THE WISDOT STANDARD SIGN PLATES.

"WO" SIGNS ARE THE SAME AS "W" SIGNS EXCEPT THAT THE BACKGROUND IS ORANGE.

ALL SIGNS ARE 48" X 48" UNLESS OTHERWISE NOTED.

THE EXACT NUMBER, LOCATION AND SPACING OF ALL SIGNS AND DEVICES SHALL BE ADJUSTED TO FIT FIELD CONDITIONS AS DIRECTED BY THE ENGINEER.

ALL SIGNS INAPPROPRIATE TO THE STATUS OF THE CONTROL ZONE, INCLUDING PRE-EXISTING SIGNS IN THE VICINITY, SHALL BE COVERED OR REMOVED AS DIRECTED BY THE ENGINEER.

SEE 15C34 FOR ADDITIONAL TRAFFIC CONTROL SIGNING WHEN CENTERLINE PAVEMENT MAKINGS ARE MISSING. 'DO NOT PASS' SIGNS MUST BE INSTALLED ON THE SAME DAY AS MILLING OPERATIONS.

(1) PLACE SIGNS 350' IN ADVANCE OF MILLED SURFACES AND AT 1 MILE INTERVALS, OR AS DIRECTED BY THE ENGINEER.

(2) PLACE SIGN 200' MIN. FROM INTERSECTION AND 200' MIN. AFTER ADVANCE WARNING SIGN SHOWN IN SDD 15C04.

LEGEND

SIGN ON TEMPORARY SUPPORT

DIRECTION OF TRAFFIC

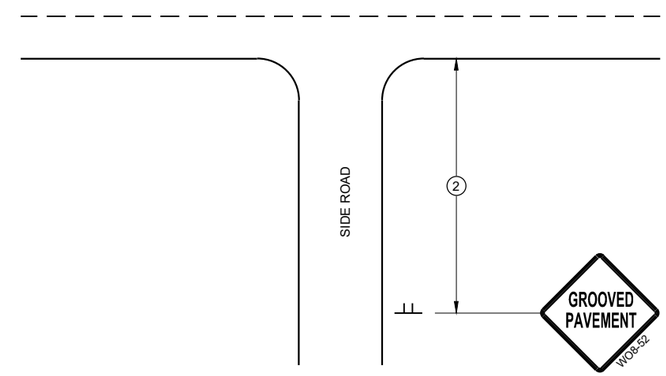

TYPICAL SIDE ROAD APPROACH SIGN DETAIL

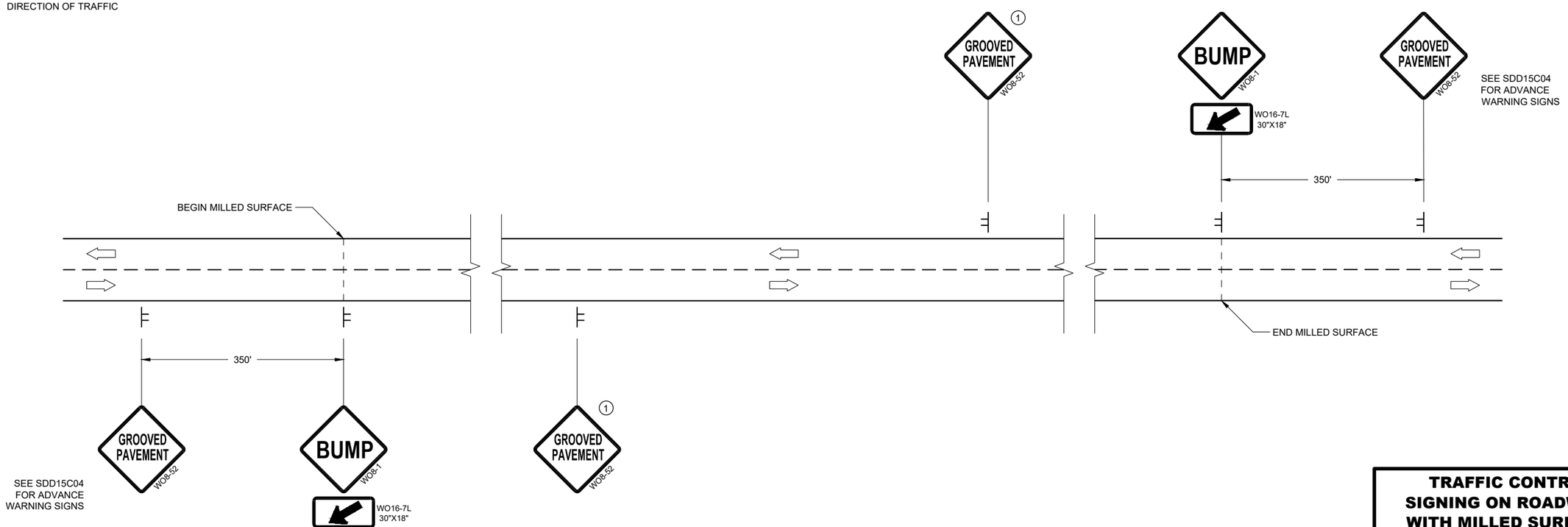

DETAIL FOR SIGNING ON MILLED SURFACES

TRAFFIC CONTROL, SIGNING ON ROADWAYS WITH MILLED SURFACES

STATE OF WISCONSIN
DEPARTMENT OF TRANSPORTATION

APPROVED
February 2020 /S/ Andrew Heidtke
DATE WORK ZONE ENGINEE
FHWA

6

SDD 15D44 - 02

GENERAL NOTES

DRAWING NOT TO SCALE. ALL SIGNS AND POSTS ON THIS SHEET SHALL BE PAID FOR WITH 'TRAFFIC CONTROL SIGNS' BID ITEM. ALL SIDE ROADS WHICH ARE UNDER CONSTRUCTION OF CURB AND GUTTER AND/OR GRADING SHALL BE ADEQUATELY SIGNED.

ALL SIGNS AND DEVICES SHALL BE IN CONFORMANCE WITH THE WISCONSIN MANUAL OF UNIFORM TRAFFIC CONTROL DEVICES (WMUTCD). SIGN LAYOUTS SHALL BE IN ACCORDANCE WITH THE WISDOT STANDARD SIGN PLATES.

"WO" SIGNS ARE THE SAME AS "W" SIGNS EXCEPT THAT THE BACKGROUND IS ORANGE.

ALL SIGNS ARE 48" X 48" UNLESS OTHERWISE NOTED.

THE EXACT NUMBER, LOCATION AND SPACING OF ALL SIGNS AND DEVICES SHALL BE ADJUSTED TO FIT FIELD CONDITIONS AS DIRECTED BY THE ENGINEER.

ALL SIGNS INAPPROPRIATE TO THE STATUS OF THE CONTROL ZONE, INCLUDING PRE-EXISTING SIGNS IN THE VICINITY, SHALL BE COVERED OR REMOVED AS DIRECTED BY THE ENGINEER.

SEE 15C34 FOR ADDITIONAL TRAFFIC CONTROL SIGNING WHEN CENTERLINE PAVEMENT MAKINGS ARE MISSING. 'DO NOT PASS' SIGNS MUST BE INSTALLED ON THE SAME DAY AS MILLING OPERATIONS.

(1) PLACE SIGNS 350' IN ADVANCE OF CHIP SEALED SURFACES AND AT 1 MILE INTERVALS, OR AS DIRECTED BY THE ENGINEER.

(2) PLACE SIGN 200' MIN. FROM INTERSECTION AND 200' MIN. AFTER ADVANCE WARNING SIGN SHOWN IN SDD 15C04.

LEGEND

SIGN ON TEMPORARY SUPPORT

DIRECTION OF TRAFFIC

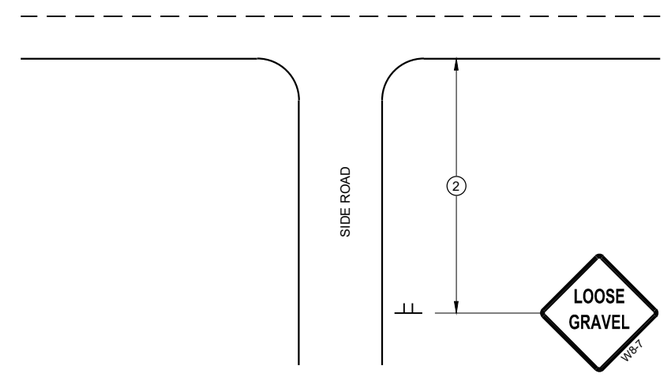

TYPICAL SIDE ROAD APPROACH SIGN DETAIL

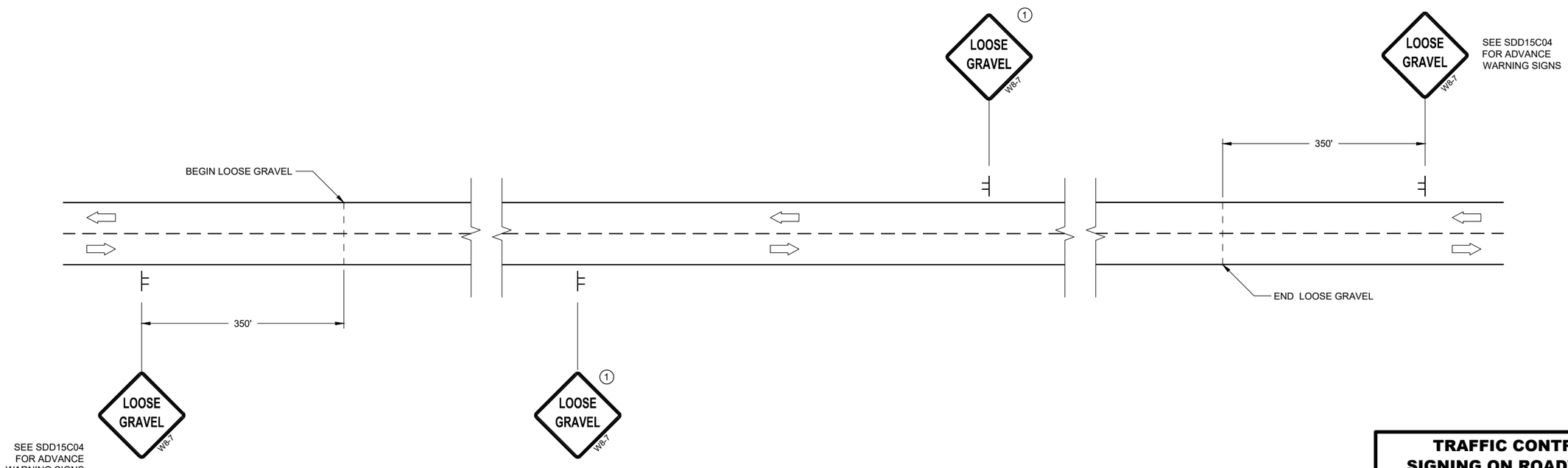

DETAIL FOR SIGNING ON CHIP SEALED SURFACES

TRAFFIC CONTROL SIGNING ON ROADWAYS WITH LOOSE GRAVEL

STATE OF WISCONSIN
DEPARTMENT OF TRANSPORTATION

APPROVED
February 2020 — DATE
/S/ Andrew Heidtke — WORK ZONE ENGINEE
FHWA

6
SDD 15D45 - 02

URBAN AREA

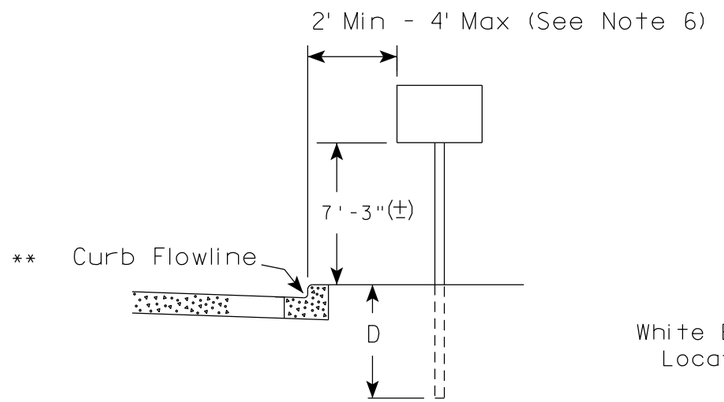

RURAL AREA (See Note 2)

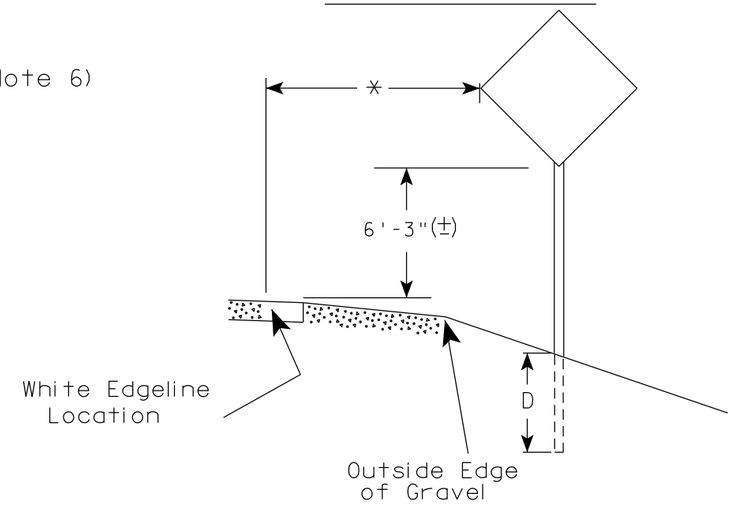

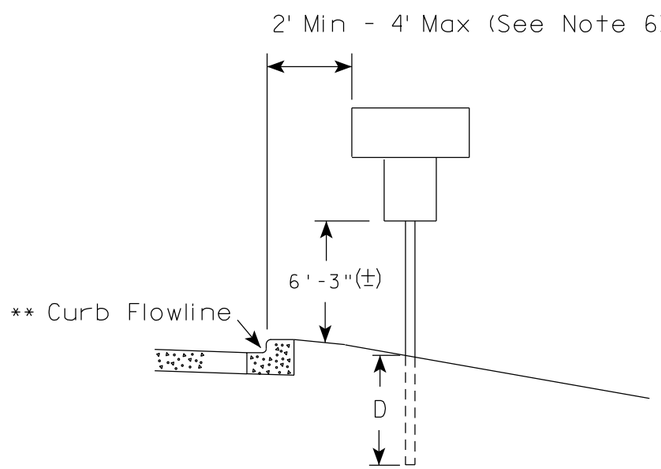

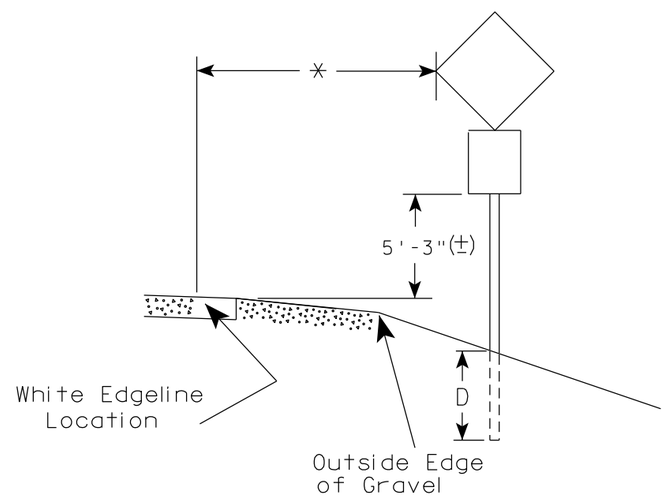

** The existence of curb and gutter does not in itself mandate the vertical clearance illustrated. That height is typically measured where there is sidewalk adjacent to the roadway or parking is permitted. In the absence of sidewalk vertical clearance is measured from the top of the curb. Offset of signs is measured from the flow line.

* 6 feet from edge of a paved shoulder or 12 feet from the edge of pavement (edge line location) or 2 feet from outside edge of gravel, whichever is greater unless directed by project engineer.

GENERAL NOTES

1. Signs wider than 4 feet or 20 sq.ft or larger, shall be mounted on multiple posts. Refer to plate A4-4.
2. If signs are mounted on or behind barrier wall, see A4-10 sign plate.
   The Double Arrow sign (W12-1D) shall be mounted at a height of 2'-3" (±). The Chevron sign (W1-8), Roundabout Chevron panel (R6-4B), Enhanced Reference Markers, Clearance Markers (W5-52), Mile Markers (D10 series), In Road Object Markers (W5-54) & End of Road Markers (W5-56) shall be mounted at a height of 4'-3" (±).
3. For expressways and freeways, mounting height is 7'- 3" (±) or 6'-3" (±) depending upon existence of a sub-sign.
4. Minimum mounting height for signs mounted on traffic signal poles is 5'- 3" (±).
5. Offset distance shall be consistent with existing signs or consistent throughout length of project.
6. The (±) tolerance for mounting height is 3 inches.
7. Folding signs shall be mounted at a height of 5'-3" (±) or as directd by the Engineer.

POST EMBEDMENT DEPTH

Area of Sign Installation (Sq.Ft.)	D (Min)
20 or Less	4'
Greater than 20	5'

TYPICAL INSTALLATION OF PERMANENT TYPE II SIGNS ON SINGLE POSTS

WISCONSIN DEPT OF TRANSPORTATION

APPROVED Matthew R Rauch for State Traffic Engineer

DATE 5/13/2020 PLATE NO. A4-3.22

7 7

PROJECT NO:	HWY:	COUNTY:		SHEET NO: 137	E

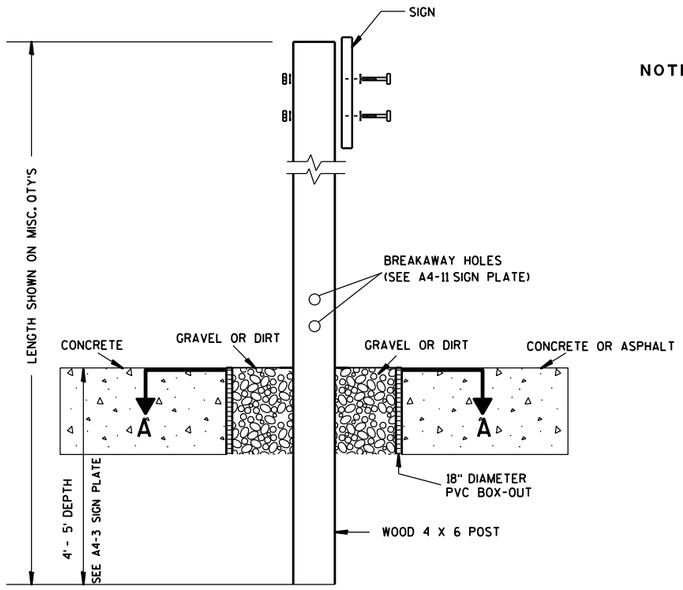

ELEVATION VIEW

DETAIL OF WOOD 4 X 6 SIGN POST IN BOX-OUT

NOTES:
1. ALL MATERIAL TO BE APPROVED BY ENGINEER PRIOR TO INSTALLATION
2. SEE SIGN PLATE A4-8 FOR SIGN HARDWARE REQUIREMENTS
3. 18 INCH X 18 INCH SQUARE BOX-OUTS MAY BE USED FOR INSTALLATIONS IN EXISTING CONCRETE OR ASPHALT LOCATIONS.

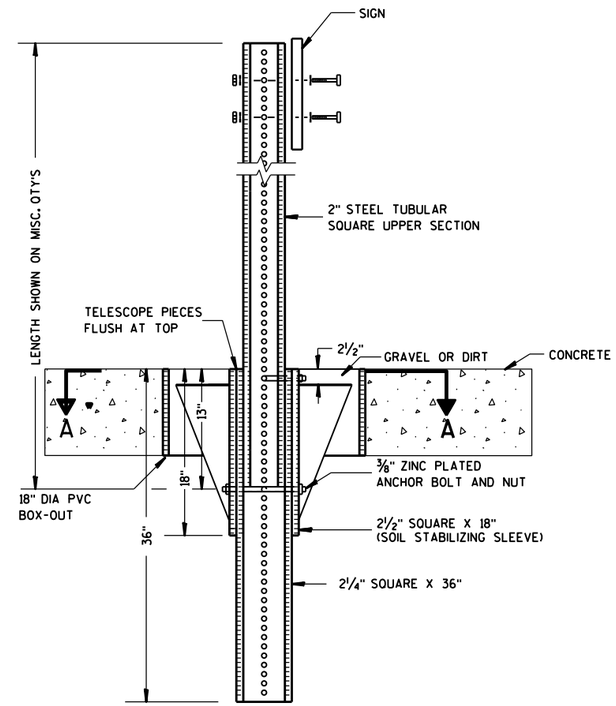

ELEVATION VIEW

DETAIL OF STEEL 2 X 2 SIGN POST IN BOX-OUT

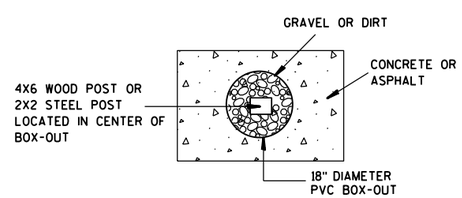

PLAN VIEW

FOR NEW CONCRETE/ASPHALT INSTALLATIONS

SIGN POST
BOX-OUTS
A4-3B

WISCONSIN DEPT OF TRANSPORTATION

APPROVED Matthew R Rauch
for State Traffic Engineer

DATE 1/27/14 PLATE NO. A4-3B.1

PROJECT NO:	HWY:	COUNTY:		SHEET NO:	E

URBAN AREA

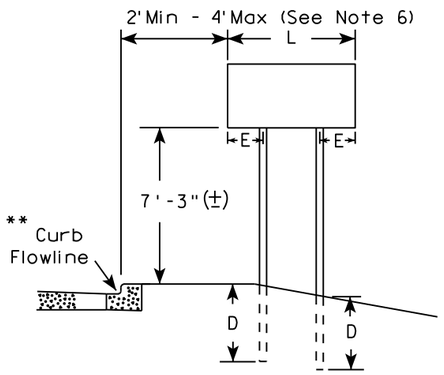

RURAL AREA (See Note 3)

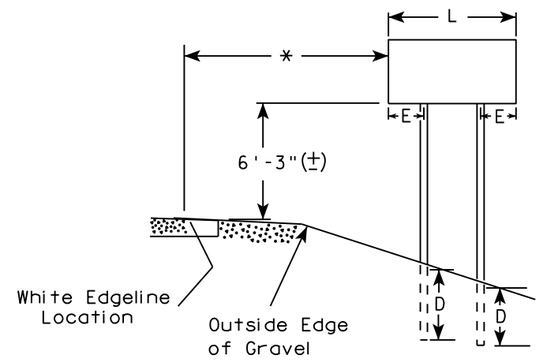

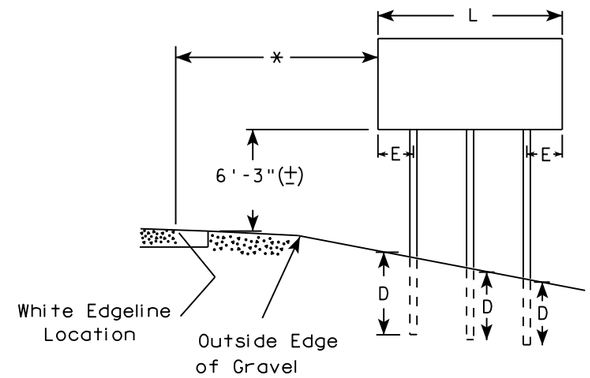

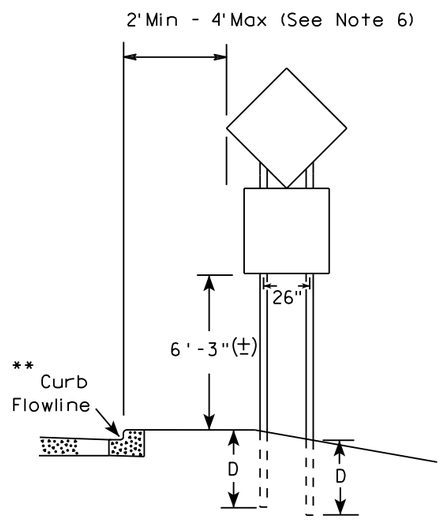

48" DIAMOND WARNING SIGN

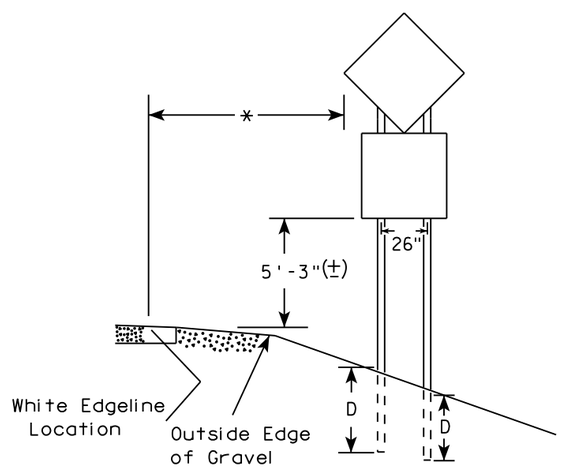

48" DIAMOND WARNING SIGN

SIGN SHAPE OTHER THAN DIAMOND (TWO POSTS REQUIRED)	
L	E
*** Greater than 48" Less than 60"	12"
60" to 108"	L/5

SIGN SHAPE OTHER THAN DIAMOND (THREE POSTS REQUIRED)	
L	E
Greater than 108" to 144"	12"

GENERAL NOTES

1. For 3 or 4 post installations, individual post spacing shall be greater than 3'-6".
2. See tables below for required number of posts.
3. For expressways and freeways, mounting height is 7'-3" (±) or 6'-3" (±) depending upon existence of sub-sign.
4. The (±) tolerance for mounting height is 3 inches.
5. J-Assemblies are considered to be one sign for mounting height.
6. Offset distance shall be consistent with existing signs or consistent throughout length of project.
7. Folding signs shall be mounted at a height of 5'-3" (±) or as directed by the engineer.
8. The Double Arrow sign (W12-1) shall be mounted at a height of 2'-3" (±). The Chevron sign (W1-8), Roundabout Chevron panel (R6-4B), Clearance Markers (W5-52), Mile Markers (D10 series), In Road Object Markers (W5-54) & End of Road Markers (W5-56) shall be mounted at a height of 4"-3" (±).

* 6 feet from edge of a paved shoulder or 12 feet from the edge of pavement (edge line location) or 2 feet from outside edge of gravel, whichever is greater unless directed by project engineer.

** The existence of curb and gutter does not in itself mandate the vertical clearance illustrated. That height is typically measured where there is sidewalk adjacent to the roadway or parking is permitted. In the absence of sidewalk vertical clearance is measured from the top of the curb. Offset of signs is measured from the flow line.

*** See A4-3 sign plate for signs 4' or less in width and less than 20 S.F. in area.

POST EMBEDMENT DEPTH

Area of Sign Installation (Sq. Ft.)	D (Min)
20 or Less	4'
Greater than 20	5'

TYPICAL INSTALLATION OF TYPE II SIGNS ON MULTIPLE POSTS

WISCONSIN DEPT OF TRANSPORTATION

APPROVED Matthew R Rauch
For State Traffic Engineer

DATE 8/21/17 PLATE NO. A4-4.15

7

7

PROJECT NO:	HWY:	COUNTY:		SHEET NO: 139	E

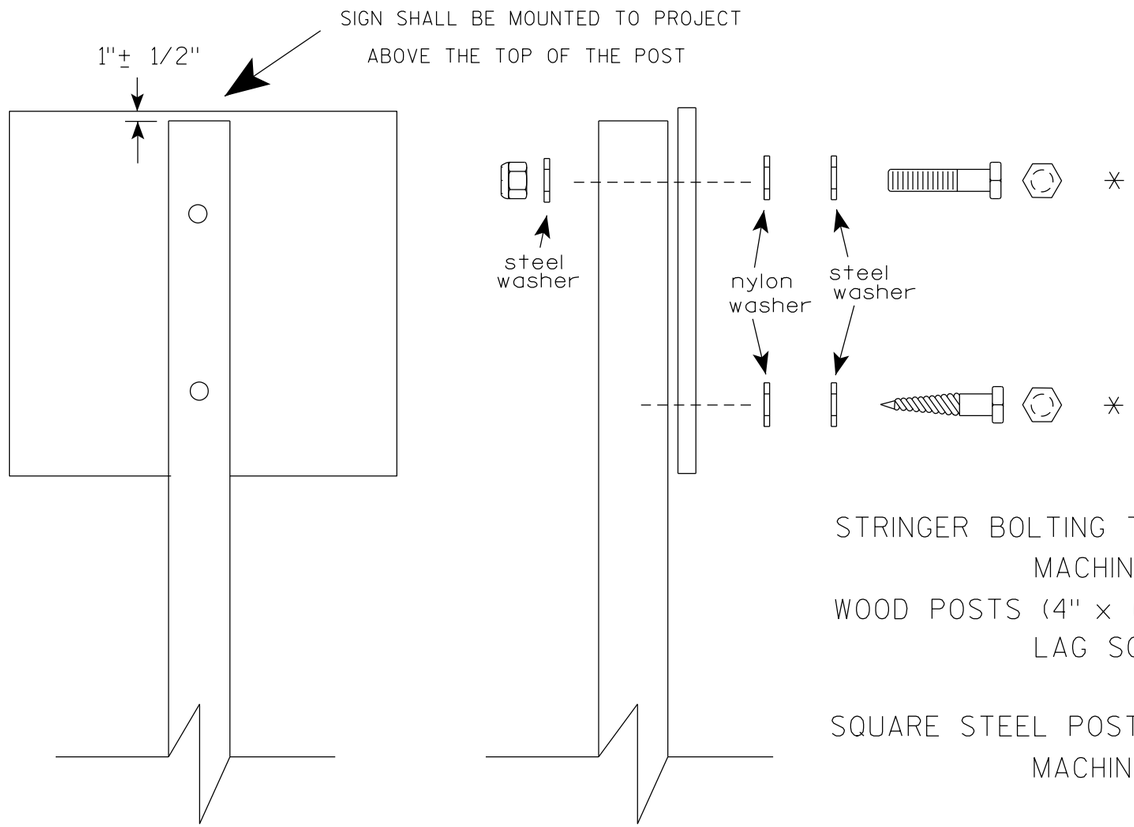

Nuts, bolts and lags used for mounting signs shall have hexagonal heads and shall be either :

a. Hot dip galvanized in accordance with ASTM Designation: A 153, Class D, or SC 3

b. Electro-galvanized in accordance with ASTM Designation : B 633, TYPE III, SC 3.

Threads on bolts and nuts shall be manufactured with sufficient allowance for the cadmium plate or galvanized coating to permit the nuts to run freely on the bolts.

STRINGER BOLTING TO ALUMINUM SIGNS (SEE SIGN PLATE A4-18)

MACHINE BOLTS - 5/16" X 1-3/4" Length w/ lock nuts

WOOD POSTS (4" x 6")

LAG SCREWS - 3/8" X 3" (NO STRINGERS ON BACK OF SIGN)

3/8" X 4" (STRINGERS ON BACK OF SIGN)

SQUARE STEEL POSTS (2" x 2")

MACHINE BOLTS - 3/8" X 3-1/4" Length w/ nuts (NO STRINGER ON BACK OF SIGN)

3/8" X 5" Length w/ nuts (STRINGERS ON BACK OF SIGN)

RIVETS - 9/32 " (6605-9-6) BULB-TITE, TRI-FOLD, ALUMINUM BODY/MANDREL

O.D. FLANGE .720-.765 INCH, GRIP RANGE .042-.375 INCH

WASHERS (ALL POSTS) -

1-1/4" O.D. X 3/8" I.D. X 1/16" STEEL

1-1/4" O.D. X 3/8" I.D. X .080 NYLON

* Two different fastening systems are shown for illustration purposes. On any individual sign, either one or the other system shall be used. Actual number of fasteners per sign varies with the sign area, but normally there are two. For a single post installation, all signs greater than 9 sq. ft. require the use of 3 fasteners.

ATTACHMENT OF SIGNS TO POSTS

WISCONSIN DEPT OF TRANSPORTATION

APPROVED Matthew R Rauch
for State Traffic Engineer

DATE 4/1/2020 PLATE NO. A4-8.9

TELESCOPIC TUBING ANCHORS
TWO PIECE SYSTEM

2 1/4" SQUARE
12 GAUGE
PERFORATED
GALVANIZED FINISH

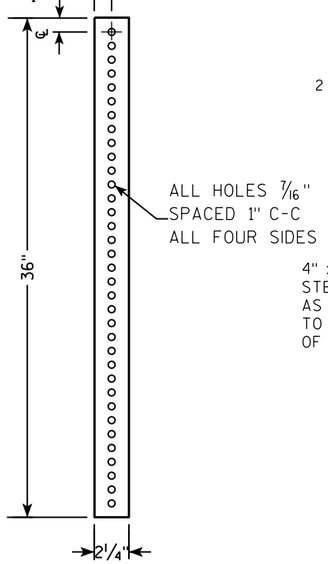

2 1/2" SQUARE
12 GAUGE
OMNI-DIRECTIONAL
PERFORATED
SOIL STABILIZING SLEEVE
GALVANIZED FINISH

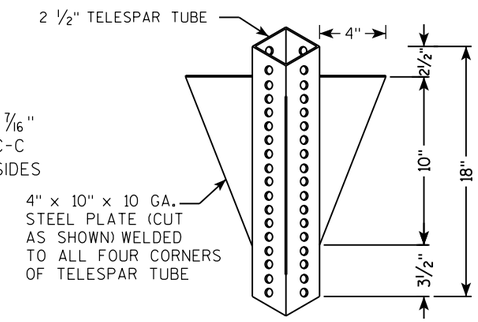

DETAIL OF TUBULAR STEEL SIGN POST
(IN POURED CONCRETE OR ASPHALT)

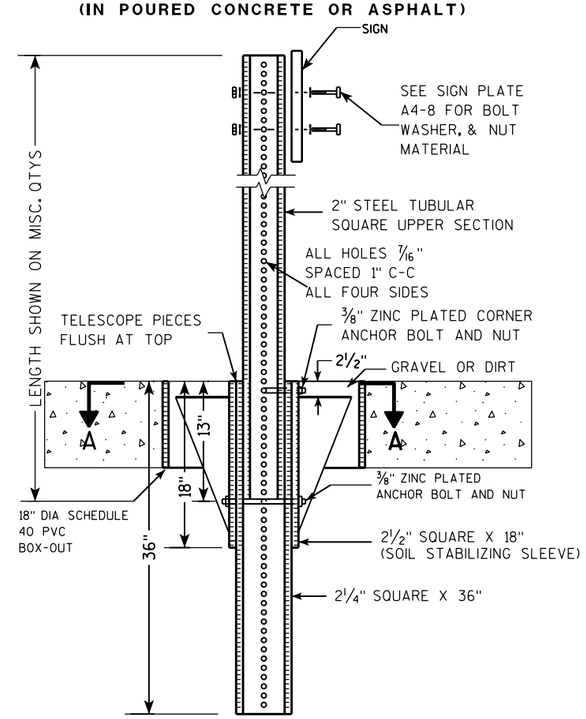

DETAIL OF TUBULAR STEEL SIGN POST
(IN LOCATIONS OTHER THAN POURED CONCRETE OR ASPHALT)

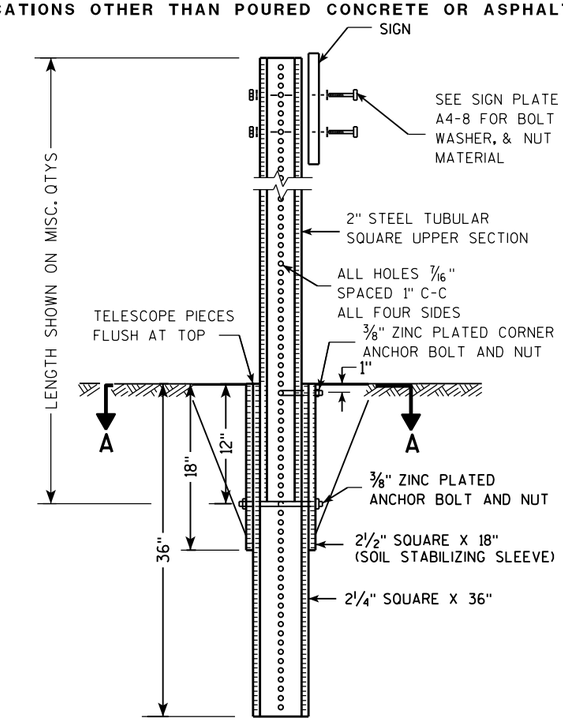

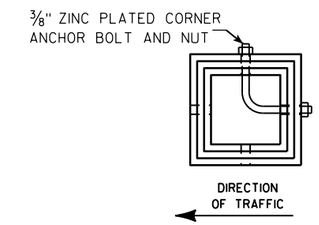

SECTION A-A

Area of Sign Installation (Sq. Ft.)	Number of Required Posts
9 or less	1
Greater than 9 less than or equal to 18	2
Greater than 18 less than or equal to 27	3

Signs wider than 3 feet or larger than 9 sq. ft shall be mounted on multiple posts (see above table).

TUBULAR STEEL
SIGN POST
A4-9

WISCONSIN DEPT OF TRANSPORTATION

APPROVED Matthew R Rauch
for State Traffic Engineer

DATE 2/05/15 PLATE A4-9.9

7 7

PROJECT NO:	HWY:	COUNTY:		SHEET NO:	E

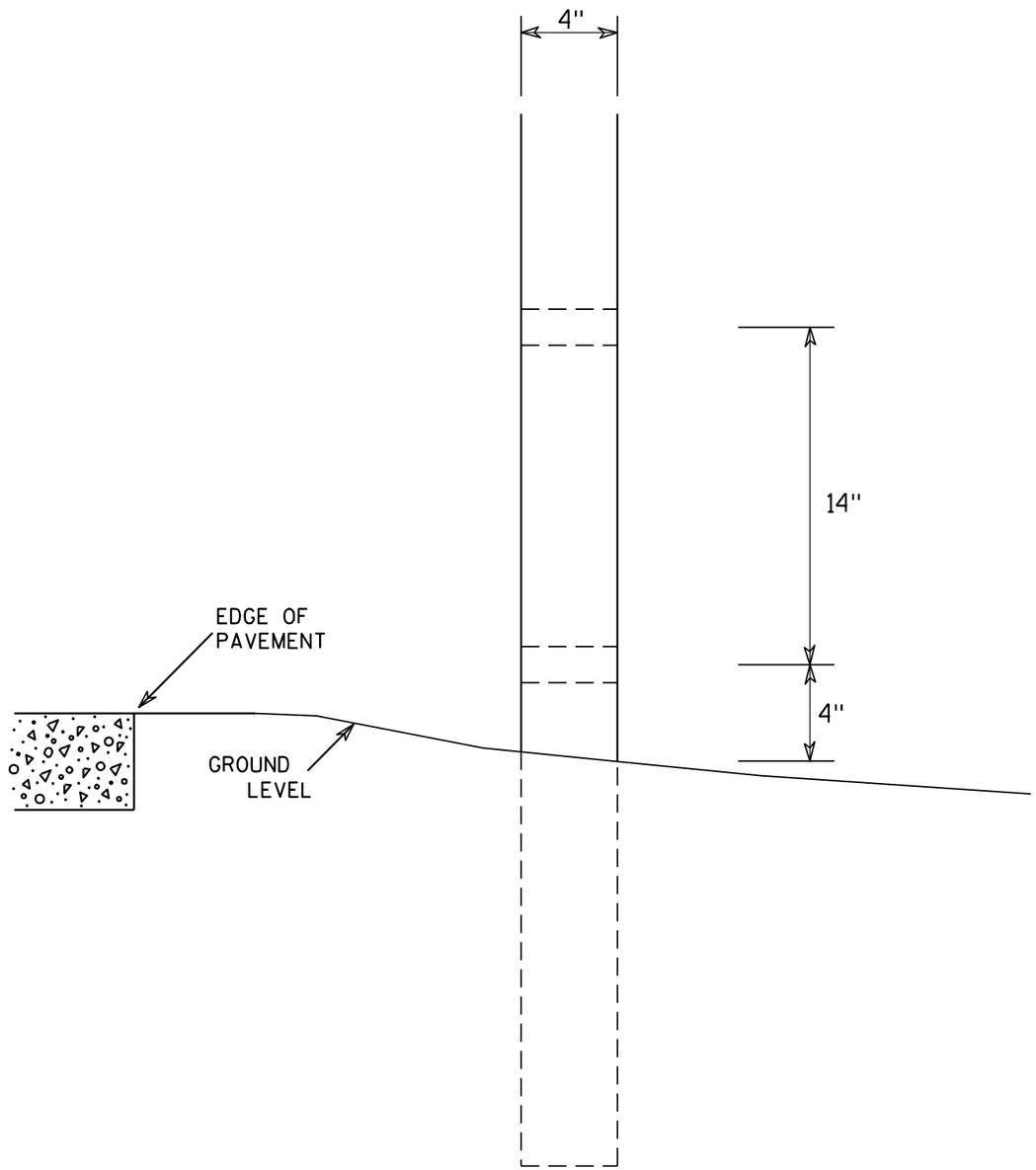

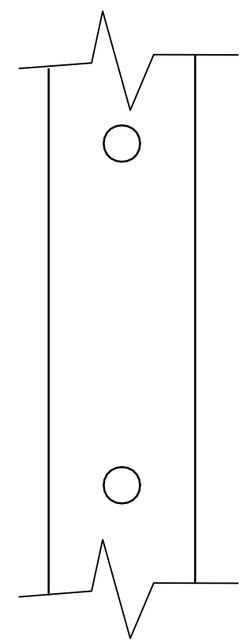

SIDE VIEW

GENERAL NOTES

1. All 4 x 6 Wood Posts shall be modified by having two 1½" diameter holes drilled perpendicular to the roadway centerline.

7

7

4 X 6 WOOD POST MODIFICATIONS

WISCONSIN DEPT OF TRANSPORTATION

APPROVED Chester J Spang for State Traffic Engineer

DATE 3/27/97 PLATE NO. A4-11.2

PROJECT NO:	HWY:	COUNTY:		SHEET NO: 142	E

BANDING

SINGLE SIGN

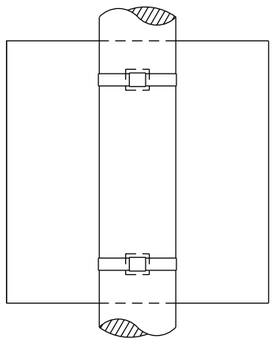

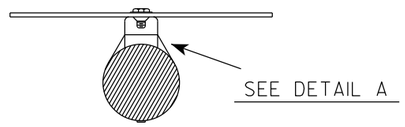

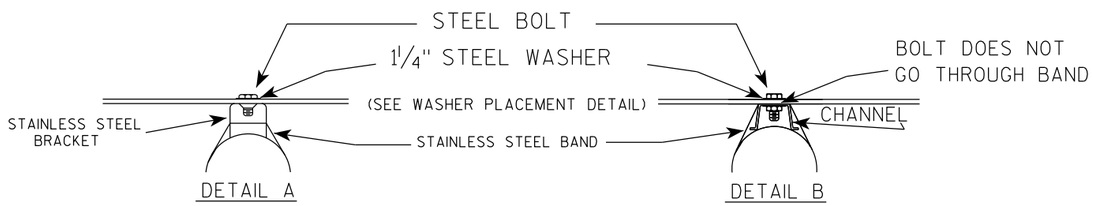

WASHER PLACEMENT

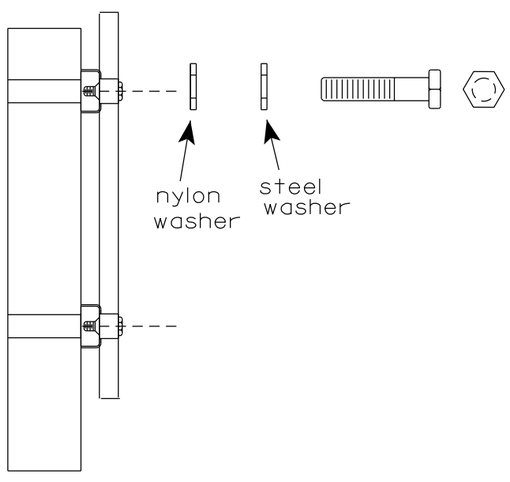

WASHERS (ALL POSTS) -
1-1/4" O.D. X 3/8" I.D. X 1/16" STEEL
1-1/4" O.D. X 3/8" I.D. X .080 NYLON
FOR ALL TYPE H SIGNS

GENERAL NOTES

1. Any sign over 3 feet in width shall use the V-Block banding method. See A5-10 standard plate.
2. Signs 3 feet or greater in height shall have three bracket bands installed. Signs less than 3 feet in height shall have two bracket bands installed.
3. Banding and assembly bracket shall be stainless steel. All bands shall be ¾" in width and 0.025" thickness.
4. ALL SIGN MOUNTING BOLTS AND WASHERS SHALL BE EITHER:
   a. Hot dip or mechanically galvanized in accordance with ASTM Designation: A 153, Class D
   b. Electro-galvanized in accordance with ASTM designation: B 633, Type III, SC 3

"J" ASSEMBLY

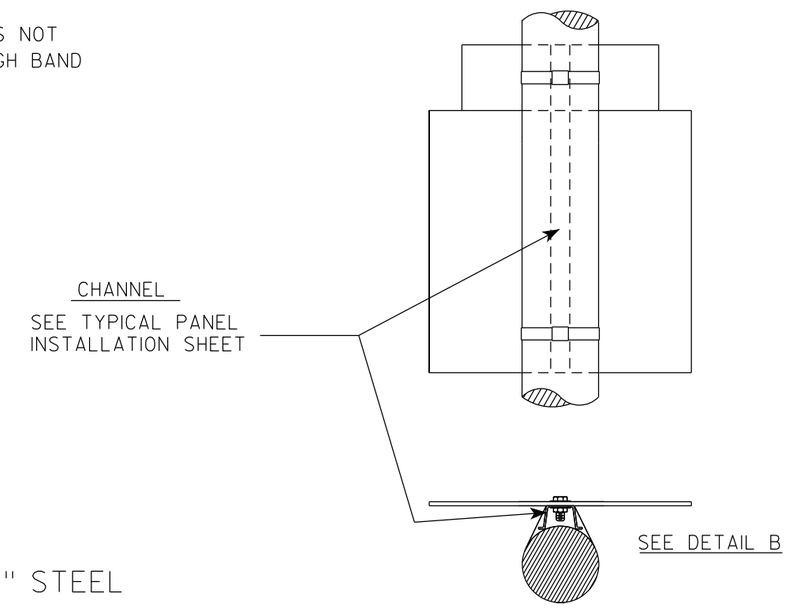

STANDARD SIGN
SIGN BANDING DETAILS

WISCONSIN DEPT OF TRANSPORTATION

APPROVED Matthew R Rauch for State Traffic Engineer

DATE 6/10/19 PLATE NO. A5-9.4

PROJECT NO:	HWY:	COUNTY:		SHEET NO: 143	E

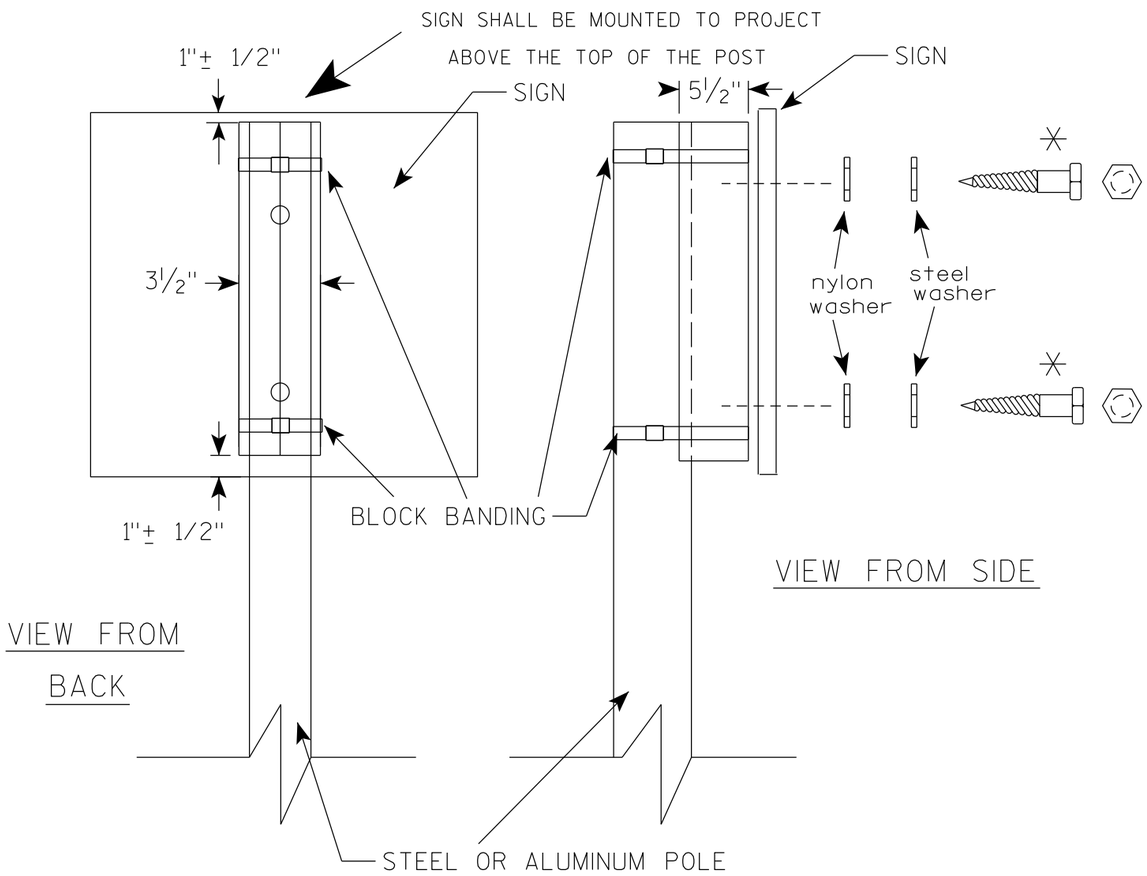

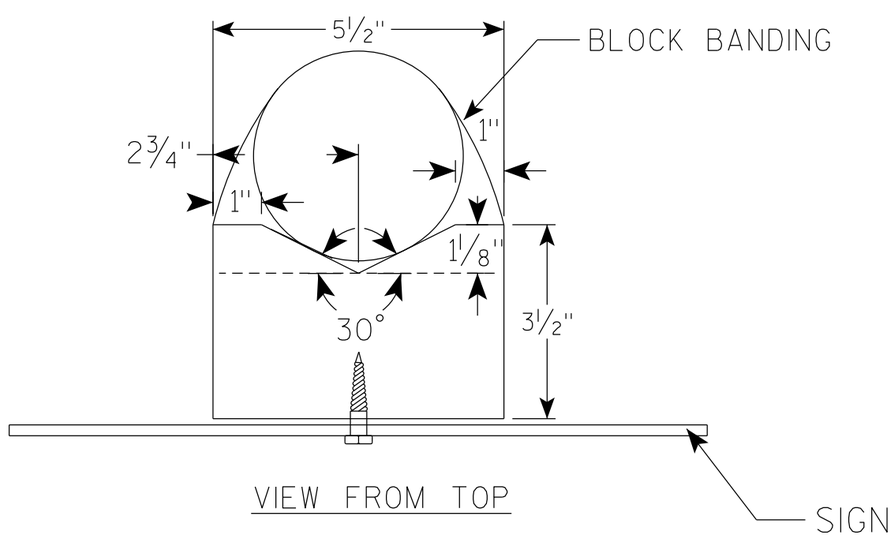

GENERAL NOTES

1. WOOD 4"X6" POST MATERIAL SHALL CONFORM TO 507.2.2 OF THE WisDOT STANDARD SPECIFICATIONS
2. BLOCK BANDING AND CLIPS SHALL BE STAINLESS STEEL, 3/4" WIDTH AND 0.025" THICKNESS
3. SIGNS 3' OR GREATER IN HEIGHT SHALL UTILIZE 3 BLOCK BANDS. SIGNS UNDER 3' IN HEIGHT SHALL UTILIZE 2 BLOCK BANDS
4. ACTUAL NUMBER OF FASTENERS PER SIGN VARIES WITH THE SIGN AREA, BUT NORNALLY THERE ARE TWO. FOR SIGNS GREATER THAN 9 S.F. 3 FASTENERS SHALL BE USED.
5. ALL SIGN MOUNTING BOLTS AND WASHERS SHALL BE EITHER:
   a. Hot dip or mechanically galvanized in accordance with ASTM Designation: A 153, Class D
   b. Electro-galvanized in accordance with ASTM Designation : B 633, TYPE III, SC 3
6. ALL BOLTS SHALL HAVE HEXAGONAL HEADS.
7. STEEL WASHERS SHALL BE 1 1/4" O.D. X 3/8" I.D. X 1/16"
8. NYLON WASHERS SHALL BE 1 1/4" O.D. X 3/8" I.D. X .080 FOR TYPE H OR TYPE F FACE SIGN

✳ LAG BOLTS SHALL BE 3/8" X 2 1/2"

BLOCK BANDING DETAIL
(V-BLOCK OPTION)

WISCONSIN DEPT OF TRANSPORTATION

APPROVED Matthew R Rauch
For State Traffic Engineer

DATE 6/10/19 PLATE NO. A5-10.2

PROJECT NO:				SHEET NO: 144	E

NOTES

1. Sign is Type II - Type F Reflective
2. Color:
   Background - Orange
   Message - Black
3. Message Series - D
4. Substitute appropriate numeral and adjust spacing to achieve proper balance.

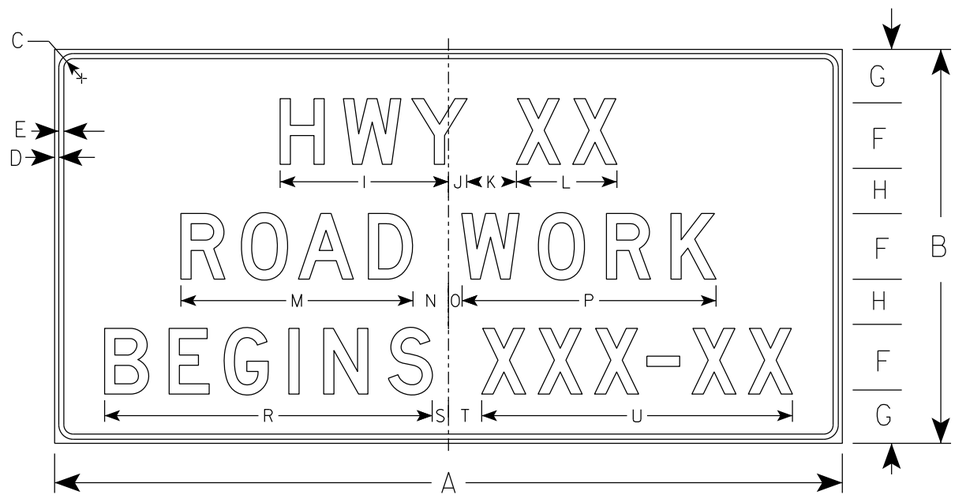

G20-57

SIZE	A	B	C	D	E	F	G	H	I	J	K	L	M	N	O	P	Q	R	S	T	U	V	W	X	Y	Z	Area sq. ft.
1																											
2																											
3	72	36	1 1/8	1/2	5/8	6	5	4	15 5/8	1 5/8	5	9 1/4	21 1/4	3 1/2	1 1/2	23 1/4		29 7/8	1 3/4	3 1/4	28 1/2						18.0
4	96	48	2 1/4	3/4	1	8	6 1/2	5 1/2	20 5/8	2 1/4	6	12 1/4	28 1/4	4 3/8	1 5/8	31		39 1/4	2	4	37 7/8						32.0
5																											

STANDARD SIGN
G20-57

WISCONSIN DEPT OF TRANSPORTATION

APPROVED Matthew R Rauch
For State Traffic Engineer

DATE 1/22/19 PLATE NO. G20-57.3

PROJECT NO: | HWY: | COUNTY: | SHEET NO: 145 | E

NOTES

1. Sign is Type II - Type F Reflective
2. Color:
   Background - Orange
   Message - Black
3. Message Series - D
4. Substitute appropriate numeral and adjust spacing to achieve proper balance.

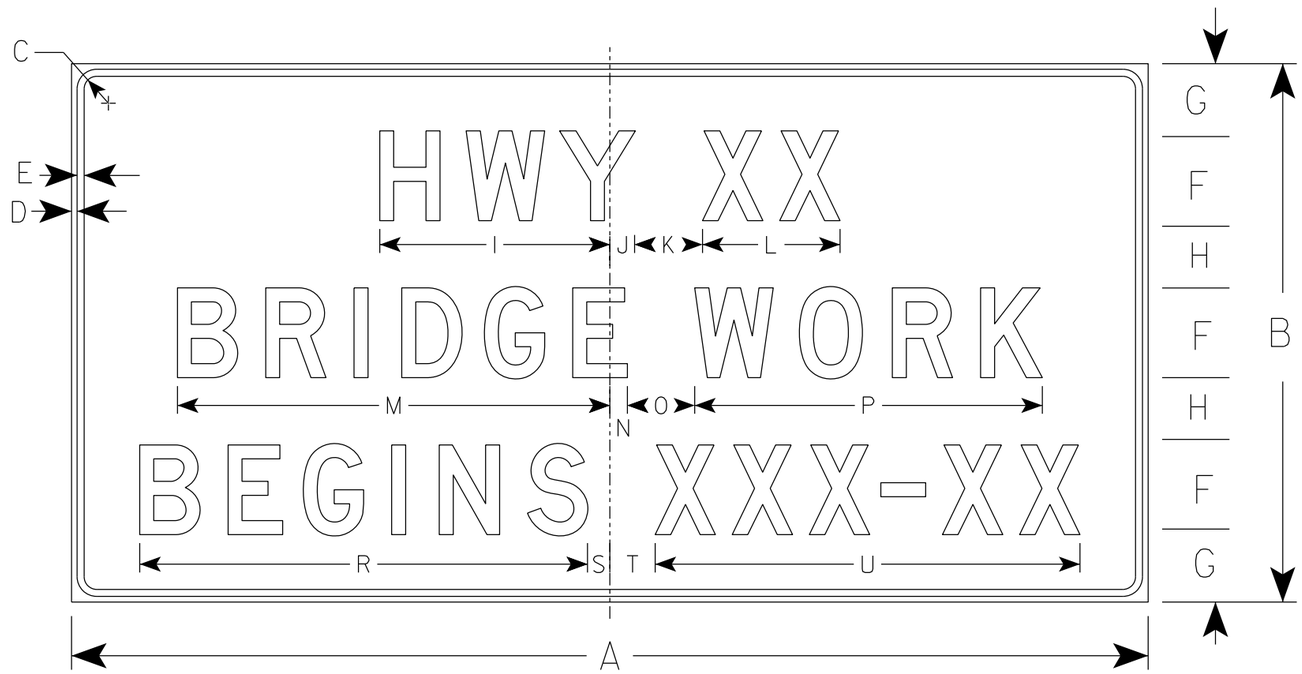

G20-57B

SIZE	A	B	C	D	E	F	G	H	I	J	K	L	M	N	O	P	Q	R	S	T	U	V	W	X	Y	Z	Area sq. ft.
1																											
2																											
3	72	36	1 1/8	1/2	5/8	6	5	4	15 5/8	1 5/8	5	9 1/4	29 1/8	7/8	5	23 1/4		29 7/8	1 3/4	3 1/4	28 1/2						18.0
4	96	48	2 1/4	3/4	1	8	6 1/2	5 1/2	20 5/8	2 1/4	6	12 1/4	38 1/2	1 1/2	6	31		39 1/4	2	4	37 7/8						32.0
5																											

STANDARD SIGN
G20-57B

WISCONSIN DEPT OF TRANSPORTATION

APPROVED Matthew R Rauch
for State Traffic Engineer

DATE 1/22/19 PLATE NO. G20-57B.1

PROJECT NO:	HWY:	COUNTY:		SHEET NO: 146	E

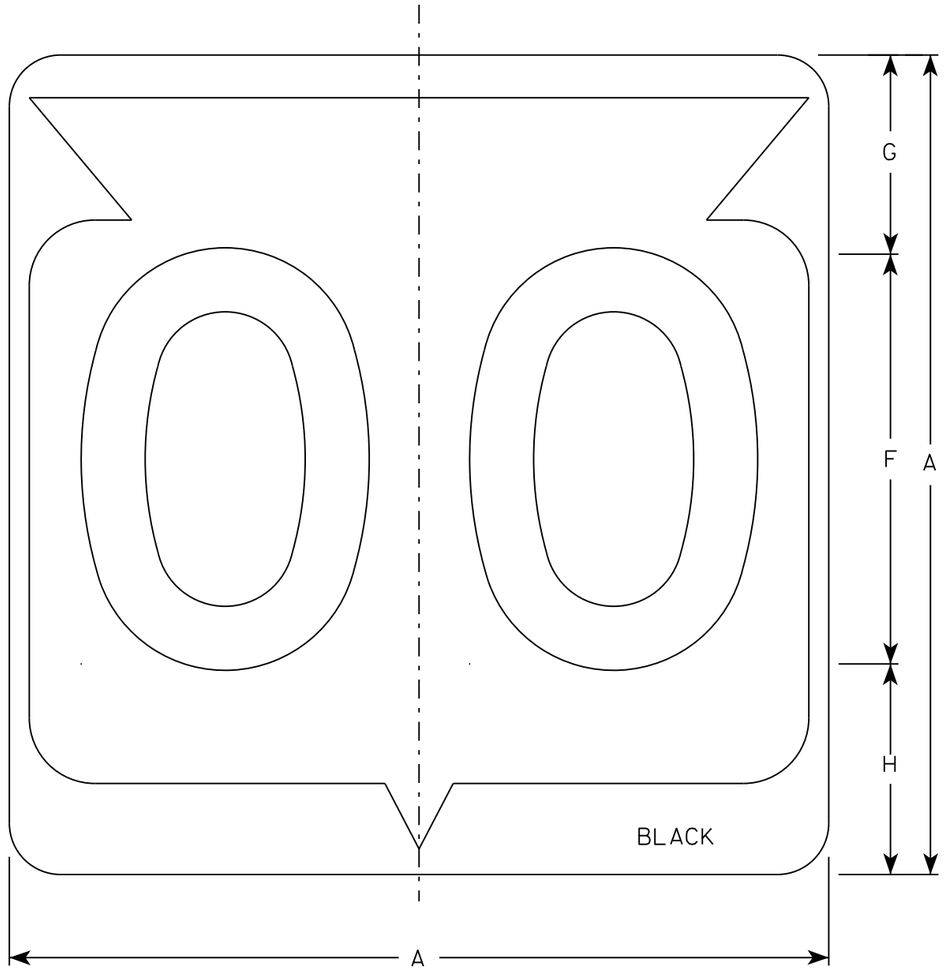

M1-6

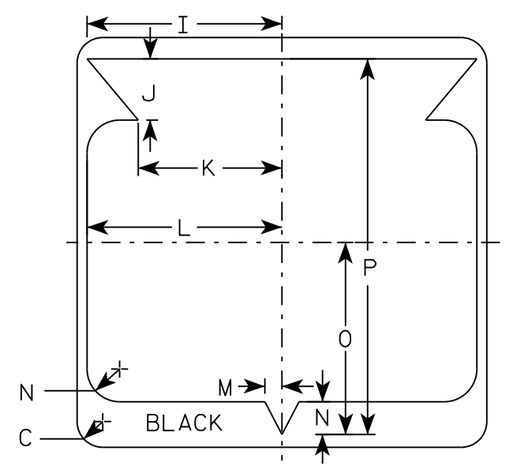

NOTES

1. Sign is Type II - Type H Reflective
2. Color:
   Background - White
   Message - Black
3. Message Series - D except 3 number signs Series C
4. Corners may be square or rounded when base material is plywood but borders shall be rounded as shown. When base material is metal, the corners and borders shall be rounded.

SIZE	A	B	C	D	E	F	G	H	I	J	K	L	M	N	O	P	Q	R	S	T	U	V	W	X	Y	Z	Area sq. ft.
1																											
2	24		1 1/2			12	5 1/2	6 1/2	10 1/4	2 1/2	8 7/8	11 1/2	1	1 7/8	11 1/4	21 7/8											4.0
3	36		2 1/4			18	8 3/4	9 1/4	15 3/8	5 3/8	12 5/8	17 1/8	1 1/2	2 7/8	16 7/8	33											9.0
4	36		2 1/4			18	8 3/4	9 1/4	15 3/8	5 3/8	12 5/8	17 1/8	1 1/2	2 7/8	16 7/8	33											9.0
5	36		2 1/4			18	8 3/4	9 1/4	15 3/8	5 3/8	12 5/8	17 1/8	1 1/2	2 7/8	16 7/8	33											9.0

STATE ROUTE MARKER
M1-6 FOR ASSEMBLIES

WISCONSIN DEPT OF TRANSPORTATION

APPROVED Matthew R Rauch
for State Traffic Engineer

DATE 3/16/18 PLATE NO. M1-6.10

PROJECT NO: | HWY: | COUNTY: | SHEET NO: 147 | E

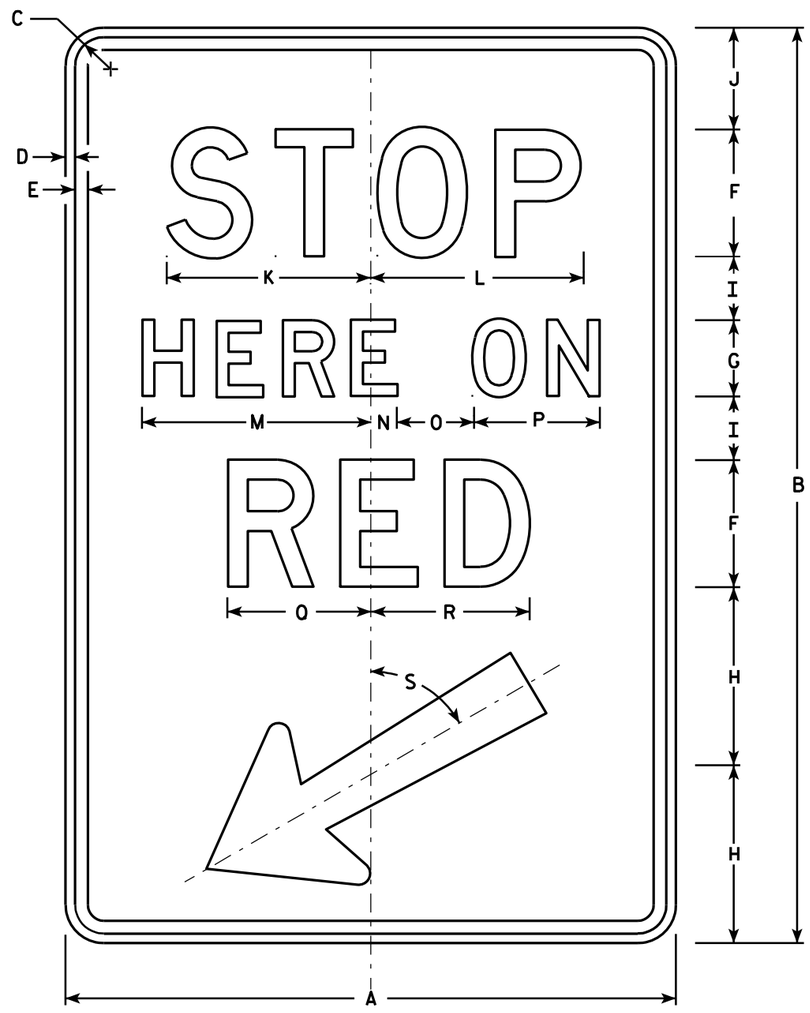

R10-6

NOTES

1. Sign is Type II - Type H Reflective - reference WIS DOT Standard Specification for HIGHWAY and STRUCTURE CONSTRUCTION latest edition.
2. Color:
   Background - White
   Message - Black
3. Message Series - D
4. Corners may be square or rounded when base material is plywood but borders shall be rounded as shown. When base material is metal, the corners and borders shall be rounded.

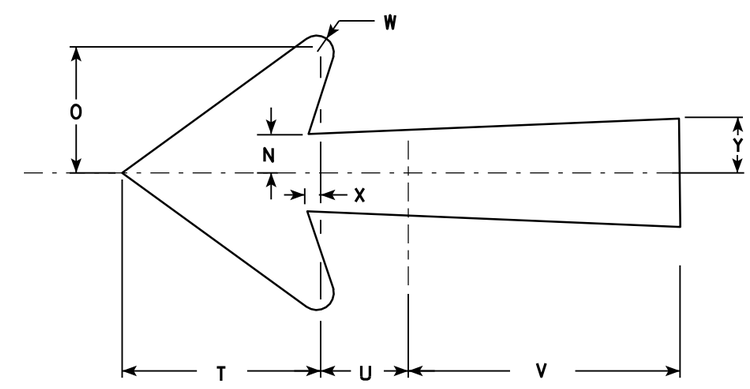

Arrow Detail

SIZE	A	B	C	D	E	F	G	H	I	J	K	L	M	N	O	P	Q	R	S	T	U	V	W	X	Y	Z	Area sq. ft.
1																											
2S	24	36	1 1/8	3/8	1/2	5	3	7	2 1/2	4	8	8 3/8	9	1	3	5	5 5/8	6 1/4	60°	5 1/4	2 1/4	7 1/8	1/2	3/8	1 3/8		6.0
2M	24	36	1 1/8	3/8	1/2	5	3	7	2 1/2	4	8	8 3/8	9	1	3	5	5 5/8	6 1/4	60°	5 1/4	2 1/4	7 1/8	1/2	3/8	1 3/8		6.0
3																											
4																											
5																											

STANDARD SIGN
R10-6

WISCONSIN DEPT OF TRANSPORTATION

APPROVED Matthew R Rauch
for State Traffic Engineer

DATE 4/5/11 PLATE NO. R10-6.6

PROJECT NO:	HWY:	COUNTY:		SHEET NO: 148	E

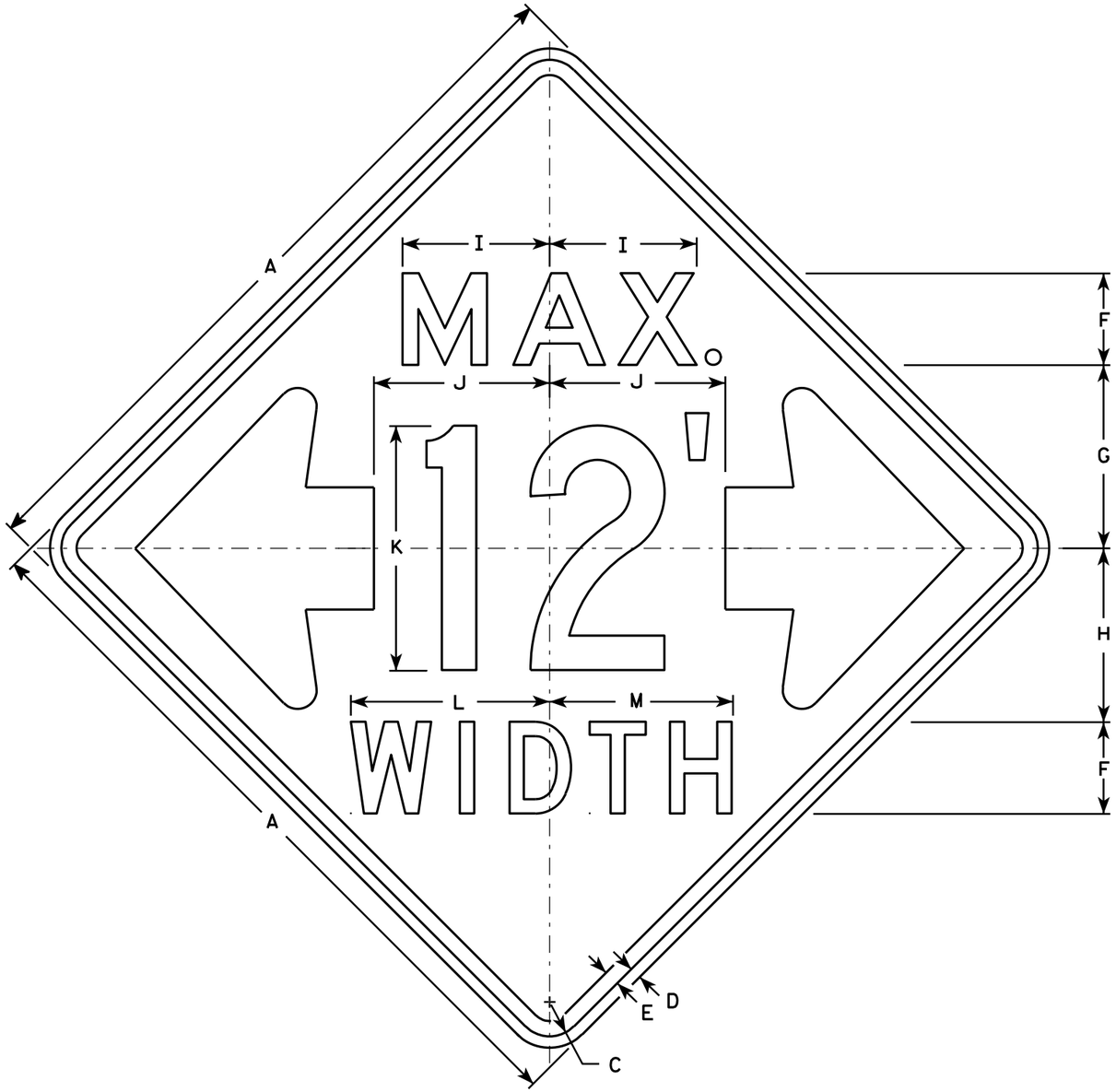

W12-52

NOTES

1. Sign is Type II - Type F Reflective - reference WIS DOT Standard Specification for HIGHWAY and STRUCTURE CONSTRUCTION latest edition.
2. Color:
   Background - Orange
   Message - Black
3. Message Series - See note 5
4. Corners may be square or rounded when base material is plywood but borders shall be rounded as shown. When base material is metal, the corners and borders shall be rounded.
5. The top line is series E, the numerals are series C, and the bottom line is series D.
6. Substitute appropriate numerals and adjust spacing as required.

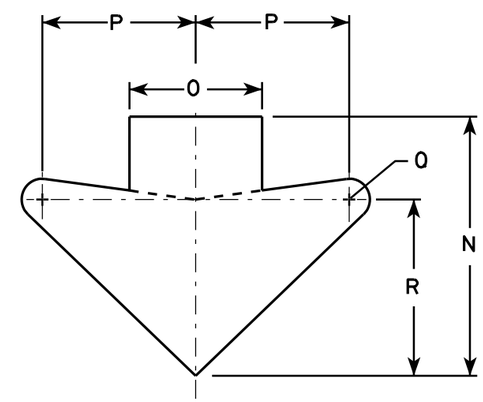

ARROW DETAIL

SIZE	A	B	C	D	E	F	G	H	I	J	K	L	M	N	O	P	Q	R	S	T	U	V	W	X	Y	Z	Area sq. ft.
1																											
2S	48		2 1/4	3/4	1	6	12	11 3/8	9 5/8	11 1/2	16	13	12	15 5/8	8	9 1/4	1 1/4	10 5/8									16.0
2M	48		2 1/4	3/4	1	6	12	11 3/8	9 5/8	11 1/2	16	13	12	15 5/8	8	9 1/4	1 1/4	10 5/8									16.0
3																											
4																											
5																											

STANDARD SIGN
W12-52

WISCONSIN DEPT OF TRANSPORTATION

APPROVED Matthew R Rauch
for State Traffic Engineer

DATE 3/16/11 PLATE NO. W12-52.7

PROJECT NO:	HWY:	COUNTY:		SHEET NO: 149	E

NOTES

1. Sign is Type II- Type F Reflective
2. Color:
   Background - Yellow
   Message - Black
3. Message Series - Lines 1 and 2 are Series D.
   Line 3 is series C.
4. Corners and borders shall be rounded on all base materials for this sign.

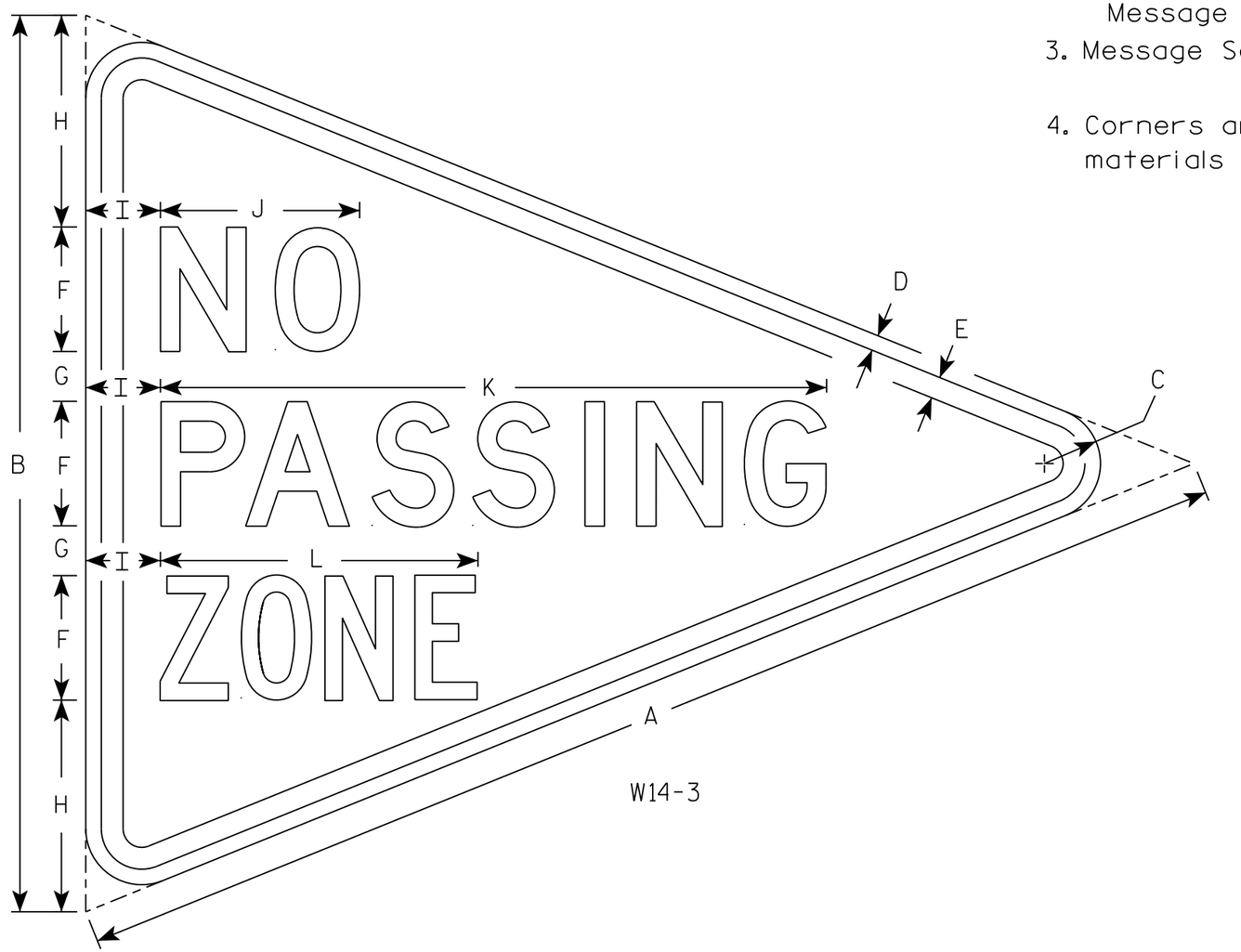

W14-3

SIZE	A	B	C	D	E	F	G	H	I	J	K	L	M	N	O	P	Q	R	S	T	U	V	W	X	Y	Z	Area sq. ft.
1																											
2S	48	36	2 1/4	5/8	7/8	5	2	8 1/2	3	8	26 3/4	12 3/4															5.56
2M																											
3																											
4																											
5																											

STANDARD SIGN
W14-3

WISCONSIN DEPT OF TRANSPORTATION

APPROVED Matthew R Rauch
for State Traffic Engineer
DATE 3/21/17 PLATE NO. W14-3.10

PROJECT NO: | HWY: | COUNTY: | SHEET NO: 150 | E

NOTES

1. Sign is Type II - Type F Reflective
2. Color:
   Background - Orange
   Message - Black
3. Message Series - C
4. Corners may be square or rounded when base material is plywood but borders shall be rounded as shown. When base material is metal, the corners and borders shall be rounded.

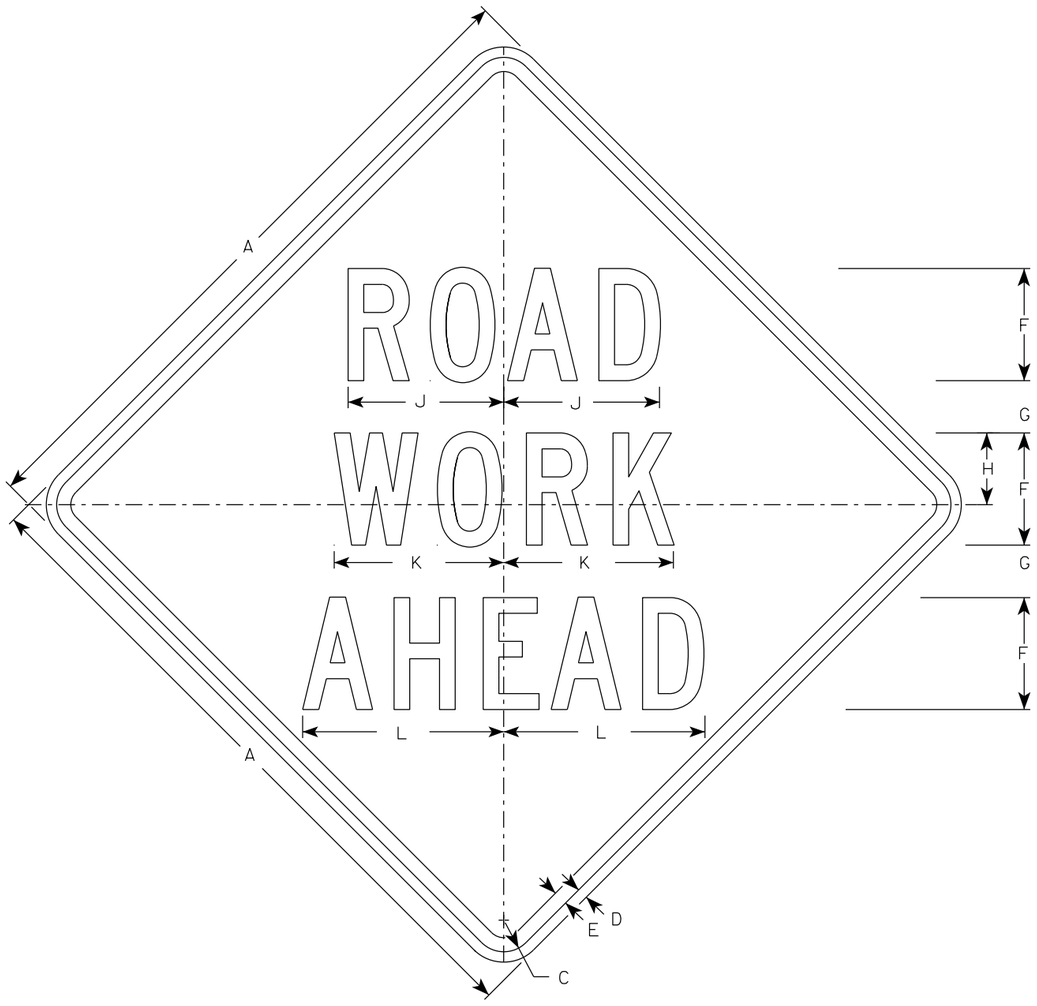

W20-1A

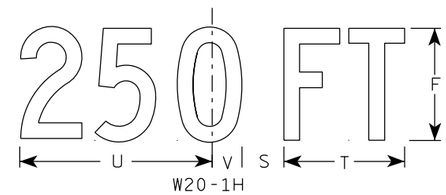

W20-1H

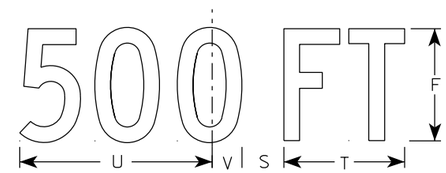

W20-1D

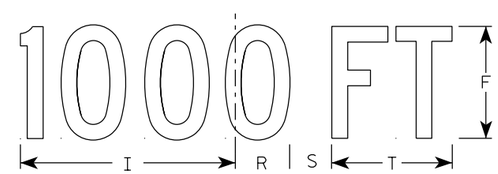

W20-1C

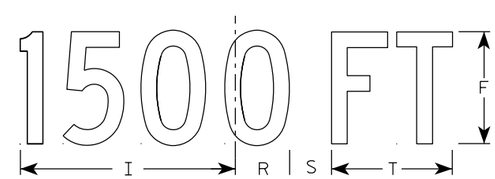

W20-1B

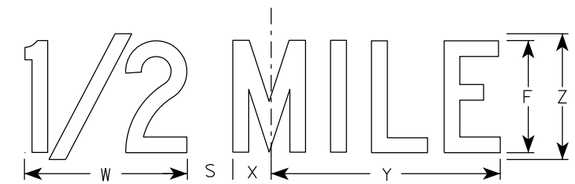

W20-1G

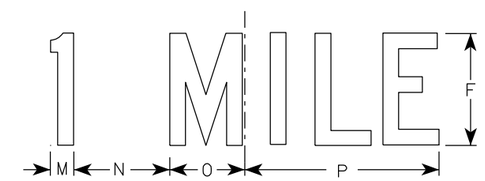

W20-1F

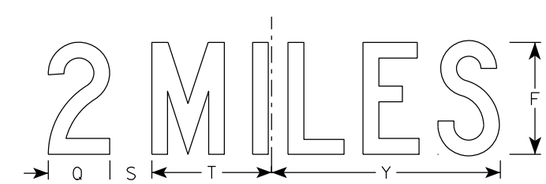

W20-1E

SIZE	A	B	C	D	E	F	G	H	I	J	K	L	M	N	O	P	Q	R	S	T	U	V	W	X	Y	Z	Area sq. ft.
1	36		1 5/8	5/8	3/4	5	2 5/8	3 1/4	10 1/8	7	7 5/8	8 7/8	1 1/8	4 1/2	3 1/2	9	3 1/4	2 1/2	2 1/4	5 5/8	9	1 3/8	8	1 3/4	10 3/4	6	9.0
2S	48		2 1/4	3/4	1	8	3 3/4	5 1/8	15 3/8	11 1/8	12 1/8	14 3/8	1 5/8	6 7/8	5 3/8	13 7/8	4 3/8	3 7/8	3	8 5/8	13 3/4	2 1/8	11 7/8	2 3/4	16 3/8	9	16.0
2M	48		2 1/4	3/4	1	8	3 3/4	5 1/8	15 3/8	11 1/8	12 1/8	14 3/8	1 5/8	6 7/8	5 3/8	13 7/8	4 3/8	3 7/8	3	8 5/8	13 3/4	2 1/8	11 7/8	2 3/4	16 3/8	9	16.0
3	48		2 1/4	3/4	1	8	3 3/4	5 1/8	15 3/8	11 1/8	12 1/8	14 3/8	1 5/8	6 7/8	5 3/8	13 7/8	4 3/8	3 7/8	3	8 5/8	13 3/4	2 1/8	11 7/8	2 3/4	16 3/8	9	16.0
4	48		2 1/4	3/4	1	8	3 3/4	5 1/8	15 3/8	11 1/8	12 1/8	14 3/8	1 5/8	6 7/8	5 3/8	13 7/8	4 3/8	3 7/8	3	8 5/8	13 3/4	2 1/8	11 7/8	2 3/4	16 3/8	9	16.0
5	48		2 1/4	3/4	1	8	3 3/4	5 1/8	15 3/8	11 1/8	12 1/8	14 3/8	1 5/8	6 7/8	5 3/8	13 7/8	4 3/8	3 7/8	3	8 5/8	13 3/4	2 1/8	11 7/8	2 3/4	16 3/8	9	16.0

STANDARD SIGN
W20-1A, B, C, D, E, F, G & H

WISCONSIN DEPT OF TRANSPORTATION

APPROVED Matthew R Rauch
For State Traffic Engineer
DATE 3/25/2020 PLATE NO. W20-1.11

PROJECT NO:

SHEET NO: E

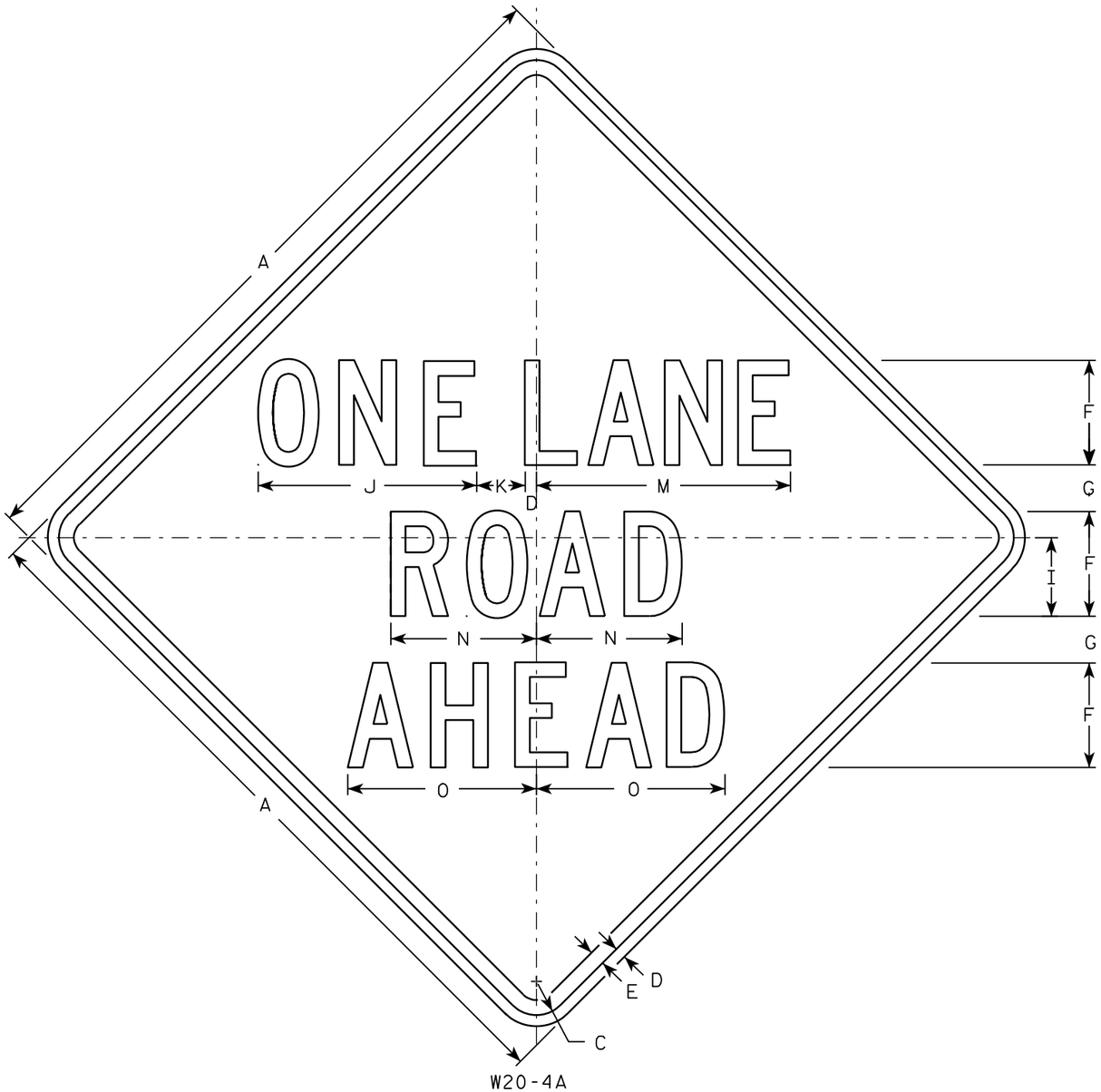

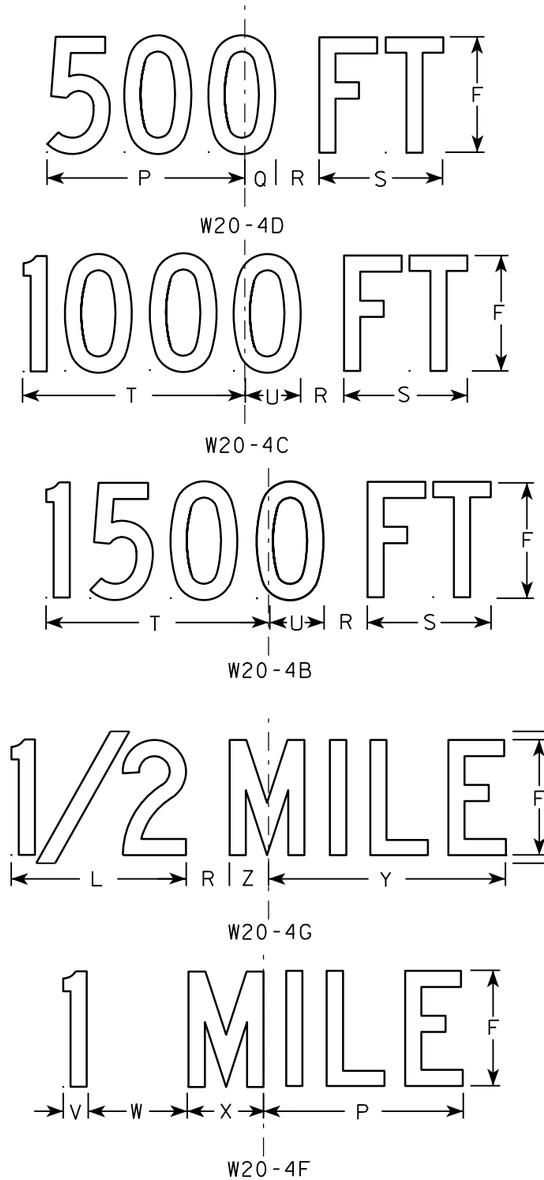

NOTES

1. Sign is Type II - Type F Reflective - reference WIS DOT Standard Specification for HIGHWAY and STRUCTURE CONSTRUCTION latest edition.
2. Color:
   Background - Orange
   Message - Black
3. Message Series - C
4. Corners may be square or rounded when base material is plywood but borders shall be rounded as shown. When base material is metal, the corners and borders shall be rounded.

SIZE	A	B	C	D	E	F	G	H	I	J	K	L	M	N	O	P	Q	R	S	T	U	V	W	X	Y	Z	Area sq. ft.
1	36		1 5/8	5/8	3/4	5	2 3/8	6	3 3/4	10 3/8	2 3/8	8	13 1/2	7	8 7/8	9	1 3/8	1 7/8	5 5/8	10 1/8	2 1/2	1 1/8	4 1/2	3 1/2	10 3/4	1 3/4	9.0
2S	48		2 1/4	3/4	1	7	3 1/8	8	5 1/4	14 5/8	3 1/4	10 5/8	17 3/4	9 3/4	12 5/8	12	1 7/8	2 5/8	7 1/2	13 1/2	3 3/8	1 1/2	6	4 5/8	14 3/8	2 3/8	16.0
2M	48		2 1/4	3/4	1	7	3 1/8	8	5 1/4	14 5/8	3 1/4	10 5/8	17 3/4	9 3/4	12 5/8	12	1 7/8	2 5/8	7 1/2	13 1/2	3 3/8	1 1/2	6	4 5/8	14 3/8	2 3/8	16.0
3	48		2 1/4	3/4	1	7	3 1/8	8	5 1/4	14 5/8	3 1/4	10 5/8	17 3/4	9 3/4	12 5/8	12	1 7/8	2 5/8	7 1/2	13 1/2	3 3/8	1 1/2	6	4 5/8	14 3/8	2 3/8	16.0
4	48		2 1/4	3/4	1	7	3 1/8	8	5 1/4	14 5/8	3 1/4	10 5/8	17 3/4	9 3/4	12 5/8	12	1 7/8	2 5/8	7 1/2	13 1/2	3 3/8	1 1/2	6	4 5/8	14 3/8	2 3/8	16.0
5	48		2 1/4	3/4	1	7	3 1/8	8	5 1/4	14 5/8	3 1/4	10 5/8	17 3/4	9 3/4	12 5/8	12	1 7/8	2 5/8	7 1/2	13 1/2	3 3/8	1 1/2	6	4 5/8	14 3/8	2 3/8	16.0

STANDARD SIGN
W20-4A, B, C, D, F & G

WISCONSIN DEPT OF TRANSPORTATION

APPROVED Matthew R Rauch
for State Traffic Engineer

DATE 3/18/11 PLATE NO. W20-4.9

PROJECT NO:

SHEET NO: 152 E

NOTES

1. Sign is Type II - Type F Reflective - reference WIS DOT Standard Specification for HIGHWAY and STRUCTURE CONSTRUCTION latest edition.
2. Color:
   Background - Orange
   Message - Black
3. Corners may be square or rounded when base material is plywood but borders shall be rounded as shown. When base material is metal, the corners and borders shall be rounded.

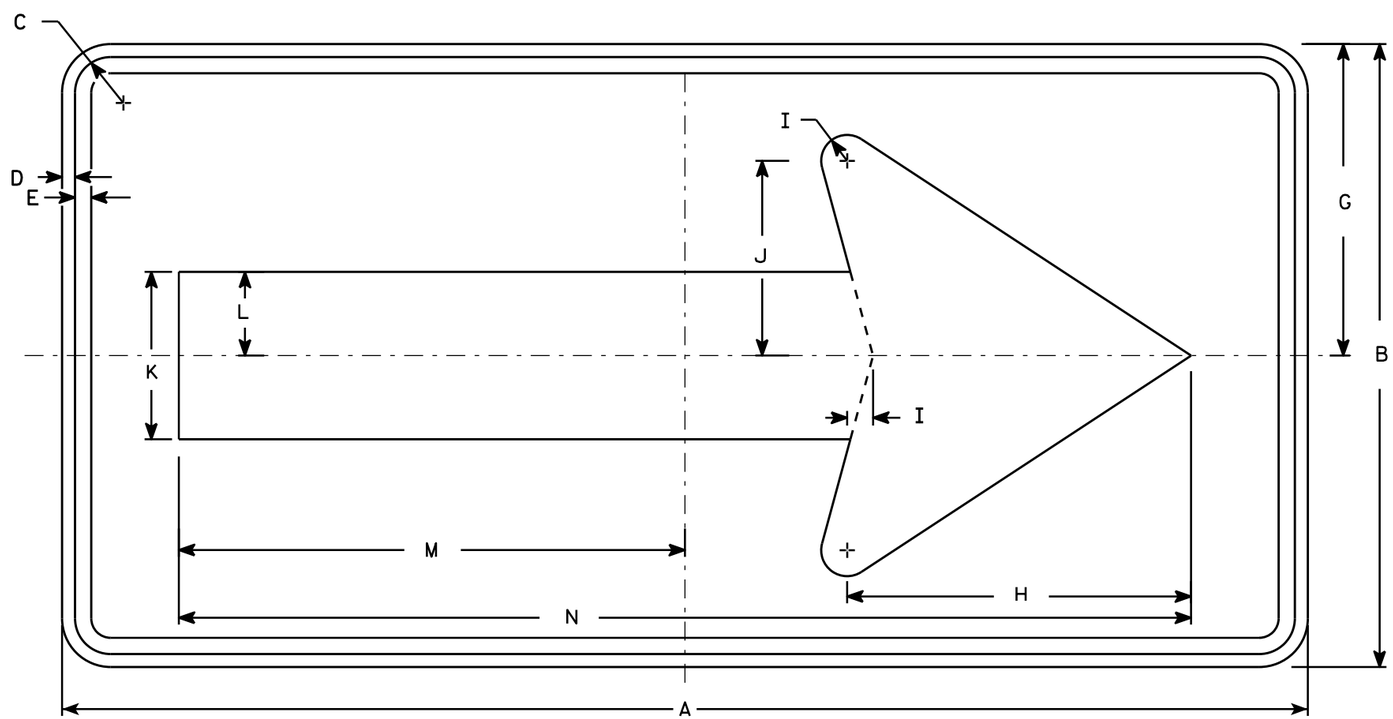

W01-6

SIZE	A	B	C	D	E	F	G	H	I	J	K	L	M	N	O	P	Q	R	S	T	U	V	W	X	Y	Z	Area sq. ft.
1																											
2S	48	24	1 3/8	1/2	5/8		12	13 1/4	1	7 1/2	6 1/2	3 1/4	19 1/2	39													8.0
2M	48	24	1 3/8	1/2	5/8		12	13 1/4	1	7 1/2	6 1/2	3 1/4	19 1/2	39													8.0
3	60	30	1 3/8	1/2	5/8		15	16 1/4	1 1/4	9 1/4	8	4	24 3/8	48 3/4													12.5
4	60	30	1 3/8	1/2	5/8		15	16 1/4	1 1/4	9 1/4	8	4	24 3/8	48 3/4													12.5
5	60	30	1 3/8	1/2	5/8		15	16 1/4	1 1/4	9 1/4	8	4	24 3/8	48 3/4													12.5

STANDARD SIGN
W01-6

WISCONSIN DEPT OF TRANSPORTATION

APPROVED Matthew R Rauch
for State Traffic Engineer

DATE 11/18/13 PLATE NO. W01-6.1

PROJECT NO: | HWY: | COUNTY: | SHEET NO: | E

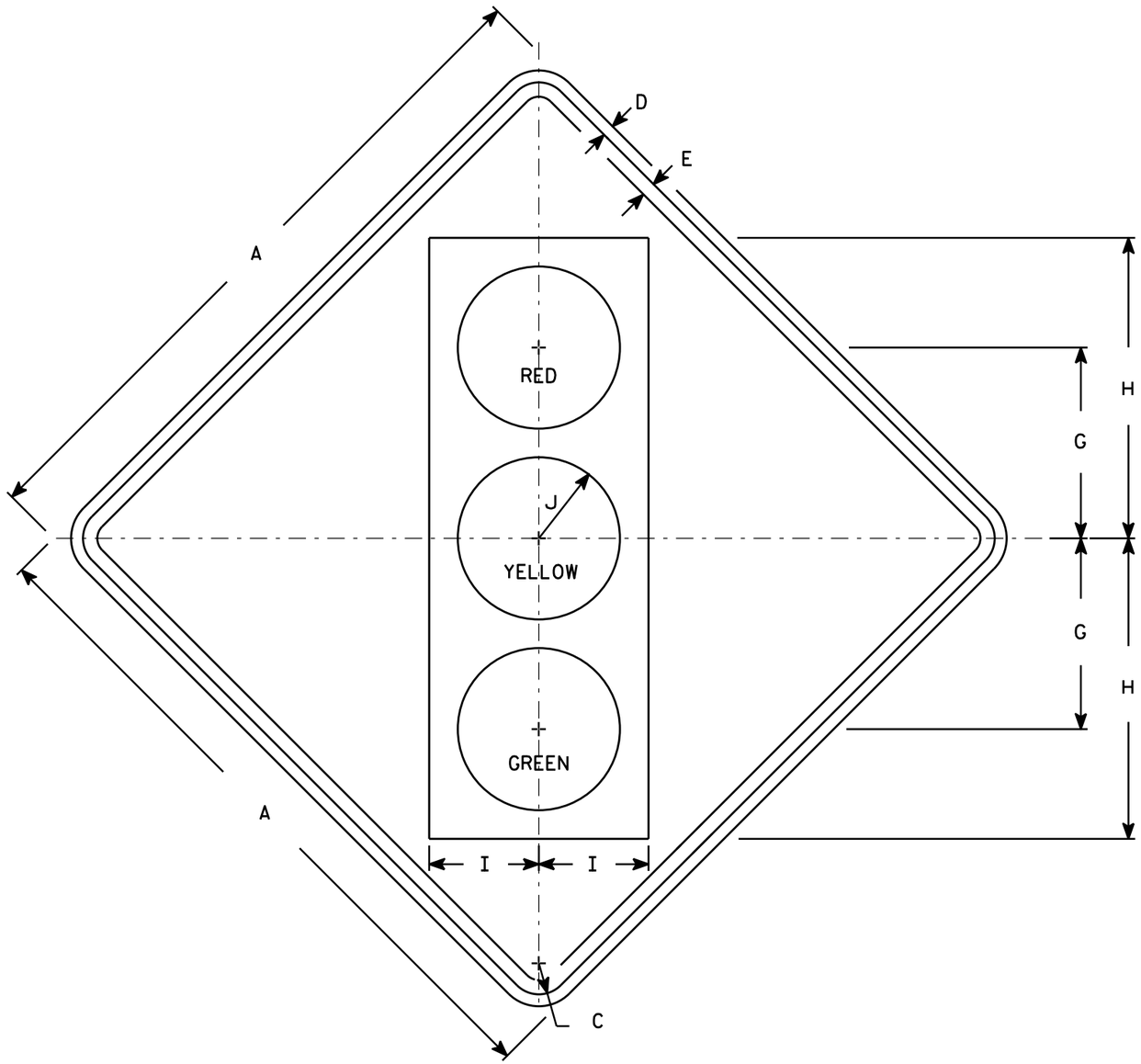

W03-3

NOTES

1. Sign is Type II - Type F Reflective - reference WIS DOT Standard Specification for HIGHWAY and STRUCTURE CONSTRUCTION latest edition.
2. Color:
   Background - Orange
   Message - See Note 4
3. Corners may be square or rounded when base material is plywood but borders shall be rounded as shown. When base material is metal, the corners and borders shall be rounded.
4. Symbol and border are non-reflective black.
   Top circle - Type H Reflectorized Red
   Center circle - Same as background
   Bottom circle - Type H Reflectorized Green

SIZE	A	B	C	D	E	F	G	H	I	J	K	L	M	N	O	P	Q	R	S	T	U	V	W	X	Y	Z	Area sq. ft.
1	36		1 5/8	5/8	3/4		10	15 3/4	5 3/4	4 1/4																	9.0
2S	48		2 1/4	3/4	1		12 1/2	20	7 1/2	5																	16.0
2M	48		2 1/4	3/4	1		12 1/2	20	7 1/2	5																	16.0
3	48		2 1/4	3/4	1		12 1/2	20	7 1/2	5																	16.0
4	48		2 1/4	3/4	1		12 1/2	20	7 1/2	5																	16.0
5	48		2 1/4	3/4	1		12 1/2	20	7 1/2	5																	16.0

STANDARD SIGN
W03-3

WISCONSIN DEPT OF TRANSPORTATION

APPROVED Matthew R Rauch
for State Traffic Engineer

DATE 11/20/13 PLATE 154 W03-3.1

PROJECT NO: | HWY: | COUNTY: | SHEET NO: E

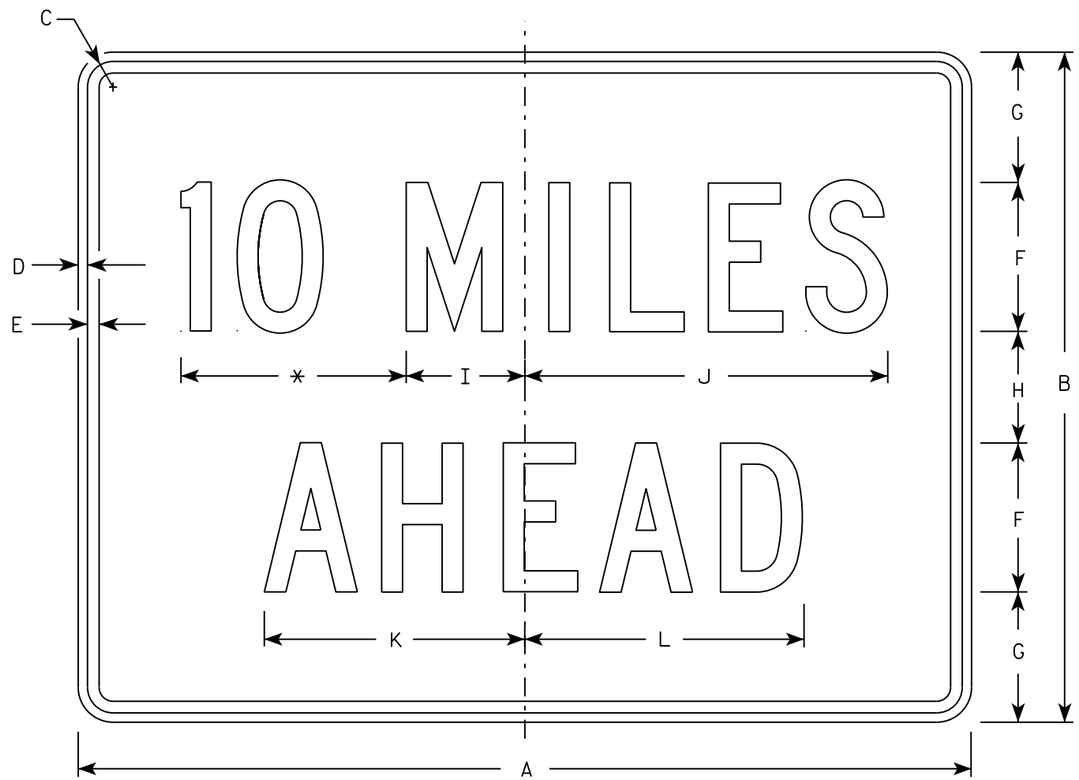

W057-52

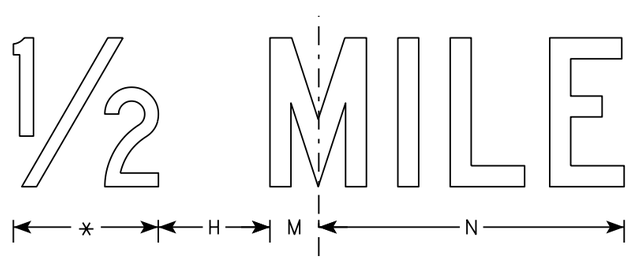

* See note 5

NOTES

1. Sign is Type II - Type F Reflective
2. Color:
   Background - Orange
   Message - Black
3. Message Series - C
4. Corners may be square or rounded when base material is plywood but borders shall be rounded as shown. When base material is metal, the corners and borders shall be rounded.
5. Substitute appropriate numerals to the nearest quarter mile and optically adjust spacing to achieve proper balance.

SIZE	A	B	C	D	E	F	G	H	I	J	K	L	M	N	O	P	Q	R	S	T	U	V	W	X	Y	Z	Area sq. ft.
1	36	24	1 1/8	3/8	1/2	6	4 1/2	3	4 3/4	14 5/8	10 5/8	11 3/8	2	12													6.0
2S	48	36	1 3/8	1/2	5/8	8	7	6	6 3/8	19 1/2	14	15	2 3/4	16 3/8													12.0
2M	48	36	1 3/8	1/2	5/8	8	7	6	6 3/8	19 1/2	14	15	2 3/4	16 3/8													12.0
3	48	36	1 3/8	1/2	5/8	8	7	6	6 3/8	19 1/2	14	15	2 3/4	16 3/8													12.0
4	48	36	1 3/8	1/2	5/8	8	7	6	6 3/8	19 1/2	14	15	2 3/4	16 3/8													12.0
5	48	36	1 3/8	1/2	5/8	8	7	6	6 3/8	19 1/2	14	15	2 3/4	16 3/8													12.0

STANDARD SIGN
W057-52

WISCONSIN DEPT OF TRANSPORTATION

APPROVED Matthew R Rauch
for State Traffic Engineer

DATE 3/21/17 PLATE NO. W057-52.2

PROJECT NO: | HWY: | COUNTY: | SHEET NO: 155 | E

STATE PROJECT NUMBER
9140-12-71

LEGEND

(X) INDICATES WING NUMBER

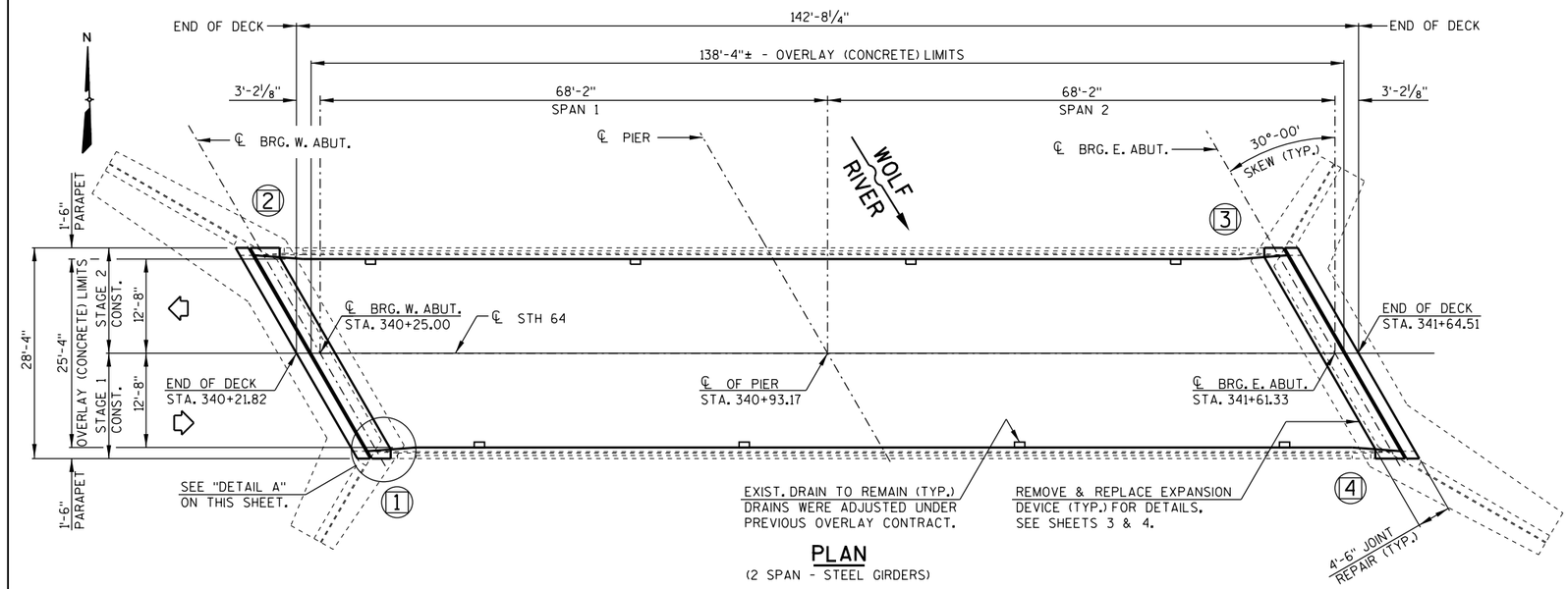

PLAN

(2 SPAN - STEEL GIRDERS)

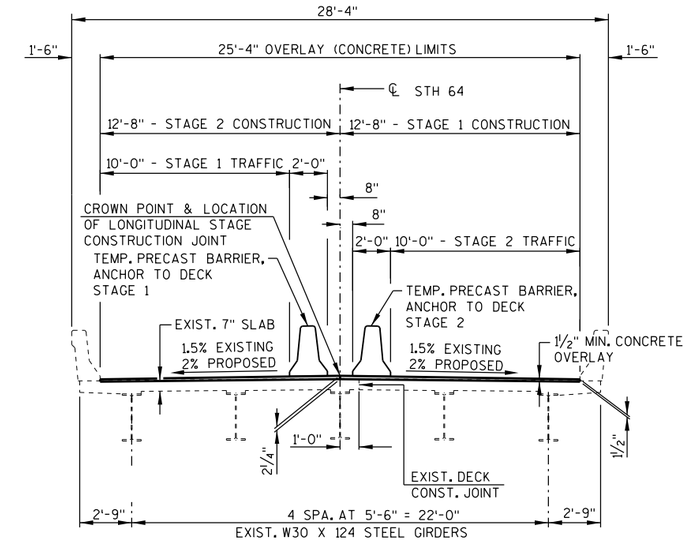

CROSS SECTION THRU ROADWAY

(LOOKING UPSTATION)

NOTE: EXISTING 1½" CONCRETE OVERLAY TO BE REMOVED PER BID ITEM "REMOVING CONCRETE MASONRY DECK OVERLAY B-34-838".

AVERAGE CONCRETE OVERLAY THICKNESS = 2⅜".

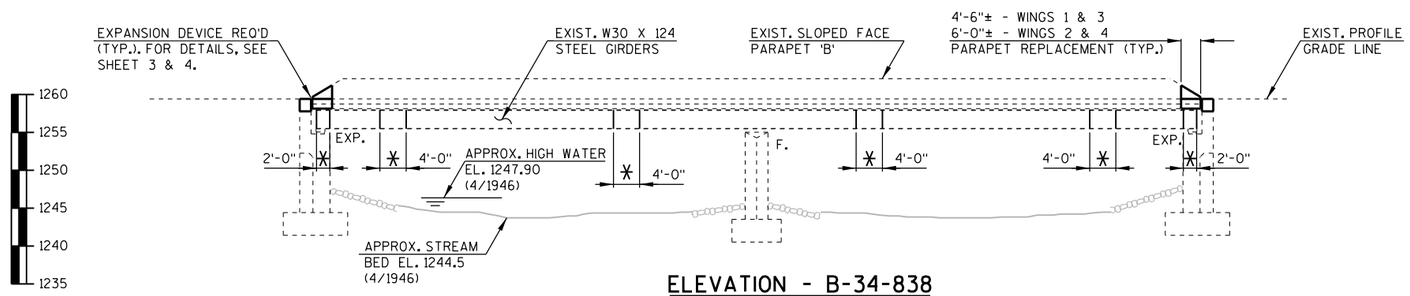

ELEVATION - B-34-838

(NORMAL TO WOLF RIVER)

✱ CLEAN AND PAINT

WISCONSIN ELIZABETH A. NEMEC E-43409-6 STEVENS POINT, WI 4/18/20 PROFESSIONAL ENGINEER

STRUCTURES DESIGN CONTACTS

BRIDGE OFFICE:
AARON BONK (608) 261-0261

CONSULTANT:
BETH NEMEC (715) 342-3069

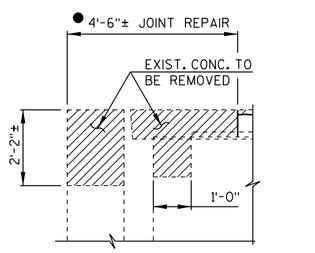

● DIMENSION GIVEN IS NORMAL TO ℄ OF SUBSTRUCTURE UNIT.

REMOVAL LIMITS AT EXISTING JOINT

NOTE: FOR EXPANSION DEVICE DETAILS, SEE SHEETS 3 & 4.

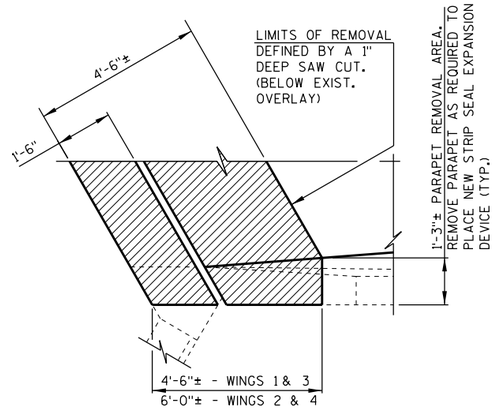

DETAIL A

NOTE: SALVAGE ALL EXISTING LONGITUDINAL REINFORCEMENT IN THE DECK AND 1'-6" MINIMUM OF TRANSVERSE STEEL.

DESIGN DATA

LIVELOAD:
DESIGN LOADING: HS-20
INVENTORY RATING: HS16
OPERATIONAL RATING: HS27
WISCONSIN STANDARD PERMIT VEHICLE (WIS-SPV): 220 KIPS

MATERIAL PROPERTIES:
CONCRETE MASONRY
SUPERSTRUCTURE —— f'c = 4,000 PSI
ALL OTHER ———— f'c = 3,500 PSI
BAR STEEL REINFORCEMENT,
GRADE 60 ———— fy = 60,000 PSI

TRAFFIC DATA

A.D.T. (2020) = 2,200
A.D.T. (2040) = 2,800
DESIGN SPEED = 60 M.P.H.

LIST OF DRAWINGS

1. GENERAL PLAN
2. QUANTITIES & GENERAL NOTES
3. ABUTMENT EXPANSION JOINT REPAIR - 1
4. ABUTMENT EXPANSION JOINT REPAIR - 2
5. BILL OF BARS & PARAPET JT. DETAILS
6. BAR SPLICER (COUPLER) DETAILS

BENCH MARK TABLE

NO.	STATION	DESCRIPTION	ELEVATION
CP-20	343+09, 45.6' LT.	¾-INCH REBAR WITH CAP	1257.08
26	328+80, 47.5 RT.	60d IN PP 31-14-10 13/53	1269.79

NO.	DATE	REVISION	BY

AECOM

STATE OF WISCONSIN
DEPARTMENT OF TRANSPORTATION

ACCEPTED SDR 05/07/20
CHIEF STRUCTURES DESIGN ENGINEER DATE

STRUCTURE B-34-838

STH 64 OVER WOLF RIVER

COUNTY LANGLADE | TOWN/~~CITY/VILLAGE~~ WOLF RIVER

DESIGN SPEC. REHABILITATION N/A

DESIGNED BY JRD | DESIGN CK'D. EAN | DRAWN BY TAW | PLANS CK'D. EAN

GENERAL PLAN

SHEET 1 OF 6
156

8

8

PRINTER DRIVER: C:\ProgramData\Bentley\MicroStation V8i (SELECTseries)\WorkSpace\System\pltcfg\ME_PDF_11 x 17.plt
PEN TABLE: C:\MP\CLIENT\AMER-USA-WI-WisDOT\dev\WisDOTBridgeVerA\Pen Tables\AE_WisDOT_Structure.tbl
FILE NAME: C:\Users\kreaulc\AECOM Directory\Nemec, Elizabeth - 60600222-STH64_Langlade\400_Technical\400_Structural\dgn\B-34-0838\01_genplan_b-34-838.dgn
PLOT DATE: 4/15/2020 PLOT TIME: 8:45:16 PM

PRINTER DRIVER: C:\ProgramData\Bentley\MicroStation V8i (SELECTseries)\WorkSpace\System\pltcfg\AE_PDF_11 x 17.plt
PEN TABLE: C:\MP\CLIENT\AMER-USA-WI-WisDOT\dev\WisDOTBridgeVerA\Pen Tables\AE_WisDOT_Structure.tbl
FILE NAME: C:\Users\kreulc\AECOM Directory\Nemec, Elizabeth - 60600222-STH64 Langlade\400 Technical\480 Structural\dgn\B-34-0838\02_quant_notes_b-34-838.dgn
PLOT DATE: 4/15/2020 PLOT TIME: 8:45:16 PM BATCH PRINT SHEET 2 OF 6

GENERAL NOTES

DRAWINGS SHALL NOT BE SCALED.

DIMENSIONS AND ELEVATIONS SHOWN ARE BASED ON THE ORIGINAL STRUCTURE PLANS.

PROTECTIVE SURFACE TREATMENT SHALL BE APPLIED TO THE ENTIRE TOP SURFACE OF THE NEW CONCRETE OVERLAY AND TOPS OF PAVING BLOCKS.

PIGMENTED SURFACE SEALER SHALL BE APPLIED TO THE TOP AND INSIDE FACES OF EXISTING PARAPETS. PERFORM "CLEANING PARAPETS" PRIOR TO THIS APPLICATION.

APPLY "PIGMENTED SURFACE SEALER" TO THE TOP AND INSIDE FACES OF NEW SECTIONS OF PARAPET AT THE JOINT REPLACEMENT.

SEAL OVERLAY CONSTRUCTION JOINTS ACCORDING TO SECTION 502.3.13.1 OF THE STANDARD SPECIFICATIONS. COST INCIDENTAL TO BID ITEM "CONCRETE MASONRY OVERLAY DECKS".

THE TOTAL AVERAGE OVERLAY THICKNESS IS BASED ON THE AVERAGE OVERLAY THICKNESS PLUS ½-INCH TO ACCOUNT FOR VARIATIONS IN THE DECK SURFACE.

PREPARATION DECKS TYPE 1, PREPARATION DECKS TYPE 2, AND FULL-DEPTH DECK REPAIR AREAS ARE DETERMINED BY THE ENGINEER. DECK PREPARATION AND FULL-DEPTH DECK REPAIRS SHALL BE FILLED WITH "CONCRETE MASONRY OVERLAY DECKS".

"CONCRETE SURFACE REPAIR" AT PARAPETS/ABUTMENTS/PIER IS ESTIMATED TO BE 20 S.F. EDGE OF DECK REPAIR IS ESTIMATED TO BE 15 S.F. "CONCRETE SURFACE REPAIR" AREAS SHOWN IN THE QUANTITIES TABLE ARE BASED ON THE BRIDGE INSPECTION REPORT AND ARE APPROXIMATE. EXACT AREAS OF REPAIR SHALL BE DETERMINED IN THE FIELD BY THE PROJECT ENGINEER.

ALL CONCRETE REMOVAL NOT COVERED WITH CONCRETE OVERLAY SHALL BE DEFINED BY A 1-INCH DEEP SAW CUT.

ANY EXCAVATION REQUIRED TO COMPLETE THE OVERLAY OR JOINT REPAIRS AT THE ABUTMENTS TO BE CONSIDERED INCIDENTAL TO THE BID ITEM "CONCRETE MASONRY OVERLAY DECKS".

MAINTAIN EXISTING CONCRETE COVER (1" MINIMUM) OVER THE TOP MAT OF REINFORCING STEEL.

PROFILE GRADE LINE SHALL BE DETERMINED IN THE FIELD BASED ON A MINIMUM OVERLAY THICKNESS OF 2¼" AT CENTERLINE AND 1½" AT THE EDGES, PLACED ABOVE THE DECK SURFACE AFTER "CLEANING DECKS TO REAPPLY CONCRETE MASONRY OVERLAY". EXPECTED AVERAGE OVERLAY THICKNESS IS 2⅜". IF EXPECTED AVERAGE OVERLAY THICKNESS IS EXCEEDED BY MORE THAN ½", CONTACT THE STRUCTURES DESIGN SECTION.

CLEAN, STRAIGHTEN AND UTILIZE EXISTING BAR STEEL REINFORCEMENT WHERE SHOWN AND EXTEND 24 BAR DIAMETERS INTO NEW WORK, UNLESS SPECIFIED OTHERWISE.

DRAINS TO REMAIN IN PLACE AS SHOWN. DRAINS WERE ADJUSTED OR REMOVED UNDER PREVIOUS OVERLAY CONTRACT.

CLEAN AND PAINT GIRDER ENDS, BEARINGS AND CONNECTIONS WITHIN 2 FEET OF THE ABUTMENTS. CLEAN AND PAINT ALL SURFACES OF THE EXTERIOR GIRDER FOR 4 FEET CENTERED ON THE BRIDGE DRAIN DOWNSPOUTS. ALL CLEANING AND PAINTING TO BE PAID FOR AS "STRUCTURE OVERCOATING CLEANING AND PRIMING B-34-838".

PAINT APPLICATIONS ON THE BEARINGS SHALL BE BRUSHED ON.

EXISTING STEEL SUPERSTRUCTURE AND BEARINGS SHALL BE PAINTED BROWN, FEDERAL COLOR NUMBER 10219.

BAR STEEL SHALL BE EMBEDDED 2" CLEAR UNLESS OTHERWISE SHOWN OR NOTED.

THE ADDITIONAL HORIZONTAL REINFORCEMENT REQUIRED IN THE PARAPETS SHALL BE TIED TO THE EXISTING HORIZONTAL REINFORCEMENT.

TRAFFIC TO BE MAINTAINED DURING CONSTRUCTION.

ORIGINAL SLAB DEPTH SHOWN (FROM 1980). ASSUME CONCRETE OVERLAY IN 2003 REDUCED STRUCTURAL SLAB THICKNESS TO 6" AS PART OF DECK CLEANING PROCEDURE.

UNDER THE BID ITEM "REMOVING CONCRETE MASONRY DECK OVERLAY B-34-838", REMOVE THE ENTIRE EXISTING OVERLAY 1½"±. UNDER THE BID ITEM "CLEANING DECKS TO REAPPLY CONCRETE MASONRY OVERLAY", PREPARE THE ORIGINAL DECK SURFACE FOR THE APPLICATION OF CONCRETE OVERLAY. PRIOR TO REMOVAL, CHECK A MINIMUM OF 3 LOCATIONS OR AS DIRECTED BY THE ENGINEER TO ENSURE THE REMOVAL WILL MAINTAIN EXISTING CONCRETE COVER (1" MIN.) OVER THE TOP MAT OF REINFORCING STEEL.

TOTAL ESTIMATED QUANTITIES

BID ITEM NUMBER	BID ITEM	UNIT	TOTALS
502.3101	EXPANSION DEVICE B-34-838	LF	66
502.3200	PROTECTIVE SURFACE TREATMENT	SY	405
502.3210	PIGMENTED SURFACE SEALER	SY	115
502.4205	ADHESIVE ANCHORS NO. 5 BAR	EACH	68
505.0400	BAR STEEL REINFORCEMENT HS STRUCTURES	LB	2,200
505.0904	BAR COUPLERS NO. 4	EACH	8
505.0905	BAR COUPLERS NO. 5	EACH	20
509.0301	PREPARATION DECKS TYPE 1	SY	45
509.0302	PREPARATION DECKS TYPE 2	SY	20
509.0505.S	CLEANING DECKS TO REAPPLY CONCRETE MASONRY OVERLAY	SY	405
509.1000	JOINT REPAIR	SY	34
509.1500	CONCRETE SURFACE REPAIR	SF	60
509.2000	FULL-DEPTH DECK REPAIR	SY	5
509.2500	CONCRETE MASONRY OVERLAY DECKS	CY	50
509.9005.S	REMOVING CONCRETE MASONRY DECK OVERLAY B-34-838	SY	405
509.9050.S	CLEANING PARAPETS	LF	286
517.3000.S	STRUCTURE OVERCOATING CLEANING AND PRIMING B-34-838	LS	1
517.4000.S	CONTAINMENT AND COLLECTION OF WASTE MATERIALS B-34-838	LS	1
517.6001.S	PORTABLE DECONTAMINATION FACILITY	EACH	1
	NON-BID ITEMS		
	FILLER	SIZE	1/2" & 3/4"

8

8

NO.	DATE	REVISION	BY

STATE OF WISCONSIN
DEPARTMENT OF TRANSPORTATION

STRUCTURE B-34-838

DRAWN BY TAW PLANS CK'D. EAN

QUANTITIES & GENERAL NOTES

PRINTER DRIVER: C:\ProgramData\Bentley\MicroStation V8i (SELECTseries)\WorkSpace\System\pltcfg\AE_PDF_11 x 17.plt
PEN TABLE: C:\MP\CLIENT\AMER-USA-WI-WisDOT\dev\WisDOTBridgeVerA\Pen Tables\AE_WisDOT_Structure.tbl
FILE NAME: C:\Users\kreule\AECOM Directory\Nemec, Elizabeth - 60600222-STH64 Langlade\400 Technical\480 Structural\dgn\B-34-0838\03_exp_jt_repair_plan_b-34-838.dgn
PLOT DATE: 4/15/2020 PLOT TIME: 8:45:18 PM BATCH PRINT SHEET 3 OF 6

STATE PROJECT NUMBER
9140-12-71

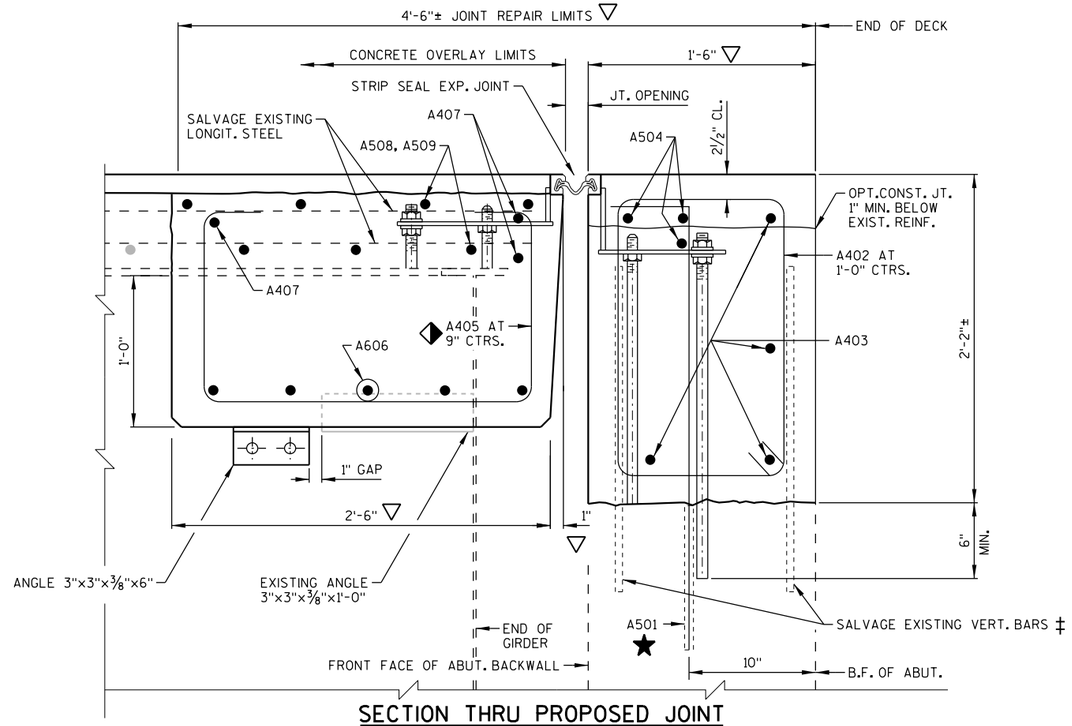

SECTION THRU PROPOSED JOINT
STEEL GIRDER WITH END DIAPHRAGM CONCRETE OVERLAY

(WEST ABUTMENT SHOWN, EAST ABUTMENT SIMILIAR)

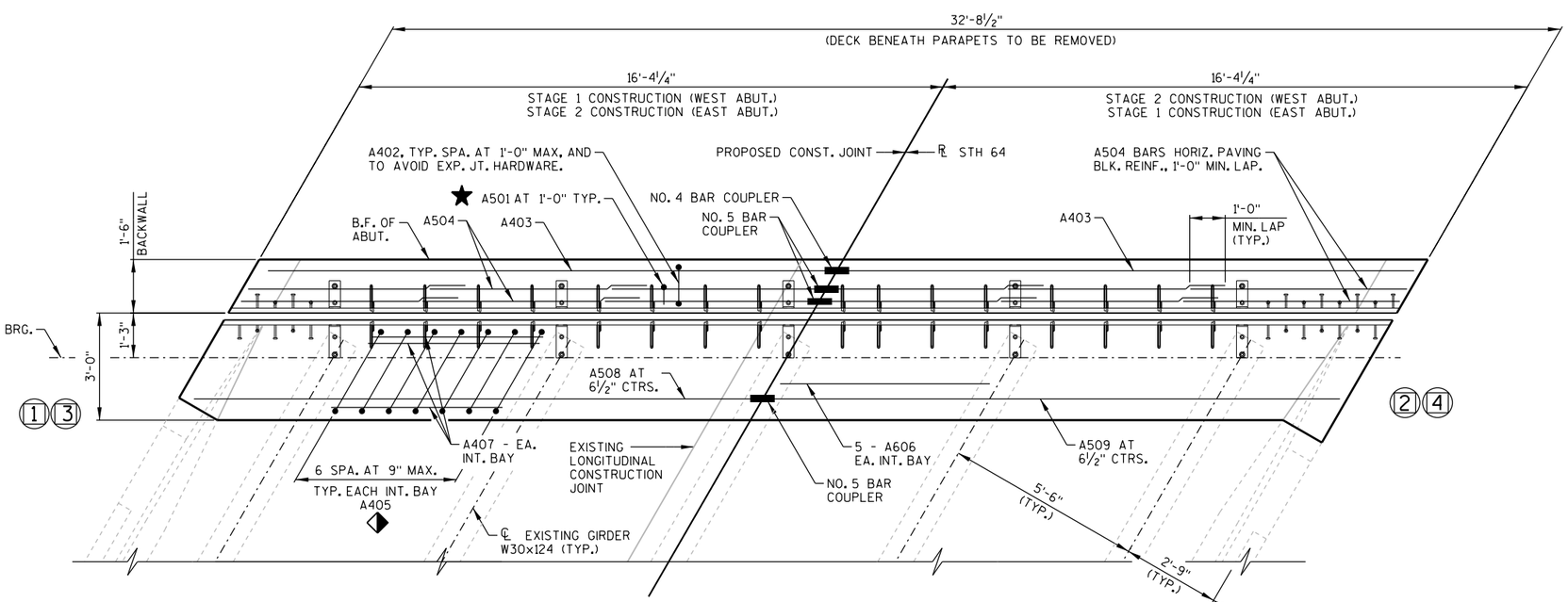

ABUTMENT EXPANSION REPLACEMENT PLAN

(WEST ABUTMENT SHOWN, EAST ABUTMENT SIMILIAR)

NOTE

PARAPET REINFORCEMENT NOT SHOWN ON THIS SHEET. REFER TO SHT. 5 "BILL OF BARS & PARAPET JT. DETAILS" FOR PARAPET REINFORCEMENT.

DIAPHRAGM SUPPORT ANGLES SHALL BE ASTM A709 GRADE 36. BOLTS ARE ¾" DIA. ALL BOLTS, NUTS AND WASHERS SHALL BE ASTM A325 TYPE 1.

ALL SUPPORT ANGLES SHALL BE HOT-DIPPED GALVANIZED. ALL BOLTS, NUTS AND WASHERS SHALL BE HOT-DIPPED GALVANIZED IN ACCORDANCE WITH ASTM A153 CLASS C. GALVANIZED NUTS SHALL BE TAPPED OVERSIZED IN ACCORDANCE WITH THE REQUIREMENTS OF ASTM A563 AND SHALL MEET THE REQUIREMENTS OF SUPPLEMENTARY REQUIREMENT S1 OF ASTM A563, LUBRICANT AND TEST FOR COATED NUTS.

ALL END DIAPHRAGM SUPPORT HARDWARE SHALL BE INCIDENTAL TO "CONCRETE MASONRY OVERLAY DECKS".

EXISTING TRANSVERSE STEEL IS NORMAL TO THE GIRDERS. SAVE AND INCORPORATE 1'-6" MIN. OF EXISTING TRANSVERSE REINFORCING BARS. NEW TRANSVERSE STEEL ARE PLACED ALONG SKEW.

LEGEND

▽ DIMENSIONS GIVEN ARE NORMAL TO ℄ OF SUBSTRUCTURE UNIT. INCORPORATE EXISTING REINFORCEMENT.

★ ADHESIVE ANCHORS NO. 5 BAR (A501). EMBED 1'-0" IN CONCRETE. SPACE AT 1'-0", TURN 10" LEG AS NECESSARY TO FIT.

‡ EXISTING BARS ARE LIKELY TO BE CORRODED AND/OR DAMAGED DURING CONCRETE REMOVAL. SALVAGE AND INCORPORATE AS MUCH REBAR AS PRACTICAL. SUPPLEMENT WITH THE BARS INDICATED BY ★.

◆ BARS PLACED PARALLEL TO GIRDERS SPACING PERPENDICULAR TO ℄ GIRDERS.

NO.	DATE	REVISION	BY

STATE OF WISCONSIN
DEPARTMENT OF TRANSPORTATION

STRUCTURE B-34-838

DRAWN BY KAM | PLANS CK'D. EAN

ABUTMENT EXPANSION JOINT REPAIR - 1

SHEET 3 OF 6
158

8

8

PRINTER DRIVER: C:\ProgramData\Bentley\MicroStation V8i (SELECTseries)\WorkSpace\System\pltcfg\AE_PDF_11 x 17.plt
PEN TABLE: C:\MP\CLIENT\AMER-USA-WI-WisDOT\dev\WisDOTBridgeVerA\Pen Tables\AE_WisDOT_Structure.tbl
FILE NAME: C:\Users\kreulc\AECOM Directory\Nemec, Elizabeth - 60600222-STH64.Langlade\400.Technical\480.Structural\dgn\B-34-0838\04.exp_jt-repair_2.b-34-838.dgn
PLOT DATE: 4/15/2020 PLOT TIME: 8:45:18 PM
BATCH PRINT SHEET 4 OF 6

STATE PROJECT NUMBER
9140-12-71

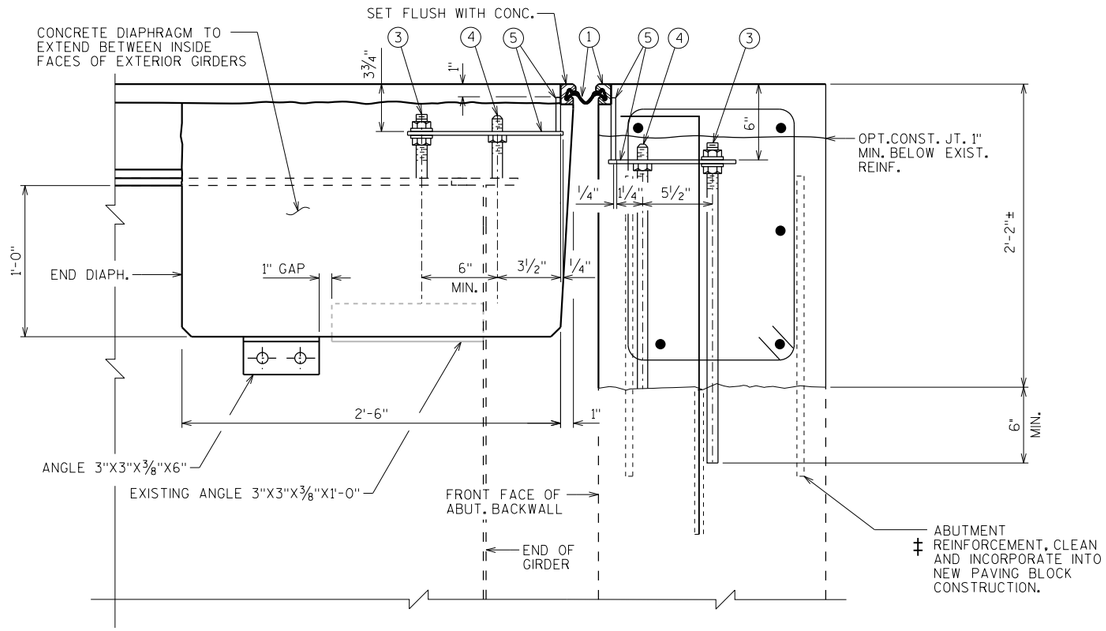

SECTION THRU JOINT AT ABUTMENT

NORMAL TO ℄ SUBSTRUCTURE
(WEST ABUTMENT SHOWN, EAST ABUTMENT SIMILIAR)

LEGEND

1. NEOPRENE STRIP SEAL (4 - INCH) AND STEEL EXTRUSIONS. SET JT. OPENING AT 1¾".
2. STUDS ⅝"Φ X 6⅜" LONG AT 6" ALTERNATE CENTERS. WELD TO EXTRUSIONS AND BEND AS SHOWN AFTER WELDING.
2A. ½" THICK ANCHOR PLATE WITH ⅝"Φ ROD (OR ALTERNATE STRIP SEAL ANCHOR). WELD ROD TO ANCHOR PLATE, WELD ANCHOR PLATE TO NO. 1 AT 1'-6" CENTERS BETWEEN GIRDERS.
3. ¾" Φ THREADED ROD WITH 2 NUTS AND PLATE WASHERS. WELD THREADED ROD TO TOP FLANGE OR ATTACH BY BOLTING THRU FLANGE. ON ABUTMENT SIDE GROUT THREADED ROD INTO FIELD DRILLED HOLES IN ABUTMENT BACKWALL AS SHOWN.
4. ¾"Φ THREADED ROD WITH NUT. TACK WELD NUT TO NO. 5.
5. FABRICATE SUPPORT FROM 3" X ½" BAR AS SHOWN OR EQUIVALENT, ONE PER GIRDER PER SIDE. SHOP OR FIELD WELD TO NO. 1. IF FIELD WELDED, COVER WELDED AREAS WITH EPOXY-COATING MATERIAL. PROVIDE 1½" Φ HOLE FOR NO. 3 AND 1" Φ HOLE FOR NO. 4.

‡ EXISTING BARS ARE LIKELY TO BE CORRODED AND/OR DAMAGED DURING CONCRETE REMOVAL. SALVAGE AND INCORPORATE AS MUCH REBAR AS PRACTICAL.

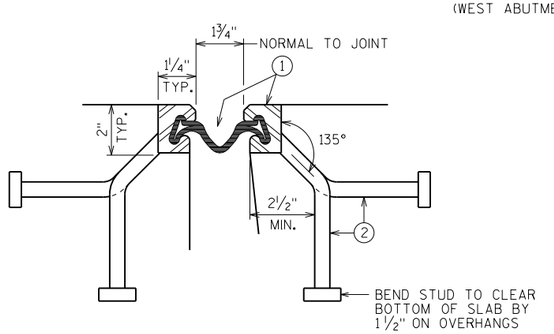

SECTION THRU JOINT

EXTERIOR GIRDER TO EDGE OF DECK AND AT PARAPETS.

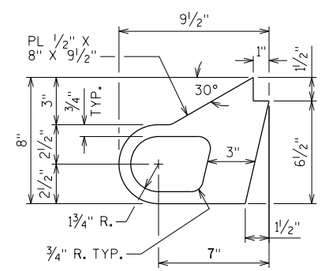

ALTERNATE STRIP SEAL ANCHOR

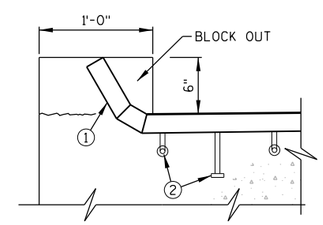

SECTION THRU PARAPET

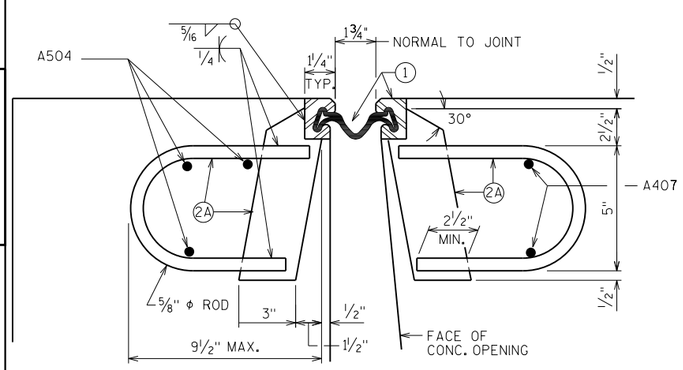

SECTION THRU JOINT

ROADWAY TRAFFIC AREA BETWEEN EXTERIOR GIRDERS.

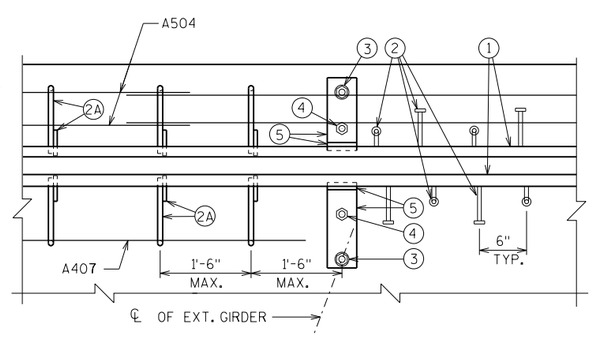

PART PLAN

NOTES

ONE FIELD SPLICE PERMITTED IN STEEL EXTRUSIONS, UNLESS MORE ARE REQUIRED FOR STAGED CONSTRUCTION, HANDLING OR GALVANIZING REQUIREMENTS. IF USED, DETAILS SHALL BE SUBMITTED FOR APPROVAL. NO SPLICING PERMITTED IN NEOPRENE STRIP SEAL.

AFTER FABRICATION, BUT BEFORE SHIPMENT, STRAIGHTEN STEEL EXTRUSIONS SUCH THAT THEY SHALL BE FREE FROM WARP, TWIST AND SWEEP.

FABRICATOR SHALL PROVIDE MEANS OF KEEPING GALVANIZED EXTRUSIONS CLEAN AND SMOOTH DURING SHIPMENT AND PRIOR TO APPLYING LUBRICANT ADHESIVE FOR NEOPRENE GLAND INSTALLATION.

SANDBLAST PLATES, SUPPORTS AND EXTRUSIONS AFTER FABRICATION IN ACCORDANCE WITH SSPC SP. #6 "COMMERCIAL BLAST CLEANING". AFTER BLAST CLEANING, THE PLATES, SUPPORTS AND EXTRUSIONS SHALL BE HOT DIPPED GALVANIZED.

STRIP SEAL EXPANSION JOINT ASSEMBLY, INCLUDING ANCHOR STUDS AND HARDWARE WILL BE PAID FOR AT THE LINEAR FOOT PRICE BID FOR "EXPANSION DEVICE B-34-838".

NO.	DATE	REVISION	BY

STATE OF WISCONSIN
DEPARTMENT OF TRANSPORTATION

STRUCTURE B-34-838

DRAWN BY KAM | PLANS CK'D. EAN

ABUTMENT EXPANSION JOINT REPAIR - 2

SHEET 4 OF 6
159

8

8

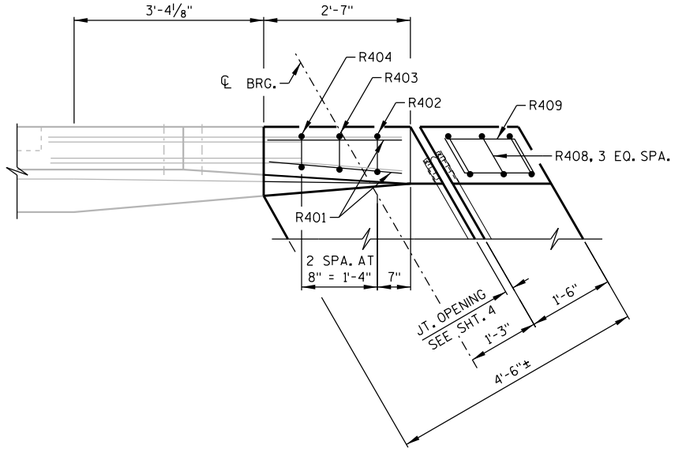

PARAPET PLAN - WINGS 1 & 3

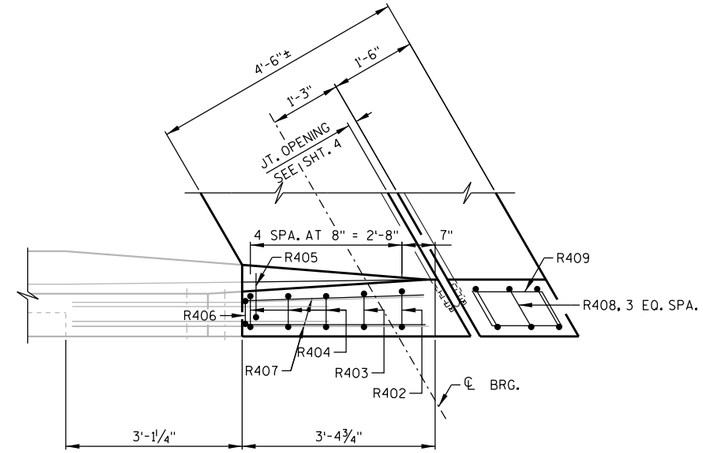

PARAPET PLAN - WINGS 2 & 4

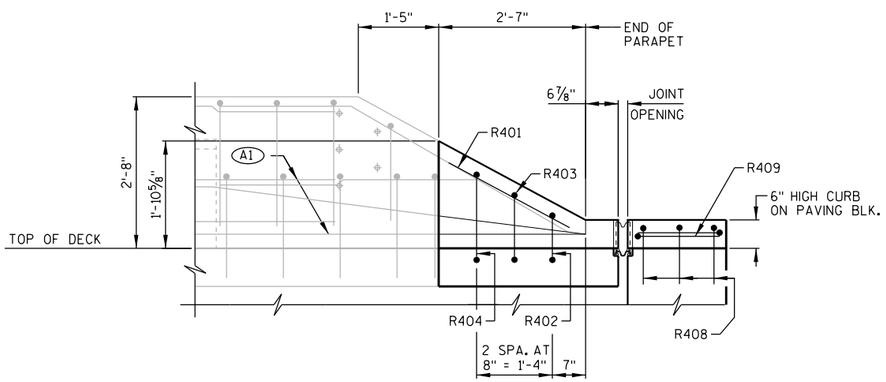

INSIDE PARAPET ELEVATION - WINGS 1 & 3

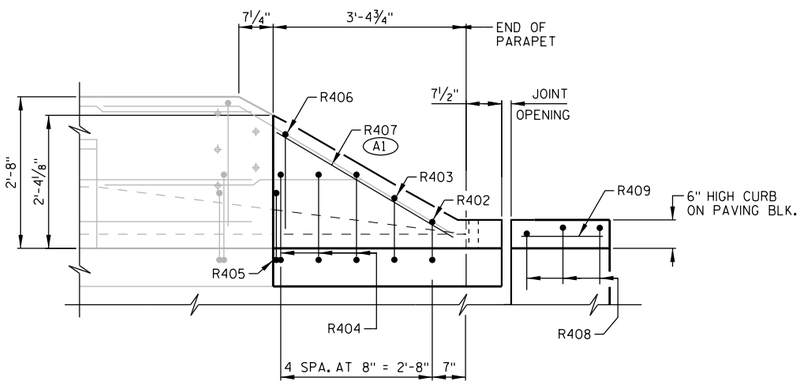

OUTSIDE PARAPET ELEVATION - WINGS 2 & 4

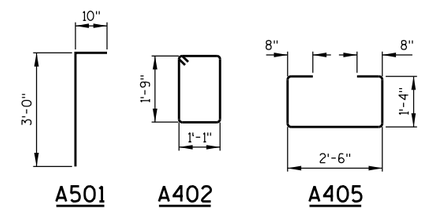

A501 A402 A405

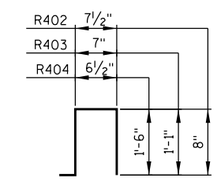

R402, R403, R404

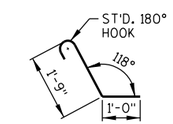

R405

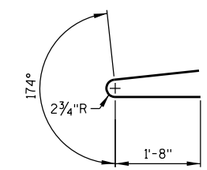

R406

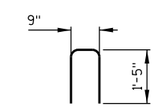

R408

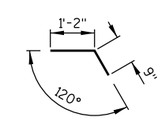

R409

BILL OF BARS

DIMENSIONS IN BENDING DETAILS ARE OUT TO OUT OF BAR.

MARK	STAGE 1 NO. REQ'D	STAGE 2 NO. REQ'D	LENGTH	BENT	LOCATION	
NON-COATED BARS						TOTAL WEIGHT = 2,200 LBS
A501	34	34	3 - 9	X	PAVING BLOCK - EAST AND WEST ABUT.	VERT.
A402	34	34	6 - 4	X	PAVING BLOCK - EAST AND WEST ABUT.	VERT.
A403	8	8	16 - 2		PAVING BLOCK - EAST AND WEST ABUT.	TRANS.
A504	12	12	8 - 8		PAVING BLOCK - EAST AND WEST ABUT.	TRANS.
A405	28	28	6 - 0	X	END DIAPHRAGM BTWN. GIRDERS	VERT.
A606	20	20	5 - 11		END DIAPHRAGM BTWN. GIRDERS	TRANS.
A407	12	12	5 - 11		END DIAPHRAGM BTWN. GIRDERS	TRANS.
A508	7	7	16 - 0		END DIAPHRAGM	TRANS.
A509	7	7	16 - 2		END DIAPHRAGM	TRANS.
R401	2	2	2 - 5		PARAPET - WING 1 & 3 TOP	HORIZ.
R402	2	2	2 - 8	X	PARAPET - ALL WINGS	VERT.
R403	2	2	3 - 6	X	PARAPET - ALL WINGS	VERT.
R404	4	4	4 - 3	X	PARAPET - ALL WINGS	VERT.
R405	1	1	3 - 3	X	PARAPET - WING 2 & 4 TOP	VERT.
R406	1	1	4 - 0	X	PARAPET - WING 2 & 4 TOP	VERT.
R407	2	2	3 - 7		PARAPET - WING 2 & 4 TOP	HORIZ.
R408	6	6	3 - 7	X	CURB - ALL WINGS	VERT.
R409	4	4	1 - 9	X	CURB - ALL WINGS	HORIZ.

LEGEND

(A1) SALVAGE EXISTING HORIZONTAL AND VERTICAL PARAPET REINFORCEMENT. EXTEND FULL LENGTH INTO NEW WORK AND TRIM AS REQUIRED. TIE NEW REINFORCEMENT TO THE EXISTING.

◪ SPLICE AT STAGING LINE WITH BAR COUPLERS. SEE SHT. 6 FOR DETAILS.

NO.	DATE	REVISION	BY

STATE OF WISCONSIN
DEPARTMENT OF TRANSPORTATION

STRUCTURE B-34-838

DRAWN BY KAM | PLANS CK'D. EAN

BILL OF BARS & PARAPET JT. DETAILS

8

8

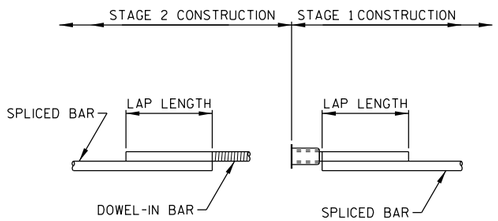

DOWEL BAR COUPLER

STAGE 2 DOWEL SCREWS INTO COUPLER PLACED IN STAGE 1

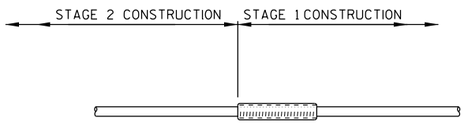

ONE PIECE THREADED COUPLER

BAR COUPLER ALTERNATIVES

NOTES

FOR DOWEL BAR COUPLERS, ALL DOWEL BARS SHALL BE LAPPED AND TIED TO THE REINFORCEMENT BARS.

SEE SHEET 3 FOR LOCATIONS OF THE COUPLERS.

DOWEL BAR SPLICER LAP LENGTHS

CONCRETE UNDER BAR	BAR SIZE	4	5	6	7	8	9	10	11
12" OR LESS	f'c = 3500	1'-8"	2'-8"	3'-2"	4'-3"	5'-6"	7'-0"	8'-9"	10'-11"
	f'c = 4000	1'-8"	2'-8"	3'-2"	4'-0"	5'-2"	6'-6"	8'-3"	10'-2'
MORE THAN 12"	f'c = 3500	2'-3"	2'-11"	3'-6"	4'-8"	6'-1'	7'-10"	9'-10"	12'-1"
	f'c = 4000	2'-3"	2'-11"	3'-6"	4'-5'	5'-8"	7'-4"	9'-2"	11'-4"

BAR LENGTH COMPUTED TO ℄ LONGIT. JOINT AND SHALL BE MODIFIED IF REQ'D. TO BAR COUPLER MANUFACTURER RECOMENDATIONS. PAY BASED ON BARS AS DETAILED.

NO.	DATE	REVISION	BY

STATE OF WISCONSIN
DEPARTMENT OF TRANSPORTATION

STRUCTURE B-34-838

DRAWN BY KAM | PLANS CK'D. EAN

BAR SPLICER (COUPLER) DETAILS

SHEET 6 OF 6

8

8

DIVISION 1 - STH 64

STATION	DISTANCE	AREA (SF) CUT	AREA (SF) SALVAGED/ UNUSABLE PAVEMENT MATERIAL	AREA (SF) FILL	INCREMENTAL VOL (CY) (UNADJUSTED) CUT	INCREMENTAL VOL (CY) (UNADJUSTED) SALVAGED/ UNUSABLE PAVEMENT MATERIAL	INCREMENTAL VOL (CY) (UNADJUSTED) FILL	CUMULATIVE VOL (CY) EXPANDED CUT 1.00	CUMULATIVE VOL (CY) EXPANDED FILL 1.25	CUMULATIVE VOL (CY) MASS ORDINATE
483+50	0.00	0.00	0.00	0.00	0	0	0	0	0	0
484+00	50.00	32.64	0.00	0.00	30	0	0	30	0	30
484+09	9.00	45.69	0.00	0.00	13	0	0	43	0	43
484+18.62	9.62	52.86	0.00	0.00	18	0	0	61	0	61
484+50	31.38	23.74	6.13	10.79	45	4	6	105	8	94
485+00	50.00	10.66	3.06	1.76	32	9	12	137	22	103
485+50	0.00	10.29	3.06	22.50	0	0	0	0	0	103
486+00	50.00	20.52	6.13	27.92	29	9	47	29	58	64
486+50	50.00	19.43	6.13	42.39	37	11	65	66	140	9
487+00	50.00	18.11	6.13	47.42	35	11	83	100	244	-72
487+50	50.00	22.27	6.13	39.81	37	11	81	138	345	-147
487+77	27.00	22.39	6.13	3.74	22	6	22	160	372	-158
488+00	23.00	18.48	6.13	4.76	17	5	4	177	376	-150
488+02	2.00	18.25	6.13	4.83	1	0	0	179	377	-150
488+27	25.00	18.57	6.13	7.10	17	6	6	196	384	-145
488+50	23.00	23.28	6.13	8.23	18	5	7	214	392	-141
488+52	2.00	18.70	6.13	7.91	2	0	1	215	393	-140
488+77	25.00	28.21	6.13	7.15	22	6	7	237	401	-133
489+00	23.00	38.48	6.13	5.75	28	5	5	265	408	-117
489+02	2.00	39.18	6.13	5.45	3	0	0	268	409	-115
489+50	48.00	26.82	3.06	3.73	59	8	8	327	419	-75
490+00	50.00	17.40	3.06	6.22	41	6	9	368	430	-51
490+50	50.00	0.00	0.00	0.00	16	3	6	384	438	-45
			total		521	106	368			

9

9

CULVERT 95+02

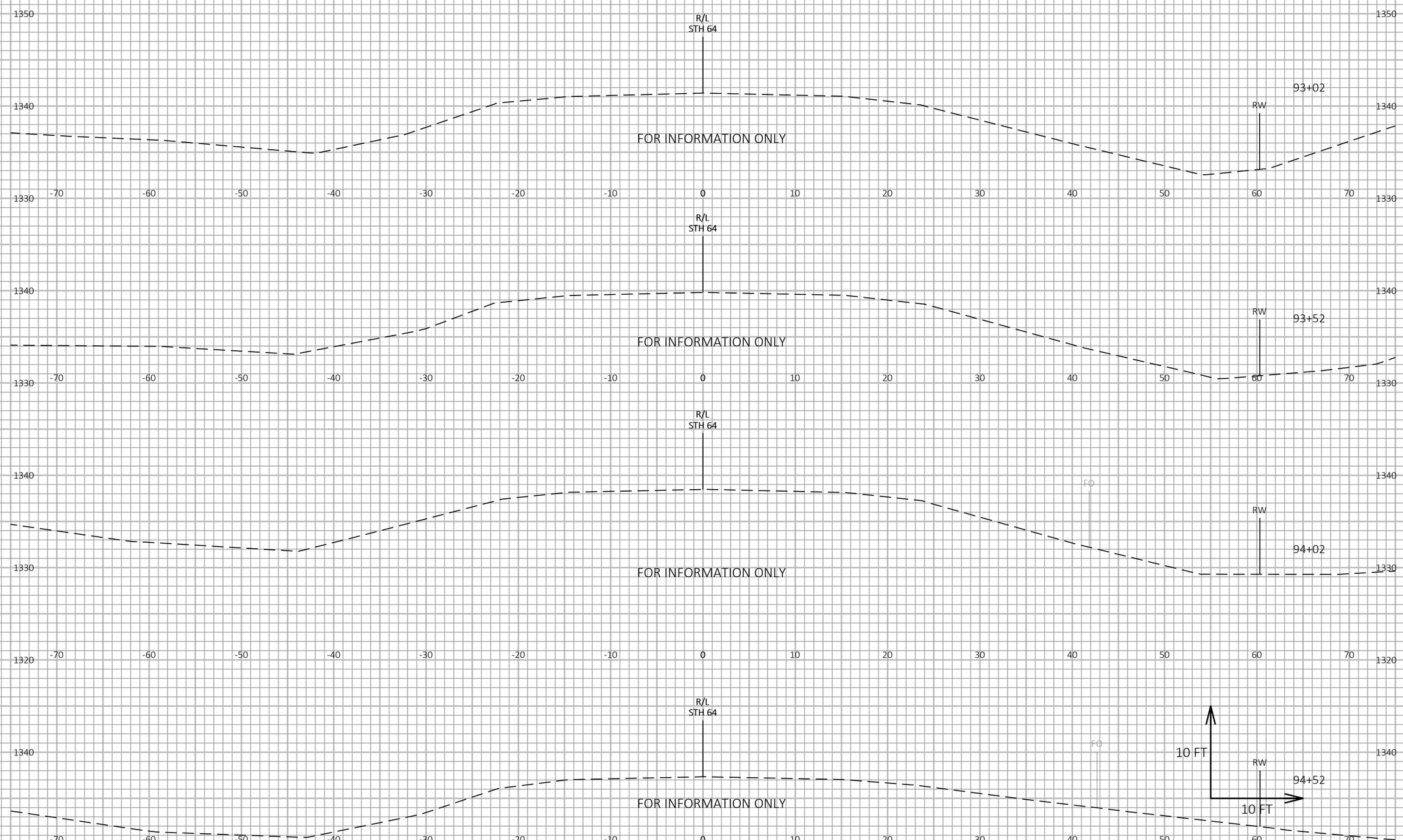

9

9

PROJECT NO: 9140-12-74	HWY: STH 64	COUNTY: LANGLADE	CROSS SECTIONS: PERMANENT CULVERTS	SHEET 163	E

FILE NAME : C:\USERS\JESSICA.LANCELLE\AECOM DIRECTORY\NEMEC, ELIZABETH - 60600222-STH64_LANGLADE\900_CAD_GIS\910_CAD\SHEETS\74\090102-XS.DWG
LAYOUT NAME - Final_1
PLOT DATE : 4/20/2020 4:32 PM
PLOT BY : LANCELLE, JESSICA
PLOT NAME :
PLOT SCALE : 1 IN:10 FT HORZ. / 1 IN:10 FT VERT.
WISDOT/CADDS SHEET 49

CULVERT 95+02

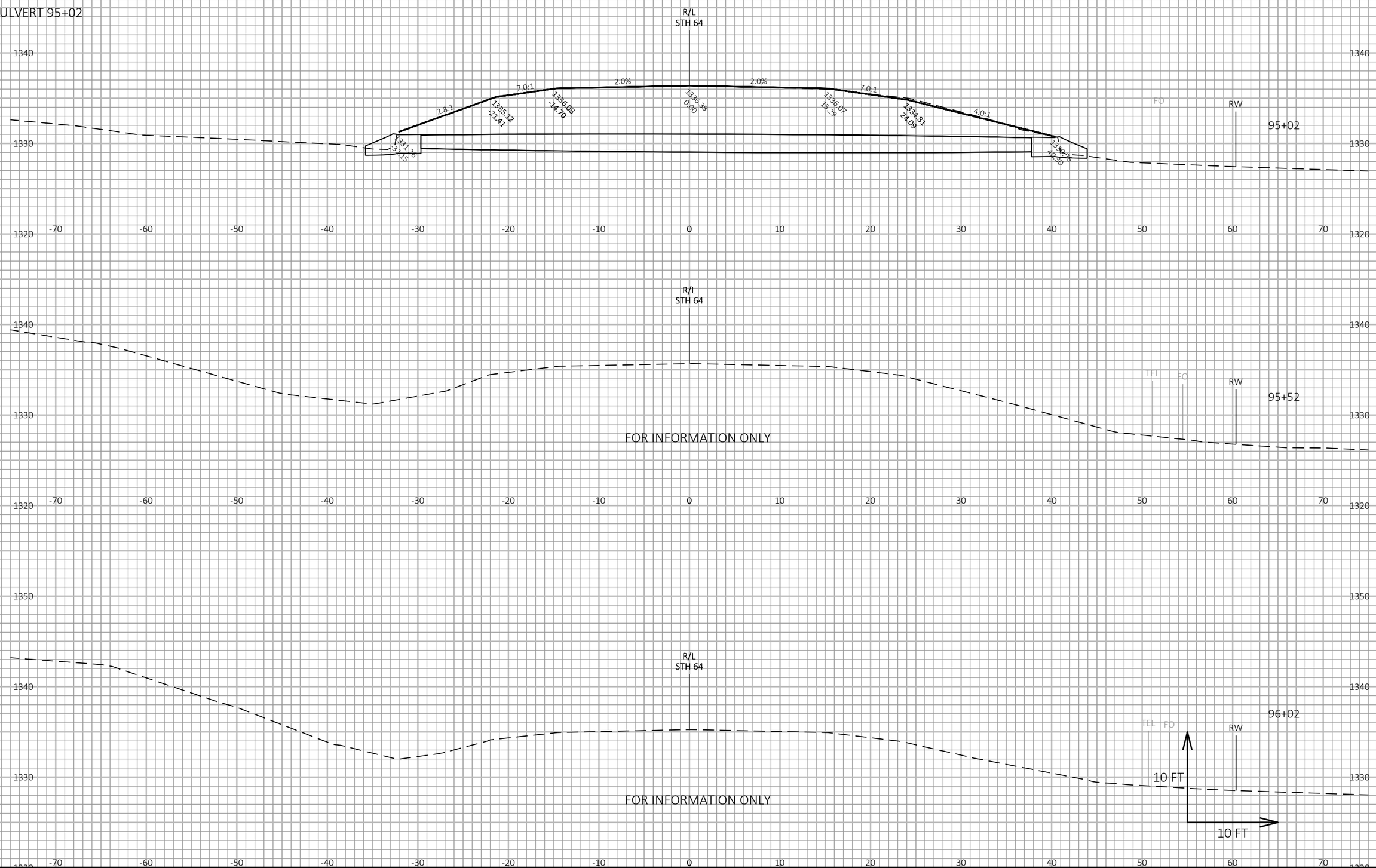

9

9

PROJECT NO: 9140-12-74	HWY: STH 64	COUNTY: LANGLADE	CROSS SECTIONS: PERMANENT CULVERTS	SHEET 164	E

FILE NAME : C:\USERS\JESSICA.LANCELLE\AECOM DIRECTORY\NEMEC, ELIZABETH - 60600222-STH64_LANGLADE\900_CAD_GIS\910_CAD\SHEETS\74\090102-XS.DWG
LAYOUT NAME - Final_2
PLOT DATE : 4/20/2020 4:32 PM
PLOT BY : LANCELLE, JESSICA
PLOT NAME :
PLOT SCALE : 1 IN:10 FT HORZ. / 1 IN:10 FT VERT.
WISDOT/CADDS SHEET 49

CULVERT 95+02

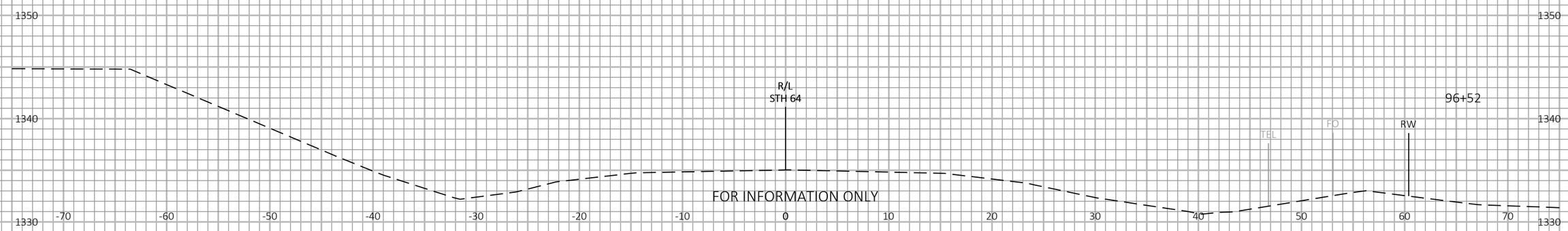

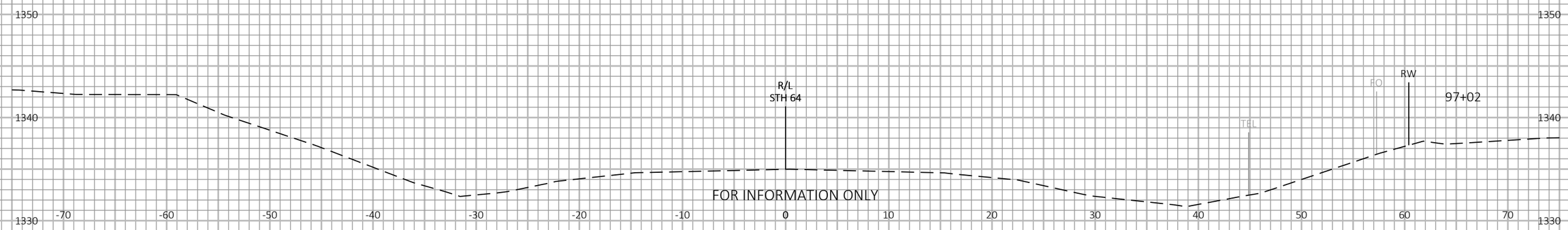

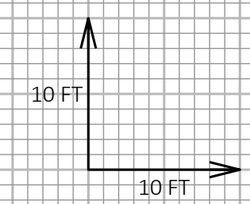

9

9

PROJECT NO: 9140-12-74	HWY: STH 64	COUNTY: LANGLADE	CROSS SECTIONS: PERMANENT CULVERTS	SHEET 165	E

FILE NAME : C:\USERS\JESSICA.LANCELLE\AECOM DIRECTORY\NEMEC, ELIZABETH - 60600222-STH64_LANGLADE\900_CAD_GIS\910_CAD\SHEETS\74\090102-XS.DWG
LAYOUT NAME - Final_3
PLOT DATE : 4/20/2020 4:32 PM
PLOT BY : LANCELLE, JESSICA
PLOT NAME :
PLOT SCALE : 1 IN:10 FT HORZ. / 1 IN:10 FT VERT.
WISDOT/CADDS SHEET 49

CULVERT 210+38

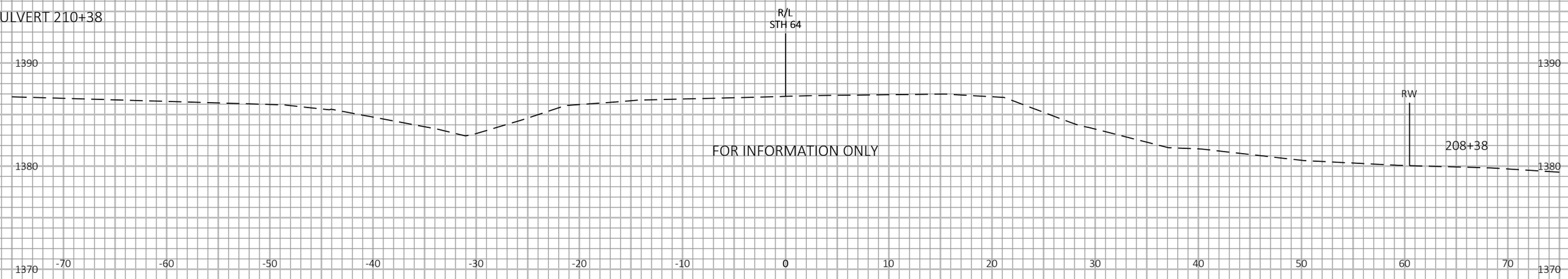

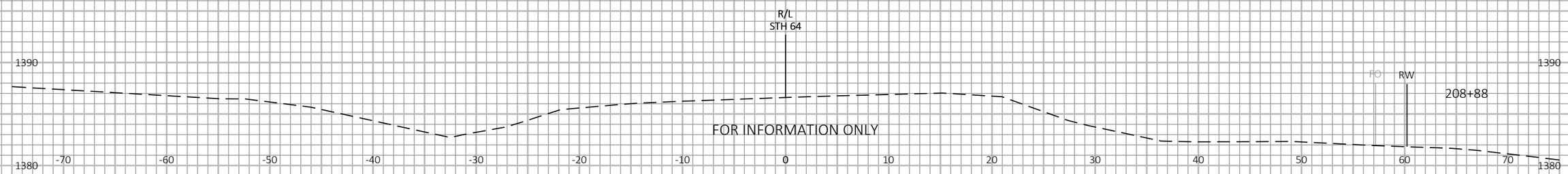

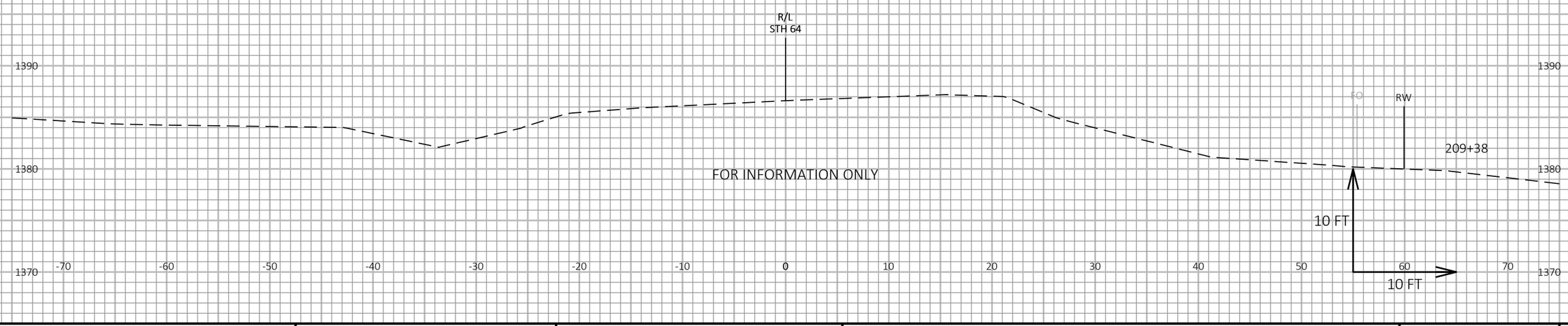

9

9

PROJECT NO: 9140-12-74	HWY: STH 64	COUNTY: LANGLADE	CROSS SECTIONS: PERMANENT CULVERTS	SHEET 166	E

FILE NAME : \\USSTV1FP001\DATA\PROJECTS\60600222\900_CAD_GIS\910_CAD\SHEETS\74\090102-XS.DWG
LAYOUT NAME - Final_4
PLOT DATE : 1/20/2020 12:50 PM
PLOT BY : LANCELLE, JESSICA
PLOT NAME :
PLOT SCALE : 1 IN:10 FT HORZ. / 1 IN:10 FT VERT.
WISDOT/CADDS SHEET 49

CULVERT 210+38

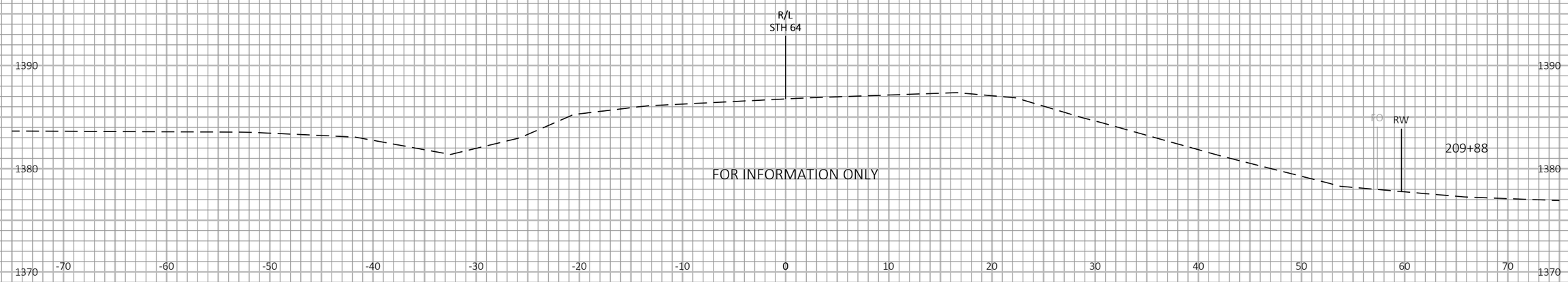

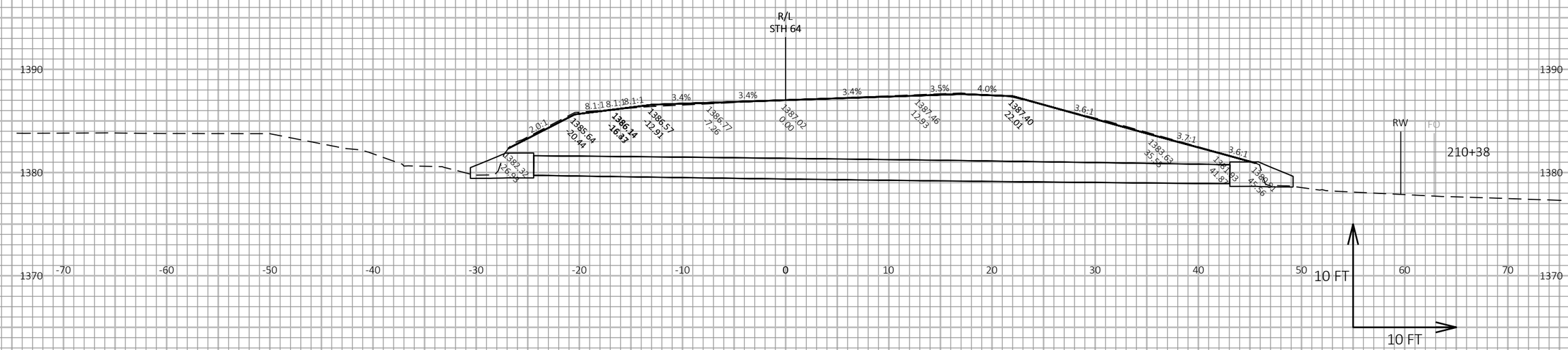

9

9

PROJECT NO: 9140-12-74	HWY: STH 64	COUNTY: LANGLADE	CROSS SECTIONS: PERMANENT CULVERTS	SHEET 167	E

FILE NAME : \\USSTV1FP001\DATA\PROJECTS\60600222\900_CAD_GIS\910_CAD\SHEETS\74\090102-XS.DWG
LAYOUT NAME - Final_5
PLOT DATE : 1/20/2020 12:50 PM
PLOT BY : LANCELLE, JESSICA
PLOT NAME :
PLOT SCALE : 1 IN:10 FT HORZ. / 1 IN:10 FT VERT.
WISDOT/CADDS SHEET 49

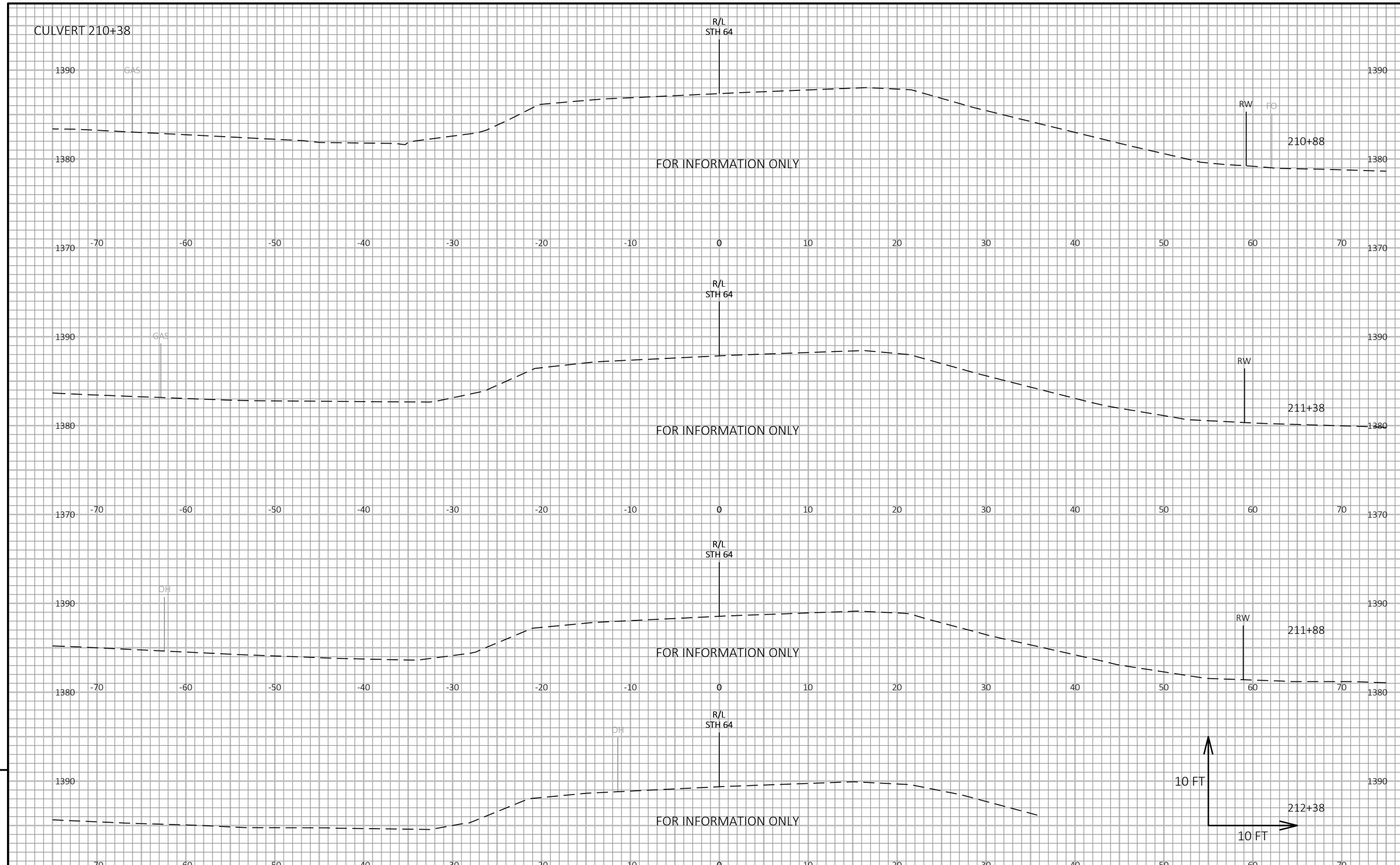

9

9

PROJECT NO: 9140-12-74	HWY: STH 64	COUNTY: LANGLADE	CROSS SECTIONS: PERMANENT CULVERTS	SHEET 168	E

FILE NAME : \\USSTV1FP001\DATA\PROJECTS\60600222\900_CAD_GIS\910_CAD\SHEETS\74\090102-XS.DWG
LAYOUT NAME - Final_6
PLOT DATE : 1/20/2020 12:50 PM
PLOT BY : LANCELLE, JESSICA
PLOT NAME :
PLOT SCALE : 1 IN:10 FT HORZ. / 1 IN:10 FT VERT.
WISDOT/CADDS SHEET 49

CULVERT 262+82

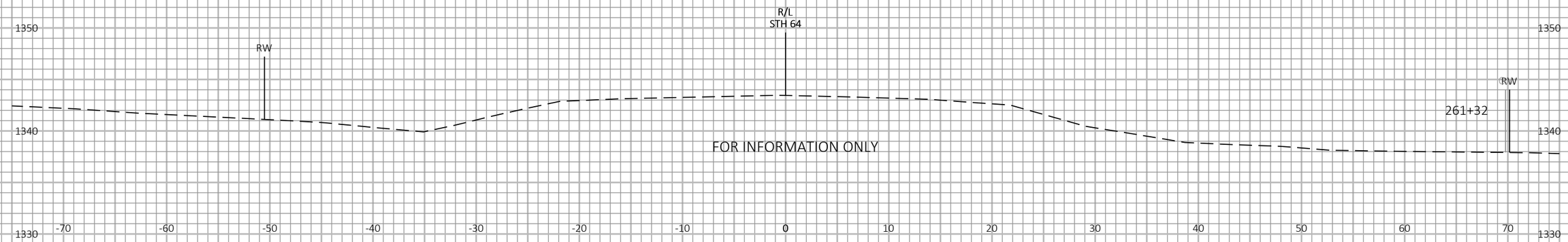

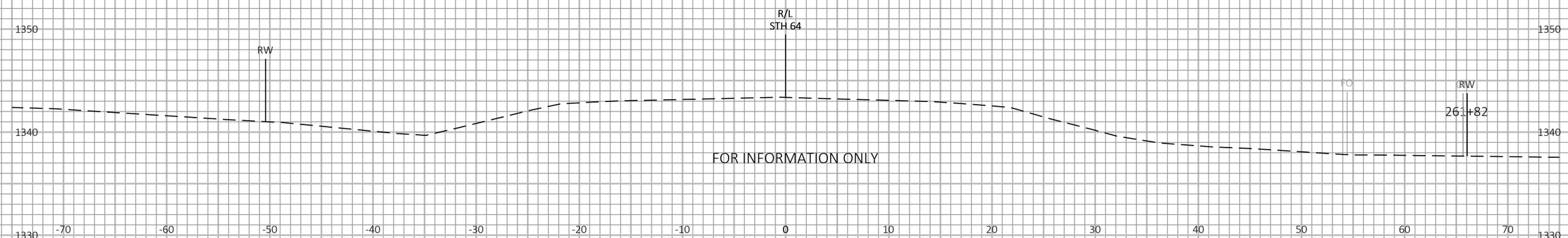

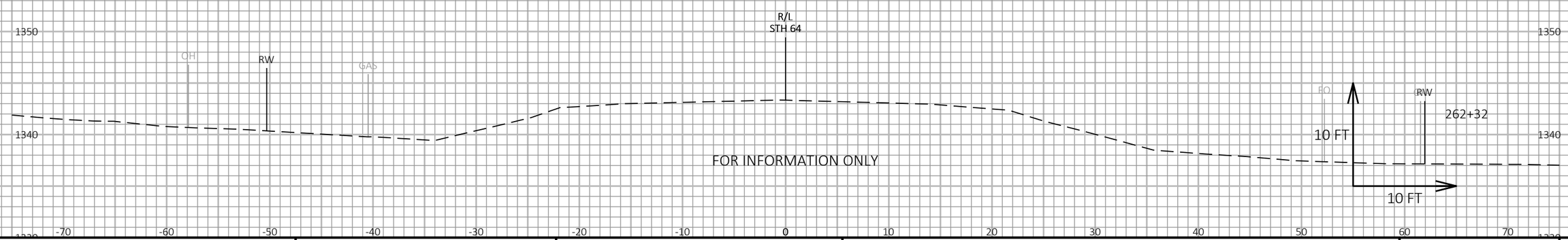

9

9

PROJECT NO: 9140-12-74	HWY: STH 64	COUNTY: LANGLADE	CROSS SECTIONS: PERMANENT CULVERTS	SHEET 169	E

FILE NAME : \\USSTV1FP001\DATA\PROJECTS\60600222\900_CAD_GIS\910_CAD\SHEETS\74\090102-XS.DWG
LAYOUT NAME - Final_7
PLOT DATE : 1/20/2020 12:50 PM
PLOT BY : LANCELLE, JESSICA
PLOT NAME :
PLOT SCALE : 1 IN:10 FT HORZ. / 1 IN:10 FT VERT.
WISDOT/CADDS SHEET 49

CULVERT 262+82

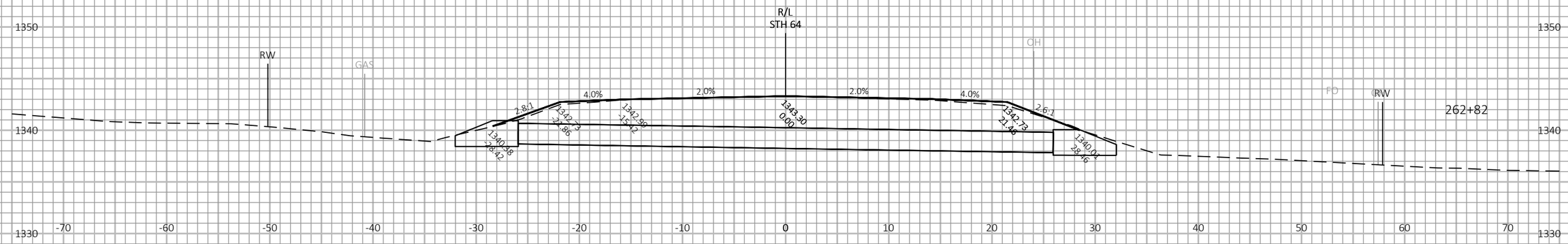

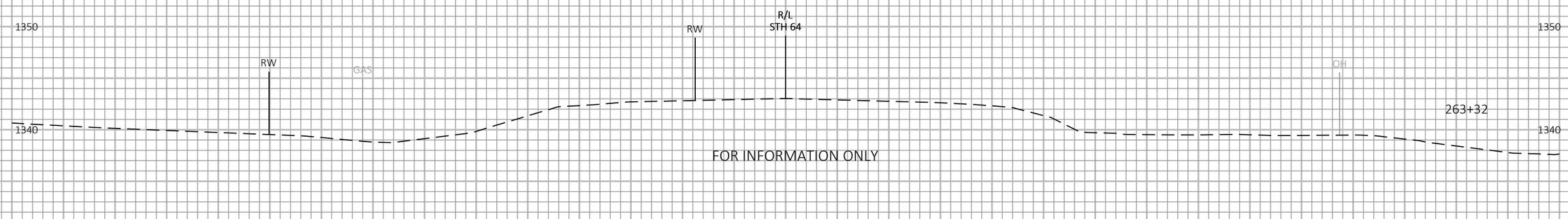

FOR INFORMATION ONLY

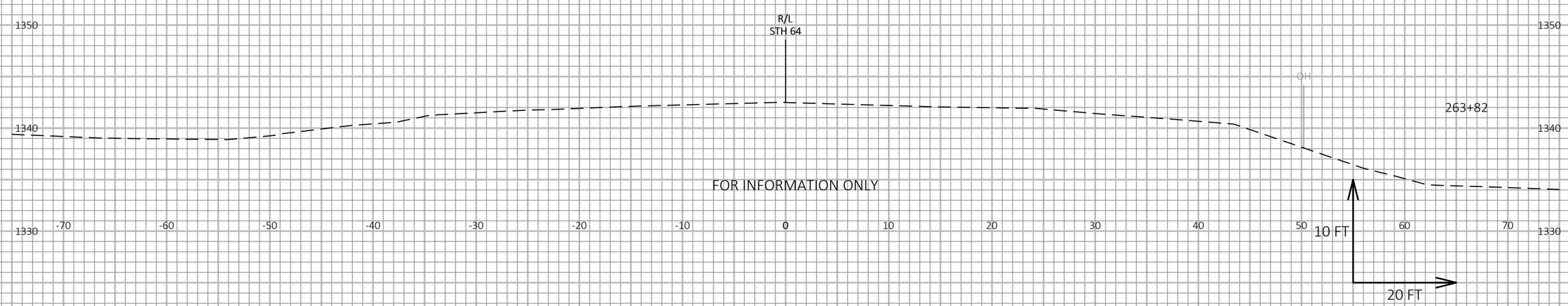

FOR INFORMATION ONLY

9

9

PROJECT NO: 9140-12-74	HWY: STH 64	COUNTY: LANGLADE	CROSS SECTIONS: PERMANENT CULVERTS	SHEET 170	E

FILE NAME : \\USSTV1FP001\DATA\PROJECTS\60600222\900_CAD_GIS\910_CAD\SHEETS\74\090102-XS.DWG
LAYOUT NAME - Final_8
PLOT DATE : 1/20/2020 12:50 PM
PLOT BY : LANCELLE, JESSICA
PLOT NAME :
PLOT SCALE : 1 IN:20 FT HORZ. / 1 IN:10 FT VERT.
WISDOT/CADDS SHEET 49

CULVERT 262+82

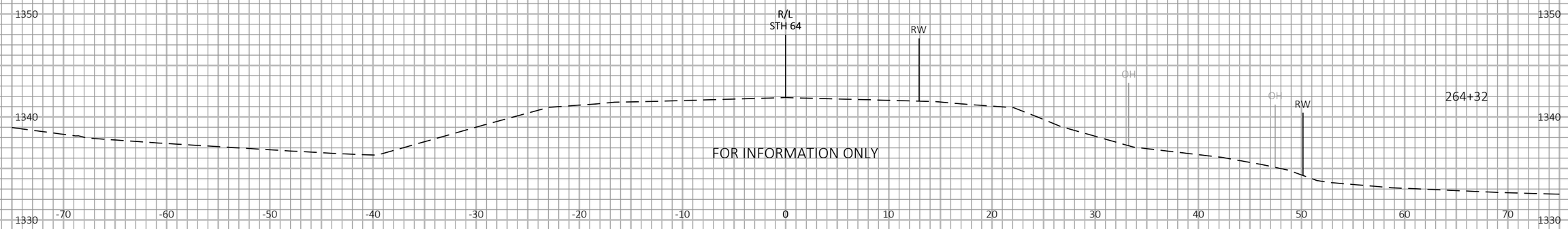

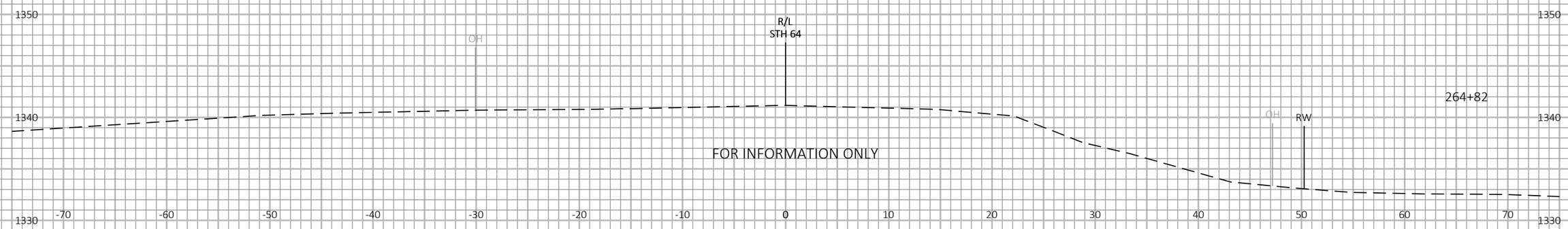

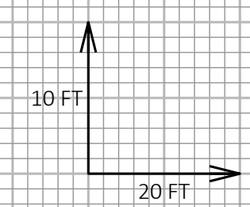

9

9

PROJECT NO: 9140-12-74	HWY: STH 64	COUNTY: LANGLADE	CROSS SECTIONS: PERMANENT CULVERTS	SHEET 171	E

FILE NAME : \\USSTV1FP001\DATA\PROJECTS\60600222\900_CAD_GIS\910_CAD\SHEETS\74\090102-XS.DWG
LAYOUT NAME - Final_9
PLOT DATE : 1/20/2020 12:50 PM
PLOT BY : LANCELLE, JESSICA
PLOT NAME :
PLOT SCALE : 1 IN:20 FT HORZ. / 1 IN:10 FT VERT.
WISDOT/CADDS SHEET 49

CULVERT 292+36

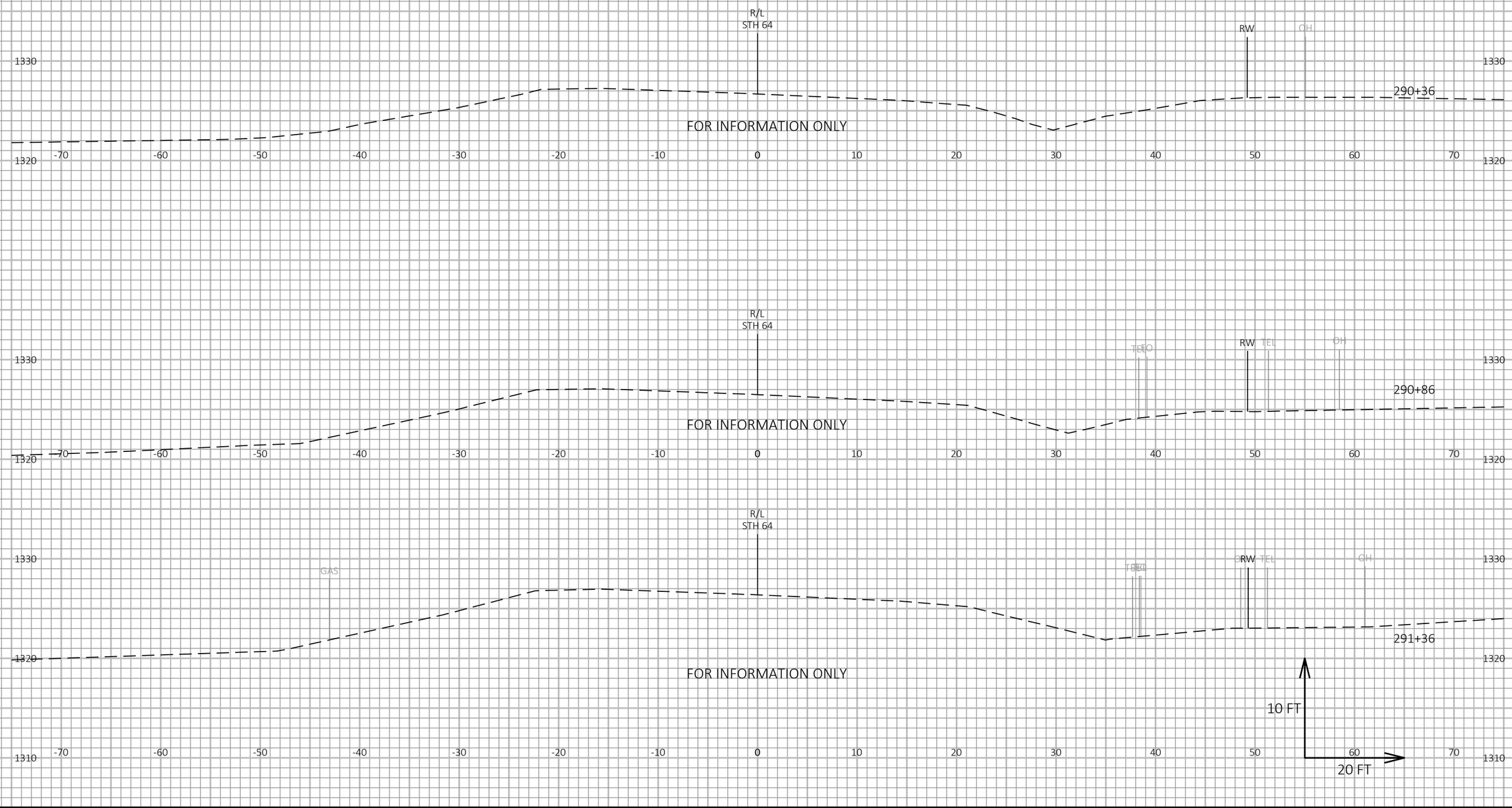

9

9

PROJECT NO: 9140-12-74	HWY: STH 64	COUNTY: LANGLADE	CROSS SECTIONS: PERMANENT CULVERTS	SHEET 172	E

FILE NAME : \\USSTV1FP001\DATA\PROJECTS\60600222\900_CAD_GIS\910_CAD\SHEETS\74\090102-XS.DWG
LAYOUT NAME - Final_10
PLOT DATE : 1/20/2020 12:50 PM
PLOT BY : LANCELLE, JESSICA
PLOT NAME :
PLOT SCALE : 1 IN:20 FT HORZ. / 1 IN:10 FT VERT.
WISDOT/CADDS SHEET 49

CULVERT 292+36

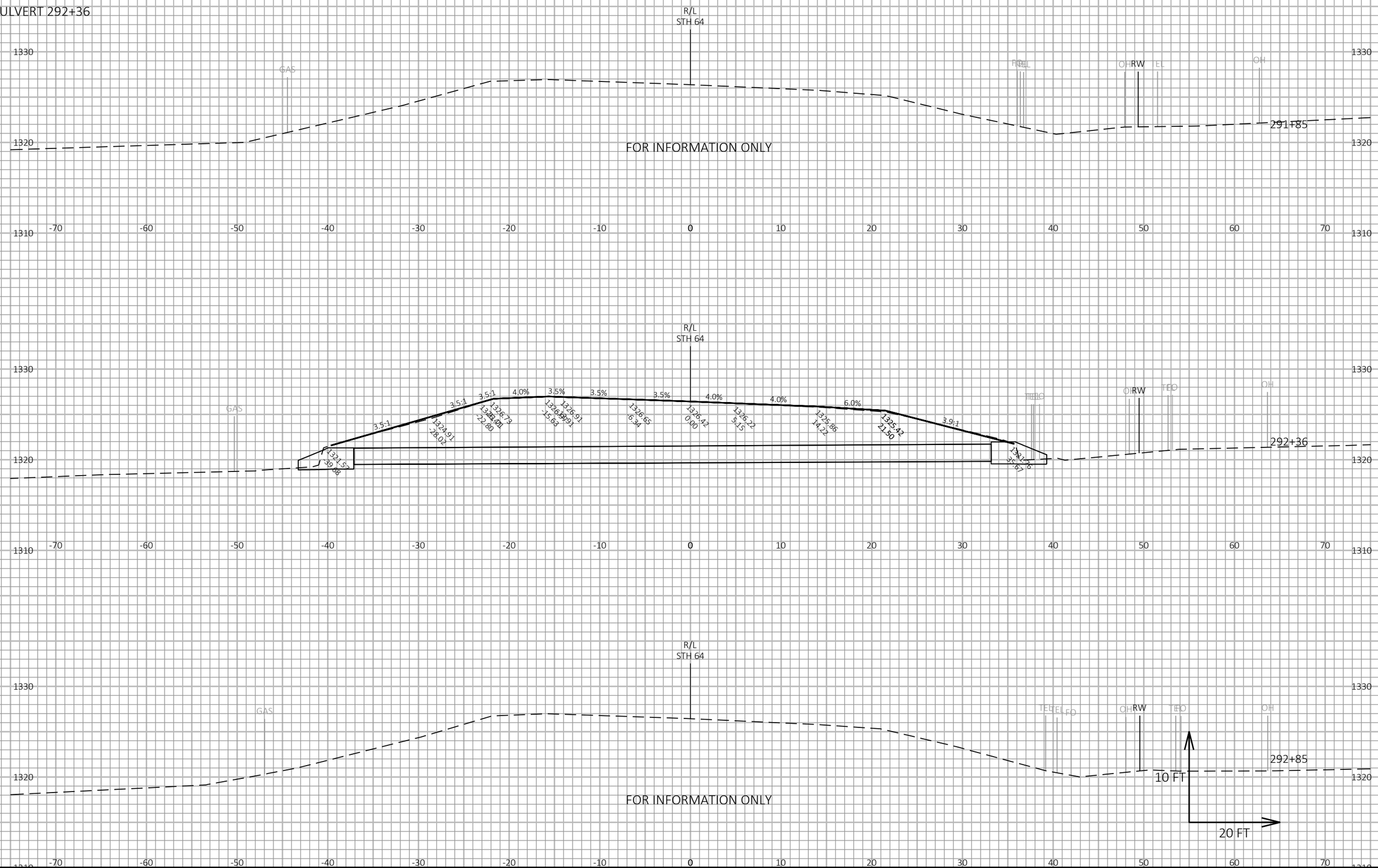

9

9

PROJECT NO: 9140-12-74	HWY: STH 64	COUNTY: LANGLADE	CROSS SECTIONS: PERMANENT CULVERTS	SHEET 173	E

FILE NAME : \\USSTV1FP001\DATA\PROJECTS\60600222\900_CAD_GIS\910_CAD\SHEETS\74\090102-XS.DWG
LAYOUT NAME - Final_11
PLOT DATE : 1/20/2020 12:50 PM
PLOT BY : LANCELLE, JESSICA
PLOT NAME :
PLOT SCALE : 1 IN:20 FT HORZ. / 1 IN:10 FT VERT.
WISDOT/CADDS SHEET 49

CULVERT 292+36

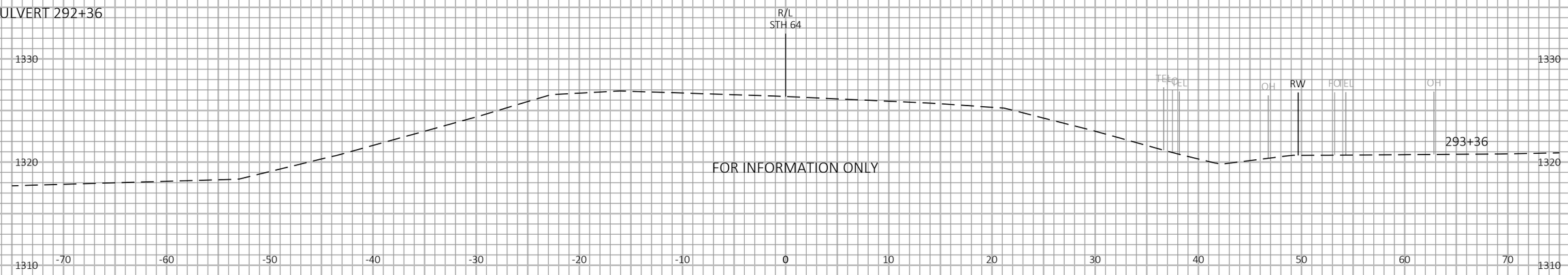

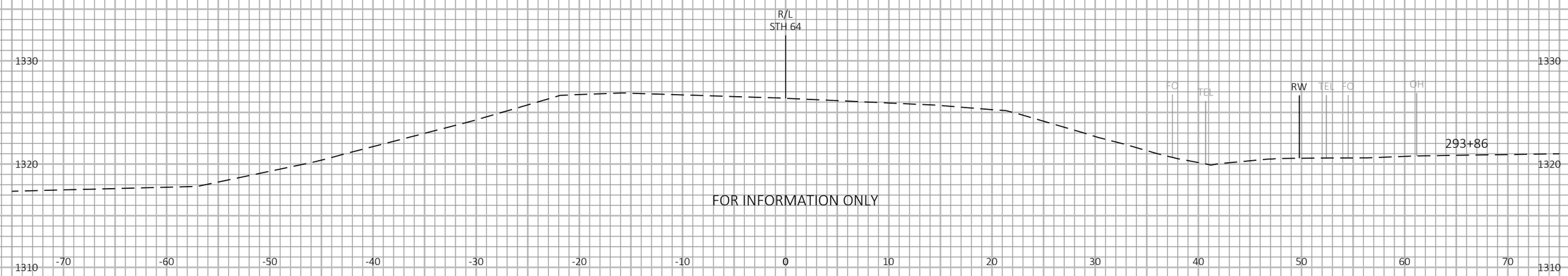

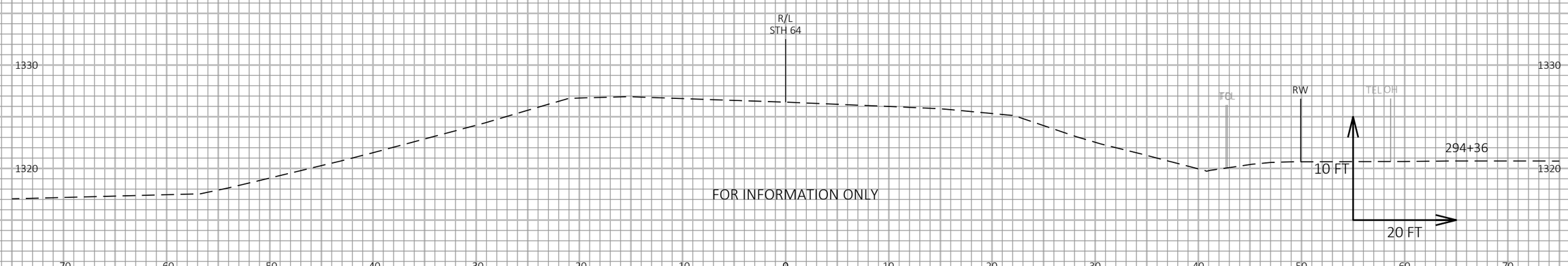

9

9

PROJECT NO: 9140-12-74	HWY: STH 64	COUNTY: LANGLADE	CROSS SECTIONS: PERMANENT CULVERTS	SHEET 174	E

FILE NAME : \\USSTV1FP001\DATA\PROJECTS\60600222\900_CAD_GIS\910_CAD\SHEETS\74\090102-XS.DWG
LAYOUT NAME - Final_12
PLOT DATE : 1/20/2020 12:50 PM
PLOT BY : LANCELLE, JESSICA
PLOT NAME :
PLOT SCALE : 1 IN:20 FT HORZ. / 1 IN:10 FT VERT.
WISDOT/CADDS SHEET 49

CULVERT 320+89

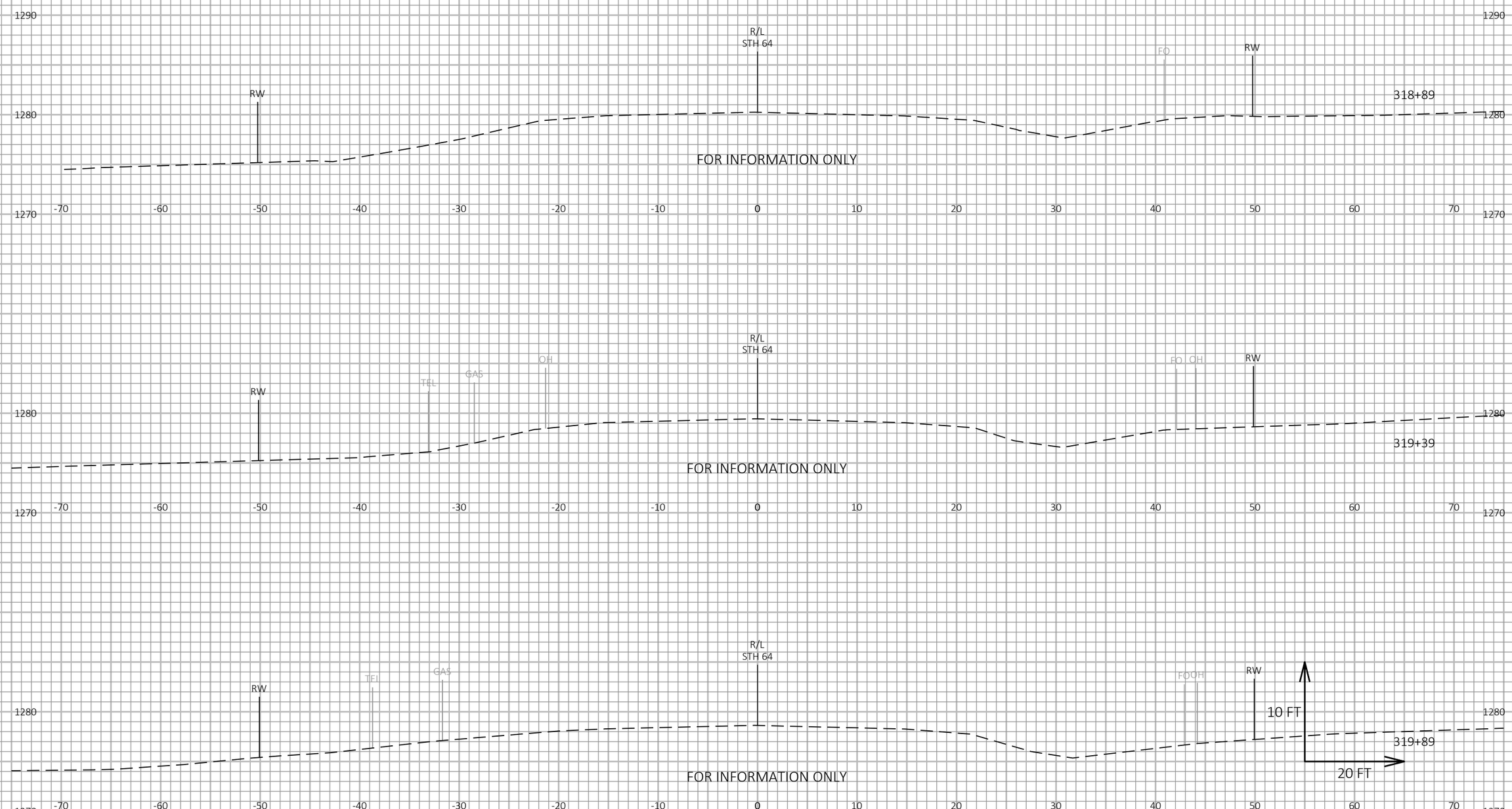

PROJECT NO: 9140-12-74	HWY: STH 64	COUNTY: LANGLADE	CROSS SECTIONS: PERMANENT CULVERTS	SHEET 175	E

FILE NAME : \\USSTV1FP001\DATA\PROJECTS\60600222\900_CAD_GIS\910_CAD\SHEETS\74\090102-XS.DWG
LAYOUT NAME - Final_13
PLOT DATE : 1/20/2020 12:51 PM
PLOT BY : LANCELLE, JESSICA
PLOT NAME :
PLOT SCALE : 1 IN:20 FT HORZ. / 1 IN:10 FT VERT.
WISDOT/CADDS SHEET 49

CULVERT 320+89

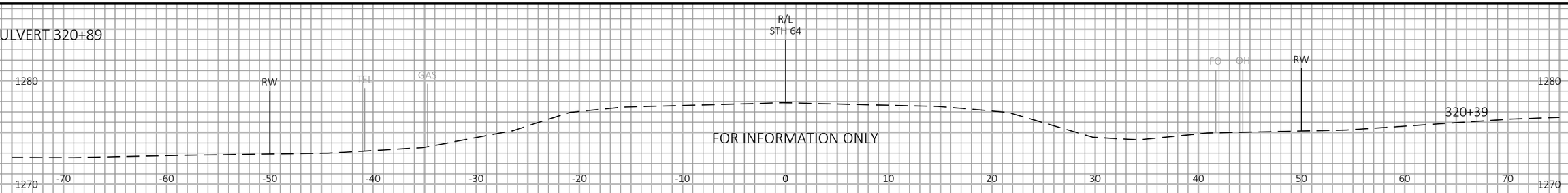

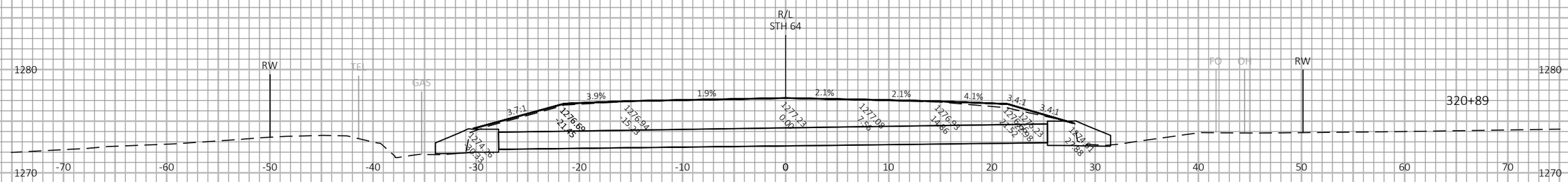

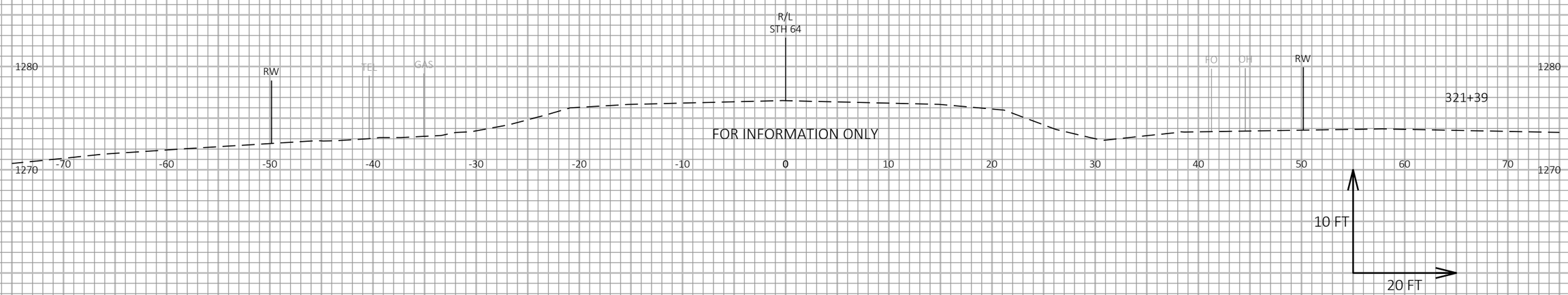

9

9

PROJECT NO: 9140-12-74	HWY: STH 64	COUNTY: LANGLADE	CROSS SECTIONS: PERMANENT CULVERTS	SHEET 176	E

FILE NAME : \\USSTV1FP001\DATA\PROJECTS\60600222\900_CAD_GIS\910_CAD\SHEETS\74\090102-XS.DWG
LAYOUT NAME - Final_14
PLOT DATE : 1/20/2020 12:51 PM
PLOT BY : LANCELLE, JESSICA
PLOT NAME :
PLOT SCALE : 1 IN:20 FT HORZ. / 1 IN:10 FT VERT.
WISDOT/CADDS SHEET 49

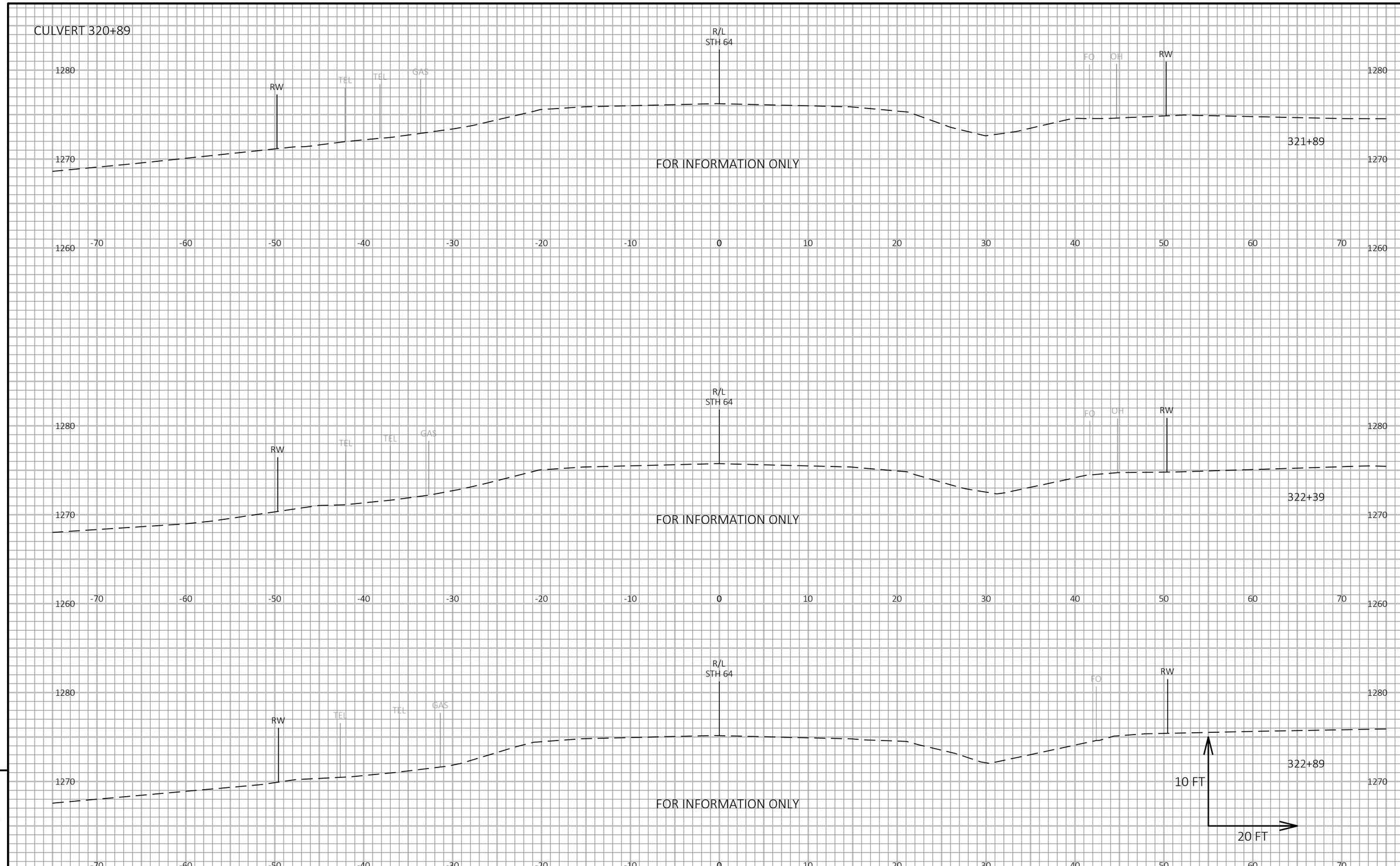

PROJECT NO: 9140-12-74	HWY: STH 64	COUNTY: LANGLADE	CROSS SECTIONS: PERMANENT CULVERTS	SHEET 177	E

FILE NAME : \\USSTV1FP001\DATA\PROJECTS\60600222\900_CAD_GIS\910_CAD\SHEETS\74\090102-XS.DWG
LAYOUT NAME - Final_15
PLOT DATE : 1/20/2020 12:51 PM
PLOT BY : LANCELLE, JESSICA
PLOT NAME :
PLOT SCALE : 1 IN:20 FT HORZ. / 1 IN:10 FT VERT.
WISDOT/CADDS SHEET 49

CULVERT 384+56

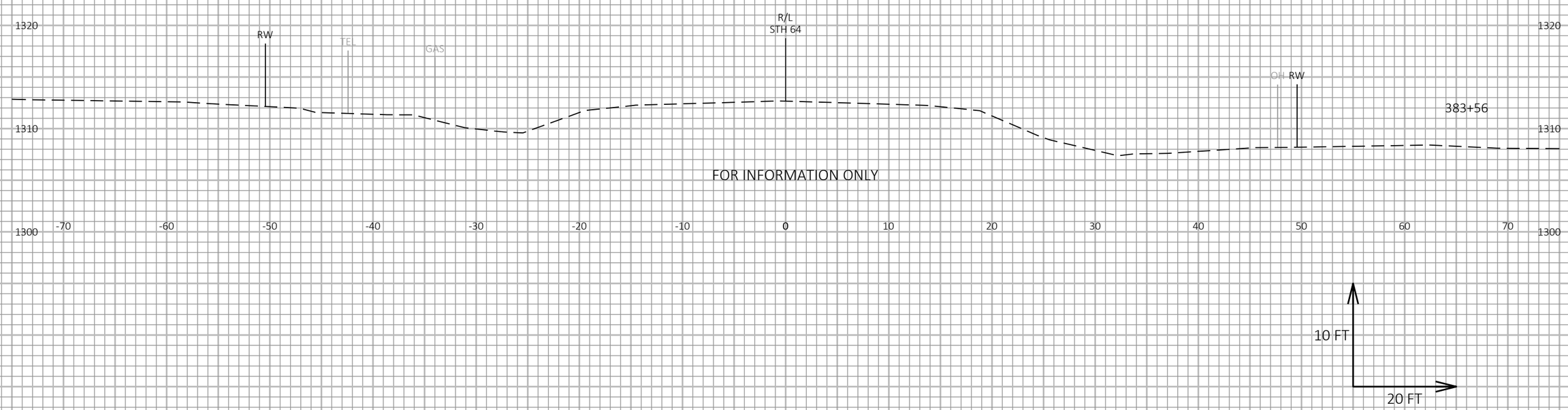

FOR INFORMATION ONLY

9

9

PROJECT NO: 9140-12-74	HWY: STH 64	COUNTY: LANGLADE	CROSS SECTIONS: PERMANENT CULVERTS	SHEET 178	E

FILE NAME : \\USSTV1FP001\DATA\PROJECTS\60600222\900_CAD_GIS\910_CAD\SHEETS\74\090102-XS.DWG
LAYOUT NAME - Final_16
PLOT DATE : 1/20/2020 12:51 PM
PLOT BY : LANCELLE, JESSICA
PLOT NAME :
PLOT SCALE : 1 IN:20 FT HORZ. / 1 IN:10 FT VERT.
WISDOT/CADDS SHEET 49

CULVERT 384+56

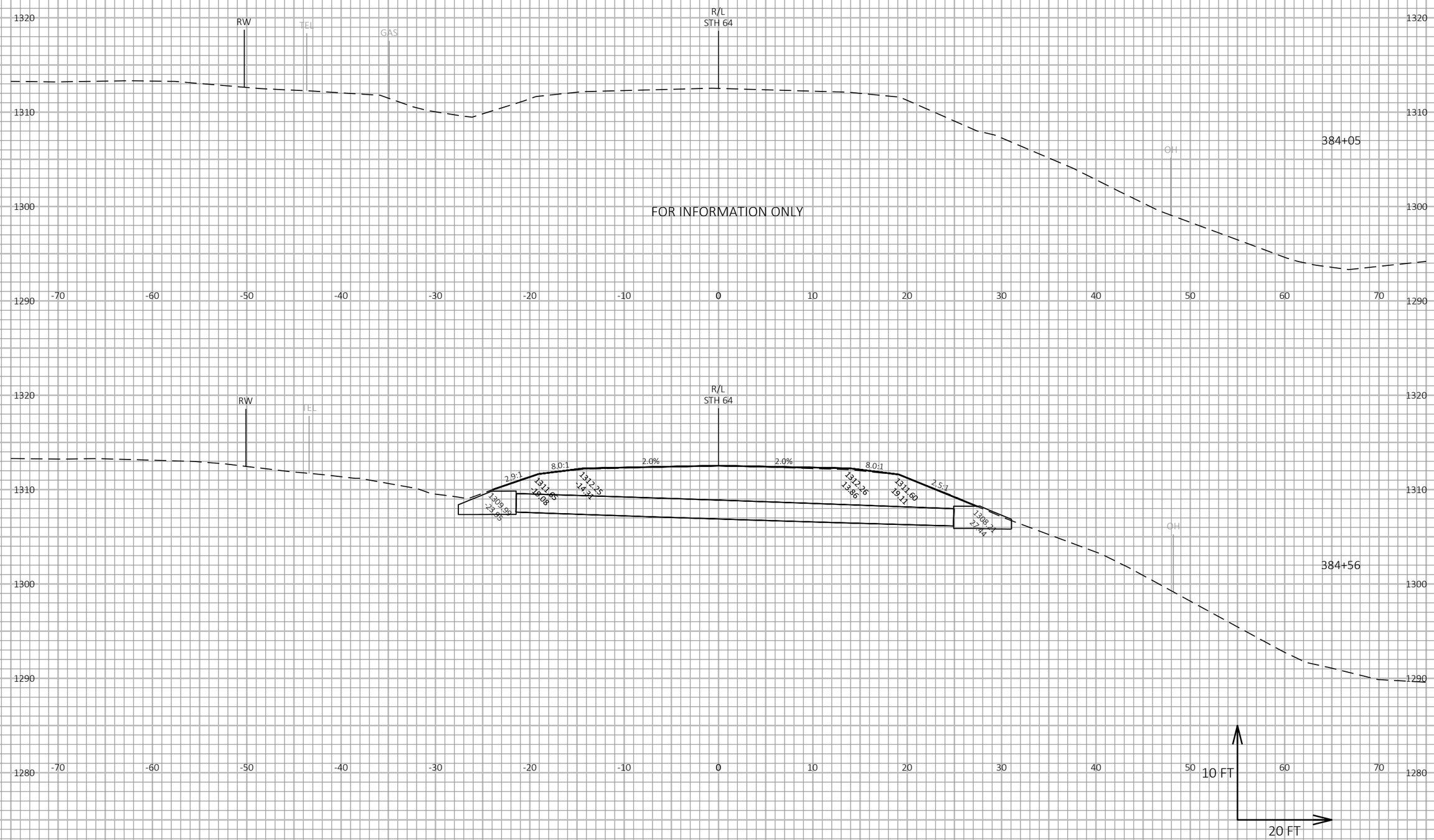

9

9

PROJECT NO: 9140-12-74	HWY: STH 64	COUNTY: LANGLADE	CROSS SECTIONS: PERMANENT CULVERTS	SHEET 179	E

FILE NAME : \\USSTV1FP001\DATA\PROJECTS\60600222\900_CAD_GIS\910_CAD\SHEETS\74\090102-XS.DWG
LAYOUT NAME - Final_17
PLOT DATE : 1/20/2020 12:51 PM
PLOT BY : LANCELLE, JESSICA
PLOT NAME :
PLOT SCALE : 1 IN:20 FT HORZ. / 1 IN:10 FT VERT.
WISDOT/CADDS SHEET 49

CULVERT 384+56

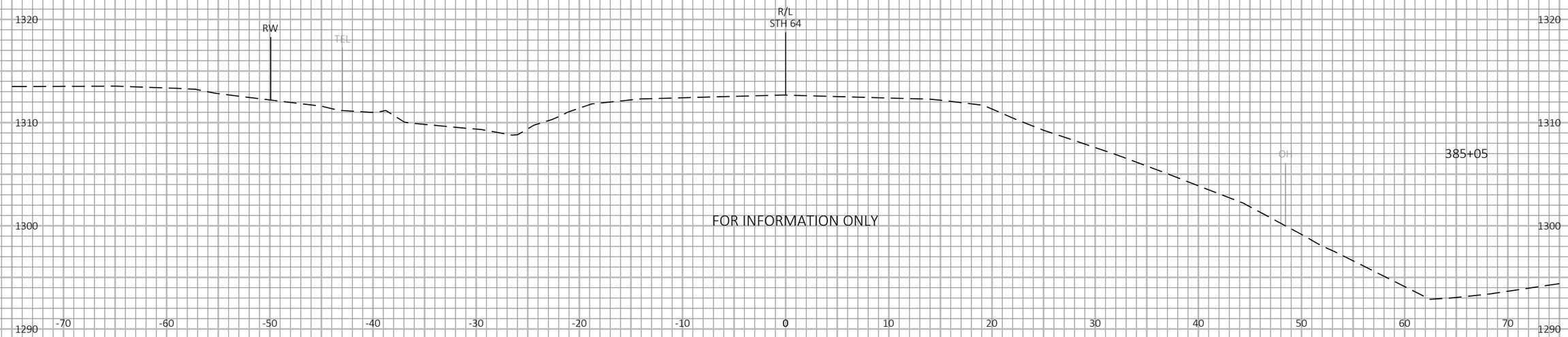

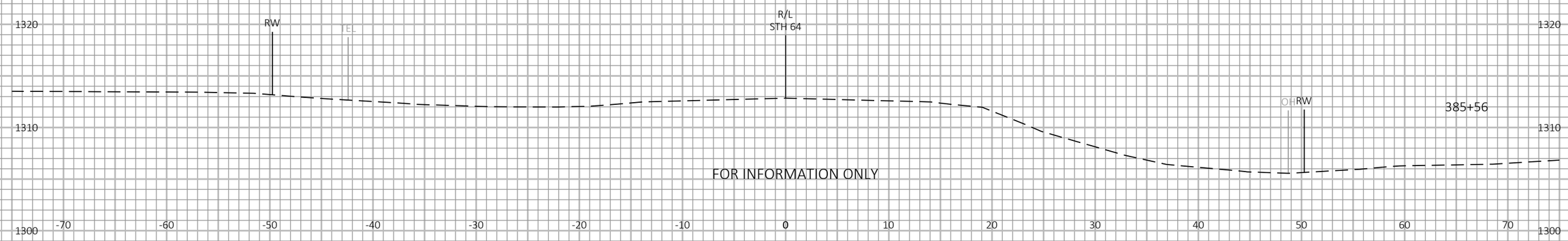

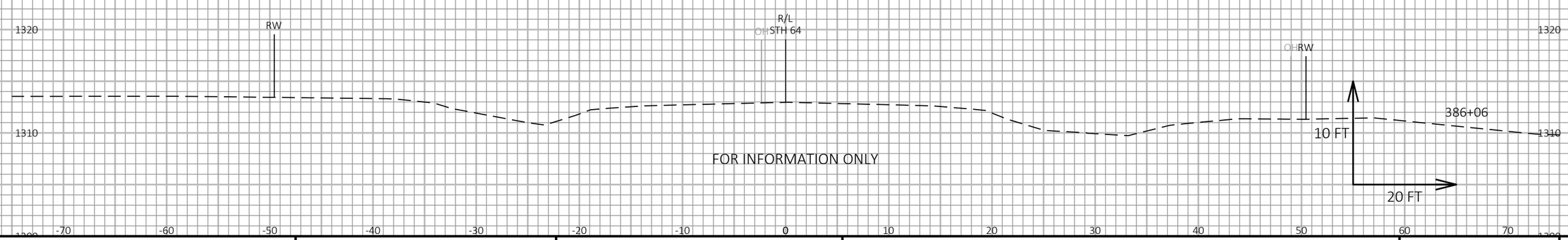

9

9

PROJECT NO: 9140-12-74	HWY: STH 64	COUNTY: LANGLADE	CROSS SECTIONS: PERMANENT CULVERTS	SHEET 180	E

FILE NAME : \\USSTV1FP001\DATA\PROJECTS\60600222\900_CAD_GIS\910_CAD\SHEETS\74\090102-XS.DWG
LAYOUT NAME - Final_18
PLOT DATE : 1/20/2020 12:51 PM
PLOT BY : LANCELLE, JESSICA
PLOT NAME :
PLOT SCALE : 1 IN:20 FT HORZ. / 1 IN:10 FT VERT.
WISDOT/CADDS SHEET 49

CULVERT 384+56

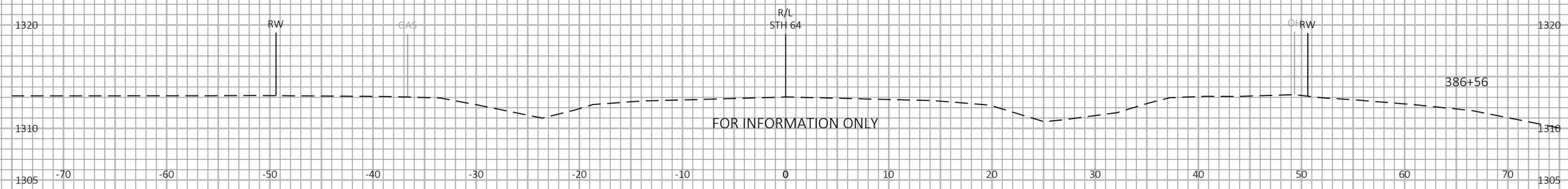

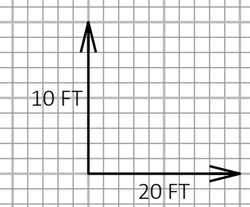

9

9

PROJECT NO: 9140-12-74	HWY: STH 64	COUNTY: LANGLADE	CROSS SECTIONS: PERMANENT CULVERTS	SHEET 181	E

FILE NAME : \\USSTV1FP001\DATA\PROJECTS\60600222\900_CAD_GIS\910_CAD\SHEETS\74\090102-XS.DWG
LAYOUT NAME - Final_19
PLOT DATE : 1/20/2020 12:51 PM
PLOT BY : LANCELLE, JESSICA
PLOT NAME :
PLOT SCALE : 1 IN:20 FT HORZ. / 1 IN:10 FT VERT.
WISDOT/CADDS SHEET 49

CULVERT 471+78

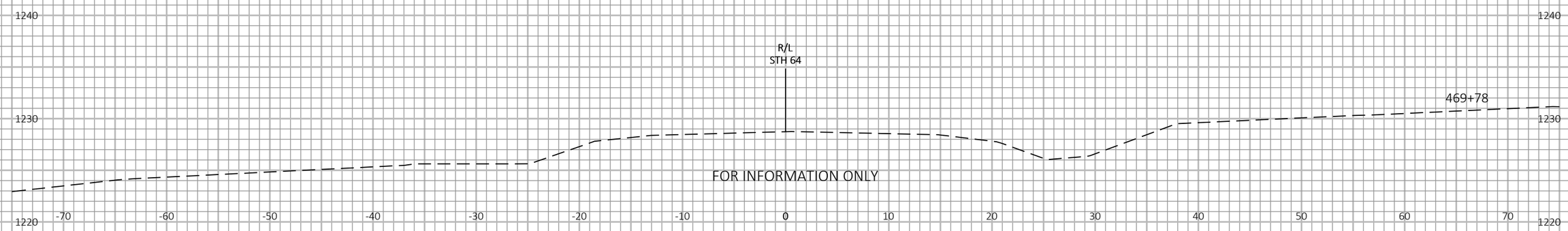

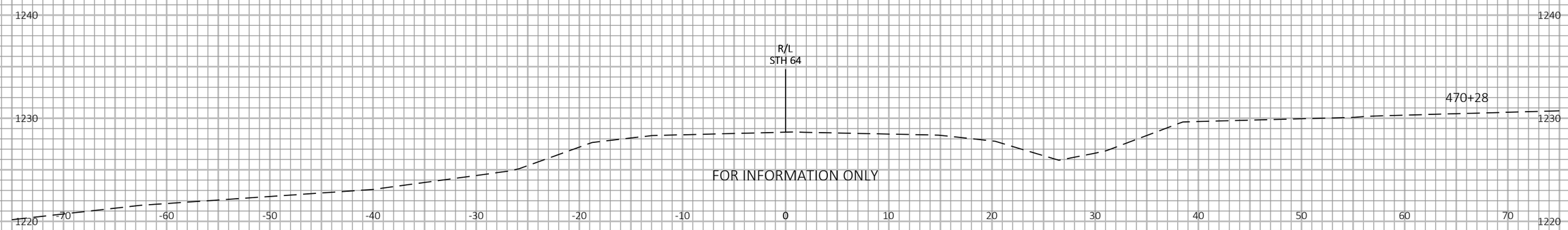

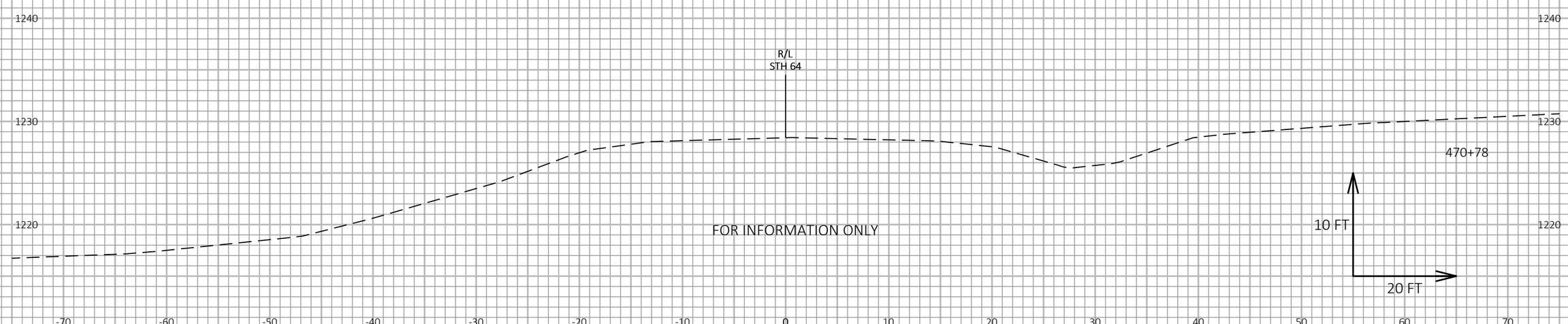

9

9

PROJECT NO: 9140-12-74	HWY: STH 64	COUNTY: LANGLADE	CROSS SECTIONS: PERMANENT CULVERTS	SHEET 182	E

FILE NAME : \\USSTV1FP001\DATA\PROJECTS\60600222\900_CAD_GIS\910_CAD\SHEETS\74\090102-XS.DWG
LAYOUT NAME - Final_20
PLOT DATE : 1/20/2020 12:51 PM
PLOT BY : LANCELLE, JESSICA
PLOT NAME :
PLOT SCALE : 1 IN:20 FT HORZ. / 1 IN:10 FT VERT.
WISDOT/CADDS SHEET 49

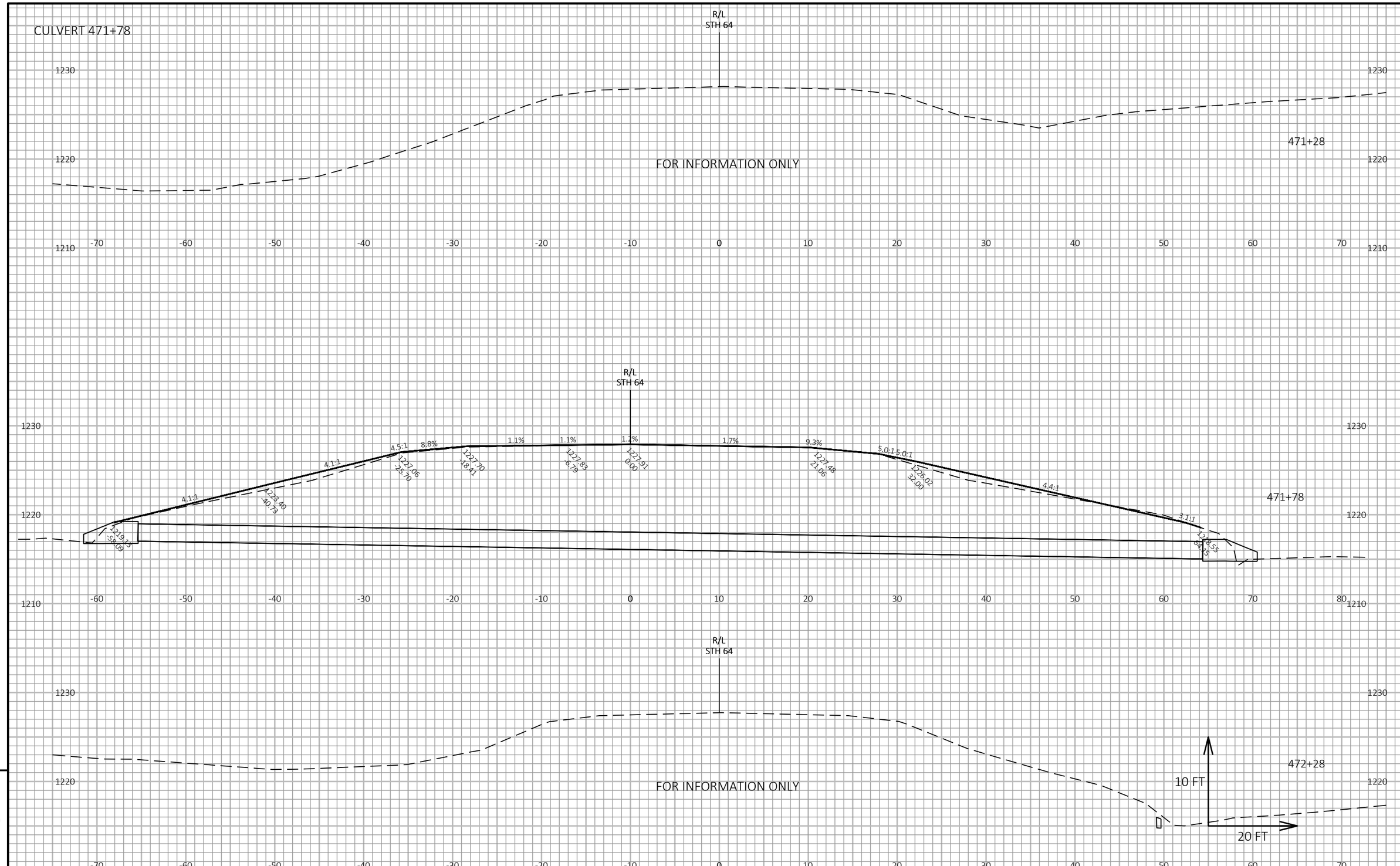

9

9

PROJECT NO: 9140-12-74	HWY: STH 64	COUNTY: LANGLADE	CROSS SECTIONS: PERMANENT CULVERTS	SHEET 183	E

FILE NAME : \\USSTV1FP001\DATA\PROJECTS\60600222\900_CAD_GIS\910_CAD\SHEETS\74\090102-XS.DWG
LAYOUT NAME - Final_21

PLOT DATE : 1/20/2020 12:51 PM PLOT BY : LANCELLE, JESSICA PLOT NAME : PLOT SCALE : 1 IN:20 FT HORZ. / 1 IN:10 FT VERT.

WISDOT/CADDS SHEET 49

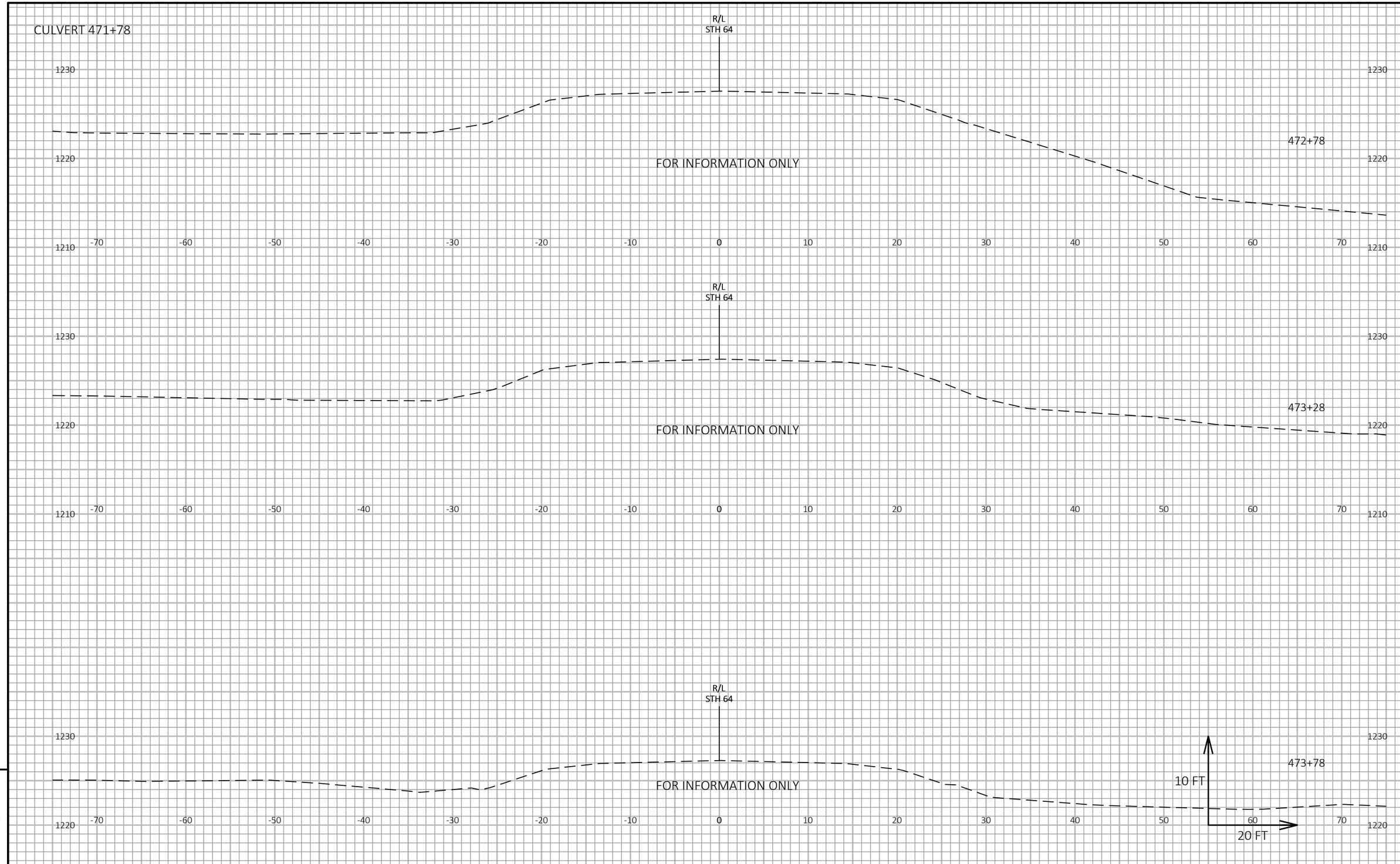

PROJECT NO: 9140-12-74	HWY: STH 64	COUNTY: LANGLADE	CROSS SECTIONS: PERMANENT CULVERTS	SHEET 184	E

FILE NAME : \\USSTV1FP001\DATA\PROJECTS\60600222\900_CAD_GIS\910_CAD\SHEETS\74\090102-XS.DWG
LAYOUT NAME - Final_22
PLOT DATE : 1/20/2020 12:51 PM
PLOT BY : LANCELLE, JESSICA
PLOT NAME :
PLOT SCALE : 1 IN:20 FT HORZ. / 1 IN:10 FT VERT.
WISDOT/CADDS SHEET 49

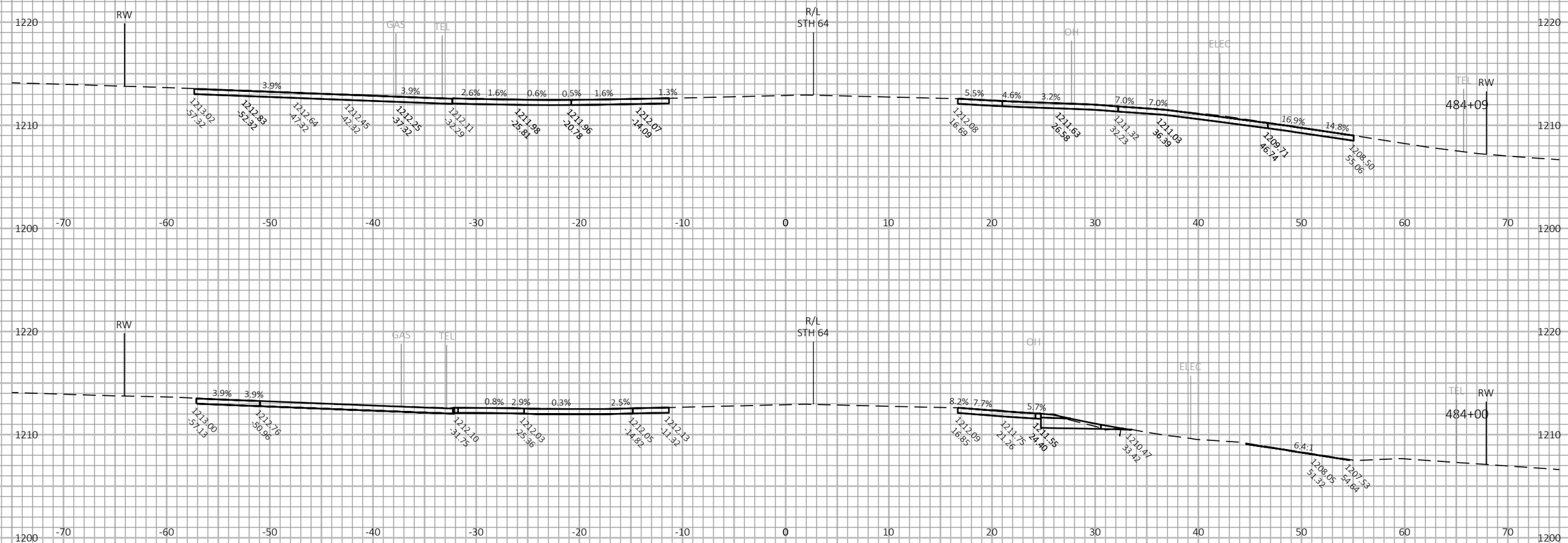

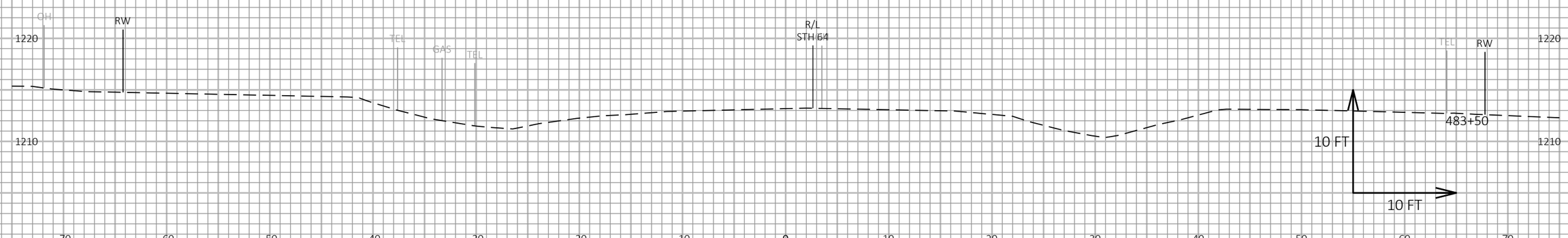

9

9

PROJECT NO: 9140-12-74	HWY: STH 64	COUNTY: LANGLADE	CROSS SECTIONS: MGS IMPROVEMENTS	SHEET 185	E

FILE NAME : C:\USERS\JESSICA.LANCELLE\AECOM DIRECTORY\NEMEC, ELIZABETH - 60600222-STH64_LANGLADE\900_CAD_GIS\910_CAD\SHEETS\74\090101-XS.DWG
LAYOUT NAME - MGS-1
PLOT DATE : 4/20/2020 4:15 PM
PLOT BY : LANCELLE, JESSICA
PLOT NAME :
PLOT SCALE : 1 IN:10 FT HORZ. / 1 IN:10 FT VERT.
WISDOT/CADDS SHEET 49

STRUCTURE B-34-24
OVER THE S. BRANCH OCONTO RIVER

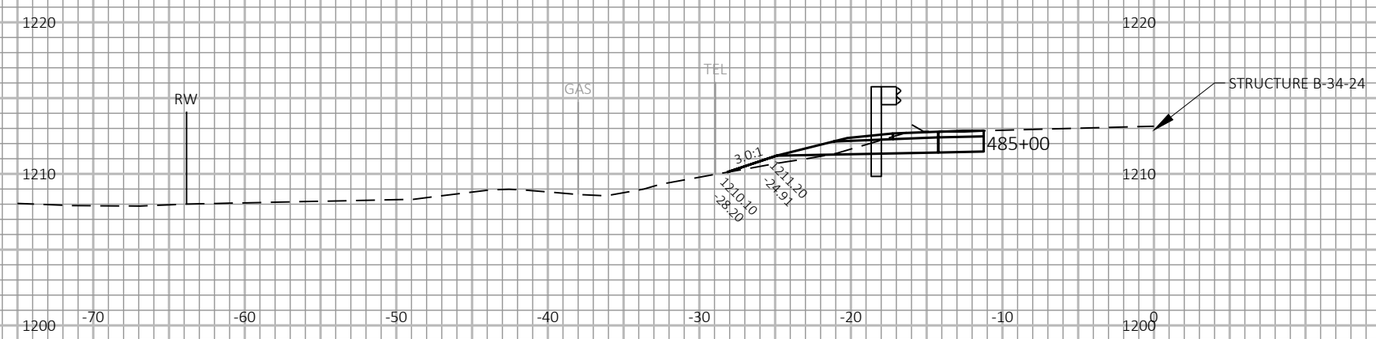

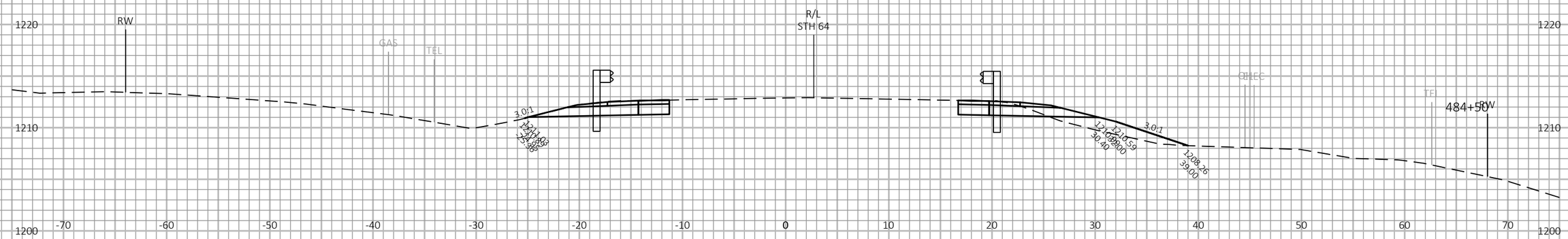

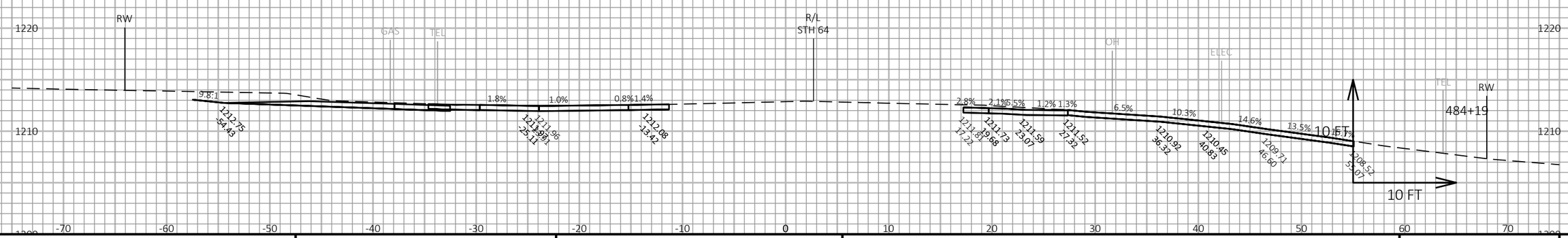

9

9

PROJECT NO: 9140-12-74	HWY: STH 64	COUNTY: LANGLADE	CROSS SECTIONS: MGS IMPROVEMENTS	SHEET 186	E

FILE NAME : C:\USERS\JESSICA.LANCELLE\AECOM DIRECTORY\NEMEC, ELIZABETH - 60600222-STH64_LANGLADE\900_CAD_GIS\910_CAD\SHEETS\74\090101-XS.DWG
LAYOUT NAME - MGS-2
PLOT DATE : 4/20/2020 4:15 PM
PLOT BY : LANCELLE, JESSICA
PLOT NAME :
PLOT SCALE : 1 IN:10 FT HORZ. / 1 IN:10 FT VERT.
WISDOT/CADDS SHEET 49

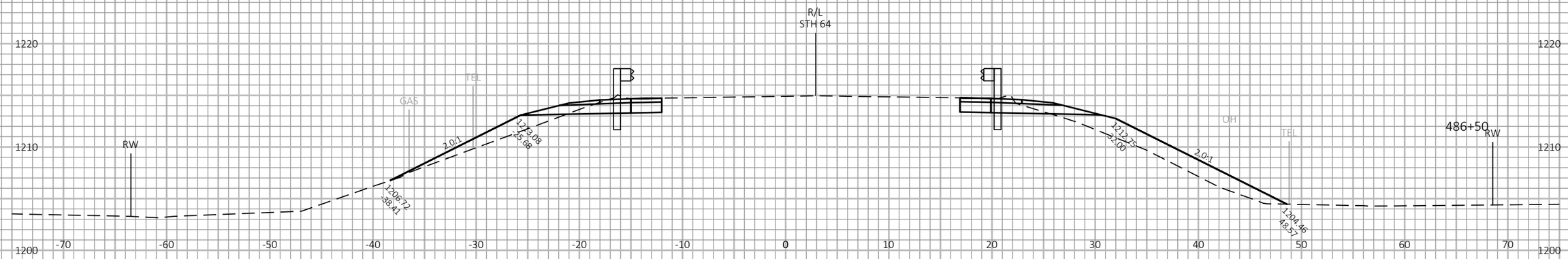

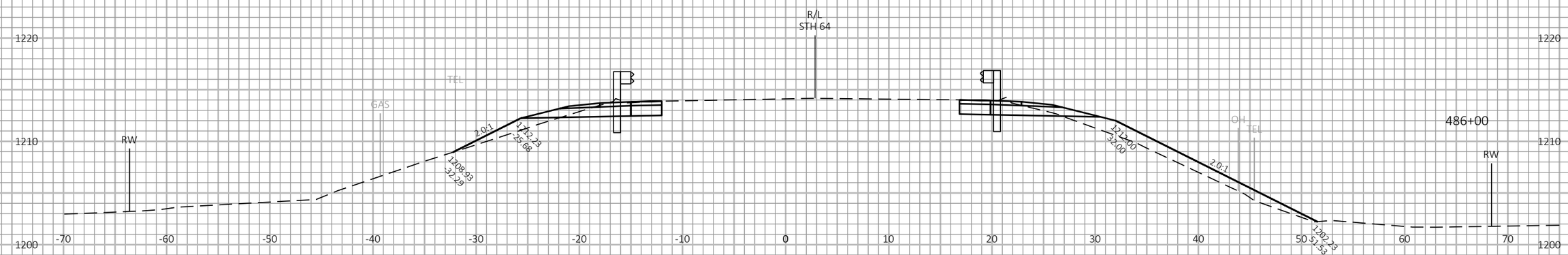

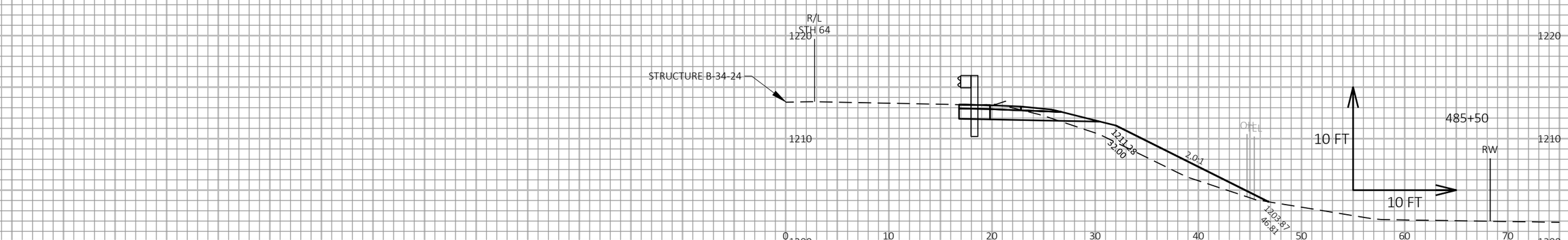

9

9

PROJECT NO: 9140-12-74	HWY: STH 64	COUNTY: LANGLADE	CROSS SECTIONS: MGS IMPROVEMENTS	SHEET 187	E

FILE NAME : C:\USERS\JESSICA.LANCELLE\AECOM DIRECTORY\NEMEC, ELIZABETH - 60600222-STH64_LANGLADE\900_CAD_GIS\910_CAD\SHEETS\74\090101-XS.DWG
LAYOUT NAME - MGS-3
PLOT DATE : 4/20/2020 4:15 PM
PLOT BY : LANCELLE, JESSICA
PLOT NAME :
PLOT SCALE : 1 IN:10 FT HORZ. / 1 IN:10 FT VERT.
WISDOT/CADDS SHEET 49

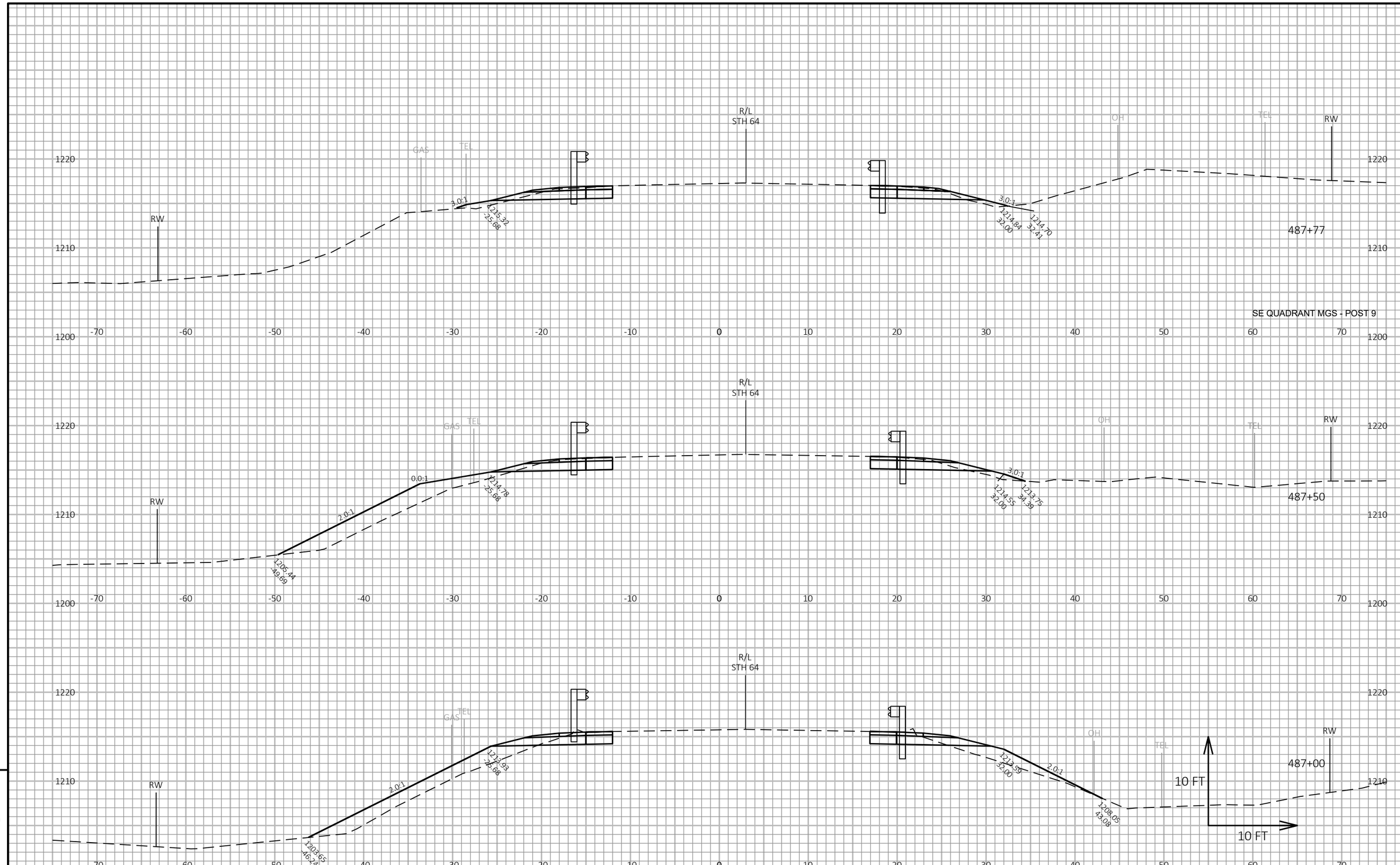

9

9

PROJECT NO: 9140-12-74	HWY: STH 64	COUNTY: LANGLADE	CROSS SECTIONS: MGS IMPROVEMENTS	SHEET 188	E

FILE NAME : C:\USERS\JESSICA.LANCELLE\AECOM DIRECTORY\NEMEC, ELIZABETH - 60600222-STH64_LANGLADE\900_CAD_GIS\910_CAD\SHEETS\74\090101-XS.DWG
LAYOUT NAME - MGS-4
PLOT DATE : 4/20/2020 4:16 PM
PLOT BY : LANCELLE, JESSICA
PLOT NAME :
PLOT SCALE : 1 IN:10 FT HORZ. / 1 IN:10 FT VERT.
WISDOT/CADDS SHEET 49

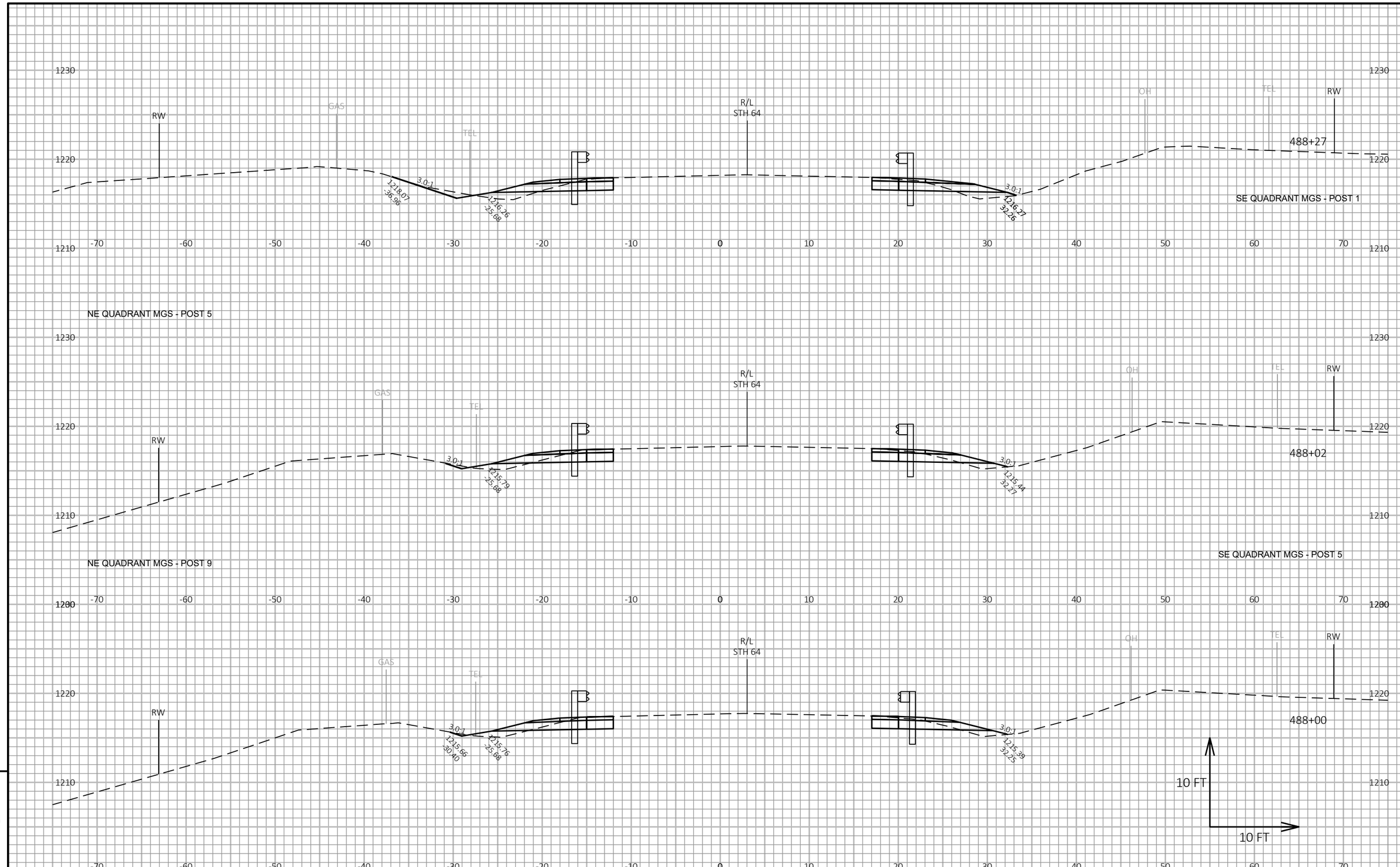

PROJECT NO: 9140-12-74	HWY: STH 64	COUNTY: LANGLADE	CROSS SECTIONS: MGS IMPROVEMENTS	SHEET 189	E

FILE NAME : C:\USERS\JESSICA.LANCELLE\AECOM DIRECTORY\NEMEC, ELIZABETH - 60600222-STH64_LANGLADE\900_CAD_GIS\910_CAD\SHEETS\74\090101-XS.DWG
LAYOUT NAME - MGS-5
PLOT DATE : 4/20/2020 4:16 PM
PLOT BY : LANCELLE, JESSICA
PLOT NAME :
PLOT SCALE : 1 IN:10 FT HORZ. / 1 IN:10 FT VERT.
WISDOT/CADDS SHEET 49

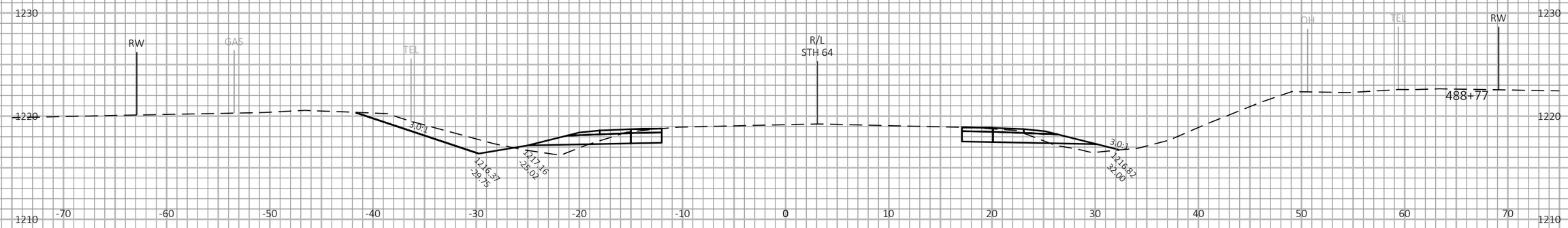

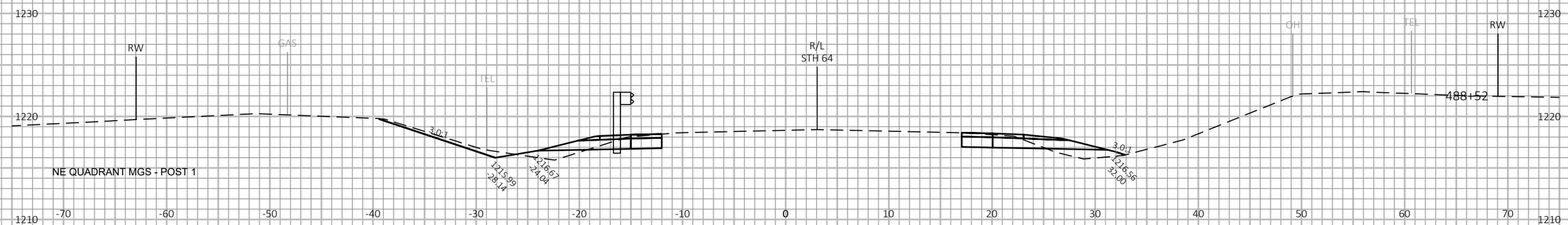

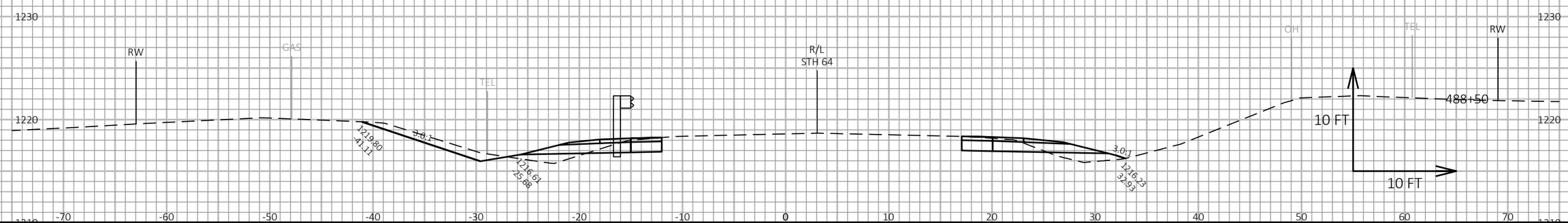

9

9

PROJECT NO: 9140-12-74	HWY: STH 64	COUNTY: LANGLADE	CROSS SECTIONS: MGS IMPROVEMENTS	SHEET 190	E

FILE NAME : C:\USERS\JESSICA.LANCELLE\AECOM DIRECTORY\NEMEC, ELIZABETH - 60600222-STH64_LANGLADE\900_CAD_GIS\910_CAD\SHEETS\74\090101-XS.DWG
LAYOUT NAME - MGS-6
PLOT DATE : 4/20/2020 4:16 PM
PLOT BY : LANCELLE, JESSICA
PLOT NAME :
PLOT SCALE : 1 IN:10 FT HORZ. / 1 IN:10 FT VERT.
WISDOT/CADDS SHEET 49

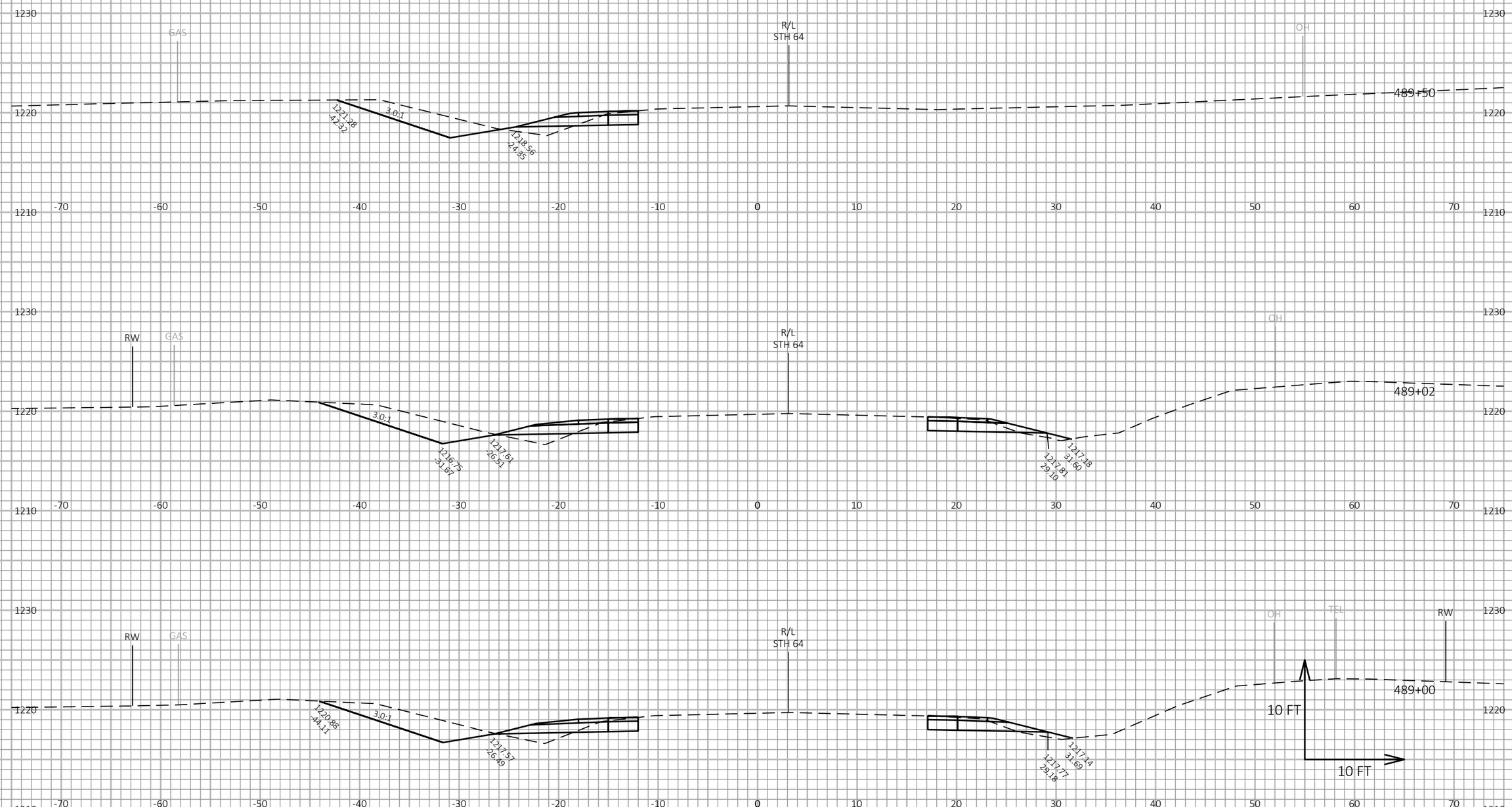

PROJECT NO: 9140-12-74	HWY: STH 64	COUNTY: LANGLADE	CROSS SECTIONS: MGS IMPROVEMENTS	SHEET 191	E

FILE NAME : C:\USERS\JESSICA.LANCELLE\AECOM DIRECTORY\NEMEC, ELIZABETH - 60600222-STH64_LANGLADE\900_CAD_GIS\910_CAD\SHEETS\74\090101-XS.DWG
LAYOUT NAME - MGS-7
PLOT DATE : 4/20/2020 4:16 PM PLOT BY : LANCELLE, JESSICA PLOT NAME : PLOT SCALE : 1 IN:10 FT HORZ. / 1 IN:10 FT VERT.

WISDOT/CADDS SHEET 49

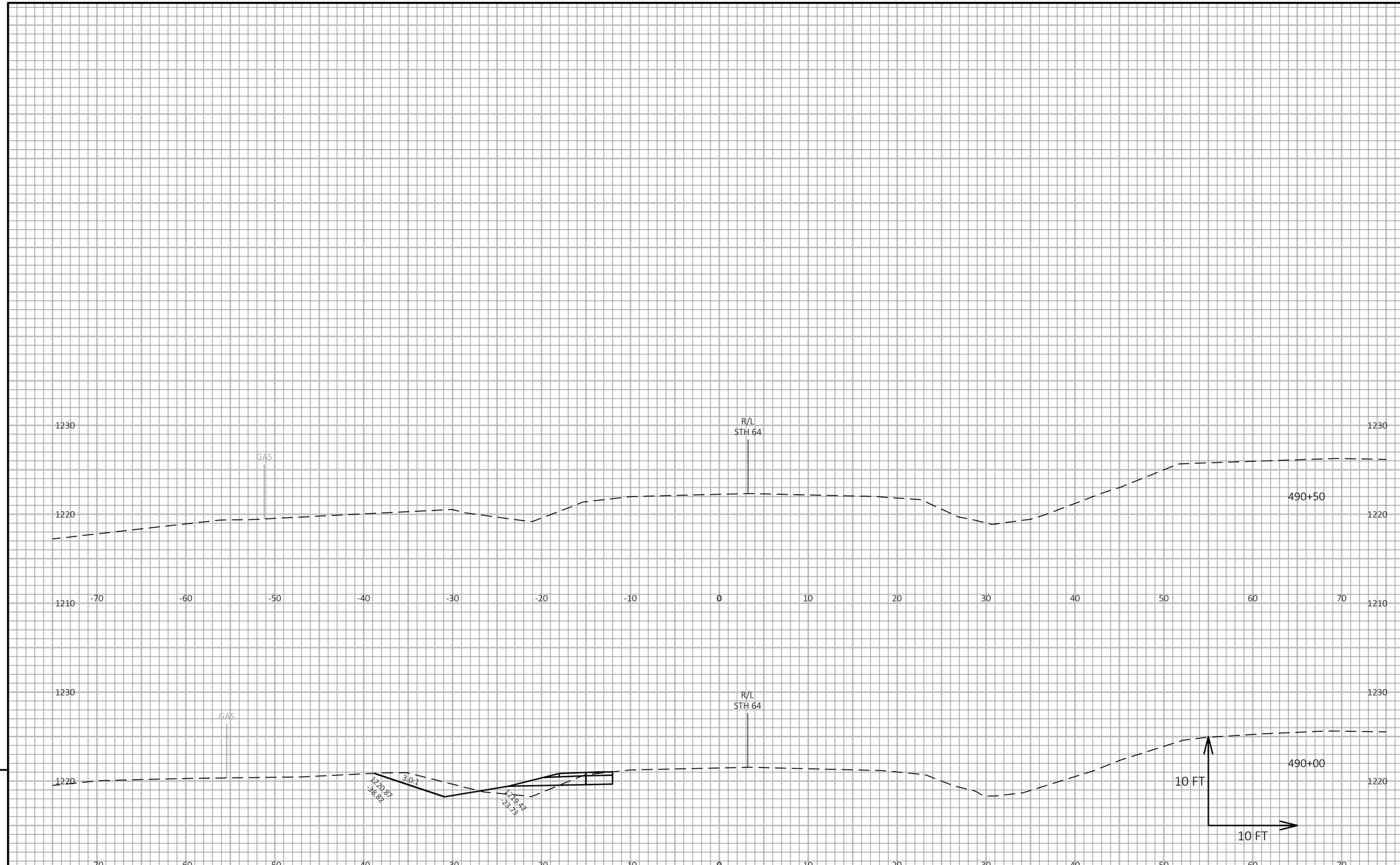

PROJECT NO: 9140-12-74	HWY: STH 64	COUNTY: LANGLADE	CROSS SECTIONS: MGS IMPROVEMENTS	SHEET 192	E

FILE NAME : C:\USERS\JESSICA.LANCELLE\AECOM DIRECTORY\NEMEC, ELIZABETH - 60600222-STH64_LANGLADE\900_CAD_GIS\910_CAD\SHEETS\74\090101-XS.DWG
LAYOUT NAME - MGS-8
PLOT DATE : 4/20/2020 4:16 PM
PLOT BY : LANCELLE, JESSICA
PLOT NAME :
PLOT SCALE : 1 IN:10 FT HORZ. / 1 IN:10 FT VERT.
WISDOT/CADDS SHEET 49

Notes

Wisconsin Department of Transportation

Dedicated people creating transportation solutions through innovation and exceptional service.

http://www.dot.wisconsin.gov