WKE

APR 14, 2020

ORDER OF SHEETS

TOTAL SHEETS = 254

STATE OF WISCONSIN
DEPARTMENT OF TRANSPORTATION

PLAN OF PROPOSED IMPROVEMENT

T. VINLAND, CTH A

INDIAN POINT - CTH GG

CTH A

WINNEBAGO COUNTY

STATE PROJECT	FEDERAL PROJECT	
	PROJECT	CONTRACT
4627-02-71	WISC 2020076	1

STATE PROJECT NUMBER

4627-02-71

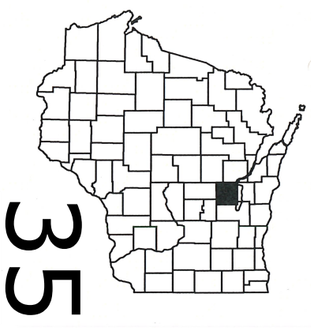

35

N

DESIGN DESIGNATION

A.A.D.T.	(2020)	=	5100
A.A.D.T.	(2040)	=	6100
D.H.V.	(2040)	=	700
D.D.	(2040)	=	50-50
T.	(2040)	=	7.6%
DESIGN SPEED		=	50 MPH
ESALS		=	770,000

CONVENTIONAL SYMBOLS

PLAN

CORPORATE LIMITS
PROPERTY LINE
LOT LINE
LIMITED HIGHWAY EASEMENT
EXISTING RIGHT OF WAY
PROPOSED OR NEW R/W LINE
SLOPE INTERCEPT
REFERENCE LINE (300'EB')
EXISTING CULVERT
PROPOSED CULVERT (Box or Pipe)
COMBUSTIBLE FLUIDS (CAUTION)
MARSH AREA
WOODED OR SHRUB AREA

PROFILE

GRADE LINE
ORIGINAL GROUND
MARSH OR ROCK PROFILE (To be noted as such) (ROCK)
SPECIAL DITCH (LABEL)
GRADE ELEVATION (95.36)
CULVERT (Profile View)

UTILITIES

ELECTRIC — E —
FIBER OPTIC — FO —
GAS — G —
SANITARY SEWER — SAN —
STORM SEWER — SS —
TELEPHONE — T —
WATER — W —
UTILITY PEDESTAL
POWER POLE
TELEPHONE POLE

END PROJECT
STA. 307+55.45

BEGIN PROJECT
STA. 234+00
Y= 502434.47
X = 802443.46

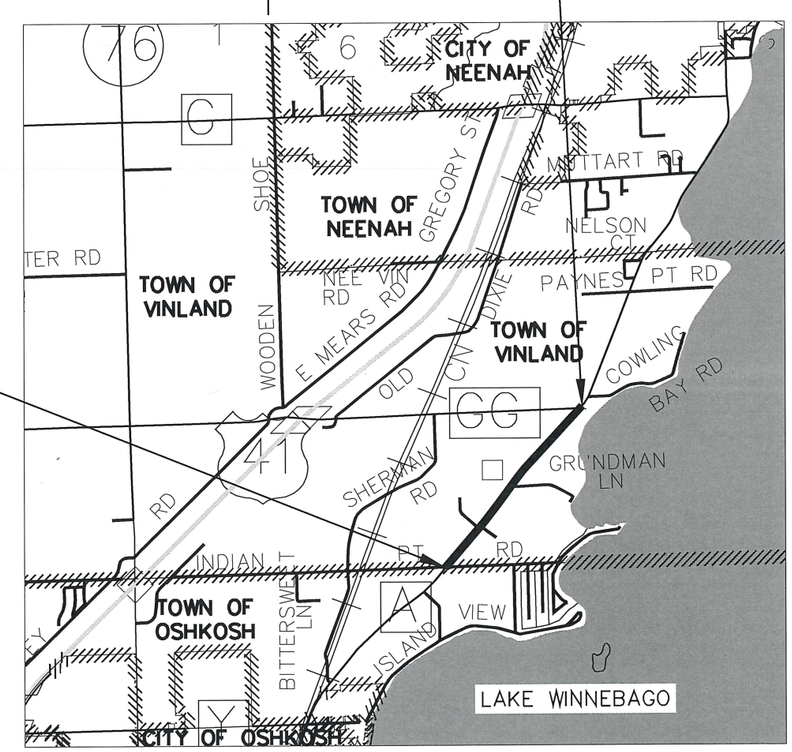

LAYOUT

SCALE 0 — 1.0 MI

TOTAL NET LENGTH OF CENTERLINE = 1.393 MILES

HORIZONTAL POSITIONS SHOWN ON THIS PLAN ARE WISCONSIN COORDINATE REFERENCE SYSTEM (WISCRS), WINNEBAGO COUNTY, NAD83 (1997), IN U.S. SURVEY FEET. POSITIONS SHOWN ARE GRID COORDINATES, GRID BEARINGS, AND GRID DISTANCES. GRID DISTANCES ARE THE SAME AS GROUND DISTANCES. ELEVATIONS ARE REFERENCED TO NAVD 88 (2012). GPS DERIVED ELEVATIONS ARE BASED ON GEOID 12A.

ACCEPTED FOR WINNEBAGO COUNTY

10/29/19 DATE — SIGNATURE

Highway Commissioner TITLE OF OFFICIAL

ORIGINAL PLANS PREPARED BY

McMAHON ENGINEERS \ ARCHITECTS

WISCONSIN COREY R. SCHUH E-42462 NEENAH WI PROFESSIONAL ENGINEER

10/23/19 DATE — SIGNATURE

STATE OF WISCONSIN
DEPARTMENT OF TRANSPORTATION

PREPARED BY

Surveyor	McMAHON
Designer	McMAHON
Regional Examiner	BRIAN EDWARDS
Regional Supervisor	JAMES THOMPSON

APPROVED FOR THE DEPARTMENT

DATE 10/30/19 (Signature)

E

PROJECT ID: 4627-02-71

WITH: NA

COUNTY: WINNEBAGO

W:\PROJECTS\W0059\81700113\CADD\Civil3D\Plan Sheets\01-TITLE\CTH A Title Sheet.dwg, TITLE SHEET 1 IN EQ 0.5 MI, 10/29/2019 4:08:30 PM, cclemens, 1:1

GENERAL NOTES

BEARINGS AND COORDINATES SHOWN ON THIS PLAN ARE REFERENCED TO THE WINNEBAGO COUNTY COORDINATE SYSTEM. DISTANCES SHOWN ARE GROUND DISTANCES.

ELEVATIONS ON THIS PLAN ARE REFERENCED TO NGS DATA CONTROL POINT DF6079, DESIGNATION: VINLAND GPS AS ELEVATION 772.6 NAVD 88(2012) BASED ON GEOID 12A.

THE LOCATIONS OF EXISTING UTILITY FACILITIES AS SHOWN ON THE PLAN ARE APPROXIMATE AND ARE BASED ON UTILITY LOCATES OBTAINED FROM THE UTILITIES WHEN THE SURVEY DATA WAS COLLECTED PRIOR TO THE FINAL DESIGN OF THE PROJECT. IT IS ANTICIPATED THAT UTILITY FACILITIES WILL BE RELOCATED AS PART OF THIS PROJECT AS DESCRIBED IN THE SPECIAL PROVISIONS. PROPOSED RELOCATED UTILITIES ARE NOT SHOWN ON THE PLAN SHEETS. THERE MAY BE OTHER UTILITY FACILITIES WITHIN THE PROJECT LIMITS THAT ARE NOT SHOWN ON THE PLAN SHEETS. THE CONTRACTOR SHALL NOTIFY DIGGERS HOTLINE AND AFFECTED UTILITIES PRIOR TO THE START OF WORK.

NO TREES, SHRUBS OR LANDSCAPING ARE TO BE REMOVED WITHOUT PRIOR APPROVAL OF THE ENGINEER.

THE LOCATION OF ALL EROSION CONTROL ITEMS IS APPROXIMATE AND MAY BE ADJUSTED BY THE ENGINEER IN THE FIELD.

ALL RADII SHOWN ON THE PLAN SHEETS ARE TO THE FACE OF CURB.

THE ELEVATIONS SHOWN ON THE ROADWAY CROSS SECTIONS ARE SUBGRADE CL, SUBGRADE EDGE OF TRAVEL LANE, FINISHED SURFACE ELEVATION AT THE SUBGRADE SHOULDER POINT, DITCH FLOWLINE, AND SLOPE INTERCEPT.

THE EXACT LIMITS OF CONCRETE, ASPHALT, OR GRAVEL DRIVEWAY REMOVAL AND REPLACEMENT SHOWN ON THE PLAN ARE APPROXIMATE AND SHALL BE DETERMINED BY THE ENGINEER IN THE FIELD.

EXCAVATION BELOW SUBGRADE (EBS) AREAS ARE CALLED OUT AS UNDISTRIBUTED ON THE PLAN QUANTITIES FOR COMMON EXCAVATION. THESE AREAS ARE TO BE BACKFILLED WITH BREAKER RUN. EXACT LOCATIONS SHALL BE DETERMINED BY THE ENGINEER IN THE FIELD.

PRIOR TO ORDERING DRAINAGE PIPES AND STRUCTURES, THE CONTRACTOR SHALL VERIFY RELATED DRAINAGE INFORMATION IN THE PLAN WITH THE ENGINEER.

PIPE ELEVATIONS AS SHOWN ON THE PLANS MAY BE ADJUSTED BY THE ENGINEER TO FIT FIELD CONDITIONS.

THE REMOVAL OF CONCRETE DRIVEWAYS WILL BE MEASURED AND PAID FOR AS REMOVING PAVEMENT. THE REMOVAL OF ASPHALTIC DRIVEWAY APRONS AND ASPHALTIC DRIVEWAYS BEHIND THE SIDEWALK WILL BE PAID FOR AS COMMON EXCAVATION.

ASPHALT DRIVEWAYS SHALL CONSIST OF 2 1/2 INCHES ASPHALTIC SURFACE DRIVEWAYS AND FIELD ENTRANCES, INSTALLED IN ONE LAYER. OVER 12-INCHES BASE AGGREGATE DENSE 1 1/4 INCH.

CONCRETE DRIVEWAYS SHALL CONSIST OF CONCRETE DRIVEWAY 6-INCH OVER 6" OF BASE AGGREGATE DENSE 1 1/4-INCH.

ALL DISTURBED AREAS NOT OTHERWISE SURFACED SHALL BE RESTORED WITH TOPSOIL, FERTILIZER, SEED AND EMAT. SEE EROSION CONTROL DETAIL.

FILL AS SHOWN ON THE PLAN PERTAINS TO EMBANKMENT CONSTRUCTED FROM COMMON EXCAVATION. THE FACTOR USED FOR EXPANDING THE FILLS TO COMPLETE THE VOLUME OF MATERIAL REQUIRED IS 30% FOR COMMON EXCAVATION.

REMOVE ANY REINFORCEMENT AND MESH FOUND IN THE EXISTING CONCRETE. THIS WORK SHALL BE CONSIDERED INCIDENTAL TO THE ITEM OF REMOVING PAVEMENT.

THE LIMITS OF PAVEMENT REMOVAL ON SIDE STREETS AND MATCH POINTS IS APPROXIMATE AND SHALL BE VERIFIED IN THE FIELD BY THE ENGINEER.

STANDARD ABBREVIATIONS AND SYMBOLS

ADJ.	ADJUST
ASPH	ASPHALT
AVE.	AVENUE
⊕	BENCH MARK
B-B	BACK TO BACK OF CURB
B.A.D.	BASE AGGREGATE DENSE
B.O.C. or B/C	BACK OF CURB
℄ or CL	CENTERLINE
C.E.	COMMERCIAL ENTRANCE
CONC.	CONCRETE
CL.	CLASS
C.O.	CLEAN OUT
CPCM	CULVERT PIPE CORRUGATED METAL
CPCS	CULVERT PIPE CORRUGATED STEEL
CPRC	CULVERT PIPE REINFORCED CONCRETE
CPP	CORRUGATED PLASTIC PIPE
CT	COURT
CTH	COUNTY TRUNK HIGHWAY
△	DELTA
D.	DEGREE OF CURVE
D.W.	DRIVEWAY
E.	EAST
EB	EASTBOUND
E-MAT	EROSION MAT
ELEV	ELEVATION
EOP	EDGE OF PAVEMENT
EOR	END OF RADIUS
EXIST.	EXISTING
F-F	FACE TO FACE OF CURB
F.E.	FIELD ENTRANCE
FL	FLOWLINE
F.M.	FORCE MAIN
GRAV	GRAVEL
GV	GAS VALVE
HDPE	HIGH DENSITY POLYETHYLENE CULVERT PIPE
HE	HIGHWAY EASEMENT
HMA	HMA
H.P.	HIGH POINT
HYD.	HYDRANT
L.	LENGTH OF CURVE
L.V.C.	LENGTH OF VERTICAL CURVE
L.P.	LOW POINT
L.S.	LANDSCAPING
LA	LANE
LT.	LEFT
MH	MANHOLE
MAX	MAXIMUM
MIN	MINIMUM
NB	NORTH BOUND
NO.	NUMBER
NOR.	NORMAL
P.E.	PRIVATE ENTRANCE
P.G.L.	PROFILE GRADE LINE
P.I.	POINT OF INTERSECTION
P.T.	POINT OF TANGENCY
P.V.C.	POINT OF VERTICAL CURVATURE
P.V.I.	POINT OF VERTICAL INTERSECTION
P.V.T.	POINT OF VERTICAL TANGENCY
PACS	PIPE ARCH CORRUGATED STEEL
P/L	PROPERTY LINE
PVT.	PAVEMENT
PED.	PEDESTAL
R or RAD	RADIUS
RECONST.	RECONSTRUCT
REQ'D	REQUIRED
R/L	REFERENCE LINE
REM.	REMOVE
R/W	RIGHT OF WAY
RD.	ROAD
RT.	RIGHT
S.	SOUTH
SAN	SANITARY SEWER
SB	SOUTH BOUND
S.D.D.	STANDARD DETAIL DRAWING
S.I.	SLOPE INTERCEPT
SS	STORM SEWER
STA.	STATION
STH	STATE TRUNK HIGHWAY
STA.	STATION
SW	CONCRETE SIDEWALK
T.I.	TEMPORARY INTEREST
TLE	TEMPORARY LIMITED INTEREST
TYP.	TYPICAL
V.C.	VERTICAL CURVE
WB	WESTBOUND
W	WATERMAIN
WV	WATER VALVE/SHUTOFF
⊗	HYDRANT W/AUXILIARY VALVE
●—⌑	LIGHT POLE
●	EXISTING PROPERTY IRON

ORDER OF SECTION 2 SHEETS:

- GENERAL NOTES, UTILITIES, ABBREVIATIONS
- PROJECT OVERVIEW AND ALIGNMENT
- TYPICAL SECTIONS
- CONSTRUCTION DETAILS
- EROSION CONTROL
- STORM SEWER
- SIGNING AND PAVEMENT MARKING
- TRAFFIC CONTROL

DIGGERS HOTLINE

Dial 811 or (800)242-8511

www.DiggersHotline.com

	HYDROLOGIC SOIL GROUP											
	A			B			C			D		
	SLOPE RANGE (PERCENT)			SLOPE RANGE (PERCENT)			SLOPE RANGE (PERCENT)			SLOPE RANGE (PERCENT)		
LAND USE:	0-2	2-6	6 & OVER	0-2	2-6	6 & OVER	0-2	2-6	6 & OVER	0-2	2-6	6 & OVER
ROW CROPS	.08 .22	.16 .30	.22 .38	.12 .26	.20 .34	.27 .44	.15 .30	.24 .37	.33 .50	.19 .34	.28 .41	.38 .56
MEDIAN STRIP-TURF	.19 .24	.20 .26	.24 .30	.19 .26	.22 .28	.26 .33	.20 .26	.23 .30	.30 .37	.20 .27	.25 .32	.30 .40
SIDE SLOPE-TURF			.25 .32			.27 .34			.28 .36			.30 .38
PAVEMENT:												
ASPHALT	.70 - .95											
CONCRETE	.80 - .95											
BRICK	.70 - .80											
DRIVES, WALKS	.75 - .80											
ROOFS	.75 - .95											
GRAVEL ROADS, SHOULDERS	.40 - .60											

TOTAL PROJECT AREA = 9.49 ACRES
TOTAL AREA EXPECTED TO BE DISTURBED BY CONSTRUCTION ACTIVITIES = 11.06 ACRES

UTILITIES:

AT&T
CHUCK BARTLETT
70 E. DIVISION ST.
FOND DU LAC, WI 54935
920-929-1013
CB1461@ATT.COM

WPS ELECTRIC
NATE HALL
3300 N. MAIN ST.
OSHKOSH, WI 54901
C:920-850-6419
O:920-617-2741
NATHAN.HALL@WISCONSINPUBLICSERVICE.COM

WPS GAS
STEVE BONECK
3300 N. MAIN ST
OSHKOSH, WI 54901
920-236-5918
STEVE.BONECK@WISCONSINPUBLICSERVICE.COM

TDS METROCOM
JEREMIAH LUBEN
SUITE 218A
10 COLLEGE AVENUE
APPLETON, WI 54911
C: 715-850-2987
O: 715-758-6583
JEREMIAH.LUBEN@TDSTELECOM.COM

CHARTER COMMUNICATIONS
VINCE ALBIN
3250 DESTINATION DRIVE
APPLETON, WI 54915
920-831-9249
VINCE.ALBIN@CHARTER.COM

DNR LIAISON:

DEPARTMENT OF NATURAL RESOURCES
JAY SCHIEFELBEIN
2984 SHAWANO AVE
GREEN BAY, WI 54313-6727
920-360-3784
JEREMIAH.SCHIEFELBEIN@WISCONSIN.GOV

CONTROL POINTS △				
STA.	LOCATION	DESCRIPTION	NORTHING	EASTING
234+76.52	25.33'RT.	MAG NAIL	502477.30	802511.58
242+02.03	12.26'LT.	MAG NAIL	503044.61	802964.21
251+96.10	77.69'LT.	MAG NAIL	503828.87	803576.06
253+29.83	18.35'RT.	MAG NAIL	503868.48	803735.57
253+99.89	19.30'LT.	MAG NAIL	503946.40	803751.48
263+59.68	12.92'RT.	MAG NAIL	504700.44	804343.95
270+80.64	17.06'RT.	MAG NAIL	505255.80	804804.20
279+28.91	13.61'LT.	MAG NAIL	505910.19	805343.49
291+09.85	13.13'RT.	MAG NAIL	506744.09	806180.13
304+21.22	281.03'LT	MAG NAIL	507894.22	806875.41
306+09.66	85.55'LT.	MAG NAIL	507894.95	807146.92
307+49.21	33.53'RT.	MAG NAIL	507913.26	807329.46
325+62.38	179.8'RT.	MONUMENT	502442.14	802684.12

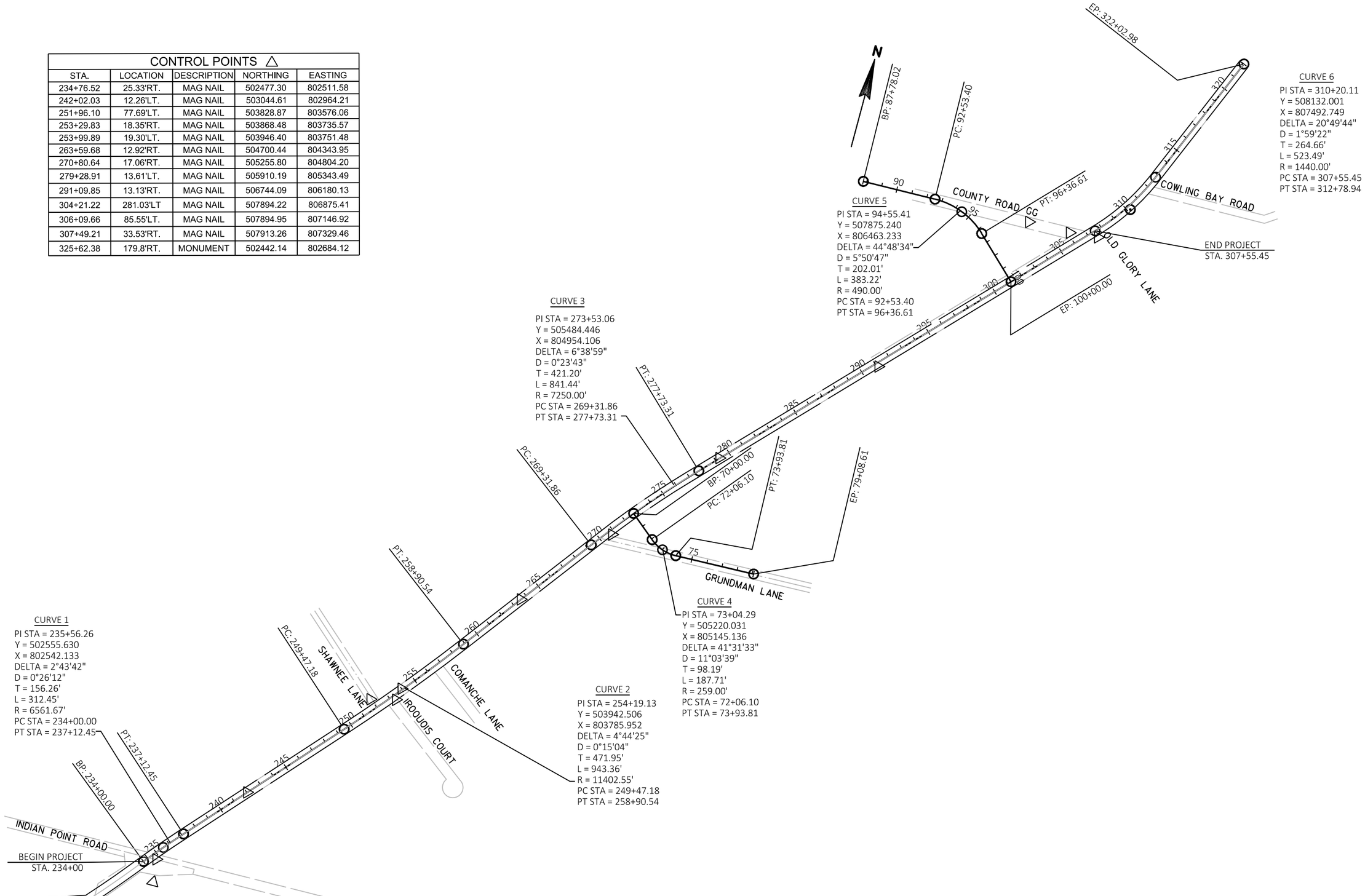

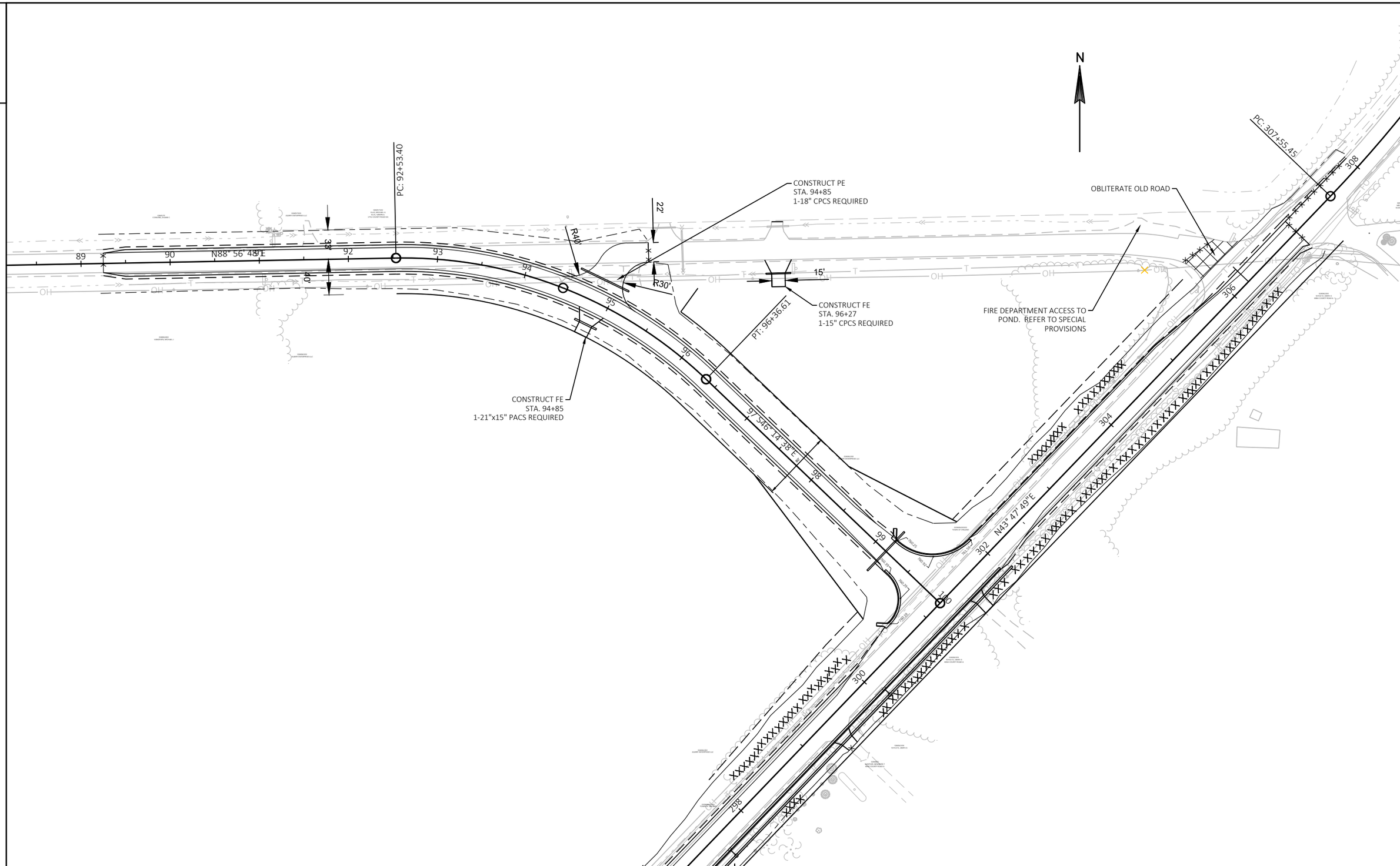

PROJECT NO: 4627-02-71	HWY: CTH A	COUNTY: WINNEBAGO	CTH GG OVERVIEW PLAN	SHEET 5	E

FILE NAME : W:\PROJECTS\W0059\81700113\CADD\CIVIL3D\PLAN SHEETS\05-PLAN AND PROFILE\05- SIDE STREET PLAN & PROFILE.DWG
LAYOUT NAME - CTH GG OVERVIEW
PLOT DATE : 1/7/2020 2:57 PM PLOT BY : JORDAN JELINSKI PLOT NAME : _____ PLOT SCALE : 1 IN:100 FT

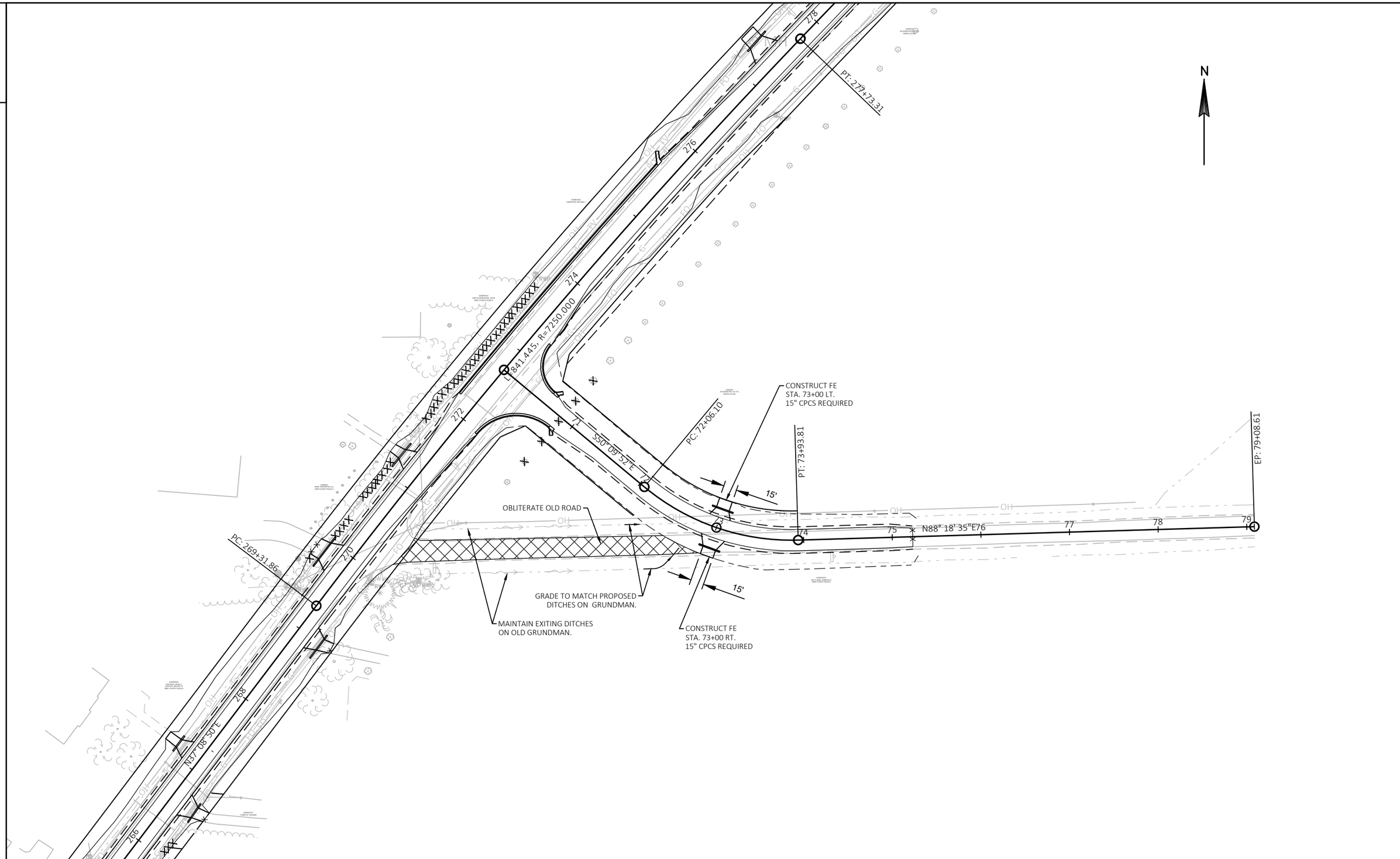

PROJECT NO: 4627-02-71	HWY: CTH A	COUNTY: WINNEBAGO	GRUNDMAN LANE OVERVIEW PLAN	SHEET 6	E

FILE NAME : W:\PROJECTS\W0059\81700113\CADD\CIVIL3D\PLAN SHEETS\05-PLAN AND PROFILE\05- SIDE STREET PLAN & PROFILE.DWG
LAYOUT NAME - GRUNDMAN LANE OVERVIEW
PLOT DATE : 1/7/2020 2:57 PM PLOT BY : JORDAN JELINSKI PLOT NAME : _____ PLOT SCALE : 1 IN:100 FT

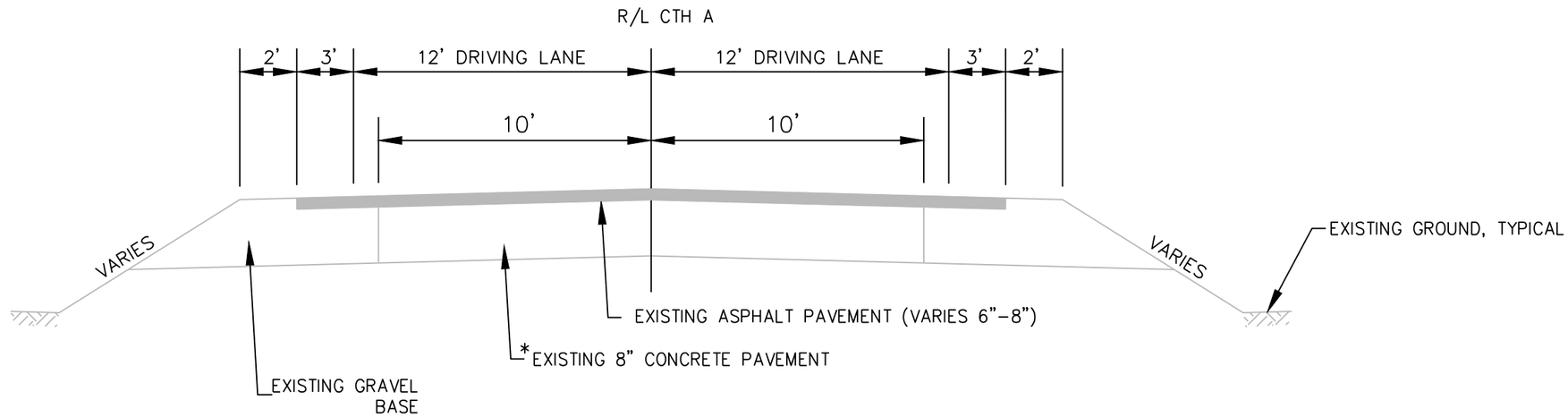

TYPICAL EXISTING SECTION

STA. 234+00 TO STA. 257+00
(INDIAN POINT ROAD TO COMANCHE LANE)

*NOTE- SOIL BORINGS INDICATE THAT THE EXISTING UNDERLYING CONCRETE PAVEMENT WAS CONSTRUCTED DIRECTLY ON FILL.

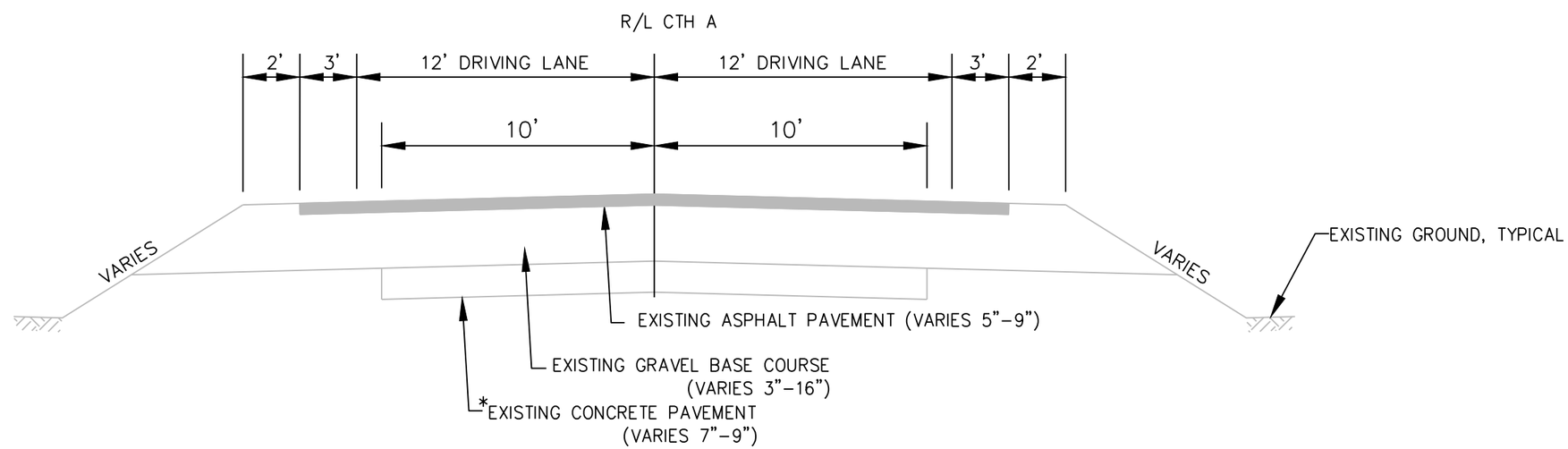

TYPICAL EXISTING SECTION

STA. 257+00 TO STA. 307+00
(COMANCHE LANE TO CTH GG)

2

REFER TO EROSION CONTROL DETAIL SHEETS FOR ADDITIONAL INFORMATION

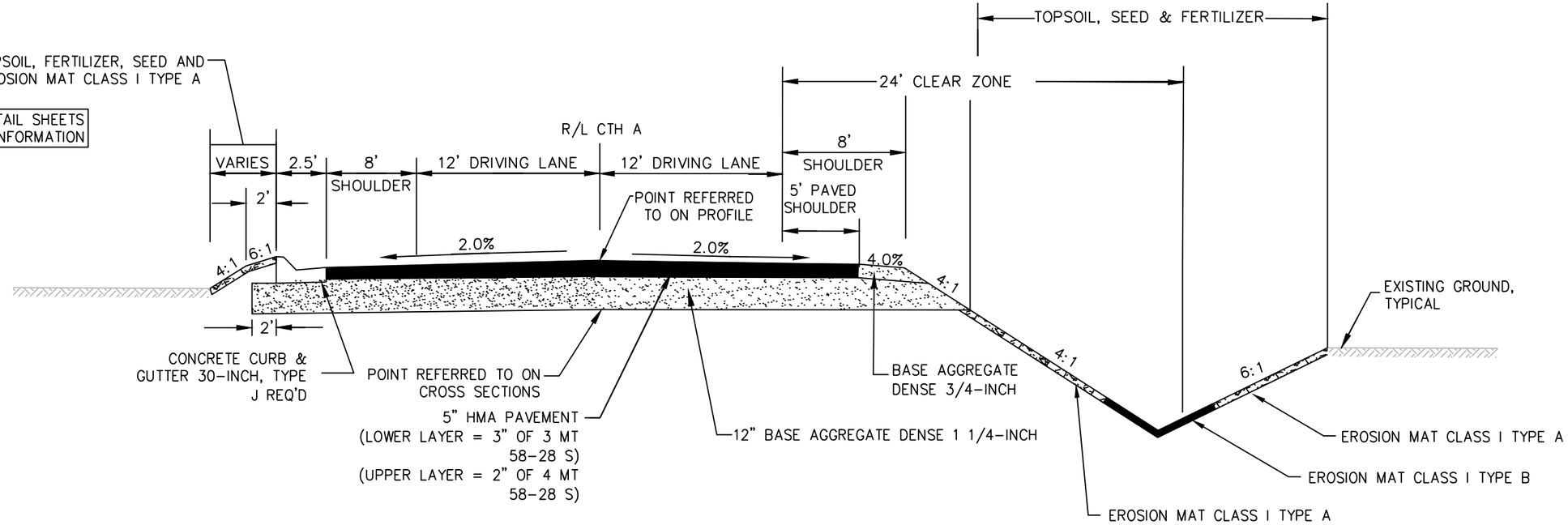

TYPICAL URBANIZED SECTION

STA. 272+20 TO 275+55 LT
STA. 290+05 TO 302+00 RT

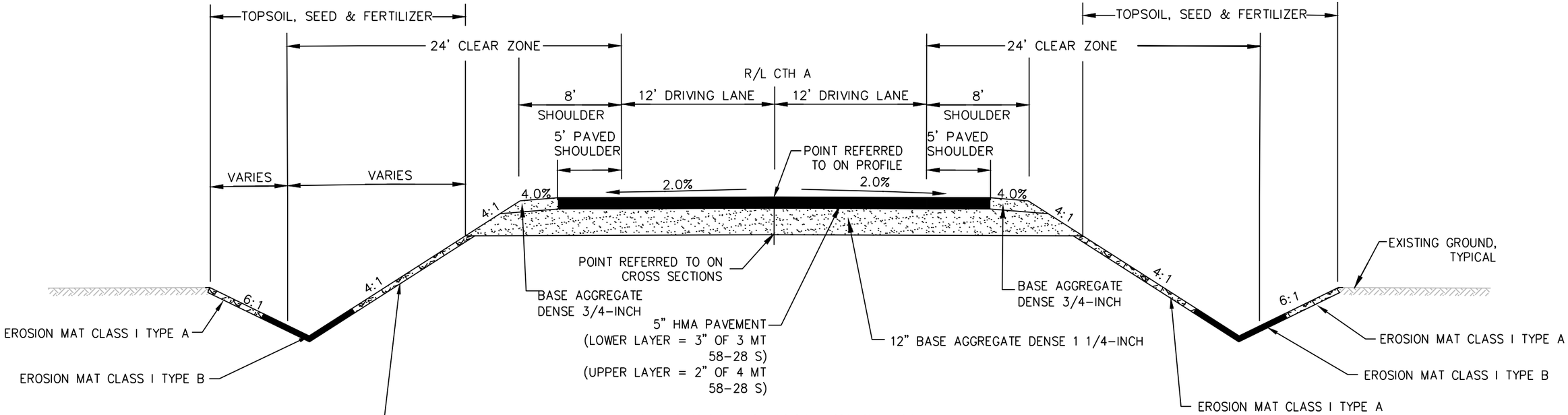

TYPICAL RURAL SECTION

STA. 234+00 TO STA. 307+00

EROSION MAT CLASS I TYPE B TO BE 1 - 8 FT WIDE ROLL CENTERED OVER DITCH FLOWLINE

PROJECT NO: 4627-02-71	HWY: CTH A	COUNTY: WINNEBAGO	PLAN: PROPOSED TYPICAL SECTIONS	SHEET 8	E

FILE NAME : W:\PROJECTS\W0059\81700113\CADD\CIVIL3D\PLAN SHEETS\02-TYPICALS\CTH A TYPICAL SECTIONS.DWG
LAYOUT NAME - PROPOSED CTH A TYPICAL SECTIONS
PLOT DATE : 1/7/2020 2:57 PM PLOT BY : JORDAN JELINSKI PLOT NAME : PLOT SCALE : 1'-0" = 1'-0"

2

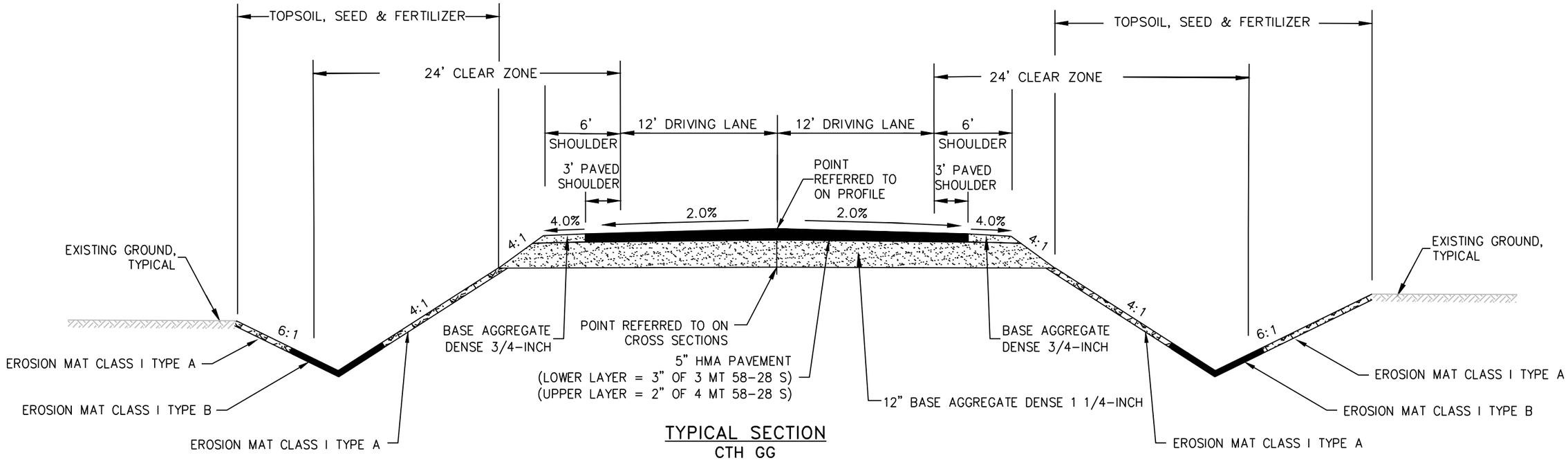

TYPICAL SECTION
CTH GG

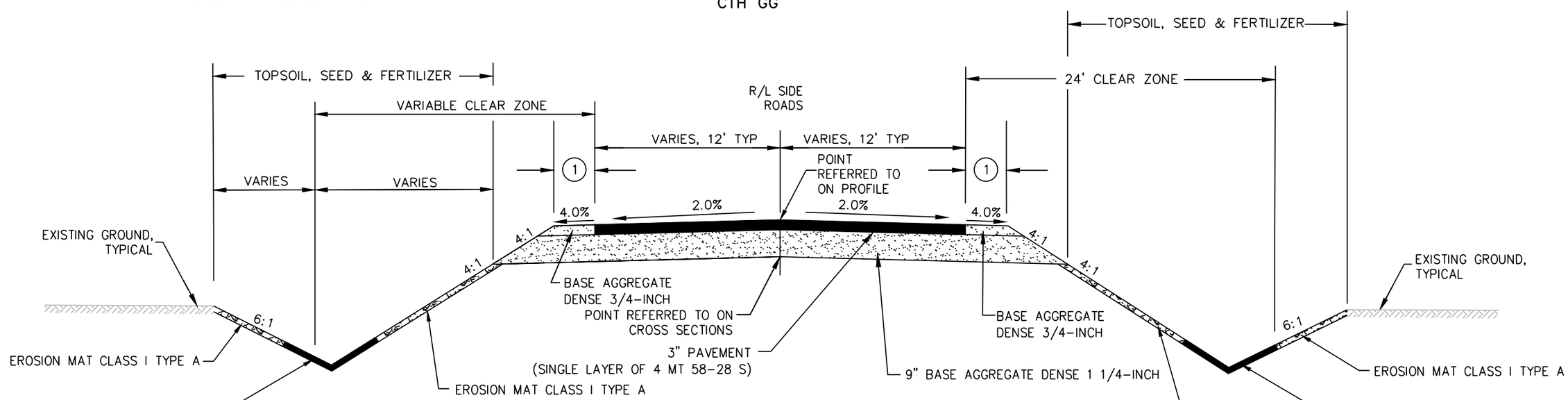

TYPICAL SIDE STREET SECTION
GRUNDMAN LANE
COMANCHE LANE
IROQUOIS COURT
SHAWNEE LANE

REFER TO EROSION CONTROL DETAIL SHEETS FOR ADDITIONAL INFORMATION

EROSION MAT CLASS I TYPE B TO BE 1 – 8 FT WIDE ROLL CENTERED OVER DITCH FLOWLINE

(1) SHOULDER ON GRUNDMAN LANE = 3'
SHOULDER ON COMANCHE LANE = 2'
SHOULDER ON IROQUOIS COURT = 2'
SHOULDER ON SHAWNEE LANE = 2'

PROJECT NO: 4627-02-71	HWY: CTH A	COUNTY: WINNEBAGO	PLAN: PROPOSED SIDE STREET TYPICAL SECTIONS	SHEET 9	E

FILE NAME : W:\PROJECTS\W0059\81700113\CADD\CIVIL3D\PLAN SHEETS\02-TYPICALS\CTH A TYPICAL SECTIONS.DWG
LAYOUT NAME - PROPOSED SIDE ROAD TYPICAL SECTIONS
PLOT DATE : 1/7/2020 2:57 PM PLOT BY : JORDAN JELINSKI PLOT NAME : PLOT SCALE : 1'-0" = 1'-0"
WISDOT/CADDS SHEET 42

2

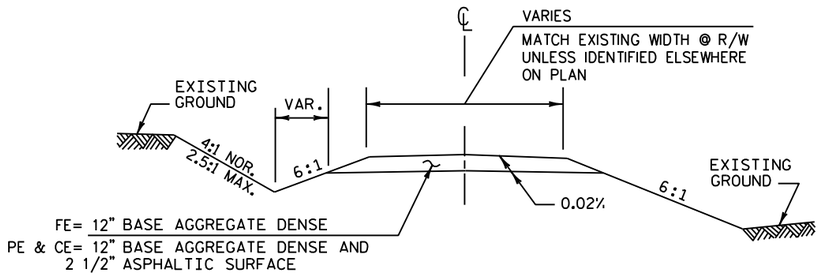

TYPICAL CROSS SECTION

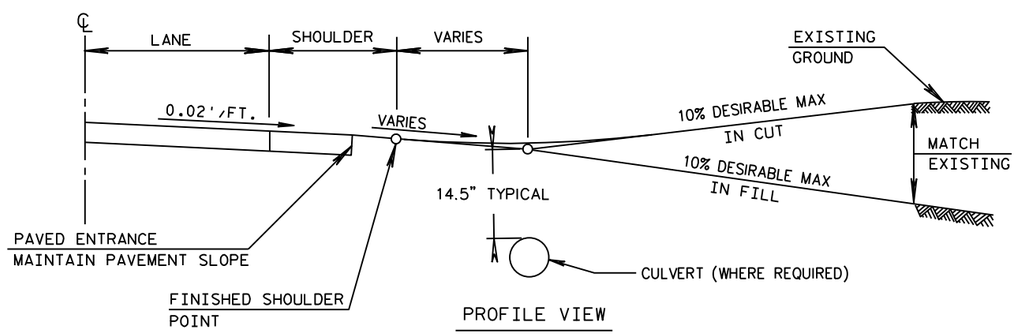

PROFILE VIEW

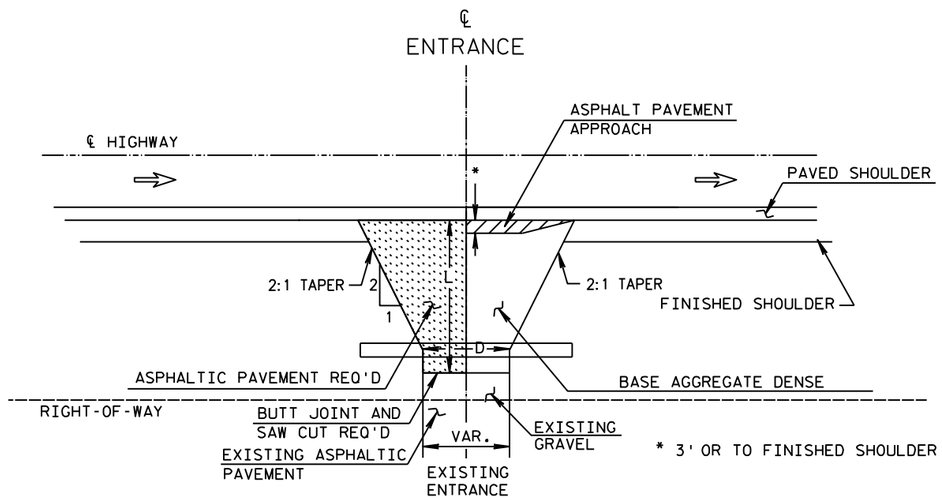

L=VARIABLE, EXACT LENGTH TO BE DETERMINED
IN THE FIELD BY THE ENGINEER.
BLEND BACK ON THE ENTRANCE FAR
ENOUGH TO GET A SMOOTH PROFILE.

PLAN VIEW

RURAL DRIVEWAY INTERSECTION DETAIL
(PE's, FE's & CE'S)
(FOR NEW CONSTRUCTION)

2

TYPICAL CROSS SECTION

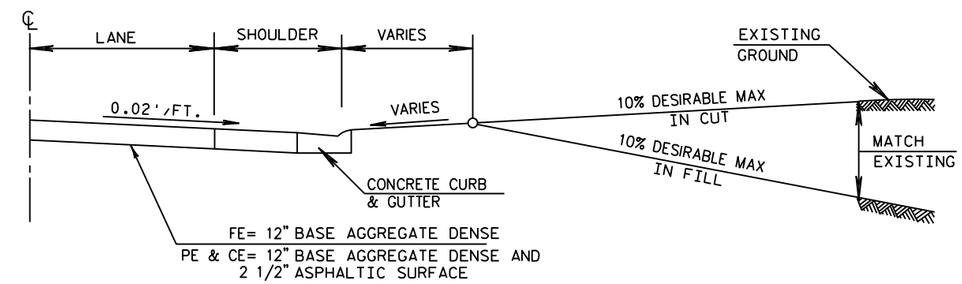

PROFILE VIEW

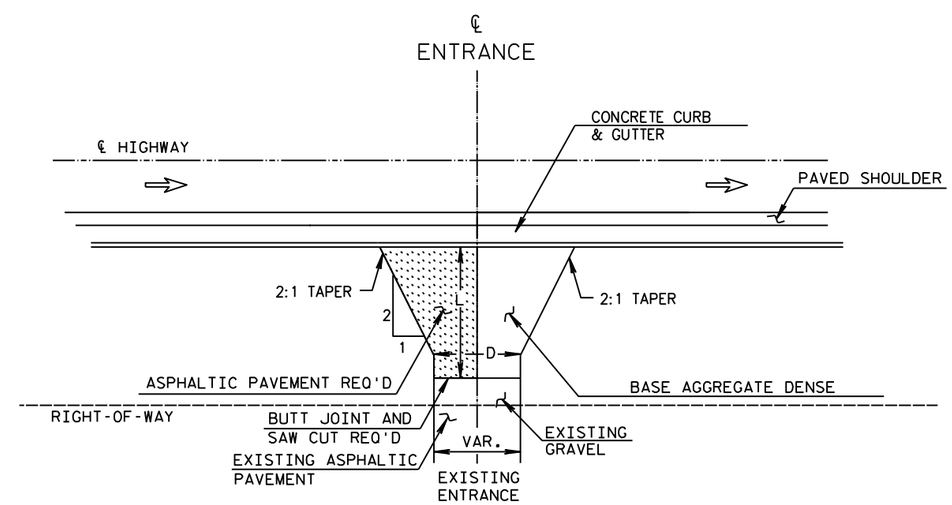

L=VARIABLE, EXACT LENGTH TO BE DETERMINED
IN THE FIELD BY THE ENGINEER.
BLEND BACK ON THE ENTRANCE FAR
ENOUGH TO GET A SMOOTH PROFILE.

PLAN VIEW

URBAN DRIVEWAY INTERSECTION DETAIL
(PE's, FE's & CE'S)
(FOR NEW CONSTRUCTION)

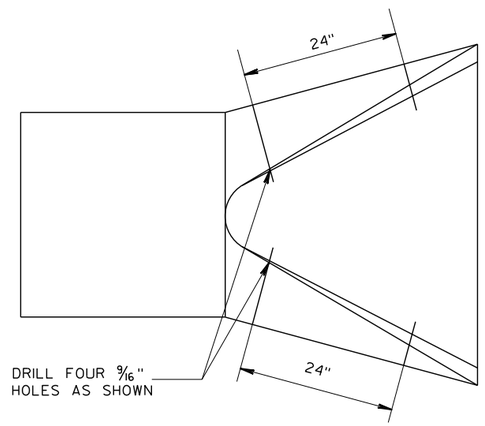

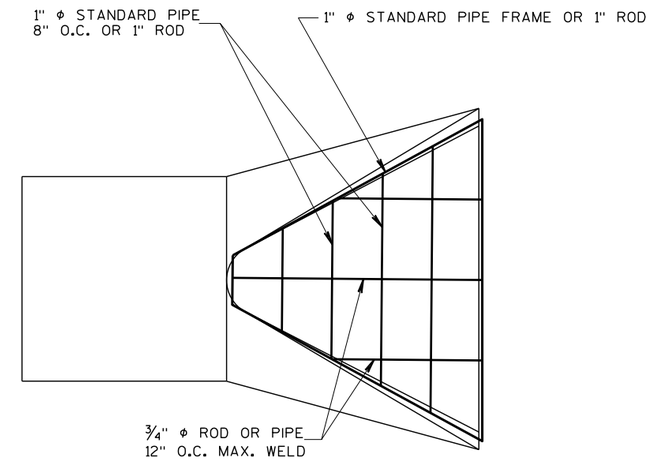

AT EACH PIPE

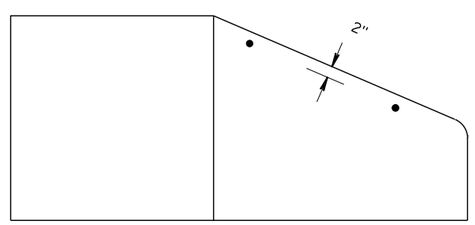

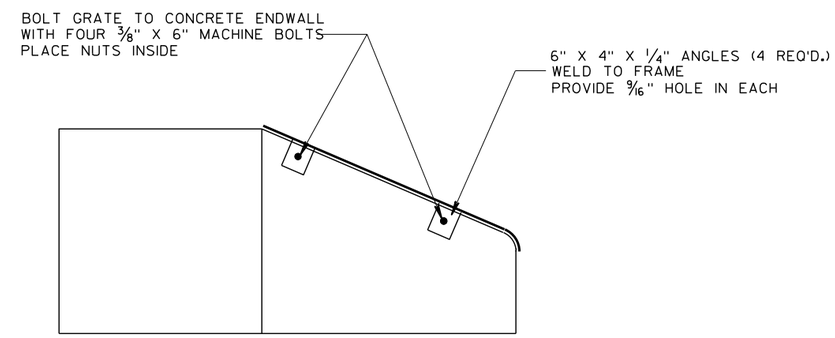

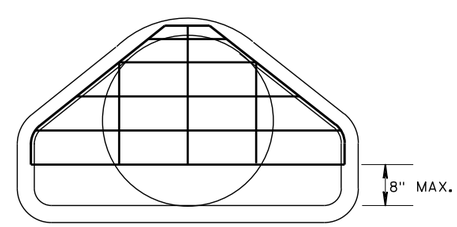

PIPE GRATE DETAIL

PROJECT NO: 4627-02-71	HWY: CTH A	COUNTY: WINNEBAGO	PLAN: PIPE GRATE DETAIL	SHEET 11	E

FILE NAME : W:\PROJECTS\W0059\81700113\CADD\CIVIL3D\PLAN SHEETS\02-TYPICALS\CTH A TYPICAL SECTIONS.DWG
LAYOUT NAME - PIPE GRATE DETAIL
PLOT DATE : 1/7/2020 2:57 PM PLOT BY : JORDAN JELINSKI PLOT NAME : PLOT SCALE : 1'-0" = 1'-0"

2

2

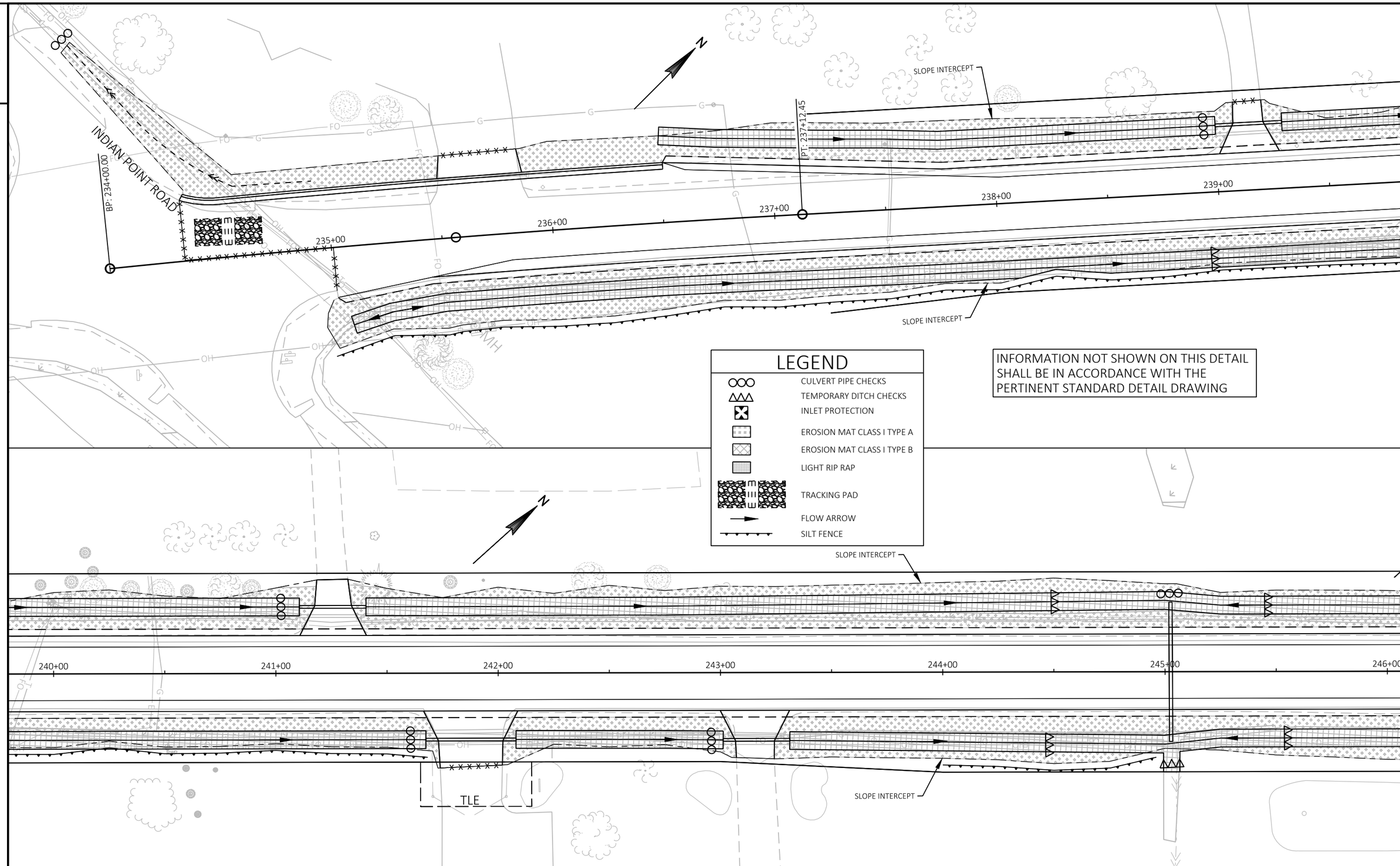

LEGEND

- CULVERT PIPE CHECKS
- TEMPORARY DITCH CHECKS
- INLET PROTECTION
- EROSION MAT CLASS I TYPE A
- EROSION MAT CLASS I TYPE B
- LIGHT RIP RAP
- TRACKING PAD
- FLOW ARROW
- SILT FENCE

INFORMATION NOT SHOWN ON THIS DETAIL SHALL BE IN ACCORDANCE WITH THE PERTINENT STANDARD DETAIL DRAWING

PROJECT NO: 4627-02-71	HWY: CTH A	COUNTY: WINNEBAGO	02- EROSION CONTROL	SHEET 12	E

FILE NAME : W:\PROJECTS\W0059\81700113\CADD\CIVIL3D\PLAN SHEETS\02-EC\02-CTH A EROSION CONTROL.DWG
LAYOUT NAME - 1 EC
PLOT DATE : 1/7/2020 2:58 PM
PLOT BY : JORDAN JELINSKI
PLOT NAME :
PLOT SCALE : 1 IN:40 FT

2

INFORMATION NOT SHOWN ON THIS DETAIL SHALL BE IN ACCORDANCE WITH THE PERTINENT STANDARD DETAIL DRAWING

SLOPE INTERCEPT

PC: 249+47.18

SHAWNEE LANE

247+00 248+00 249+00 250+00 251+00 252+00

PLE

EROSION MAT CLASS I TYPE B (TYP)

SLOPE INTERCEPT

LEGEND

- CULVERT PIPE CHECKS
- TEMPORARY DITCH CHECKS
- INLET PROTECTION
- EROSION MAT CLASS I TYPE A
- EROSION MAT CLASS I TYPE B
- LIGHT RIP RAP
- TRACKING PAD
- FLOW ARROW
- SILT FENCE

SLOPE INTERCEPT

253+00 254+00 255+00 256+00 257+00 258+00

EP: 40+00.00

BP: 50+00.00

BP: 60+00.00

PLE

EROSION MAT CLASS I TYPE B (TYP)

SLOPE INTERCEPT

IROQUOIS COURT

COMANCHE LANE

61+00

2

PROJECT NO: 4627-02-71	HWY: CTH A	COUNTY: WINNEBAGO	02- EROSION CONTROL	SHEET 13	E

FILE NAME : W:\PROJECTS\W0059\8170011 3\CADD\CIVIL3D\PLAN SHEETS\02-EC\02-CTH A EROSION CONTROL.DWG
LAYOUT NAME - 2 EC

PLOT DATE : 1/7/2020 2:58 PM PLOT BY : JORDAN JELINSKI PLOT NAME : PLOT SCALE : 1 IN:40 FT

WISDOT/CADDS SHEET 42

2

2

SLOPE INTERCEPT

PT: 258+90.54

259+00

260+00

261+00

262+00

263+00

264+00

SLOPE INTERCEPT

INFORMATION NOT SHOWN ON THIS DETAIL SHALL BE IN ACCORDANCE WITH THE PERTINENT STANDARD DETAIL DRAWING

LEGEND

- CULVERT PIPE CHECKS
- TEMPORARY DITCH CHECKS
- INLET PROTECTION
- EROSION MAT CLASS I TYPE A
- EROSION MAT CLASS I TYPE B
- LIGHT RIP RAP
- TRACKING PAD
- FLOW ARROW
- SILT FENCE

PC: 269+31.86

265+00

266+00

267+00

268+00

269+00

270+00

SLOPE INTERCEPT

PLE

GRUNDMAN L

PROJECT NO: 4627-02-71	HWY: CTH A	COUNTY: WINNEBAGO	02- EROSION CONTROL	SHEET 14	E

FILE NAME : W:\PROJECTS\W0059\81700113\CADD\CIVIL3D\PLAN SHEETS\02-EC\02-CTH A EROSION CONTROL.DWG
LAYOUT NAME - 3 EC

PLOT DATE : 1/7/2020 2:58 PM PLOT BY : JORDAN JELINSKI PLOT NAME : PLOT SCALE : 1 IN:40 FT

WISDOT/CADDS SHEET 42

2

2

N

SLOPE INTERCEPT

3/4" REBAR

271+00

272+00

273+00

BP: 70+00.00

274+00

275+00

276+00

277+00

GRUNDMAN LANE

71+00

TLE

SLOPE INTERCEPT

LEGEND

- CULVERT PIPE CHECKS
- TEMPORARY DITCH CHECKS
- INLET PROTECTION
- EROSION MAT CLASS I TYPE A
- EROSION MAT CLASS I TYPE B
- LIGHT RIP RAP
- TRACKING PAD
- FLOW ARROW
- SILT FENCE

INFORMATION NOT SHOWN ON THIS DETAIL SHALL BE IN ACCORDANCE WITH THE PERTINENT STANDARD DETAIL DRAWING

N

SLOPE INTERCEPT

PT: 277+73.31

278+00

279+00

280+00

281+00

282+00

283+00

SLOPE INTERCEPT

PROJECT NO: 4627-02-71	HWY: CTH A	COUNTY: WINNEBAGO	02- EROSION CONTROL	SHEET 15	E

FILE NAME : W:\PROJECTS\W0059\81700113\CADD\CIVIL3D\PLAN SHEETS\02-EC\02-CTH A EROSION CONTROL.DWG
LAYOUT NAME - 4 EC

PLOT DATE : 1/7/2020 2:59 PM PLOT BY : JORDAN JELINSKI PLOT NAME : PLOT SCALE : 1 IN:40 FT

WISDOT/CADDS SHEET 42

2

2

SLOPE INTERCEPT

284+00

285+00

286+00

287+00

288+00

289+00

SLOPE INTERCEPT

TLE

INFORMATION NOT SHOWN ON THIS DETAIL SHALL BE IN ACCORDANCE WITH THE PERTINENT STANDARD DETAIL DRAWING

LEGEND

- CULVERT PIPE CHECKS
- TEMPORARY DITCH CHECKS
- INLET PROTECTION
- EROSION MAT CLASS I TYPE A
- EROSION MAT CLASS I TYPE B
- LIGHT RIP RAP
- TRACKING PAD
- FLOW ARROW
- SILT FENCE

TLE

290+00

291+00

292+00

293+00

294+00

295+00

SLOPE INTERCEPT

PROJECT NO: 4627-02-71	HWY: CTH A	COUNTY: WINNEBAGO	02- EROSION CONTROL	SHEET 16	E

FILE NAME : W:\PROJECTS\W0059\81700113\CADD\CIVIL3D\PLAN SHEETS\02-EC\02-CTH A EROSION CONTROL.DWG
LAYOUT NAME - 5 EC

PLOT DATE : 1/7/2020 2:59 PM PLOT BY : JORDAN JELINSKI PLOT NAME : PLOT SCALE : 1 IN:40 FT

WISDOT/CADDS SHEET 42

2

INFORMATION NOT SHOWN ON THIS DETAIL SHALL BE IN ACCORDANCE WITH THE PERTINENT STANDARD DETAIL DRAWING

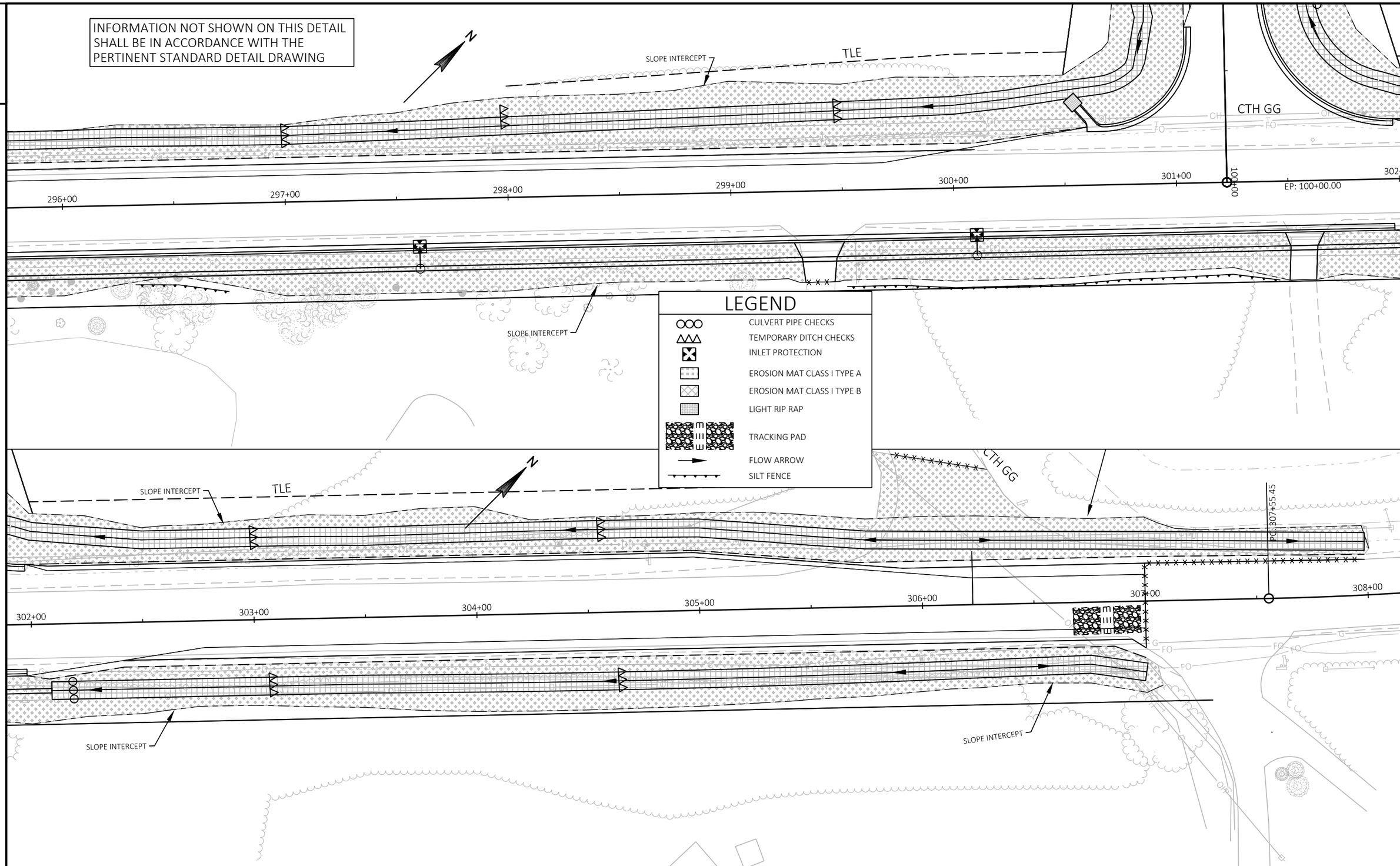

2

PROJECT NO: 4627-02-71	HWY: CTH A	COUNTY: WINNEBAGO	02- EROSION CONTROL	SHEET 17	E

FILE NAME : W:\PROJECTS\W0059\81700113\CADD\CIVIL3D\PLAN SHEETS\02-EC\02-CTH A EROSION CONTROL.DWG
LAYOUT NAME - 6 EC
PLOT DATE : 1/7/2020 2:59 PM
PLOT BY : JORDAN JELINSKI
PLOT NAME :
PLOT SCALE : 1 IN:40 FT

2

2

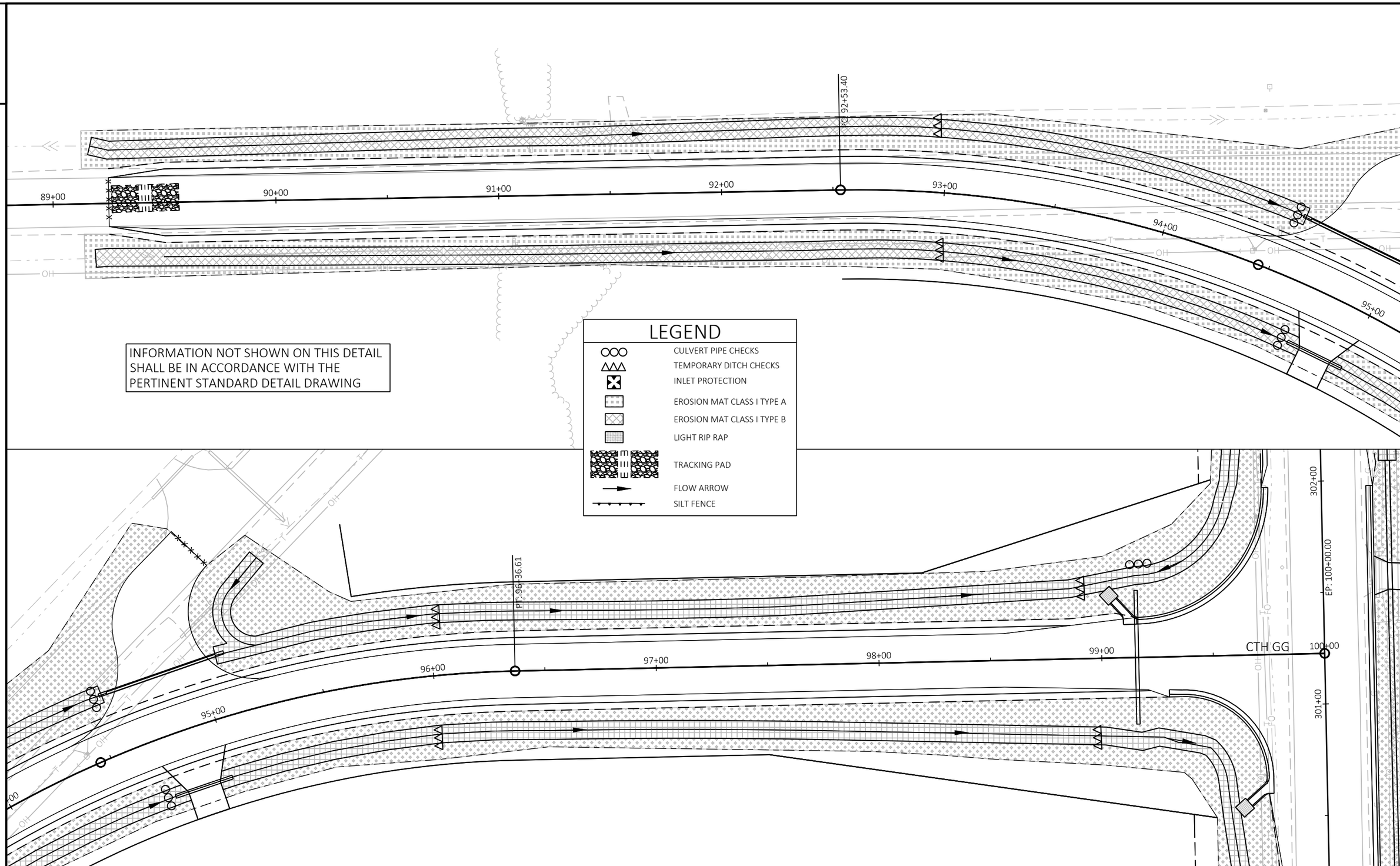

INFORMATION NOT SHOWN ON THIS DETAIL SHALL BE IN ACCORDANCE WITH THE PERTINENT STANDARD DETAIL DRAWING

PROJECT NO: 4627-02-71	HWY: CTH A	COUNTY: WINNEBAGO	02- EROSION CONTROL- CTH GG	SHEET 18	E

FILE NAME : W:\PROJECTS\W0059\81700113\CADD\CIVIL3D\PLAN SHEETS\02-EC\02-CTH A EROSION CONTROL.DWG
LAYOUT NAME - 7 EC
PLOT DATE : 1/7/2020 2:59 PM PLOT BY : JORDAN JELINSKI PLOT NAME : PLOT SCALE : 1 IN:40 FT

2

INFORMATION NOT SHOWN ON THIS DETAIL SHALL BE IN ACCORDANCE WITH THE PERTINENT STANDARD DETAIL DRAWING

273+00
BP: 70+00.00
GRUNDMAN LANE
71+00
72+00
PC: 72+06.10
73+00
PT: 73+93.81
74+00
75+00
272+00
OH
EOD

LEGEND

- CULVERT PIPE CHECKS
- TEMPORARY DITCH CHECKS
- INLET PROTECTION
- EROSION MAT CLASS I TYPE A
- EROSION MAT CLASS I TYPE B
- LIGHT RIP RAP
- TRACKING PAD
- FLOW ARROW
- SILT FENCE

N

2

271+00
270+00
269+00
GRUNDMAN LANE
72+00
73+00
74+00
PT: 73+93.81
OH

N

PROJECT NO: 4627-02-71	HWY: CTH A	COUNTY: WINNEBAGO	02- EROSION CONTROL- GRUNDMAN LANE	SHEET 19	E

FILE NAME : W:\PROJECTS\W0059\81700113\CADD\CIVIL3D\PLAN SHEETS\02-EC\02-CTH A EROSION CONTROL.DWG
LAYOUT NAME - 8 EC
PLOT DATE : 1/7/2020 2:59 PM
PLOT BY : JORDAN JELINSKI
PLOT NAME :
PLOT SCALE : 1 IN:40 FT
WISDOT/CADDS SHEET 42

2

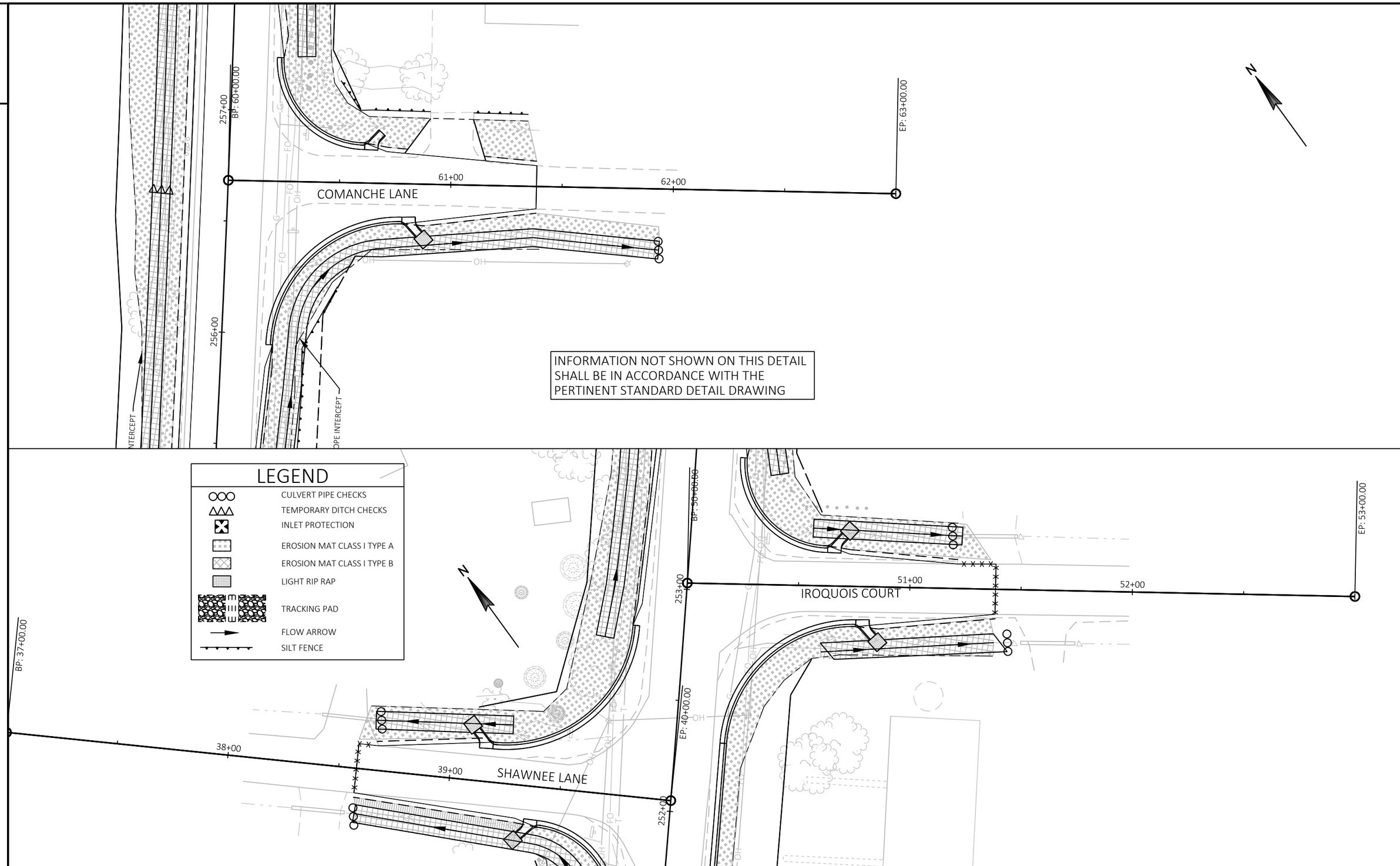

2

PROJECT NO: 4627-02-71	HWY: CTH A	COUNTY: WINNEBAGO	02- EROSION CONTROL- COMANCHEE LANE & SHAWNEE LANE	SHEET 20	E

FILE NAME : W:\PROJECTS\W0059\81700113\CADD\CIVIL3D\PLAN SHEETS\02-EC\02-CTH A EROSION CONTROL.DWG
LAYOUT NAME - 9 EC
PLOT DATE : 1/7/2020 2:59 PM
PLOT BY : JORDAN JELINSKI
PLOT NAME :
PLOT SCALE : 1 IN:40 FT

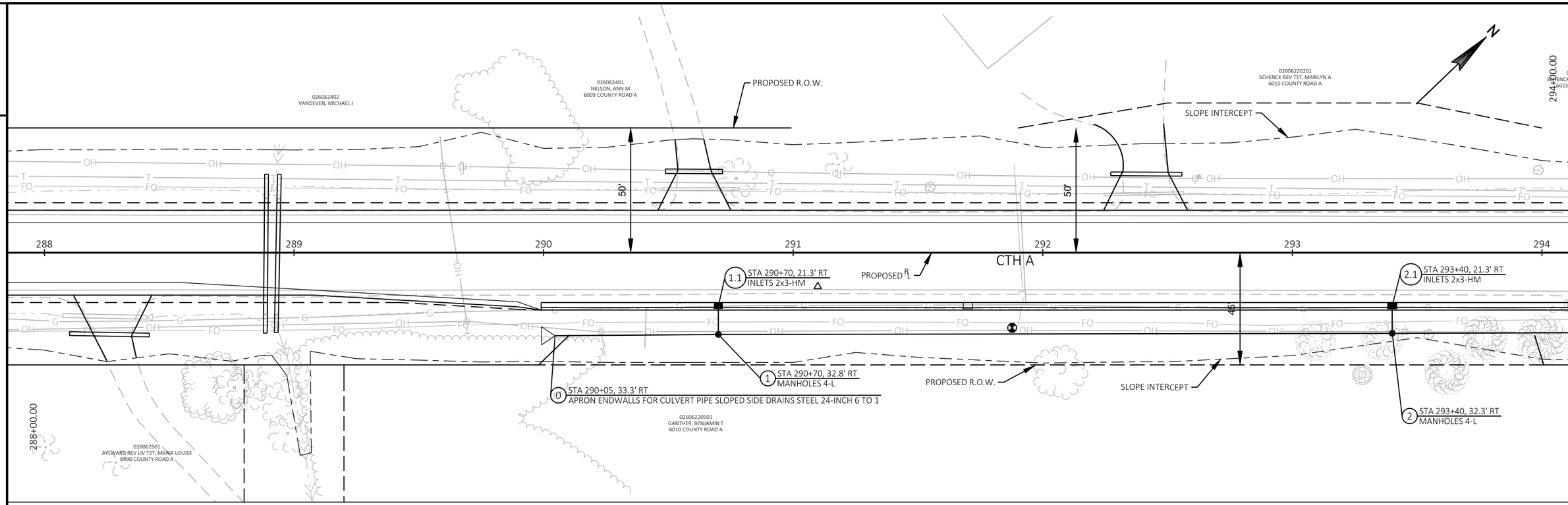

PROJECT NO: 4627-02-71	HWY: CTH A	COUNTY: WINNEBAGO	PLAN: STORM SEWER DETAIL	SHEET 21	E

FILE NAME : W:\PROJECTS\W0059\81700113\CADD\CIVIL3D\PLAN SHEETS\02-SS-DETAILS\02- CTH A STORM SEWER DETAILS.DWG
LAYOUT NAME - 1 SS
PLOT DATE : 1/7/2020 3:00 PM PLOT BY : JORDAN JELINSKI PLOT NAME : PLOT SCALE : 1 IN:40 FT

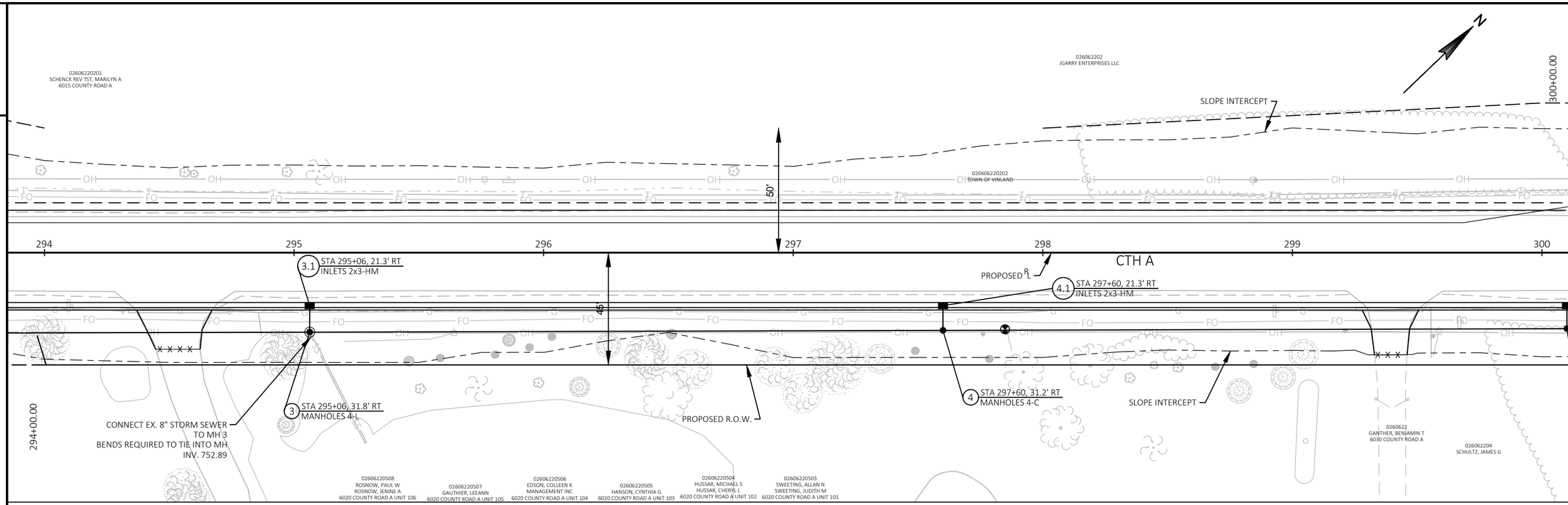

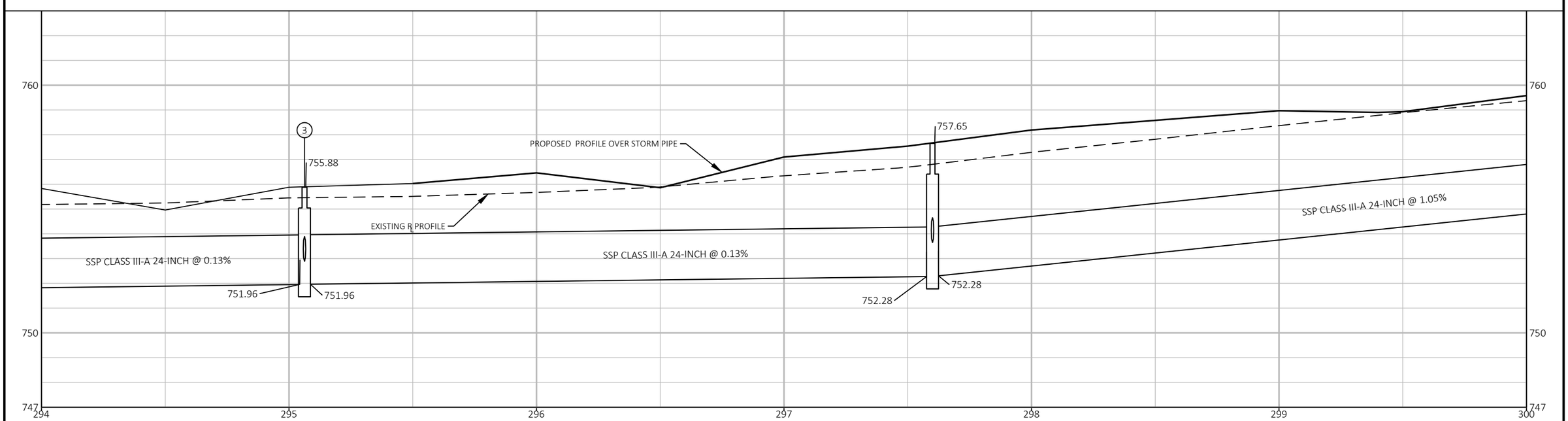

PROJECT NO: 4627-02-71	HWY: CTH A	COUNTY: WINNEBAGO	PLAN: STORM SEWER DETAIL	SHEET 22	E

FILE NAME : W:\PROJECTS\W0059\81700113\CADD\CIVIL3D\PLAN SHEETS\02-SS-DETAILS\02- CTH A STORM SEWER DETAILS.DWG
LAYOUT NAME - 2 SS
PLOT DATE : 1/7/2020 3:00 PM PLOT BY : JORDAN JELINSKI PLOT NAME : PLOT SCALE : 1 IN:40 FT

WISDOT/CADDS SHEET 42

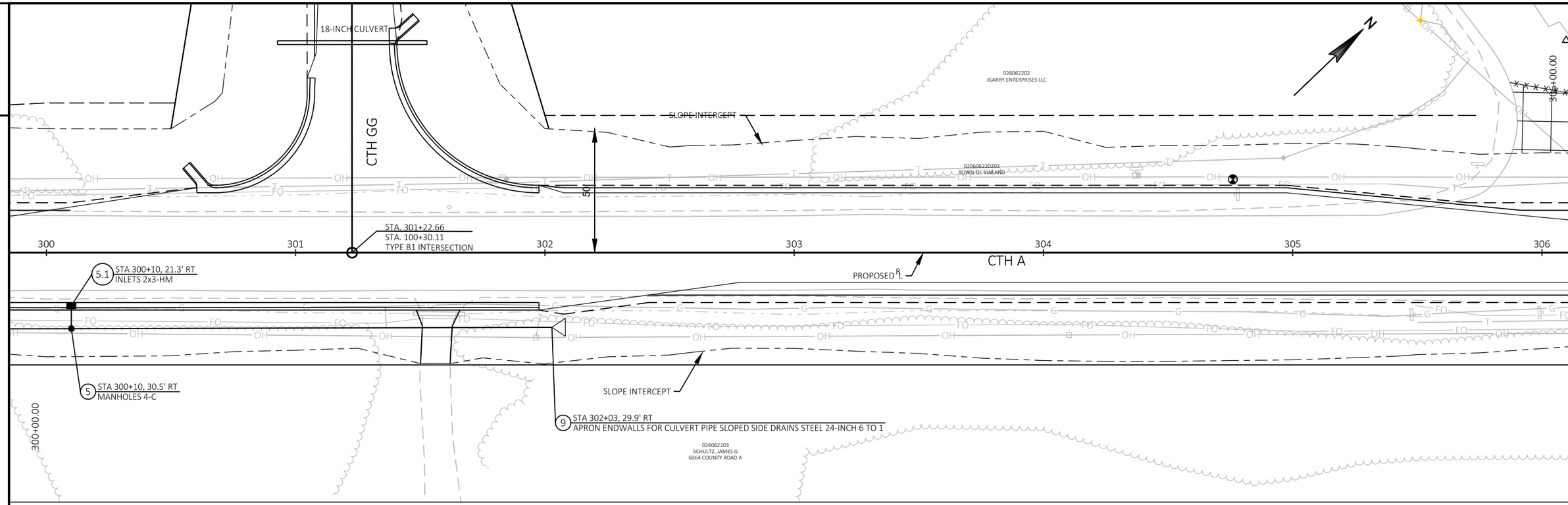

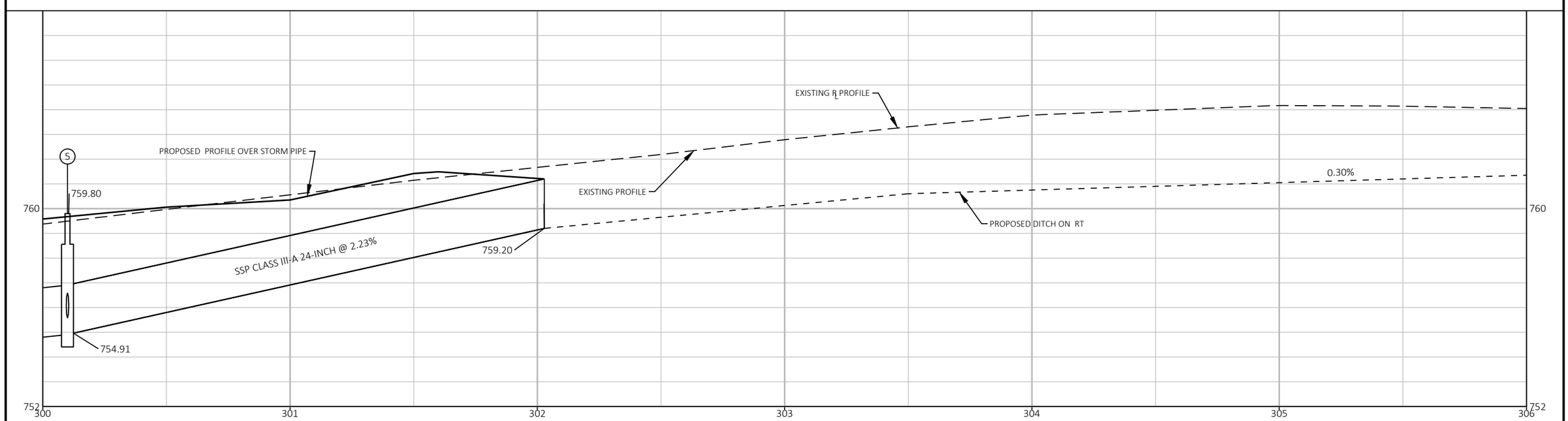

PROJECT NO: 4627-02-71	HWY: CTH A	COUNTY: WINNEBAGO	PLAN: STORM SEWER DETAIL	SHEET 23	E

FILE NAME : W:\PROJECTS\W0059\81700113\CADD\CIVIL3D\PLAN SHEETS\02-SS-DETAILS\02- CTH A STORM SEWER DETAILS.DWG
LAYOUT NAME - 3 SS
PLOT DATE : 1/7/2020 3:00 PM PLOT BY : JORDAN JELINSKI PLOT NAME : PLOT SCALE : 1 IN:40 FT

WISDOT/CADDS SHEET 42

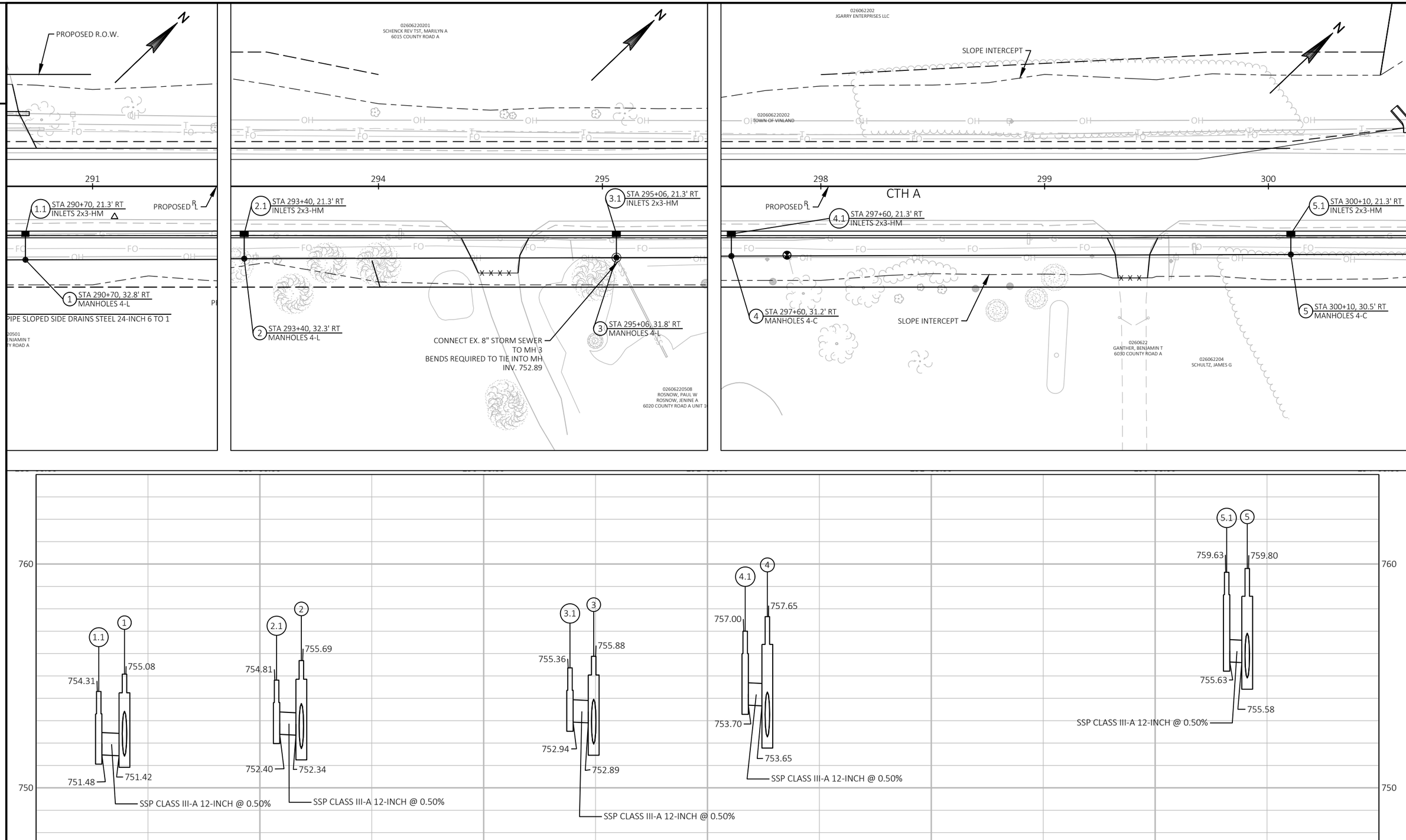

PROJECT NO: 4627-02-71	HWY: CTH A	COUNTY: WINNEBAGO	PLAN: STORM SEWER DETAIL	SHEET 24	E

FILE NAME : W:\PROJECTS\W0059\81700113\CADD\CIVIL3D\PLAN SHEETS\02-SS-DETAILS\02- CTH A STORM SEWER DETAILS.DWG
LAYOUT NAME - 4 SS
PLOT DATE : 1/7/2020 3:01 PM PLOT BY : JORDAN JELINSKI PLOT NAME : PLOT SCALE : 1 IN:40 FT

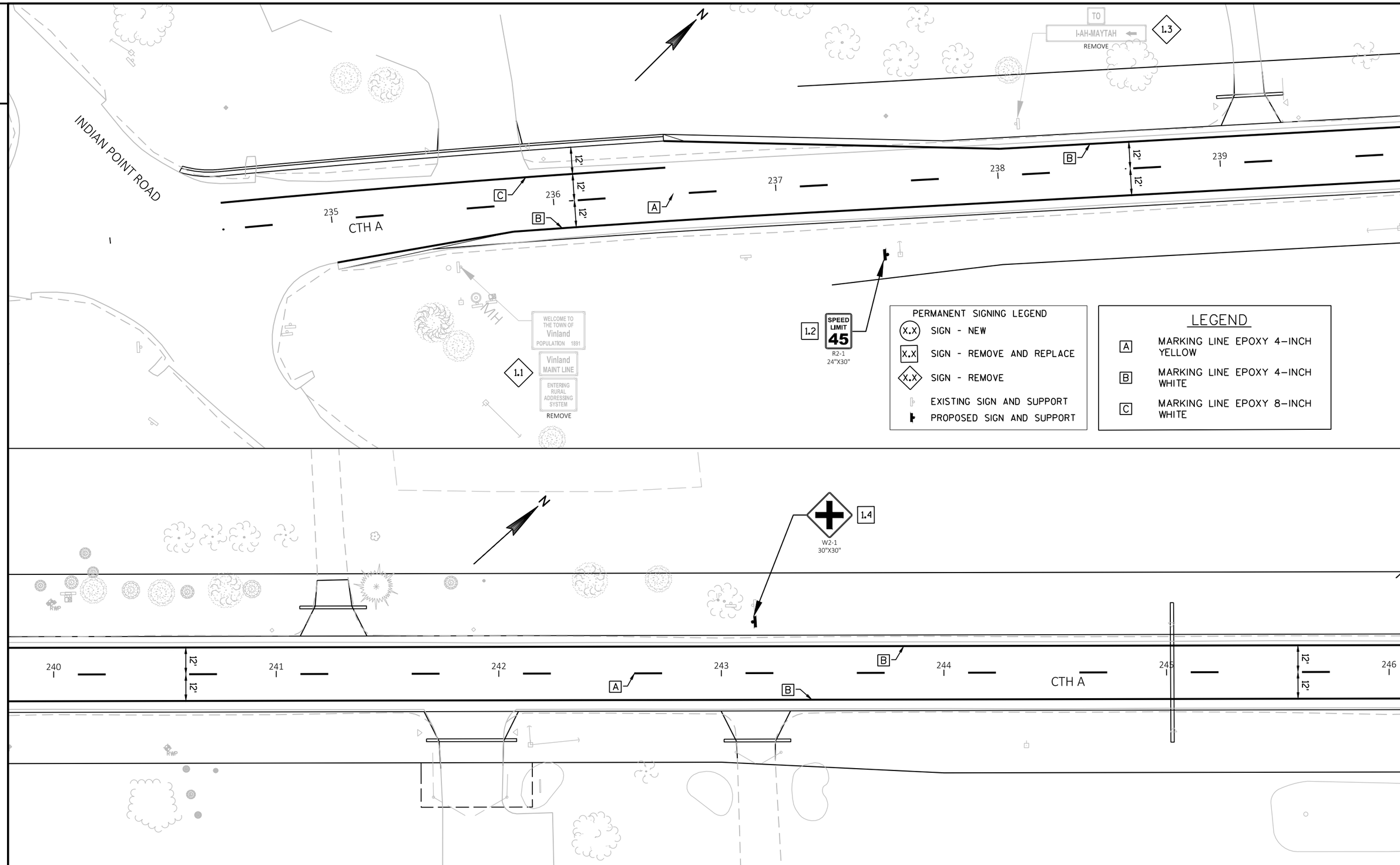

PROJECT NO: 4627 02-71	HWY: CTH A	COUNTY: WINNEBAGO	PERMANENT SIGNING AND PAVEMENT MARKING	SHEET 25	E

FILE NAME : W:\PROJECTS\W0059\81700113\CADD\CIVIL3D\PLAN SHEETS\02-SIGNING\02-CTH A PAVEMENT MARKING AND SIGNING.DWG
LAYOUT NAME - 1 Sign & PM
PLOT DATE : 1/7/2020 3:03 PM PLOT BY : JORDAN JELINSKI PLOT NAME : PLOT SCALE : 1" = 40'

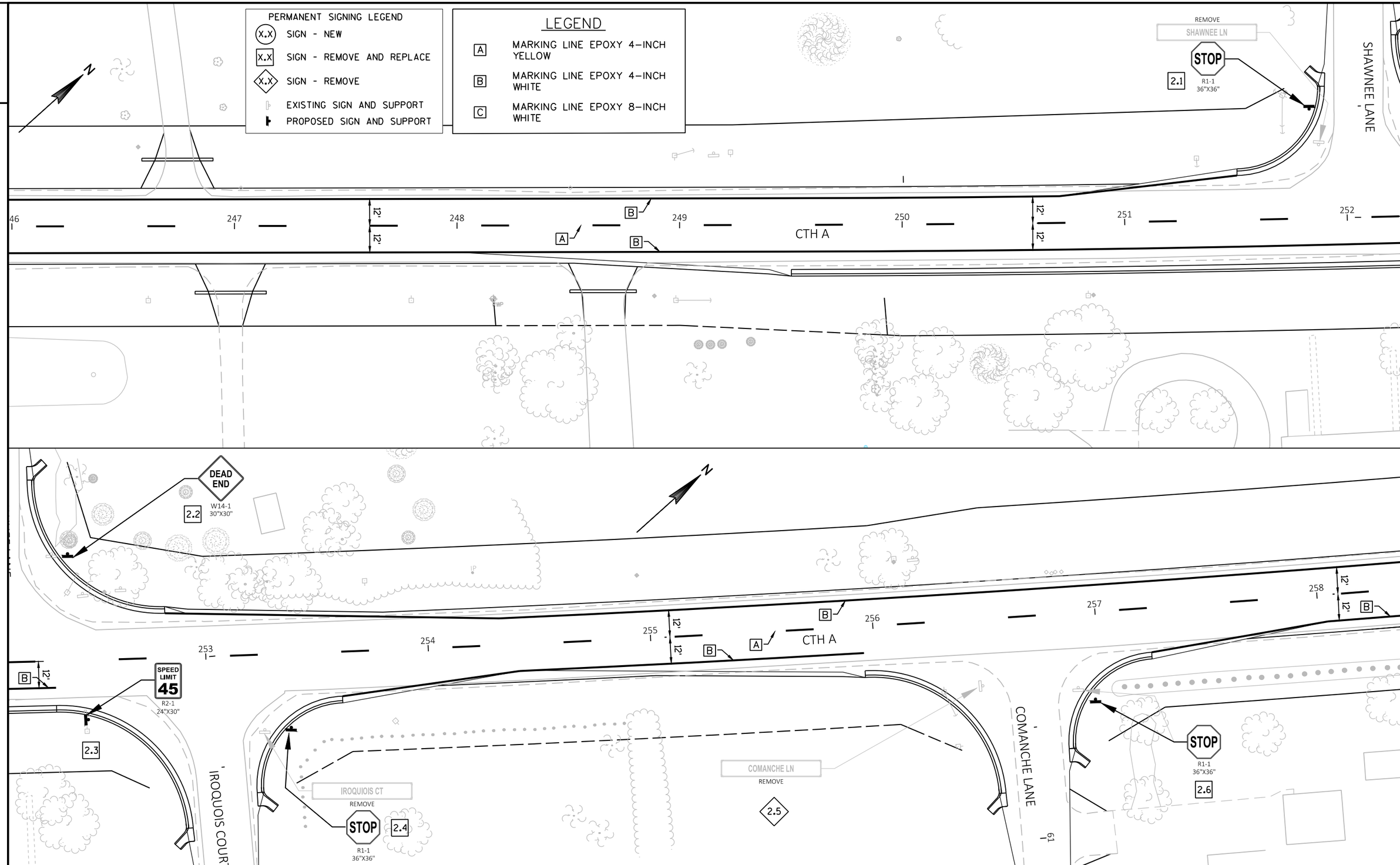

PROJECT NO: 4627 02-71	HWY: CTH A	COUNTY: WINNEBAGO	PERMANENT SIGNING AND PAVEMENT MARKING	SHEET 26	E

FILE NAME : W:\PROJECTS\W0059\81700113\CADD\CIVIL3D\PLAN SHEETS\02-SIGNING\02-CTH A PAVEMENT MARKING AND SIGNING.DWG
LAYOUT NAME - 2 Sign & PM
PLOT DATE : 1/7/2020 3:03 PM PLOT BY : JORDAN JELINSKI PLOT NAME : PLOT SCALE : 1" = 40'

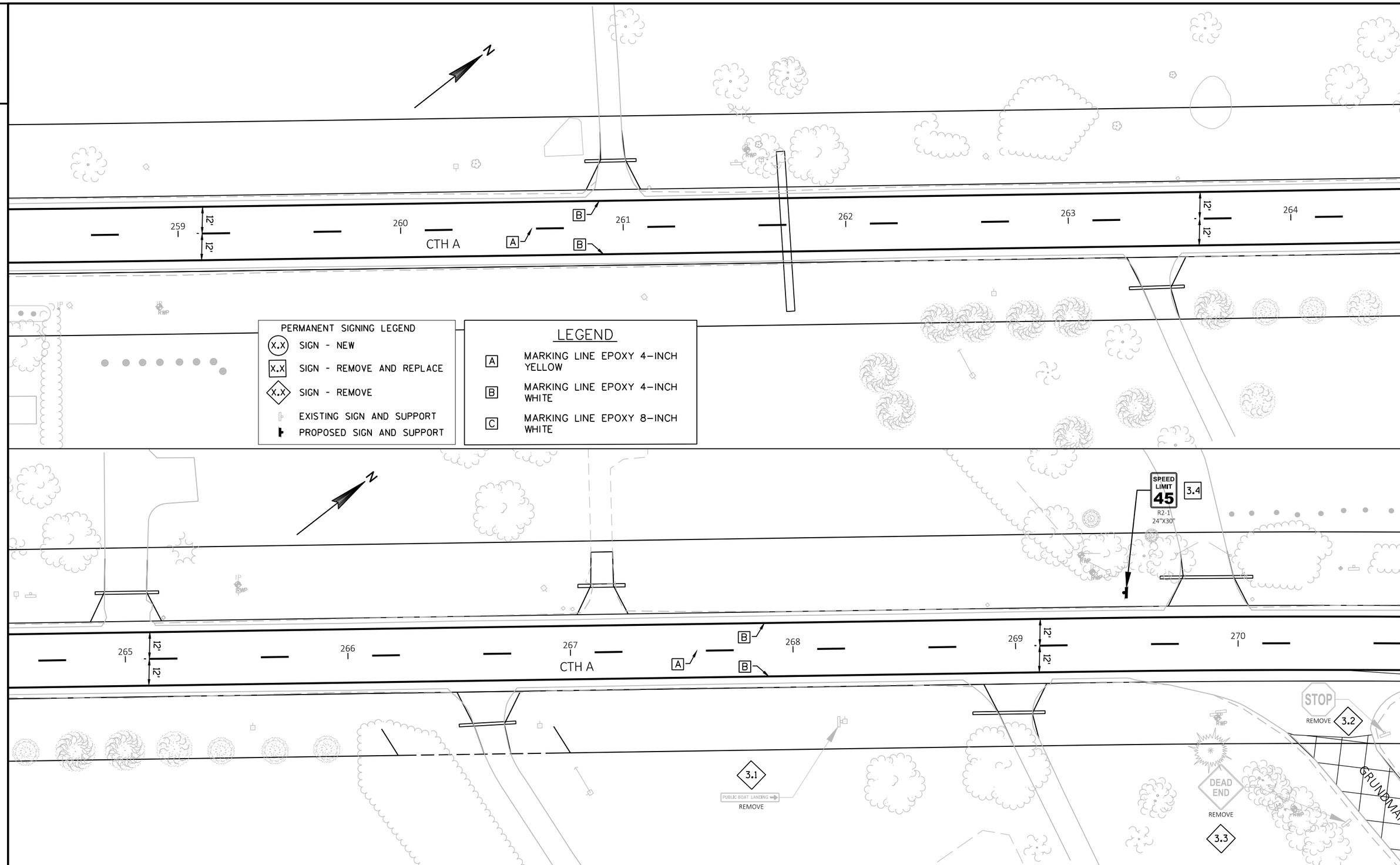

PROJECT NO: 4627 02-71	HWY: CTH A	COUNTY: WINNEBAGO	PERMANENT SIGNING AND PAVEMENT MARKING	SHEET 27	E

FILE NAME : W:\PROJECTS\W0059\81700113\CADD\CIVIL3D\PLAN SHEETS\02-SIGNING\02-CTH A PAVEMENT MARKING AND SIGNING.DWG
LAYOUT NAME - 3 Sign & PM
PLOT DATE : 1/7/2020 3:03 PM PLOT BY : JORDAN JELINSKI PLOT NAME : PLOT SCALE : 1" = 40'

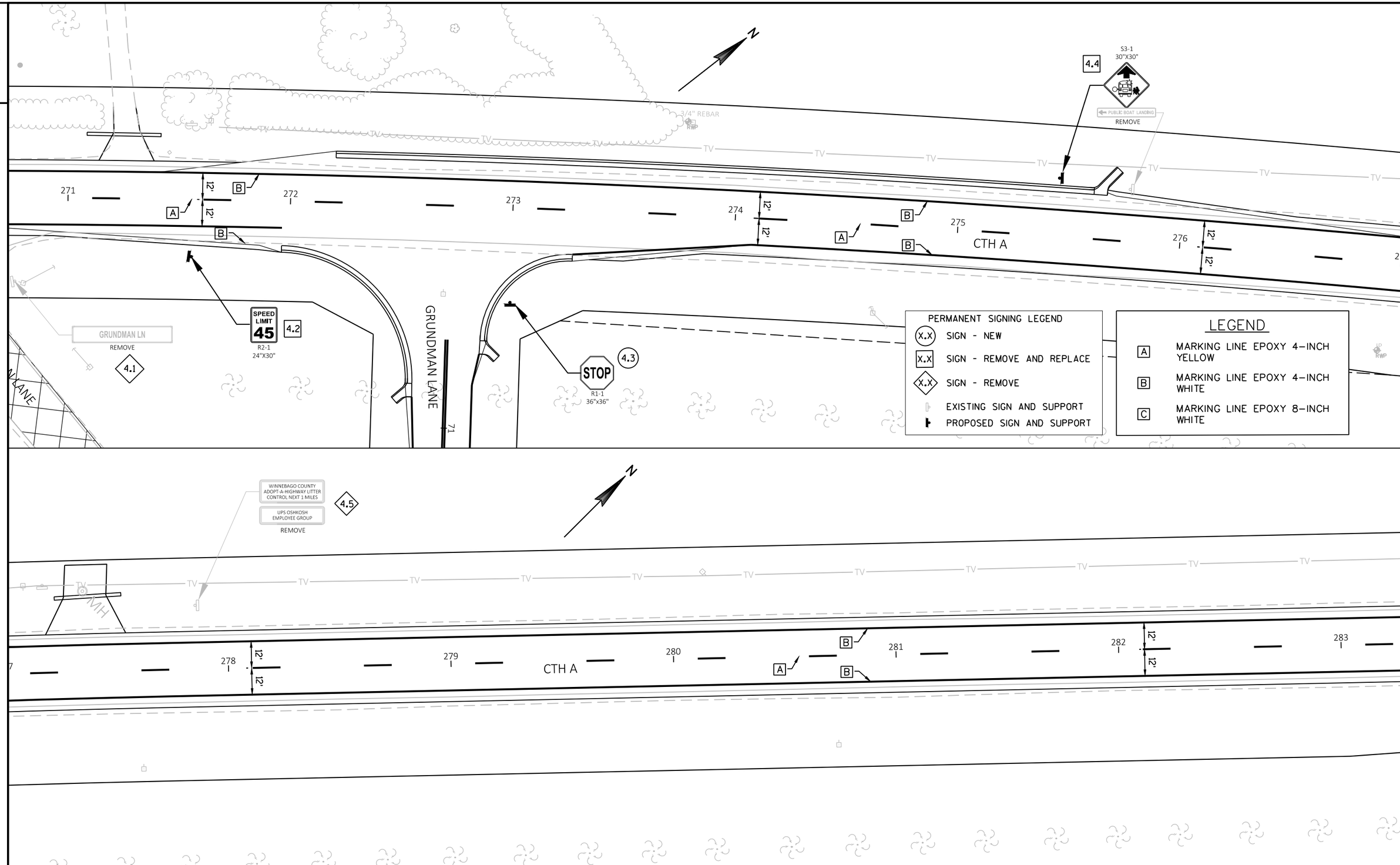

PROJECT NO: 4627 02-71	HWY: CTH A	COUNTY: WINNEBAGO	PERMANENT SIGNING AND PAVEMENT MARKING	SHEET 28	E

FILE NAME : W:\PROJECTS\W0059\81700113\CADD\CIVIL3D\PLAN SHEETS\02-SIGNING\02-CTH A PAVEMENT MARKING AND SIGNING.DWG
LAYOUT NAME - 4 Sign & PM
PLOT DATE : 1/7/2020 3:03 PM PLOT BY : JORDAN JELINSKI PLOT NAME : PLOT SCALE : 1" = 40'

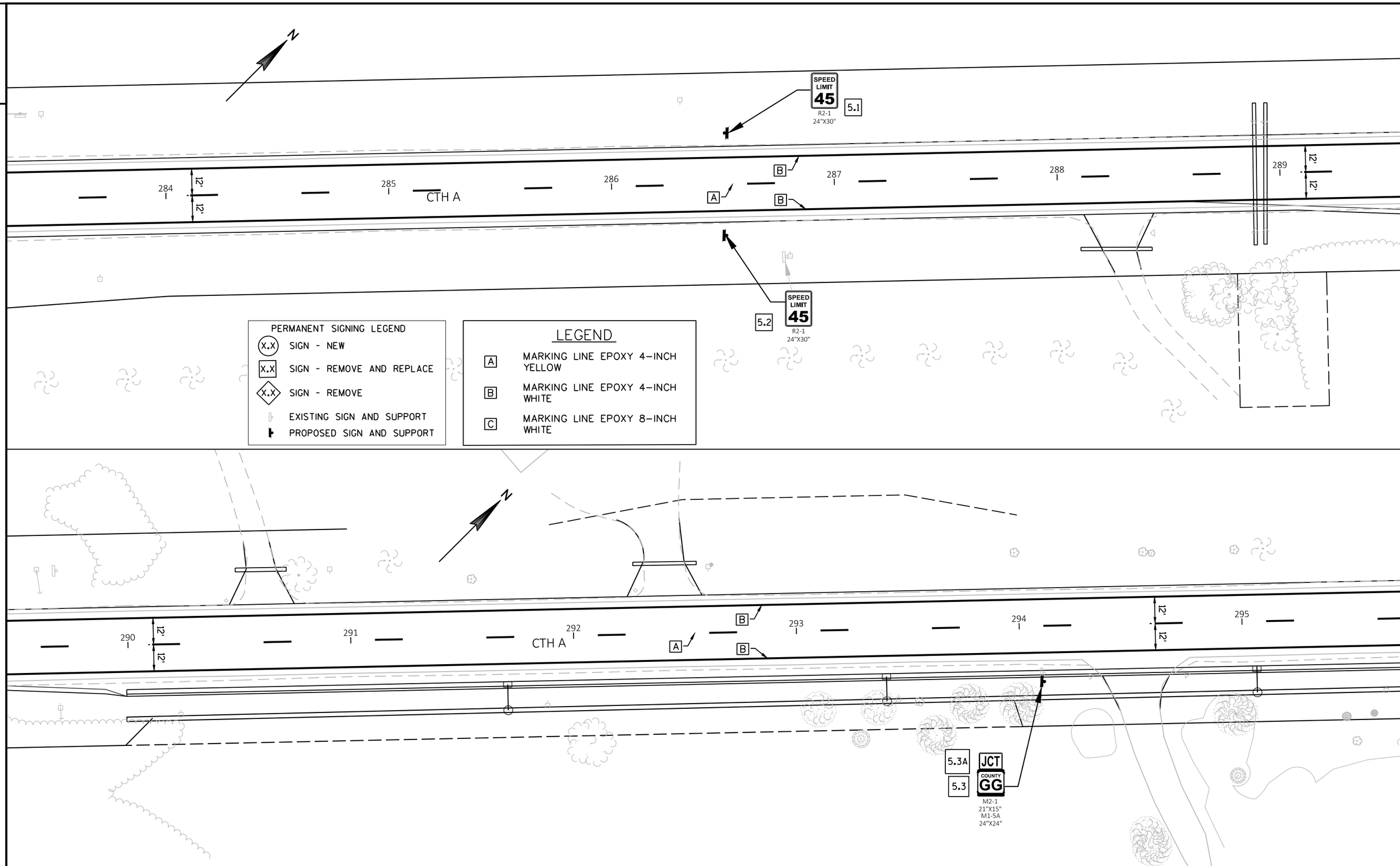

PERMANENT SIGNING LEGEND

- X.X SIGN - NEW
- X.X SIGN - REMOVE AND REPLACE
- X.X SIGN - REMOVE
- EXISTING SIGN AND SUPPORT
- PROPOSED SIGN AND SUPPORT

LEGEND

- A MARKING LINE EPOXY 4-INCH YELLOW
- B MARKING LINE EPOXY 4-INCH WHITE
- C MARKING LINE EPOXY 8-INCH WHITE

PROJECT NO: 4627 02-71	HWY: CTH A	COUNTY: WINNEBAGO	PERMANENT SIGNING AND PAVEMENT MARKING	SHEET 29	E

FILE NAME : W:\PROJECTS\W0059\81700113\CADD\CIVIL3D\PLAN SHEETS\02-SIGNING\02-CTH A PAVEMENT MARKING AND SIGNING.DWG
LAYOUT NAME - 5 Sign & PM
PLOT DATE : 1/7/2020 3:04 PM PLOT BY : JORDAN JELINSKI PLOT NAME : PLOT SCALE : 1" = 40'

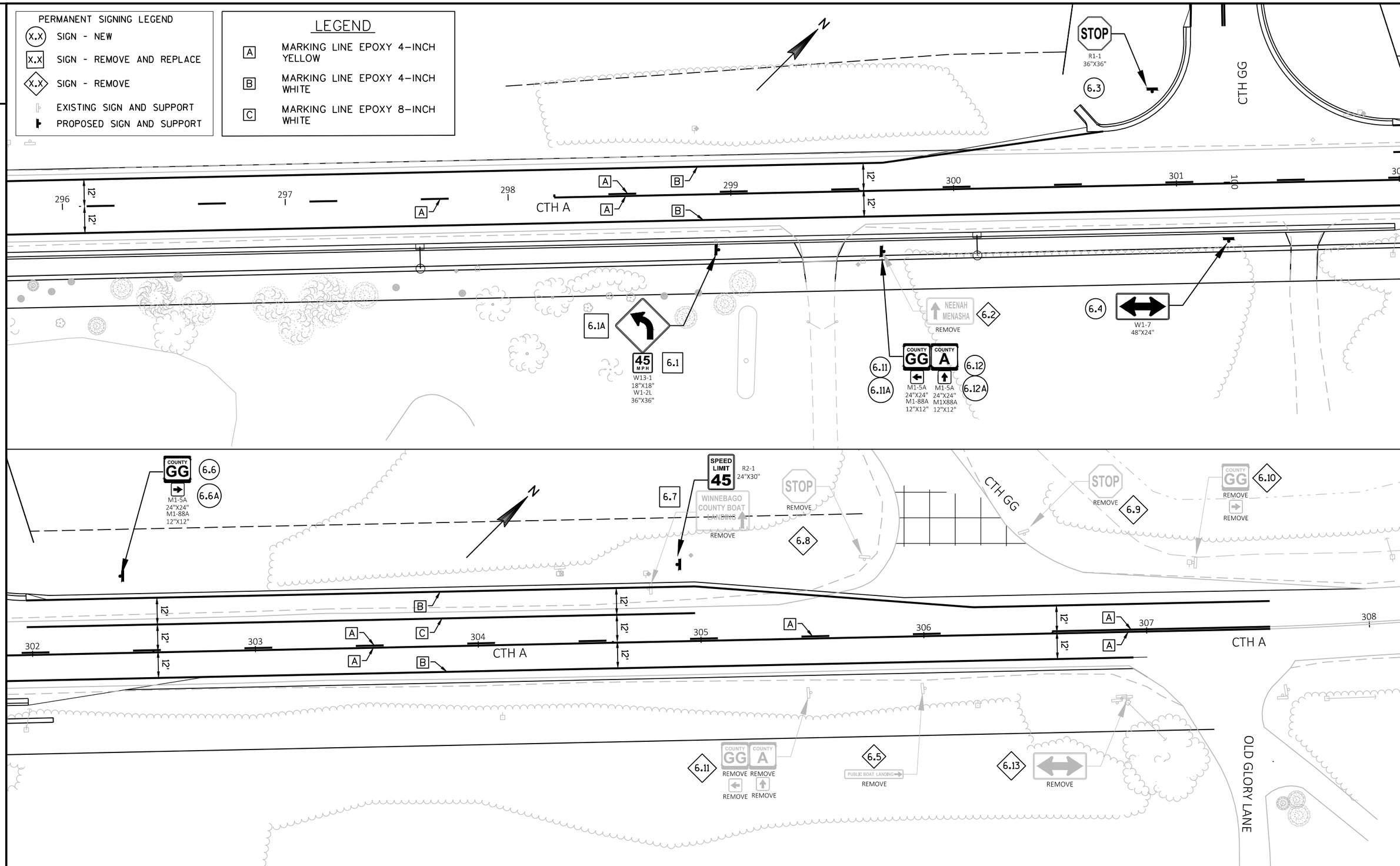

PROJECT NO: 4627 02-71	HWY: CTH A	COUNTY: WINNEBAGO	PERMANENT SIGNING AND PAVEMENT MARKING	SHEET 30	E

FILE NAME : W:\PROJECTS\W0059\81700113\CADD\CIVIL3D\PLAN SHEETS\02-SIGNING\02-CTH A PAVEMENT MARKING AND SIGNING.DWG
LAYOUT NAME - 6 Sign & PM
PLOT DATE : 1/7/2020 3:04 PM PLOT BY : JORDAN JELINSKI PLOT NAME : PLOT SCALE : 1" = 40'

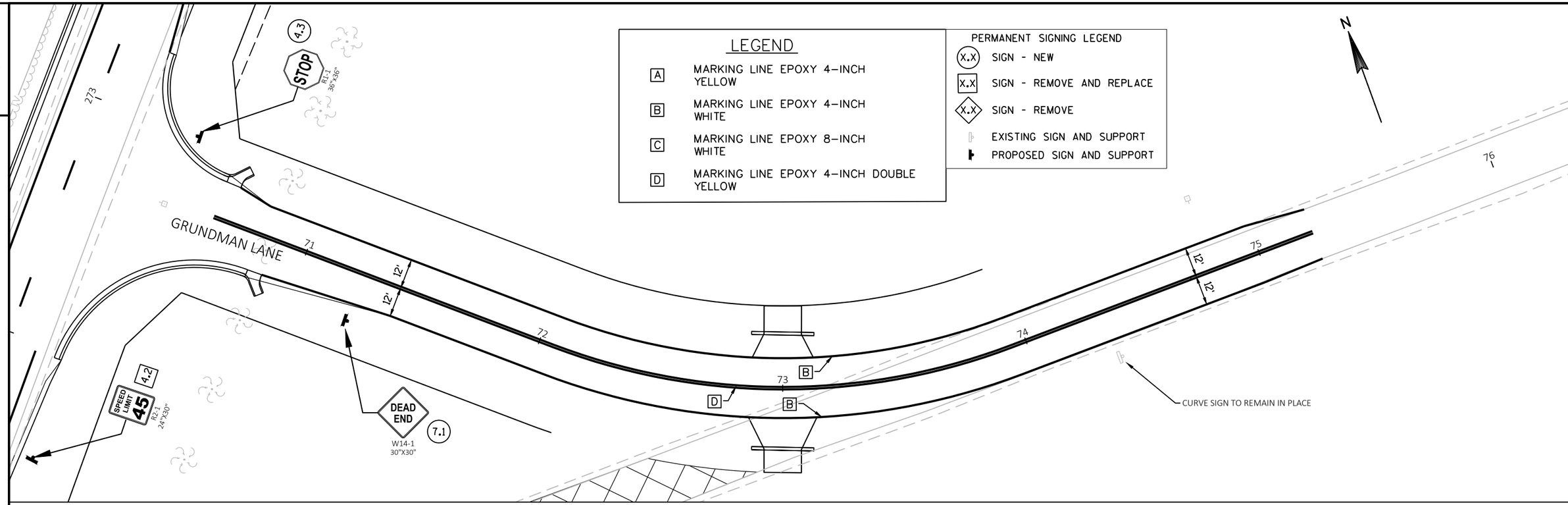

PROJECT NO: 4627-02-71	HWY: CTH A	COUNTY: WINNEBAGO	GRUNDMAN LANE	SHEET 31	E

FILE NAME : W:\PROJECTS\W0059\81700113\CADD\CIVIL3D\PLAN SHEETS\02-SIGNING\02-CTH A PAVEMENT MARKING AND SIGNING.DWG
LAYOUT NAME - 7 Sign & PM
PLOT DATE : 1/7/2020 3:04 PM PLOT BY : JORDAN JELINSKI PLOT NAME : PLOT SCALE : 1" = 40'

2

N

LITTER CONTROL SIGN TO REMAIN IN PLACE

STOP AHEAD SIGN TO REMAIN IN PLACE

CTH GG

88 89 90 91 92 93

12' 12' 12' 12'

B D B

8.1 W1-2R 36"X36"

8.1A JCT M2-1 18"X18"

8.1B COUNTY A M1-5A 24"X24"

PERMANENT SIGNING LEGEND

X.X SIGN - NEW

X.X SIGN - REMOVE AND REPLACE

X.X SIGN - REMOVE

EXISTING SIGN AND SUPPORT

PROPOSED SIGN AND SUPPORT

8.2 W1-2L 36"X36"

94 95 96 97 98 99 100 301 302

12' 12' 12' 12'

B D B

CTH GG

CTH GG

8.1 REMOVE

JCT REMOVE

COUNTY A REMOVE

STOP R1-1 36"X36" 6.3

LEGEND

A MARKING LINE EPOXY 4-INCH YELLOW

B MARKING LINE EPOXY 4-INCH WHITE

C MARKING LINE EPOXY 8-INCH WHITE

D MARKING LINE EPOXY 4-INCH DOUBLE YELLOW

2

PROJECT NO: 4627-02-71	HWY: CTH A	COUNTY: WINNEBAGO	CTH GG	SHEET 32	E

FILE NAME : W:\PROJECTS\W0059\81700113\CADD\CIVIL3D\PLAN SHEETS\02-SIGNING\02-CTH A PAVEMENT MARKING AND SIGNING.DWG
LAYOUT NAME - 8 Sign & PM

PLOT DATE : 1/7/2020 3:04 PM PLOT BY : JORDAN JELINSKI PLOT NAME : PLOT SCALE : 1" = 40'

WISDOT/CADDS SHEET 42

A DETOUR ROUTE WILL BE SIGNED AND MAINTAINED FOR THE PROJECT BY THE WINNEBAGO COUNTY HIGHWAY DEPARTMENT. THE DETOUR ROUTE WILL BE CTH Y TO STH 76, STH 76 TO GREEN VALLEY RD., GREEN VALLEY RD. TO CTH GG, AND CTH GG TO CTH A. THE TOTAL LENGTH OF THE DETOUR IS APPROXIMATELY 5.6 MILES.

* CTH GG TO BE MAINTAINED AS PART OF DETOUR ROUTE ON NEW OR EXISTING PAVEMENT

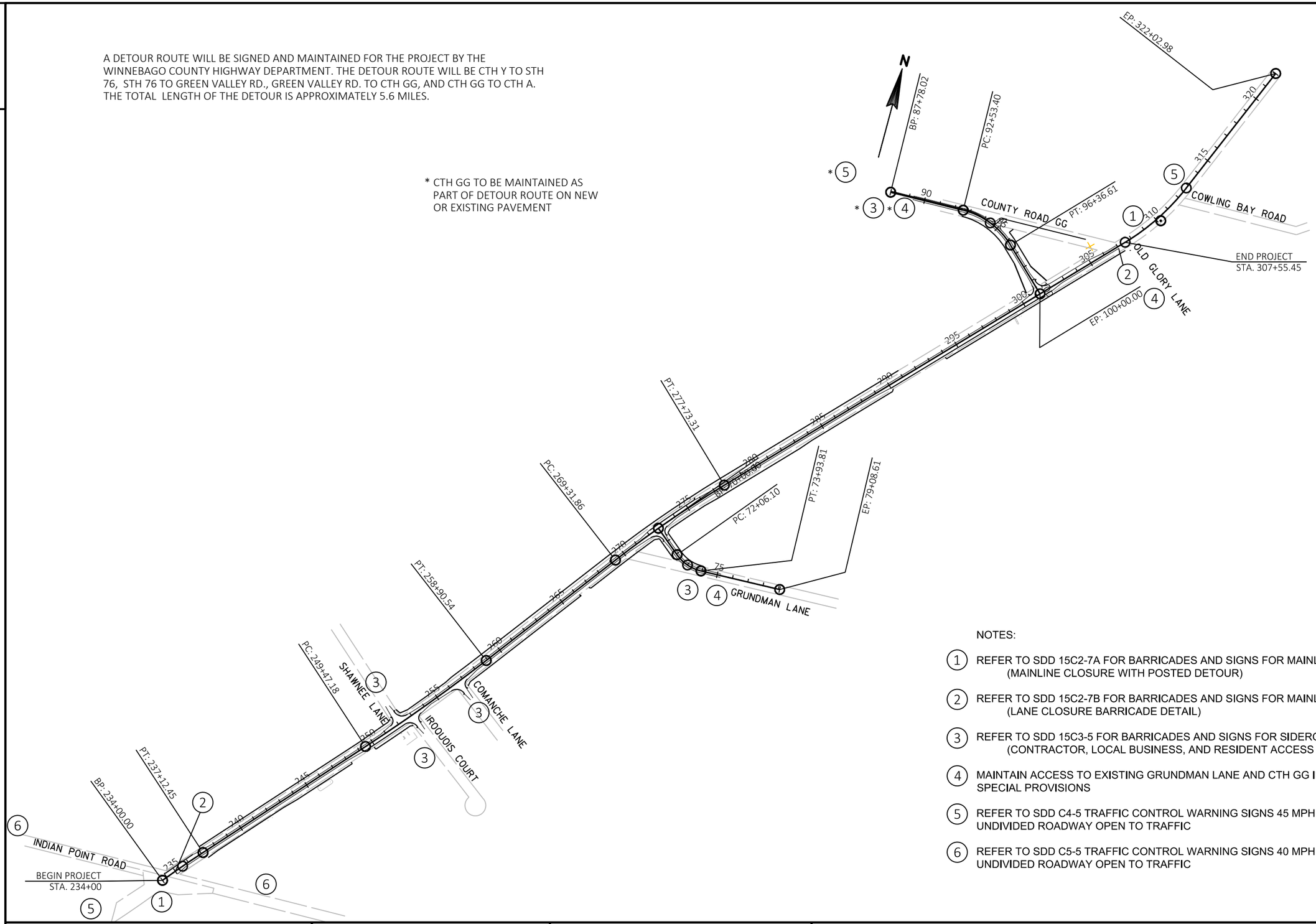

NOTES:

1. REFER TO SDD 15C2-7A FOR BARRICADES AND SIGNS FOR MAINLINE CLOSURES, DETAIL A (MAINLINE CLOSURE WITH POSTED DETOUR)
2. REFER TO SDD 15C2-7B FOR BARRICADES AND SIGNS FOR MAINLINE CLOSURES, DETAIL E (LANE CLOSURE BARRICADE DETAIL)
3. REFER TO SDD 15C3-5 FOR BARRICADES AND SIGNS FOR SIDEROAD CLOSURES, DETAIL 4 (CONTRACTOR, LOCAL BUSINESS, AND RESIDENT ACCESS TO PROJECT)
4. MAINTAIN ACCESS TO EXISTING GRUNDMAN LANE AND CTH GG IN ACCORDANCE WITH SPECIAL PROVISIONS
5. REFER TO SDD C4-5 TRAFFIC CONTROL WARNING SIGNS 45 MPH OR LESS TWO-WAY UNDIVIDED ROADWAY OPEN TO TRAFFIC
6. REFER TO SDD C5-5 TRAFFIC CONTROL WARNING SIGNS 40 MPH OR LESS TWO-WAY UNDIVIDED ROADWAY OPEN TO TRAFFIC

Estimate Of Quantities

4627-02-71

Line	Item	Item Description	Unit	Total	Qty
0002	201.0105	Clearing	STA	18.000	18.000
0004	201.0120	Clearing	ID	642.000	642.000
0006	201.0205	Grubbing	STA	18.000	18.000
0008	201.0220	Grubbing	ID	642.000	642.000
0010	203.0100	Removing Small Pipe Culverts	EACH	28.000	28.000
0012	204.0100	Removing Pavement	SY	16,100.000	16,100.000
0014	204.0150	Removing Curb & Gutter	LF	34.000	34.000
0016	204.0170	Removing Fence	LF	10.000	10.000
0018	205.0100	Excavation Common	CY	26,606.000	26,606.000
0020	213.0100	Finishing Roadway (project) 01.4627-02-71	EACH	1.000	1.000
0022	214.0100	Obliterating Old Road	STA	5.700	5.700
0024	305.0110	Base Aggregate Dense 3/4-Inch	TON	1,415.000	1,415.000
0026	305.0120	Base Aggregate Dense 1 1/4-Inch	TON	35,930.000	35,930.000
0028	311.0110	Breaker Run	TON	10,000.000	10,000.000
0030	416.0160	Concrete Driveway 6-Inch	SY	70.000	70.000
0032	416.1010	Concrete Surface Drains	CY	8.400	8.400
0034	455.0605	Tack Coat	GAL	2,164.000	2,164.000
0036	460.2000	Incentive Density HMA Pavement	DOL	6,980.000	6,980.000
0038	460.6223	HMA Pavement 3 MT 58-28 S	TON	6,572.000	6,572.000
0040	460.6224	HMA Pavement 4 MT 58-28 S	TON	4,398.000	4,398.000
0042	465.0120	Asphaltic Surface Driveways and Field Entrances	TON	199.000	199.000
0044	521.1015	Apron Endwalls for Culvert Pipe Steel 15-Inch	EACH	36.000	36.000
0046	521.1018	Apron Endwalls for Culvert Pipe Steel 18-Inch	EACH	6.000	6.000
0048	521.1217	Apron Endwalls for Pipe Arch Steel 17x13-Inch	EACH	2.000	2.000
0050	521.1221	Apron Endwalls for Pipe Arch Steel 21x15-Inch	EACH	4.000	4.000
0052	521.1524	Apron Endwalls for Culvert Pipe Sloped Side Drains Steel 24-Inch 6 to 1	EACH	2.000	2.000
0054	521.3115	Culvert Pipe Corrugated Steel 15-Inch	LF	508.000	508.000
0056	521.3118	Culvert Pipe Corrugated Steel 18-Inch	LF	86.000	86.000
0058	521.3717	Pipe Arch Corrugated Steel 17x13-Inch	LF	24.000	24.000
0060	521.3721	Pipe Arch Corrugated Steel 21x15-Inch	LF	80.000	80.000
0062	522.0518	Culvert Pipe Reinforced Concrete Class V 18-Inch	LF	220.000	220.000
0064	522.1018	Apron Endwalls for Culvert Pipe Reinforced Concrete 18-Inch	EACH	8.000	8.000
0066	522.2429	Culvert Pipe Reinforced Concrete Horizontal Elliptical Class HE-IV 29x45-Inch	LF	64.000	64.000
0068	522.2629	Apron Endwalls for Culvert Pipe Reinforced Concrete Horizontal Elliptical 29x45-Inch	EACH	2.000	2.000
0070	601.0415	Concrete Curb & Gutter 6-Inch Sloped 30-Inch Type J	LF	2,796.000	2,796.000
0072	606.0100	Riprap Light	CY	14.000	14.000
0074	608.3012	Storm Sewer Pipe Class III-A 12-Inch	LF	53.000	53.000

4627-02-71

Line	Item	Item Description	Unit	Total	Qty
0076	608.3024	Storm Sewer Pipe Class III-A 24-Inch	LF	1,198.000	1,198.000
0078	611.0545	Manhole Covers Type L	EACH	3.000	3.000
0080	611.0612	Inlet Covers Type C	EACH	2.000	2.000
0082	611.0627	Inlet Covers Type HM	EACH	5.000	5.000
0084	611.2004	Manholes 4-FT Diameter	EACH	5.000	5.000
0086	611.3230	Inlets 2x3-FT	EACH	5.000	5.000
0088	611.9800.S	Pipe Grates	EACH	2.000	2.000
0090	618.0100	Maintenance And Repair of Haul Roads (project) 01.4657-02-71	EACH	1.000	1.000
0092	619.1000	Mobilization	EACH	1.000	1.000
0094	624.0100	Water	MGAL	1,100.000	1,100.000
0096	625.0500	Salvaged Topsoil	SY	39,559.000	39,559.000
0098	627.0200	Mulching	SY	200.000	200.000
0100	628.1504	Silt Fence	LF	5,606.000	5,606.000
0102	628.1520	Silt Fence Maintenance	LF	5,606.000	5,606.000
0104	628.1905	Mobilizations Erosion Control	EACH	6.000	6.000
0106	628.1910	Mobilizations Emergency Erosion Control	EACH	6.000	6.000
0108	628.2002	Erosion Mat Class I Type A	SY	25,585.000	25,585.000
0110	628.2004	Erosion Mat Class I Type B	SY	14,044.000	14,044.000
0112	628.7005	Inlet Protection Type A	EACH	2.000	2.000
0114	628.7015	Inlet Protection Type C	EACH	4.000	4.000
0116	628.7020	Inlet Protection Type D	EACH	1.000	1.000
0118	628.7504	Temporary Ditch Checks	LF	580.000	580.000
0120	628.7555	Culvert Pipe Checks	EACH	105.000	105.000
0122	628.7560	Tracking Pads	EACH	3.000	3.000
0124	629.0210	Fertilizer Type B	CWT	24.000	24.000
0126	630.0130	Seeding Mixture No. 30	LB	715.000	715.000
0128	630.0200	Seeding Temporary	LB	1,070.000	1,070.000
0130	630.0500	Seed Water	MGAL	950.000	950.000
0132	633.5200	Markers Culvert End	EACH	8.000	8.000
0134	634.0614	Posts Wood 4x6-Inch X 14-FT	EACH	7.000	7.000
0136	634.0616	Posts Wood 4x6-Inch X 16-FT	EACH	13.000	13.000
0138	634.0618	Posts Wood 4x6-Inch X 18-FT	EACH	2.000	2.000
0140	637.2210	Signs Type II Reflective H	SF	107.440	107.440
0142	637.2230	Signs Type II Reflective F	SF	62.250	62.250
0144	638.2602	Removing Signs Type II	EACH	47.000	47.000
0146	638.3000	Removing Small Sign Supports	EACH	29.000	29.000
0148	642.5401	Field Office Type D	EACH	1.000	1.000
0150	643.0300	Traffic Control Drums	DAY	23,250.000	23,250.000
0152	643.0420	Traffic Control Barricades Type III	DAY	8,060.000	8,060.000

4627-02-71

Line	Item	Item Description	Unit	Total	Qty
0154	643.0705	Traffic Control Warning Lights Type A	DAY	10,230.000	10,230.000
0156	643.0715	Traffic Control Warning Lights Type C	DAY	3,875.000	3,875.000
0158	643.0900	Traffic Control Signs	DAY	7,750.000	7,750.000
0160	643.5000	Traffic Control	EACH	1.000	1.000
0162	645.0130	Geotextile Type R	SY	40.000	40.000
0164	645.0135	Geotextile Type SR	SY	6,000.000	6,000.000
0166	646.1020	Marking Line Epoxy 4-Inch	LF	23,425.000	23,425.000
0168	646.3020	Marking Line Epoxy 8-Inch	LF	540.000	540.000
0170	650.4000	Construction Staking Storm Sewer	EACH	12.000	12.000
0172	650.4500	Construction Staking Subgrade	LF	9,384.000	9,384.000
0174	650.5000	Construction Staking Base	LF	9,384.000	9,384.000
0176	650.5500	Construction Staking Curb Gutter and Curb & Gutter	LF	2,796.000	2,796.000
0178	650.6000	Construction Staking Pipe Culverts	EACH	29.000	29.000
0180	650.9910	Construction Staking Supplemental Control (project) 01.4657-02-71	LS	1.000	1.000
0182	650.9920	Construction Staking Slope Stakes	LF	9,384.000	9,384.000
0184	690.0150	Sawing Asphalt	LF	615.000	615.000
0186	690.0250	Sawing Concrete	LF	14.000	14.000
0188	740.0440	Incentive IRI Ride	DOL	5,492.000	5,492.000
0190	ASP.1T0A	On-the-Job Training Apprentice at $5.00/HR	HRS	2,000.000	2,000.000
0192	ASP.1T0G	On-the-Job Training Graduate at $5.00/HR	HRS	1,320.000	1,320.000
0194	SPV.0090	Special 01.Storm Sewer Pipe 8-Inch	LF	10.000	10.000
0196	SPV.0105	Special 01.Grading and Shaping Special Ditch	LS	1.000	1.000
0198	SPV.0105	Special 02.Temporary Mailbox Accomodations	LS	1.000	1.000

ALL ITEMS ON THIS SHEET ARE CATEGORY 0010 UNLESS OTHERWISE NOTED

3

CLEARING AND GRUBBING

STATION	LOCATION	201.0105 CLEARING STA.	201.0120 CLEARING ID	201.0205 GRUBBING STA	201.0220 GRUBBING ID
240+00 - 241+00 LT.	CTH A	1	-	1	-
241+45 LT.	CTH A	-	7	-	7
242+41 LT.	CTH A	-	16	-	16
242+72 LT.	CTH A	-	12	-	12
243+00 LT.	CTH A	-	12	-	12
252+40 LT.	CTH A	-	8	-	8
252+61 LT.	CTH A	-	24	-	24
252+97 LT.	CTH A	-	6	-	6
253+10 LT.	CTH A	-	24	-	24
253+19 LT.	CTH A	-	40	-	40
253+29 LT.	CTH A	-	8	-	8
253+39 LT.	CTH A	-	24	-	24
255+82 LT.	CTH A	-	6	-	6
256+08 LT.	CTH A	-	24	-	24
257+18 RT.	CTH A	-	18	-	18
258+60 LT.	CTH A	-	30	-	30
260+34 LT.	CTH A	-	4	-	4
261+62 LT.	CTH A	-	3	-	3
261+63 LT.	CTH A	-	18	-	18
261+65 LT.	CTH A	-	6	-	6
261+87 LT.	CTH A	-	24	-	24
262+00 - 263+00	CTH A	1	-	1	-
263+22 LT.	CTH A	-	4	-	4
265+00 - 267+00 RT.	CTH A	2	-	2	-
269+70 LT.	CTH A	-	18	-	18
270+00 - 274+00 LT.	CTH A	4	-	4	-
288+96 RT.	CTH A	-	46	-	46
289+00 - 291+00 LT. & RT.	CTH A	2	-	2	-
291+18 LT.	CTH A	-	36	-	36
291+55 LT.	CTH A	-	15	-	15
293+55 RT.	CTH A	-	20	-	20
293+77 RT.	CTH A	-	12	-	12
293+99 LT.	CTH A	-	18	-	18
294+00 RT.	CTH A	-	20	-	20
294+56 LT.	CTH A	-	24	-	24
294+60 LT.	CTH A	-	15	-	15
294+96 LT.	CTH A	-	18	-	18
295+11 LT.	CTH A	-	30	-	30
295+85 RT.	CTH A	-	5	-	5
295+94 RT.	CTH A	-	12	-	12
296+03 RT.	CTH A	-	27	-	27
296+51 RT.	CTH A	-	4	-	4
296+76 LT.	CTH A	-	4	-	4
299+00 - 307+00 LT. & RT.	CTH A	8	-	8	-
	PROJECT TOTALS	18	642	18	642

REMOVING SMALL PIPE CULVERTS

203.0100

STATION	LOCATION	EACH
235+65 LT.	CTH A	1
239+15 LT.	CTH A	1
241+25 LT.	CTH A	1
241+88 RT.	CTH A	1
243+16 RT.	CTH A	1
245+02 CROSS	CTH A	1
246+74 LT.	CTH A	1
246+98 RT.	CTH A	1
248+66 RT.	CTH A	1
260+95 LT	CTH A	1
261+75 CROSS	CTH A	1
263+39 RT.	CTH A	1
265+01 LT.	CTH A	1
266+63 RT.	CTH A	1
267+14 LT.	CTH A	1
269+00 RT.	CTH A	1
269+86 LT.	CTH A	1
271+25 RT.	CTH A	1
271+26 LT.	CTH A	1
277+36 LT.	CTH A	1
288+27 RT.	CTH A	1
288+89 CROSS	CTH A	1
288+93 CROSS	CTH A	1
290+61 LT.	CTH A	1
292+42 LT.	CTH A	1
294+54 RT.	CTH A	1
299+40 RT	CTH A	1
301+58 RT.	CTH A	1
PROJECT TOTAL		28

REMOVING PAVEMENT

204.0100

STATION TO STATION	LOCATION	SY
234+50 TO 307+00	CTH A	16,100
	PROJECT TOTALS	16100

REMOVING CURB & GUTTER

204.0150

STATION	LOCATION	L.F.
234+34 - 234+67 LT.	CTH A	34
	PROJECT TOTAL	34

REMOVING FENCE

204.0170

STATION	LOCATION	L.F.
239+30 LT.	CTH A	10
	PROJECT TOTAL	10

3

3

EARTHWORK SUMMARY

Division	From/To Station	Location	Excavation Common (Item # 205.0100) Cut	Excavation Common (Item # 205.0100) EBS	Salvaged/Unusable Pavement Material (Refer to Note 6)	Available Material	Unexpanded Fill	1 Expanded Fill Factor 1.30	Mass Ordinate +/-	Comment:
0010										
	234+50 - 307+00	CTH A	19475	-	8337	11138	1997	2596	8542	
	38+00 - 39+50	SHAWNEE LANE	145	-	10	135	8	10	125	
	50+50 - 51+50	IROQUOIS COURT	120	-	15	105	24	31	74	
	60+50 - 61+50	COMANCHE LANE	66	-	9	57	24	31	26	
	70+50 - 75+50	GRUNDMAN ROAD	627	-	2	625	97	127	499	777 CY (REFER TO NOTE 5)
	88+00 - 100+00	CTH GG	1172	-	2	1170	624	811	360	1344 CY (REFER TO NOTE 5)
									0	
	234+50 - 307+00	UNDISTRIBUTED	-	5000						
Subtotal			21606	5000	8375	13231	2773	3605	9627	
Grand Total			26606		8375	13231	2773	3605	9627	

Total Excavation Common 26,606

1 EXPANSION FACTOR FOR FILL = 30%

2 MASS ORDINATE: POSITIVE QUANTITY INDICATES AN EXCESS OF MATERIAL ON THE PROJECT

3 UNDISTRIBUTED EBS (EXCAVATION BELOW SUBGRADE) VOLUME IS APPROXIMATED AND IS NOT SHOWN ON CROSS SECTIONS. ACTUAL EBS LOCATIONS TO BE DETERMINED BY ENGINEER FOR UNSTABLE SOILS. EBS EXCAVATION MATERIAL IS NOT INCLUDED IN THE MASS ORDINATE.

4 EBS EXCAVATION TO BE BACK FILLED AS SHOWN ON THE PLAN DETAIL.

5 APPROXIMATE AMOUNT OF TOPSOIL ANTICIPATED TO BE ENCOUNTERED WITHIN LIMITS OF EXCAVATION OF THE REALIGNED ROADWAY. THIS QUANTITY IS NOT INCLUDED IN THE QUANTITY FOR EXCAVATION COMMON.

6 INCLUDES EXISTING ASPHALT AND CONCRETE PAVEMENT. ALSO INCLUDED IS THE EXISTING CONCRETE PAVEMENT LOCATED BELOW THE PROPOSED SUBGRADE ELEVATION WHICH IS NOT INCLUDED IN THE QUANTITY FOR EXCAVATION QUANTITY.

NOTE: EXISTING BASE COURSE FOUND WITHIIN THE LIMITS OF EXCAVATION SHALL BE REUSED WITHIN THE PROJECT LIMITS

3

3

FINISHING ROADWAY

PROJECT	213.0100 EACH
4627-02-71	1
PROJECT TOTAL	1

WATER

624.0100 *

LOCATION	MGAL
BASE COMPACTION	600
DUST CONTROL	100
PROJECT TOTAL	700

* ADDITIONAL QUANTITIES INCLUDED ELSEWHERE

OBLITERATING OLD ROAD

LOCATION	STA. - STA.	214.0100 STA
GRUNDMAN LANE	70+50 RT - 72+90 RT	3.5
CTH GG	305+80 LT - 308+00 LT (CTH A)	2.2
PROJECT TOTAL		5.7

BASE AGGREGATE AND BREAKER RUN

STATION TO STATION	LOCATION	305.0110 3/4-INCH TON	305.0120 1-1/4 INCH TON	311.0110 BREAKER RUN TON	624.0100 * WATER MGAL	645.0135 GEOTEXTILE FABRIC TYPE SR SY	REMARKS
234+00 TO 307+00	CTH A	1060	23900	--	--	--	--
38+58 TO 39+80	SHAWNEE	5	400	--	--	--	--
50+20 TO 51+38.5	IROQUOIS	5	390	--	--	--	--
60+20 TO 61+38.5	COMMANCHE	5	380	--	--	--	--
70+24 TO 75+23	GRUNDMAN	50	1300	--	--	--	--
89+25 TO 100+00	CTH GG	190	3310	--	--	--	--
DRIVEWAYS	--	--	1250	--	--	--	--
UNDISTRIBUTED	--	100	5000	--	400		
UNDISTRIBUTED EBS	--	--	--	10000	--	6000	--
	PROJECT TOTALS	1,415	35,930	10,000	400	6,000	

* ADDITIONAL QUANTITIES INCLUDED ELSEWHERE

3

CONCRETE SURFACE DRAINS

STATION	LOCATION	416.1010 CONCRETE SURFACE DRAIN C.Y.	606.0100 LIGHT RIP RAP C.Y.	645.0130 GEOTEXTILE FABRIC TYPE R S.Y.
STA. 39+15 LT	SHAWNEE LANE	0.7	1.4	4
STA. 39+37 RT	SHAWNEE LANE	0.7	1.4	4
STA. 50+67 LT	IROQUOIS CT	0.7	1.4	4
STA. 50+80 RT	IROQUOIS CT	0.7	1.4	4
STA. 60+80 RT	COMANCHE LANE	0.7	1.4	4
STA. 60+65 LT	COMANCHE LANE	0.7	1.4	4
STA. 70+60 LT	GRUNDMAN LANE	0.9	1.4	4
STA. 70+80 RT	GRUNDMAN LANE	0.9	1.4	4
STA. 275+60 LT	CTH A	0.9	1.4	4
STA. 90+15 LT	CTH GG	1.5	1.4	4
	PROJECT TOTAL	8.4	14	40

ASPHALTIC SURFACE DRIVEWAYS AND FIELD ENTRANCES

465.0120

STATION	LOCATION	TON
235+68 LT.	CTH A	8.0
239+15 LT.	CTH A	8.5
241+88 RT.	CTH A	16.0
246+74 LT.	CTH A	7.5
248+66 RT.	CTH A	11.5
260+95 LT.	CTH A	7.0
263+39 RT.	CTH A	7.0
265+01 LT.	CTH A	12.0
266+63 RT.	CTH A	8.0
269+00 RT.	CTH A	8.0
269+86 LT.	CTH A	13.0
294+54 RT.	CTH A	7.5
94+80 LT.	CTH GG	85.0
	PROJECT TOTALS	199

ASPHALTIC ITEMS

STATION TO STATION	LOCATION	455.0605 TACK COAT GAL	460.6223 HMA PAVEMENT 3 MT 58-28 S TON	460.6224 HMA PAVEMENT 4 MT 58-28 S TON
234+00 TO 307+00	CTH A	1750	5310	3560
38+58 TO 39+80	SHAWNEE	31	96	64
50+20 TO 51+38.5	IROQUOIS	29	90	60
60+20 TO 61+38.5	COMMANCHE	29	90	60
70+24 TO 75+23	GRUNDMAN	91	276	184
89+25 TO 100+00	CTH GG	234	710	470
	PROJECT TOTALS	2,164	6,572	4,398

CONCRETE DRIVEWAY 6-INCH

416.0160

STATION	LOCATION	S.Y.
267+14 LT.	CTH A	40
299+40 RT	CTH A	30
	PROJECT TOTALS	70

ALL ITEMS ON THIS SHEET ARE CATEGORY 0010 UNLESS OTHERWISE NOTED

CULVERT PIPE

STATION	LOCATION	CULVERT PIPE CORRUGATED STEEL * 521.3115 15-INCH LF	521.3118 18-INCH LF	PIPE ARCH CORRUGATED STEEL * 521.3717 17x13-INCH LF	521.3721 21x15-INCH LF	CULVERT PIPE REINFORCED CONCRETE CLASS V 522.0518 18-INCH LF	CULVERT PIPE REINFORCED CONCRETE HORIZONTAL ELLIPTICAL CLASS HE-IV 522.2429 29x45-INCH LF	APRON ENDWALLS FOR CULVERT PIPE STEEL 521.1015 15-INCH EACH	521.1018 18-INCH EACH	APRON ENDWALLS FOR PIPE ARCH STEEL 521.1217 17x13-INCH EACH	521.1221 21x15-INCH EACH	APRON ENDWALLS FOR CULVERT PIPE REINFORCED CONCRETE 522.1018 18-INCH EACH	APRON ENDWALLS FOR CULVERT PIPE REINFORCED CONCRETE HORIZONTAL ELLIPTICAL 522.2629 29X 45-INCH EACH	MARKERS CULVERT END 633.5200 EACH	CONSTRUCTION STAKING PIPE CULVERTS 650.6000 EACH	PIPE GRATES 611.9800.S EACH
239+15 LT.	CTH A	25	--	--	--	--	--	2	--	--	--	--	--	--	1	--
241+25 LT.	CTH A	27	--	--	--	--	--	2	--	--	--	--	--	--	1	--
241+88 RT.	CTH A	40	--	--	--	--	--	2	--	--	--	--	--	--	1	--
243+16 RT.	CTH A	28	--	--	--	--	--	2	--	--	--	--	--	--	1	--
245+03 CROSS	CTH A	--	--	--	--	52	--	--	--	--	--	2	--	2	1	--
246+74 LT.	CTH A	32	--	--	--	--	--	2	--	--	--	--	--	--	1	--
246+98 RT.	CTH A	32	--	--	--	--	--	2	--	--	--	--	--	--	1	--
248+66 RT.	CTH A	30	--	--	--	--	--	2	--	--	--	--	--	--	1	--
260+95 LT.	CTH A	22	--	--	--	--	--	2	--	--	--	--	--	--	1	--
261+75 CROSS	CTH A	--	--	--	--	--	64	--	--	--	--	--	2	2	1	2
263+39 RT.	CTH A	24	--	--	--	--	--	2	--	--	--	--	--	--	1	--
265+01 LT.	CTH A	30	--	--	--	--	--	2	--	--	--	--	--	--	1	--
266+63 RT.	CTH A	26	--	--	--	--	--	2	--	--	--	--	--	--	1	--
267+14 LT.	CTH A	23	--	--	--	--	--	2	--	--	--	--	--	--	1	--
269+00 RT.	CTH A	28	--	--	--	--	--	2	--	--	--	--	--	--	1	--
269+86 LT.	CTH A	35	--	--	--	--	--	2	--	--	--	--	--	--	1	--
271+26 LT.	CTH A	--	--	24	--	--	--	--	--	2	--	--	--	--	1	--
277+36 LT.	CTH A	--	30	--	--	--	--	--	2	--	--	--	--	--	1	--
288+27 RT.	CTH A	28	--	--	--	--	--	2	--	--	--	--	--	--	1	--
288+89 CROSS	CTH A	--	--	--	--	56	--	--	--	--	--	2	--	2	1	--
288+93 CROSS	CTH A	--	--	--	--	56	--	--	--	--	--	2	--	2	1	--
290+61 LT.	CTH A	--	--	--	25	--	--	--	--	--	2	--	--	--	1	--
292+41 LT.	CTH A	--	30	--	--	--	--	--	2	--	--	--	--	--	1	--
73+00 LT	GRUNDMAN LN	26	--	--	--	--	--	2		--	--	--	--	--	1	--
73+00 RT.	GRUNDMAN LN	26	--	--	--	--	--	2	--	--	--	--	--	--	1	--
94+87 RT.	CTH GG	--	26	--	--	--	--	--	2	--	--	--	--	--	1	--
94+85 LT.	CTH GG	--	--	--	55	--	--	--	--	--	2	--	--	--	1	--
96+27 LT.	CTH GG	26	--	--	--	--	--	2	--	--	--	--	--	--	1	--
99+15	CTH GG	--	--	--	--	56	--	--	--	--	--	2	--	--	1	--
	PROJECT TOTAL	508	86	24	80	220	64	36	6	2	4	8	2	8	29	2

* MINIMUM WALL THICKNESS = 0.064"

3

CONCRETE CURB & GUTTER 6-INCH SLOPPED 30-INCH TYPE J

601.0415

STATION	LOCATION	L.F.
234+34 - 236+51 LT.	CTH A	218
249+50 - 252+92 RT.	CTH A	371
251+51 - 251+92 LT.	CTH A	59
252+22 - 252+82 LT.	CTH A	93
253+21 - 253+61 RT.	CTH A	62
255+95 - 256+55 RT.	CTH A	90
256+84 - 257+24 RT.	CTH A	61
271+96 - 272+57 RT.	CTH A	92
272+20 - 275+60 LT.	CTH A	341
272+87 - 273+28 RT.	CTH A	60
290+00 - 301+98 RT.	CTH A	1198
300+68 - 301+08 LT.	CTH A	60
301+38 - 301+98 LT.	CTH A	91
PROJECT TOTAL		2796

STORM SEWER PIPES

FROM	-	TO	LOCATION	608.3012 Storm Sewer Pipe Class III-A 12-Inch LF	608.3024 Storm Sewer Pipe Class III-A 24-Inch LF	SPV.0090.01 Storm Sewer Pipe *8-Inch EACH	INLET ELEVATION	DISCHARGE ELEVATION	SLOPE FT/FT
0	-	1	CTH A		65		751.42	751.33	0.0014
-	-	1	CTH A			10	*	*	*
1	-	2	CTH A		270		751.77	751.42	0.0013
2	-	3	CTH A		166		751.96	751.75	0.0013
3	-	4	CTH A		254		752.28	751.96	0.0013
4	-	5	CTH A		250		754.91	752.28	0.0105
5	-	9	CTH A		193		759.20	754.91	0.0222
1.1	-	1	CTH A	12			751.48	751.42	0.0050
2.1	-	2	CTH A	11			752.40	752.34	0.0055
3.1	-	3	CTH A	11			752.94	752.89	0.0045
4.1	-	4	CTH A	10			753.70	753.65	0.0050
5.1	-	5	CTH A	9			755.63	755.58	0.0056
			TOTALS	53	1198	10			

*REFER TO STORM SEWER DETAIL

STORM SEWER STRUCTURES

STRUCTURE	STATION	OFFSET*	LOCATION	521.1524 Apron Endwalls for Culvert Pipe Sloped Side Drains Steel 24- Inch 6 to 1 EACH	611.0545 Manhole Covers Type L EACH	611.0612 Inlet Covers Type C EACH	611.0627 Inlet Covers Type HM EACH	611.2004 Manholes 4-FT Diameter EACH	611.3230 Inlets 2x3-FT EACH	650.4000 Construction Staking Storm Sewer EACH	RIM ELEVATION	INVERT** ELEVATION	DEPTH*** FT
0	290+04.57	33.3' RT	CTH A	1						1		753.58	
1	290+70.00	32.8' RT	CTH A		1			1		1	755.08	751.42	3.41
2	293+40.00	32.3' RT	CTH A		1			1		1	755.69	751.75	3.68
3	295+06.27	31.8' RT	CTH A		1			1		1	755.88	751.96	3.67
4	297+60.00	31.2' RT	CTH A			1		1		1	757.65	752.28	4.71
5	300+10.00	30.5' RT	CTH A			1		1		1	759.80	754.91	4.23
9	302+03.00	29.9' RT	CTH A	1						1		761.45	
1.1	290+70.00	21.3' RT	CTH A				1		1	1	754.31	751.48	2.00
2.1	293+40.00	21.3' RT	CTH A				1		1	1	754.81	752.40	1.58
3.1	295+06.27	21.3' RT	CTH A				1		1	1	755.36	752.94	1.58
4.1	297+60.00	21.3' RT	CTH A				1		1	1	757.00	753.70	2.47
5.1	300+10.00	21.3' RT	CTH A				1		1	1	759.63	755.63	3.17
			TOTALS	2	3	2	5	5	5	12			

REMARKS

* STATIONS AND OFFSETS ARE TO CENTER OF STRUCTURE

** THE INVERT ELEVATION IS THE ELEVATION OF THE LOWEST PIPE FLOW LINE

*** DEPTH FOR INLETS = RIM ELEV - TOP OF STRUCTURE BASE ELEV - COVER HEIGHT - 6 -INCH ADJUSTMENT RING HEIGHT

*** DEPTH FOR MANHOLES = RIM ELEV - TOP OF STRUCTURE BASE ELEV - COVER HEIGHT - 2 -INCH ADJUSTMENT RING HEIGHT

NOTE: PROPOSED MANHOLES ARE LOCATED IN LANDSCAPE AREAS BEHIND CURB

ALL ITEMS ON THIS SHEET ARE CATEGORY 0010 UNLESS OTHERWISE NOTED

3

MAINTANANCE AND REPAIR OF HAUL ROADS
618.0100
CATEGORY .0020

PROJECT	EA
4627-02-71	1
PROJECT TOTAL	1

MOBILIZATION
619.1000

PROJECT	EA
4627-02-71	1
PROJECT TOTAL	1

3

LANDSCAPING SUMMARY

STATION TO STATION	LOCATION	625.0500 SALVAGED TOPSOIL	627.0200 MULCH	628.2002 EROSION MAT CLASS I TYPE A	628.2004 EROSION MAT CLASS I TYPE B	629.0210 FERTILIZER TYPE B	630.0130 SEEDING MIXTURE NO. 30	630.0200 SEEDING TEMPORARY	630.0500 SEED WATER
		SY	SY	SY	SY	CWT.	LB.	LB.	MGAL
234+00 - 252+00 LT.	CTH A	3990	--	2610	1380	2.5	71.8	107.7	--
234+00 - 253+00 RT.	CTH A	3040	--	1724	1316	1.9	54.7	82.1	--
252+00 - 271+25 LT.	CTH A	4197	--	2610	1587	2.6	75.6	113.3	--
253+00 -272+72 RT.	CTH A	3926	--	2190	1736	2.5	70.7	106.0	--
271+25 - 301+22 LT.	CTH A	7010	--	4733	2276	4.4	126.2	189.3	--
272+72 - 301+57 RT.	CTH A	5871	--	4381	1490	3.7	105.7	158.5	--
301+22 - 307+99 LT.	CTH A	1603	--	1003	601	1.0	28.9	43.3	--
301+57 - 307+07 RT.	CTH A	1219	--	782	437	0.8	21.9	32.9	--
70+80 - 75+25 RT.	GRUNDMAN LN.	1781	--	1383	398	0.5	32.1	48.1	--
70+80 - 75+25 LT.	GRUNDMAN LN.	748	--	360	388	0.5	13.5	20.2	--
89+25 - 99+36 RT.	CTH GG	1973	--	1097	877	1.2	35.5	53.3	--
89+25 - 99+17 LT.	CTH GG	2401	--	1512	889	1.5	43.2	64.8	--
UNDISTRIBUTED	CTH A	--	--	-	-	-	-	-	950.0
UNDISTRIBUTED	CTH A	1800	200	1200	670	1.2	35	50	--
	PROJECT TOTALS	39,559	200	25,585	14,044	24	715	1,070	950

SILT FENCE

STATION TO STATION	LOCATION	628.1504 SILT FENCE L.F.	628.1520 SILT FENCE MAINTENANCE L.F.
234+98 - 241+68 RT.	CTH A	671	671
244+00 - 244+96 RT.	CTH A	97	97
248+79 - 251+49 LT.	CTH A	270	270
253+55 - 254+87 RT.	CTH A	133	133
255+03 - 256+23 RT.	CTH A	124	124
257+03 - 263+32 RT.	CTH A	711	711
261+05 - 261+50 LT.	CTH A	45	45
263+53 - 266+49 RT.	CTH A	296	296
266+76 - 268+92 RT.	CTH A	216	216
269+13 - 270+29 RT.	CTH A	118	118
270+61 - 272+22 RT.	CTH A	161	161
277+00 - 280+10 RT.	CTH A	311	311
278+24 - 278+96 RT.	CTH A	71	71
280+96 - 288+24 RT.	CTH A	729	729
281+35 - 282+43 LT.	CTH A	108	108
288+41 - 288+90 RT.	CTH A	49	49
289+10 - 289+61 RT.	CTH A	51	51
290+72 - 294+37 RT.	CTH A	370	370
295+91 - 299+25 RT.	CTH A	337	337
299+51 - 301+44 RT.	CTH A	194	194
301+66 - 307+09 RT.	CTH A	544	544
PROJECT TOTALS		5606	5606

3

MOBILIZATIONS EROSION CONTROL

LOCATION	628.1905 MOBILIZATIONS EROSION CONTROL EACH	628.1910 MOBILIZATIONS EMERGENCY EROSION CONTROL EACH
PROJECT LIMITS	6	6
PROJECT TOTAL	6	6

INLET PROTECTION

STATION	628.7005 TYPE A EACH	628.7015 TYPE C EACH	628.7020 TYPE D EACH
290+70 RT	0	0	1
293+40 RT	0	1	0
295+06 RT	0	1	0
297+60 RT	1	1	0
300+10 RT	1	1	0
	2	4	1

NOTE: INLET PROTECTION TYPE A'S ARE FOR MH'S WITH OPEN GRATES.
INLET PROTECTION TYPE C & D'S ARE FOR PROPOSED INLETS IN NEW CURB.

CULVERT PIPE CHECKS

628.7555

STATION	LOCATION	EACH
234+00 LT.	CTH A	3
238+95 LT.	CTH A	3
241+11 LT.	CTH A	3
241+65 RT.	CTH A	3
243+02 RT.	CTH A	3
245+03 LT.	CTH A	3
246+90 LT.	CTH A	3
247+10 RT.	CTH A	3
248+80 RT.	CTH A	3
260+83 LT.	CTH A	3
261+71 LT.	CTH A	6
263+52 RT.	CTH A	3
265+25 LT.	CTH A	3
266+74 RT.	CTH A	3
267+25 LT.	CTH A	3
269+14 RT.	CTH A	3
270+02 LT.	CTH A	3
277+20 LT.	CTH A	3
288+07 RT.	CTH A	3
289+91 LT.	CTH A	6
290+72 LT.	CTH A	3
292+56 LT.	CTH A	3
302+18 RT.	CTH A	3
38+58 RT.	SHAWNEE LN.	3
38+67 LT.	SHAWNEE LN.	3
51+20 LT.	IROQUOIS CT.	3
51+46 RT.	IROQUOIS CT.	3
62+00 RT.	COMANCHE LN.	3
72+84 LT.	GRUNDMAN LANE	3
72+86 RT.	GRUNDMAN LANE	3
94+53 LT.	CTH GG	3
94+68 RT	CTH GG	3
99+16 LT.	CTH GG	3
PROJECT TOTAL		105

TEMPORARY DITCH CHECKS

628.7504

STATION TO STATION	LOCATION	L.F.
234+00 - 256+65 LT. & RT.	CTH A	80
256+60 - 272+22 LT. & RT.	CTH A	50
272+72 - 301+25 LT. & RT.	CTH A	310
301+25 - 308+00 LT. & RT.	CTH A	40
70+80 - 75+25 LT. & RT.	GRUNDMAN LN.	40
89+25 - 99+30 LT. & RT.	CTH GG	60
PROJECT TOTAL		580

TRACKING PADS

628.7560

STATION	LOCATION	EACH
CTH A	234+50	1
CTH A	307+00	1
CTH GG	89+25	1
PROJECT TOTAL		3

SIGNING

ALL ITEMS ON THIS SHEET ARE CATEGORY 0010 UNLESS OTHERWISE NOTED

SIGN #	STATION	LOCATION	SIGN CODE	SIZE W	X	H	637.2210 SIGNS TYPE II REFLECTIVE H SF	637.2230 SIGNS TYPE II REFLECTIVE F SF	634.0614 POSTS WOOD 4X6-INCH X14-FT EACH	634.0616 POSTS WOOD 4X6-INCH X16-FT EACH	634.0618 POSTS WOOD 4X6-INCH X18-FT EACH	638.2602 REMOVING SIGNS TYPE II EACH	638.3000 REMOVING SMALL SIGN SUPPORTS EACH	REMARKS
1.0	235+50 RT	CTH A	--	--	--	--	--	--	--	--	--	3	1	
1.2	237+48 RT	CTH A	R2-1	24	X	30	5.00	--	--	1	--	1	1	
1.3	238+07 LT	CTH A	-	--	--	--	--	--	--	--	--	2	1	
1.4	243+15 LT	CTH A	W2-1	30	X	30	--	6.25	--	1	--	1	1	
2.1	251+84 LT	CTH A	R1-1	36	X	36	9.00	--	1	--	--	2	1	REMOVE @ 251+88 LT
2.2	252+40 LT	CTH A	W14-1	30	X	30	--	6.25	1	--	--	1	1	REMOVE @ 252+30LT
2.3	252+45 RT	CTH A	R2-1	24	X	30	5.00	--	1	--	--	1	1	
2.4	253+38 RT	CTH A	R1-1	36	X	36	9.00	--	--	--	--	2	1	REMOVE @ 253+24 RT
2.5	256+45 RT	CTH A	--	--	--	--	--	--	--	--	--	1	1	
2.6	256+98 RT	CTH A	R1-1	36	X	36	9.00	--	1	--	--	1	1	REMOVE @ 256+91 RT
3.1	268+15 RT	CTH A	--	--	--	--	--	--	--	--	--	1	--	EXISTING SIGN ON UTILITY POLE
3.2	270+63 RT	CTH A	--	--	--	--	--	--	--	--	--	1	1	
3.3	270+45 RT	CTH A	--	--	--	--	--	--	--	--	--	1	1	
3.4	269+49 LT	CTH A	R2-1	24	X	30	5.00	--	1	--	--	1	1	
4.1	270+75 RT	CTH A	--	--	--	--	--	--	--	--	--	1	1	
4.2	271+55 RT	CTH A	R2-1	24	X	30	5.00	--	--	1	--	1	1	
4.3	273+00 RT	CTH A	R1-1	36	X	36	9.00	--	1	--	--	--	--	
4.4	275+45 LT	CTH A	S3-1	30	X	30	--	6.25	--	1	--	2	1	REMOVE @ 275+75 LT
4.5	277+85 LT	CTH A	--	--	--	--	--	--	--	--	--	2	1	
5.1	286+50 LT	CTH A	R2-1	24	X	30	5.00	--	--	1	--	1	1	
5.2	286+50 RT	CTH A	R2-1	24	X	30	5.00	--	--	1	--	1	--	EXISTING SIGN ON UTILITY POLE @ 286+78 RT
5.3	294+12 RT	CTH A	M2-1	21	X	15	2.19	--	--	1	--	2	1	
5.3A	294+12 RT	CTH A	M1-5A	24	X	24	4.00	--	--	--	--	--	--	MOUNT WITH 5.3
6.1	298+95 RT	CTH A	W1-2L	36	X	36	--	9.00	--	1	--	2	1	
6.1A	298+95 RT	CTH A	W13-1	18	X	18	--	2.25	--	--	--	--	--	MOUNT WITH 6.1
6.2	299+65 RT	CTH A	--	--	--	--	--	--	--	--	--	1	1	
6.3	300+90 LT	CTH A	R1-1	36	X	36	9.00	--	1	--	--	--	--	
6.4	301+25 RT	CTH A	W1-7	48	X	24	--	8.00	--	1	--	--	--	
6.5	306+00 RT	CTH A	--	--	--	--	--	--	--	--	--	1	1	
6.6	302+40 LT	CTH A	M1-5A	24	X	24	4.00	--	--	1	--	--	--	
6.6A	302+40 LT	CTH A	M1-88A	12	X	12	1.00	--	--	--	--	--	--	MOUNT WITH 6.6
6.7	304+90 LT	CTH A	R2-1	24	X	30	5.00	--	--	1	--	2	1	REMOVE @ 304+78 LT
6.8	305+75 LT	CTH A	--	--	--	--	--	--	--	--	--	1	1	
6.9	306+45 LT	CTH A	--	--	--	--	--	--	--	--	--	1	1	
6.10	307+20 LT	CTH A	--	--	--	--	--	--	--	--	--	2	1	
6.11	299+65 RT	CTH A	M1-5A	24	X	24	4.00	--	--	1	--	4	1	REMOVE @ 305+48 RT
6.11A	299+65 RT	CTH A	M1-88A	12	X	12	1.00	--	--	--	--	--	--	
6.12	299+65 RT	CTH A	M1-5A	24	X	24	4.00	--	--	--	--	--	--	
6.12A	299+65 RT	CTH A	M1-88A	12	X	12	1.00	--	--	--	--	--	--	
6.13	306+88 RT	CTH A	--	--	--	--	--	--	--	--	--	1	1	
7.1	71+25 RT	GRUNDMAN	W14-1	30	X	30	--	6.25	--	1	--	--	--	
8.1	92+00 RT	CTH GG	W1-2R	36	X	36	--	9.00	--	--	1	3	1	REMOVE @ 94+48 LT
8.1A	92+00 RT	CTH GG	M2-1	18"	X	18"	2.25	--	--	--	--	--	--	MOUNT WITH 8.1
8.1B	92+00 RT	CTH GG	M1-5A	24"	X	24"	4.00	--	--	--	--	--	--	MOUNT WITH 8.1
8.2	97+00 LT	CTH GG	W1-2L	36	X	36	--	9.00	--	--	1	--	--	
							107.44	62.25	7	13	2	47	29	

3

FIELD OFFICE TYPE D

642.5401

PROJECT	EA
4627-02-71	1
PROJECT TOTAL	1

MARKING LINE EPOXY

STATION TO STATION	LOCATION	646.1020 4-INCH (WHITE) LF	646.1020 4-INCH (YELLOW) LF	646.3020 8-INCH LF
234+00 TO 307+00	CTH A	14600	2825	540
70+50 TO 75+25	GRUNDMAN	950	950	--
89+20 TO 99+50	CTH GG	2050	2050	--
	PROJECT TOTALS	17600	5825	540

TOTAL 646.1020 = 23,425 LF

TRAFFIC CONTROL SUMMARY

LOCATION	SERVICE DAYS	643.0300 DRUMS NO	643.0300 DRUMS DAYS	643.0420 BARRICADES TYPE III NO	643.0420 BARRICADES TYPE III DAYS	643.0705 WARNING LIGHTS TYPE A NO	643.0705 WARNING LIGHTS TYPE A DAYS	643.0715 WARNING LIGHTS TYPE C NO	643.0715 WARNING LIGHTS TYPE C DAYS	643.0900 SIGNS NO	643.0900 SIGNS DAYS	643.5000 TRAFFIC CONTROL EACH
PROJECT 4627-02-71												1
CTH A(AT BEGIN PROJECT)	155	--	--	6	930	8	1240	--	--	--	--	
SIDEROAD CLOSURES	155	--	--	30	4650	40	6200	--	--	40	6200	
CTH A (AT END PROJECT)	155	--	--	6	930	8	1240	--	--	--	--	
CTH A (WITHIN PROJECT)	155	100	15500	--	--	--	--	--	--	--	--	
UNDISTRIBUTED	155	50	7750	10	1550	10	1550	25	3875	10	1550	
PROJECT TOTALS		150	23250	52	8060	66	10230	25	3875	50	7750	1

CONSTRUCTION STAKING

STATION TO STATION	LOCATION	650.4500 SUBGRADE LF	650.5000 BASE LF	650.5500 CURB AND CURB & GUTTER LF	650.9910 SUPPLIMENTAL CONTROL LS	650.9920 SLOPE STAKES LF
4627-02-71	CTH A	--	--	--	1	--
234+34 TO 308+00	CTH A	7366	7366	2796	--	7366
38+58 TO 40+00	SHAWNEE	142	142	--	--	142
50+00 TO 51+38.50	IROQUOIS CT	139	139	--	--	139
60+00 TO 61+38.50	COMANCHE	139	139	--	--	139
70+00 TO 75+23	GRUNDMAN	523	523	--	--	523
89+25 TO 100+00	CTH GG	1075	1075	--	--	1075
	*PROJECT TOTAL	9384	9384	2796	1	9384

*ADDITIONAL QUANTITIES INCLUDED ELSEWHERE

SAWING ASPHALT

690.0150

STATION	LOCATION	LF
234+33 - 235+01 LT. & RT.	CTH A	115
235+51 - 235+86 LT.	CTH A	35
239+08 - 239+21 LT.	CTH A	13
241+74 - 242+08 RT.	CTH A	28
246+68 - 246+80 LT.	CTH A	12
248+57 - 248+75 RT.	CTH A	18
260+90 -261+00 LT.	CTH A	10
263+36 - 263+47 RT.	CTH A	11
264+92 - 265+11 LT.	CTH A	19
266+59 - 266+71 RT.	CTH A	13
268+95 - 269+07 RT.	CTH A	13
269+74 - 269+95 LT.	CTH A	21
294+45 - 294+62 RT.	CTH A	18
299+32 - 299+46 RT.	CTH A	14
307+00 - 307+99 LT. & RT.	CTH A	137
38+58 LT. & RT.	SHAWNEE LN.	31
51+21 - 51+36 LT. & RT.	IROQUOIS CT.	38
75+24 LT. & RT.	GRUNDMAN LN.	21
89+25 LT. & RT.	CTH GG	22
95+06 - 95+15 LT	CTH GG	13
95+86 - 95+93 LT	CTH GG	13
PROJECT TOTAL		615

SAWING CONCRETE

690.0250

STATION	LOCATION	LF	REMARK
234+44 LT.	CTH A	3	CURB MATCH
267+09 - 267+20 LT.	CTH A	11	DRIVEWAY
PROJECT TOTAL		14	

GRADING AND SHAPING SPECIAL DITCH

SPV.0105.01

STATION	LS
234+00 TO 234+94 LT	1
PROJECT TOTAL	1

NOTE: DITCH IS LOCATED ON THE NORTH WEST CORNER OF INDIAN POINT RD (ESTIMATED AT 145 LF)

R/W PROJECT NUMBER 4627-02-00	SHEET NUMBER	TOTAL SHEETS
R/W PROJECT NUMBER 4627-02-00	4.1	22

PLAT OF RIGHT OF WAY REQUIRED FOR

INDIAN PT ROAD - C.T.H. GG
TOWN OF VINLAND

C.T.H. A	WINNEBAGO

CONVENTIONAL SYMBOLS

SECTION LINE
QUARTER LINE
SIXTEENTH LINE
NEW REFERENCE LINE
NEW R/W LINE
EXISTING R/W LINE
PROPERTY LINE
LOT, TIE, AND OTHER MINOR LINES
SLOPE INTERCEPT
CORPORATE LIMITS
UNDERGROUND FACILITY (COMMUNICATIONS, ELECTRIC, ETC) — W (TYPE)
FEE ACQUISITION AREA (HATCHING VARIES BY OWNER)
TEMP. LIMITED EASEMENT AREA
EASEMENT AREA (HIGHWAY, PERMANENT LIMITED, OR RESTRICTED DEVELOPMENT)
TRANSMISSION STRUCTURES
BUILDING
BUILDING (TO BE REMOVED)
BRIDGE

PARCEL NUMBER 25
UTILITY NUMBER 40
SECTION CORNER
R/W MONUMENT
NON-MONUMENTED R/W POINT
NOTATION FOR COMBUSTABLE FLUIDS — CAUTION
FOUND IRON PIN — IP
VALVE (GAS, WATER, ETC.) — (TYPE)
NOTATION FOR HIGH VOLTAGE TRANSMISSION LINES — CAUTION
SIGN
OFF-PREMISE SIGN — #1-25

ACCESS CONTROLLED BY ACQUISITION
NO ACCESS (BY STATUTORY AUTHORITY)
ACCESS RESTRICTED (BY PREVIOUS PROJECT OR CONTROL)
NO ACCESS (NEW HIGHWAY)
NATIONAL GEODETIC SURVEY MONUMENT
SIXTEENTH CORNER MONUMENT
PARALLEL OFFSETS

AREA TO BE VACTED

CONVENTIONAL UTILITY SYMBOLS

WATER	W
GAS	G
TELEPHONE	T
OVERHEAD TRANSMISSION LINES	OH
ELECTRIC	E
CABLE TELEVISION	TV
FIBER OPTIC	FO
SANITARY SEWER	SAN
STORM SEWER	SS
ELECTRIC TOWER	

	NON-COMPENSABLE	COMPENSABLE
POWER POLE		
TELEPHONE POLE		
TELEPHONE PEDESTAL		

CURVE DATA ABBREVIATIONS

LONG CHORD	LCH
LONG CHORD BEARING	LCB
RADIUS	R
DEGREE OF CURVE	D
CENTRAL ANGLE	Δ/DELTA
LENGTH OF CURVE	L
TANGENT	T
DIRECTION AHEAD	DA
DIRECTION BACK	DB

CONVENTIONAL ABBREVIATIONS

ACCESS RIGHTS	AR	OUTLOT	OL
ACRES	AC	PAGE	P
AHEAD	AH	POINT OF TANGENCY	PT
ALUMINUM	ALUM	PROPERTY LINE	PL
AND OTHERS	ET AL	RECORDED AS	(100')
BACK	BK	REEL / IMAGE	R/I
BLOCK	BLK	REFERENCE LINE	R/L
CENTERLINE	C/L	PERMANENT LIMITED EASEMENT	PLE
CERTIFIED SURVEY MAP	CSM	POINT OF BEGINNING	POB
CONCRETE	CONC	POINT OF CURVATURE	PC
COUNTY	CO	POINT OF COMPOUND CURVE	PCC
COUNTY TRUNK HIGHWAY	CTH	POINT OF INTERSECTION	PI
DISTANCE	DIST	REMAINING	REM
CORNER	COR	RESTRICTIVE DEVELOPMENT EASEMENT	RDE
DOCUMENT NUMBER	DOC	RIGHT	RT
EASEMENT	EASE	RIGHT OF WAY	R/W
EXISTING	EX	SECTION	SEC
GAS VALVE	GV	SEPTIC VENT	SEPV
GRID NORTH	GN	SQUARE FEET	SF
HIGHWAY EASEMENT	HE	STATE TRUNK HIGHWAY	STH
IDENTIFICATION	ID	STATION	STA
LAND CONTRACT	LC	TELEPHONE PEDESTAL	TP
LEFT	LT	TEMPORARY LIMITED EASEMENT	TLE
MONUMENT	MON	TRANSPORTATION PROJECT PLAT	TPP
NATIONAL GEODETIC SURVEY	NGS	UNITED STATES HIGHWAY	USH
NUMBER	NO	VOLUME	V

NOTES:

POSITIONS SHOWN ON THIS PLAT ARE WISCONSIN COORDINATE REFERENCE SYSTEM COORDINATES (WISCRS), WINNEBAGO COUNTY, NAD83(91) IN US SURVEY FEET. VALUES SHOWN ARE GRID COORDINATES, GRID BEARINGS, AND GRID DISTANCES. GRID DISTANCES MAY BE USED AS GROUND DISTANCES.

RIGHT-OF-WAY MONUMENTS ARE TYPE 2 AND ARE PLACED PRIOR TO OR AT THE TIME OF LAND TITLE TRANSFER.

RIGHT-OF-WAY BOUNDARIES ARE DEFINED WITH COURSES OF THE PERIMETER OF THE HIGHWAY LANDS REFERENCED TO THE U.S. PUBLIC LAND SURVEY SYSTEM OR OTHER "SURVEYS" OF PUBLIC RECORD.

BASIS FOR EXISTING R/W

GOVERNMENT CORNERS PER WINNEBAGO COUNTY COORDINATE SYSTEM

SUBDIVISION PLATS
- TRANSPORTATION PROJECT PLAT 2011-000 NOVEMBER 28, 2011
- PLAT OF R/W STATE AID PROJECT NO. 3204 JUNE, 1956
- ASSESSOR'S PLAT NO. 1 TOWN OF VINLAND DECEMBER 27, 1963
- TOWN OF VINLAND ASSESSOR'S PLAT NO. 2 NOVEMBER 27, 1984

CONDOMINIUM PLATS
- HERITAGE COVE CONDOMINIUMS, MAY 15, 1997

CERTIFIED SURVEY MAPS
- VOLUME 1, PAGE 1420 JULY 19, 1985
- VOLUME 1, PAGE 6823 March 24, 2014
- VOLUME 1, PAGE 5787 AUGUST 31, 2005
- VOLUME 1, PAGE 1635 DECEMBER 12, 1986
- VOLUME 1, PAGE 5669 JANUARY 24, 2005
- VOLUME 1, PAGE 360 JUNE 27, 1978
- VOLUME 1, PAGE 2830 DECEMBER 01, 1993
- VOLUME 1, PAGE 2863 FEBRUARY 17, 1994
- VOLUME 1, PAGE 810 OCTOBER 08, 1980
- VOLUME 1, PAGE 448 OCTOBER 11, 1978
- VOLUME 1, PAGE 5757 JULY 22, 2005
- VOLUME 1, PAGE 3407 APRIL 29, 1996
- VOLUME 1, PAGE 2966 JULY 28, 1994
- VOLUME 1, PAGE 863 FEBRUARY 23, 1981

DEEDS OF RECORD
- DOCUMENT NO. 1489486 DECEMBER 12, 2008
- DOCUMENT NO. 1656941 JANUARY 24, 2014
- DOCUMENT NO. 688847 SEPTEMBER 22, 1987
- DOCUMENT NO. 1458758 JANUARY 17, 2008
- DOCUMENT NO. 1031669 OCTOBER 29, 1998
- DOCUMENT NO. 1578349 AUGUST 15, 2011
- DOCUMENT NO. 1361059 JULY 01, 2005
- DOCUMENT NO. 1667948 JULY 21, 2014
- DOCUMENT NO. 732519 OCTOBER 27, 1989
- DOCUMENT NO. 796425 MAY 04, 1992
- DOCUMENT NO. 1689099 JUNE 05, 2015
- DOCUMENT NO. 1699856 OCTOBER 21, 2015
- DOCUMENT NO. 1219865 DECEMBER 18, 2002
- DOCUMENT NO. 1720770 AUGUST 18, 2016
- DOCUMENT NO. 1532754 FEBRUARY 25, 2010
- DOCUMENT NO. 1555615 NOVEMBER 04, 2010
- DOCUMENT NO. 906726 JUNE 12, 1995
- DOCUMENT NO. 1627892 JANUARY 30, 2013
- DOCUMENT NO. 1699856 OCTOBER 21, 2015
- DOCUMENT NO. 1315750 JUNE 14, 2004

FOUND MONUMENTS AS SHOWN ON THIS PLAT OF RIGHT-OF-WAY

PLATS OF SURVEY

A TEMPORARY LIMITED EASEMENT (TLE) IS A RIGHT FOR CONSTRUCTION PURPOSES, AS DEFINED HEREIN, INCLUDING THE RIGHT TO OPERATE NECESSARY EQUIPMENT THEREON, THE RIGHT OF INGRESS AND EGRESS, AS LONG AS REQUIRED FOR SUCH PUBLIC, PURPOSE, Including THE RIGHT TO PRESERVE, PROTECT, REMOVE, OR PLANT THEREON ANY VEGETATION THAT THE HIGHWAY AUTHORITIES MAY DEEM DESIRABLE. ALL (TLEs) ON THIS PLAT EXPIRE AT THE COMPLETION OF THE CONSTRUCTION PROJECT FOR WHICH THIS INSTRUMENT IS GIVEN. TLE AREAS ARE TO THE FACE OF THE BUILDING FOR SLOPING, NOT WITHIN THE BUILDING.

END RELOCATION ORDER STA 307+55.45
Y= 507940.967 X = 807309.573
2504.93' EAST AND 96.22' NORTH OF THE NORTH 1/4 CORNER OF SECTION 20, TOWNSHIP 19 NORTH, RANGE 17 EAST

BEGIN RELOCATION ORDER STA 234+00
Y= 502434.469 X = 802443.462
245.79' EAST AND 28.54' SOUTH OF THE SOUTHWEST CORNER OF SECTION 20, TOWNSHIP 19 NORTH, RANGE 17 EAST

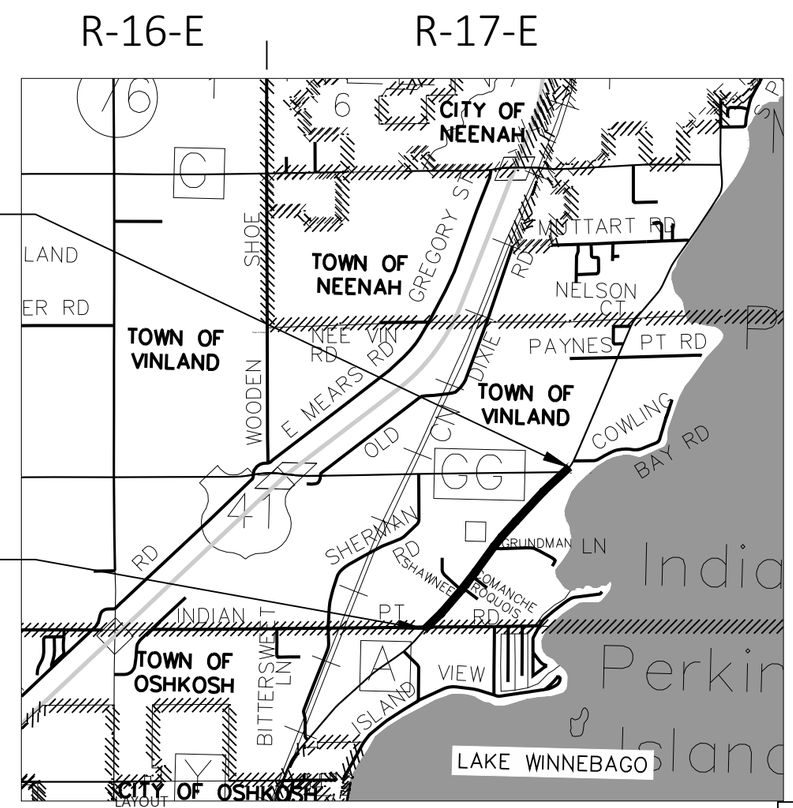

TOTAL NET LENGTH OF CENTERLINE = 1.39 Miles

CAUTION:
THIS PLAT IS FOR ILLUSTRATIVE PURPOSES ONLY. DEEDS MUST BE CHECKED TO DETERMINE PROPERTY BOUNDARIES.

REVISION DATE
May 10, 2019
May 24, 2019
August 20, 2019

ORIGINAL PLANS PREPAED BY MCMAHON

WISCONSIN DAVID M. SCHMALZ S-1284 NEENAH WIS. LAND SURVEYOR

april 9, 2019 — David M. Schmalz
DATE — SIGNATURE

WINNEBAGO COUNTY

DATE: 4/11/19 (Signature)
Raymond G. Pabnen (Print Name)

SCHEDULE OF LAND & INTEREST REQUIRED

PARCEL NUMBER	SHEET NUMBER	OWNER(S)	TAX KEY NUMBER	INTEREST REQUIRED	TOTAL ACRES	R/W ACRES REQUIRED NEW	EXISTING	TOTAL	TOTAL ACRES REMAINING	TLE ACRES	PLE ACRES
2	4.5, 4.6	Laura E. & Jeffrey R. Jungwirth	026063903	FEE	5.540	0.077		0.077	5.463		
3	4.6	Curtis R. Daye	026063908	FEE	6.570	0.083		0.083	6.487		
4	4.6, 4.7	Jeffrey E. and Deborah A. DeVries Living Trust dated June 11, 2007	0260639	FEE	17.030	0.172		0.172	16.858		
								0.000	0.000		
6	4.7, 4.8	David W. and Robin R. Grable	0260886	FEE	1.140	0.087		0.087	1.053		
7	4.5, 4.6	Norman D Mueller	026063904	FEE	1.790	0.051		0.051	1.739		
8	4.6	Stephen J. Nau and Tracy L. Nau	026063906	FEE	1.650	0.001		0.001	1.649		
9	4.6, 4.7	Jeffrey A. Gorr d/b/a All Season Power Equipment and Jeffrey A. Gorr	026063905	FEE/TLE	2.580	0.094		0.094	2.486	0.023	
11	4.7	Robert W. Probst and Carol A. Capener, or their successors, as Trustees of the Robert W. Probst and Carol A. Capener Joint Revocable Trust dated September 11, 2008	02606390501	FEE	5.010	0.083		0.083	4.927		
12	4.7	Joseph Zelinski and Tammy Zelinski	026064008	PLE	1.000			0.000	1.000		0.053
13	4.7, 4.8	David G. Morrison, Jr. and Traci L. Morrison	02606400701	FEE	1.500	0.111		0.111	1.389		
14	4.8	William A. Aubrey	026068309	FEE	0.990	0.062		0.062	0.928		
16	4.8, 4.9, 4.10	Derrick W. Allen and Ellen F. Allen	02606360901 & 02606360902	FEE	18.590	0.267		0.267	18.323		
17	4.10	Bruce G. Cleveland a/k/a Jerry Cleveland and Janell A. Cleveland	0260636	FEE	2.720	0.154		0.154	2.566		
18	4.10, 4.11	Robert W. Guetzkow	026063601	FEE	2.250	0.147		0.147	2.103		
19	4.8	Adam E. Anders and Lisa A. Anders	026064007	PLE	1.040			0.000	1.040		0.047
21	4.8, 4.9	Douglas J. Dickson and Diane K. Dickson, Trustees, or their successors in trust under the Douglas and Diane Dickson Living Trust, dated February 18, 2010	026064010	PLE	1.010			0.000	1.010		0.044
22	4.9	Stanley H. Meyer and Pamela J. Meyer, as Trustee(s) of the Stanley and Pamela Meyer Revocable Trust U/A Dated November 28, 2011	026063605	FEE	0.460	0.044		0.044	0.416		
23	4.9, 4.10	Douglas J. Dickson and Diane K. Dickson Living, Trustees, or their successors in trust under the Douglas and Diane Dickson Living Trust, dated February 18, 2010	26063604	FEE	12.130	0.096		0.096	12.034		
24	4.10	Linda Patzlaff a/k/a Linda L. Patzlaff	026063603 & 026063602	FEE	4.000	0.117	0.320	0.437	3.563		
27	4.10, 4.11	Paula Sorensen, Tod A. Sorensen and Michael J. Sorensen, subject to the life estate of Charles F. Sorensen	0260637	PLE	5.010			0.000	5.010		0.021
28	4.10 ,4.11, 4.19	Larry L. Popp	026064201	FEE	5.620	0.083		0.083	5.537		
29	4.11	Merf Properties, LLC, a Wisconsin Limited Liability Company	0260635	FEE	3.750	0.04		0.040	3.710		
31	4.11, 4.12, 4.19	Vickie Van Oudenhoven	026063501	FEE	3.370	0.048		0.048	3.322		
33	4.12, 4.13, 4.14, 4.15	Michael J. VandeVen a/k/a Michael J. Van de Ven	026062502 & 026062402	FEE	50.010	0.399		0.399	49.611		
34	4.11, 4.12, 4.13, 4.14, 4.15. 4.19	Maria Louise Aylward Revocable Living Trust Dated June 16, 1997 (as amended and restated), Maria Louise Aylward, Trustee	0260625, 0260624 & 026062501	FEE/TLE	23.000	0.565	1.875	2.440	20.560	0.105	
38	4.15	Ann M. Nelson	026062401	FEE	4.690	0.032		0.032	4.658		
39	4.15, 4.16	Nicholas A. Yost and Amanda M. Beyer	02606220201	FEE/TLE	1.000			0.000	1.000	0.036	
41	4.16, 4.17, 4.20, 4.21	JGarry Enterprises, LLC	026062202	FEE/TLE	11.410	1.081		1.081	10.329	0.080	
								0.000	0.000		
43	4.15, 4.16	Benjamin T. Ganther	02606220501	PLE	5.000	0.108		0.108	4.892		
44	4.16	Allan N. Sweeting and Judith M. Sweeting (Unit 101), Michael S. Hussar and Cheryl L. Hussar (Unit 102), Cynthia G. Hanson (Unit 103), Colleen K. Edson (Unit 104), LeeAnn Gauthier (Unit 105), Pau. W. Rosnow and Jenine A. Rosnow (Unit 106)	02606220503, 02606220504, 02606220505, 02606220506, 02606220507 & 02606220508	FEE	3.000	0.144		0.144	2.856		
									0.000		
46	4.16	Benjamin T. Ganther	0260622	FEE	5.150	0.009		0.009	5.141		
47	4.17, 4.18	James G. Schultz	026062203 & 026062204	FEE	7.920	0.208		0.208	7.712		

UTILITIES SCHEDULE OF INTERESTS REQUIRED

UTILITY NUMBER	OWNER	INTEREST REQUIRED
100	WISCONSIN PUBLIC SERVICE (ELECTRICAL)	RELEASE OF RIGHTS
101	TIME WARNER CABLE	RELEASE OF RIGHTS
102	WISCONSIN PUBLIC SERVICE (GAS)	RELEASE OF RIGHTS
103	AT&T WISCONSIN	RELEASE OF RIGHTS

GN

4

4

OWNER'S NAME ARE SHOWN FOR REFERENCE PURPOSES ONLY AND ARE SUBJECT TO CHANGE PRIOR TO THE TRANSFER OF LAND INTEREST TO THE COUNTY.

REVISION DATE May 10, 2019 May 24, 2019 August 20, 2019

DATE

GRID FACTOR

SCALE, FEET 0

HWY: CTH A

COUNTY: WINNEBAGO

STATE R/W PROJECT NUMBER 4627-02-00

CONSTRUCTION PROJECT NUMBER 4627-02-71

PLAT SHEET 4.2

PS&E SHEET 48

E

FILE NAME : 2 RW PLAT SOI.DWG
LAYOUT NAME - RW 1 IN 50 FT

PLOT DATE : 1/8/2020 10:22 AM PLOT BY : CHRIS CLEMENS PLOT NAME : PLOT SCALE : 1 IN:50 FT

WISDOT/CADDS SHEET 75

W:\PROJECTS\W0059\81700113\CADD\Civil3D\Plan Sheets\04-RW PLAT\2 RW PLAT SOI.dwg, RW 1 IN 50 FT, 1/8/2020 10:22:59 AM, cclemens, 1:1

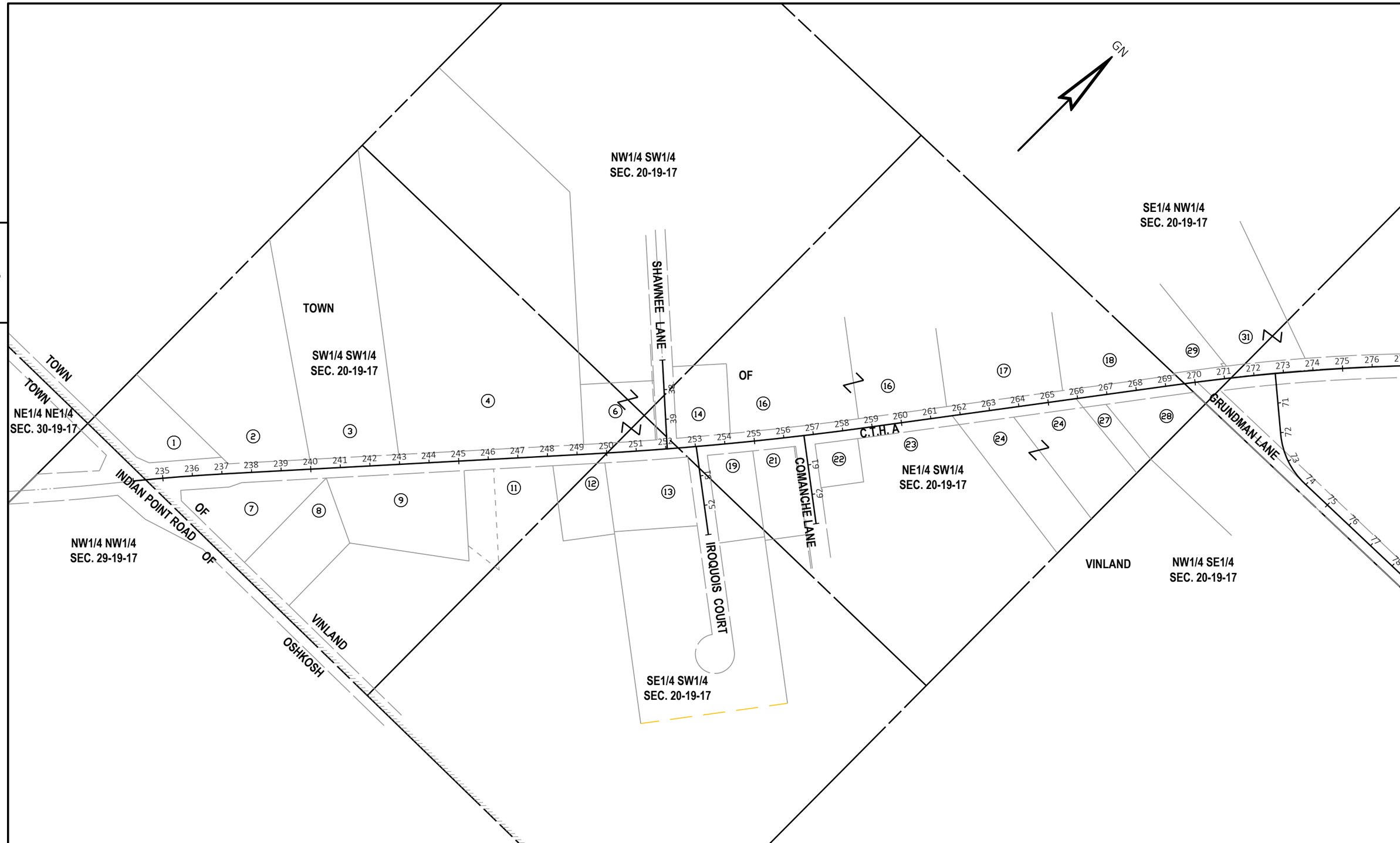

REVISION DATE	DATE	SCALE, FEET	HWY: CTH A	STATE R/W PROJECT NUMBER 4627-02-00	PLAT SHEET 4.3	
	GRID FACTOR	0 150 300	COUNTY: WINNEBAGO	CONSTRUCTION PROJECT NUMBER 4627-02-71	PS&E SHEET 49	E

FILE NAME : CTH A RW PLAT LAYOUT SHEET.DWG
LAYOUT NAME - 3
PLOT DATE : 1/8/2020 10:23 AM PLOT BY : CHRIS CLEMENS PLOT NAME : PLOT SCALE : 1:300
WISDOT/CADDS SHEET 75

W:\PROJECTS\W0059\81700113\CADD\Civil3D\Plan Sheets\04-RW PLAT\CTH A RW PLAT LAYOUT SHEET.dwg, 3, 1/8/2020 10:23:06 AM, cclemens, 1:1

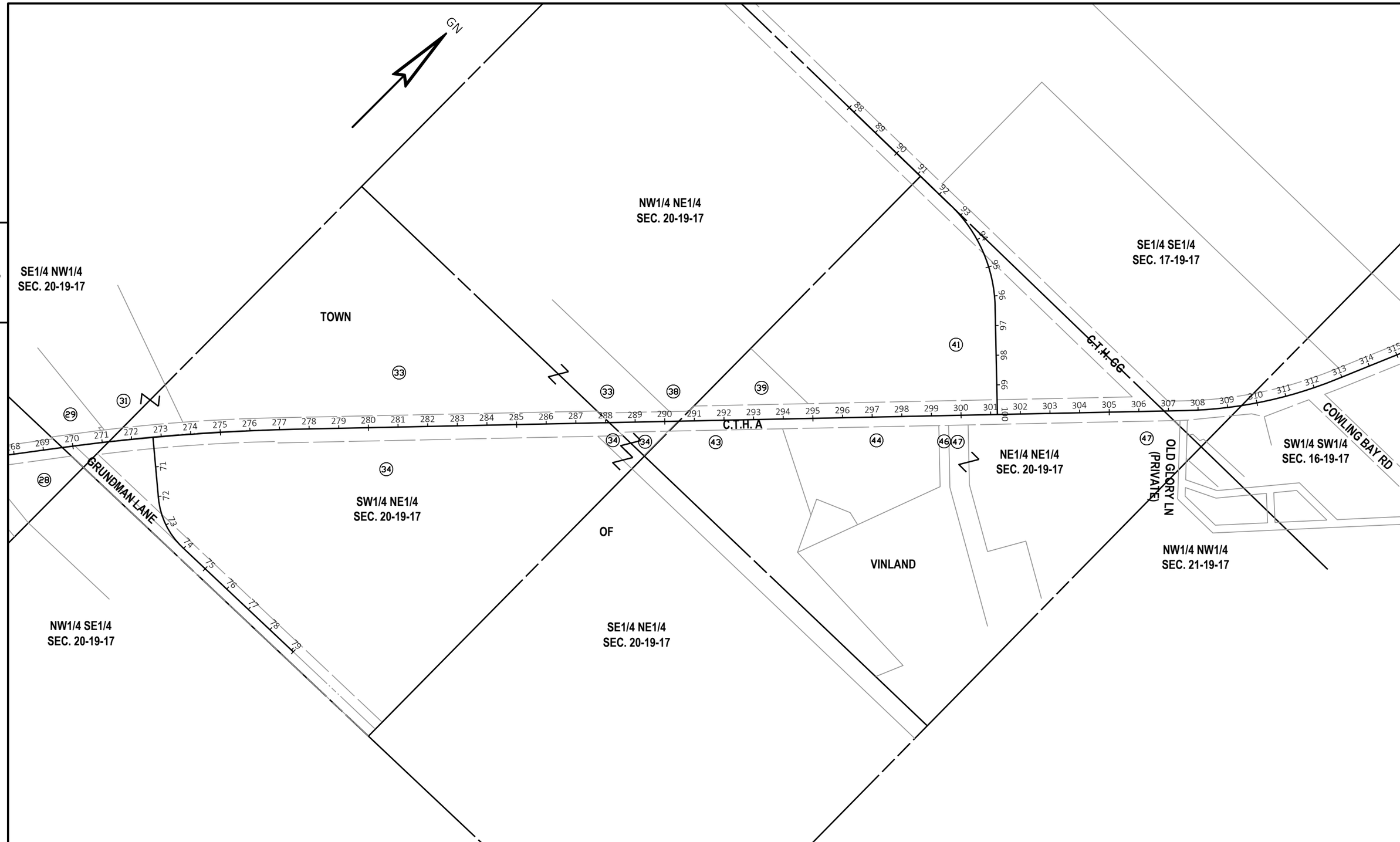

REVISION DATE	DATE	SCALE, FEET	HWY: CTH A	STATE R/W PROJECT NUMBER 4627-02-00	PLAT SHEET 4.4	
	GRID FACTOR	0 150 300	COUNTY: WINNEBAGO	CONSTRUCTION PROJECT NUMBER 4627-02-71	PS&E SHEET 50	E

FILE NAME : CTH A RW PLAT LAYOUT SHEET.DWG
LAYOUT NAME - 4
PLOT DATE : 1/8/2020 10:23 AM PLOT BY : CHRIS CLEMENS PLOT NAME : PLOT SCALE : 1:300
WISDOT/CADDS SHEET 75

W:\PROJECTS\W0059\81700113\CADD\Civil3D\Plan Sheets\04-RW PLAT\CTH A RW PLAT LAYOUT SHEET.dwg, 4, 1/8/2020 10:23:06 AM, cclemens, 1:1

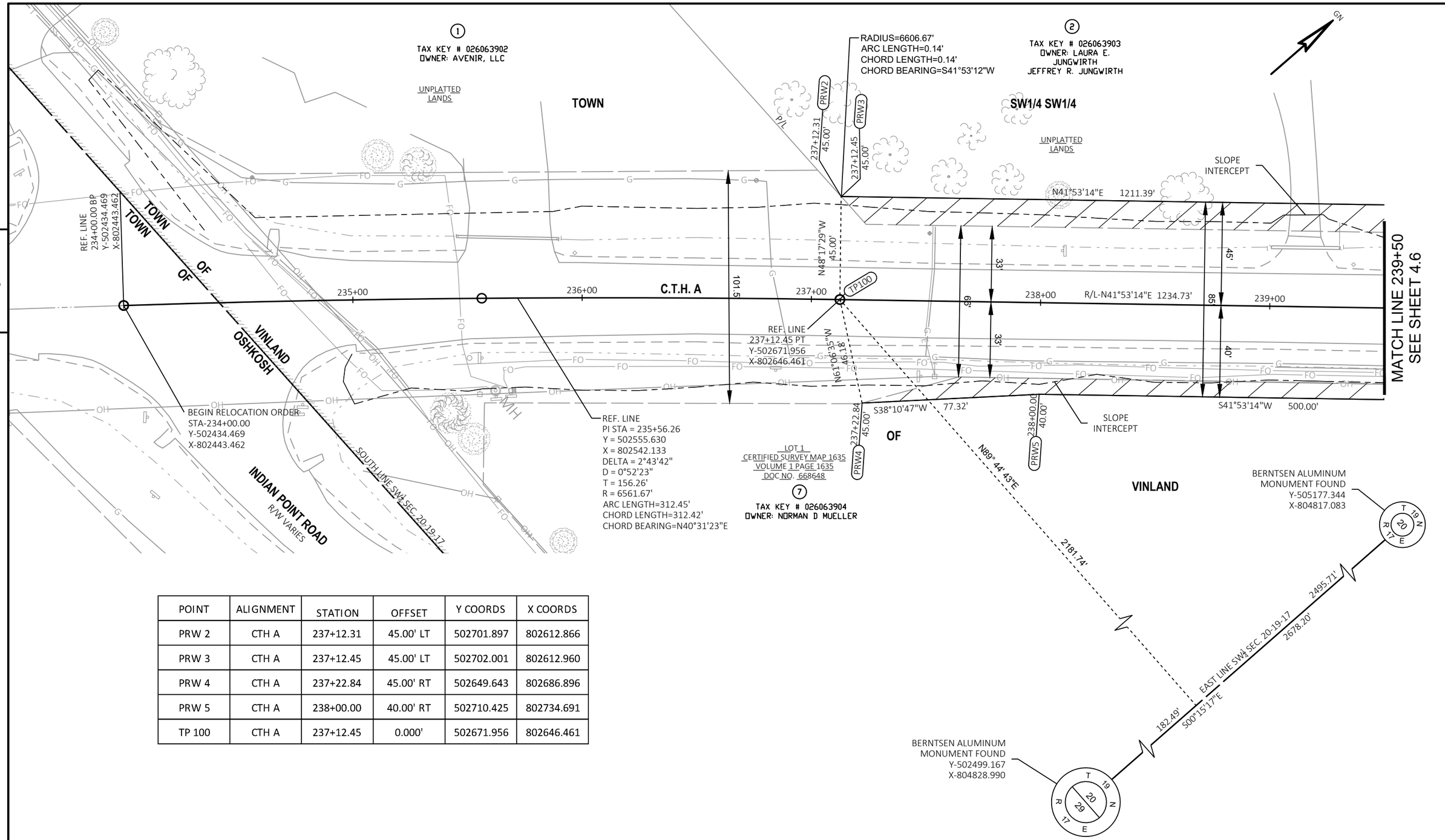

POINT	ALIGNMENT	STATION	OFFSET	Y COORDS	X COORDS
PRW 2	CTH A	237+12.31	45.00' LT	502701.897	802612.866
PRW 3	CTH A	237+12.45	45.00' LT	502702.001	802612.960
PRW 4	CTH A	237+22.84	45.00' RT	502649.643	802686.896
PRW 5	CTH A	238+00.00	40.00' RT	502710.425	802734.691
TP 100	CTH A	237+12.45	0.000'	502671.956	802646.461

REVISION DATE

DATE

GRID FACTOR

SCALE, FEET 0 20 40

HWY: CTH A

COUNTY: WINNEBAGO

STATE R/W PROJECT NUMBER 4627-02-00

CONSTRUCTION PROJECT NUMBER 4627-02-71

PLAT SHEET 4.5

PS&E SHEET 51

E

FILE NAME : CTH A RW PLAT.DWG
LAYOUT NAME - 5

PLOT DATE : 1/8/2020 10:23 AM PLOT BY : CHRIS CLEMENS PLOT NAME : PLOT SCALE : 1 IN:40 FT

WISDOT/CADDS SHEET 75

W:\PROJECTS\W0059\8170013\CADD\Civil3D\Plan Sheets\04-RW PLAT\CTH A RW PLAT.dwg, 5, 1/8/2020 10:23:47 AM, cclemens, 1:1

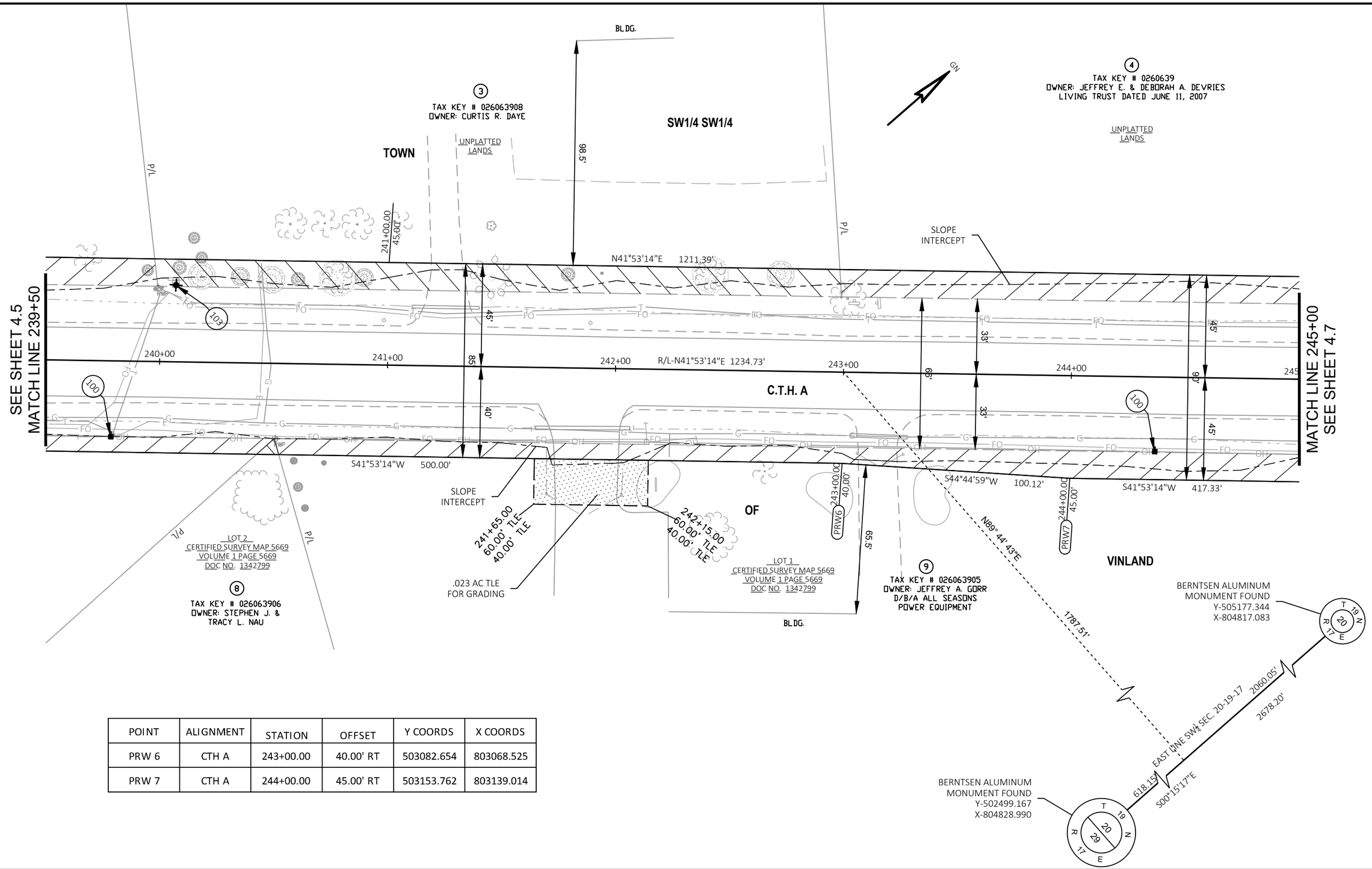

POINT	ALIGNMENT	STATION	OFFSET	Y COORDS	X COORDS
PRW 6	CTH A	243+00.00	40.00' RT	503082.654	803068.525
PRW 7	CTH A	244+00.00	45.00' RT	503153.762	803139.014

REVISION DATE August 20, 2019	DATE	SCALE, FEET 0 20 40	HWY: CTH A
	GRID FACTOR		COUNTY: WINNEBAGO

STATE R/W PROJECT NUMBER	4627-02-00	PLAT SHEET 4.6
CONSTRUCTION PROJECT NUMBER	4627-02-71	PS&E SHEET 52

E

FILE NAME : CTH A RW PLAT.DWG
LAYOUT NAME - 6
PLOT DATE : 1/8/2020 10:23 AM PLOT BY : CHRIS CLEMENS PLOT NAME : PLOT SCALE : 1 IN:40 FT

WISDOT/CADDS SHEET 75

W:\PROJECTS\W0059\8170013\CADD\Civil3D\Plan Sheets\04-RW PLAT\CTH A RW PLAT.dwg, 6, 1/8/2020 10:23:51 AM, cclemens, 1:1

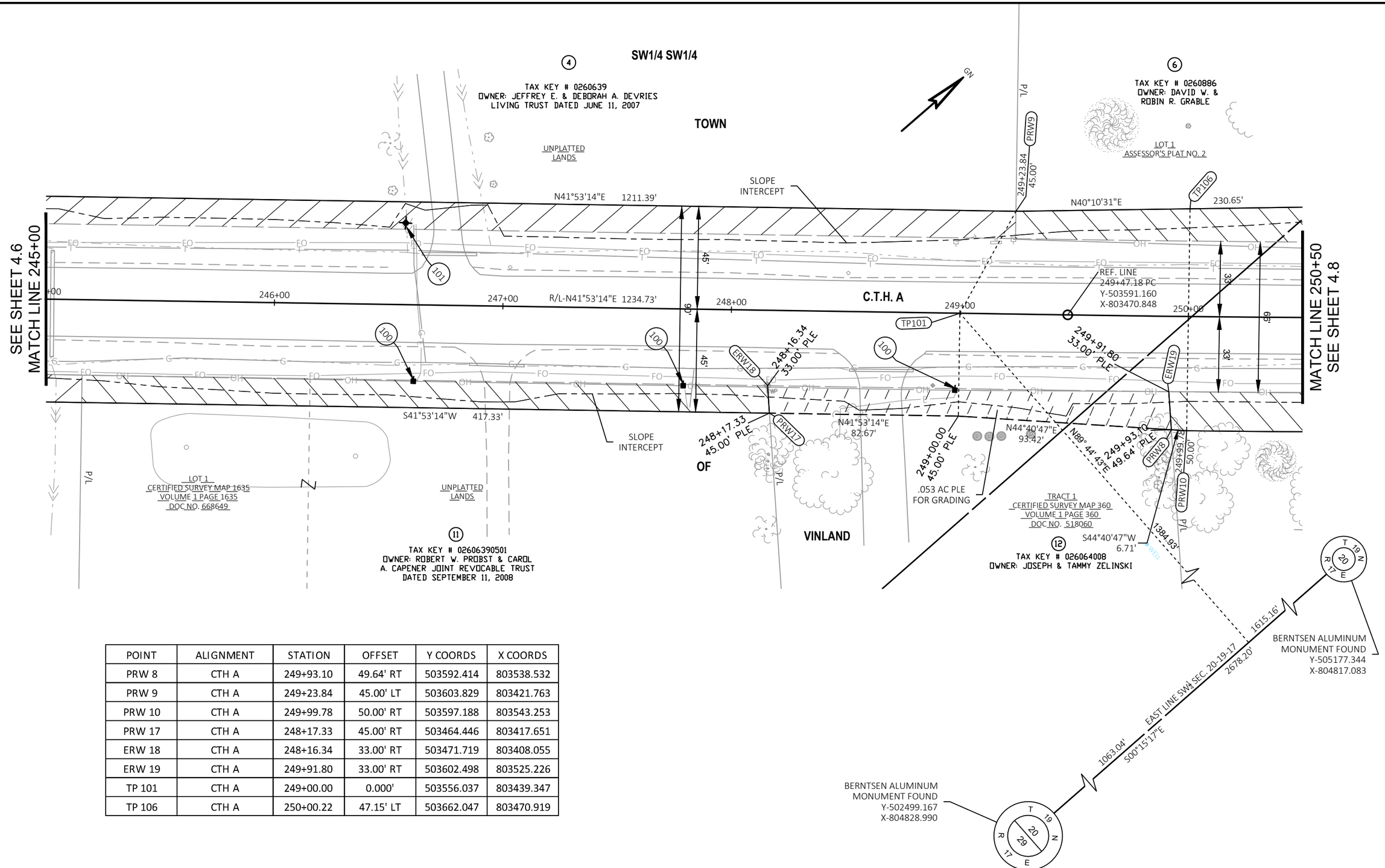

POINT	ALIGNMENT	STATION	OFFSET	Y COORDS	X COORDS
PRW 8	CTH A	249+93.10	49.64' RT	503592.414	803538.532
PRW 9	CTH A	249+23.84	45.00' LT	503603.829	803421.763
PRW 10	CTH A	249+99.78	50.00' RT	503597.188	803543.253
PRW 17	CTH A	248+17.33	45.00' RT	503464.446	803417.651
ERW 18	CTH A	248+16.34	33.00' RT	503471.719	803408.055
ERW 19	CTH A	249+91.80	33.00' RT	503602.498	803525.226
TP 101	CTH A	249+00.00	0.000'	503556.037	803439.347
TP 106	CTH A	250+00.22	47.15' LT	503662.047	803470.919

REVISION DATE	May 24, 2019	August 20, 2019	

DATE _____

GRID FACTOR _____

SCALE, FEET 0 20 40

HWY: CTH A	STATE R/W PROJECT NUMBER 4627-02-00	PLAT SHEET 4.7
COUNTY: WINNEBAGO	CONSTRUCTION PROJECT NUMBER 4627-02-71	PS&E SHEET 53

E

FILE NAME : CTH A RW PLAT.DWG
LAYOUT NAME - 7

PLOT DATE : 1/8/2020 10:23 AM PLOT BY : CHRIS CLEMENS PLOT NAME : PLOT SCALE : 1 IN:40 FT

WISDOT/CADDS SHEET 75

W:\PROJECTS\W0059\81700113\CADD\Civil3D\Plan Sheets\04-RW PLAT\CTH A RW PLAT.dwg, 7, 1/8/2020 10:23:55 AM, cclemens, 1:1

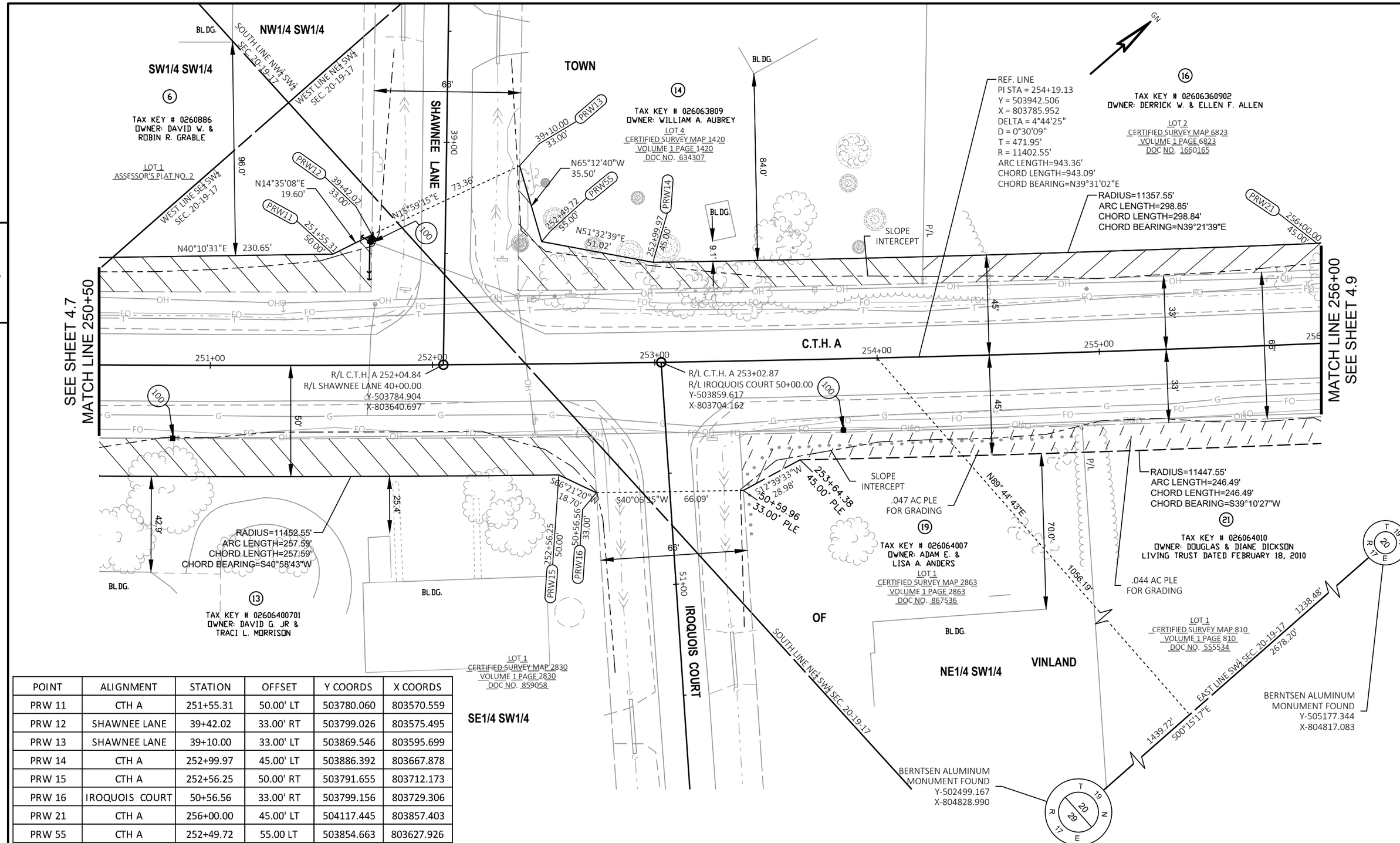

POINT	ALIGNMENT	STATION	OFFSET	Y COORDS	X COORDS
PRW 11	CTH A	251+55.31	50.00' LT	503780.060	803570.559
PRW 12	SHAWNEE LANE	39+42.02	33.00' RT	503799.026	803575.495
PRW 13	SHAWNEE LANE	39+10.00	33.00' LT	503869.546	803595.699
PRW 14	CTH A	252+99.97	45.00' LT	503886.392	803667.878
PRW 15	CTH A	252+56.25	50.00' RT	503791.655	803712.173
PRW 16	IROQUOIS COURT	50+56.56	33.00' RT	503799.156	803729.306
PRW 21	CTH A	256+00.00	45.00' LT	504117.445	803857.403
PRW 55	CTH A	252+49.72	55.00 LT	503854.663	803627.926

REVISION DATE	May 24, 2019	August 20, 2019	

DATE _____

GRID FACTOR _____

SCALE, FEET 0 20 40

HWY: CTH A

COUNTY: WINNEBAGO

STATE R/W PROJECT NUMBER 4627-02-00

CONSTRUCTION PROJECT NUMBER 4627-02-71

PLAT SHEET 4.8

PS&E SHEET 54

E

FILE NAME : CTH A RW PLAT.DWG
LAYOUT NAME - 8

PLOT DATE : 1/8/2020 10:24 AM PLOT BY : CHRIS CLEMENS PLOT NAME : PLOT SCALE : 1 IN:40 FT

WISDOT/CADDS SHEET 75

W:\PROJECTS\W0059\8170011\3\CADD\Civil3D\Plan Sheets\04-RW PLAT\CTH A RW PLAT.dwg, 8, 1/8/2020 10:23:59 AM, cclemens, 1:1

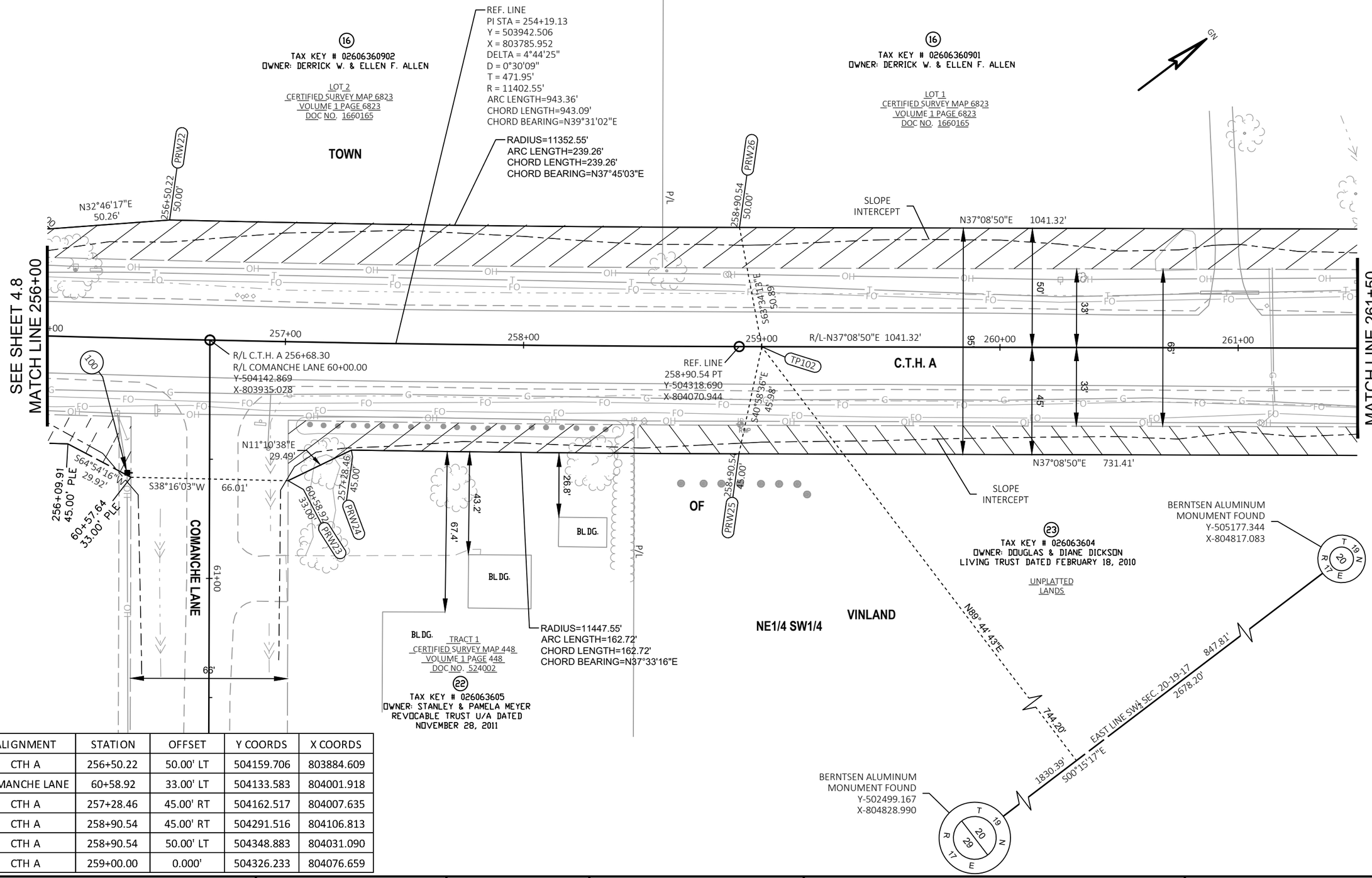

POINT	ALIGNMENT	STATION	OFFSET	Y COORDS	X COORDS
PRW 22	CTH A	256+50.22	50.00' LT	504159.706	803884.609
PRW 23	COMANCHE LANE	60+58.92	33.00' LT	504133.583	804001.918
PRW 24	CTH A	257+28.46	45.00' RT	504162.517	804007.635
PRW 25	CTH A	258+90.54	45.00' RT	504291.516	804106.813
PRW 26	CTH A	258+90.54	50.00' LT	504348.883	804031.090
TP 102	CTH A	259+00.00	0.000'	504326.233	804076.659

REVISION DATE May 24, 2019	DATE	SCALE, FEET 0 20 40	HWY: CTH A	STATE R/W PROJECT NUMBER 4627-02-00	PLAT SHEET 4.9
	GRID FACTOR		COUNTY: WINNEBAGO	CONSTRUCTION PROJECT NUMBER 4627-02-71	PS&E SHEET 55 E

FILE NAME : CTH A RW PLAT.DWG
LAYOUT NAME - 9
PLOT DATE : 1/8/2020 10:24 AM PLOT BY : CHRIS CLEMENS PLOT NAME : PLOT SCALE : 1 IN:40 FT

W:\PROJECTS\W0059\81700113\CADD\Civil3D\Plan Sheets\04-RW PLAT\CTH A RW PLAT.dwg, 9, 1/8/2020 10:24:03 AM, cclemens, 1:1

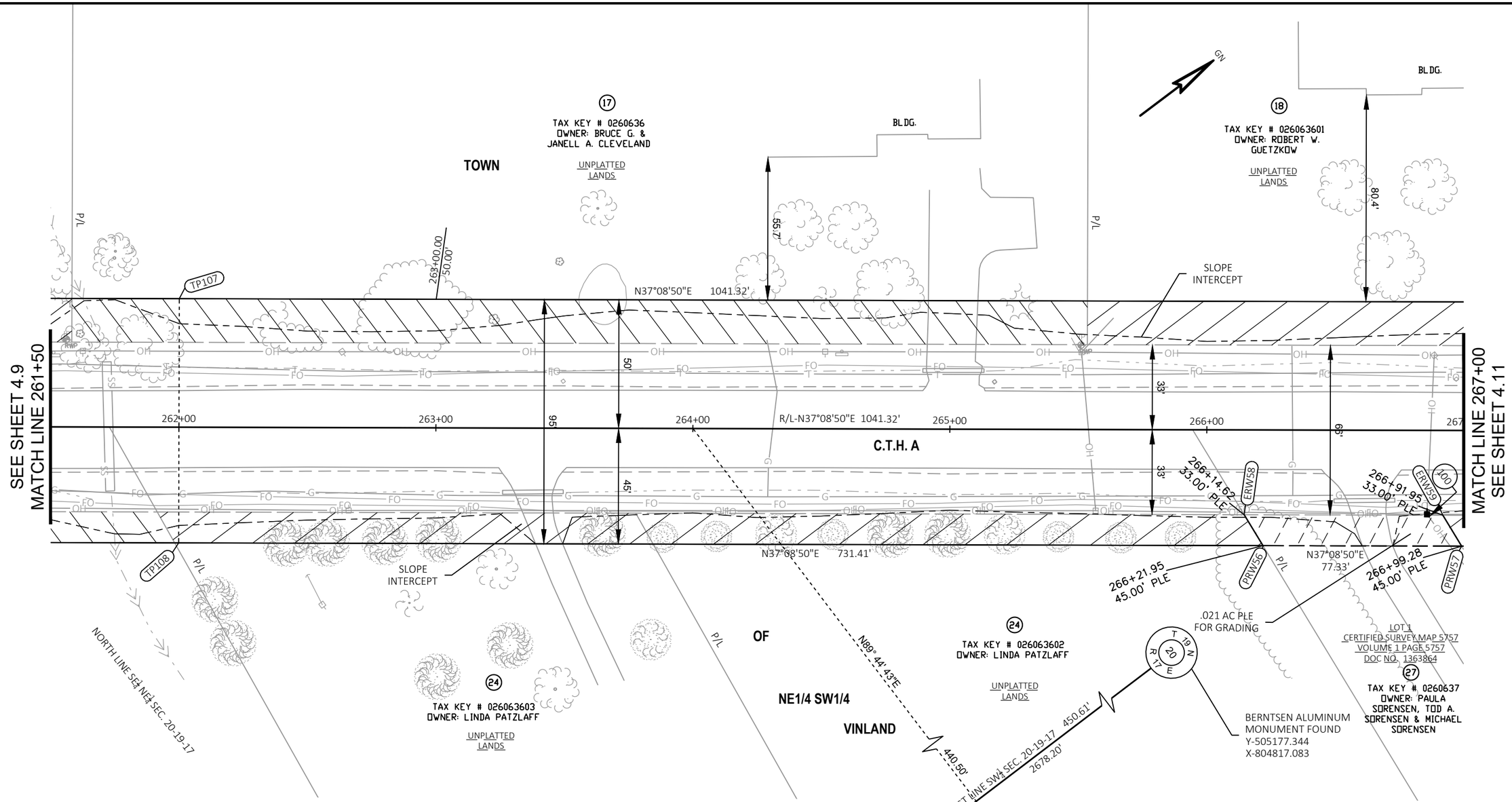

POINT	ALIGNMENT	STATION	OFFSET	Y COORDS	X COORDS
TP 107	CTH A	262+00.00	50.00' LT	504595.549	804217.961
TP 108	CTH A	262+00.00	45.00' RT	504538.182	804293.685
PRW56	CTH A	266+21.95	45.00' RT	504874.516	804548.487
PRW57	CTH A	266+99.28	45.00' RT	504936.152	804595.181
ERW58	CTH A	266+14.62	33.00' RT	504875.924	804534.498
ERW59	CTH A	266+91.95	33.00' RT	504937.559	804581.193

REVISION DATE			
	May 10, 2019	August 20, 2019	

DATE _____

GRID FACTOR _____

SCALE, FEET 0 20 40

HWY: CTH A

COUNTY: WINNEBAGO

STATE R/W PROJECT NUMBER 4627-02-00

CONSTRUCTION PROJECT NUMBER 4627-02-71

PLAT SHEET 4.10

PS&E SHEET

E

FILE NAME : CTH A RW PLAT.DWG
LAYOUT NAME - 10

PLOT DATE : 1/8/2020 10:24 AM PLOT BY : CHRIS CLEMENS PLOT NAME : PLOT SCALE : 1 IN:40 FT

WISDOT/CADDS SHEET 75

W:\PROJECTS\W0059\81700113\CADD\Civil3D\Plan Sheets\04-RW PLAT\CTH A RW PLAT.dwg, 10, 1/8/2020 10:24:08 AM, cclemens, 1:1

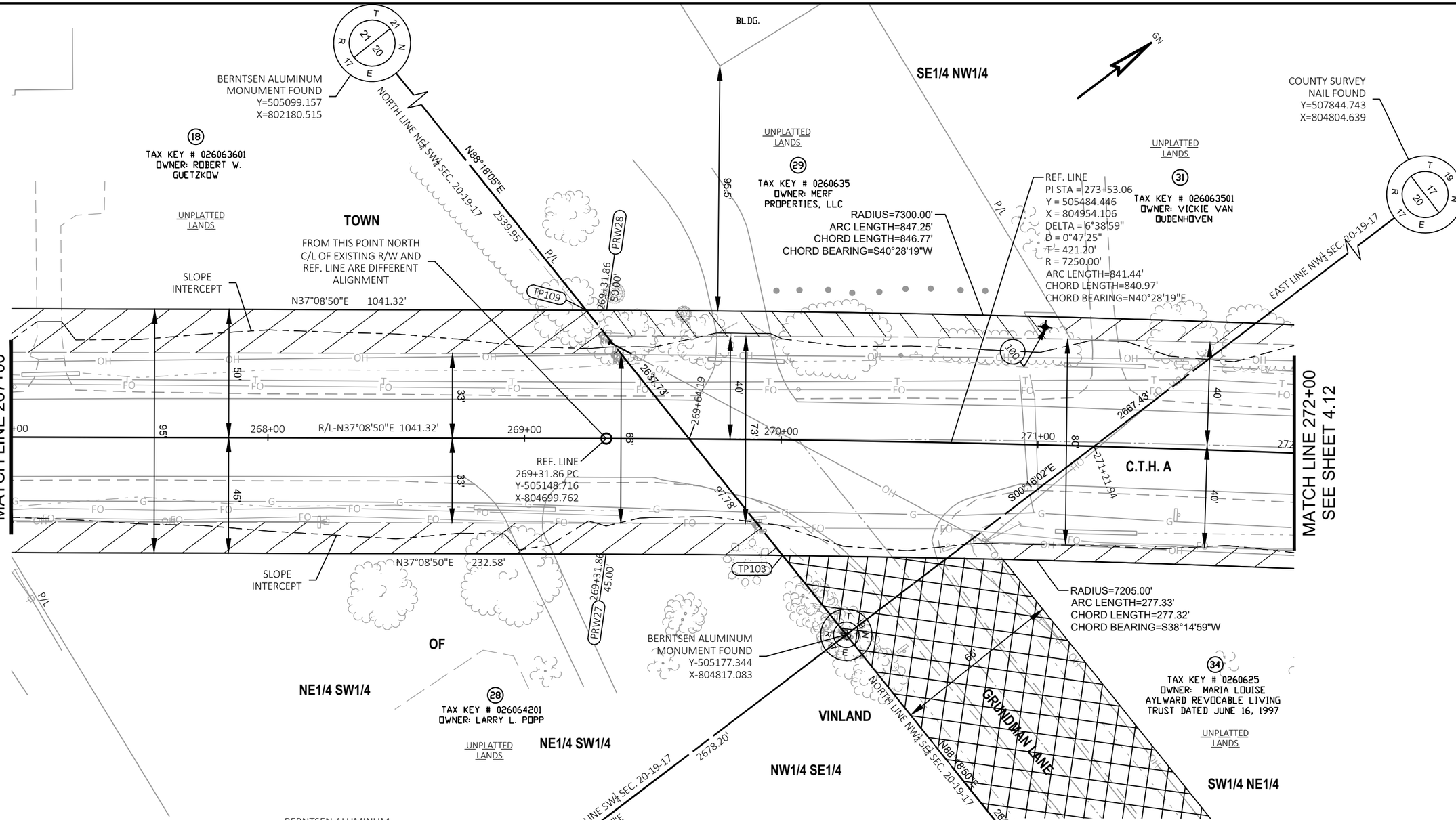

POINT	ALIGNMENT	STATION	OFFSET	Y COORDS	X COORDS
PRW 27	CTH A	269+31.86	45.00' RT	505121.542	804735.631
PRW 28	CTH A	269+31.86	50.00' LT	505178.910	804659.907
TP 103	CTH A	270+01.07	45.00' RT	505176.168	804777.426
TP 109	CTH A	269+23.87	50.00' LT	505172.540	804655.082

REVISION DATE

DATE

GRID FACTOR

SCALE, FEET 0 20 40

HWY: CTH A

COUNTY: WINNEBAGO

STATE R/W PROJECT NUMBER 4627-02-00

CONSTRUCTION PROJECT NUMBER 4627-02-71

PLAT SHEET 4.11

PS&E SHEET 57

E

FILE NAME : CTH A RW PLAT.DWG
LAYOUT NAME - 11

PLOT DATE : 1/8/2020 10:24 AM PLOT BY : CHRIS CLEMENS PLOT NAME : PLOT SCALE : 1 IN:40 FT

WISDOT/CADDS SHEET 75

W:\PROJECTS\W0059\81700113\CADD\Civil3D\Plan Sheets\04-RW PLAT\CTH A RW PLAT.dwg, 11, 1/8/2020 10:24:13 AM, cclemens, 1:1

POINT	ALIGNMENT	STATION	OFFSET	Y COORDS	X COORDS
PRW 29	CTH A	272+10.93	45.00' RT	505339.324	804907.315
PRW 37	CTH A	273+33.17	45.00' RT	505432.609	804985.135
PRW 38	CTH A	275+99.45	45.00' RT	505631.188	805160.027
PRW 39	CTH A	277+00.00	50.00' RT	505701.057	805231.589

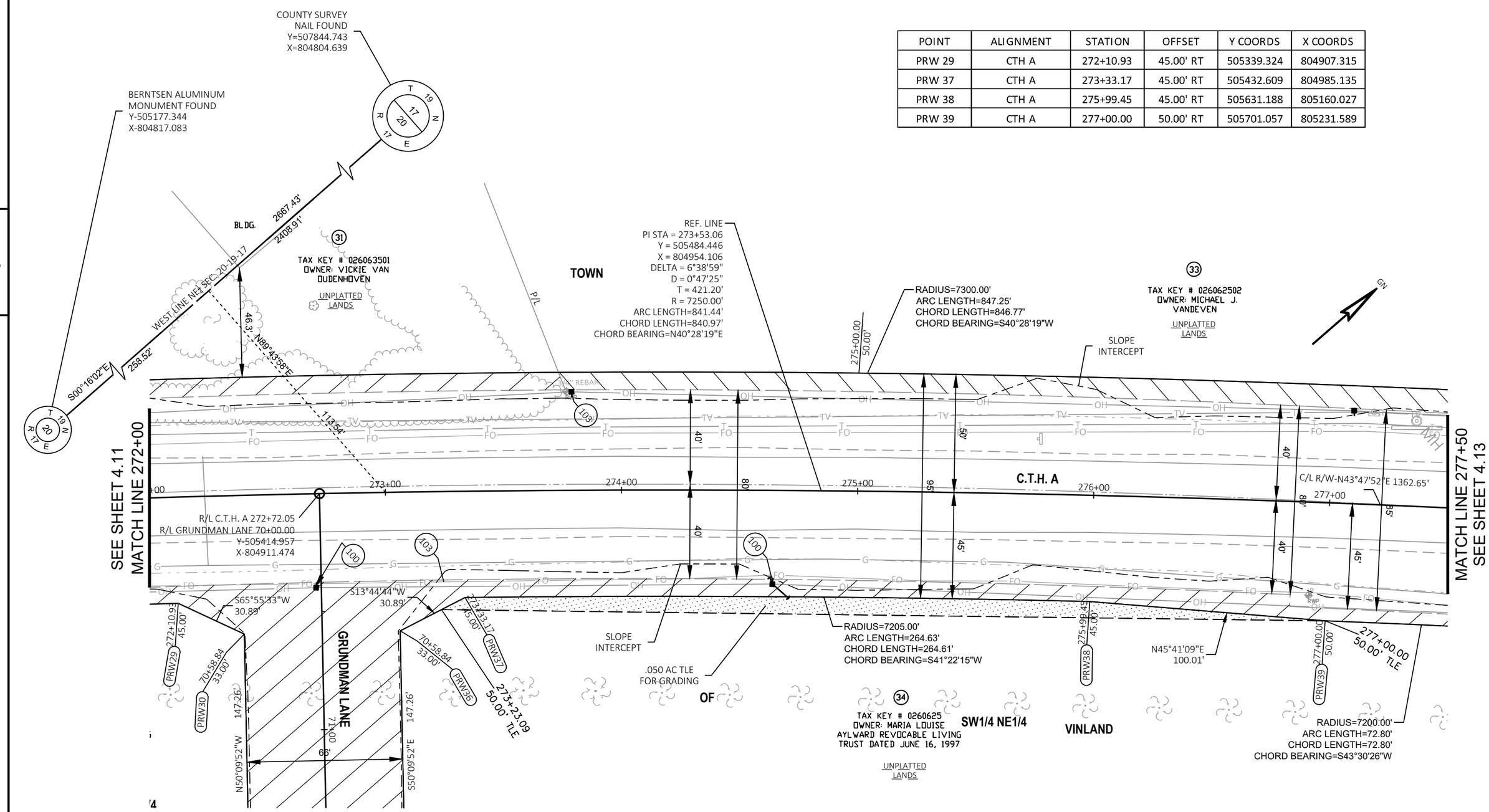

REVISION DATE	DATE	SCALE, FEET	HWY: CTH A	STATE R/W PROJECT NUMBER 4627-02-00	PLAT SHEET 4.12	
	GRID FACTOR	0 20 40	COUNTY: WINNEBAGO	CONSTRUCTION PROJECT NUMBER 4627-02-71	PS&E SHEET 58	E

FILE NAME : CTH A RW PLAT.DWG
LAYOUT NAME - 12
PLOT DATE : 1/8/2020 10:24 AM PLOT BY : CHRIS CLEMENS PLOT NAME : PLOT SCALE : 1 IN:40 FT
WISDOT/CADDS SHEET 75

W:\PROJECTS\W0059\8170011 3\CADD\Civil3D\Plan Sheets\04-RW PLAT\CTH A RW PLAT.dwg, 12, 1/8/2020 10:24:18 AM, cclemens, 1:1

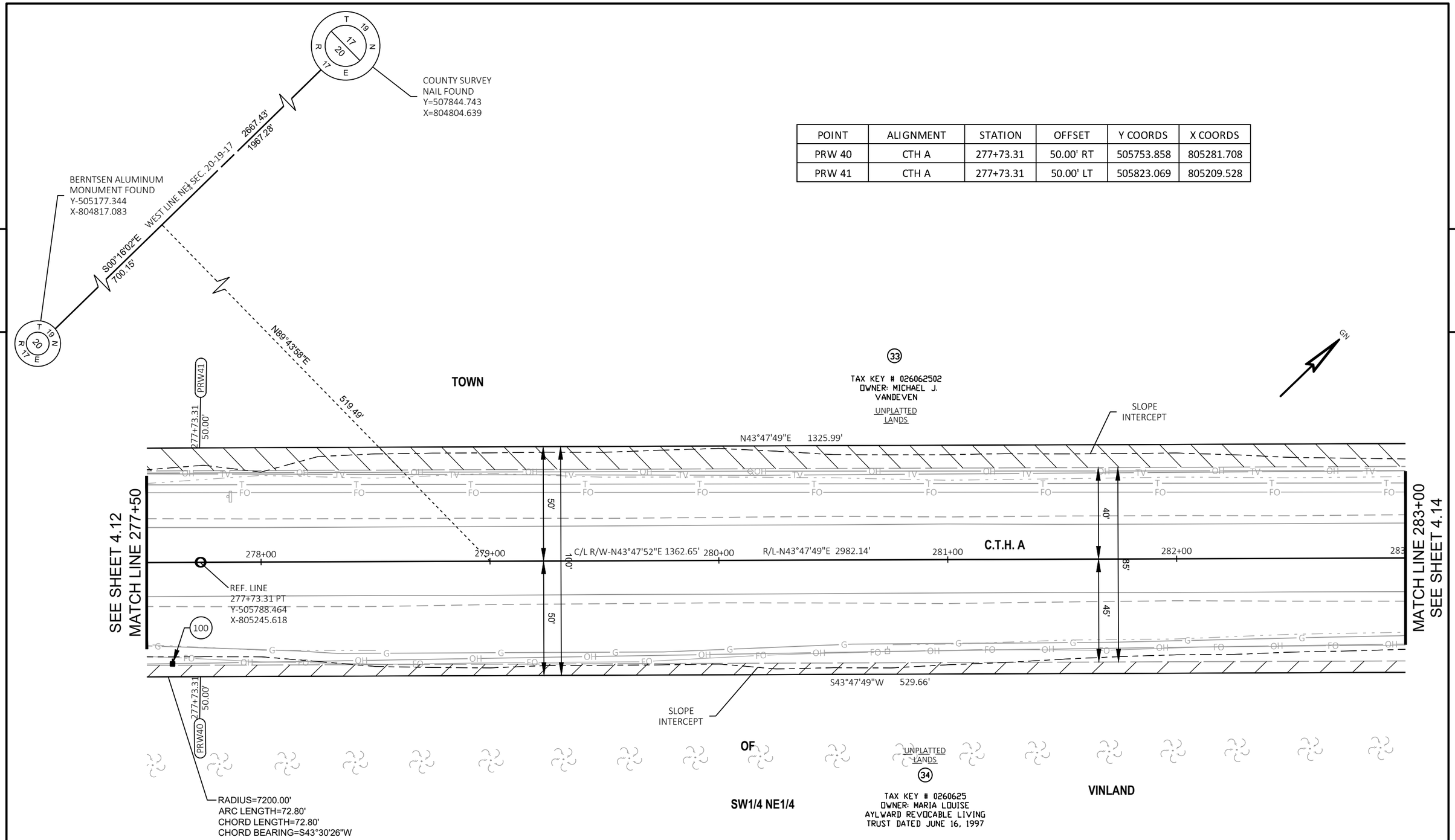

POINT	ALIGNMENT	STATION	OFFSET	Y COORDS	X COORDS
PRW 40	CTH A	277+73.31	50.00' RT	505753.858	805281.708
PRW 41	CTH A	277+73.31	50.00' LT	505823.069	805209.528

4

REVISION DATE	August 20, 2019	DATE	SCALE, FEET 0 20 40	HWY: CTH A	STATE R/W PROJECT NUMBER 4627-02-00	PLAT SHEET 4.13	
		GRID FACTOR		COUNTY: WINNEBAGO	CONSTRUCTION PROJECT NUMBER 4627-02-71	PS&E SHEET 59	E

POINT	ALIGNMENT	STATION	OFFSET	Y COORDS	X COORDS
PRW 42	CTH A	283+02.97	50.00' RT	506136.167	805648.289
PRW 43	CTH A	284+00.00	45.00' RT	506209.665	805711.836

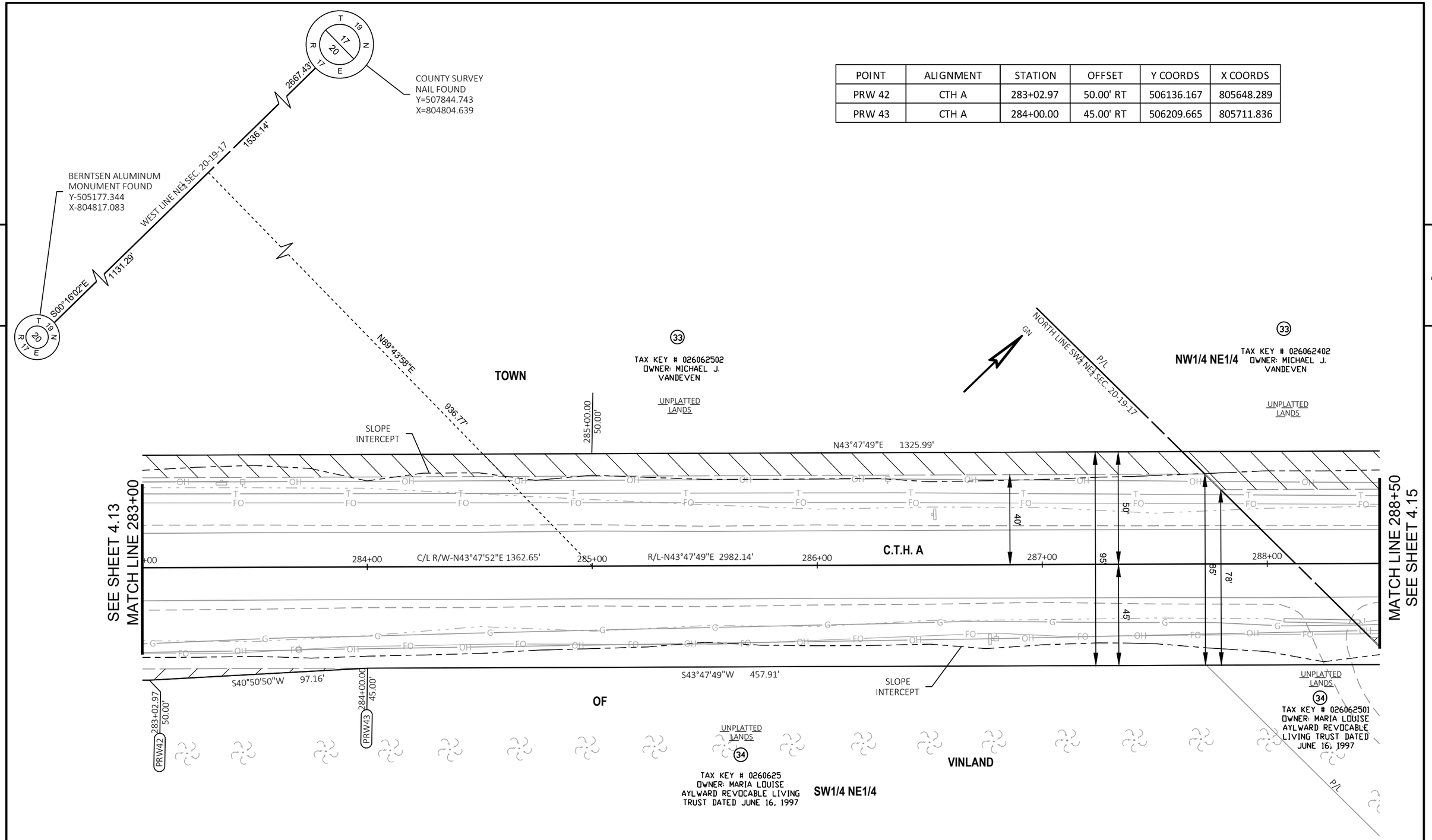

REVISION DATE	DATE	SCALE, FEET	HWY: CTH A	STATE R/W PROJECT NUMBER 4627-02-00	PLAT SHEET 4.14	
	GRID FACTOR	0 20 40	COUNTY: WINNEBAGO	CONSTRUCTION PROJECT NUMBER 4627-02-71	PS&E SHEET — 60	E

FILE NAME : CTH A RW PLAT.DWG
LAYOUT NAME - 14
PLOT DATE : 1/8/2020 10:24 AM PLOT BY : CHRIS CLEMENS PLOT NAME : PLOT SCALE : 1 IN:40 FT
WISDOT/CADDS SHEET 75

W:\PROJECTS\W0059\8170013\CADD\Civil3D\Plan Sheets\04-RW PLAT\CTH A RW PLAT.dwg, 14, 1/8/2020 10:24:27 AM, cclemens, 1:1

POINT	ALIGNMENT	STATION	OFFSET	Y COORDS	X COORDS
PRW 44	CTH A	288+57.91	45.00' RT	506540.181	806028.756
PRW 45	CTH A	290+99.30	50.00' LT	506780.167	806127.254
TP 104	CTH A	290+00.00	0.000'	506673.888	806094.618
TP 111	CTH A	291+50.00	49.98' LT	506673.888	806094.618
TP 112	CTH A	291+50.00	45.00' RT	506673.888	806094.618
PRW 60	CTH A	289+98.00	45.00' RT	506641.303	806125.718
ERW 61	CTH A	290+10.39	33.01' RT	506658.538	806125.634
ERW 62	CTH A	293+97.06	33.11' RT	506937.569	806393.330

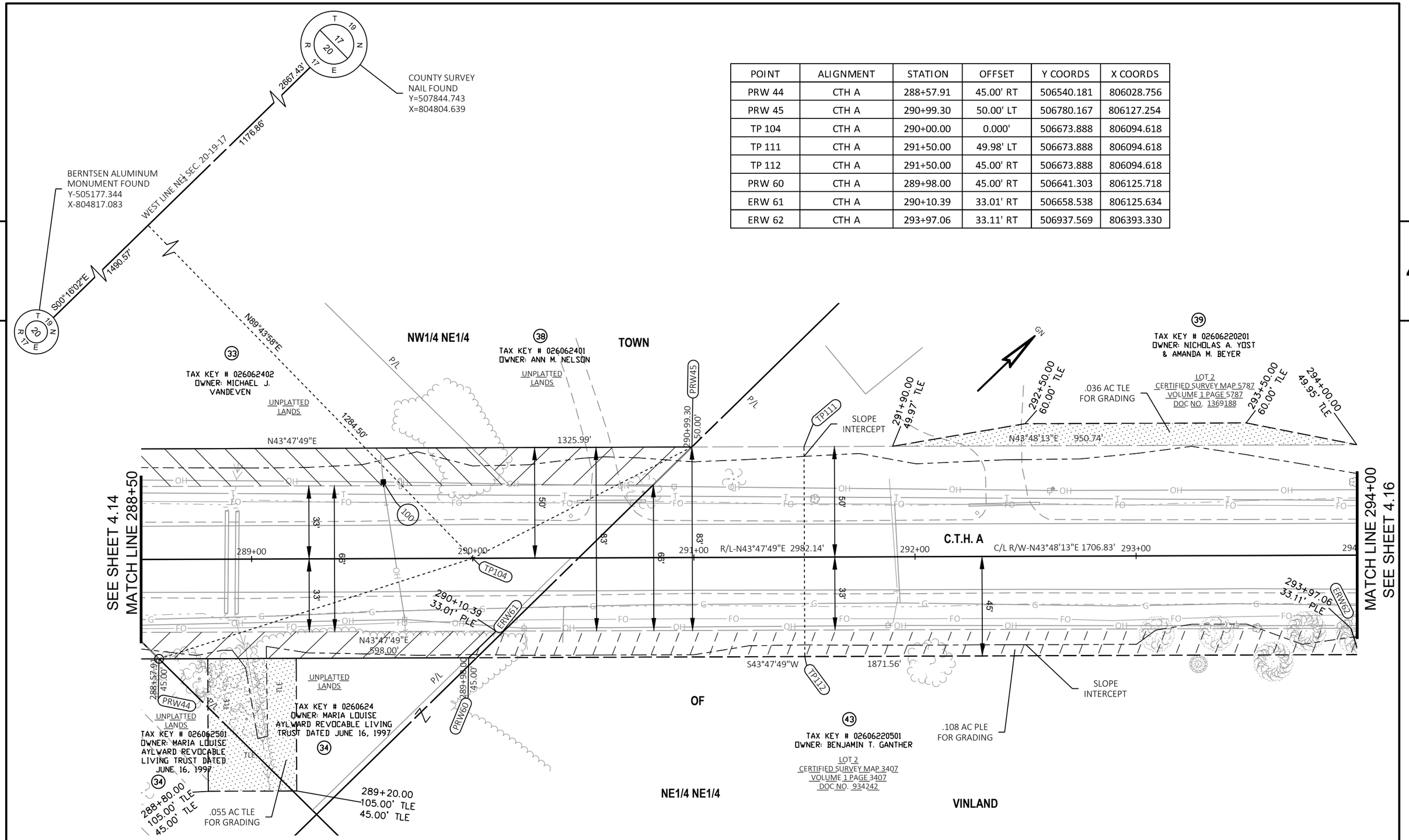

REVISION DATE

DATE

GRID FACTOR

SCALE, FEET 0 20 40

HWY: CTH A

COUNTY: WINNEBAGO

STATE R/W PROJECT NUMBER 4627-02-00

CONSTRUCTION PROJECT NUMBER 4627-02-71

PLAT SHEET 4.15

PS&E SHEET

E

FILE NAME : CTH A RW PLAT.DWG
LAYOUT NAME - 15

PLOT DATE : 1/8/2020 10:24 AM PLOT BY : CHRIS CLEMENS PLOT NAME : PLOT SCALE : 1 IN:40 FT

WISDOT/CADDS SHEET 75

W:\PROJECTS\W0059\81700113\CADD\Civil3D\Plan Sheets\04-RW PLAT\CTH A RW PLAT.dwg, 15, 1/8/2020 10:24:31 AM, cclemens, 1:1

POINT	ALIGNMENT	STATION	OFFSET	Y COORDS	X COORDS
PRW 63	CTH A	294+00.70	45.00' RT	506931.964	806404.422

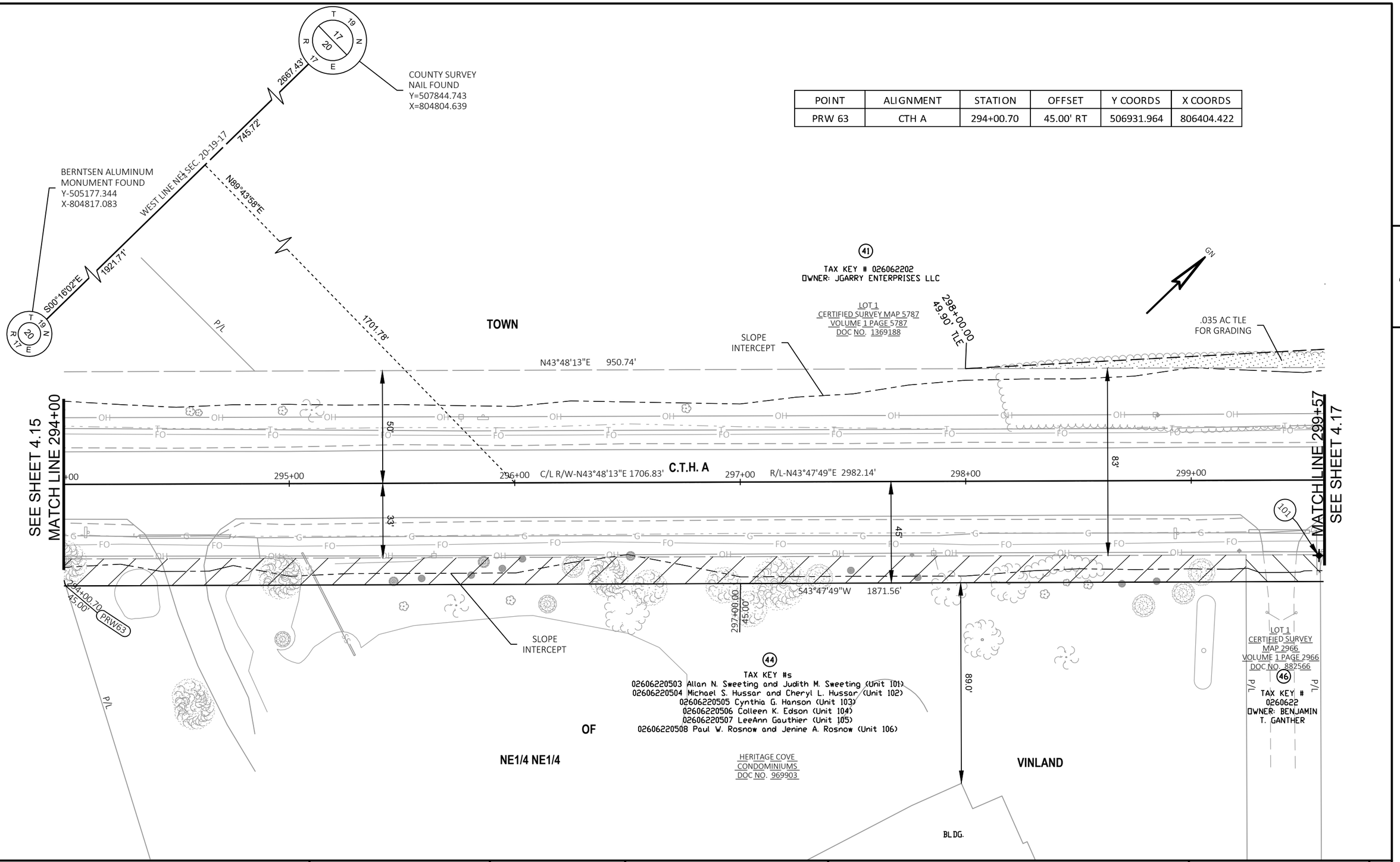

REVISION DATE	DATE	SCALE, FEET	HWY: CTH A	STATE R/W PROJECT NUMBER 4627-02-00	PLAT SHEET 4.16	
	GRID FACTOR	0 20 40	COUNTY: WINNEBAGO	CONSTRUCTION PROJECT NUMBER 4627-02-71	PS&E SHEET 62	E

FILE NAME : CTH A RW PLAT.DWG
LAYOUT NAME - 16
PLOT DATE : 1/8/2020 10:24 AM PLOT BY : CHRIS CLEMENS PLOT NAME : PLOT SCALE : 1 IN:40 FT
WISDOT/CADDS SHEET 75

W:\PROJECTS\W0059\8170\0113\CADD\Civil3D\Plan Sheets\04-RW PLAT\CTH A RW PLAT.dwg, 16, 1/8/2020 10:24:36 AM, cclemens, 1:1

POINT	ALIGNMENT	STATION	OFFSET	Y COORDS	X COORDS
PRW 47	CTH A	300+50.03	49.87' LT	507466.310	806785.348
PRW 54	CTH A	302+01.54	49.85' LT	507575.662	806890.226

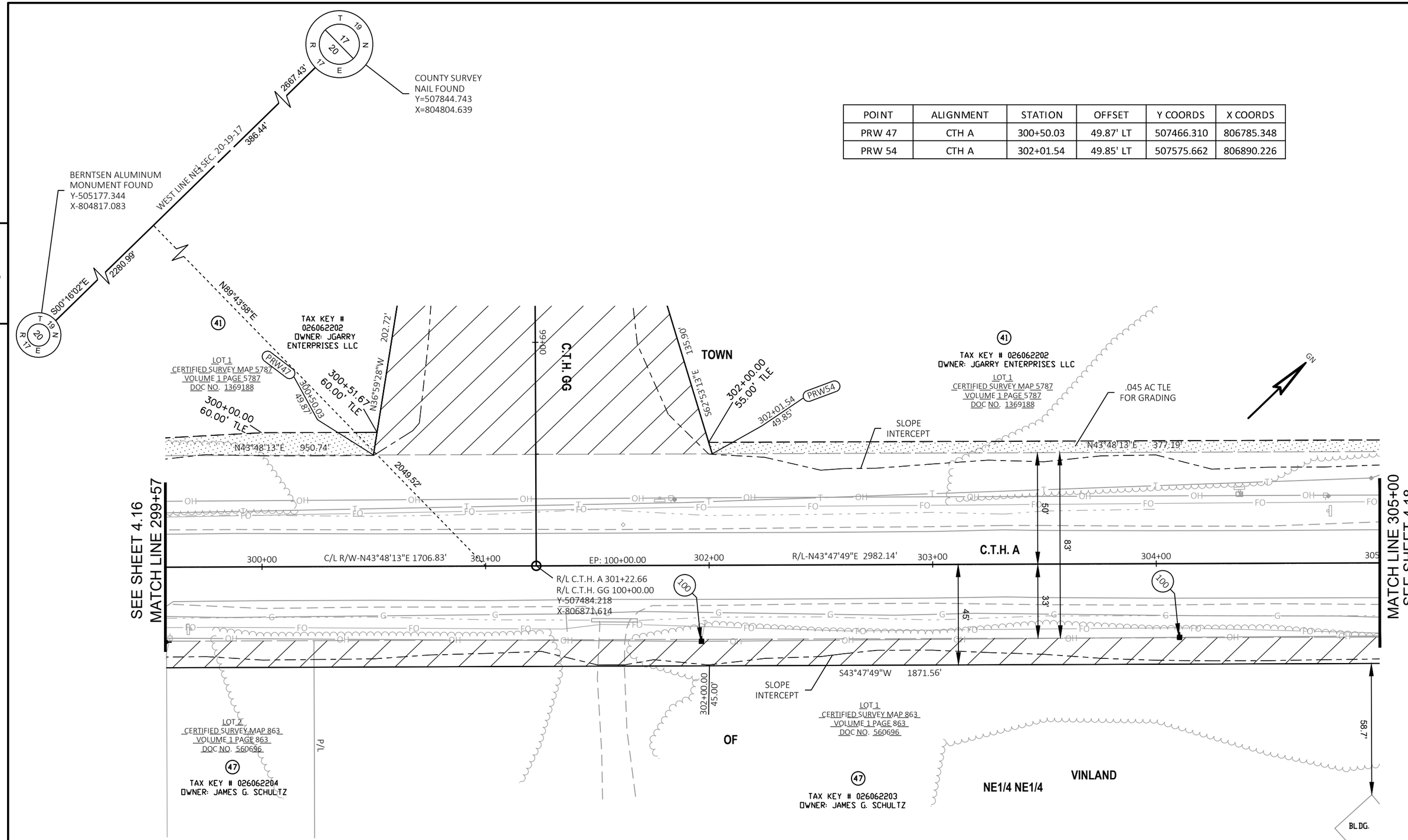

REVISION DATE	August 20, 2019	DATE	SCALE, FEET 0 20 40	HWY: CTH A	STATE R/W PROJECT NUMBER 4627-02-00	PLAT SHEET 4.17
		GRID FACTOR		COUNTY: WINNEBAGO	CONSTRUCTION PROJECT NUMBER 4627-02-71	PS&E SHEET 63

E

FILE NAME : CTH A RW PLAT.DWG
LAYOUT NAME - 17
PLOT DATE : 1/8/2020 10:24 AM PLOT BY : CHRIS CLEMENS PLOT NAME : PLOT SCALE : 1 IN:40 FT

WISDOT/CADDS SHEET 75

W:\PROJECTS\W0059\81700113\CADD\Civil3D\Plan Sheets\04-RW PLAT\CTH A RW PLAT.dwg, 17, 1/8/2020 10:24:40 AM, cclemens, 1:1

POINT	ALIGNMENT	STATION	OFFSET	Y COORDS	X COORDS
PRW 46	CTH A	307+29.47	45.00' RT	507891.069	807324.073
TP 105	CTH A	306+44.43	40.49' LT	507792.674	807167.381
TP 113	CTH A	305+78.73	49.81' LT	507792.674	807167.381

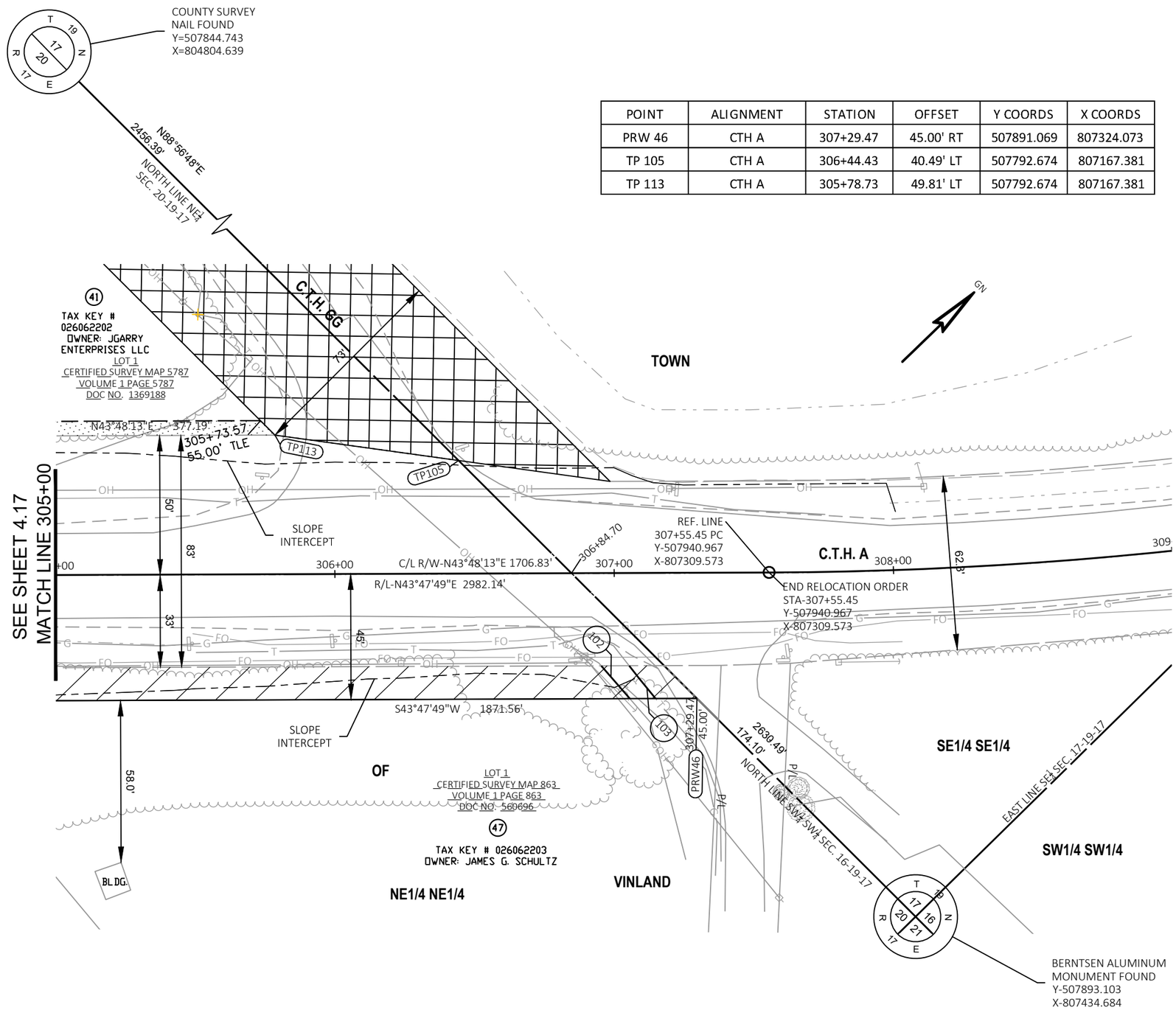

REVISION DATE	DATE	SCALE, FEET	HWY: CTH A	STATE R/W PROJECT NUMBER 4627-02-00	PLAT SHEET 4.18	
	GRID FACTOR	0 20 40	COUNTY: WINNEBAGO	CONSTRUCTION PROJECT NUMBER 4627-02-71	PS&E SHEET 64	E

FILE NAME : CTH A RW PLAT.DWG
LAYOUT NAME - 18
PLOT DATE : 1/8/2020 10:24 AM PLOT BY : CHRIS CLEMENS PLOT NAME : PLOT SCALE : 1 IN:40 FT
WISDOT/CADDS SHEET 75

W:\PROJECTS\W0059\81700113\CADD\Civil3D\Plan Sheets\04-RW PLAT\CTH A RW PLAT.dwg, 18, 1/8/2020 10:24:44 AM, cclemens, 1:1

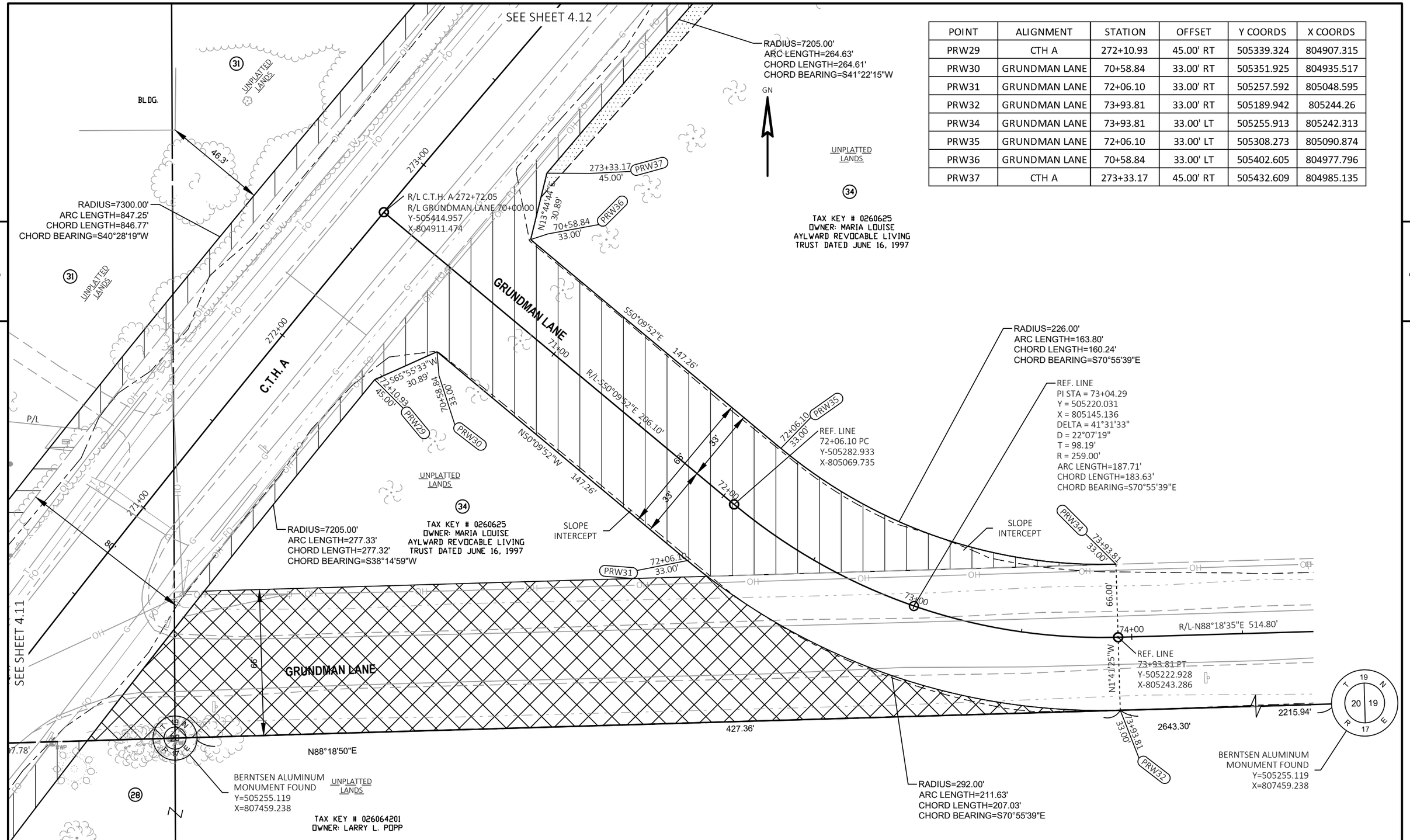

POINT	ALIGNMENT	STATION	OFFSET	Y COORDS	X COORDS
PRW29	CTH A	272+10.93	45.00' RT	505339.324	804907.315
PRW30	GRUNDMAN LANE	70+58.84	33.00' RT	505351.925	804935.517
PRW31	GRUNDMAN LANE	72+06.10	33.00' RT	505257.592	805048.595
PRW32	GRUNDMAN LANE	73+93.81	33.00' RT	505189.942	805244.26
PRW34	GRUNDMAN LANE	73+93.81	33.00' LT	505255.913	805242.313
PRW35	GRUNDMAN LANE	72+06.10	33.00' LT	505308.273	805090.874
PRW36	GRUNDMAN LANE	70+58.84	33.00' LT	505402.605	804977.796
PRW37	CTH A	273+33.17	45.00' RT	505432.609	804985.135

4

4

REVISION DATE

DATE

GRID FACTOR

SCALE, FEET 0 20 40

HWY: CTH A

COUNTY: WINNEBAGO

STATE R/W PROJECT NUMBER 4627-02-00

CONSTRUCTION PROJECT NUMBER 4627-02-71

PLAT SHEET 4.19

PS&E SHEET 65

E

FILE NAME : SIDE ROADS RW PLAT.DWG
LAYOUT NAME - 19

PLOT DATE : 1/8/2020 10:25 AM PLOT BY : CHRIS CLEMENS PLOT NAME : PLOT SCALE : ##########

WISDOT/CADDS SHEET 75

W:\PROJECTS\W0059\81700113\CADD\Civil3D\Plan Sheets\04-RW PLAT\Side Roads RW PLAT.dwg, 19, 1/8/2020 10:25:03 AM, cclemens, 1:1

POINT	ALIGNMENT	STATION	OFFSET	Y COORDS	X COORDS
PRW 49	CTH GG	96+36.61	40.00' RT	507706.640	806581.480
PRW 50	CTH GG	92+53.40	40.00' RT	507831.376	806262.207
PRW 51	CTH GG	95+69.11	72.85' LT	507837.749	806600.010
PRW 52	CTH GG	96+36.61	40.00' LT	507764.265	806636.973
PRW 60	CTH GG	95+69.11	40.00' LT	507811.130	806580.767

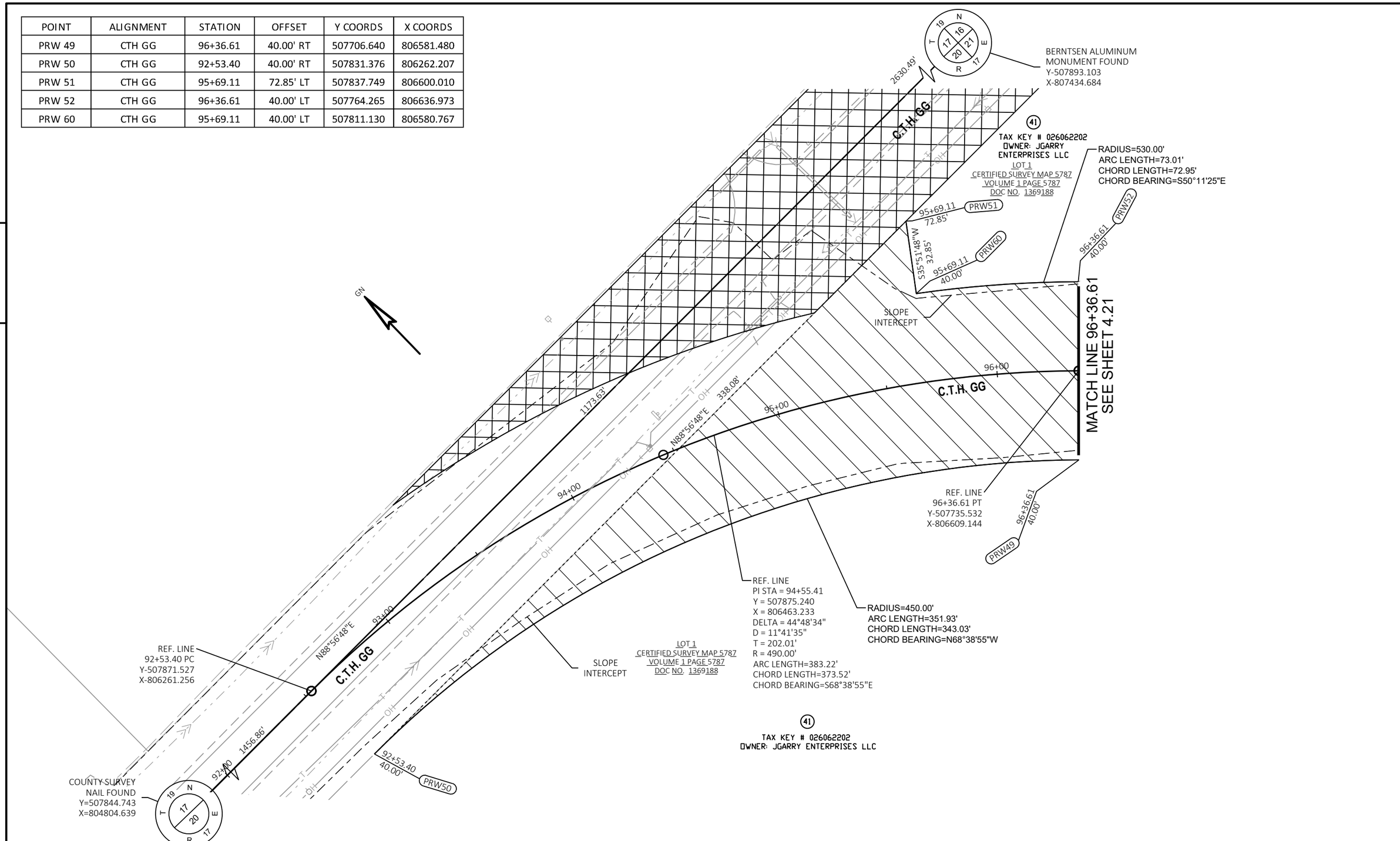

REVISION DATE	May 24, 2019		
DATE		SCALE, FEET 0 20 40	
GRID FACTOR			

HWY: CTH A	STATE R/W PROJECT NUMBER 4627-02-00	PLAT SHEET 4.20
COUNTY: WINNEBAGO	CONSTRUCTION PROJECT NUMBER 4627-02-71	PS&E SHEET 66

E

FILE NAME : SIDE ROADS RW PLAT.DWG
LAYOUT NAME - 20
PLOT DATE : 1/8/2020 10:25 AM PLOT BY : CHRIS CLEMENS PLOT NAME : PLOT SCALE : 1 IN:40 FT

WISDOT/CADDS SHEET 75

W:\PROJECTS\W0059\81700113\CADD\Civil3D\Plan Sheets\04-RW PLATS\Side Roads RW PLAT.dwg, 20, 1/8/2020 10:25:07 AM, cclemens, 1:1

4

4

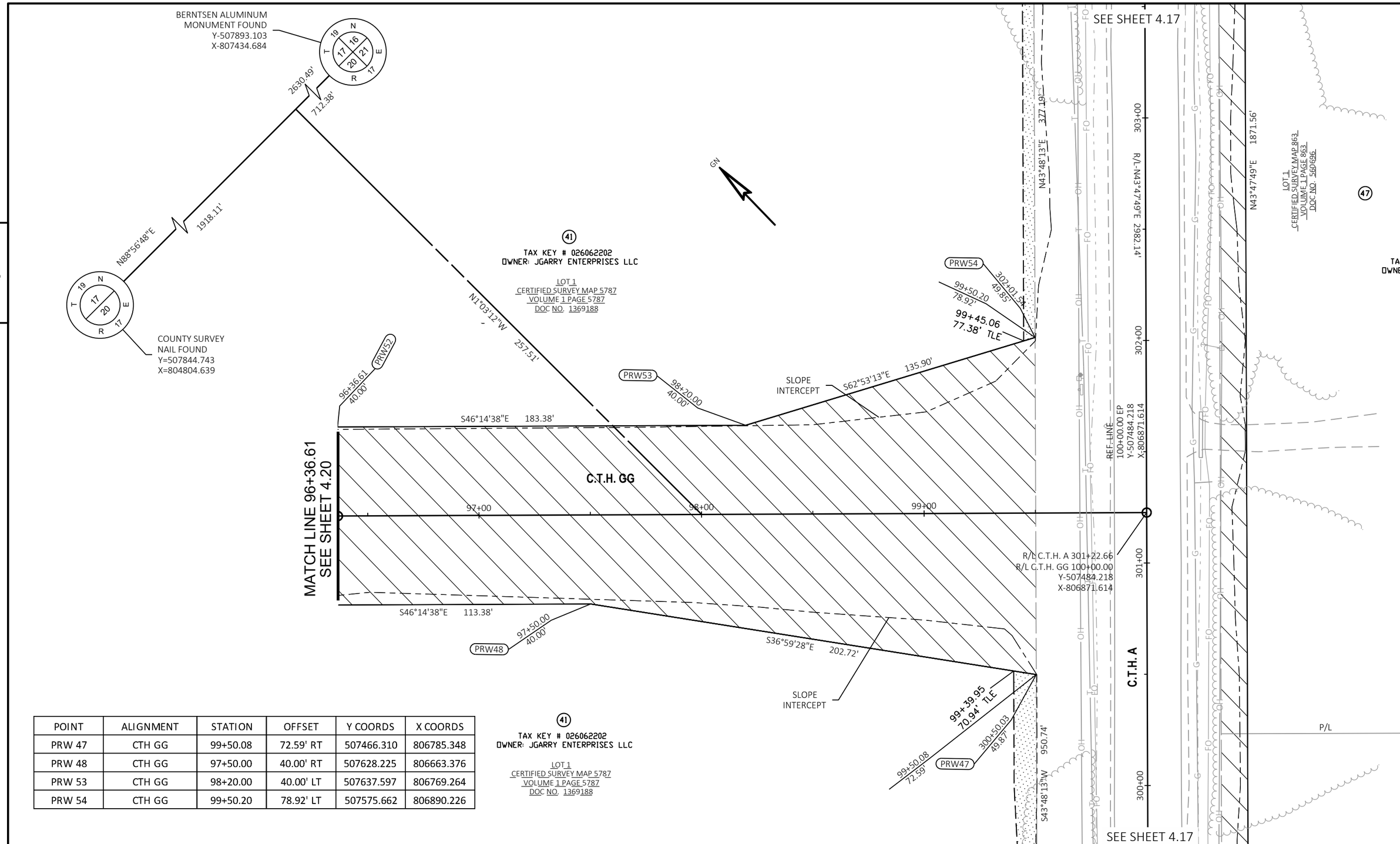

POINT	ALIGNMENT	STATION	OFFSET	Y COORDS	X COORDS
PRW 47	CTH GG	99+50.08	72.59' RT	507466.310	806785.348
PRW 48	CTH GG	97+50.00	40.00' RT	507628.225	806663.376
PRW 53	CTH GG	98+20.00	40.00' LT	507637.597	806769.264
PRW 54	CTH GG	99+50.20	78.92' LT	507575.662	806890.226

REVISION DATE	DATE	SCALE, FEET 0 20 40	HWY: CTH A	STATE R/W PROJECT NUMBER 4627-02-00	PLAT SHEET 4.21
	GRID FACTOR		COUNTY: WINNEBAGO	CONSTRUCTION PROJECT NUMBER 4627-02-71	PS&E SHEET 67

E

FILE NAME : SIDE ROADS RW PLAT.DWG
LAYOUT NAME - 21
PLOT DATE : 1/8/2020 10:25 AM PLOT BY : CHRIS CLEMENS PLOT NAME : PLOT SCALE : 1 IN:40 FT

WISDOT/CADDS SHEET 75

W:\PROJECTS\W0059\81700113\CADD\Civil3D\Plan Sheets\04-RW PLAT\Side Roads RW PLAT.dwg, 21, 1/8/2020 10:25:11 AM, cclemens, 1:1

RW Acquisition Area No. 1			
BEGIN PT #	END PT #	BEARING	DISTANCE
TP 100	PRW 2	N48°17'29"W	45.00'
PRW 2	PRW 3	SEE SHEET 4.5 FOR CURVE DATA	
PRW 3	PRW 9	N41°53'14"E	1211.39'
PRW 9	TP 106	N40°10'31"E	76.19'
TP 106	PRW 10	S48°07'07"E	97.15'
PRW 10	PRW 8	S44°40'47"W	100.13'
	PRW 7	S41°53'14"W	500.00'
PRW 7	PRW 6	S44°44'59"W	100.12'
PRW 6	PRW 5	S41°53'14"W	500.00'
PRW 5	PRW 4	S38°10'47"W	77.32'
PRW 4	TP 100	N61°06'35"W	46.18'

RW Acquisition Area No. 5			
BEGIN PT #	END PT #	BEARING	DISTANCE
TP 104	PRW 45	N17°04'27"E	111.15'
PRW 45	PRW 47	N43°48'13"E	950.74'
PRW 47	PRW 48	N36°59'28"W	202.72'
PRW 48	PRW 49	N46°14'38"W	113.38'
PRW 49	PRW 50	SEE SHEET 4.20 FOR CURVE DATA	
PRW 50	PRW 51	N88°56'48"E	338.08'
PRW 51	PRW 60	S35°51'48"E	32.85'
PRW 60	PRW 52	SEE SHEET 4.20 FOR CURVE DATA	
PRW 52	PRW 53	S46°14'38"E	183.38'
PRW 53	PRW 54	S62°53'13"E	135.90'
PRW 54	TP 113	N43°48'13"E	377.19'
TP 113	TP 105	N51°52'29"E	66.36'
TP 105	PRW 46	N88°56'48"E	120.58'
PRW 46	PRW 44	S43°47'49"W	1871.56'
PRW 44	TP 104	N26°13'27"E	149.05'

RW Acquisition Area No. 2			
BEGIN PT #	END PT #	BEARING	DISTANCE
TP 101	PRW 9	N20°11'59"W	50.92'
PRW 9	PRW 11	N40°10'31"E	230.65'
PRW 11	PRW 12	N14°35'08"E	19.60'
PRW 12	PRW 13	N15°59'15"E	73.36'
PRW 13	PRW 55	S65°12'40"E	35.50'
PRW 55	PRW 14	N51°32'39"E	51.02'
PRW 14	PRW 21	SEE SHEET 4.8 FOR CURVE DATA	
PRW 21	PRW 22	N32°46'17"E	50.26'
PRW 22	PRW 26	SEE SHEET 4.9 FOR CURVE DATA	
PRW 26	TP 107	N37°08'50"E	309.46'
TP 107	TP 108	S52°51'10"E	95.00'
TP 108	PRW 25	S37°08'50"W	309.46'
PRW 25	PRW 24	SEE SHEET 4.9 FOR CURVE DATA	
PRW 24	PRW 23	S11°10'38"W	29.49'
PRW 23		S38°16'03"W	66.01'
		S64°54'16"W	29.92'
		SEE SHEET 4.8 FOR CURVE DATA	
		S12°39'33"W	28.98'
	PRW 16	S40°06'35"W	66.09'
PRW 16	PRW 15	S66°21'20"W	18.70'
PRW 15	PRW 10	SEE SHEET 4.8 FOR CURVE DATA	
PRW 10		S44°40'47"W	100.13'
	TP 101	N48°06'46"W	45.00'

RW Acquisition Area No. 3			
BEGIN PT #	END PT #	BEARING	DISTANCE
TP 102	PRW 26	N63°34'13"W	50.89'
PRW 26	TP 109	N37°08'50"E	1033.33'
TP 109	TP 103	N88°18'05"E	122.40'
TP 103	PRW 27	RADIUS=7205.00' ARC LENGTH=68.78' CHORD LENGTH=68.78' CHORD BEARING=S37°25'14"W	
PRW 27	PRW 25	S37°08'50"W	1041.32'
PRW 25	TP 102	N40°58'36"W	45.98'

RW Acquisition Area No. 4			
BEGIN PT #	END PT #	BEARING	DISTANCE
TP 109	PRW 28	N37°08'50"E	7.99'
PRW 28	PRW 41	SEE SHEET 4.11 & 4.12 FOR CURVE DATA	
PRW 41	PRW 45	N43°47'49"E	1325.99'
PRW 45	TP 111	N43°48'13"E	50.72'
TP 111	TP 112	S46°12'11"E	94.98'
TP 112	PRW 44	S43°47'49"W	292.09'
PRW 44	PRW 43	S43°47'49"W	457.91'
PRW 43	PRW 42	S40°50'50"W	97.16'
PRW 42	PRW 40	S43°47'49"W	529.66'
PRW 40	PRW 39	SEE SHEET 4.12 & 4.13 FOR CURVE DATA	
PRW 39	PRW 38	S45°41'09"W	100.01'
PRW 38	PRW 37	SEE SHEET 4.12 FOR CURVE DATA	
PRW 37	PRW 36	S13°44'44"W	30.89'
PRW 36	PRW 35	S50°09'52"E	147.26'
PRW 35	PRW 34	SEE SHEET 4.19 FOR CURVE DATA	
PRW 34	PRW 32	S01°41'25"E	66.00'
PRW 32	PRW 31	SEE SHEET 4.19 FOR CURVE DATA	
PRW 31	PRW 30	N50°09'52"W	147.26'
PRW 30	PRW 29	S65°55'33"W	30.89'
PRW 29	TP 103	RADIUS=7205.00' ARC LENGTH=208.55' CHORD LENGTH=208.55' CHORD BEARING=S38°31'24"W	
TP 103	TP 109	S88°18'05"W	122.40'

4

4

REVISION DATE May 24, 2019

DATE

GRID FACTOR

SCALE, FEET 0 20 40

HWY: CTH A

COUNTY: WINNEBAGO

STATE R/W PROJECT NUMBER 4627-02-00

CONSTRUCTION PROJECT NUMBER 4627-02-71

PLAT SHEET 4.22

PS&E SHEET

E

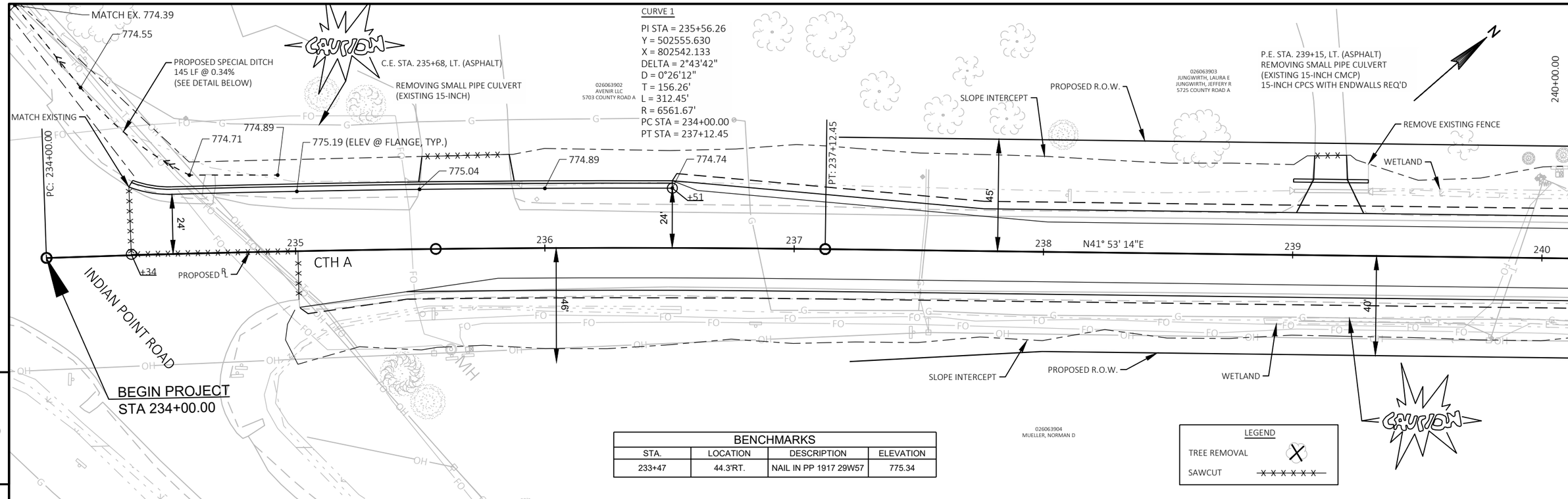

BENCHMARKS			
STA.	LOCATION	DESCRIPTION	ELEVATION
233+47	44.3'RT.	NAIL IN PP 1917 29W57	775.34

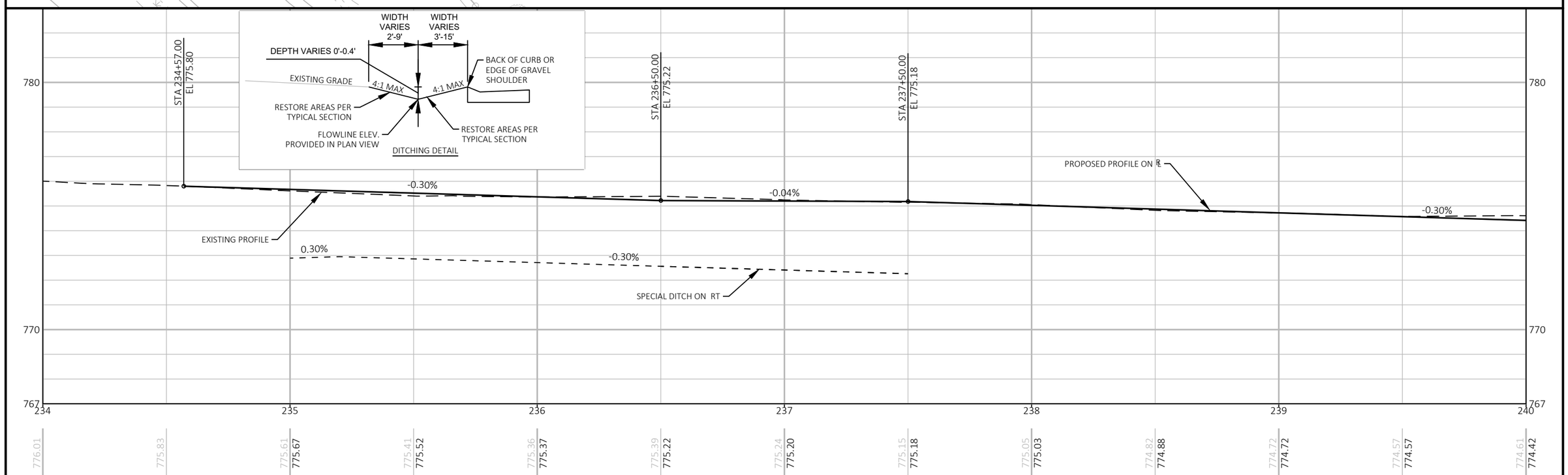

PROJECT NO: 4627-02-71	HWY: CTH A	COUNTY: WINNEBAGO	PLAN AND PROFILE: CTH A	SHEET 69	E

FILE NAME : W:\PROJECTS\W0059\81700113\CADD\CIVIL3D\PLAN SHEETS\05-PLAN AND PROFILE\05- CTH A PLAN & PROFILE.DWG
LAYOUT NAME - 1
PLOT DATE : 1/8/2020 8:02 AM
PLOT BY : JORDAN JELINSKI
PLOT NAME :
PLOT SCALE : 1" = 40'
WISDOT/CADDS SHEET 44

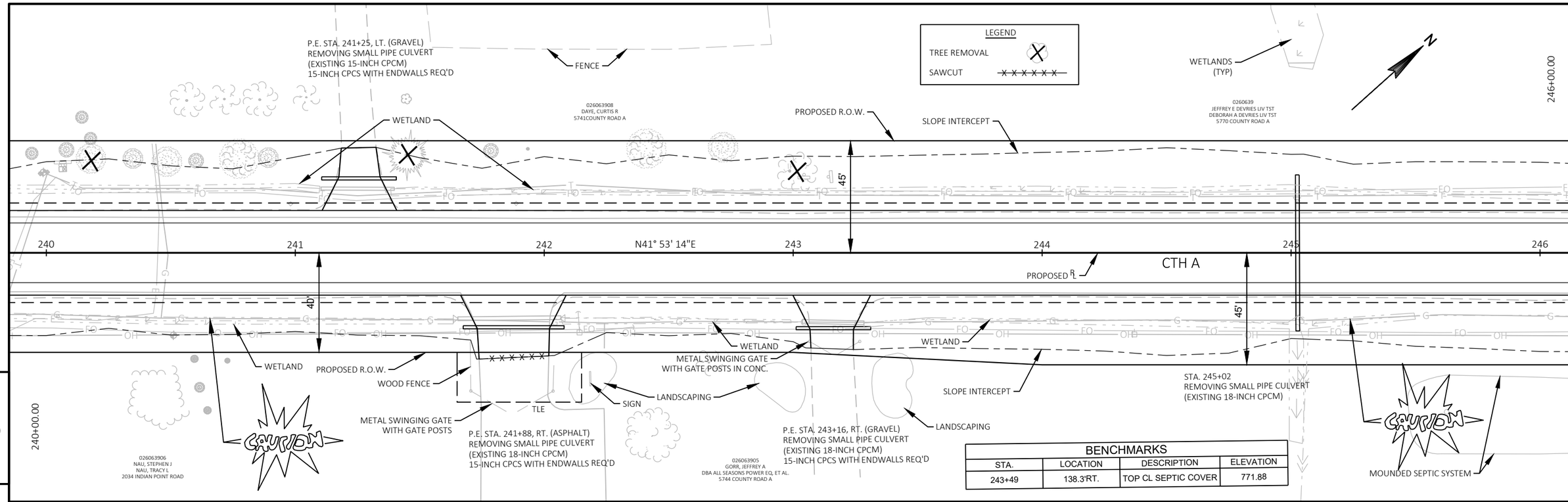

BENCHMARKS			
STA.	LOCATION	DESCRIPTION	ELEVATION
243+49	138.3'RT.	TOP CL SEPTIC COVER	771.88

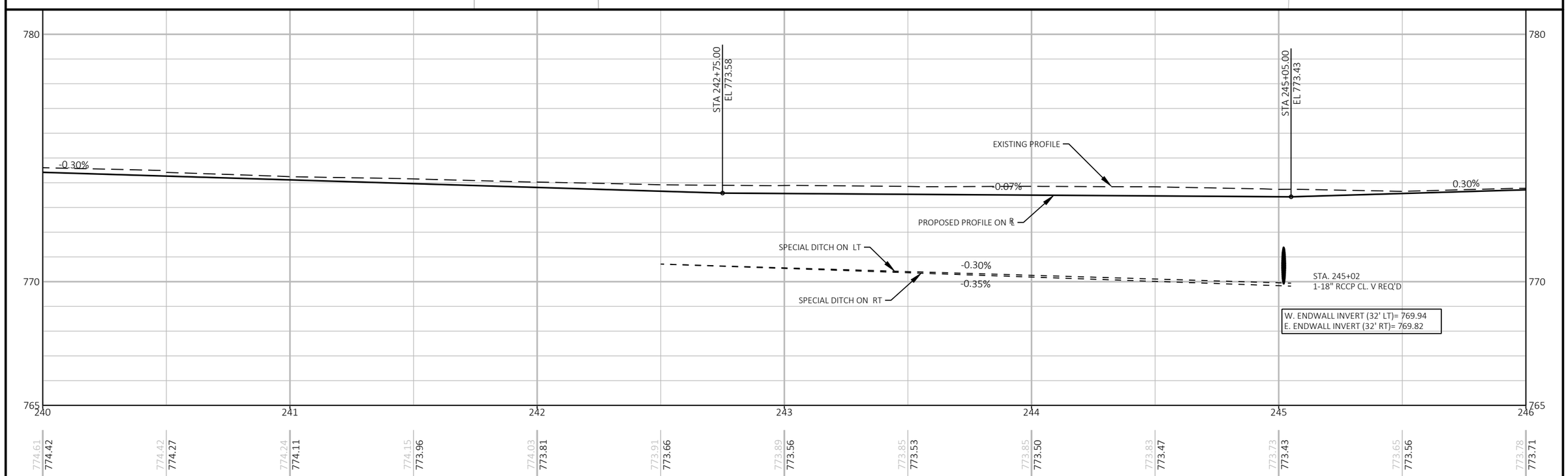

PROJECT NO: 4627-02-71	HWY: CTH A	COUNTY: WINNEBAGO	PLAN AND PROFILE: CTH A	SHEET 70	E

FILE NAME : W:\PROJECTS\W0059\81700113\CADD\CIVIL3D\PLAN SHEETS\05-PLAN AND PROFILE\05- CTH A PLAN & PROFILE.DWG
LAYOUT NAME - 2
PLOT DATE : 1/7/2020 3:18 PM
PLOT BY : JORDAN JELINSKI
PLOT NAME :
PLOT SCALE : 1" = 40'

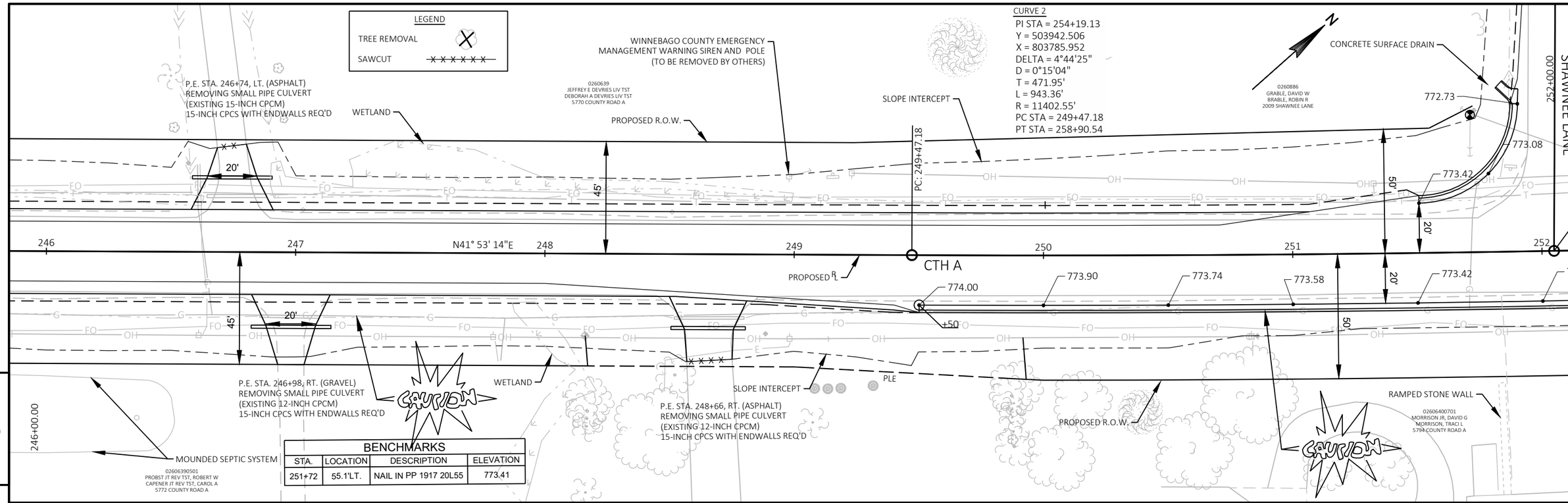

BENCHMARKS			
STA.	LOCATION	DESCRIPTION	ELEVATION
251+72	55.1'LT.	NAIL IN PP 1917 20L55	773.41

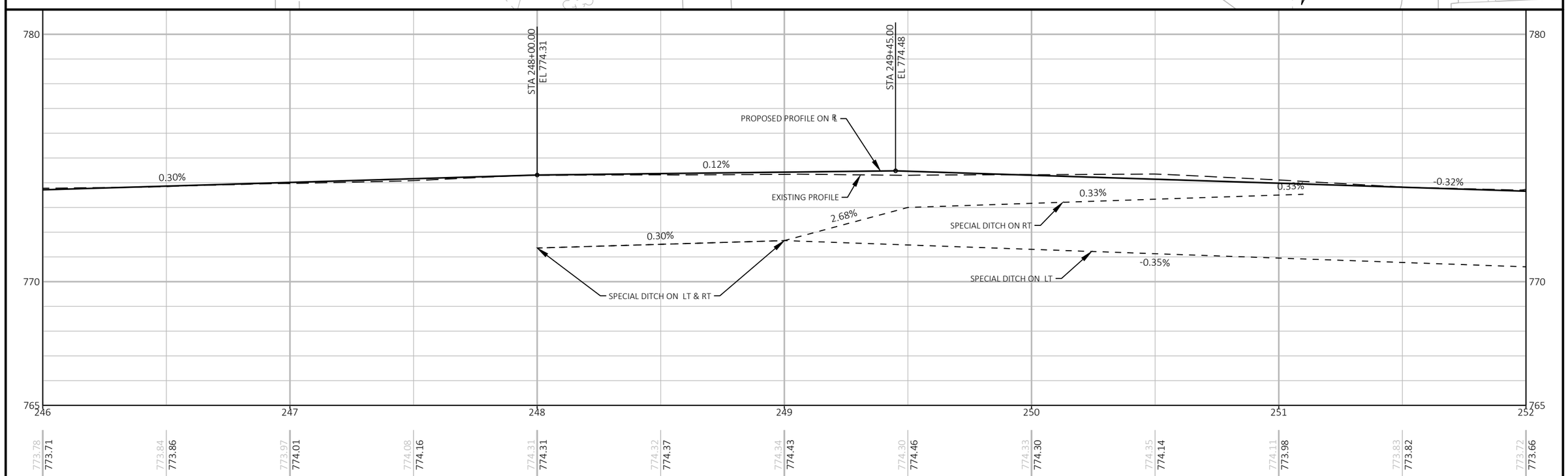

PROJECT NO: 4627-02-71	HWY: CTH A	COUNTY: WINNEBAGO	PLAN AND PROFILE: CTH A	SHEET 71	E

FILE NAME : W:\PROJECTS\W0059\81700113\CADD\CIVIL3D\PLAN SHEETS\05-PLAN AND PROFILE\05- CTH A PLAN & PROFILE.DWG
LAYOUT NAME - 3
PLOT DATE : 1/7/2020 3:18 PM
PLOT BY : JORDAN JELINSKI
PLOT NAME :
PLOT SCALE : 1" = 40'

CURVE 2
PI STA = 254+19.13
Y = 503942.506
X = 803785.952
DELTA = 4°44'25"
D = 0°15'04"
T = 471.95'
L = 943.36'
R = 11402.55'
PC STA = 249+47.18
PT STA = 258+90.54

BENCHMARKS			
STA.	LOCATION	DESCRIPTION	ELEVATION
256+35	55.9'RT.	NAIL IN PP 1917 20L66	770.15

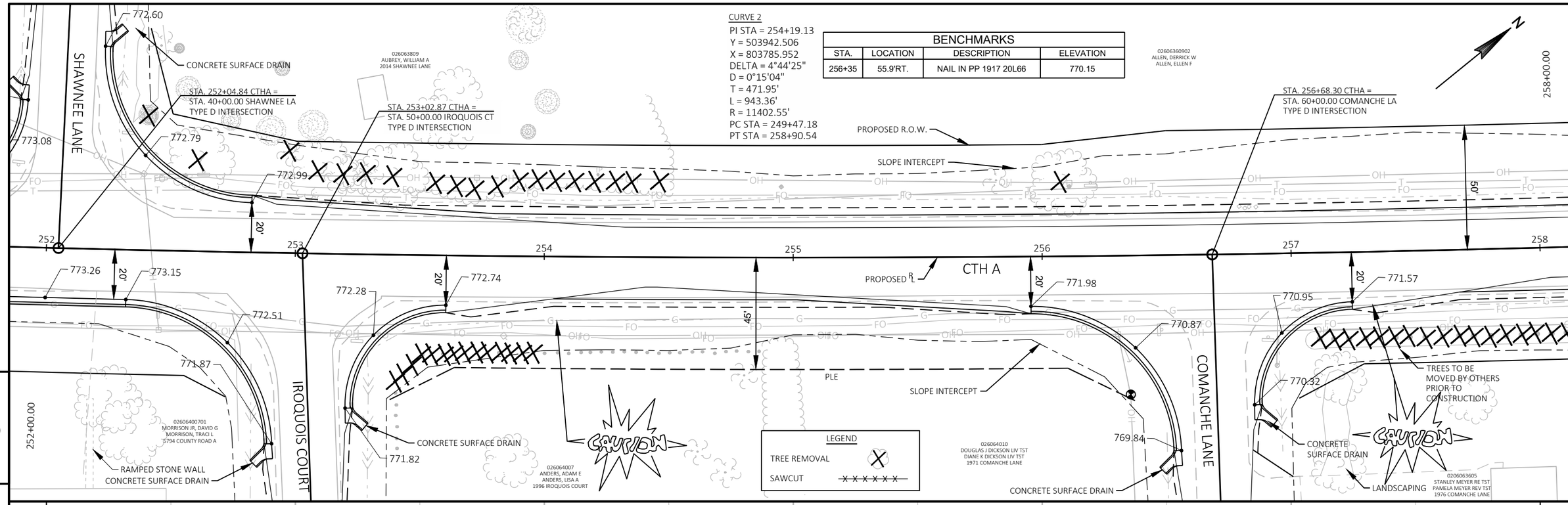

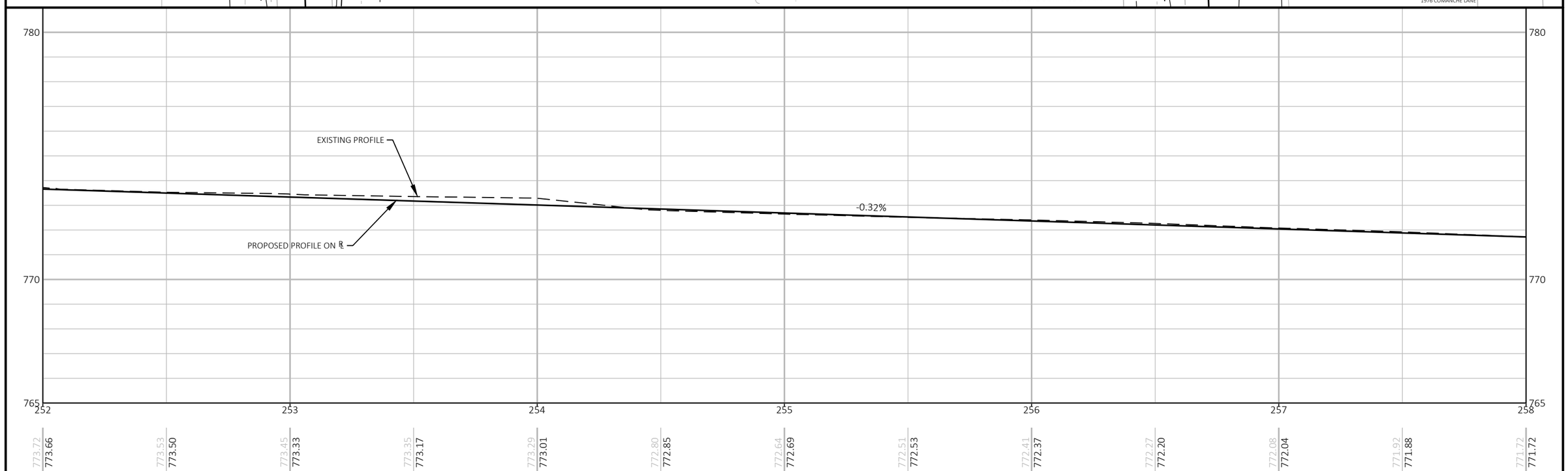

PROJECT NO: 4627-02-71	HWY: CTH A	COUNTY: WINNEBAGO	PLAN AND PROFILE: CTH A	SHEET 72	E

FILE NAME : W:\PROJECTS\W0059\81700113\CADD\CIVIL3D\PLAN SHEETS\05-PLAN AND PROFILE\05- CTH A PLAN & PROFILE.DWG
LAYOUT NAME - 4
PLOT DATE : 1/7/2020 3:18 PM PLOT BY : JORDAN JELINSKI PLOT NAME : PLOT SCALE : 1" = 40'

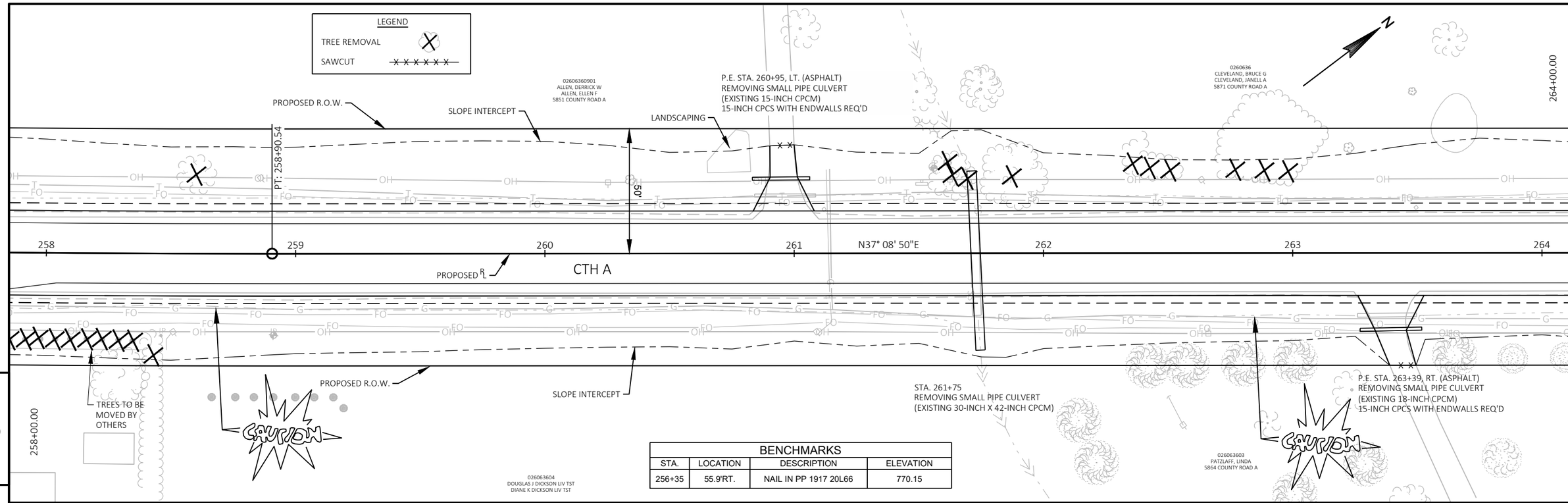

BENCHMARKS			
STA.	LOCATION	DESCRIPTION	ELEVATION
256+35	55.9'RT.	NAIL IN PP 1917 20L66	770.15

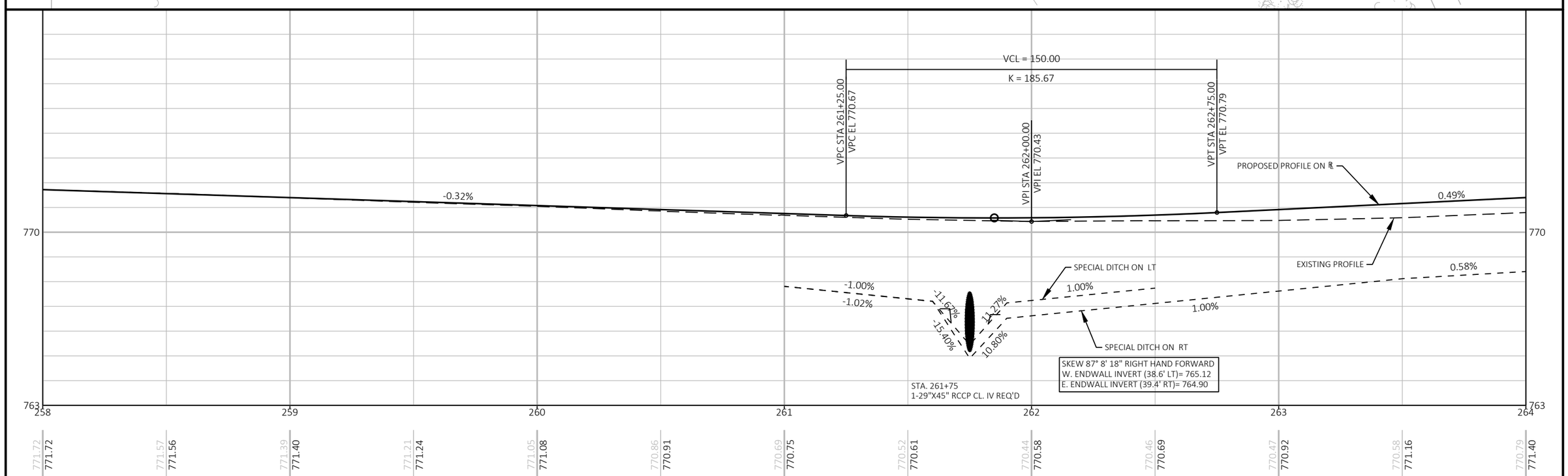

PROJECT NO: 4627-02-71	HWY: CTH A	COUNTY: WINNEBAGO	PLAN AND PROFILE: CTH A	SHEET 73	E

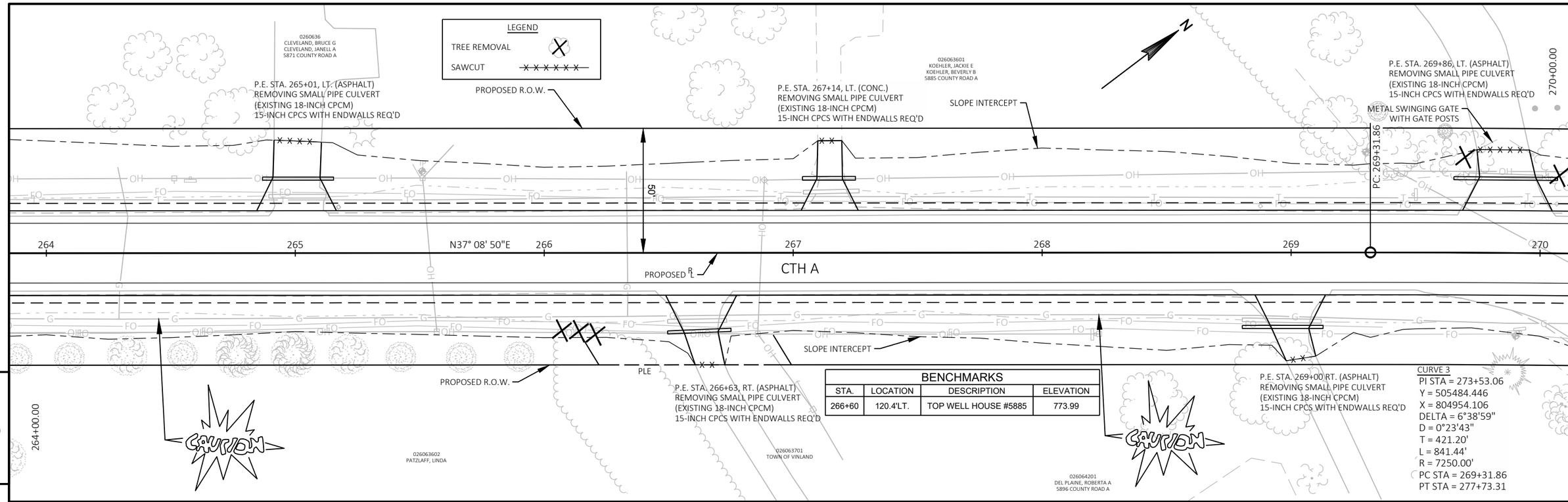

BENCHMARKS			
STA.	LOCATION	DESCRIPTION	ELEVATION
266+60	120.4'LT.	TOP WELL HOUSE #5885	773.99

CURVE 3
PI STA = 273+53.06
Y = 505484.446
X = 804954.106
DELTA = 6°38'59"
D = 0°23'43"
T = 421.20'
L = 841.44'
R = 7250.00'
PC STA = 269+31.86
PT STA = 277+73.31

PROJECT NO: 4627-02-71	HWY: CTH A	COUNTY: WINNEBAGO	PLAN AND PROFILE: CTH A	SHEET 74	E

FILE NAME : W:\PROJECTS\W0059\81700113\CADD\CIVIL3D\PLAN SHEETS\05-PLAN AND PROFILE\05- CTH A PLAN & PROFILE.DWG
LAYOUT NAME - 6
PLOT DATE : 1/7/2020 3:19 PM
PLOT BY : JORDAN JELINSKI
PLOT NAME :
PLOT SCALE : 1" = 40'

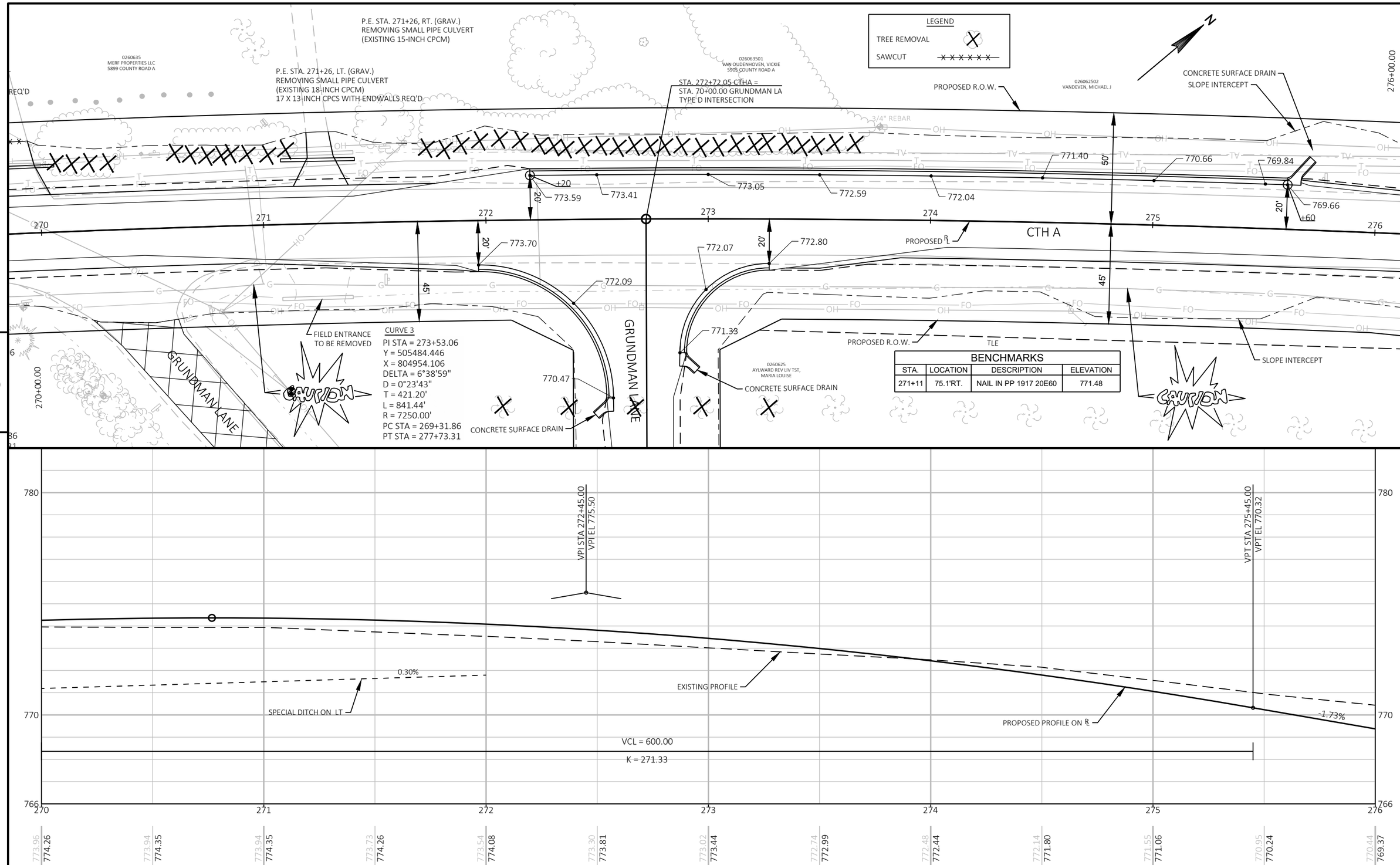

PROJECT NO: 4627-02-71	HWY: CTH A	COUNTY: WINNEBAGO	PLAN AND PROFILE: CTH A	SHEET 75	E

FILE NAME : W:\PROJECTS\W0059\81700113\CADD\CIVIL3D\PLAN SHEETS\05-PLAN AND PROFILE\05- CTH A PLAN & PROFILE.DWG
LAYOUT NAME - 7
PLOT DATE : 1/7/2020 3:19 PM PLOT BY : JORDAN JELINSKI PLOT NAME : PLOT SCALE : 1" = 40'

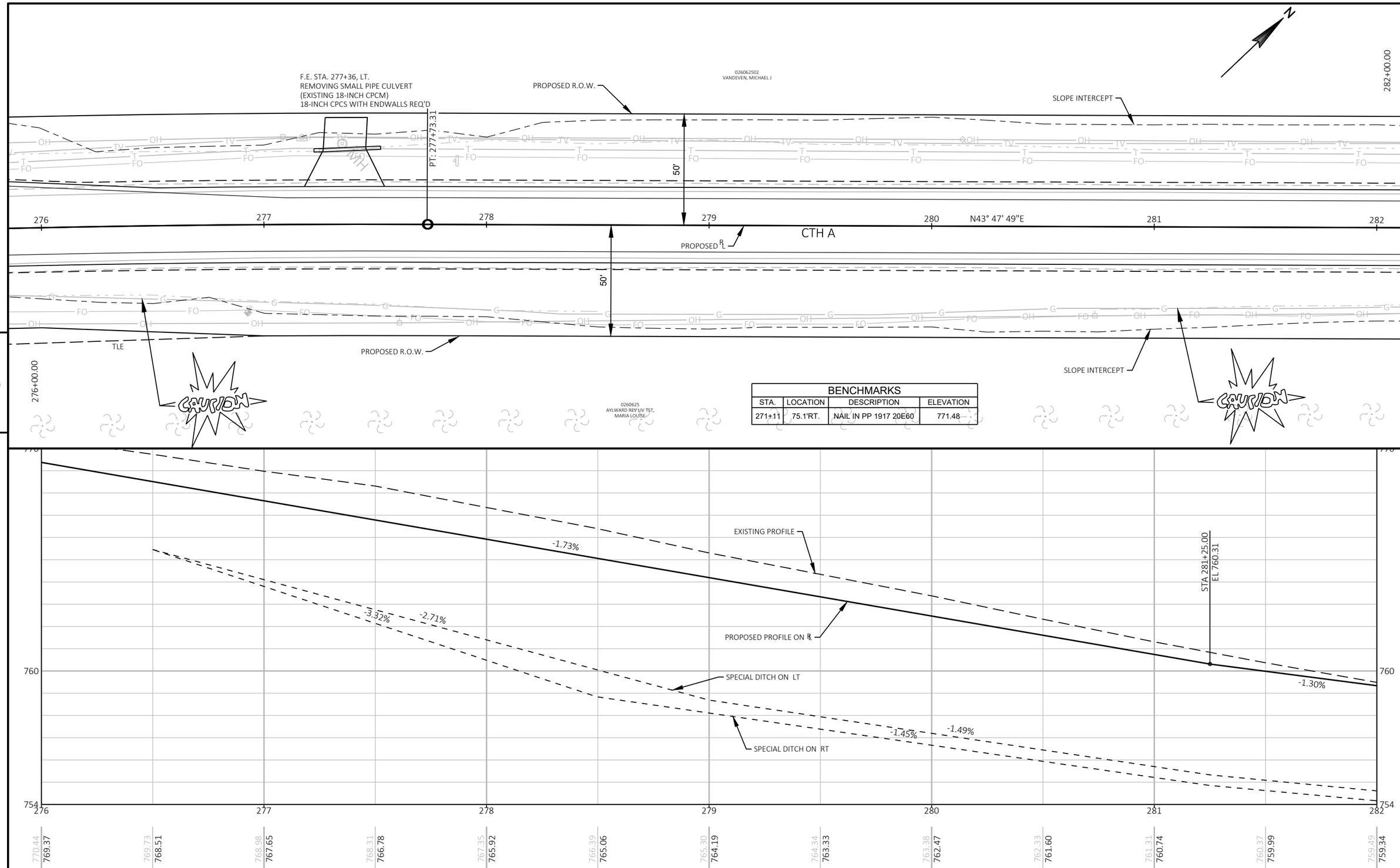

BENCHMARKS			
STA.	LOCATION	DESCRIPTION	ELEVATION
271+11	75.1'RT.	NAIL IN PP 1917 20E60	771.48

PROJECT NO: 4627-02-71	HWY: CTH A	COUNTY: WINNEBAGO	PLAN AND PROFILE: CTH A	SHEET 76	E

FILE NAME : W:\PROJECTS\W0059\81700113\CADD\CIVIL3D\PLAN SHEETS\05-PLAN AND PROFILE\05- CTH A PLAN & PROFILE.DWG
LAYOUT NAME - 8
PLOT DATE : 1/7/2020 3:19 PM PLOT BY : JORDAN JELINSKI PLOT NAME : PLOT SCALE : 1" = 40'

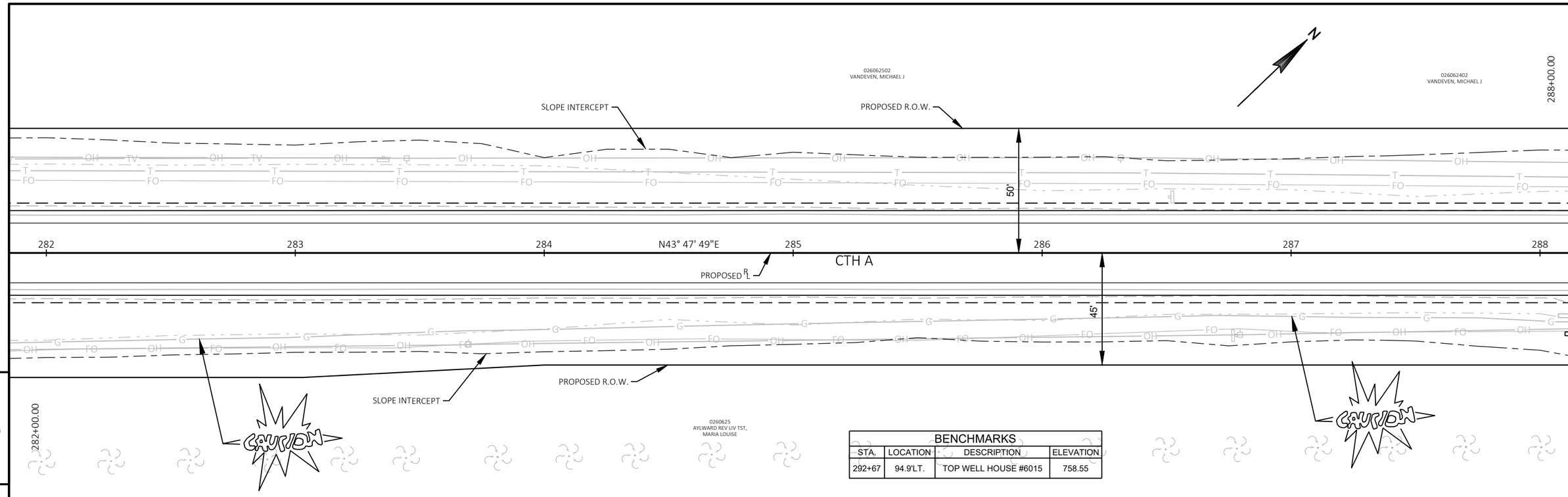

BENCHMARKS			
STA.	LOCATION	DESCRIPTION	ELEVATION
292+67	94.9'LT.	TOP WELL HOUSE #6015	758.55

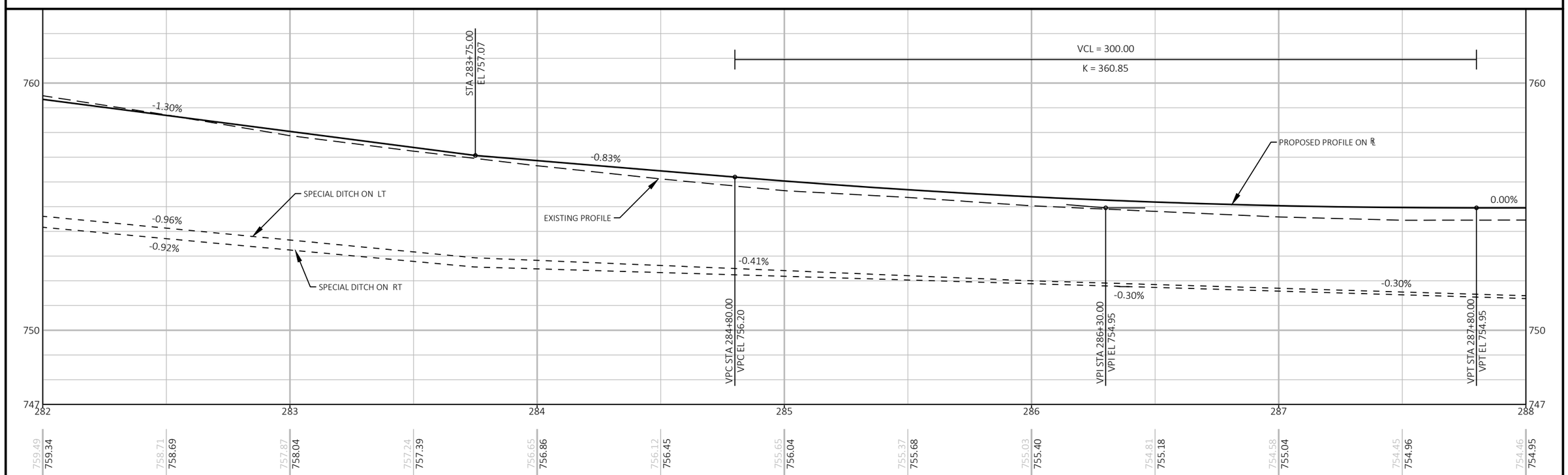

PROJECT NO: 4627-02-71	HWY: CTH A	COUNTY: WINNEBAGO	PLAN AND PROFILE: CTH A	SHEET 77	E

FILE NAME : W:\PROJECTS\W0059\81700113\CADD\CIVIL3D\PLAN SHEETS\05-PLAN AND PROFILE\05- CTH A PLAN & PROFILE.DWG
LAYOUT NAME - 9
PLOT DATE : 1/7/2020 3:19 PM
PLOT BY : JORDAN JELINSKI
PLOT NAME :
PLOT SCALE : 1" = 40'
WISDOT/CADDS SHEET 44

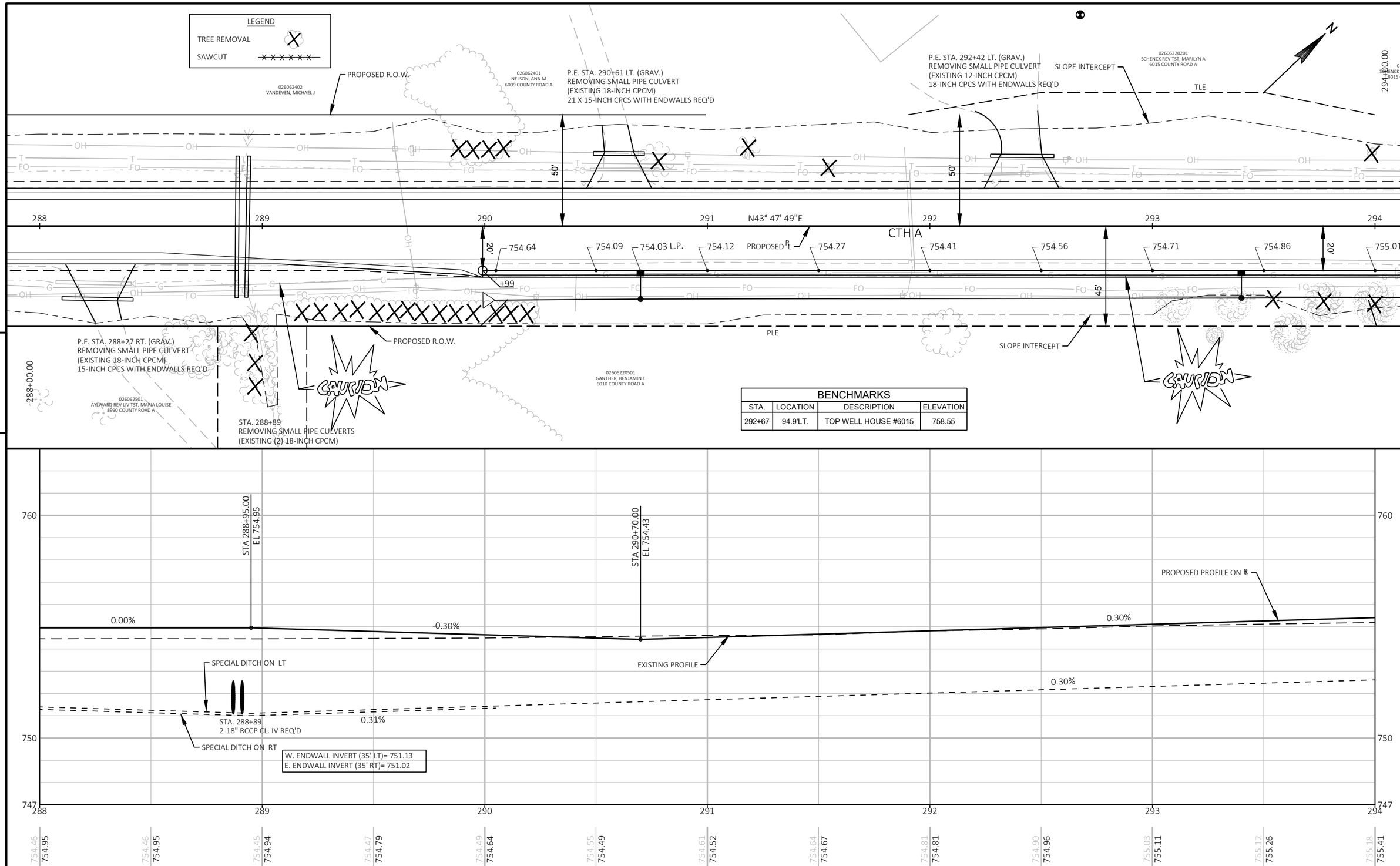

BENCHMARKS			
STA.	LOCATION	DESCRIPTION	ELEVATION
292+67	94.9'LT.	TOP WELL HOUSE #6015	758.55

PROJECT NO: 4627-02-71	HWY: CTH A	COUNTY: WINNEBAGO	PLAN AND PROFILE: CTH A	SHEET 78	E

FILE NAME : W:\PROJECTS\W0059\81700113\CADD\CIVIL3D\PLAN SHEETS\05-PLAN AND PROFILE\05- CTH A PLAN & PROFILE.DWG
LAYOUT NAME - 10
PLOT DATE : 1/7/2020 3:19 PM
PLOT BY : JORDAN JELINSKI
PLOT NAME :
PLOT SCALE : 1" = 40'

BENCHMARKS			
STA.	LOCATION	DESCRIPTION	ELEVATION
292+67	94.9'LT.	TOP WELL HOUSE #6015	758.55

LEGEND

TREE REMOVAL

SAWCUT

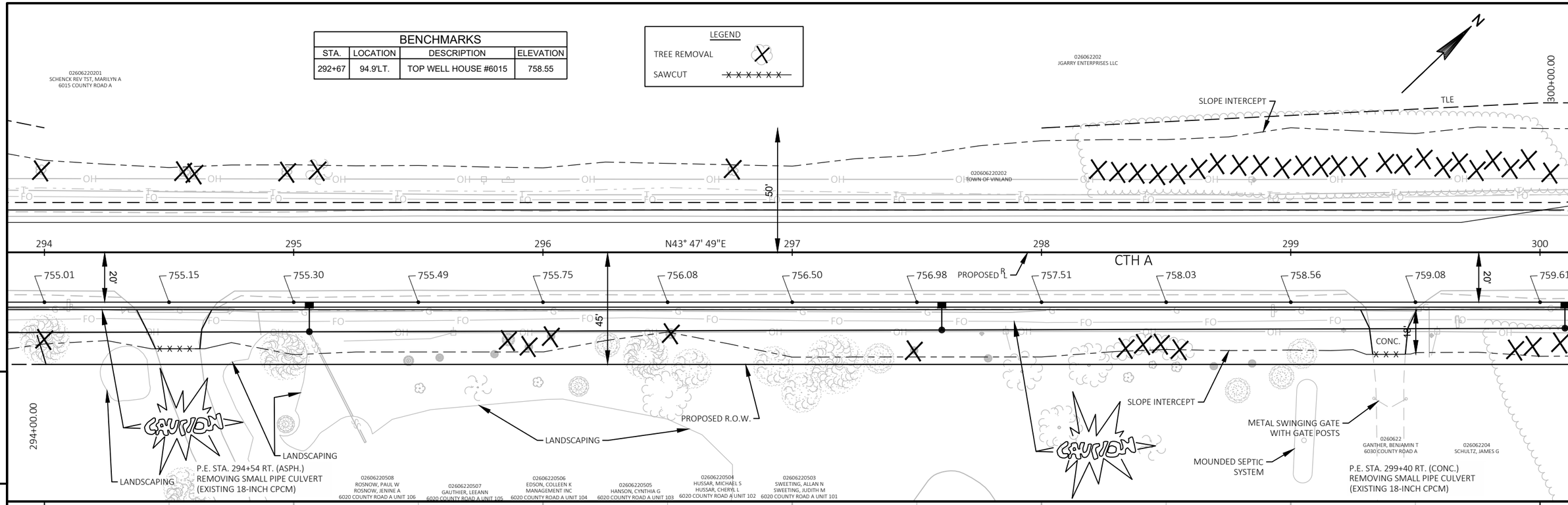

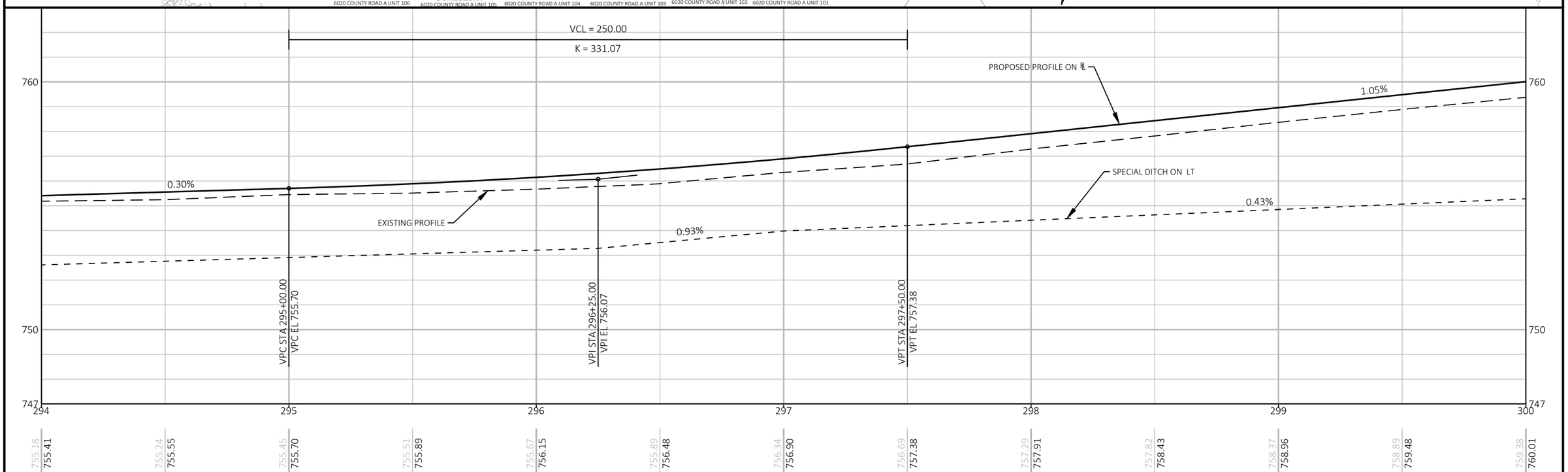

PROJECT NO: 4627-02-71	HWY: CTH A	COUNTY: WINNEBAGO	PLAN AND PROFILE: CTH A	SHEET 79	E

FILE NAME : W:\PROJECTS\W0059\81700113\CADD\CIVIL3D\PLAN SHEETS\05-PLAN AND PROFILE\05- CTH A PLAN & PROFILE.DWG
LAYOUT NAME - 11
PLOT DATE : 1/7/2020 3:19 PM
PLOT BY : JORDAN JELINSKI
PLOT NAME :
PLOT SCALE : 1" = 40'

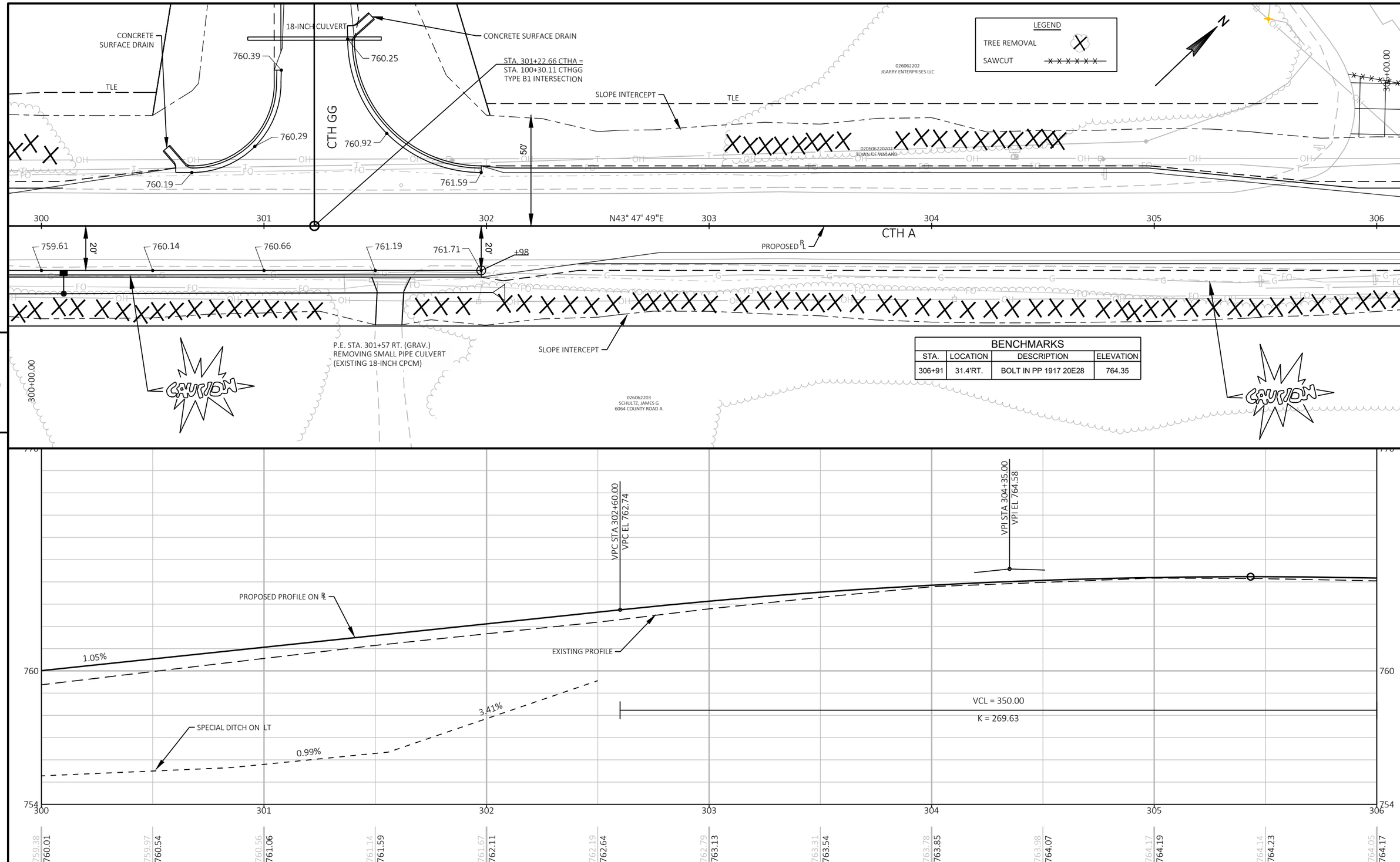

BENCHMARKS			
STA.	LOCATION	DESCRIPTION	ELEVATION
306+91	31.4'RT.	BOLT IN PP 1917 20E28	764.35

PROJECT NO: 4627-02-71	HWY: CTH A	COUNTY: WINNEBAGO	PLAN AND PROFILE: CTH A	SHEET 80	E

FILE NAME : W:\PROJECTS\W0059\81700113\CADD\CIVIL3D\PLAN SHEETS\05-PLAN AND PROFILE\05- CTH A PLAN & PROFILE.DWG
LAYOUT NAME - 12
PLOT DATE : 1/7/2020 3:19 PM PLOT BY : JORDAN JELINSKI PLOT NAME : PLOT SCALE : 1" = 40'

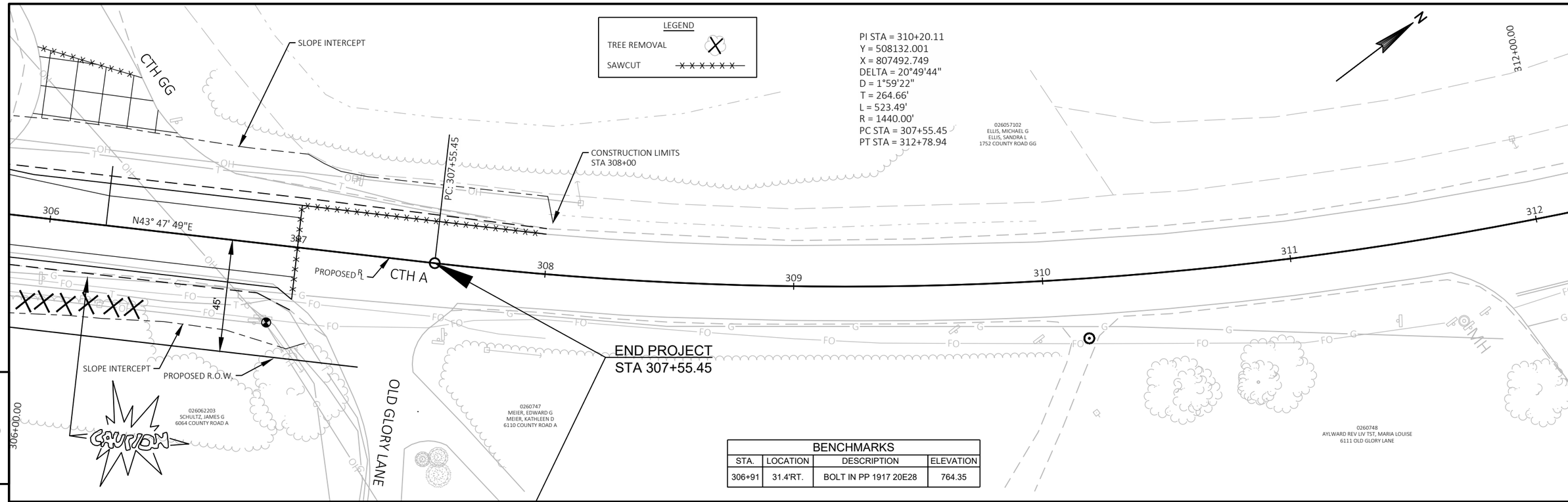

BENCHMARKS			
STA.	LOCATION	DESCRIPTION	ELEVATION
306+91	31.4'RT.	BOLT IN PP 1917 20E28	764.35

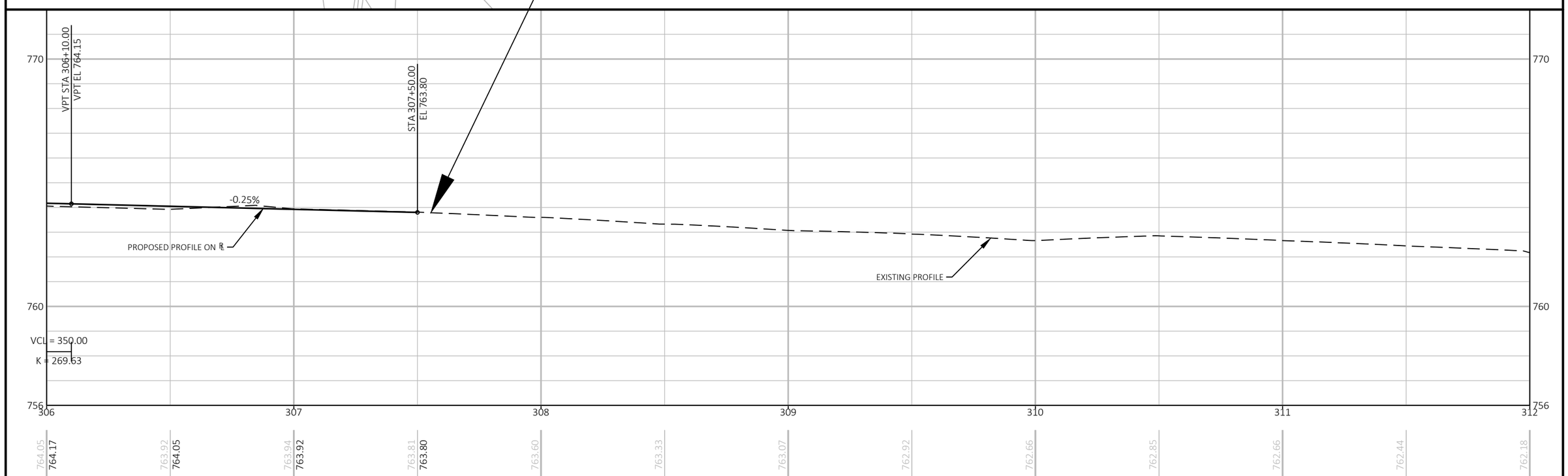

PROJECT NO: 4627-02-71	HWY: CTH A	COUNTY: WINNEBAGO	PLAN AND PROFILE: CTH A	SHEET 81	E

FILE NAME : W:\PROJECTS\W0059\81700113\CADD\CIVIL3D\PLAN SHEETS\05-PLAN AND PROFILE\05- CTH A PLAN & PROFILE.DWG
LAYOUT NAME - 13
PLOT DATE : 1/7/2020 3:19 PM
PLOT BY : JORDAN JELINSKI
PLOT NAME :
PLOT SCALE : 1" = 40'

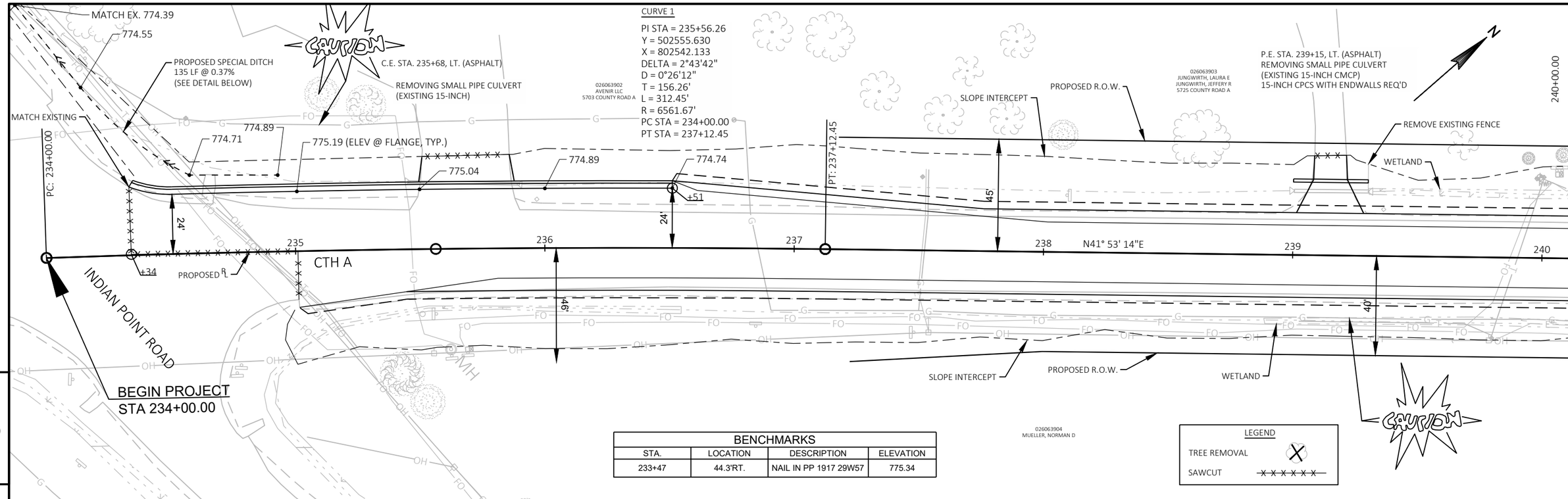

BENCHMARKS			
STA.	LOCATION	DESCRIPTION	ELEVATION
233+47	44.3'RT.	NAIL IN PP 1917 29W57	775.34

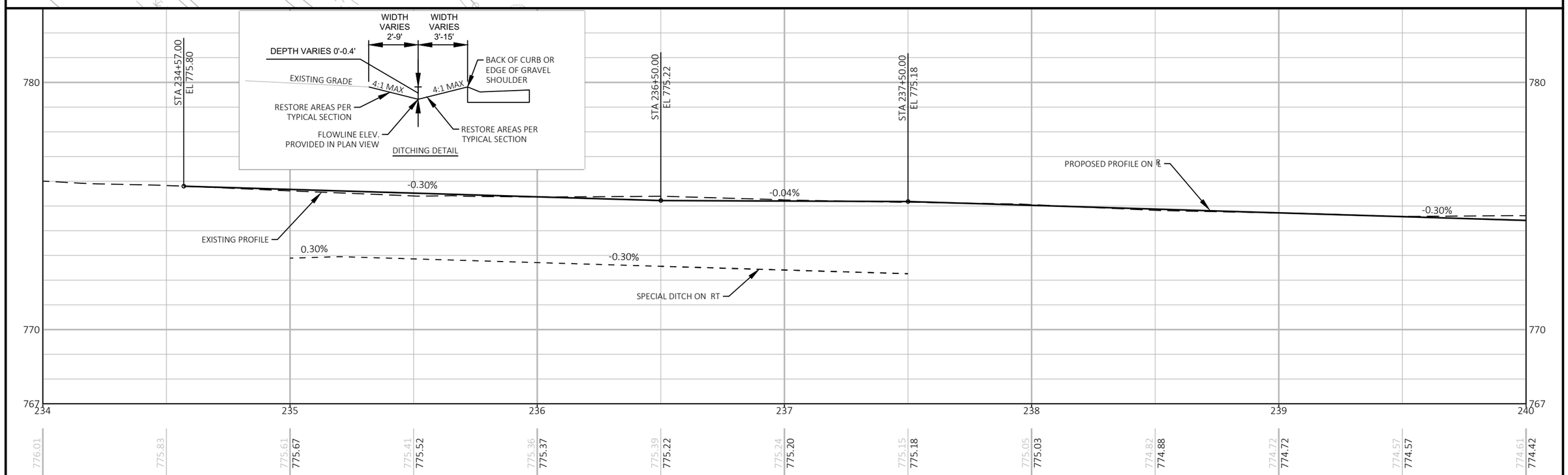

PROJECT NO: 4627-02-71	HWY: CTH A	COUNTY: WINNEBAGO	PLAN AND PROFILE: CTH A	SHEET 82	E

FILE NAME : W:\PROJECTS\W0059\81700113\CADD\CIVIL3D\PLAN SHEETS\05-PLAN AND PROFILE\05- CTH A PLAN & PROFILE.DWG
LAYOUT NAME - 1
PLOT DATE : 1/7/2020 3:24 PM
PLOT BY : JORDAN JELINSKI
PLOT NAME :
PLOT SCALE : 1" = 40'

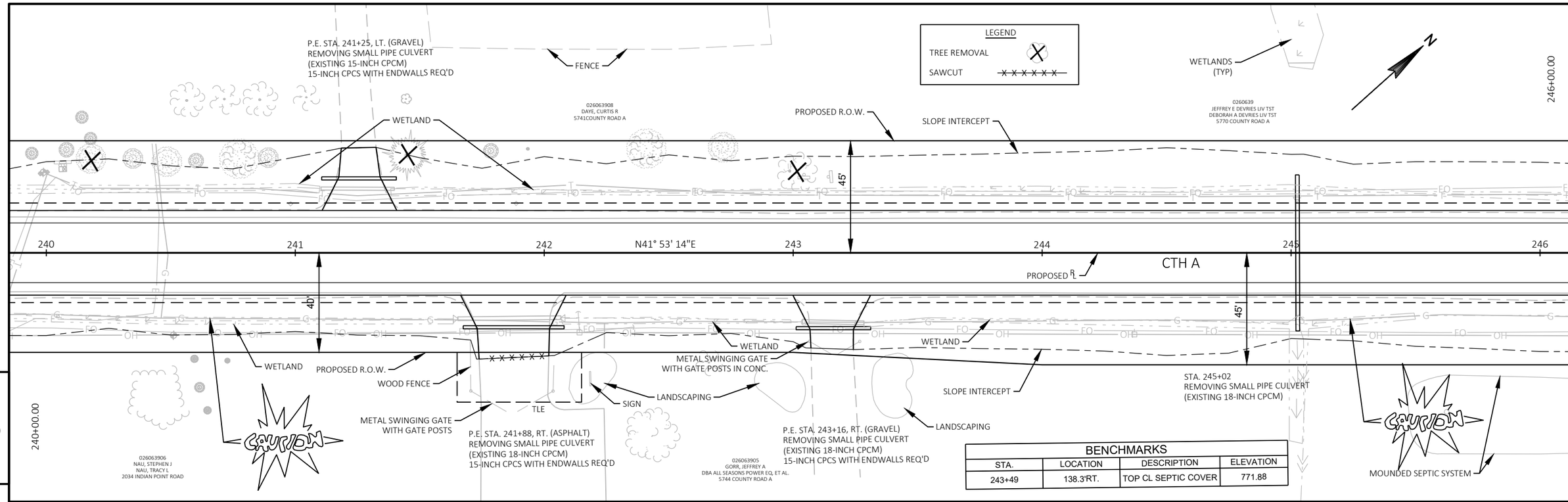

BENCHMARKS			
STA.	LOCATION	DESCRIPTION	ELEVATION
243+49	138.3'RT.	TOP CL SEPTIC COVER	771.88

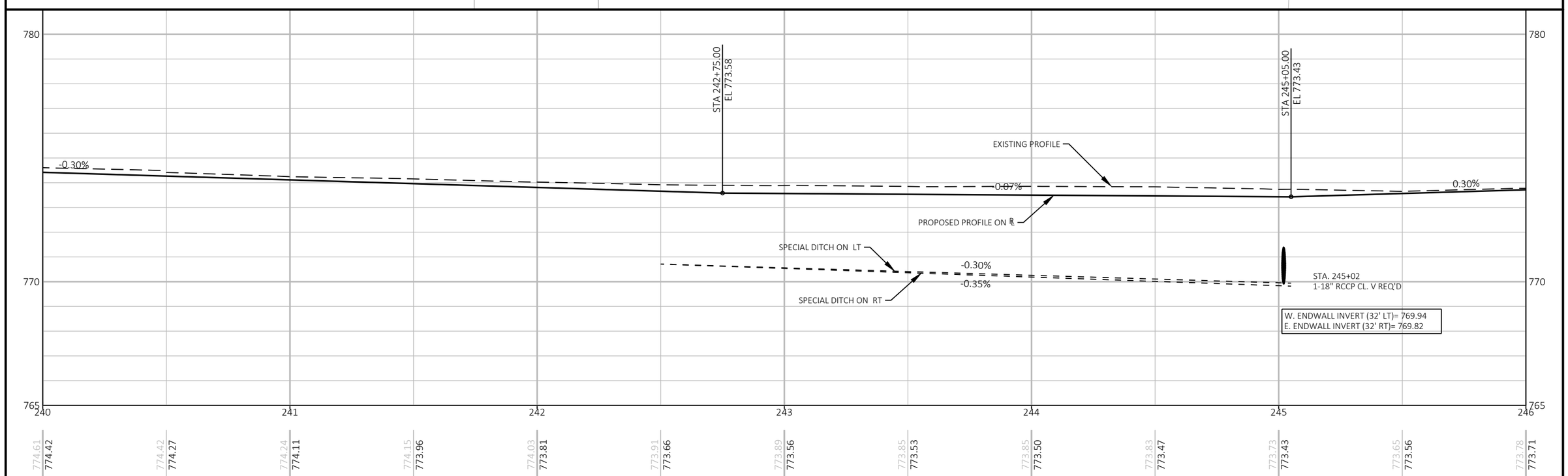

PROJECT NO: 4627-02-71	HWY: CTH A	COUNTY: WINNEBAGO	PLAN AND PROFILE: CTH A	SHEET 83	E

FILE NAME : W:\PROJECTS\W0059\81700113\CADD\CIVIL3D\PLAN SHEETS\05-PLAN AND PROFILE\05- CTH A PLAN & PROFILE.DWG
LAYOUT NAME - 2
PLOT DATE : 1/7/2020 3:24 PM
PLOT BY : JORDAN JELINSKI
PLOT NAME :
PLOT SCALE : 1" = 40'

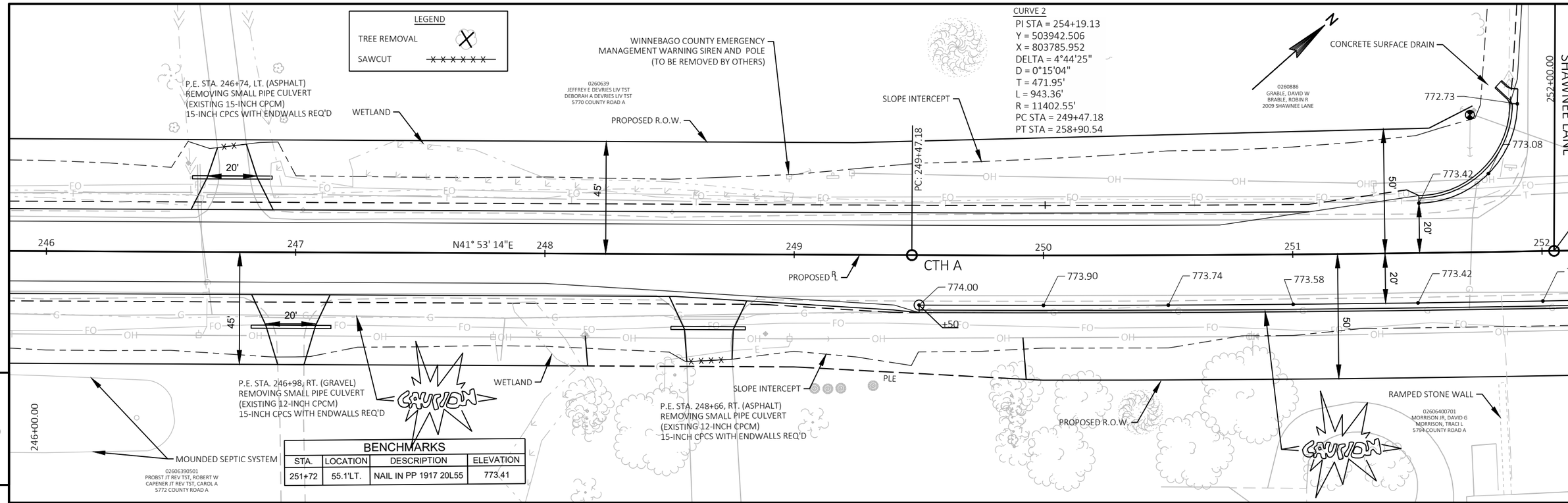

BENCHMARKS			
STA.	LOCATION	DESCRIPTION	ELEVATION
251+72	55.1'LT.	NAIL IN PP 1917 20L55	773.41

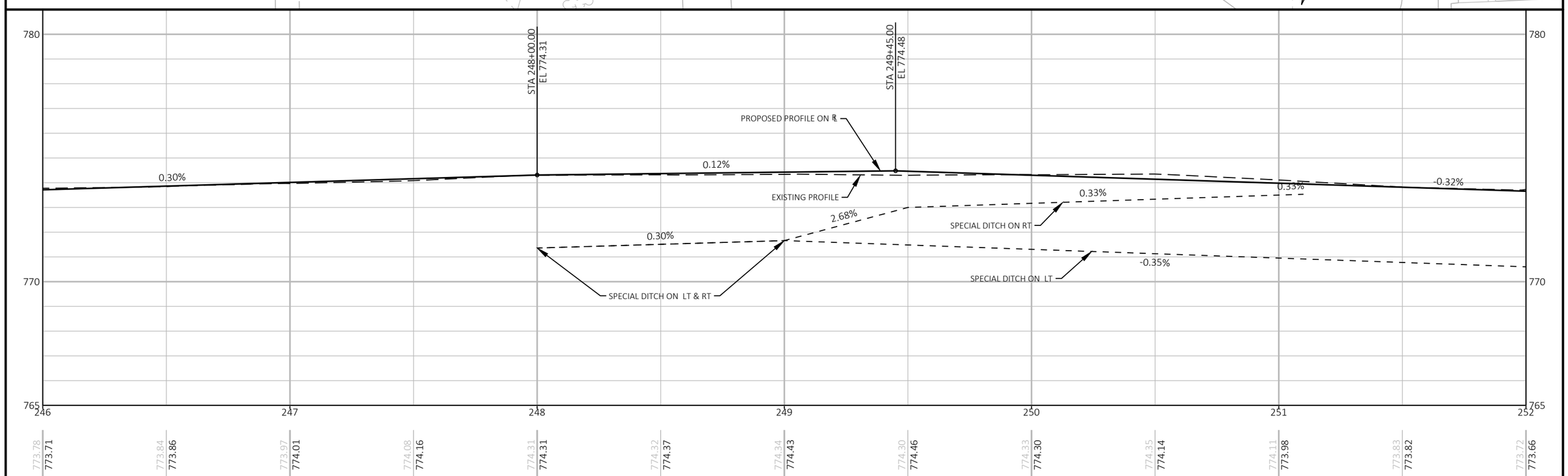

PROJECT NO: 4627-02-71	HWY: CTH A	COUNTY: WINNEBAGO	PLAN AND PROFILE: CTH A	SHEET 84	E

FILE NAME : W:\PROJECTS\W0059\81700113\CADD\CIVIL3D\PLAN SHEETS\05-PLAN AND PROFILE\05- CTH A PLAN & PROFILE.DWG
LAYOUT NAME - 3
PLOT DATE : 1/7/2020 3:24 PM
PLOT BY : JORDAN JELINSKI
PLOT NAME :
PLOT SCALE : 1" = 40'

CURVE 2
PI STA = 254+19.13
Y = 503942.506
X = 803785.952
DELTA = 4°44'25"
D = 0°15'04"
T = 471.95'
L = 943.36'
R = 11402.55'
PC STA = 249+47.18
PT STA = 258+90.54

BENCHMARKS			
STA.	LOCATION	DESCRIPTION	ELEVATION
256+35	55.9'RT.	NAIL IN PP 1917 20L66	770.15

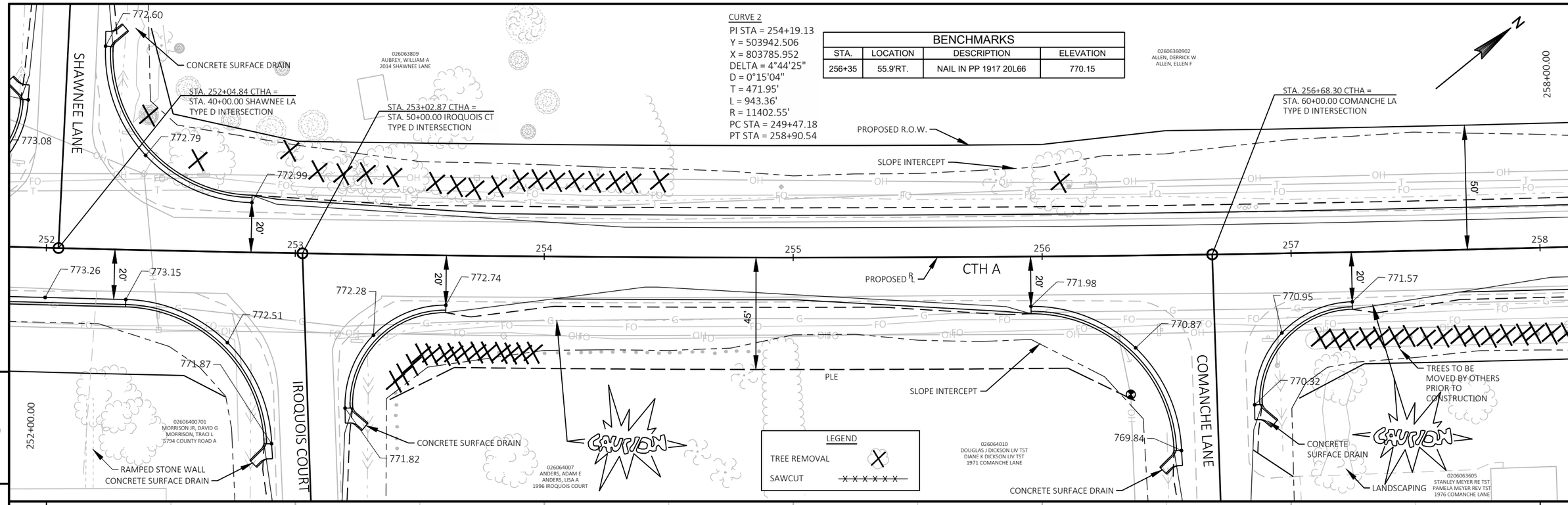

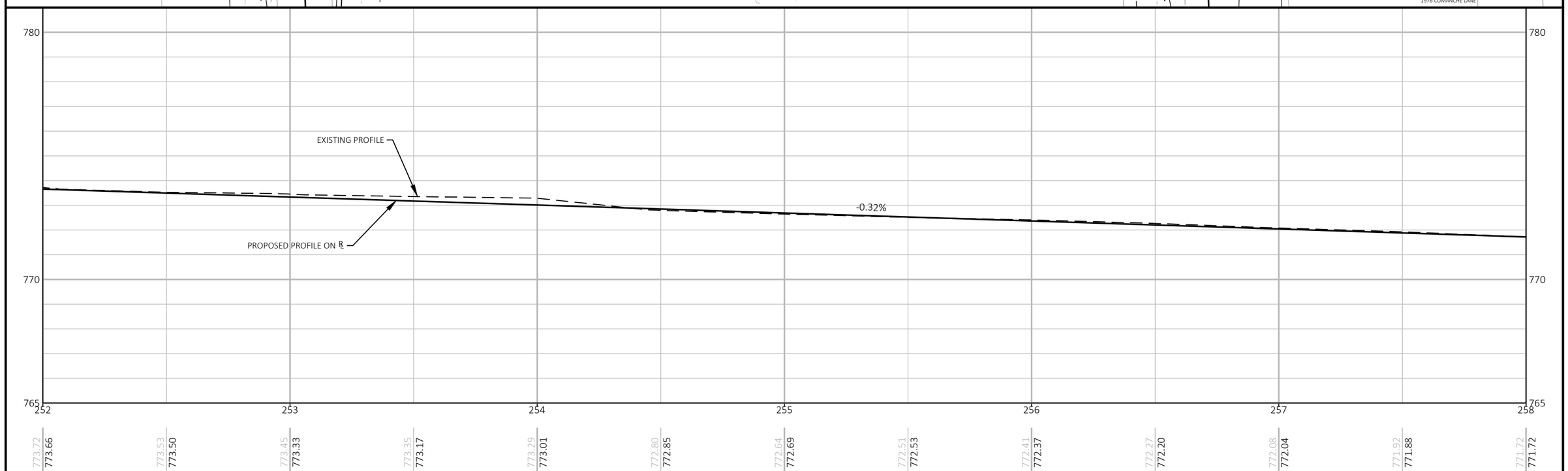

PROJECT NO: 4627-02-71	HWY: CTH A	COUNTY: WINNEBAGO	PLAN AND PROFILE: CTH A	SHEET 85	E

FILE NAME : W:\PROJECTS\W0059\81700113\CADD\CIVIL3D\PLAN SHEETS\05-PLAN AND PROFILE\05- CTH A PLAN & PROFILE.DWG
LAYOUT NAME - 4
PLOT DATE : 1/7/2020 3:24 PM PLOT BY : JORDAN JELINSKI PLOT NAME : PLOT SCALE : 1" = 40'

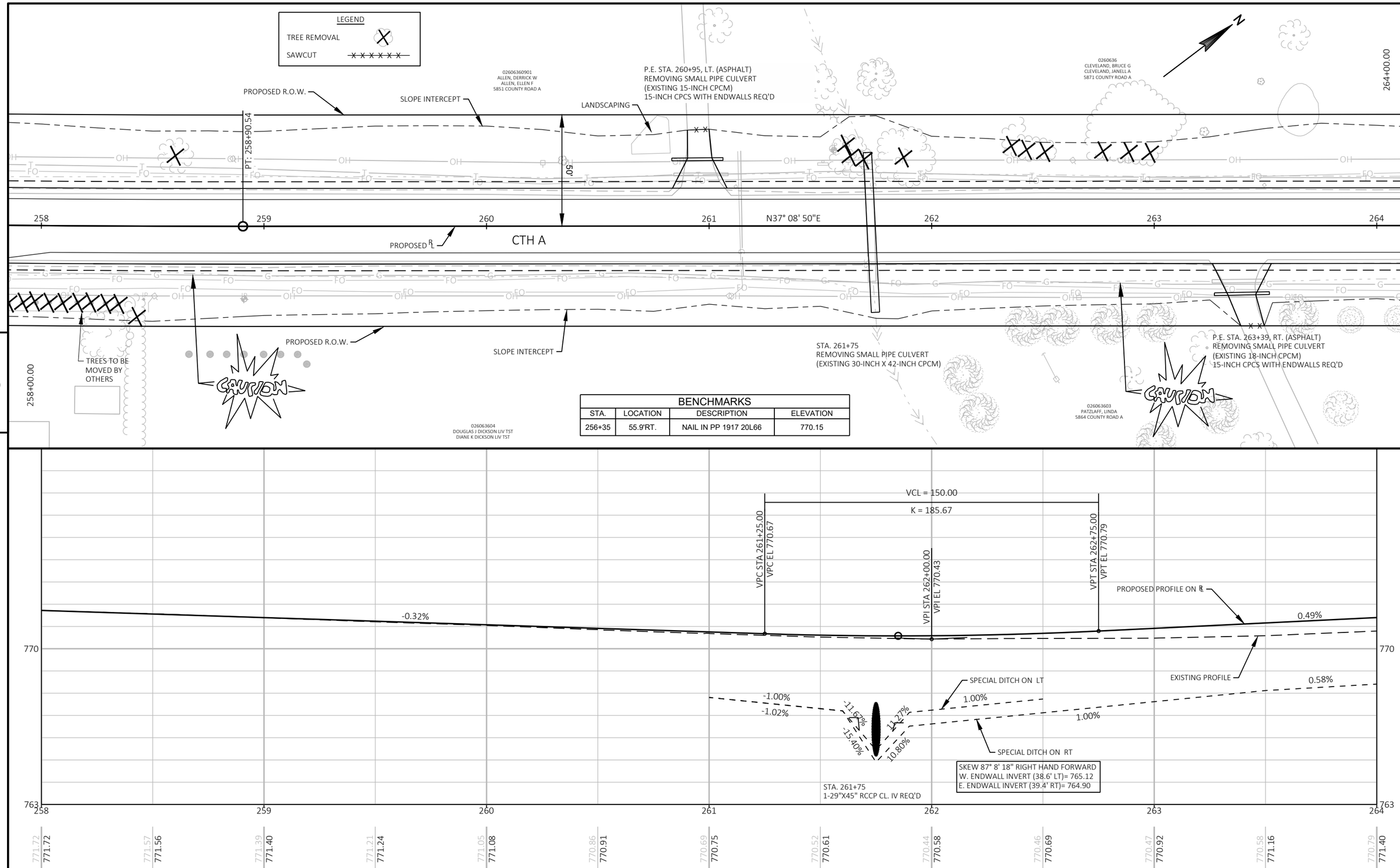

BENCHMARKS			
STA.	LOCATION	DESCRIPTION	ELEVATION
256+35	55.9'RT.	NAIL IN PP 1917 20L66	770.15

PROJECT NO: 4627-02-71	HWY: CTH A	COUNTY: WINNEBAGO	PLAN AND PROFILE: CTH A	SHEET 86	E

FILE NAME : W:\PROJECTS\W0059\81700113\CADD\CIVIL3D\PLAN SHEETS\05-PLAN AND PROFILE\05- CTH A PLAN & PROFILE.DWG
LAYOUT NAME - 5
PLOT DATE : 1/7/2020 3:24 PM
PLOT BY : JORDAN JELINSKI
PLOT NAME :
PLOT SCALE : 1" = 40'

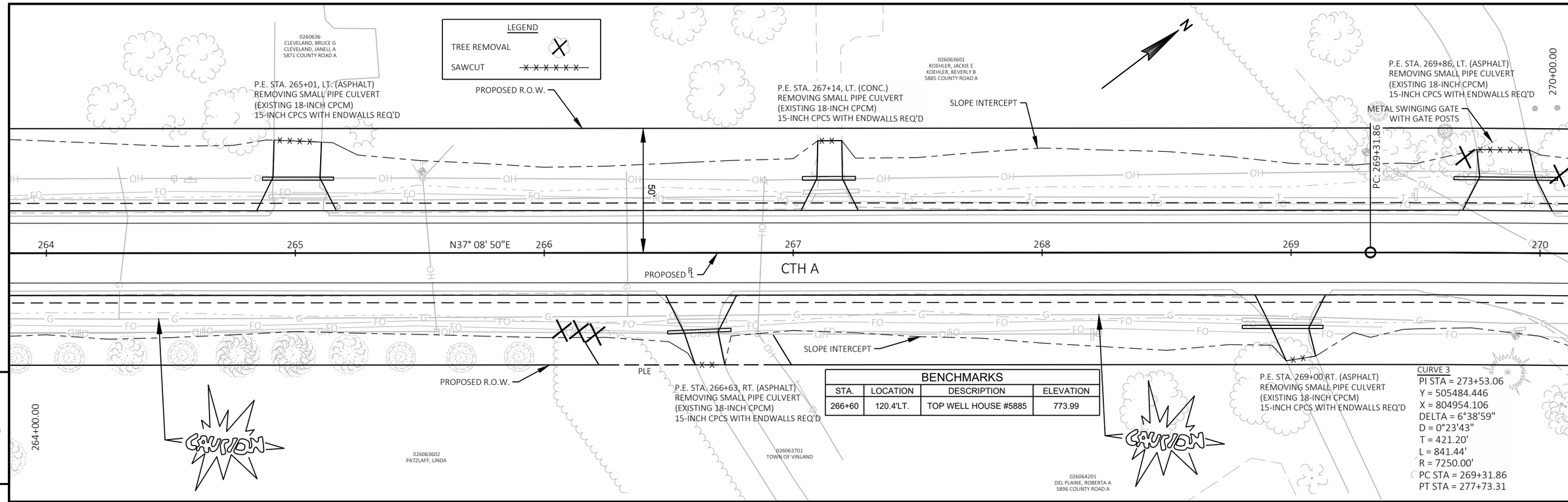

BENCHMARKS			
STA.	LOCATION	DESCRIPTION	ELEVATION
266+60	120.4'LT.	TOP WELL HOUSE #5885	773.99

CURVE 3
PI STA = 273+53.06
Y = 505484.446
X = 804954.106
DELTA = 6°38'59"
D = 0°23'43"
T = 421.20'
L = 841.44'
R = 7250.00'
PC STA = 269+31.86
PT STA = 277+73.31

PROJECT NO: 4627-02-71	HWY: CTH A	COUNTY: WINNEBAGO	PLAN AND PROFILE: CTH A	SHEET 87	E

FILE NAME : W:\PROJECTS\W0059\81700113\CADD\CIVIL3D\PLAN SHEETS\05-PLAN AND PROFILE\05- CTH A PLAN & PROFILE.DWG
LAYOUT NAME - 6
PLOT DATE : 1/7/2020 3:25 PM
PLOT BY : JORDAN JELINSKI
PLOT NAME :
PLOT SCALE : 1" = 40'
WISDOT/CADDS SHEET 44

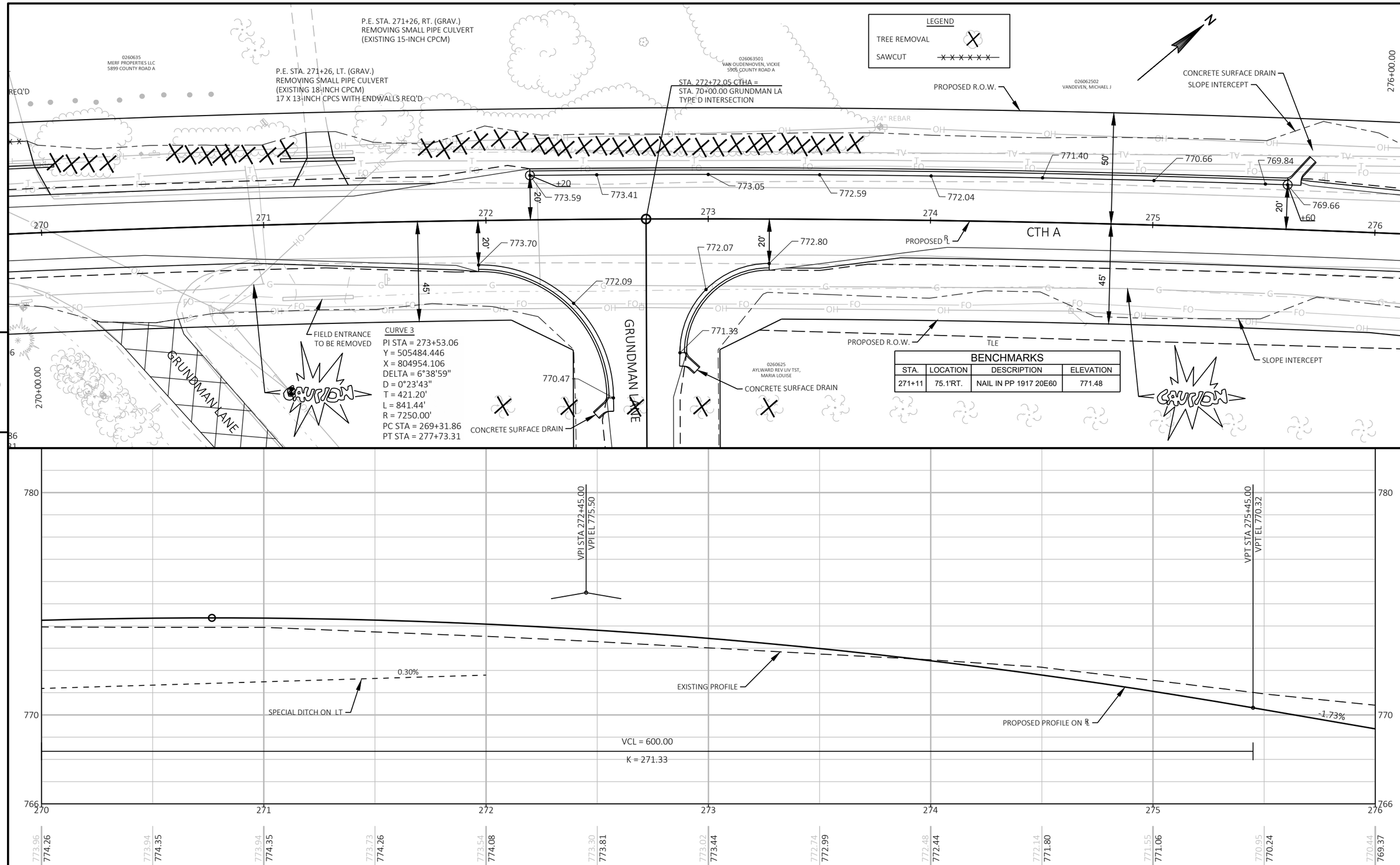

PROJECT NO: 4627-02-71	HWY: CTH A	COUNTY: WINNEBAGO	PLAN AND PROFILE: CTH A	SHEET 88	E

FILE NAME : W:\PROJECTS\W0059\81700113\CADD\CIVIL3D\PLAN SHEETS\05-PLAN AND PROFILE\05- CTH A PLAN & PROFILE.DWG
LAYOUT NAME - 7
PLOT DATE : 1/7/2020 3:25 PM PLOT BY : JORDAN JELINSKI PLOT NAME : PLOT SCALE : 1" = 40'

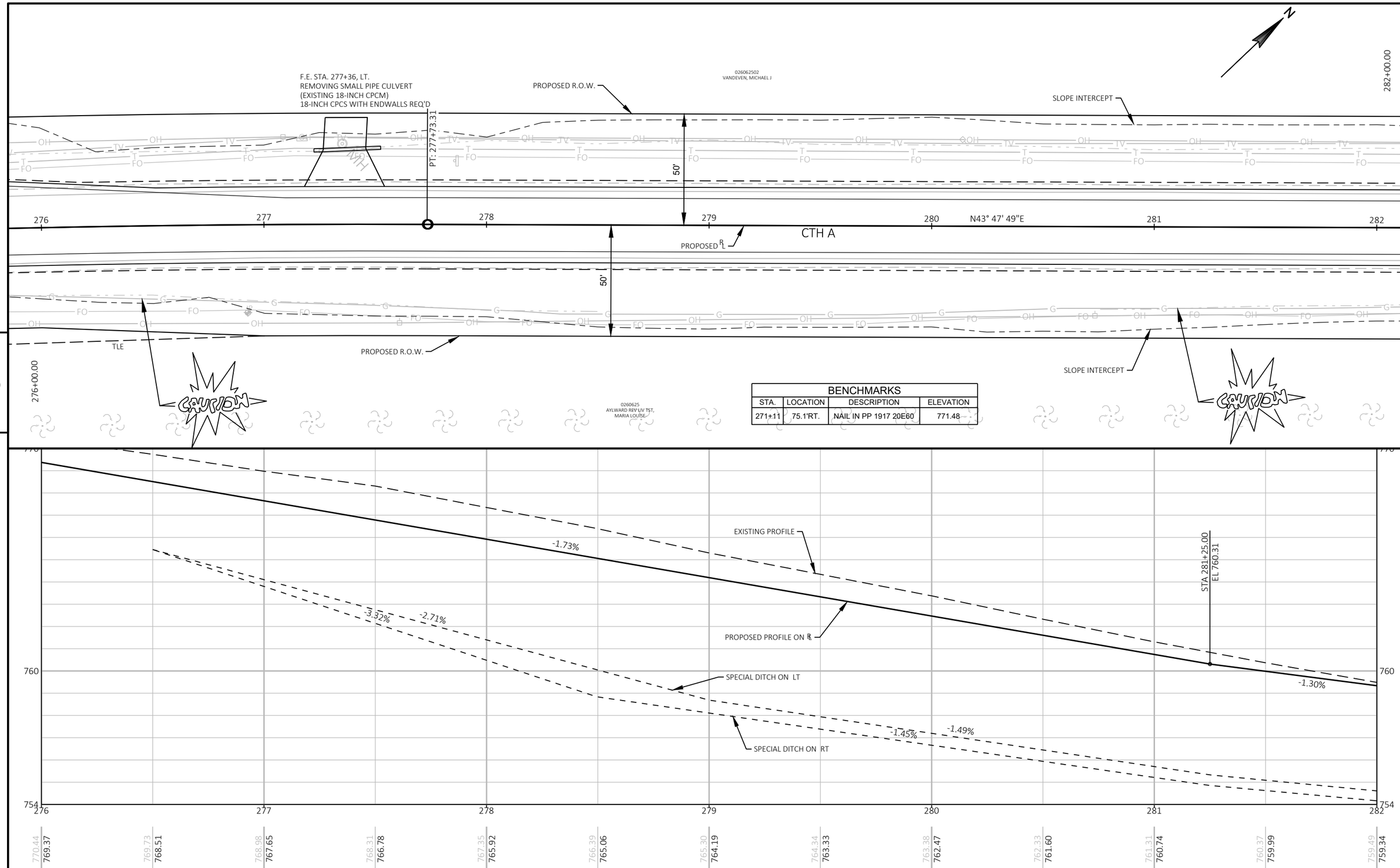

BENCHMARKS			
STA.	LOCATION	DESCRIPTION	ELEVATION
271+11	75.1'RT.	NAIL IN PP 1917 20E60	771.48

PROJECT NO: 4627-02-71	HWY: CTH A	COUNTY: WINNEBAGO	PLAN AND PROFILE: CTH A	SHEET 89	E

FILE NAME : W:\PROJECTS\W0059\81700113\CADD\CIVIL3D\PLAN SHEETS\05-PLAN AND PROFILE\05- CTH A PLAN & PROFILE.DWG
LAYOUT NAME - 8
PLOT DATE : 1/7/2020 3:25 PM PLOT BY : JORDAN JELINSKI PLOT NAME : PLOT SCALE : 1" = 40'

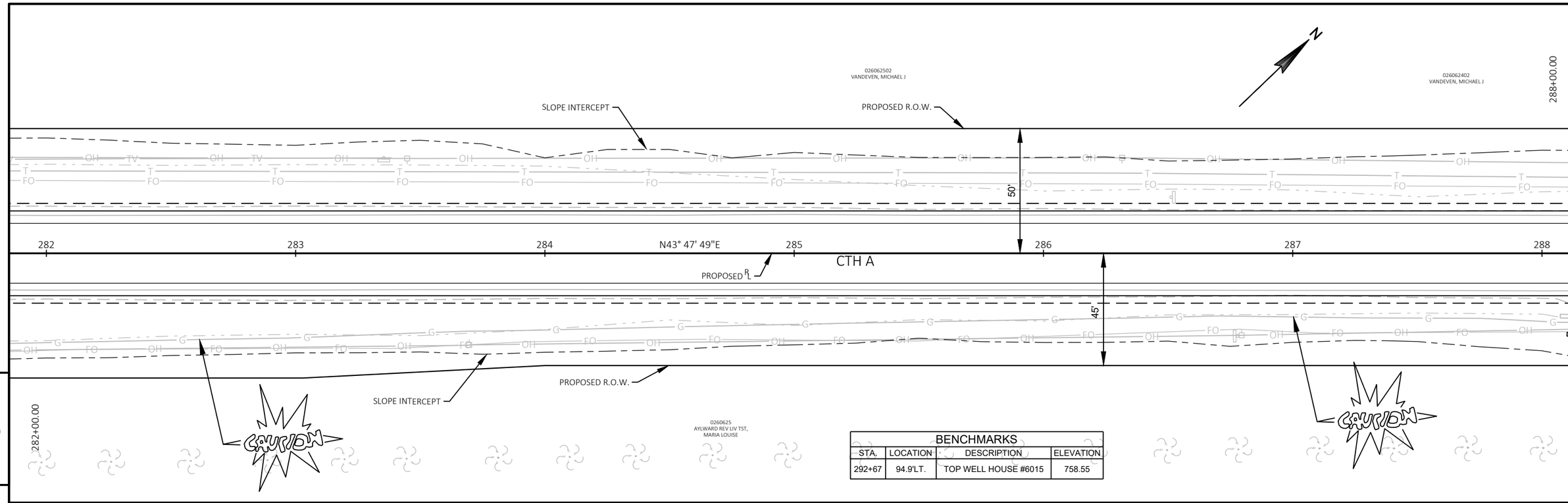

BENCHMARKS			
STA.	LOCATION	DESCRIPTION	ELEVATION
292+67	94.9'LT.	TOP WELL HOUSE #6015	758.55

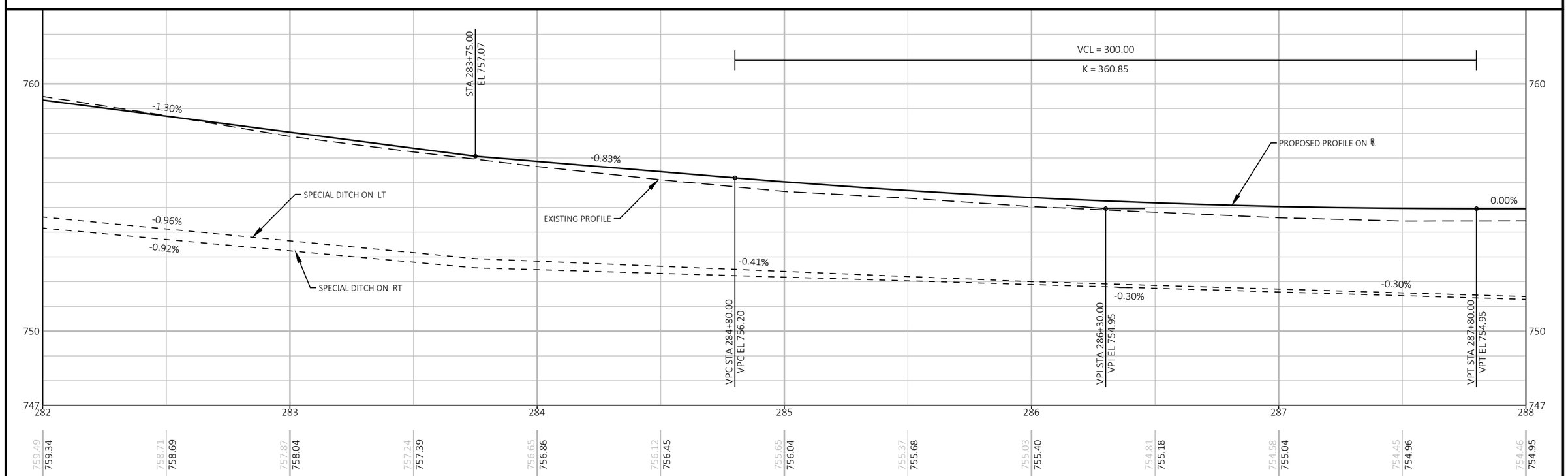

PROJECT NO: 4627-02-71	HWY: CTH A	COUNTY: WINNEBAGO	PLAN AND PROFILE: CTH A	SHEET 90	E

FILE NAME : W:\PROJECTS\W0059\81700113\CADD\CIVIL3D\PLAN SHEETS\05-PLAN AND PROFILE\05- CTH A PLAN & PROFILE.DWG
LAYOUT NAME - 9
PLOT DATE : 1/7/2020 3:25 PM
PLOT BY : JORDAN JELINSKI
PLOT NAME :
PLOT SCALE : 1" = 40'

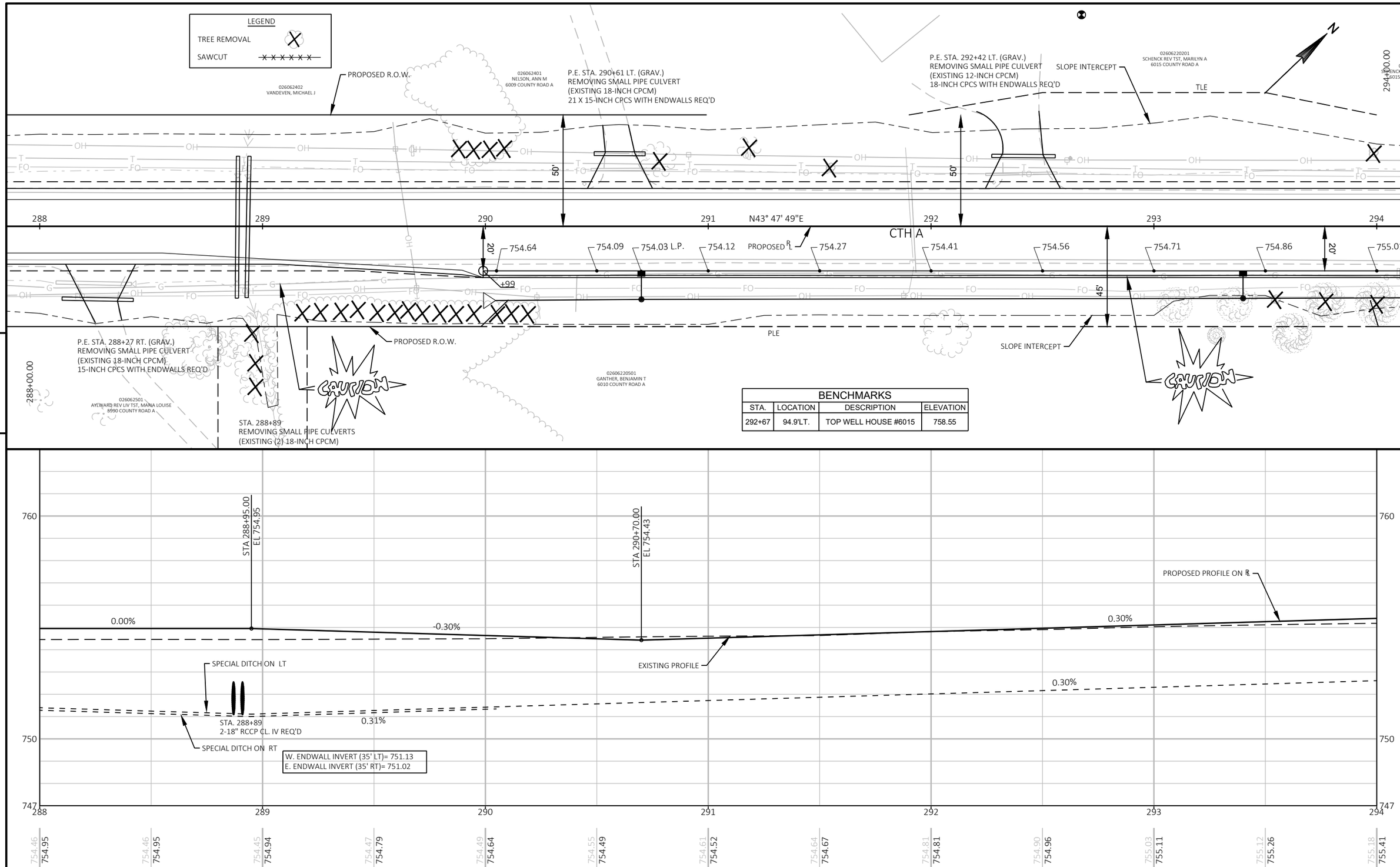

BENCHMARKS

STA.	LOCATION	DESCRIPTION	ELEVATION
292+67	94.9'LT.	TOP WELL HOUSE #6015	758.55

PROJECT NO: 4627-02-71	HWY: CTH A	COUNTY: WINNEBAGO	PLAN AND PROFILE: CTH A	SHEET 91	E

FILE NAME : W:\PROJECTS\W0059\81700113\CADD\CIVIL3D\PLAN SHEETS\05-PLAN AND PROFILE\05- CTH A PLAN & PROFILE.DWG
LAYOUT NAME - 10
PLOT DATE : 1/7/2020 3:25 PM PLOT BY : JORDAN JELINSKI PLOT NAME : PLOT SCALE : 1" = 40'

BENCHMARKS			
STA.	LOCATION	DESCRIPTION	ELEVATION
292+67	94.9'LT.	TOP WELL HOUSE #6015	758.55

LEGEND

TREE REMOVAL

SAWCUT

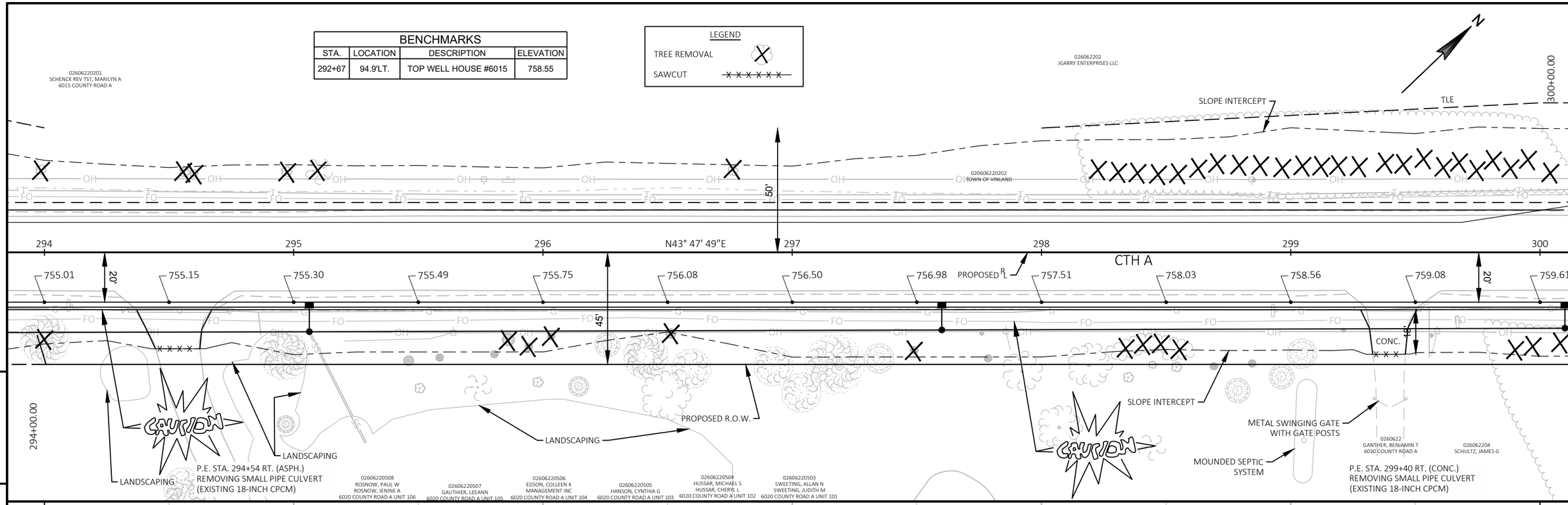

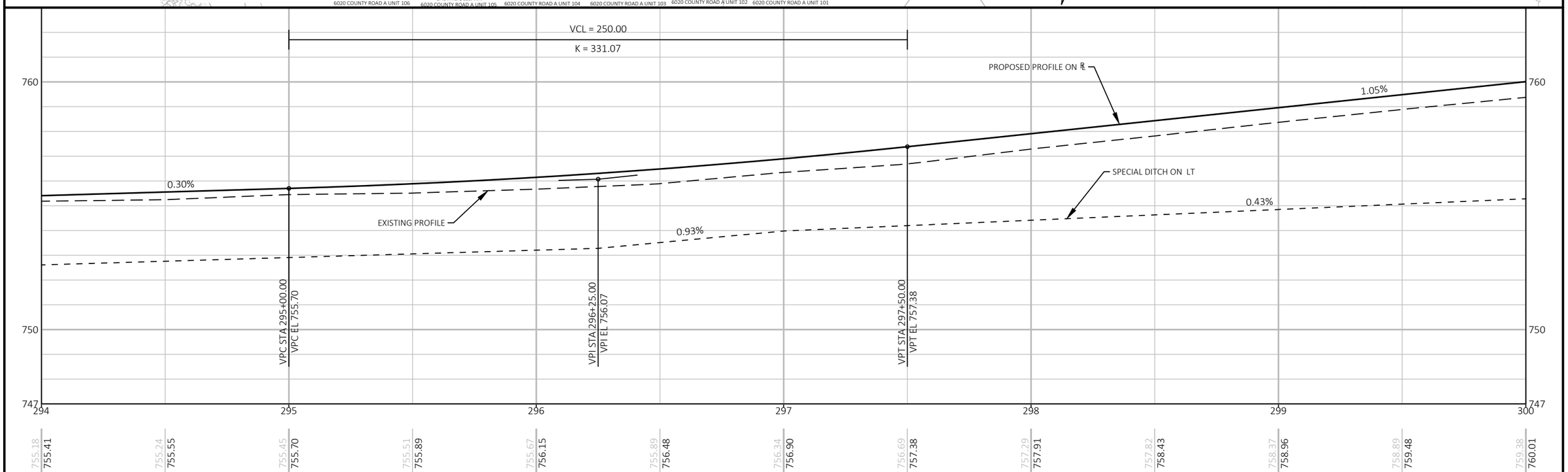

PROJECT NO: 4627-02-71	HWY: CTH A	COUNTY: WINNEBAGO	PLAN AND PROFILE: CTH A	SHEET 92	E

FILE NAME : W:\PROJECTS\W0059\81700113\CADD\CIVIL3D\PLAN SHEETS\05-PLAN AND PROFILE\05- CTH A PLAN & PROFILE.DWG
LAYOUT NAME - 11
PLOT DATE : 1/7/2020 3:25 PM
PLOT BY : JORDAN JELINSKI
PLOT NAME :
PLOT SCALE : 1" = 40'

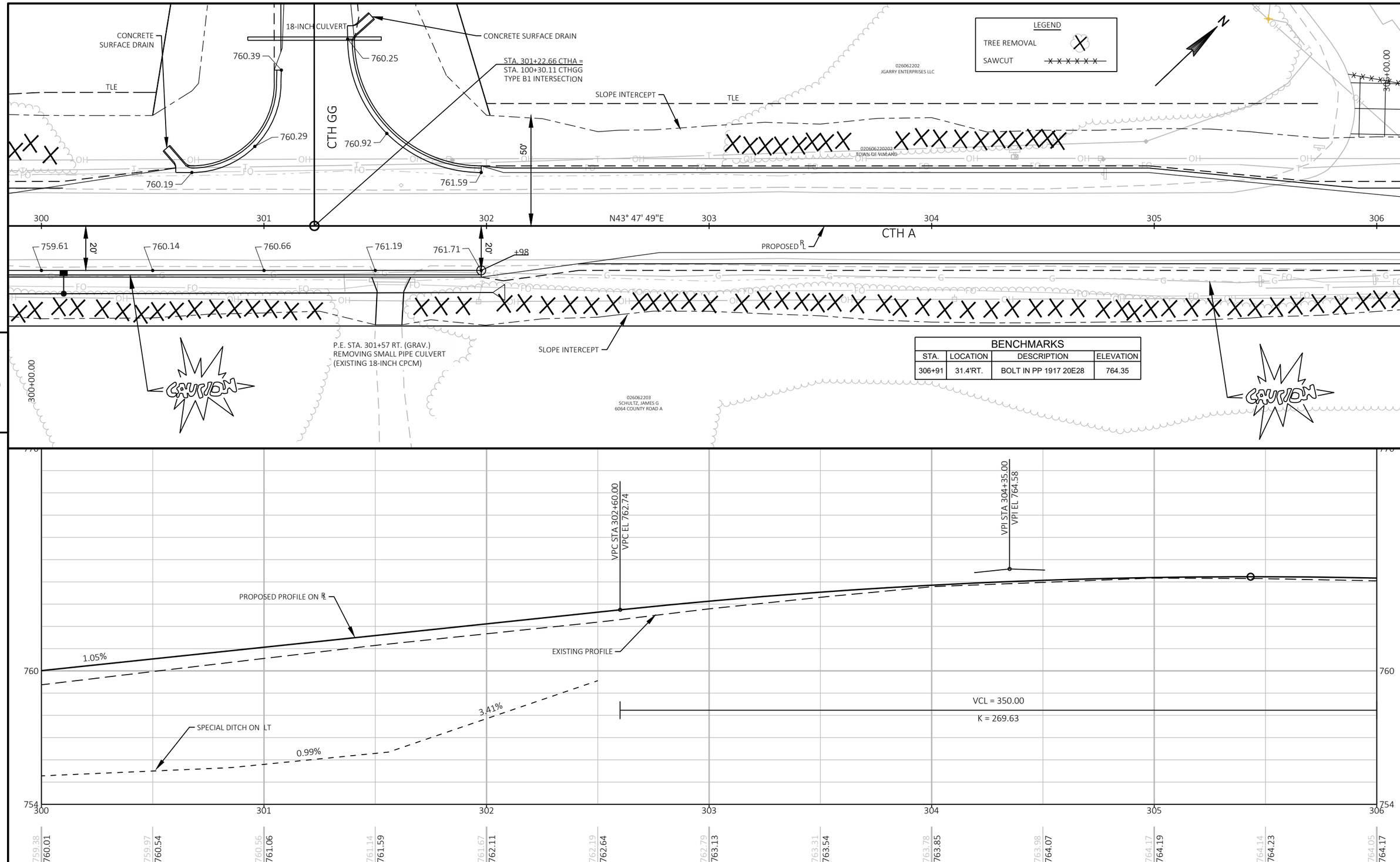

BENCHMARKS			
STA.	LOCATION	DESCRIPTION	ELEVATION
306+91	31.4'RT.	BOLT IN PP 1917 20E28	764.35

PROJECT NO: 4627-02-71	HWY: CTH A	COUNTY: WINNEBAGO	PLAN AND PROFILE: CTH A	SHEET 93	E

FILE NAME : W:\PROJECTS\W0059\81700113\CADD\CIVIL3D\PLAN SHEETS\05-PLAN AND PROFILE\05- CTH A PLAN & PROFILE.DWG
LAYOUT NAME - 12
PLOT DATE : 1/7/2020 3:25 PM PLOT BY : JORDAN JELINSKI PLOT NAME : PLOT SCALE : 1" = 40'

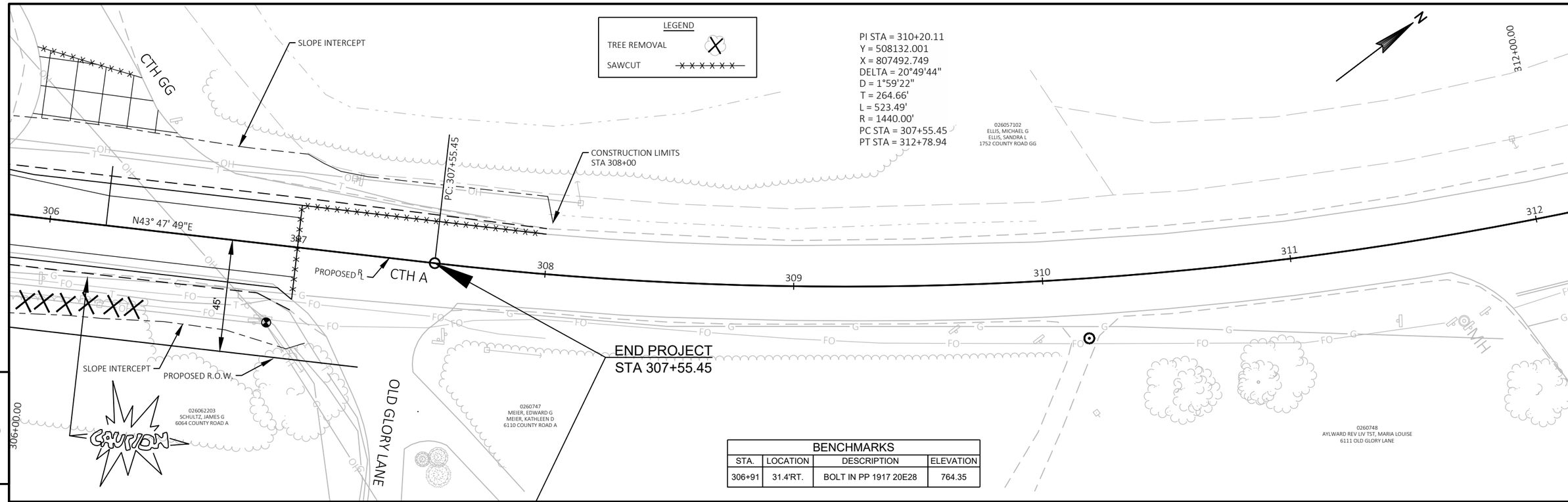

BENCHMARKS			
STA.	LOCATION	DESCRIPTION	ELEVATION
306+91	31.4'RT.	BOLT IN PP 1917 20E28	764.35

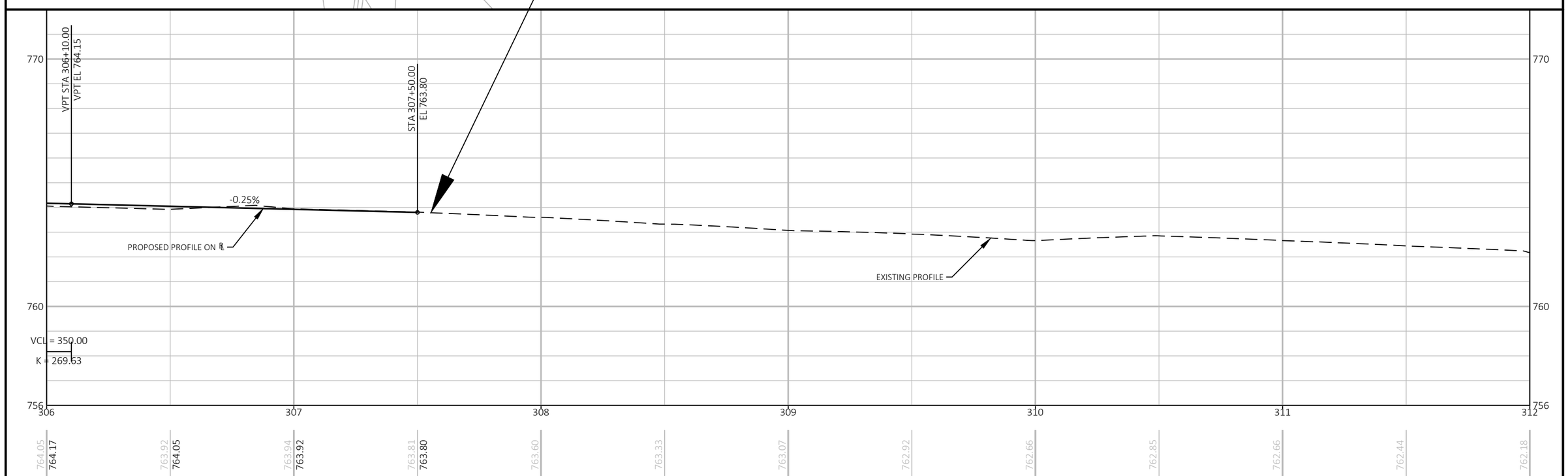

PROJECT NO: 4627-02-71	HWY: CTH A	COUNTY: WINNEBAGO	PLAN AND PROFILE: CTH A	SHEET 94	E

FILE NAME : W:\PROJECTS\W0059\81700113\CADD\CIVIL3D\PLAN SHEETS\05-PLAN AND PROFILE\05- CTH A PLAN & PROFILE.DWG
LAYOUT NAME - 13
PLOT DATE : 1/7/2020 3:25 PM PLOT BY : JORDAN JELINSKI PLOT NAME : PLOT SCALE : 1" = 40'

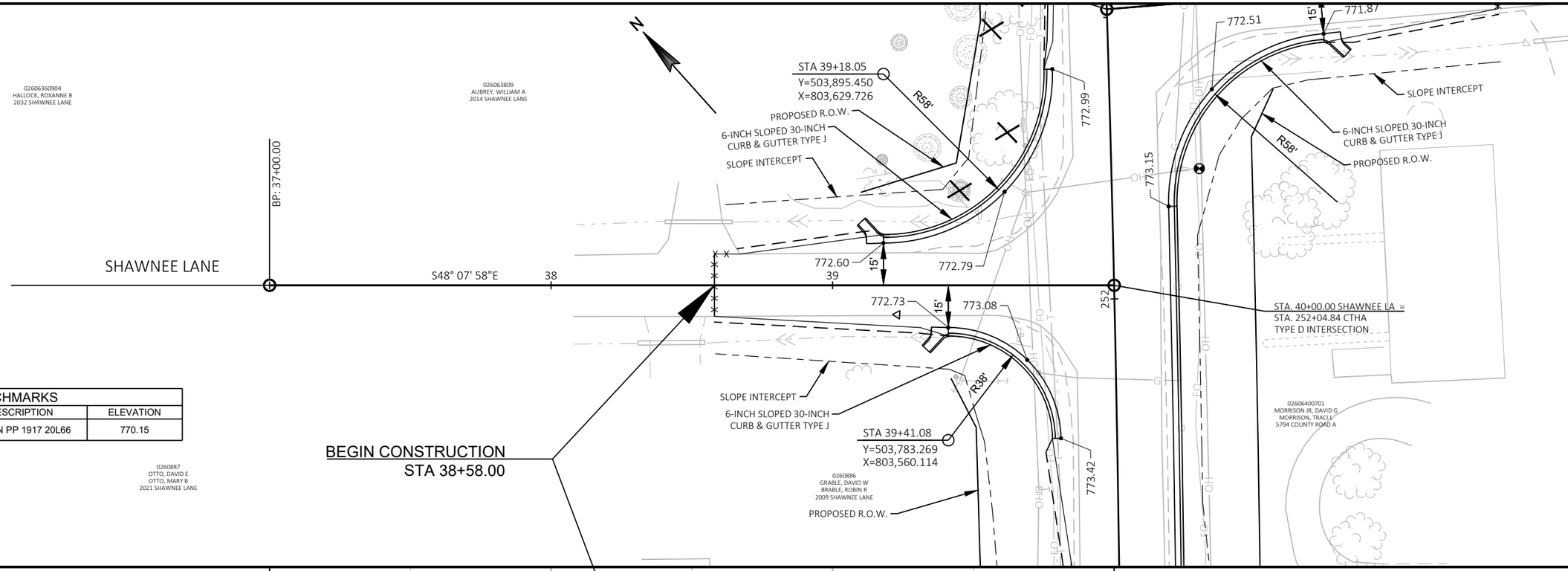

BENCHMARKS			
STA.	LOCATION	DESCRIPTION	ELEVATION
256+35	55.9'RT.	NAIL IN PP 1917 20L66	770.15

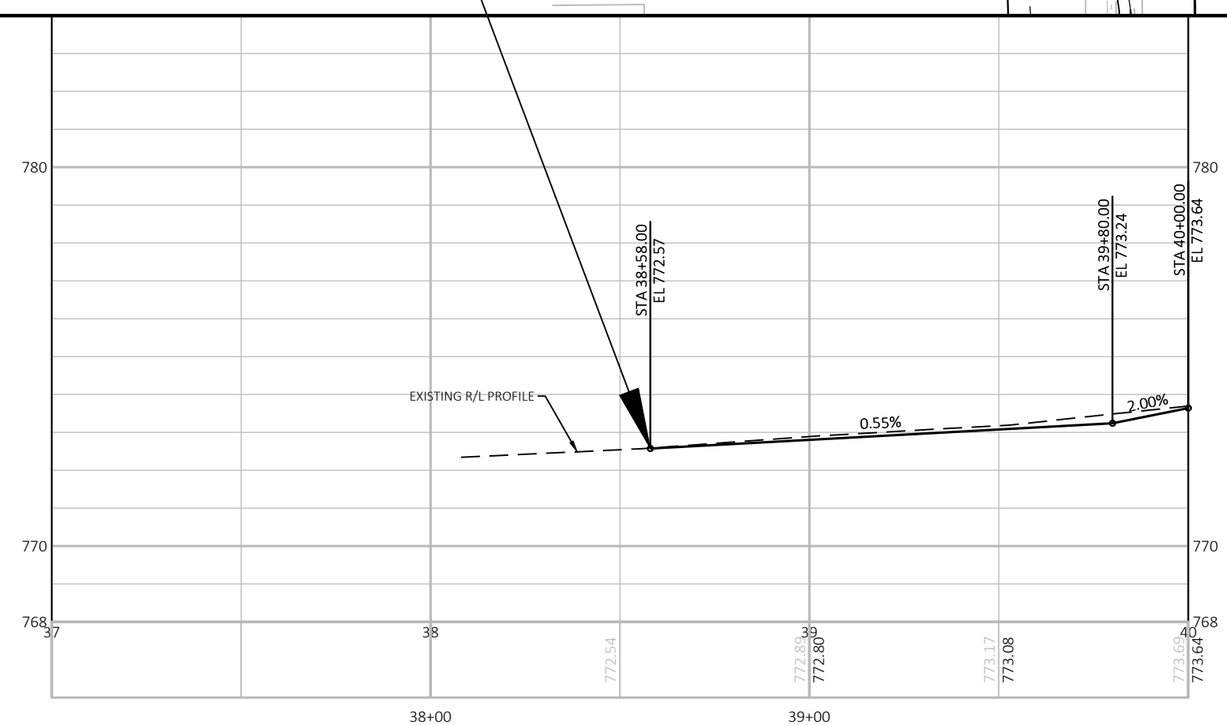

PROJECT NO: 4627-02-71	HWY: CTH A	COUNTY: WINNEBAGO	PLAN AND PROFILE: SHAWNEE LANE	SHEET 95	E

FILE NAME : W:\PROJECTS\W0059\81700113\CADD\CIVIL3D\PLAN SHEETS\05-PLAN AND PROFILE\05- SIDE STREET PLAN & PROFILE.DWG
LAYOUT NAME - 1 Shawnee
PLOT DATE : 1/7/2020 3:26 PM PLOT BY : JORDAN JELINSKI PLOT NAME : PLOT SCALE : 1 IN:40 FT

BENCHMARKS			
STA.	LOCATION	DESCRIPTION	ELEVATION
256+35	55.9'RT.	NAIL IN PP 1917 20L66	770.15

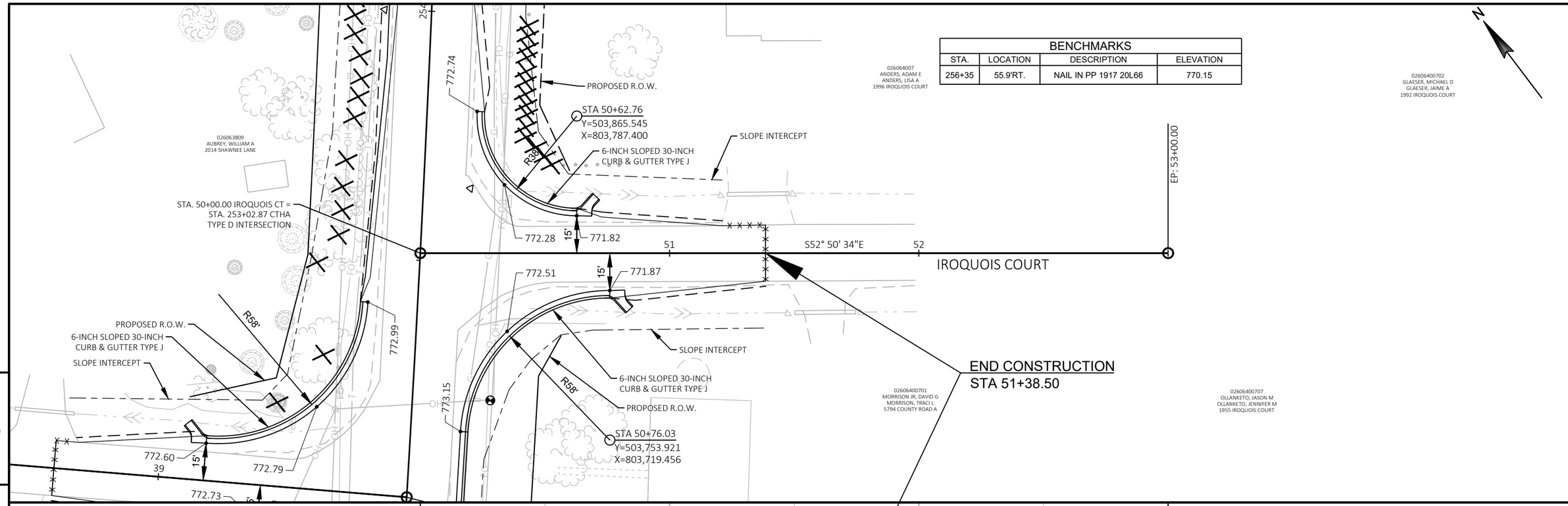

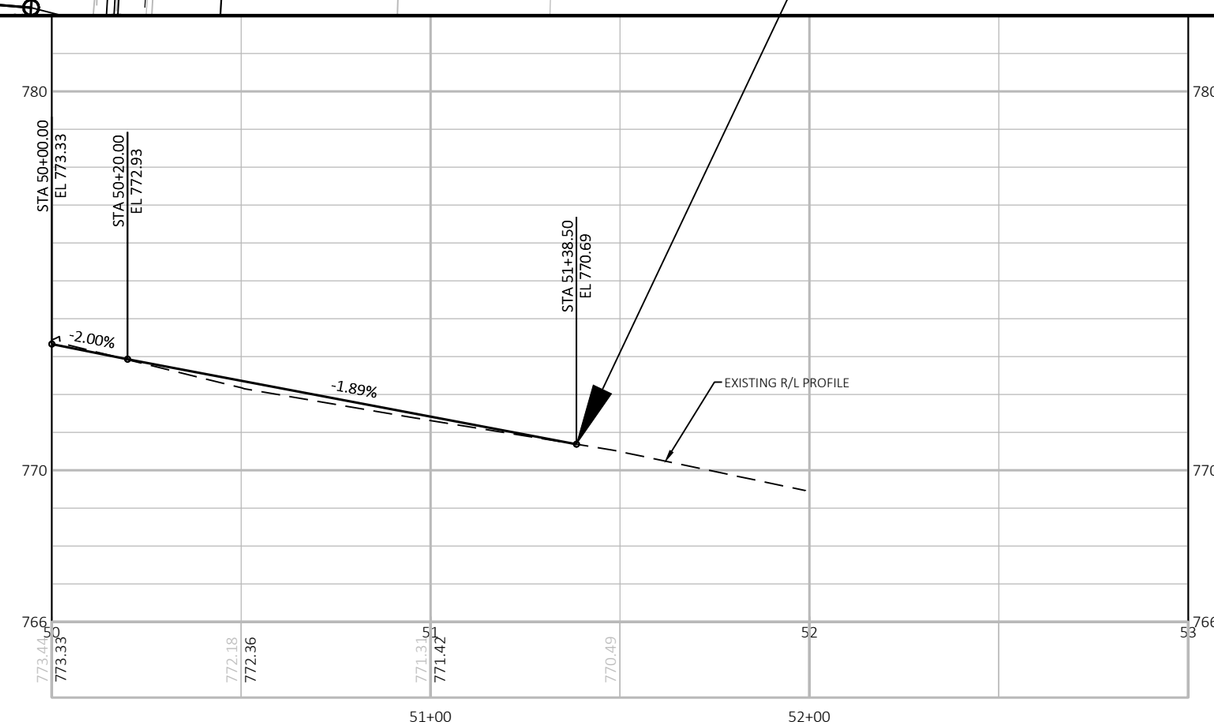

PROJECT NO: 4627-02-71	HWY: CTH A	COUNTY: WINNEBAGO	PLAN AND PROFILE: IROQUOIS COURT	SHEET 96	E

FILE NAME : W:\PROJECTS\W0059\81700113\CADD\CIVIL3D\PLAN SHEETS\05-PLAN AND PROFILE\05- SIDE STREET PLAN & PROFILE.DWG
LAYOUT NAME - 2 Iroquois
PLOT DATE : 1/7/2020 3:26 PM PLOT BY : JORDAN JELINSKI PLOT NAME : PLOT SCALE : 1 IN:40 FT

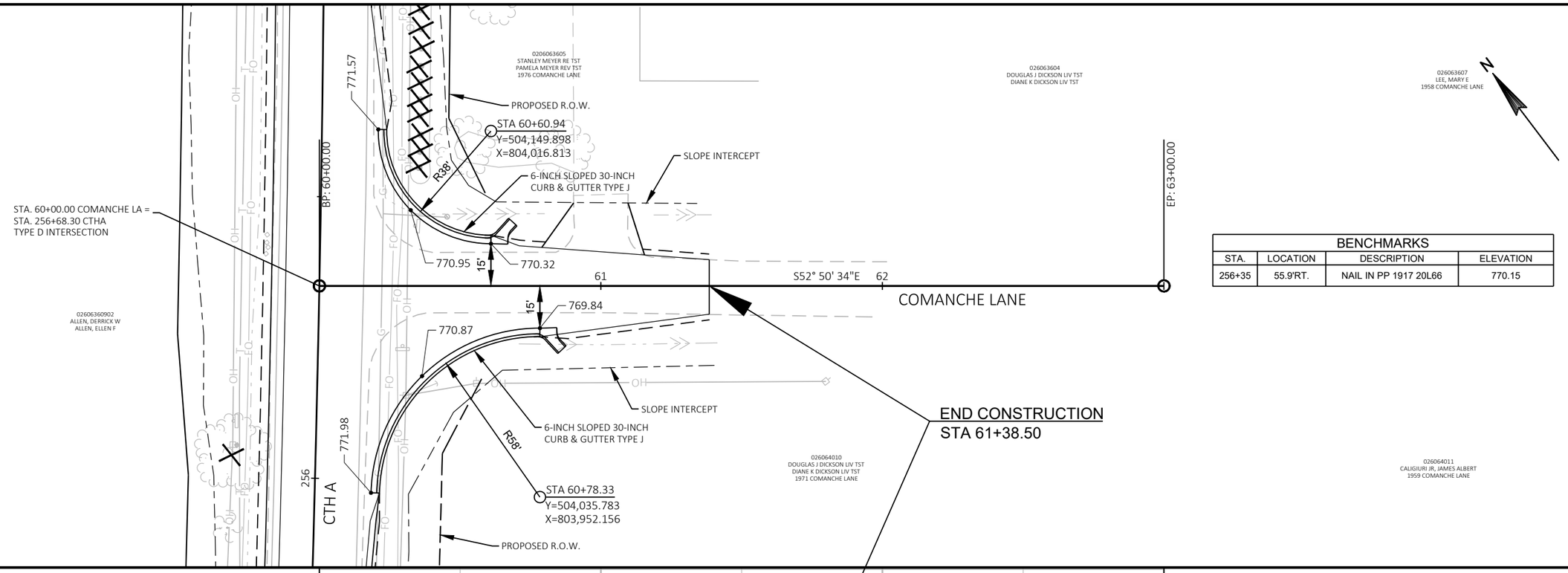

BENCHMARKS			
STA.	LOCATION	DESCRIPTION	ELEVATION
256+35	55.9'RT.	NAIL IN PP 1917 20L66	770.15

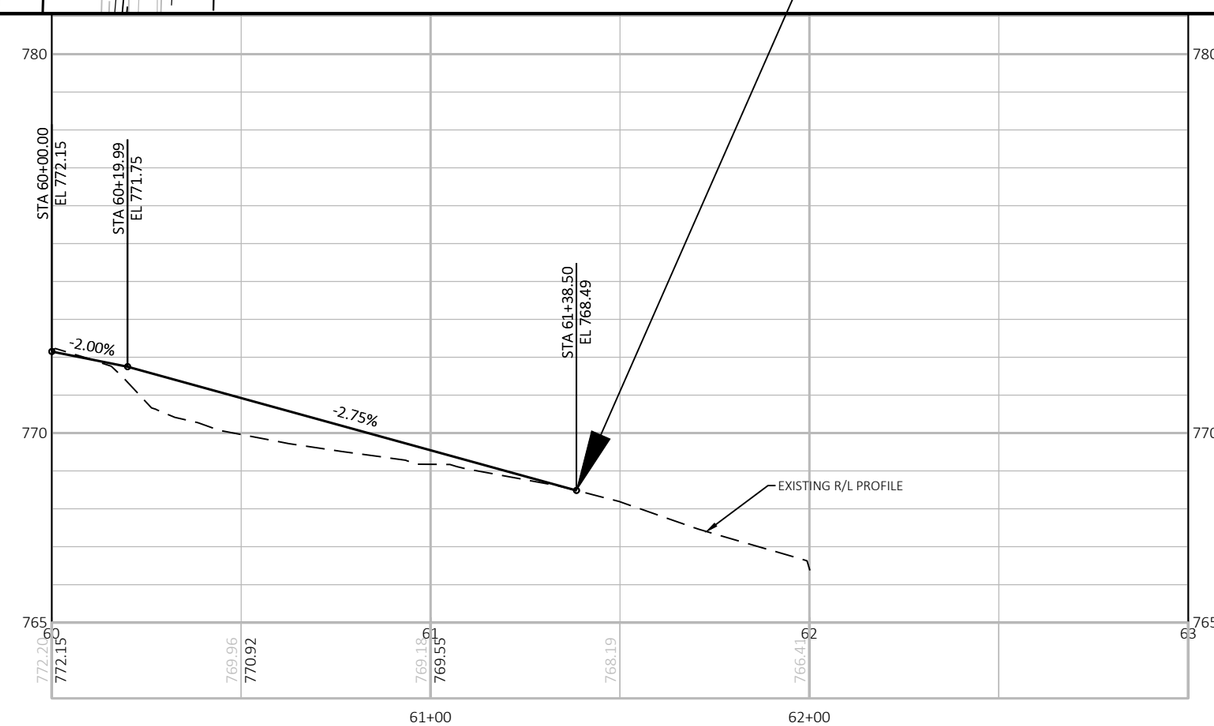

PROJECT NO: 4627-02-71	HWY: CTH A	COUNTY: WINNEBAGO	PLAN AND PROFILE: COMANCHE LANE	SHEET 97	E

FILE NAME : W:\PROJECTS\W0059\81700113\CADD\CIVIL3D\PLAN SHEETS\05-PLAN AND PROFILE\05- SIDE STREET PLAN & PROFILE.DWG
LAYOUT NAME - 3 Comanche
PLOT DATE : 1/7/2020 3:26 PM PLOT BY : JORDAN JELINSKI PLOT NAME : PLOT SCALE : 1 IN:40 FT

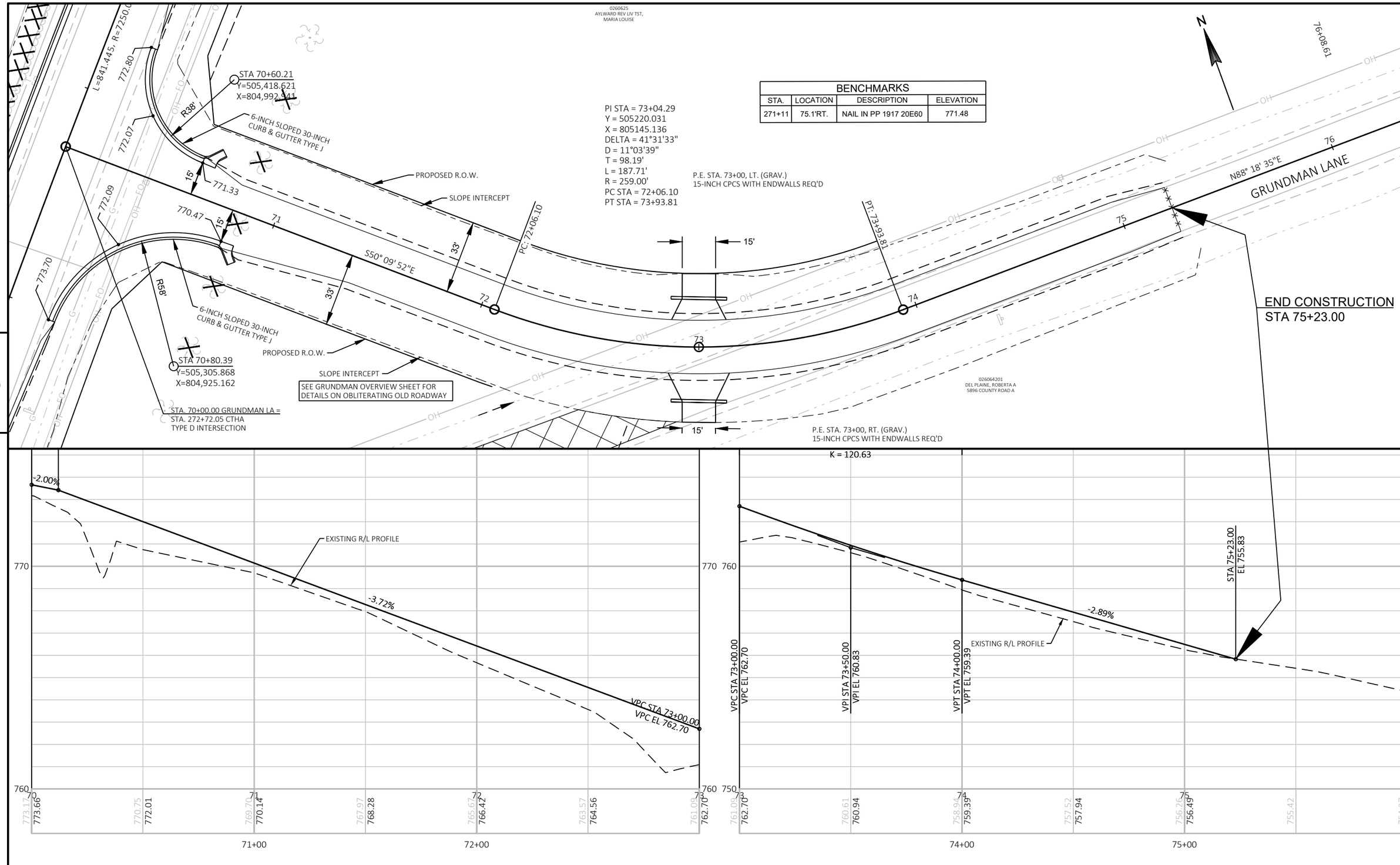

BENCHMARKS			
STA.	LOCATION	DESCRIPTION	ELEVATION
271+11	75.1'RT.	NAIL IN PP 1917 20E60	771.48

5

5

PROJECT NO: 4627-02-71	HWY: CTH A	COUNTY: WINNEBAGO	PLAN AND PROFILE: GRUNDMAN LANE	SHEET 98	E

FILE NAME : W:\PROJECTS\W0059\81700113\CADD\CIVIL3D\PLAN SHEETS\05-PLAN AND PROFILE\05- SIDE STREET PLAN & PROFILE.DWG
LAYOUT NAME - 4 Grundman
PLOT DATE : 1/7/2020 3:26 PM PLOT BY : JORDAN JELINSKI PLOT NAME : PLOT SCALE : 1 IN:40 FT

BENCHMARKS			
STA.	LOCATION	DESCRIPTION	ELEVATION
306+91	31.4'RT.	BOLT IN PP 1917 20E28	764.35

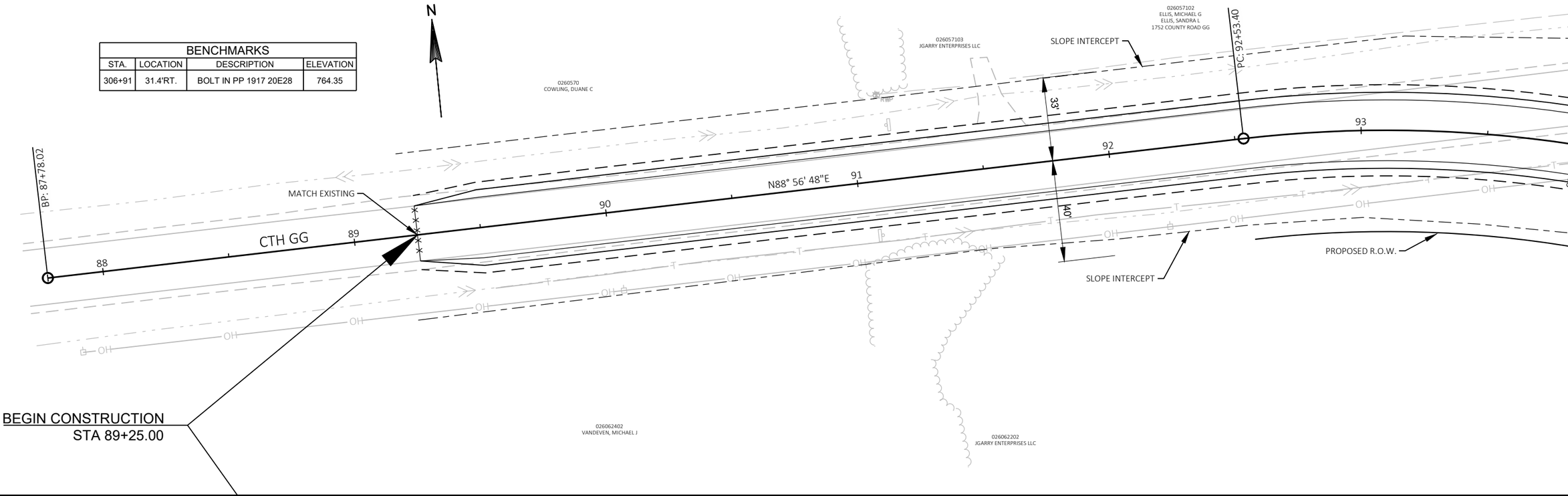

5

5

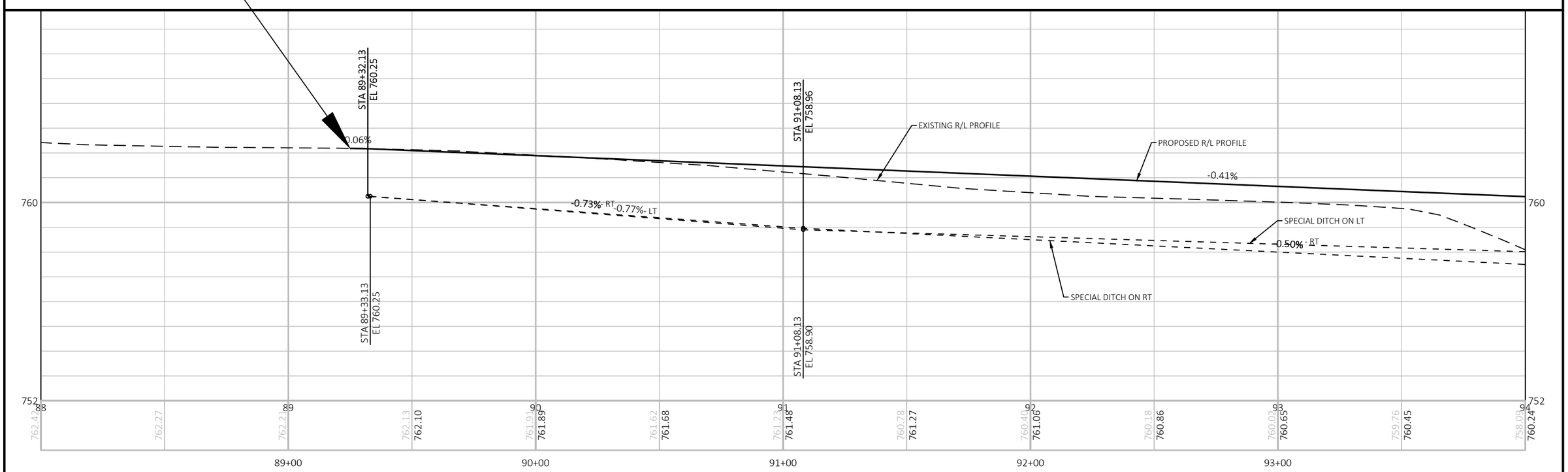

PROJECT NO: 4627-02-71	HWY: CTH A	COUNTY: WINNEBAGO	PLAN AND PROFILE: CTH GG	SHEET 99	E

FILE NAME : W:\PROJECTS\W0059\81700113\CADD\CIVIL3D\PLAN SHEETS\05-PLAN AND PROFILE\05- SIDE STREET PLAN & PROFILE.DWG
LAYOUT NAME - 5 CTH GG
PLOT DATE : 1/7/2020 3:26 PM PLOT BY : JORDAN JELINSKI PLOT NAME : PLOT SCALE : 1 IN:40 FT

WISDOT/CADDS SHEET 44

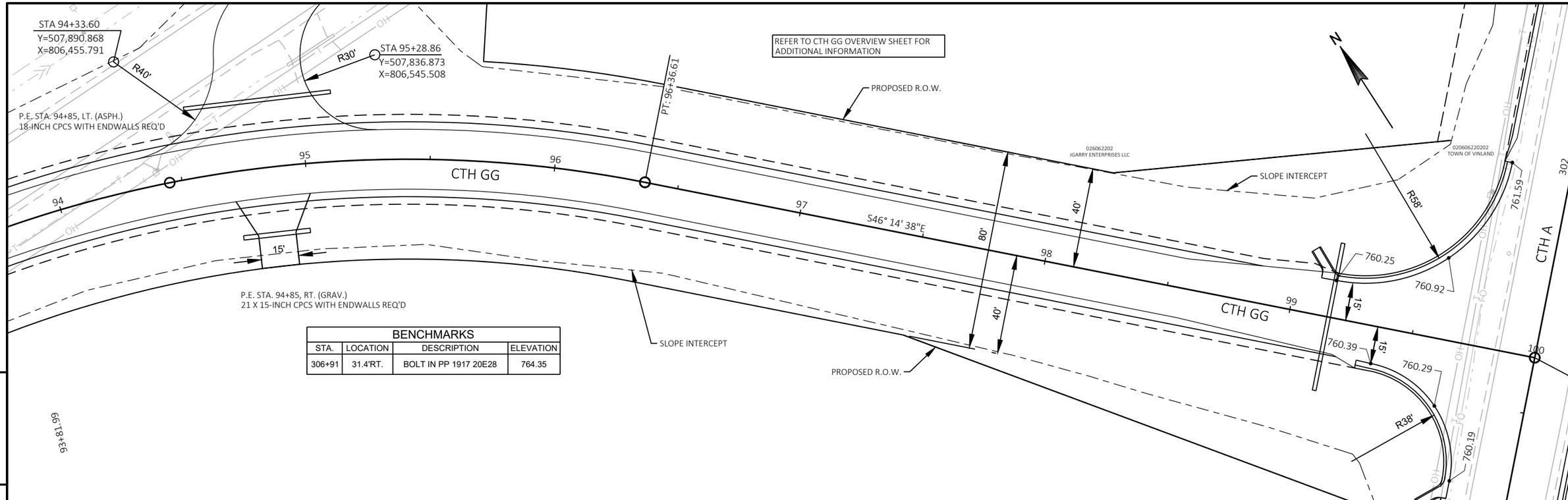

BENCHMARKS			
STA.	LOCATION	DESCRIPTION	ELEVATION
306+91	31.4'RT.	BOLT IN PP 1917 20E28	764.35

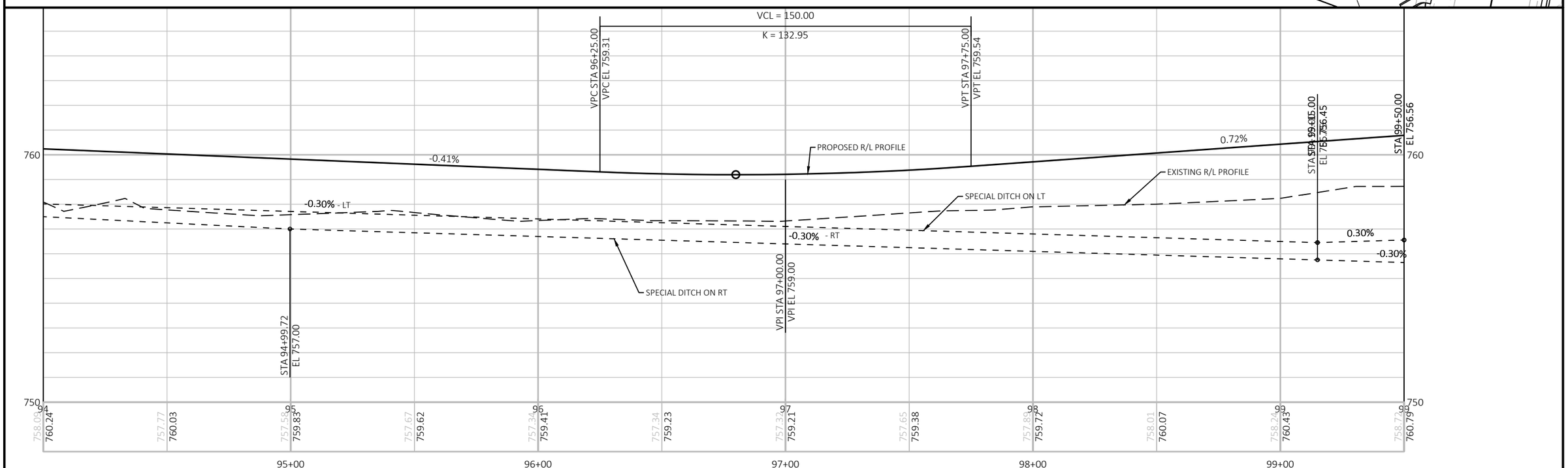

PROJECT NO: 4627-02-71	HWY: CTH A	COUNTY: WINNEBAGO	PLAN AND PROFILE: CTH GG	SHEET 100	E

FILE NAME : W:\PROJECTS\W0059\81700113\CADD\CIVIL3D\PLAN SHEETS\05-PLAN AND PROFILE\05- SIDE STREET PLAN & PROFILE.DWG
LAYOUT NAME - 6 CTH GG
PLOT DATE : 1/7/2020 3:27 PM PLOT BY : JORDAN JELINSKI PLOT NAME : PLOT SCALE : 1 IN:40 FT

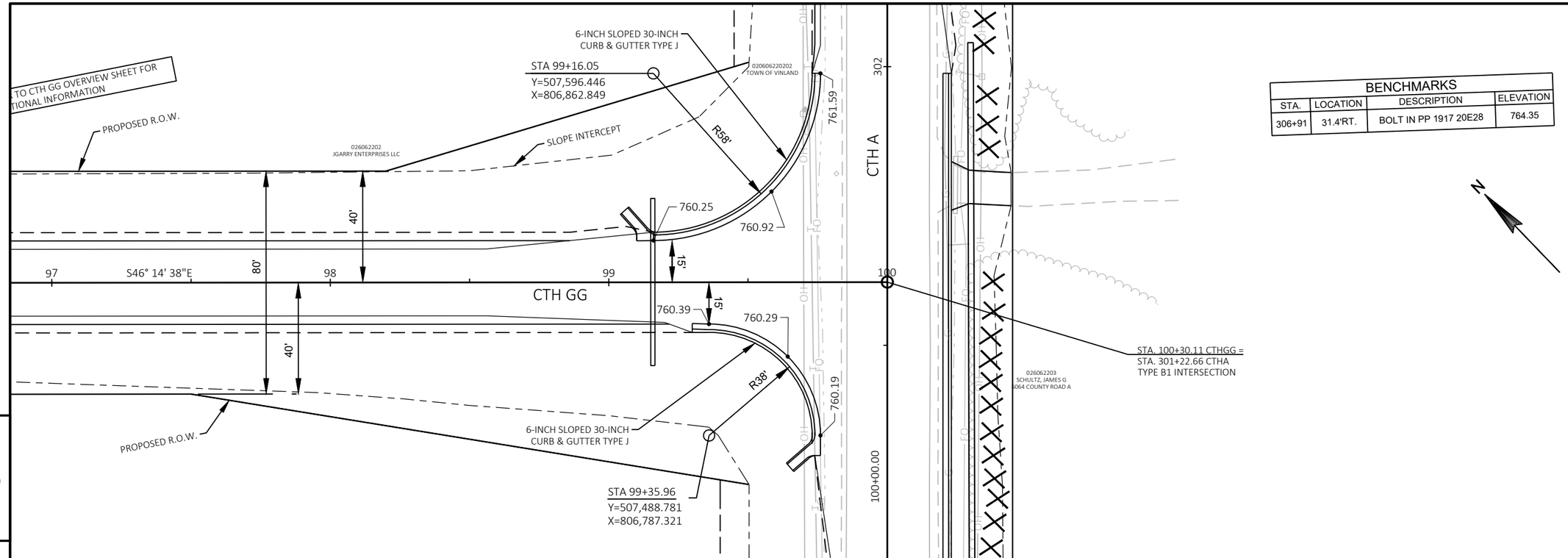

BENCHMARKS			
STA.	LOCATION	DESCRIPTION	ELEVATION
306+91	31.4'RT.	BOLT IN PP 1917 20E28	764.35

5

5

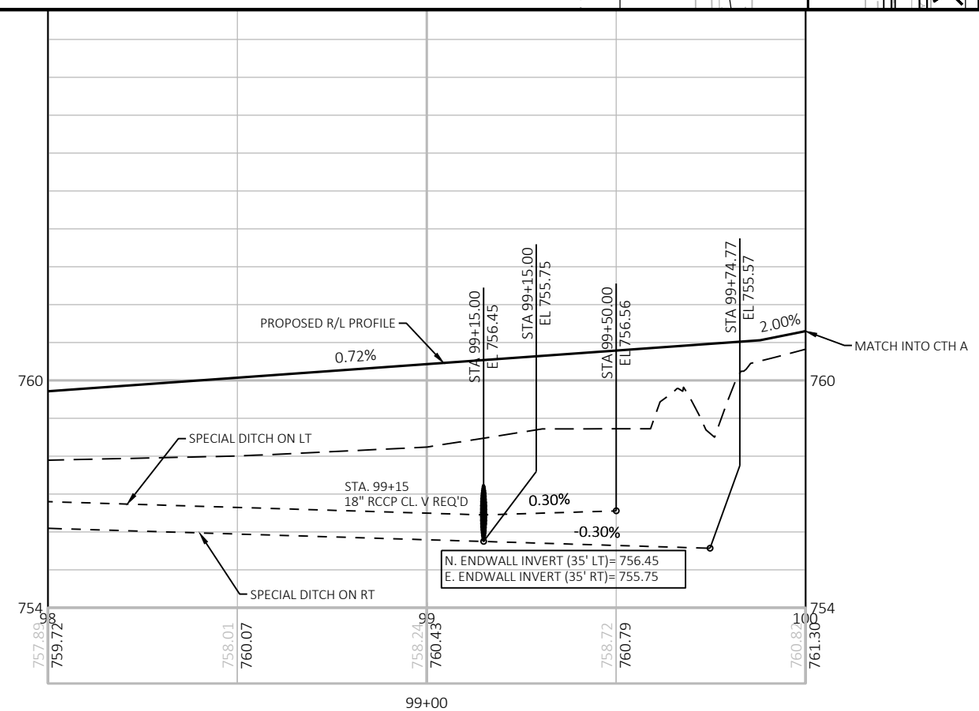

PROJECT NO: 4627-02-71	HWY: CTH A	COUNTY: WINNEBAGO	PLAN AND PROFILE: CTH GG	SHEET 101	E

FILE NAME : W:\PROJECTS\W0059\81700113\CADD\CIVIL3D\PLAN SHEETS\05-PLAN AND PROFILE\05- SIDE STREET PLAN & PROFILE.DWG
LAYOUT NAME - 7 CTH GG
PLOT DATE : 1/7/2020 3:27 PM PLOT BY : JORDAN JELINSKI PLOT NAME : PLOT SCALE : 1 IN:40 FT

Standard Detail Drawing List

08A05-19B	INLET COVERS TYPE B, B-A, C, MS, MS-A, & WM
08A05-19C	INLET COVERS TYPE F, HM, HM-S, S, T, V, HM-GJ, & HM-GJ-S
08A05-19D	INLET COVER TYPE BW, MANHOLE COVERS, TYPE K, J, J-S, L & M
08B09-02	MANHOLES 3-FT, 4-FT, 5-FT, 6-FT, 7-FT AND 8-FT DIAMETER
08C07-02	INLETS 2X2-FT, 2X2.5-FT, 2X3-FT AND 2.5X3-FT
08D01-20A	CONCRETE CURB & GUTTER
08D01-20B	CONCRETE CURB, TIES AND CURB AND GUTTER APPLICATIONS
08D04-05	CONCRETE SURFACE DRAINS & ASPHALTIC FLUMES
08E08-03	TYPICAL INSTALLATIONS OF EROSION BALES / TEMPORARY DITCH CHECKS
08E09-06	SILT FENCE
08E10-02	INLET PROTECTION TYPE A, B, C AND D
08E14-01	TRACKING PAD
08E15-01	CULVERT PIPE CHECK
08F01-11	APRON ENDWALLS FOR CULVERT PIPE
08F02-01	APRON ENDWALLS FOR PIPE ARCH AND ELLIPTICAL PIPE
08F04-07	JOINT TIES FOR CONCRETE PIPE AND CONCRETE COLLAR DETAIL
08F07-05	STEEL APRON ENDWALLS FOR CULVERT PIPE AND PIPE ARCH SLOPED SIDE DRAINS
09A01-13A	AT-GRADE SIDE ROAD INTERSECTION, TYPES "B1", "B2", "C" AND D AND TEE INTERSECTION BYPASS LANE
15A03-02A	FLEXIBLE MARKER POST FOR CULVERT END
15A03-02B	FLEXIBLE MARKER POST FOR CULVERT END
15C02-07A	BARRICADES AND SIGNS FOR MAINLINE CLOSURES
15C02-07B	BARRICADES AND SIGNS FOR VARIOUS CLOSURES
15C03-05	BARRICADES AND SIGNS FOR SIDEROAD CLOSURES
15C04-05	TRAFFIC CONTROL, ADVANCE WARNING SIGNS 45 M.P.H. OR GREATER TWO-WAY UNDIVIDED ROAD OPEN TO TRAFFIC
15C05-05	TRAFFIC CONTROL, ADVANCE WARNING SIGNS 40 M.P.H. OR LESS
15C08-19A	LONGITUDINAL MARKING (MAINLINE)
15C11-07A	CHANNELIZING DEVICES FLEXIBLE TUBULAR MARKER POST
15C11-07B	CHANNELIZING DEVICES DRUMS, CONES, BARRICADES AND VERTICAL PANELS
15C35-03A	PAVEMENT MARKING (INTERSECTIONS)
15D38-02A	TEMPORARY TRAFFIC CONTROL SIGN MOUNTING
15D38-02B	ATTACHMENT OF SIGNS TO POSTS

6

6

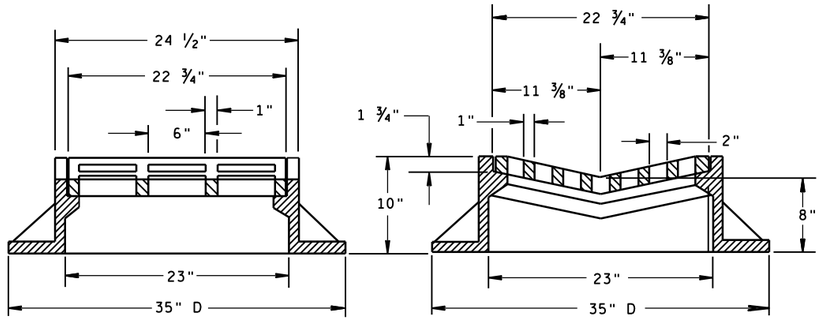

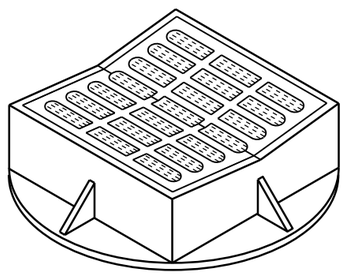

TYPE "B"

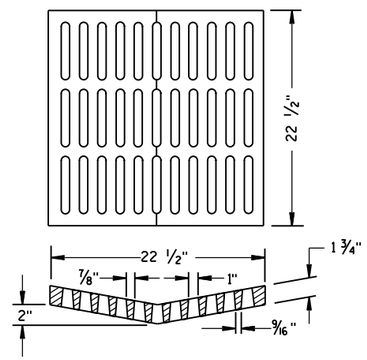

ALTERNATIVE GRATE FOR TYPE "B" COVER

USE WHERE PEDESTRIAN OR BICYCLE TRAFFIC IS POSSIBLE.

NOTED AS TYPE B-A ON THE DRAINAGE TABLE

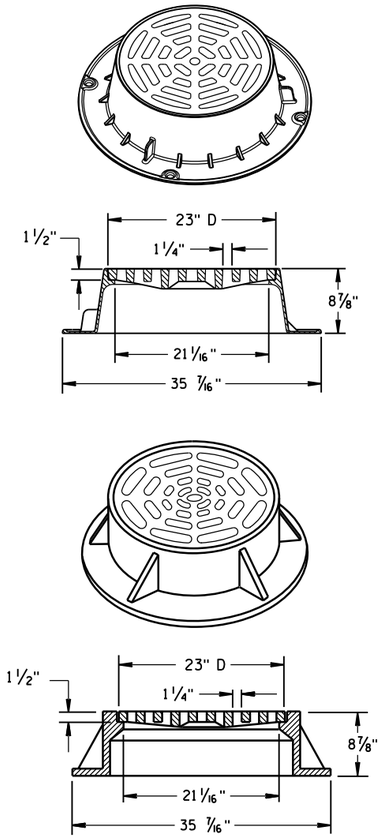

TYPE "C"

NOTE: EITHER CASTING IS ACCEPTABLE

GENERAL NOTES

DETAILS OF CONSTRUCTION, MATERIALS AND WORKMANSHIP NOT SHOWN ON THIS DRAWING SHALL CONFORM TO THE PERTINENT REQUIREMENTS OF THE STANDARD SPECIFICATIONS AND THE APPLICABLE SPECIAL PROVISIONS.

DETAIL DRAWINGS FOR PROPOSED ALTERNATE DESIGNS FOR CATCH BASIN, MANHOLE AND INLET COVERS SHALL BE SUBMITTED TO THE ENGINEER FOR APPROVAL PROVIDING THAT SUCH ALTERNATE DESIGNS MAKE PROVISION FOR EQUIVALENT CAPACITY AND STRENGTH.

ROUND FRAMES AND COVERS SHALL HAVE CONTINUOUSLY MACHINED BEARING SURFACES TO PREVENT ROCKING AND RATTLING.

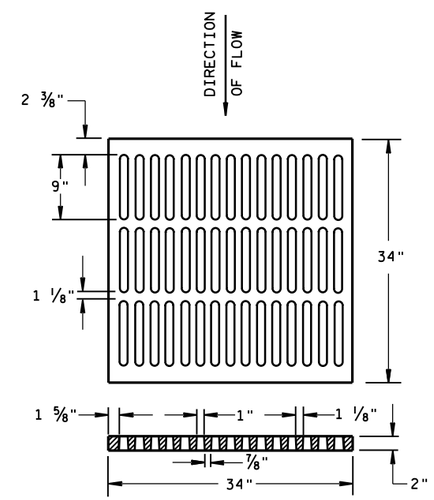

ALTERNATIVE TYPE "MS"

USE WHERE PEDESTRIAN OR BICYCLE TRAFFIC IS PERMITTED

NOTED AS TYPE MS-A ON THE DRAINAGE TABLE

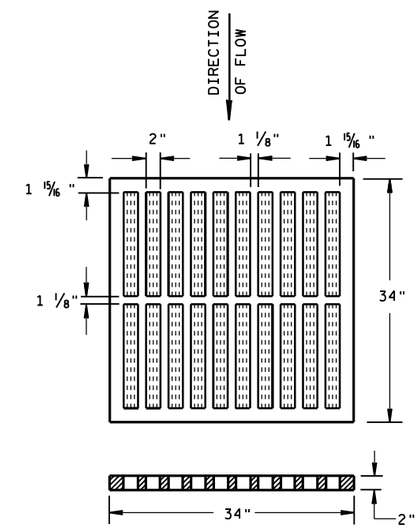

TYPE "MS"

USE ON FREEWAYS AND EXPRESSWAYS

NOTED AS TYPE MS ON DRAINAGE TABLE

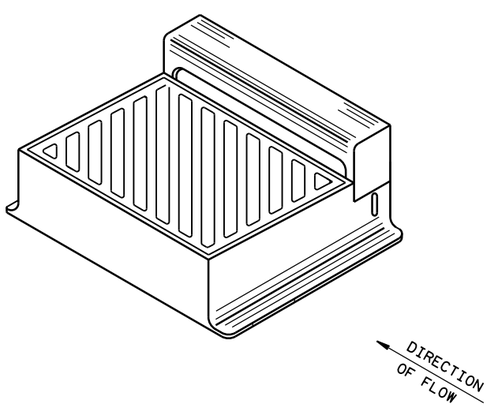

DIAGONAL SLOTS, SHALL BE ORIENTED TO THE DIRECTION OF FLOW AS ILLUSTRATED. GRATES ARE MANUFACTURED TO BE REVERSIBLE.

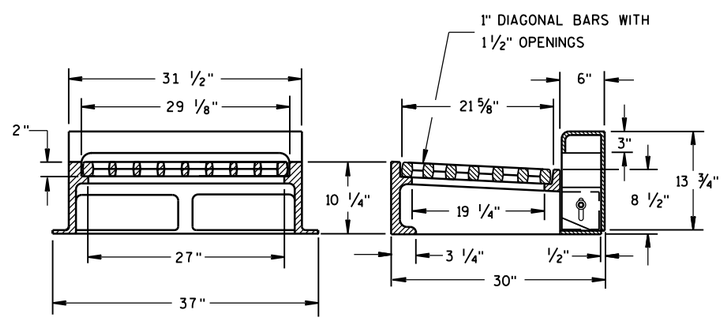

NOTE: CURB BOX HEIGHT ADJUSTABLE 6" TO 9"

TYPE "WM"

6

6

S.D.D. 8 A 5-19b

S.D.D. 8 A 5-19b

INLET COVERS
TYPE B, B-A, C,
MS, MS-A, & WM

STATE OF WISCONSIN
DEPARTMENT OF TRANSPORTATION

APPROVED

11/27/2013 — DATE

/S/ Jerry H. Zogg — ROADWAY STANDARDS DEVELOPMENT ENGINEER

FHWA

GENERAL NOTES

DETAILS OF CONSTRUCTION, MATERIALS AND WORKMANSHIP NOT SHOWN ON THIS DRAWING SHALL CONFORM TO THE PERTINENT REQUIREMENTS OF THE STANDARD SPECIFICATIONS AND THE APPLICABLE SPECIAL PROVISIONS.

DETAIL DRAWINGS FOR PROPOSED ALTERNATE DESIGNS FOR INLET COVERS SHALL BE SUBMITTED TO THE ENGINEER FOR APPROVAL PROVIDING THAT SUCH ALTERNATE DESIGNS MAKE PROVISION FOR EQUIVALENT CAPACITY AND STRENGTH.

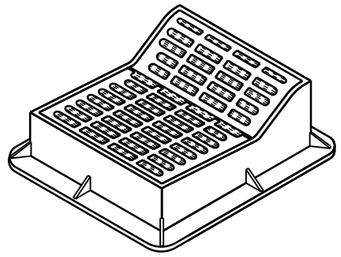

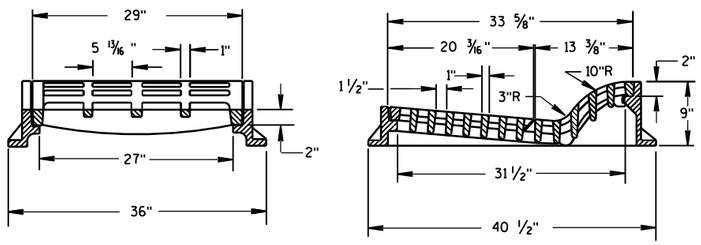

TYPE "F"

USE WITH TYPES A & D CONCRETE CURB & GUTTER, 36 INCH.

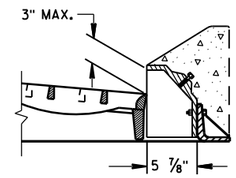

ALTERNATIVE CURB BOX FOR TYPE "HM" COVER

USE WITH TYPES G & J CONCRETE CURB & GUTTER, 30 INCH
NOTED AS TYPE HM-GJ ON DRAINAGE TABLE

NOTE:
SPECIAL GRATE FOR THE
TYPE "H" COVER MAY ALSO BE
USED FOR THE TYPE "HM-GJ" COVER
NOTED AS TYPE HM-GJ-S ON DRAINAGE TABLE

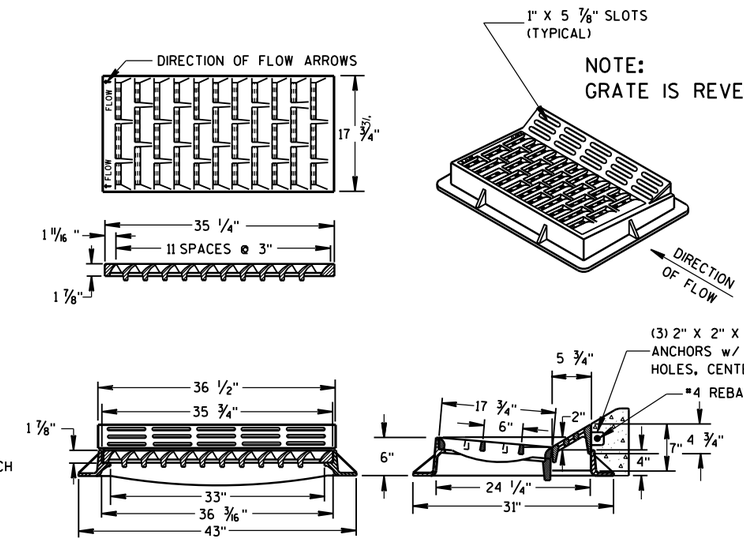

NOTE:
GRATE IS REVERSIBLE.

TYPE "HM"

USE WITH TYPES A & D CONCRETE CURB & GUTTER, 36 INCH.

NOTE:
SPECIAL GRATE FOR THE
TYPE "H" COVER MAY ALSO BE
USED FOR THE TYPE "HM" COVER
NOTED AS TYPE HM-S ON DRAINAGE TABLE

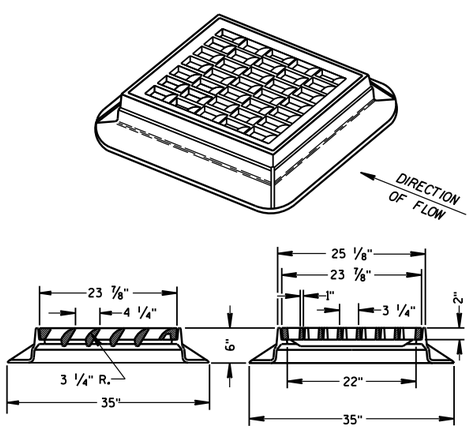

TYPE "S"

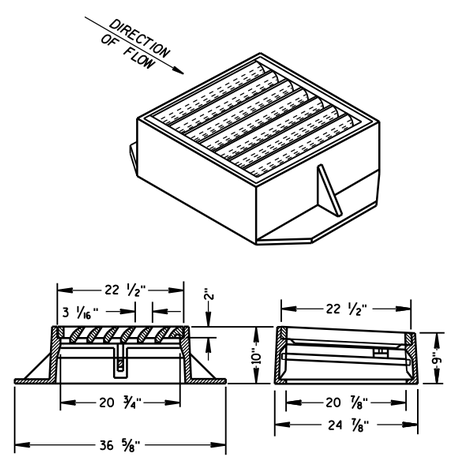

TYPE "V"

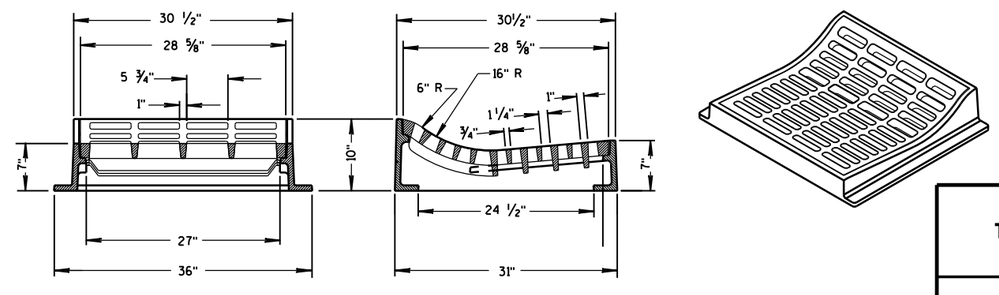

TYPE "T"

USE WITH TYPES R & T CONCRETE CURB & GUTTER, 36 INCH.

INLET COVERS
TYPE F, HM, HM-S, S, T, V, HM-GJ, & HM-GJ-S

STATE OF WISCONSIN
DEPARTMENT OF TRANSPORTATION

APPROVED
11/27/2013 — DATE
/S/ Jerry H. Zogg — ROADWAY STANDARDS DEVELOPMENT ENGINEER
FHWA

6

S.D.D. 8 A 5-19c

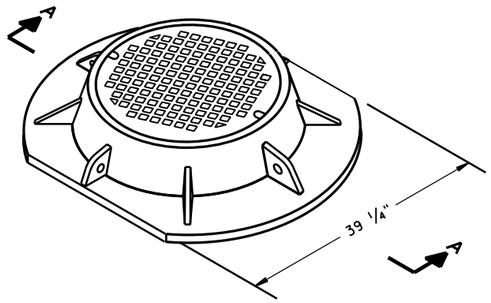

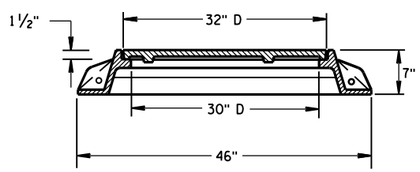

SECTION A-A
TYPE "K"

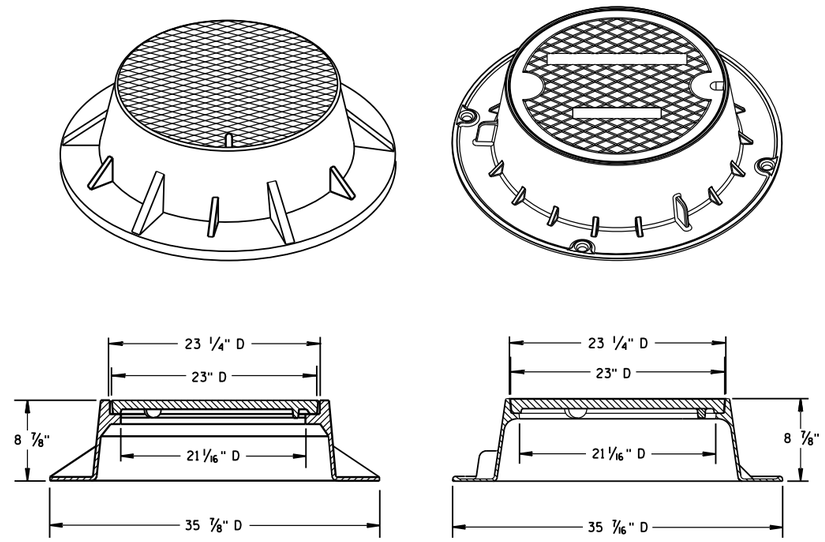

TYPE "J"
NOTE: EITHER CASTING IS ACCEPTABLE

GENERAL NOTES

DETAILS OF CONSTRUCTION, MATERIALS AND WORKMANSHIP NOT SHOWN ON THIS DRAWING SHALL CONFORM TO THE PERTINENT REQUIREMENTS OF THE STANDARD SPECIFICATIONS AND THE APPLICABLE SPECIAL PROVISIONS.

DETAIL DRAWINGS FOR PROPOSED ALTERNATE DESIGNS FOR MANHOLE COVERS SHALL BE SUBMITTED TO THE ENGINEER FOR APPROVAL PROVIDING THAT SUCH ALTERNATE DESIGNS MAKE PROVISION FOR EQUIVALENT CAPACITY AND STRENGTH.

ROUND FRAMES AND COVERS SHALL HAVE CONTINUOUSLY MACHINED BEARING SURFACES TO PREVENT ROCKING AND RATTLING.

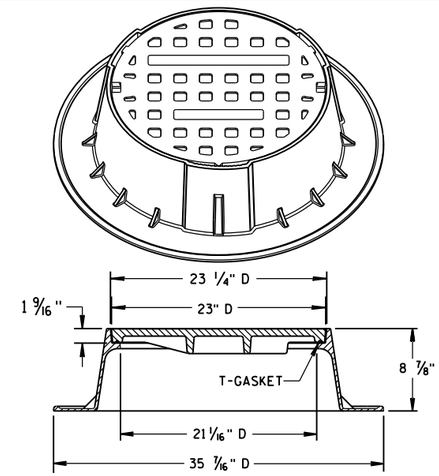

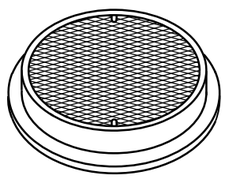

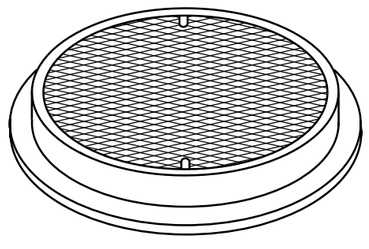

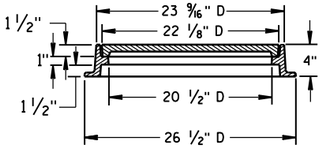

TYPE "L"

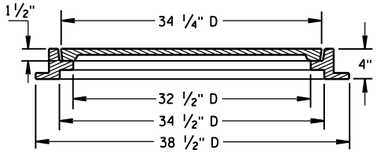

TYPE "M"

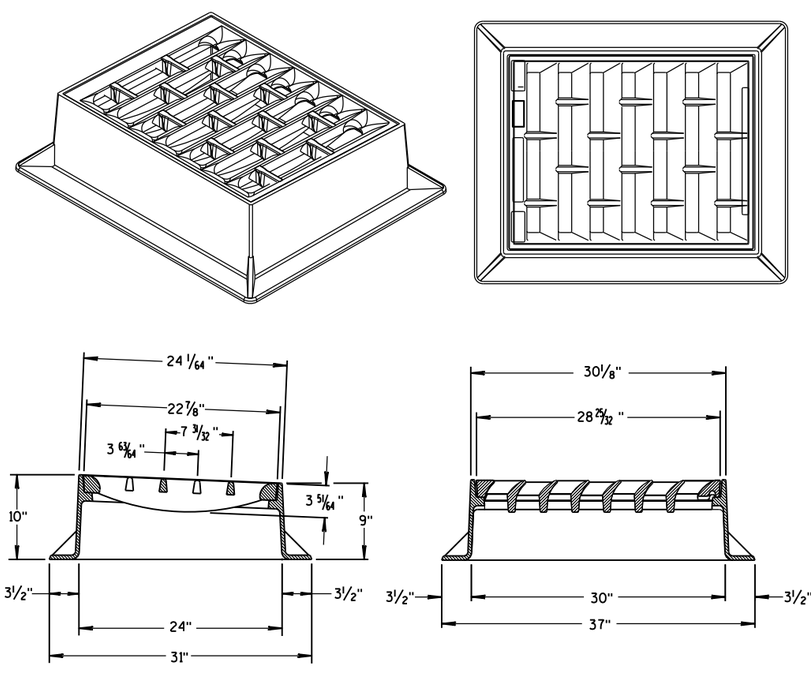

INLET COVER TYPE "BW"

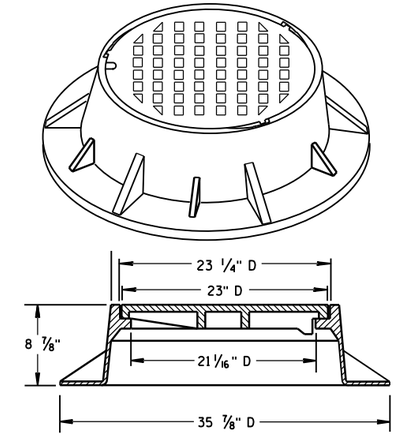

TYPE "J" SPECIAL
TYPE "B" NON-ROCKING SELF-SEAL LID
(NOTED AS TYPE J-S ON THE DRAINAGE TABLE)
NOTE: EITHER CASTING IS ACCEPTABLE

INLET COVER TYPE BW
MANHOLE COVERS, TYPE K, J, J-S, L & M

STATE OF WISCONSIN
DEPARTMENT OF TRANSPORTATION

APPROVED
11/27/2013 — DATE
/S/ Jerry H. Zogg — ROADWAY STANDARDS DEVELOPMENT ENGINEER
FHWA

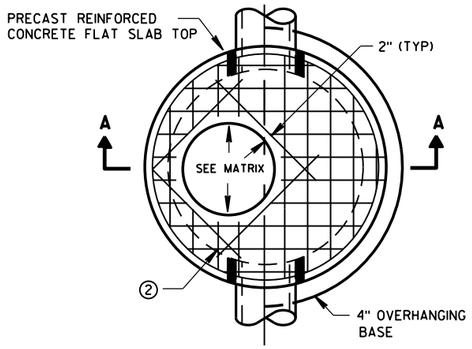

PLAN VIEW CIRCULAR OPENING

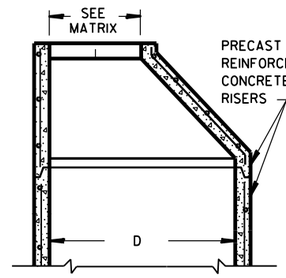

OPTIONAL PRECAST REINFORCED CONCRETE ECCENTRIC TOP

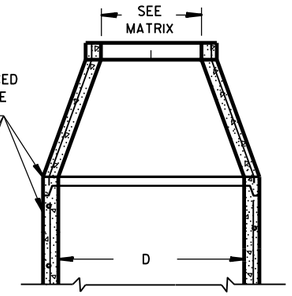

OPTIONAL PRECAST REINFORCED CONCRETE CONCENTRIC TOP

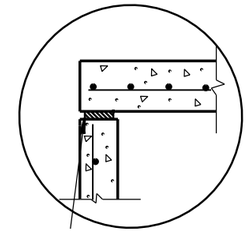

TOP WITH PLAIN END JOINT

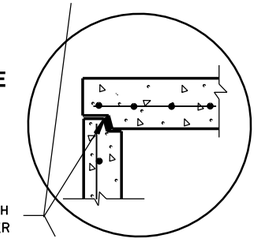

JOINTS TO BE SEALED WITH A BUTYL RUBBER SEAL PER SEALANT MANUFACTURERS RECOMMENDATIONS CONFORMING TO ASTM C990 (TYP)

TOP WITH TONGUE AND GROOVE JOINT

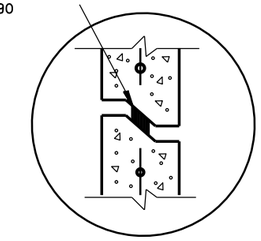

RISER WITH TONGUE AND GROOVE JOINT

DETAIL "B"

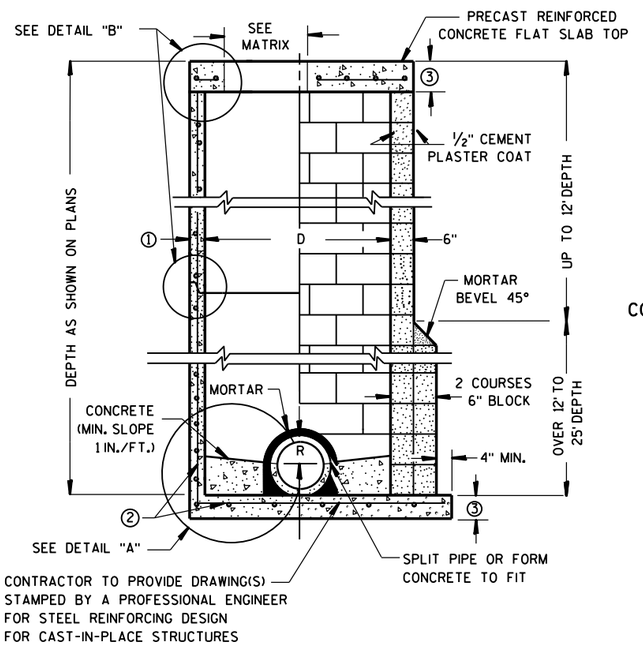

PRECAST REINFORCED CONCRETE WITH MONOLITHIC BASE

CONCRETE BLOCK WITH CAST-IN-PLACE OR PRECAST REINFORCED CONCRETE BASE ②

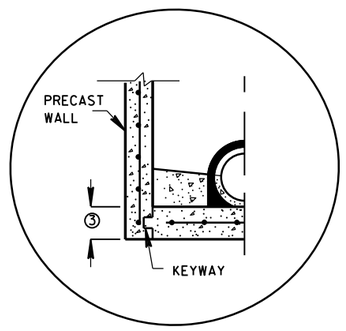

PRECAST REINFORCED CONCRETE WITH INTEGRAL BASE OPTION

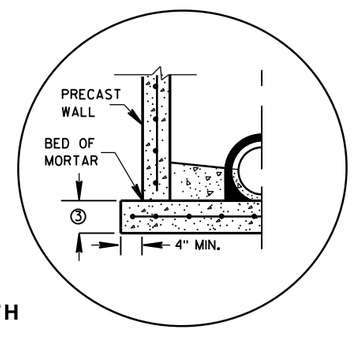

SEPARATE PRECAST REINFORCED CONCRETE BASE OPTION

DETAIL "A"

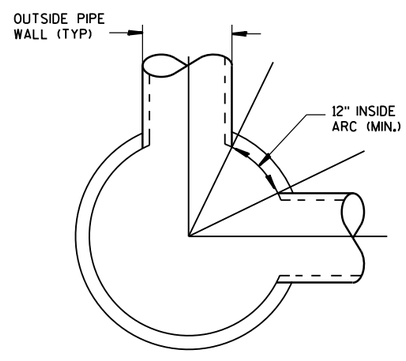

DETAIL "C"

GENERAL NOTES

DETAILS OF CONSTRUCTION, MATERIALS AND WORKMANSHIP NOT SHOWN ON THIS DRAWING SHALL CONFORM TO THE PERTINENT REQUIREMENTS OF THE STANDARD SPECIFICATIONS AND THE APPLICABLE SPECIAL PROVISIONS.

UNLESS OTHERWISE AUTHORIZED IN WRITING BY THE ENGINEER, THE CONTRACTOR SHALL NOT ORDER AND DELIVER PRECAST MANHOLE UNITS REQUIRED FOR THE PROJECT UNTIL A LIST OF SIZES IS FURNISHED BY THE ENGINEER.

DETAILED DRAWINGS FOR PROPOSED ALTERNATE DESIGNS FOR UNDERGROUND DRAINAGE STRUCTURES SHALL BE SUBMITTED TO THE ENGINEER FOR APPROVAL PROVIDING THAT SUCH ALTERNATE DESIGNS MAKE PROVISION FOR EQUIVALENT CAPACITY AND STRENGTH.

ALL DRAINAGE STRUCTURES ARE DESIGNATED ON THE PLANS AS "MANHOLES 3X3-L", "CATCH BASINS 4-B", "INLETS 2X3-H", ETC. THE FIRST NUMBERS DESIGNATE THE SIZE OF THE STRUCTURE, AND THE FOLLOWING LETTER DESIGNATES THE TYPE OF COVER TO BE USED TO COMPRISE THE COMPLETE UNIT.

BASES SHALL BE PLACED ON A BED OF MATERIAL AT LEAST 6 INCHES IN DEPTH, WHICH MEETS THE REQUIREMENTS OF FOUNDATION BACKFILL. THIS BEDDING SHALL BE COMPACTED AND PROVIDE UNIFORM SUPPORT FOR THE ENTIRE AREA OF THE BASE.

PRECAST REINFORCED CONE TOPS (ECCENTRIC OR CONCENTRIC) OR PRECAST REINFORCED FLAT SLAB TOPS MAY BE USED ON CONCRETE BLOCK STRUCTURES.

ECCENTRIC CONE TOPS MAY BE USED ON ALL STRUCTURES, AND CONCENTRIC CONE TOPS SHALL BE USED ONLY ON STRUCTURES 5 FEET OR LESS IN DEPTH, UNLESS OTHERWISE DIRECTED BY THE ENGINEER.

STEPS MEETING AASHTO M199 AND THE FOLLOWING REQUIREMENTS SHALL BE INSTALLED IN ALL STRUCTURES OVER 5 FEET IN DEPTH: 16 INCH C-C MAXIMUM SPACING; PROJECT A MINIMUM CLEAR DISTANCE OF 4 INCHES FROM THE WALL AT THE POINT OF EMBEDMENT; MINIMUM LENGTH OF 10 INCHES; MINIMUM WALL EMBEDMENT OF 3 INCHES. FERROUS METAL STEPS NOT PAINTED OR TREATED TO RESIST CORROSION SHALL HAVE A MINIMUM CROSS SECTIONAL DIMENSION OF 1 INCH.

STEPS OF APPROVED POLYPROPYLENE PLASTIC COATED REINFORCEMENT BAR ARE ACCEPTABLE. REINFORCING BAR MUST BE A MINIMUM OF ½" AND MEET THE REQUIREMENTS OF ASTM A615.

CERTIFICATION SHALL BE PROVIDED THAT INSTALLED STEPS WHEN TESTED IN ACCORDANCE WITH SECTION 10 OF AASHTO T280 CAN WITHSTAND A VERTICAL LOAD OF 800 LBS. AND A HORIZONTAL LOAD OF 400 LBS.

ALL BAR STEEL REINFORCEMENT SHALL BE EMBEDDED 2 INCHES CLEAR UNLESS OTHERWISE SHOWN OR NOTED.

CONCRETE BLOCK WILL NOT BE PERMITED FOR STRUCTURES GREATER THAN 4 FEET IN DIAMETER.

PRECAST REINFORCED RISERS SHALL HAVE A TONGUE AND GROOVE JOINT WITH TONGUE UP OR DOWN.

ALL PRECAST MANHOLE UNITS SHALL CONFORM TO THE PERTINENT REQUIREMENTS OF AASHTO DESIGNATION M 199.

4" OVERHANGING BASES ARE REQUIRED FOR ALL CONCRETE BLOCK INSTALLATIONS. 4" OVERHANG IS REQUIRED WHEN SEPARATE PRECAST BASE IS PROVIDED. OVERHANG IS NOT REQUIRED ON PRECAST STRUCTURES WITH AN INTEGRAL OR MONOLITHIC BASE.

FOR ADDITIONAL CONFIGURATIONS, MAINTAIN A MINIMUM OF 12 INCHES AS MEASURED FROM THE INSIDE OF THE STRUCTURE WALL BETWEEN THE OUTSIDE PIPE WALLS OF ADJACENT PIPES. SEE DETAIL "C".

① MINIMUM WALL THICKNESS SHALL BE 4 INCHES FOR 3-FT, 5 INCHES FOR 4-FT, 6 INCHES FOR 5-FT, 7 INCHES FOR 6-FT, 8 INCHES FOR 7-FT AND 9 INCHES FOR 8-FT DIAMETER PRECAST MANHOLES.

② FOR PRECAST MANHOLES PROVIDE REINFORCING STEEL IN ACCORDANCE TO AASHTO M199.

③ PRECAST FLAT SLAB TOPS AND BASES WITH A DIAMETER OF 48" AND LESS SHALL HAVE A MINIMUM THICKNESS OF 6". PRECAST FLAT SLAB TOPS AND BASES WITH A DIAMETER LARGER THAN 48" SHALL HAVE A MINIMUM THICKNESS OF 8".

MANHOLE COVER OPENING MATRIX

MANHOLE COVER TYPE	C	ALL J'S	K	L	M
OPENING SIZE (FT)					
2 DIA.	X	X		X	
3 DIA.			X		X

PIPE MATRIX

MANHOLE SIZE	MAXIMUM INSIDE PIPE DIAMETER FOR TWO PIPES	
	180° SEPARATION (IN)	90° SEPARATION (IN)
3-FT	15	12
4-FT	24	18
5-FT	36	24
6-FT	42	36
7-FT	48	36
8-FT	60	42

MANHOLES 3-FT, 4-FT, 5-FT, 6-FT, 7-FT AND 8-FT DIAMETER

STATE OF WISCONSIN
DEPARTMENT OF TRANSPORTATION

APPROVED
Sept., 2016 — DATE
/S/ Rodney Taylor — ROADWAY STANDARDS DEVELOPMENT UNIT SUPERV
FHWA

MANHOLES 3-FT, 4-FT, 5-FT, 6-FT, 7-FT AND 8-FT DIAMETER

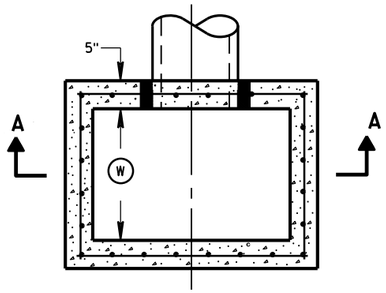

PLAN VIEW

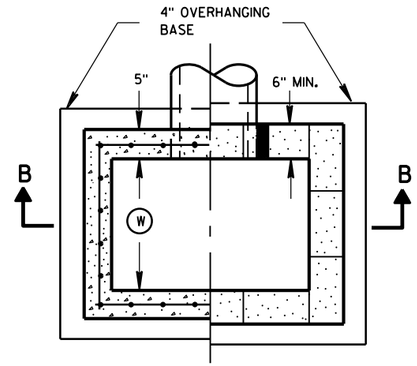

PLAN VIEW

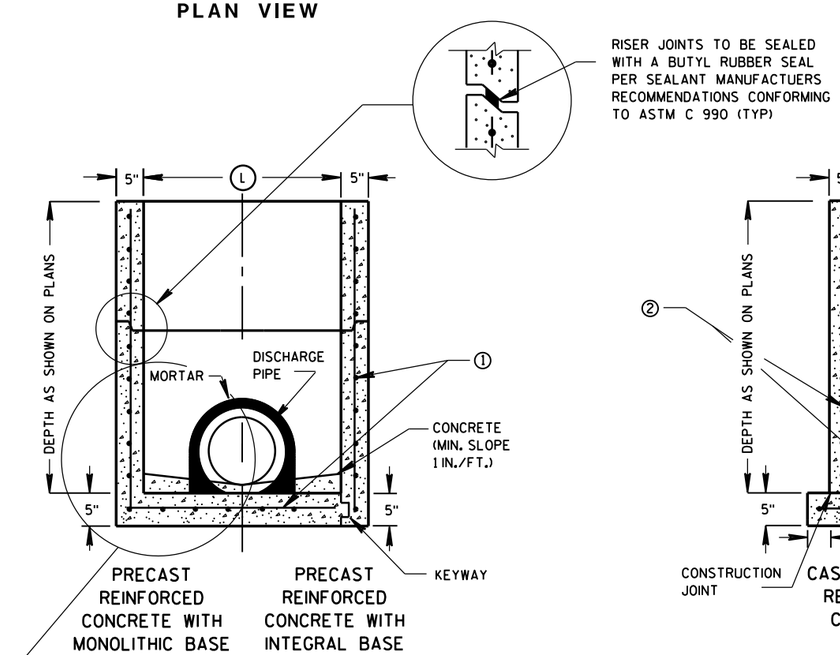

SECTION A-A

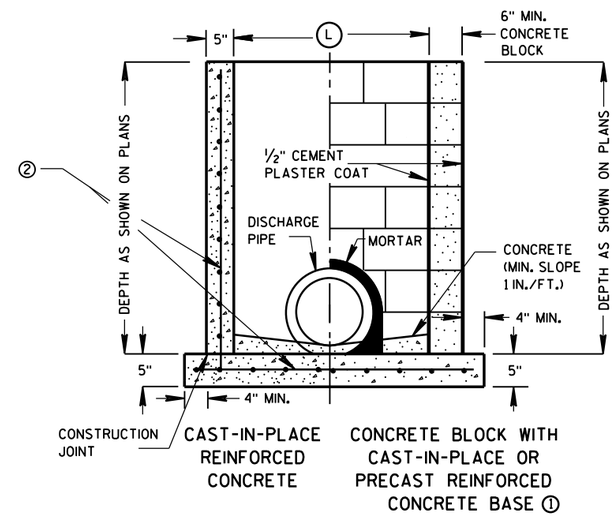

SECTION B-B

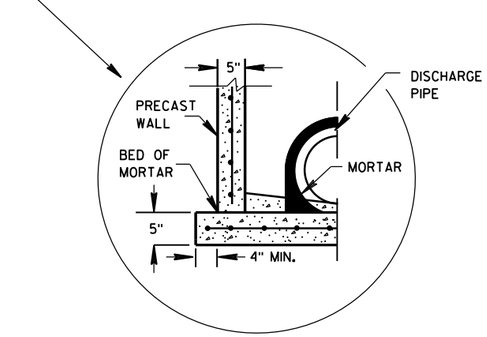

SEPARATE PRECAST REINFORCED CONCRETE BASE OPTION

GENERAL NOTES

DETAILS OF CONSTRUCTION, MATERIALS AND WORKMANSHIP NOT SHOWN ON THIS DRAWING SHALL CONFORM TO THE PERTINENT REQUIREMENTS OF THE STANDARD SPECIFICATIONS AND THE APPLICABLE SPECIAL PROVISIONS.

UNLESS OTHERWISE AUTHORIZED IN WRITING BY THE ENGINEER, THE CONTRACTOR SHALL NOT ORDER AND DELIVER PRECAST INLET UNITS REQUIRED FOR THE PROJECT UNTIL A LIST OF SIZES IS FURNISHED BY THE ENGINEER.

DETAILED DRAWINGS FOR PROPOSED ALTERNATE DESIGNS FOR UNDERGROUND DRAINAGE STRUCTURES SHALL BE SUBMITTED TO THE ENGINEER FOR APPROVAL PROVIDING THAT SUCH ALTERNATE DESIGNS MAKE PROVISION FOR EQUIVALENT CAPACITY AND STRENGTH.

ALL PRECAST INLET UNITS SHALL CONFORM TO THE PERTINENT REQUIREMENTS OF ASTM C 913.

ALL DRAINAGE STRUCTURES ARE DESIGNATED ON THE PLANS AS "MANHOLES 3X3-L", "CATCH BASINS 4-B", "INLETS 2X3-H", ETC. THE FIRST NUMBERS DESIGNATES THE SIZE OF THE STRUCTURE, AND THE FOLLOWING LETTER DESIGNATES THE TYPE OF COVER TO BE USED TO COMPRISE THE COMPLETE UNIT.

BASES SHALL BE PLACED ON A BED OF MATERIAL AT LEAST 6 INCHES IN DEPTH, WHICH MEETS THE REQUIREMENTS OF FOUNDATION BACKFILL. THIS BEDDING SHALL BE COMPACTED AND PROVIDE UNIFORM SUPPORT FOR THE ENTIRE AREA OF THE BASE.

ALL BAR STEEL REINFORCEMENT SHALL BE EMBEDDED 2 INCHES CLEAR UNLESS OTHERWISE SHOWN OR NOTED.

PRECAST REINFORCED RISERS SHALL HAVE A TONGUE AND GROOVE JOINT WITH TONGUE UP OR DOWN.

4" OVERHANGING BASES ARE REQUIRED FOR CAST-IN-PLACE REINFORCED CONCRETE AND CONCRETE BLOCK INSTALLATIONS.
4" OVERHANG IS REQUIRED WHEN SEPARATE PRECAST BASE IS PROVIDED.
OVERHANG IS NOT REQUIRED ON PRECAST STRUCTURES WITH AN INTEGRAL OR MONOLITHIC BASE.

MAXIMUM INSIDE PIPE DIAMETER DETERMINED BY 3 INCH CLEARANCE ON EACH SIDE OF THE OUTSIDE WALL OF THE PIPE. SEE DETAIL "A". ASSUMES PIPE ENTERS PERPENDICULAR TO THE STRUCTURE.

① FOR PRECAST INLETS PROVIDE REINFORCING STEEL IN ACCORDANCE TO ASTM C 913.

② CONTRACTOR TO PROVIDE DRAWING(S) STAMPED BY A PROFESSIONAL ENGINEER FOR STEEL REINFORCING DESIGN FOR CAST-IN-PLACE STRUCTURES.

INLET COVER MATRIX

INLET SIZE		INLET COVER TYPE	ALL A'S	ALL B'S	BW	F	ALL H'S	S	T	V	WM
	WIDTH Ⓦ (FT)	LENGTH Ⓛ (FT)									
2X2-FT	2	2	X	X				X		X	
2X2.5-FT	2	2.5			X			X	X	X	X
2X3-FT	2	3					X				
2.5X3-FT	2.5	3				X					

PIPE MATRIX

INLET SIZE	MAXIMUM INSIDE PIPE DIAMETER	
	WIDTH (IN)	LENGTH (IN)
2X2-FT	12	12
2X2.5-FT	12	18
2X3-FT	12	24
2.5X3-FT	18	24

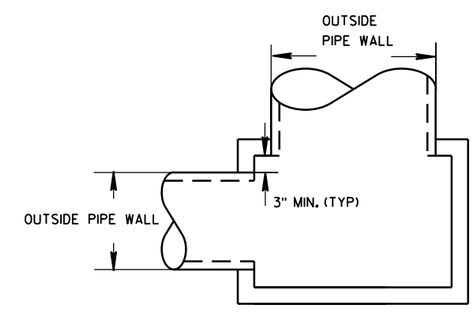

DETAIL "A"

INLETS 2X2-FT, 2X2.5-FT, 2X3-FT AND 2.5X3-FT

INLETS 2X2-FT, 2X2.5-FT, 2X3-FT AND 2.5X3-FT

STATE OF WISCONSIN
DEPARTMENT OF TRANSPORTATION

APPROVED
Sept., 2016 — DATE
/S/ Rodney Taylor
ROADWAY STANDARDS D IT
UNIT SUPERVIS
FHWA

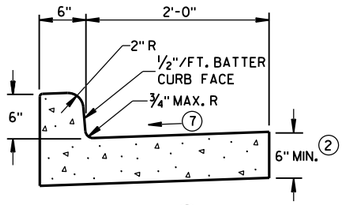

TYPES A[1] & D

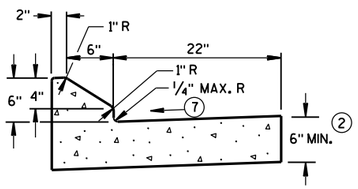

6" SLOPED CURB TYPES G[1] & J

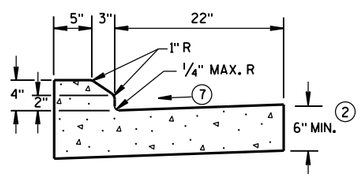

4" SLOPED CURB TYPES G[1] & J

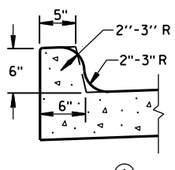

TYPES K[1] & L
(OPTIONAL CURB SHAPE)

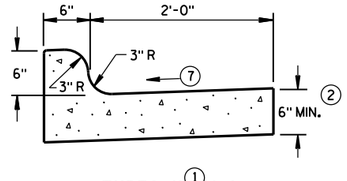

TYPES K[1] & L

CONCRETE CURB & GUTTER 30"

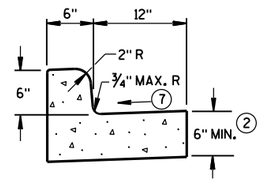

TYPES A[1] & D

CONCRETE CURB & GUTTER 18"

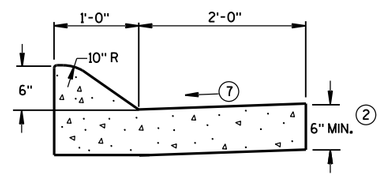

6" SLOPED CURB TYPES A[1] & D

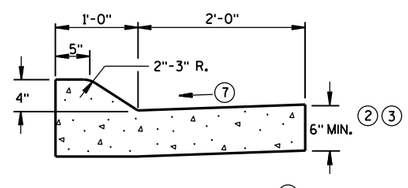

4" SLOPED CURB TYPES A[1] & D

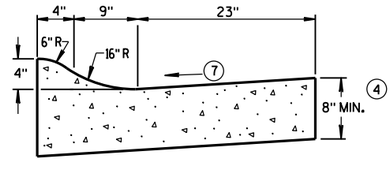

4" SLOPED CURB TYPES R[1] & T[5]

CONCRETE CURB & GUTTER 36"

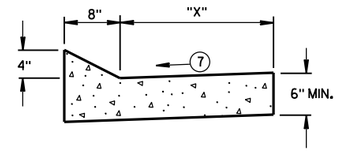

TYPES TBT & TBTT[1]

CONCRETE CURB & GUTTER

TBT & TBTT	"X"
30"	22"
36"	28"

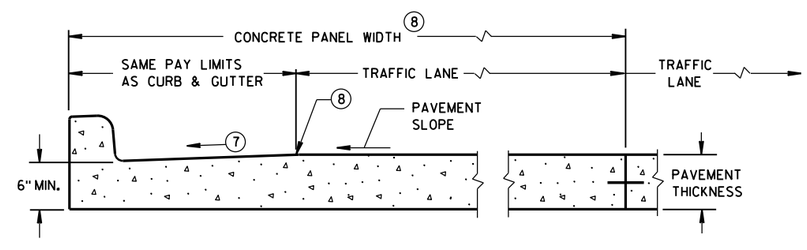

PARTIAL SECTION OF PAVEMENT*
WITH INTEGRAL CURB & GUTTER

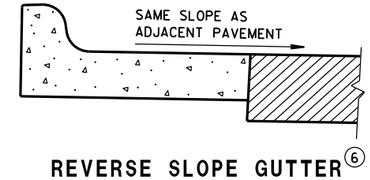

REVERSE SLOPE GUTTER[6]
(TYPICAL FOR ALL CURB & GUTTER TYPES)

GENERAL NOTES

DETAILS OF CONSTRUCTION, MATERIALS AND WORKMANSHIP NOT SHOWN ON THIS DRAWING SHALL CONFORM TO THE PERTINENT REQUIREMENTS OF THE CONTRACT.

PAVEMENT TIES AND TIE BARS SHALL BE EPOXY COATED IN CONFORMANCE WITH SUBSECTION 505.2.6.2 OF THE STANDARD SPECIFICATIONS.

INTEGRAL CURB & GUTTER SHALL CONFORM TO THE DETAILS SHOWN FOR CONCRETE CURB & GUTTER INCLUDING THE TRANSVERSE GUTTER SLOPE.

WHERE THE TRANSVERSE JOINTS IN THE PAVEMENT ARE REQUIRED TO BE SEALED, THE JOINTS IN THE INTEGRAL CURB AND GUTTER SHALL BE SEALED TO THE FACE OF CURB WITH THE SAME TYPE OF SEALANT. THE COST OF FURNISHING AND INSTALLING THIS SEALANT SHALL BE INCIDENTAL TO THE ITEM CONCRETE CURB AND GUTTER.

UNLESS OTHERWISE SHOWN ON THE TYPICAL CROSS SECTIONS, THE BASE AGGREGATE AND COMMON EXCAVATION LIMITS ARE 2'-0" BEHIND THE BACK OF CURBS.

1. TIE BARS ARE REQUIRED FOR CURB AND GUTTER TYPES A, G, K, R AND TBTT.
2. THE BOTTOM OF CURB AND GUTTER MAY BE CONSTRUCTED EITHER LEVEL OR PARALLEL TO THE SLOPE OF THE SUBGRADE OR BASE AGGREGATE PROVIDED A 6" MINIMUM GUTTER THICKNESS IS MAINTAINED.
3. USE 8" MINIMUM GUTTER THICKNESS WHEN USED WITH AN ADJACENT CONCRETE TRUCK APRON PLACED BEHIND BACK OF CURB.
4. THE BOTTOM OF CURB AND GUTTER MAY BE CONSTRUCTED EITHER LEVEL OR PARALLEL TO THE SLOPE OF THE SUBGRADE OR BASE AGGREGATE PROVIDED A 8" MINIMUM GUTTER THICKNESS IS MAINTAINED.
5. THE FACE OF CURB IS 6" FROM THE BACK OF CURB.
6. WHEN REVERSE SLOPE GUTTER IS REQUIRED, THE LOCATION(S) WILL BE SHOWN ELSEWHERE IN THE PLAN.
7. USE 4% GUTTER CROSS SLOPE UNLESS OTHERWISE NOTED IN THE PLANS.
8. INCLUDE LONGITUDINAL JOINT AND TIE BARS ALONG LANE EDGE WHEN CONCRETE PANEL WIDTH EXCEEDS THE MAXIMUM WIDTH PER TABLE BELOW. LONGITUDINAL JOINT(S) ARE NOT ALLOWED WITHIN TRAFFIC LANES AND BIKE LANES. LONGITUDINAL JOINT MAY BE SAWED.

PAVEMENT THICKNESS AND MAXIMUM CONCRETE PANEL WIDTH TABLE

PAVEMENT THICKNESS	MAXIMUM PANEL WIDTH
LESS THAN 10"	12'
10" & ABOVE	15'

* BIKE LANE IS NOT SHOWN.

CONCRETE CURB & GUTTER

STATE OF WISCONSIN
DEPARTMENT OF TRANSPORTATION

6

6

S.D.D. 8 D 1-20a

S.D.D. 8 D 1-20a

GENERAL NOTES

DETAILS OF CONSTRUCTION, MATERIALS AND WORKMANSHIP NOT SHOWN ON THIS DRAWING SHALL CONFORM TO THE PERTINENT REQUIREMENTS OF THE CONTRACT.

PAVEMENT TIES AND TIE BARS SHALL BE EPOXY COATED IN CONFORMANCE WITH SUBSECTION 505.2.6.2 OF THE STANDARD SPECIFICATIONS.

UNLESS OTHERWISE SHOWN ON THE TYPICAL CROSS SECTIONS, THE BASE AGGREGATE AND COMMON EXCAVATION LIMITS ARE 2'-0" BEHIND THE BACK OF CURBS.

(1) TIE BARS ARE REQUIRED FOR CURB AND GUTTER TYPES A, G, K, R AND TBTT.

(2) THE BOTTOM OF CURB AND GUTTER MAY BE CONSTRUCTED EITHER LEVEL OR PARALLEL TO THE SLOPE OF THE SUBGRADE OR BASE AGGREGATE PROVIDED A 6" MINIMUM GUTTER THICKNESS IS MAINTAINED.

(9) REFER TO SDD 8D18 AND SDD 8D19 FOR ADDITIONAL DRIVEWAY ENTRANCE CURB DETAILS.

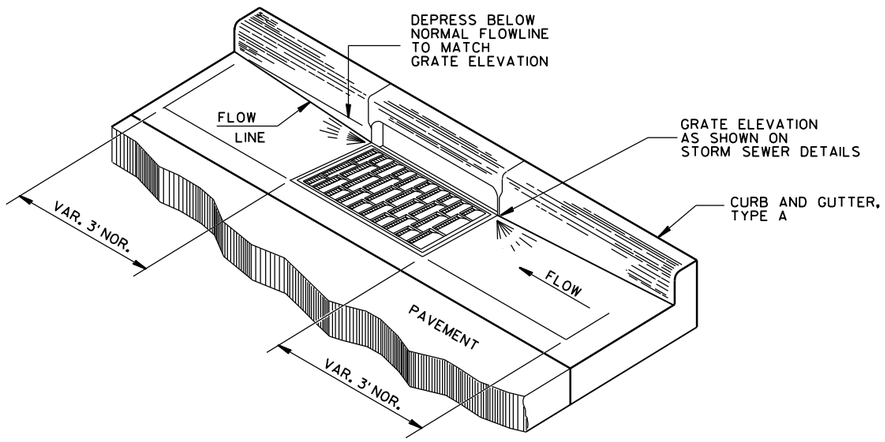

DETAIL OF CURB AND GUTTER AT INLETS

(TYPE H INLET COVER SHOWN)

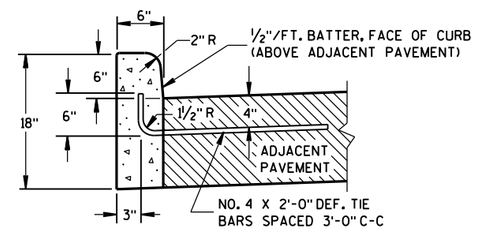

TYPES A(1) & D

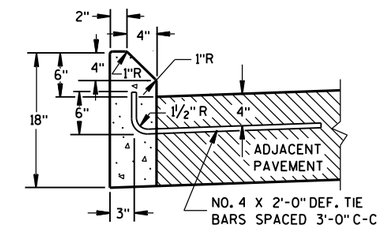

TYPES G(1) & J

CONCRETE CURB

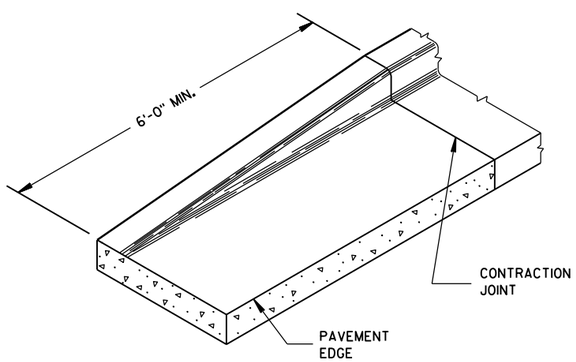

END SECTION CURB & GUTTER

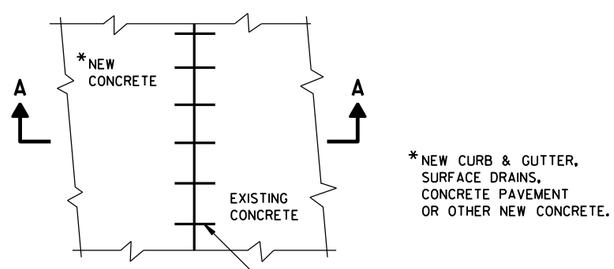

PLAN VIEW

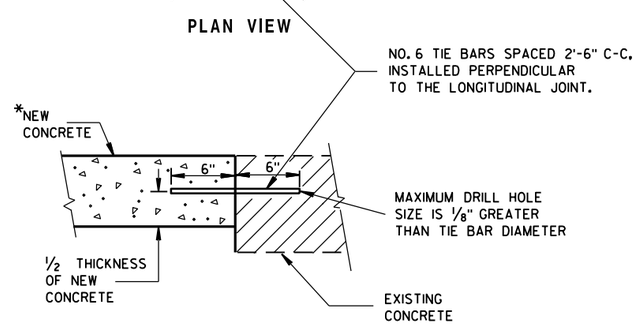

SECTION A-A

TIE BARS DRILLED INTO EXISTING PAVEMENT

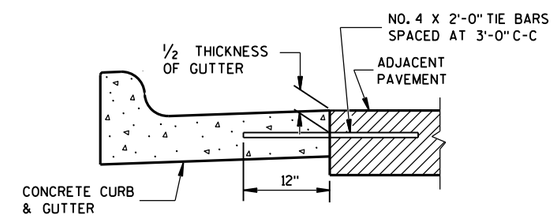

TYPICAL TIE BAR LOCATION (1)

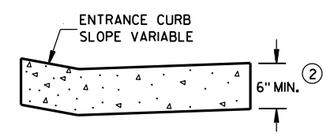

DRIVEWAY ENTRANCE CURB (9)

(WHEN DIRECTED BY THE ENGINEER)

CONCRETE CURB, TIES AND CURB AND GUTTER APPLICATIONS

STATE OF WISCONSIN
DEPARTMENT OF TRANSPORTATION

APPROVED
June, 2017 — DATE
/S/ Rodney Taylor — ROADWAY STANDARDS UNIT SUPERVISOR
ENT
FHWA

GENERAL NOTES

DETAILS OF CONSTRUCTION, MATERIALS AND WORKMANSHIP NOT SHOWN ON THIS DRAWING SHALL CONFORM TO PERTINENT REQUIREMENTS OF THE STANDARD SPECIFICATIONS AND APPLICABLE SPECIAL PROVISIONS.

WELDED STEEL WIRE FABRIC SHALL BE IN ACCORDANCE WITH AASHTO SPECIFICATION M55.

① JOINTS SHALL BE 1/8 TO 1/4 INCH WIDE BY 1 1/2 INCHES DEEP AND SPACED AT UNIFORM INTERVALS OF APPROXIMATELY 4 FEET.

② GEOTEXTILE FABRIC TYPE "R" SHALL UNDERLAY THE FULL LENGTH AND WIDTH OF THE CONCRETE SURFACE DRAIN AND RIPRAP.

③ CONCRETE SURFACE DRAIN WITHOUT CURB AND GUTTER MAY BE USED ON BACKSLOPES WHEN SPECIFIED

ASPHALTIC FLUME

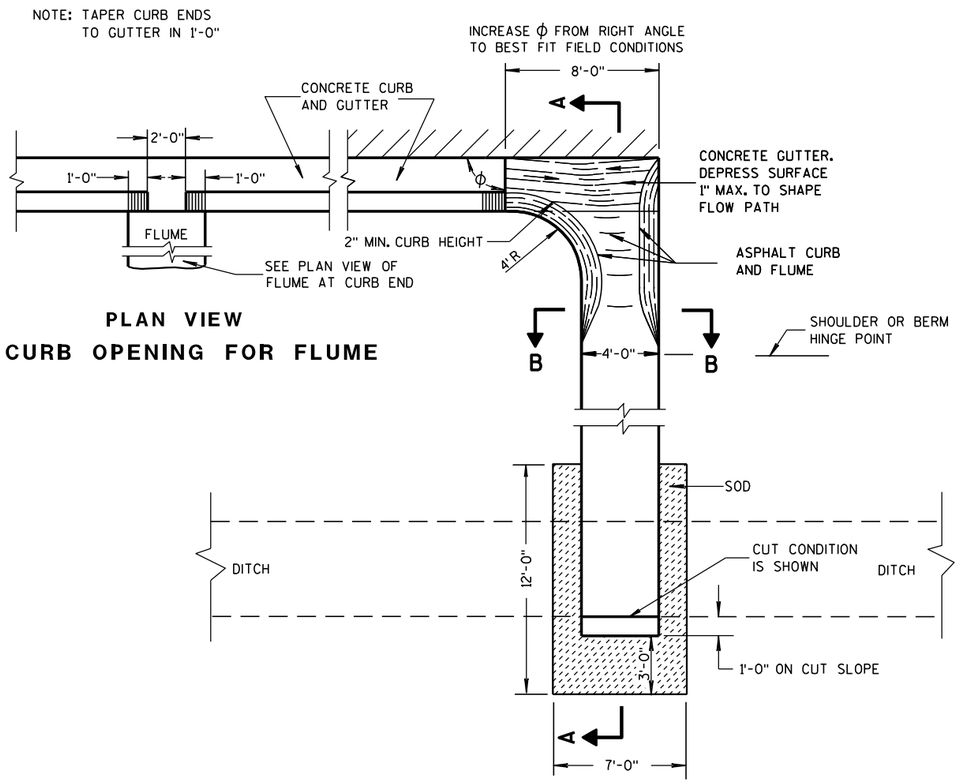

PLAN VIEW
CURB OPENING FOR FLUME

PLAN VIEW
FLUME AT CURB END

③ CONCRETE SURFACE DRAIN

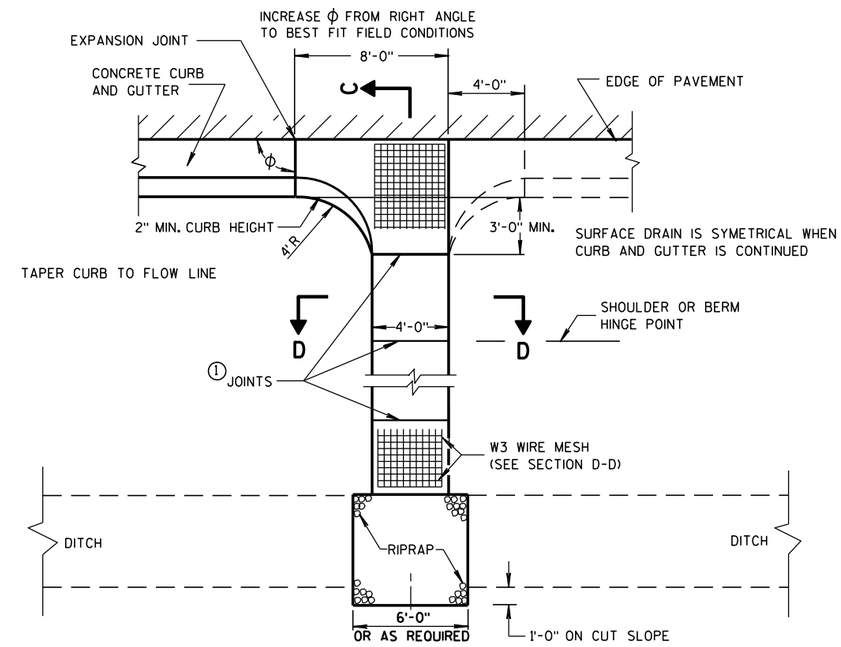

PLAN VIEW

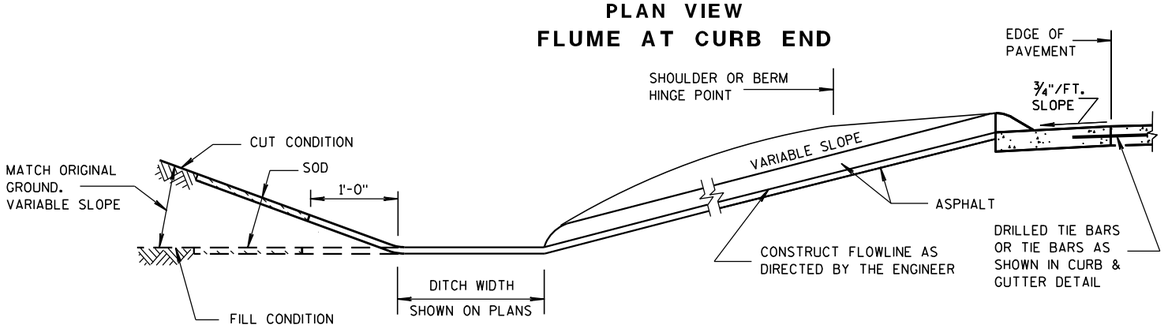

SECTION A-A

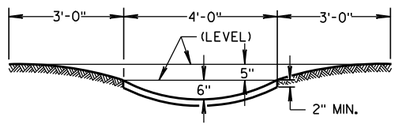

SECTION B-B

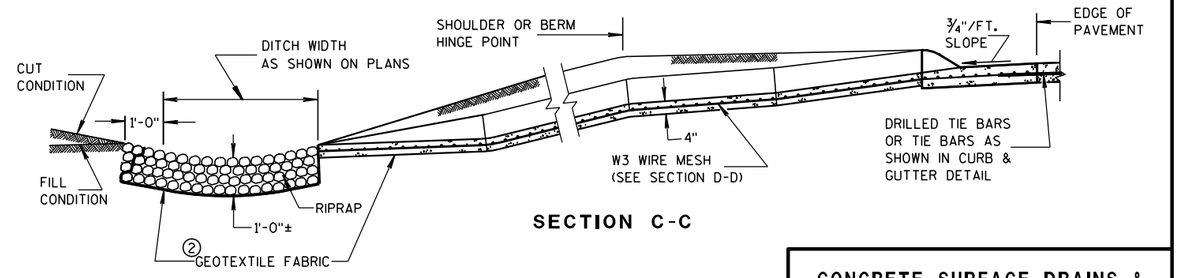

SECTION C-C

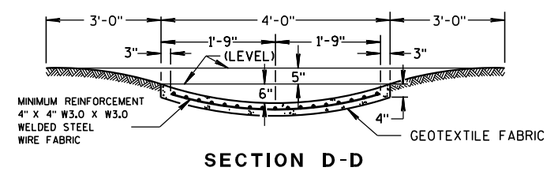

SECTION D-D

CONCRETE SURFACE DRAINS & ASPHALTIC FLUMES

STATE OF WISCONSIN
DEPARTMENT OF TRANSPORTATION

APPROVED
9-4-08 /S/ Jerry H. Zogg
DATE ROADWAY STANDARDS ENGINEER MENT
FHWA

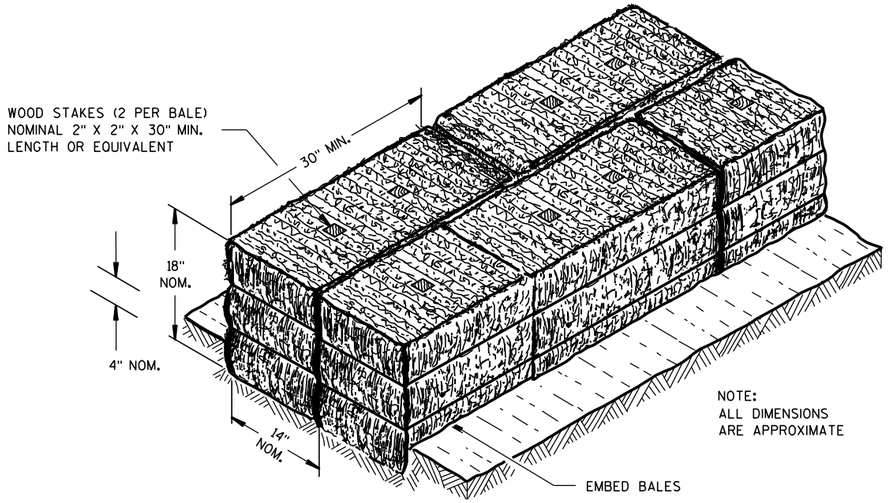

SECTION A-A

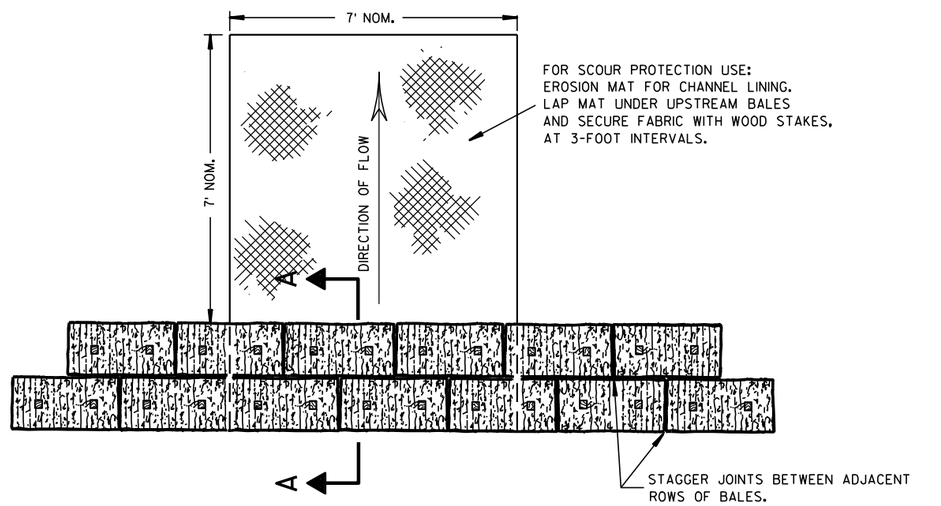

PLAN VIEW

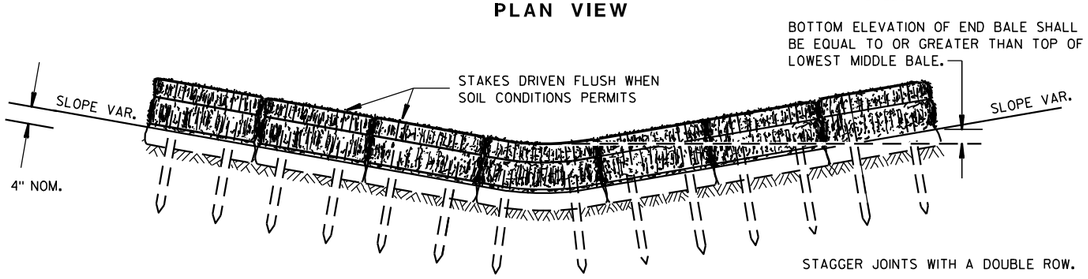

FRONT ELEVATION

TEMPORARY DITCH CHECK USING EROSION BALES ①

GENERAL NOTES

DETAILS OF CONSTRUCTION, MATERIALS AND WORKMANSHIP NOT SHOWN ON THIS DRAWING SHALL CONFORM TO THE PERTINENT REQUIREMENTS OF THE STANDARD SPECIFICATIONS AND THE APPLICABLE SPECIAL PROVISIONS.

① TEMPORARY DITCH CHECKS EITHER EROSION BALES OR MANUFACTURED SHALL BE PAID FOR UNDER THE BID ITEM OF TEMPORARY DITCH CHECK. THE DEPARTMENT WILL NOT PAY FOR TEMPORARY DITCH CHECKS CONSTRUCTED OF A SINGLE ROW OF EROSION BALES.

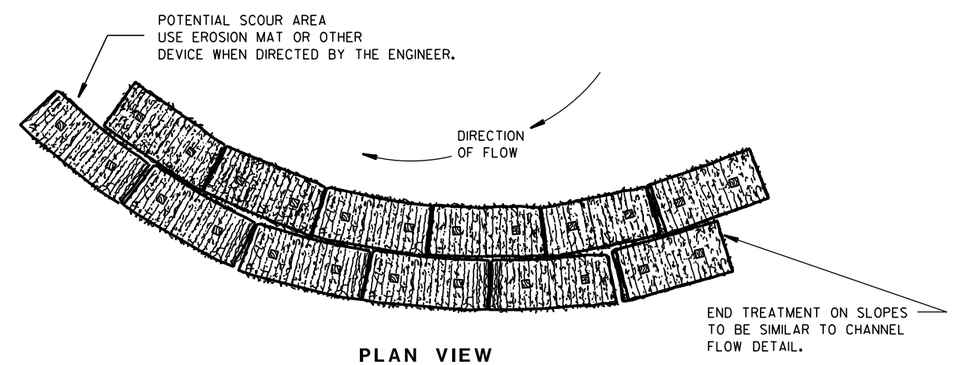

PLAN VIEW

WHEN ALTERING THE DIRECTION OF FLOW

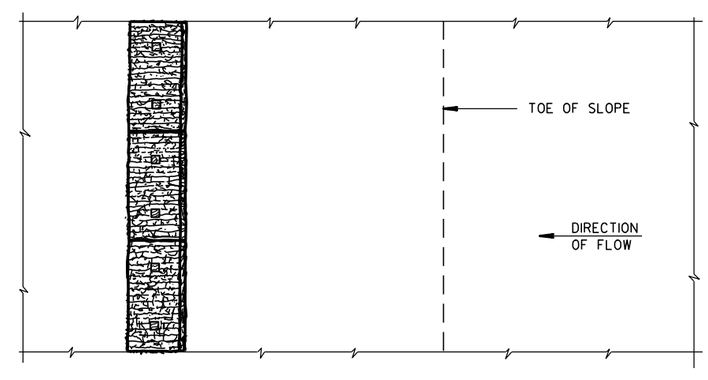

PLAN VIEW

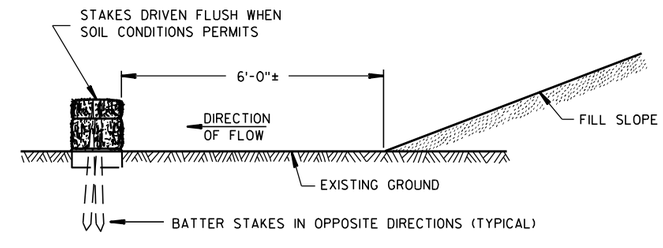

FRONT ELEVATION

WHEN EXISTING GROUND SLOPES AWAY FROM FILL SLOPE

EROSION BALES FOR SHEET FLOW

TYPICAL INSTALLATIONS OF EROSION BALES / TEMPORARY DITCH CHECKS

STATE OF WISCONSIN
DEPARTMENT OF TRANSPORTATION

APPROVED

6/04/02 — /S/ Beth Cann... — ...GINEER
DATE — CHIEF ROADWAY DEVELOP...

FHWA

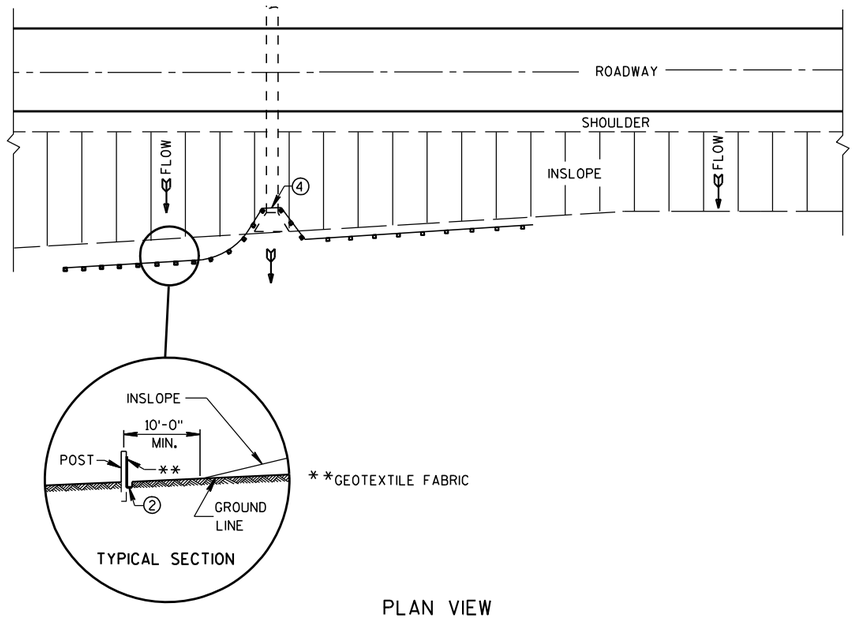

PLAN VIEW

TYPICAL APPLICATION OF SILT FENCE

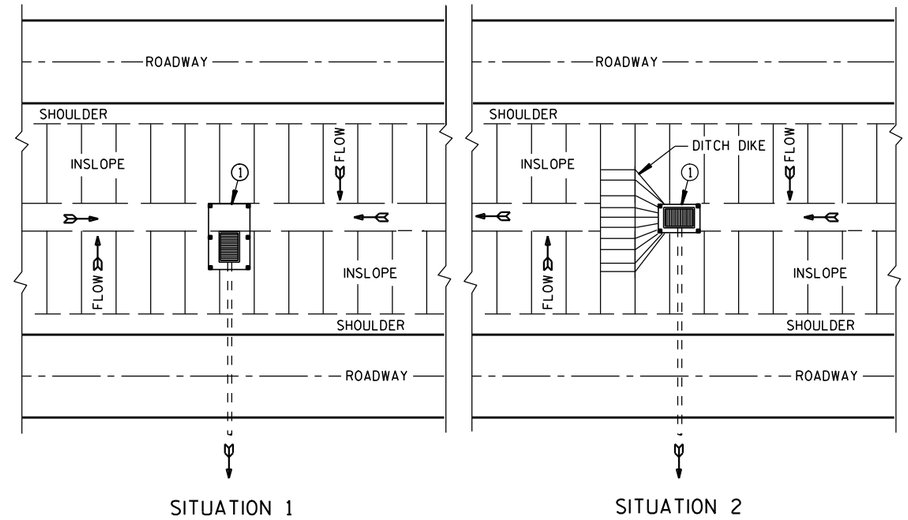

PLAN VIEW

SILT FENCE AT MEDIAN SURFACE DRAINS

GENERAL NOTES

DETAILS OF CONSTRUCTION NOT SHOWN ON THIS DRAWING SHALL CONFORM TO THE PERTINENT REQUIREMENTS OF THE STANDARD SPECIFICATIONS AND APPLICABLE SPECIAL PROVISIONS.

① HORIZONTAL BRACE REQUIRED WITH 2" X 4" WOODEN FRAME OR EQUIVALENT AT TOP OF POSTS.

② FOR MANUAL INSTALLATIONS THE TRENCH SHALL BE A MINIMUM OF 4" WIDE & 6" DEEP TO BURY AND ANCHOR THE GEOTEXTILE FABRIC. FOLD MATERIAL TO FIT TRENCH AND BACKFILL & COMPACT TRENCH WITH EXCAVATED SOIL.

③ WOOD POSTS SHALL BE A MINIMUM SIZE OF 1⅛" X 1⅛" OF OAK OR HICKORY.

④ SILT FENCE TO EXTEND ACROSS THE TOP OF THE PIPE.

⑤ CONSTRUCT SILT FENCE FROM A CONTINUOUS ROLL IF POSSIBLE BY CUTTING LENGTHS TO AVOID JOINTS. IF A JOINT IS NECESSARY USE ONE OF THE FOLLOWING TWO METHODS; A) OVERLAP THE END POSTS AND TWIST, OR ROTATE, AT LEAST 180 DEGREES. B) HOOK THE END OF EACH SILT FENCE LENGTH.

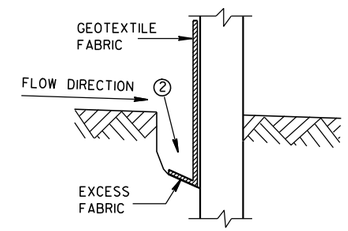

TRENCH DETAIL

NOTE: ADDITIONAL POST DEPTH OR TIE BACKS MAY BE REQUIRED IN UNSTABLE SOILS

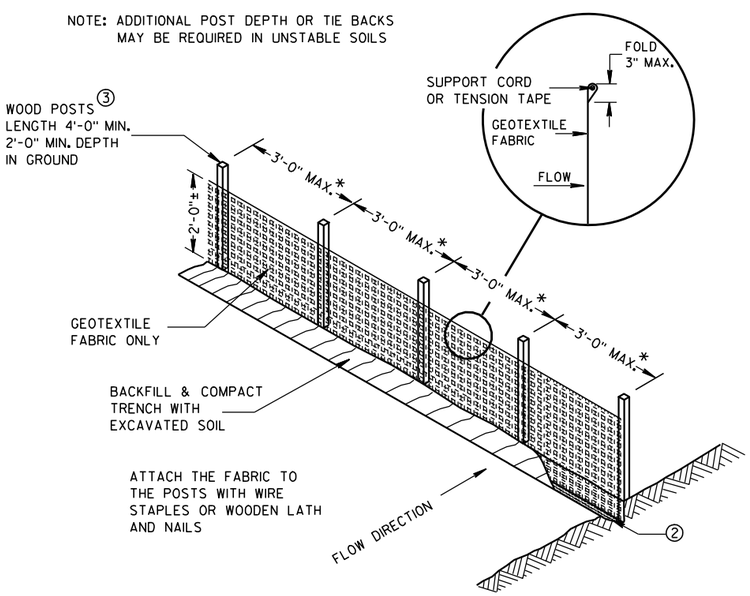

*NOTE: 8'-0" POST SPACING ALLOWED IF A WOVEN GEOTEXTILE FABRIC IS USED.

SILT FENCE

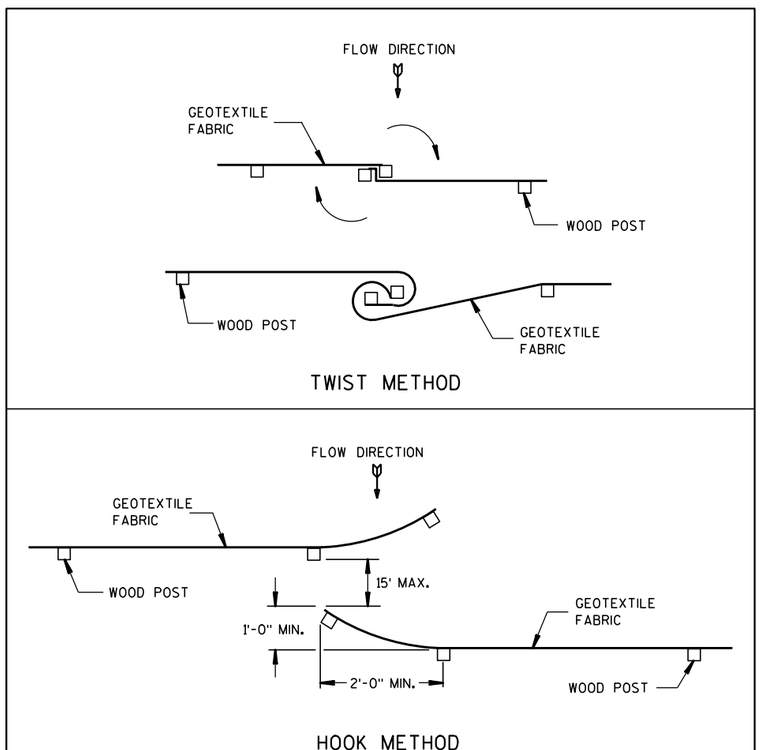

JOINING TWO LENGTHS OF SILT FENCE ⑤

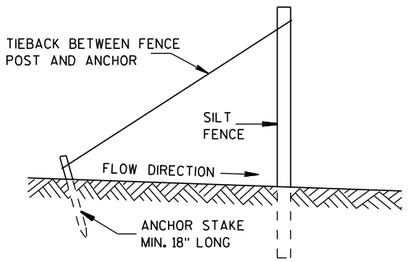

SILT FENCE TIE BACK

(WHEN REQUIRED BY THE ENGINEER)

SILT FENCE
STATE OF WISCONSIN DEPARTMENT OF TRANSPORTATION
APPROVED 4-29-05 /S/ Beth Cann----- DATE CHIEF ROADWAY DEVELOP ENGINEER FHWA

6

6

S.D.D. 8 E 9-6

S.D.D. 8 E 9-6

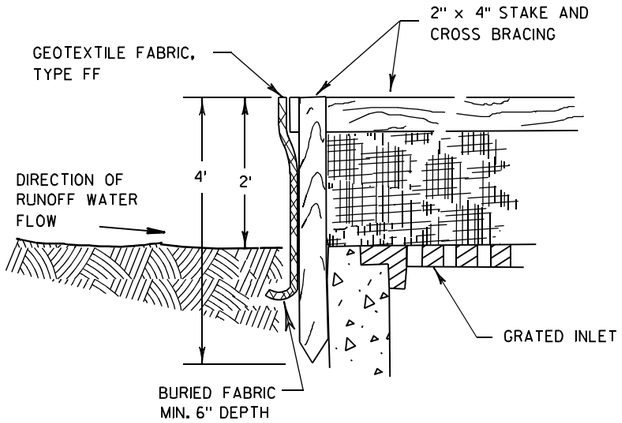

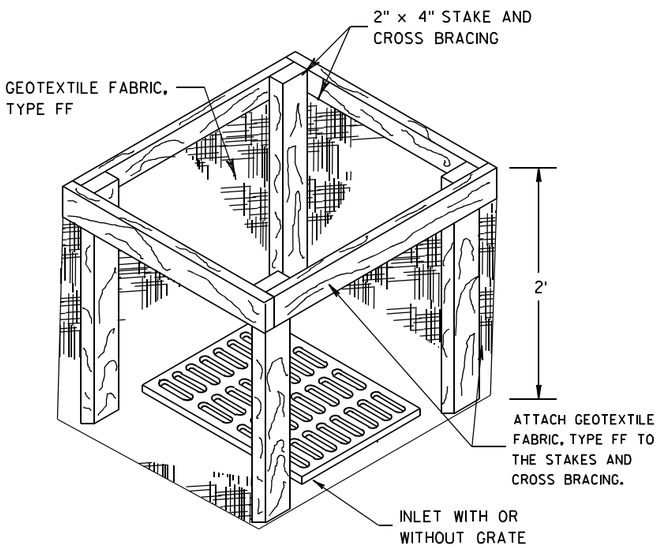

INLET PROTECTION, TYPE A

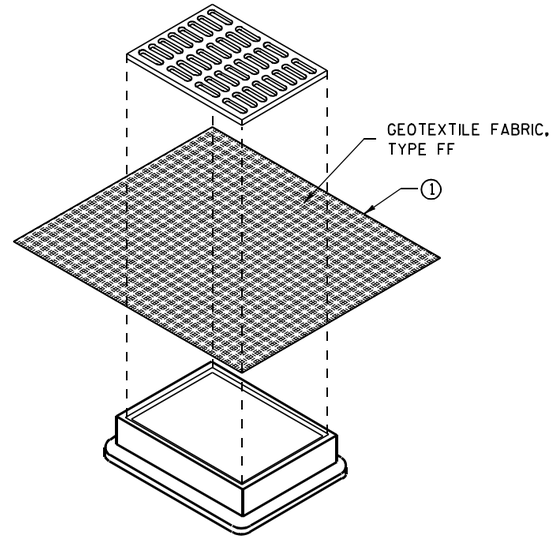

INLET PROTECTION, TYPE B
(WITHOUT CURB BOX)

(CAN BE INSTALLED IN ANY INLET WITHOUT A CURB BOX)

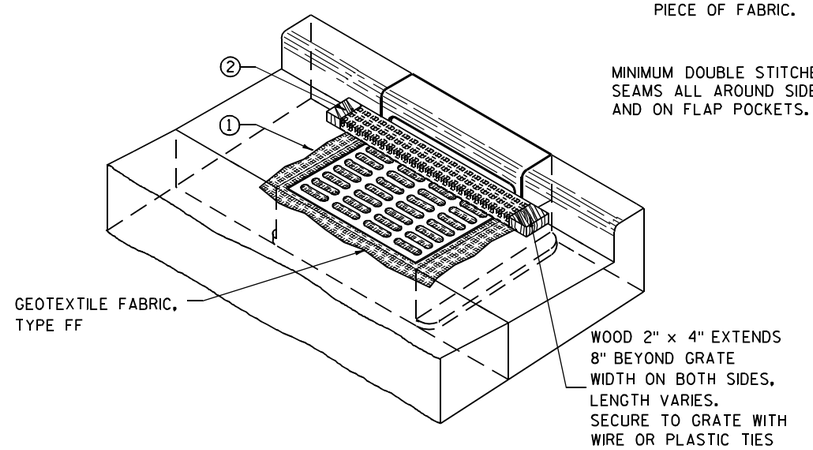

INLET PROTECTION, TYPE C (WITH CURB BOX)

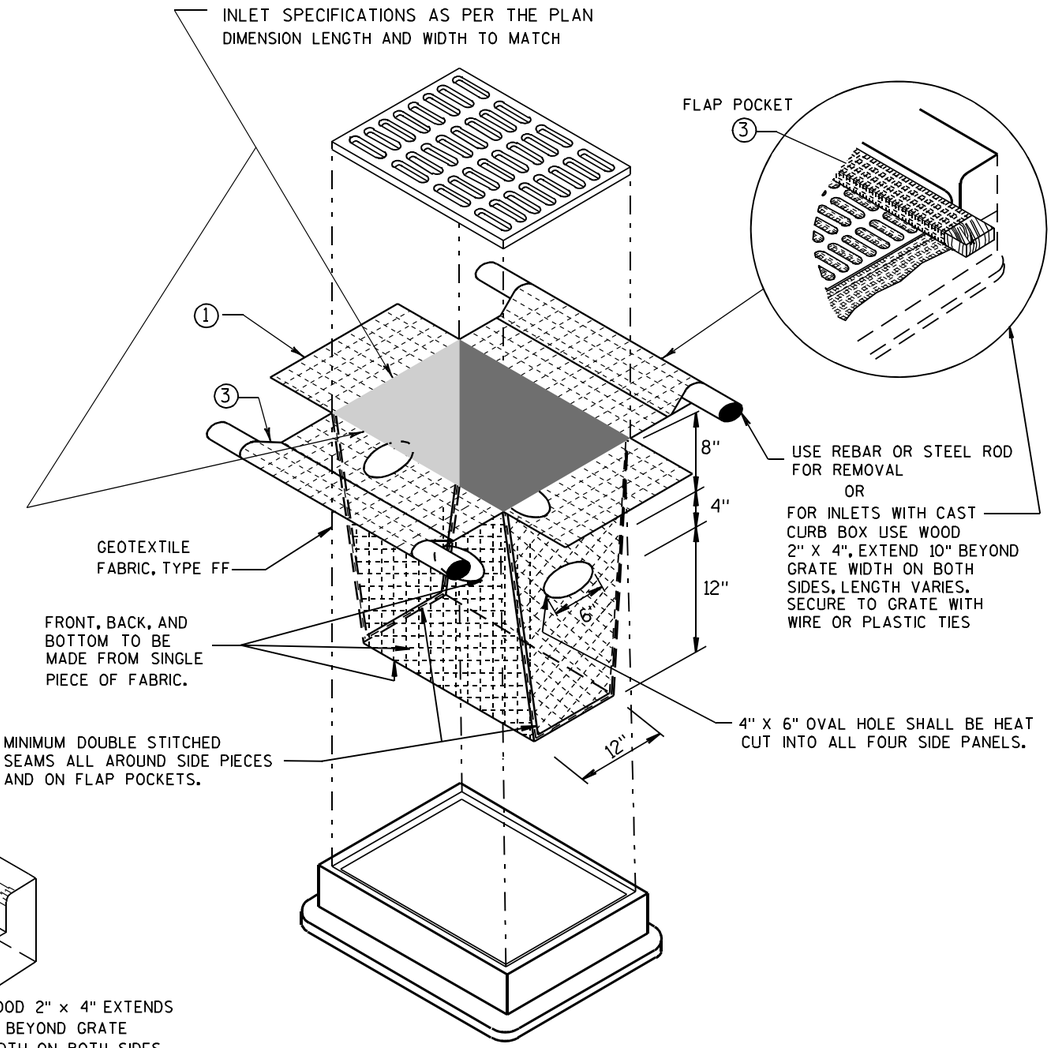

INLET PROTECTION, TYPE D

(CAN BE INSTALLED IN ANY INLET TYPE WITH
OR WITHOUT A CURB BOX AS PER NOTE ②)

GENERAL NOTES

INLET PROTECTION DEVICES SHALL BE MAINTAINED OR REPLACED AT THE DIRECTION OF THE ENGINEER.

MANUFACTURED ALTERNATIVES APPROVED AND LISTED ON THE DEPARTMENT'S EROSION CONTROL PRODUCT ACCEPTABILITY LIST MAY BE SUBSTITUTED.

WHEN REMOVING OR MAINTAINING INLET PROTECTION, CARE SHALL BE TAKEN SO THAT THE SEDIMENT TRAPPED ON THE GEOTEXTILE FABRIC DOES NOT FALL INTO THE INLET. ANY MATERIAL FALLING INTO THE INLET SHALL BE REMOVED IMMEDIATELY.

① FINISHED SIZE, INCLUDING FLAP POCKETS WHERE REQUIRED, SHALL EXTEND A MINIMUM OF 10" AROUND THE PERIMETER TO FACILITATE MAINTENANCE OR REMOVAL.

② FOR INLET PROTECTION, TYPE C (WITH CURB BOX), AN ADDITIONAL 18" OF FABRIC IS WRAPPED AROUND THE WOOD AND SECURED WITH STAPLES. THE WOOD SHALL NOT BLOCK THE ENTIRE HEIGHT OF THE CURB BOX OPENING.

③ FLAP POCKETS SHALL BE LARGE ENOUGH TO ACCEPT WOOD 2X4.

INSTALLATION NOTES

TYPE B & C

TRIM EXCESS FABRIC IN THE FLOW LINE TO WITHIN 3" OF THE GRATE.

THE CONTRACTOR SHALL DEMONSTRATE A METHOD OF MAINTENANCE, USING A SEWN FLAP, HAND HOLDS OR OTHER METHOD TO PREVENT ACCUMULATED SEDIMENT FROM ENTERING THE INLET.

TYPE D

DO NOT INSTALL INLET PROTECTION TYPE D IN INLETS SHALLOWER THAN 30", MEASURED FROM THE BOTTOM OF THE INLET TO THE TOP OF THE GRATE.

TRIM EXCESS FABRIC IN THE FLOW LINE TO WITHIN 3" OF THE GRATE.

THE INSTALLED BAG SHALL HAVE A MINIMUM SIDE CLEARANCE, BETWEEN THE INLET WALLS AND THE BAG, MEASURED AT THE BOTTOM OF THE OVERFLOW HOLES, OF 3". WHERE NECESSARY THE CONTRACTOR SHALL CINCH THE BAG, USING PLASTIC ZIP TIES, TO ACHIEVE THE 3" CLEARANCE. THE TIES SHALL BE PLACED AT A MAXIMUM OF 4" FROM THE BOTTOM OF THE BAG.

INLET PROTECTION
TYPE A, B, C, AND D

STATE OF WISCONSIN
DEPARTMENT OF TRANSPORTATION

APPROVED
10/16/02 — DATE
/S/ Beth Cannatine
CHIEF ROADWAY DEVELOPMENT ENGINEER
FHWA

6

S.D.D. 8 E 10-2

GENERAL NOTES

DETAILS OF CONSTRUCTION, MATERIALS AND WORKMANSHIP NOT SHOWN ON THIS DRAWING SHALL CONFORM TO THE PERTINENT REQUIREMENTS OF THE STANDARD SPECIFICATIONS AND THE APPLICABLE SPECIAL PROVISIONS.

TRACKING PAD SHALL BE INSPECTED DAILY. DEFICIENT AREAS SHALL BE REPAIRED OR REPLACED IMMEDIATELY.

TRACKING PAD TO BE REMOVED AFTER CONSTRUCTION IS COMPLETED.

TRACKING PAD SHALL BE THE FULL WIDTH OF THE EGRESS POINT.

SURFACE WATER MUST BE PREVENTED FROM PASSING THROUGH THE TRACKING PAD. FLOWS SHALL BE DIVERTED AWAY, AROUND OR CONVEYED UNDER THE TRACKING PAD.

CULVERT PIPE OR OTHER BMP USED TO DIVERT WATER AWAY, AROUND OR UNDER THE TRACKING PAD SHALL BE DESIGNED TO CONVEY THE 2 YEAR - 24 HOUR EVENT.

THE COST OF ADDITIONAL BMP TO DIVERT WATER ARE INCIDENTAL TO THE TRACKING PAD BID ITEM.

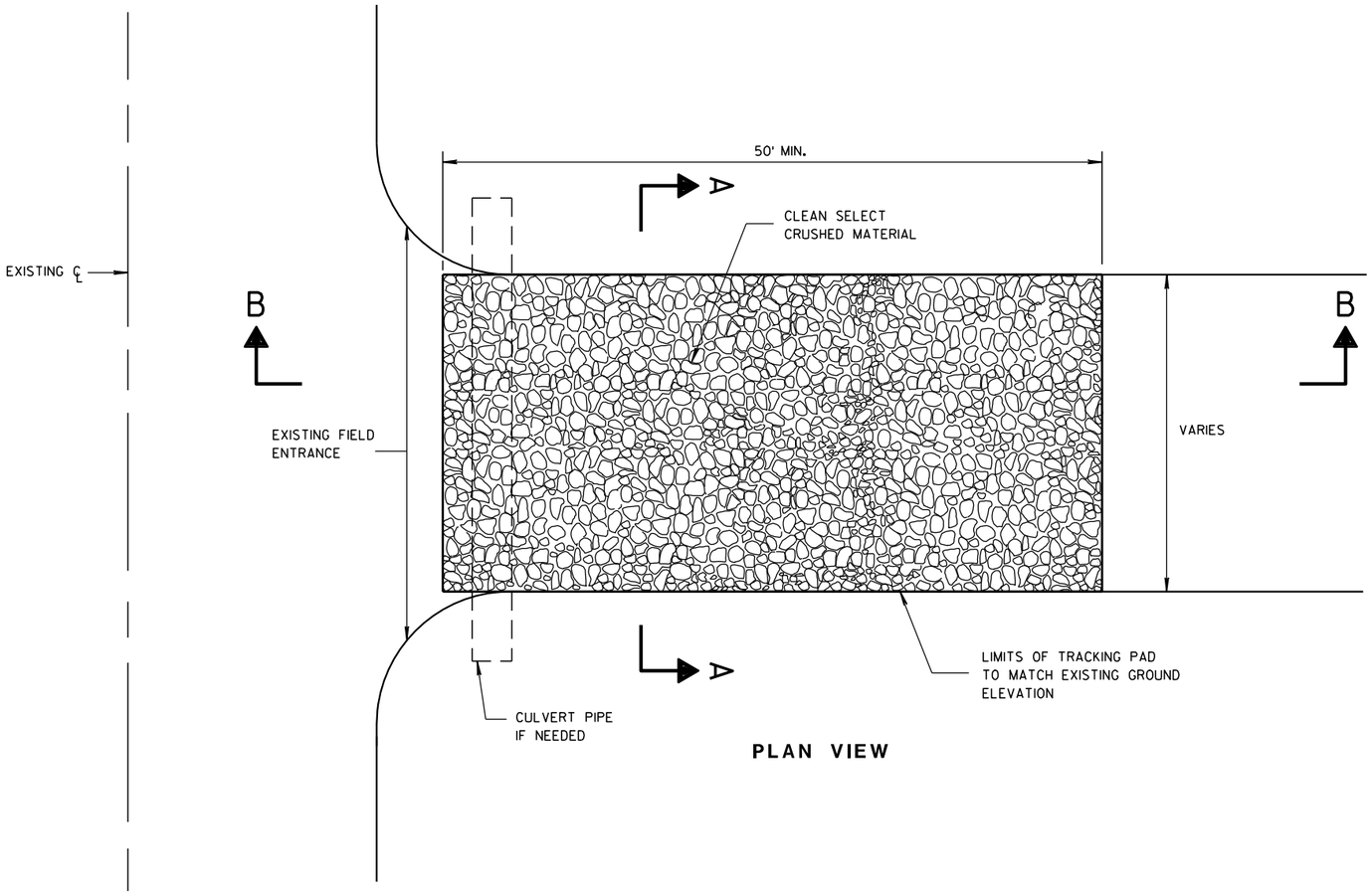

PLAN VIEW

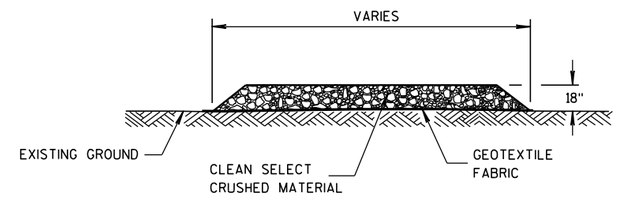

SECTION A-A

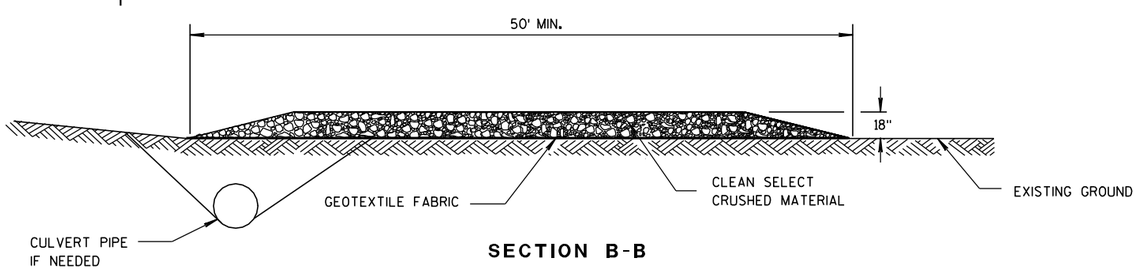

SECTION B-B

TRACKING PAD

6

6

S.D.D. 8 E 14-1

S.D.D. 8 E 14-1

TRACKING PAD

STATE OF WISCONSIN
DEPARTMENT OF TRANSPORTATION

APPROVED

3/24/2011	/S/ Jerry H. Zona	
DATE	ROADWAY STANDARDS ENGINEER	ENT

FHWA

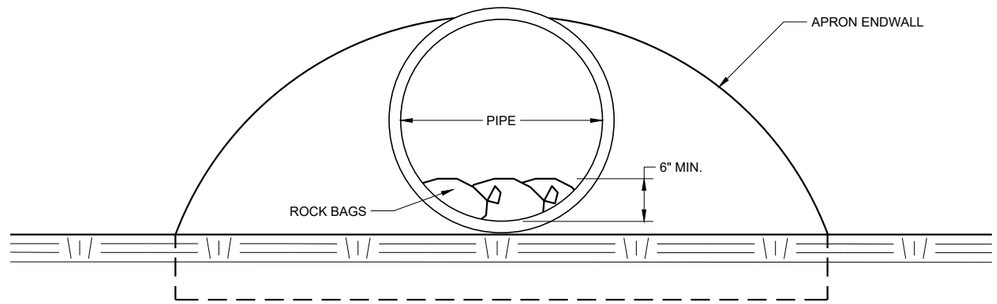

END VIEW

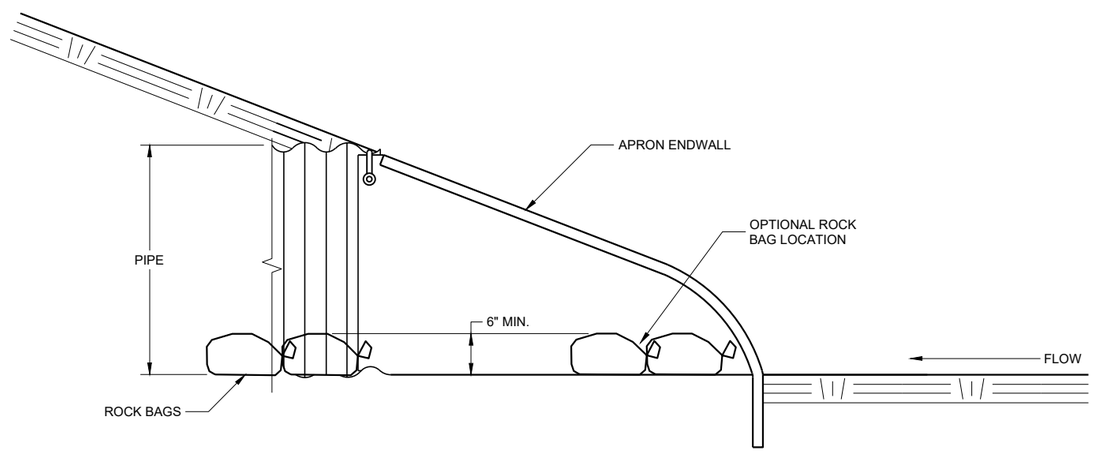

SIDE VIEW

CULVERT PIPE CHECK

(INSTALL ON INLET END ONLY)

CULVERT PIPE CHECK

STATE OF WISCONSIN
DEPARTMENT OF TRANSPORTATION

APPROVED
May 2019 — DATE
/S/ Daniel Schave — EROSION CONTROL ENGI
FHWA

6

6

SDD 08E15 - 01

SDD 08E15 - 01

METAL APRON ENDWALLS

PIPE DIA. (IN.)	MIN. THICK. (Inches) STEEL	MIN. THICK. (Inches) ALUM.	DIMENSIONS (Inches) A (±1")	B (MAX.)	H (±1")	L (±1 1/2")	L1 ①	L2 ①	W (±2")	APPROX. SLOPE	BODY
12	.064	.060	6	6	6	21	12	17 1/2	24	2 1/2 to 1	1 Pc.
15	.064	.060	7	8	6	26	14	21 3/4	30	2 1/2 to 1	1 Pc.
18	.064	.060	8	10	6	31	15	28 1/4	36	2 1/2 to 1	1 Pc.
21	.064	.060	9	12	6	36	18	29 5/8	42	2 1/2 to 1	1 Pc.
24	.064	.075	10	13	6	41	18	37 1/4	48	2 1/2 to 1	1 Pc.
30	.079	.075	12	16	8	51	18	52 1/4	60	2 1/2 to 1	1 Pc.
36	.079	.105	14	19	9	60	24	59 3/4	72	2 1/2 to 1	2 Pc.
42	.109	.105	16	22	11	69	24	75 5/8	84	2 1/2 to 1	2 Pc.
48	.109	.105	18	27	12	78	24	81	90	2 1/4 to 1	3 Pc.
54	.109	.105	18	30	12	84	30	85 1/2	102	2 1/4 to 1	3 Pc.
60	.109×	.105×	18	33	12	87	—	—	114	2 to 1	3 Pc.
66	.109×	.105×	18	36	12	87	—	—	120	2 to 1	3 Pc.
72	.109×	.105×	18	39	12	87	—	—	126	2 to 1	3 Pc.
78	.109×	.105×	18	42	12	87	—	—	132	1 1/2 to 1	3 Pc.
84	.109×	.105×	18	45	12	87	—	—	138	1 1/2 to 1	3 Pc.
90	.109×	.105×	18	37	12	87	—	—	144	1 1/2 to 1	3 Pc.
96	.109×	.105×	18	35	12	87	—	—	150	1 1/2 to 1	3 Pc.

× EXCEPT CENTER PANEL
SEE GENERAL NOTES

REINFORCED CONCRETE APRON ENDWALLS

PIPE DIA. (IN.)	DIMENSIONS (Inches) T	A	B	C	D	E	G	APPROX. SLOPE
12	2	4	24	48 7/8	72 7/8	24	2	3 to 1
15	2 1/4	6	27	46	73	30	2 1/4	3 to 1
18	2 1/2	9	27	46	73	36	2 1/2	3 to 1
21	2 3/4	9	36	37 1/2	73 1/2	42	2 3/4	3 to 1
24	3	9 1/2	43 1/2	30	73 1/2	48	3	3 to 1
27	3 1/4	10 1/2	49 1/2	24	73 1/2	54	3 1/4	3 to 1
30	3 1/2	12	54	19 3/4	73 1/2	60	3 1/2	3 to 1
36	4	15	63	34 3/4	97 3/4	72	4	3 to 1
42	4 1/2	21	63	35	98	78	4 1/2	3 to 1
48	5	24	72	26	98	84	5	3 to 1
54	5 1/2	27	65	*33 1/4-**35	*98 1/4-**100	90	5 1/2	2 2/5 to 1
60	6	*30-**35	60	39	99	96	5	2 to 1
66	6 1/2	*24-**30	*72-**78	*21-**27	99	102	5 1/2	2 to 1
72	7	*24-**36	78	21	99	108	6	2 to 1
78	7 1/2	*24-**36	78	21	99	114	6 1/2	2 to 1
84	8	36	90 1/2	21	111 1/2	120	6 1/2	1 1/2 to 1
90	8 1/2	41	87 1/2	24	111 1/2	132	6 1/2	1 1/2 to 1

*MINIMUM
**MAXIMUM

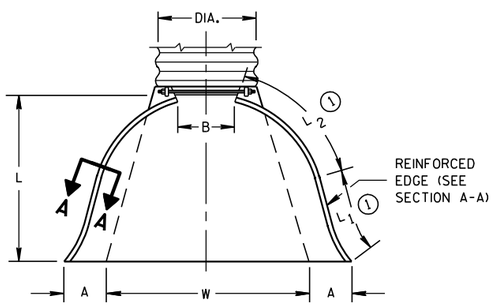

PLAN VIEW

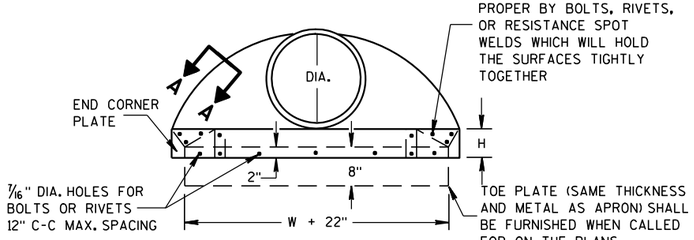

END VIEW

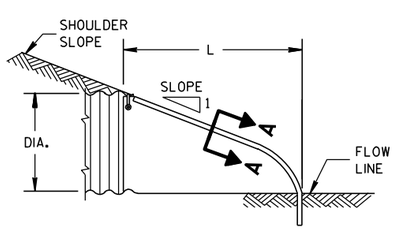

SIDE ELEVATION

METAL ENDWALLS

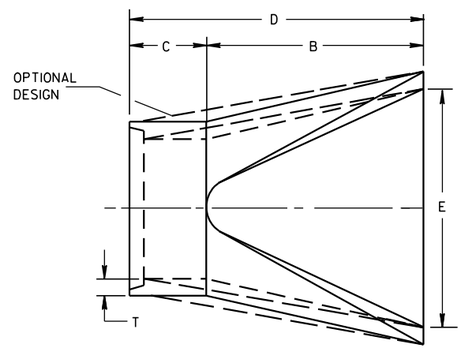

PLAN

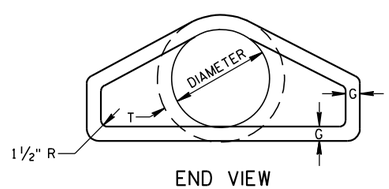

END VIEW

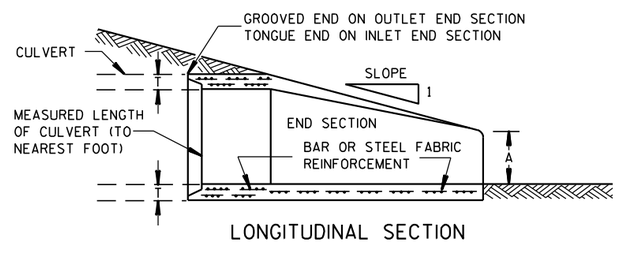

LONGITUDINAL SECTION

CONCRETE ENDWALLS

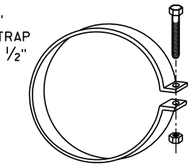

ALTERNATE FOR TYPE 1 CONNECTION

END SECTION CONNECTOR STRAP

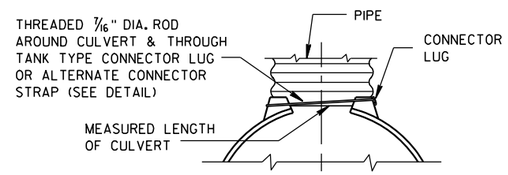

TYPE 1
FOR 12" THRU 24" CORR. PIPE

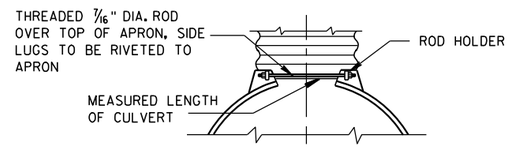

TYPE 2
FOR 30" THRU 96" CORR. PIPE

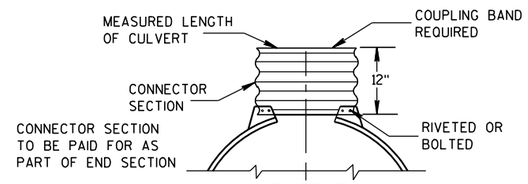

TYPE 3
FOR 42" THRU 96" CORR. PIPE

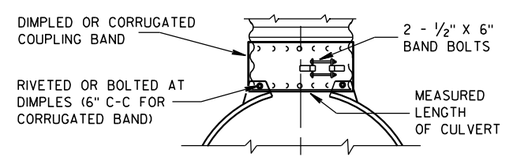

TYPE 5
ALTERNATE FOR:
ALL SIZES CORRUGATED CIRCULAR PIPE

NOTE: DIMPLED BAND FITS OVER OUTSIDE OF ENDWALL, AND CORRUGATED BAND FITS INSIDE ENDWALL. DIMPLED BAND MAY BE USED WITH HELICALLY CORRUGATED PIPE.

FOR CIRCUMFERENTIALLY CORRUGATED PIPE USE ENDWALL CONNECTION DETAILS 1, 2, 3 OR 5 AS APPLICABLE.

FOR HELICALLY CORRUGATED PIPE USE ENDWALL CONNECTION DETAILS 1, 2 OR 5.

FOR HELICALLY CORRUGATED PIPES WITH TWO CIRCUMFERENTIAL CORRUGATIONS AT EACH END USE ENDWALL CONNECTION DETAILS 1, 2 OR 3.

CONNECTION DETAILS

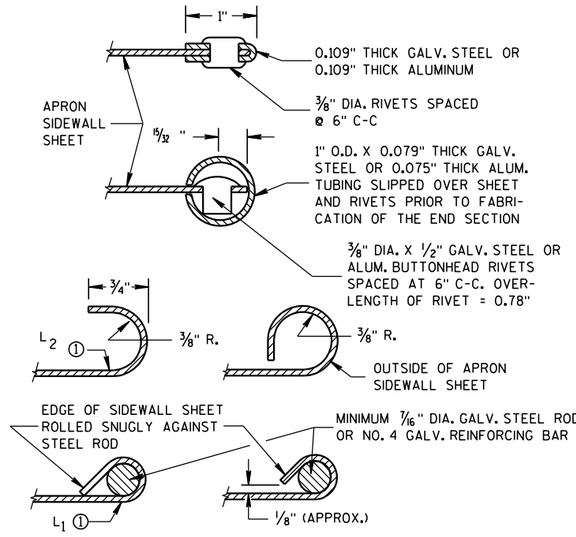

SECTION A-A

GENERAL NOTES

DETAILS OF CONSTRUCTION, MATERIALS AND WORKMANSHIP NOT SHOWN ON THIS DRAWING SHALL CONFORM TO THE PERTINENT REQUIREMENTS OF THE STANDARD SPECIFICATIONS AND THE APPLICABLE SPECIAL PROVISIONS.

CONCRETE CULVERT ENDWALLS MAY NOT BE USED WITH GALVANIZED STEEL OR ALUMINUM CULVERT PIPE OR VISE VERSA. GALVANIZED STEEL OR ALUMINUM ENDWALLS SHALL NORMALLY BE INSTALLED ON CULVERT PIPE OF THE SAME METAL.

ALL THREE PIECE STEEL APRON ENDWALLS FOR 60" DIAMETER PIPE AND LARGER SHALL HAVE 0.109" SIDES AND 0.138" CENTER PANELS. ALL THREE PIECE ALUMINUM APRON ENDWALLS FOR 60" DIAMETER PIPE AND LARGER SHALL HAVE 0.105" SIDES AND 0.134" CENTER PANELS. THE WIDTH OF CENTER PANELS SHALL BE GREATER THAN 20 PERCENT OF THE PIPE PERIMETER.

LAP SEAMS SHALL BE TIGHTLY JOINED BY GALVANIZED RIVETS OR BOLTS FOR STEEL UNITS AND ALUMINUM RIVETS AND BOLTS FOR ALUMINUM UNITS. FOR THE 60" THROUGH 96" DIAMETER APRON ENDWALL SIZES, THE REINFORCED EDGES AND CENTER PANEL SEAMS SHALL BE FURTHER REINFORCED WITH GALVANIZED STEEL OR ALUMINUM STIFFENER ANGLES. THE ANGLES SHALL BE ATTACHED BY GALVANIZED NUTS AND BOLTS FOR STEEL UNITS AND ALUMINUM NUTS AND BOLTS FOR ALUMINUM UNITS.

WHERE TWO OR MORE PIPES WITH APRON ENDWALLS ARE LAID ADJACENT TO EACH OTHER, THEY SHALL BE SEPARATED BY A DISTANCE SUFFICIENT TO PROVIDE A MINIMUM CLEARANCE OF 6 INCHES BETWEEN APRON ENDWALLS.

① FOR PIPE SIZES UP TO 60" DIAMETER, A 180° ROLLED EDGE MAY BE USED INSTEAD OF STEEL ROD REINFORCEMENT. SEE SECTION A-A.

APRON ENDWALLS FOR CULVERT PIPE

STATE OF WISCONSIN
DEPARTMENT OF TRANSPORTATION

APPROVED
11/30/94 — DATE
/S/ Rory L. Rhinesmith — CHIEF ROADWAY DEVELOPMENT ENGINEER
FHWA

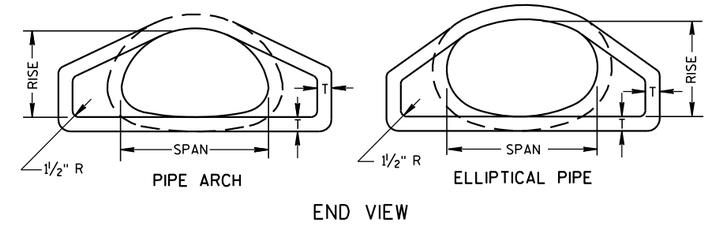

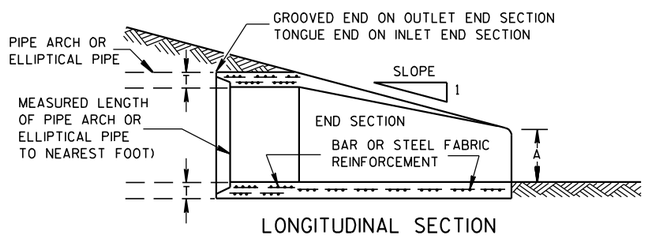

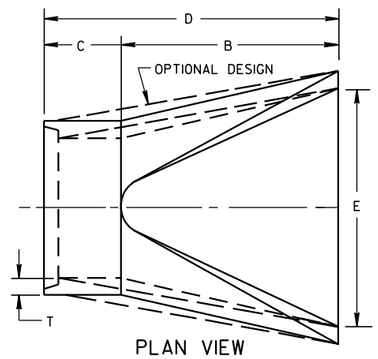

CONCRETE ENDWALLS

2- ⅔" X ½" CORRUGATIONS														
EQUIV. DIA. (Inches)	(Inches)		MIN. THICK. (Inches)		DIMENSIONS (Inches)							APPROX. SLOPE	BODY
	SPAN	RISE	STEEL	ALUM.	A (±1")	B (MAX.)	H (±1")	L (±1½")	L1 ①	L2 ①	W (±2")		
15	17	13	.064	.060	7	9	6	19	14	16	30	2½ to 1	1 Pc.
18	21	15	.064	.060	7	10	6	23	14	19⅜	36	2½ to 1	1 Pc.
21	24	18	.064	.060	8	12	6	28	18	21¾	42	2½ to 1	1 Pc.
24	28	20	.064	.060	9	14	6	32	18	27½	48	2½ to 1	1 Pc.
30	35	24	.079	.075	10	16	6	39	18	37⅝	60	2½ to 1	1 Pc.
36	42	29	.079	.075	12	18	8	46	24	45⅜	75	2½ to 1	1 Pc.
42	49	33	.109	.105	13	21	9	53	24	54¾	85	2½ to 1	2 Pc.
48	57	38	.109	.105	18	26	12	63	24	68	90	2½ to 1	3 Pc.
54	64	43	.109	.105	18	30	12	70	24	72¾	102	2¼ to 1	3 Pc.
60	71	47	.109*	.105*	18	33	12	77	30	82¼	114	2¼ to 1	3 Pc.
66	77	52	.109*	.105*	18	36	12	77	—	—	126	2 to 1	3 Pc.
72	83	57	.109*	.105*	18	39	12	77	—	—	138	2 to 1	3 Pc.

3" X 1" CORRUGATIONS														
EQUIV. DIA. (Inches)	(Inches)		MIN. THICK. (Inches)		DIMENSIONS (Inches)							APPROX. SLOPE	BODY
	SPAN	RISE	STEEL	ALUM.	A (±1")	B (MAX.)	H (±1")	L (±1½")	L1 ①	L2 ①	W (±2")		
48	53	41	.109	.105	18	26	12	63	24	72¾	90	2½ to 1	2 Pc.
54	60	46	.109	.105	18	30	12	70	30	82¼	102	2 to 1	2 Pc.
60	66	51	.109*	.105*	18	33	12	77	—	—	114	1½ to 1	3 Pc.
66	73	55	.109*	.105*	18	36	12	77	—	—	126	1½ to 1	3 Pc.
72	81	59	.109*	.105*	18	39	12	77	—	—	138	2 to 1	3 Pc.
78	87	63	.109*	.105*	22	38	12	77	—	—	148	1½ to 1	3 Pc.
84	95	67	.109*	.105*	22	34	12	77	—	—	162	1½ to 1	3 Pc.
90	103	71	.109*	.105*	22	38	12	77	—	—	174	1½ to 1	3 Pc.
96	112	75	.109*	.105*	24	40	12	77	—	—	174	1½ to 1	3 Pc.

NOTE: ALL SPLICES TO BE LAP RIVETED OR BOLTED.

* EXCEPT CENTER PANEL SEE GENERAL NOTES

REINFORCED CONCRETE PIPE ARCH									
EQUIV. DIA. (Inches)	DIMENSIONS (Inches)								APPROX. SLOPE
	** SPAN	** RISE	T	A	B	C	D	E	
24	29	18	3	8½	39	33	72	48	3 to 1
30	36	22	3½	9½	50	46	96	60	3 to 1
36	44	27	4	11⅛	60	36	96	72	3 to 1
42	51	31	4½	15 13/16	60	36	96	78	3 to 1
48	58	36	5	21	60	36	96	84	3 to 1
54	65	40	5½	25½	60	36	96	90	3 to 1
60	73	45	6	31	60	36	96	96	3 to 1
72	88	54	7	31	60	39	99	120	2 to 1
84	102	62	8	28½	83	19	102	144	2 to 1

REINFORCED CONCRETE ELLIPTICAL PIPE									
EQUIV. DIA. (Inches)	DIMENSIONS (Inches)								APPROX. SLOPE
	** SPAN	** RISE	T	A	B	C	D	E	
24	30	19	3¼	8½	39	33	72	48	3 to 1
30	38	24	3¾	9½	54	18	72	60	3 to 1
36	45	29	4½	11⅛	60	24	84	72	2½ to 1
42	53	34	5	15¾	60	36	96	78	2½ to 1
48	60	38	5½	21	60	36	96	84	2½ to 1
54	68	43	6	25½	60	36	96	90	2½ to 1
60	76	48	6½	30	60	36	96	96	2½ to 1

**NOMINAL SIZE

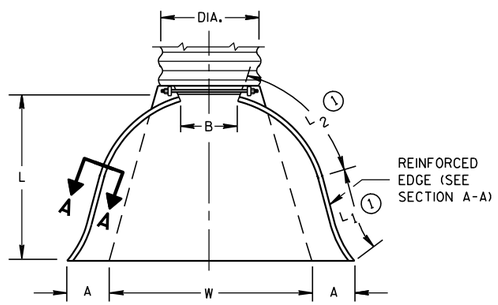

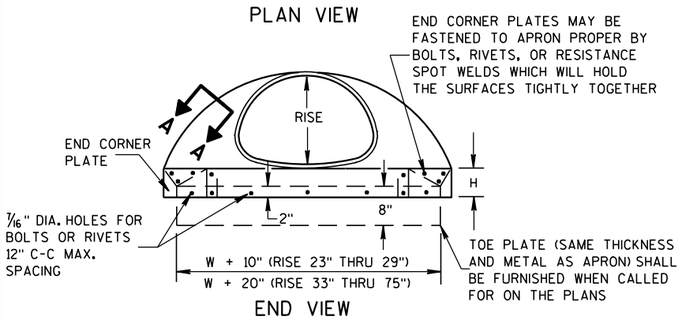

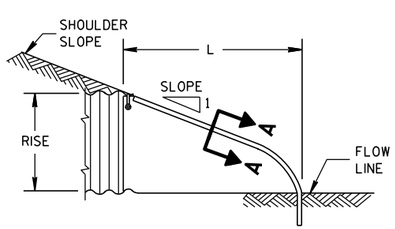

SIDE ELEVATION

METAL ENDWALLS

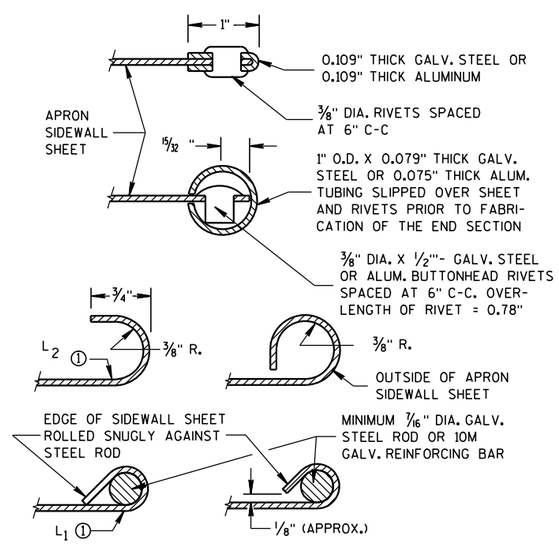

SECTION A-A

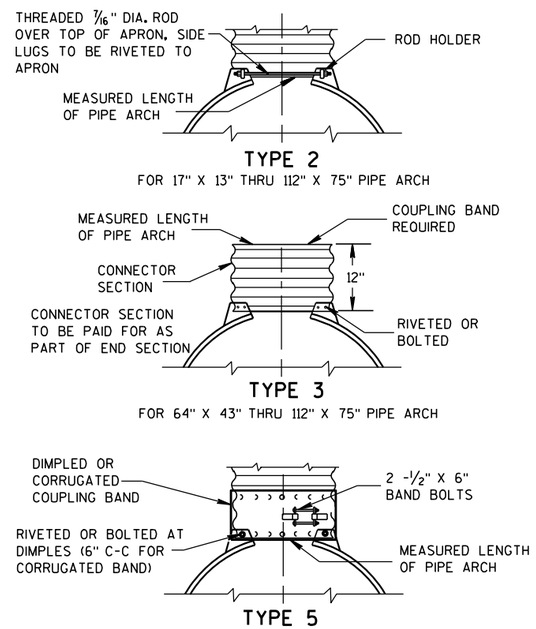

NOTE: DIMPLED BAND FITS OVER OUTSIDE OF ENDWALL, AND CORRUGATED BAND FITS INSIDE ENDWALL.

CONNECTION DETAILS

GENERAL NOTES

DETAILS OF CONSTRUCTION, MATERIALS AND WORKMANSHIP NOT SHOWN ON THIS DRAWING SHALL CONFORM TO THE PERTINENT REQUIREMENTS OF THE STANDARD SPECIFICATIONS AND THE APPLICABLE SPECIAL PROVISIONS.

CONCRETE APRON ENDWALLS MAY NOT BE USED WITH GALVANIZED STEEL OR ALUMINUM CULVERT PIPE OR VISE VERSA. GALVANIZED STEEL OR ALUMINUM APRON ENDWALLS SHALL NORMALLY BE INSTALLED ON CULVERT PIPE OF THE SAME METAL.

ALL THREE PIECE STEEL APRON ENDWALLS FOR 66" X 51" PIPE ARCH AND LARGER SHALL HAVE 0.109" SIDES AND 0.138" CENTER PANELS. ALL THREE PIECE ALUMINUM APRON ENDWALLS FOR 66" X 51" PIPE ARCH AND LARGER SHALL HAVE 0.105" SIDES AND 0.134" CENTER PANELS. THE WIDTH OF CENTER PANELS SHALL BE GREATER THAN 20 PERCENT OF THE PIPE ARCH PERIMETER.

LAP SEAMS SHALL BE TIGHTLY JOINED BY GALVANIZED RIVETS OR BOLTS FOR STEEL UNITS AND ALUMINUM RIVETS AND BOLTS FOR ALUMINUM UNITS. FOR THE 77" X 52" THROUGH 112" X 75" APRON ENDWALL SIZES, THE REINFORCED EDGES AND CENTER PANEL SEAMS SHALL BE FURTHER REINFORCED WITH GALVANIZED STEEL OR ALUMINUM STIFFENER ANGLES. THE ANGLES SHALL BE ATTACHED BY GALVANIZED NUTS AND BOLTS FOR STEEL UNITS AND ALUMINUM NUTS AND BOLTS FOR ALUMINUM UNITS.

WHERE TWO OR MORE PIPES WITH APRON ENDWALLS ARE LAID ADJACENT TO EACH OTHER, THEY SHALL BE SEPARATED BY A DISTANCE SUFFICIENT TO PROVIDE A MINIMUM CLEARANCE OF 6 INCHES BETWEEN APRON ENDWALLS.

① FOR PIPE ARCH SIZES UP TO 73" X 55" A 180° ROLLED EDGE MAY BE USED INSTEAD OF STEEL ROD REINFORCEMENT. SEE SECTION A-A.

APRON ENDWALLS FOR PIPE ARCH AND ELLIPTICAL PIPE

STATE OF WISCONSIN
DEPARTMENT OF TRANSPORTATION

APPROVED
11/30/94 — DATE
/S/ Rory L. Rhinesmith — CHIEF ROADWAY DEVELOPMENT ENGINEER
FHWA

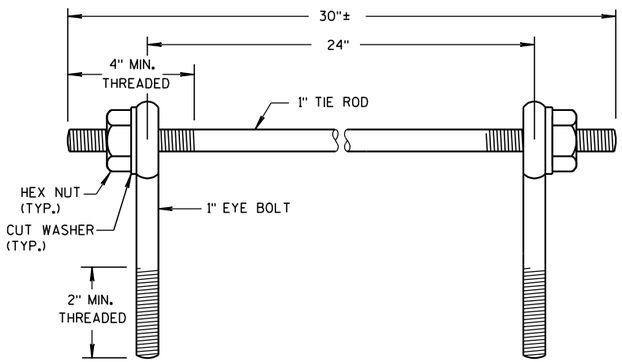

EYE BOLTS AND TIE ROD

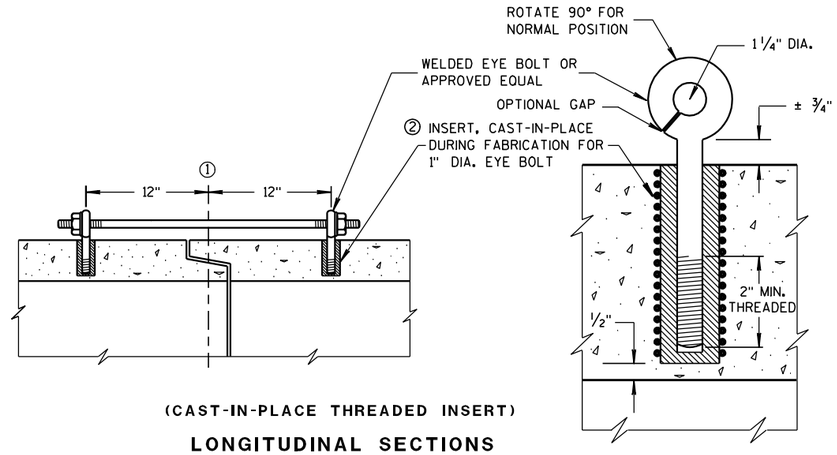

(CAST-IN-PLACE THREADED INSERT)

LONGITUDINAL SECTIONS

EYE BOLT AND TIE ROD ASSEMBLY (ALTERNATE NO. 1)

GENERAL NOTES

DETAILS OF CONSTRUCTION, MATERIALS, AND WORKMANSHIP NOT SHOWN ON THIS DRAWING SHALL CONFORM TO THE PERTINENT REQUIREMENTS OF THE STANDARD SPECIFICATIONS AND APPLICABLE SPECIAL PROVISIONS.

CONCRETE CULVERT AND STORM SEWER PIPE SHALL BE TIED TOGETHER IN THE MANNER ILLUSTRATED BY THIS DETAIL AT LOCATIONS DESIGNATED IN THE STANDARD SPECIFICATIONS AND THE PLAN. THE CONTRACTOR MAY USE EITHER ALTERNATE 1, 2 OR 3 FOR DRAINAGE STRUCTURES. ONLY ALTERNATE 1 AND 3 MAY BE USED FOR CATTLE PASSES, UNLESS OTHERWISE STATED IN THE CONTRACT. THE MATERIALS, FABRICATION AND WORK NECESSARY TO TIE THE PIPE BY THIS DETAIL WILL BE CONSIDERED INCIDENTAL TO THE PIPE AND APRON ENDWALLS IF REQUIRED.

DETAILED DRAWINGS FOR PROPOSED ALTERNATE DESIGNS FOR JOINT TIES SHALL BE SUBMITTED TO THE ENGINEER FOR APPROVAL.

JOINT TIES TO BE HOT-DIP GALVANIZED PER ASTM A 153.

① ℄ OF TONGUE AND GROOVE OR BELL AND SPIGOT JOINTS.

② THE INSIDE OF THE THREADED INSERTS SHALL BE CLEAN TO ALLOW THE INSERTION OF THREADED EYE BOLTS.

③ HOLES SHALL BE CAST-IN-PLACE OR DRILLED 12 INCHES FROM ℄ OF TONGUE AND GROOVE.

④ BOLT PROJECTION INSIDE OF PIPE SHALL NOT EXCEED 2 INCHES.

⑤ OPENING TO BE ROD DIAMETER PLUS 1 INCH.

⑥ LENGTH ADEQUATE TO EXTEND TO WITHIN 1/2 INCH OF THE INNER SURFACE OF THE PIPE.

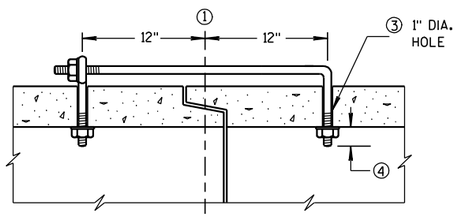

(TONGUE & GROOVE PIPE)

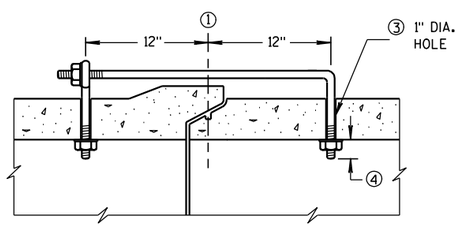

(MODIFIED BELL PIPE)

LONGITUDINAL SECTION

EYE BOLT DIMENSION TABLE

PIPE SIZE	L = LENGTH	
	TONGUE & GROOVE PIPE	MODIFIED BELL PIPE
18" TO 24"	4 1/2"	6 1/4"
30"	5"	7"
36"	5 1/2"	7"
42"	6"	
48"	6 1/2"	
60"	7 1/2"	
66"	8"	

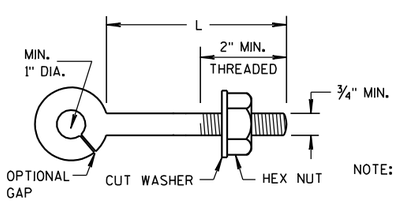

NOTE:

EYE BOLT

NOTE: TWO EYE BOLTS MAY BE USED WITH A 30" LONG THREADED ROD IN LIEU OF THE 90° BENT TIE ROD.

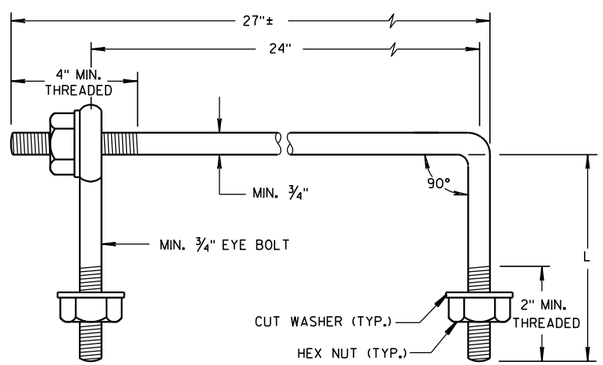

EYE BOLT AND TIE ROD

(JOINT TIES FOR 18" TO 66" DIA. CONCRETE PIPE)

EYE BOLT AND TIE ROD ASSEMBLY (ALTERNATE NO. 2)

ADJUSTABLE TIE ROD TABLE

PIPE DIAMETER	TIE ROD DIAMETER	D	L_1	N
12-60	5/8	5/8	5	1/2
66-84	3/4	3/4	5	1/2
90-108	1	1	7	1 7/16

DIMENSIONS SHOWN ARE IN INCHES

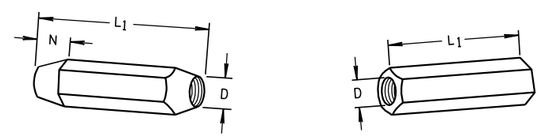

TAPERED PLAIN

RIGHT AND LEFT THREADS

SLEEVE NUTS

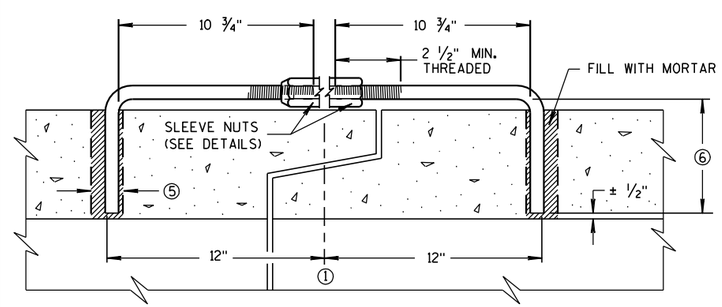

LONGITUDINAL SECTION

(JOINT TIES FOR 12" TO 108" DIA. CONCRETE PIPE)

ADJUSTABLE TIE ROD (ALTERNATE NO. 3)

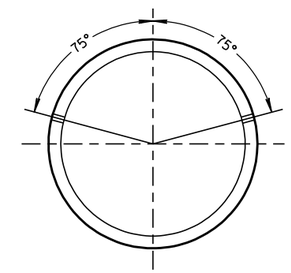

PLACEMENT OF (2) CAST-IN-PLACE INSERTS OR HOLES DURING FABRICATION FOR PIPE SECTIONS REQUIRING TIE RODS

TRANSVERSE SECTION

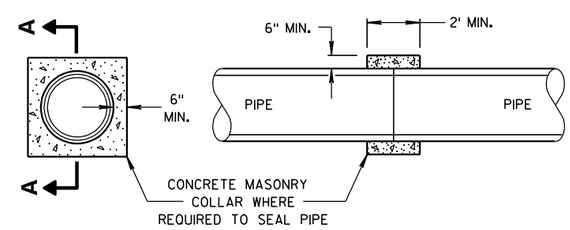

SECTION A-A

CONCRETE COLLAR DETAIL

JOINT TIES FOR CONCRETE PIPE AND CONCRETE COLLAR DETAIL

STATE OF WISCONSIN
DEPARTMENT OF TRANSPORTATION

APPROVED
6/5/2012 — DATE
/S/ Jerry H. Zogg — ROADWAY STANDARDS DEVELOPMENT ENGINEER
FHWA

6

6

S.D.D. 8 F 4-7

S.D.D. 8 F 4-7

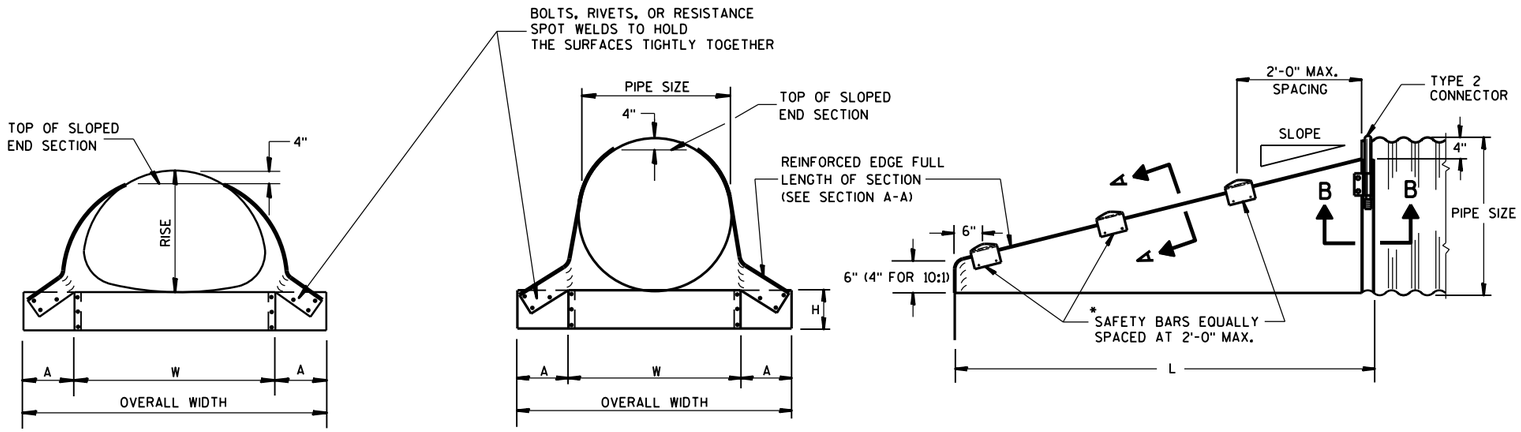

FRONT VIEW

FRONT VIEW

SIDE VIEW

GENERAL NOTES

DETAILS OF CONSTRUCTION, MATERIALS AND WORKMANSHIP NOT SHOWN ON THIS DRAWING SHALL CONFORM TO THE PERTINENT REQUIREMENTS OF THE STANDARD SPECIFICATIONS AND THE APPLICABLE SPECIAL PROVISIONS.

SLOPED END SECTIONS SHALL CONFORM TO THE REQUIREMENTS OF THE STANDARD SPECIFICATIONS, SECTION 521 FOR STEEL APRON ENDWALLS.

SAFETY BARS SHALL BE FABRICATED FROM GALVANIZED STEEL PIPE MEETING THE REQUIREMENTS OF ASTM A-53, GRADE B, SCHEDULE 40 OR APPROVED EQUAL.

STEEL APRON ENDWALLS FOR CULVERT PIPE SLOPED SIDE DRAINS

PIPE DIA. (IN.)	MIN. THICK. (Inches)	DIMENSIONS (Inches)				L DIMENSIONS					
		A	H	W	OVERALL WIDTH	SLOPE	LENGTH INCHES	SLOPE	LENGTH INCHES	SLOPE	LENGTH INCHES
15	.064	8	6	21	37	4:1	20	6:1	30	10:1	70
18	.064	8	6	24	40	4:1	32	6:1	48	10:1	100
21	.064	8	6	27	43	4:1	44	6:1	66	10:1	130
24	.064	8	6	30	46	4:1	56	6:1	84	10:1	160
30	.109	12	9	36	60	4:1	80	6:1	120	10:1	220
36	.109	12	9	42	66	4:1	104	6:1	156	10:1	280
42	.109	16	12	48	80	4:1	128	6:1	192	——	——
48	.109	16	12	54	86	4:1	152	6:1	228	——	——
54	.109	16	12	60	92	4:1	176	6:1	264	——	——
60	.109	16	12	66	98	4:1	200	6:1	300	——	——

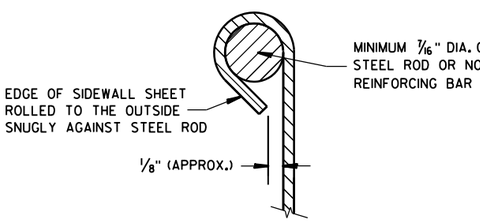

SECTION A-A

*NOTE:
THREE SAFETY BARS ARE SHOWN. ACTUAL NUMBER OF BARS REQUIRED AT A 2'-0" C-C MAX. SPACING WILL VARY DEPENDING ON THE LENGTH OF THE END SECTION.

3" GALVANIZED PIPE. FLATTEN ENDS, THEN BEND OUTSIDE 4" TO MATCH END SECTION SIDES.

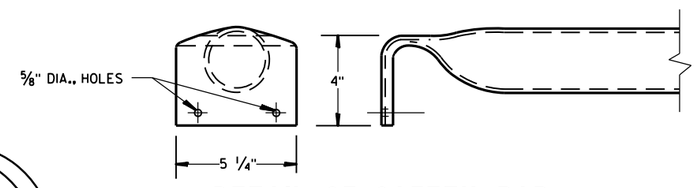

DETAIL OF SAFETY BAR

STEEL APRON ENDWALLS FOR PIPE ARCH SLOPED SIDE DRAINS

EQUIV. DIA. (Inches)	(Inches)		MIN. THICK. (Inches) ①	DIMENSIONS (Inches)				L DIMENSIONS					
	SPAN	RISE		A	H	W	OVERALL WIDTH	SLOPE	LENGTH INCHES	SLOPE	LENGTH INCHES	SLOPE	LENGTH INCHES
15	17	13	.064 *	7	6	30	44	4:1	19	6:1	30	10:1 ②	70
18	21	15	.064 *	8	6	27	43	4:1	20	6:1	30	10:1	70
21	24	18	.064 *	8	6	30	46	4:1	32	6:1	48	10:1	100
24	28	20	.064 *	8	6	34	50	4:1	40	6:1	60	10:1	120
30	35	24	.079 *	12	9	41	65	4:1	56	6:1	84	10:1	160
36	42	29	.109 *	12	9	48	72	4:1	76	6:1	114	10:1	210
42	49	33	.109	16	12	55	87	4:1	92	6:1	138	——	——
48	57	38	.109	16	12	63	95	4:1	112	6:1	168	——	——
54	64	43	.109	16	12	70	102	4:1	132	6:1	198	——	——

① * MINIMUM THICKNESS OF ALL 10:1 SLOPED SIDE DRAINS IS 0.109".
② ACTUAL SLOPE GREATER THAN 10:1.

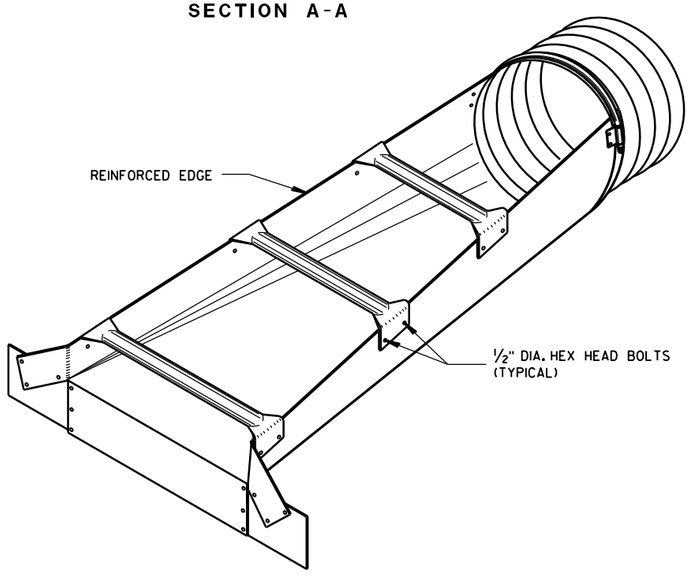

ISOMETRIC VIEW

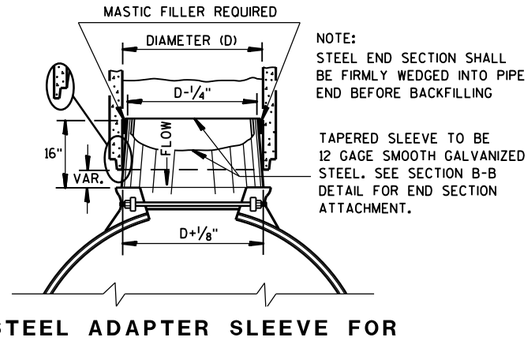

NOTE:
STEEL END SECTION SHALL BE FIRMLY WEDGED INTO PIPE END BEFORE BACKFILLING

TAPERED SLEEVE TO BE 12 GAGE SMOOTH GALVANIZED STEEL. SEE SECTION B-B DETAIL FOR END SECTION ATTACHMENT.

STEEL ADAPTER SLEEVE FOR CONCRETE PIPE

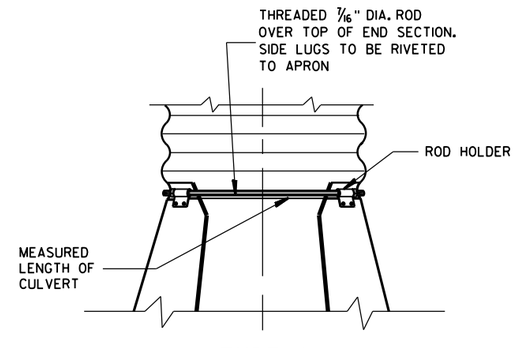

TYPE 2 CONNECTION DETAIL

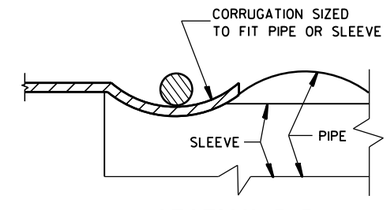

SECTION B-B

STEEL APRON ENDWALLS FOR CULVERT PIPE AND PIPE ARCH SLOPED SIDE DRAINS

STATE OF WISCONSIN
DEPARTMENT OF TRANSPORTATION

APPROVED
9/14/2012 — DATE
/S/ Jerry H. Zogg — ROADWAY STANDARDS DEVELOPMENT ENGINEER
FHWA

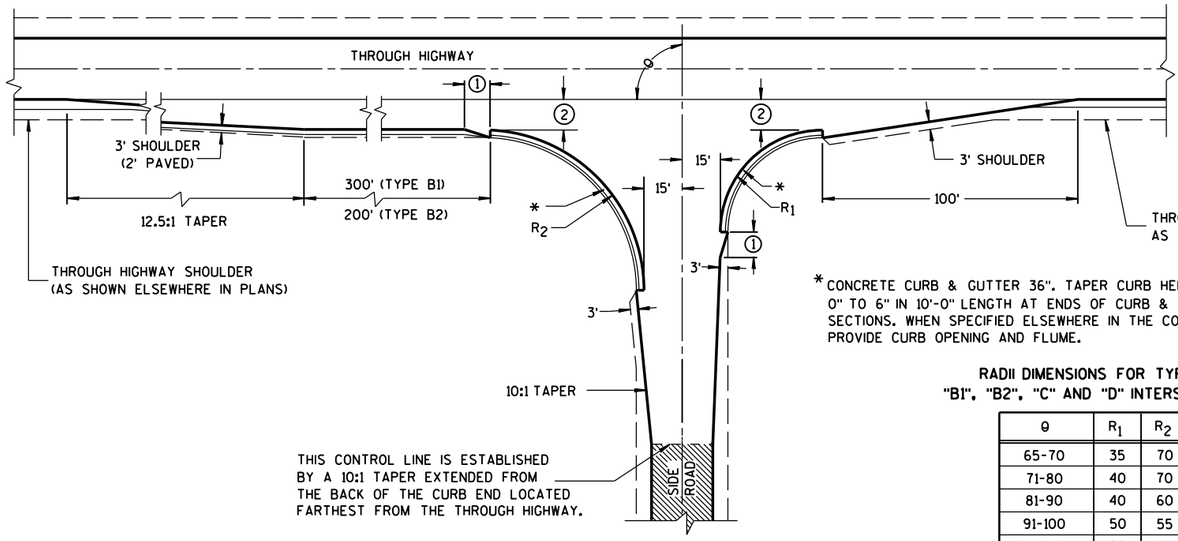

TYPE "B1" AND "B2"

*CONCRETE CURB & GUTTER 36". TAPER CURB HEIGHT 0" TO 6" IN 10'-0" LENGTH AT ENDS OF CURB & GUTTER SECTIONS. WHEN SPECIFIED ELSEWHERE IN THE CONTRACT, PROVIDE CURB OPENING AND FLUME.

RADII DIMENSIONS FOR TYPES "B1", "B2", "C" AND "D" INTERSECTIONS

θ	R_1	R_2
65-70	35	70
71-80	40	70
81-90	40	60
91-100	50	55
101-110	60	45

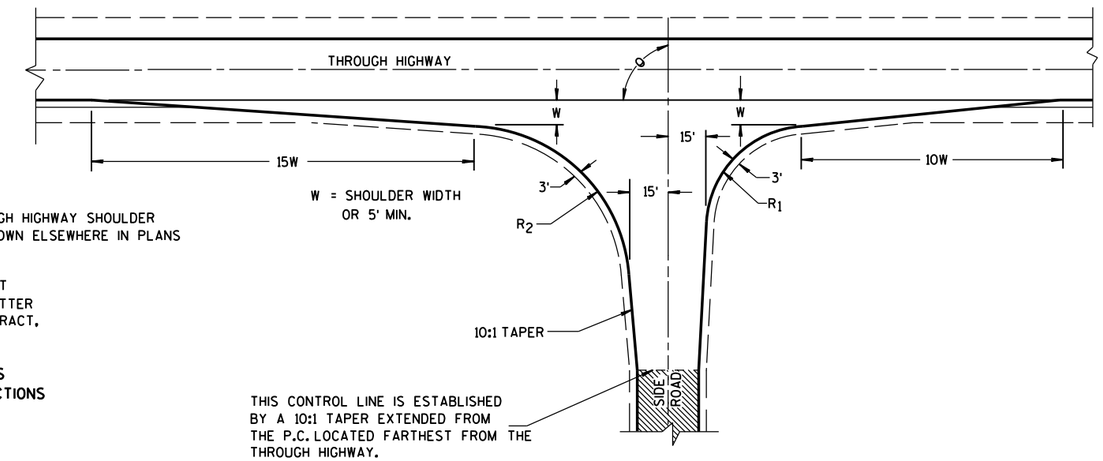

TYPE "C"

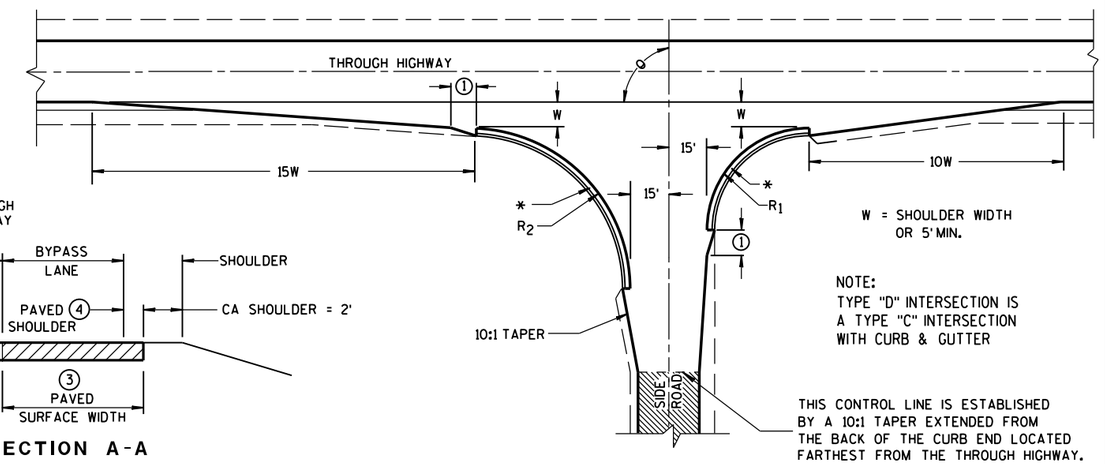

TYPE "D"

GENERAL NOTES

DESIGNS MAY BE USED INTERCHANGEABLY IN COMBINATION OR SEPARATELY FOR ANY ONE COMPLETE INTERSECTION DEPENDING UPON INTERSECTION ANGLE AND SURFACING OF EACH APPROACH ROADWAY.

SIDE ROAD SURFACING NOTE

WHEN THE SIDE ROAD IS NOT PRESENTLY PAVED, PAVEMENT SHALL BE PLACED TO THE LIMITS SHOWN UNLESS OTHERWISE PROVIDED IN THE CONTRACT. WHERE THE CONSTRUCTION LIMITS ARE BEYOND THE PAVING LIMITS, CRUSHED AGGREGATE SURFACING SHALL BE PLACED BETWEEN THE PAVING LIMITS AND CONSTRUCTION LIMITS.

WHEN THE SIDE ROAD IS PRESENTLY PAVED, NEW PAVEMENT SHALL BE PLACED TO THE LIMITS OF DESIGN AS SHOWN AND BEYOND, IF NECESSARY, TO MEET EXISTING PAVEMENT.

WHEN THE SIDE ROAD IS THE CONSTRUCTION PROJECT, THE INTERSECTION SURFACING SHALL BE THE SAME AS FOR THE PROJECT.

EXISTING PAVED SURFACE

BYPASS LANE

(1) 10-FT TYPICAL.

(2) 12-FT** PLUS ADDITIONAL WIDTH FOR BIKE LANE IF SHOWN ELSEWHERE IN THE PLAN.

**10-FT MAY BE USED ON TYPE B2 ON RESURFACING PROJECTS IF SPECIFIED IN THE CONTRACT.

(3) BYPASS LANE PAVED SURFACE WIDTH OUTSIDE OF TRAVEL LANE
-ASPHALT = 12-FT PLUS PAVED SHOULDER WIDTH.
-PC CPNCRETE = 13-FT PLUS PAVED SHOULDER WIDTH.

(4) BYPASS LANE PAVED SHOULDER WIDTH = THE GREATER OF 1-FT OR THE PAVED SHOULDER WIDTH OF THE THROUGH HIGHWAY.

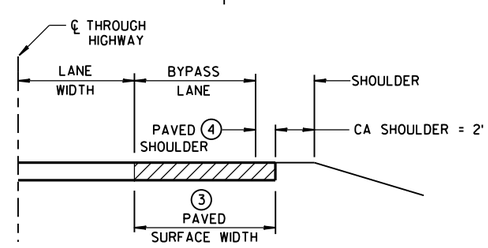

SECTION A-A
(SHOWING BYPASS LANE AND SHOULDER)

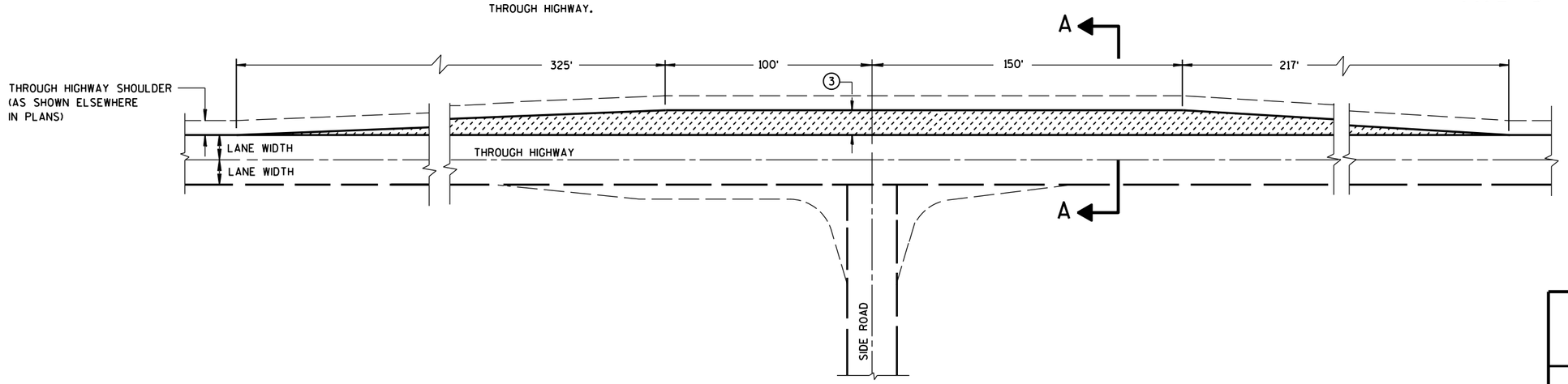

TEE INTERSECTION BYPASS LANE DETAIL

AT-GRADE SIDE ROAD INTERSECTION, TYPES "B1", "B2", "C" AND "D" AND TEE INTERSECTION BYPASS LANE

STATE OF WISCONSIN
DEPARTMENT OF TRANSPO

6

S.D.D. 9 A 1-13a

GENERAL NOTES

DETAILS OF CONSTRUCTION, MATERIALS AND WORKMANSHIP NOT SHOWN ON THIS DRAWING SHALL CONFORM TO THE PERTINENT REQUIREMENTS OF THE STANDARD SPECIFICATIONS AND THE APPLICABLE SPECIAL PROVISIONS.

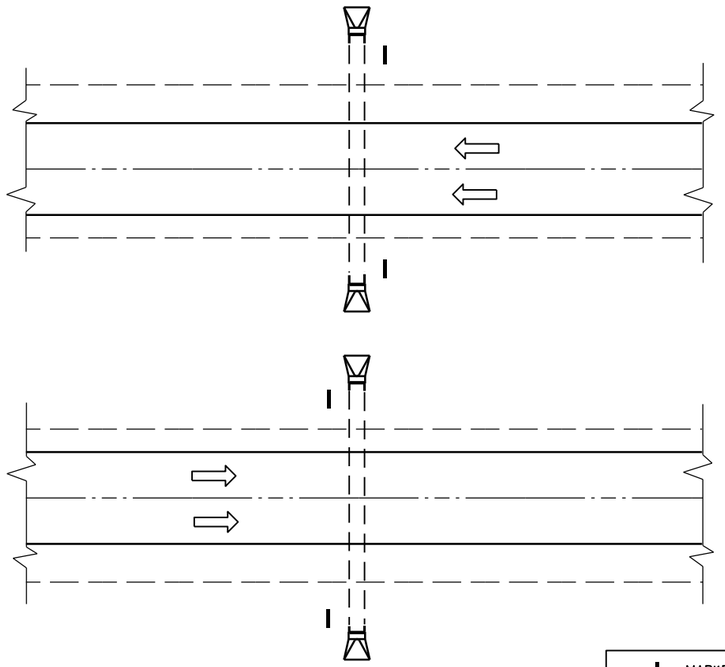

PLAN VIEW

DIVIDED HIGHWAY

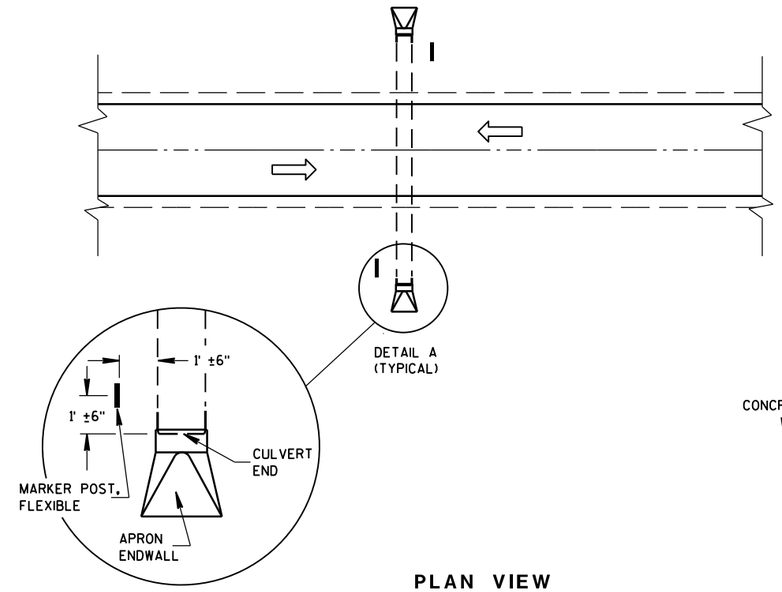

DETAIL A
(TYPICAL)

PLAN VIEW

UNDIVIDED HIGHWAY

MARKER POST, FLEXIBLE

DIRECTION OF TRAFFIC FLOW

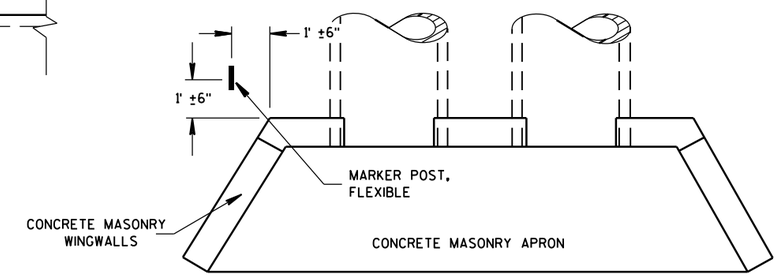

PLAN VIEW

CONCRETE MASONRY ENDWALLS FOR CULVERT PIPE AND PIPE ARCH

FLEXIBLE MARKER POST LOCATION

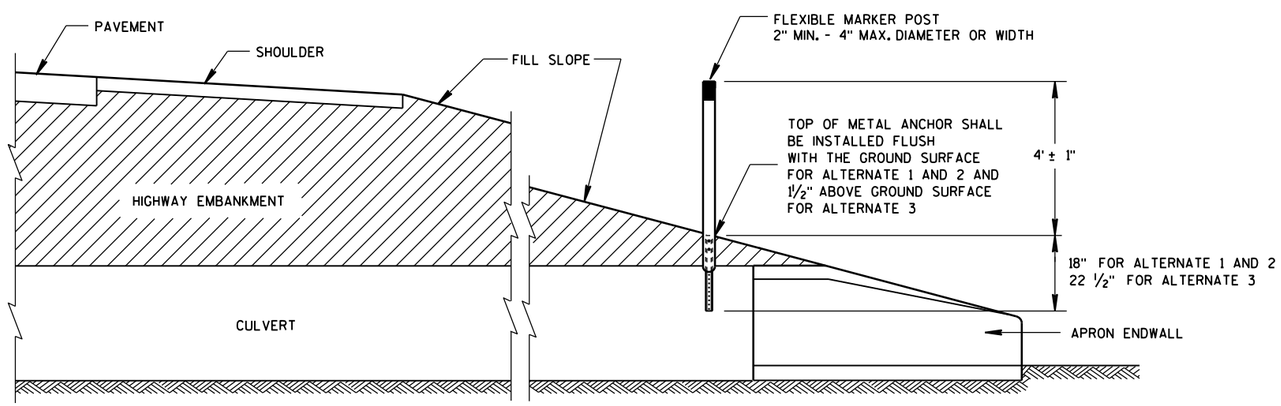

CROSS SECTION

FLEXIBLE MARKER POST

FLEXIBLE MARKER POST FOR CULVERT END

STATE OF WISCONSIN
DEPARTMENT OF TRANSPOR

6

6

S.D.D. 15 A 3-2a

S.D.D. 15 A 3-2a

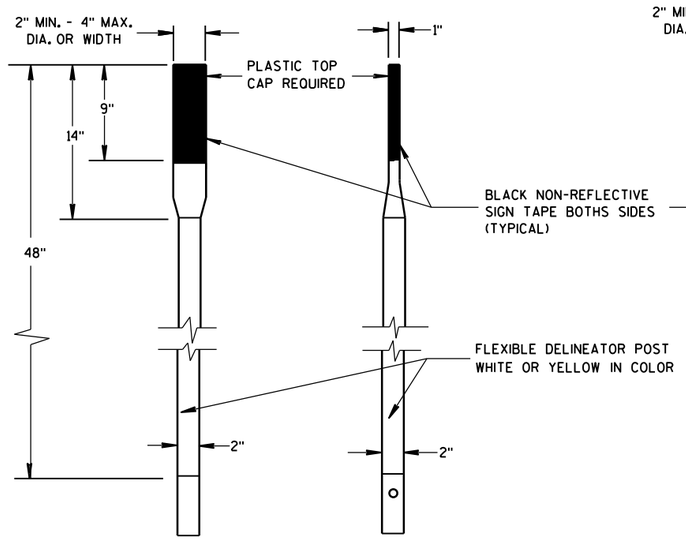

FRONT VIEW SIDE VIEW

ALTERNATE 1

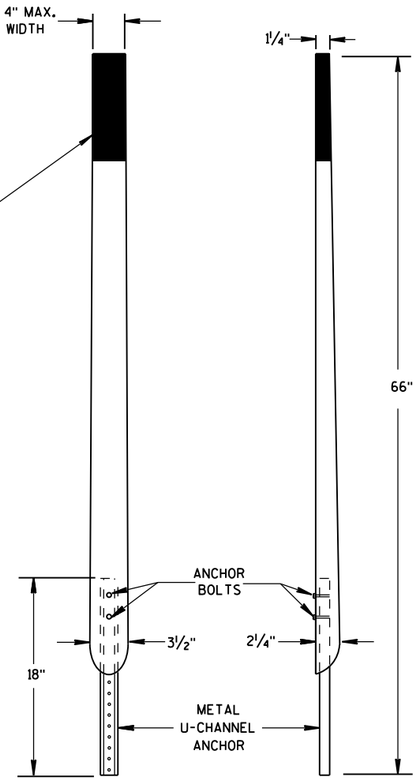

FRONT VIEW SIDE VIEW

ALTERNATE 2

FLEXIBLE MARKER POSTS

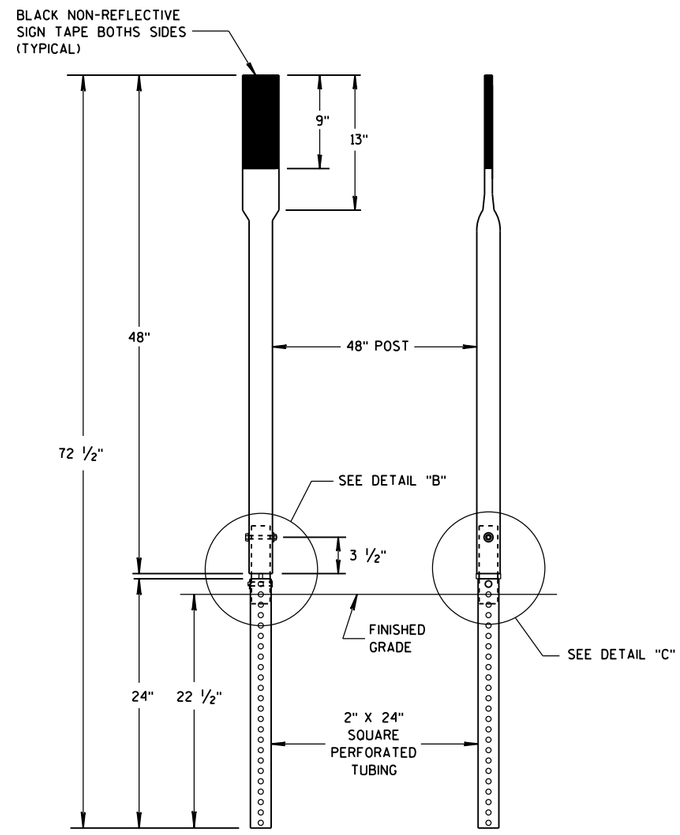

FRONT VIEW SIDE VIEW

ALTERNATE 3

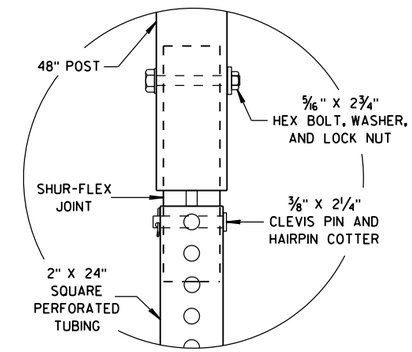

DETAIL B

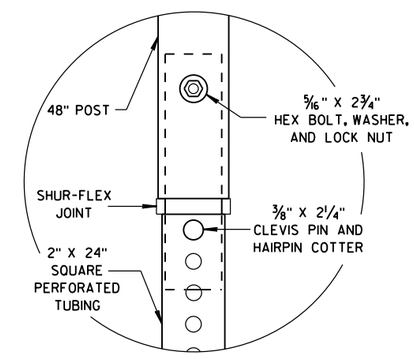

DETAIL C

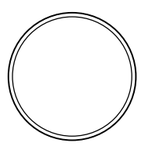

SECTION A-A

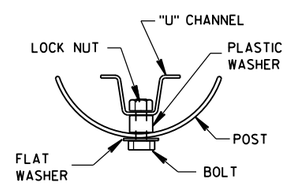

SECTION B-B

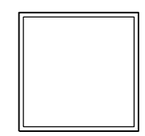

SECTION C-C

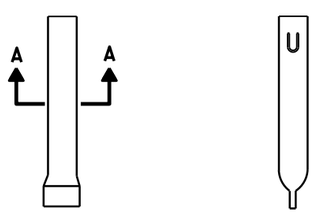

FRONT VIEW SIDE VIEW

ALTERNATE 1

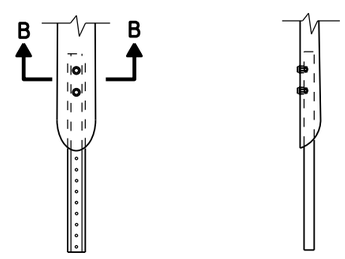

FRONT VIEW SIDE VIEW

ALTERNATE 2

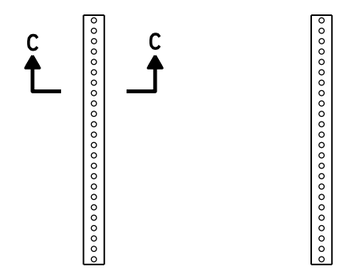

FRONT VIEW SIDE VIEW

ALTERNATE 3

FLEXIBLE MARKER POST ANCHORS

FLEXIBLE MARKER POST
FOR CULVERT END

STATE OF WISCONSIN
DEPARTMENT OF TRANSPORTATION

APPROVED
10/1/2012 /S/ Travis Feltes
DATE STATE TRAFFIC ENGINEER
FHWA

6

6

S.D.D. 15 A 3-2b

S.D.D. 15 A 3-2b

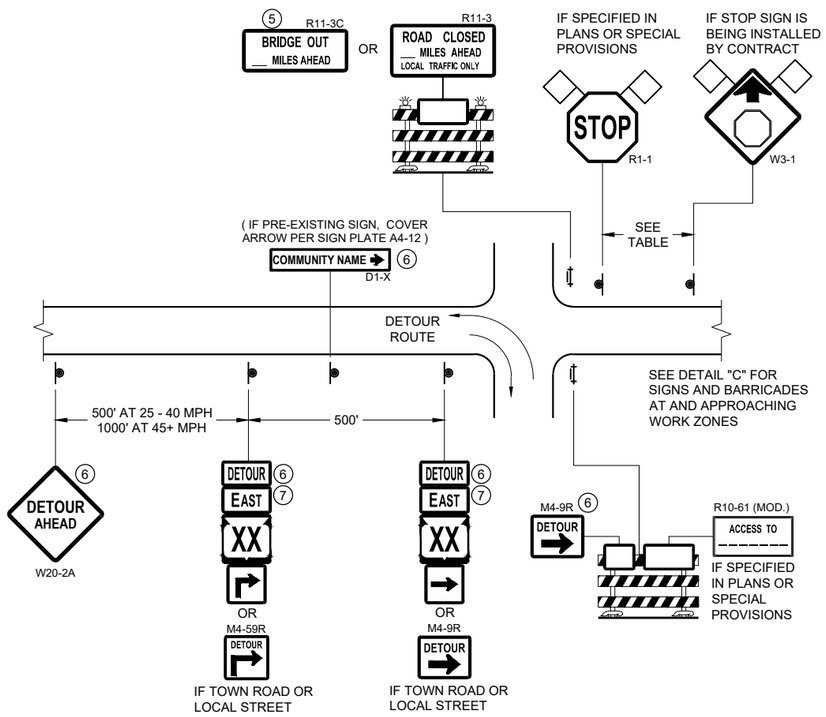

DETAIL A

MAINLINE CLOSURE WITH POSTED DETOUR

WORK ZONE GREATER THAN OR EQUAL TO ½ MILE FROM DETOUR ROUTE (1000 FEET IF URBAN)

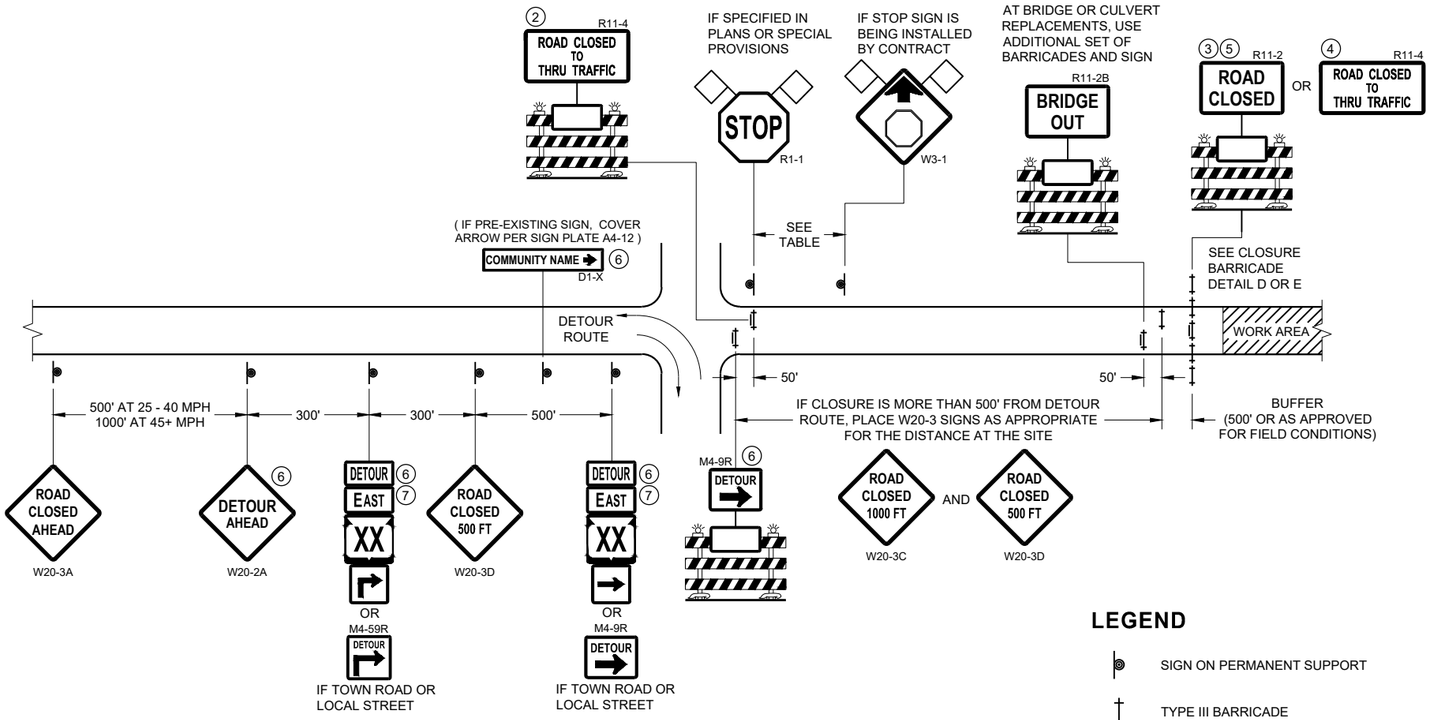

DETAIL B

MAINLINE CLOSURE WITH POSTED DETOUR

WORK ZONE LESS THAN ½ MILE FROM DETOUR ROUTE (1000 FEET IF URBAN)

LEGEND

- SIGN ON PERMANENT SUPPORT
- TYPE III BARRICADE
- TYPE III BARRICADE WITH ATTACHED SIGN
- TYPE "A" WARNING LIGHT (FLASHING)
- WORK AREA
- FLAGS, 16" X 16" MIN. (ORANGE)
- DETOUR M4 - 8
- EAST M3 - X
- XX M1 - 4 OR XX M1 - 6 OR COUNTY X M1 - 5A
- M05 - 1 OR M06 - 1

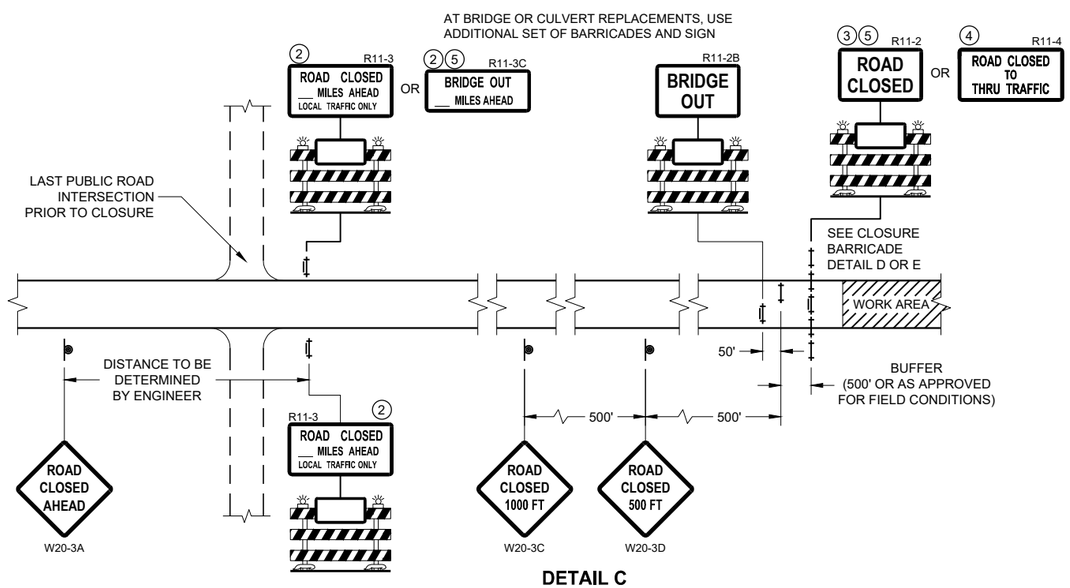

DETAIL C

MAINLINE CLOSURE, NO POSTED DETOUR

SPEED LIMIT (MPH)	"STOP AHEAD" ADVANCE WARNING DISTANCE (FT)
25	200
30	200
35	350
40	350
45	500
50	550
55	750

SEE SDD 15C2-SHEET "b" FOR GENERAL NOTES AND FOOTNOTES 1 THROUGH 7

BARRICADES AND SIGNS FOR MAINLINE CLOSURES

STATE OF WISCONSIN
DEPARTMENT OF TRANSPORTATION

APPROVED
November 2018 /S/ Andrew Heidtke
DATE WORK ZONE ENGINEER
FHWA

6

SDD 15C02 - 07a

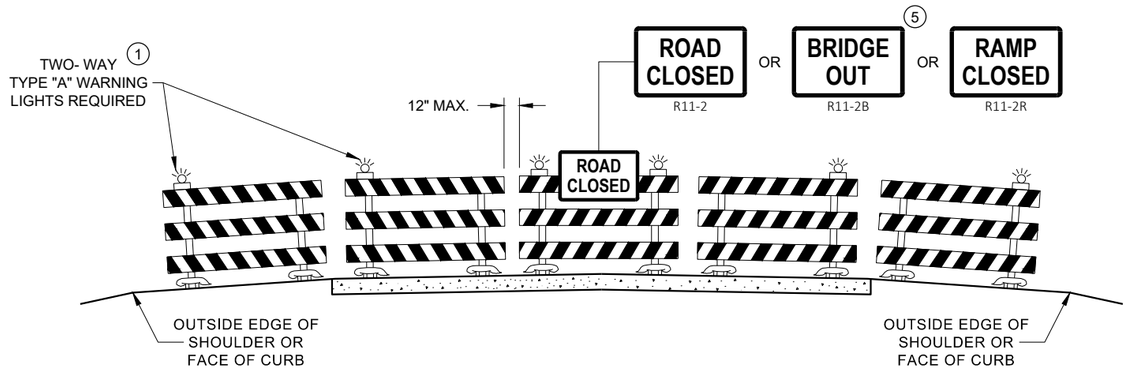

DETAIL D
ROAD CLOSURE BARRICADE DETAIL
APPROACH VIEW

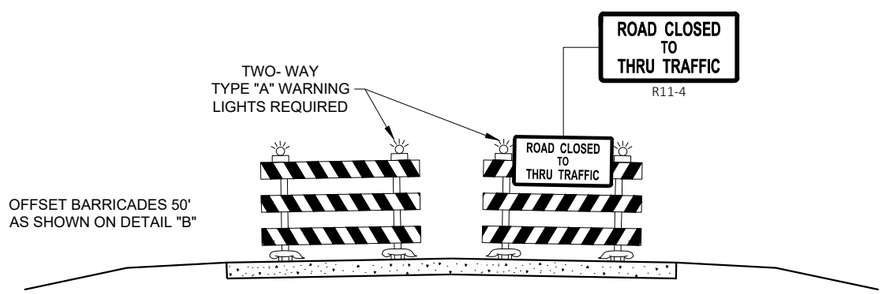

DETAIL E
LANE CLOSURE BARRICADE DETAIL
APPROACH VIEW

SEE SDD 15C2 - SHEET "a" FOR LEGEND

GENERAL NOTES

THE EXACT NUMBER, LOCATION, AND SPACING OF ALL SIGNS AND BARRICADES SHALL BE ADJUSTED TO FIT FIELD CONDITIONS AS APPROVED BY THE ENGINEER.

ANY SIGNS TEMPORARY OR EXISTING, WHICH CONFLICT WITH TRAFFIC CONTROL "IN USE", SHALL BE REMOVED OR COVERED AS NEEDED AND AS APPROVED BY THE ENGINEER.

THE SPACING BETWEEN TRAFFIC CONTROL SIGNS SHOULD BE ADJUSTED TO NOT CONFLICT WITH AND SHOULD PROVIDE A DESIRABLE MINIMUM OF 200 FEET CLEARANCE TO EXISTING SIGNS THAT WILL REMAIN IN PLACE.

BARRICADES THAT MUST BE MOVED FOR A WORK OPERATION SHALL BE IMMEDIATELY RE-ESTABLISHED UPON COMPLETION OF THE OPERATION, OR FOR CONTINUING OPERATIONS, AT THE END OF EACH WORKING DAY.

SIGNS THAT WILL BE IN PLACE LESS THAN 7 CONTINUOUS DAYS AND NIGHTS MAY BE MOUNTED ON PORTABLE SUPPORTS.

ALL TYPE III BARRICADES SHALL HAVE RAILS REFLECTORIZED ON BOTH FACES. STRIPES SHALL BE PROPERLY SLOPED DOWN TOWARD THE TRAFFIC SIDE OR AS SHOWN IN THE ROAD CLOSURE BARRICADE DETAIL "D" FOR FULL ROAD CLOSURES.

TYPE "A" LOW - INTENSITY FLASHING WARNING LIGHTS SHALL BE VISIBLE ON BOTH SIDES OF THE BARRICADE.

THE R11 - 2, R11 - 3, M4 - 9, R11 - 4, AND R10 - 61 SIGNS PLACED ON THE BARRICADES SHALL COVER NO MORE THAN THE TOP RAIL. THE SIGNS SHALL NOT COVER ANY PORTION OF THE MIDDLE RAIL OR BOTTOM RAILS.

"WO" AND "MO" SIGNS ARE THE SAME AS "W" AND "M" SIGNS EXCEPT THE BACKGROUND IS ORANGE.

ALL SIGNS SHALL BE 48" X 48" UNLESS OTHERWISE NOTED BELOW:
- R11 - 2 SHALL BE 48" X 30"
- R11 - 3 SHALL, R11 - 4 AND R10 - 61 SHALL BE 60 " X 30"
- M4 - 9 SHALL BE 30" X 24"
- M3 - X SHALL BE 24" X 12" (36" X 18" IF NEEDED TO MATCH EXISTING SIGNS)
- M4 - 8 SHALL BE 24" X 12" (36" X 18" IF NEEDED TO MATCH EXISTING SIGNS)
- M1 - 4, M1 - 5A AND M1 - 6 SHALL BE 24" X 24" (36" X 36" IF NEEDED TO MATCH EXISTING SIGNS)
- MO5 - 1 AND MO6 - 1 SHALL BE 21" X 21" (30" X 30" IF NEEDED TO MATCH EXISTING SIGNS)
- D1 - X SHALL BE AS SHOWN ON SPECIFIC PROJECT SIGNING DETAIL SHEETS.
- R1 - 1 SHALL BE 36" X 36"

1. TWO WARNING LIGHTS SHALL BE PROVIDED ON THE CENTER BARRICADE AND A MINIMUM OF ONE WARNING LIGHT SHALL BE PROVIDED ON EACH OF THE OTHER BARRICADES WITHIN THE ROADWAY LIMITS. SPACING OF THE WARNING LIGHTS SHALL BE UNIFORM TO THE EDGE OF ROADWAY AS SHOWN (APPROX. 8 FOOT LIGHT SPACING.
2. THESE SIGNS AND BARRICADES ARE NOT REQUIRED IF ROAD CLOSURE BEGINS AT AN INTERSECTION.
3. FOR ROAD CLOSURE WITHOUT LOCAL ACCESS TO PROJECT, SEE ROAD CLOSURE BARRICADE DETAIL "D".
4. FOR ROAD CLOSURE WITH LOCAL ACCESS TO PROJECT, SEE ROAD CLOSURE BARRICADE DETAIL "E".
5. FOR BRIDGE OR CULVERT REPLACEMENTS, SUBSTITUTE "BRIDGE OUT" INSTEAD OF "ROAD CLOSED" ON R11 - 2 AND R11 - 3 SIGNS.
6. INSTALL DETOUR AND COMMUNITY GUIDE SIGNS AND ARROWS ONLY IF SPECIFIED IN THE CONTRACT. IF THERE ARE EXISTING ROUTE MARKER ASSEMBLIES THAT WILL REMAIN IN PLACE, ADJUST THE LOCATION OF THE DETOUR ROUTE SIGNS TO CORRESPOND WITH THE EXISTING ASSEMBLIES. MODIFY EXISTING SIGNS WHERE POSSIBLE. SEE SPECIFIC PROJECT DETOUR SIGNING DETAIL SHEETS. IF DETOUR SIGNS ARE BEING INSTALLED BY OTHERS, PLACE THE CONTRACTED TRAFFIC CONTROL SIGNS TO ALLOW FOR PLACEMENT OF ALL WARNING, DETOUR AND GUIDE SIGNS AS SHOWN.
7. "EAST" CARDINAL DIRECTION MARKERS AND RIGHT TURN ARROWS ARE SHOWN. USE OTHER CARDINAL DIRECTIONS AND ARROWS AS APPROPRIATE.

BARRICADES AND SIGNS FOR VARIOUS CLOSURES

STATE OF WISCONSIN
DEPARTMENT OF TRANSPORTATION

APPROVED
November 2018 — DATE
/S/ Andrew Heidtke — WORK ZONE ENGINEE
FHWA

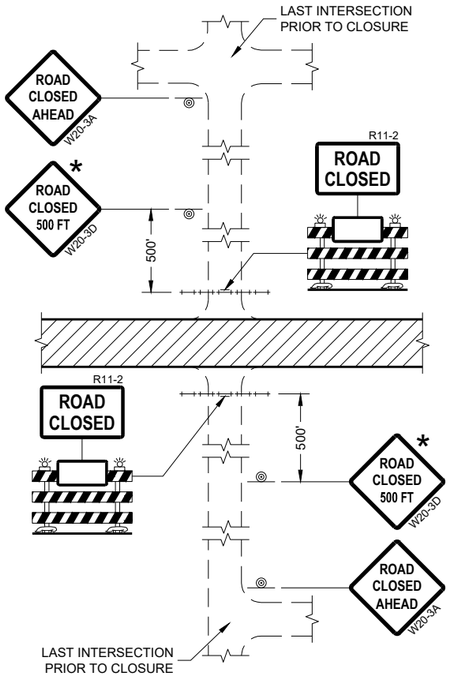

DETAIL 1
(NO ACCESS TO PROJECT)

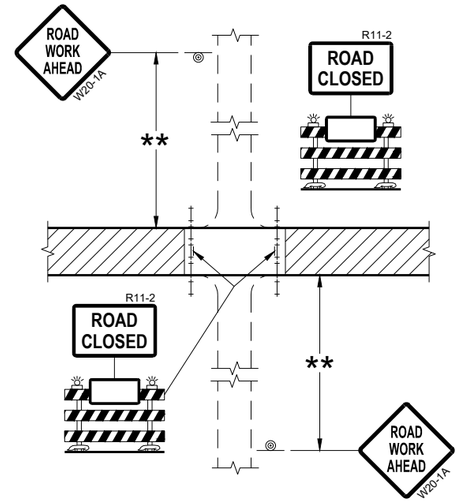

DETAIL 2
(PUBLIC CROSS-TRAFFIC MAINTAINED.
NO ACCESS TO PROJECT)

GENERAL NOTES

THE EXACT NUMBER, LOCATION, AND SPACING OF ALL SIGNS AND BARRICADES SHALL BE ADJUSTED TO FIT FIELD CONDITIONS AS APPROVED BY THE ENGINEER.

ANY SIGNS TEMPORARY OR EXISTING, WHICH CONFLICT WITH TRAFFIC CONTROL "IN USE" SHALL BE REMOVED OR COVERED AS NEEDED AND AS APPROVED BY THE ENGINEER.

THE SPACING BETWEEN TRAFFIC CONTROL SIGNS SHOULD BE ADJUSTED TO NOT CONFLICT WITH AND SHOULD PROVIDE A DESIRABLE MINIMUM OF 200 FEET CLEARANCE (500 FEET DESIRABLE) TO EXISTING SIGNS THAT WILL REMAIN IN PLACE.

IF A "STOP" SIGN MUST BE REMOVED FOR A WORK OPERATION, A TEMPORARY "STOP" SIGN SHALL BE PLACED PRIOR TO THE SIGN REMOVAL, OR A FLAGGER SHALL BE PROVIDED UNTIL THE SIGN IS REESTABLISHED.

BARRICADES THAT MUST BE MOVED FOR A WORK OPERATION SHALL BE IMMEDIATELY REESTABLISHED UPON COMPLETION OF THE OPERATION OR FOR CONTINUING OPERATIONS, AT THE END OF EACH WORKING DAY.

SIGNS THAT WILL BE IN PLACE LESS THAN SEVEN CONTINUOUS DAYS AND NIGHTS MAY BE MOUNTED ON PORTABLE SUPPORTS.

ALL TYPE III BARRICADES SHALL HAVE RAILS REFLECTORIZED ON BOTH FACES. STRIPES SHALL BE PROPERLY SLOPED DOWN TOWARD THE TRAFFIC SIDE OR AS SHOWN IN THE ROAD CLOSURE BARRICADE DETAIL "D" FOR FULL ROAD CLOSURES.

TYPE "A" LOW-INTENSITY FLASHING WARNING LIGHTS SHALL BE VISIBLE ON BOTH SIDES OF THE BARRICADE.

THE R11-2, R11-3, AND R11-4 SIGNS PLACED ON BARRICADES SHALL COVER NO MORE THAN THE TOP RAIL. THE SIGNS SHALL NOT COVER ANY PORTION OF THE MIDDLE OR BOTTOM RAILS.

ALL SIGNS SHALL BE 48" X 48" UNLESS OTHERWISE NOTED BELOW:
R11-2 SHALL BE 48" X 30".
R11-4 AND R11-3 SHALL BE 60" X 30".

* OMIT THE "ROAD CLOSED 500 FT." SIGN IF THE LAST INTERSECTION IS 500 FEET OR LESS FROM THE WORK ZONE.

** 500' MAX. OR AT LAST INTERSECTION, WHICHEVER IS CLOSEST.

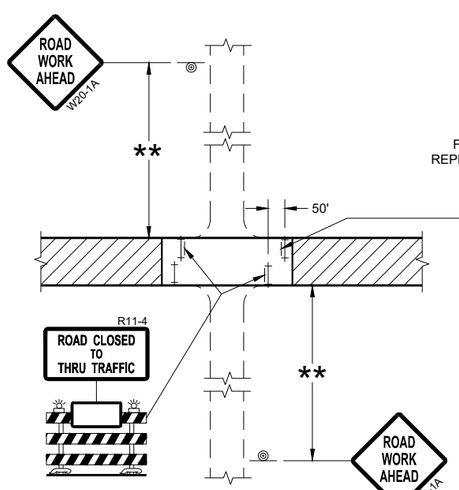

DETAIL 3
(PUBLIC CROSS-TRAFFIC MAINTAINED.
CONTRACTOR, LOCAL BUSINESS AND
RESIDENT ACCESS TO PROJECT)

FOR BRIDGE OR CULVERT
REPLACEMENT, USE ADDITIONAL
SIGN ON BARRICADE

BRIDGE OUT
XX MILES AHEAD
R11-3C

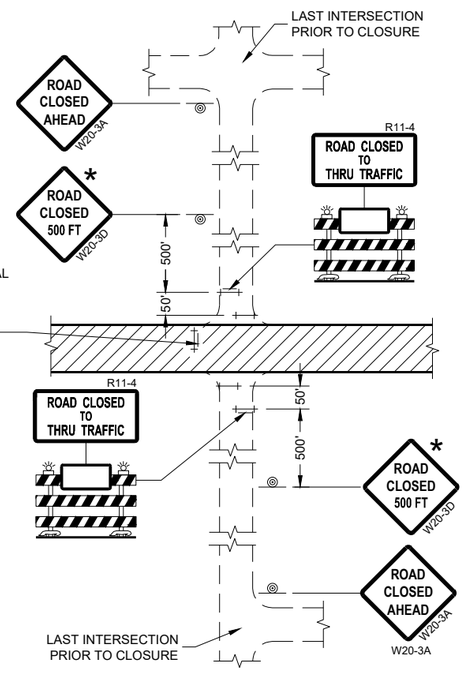

DETAIL 4
(CONTRACTOR, LOCAL BUSINESS AND
RESIDENT ACCESS TO PROJECT)

LEGEND

- SIGN ON PERMANENT SUPPORT
- TYPE III BARRICADE
- TYPE III BARRICADE WITH ATTACHED SIGN
- TYPE "A" WARNING LIGHT (FLASHING)
- WORK AREA

BARRICADES AND SIGNS FOR SIDEROAD CLOSURES

STATE OF WISCONSIN
DEPARTMENT OF TRANSPORTATION

APPROVED
July 2018 — DATE
/S/ Andrew Heidtke — WORK ZONE ENGINEE
FHWA

6

SDD 15C03 - 05

GENERAL NOTES

THE EXACT NUMBER, LOCATION, AND SPACING OF ALL SIGNS AND DEVICES SHALL BE ADJUSTED TO FIT FIELD CONDITIONS.

THE SPACING BETWEEN TRAFFIC CONTROL SIGNS SHOULD BE ADJUSTED TO NOT CONFLICT WITH AND SHOULD PROVIDE A MINIMUM OF 200 FEET (500 FEET DESIRABLE) CLEARANCE TO EXISTING SIGNS THAT WILL REMAIN IN PLACE.

ALL SIGNS ARE 48" X 48" UNLESS OTHERWISE NOTED.

SIGNS THAT WILL BE IN PLACE LESS THAN SEVEN CONTINUOUS DAYS AND NIGHTS MAY BE MOUNTED ON PORTABLE SUPPORTS.

IF A "STOP" SIGN MUST BE REMOVED FOR A WORK OPERATION, A TEMPORARY "STOP" SIGN SHALL BE PLACED PRIOR TO THE SIGN REMOVAL, OR A FLAGGER SHALL BE PROVIDED UNTIL THE SIGN IS REESTABLISHED.

* OMIT G20-1 SIGNS IF LENGTH OF WORK AREA IS 2 MILES OR LESS

** PLACE AN ADDITIONAL W20-1A "ROAD WORK AHEAD" SIGN IF WORK AREA WITHIN THE PROJECT IS SEPARATED BY MORE THAN 2 MILES FROM PREVIOUS WORK AREA.

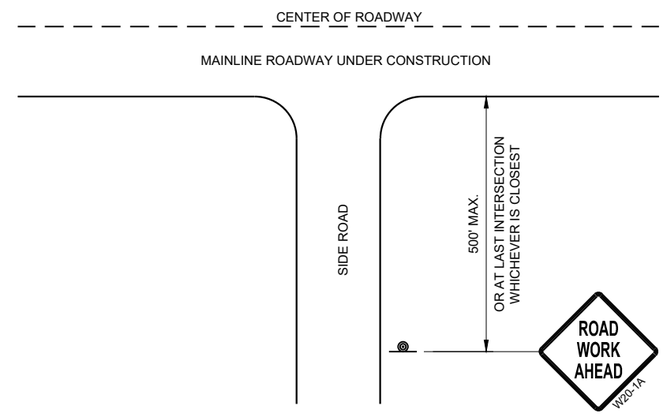

TYPICAL SIDE ROAD APPROACH WARNING SIGN DETAIL

LEGEND

- SIGN ON PERMANENT SUPPORT
- DIRECTION OF TRAFFIC
- WORK AREA

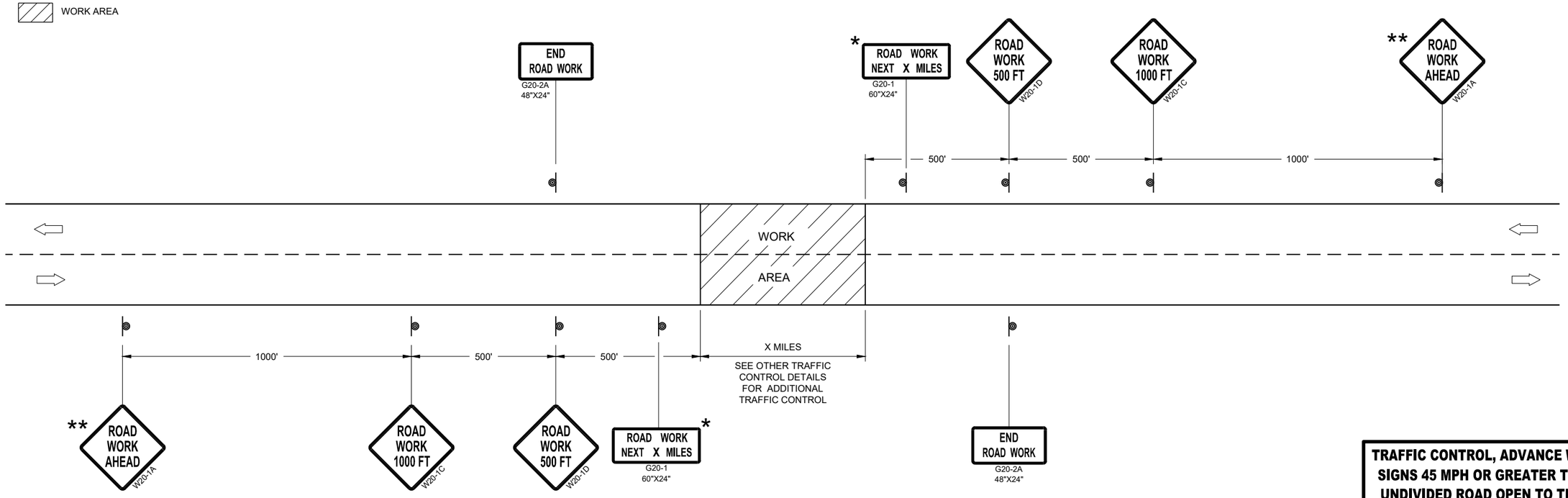

TRAFFIC CONTROL, ADVANCE WARNING SIGNS 45MPH OR GREATER

TRAFFIC CONTROL, ADVANCE WARNING SIGNS 45 MPH OR GREATER TWO-WAY UNDIVIDED ROAD OPEN TO TRAFFICE

STATE OF WISCONSIN
DEPARTMENT OF TRANSPORTATION

APPROVED
July 2018 — DATE
/S/ Andrew Heidtke — WORK ZONE ENGINEE
FHWA

6

SDD 15C04 - 05

GENERAL NOTES

THE EXACT NUMBER, LOCATION, AND SPACING OF ALL SIGNS AND DEVICES SHALL BE ADJUSTED TO FIT FIELD CONDITIONS.

THE SPACING BETWEEN TRAFFIC CONTROL SIGNS SHOULD BE ADJUSTED TO NOT CONFLICT WITH AND SHOULD PROVIDE A MINIMUM OF 200 FEET (500 FEET DESIRABLE) CLEARANCE TO EXISTING SIGNS THAT WILL REMAIN IN PLACE.

ALL SIGNS ARE 48" X 48" UNLESS OTHERWISE NOTED. IF NECESSARY DUE TO SPACE CONSTRAINTS, 36"X36" SIGNS MAY BE USED INSTEAD OF 48" X 48" SIGNS.

SIGNS THAT WILL BE IN PLACE LESS THAN SEVEN CONTINUOUS DAYS AND NIGHTS MAY BE MOUNTED ON PORTABLE SUPPORTS.

IF A "STOP" SIGN MUST BE REMOVED FOR A WORK OPERATION, A TEMPORARY "STOP" SIGN SHALL BE PLACED PRIOR TO THE SIGN REMOVAL, OR A FLAGGER SHALL BE PROVIDED UNTIL THE SIGN IS REESTABLISHED.

* THE THIRD W20-1 SIGN IS REQUIRED ONLY IF THERE IS AN INTERSECTION BETWEEN THE "ROAD WORK 500 FEET" SIGN AND THE WORK ZONE. ADJUST THE PLACEMENT OF THIS SIGN BASED ON INTERSECTION LOCATION AND OTHER FIELD CONDITIONS.

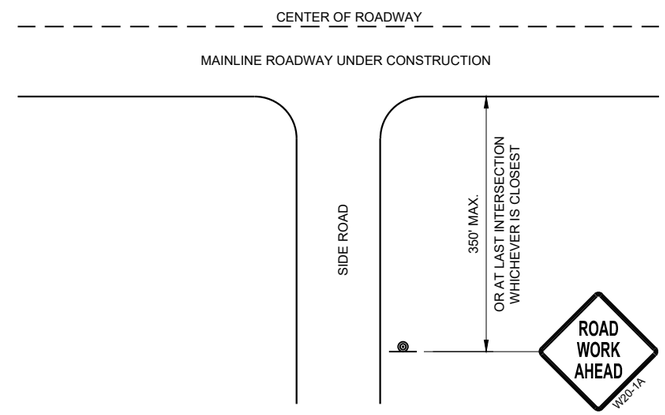

TYPICAL SIDE ROAD APPROACH WARNING SIGN DETAIL

LEGEND

- SIGN ON PERMANENT SUPPORT
- DIRECTION OF TRAFFIC
- WORK AREA

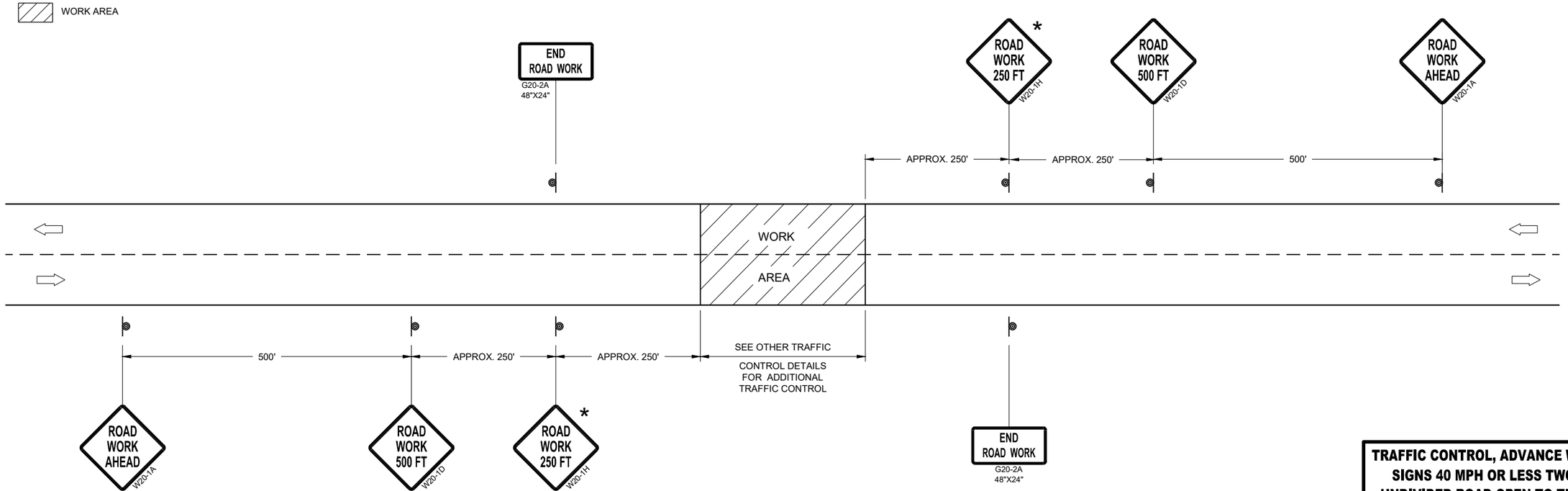

TRAFFIC CONTROL, ADVANCE WARNING SIGNS 40MPH OR LESS

TRAFFIC CONTROL, ADVANCE WARNING SIGNS 40 MPH OR LESS TWO-WAY UNDIVIDED ROAD OPEN TO TRAFFICE

STATE OF WISCONSIN
DEPARTMENT OF TRANSPORTATION

APPROVED
July 2018 — DATE
/S/ Andrew Heidtke — WORK ZONE ENGINEE
FHWA

6

SDD 15C05 - 05

6

SDD 15C05 - 05

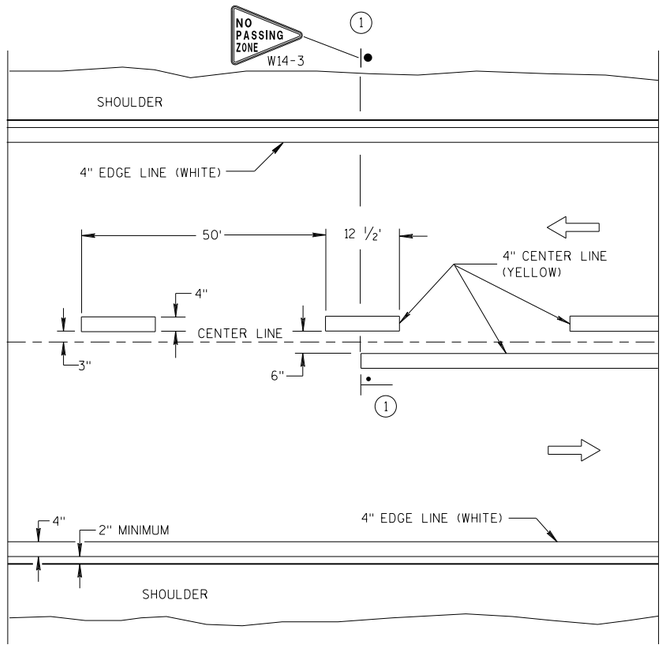

TWO WAY TRAFFIC

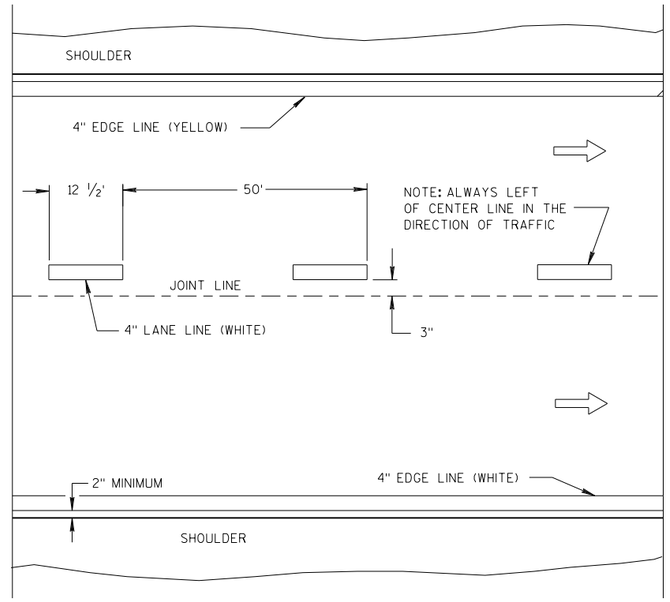

ONE WAY TRAFFIC

PERMANENT PAVEMENT MARKING

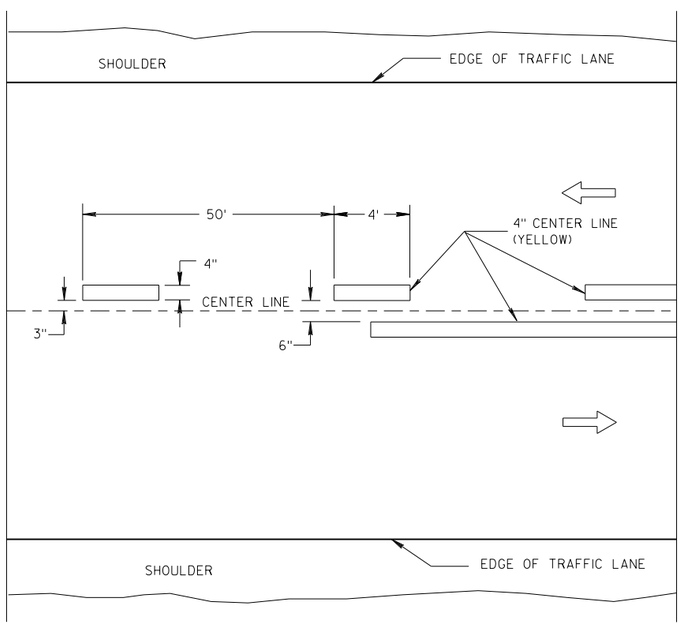

TWO WAY TRAFFIC

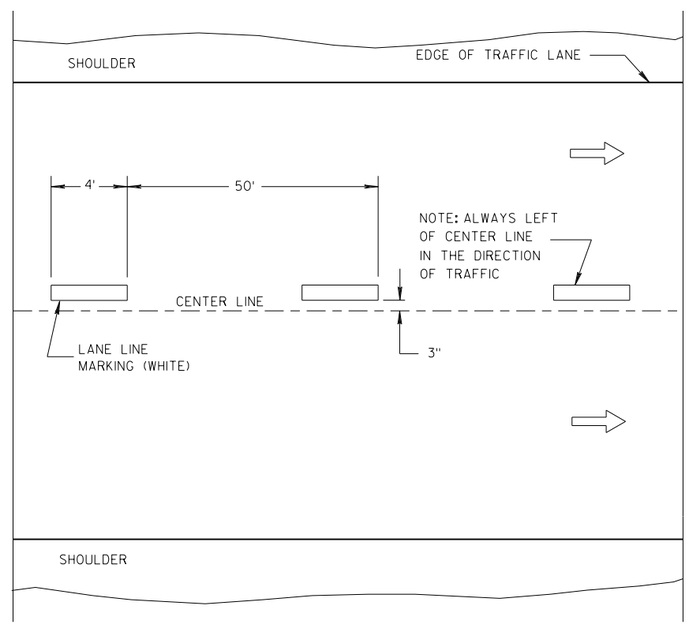

ONE WAY TRAFFIC

TEMPORARY PAVEMENT MARKING

GENERAL NOTES

DETAILS OF CONSTRUCTION NOT SHOWN ON THIS DRAWING SHALL CONFORM TO STANDARD SPECIFICATIONS AND SPECIAL PROVISIONS.

(1) LOCATE THE NO PASSING ZONE W14-3 SIGN WITHIN 50 FEET OF THE "T" MARKING.

NOTE

ARROW SYMBOL (⇨) SHOWS DIRECTION OF TRAVEL

LEGEND

"T" MARKING

POST MOUNTED SIGN

LONGITUDINAL MARKING (MAINLINE)

STATE OF WISCONSIN
DEPARTMENT OF TRANSPORTATION

APPROVED

7/2018 — DATE

/S/ Matthew R. Rauch — STATE SIGNING AND MAR INEER

FHWA

6

S.D.D. 15 C 8-19a

GENERAL NOTES

DETAILS OF CONSTRUCTION NOT SHOWN ON THIS DRAWING SHALL CONFORM TO THE PERTINENT REQUIREMENTS OF THE STANDARD SPECIFICATIONS AND THE APPLICABLE SPECIAL PROVISIONS.

SURFACE MOUNTED BASES SHALL BE FURNISHED IN ACCORDANCE WITH MANUFACTURERS RECOMMENDATIONS TO BE COMPATIBLE WITH FLEXIBLE TUBULAR MARKER POSTS TO A SIZE AND SHAPE THAT WILL PROVIDE A STABLE POST FOUNDATION WHEN SECURED TO THE PAVEMENT.

THE ASPHALTIC ADHESIVE OR BUTYL PAD FURNISHED SHALL BE IN ACCORDANCE WITH MANUFACTURERS RECOMMENDATIONS, UNLESS DIRECTED BY THE ENGINEER TO USE BOLTS.

(1) REFLECTIVE SHEETING SHALL FOLLOW THE REQUIREMENTS IN THE APPROVED PRODUCTS LISTING FOR SIGN SHEETING.

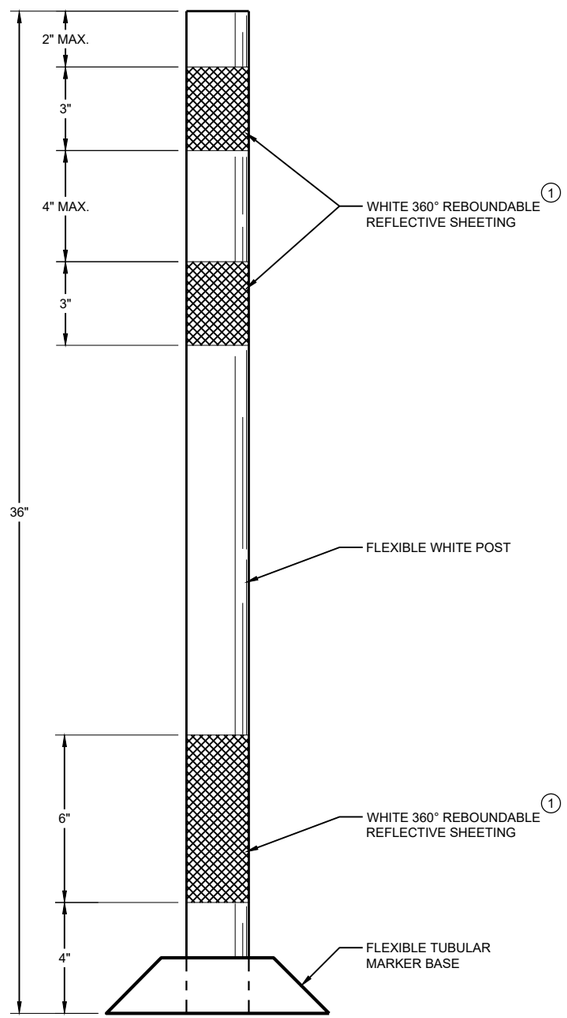

FLEXIBLE TUBULAR MARKER POST PERMANENT CROSSOVER

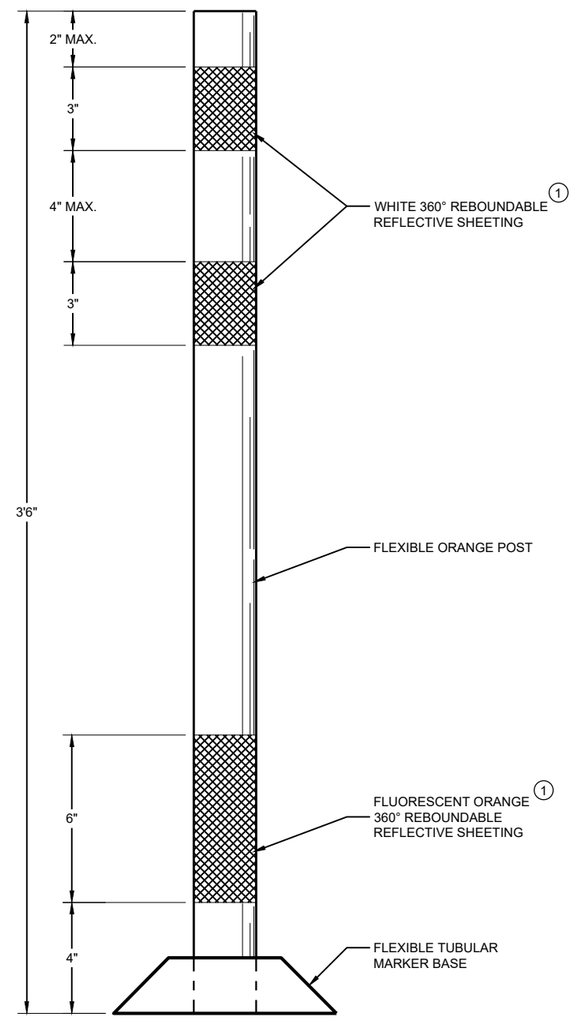

FLEXIBLE TUBULAR MARKER POST WORK ZONE

6

SDD 15C11 - 07a

CHANNELIZING DEVICES FLEXIBLE TUBULAR MARKER POST

STATE OF WISCONSIN
DEPARTMENT OF TRANSPORTATION

APPROVED
June 2017 — DATE
/S/ Andrew Heidtke — WORK ZONE ENGINEE
FHWA

6

SDD 15C11 - 07a

GENERAL NOTES

1. REFLECTIVE SHEETING SHALL FOLLOW THE REQUIREMENTS IN THE APPROVED PRODUCTS LISTING FOR SIGN SHEETING.
2. LOCATION OF WARNING LIGHTS WHEN SHOWN ON THE PLAN.

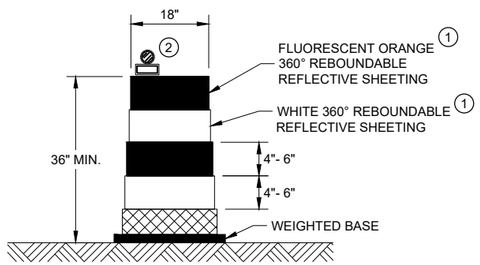

DRUM

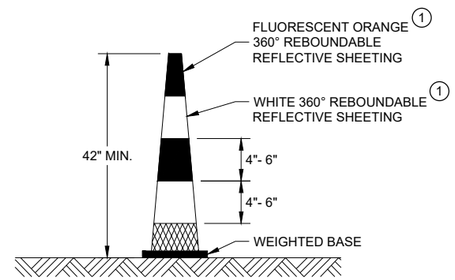

42" CONE

DO NOT USE IN TAPERS
½ SPACING OF DRUMS

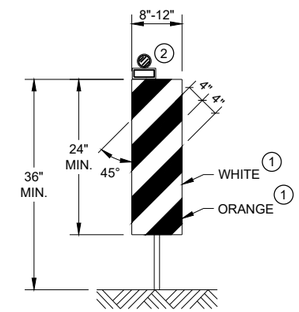

VERTICAL PANEL

THE STRIPES SHALL SLOPE DOWNWARD TO
THE TRAFFIC SIDE FOR CHANNELIZATION.

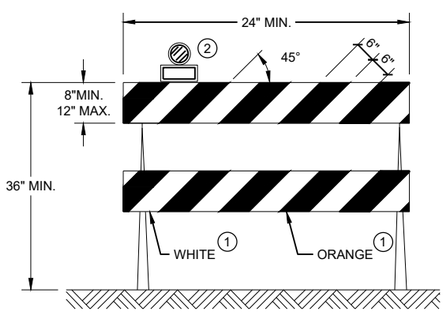

TYPE II BARRICADE

FOR RAILS LESS THAN 36" LONG, 4" WIDE STRIPES
MAY BE USED. ALL STRIPES SHALL SLOPE DOWNWARD
TO THE TRAFFIC SIDE FOR CHANNELIZATION.

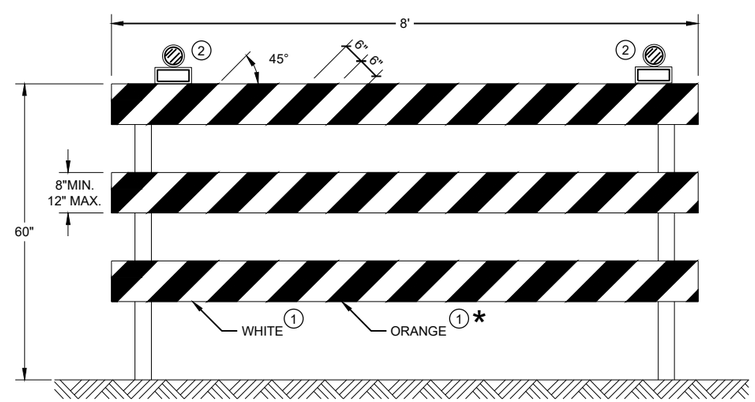

TYPE III BARRICADE

IF SIGN MOUNTED, DO NOT COVER MORE THAN 50% OF THE TOP
TWO RAILS OR 33% OF THE TOTAL AREA OF THE THREE RAILS.

* IF USED FOR A PERMANENT APPLICATION USE RED SHEETING.

CHANNELIZING DEVICES DRUMS, CONES, BARRICADES AND VERTICAL PANELS

STATE OF WISCONSIN
DEPARTMENT OF TRANSPORTATION

APPROVED
June 2017 — DATE
/S/ Andrew Heidtke — WORK ZONE ENGINEE
FHWA

6

SDD 15C11 - 07b

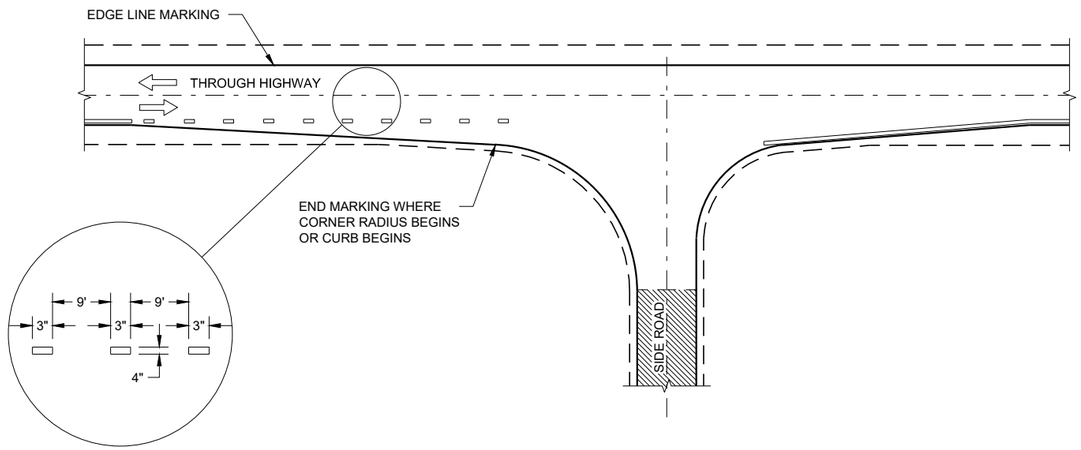

MINOR INTERSECTION

GENERAL NOTES

OMIT EDGE LINES THROUGH INTERSECTIONS. CONTINUE EDGE LINES THROUGH DRIVEWAYS.

1. WHEN DISTANCE "A" IS LESS THAN 250 FEET, OMIT LANE LINE.
2. WHEN DISTANCE "B" IS LESS THAN 100 FEET, OMIT CHANNELIZING LANE LINE.
3. BARRIER LINE ENDS AT SIDE ROAD PAVEMENT / SURFACE EDGE EXTENSION.
4. BARRIER LINE STARTS 500 FEET PRIOR TO THE BYPASS TAPER

ARROW SYMBOL (⇨) SHOWS DIRECTION OF TRAVEL

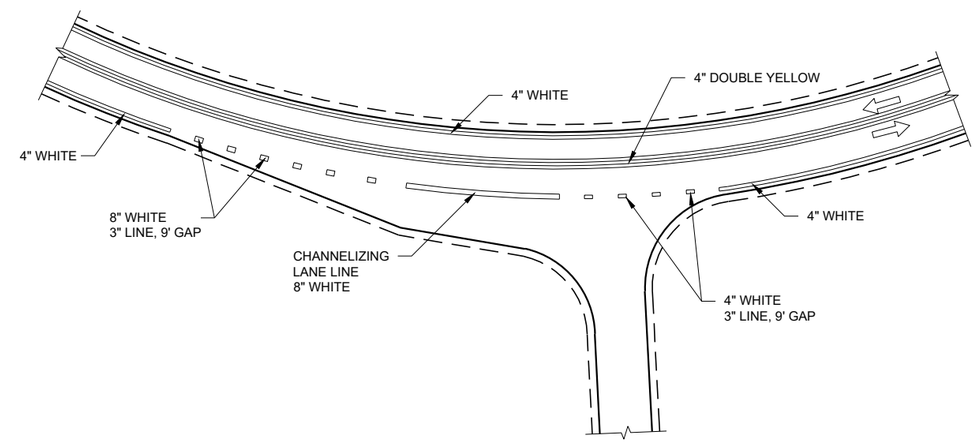

INTERSECTION ON OUTSIDE OF CURVE

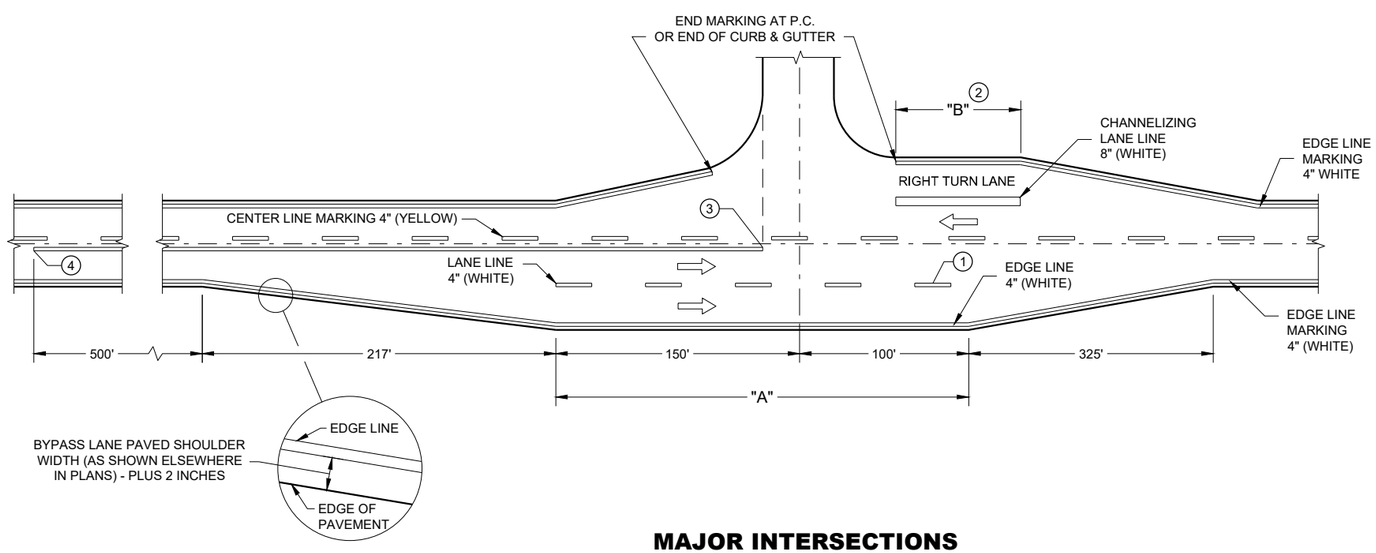

MAJOR INTERSECTIONS

(INTERSECTION WITH FULL RIGHT TURN LANE OR BYPASS LANE)

PAVEMENT MARKING (INTERSECTIONS)

STATE OF WISCONSIN
DEPARTMENT OF TRANSPORTAT

6

SDD 15C35 - 03a

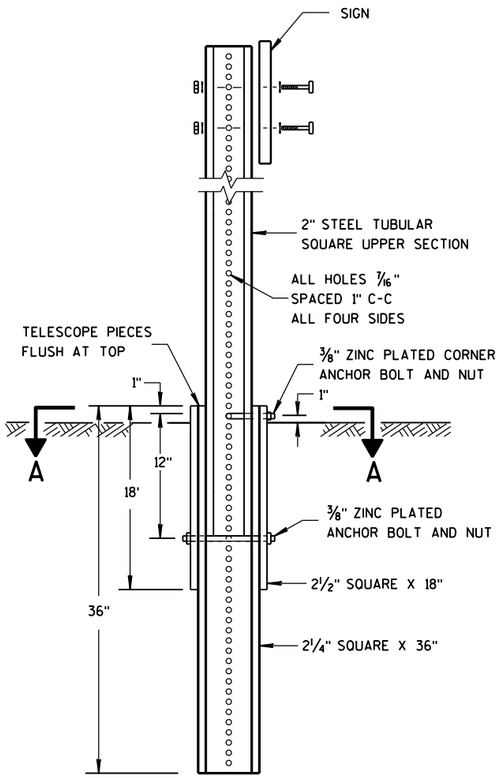

DETAIL OF TUBULAR STEEL SIGN POST

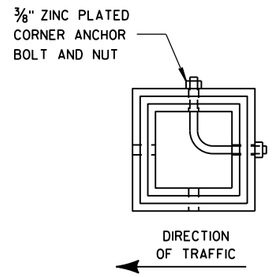

SECTION A-A

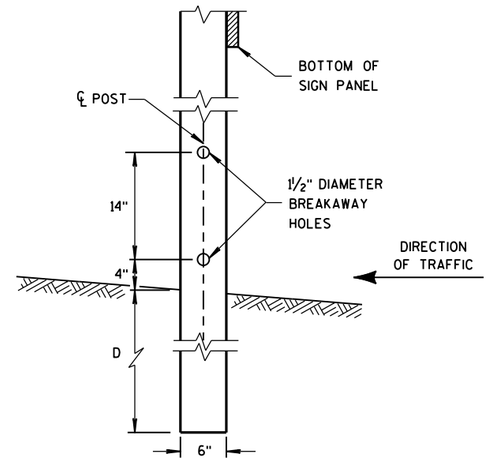

4"x6" WOOD POST MODIFICATION

GENERAL NOTES

1. 6 FEET FROM THE EDGE OF PAVEMENT (EDGE LINE LOCATION) UNLESS OTHERWISE DIRECTED BY THE PROJECT ENGINEER. LATERAL OFFSET SHOULD BE ADJUSTED TO AVOID THE DITCH FLOWLINE.
2. THE EXISTENCE OF CURB AND GUTTER DOES NOT IN ITSELF MANDATE THE VERTICAL CLEARANCE ILLUSTRATED. THAT HEIGHT IS TYPICALLY MEASURED WHERE THERE IS SIDEWALK ADJACENT TO THE ROADWAY OR PARKING IS PERMITTED. IN THE ABSENCE OF SIDEWALK, VERTICAL CLEARANCE IS MEASURED FROM THE TOP OF THE CURB. IF NO SIDEWALK AND NO PARKING, VERTICAL CLEARANCE MAY BE REDUCED TO 5 FOOT MINIMUM. OFFSET OF SIGNS IS MEASURED FROM THE CURB FLOWLINE.
3. FOR SIGNS REQUIRING 4 POSTS, SPACE INTERMEDIATE POSTS EVENLY.

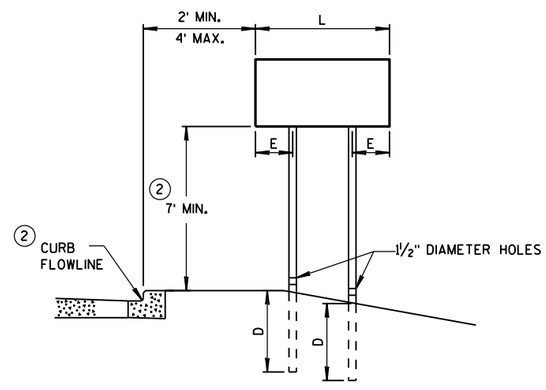

URBAN AREA

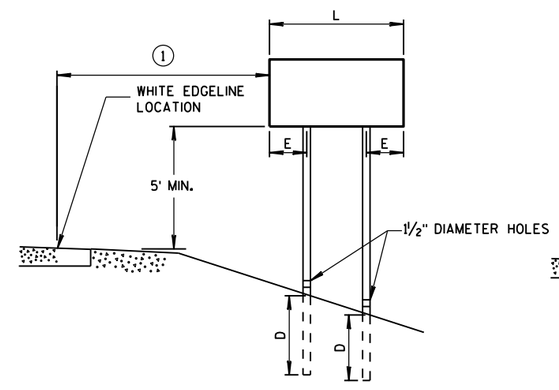

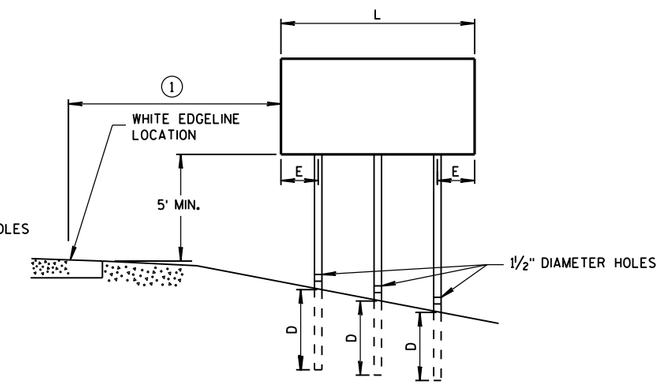

RURAL AREA

POST MOUNTING DETAIL FOR TEMPORARY TRAFFIC CONTROL FIXED MESSAGE SIGNS

TUBULAR STEEL POSTS

AREA OF SIGN INSTALLATION (SQ. FT.)	NUMBER OF REQUIRED TUBULAR STEEL POSTS
9 OR LESS	1
GREATER THAN 9 LESS THAN OR EQUAL TO 18	2
GREATER THAN 18 LESS THAN OR EQUAL TO 27	3

SIGNS WIDER THAN 3 FEET OR LARGER THAN 9 SQ. FT. SHALL BE MOUNTED ON MULTIPLE POSTS (SEE ABOVE TABLE).

SIGNS LARGER THAN 27 SQ. FT. SHALL NOT BE MOUNTED ON TUBULAR STEEL POSTS.

WOOD POST EMBEDMENT DEPTH

AREA OF SIGN INSTALLATION (SQ. FT.)	D (MIN)
20 OR LESS	4'
GREATER THAN 20	5'

4" X 6" WOOD POST

POST SPACING REQUIREMENTS		NUMBER OF WOOD POSTS REQUIRED
L	E	
48" OR LESS AND LESS THAN 20 SQ. FT.	-	1
LESS THAN 60"	12"	2
60" TO 120"	L/5	2
GREATER THAN 120" LESS THAN 168"	12"	3
168" AND GREATER	12"	4

SEE NOTE 3

TEMPORARY TRAFFIC CONTROL SIGN MOUNTING

STATE OF WISCONSIN
DEPARTMENT OF TRANSPO

6

S.D.D. 15 D 38-2a

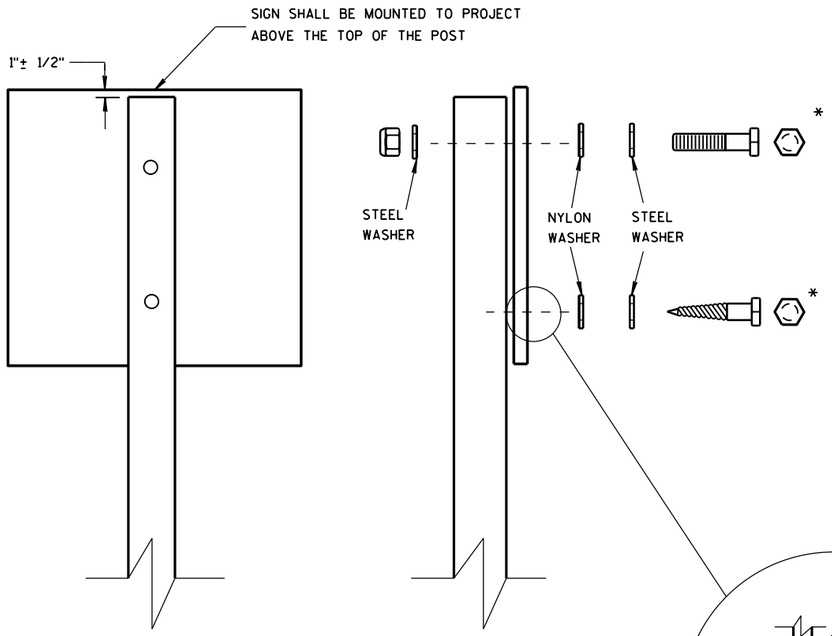

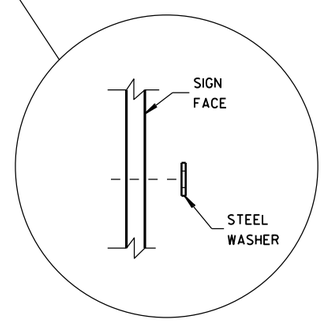

WASHER PLACEMENT WHEN SIGN HAS OTHER THAN TYPE H OR TYPE F FACE

NUTS, BOLTS AND LAGS USED FOR MOUNTING SIGNS SHALL HAVE HEXAGONAL HEADS AND SHALL BE EITHER:

A. HOT DIP GALVANIZED IN ACCORDANCE WITH ASTM DESIGNATION: A 153, CLASS D, OR SC 3

B. ELECTRO-GALVANIZED IN ACCORDANCE WITH ASTM DESIGNATION: B 633, TYPE III, SC 3

THREADS ON BOLTS AND NUTS SHALL BE MANUFACTURED WITH SUFFICIENT ALLOWANCE FOR THE CADMIUM PLATE OR GALVANIZED COATING TO PERMIT THE NUTS TO RUN FREELY ON THE BOLTS.

WOOD POSTS (4" x 4" or 4" x 6")

LAG SCREWS - 3/8" X 3"

MACHINE BOLTS - 5/16" X 6-1/2" OR 7" LENGTH W/ NUTS

SQUARE STEEL POSTS (2" x 2")

MACHINE BOLTS - 3/8" X 3-1/4" LENGTH W/ NUTS

RIVETS - 9/32" (6605-9-6) BULB-TITE, TRI-FOLD, ALUMINUM BODY/MANDREL O.D. FLANGE .720-.765 INCH, GRIP RANGE .042-.375 INCH

WASHERS (ALL POSTS) -

1-1/4" O.D. X 3/8" I.D. X 1/16" STEEL

1-1/4" O.D. X 3/8" I.D. X .080 NYLON FOR ALL TYPE H SIGNS

* TWO DIFFERENT FASTENING SYSTEMS ARE SHOWN FOR ILLUSTRATION PURPOSES. ON ANY INDIVIDUAL SIGN, EITHER ONE OR THE OTHER SYSTEM SHALL BE USED. ACTUAL NUMBER OF FASTENERS PER SIGN VARIES WITH THE SIGN AREA. FOR A SINGLE POST INSTALLATION, ALL SIGNS GREATER THAN 9 SQ. FT. REQUIRE THE USE OF 3 FASTENERS.

6

6

S.D.D. 15 D 38-2b

S.D.D. 15 D 38-2b

ATTACHMENT OF SIGNS TO POSTS

STATE OF WISCONSIN
DEPARTMENT OF TRANSPORTATION

APPROVED

June 2017 — DATE

/S/ Andrew Heldtke — WORK ZONE ENG

FHWA

TYPICAL ASSEMBLIES

J1-1

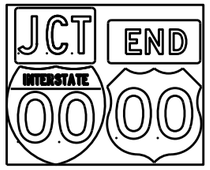

J1-2

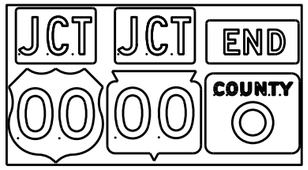

J1-3

J2-1

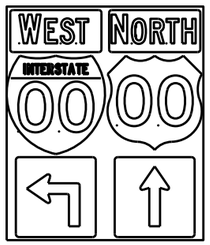

J2-2

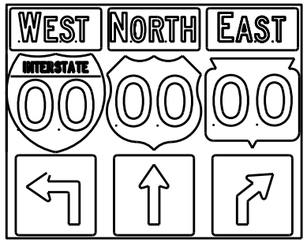

J2-3

JV

(Typical Vertical J-Assembly
See Note 10 and 11)

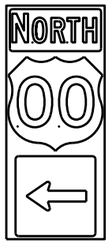

J3-1

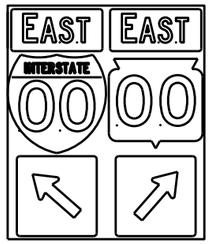

J3-2

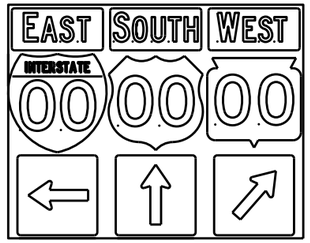

J3-3

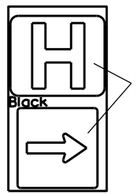

Blue Background

JH-1

J4-1

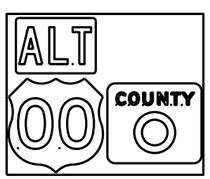

J4-2

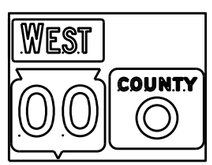

J4-2

J13-1

J12-1

J32-1

J33-1

J23-1

J22-1

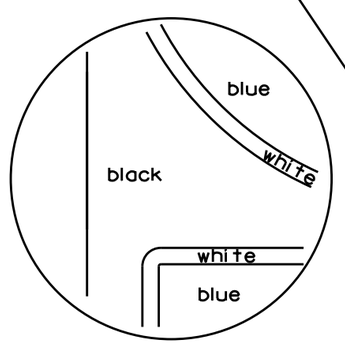

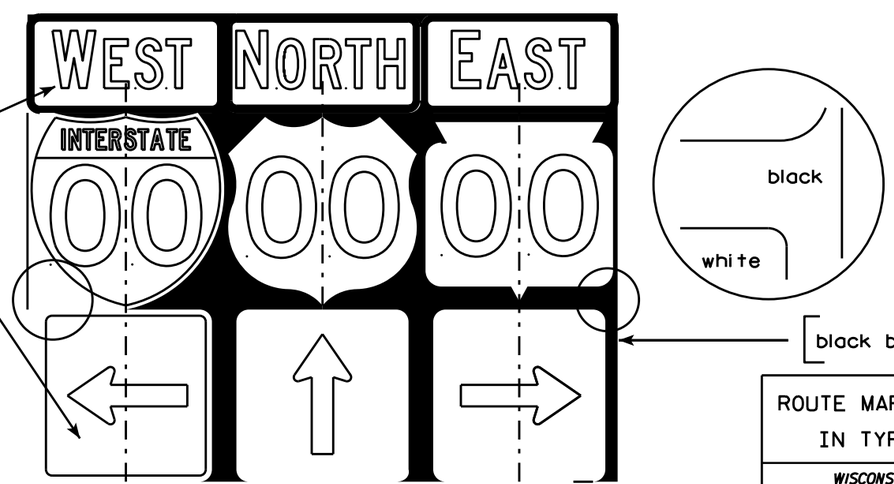

NOTES

1. Signs are Type II - Type H Reflective - reference WIS DOT Standard Specification for HIGHWAY and STRUCTURE CONSTRUCTION latest edition.
2. Color:
   Background - Black Non-reflective
   Message - see Note 5
3. Message Series - See Note 5
4. Corners shall be square or rounded if base material is plywood. If base material is metal the corners shall be rounded.
5. The colors and message spacing on each marker shall be according to the applicable route marker panel specifications.
6. Certain marker heads require the component pieces to be the same color. As an example, all the components used with an M1-1 Interstate marker shall be blue.
7. Single panel j-assemblies shall only be used with route marker shields that are same size. If the route marker shields are different size use multiple piece component.
8. Route assemblies that have 24 inch route shields and have dimensions greater than 48 inches (both vertical and horizontal) shall have one horizontal splice between the arrows and route shields. Vertical splices shall not be used on route assemblies with a horizontal dimension of 144 inches or less. The contractor shall not use more than one vertical joint per sign and the joint shall be between route shields.
9. Route assemblies that have 36 inch shields and have dimensions greater than 48 inchs (both vertical and horizontal) shall have two horizontal splices. One horizontal splice shall be between the cardinal direction and route shields and the other horizontal splice shall be between the arrows and route shields. Vertical splices shall not be used on route assemblies with a horizontal dimension of 144 or less. The contractor shall not use more than one vertical joint per sign and the joint shall be between route shields.
10. All Vertical J Assemblies are given a Sign Code of JV
11. For JV Assemblies that have a mixture of Interstate and non Interstate shields, arrows and cardinals shall be white on blue.

ROUTE MARKERS & COMPONENTS
IN TYPICAL ASSEMBLIES

WISCONSIN DEPT OF TRANSPORTATION

APPROVED Matthew R Rauch
for State Traffic Engineer

DATE 2/06/14 PLATE A2-1S.8

PROJECT NO: | SHEET NO: E

URBAN AREA

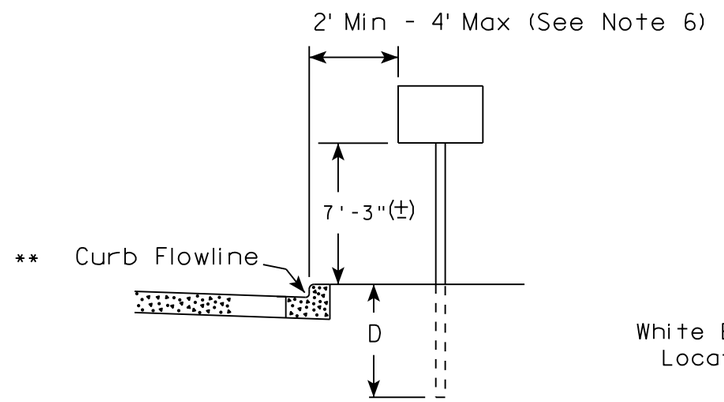

RURAL AREA (See Note 2)

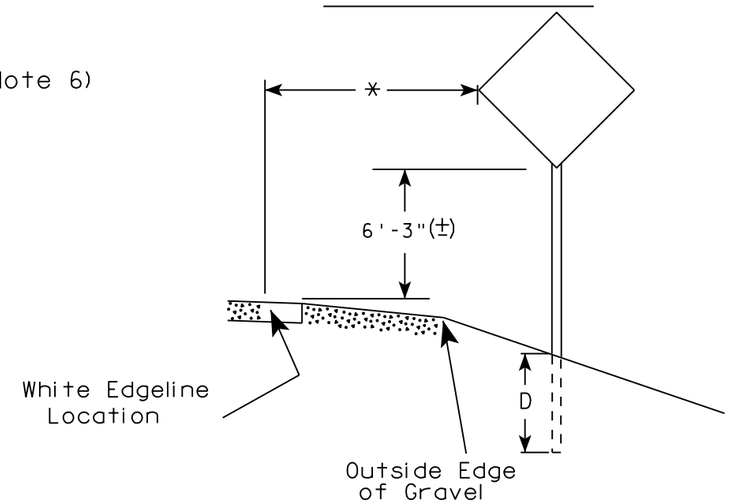

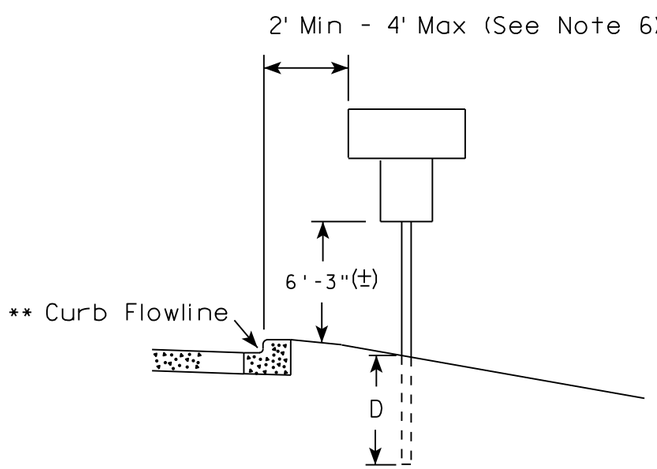

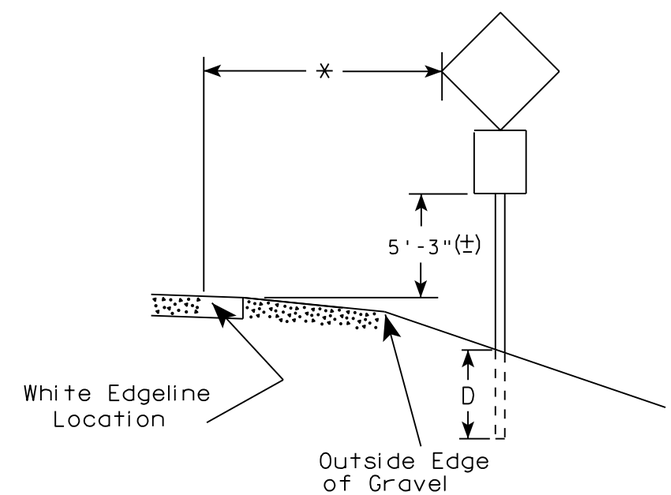

** The existence of curb and gutter does not in itself mandate the vertical clearance illustrated. That height is typically measured where there is sidewalk adjacent to the roadway or parking is permitted. In the absence of sidewalk vertical clearance is measured from the top of the curb. Offset of signs is measured from the flow line.

* 6 feet from edge of a paved shoulder or 12 feet from the edge of pavement (edge line location) or 2 feet from outside edge of gravel, whichever is greater unless directed by project engineer.

POST EMBEDMENT DEPTH

Area of Sign Installation (Sq. Ft.)	D (Min)
20 or Less	4'
Greater than 20	5'

GENERAL NOTES

1. Signs wider than 4 feet or 20 sq.ft or larger, shall be mounted on multiple posts. Refer to plate A4-4.
2. If signs are mounted on barrier wall, see A4-10 sign plate.
3. For expressways and freeways, mounting height is 7'- 3" (±) or 6'-3" (±) depending upon existence of a sub-sign.
4. J-Assemblies are considered to be one sign for mounting height.
5. Minimum mounting height for signs mounted on traffic signal poles is 5'- 3" (±).
6. Offset distance shall be consistent with existing signs or consistent throughout length of project.
7. The (±) tolerance for mounting height is 3 inches.
8. Folding signs shall be mounted at a height of 5'-3" (±) or as directd by the Engineer.
9. The Double Arrow sign (W12-1) shall be mounted at a height of 2'-3" (±). The Chevron sign (W1-8), Roundabout Chevron panel (R6-4B), Enhanced Reference Markers, Clearance Markers (W5-52), Mile Markers (D10 series), In Road Object Markers (W5-54) & End of Road Markers (W5-56) shall be mounted at a height of 4'-3" (±).

TYPICAL INSTALLATION OF PERMANENT TYPE II SIGNS ON SINGLE POSTS

WISCONSIN DEPT OF TRANSPORTATION

APPROVED Matthew R Rauch for State Traffic Engineer

DATE 8/21/17 PLATE NO. A4-3.21

7 7

PROJECT NO:	HWY:	COUNTY:		SHEET NO: 135	E

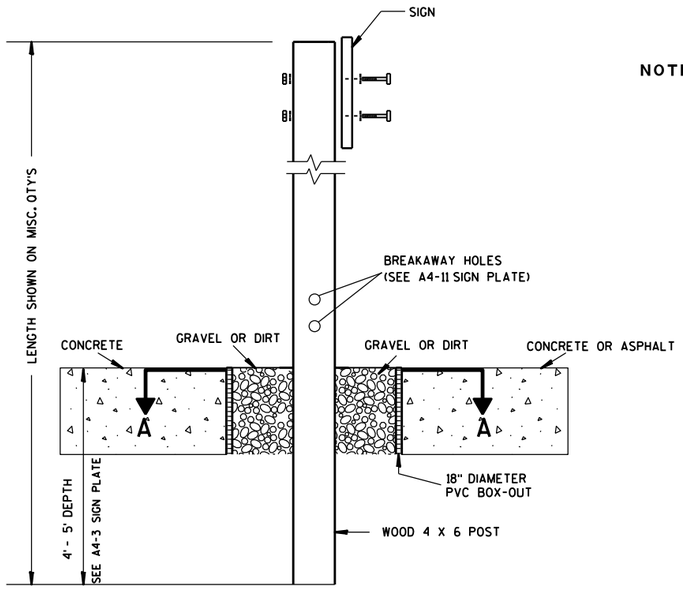

ELEVATION VIEW

DETAIL OF WOOD 4 X 6 SIGN POST IN BOX-OUT

NOTES:
1. ALL MATERIAL TO BE APPROVED BY ENGINEER PRIOR TO INSTALLATION
2. SEE SIGN PLATE A4-8 FOR SIGN HARDWARE REQUIREMENTS
3. 18 INCH X 18 INCH SQUARE BOX-OUTS MAY BE USED FOR INSTALLATIONS IN EXISTING CONCRETE OR ASPHALT LOCATIONS.

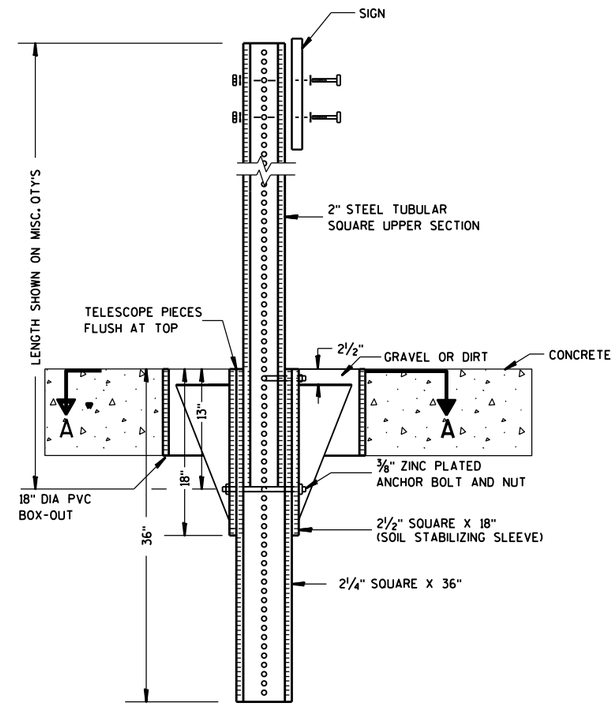

ELEVATION VIEW

DETAIL OF STEEL 2 X 2 SIGN POST IN BOX-OUT

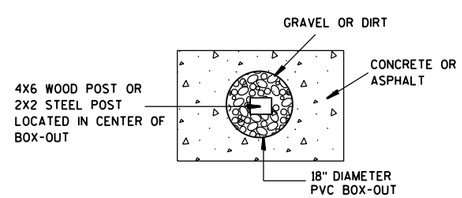

PLAN VIEW

FOR NEW CONCRETE/ASPHALT INSTALLATIONS

SIGN POST
BOX-OUTS
A4-3B

WISCONSIN DEPT OF TRANSPORTATION

APPROVED Matthew R Rauch
for State Traffic Engineer

DATE 1/27/14 PLATE NO. A4-3B.1

PROJECT NO:	HWY:	COUNTY:		SHEET NO:	E

URBAN AREA

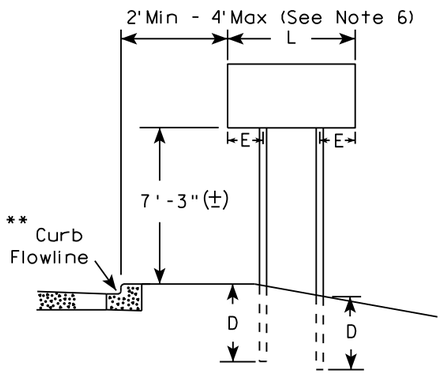

RURAL AREA (See Note 3)

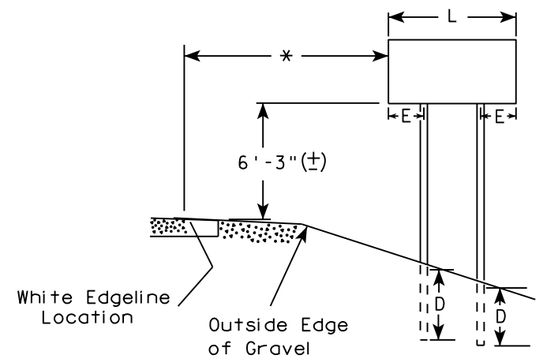

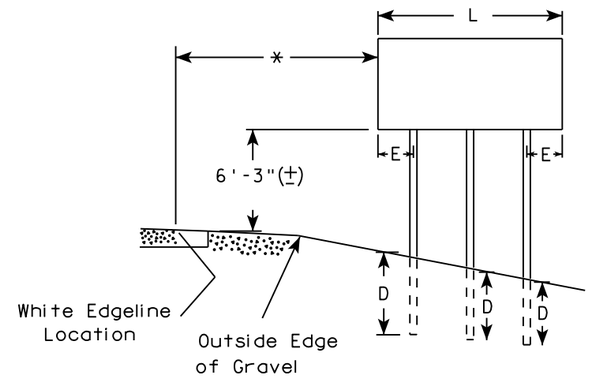

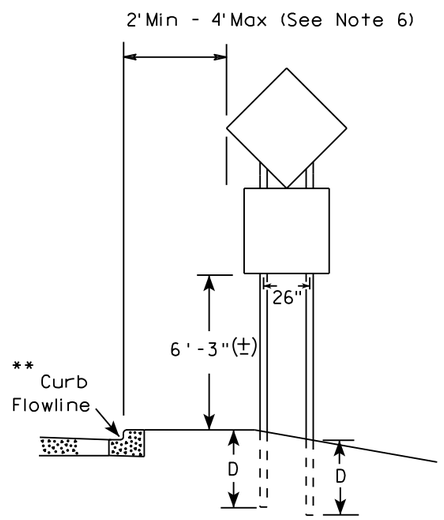

48" DIAMOND WARNING SIGN

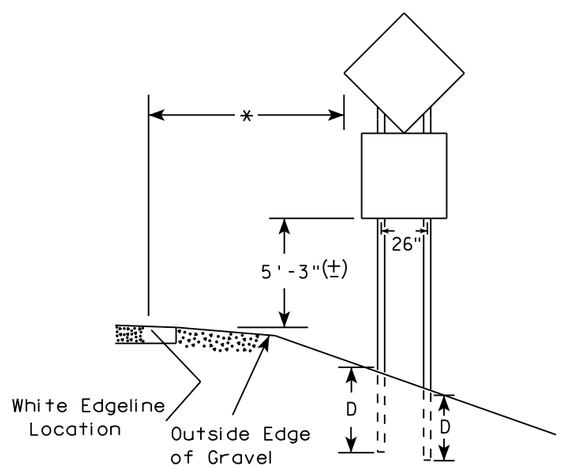

48" DIAMOND WARNING SIGN

SIGN SHAPE OTHER THAN DIAMOND (TWO POSTS REQUIRED)	
L	E
*** Greater than 48" Less than 60"	12"
60" to 108"	L/5

SIGN SHAPE OTHER THAN DIAMOND (THREE POSTS REQUIRED)	
L	E
Greater than 108" to 144"	12"

GENERAL NOTES

1. For 3 or 4 post installations, individual post spacing shall be greater than 3'-6".
2. See tables below for required number of posts.
3. For expressways and freeways, mounting height is 7'-3" (±) or 6'-3" (±) depending upon existence of sub-sign.
4. The (±) tolerance for mounting height is 3 inches.
5. J-Assemblies are considered to be one sign for mounting height.
6. Offset distance shall be consistent with existing signs or consistent throughout length of project.
7. Folding signs shall be mounted at a height of 5'-3" (±) or as directed by the engineer.
8. The Double Arrow sign (W12-1) shall be mounted at a height of 2'-3" (±). The Chevron sign (W1-8), Roundabout Chevron panel (R6-4B), Clearance Markers (W5-52), Mile Markers (D10 series), In Road Object Markers (W5-54) & End of Road Markers (W5-56) shall be mounted at a height of 4"-3" (±).

* 6 feet from edge of a paved shoulder or 12 feet from the edge of pavement (edge line location) or 2 feet from outside edge of gravel, whichever is greater unless directed by project engineer.

** The existence of curb and gutter does not in itself mandate the vertical clearance illustrated. That height is typically measured where there is sidewalk adjacent to the roadway or parking is permitted. In the absence of sidewalk vertical clearance is measured from the top of the curb. Offset of signs is measured from the flow line.

*** See A4-3 sign plate for signs 4' or less in width and less than 20 S.F. in area.

POST EMBEDMENT DEPTH

Area of Sign Installation (Sq. Ft.)	D (Min)
20 or Less	4'
Greater than 20	5'

TYPICAL INSTALLATION OF TYPE II SIGNS ON MULTIPLE POSTS

WISCONSIN DEPT OF TRANSPORTATION

APPROVED Matthew R Rauch
For State Traffic Engineer

DATE 8/21/17 PLATE NO. A4-4.15

7

7

PROJECT NO:	HWY:	COUNTY:		SHEET NO: 137	E

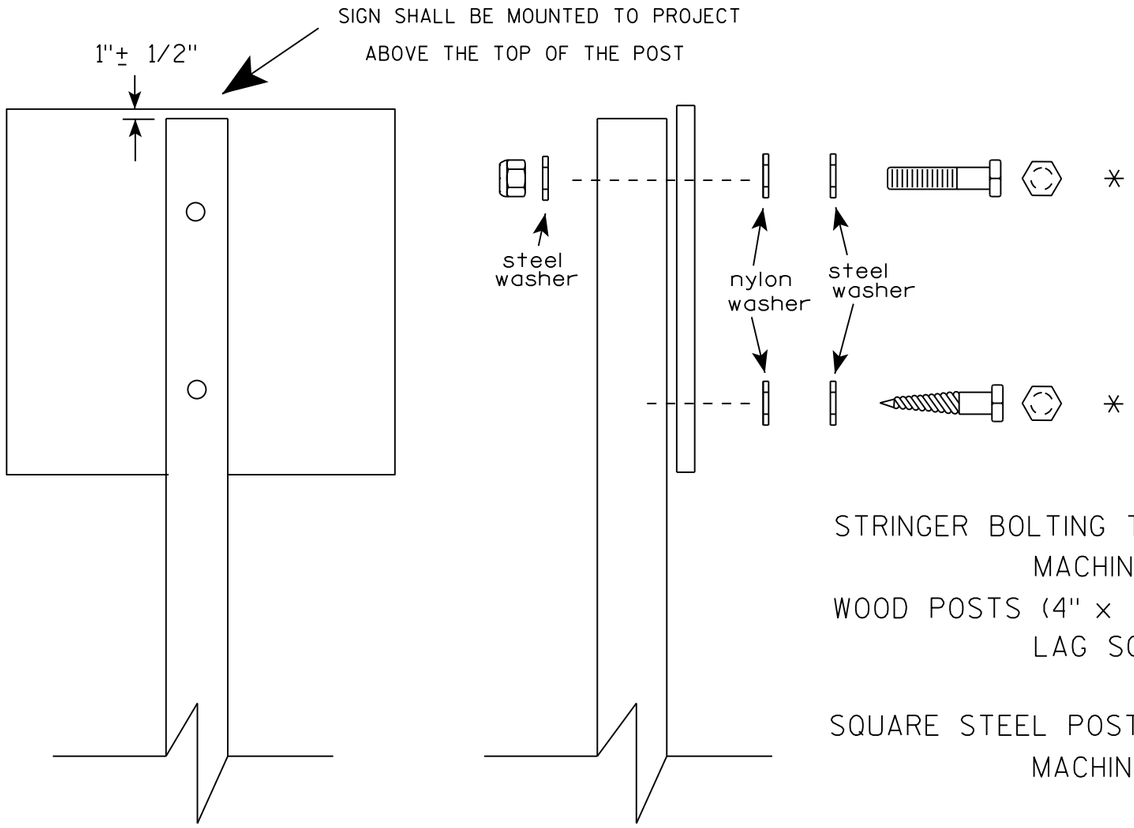

Nuts, bolts and lags used for mounting signs shall have hexagonal heads and shall be either :

a. Hot dip galvanized in accordance with ASTM Designation: A 153, Class D, or SC 3

b. Electro-galvanized in accordance with ASTM Designation : B 633, TYPE III, SC 3.

Threads on bolts and nuts shall be manufactured with sufficient allowance for the cadmium plate or galvanized coating to permit the nuts to run freely on the bolts.

STRINGER BOLTING TO ALUMINUM SIGNS (SEE SIGN PLATE A4-18)

MACHINE BOLTS - 5/16" X 1-3/4" Length w/ lock nuts

WOOD POSTS (4" x 4" or 4" x 6")

LAG SCREWS - 3/8" X 3" (NO STRINGERS ON BACK OF SIGN)

3/8" X 4" (STRINGERS ON BACK OF SIGN)

SQUARE STEEL POSTS (2" x 2")

MACHINE BOLTS - 3/8" X 3-1/4" Length w/ nuts (NO STRINGER ON BACK OF SIGN)

3/8" X 5" Length w/ nuts (STRINGERS ON BACK OF SIGN)

RIVETS - 9/32 " (6605-9-6) BULB-TITE, TRI-FOLD, ALUMINUM BODY/MANDREL

O.D. FLANGE .720-.765 INCH, GRIP RANGE .042-.375 INCH

WASHERS (ALL POSTS) -

1-1/4" O.D. X 3/8" I.D. X 1/16" STEEL

1-1/4" O.D. X 3/8" I.D. X .080 NYLON

* Two different fastening systems are shown for illustration purposes. On any individual sign, either one or the other system shall be used. Actual number of fasteners per sign varies with the sign area, but normally there are two. For a single post installation, all signs greater than 9 sq. ft. require the use of 3 fasteners.

ATTACHMENT OF SIGNS TO POSTS

WISCONSIN DEPT OF TRANSPORTATION

APPROVED Matthew R Rauch
for State Traffic Engineer

DATE 8/11/16 PLATE NO. A4-8.8

PROJECT NO: SHEET NO: E

TELESCOPIC TUBING ANCHORS
TWO PIECE SYSTEM

2 1/4" SQUARE
12 GAUGE
PERFORATED
GALVANIZED FINISH

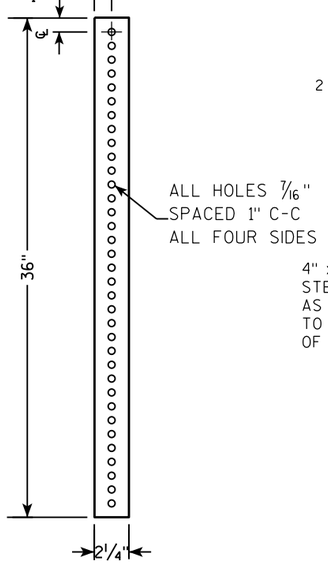

2 1/2" SQUARE
12 GAUGE
OMNI-DIRECTIONAL
PERFORATED
SOIL STABILIZING SLEEVE
GALVANIZED FINISH

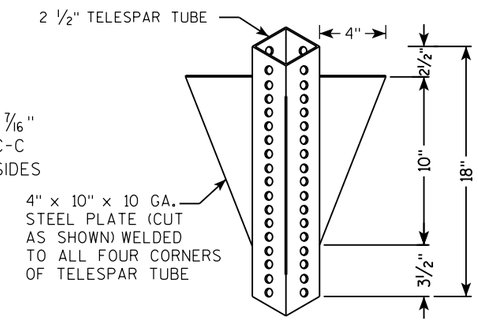

DETAIL OF TUBULAR STEEL SIGN POST
(IN POURED CONCRETE OR ASPHALT)

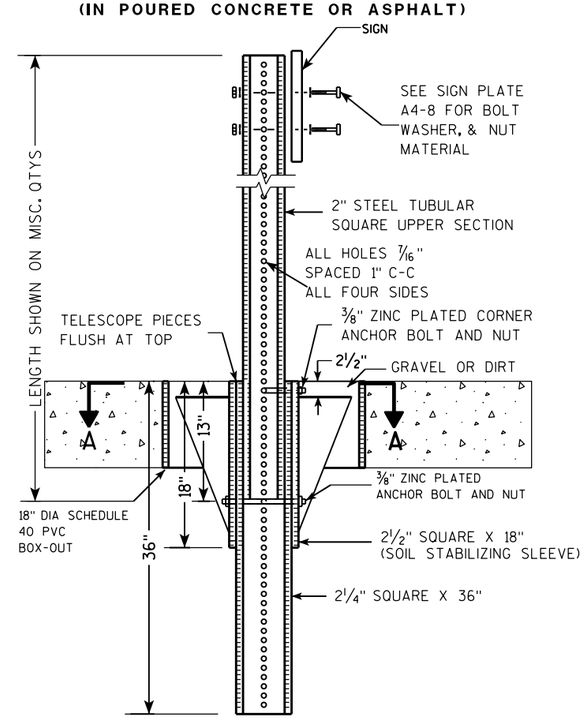

DETAIL OF TUBULAR STEEL SIGN POST
(IN LOCATIONS OTHER THAN POURED CONCRETE OR ASPHALT)

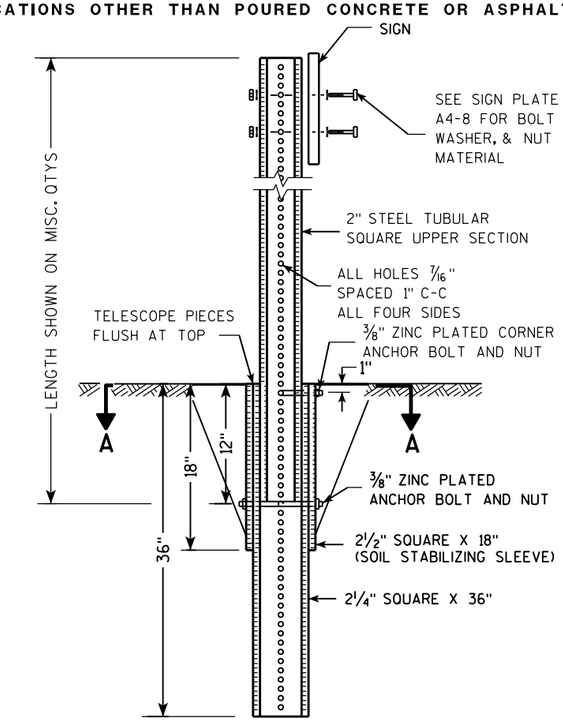

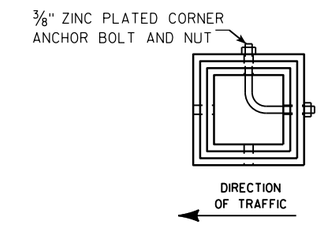

SECTION A-A

Area of Sign Installation (Sq. Ft.)	Number of Required Posts
9 or less	1
Greater than 9 less than or equal to 18	2
Greater than 18 less than or equal to 27	3

Signs wider than 3 feet or larger than 9 sq. ft shall be mounted on multiple posts (see above table).

TUBULAR STEEL
SIGN POST
A4-9

WISCONSIN DEPT OF TRANSPORTATION

APPROVED Matthew R Rauch
for State Traffic Engineer

DATE 2/05/15 PLATE A4-9.9

7 7

PROJECT NO:	HWY:	COUNTY:		SHEET NO:	E

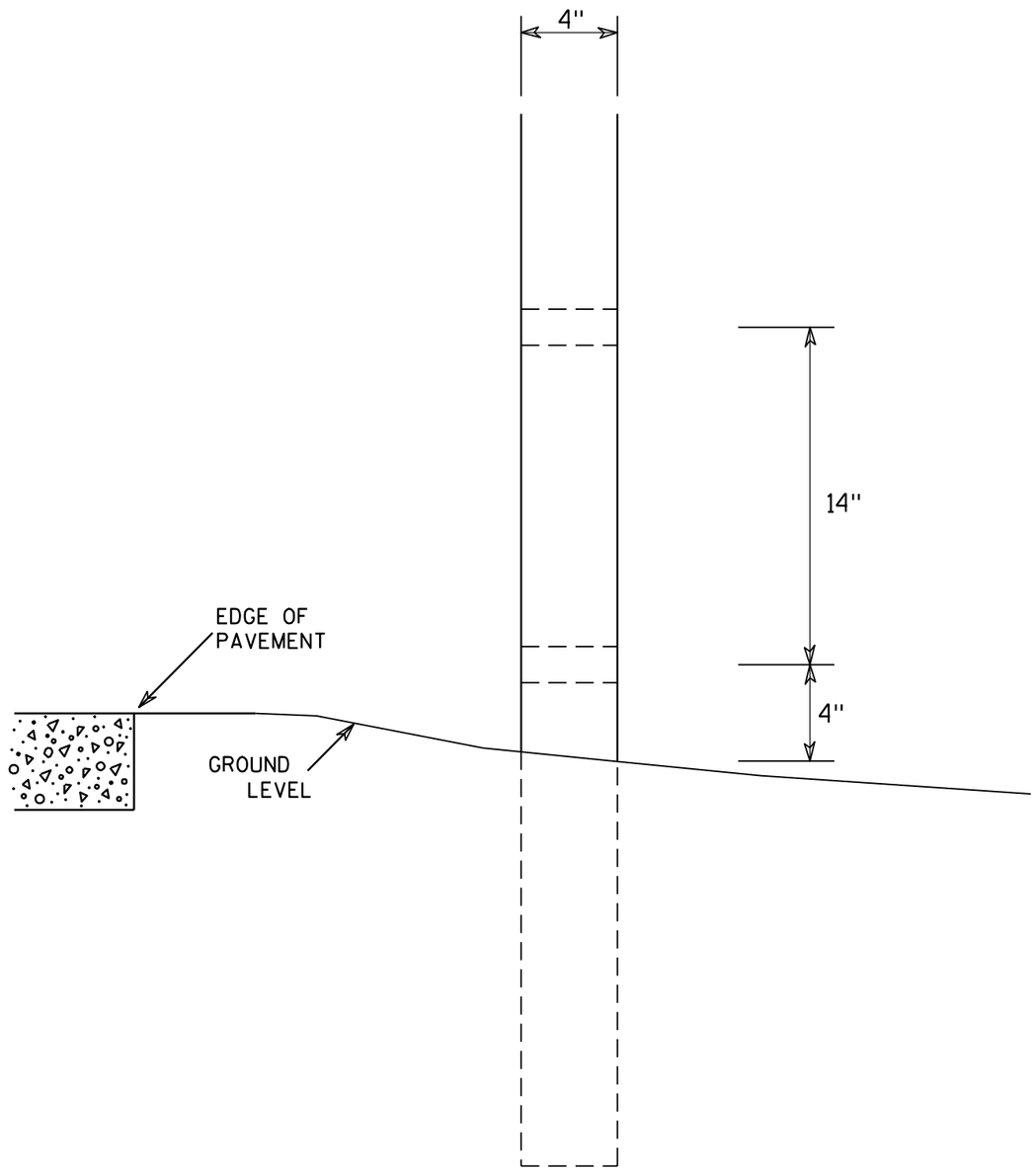

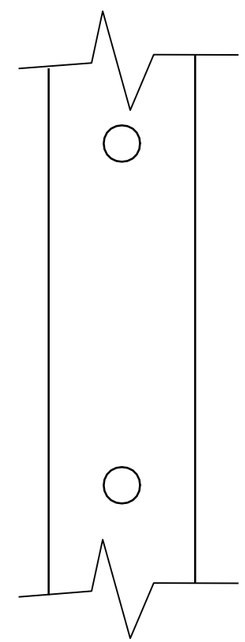

SIDE VIEW

GENERAL NOTES

1. All 4 x 6 Wood Posts shall be modified by having two 1½" diameter holes drilled perpendicular to the roadway centerline.

7

7

4 X 6 WOOD POST MODIFICATIONS

WISCONSIN DEPT OF TRANSPORTATION

APPROVED Chester J Spang for State Traffic Engineer

DATE 3/27/97 PLATE NO. A4-11.2

PROJECT NO:	HWY:	COUNTY:		SHEET NO: 140	E

BANDING

SINGLE SIGN

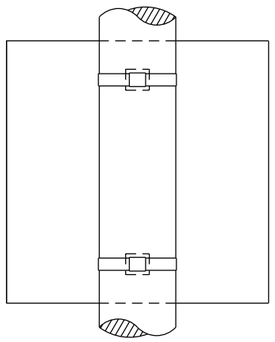

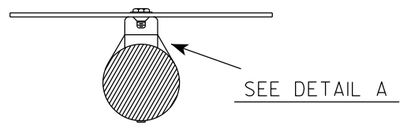

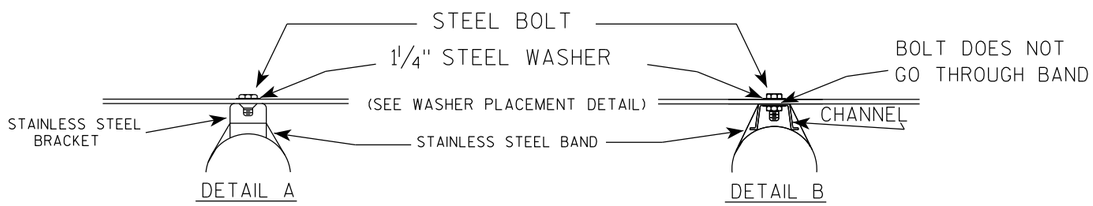

WASHER PLACEMENT

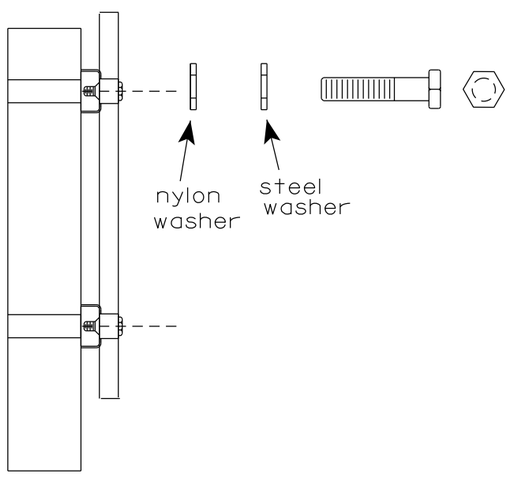

WASHERS (ALL POSTS) -
1-1/4" O.D. X 3/8" I.D. X 1/16" STEEL
1-1/4" O.D. X 3/8" I.D. X .080 NYLON
FOR ALL TYPE H SIGNS

GENERAL NOTES

1. Any sign over 3 feet in width shall use the V-Block banding method. See A5-10 standard plate.
2. Signs 3 feet or greater in height shall have three bracket bands installed. Signs less than 3 feet in height shall have two bracket bands installed.
3. Banding and assembly bracket shall be stainless steel. All bands shall be ¾" in width and 0.025" thickness.
4. ALL SIGN MOUNTING BOLTS AND WASHERS SHALL BE EITHER:
   a. Hot dip or mechanically galvanized in accordance with ASTM Designation: A 153, Class D
   b. Electro-galvanized in accordance with ASTM designation: B 633, Type III, SC 3

"J" ASSEMBLY

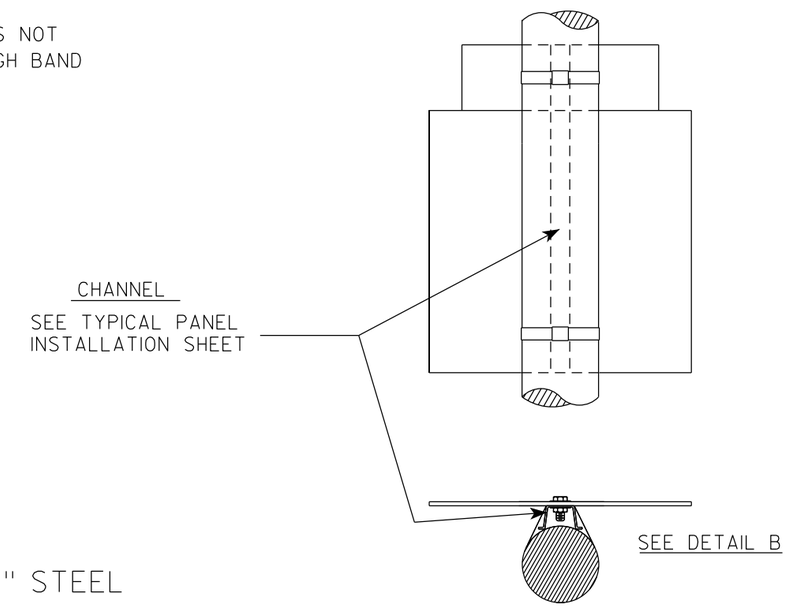

STANDARD SIGN
SIGN BANDING DETAILS

WISCONSIN DEPT OF TRANSPORTATION

APPROVED Matthew R Rauch for State Traffic Engineer

DATE 6/10/19 PLATE NO. A5-9.4

PROJECT NO:	HWY:	COUNTY:		SHEET NO: 141	E

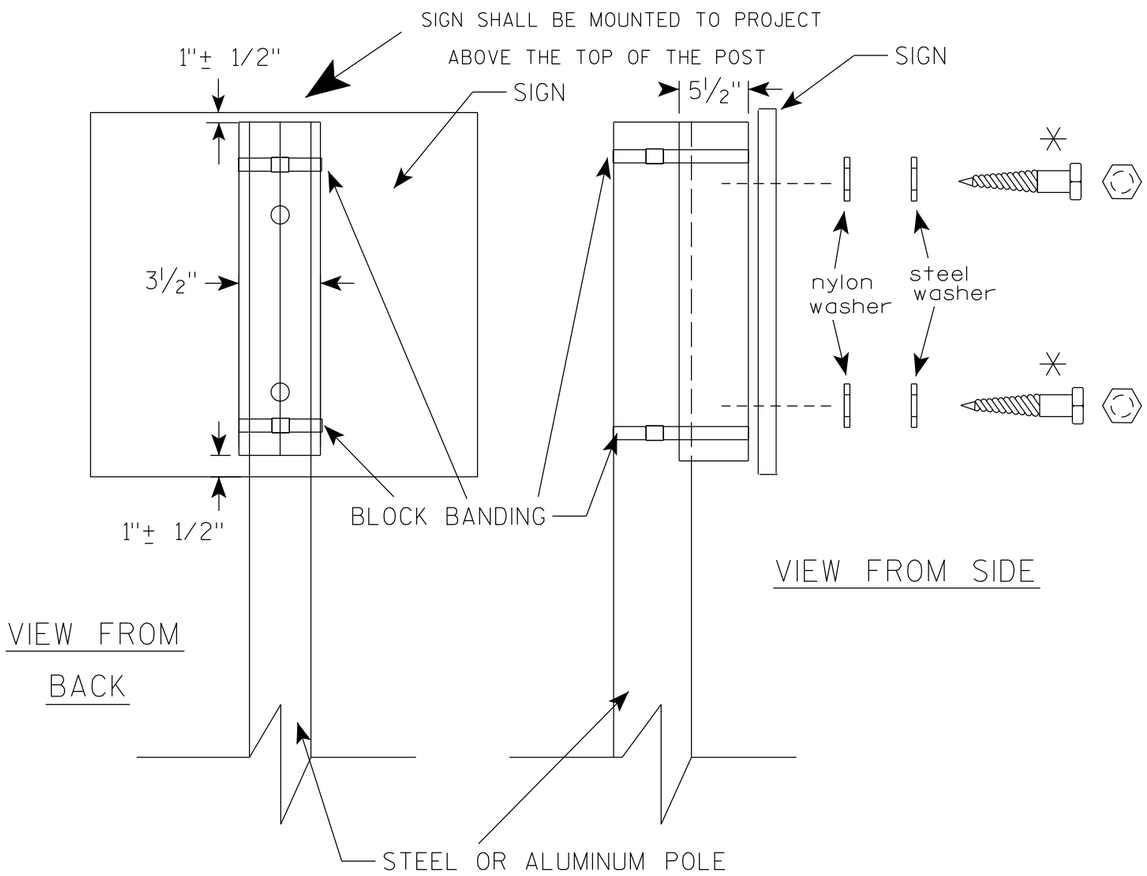

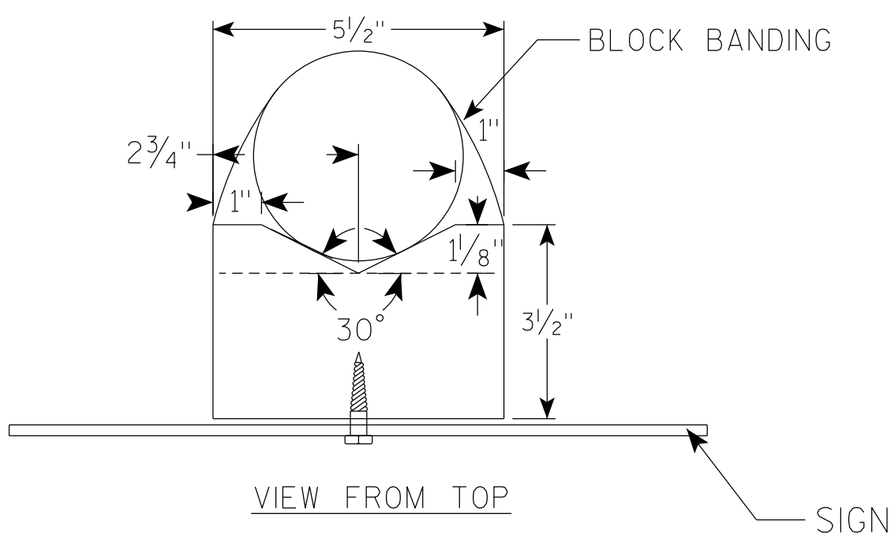

GENERAL NOTES

1. WOOD 4"X6" POST MATERIAL SHALL CONFORM TO 507.2.2 OF THE WisDOT STANDARD SPECIFICATIONS
2. BLOCK BANDING AND CLIPS SHALL BE STAINLESS STEEL, ¾" WIDTH AND 0.025" THICKNESS
3. SIGNS 3' OR GREATER IN HEIGHT SHALL UTILIZE 3 BLOCK BANDS. SIGNS UNDER 3' IN HEIGHT SHALL UTILIZE 2 BLOCK BANDS
4. ACTUAL NUMBER OF FASTENERS PER SIGN VARIES WITH THE SIGN AREA, BUT NORNALLY THERE ARE TWO. FOR SIGNS GREATER THAN 9 S.F. 3 FASTENERS SHALL BE USED.
5. ALL SIGN MOUNTING BOLTS AND WASHERS SHALL BE EITHER:
   a. Hot dip or mechanically galvanized in accordance with ASTM Designation: A 153, Class D
   b. Electro-galvanized in accordance with ASTM Designation : B 633, TYPE III, SC 3
6. ALL BOLTS SHALL HAVE HEXAGONAL HEADS.
7. STEEL WASHERS SHALL BE 1¼" O.D. X ⅜" I.D. X 1/16"
8. NYLON WASHERS SHALL BE 1¼" O.D. X ⅜" I.D. X .080 FOR TYPE H OR TYPE F FACE SIGN

✳ LAG BOLTS SHALL BE ⅜" X 2½"

BLOCK BANDING DETAIL
(V-BLOCK OPTION)

WISCONSIN DEPT OF TRANSPORTATION

APPROVED Matthew R Rauch
For State Traffic Engineer

DATE 6/10/19 PLATE NO. A5-10.2

PROJECT NO:				SHEET NO: 142	E

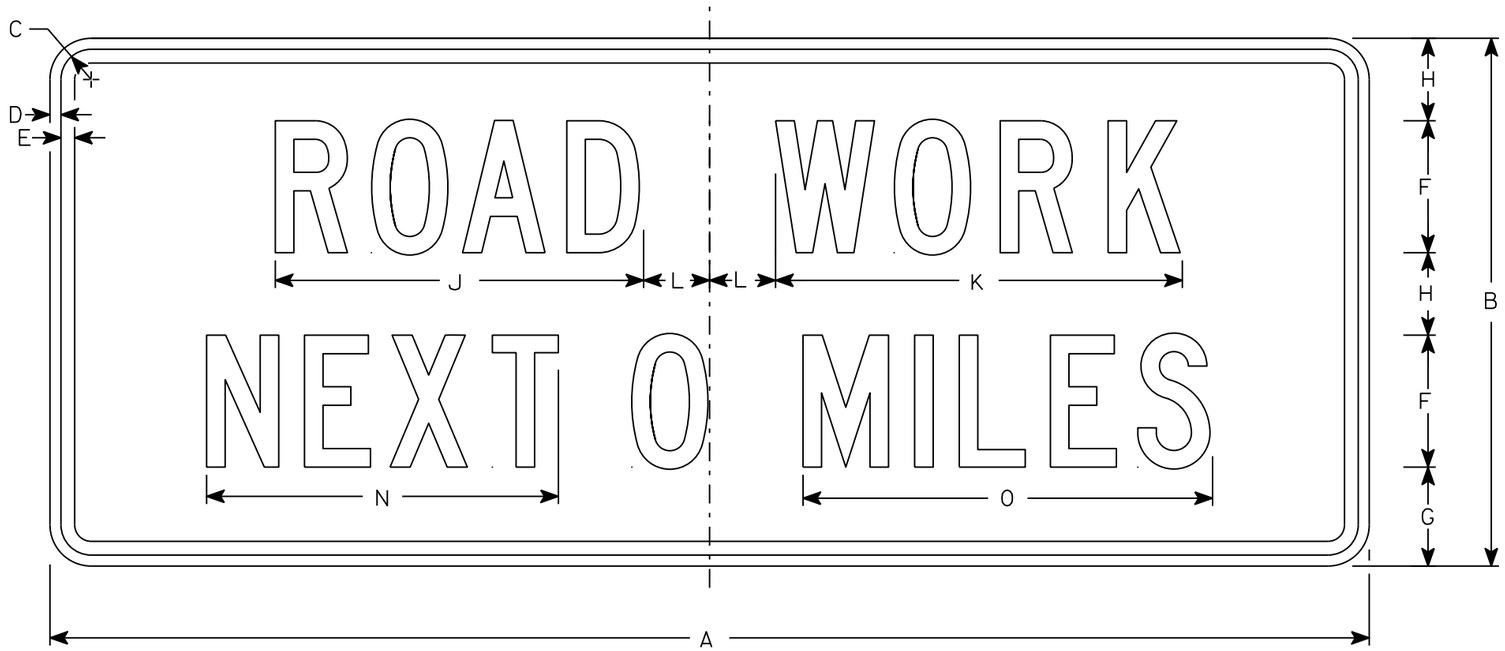

G20-1

NOTES

1. Sign is Type II - Type F Reflective
2. Color:
   Background - Orange
   Message - Black
3. Message Series - C
4. Corners may be square or rounded when base material is plywood but borders shall be rounded as shown. When base material is metal, the corners and borders shall be rounded.
5. Round distance to nearest whole Mile and substitute appropriate numerals and optically adjust spacing to achieve proper balance

SIZE	A	B	C	D	E	F	G	H	I	J	K	L	M	N	O	P	Q	R	S	T	U	V	W	X	Y	Z	Area sq. ft.
1																											
2	60	24	1 3/8	1/2	5/8	6	4 1/2	3 3/4		16 3/4	18 1/2	3		16	18 5/8												10
3																											
4	60	24	1 3/8	1/2	5/8	6	4 1/2	3 3/4		16 3/4	18 1/2	3		16	18 5/8												10
5																											

STANDARD SIGN
G20-1

WISCONSIN DEPT OF TRANSPORTATION

APPROVED Matthew R Rauch
for State Traffic Engineer
DATE 3/14/17 PLATE NO. G20-1.8

PROJECT NO: | HWY: | COUNTY: | SHEET NO: 143 | E

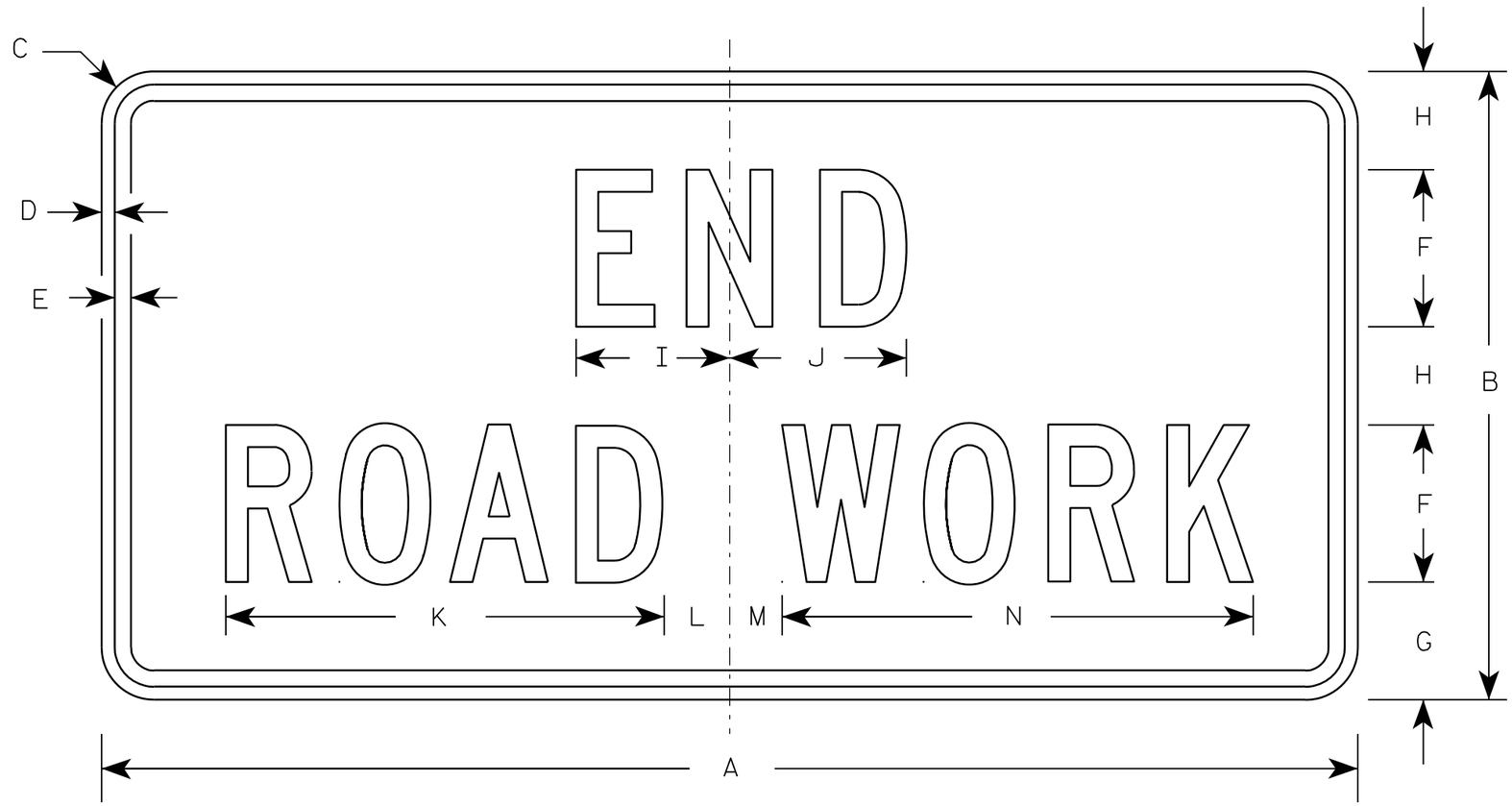

G20-2A

NOTES

1. Sign is Type II - Type F Reflective - reference WIS DOT Standard Specification for HIGHWAY and STRUCTURE CONSTRUCTION latest edition.
2. Color:
   Background - Orange
   Message - Black
3. Message Series - C
4. Corners may be square or rounded when base material is plywood but borders shall be rounded as shown. When base material is metal, the corners and borders shall be rounded.

Metric equivalent for this sign is:

SIZE	
1	900 mm X 450 mm
2	1200 mm X 600 mm
3	1200 mm X 600 mm
4	1200 mm X 600 mm
5	1200 mm X 600 mm

SIZE	A	B	C	D	E	F	G	H	I	J	K	L	M	N	O	P	Q	R	S	T	U	V	W	X	Y	Z	Area sq. ft.	Area m2
1	36	18	1 1/8	3/8	1/2	4	3 3/4	2 1/2	4 1/8	4 1/8	11 1/8	2	1	12 1/8													4.5	0.41
2	48	24	1 1/2	1/2	5/8	6	4 1/2	3 3/4	5 7/8	6 3/4	16 3/4	2 1/2	1 3/4	18 1/2													8.0	0.72
3	48	24	1 1/2	1/2	5/8	6	4 1/2	3 3/4	5 7/8	6 3/4	16 3/4	2 1/2	1 3/4	18 1/2													8.0	0.72
4	48	24	1 1/2	1/2	5/8	6	4 1/2	3 3/4	5 7/8	6 3/4	16 3/4	2 1/2	1 3/4	18 1/2													8.0	0.72
5	48	24	1 1/2	1/2	5/8	6	4 1/2	3 3/4	5 7/8	6 3/4	16 3/4	2 1/2	1 3/4	18 1/2													8.0	0.72

STANDARD SIGN

G20-2A

WISCONSIN DEPT OF TRANSPORTATION

APPROVED Matthew R Rauch
for State Traffic Engineer

DATE 9/30/09 PLATE NO. G20-2A.8

PROJECT NO:	HWY:	COUNTY:		SHEET NO: 144	E

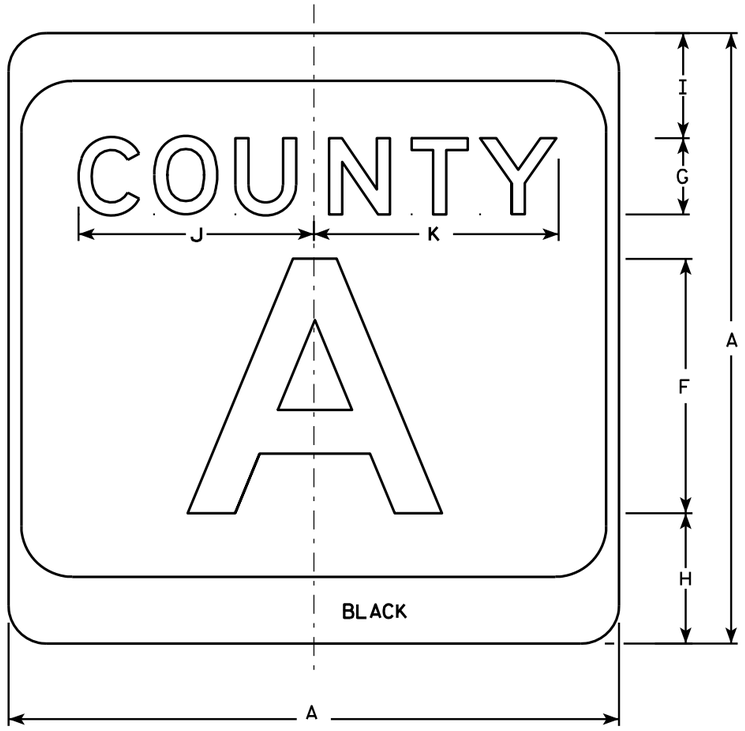

M1-5A

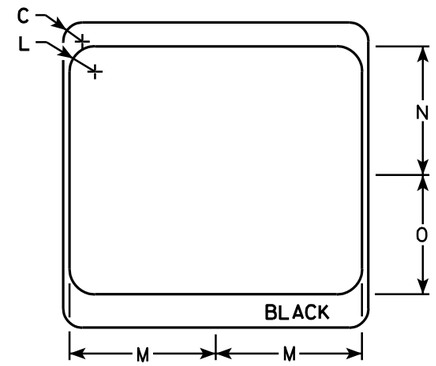

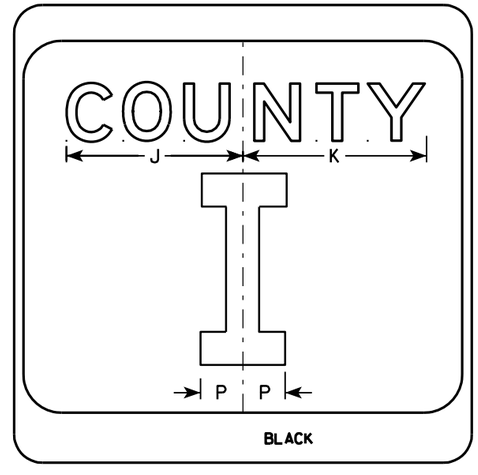

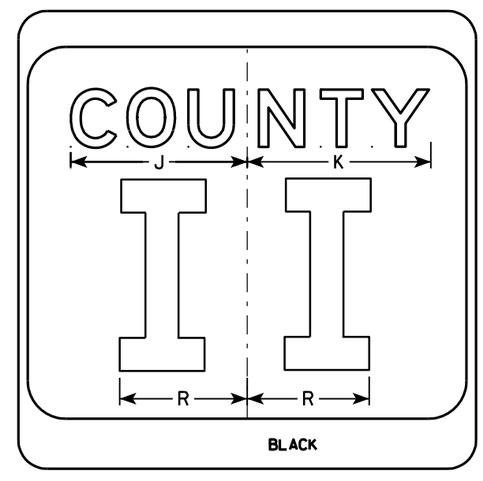

NOTES

1. Sign is Type II - see Note 7 - reference WIS DOT Standard Specification for HIGHWAY and STRUCTURE CONSTRUCTION latest edition.
2. Color:
   Background - White & Black - See Note 7
   Message - Black
3. Message Series - see Note 5
4. Corners may be square or rounded when base material is plywood but borders shall be rounded as shown. When base material is metal, the corners and borders shall be rounded.
5. Message Series E for 1 letter.
   Message Series D for 2 letters unless message is too big then Series C.
   Message Series C for 3 letters unless message is too big then Series B.
6. Substitute appropriate letters & optically center to achieve proper balance.
7. Permanent Signs
   Background - Type H Reflective
   Detour or temporary Signs
   Background - Reflective

SIZE	A	B	C	D	E	F	G	H	I	J	K	L	M	N	O	P	Q	R	S	T	U	V	W	X	Y	Z	Area sq. ft.
1																											
2	24		1 1/2			10	3	5 1/8	4 1/8	9 1/4	9 5/8	2	11 1/2	10 1/8	9 3/8	2 1/4		6 5/8									4.0
3	36		2 1/4			16	4	7 5/8	5 5/8	12 1/4	12 7/8	3	17 1/8	15 1/4	14	3 3/8		10									9.0
4	36		2 1/4			16	4	7 5/8	5 5/8	12 1/4	12 7/8	3	17 1/8	15 1/4	14	3 3/8		10									9.0
5	36		2 1/4			16	4	7 5/8	5 5/8	12 1/4	12 7/8	3	17 1/8	15 1/4	14	3 3/8		10									9.0

CTH MARKER
M1-5A FOR ASSEMBLIES

WISCONSIN DEPT OF TRANSPORTATION

APPROVED Matthew R Rauch
for State Traffic Engineer

DATE 9/27/11 PLATE NO. M1-5A.8

PROJECT NO:	HWY:	COUNTY:		SHEET NO: 145	E

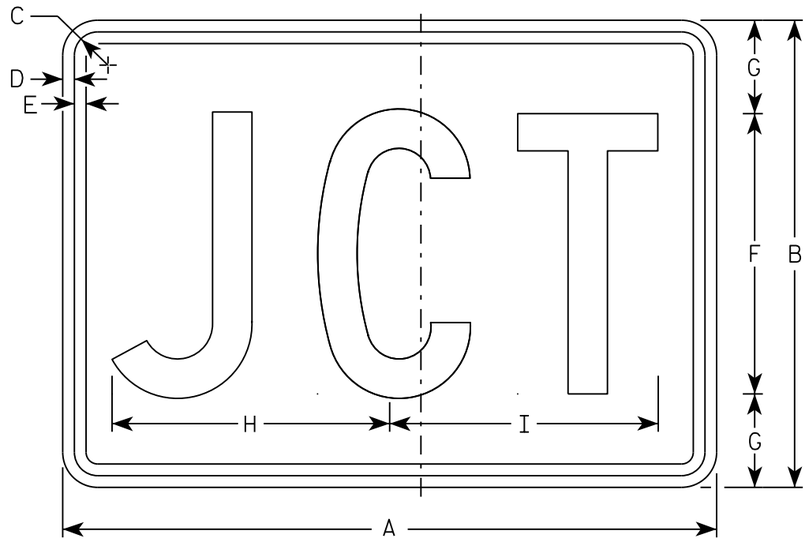

M2-1
MM2-1
MP2-1

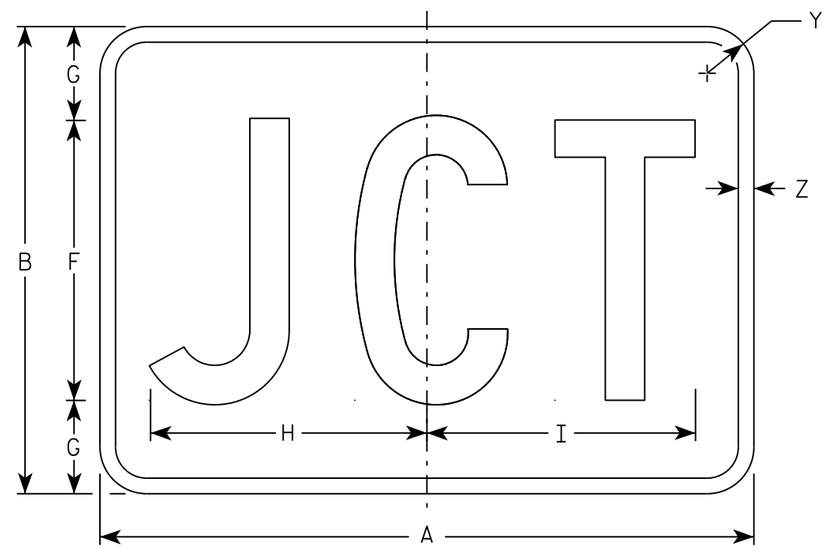

MB2-1
MK2-1
MN2-1
MR2-1

NOTES

1. Sign is Type II - Type H
2. Color:
   Background - See note 5
   Message - See note 5
3. Message Series - C
4. Corners may be square or rounded when base material is plywood but borders shall be rounded as shown. When base material is metal, the corners and borders shall be rounded.
5. M2-1 Background - White
   Message - Black
   MB2-1 Background - Blue
   Message - White
   MK2-1 Background - Green
   Message - White
   MM2-1 Background - White
   Message - Green
   MN2-1 Background - Brown
   Message - White
   MP2-1 Background - White
   Message - Blue
   MR2-1 Background - Brown
   Message - Yellow

SIZE	A	B	C	D	E	F	G	H	I	J	K	L	M	N	O	P	Q	R	S	T	U	V	W	X	Y	Z	Area sq. ft.
1																											
2	21	15	1 1/8	3/8	3/8	9	3	8 7/8	8 5/8																1 1/2	1/2	2.20
3	30	21	1 1/8	3/8	3/8	13	4	12 7/8	12 3/8																1 1/2	1/2	4.40
4	30	21	1 1/8	3/8	3/8	13	4	12 7/8	12 3/8																1 1/2	1/2	4.40
5	30	21	1 1/8	3/8	3/8	13	4	12 7/8	12 3/8																1 1/2	1/2	4.40

STANDARD SIGN
M2-1

WISCONSIN DEPT OF TRANSPORTATION

APPROVED Matthew R Rauch
for State Traffic Engineer

DATE 10/15/15 PLATE 146 M2-1.12

PROJECT NO: | HWY: | COUNTY: | SHEET NO: | E

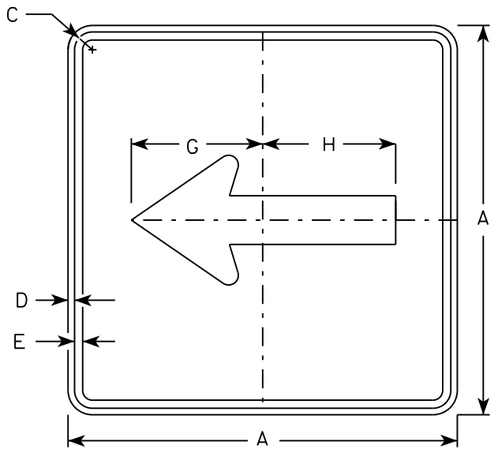

M6-1
MM6-1
MO6-1
MP6-1

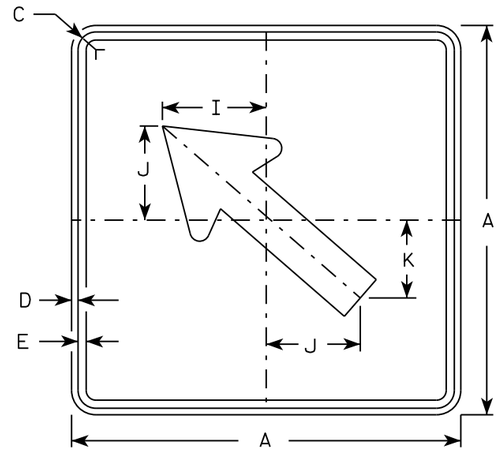

M6-2
MM6-2
MO6-2
MP6-2

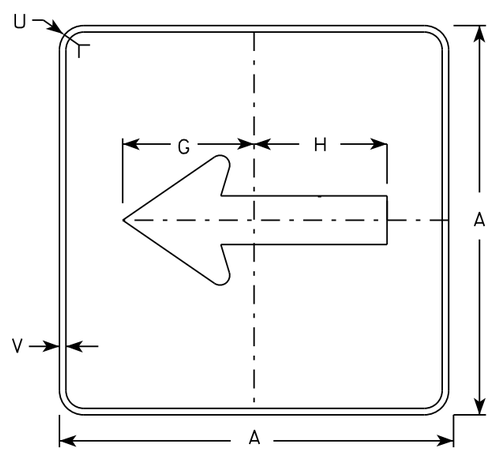

MB6-1
MK6-1
MN6-1
MR6-1

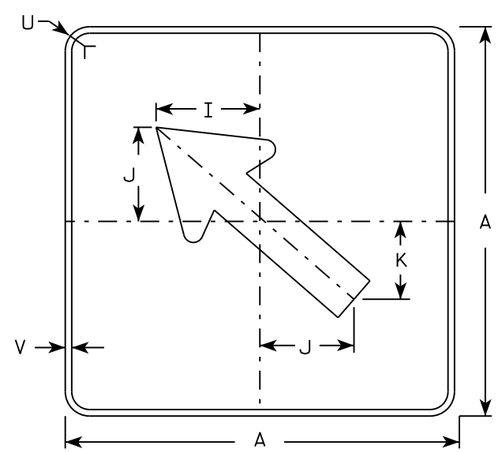

MB6-2
MK6-2
MN6-2
MR6-2

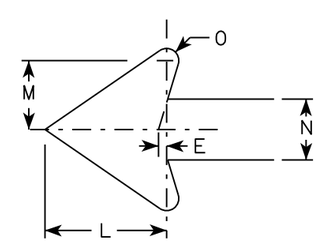

NOTES

1. Signs are Type II - Type H except as Shown
2. Color:
   Background - See note 4
   Message - See note 4
3. Corners may be square or rounded when base material is plywood but borders shall be rounded as shown. When base material is metal, the corners and borders shall be rounded.
4. M6-1 and M6-2 Background - White
   Message - Black
   MB6-1 and MB6-2 Background - Blue
   Message - White
   MK6-1 and MK6-2 Background - Green
   Message - White
   MM6-1 and MM6-2 Background - White
   Message - Green
   MN6-1 and MN6-2 Background - Brown
   Message - White
   MO6-1 and MO6-2 Background - Orange - Type F Reflective
   Message - Black
   MP6-1 and MP6-2 Background - White
   Message - Blue
   MR6-1 and MR6-2 Background - Brown
   Message - Yellow

SIZE	A	B	C	D	E	F	G	H	I	J	K	L	M	N	O	P	Q	R	S	T	U	V	W	X	Y	Z	Area sq. ft.
1																											
2	21		1 1/8	3/8	3/8		7 1/2	7 1/8	5 5/8	5	4 1/4	5 1/4	3	2 5/8	1/2						1 1/2	1/2					3.06
3	30		1 3/8	1/2	5/8		10 3/4	10 1/4	8	7 1/4	6	7 1/2	4 1/4	3 3/4	3/4						1 7/8	1/2					6.25
4	30		1 3/8	1/2	5/8		10 3/4	10 1/4	8	7 1/4	6	7 1/2	4 1/4	3 3/4	3/4						1 7/8	1/2					6.25
5	30		1 3/8	1/2	5/8		10 3/4	10 1/4	8	7 1/4	6	7 1/2	4 1/4	3 3/4	3/4						1 7/8	1/2					6.25

STANDARD SIGN
M6-1 & M6-2
SERIES

WISCONSIN DEPT OF TRANSPORTATION

APPROVED Matthew R Rauch
for State Traffic Engineer

DATE 10/15/15 PLATE 147 M6-1.15

PROJECT NO: | HWY: | COUNTY: | SHEET NO: | E

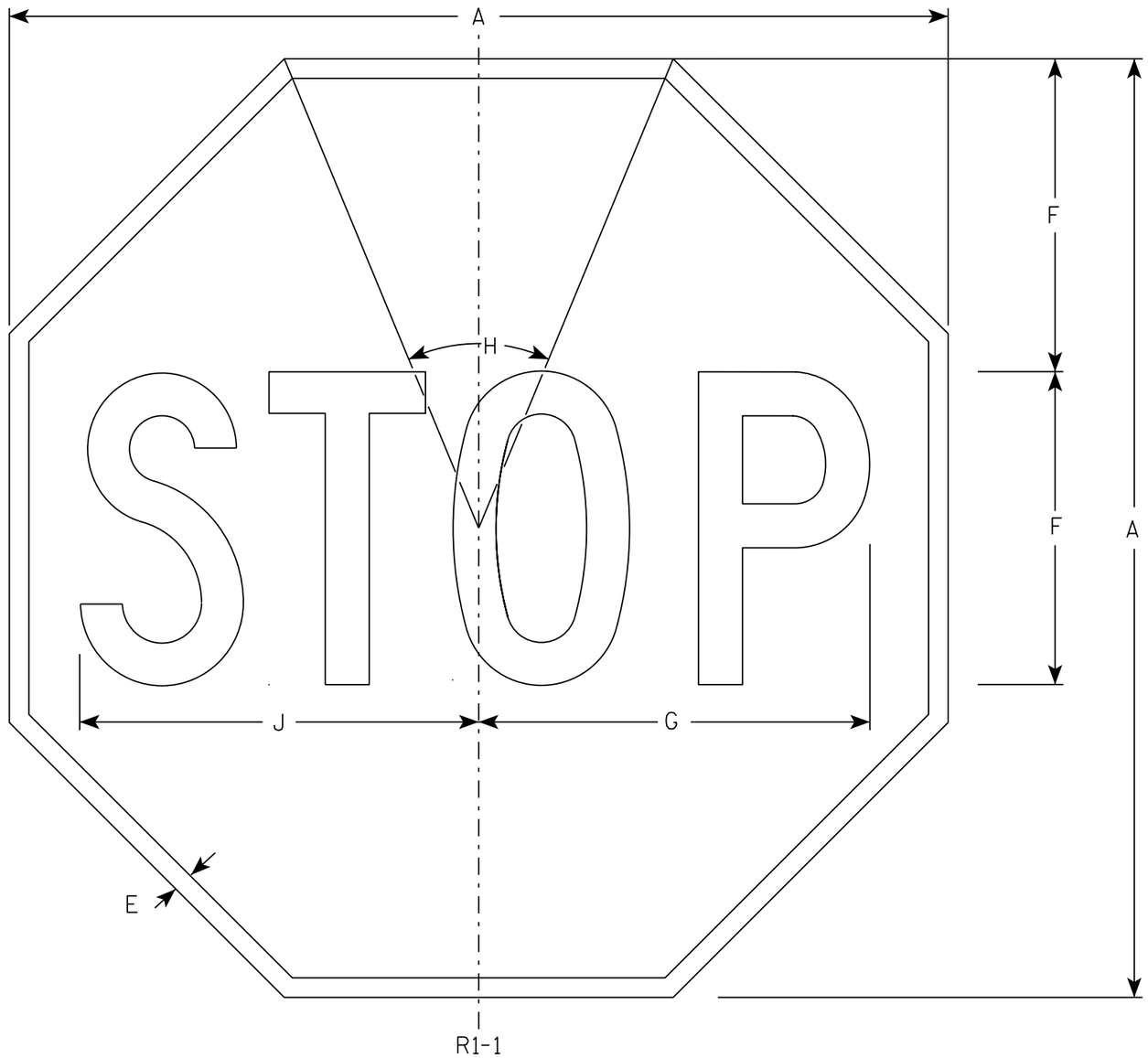

NOTES

1. Sign is Type II - Type H Reflective - reference WIS DOT Standard Specification for HIGHWAY and STRUCTURE CONSTRUCTION latest edition.
2. Color:
   Background - Red
   Message - White
3. Message Series - C

SIZE	A	B	C	D	E	F	G	H	I	J	K	L	M	N	O	P	Q	R	S	T	U	V	W	X	Y	Z	Area sq. ft.
1	30				5/8	10	12 1/2	45°		12 3/4																	5.18
2S	30				5/8	10	12 1/2	45°		12 3/4																	5.18
2M	36				3/4	12	15	45°		15 3/8																	7.46
3	36				3/4	12	15	45°		15 3/8																	7.46
4	48				1	16	20	45°		20 1/2																	13.25
5	48				1	16	20	45°		20 1/2																	13.25
6	18				3/8	6	7 3/4	45°		7 3/4																	1.86
7	12				1/4	4	5	45°		5 1/8																	0.78

STANDARD SIGN
R1-1

WISCONSIN DEPT OF TRANSPORTATION

APPROVED Matthew R Rauch
for State Traffic Engineer

DATE 11/12/15 PLATE NO. R1-1.13

PROJECT NO: | HWY: | COUNTY: | SHEET NO: 148 | E

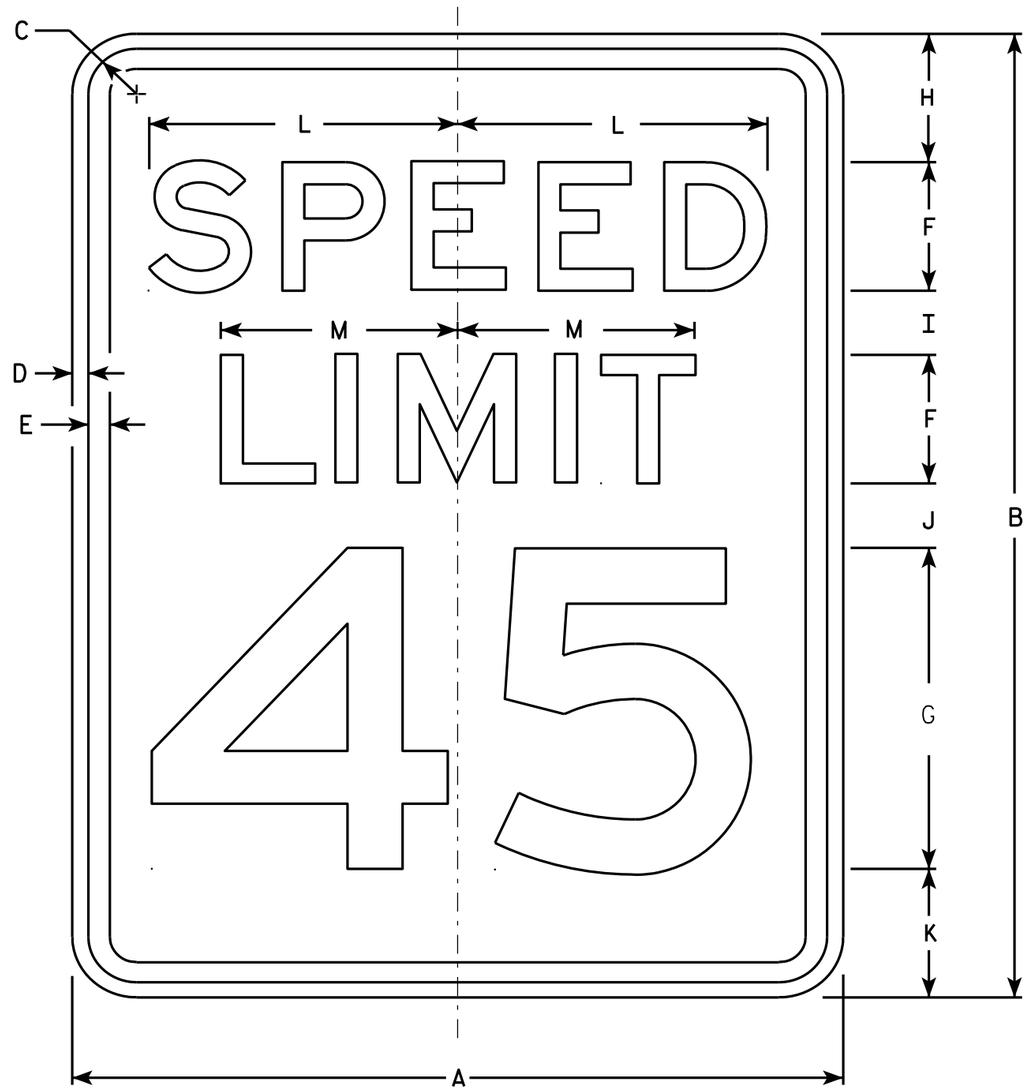

R2-1

NOTES

1. Sign is Type II - Type H Reflective - reference WIS DOT Standard Specification for HIGHWAY and STRUCTURE CONSTRUCTION latest edition.
2. Color:
   Background - White
   Message - Black
3. Message Series - E
4. Corners may be square or rounded when base material is plywood but borders shall be rounded as shown. When base material is metal, the corners and borders shall be rounded.
5. Substitute appropriate numerals and optically adjust spacing to achieve proper balance.

SIZE	A	B	C	D	E	F	G	H	I	J	K	L	M	N	O	P	Q	R	S	T	U	V	W	X	Y	Z	Area sq. ft.
1	18	24	1 1/8	3/8	1/2	3	8	3	2	2	3	7 1/4	5 1/2														3.0
2S	24	30	1 1/8	3/8	1/2	4	10	3	2 1/4	3 3/8	3 3/8	9 5/8	7 3/8														5.0
2M	30	36	1 3/8	1/2	5/8	5	12	5	2 1/2	2 1/2	4	12	9 1/4														7.5
3	36	48	1 3/8	1/2	5/8	6	14	6	5	5	6	14 3/8	11														12.0
4	36	48	1 3/8	1/2	5/8	6	14	6	5	5	6	14 3/8	11														12.0
5	48	60	2 1/4	3/4	1	8	20	6	4 1/2	6 3/4	6 3/4	19 1/4	14 5/8														20.0

STANDARD SIGN
R2-1

WISCONSIN DEPT OF TRANSPORTATION

APPROVED Matthew R Rauch
for State Traffic Engineer

DATE 5/26/10 PLATE NO. R2-1.13

PROJECT NO: | HWY: | COUNTY: | SHEET NO: 149 | E

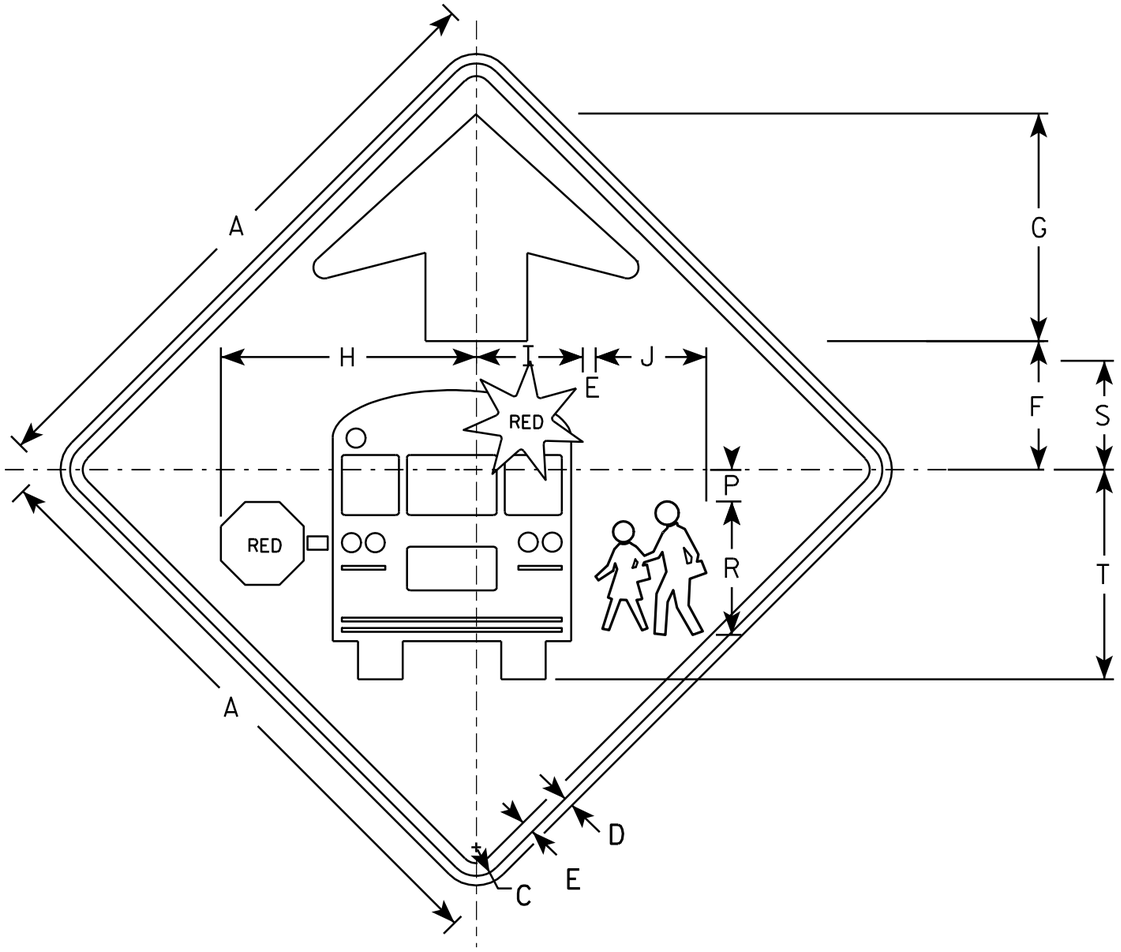

S3-1

NOTES

1. All Signs Type II - Type F Reflective - reference WIS DOT Standard Specification for HIGHWAY and STRUCTURE CONSTRUCTION latest edition.
2. Color:
   Background - YELLOW-GREEN
   Message - BLACK except as noted
   Circles except PEDS- RED BACKGROUND
3. Corners may be square or rounded when base material is plywood but borders shall be rounded as shown. When base material is metal, the corners and borders shall be rounded.

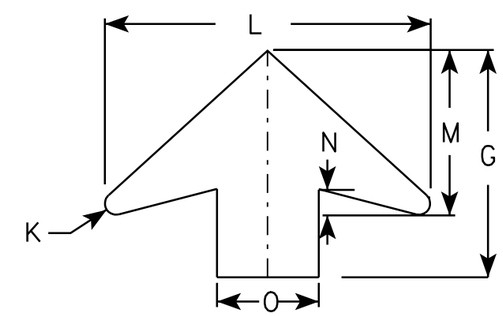

ARROW DETAIL

SIZE	A	B	C	D	E	F	G	H	I	J	K	L	M	N	O	P	Q	R	S	T	U	V	W	X	Y	Z	Area sq. ft.
1	30		1 3/8	1/2	5/8	6 1/4	11 1/4	12 1/2	5 1/4	5 1/2	1/2	16	8	1 1/4	5	1 1/2		6 5/8	5 3/8	10 3/8							6.25
2	36		1 5/8	5/8	3/4	7 1/2	13 1/2	15 1/8	6 1/4	6 1/2	5/8	19 1/4	9 3/4	1 5/8	6	1 7/8		7 7/8	6 3/8	12 3/8							9.0
3	48		2 1/4	3/4	1	10	17 7/8	20 1/8	8 3/8	8 3/4	7/8	25 5/8	13	2	8	2 1/2		10 1/2	8 1/2	16 1/2							16.0
4	48		2 1/4	3/4	1	10	17 7/8	20 1/8	8 3/8	8 3/4	7/8	25 5/8	13	2	8	2 1/2		10 1/2	8 1/2	16 1/2							16.0
5																											

STANDARD SIGN
S3-1

WISCONSIN DEPT OF TRANSPORTATION

APPROVED Matthew R Rauch
for State Traffic Engineer

DATE 6/8/10 PLATE NO. S3-1.6

PROJECT NO:

SHEET NO: 150 E

NOTES

1. Sign is Type II - Type F Reflective - reference WIS DOT Standard Specification for HIGHWAY and STRUCTURE CONSTRUCTION latest edition.
2. Color:
   Background - Yellow
   Message - Black
3. Corners may be square or rounded when base material is plywood but borders shall be rounded as shown. When base material is metal, the corners and borders shall be rounded.
4. W1-2L is the same as W1-2R except the arrow is reversed along the vertical centerline.

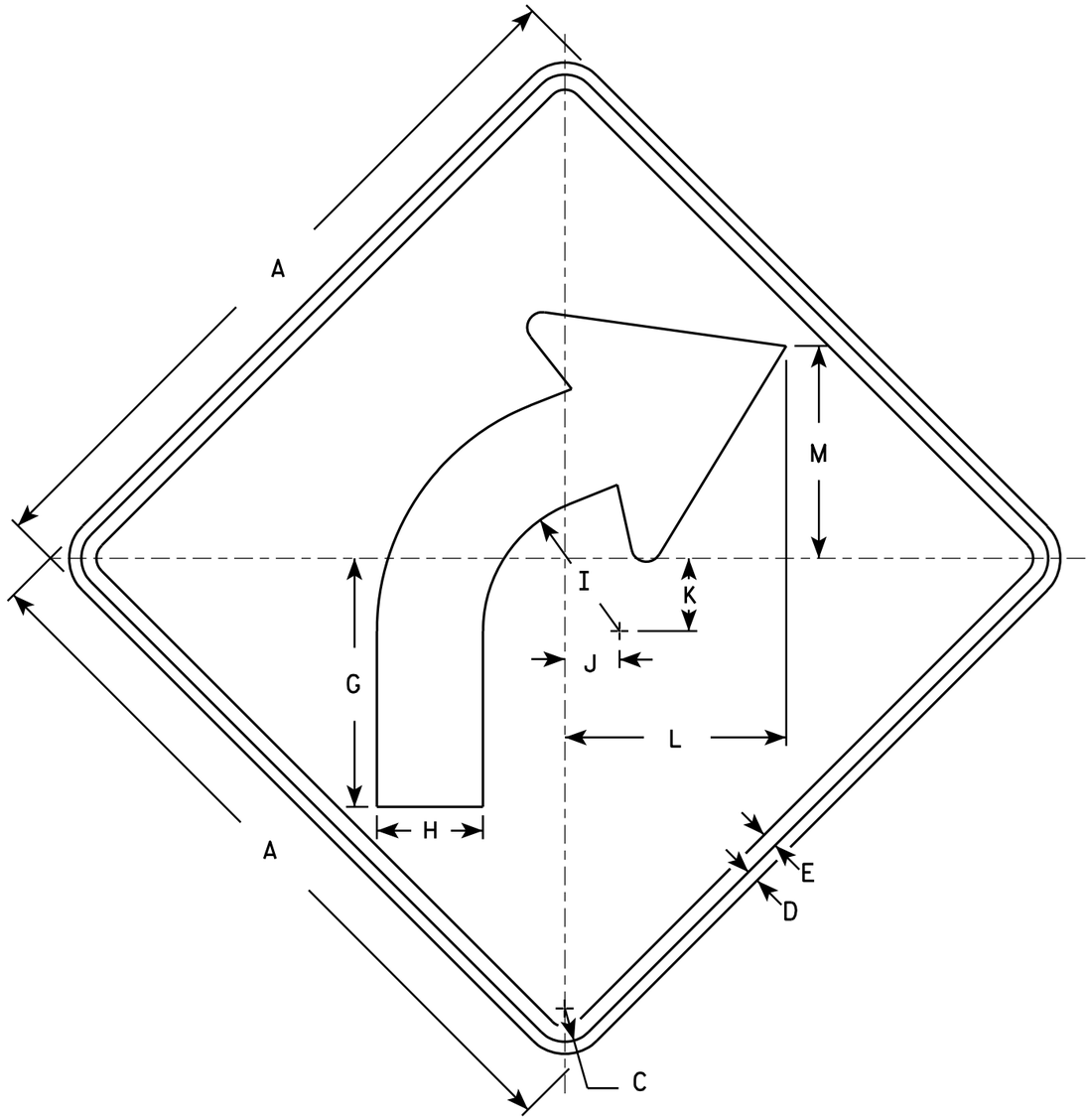

W1-2R

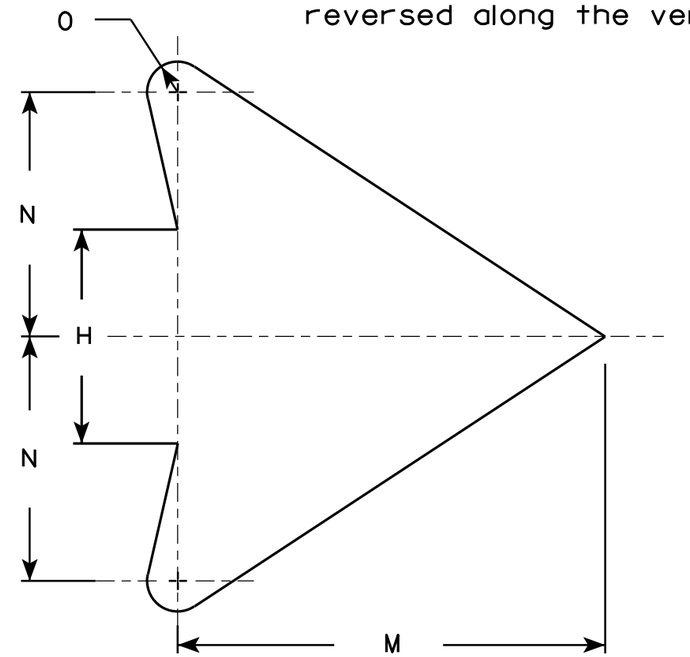

ARROW DETAIL

SIZE	A	B	C	D	E	F	G	H	I	J	K	L	M	N	O	P	Q	R	S	T	U	V	W	X	Y	Z	Area sq. ft.
1	24		1 1/8	3/8	1/2		8 1/4	3 1/2	4 1/2	1 3/4	2 3/8	7 1/4	7	4	1/2												4.0
2S	30		1 3/8	1/2	5/8		10 1/4	4 3/8	5 5/8	2 1/4	3	9 1/8	8 3/4	5	5/8												6.25
2M	36		1 5/8	5/8	3/4		12 3/8	5 1/4	6 3/4	2 5/8	3 1/2	10 7/8	10 1/2	6	3/4												9.0
3	36		1 5/8	5/8	3/4		12 3/8	5 1/4	6 3/4	2 5/8	3 1/2	10 7/8	10 1/2	6	3/4												9.0
4	36		1 5/8	5/8	3/4		12 3/8	5 1/4	6 3/4	2 5/8	3 1/2	10 7/8	10 1/2	6	3/4												9.0
5	48		2 1/4	3/4	1		16 1/2	7	9	3 1/2	4 5/8	14 1/2	14	8	1												16.0

STANDARD SIGN
W1-2

WISCONSIN DEPT OF TRANSPORTATION

APPROVED Matthew R Rauch
for State Traffic Engineer

DATE 5/15/12 PLATE NO. W1-2.10

PROJECT NO:	HWY:	COUNTY:		SHEET NO: 151	E

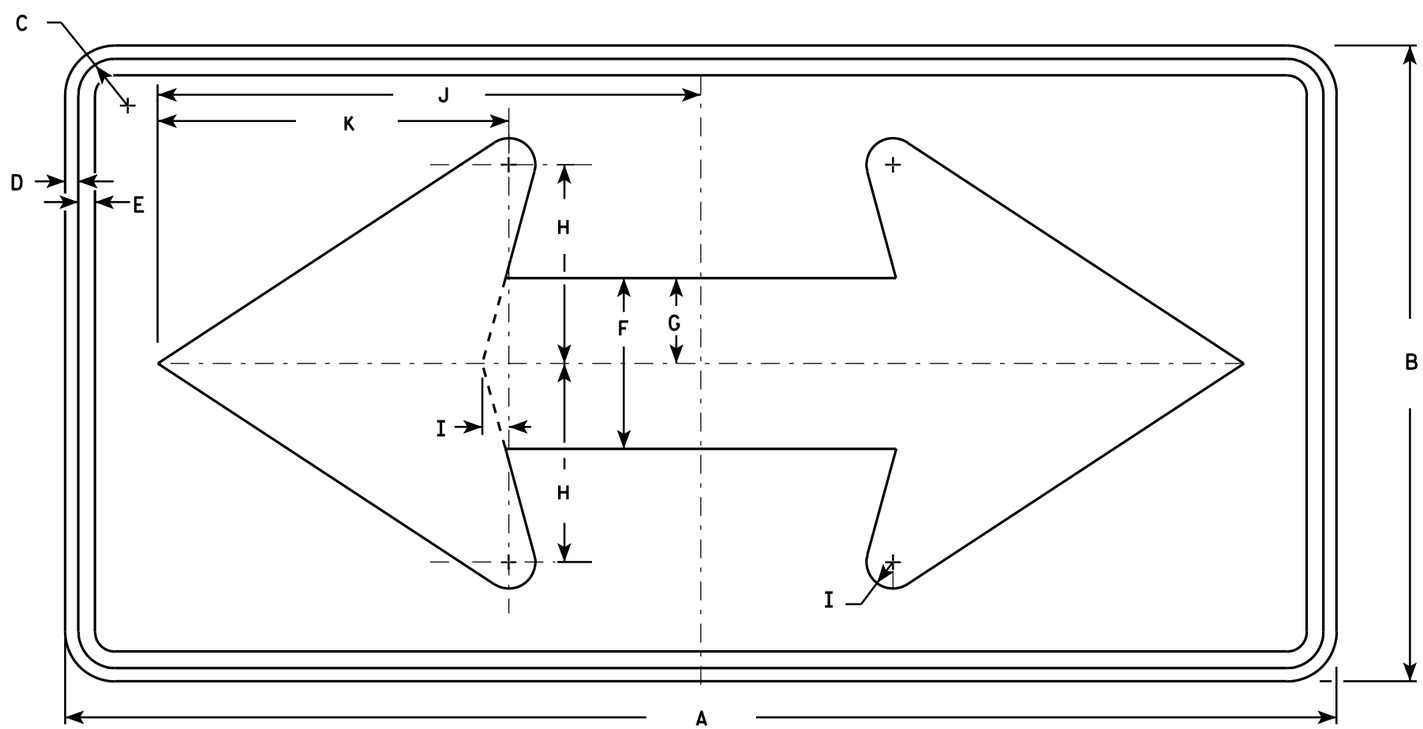

W1-7

NOTES

1. Sign is Type II - Type F Reflective - reference WIS DOT Standard Specification for HIGHWAY and STRUCTURE CONSTRUCTION latest edition.
2. Color:
   Background - Yellow
   Message - Black
3. Corners may be square or rounded when base material is plywood but borders shall be rounded as shown. When base material is metal, the corners and borders shall be rounded.

SIZE	A	B	C	D	E	F	G	H	I	J	K	L	M	N	O	P	Q	R	S	T	U	V	W	X	Y	Z	Area sq. ft.
1	36	18	1 1/8	3/8	1/2	5	2 1/2	5 3/4	3/4	15 5/8	10 1/8																4.5
2S	48	24	1 3/8	1/2	5/8	6 1/2	3 1/4	7 1/2	1	20 1/2	13 1/4																8.0
2M	48	24	1 3/8	1/2	5/8	6 1/2	3 1/4	7 1/2	1	20 1/2	13 1/4																8.0
3	60	30	1 3/8	1/2	5/8	8	4	9 1/4	1 1/4	25 3/8	16 1/4																12.5
4	60	30	1 3/8	1/2	5/8	8	4	9 1/4	1 1/4	25 3/8	16 1/4																12.5
5	96	48	2 1/4	3/4	1	13	6 1/2	15	2	41	26 1/2																32.0

STANDARD SIGN
W1-7

WISCONSIN DEPT OF TRANSPORTATION

APPROVED Matthew R Rauch
for State Traffic Engineer

DATE 6/7/10 PLATE NO. W1-7.7

PROJECT NO: | HWY: | COUNTY: | SHEET NO: 152 | E

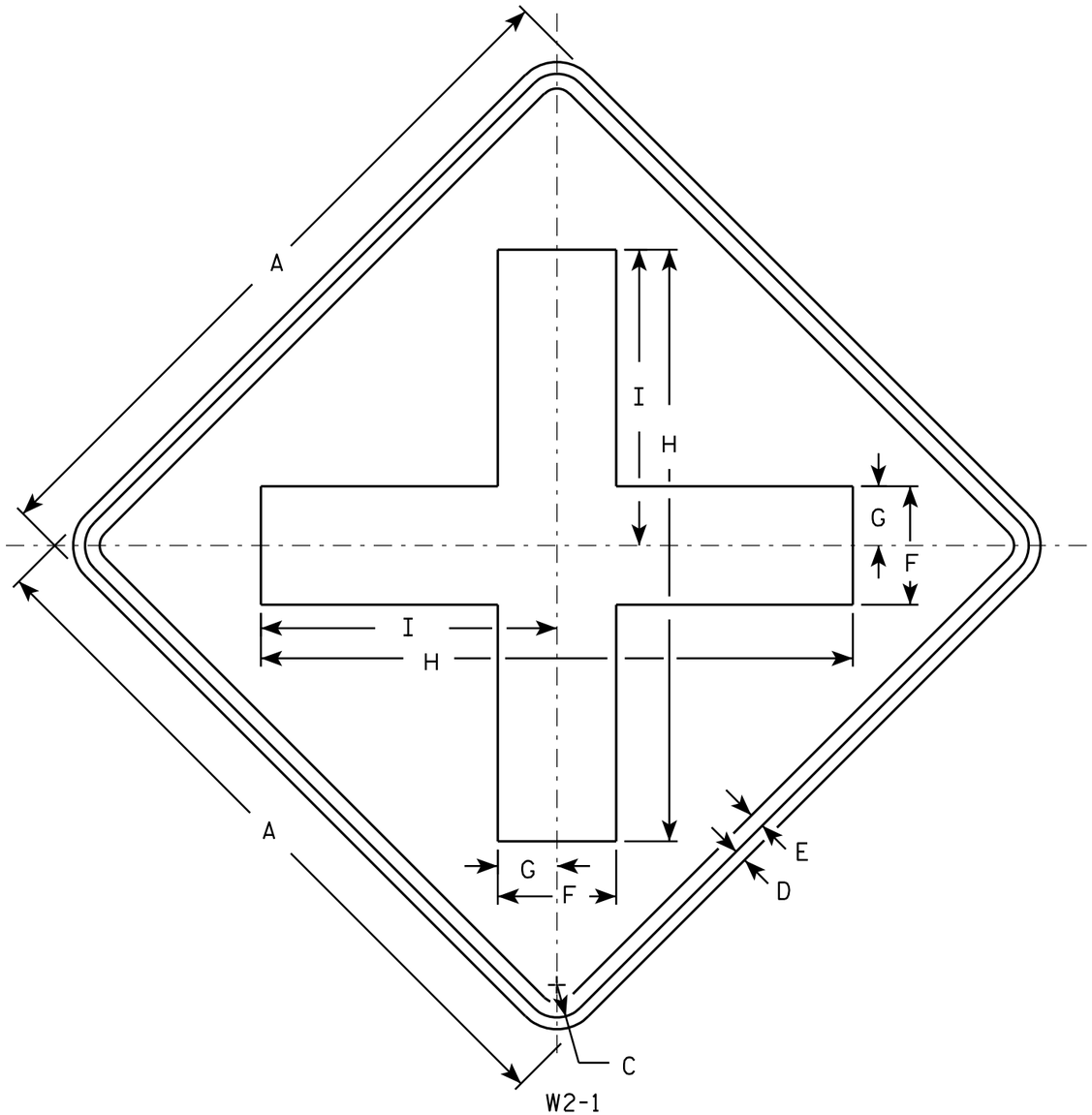

NOTES

1. Sign is Type II - Type F Reflective - reference WIS DOT Standard Specification for HIGHWAY and STRUCTURE CONSTRUCTION latest edition.
2. Color:
   Background - Yellow
   Message - Black
3. Corners may be square or rounded when base material is plywood but borders shall be rounded as shown. When base material is metal, the corners and borders shall be rounded.

SIZE	A	B	C	D	E	F	G	H	I	J	K	L	M	N	O	P	Q	R	S	T	U	V	W	X	Y	Z	Area sq. ft.
1	24		1 1/8	3/8	1/2	4	2	20	10																		4.0
2S	30		1 3/8	1/2	5/8	5	2 1/2	25	12 1/2																		6.25
2M	30		1 3/8	1/2	5/8	5	2 1/2	25	12 1/2																		6.25
3	36		1 5/8	5/8	3/4	6	3	30	15																		9.0
4	48		2 1/4	3/4	1	8	4	40	20																		16.0
5																											

STANDARD SIGN
W2-1

WISCONSIN DEPT OF TRANSPORTATION

APPROVED Matthew R Rauch
for State Traffic Engineer

DATE 5/29/12 PLATE NO. W2-1.9

PROJECT NO:	HWY:	COUNTY:		SHEET NO: 153	E

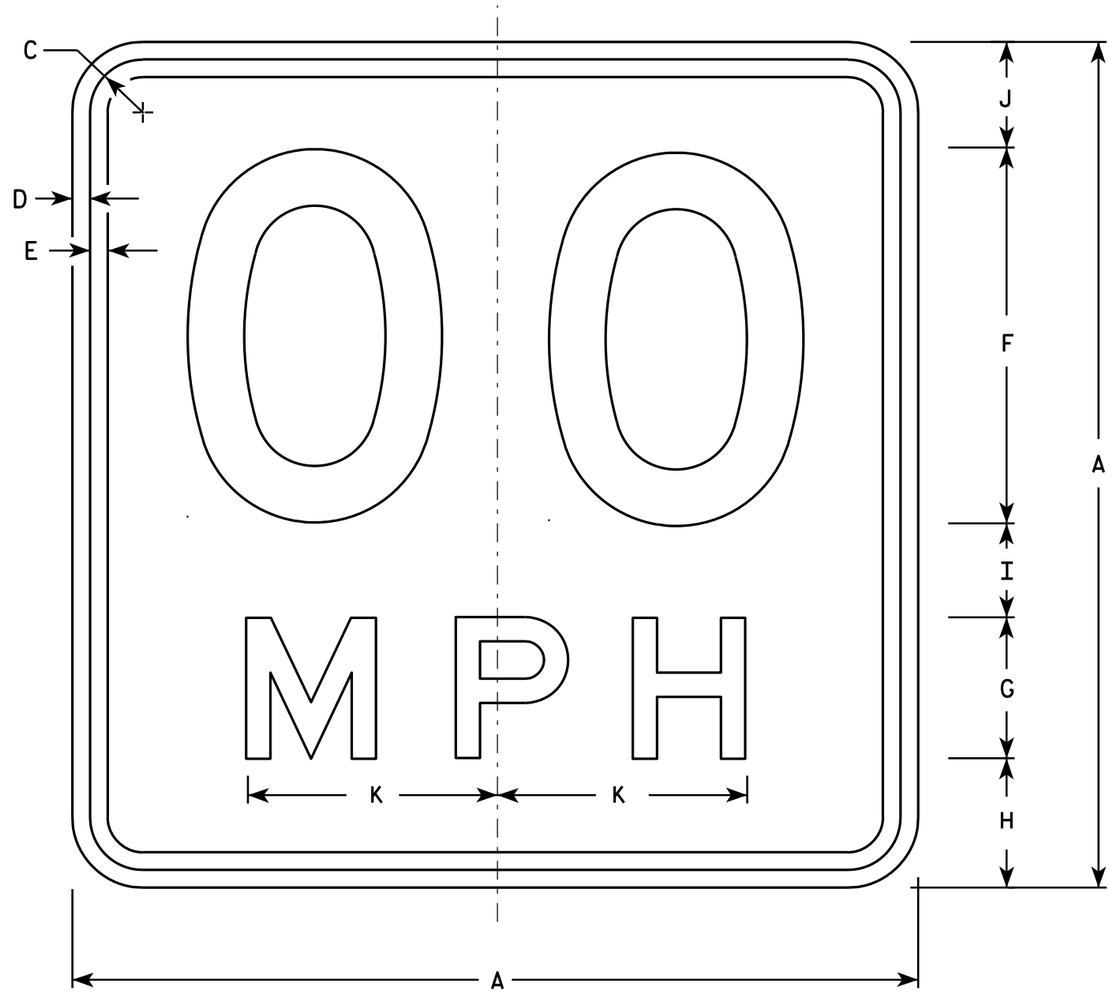

W13-1

* For 30" x 30" Warning Signs, use 18" x 18" W13-1 signs.
For 36" x 36" Warning Signs, use 24" x 24" W13-1 signs.

NOTES

1. Sign is Type II - Type F Reflective - reference WIS DOT Standard Specification for HIGHWAY and STRUCTURE CONSTRUCTION latest edition.
2. Color:
   Background - Yellow
   Message - Black
3. Message Series - See Note 6
4. Corners may be square or rounded when base material is plywood but borders shall be rounded as shown. When base material is metal, the corners and borders shall be rounded.
5. Substitute appropriate numerals and optically space about centerline to achieve proper balance.
6. Line 1 is Series D
   Line 2 is Series E

SIZE	A	B	C	D	E	F	G	H	I	J	K	L	M	N	O	P	Q	R	S	T	U	V	W	X	Y	Z	Area sq. ft.
1	18		1 1/8	3/8	3/8	8	3	2 3/4	2	2 1/4	5 3/8																2.25
* 2S	18		1 1/8	3/8	3/8	8	3	2 3/4	2	2 1/4	5 3/8																2.25
* 2M	18		1 1/8	3/8	3/8	8	3	2 3/4	2	2 1/4	5 3/8																2.25
3	24		1 1/8	3/8	1/2	10	4	4	2 3/4	3 1/4	6 5/8																4.00
4	36		1 5/8	5/8	3/4	16	6	5 1/2	4	4 1/2	10 5/8																9.00
5	36		1 5/8	5/8	3/4	16	6	5 1/2	4	4 1/2	10 5/8																9.00

STANDARD SIGN
W13-1

WISCONSIN DEPT OF TRANSPORTATION

APPROVED Matthew R Rauch
For State Traffic Engineer

DATE 5/31/12 PLATE NO. W13-1.16

PROJECT NO: | HWY: | COUNTY: | SHEET NO: 154 | E

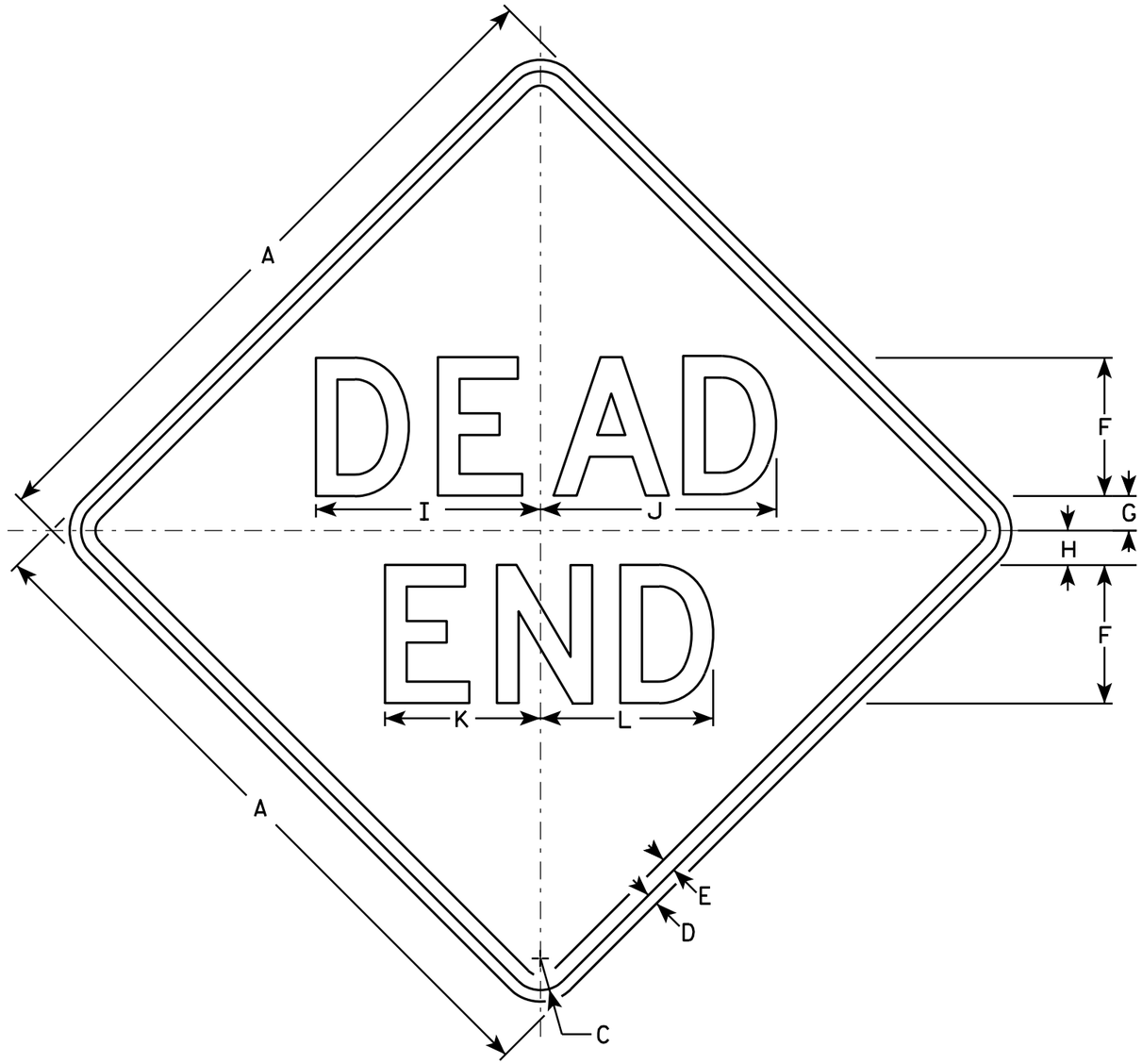

W14-1

NOTES

1. Sign is Type II - Type F Reflective - reference WIS DOT Standard Specification for HIGHWAY and STRUCTURE CONSTRUCTION latest edition.
2. Color:
   Background - Yellow
   Message - Black
3. Message Series - D
4. Corners may be square or rounded when base material is plywood but borders shall be rounded as shown. When base material is metal, the corners and borders shall be rounded.

SIZE	A	B	C	D	E	F	G	H	I	J	K	L	M	N	O	P	Q	R	S	T	U	V	W	X	Y	Z	Area sq. ft.
1	24		1 1/8	3/8	1/2	5	1	2	8 1/4	8 5/8	5 5/8	6 1/4															4.0
2S	30		1 3/8	1/2	5/8	6	1 1/2	2 1/2	9 3/4	10 1/4	6 3/4	7 1/2															6.25
2M	30		1 3/8	1/2	5/8	6	1 1/2	2 1/2	9 3/4	10 1/4	6 3/4	7 1/2															6.25
3	36		1 5/8	5/8	3/4	7	2	3	11 3/8	12	7 7/8	8 3/4															9.0
4																											
5																											

STANDARD SIGN
W14-1

WISCONSIN DEPT OF TRANSPORTATION

APPROVED Matthew R Rauch
for State Traffic Engineer

DATE 3/13/13 PLATE NO. W14-1.7

PROJECT NO: | HWY: | COUNTY: | SHEET NO: 155 | E

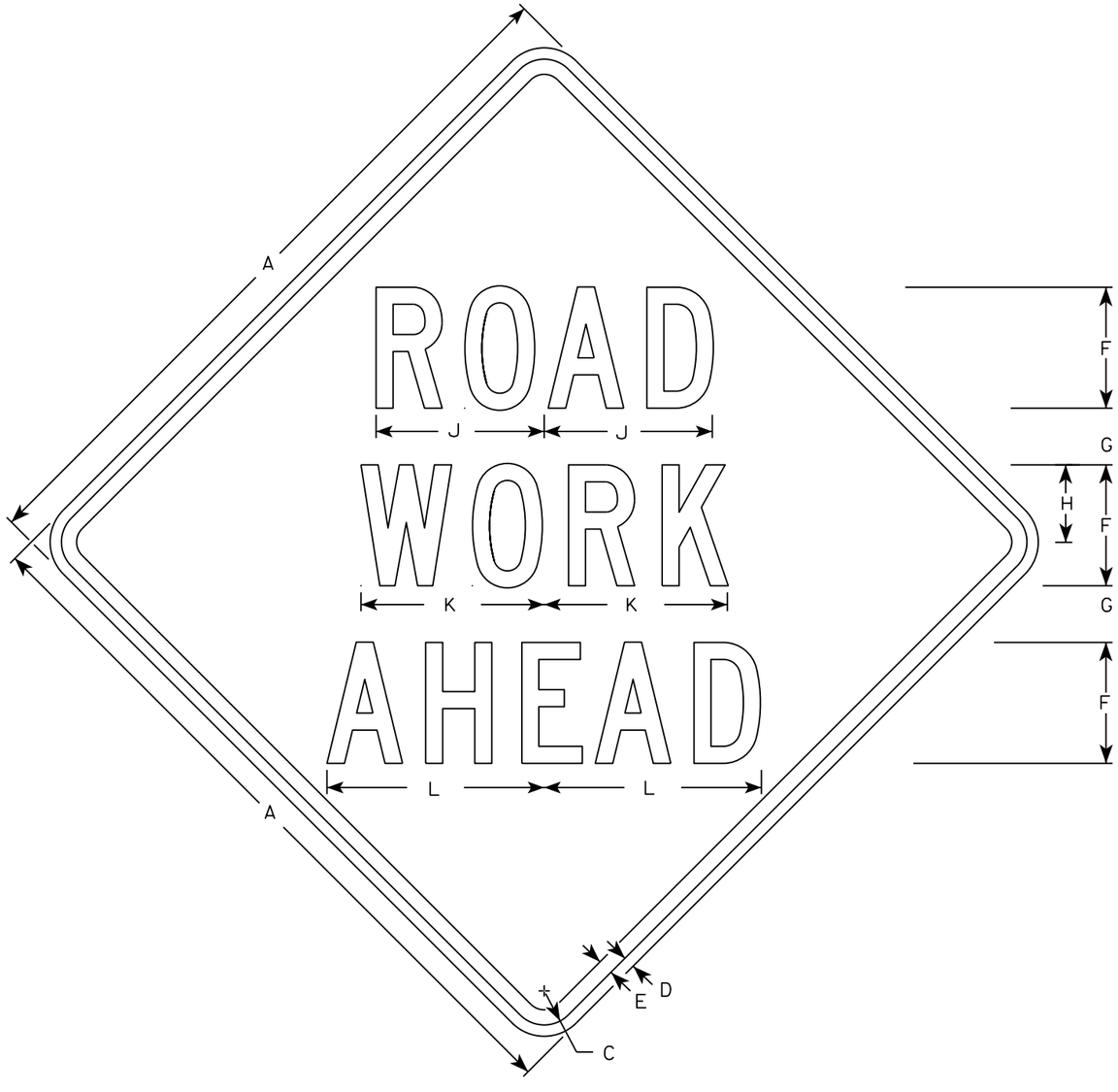

W20-1A

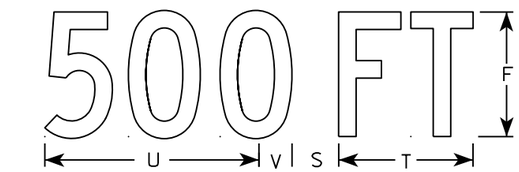

W20-1D

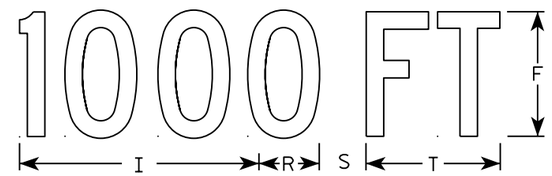

W20-1C

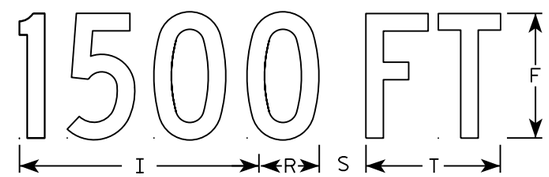

W20-1B

W20-1G

W20-1F

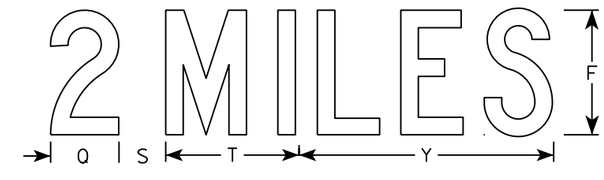

W20-1E

NOTES

1. Sign is Type II - Type F Reflective
2. Color:
   Background - Orange
   Message - Black
3. Message Series - C
4. Corners may be square or rounded when base material is plywood but borders shall be rounded as shown. When base material is metal, the corners and borders shall be rounded.

SIZE	A	B	C	D	E	F	G	H	I	J	K	L	M	N	O	P	Q	R	S	T	U	V	W	X	Y	Z	Area sq. ft.
1	36		1 3/8	1/2	5/8	5	2 5/8	3 1/4	10 1/8	7	7 5/8	8 7/8	1 1/8	4 1/2	3 1/2	9		2 1/2	2 1/4	5 5/8	9	1 3/8	8	1 3/4	10 3/4	6	9.0
2S	48		2 1/4	3/4	1	8	3 3/4	5 1/8	15 3/8	11 1/8	12 1/8	14 3/8	1 5/8	6 7/8	5 3/8	13 7/8	4 3/8	3 7/8	3	8 5/8	13 3/4	2 1/8	11 7/8	2 3/4	16 3/8	9	16.0
2M	48		2 1/4	3/4	1	8	3 3/4	5 1/8	15 3/8	11 1/8	12 1/8	14 3/8	1 5/8	6 7/8	5 3/8	13 7/8	4 3/8	3 7/8	3	8 5/8	13 3/4	2 1/8	11 7/8	2 3/4	16 3/8	9	16.0
3	48		2 1/4	3/4	1	8	3 3/4	5 1/8	15 3/8	11 1/8	12 1/8	14 3/8	1 5/8	6 7/8	5 3/8	13 7/8	4 3/8	3 7/8	3	8 5/8	13 3/4	2 1/8	11 7/8	2 3/4	16 3/8	9	16.0
4	48		2 1/4	3/4	1	8	3 3/4	5 1/8	15 3/8	11 1/8	12 1/8	14 3/8	1 5/8	6 7/8	5 3/8	13 7/8	4 3/8	3 7/8	3	8 5/8	13 3/4	2 1/8	11 7/8	2 3/4	16 3/8	9	16.0
5	48		2 1/4	3/4	1	8	3 3/4	5 1/8	15 3/8	11 1/8	12 1/8	14 3/8	1 5/8	6 7/8	5 3/8	13 7/8	4 3/8	3 7/8	3	8 5/8	13 3/4	2 1/8	11 7/8	2 3/4	16 3/8	9	16.0

STANDARD SIGN
W20-1A, B, C, D, F & G

WISCONSIN DEPT OF TRANSPORTATION

APPROVED Matthew R Rauch
for State Traffic Engineer

DATE 5/07/15 PLATE NO. W20-1.10

PROJECT NO:

SHEET NO: E

CTH A

Total Volume Table							
Station	Cut Area	Fill Area	Cut Vol	Fill Vol	Cum Cut Vol	Cum Fill Vol	Net Vol
234+50.00	0.00	0.00	0.00	0.00	0.00	0.00	0.00
235+00.00	61.30	6.15	56.76	5.69	56.76	5.69	51.07
235+50.00	82.86	1.08	133.49	6.69	190.24	12.38	177.86
235+56.23	81.88	0.00	19.00	0.12	209.24	12.51	196.73
236+00.00	79.18	2.71	130.57	2.20	339.81	14.71	325.10
236+50.00	79.84	4.43	147.24	6.61	487.05	21.32	465.73
237+00.00	84.93	0.40	152.56	4.47	639.61	25.79	613.82
237+12.45	79.53	0.85	37.92	0.29	677.54	26.08	651.46
237+50.00	70.75	2.85	104.49	2.58	782.02	28.65	753.37
238+00.00	65.33	3.45	125.99	5.84	908.02	34.49	873.52
238+50.00	56.83	4.05	113.11	6.95	1021.12	41.44	979.68
239+00.00	58.96	5.47	107.22	8.82	1128.34	50.26	1078.08
239+15.00	71.11	4.46	36.13	2.76	1164.47	53.02	1111.46
239+50.00	53.17	9.87	80.55	9.29	1245.03	62.31	1182.72
240+00.00	63.09	9.28	107.64	17.73	1352.67	80.05	1272.63
240+50.00	61.81	7.66	115.65	15.69	1468.32	95.73	1372.58
241+00.00	64.33	8.21	116.80	14.70	1585.12	110.43	1474.69
241+25.00	80.29	5.52	66.96	6.35	1652.08	116.79	1535.29
241+50.00	66.08	7.27	67.77	5.92	1719.84	122.71	1597.13
242+00.00	95.80	3.64	149.89	10.11	1869.73	132.82	1736.92

Total Volume Table							
Station	Cut Area	Fill Area	Cut Vol	Fill Vol	Cum Cut Vol	Cum Fill Vol	Net Vol
242+50.00	71.58	7.48	154.98	10.30	2024.72	143.12	1881.60
243+00.00	78.84	5.39	139.28	11.92	2163.99	155.04	2008.95
243+15.00	93.42	3.74	47.85	2.54	2211.84	157.58	2054.26
243+50.00	81.55	7.38	113.41	7.21	2325.25	164.79	2160.47
244+00.00	84.00	7.65	153.29	13.91	2478.54	178.70	2299.84
244+50.00	90.83	7.91	161.88	14.40	2640.42	193.10	2447.32
245+00.00	72.43	11.97	151.17	18.40	2791.59	211.50	2580.08
245+05.00	70.22	14.54	13.21	2.45	2804.79	213.96	2590.84
245+50.00	67.29	8.73	114.59	19.39	2919.38	233.34	2686.04
246+00.00	70.22	6.91	127.32	14.47	3046.70	247.82	2798.88
246+50.00	63.97	7.28	124.25	13.14	3170.95	260.95	2910.00
246+75.00	98.86	0.30	75.38	3.51	3246.33	264.46	2981.87
247+00.00	77.42	7.70	81.61	3.70	3327.94	268.16	3059.78
247+50.00	60.59	8.07	127.79	14.60	3455.73	282.77	3172.97
248+00.00	61.10	10.20	112.68	16.92	3568.42	299.69	3268.73
248+50.00	62.61	8.15	114.55	16.99	3682.97	316.68	3366.29
248+65.00	78.03	6.03	39.07	3.94	3722.04	320.62	3401.42
249+00.00	59.44	2.95	89.10	5.82	3811.13	326.43	3484.70
249+47.18	57.44	4.51	102.11	6.52	3913.25	332.95	3580.30
249+50.00	57.35	5.05	5.99	0.50	3919.24	333.45	3585.79

CTH A

Total Volume Table							
Station	Cut Area	Fill Area	Cut Vol	Fill Vol	Cum Cut Vol	Cum Fill Vol	Net Vol
250+00.00	77.79	0.72	125.13	5.34	4044.37	338.79	3705.58
250+50.00	96.80	0.00	161.66	0.66	4206.03	339.45	3866.58
251+00.00	103.60	0.00	185.55	0.00	4391.58	339.45	4052.13
251+50.00	99.63	0.00	188.18	0.00	4579.76	339.45	4240.31
252+00.00	91.07	0.04	176.58	0.04	4756.34	339.49	4416.85
252+50.00	89.96	0.29	167.62	0.31	4923.96	339.80	4584.16
253+00.00	89.86	0.00	166.50	0.27	5090.46	340.07	4750.38
253+50.00	63.22	5.26	141.74	4.87	5232.20	344.95	4887.25
254+00.00	69.12	2.77	122.53	7.44	5354.73	352.38	5002.35
254+18.86	64.42	3.48	46.64	2.18	5401.37	354.56	5046.80
254+50.00	61.69	2.96	72.73	3.71	5474.10	358.28	5115.82
255+00.00	53.47	5.06	106.63	7.42	5580.73	365.70	5215.03
255+50.00	53.57	6.03	99.11	10.27	5679.84	375.97	5303.87
256+00.00	60.63	1.68	105.74	7.14	5785.58	383.11	5402.47
256+50.00	74.82	2.04	125.41	3.44	5911.00	386.56	5524.44
257+00.00	85.38	2.56	148.33	4.26	6059.33	390.81	5668.51
257+50.00	121.67	0.26	191.71	2.61	6251.04	393.42	5857.61
258+00.00	110.80	0.25	215.25	0.47	6466.28	393.89	6072.40
258+50.00	108.05	0.29	202.64	0.50	6668.92	394.39	6274.54
258+90.54	97.73	0.64	154.47	0.70	6823.40	395.09	6428.31

Total Volume Table							
Station	Cut Area	Fill Area	Cut Vol	Fill Vol	Cum Cut Vol	Cum Fill Vol	Net Vol
259+00.00	92.99	0.46	33.42	0.19	6856.82	395.28	6461.54
259+50.00	95.29	0.03	174.33	0.46	7031.15	395.74	6635.42
260+00.00	96.82	0.00	177.88	0.03	7209.03	395.77	6813.27
260+50.00	89.43	0.06	172.45	0.05	7381.48	395.82	6985.66
261+00.00	92.57	0.05	168.52	0.10	7550.00	395.92	7154.08
261+50.00	63.38	4.83	144.40	4.52	7694.40	400.44	7293.96
261+75.00	57.12	57.51	55.79	28.86	7750.19	429.30	7320.89
262+00.00	58.38	9.66	53.47	31.10	7803.67	460.40	7343.27
262+50.00	50.44	8.11	100.77	16.45	7904.43	476.85	7427.58
263+00.00	42.88	6.54	86.41	13.56	7990.84	490.41	7500.43
263+40.00	59.98	1.49	76.19	5.95	8067.04	496.36	7570.67
263+50.00	53.15	3.26	20.95	0.88	8087.99	497.24	7590.74
264+00.00	49.33	5.18	94.89	7.82	8182.87	505.06	7677.81
264+50.00	44.29	6.56	86.68	10.87	8269.56	515.92	7753.63
265+00.00	58.97	8.48	95.61	13.92	8365.17	529.85	7835.32
265+50.00	42.57	7.72	94.02	15.00	8459.18	544.85	7914.34
266+00.00	38.59	9.23	75.15	15.70	8534.33	560.54	7973.79
266+50.00	41.21	2.86	73.89	11.20	8608.22	571.74	8036.47
266+60.00	58.05	1.90	18.38	0.88	8626.60	572.63	8053.97
267+00.00	47.55	4.87	78.22	5.01	8704.82	577.64	8127.18

CTH A

Total Volume Table							
Station	Cut Area	Fill Area	Cut Vol	Fill Vol	Cum Cut Vol	Cum Fill Vol	Net Vol
267+15.00	54.40	4.10	28.32	2.49	8733.13	580.13	8153.01
267+50.00	48.42	3.01	66.64	4.61	8799.78	584.73	8215.04
268+00.00	61.06	1.62	101.37	4.29	8901.15	589.02	8312.13
268+50.00	60.03	4.21	112.13	5.40	9013.27	594.42	8418.85
269+00.00	53.59	1.65	105.21	5.43	9118.48	599.85	8518.63
269+31.86	45.84	6.66	58.67	4.91	9177.15	604.76	8572.39
269+50.00	47.73	7.98	31.43	4.92	9208.58	609.67	8598.90
269+85.00	77.24	0.03	81.00	5.19	9289.58	614.87	8674.71
270+00.00	79.33	0.05	43.49	0.02	9333.07	614.89	8718.18
270+50.00	67.67	8.14	136.11	7.58	9469.18	622.46	8846.71
271+00.00	42.70	15.96	102.19	22.31	9571.37	644.78	8926.59
271+25.00	65.35	0.65	50.02	7.69	9621.39	652.47	8968.93
271+50.00	40.08	15.37	48.81	7.42	9670.20	659.88	9010.32
271+96.40	37.94	14.25	67.03	25.44	9737.23	685.32	9051.91
272+00.00	39.19	11.49	5.15	1.72	9742.38	687.04	9055.34
272+50.00	39.10	32.98	72.49	41.18	9814.88	728.22	9086.65
273+00.00	42.83	37.69	75.86	65.44	9890.74	793.66	9097.08
273+50.00	50.56	40.66	86.47	72.54	9977.21	866.21	9111.00
273+52.58	0.00	0.00	2.42	1.95	9979.63	868.15	9111.48
274+00.00	64.73	33.83	56.84	29.71	10036.47	897.86	9138.62

Total Volume Table							
Station	Cut Area	Fill Area	Cut Vol	Fill Vol	Cum Cut Vol	Cum Fill Vol	Net Vol
274+50.00	75.97	24.51	130.28	54.02	10166.76	951.87	9214.88
275+00.00	93.68	30.61	157.08	51.03	10323.84	1002.90	9320.94
275+50.00	102.65	22.53	181.79	49.20	10505.63	1052.10	9453.53
276+00.00	128.93	0.21	214.42	21.05	10720.05	1073.15	9646.90
276+50.00	124.59	1.32	234.74	1.42	10954.79	1074.57	9880.22
277+00.00	132.03	0.02	237.61	1.24	11192.40	1075.81	10116.59
277+35.00	165.52	0.01	192.85	0.02	11385.26	1075.83	10309.42
277+50.00	151.54	0.03	88.07	0.01	11473.33	1075.84	10397.48
277+73.31	146.71	0.24	128.72	0.12	11602.04	1075.96	10526.08
278+00.00	140.42	1.43	141.93	0.83	11743.98	1076.79	10667.19
278+50.00	129.23	5.96	249.67	6.84	11993.65	1083.63	10910.02
279+00.00	126.57	1.81	236.85	7.19	12230.50	1090.82	11139.68
279+50.00	117.73	2.13	226.21	3.65	12456.71	1094.47	11362.24
280+00.00	114.04	0.57	214.60	2.50	12671.31	1096.98	11574.33
280+50.00	105.15	0.32	202.96	0.83	12874.27	1097.81	11776.46
281+00.00	94.44	4.39	184.81	4.37	13059.08	1102.17	11956.90
281+50.00	88.74	4.88	169.61	8.59	13228.69	1110.77	12117.93
282+00.00	79.29	6.27	155.59	10.33	13384.28	1121.09	12263.19
282+50.00	64.03	10.19	132.70	15.24	13516.98	1136.33	12380.65
283+00.00	53.00	9.63	108.36	18.35	13625.34	1154.68	12470.66

CTH A

Total Volume Table							
Station	Cut Area	Fill Area	Cut Vol	Fill Vol	Cum Cut Vol	Cum Fill Vol	Net Vol
283+50.00	55.23	7.70	100.21	16.05	13725.56	1170.74	12554.82
284+00.00	50.09	9.25	97.52	15.69	13823.07	1186.43	12636.64
284+50.00	47.36	11.47	90.23	19.18	13913.31	1205.62	12707.69
285+00.00	42.95	11.80	83.62	21.55	13996.93	1227.17	12769.76
285+50.00	43.35	14.01	79.91	23.90	14076.84	1251.07	12825.77
286+00.00	45.31	10.55	82.09	22.74	14158.93	1273.81	12885.13
286+50.00	44.13	9.10	82.82	18.19	14241.75	1292.00	12949.75
287+00.00	43.37	10.59	81.02	18.23	14322.77	1310.23	13012.54
287+50.00	41.05	9.72	78.17	18.80	14400.94	1329.03	13071.90
288+00.00	49.76	7.78	84.09	16.20	14485.03	1345.23	13139.80
288+25.00	70.00	2.38	55.45	4.70	14540.48	1349.93	13190.54
288+50.00	50.48	8.62	55.78	5.09	14596.25	1355.02	13241.23
288+75.00	50.27	13.91	46.64	10.43	14642.90	1365.46	13277.44
288+89.00	44.48	18.09	24.56	8.30	14667.46	1373.75	13293.71
289+00.00	38.30	16.37	16.86	7.02	14684.32	1380.77	13303.55
289+50.00	60.30	10.90	91.29	25.25	14775.62	1406.02	13369.59
290+00.00	63.32	10.21	114.46	19.55	14890.08	1425.57	13464.51
290+50.00	80.83	35.58	133.47	42.40	15023.55	1467.97	13555.58
290+60.00	88.88	33.03	31.43	12.70	15054.98	1480.68	13574.30
291+00.00	71.60	31.33	118.87	47.67	15173.85	1528.35	13645.50

Total Volume Table							
Station	Cut Area	Fill Area	Cut Vol	Fill Vol	Cum Cut Vol	Cum Fill Vol	Net Vol
291+50.00	72.32	3.34	133.26	32.09	15307.11	1560.44	13746.67
292+00.00	74.88	0.80	136.30	3.83	15443.41	1564.27	13879.14
292+40.00	92.95	0.64	124.32	1.07	15567.74	1565.35	14002.39
292+50.00	91.70	1.18	34.20	0.34	15601.93	1565.68	14036.25
293+00.00	89.75	2.02	168.01	2.96	15769.94	1568.65	14201.29
293+50.00	87.27	2.36	163.90	4.06	15933.85	1572.71	14361.14
294+00.00	53.11	3.07	129.98	5.03	16063.83	1577.74	14486.09
294+50.00	56.58	3.36	101.56	5.95	16165.39	1583.69	14581.70
295+00.00	45.22	4.49	94.26	7.26	16259.65	1590.95	14668.70
295+50.00	44.29	1.13	82.88	5.20	16342.53	1596.15	14746.37
296+00.00	38.61	18.46	76.76	18.14	16419.29	1614.29	14805.00
296+50.00	40.55	18.71	73.30	34.41	16492.59	1648.70	14843.88
297+00.00	36.52	26.73	71.37	42.07	16563.95	1690.78	14873.17
297+50.00	40.25	27.55	71.09	50.26	16635.04	1741.04	14894.00
298+00.00	55.50	29.08	88.66	52.44	16723.70	1793.47	14930.23
298+50.00	62.47	19.17	109.24	44.68	16832.94	1838.15	14994.79
299+00.00	70.28	13.91	122.92	30.63	16955.86	1868.78	15087.08
299+40.00	77.22	9.93	109.26	17.66	17065.12	1886.44	15178.68
299+50.00	76.73	11.33	28.51	3.94	17093.63	1890.38	15203.25
300+00.00	73.01	11.30	138.65	20.96	17232.27	1911.33	15320.94

CTH A

Total Volume Table							
Station	Cut Area	Fill Area	Cut Vol	Fill Vol	Cum Cut Vol	Cum Fill Vol	Net Vol
300+50.00	64.29	14.97	127.13	24.32	17359.40	1935.65	15423.75
301+00.00	45.82	16.14	101.96	28.80	17461.36	1964.45	15496.91
301+50.00	51.47	4.40	90.09	19.02	17551.45	1983.47	15567.98
301+60.00	51.64	2.97	19.09	1.37	17570.54	1984.83	15585.71
302+00.00	82.13	2.29	99.09	3.90	17669.63	1988.73	15680.90
302+50.00	72.98	0.55	143.62	2.63	17813.25	1991.36	15821.89
303+00.00	80.98	1.11	142.56	1.53	17955.81	1992.90	15962.91
303+50.00	78.69	0.40	147.85	1.40	18103.65	1994.30	16109.36
304+00.00	101.82	0.00	167.14	0.37	18270.79	1994.66	16276.13
304+50.00	117.00	0.00	202.61	0.00	18473.40	1994.66	16478.74
305+00.00	124.66	0.00	223.76	0.00	18697.16	1994.66	16702.50
305+50.00	109.84	0.31	217.13	0.29	18914.30	1994.95	16919.35
306+00.00	105.10	0.25	199.02	0.52	19113.32	1995.47	17117.85
306+50.00	94.20	0.49	184.54	0.68	19297.85	1996.15	17301.70
306+75.00	95.03	0.26	87.60	0.35	19385.46	1996.50	17388.95
307+00.00	98.46	0.00	89.58	0.12	19475.03	1996.63	17478.41

SHAWNEE LANE

Total Volume Table							
Station	Cut Area	Fill Area	Cut Vol	Fill Vol	Cum Cut Vol	Cum Fill Vol	Net Vol
38+00.00	0.00	0.00	0.00	0.00	0.00	0.00	0.00
38+50.00	0.00	0.00	0.00	0.00	0.00	0.00	0.00
38+70.00	38.85	0.84	14.39	0.31	14.39	0.31	14.08
39+00.00	46.44	0.64	47.38	0.82	61.77	1.14	60.64
39+50.00	43.54	6.35	83.31	6.47	145.09	7.60	137.48

IROQUOIS COURT

Total Volume Table							
Station	Cut Area	Fill Area	Cut Vol	Fill Vol	Cum Cut Vol	Cum Fill Vol	Net Vol
50+50.00	29.39	24.63	0.00	0.00	0.00	0.00	0.00
51+00.00	33.60	0.70	58.32	23.45	58.32	23.45	34.86
51+15.00	35.59	0.01	19.22	0.20	77.54	23.65	53.89
51+35.00	44.49	0.00	29.66	0.00	107.20	23.66	83.54
51+50.00	0.00	0.00	12.36	0.00	119.56	23.66	95.90

COMANCHE LANE

Total Volume Table							
Station	Cut Area	Fill Area	Cut Vol	Fill Vol	Cum Cut Vol	Cum Fill Vol	Net Vol
60+50.00	6.28	21.37	0.00	0.00	0.00	0.00	0.00
61+00.00	22.91	2.62	27.02	22.21	27.02	22.21	4.81
61+35.00	26.56	0.12	32.06	1.77	59.09	23.98	35.11
61+50.00	0.00	0.00	7.38	0.03	66.47	24.01	42.45

GRUNDMAN ROAD

Total Volume Table							
Station	Cut Area	Fill Area	Cut Vol	Fill Vol	Cum Cut Vol	Cum Fill Vol	Net Vol
70+50.00	7.76	18.80	0.00	0.00	0.00	0.00	0.00
71+00.00	56.48	0.00	59.48	17.40	59.48	17.40	42.07
71+50.00	67.60	0.00	114.89	0.00	174.37	17.40	156.96
72+00.00	42.47	0.00	101.92	0.00	276.28	17.40	258.88
72+06.10	40.42	0.00	9.36	0.00	285.65	17.40	268.24
72+50.00	20.15	8.68	48.38	7.49	334.03	24.90	309.13
72+99.96	49.40	14.67	64.77	21.78	398.80	46.67	352.13
73+00.00	49.43	14.65	0.08	0.02	398.88	46.70	352.18
73+50.00	31.32	6.59	76.70	19.19	475.58	65.89	409.69
73+93.81	20.51	5.98	42.72	10.21	518.30	76.10	442.20
74+00.00	19.67	6.73	4.60	1.46	522.91	77.56	445.35
74+50.00	17.42	5.72	34.35	11.53	557.25	89.08	468.17
75+00.00	29.01	1.59	42.99	6.77	600.25	95.85	504.39
75+50.00	0.00	0.00	26.86	1.48	627.11	97.33	529.77

CTH GG

Total Volume Table							
Station	Cut Area	Fill Area	Cut Vol	Fill Vol	Cum Cut Vol	Cum Fill Vol	Net Vol
88+00.00	0.00	0.00	0.00	0.00	0.00	0.00	0.00
88+50.00	0.00	0.00	0.00	0.00	0.00	0.00	0.00
89+00.00	0.00	0.00	0.00	0.00	0.00	0.00	0.00
89+25.00	52.99	36.94	24.53	17.10	24.53	17.10	7.43
89+50.00	56.13	0.37	50.52	17.27	75.05	34.37	40.68
90+00.00	55.19	0.21	103.08	0.53	178.12	34.90	143.22
90+50.00	52.59	0.37	99.80	0.54	277.92	35.44	242.48
91+00.00	45.96	0.82	91.25	1.10	369.17	36.54	332.64
91+50.00	30.26	3.39	70.58	3.89	439.75	40.43	399.32
92+00.00	20.86	6.48	47.34	9.14	487.08	49.56	437.52
92+50.00	20.41	9.26	38.22	14.58	525.30	64.14	461.16
92+53.40	20.95	9.13	2.60	1.16	527.91	65.29	462.61
93+00.00	25.94	5.86	39.89	13.44	567.79	78.74	489.05
93+50.00	27.22	2.68	49.13	8.06	616.92	86.80	530.13
94+00.00	28.89	11.21	53.55	12.69	670.48	99.49	570.99
94+45.01	33.54	31.44	54.68	35.86	725.16	135.35	589.82
94+50.00	28.40	34.31	5.73	6.08	730.89	141.43	589.46
94+82.00	2.70	49.54	19.19	50.69	750.08	192.12	557.96
95+00.00	3.93	42.44	2.08	31.33	752.16	223.45	528.71
95+50.00	11.46	24.60	13.68	63.43	765.84	286.88	478.96

Total Volume Table							
Station	Cut Area	Fill Area	Cut Vol	Fill Vol	Cum Cut Vol	Cum Fill Vol	Net Vol
96+00.00	5.84	31.04	15.42	52.60	781.26	339.48	441.78
96+36.61	5.95	22.45	7.73	36.92	789.00	376.40	412.60
96+50.00	3.96	23.63	2.46	11.42	791.46	387.82	403.63
97+00.00	5.53	20.08	8.79	40.47	800.25	428.30	371.95
97+50.00	17.73	7.30	21.54	25.35	821.79	453.65	368.14
98+00.00	22.21	9.82	36.98	15.85	858.77	469.50	389.27
98+50.00	30.72	19.80	49.01	27.42	907.78	496.92	410.86
99+00.00	44.65	26.37	69.79	42.75	977.57	539.67	437.90
99+15.00	58.35	21.39	28.61	13.27	1006.19	552.94	453.24
99+50.00	81.62	36.10	90.72	37.27	1096.91	590.21	506.70
100+00.00	0.00	0.00	75.57	33.43	1172.49	623.64	548.85

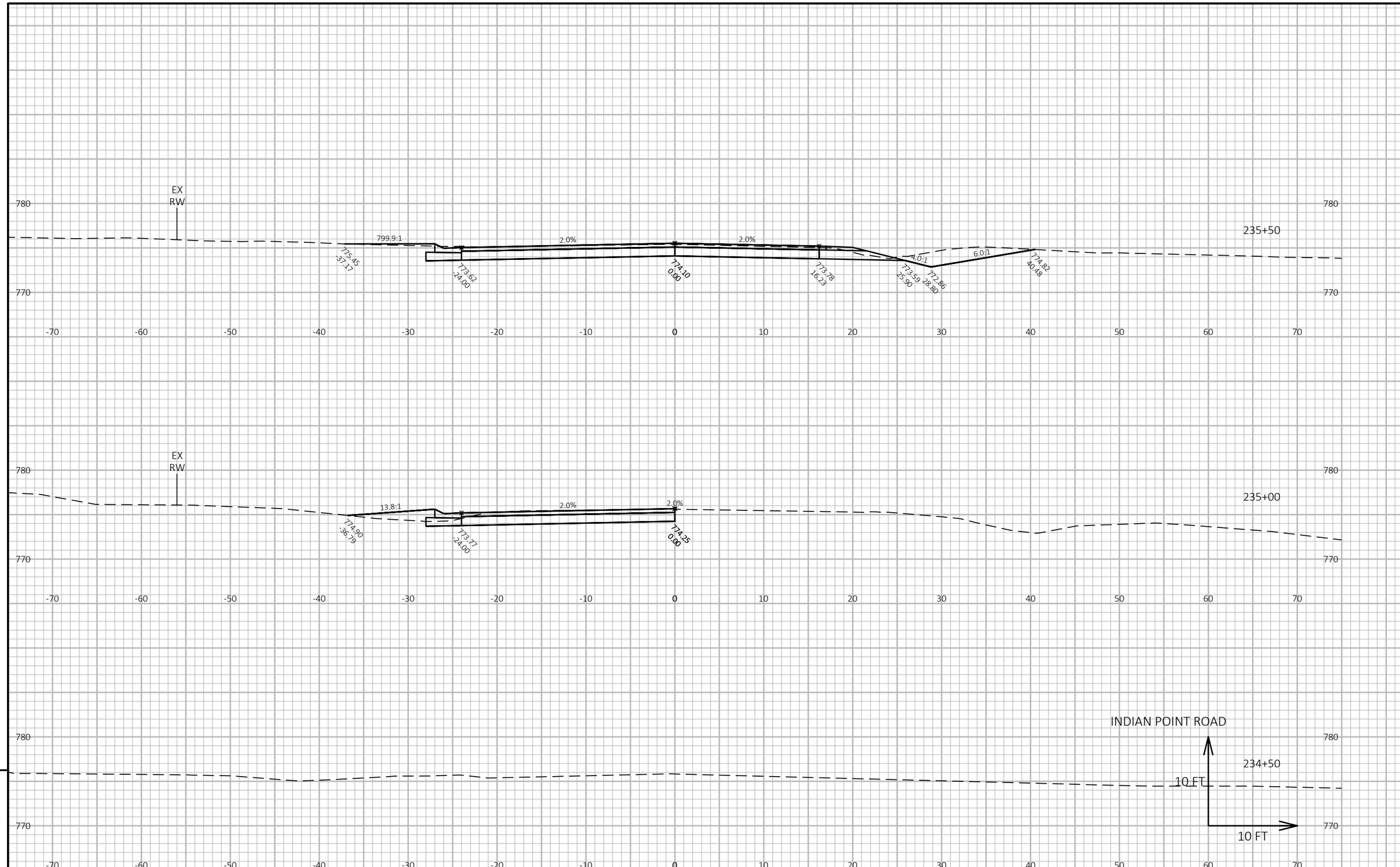

PROJECT NO: 4627-02-71	HWY: CTH A	COUNTY: WINNEBAGO	CROSS SECTIONS: CTH A	SHEET 164	E

FILE NAME : W:\PROJECTS\W0059\81700113\CADD\CIVIL3D\XREF\X_CTH A_CRDR.DWG
LAYOUT NAME - Section Sheet - (1)
PLOT DATE : 1/7/2020 3:40 PM
PLOT BY : JORDAN JELINSKI
PLOT NAME :
PLOT SCALE : 1 IN:10 FT HORZ. / 1 IN:10 FT VERT.
WISDOT/CADDS SHEET 49

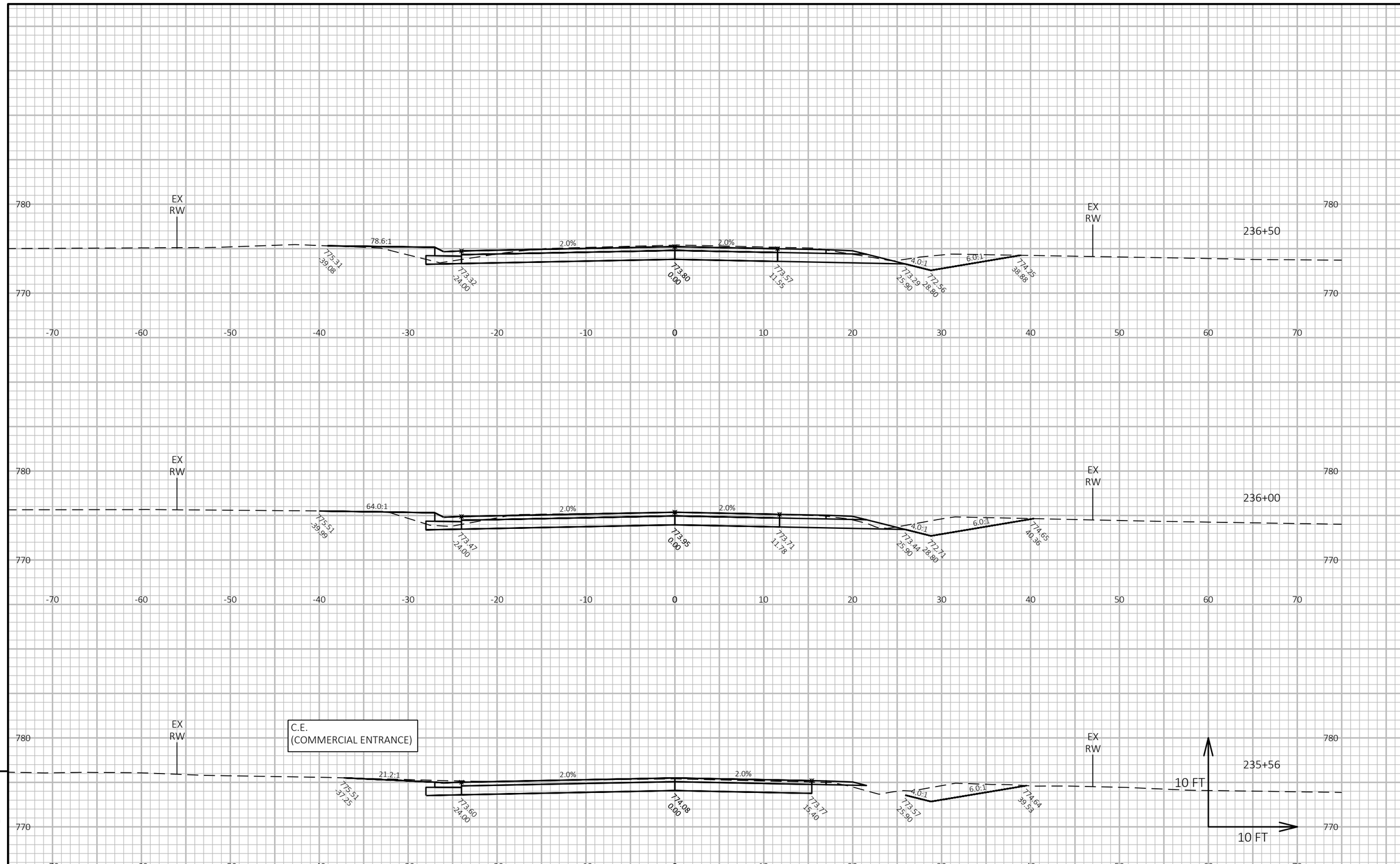

9

9

PROJECT NO: 4627-02-71	HWY: CTH A	COUNTY: WINNEBAGO	CROSS SECTIONS: CTH A	SHEET 165	E

FILE NAME : W:\PROJECTS\W0059\81700113\CADD\CIVIL3D\XREF\X_CTH A_CRDR.DWG
LAYOUT NAME - Section Sheet - (2)
PLOT DATE : 1/7/2020 3:40 PM
PLOT BY : JORDAN JELINSKI
PLOT NAME :
PLOT SCALE : 1 IN:10 FT HORZ. / 1 IN:10 FT VERT.
WISDOT/CADDS SHEET 49

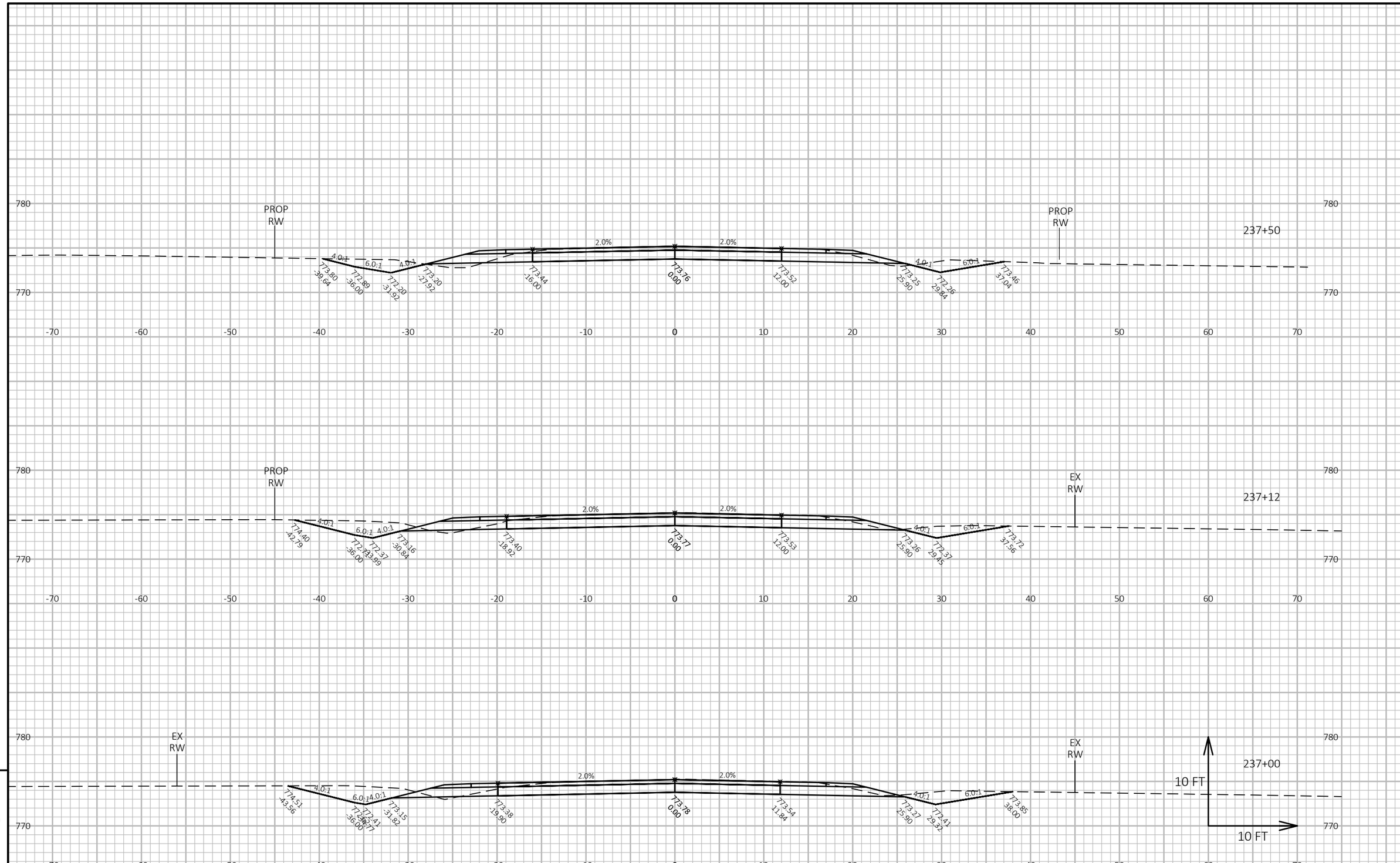

9

9

PROJECT NO: 4627-02-71	HWY: CTH A	COUNTY: WINNEBAGO	CROSS SECTIONS: CTH A	SHEET 166	E

FILE NAME : W:\PROJECTS\W0059\81700113\CADD\CIVIL3D\XREF\X_CTH A_CRDR.DWG
LAYOUT NAME - Section Sheet - (3)
PLOT DATE : 1/7/2020 3:41 PM
PLOT BY : JORDAN JELINSKI
PLOT NAME :
PLOT SCALE : 1 IN:10 FT HORZ. / 1 IN:10 FT VERT.

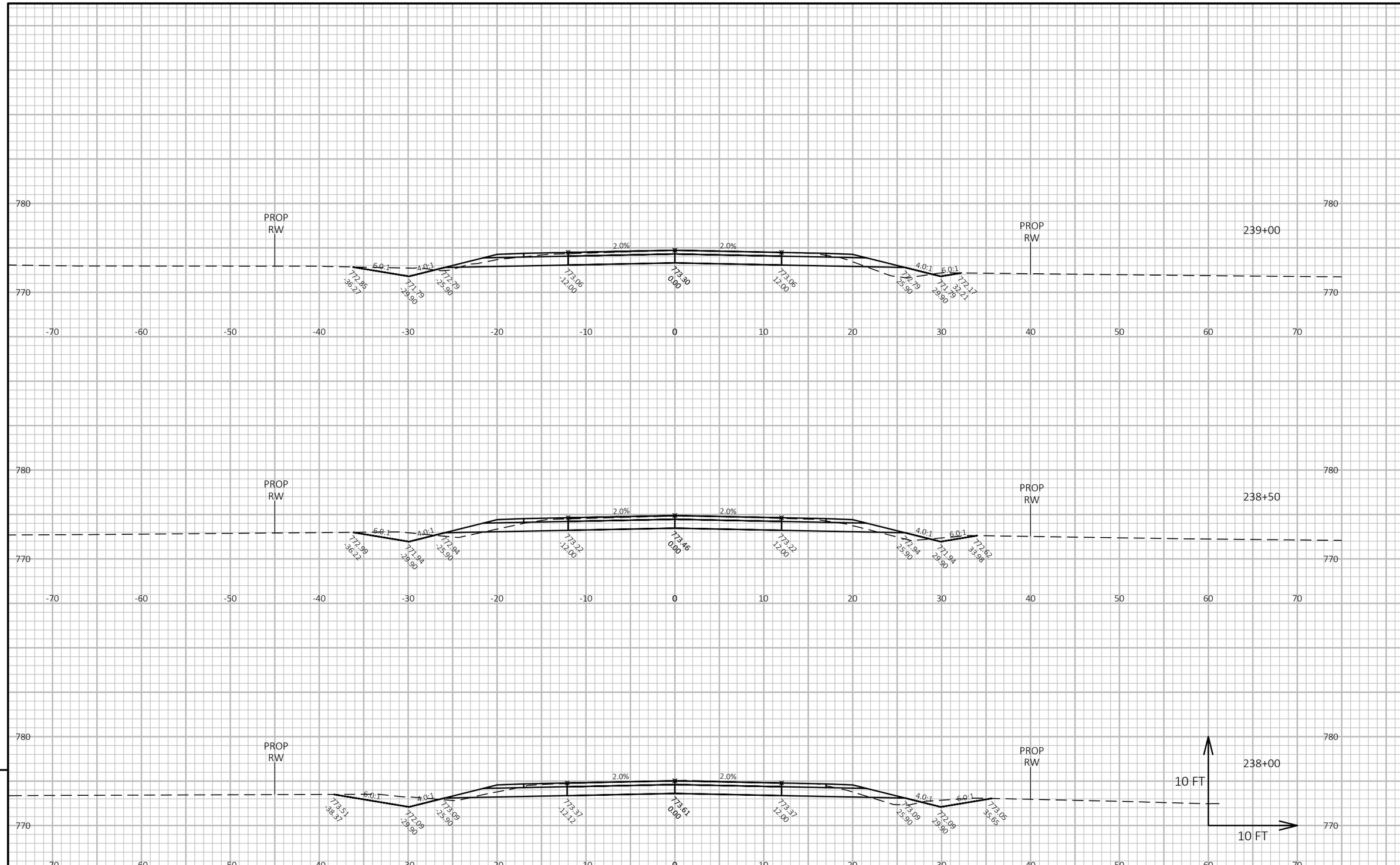

9

9

PROJECT NO: 4627-02-71	HWY: CTH A	COUNTY: WINNEBAGO	CROSS SECTIONS: CTH A	SHEET 167	E

FILE NAME : W:\PROJECTS\W0059\81700113\CADD\CIVIL3D\XREF\X_CTH A_CRDR.DWG
LAYOUT NAME - Section Sheet - (4)
PLOT DATE : 1/7/2020 3:41 PM
PLOT BY : JORDAN JELINSKI
PLOT NAME :
PLOT SCALE : 1 IN:10 FT HORZ. / 1 IN:10 FT VERT.
WISDOT/CADDS SHEET 49

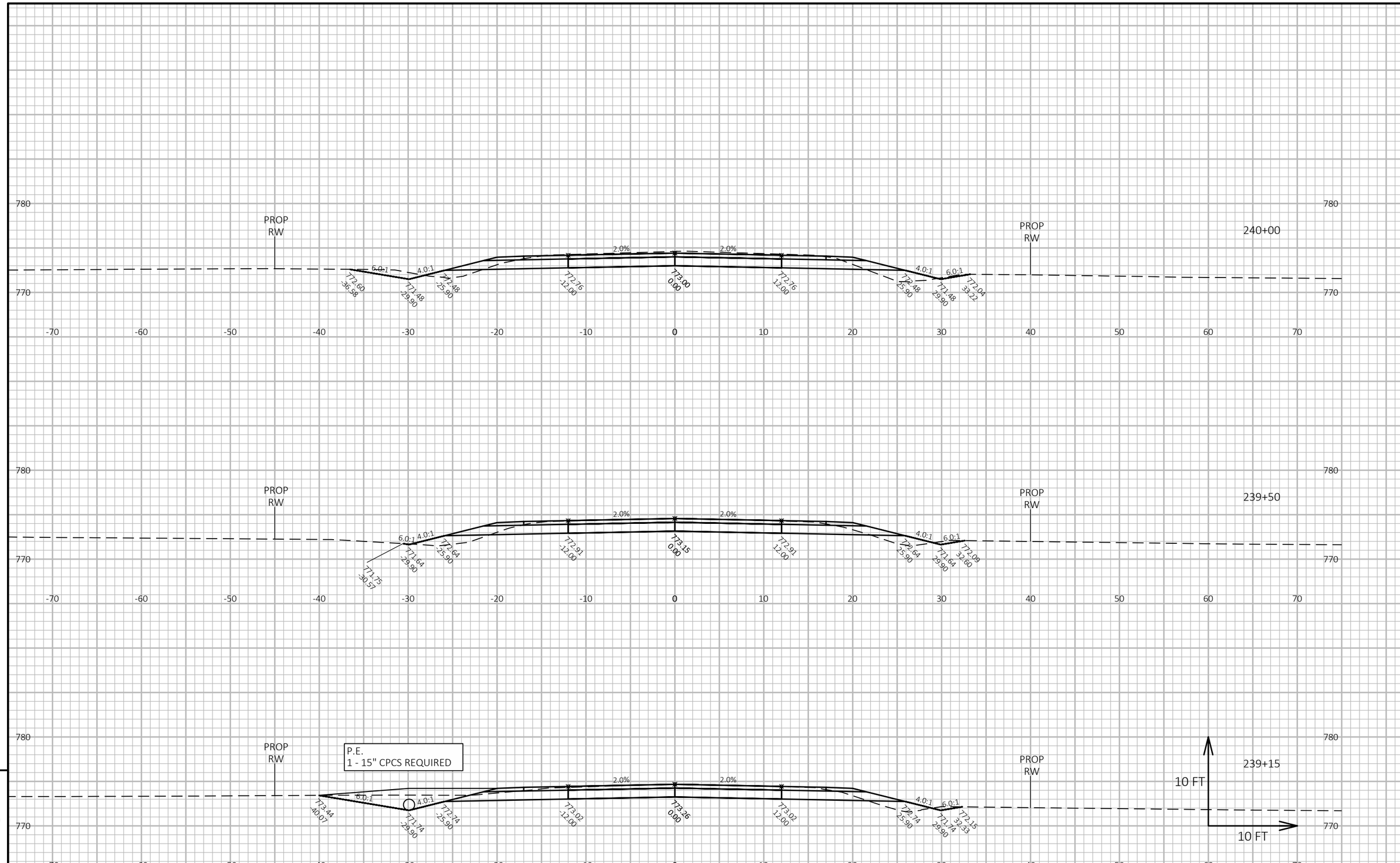

9

9

PROJECT NO: 4627-02-71	HWY: CTH A	COUNTY: WINNEBAGO	CROSS SECTIONS: CTH A	SHEET 168	E

FILE NAME : W:\PROJECTS\W0059\81700113\CADD\CIVIL3D\XREF\X_CTH A_CRDR.DWG
LAYOUT NAME - Section Sheet - (5)
PLOT DATE : 1/7/2020 3:42 PM
PLOT BY : JORDAN JELINSKI
PLOT NAME :
PLOT SCALE : 1 IN:10 FT HORZ. / 1 IN:10 FT VERT.

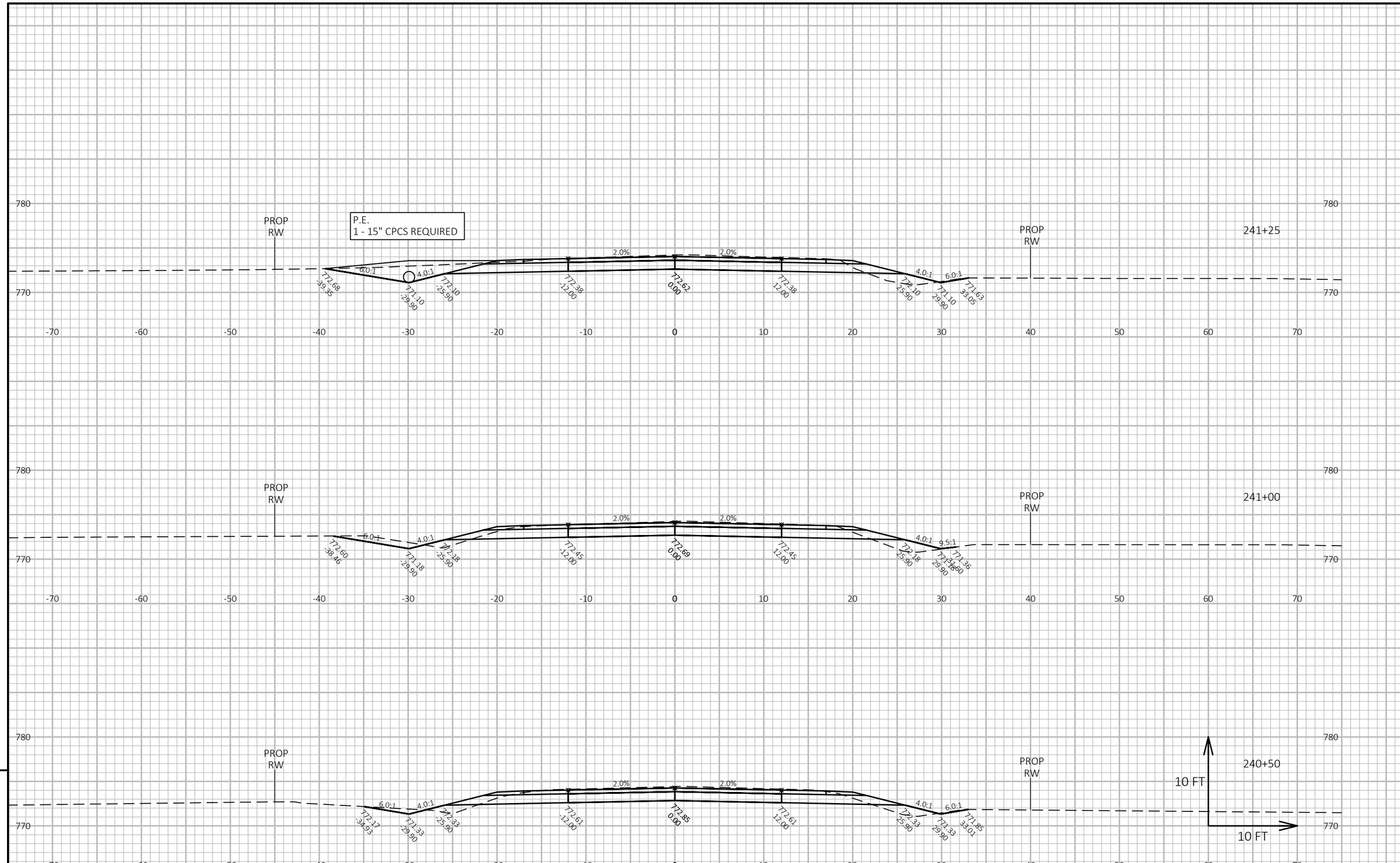

9

9

PROJECT NO: 4627-02-71	HWY: CTH A	COUNTY: WINNEBAGO	CROSS SECTIONS: CTH A	SHEET 169	E

FILE NAME : W:\PROJECTS\W0059\81700113\CADD\CIVIL3D\XREF\X_CTH A_CRDR.DWG
LAYOUT NAME - Section Sheet - (6)
PLOT DATE : 1/7/2020 3:42 PM
PLOT BY : JORDAN JELINSKI
PLOT NAME :
PLOT SCALE : 1 IN:10 FT HORZ. / 1 IN:10 FT VERT.

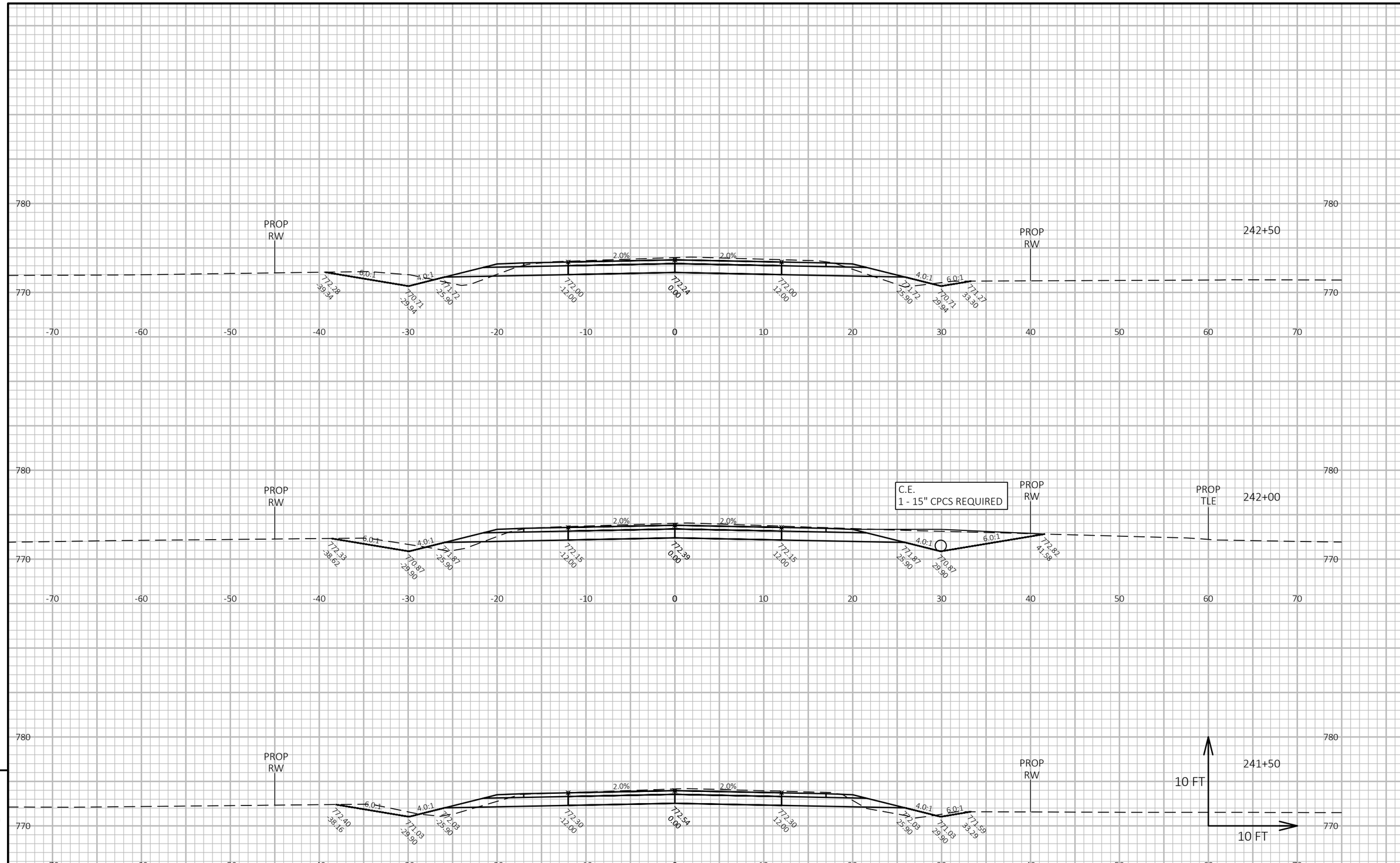

9

9

PROJECT NO: 4627-02-71	HWY: CTH A	COUNTY: WINNEBAGO	CROSS SECTIONS: CTH A	SHEET 170	E

FILE NAME : W:\PROJECTS\W0059\81700113\CADD\CIVIL3D\XREF\X_CTH A_CRDR.DWG
LAYOUT NAME - Section Sheet - (7)
PLOT DATE : 1/7/2020 3:42 PM
PLOT BY : JORDAN JELINSKI
PLOT NAME :
PLOT SCALE : 1 IN:10 FT HORZ. / 1 IN:10 FT VERT.
WISDOT/CADDS SHEET 49

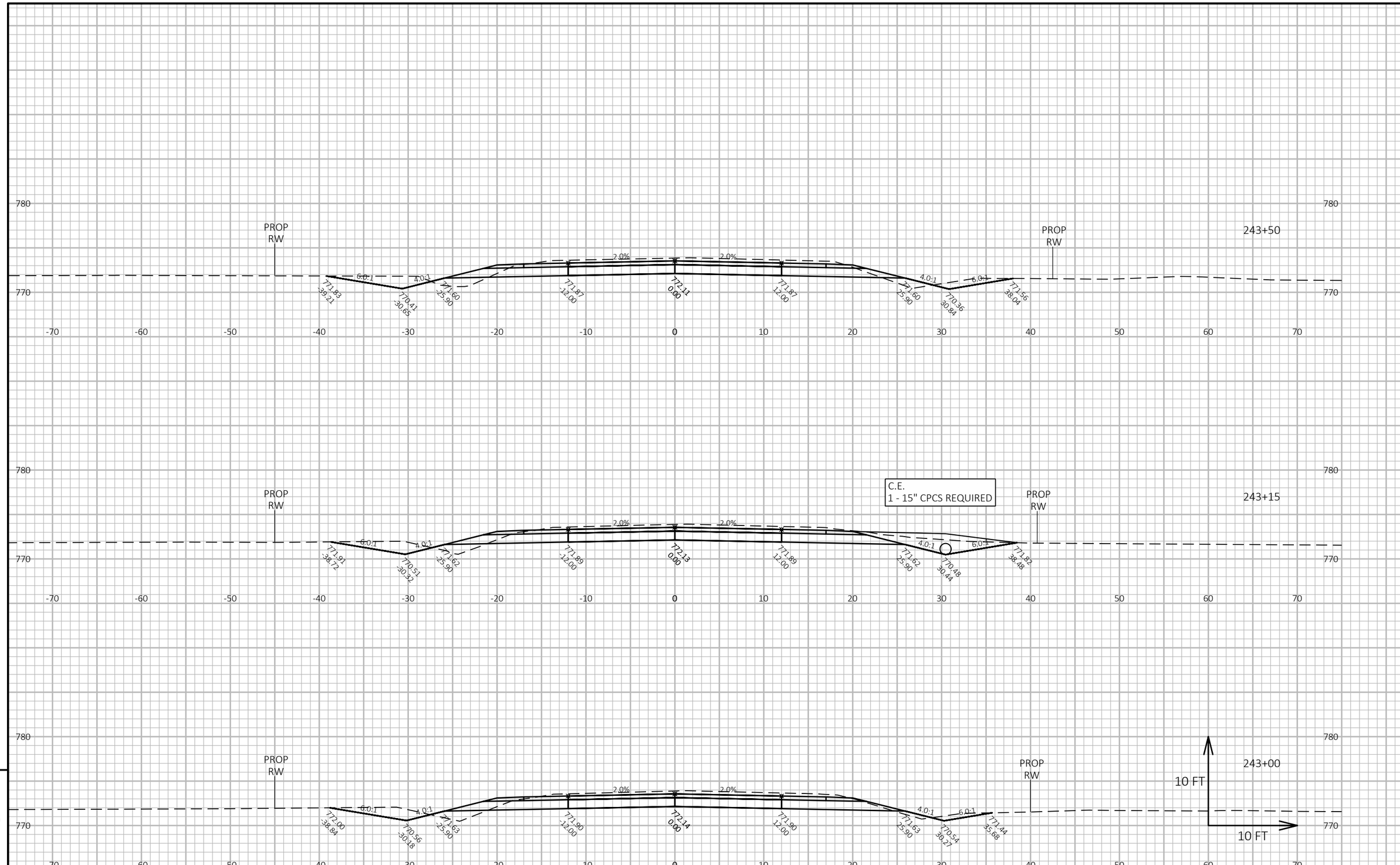

9

9

PROJECT NO: 4627-02-71	HWY: CTH A	COUNTY: WINNEBAGO	CROSS SECTIONS: CTH A	SHEET 171	E

FILE NAME : W:\PROJECTS\W0059\81700113\CADD\CIVIL3D\XREF\X_CTH A_CRDR.DWG
LAYOUT NAME - Section Sheet - (8)
PLOT DATE : 1/7/2020 3:43 PM
PLOT BY : JORDAN JELINSKI
PLOT NAME :
PLOT SCALE : 1 IN:10 FT HORZ. / 1 IN:10 FT VERT.

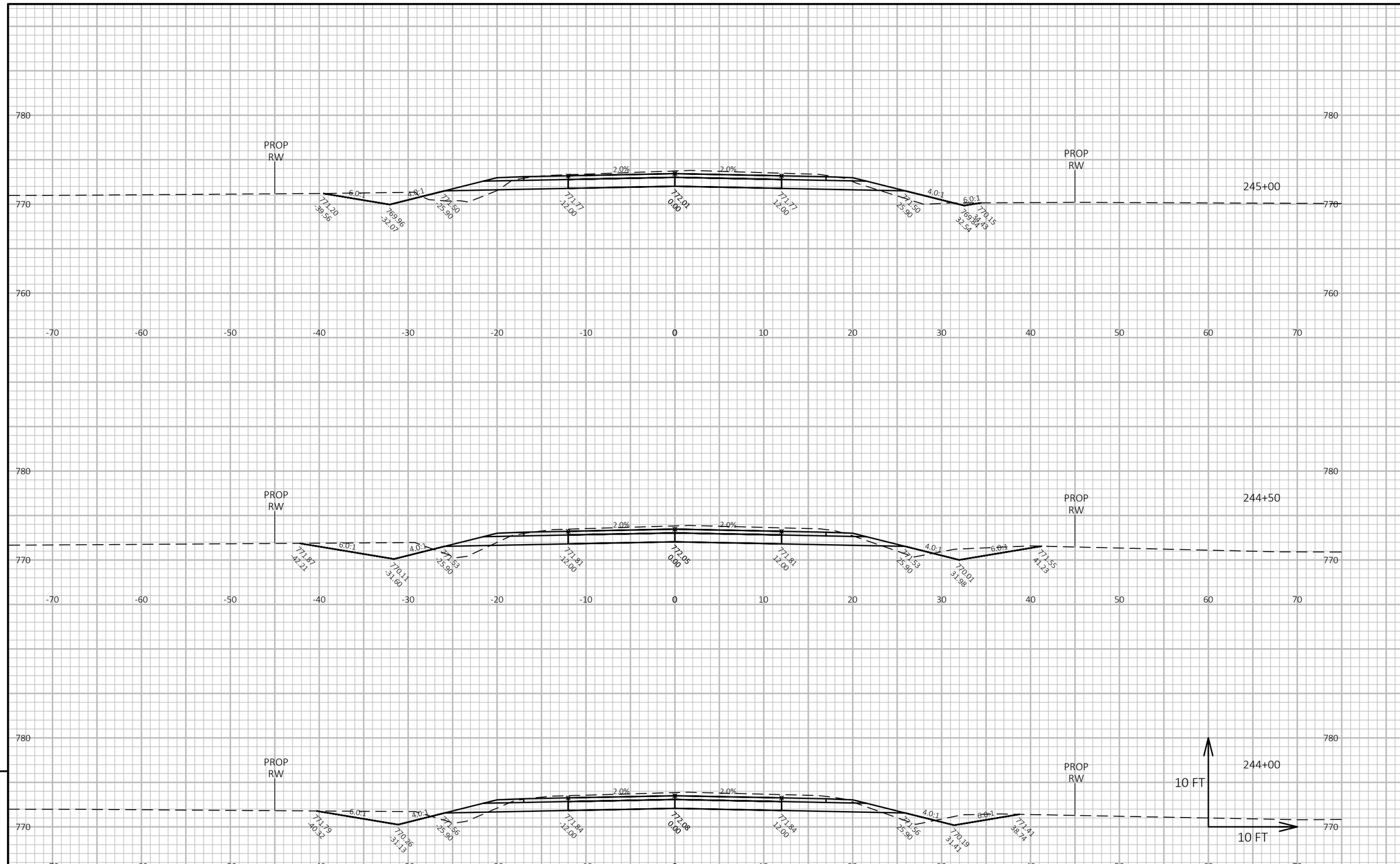

9

9

PROJECT NO: 4627-02-71	HWY: CTH A	COUNTY: WINNEBAGO	CROSS SECTIONS: CTH A	SHEET 172	E

FILE NAME : W:\PROJECTS\W0059\81700113\CADD\CIVIL3D\XREF\X_CTH A_CRDR.DWG
LAYOUT NAME - Section Sheet - (9)
PLOT DATE : 1/7/2020 3:43 PM
PLOT BY : JORDAN JELINSKI
PLOT NAME :
PLOT SCALE : 1 IN:10 FT HORZ. / 1 IN:10 FT VERT.
WISDOT/CADDS SHEET 49

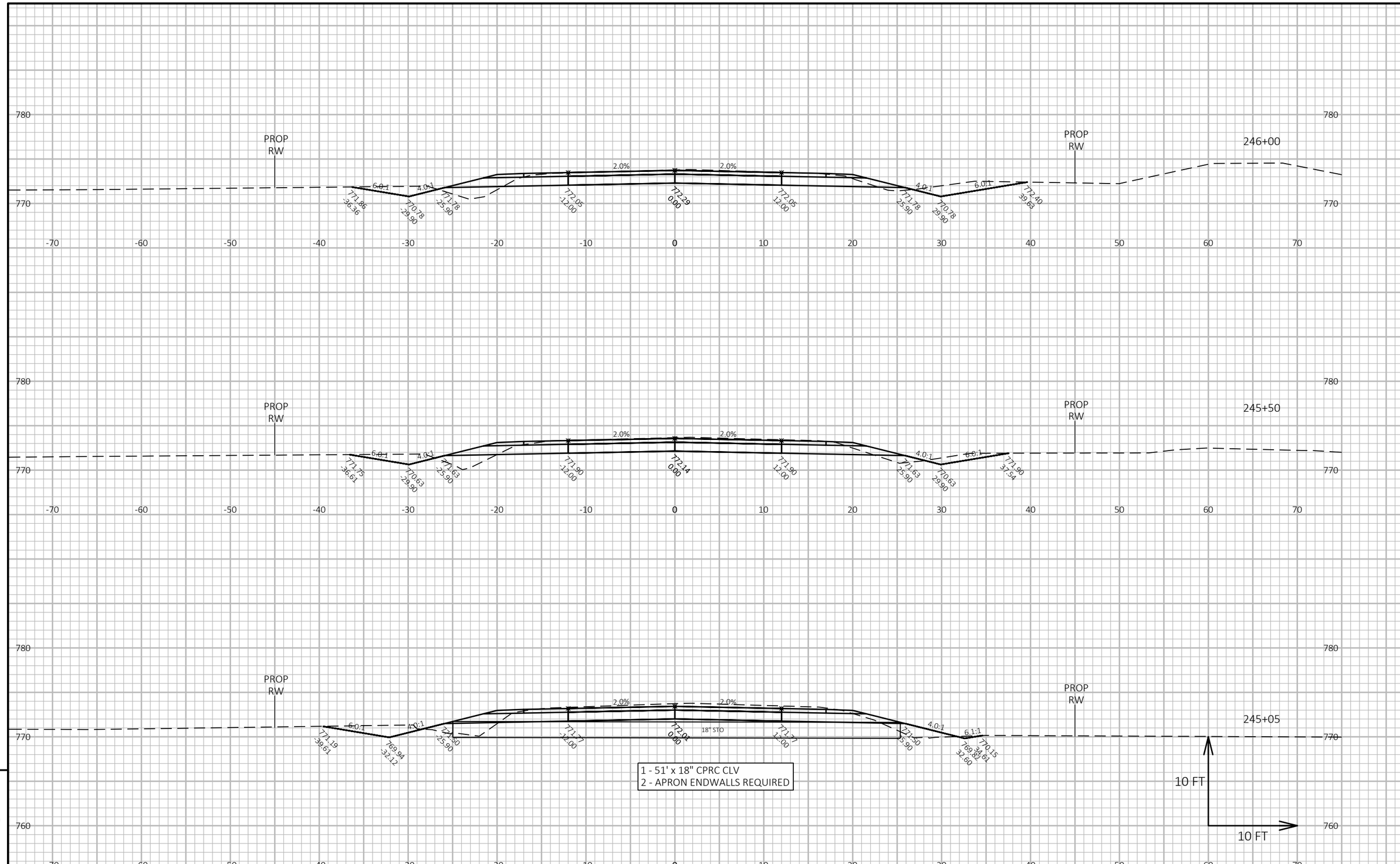

9

9

PROJECT NO: 4627-02-71	HWY: CTH A	COUNTY: WINNEBAGO	CROSS SECTIONS: CTH A	SHEET 173	E

FILE NAME : W:\PROJECTS\W0059\81700113\CADD\CIVIL3D\XREF\X_CTH A_CRDR.DWG
LAYOUT NAME - Section Sheet - (10)
PLOT DATE : 1/7/2020 3:43 PM
PLOT BY : JORDAN JELINSKI
PLOT NAME :
PLOT SCALE : 1 IN:10 FT HORZ. / 1 IN:10 FT VERT.
WISDOT/CADDS SHEET 49

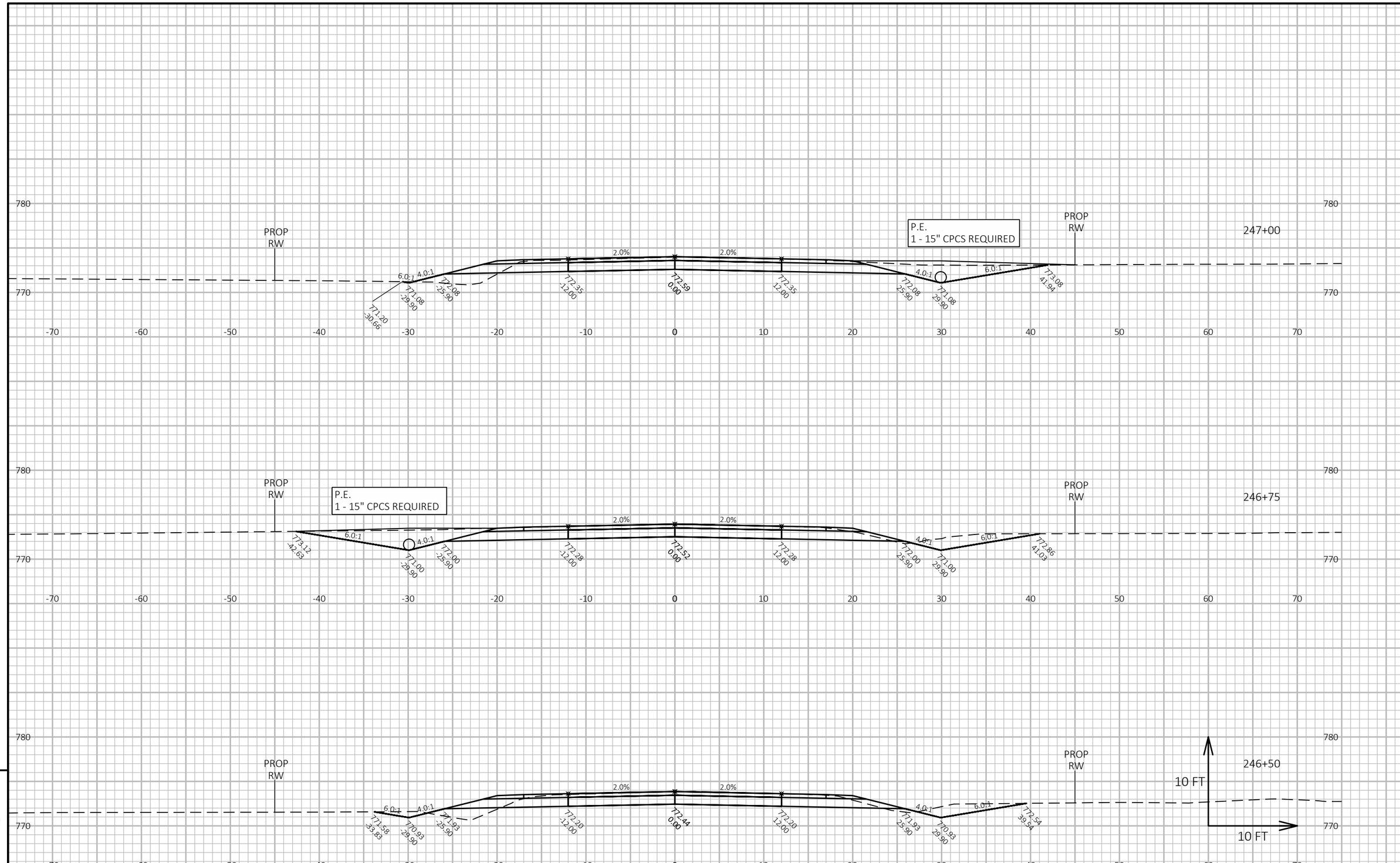

9

9

PROJECT NO: 4627-02-71	HWY: CTH A	COUNTY: WINNEBAGO	CROSS SECTIONS: CTH A	SHEET 174	E

FILE NAME : W:\PROJECTS\W0059\81700113\CADD\CIVIL3D\XREF\X_CTH A_CRDR.DWG
LAYOUT NAME - Section Sheet - (11)
PLOT DATE : 1/7/2020 3:44 PM
PLOT BY : JORDAN JELINSKI
PLOT NAME :
PLOT SCALE : 1 IN:10 FT HORZ. / 1 IN:10 FT VERT.

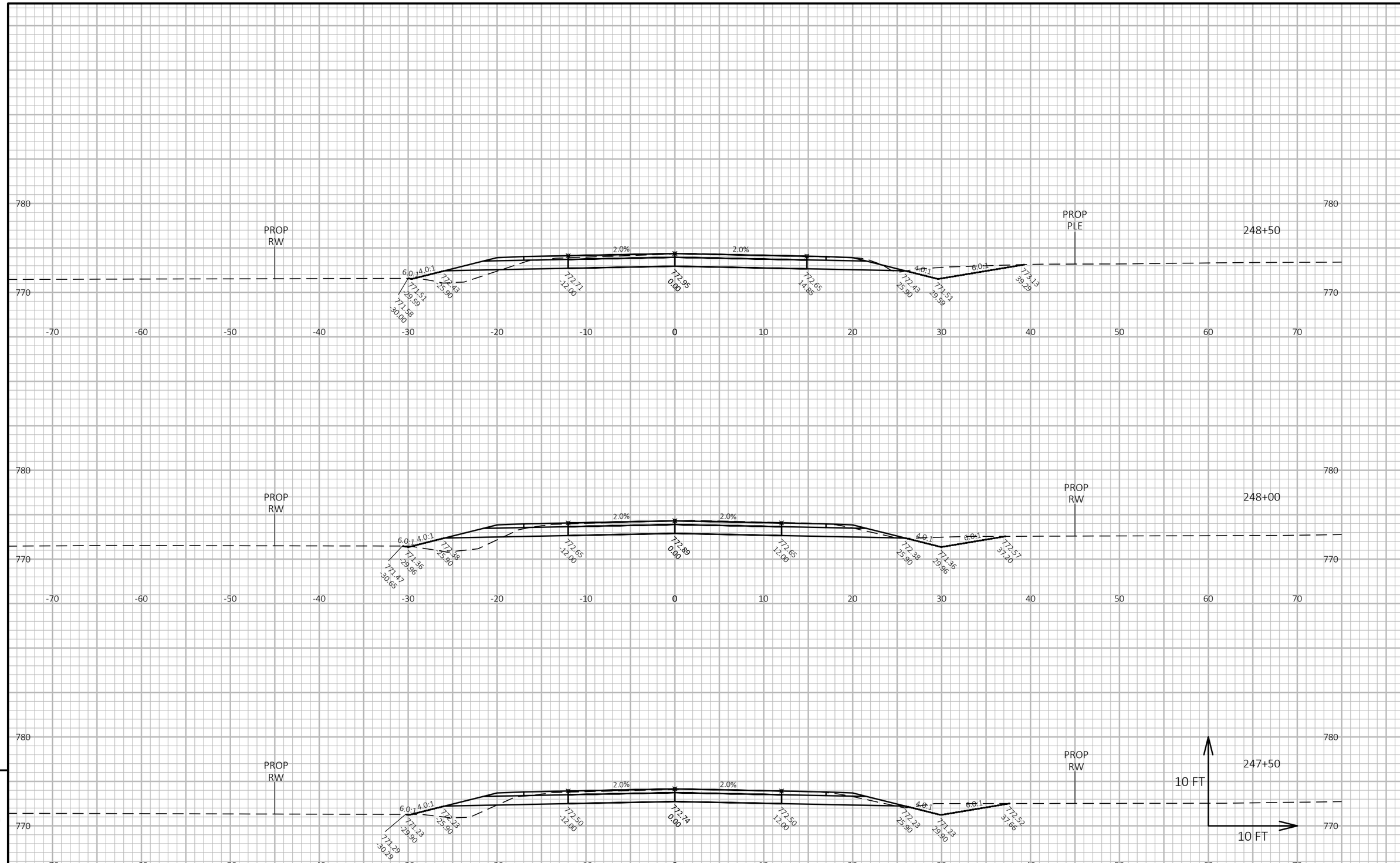

9

9

PROJECT NO: 4627-02-71	HWY: CTH A	COUNTY: WINNEBAGO	CROSS SECTIONS: CTH A	SHEET 175	E

FILE NAME : W:\PROJECTS\W0059\81700113\CADD\CIVIL3D\XREF\X_CTH A_CRDR.DWG
LAYOUT NAME - Section Sheet - (12)
PLOT DATE : 1/7/2020 3:44 PM
PLOT BY : JORDAN JELINSKI
PLOT NAME :
PLOT SCALE : 1 IN:10 FT HORZ. / 1 IN:10 FT VERT.

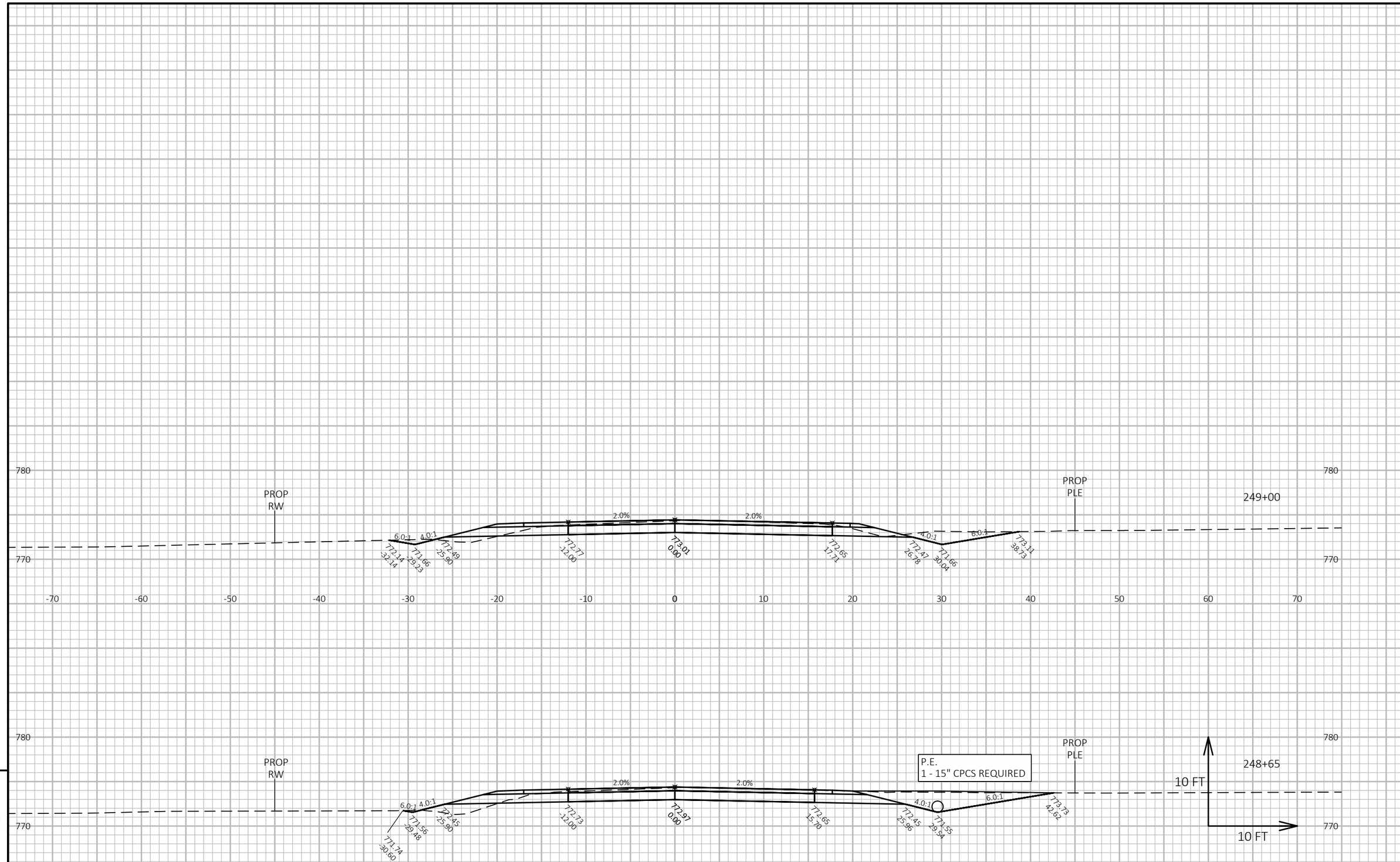

9

9

PROJECT NO: 4627-02-71	HWY: CTH A	COUNTY: WINNEBAGO	CROSS SECTIONS: CTH A	SHEET 176	E

FILE NAME : W:\PROJECTS\W0059\81700113\CADD\CIVIL3D\XREF\X_CTH A_CRDR.DWG
LAYOUT NAME - Section Sheet - (13)
PLOT DATE : 1/7/2020 3:44 PM
PLOT BY : JORDAN JELINSKI
PLOT NAME :
PLOT SCALE : 1 IN:10 FT HORZ. / 1 IN:10 FT VERT.

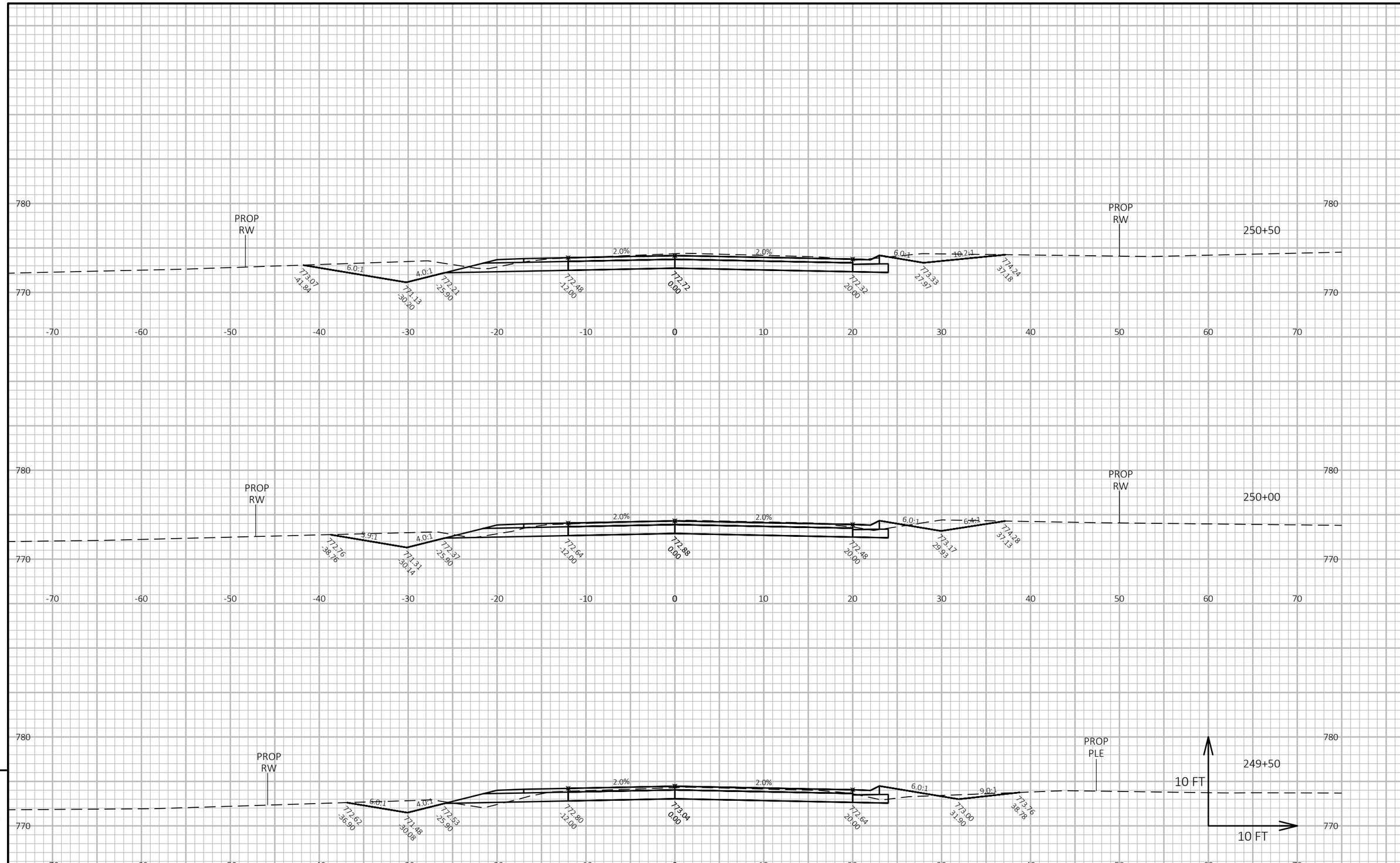

PROJECT NO: 4627-02-71	HWY: CTH A	COUNTY: WINNEBAGO	CROSS SECTIONS: CTH A	SHEET 177	E

FILE NAME : W:\PROJECTS\W0059\81700113\CADD\CIVIL3D\XREF\X_CTH A_CRDR.DWG
LAYOUT NAME - Section Sheet - (14)
PLOT DATE : 1/7/2020 3:45 PM
PLOT BY : JORDAN JELINSKI
PLOT NAME :
PLOT SCALE : 1 IN:10 FT HORZ. / 1 IN:10 FT VERT.

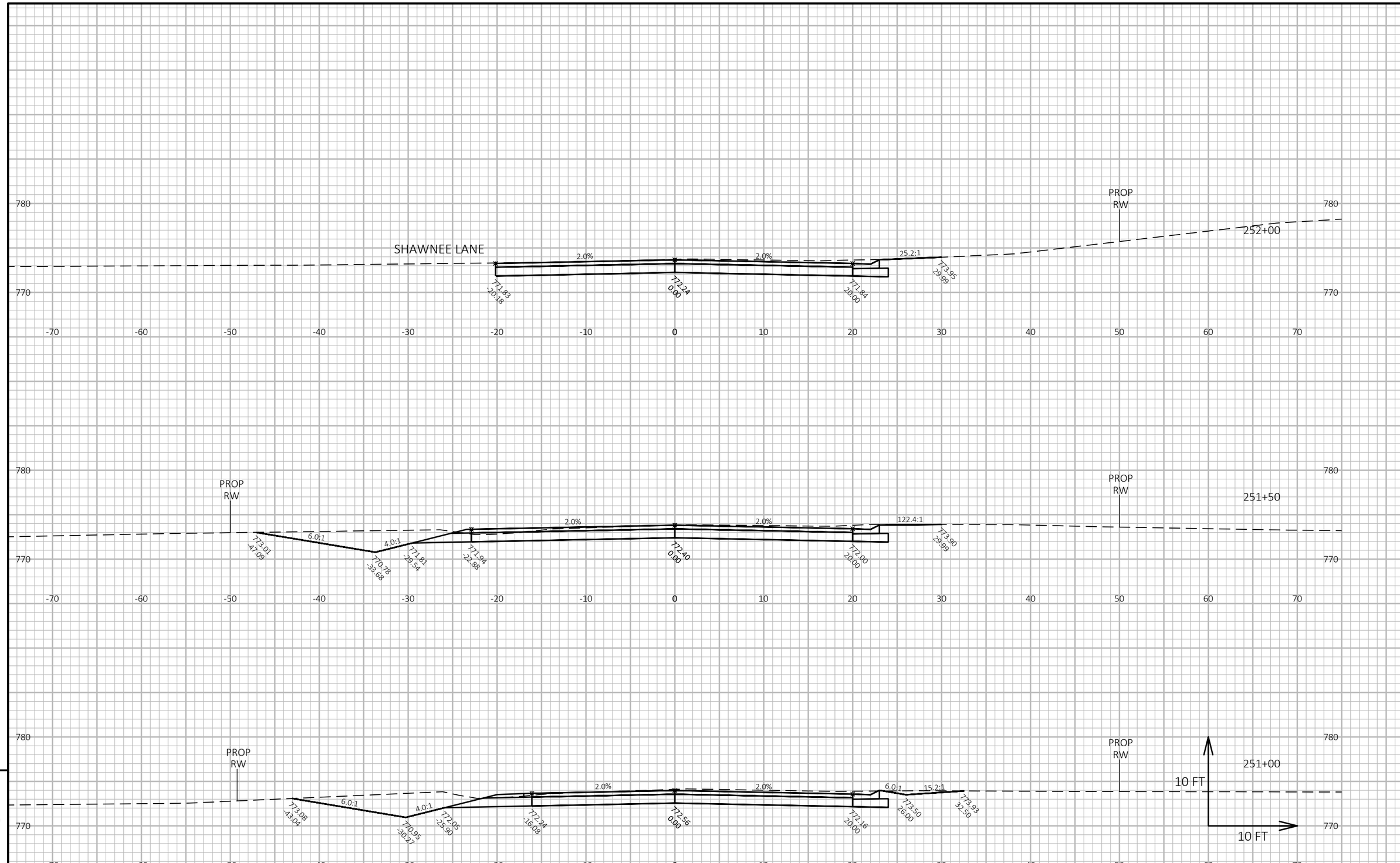

9

9

PROJECT NO: 4627-02-71	HWY: CTH A	COUNTY: WINNEBAGO	CROSS SECTIONS: CTH A	SHEET 178	E

FILE NAME : W:\PROJECTS\W0059\81700113\CADD\CIVIL3D\XREF\X_CTH A_CRDR.DWG
LAYOUT NAME - Section Sheet - (15)
PLOT DATE : 1/7/2020 3:45 PM
PLOT BY : JORDAN JELINSKI
PLOT NAME :
PLOT SCALE : 1 IN:10 FT HORZ. / 1 IN:10 FT VERT.

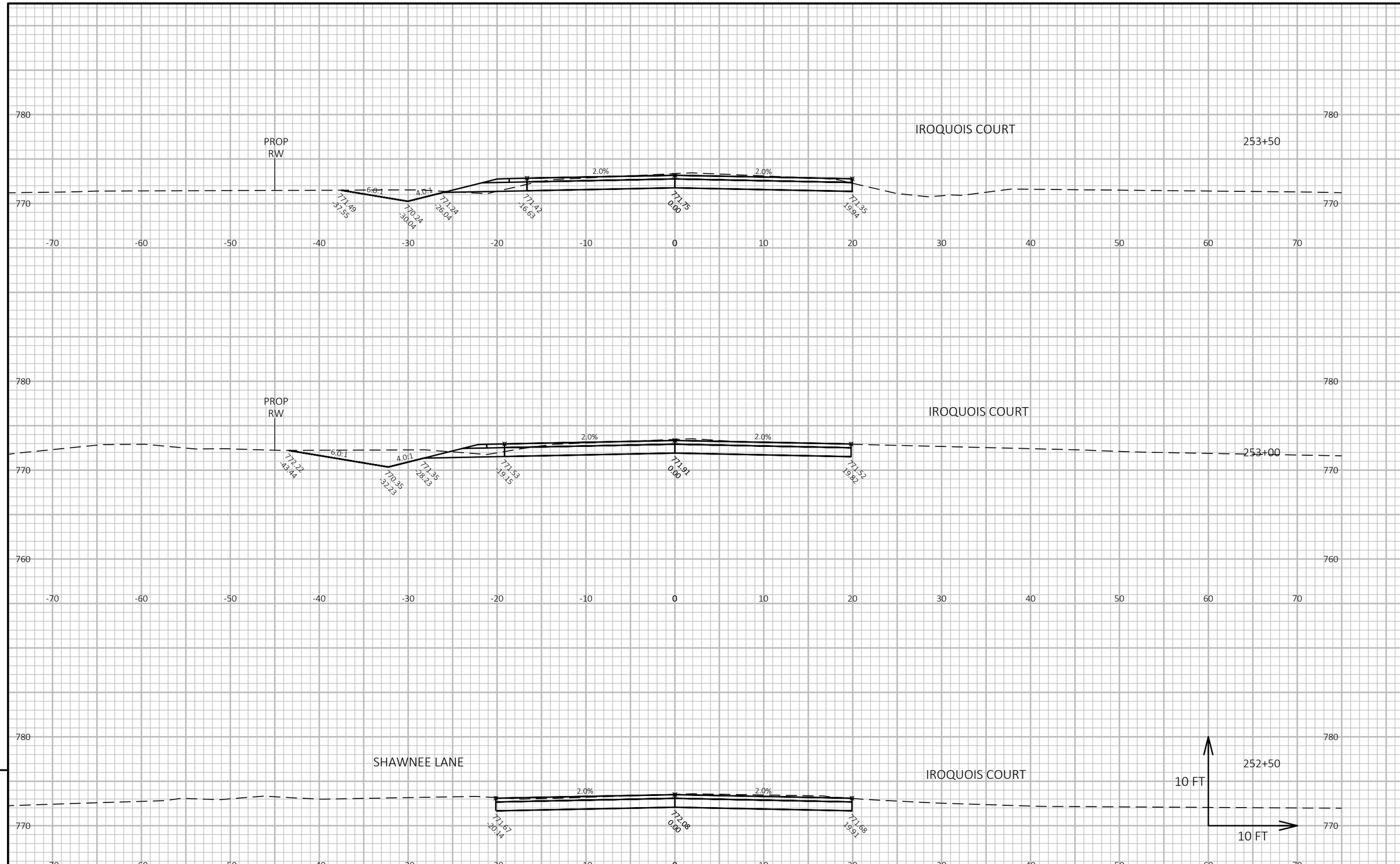

9

9

PROJECT NO: 4627-02-71	HWY: CTH A	COUNTY: WINNEBAGO	CROSS SECTIONS: CTH A	SHEET 179	E

FILE NAME : W:\PROJECTS\W0059\81700113\CADD\CIVIL3D\XREF\X_CTH A_CRDR.DWG
LAYOUT NAME - Section Sheet - (16)
PLOT DATE : 1/7/2020 3:46 PM
PLOT BY : JORDAN JELINSKI
PLOT NAME :
PLOT SCALE : 1 IN:10 FT HORZ. / 1 IN:10 FT VERT.
WISDOT/CADDS SHEET 49

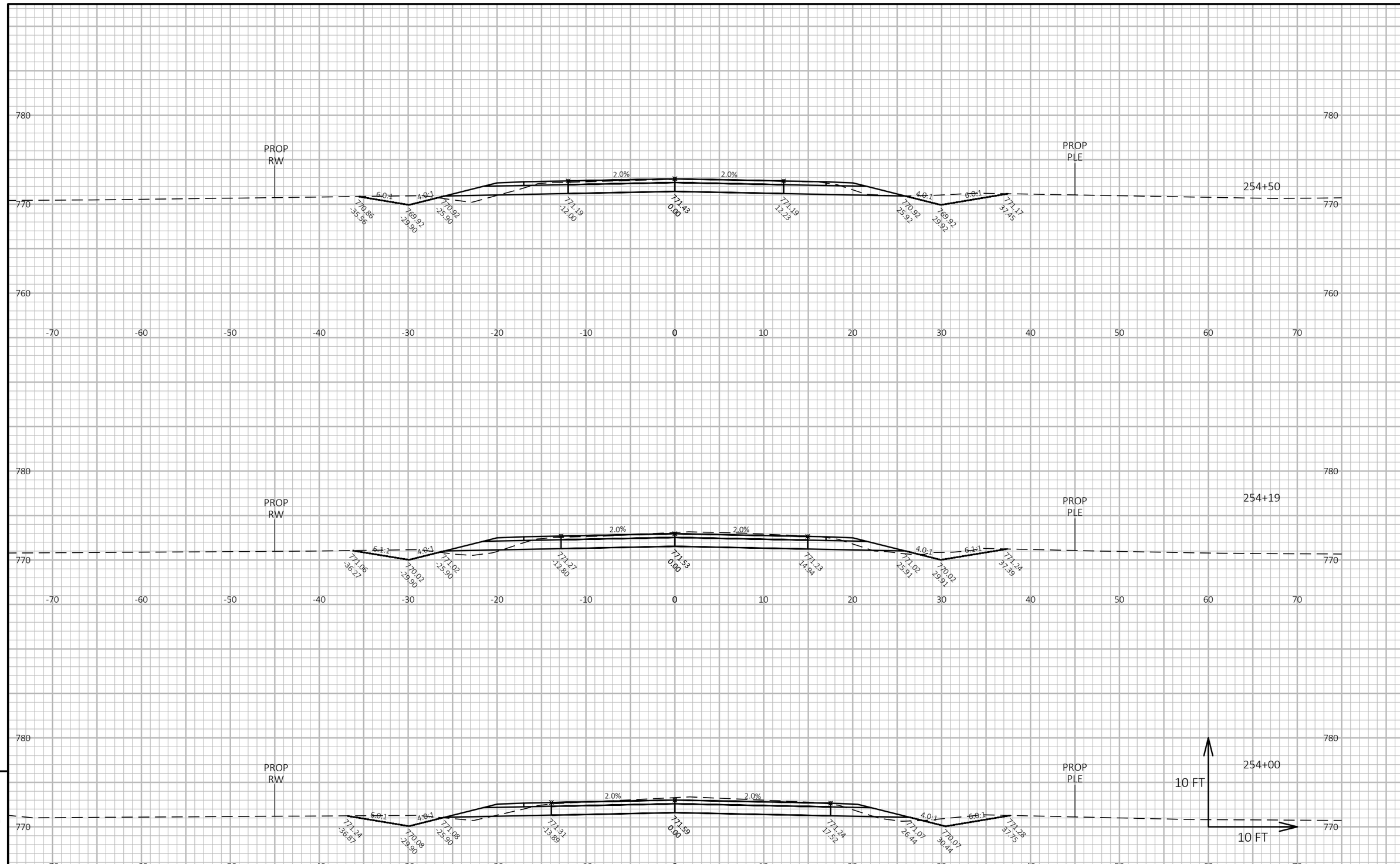

9

9

PROJECT NO: 4627-02-71	HWY: CTH A	COUNTY: WINNEBAGO	CROSS SECTIONS: CTH A	SHEET 180	E

FILE NAME : W:\PROJECTS\W0059\81700113\CADD\CIVIL3D\XREF\X_CTH A_CRDR.DWG
LAYOUT NAME - Section Sheet - (17)
PLOT DATE : 1/7/2020 3:46 PM
PLOT BY : JORDAN JELINSKI
PLOT NAME :
PLOT SCALE : 1 IN:10 FT HORZ. / 1 IN:10 FT VERT.

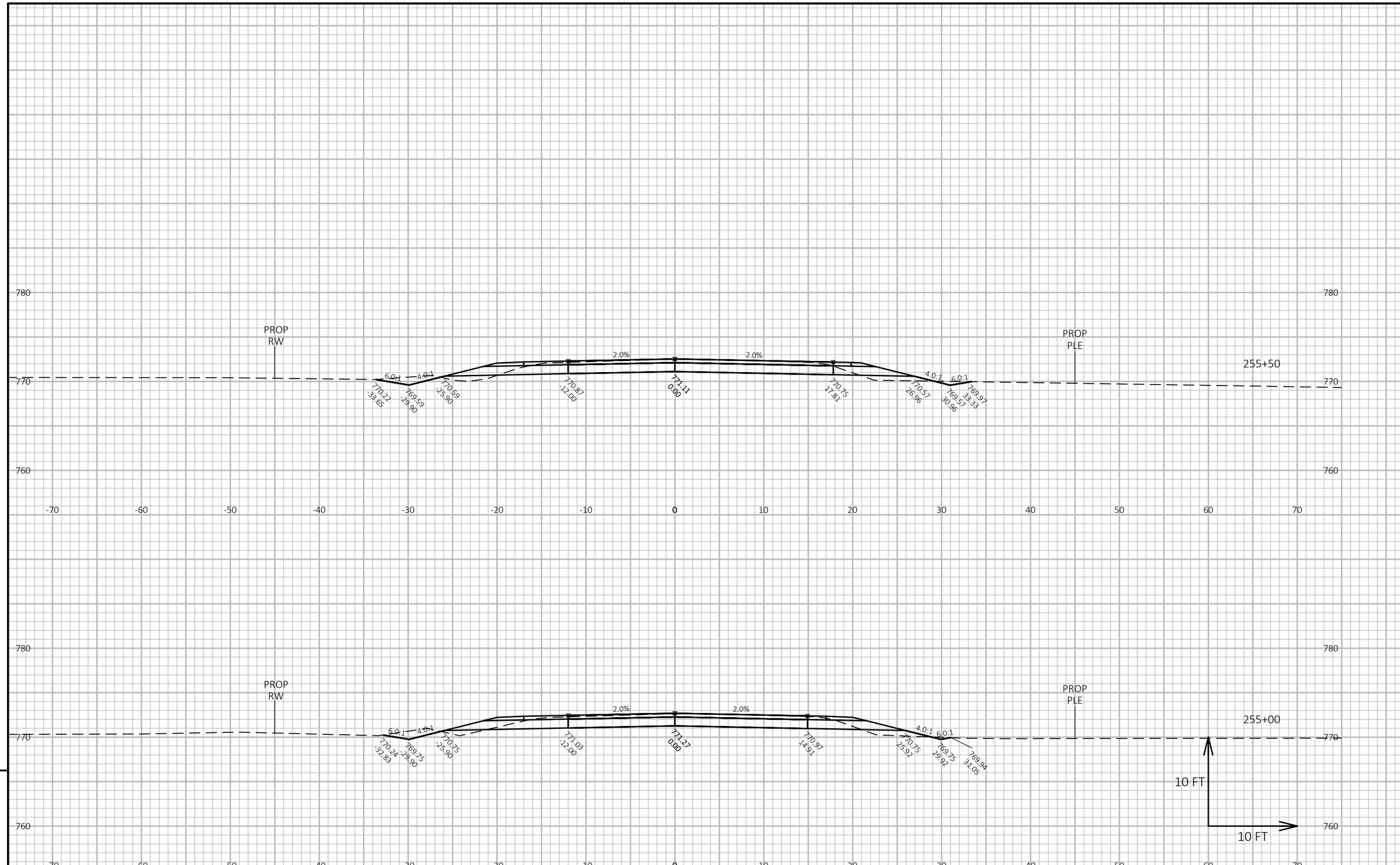

9

9

PROJECT NO: 4627-02-71	HWY: CTH A	COUNTY: WINNEBAGO	CROSS SECTIONS: CTH A	SHEET 181	E

FILE NAME : W:\PROJECTS\W0059\81700113\CADD\CIVIL3D\XREF\X_CTH A_CRDR.DWG
LAYOUT NAME - Section Sheet - (18)
PLOT DATE : 1/7/2020 3:46 PM
PLOT BY : JORDAN JELINSKI
PLOT NAME :
PLOT SCALE : 1 IN:10 FT HORZ. / 1 IN:10 FT VERT.
WISDOT/CADDS SHEET 49

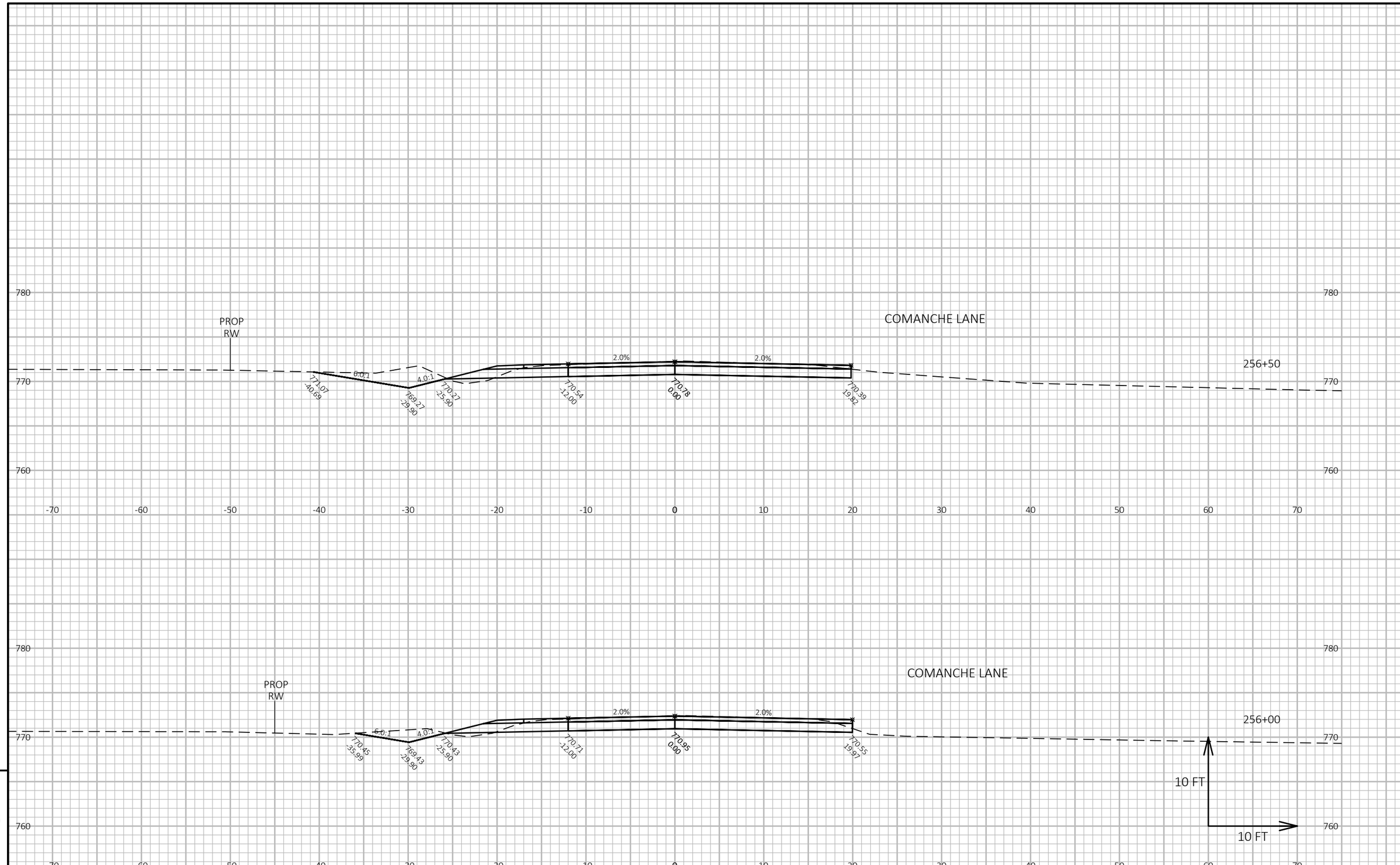

9

9

PROJECT NO: 4627-02-71	HWY: CTH A	COUNTY: WINNEBAGO	CROSS SECTIONS: CTH A	SHEET 182	E

FILE NAME : W:\PROJECTS\W0059\81700113\CADD\CIVIL3D\XREF\X_CTH A_CRDR.DWG
LAYOUT NAME - Section Sheet - (19)
PLOT DATE : 1/7/2020 3:47 PM
PLOT BY : JORDAN JELINSKI
PLOT NAME :
PLOT SCALE : 1 IN:10 FT HORZ. / 1 IN:10 FT VERT.
WISDOT/CADDS SHEET 49

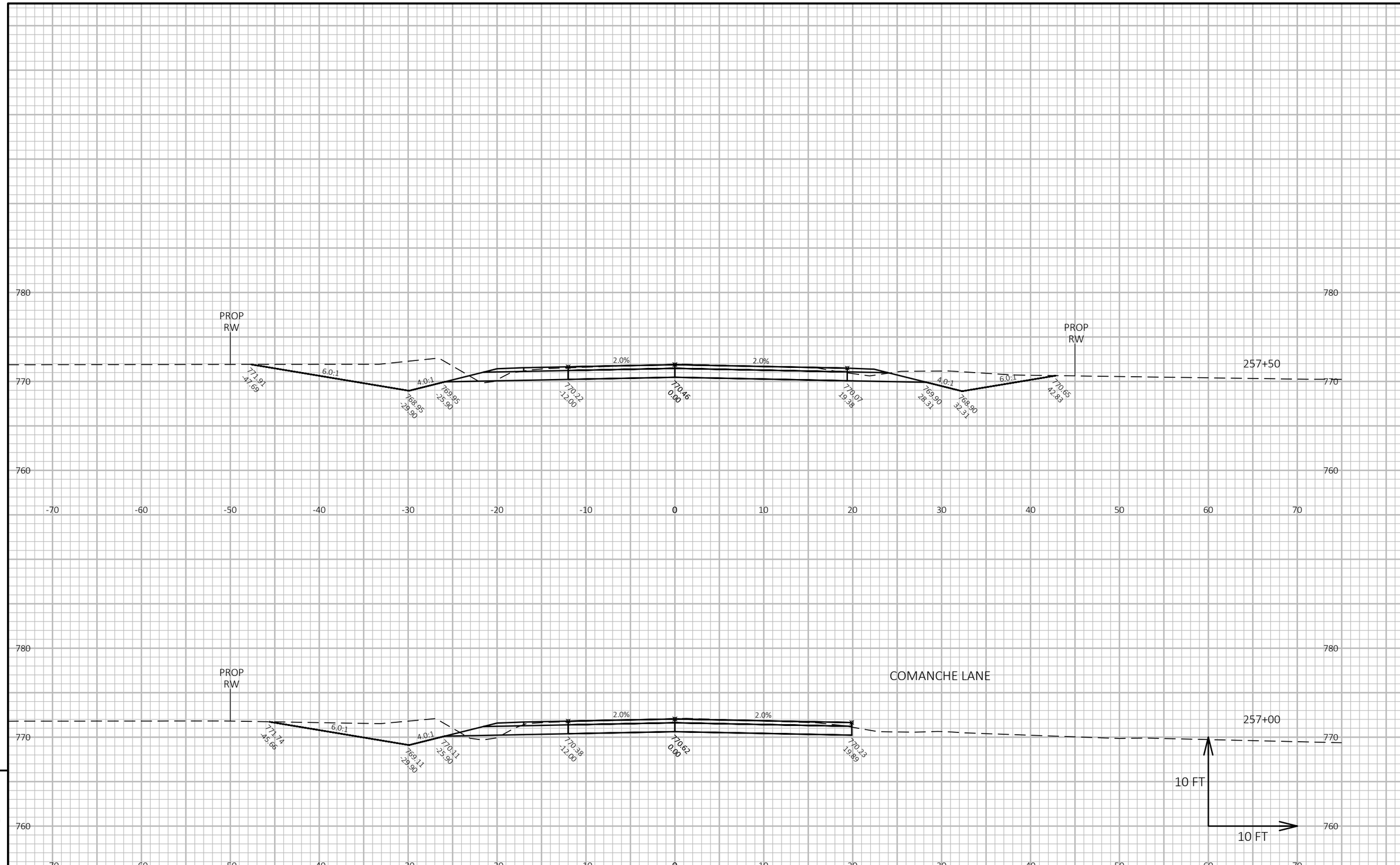

PROJECT NO: 4627-02-71	HWY: CTH A	COUNTY: WINNEBAGO	CROSS SECTIONS: CTH A	SHEET 183	E

FILE NAME : W:\PROJECTS\W0059\81700113\CADD\CIVIL3D\XREF\X_CTH A_CRDR.DWG
LAYOUT NAME - Section Sheet - (20)
PLOT DATE : 1/7/2020 3:47 PM
PLOT BY : JORDAN JELINSKI
PLOT NAME :
PLOT SCALE : 1 IN:10 FT HORZ. / 1 IN:10 FT VERT.
WISDOT/CADDS SHEET 49

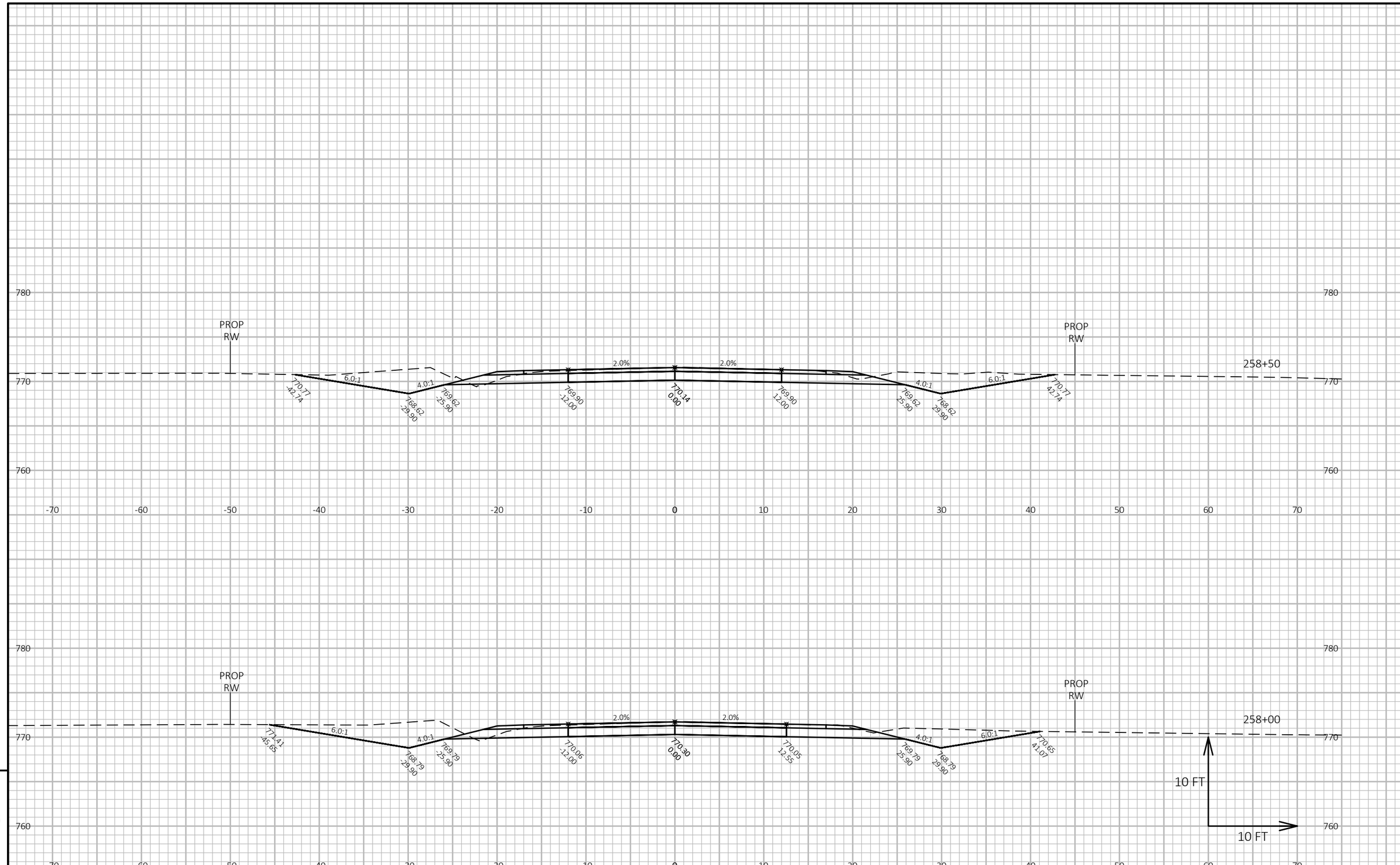

9

9

PROJECT NO: 4627-02-71	HWY: CTH A	COUNTY: WINNEBAGO	CROSS SECTIONS: CTH A	SHEET 184	E

FILE NAME : W:\PROJECTS\W0059\81700113\CADD\CIVIL3D\XREF\X_CTH A_CRDR.DWG
LAYOUT NAME - Section Sheet - (21)

PLOT DATE : 1/7/2020 3:47 PM PLOT BY : JORDAN JELINSKI PLOT NAME : **PLOT SCALE :** 1 IN:10 FT HORZ. / 1 IN:10 FT VERT.

WISDOT/CADDS SHEET 49

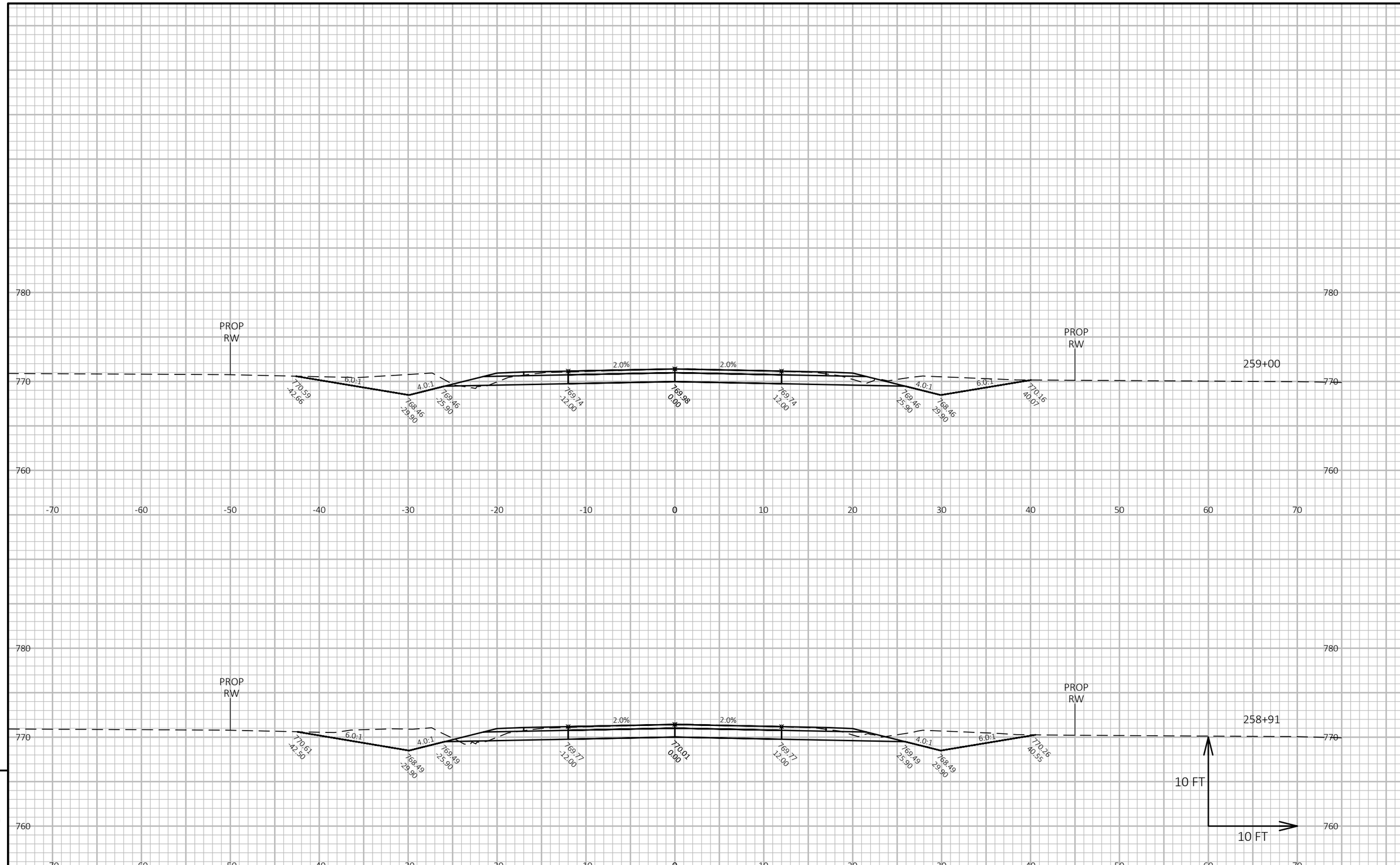

9

9

PROJECT NO: 4627-02-71	HWY: CTH A	COUNTY: WINNEBAGO	CROSS SECTIONS: CTH A	SHEET 185	E

FILE NAME : W:\PROJECTS\W0059\81700113\CADD\CIVIL3D\XREF\X_CTH A_CRDR.DWG
LAYOUT NAME - Section Sheet - (22)
PLOT DATE : 1/7/2020 3:48 PM
PLOT BY : JORDAN JELINSKI
PLOT NAME :
PLOT SCALE : 1 IN:10 FT HORZ. / 1 IN:10 FT VERT.
WISDOT/CADDS SHEET 49

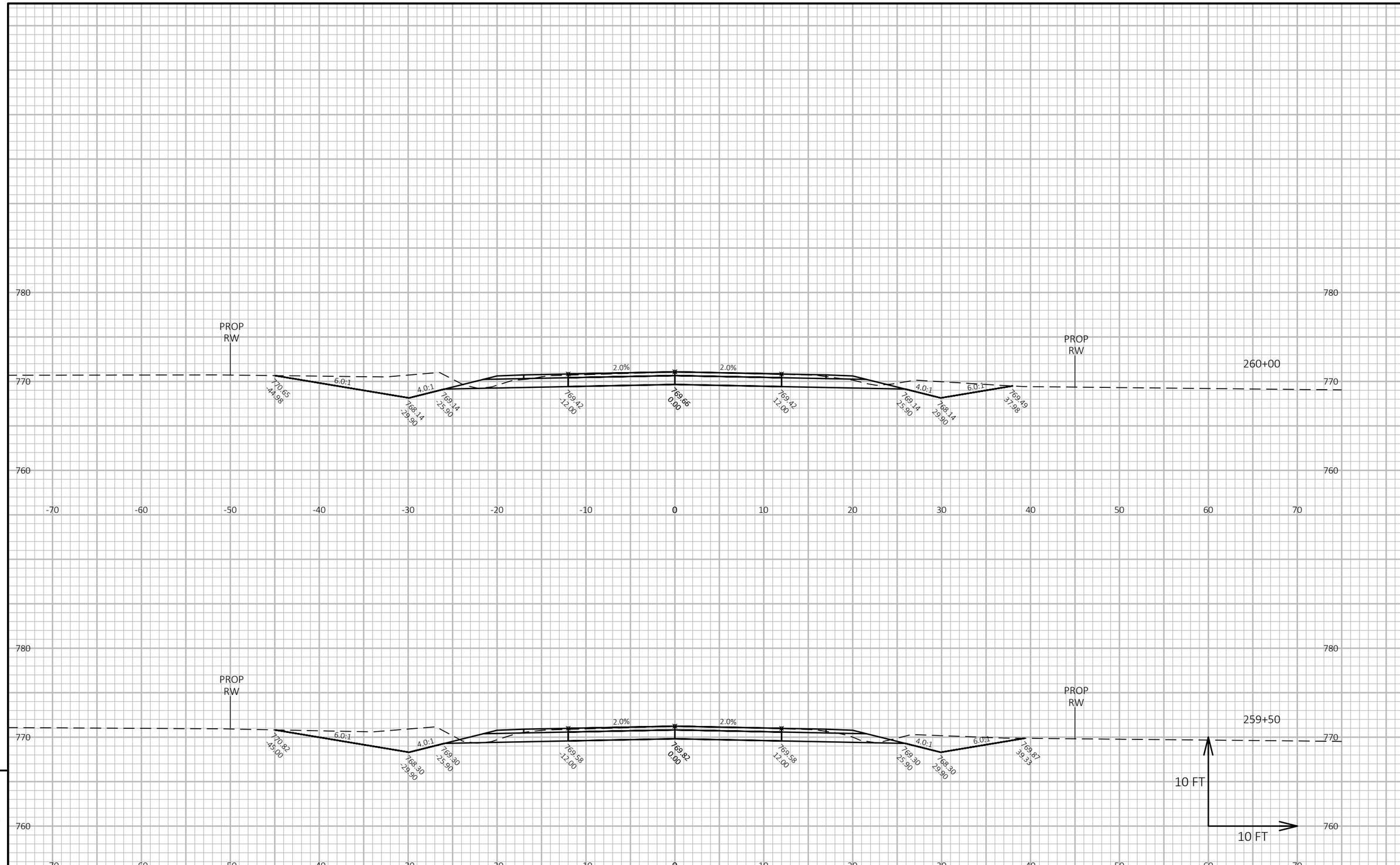

9

9

PROJECT NO: 4627-02-71	HWY: CTH A	COUNTY: WINNEBAGO	CROSS SECTIONS: CTH A	SHEET 186	E

FILE NAME : W:\PROJECTS\W0059\81700113\CADD\CIVIL3D\XREF\X_CTH A_CRDR.DWG
LAYOUT NAME - Section Sheet - (23)
PLOT DATE : 1/7/2020 3:48 PM
PLOT BY : JORDAN JELINSKI
PLOT NAME :
PLOT SCALE : 1 IN:10 FT HORZ. / 1 IN:10 FT VERT.
WISDOT/CADDS SHEET 49

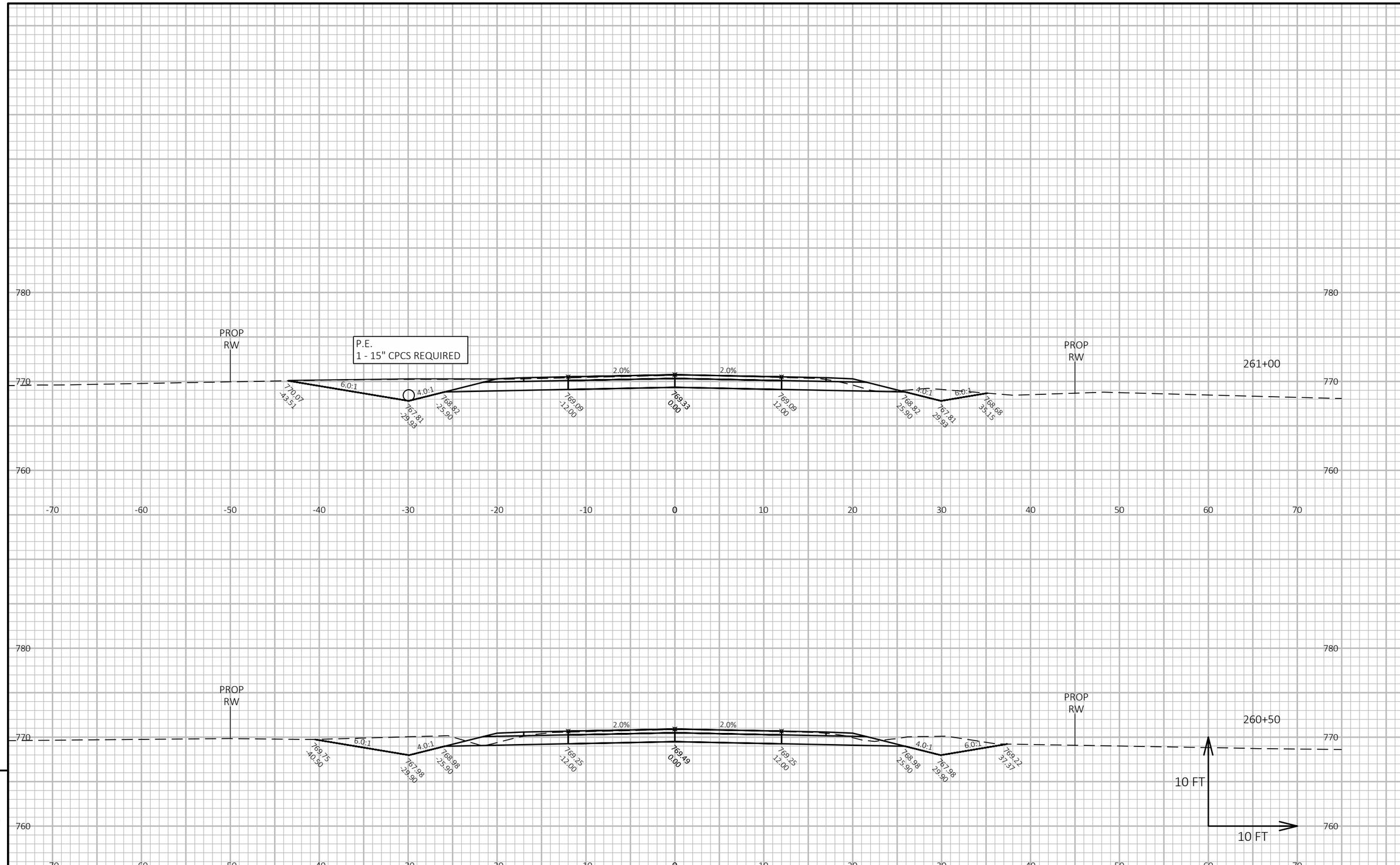

9

9

PROJECT NO: 4627-02-71	HWY: CTH A	COUNTY: WINNEBAGO	CROSS SECTIONS: CTH A	SHEET 187	E

FILE NAME : W:\PROJECTS\W0059\81700113\CADD\CIVIL3D\XREF\X_CTH A_CRDR.DWG
LAYOUT NAME - Section Sheet - (24)
PLOT DATE : 1/7/2020 3:48 PM
PLOT BY : JORDAN JELINSKI
PLOT NAME :
PLOT SCALE : 1 IN:10 FT HORZ. / 1 IN:10 FT VERT.
WISDOT/CADDS SHEET 49

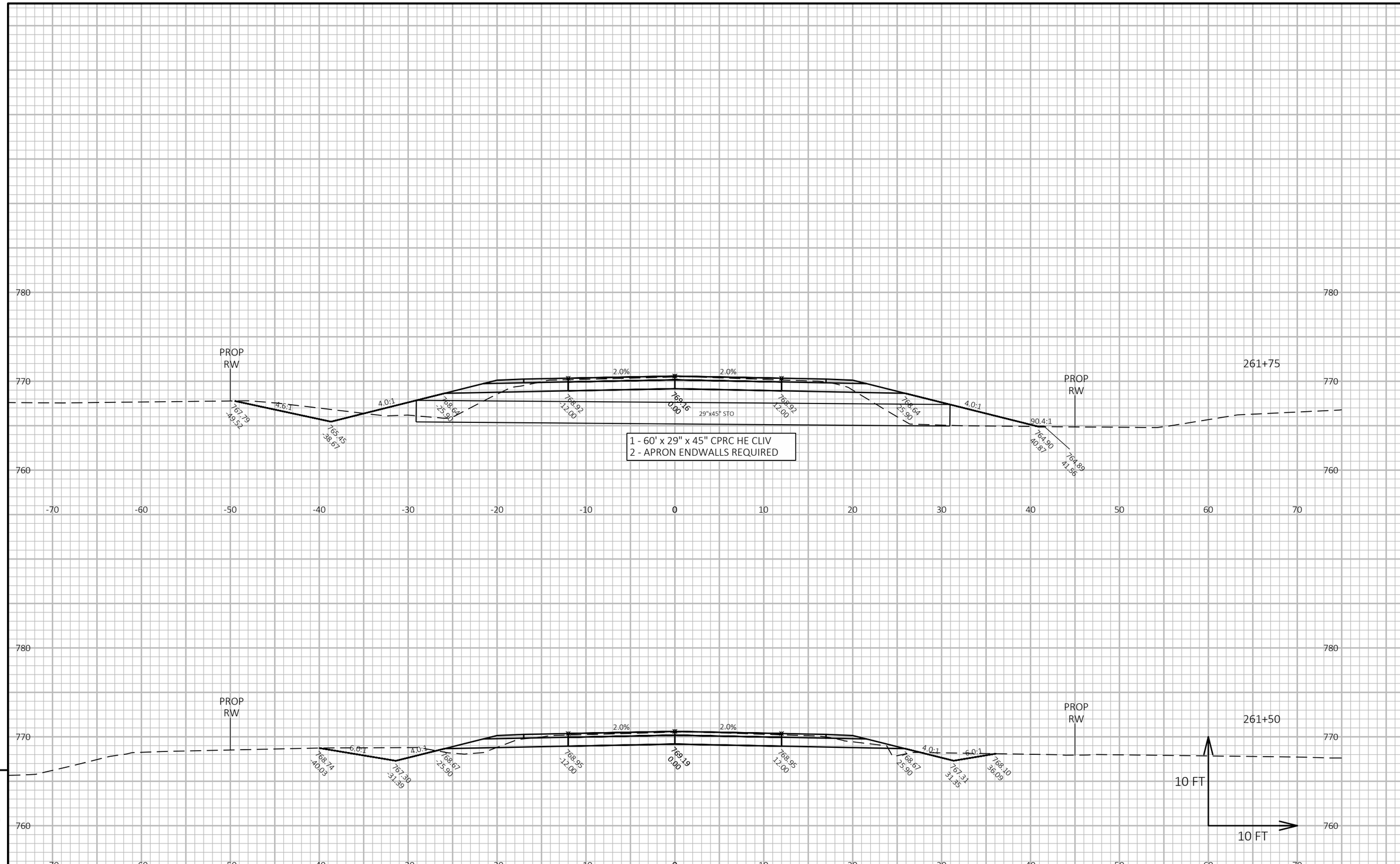

9

9

PROJECT NO: 4627-02-71	HWY: CTH A	COUNTY: WINNEBAGO	CROSS SECTIONS: CTH A	SHEET 188	E

FILE NAME : W:\PROJECTS\W0059\81700113\CADD\CIVIL3D\XREF\X_CTH A_CRDR.DWG
LAYOUT NAME - Section Sheet - (25)
PLOT DATE : 1/7/2020 3:49 PM
PLOT BY : JORDAN JELINSKI
PLOT NAME :
PLOT SCALE : 1 IN:10 FT HORZ. / 1 IN:10 FT VERT.
WISDOT/CADDS SHEET 49

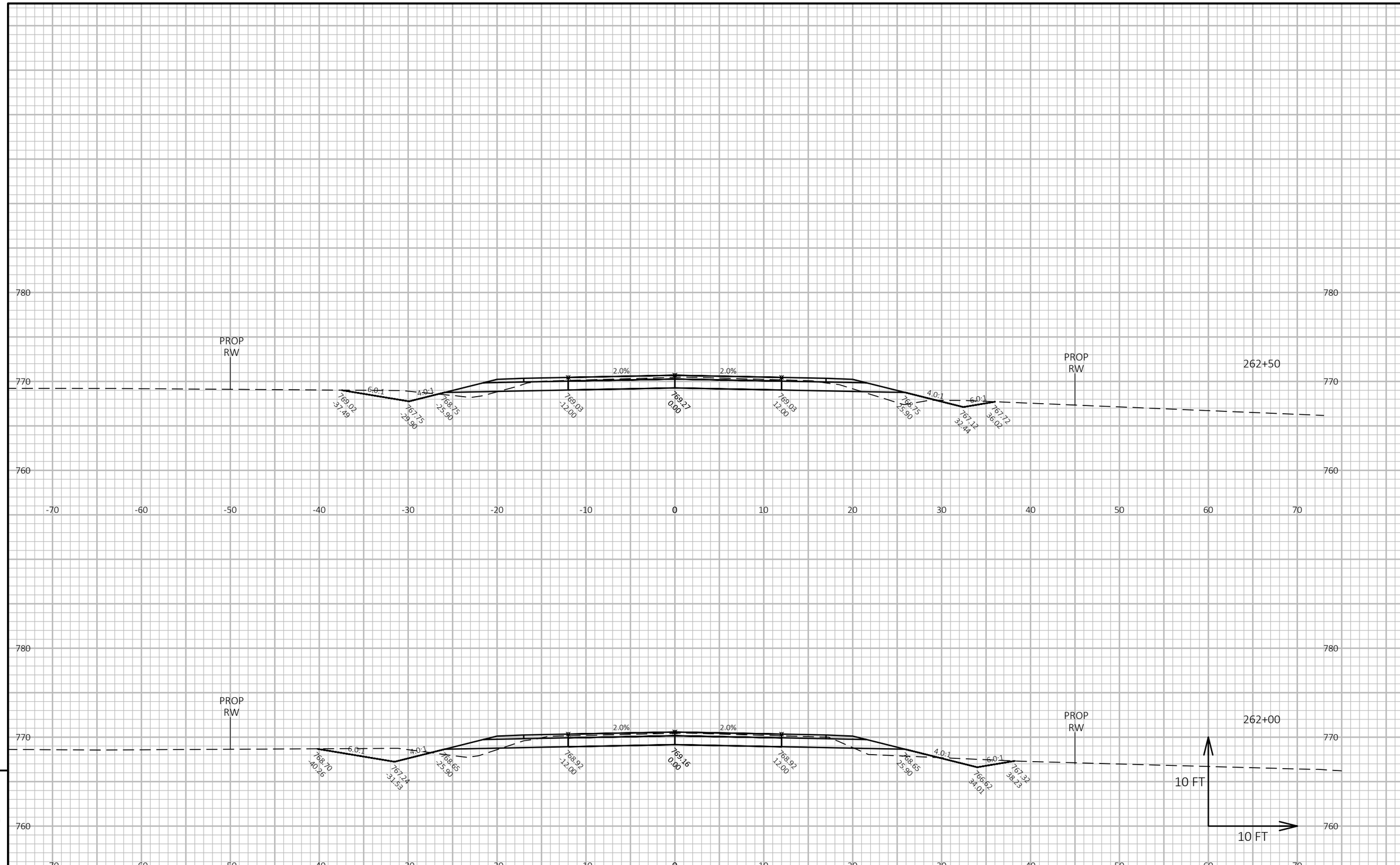

PROJECT NO: 4627-02-71	HWY: CTH A	COUNTY: WINNEBAGO	CROSS SECTIONS: CTH A	SHEET 189	E

FILE NAME : W:\PROJECTS\W0059\81700113\CADD\CIVIL3D\XREF\X_CTH A_CRDR.DWG
LAYOUT NAME - Section Sheet - (26)
PLOT DATE : 1/7/2020 3:49 PM
PLOT BY : JORDAN JELINSKI
PLOT NAME :
PLOT SCALE : 1 IN:10 FT HORZ. / 1 IN:10 FT VERT.
WISDOT/CADDS SHEET 49

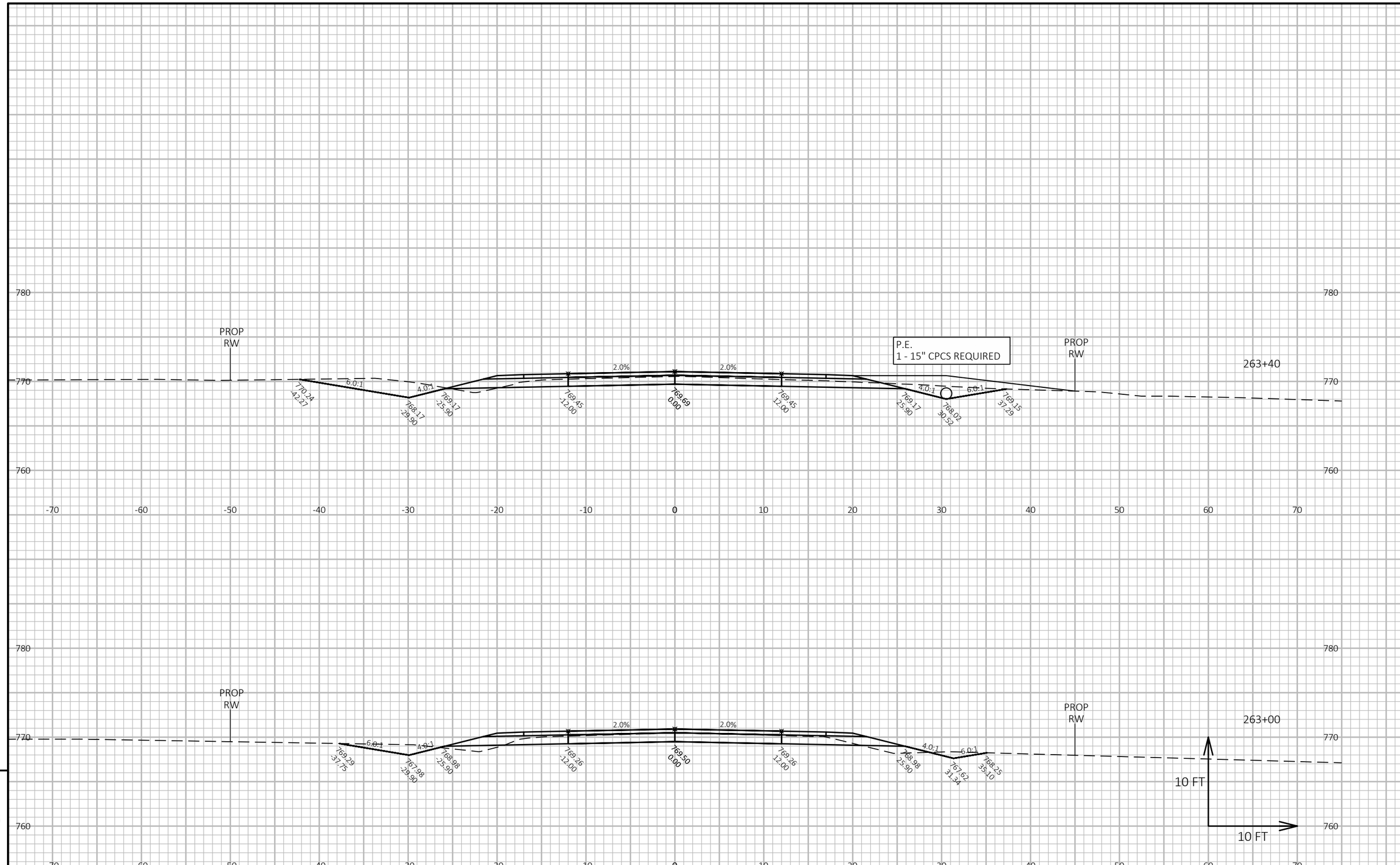

PROJECT NO: 4627-02-71	HWY: CTH A	COUNTY: WINNEBAGO	CROSS SECTIONS: CTH A	SHEET 190	E

FILE NAME : W:\PROJECTS\W0059\81700113\CADD\CIVIL3D\XREF\X_CTH A_CRDR.DWG
LAYOUT NAME - Section Sheet - (27)
PLOT DATE : 1/7/2020 3:49 PM
PLOT BY : JORDAN JELINSKI
PLOT NAME :
PLOT SCALE : 1 IN:10 FT HORZ. / 1 IN:10 FT VERT.
WISDOT/CADDS SHEET 49

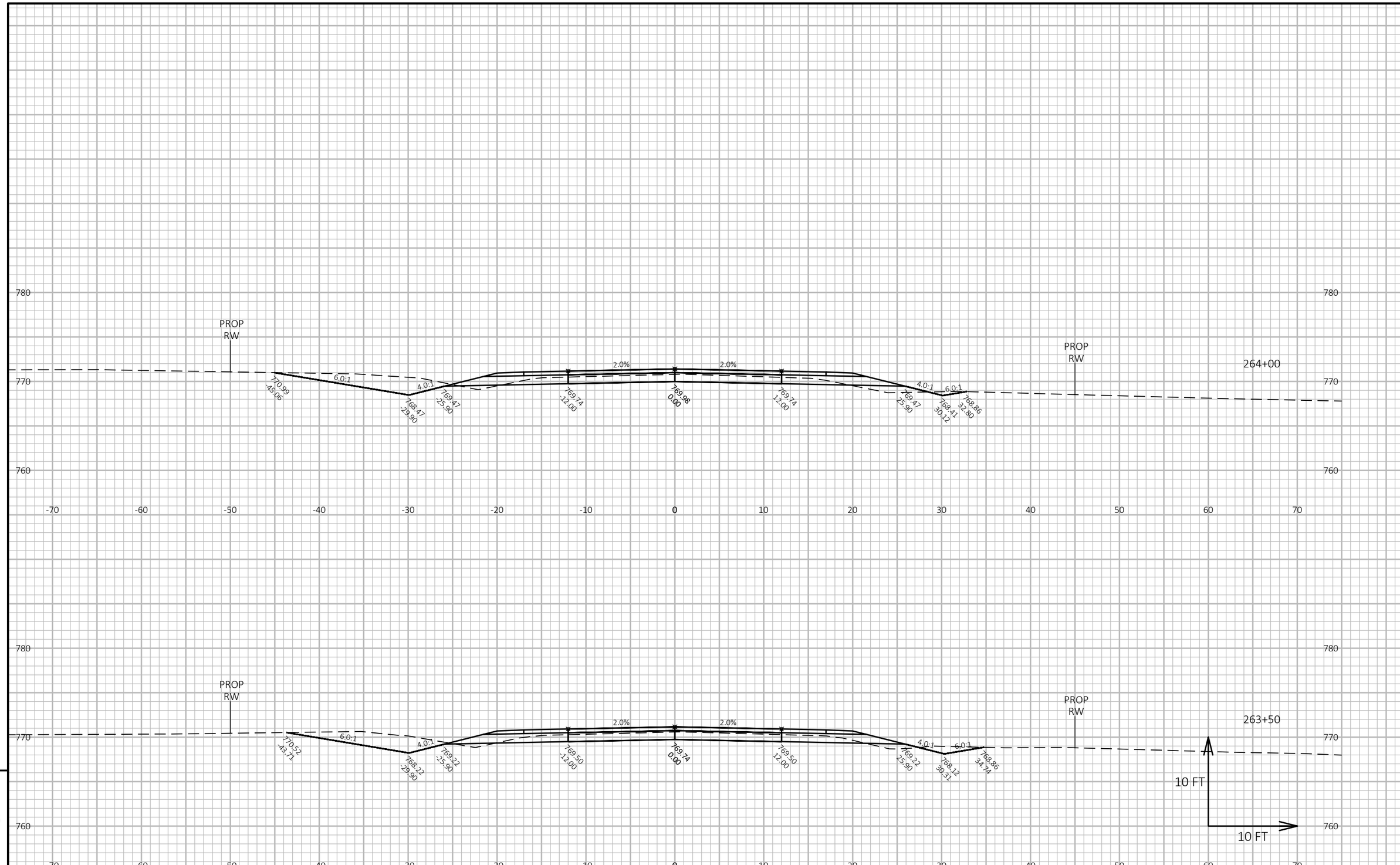

9

9

PROJECT NO: 4627-02-71	HWY: CTH A	COUNTY: WINNEBAGO	CROSS SECTIONS: CTH A	SHEET 191	E

FILE NAME : W:\PROJECTS\W0059\81700113\CADD\CIVIL3D\XREF\X_CTH A_CRDR.DWG
LAYOUT NAME - Section Sheet - (28)
PLOT DATE : 1/7/2020 3:50 PM
PLOT BY : JORDAN JELINSKI
PLOT NAME :
PLOT SCALE : 1 IN:10 FT HORZ. / 1 IN:10 FT VERT.
WISDOT/CADDS SHEET 49

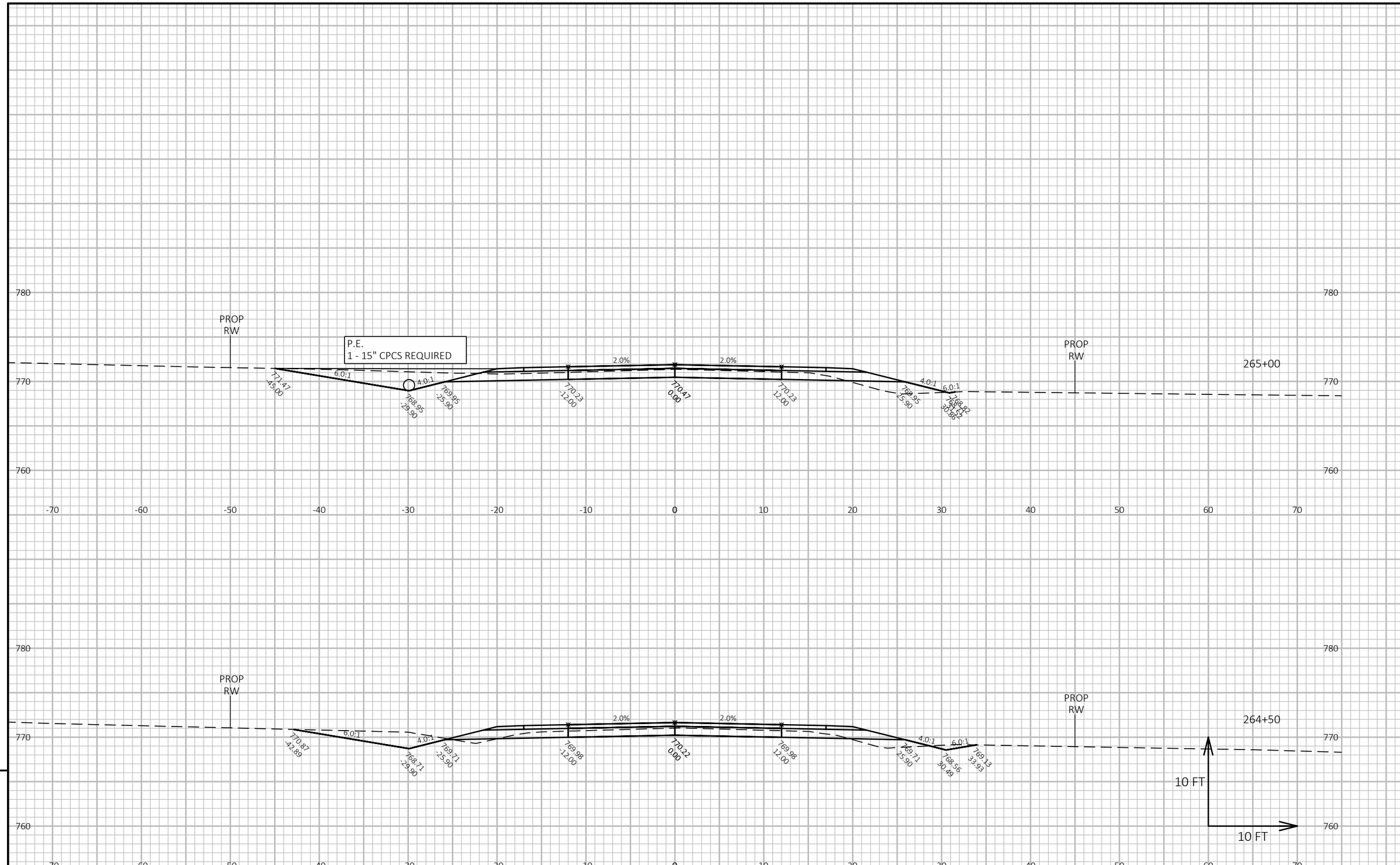

9

9

PROJECT NO: 4627-02-71	HWY: CTH A	COUNTY: WINNEBAGO	CROSS SECTIONS: CTH A	SHEET 192	E

FILE NAME : W:\PROJECTS\W0059\81700113\CADD\CIVIL3D\XREF\X_CTH A_CRDR.DWG
LAYOUT NAME - Section Sheet - (29)
PLOT DATE : 1/7/2020 3:50 PM
PLOT BY : JORDAN JELINSKI
PLOT NAME :
PLOT SCALE : 1 IN:10 FT HORZ. / 1 IN:10 FT VERT.
WISDOT/CADDS SHEET 49

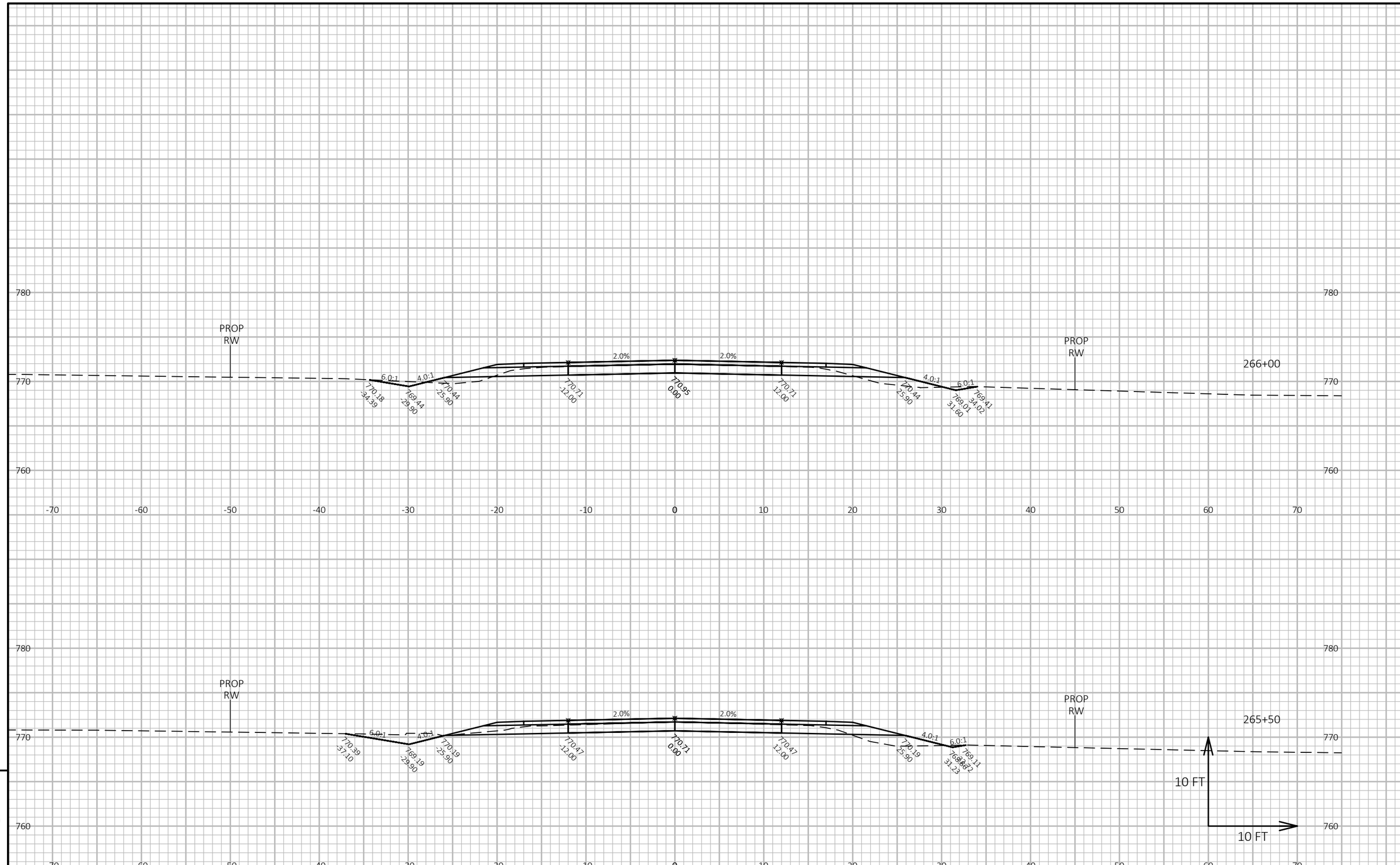

9

9

PROJECT NO: 4627-02-71	HWY: CTH A	COUNTY: WINNEBAGO	CROSS SECTIONS: CTH A	SHEET 193	E

FILE NAME : W:\PROJECTS\W0059\81700113\CADD\CIVIL3D\XREF\X_CTH A_CRDR.DWG
LAYOUT NAME - Section Sheet - (30)
PLOT DATE : 1/7/2020 3:51 PM
PLOT BY : JORDAN JELINSKI
PLOT NAME :
PLOT SCALE : 1 IN:10 FT HORZ. / 1 IN:10 FT VERT.
WISDOT/CADDS SHEET 49

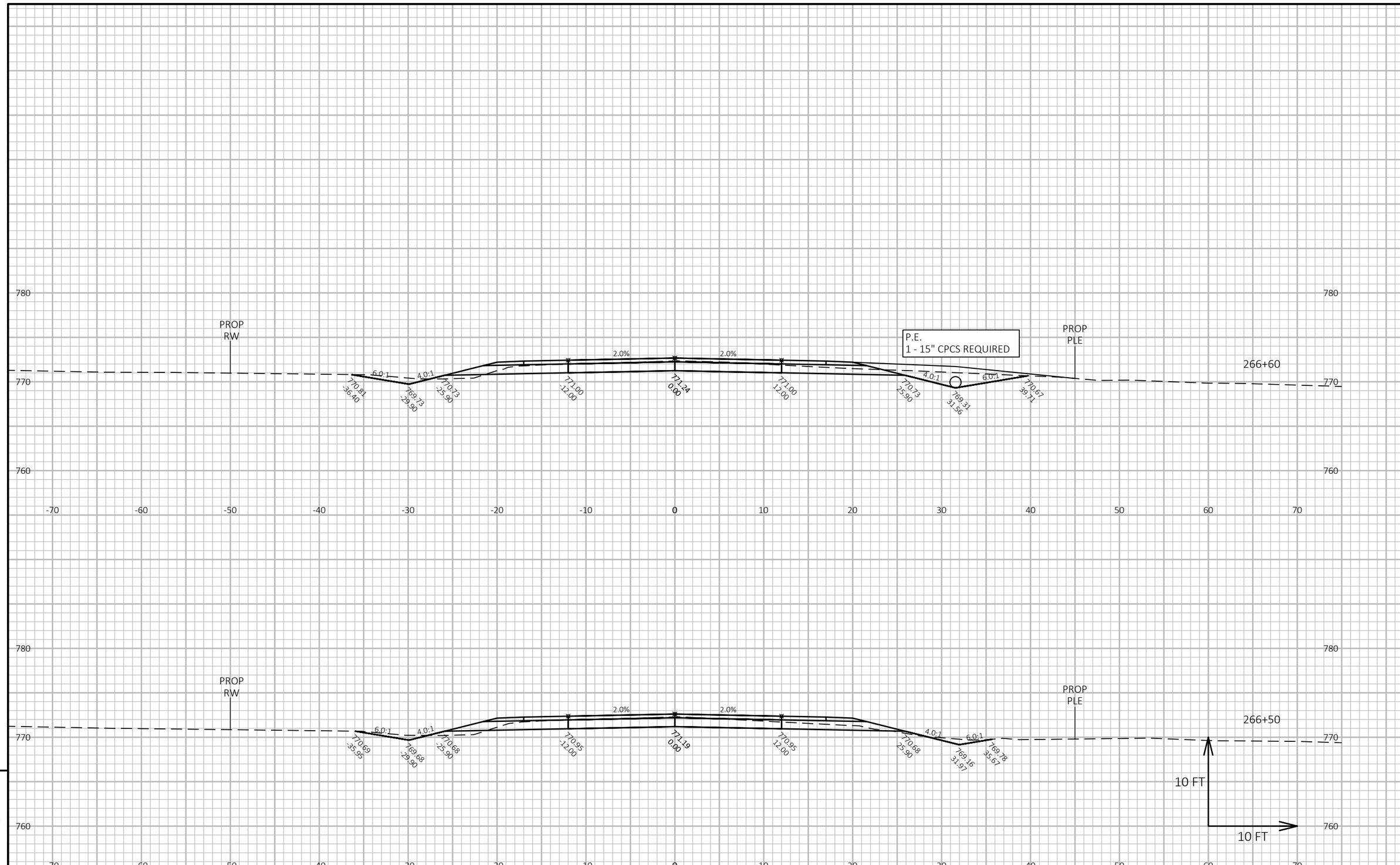

9

9

PROJECT NO: 4627-02-71	HWY: CTH A	COUNTY: WINNEBAGO	CROSS SECTIONS: CTH A	SHEET 194	E

FILE NAME : W:\PROJECTS\W0059\81700113\CADD\CIVIL3D\XREF\X_CTH A_CRDR.DWG
LAYOUT NAME - Section Sheet - (31)
PLOT DATE : 1/7/2020 3:51 PM
PLOT BY : JORDAN JELINSKI
PLOT NAME :
PLOT SCALE : 1 IN:10 FT HORZ. / 1 IN:10 FT VERT.
WISDOT/CADDS SHEET 49

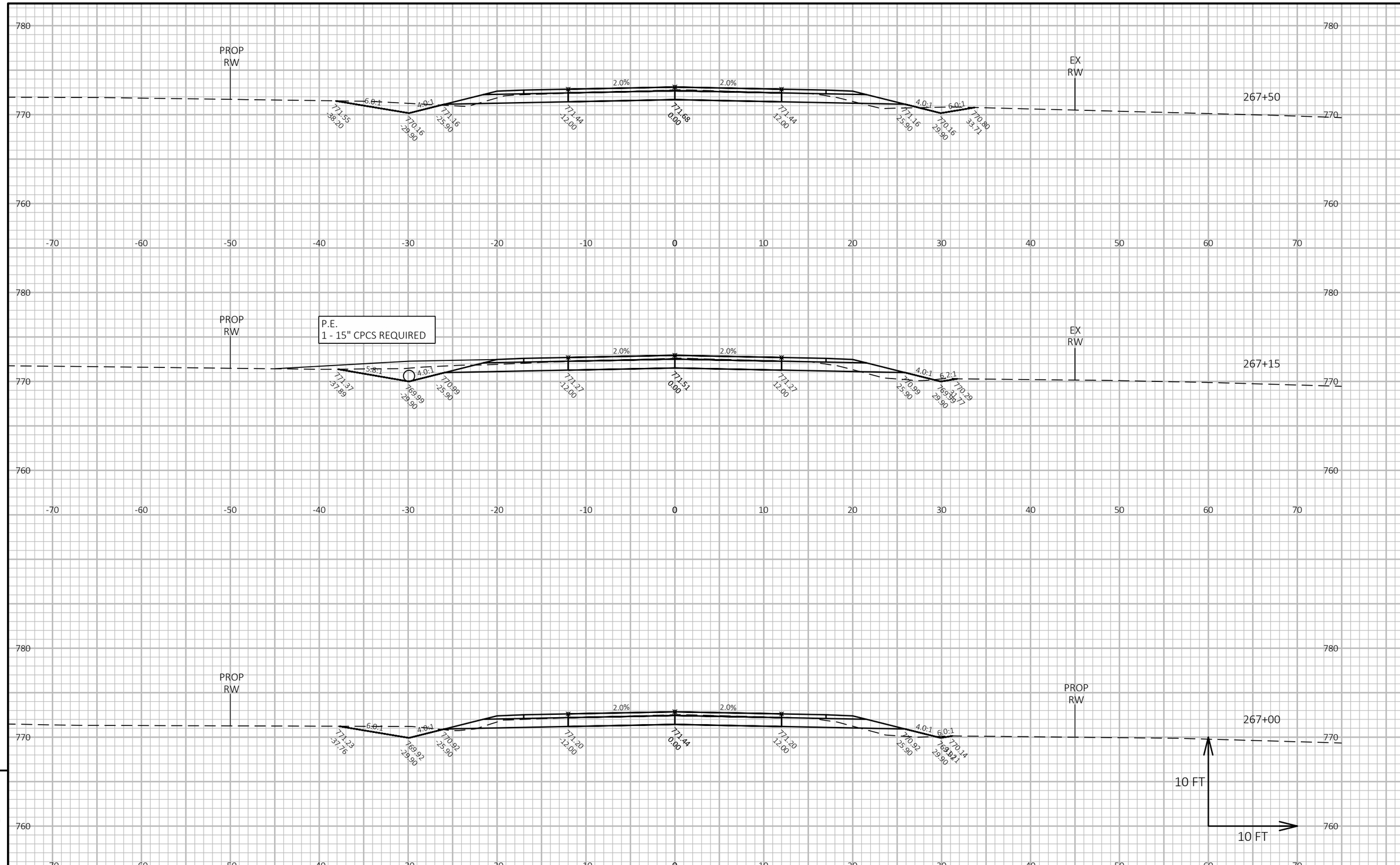

9

9

PROJECT NO: 4627-02-71	HWY: CTH A	COUNTY: WINNEBAGO	CROSS SECTIONS: CTH A	SHEET 195	E

FILE NAME : W:\PROJECTS\W0059\81700113\CADD\CIVIL3D\XREF\X_CTH A_CRDR.DWG
LAYOUT NAME - Section Sheet - (32)
PLOT DATE : 1/7/2020 3:51 PM
PLOT BY : JORDAN JELINSKI
PLOT NAME :
PLOT SCALE : 1 IN:10 FT HORZ. / 1 IN:10 FT VERT.
WISDOT/CADDS SHEET 49

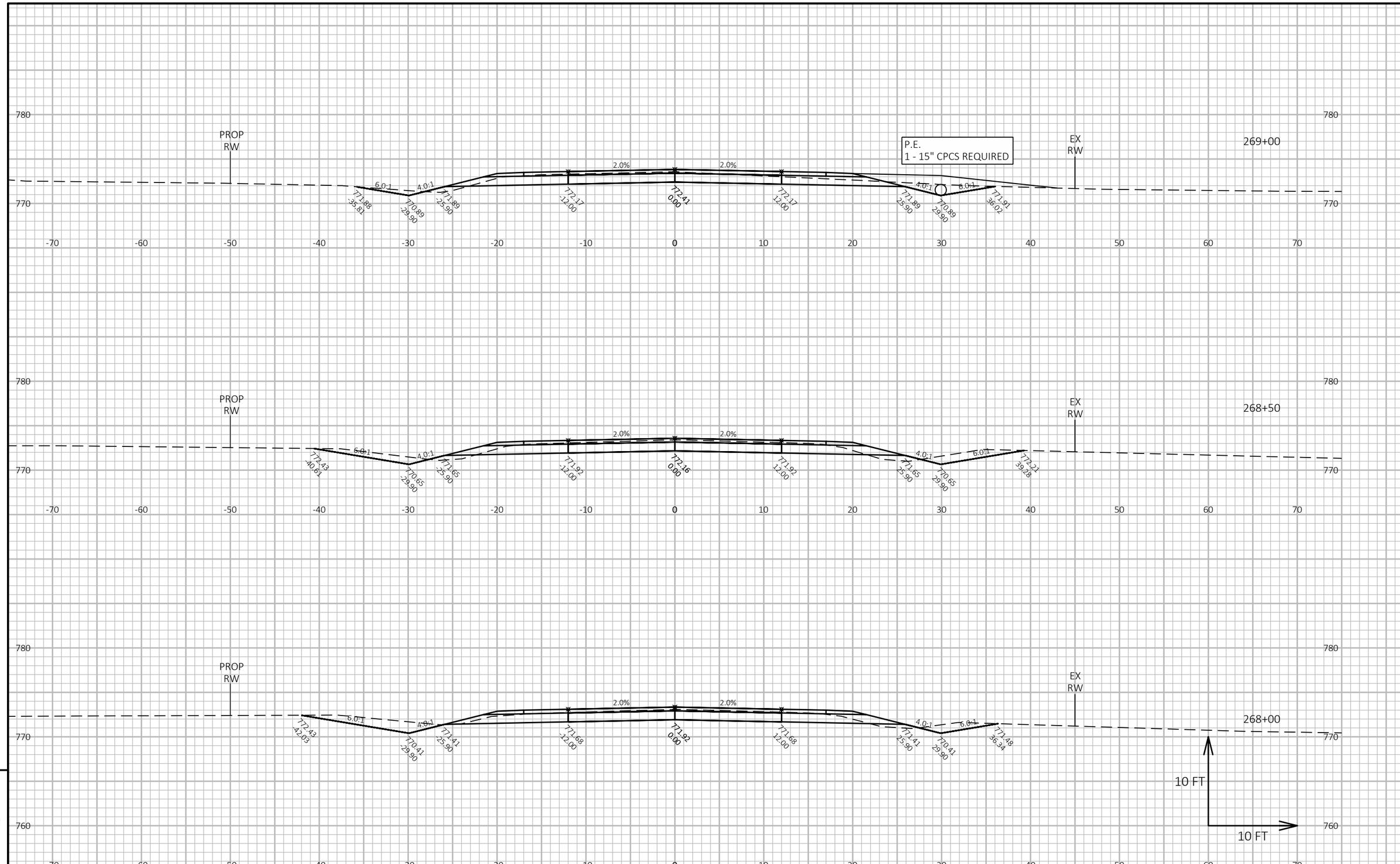

9

9

PROJECT NO: 4627-02-71	HWY: CTH A	COUNTY: WINNEBAGO	CROSS SECTIONS: CTH A	SHEET 196	E

FILE NAME : W:\PROJECTS\W0059\81700113\CADD\CIVIL3D\XREF\X_CTH A_CRDR.DWG
LAYOUT NAME - Section Sheet - (33)

PLOT DATE : 1/7/2020 3:52 PM PLOT BY : JORDAN JELINSKI PLOT NAME : **PLOT SCALE :** 1 IN:10 FT HORZ. / 1 IN:10 FT VERT.

WISDOT/CADDS SHEET 49

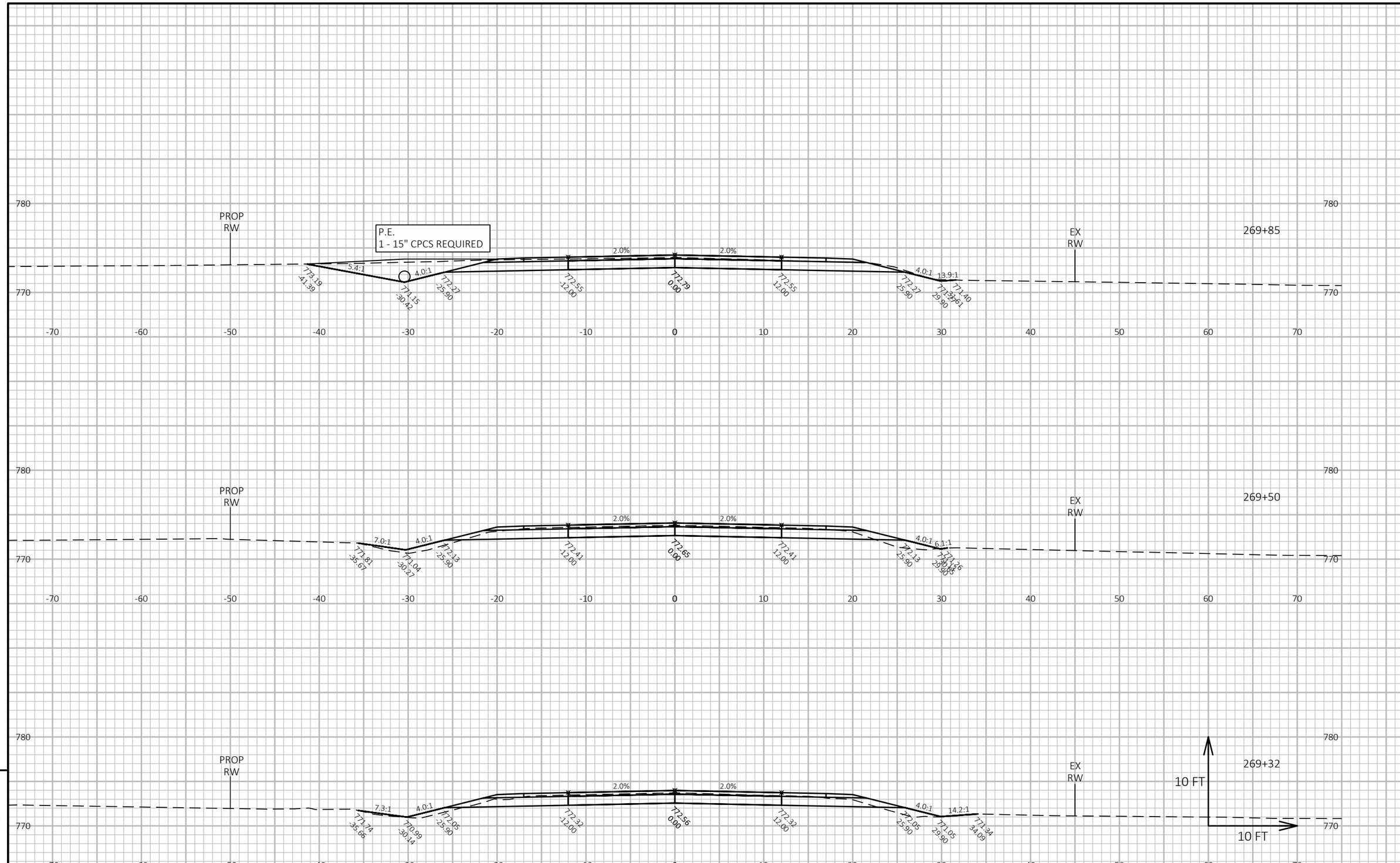

PROJECT NO: 4627-02-71	HWY: CTH A	COUNTY: WINNEBAGO	CROSS SECTIONS: CTH A	SHEET 197	E

FILE NAME : W:\PROJECTS\W0059\81700113\CADD\CIVIL3D\XREF\X_CTH A_CRDR.DWG
LAYOUT NAME - Section Sheet - (34)
PLOT DATE : 1/7/2020 3:52 PM
PLOT BY : JORDAN JELINSKI
PLOT NAME :
PLOT SCALE : 1 IN:10 FT HORZ. / 1 IN:10 FT VERT.
WISDOT/CADDS SHEET 49

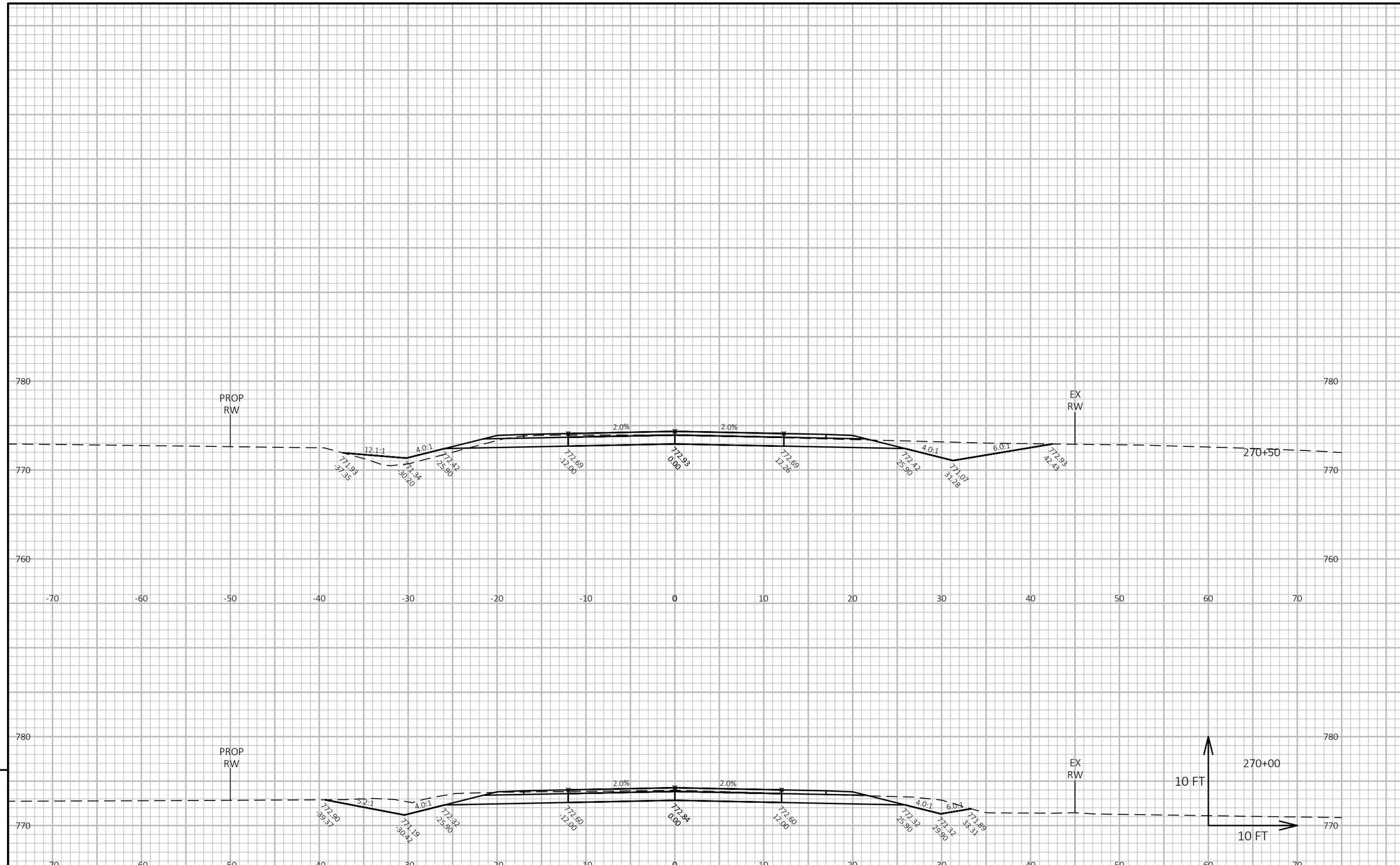

9

9

PROJECT NO: 4627-02-71	HWY: CTH A	COUNTY: WINNEBAGO	CROSS SECTIONS: CTH A	SHEET 198	E

FILE NAME : W:\PROJECTS\W0059\81700113\CADD\CIVIL3D\XREF\X_CTH A_CRDR.DWG
LAYOUT NAME - Section Sheet - (35)
PLOT DATE : 1/7/2020 3:52 PM
PLOT BY : JORDAN JELINSKI
PLOT NAME :
PLOT SCALE : 1 IN:10 FT HORZ. / 1 IN:10 FT VERT.
WISDOT/CADDS SHEET 49

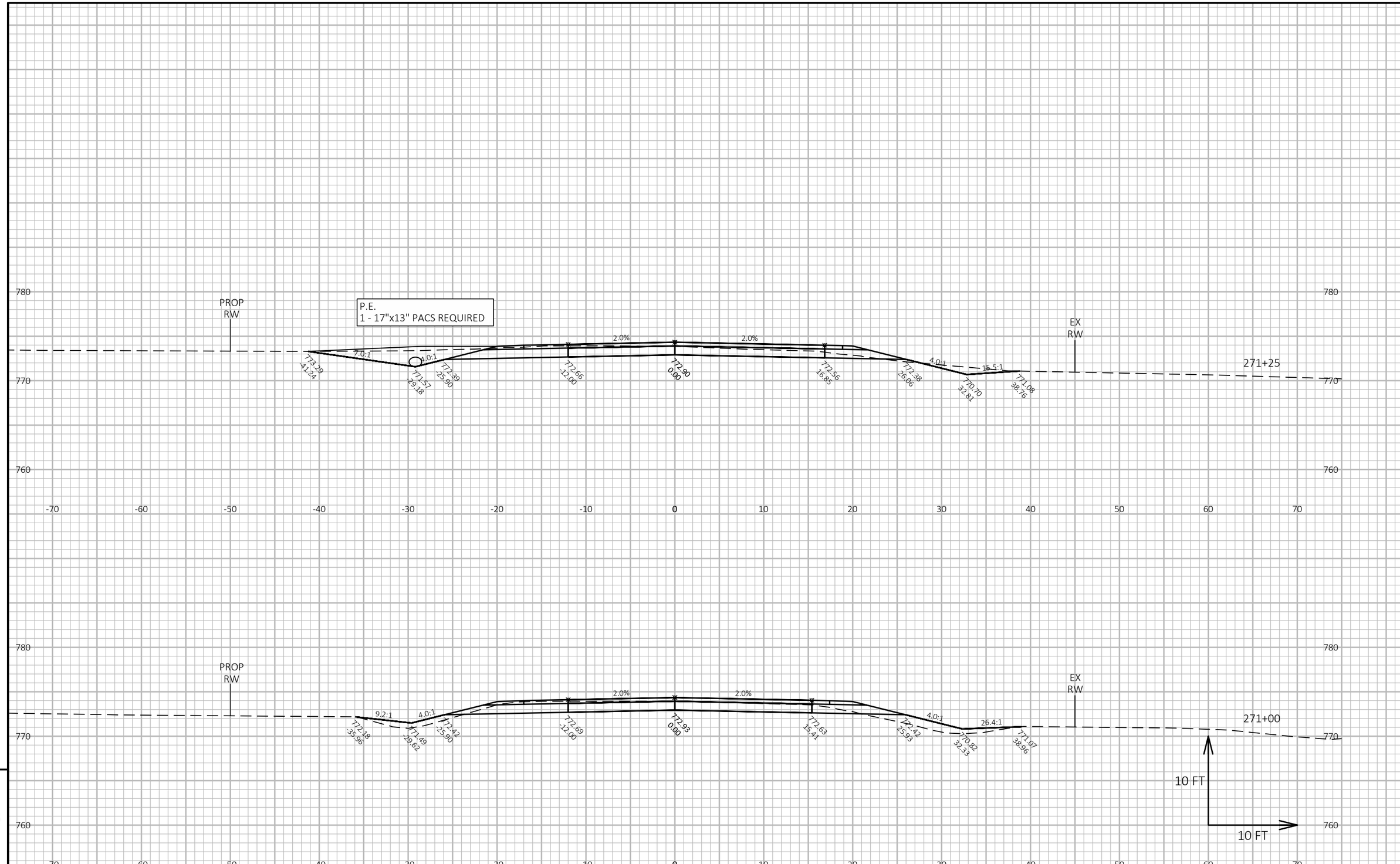

9

9

PROJECT NO: 4627-02-71	HWY: CTH A	COUNTY: WINNEBAGO	CROSS SECTIONS: CTH A	SHEET 199	E

FILE NAME : W:\PROJECTS\W0059\81700113\CADD\CIVIL3D\XREF\X_CTH A_CRDR.DWG
LAYOUT NAME - Section Sheet - (36)
PLOT DATE : 1/7/2020 3:53 PM
PLOT BY : JORDAN JELINSKI
PLOT NAME :
PLOT SCALE : 1 IN:10 FT HORZ. / 1 IN:10 FT VERT.
WISDOT/CADDS SHEET 49

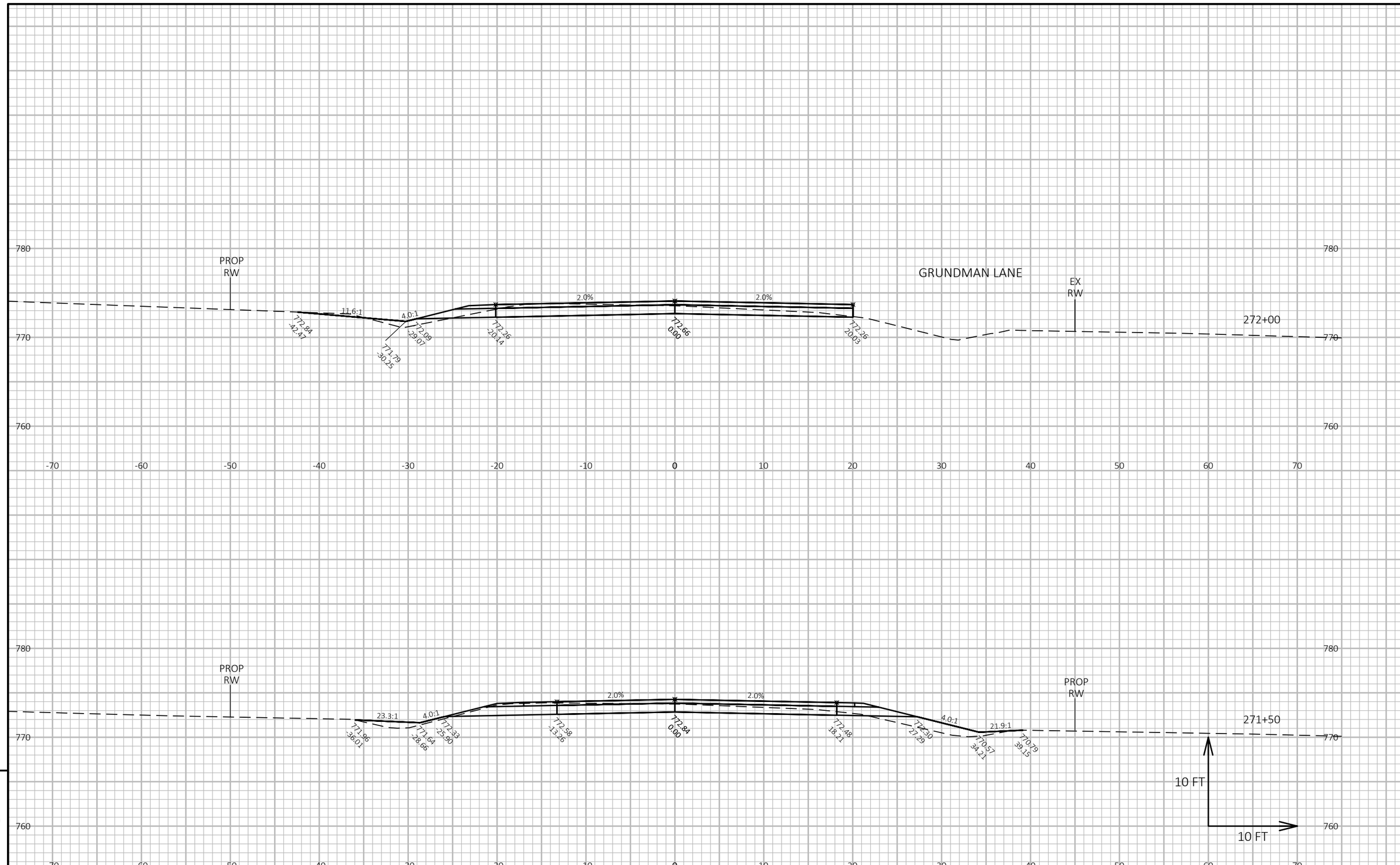

PROJECT NO: 4627-02-71	HWY: CTH A	COUNTY: WINNEBAGO	CROSS SECTIONS: CTH A	SHEET 200	E

FILE NAME : W:\PROJECTS\W0059\81700113\CADD\CIVIL3D\XREF\X_CTH A_CRDR.DWG
LAYOUT NAME - Section Sheet - (37)
PLOT DATE : 1/7/2020 3:53 PM
PLOT BY : JORDAN JELINSKI
PLOT NAME :
PLOT SCALE : 1 IN:10 FT HORZ. / 1 IN:10 FT VERT.
WISDOT/CADDS SHEET 49

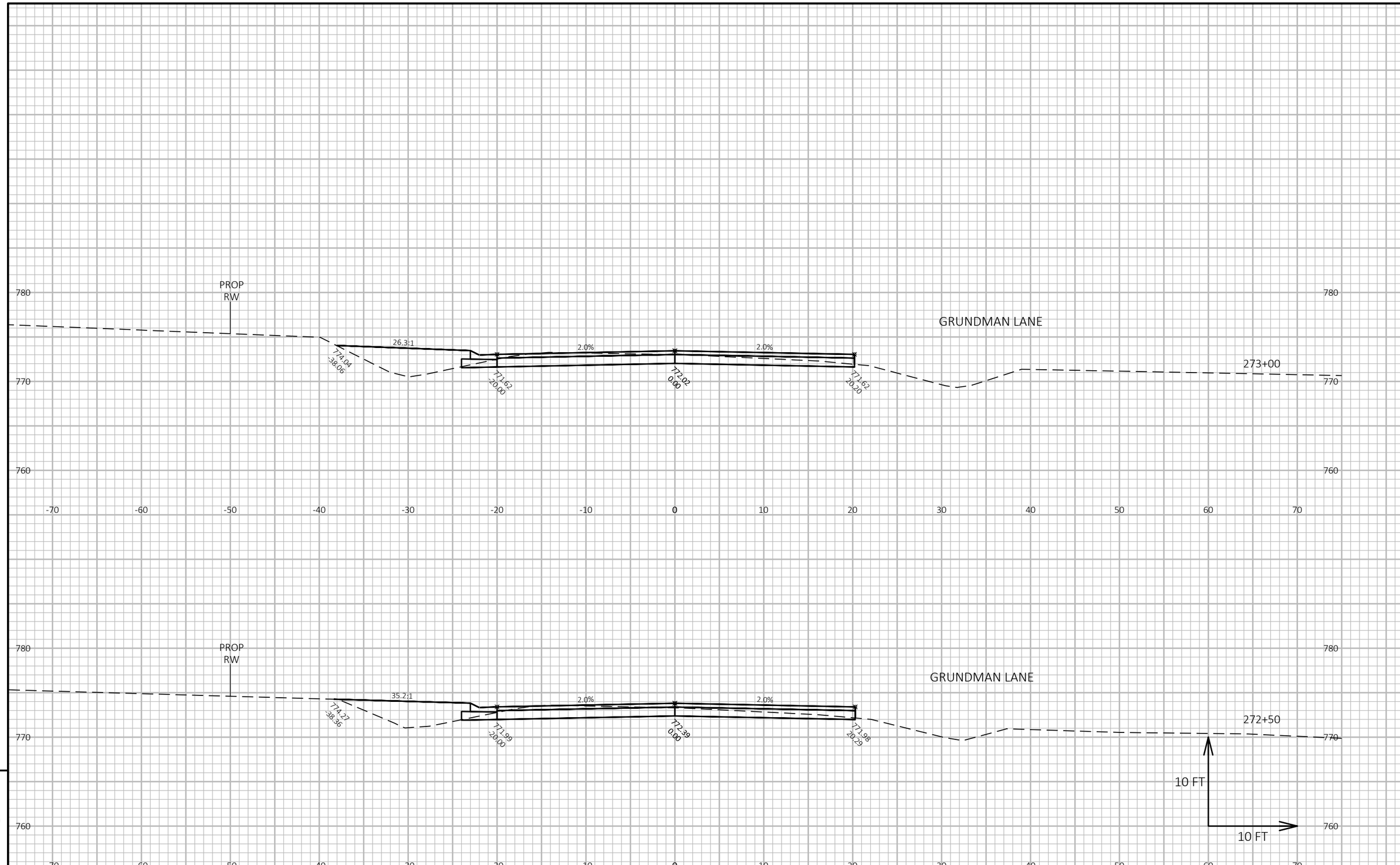

9

9

PROJECT NO: 4627-02-71	HWY: CTH A	COUNTY: WINNEBAGO	CROSS SECTIONS: CTH A	SHEET 201	E

FILE NAME : W:\PROJECTS\W0059\81700113\CADD\CIVIL3D\XREF\X_CTH A_CRDR.DWG
LAYOUT NAME - Section Sheet - (38)
PLOT DATE : 1/7/2020 3:54 PM
PLOT BY : JORDAN JELINSKI
PLOT NAME :
PLOT SCALE : 1 IN:10 FT HORZ. / 1 IN:10 FT VERT.
WISDOT/CADDS SHEET 49

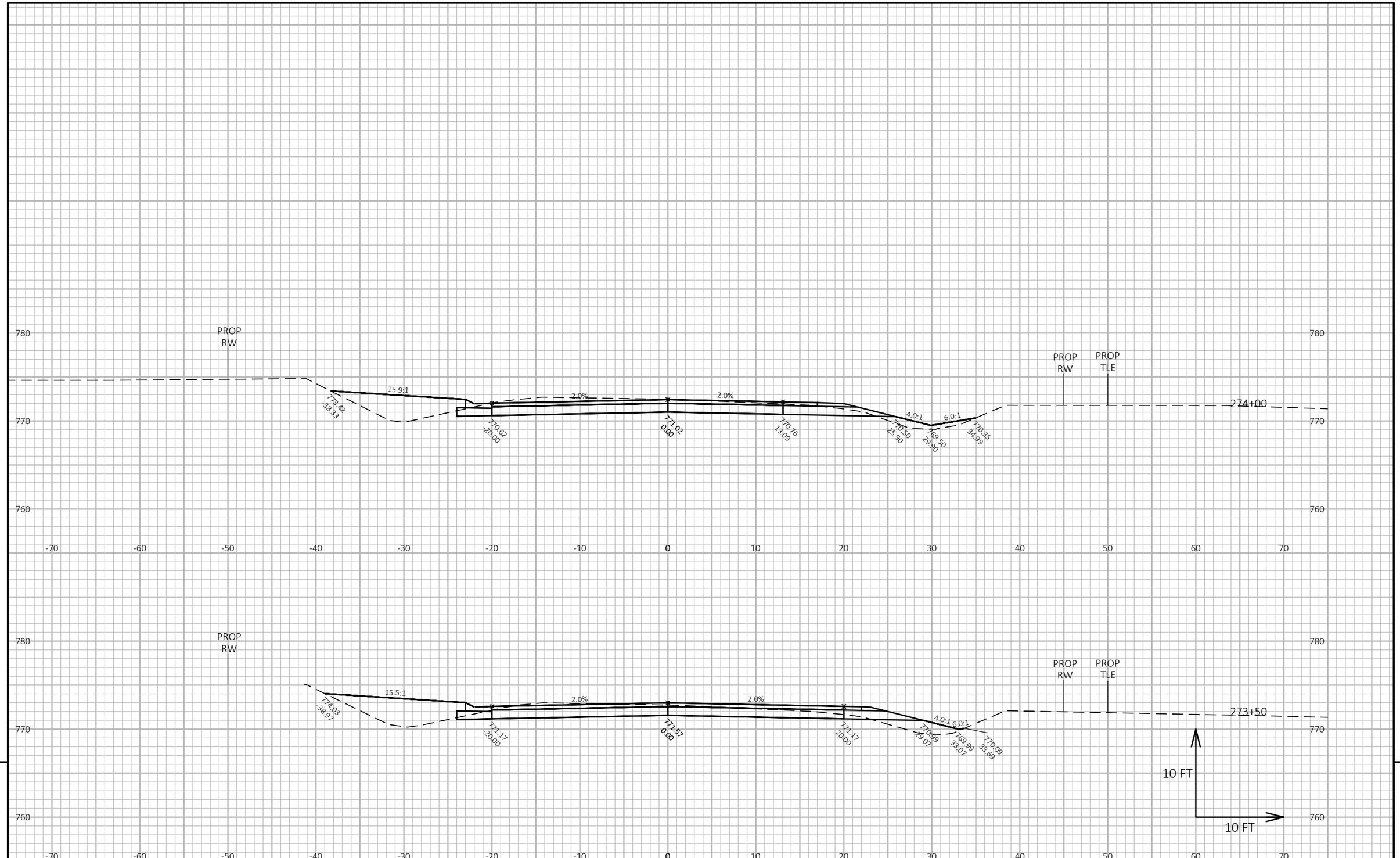

9

9

PROJECT NO: 4627-02-71	HWY: CTH A	COUNTY: WINNEBAGO	CROSS SECTIONS: CTH A	SHEET 202	E

FILE NAME : W:\PROJECTS\W0059\81700113\CADD\CIVIL3D\XREF\X_CTH A_CRDR.DWG
LAYOUT NAME - Section Sheet - (39)
PLOT DATE : 1/7/2020 3:54 PM
PLOT BY : JORDAN JELINSKI
PLOT NAME :
PLOT SCALE : 1 IN:10 FT HORZ. / 1 IN:10 FT VERT.
WISDOT/CADDS SHEET 49

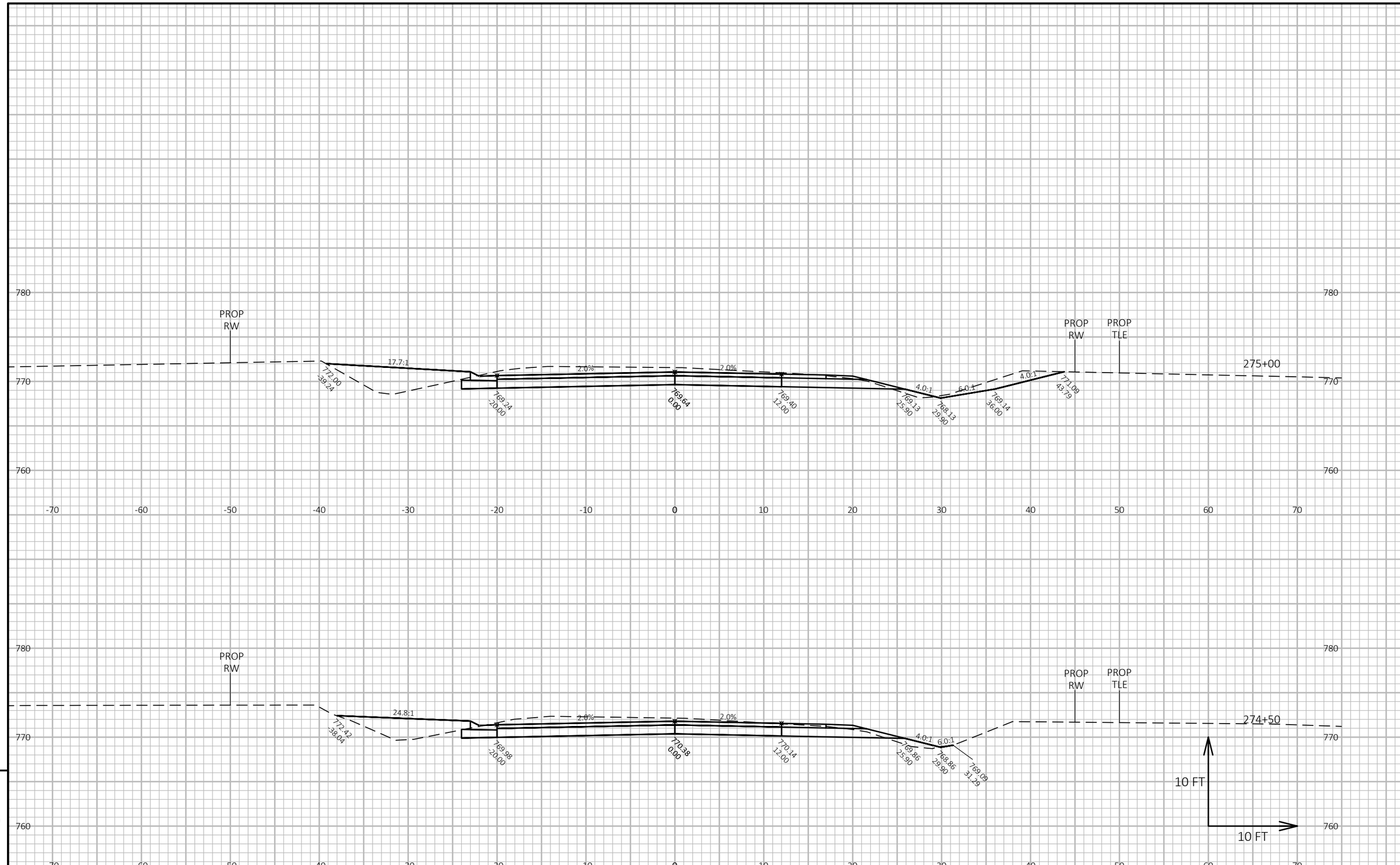

9

9

PROJECT NO: 4627-02-71	HWY: CTH A	COUNTY: WINNEBAGO	CROSS SECTIONS: CTH A	SHEET 203	E

FILE NAME : W:\PROJECTS\W0059\81700113\CADD\CIVIL3D\XREF\X_CTH A_CRDR.DWG
LAYOUT NAME - Section Sheet - (40)
PLOT DATE : 1/7/2020 3:54 PM
PLOT BY : JORDAN JELINSKI
PLOT NAME :
PLOT SCALE : 1 IN:10 FT HORZ. / 1 IN:10 FT VERT.
WISDOT/CADDS SHEET 49

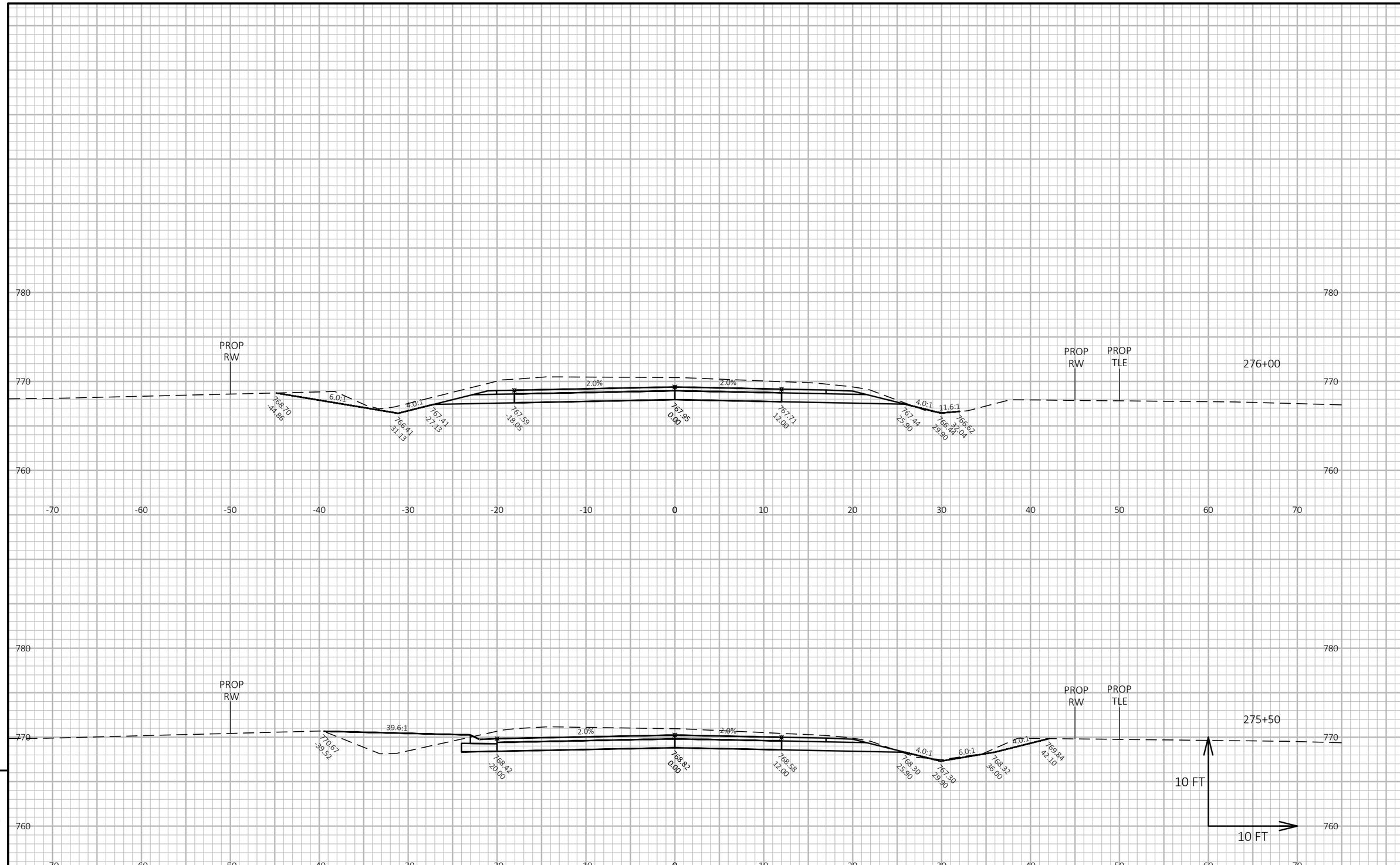

9

9

PROJECT NO: 4627-02-71	HWY: CTH A	COUNTY: WINNEBAGO	CROSS SECTIONS: CTH A	SHEET 204	E

FILE NAME : W:\PROJECTS\W0059\81700113\CADD\CIVIL3D\XREF\X_CTH A_CRDR.DWG
LAYOUT NAME - Section Sheet - (41)
PLOT DATE : 1/7/2020 3:55 PM
PLOT BY : JORDAN JELINSKI
PLOT NAME :
PLOT SCALE : 1 IN:10 FT HORZ. / 1 IN:10 FT VERT.
WISDOT/CADDS SHEET 49

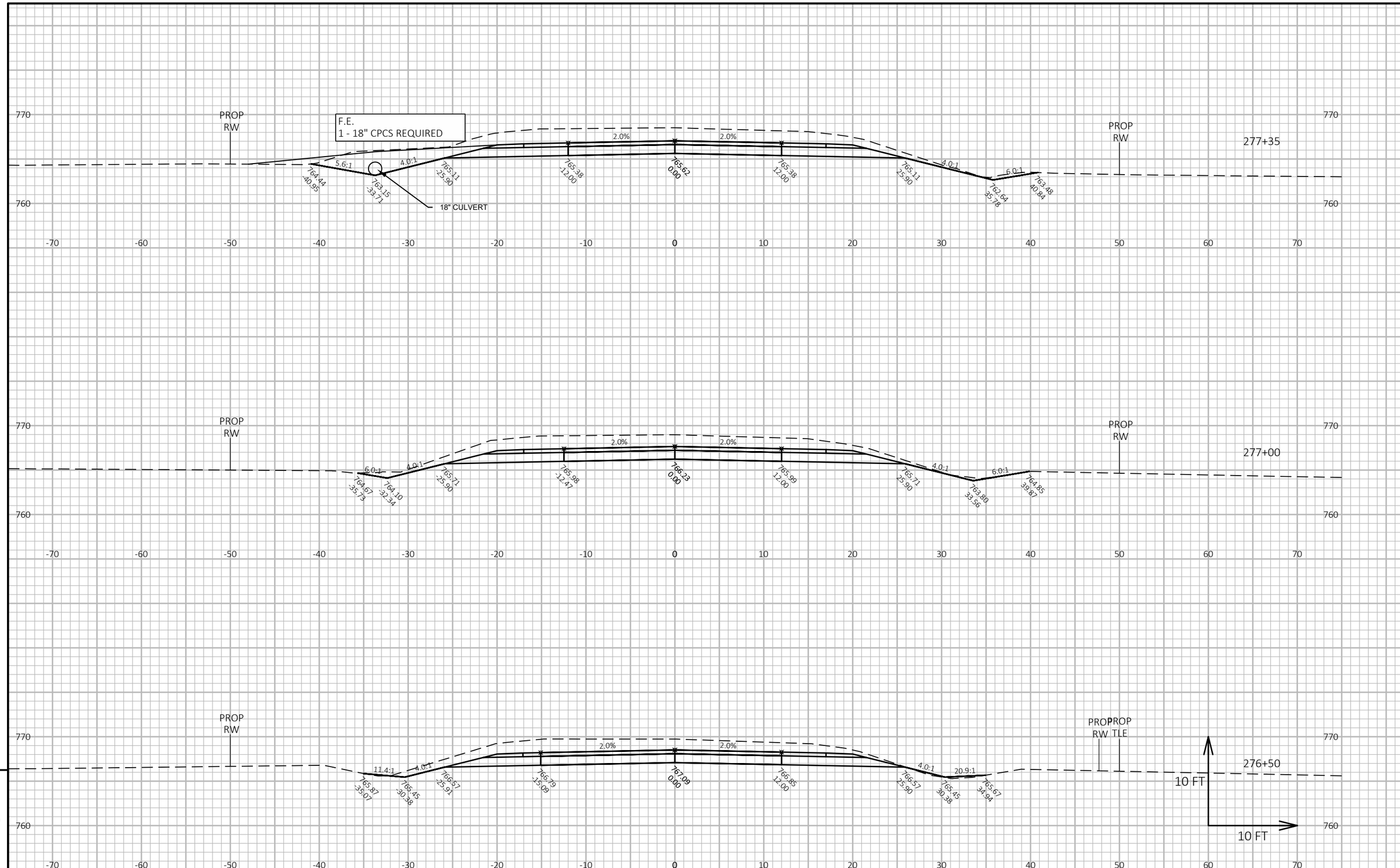

PROJECT NO: 4627-02-71	HWY: CTH A	COUNTY: WINNEBAGO	CROSS SECTIONS: CTH A	SHEET 205	E

FILE NAME : W:\PROJECTS\W0059\81700113\CADD\CIVIL3D\XREF\X_CTH A_CRDR.DWG
LAYOUT NAME - Section Sheet - (42)
PLOT DATE : 1/7/2020 3:55 PM
PLOT BY : JORDAN JELINSKI
PLOT NAME :
PLOT SCALE : 1 IN:10 FT HORZ. / 1 IN:10 FT VERT.

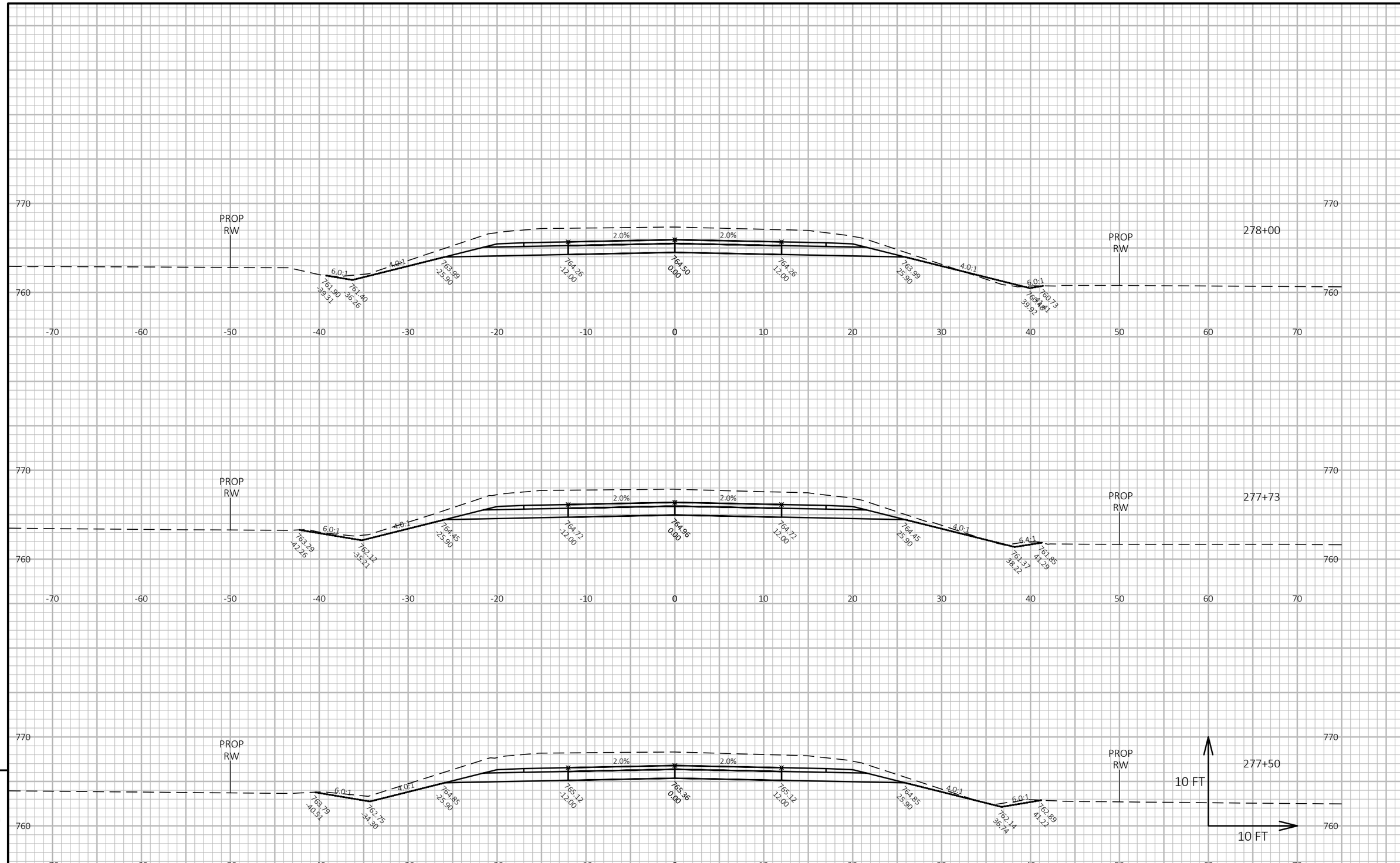

9

9

PROJECT NO: 4627-02-71	HWY: CTH A	COUNTY: WINNEBAGO	CROSS SECTIONS: CTH A	SHEET 206	E

FILE NAME : W:\PROJECTS\W0059\81700113\CADD\CIVIL3D\XREF\X_CTH A_CRDR.DWG
LAYOUT NAME - Section Sheet - (43)
PLOT DATE : 1/7/2020 3:55 PM
PLOT BY : JORDAN JELINSKI
PLOT NAME :
PLOT SCALE : 1 IN:10 FT HORZ. / 1 IN:10 FT VERT.
WISDOT/CADDS SHEET 49

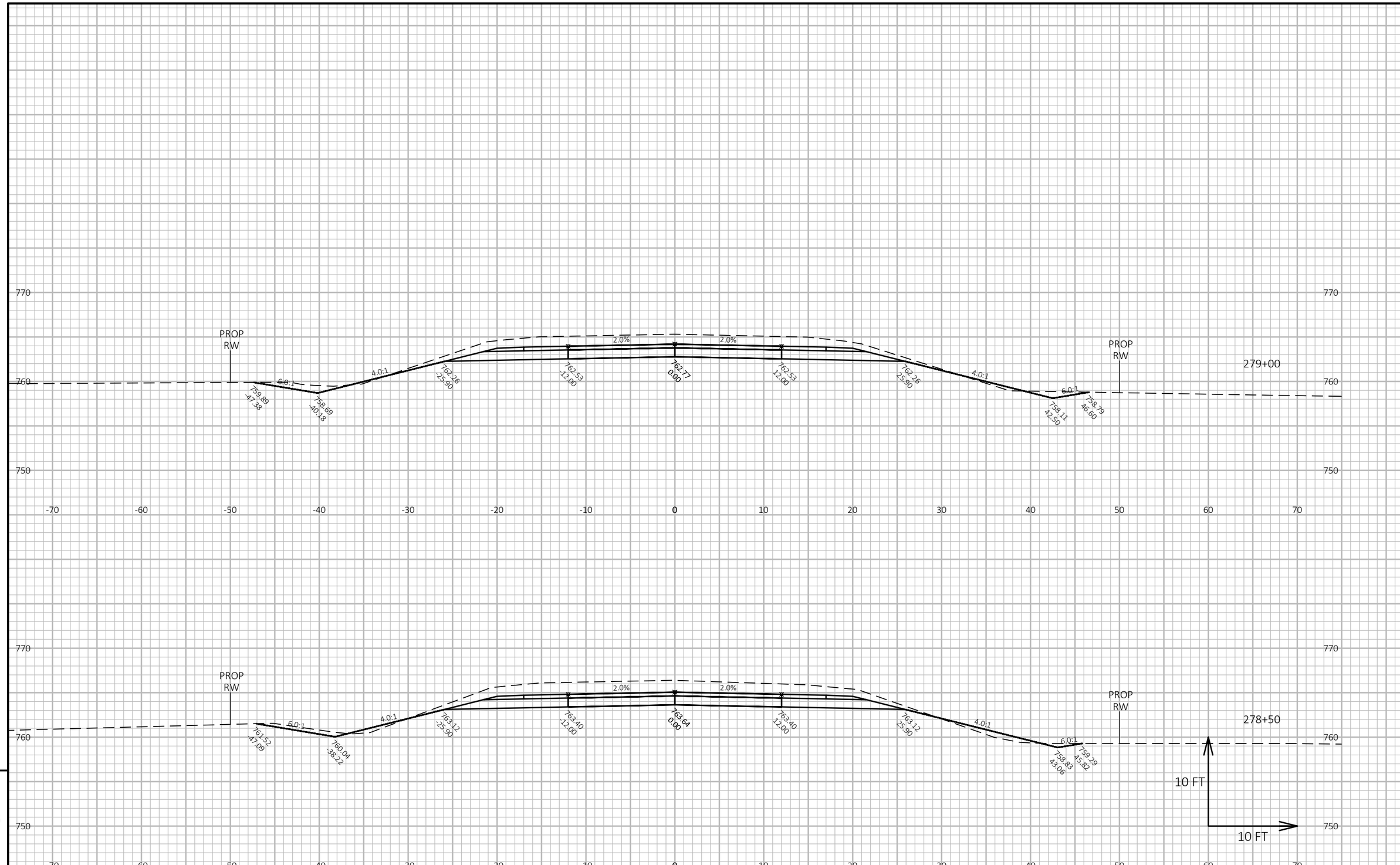

9

9

PROJECT NO: 4627-02-71	HWY: CTH A	COUNTY: WINNEBAGO	CROSS SECTIONS: CTH A	SHEET 207	E

FILE NAME : W:\PROJECTS\W0059\81700113\CADD\CIVIL3D\XREF\X_CTH A_CRDR.DWG
LAYOUT NAME - Section Sheet - (44)
PLOT DATE : 1/7/2020 3:56 PM
PLOT BY : JORDAN JELINSKI
PLOT NAME :
PLOT SCALE : 1 IN:10 FT HORZ. / 1 IN:10 FT VERT.
WISDOT/CADDS SHEET 49

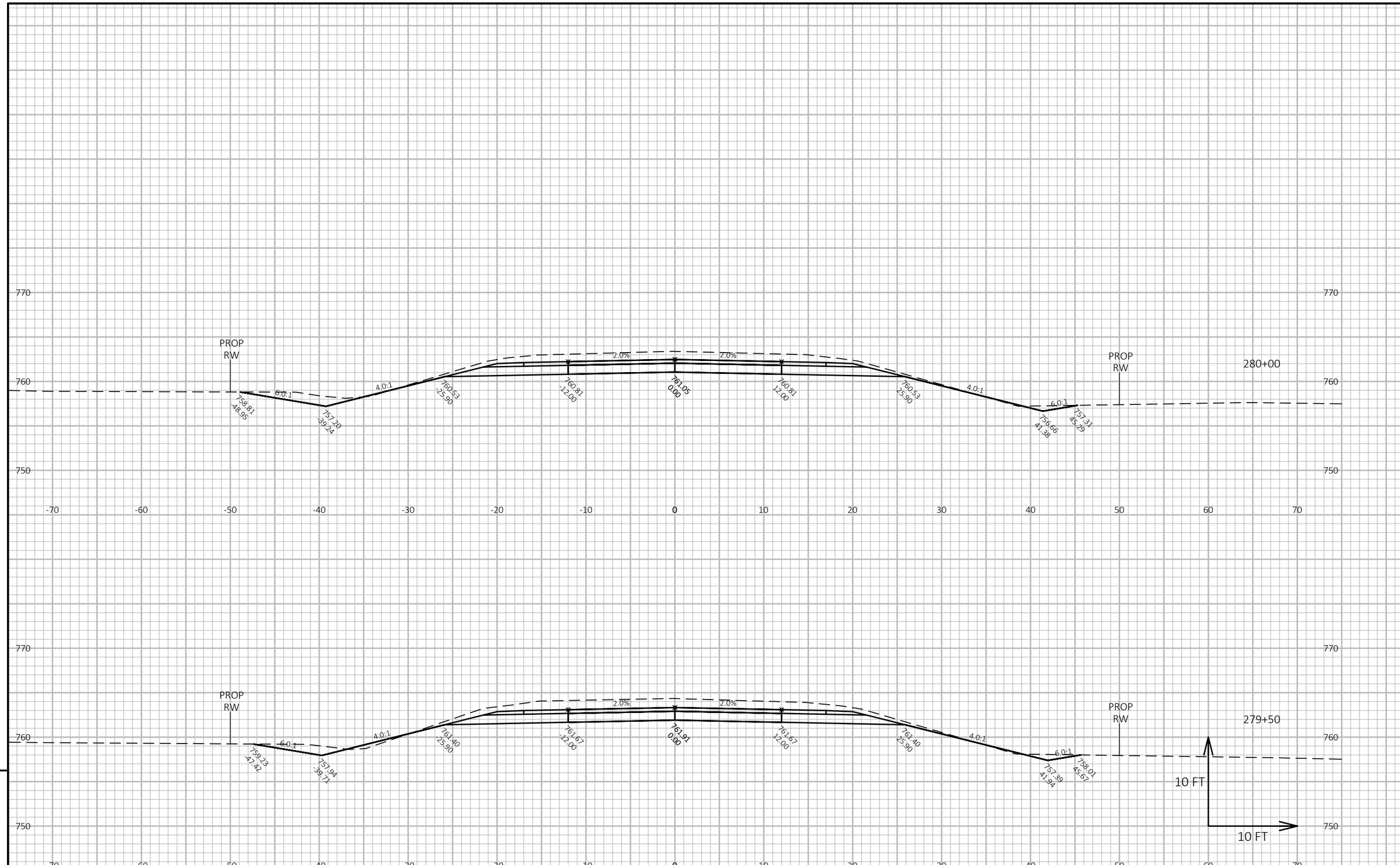

9

9

PROJECT NO: 4627-02-71	HWY: CTH A	COUNTY: WINNEBAGO	CROSS SECTIONS: CTH A	SHEET 208	E

FILE NAME : W:\PROJECTS\W0059\81700113\CADD\CIVIL3D\XREF\X_CTH A_CRDR.DWG
LAYOUT NAME - Section Sheet - (45)
PLOT DATE : 1/7/2020 3:56 PM
PLOT BY : JORDAN JELINSKI
PLOT NAME :
PLOT SCALE : 1 IN:10 FT HORZ. / 1 IN:10 FT VERT.
WISDOT/CADDS SHEET 49

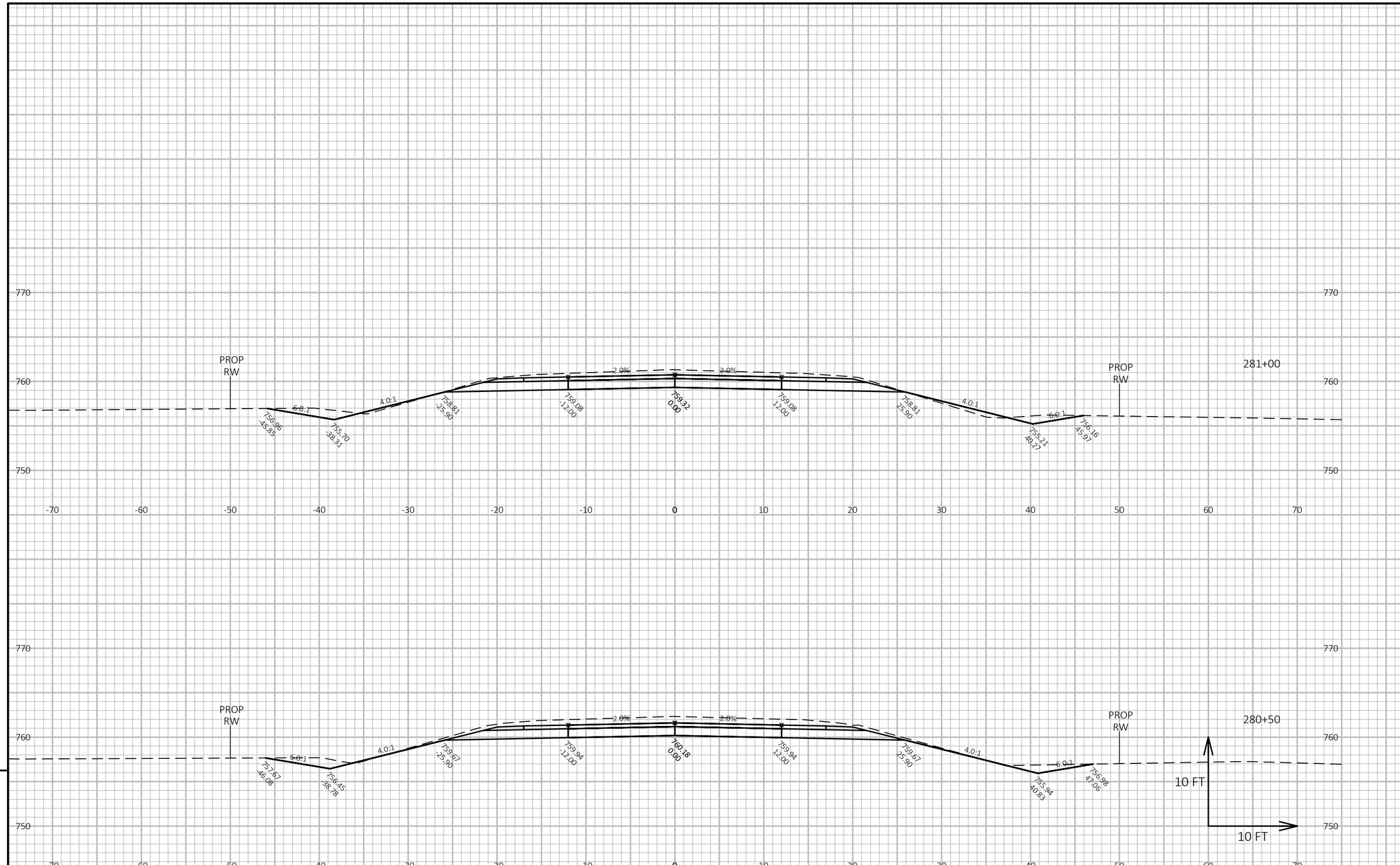

9

9

PROJECT NO: 4627-02-71	HWY: CTH A	COUNTY: WINNEBAGO	CROSS SECTIONS: CTH A	SHEET 209	E

FILE NAME : W:\PROJECTS\W0059\81700113\CADD\CIVIL3D\XREF\X_CTH A_CRDR.DWG
LAYOUT NAME - Section Sheet - (46)
PLOT DATE : 1/7/2020 3:56 PM
PLOT BY : JORDAN JELINSKI
PLOT NAME :
PLOT SCALE : 1 IN:10 FT HORZ. / 1 IN:10 FT VERT.
WISDOT/CADDS SHEET 49

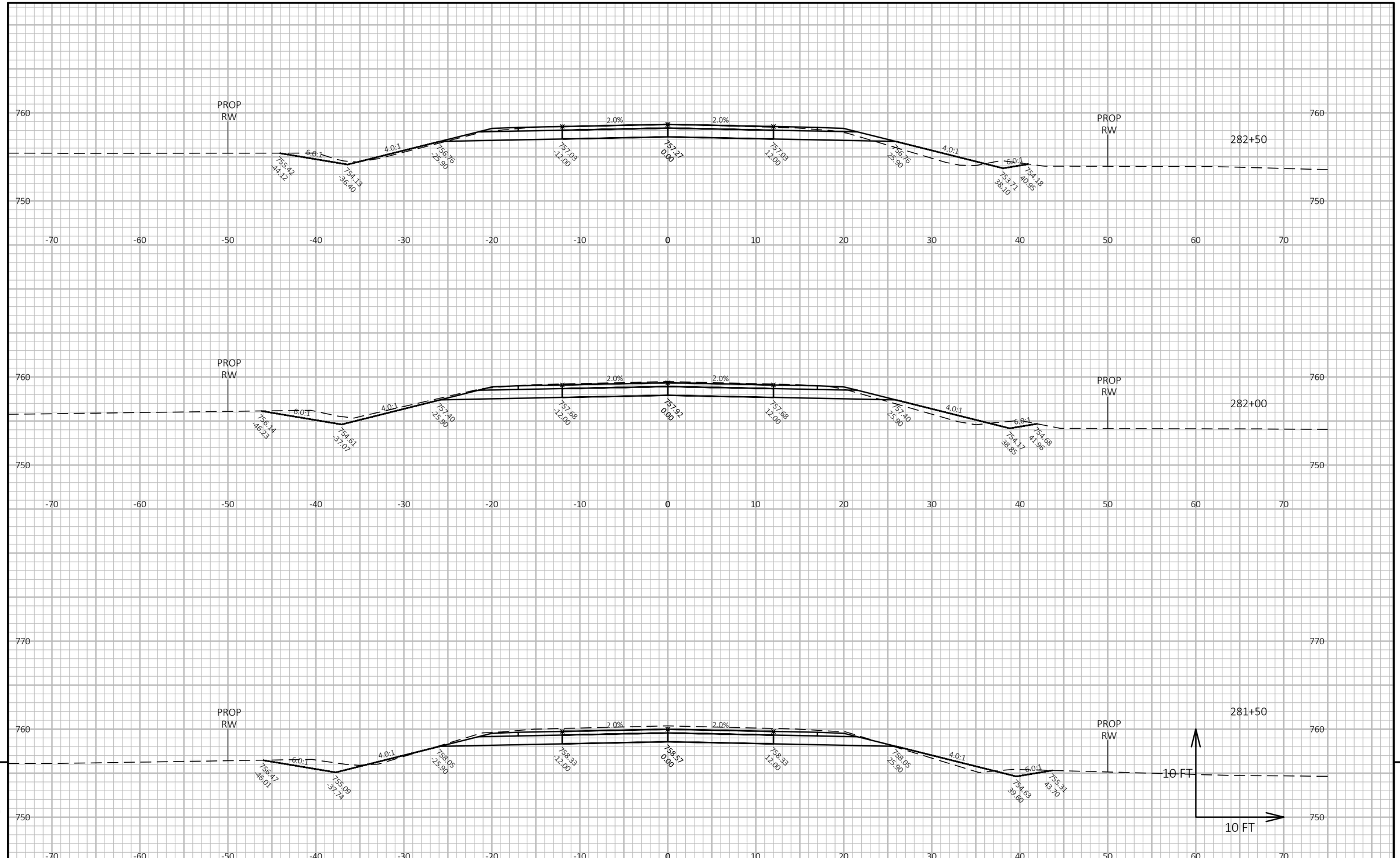

9

9

PROJECT NO: 4627-02-71	HWY: CTH A	COUNTY: WINNEBAGO	CROSS SECTIONS: CTH A	SHEET 210	E

FILE NAME : W:\PROJECTS\W0059\81700113\CADD\CIVIL3D\XREF\X_CTH A_CRDR.DWG
LAYOUT NAME - Section Sheet - (47)

PLOT DATE : 1/7/2020 3:57 PM PLOT BY : JORDAN JELINSKI PLOT NAME : PLOT SCALE : 1 IN:10 FT HORZ. / 1 IN:10 FT VERT.

WISDOT/CADDS SHEET 49

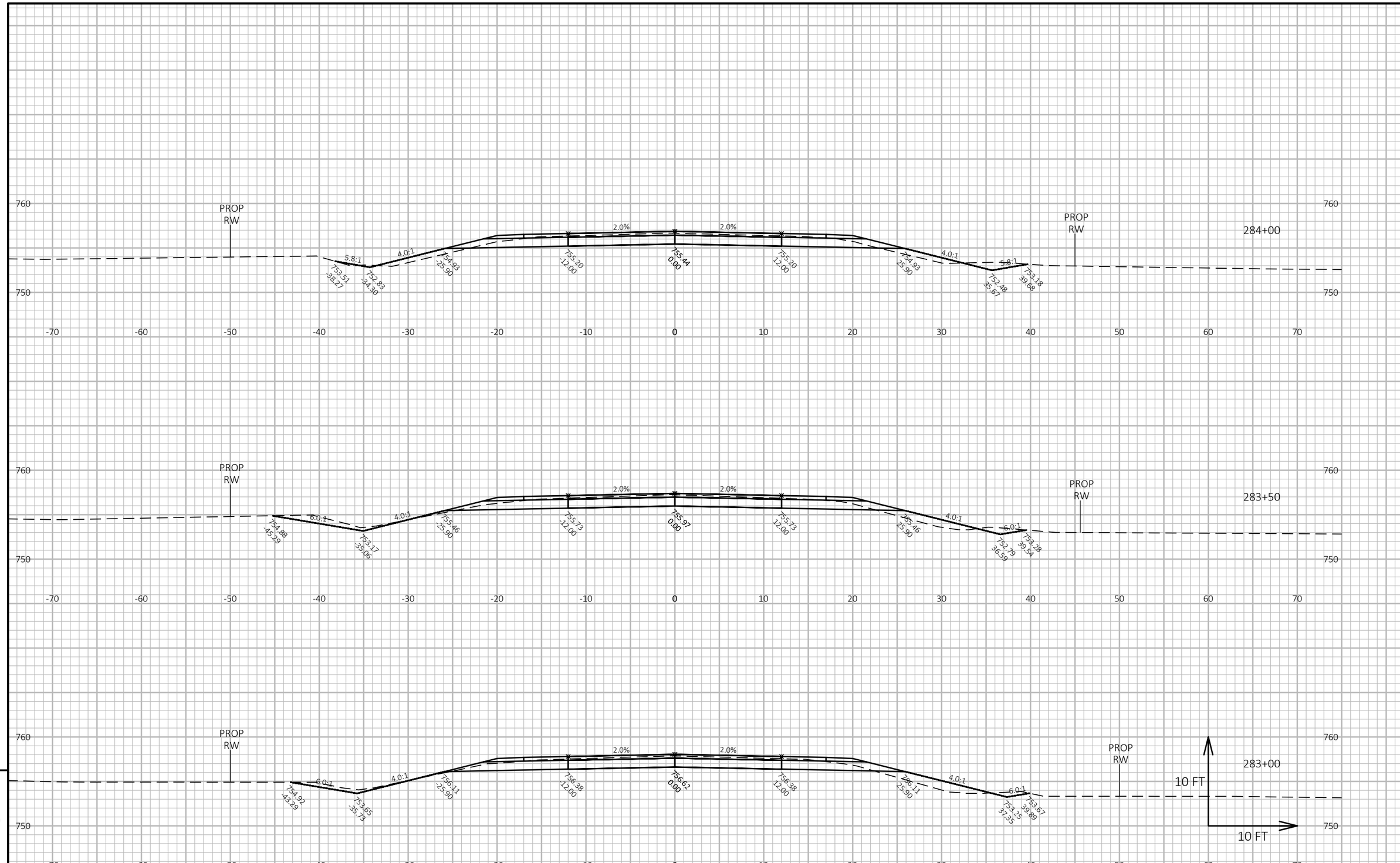

9

9

PROJECT NO: 4627-02-71	HWY: CTH A	COUNTY: WINNEBAGO	CROSS SECTIONS: CTH A	SHEET 211	E

FILE NAME : W:\PROJECTS\W0059\81700113\CADD\CIVIL3D\XREF\X_CTH A_CRDR.DWG
LAYOUT NAME - Section Sheet - (48)
PLOT DATE : 1/7/2020 3:57 PM
PLOT BY : JORDAN JELINSKI
PLOT NAME :
PLOT SCALE : 1 IN:10 FT HORZ. / 1 IN:10 FT VERT.
WISDOT/CADDS SHEET 49

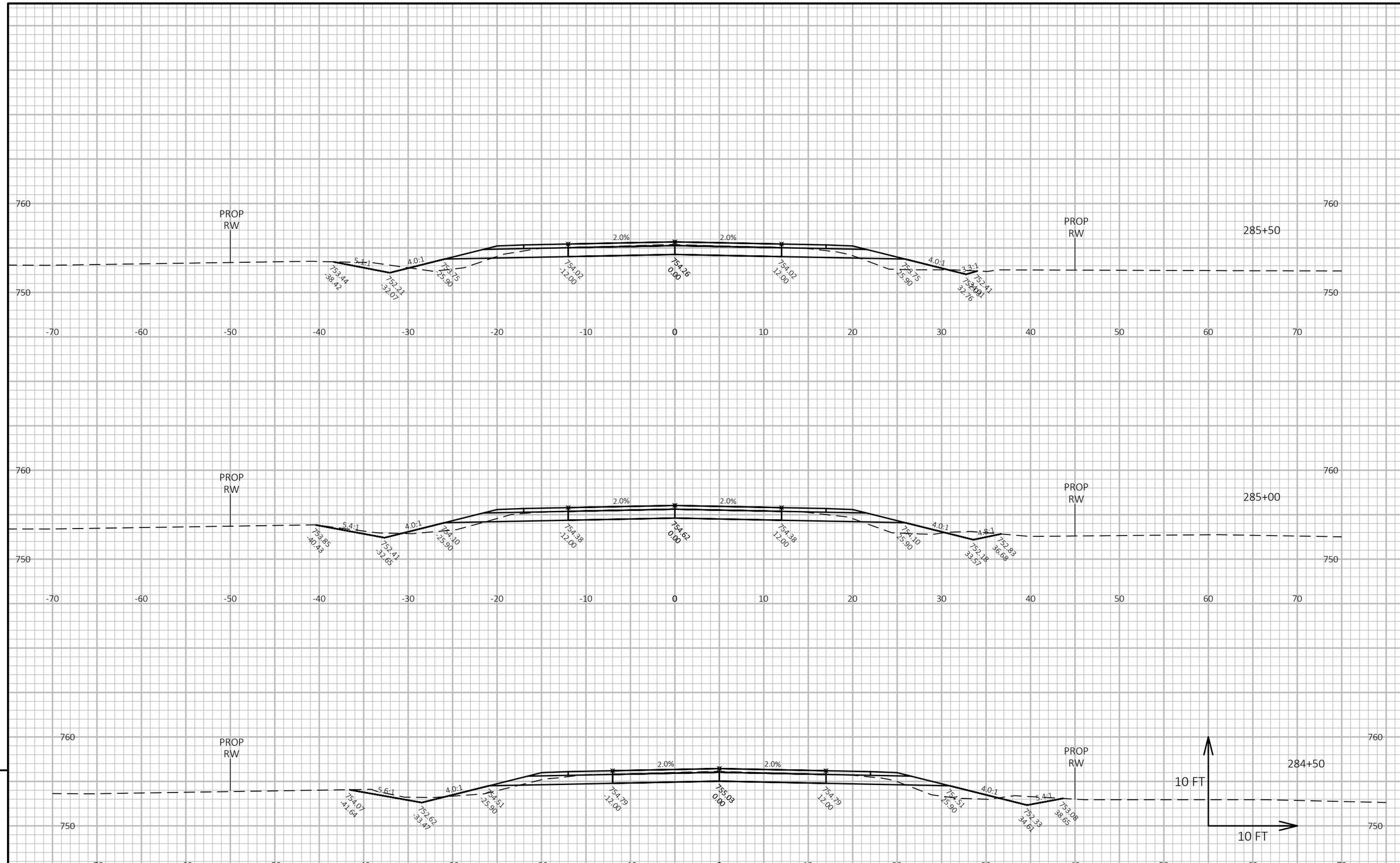

9

9

PROJECT NO: 4627-02-71	HWY: CTH A	COUNTY: WINNEBAGO	CROSS SECTIONS: CTH A	SHEET 212	E

FILE NAME : W:\PROJECTS\W0059\81700113\CADD\CIVIL3D\XREF\X_CTH A_CRDR.DWG
LAYOUT NAME - Section Sheet - (49)
PLOT DATE : 1/7/2020 3:58 PM
PLOT BY : JORDAN JELINSKI
PLOT NAME :
PLOT SCALE : 1 IN:10 FT HORZ. / 1 IN:10 FT VERT.
WISDOT/CADDS SHEET 49

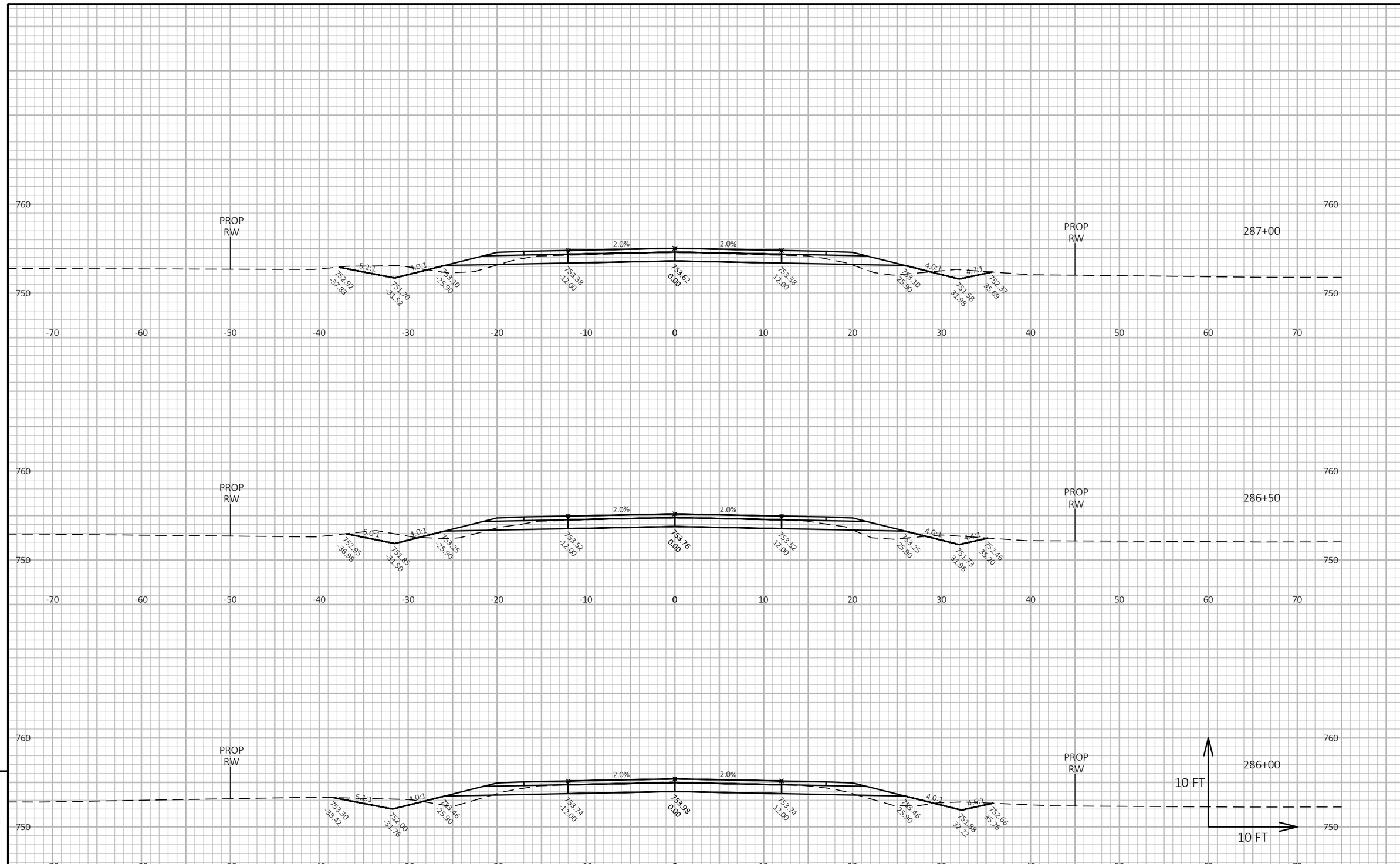

9

9

PROJECT NO: 4627-02-71	HWY: CTH A	COUNTY: WINNEBAGO	CROSS SECTIONS: CTH A	SHEET 213	E

FILE NAME : W:\PROJECTS\W0059\81700113\CADD\CIVIL3D\XREF\X_CTH A_CRDR.DWG
LAYOUT NAME - Section Sheet - (50)
PLOT DATE : 1/7/2020 3:58 PM
PLOT BY : JORDAN JELINSKI
PLOT NAME :
PLOT SCALE : 1 IN:10 FT HORZ. / 1 IN:10 FT VERT.

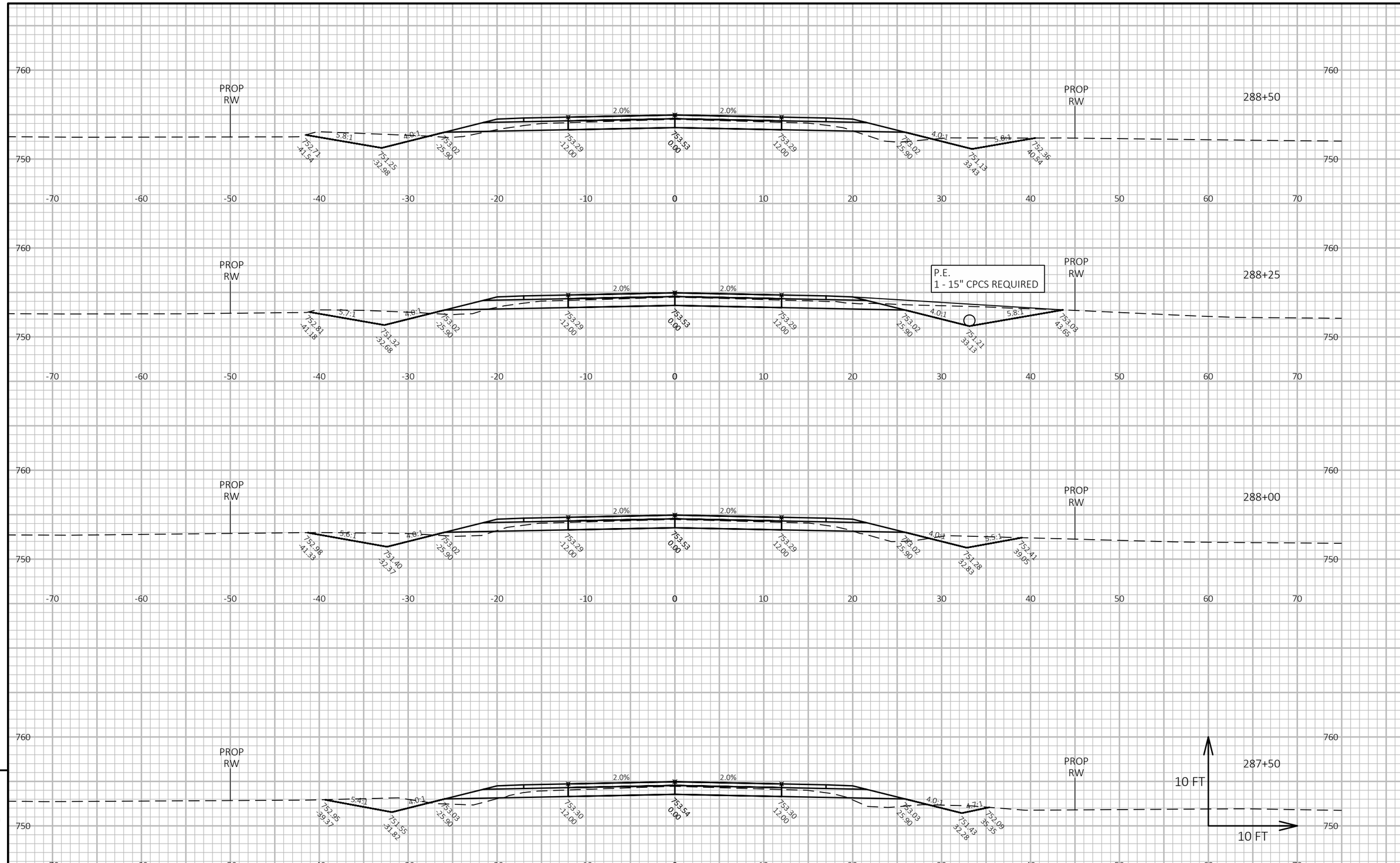

9

9

PROJECT NO: 4627-02-71	HWY: CTH A	COUNTY: WINNEBAGO	CROSS SECTIONS: CTH A	SHEET 214	E

FILE NAME : W:\PROJECTS\W0059\81700113\CADD\CIVIL3D\XREF\X_CTH A_CRDR.DWG
LAYOUT NAME - Section Sheet - (51)
PLOT DATE : 1/7/2020 3:58 PM
PLOT BY : JORDAN JELINSKI
PLOT NAME :
PLOT SCALE : 1 IN:10 FT HORZ. / 1 IN:10 FT VERT.
WISDOT/CADDS SHEET 49

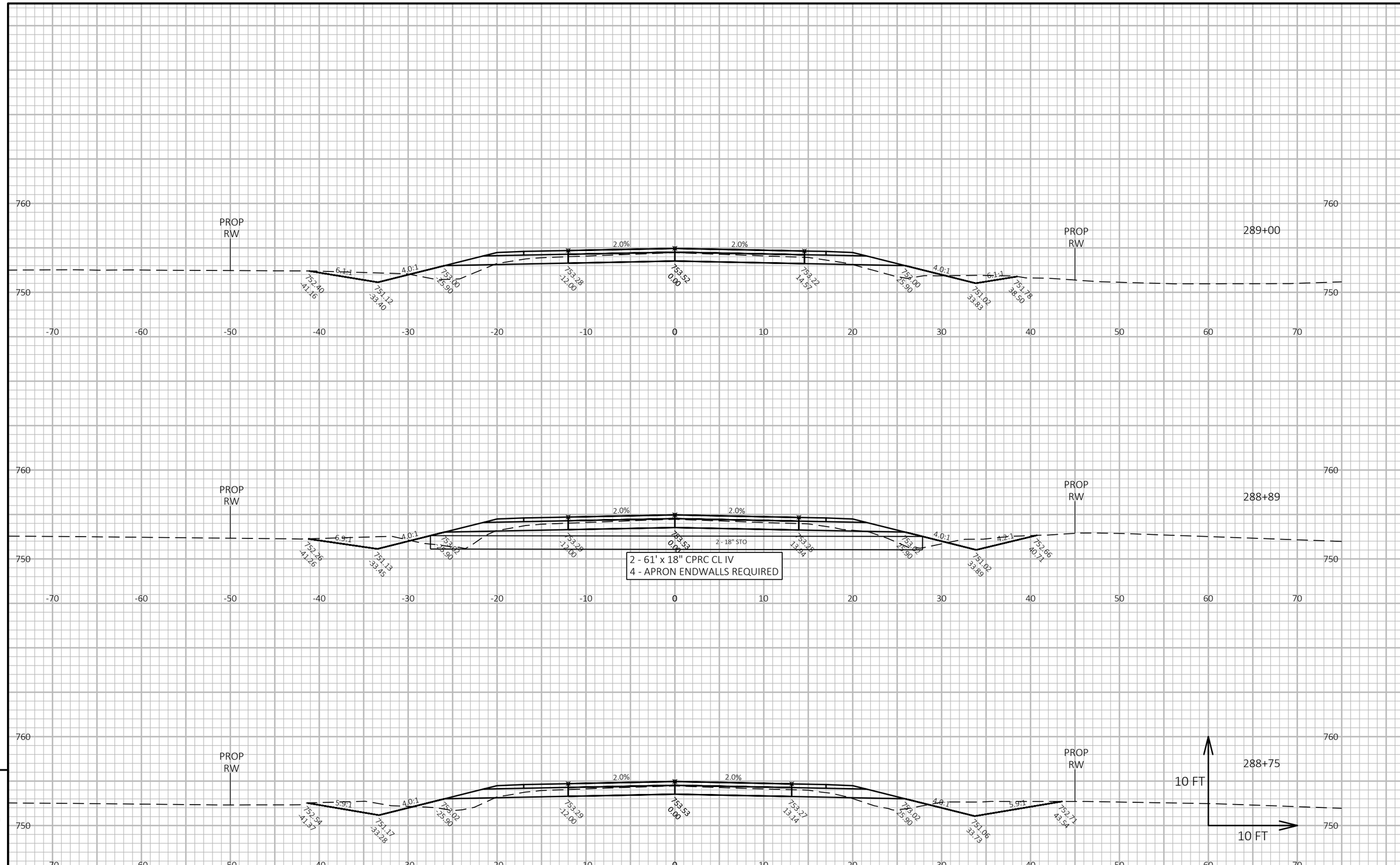

9

9

PROJECT NO: 4627-02-71	HWY: CTH A	COUNTY: WINNEBAGO	CROSS SECTIONS: CTH A	SHEET 215	E

FILE NAME : W:\PROJECTS\W0059\81700113\CADD\CIVIL3D\XREF\X_CTH A_CRDR.DWG
LAYOUT NAME - Section Sheet - (52)
PLOT DATE : 1/7/2020 3:59 PM
PLOT BY : JORDAN JELINSKI
PLOT NAME :
PLOT SCALE : 1 IN:10 FT HORZ. / 1 IN:10 FT VERT.
WISDOT/CADDS SHEET 49

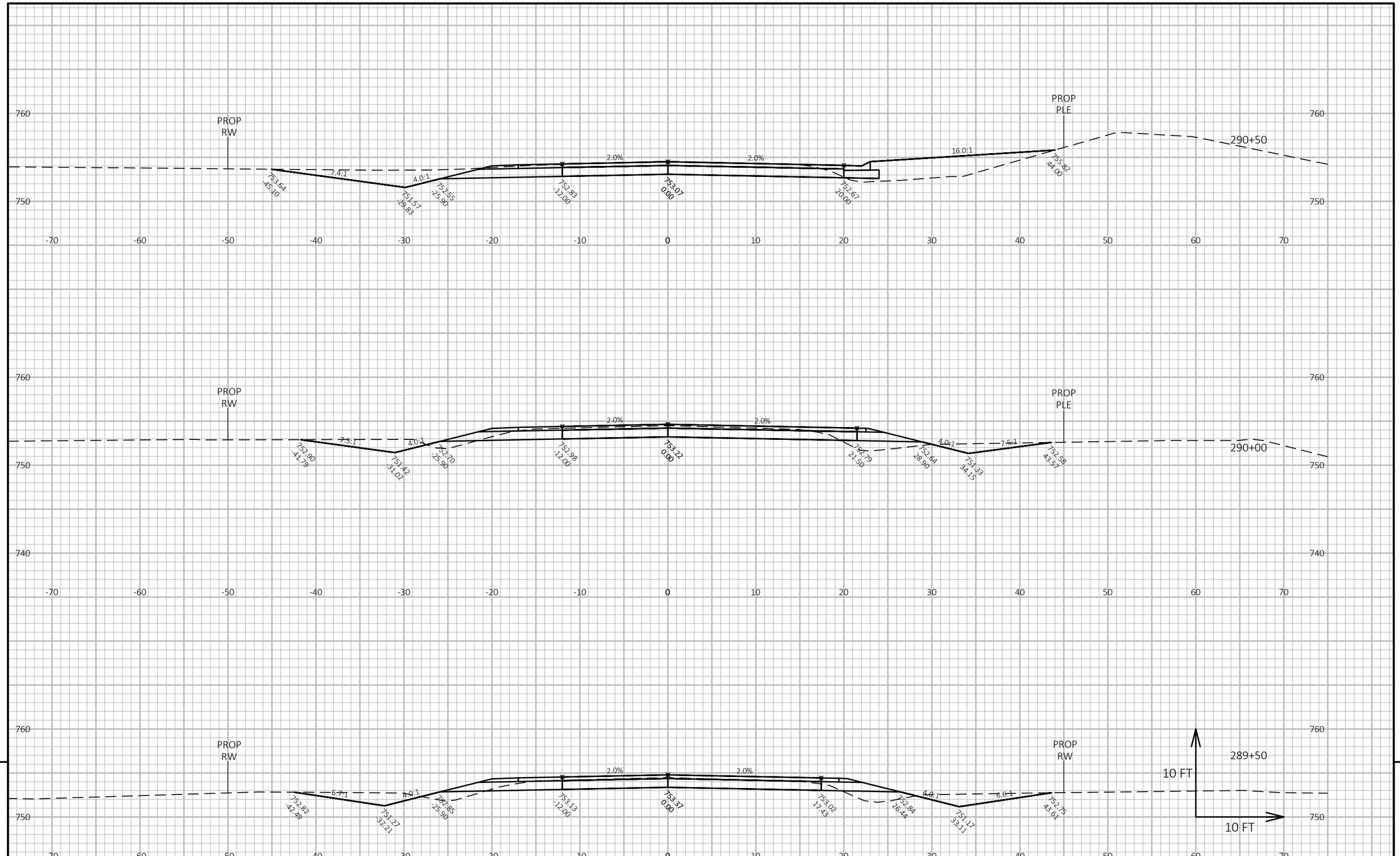

9

9

PROJECT NO: 4627-02-71	HWY: CTH A	COUNTY: WINNEBAGO	CROSS SECTIONS: CTH A	SHEET 216	E

FILE NAME : W:\PROJECTS\W0059\81700113\CADD\CIVIL3D\XREF\X_CTH A_CRDR.DWG
LAYOUT NAME - Section Sheet - (53)
PLOT DATE : 1/7/2020 3:59 PM
PLOT BY : JORDAN JELINSKI
PLOT NAME :
PLOT SCALE : 1 IN:10 FT HORZ. / 1 IN:10 FT VERT.
WISDOT/CADDS SHEET 49

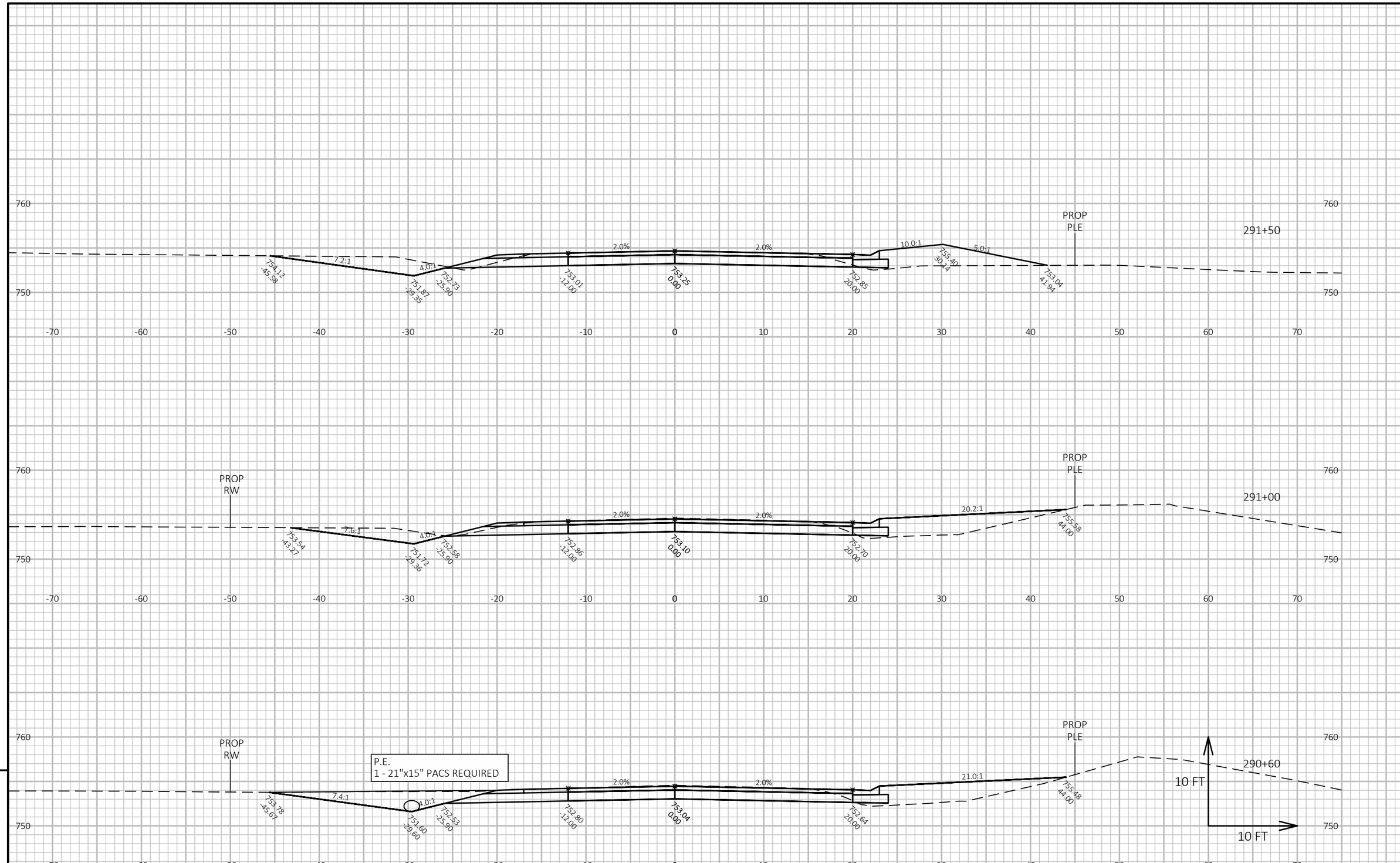

PROJECT NO: 4627-02-71	HWY: CTH A	COUNTY: WINNEBAGO	CROSS SECTIONS: CTH A	SHEET 217	E

FILE NAME : W:\PROJECTS\W0059\81700113\CADD\CIVIL3D\XREF\X_CTH A_CRDR.DWG
LAYOUT NAME - Section Sheet - (54)
PLOT DATE : 1/7/2020 3:59 PM
PLOT BY : JORDAN JELINSKI
PLOT NAME :
PLOT SCALE : 1 IN:10 FT HORZ. / 1 IN:10 FT VERT.
WISDOT/CADDS SHEET 49

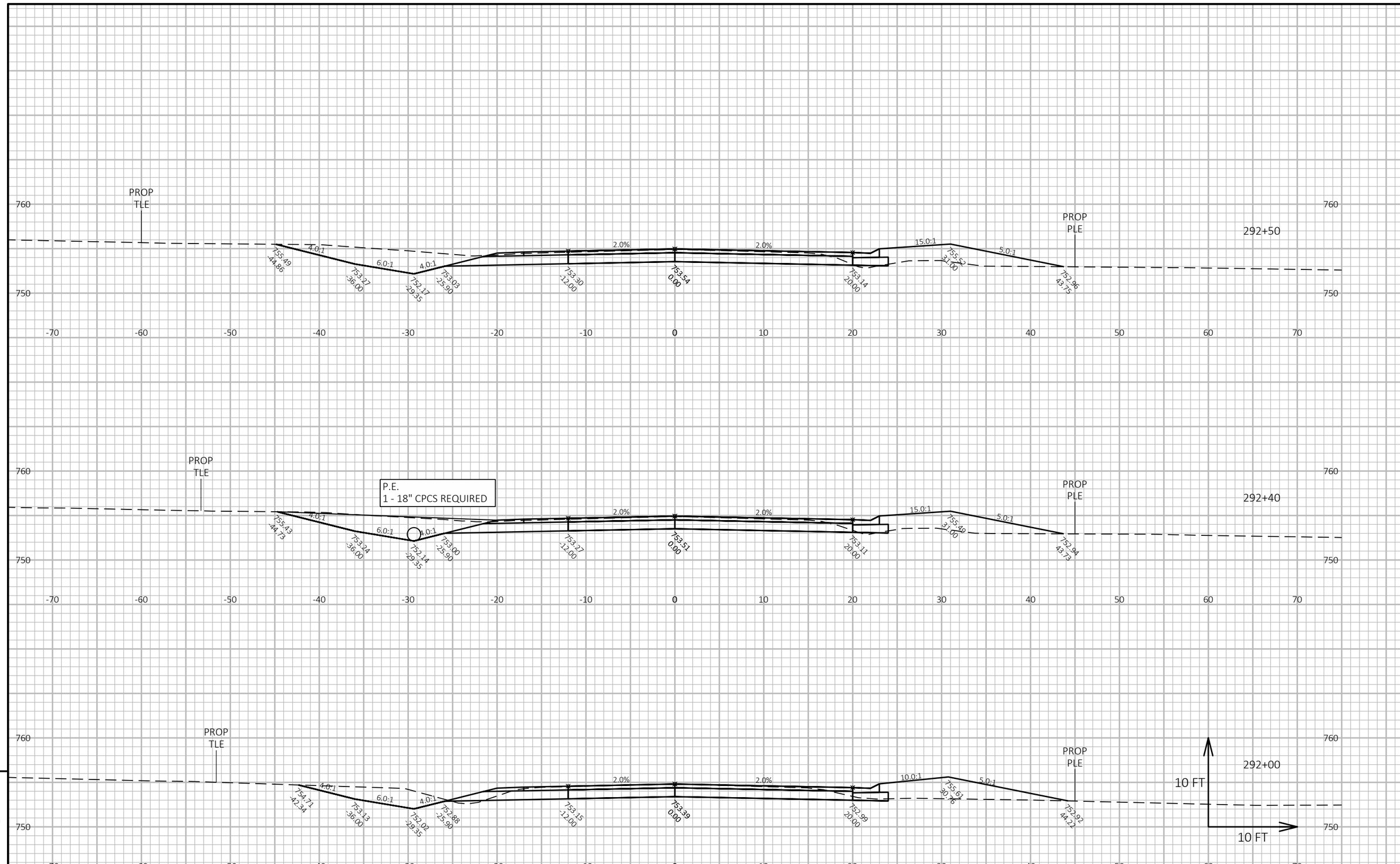

9

9

PROJECT NO: 4627-02-71	HWY: CTH A	COUNTY: WINNEBAGO	CROSS SECTIONS: CTH A	SHEET 218	E

FILE NAME : W:\PROJECTS\W0059\81700113\CADD\CIVIL3D\XREF\X_CTH A_CRDR.DWG
LAYOUT NAME - Section Sheet - (55)
PLOT DATE : 1/7/2020 4:00 PM
PLOT BY : JORDAN JELINSKI
PLOT NAME :
PLOT SCALE : 1 IN:10 FT HORZ. / 1 IN:10 FT VERT.
WISDOT/CADDS SHEET 49

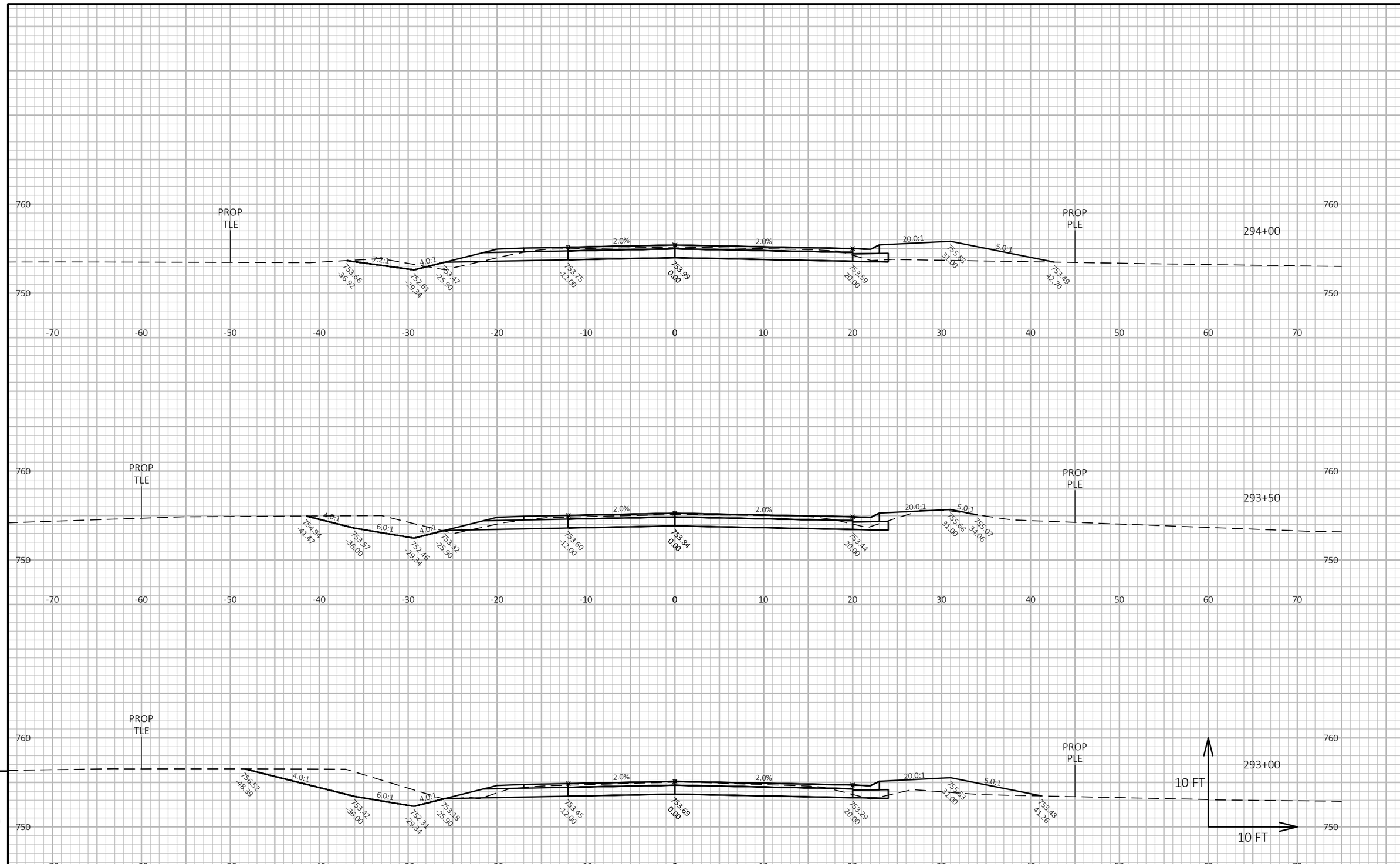

PROJECT NO: 4627-02-71	HWY: CTH A	COUNTY: WINNEBAGO	CROSS SECTIONS: CTH A	SHEET 219	E

FILE NAME : W:\PROJECTS\W0059\81700113\CADD\CIVIL3D\XREF\X_CTH A_CRDR.DWG
LAYOUT NAME - Section Sheet - (56)
PLOT DATE : 1/7/2020 4:00 PM
PLOT BY : JORDAN JELINSKI
PLOT NAME :
PLOT SCALE : 1 IN:10 FT HORZ. / 1 IN:10 FT VERT.

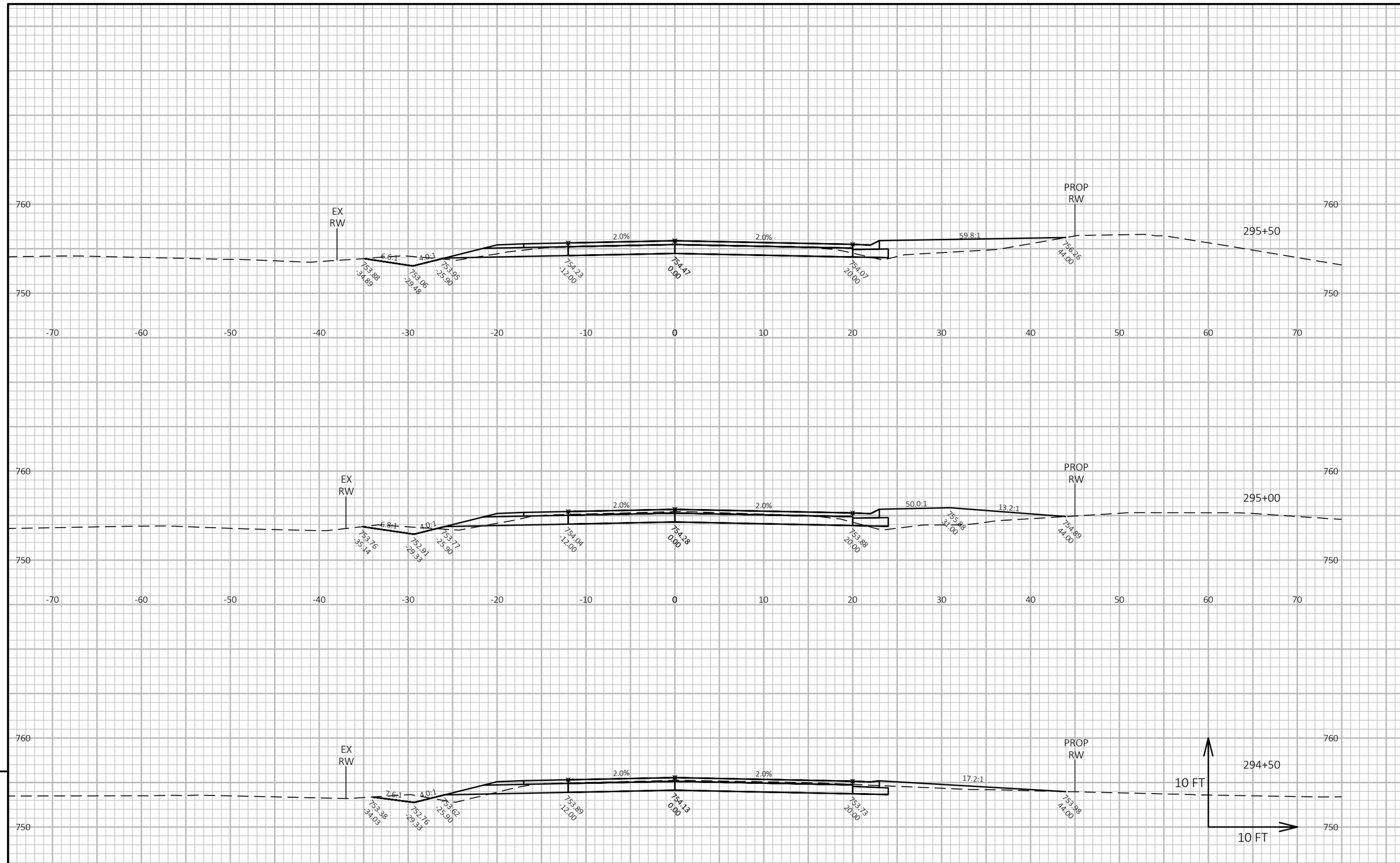

9

9

PROJECT NO: 4627-02-71	HWY: CTH A	COUNTY: WINNEBAGO	CROSS SECTIONS: CTH A	SHEET 220	E

FILE NAME : W:\PROJECTS\W0059\81700113\CADD\CIVIL3D\XREF\X_CTH A_CRDR.DWG
LAYOUT NAME - Section Sheet - (57)

PLOT DATE : 1/7/2020 4:00 PM PLOT BY : JORDAN JELINSKI PLOT NAME : **PLOT SCALE :** 1 IN:10 FT HORZ. / 1 IN:10 FT VERT.

WISDOT/CADDS SHEET 49

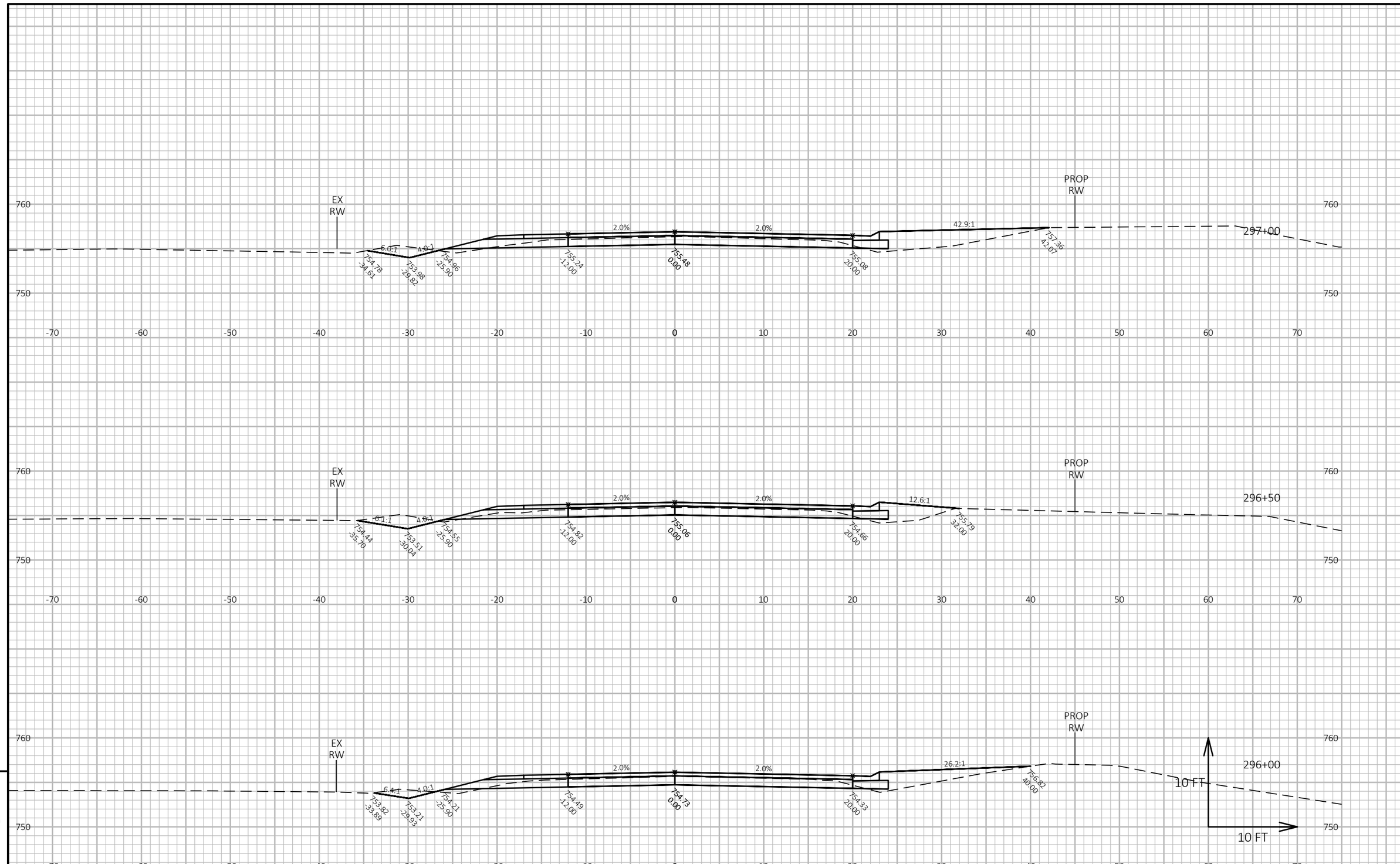

9

9

PROJECT NO: 4627-02-71	HWY: CTH A	COUNTY: WINNEBAGO	CROSS SECTIONS: CTH A	SHEET 221	E

FILE NAME : W:\PROJECTS\W0059\81700113\CADD\CIVIL3D\XREF\X_CTH A_CRDR.DWG
LAYOUT NAME - Section Sheet - (58)
PLOT DATE : 1/7/2020 4:01 PM
PLOT BY : JORDAN JELINSKI
PLOT NAME :
PLOT SCALE : 1 IN:10 FT HORZ. / 1 IN:10 FT VERT.
WISDOT/CADDS SHEET 49

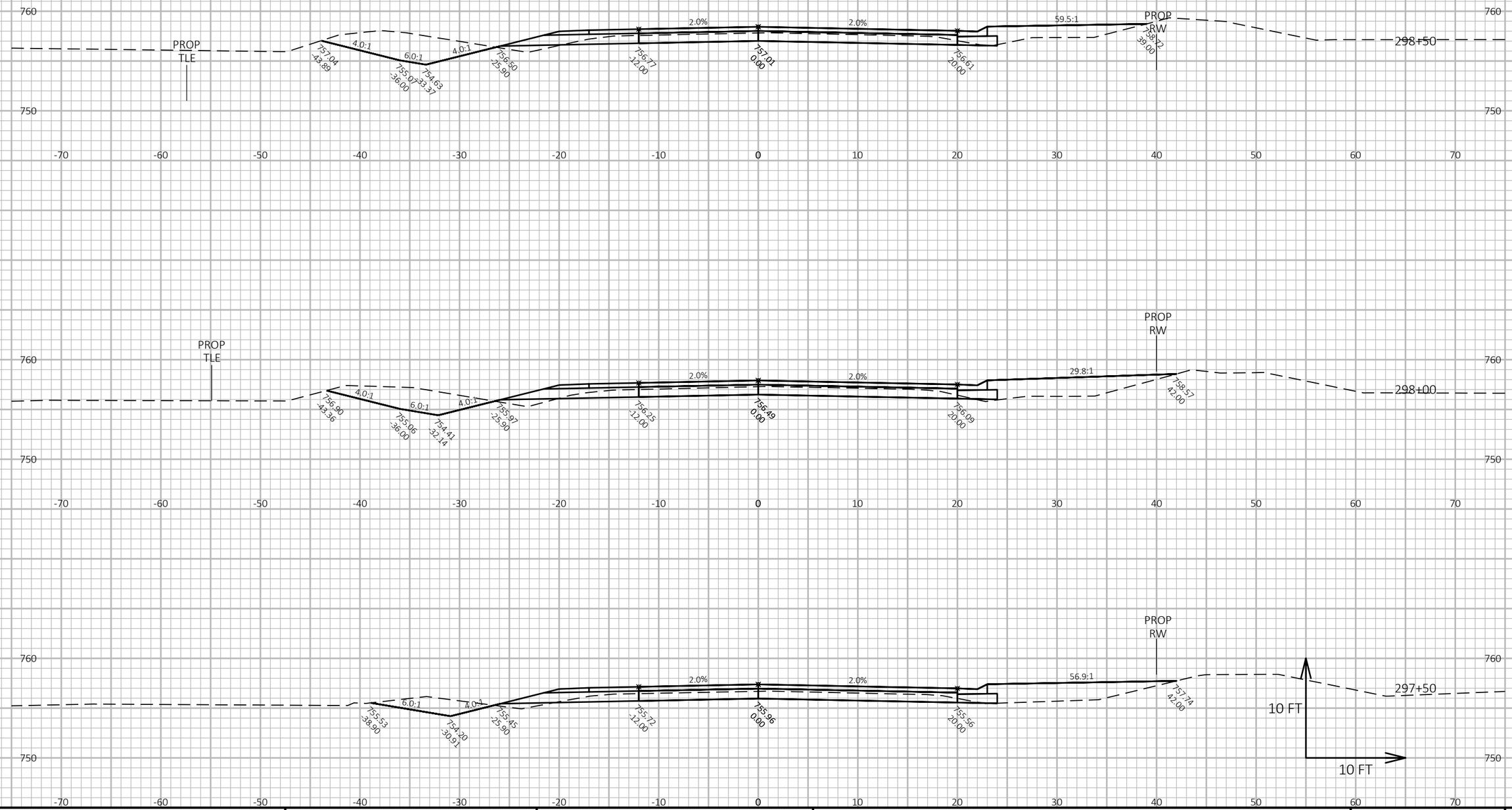

9

9

PROJECT NO: 4627-02-71	HWY: CTH A	COUNTY: WINNEBAGO	CROSS SECTIONS: CTH A	SHEET 222	E

FILE NAME : W:\PROJECTS\W0059\81700113\CADD\CIVIL3D\XREF\X_CTH A_CRDR.DWG
LAYOUT NAME - Section Sheet - (59)

PLOT DATE : 1/7/2020 4:01 PM PLOT BY : JORDAN JELINSKI PLOT NAME : **PLOT SCALE :** 1 IN:10 FT HORZ. / 1 IN:10 FT VERT.

WISDOT/CADDS SHEET 49

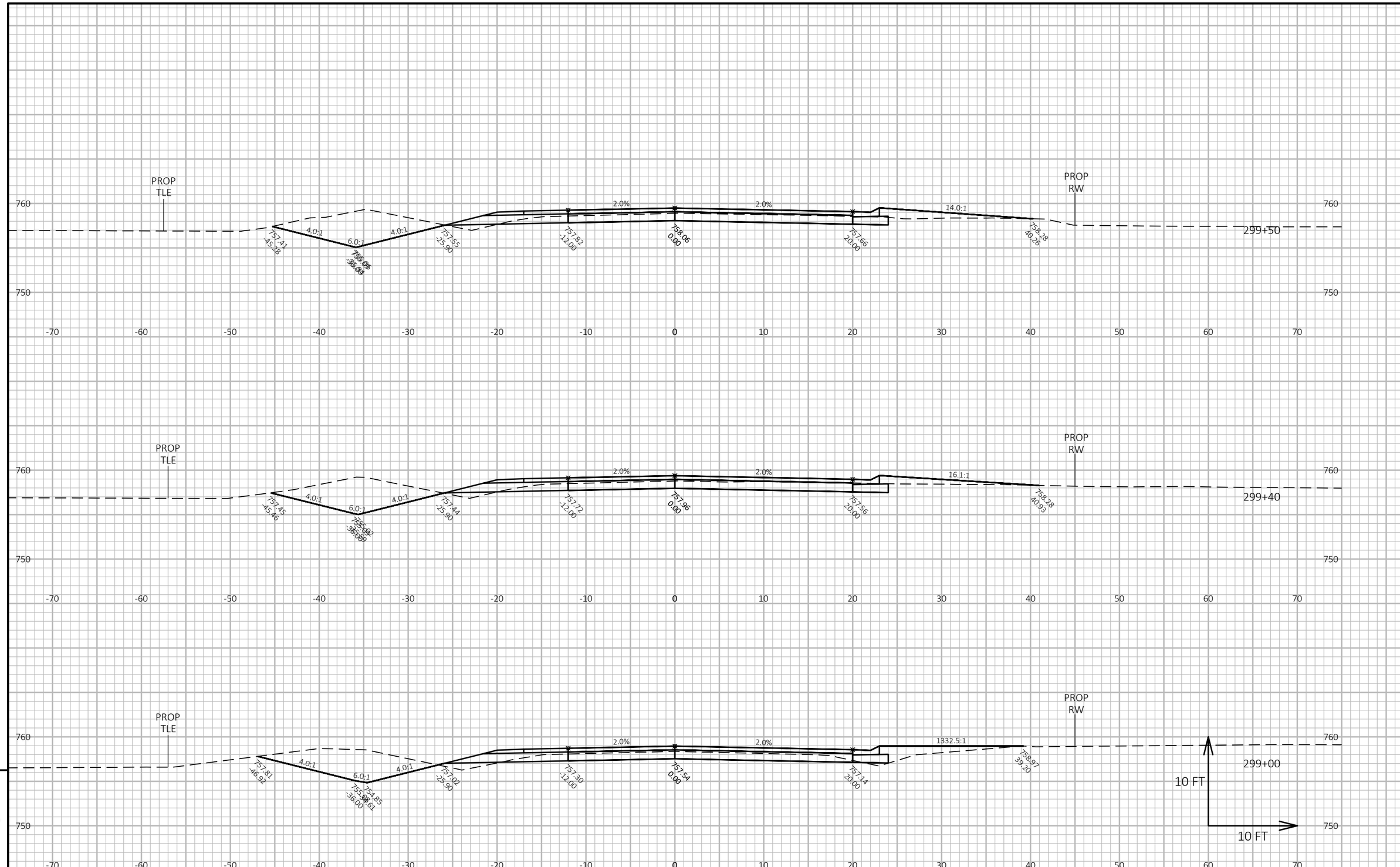

PROJECT NO: 4627-02-71	HWY: CTH A	COUNTY: WINNEBAGO	CROSS SECTIONS: CTH A	SHEET 223	E

FILE NAME : W:\PROJECTS\W0059\81700113\CADD\CIVIL3D\XREF\X_CTH A_CRDR.DWG
LAYOUT NAME - Section Sheet - (60)
PLOT DATE : 1/7/2020 4:01 PM
PLOT BY : JORDAN JELINSKI
PLOT NAME :
PLOT SCALE : 1 IN:10 FT HORZ. / 1 IN:10 FT VERT.
WISDOT/CADDS SHEET 49

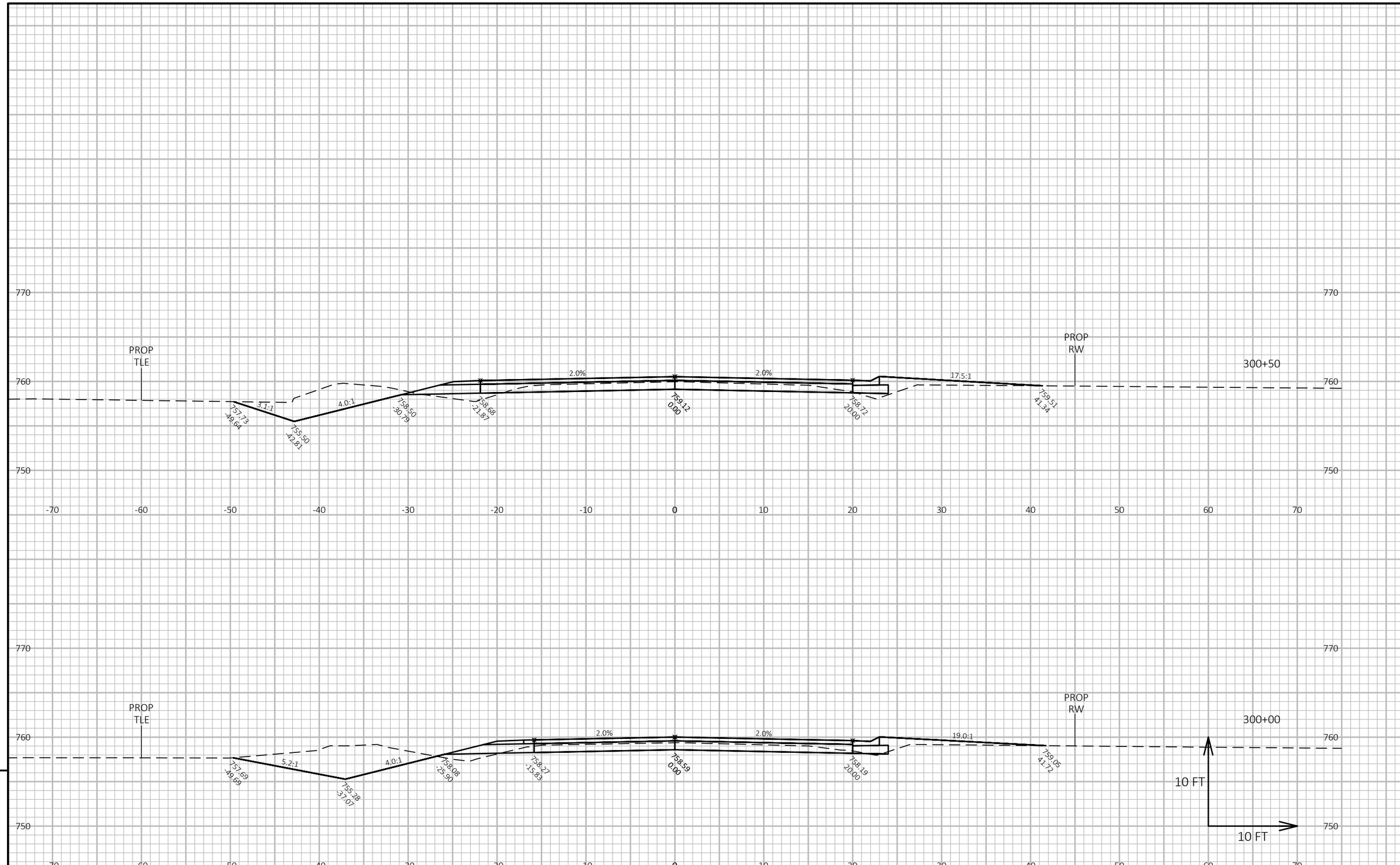

9

9

PROJECT NO: 4627-02-71	HWY: CTH A	COUNTY: WINNEBAGO	CROSS SECTIONS: CTH A	SHEET 224	E

FILE NAME : W:\PROJECTS\W0059\81700113\CADD\CIVIL3D\XREF\X_CTH A_CRDR.DWG
LAYOUT NAME - Section Sheet - (61)
PLOT DATE : 1/7/2020 4:02 PM
PLOT BY : JORDAN JELINSKI
PLOT NAME :
PLOT SCALE : 1 IN:10 FT HORZ. / 1 IN:10 FT VERT.
WISDOT/CADDS SHEET 49

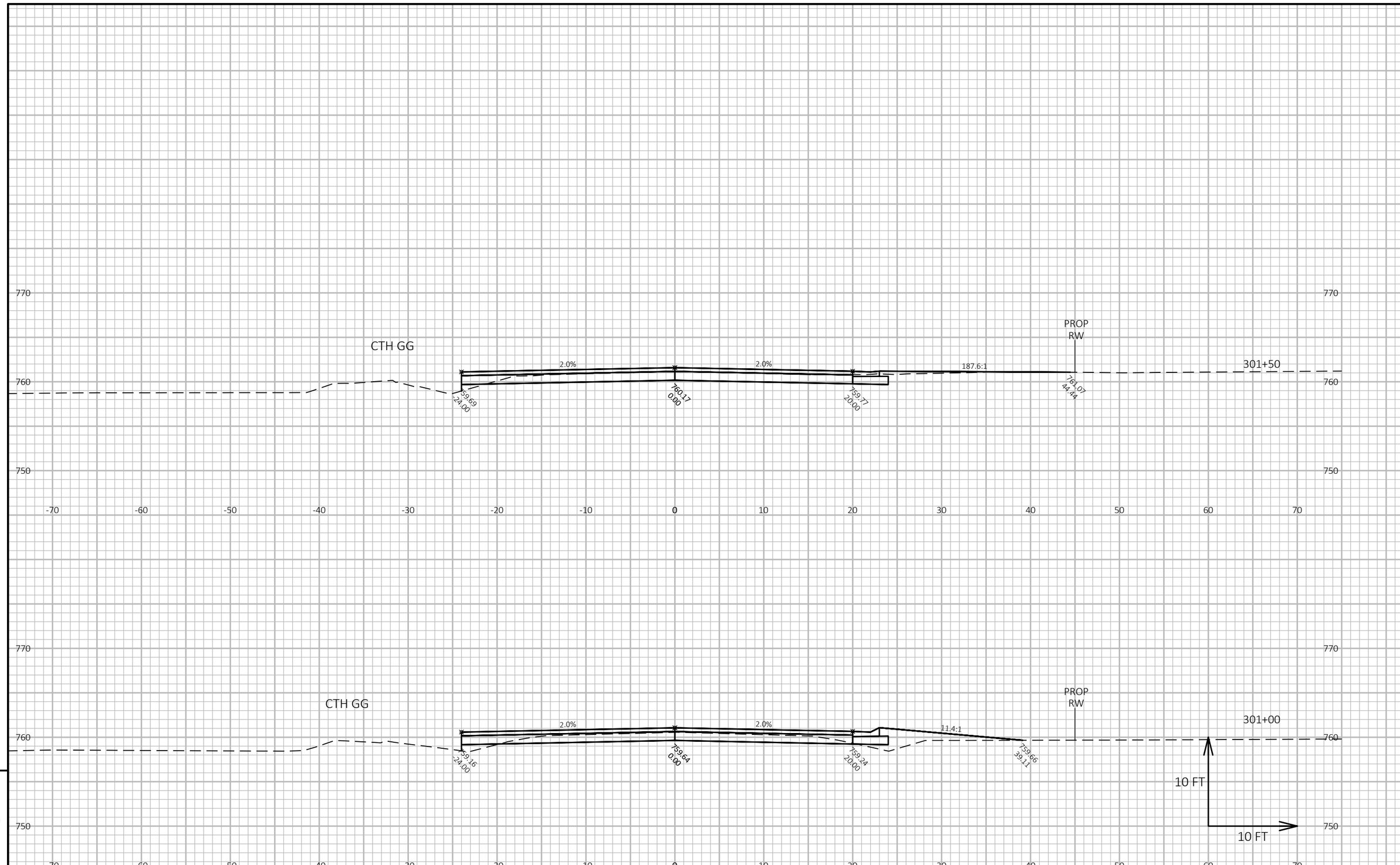

9

9

PROJECT NO: 4627-02-71	HWY: CTH A	COUNTY: WINNEBAGO	CROSS SECTIONS: CTH A	SHEET 225	E

FILE NAME : W:\PROJECTS\W0059\81700113\CADD\CIVIL3D\XREF\X_CTH A_CRDR.DWG
LAYOUT NAME - Section Sheet - (62)
PLOT DATE : 1/7/2020 4:02 PM
PLOT BY : JORDAN JELINSKI
PLOT NAME :
PLOT SCALE : 1 IN:10 FT HORZ. / 1 IN:10 FT VERT.
WISDOT/CADDS SHEET 49

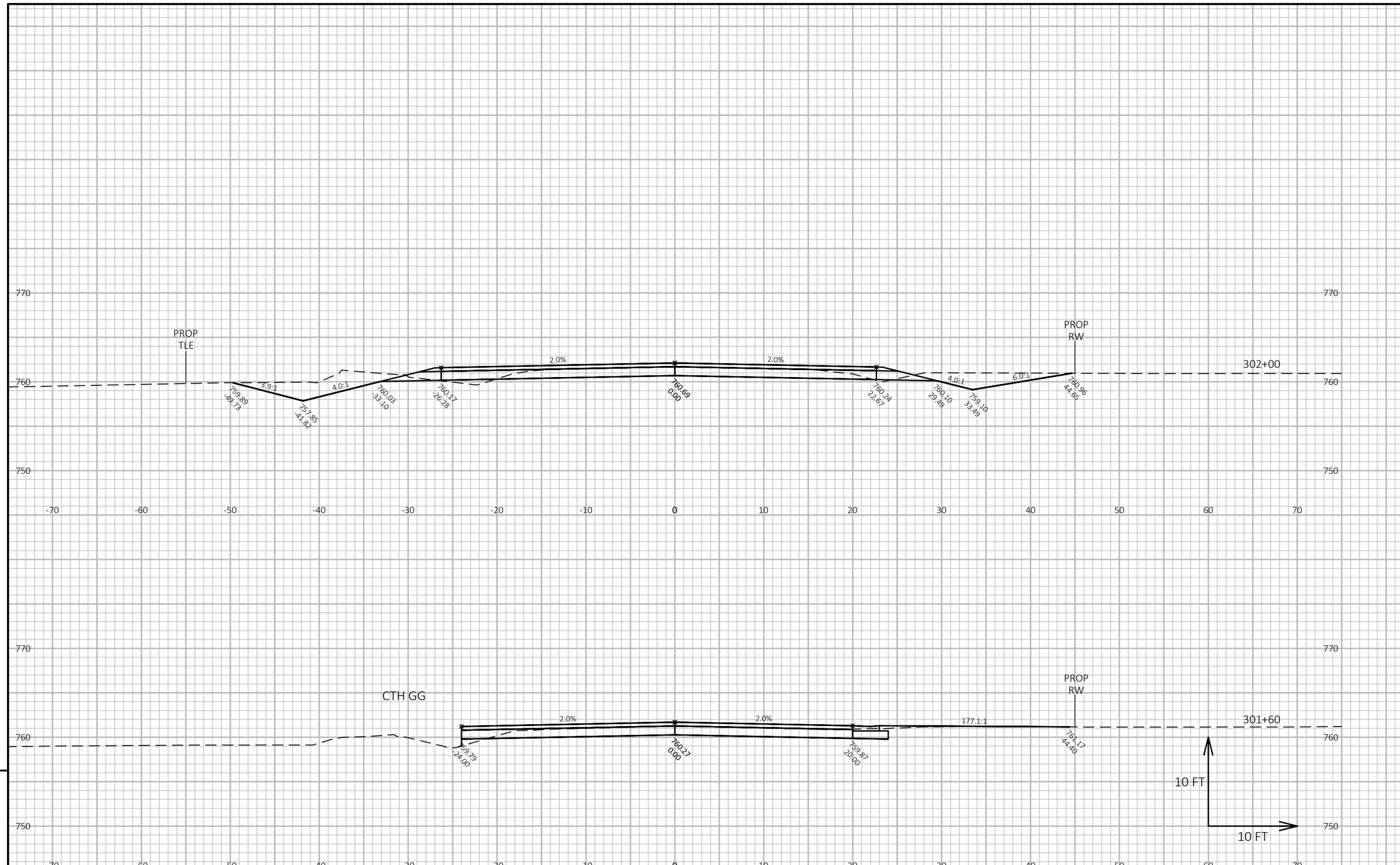

9

9

PROJECT NO: 4627-02-71	HWY: CTH A	COUNTY: WINNEBAGO	CROSS SECTIONS: CTH A	SHEET 226	E

FILE NAME : W:\PROJECTS\W0059\81700113\CADD\CIVIL3D\XREF\X_CTH A_CRDR.DWG
LAYOUT NAME - Section Sheet - (63)
PLOT DATE : 1/7/2020 4:02 PM
PLOT BY : JORDAN JELINSKI
PLOT NAME :
PLOT SCALE : 1 IN:10 FT HORZ. / 1 IN:10 FT VERT.
WISDOT/CADDS SHEET 49

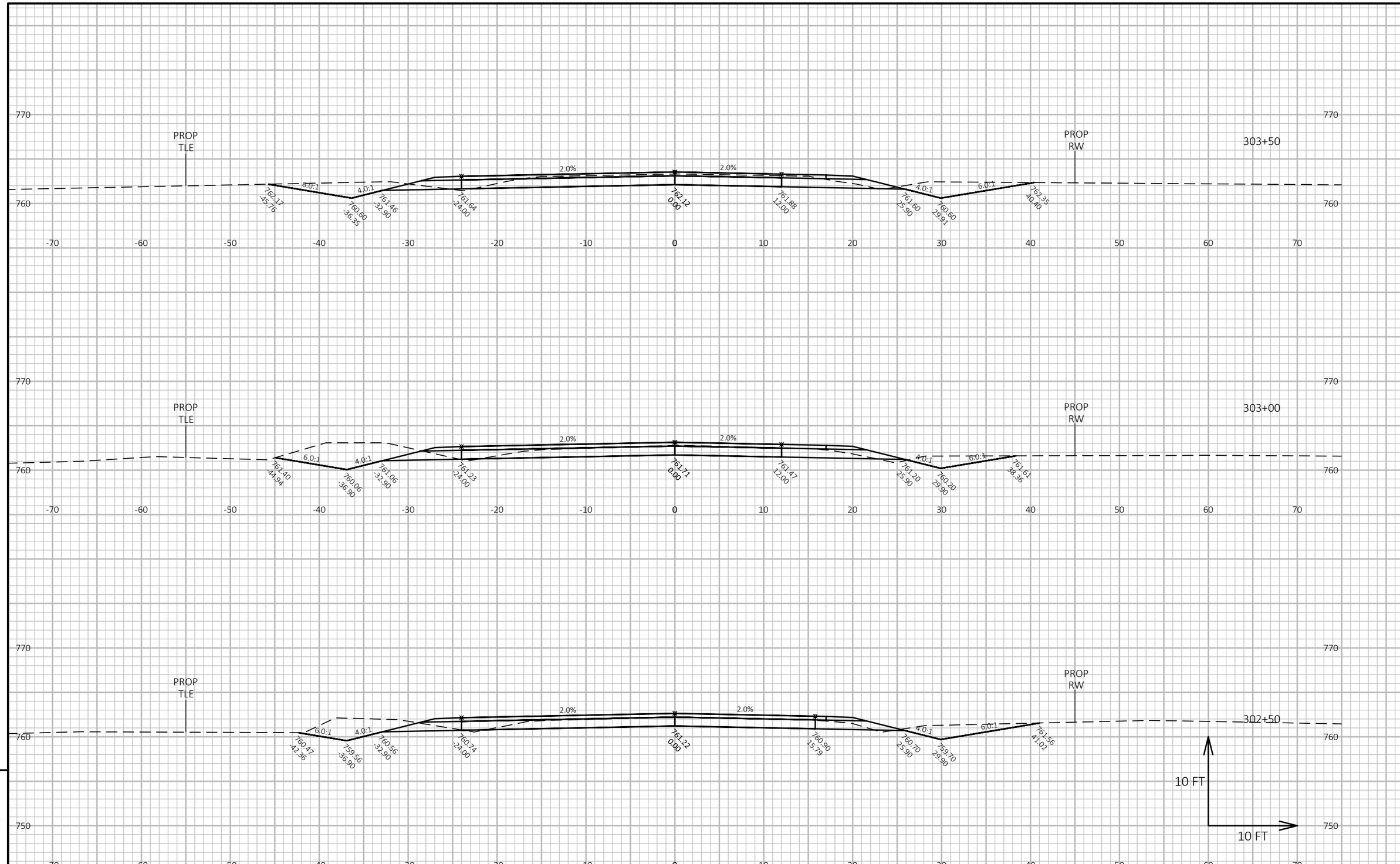

9

9

PROJECT NO: 4627-02-71	HWY: CTH A	COUNTY: WINNEBAGO	CROSS SECTIONS: CTH A	SHEET 227	E

FILE NAME : W:\PROJECTS\W0059\81700113\CADD\CIVIL3D\XREF\X_CTH A_CRDR.DWG
LAYOUT NAME - Section Sheet - (64)
PLOT DATE : 1/7/2020 4:03 PM
PLOT BY : JORDAN JELINSKI
PLOT NAME :
PLOT SCALE : 1 IN:10 FT HORZ. / 1 IN:10 FT VERT.
WISDOT/CADDS SHEET 49

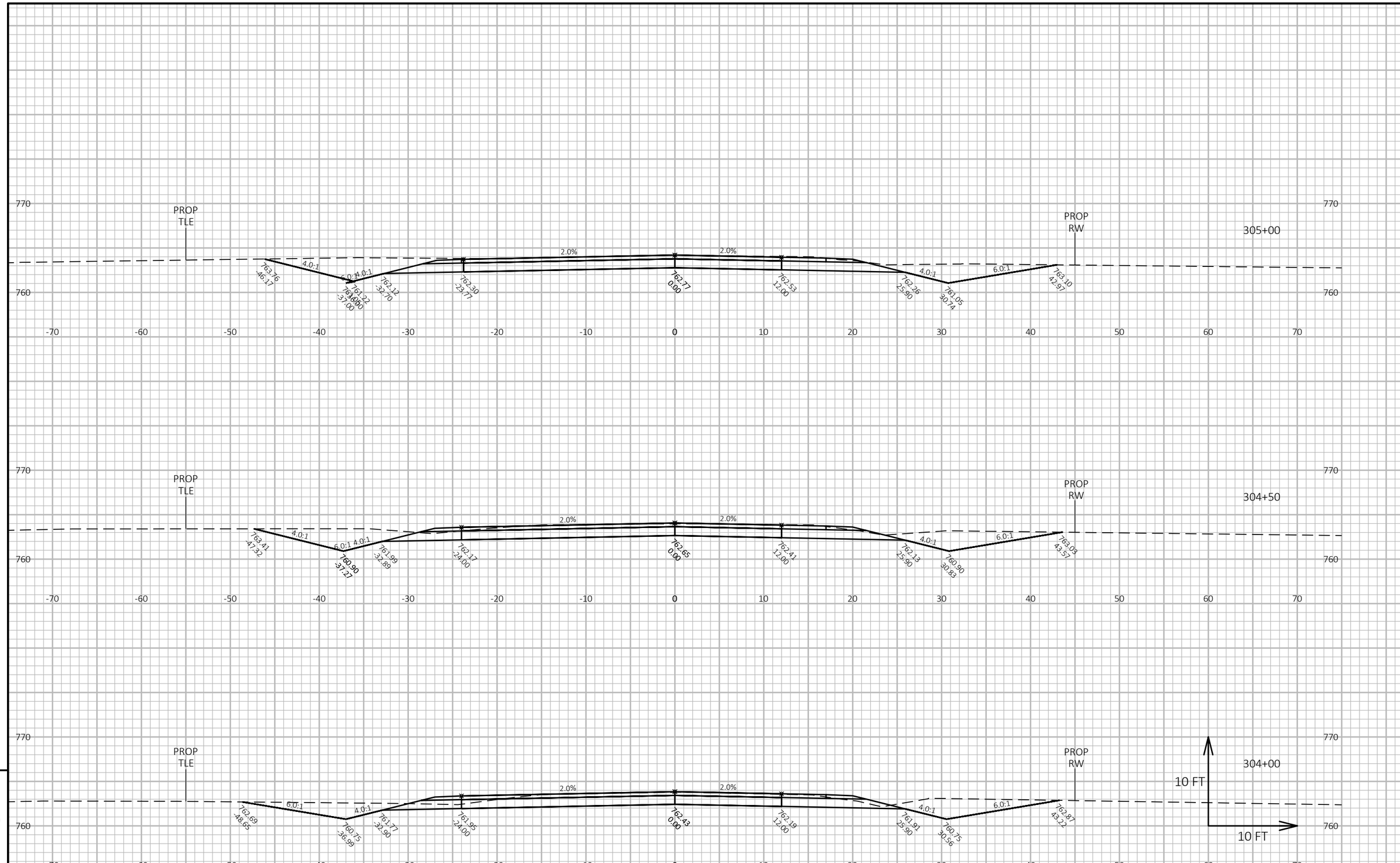

9

9

PROJECT NO: 4627-02-71	HWY: CTH A	COUNTY: WINNEBAGO	CROSS SECTIONS: CTH A	SHEET 228	E

FILE NAME : W:\PROJECTS\W0059\81700113\CADD\CIVIL3D\XREF\X_CTH A_CRDR.DWG
LAYOUT NAME - Section Sheet - (65)
PLOT DATE : 1/7/2020 4:03 PM
PLOT BY : JORDAN JELINSKI
PLOT NAME :
PLOT SCALE : 1 IN:10 FT HORZ. / 1 IN:10 FT VERT.

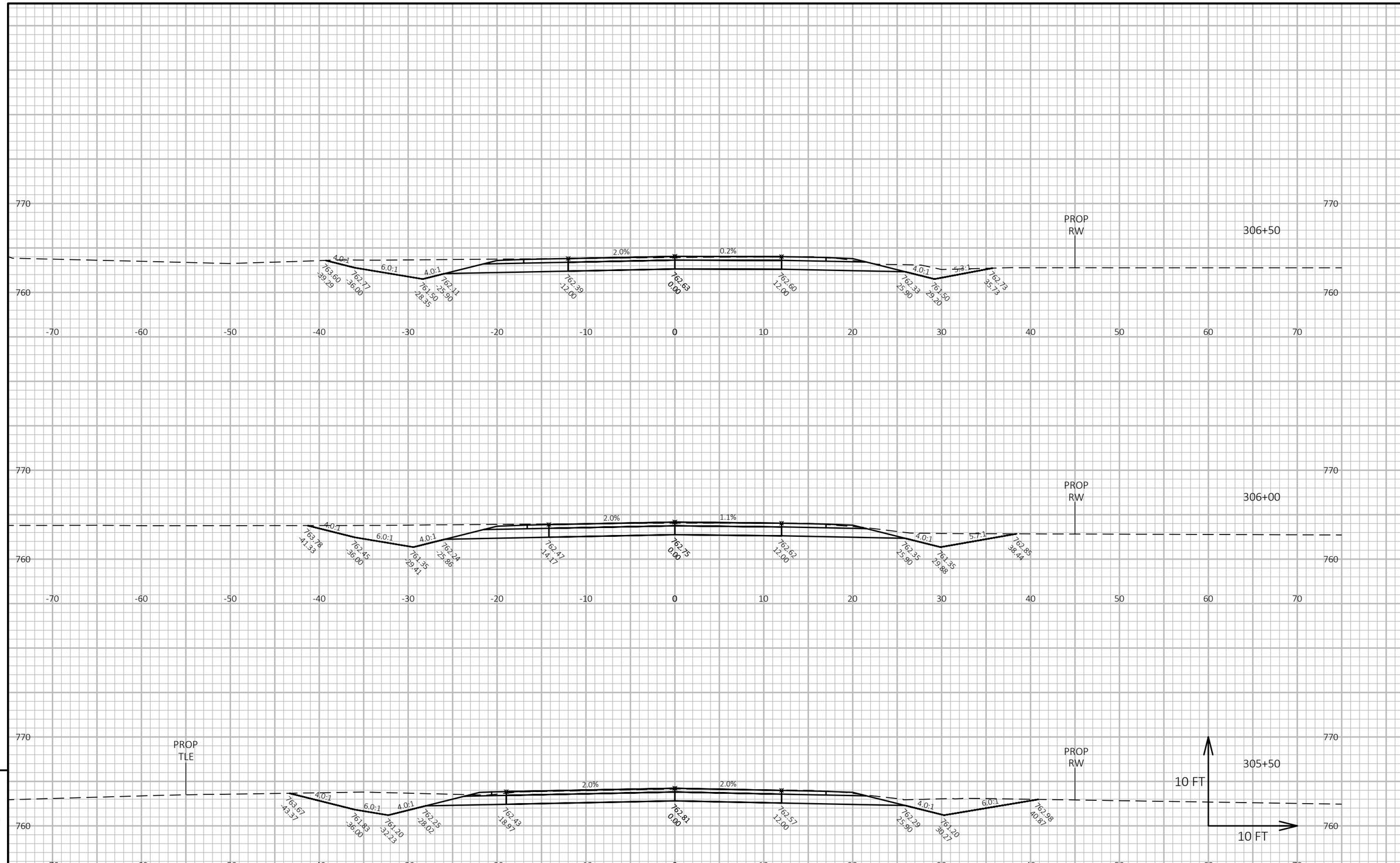

9

9

PROJECT NO: 4627-02-71	HWY: CTH A	COUNTY: WINNEBAGO	CROSS SECTIONS: CTH A	SHEET 229	E

FILE NAME : W:\PROJECTS\W0059\81700113\CADD\CIVIL3D\XREF\X_CTH A_CRDR.DWG
LAYOUT NAME - Section Sheet - (66)
PLOT DATE : 1/7/2020 4:03 PM
PLOT BY : JORDAN JELINSKI
PLOT NAME :
PLOT SCALE : 1 IN:10 FT HORZ. / 1 IN:10 FT VERT.
WISDOT/CADDS SHEET 49

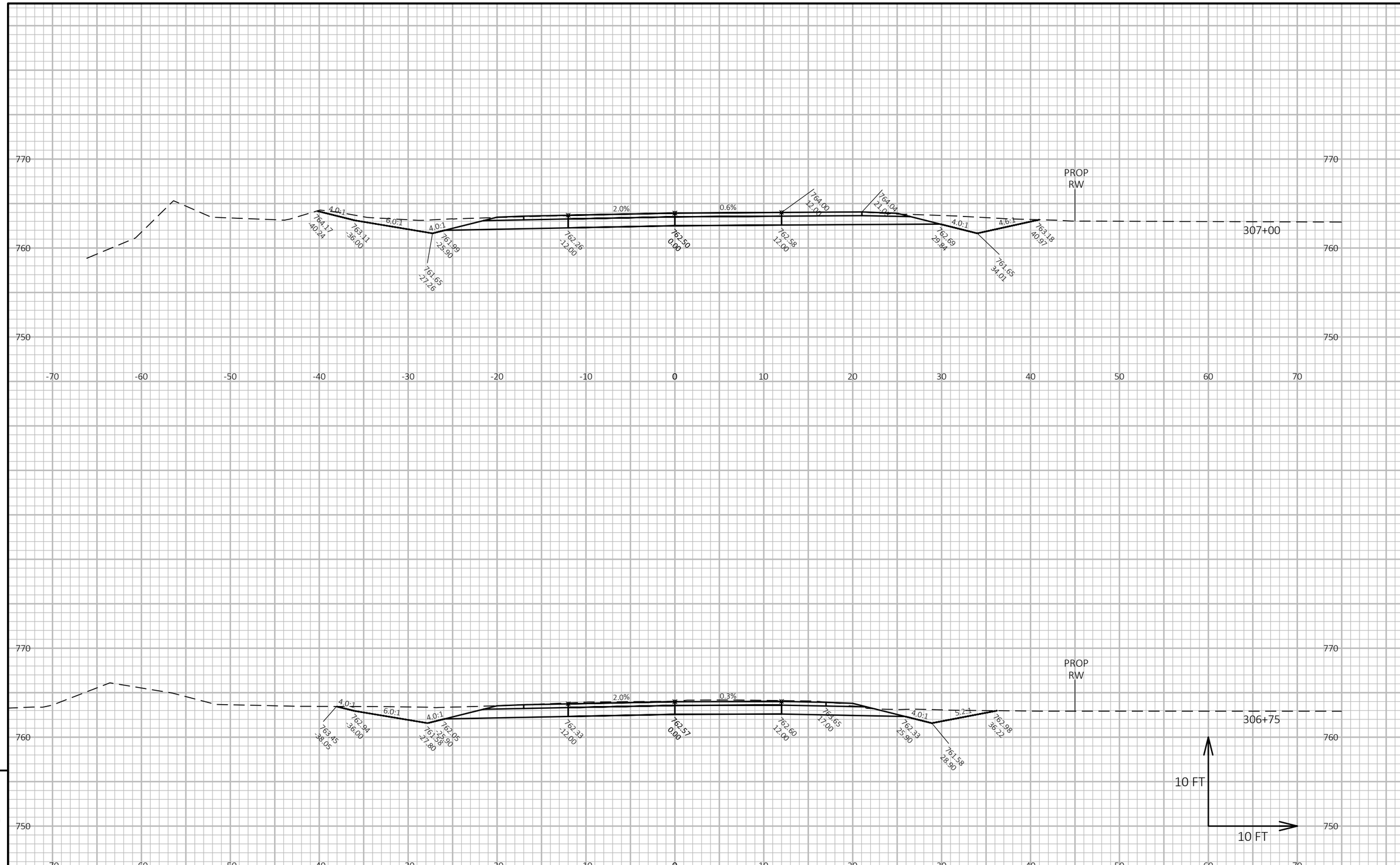

9

9

PROJECT NO: 4627-02-71	HWY: CTH A	COUNTY: WINNEBAGO	CROSS SECTIONS: CTH A	SHEET 230	E

FILE NAME : W:\PROJECTS\W0059\81700113\CADD\CIVIL3D\XREF\X_CTH A_CRDR.DWG
LAYOUT NAME - Section Sheet - (67)
PLOT DATE : 1/7/2020 4:04 PM
PLOT BY : JORDAN JELINSKI
PLOT NAME :
PLOT SCALE : 1 IN:10 FT HORZ. / 1 IN:10 FT VERT.
WISDOT/CADDS SHEET 49

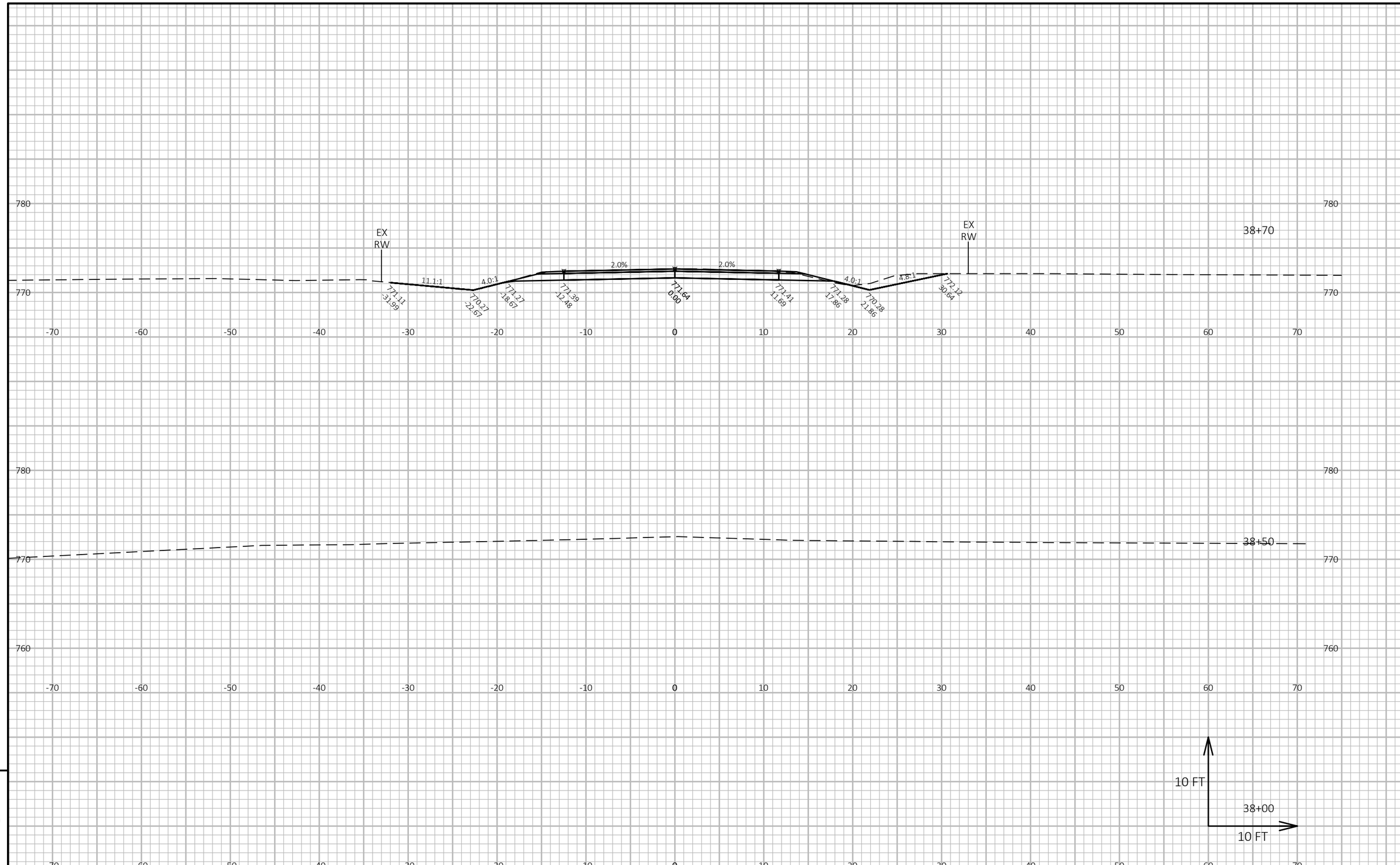

9

9

PROJECT NO: 4627-02-71	HWY: CTH A	COUNTY: WINNEBAGO	CROSS SECTIONS: SHAWNEE LANE	SHEET 231	E

FILE NAME : W:\PROJECTS\W0059\81700113\CADD\CIVIL3D\XREF\X_CTH A_CRDR.DWG
LAYOUT NAME - Shawnee - (1)
PLOT DATE : 1/7/2020 4:04 PM
PLOT BY : JORDAN JELINSKI
PLOT NAME :
PLOT SCALE : 1 IN:10 FT HORZ. / 1 IN:10 FT VERT.
WISDOT/CADDS SHEET 49

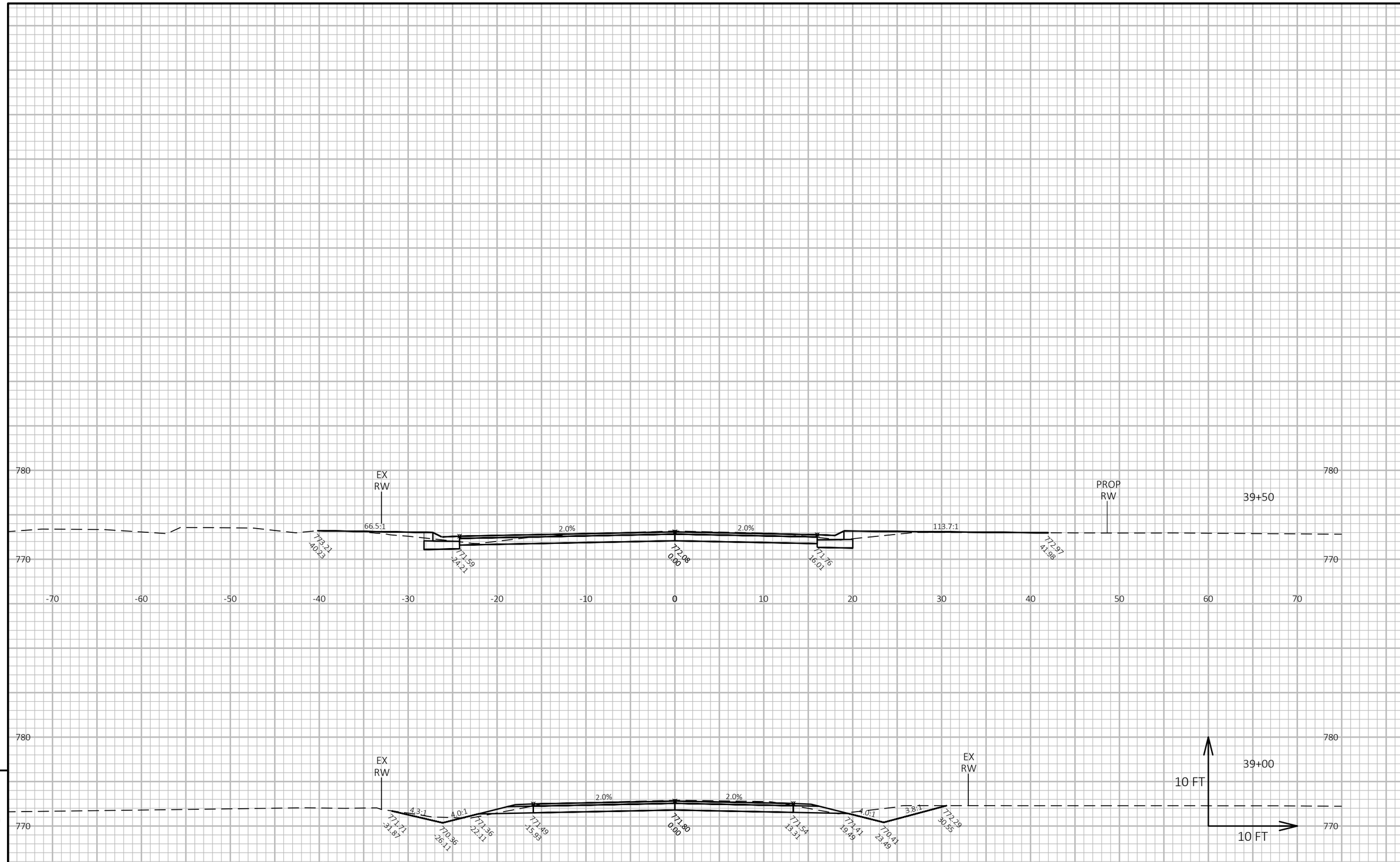

9

9

PROJECT NO: 4627-02-71	HWY: CTH A	COUNTY: WINNEBAGO	CROSS SECTIONS: SHAWNEE LANE	SHEET 232	E

FILE NAME : W:\PROJECTS\W0059\81700113\CADD\CIVIL3D\XREF\X_CTH A_CRDR.DWG
LAYOUT NAME - Shawnee - (2)
PLOT DATE : 1/7/2020 4:04 PM
PLOT BY : JORDAN JELINSKI
PLOT NAME :
PLOT SCALE : 1 IN:10 FT HORZ. / 1 IN:10 FT VERT.
WISDOT/CADDS SHEET 49

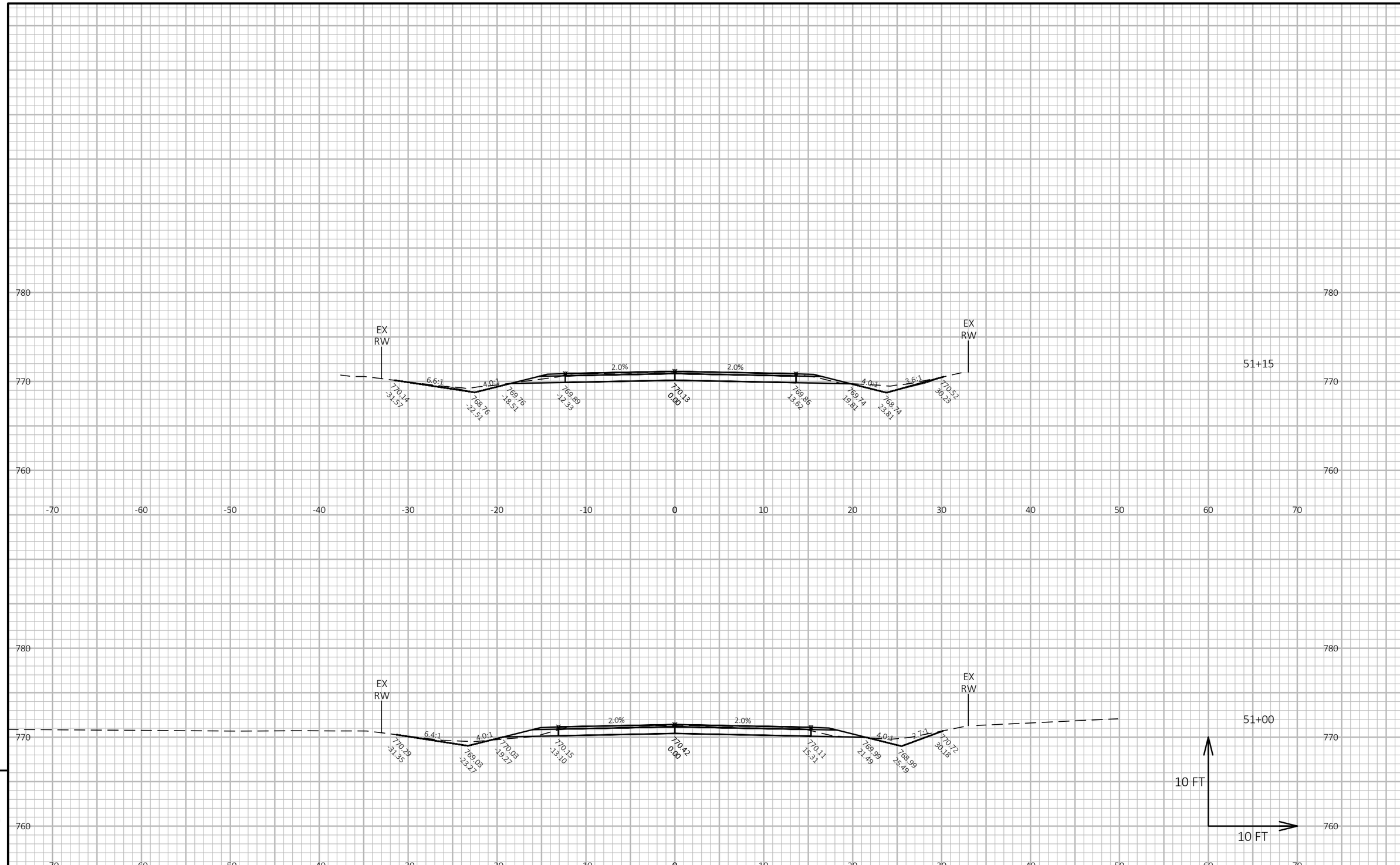

PROJECT NO: 4627-02-71	HWY: CTH A	COUNTY: WINNEBAGO	CROSS SECTIONS: IROQUOIS COURT	SHEET 233	E

FILE NAME : W:\PROJECTS\W0059\81700113\CADD\CIVIL3D\XREF\X_CTH A_CRDR.DWG
LAYOUT NAME - Iroquois - (1)
PLOT DATE : 1/7/2020 4:05 PM
PLOT BY : JORDAN JELINSKI
PLOT NAME :
PLOT SCALE : 1 IN:10 FT HORZ. / 1 IN:10 FT VERT.
WISDOT/CADDS SHEET 49

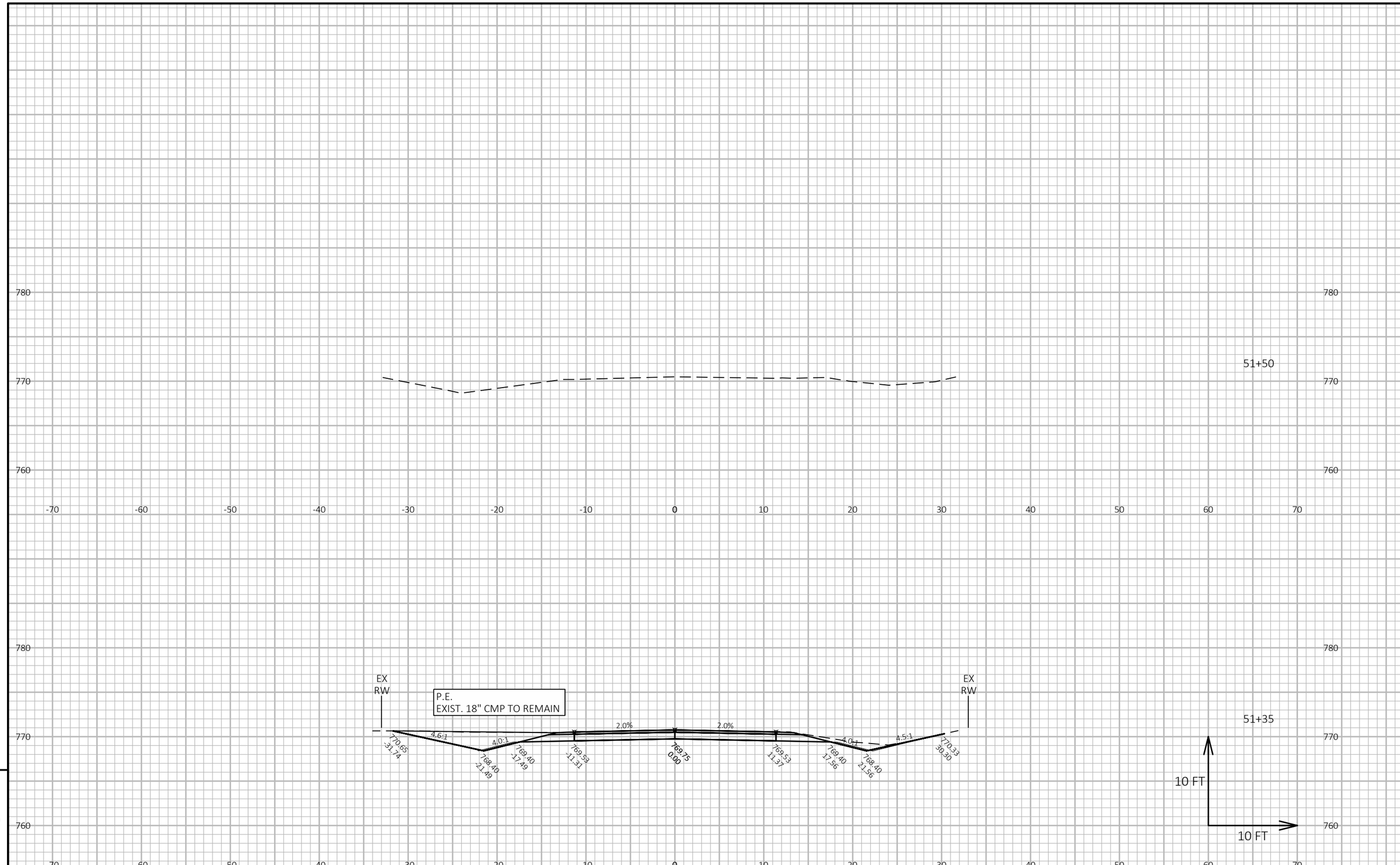

9

9

PROJECT NO: 4627-02-71	HWY: CTH A	COUNTY: WINNEBAGO	CROSS SECTIONS: IROQUOIS COURT	SHEET 234	E

FILE NAME : W:\PROJECTS\W0059\81700113\CADD\CIVIL3D\XREF\X_CTH A_CRDR.DWG
LAYOUT NAME - Iroquois - (2)
PLOT DATE : 1/7/2020 4:05 PM
PLOT BY : JORDAN JELINSKI
PLOT NAME :
PLOT SCALE : 1 IN:10 FT HORZ. / 1 IN:10 FT VERT.
WISDOT/CADDS SHEET 49

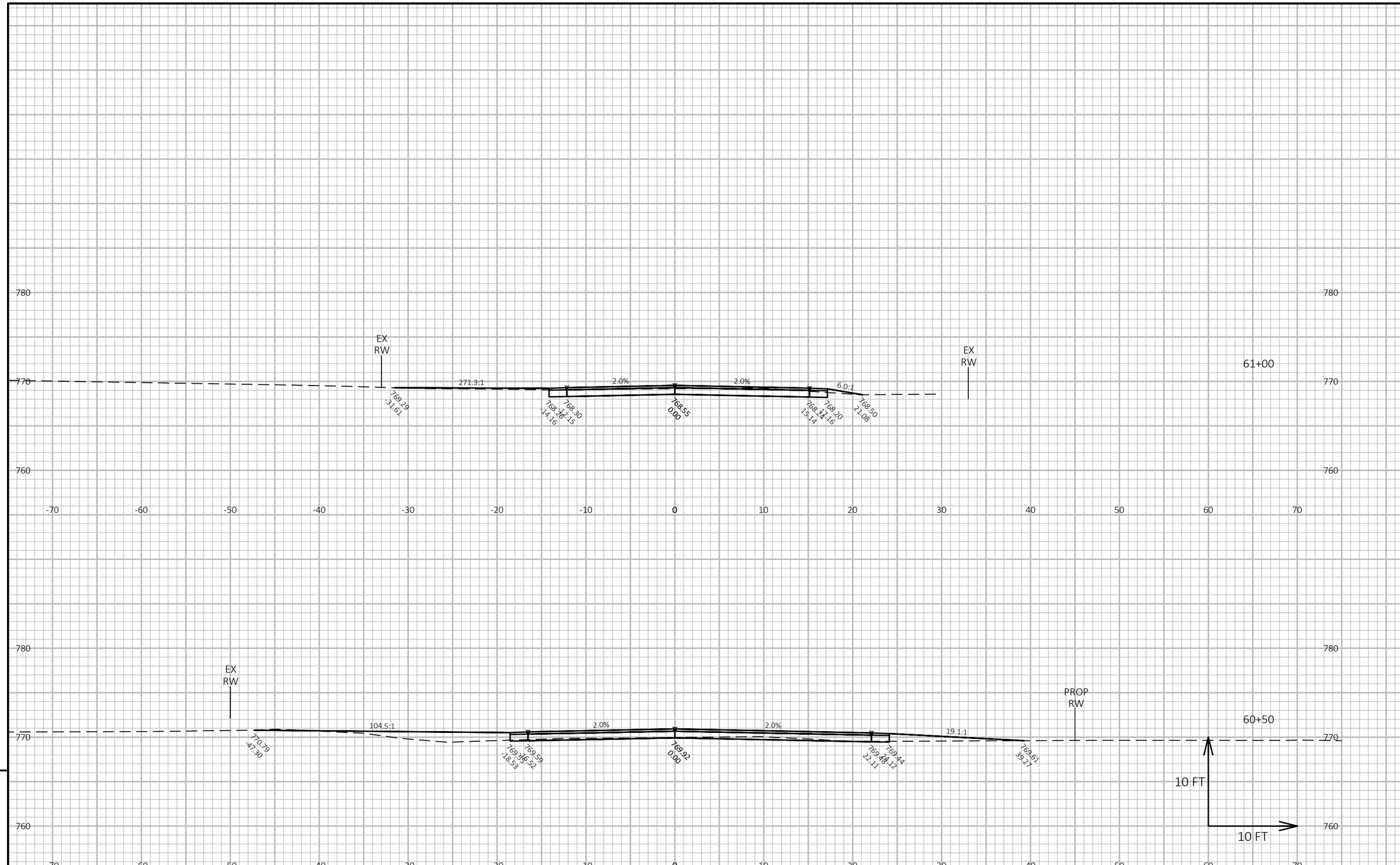

9

9

PROJECT NO: 4627-02-71	HWY: CTH A	COUNTY: WINNEBAGO	CROSS SECTIONS: COMANCHE LANE	SHEET 235	E

FILE NAME : W:\PROJECTS\W0059\81700113\CADD\CIVIL3D\XREF\X_CTH A_CRDR.DWG
LAYOUT NAME - Comanche - (1)
PLOT DATE : 1/7/2020 4:05 PM
PLOT BY : JORDAN JELINSKI
PLOT NAME :
PLOT SCALE : 1 IN:10 FT HORZ. / 1 IN:10 FT VERT.
WISDOT/CADDS SHEET 49

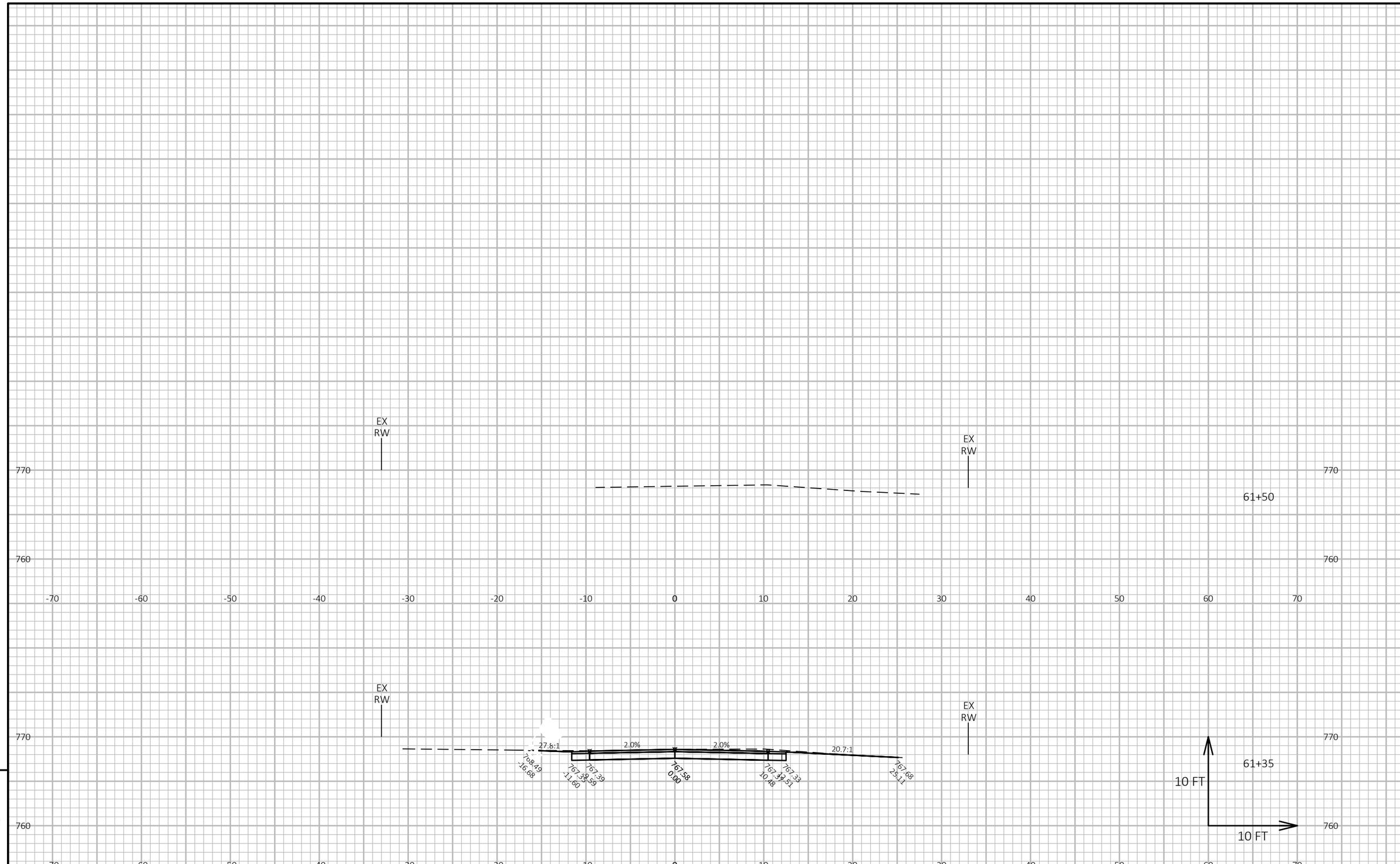

9

9

PROJECT NO: 4627-02-71	HWY: CTH A	COUNTY: WINNEBAGO	CROSS SECTIONS: COMANCHE LANE	SHEET 236	E

FILE NAME : W:\PROJECTS\W0059\81700113\CADD\CIVIL3D\XREF\X_CTH A_CRDR.DWG
LAYOUT NAME - Comanche - (2)
PLOT DATE : 1/7/2020 4:06 PM
PLOT BY : JORDAN JELINSKI
PLOT NAME :
PLOT SCALE : 1 IN:10 FT HORZ. / 1 IN:10 FT VERT.
WISDOT/CADDS SHEET 49

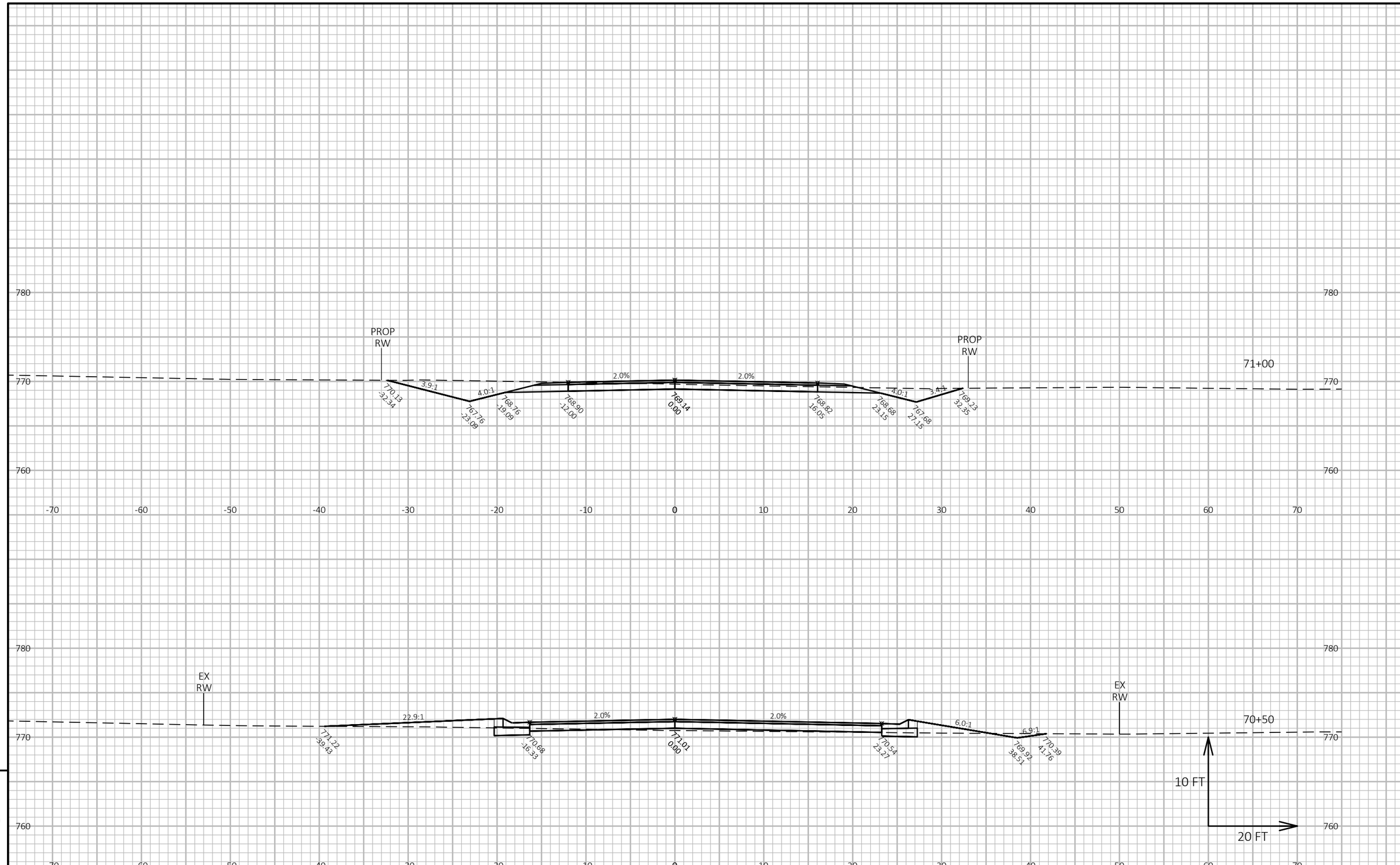

9

9

PROJECT NO: 4627-02-71	HWY: CTH A	COUNTY: WINNEBAGO	CROSS SECTIONS: GRUNDMAN LANE	SHEET 237	E

FILE NAME : W:\PROJECTS\W0059\81700113\CADD\CIVIL3D\XREF\X_CTH A_CRDR.DWG
LAYOUT NAME - Grundman - (1)
PLOT DATE : 1/7/2020 4:06 PM
PLOT BY : JORDAN JELINSKI
PLOT NAME :
PLOT SCALE : 1 IN:20 FT HORZ. / 1 IN:10 FT VERT.
WISDOT/CADDS SHEET 49

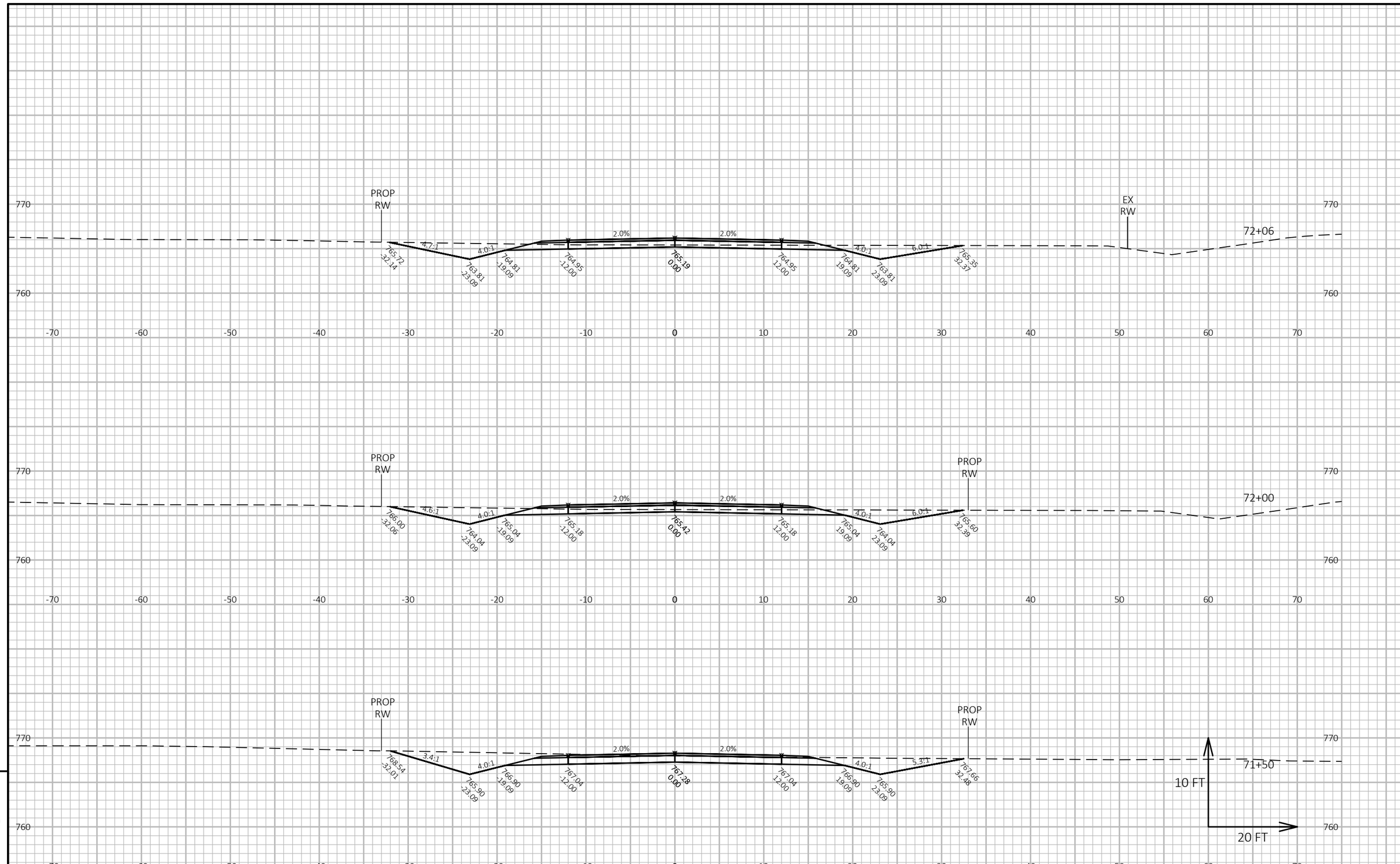

9

9

PROJECT NO: 4627-02-71	HWY: CTH A	COUNTY: WINNEBAGO	CROSS SECTIONS: GRUNDMAN LANE	SHEET 238	E

FILE NAME : W:\PROJECTS\W0059\81700113\CADD\CIVIL3D\XREF\X_CTH A_CRDR.DWG
LAYOUT NAME - Grundman - (2)
PLOT DATE : 1/7/2020 4:06 PM
PLOT BY : JORDAN JELINSKI
PLOT NAME :
PLOT SCALE : 1 IN:20 FT HORZ. / 1 IN:10 FT VERT.
WISDOT/CADDS SHEET 49

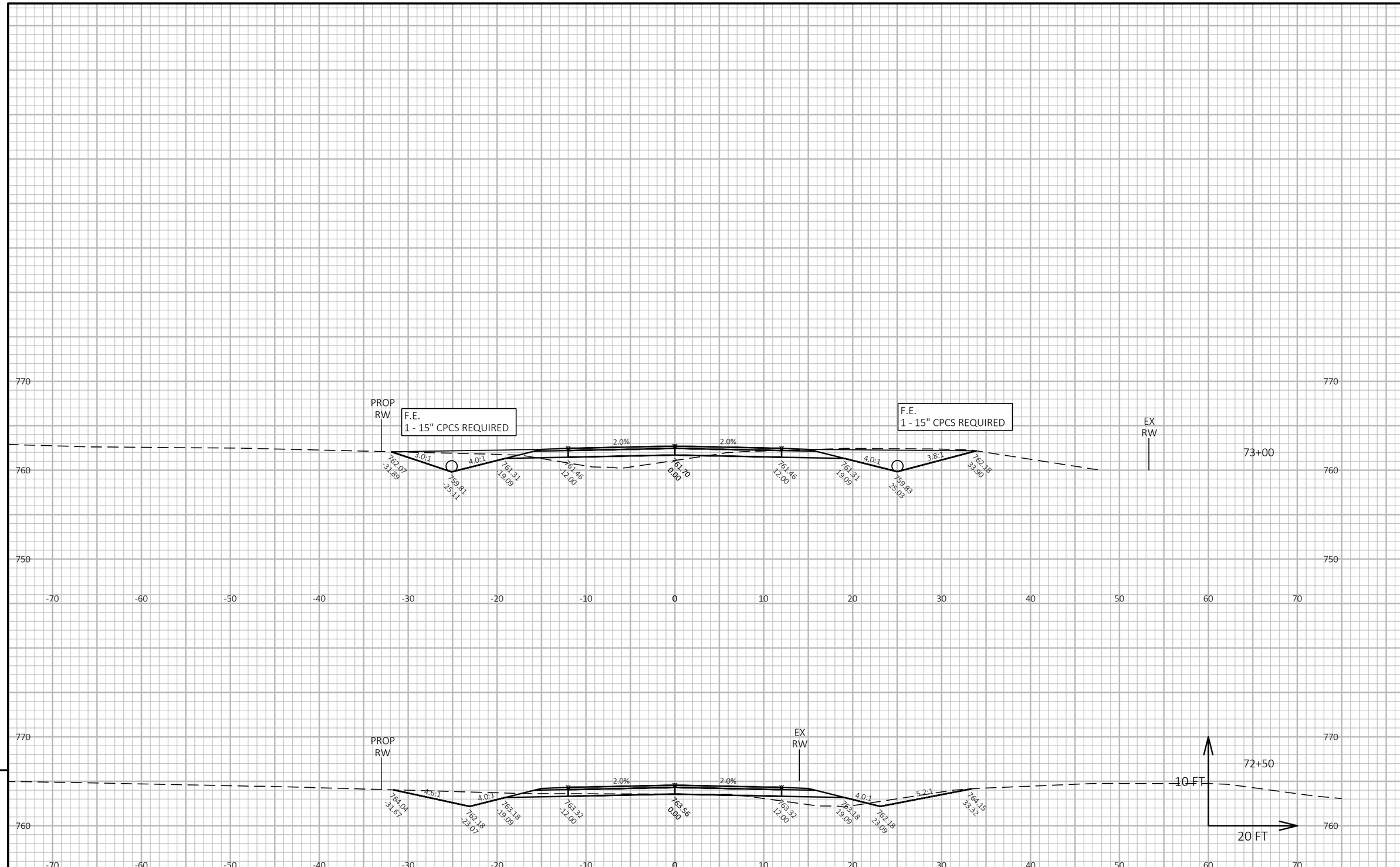

9

9

PROJECT NO: 4627-02-71	HWY: CTH A	COUNTY: WINNEBAGO	CROSS SECTIONS: GRUNDMAN LANE	SHEET 239	E

FILE NAME : W:\PROJECTS\W0059\81700113\CADD\CIVIL3D\XREF\X_CTH A_CRDR.DWG
LAYOUT NAME - Grundman - (3)
PLOT DATE : 1/7/2020 4:07 PM
PLOT BY : JORDAN JELINSKI
PLOT NAME :
PLOT SCALE : 1 IN:20 FT HORZ. / 1 IN:10 FT VERT.

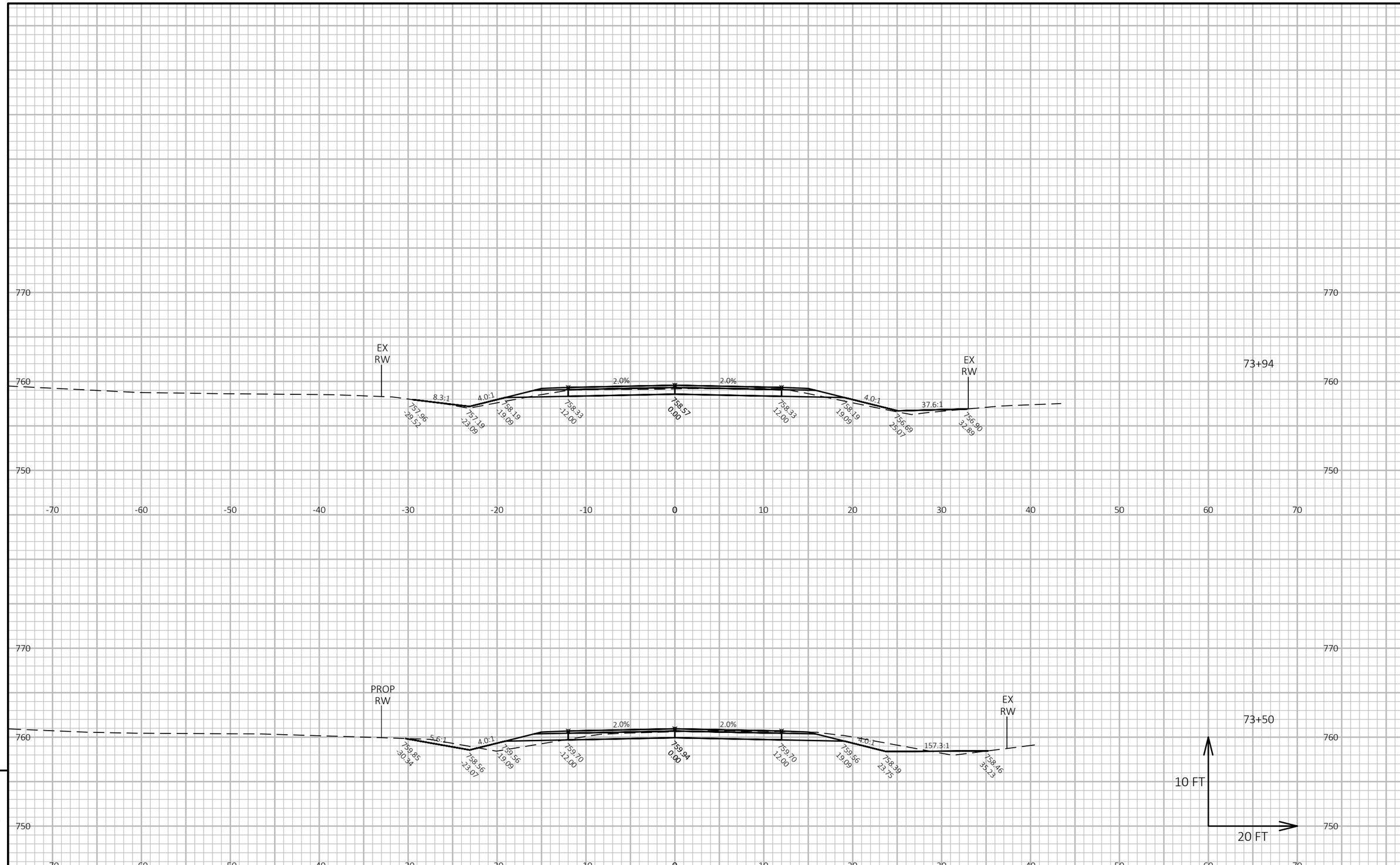

9

9

PROJECT NO: 4627-02-71	HWY: CTH A	COUNTY: WINNEBAGO	CROSS SECTIONS: GRUNDMAN LANE	SHEET 240	E

FILE NAME : W:\PROJECTS\W0059\81700113\CADD\CIVIL3D\XREF\X_CTH A_CRDR.DWG
LAYOUT NAME - Grundman - (4)
PLOT DATE : 1/7/2020 4:07 PM
PLOT BY : JORDAN JELINSKI
PLOT NAME :
PLOT SCALE : 1 IN:20 FT HORZ. / 1 IN:10 FT VERT.
WISDOT/CADDS SHEET 49

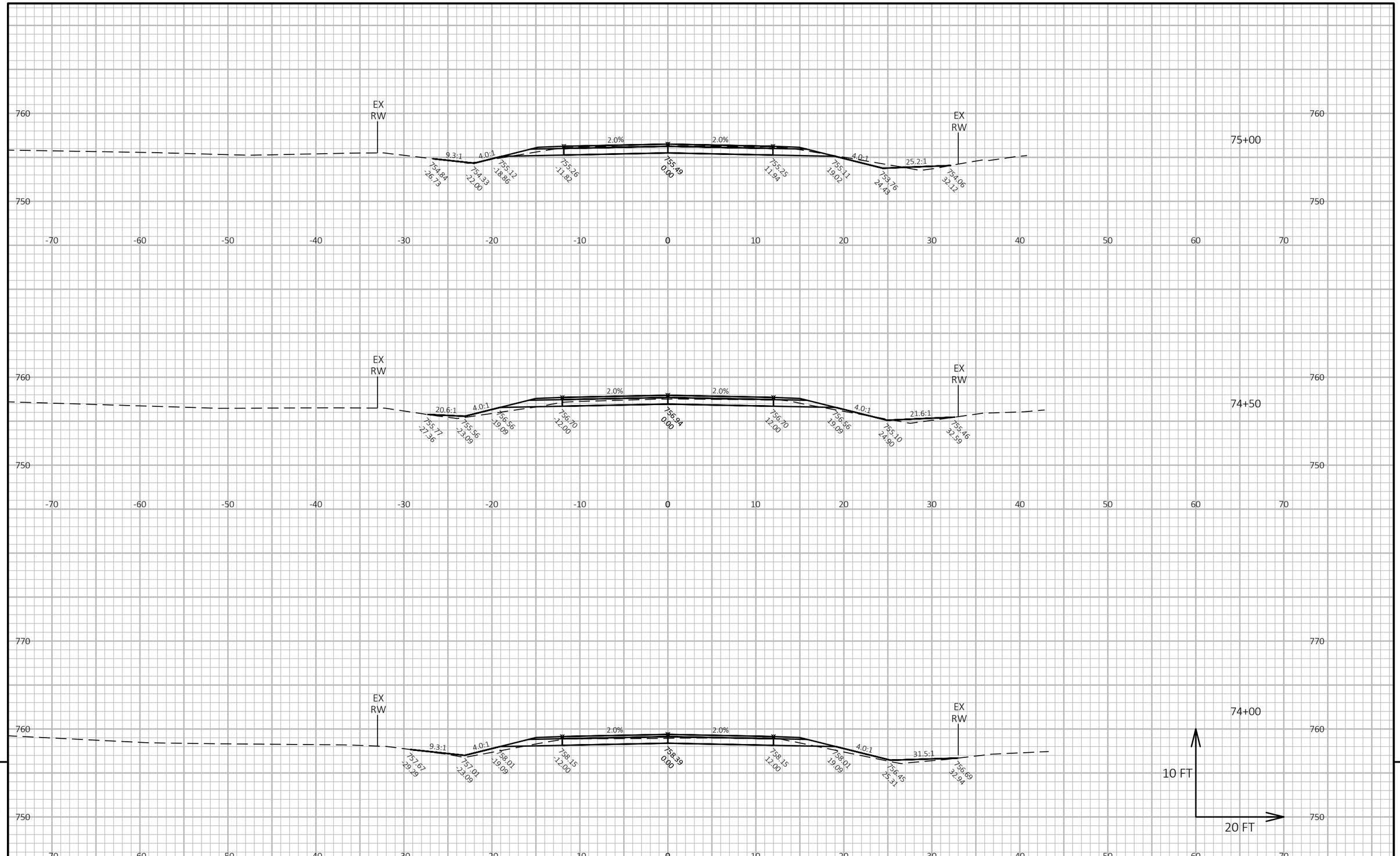

PROJECT NO: 4627-02-71	HWY: CTH A	COUNTY: WINNEBAGO	CROSS SECTIONS: GRUNDMAN LANE	SHEET 241	E

FILE NAME : W:\PROJECTS\W0059\81700113\CADD\CIVIL3D\XREF\X_CTH A_CRDR.DWG
LAYOUT NAME - Grundman - (5)
PLOT DATE : 1/7/2020 4:08 PM
PLOT BY : JORDAN JELINSKI
PLOT NAME :
PLOT SCALE : 1 IN:20 FT HORZ. / 1 IN:10 FT VERT.
WISDOT/CADDS SHEET 49

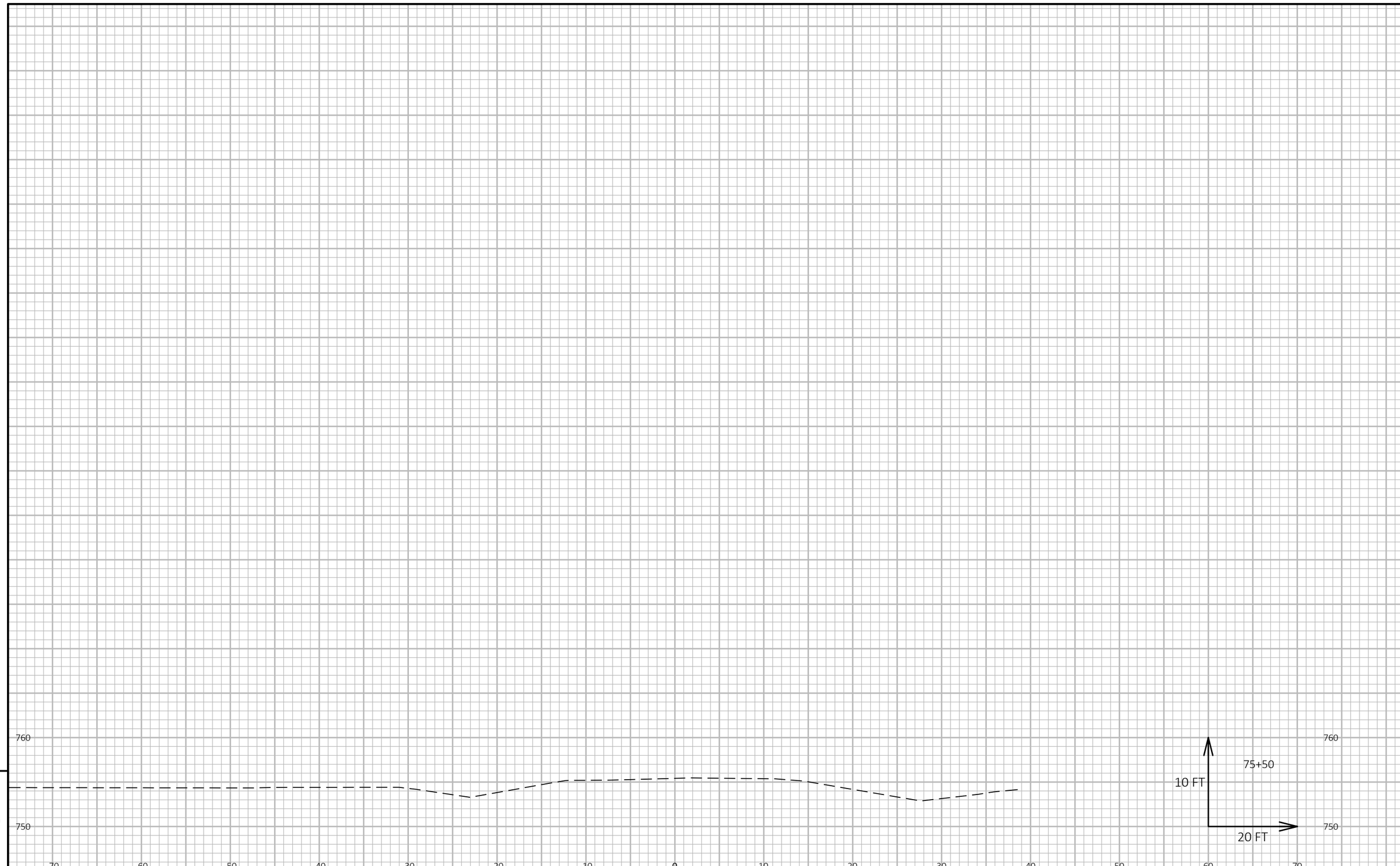

PROJECT NO: 4627-02-71	HWY: CTH A	COUNTY: WINNEBAGO	CROSS SECTIONS: GRUNDMAN LANE	SHEET 242	E

FILE NAME : W:\PROJECTS\W0059\81700113\CADD\CIVIL3D\XREF\X_CTH A_CRDR.DWG
LAYOUT NAME - Grundman - (6)
PLOT DATE : 1/7/2020 4:08 PM
PLOT BY : JORDAN JELINSKI
PLOT NAME :
PLOT SCALE : 1 IN:20 FT HORZ. / 1 IN:10 FT VERT.
WISDOT/CADDS SHEET 49

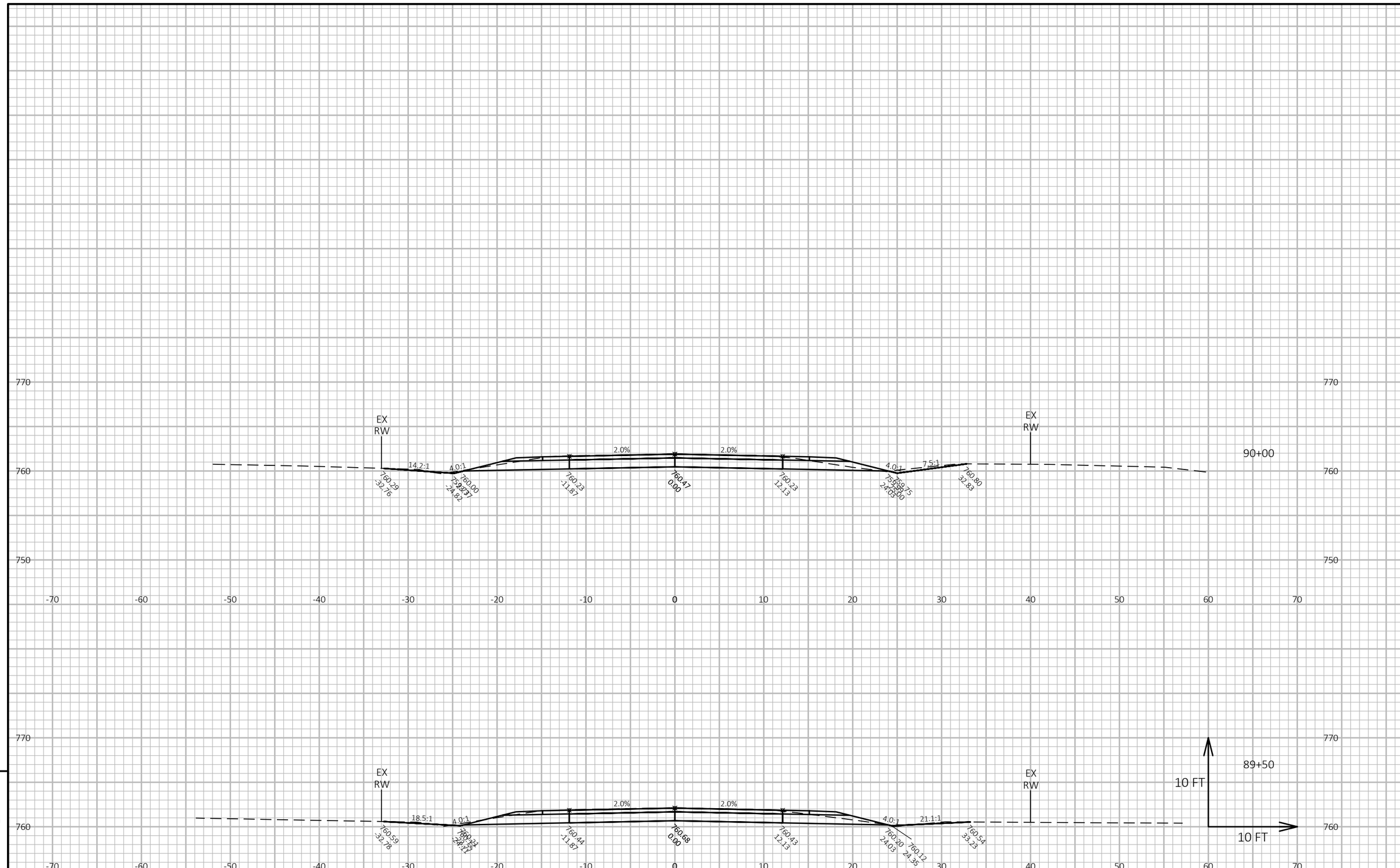

PROJECT NO: 4627-02-71	HWY: CTH A	COUNTY: WINNEBAGO	CROSS SECTIONS: CTH GG	SHEET 243	E

FILE NAME : W:\PROJECTS\W0059\81700113\CADD\CIVIL3D\XREF\X_CTH A_CRDR.DWG
LAYOUT NAME - GG - (1)
PLOT DATE : 1/7/2020 4:08 PM
PLOT BY : JORDAN JELINSKI
PLOT NAME :
PLOT SCALE : 1 IN:10 FT HORZ. / 1 IN:10 FT VERT.

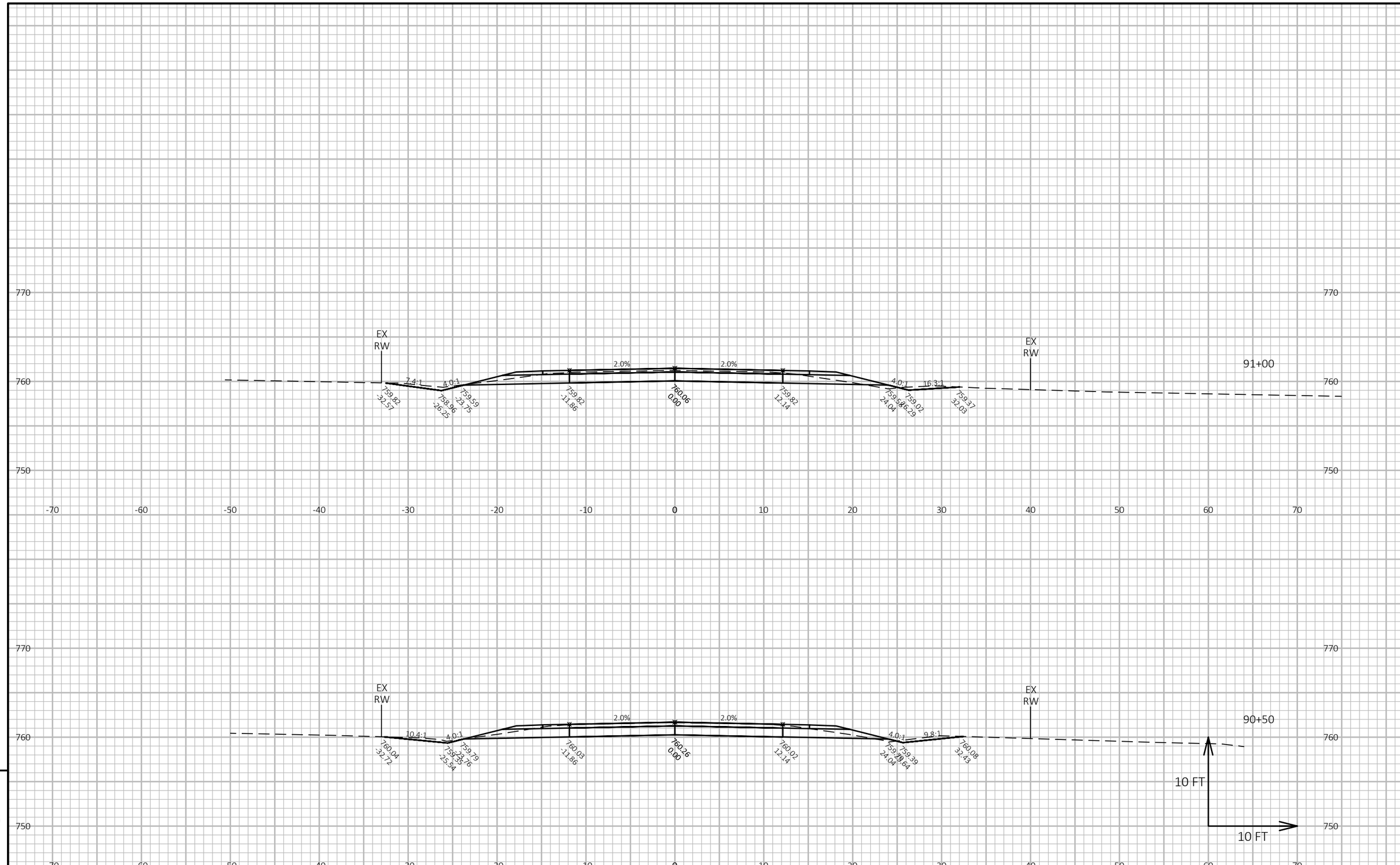

9

9

PROJECT NO: 4627-02-71	HWY: CTH A	COUNTY: WINNEBAGO	CROSS SECTIONS: CTH GG	SHEET 244	E

FILE NAME : W:\PROJECTS\W0059\81700113\CADD\CIVIL3D\XREF\X_CTH A_CRDR.DWG
LAYOUT NAME - GG - (2)
PLOT DATE : 1/7/2020 4:09 PM
PLOT BY : JORDAN JELINSKI
PLOT NAME :
PLOT SCALE : 1 IN:10 FT HORZ. / 1 IN:10 FT VERT.
WISDOT/CADDS SHEET 49

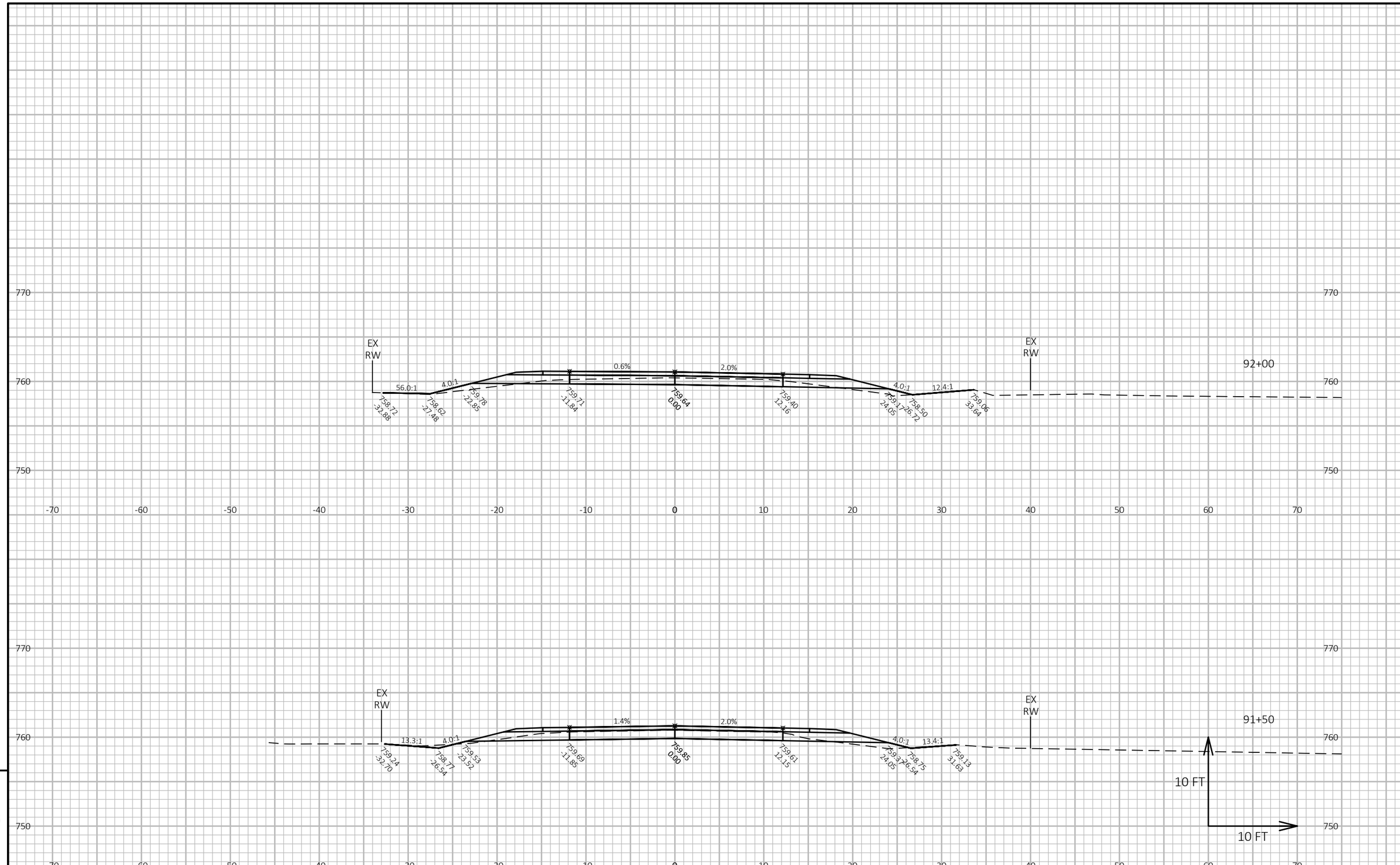

PROJECT NO: 4627-02-71	HWY: CTH A	COUNTY: WINNEBAGO	CROSS SECTIONS: CTH GG	SHEET 245	E

FILE NAME : W:\PROJECTS\W0059\81700113\CADD\CIVIL3D\XREF\X_CTH A_CRDR.DWG
LAYOUT NAME - GG - (3)
PLOT DATE : 1/7/2020 4:09 PM
PLOT BY : JORDAN JELINSKI
PLOT NAME :
PLOT SCALE : 1 IN:10 FT HORZ. / 1 IN:10 FT VERT.
WISDOT/CADDS SHEET 49

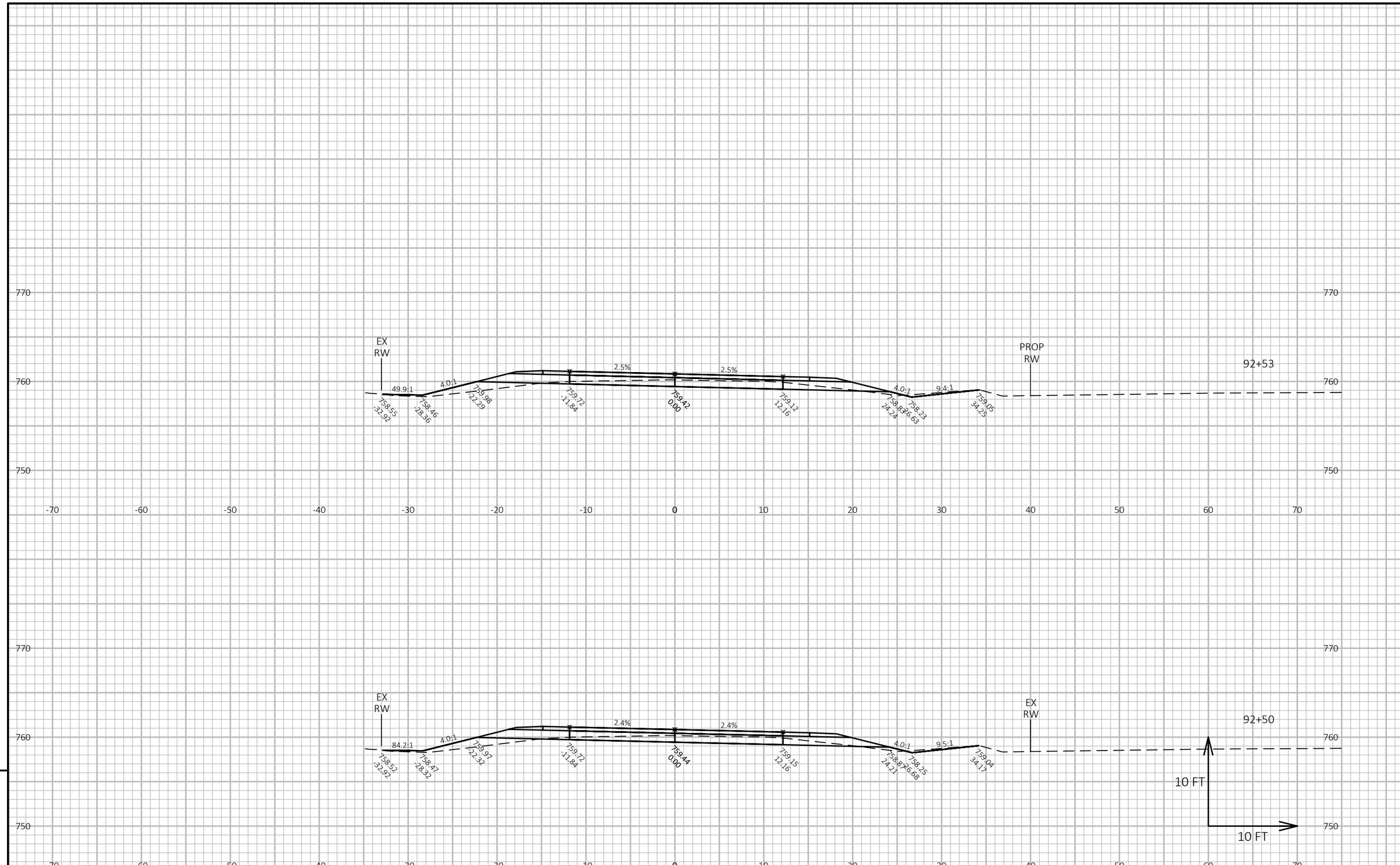

9

9

PROJECT NO: 4627-02-71	HWY: CTH A	COUNTY: WINNEBAGO	CROSS SECTIONS: CTH GG	SHEET 246	E

FILE NAME : W:\PROJECTS\W0059\81700113\CADD\CIVIL3D\XREF\X_CTH A_CRDR.DWG
LAYOUT NAME - GG - (4)
PLOT DATE : 1/7/2020 4:09 PM
PLOT BY : JORDAN JELINSKI
PLOT NAME :
PLOT SCALE : 1 IN:10 FT HORZ. / 1 IN:10 FT VERT.
WISDOT/CADDS SHEET 49

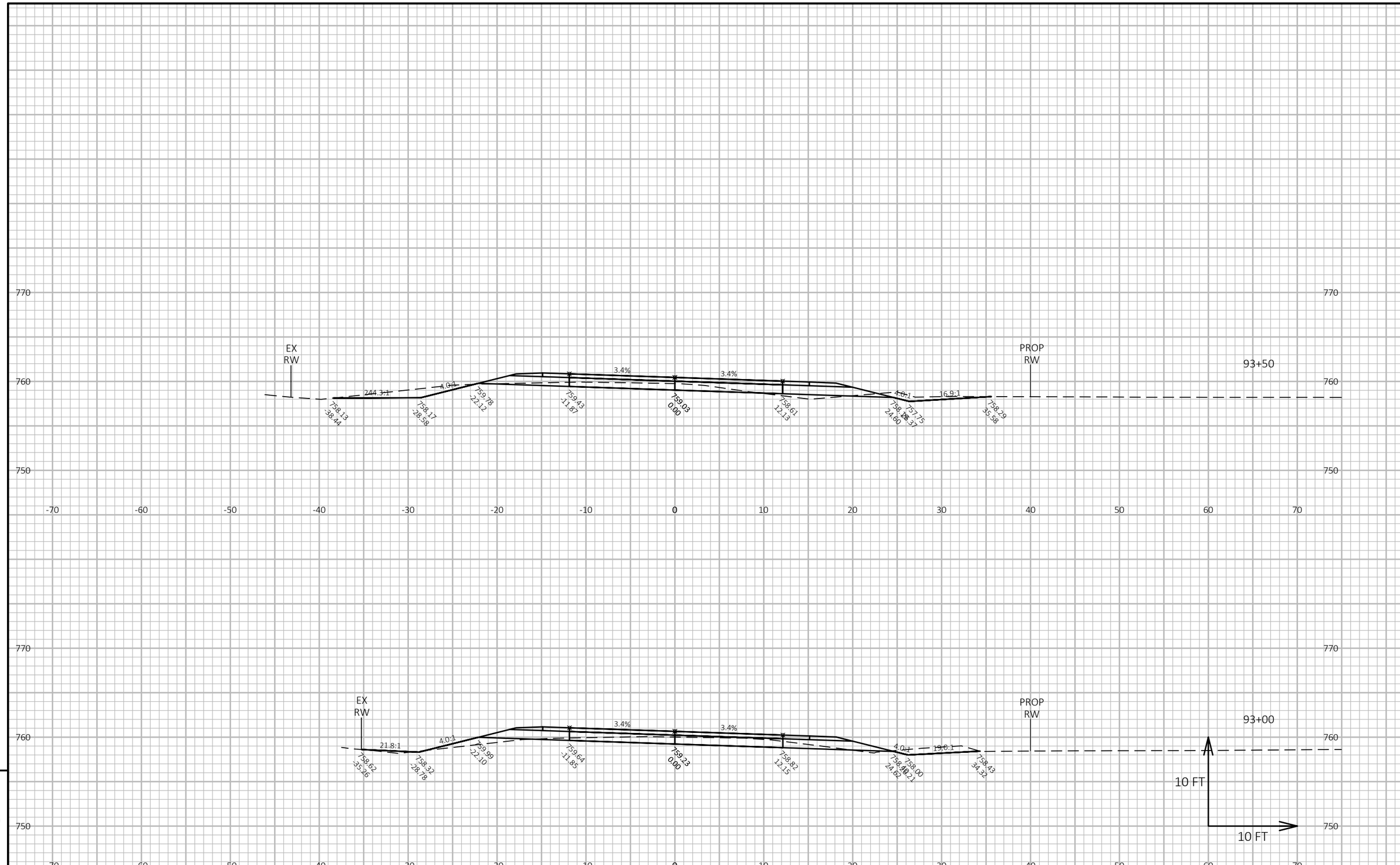

9

9

PROJECT NO: 4627-02-71	HWY: CTH A	COUNTY: WINNEBAGO	CROSS SECTIONS: CTH GG	SHEET 247	E

FILE NAME : W:\PROJECTS\W0059\81700113\CADD\CIVIL3D\XREF\X_CTH A_CRDR.DWG
LAYOUT NAME - GG - (5)
PLOT DATE : 1/7/2020 4:10 PM
PLOT BY : JORDAN JELINSKI
PLOT NAME :
PLOT SCALE : 1 IN:10 FT HORZ. / 1 IN:10 FT VERT.

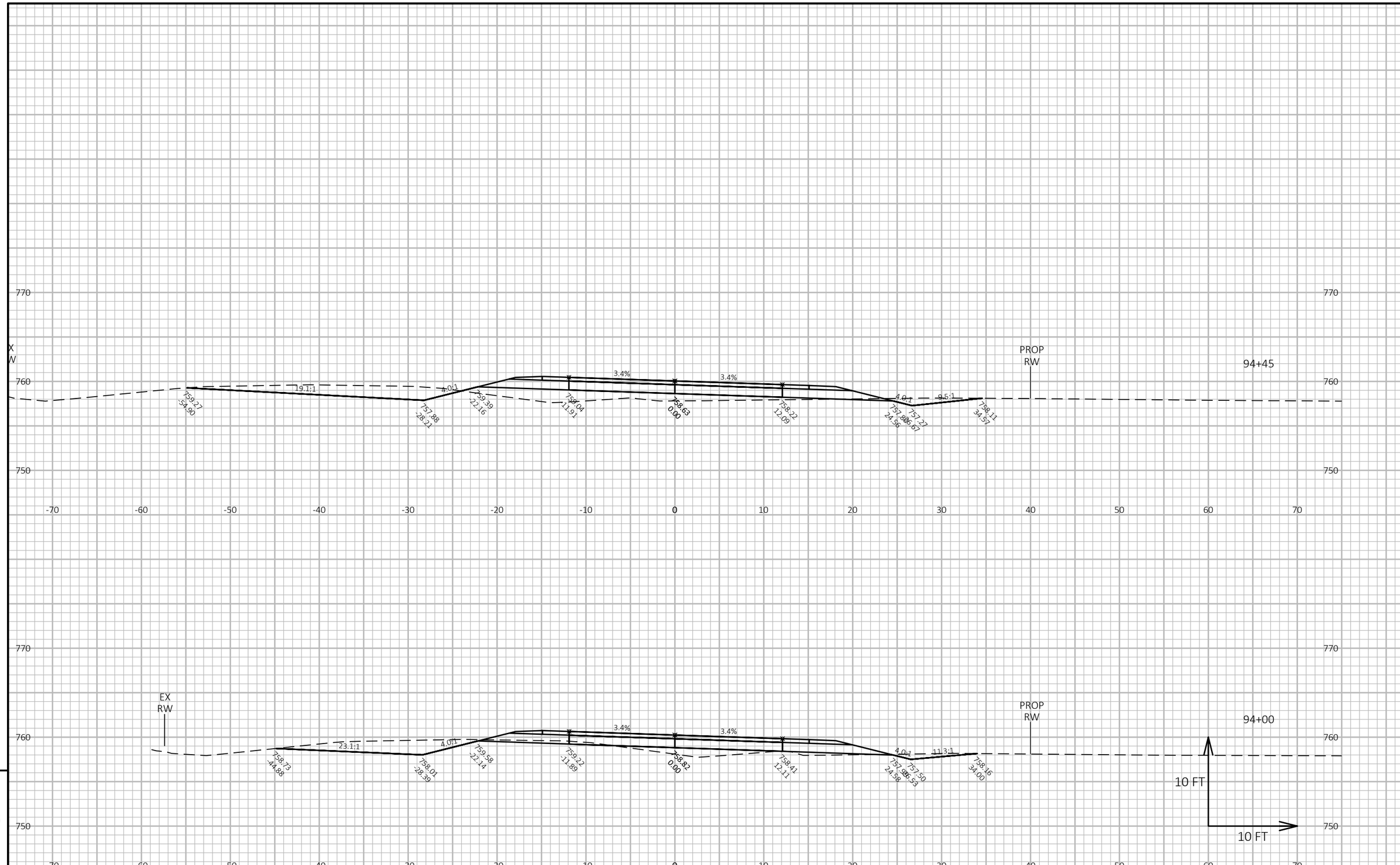

PROJECT NO: 4627-02-71	HWY: CTH A	COUNTY: WINNEBAGO	CROSS SECTIONS: CTH GG	SHEET 248	E

FILE NAME : W:\PROJECTS\W0059\81700113\CADD\CIVIL3D\XREF\X_CTH A_CRDR.DWG
LAYOUT NAME - GG - (6)
PLOT DATE : 1/7/2020 4:10 PM
PLOT BY : JORDAN JELINSKI
PLOT NAME :
PLOT SCALE : 1 IN:10 FT HORZ. / 1 IN:10 FT VERT.

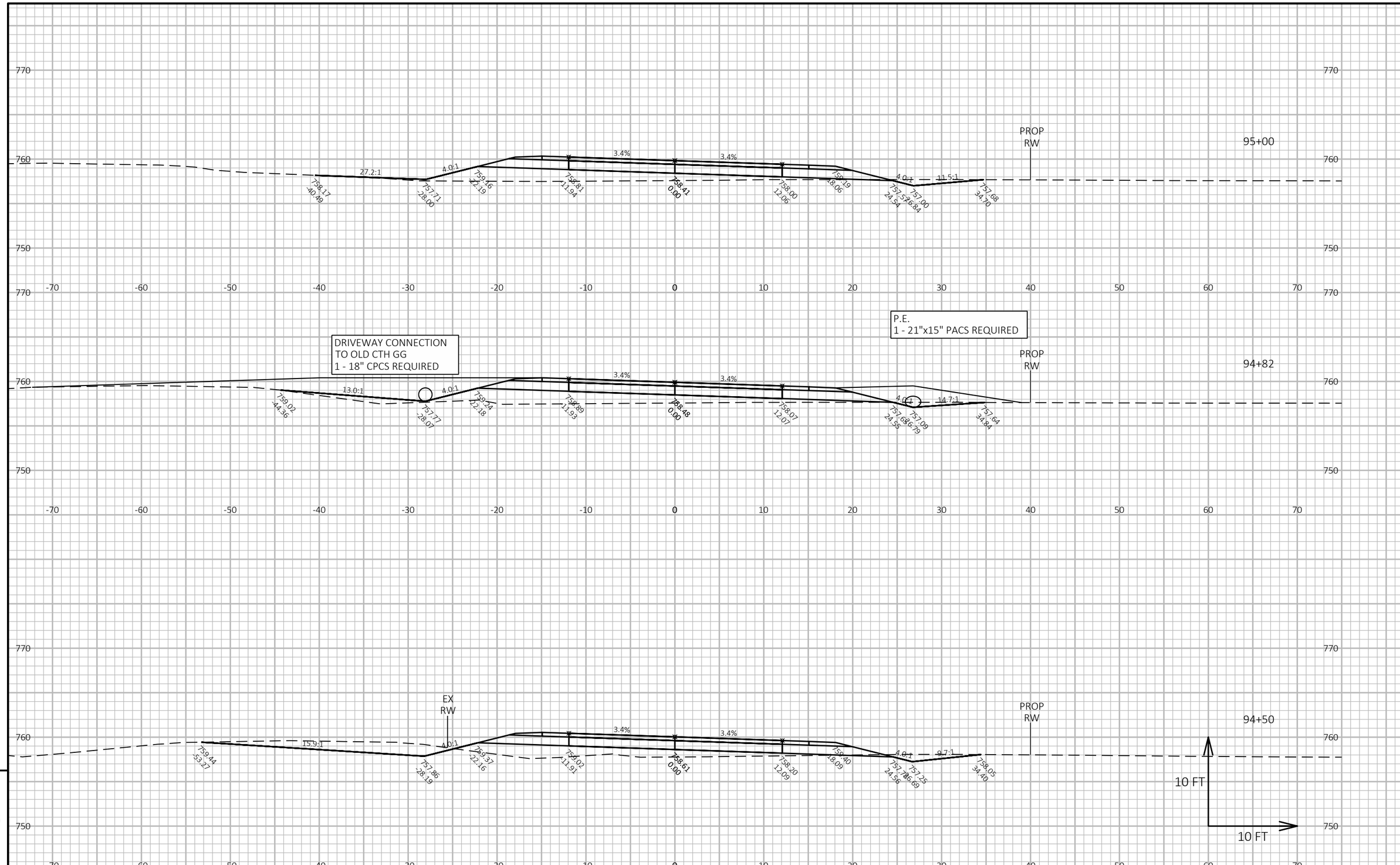

9

9

PROJECT NO: 4627-02-71	HWY: CTH A	COUNTY: WINNEBAGO	CROSS SECTIONS: CTH GG	SHEET 249	E

FILE NAME : W:\PROJECTS\W0059\81700113\CADD\CIVIL3D\XREF\X_CTH A_CRDR.DWG
LAYOUT NAME - GG - (7)
PLOT DATE : 1/7/2020 4:10 PM
PLOT BY : JORDAN JELINSKI
PLOT NAME :
PLOT SCALE : 1 IN:10 FT HORZ. / 1 IN:10 FT VERT.

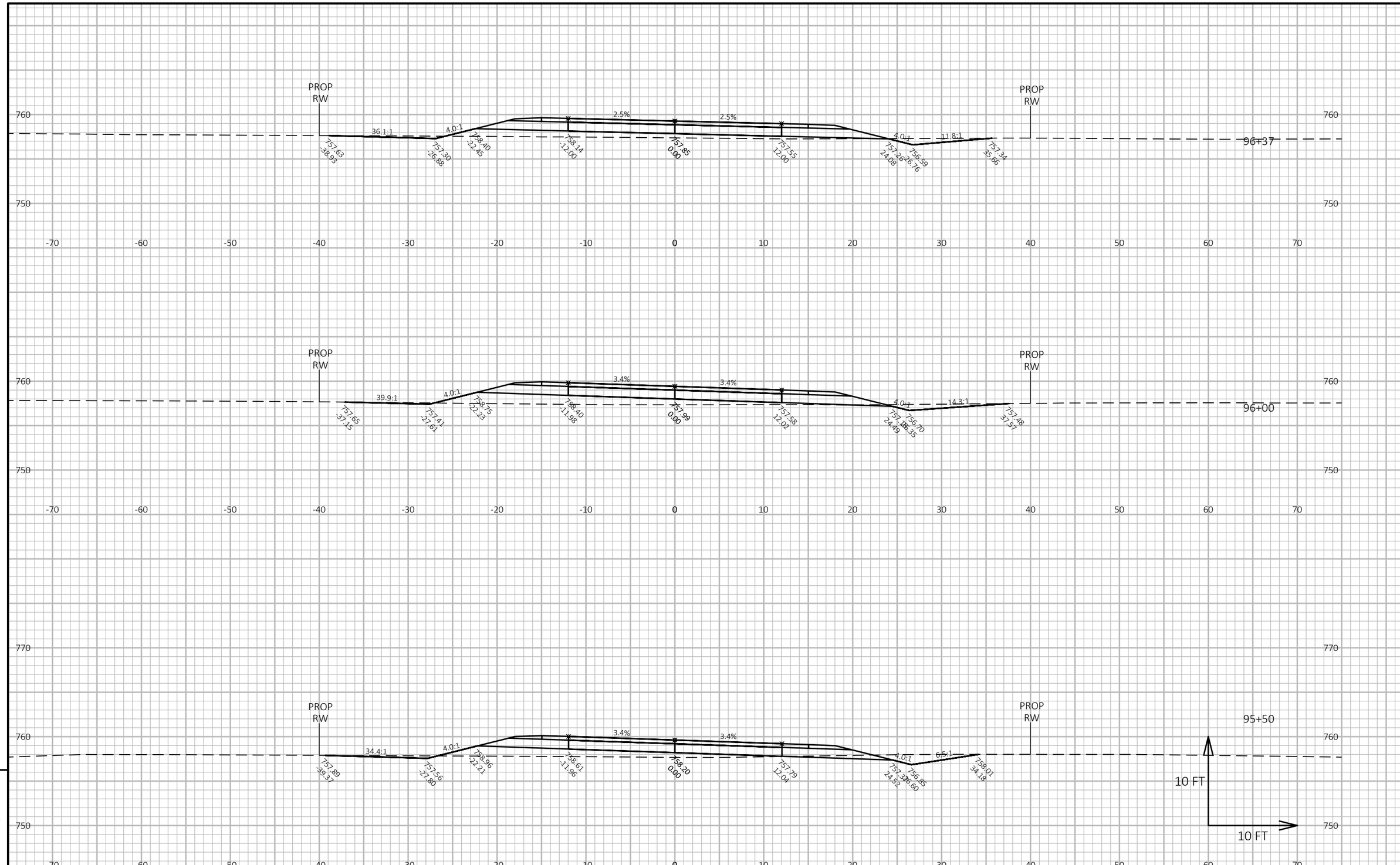

9

9

PROJECT NO: 4627-02-71	HWY: CTH A	COUNTY: WINNEBAGO	CROSS SECTIONS: CTH GG	SHEET 250	E

FILE NAME : W:\PROJECTS\W0059\81700113\CADD\CIVIL3D\XREF\X_CTH A_CRDR.DWG
LAYOUT NAME - GG - (8)
PLOT DATE : 1/7/2020 4:11 PM
PLOT BY : JORDAN JELINSKI
PLOT NAME :
PLOT SCALE : 1 IN:10 FT HORZ. / 1 IN:10 FT VERT.

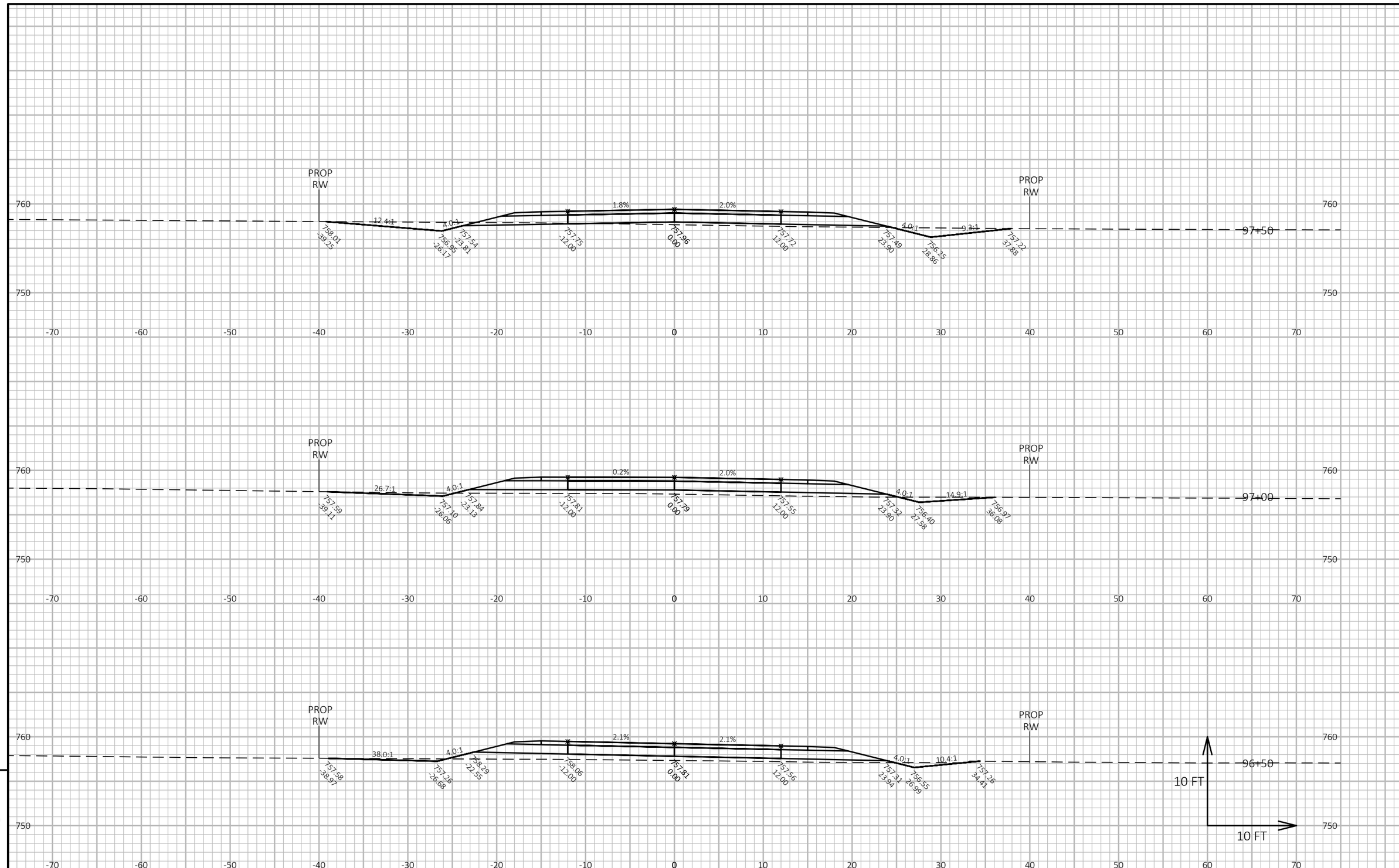

9

9

PROJECT NO: 4627-02-71	HWY: CTH A	COUNTY: WINNEBAGO	CROSS SECTIONS: CTH GG	SHEET 251	E

FILE NAME : W:\PROJECTS\W0059\81700113\CADD\CIVIL3D\XREF\X_CTH A_CRDR.DWG
LAYOUT NAME - GG - (9)
PLOT DATE : 1/7/2020 4:11 PM
PLOT BY : JORDAN JELINSKI
PLOT NAME :
PLOT SCALE : 1 IN:10 FT HORZ. / 1 IN:10 FT VERT.

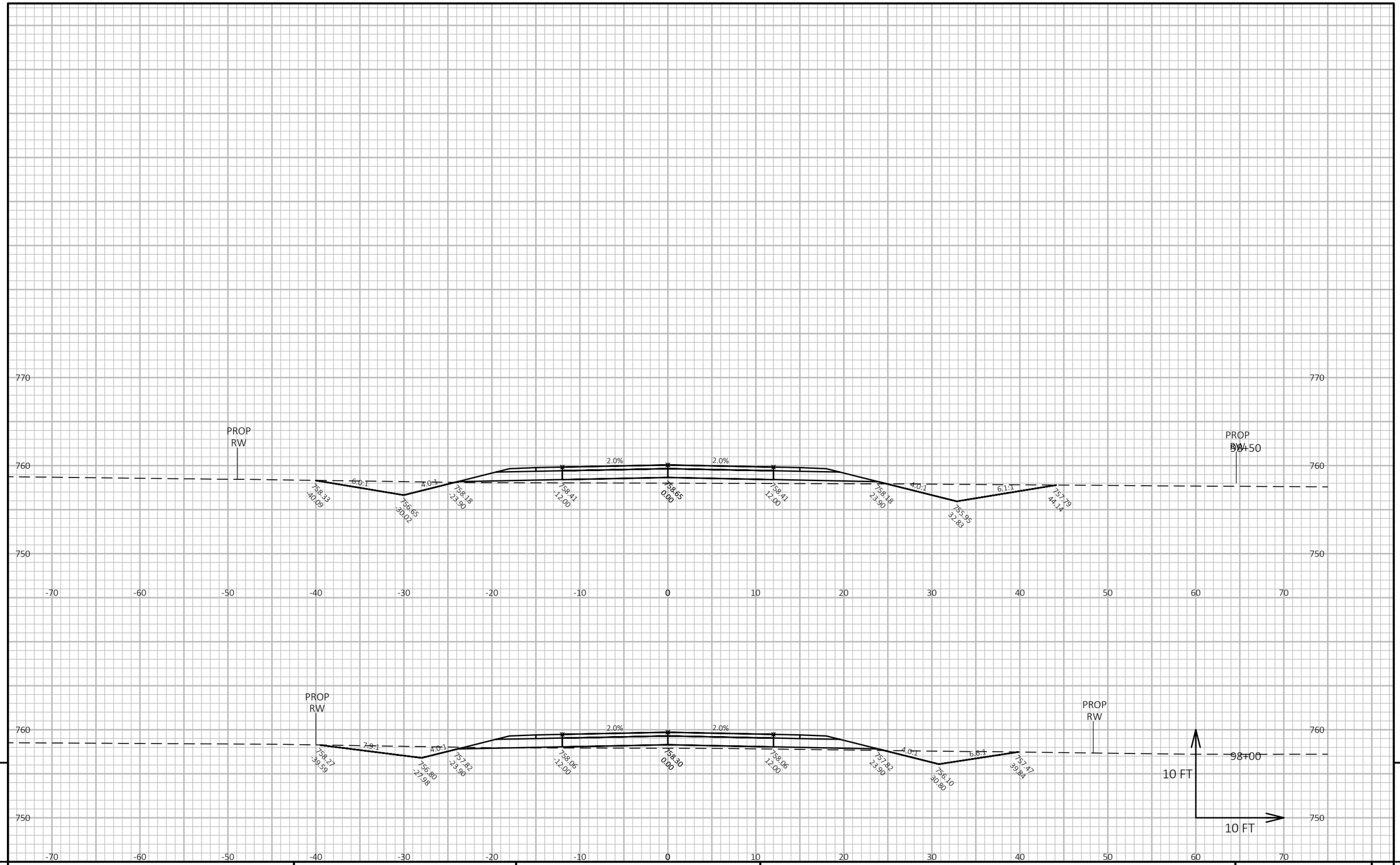

9

9

PROJECT NO: 4627-02-71	HWY: CTH A	COUNTY: WINNEBAGO	CROSS SECTIONS: CTH GG	SHEET 252	E

FILE NAME : W:\PROJECTS\W0059\81700113\CADD\CIVIL3D\XREF\X_CTH A_CRDR.DWG
LAYOUT NAME - GG - (10)
PLOT DATE : 1/7/2020 4:11 PM
PLOT BY : JORDAN JELINSKI
PLOT NAME :
PLOT SCALE : 1 IN:10 FT HORZ. / 1 IN:10 FT VERT.

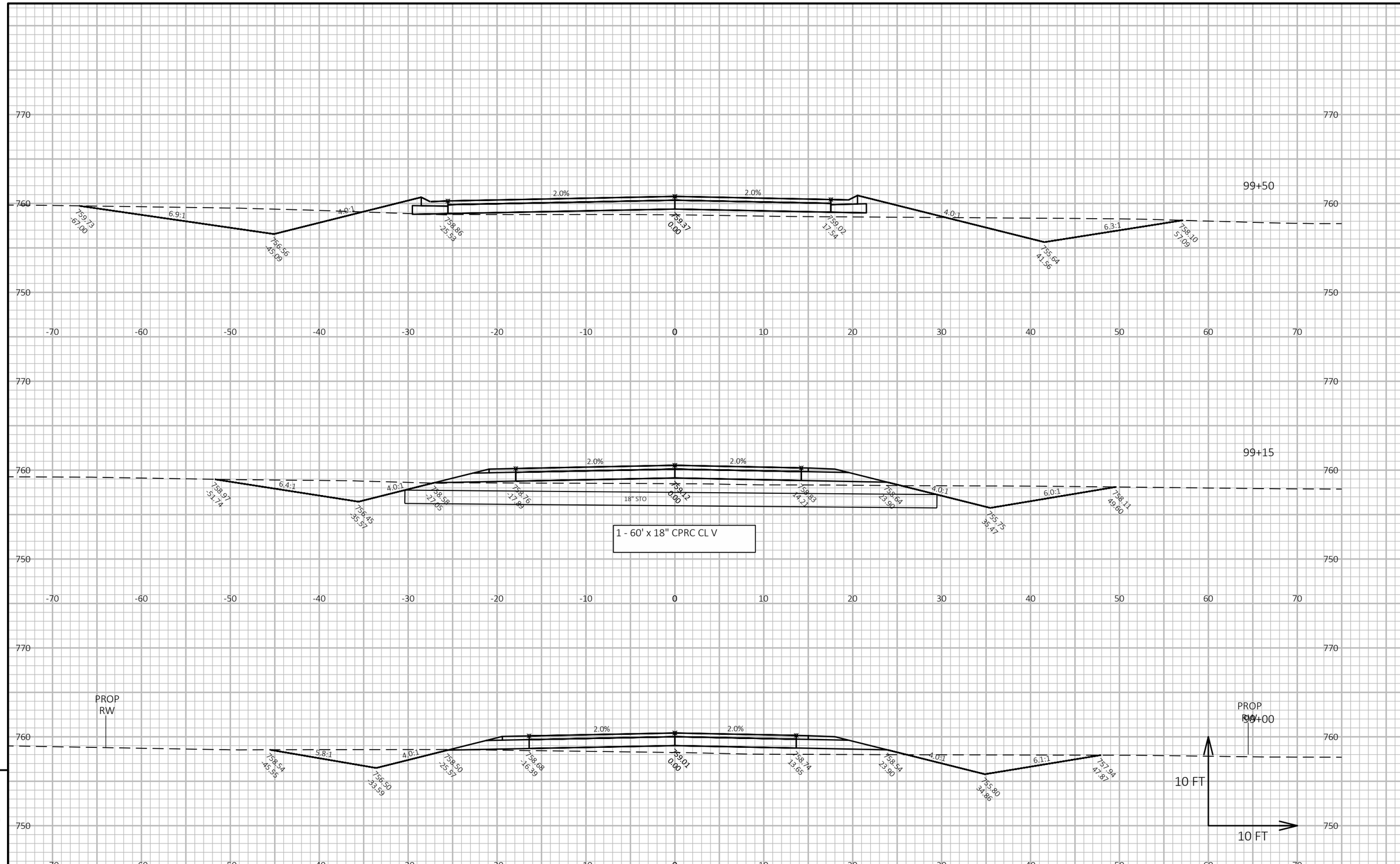

PROJECT NO: 4627-02-71	HWY: CTH A	COUNTY: WINNEBAGO	CROSS SECTIONS: CTH GG	SHEET 253	E

FILE NAME : W:\PROJECTS\W0059\81700113\CADD\CIVIL3D\XREF\X_CTH A_CRDR.DWG
LAYOUT NAME - GG - (11)
PLOT DATE : 1/7/2020 4:12 PM
PLOT BY : JORDAN JELINSKI
PLOT NAME :
PLOT SCALE : 1 IN:10 FT HORZ. / 1 IN:10 FT VERT.

Wisconsin Department of Transportation

Dedicated people creating transportation solutions through innovation and exceptional service.

http://www.dot.wisconsin.gov