RHI

APRIL 2020

PROJECT ID: 1009-44-67, 9216-07-61, 9225-06-61

WITH:

COUNTY: LINCOLN AND PRICE

23

ORDER OF SHEETS

Section No.	1	Title
Section No.	2	Typical Sections and Details
Section No.	3	Estimate of Quantities
Section No.	3	Miscellaneous Quantities
Section No.	4	Right of Way Plat
Section No.	5	Plan and Profile
Section No.	6	Standard Detail Drawings
Section No.	7	Sign Plates
Section No.	8	Structure Plans
Section No.	9	Computer Earthwork Data
Section No.	9	Cross Sections

TOTAL SHEETS = 200

STATE OF WISCONSIN
DEPARTMENT OF TRANSPORTATION

PLAN OF PROPOSED IMPROVEMENT

STATE PROJECT	FEDERAL PROJECT	
	PROJECT	CONTRACT
1009-44-67	WISC 2020148	1
9216-07-61		
9225-06-61		

LINCOLN COUNTY CULVERT REPLACEMENTS
C-35-12, C-35-63, C-35-69
VARIOUS HIGHWAYS
LINCOLN COUNTY

STATE PROJECT NUMBER
1009-44-67

OGEMA - TOMAHAWK
PRICE COUNTY CULVERT LINING
STH 86
PRICE COUNTY

STATE PROJECT NUMBER
9216-07-61

CHELSEA - SPIRIT
JOHNSON CREEK CULVERT REPLACEMENTS
STH 102
PRICE COUNTY

STATE PROJECT NUMBER
9225-06-61

PROJECT LOCATIONS

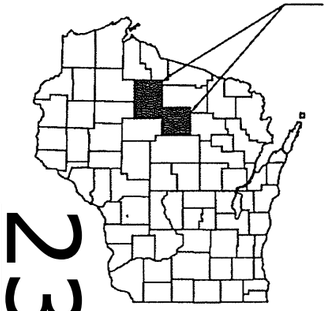

N

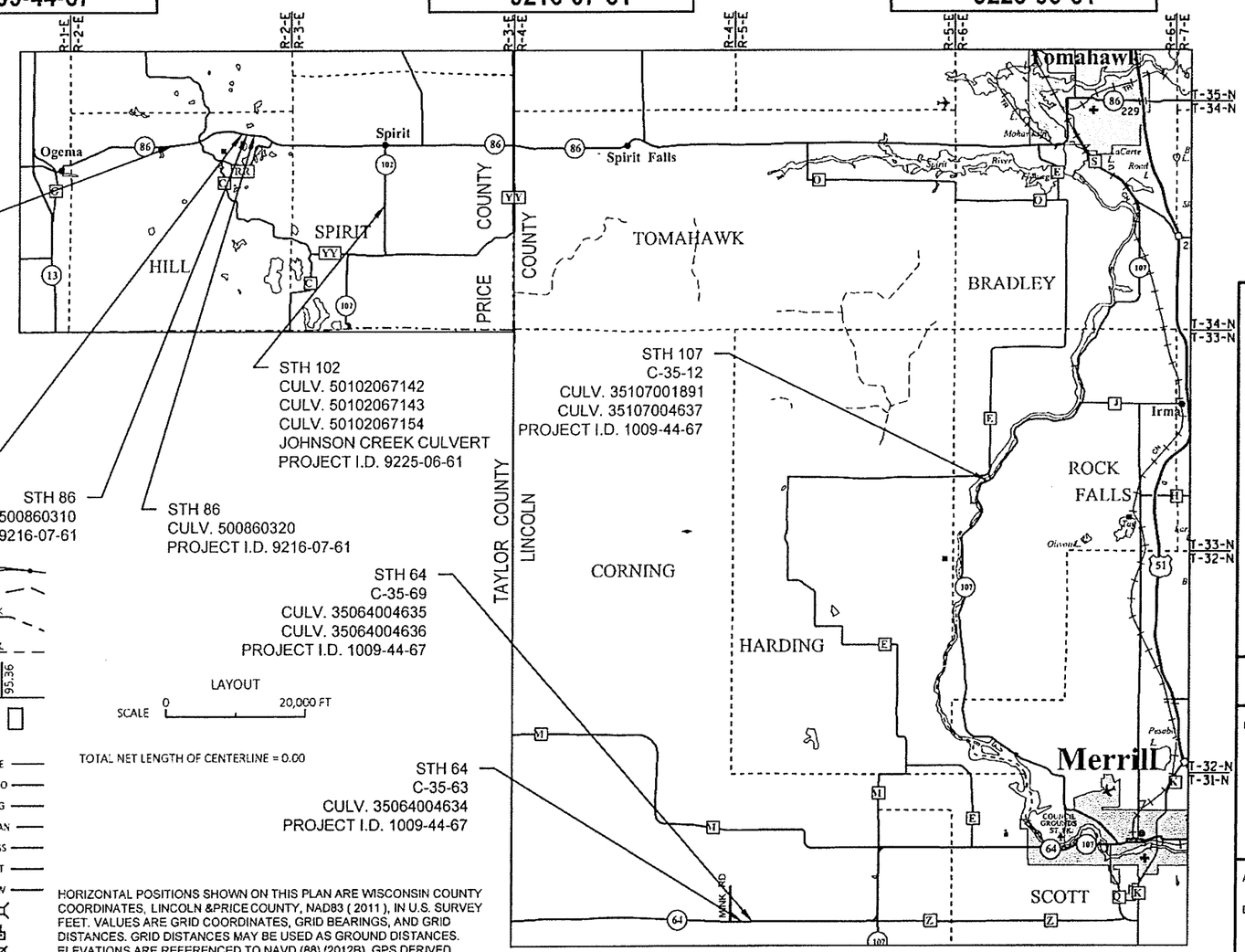

STH 86
CULV. 500860200
PROJECT I.D. 9216-07-61

STH 102
CULV. 50102067142
CULV. 50102067143
CULV. 50102067154
JOHNSON CREEK CULVERT
PROJECT I.D. 9225-06-61

STH 107
C-35-12
CULV. 35107001891
CULV. 35107004637
PROJECT I.D. 1009-44-67

STH 86
CULV. 500860290
PROJECT I.D. 9216-07-61

STH 86
CULV. 500860310
PROJECT I.D. 9216-07-61

STH 86
CULV. 500860320
PROJECT I.D. 9216-07-61

STH 64
C-35-69
CULV. 35064004635
CULV. 35064004636
PROJECT I.D. 1009-44-67

STH 64
C-35-63
CULV. 35064004634
PROJECT I.D. 1009-44-67

LAYOUT
SCALE 0 20,000 FT

TOTAL NET LENGTH OF CENTERLINE = 0.00

DESIGN DESIGNATION		STH 107	STH 64	STH 102	STH 86
A.A.D.T.	(2020) =	360	700	220	585
A.A.D.T.	(2040) =	410	810	240	705
D.H.V.	=	51	80	44	-
D.D.	=	60/40	61/39	60/40	62/38
T.	=	8.1	19.8	14.8	6.2
DESIGN SPEED	=	60 MPH	60 MPH	60 MPH	60 MPH
ESALS	=	XX	XX	XX	XX

CONVENTIONAL SYMBOLS

PLAN
- CORPORATE LIMITS
- PROPERTY LINE
- LOT LINE
- LIMITED HIGHWAY EASEMENT
- EXISTING RIGHT OF WAY
- PROPOSED OR NEW R/W LINE
- SLOPE INTERCEPT
- REFERENCE LINE (300 FT)
- EXISTING CULVERT
- PROPOSED CULVERT (Box or Pipe)
- COMBUSTIBLE FLUIDS (CAUTION)
- MARSH AREA
- WOODED OR SHRUB AREA

PROFILE
- GRADE LINE
- ORIGINAL GROUND
- MARSH OR ROCK PROFILE (To be noted as such) (ROCK)
- SPECIAL DITCH (LABEL)
- GRADE ELEVATION (95.36)
- CULVERT (Profile View)

UTILITIES
- ELECTRIC — E —
- FIBER OPTIC — FO —
- GAS — G —
- SANITARY SEWER — SAN —
- STORM SEWER — SS —
- TELEPHONE — T —
- WATER — W —
- UTILITY PEDESTAL
- POWER POLE
- TELEPHONE POLE

HORIZONTAL POSITIONS SHOWN ON THIS PLAN ARE WISCONSIN COUNTY COORDINATES, LINCOLN &PRICE COUNTY, NAD83 (2011), IN U.S. SURVEY FEET. VALUES ARE GRID COORDINATES, GRID BEARINGS, AND GRID DISTANCES. GRID DISTANCES MAY BE USED AS GROUND DISTANCES. ELEVATIONS ARE REFERENCED TO NAVD (88) (2012B). GPS DERIVED ELEVATIONS ARE BASED ON GEOID 12B.

ORIGINAL PLANS PREPARED BY
OMNNI ASSOCIATES

WISCONSIN
DAVID S. GALE
E-26283
Luxemburg, Wis.
PROFESSIONAL ENGINEER
10/28/19

STATE OF WISCONSIN
DEPARTMENT OF TRANSPORTATION

PREPARED BY

Surveyor	OMNNI ASSOCIATES
Designer	OMNNI ASSOCIATES
Project Manager	JESSE JEFFERSON
Regional Examiner	
Regional Supervisor	R. STAFFORD

APPROVED FOR THE DEPARTMENT
DATE: 10/28/19 (Signature)

E

GENERAL NOTES

LOCATIONS OF EXISTING AND PROPOSED UTILITY FACILITIES AS SHOWN ON THE PLANS ARE APPROXIMATE. THERE MAY ALSO BE OTHER UTILITY FACILITIES WITHIN THE PROJECT AREA THAT ARE NOT SHOWN.

1009-44-67 (STH 64 AND STH 107):

UTILITIES

COMMUNICATIONS
FRONTIER COMMUNICATIONS OF WI LLC
521 4TH ST
WAUSAU, WI 54403
ATTN: CHRIS POLLACK
TELEPHONE: (715) 847-1240
EMAIL: CHRISTOPHER.POLLACK@FTR.COM

ELECTRIC
WISCONSIN PUBLIC SERVICE CORPORATION
PO BOX 1166
WAUSAU, WI 54402
ATTN: CLAYTON VIRCKS
TELEPHONE: (715) 573-7806
EMAIL: CLAYTON.VIRCKS@WISCONSINPUBLICSERVICE.COM

COMMUNICATIONS (STH 64 C-35-63 AND C-35-69 ONLY)
CHARTER COMMUNICATIONS
853 MCINTOSH ST
WAUSAU, WI 54402
ATTN: SCOTT OLSON
TELEPHONE: 715-216-6204
EMAIL: SCOTT.OLSON@CHARTER.COM

9225-06-61 (STH 102):

UTILITIES

COMMUNICATIONS
CENTURYLINK
P.O. BOX 78
HAWKINS, WI 54530
ATTN: BRIAN HUHN
TELEPHONE: (715) 563-8294
EMAIL: BRIAN.HUHN@CENTURYLINK.COM

ELECTRIC
PRICE ELECTRIC COOPERATIVE INC
PO BOX 110
PHILLIPS, WI 54555
ATTN: BEN ORYSEN
TELEPHONE: (715) 339-2155
EMAIL: BORYSEN@PRICE-ELECTRIC.COM

9216-07-61 (STH 86):

UTILITIES

COMMUNICATIONS
CENTURYLINK
P,O. BOX 78
HAWKINS, WI 54530
ATTN: BRIAN HUHN
TELEPHONE: (715) 563-8294
EMAIL: BRIAN.HUHN@CENTURYLINK.COM

OTHER CONTACTS

DNR LIAISON
DEPARTMENT OF NATURAL RESOURCES
NORTHERN REGION HEADQUARTERS
107 SUTLIFF
RHINELANDER, WI 54501
ATTN: WENDY HENNIGES
TELEPHONE: 715-365-8916
E-MAIL: WENDY.HENNIGES@WISCONSIN.GOV

STH 64 (C-35-63) TOTAL PROJECT AREA = 0.96 ACRES
TOTAL AREA EXPECTED TO BE DISTURBED BY CONSTRUCTION ACTIVITIES = 0.47 ACRES

STH 64 (C-35-69) TOTAL PROJECT AREA = 0.94 ACRES
TOTAL AREA EXPECTED TO BE DISTURBED BY CONSTRUCTION ACTIVITIES = 0.37 ACRES

STH 86 TOTAL PROJECT AREA = 14.44 ACRES
TOTAL AREA EXPECTED TO BE DISTURBED BY CONSTRUCTION ACTIVITIES = 2.85 ACRES

STH 102 TOTAL PROJECT AREA = 1.07 ACRES
TOTAL AREA EXPECTED TO BE DISTURBED BY CONSTRUCTION ACTIVITIES = 0.60 ACRES

STH 107 TOTAL PROJECT AREA = 0.48 ACRES
TOTAL AREA EXPECTED TO BE DISTURBED BY CONSTRUCTION ACTIVITIES = 0.23 ACRES

ORDER OF SECTION 2 SHEETS

GENERAL NOTES
TYPICAL SECTIONS
CONSTRUCTION DETAILS
EROSION CONTROL PLAN
TRAFFIC CONTROL PLAN
DETOUR PLAN

RUNOFF COEFFICIENT TABLE

	HYDROLOGIC SOIL GROUP											
	A			B			C			D		
	SLOPE RANGE (PERCENT)			SLOPE RANGE (PERCENT)			SLOPE RANGE (PERCENT)			SLOPE RANGE (PERCENT)		
LAND USE:	0-2	2-6	6 & OVER	0-2	2-6	6 & OVER	0-2	2-6	6 & OVER	0-2	2-6	6 & OVER
ROW CROPS	0.08	0.16	0.22	0.12	0.20	0.27	0.15	0.24	0.33	0.19	0.28	0.38
	0.22	0.30	0.38	0.26	0.34	0.44	0.30	0.37	0.50	0.34	0.41	0.56
MEDIAN STRIP -	0.19	0.20	0.24	0.19	0.22	0.26	0.20	0.23	0.30	0.20	0.25	0.30
TURF	0.24	0.26	0.30	0.25	0.28	0.33	0.26	0.30	0.37	0.27	0.32	0.40
SIDE SLOPE -			0.25			0.27			0.28			0.30
TURF			0.32			0.34			0.36			0.38
PAVEMENT:												
ASPHALT	.70 - .95											
CONCRETE	.80 - .95											
BRICK	.70 - .80											
DRIVES, WALKS	.75 - .85											
ROOFS	.75 - .95											
GRAVEL ROADS, SHOULDERS	.40 - .60											

DIGGERS HOTLINE
Dial 811 or (800) 242-8511
www.DiggersHotline.com

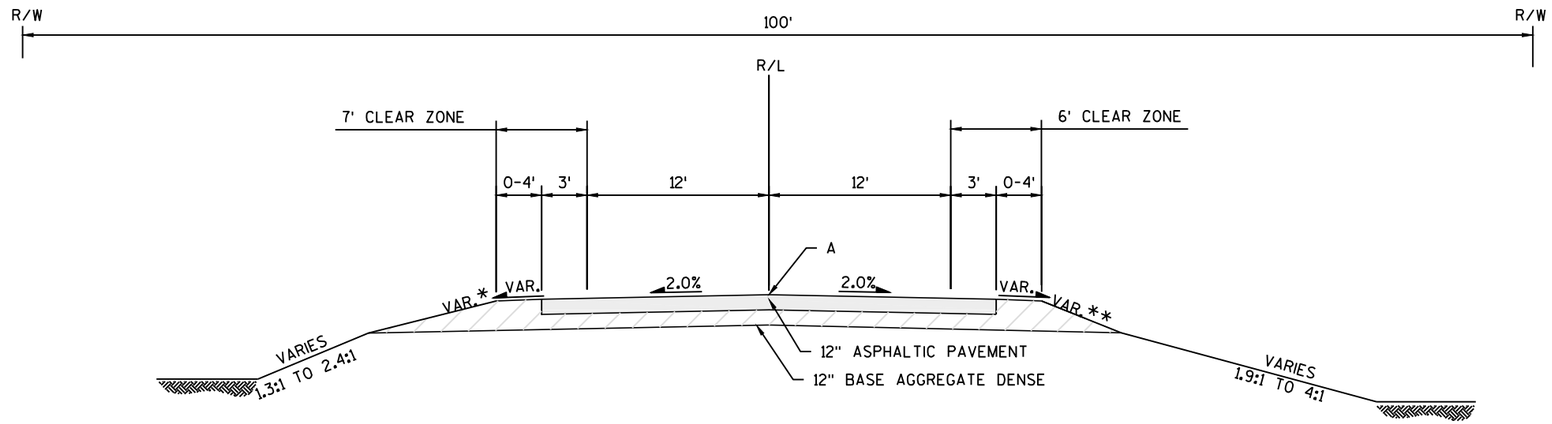

* 4.5:1 TO 7.5:1

** 1.9:1 TO 4:1

TYPICAL EXISTING SECTION STH 64 (C-35-63)

STA 326+39 TO STA 328+02

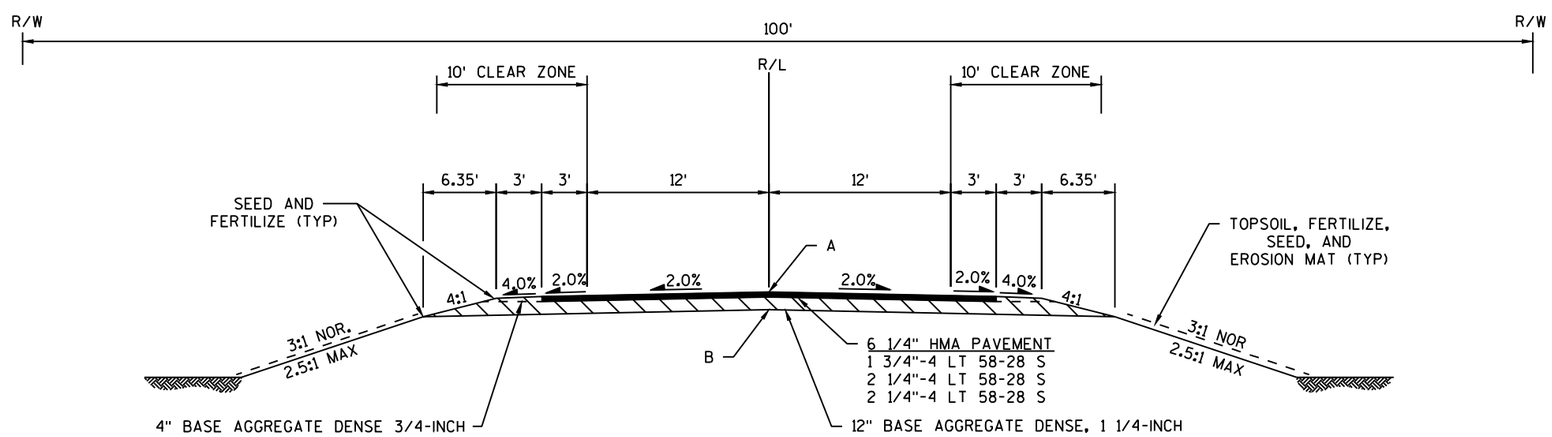

TYPICAL FINISHED SECTION STH 64 (C-35-63)

STA 326+39 TO STA 328+02

NOTE A: POINT REFERRED TO ON PROFILE.
NOTE B: POINT REFERRED TO ON CROSS SECTIONS.

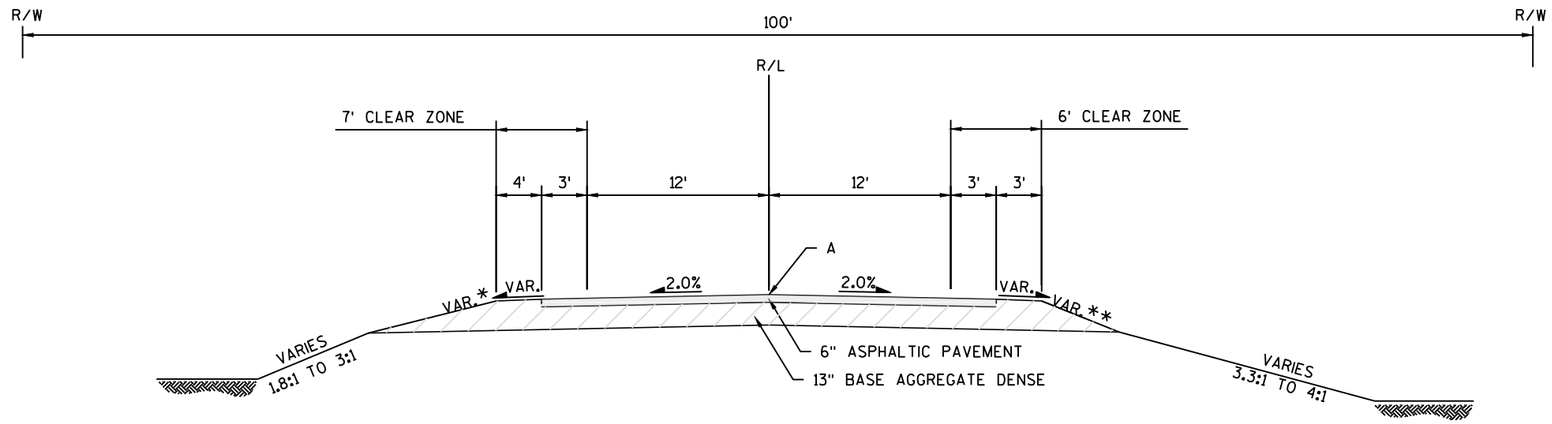

* 3.3:1 TO 4.8:1

** 2:1 TO 2.8:1

TYPICAL EXISTING SECTION STH 64 (C-35-69)

STA 3+24 TO STA 4+95

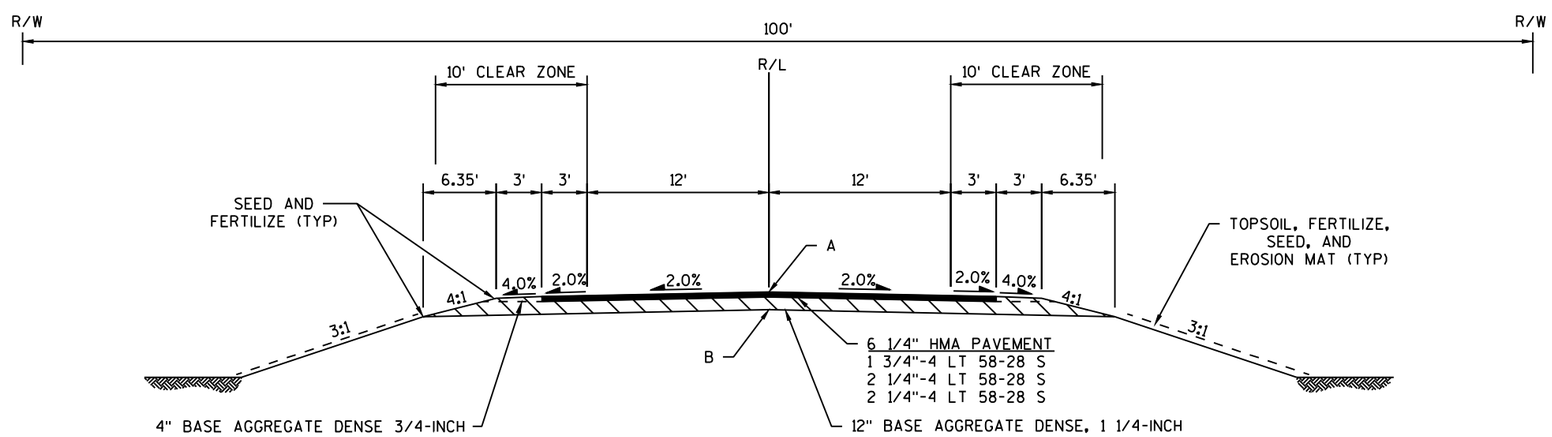

TYPICAL FINISHED SECTION STH 64 (C-35-69)

STA 3+24 TO STA 4+95

NOTE A; POINT REFERRED TO ON PROFILE.
NOTE B; POINT REFERRED TO ON CROSS SECTIONS.

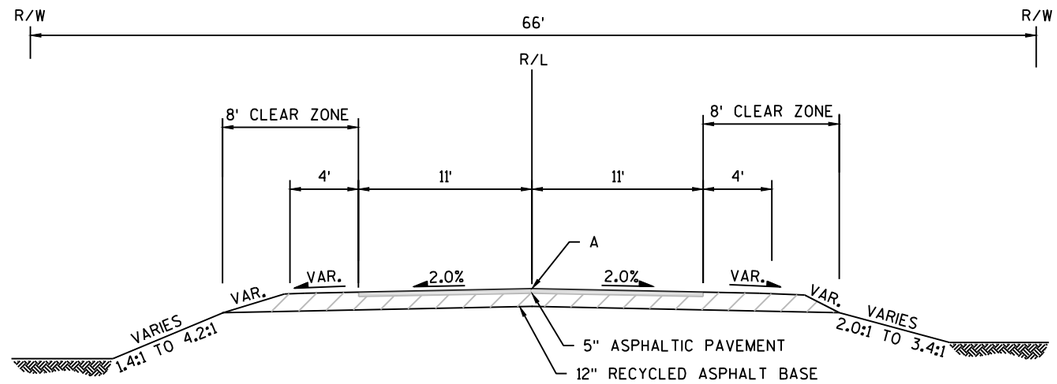

TYPICAL EXISTING SECTION STH 107

STA 1+50 TO STA 2+70

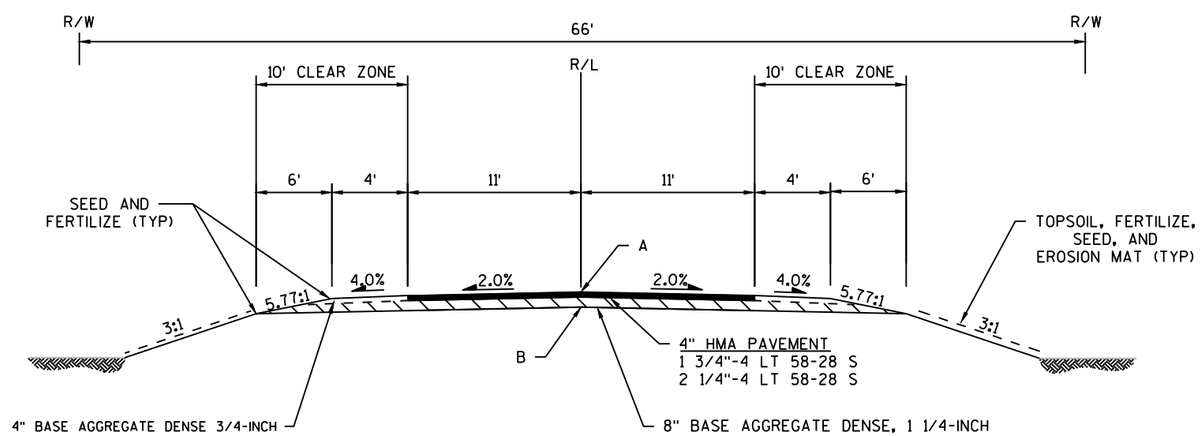

TYPICAL FINISHED SECTION STH 107

STA 1+50 TO STA 2+70

NOTE A; POINT REFERRED TO ON PROFILE.
NOTE B; POINT REFERRED TO ON CROSS SECTIONS.

PROJECT NO: 1009-44-67	HWY: STH 107	COUNTY: LINCOLN	TYPICAL SECTION STH 107	SHEET 5	E

2

△ 500860200
2.2:1 TO 5.3:1
500860290
2.1:1 TO 5.3:1
500860310 & 500860320
2:1 TO 6.8:1

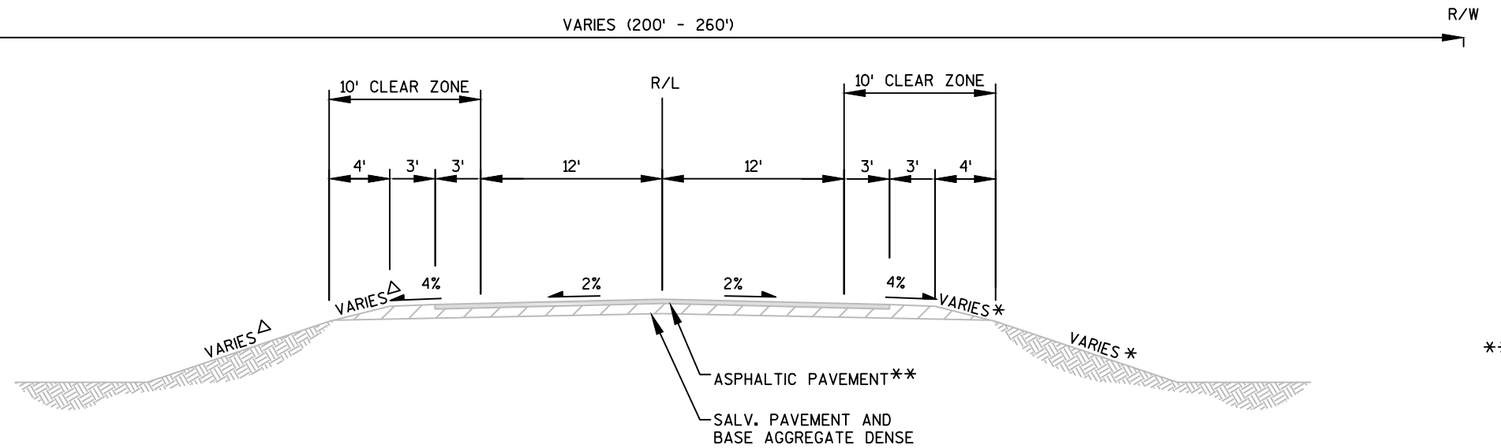

* 500860200
2.3:1 TO 3.8:1
500860290
2.0:1 TO 5:1
500860310 & 500860320
2:1 TO 5.7:1

** CURRENTLY PAVED TO BEAM GUARD WHERE BEAM GUARD IS PRESENT.

TYPICAL EXISTING SECTION STH 86

CULVERTS 500860200, 500860290, 500860310, AND 500860320

△ 500860200
2.2:1 TO 5.3:1
500860290
2.1:1 TO 5.3:1
500860310 & 500860320
2:1 TO 6.8:1

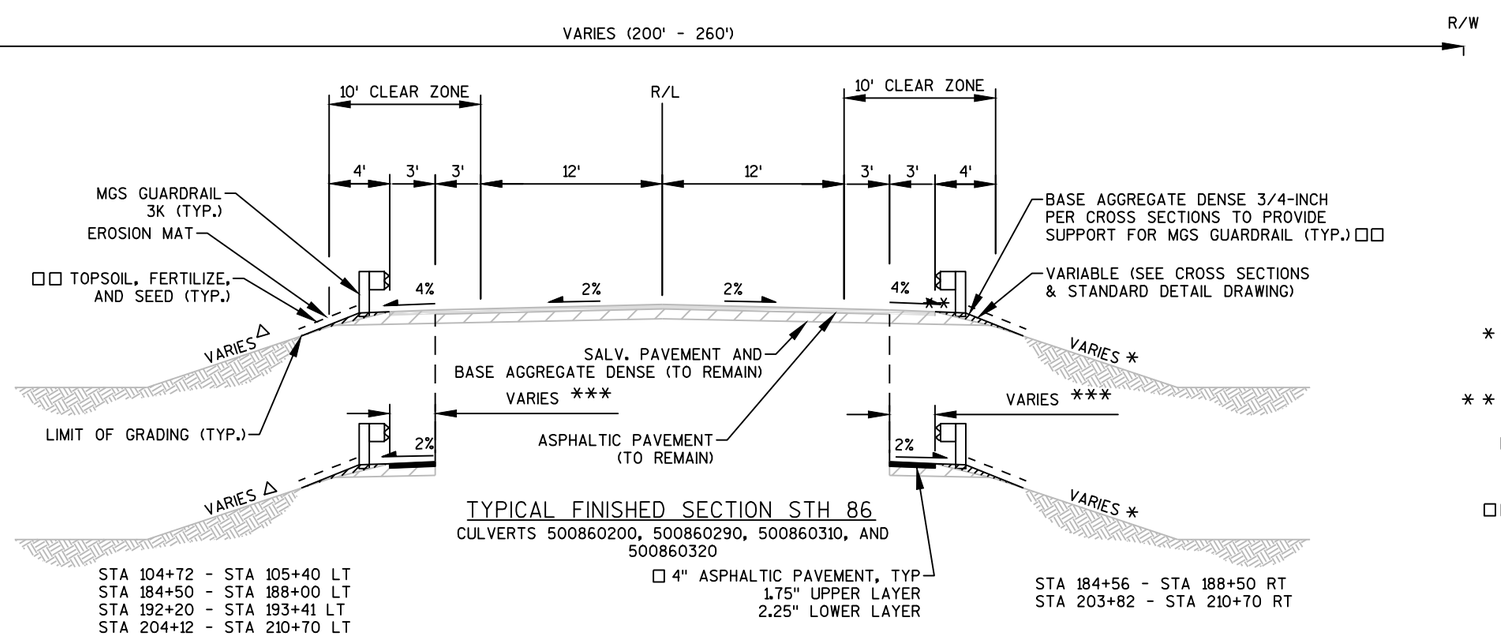

TYPICAL FINISHED SECTION STH 86

CULVERTS 500860200, 500860290, 500860310, AND 500860320

* 500860200
2.3:1 TO 3.8:1
500860290
2.0:1 TO 5:1
500860310 & 500860320
2:1 TO 5.7:1

** 10:1 PER STANDARD DETAIL DRAWING

*** VARIES FROM 3' TO 5' AT EAT

□ PAVE BEYOND EXISTING BEAM GUARD AREAS PER CONSTRUCTION DETAIL AND PLAN AND PROFILE.

□□ ALL WORK INCLUDED IN BARRIER SYSTEM GRADING SHAPING FINISHING

2

PROJECT NO: 9216-07-61	HWY: STH 86	COUNTY: PRICE	PLAN: TYPICAL SECTION STH 86	SHEET 6	E

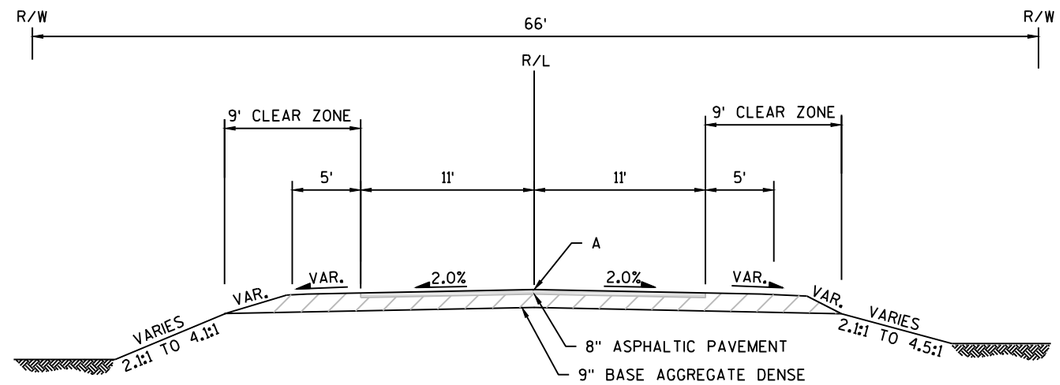

TYPICAL EXISTING SECTION STH 102

STA 14+34 TO STA 15+93

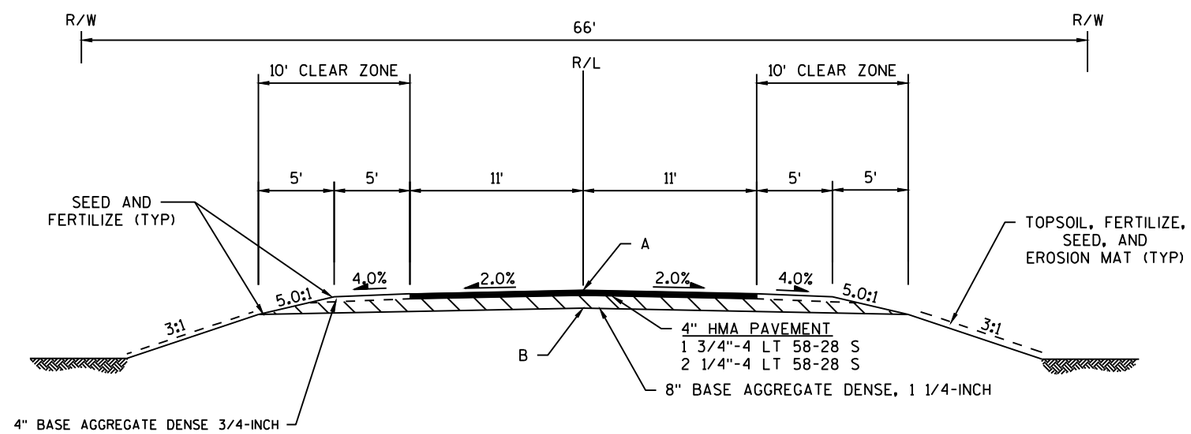

TYPICAL FINISHED SECTION STH 102

STA 14+34 TO STA 15+93

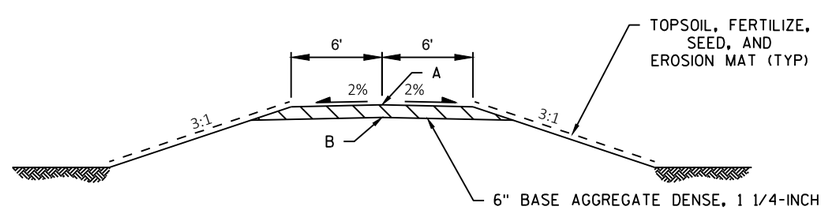

TYPICAL FINISHED SECTION TEMPORARY DRIVEWAY

STA 100+10.79 TO STA 101+65.16

NOTE A; POINT REFERRED TO ON PROFILE.
NOTE B; POINT REFERRED TO ON CROSS SECTIONS.

2

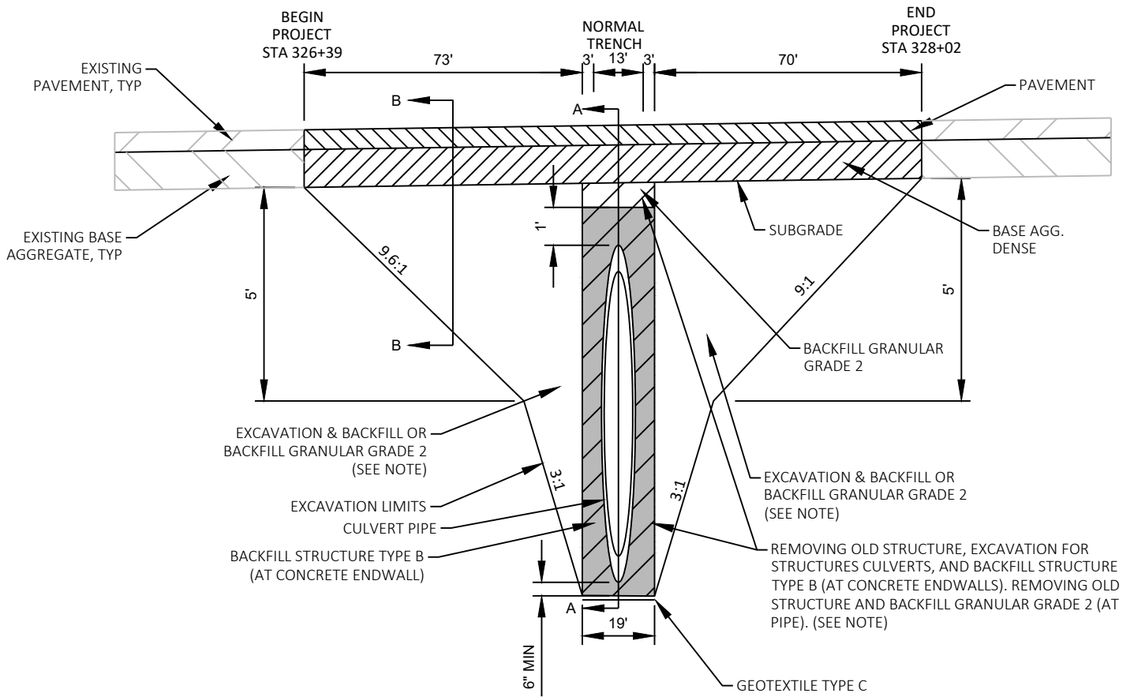

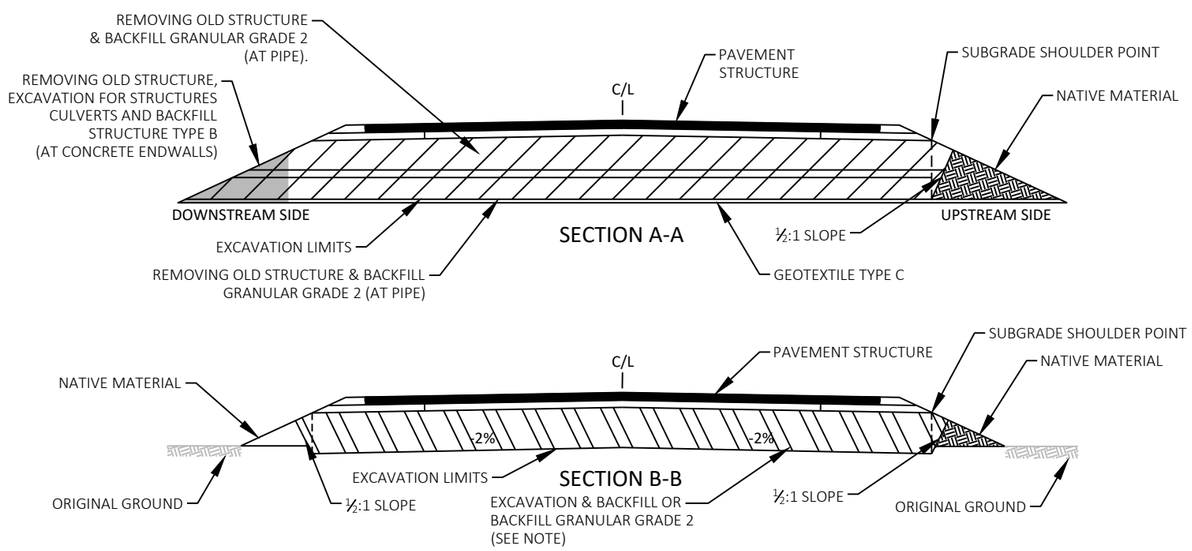

CULVERT EXCAVATION AND INSTALLATION DETAIL

STH 64 (C-35-63)

NOTE: EXCAVATION AND BACKFILL INCLUDED UNDER STANDARD PIPE ITEM. UNLESS DETERMINED TO BE UNUSABLE BY THE ENGINEER, ALL MATERIAL REMOVED IN THE TRANSITION CUT (EXCAVATION AREA) AND STRUCTURE EXCAVATIONS TO BE REUSED AS BACKFILL IN ALL AREAS EXCAVATED FOR THE CULVERT AND TRANSITION AREA EXCEPT WHERE BACKFILL GRANULAR GRADE 2 AND BACKFILL STRUCTURE TYPE B IS SHOWN IN THE PIPE REPLACEMENT AND CONCRETE ENDWALL AREAS.

2

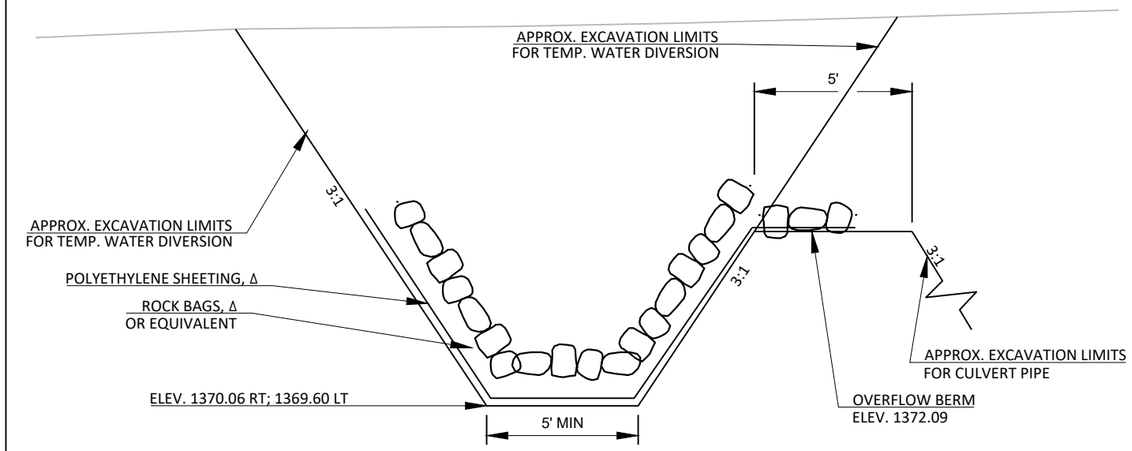

TEMPORARY WATER DIVERSION CHANNEL

STH 64 (C-35-63)

Δ INCIDENTAL TO TEMPORARY WATER DIVERSION

NOTE: EXCEPT FOR MARSH EXCAVATION AND MARSH BACKFILL, EXCAVATION AND BACKFILL FOR THE DIVERSION CHANNEL IS INCLUDED IN THE TEMPORARY WATER DIVERSION ITEM.

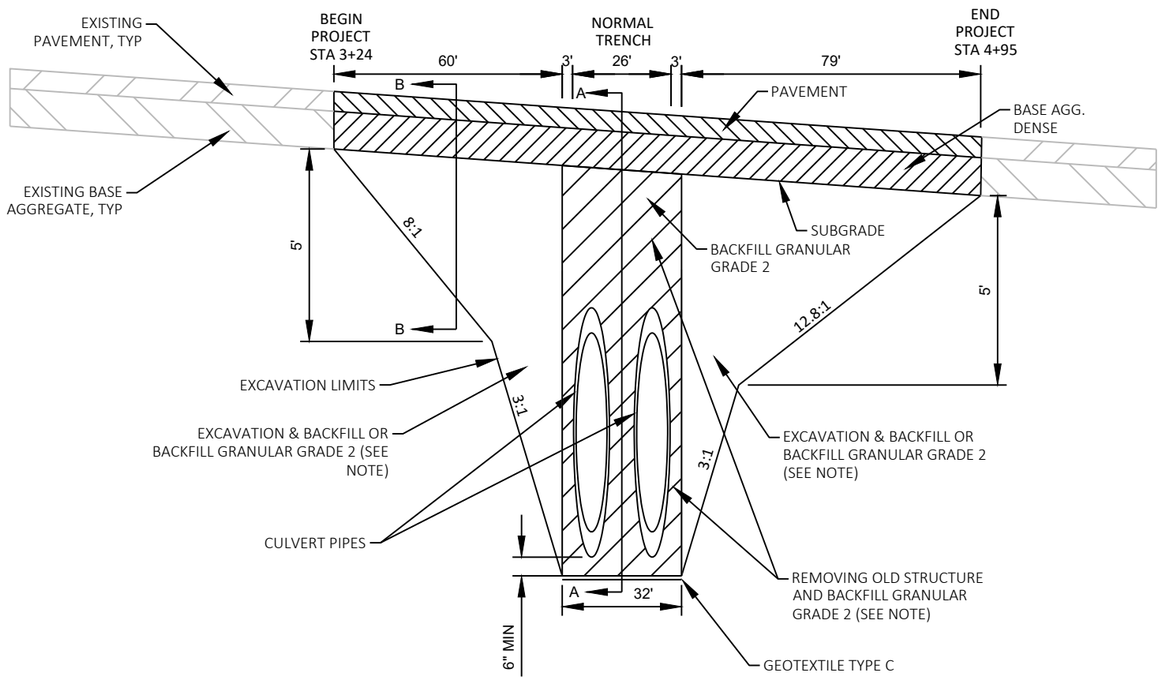

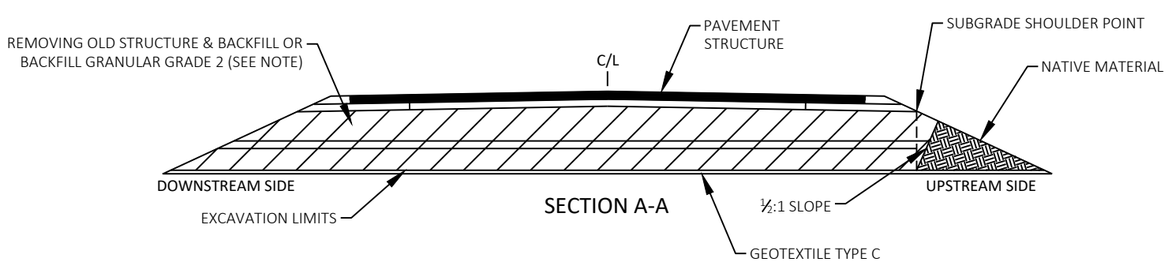

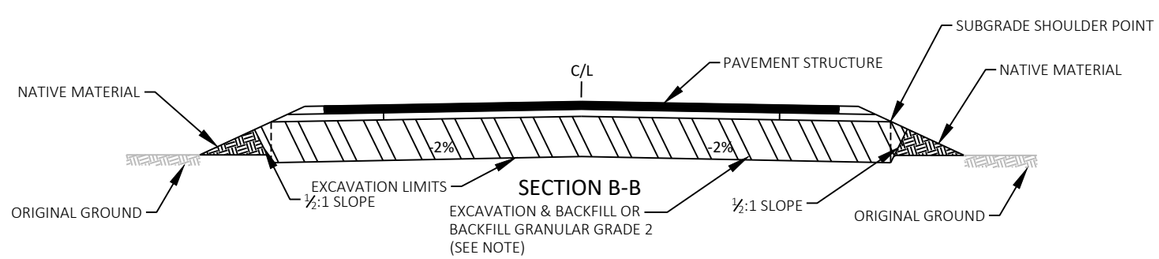

CULVERT EXCAVATION AND INSTALLATION DETAIL

STH 64 (C-35-69)

NOTE: EXCAVATION AND BACKFILL INCLUDED UNDER STANDARD PIPE ITEM. UNLESS DETERMINED TO BE UNUSABLE BY THE ENGINEER, ALL MATERIAL REMOVED IN THE TRANSITION CUT (EXCAVATION AREA) AND REMOVING OLD STRUCTURE AREAS TO BE REUSED AS BACKFILL IN ALL AREAS EXCAVATED FOR THE CULVERT AND TRANSITION AREA EXCEPT WHERE BACKFILL GRANULAR GRADE 2 IS SHOWN.

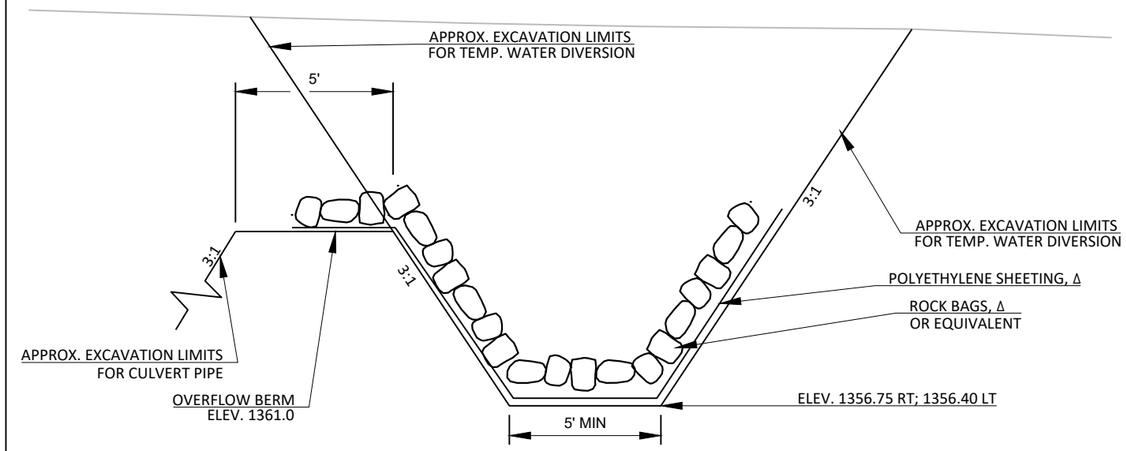

TEMPORARY WATER DIVERSION CHANNEL

STH 64 (C-35-69)

Δ INCIDENTAL TO TEMPORARY WATER DIVERSION

NOTE: EXCEPT FOR MARSH EXCAVATION AND MARSH BACKFILL, EXCAVATION AND BACKFILL FOR THE DIVERSION CHANNEL IS INCLUDED IN THE TEMPORARY WATER DIVERSION ITEM.

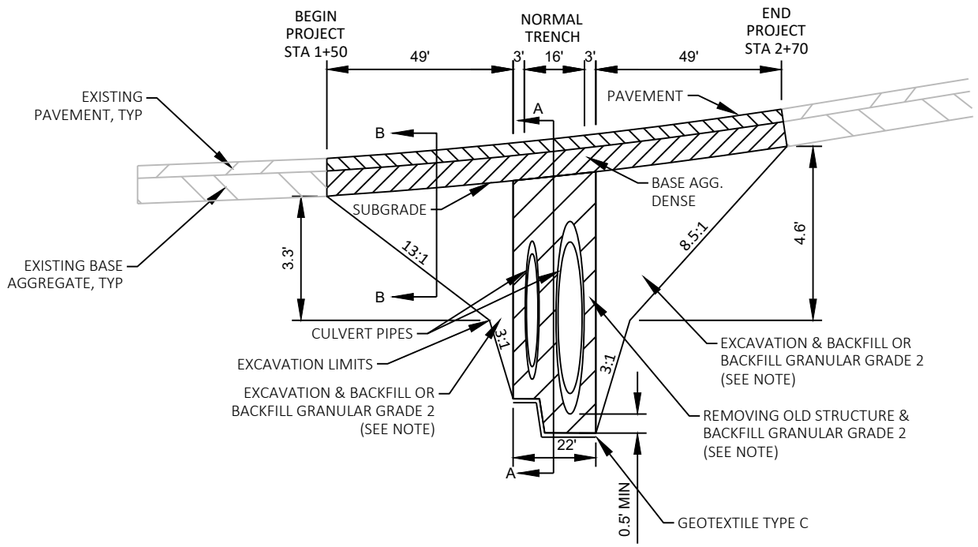

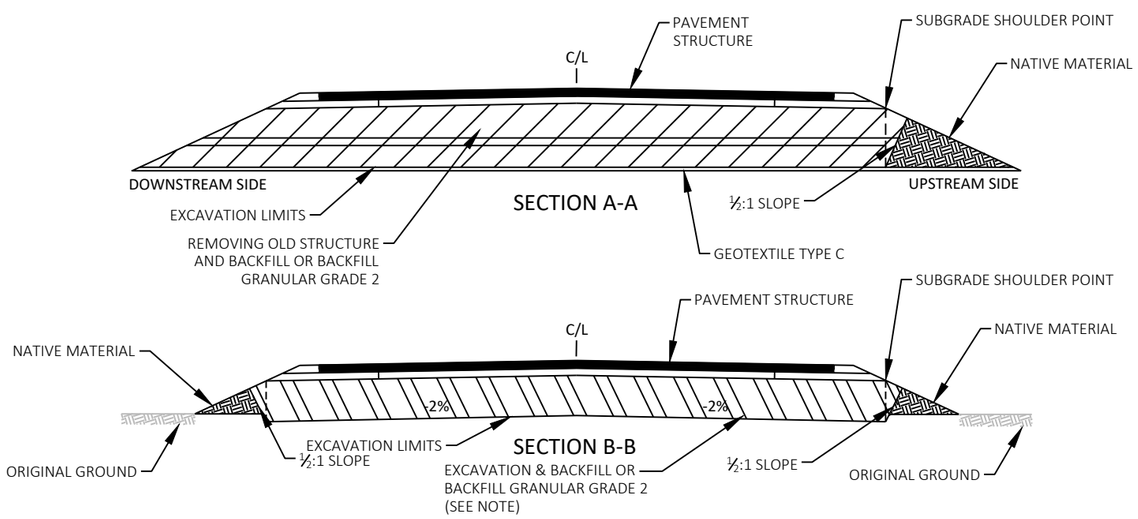

CULVERT EXCAVATION AND INSTALLATION DETAIL

STH 107

NOTE: EXCAVATION AND BACKFILL INCLUDED UNDER STANDARD PIPE BID ITEM. UNLESS DETERMINED TO BE UNUSABLE BY THE ENGINEER, ALL MATERIAL REMOVED IN THE TRANSITION CUT (EXCAVATION AREA) AND REMOVING OLD STRUCTURE AREAS TO BE REUSED AS BACKFILL IN ALL AREAS EXCAVATED FOR THE CULVERT AND TRANSITION AREA EXCEPT WHERE BACKFILL GRANULAR GRADE 2 IS SHOWN.

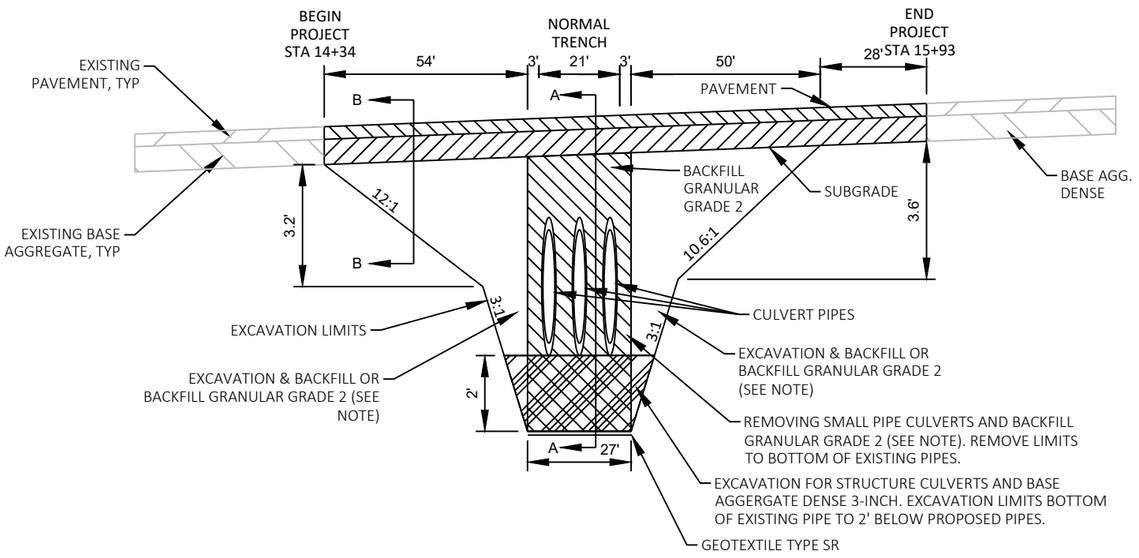

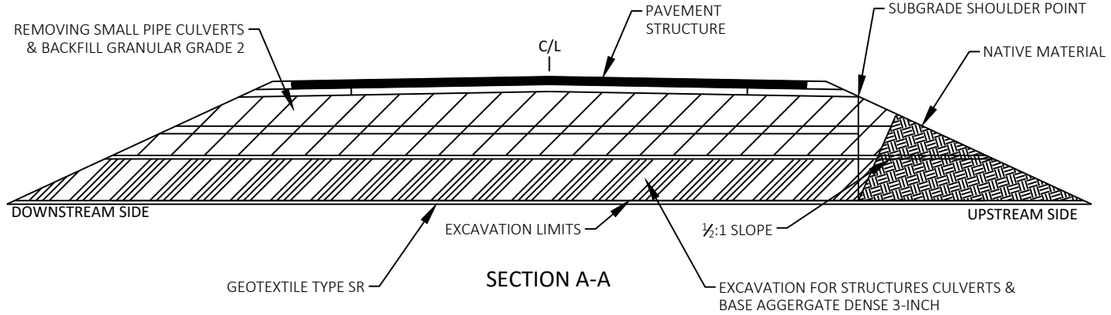

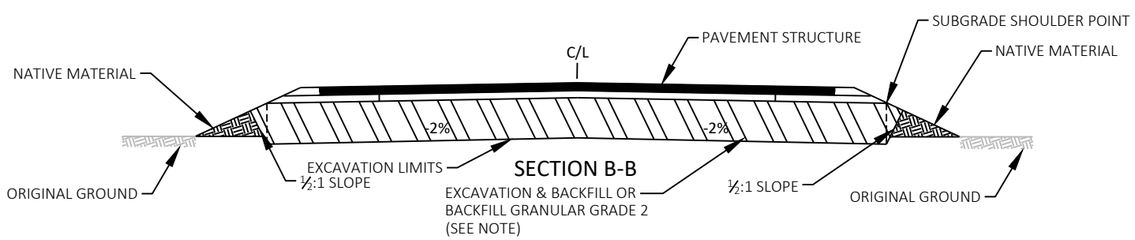

CULVERT EXCAVATION AND INSTALLATION DETAIL

STH 102

NOTE: EXCAVATION AND BACKFILL INCLUDED UNDER STANDARD PIPE ITEM. UNLESS DETERMINED TO BE UNUSABLE BY THE ENGINEER, ALL MATERIAL REMOVED IN THE TRANSITION CUT (EXCAVATION AREA) AND REMOVING SMALL PIPE CULVERTS AREAS TO BE REUSED AS BACKFILL IN ALL AREAS EXCAVATED FOR THE CULVERT AND TRANSITION AREA EXCEPT WHERE BACKFILL GRANULAR GRADE 2 IS SHOWN.

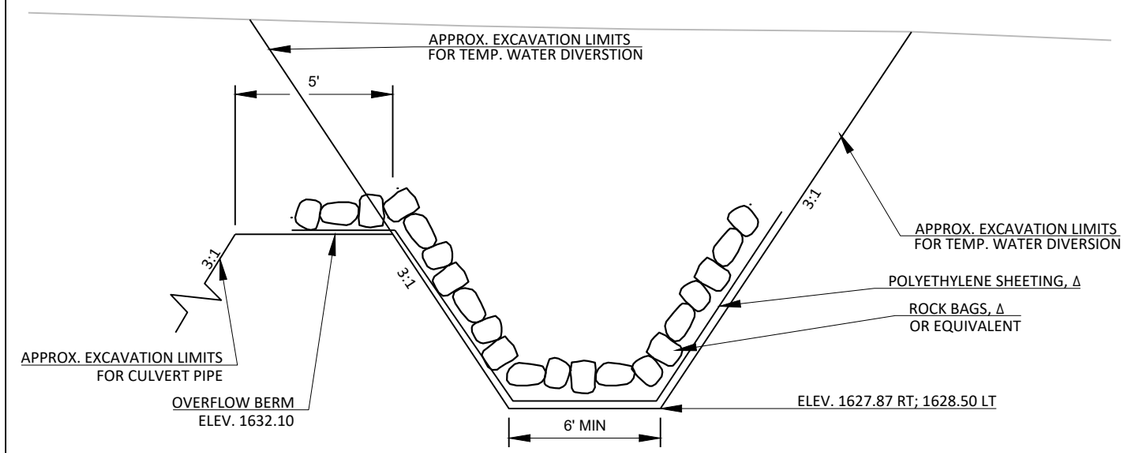

TEMPORARY WATER DIVERSION CHANNEL

STH 102

Δ INCIDENTAL TO TEMPORARY WATER DIVERSION

NOTE: EXCEPT FOR MARSH EXCAVATION AND MARSH BACKFILL, EXCAVATION AND BACKFILL FOR THE DIVERSION CHANNEL IS INCLUDED IN THE TEMPORARY WATER DIVERSION ITEM.

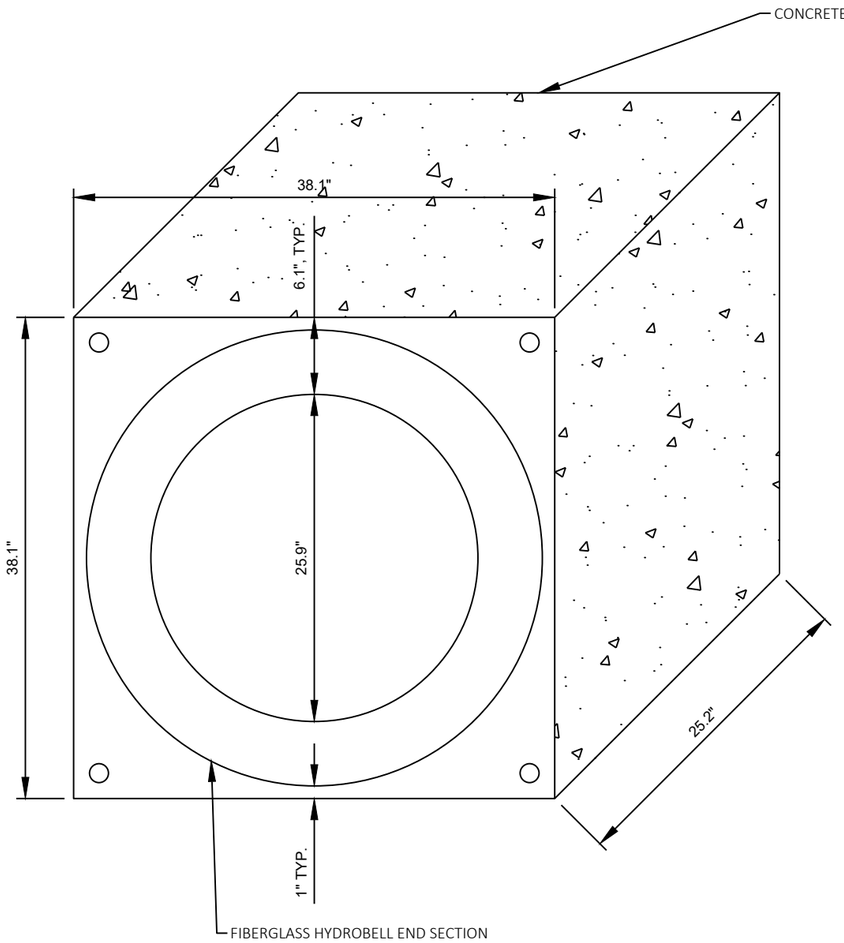

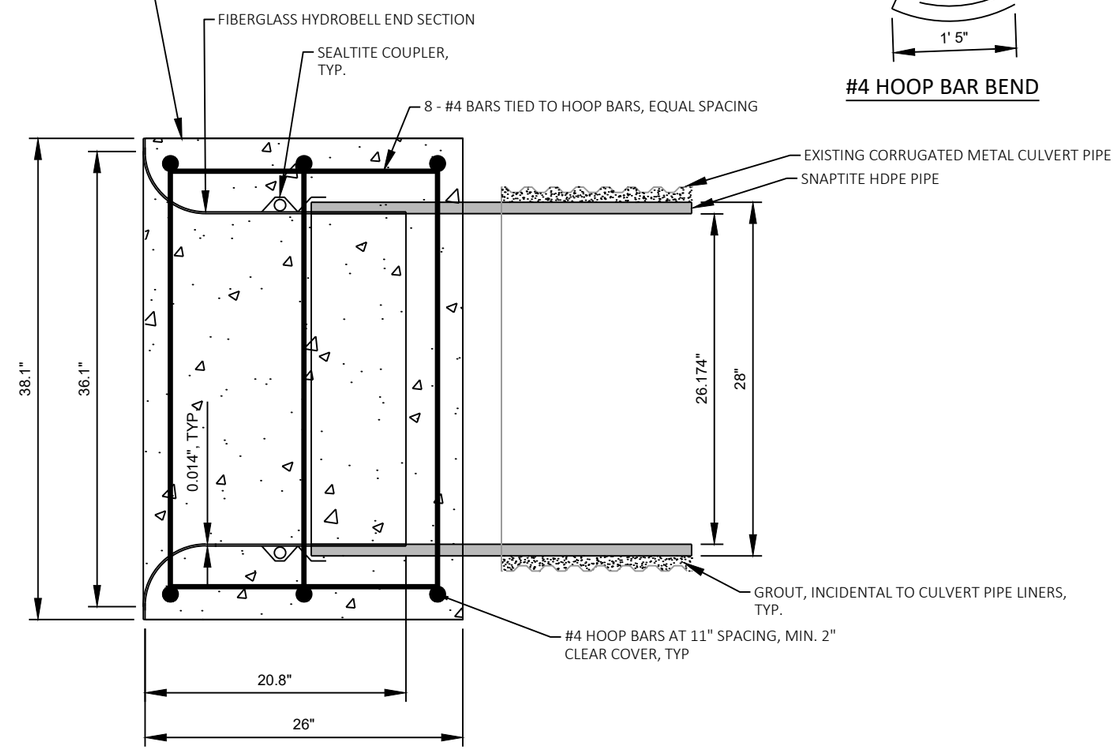

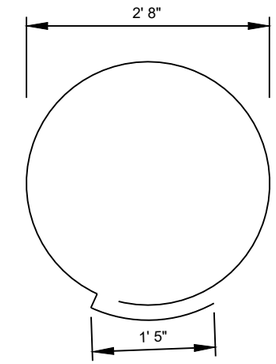

#4 HOOP BAR BEND

CONCRETE COLLAR FOR PIPE

STH 86 CULVERT 500860310 RT

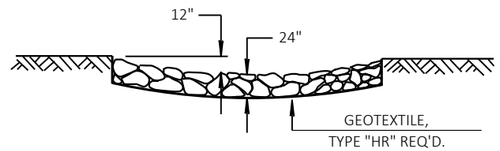

SECTION A-A

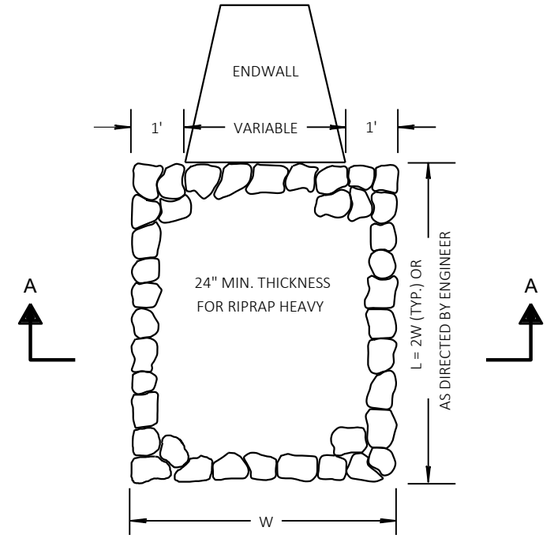

RIPRAP HEAVY TREATMENT AT CULVERTS

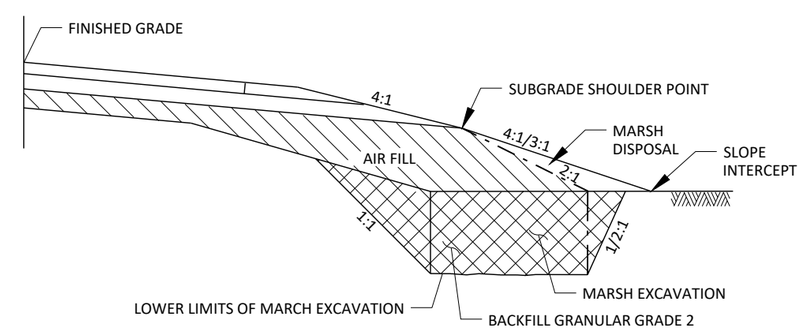

TYPICAL MARSH EXCAVATION

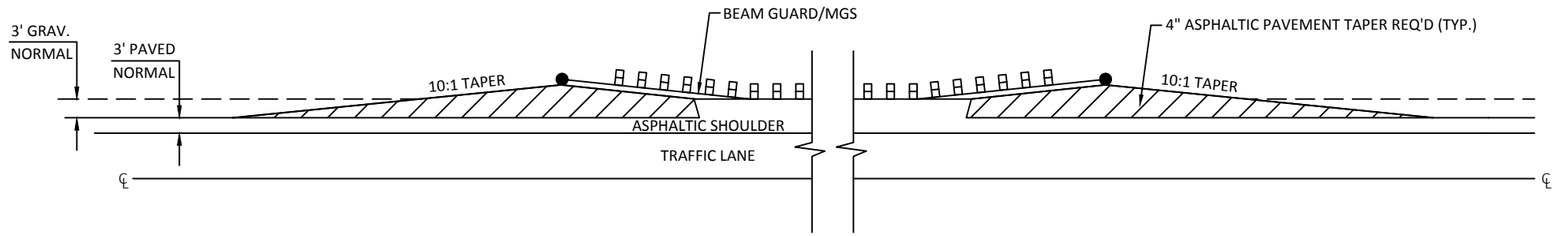

DETAIL FOR ASPHALTIC SHOULDER AT BEAM GUARD / MGS

STH 86

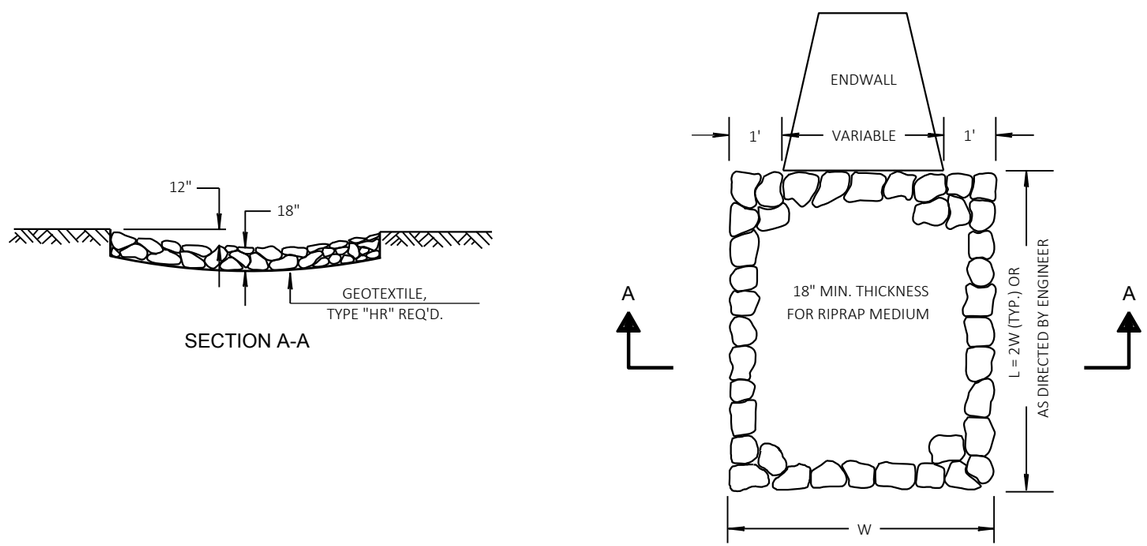

RIPRAP MEDIUM TREATMENT AT CULVERTS

STH 86

PROJECT NO: 9216-07-61	HWY: STH 86	COUNTY: PRICE	CONSTRUCTION DETAIL: STH 86	SHEET 14	E

2

LEGEND

- EROSION MAT URBAN CLASS I, TYPE B
- SILT FENCE
- RIP RAP
- SLOPE INTERCEPT
- SURFACE WATER FLOW
- WETLANDS
- PERMITTED WETLAND IMPACTS (PERMANENT)
- PERMITTED WETLAND IMPACTS (TEMP.)

N

2

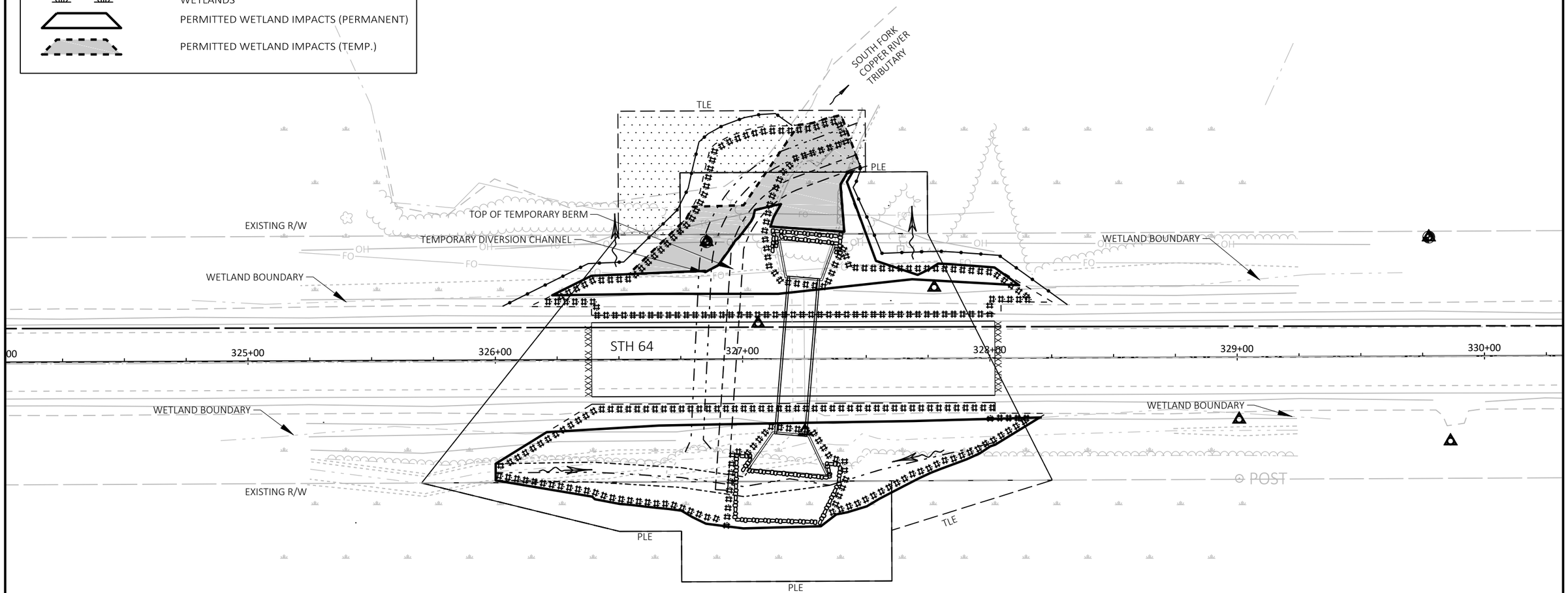

Q2 = 26 CFS
ELEV Q2 = 1370.74
Q5 = 41 CFS
ELEV Q5 = 1370.93WATER DEPTH IN CHANNEL = 1.2'
V5 = 5.1 FPS
SEE TEMPORARY WATER DIVERSION CONSTRUCTION DETAIL FOR CHANNEL CONFIGURATION

PROJECT NO: 1009-44-67	HWY: STH 64	COUNTY: LINCOLN	EROSION CONTROL: STH 64 (C-35-63)	SHEET 15	E

FILE NAME : F:\TR\JOBS\E2271A17\CIVIL 3D 2016 STH 64 WEST\SHEETSPLAN\10094437-022001-EC.DWG
LAYOUT NAME - 10094467-022001-ec
PLOT DATE : 9/10/2019 2:05 PM PLOT BY : MATT TOMSOVIC PLOT NAME : PLOT SCALE : 1 IN:40 FT

WISDOT/CADDS SHEET 42

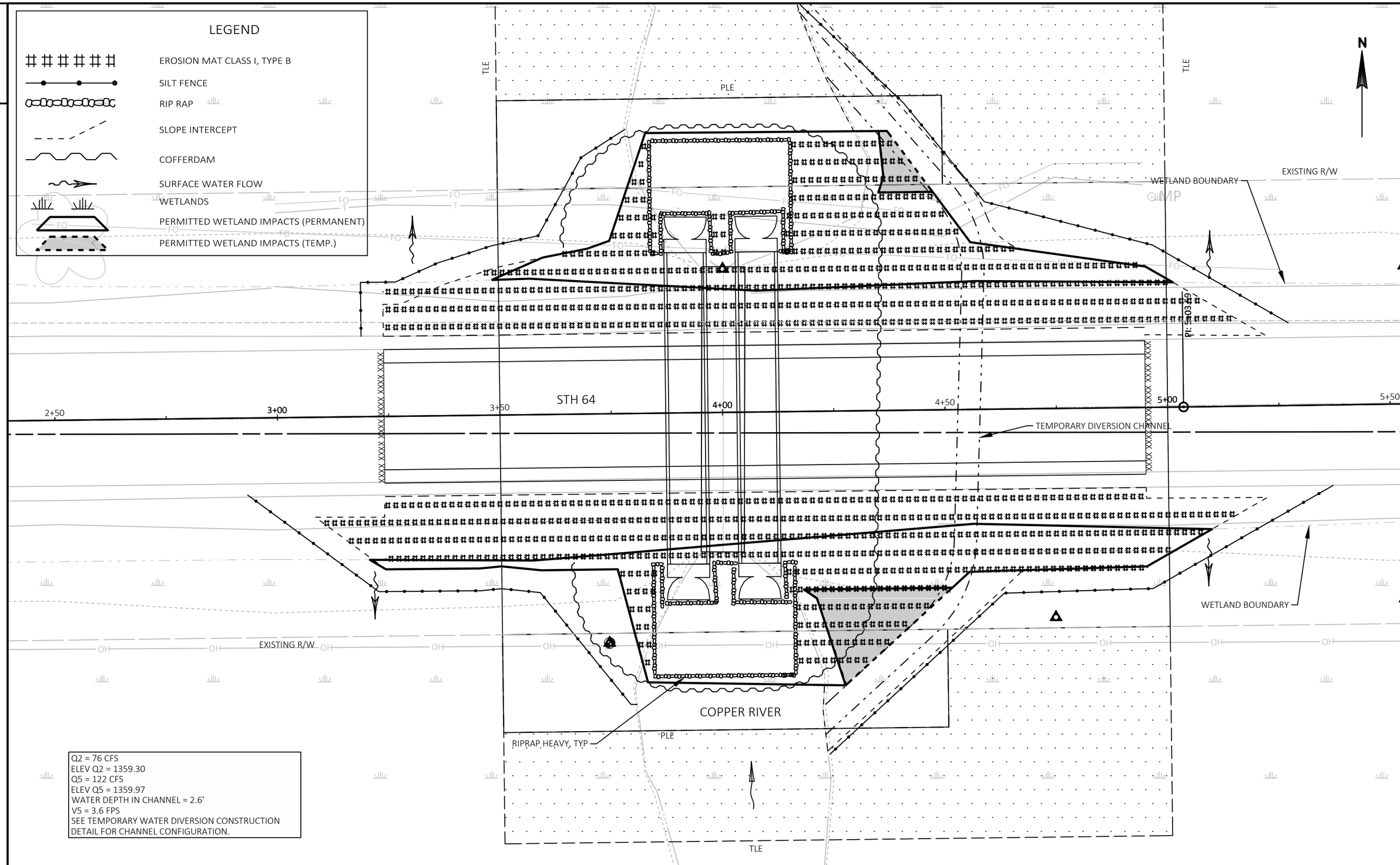

PROJECT NO: 1009-44-67	HWY: STH 64	COUNTY: LINCOLN	EROSION CONTROL: STH 64 (C-35-69)	SHEET 16	E

FILE NAME : F:\TR\JOBS\E2271A17\CIVIL 3D 2016 STH 64 EAST\SHEETSPLAN\10094437-022001-EC.DWG
LAYOUT NAME - 10094467-022002-ec
PLOT DATE : 9/10/2019 2:09 PM PLOT BY : MATT TOMSOVIC PLOT NAME : PLOT SCALE : ##########

2

2

WETLAND BOUNDARY

GRAND FATHERS DAM CREEK

EXISTING TIMBER STRUCTURE TO REMAIN

TLE

PROPOSED R/W

EXISTING R/W

STH 107

1+00

2+00

3+00

BORE

WETLAND BOUNDARY

EXISTING R/W

WETLAND BOUNDARY

TLE

TLE

PLE

TLE

Q2 = 8 CFS
ELEV Q2 = 1406.09
Q5 = 14 CFS
ELEV Q5 = 1406.36

LEGEND

EROSION MAT URBAN CLASS I, TYPE B
SILT FENCE
RIP RAP
SLOPE INTERCEPT
SURFACE WATER FLOW
WETLANDS
PERMITTED WETLAND IMPACTS (PERMANENT)

PROJECT NO: 1009-44-67	HWY: STH 107	COUNTY: LINCOLN	EROSION CONTROL: STH 107 (C-35-12)	SHEET 17	E

FILE NAME : F:\TR\JOBS\E2271A17\CIVIL 3D 2016 STH 107\SHEETSPLAN\10094437-022001-EC.DWG
LAYOUT NAME - 10094467-022003-ec
PLOT DATE : 9/10/2019 2:11 PM
PLOT BY : MATT TOMSOVIC
PLOT NAME :
PLOT SCALE : 1 IN:20 FT

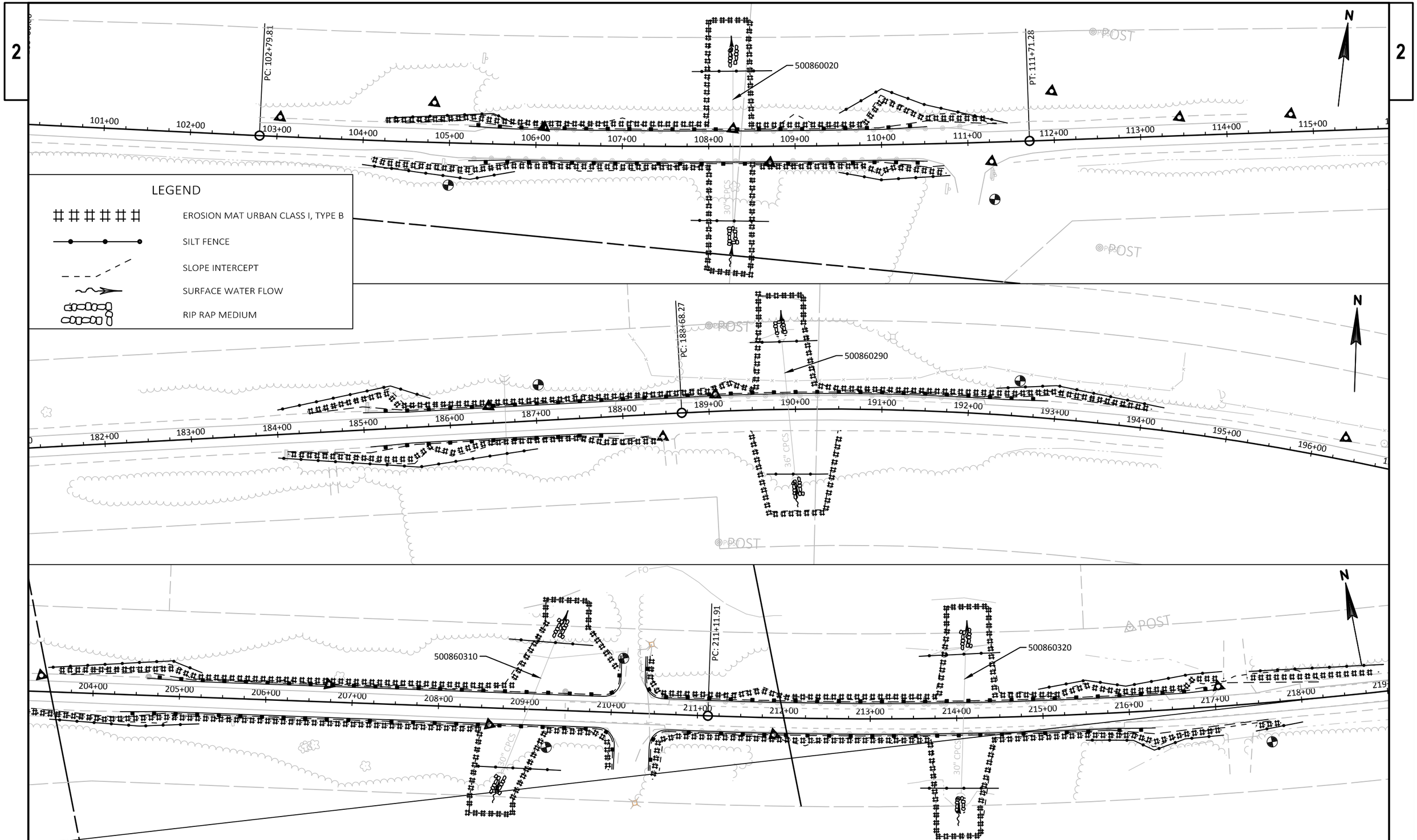

PROJECT NO: 9216-07-61	HWY: STH 86	COUNTY: PRICE	EROSION CONTROL STH 86	SHEET 18	E

FILE NAME : F:\TR\JOBS\E2271A17\CIVIL 3D 2016 STH 86\SHEETSPLAN\92160761-022001-EC.DWG
LAYOUT NAME - 92160761-022004-ec
PLOT DATE : 7/16/2019 1:15 PM
PLOT BY : JAIRO MAZARIEGOS
PLOT NAME :
PLOT SCALE : 1 IN:100 FT

2

2

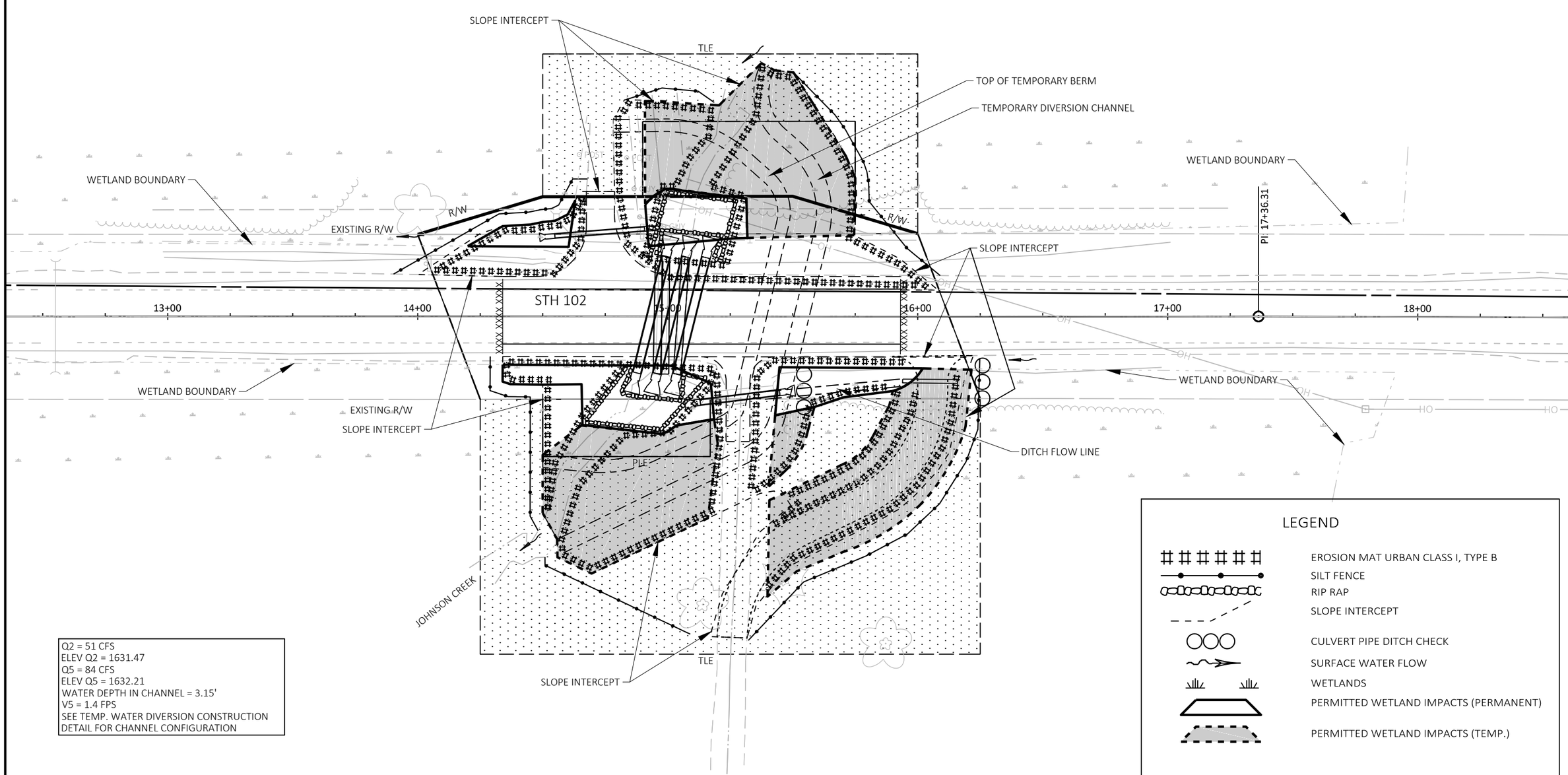

Q2 = 51 CFS
ELEV Q2 = 1631.47
Q5 = 84 CFS
ELEV Q5 = 1632.21
WATER DEPTH IN CHANNEL = 3.15'
V5 = 1.4 FPS
SEE TEMP. WATER DIVERSION CONSTRUCTION DETAIL FOR CHANNEL CONFIGURATION

PROJECT NO: 9225-06-61	HWY: STH 102	COUNTY: PRICE	EROSION CONTROL STH 102	SHEET 19	E

FILE NAME : F:\TR\JOBS\E2271A17\CIVIL 3D 2016 STH 102\SHEETSPLAN\92250661-022001-EC.DWG
LAYOUT NAME - 92250661-022005-ec
PLOT DATE : 9/26/2019 11:39 AM PLOT BY : MATT TOMSOVIC PLOT NAME : PLOT SCALE : 1 IN:40 FT

WISDOT/CADDS SHEET 42

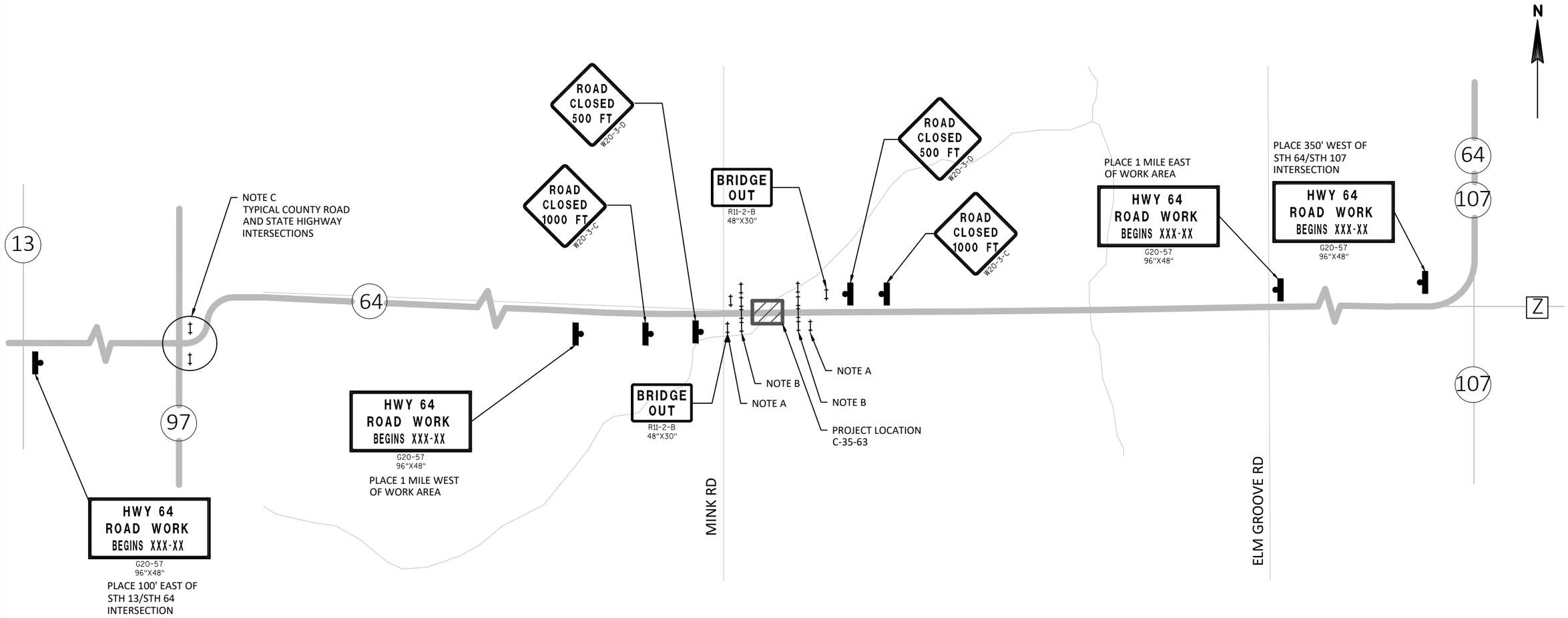

LEGEND

- (00) SIGN NUMBER
- (A) TYPE "A" WARNING LIGHT (FLASHING)
- POST MOUNTED SIGN
- TYPE III BARRICADE
- WORK AREA

NOTE A: USE SDD "BARRICADES AND SIGNS FOR MAINLINE CLOSURES" DETAIL A AND DETAIL E.

NOTE B: USE SDD "BARRICADES AND SIGNS FOR MAINLINE CLOSURES" DETAIL D.

NOTE C: USE SDD "BARRICADES AND SIGNS FOR SIDEROAD CLOSURES" DETAIL 3 FOR ALL COUNTY ROAD AND STATE HIGHWAY INTERSECTIONS.

SEE DETOUR PLAN FOR ADDITIONAL SIGNING AND INFORMATION.

TRAFFIC CONTROL GENERAL NOTES

1. THE EXACT NUMBER, LOCATION AND SPACING OF ALL SIGNS AND DEVICES SHALL BE ADJUSTED TO FIT FIELD CONDITIONS AS DIRECTED BY THE ENGINEER.
2. THE SPACING BETWEEN PROPOSED SIGNS SHOULD BE ADJUSTED TO NOT CONFLICT WITH AND TO PROVIDE A MINIMUM OF 200 FEET (500 FEET DESIRABLE) DISTANCE TO EXISTING SIGNS.
3. ALL SIGNS SHALL BE 48" x 48" UNLESS OTHERWISE NOTED.
4. "WO" SIGNS ARE THE SAME AS "W" SIGNS EXCEPT THE BACKGROUND IS ORANGE.
5. FIXED MESSAGE SIGNS SHALL BE PLACED ONE WEEK IN ADVANCE OF INITIAL ROAD CLOSURE.
6. SEE ADDITIONAL TRAFFIC CONTROL DETAIL SHEETS, DETOUR DETAIL SHEETS AND STANDARD DETAIL DRAWINGS FOR ADDITIONAL TRAFFIC CONTROL REQUIREMENTS.

THIS TRAFFIC CONTROL PLAN IS APPLICABLE DURING THE CLOSURE OF STH 64 FOR C-35-63 AND THE ASSOCIATED DETOUR.

FOR C-35-63 AND C-35-69, CONTRACTOR MUST COMPLETE ONE CULVERT BEFORE STARTING THE SECOND CULVERT.

PROJECT NO: 1009-44-67	HWY: STH 64	COUNTY: LINCOLN	TRAFFIC CONTROL PLAN - STH 64 C-35-63	SHEET 20	E

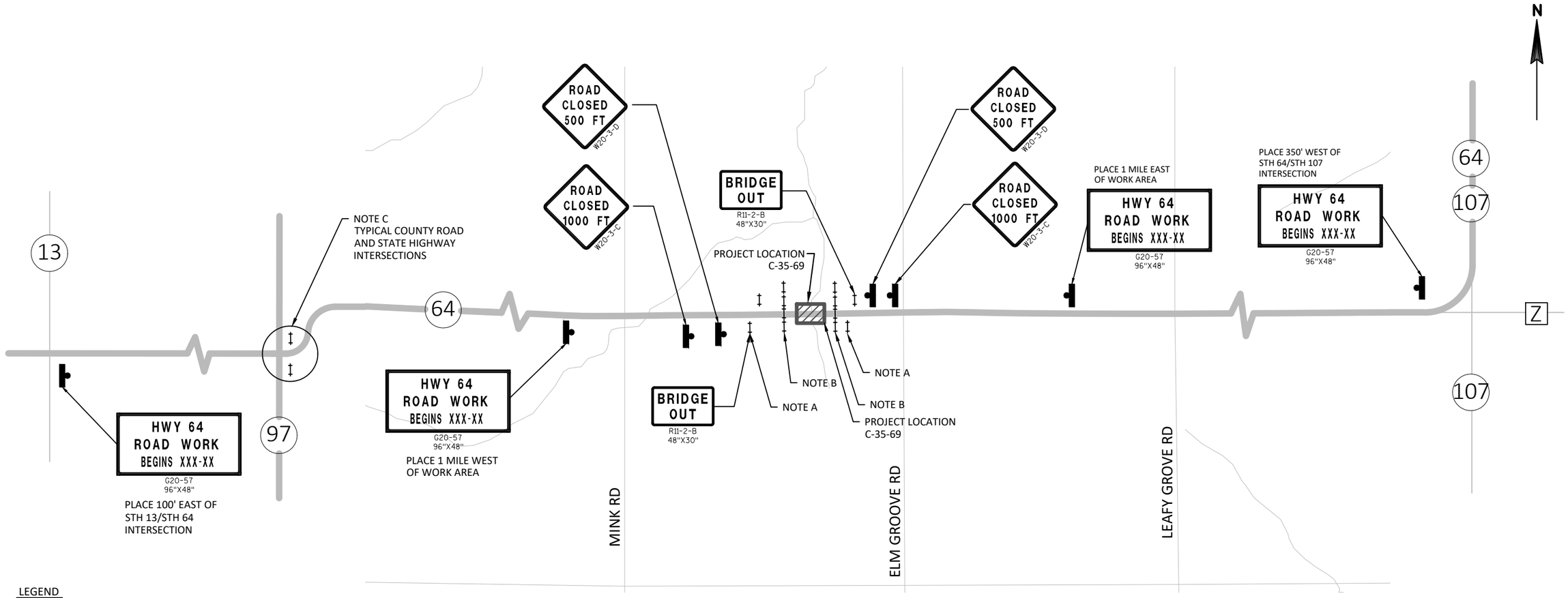

LEGEND

00	SIGN NUMBER
A	TYPE "A" WARNING LIGHT (FLASHING)
	POST MOUNTED SIGN
	TYPE III BARRICADE
	WORK AREA

NOTE A: USE SDD "BARRICADES AND SIGNS FOR MAINLINE CLOSURES" DETAIL A AND DETAIL E.

NOTE B: USE SDD "BARRICADES AND SIGNS FOR MAINLINE CLOSURES" DETAIL D.

NOTE C: USE SDD "BARRICADES AND SIGNS FOR SIDEROAD CLOSURES" DETAIL 3 FOR ALL COUNTY ROAD AND STATE HIGHWAY INTERSECTIONS.

SEE DETOUR PLAN FOR ADDITIONAL SIGNING AND INFORMATION.

TRAFFIC CONTROL GENERAL NOTES

1. THE EXACT NUMBER, LOCATION AND SPACING OF ALL SIGNS AND DEVICES SHALL BE ADJUSTED TO FIT FIELD CONDITIONS AS DIRECTED BY THE ENGINEER.
2. THE SPACING BETWEEN PROPOSED SIGNS SHOULD BE ADJUSTED TO NOT CONFLICT WITH AND TO PROVIDE A MINIMUM OF 200 FEET (500 FEET DESIRABLE) DISTANCE TO EXISTING SIGNS.
3. ALL SIGNS SHALL BE 48" x 48" UNLESS OTHERWISE NOTED.
4. "WO" SIGNS ARE THE SAME AS "W" SIGNS EXCEPT THE BACKGROUND IS ORANGE.
5. FIXED MESSAGE SIGNS SHALL BE PLACED ONE WEEK IN ADVANCE OF INITIAL ROAD CLOSURE.
6. SEE ADDITIONAL TRAFFIC CONTROL DETAIL SHEETS, DETOUR DETAIL SHEETS AND STANDARD DETAIL DRAWINGS FOR ADDITIONAL TRAFFIC CONTROL REQUIREMENTS.

THIS TRAFFIC CONTROL PLAN IS APPLICABLE DURING THE CLOSURE OF STH 64 FOR C-35-69 AND THE ASSOCIATED DETOUR.

FOR C-35-63 AND C-35-69, CONTRACTOR MUST COMPLETE ONE CULVERT BEFORE STARTING THE SECOND CULVERT.

(A) DETOUR ROAD OPEN TO COUNTY E — R10-61 60"X30" — M4-9L 30"X24"

(B) BRIDGE OUT 4 MILES AHEAD — R11-3C 60"X24"

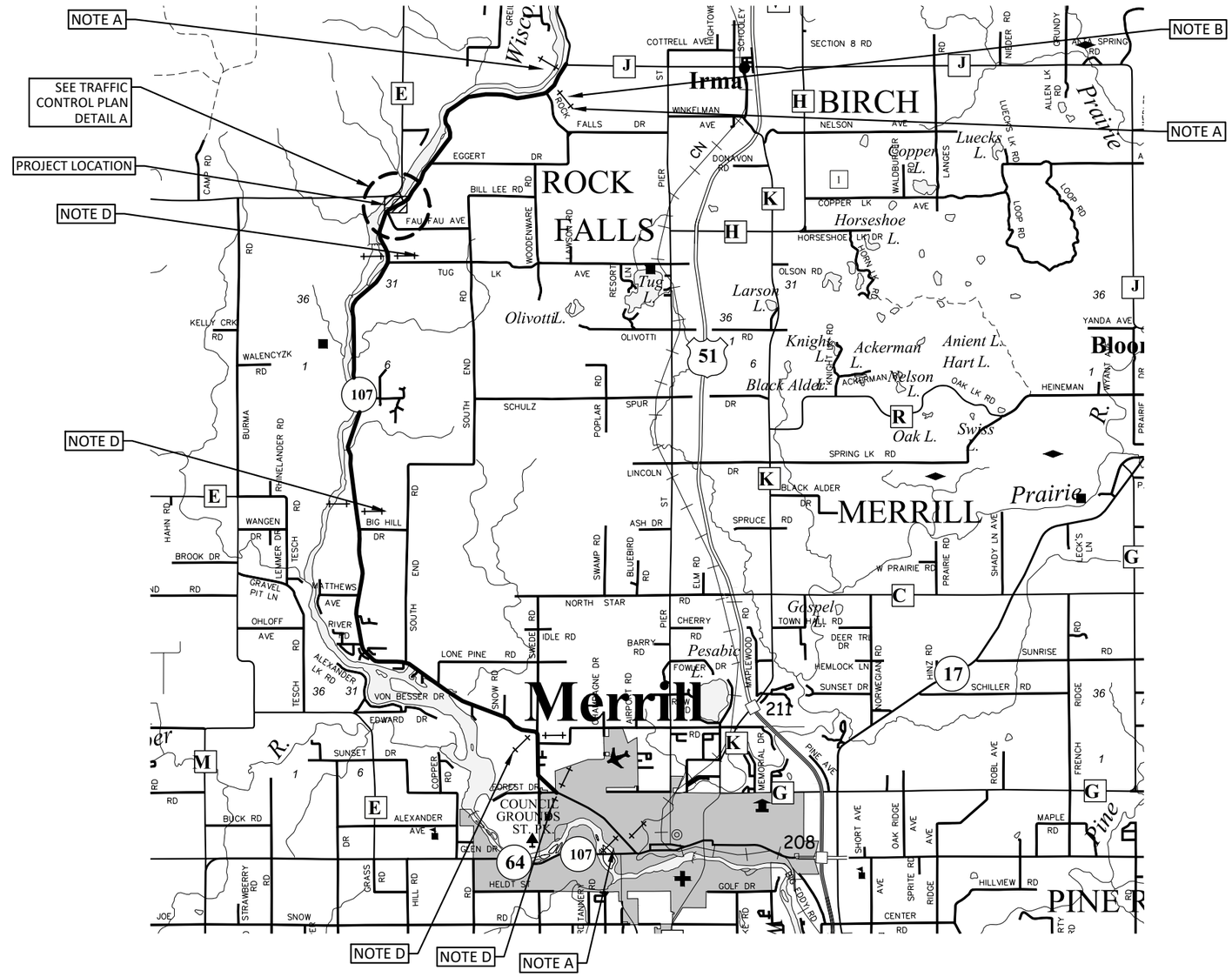

LEGEND

- (00) SIGN NUMBER
- (A) TYPE "A" WARNING LIGHT (FLASHING)
- POST MOUNTED SIGN
- TYPE III BARRICADE
- WORK AREA

NOTE A: USE SDD "BARRICADES AND SIGNS FOR MAINLINE CLOSURES" DETAIL A AND DETAIL E.

NOTE B: USE SDD "BARRICADES AND SIGNS FOR MAINLINE CLOSURES" DETAIL D.

NOTE C: USE SDD "BARRICADES AND SIGNS FOR MAINLINE CLOSURES DETAIL C.

NOTE D: USE SDD "BARRICADES AND SIGNS FOR SIDEROAD CLOSURES" DETAIL 3.

TRAFFIC CONTROL GENERAL NOTES

1. THE EXACT NUMBER, LOCATION AND SPACING OF ALL SIGNS AND DEVICES SHALL BE ADJUSTED TO FIT FIELD CONDITIONS AS DIRECTED BY THE ENGINEER.
2. THE SPACING BETWEEN PROPOSED SIGNS SHOULD BE ADJUSTED TO NOT CONFLICT WITH AND TO PROVIDE A MINIMUM OF 200 FEET (500 FEET DESIRABLE) DISTANCE TO EXISTING SIGNS.
3. ALL SIGNS SHALL BE 48" x 48" UNLESS OTHERWISE NOTED.
4. "WO" SIGNS ARE THE SAME AS "W" SIGNS EXCEPT THE BACKGROUND IS ORANGE.
5. FIXED MESSAGE SIGNS SHALL BE PLACED ONE WEEK IN ADVANCE OF INITIAL ROAD CLOSURE.
6. SEE DETOUR DETAIL SHEETS AND STANDARD DETAIL DRAWINGS FOR ADDITIONAL TRAFFIC CONTROL REQUIREMENTS.

PROJECT NO: 1009-44-67	HWY: STH 107	COUNTY: LINCOLN	TRAFFIC CONTROL PLAN -STH 107	SHEET 22	E

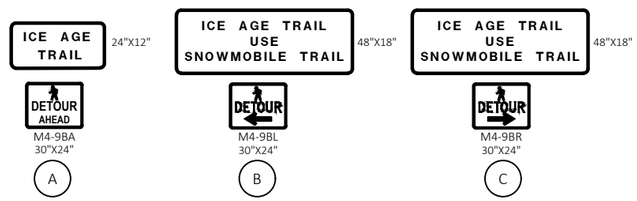

LEGEND

- (00) SIGN NUMBER
- (A) TYPE "A" WARNING LIGHT (FLASHING)
- POST MOUNTED SIGN
- TYPE III BARRICADE
- WORK AREA

NOTE B: USE SDD "BARRICADES AND SIGNS FOR MAINLINE CLOSURES" DETAIL D.

NOTE C: USE SDD "BARRICADES AND SIGNS FOR MAINLINE CLOSURES DETAIL C.

NOTE D: USE SDD "BARRICADES AND SIGNS FOR SIDEROAD CLOSURES" DETAIL 3.

TRAFFIC CONTROL GENERAL NOTES

1. THE EXACT NUMBER, LOCATION AND SPACING OF ALL SIGNS AND DEVICES SHALL BE ADJUSTED TO FIT FIELD CONDITIONS AS DIRECTED BY THE ENGINEER.
2. THE SPACING BETWEEN PROPOSED SIGNS SHOULD BE ADJUSTED TO NOT CONFLICT WITH AND TO PROVIDE A MINIMUM OF 200 FEET (500 FEET DESIRABLE) DISTANCE TO EXISTING SIGNS.
3. ALL SIGNS SHALL BE 48" x 48" UNLESS OTHERWISE NOTED.
4. "WO" SIGNS ARE THE SAME AS "W" SIGNS EXCEPT THE BACKGROUND IS ORANGE.
5. FIXED MESSAGE SIGNS SHALL BE PLACED ONE WEEK IN ADVANCE OF INITIAL ROAD CLOSURE.
6. SEE DETOUR DETAIL SHEETS AND STANDARD DETAIL DRAWINGS FOR ADDITIONAL TRAFFIC CONTROL REQUIREMENTS.
7. MAINTAIN PEDESTRIAN ACCESS THRU CONSTRUCTION ZONE USING ADJACENT SNOWMOBILE TRAIL.

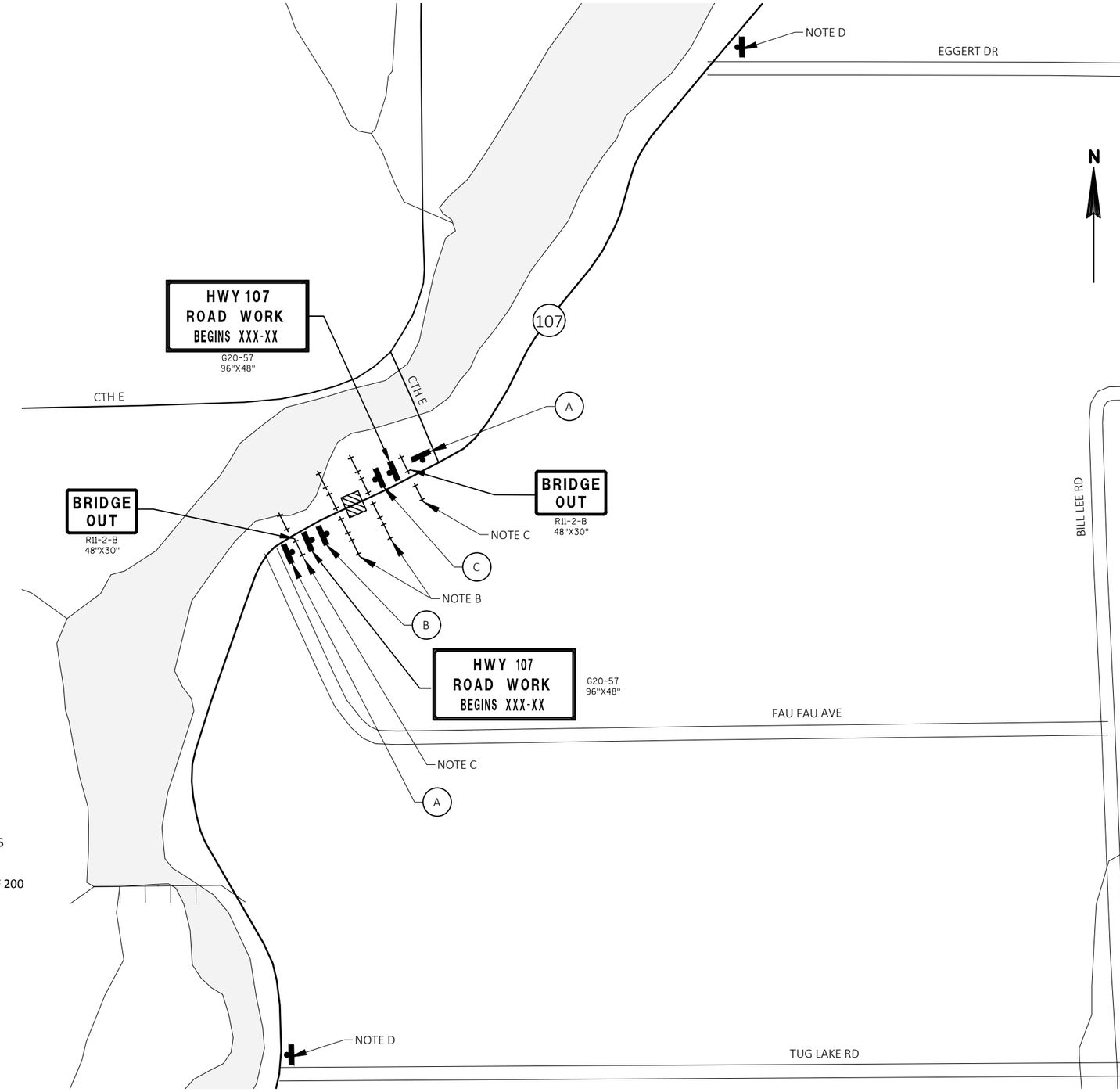

DETAIL A

PROJECT NO: 1009-44-67	HWY: STH 107	COUNTY: LINCOLN	TRAFFIC CONTROL PLAN - STH 107 DETAIL A	SHEET 23	E

2

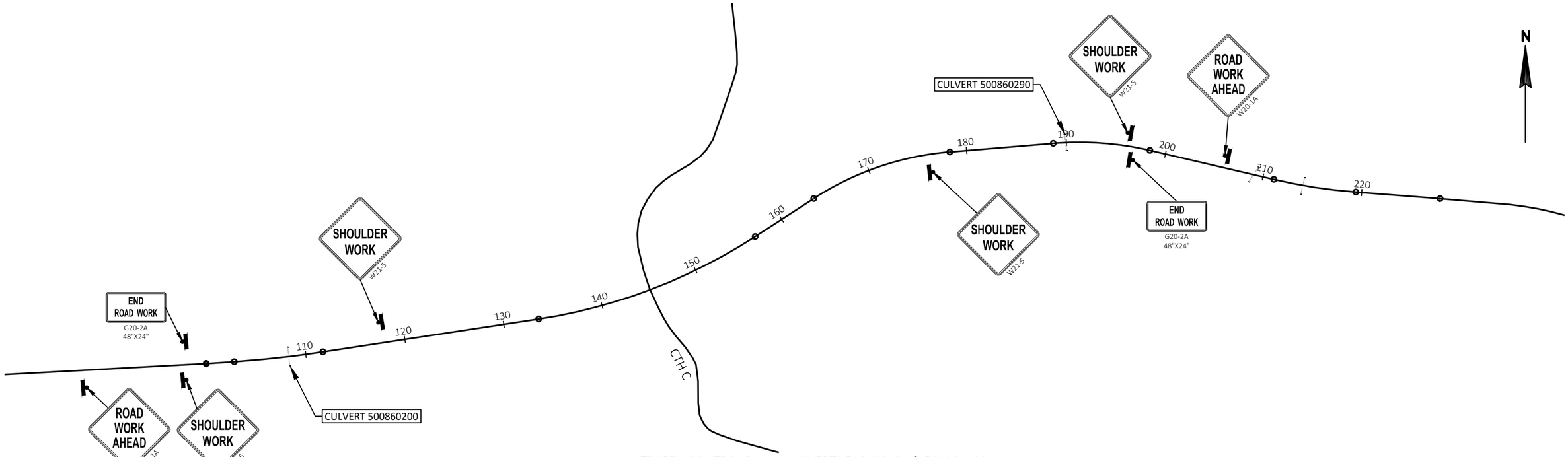

TRAFFIC CONTROL PLAN - CULVERTS 500860200 & 500860290

NOTE: SIGNS ASSOCIATED WITH FLAGGING OPERATIONS SDD. 15C12-07 ARE INCIDENTAL TO TRAFFIC CONTROL EACH ITEM.

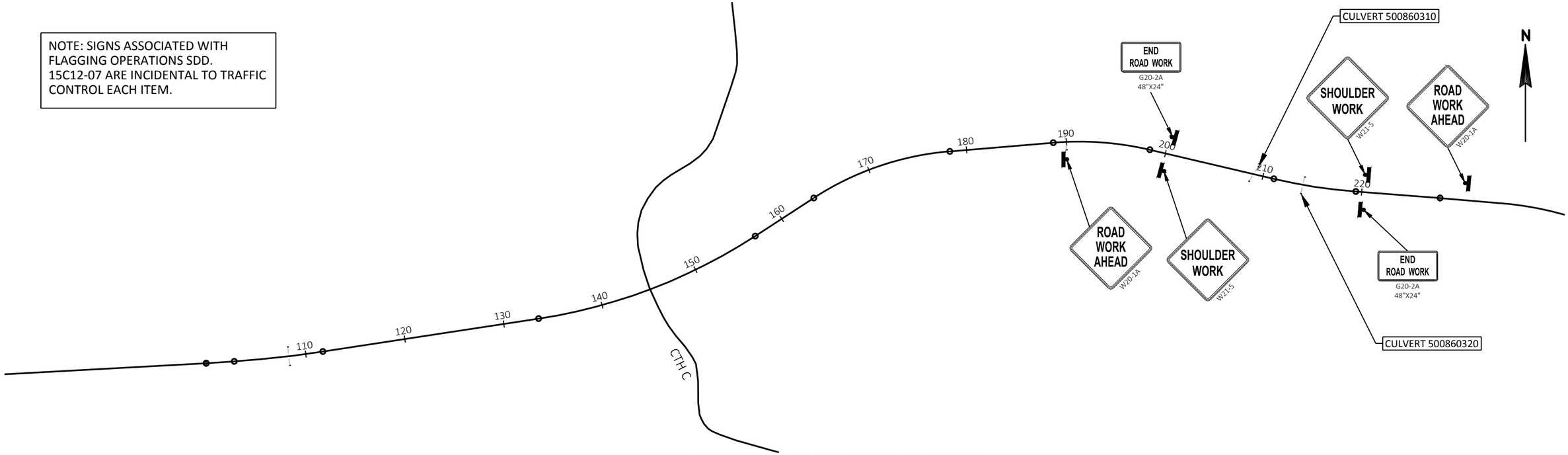

TRAFFIC CONTROL PLAN - CULVERTS 500860310 & 500860320

PROJECT NO: 9216-07-61	HWY: STH 86	COUNTY: PRICE	TRAFFIC CONTROL PLAN - STH 86	SHEET 24	E

FILE NAME : F:\TR\JOBS\E2271A17\CIVIL 3D 2016 STH 86\SHEETSPLAN\92160761-025001-TC.DWG
LAYOUT NAME - 92160761-025001-tc
PLOT DATE : 6/27/2019 9:34 AM PLOT BY : JAIRO MAZARIEGOS PLOT NAME : PLOT SCALE : 1 IN:1000 FT

WISDOT/CADDS SHEET 42

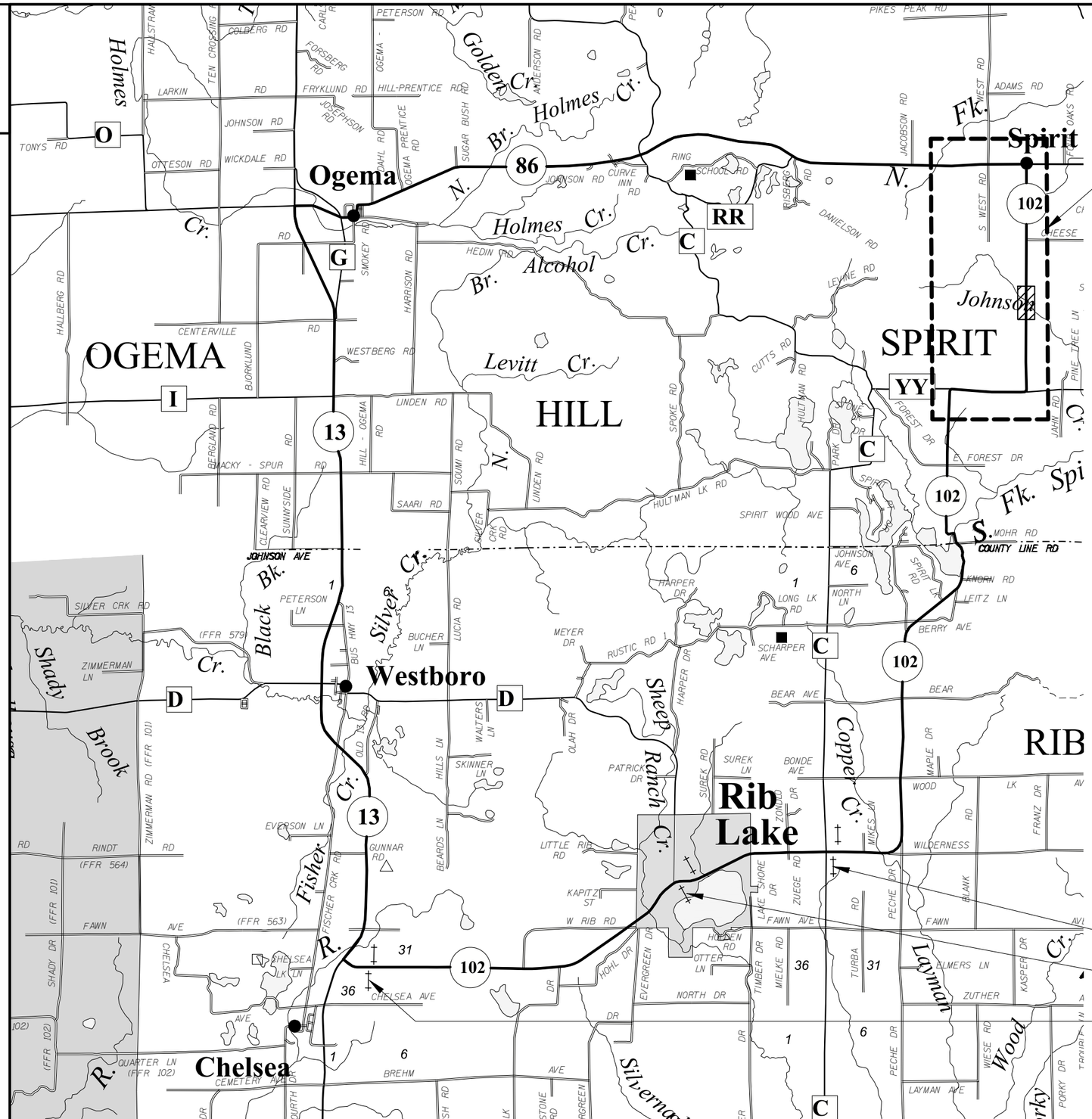

N

LEGEND

00	SIGN NUMBER
A	TYPE "A" WARNING LIGHT (FLASHING)
	POST MOUNTED SIGN
	TYPE III BARRICADE
	WORK AREA

NOTE A: USE SDD "BARRICADES AND SIGNS FOR MAINLINE CLOSURES" DETAIL A AND DETAIL E.

NOTE B: USE SDD "BARRICADES AND SIGNS FOR MAINLINE CLOSURES" DETAIL D.

NOTE C: USE SDD "BARRICADES AND SIGNS FOR MAINLINE CLOSURES DETAIL C.

NOTE D: USE SDD "BARRICADES AND SIGNS FOR SIDEROAD CLOSURES" DETAIL 3.

TRAFFIC CONTROL GENERAL NOTES

1. THE EXACT NUMBER, LOCATION AND SPACING OF ALL SIGNS AND DEVICES SHALL BE ADJUSTED TO FIT FIELD CONDITIONS AS DIRECTED BY THE ENGINEER.
2. THE SPACING BETWEEN PROPOSED SIGNS SHOULD BE ADJUSTED TO NOT CONFLICT WITH AND TO PROVIDE A MINIMUM OF 200 FEET (500 FEET DESIRABLE) DISTANCE TO EXISTING SIGNS.
3. ALL SIGNS SHALL BE 48" x 48" UNLESS OTHERWISE NOTED.
4. "WO" SIGNS ARE THE SAME AS "W" SIGNS EXCEPT THE BACKGROUND IS ORANGE.
5. FIXED MESSAGE SIGNS SHALL BE PLACED ONE WEEK IN ADVANCE OF INITIAL ROAD CLOSURE.
6. SEE DETOUR DETAIL SHEETS AND STANDARD DETAIL DRAWINGS FOR ADDITIONAL TRAFFIC CONTROL REQUIREMENTS.

PROJECT NO: 9225-06-61	HWY: STH 102	COUNTY: PRICE	TRAFFIC CONTROL PLAN - STH 102	SHEET 25	E

FILE NAME : F:\TR\JOBS\E2271A17\CIVIL 3D 2016 STH 102\SHEETSPLAN\92250661-025001-TC.DWG
LAYOUT NAME - 92250661-025005-tc
PLOT DATE : 9/10/2019 2:16 PM PLOT BY : MATT TOMSOVIC PLOT NAME : PLOT SCALE : 1 IN:1.5 MI

WISDOT/CADDS SHEET 42

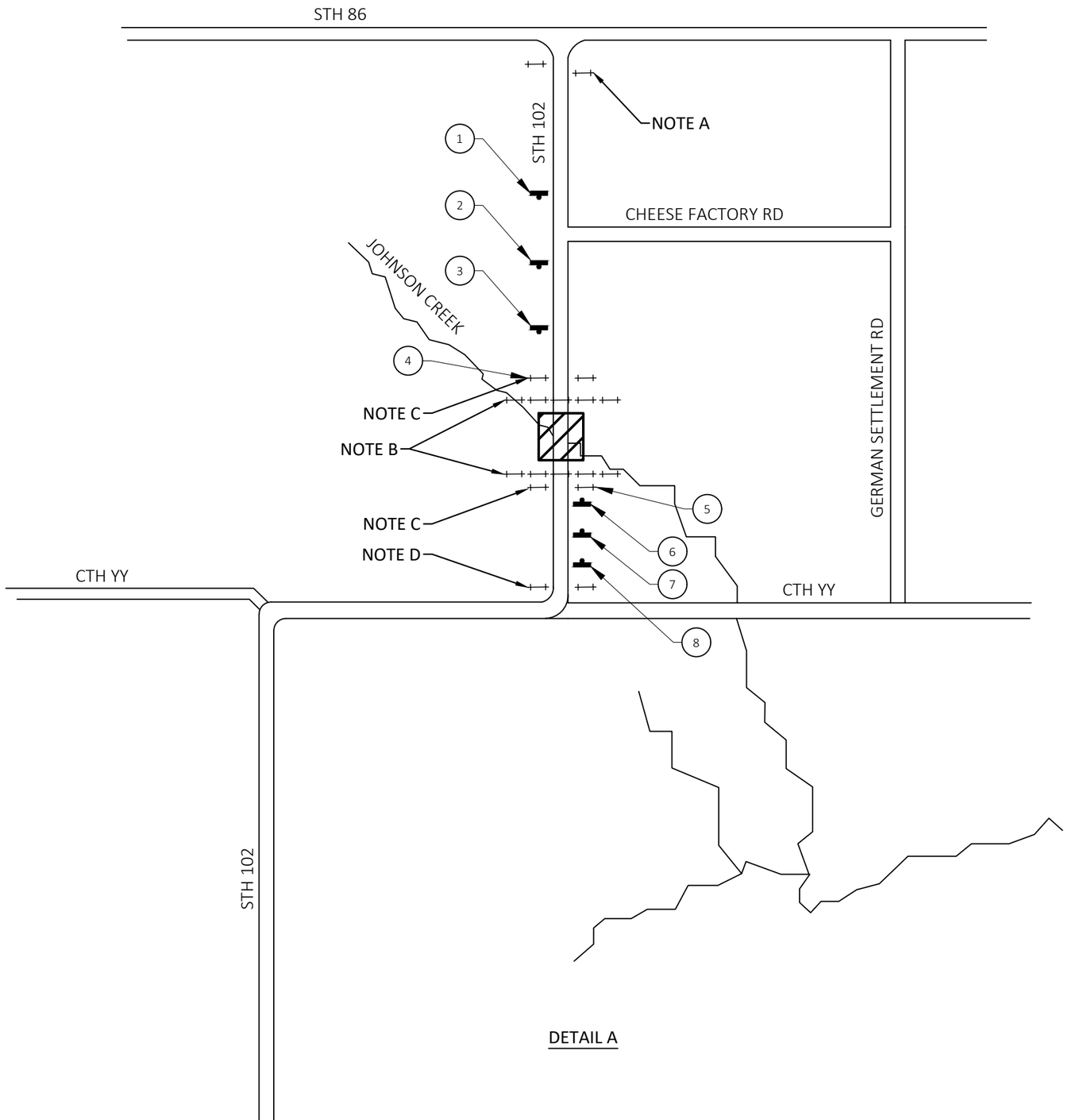

DETAIL A

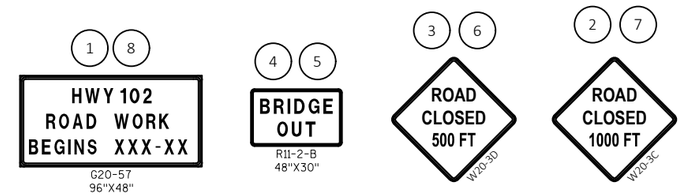

LEGEND

00	SIGN NUMBER
A	TYPE "A" WARNING LIGHT (FLASHING)
	POST MOUNTED SIGN
	TYPE III BARRICADE
	WORK AREA

NOTE A: USE SDD "BARRICADES AND SIGNS FOR MAINLINE CLOSURES" DETAIL A AND DETAIL E.

NOTE B: USE SDD "BARRICADES AND SIGNS FOR MAINLINE CLOSURES" DETAIL D.

NOTE C: USE SDD "BARRICADES AND SIGNS FOR MAINLINE CLOSURES DETAIL C.

NOTE D: USE SDD "BARRICADES AND SIGNS FOR SIDEROAD CLOSURES" DETAIL 3.

TRAFFIC CONTROL GENERAL NOTES

1. THE EXACT NUMBER, LOCATION AND SPACING OF ALL SIGNS AND DEVICES SHALL BE ADJUSTED TO FIT FIELD CONDITIONS AS DIRECTED BY THE ENGINEER.
2. THE SPACING BETWEEN PROPOSED SIGNS SHOULD BE ADJUSTED TO NOT CONFLICT WITH AND TO PROVIDE A MINIMUM OF 200 FEET (500 FEET DESIRABLE) DISTANCE TO EXISTING SIGNS.
3. ALL SIGNS SHALL BE 48" x 48" UNLESS OTHERWISE NOTED.
4. "WO" SIGNS ARE THE SAME AS "W" SIGNS EXCEPT THE BACKGROUND IS ORANGE.
5. FIXED MESSAGE SIGNS SHALL BE PLACED ONE WEEK IN ADVANCE OF INITIAL ROAD CLOSURE.
6. SEE DETOUR DETAIL SHEETS AND STANDARD DETAIL DRAWINGS FOR ADDITIONAL TRAFFIC CONTROL REQUIREMENTS.

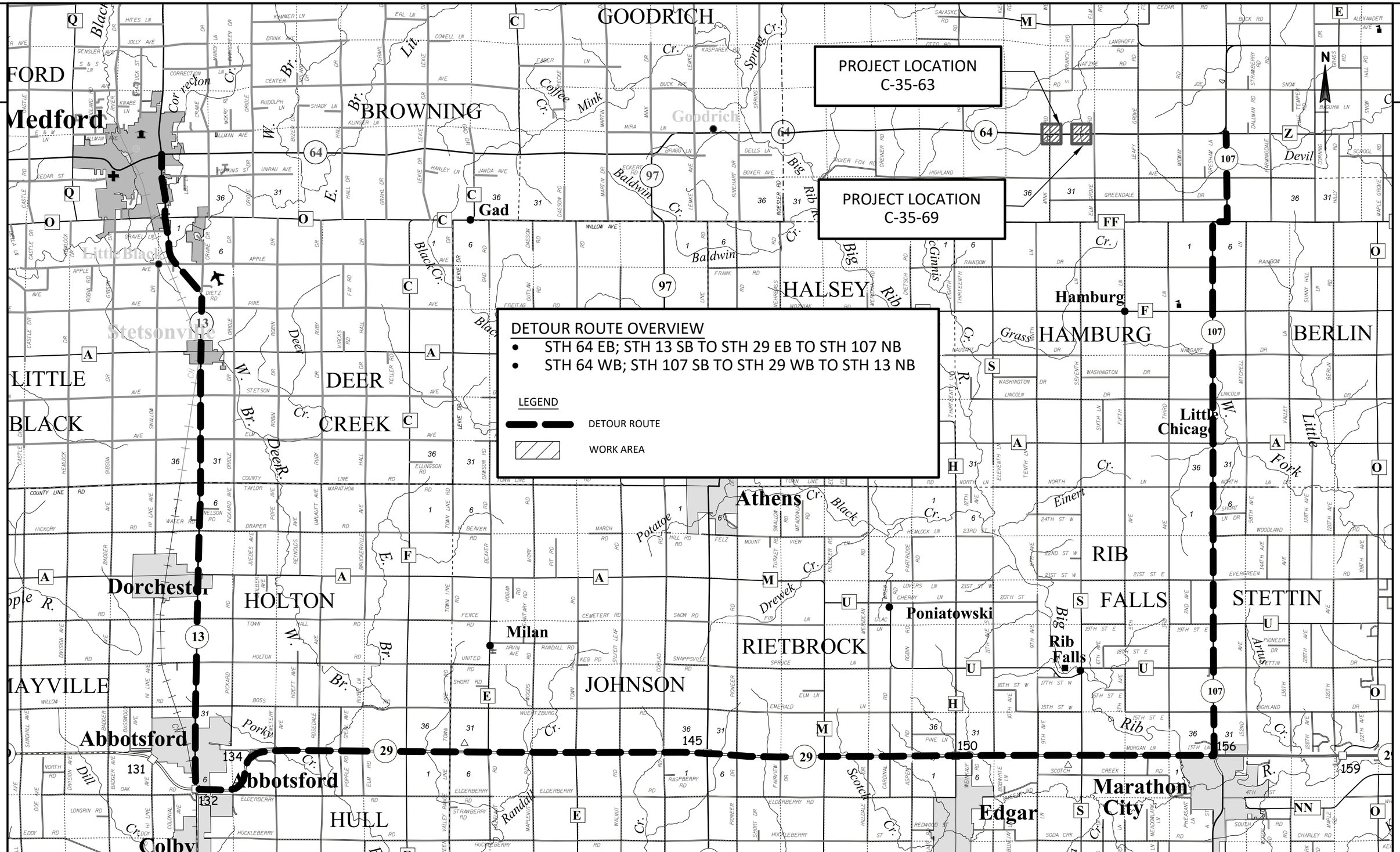

PROJECT NO: 1009-44-67	HWY: STH 64	COUNTY: LINCOLN	DETOUR PLAN OVERVIEW - STH 64 C-35-63 AND C-35-69	SHEET 27	E

FILE NAME : F:\TR\JOBS\E2271A17\CIVIL 3D 2016 STH 64 WEST\SHEETSPLAN\10094437-027001-DT.DWG
LAYOUT NAME - 10094437-027001-dt
PLOT DATE : 4/1/2019 10:10 AM PLOT BY : MATT TOMSOVIC PLOT NAME : PLOT SCALE : 1 IN:2 MI
WISDOT/CADDS SHEET 42

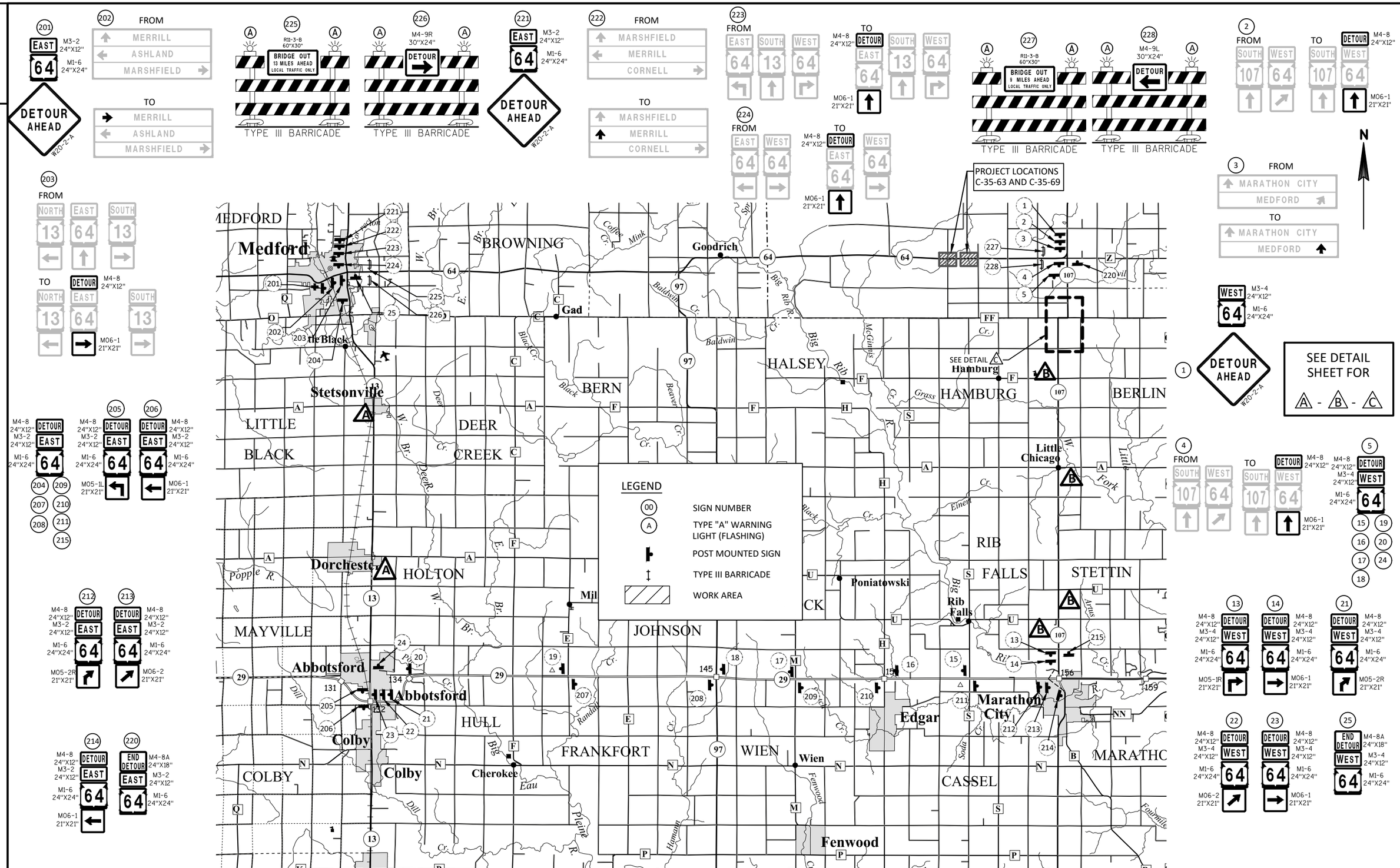

PROJECT NO: 1009-44-67	HWY: STH 64	COUNTY: LINCOLN	DETOUR PLAN - STH 64 C-35-63 AND C-35-69	SHEET 28	E

FILE NAME : F:\TR\JOBS\E2271A17\CIVIL 3D 2016 STH 64 WEST\SHEETSPLAN\10094437-027002-DT.DWG
LAYOUT NAME - 10094437-027002-dt
PLOT DATE : 9/26/2019 8:35 AM PLOT BY : MATT TOMSOVIC PLOT NAME : PLOT SCALE : ##########

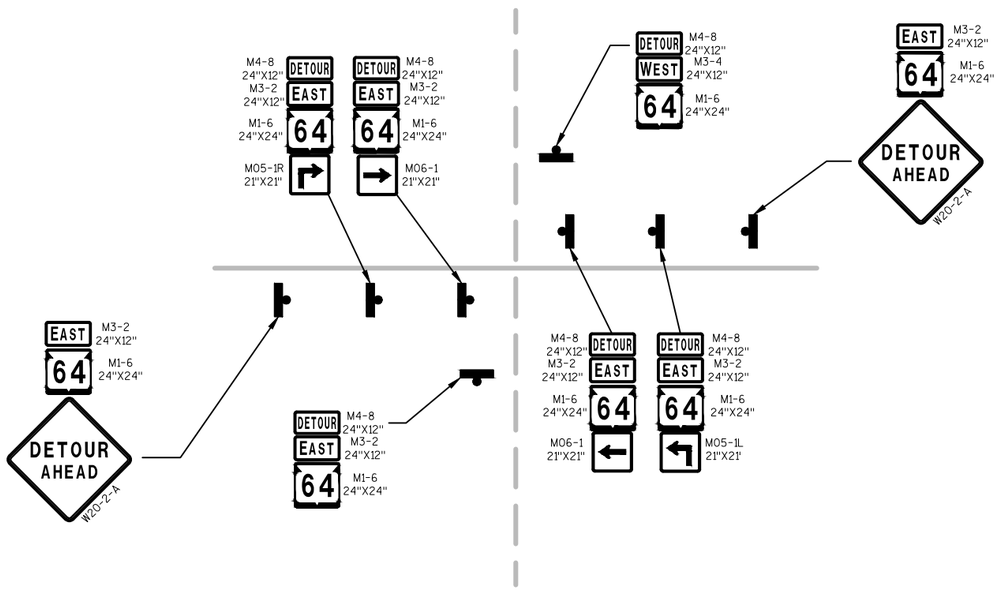

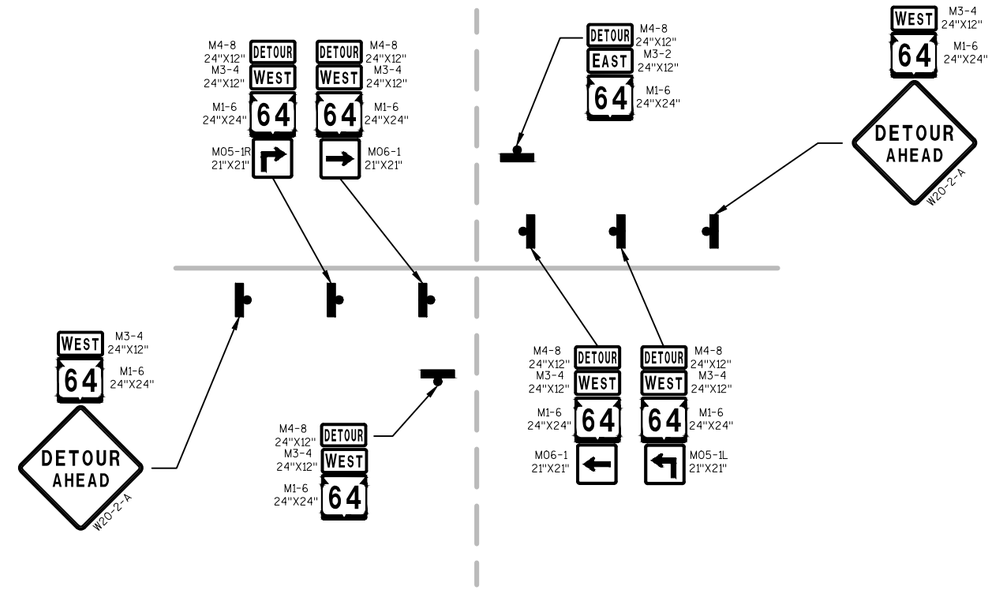

SIDEROAD TYPICAL A

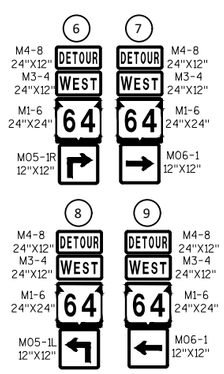

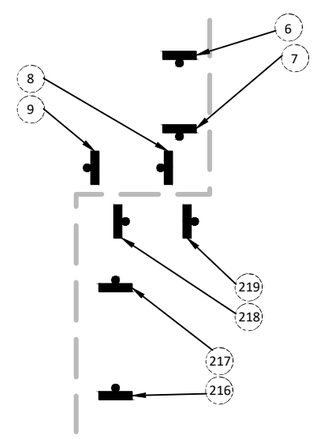

DETAIL C

SIDEROAD TYPICAL B

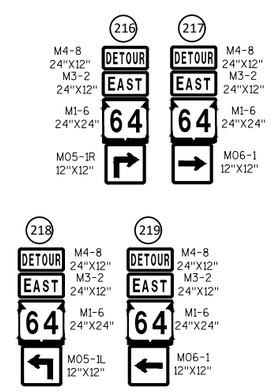

LEGEND

- DETOUR ROUTE
- (00) SIGN NUMBER
- POST MOUNTED SIGN
- TYPE III BARRICADE

PROJECT NO: 1009-44-67	HWY: STH 64	COUNTY: LINCOLN	DETOUR PLAN DETAIL - A - B - C STH 64 C-35-63 AND C-35-69	SHEET 29	E

FILE NAME : F:\TR\JOBS\E2271A17\CIVIL 3D 2016 STH 64 WEST\SHEETSPLAN\10094437-027002-DT.DWG
LAYOUT NAME - 10094437-027003-dt
PLOT DATE : 4/1/2019 10:11 AM PLOT BY : MATT TOMSOVIC PLOT NAME : PLOT SCALE : 1 IN:100 FT

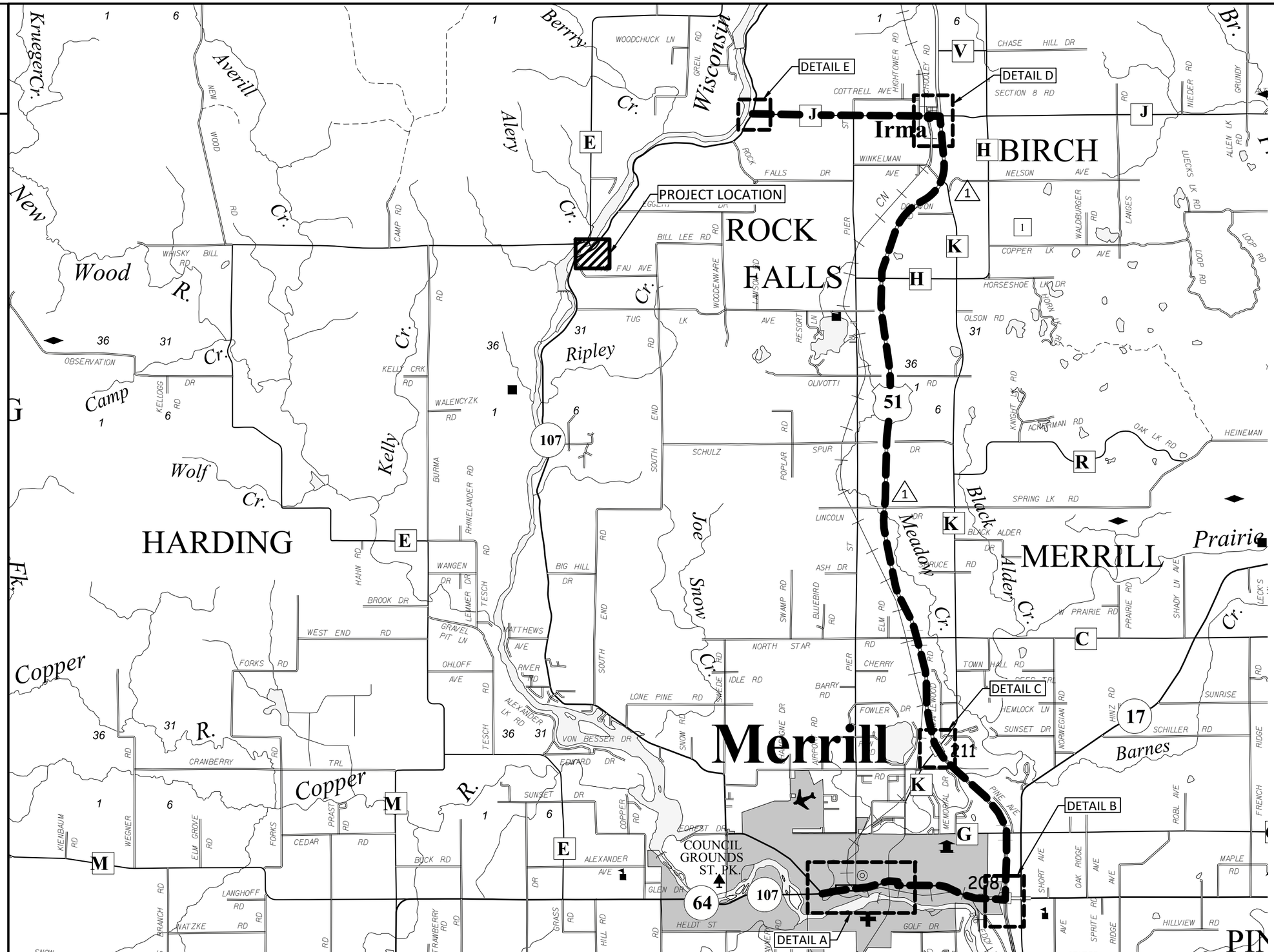

DETOUR ROUTE OVERVIEW

- STH 107 NB: STH 64 EB TO USH 51 NB TO CTH J WB
- STH 107 SB; CTH J EB TO USH 51 SB TO STH 64 WB

LEGEND

- DETOUR ROUTE
- WORK AREA

SEE DETAIL SHEET FOR △1

PROJECT NO: 1009-44-67	HWY: STH 107	COUNTY: LINCOLN	DETOUR PLAN STH 107	SHEET 30	E

FILE NAME : F:\TR\JOBS\E2271A17\CIVIL 3D 2016 STH 107\SHEETSPLAN\10094437-027001-DT.DWG
LAYOUT NAME - 10094467-027004-dt
PLOT DATE : 4/1/2019 10:52 AM PLOT BY : MATT TOMSOVIC PLOT NAME : PLOT SCALE : 1 IN:1.5 MI

WISDOT/CADDS SHEET 42

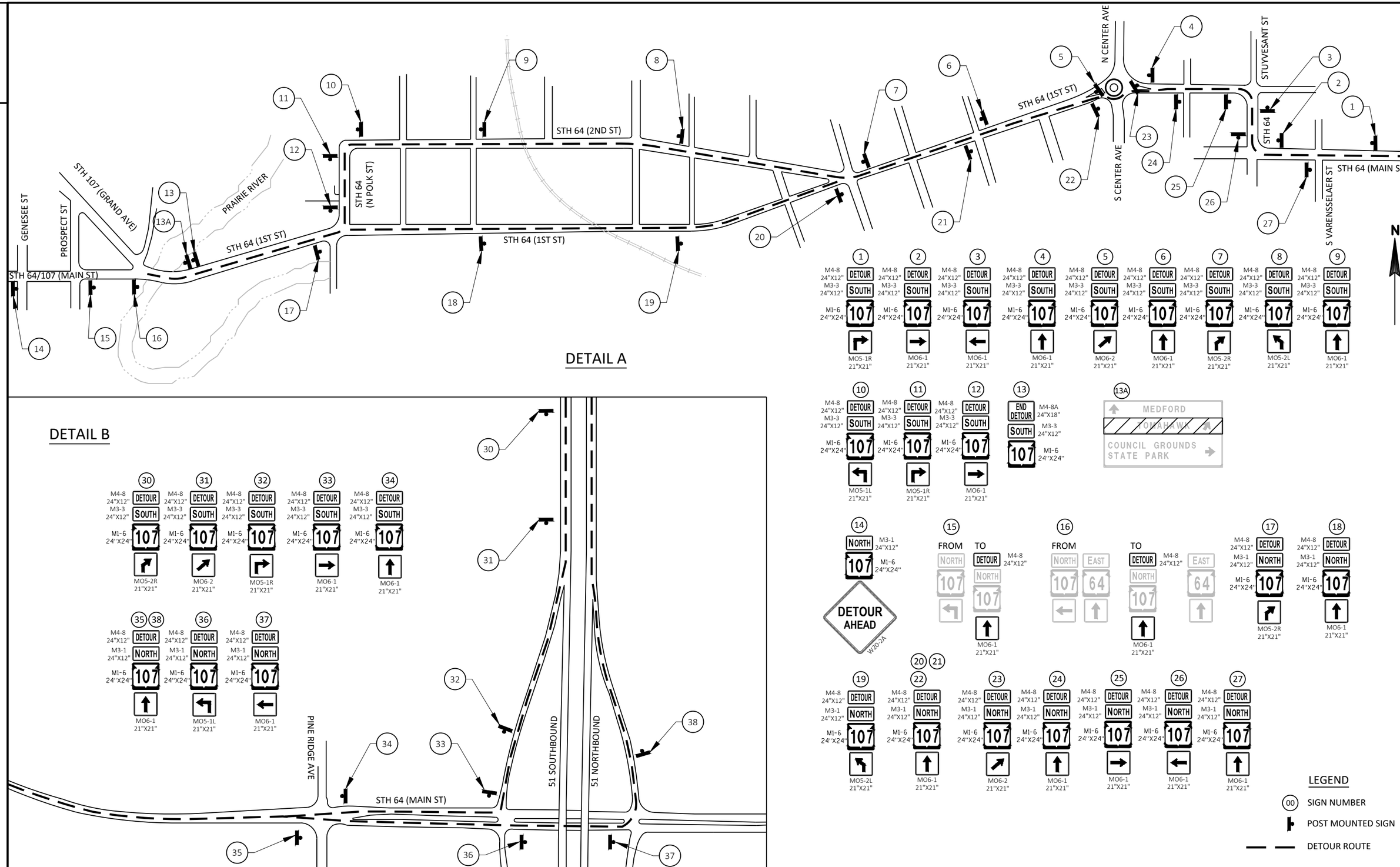

PROJECT NO: 1009-44-67	HWY: STH 107	COUNTY: LINCOLN	DETOUR PLAN STH 107 - DETAILS A AND B	SHEET 31	E

FILE NAME : F:\TR\JOBS\E2271A17\CIVIL 3D 2016 STH 107\SHEETSPLAN\10094437-027001-DT.DWG
LAYOUT NAME - 10094467-027005-dt
PLOT DATE : 4/1/2019 10:52 AM
PLOT BY : MATT TOMSOVIC
PLOT NAME :
PLOT SCALE : 1 IN:500 FT

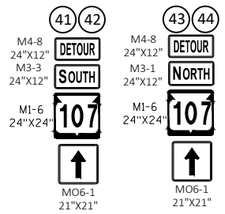

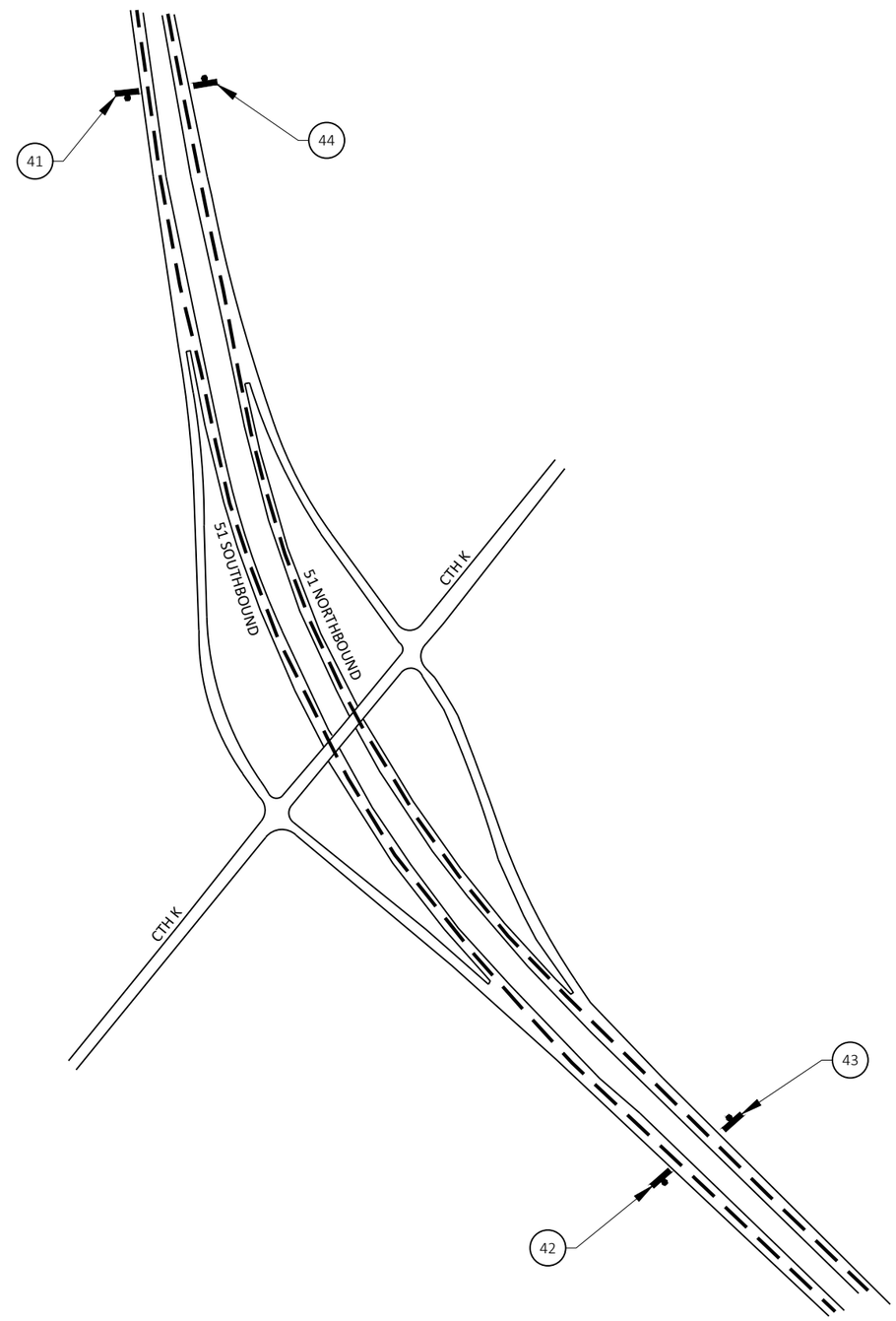

N

DETAIL C

LEGEND

00 SIGN NUMBER

POST MOUNTED SIGN

DETOUR ROUTE

PROJECT NO: 1009-44-67	HWY: STH 107	COUNTY: LINCOLN	DETOUR PLAN STH 107- DETAIL C	SHEET 32	E

FILE NAME : F:\TR\JOBS\E2271A17\CIVIL 3D 2016 STH 107\SHEETSPLAN\10094437-027001-DT.DWG
LAYOUT NAME - 10094467-027006-dt
PLOT DATE : 4/1/2019 10:52 AM PLOT BY : MATT TOMSOVIC PLOT NAME : PLOT SCALE : 1 IN:500 FT

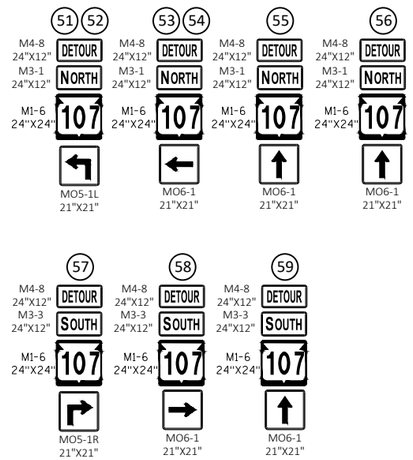

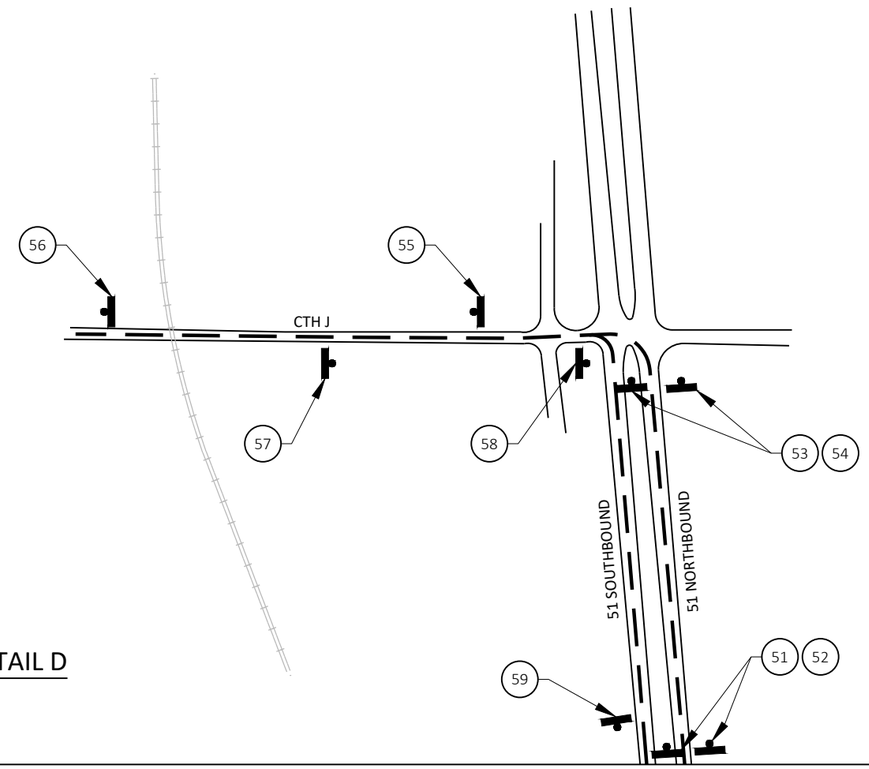

DETAIL D

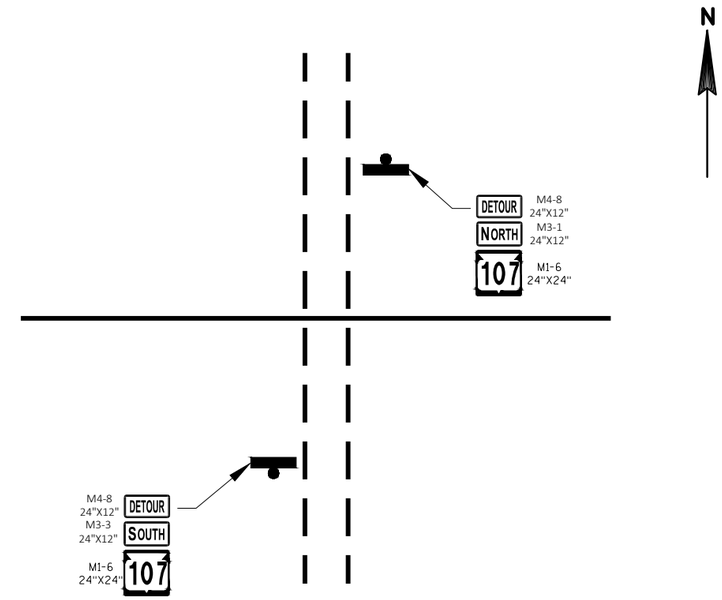

1 SIDEROAD

LINCOLN DR

CTH K / WINKELMAN AVE

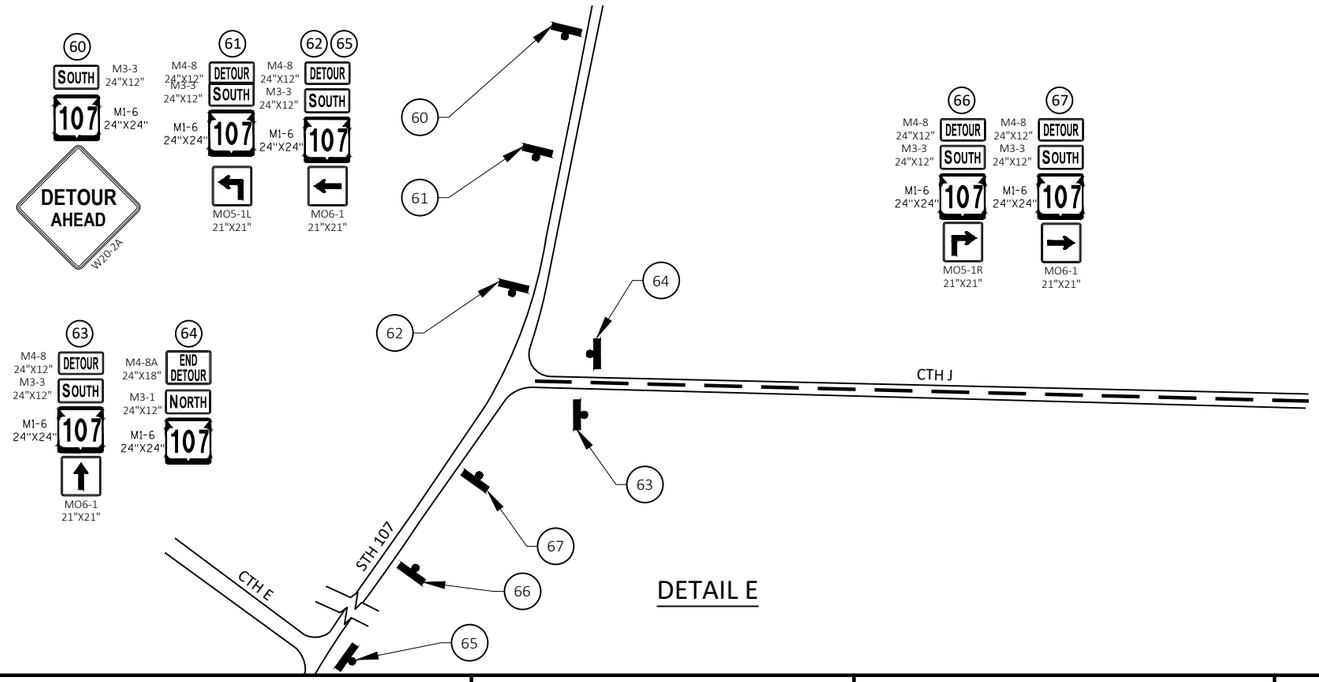

DETAIL E

LEGEND

- (00) SIGN NUMBER
- POST MOUNTED SIGN
- DETOUR ROUTE

PROJECT NO: 1009-44-67	HWY: STH 107	COUNTY: LINCOLN	DETOUR PLAN STH 107 - DETAILS D - E AND 1	SHEET 33	E

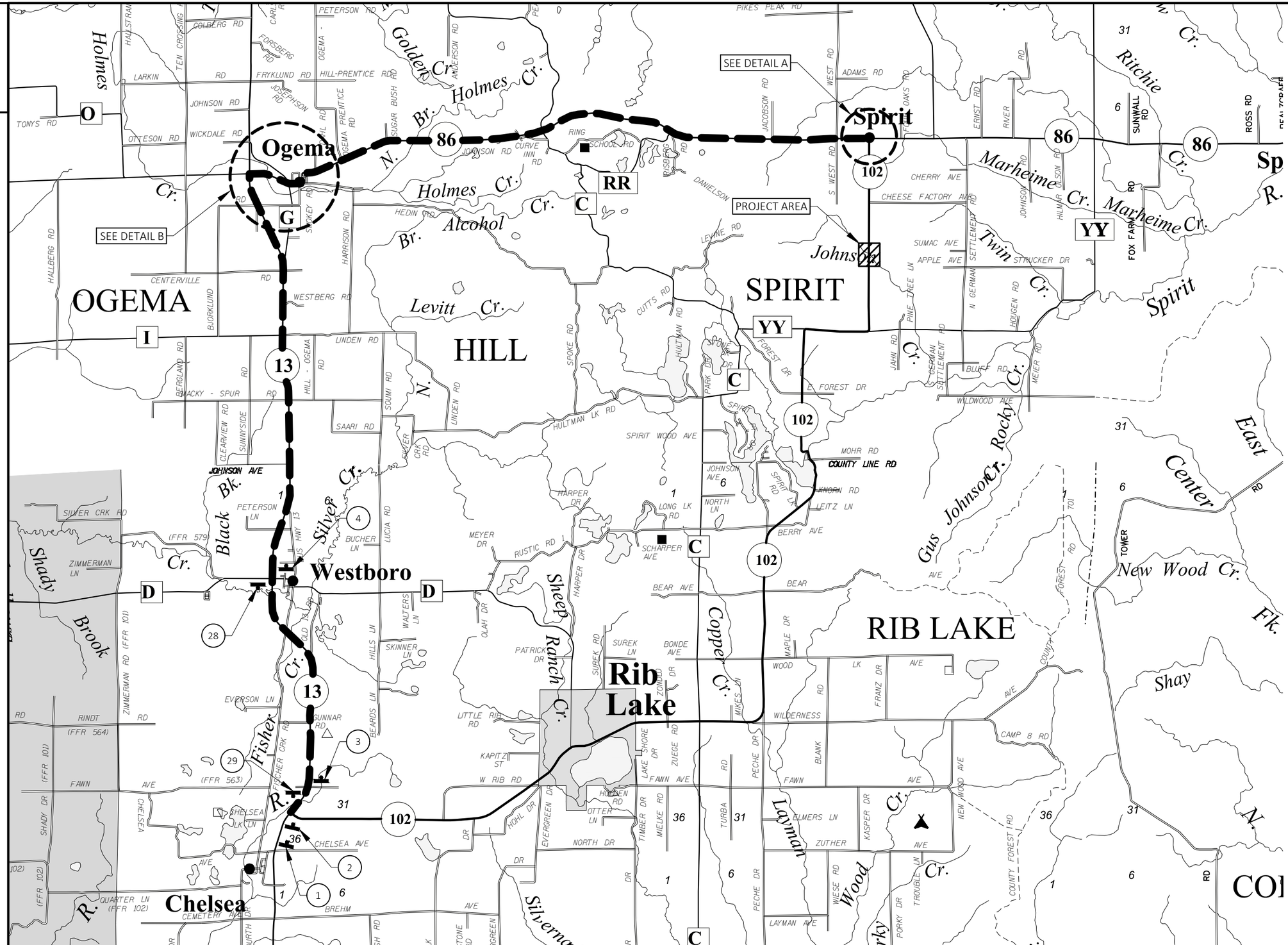

DETOUR ROUTE OVERVIEW

STH 102 NB: STH 13 NB TO STH 86 EB

STH 102 SB: STH 86 WB TO STH 13 SB

LEGEND

DETOUR ROUTE

WORK AREA

PROJECT NO: 9225-06-61	HWY: STH 102	COUNTY: PRICE	DETOUR PLAN - STH 102	SHEET 34 E

FILE NAME : F:\TR\JOBS\E2271A17\CIVIL 3D 2016 STH 102\SHEETSPLAN\92250661-027001-DT.DWG
LAYOUT NAME - 92250661-027008-dt
PLOT DATE : 4/1/2019 11:19 AM PLOT BY : MATT TOMSOVIC PLOT NAME : PLOT SCALE : 1 IN:1.5 MI

WISDOT/CADDS SHEET 42

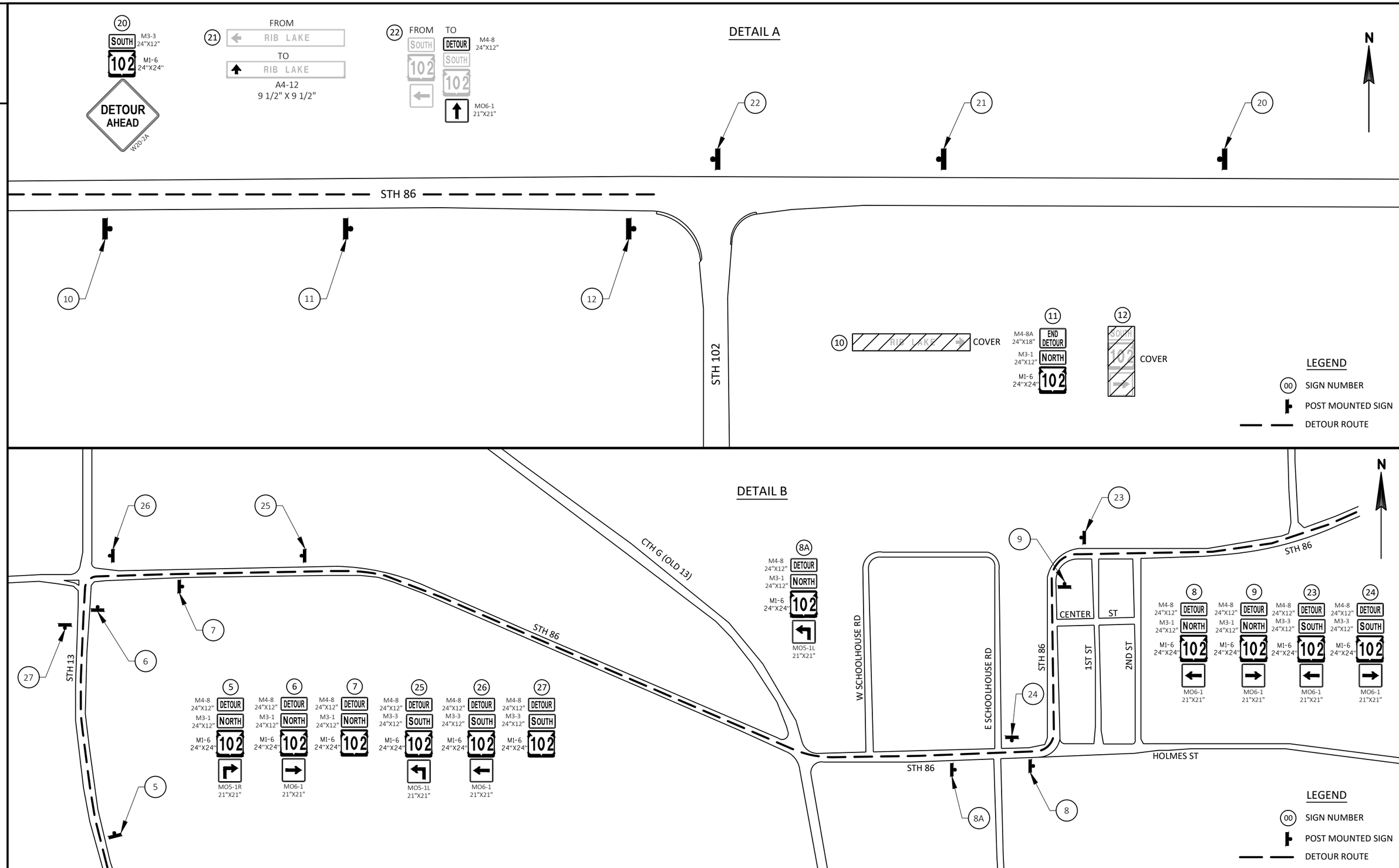

PROJECT NO: 9225-06-61	HWY: STH 102	COUNTY: PRICE	DETOUR PLAN STH 102 - DETAILS A AND B	SHEET 35	E

FILE NAME : F:\TR\JOBS\E2271A17\CIVIL 3D 2016 STH 102\SHEETSPLAN\92250661-027001-DT.DWG
LAYOUT NAME - 92250661-027009-dt
PLOT DATE : 4/1/2019 11:19 AM PLOT BY : MATT TOMSOVIC PLOT NAME : PLOT SCALE : ##########

Estimate Of Quantities

Line	Item	Item Description	Unit	Total	1009-44-67 Qty	9216-07-61 Qty	9225-06-61 Qty
0002	201.0105	Clearing	STA	9.000	4.000	4.000	1.000
0004	201.0205	Grubbing	STA	9.000	4.000	4.000	1.000
0006	203.0100	Removing Small Pipe Culverts	EACH	5.000			5.000
0008	203.0200	Removing Old Structure (station) 01. STA 2+13	LS	1.000	1.000		
0010	203.0200	Removing Old Structure (station) 02. STA 327+25	LS	1.000	1.000		
0012	203.0200	Removing Old Structure (station) 03. STA 4+00	LS	1.000	1.000		
0014	204.0165	Removing Guardrail	LF	3,068.000	420.000	2,648.000	
0016	204.0180	Removing Delineators and Markers	EACH	9.000		9.000	
0018	204.0205	Removing Utility Poles	EACH	3.000	3.000		
0020	205.0100	Excavation Common	CY	1,731.000	1,289.000		442.000
0022	205.0400	Excavation Marsh	CY	1,754.000	1,532.000		222.000
0024	206.2000	Excavation for Structures Culverts (structure) 01. M-35-01	LS	1.000	1.000		
0026	206.2000	Excavation for Structures Culverts (structure) 02. STA 14+93.5, STA 15+01.5, and STA 15+09.5	LS	1.000			1.000
0028	206.5000	Cofferdams (structure) 01. C-35-69	LS	1.000	1.000		
0030	209.2100	Backfill Granular Grade 2	CY	7,212.000	5,821.000		1,391.000
0032	210.2500	Backfill Structure Type B	TON	130.000	130.000		
0034	213.0100	Finishing Roadway (project) 01. 1009-44-67	EACH	1.000	1.000		
0036	213.0100	Finishing Roadway (project) 02. 9216-07-61	EACH	1.000		1.000	
0038	213.0100	Finishing Roadway (project) 03. 9225-06-61	EACH	1.000			1.000
0040	305.0110	Base Aggregate Dense 3/4-Inch	TON	140.000	90.000		50.000
0042	305.0120	Base Aggregate Dense 1 1/4-Inch	TON	1,814.000	1,360.000		454.000
0044	305.0130	Base Aggregate Dense 3-Inch	TON	333.000			333.000
0046	455.0605	Tack Coat	GAL	235.000	100.000	105.000	30.000
0048	460.2000	Incentive Density HMA Pavement	DOL	310.000	250.000		60.000
0050	460.5224	HMA Pavement 4 LT 58-28 S	TON	560.000	470.000		90.000
0052	465.0105	Asphaltic Surface	TON	345.000		345.000	
0054	504.0100	Concrete Masonry Culverts	CY	35.000	35.000		
0056	505.0400	Bar Steel Reinforcement HS Structures	LB	1,080.000	1,080.000		
0058	505.0600	Bar Steel Reinforcement HS Coated Structures	LB	1,930.000	1,930.000		
0060	520.1018	Apron Endwalls for Culvert Pipe 18-Inch	EACH	2.000			2.000
0062	520.1024	Apron Endwalls for Culvert Pipe 24-Inch	EACH	7.000		5.000	2.000
0064	520.1030	Apron Endwalls for Culvert Pipe 30-Inch	EACH	2.000		2.000	
0066	520.2024	Culvert Pipe Temporary 24-Inch	LF	22.000			22.000
0068	520.3518	Culvert Pipe Class III-B 18-Inch	LF	36.000			36.000
0070	520.3524	Culvert Pipe Class III-B 24-Inch	LF	32.000			32.000
0072	520.9700.S	Culvert Pipe Liners (size) 01. 30-Inch	LF	512.000		512.000	
0074	520.9700.S	Culvert Pipe Liners (size) 02. 36-Inch	LF	156.000		156.000	
0076	520.9750.S	Cleaning Culvert Pipes for Liner Verification	EACH	4.000		4.000	

Line	Item	Item Description	Unit	Total	1009-44-67 Qty	9216-07-61 Qty	9225-06-61 Qty
0078	521.3130	Culvert Pipe Corrugated Steel 30-Inch	LF	10.000		10.000	
0080	521.3136	Culvert Pipe Corrugated Steel 36-Inch	LF	8.000		8.000	
0082	522.0436	Culvert Pipe Reinforced Concrete Class IV 36-Inch	LF	190.000	46.000		144.000
0084	522.1036	Apron Endwalls for Culvert Pipe Reinforced Concrete 36-Inch	EACH	8.000	2.000		6.000
0086	522.2363	Culvert Pipe Reinforced Concrete Horizontal Elliptical Class HE-III 63x98-Inch	LF	140.000	140.000		
0088	522.2648	Apron Endwalls for Culvert Pipe Reinforced Concrete Horizontal Elliptical 48x76-Inch	EACH	2.000	2.000		
0090	522.2663	Apron Endwalls for Culvert Pipe Reinforced Concrete Horizontal Elliptical 63x98-Inch	EACH	4.000	4.000		
0092	606.0200	Riprap Medium	CY	50.000		50.000	
0094	606.0300	Riprap Heavy	CY	274.000	194.000		80.000
0096	614.0010	Barrier System Grading Shaping Finishing 01. STH 86 Culvert 500860200	EACH	1.000		1.000	
0098	614.0010	Barrier System Grading Shaping Finishing 02. STH 86 Culvert 500860290	EACH	1.000		1.000	
0100	614.0010	Barrier System Grading Shaping Finishing 03. STH 86 Culvert 500860310	EACH	1.000		1.000	
0102	614.0010	Barrier System Grading Shaping Finishing 04. STH 86 Culvert 500860320	EACH	1.000		1.000	
0104	614.2330	MGS Guardrail 3 K	LF	3,812.500		3,812.500	
0106	614.2350	MGS Guardrail Short Radius	LF	140.000		140.000	
0108	614.2610	MGS Guardrail Terminal EAT	EACH	12.000		12.000	
0110	614.2630	MGS Guardrail Short Radius Terminal	EACH	4.000		4.000	
0112	618.0100	Maintenance And Repair of Haul Roads (project) 01. 1009-44-67	EACH	1.000	1.000		
0114	618.0100	Maintenance And Repair of Haul Roads (project) 02. 9216-07-61	EACH	1.000		1.000	
0116	618.0100	Maintenance And Repair of Haul Roads (project) 03. 9225-06-61	EACH	1.000			1.000
0118	619.1000	Mobilization	EACH	1.000	0.550	0.330	0.120
0120	624.0100	Water	MGAL	31.000	21.000		10.000
0122	625.0100	Topsoil	SY	6,870.000	4,090.000		2,780.000
0124	628.1504	Silt Fence	LF	5,795.000	1,400.000	3,700.000	695.000
0126	628.1520	Silt Fence Maintenance	LF	5,795.000	1,400.000	3,700.000	695.000
0128	628.1905	Mobilizations Erosion Control	EACH	9.000	6.000	1.000	2.000
0130	628.1910	Mobilizations Emergency Erosion Control	EACH	7.000	3.000	2.000	2.000
0132	628.2008	Erosion Mat Urban Class I Type B	SY	17,870.000	4,090.000	11,000.000	2,780.000
0134	628.7555	Culvert Pipe Checks	EACH	3.000			3.000
0136	629.0210	Fertilizer Type B	CWT	4.890	2.790		2.100
0138	630.0130	Seeding Mixture No. 30	LB	52.000	40.000		12.000

Line	Item	Item Description	Unit	Total	1009-44-67 Qty	9216-07-61 Qty	9225-06-61 Qty
0140	630.0160	Seeding Mixture No. 60	LB	73.000	37.000		36.000
0142	630.0200	Seeding Temporary	LB	88.000	54.000		34.000
0144	630.0500	Seed Water	MGAL	156.000	94.000		62.000
0146	633.5200	Markers Culvert End	EACH	24.000	10.000	8.000	6.000
0148	638.2102	Moving Signs Type II	EACH	3.000		3.000	
0150	642.5001	Field Office Type B	EACH	1.000	0.550	0.330	0.120
0152	643.0300	Traffic Control Drums	DAY	4,660.000		4,660.000	
0154	643.0420	Traffic Control Barricades Type III	DAY	2,500.000	1,840.000		660.000
0156	643.0705	Traffic Control Warning Lights Type A	DAY	4,990.000	3,670.000		1,320.000
0158	643.0900	Traffic Control Signs	DAY	29,894.000	26,740.000	349.000	2,805.000
0160	643.0920	Traffic Control Covering Signs Type II	EACH	3.000	1.000		2.000
0162	643.1000	Traffic Control Signs Fixed Message	SF	436.000	336.000	36.000	64.000
0164	643.5000	Traffic Control	EACH	1.000	0.250	0.670	0.080
0166	645.0105	Geotextile Type C	SY	745.000	745.000		
0168	645.0120	Geotextile Type HR	SY	710.000	380.000	170.000	160.000
0170	645.0135	Geotextile Type SR	SY	220.000			220.000
0172	646.1020	Marking Line Epoxy 4-Inch	LF	1,752.000	1,232.000		520.000
0174	650.4500	Construction Staking Subgrade	LF	613.000	454.000		159.000
0176	650.5000	Construction Staking Base	LF	613.000	454.000		159.000
0178	650.6000	Construction Staking Pipe Culverts	EACH	8.000	5.000		3.000
0180	650.9910	Construction Staking Supplemental Control (project) 01. 1009-44-67	LS	1.000	1.000		
0182	650.9910	Construction Staking Supplemental Control (project) 02. 9216-07-61	LS	1.000		1.000	
0184	650.9910	Construction Staking Supplemental Control (project) 03. 9225-06-61	LS	1.000			1.000
0186	650.9920	Construction Staking Slope Stakes	LF	613.000	454.000		159.000
0188	690.0150	Sawing Asphalt	LF	208.000	164.000		44.000
0190	715.0502	Incentive Strength Concrete Structures	DOL	210.000	210.000		
0192	ASP.1T0A	On-the-Job Training Apprentice at $5.00/HR	HRS	300.000	300.000		
0194	ASP.1T0G	On-the-Job Training Graduate at $5.00/HR	HRS	600.000	600.000		
0196	SPV.0035	Special 01. Marsh Excavation Stockpile & Replacement	CY	63.000			63.000
0198	SPV.0060	Special 01. Utility Line Opening	EACH	7.000	7.000		
0200	SPV.0060	Special 02. Hydro-Bell End Section	EACH	1.000		1.000	
0202	SPV.0060	Special 03. Concrete Collar for Hydro-Bell End Section	EACH	1.000		1.000	
0204	SPV.0090	Special 01. CPRC Horizontal Elliptical Class HE-IV 87x136-Inch	LF	64.000	64.000		
0206	SPV.0090	Special 02. CPRC Horizontal Elliptical Class HE-IV 48x76-Inch	LF	46.000	46.000		
0208	SPV.0105	Special 01. Temporary Water Diversion STH 64 STA 327+22	LS	1.000	1.000		

					1009-44-67	9216-07-61	9225-06-61
Line	**Item**	**Item Description**	**Unit**	**Total**	**Qty**	**Qty**	**Qty**
0210	SPV.0105	Special 02. Temporary Water Diversion STH 64 STA 3+92 and STA 4+08	LS	1.000	1.000		
0212	SPV.0105	Special 03. Temporary Water Diversion STH 102	LS	1.000			1.000

3

EARTHWORK (CATEGORY 0020)

Division	From/To Station	Location	205.0100 Excavation Common (1)		Available Material (5)	205.0500 Excavation Marsh (6)	209.2100 Backfill Granular Grade 2	Unexpanded Fill	Expanded Fill	Mass Ordinate +/- (7)	Waste (8)
			Cut (2)	EBS Excavation (3)			Factor 1.20		Factor 1.25		
Division 1											
STH 64	326+00/328+25	STH 64	693	0	693	584	701	214	268	425	1,009
PIPE TRANSITION EXCAVATION			831 *	0	831	0	1,460	0	0	831	831
Grand Total			693	0	1,524	584	2,161	214	268	1,256	1,840
Total Excavation Common			693								

Notes:
(1) Excavation Common is the sum of the Cut and EBS Excavation columns. Item number 205.0100
(2) Salvaged/Unsuable Pavement Material is included in Cut.
(5) Available Material = Cut
(6) Marsh Excavation - to be backfilled with Backfill Granular Grade 2, Item 209.2100. Marsh Excavation assumed to be wasted.
(7) Mass Ordinate = Cut - Expanded Fill (Does not include marsh excavation)
(8) Includes Marsh Excavation Waste
* Excavation included within normal pipe item. Excavation Common = 0; shown here for information only.

CLEARING AND GRUBBING

STATION TO STATION	LOCATION	201.0105 CLEARING STA	201.0205 GRUBBING STA
CATEGORY 0020			
326+00 - 328+00	STH 64	2	2
PROJECT TOTALS		2	2

REMOVING UTILITY POLES

STATION	LOCATION	204.0205 REMOVING UTILITY POLES EACH
CATEGORY 0020		
326+85	STH 64 LT	1
327+60	STH 64 LT	1
PROJECT TOTALS		2

BASE COURSE

STATION TO STATION	LOCATION	305.0110 BASE AGGREGATE DENSE 3/4-INCH TON	305.0120 BASE AGGREGATE DENSE 1 1/4-INCH TON	624.0100 WATER MGAL
CATEGORY 0020				
326+39 - 328+02	STH 64	30	540	8
PROJECT TOTALS		30	540	8

ASPHALTIC ITEMS

STATION	TO	STATION	LOCATION	455.0605 TACK COAT GAL	460.5224 HMA PAVEMENT 4 LT 58-28 S TON
CATEGORY 0020					
326+39	-	328+02	STH 64	40	200
PROJECT TOTAL				40	200

CULVERT PIPES

STATION	LOCATION	SPV.0090.01 CPRC HORIZONTAL ELLIPTICAL CLASS HE-IV 87X136-INCH LF	650.6000 CONSTRUCTION STAKING PIPE CULVERTS EACH
CATEGORY 0020			
327+22	STH 64	64	1
TOTALS		64	1

3

EROSION CONTROL ITEMS

STATION TO STATION			LOCATION	628.1504 SILT FENCE LF	628.1520 SILT FENCE MAINT LF	628.1905 MOB. EROSION CONTROL EA	628.1910 MOB. EROSION CONTROL EMERGENCY EA
CATEGORY 0020							
326+00	-	328+30	STH 64	280	280	---	---
UNDISTRIBUTED				60	60	2	1
			PROJECT TOTALS	340	340	2	1

LANDSCAPING ITEMS

STATION TO STATION			DIR	LOCATION	625.0100 TOPSOIL SY	628.2008 EROSION MAT URBAN CLASS I TYPE B SY	629.0210 FERTILIZER TYPE B CWT	630.0130 SEEDING MIX NO. 30 LB	630.0160 SEEDING MIX NO. 60 LB	630.0200 TEMP SEEDING LB	630.0500 SEED WATER MGAL
CATEGORY 0020											
326+15	-	328+25	LT	STH 64	790	790	0.53	5	10	11	18
326+00	-	328+25	RT	STH 64	840	840	0.56	4	12	11	19
				UNDISTRIBUTED	330	330	0.21	2	2	3	8
				PROJECT TOTALS	1,960	1,960	1.30	11	24	25	45

MARKERS CULVERT END

STATION	LOCATION	633.5200 MARKERS CULVERT END EACH
CATEGORY 0020		
327+22	STH 64	2
PROJECT TOTALS		2

GEOTEXTILE

STATION TO STATION			LOCATION	645.0105 GEOTEXTILE TYPE C* SY
CATEGORY 0020				
327+12	-	327+32	STH 64	135 *
			PROJECT TOTALS	135 *

* AREA UNDER CULVERT. SEE STRUCTURE PLAN FOR ADDITIONAL QUANTITIES UNDER ENDWALL

PAVEMENT MARKING

STATION - STATION			LOCATION	646.1020 MARKING LINE EPOXY 4-INCH (WHITE) LF	646.1020 MARKING LINE EPOXY 4-INCH (YELLOW) LF
CATEGORY 0020					
326+39	-	328+02	STH 64	326	41
			PROJECT TOTALS	367	

TRAFFIC CONTROL

LOCATION	EST. SERVICE PERIOD DAYS	643.0420 BARRICADES TYPE III NO	643.0420 BARRICADES TYPE III DAYS	643.0705 WARNING LIGHTS TYPE A NO	643.0705 WARNING LIGHTS TYPE A DAYS	643.0900 SIGNS NO	643.0900 SIGNS DAYS	643.5000 TRAFFIC CONTROL EACH	643.1000 SIGNS FIXED MESSAGE* SF
CATEGORY 0020									
STH 64	30	20	600	40	1,200	18	540	---	128
DETOUR	30	4	120	8	240	314	9,420	---	---
	SUBTOTALS		720		1,440		9,960	0	128
UNDISTRIBUTED	---		70		140		1000	0.34	---
	SUBTOTALS		70		140	0	1000	0.34	
	PROJECT TOTALS		790		1,580		10,960	0.34	128

* INSTALL 7 DAYS IN ADVANCED OF CONSTRUCTION

CONSTRUCTION STAKING

STATION TO STATION	LOCATION	650.4500 CONSTRUCTION STAKING SUBGRADE LF	650.5000 CONSTRUCTION STAKING BASE LF	650.9910 CONSTRUCTION STAKING SUPPLEMENTAL CONTROL LS	650.9920 CONSTRUCTION STAKING SLOPE STAKES LF
CATEGORY 0020					
326+39 - 328+02	STH 64	163	163	0.34	163
	PROJECT TOTALS	163	163	0.34	163

SAW CUTTING

STATION TO STATION	DIR	LOCATION	690.0150 SAWING ASPHALT LF
CATEGORY 0020			
326+39	R/L	STH 64	30
328+02	R/L	STH 64	30
PROJECT TOTALS			60

UTILITY LINE OPENING

STATION*	LOCATION*	DIR	SPV.0060.01 UTILITY LINE OPENING EACH
CATEGORY 0020			
326+75	53'	LT	1
327+00	59'	LT	1
327+50	58'	LT	1
PROJECT TOTAL			3

* LOCATIONS DETERMINED BY CONTRACTOR OPERATIONS

3

EARTHWORK (CATEGORY 0030)

Division	From/To Station	Location	205.0100 Excavation Common (1)		Available Material (5)	205.0500 Excavation Marsh (6)	209.1500 Backfill Granular Grade 2	Unexpanded Fill	Expanded Fill	Mass Ordinate +/- (7)	Waste (8)
			Cut (2)	EBS Excavation			Factor 1.20		Factor 1.25		
STH 64	3+00/5+25	STH 64	410	0	410	809	971	194	243	167	977
Pipe Transition Area			895 *	0	895	0	1,795	0	0	895	895
Grand Total			410		1,305	809	2,766	194	243	1,062	1,872
Total Exc. Common			410								

Notes:

(1) Excavation Common is the sum of the Cut and EBS Excavation columns. Item number 205.0100

(2) Salvaged/Unsuable Pavement Material is included in Cut.

(5) Available Material = Cut

(6) Marsh Excavation - to be backfilled with Backfill Granular Grade 2, Item 209.2100. Marsh Excavation assumed to be wasted.

(7) Mass Ordinate = Cut - Expanded Fill (Does not include marsh excavation)

(8) Includes Marsh Excavation Waste

* Excavation included within normal pipe item. Excavation Common = 0; shown for information only.

REMOVING UTILITY POLES

STATION	LOCATION	204.205 REMOVING UTILITY POLES EACH
CATEGORY 0030		
3+75	STH 64 RT	1
	PROJECT TOTALS	1

BASE COURSE

STATION TO STATION		LOCATION	305.0110 BASE AGGREGATE DENSE 3/4-INCH TON	305.0120 BASE AGGREGATE DENSE 1 1/4-INCH TON	624.0100 WATER MGAL
CATEGORY 0030					
3+24 -	4+95	STH 64	30	570	9
		PROJECT TOTALS	30	570	9

ASPHALTIC ITEMS

STATION	TO	STATION	LOCATION	455.0605 TACK COAT GAL	460.5224 HMA PAVEMENT 4 LT 58-28 S TON
CATEGORY 0030					
3+24	-	4+95	STH 64	40	200
			PROJECT TOTAL	40	200

CULVERT PIPES

STATION	LOCATION	522.2363 CPRC HORIZONTAL ELLIPTICAL CLASS HE-III 63X98-INCH LF	522.2663 AEW FOR CPRC HORIZONTAL ELLIPTICAL 63X98-INCH EACH	650.6000 CONSTRUCTION STAKING PIPE CULVERTS EACH
CATEGORY 0030				
3+92	STH 64	70	2	1
4+08	STH 64	70	2	1
	TOTALS	140	4	2

RIPRAP

STATION	DIR	LOCATION	606.0300 RIPRAP HEAVY CY	645.0120 GEOTEXTILE TYPE HR SY
CATEGORY 0030				
4+00	LT	STH 64	38	75
4+00	RT	STH 64	39	75
		PROJECT TOTAL	77	150

3

3

LANDSCAPING ITEMS

STATION TO STATION			DIR	LOCATION	625.0100 TOPSOIL SY	628.2008 EROSION MAT URBAN CLASS I TYPE B SY	629.0210 FERTILIZER TYPE B CWT	630.0130 SEEDING MIX NO. 30 LB	630.0160 SEEDING MIX NO. 60 LB	630.0200 TEMP SEEDING LB	630.0500 SEED WATER MGAL
CATEGORY 0030											
3+24	-	5+25	LT	STH 64	540	540	0.38	5	6	7	12
3+00	-	5+25	RT	STH 64	520	520	0.37	5	5	7	12
UNDISTRIBUTED					210	210	0.13	2	2	3	5
PROJECT TOTALS					1,270	1,270	0.88	12	13	17	29

EROSION CONTROL ITEMS

STATION TO STATION			LOCATION	628.1504 SILT FENCE LF	628.1520 SILT FENCE MAINT LF	628.1905 MOB. EROSION CONTROL EA	628.1910 MOB. EROSION CONTROL EMERGENCY EA
CATEGORY 0030							
3+00	-	5+40	STH 64	440	440	---	---
UNDISTRIBUTED				90	90	2	1
PROJECT TOTALS				530	530	2	1

MARKERS CULVERT END

STATION	LOCATION	633.5200 MARKERS CULVERT END EACH
CATEGORY 0030		
3+92	STH 64	2
4+08	STH 64	2
PROJECT TOTALS		4

GEOTEXTILE

STATION TO STATION			LOCATION	645.0105 GEOTEXTILE TYPE C SY
CATEGORY 0030				
3+84	-	4+16	STH 64	340
PROJECT TOTALS				340

PAVEMENT MARKING

STATION - STATION			LOCATION	646.1020 MARKING LINE EPOXY 4-INCH (WHITE) LF	646.1020 MARKING LINE EPOXY 4-INCH (YELLOW) LF
CATEGORY 0030					
3+24	-	4+95	STH 64	342	43
PROJECT TOTALS				385	

TRAFFIC CONTROL

LOCATION	EST. SERVICE PERIOD DAYS	643.0420 BARRICADES TYPE III NO	643.0420 BARRICADES TYPE III DAYS	643.0705 WARNING LIGHTS TYPE A NO	643.0705 WARNING LIGHTS TYPE A DAYS	643.0900 SIGNS NO	643.0900 SIGNS DAYS	643.1000 SIGNS FIXED MESSAGE SF	643.5000 TRAFFIC CONTROL EACH
CATEGORY 0030									
STH 64	25	20	500	40	1,000	18	450	128	---
DETOUR	25	4	100	8	200	314	7,850	--	---
SUBTOTALS			600		1,200		8,300	128	0
UNDISTRIBUTED	---		60		120		830	--	0.33
SUBTOTALS			60		120		830	--	0.33
PROJECT TOTALS			660		1,320		9,130	128	0.33

CONSTRUCTION STAKING

STATION TO STATION			LOCATION	650.4500 CONSTRUCTION STAKING SUBGRADE LF	650.5000 CONSTRUCTION STAKING BASE LF	650.9910 CONSTRUCTION STAKING SUPPLEMENTAL CONTROL LS	650.9920 CONSTRUCTION STAKING SLOPE STAKES LF
CATEGORY 0030							
3+24	-	4+95	STH 64	171	171	0.33	171
PROJECT TOTALS				171	171	0.33	171

SAW CUTTING

STATION TO STATION			DIR	LOCATION	690.0150 SAWING ASPHALT LF
CATEGORY 0030					
3+24			R/L	STH 64	30
4+95			R/L	STH 64	30
PROJECT TOTALS					60

UTILITY LINE OPENING

STATION*	LOCATION*	DIR	SPV.0060.01 UTILITY LINE OPENING EACH
CATEGORY 0030			
3+60	38'	LT	1
3+60	47-51'	LT	1
4+35	35'	LT	1
4+35	42-46'	LT	1
PROJECT TOTAL			4

* LOCATIONS DETERMINED BY CONTRACTOR OPERATIONS

3

EARTHWORK - STH 107 (CATEGORY 0010)

Division	From/To Station	Location	205.0100 Excavation Common (1)		Available Material (5)	205.0500 Excavation Marsh (6)	209.1500 Backfill Granular Grade 2	Unexpanded Fill	Expanded Fill	Mass Ordinate +/- (7)	Waste (8)
			Cut (2)	EBS Excavation (3)			Factor 1.20		Factor 1.25		
STH 107	1+25/3+00	STH 107	186	0	186	139	166	155	194	-8	139
Pipe Transition Area			*358	0	358	0	728	2	2	356	356
Grand Total			186		544	139	894	157	196	348	495
Total Exc. Common			186								

Notes:
(1) Excavation Common is the sum of the Cut and EBS Excavation columns. Item number 205.0100
(4) Salvaged/Unusable Pavement Material
(5) Available Material = Cut
(6) Marsh Excavation - to be backfilled with Backfill Granular Grade 2, Item 209.2100. Marsh Excavation assumed to be wasted.
(7) Mass Ordinate = Cut - Expanded Fill (Does not include marsh excavation)
(8) Includes Marsh Excavation Waste
* Excavation included within normal pipe item. Excavation Common = 0; shown for information only.

CLEARING AND GRUBBING

STATION TO STATION	LOCATION	201.0105 CLEARING STA	201.0205 GRUBBING STA
CATEGORY 0010			
1+50 - 3+00	STH 107	2	2
PROJECT TOTALS		2	2

REMOVING GUARDRAIL

STATION TO STATION	DIR	LOCATION	204.0165 REMOVING GAURDRAIL LF
CATEGORY 0010			
1+05 - 3+15	RT	STH 107	210
1+10 - 3+20	LT	STH 107	210
PROJECT TOTALS			420

BASE COURSE

STATION TO STATION	LOCATION	305.0110 BASE AGGREGATE DENSE 3/4-INCH TON	305.0120 BASE AGGREGATE DENSE 1 1/4-INCH TON	624.0100 WATER MGAL
CATEGORY 0010				
1+50 - 2+70	STH 107	30	250	4
PROJECT TOTALS		30	250	4

ASPHALTIC ITEMS

STATION	TO	STATION	LOCATION	455.0605 TACK COAT GAL	460.5224 HMA PAVEMENT 4 LT 58-28 S TON
CATEGORY 0010					
1+50	-	2+70	STH 107	20	70
			PROJECT TOTAL	20	70

CULVERT PIPES

STATION	LOCATION	522.0436 CPRC CLASS IV 36-INCH LF	SPV.0090.01 CPRC HORIZONTAL ELLIPTICAL CLASS HE-IV 48X76-INCH LF	522.1036 AEW FOR CPRC 36-INCH EACH	522.2648 AEW FOR CPRC HORIZONTAL ELLIPTICAL 48X76-INCH EACH	650.6000 CONSTRUCTION STAKING PIPE CULVERT EACH
CATEGORY 0010						
2+04	STH 107	46	---	2	---	1
2+14	STH 107	---	46	---	2	1
	TOTALS	46	46	2	2	2

3

RIPRAP

STATION	DIR	LOCATION	606.0300 RIPRAP HEAVY CY	645.0120 GEOTEXTILE TYPE HR SY
CATEGORY 0010				
2+09	LT	STH 107	20	40
2+09	RT	STH 107	20	40
		PROJECT TOTAL	40	80

LANDSCAPING ITEMS

STATION TO STATION			DIR	LOCATION	625.0100 TOPSOIL SY	628.2008 EROSION MAT URBAN CLASS I TYPE B SY	629.0210 FERTILIZER TYPE B CWT	630.0130 SEEDING MIX NO. 30 LB	630.0200 TEMP SEEDING LB	630.0500 SEED WATER MGAL
CATEGORY 0010										
1+25	-	3+00	LT	STH 107	330	330	0.24	7	4	8
1+25	-	3+00	RT	STH 107	390	390	0.28	8	5	9
				UNDISTRIBUTED	140	140	0.09	2	3	3
				PROJECT TOTALS	860	860	0.61	17	12	20

3

EROSION CONTROL ITEMS

STATION TO STATION			LOCATION	628.1504 SILT FENCE LF	628.1520 SILT FENCE MAINT LF	628.1905 MOB. EROSION CONTROL EA	628.1910 MOB. EROSION CONTROL EMERGENCY EA
CATEGORY 0010							
1+00	-	3+20	STH 107	440	440	---	---
UNDISTRIBUTED				90	90	2	1
			PROJECT TOTALS	530	530	2	1

MARKERS CULVERT END

STATION	LOCATION	633.5200 MARKERS CULVERT END EACH
CATEGORY 0010		
2+04	STH 107	2
2+14	STH 107	2
PROJECT TOTALS		4

GEOTEXTILE

STATION TO STATION			LOCATION	645.0105 GEOTEXTILE TYPE C SY
CATEGORY 0010				
1+98	-	2+20	STH 107	180
			PROJECT TOTALS	180

TRAFFIC CONTROL

LOCATION	EST. SERVICE PERIOD DAYS	643.0420 BARRICADES TYPE III NO	643.0420 BARRICADES TYPE III DAYS	643.0705 WARNING LIGHTS TYPE A NO	643.0705 WARNING LIGHTS TYPE A DAYS	643.0900 SIGNS NO	643.0900 SIGNS DAYS	643.1000 SIGNS FIXED MESSAGE SF	643.5000 TRAFFIC CONTROL EACH
CATEGORY 0010									
STH 107	25	14	350	28	700	12	300	64	---
ICE AGE TRAIL	25	--	--	--	--	4	100	16	---
DETOUR	25	--	--	--	--	226	5,650	--	---
	SUBTOTALS		350		700		6,050	80	0
UNDISTRIBUTED	---		40		70		600	0	0.33
	SUBTOTALS		40	0	70	0	600	0	0
	PROJECT TOTALS		390		770		6,650	80	0.33

COVERING SIGNS

LOCATION	STAGE	643.0920 TRAFFIC CONTROL COVERING SIGNS TYPE II EACH	NUMBER OF CYCLES	NUMBER OF SIGNS
CATEGORY 0010				
STH 107 DETOUR	1	1	1	1
PROJECT TOTALS		1		

PAVEMENT MARKING

STATION - STATION			LOCATION	646.1020 MARKING LINE EPOXY 4-INCH (WHITE) LF	646.1020 MARKING LINE EPOXY 4-INCH (YELLOW) LF
CATEGORY 0010					
1+50	-	2+70	STH 107	240	240
			PROJECT TOTALS	480	

CONSTRUCTION STAKING

STATION TO STATION			LOCATION	650.4500 CONSTRUCTION STAKING SUBGRADE LF	650.5000 CONSTRUCTION STAKING BASE LF	650.9910 CONSTRUCTION STAKING SUPPLEMENTAL CONTROL LS	650.9920 CONSTRUCTION STAKING SLOPE STAKES LF
CATEGORY 0010							
1+50	-	2+70	STH 107	120	120	0.33	120
			PROJECT TOTALS	120	120	0.33	120

SAW CUTTING

STATION TO STATION	DIR	LOCATION	690.0150 SAWING ASPHALT LF
CATEGORY 0010			
1+50	R/L	STH 107	22
2+70	R/L	STH 107	22
PROJECT TOTALS			44

3

CLEARING AND GRUBBING

STATION TO STATION	LOCATION	201.0105 CLEARING STA	201.0205 GRUBBING STA
CATEGORY 0010			
108+00 - 109+00	STH 86	1	1
189+50 - 190+50	STH 86	1	1
208+50 - 209+50	STH 86	1	1
213+50 - 214+50	STH 86	1	1
PROJECT TOTALS		4	4

REMOVING DELINEATORS AND MARKERS

STATION	DIR	LOCATION	204.0180 REMOVING DELINEATORS AND MARKERS EACH
CATEGORY 0010			
204+62	LT	STH 86	1
204+73	RT	STH 86	1
206+12	RT	STH 86	1
206+15	LT	STH 86	1
207+16	LT	STH 86	1
207+54	RT	STH 86	1
208+42	RT	STH 86	1
208+47	LT	STH 86	1
209+46	LT	STH 86	1
PROJECT TOTALS			9

REMOVING GUARDRAIL

STATION TO STATION	DIR	LOCATION	204.0165 REMOVING GUARDRAIL LF
CATEGORY 0010			
105+10 - 110+50	RT	STH 86	540
105+40 - 111+05	LT	STH 86	565
187+93 - 192+15	LT	STH 86	425
210+60 - 216+00	RT	STH 86	540
210+67 - 216+45	LT	STH 86	578
PROJECT TOTALS			2,648

ASPHALTIC SURFACE ITEMS

STATION TO STATION	DIR	LOCATION	455.0605 TACK COAT GAL	465.0105 ASPHALTIC SURFACE TON
CATEGORY 0010				
104+70 - 105+42	LT	STH 86	2	6
184+40 - 188+50	RT	STH 86	21	70
184+45 - 187+93	LT	STH 86	13	44
192+16 - 193+47	LT	STH 86	6	21
203+85 - 210+65	RT	STH 86	16	51
204+02 - 210+65	LT	STH 86	23	74
215+93 216+80	RT	STH 86	2	8
216+42 - 217+63	LT	STH 86	4	13
UNDISTRIBUTED			18	58
		PROJECT TOTAL	105	345

3

CULVERT PIPES

STATION	LOCATION	520.9700.S.01 CULVERT PIPE LINERS, 30-INCH LF	520.9700.S.02 CULVERT PIPE LINERS, 36-INCH LF	520.9750.S.01 CLEANING CULVERT PIPES FOR LINER VERIFICATION EA	521.3130 CULVERT PIPE CORR. STEEL 30-INCH LF	521.3136 CULVERT PIPE CORR. STEEL 36-INCH LF	STEEL THICKNESS (INCHES)
CATEGORY 0010							
108+28	STH 86	180	---	1	---	---	---
189+92	STH 86	---	156	1	---	8	0.079
209+04	STH 86	167	---	1	---	---	---
214+08	STH 86	165	---	1	10	---	0.079
PROJECT TOTALS		512	156	4	10	8	

CULVERT PIPES END SECTIONS

STATION	LOCATION	520.1024 AEW FOR CULVERT PIPE 24-INCH EACH	520.1030 AEW FOR CULVERT PIPE 30-INCH EACH	SPV.0060.03 CONCRETE COLLAR FOR HYDRO-BELL END SECTION EACH	633.5200 CULVERT MARKERS END EACH	SPV.0060.02 HYDRO-BELL END SECTION EACH	REMARKS
CATEGORY 0010							
108+28	STH 86	2	---	---	2	---	---
189+92	STH 86	---	2	---	2	---	---
209+04	STH 86	1	---	1	2	1	HYDRO-BELL & CONCRETE COLLAR INLET END ONLY
214+08	STH 86	2	---	---	2	---	---
PROJECT TOTALS		5	2	1	8	1	

3

RIPRAP

STATION	DIR	LOCATION	606.0200 RIPRAP MEDIUM CY	645.0120 GEOTEXTILE TYPE HR SY
CATEGORY 0010				
108+28	LT & RT	STH 86	12	40
189+92	LT & RT	STH 86	14	50
209+04	LT & RT	STH 86	12	40
214+08	LT & RT	STH 86	12	40
		PROJECT TOTALS	50	170

GUARDRAIL

STATION	TO	STATION	DIR	LOCATION	614.2330 MGS GUARDRAIL 3K LF	614.2350 MGS GUARDRAIL SHORT RADIUS LF	614.2610 MGS GUARDRAIL TERMINAL EAT EACH	614.2630 MGS GUARDRAIL SHORT RADIUS TERMINAL EACH
CATEGORY 0010								
105+22	-	110+53	LT	STH 86	425	---	2	---
105+22	-	110+53	RT	STH 86	425	---	2	---
185+00	-	192+91	LT	STH 86	687.5	---	2	---
185+06	-	188+00	RT	STH 86	187.5	---	2	---
204+62	-	210+05	LT	STH 86	475	35	1	1
204+32	-	210+02	RT	STH 86	500	35	1	1
210+40	-	217+13	LT	STH 86	600	35	1	1
210+50	-	216+29	RT	STH 86	512.5	35	1	1
				PROJECT TOTAL	3812.5	140	12	4

BARRIER SYSTEM GRADING SHAPING FINISHING *

STATION	TO	STATION	DIR	LOCATION	614.0010.01 STH 86 CULVERT 500860200 EACH	614.0010.02 STH 86 CULVERT 500860290 EACH	614.0010.03 STH 86 CULVERT 500860310 EACH	614.0010.04 STH 86 CULVERT 500860320 EACH
CATEGORY 0010								
104+20	-	111+35	LT & RT	STH 86	1	---	---	---
184+00	-	194+00	LT & RT	STH 86	---	1	---	---
203+00	-	210+01	LT & RT	STH 86	---	---	1	---
210+40	-	219+00	LT & RT	STH 86	---	---	---	1
				PROJECT TOTALS	1	1	1	1

* SEE BARRIER SYSTEM GRADING SHAPING FINISHING INFORMATION TABLE FOR ESTIMATED QUANTITIES. ALL LANDSCAPING REQUIRED AT EACH CULVERT AREA IS INCLUDED IN THE BARRIER SYSTEM GRADING SHAPING FINISHING ITEM.

BARRIER SYSTEM GRADING SHAPING FINISHING INFORMATION TABLE*

CULVERT	STATION	TO	STATION	DIR	CUT CY	EXPANDED FILL (BAD 3/4-INCH) CY	TOPSOIL SY	FERTILIZER TYPE B CWT	SEEDING MIX NO. 30 LB	SEED WATER MGAL	CONSTRUCTION STAKING SLOPE STAKES LF
500860200	104+20	-	111+35	LT & RT	2	172	2,260	1.5	41	50	715
UNDISTRIBUTED					---	---	450	0.3	8	10	---
500860290	184+00	-	194+00	LT & RT	1	112	2,370	1.5	43	53	1,000
UNDISTRIBUTED					---	---	470	0.3	9	10	---
500860310	203+00	-	210+01	LT & RT	14	66	2,170	1.4	39	49	700
UNDISTRIBUTED					---	---	430	0.3	8	10	---
500860320	210+40	-	219+00	LT & RT	19	153	2,530	1.6	46	57	860
UNDISTRIBUTED					---	---	470	0.3	9	10	---
				PROJECT TOTALS	36	503	11,150	7.2	203	249	3,275

QUANTITIES ARE FOR INFORMATION ONLY. SEE EARTHWORK TABLE FOR DETAILS AND BARRIER SYSTEM GRADING SHAPING FINISHING TABLE FOR ACTUAL ITEMS & QUANTITIES. ALL LANDSCAPING REQUIRED AT EACH CULVERT AREA IS INCLUDED IN THE BARRIER SYSTEM GRADING SHAPING FINISHING ITEM.

EROSION CONTROL

STATION TO STATION			LOCATION	628.1504 SILT FENCE LF	628.1520 SILT FENCE MAINTENCE LF	628.1905 MOB. EROSION CONTROL EA	628.1910 MOB. EMERGENCY EROSION CONTROL EA
CATEGORY 0010							
104+00	-	11+50	STH 86	830	830	---	---
184+00	-	194+25	STH 86	880	880	---	---
203+50	-	210+25	STH 86	550	550	---	---
210+25	-	219+00	STH 86	820	820	---	---
			UNDISTRIBUTED	620	620	1	2
			PROJECT TOTALS	3,700	3,700	1	2

EROSION MAT

STATION TO STATION			LOCATION	628.2008 EROSION MAT URBAN CLASS I TYPE B SY
CATEGORY 0010				
14+00	-	111+50	STH 86	2,260
184+00	-	194+25	STH 86	2,370
203+29	-	210+25	STH 86	2,170
210+25	-	219+00	STH 86	2,360
			UNDISTRIBUTED	1,840
			PROJECT TOTALS	11,000

MOVING SIGNG AND SUPPORTS

STATION	DIR	LOCATION	638.2102 MOVING SIGNS TYPE II EA
CATEGORY 0010			
104+96	RT	STH 86	1
185+08	LT	STH 86	1
205+65	RT	STH 86	1
		PROJECT TOTALS	3

3

CONSTRUCTION STAKING

STATION TO STATION			LOCATION	650.9910 CONSTRUCTION STAKING SUPPLEMENTAL CONTROL LS
CATEGORY 0010				
104+20	-	218+20	STH 86	1
			CATEGORY 0040 TOTAL	
			PROJECT TOTALS	1

TRAFFIC CONTROL

STATION	TO	STATION		LOCATION	TRAFFIC CONTROL DRUMS APPROX. SERVICE PERIOD DAYS	643.0300 TRAFFIC CONTROL DRUMS NO.	DAYS	SIGN CODE	SIGN SIZE	TRAFFIC CONTROL SIGNS APPROX. SERVICE PERIOD DAYS	643.0900 TRAFFIC CONTROL SIGNS NO.	DAYS	643.1000 SIGNS FIXED MESSAGE SF	MESSAGE	NOTE
PROJECT 9216-07-61 CATEGORY 0010															
87+90	-		RT	STH 86	--	--	--	W20-1A	1	24	1	24	--		
97+95	-		RT	STH 86	--	--	--	W21-5	1	24	1	24	--		
98+00	-		LT	STH 86	--	--	--	G20-2A	1	24	1	24	--		
117+65	-		LT	STH 86	--	--	--	W21-5	1	24	1	24	--		
104+20	-		RT	STH 86		--	--	G20-57	3	7	--	--	18	HWY 86 ROAD WORK BEGINS XXX XX	NOTE 1
107+80	-	108+80	LT	STH 86	9	10	90	--	--	--	--	--	--		BEAMGUARD REMOVAL AREA FOR CULVERT LINING ACCESS (10' SPACING)
107+80	-	108+80	RT	STH 86	9	10	90	--	--	--	--	--	--		
98+00	-	114+00	RT	STH 86	14	30	420	--	--	--	--	--	--		BEAMGUARD REMOVAL AND REPLACEMENT (100' WORK AREA BUFFER SPACING & 50' TAPER SPACING)
102+00	-	118+05	LT	STH 86	17	30	510	--	--	--	--	--	--		
---	-			JOHNSON RD	--	--	--	W20-1A	2S	23	1	23	--	ROAD WORK AHEAD	SEE SDD 15C4-5, TYPICAL SIDEROAD APPROACH WARNING SIGN DETAIL
---	-			CURVE INN RD	--	--	--	W20-1A	2S	23	2	46	--	ROAD WORK AHEAD	
---	-			CTH C	--	--	--	W20-1A	2S	23	2	46	--	ROAD WORK AHEAD	
176+36	-		RT	STH 86	--	--	--	W21-5	1	24	1	24	--		
196+10	-		RT	STH 86	--	--	--	G20-2A	1	24	1	24	--		
196+90	-		LT	STH 86	--	--	--	W21-5	1	24	1	24	--		
205+85	-		LT	STH 86	--	--	--	W20-1A	1	24	1	24	--		
189+35	-	190+35	LT	STH 86	8	10	80	--	--	--	--	--	--		BEAMGUARD REMOVAL AREA FOR CULVERT LINING ACCESS (10' SPACING)
177+95	-	191+00	RT	STH 86	9	25	225	--	--	--	--	--	--		
182+00	-	200+65	LT	STH 86	15	35	525	--	--	--	--	--	--		BEAMGUARD REMOVAL AND REPLACEMENT (100' WORK AREA BUFFER SPACING & 50' TAPER SPACING)
190+00	-		RT	STH 86	--	--	--	W20-1A	1	23	1	23	--		
200+25	-		RT	STH 86	--	--	--	W21-5	1	23	1	23	--		
200+35	-		LT	STH 86	--	--	--	G20-2A	1	23	1	23	--		
197+50	-	220+00	RT	STH 86	32	40	1280	--	--	--	--	--	--		BEAMGUARD REMOVAL AND REPLACEMENT (100' WORK AREA BUFFER SPACING & 50' TAPER SPACING)
202+00	-	214+05	LT	STH 86	32	40	1280	--	--	--	--	--	--		
213+50	-	214+50	LT	STH 86	8	10	80	--	--	--	--	--	--		BEAMGUARD REMOVAL AREA FOR CULVERT LINING ACCESS(10' SPACING)
213+50	-	214+50	RT	STH 86	8	10	80	--	--	--	--	--	--		
218+20	-		LT	STH 86	--	--	--	G20-57	3	7	--	--	18	HWY 86 ROAD WORK BEGINS XXX XX	NOTE 1
220+20	-		RT	STH 86	--	--	--	G20-2A	1	23	1	23	--		
220+35	-		LT	STH 86	--	--	--	W21-5	1	23	1	23	--		
230+85	-		LT	STH 86	--	--	--	W20-1A	1	23	1	23	--		
				PROJECT TOTALS		4,660					349		36		

NOTE 1: INSTALL A MINIMUM OF 7 DAYS PRIOR TO START OF CONSTRUCTION. REMOVE SIGNS AT START OF CONSTRUCTION

3

EARTHWORK - STH 102 (CATEGORY 0010)

Division	From/To Station	Location	205.0100 Excavation Common (1)		Available Material (5)	205.0500 Excavation Marsh (6)	209.2100 Backfill Granular Grade 2	Unexpanded Fill	Expanded Fill	SPV.0035.01 Marsh Excavation Stockpile & Replacement	Mass Ordinate +/- (7)	Waste (8)
			Cut	EBS Excavation			Factor 1.20		Factor 1.25	Factor 1.00		
STH 102	14+00/16+00	STH 102	238	0	238	170	204	60	74	0	164	333
PIPE TRANSITION AREA			*573	0	573	0	1,030	62	77	0	496	496
TEMPORARY DRIVEWAY			6	0	6	52	157	76	94	0	---	6
TEMPORARY DRIVEWAY REMOVAL			**199	0	199	0	0	0	0	52	---	199
Grand Total			442		1,016	222	1,391	197	246	52	660	1,034
Total Exc. Common			442									

Notes:

(1) Excavation Common is the sum of the Cut and EBS Excavation columns. Item number 205.0100

(5) Available Material = Cut

(6) Marsh Excavation - to be backfilled with Backfill Granular Grade 2, Item 209.2100. Marsh Excavation assumed to be wasted.

(7) Mass Ordinate = Cut - Expanded Fill (Does not include marsh excavation nor expanded fill in Temporary Driveway)

(8)Except for the Temporary Driveway, includes Marsh Excavation Waste

* Excavation included with the normal pipe item. Excavation Common = 0; shown here for information only.

**Temporary Driveway Removal Cut includes Fill or Granular Backfill Grade 2 for Temporary Drive, Granular Backfill Grade 2 removal in original marsh excavation areas, and removal of Base Agg. Used for surface of Temporary Drive.

CLEARING AND GRUBBING

STATION TO STATION	LOCATION	201.0105 CLEARING STA	201.0205 GRUBBING STA
CATEGORY 0010			
15+25 - 16+25	STH 102	1	1
PROJECT TOTALS		1	1

REMOVING SMALL PIPE CULVERTS

STATION TO STATION	DIR	LOCATION	203.0100 REMOVING SMALL PIPE CULVERTS EACH
CATEGORY 0010			
14+75	LT	STH 102	1
15+25	RT	STH 102	1
14+95	R/L	STH 102	1
15+00	R/L	STH 102	1
15+05	R/L	STH 102	1
PROJECT TOTALS			5

BASE COURSE

STATION TO STATION	LOCATION	305.0110 BASE AGGREGATE DENSE 3/4-INCH TON	305.0120 BASE AGGREGATE DENSE 1 1/4-INCH TON	305.0130 BASE AGGREGATE DENSE 3-INCH TON	624.0100 WATER MGAL
CATEGORY 0010					
14+34 - 15+93	STH 102	50	334	0	5
14+75	DRIVEWAY	0	23	0	0
15+25	DRIVEWAY	0	14	0	0
16+10	TEMP DRIVEWAY	0	83	0	5
15+00	PIPE BEDDING	0	0	333	0
PROJECT TOTALS		50	454	333	10

ASPHALTIC ITEMS

STATION	TO	STATION	LOCATION	455.0605 TACK COAT GAL	460.5224 HMA PAVEMENT 4 LT 58-28 S TON
CATEGORY 0010					
14+34	-	15+93	STH 102	30	90
PROJECT TOTAL				30	90

MARKERS CULVERT END

STATION	LOCATION	633.5200 MARKERS CULVERT END EACH
CATEGORY 0010		
14+94	STH 102	2
15+02	STH 102	2
15+10	STH 102	2
PROJECT TOTALS		6

3

CULVERT PIPES

STATION	LOCATION	520.1018 ARPON ENDWALLS FOR CULVERT PIPE 18-INCH EACH	520.1024 ARPON ENDWALLS FOR CULVERT PIPE 24-INCH EACH	520.2024 CULVERT PIPE TEMPORARY 24-INCH LF	520.3518 CULVERT PIPE III-B 18-INCH LF	520.3524 CULVERT PIPE III-B 24-INCH LF	522.0436 CPRC Class IV 36-Inch LF	522.1036 AEW for CPRC 36-Inch EACH	650.6000 CONSTRUCTION STAKING PIPE CULVERTS EACH
CATEGORY 0010									
14+75	LT	2	---	---	36	---	---	---	---
14+93.5	STH 102	---	---	---	---	---	48	2	1
15+01.5	STH 102	---	---	---	---	---	48	2	1
15+09.5	STH 102	---	---	---	---	---	48	2	1
15+25	RT	---	2	---	---	32	---	---	---
16+10	RT	---	---	22	---	---	---	---	---
	TOTALS	2	2	22	36	32	144	6	3

LANDSCAPING ITEMS

STATION TO STATION			DIR	LOCATION	625.0100 TOPSOIL SY	628.2008 EROSION MAT URBAN CLASS I TYPE B SY	629.0210 FERTILIZER TYPE B CWT	630.0130 SEEDING MIX NO. 30 LB	630.0160 SEEDING MIX NO. 60 LB	630.0200 TEMP SEEDING LB	630.0500 SEED WATER MGAL
CATEGORY 0010											
14+00	-	16+10	LT	STH 102	960	960	0.64	5	13	13	22
14+34	-	15+93	RT	STH 102	990	990	0.94	4	15	13	22
100+16	-	101+65	R/L	TEMP DWY	370	370	0.23	1	6	5	8
				UNDISTRIBUTED	460	460	0.29	2	2	3	10
				PROJECT TOTALS	2,780	2,780	2.10	12	36	34	62

TRAFFIC CONTROL

LOCATION	EST. SERVICE PERIOD DAYS	643.0420 BARRICADES TYPE III NO	DAYS	643.0705 WARNING LIGHTS TYPE A NO	DAYS	643.0900 SIGNS NO	DAYS	643.1000 SIGNS FIXED MESSAGE* SF	643.5000 TRAFFIC CONTROL EACH
CATEGORY 0010									
STH 102	30	20	600	40	1,200	19	570	64	---
DETOUR	30	--	--	--	--	66	1,980	--	---
	SUBTOTALS		600		1,200		2,550	64	0
UNDISTRIBUTED	---		60		120		255	--	1
	SUBTOTALS		60		120	0	255	0	1
	PROJECT TOTALS		660		1,320		2,805	64	1

*INSTALL 7 DAYS IN ADVANCE OF CONSTRUCTION

CONSTRUCTION STAKING

STATION TO STATION	LOCATION	650.4500 CONSTRUCTION STAKING SUBGRADE LF	650.5000 CONSTRUCTION STAKING BASE LF	650.9910 CONSTRUCTION STAKING SUPPLEMENTAL CONTROL LS	650.9920 CONSTRUCTION STAKING SLOPE STAKES LF
CATEGORY 0010					
14+34 - 15+93	STH 102	159	159	1	159
	PROJECT TOTALS	159	159	1	159

EROSION CONTROL ITEMS

STATION TO STATION			LOCATION	628.1504 SILT FENCE LF	628.1520 SILT FENCE MAINT LF	628.1905 MOB. EROSION CONTROL EA	628.1910 MOB. EMERGENCY EROSION CONTROL EA	628.7555 CULVERT PIPE CHECKS EACH
CATEGORY 0010								
13+80	-	16+25	STH 102	575	575	---	---	3
UNDISTRIBUTED				120	120	2	2	---
			PROJECT TOTALS	695	695	2	2	3

RIPRAP

STATION	DIR	LOCATION	606.0300 RIPRAP HEAVY CY	645.0120 GEOTEXTILE TYPE HR SY
CATEGORY 0010				
15+00	LT	STH 102	40	80
15+00	RT	STH 102	40	80
		PROJECT TOTAL	80	160

GEOTEXTILE

STATION TO STATION	LOCATION	645.0135 GEOTEXTILE TYPE SR SY
CATEGORY 0010		
14+88 - 15+15	STH 102	220
	PROJECT TOTALS	220

COVERING SIGNS

LOCATION	STAGE	643.0920 TRAFFIC CONTROL COVERING SIGNS TYPE II EACH	NUMBER OF CYCLES	NUMBER OF SIGNS
CATEGORY 0010				
STH 102 DETOUR	1	2	1	2
	PROJECT TOTAL	2		

PAVEMENT MARKING

STATION - STATION			LOCATION	646.1020 EPOXY 4-INCH (WHITE) LF	EPOXY 4-INCH (YELLOW) LF
CATEGORY 0010					
14+34	-	15+93	STH 102	320	200
			PROJECT TOTALS	520	

SAW CUTTING

STATION TO STATION	DIR	LOCATION	690.0150 SAWING ASPHALT LF
CATEGORY 0010			
14+34	R/L	STH 102	22
15+93	R/L	STH 102	22
PROJECT TOTALS			44

3

536218

SARAH L. KOSS
LINCOLN COUNTY, WI
REGISTER OF DEEDS

04/26/2019 02:04:28PM

REC FEE: 25.00
PAGES: 1

Volume 1
Page 25

RESERVED FOR REGISTER OF DEEDS
PROJECT NUMBER 1009-44-27- 4.02
AMENDMENT NO:___

TRANSPORTATION PROJECT PLAT NO: 1009-44-27 - 4.02

BEING A PART OF THE SOUTHWEST QUARTER OF THE SOUTHWEST QUARTER, SECTION 19, T31N, R5E, AND A PART OF THE NORTHWEST QUARTER OF THE NORTHWEST QUARTER, SECTION 30, T31N, R5E, TOWN OF CORNING, LINCOLN COUNTY, WISCONSIN

RELOCATION ORDER STH 64 LINCOLN COUNTY
C-35-12, C-35-63, C-35-69
LINCOLN COUNTY CULVERT REPLACEMENTS

TO PROPERTY ESTABLISH, LAY OUT, WIDEN, ENLARGE, EXTEND, CONSTRUCT, RECONSTRUCT, IMPROVE, OR MAINTAIN A PORTION OF THE HIGHWAY DESIGNATED ABOVE, THE STATE OF WISCONSIN DEPARTMENT OF TRANSPORTATION DEEMS IT NECESSARY TO RELOCATE OR CHANGE SAID HIGHWAY AND ACQUIRE CERTAIN LANDS AND INTERESTS OR RIGHTS IN LANDS FOR THE ABOVE NAMED PROJECT.

TO EFFECT THIS CHANGE, PURSUANT TO AUTHORITY GRANTED UNDER SUBSECTIONS 84.02 (3), 84.09 AND 84.30, WISCONSIN STATUTES, THE DEPARTMENT OF TRANSPORTATION HEREBY ORDERS THAT:

1. THAT PORTION OF SAID HIGHWAY AS SHOWN ON THIS PLAT IS LAID OUT AND ESTABLISHED TO THE LINES AND WIDTHS AS SO SHOWN FOR THE ABOVE NAMED PROJECT.
2. THE LANDS OR INTERESTS OR RIGHTS IN LANDS AS SHOWN ON THIS PLAT ARE REQUIRED BY THE DEPARTMENT FOR THE ABOVE PROJECT AND SHALL BE ACQUIRED IN THE NAME OF THE STATE OF WISCONSIN, PURSUANT TO THE PROVISIONS OF SUBSECTION 84.09 (1) OR (2). WISCONSIN STATUTES.

PROJECT LOCATION

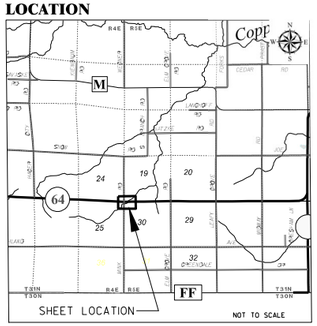

CONVENTIONAL SYMBOLS

SECTION LINE
QUARTER LINE
SIXTEENTH LINE
NEW REFERENCE LINE
NEW R/W LINE
EXISTING R/W OR HE LINE
PROPERTY LINE
LOT, TIE & OTHER MINOR LINES
SLOPE INTERCEPT
CORPORATE LIMITS
UNDERGROUND FACILITY (COMMUNICATIONS, ELECTRIC, ETC)
NEW R/W (FEE OR HE) (HATCHING VARIES BY OWNER)
HIGHWAY EASEMENT (HATCH VARIES)
TEMPORARY LIMITED EASEMENT AREA
EASEMENT AREA (PERMANENT LIMITED OR RESTRICTED DEVELOPMENT)
TRANSMISSION STRUCTURES
BUILDING
TO BE REMOVED
BRIDGE

SECTION CORNER SYMBOL
SECTION CORNER MONUMENT
GEODETIC SURVEY MONUMENT
SIXTEENTH CORNER MONUMENT
SIGN
OFF-PREMISE SIGN

R/W MONUMENT (TO BE SET)
NON-MONUMENTED R/W POINT
FOUND IRON PIN (3-INCH UNLESS NOTED)

	COMPENSABLE	NON-COMPENSABLE
ELECTRIC POLE		
TELEPHONE POLE		
PEDESTAL (LABEL TYPE) (TV, TEL, ELEC, ETC.)		

ACCESS RESTRICTED BY ACQUISITION
NO ACCESS (BY STATUTORY AUTHORITY)
ACCESS RESTRICTED (BY PREVIOUS PROJECT OR CONTROL)
NO ACCESS (NEW HIGHWAY)
PARCEL NUMBER 25
UTILITY NUMBER 40
HE POINT 24
PLE POINT 25
PARALLEL OFFSETS

CONVENTIONAL ABBREVIATIONS

ACCESS RIGHTS	AR	POINT OF INTERSECTION	PI
ACRES	AC	PROPERTY LINE	PL
AHEAD	AH	RECORDED AS	(100')
ALUMINUM	ALUM	REEL / IMAGE	R/I
AND OTHERS	ET AL	REFERENCE LINE	R/L
BACK	BK	REMAINING	REM
BLOCK	BLK	RESTICTIVE DEVELOPMENT EASEMENT	RDE
CENTERLINE	C/L	RIGHT	RT
CERTIFIED SURVEY MAP	CSM	RIGHT OF WAY	R/W
CONCRETE	CONC	SECTION	SEC
COUNTY	CO	SEPTIC VENT	SEPV
COUNTY TRUNK HIGHWAY	CTH	SQUARE FEET	SF
DISTANCE	DIST	STATE TRUNK HIGHWAY	STH
CORNER	COR	STATION	STA
DOCUMENT NUMBER	DOC	TELEPHONE PEDESTAL	TP
EASEMENT	EASE	TEMPORARY LIMITED EASEMENT	TLE
EXISTING	EX	TRANSPORTATION PROJECT PLAT	TPP
GAS VALVE	GV	UNITED STATES HIGHWAY	USH
GRID NORTH	GN	VOLUME	V
HIGHWAY EASEMENT	HE		
IDENTIFICATION	ID		
LAND CONTRACT	LC		
LEFT	LT		
MONUMENT	MON		
NATIONAL GEODETIC SURVEY	NGS		
NUMBER	NO		
OUTLOT	OL		
PAGE	P		
POINT OF TANGENCY	PT		
PERMANENT LIMITED EASEMENT	PLE		
POINT OF BEGINNING	POB		
POINT OF CURVATURE	PC		
POINT OF COMPOUND CURVE	PCC		

CURVE DATA

LONG CHORD	LCH
LONG CHORD BEARING	LCB
RADIUS	R
DEGREE OF CURVE	D
CENTRAL ANGLE	Δ/DELTA
LENGTH OF CURVE	L
TANGENT	T
DIRECTION AHEAD	DA
DIRECTION BACK	DB

GN
W E
S
SCALE, FEET
0 40 80

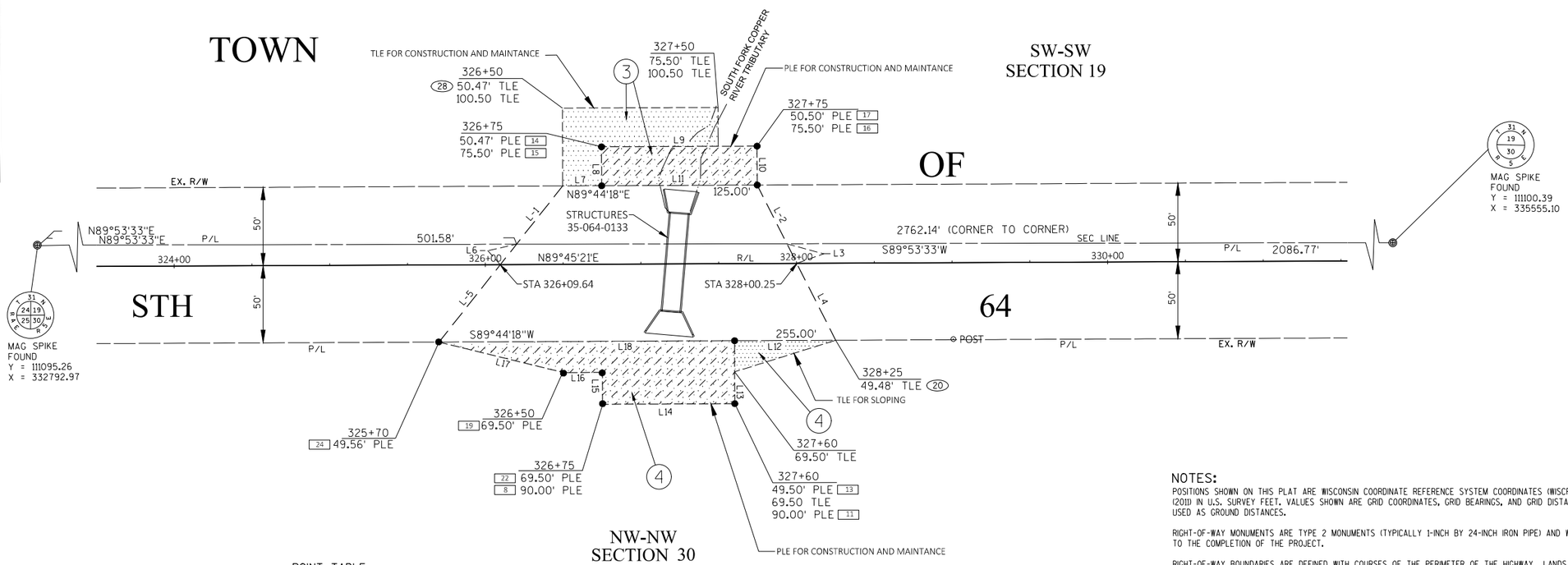

LINE TABLE

FROM-TO	BEARING	DISTANCE
L1	N38°24'24"E	47.85'
L2	S26°48'46"E	42.28'
L3	S26°48'46"E	14.19'
L4	S26°48'46"E	55.33'
L5	N38°24'24"E	63.46'
L6	N38°24'24"E	16.78'
L7	N89°44'18"E	25.00'
L8	N00°14'39"W	25.02'
L9	N89°45'21"E	100.00'
L10	S00°14'39"E	25.00'
L11	S89°44'18"W	100.00'
L12	S89°44'18"W	65.00'
L13	S00°14'39"E	40.50'
L14	S89°45'21"W	85.00'
L15	N00°14'39"W	20.50'
L16	S89°45'21"W	25.00'
L17	N76°14'59"W	82.45'
L18	N89°44'18"E	190.00'

POINT TABLE

PT#	Y	X	DESC.
8	110993.27	333349.87	PLE
11	110993.64	333434.87	PLE
13	111034.13	333434.69	PLE
14	111133.74	333349.27	PLE
15	111158.77	333349.16	PLE
16	111159.20	333449.16	PLE
17	111134.20	333449.27	PLE
19	111013.67	333324.78	PLE
20	111034.43	333499.69	TLE
22	111013.77	333349.78	PLE
24	111033.26	333244.69	PLE
28	111133.64	333324.27	TLE

EXISTING HIGHWAY RIGHT-OF-WAY SHOWN IS BASED UPON THE FOLLOWING POINTS OF REFERENCE:

EXISTING HIGHWAY RIGHT-OF-WAY OF STH 64 ESTABLISHED FROM PREVIOUS PROJECT: T020(5), DATED FEBRUARY 4, 1953

SCHEDULE OF LANDS AND INTEREST

"OWNERS" NAMES ARE SHOWN FOR REFERENCE PURPOSES ONLY AND ARE SUBJECT TO CHANGE PRIOR TO TRANSFER OF LAND INTERESTS TO THE STATE OR DEPT.

PARCEL NO.	OWNER	INTEREST REQUIRED	AREA ACRES REQUIRED NEW	EXISTING	TOTAL	TLE AREA	PLE AREA
3	DELORES STAUB AND RALPH STAUB	TLE PLE	---	---	---	0.07 AC	0.06 AC
4	BRIANE HEINOWSKI	TLE PLE	---	---	---	0.01 AC	0.11 AC

NOTES:

POSITIONS SHOWN ON THIS PLAT ARE WISCONSIN COORDINATE REFERENCE SYSTEM COORDINATES (WISCRS), (LINCOLN) COUNTY, NAD 83 (2011) IN U.S. SURVEY FEET. VALUES SHOWN ARE GRID COORDINATES, GRID BEARINGS, AND GRID DISTANCES. GRID DISTANCES MAY BE USED AS GROUND DISTANCES.

RIGHT-OF-WAY MONUMENTS ARE TYPE 2 MONUMENTS (TYPICALLY 1-INCH BY 24-INCH IRON PIPE) AND WILL BE PLACED PRIOR TO THE COMPLETION OF THE PROJECT.

RIGHT-OF-WAY BOUNDARIES ARE DEFINED WITH COURSES OF THE PERIMETER OF THE HIGHWAY LANDS REFERENCED TO THE U.S. PUBLIC LAND SURVEY OR OTHER SURVEYS OF RECORD.

PROPERTY LINES SHOWN ON THIS PLAT ARE DRAWN FROM DATA DERIVED FROM MAPS AND DOCUMENTS OF PUBLIC RECORD AND/OR EXISTING OCCUPATIONAL LINES. EXCLUDING RIGHT-OF-WAY BOUNDARIES, THIS PLAT MAY NOT BE A TRUE REPRESENTATION OF EXISTING PROPERTY LINES AND SHOULD NOT BE USED AS A SUBSTITUTE FOR AN ACCURATE FIELD SURVEY.

DIMENSIONS FOR THE NEW RIGHT-OF-WAY IS MEASURED ALONG AND PERPENDICULAR TO THE NEW REFERENCE LINES.

ALL RIGHT-OF-WAY LINES DEPICTED IN THE NON-ACQUISTION AREAS ARE INTENDED TO RE-ESTABLISH EXISTING RIGHT-OF-WAY LINES AS DETERMINED FROM PREVIOUS PROJECTS, OTHER RECORDED DOCUMENTS, OR FROM CENTERLINE OF EXISTING PAVEMENTS.

FOR THE CURRENT ACCESS/DRIVEWAY INFORMATION, CONTACT THE PLANNING UNIT OF THE WISCONSIN DEPARTMENT OF TRANSPORTATION OFFICE IN MADISON.

A TEMPORARY LIMITED EASEMENT (TLE) IS A RIGHT FOR CONSTRUCTION PURPOSES, AS DEFINED HEREIN, INCLUDING THE RIGHT TO OPERATE NECESSARY EQUIPMENT THEREON AND THE RIGHT OF INGRESS AND EGRESS, AS LONG AS REQUIRED FOR SUCH PUBLIC PURPOSE, INCLUDING THE RIGHT TO PRESERVE, PROTECT, REMOVE, OR PLANT THEREON ANY VEGETATION THAT THE HIGHWAY AUTHORITIES MAY DEEM NECESSARY OR DESIRABLE. ALL TLE'S EXPIRE AT THE COMPLETION OF THE PROJECT FOR WHICH THIS INSTRUMENT IS GIVEN.

A PERMANENT LIMITED EASEMENT (PLE) IS A RIGHT FOR CONSTRUCTION AND MAINTENANCE PURPOSES, AS DEFINED HEREIN, INCLUDING THE RIGHT TO OPERATE THE NECESSARY EQUIPMENT THEREON AND THE RIGHT OF INGRESS AND EGRESS AS LONG AS REQUIRED FOR SUCH PUBLIC PURPOSE, INCLUDING THE RIGHT TO PRESERVE, PROTECT, REMOVE OR PLANT THEREON ANY VEGETATION THAT THE HIGHWAY AUTHORITIES MAY DEEM NECESSARY OR DESIRABLE, BUT WITHOUT PREJUDICE TO THE OWNERS RIGHT TO MAKE OR CONSTRUCT IMPROVEMENTS ON SAID LANDS OR TO FLATTEN THE SLOPES, PROVIDING SAID ACTIVITIES WILL NOT IMPAIR OR OTHERWISE ADVERSELY AFFECT THE HIGHWAY FACILITIES.

OMNNI ASSOCIATES
OMNNI ASSOCIATES
ONE SYSTEMS DRIVE
APPLETON, WI 54914-1654
PHONE (920) 735-6900
FAX (920) 830-6100

I, DAVID A. YURK, PROFESSIONAL LAND SURVEYOR, HEREBY CERTIFY THAT IN FULL COMPLIANCE WITH THE PROVISIONS OF SECTION 84.095 OF THE WISCONSIN STATUTES AND UNDER THE DIRECTION OF THE DEPARTMENT, I HAVE SURVEYED AND MAPPED THIS TRANSPORTATION PROJECT PLAT AND SUCH PLAT CORRECTLY REPRESENTS ALL EXTERIOR BOUNDARIES OF THE SURVEYED LAND.

WISCONSIN DAVID A. YURK S-2648 OSHKOSH, WI LAND SURVEYOR

(SIGNATURE) David A. Yurk DATE 4-16-2019
(PRINTED NAME) DAVID A. YURK
(REGISTRATION NO.) S-2648

THIS PLAT AND RELOCATION ORDER IS APPROVED FOR THE DEPARTMENT.

(SIGNATURE) Brent L Stella DATE 4-24-19
(PRINT NAME:) Brent L Stella

FILE NAME : F:\TR\JOBS\E2271A17\CIVIL 3D 2016 STH 64 WEST\RW\TPP WEST.DWG
APPRAISAL PLAT DATE : 4-16-2019
PLOT DATE : 4/16/2019 4:33 PM PLOT BY : OMNNI ASSOCIATES, INC. - JAIRO MAZARIEGOS

TRANSPORTATION PROJECT PLAT NO: 1009-44-27 - 4.03

BEING A PART OF THE SOUTHWEST QUARTER OF THE SOUTHEAST QUARTER, SECTION 19, T31N, R5E, AND A PART OF THE NORTHWEST QUARTER OF THE NORTHEAST QUARTER, SECTION 30, T31N, R5E, TOWN OF CORNING, LINCOLN COUNTY, WISCONSIN

RELOCATION ORDER STH 64 LINCOLN COUNTY
C-35-12, C-35-63, C-35-69
LINCOLN COUNTY CULVERT REPLACEMENTS

TO PROPERTY ESTABLISH, LAY OUT, WIDEN, ENLARGE, EXTEND, CONSTRUCT, RECONSTRUCT, IMPROVE, OR MAINTAIN A PORTION OF THE HIGHWAY DESIGNATED ABOVE, THE STATE OF WISCONSIN DEPARTMENT OF TRANSPORTATION DEEMS IT NECESSARY TO RELOCATE OR CHANGE SAID HIGHWAY AND ACQUIRE CERTAIN LANDS AND INTERESTS OR RIGHTS IN LANDS FOR THE ABOVE NAMED PROJECT.

TO EFFECT THIS CHANGE, PURSUANT TO AUTHORITY GRANTED UNDER SUBSECTIONS 84.02 (3), 84.09 AND 84.30, WISCONSIN STATUTES, THE DEPARTMENT OF TRANSPORTATION HEREBY ORDERS THAT:

1. THAT PORTION OF SAID HIGHWAY AS SHOWN ON THIS PLAT IS LAID OUT AND ESTABLISHED TO THE LINES AND WIDTHS AS SO SHOWN FOR THE ABOVE NAMED PROJECT.
2. THE LANDS OR INTERESTS OR RIGHTS IN LANDS AS SHOWN ON THIS PLAT ARE REQUIRED BY THE DEPARTMENT FOR THE ABOVE PROJECT AND SHALL BE ACQUIRED IN THE NAME OF THE STATE OF WISCONSIN, PURSUANT TO THE PROVISIONS OF SUBSECTION 84.09 (1) OR (2). WISCONSIN STATUTES.

CONVENTIONAL SYMBOLS

SECTION LINE
QUARTER LINE
SIXTEENTH LINE
NEW REFERENCE LINE
NEW R/W LINE
EXISTING R/W OR HE LINE
PROPERTY LINE
LOT, TIE & OTHER MINOR LINES
SLOPE INTERCEPT
CORPORATE LIMITS
UNDERGROUND FACILITY (COMMUNICATIONS, ELECTRIC, ETC)
NEW R/W (FEE OR HE) (HATCHING VARIES BY OWNER)
HIGHWAY EASEMENT (HATCH VARIES)
TEMPORARY LIMITED EASEMENT AREA
EASEMENT AREA (PERMANENT LIMITED OR RESTRICTED DEVELOPMENT)
TRANSMISSION STRUCTURES
BUILDING — TO BE REMOVED
BRIDGE

SECTION CORNER SYMBOL
SECTION CORNER MONUMENT
R/W MONUMENT (TO BE SET)
NON-MONUMENTED R/W POINT
FOUND IRON PIN (1-INCH UNLESS NOTED)
GEODETIC SURVEY MONUMENT
SIXTEENTH CORNER MONUMENT
SIGN
OFF-PREMISE SIGN

	COMPENSABLE	NON-COMPENSABLE
ELECTRIC POLE		
TELEPHONE POLE		
PEDESTAL (LABEL TYPE) (TV, TEL, ELEC, ETC.)		

ACCESS RESTRICTED BY ACQUISITION
NO ACCESS (BY STATUTORY AUTHORITY)
ACCESS RESTRICTED (BY PREVIOUS PROJECT OR CONTROL)
NO ACCESS (NEW HIGHWAY)
PARCEL NUMBER 25
UTILITY NUMBER 40
HE POINT 24
PLE POINT 25
PARALLEL OFFSETS

CONVENTIONAL ABBREVIATIONS

ACCESS RIGHTS	AR	POINT OF INTERSECTION	PI
ACRES	AC	PROPERTY LINE	PL
AHEAD	AH	RECORDED AS	(100')
ALUMINUM	ALUM	REEL / IMAGE	R/I
AND OTHERS	ET AL	REFERENCE LINE	R/L
BACK	BK	REMAINING	REM
BLOCK	BLK	RESTICTIVE DEVELOPMENT EASEMENT	RDE
CENTERLINE	C/L	RIGHT	RT
CERTIFIED SURVEY MAP	CSM	RIGHT OF WAY	R/W
CONCRETE	CONC	SECTION	SEC
COUNTY	CO	SEPTIC VENT	SEPV
COUNTY TRUNK HIGHWAY	CTH	SQUARE FEET	SF
DISTANCE	DIST	STATE TRUNK HIGHWAY	STH
CORNER	COR	STATION	STA
DOCUMENT NUMBER	DOC	TELEPHONE PEDESTAL	TP
EASEMENT	EASE	TEMPORARY LIMITED EASEMENT	TLE
EXISTING	EX	TRANSPORTATION PROJECT PLAT	TPP
GAS VALVE	GV	UNITED STATES HIGHWAY	USH
GRID NORTH	GN	VOLUME	V
HIGHWAY EASEMENT	HE		
IDENTIFICATION	ID		
LAND CONTRACT	LC		
LEFT	LT		
MONUMENT	MON		
NATIONAL GEODETIC SURVEY	NGS		
NUMBER	NO		
OUTLOT	OL		
PAGE	P		
POINT OF TANGENCY	PT		
PERMANENT LIMITED EASEMENT	PLE		
POINT OF BEGINNING	POB		
POINT OF CURVATURE	PC		
POINT OF COMPOUND CURVE	PCC		

CURVE DATA

LONG CHORD	LCH
LONG CHORD BEARING	LCB
RADIUS	R
DEGREE OF CURVE	D
CENTRAL ANGLE	Δ/DELTA
LENGTH OF CURVE	L
TANGENT	T
DIRECTION AHEAD	DA
DIRECTION BACK	DB

GN
W E
S

SCALE, FEET
0 40 80

536219
SARAH L. KOSS
LINCOLN COUNTY, WI
REGISTER OF DEEDS
04/26/2019 02:08:46PM
REC FEE: 25.00
PAGES: 1
Volume 1
Page 26

RESERVED FOR REGISTER OF DEEDS
PROJECT NUMBER 1009-44-27 - 4.03
AMENDMENT NO:___

NOTES:

POSITIONS SHOWN ON THIS PLAT ARE WISCONSIN COORDINATE REFERENCE SYSTEM COORDINATES (WISCRS), (LINCOLN) COUNTY, NAD 83 (2011) IN U.S. SURVEY FEET. VALUES SHOWN ARE GRID COORDINATES, GRID BEARINGS, AND GRID DISTANCES. GRID DISTANCES MAY BE USED AS GROUND DISTANCES.

RIGHT-OF-WAY MONUMENTS ARE TYPE 2 MONUMENTS (TYPICALLY 1-INCH BY 24-INCH IRON PIPE) AND WILL BE PLACED PRIOR TO THE COMPLETION OF THE PROJECT.

RIGHT-OF-WAY BOUNDARIES ARE DEFINED WITH COURSES OF THE PERIMETER OF THE HIGHWAY LANDS REFERENCED TO THE U.S. PUBLIC LAND SURVEY OR OTHER SURVEYS OF RECORD.

PROPERTY LINES SHOWN ON THIS PLAT ARE DRAWN FROM DATA DERIVED FROM MAPS AND DOCUMENTS OF PUBLIC RECORD AND/OR EXISTING OCCUPATIONAL LINES. EXCLUDING RIGHT-OF-WAY BOUNDARIES, THIS PLAT MAY NOT BE A TRUE REPRESENTATION OF EXISTING PROPERTY LINES AND SHOULD NOT BE USED AS A SUBSTITUTE FOR AN ACCURATE FIELD SURVEY.

DIMENSIONS FOR THE NEW RIGHT-OF-WAY IS MEASURED ALONG AND PERPENDICULAR TO THE NEW REFERENCE LINES.

ALL RIGHT-OF-WAY LINES DEPICTED IN THE NON-ACQUISTION AREAS ARE INTENDED TO RE-ESTABLISH EXISTING RIGHT-OF-WAY LINES AS DETERMINED FROM PREVIOUS PROJECTS, OTHER RECORDED DOCUMENTS, OR FROM CENTERLINE OF EXISTING PAVEMENTS.

FOR THE CURRENT ACCESS/DRIVEWAY INFORMATION, CONTACT THE PLANNING UNIT OF THE WISCONSIN DEPARTMENT OF TRANSPORTATION OFFICE IN MADISON.

A TEMPORARY LIMITED EASEMENT (TLE) IS A RIGHT FOR CONSTRUCTION PURPOSES, AS DEFINED HEREIN, INCLUDING THE RIGHT TO OPERATE NECESSARY EQUIPMENT THEREON AND THE RIGHT OF INGRESS AND EGRESS, AS LONG AS REQUIRED FOR SUCH PUBLIC PURPOSE, INCLUDING THE RIGHT TO PRESERVE, PROTECT, REMOVE, OR PLANT THEREON ANY VEGETATION THAT THE HIGHWAY AUTHORITIES MAY DEEM NECESSARY OR DESIRABLE. ALL TLE'S EXPIRE AT THE COMPLETION OF THE PROJECT FOR WHICH THIS INSTRUMENT IS GIVEN.

A PERMANENT LIMITED EASEMENT (PLE) IS A RIGHT FOR CONSTRUCTION AND MAINTENANCE PURPOSES, AS DEFINED HEREIN, INCLUDING THE RIGHT TO OPERATE THE NECESSARY EQUIPMENT THEREON AND THE RIGHT OF INGRESS AND EGRESS AS LONG AS REQUIRED FOR SUCH PUBLIC PURPOSE, INCLUDING THE RIGHT TO PRESERVE, PROTECT, REMOVE OR PLANT THEREON ANY VEGETATION THAT THE HIGHWAY AUTHORITIES MAY DEEM NECESSARY OR DESIRABLE, BUT WITHOUT PREJUDICE TO THE OWNERS RIGHT TO MAKE OR CONSTRUCT IMPROVEMENTS ON SAID LANDS OR TO FLATTEN THE SLOPES, PROVIDING SAID ACTIVITIES WILL NOT IMPAIR OR OTHERWISE ADVERSELY AFFECT THE HIGHWAY FACILITIES.

4

4

LINE TABLE

FROM-TO	BEARING	DISTANCE
L1	N00°40'43"W	50.63'
L2	S00°40'43"E	50.72'
L3	S00°40'43"E	5.62'
L4	S00°40'43"E	43.66'
L5	N00°40'43"W	45.24'
L6	N00°40'43"W	4.13'
L7	N00°40'43"W	20.00'
L8	N89°17'18"E	100.00'
L9	S00°40'43"E	20.00'
L10	S89°17'18"W	100.00'
L11	S89°17'18"W	50.00'
L12	S00°40'43"E	22.00'
L13	S89°17'18"W	100.00'
L14	N00°40'43"W	22.00'
L15	N89°17'18"E	100.00'

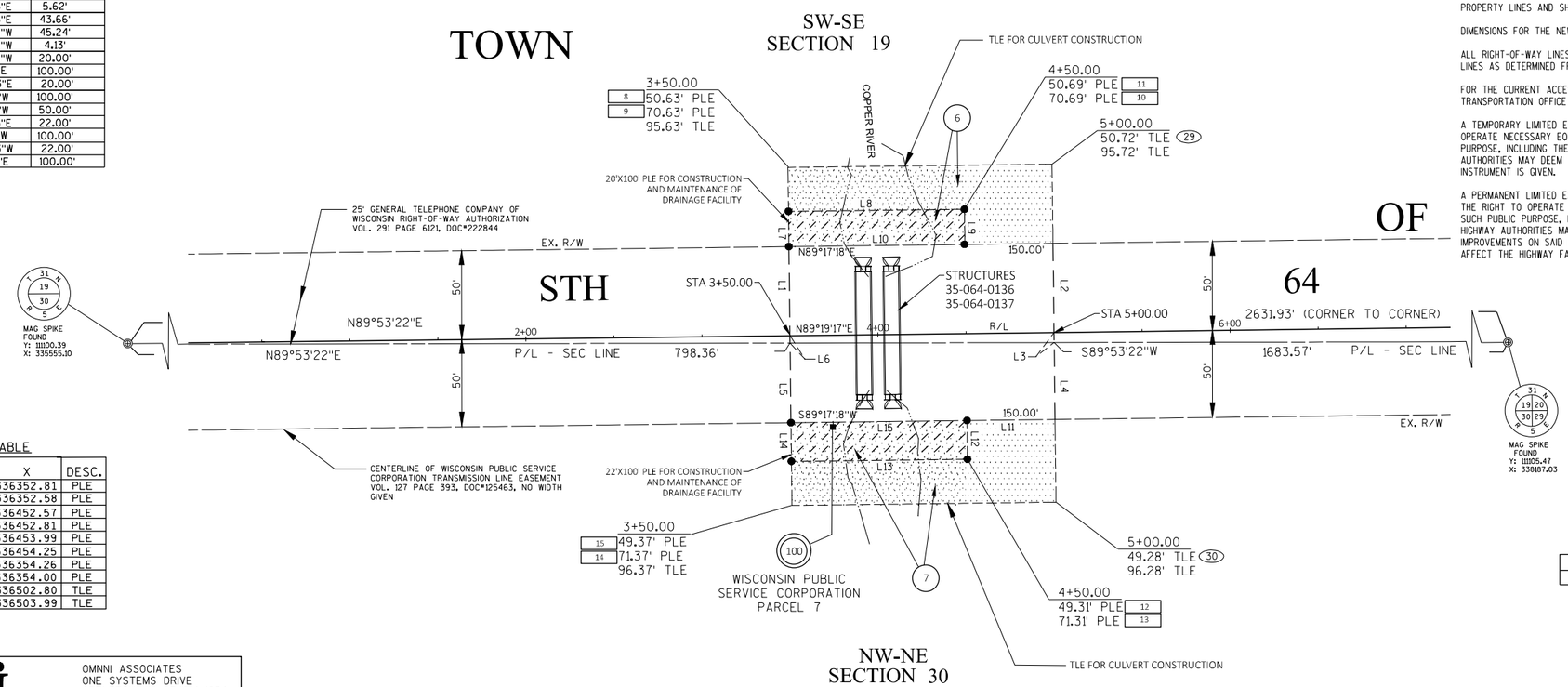

POINT TABLE

PT#	Y	X	DESC.
8	111156.68	336352.81	PLE
9	111176.68	336352.58	PLE
10	111177.93	336452.57	PLE
11	111157.93	336452.81	PLE
12	111057.93	336453.99	PLE
13	111035.94	336454.25	PLE
14	111034.69	336354.26	PLE
15	111056.69	336354.00	PLE
29	111158.55	336502.80	TLE
30	111058.55	336503.99	TLE

UTILITY INTEREST REQUIRED

UTILITY	OWNERS	INTEREST REQUIRED
100	WISCONSIN PUBLIC SERVICE CORPORATION	RELEASE OF RIGHTS

PROJECT LOCATION

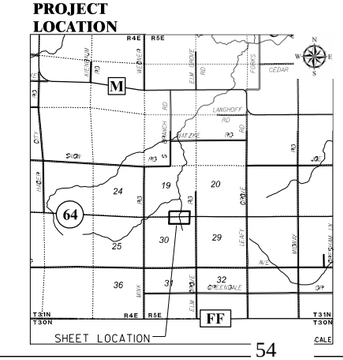

OMNNI ASSOCIATES
ONE SYSTEMS DRIVE
APPLETON, WI 54914-1654
PHONE (920) 735-6900
FAX (920) 830-6100

I, DAVID A. YURK, PROFESSIONAL LAND SURVEYOR, HEREBY CERTIFY THAT IN FULL COMPLIANCE WITH THE PROVISIONS OF SECTION 84.095 OF THE WISCONSIN STATUTES AND UNDER THE DIRECTION OF THE DEPARTMENT, I HAVE SURVEYED AND MAPPED THIS TRANSPORTATION PROJECT PLAT AND SUCH PLAT CORRECTLY REPRESENTS ALL EXTERIOR BOUNDARIES OF THE SURVEYED LAND.

WISCONSIN DAVID A. YURK S-2648 OSHKOSH, WI LAND SURVEYOR

(SIGNATURE) David A. Yurk DATE 4-16-2019
(PRINTED NAME) DAVID A. YURK
(REGISTRATION NO.) S-2648

THIS PLAT AND RELOCATION ORDER IS APPROVED FOR THE DEPARTMENT.

(SIGNATURE) Brent L Stella DATE 4-24-19
(PRINT NAME:) Brent I Stella

EXISTING HIGHWAY RIGHT-OF-WAY SHOWN IS BASED UPON THE FOLLOWING POINTS OF REFERENCE:

EXISTING HIGHWAY RIGHT-OF-WAY OF STH 64 ESTABLISHED FROM PREVIOUS PROJECT: T020(5), DATED FEBRUARY 4, 1953

SCHEDULE OF LANDS AND INTEREST

"OWNERS" NAMES ARE SHOWN FOR REFERENCE PURPOSES ONLY AND ARE SUBJECT TO CHANGE PRIOR TO TRANSFER OF LAND INTERESTS TO THE STATE OR DEPT.

PARCEL NO.	OWNER	INTEREST REQUIRED	AREA ACRES REQUIRED NEW	EXISTING	TOTAL	TLE AREA	PLE AREA
6	BRUCE C. BROEKING JR. AND HEATHER M. BROEKING	TLE PLE	---	---	---	0.11 AC	0.05 AC
7	TODD W. LUEDTKE	TLE PLE	---	---	---	0.11 AC	0.05 AC

FILE NAME : F:\TR\JOBS\E2271A17\CIVIL 3D 2016 STH 64 EAST\RW\TPP EAST.DWG
APPRAISAL PLAT DATE : 4-16-2019
PLOT DATE : 4/16/2019 4:32 PM PLOT BY : OMNNI ASSOCIATES, INC. - JAIRO MAZARIEGOS
---------- ---------- 4.---

TRANSPORTATION PROJECT PLAT NO: 1009-44-27 - 4.01

BEING A PART OF LOTS 1 AND 3, LINCOLN COUNTY CERTIFIED SURVEY MAP 1998 AND PART OF LOT 3 AND OUTLOT 1, LINCOLN COUNTY CERTIFIED SURVEY MAP 2015, LOCATED IN GOVERNMENT LOT 8, SECTION 30, T33N, R6E, TOWN OF ROCK FALLS, LINCOLN COUNTY, WISCONSIN

RELOCATION ORDER STH 107 LINCOLN COUNTY
C-35-12, C-35-63, C-35-69
LINCOLN COUNTY CULVERT REPLACEMENTS

TO PROPERTY ESTABLISH, LAY OUT, WIDEN, ENLARGE, EXTEND, CONSTRUCT, RECONSTRUCT, IMPROVE, OR MAINTAIN A PORTION OF THE HIGHWAY DESIGNATED ABOVE, THE STATE OF WISCONSIN DEPARTMENT OF TRANSPORTATION DEEMS IT NECESSARY TO RELOCATE OR CHANGE SAID HIGHWAY AND ACQUIRE CERTAIN LANDS AND INTERESTS OR RIGHTS IN LANDS FOR THE ABOVE NAMED PROJECT.

TO EFFECT THIS CHANGE, PURSUANT TO AUTHORITY GRANTED UNDER SUBSECTIONS 84.02 (3), 84.09 AND 84.30, WISCONSIN STATUTES, THE DEPARTMENT OF TRANSPORTATION HEREBY ORDERS THAT:

1. THAT PORTION OF SAID HIGHWAY AS SHOWN ON THIS PLAT IS LAID OUT AND ESTABLISHED TO THE LINES AND WIDTHS AS SO SHOWN FOR THE ABOVE NAMED PROJECT.
2. THE LANDS OR INTERESTS OR RIGHTS IN LANDS AS SHOWN ON THIS PLAT ARE REQUIRED BY THE DEPARTMENT FOR THE ABOVE PROJECT AND SHALL BE ACQUIRED IN THE NAME OF THE STATE OF WISCONSIN, PURSUANT TO THE PROVISIONS OF SUBSECTION 84.09 (1) OR (2), WISCONSIN STATUTES.

4

CONVENTIONAL SYMBOLS

SECTION LINE
QUARTER LINE
SIXTEENTH LINE
NEW REFERENCE LINE
NEW R/W LINE
EXISTING R/W OR HE LINE
PROPERTY LINE
LOT, TIE & OTHER MINOR LINES
SLOPE INTERCEPT
CORPORATE LIMITS
UNDERGROUND FACILITY (COMMUNICATIONS, ELECTRIC, ETC)
NEW R/W (FEE OR HE) (HATCHING VARIES BY OWNER)
HIGHWAY EASEMENT (HATCH VARIES)
TEMPORARY LIMITED EASEMENT AREA
EASEMENT AREA (PERMANENT LIMITED OR RESTRICTED DEVELOPMENT)
TRANSMISSION STRUCTURES
BUILDING — TO BE REMOVED
BRIDGE

SECTION CORNER SYMBOL
SECTION CORNER MONUMENT
GEODETIC SURVEY MONUMENT
SIXTEENTH CORNER MONUMENT
SIGN
OFF-PREMISE SIGN
R/W MONUMENT (TO BE SET)
NON-MONUMENTED R/W POINT
FOUND IRON PIN (3-INCH UNLESS NOTED)

	COMPENSABLE	NON-COMPENSABLE
ELECTRIC POLE		
TELEPHONE POLE		
PEDESTAL (LABEL TYPE) (TV, TEL, ELEC, ETC.)		

ACCESS RESTRICTED BY ACQUISITION
NO ACCESS (BY STATUTORY AUTHORITY)
ACCESS RESTRICTED (BY PREVIOUS PROJECT OR CONTROL)
NO ACCESS (NEW HIGHWAY)
PARCEL NUMBER 25 — UTILITY NUMBER 40
HE POINT 24 — PLE POINT 25
PARALLEL OFFSETS

CONVENTIONAL ABBREVIATIONS

ACCESS RIGHTS	AR	POINT OF INTERSECTION	PI
ACRES	AC	PROPERTY LINE	PL
AHEAD	AH	RECORDED AS	(100')
ALUMINUM	ALUM	REEL / IMAGE	R/I
AND OTHERS	ET AL	REFERENCE LINE	R/L
BACK	BK	REMAINING	REM
BLOCK	BLK	RESTICTIVE DEVELOPMENT EASEMENT	RDE
CENTERLINE	C/L	RIGHT	RT
CERTIFIED SURVEY MAP	CSM	RIGHT OF WAY	R/W
CONCRETE	CONC	SECTION	SEC
COUNTY	CO	SEPTIC VENT	SEPV
COUNTY TRUNK HIGHWAY	CTH	SQUARE FEET	SF
DISTANCE	DIST	STATE TRUNK HIGHWAY	STH
CORNER	COR	STATION	STA
DOCUMENT NUMBER	DOC	TELEPHONE PEDESTAL	TP
EASEMENT	EASE	TEMPORARY LIMITED EASEMENT	TLE
EXISTING	EX	TRANSPORTATION PROJECT PLAT	TPP
GAS VALVE	GV	UNITED STATES HIGHWAY	USH
GRID NORTH	GN	VOLUME	V
HIGHWAY EASEMENT	HE		
IDENTIFICATION	ID		
LAND CONTRACT	LC		
LEFT	LT		
MONUMENT	MON		
NATIONAL GEODETIC SURVEY	NGS		
NUMBER	NO		
OUTLOT	OL		
PAGE	P		
POINT OF TANGENCY	PT		
PERMANENT LIMITED EASEMENT	PLE		
POINT OF BEGINNING	POB		
POINT OF CURVATURE	PC		
POINT OF COMPOUND CURVE	PCC		

CURVE DATA

LONG CHORD	LCH
LONG CHORD BEARING	LCB
RADIUS	R
DEGREE OF CURVE	D
CENTRAL ANGLE	Δ/DELTA
LENGTH OF CURVE	L
TANGENT	T
DIRECTION AHEAD	DA
DIRECTION BACK	DB

GN
W E
S

SCALE, FEET
0 40 80

536217
SARAH L. KOSS
LINCOLN COUNTY, WI
REGISTER OF DEEDS
04/26/2019 01:59:30PM
REC FEE: 25.00
PAGES: 1
volume 1
page 24

RESERVED FOR REGISTER OF DEEDS
PROJECT NUMBER 1009-44-27 - 4.01
AMENDMENT NO:____

4

POINT TABLE

PT#	Y	X	PT#
8	173895.32	369602.01	PLE
10	173853.65	369511.11	PLE
13	173915.79	369592.63	PLE
14	173874.01	369501.77	PLE
15	173853.13	369456.34	TLE
21	173936.68	369638.06	TLE
22	173913.12	369428.84	HE
25	173996.67	369610.55	HE
26	173949.10	369467.35	HE
27	173990.77	369558.25	HE
28	174004.41	369552.00	PLE
29	173973.15	369483.83	PLE
30	173959.51	369490.08	PLE

LINE TABLE

FROM-TO	BEARING	DISTANCE
L1	S24°37'38"E	32.43'
L2	N24°37'35"W	32.65'
L3	N24°37'35"W	33.35'
L4	N46°57'04"E	52.70'
L5	N65°22'14"E	100.00'
L6	N83°33'32"E	52.63'
L7	S24°37'38"E	33.57'
L8	N65°22'14"E	25.00'
L9	N24°37'46"W	15.00'
L10	N65°22'14"E	75.00'
L11	S24°37'46"E	15.00'
L12	S65°22'14"W	75.00'
L13	S65°18'25"W	50.00'
L14	S24°37'46"E	22.52'
L15	S65°22'14"W	100.00'
L16	N24°37'46"W	22.40'
L17	N65°18'25"E	100.00'

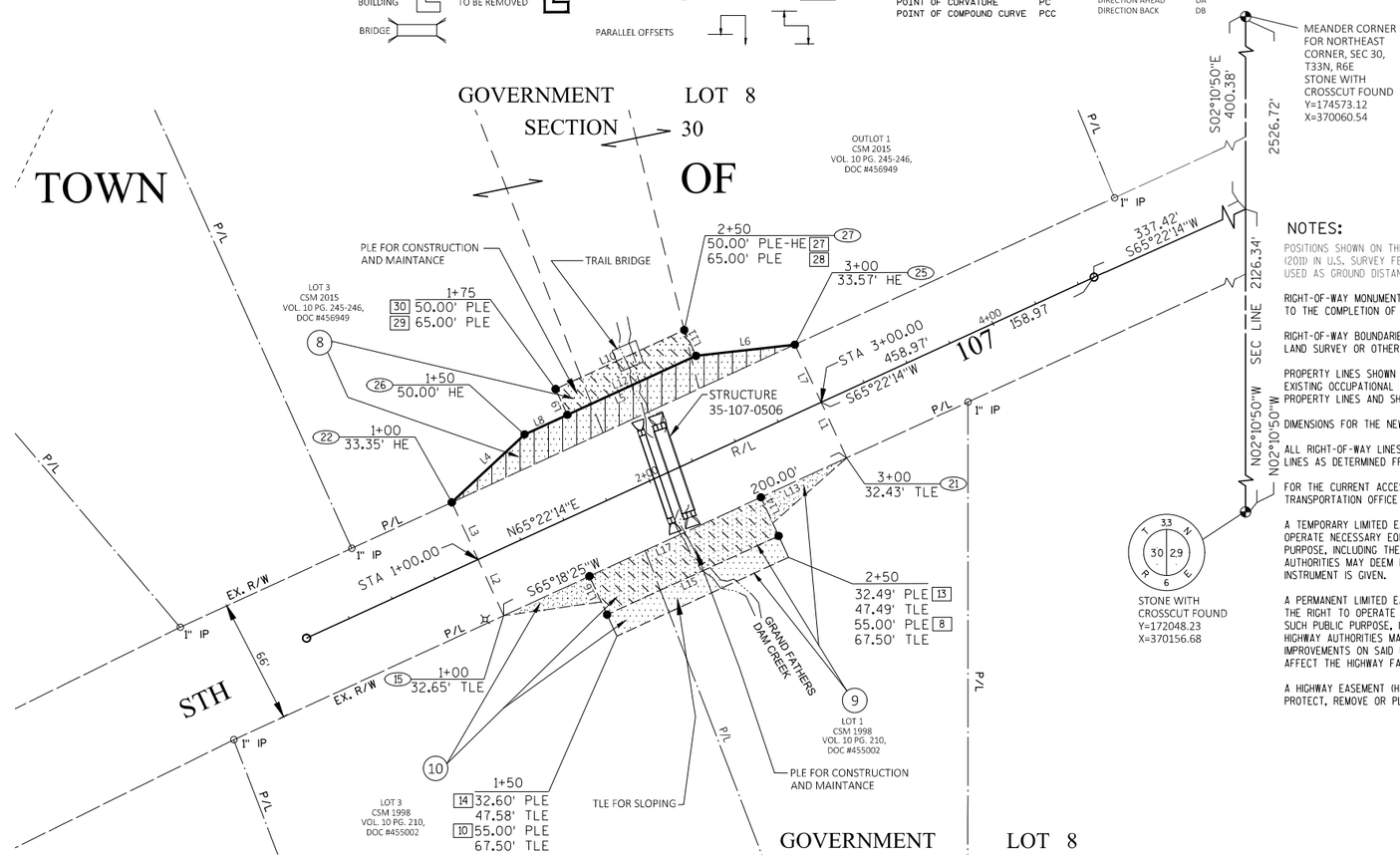

NOTES:

POSITIONS SHOWN ON THIS PLAT ARE WISCONSIN COORDINATE REFERENCE SYSTEM COORDINATES (WISCRS), (LINCOLN) COUNTY, NAD 83 (2011) IN U.S. SURVEY FEET. VALUES SHOWN ARE GRID COORDINATES, GRID BEARINGS, AND GRID DISTANCES. GRID DISTANCES MAY BE USED AS GROUND DISTANCES.

RIGHT-OF-WAY MONUMENTS ARE TYPE 2 MONUMENTS (TYPICALLY 1-INCH BY 24-INCH IRON PIPE) AND WILL BE PLACED PRIOR TO THE COMPLETION OF THE PROJECT.

RIGHT-OF-WAY BOUNDARIES ARE DEFINED WITH COURSES OF THE PERIMETER OF THE HIGHWAY LANDS REFERENCED TO THE U.S. PUBLIC LAND SURVEY OR OTHER SURVEYS OF RECORD.

PROPERTY LINES SHOWN ON THIS PLAT ARE DRAWN FROM DATA DERIVED FROM MAPS AND DOCUMENTS OF PUBLIC RECORD AND/OR EXISTING OCCUPATIONAL LINES. EXCLUDING RIGHT-OF-WAY BOUNDARIES, THIS PLAT MAY NOT BE A TRUE REPRESENTATION OF EXISTING PROPERTY LINES AND SHOULD NOT BE USED AS A SUBSTITUTE FOR AN ACCURATE FIELD SURVEY.

DIMENSIONS FOR THE NEW RIGHT-OF-WAY IS MEASURED ALONG AND PERPENDICULAR TO THE NEW REFERENCE LINES.

ALL RIGHT-OF-WAY LINES DEPICTED IN THE NON-ACQUISTION AREAS ARE INTENDED TO RE-ESTABLISH EXISTING RIGHT-OF-WAY LINES AS DETERMINED FROM PREVIOUS PROJECTS, OTHER RECORDED DOCUMENTS, OR FROM CENTERLINE OF EXISTING PAVEMENTS.

FOR THE CURRENT ACCESS/DRIVEWAY INFORMATION, CONTACT THE PLANNING UNIT OF THE WISCONSIN DEPARTMENT OF TRANSPORTATION OFFICE IN MADISON.

A TEMPORARY LIMITED EASEMENT (TLE) IS A RIGHT FOR CONSTRUCTION PURPOSES, AS DEFINED HEREIN, INCLUDING THE RIGHT TO OPERATE NECESSARY EQUIPMENT THEREON AND THE RIGHT OF INGRESS AND EGRESS, AS LONG AS REQUIRED FOR SUCH PUBLIC PURPOSE, INCLUDING THE RIGHT TO PRESERVE, PROTECT, REMOVE, OR PLANT THEREON ANY VEGETATION THAT THE HIGHWAY AUTHORITIES MAY DEEM NECESSARY OR DESIRABLE. ALL TLE'S EXPIRE AT THE COMPLETION OF THE PROJECT FOR WHICH THIS INSTRUMENT IS GIVEN.

A PERMANENT LIMITED EASEMENT (PLE) IS A RIGHT FOR CONSTRUCTION AND MAINTENANCE PURPOSES, AS DEFINED HEREIN, INCLUDING THE RIGHT TO OPERATE THE NECESSARY EQUIPMENT THEREON AND THE RIGHT OF INGRESS AND EGRESS AS LONG AS REQUIRED FOR SUCH PUBLIC PURPOSE, INCLUDING THE RIGHT TO PRESERVE, PROTECT, REMOVE OR PLANT THEREON ANY VEGETATION THAT THE HIGHWAY AUTHORITIES MAY DEEM NECESSARY OR DESIRABLE, BUT WITHOUT PREJUDICE TO THE OWNERS RIGHT TO MAKE OR CONSTRUCT IMPROVEMENTS ON SAID LANDS OR TO FLATTEN THE SLOPES, PROVIDING SAID ACTIVITIES WILL NOT IMPAIR OR OTHERWISE ADVERSELY AFFECT THE HIGHWAY FACILITIES.

A HIGHWAY EASEMENT (HE) IS AN EASEMENT FOR HIGHWAY PURPOSE, AS LONG AS SO USED, INCLUDING THE RIGHT TO PRESERVE, PROTECT, REMOVE OR PLANT THEREON ANY VEGETATION THAT THE HIGHWAY AUTHORITIES MAY DEEM NECESSARY OR DESIRABLE.

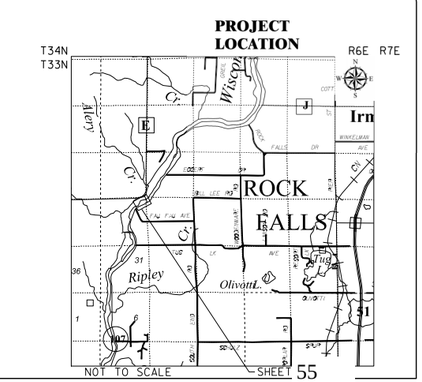

OMNI ASSOCIATES
OMNNI ASSOCIATES
ONE SYSTEMS DRIVE
APPLETON, WI 54914-1654
PHONE (920) 735-6900
FAX (920) 830-6100

I, DAVID A. YURK, PROFESSIONAL LAND SURVEYOR, HEREBY CERTIFY THAT IN FULL COMPLIANCE WITH THE PROVISIONS OF SECTION 84.095 OF THE WISCONSIN STATUTES AND UNDER THE DIRECTION OF THE DEPARTMENT, I HAVE SURVEYED AND MAPPED THIS TRANSPORTATION PROJECT PLAT AND SUCH PLAT CORRECTLY REPRESENTS ALL EXTERIOR BOUNDARIES OF THE SURVEYED LAND.

WISCONSIN DAVID A. YURK S-2648 OSHKOSH, WI LAND SURVEYOR

(SIGNATURE) David A. Yurk DATE 4-16-2019
(PRINTED NAME) DAVID A. YURK
(REGISTRATION NO.) S-2648

THIS PLAT AND RELOCATION ORDER IS APPROVED FOR THE DEPARTMENT OF TRANSPORTATION.

(SIGNATURE) Brent L Stella DATE 4-24-19
(PRINT NAME:) Brent L Stella

EXISTING HIGHWAY RIGHT-OF-WAY SHOWN IS BASED UPON THE FOLLOWING POINTS OF REFERENCE:

EXISTING HIGHWAY RIGHT-OF-WAY OF STH 107 ESTABLISHED AT 66' FROM STATE STATUTES 82.18.

SCHEDULE OF LANDS AND INTEREST

"OWNERS" NAMES ARE SHOWN FOR REFERENCE PURPOSES ONLY AND ARE SUBJECT TO CHANGE PRIOR TO TRANSFER OF LAND INTERESTS TO THE STATE OR DEPT.

PARCEL NO.	OWNER	INTEREST REQUIRED	AREA ACRES REQUIRED NEW	EXISTING	TOTAL	TLE AREA	PLE AREA
8	KAREN A. MONTI AND DAVID G. PANKOW	HE PLE	0.06 AC	---	0.06 AC	---	0.03 AC
9	WILLIAM E. WILLIAMS	TLE PLE	---	---	---	0.01 AC	0.04 AC
10	DUSTIN J. MONTI & SWAWZA C. MONTI	TLE PLE	---	---	---	0.01 AC	0.02 AC

TRANSPORTATION PROJECT PLAT NO: 9225-06-21 - 4.01

BEING A PART OF THE SOUTHEAST QUARTER OF THE SOUTHWEST QUARTER AND A PART OF THE SOUTHWEST QUARTER OF THE SOUTHEAST QUARTER, SECTION 16, T34N, R3E, TOWN OF SPIRIT, PRICE COUNTY, WISCONSIN

RELOCATION ORDER STH 102 PRICE COUNTY
CHELSE - SPIRIT
JOHNSON CREEK CULVERT REPLACEMENTS

TO PROPERTY ESTABLISH, LAY OUT, WIDEN, ENLARGE, EXTEND, CONSTRUCT, RECONSTRUCT, IMPROVE, OR MAINTAIN A PORTION OF THE HIGHWAY DESIGNATED ABOVE, THE STATE OF WISCONSIN DEPARTMENT OF TRANSPORTATION DEEMS IT NECESSARY TO RELOCATE OR CHANGE SAID HIGHWAY AND ACQUIRE CERTAIN LANDS AND INTERESTS OR RIGHTS IN LANDS FOR THE ABOVE NAMED PROJECT.

TO EFFECT THIS CHANGE, PURSUANT TO AUTHORITY GRANTED UNDER SUBSECTIONS 84.02 (3), 84.09 AND 84.30, WISCONSIN STATUTES, THE DEPARTMENT OF TRANSPORTATION HEREBY ORDERS THAT:

1. THAT PORTION OF SAID HIGHWAY AS SHOWN ON THIS PLAT IS LAID OUT AND ESTABLISHED TO THE LINES AND WIDTHS AS SO SHOWN FOR THE ABOVE NAMED PROJECT.
2. THE LANDS OR INTERESTS OR RIGHTS IN LANDS AS SHOWN ON THIS PLAT ARE REQUIRED BY THE DEPARTMENT FOR THE ABOVE PROJECT AND SHALL BE ACQUIRED IN THE NAME OF THE STATE OF WISCONSIN, PURSUANT TO THE PROVISIONS OF SUBSECTION 84.09 (1) OR (2), WISCONSIN STATUTES.

Document No. 384464
JUDITH L. CHIZEK
PRICE COUNTY, WI
REGISTER OF DEEDS
RECEIVED FOR RECORD
April 26, 2019
AT 10:32 AM
RECORDING FEE: $25.00

PAGES:1 By: LM*
**The above recording information verifies that this document has been electronically recorded and returned to the submitter

RESERVED FOR REGISTER OF DEEDS
PROJECT NUMBER 9225-06-21- 4.01
AMENDMENT NO:___

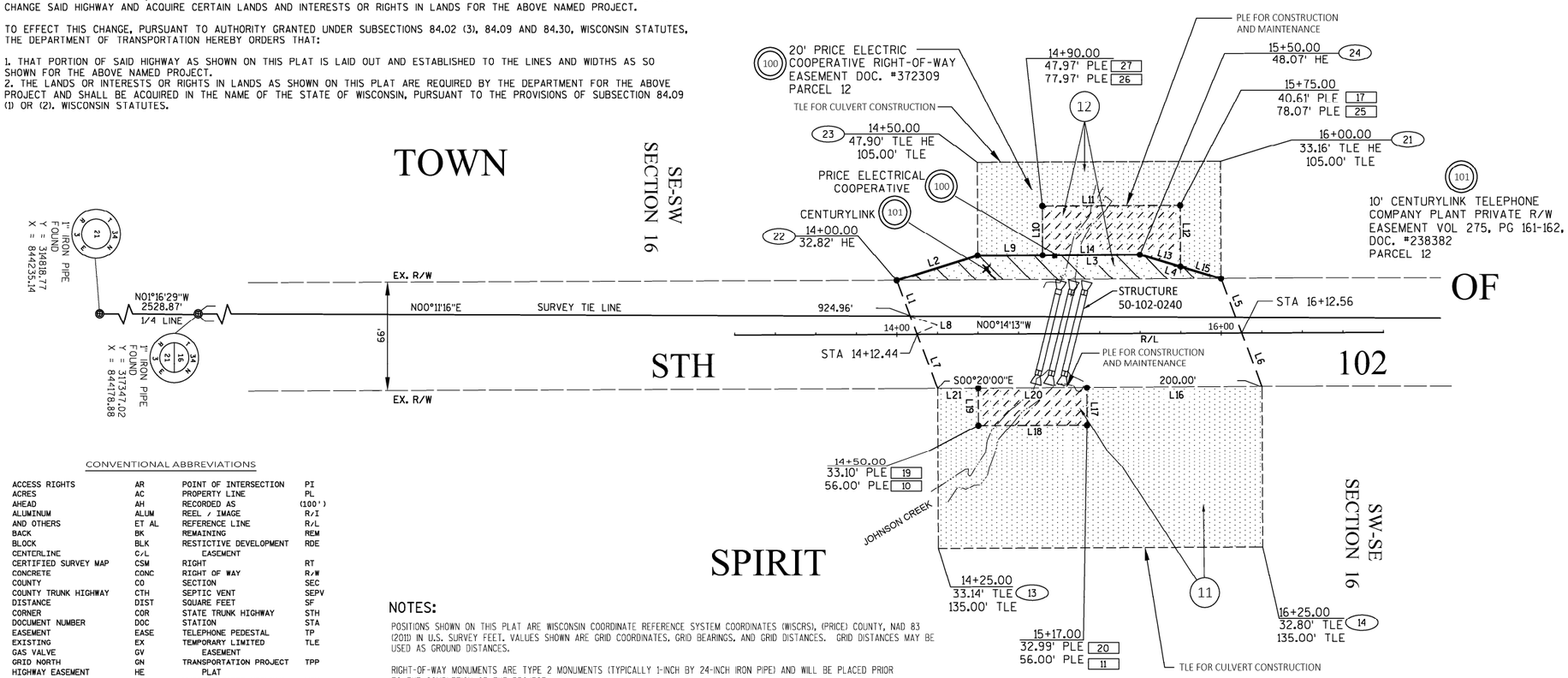

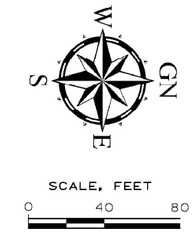

CONVENTIONAL SYMBOLS

SECTION LINE
QUARTER LINE
SIXTEENTH LINE
NEW REFERENCE LINE
NEW R/W LINE
EXISTING R/W OR HE LINE
PROPERTY LINE
LOT, TIE & OTHER MINOR LINES
SLOPE INTERCEPT
CORPORATE LIMITS
UNDERGROUND FACILITY (COMMUNICATIONS, ELECTRIC, ETC)
NEW R/W (FEE OR HE) (HATCHING VARIES BY OWNER)
HIGHWAY EASEMENT (HATCH VARIES)
TEMPORARY LIMITED EASEMENT AREA
EASEMENT AREA (PERMANENT LIMITED OR RESTRICTED DEVELOPMENT)
TRANSMISSION STRUCTURES
BUILDING
TO BE REMOVED
BRIDGE

SECTION CORNER SYMBOL
SECTION CORNER MONUMENT
GEODETIC SURVEY MONUMENT
SIXTEENTH CORNER MONUMENT
SIGN
OFF-PREMISE SIGN
R/W MONUMENT (TO BE SET)
NON-MONUMENTED R/W POINT
FOUND IRON PIN (1-INCH UNLESS NOTED)

	COMPENSABLE	NON-COMPENSABLE
ELECTRIC POLE		
TELEPHONE POLE		
PEDESTAL (LABEL TYPE) (TV, TEL, ELEC, ETC.)		

ACCESS RESTRICTED BY ACQUISITION
NO ACCESS (BY STATUTORY AUTHORITY)
ACCESS RESTRICTED (BY PREVIOUS PROJECT OR CONTROL)
NO ACCESS (NEW HIGHWAY)
PARCEL NUMBER 25
UTILITY NUMBER 40
HE POINT 24
PLE POINT 25
PARALLEL OFFSETS

CONVENTIONAL ABBREVIATIONS

ACCESS RIGHTS	AR	POINT OF INTERSECTION	PI
ACRES	AC	PROPERTY LINE	PL
AHEAD	AH	RECORDED AS	(100')
ALUMINUM	ALUM	REEL / IMAGE	R/I
AND OTHERS	ET AL	REFERENCE LINE	R/L
BACK	BK	REMAINING	REM
BLOCK	BLK	RESTICTIVE DEVELOPMENT EASEMENT	RDE
CENTERLINE	C/L	RIGHT	RT
CERTIFIED SURVEY MAP	CSM	RIGHT OF WAY	R/W
CONCRETE	CONC	SECTION	SEC
COUNTY	CO	SEPTIC VENT	SEPV
COUNTY TRUNK HIGHWAY	CTH	SQUARE FEET	SF
DISTANCE	DIST	STATE TRUNK HIGHWAY	STH
CORNER	COR	STATION	STA
DOCUMENT NUMBER	DOC	TELEPHONE PEDESTAL	TP
EASEMENT	EASE	TEMPORARY LIMITED EASEMENT	TLE
EXISTING	EX	TRANSPORTATION PROJECT PLAT	TPP
GAS VALVE	GV	UNITED STATES HIGHWAY	USH
GRID NORTH	GN	VOLUME	V
HIGHWAY EASEMENT	HE		
IDENTIFICATION	ID		
LAND CONTRACT	LC		
LEFT	LT		
MONUMENT	MON		
NATIONAL GEODETIC SURVEY NUMBER	NGS NO		
OUTLOT	OL		
PAGE	P		
POINT OF TANGENCY	PT		
PERMANENT LIMITED EASEMENT	PLE		
POINT OF BEGINNING	POB		
POINT OF CURVATURE	PC		
POINT OF COMPOUND CURVE	PCC		

CURVE DATA

LONG CHORD	LCH
LONG CHORD BEARING	LCB
RADIUS	R
DEGREE OF CURVE	D
CENTRAL ANGLE	Δ/DELTA
LENGTH OF CURVE	L
TANGENT	T
DIRECTION AHEAD	DA
DIRECTION BACK	DB

NOTES:

POSITIONS SHOWN ON THIS PLAT ARE WISCONSIN COORDINATE REFERENCE SYSTEM COORDINATES (WISCRS), (PRICE) COUNTY, NAD 83 (2011) IN U.S. SURVEY FEET. VALUES SHOWN ARE GRID COORDINATES, GRID BEARINGS, AND GRID DISTANCES. GRID DISTANCES MAY BE USED AS GROUND DISTANCES.

RIGHT-OF-WAY MONUMENTS ARE TYPE 2 MONUMENTS (TYPICALLY 1-INCH BY 24-INCH IRON PIPE) AND WILL BE PLACED PRIOR TO THE COMPLETION OF THE PROJECT.

RIGHT-OF-WAY BOUNDARIES ARE DEFINED WITH COURSES OF THE PERIMETER OF THE HIGHWAY LANDS REFERENCED TO THE U.S. PUBLIC LAND SURVEY OR OTHER SURVEYS OF RECORD.

PROPERTY LINES SHOWN ON THIS PLAT ARE DRAWN FROM DATA DERIVED FROM MAPS AND DOCUMENTS OF PUBLIC RECORD AND/OR EXISTING OCCUPATIONAL LINES. EXCLUDING RIGHT-OF-WAY BOUNDARIES, THIS PLAT MAY NOT BE A TRUE REPRESENTATION OF EXISTING PROPERTY LINES AND SHOULD NOT BE USED AS A SUBSTITUTE FOR AN ACCURATE FIELD SURVEY.

DIMENSIONS FOR THE NEW RIGHT-OF-WAY IS MEASURED ALONG AND PERPENDICULAR TO THE NEW REFERENCE LINES.

ALL RIGHT-OF-WAY LINES DEPICTED IN THE NON-ACQUISITION AREAS ARE INTENDED TO RE-ESTABLISH EXISTING RIGHT-OF-WAY LINES AS DETERMINED FROM PREVIOUS PROJECTS, OTHER RECORDED DOCUMENTS, OR FROM CENTERLINE OF EXISTING PAVEMENTS.

FOR THE CURRENT ACCESS/DRIVEWAY INFORMATION, CONTACT THE PLANNING UNIT OF THE WISCONSIN DEPARTMENT OF TRANSPORTATION OFFICE IN MADISON.

A TEMPORARY LIMITED EASEMENT (TLE) IS A RIGHT FOR CONSTRUCTION PURPOSES, AS DEFINED HEREIN, INCLUDING THE RIGHT TO OPERATE NECESSARY EQUIPMENT THEREON AND THE RIGHT OF INGRESS AND EGRESS, AS LONG AS REQUIRED FOR SUCH PUBLIC PURPOSE, INCLUDING THE RIGHT TO PRESERVE, PROTECT, REMOVE, OR PLANT THEREON ANY VEGETATION THAT THE HIGHWAY AUTHORITIES MAY DEEM NECESSARY OR DESIRABLE. ALL TLE'S EXPIRE AT THE COMPLETION OF THE PROJECT FOR WHICH THIS INSTRUMENT IS GIVEN.

A PERMANENT LIMITED EASEMENT (PLE) IS A RIGHT FOR CONSTRUCTION AND MAINTENANCE PURPOSES, AS DEFINED HEREIN, INCLUDING THE RIGHT TO OPERATE NECESSARY EQUIPMENT THEREON AND THE RIGHT OF INGRESS AND EGRESS AS LONG AS REQUIRED FOR SUCH PUBLIC PURPOSE, INCLUDING THE RIGHT TO PRESERVE, PROTECT, REMOVE OR PLANT THEREON ANY VEGETATION THAT THE HIGHWAY AUTHORITIES MAY DEEM NECESSARY OR DESIRABLE, BUT WITHOUT PREJUDICE TO THE OWNERS RIGHT TO MAKE OR CONSTRUCT IMPROVEMENTS ON SAID LANDS OR TO FLATTEN THE SLOPES, PROVIDING SAID ACTIVITIES WILL NOT IMPAIR OR OTHERWISE ADVERSELY AFFECT THE HIGHWAY FACILITIES.

A HIGHWAY EASEMENT (HE) IS AN EASEMENT FOR HIGHWAY PURPOSE, AS LONG AS SO USED, INCLUDING THE RIGHT TO PRESERVE, PROTECT, REMOVE OR PLANT THEREON ANY VEGETATION THAT THE HIGHWAY AUTHORITIES MAY DEEM NECESSARY OR DESIRABLE.

EXISTING HIGHWAY RIGHT-OF-WAY SHOWN IS BASED UPON THE FOLLOWING POINTS OF REFERENCE:
EXISTING HIGHWAY RIGHT-OF-WAY OF STH 102 ESTABLISHED AT 66' FROM STATE STATUTES 82.18.

UTILITY INTEREST REQUIRED

UTILITY	OWNERS	INTEREST REQUIRED
100	PRICE ELECTRIC COOPERATIVE INC.	RELEASE OF RIGHTS
101	CENTURYTEL OF NORTHERN WISCONSIN, LLC. D/B/A/CENTURYLINK	RELEASE OF RIGHTS

LINE TABLE

L1	S69°00'08"W	23.08'
L2	N17°01'19"W	52.23'
L3	N00°20'00"W	100.00'
L4	N16°22'22"E	52.18'
L5	N69°00'08"E	35.45'
L6	N69°00'08"E	35.08'
L7	S69°00'08"W	35.44'
L8	S69°00'08"W	12.01'
L9	N00°20'00"W	40.00'
L10	S89°45'47"W	30.00'
L11	N00°18'19"W	85.00'
L12	N89°45'47"E	37.46'
L13	S16°22'22"W	26.09'
L14	S00°20'00"E	60.00'
L15	N16°22'22"E	26.09'
L16	S00°20'00"E	108.00'
L17	N89°45'47"E	23.02'
L18	S00°14'13"E	67.00'
L19	S89°45'47"W	22.90'
L20	N00°20'00"W	67.00'
L21	S00°20'00"E	25.00'

POINT TABLE

PT#	Y	X	PT#
10	318313.67	844248.97	PLE
11	318380.67	844248.69	PLE
13	318289.00	844328.07	TLE
14	318488.99	844327.25	TLE
17	318438.27	844151.84	PLE
19	318313.57	844226.07	PLE
20	318380.57	844225.68	PLE
21	318463.30	844159.19	HE
22	318263.30	844160.36	HE
23	318313.24	844145.07	HE
24	318413.23	844144.49	HE
25	318438.11	844114.38	PLE
26	318353.11	844114.84	PLE
27	318353.23	844144.84	PLE

OMNI ASSOCIATES
OMNI ASSOCIATES
ONE SYSTEMS DRIVE
APPLETON, WI 54914-1654
PHONE (920) 735-6900
FAX (920) 830-6100

I, DAVID A. YURK, PROFESSIONAL LAND SURVEYOR, HEREBY CERTIFY THAT IN FULL COMPLIANCE WITH THE PROVISIONS OF SECTION 84.095 OF THE WISCONSIN STATUTES AND UNDER THE DIRECTION OF THE DEPARTMENT, I HAVE SURVEYED AND MAPPED THIS TRANSPORTATION PROJECT PLAT AND SUCH PLAT CORRECTLY REPRESENTS ALL EXTERIOR BOUNDARIES OF THE SURVEYED LAND.

WISCONSIN DAVID A. YURK S-2648 OSHKOSH, WI LAND SURVEYOR

(SIGNATURE) David A. Yurk DATE 4-16-2019
(PRINTED NAME) DAVID A. YURK
(REGISTRATION NO.) S-2648

THIS PLAT AND RELOCATION ORDER IS APPROVED FOR THE DEPARTMENT.

(SIGNATURE) Brent L Stella DATE 4-24-19
(PRINT NAME:) Brent L Stella

SCHEDULE OF LANDS AND INTEREST

"OWNERS" NAMES ARE SHOWN FOR REFERENCE PURPOSES ONLY AND ARE SUBJECT TO CHANGE PRIOR TO TRANSFER OF LAND INTERESTS TO THE STATE OR DEPT.

PARCEL NO.	OWNER	INTEREST REQUIRED	AREA ACRES REQUIRED NEW	EXISTING	TOTAL	TLE AREA	PLE AREA
11	MARK F. BEDER	TLE PLE	---	---	---	0.43 AC	0.04 AC
12	ROBERT J. AND VICTORIA A. PINNOW	HE TLE PLE	0.05 AC	---	0.05 AC	0.14 AC	0.06 AC

PROJECT LOCATION

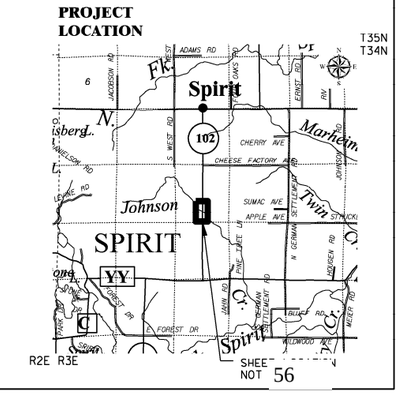

SHEET NOT 56

BENCH MARKS				
NO.	STATION	OFFSET	DESCRIPTION	ELEV.
BM1	323+92	47' LT	60D SPIKE IN PP*3105 19L6, 335' WEST OF C-35-63	1377.84
BM2	326+85	48' LT	60D SPIKE IN PP*3105 19L5, 40' WEST OF C-35-63	1373.88
BM3	329+78	48' LT	60D SPIKE IN PP*3105 19L4, 250' EAST OF C-35-63	1373.22

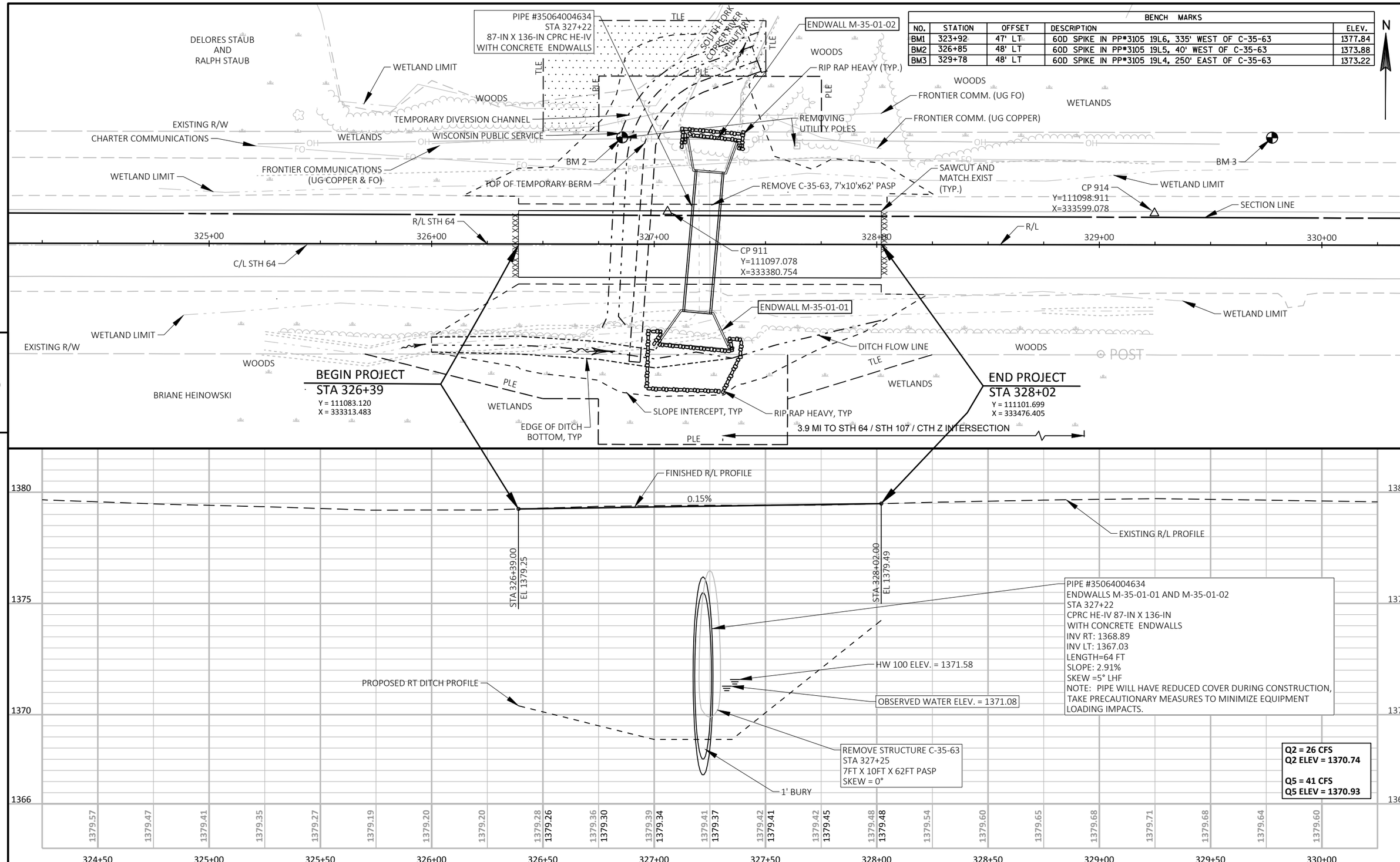

5

5

PROJECT NO: 1009-44-67	HWY: STH 64	COUNTY: LINCOLN	PLAN AND PROFILE: STH 64 (C-35-63)	SHEET 57	E

BENCH MARKS				
NO.	STATION	OFFSET	DESCRIPTION	ELEV.
BM4	---	51' LT	60D SPK IN PP*3105 19R1 @ PROPERTY ADDRESS W9480 STH 64	1366.59
BM5	0+35	50' RT	60D SPK IN PP*3105 30E7 @ 365' W. OF CULVERT C35-69.	1366.04
BM6	3+75	52' RT	60D SPK IN PP*3105 30E6 @ 25' W. OF CULVERT C35-69	1360.92

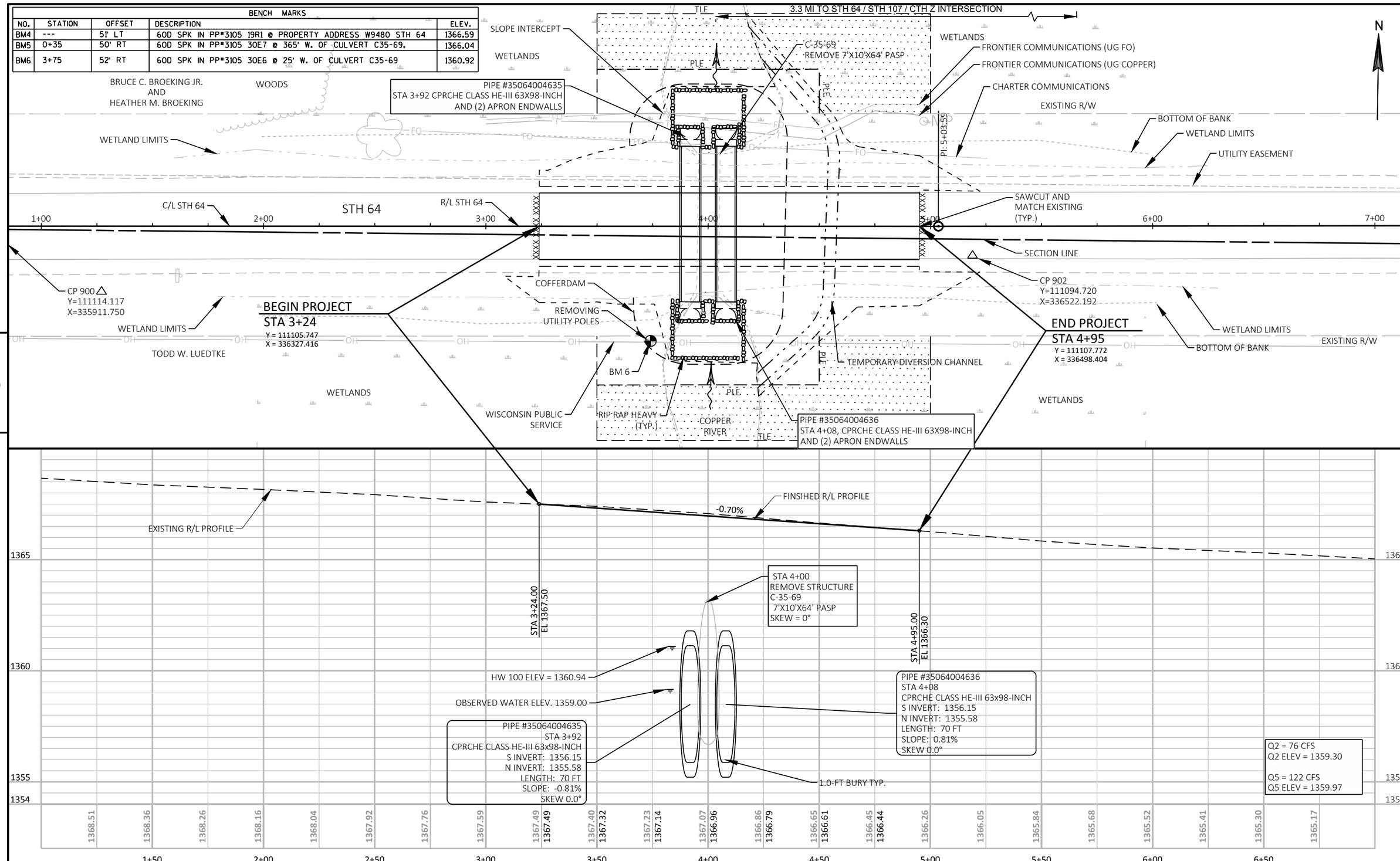

PROJECT NO: 1009-44-67	HWY: STH 64	COUNTY: LINCOLN	PLAN AND PROFILE: STH 64 (C-35-69)	SHEET 58	E

BENCH MARKS				
NO.	STATION	OFFSET	DESCRIPTION	ELEV.
BM10	-3+86	30' RT	60D SPIKE IN 42" MAPLE	1406.56
BM11	-2+06	45' RT	60D SPIKE IN PP#161 3306.30E3, 420' SW OF C-35-12	1411.57
BM12	-0+28	36' RT	60D SPIKE IN PP#3306 30E24, 245' SW OF C-35-12	1411.12

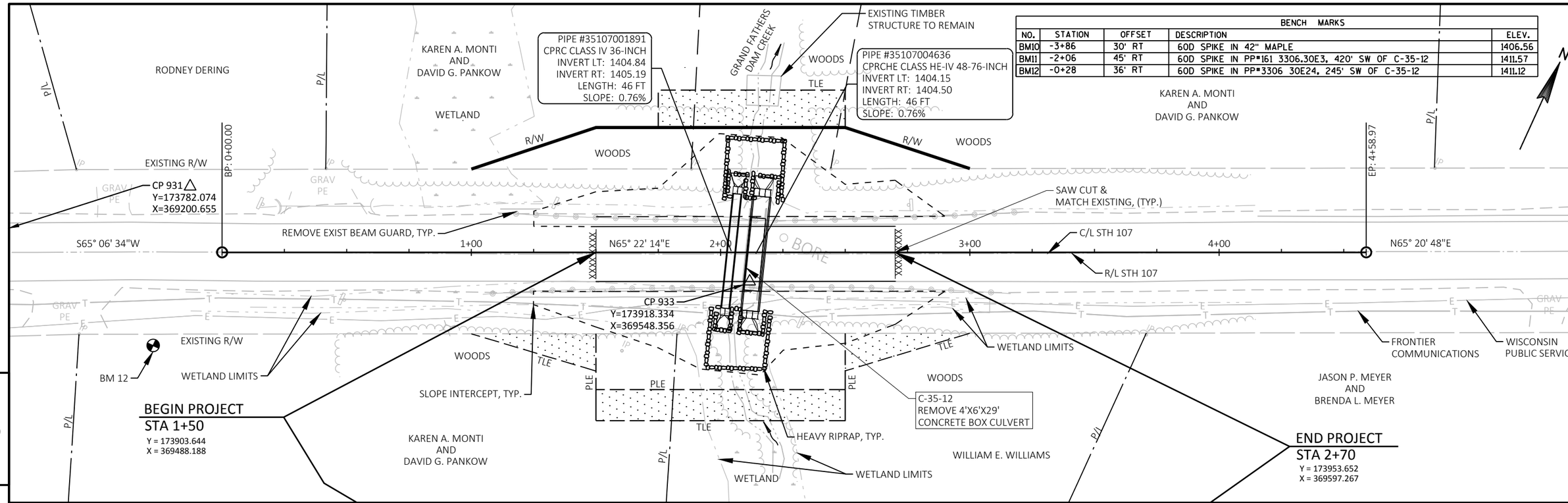

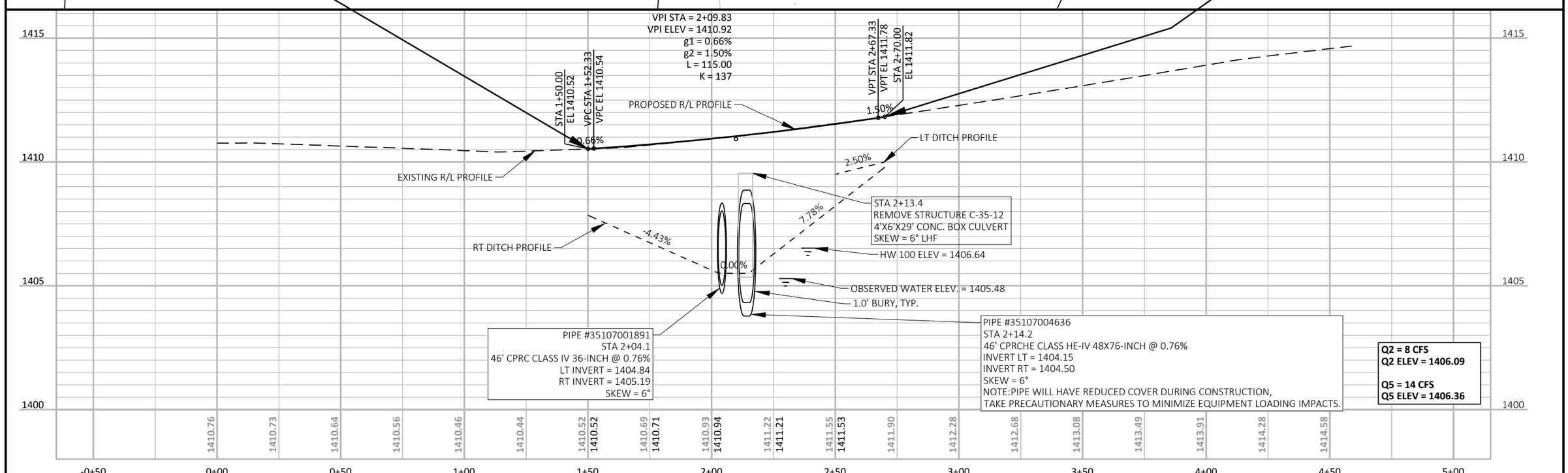

PROJECT NO: 1009-44-67	HWY: STH 107	COUNTY: LINCOLN	PLAN AND PROFILE: STH 107	SHEET 59	E

FILE NAME : F:\TR\JOBS\E2271A17\CIVIL 3D 2016 STH 107\SHEETSPLAN\10094437-050101-PP.DWG
LAYOUT NAME - 10094467-050103-pp
PLOT DATE : 10/4/2019 8:29 AM PLOT BY : JAIRO MAZARIEGOS PLOT NAME : PLOT SCALE : 1 IN:40 FT

BENCH MARKS				
NO.	STATION	OFFSET	DESCRIPTION	ELEV.
BM1	105+00	50' RT	60D SPIKE IN 16-INCH POPLAR TREE	1702.27
BM2	111+28	65' RT	60D SPIKE IN 12-INCH POPLAR TREE	1713.78

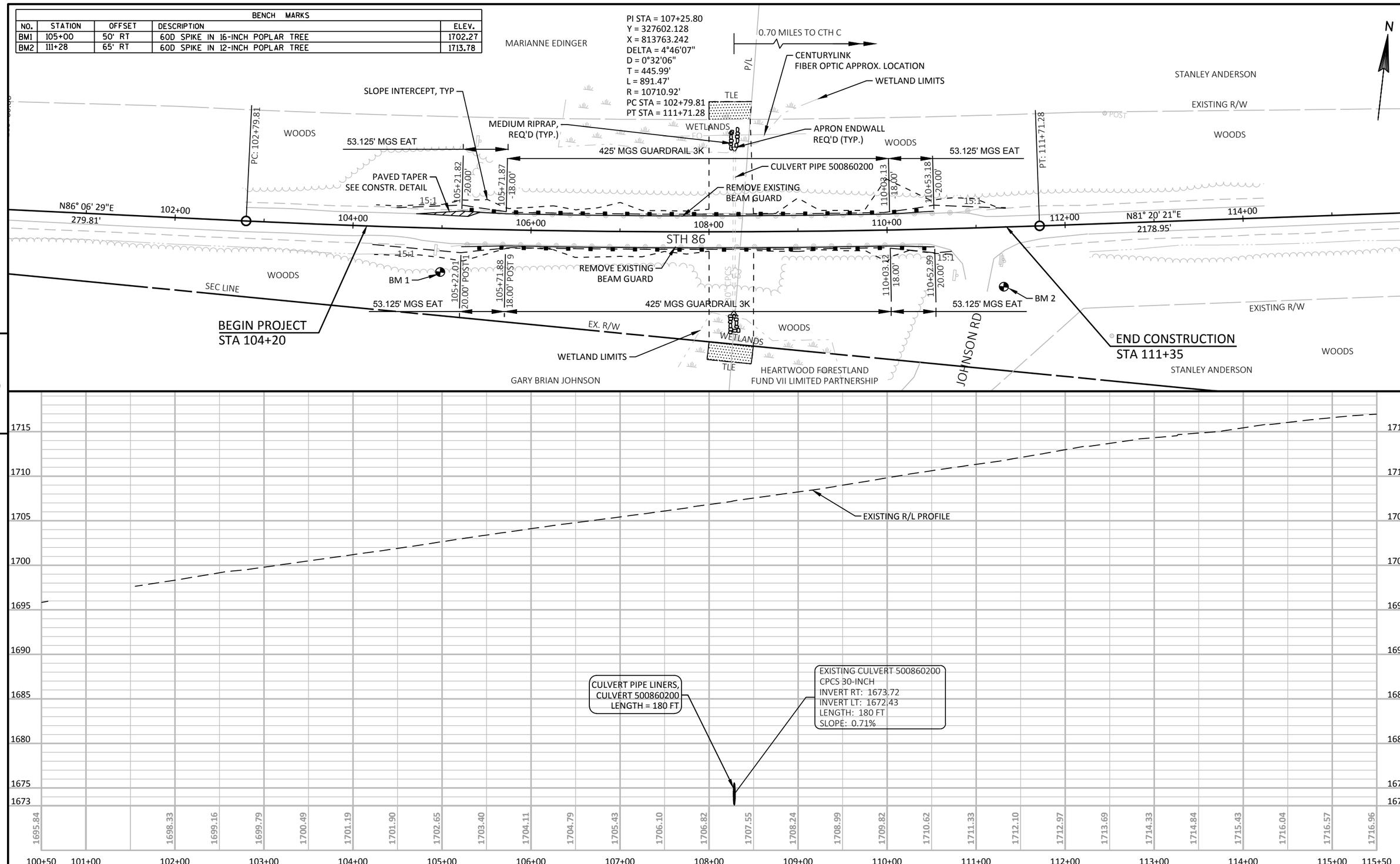

PROJECT NO: 9216-07-61	HWY: STH 86	COUNTY: PRICE	PLAN AND PROFILE: STH 86 500860200	SHEET 60	E

FILE NAME : F:\TR\JOBS\E2271A17\CIVIL 3D 2016 STH 86\SHEETSPLAN\92160761-050101-PP.DWG
LAYOUT NAME - 92160761-050104-pp
PLOT DATE : 6/25/2019 4:38 PM
PLOT BY : JAIRO MAZARIEGOS
PLOT NAME :
PLOT SCALE : 1 IN:100 FT

BENCH MARKS				
NO.	STATION	OFFSET	DESCRIPTION	ELEV.
BM3	187+04	41' LT	60D SPIKE IN 12-INCH POPLAR TREE	1767.06
BM4	192+58	40' LT	60D SPIKE IN 6-INCH BIRCH TREE	1788.54

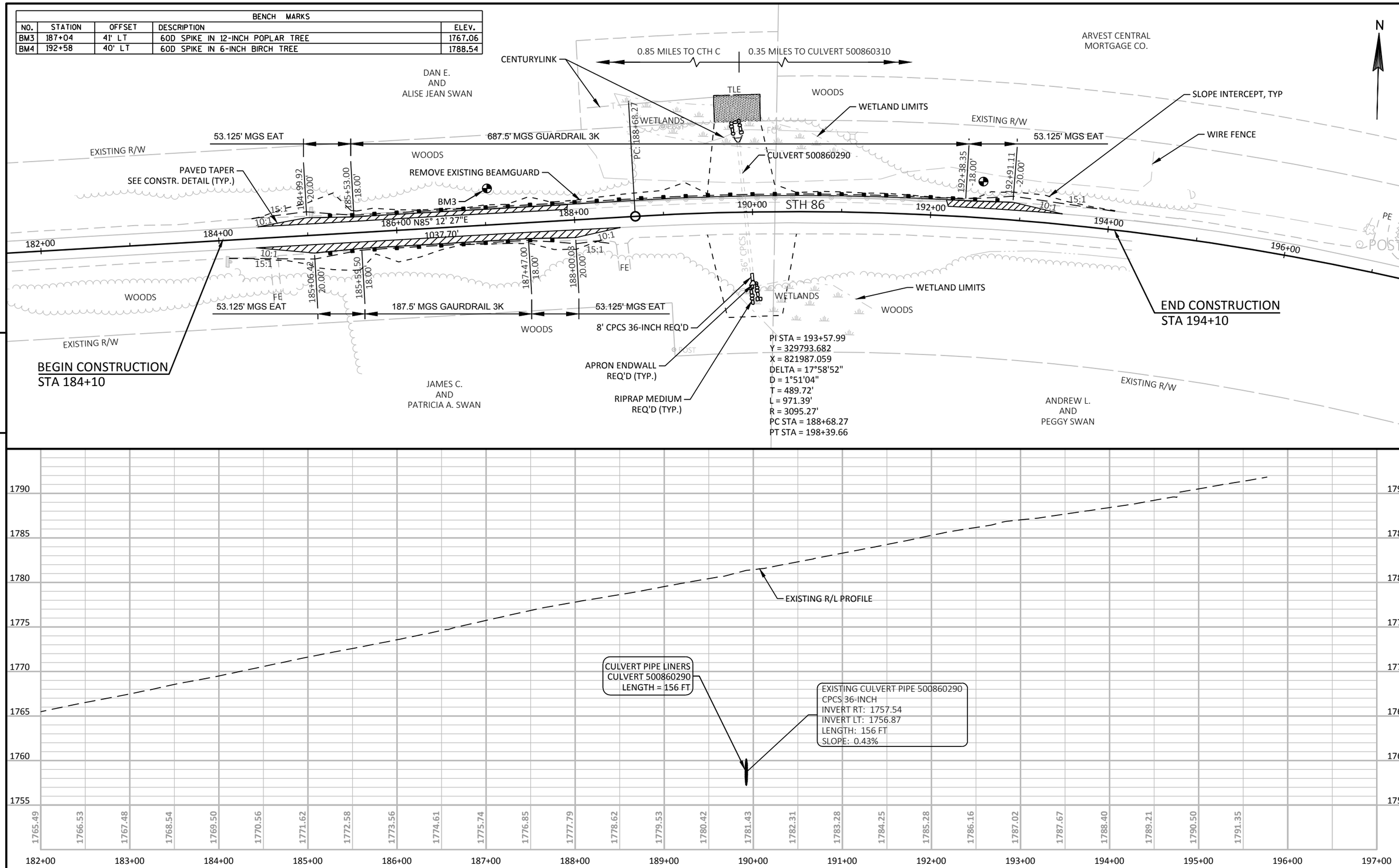

PROJECT NO: 9216-07-61	HWY: STH 86	COUNTY: PRICE	PLAN AND PROFILE: STH 86 500860290	SHEET 61	E

BENCH MARKS				
NO.	STATION	OFFSET	DESCRIPTION	ELEV.
BM5	209+26	44' RT	60D SPIKE IN 10-INCH POPLAR TREE	1797.70
BM6	210+13	45' LT	60D SPIKE IN 8-INCH BIRCH TREE	1800.40
BM7	217+62	63' RT	60D SPIKE IN 8-INCH ASPEN TREE	1812.75

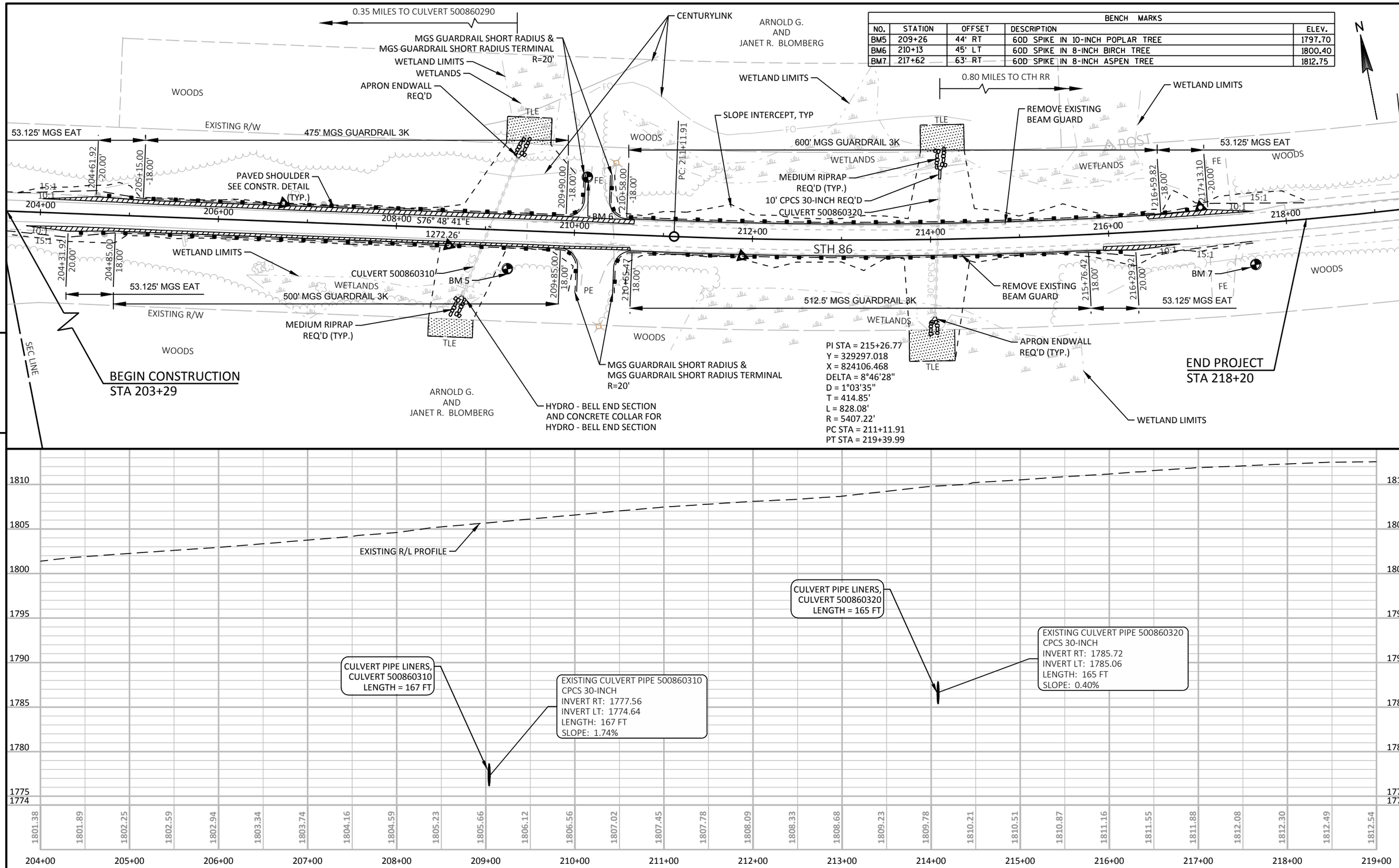

PROJECT NO: 9216-07-61	HWY: STH 86	COUNTY: PRICE	PLAN AND PROFILE: STH 86 500860310 & 500860320	SHEET 62	E

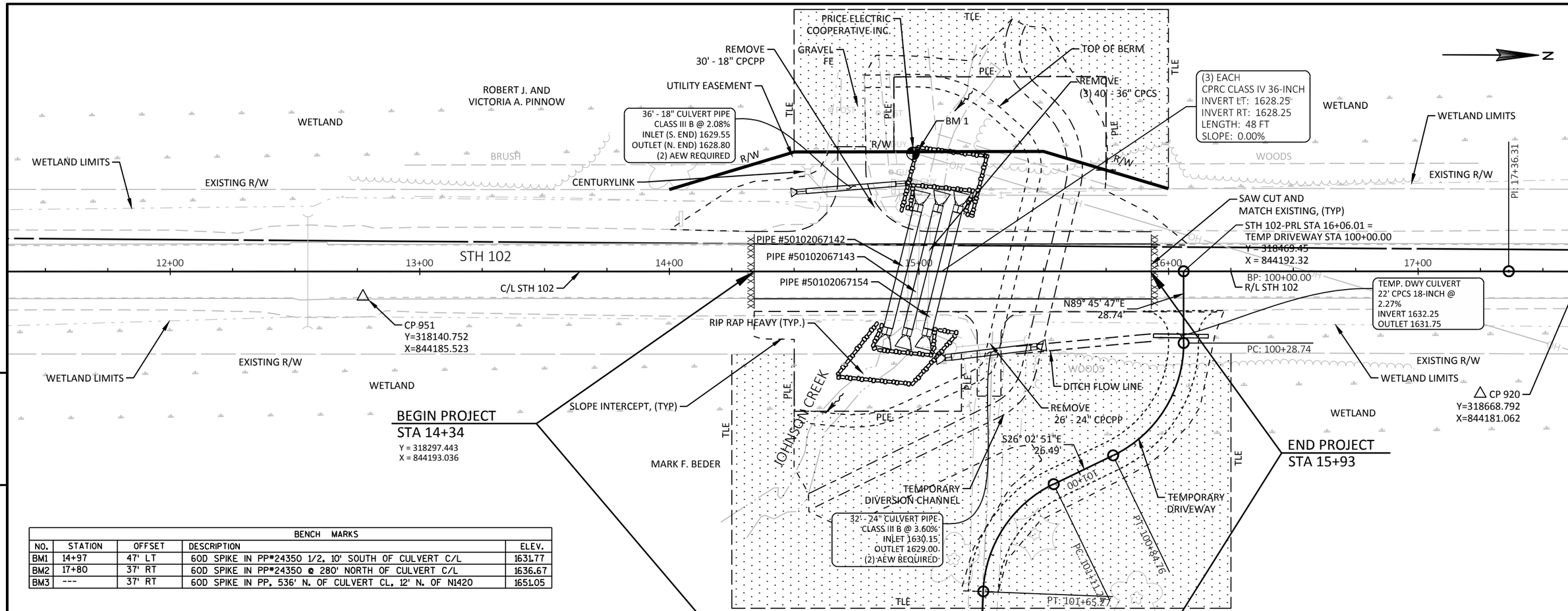

BENCH MARKS				
NO.	STATION	OFFSET	DESCRIPTION	ELEV.
BM1	14+97	47' LT	60D SPIKE IN PP#24350 1/2, 10' SOUTH OF CULVERT C/L	1631.77
BM2	17+80	37' RT	60D SPIKE IN PP#24350 @ 280' NORTH OF CULVERT C/L	1636.67
BM3	---	37' RT	60D SPIKE IN PP, 536' N. OF CULVERT CL, 12' N. OF N1420	1651.05

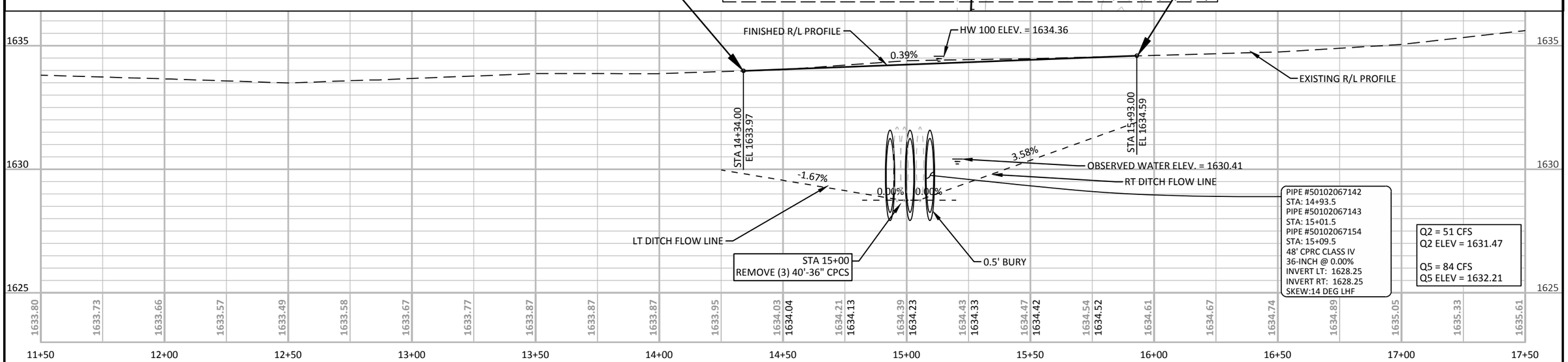

PROJECT NO: 9225-06-61	HWY: STH 102	COUNTY: PRICE	PLAN AND PROFILE: STH 102	SHEET 63	E

BENCH MARKS				
NO.	STATION	OFFSET	DESCRIPTION	ELEV.
BM1	14+97	47' LT	60D SPIKE IN PP#24350 1/2, 10' SOUTH OF CULVERT C/L	1631.77
BM2	17+80	37' RT	60D SPIKE IN PP#24350 @ 280' NORTH OF CULVERT C/L	1636.67
BM3	---	37' RT	60D SPIKE IN PP, 536' N. OF CULVERT CL, 12' N. OF N1420	1651.05

CURVE A
PI STA = 100+60.10
Y = 318469.697
X = 844252.423
DELTA = 64°11'23"
D = 114°35'30"
T = 31.36'
L = 56.02'
R = 50.00'
PC STA = 100+28.74
PT STA = 100+84.76

CURVE B
PI STA = 101+41.23
Y = 318390.785
X = 844290.992
DELTA = 61°54'36"
D = 114°35'30"
T = 29.99'
L = 54.03'
R = 50.00'
PC STA = 101+11.24
PT STA = 101+65.27

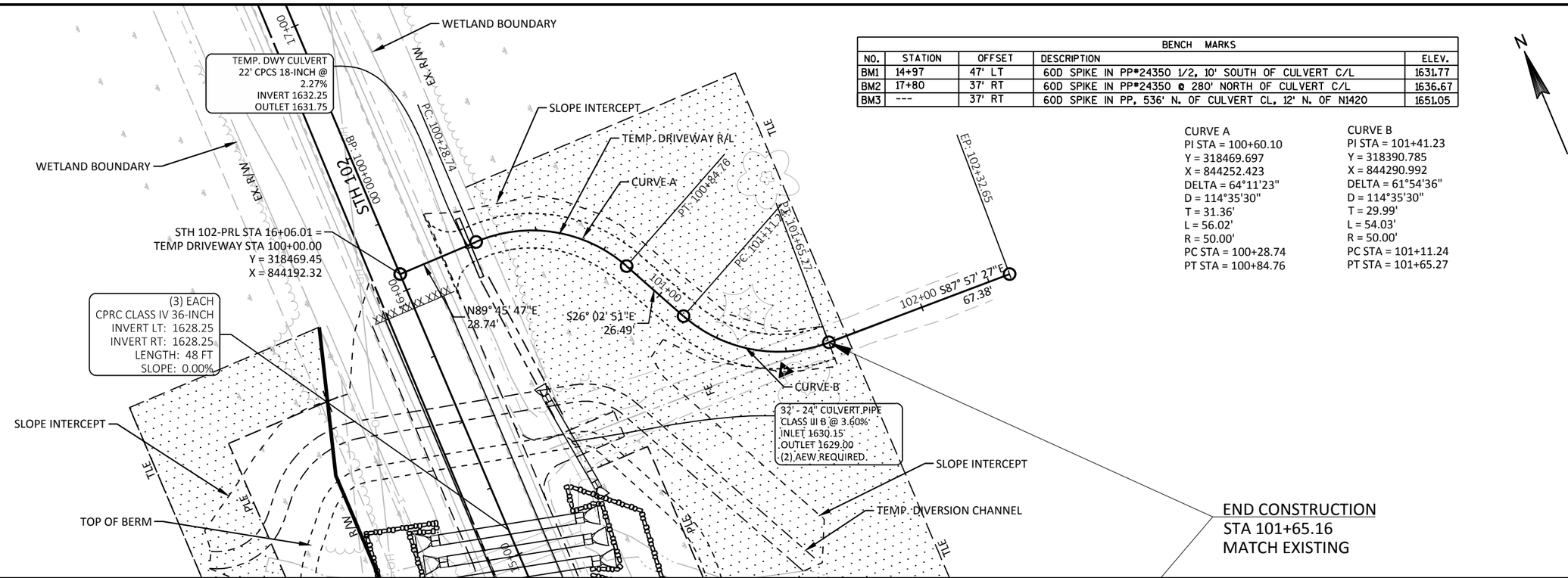

5

5

PROJECT NO: 9225-06-61	HWY: STH 102	COUNTY: PRICE	PLAN AND PROFILE: STH 102 TEMPORARY DRIVEWAY	SHEET 64	E

FILE NAME : F:\TR\JOBS\E2271A17\CIVIL 3D 2016 STH 102\SHEETSPLAN\92250661-050101-PP.DWG
LAYOUT NAME - 92250661-050108-pp
PLOT DATE : 10/4/2019 8:10 AM
PLOT BY : JAIRO MAZARIEGOS
PLOT NAME :
PLOT SCALE : 1 IN:40 FT
WISDOT/CADDS SHEET 44

Standard Detail Drawing List

08D21-01	DRIVEWAYS WITHOUT CURB & GUTTER
08E09-06	SILT FENCE
08E15-01	CULVERT PIPE CHECK
08F01-11	APRON ENDWALLS FOR CULVERT PIPE
08F02-01	APRON ENDWALLS FOR PIPE ARCH AND ELLIPTICAL PIPE
08F04-07	JOINT TIES FOR CONCRETE PIPE AND CONCRETE COLLAR DETAIL
12A03-10	NAME PLATE (STRUCTURES)
14B42-06A	MIDWEST GUARDRAIL SYSTEM (MGS) GUARDRAIL
14B42-06B	MIDWEST GUARDRAIL SYSTEM (MGS) GUARDRAIL
14B42-06C	MIDWEST GUARDRAIL SYSTEM (MGS) GUARDRAIL
14B42-06D	MIDWEST GUARDRAIL SYSTEM (MGS) GUARDRAIL
14B44-04A	MIDWEST GUARDRAIL SYSTEM ENERGY ABSORBING TERMINAL (MGS)
14B44-04B	MIDWEST GUARDRAIL SYSTEM ENERGY ABSORBING TERMINAL (MGS)
14B44-04C	MIDWEST GUARDRAIL SYSTEM ENERGY ABSORBING TERMINAL (MGS)
14B53-01A	SHORT RADIUS BEAM GUARD (MGS) SHORT RADIUS TERMINAL (MGS)
14B53-01B	SHORT RADIUS BEAM GUARD (MGS) SHORT RADIUS TERMINAL (MGS)
14B53-01C	SHORT RADIUS BEAM GUARD (MGS) SHORT RADIUS TERMINAL (MGS)
14B53-01D	SHORT RADIUS BEAM GUARD (MGS) SHORT RADIUS TERMINAL (MGS)
14B53-01E	SHORT RADIUS BEAM GUARD (MGS) SHORT RADIUS TERMINAL (MGS)
14B53-01F	SHORT RADIUS BEAM GUARD (MGS) SHORT RADIUS TERMINAL (MGS)
14B53-01G	SHORT RADIUS BEAM GUARD (MGS) SHORT RADIUS TERMINAL (MGS)
14B53-01H	SHORT RADIUS BEAM GUARD (MGS) SHORT RADIUS TERMINAL (MGS)
14B53-01I	SHORT RADIUS BEAM GUARD (MGS) SHORT RADIUS TERMINAL (MGS)
15A03-02A	FLEXIBLE MARKER POST FOR CULVERT END
15A03-02B	FLEXIBLE MARKER POST FOR CULVERT END
15C02-07A	BARRICADES AND SIGNS FOR MAINLINE CLOSURES
15C02-07B	BARRICADES AND SIGNS FOR VARIOUS CLOSURES
15C02-07C	DETOUR SIGNING FOR MAINLINE CLOSURES
15C03-05	BARRICADES AND SIGNS FOR SIDEROAD CLOSURES
15C08-19A	LONGITUDINAL MARKING (MAINLINE)
15C11-07B	CHANNELIZING DEVICES DRUMS, CONES, BARRICADES AND VERTICAL PANELS
15C12-07	TRAFFIC CONTROL FOR LANE CLOSURE WITH FLAGGING OPERATION
15D28-03	TRAFFIC CONTROL, WORK ON SHOULDER OR PARKING LANE, UNDIVIDED ROADWAY
15D38-02A	TEMPORARY TRAFFIC CONTROL SIGN MOUNTING
15D38-02B	ATTACHMENT OF SIGNS TO POSTS

6

6

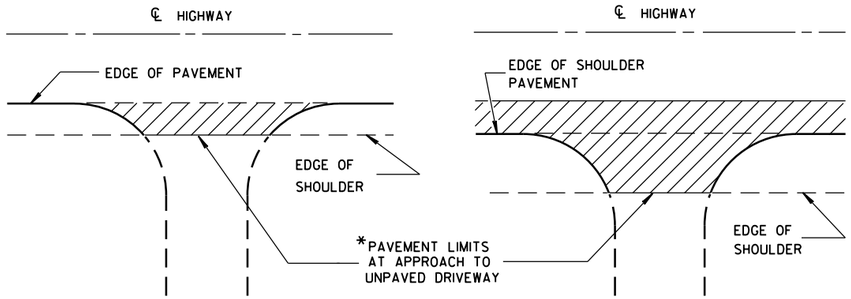

*WHERE DRIVEWAY IS PAVED, APPROACH PAVEMENT SHOULD BE EXTENDED TO MATCH DRIVEWAY PAVEMENT.

PLAN VIEW
(UNPAVED SHOULDER ON HIGHWAY)

PLAN VIEW
(PAVED SHOULDER ON HIGHWAY)

RURAL DRIVEWAY INTERSECTION DETAIL
(NO CURB & GUTTER OR SIDEWALK)

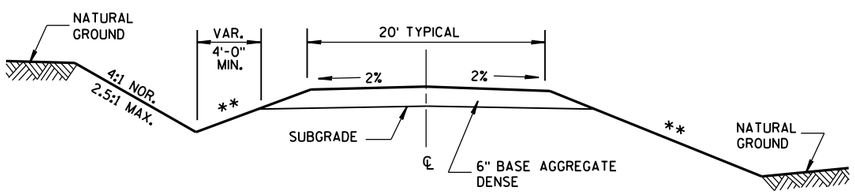

IN CUT IN FILL

TYPICAL CROSS SECTION FOR PRIVATE DRIVE OR FIELD ENTRANCE AGGREGATE SURFACE

** SLOPE CAN VARY WITH SPEED. SEE 11-45-2.6.2.

POSTED SPEED MPH	MAX. SLOPE
<35	4:1
≥35 TO <60	6:1
≥60	10:1

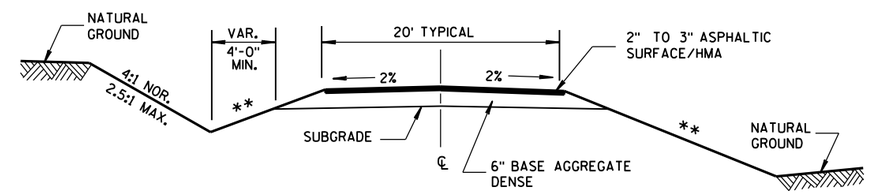

IN CUT IN FILL

TYPICAL CROSS SECTION FOR PRIVATE DRIVE OR FIELD ENTRANCE ASPHALTIC SURFACE

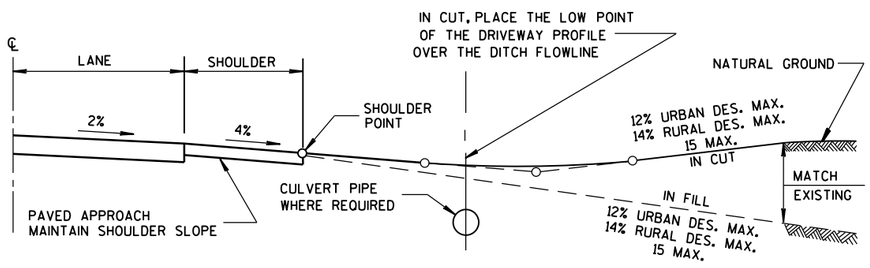

TYPICAL DRIVEWAY PROFILES

DRIVEWAYS WITHOUT CURB & GUTTER

STATE OF WISCONSIN
DEPARTMENT OF TRANSPORTATION

APPROVED
December, 2016 /S/ Rodney Taylor
DATE ROADWAY STANDARDS UNIT SUPERV ENT
FHWA

6

6

S.D.D. 8 D 21-1

S.D.D. 8 D 21-1

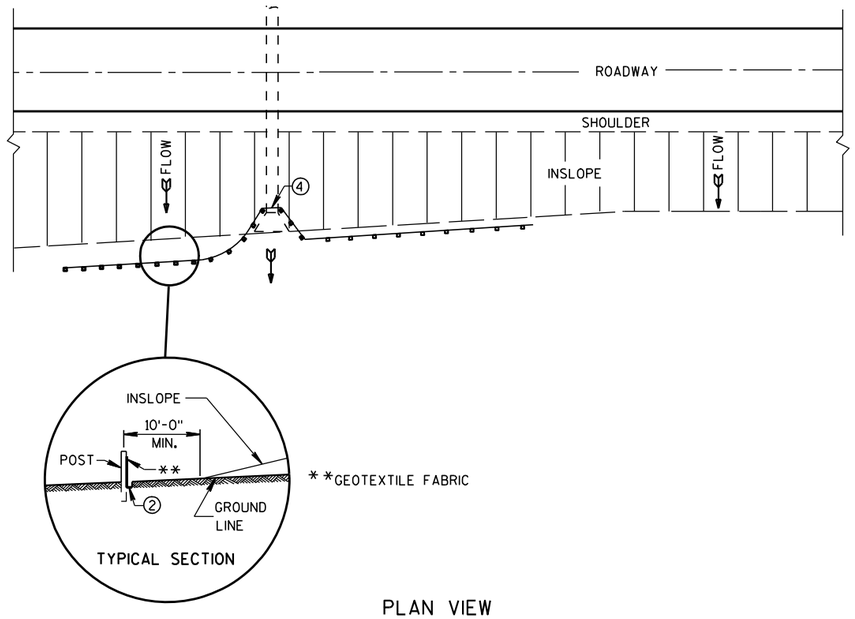

PLAN VIEW

TYPICAL APPLICATION OF SILT FENCE

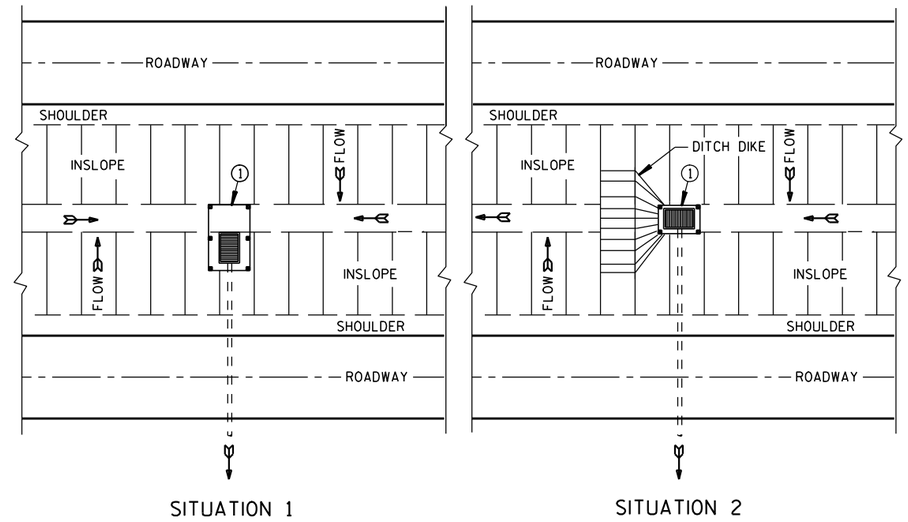

PLAN VIEW

SILT FENCE AT MEDIAN SURFACE DRAINS

GENERAL NOTES

DETAILS OF CONSTRUCTION NOT SHOWN ON THIS DRAWING SHALL CONFORM TO THE PERTINENT REQUIREMENTS OF THE STANDARD SPECIFICATIONS AND APPLICABLE SPECIAL PROVISIONS.

① HORIZONTAL BRACE REQUIRED WITH 2" X 4" WOODEN FRAME OR EQUIVALENT AT TOP OF POSTS.

② FOR MANUAL INSTALLATIONS THE TRENCH SHALL BE A MINIMUM OF 4" WIDE & 6" DEEP TO BURY AND ANCHOR THE GEOTEXTILE FABRIC. FOLD MATERIAL TO FIT TRENCH AND BACKFILL & COMPACT TRENCH WITH EXCAVATED SOIL.

③ WOOD POSTS SHALL BE A MINIMUM SIZE OF 1⅛" X 1⅛" OF OAK OR HICKORY.

④ SILT FENCE TO EXTEND ACROSS THE TOP OF THE PIPE.

⑤ CONSTRUCT SILT FENCE FROM A CONTINUOUS ROLL IF POSSIBLE BY CUTTING LENGTHS TO AVOID JOINTS. IF A JOINT IS NECESSARY USE ONE OF THE FOLLOWING TWO METHODS; A) OVERLAP THE END POSTS AND TWIST, OR ROTATE, AT LEAST 180 DEGREES. B) HOOK THE END OF EACH SILT FENCE LENGTH.

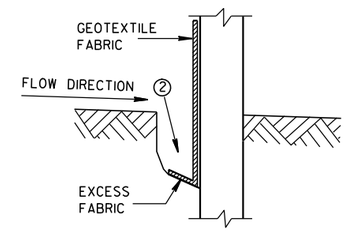

TRENCH DETAIL

NOTE: ADDITIONAL POST DEPTH OR TIE BACKS MAY BE REQUIRED IN UNSTABLE SOILS

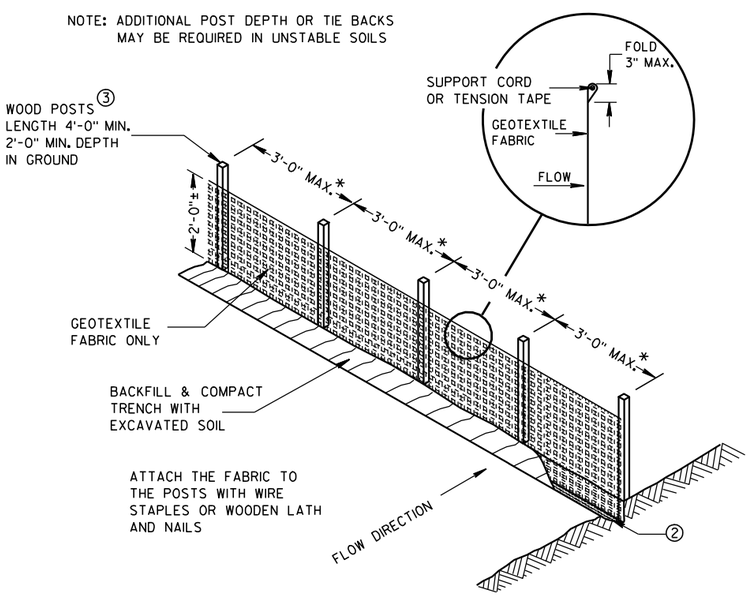

*NOTE: 8'-0" POST SPACING ALLOWED IF A WOVEN GEOTEXTILE FABRIC IS USED.

SILT FENCE

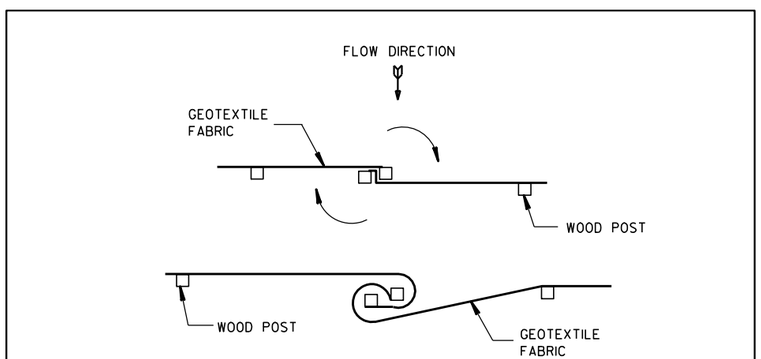

TWIST METHOD

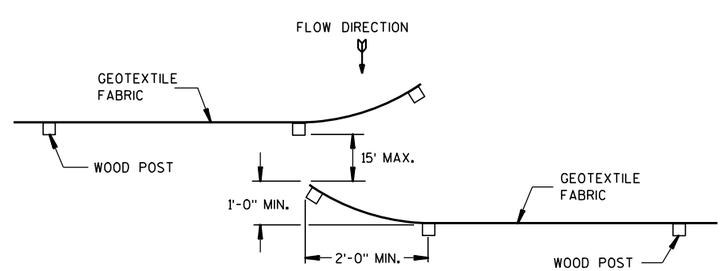

HOOK METHOD

JOINING TWO LENGTHS OF SILT FENCE ⑤

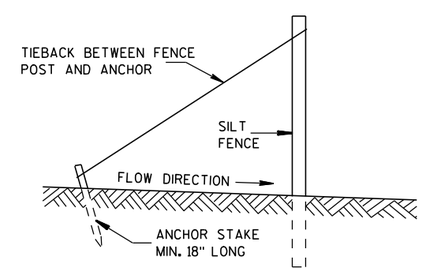

SILT FENCE TIE BACK

(WHEN REQUIRED BY THE ENGINEER)

SILT FENCE
STATE OF WISCONSIN DEPARTMENT OF TRANSPORTATION
APPROVED 4-29-05 /S/ Beth Cann----- DATE CHIEF ROADWAY DEVELOP ENGINEER FHWA

6

6

S.D.D. 8 E 9-6

S.D.D. 8 E 9-6

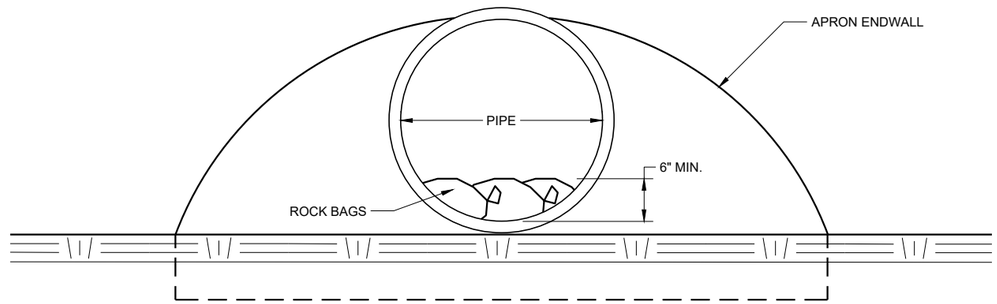

END VIEW

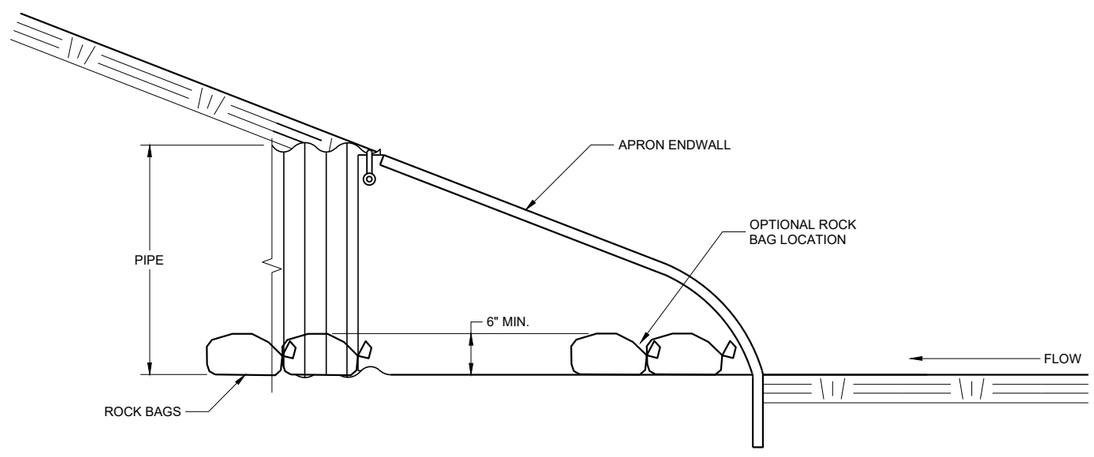

SIDE VIEW

CULVERT PIPE CHECK

(INSTALL ON INLET END ONLY)

CULVERT PIPE CHECK

STATE OF WISCONSIN
DEPARTMENT OF TRANSPORTATION

APPROVED
May 2019 — DATE
/S/ Daniel Schave — EROSION CONTROL ENGI
FHWA

6

SDD 08E15 - 01

METAL APRON ENDWALLS

PIPE DIA. (IN.)	MIN. THICK. (Inches) STEEL	MIN. THICK. (Inches) ALUM.	DIMENSIONS (Inches) A (±1")	B (MAX.)	H (±1")	L (±1 1/2")	L1 ①	L2 ①	W (±2")	APPROX. SLOPE	BODY
12	.064	.060	6	6	6	21	12	17 1/2	24	2 1/2 to 1	1 Pc.
15	.064	.060	7	8	6	26	14	21 3/4	30	2 1/2 to 1	1 Pc.
18	.064	.060	8	10	6	31	15	28 1/4	36	2 1/2 to 1	1 Pc.
21	.064	.060	9	12	6	36	18	29 5/8	42	2 1/2 to 1	1 Pc.
24	.064	.075	10	13	6	41	18	37 1/4	48	2 1/2 to 1	1 Pc.
30	.079	.075	12	16	8	51	18	52 1/4	60	2 1/2 to 1	1 Pc.
36	.079	.105	14	19	9	60	24	59 3/4	72	2 1/2 to 1	2 Pc.
42	.109	.105	16	22	11	69	24	75 5/8	84	2 1/2 to 1	2 Pc.
48	.109	.105	18	27	12	78	24	81	90	2 1/4 to 1	3 Pc.
54	.109	.105	18	30	12	84	30	85 1/2	102	2 1/4 to 1	3 Pc.
60	.109×	.105×	18	33	12	87	—	—	114	2 to 1	3 Pc.
66	.109×	.105×	18	36	12	87	—	—	120	2 to 1	3 Pc.
72	.109×	.105×	18	39	12	87	—	—	126	2 to 1	3 Pc.
78	.109×	.105×	18	42	12	87	—	—	132	1 1/2 to 1	3 Pc.
84	.109×	.105×	18	45	12	87	—	—	138	1 1/2 to 1	3 Pc.
90	.109×	.105×	18	37	12	87	—	—	144	1 1/2 to 1	3 Pc.
96	.109×	.105×	18	35	12	87	—	—	150	1 1/2 to 1	3 Pc.

× EXCEPT CENTER PANEL
SEE GENERAL NOTES

REINFORCED CONCRETE APRON ENDWALLS

PIPE DIA. (IN.)	DIMENSIONS (Inches) T	A	B	C	D	E	G	APPROX. SLOPE
12	2	4	24	48 7/8	72 7/8	24	2	3 to 1
15	2 1/4	6	27	46	73	30	2 1/4	3 to 1
18	2 1/2	9	27	46	73	36	2 1/2	3 to 1
21	2 3/4	9	36	37 1/2	73 1/2	42	2 3/4	3 to 1
24	3	9 1/2	43 1/2	30	73 1/2	48	3	3 to 1
27	3 1/4	10 1/2	49 1/2	24	73 1/2	54	3 1/4	3 to 1
30	3 1/2	12	54	19 3/4	73 1/2	60	3 1/2	3 to 1
36	4	15	63	34 3/4	97 3/4	72	4	3 to 1
42	4 1/2	21	63	35	98	78	4 1/2	3 to 1
48	5	24	72	26	98	84	5	3 to 1
54	5 1/2	27	65	*33 1/4-**35	*98 1/4-**100	90	5 1/2	2 2/5 to 1
60	6	*30-**35	60	39	99	96	5	2 to 1
66	6 1/2	*24-**30	*72-**78	*21-**27	99	102	5 1/2	2 to 1
72	7	*24-**36	78	21	99	108	6	2 to 1
78	7 1/2	*24-**36	78	21	99	114	6 1/2	2 to 1
84	8	36	90 1/2	21	111 1/2	120	6 1/2	1 1/2 to 1
90	8 1/2	41	87 1/2	24	111 1/2	132	6 1/2	1 1/2 to 1

*MINIMUM
**MAXIMUM

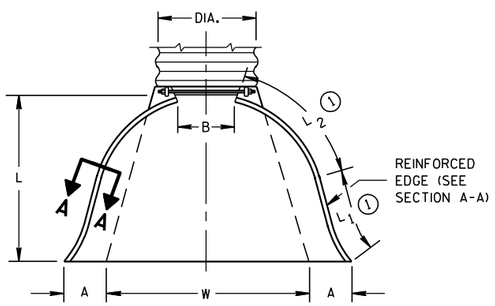

PLAN VIEW

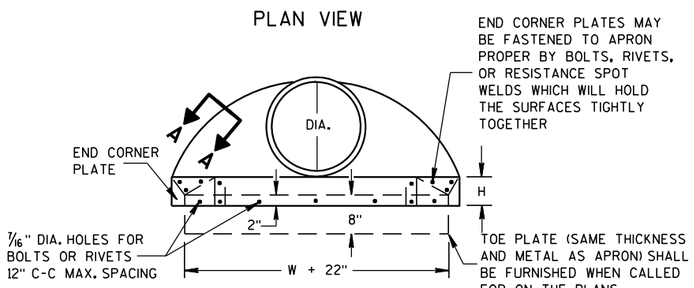

END VIEW

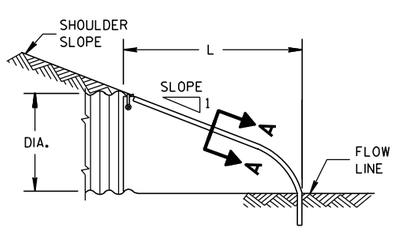

SIDE ELEVATION

METAL ENDWALLS

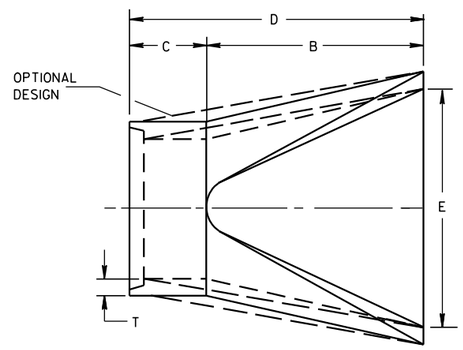

PLAN

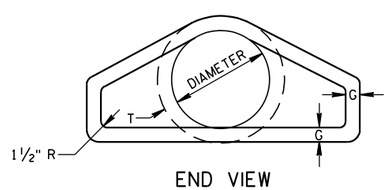

END VIEW

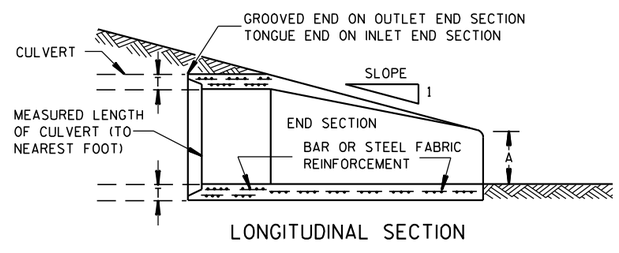

LONGITUDINAL SECTION

CONCRETE ENDWALLS

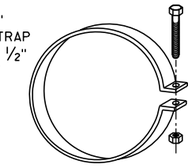

ALTERNATE FOR TYPE 1 CONNECTION

END SECTION CONNECTOR STRAP

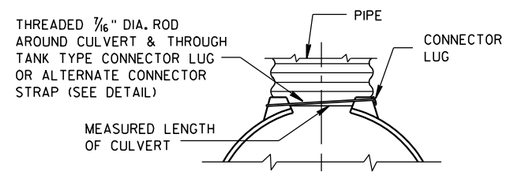

TYPE 1
FOR 12" THRU 24" CORR. PIPE

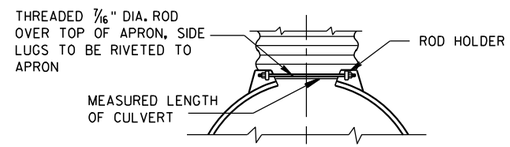

TYPE 2
FOR 30" THRU 96" CORR. PIPE

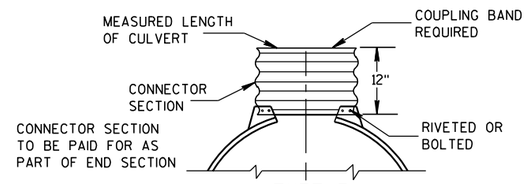

TYPE 3
FOR 42" THRU 96" CORR. PIPE

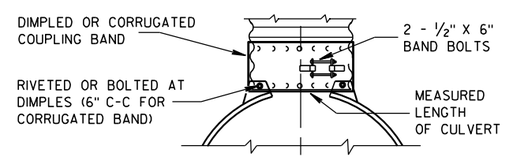

TYPE 5
ALTERNATE FOR:
ALL SIZES CORRUGATED CIRCULAR PIPE

NOTE: DIMPLED BAND FITS OVER OUTSIDE OF ENDWALL, AND CORRUGATED BAND FITS INSIDE ENDWALL. DIMPLED BAND MAY BE USED WITH HELICALLY CORRUGATED PIPE.

FOR CIRCUMFERENTIALLY CORRUGATED PIPE USE ENDWALL CONNECTION DETAILS 1, 2, 3 OR 5 AS APPLICABLE.

FOR HELICALLY CORRUGATED PIPE USE ENDWALL CONNECTION DETAILS 1, 2 OR 5.

FOR HELICALLY CORRUGATED PIPES WITH TWO CIRCUMFERENTIAL CORRUGATIONS AT EACH END USE ENDWALL CONNECTION DETAILS 1, 2 OR 3.

CONNECTION DETAILS

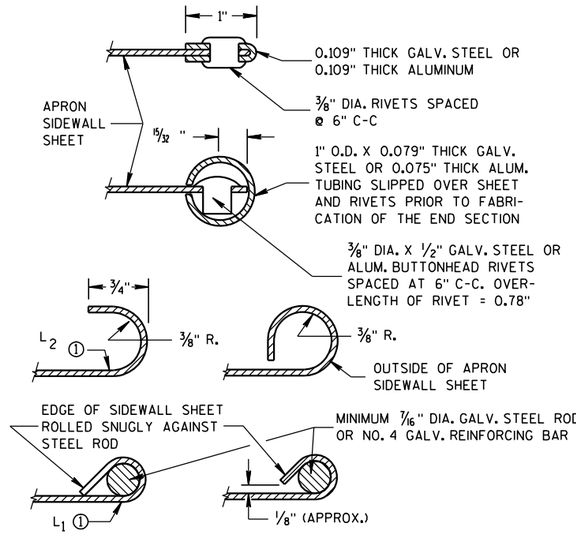

SECTION A-A

GENERAL NOTES

DETAILS OF CONSTRUCTION, MATERIALS AND WORKMANSHIP NOT SHOWN ON THIS DRAWING SHALL CONFORM TO THE PERTINENT REQUIREMENTS OF THE STANDARD SPECIFICATIONS AND THE APPLICABLE SPECIAL PROVISIONS.

CONCRETE CULVERT ENDWALLS MAY NOT BE USED WITH GALVANIZED STEEL OR ALUMINUM CULVERT PIPE OR VISE VERSA. GALVANIZED STEEL OR ALUMINUM ENDWALLS SHALL NORMALLY BE INSTALLED ON CULVERT PIPE OF THE SAME METAL.

ALL THREE PIECE STEEL APRON ENDWALLS FOR 60" DIAMETER PIPE AND LARGER SHALL HAVE 0.109" SIDES AND 0.138" CENTER PANELS. ALL THREE PIECE ALUMINUM APRON ENDWALLS FOR 60" DIAMETER PIPE AND LARGER SHALL HAVE 0.105" SIDES AND 0.134" CENTER PANELS. THE WIDTH OF CENTER PANELS SHALL BE GREATER THAN 20 PERCENT OF THE PIPE PERIMETER.

LAP SEAMS SHALL BE TIGHTLY JOINED BY GALVANIZED RIVETS OR BOLTS FOR STEEL UNITS AND ALUMINUM RIVETS AND BOLTS FOR ALUMINUM UNITS. FOR THE 60" THROUGH 96" DIAMETER APRON ENDWALL SIZES, THE REINFORCED EDGES AND CENTER PANEL SEAMS SHALL BE FURTHER REINFORCED WITH GALVANIZED STEEL OR ALUMINUM STIFFENER ANGLES. THE ANGLES SHALL BE ATTACHED BY GALVANIZED NUTS AND BOLTS FOR STEEL UNITS AND ALUMINUM NUTS AND BOLTS FOR ALUMINUM UNITS.

WHERE TWO OR MORE PIPES WITH APRON ENDWALLS ARE LAID ADJACENT TO EACH OTHER, THEY SHALL BE SEPARATED BY A DISTANCE SUFFICIENT TO PROVIDE A MINIMUM CLEARANCE OF 6 INCHES BETWEEN APRON ENDWALLS.

① FOR PIPE SIZES UP TO 60" DIAMETER, A 180° ROLLED EDGE MAY BE USED INSTEAD OF STEEL ROD REINFORCEMENT. SEE SECTION A-A.

APRON ENDWALLS FOR CULVERT PIPE

STATE OF WISCONSIN
DEPARTMENT OF TRANSPORTATION

APPROVED
11/30/94 — DATE
/S/ Rory L. Rhinesmith — CHIEF ROADWAY DEVELOPMENT ENGINEER
FHWA

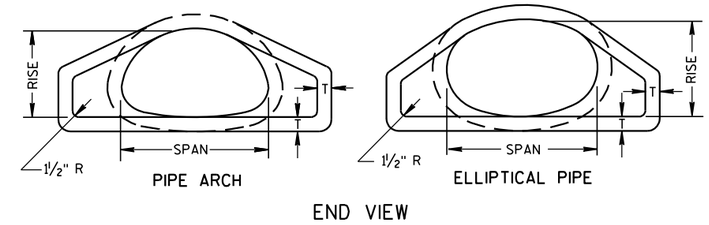

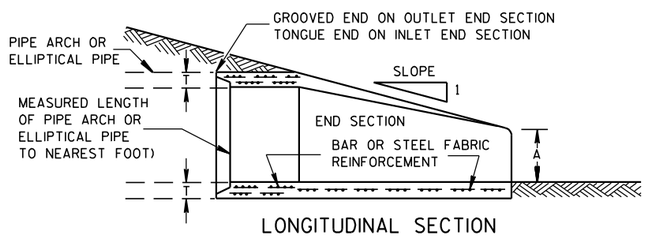

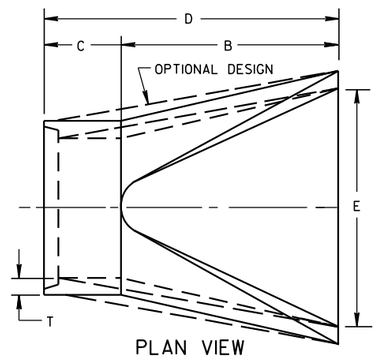

CONCRETE ENDWALLS

2- ⅔" X ½" CORRUGATIONS														
EQUIV. DIA. (Inches)	(Inches)		MIN. THICK. (Inches)		DIMENSIONS (Inches)							APPROX. SLOPE	BODY
	SPAN	RISE	STEEL	ALUM.	A (±1")	B (MAX.)	H (±1")	L (±1½")	L1 ①	L2 ①	W (±2")		
15	17	13	.064	.060	7	9	6	19	14	16	30	2½ to 1	1 Pc.
18	21	15	.064	.060	7	10	6	23	14	19⅜	36	2½ to 1	1 Pc.
21	24	18	.064	.060	8	12	6	28	18	21¾	42	2½ to 1	1 Pc.
24	28	20	.064	.060	9	14	6	32	18	27½	48	2½ to 1	1 Pc.
30	35	24	.079	.075	10	16	6	39	18	37⅝	60	2½ to 1	1 Pc.
36	42	29	.079	.075	12	18	8	46	24	45⅜	75	2½ to 1	1 Pc.
42	49	33	.109	.105	13	21	9	53	24	54¾	85	2½ to 1	2 Pc.
48	57	38	.109	.105	18	26	12	63	24	68	90	2½ to 1	3 Pc.
54	64	43	.109	.105	18	30	12	70	24	72¾	102	2¼ to 1	3 Pc.
60	71	47	.109*	.105*	18	33	12	77	30	82¼	114	2¼ to 1	3 Pc.
66	77	52	.109*	.105*	18	36	12	77	—	—	126	2 to 1	3 Pc.
72	83	57	.109*	.105*	18	39	12	77	—	—	138	2 to 1	3 Pc.

3" X 1" CORRUGATIONS														
EQUIV. DIA. (Inches)	(Inches)		MIN. THICK. (Inches)		DIMENSIONS (Inches)							APPROX. SLOPE	BODY
	SPAN	RISE	STEEL	ALUM.	A (±1")	B (MAX.)	H (±1")	L (±1½")	L1 ①	L2 ①	W (±2")		
48	53	41	.109	.105	18	26	12	63	24	72¾	90	2½ to 1	2 Pc.
54	60	46	.109	.105	18	30	12	70	30	82¼	102	2 to 1	2 Pc.
60	66	51	.109*	.105*	18	33	12	77	—	—	114	1½ to 1	3 Pc.
66	73	55	.109*	.105*	18	36	12	77	—	—	126	1½ to 1	3 Pc.
72	81	59	.109*	.105*	18	39	12	77	—	—	138	2 to 1	3 Pc.
78	87	63	.109*	.105*	22	38	12	77	—	—	148	1½ to 1	3 Pc.
84	95	67	.109*	.105*	22	34	12	77	—	—	162	1½ to 1	3 Pc.
90	103	71	.109*	.105*	22	38	12	77	—	—	174	1½ to 1	3 Pc.
96	112	75	.109*	.105*	24	40	12	77	—	—	174	1½ to 1	3 Pc.

NOTE: ALL SPLICES TO BE LAP RIVETED OR BOLTED.

* EXCEPT CENTER PANEL SEE GENERAL NOTES

REINFORCED CONCRETE PIPE ARCH									
EQUIV. DIA. (Inches)	DIMENSIONS (Inches)								APPROX. SLOPE
	** SPAN	** RISE	T	A	B	C	D	E	
24	29	18	3	8½	39	33	72	48	3 to 1
30	36	22	3½	9½	50	46	96	60	3 to 1
36	44	27	4	11⅛	60	36	96	72	3 to 1
42	51	31	4½	15 13/16	60	36	96	78	3 to 1
48	58	36	5	21	60	36	96	84	3 to 1
54	65	40	5½	25½	60	36	96	90	3 to 1
60	73	45	6	31	60	36	96	96	3 to 1
72	88	54	7	31	60	39	99	120	2 to 1
84	102	62	8	28½	83	19	102	144	2 to 1

REINFORCED CONCRETE ELLIPTICAL PIPE									
EQUIV. DIA. (Inches)	DIMENSIONS (Inches)								APPROX. SLOPE
	** SPAN	** RISE	T	A	B	C	D	E	
24	30	19	3¼	8½	39	33	72	48	3 to 1
30	38	24	3¾	9½	54	18	72	60	3 to 1
36	45	29	4½	11⅛	60	24	84	72	2½ to 1
42	53	34	5	15¾	60	36	96	78	2½ to 1
48	60	38	5½	21	60	36	96	84	2½ to 1
54	68	43	6	25½	60	36	96	90	2½ to 1
60	76	48	6½	30	60	36	96	96	2½ to 1

**NOMINAL SIZE

GENERAL NOTES

DETAILS OF CONSTRUCTION, MATERIALS AND WORKMANSHIP NOT SHOWN ON THIS DRAWING SHALL CONFORM TO THE PERTINENT REQUIREMENTS OF THE STANDARD SPECIFICATIONS AND THE APPLICABLE SPECIAL PROVISIONS.

CONCRETE APRON ENDWALLS MAY NOT BE USED WITH GALVANIZED STEEL OR ALUMINUM CULVERT PIPE OR VISE VERSA. GALVANIZED STEEL OR ALUMINUM APRON ENDWALLS SHALL NORMALLY BE INSTALLED ON CULVERT PIPE OF THE SAME METAL.

ALL THREE PIECE STEEL APRON ENDWALLS FOR 66" X 51" PIPE ARCH AND LARGER SHALL HAVE 0.109" SIDES AND 0.138" CENTER PANELS. ALL THREE PIECE ALUMINUM APRON ENDWALLS FOR 66" X 51" PIPE ARCH AND LARGER SHALL HAVE 0.105" SIDES AND 0.134" CENTER PANELS. THE WIDTH OF CENTER PANELS SHALL BE GREATER THAN 20 PERCENT OF THE PIPE ARCH PERIMETER.

LAP SEAMS SHALL BE TIGHTLY JOINED BY GALVANIZED RIVETS OR BOLTS FOR STEEL UNITS AND ALUMINUM RIVETS AND BOLTS FOR ALUMINUM UNITS. FOR THE 77" X 52" THROUGH 112" X 75" APRON ENDWALL SIZES, THE REINFORCED EDGES AND CENTER PANEL SEAMS SHALL BE FURTHER REINFORCED WITH GALVANIZED STEEL OR ALUMINUM STIFFENER ANGLES. THE ANGLES SHALL BE ATTACHED BY GALVANIZED NUTS AND BOLTS FOR STEEL UNITS AND ALUMINUM NUTS AND BOLTS FOR ALUMINUM UNITS.

WHERE TWO OR MORE PIPES WITH APRON ENDWALLS ARE LAID ADJACENT TO EACH OTHER, THEY SHALL BE SEPARATED BY A DISTANCE SUFFICIENT TO PROVIDE A MINIMUM CLEARANCE OF 6 INCHES BETWEEN APRON ENDWALLS.

① FOR PIPE ARCH SIZES UP TO 73" X 55" A 180° ROLLED EDGE MAY BE USED INSTEAD OF STEEL ROD REINFORCEMENT. SEE SECTION A-A.

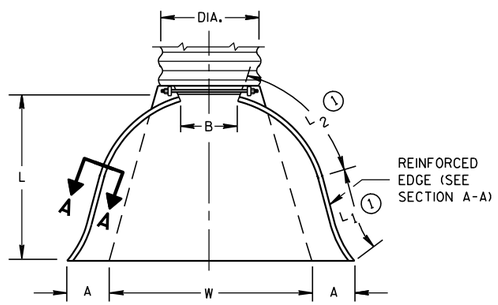

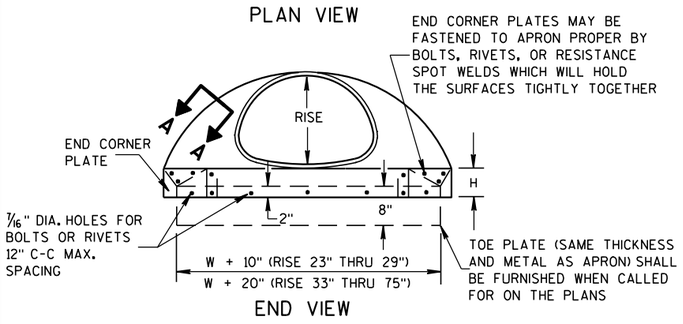

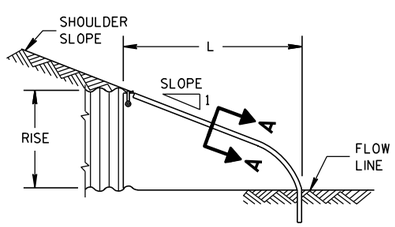

SIDE ELEVATION

METAL ENDWALLS

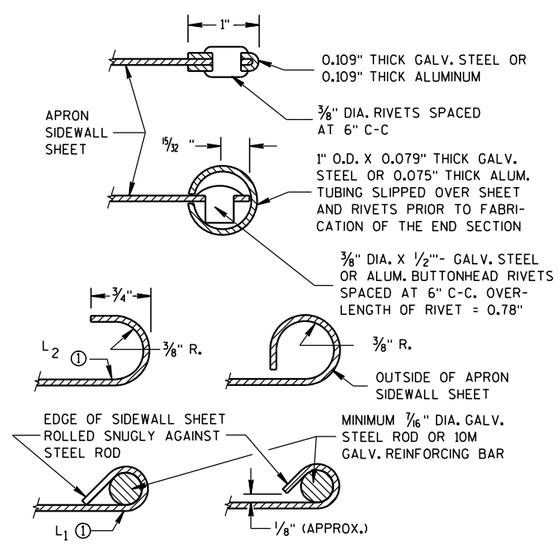

SECTION A-A

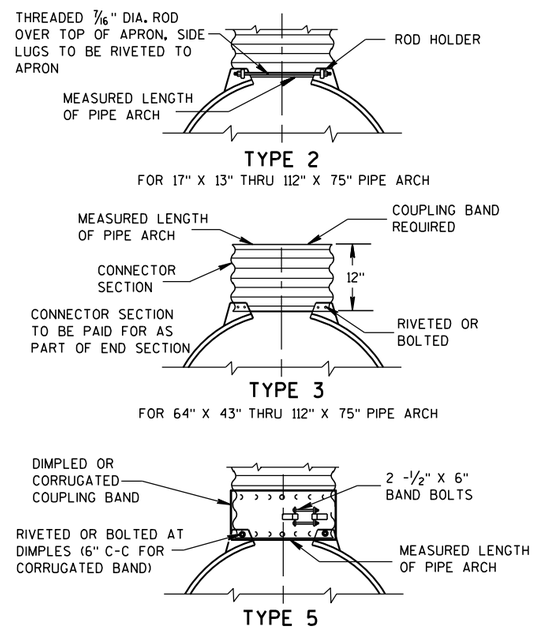

NOTE: DIMPLED BAND FITS OVER OUTSIDE OF ENDWALL, AND CORRUGATED BAND FITS INSIDE ENDWALL.

CONNECTION DETAILS

APRON ENDWALLS FOR PIPE ARCH AND ELLIPTICAL PIPE

STATE OF WISCONSIN
DEPARTMENT OF TRANSPORTATION

APPROVED

11/30/94 — DATE

/S/ Rory L. Rhinesmith — CHIEF ROADWAY DEVELOPMENT ENGINEER

FHWA

6

S.D.D. 8 F 2-1

6

S.D.D. 8 F 2-1

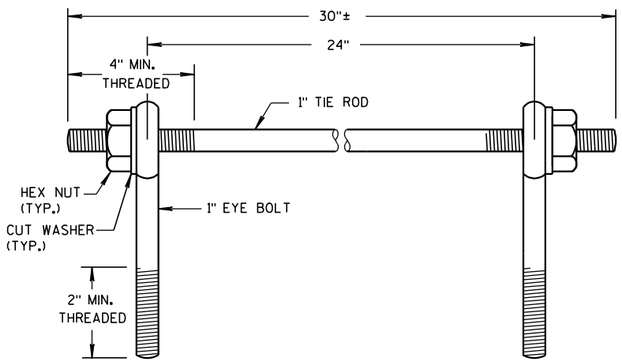

EYE BOLTS AND TIE ROD

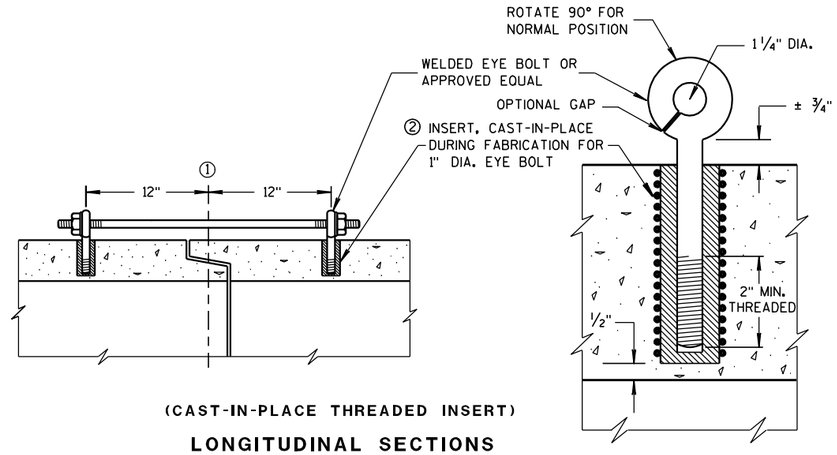

(CAST-IN-PLACE THREADED INSERT)

LONGITUDINAL SECTIONS

EYE BOLT AND TIE ROD ASSEMBLY (ALTERNATE NO. 1)

GENERAL NOTES

DETAILS OF CONSTRUCTION, MATERIALS, AND WORKMANSHIP NOT SHOWN ON THIS DRAWING SHALL CONFORM TO THE PERTINENT REQUIREMENTS OF THE STANDARD SPECIFICATIONS AND APPLICABLE SPECIAL PROVISIONS.

CONCRETE CULVERT AND STORM SEWER PIPE SHALL BE TIED TOGETHER IN THE MANNER ILLUSTRATED BY THIS DETAIL AT LOCATIONS DESIGNATED IN THE STANDARD SPECIFICATIONS AND THE PLAN. THE CONTRACTOR MAY USE EITHER ALTERNATE 1, 2 OR 3 FOR DRAINAGE STRUCTURES. ONLY ALTERNATE 1 AND 3 MAY BE USED FOR CATTLE PASSES, UNLESS OTHERWISE STATED IN THE CONTRACT. THE MATERIALS, FABRICATION AND WORK NECESSARY TO TIE THE PIPE BY THIS DETAIL WILL BE CONSIDERED INCIDENTAL TO THE PIPE AND APRON ENDWALLS IF REQUIRED.

DETAILED DRAWINGS FOR PROPOSED ALTERNATE DESIGNS FOR JOINT TIES SHALL BE SUBMITTED TO THE ENGINEER FOR APPROVAL.

JOINT TIES TO BE HOT-DIP GALVANIZED PER ASTM A 153.

① ℄ OF TONGUE AND GROOVE OR BELL AND SPIGOT JOINTS.

② THE INSIDE OF THE THREADED INSERTS SHALL BE CLEAN TO ALLOW THE INSERTION OF THREADED EYE BOLTS.

③ HOLES SHALL BE CAST-IN-PLACE OR DRILLED 12 INCHES FROM ℄ OF TONGUE AND GROOVE.

④ BOLT PROJECTION INSIDE OF PIPE SHALL NOT EXCEED 2 INCHES.

⑤ OPENING TO BE ROD DIAMETER PLUS 1 INCH.

⑥ LENGTH ADEQUATE TO EXTEND TO WITHIN 1/2 INCH OF THE INNER SURFACE OF THE PIPE.

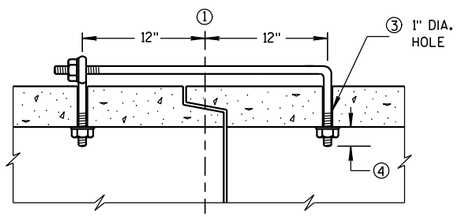

(TONGUE & GROOVE PIPE)

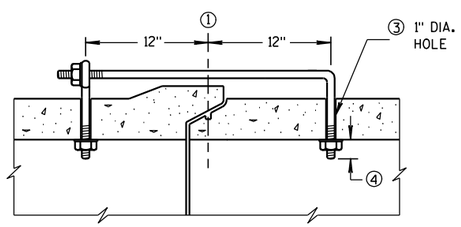

(MODIFIED BELL PIPE)

LONGITUDINAL SECTION

EYE BOLT DIMENSION TABLE

PIPE SIZE	L = LENGTH	
	TONGUE & GROOVE PIPE	MODIFIED BELL PIPE
18" TO 24"	4 1/2"	6 1/4"
30"	5"	7"
36"	5 1/2"	7"
42"	6"	
48"	6 1/2"	
60"	7 1/2"	
66"	8"	

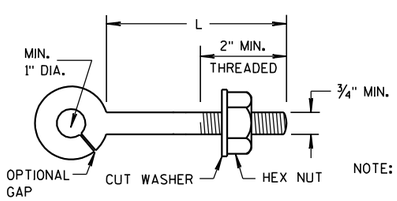

EYE BOLT

NOTE:

NOTE: TWO EYE BOLTS MAY BE USED WITH A 30" LONG THREADED ROD IN LIEU OF THE 90° BENT TIE ROD.

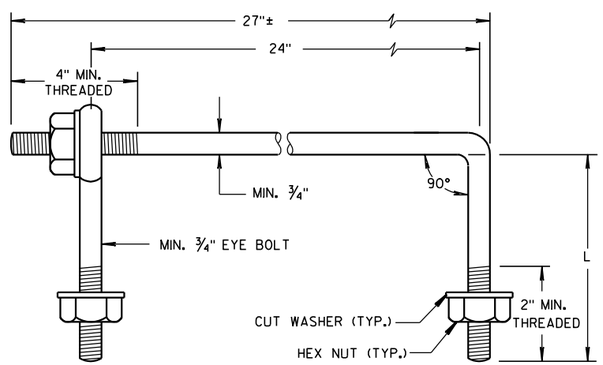

EYE BOLT AND TIE ROD

(JOINT TIES FOR 18" TO 66" DIA. CONCRETE PIPE)

EYE BOLT AND TIE ROD ASSEMBLY (ALTERNATE NO. 2)

ADJUSTABLE TIE ROD TABLE

PIPE DIAMETER	TIE ROD DIAMETER	D	L_1	N
12-60	5/8	5/8	5	1/2
66-84	3/4	3/4	5	1/2
90-108	1	1	7	1 7/16

DIMENSIONS SHOWN ARE IN INCHES

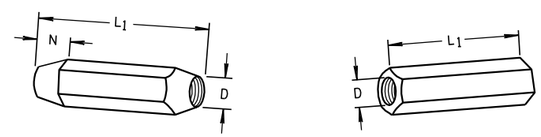

TAPERED PLAIN

RIGHT AND LEFT THREADS

SLEEVE NUTS

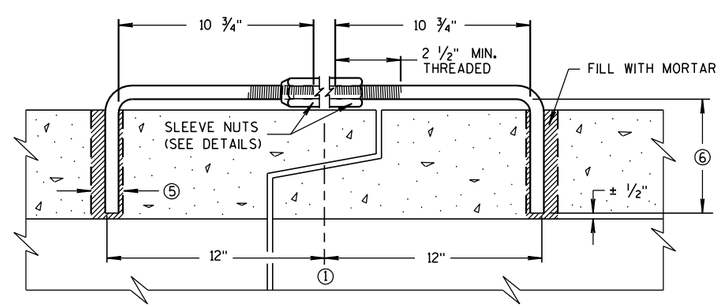

LONGITUDINAL SECTION

(JOINT TIES FOR 12" TO 108" DIA. CONCRETE PIPE)

ADJUSTABLE TIE ROD (ALTERNATE NO. 3)

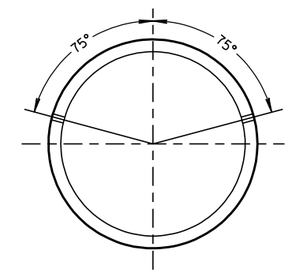

PLACEMENT OF (2) CAST-IN-PLACE INSERTS OR HOLES DURING FABRICATION FOR PIPE SECTIONS REQUIRING TIE RODS

TRANSVERSE SECTION

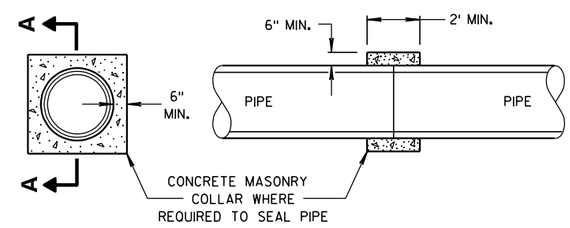

SECTION A-A

CONCRETE COLLAR DETAIL

JOINT TIES FOR CONCRETE PIPE AND CONCRETE COLLAR DETAIL

STATE OF WISCONSIN
DEPARTMENT OF TRANSPORTATION

APPROVED
6/5/2012 /S/ Jerry H. Zogg
DATE ROADWAY STANDARDS DEVELOPMENT ENGINEER
FHWA

6

S.D.D. 8 F 4-7

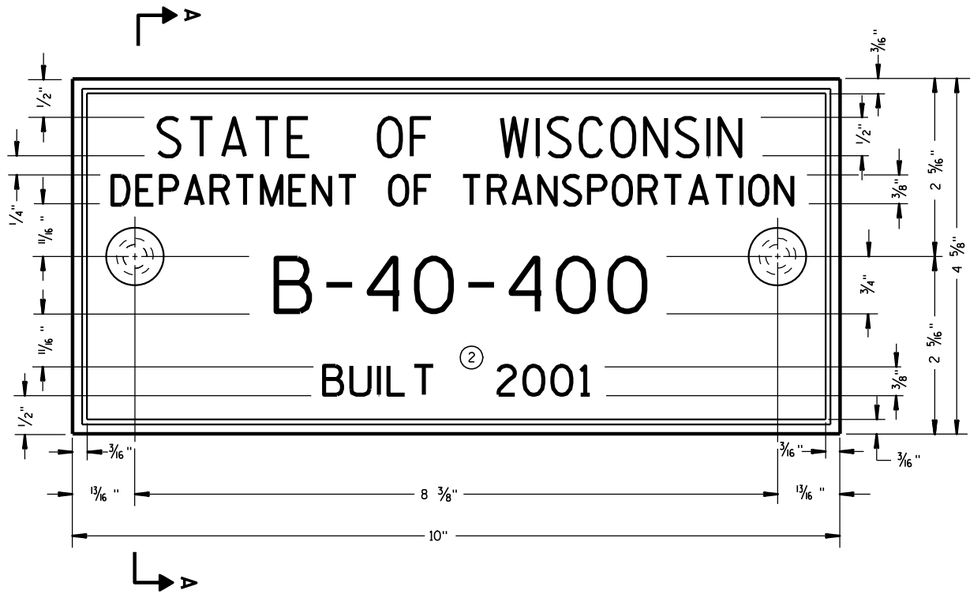

TYPICAL NAME PLATE

(BRIDGES, CULVERTS, AND RETAINING WALLS)

GENERAL NOTES

NAME PLATES TO BE INSTALLED ON BRIDGES, CULVERTS, AND RETAINING WALLS SHALL CONFORM TO THE REQUIREMENTS OF SECTION 502.3.11 OF THE STANDARD SPECIFICATIONS.

THE BRIDGE NUMBER AND YEAR BUILT SHOWN ON THIS DRAWING ARE EXAMPLES ONLY. SEE CONSTRUCTION PLANS FOR INDIVIDUAL NUMBERING AND YEAR BUILT.

① EPOXY RESIN SHALL BE FROM AN APPROVED MANUFACTURER AND USED IN ACCORDANCE WITH MANUFACTURER'S RECOMMENDATIONS.

② REHABILITATION OF AN EXISTING STRUCTURE SHOULD USE THE DATE OF ORIGINAL STRUCTURE CONSTRUCTION.

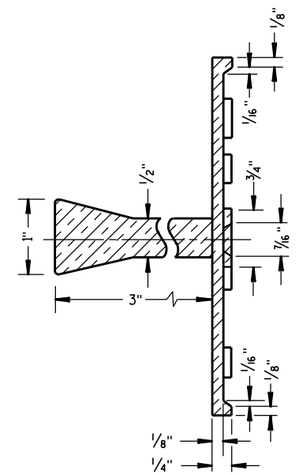

SECTION A-A

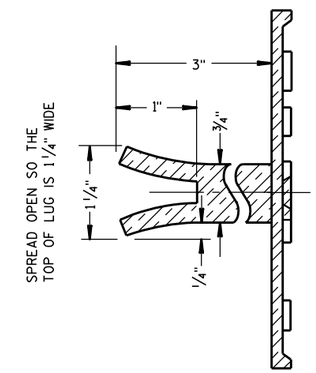

ALTERNATE LUG

6

FOR MULTI-UNIT STRUCTURES
LINE 3 ABOVE SHALL READ

B = BRIDGE
C = CULVERT
R = RETAINING WALL

COUNTY NO.

BRIDGE NO.

UNIT NO. FOR MULTIPLE
UNIT BRIDGE

B-40-400-1A

NUMBERING DESIGNATION
MULTI-UNIT STRUCTURES

① ADHERE ANCHOR LUG TO
PRECAST RETAINING WALL
WITH EPOXY RESIN.

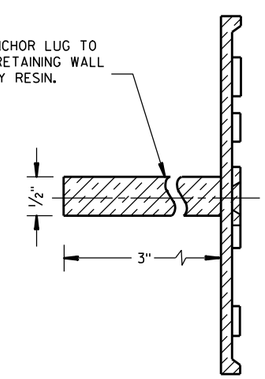

ALTERNATE LUG

(FOR ATTACHMENT TO PRECAST STRUCTURES)

NAME PLATE (STRUCTURES)		
STATE OF WISCONSIN DEPARTMENT OF TRANSPORTATION		
APPROVED		
3/26/10 DATE	/S/ Scot Beck-- CHIEF STRUCTURAL DEVELOP	ENGINEER
FHWA		

1. WOOD OR STEEL POSTS (w6X9 OR w6X8.5) MAY BE USED. DO NOT INTERMIX WOOD AND STEEL POSTS. INSTALL STEEL POSTS WITH HOLES ON APPROACHING TRAFFIC SIDE.
2. USE WOOD OR APPROVED PLASTIC BLOCKOUTS. WOOD BLOCKOUTS MAY BE CONSTRUCTED OUT OF TWO OR MORE WOOD BLOCKOUTS. SEE ALTERNATE WOOD BLOCKOUT DETAIL. DIMENSIONS OF APPROVED PLASTIC BLOCKOUTS MAY VARY.
3. IF ROCK IS ENCOUNTERED DURING EXCAVATION, PROVIDE A HOLE 12 INCHES IN DIAMETER EXTENDING 20 INCHES DEEP INTO THE ROCK. PLACE APPROXIMATELY 2 1/2" INCHES OF GRANULAR MATERIAL IN THE BOTTOM OF THE HOLE. CUT THE POSTS THE TO LENGTH AMD INSTALL. BACKFILL WITH EXCAVATED MATERIAL AND COMPACT. BACKFILL IS TO BE FREE OF LARGE ROCKS.
4. WHEN THE DISTANCE FROM BACK OF POST TO SHOULDER HINGE POINT IS LESS THAN 2 FEET INSTALL LONGER POST AT HALF POST SPACING (K).
5. FOR NEW MGS INSTALLATION TOP OF W-BEAM RAIL TOLERANCE IS +1". FOR EXISTING MGS INSTALLATION TOP OF W-BEAM IS BETWEEN 27 ¾" TO 32".
6. WHEN USING STEEL POST AND WOOD BLOCKOUTS INSTALL FOUR 16D GALVANIZED NAILS. INSTALL NAILS AT THE BACK CORNERS OF THE BLOCK AND BEND THE NAILS OVER THE FLANGE OF THE STEEL POST.
7. TOTAL POST LENGTH FOR TYPE K IS 7' - 0". TOTAL POST LENGTH FOR OTHER MGS TYPES IS 6' - 0".

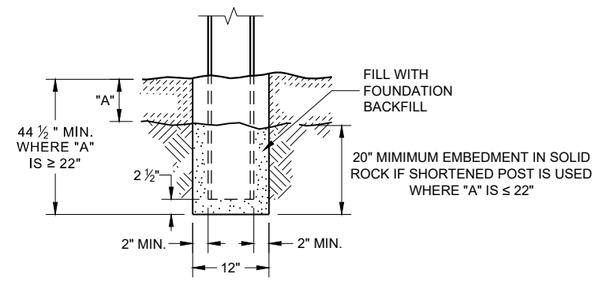

END VIEW
SETTING STEEL OR WOOD POST IN ROCK (3)

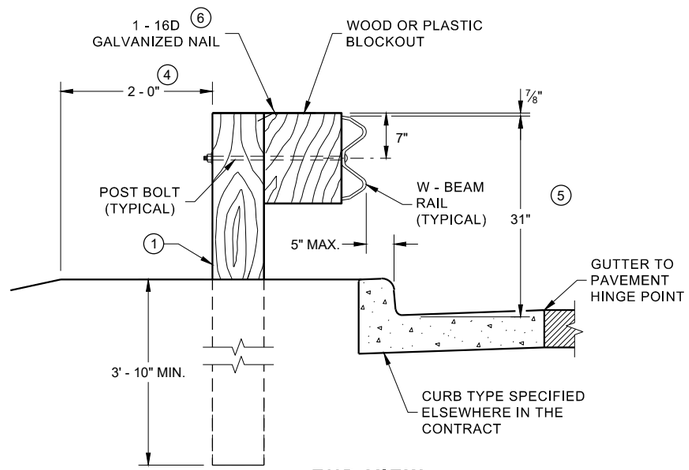

END VIEW
LOCATED ALONG A CURBED ROADWAY

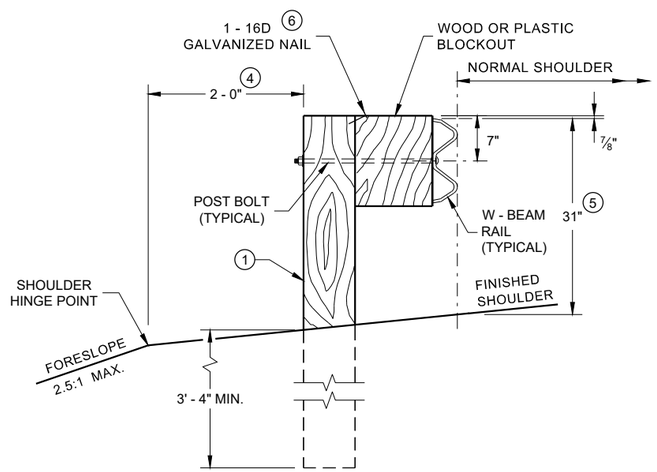

END VIEW
LOCATED ALONG A ROADWAY SHOULDER STANDARD INSTALLATION

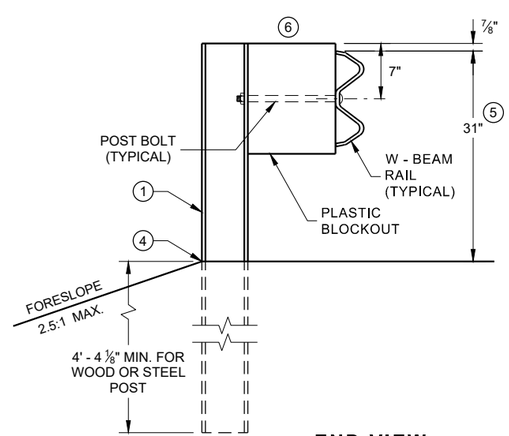

END VIEW
MGS LONGER POST AT HALFPOST SPACING W BEAM (K)

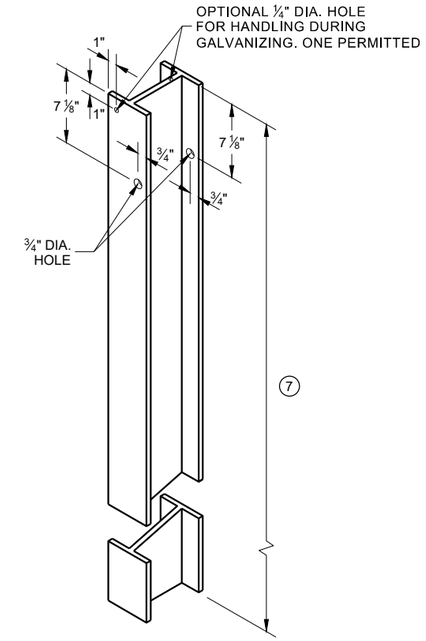

STEEL POST & HOLE PUNCHING DETAIL (W 6 X 9) (1)

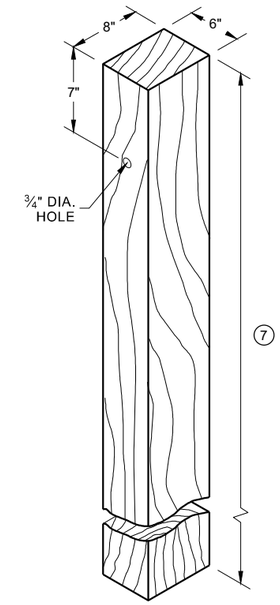

WOOD POST (6" X 8") NOMINAL (1)

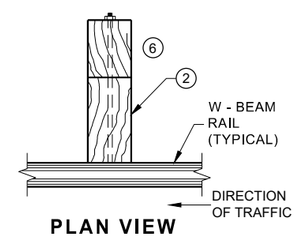

PLAN VIEW WOOD POST, BLOCKOUT & BEAM

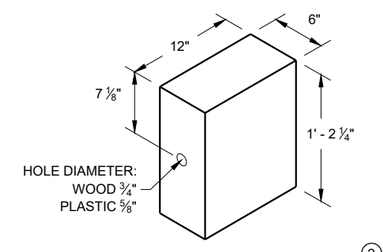

WOOD OR PLASTIC BLOCKOUT (2)

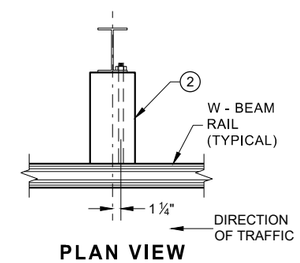

PLAN VIEW STEEL POST, PLASTIC BLOCKOUT & BEAM

MIDWEST GUARDRAIL SYSTEM (MGS) GUARDRAIL

STATE OF WISCONSIN
DEPARTMENT OF TRANSPORTA

6

SDD 14B42 - 06a

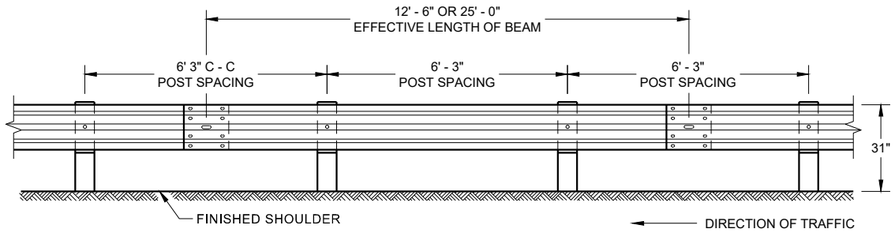

FRONT VIEW
POST SPACING STANDARD INSTALLATION

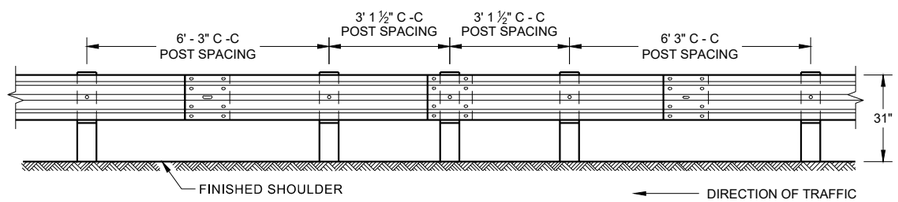

FRONT VIEW
HALF POST SPACING (HS) AND HALF POST SPACING WITH LONGER POSTS (K)

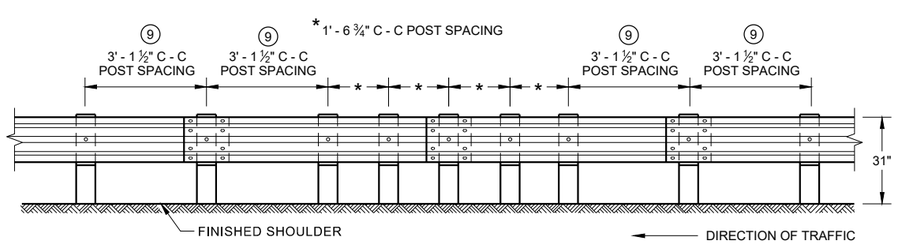

FRONT VIEW
QUARTER POST SPACING (QS)

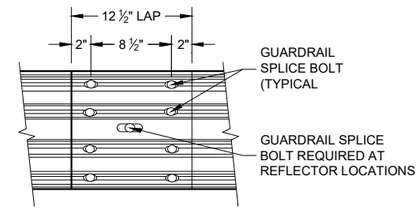

FRONT VIEW
MID-SPAN BEAM SPLICE

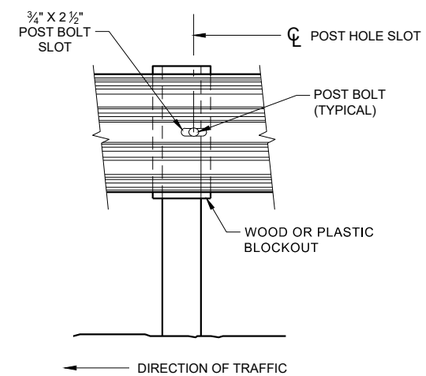

FRONT VIEW AT STEEL POST

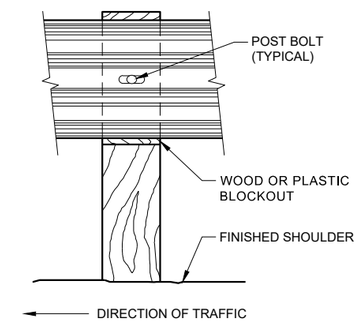

FRONT VIEW AT WOOD POST

GENERAL NOTES

8 DO NOT INSTALL REFLECTORS ON THE FIRST 50 FEET OF THE APPROACH END OF THE ENERGY ABSORBING TERMINAL. RAIL SPLICE LOCATIONS ARE THE ONLY ACCEPTABLE LOCATIONS FOR REFLECTORS.

9 25 FEET OF HALF POST SPACING IS REQUIRED ON APPROACH AND DEPARTURE ENDS OF QUARTER POST SPACING.

POST BOLTS ARE A ⅝" DIAMETER ASTM A307 GUARDRAIL BOLT. A POST BOLT REQUIRES ⅝" DIAMETER A563A DOUBLE RECESSED (DR) HEAVY HEX NUT AND ⅝" DIAMETER F844 FLAT WASHER. POST BOLTS MAY BE LONGER IF MULTIPLE BLOCKOUTS ARE BEING USED.

GUARD RAIL SPLICE BOLTS ARE A ⅝" DIAMETER ASTM A307 GUARDRAIL HEAD BOLT. A GUARDRAIL SPLICE BOLT REQUIRES ⅝" DIAMETER A563A DOUBLE RECESSED (DR) HEAVY HEX NUT.

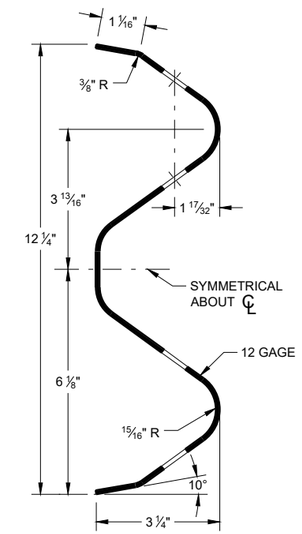

SECTION THRU W-BEAM RAIL

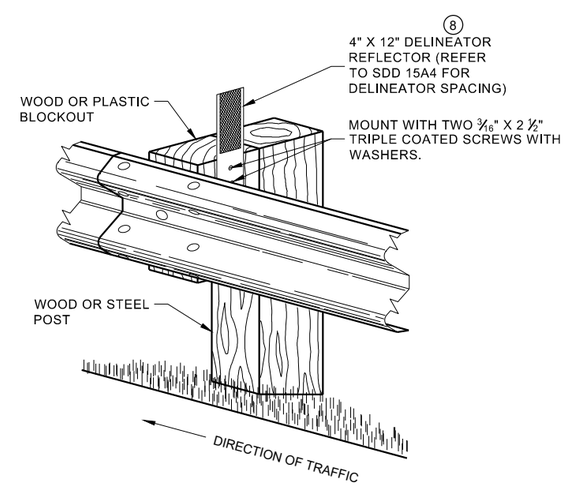

ONE SIDED REFLECTOR DETAIL AND TYPICAL INSTALLATION

MIDWEST GUARDRAIL SYSTEM (MGS) GUARDRAIL

STATE OF WISCONSIN
DEPARTMENT OF TRANSPORTA

6

SDD 14B42 - 06b

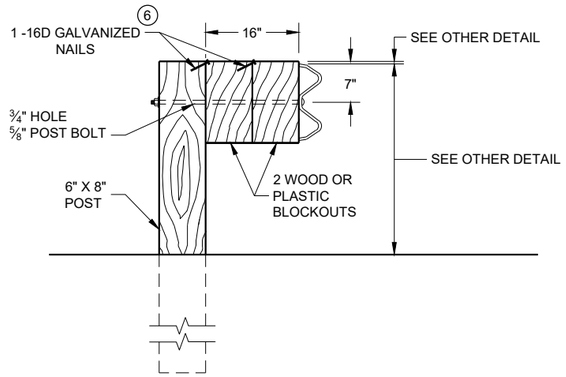

DETAIL FOR 16" BLOCKOUT DEPTH

IT IS ACCEPTABLE TO USE BLOCKOUTS UP TO 16" DEEP TO INCREASE THE POST OFFSET TO AVOID UNDERGROUND OBSTACLES. THERE IS NO LIMIT TO THE NUMBER OF POSTS THAT CAN HAVE ADDITIONAL BLOCKOUTS UP TO 16" DEEP.

NOTE:

1. ALL FILLETS SHALL HAVE A MINIMUM RADIUS OF 3/16".
2. IF THE BOLT EXTENDS MORE THAN ¼" FROM THE NUT THE BOLT SHOULD BE TRIMMED BACK.

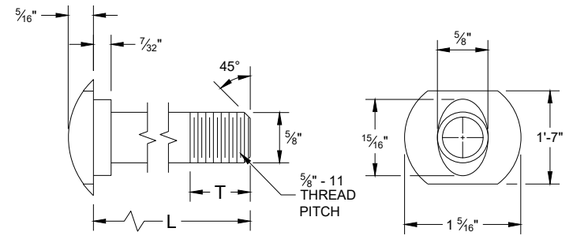

POST BOLT TABLE

L	T (MIN.)
1 ¼"	1 ⅛"
2"	1 ¾"
10"	4"
14"	4 1/16"
18"	4"
21"	4 1/16"
25"	4"

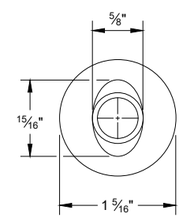

ALTERNATE BOLT HEAD

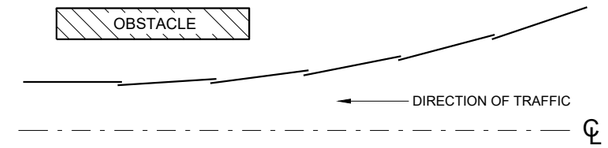

PLAN VIEW
BEAM LAPPING DETAIL

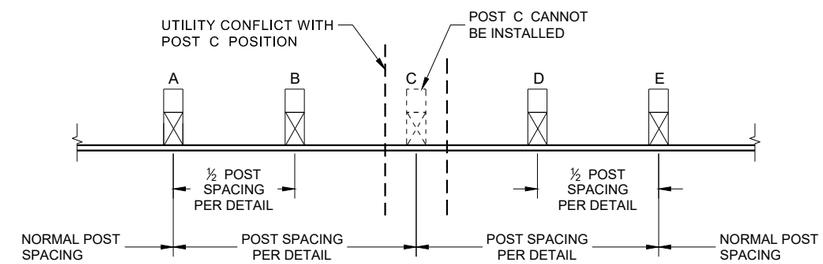

POST DRIVING FOR CONTINUOUS UNDERGROUND OBSTRUCTION

6

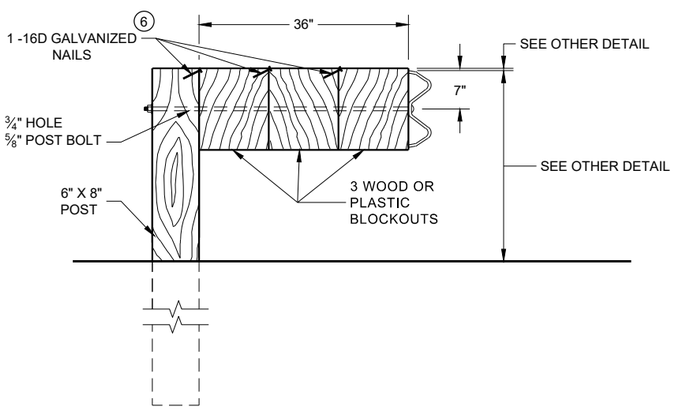

DETAIL FOR 36" BLOCKOUT DEPTH

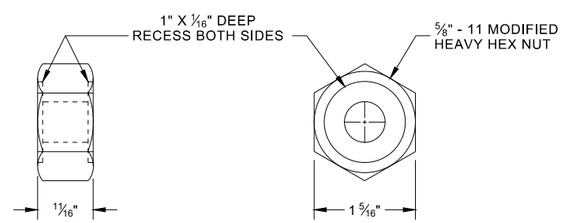

POST BOLT, SPLICE BOLT AND RECESS NUT

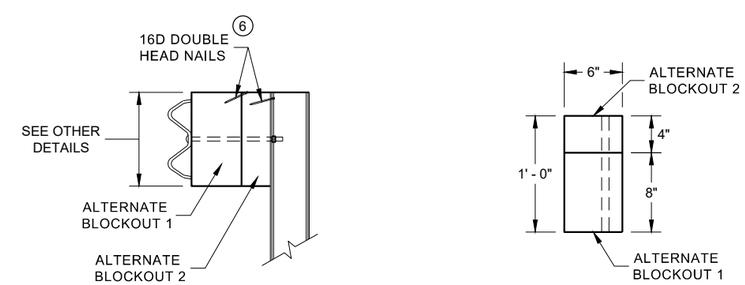

SIDE VIEW

PLAN VIEW

ALTERNATE WOOD BLOCKOUT DETAIL

NOTES: UNDER SPECIAL CIRCUMSTANCES, SUCH AS AVOIDING OBSTACLES THAT ARE NOT RELOCATED, IT IS ACCEPTABLE TO INSTALL ADDITIONAL BLOCKOUTS TO OBTAIN UP TO 36" DEPTH FOR ONE OR TWO POSTS IN A SECTION OF GUARDRAIL.

DO NOT USE 16" OR 36" BLOCKOUTS IF IT CAUSES THE POST TO BE DRIVEN BEYOND SHOULDER HINGE POINT OR CAUSES A FIXED OBJECT TO BE WITHIN THE DEFLECTION DISTANCE OF THE BARRIER.

(6) WHEN USING STEEL POST AD WOOD BLOCKOUTS, INSTALL FOUR 16D GALVANIZED NAILS. INSTALL NAILS AT THE BACK CORNERS OF THE BLOCK AND BEND THE NAILS OVER THE FLANGE OF THE STEEL POST.

MIDWEST GUARDRAIL SYSTEM (MGS) GUARDRAIL

STATE OF WISCONSIN
DEPARTMENT OF TRANSPORTA

SDD 14B42 - 06c

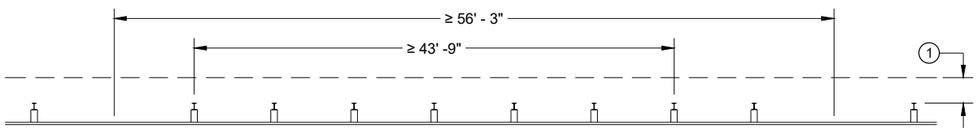

MISSING POST IN NORMAL BEAM GUARD RUN

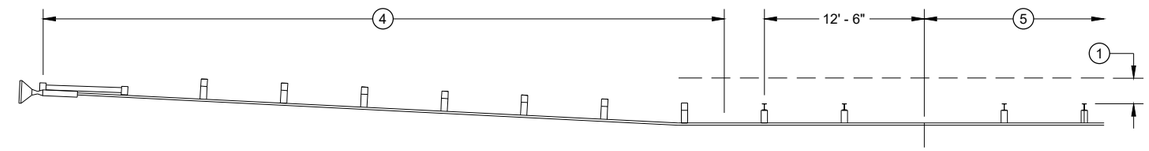

MISSING POST IN NORMAL BEAM GUARD RUN NEAR EAT

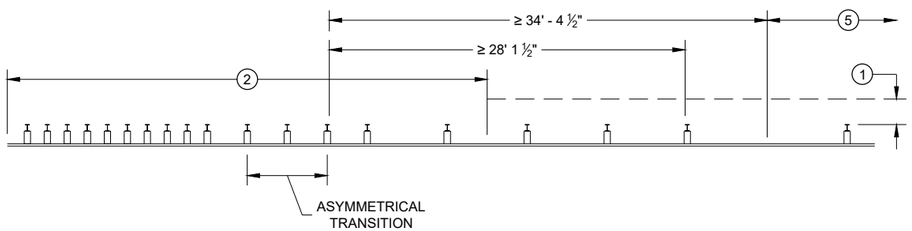

MISSING POST NEAR APPROACH THRIE BEAM TRANSITION

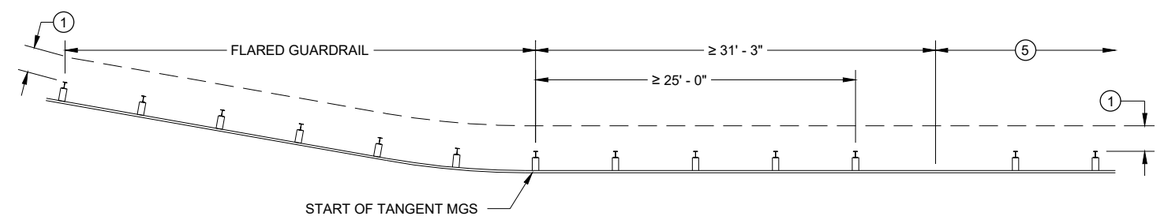

MISSING POST IN NORMAL BEAM GUARD RUN NEAR FLARED BEAM GUARD

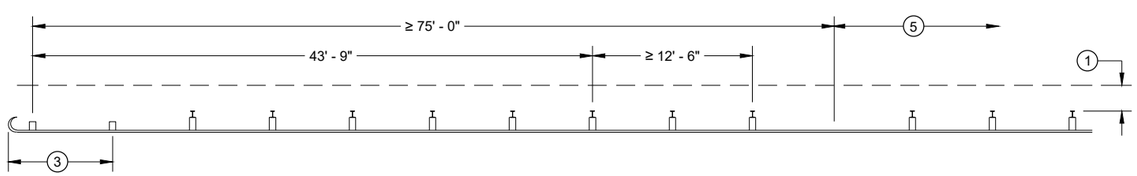

MISSING POST IN NORMAL BEAM GUARD RUN NEAR TYPE 2 TERMINAL

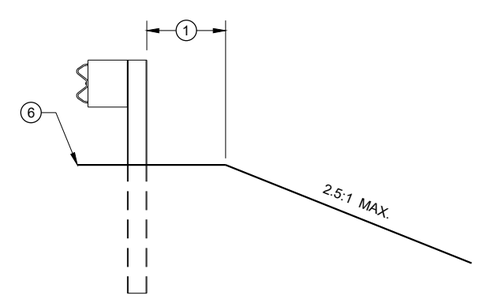

CROSS SECTION VIEW

1. MINIMUM OF 2 FEET OF GRADING BEHIND POST.
2. SEE SDD 14B45 FOR MORE DETAILS.
3. SEE SDD 14B47 FOR MORE DETAILS.
4. SEE SDD 14B44 FOR MORE DETAILS.
5. SEE MISSING POST IN NORMAL BEAM GUARD RUN FOR DISTANCE TO NEXT MISSING POST AND AREA FOR WELL DRAINED, COMPACTED SOILS.
6. SEE PLAN FOR SHOULDER DESIGN.

MIDWEST GUARDRAIL SYSTEM (MGS) GUARDRAIL

STATE OF WISCONSIN
DEPARTMENT OF TRANSPORTATION

APPROVED
7/2018 — DATE
/S/ Rodney Taylor — ROADWAY STANDARDS DEVE UNIT SUPERVISOR
FHWA

6

SDD 14B42 - 06d

GENERAL NOTES

(A) THE SLOPE IN THE AREA BOUNDED BY THE GRADELINE, THE HINGE POINT LINE (HPL) AND THE CLEAR ZONE LIMITS (CZL) SHALL BE 4:1 OR FLATTER.

(B) AFTER FINAL ASSEMBLY, RECHECK CABLE TO BE SURE IT IS TAUT AND HAS NOT RELAXED

(C) DIFFERENT MANUFACTURERS REQUIRE DIFFERENT PERFORATED W - BEAM RAIL END PANELS. SEE MANUFACTURER'S INFORMATION.

(D) ATTACH ALUMINUM SHEET TO E.A.T. HEAD USING 4 STAINLESS STEEL SELF - TAPPING SCREWS. ONE SCREW PER CORNER.

(E) HARDWARE MAY VARY BETWEEN MANUFACTURER. SEE MANUFACTURER'S DRAWING FOR INFORMATION.

DIMENSIONS MAY VARY, MANUFACTURER'S INFORMATION.

SEE SDD 14B42 FOR MORE INFORMATION.

* DO NOT ATTACH BLOCKOUTS TO POST 1 AND 2.

DO NOT INSTALL REFLECTORS ON THE FIRST 50 FEET OF THE APPROACH END OF THE ENERGY ABSORBING TERMINAL.

SEE MANUFACTURER'S DRAWING FOR SPLICE LOCATION, HARDWARE DIMENSIONS AND INSTALLATION INSTRUCTIONS.

THE CENTER OF THE UPPER 3 ½" DIAMETER HOLE ON POST NUMBER 3 THROUGH POST 9 IS TO BE FLUSH WITH THE GROUND LINE UP TO A MAXIMUM OF 2" ABOVE GROUND LINE. WOOD BLOCKS ON POSTS NUMBERED 3 THROUGH 9 MAY BE ADJUSTED UP TO 3" ABOVE THE TOP OF POST.

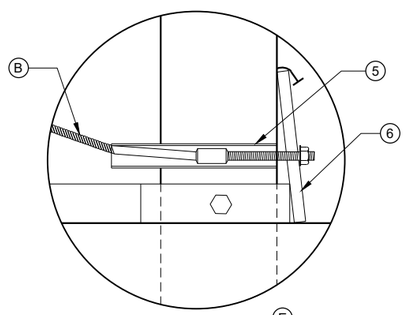

DETAIL "A" (E)

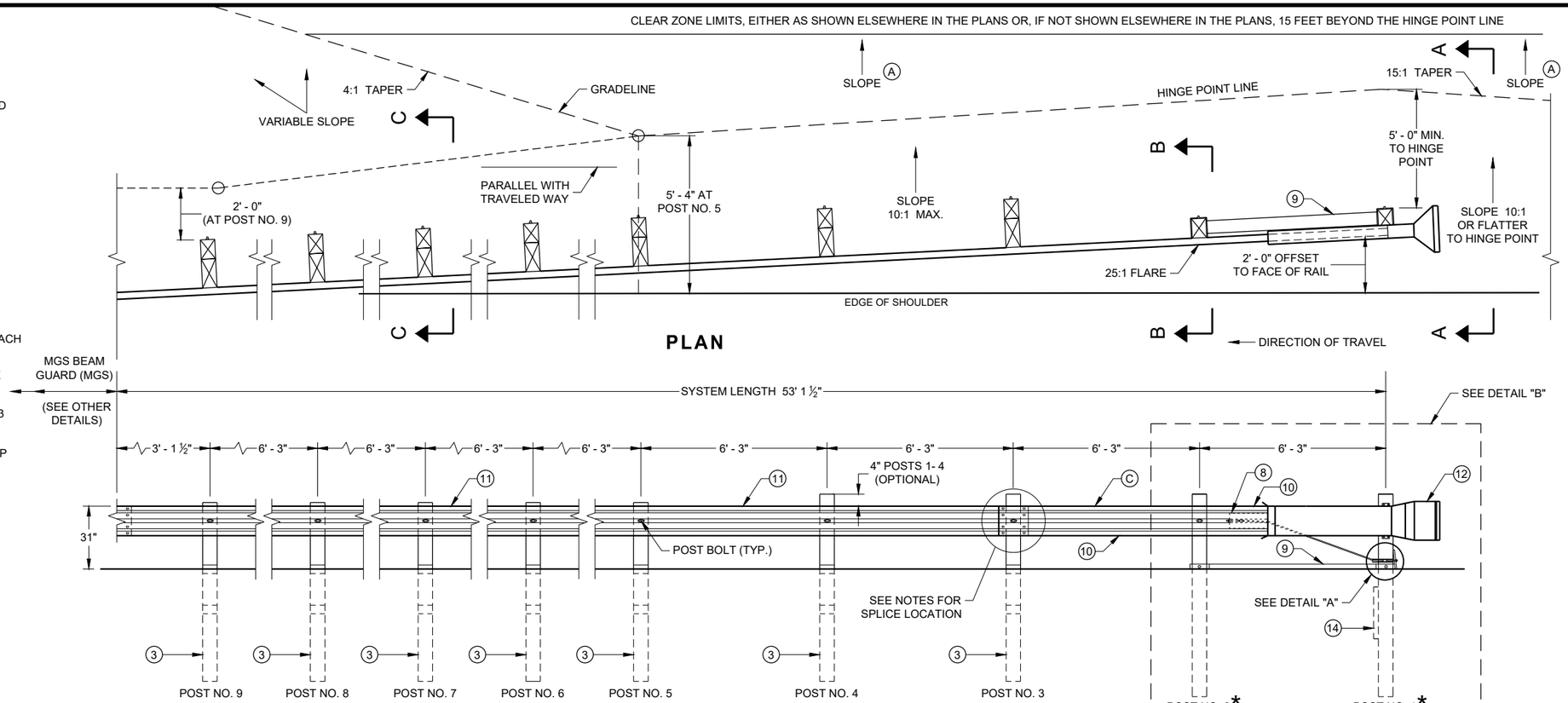

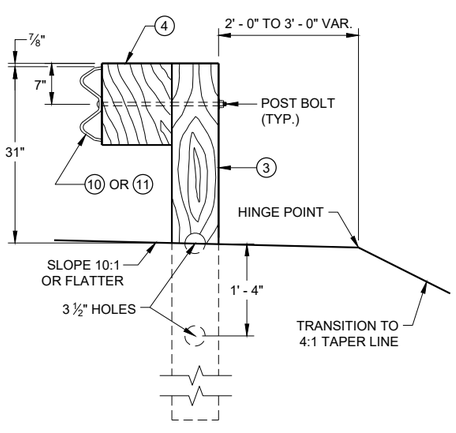

SECTION C - C
TYPICAL AT POST NOS. 3 - 9

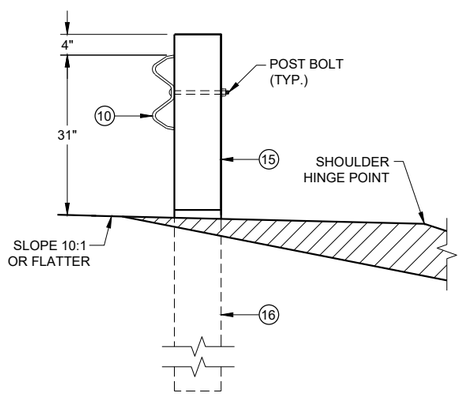

SECTION B - B
TYPICAL AT POST NO. 2*

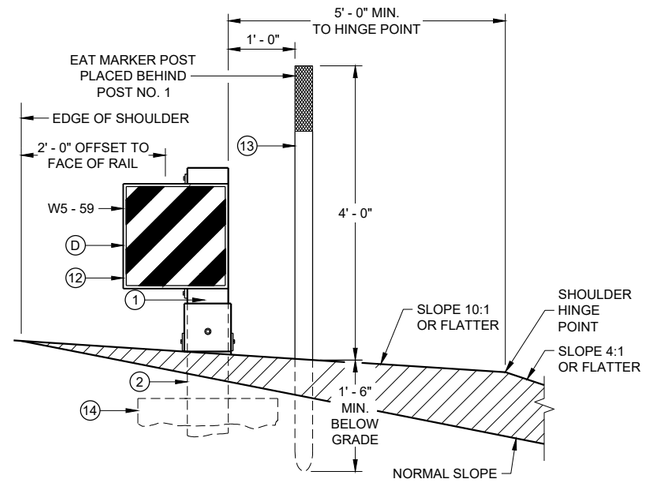

SECTION A - A
TYPICAL AT POST NO. 1*

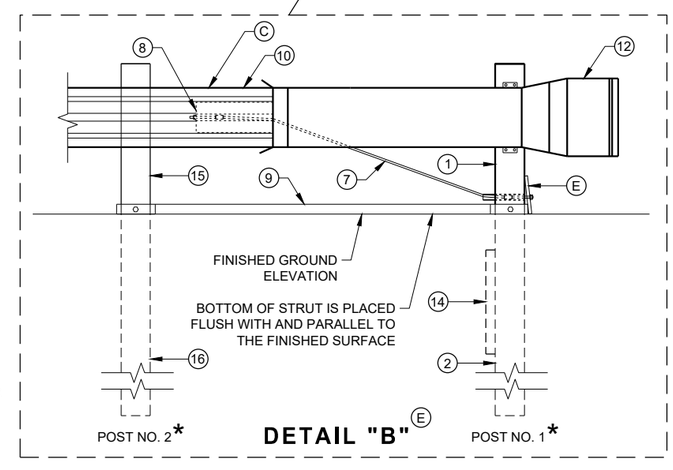

DETAIL "B" (E)

MIDWEST GUARDRAIL SYSTEM ENERGY ABSORBING TERMINAL (MGS)

STATE OF WISCONSIN
DEPARTMENT OF TRANSPORTATION

6

SDD 14B44 - 04a

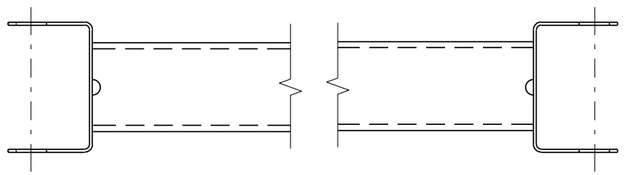

GENERIC GROUND STRUT (9)(E)

BILL OF MATERIALS

PART NO.	DESCRIPTION MATERIALS PROVIDED BY MGS EAT MANUFACTURER. SEE MANUGACTURER'S DETAILS FOR MORE INFORMATION.
1	UPPER POST NO. 1 6" X 6" TUBE
2	LOWER POST NO. 1
3	WOOD CRT
4	WOOD BLOCKOUT
5	PIPE SLEEVE
6	BEARING PLATE
7	BCT CABLE ASSEMBLY
8	ANCHOR CABLE BOX
9	GROUND STRUT
10	PERFORATED W-BEAM RAIL END PANEL, 12'-6" LONG.
11	STANDARD W-BEAM RAIL. MULTIPLE SECTIONS REQUIRED. SECTIONS VARY IN LENGTH.
12	IMPACT HEAD
13	EAT MARKER POST - YELLOW (SEE APPROVED PRODUCTS LIST)
14	SOIL PLATE
15	UPPER POST NO. 2
16	LOWER POST NO. 2

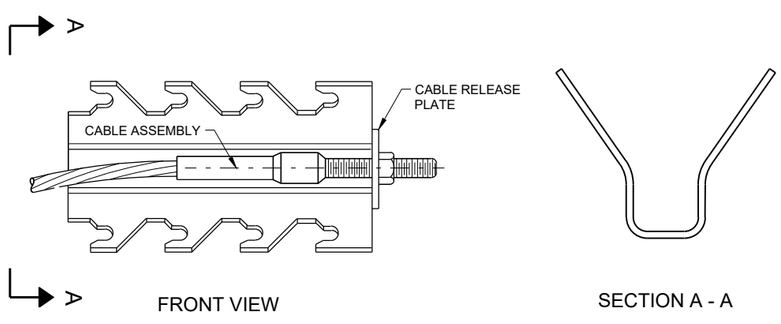

GENERIC ANCHOR CABLE BOX (9)(E)

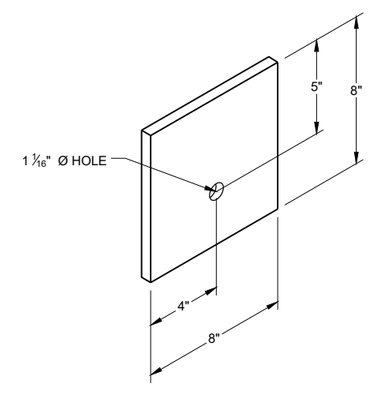

BEARING PLATE (6)(E)

MIDWEST GUARDRAIL SYSTEM ENERGY ABSORBING TERMINAL (MGS)

STATE OF WISCONSIN
DEPARTMENT OF TRANSPORTAT

6

SDD 14B44 - 04b

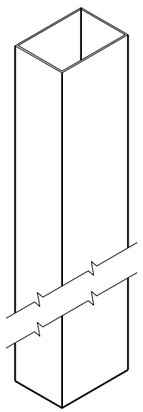

UPPER POST NO. 1 (1) (E)

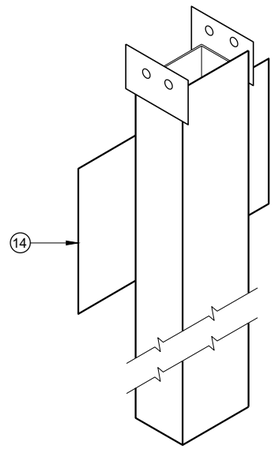

LOWER POST NO. 1 (2) (E)

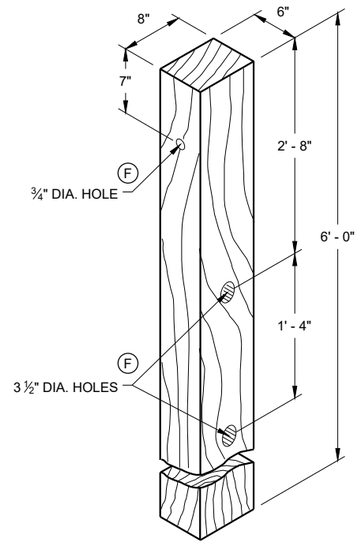

WOOD CRT POST (3) (E)
POSTS NUMBER 3-9

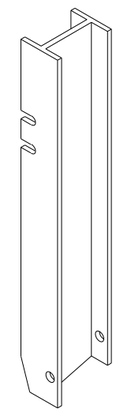

UPPER POST NO. 2 (15) (E)

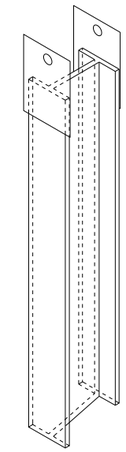

LOWER POST NO. 2 (16) (E)

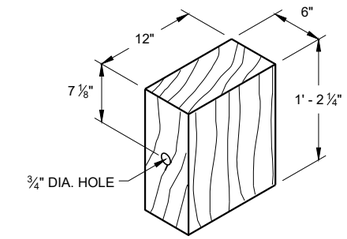

WOOD BLOCKOUT (4)
REQ'D. AT ALL POSTS EXCEPT POST NO'S 1 & 2

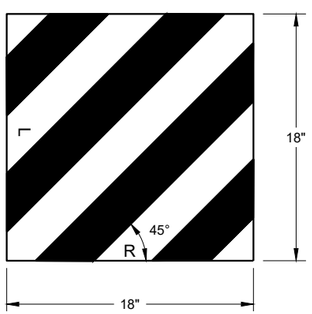

W5 - 59

REFLECTIVE SHEETING DETAIL (E)

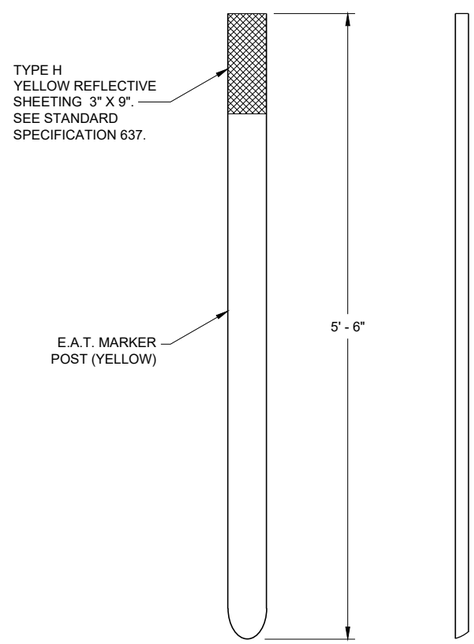

FRONT VIEW SIDE VIEW

E.A.T. MARKER POST (13)

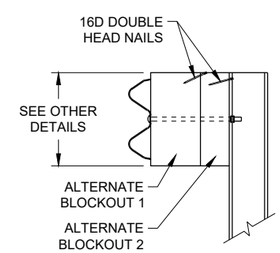

SIDE VIEW

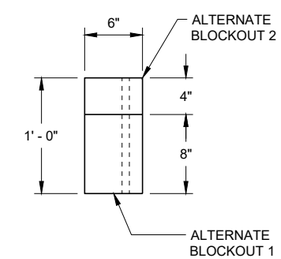

TOP VIEW

ALTERNATE WOOD BLOCKOUT DETAIL

MIDWEST GUARDRAIL SYSTEM ENERGY ABSORBING TERMINAL (MGS)

STATE OF WISCONSIN
DEPARTMENT OF TRANSPORTATION

APPROVED
7/2018 — DATE
/S/ Rodney Taylor — ROADWAY STANDARDS DEVE UNIT SUPERVISOR
FHWA

6
SDD 14B44 - 04c

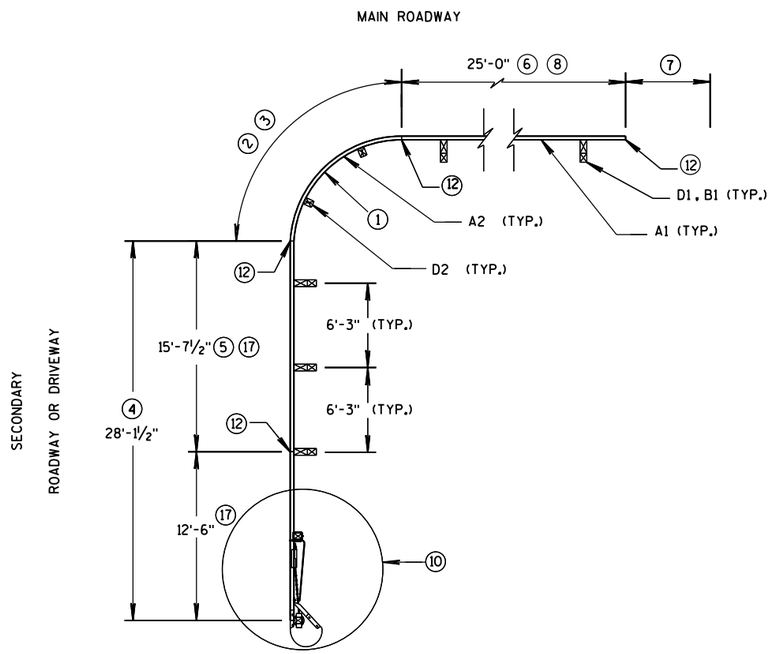

SHORT RADIUS BEAM GUARD WITH SHORT RADIUS TERMINAL ON SECONDARY ROAD OR DRIVEWAY PLAN VIEW

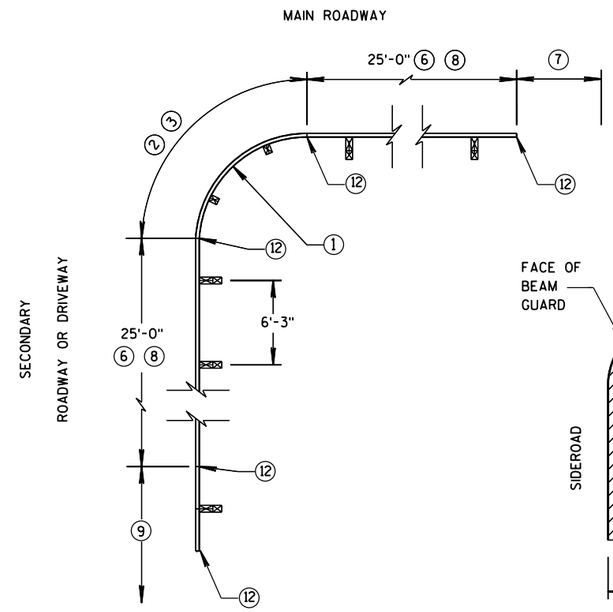

SHORT RADIUS BEAM GUARD WITH EAT, ADDITIONAL BEAM GUARD OR TRANSITION TO RIGID BARRIER ON SECONDARY ROAD OR DRIVEWAY PLAN VIEW

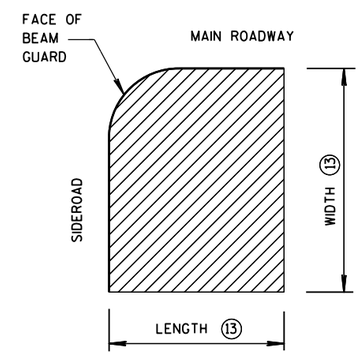

AREA FREE OF FIXED OBJECTS FOR RADIUS 32' AND LESS 16

TABLE FOR RADIUS OF 32' AND LESS

RADIUS FT	LENGTH FT	WIDTH FT
8	25	15
16	30	15
24	40	20
32	50	30

GENERAL NOTES

SEE PLANS FOR OTHER BARRIER SYSTEM AND LOCATION SPECIFICS.

SEE 14B42 FOR MORE INFORMATION ON BEAM GUARD INSTALLATION, PARTS, MATERIALS, AND INSTALLATION INFORMATION.

GALVANIZE PARTS AFTER FABRICATION.

WELDING IS TO FOLLOW CURRENT REQUIREMENTS OF THE AMERICAN WELDING SOCIETY STRUCTURAL WELDING CODE ANSI/AWS D1.1

UNLESS NOTED OTHERWISE, ALL PLATES ARE FLAT AND FREE OF WARP.

UNLESS NOTED OTHERWISE, ALL EDGES ARE SMOOTH, STRAIGHT AND VERITCAL.

ALL CUTS AND HOLES, EXCEPT IN BEAM GUARD RAIL ARE TO BE MACHINED OR MACHINE FLAME CUTS.

UNLESS NOTED OTHERWISE CUT OR PROVIDE BOLTS THAT ARE ¼" TO ½" BEYOND THE NUT

DRAWINGS ARE NOT TO SCALE.

1. RADIUS MEASURE FROM INSIDE OF RAIL. LENGTH OF BEAM GUARD SHORT RADIUS GUARD MEASURED ALONG TRAFFIC SIDE OF RAIL. RADIUS BETWEEN 8 FEET TO 150 FEET. SEE PLAN FOR REQUIRED RADIUS. BEAM GUARD RAIL IN RADIUS IS SHOP BENT. ODD RAIL LENGTH OR FIELD CUTS MAY BE REQUIRED.
2. CONTROLLED RELEASE TERMINAL (CRT) POSTS ARE USED IN THE RADIUS. CONTROLLED RELEASE TERMINAL (CRT) POSTS ARE SPACED 6'-3". SEE PLAN FOR NUMBER OF CONTROLLED RELEASE TERMINAL (CRT) POSTS.
3. WITHIN RADIUS BEAM GUARD RAILS ARE NOT BOLTED TO POSTS. BEAM GUARD RAILS RESTED ON TOP OF LAG SCREW.
4. MINIMUM LENGTH OF BEAM GUARD ALONG SIDE ROAD OR DRIVEWAY TO INSTALL SHORT RADIUS TERMINAL. BEAM GUARD IS PAID FOR WITH BEAM GUARD ITEM.
5. ODD LENGTH OF BEAM GUARD REQUIRED TO INSTALL SHORT RADIUS TERMINAL.
6. MINIMUM AMOUNT OF BEAM GUARD TO BE INSTALLED PRIOR TRANSITION TO RIGID BARRIER, ADDITIONAL BEAM GUARD, OR EAT. BEAM GUARD PAID FOR WITH BEAM GUARD ITEM. SEE PLANS FOR MORE DETAIL.
7. BEAM GUARD, EAT OR TRANSITION TO RIGID BARRIER. SEE PLAN.
8. TOP OF BEAM GUARD BY THE RADIUS IS 27". HEIGHT OF BEAM GUARD IS 31" BY TRANSITION TO RIGID BARRIER, ADDITIONAL BEAM GUARD OR EAT.
9. ADDITIONAL BEAM GUARD, EAT OR TRANSITION TO RIGID BARRIER. BEAM GUARD SHOWN. SEE PLAN FOR DETAILS.
10. SHORT RADIUS TERMINAL (SEE OTHER DETAILS)
11. HEIGHT VARIES. SEE NOTE 8 AND 17.
12. BEAM GUARD RAIL SPLICE LOCATION. SPLICE LOCATION REQUIRE PART F1 AND F2. SEE SDD 14B42 FOR DETAILS.
13. SEE TABLE FOR VALUES.
14. MAXIMUM HEIGHT FOR CENTER OF HOLE IS ¾" ABOVE FINISHED GROUND ±1".
15. DRILL 15/64" DIA. PILOT HOLE. DO NOT HAMMER LAG SCREW INTO POST.
16. SMALL SIGNS ON BREAKAWAY HARDWARE ARE ACCEPTABLE.
17. TOP OF RAIL HEIGHT IS 27" WHEN USING A SHORT RADIUS TERMINAL.

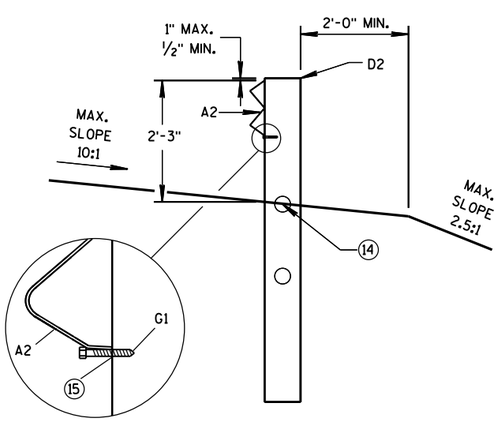

CONTROLLED RELEASE TERMINAL POST (CRT) IN RADIUS

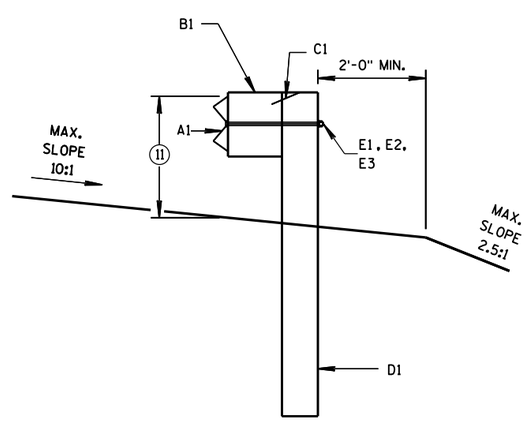

BEAM GUARD POSTS IN HEIGHT TRANSITION

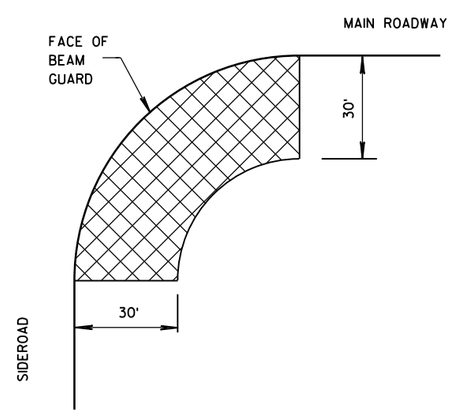

AREA FREE OF FIXED OBJECTS 16 RADIUS GREATER THAN 32'

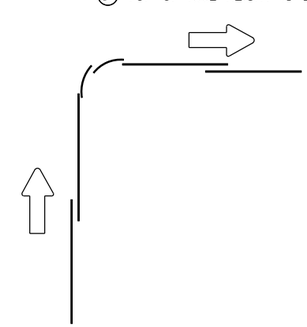

LAP SPLICE DETAIL

SHORT RADIUS BEAM GUARD (MGS) SHORT RADIUS TERMINAL (MGS)

STATE OF WISCONSIN
DEPARTMENT OF TRANSPORT

6

S.D.D. 14 B 53-1a

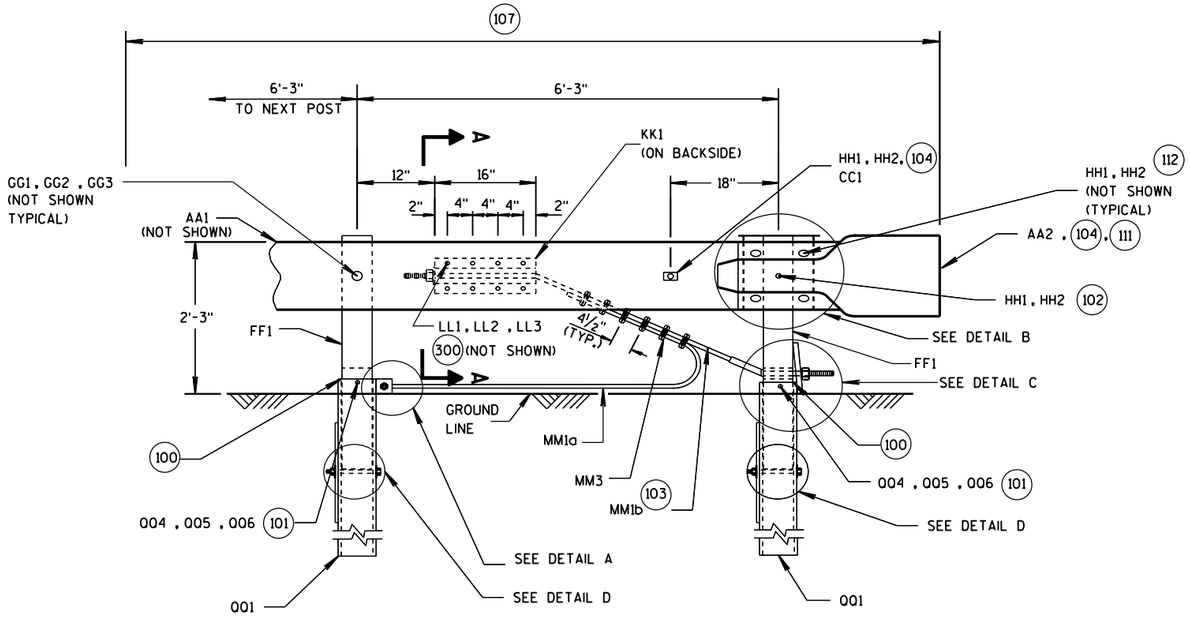

SHORT RADIUS TERMINAL
PROFILE VIEW

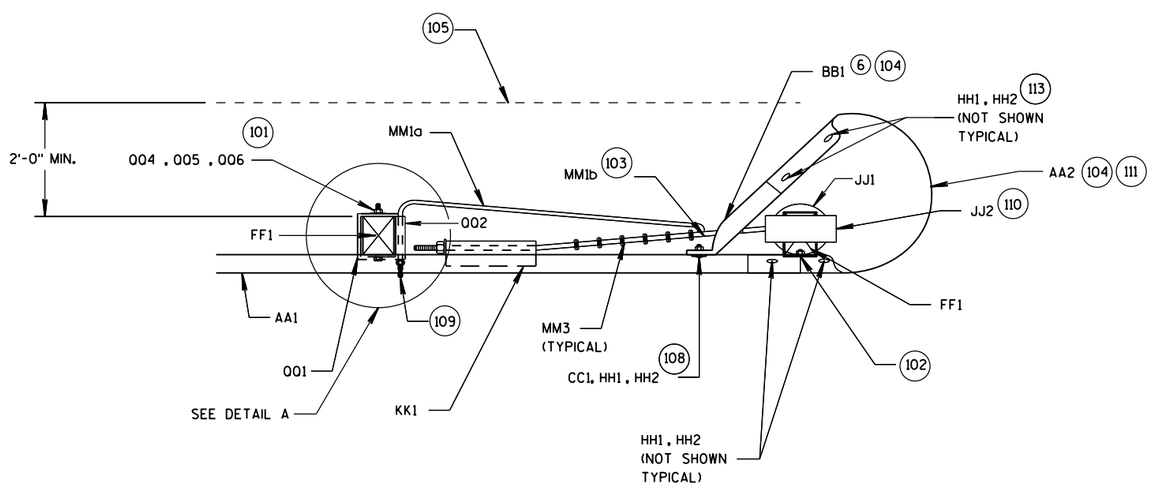

SHORT RADIUS TERMINAL
TOP VIEW

100 TOP OF FOUNDATION TUBE 2 INCHES MAXIMUM ABOVE FINISHED GROUND.

101 WASHERS REQUIRED BETWEEN BOLT HEAD AND FOUNDATION TUBE AND BETWEEN NUT AND FOUNDATION TUBE.

102 SPLICE BOLT AND NUT CONNECTS BEAM GUARD RAIL, W-BEAM END SECTION BUFFER, AND STEEL PIPE ASSEMBLY. NO WASHER REQUIRED. SEE DETAIL B.

103 CABLE IS TAUT.

104 ADJUST AA2 AND BB1 TO FIT.

105 BREAK POINT OF SHOULDER.

106 TACK WELD CABLE CONNECTOR TUBE PLATE TO CABLE CONNECTION TUBE. SEE DETAIL A PROFILE VIEW.

107 PAY LIMIT FOR BEAM GUARD.

108 SQUARE WASHER BETWEEN HEAD OF BOLT AND TRAFFIC FACE OF BEAM GUARD. ROUND WASHER REQUIRED BETWEEN NUT AND BB1.

109 CUT OR PROVIDE THREADED STUD THAT IS FLUSH WITH FACE OF BEAM GUARD RAIL KK1 (PLUS OR MINUS 1/2" TOLERANCE). DEBURR AFTER CUTTING.

110 SEE STEEL PIPE ASSEMBLY DETAILS.

111 ATTACH UU2 WITH UU3. SHOP APPLY UU1 TO UU2.

112 FOUR HH1 AND HH2 REQUIRED TO ATTACH AA1 TO AA2.

113 FOUR HH1 AND HH2 REQUIRED TO ATTACH AA2 TO BB1.

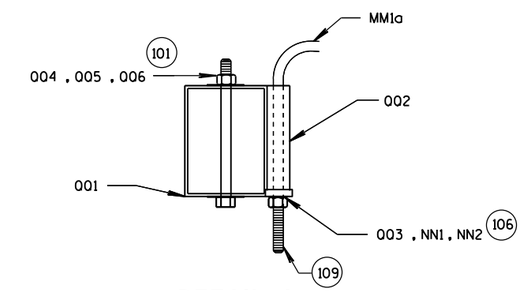

DETAIL A
TOP VIEW
(WOOD BREAKAWAY AND BEAM
GUARD RAIL POSTS NOT SHOWN)

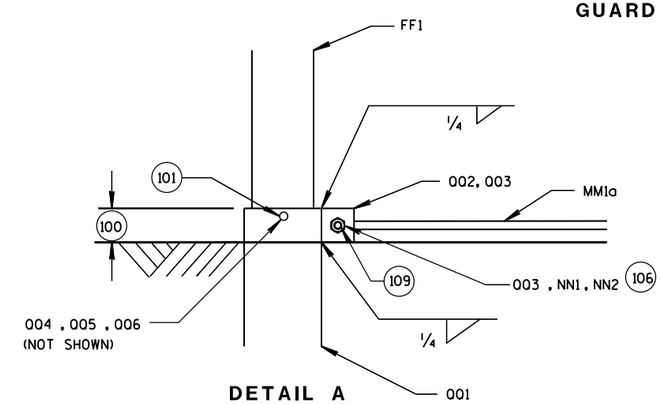

DETAIL A
PROFILE VIEW

STEEL PLATE BEAM GUARD
SHORT RADIUS TERMINAL
MGS

STATE OF WISCONSIN
DEPARTMENT OF TRANSPO

6

S.D.D. 14 B 53-1b

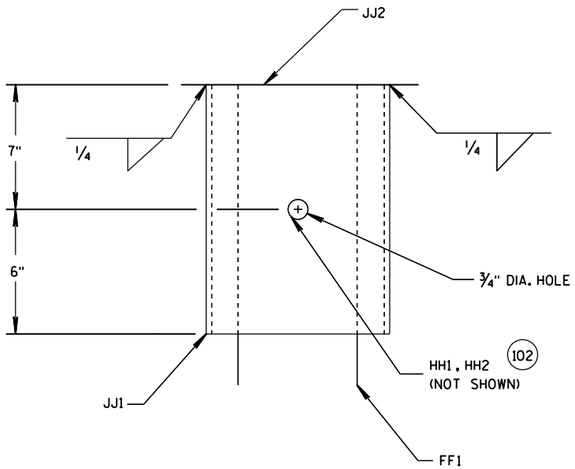

DETAIL B
PROFILE VIEW OF STEEL PIPE ASSEMBLY
(BEAM GUARD AND W-BEAM
END SECTION NOT SHOWN)

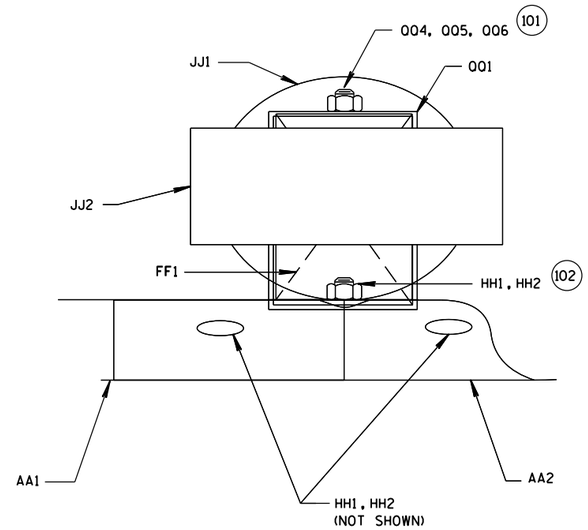

DETAIL B
PLAN VIEW OF STEEL PIPE ASSEMBLY

200 2 NAILS SPACED 4 INCHES CENTER TO CENTER.

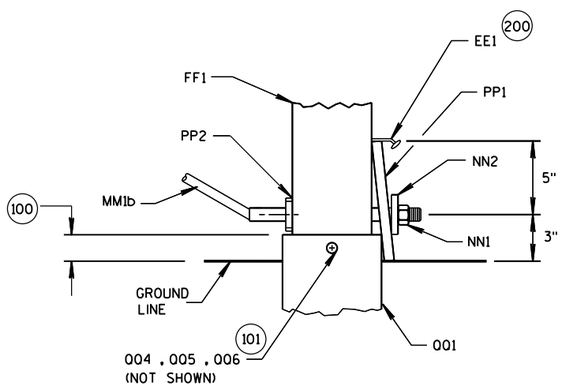

DETAIL C
PROFILE VIEW

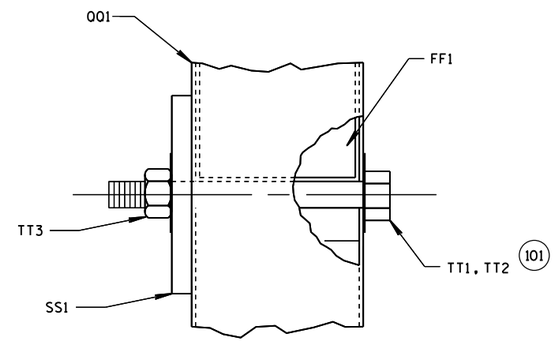

DETAIL D
PROFILE VIEW

SHORT RADIUS BEAM GUARD (MGS) SHORT RADIUS TERMINAL (MGS)

STATE OF WISCONSIN
DEPARTMENT OF TRANSPOR

6

6

S.D.D. 14 B 53-1c

S.D.D. 14 B 53-1c

300 WASHERS REQUIRED BETWEEN BOLT HEAD AND BEAM GUARD RAIL AND BETWEEN NUT AND ANCHOR BRACKET. EIGHT LL1 AND LL3 REQUIRED. SIXTEEN LL2 REQUIRED.

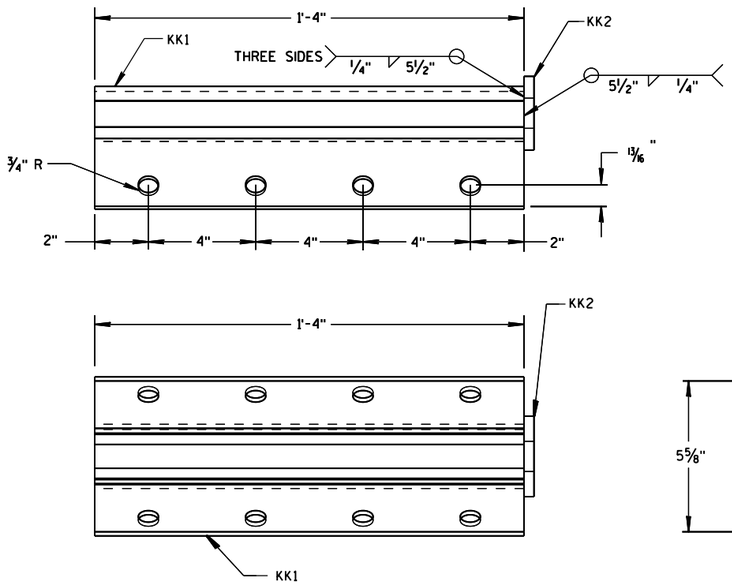

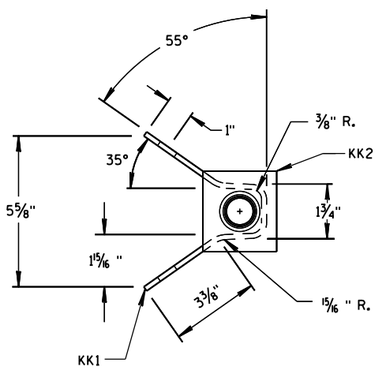

ANCHOR BRACKET (KK1, KK2)

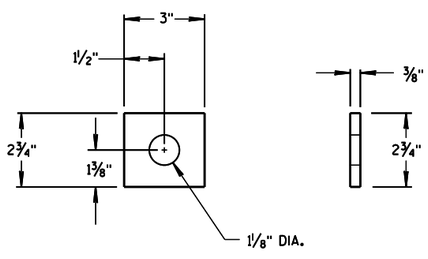

ANCHOR BRACKET BEARING PLATE (KK2)

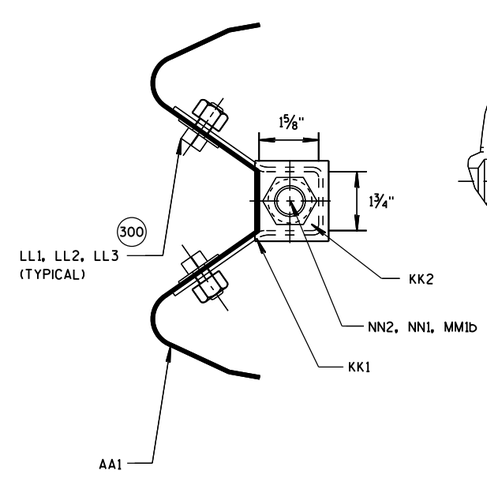

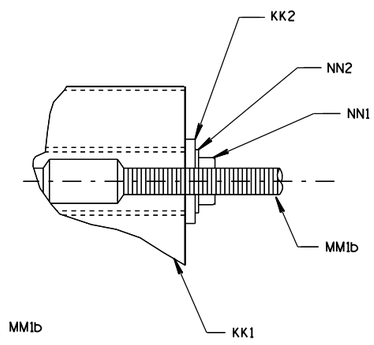

SECTION A-A

SHORT RADIUS BEAM GUARD
(MGS) SHORT RADIUS
TERMINAL (MGS)

STATE OF WISCONSIN
DEPARTMENT OF TRANSPO

6

S.D.D. 14 B 53-1d

400 CROSS SECTON OF PART IS TO FIT OVER AA1.

401 CROSS SECTON OF PART IS TO FIT OVER OR UNDER AA1.

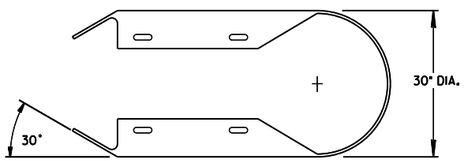

TOP VIEW

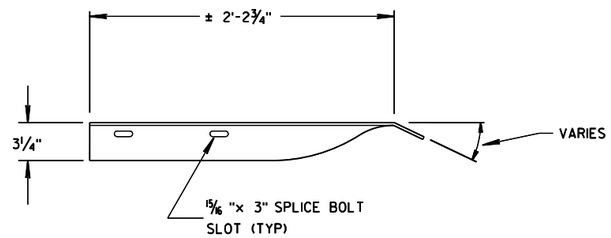

TOP VIEW

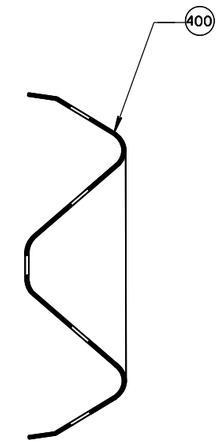

SECTION B-B

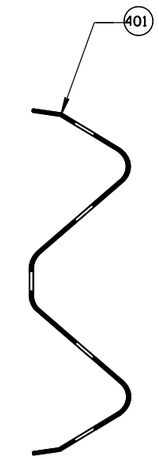

SECTION C-C

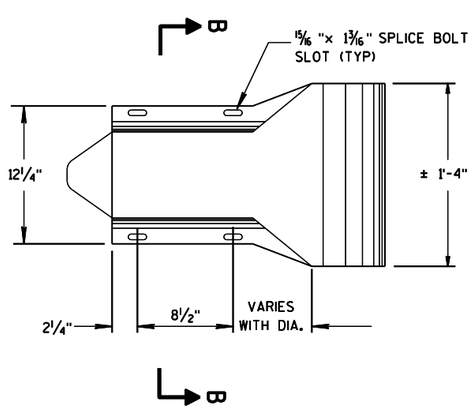

W-BEAM
END SECTION BUFFER (AA2)

PROFILE VIEW

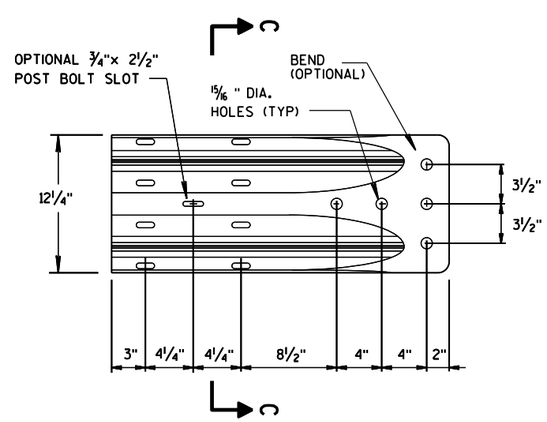

W-BEAM
TERMINAL CONNECTOR (BB1)

PROFILE VIEW

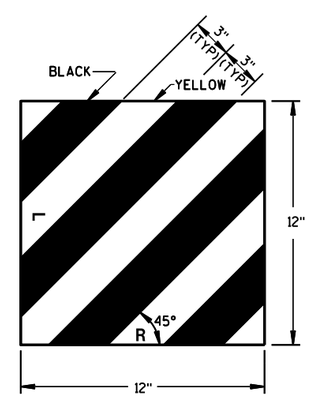

REFLECTIVE SHEETING
(UU1, UU2)

SHORT RADIUS BEAM GUARD
(MGS) SHORT RADIUS
TERMINAL (MGS)

STATE OF WISCONSIN
DEPARTMENT OF TRANSPOR

6

S.D.D. 14 B 53-1e

(500) SEE DETAIL "D" FOR LOCATION AND ATTACHING SS1.

(501) FOR MM1a THREADED STUD ONLY REQUIRED ON ONE END. SWAGED FITTING REQUIRED.

(502) LOCATE HOLES ON THE CENTERLINE OF THE SIDE OF THE POST.

(503) MM1a MAY HAVE ONE THREADED STUD 4 INCHES LONG. SEE NOTE (109).

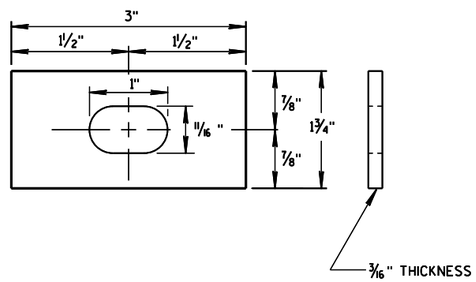

RECTANGULAR PLATE WASHER (CC1)

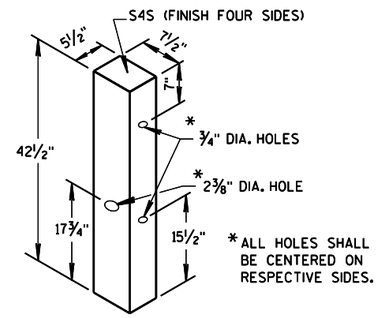

WOOD BREAKAWAY POST (FF1)

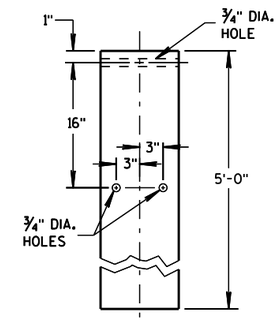

FOUNDATION TUBE (QQ1) (500)

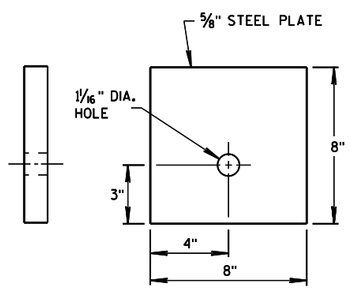

BEARING PLATE (PP1)

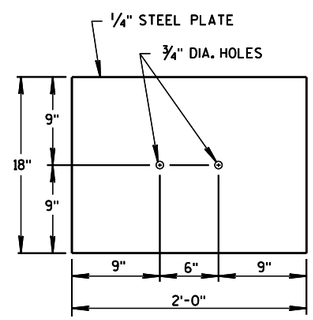

SOIL PLATE (SS1)

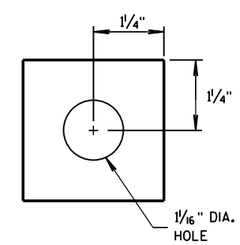

TUBE END PLATE (QQ3)

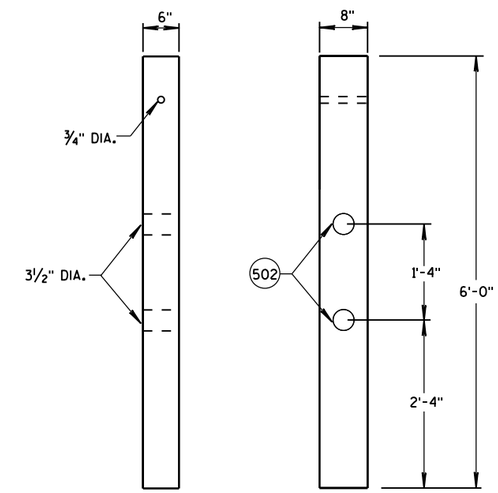

FRONT VIEW SIDE VIEW

CONTROLLED RELEASE TERMINAL POST (CRT) (D2)

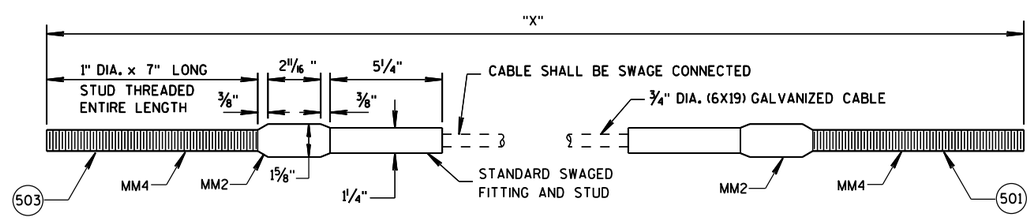

"X" LENGTH

MM1a	9'-0"
MM1b	6'-8"

CABLE ASSEMBLY (MM1a , MM1b)

SHORT RADIUS BEAM GUARD (MGS) SHORT RADIUS TERMINAL (MGS)

STATE OF WISCONSIN
DEPARTMENT OF TRANSPOR

6

S.D.D. 14 B 53-1f

BILL OF MATERIALS - SHORT RADIUS BEAM GUARD (MGS)

PART	DESCRIPTION	MATERIALS SPECIFICATIONS	NOTES
A1	BEAM GUARD RAIL	AASHTO M180, CLASS A, TYPE 2	
		APPROVED PRODUCER	
A2	BEAM GUARD RAIL - SHOP BENT	INDICATE ON BACK OF RAIL RADIUS THAT RAIL WAS BENT TO. SHOP BEND RADIUS IS TO THE NEAREST FOOT. FOLLOW AASHTO M180 ON HOW TO MARK RADIUS INFORMATION.	
		AASHTO M180, CLASS A, TYPE 2	
		APPROVED PRODUCER	
B1	BLOCK - WOOD	WISDOT SPEC. 614	SEE SDD 14B42
C1	NAIL	ASTM A153 HOT DIP CLASS D	
		ASTM F1667 TYPE 1 STYLE 12 (16 DOUBLE HEAD)	
D1	POST-STRONG POST-WOOD	WISDOT SPEC. 614	SEE SDD 14B42
D2	POST-CRT-WOOD	WISDOT SPEC. 614	
E1	POST BOLT	ASTM A307 GRADE A OR SAE J429 GRADE 2	5/8" DIA. SEE SDD 14B42 FOR BOLT GEOMETRY
		AASHTO M180	
		GALV. HOT DIP TO AASHTO M232 CLASS C/ASTM A153 CLASS C/ASTM F2329 OR GALV. MECHANICALLY TO AASHTO M298 CLASS 50, TYPE 1/ASTM B695 CLASS 50, TYPE 1	
		UNC	
E2	POST BOLT-WASHER	ASTM F436 TYPE 1 (HARDEN TYPICALLY USED WITH STEEL) OR ASTM F844 (UNHARDENED TYPICALLY WITH WOOD)	5/8" DIA.
		GALV. AASHTO M111/ASTM A 123 OR GALV. HOT DIP. TO AASHTO M232 CLASS C/ASTM A153 CLASS C/ASTM F2329	
E3	POST BOLT - NUT		5/8" DIA. SEE SDD 14B42 FOR GEOMETRY
		AASHTO M180 DOUBLE RECESSED HEAVY HEX HEAD	
		GALV. HOT DIP TO AASHTO M232 CLASS C/ASTM A153 CLASS C/ASTM F2329 OR GALV. MECHANICALLY TO AASHTO M298 CLASS 50, TYPE 1/ASTM B695 CLASS 50, TYPE 1	
		UNC	
		OVER TAPPED NUTS OVER-SIZE AS SPECIFIED IN AASHTO 291/ ASTM A 563	
		ASTM A563 GRADE A HEAVY HEX HEAD	
F1	SPLICE BOLT	GALV. HOT DIP TO AASHTO M232 CLASS C/ASTM A153 CLASS C/ASTM F2329 OR GALV. MECHANICALLY TO AASHTO M298 CLASS 50, TYPE 1/ASTM B695 CLASS 50, TYPE 1	5/8" DIA. SEE SDD 14B42 FOR GEOMETRY AND OTHER INFORMATION
		ASTM A307 GRADE A OR SAE J429 GRADE 2	
		UNC	
		AASHTO M180	

PART	DESCRIPTION	MATERIALS SPECIFICATIONS	NOTES
F2	SPLICE BOLT - NUT	ASTM A563 GRADE A	5/8" DIA. SEE SDD 14B42 FOR GEOMETRY
		AASHTO M180 DOUBLE RECESSED HEAVY HEX HEAD	
		GALV. HOT DIP TO AASHTO M232 CLASS C/ASTM A153 CLASS C/ASTM F2329 OR GALV. MECHANICALLY TO AASHTO M298 CLASS 50, TYPE 1/ASTM B695 CLASS 50, TYPE 1	
		OVER TAPPED NUTS OVER-SIZE AS SPECIFIED IN AASHTO 291/ ASTM A 563	
		UNC	
G1	LAG SCREW	ASTM A308 GRADE A ASTM A153 CLASS D	3/8" DIA. 3" LONG
H1	DELINEATOR - BEAM GUARD		SEE SDD 14B42 FOR MORE INFORMATION
H2	DELINEATION - SHEETING	YELLOW OR WHITE	
		WISDOT SPEC 637 TYPE SH	
		APPROVED PRODUCT LIST	
J1	FOUNDATION BACKFILL	STANDARD SPEC. 614	
AA1	BEAM GUARD RAIL - PUNCHED	AASHTO M180, CLASS A, TYPE 2	
		APPROVED PRODUCER	
AA2	BEAM GUARD RAIL - END SECTION BUFFER	AASHTO M180, CLASS A, TYPE 2	
		APPROVED PRODUCER	
BB1	BEAM GUARD RAIL - TERMINAL CONNECTOR MODIFIED	AASHTO M180, CLASS A, TYPE 2	
		APPROVED PRODUCER	
CC1	SHORT RADIUS - SQUARE WASHER	AASHTO M180	
		GALV. AASHTO M111 / ASTM A123	
EE1	NAIL	ASTM A153 HOT DIP CLASS D	
		ASTM F1667 TYPE 1 STYLE 12 (16 DOUBLE HEADED)	
FF1	POST - BCT - WOOD	S4S FINISH ON 4 SIDES	
		WISDOT SPEC. 614	
GG1	POST BOLT	ASTM A307 GRADE A OR SAE J429 GRADE 2	3/8" DIA. SEE SDD 14B42 FOR GEOMETRY
		AASHTO M180	
		GALV. HOT DIP TO AASHTO M232 CLASS C/ASTM A153 CLASS C / ASTM F2329 OR GALV. MECHANICALLY TO AASHTO M298 CLASS 50, TYPE 1/ASTM B695 CLASS 50, TYPE 1	
		UNC	
GG2	POST BOLT - WASHER	ASTM F436 TYPE 1 (HARDEN TYPICALLY USED WITH STEEL) OR ASTM F844 (UNHARDENED TYPICALLY WITH WOOD)	3/8" DIA.
		GALV. AASHTO M111 / ASTM A123 OR5 GALV. HOT DIP TO AASHTO M232 CLASS C / ASTM A153 CLASS C / ASTM F2329	

SHORT RADIUS BEAM GUARD (MGS) SHORT RADIUS TERMINAL (MGS)

STATE OF WISCONSIN
DEPARTMENT OF TRANSPO

6

S.D.D. 14 B 53-1g

BILL OF MATERIALS - SHORT RADIUS BEAM GUARD (MGS)

PART	DESCRIPTION	MATERIALS SPECIFICATIONS	NOTES
GG3	POST BOLT - NUT	ASTM A563 GRADE A	3/8" DIA.
		AASHTO M180 DOUBLE RECESSED HEAVY HEX HEAD	SEE 14B42 FOR GEOMETRY
		GALV. HOT DIP TO AASHTO M232 CLASS C/ASTM A153 CLASS C / ASTM F2329 OR GALV. MECHANICALLY TO AASHTO M298 CLASS 50, TYPE 1/ASTM B695 CLASS 50, TYPE 1	
		UNC	
		OVER TAPPED NUTS OVER-SIZE AS SPECIFIED IN AASHTO 291 / ASTM A 563	
		ASTM A563 GRADE A HEAVY HEX HEAD	
HH1	SPLICE BOLT	GALV. HOT DIP TO AASHTO M232 CLASS C/ASTM A153 CLASS C / ASTM F2329 OR GALV. MECHANICALLY TO AASHTO M298 CLASS 50, TYPE 1/ASTM B695 CLASS 50, TYPE 1	3/8" DIA. SEE 14B42 FOR GEOMETRY
		ASTM A307 GRADE A OR SAE J429 GRADE 2	
		UNC	
		AASHTO M180 HEAD GEOMETRY	
HH2	SPLICE BOLT - NUT	ASTM A563 GRADE A	3/8" DIA.
		AASHTO M180 DOUBLE RECESSED HEAVY HEX HEAD	
		GALV. HOT DIP TO AASHTO M232 CLASS C/ASTM A153 CLASS C / ASTM F2329 OR GALV. MECHANICALLY TO AASHTO M298 CLASS 50, TYPE 1/ASTM B695 CLASS 50, TYPE 1	SEE 14B42 FOR GEOMETRY
		OVER TAPPED NUTS OVER-SIZE AS SPECIFIED IN AASHTO 291 / ASTM A 563	
		UNC	
JJ1	PIPE - STEEL	ASTM A53 GALVANIZED GRADE B SCHEDULE 40	10" O.D.
JJ2	TOP PLATE	ASTM A36 MIN STRENGTH 36 KSI, OR ASTM A529 MAX. STRENGTH 50 KSI, OR ASTM A572 MAX STRENGTH 50 KSI OR ASTM A709 MAX STRENGTH 50 KSI OR ASTM A992 MAX STRENGTH 50 KSI	DIMENSIONS 3/8" X 4" X 1'-0"
		GALV. AASHTO M111 / ASTM A123	
KK1	ANCHOR BRACKET	ASTM A36 MIN STRENGTH 36 KSI, OR ASTM A529 MAX. STRENGTH 50 KSI, OR ASTM A572 MAX STRENGTH 50 KSI OR ASTM A709 MAX STRENGTH 50 KSI OR ASTM A992 MAX STRENGTH 50 KSI	
		GALV. AASHTO M111 / ASTM A123	
KK2	ANCHOR BRACKET - BEARING PLATE	ASTM A36 MIN STRENGTH 36 KSI, OR ASTM A529 MAX. STRENGTH 50 KSI, OR ASTM A572 MAX STRENGTH 50 KSI OR ASTM A709 MAX STRENGTH 50 KSI OR ASTM A992 MAX STRENGTH 50 KSI	
		GALV. AASHTO M111 / ASTM A123	
LL1	ANCHOR BRACKET - BOLT	ASTM A307 GRADE B HEAVY HEX HEAD OR SAE J429 GRADE 2 HEAVY HEX HEAD	5/8" DIA.
		GALV. HOT DIP TO AASHTO M232 CLASS C/ASTM A153 CLASS C / ASTM F2329 OR GALV. MECHANICALLY TO AASHTO M298 CLASS 50, TYPE 1/ASTM B695 CLASS 50, TYPE 1	
		UNC	
LL2	ANCHOR BRACKET - WASHER	ASTM F436 TYPE 1 (HARDEN WASHER ONLY)	5/8" DIA.
		GALV. AASHTO M111 / ASTM A123 OR5 GALV. HOT DIP TO AASHTO M232 CLASS C / ASTM A153 CLASS C / ASTM F2329	
LL3	ANCHOR BRACKET - NUT	ASTM A563 GRADE A	5/8" DIA.
		GALV. HOT DIP TO AASHTO M232 CLASS C/ASTM A153 CLASS C / ASTM F2329 OR GALV. MECHANICALLY TO AASHTO M298 CLASS 50, TYPE 1/ASTM B695 CLASS 50, TYPE 1	
		OVER TAPPED NUTS OVER-SIZE AS SPECIFIED IN AASHTO 291 / ASTM A563	
		UNC	

PART	DESCRIPTION	MATERIALS SPECIFICATIONS	NOTES
MM1a	ANCHOR CABLE	AASHTO M30 / ASTM A741 INDEPENDENT WIRE CORE (IWRC) OR WIRE STRAND CORE (WCS), IMPROVED PLOW STEEL (IPS), 6X19, TYPE II OR IIc CLASS C ZINC COATED	
MM1b	ANCHOR CABLE	AASHTO M30 / ASTM A741 INDEPENDENT WIRE CORE (IWRC) OR WIRE STRAND CORE (WCS), IMPROVED PLOW STEEL (IPS), 6X19, TYPE II OR IIc CLASS C ZINC COATED	
MM2	ANCHOR CABLE - SWAGE FITTING	ASTM A576 GRADE 1035	
		SWAGE FITTINGS ARE TO BE FACTORY SWEDGED. WITH A BREAKING STRENGTH 40,000 LBS.	
		GALV. AASHTO M111 / ASTM A123	
		ASME B30.26 FORGED, CAST, OR DIE STAMPED WITH THE FOLLOWING INTO CONNECTION: NAME OF MANUFACTURER OR TRADEMARK OF CONNECTION'S MANUFACTURER, SIZE OR RATED LOAD, GRADE.	
MM3	WIRE ROPE CABLE CLAMPS	FF-C-450D TYPE 1 CLASS 1	3/4"
		ASTM A153 HOT DIP CLASS D	
MM4	ANCHOR CABLE - SWAGE FITTING - STUD	ASTM F3125 GRADE A325 TYPE 1 OR SAE GRADE 5 OR ASTM A449 TYPE 1 HEAVY HEX HEAD	
		GALV. HOT DIP TO AASHTO M232 CLASS C/ASTM A153 CLASS C / ASTM F2329 OR GALV. MECHANICALLY TO AASHTO M298 CLASS 50, TYPE 1/ASTM B695 CLASS 50, TYPE 1	
		UNC	
NN1	ANCHOR CABLE - NUT	ASTM A563 GRADE A	1" DIA.
		AASHTO M180 DOUBLE RECESSED HEAVY HEX HEAD	
		GALV. HOT DIP TO AASHTO M232 CLASS C/ASTM A153 CLASS C / ASTM F2329 OR GALV. MECHANICALLY TO AASHTO M298 CLASS 50, TYPE 1/ASTM B695 CLASS 50, TYPE 1	
		OVER TAPPED NUTS OVER-SIZE AS SPECIFIED IN AASHTO 291 / ASTM A563	
		UNC	
NN2	ANCHOR CABLE - NUT - WASHER	ASTM F436 TYPE 1 (HARDEN WASHER ONLY)	1" DIA.
		GALV. AASHTO M111 / ASTM A123 OR5 GALV. HOT DIP TO AASHTO M232 CLASS C / ASTM A153 CLASS C / ASTM F2329	
PP1	BEARING PLATE AT POST	ASTM A36 MIN STRENGTH 36 KSI, OR ASTM A529 MAX. STRENGTH 50 KSI, OR ASTM A572 MAX STRENGTH 50 KSI OR ASTM A709 MAX STRENGTH 50 KSI OR ASTM A992 MAX STRENGTH 50 KSI	
		GALV. AASHTO M111 / ASTM A123	
PP2	PIPE - STEEL	ASTM A53 GALVANIZED GRADE B SCHEDULE 40	2" DIA. x 6" LONG
OO1	FOUNDATION TUBE	ASTM A500 GRADE B	8" X 6" X 3/16"
		GALV. AASHTO M111 / ASTM A123	
OO2	SHORT RADIUS - FOUNDATION TUBE - ANCHOR CABLE - TUBE	ASTM A500 GRADE B	DIMENSIONS 2 1/2" X 2 1/4" X 1/4" X 8"
		GALV. AASHTO M111 / ASTM A123	

6

S.D.D. 14 B 53-1h

SHORT RADIUS BEAM GUARD (MGS) SHORT RADIUS TERMINAL (MGS)

STATE OF WISCONSIN
DEPARTMENT OF TRANSPOR

6

S.D.D. 14 B 53-1h

BILL OF MATERIALS - SHORT RADIUS BEAM GUARD (MGS)

PART	DESCRIPTION	MATERIALS SPECIFICATIONS	NOTES
003	SHORT RADIUS - SOIL TUBE - ANCHOR CABLE - TUBE - END PLATE	ASTM A36 MIN STRENGTH 36 KSI, OR ASTM A529 MAX. STRENGTH 50 KSI, OR ASTM A572 MAX STRENGTH 50 KSI OR ASTM A709 MAX STRENGTH 50 KSI OR ASTM A992 MAX STRENGTH 50 KSI	DIMENSIONS 2½" X 2½" X ¼"
		GALV. AASHTO M111 / ASTM A123	
004	GROUND STRUT AND YOKE - BOLT	GALV. HOT DIP TO AASHTO M232 CLASS C/ASTM A153 CLASS C / ASTM F2329 OR GALV. MECHANICALLY TO AASHTO M298 CLASS 50, TYPE 1 / ASTM B695 CLASS 50, TYPE 1	⅝" DIA.
		ASTM A307 GRADE B HEAVY HEX HEAD OR SAE J429 GRADE 2 HEAVY HEX HEAD	
		UNC	
005	GROUND PLATE AND YOKE - WASHER	ASTM F436 TYPE 1 (HARDEN WASHER ONLY)	⅝" DIA.
		GALV. AASHTO M111 / ASTM A123 OR5 GALV. HOT DIP TO AASHTO M232 CLASS C / ASTM A153 CLASS C / ASTM F2329	
006	GROUND STRUT AND YOKE - NUT	HEAVY HEX	⅝" DIA.
		UNC	
		ASTM A563 GRADE A	
		OVER TAPPED NUTS AS SPECIFIED IN AASHTO 291 / ASTM A 563	
		GALV. HOT DIP TO AASHTO M232 CLASS C/ASTM A153 CLASS C / ASTM F2329 OR GALV. MECHANICALLY TO AASHTO M298 CLASS 50, TYPE 1 / ASTM B695 CLASS 50, TYPE 1	
SS1	SOIL PLATE	ASTM A36 MIN STRENGTH 36 KSI, OR ASTM A529 MAX. STRENGTH 50 KSI, OR ASTM A572 MAX STRENGTH 50 KSI OR ASTM A709 MAX STRENGTH 50 KSI OR ASTM A992 MAX STRENGTH 50 KSI	
		GALV. AASHTO M111 / ASTM A123	
TT1	SOIL PLATE - BOLT	ASTM A307 GRADE B HEAVY HEX HEAD OR SAE J429 GRADE 2 HEAVY HEX HEAD	⅝" DIA.
		GALV. HOT DIP TO AASHTO M232 CLASS C/ASTM A153 CLASS C / ASTM F2329 OR GALV. MECHANICALLY TO AASHTO M298 CLASS 50, TYPE 1/ASTM B695 CLASS 50, TYPE 1	
		UNC	
TT2	SOIL PLATE - WASHER	ASTM F436 TYPE 1 (HARDEN WASHER ONLY)	⅝" DIA.
		GALV. AASHTO M111 / ASTM A123 OR5 GALV. HOT DIP TO AASHTO M232 CLASS C / ASTM A153 CLASS C / ASTM F2329	
TT3	SOIL PLATE - NUT	GALV. HOT DIP TO AASHTO M232 CLASS C/ASTM A153 CLASS C / ASTM F2329 OR GALV. MECHANICALLY TO AASHTO M298 CLASS 50, TYPE 1 / ASTM B695 CLASS 50, TYPE 1	⅝" DIA.
UU1	OBJECT MARKER - SHEETING	MUTCD / WISDOT OBJECT MARKER TYPE 3	PATTERN AND COLOR FOR SHEETING SHEETING TYPE FOR MARKER
		WISDOT SPEC 637 TYPE F	
		APPROVED PRODUCT LIST	
UU2	OBJECT MARKER - ALUMINUM PLATE	WISDOT SPEC 637 ALUMINUM PLATE	MATERIAL AND THICKNESS OF MATERIALS
UU3	OBJECT MARKER - SCREWS	STAINLESS SELF-TAPPING SCREWS	
VV1	FOUNDATION BACKFILL	WISDOT SPEC 614	

6

S.D.D. 14 B 53-1i

SHORT RADIUS BEAM GUARD (MGS) SHORT RADIUS TERMINAL (MGS)

STATE OF WISCONSIN
DEPARTMENT OF TRANSPORTATION

APPROVED
June 2017 — DATE
/S/ Rodney Taylor
ROADWAY STANDARDS D[illegible] UNIT SUPERVI[illegible]
FHWA
[illegible]NT

6

S.D.D. 14 B 53-1i

GENERAL NOTES

DETAILS OF CONSTRUCTION, MATERIALS AND WORKMANSHIP NOT SHOWN ON THIS DRAWING SHALL CONFORM TO THE PERTINENT REQUIREMENTS OF THE STANDARD SPECIFICATIONS AND THE APPLICABLE SPECIAL PROVISIONS.

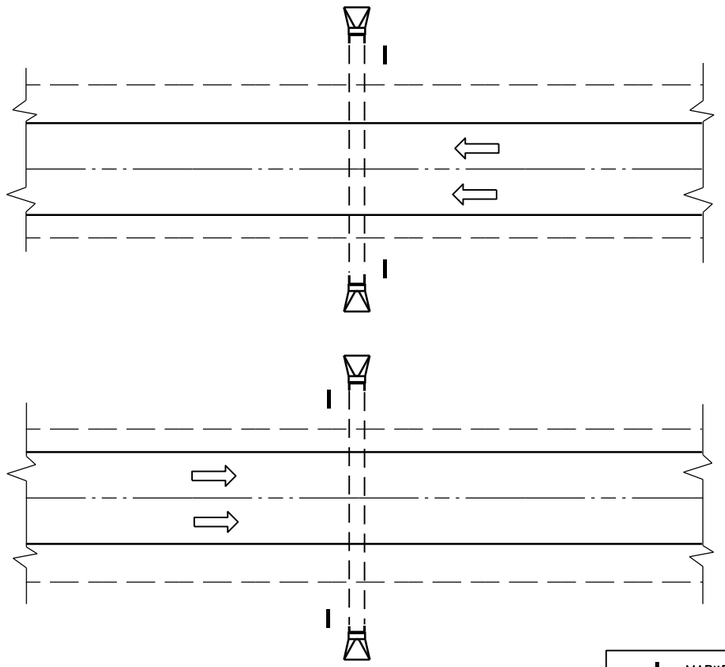

PLAN VIEW

DIVIDED HIGHWAY

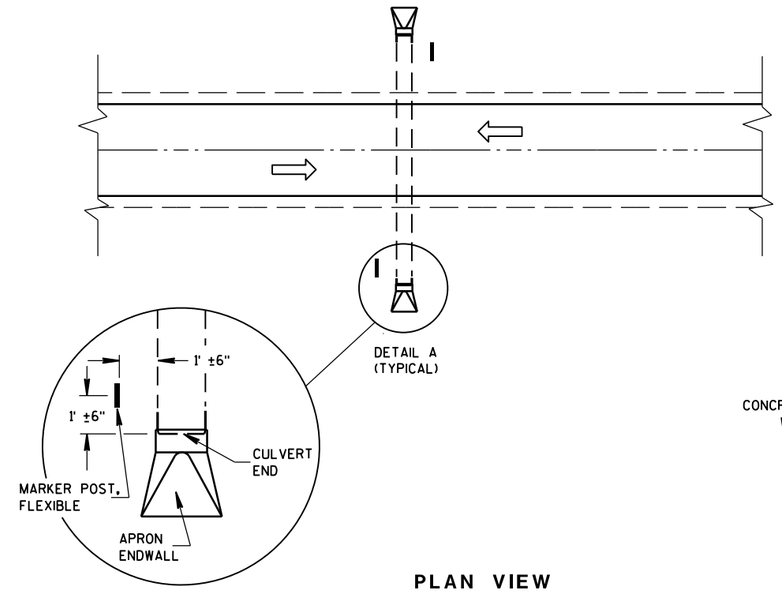

DETAIL A
(TYPICAL)

PLAN VIEW

UNDIVIDED HIGHWAY

MARKER POST, FLEXIBLE

DIRECTION OF TRAFFIC FLOW

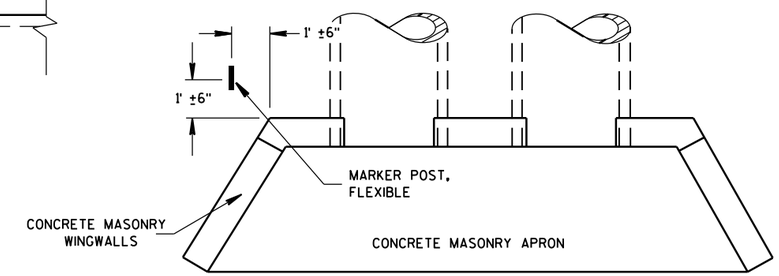

PLAN VIEW

CONCRETE MASONRY ENDWALLS FOR CULVERT PIPE AND PIPE ARCH

FLEXIBLE MARKER POST LOCATION

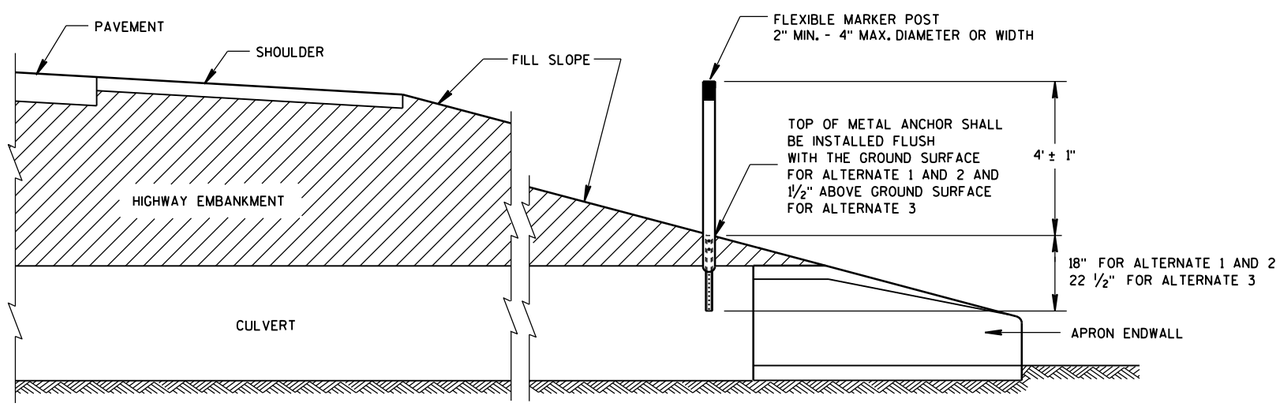

CROSS SECTION

FLEXIBLE MARKER POST

FLEXIBLE MARKER POST FOR CULVERT END

STATE OF WISCONSIN
DEPARTMENT OF TRANSPOR

6

S.D.D. 15 A 3-2a

6

S.D.D. 15 A 3-2a

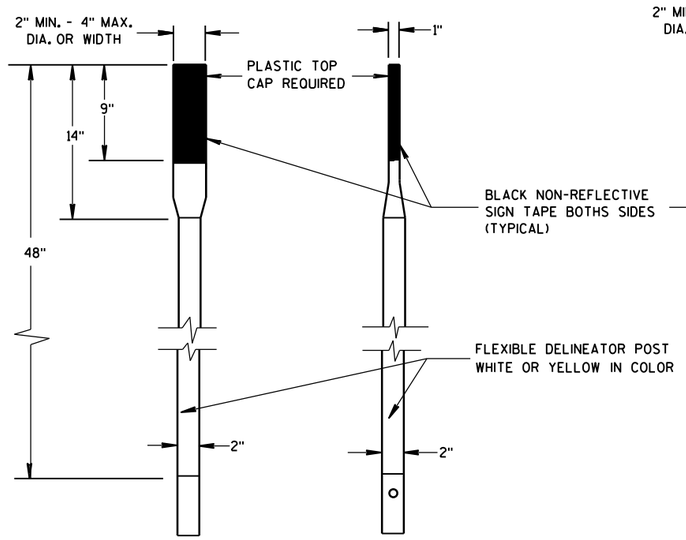

FRONT VIEW SIDE VIEW

ALTERNATE 1

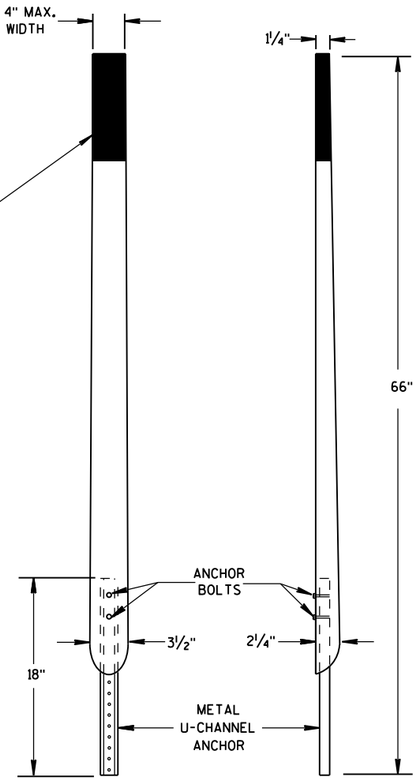

FRONT VIEW SIDE VIEW

ALTERNATE 2

FLEXIBLE MARKER POSTS

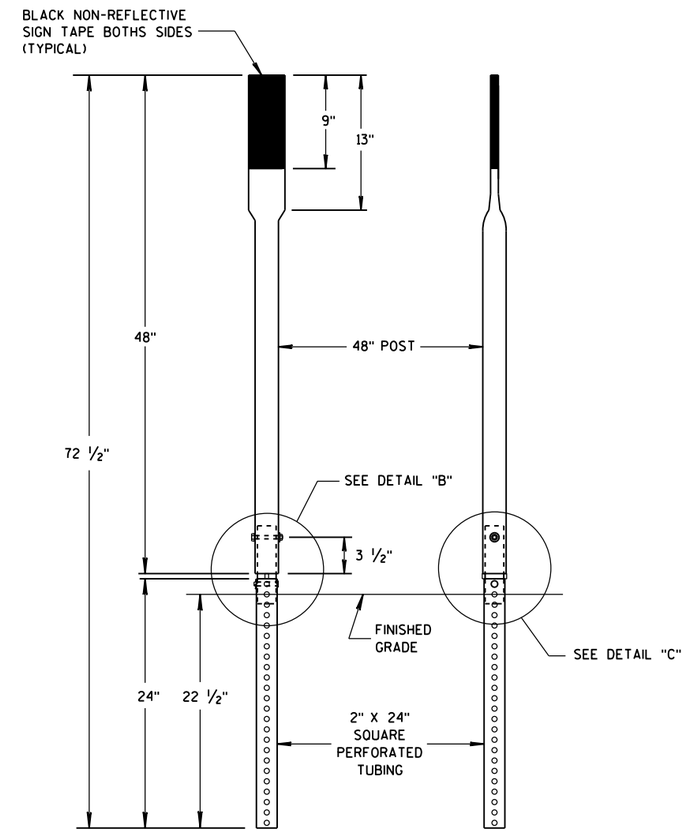

FRONT VIEW SIDE VIEW

ALTERNATE 3

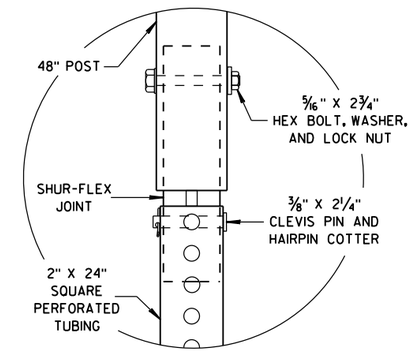

DETAIL B

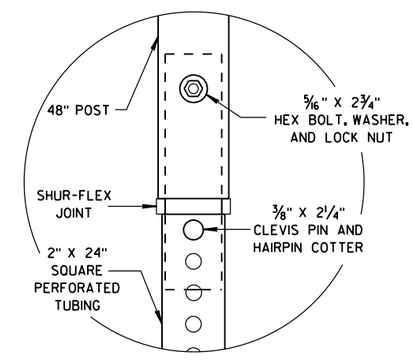

DETAIL C

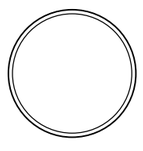

SECTION A-A

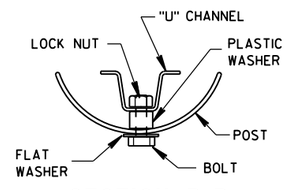

SECTION B-B

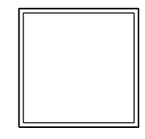

SECTION C-C

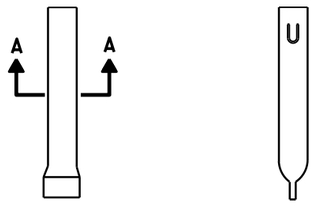

FRONT VIEW SIDE VIEW

ALTERNATE 1

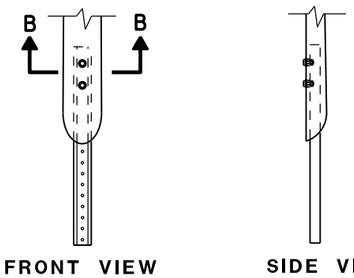

FRONT VIEW SIDE VIEW

ALTERNATE 2

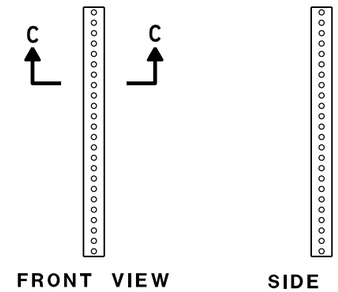

FRONT VIEW SIDE VIEW

ALTERNATE 3

FLEXIBLE MARKER POST ANCHORS

FLEXIBLE MARKER POST
FOR CULVERT END

STATE OF WISCONSIN
DEPARTMENT OF TRANSPORTATION

APPROVED
10/1/2012 /S/ Travis Feltes
DATE STATE TRAFFIC ENGINEER
FHWA

6

6

S.D.D. 15 A 3-2b

S.D.D. 15 A 3-2b

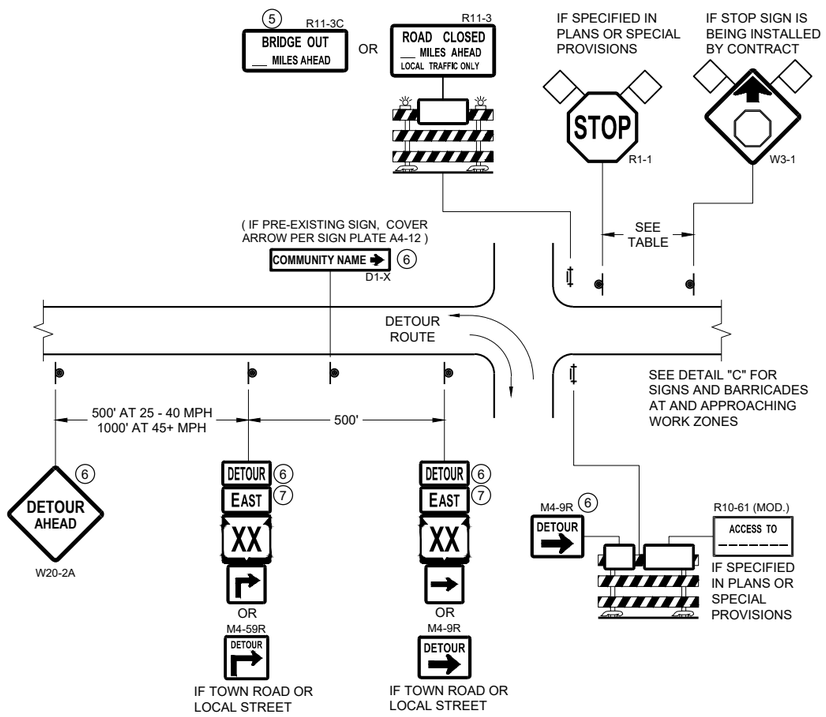

DETAIL A
MAINLINE CLOSURE WITH POSTED DETOUR

WORK ZONE GREATER THAN OR EQUAL TO ½ MILE FROM DETOUR ROUTE (1000 FEET IF URBAN)

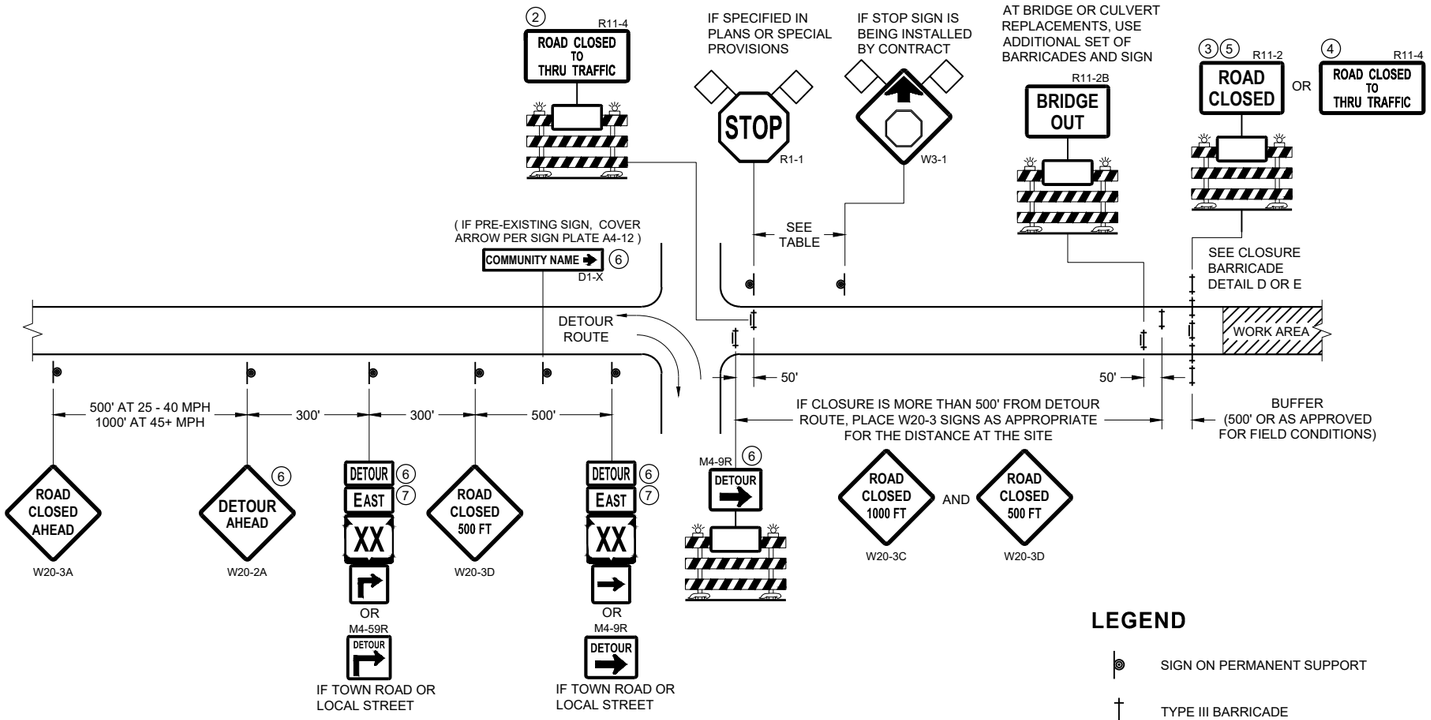

DETAIL B
MAINLINE CLOSURE WITH POSTED DETOUR

WORK ZONE LESS THAN ½ MILE FROM DETOUR ROUTE (1000 FEET IF URBAN)

LEGEND

- SIGN ON PERMANENT SUPPORT
- TYPE III BARRICADE
- TYPE III BARRICADE WITH ATTACHED SIGN
- TYPE "A" WARNING LIGHT (FLASHING)
- WORK AREA
- FLAGS, 16" X 16" MIN. (ORANGE)
- DETOUR M4 - 8
- EAST M3 - X
- XX M1 - 4 OR XX M1 - 6 OR COUNTY X M1 - 5A
- M05 - 1 OR M06 - 1

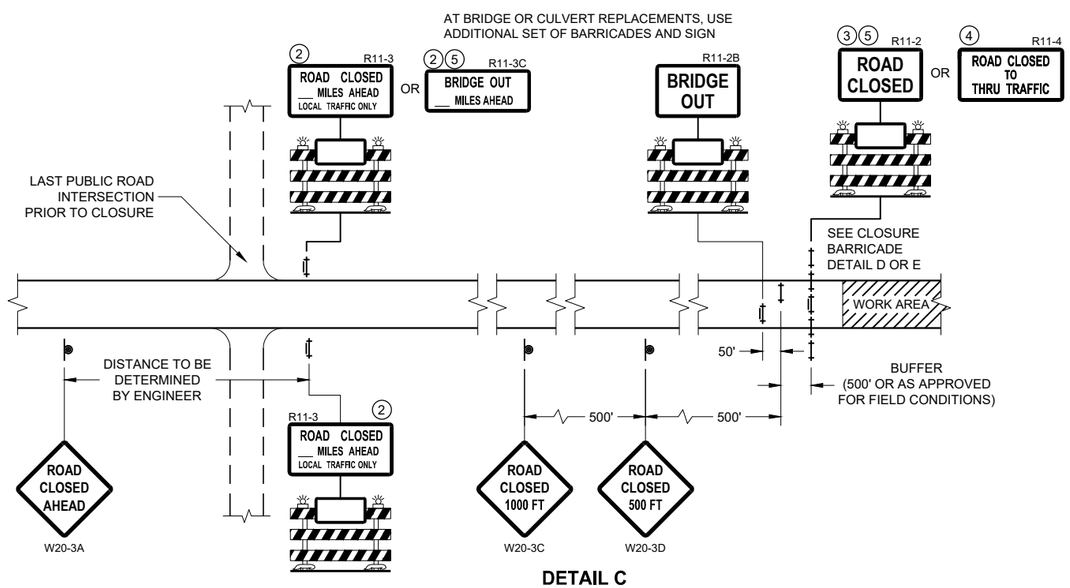

DETAIL C
MAINLINE CLOSURE, NO POSTED DETOUR

SPEED LIMIT (MPH)	"STOP AHEAD" ADVANCE WARNING DISTANCE (FT)
25	200
30	200
35	350
40	350
45	500
50	550
55	750

SEE SDD 15C2-SHEET "b" FOR GENERAL NOTES AND FOOTNOTES 1 THROUGH 7

BARRICADES AND SIGNS FOR MAINLINE CLOSURES

STATE OF WISCONSIN
DEPARTMENT OF TRANSPORTATION

APPROVED
November 2018 /S/ Andrew Heidtke
DATE WORK ZONE ENGINEER
FHWA

6

SDD 15C02 - 07a

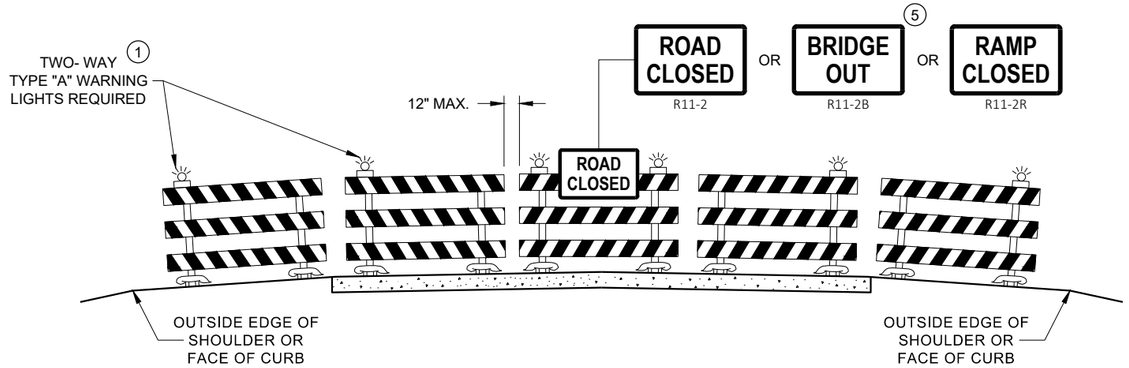

DETAIL D
ROAD CLOSURE BARRICADE DETAIL
APPROACH VIEW

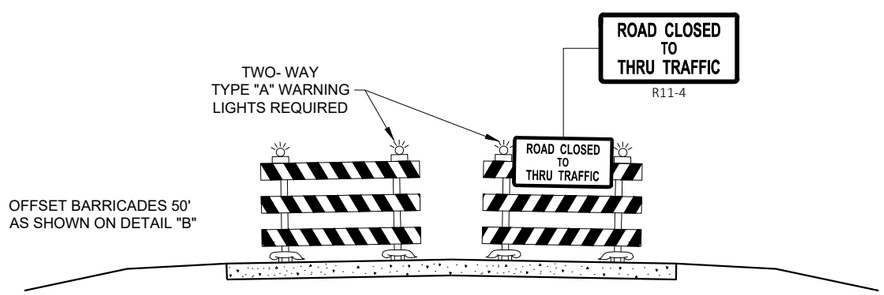

DETAIL E
LANE CLOSURE BARRICADE DETAIL
APPROACH VIEW

SEE SDD 15C2 - SHEET "a" FOR LEGEND

GENERAL NOTES

THE EXACT NUMBER, LOCATION, AND SPACING OF ALL SIGNS AND BARRICADES SHALL BE ADJUSTED TO FIT FIELD CONDITIONS AS APPROVED BY THE ENGINEER.

ANY SIGNS TEMPORARY OR EXISTING, WHICH CONFLICT WITH TRAFFIC CONTROL "IN USE", SHALL BE REMOVED OR COVERED AS NEEDED AND AS APPROVED BY THE ENGINEER.

THE SPACING BETWEEN TRAFFIC CONTROL SIGNS SHOULD BE ADJUSTED TO NOT CONFLICT WITH AND SHOULD PROVIDE A DESIRABLE MINIMUM OF 200 FEET CLEARANCE TO EXISTING SIGNS THAT WILL REMAIN IN PLACE.

BARRICADES THAT MUST BE MOVED FOR A WORK OPERATION SHALL BE IMMEDIATELY RE-ESTABLISHED UPON COMPLETION OF THE OPERATION, OR FOR CONTINUING OPERATIONS, AT THE END OF EACH WORKING DAY.

SIGNS THAT WILL BE IN PLACE LESS THAN 7 CONTINUOUS DAYS AND NIGHTS MAY BE MOUNTED ON PORTABLE SUPPORTS.

ALL TYPE III BARRICADES SHALL HAVE RAILS REFLECTORIZED ON BOTH FACES. STRIPES SHALL BE PROPERLY SLOPED DOWN TOWARD THE TRAFFIC SIDE OR AS SHOWN IN THE ROAD CLOSURE BARRICADE DETAIL "D" FOR FULL ROAD CLOSURES.

TYPE "A" LOW - INTENSITY FLASHING WARNING LIGHTS SHALL BE VISIBLE ON BOTH SIDES OF THE BARRICADE.

THE R11 - 2, R11 - 3, M4 - 9, R11 - 4, AND R10 - 61 SIGNS PLACED ON THE BARRICADES SHALL COVER NO MORE THAN THE TOP RAIL. THE SIGNS SHALL NOT COVER ANY PORTION OF THE MIDDLE RAIL OR BOTTOM RAILS.

"WO" AND "MO" SIGNS ARE THE SAME AS "W" AND "M" SIGNS EXCEPT THE BACKGROUND IS ORANGE.

ALL SIGNS SHALL BE 48" X 48" UNLESS OTHERWISE NOTED BELOW:
- R11 - 2 SHALL BE 48" X 30"
- R11 - 3 SHALL, R11 - 4 AND R10 - 61 SHALL BE 60 " X 30"
- M4 - 9 SHALL BE 30" X 24"
- M3 - X SHALL BE 24" X 12" (36" X 18" IF NEEDED TO MATCH EXISTING SIGNS)
- M4 - 8 SHALL BE 24" X 12" (36" X 18" IF NEEDED TO MATCH EXISTING SIGNS)
- M1 - 4, M1 - 5A AND M1 - 6 SHALL BE 24" X 24" (36" X 36" IF NEEDED TO MATCH EXISTING SIGNS)
- MO5 - 1 AND MO6 - 1 SHALL BE 21" X 21" (30" X 30" IF NEEDED TO MATCH EXISTING SIGNS)
- D1 - X SHALL BE AS SHOWN ON SPECIFIC PROJECT SIGNING DETAIL SHEETS.
- R1 - 1 SHALL BE 36" X 36"

1. TWO WARNING LIGHTS SHALL BE PROVIDED ON THE CENTER BARRICADE AND A MINIMUM OF ONE WARNING LIGHT SHALL BE PROVIDED ON EACH OF THE OTHER BARRICADES WITHIN THE ROADWAY LIMITS. SPACING OF THE WARNING LIGHTS SHALL BE UNIFORM TO THE EDGE OF ROADWAY AS SHOWN (APPROX. 8 FOOT LIGHT SPACING.
2. THESE SIGNS AND BARRICADES ARE NOT REQUIRED IF ROAD CLOSURE BEGINS AT AN INTERSECTION.
3. FOR ROAD CLOSURE WITHOUT LOCAL ACCESS TO PROJECT, SEE ROAD CLOSURE BARRICADE DETAIL "D".
4. FOR ROAD CLOSURE WITH LOCAL ACCESS TO PROJECT, SEE ROAD CLOSURE BARRICADE DETAIL "E".
5. FOR BRIDGE OR CULVERT REPLACEMENTS, SUBSTITUTE "BRIDGE OUT" INSTEAD OF "ROAD CLOSED" ON R11 - 2 AND R11 - 3 SIGNS.
6. INSTALL DETOUR AND COMMUNITY GUIDE SIGNS AND ARROWS ONLY IF SPECIFIED IN THE CONTRACT. IF THERE ARE EXISTING ROUTE MARKER ASSEMBLIES THAT WILL REMAIN IN PLACE, ADJUST THE LOCATION OF THE DETOUR ROUTE SIGNS TO CORRESPOND WITH THE EXISTING ASSEMBLIES. MODIFY EXISTING SIGNS WHERE POSSIBLE. SEE SPECIFIC PROJECT DETOUR SIGNING DETAIL SHEETS. IF DETOUR SIGNS ARE BEING INSTALLED BY OTHERS, PLACE THE CONTRACTED TRAFFIC CONTROL SIGNS TO ALLOW FOR PLACEMENT OF ALL WARNING, DETOUR AND GUIDE SIGNS AS SHOWN.
7. "EAST" CARDINAL DIRECTION MARKERS AND RIGHT TURN ARROWS ARE SHOWN. USE OTHER CARDINAL DIRECTIONS AND ARROWS AS APPROPRIATE.

BARRICADES AND SIGNS FOR VARIOUS CLOSURES

STATE OF WISCONSIN
DEPARTMENT OF TRANSPORTATION

APPROVED
November 2018 — DATE
/S/ Andrew Heidtke — WORK ZONE ENGINEE
FHWA

6

6

SDD 15C02 - 07b

SDD 15C02 - 07b

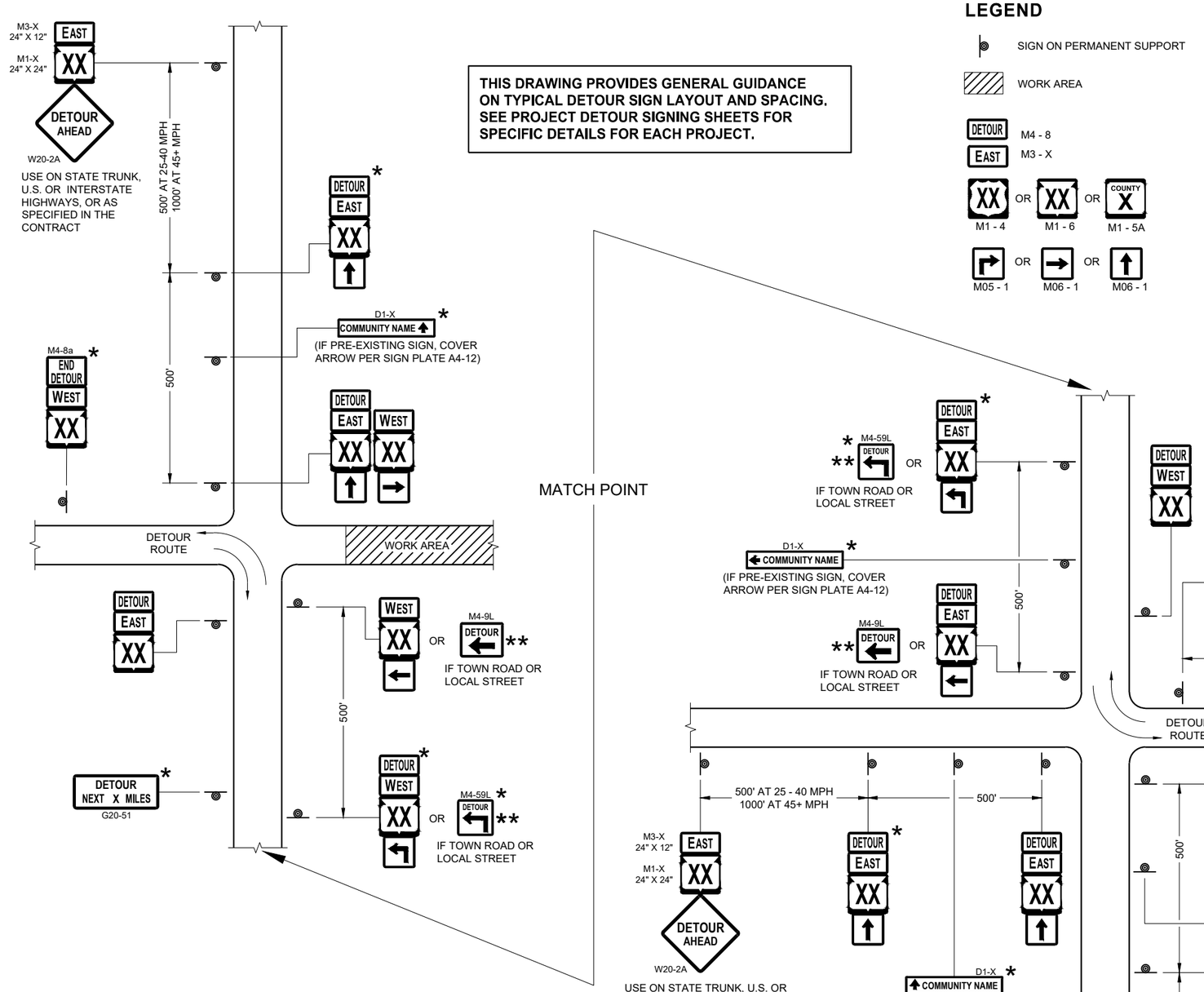

THIS DRAWING PROVIDES GENERAL GUIDANCE ON TYPICAL DETOUR SIGN LAYOUT AND SPACING. SEE PROJECT DETOUR SIGNING SHEETS FOR SPECIFIC DETAILS FOR EACH PROJECT.

LEGEND

- SIGN ON PERMANENT SUPPORT
- WORK AREA
- DETOUR — M4 - 8
- EAST — M3 - X
- XX — M1 - 4 OR XX — M1 - 6 OR COUNTY X — M1 - 5A
- M05 - 1 OR M06 - 1 OR M06 - 1

GENERAL NOTES

THE EXACT NUMBER, LOCATION AND SPACING OF ALL SIGNS SHALL BE ADJUSTED TO FIT FIELD CONDITIONS AS APPROVED BY THE ENGINEER.

IF THERE ARE EXISTING ROUTE MARKER ASSEMBLIES THAT WILL REMAIN IN PLACE, ADJUST THE LOCATION OF THE DETOUR ROUTE SIGNS TO CORRESPOND WITH THE EXISTING ASSEMBLIES. SEE SPECIFIC PROJECT DETOUR SIGNING DETAIL SHEETS. MODIFY EXISTING SIGNS WHERE POSSIBLE.

THE SPACING BETWEEN TRAFFIC CONTROL AND DETOUR SIGNS SHOULD BE ADJUSTED TO NOT CONFLICT WITH AND TO PROVIDE A DESIRABLE MINIMUM OF 200 FEET CLEARANCE TO EXISTING SIGNS THAT WILL REMAIN IN PLACE.

ANY SIGNS TEMPORARY OR EXISTING, WHICH CONFLICT WITH TRAFFIC CONTROL "IN USE" SHALL BE REMOVED OR COVERED AS NEEDED AND AS APPROVED BY THE ENGINEER.

SIGNS THAT WILL BE IN PLACE LESS THAN 7 CONTINUOUS DAYS AND NIGHTS MAY BE MOUNTED ON PORTABLE SUPPORTS.

"MO" SIGNS ARE THE SAME AS "M" SIGNS EXCEPT THE BACKGROUND IS ORANGE.

SIGN SIZES SHALL BE AS FOLLOWS:

M3-X SHALL BE 24" X 12" (36" X 18" IF NEEDED TO MATCH EXISTING SIGNS)
M4-8 SHALL BE 24" X 12" (36" X 18" IF NEEDED TO MATCH EXISTING SIGNS)
M1-4, M1-5A AND M1-6 SHALL BE 24" X 24" (30" X 30" IF NEEDED TO MATCH EXISTING SIGNS)
M05-1 AND M06-1 SHALL BE 21" X 21" (30" X 30" IF NEEDED TO MATCH EXISTING SIGNS)
M4-9 AND M4-59 SHALL BE 30" X 24"
M4-8a SHALL BE 24" X 18"
G20-51 SHALL BE 60" X 24"
W20-2A SHALL BE 48" X 48"
D1-X SHALL BE AS SHOWN ON SPECIFIC PROJECT SIGNING DETAIL SHEETS.

* OPTIONAL SIGNS. SEE SPECIFIC PROJECT DETOUR SIGNING DETAIL SHEETS.

** FOR A TOWN ROAD OR LOCAL STREET DETOURED ONTO A STATE TRUNK HIGHWAY, PLACE A ROAD NAME PLAQUE ABOVE THE M4-9 SIGN AS SPECIFIED IN THE CONTRACT.

SEE SPECIFIC PROJECT DETOUR SIGNING DETAIL SHEETS AND DETAIL A OR B ON SDD SHEET 15C02 - SHEET "a"

DETAIL F
DETOUR SIGNING

DETOUR SIGNING FOR MAINLINE CLOSURES

STATE OF WISCONSIN
DEPARTMENT OF TRANSPORTATION

APPROVED
November 2018 /S/ Andrew Heidtke
DATE WORK ZONE ENGINEER
FHWA

6

SDD 15C02 - 07c

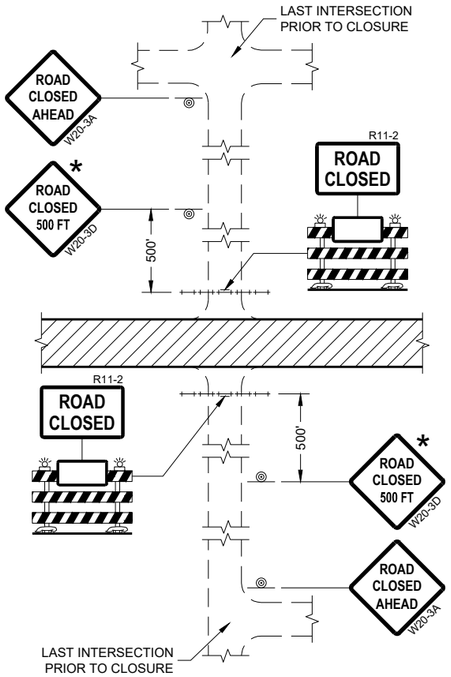

DETAIL 1
(NO ACCESS TO PROJECT)

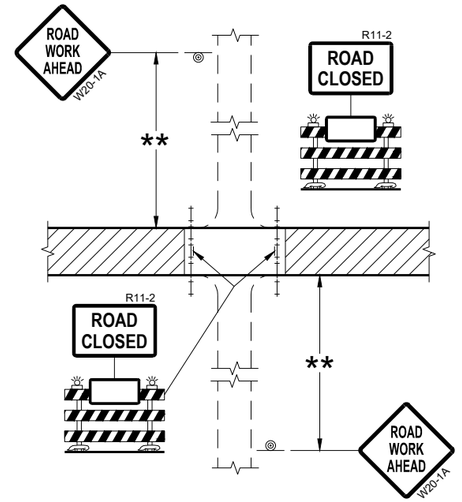

DETAIL 2
(PUBLIC CROSS-TRAFFIC MAINTAINED.
NO ACCESS TO PROJECT)

GENERAL NOTES

THE EXACT NUMBER, LOCATION, AND SPACING OF ALL SIGNS AND BARRICADES SHALL BE ADJUSTED TO FIT FIELD CONDITIONS AS APPROVED BY THE ENGINEER.

ANY SIGNS TEMPORARY OR EXISTING, WHICH CONFLICT WITH TRAFFIC CONTROL "IN USE" SHALL BE REMOVED OR COVERED AS NEEDED AND AS APPROVED BY THE ENGINEER.

THE SPACING BETWEEN TRAFFIC CONTROL SIGNS SHOULD BE ADJUSTED TO NOT CONFLICT WITH AND SHOULD PROVIDE A DESIRABLE MINIMUM OF 200 FEET CLEARANCE (500 FEET DESIRABLE) TO EXISTING SIGNS THAT WILL REMAIN IN PLACE.

IF A "STOP" SIGN MUST BE REMOVED FOR A WORK OPERATION, A TEMPORARY "STOP" SIGN SHALL BE PLACED PRIOR TO THE SIGN REMOVAL, OR A FLAGGER SHALL BE PROVIDED UNTIL THE SIGN IS REESTABLISHED.

BARRICADES THAT MUST BE MOVED FOR A WORK OPERATION SHALL BE IMMEDIATELY REESTABLISHED UPON COMPLETION OF THE OPERATION OR FOR CONTINUING OPERATIONS, AT THE END OF EACH WORKING DAY.

SIGNS THAT WILL BE IN PLACE LESS THAN SEVEN CONTINUOUS DAYS AND NIGHTS MAY BE MOUNTED ON PORTABLE SUPPORTS.

ALL TYPE III BARRICADES SHALL HAVE RAILS REFLECTORIZED ON BOTH FACES. STRIPES SHALL BE PROPERLY SLOPED DOWN TOWARD THE TRAFFIC SIDE OR AS SHOWN IN THE ROAD CLOSURE BARRICADE DETAIL "D" FOR FULL ROAD CLOSURES.

TYPE "A" LOW-INTENSITY FLASHING WARNING LIGHTS SHALL BE VISIBLE ON BOTH SIDES OF THE BARRICADE.

THE R11-2, R11-3, AND R11-4 SIGNS PLACED ON BARRICADES SHALL COVER NO MORE THAN THE TOP RAIL. THE SIGNS SHALL NOT COVER ANY PORTION OF THE MIDDLE OR BOTTOM RAILS.

ALL SIGNS SHALL BE 48" X 48" UNLESS OTHERWISE NOTED BELOW:
R11-2 SHALL BE 48" X 30".
R11-4 AND R11-3 SHALL BE 60" X 30".

* OMIT THE "ROAD CLOSED 500 FT." SIGN IF THE LAST INTERSECTION IS 500 FEET OR LESS FROM THE WORK ZONE.

** 500' MAX. OR AT LAST INTERSECTION, WHICHEVER IS CLOSEST.

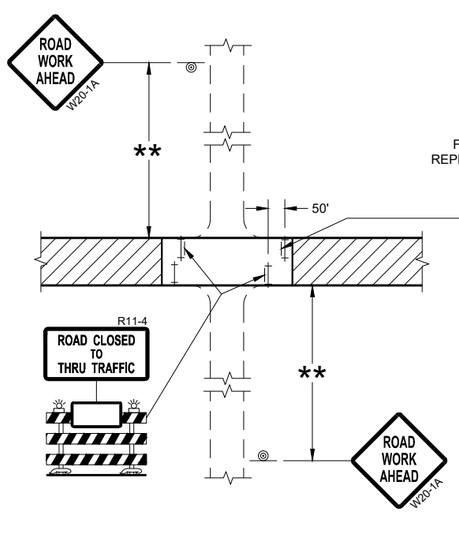

DETAIL 3
(PUBLIC CROSS-TRAFFIC MAINTAINED.
CONTRACTOR, LOCAL BUSINESS AND
RESIDENT ACCESS TO PROJECT)

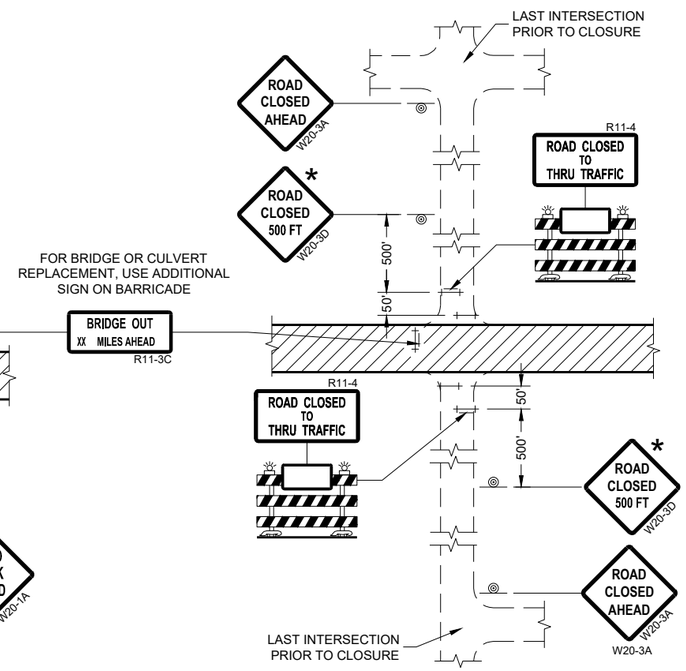

DETAIL 4
(CONTRACTOR, LOCAL BUSINESS AND
RESIDENT ACCESS TO PROJECT)

LEGEND

- SIGN ON PERMANENT SUPPORT
- TYPE III BARRICADE
- TYPE III BARRICADE WITH ATTACHED SIGN
- TYPE "A" WARNING LIGHT (FLASHING)
- WORK AREA

BARRICADES AND SIGNS FOR SIDEROAD CLOSURES

STATE OF WISCONSIN
DEPARTMENT OF TRANSPORTATION

APPROVED
July 2018 — DATE
/S/ Andrew Heidtke — WORK ZONE ENGINEE
FHWA

6
SDD 15C03 - 05

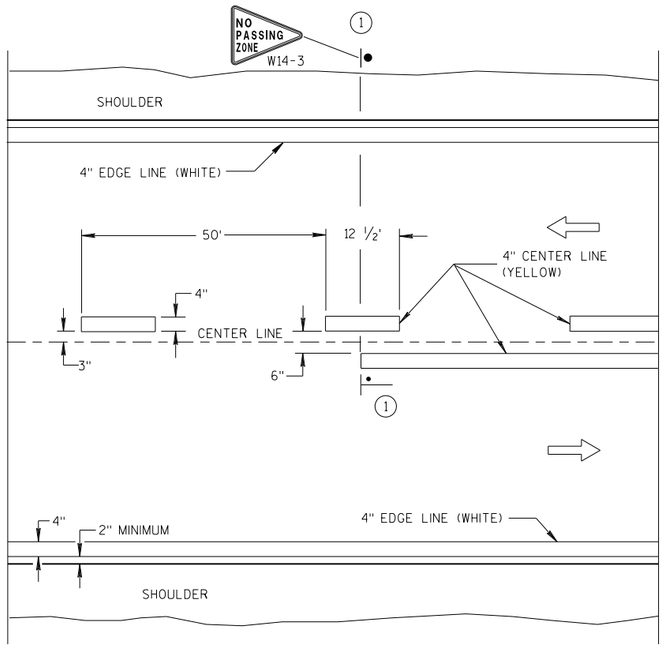

TWO WAY TRAFFIC

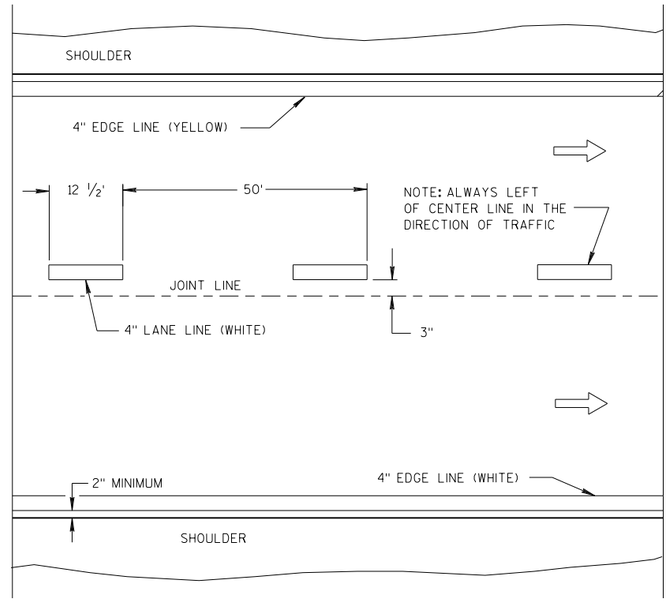

ONE WAY TRAFFIC

PERMANENT PAVEMENT MARKING

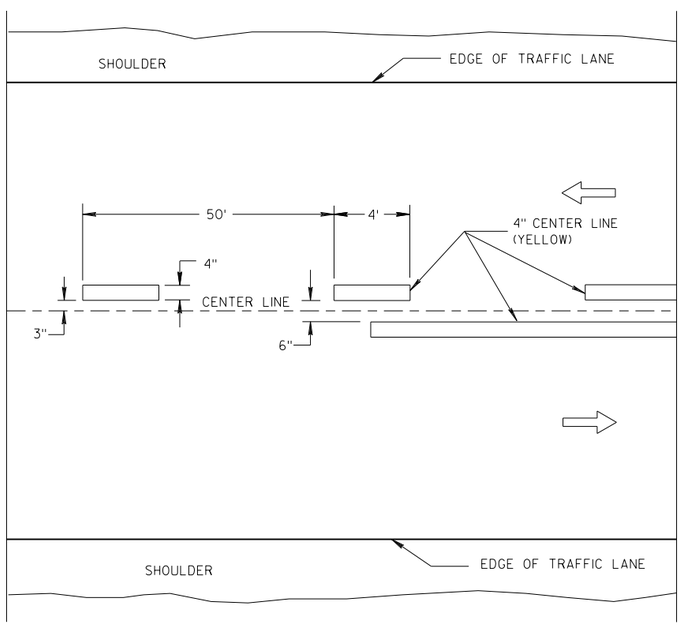

TWO WAY TRAFFIC

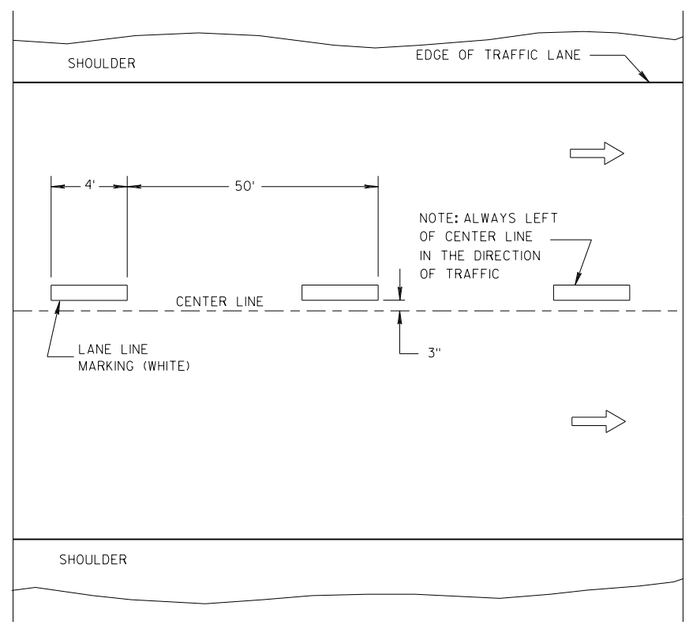

ONE WAY TRAFFIC

TEMPORARY PAVEMENT MARKING

GENERAL NOTES

DETAILS OF CONSTRUCTION NOT SHOWN ON THIS DRAWING SHALL CONFORM TO STANDARD SPECIFICATIONS AND SPECIAL PROVISIONS.

(1) LOCATE THE NO PASSING ZONE W14-3 SIGN WITHIN 50 FEET OF THE "T" MARKING.

NOTE

ARROW SYMBOL (⇨) SHOWS DIRECTION OF TRAVEL

LEGEND

"T" MARKING

POST MOUNTED SIGN

LONGITUDINAL MARKING (MAINLINE)

STATE OF WISCONSIN
DEPARTMENT OF TRANSPORTATION

APPROVED

7/2018 — DATE

/S/ Matthew R. Rauch — STATE SIGNING AND MAR INEER

FHWA

GENERAL NOTES

1. REFLECTIVE SHEETING SHALL FOLLOW THE REQUIREMENTS IN THE APPROVED PRODUCTS LISTING FOR SIGN SHEETING.
2. LOCATION OF WARNING LIGHTS WHEN SHOWN ON THE PLAN.

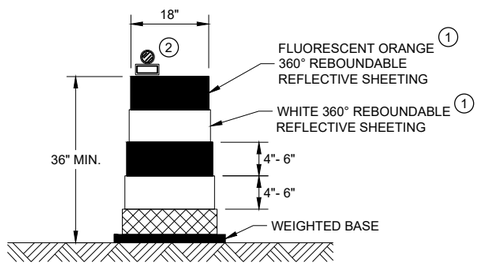

DRUM

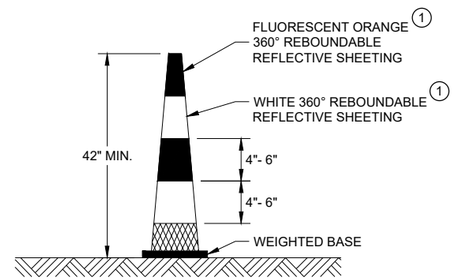

42" CONE

DO NOT USE IN TAPERS
½ SPACING OF DRUMS

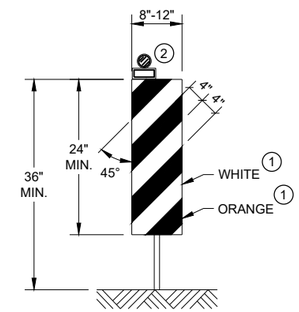

VERTICAL PANEL

THE STRIPES SHALL SLOPE DOWNWARD TO
THE TRAFFIC SIDE FOR CHANNELIZATION.

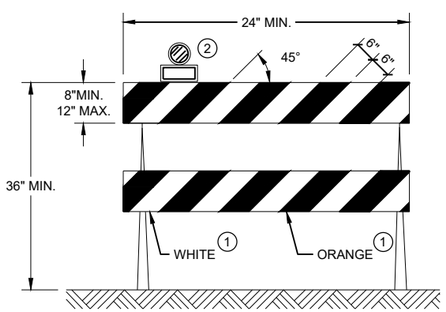

TYPE II BARRICADE

FOR RAILS LESS THAN 36" LONG, 4" WIDE STRIPES
MAY BE USED. ALL STRIPES SHALL SLOPE DOWNWARD
TO THE TRAFFIC SIDE FOR CHANNELIZATION.

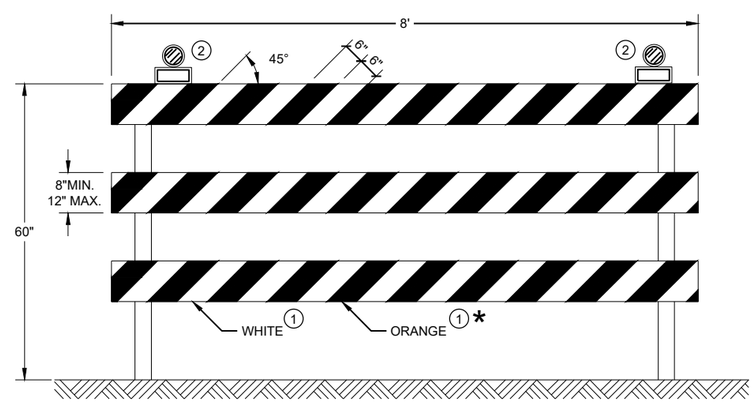

TYPE III BARRICADE

IF SIGN MOUNTED, DO NOT COVER MORE THAN 50% OF THE TOP
TWO RAILS OR 33% OF THE TOTAL AREA OF THE THREE RAILS.

* IF USED FOR A PERMANENT APPLICATION USE RED SHEETING.

CHANNELIZING DEVICES DRUMS, CONES, BARRICADES AND VERTICAL PANELS

STATE OF WISCONSIN
DEPARTMENT OF TRANSPORTATION

APPROVED
June 2017 — DATE
/S/ Andrew Heidtke — WORK ZONE ENGINEE
FHWA

6

SDD 15C11 - 07b

6

SDD 15C11 - 07b

LEGEND

SIGN ON PORTABLE OR PERMANENT SUPPORT

TEMPORARY PORTABLE RUMBLE STRIP ARRAY

DIRECTION OF TRAFFIC

WORK AREA

FLAGGER, EQUIPPED WITH STOP/SLOW PADDLE FASTENED ON SUPPORT STAFF

GENERAL NOTES

DETAILS OF TRAFFIC CONTROL DEVICES AND INSTALLATION NOT SHOWN ON THIS DRAWING SHALL CONFORM TO THE PERTINENT REQUIREMENTS OF THE STANDARD SPECIFICATIONS, THE SPECIAL PROVISIONS, AND THE MANUAL ON UNIFORM TRAFFIC CONTROL DEVICES.

ALL SIGNS ARE 48" X 48" UNLESS OTHERWISE NOTED.

"WO" SIGNS ARE THE SAME AS "W" SIGNS EXCEPT THE BACKGROUND IS ORANGE.

THE EXACT NUMBER, LOCATION AND SPACING OF ALL SIGNS, DEVICES, AND LOCATION OF ALL FLAGGERS SHALL BE ADJUSTED TO FIT FIELD CONDITIONS AS APPROVED BY THE ENGINEER.

THE FIRST ADVANCE WARNING SIGN SHOULD TYPICALLY BE LOCATED IN ADVANCE OF THE ANTICIPATED TRAFFIC BACKUP OR QUEUE.

WHEN A SIDE ROAD OR RAMP INTERSECTS THE FACILITY ON WHICH THE WORK IS BEING PERFORMED, ADDITIONAL TRAFFIC CONTROLS SHALL BE PROVIDED AS SPECIFIED IN THE PLANS AND/OR THE SPECIAL PROVISIONS OR AS APPROVED BY THE ENGINEER.

FLAGGING

FLAGGERS SHALL BE IN SIGHT OF EACH OTHER OR IN DIRECT COMMUNICATION AT ALL TIMES. THEY SHALL BE EQUIPPED WITH STOP/SLOW PADDLES FASTENED ON SUPPORT STAFFS. WHEN THE FLAGGING OPERATION IS NOT IN EFFECT REMOVE TEMPORARY PORTABLE RUMBLE STRIPS PRIOR TO COVERING OR REMOVING ALL ADVANCE SIGNING.

(1) FOR MOVING WORK OPERATIONS, POST ADDITIONAL W20-7A FLAGGER SIGNS AT APPROXIMATELY 3,500' INTERVALS IN THE MOVING WORK OPERATION OR AS APPROVED BY THE ENGINEER.

(2) SIGN NOT REQUIRED IF FLAGGING OPERATION OCCURS WITHIN A SIGNED ROAD WORK ZONE AREA.

WHEN THE DISTANCE BETWEEN FLAGGERS EXCEEDS 2 MILES, A PILOT CAR IS REQUIRED. WHEN CURVES REDUCE SIGHT DISTANCE BELOW 400', A PILOT CAR IS REQUIRED.

TEMPORARY PORTABLE RUMBLE STRIPS

UTILIZE TEMPORARY PORTABLE RUMBLE STRIPS ON ALL FLAGGING OPERATIONS.

(3) EACH TEMPORARY PORTABLE RUMBLE STRIP ARRAY CONSISTS OF THREE RUMBLE STRIPS SPACED ACCORDING TO MANUFACTURER'S RECOMMENDATION, PLACED TRANSVERSE ACROSS THE LANE AT LOCATIONS SHOWN.

ONLY USE TEMPORARY PORTABLE RUMBLE STRIPS FOR THE APPROVED PRODUCTS LIST.

INSTALL TEMPORARY RUMBLE STRIPS PER MANUFACTURER'S RECOMMENDATIONS.

PLACE ADVANCE SIGNING PRIOR TO INSTALLING TEMPORARY RUMBLE STRIPS.

DO NOT INSTALL TEMPORARY PORTABLE RUMBLE STRIPS ON GRAVEL, MILLED SURFACES, OR ASPHALT THAT HAS BEEN PAVED LESS THAN 12 HOURS.

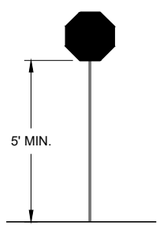

STOP/SLOW PADDLE ON SUPPORT STAFF

SIGN AND TEMPORARY RUMBLE STRIP ARRAY SPACING TABLE

SPEED LIMIT	SPACING "A"
25-30 MPH	200'
35-40 MPH	350'
45-55 MPH	500'

USE OF WO3-4 SIGN IS OPTIONAL. WHEN USED, THIS SIGN SHALL BE LOCATED BETWEEN THE W20-7A AND W20-4A SIGNS, USING SPACING "A".

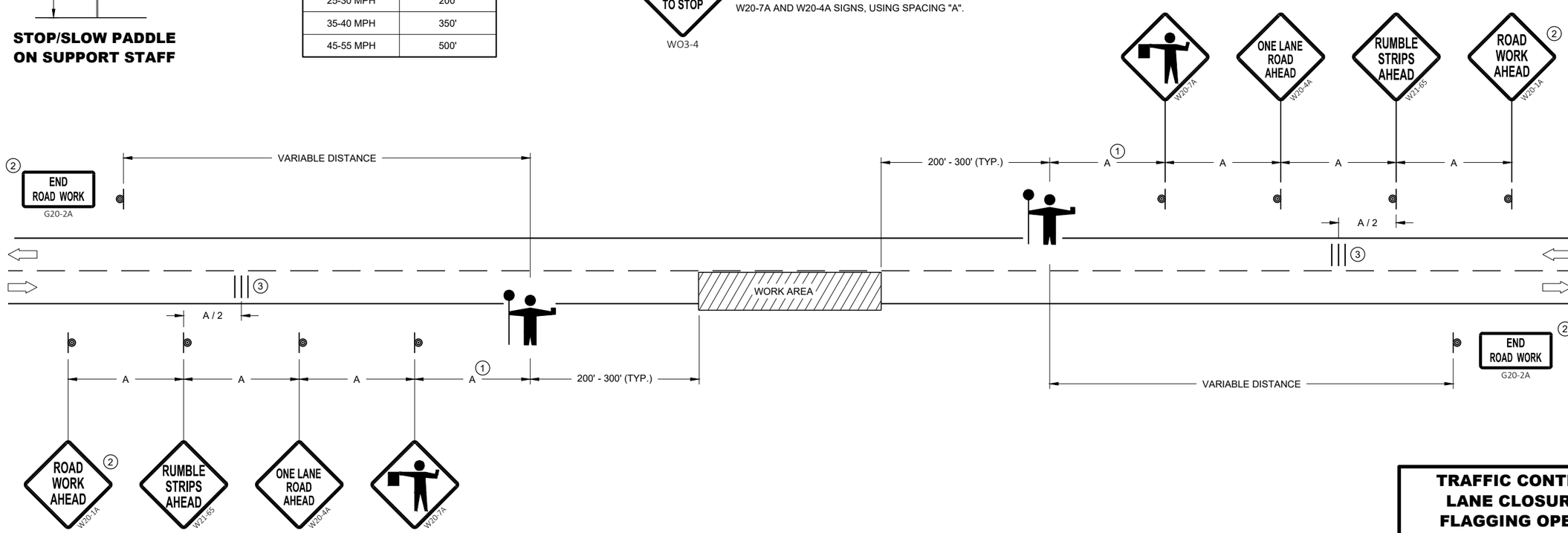

TRAFFIC CONTROL FOR LANE CLOSURE WITH FLAGGING OPERATION

TRAFFIC CONTROL FOR LANE CLOSURE WITH FLAGGING OPERATION

STATE OF WISCONSIN
DEPARTMENT OF TRANSPORTATION

APPROVED
May 2019 — DATE
/S/ Andrew Heidtke — WORK ZONE ENGINEE
FHWA

6
SDD 15C12 - 07

LEGEND

- SIGN ON PERMANENT SUPPORT
- TRAFFIC CONTROL DRUM
- DIRECTION OF TRAFFIC
- WORK ZONE

TABLE A

S \ W	SHOULDER TAPER LENGTH (FEET) 4	6	8	10	BUFFER SPACE (FEET)
30	20	30	40	50	200
35	30	45	55	70	250
40	40	55	75	90	305
45	60	90	120	150	360
50	70	100	135	170	425
55	75	110	150	185	495

W = SHOULDER WIDTH (FEET
S = NON-CONSTRUCTION SPEED LIMIT (MPH)

TAPER LENGTH

L= WS AT 45 MPH OR GREATER
L = WS^2 / 60 AT 40 MPH OR LESS

SHOULDER TAPER LENGTH = 1/3L

GENERAL NOTES

ALL SIGNS ARE 48"X48" UNLESS OTHERWISE NOTED. IF NECESSARY DUE TO SPACE CONSTRAINTS IN URBAN AREAS, 36" X 36" SIGNS MAY BE USED IF APPROVED BY THE REGIONAL TRAFFIC UNIT.

"WO" IS THE SAME AS "W" EXCEPT THE BACKGROUND IS ORANGE.

ANY SIGNS TEMPORARY OR EXISTING, WHICH CONFLICT WITH THE TRAFFIC CONTROL "IN USE" SHALL BE REMOVED OR COVERED AS NEEDED AND AS APPROVED BY THE ENGINEER.

THE EXACT NUMBER, LOCATION, AND SPACING OF ALL SIGNS AND DEVICES SHALL BE ADJUSTED TO FIT FIELD CONDITIONS AS APPROVED BY THE ENGINEER.

CHANNELIZING DEVICES PLACED ADJACENT TO WORK AREA SHALL BE PULLED BACK FROM THE TRAVEL LANE WHEN WORK IS NOT IN PROGRESS.

SIGNS THAT WILL BE IN PLACE LESS THAN 7 CONTINUOUS DAYS AND NIGHTS MAY BE MOUNTED ON PORTABLE SUPPORTS.

W20-1A AND G20-2A SIGNS ARE NOT REQUIRED IF THE WORK AREA IS WITHN A LARGER WORK ZONE WHERE THESE SIGNS ARE ALREADY RESENT. G20-2A SIGNS MAY ALSO BE OMITTED IF DURATION OF WORK IS LESS THAN 7 CONTINUOUS DAYS AND NIGHTS.

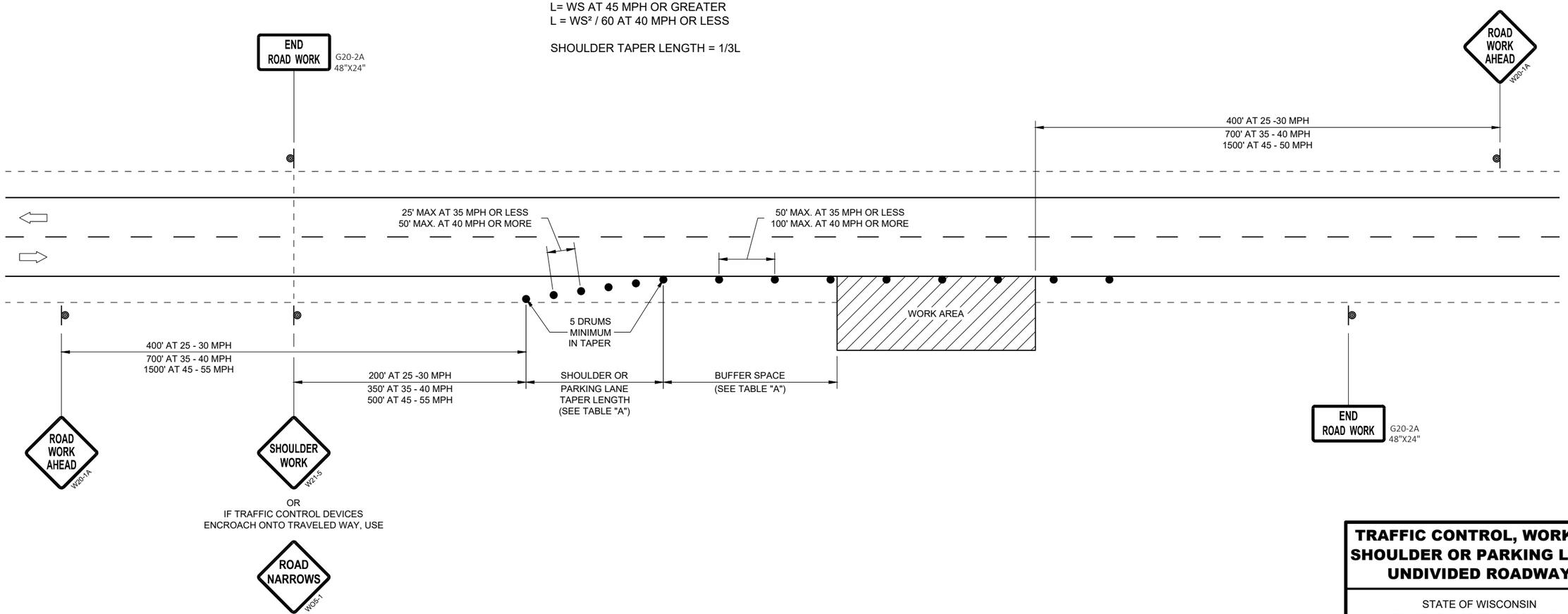

TRAFFIC CONTROL, WORK ON SHOULDER OR PARKING LANE, UNDIVIDED ROADWAY

STATE OF WISCONSIN
DEPARTMENT OF TRANSPORTATION

APPROVED
August 2019 — DATE
/S/ Andrew Heidtke — STATEWIDE WORK ZONE T SAFETY ENGINEER
FHWA

6

SDD 15D28 - 03

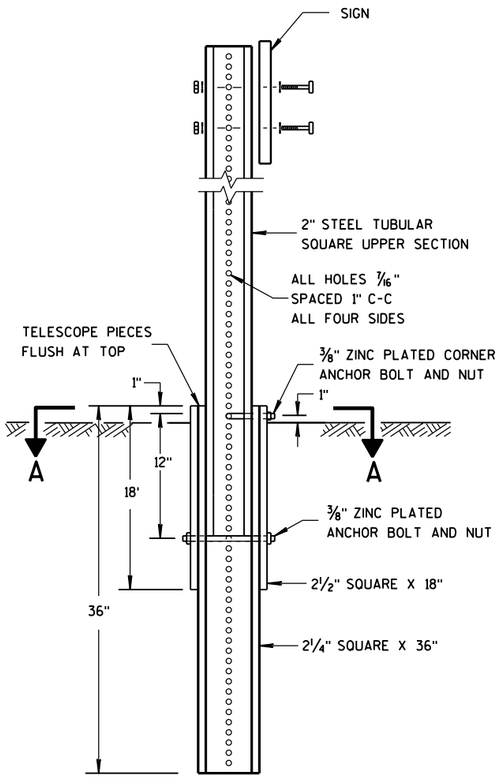

DETAIL OF TUBULAR STEEL SIGN POST

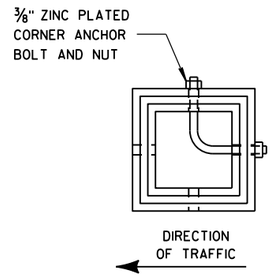

SECTION A-A

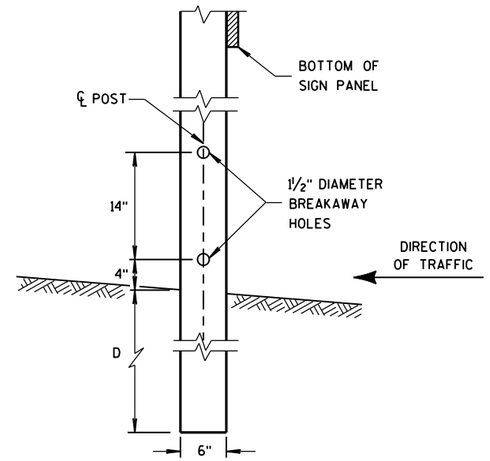

4"x6" WOOD POST MODIFICATION

GENERAL NOTES

1. 6 FEET FROM THE EDGE OF PAVEMENT (EDGE LINE LOCATION) UNLESS OTHERWISE DIRECTED BY THE PROJECT ENGINEER. LATERAL OFFSET SHOULD BE ADJUSTED TO AVOID THE DITCH FLOWLINE.
2. THE EXISTENCE OF CURB AND GUTTER DOES NOT IN ITSELF MANDATE THE VERTICAL CLEARANCE ILLUSTRATED. THAT HEIGHT IS TYPICALLY MEASURED WHERE THERE IS SIDEWALK ADJACENT TO THE ROADWAY OR PARKING IS PERMITTED. IN THE ABSENCE OF SIDEWALK, VERTICAL CLEARANCE IS MEASURED FROM THE TOP OF THE CURB. IF NO SIDEWALK AND NO PARKING, VERTICAL CLEARANCE MAY BE REDUCED TO 5 FOOT MINIMUM. OFFSET OF SIGNS IS MEASURED FROM THE CURB FLOWLINE.
3. FOR SIGNS REQUIRING 4 POSTS, SPACE INTERMEDIATE POSTS EVENLY.

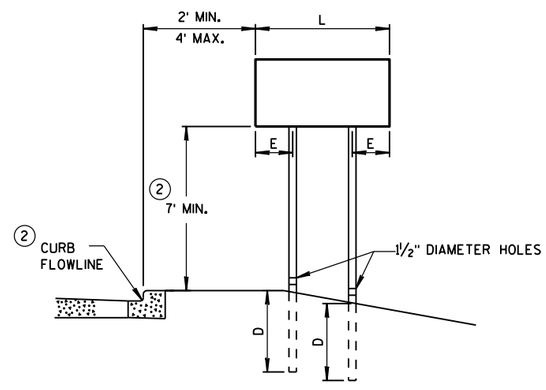

URBAN AREA

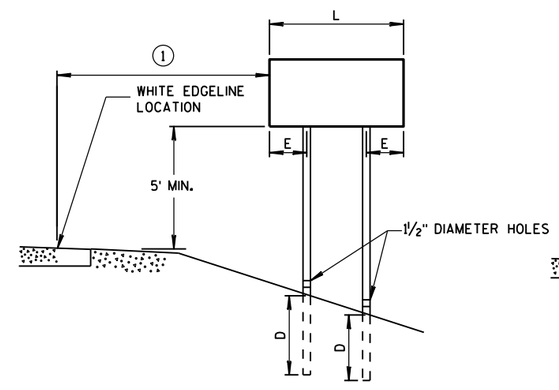

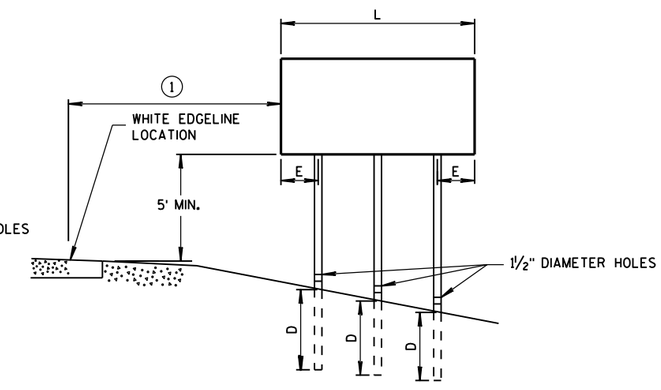

RURAL AREA

POST MOUNTING DETAIL FOR TEMPORARY TRAFFIC CONTROL FIXED MESSAGE SIGNS

TUBULAR STEEL POSTS

AREA OF SIGN INSTALLATION (SQ. FT.)	NUMBER OF REQUIRED TUBULAR STEEL POSTS
9 OR LESS	1
GREATER THAN 9 LESS THAN OR EQUAL TO 18	2
GREATER THAN 18 LESS THAN OR EQUAL TO 27	3

SIGNS WIDER THAN 3 FEET OR LARGER THAN 9 SQ. FT. SHALL BE MOUNTED ON MULTIPLE POSTS (SEE ABOVE TABLE).

SIGNS LARGER THAN 27 SQ. FT. SHALL NOT BE MOUNTED ON TUBULAR STEEL POSTS.

WOOD POST EMBEDMENT DEPTH

AREA OF SIGN INSTALLATION (SQ. FT.)	D (MIN)
20 OR LESS	4'
GREATER THAN 20	5'

4" X 6" WOOD POST

POST SPACING REQUIREMENTS		NUMBER OF WOOD POSTS REQUIRED
L	E	
48" OR LESS AND LESS THAN 20 SQ. FT.	-	1
LESS THAN 60"	12"	2
60" TO 120"	L/5	2
GREATER THAN 120" LESS THAN 168"	12"	3
168" AND GREATER	12"	4

SEE NOTE 3

TEMPORARY TRAFFIC CONTROL SIGN MOUNTING

STATE OF WISCONSIN
DEPARTMENT OF TRANSPO

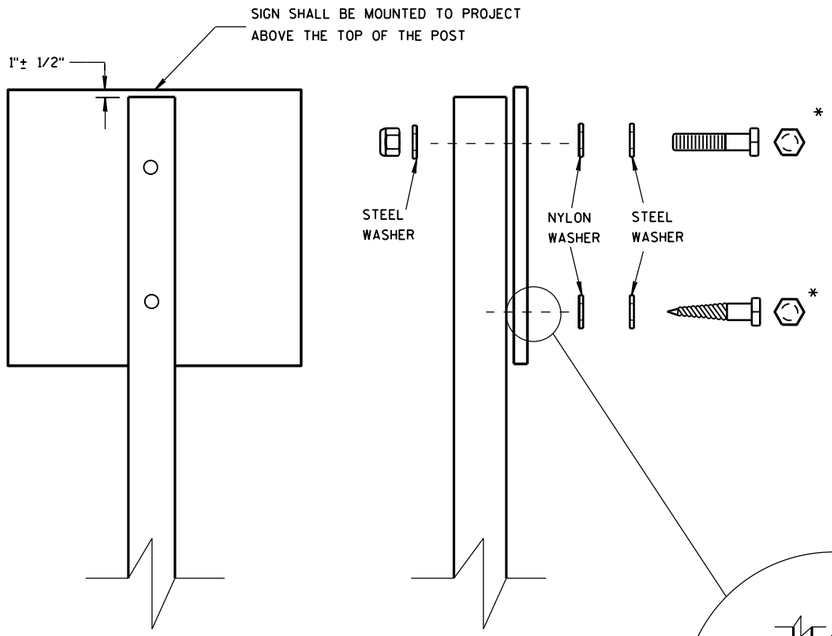

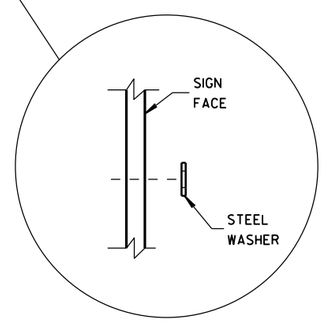

WASHER PLACEMENT WHEN SIGN HAS OTHER THAN TYPE H OR TYPE F FACE

NUTS, BOLTS AND LAGS USED FOR MOUNTING SIGNS SHALL HAVE HEXAGONAL HEADS AND SHALL BE EITHER:

A. HOT DIP GALVANIZED IN ACCORDANCE WITH ASTM DESIGNATION: A 153, CLASS D, OR SC 3

B. ELECTRO-GALVANIZED IN ACCORDANCE WITH ASTM DESIGNATION: B 633, TYPE III, SC 3

THREADS ON BOLTS AND NUTS SHALL BE MANUFACTURED WITH SUFFICIENT ALLOWANCE FOR THE CADMIUM PLATE OR GALVANIZED COATING TO PERMIT THE NUTS TO RUN FREELY ON THE BOLTS.

WOOD POSTS (4" x 4" or 4" x 6")

LAG SCREWS - 3/8" X 3"

MACHINE BOLTS - 5/16" X 6-1/2" OR 7" LENGTH W/ NUTS

SQUARE STEEL POSTS (2" x 2")

MACHINE BOLTS - 3/8" X 3-1/4" LENGTH W/ NUTS

RIVETS - 9/32" (6605-9-6) BULB-TITE, TRI-FOLD, ALUMINUM BODY/MANDREL O.D. FLANGE .720-.765 INCH, GRIP RANGE .042-.375 INCH

WASHERS (ALL POSTS) -

1-1/4" O.D. X 3/8" I.D. X 1/16" STEEL

1-1/4" O.D. X 3/8" I.D. X .080 NYLON FOR ALL TYPE H SIGNS

* TWO DIFFERENT FASTENING SYSTEMS ARE SHOWN FOR ILLUSTRATION PURPOSES. ON ANY INDIVIDUAL SIGN, EITHER ONE OR THE OTHER SYSTEM SHALL BE USED. ACTUAL NUMBER OF FASTENERS PER SIGN VARIES WITH THE SIGN AREA. FOR A SINGLE POST INSTALLATION, ALL SIGNS GREATER THAN 9 SQ. FT. REQUIRE THE USE OF 3 FASTENERS.

6

6

S.D.D. 15 D 38-2b

S.D.D. 15 D 38-2b

ATTACHMENT OF SIGNS TO POSTS

STATE OF WISCONSIN
DEPARTMENT OF TRANSPORTATION

APPROVED

June 2017 — /S/ Andrew Heldtke
DATE — WORK ZONE ENG

FHWA

NOTES

1. Fixed Message Type II Signs - Type F Reflective
2. Color:
   Background - Orange
   Message - Black
3. Message Series - D

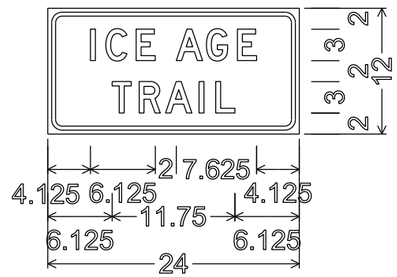

1.375" Radius, 0.375" Border, 0.375" Indent

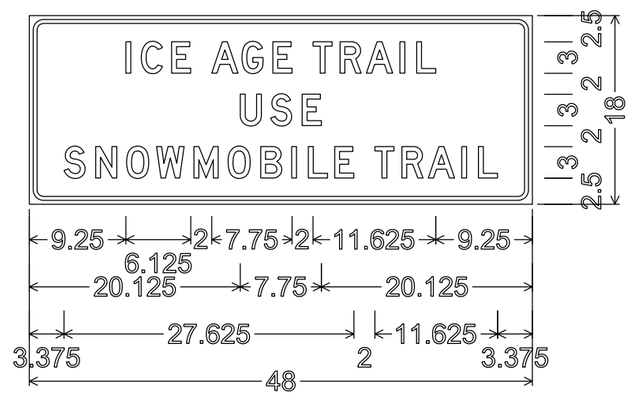

1.375" Radius, 0.375" Border, 0.375" Indent

7

7

PROJECT NO:1009-44-67	HWY: STH 107	COUNTY:LINCOLN	TEMPORARY SIGNING	SHEET NO: 101	E

URBAN AREA

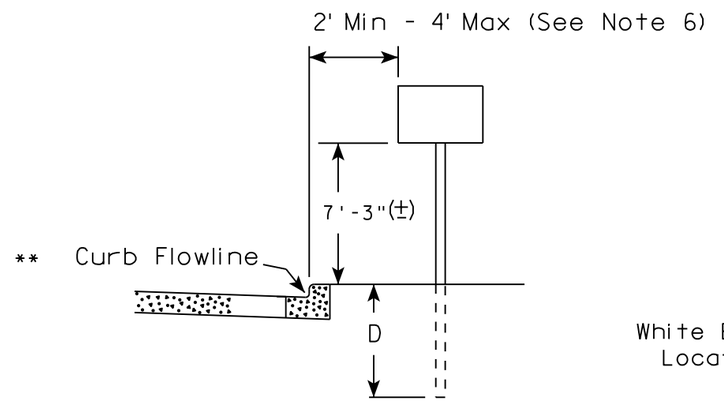

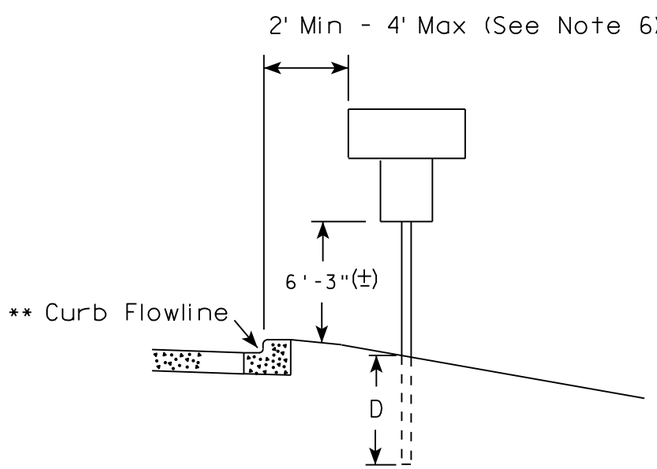

RURAL AREA (See Note 2)

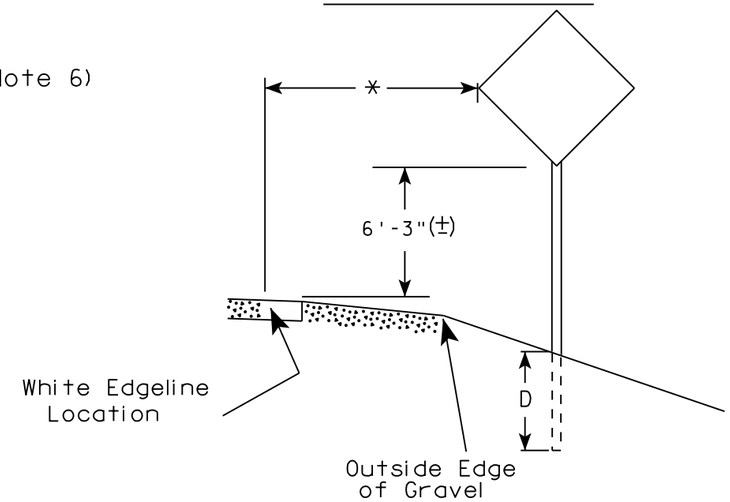

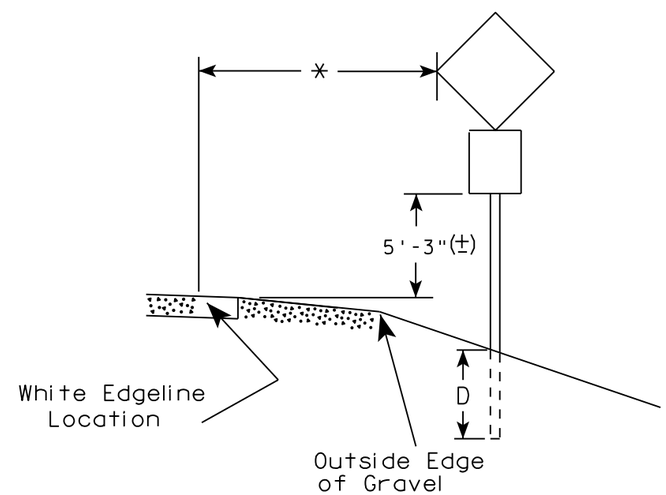

** The existence of curb and gutter does not in itself mandate the vertical clearance illustrated. That height is typically measured where there is sidewalk adjacent to the roadway or parking is permitted. In the absence of sidewalk vertical clearance is measured from the top of the curb. Offset of signs is measured from the flow line.

* 6 feet from edge of a paved shoulder or 12 feet from the edge of pavement (edge line location) or 2 feet from outside edge of gravel, whichever is greater unless directed by project engineer.

GENERAL NOTES

1. Signs wider than 4 feet or 20 sq.ft or larger, shall be mounted on multiple posts. Refer to plate A4-4.
2. If signs are mounted on barrier wall, see A4-10 sign plate.
3. For expressways and freeways, mounting height is 7'- 3" (±) or 6'-3" (±) depending upon existence of a sub-sign.
4. J-Assemblies are considered to be one sign for mounting height.
5. Minimum mounting height for signs mounted on traffic signal poles is 5'- 3" (±).
6. Offset distance shall be consistent with existing signs or consistent throughout length of project.
7. The (±) tolerance for mounting height is 3 inches.
8. Folding signs shall be mounted at a height of 5'-3" (±) or as directd by the Engineer.
9. The Double Arrow sign (W12-1) shall be mounted at a height of 2'-3" (±). The Chevron sign (W1-8), Roundabout Chevron panel (R6-4B), Enhanced Reference Markers, Clearance Markers (W5-52), Mile Markers (D10 series), In Road Object Markers (W5-54) & End of Road Markers (W5-56) shall be mounted at a height of 4'-3" (±).

POST EMBEDMENT DEPTH

Area of Sign Installation (Sq. Ft.)	D (Min)
20 or Less	4'
Greater than 20	5'

TYPICAL INSTALLATION OF PERMANENT TYPE II SIGNS ON SINGLE POSTS

WISCONSIN DEPT OF TRANSPORTATION

APPROVED Matthew R Rauch for State Traffic Engineer

DATE 8/21/17 PLATE NO. A4-3.21

7 7

PROJECT NO:	HWY:	COUNTY:		SHEET NO: 102	E

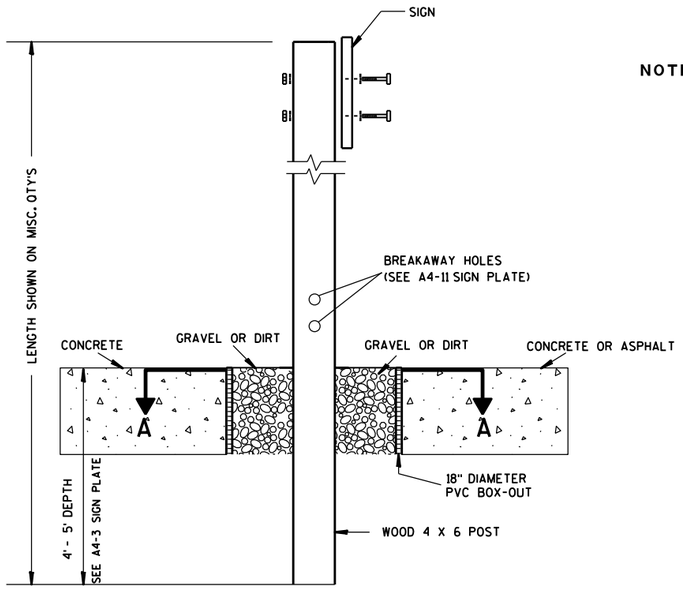

ELEVATION VIEW

DETAIL OF WOOD 4 X 6 SIGN POST IN BOX-OUT

NOTES:
1. ALL MATERIAL TO BE APPROVED BY ENGINEER PRIOR TO INSTALLATION
2. SEE SIGN PLATE A4-8 FOR SIGN HARDWARE REQUIREMENTS
3. 18 INCH X 18 INCH SQUARE BOX-OUTS MAY BE USED FOR INSTALLATIONS IN EXISTING CONCRETE OR ASPHALT LOCATIONS.

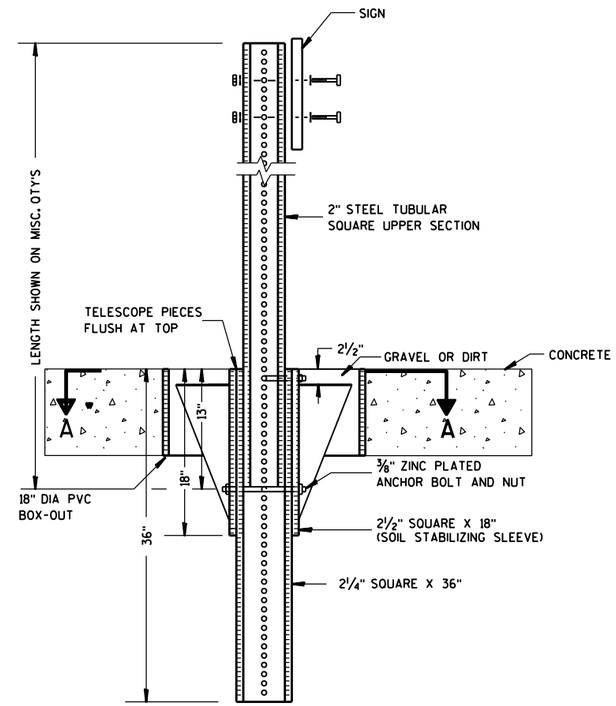

ELEVATION VIEW

DETAIL OF STEEL 2 X 2 SIGN POST IN BOX-OUT

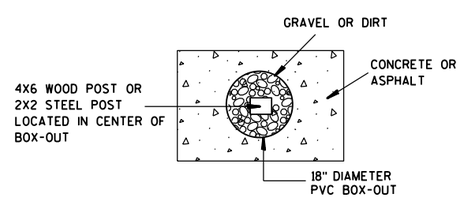

PLAN VIEW

FOR NEW CONCRETE/ASPHALT INSTALLATIONS

SIGN POST
BOX-OUTS
A4-3B

WISCONSIN DEPT OF TRANSPORTATION

APPROVED Matthew R Rauch
for State Traffic Engineer

DATE 1/27/14 PLATE NO. A4-3B.1

PROJECT NO:	HWY:	COUNTY:		SHEET NO:	E

URBAN AREA

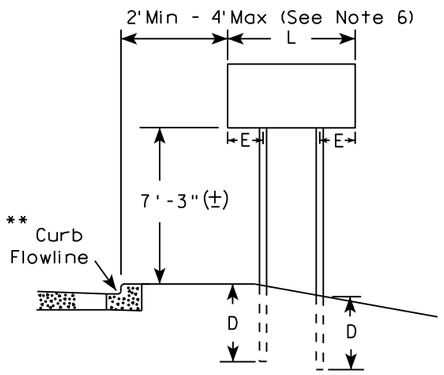

RURAL AREA (See Note 3)

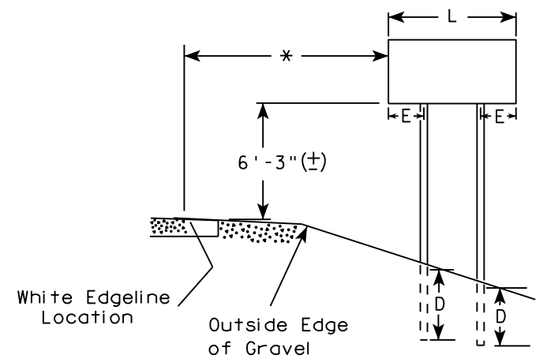

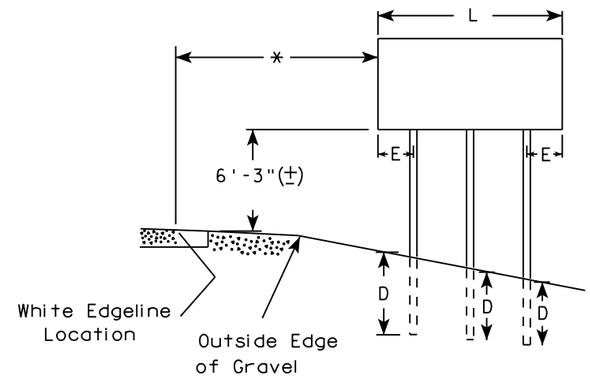

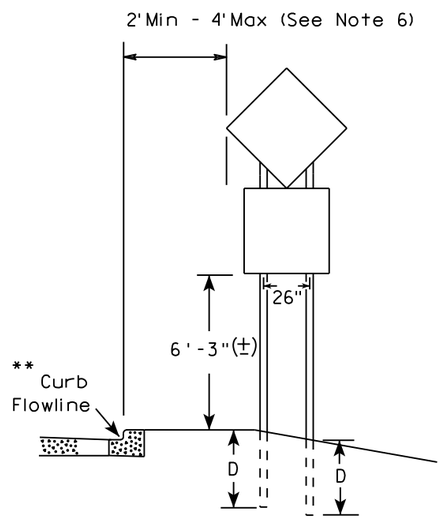

48" DIAMOND WARNING SIGN

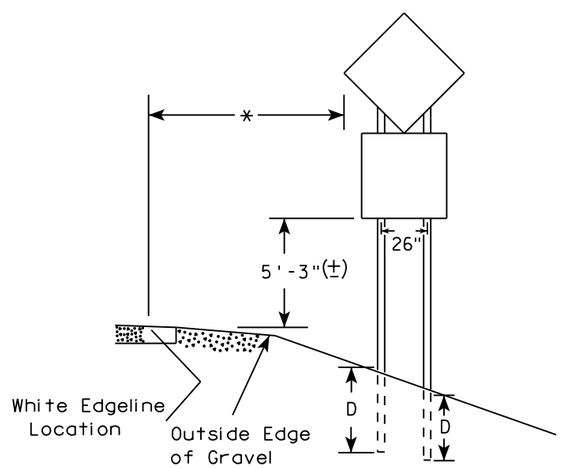

48" DIAMOND WARNING SIGN

SIGN SHAPE OTHER THAN DIAMOND (TWO POSTS REQUIRED)	
L	E
*** Greater than 48" Less than 60"	12"
60" to 108"	L/5

SIGN SHAPE OTHER THAN DIAMOND (THREE POSTS REQUIRED)	
L	E
Greater than 108" to 144"	12"

GENERAL NOTES

1. For 3 or 4 post installations, individual post spacing shall be greater than 3'-6".
2. See tables below for required number of posts.
3. For expressways and freeways, mounting height is 7'-3" (±) or 6'-3" (±) depending upon existence of sub-sign.
4. The (±) tolerance for mounting height is 3 inches.
5. J-Assemblies are considered to be one sign for mounting height.
6. Offset distance shall be consistent with existing signs or consistent throughout length of project.
7. Folding signs shall be mounted at a height of 5'-3" (±) or as directed by the engineer.
8. The Double Arrow sign (W12-1) shall be mounted at a height of 2'-3" (±). The Chevron sign (W1-8), Roundabout Chevron panel (R6-4B), Clearance Markers (W5-52), Mile Markers (D10 series), In Road Object Markers (W5-54) & End of Road Markers (W5-56) shall be mounted at a height of 4"-3" (±).

* 6 feet from edge of a paved shoulder or 12 feet from the edge of pavement (edge line location) or 2 feet from outside edge of gravel, whichever is greater unless directed by project engineer.

** The existence of curb and gutter does not in itself mandate the vertical clearance illustrated. That height is typically measured where there is sidewalk adjacent to the roadway or parking is permitted. In the absence of sidewalk vertical clearance is measured from the top of the curb. Offset of signs is measured from the flow line.

*** See A4-3 sign plate for signs 4' or less in width and less than 20 S.F. in area.

POST EMBEDMENT DEPTH

Area of Sign Installation (Sq. Ft.)	D (Min)
20 or Less	4'
Greater than 20	5'

TYPICAL INSTALLATION OF TYPE II SIGNS ON MULTIPLE POSTS

WISCONSIN DEPT OF TRANSPORTATION

APPROVED Matthew R Rauch
For State Traffic Engineer

DATE 8/21/17 PLATE NO. A4-4.15

7

7

PROJECT NO:	HWY:	COUNTY:		SHEET NO: 104	E

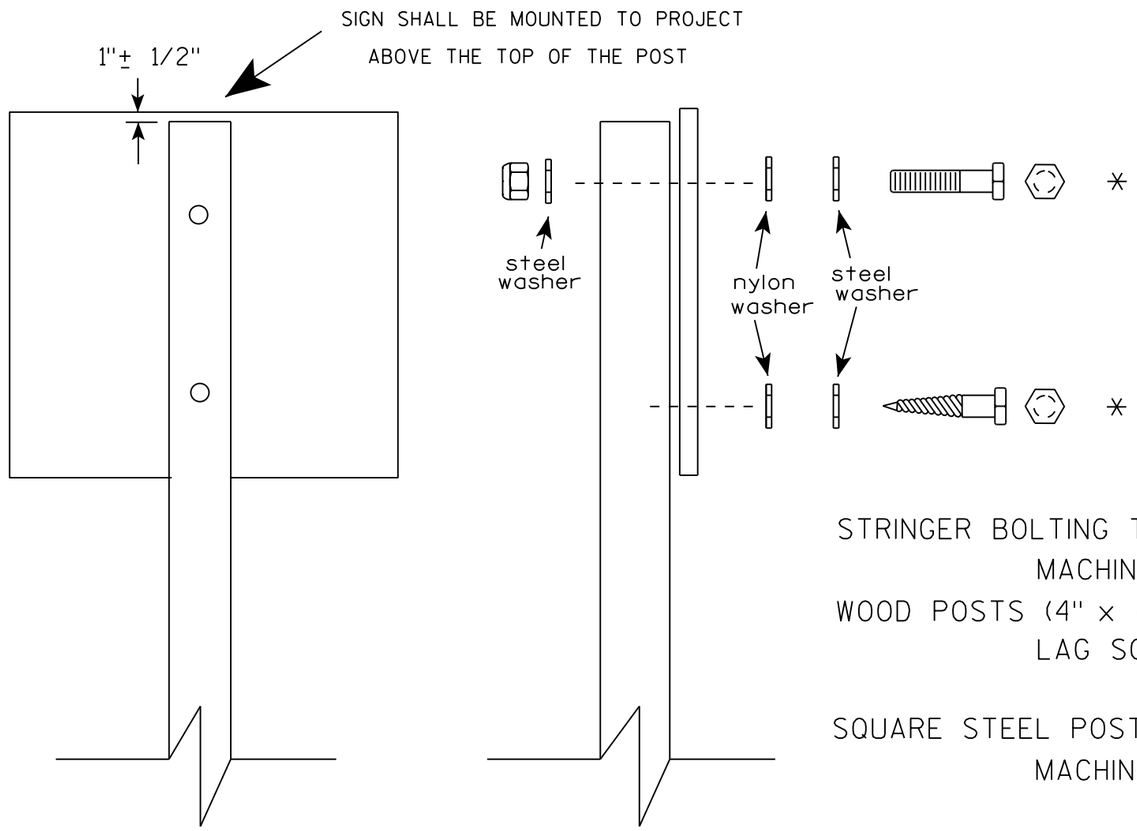

Nuts, bolts and lags used for mounting signs shall have hexagonal heads and shall be either :

a. Hot dip galvanized in accordance with ASTM Designation: A 153, Class D, or SC 3

b. Electro-galvanized in accordance with ASTM Designation : B 633, TYPE III, SC 3.

Threads on bolts and nuts shall be manufactured with sufficient allowance for the cadmium plate or galvanized coating to permit the nuts to run freely on the bolts.

STRINGER BOLTING TO ALUMINUM SIGNS (SEE SIGN PLATE A4-18)

MACHINE BOLTS - 5/16" X 1-3/4" Length w/ lock nuts

WOOD POSTS (4" x 4" or 4" x 6")

LAG SCREWS - 3/8" X 3" (NO STRINGERS ON BACK OF SIGN)

3/8" X 4" (STRINGERS ON BACK OF SIGN)

SQUARE STEEL POSTS (2" x 2")

MACHINE BOLTS - 3/8" X 3-1/4" Length w/ nuts (NO STRINGER ON BACK OF SIGN)

3/8" X 5" Length w/ nuts (STRINGERS ON BACK OF SIGN)

RIVETS - 9/32 " (6605-9-6) BULB-TITE, TRI-FOLD, ALUMINUM BODY/MANDREL

O.D. FLANGE .720-.765 INCH, GRIP RANGE .042-.375 INCH

WASHERS (ALL POSTS) -

1-1/4" O.D. X 3/8" I.D. X 1/16" STEEL

1-1/4" O.D. X 3/8" I.D. X .080 NYLON

* Two different fastening systems are shown for illustration purposes. On any individual sign, either one or the other system shall be used. Actual number of fasteners per sign varies with the sign area, but normally there are two. For a single post installation, all signs greater than 9 sq. ft. require the use of 3 fasteners.

ATTACHMENT OF SIGNS TO POSTS

WISCONSIN DEPT OF TRANSPORTATION

APPROVED Matthew R Rauch for State Traffic Engineer

DATE 8/11/16 PLATE NO. A4-8.8

PROJECT NO: SHEET NO: E

TELESCOPIC TUBING ANCHORS
TWO PIECE SYSTEM

2 1/4" SQUARE
12 GAUGE
PERFORATED
GALVANIZED FINISH

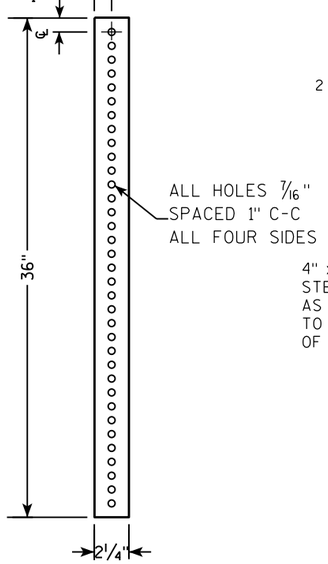

2 1/2" SQUARE
12 GAUGE
OMNI-DIRECTIONAL
PERFORATED
SOIL STABILIZING SLEEVE
GALVANIZED FINISH

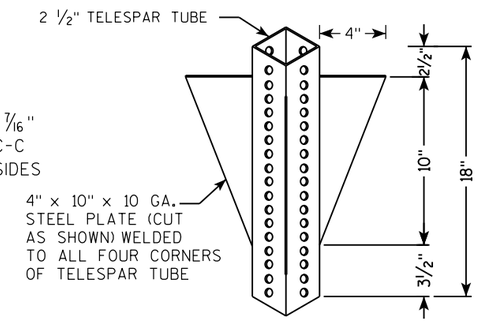

DETAIL OF TUBULAR STEEL SIGN POST
(IN POURED CONCRETE OR ASPHALT)

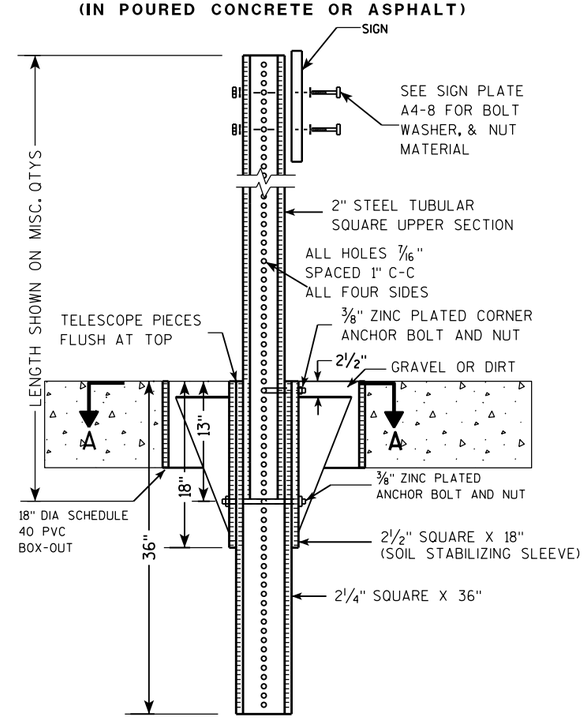

DETAIL OF TUBULAR STEEL SIGN POST
(IN LOCATIONS OTHER THAN POURED CONCRETE OR ASPHALT)

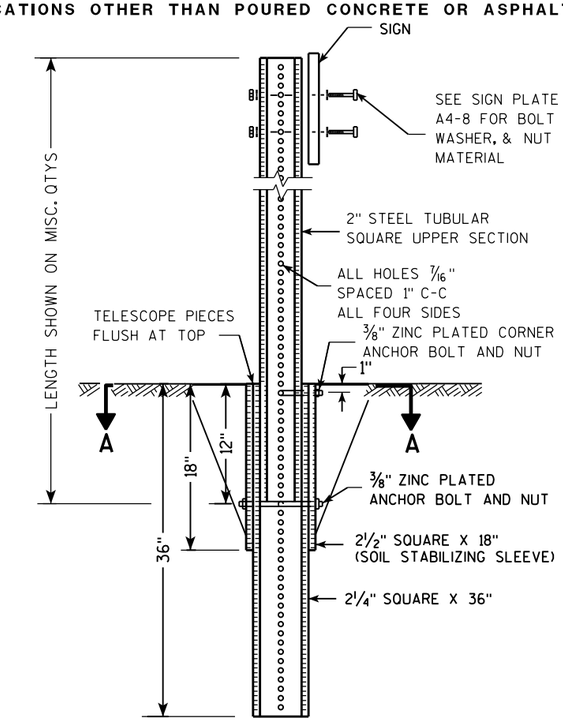

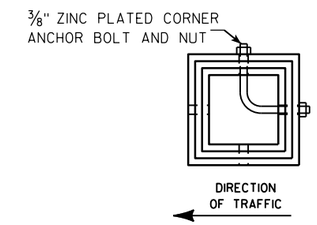

SECTION A-A

Area of Sign Installation (Sq. Ft.)	Number of Required Posts
9 or less	1
Greater than 9 less than or equal to 18	2
Greater than 18 less than or equal to 27	3

Signs wider than 3 feet or larger than 9 sq. ft shall be mounted on multiple posts (see above table).

TUBULAR STEEL
SIGN POST
A4-9

WISCONSIN DEPT OF TRANSPORTATION

APPROVED Matthew R Rauch
for State Traffic Engineer

DATE 2/05/15 PLATE A4-9.9

7 7

PROJECT NO:	HWY:	COUNTY:		SHEET NO:	E

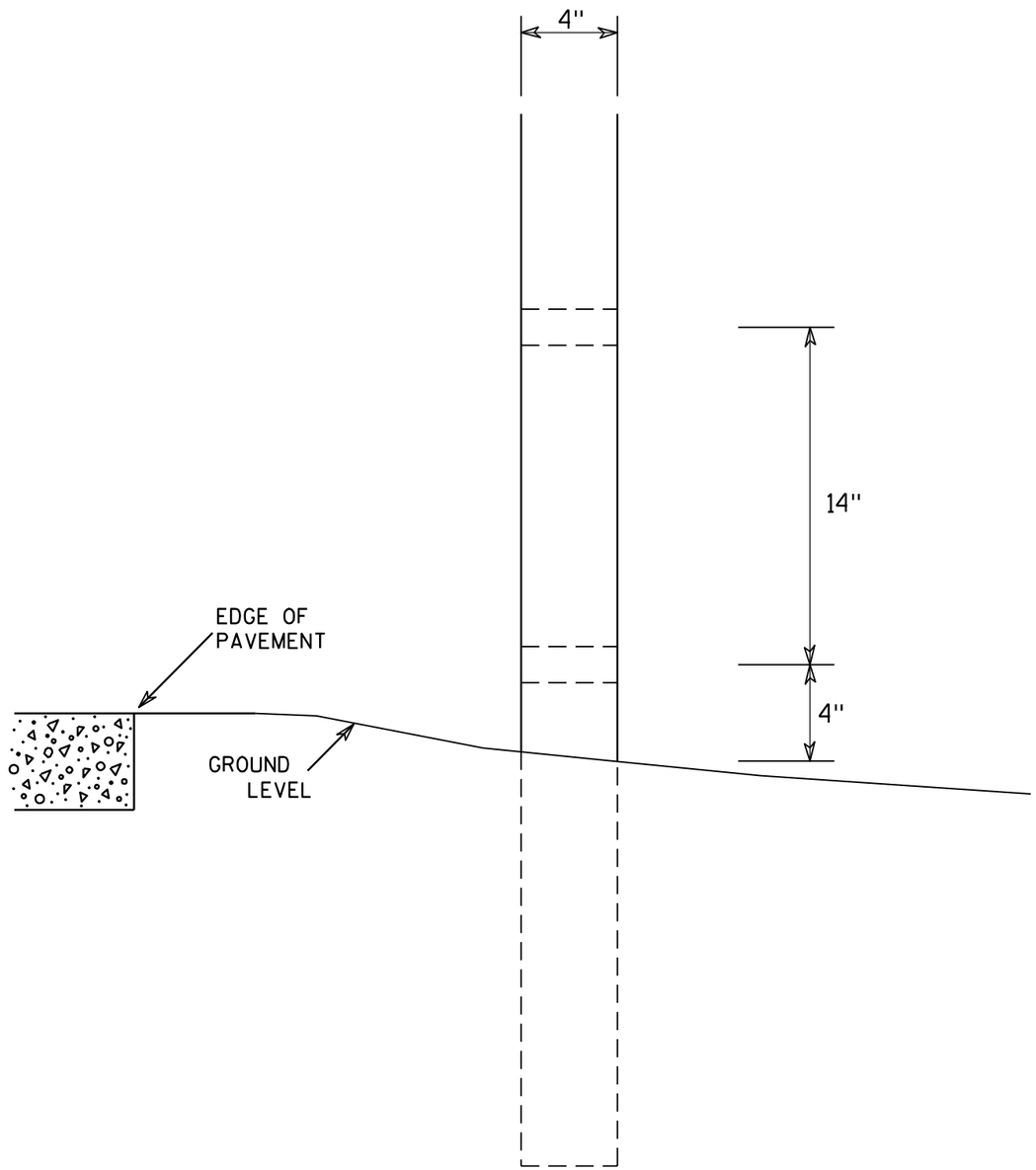

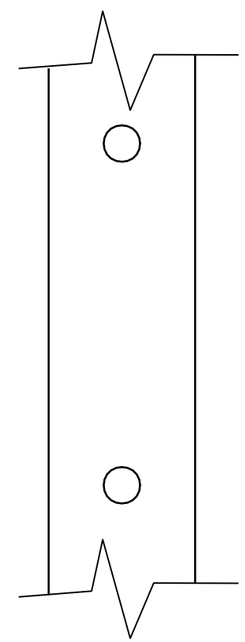

SIDE VIEW

GENERAL NOTES

1. All 4 x 6 Wood Posts shall be modified by having two 1½" diameter holes drilled perpendicular to the roadway centerline.

7

7

4 X 6 WOOD POST MODIFICATIONS

WISCONSIN DEPT OF TRANSPORTATION

APPROVED Chester J Spang for State Traffic Engineer

DATE 3/27/97 PLATE NO. A4-11.2

PROJECT NO:	HWY:	COUNTY:		SHEET NO: 107	E

SIGN LAYOUT WITH VARIOUS SIZED MESSAGES

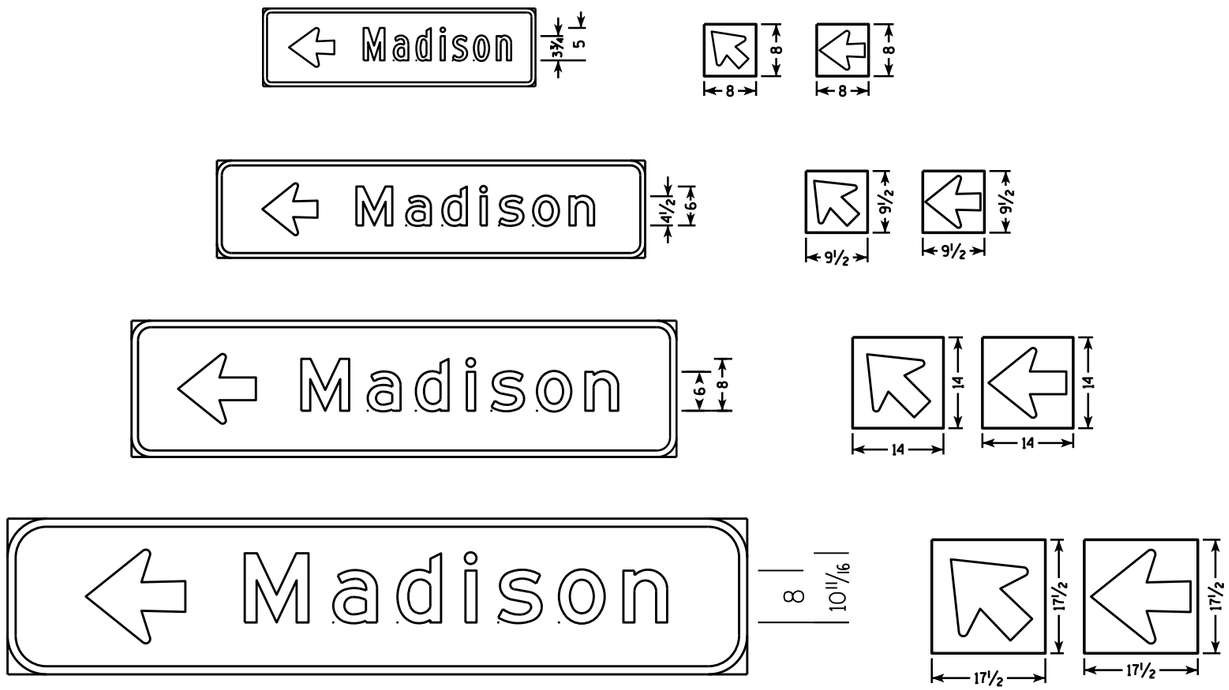

BEFORE

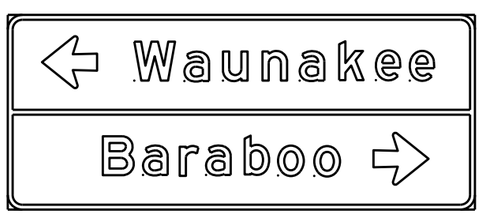

AFTER

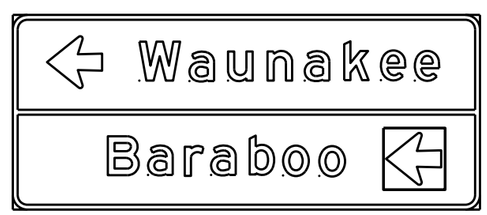

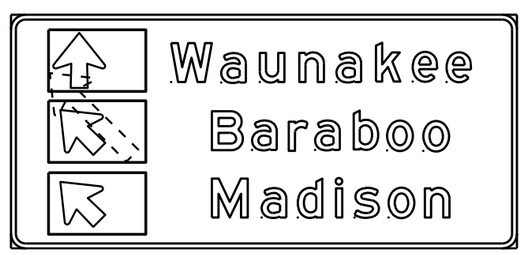

GENERAL NOTES

1. Materials shall conform to Standard Specification Section 637.
   Base - Sheet Aluminum 0.040" Thickness
   Sheeting - Orange Type F Reflective
   Arrow - Black Non-Reflective
2. Arrow signs shall be fastened to permanent sign by either aluminum rivets or aluminum self-tapping sheet metal screws. There shall be a minmum of 2 fasteners used per arrow sign.
3. There shall be a spacer consisting of a 0.08" nylon washer between the back of the arrow sign and the face of the permanent sign.
4. Arrows are per standard plate A1-2
5. Use separate arrow sign for each destination
6. Tilt arrow is always at 45 degrees
7. Arrow is centered on arrow sign

Lower Case Copy Size	Standard Width (Single Arrow)	2 Line Tilt Arrow Cover Width	3 Line Tilt Arrow Cover Width	Height
3¾" Series C	8	9 ½	14 ½	8
4½" Series D & E	9 ½	10	15	9 ½
6" Series D & E	14	16	20 ½	14
8" Series E	17 ½	20 ½	25	17 ½

DESTINATION DIRECTIONAL ARROW FOR DETOUR SIGNS

WISCONSIN DEPT OF TRANSPORTATION

APPROVED Matthew R Rauch
for State Traffic Engineer

DATE 10/08/14

A4-12.2

PROJECT NO:

SHEET NO: E

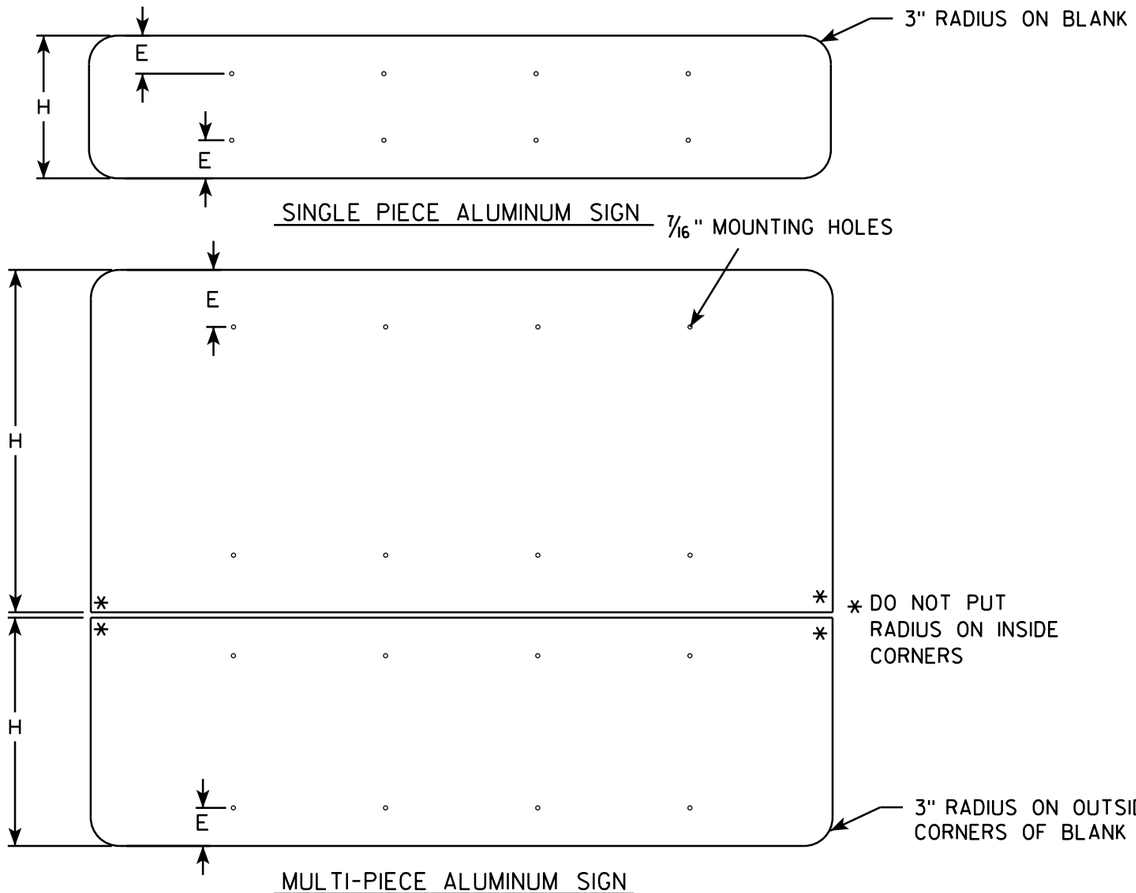

GENERAL NOTES

- ALL SIGNS OVER 60" IN WIDTH SHALL HAVE A 3" RADIUS ON THE OUTSIDE CORNERS OF THE ALUMINUM BLANK.
- MOUNTING HOLES SHALL BE 7/16" DIAMETER.
- SEE CHART FOR HOLE SPACING REQUIREMENTS
- FOR SIGN PANELS WITH DIMENSION (H) 36" AND OVER, DIMENSION E SHALL BE 6"
- FOR SIGN PANELS WITH DIMENSION (H) UNDER 36", DIMENSION E SHALL BE 4"
- SIGN STRINGER MATERIAL SHALL CONSIST OF STEEL CHANNEL POST SECTIONS, WEIGHING 1.12 LBS/FT IN ACCORDANCE WITH SECTION 633.2.1 OF THE STANDARD SPECIFICATIONS FOR HIGHWAY AND STRUCTURE CONSTRUCTION.
- SEE SIGN PLATE A4-8 FOR SIGN STRINGER BOLTING REQUIREMENTS.

SIGN WIDTH	STRINGER WIDTH	POSTS	HOLE SPACING	MOUNTING HOLES						
78"	72"	2	16"	15"	31"	47"	63"			
84"	72"	2	17"	16 1/2"	33 1/2"	50 1/2"	67 1/2"			
90"	72"	2	18"	18"	36"	54"	72"			
96"	90"	2	19"	19 1/2"	38 1/2"	57 1/2"	76 1/2"			
102"	90"	2	20"	21"	41"	61"	81"			
108"	90"	2	21"	22 1/2"	43 1/2"	64 1/2"	85 1/2"			
114"	108"	3	15"	12"	27"	42"	57"	72"	87"	102"
120"	108"	3	16"	12"	28"	44"	60"	76"	92"	108"
126"	108"	3	17"	12"	29"	46"	63"	80"	97"	114"
132"	126"	3	18"	12"	30"	48"	66"	84"	102"	120"
138"	126"	3	19"	12"	31"	50"	69"	88"	107"	126"
144"	126"	3	20"	12"	32"	52"	72"	92"	112"	132"

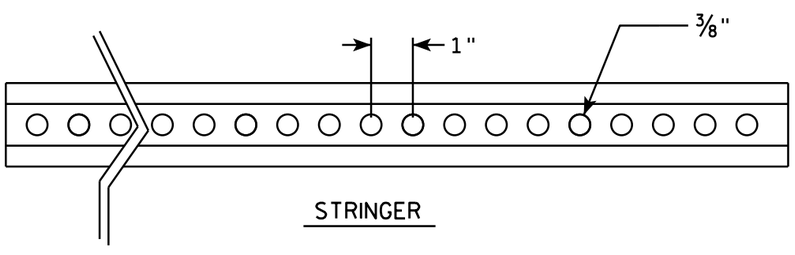

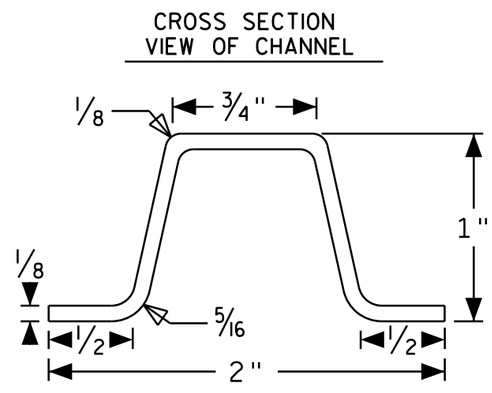

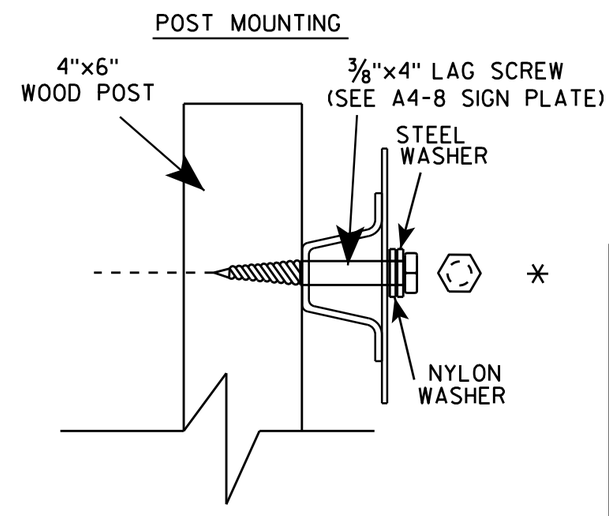

SIGN STRINGER MOUNTING REQUIREMENTS

WISCONSIN DEPT OF TRANSPORTATION

APPROVED Matthew R Rauch
for State Traffic Engineer

DATE 4/26/16 PLATE NO A4-18.1

PROJECT NO:	HWY:	COUNTY:		SHEET NO:	E

BANDING

SINGLE SIGN

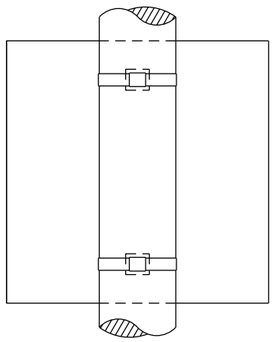

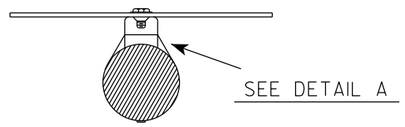

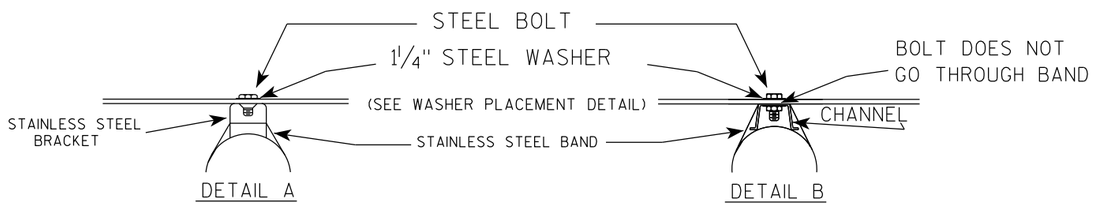

WASHER PLACEMENT

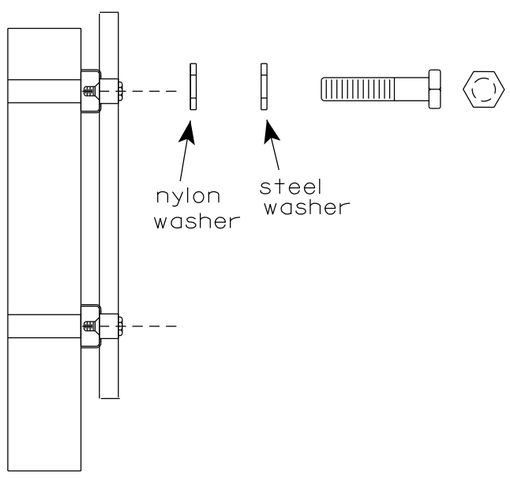

WASHERS (ALL POSTS) -
1-1/4" O.D. X 3/8" I.D. X 1/16" STEEL
1-1/4" O.D. X 3/8" I.D. X .080 NYLON
FOR ALL TYPE H SIGNS

GENERAL NOTES

1. Any sign over 3 feet in width shall use the V-Block banding method. See A5-10 standard plate.
2. Signs 3 feet or greater in height shall have three bracket bands installed. Signs less than 3 feet in height shall have two bracket bands installed.
3. Banding and assembly bracket shall be stainless steel. All bands shall be 3/4" in width and 0.025" thickness.
4. ALL SIGN MOUNTING BOLTS AND WASHERS SHALL BE EITHER:
   a. Hot dip or mechanically galvanized in accordance with ASTM Designation: A 153, Class D
   b. Electro-galvanized in accordance with ASTM designation: B 633, Type III, SC 3

"J" ASSEMBLY

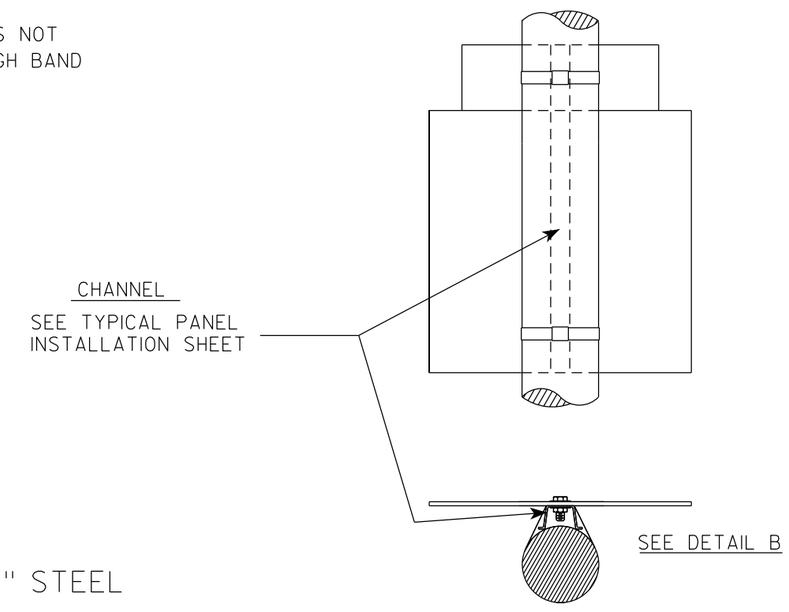

STANDARD SIGN
SIGN BANDING DETAILS

WISCONSIN DEPT OF TRANSPORTATION

APPROVED Matthew R Rauch for State Traffic Engineer

DATE 6/10/19 PLATE NO. A5-9.4

PROJECT NO:	HWY:	COUNTY:		SHEET NO: 110	E

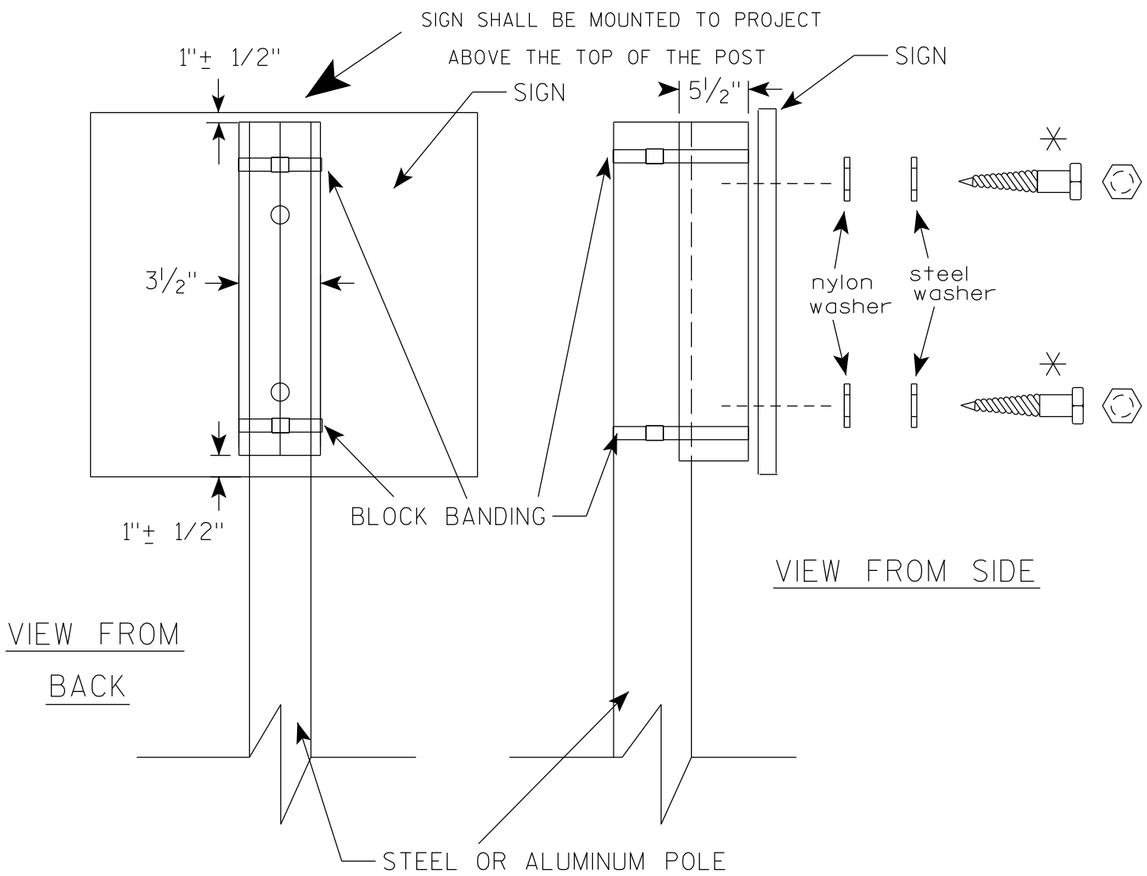

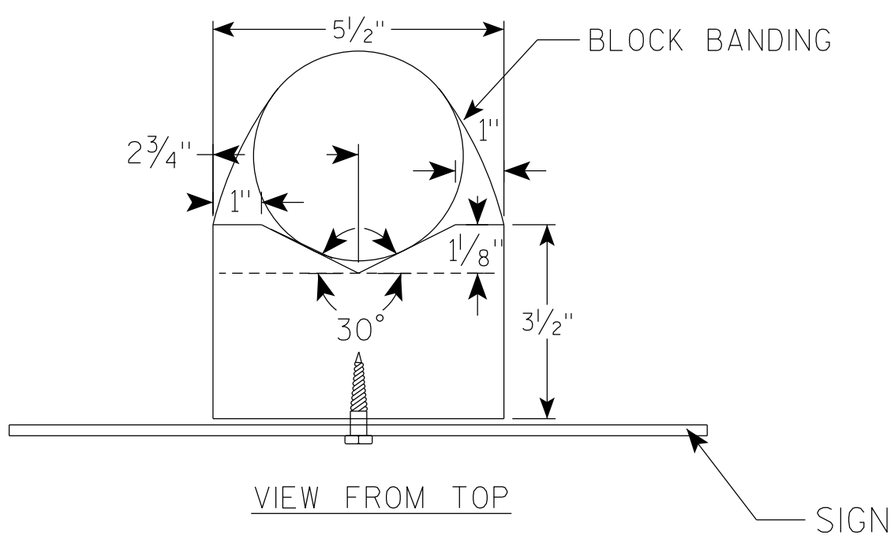

GENERAL NOTES

1. WOOD 4"X6" POST MATERIAL SHALL CONFORM TO 507.2.2 OF THE WisDOT STANDARD SPECIFICATIONS
2. BLOCK BANDING AND CLIPS SHALL BE STAINLESS STEEL, 3/4" WIDTH AND 0.025" THICKNESS
3. SIGNS 3' OR GREATER IN HEIGHT SHALL UTILIZE 3 BLOCK BANDS. SIGNS UNDER 3' IN HEIGHT SHALL UTILIZE 2 BLOCK BANDS
4. ACTUAL NUMBER OF FASTENERS PER SIGN VARIES WITH THE SIGN AREA, BUT NORNALLY THERE ARE TWO. FOR SIGNS GREATER THAN 9 S.F. 3 FASTENERS SHALL BE USED.
5. ALL SIGN MOUNTING BOLTS AND WASHERS SHALL BE EITHER:
   a. Hot dip or mechanically galvanized in accordance with ASTM Designation: A 153, Class D
   b. Electro-galvanized in accordance with ASTM Designation : B 633, TYPE III, SC 3
6. ALL BOLTS SHALL HAVE HEXAGONAL HEADS.
7. STEEL WASHERS SHALL BE 1 1/4" O.D. X 3/8" I.D. X 1/16"
8. NYLON WASHERS SHALL BE 1 1/4" O.D. X 3/8" I.D. X .080 FOR TYPE H OR TYPE F FACE SIGN

✳ LAG BOLTS SHALL BE 3/8" X 2 1/2"

BLOCK BANDING DETAIL
(V-BLOCK OPTION)

WISCONSIN DEPT OF TRANSPORTATION

APPROVED Matthew R Rauch
For State Traffic Engineer

DATE 6/10/19 PLATE NO. A5-10.2

PROJECT NO:				SHEET NO: 111	E

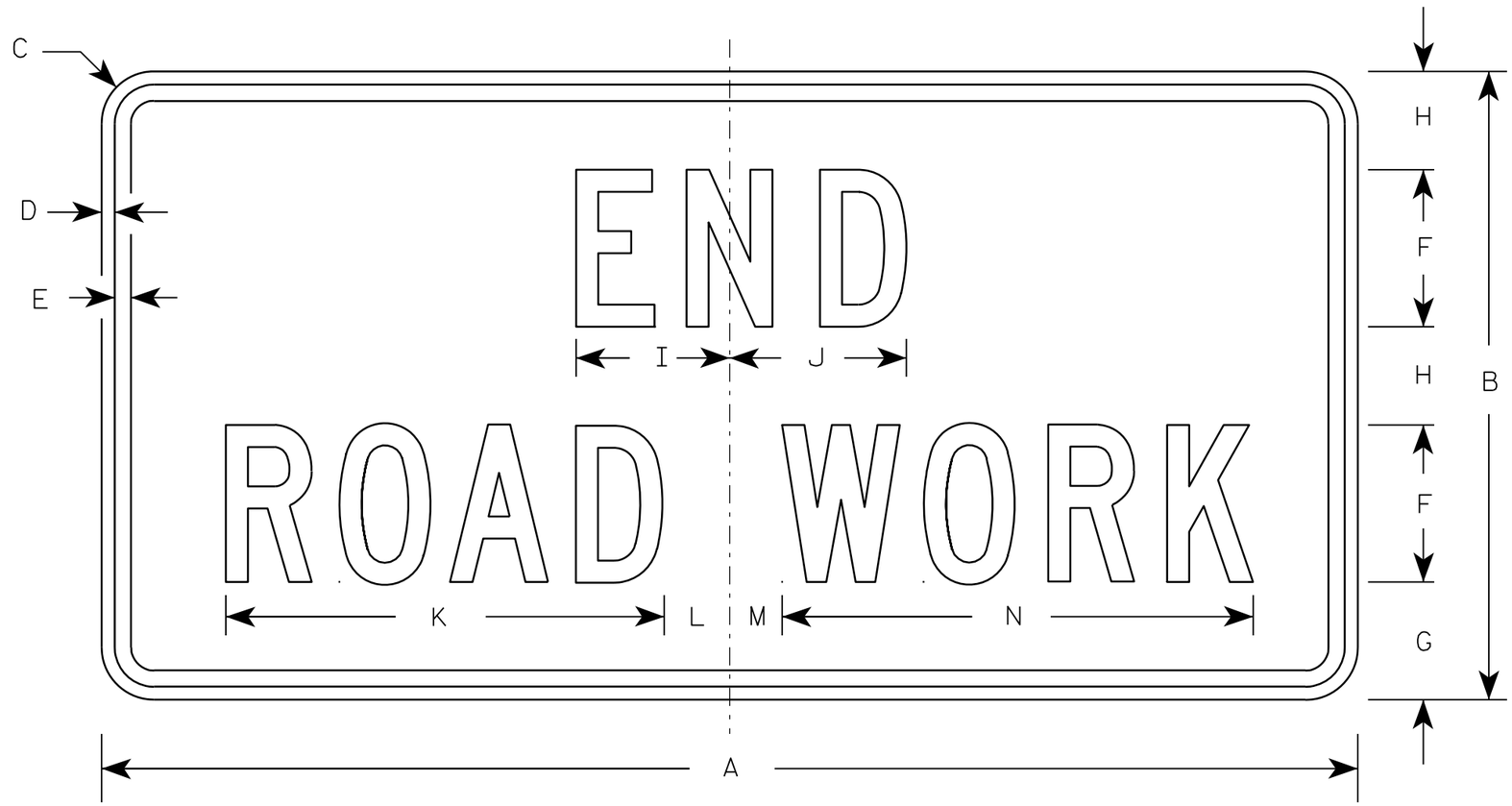

G20-2A

NOTES

1. Sign is Type II - Type F Reflective - reference WIS DOT Standard Specification for HIGHWAY and STRUCTURE CONSTRUCTION latest edition.
2. Color:
   Background - Orange
   Message - Black
3. Message Series - C
4. Corners may be square or rounded when base material is plywood but borders shall be rounded as shown. When base material is metal, the corners and borders shall be rounded.

Metric equivalent for this sign is:

SIZE	
1	900 mm X 450 mm
2	1200 mm X 600 mm
3	1200 mm X 600 mm
4	1200 mm X 600 mm
5	1200 mm X 600 mm

SIZE	A	B	C	D	E	F	G	H	I	J	K	L	M	N	O	P	Q	R	S	T	U	V	W	X	Y	Z	Area sq. ft.	Area m2
1	36	18	1 1/8	3/8	1/2	4	3 3/4	2 1/2	4 1/8	4 1/8	11 1/8	2	1	12 1/8													4.5	0.41
2	48	24	1 1/2	1/2	5/8	6	4 1/2	3 3/4	5 7/8	6 3/4	16 3/4	2 1/2	1 3/4	18 1/2													8.0	0.72
3	48	24	1 1/2	1/2	5/8	6	4 1/2	3 3/4	5 7/8	6 3/4	16 3/4	2 1/2	1 3/4	18 1/2													8.0	0.72
4	48	24	1 1/2	1/2	5/8	6	4 1/2	3 3/4	5 7/8	6 3/4	16 3/4	2 1/2	1 3/4	18 1/2													8.0	0.72
5	48	24	1 1/2	1/2	5/8	6	4 1/2	3 3/4	5 7/8	6 3/4	16 3/4	2 1/2	1 3/4	18 1/2													8.0	0.72

STANDARD SIGN

G20-2A

WISCONSIN DEPT OF TRANSPORTATION

APPROVED Matthew R Rauch
for State Traffic Engineer

DATE 9/30/09 PLATE NO. G20-2A.8

PROJECT NO:	HWY:	COUNTY:		SHEET NO: 112	E

NOTES

1. Sign is Type II - Type F Reflective
2. Color:
   Background - Orange
   Message - Black
3. Message Series - D
4. Substitute appropriate numeral and adjust spacing to achieve proper balance.

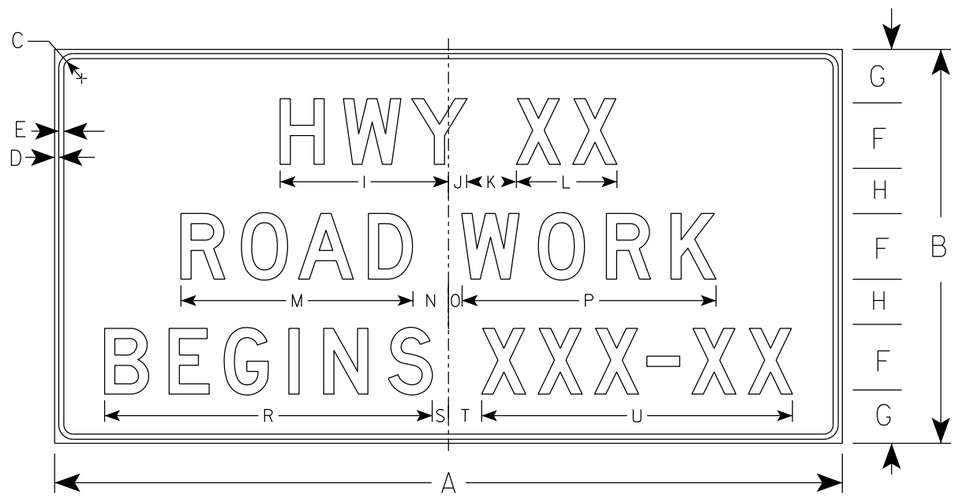

G20-57

SIZE	A	B	C	D	E	F	G	H	I	J	K	L	M	N	O	P	Q	R	S	T	U	V	W	X	Y	Z	Area sq. ft.
1																											
2																											
3	72	36	1 1/8	1/2	5/8	6	5	4	15 5/8	1 5/8	5	9 1/4	21 1/4	3 1/2	1 1/2	23 1/4		29 7/8	1 3/4	3 1/4	28 1/2						18.0
4	96	48	2 1/4	3/4	1	8	6 1/2	5 1/2	20 5/8	2 1/4	6	12 1/4	28 1/4	4 3/8	1 5/8	31		39 1/4	2	4	37 7/8						32.0
5																											

STANDARD SIGN

G20-57

WISCONSIN DEPT OF TRANSPORTATION

APPROVED Matthew R Rauch
For State Traffic Engineer

DATE 1/22/19 PLATE NO. G20-57.3

PROJECT NO: HWY: COUNTY: SHEET NO: 113 E

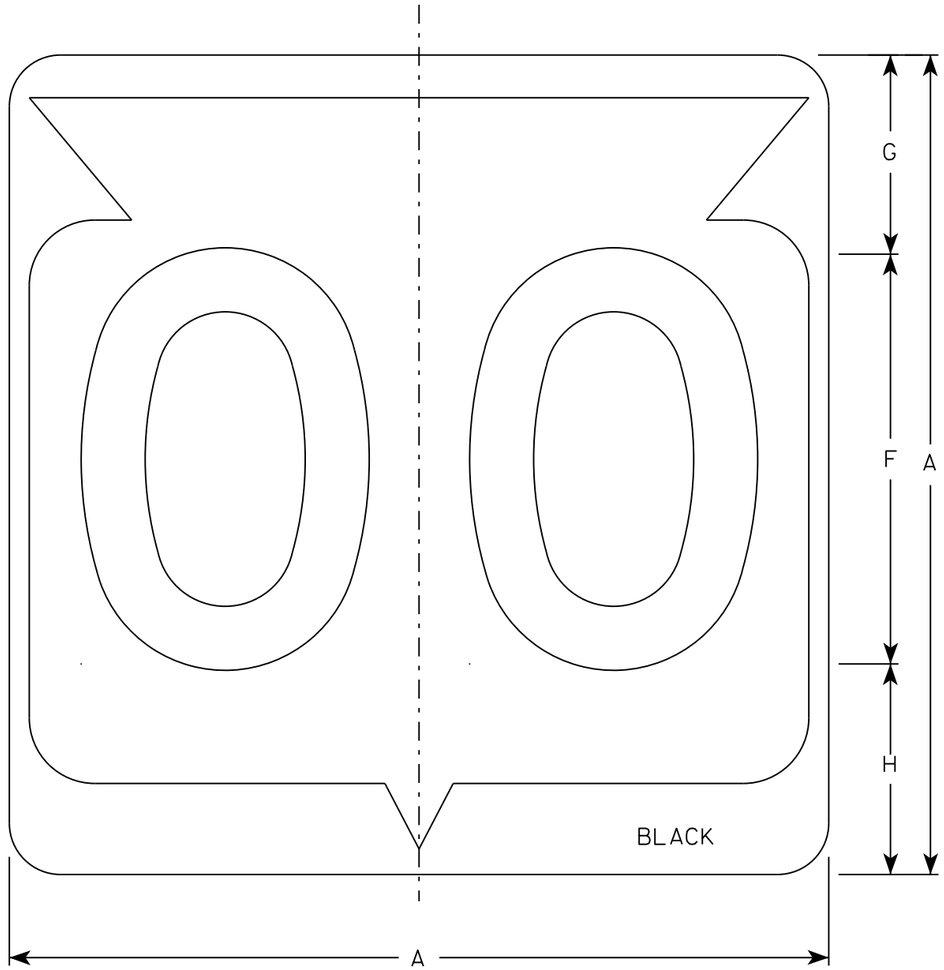

M1-6

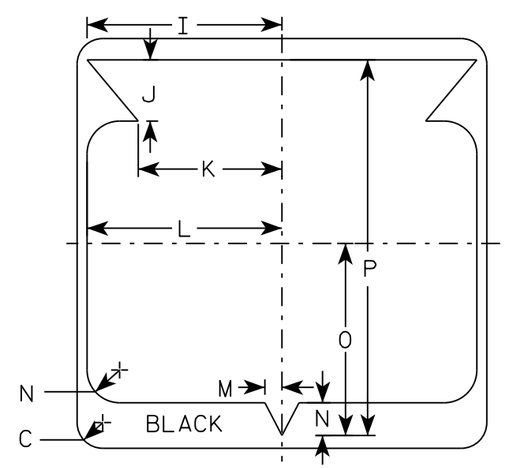

NOTES

1. Sign is Type II - Type H Reflective
2. Color:
   Background - White
   Message - Black
3. Message Series - D except 3 number signs Series C
4. Corners may be square or rounded when base material is plywood but borders shall be rounded as shown. When base material is metal, the corners and borders shall be rounded.

SIZE	A	B	C	D	E	F	G	H	I	J	K	L	M	N	O	P	Q	R	S	T	U	V	W	X	Y	Z	Area sq. ft.
1																											
2	24		1 1/2			12	5 1/2	6 1/2	10 1/4	2 1/2	8 7/8	11 1/2	1	1 7/8	11 1/4	21 7/8											4.0
3	36		2 1/4			18	8 3/4	9 1/4	15 3/8	5 3/8	12 5/8	17 1/8	1 1/2	2 7/8	16 7/8	33											9.0
4	36		2 1/4			18	8 3/4	9 1/4	15 3/8	5 3/8	12 5/8	17 1/8	1 1/2	2 7/8	16 7/8	33											9.0
5	36		2 1/4			18	8 3/4	9 1/4	15 3/8	5 3/8	12 5/8	17 1/8	1 1/2	2 7/8	16 7/8	33											9.0

STATE ROUTE MARKER
M1-6 FOR ASSEMBLIES

WISCONSIN DEPT OF TRANSPORTATION

APPROVED Matthew R Rauch
for State Traffic Engineer

DATE 3/16/18 PLATE NO. M1-6.10

PROJECT NO: | HWY: | COUNTY: | SHEET NO: 114 | E

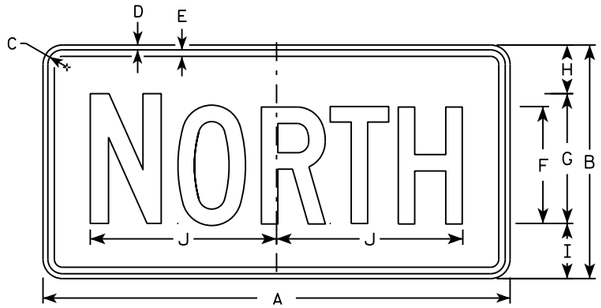

M3-1
MM3-1
MP3-1

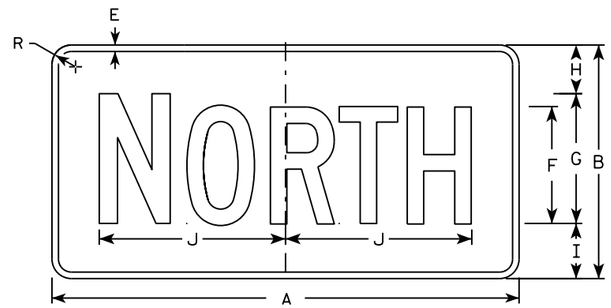

MB3-1
MK3-1
MN3-1

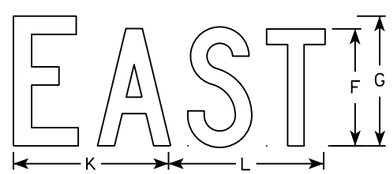

M3-2
MM3-2
MP3-2

MB3-2
MK3-2
MN3-2

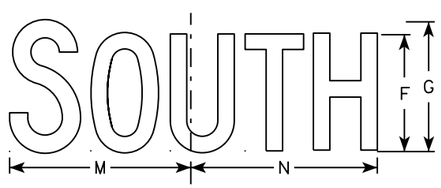

M3-3
MM3-3
MP3-3

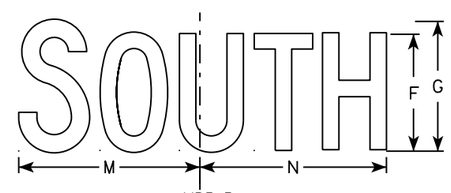

MB3-3
MK3-3
MN3-3

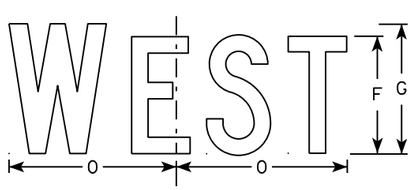

M3-4
MM3-4
MP3-4

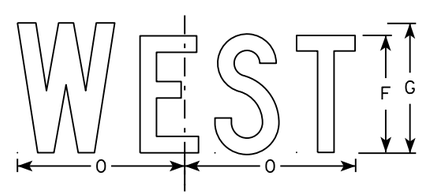

MB3-4
MK3-4
MN3-4

NOTES

1. All Signs Type II - Type H
2. Color:
   Background - See note 5
   Message - See note 5
3. Message Series - C
4. Corners may be square or rounded when base material is plywood but borders shall be rounded as shown. When base material is metal, the corners and borders shall be rounded.
5. M3-1 thru M3-4 Background - White
   Message - Black
   MB3-1 thru MB3-4 Background - Blue
   Message - White
   MK3-1 thru MK3-4 Background - Green
   Message - White
   MM3-1 thru MM3-4 Background - White
   Message - Green
   MN3-1 thru MN3-4 Background - Brown
   Message - White
   MP3-1 thru MP3-4 Background - White
   Message - Blue
6. Note the first letter of each direction is larger than the remainder of the message.

SIZE	A	B	C	D	E	F	G	H	I	J	K	L	M	N	O	P	Q	R	S	T	U	V	W	X	Y	Z	Area sq. ft.
1																											
2	24	12	1 1/8	3/8	3/8	6	7	2 1/4	2 3/4	10 1/4	7 7/8	8 3/8	10 1/4	9 3/4	8 3/4			1 1/2									2.00
3	36	18	1 1/8	3/8	1/2	9	10	3 3/4	4 1/4	14 3/8	12	12 1/8	14	14 1/8	13			1 1/2									4.5
4	36	18	1 1/8	3/8	1/2	9	10	3 3/4	4 1/4	14 3/8	12	12 1/8	14	14 1/8	13			1 1/2									4.5
5	36	18	1 1/8	3/8	1/2	9	10	3 3/4	4 1/4	14 3/8	12	12 1/8	14	14 1/8	13			1 1/2									4.5

STANDARD SIGNS
M3-1 thur M3-4
SERIES

WISCONSIN DEPT OF TRANSPORTATION

APPROVED Matthew R Rauch
for State Traffic Engineer

DATE 10/15/15 PLATE NO M3-1.14

PROJECT NO: | HWY: | COUNTY: | SHEET NO: | E

FILE NAME : C:\CAEfiles\Projects\tr_stdplate\M31.DGN PLOT DATE : 01-DEC-2015 17:54 PLOT BY : $$ plotuser $$ PLOT NAME : PLOT SCALE : 11.675051:1.000000

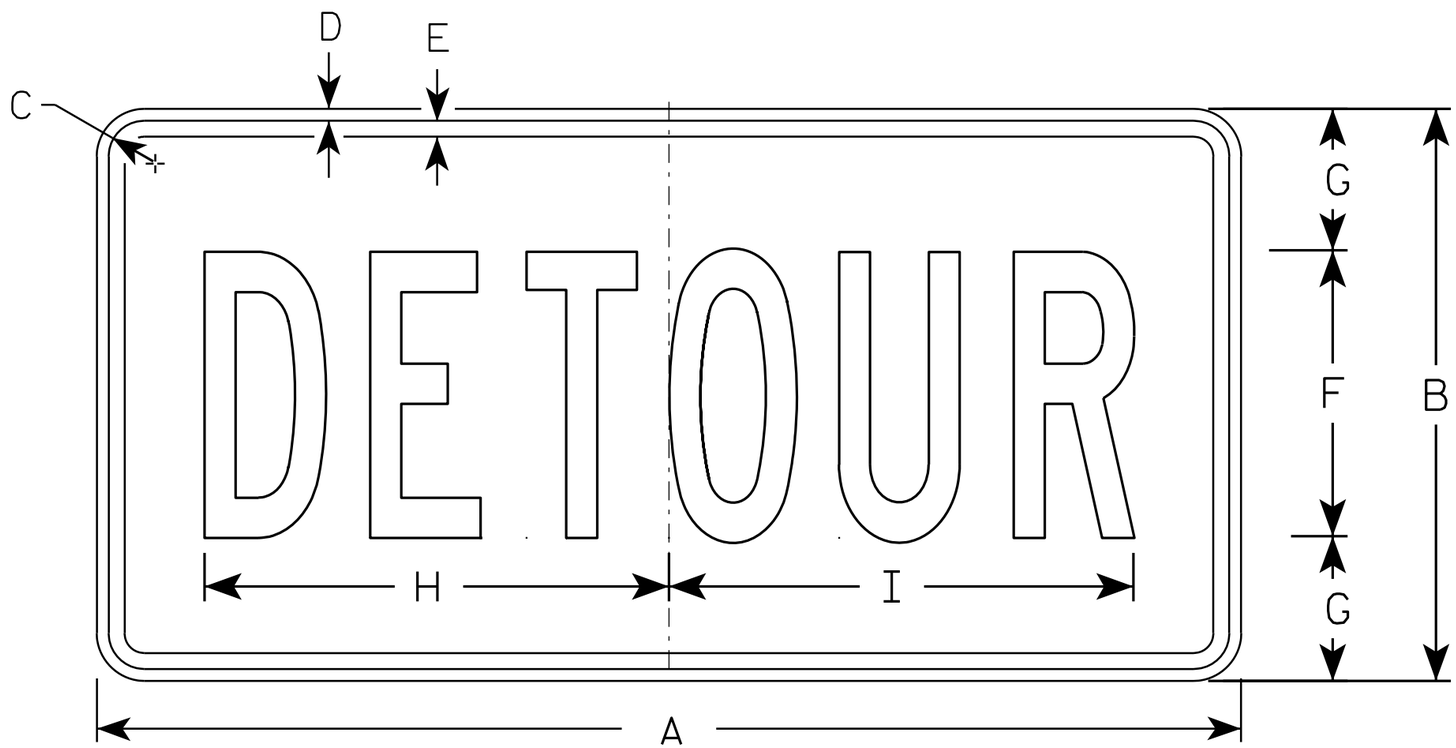

M4-8

NOTES

1. Sign is Type II - Type F Reflective - reference WIS DOT Standard Specification for HIGHWAY and STRUCTURE CONSTRUCTION latest edition.
2. Color:
   Background - Orange
   Message - Black
3. Message Series - B
4. Corners may be square or rounded when base material is plywood but borders shall be rounded as shown. When base material is metal, the corners and borders shall be rounded.

SIZE	A	B	C	D	E	F	G	H	I	J	K	L	M	N	O	P	Q	R	S	T	U	V	W	X	Y	Z	Area sq. ft.
1																											
2	24	12	1 1/8	3/8	3/8	6	3	10	10 1/4																		2.0
3	36	18	1 1/8	3/8	1/2	9	4 1/2	14 5/8	14 1/2																		4.5
4																											
5																											

STANDARD SIGN
M4-8

WISCONSIN DEPT OF TRANSPORTATION

APPROVED Matthew R Rauch
for State Traffic Engineer

DATE 11/10/10 PLATE NO. M4-8.2

PROJECT NO: | HWY: | COUNTY: | SHEET NO: 116 | E

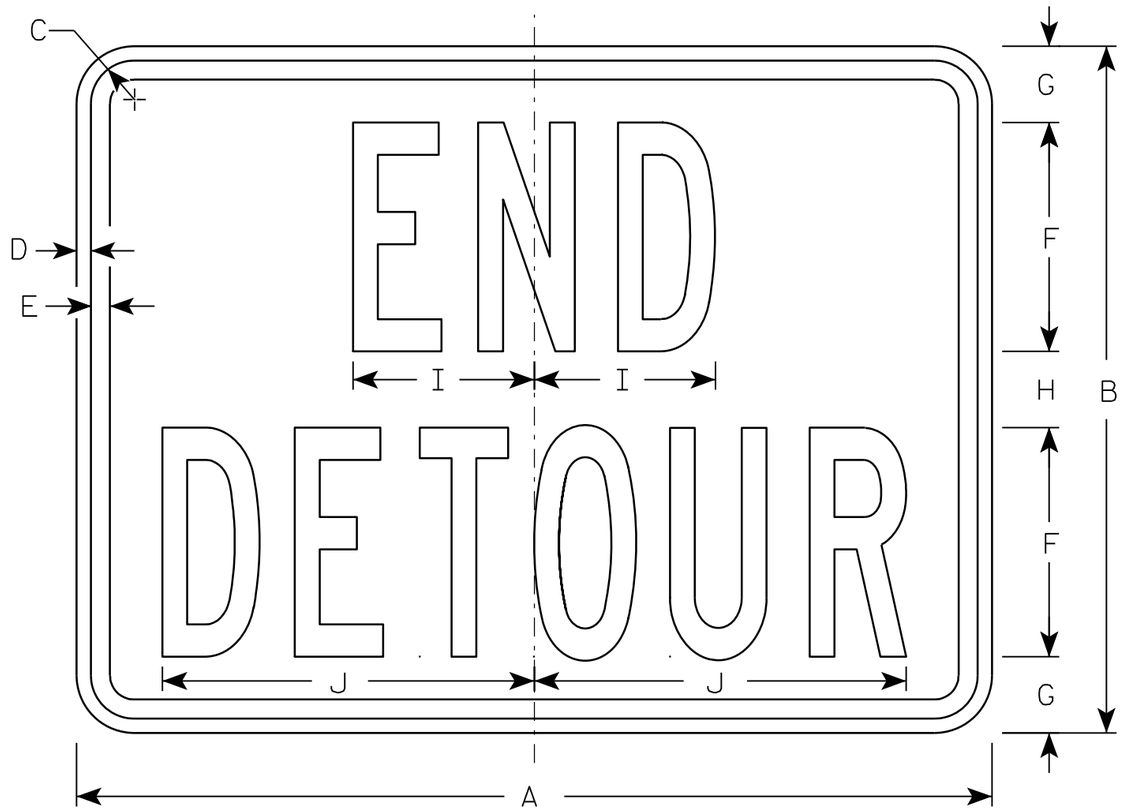

M4-8A

NOTES

1. Sign is Type II - Type F Reflective - reference WIS DOT Standard Specification for HIGHWAY and STRUCTURE CONSTRUCTION latest edition.
2. Color:
   Background - Orange
   Message - Black
3. Message Series - B
4. Corners may be square or rounded when base material is plywood but borders shall be rounded as shown. When base material is metal, the corners and borders shall be rounded.

SIZE	A	B	C	D	E	F	G	H	I	J	K	L	M	N	O	P	Q	R	S	T	U	V	W	X	Y	Z	Area sq. ft.
1																											
2	24	18	1 1/8	3/8	1/2	6	2	2	4 3/4	9 3/4																	3.0
3	30	24	1 1/8	3/8	1/2	8	2 1/2	3	6 3/4	13																	5.0
4																											
5																											

STANDARD SIGN
M4-8A

WISCONSIN DEPT OF TRANSPORTATION

APPROVED Matthew R Rauch
for State Traffic Engineer

DATE 3/9/11 PLATE NO. M4-8A.2

PROJECT NO: | HWY: | COUNTY: | SHEET NO: 117 | E

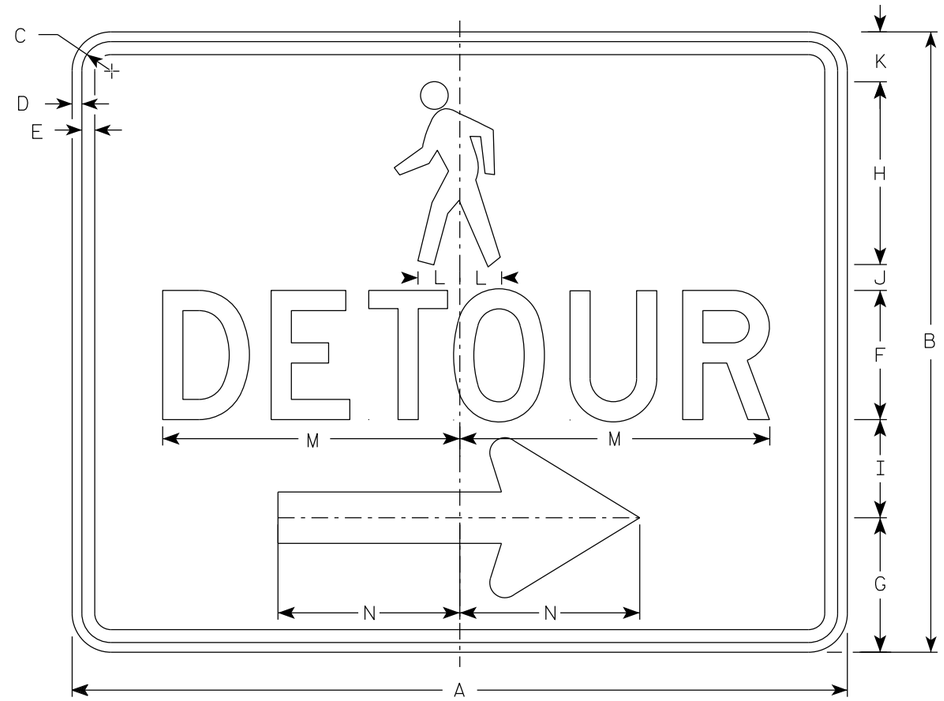

M4-9BR

NOTES

1. Sign is Type II-Type F Reflective
2. Color:
   Background - Orange
   Message - Black
3. Message Series - D
4. Corners may be square or rounded when base material is plywood but borders shall be rounded as shown. When base material is metal, the corners and borders shall be rounded.
5. M4-9BL is the same as M4-9BR except the arrow is reversed.

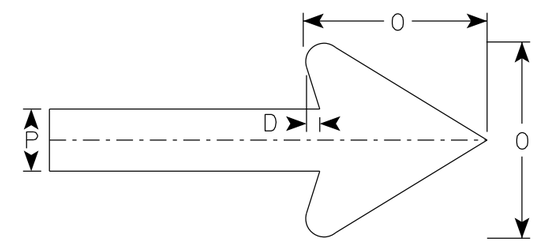

Arrow Detail

SIZE	A	B	C	D	E	F	G	H	I	J	K	L	M	N	O	P	Q	R	S	T	U	V	W	X	Y	Z	Area sq. ft.
1																											
2	30	24	1 1/8	3/8	1/2	5	5 1/4	7 1/8	3 3/4	1	1 1/8	1 5/8	11 3/4	7	6	2											5.00
3																											
4																											
5																											

STANDARD SIGN
M4-9B L&R

WISCONSIN DEPT OF TRANSPORTATION

APPROVED Matthew R Rauch
for State Traffic Engineer

DATE 7/1/19 PLATE NO. M4-9B.2

PROJECT NO: | HWY: | COUNTY: | SHEET NO: 118 | E

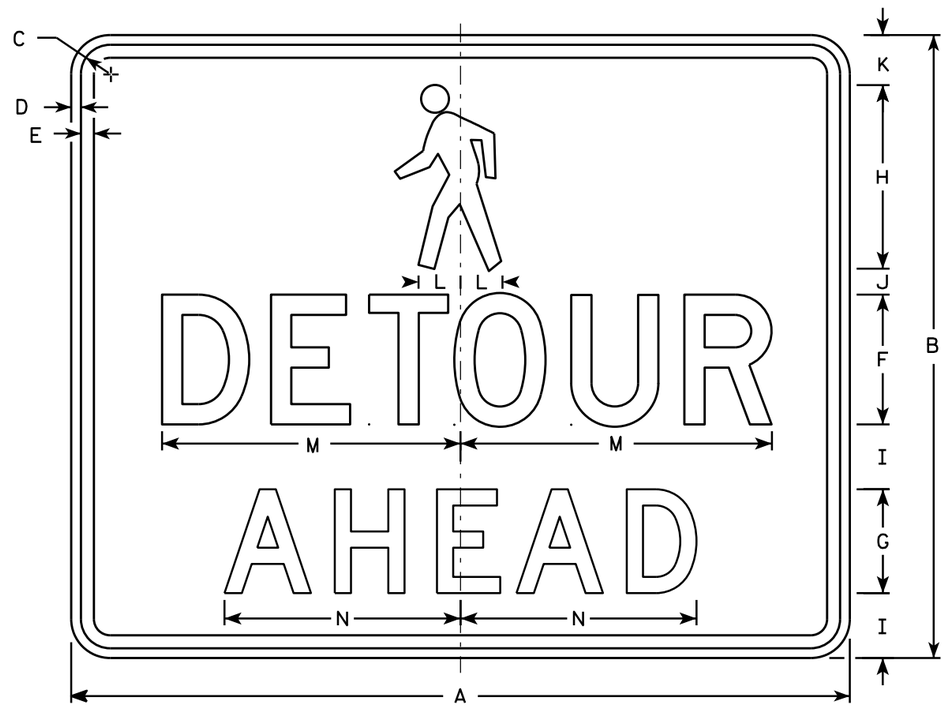

M4-9BA

NOTES

1. Sign is Type II - Type F Reflective
2. Color:
   Background - Orange
   Message - Black
3. Message Series - D
4. Corners may be square or rounded when base material is plywood but borders shall be rounded as shown. When base material is metal, the corners and borders shall be rounded.

SIZE	A	B	C	D	E	F	G	H	I	J	K	L	M	N	O	P	Q	R	S	T	U	V	W	X	Y	Z	Area sq. ft.
1																											
2	30	24	1 1/8	3/8	1/2	5	4	7 1/8	2 1/2	1	1 7/8	1 5/8	11 3/4	9 1/8													5.0
3																											
4																											
5																											

STANDARD SIGN
M4-9BA

WISCONSIN DEPT OF TRANSPORTATION

APPROVED Matthew R Rauch
for State Traffic Engineer

DATE 3/24/16 PLATE NO. M4-9BA.1

PROJECT NO: | HWY: | COUNTY: | SHEET NO: | E

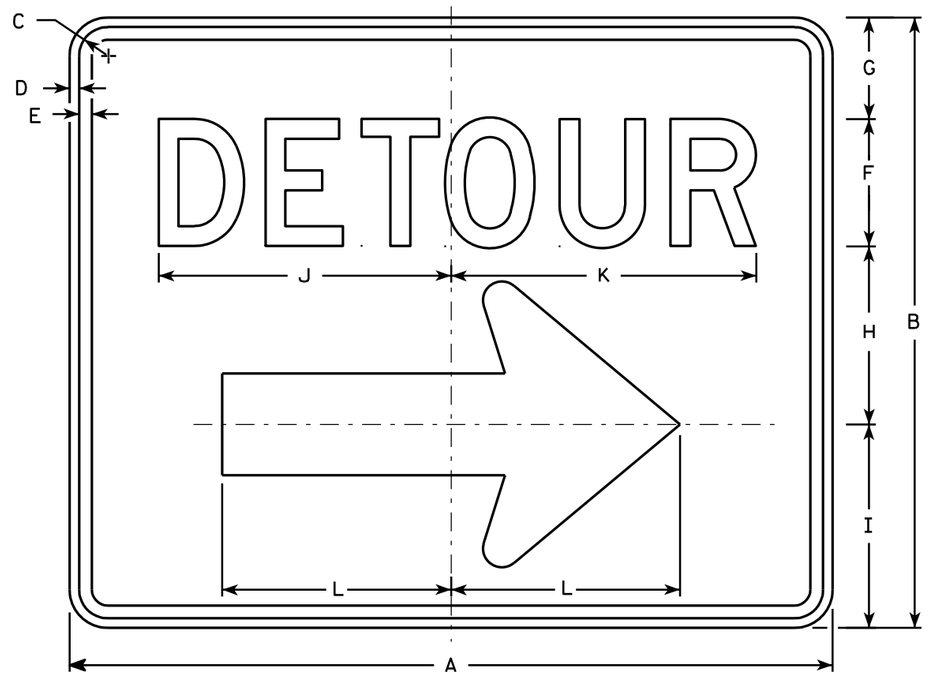

M4-9R

NOTES

1. Sign is Type II - Type F Reflective - reference WIS DOT Standard Specification for HIGHWAY and STRUCTURE CONSTRUCTION latest edition.
2. Color:
   Background - Orange
   Message - Black
3. Message Series - D
4. Corners may be square or rounded when base material is plywood but borders shall be rounded as shown. When base material is metal, the corners and borders shall be rounded.
5. M4-9L is the same as M4-9R except the arrow is reversed.

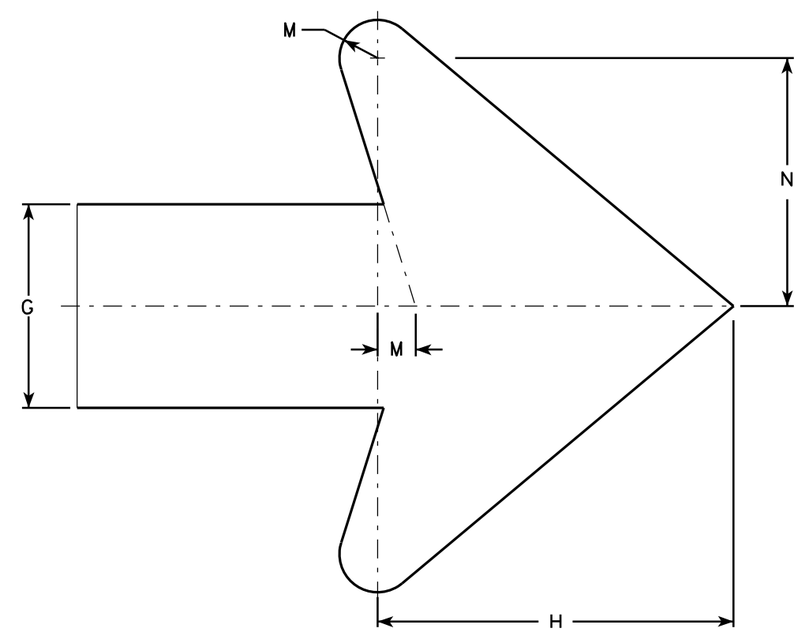

Arrow Detail

SIZE	A	B	C	D	E	F	G	H	I	J	K	L	M	N	O	P	Q	R	S	T	U	V	W	X	Y	Z	Area sq. ft.
1																											
2	30	24	1 1/8	3/8	1/2	5	4	7	8	11 1/2	12	9	3/4	4 7/8													5.00
3	30	24	1 1/8	3/8	1/2	5	4	7	8	11 1/2	12	9	3/4	4 7/8													5.00
4	48	36	1 3/8	1/2	5/8	8	6	10 1/2	11 5/8	20 5/8	20 1/2	13 1/4	1 1/8	6 7/8													12.0
5	48	36	1 3/8	1/2	5/8	8	6	10 1/2	11 5/8	20 5/8	20 1/2	13 1/4	1 1/8	6 7/8													12.0

STANDARD SIGN
M4-9 R & L

WISCONSIN DEPT OF TRANSPORTATION

APPROVED Matthew R Rauch
for State Traffic Engineer

DATE 3/9/11 PLATE NO. M4-9R.4

PROJECT NO: | HWY: | COUNTY: | SHEET NO: 120 | E

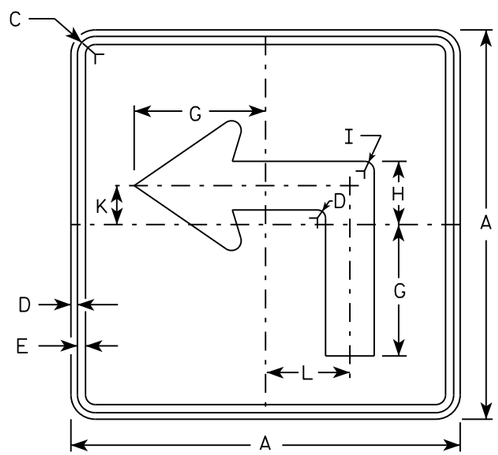

M5-1L
MM5-1L
MO5-1L
MP5-1L

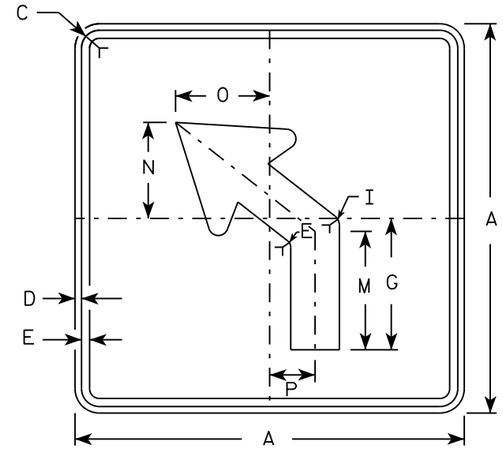

M5-2L
MM5-2L
MO5-2L
MP5-2L

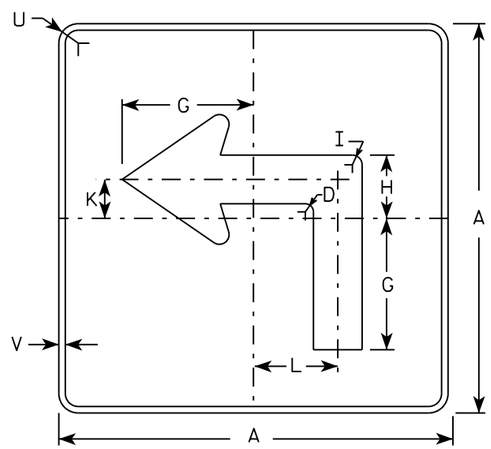

MB5-1L
MK5-1L
MN5-1L
MR5-1L

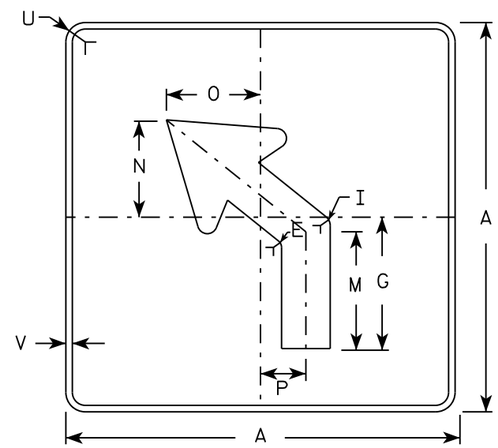

MB5-2L
MK5-2L
MN5-2L
MR5-2L

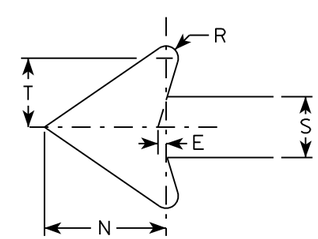

NOTES

1. Signs are Type II - Type H reflective except as shown
2. Color:
   Background - See note 4
   Message - See note 4
3. Corners may be square or rounded when base material is plywood but borders shall be rounded as shown. When base material is metal, the corners and borders shall be rounded.
4. M5-1 and M5-2 Background - White
   Message - Black
   MB5-1 and MB5-2 Background - Blue
   Message - White
   MK5-1 and MK5-2 Background - Green
   Message - White
   MM5-1 and MM5-2 Background - White
   Message - Green
   MN5-1 and MN5-2 Background - Brown
   Message - White
   MO5-1 and MO5-2 Background - Orange - Type F Reflective
   Message - Black
   MP5-1 and MP5-2 Background - White - Type H Reflective
   Message - Blue
   MR5-1 and MR5-2 Background - Brown
   Message - Yellow
5. M5-1R same as M5-1L except arrow points right.
6. M5-2R same as M5-2L except arrow tilts right.

SIZE	A	B	C	D	E	F	G	H	I	J	K	L	M	N	O	P	Q	R	S	T	U	V	W	X	Y	Z	Area sq. ft.
1																											
2	21		1 1/8	3/8	3/8		7	3 3/8	5/8		2 1/8	4 1/2	6 3/8	5 1/4	5	2 1/2		1/2	2 5/8	3	1 1/2	1/2					3.06
3	30		1 3/8	1/2	5/8		10 1/8	4 7/8	7/8		3	6 1/2	9 1/8	7 1/2	7 1/4	3 1/2		3/4	3 3/4	4 1/4	1 7/8	1/2					6.25
4	30		1 3/8	1/2	5/8		10 1/8	4 7/8	7/8		3	6 1/2	9 1/8	7 1/2	7 1/4	3 1/2		3/4	3 3/4	4 1/4	1 7/8	1/2					6.25
5	30		1 3/8	1/2	5/8		10 1/8	4 7/8	7/8		3	6 1/2	9 1/8	7 1/2	7 1/4	3 1/2		3/4	3 3/4	4 1/4	1 7/8	1/2					6.25

STANDARD SIGN
M5-1 & M5-2

WISCONSIN DEPT OF TRANSPORTATION

APPROVED Matthew R Rauch
for State Traffic Engineer

DATE 10/15/15 PLATE NO. M5-1.13

PROJECT NO: | HWY: | COUNTY: | SHEET NO: E

FILE NAME : C:\CAEfiles\Projects\tr stdplate\M51.DGN PLOT DATE : 01-DEC-2015 18:07 PLOT BY : $$ plotuser $$ PLOT NAME : PLOT SCALE : 11.675051:1.000000

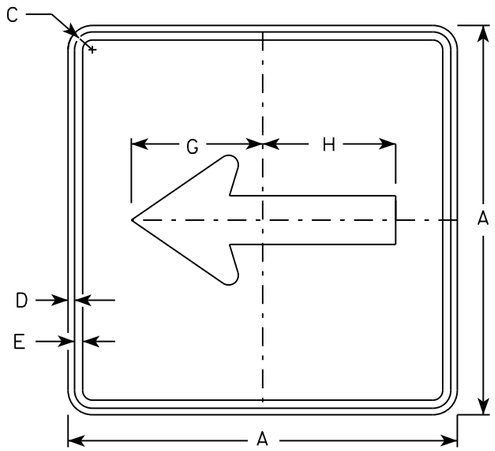

M6-1
MM6-1
MO6-1
MP6-1

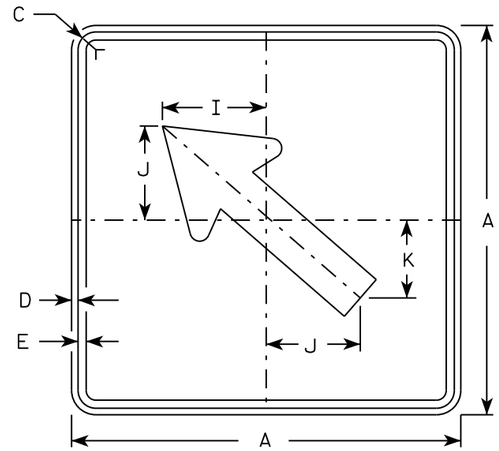

M6-2
MM6-2
MO6-2
MP6-2

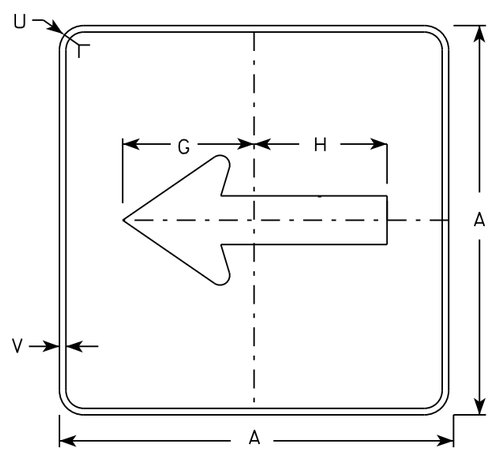

MB6-1
MK6-1
MN6-1
MR6-1

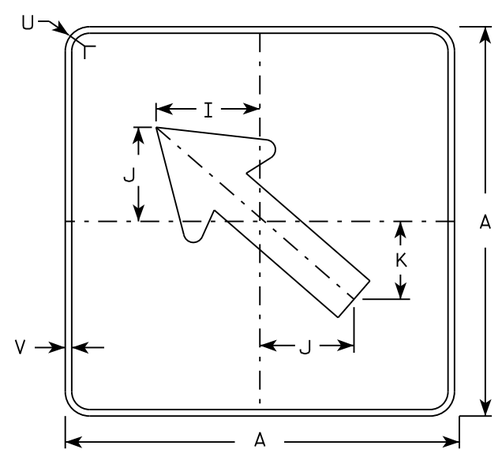

MB6-2
MK6-2
MN6-2
MR6-2

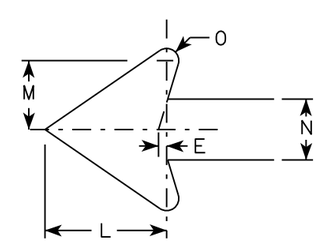

NOTES

1. Signs are Type II - Type H except as Shown
2. Color:
   Background - See note 4
   Message - See note 4
3. Corners may be square or rounded when base material is plywood but borders shall be rounded as shown. When base material is metal, the corners and borders shall be rounded.
4. M6-1 and M6-2 Background - White
   Message - Black
   MB6-1 and MB6-2 Background - Blue
   Message - White
   MK6-1 and MK6-2 Background - Green
   Message - White
   MM6-1 and MM6-2 Background - White
   Message - Green
   MN6-1 and MN6-2 Background - Brown
   Message - White
   MO6-1 and MO6-2 Background - Orange - Type F Reflective
   Message - Black
   MP6-1 and MP6-2 Background - White
   Message - Blue
   MR6-1 and MR6-2 Background - Brown
   Message - Yellow

SIZE	A	B	C	D	E	F	G	H	I	J	K	L	M	N	O	P	Q	R	S	T	U	V	W	X	Y	Z	Area sq. ft.
1																											
2	21		1 1/8	3/8	3/8		7 1/2	7 1/8	5 5/8	5	4 1/4	5 1/4	3	2 5/8	1/2						1 1/2	1/2					3.06
3	30		1 3/8	1/2	5/8		10 3/4	10 1/4	8	7 1/4	6	7 1/2	4 1/4	3 3/4	3/4						1 7/8	1/2					6.25
4	30		1 3/8	1/2	5/8		10 3/4	10 1/4	8	7 1/4	6	7 1/2	4 1/4	3 3/4	3/4						1 7/8	1/2					6.25
5	30		1 3/8	1/2	5/8		10 3/4	10 1/4	8	7 1/4	6	7 1/2	4 1/4	3 3/4	3/4						1 7/8	1/2					6.25

STANDARD SIGN
M6-1 & M6-2
SERIES

WISCONSIN DEPT OF TRANSPORTATION

APPROVED Matthew R Rauch
for State Traffic Engineer

DATE 10/15/15 PLATE 122 M6-1.15

PROJECT NO: | HWY: | COUNTY: | SHEET NO: | E

FILE NAME : C:\CAEfiles\Projects\tr stdplate\M61.DGN PLOT DATE : 01-DEC-2015 17:57 PLOT BY : $$ plotuser $$ PLOT NAME : PLOT SCALE : 11.675051:1.000000

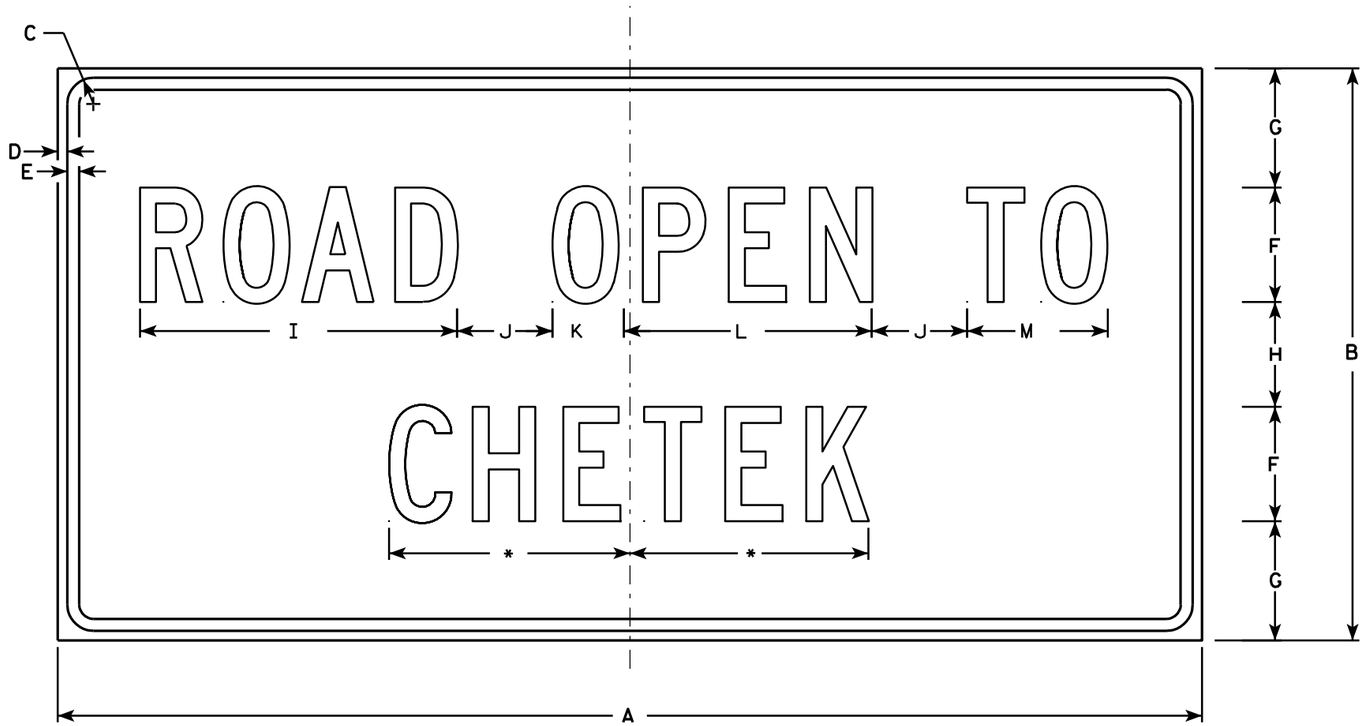

R10-61

*See note 5

NOTES

1. Sign is Type II - Type H Reflective - reference WIS DOT Standard Specification for HIGHWAY and STRUCTURE CONSTRUCTION latest edition.
2. Color:
   Background - White
   Message - Black
3. Message Series - C
4. Corners may be square or rounded when base material is plywood but borders shall be rounded as shown. When base material is metal, the corners and borders shall be rounded.
5. Substitute appropriate message and optically balance.

SIZE	A	B	C	D	E	F	G	H	I	J	K	L	M	N	O	P	Q	R	S	T	U	V	W	X	Y	Z	Area sq. ft.
1	36	24	1 3/8	1/2	5/8	4	5 1/2	5	10 3/4	2	2 1/8	8 3/8	4 5/8														6.0
2S	60	30	1 3/8	1/2	5/8	6	6 1/4	5 1/2	16 5/8	5	3 3/4	13	7 3/8														12.5
2M	60	30	1 3/8	1/2	5/8	6	6 1/4	5 1/2	16 5/8	5	3 3/4	13	7 3/8														12.5
3																											
4																											
5																											

STANDARD SIGN
R10-61

WISCONSIN DEPT OF TRANSPORTATION

APPROVED Matthew R Rauch
for State Traffic Engineer

DATE 4/4/11 PLATE NO. R10-61.5

PROJECT NO:	HWY:	COUNTY:		SHEET NO: 123	E

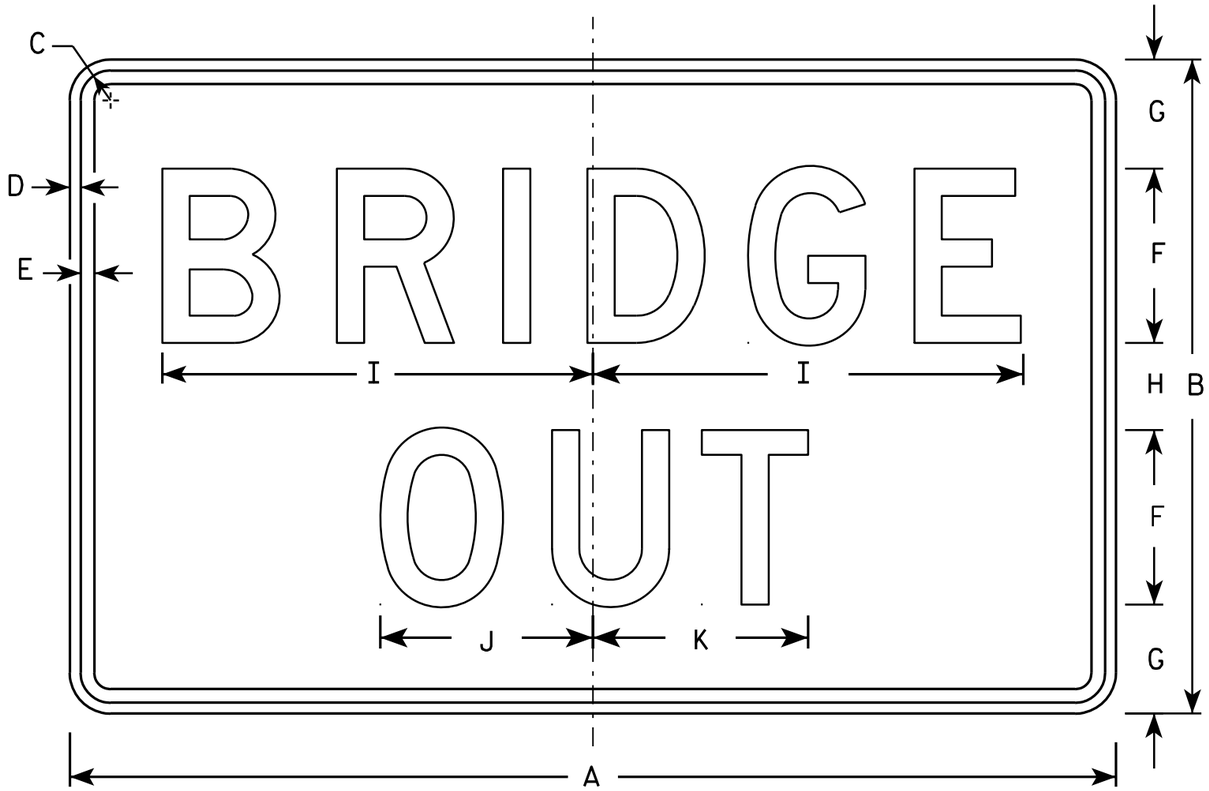

R11-2B

NOTES

1. Sign is Type II - Type H Reflective - reference WIS DOT Standard Specification for HIGHWAY and STRUCTURE CONSTRUCTION latest edition.
2. Color:
   Background - White
   Message - Black
3. Message Series - D
4. Corners may be square or rounded when base material is plywood but borders shall be rounded as shown. When base material is metal, the corners and borders shall be rounded.

SIZE	A	B	C	D	E	F	G	H	I	J	K	L	M	N	O	P	Q	R	S	T	U	V	W	X	Y	Z	Area sq. ft.
1																											
2S	48	30	1 3/8	1/2	5/8	8	5	4	19 3/4	9 3/4	9 7/8																10.0
2M	48	30	1 3/8	1/2	5/8	8	5	4	19 3/4	9 3/4	9 7/8																10.0
3	48	30	1 3/8	1/2	5/8	8	5	4	19 3/4	9 3/4	9 7/8																10.0
4	48	30	1 3/8	1/2	5/8	8	5	4	19 3/4	9 3/4	9 7/8																10.0
5	48	30	1 3/8	1/2	5/8	8	5	4	19 3/4	9 3/4	9 7/8																10.0

STANDARD SIGN
R11-2B

WISCONSIN DEPT OF TRANSPORTATION

APPROVED Matthew R Rauch
For State Traffic Engineer
DATE 4/1/11 PLATE NO. R11-2B.2

PROJECT NO:

SHEET NO: 124 E

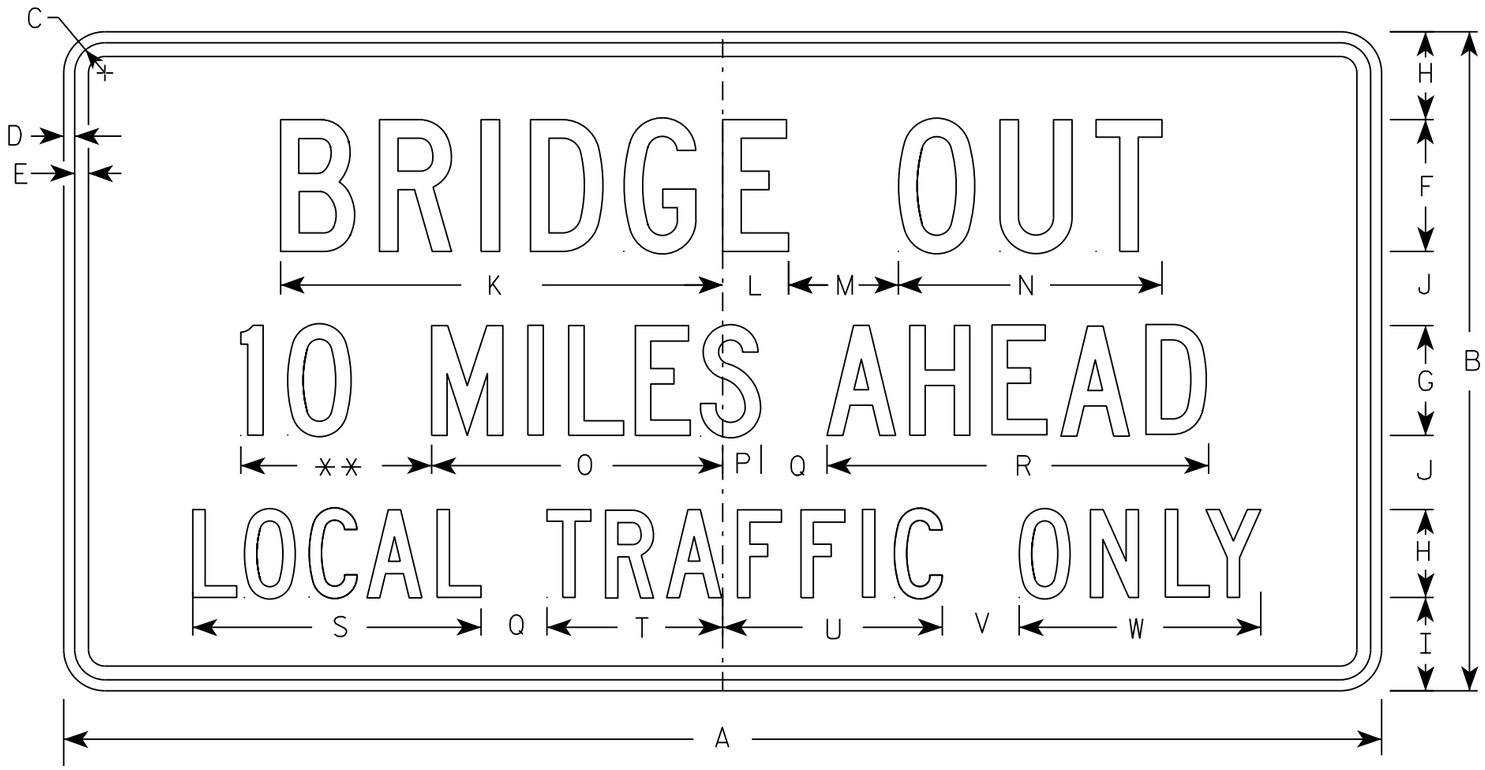

R11-3B

** See Note 5

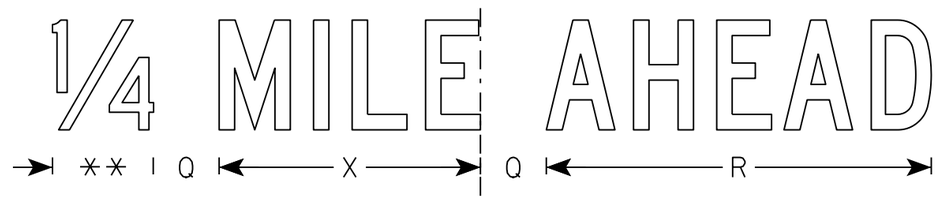

NOTES

1. Sign is Type II - Type H Reflective
2. Color:
   Background - White
   Message - Black
3. Message Series - C
4. Corners may be square or rounded when base material is plywood but borders shall be rounded as shown. When base material is metal, the corners and borders shall be rounded.
5. Substitute appropriate numerals to nearest quarter mile and optically adjust spacing to achieve proper balance.

SIZE	A	B	C	D	E	F	G	H	I	J	K	L	M	N	O	P	Q	R	S	T	U	V	W	X	Y	Z	Area sq. ft.
1	36	18	1 3/8	1/2	5/8	4	3	2 1/2	2	2	13 1/4	2 1/4	3	8	8	1 1/2	2	10 3/4	8 3/8	4 3/4	6 1/2	2	6 3/4	7 1/8			4.5
2S	60	30	1 3/8	1/2	5/8	6	5	4	4 1/4	3 3/8	20 1/8	3	5	12	13 1/4	1 3/4	3	17 3/8	13 1/8	8	10	3 1/2	11	11 7/8			12.5
2M	60	30	1 3/8	1/2	5/8	6	5	4	4 1/4	3 3/8	20 1/8	3	5	12	13 1/4	1 3/4	3	17 3/8	13 1/8	8	10	3 1/2	11	11 7/8			12.5
3																											
4																											
5																											

STANDARD SIGN
R11-3B

WISCONSIN DEPT OF TRANSPORTATION

APPROVED Matthew R Rauch
for State Traffic Engineer

DATE 3/21/17 PLATE NO. R11-3B.3

PROJECT NO: | HWY: | COUNTY: | SHEET NO: 125 | E

NOTES

1. Sign is Type II - Type H Reflective
2. Color:
   Background - White
   Message - Black
3. Message Series - C
4. Corners may be square or rounded when base material is plywood but borders shall be rounded as shown. When base material is metal, the corners and borders shall be rounded.
5. Substitute appropriate numerals to nearest quarter mile and optically adjust spacing to achieve proper balance.

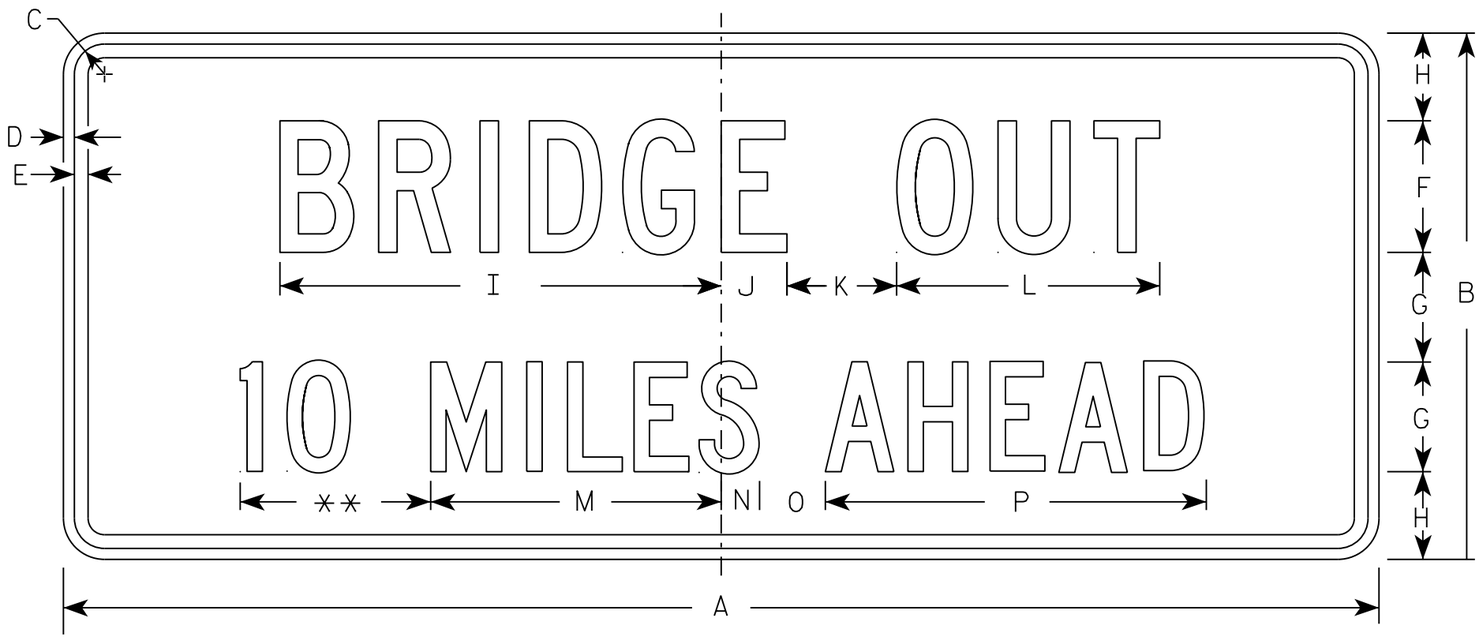

R11-3C

** See Note 5

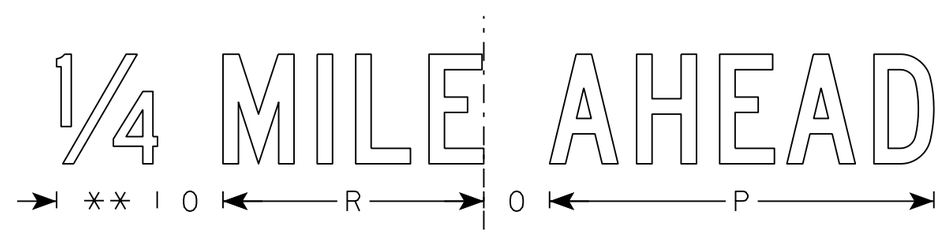

SIZE	A	B	C	D	E	F	G	H	I	J	K	L	M	N	O	P	Q	R	S	T	U	V	W	X	Y	Z	Area sq. ft.
1	36	15	1 3/8	1/2	5/8	4	3	2 1/2	13 1/4	2 1/4	3	8	8	1 1/2	2	10 3/4		7 1/8									3.75
2S	60	24	1 3/8	1/2	5/8	6	5	4	20 1/8	3	5	12	13 1/4	1 3/4	3	17 3/8		11 7/8									10.0
2M	60	24	1 3/8	1/2	5/8	6	5	4	20 1/8	3	5	12	13 1/4	1 3/4	3	17 3/8		11 7/8									10.0
3																											
4																											
5																											

STANDARD SIGN
R11-3C

WISCONSIN DEPT OF TRANSPORTATION

APPROVED Matthew R Rauch
for State Traffic Engineer

DATE 7/28/16 PLATE NO. R11-3C.3

PROJECT NO:

SHEET NO: 126 E

NOTES

1. Sign is Type II - Type F Reflective
2. Color:
   Background - Orange
   Message - Black
3. Message Series - C
4. Corners may be square or rounded when base material is plywood but borders shall be rounded as shown. When base material is metal, the corners and borders shall be rounded.

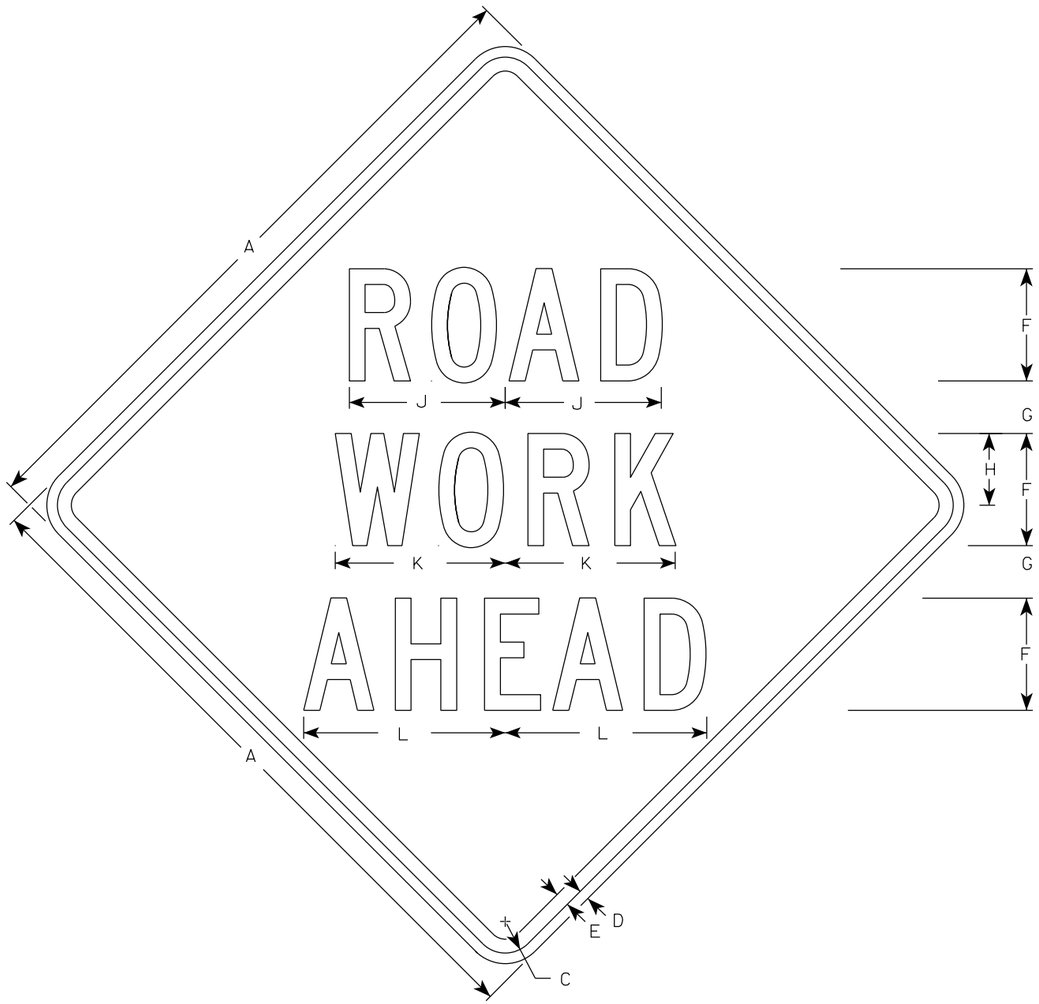

W20-1A

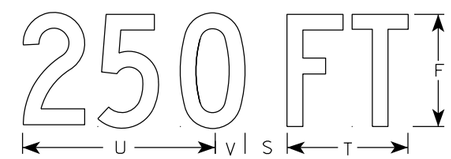

W20-1H

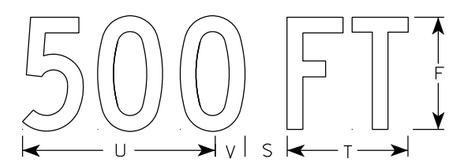

W20-1D

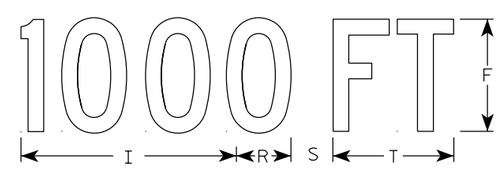

W20-1C

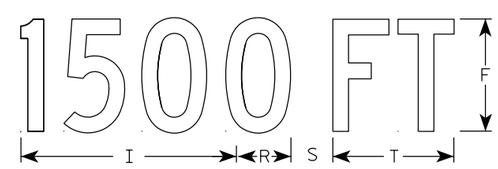

W20-1B

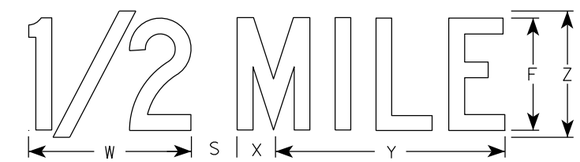

W20-1G

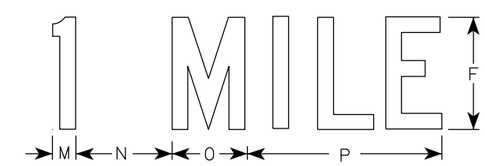

W20-1F

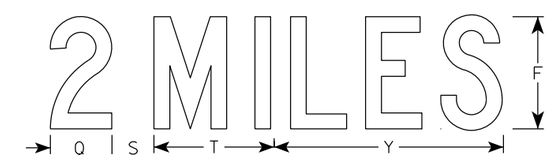

W20-1E

SIZE	A	B	C	D	E	F	G	H	I	J	K	L	M	N	O	P	Q	R	S	T	U	V	W	X	Y	Z	Area sq. ft.
1	36		1 3/8	1/2	5/8	5	2 5/8	3 1/4	10 1/8	7	7 5/8	8 7/8	1 1/8	4 1/2	3 1/2	9		2 1/2	2 1/4	5 5/8	9	1 3/8	8	1 3/4	10 3/4	6	9.0
2S	48		2 1/4	3/4	1	8	3 3/4	5 1/8	15 3/8	11 1/8	12 1/8	14 3/8	1 5/8	6 7/8	5 3/8	13 7/8	4 3/8	3 7/8	3	8 5/8	13 3/4	2 1/8	11 7/8	2 3/4	16 3/8	9	16.0
2M	48		2 1/4	3/4	1	8	3 3/4	5 1/8	15 3/8	11 1/8	12 1/8	14 3/8	1 5/8	6 7/8	5 3/8	13 7/8	4 3/8	3 7/8	3	8 5/8	13 3/4	2 1/8	11 7/8	2 3/4	16 3/8	9	16.0
3	48		2 1/4	3/4	1	8	3 3/4	5 1/8	15 3/8	11 1/8	12 1/8	14 3/8	1 5/8	6 7/8	5 3/8	13 7/8	4 3/8	3 7/8	3	8 5/8	13 3/4	2 1/8	11 7/8	2 3/4	16 3/8	9	16.0
4	48		2 1/4	3/4	1	8	3 3/4	5 1/8	15 3/8	11 1/8	12 1/8	14 3/8	1 5/8	6 7/8	5 3/8	13 7/8	4 3/8	3 7/8	3	8 5/8	13 3/4	2 1/8	11 7/8	2 3/4	16 3/8	9	16.0
5	48		2 1/4	3/4	1	8	3 3/4	5 1/8	15 3/8	11 1/8	12 1/8	14 3/8	1 5/8	6 7/8	5 3/8	13 7/8	4 3/8	3 7/8	3	8 5/8	13 3/4	2 1/8	11 7/8	2 3/4	16 3/8	9	16.0

STANDARD SIGN
W20-1A, B, C, D, F & G

WISCONSIN DEPT OF TRANSPORTATION

APPROVED Matthew R Rauch
for State Traffic Engineer

DATE 9/25/19 PLATE NO. W20-1.11

PROJECT NO:

SHEET NO: 127 E

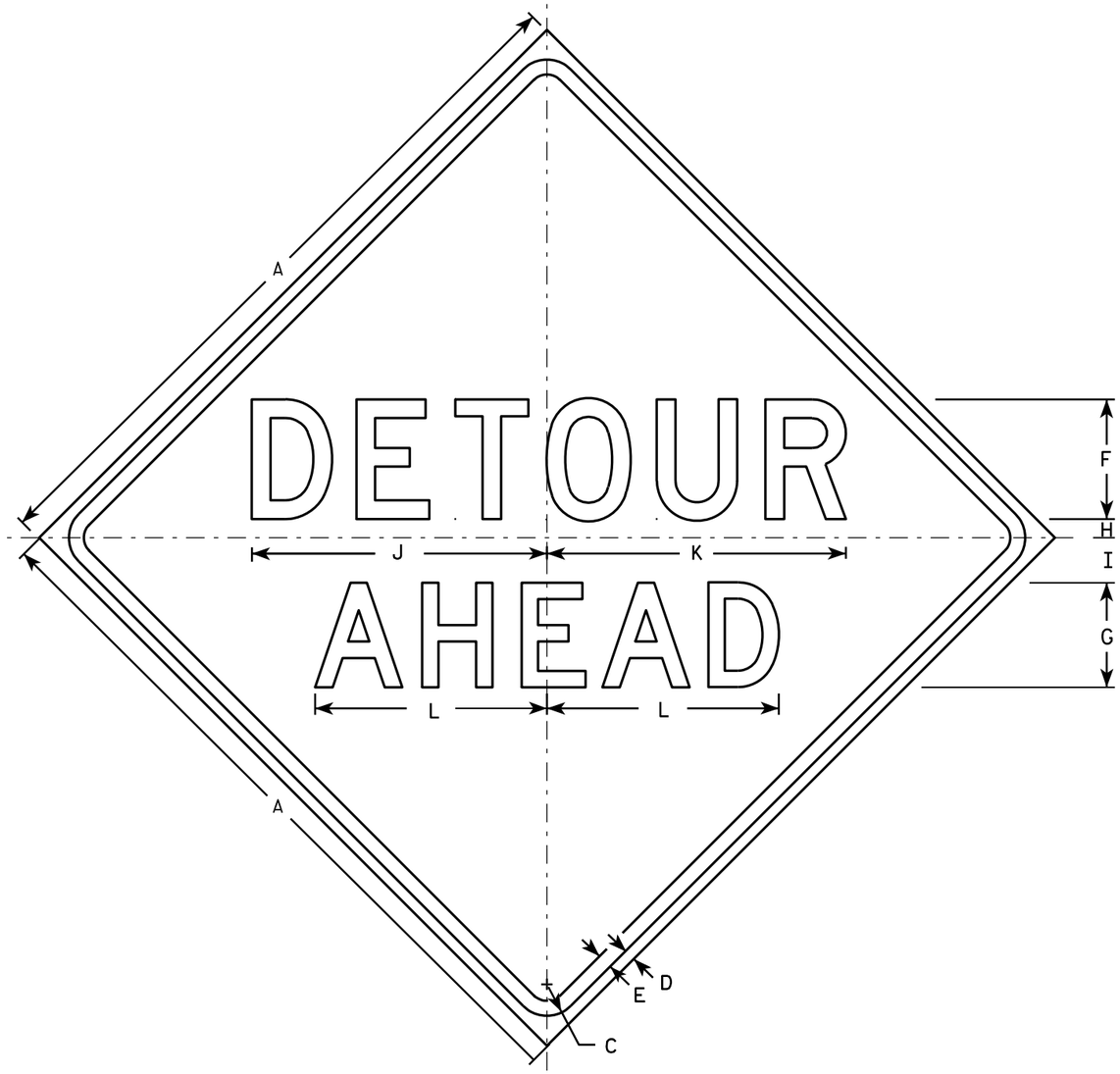

W20-2A

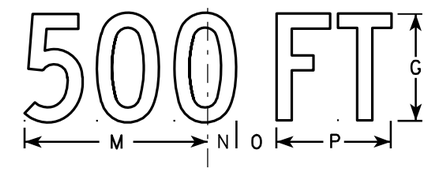

W20-2D

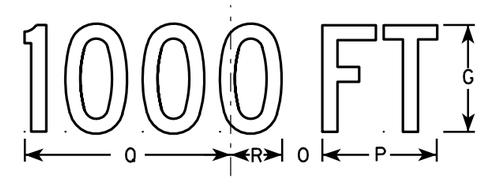

W20-2C

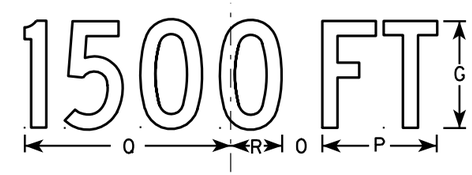

W20-2B

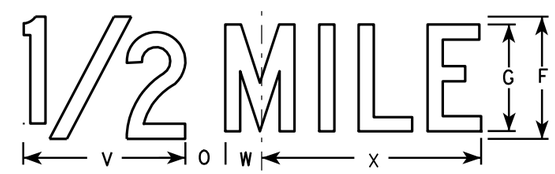

W20-2G

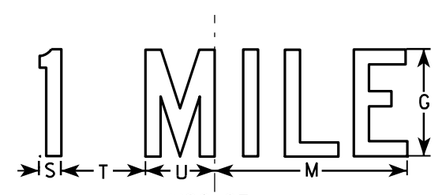

W20-2F

NOTES

1. Sign is Type II - Type F Reflective - reference WIS DOT Standard Specification for HIGHWAY and STRUCTURE CONSTRUCTION latest edition.
2. Color:
   Background - Orange
   Message - Black
3. Message Series - See note 5
4. Corners may be square or rounded when base material is plywood but borders shall be rounded as shown. When base material is metal, the corners and borders shall be rounded.
5. Line 1 is Series D.
   Line 2 is Series D for AHEAD and Series C for all other distances.

SIZE	A	B	C	D	E	F	G	H	I	J	K	L	M	N	O	P	Q	R	S	T	U	V	W	X	Y	Z	Area sq. ft.
1	36		1 5/8	5/8	3/4	6	5	1	2 1/4	14 3/4	15	11 5/8	9	1 3/8	1 7/8	5 5/8	10 1/8	2 1/2	1 1/8	4 1/2	3 1/2	8	1 3/4	10 3/4			9.0
2S	48		2 1/4	3/4	1	8	7	1 1/4	3	19 3/4	20	15 1/2	12	1 7/8	2 5/8	7 1/2	13 1/2	3 3/8	1 1/2	6	4 5/8	10 5/8	2 3/8	14 3/8			16.0
2M	48		2 1/4	3/4	1	8	7	1 1/4	3	19 3/4	20	15 1/2	12	1 7/8	2 5/8	7 1/2	13 1/2	3 3/8	1 1/2	6	4 5/8	10 5/8	2 3/8	14 3/8			16.0
3	48		2 1/4	3/4	1	8	7	1 1/4	3	19 3/4	20	15 1/2	12	1 7/8	2 5/8	7 1/2	13 1/2	3 3/8	1 1/2	6	4 5/8	10 5/8	2 3/8	14 3/8			16.0
4	48		2 1/4	3/4	1	8	7	1 1/4	3	19 3/4	20	15 1/2	12	1 7/8	2 5/8	7 1/2	13 1/2	3 3/8	1 1/2	6	4 5/8	10 5/8	2 3/8	14 3/8			16.0
5	48		2 1/4	3/4	1	8	7	1 1/4	3	19 3/4	20	15 1/2	12	1 7/8	2 5/8	7 1/2	13 1/2	3 3/8	1 1/2	6	4 5/8	10 5/8	2 3/8	14 3/8			16.0

STANDARD SIGN
W20-2A,B,C,D,F & G

WISCONSIN DEPT OF TRANSPORTATION

APPROVED Matthew R Rauch
for State Traffic Engineer
DATE 3/18/11 PLATE NO. W20-2.6

7

7

PROJECT NO: | HWY: | COUNTY: | SHEET NO: 128 | E

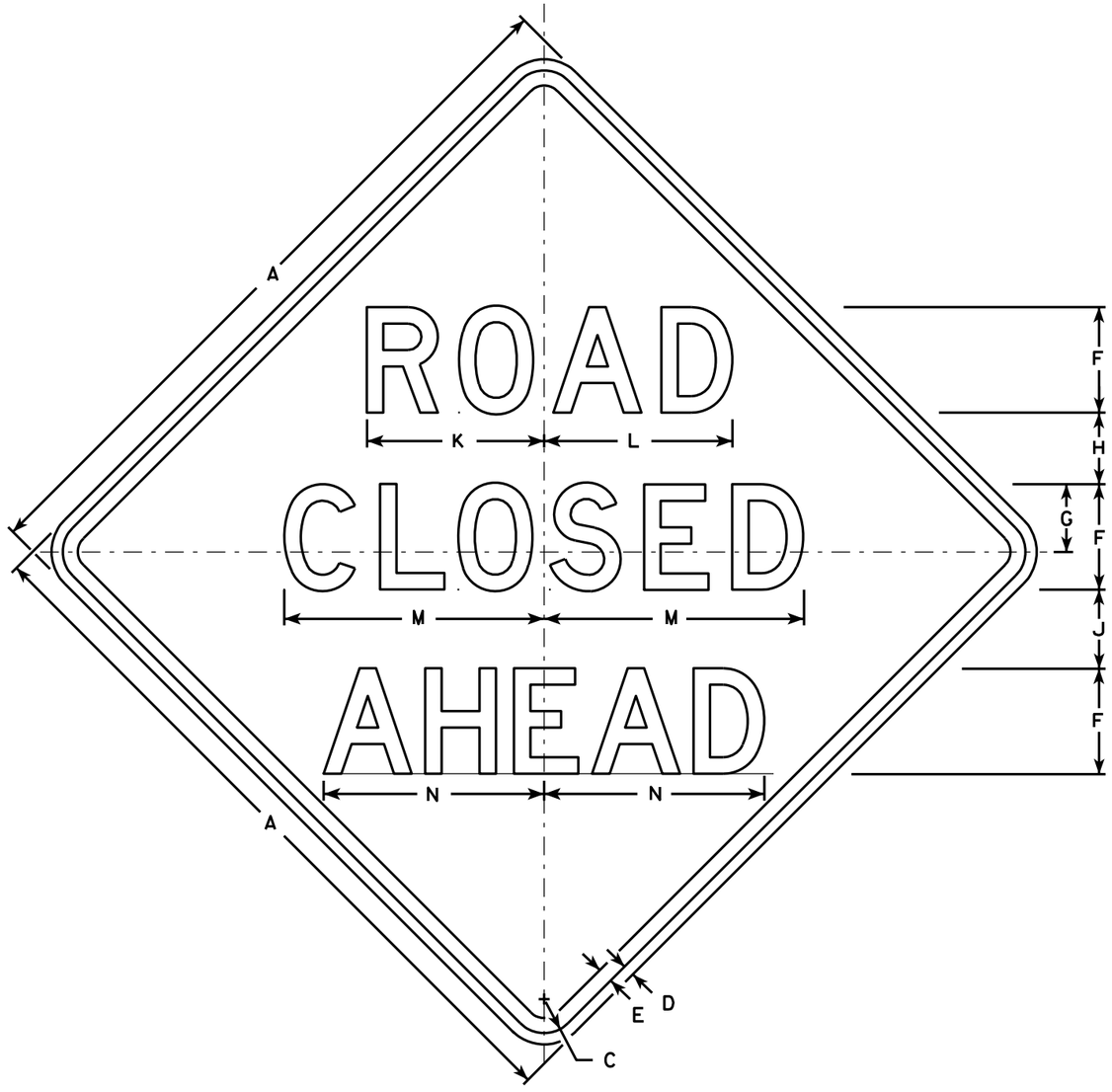

W20-3A

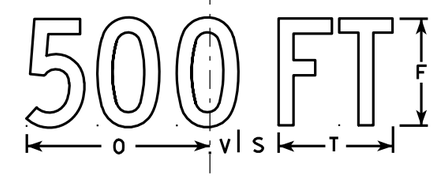

W20-3D

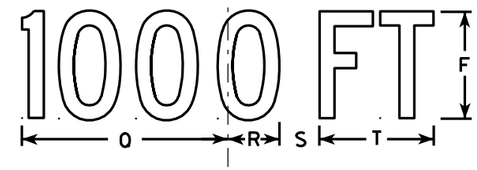

W20-3C

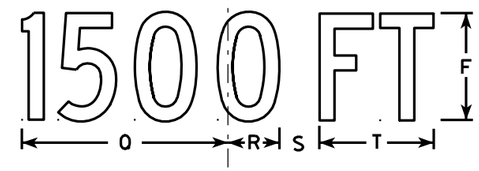

W20-3B

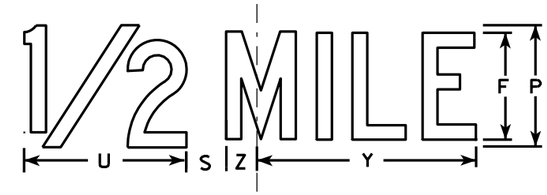

W20-3G

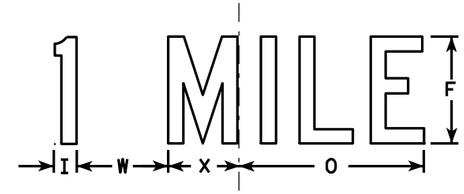

W20-3F

NOTES

1. Sign is Type II - Type F Reflective - reference WIS DOT Standard Specification for HIGHWAY and STRUCTURE CONSTRUCTION latest edition.
2. Color:
   Background - Orange
   Message - Black
3. Message Series - see note 5
4. Corners may be square or rounded when base material is plywood but borders shall be rounded as shown. When base material is metal, the corners and borders shall be rounded.
5. Lines 1 and 2 are Series D.
   Line 3 is Series D for AHEAD and Series C for all other distances.

SIZE	A	B	C	D	E	F	G	H	I	J	K	L	M	N	O	P	Q	R	S	T	U	V	W	X	Y	Z	Area sq. ft.
1	36		1 5/8	5/8	3/4	5	3 3/8	3 1/2	1 1/8	4	8 3/8	8 7/8	12 1/2	11	9	6	10 1/8	2 1/2	1 7/8	5 5/8	8	1 3/8	4 1/2	3 1/2	10 3/4	1 3/4	9.0
2S	48		2 1/4	3/4	1	7	4 1/2	4 3/4	1 1/2	5 1/4	11 3/4	12 1/2	17 1/4	14 5/8	12	8	13 1/2	3 3/8	2 5/8	7 1/2	10 5/8	1 7/8	6	4 5/8	14 3/8	2 3/8	16.0
2M	48		2 1/4	3/4	1	7	4 1/2	4 3/4	1 1/2	5 1/4	11 3/4	12 1/2	17 1/4	14 5/8	12	8	13 1/2	3 3/8	2 5/8	7 1/2	10 5/8	1 7/8	6	4 5/8	14 3/8	2 3/8	16.0
3	48		2 1/4	3/4	1	7	4 1/2	4 3/4	1 1/2	5 1/4	11 3/4	12 1/2	17 1/4	14 5/8	12	8	13 1/2	3 3/8	2 5/8	7 1/2	10 5/8	1 7/8	6	4 5/8	14 3/8	2 3/8	16.0
4	48		2 1/4	3/4	1	7	4 1/2	4 3/4	1 1/2	5 1/4	11 3/4	12 1/2	17 1/4	14 5/8	12	8	13 1/2	3 3/8	2 5/8	7 1/2	10 5/8	1 7/8	6	4 5/8	14 3/8	2 3/8	16.0
5	48		2 1/4	3/4	1	7	4 1/2	4 3/4	1 1/2	5 1/4	11 3/4	12 1/2	17 1/4	14 5/8	12	8	13 1/2	3 3/8	2 5/8	7 1/2	10 5/8	1 7/8	6	4 5/8	14 3/8	2 3/8	16.0

STANDARD SIGN
W20-3A, B, C, D, F & G

WISCONSIN DEPT OF TRANSPORTATION

APPROVED Matthew R Rauch
for State Traffic Engineer
DATE 3/18/11 PLATE NO. W20-3.7

PROJECT NO: | HWY: | COUNTY: | SHEET NO: 129 | E

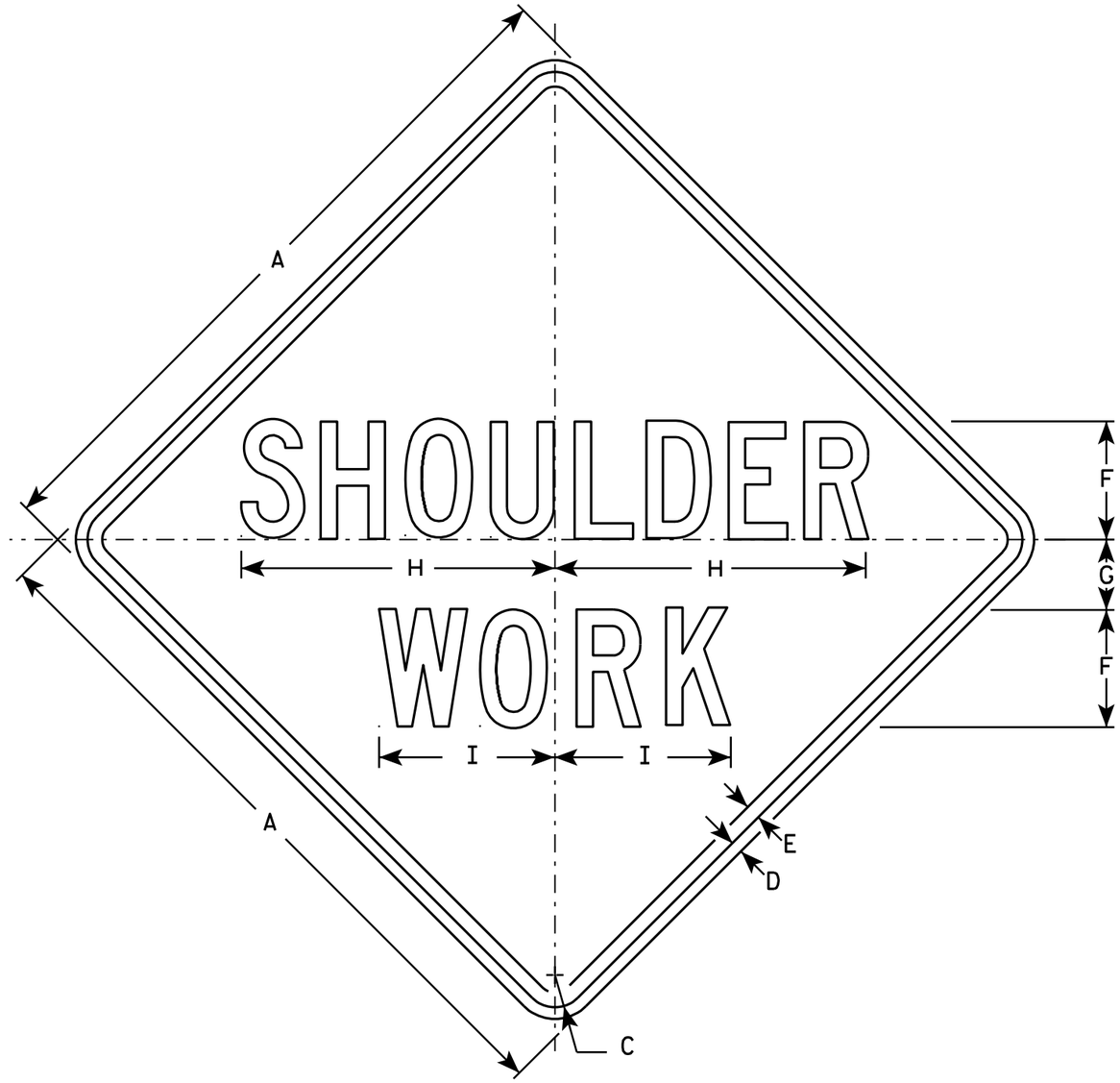

W21-5

NOTES

1. Sign is Type II - Type F Reflective - reference WIS DOT Standard Specification for HIGHWAY and STRUCTURE CONSTRUCTION latest edition.
2. Color:
   Background - Orange
   Message - Black
3. Message Series - C
4. Corners may be square or rounded when base material is plywood but borders shall be rounded as shown. When base material is metal, the corners and borders shall be rounded.

SIZE	A	B	C	D	E	F	G	H	I	J	K	L	M	N	O	P	Q	R	S	T	U	V	W	X	Y	Z	Area sq. ft.
1	24		1 1/8	3/8	1/2	4	2 1/2	10 3/4	6																		4.0
2S	30		1 3/8	1/2	5/8	5	3	13 3/8	7 1/2																		6.25
2M	30		1 3/8	1/2	5/8	5	3	13 3/8	7 1/2																		6.25
3	36		1 5/8	5/8	3/4	6	3 1/2	16	9																		9.0
4	48		2 1/4	3/4	1	8	5	21 3/8	11 1/4																		16.0
5	48		2 1/4	3/4	1	8	5	21 3/8	11 1/4																		16.0

STANDARD SIGN
W21-5

WISCONSIN DEPT OF TRANSPORTATION

APPROVED Matthew R Rauch
for State Traffic Engineer

DATE 3/21/11 PLATE NO. W21-5.5

PROJECT NO:	HWY:	COUNTY:		SHEET NO: 130	E

STATE PROJECT NUMBER
1009-44-67

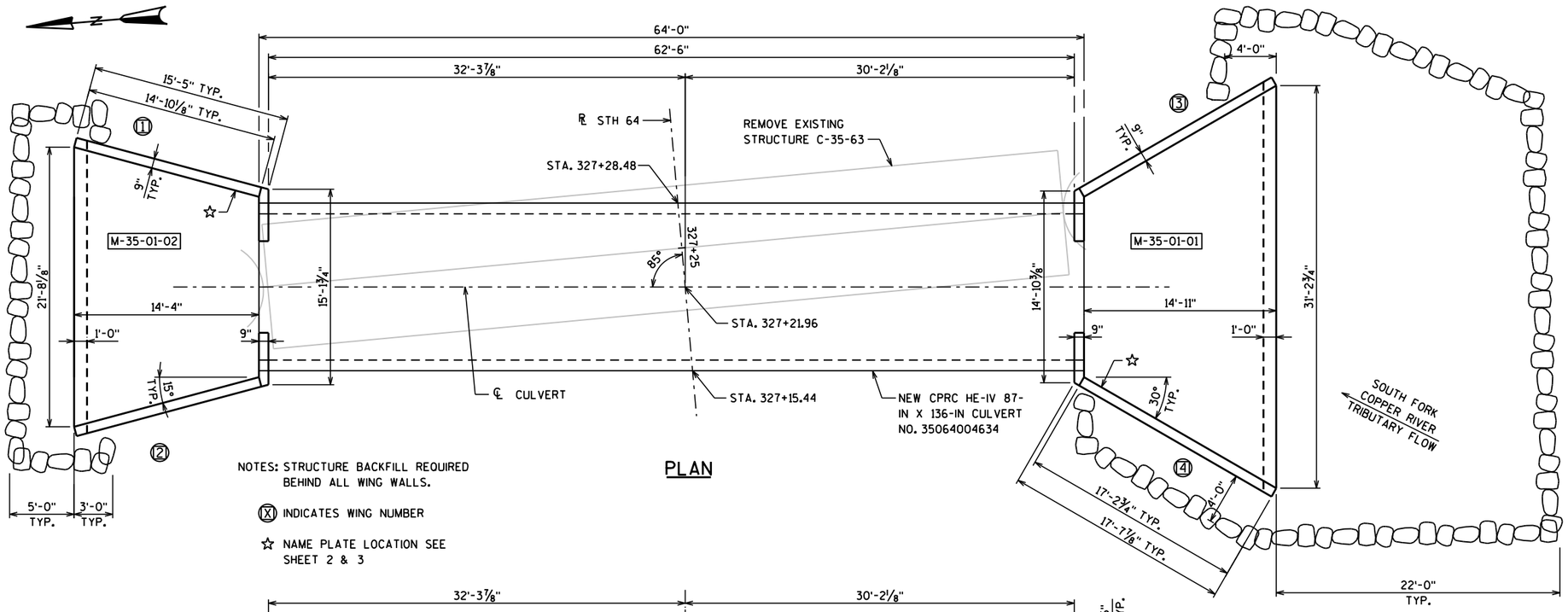

NOTES: STRUCTURE BACKFILL REQUIRED BEHIND ALL WING WALLS.

(X) INDICATES WING NUMBER

☆ NAME PLATE LOCATION SEE SHEET 2 & 3

PLAN

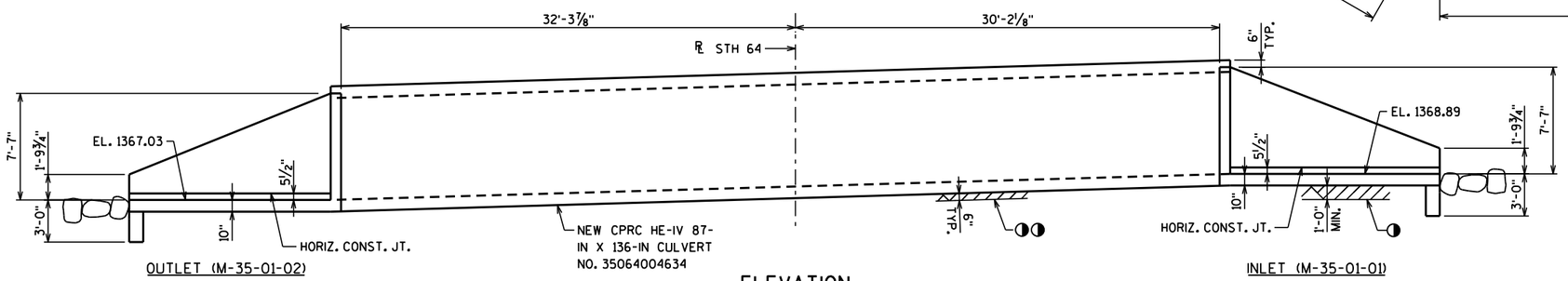

OUTLET (M-35-01-02)

INLET (M-35-01-01)

ELEVATION

(LOOKING EAST)

LIST OF DRAWINGS

1. LAYOUT
2. UPSTREAM APRON
3. DOWNSTREAM APRON

TRAFFIC DATA

ADT = 700 (2020)
810 (2040)
RDS = 60 M.P.H.

WISCONSIN BRIAN R. EPLEY E-42388 APPLETON WI PROFESSIONAL ENGINEER

8/1/2019

HYDRAULIC DATA

100 YEAR FREQUENCY

Q_{100} — 95 C.F.S.
VELOCITY — 6.57 F.P.S.
HIGH WATER — EL. 1371.58 (100 YEAR)
WATERWAY AREA — 14.5 S.F.
DRAINAGE AREA — 1.1 SQ. MILES
OVERTOPPING FREQUENCY = N/A
SCOUR CRITICAL CODE = 8

2 YEAR FREQUENCY

Q_2 — 26 C.F.S.
VELOCITY — 4.44 F.P.S.
HIGH WATER — EL. 1370.74 (2 YEAR)

DESIGN DATA

MATERIAL PROPERTIES:

CONCRETE MASONRY
GRADE A-FA — f'c = 3,500 PSI
HIGH STRENGTH BAR STEEL
REINFORCEMENT, GRADE 60 — fy = 60,000 PSI

EARTH LOAD:

ENDWALL DESIGNED FOR 1' SURCHARGE.

GENERAL NOTES

DRAWINGS SHALL NOT BE SCALED.

BAR STEEL REINFORCEMENT SHALL BE EMBEDDED 2" CLEAR UNLESS OTHERWISE SHOWN OR NOTED.

THE UPPER LIMITS OF THE "EXCAVATION FOR STRUCTURES CULVERTS M-35-01" SHALL BE THE EXISTING GROUND LINE.

AT APRONS: ALL SPACES EXCAVATED AND NOT OCCUPIED BY THE APRONS SHALL BE BACKFILLED WITH 'BACKFILL STRUCTURE TYPE B' AS SHOWN IN THE ROADWAY PLANCONSTRUCTION DETAILS.

AT PIPE: ALL SPACES EXCAVATED AND NOT OCCUPIED BY THE NEW PIPE SHALL BE BACKFILLED WITH BACKFILL GRANULAR GRADE 2 AS SHOWN ON THE ROADWAY PLAN CONSTRUCTION DETAILS.

THE APRONS AND WINGWALLS SHALL BE CAST IN PLACE.

THE CONCRETE IN THE CUTOFF WALLS MAY BE PLACED UNDERWATER IF THE EXCAVATION CANNOT BE DEWATERED.

◑ UNDERCUT APRONS 1'-0". EXCAVATION FOR UNDERCUT TO BE INCLUDED IN EXCAVATION FOR STRUCTURES CULVERTS, PLACE GEOTEXTILE TYPE C, AND BACKFILL WITH 'BACKFILL STRUCTURE TYPE B".

◑◑ UNDERCUT PIPE 6". EXCAVATION FOR UNDERCUT TO BE INCLUDED IN NORMAL PIPE ITEM. PLACE GEOTEXTILE TYPE C AND BACKFILL 6" WITH BACKFILL GRANULAR GRADE 2.

TOTAL ESTIMATED QUANTITIES

203.0200	REMOVING OLD STRUCTURE STA 327+25	1	LS
206.2000	EXCAVATION FOR STRUCTURES CULVERTS M-35-01	1	LS
210.2500	BACKFILL STRUCTURE TYPE B	130	TON
504.0100	CONCRETE MASONRY CULVERTS	35	CY
505.0400	BAR STEEL REINFORCEMENT HS STRUCTURES	1,080	LB
505.0600	BAR STEEL REINFORCEMENT HS COATED STRUCTURES	1,930	LB
606.0300	RIPRAP HEAVY	77	CY
645.0105	GEOTEXTILE TYPE C	90	SY
645.0120	GEOTEXTILE TYPE HR	150	SY

CONSULTANT CONTACT

BRIAN EPLEY
OMNNI ASSOCIATES, INC.
(920) 735-6900

BRIDGE OFFICE CONTACT

WILLIAM DREHER
(608) 266-8489

NO.	DATE	REVISION	BY

ORIGINAL PLANS PREPARED BY

OMNNI ASSOCIATES

STATE OF WISCONSIN
DEPARTMENT OF TRANSPORTATION

ACCEPTED William C. Dreher SDR 02/05/20
CHIEF STRUCTURES DESIGN ENGINEER DATE

STRUCTURE M-35-01

STH 64 over S. FORK COPPER RIVER TRIBUTARY

COUNTY	TOWN		
LINCOLN	CORNING		
DESIGN SPEC. AASHTO LRFD BRIDGE DESIGN SPECIFICATIONS		LOAD HL-93	
DESIGNED BY BRE	DESIGN CK'D. KRO	DRAWN BY NRT	PLANS CK'D. BRE

LAYOUT

SHEET 1 OF 3

STATE PROJECT NUMBER
1009-44-67

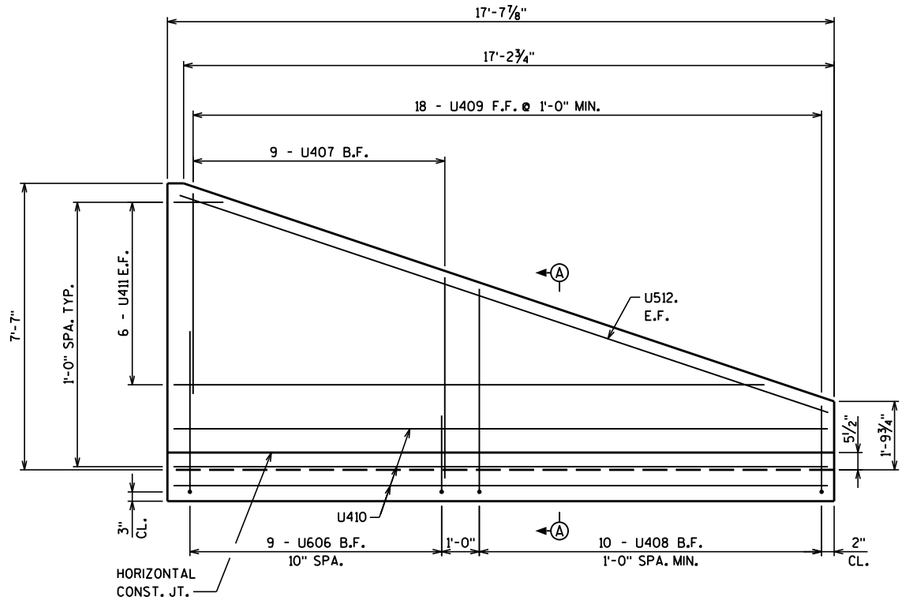

WING 4 ELEVATION

(WING 3 SIMILAR)

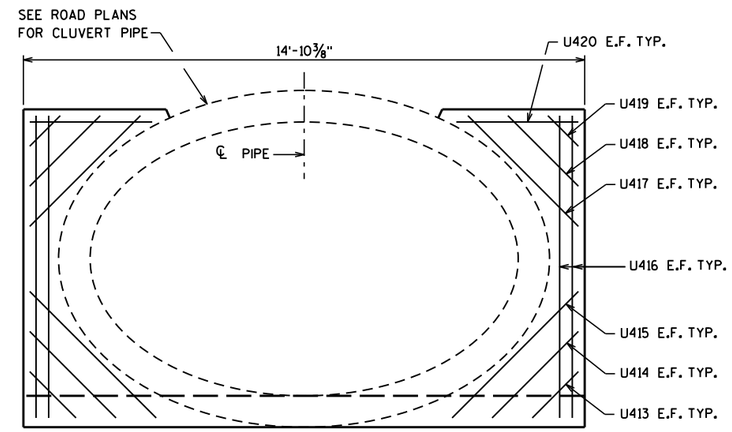

BACKWALL FRONT FACE ELEVATION

BILL OF BARS

BAR MARK	COAT	NO. REQ'D.	LENGTH	SERIES	BENT	LOCATION
U401		31	3'-6"		X	INLET CUTOFF WALL
U402		4	31'-3"			INLET CUTOFF WALL
U403		14	14'-7"			INLET APRON
U404		18	8'-4"	△		INLET APRON
U405		14	23'-5"	△		INLET APRON
U606	X	18	9'-9"	△	X	INLET WINGS CORNER B.F.
U407	X	18	5'-4"			INLET WINGS VERTICAL B.F.
U408	X	20	8'-11"	△	X	INLET WINGS CORNER B.F.
U409	X	36	5'-1"	△		INLET WINGS VERTICAL F.F.
U410	X	14	17'-4"			INLET WINGS HORIZONTAL
U411	X	24	9'-0"	△		INLET WINGS HORIZONTAL
U512	X	4	18'-0"			INLET WINGS HORIZONTAL, TOP
U413	X	4	1'-9"			INLET BACKWALL
U414	X	4	3'-3"			INLET BACKWALL
U415	X	4	4'-9"			INLET BACKWALL
U416	X	4	8'-0"			INLET BACKWALL
U417	X	4	4'-1"			INLET BACKWALL
U418	X	4	2'-7"			INLET BACKWALL
U419	X	4	1'-2"			INLET BACKWALL
U420	X	4	3'-5"			INLET BACKWALL

△ INDICATES BAR SERIES

BAR SERIES TABLE

BAR NO.	NO. REQ'D.	LENGTH
U404	2 SERIES OF 9	1'-5" TO 15'-3"
U405	1 SERIES OF 14	15'-11" TO 30'-11"
U606	2 SERIES OF 9	8'-7" TO 10'-11"
U408	2 SERIES OF 10	7'-5" TO 10'-5"
U409	2 SERIES OF 18	2'-3" TO 7'-11"
U411	4 SERIES OF 6	1'-6" TO 16'-6"

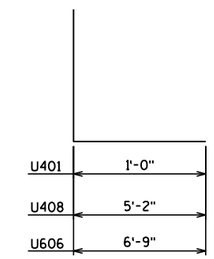

BAR BEND DIAGRAMS

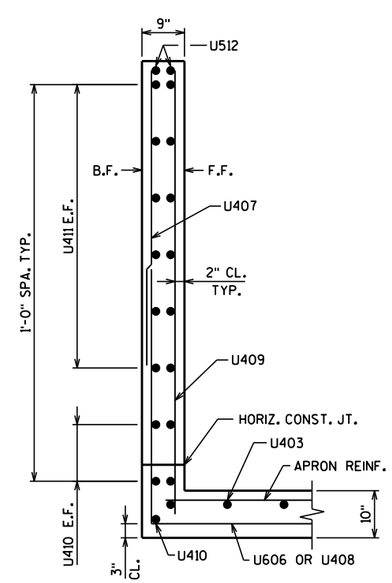

SECTION A-A

(WING 3 SIMILAR)

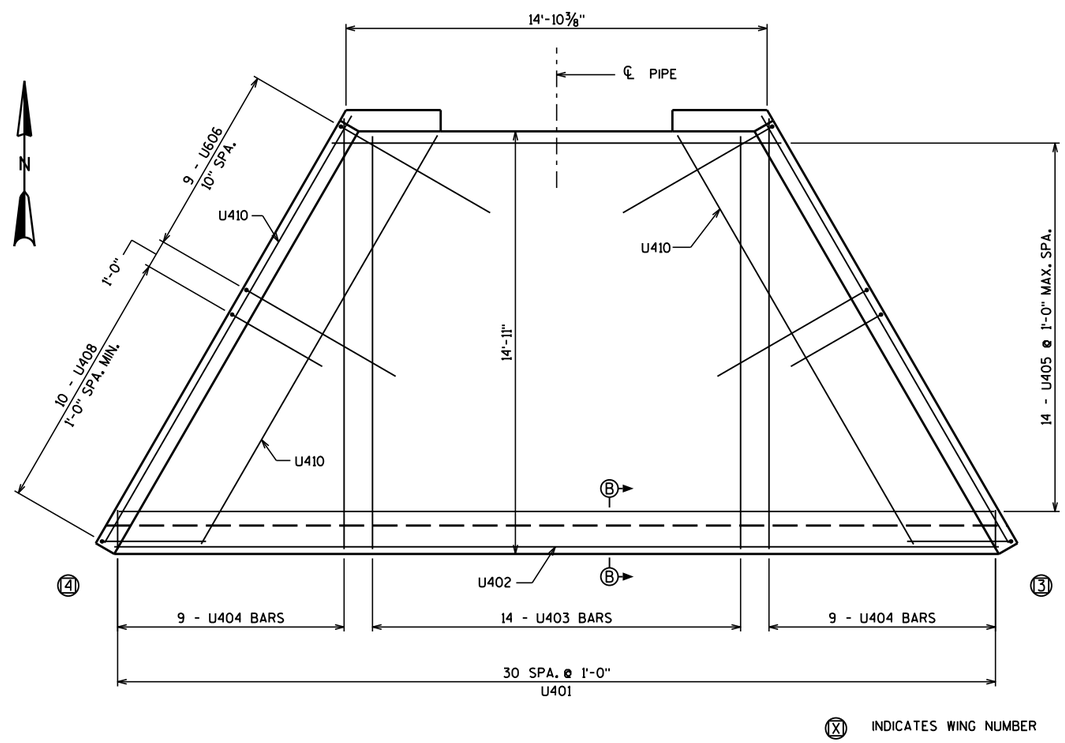

UPSTREAM APRON PLAN

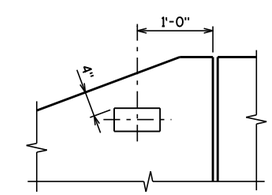

NAME PLATE LOCATION WING 1 & 4

M-35-01-01

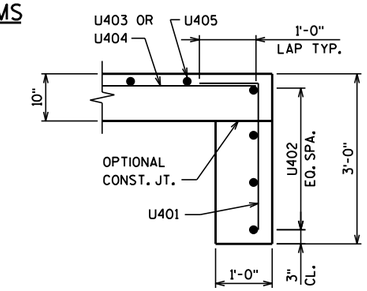

SECTION B-B

NO.	DATE	REVISION	BY

STATE OF WISCONSIN
DEPARTMENT OF TRANSPORTATION

STRUCTURE M-35-01

DRAWN BY NRT | PLANS CK'D. BRE

UPSTREAM APRON

SHEET 2 OF 3

8

8

STATE PROJECT NUMBER
1009-44-67

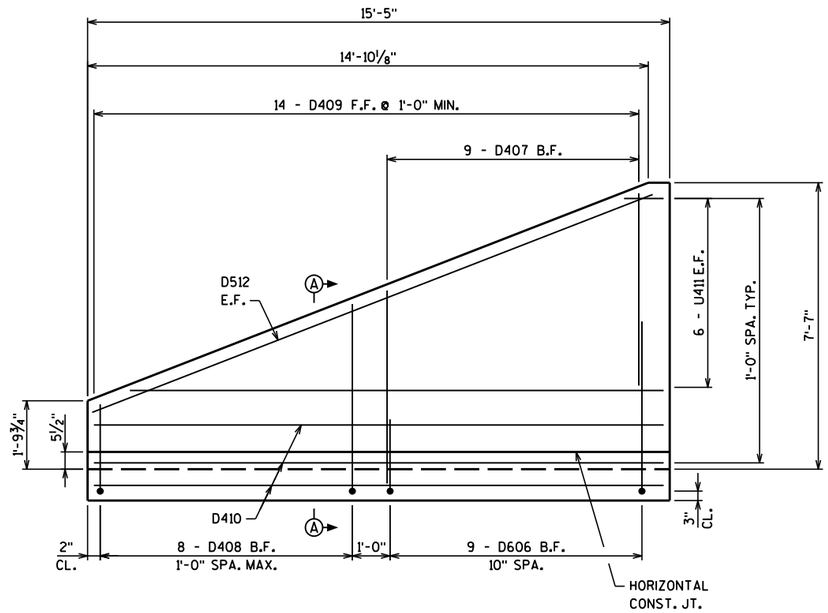

WING 1 ELEVATION

(WING 2 SIMILAR)

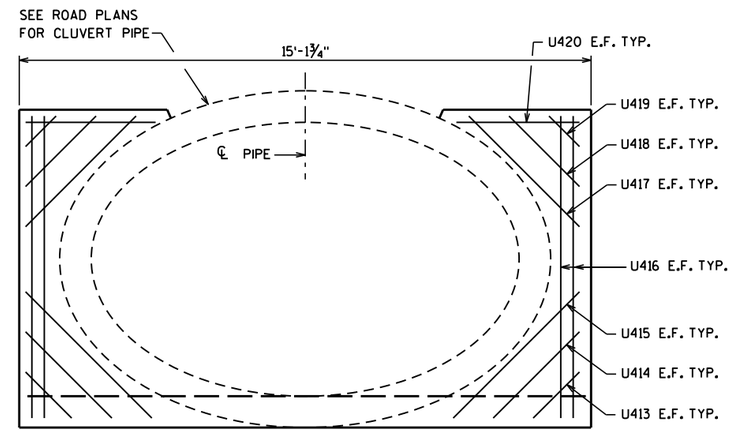

BACKWALL FRONT FACE ELEVATION

BILL OF BARS

BAR MARK	COAT	NO. REQ'D.	LENGTH	SERIES	BENT	LOCATION
D401		22	3'-6"		X	OUTLET CUTOFF WALL
D402		4	21'-8"			OUTLET CUTOFF WALL
D403		20	14'-0"			OUTLET APRON
D404		8	7'-6"	△		OUTLET APRON
D405		14	18'-8"	△		OUTLET APRON
D606	X	16	9'-10"	△	X	OUTLET WINGS CORNER B.F.
D407	X	8	5'-1"			OUTLET WINGS VERTICAL B.F.
D408	X	8	8'-9"	△	X	OUTLET WINGS CORNER B.F.
D409	X	14	5'-1"	△		OUTLET WINGS VERTICAL F.F.
D410	X	10	15'-1"			OUTLET WINGS HORIZONTAL
D411	X	24	7'-9"	△		OUTLET WINGS HORIZONTAL
D512	X	4	15'-11"			OUTLET WINGS HORIZONTAL, TOP
D413	X	4	1'-9"			OUTLET BACKWALL
D414	X	4	3'-3"			OUTLET BACKWALL
D415	X	4	4'-9"			OUTLET BACKWALL
D416	X	4	8'-0"			OUTLET BACKWALL
D417	X	4	4'-1"			OUTLET BACKWALL
D418	X	4	2'-7"			OUTLET BACKWALL
D419	X	4	1'-2"			OUTLET BACKWALL
D420	X	4	3'-5"			OUTLET BACKWALL

△ INDICATES BAR SERIES

BAR SERIES TABLE

BAR NO.	NO. REQ'D.	LENGTH
D404	2 SERIES OF 4	1'-11" TO 13'-1"
D405	1 SERIES OF 14	15'-3" TO 22'-1"
D606	2 SERIES OF 9	8'-6" TO 11'-2"
D408	2 SERIES OF 8	7'-5" TO 10'-1"
D409	2 SERIES OF 14	2'-4" TO 7'-10"
D411	4 SERIES OF 6	1'-4" TO 14'-2"

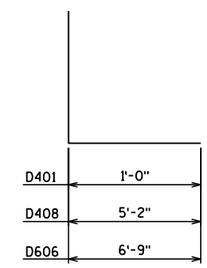

BAR BEND DIAGRAMS

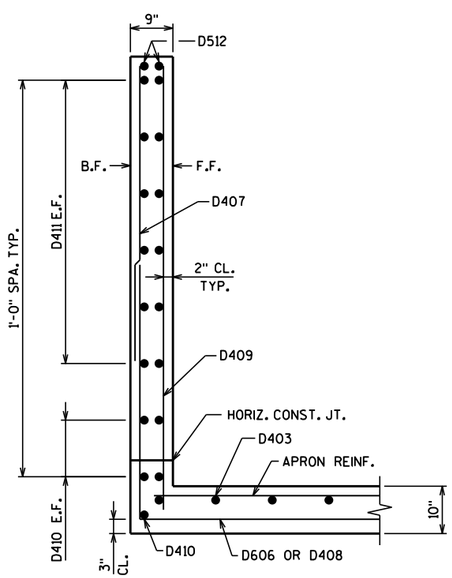

SECTION A-A

(WING 2 SIMILAR)

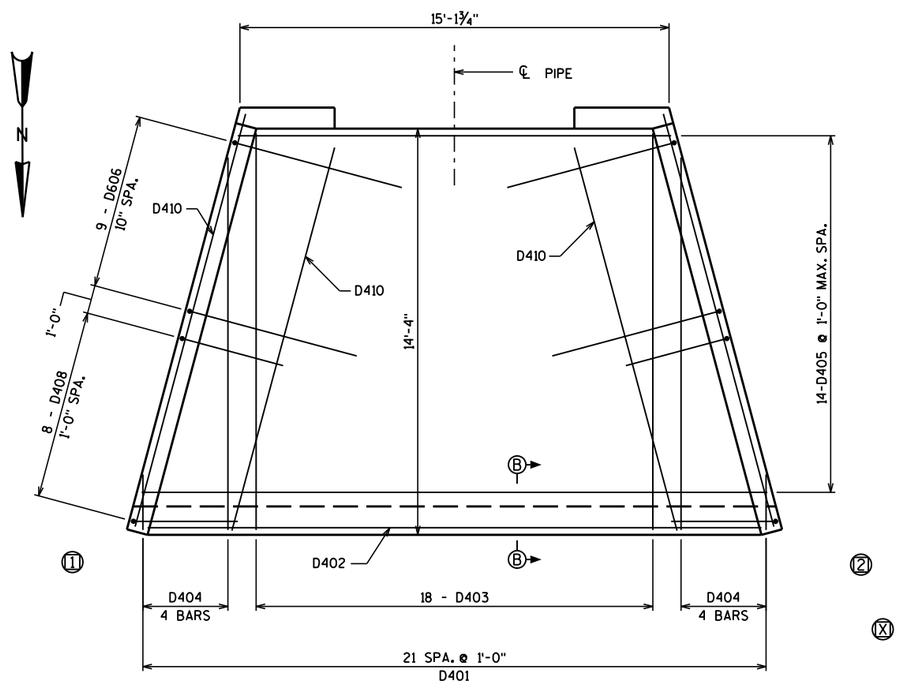

DOWNSTREAM APRON PLAN

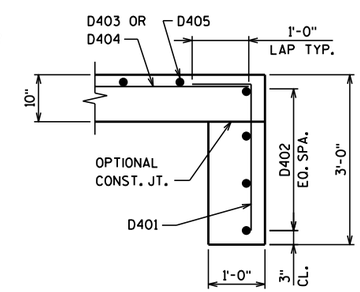

SECTION B-B

(X) INDICATES WING NUMBER

M-35-01-02

NO.	DATE	REVISION	BY

STATE OF WISCONSIN
DEPARTMENT OF TRANSPORTATION

STRUCTURE M-35-01

DRAWN BY NRT | PLANS CK'D. BRE

DOWNSTREAM APRON

SHEET 3 OF 3

8

8

EARTHWORK - STH 64 (C-35-63) - CATEGORY 0020 *

STATION	AREA (SF)			Incremental Vol (CY) (Unadjusted)			Cumulative Vol (CY)			
	Cut	Fill	Marsh Exc	Cut Note 1	Fill	Marsh Exc	Cut 1.00 Note 1	Expanded Fill 1.25	Expanded Marsh Backfill 1.20 Note 4	Mass Ordinate Note 8
326+00	0.00	0.00	0.00	0	0	0	0	0	0	0
326+38	6.00	8.00	0.00	0	0	0	0	0	0	0
326+39	69.73	12.72	50.66	27	15	37	27	19	44	9
326+50	78.37	14.75	60.01	30	6	23	58	26	71	32
326+75	94.09	20.04	79.22	80	16	64	137	46	148	92
326+90	133.52	41.90	66.74	63	17	41	201	67	197	133
327+00	144.76	54.50	90.67	52	18	29	252	90	232	162
327+01.8	145.17	57.51	224.16	10	4	10	262	94	245	167
327+21.98	149.58	58.02	90.67	110	43	118	372	148	386	224
327+37.62	137.46	32.80	150.61	83	26	70	455	181	470	274
327+50	103.19	32.04	49.17	55	15	46	510	200	525	310
327+55	94.14	28.36	52.48	18	6	9	529	207	536	322
327+75	70.00	16.40	66.21	61	17	44	589	227	589	362
328+02	61.56	14.92	54.32	66	16	60	655	247	661	408
328+03	0.00	12.00	0.00	1	0	1	656	248	662	409
328+25	0.00	0.00	0.00	36	16	32	693	268	701	425

Notes:	
1 - Cut	Cut includes Salvaged/Unusable Pavement material
Salvaged/Unusable Pavement Material	This does not show up in cross sections, but is included in earthwork calculations.
4 - Expanded Marsh Backfill	Will be backfilled with Backfill Granular Grade 2 (or Cut, or Borrow if approved by the engineer). Marsh Excavation assumed to be wasted.
8 - Mass Ordinate	If Marsh to be backfilled with Granular: [Mass Ordinate = Cut - Expanded Fill]. Does not include Marsh Excavation

* Table does not include pipe transition excavation and backfill.

EARTHWORK - STH 64 (C-35-69) - CATEGORY 0030*

STATION	AREA (SF)			Incremental Vol (CY) (Unadjusted)			Cumulative Vol (CY)			
	Cut	Fill	Marsh Exc	Cut Note 1	Fill	Marsh Exc	Cut 1.00 Note 1	Expanded Fill 1.25	Expanded Marsh Backfill 1.20 Note 4	Mass Ordinate Note 8
3+00	0.00	0.00	0.00	0	0	0	0	0	0	0
3+23	0.00	4.00	0.00	0	2	0	0	2	0	-2
3+24	62.76	4.63	74.62	1	0	1	1	2	2	-1
3+50	68.47	3.73	73.72	63	4	71	64	7	87	57
3+75	65.30	6.67	138.06	62	5	98	126	13	205	113
3+92	65.92	85.18	207.79	41	29	109	168	49	336	118
4+08.01	65.61	125.15	261.08	39	62	139	207	127	502	79
4+25	64.26	24.22	120.21	41	47	120	247	186	646	61
4+50	62.07	16.50	103.69	58	19	104	306	210	771	96
4+94.95	61.95	9.83	94.71	103	22	165	409	237	969	172
4+96	0.00	9.00	0.00	1	0	2	410	237	971	173
5+25	0.00	0.00	0.00	0	5	0	410	243	971	167

Notes:	
1 - Cut	Cut includes Salvaged/Unusable Pavement material
Salvaged/Unusable Pavement Material	This does not show up in cross sections, but is included in earthwork calculations.
4 - Expanded Marsh Backfill	Will be backfilled with Backfill Granular Grade 2 (or Cut, or Borrow if approved by the engineer). Marsh Excavation assumed to be wasted.
8 - Mass Ordinate	If Marsh to be backfilled with Granular: [Mass Ordinate = Cut - Expanded Fill]. Does not include Marsh Excavation

* Table does not include pipe transition excavation and backfill.

EARTHWORK - STH 107 (CATEGORY 0010)*

STATION	AREA (SF)			Incremental Vol (CY) (Unadjusted)			Cumulative Vol (CY)			
	Cut	Fill	Marsh Exc	Cut Note 1	Fill	Marsh Exc	Cut 1.00 Note 1	Expanded Fill 1.25	Expanded Marsh Backfill 1.20 Note 4	Mass Ordinate Note 8
1+25	0.00	0.00	0.00	0	0	0	0	0	0	0
1+49	0.00	6.00	0.00	0	3	0	0	3	0	-3
1+50.01	31.96	6.75	22.19	1	0	0	1	3	0	-3
1+75	38.53	16.53	23.37	33	11	21	33	17	26	17
2+00	28.65	60.71	74.83	31	36	45	64	61	80	3
2+04.1	28.49	76.74	76.92	4	10	12	69	74	94	-6
2+14.2	27.36	150.61	37.87	10	43	21	79	128	120	-48
2+25	49.46	29.96	31.19	15	36	14	94	173	137	-78
2+50	59.66	2.38	7.87	51	15	18	145	191	158	-47
2+70	48.27	1.40	10.05	40	1	7	185	193	166	-8
2+71	0.00	1.40	0.00	1	0	0	186	193	166	-7
3+00	0.00	0.00	0.00	0	1	0	186	194	166	-8

Notes:	
1 - Cut	Cut includes Salvaged/Unusable Pavement material
Salvaged/Unusable Pavement Material	This does not show up in cross sections, but is included in earthwork calculations.
4 - Expanded Marsh Backfill	Will be backfilled with Backfill Granular Grade 2 (or Cut, or Borrow if approved by the engineer). Marsh Excavation assumed to be wasted.
8 - Mass Ordinate	If Marsh to be backfilled with Granular: [Mass Ordinate = Cut - Expanded Fill]. Does not include Marsh Excavation

* Table does not include pipe transition excavation and backfill.

EARTHWORK - STH 86 (500860200) *

STATION	AREA (SF)		Incremental Vol (CY) (Unadjusted)		Cumulative Vol (CY)	
	Cut	Fill	Cut	Fill (BAD 3/4-INCH)	Cut 1.00	Expanded Fill 1.25 (BAD 3/4-INCH)
104+00	0.00	0.00	0	0	0	0
104+25	0.03	3.83	0	2	0	2
104+50	0.06	6.51	0	5	0	8
105+00	0.37	9.22	0	15	0	26
105+21.82	0.21	17.56	0	11	1	40
105+46.85	0.00	11.13	0	13	1	57
105+71.87	0.00	1.21	0	6	1	64
106+00	0.00	1.29	0	1	1	65
106+50	0.00	4.42	0	5	1	72
107+00	0.00	5.27	0	9	1	83
107+50	0.00	1.62	0	6	1	91
108+00	0.66	0.09	1	2	1	93
108+28.31	0.05	0.38	0	0	2	93
108+50	0.05	0.18	0	0	2	94
109+00	0.04	4.64	0	4	2	99
109+50	0.00	1.21	0	5	2	106
110+03.13	0.01	22.84	0	24	2	136
110+28.15	0.00	9.12	0	15	2	154
110+53.18	0.00	6.43	0	7	2	163
111+00	0.30	1.09	0	7	2	171
111+25	0.20	0.01	0	1	2	172

* FOR INFORMATION ONLY - SEE BARRIER GRADING SHAPING FINISHING TABLE FOR ACTUAL ITEM

EARTHWORK - STH 86 (500860290)*

STATION	AREA (SF)		Incremental Vol (CY) (Unadjusted)		Cumulative Vol (CY)	
	Cut	Fill	Cut	Fill (BAD 3/4-INCH)	Cut 1.00	Expanded Fill 1.25 (BAD 3/4-INCH)
184+00	0.00	0.48	0	0	0	0
184+50	0.22	0.30	0	1	0	1
185+00	0.34	10.89	1	10	1	14
185+06.42	0.29	17.24	0	3	1	18
185+25	0.20	28.69	0	16	1	38
185+31.4	0.17	26.04	0	6	1	46
185+50	1.03	6.95	0	11	1	60
185+56.37	0.91	2.51	0	1	2	61
186+00	0.35	1.26	1	3	3	65
186+50	0.09	0.23	0	1	3	67
187+00	0.55	0.01	1	0	4	67
187+50	0.89	0.00	1	0	5	67
187+75	0.29	4.64	1	2	6	70
188+00	0.86	7.17	1	5	6	77
188+50	0.00	0.97	1	8	7	86
189+00	0.00	1.66	0	2	7	89
189+50	0.00	0.41	0	2	7	92
189+91.91	0.09	0.05	0	0	7	92
190+00	0.06	0.01	0	0	7	92
190+50	0.27	0.00	0	0	7	92
191+00	0.00	0.72	0	1	8	93
191+50	0.00	0.63	0	1	8	95
192+00	0.10	0.00	0	1	8	95
192+41.45	0.24	0.00	0	0	8	95
192+66.29	0.30	4.05	0	2	8	98
192+91.11	0.30	6.07	0	5	8	103
193+00	0.33	5.34	0	2	8	106
193+50	0.55	0.15	1	5	9	112
194+00	0.62	0.00	1	0	10	112

* FOR INFORMATION ONLY - SEE BARRIER GRADING SHAPING FINISHING TABLE FOR ACTUAL ITEM

EARTHWORK - STH 86 (500860310)*

STATION	AREA (SF)		Incremental Vol (CY) (Unadjusted)		Cumulative Vol (CY)	
	Cut	Fill	Cut	Fill (BAD 3/4-INCH)	Cut 1.00	Expanded Fill 1.25 (BAD 3/4-INCH)
203+00	0.00	0.00	0	0	0	0
203+50	0.11	0.42	0	0	0	0
204+00	0.19	5.55	0	6	0	7
204+31.92	0.06	13.19	0	11	1	21
204+56.9	0.08	11.54	0	11	1	36
204+61.92	0.09	12.77	0	2	1	38
204+81.87	0.05	12.13	0	9	1	50
204+86.9	0.05	15.46	0	3	1	53
205+00	0.05	2.09	0	4	1	58
205+11.88	0.06	0.04	0	0	1	59
205+50	0.22	0.03	0	0	1	59
206+00	0.20	0.02	0	0	1	59
206+50	0.40	0.00	1	0	2	59
207+00	0.24	0.06	1	0	2	59
207+50	0.62	0.37	1	0	3	60
208+00	0.31	0.02	1	0	4	60
208+50	0.14	0.63	0	1	5	61
209+03.85	0.03	0.94	0	2	5	63
209+09.13	0.03	0.75	0	0	5	63
209+50	0.01	0.87	0	1	5	65
210+00	9.75	0.56	9	1	14	66
210+01	0.00	0.00	0	0	14	#VALUE!

* FOR INFORMATION ONLY - SEE BARRIER GRADING SHAPING FINISHING TABLE FOR ACTUAL ITEM

EARTHWORK - STH 86 (500860320)*

STATION	AREA (SF)		Incremental Vol (CY) (Unadjusted)		Cumulative Vol (CY)	
	Cut	Fill	Cut	Fill (BAD 3/4-INCH)	Cut 1.00	Expanded Fill 1.25 (BAD 3/4-INCH)
210+49	0.00	0.00	0	0	0	0
210+50	3.53	2.14	0	0	0	0
211+00	0.00	3.86	3	6	3	7
211+50	0.12	4.28	0	8	3	16
212+00	0.05	5.31	0	9	4	28
212+50	0.00	6.00	0	10	4	41
213+00	0.00	4.02	0	9	4	52
213+50	0.00	1.10	0	5	4	58
214+07.96	0.00	9.47	0	11	4	72
214+50	0.00	1.95	0	9	4	83
215+00	0.09	7.57	0	9	4	94
215+50	0.00	2.51	0	9	4	106
215+79.54	2.51	0.27	1	2	5	108
216+04.44	6.77	5.61	4	3	9	111
216+29.32	3.50	3.08	5	4	14	116
216+62.96	1.40	11.40	3	9	17	128
216+88.02	0.67	2.35	1	6	18	136
217+13.1	0.45	11.32	1	6	19	144
217+50	0.09	0.00	0	8	19	153
218+00	0.00	0.00	0	0	19	153

* FOR INFORMATION ONLY - SEE BARRIER SYSTEM GRADING SHAPING FINISHING TABLE FOR ACTUAL ITEM

EARTHWORK - STH 102 (CATEGORY 0010) *

STATION	AREA (SF)			Incremental Vol (CY) (Unadjusted)			Cumulative Vol (CY)			
	Cut	Fill	Marsh Exc	Cut Note 1	Fill	Marsh Exc	Cut 1.00 Note 1	Expanded Fill 1.25	Expanded Marsh Backfill 1.20 Note 4	Mass Ordinate Note 8
14+00	0.00	0.00	0.00	0	0	0	0	0	0	0
14+25	1.73	0.00	0.00	1	0	0	1	0	0	1
14+33	4.00	8.00	0.00	1	1	0	2	1	0	0
14+34	36.62	8.18	50.42	1	0	1	2	2	1	1
14+50	40.13	10.36	43.18	23	5	28	25	9	34	16
14+75	38.87	5.96	24.30	37	8	31	62	18	72	44
15+01.34	52.29	33.57	38.89	44	19	31	106	42	109	64
15+25	39.31	2.13	0.00	40	16	17	146	62	129	84
15+50	37.32	6.21	35.54	35	4	16	182	67	149	115
15+93	31.97	1.57	21.04	55	6	45	237	74	203	163
15+94	0.00	0.00	0.00	1	0	0	238	74	204	163
16+00	0.00	0.00	0.00	0	0	0	238	74	204	163

EARTHWORK - TEMPORARY DRIVEWAY (CATEGORY 0010)

STATION	AREA (SF)			Incremental Vol (CY) (Unadjusted)			Cumulative Vol (CY)			
	Cut	Fill Note 9	Marsh Exc	Cut Note 1	Fill Note 9	Marsh Exc	Cut 1.00 Note 1	Expanded Fill 1.25	Expanded Marsh Backfill 1.20 Note 4	Mass Ordinate Note 10
100+16	2.28	0.19	12.78	0	0	0	0	0	0	0
100+26	0.00	25.95	12.65	0	5	5	0	6	6	0
100+50	0.00	28.55	9.82	0	24	10	0	36	18	0
100+75	0.00	14.69	12.93	0	20	11	0	61	30	0
101+00	0.00	11.45	11.80	0	12	11	0	76	44	0
101+25	0.00	9.59	11.07	0	10	11	0	89	57	0
101+50	5.33	0.12	0.00	2	4	5	3	94	63	3
101+65	4.67	0.43	0.00	3	0	0	6	94	63	6

EARTHWORK - TEMPORARY DRIVEWAY REMOVAL(CATEGORY 0010)

STATION	AREA (SF)			Incremental Vol (CY) (Unadjusted)			Cumulative Vol (CY)			
	Cut	Fill Note 9	Marsh Exc	Cut Note 1	Fill Note 9	Marsh Exc	Cut 1.00 Note 1	Expanded Fill 1.25	Expanded Marsh Backfill 1.20 Note 4	Mass Ordinate Note 10
100+16	25.77	12.78	0.00	0	0	0	0	0	0	0
100+26	51.40	12.65	0.00	14	5	0	14	6	0	14
100+50	51.17	9.82	0.00	46	10	0	60	18	0	46
100+75	40.42	12.93	0.00	42	11	0	102	32	0	42
101+00	36.05	11.80	0.00	35	11	0	138	46	0	35
101+25	33.46	11.07	0.00	32	11	0	170	59	0	32
101+50	12.92	0.00	0.00	21	5	0	191	65	0	191
101+65	13.23	0.00	0.00	7	0	0	199	65	0	199

Notes:	
1 - Cut	Cut includes Salvaged/Unusable Pavement material
Salvaged/Unusable Pavement Material	This does not show up in cross sections, but is included in earthwork calculations.
3 - Fill	Does not include Unusable Pavement Exc volume
4 - Expanded Marsh Backfill	Will be backfilled with Backfill Granular Grade 2 (or Cut, or Borrow if approved by the engineer). Marsh Excavation assumed to be wasted.
8 - Mass Ordinate	If Marsh to be backfilled with Granular: [Mass Ordinate = Cut - Expanded Fill]. Does not include Marsh Excavation
9 - Fill	Fill for Temporary Driveway to be Backfill Granular Grade 2 (Or Borrow if approved by the engineer).
10 - Mass Ordinate	Mass Ordinate = Cut (Does not include Marsh Excavation or Fill).

* Table does not include pipe transition excavation and backfill.

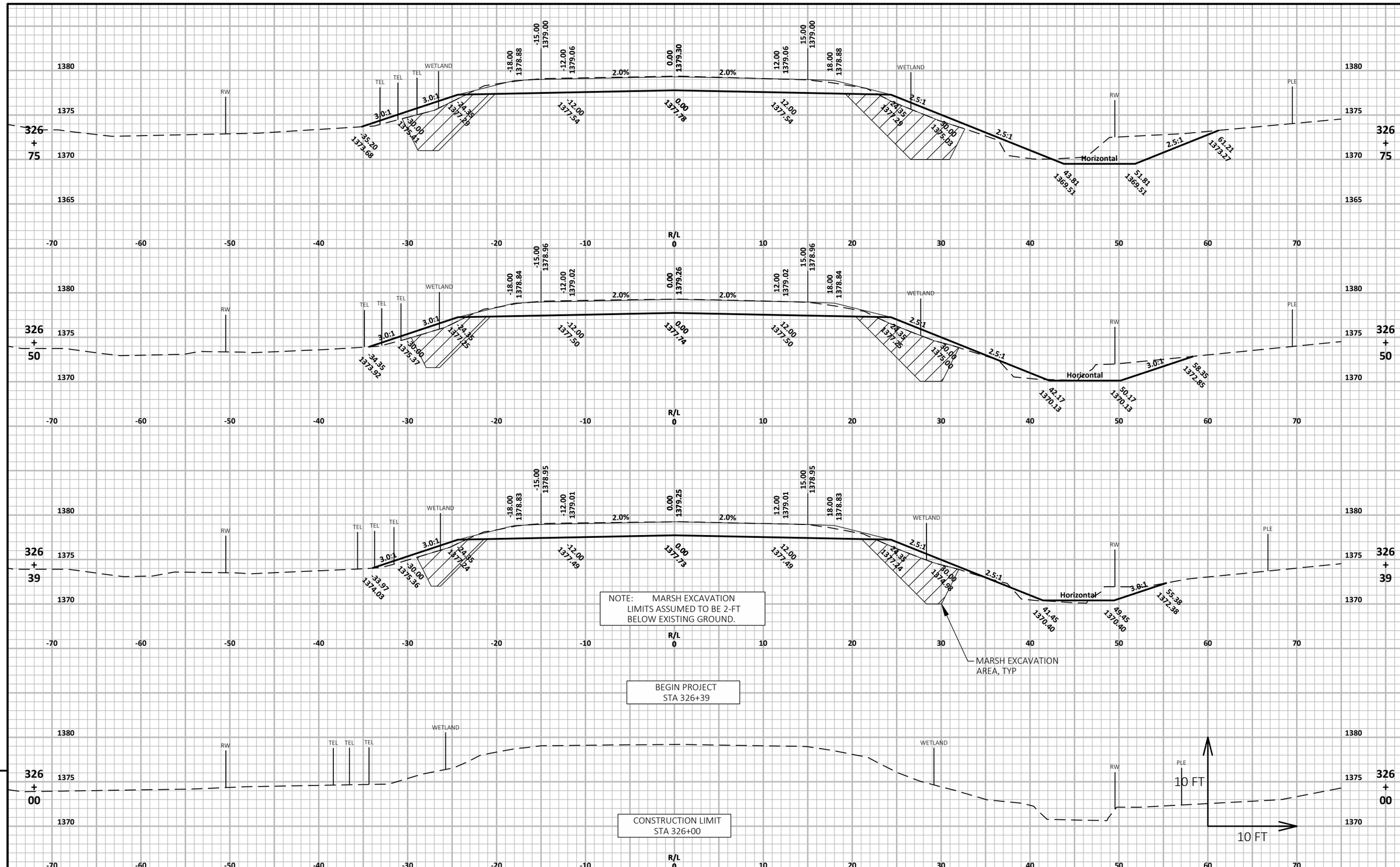

PROJECT NO: 1009-44-67	HWY: STH 64	COUNTY: LINCOLN	CROSS SECTIONS: STH 64 (C-35-63)	SHEET 142	E

FILE NAME : F:\TR\JOBS\E2271A17\CIVIL 3D 2016 STH 64 WEST\SHEETSPLAN\10094437-090201-XS.DWG
LAYOUT NAME - 10094467-090201-xs
PLOT DATE : 6/21/2019 4:15 PM
PLOT BY : JAIRO MAZARIEGOS
PLOT NAME :
PLOT SCALE : 1 IN:10 FT HORZ. / 1 IN:10 FT VERT.

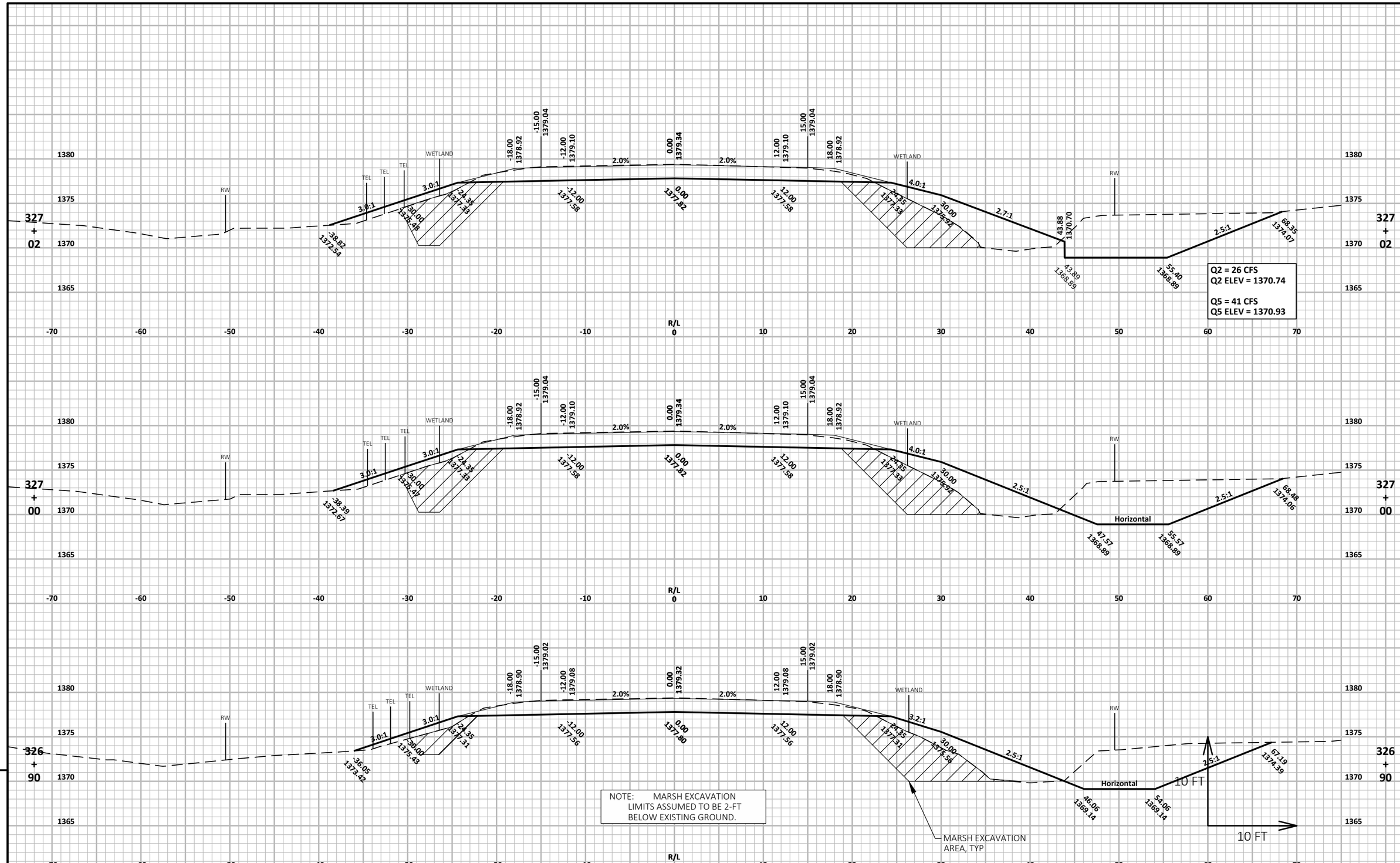

PROJECT NO: 1009-44-67	HWY: STH 64	COUNTY: LINCOLN	CROSS SECTIONS: STH 64 (C-35-63)	SHEET 143	E

FILE NAME : F:\TR\JOBS\E2271A17\CIVIL 3D 2016 STH 64 WEST\SHEETSPLAN\10094437-090201-XS.DWG
LAYOUT NAME - 10094467-090202-xs
PLOT DATE : 6/21/2019 4:15 PM PLOT BY : JAIRO MAZARIEGOS PLOT NAME : PLOT SCALE : 1 IN:10 FT HORZ. / 1 IN:10 FT VERT.

WISDOT/CADDS SHEET 49

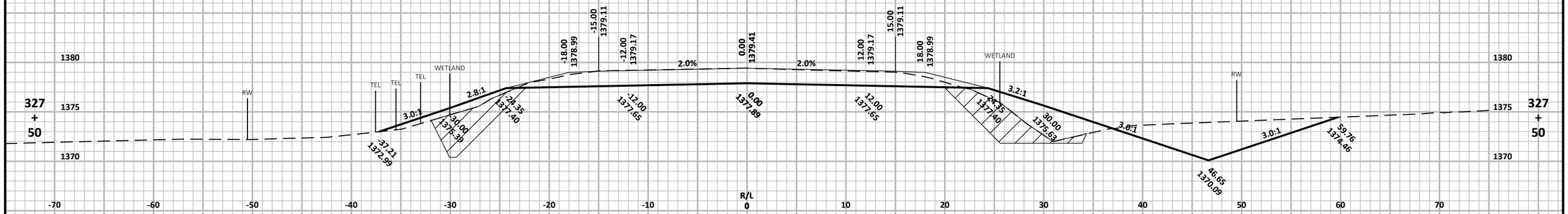

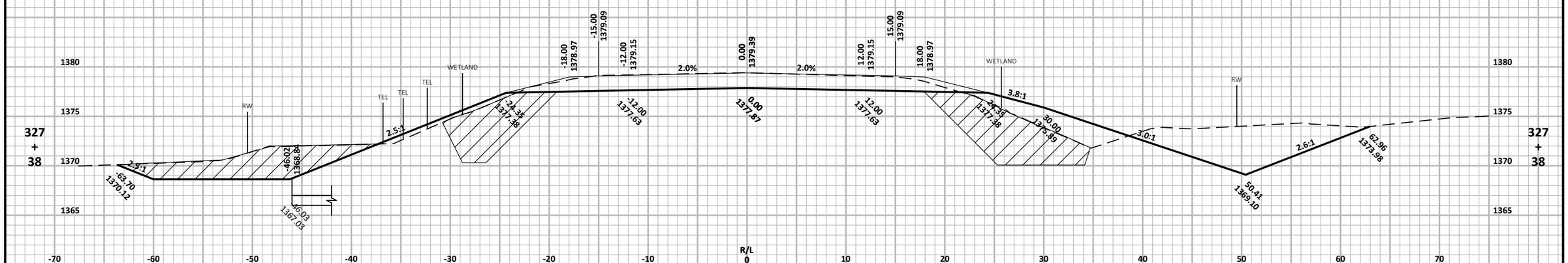

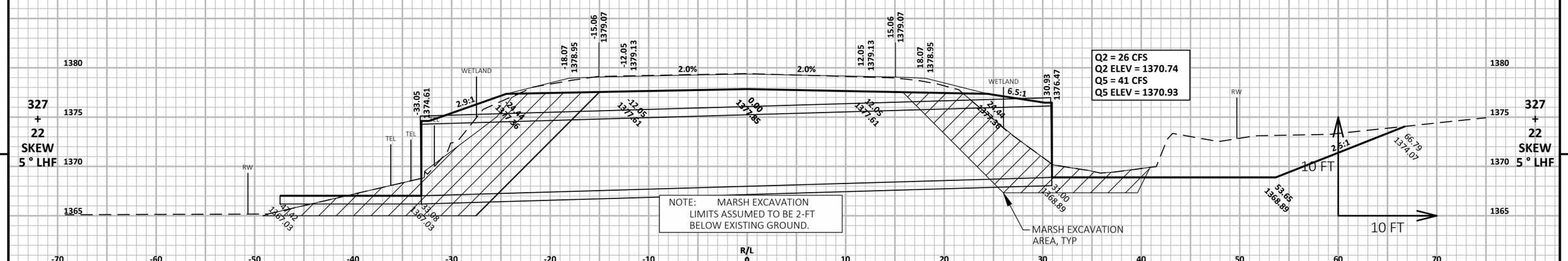

9

9

PROJECT NO: 1009-44-67	HWY: STH 64	COUNTY: LINCOLN	CROSS SECTIONS: STH 64 (C-35-63)	SHEET 144	E

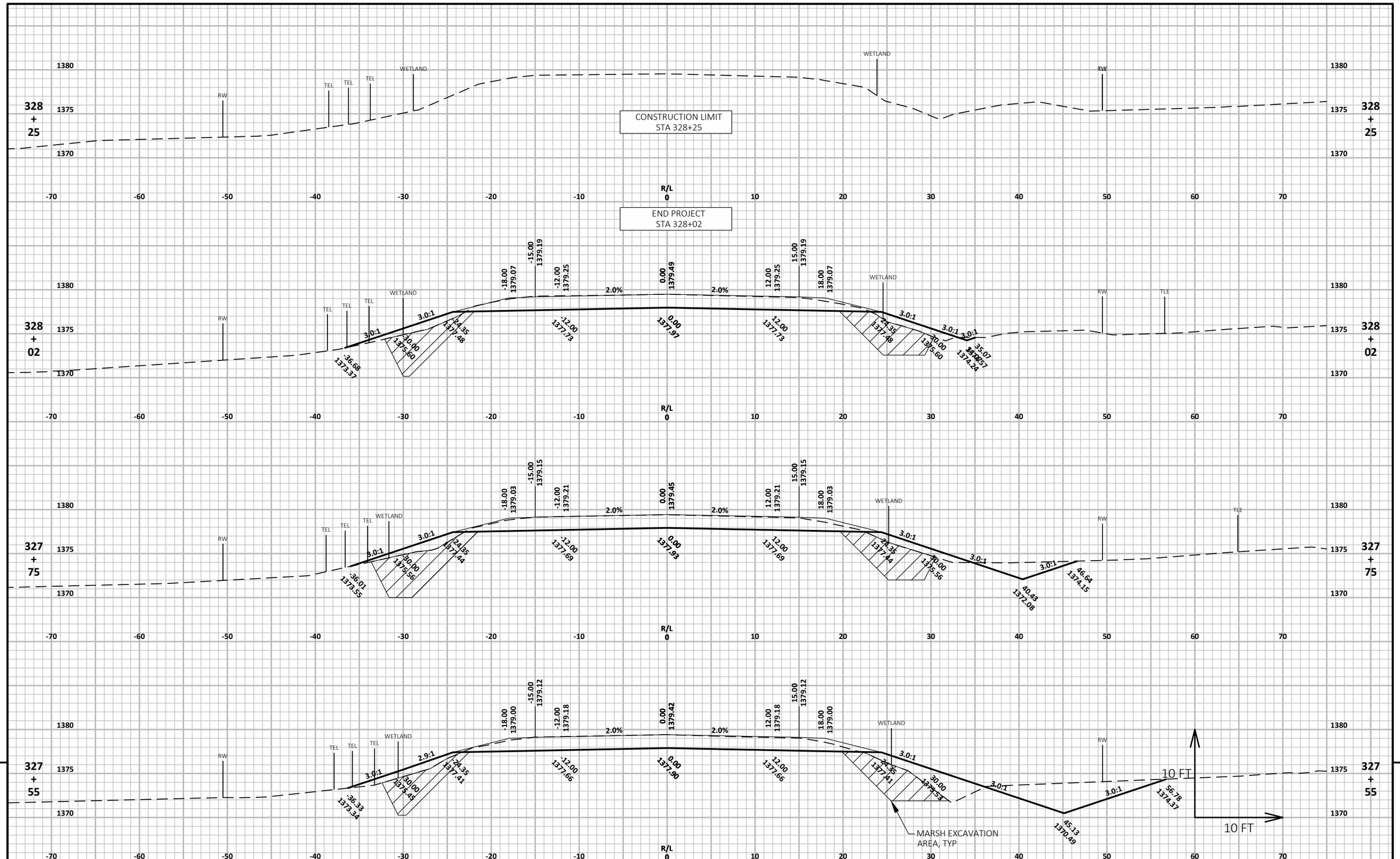

9

PROJECT NO: 1009-44-67	HWY: STH 64	COUNTY: LINCOLN	CROSS SECTIONS: STH 64 (C-35-63)	SHEET 145	E

FILE NAME : F:\TR\JOBS\E2271A17\CIVIL 3D 2016 STH 64 WEST\SHEETSPLAN\10094437-090201-XS.DWG
LAYOUT NAME - 10094467-090204-xs
PLOT DATE : 6/21/2019 4:15 PM
PLOT BY : JAIRO MAZARIEGOS
PLOT NAME :
PLOT SCALE : 1 IN:10 FT HORZ. / 1 IN:10 FT VERT.
WISDOT/CADDS SHEET 49

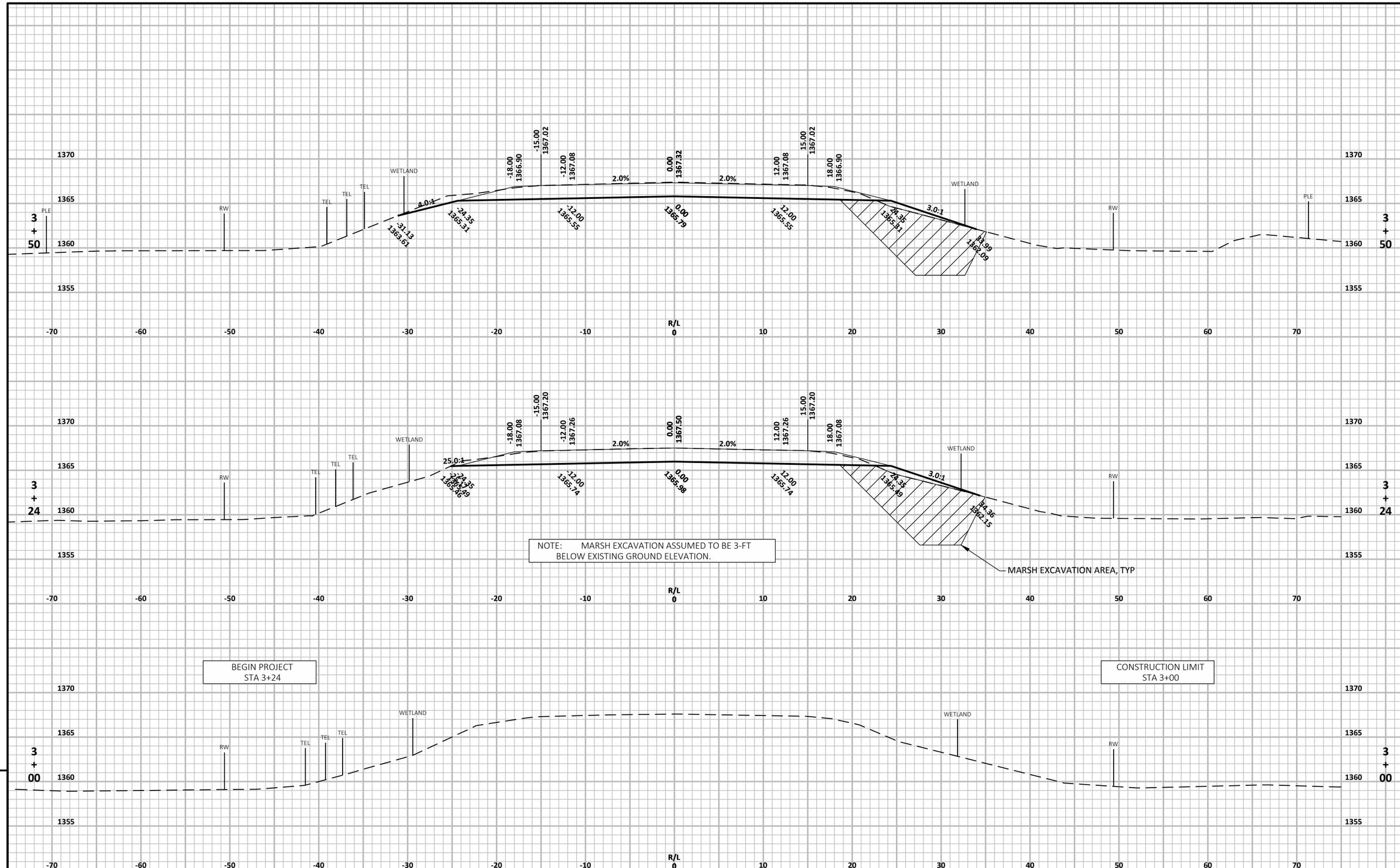

9

PROJECT NO: 1009-44-67	HWY: STH 64	COUNTY: LINCOLN	CROSS SECTIONS: STH 64 (C-35-69)	SHEET 146	E

FILE NAME : F:\TR\JOBS\E2271A17\CIVIL 3D 2016 STH 64 EAST\SHEETSPLAN\10094437-090201-XS.DWG
LAYOUT NAME - 10094467-090205-xs
PLOT DATE : 7/16/2019 1:58 PM PLOT BY : JAIRO MAZARIEGOS PLOT NAME : PLOT SCALE : 1 IN:10 FT HORZ. / 1 IN:10 FT VERT.

WISDOT/CADDS SHEET 49

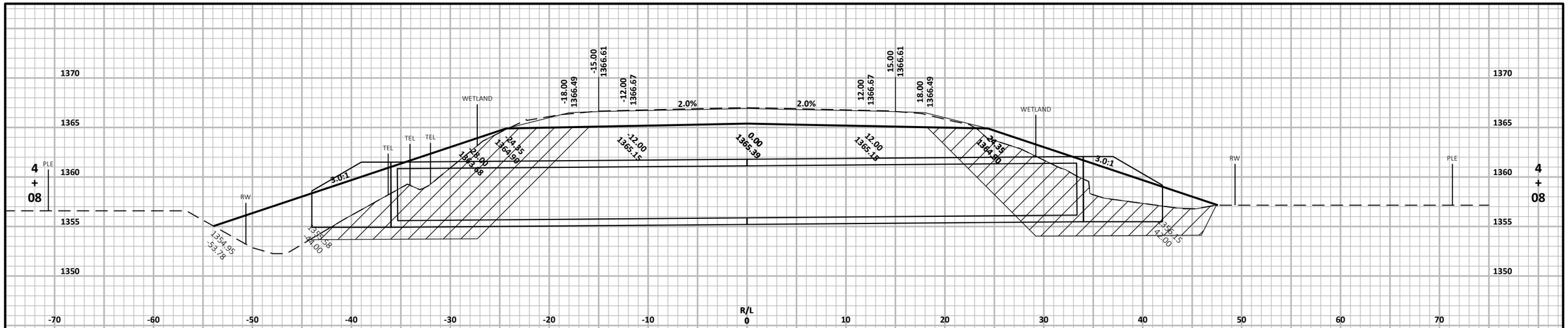

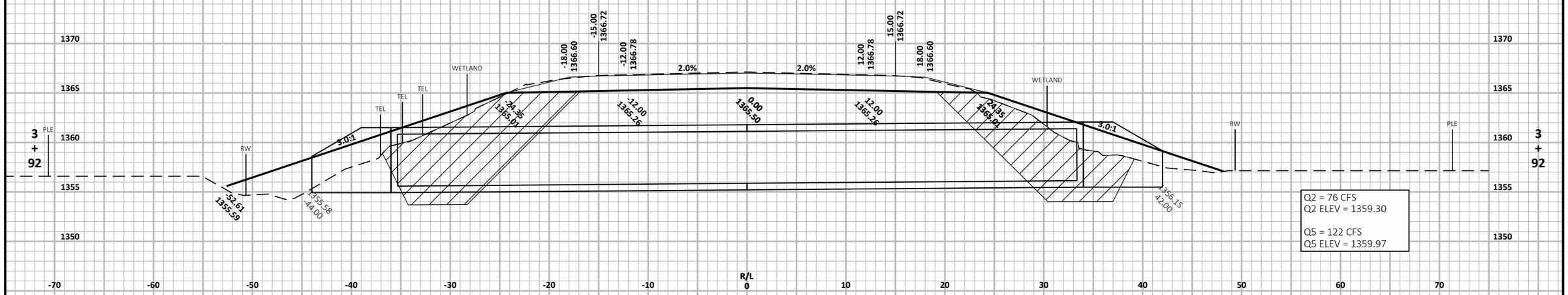

Q2 = 76 CFS
Q2 ELEV = 1359.30

Q5 = 122 CFS
Q5 ELEV = 1359.97

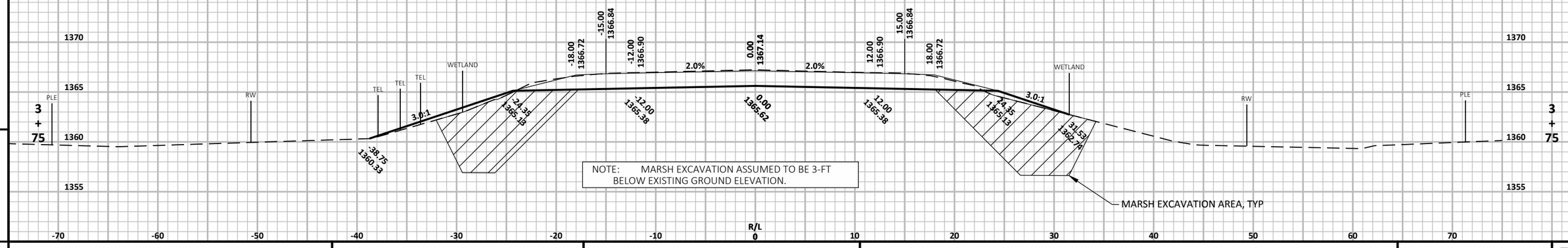

NOTE: MARSH EXCAVATION ASSUMED TO BE 3-FT BELOW EXISTING GROUND ELEVATION.

MARSH EXCAVATION AREA, TYP

9

9

PROJECT NO: 1009-44-67	HWY: STH 64	COUNTY: LINCOLN	CROSS SECTIONS: STH 64 (C-35-69)	SHEET 147	E

FILE NAME : F:\TR\JOBS\E2271A17\CIVIL 3D 2016 STH 64 EAST\SHEETSPLAN\10094437-090201-XS.DWG
LAYOUT NAME - 10094467-090206-xs
PLOT DATE : 7/16/2019 1:58 PM
PLOT BY : JAIRO MAZARIEGOS
PLOT NAME :
PLOT SCALE : 1 IN:10 FT HORZ. / 1 IN:10 FT VERT.
WISDOT/CADDS SHEET 49

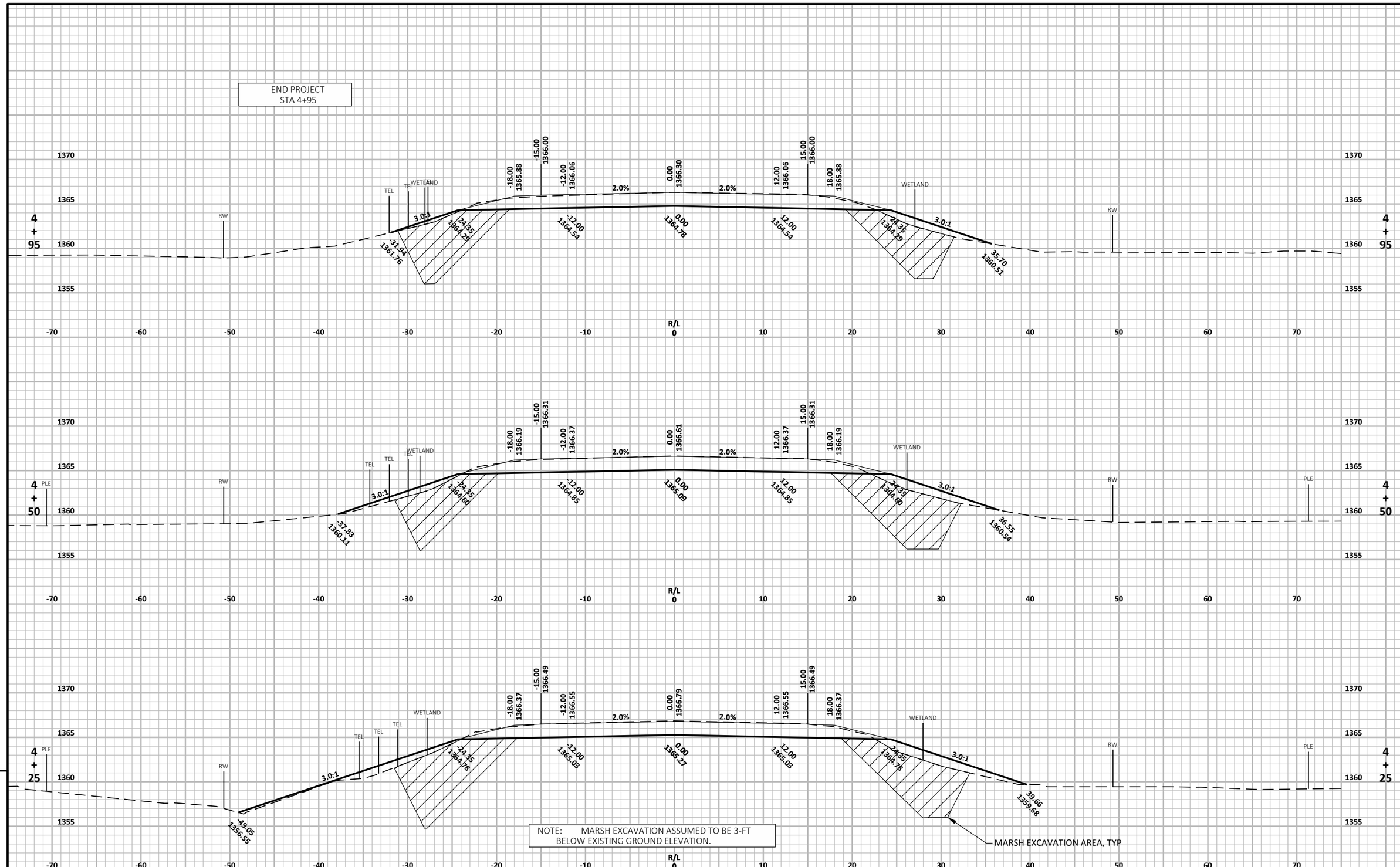

NOTE: MARSH EXCAVATION ASSUMED TO BE 3-FT BELOW EXISTING GROUND ELEVATION.

9

9

PROJECT NO: 1009-44-67	HWY: STH 64	COUNTY: LINCOLN	CROSS SECTIONS: STH 64 (C-35-69)	SHEET 148	E

FILE NAME : F:\TR\JOBS\E2271A17\CIVIL 3D 2016 STH 64 EAST\SHEETSPLAN\10094437-090201-XS.DWG
LAYOUT NAME - 10094467-090207-xs

PLOT DATE : 7/16/2019 1:58 PM PLOT BY : JAIRO MAZARIEGOS PLOT NAME : PLOT SCALE : 1 IN:10 FT HORZ. / 1 IN:10 FT VERT.

WISDOT/CADDS SHEET 49

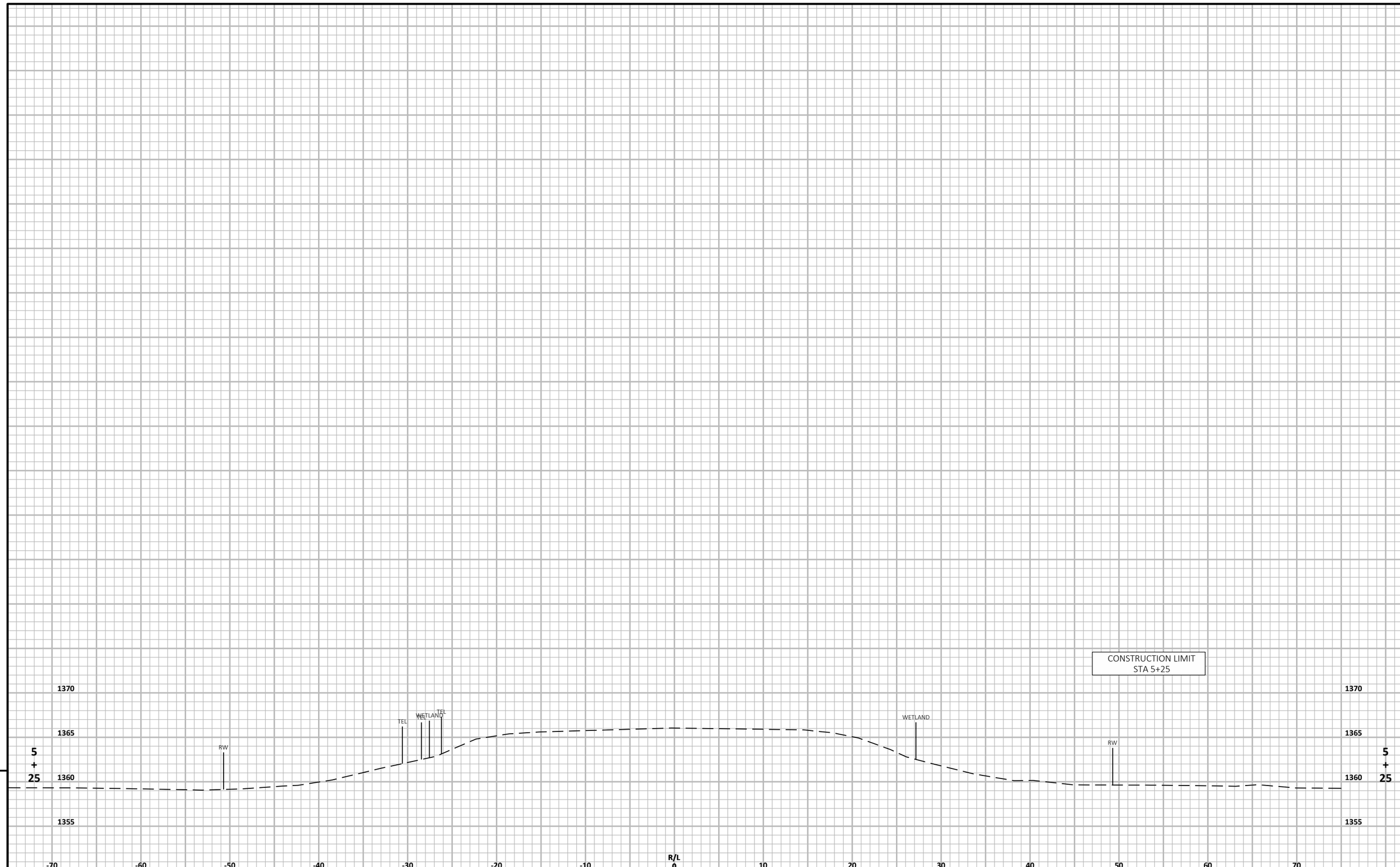

9

9

PROJECT NO: 1009-44-67	HWY: STH 64	COUNTY: LINCOLN	CROSS SECTIONS: STH 64 (C-35-69)	SHEET 149	E

FILE NAME : F:\TR\JOBS\E2271A17\CIVIL 3D 2016 STH 64 EAST\SHEETSPLAN\10094437-090201-XS.DWG
LAYOUT NAME - 10094467-090208-xs
PLOT DATE : 7/16/2019 1:58 PM
PLOT BY : JAIRO MAZARIEGOS
PLOT NAME :
PLOT SCALE : 1 IN:10 FT HORZ. / 1 IN:10 FT VERT.

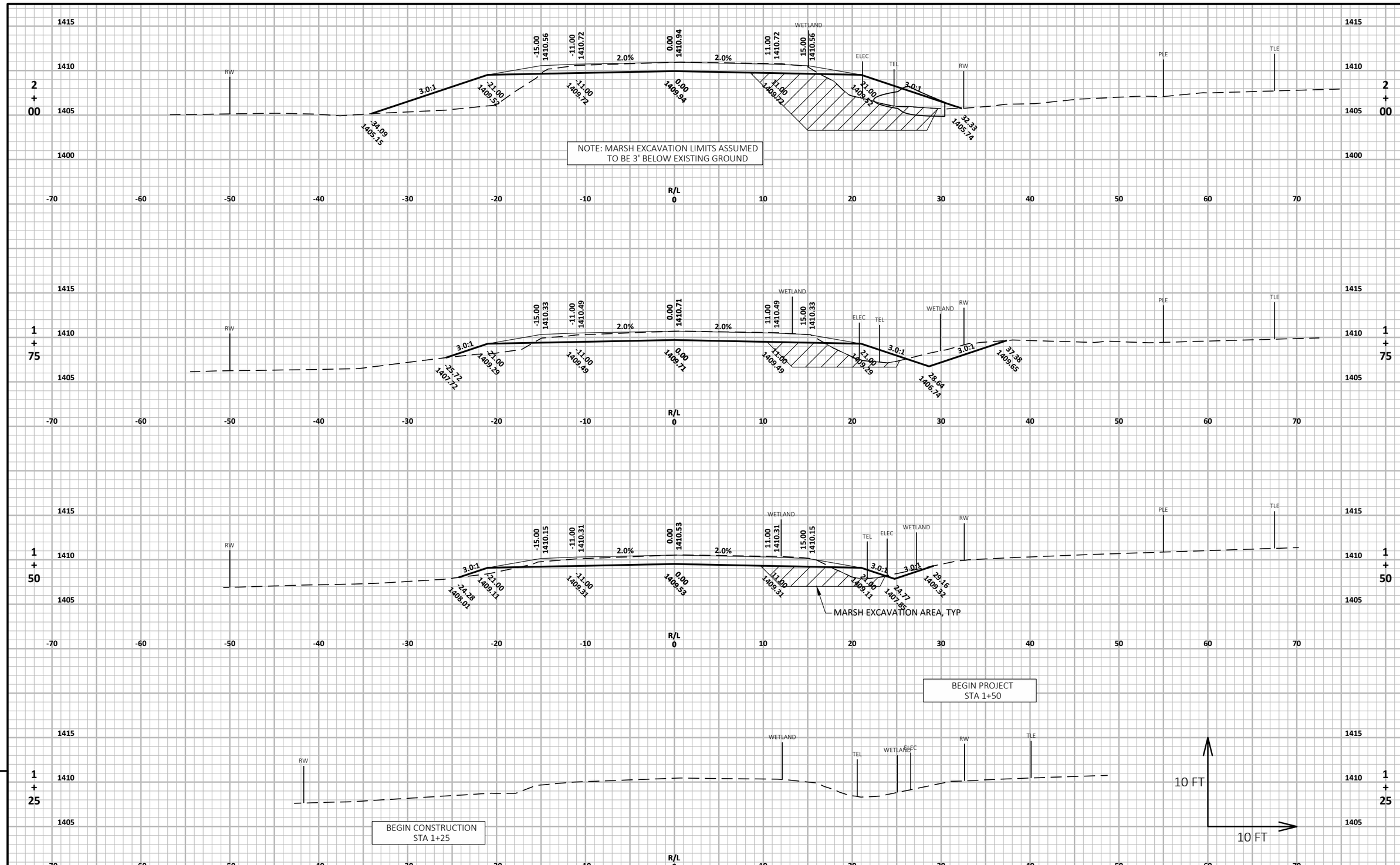

PROJECT NO: 1009-44-67	HWY: STH 107	COUNTY: LINCOLN	CROSS SECTIONS: STH 107	SHEET 150	E

FILE NAME : F:\TR\JOBS\E2271A17\CIVIL 3D 2016 STH 107\SHEETSPLAN\10094437-090201-XS.DWG
LAYOUT NAME - 10094467-090209-xs
PLOT DATE : 6/25/2019 2:19 PM
PLOT BY : JAIRO MAZARIEGOS
PLOT NAME :
PLOT SCALE : 1 IN:10 FT HORZ. / 1 IN:10 FT VERT.

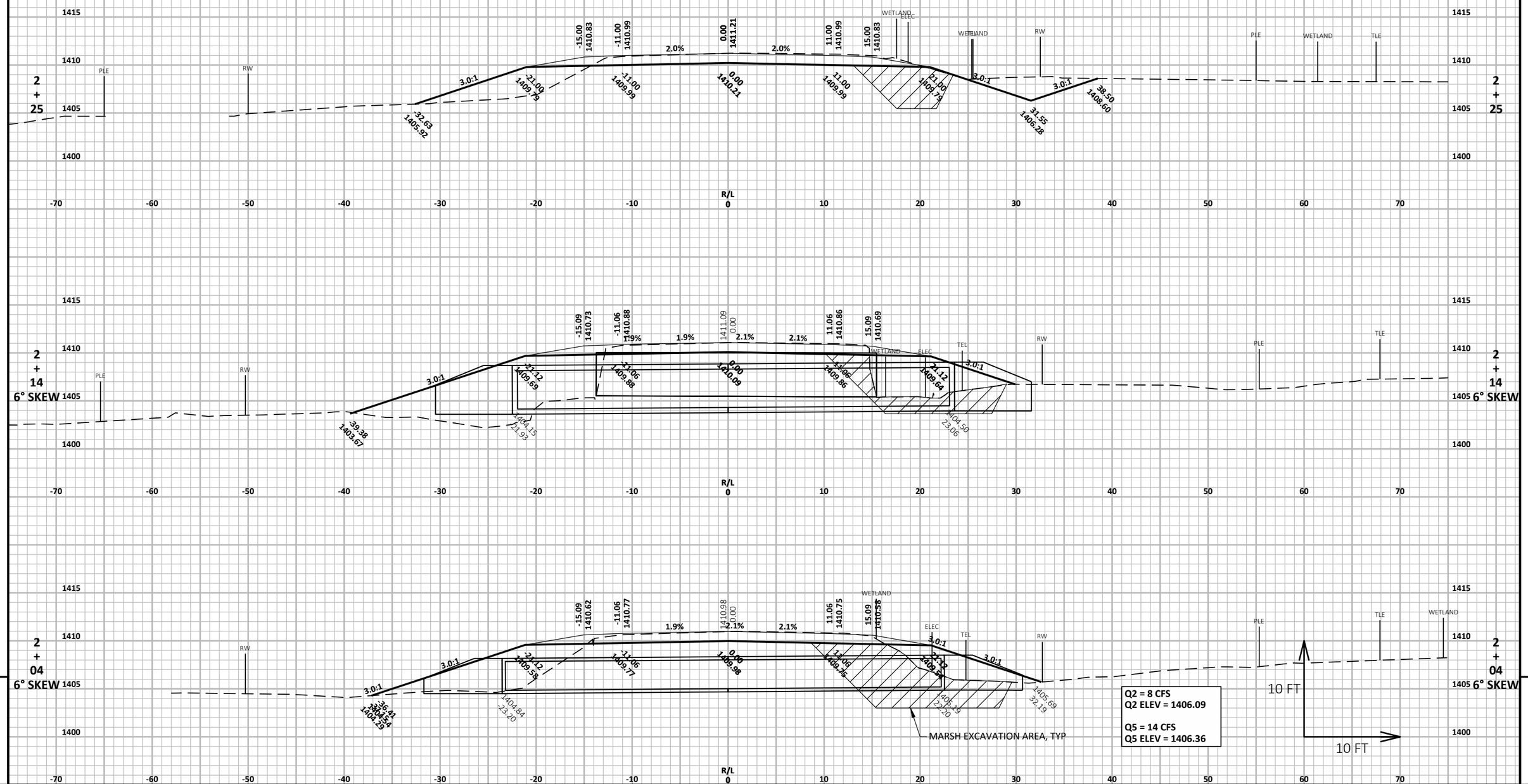

PROJECT NO: 1009-44-67	HWY: STH 107	COUNTY: LINCOLN	CROSS SECTIONS: STH 107	SHEET 151	E

FILE NAME : F:\TR\JOBS\E2271A17\CIVIL 3D 2016 STH 107\SHEETSPLAN\10094437-090201-XS.DWG
LAYOUT NAME - 10094467-090210-xs
PLOT DATE : 6/25/2019 2:19 PM PLOT BY : JAIRO MAZARIEGOS PLOT NAME : PLOT SCALE : 1 IN:10 FT HORZ. / 1 IN:10 FT VERT.

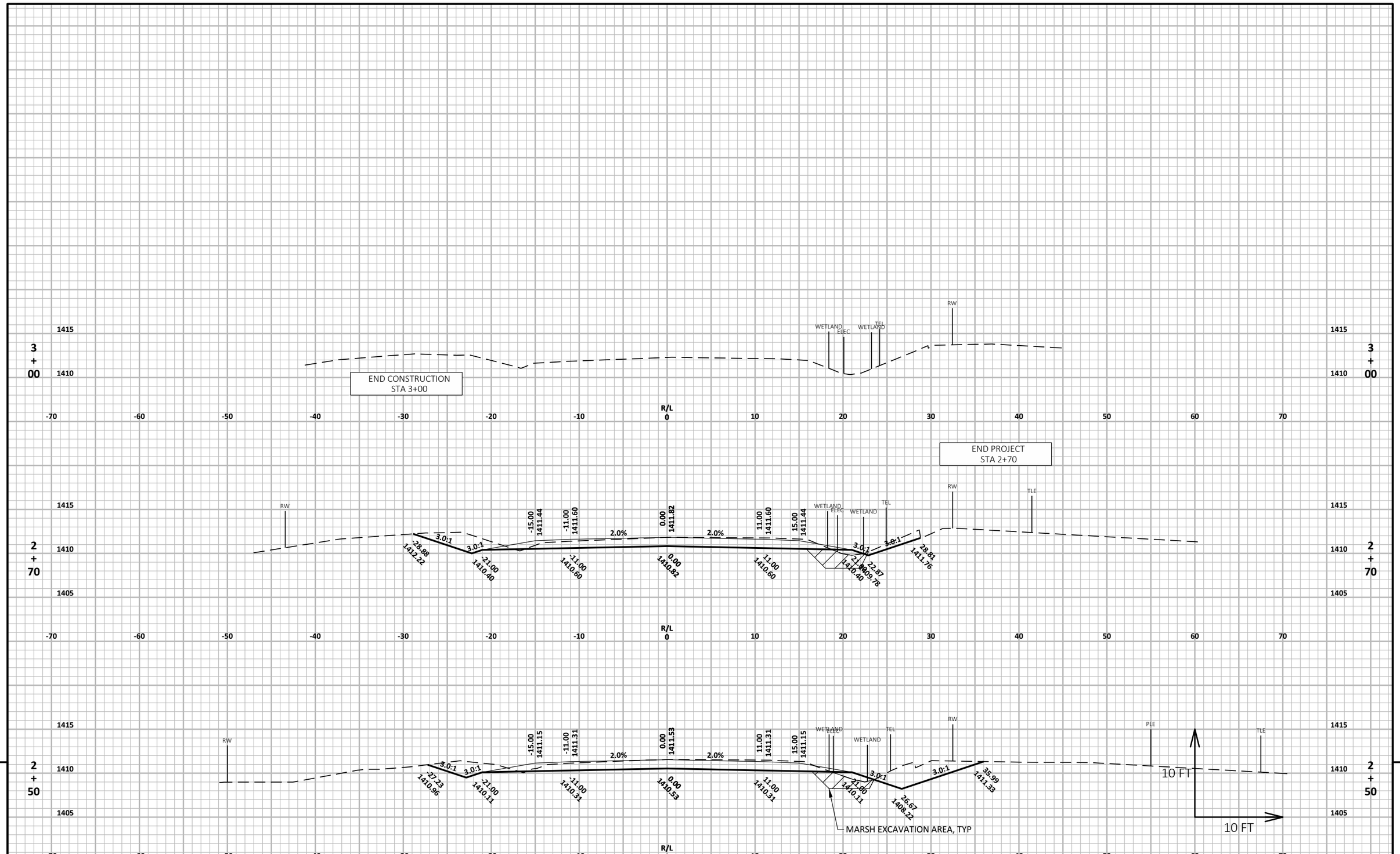

PROJECT NO: 1009-44-67	HWY: STH 107	COUNTY: LINCOLN	CROSS SECTIONS: STH 107	SHEET 152	E

FILE NAME : F:\TR\JOBS\E2271A17\CIVIL 3D 2016 STH 107\SHEETSPLAN\10094437-090201-XS.DWG
LAYOUT NAME - 10094467-090211-xs
PLOT DATE : 6/25/2019 2:19 PM PLOT BY : JAIRO MAZARIEGOS PLOT NAME : PLOT SCALE : 1 IN:10 FT HORZ. / 1 IN:10 FT VERT.

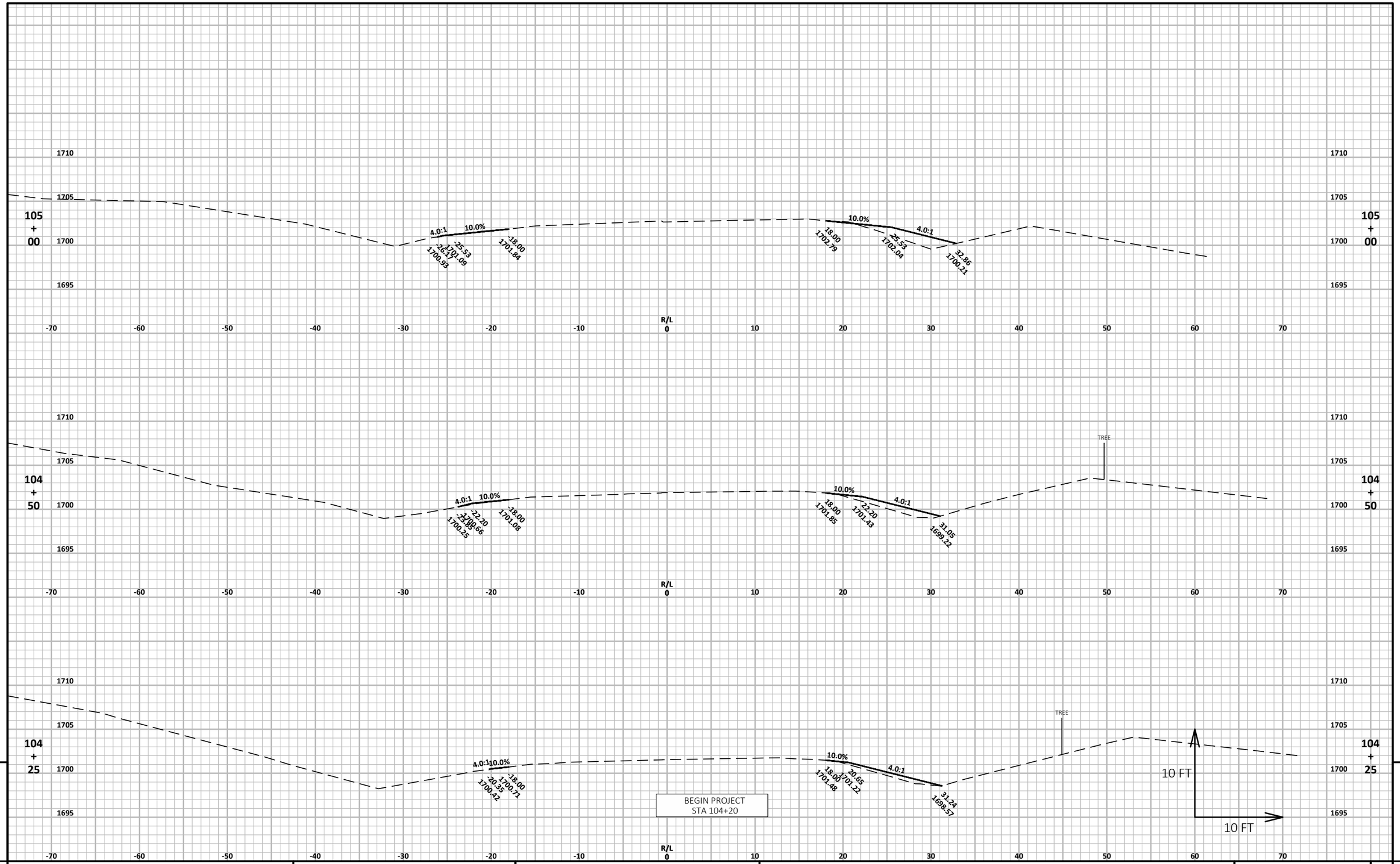

PROJECT NO: 9216-07-61	HWY: STH 86	COUNTY: PRICE	CROSS SECTIONS: STH 86 (500860200)	SHEET 153	E

FILE NAME : F:\TR\JOBS\E2271A17\CIVIL 3D 2016 STH 86\SHEETSPLAN\92160761-090201-XS.DWG
LAYOUT NAME - 92160761-090234-xs
PLOT DATE : 6/26/2019 2:48 PM
PLOT BY : JAIRO MAZARIEGOS
PLOT NAME :
PLOT SCALE : 1 IN:10 FT HORZ. / 1 IN:10 FT VERT.

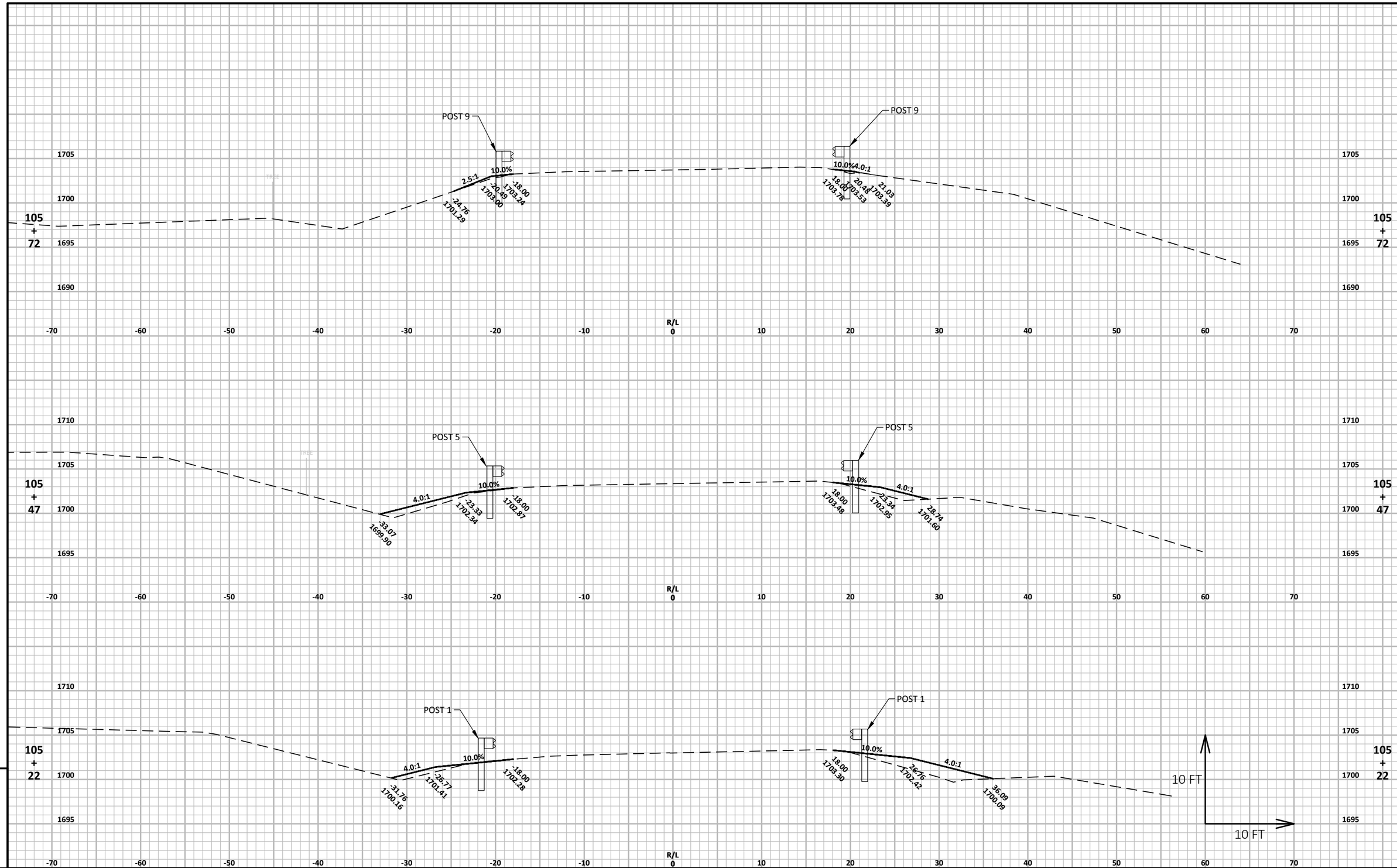

9

9

PROJECT NO: 9216-07-61	HWY: STH 86	COUNTY: PRICE	CROSS SECTIONS: STH 86 (500860200)	SHEET 154	E

FILE NAME : F:\TR\JOBS\E2271A17\CIVIL 3D 2016 STH 86\SHEETSPLAN\92160761-090201-XS.DWG
LAYOUT NAME - 92160761-090235-xs

PLOT DATE : 6/26/2019 2:48 PM PLOT BY : JAIRO MAZARIEGOS PLOT NAME : PLOT SCALE : 1 IN:10 FT HORZ. / 1 IN:10 FT VERT.

WISDOT/CADDS SHEET 49

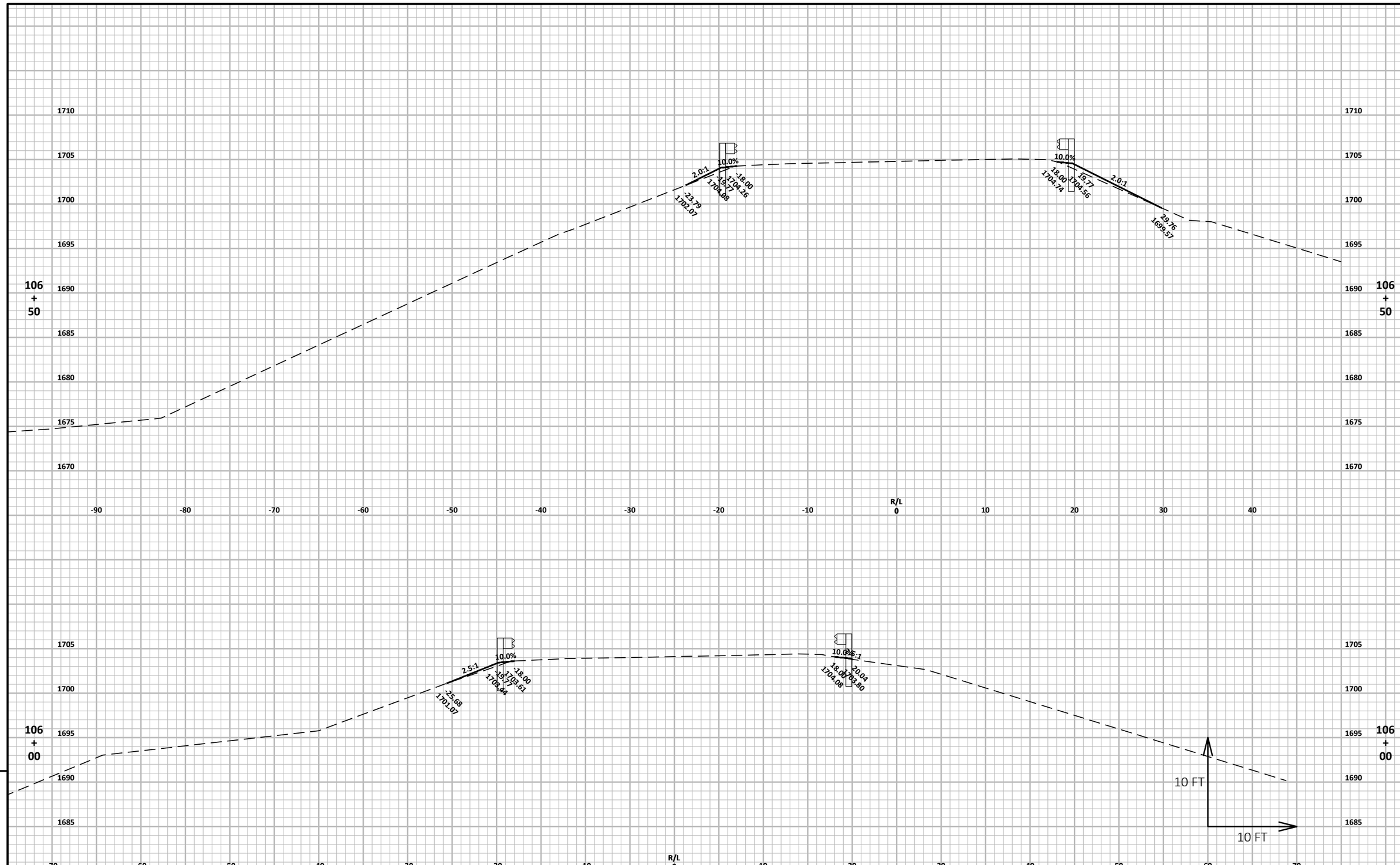

9

9

PROJECT NO: 9216-07-61	HWY: STH 86	COUNTY: PRICE	CROSS SECTIONS: STH 86 (500860200)	SHEET 155	E

FILE NAME : F:\TR\JOBS\E2271A17\CIVIL 3D 2016 STH 86\SHEETSPLAN\92160761-090201-XS.DWG
LAYOUT NAME - 92160761-090236-xs
PLOT DATE : 6/26/2019 2:48 PM
PLOT BY : JAIRO MAZARIEGOS
PLOT NAME :
PLOT SCALE : 1 IN:10 FT HORZ. / 1 IN:10 FT VERT.

WISDOT/CADDS SHEET 49

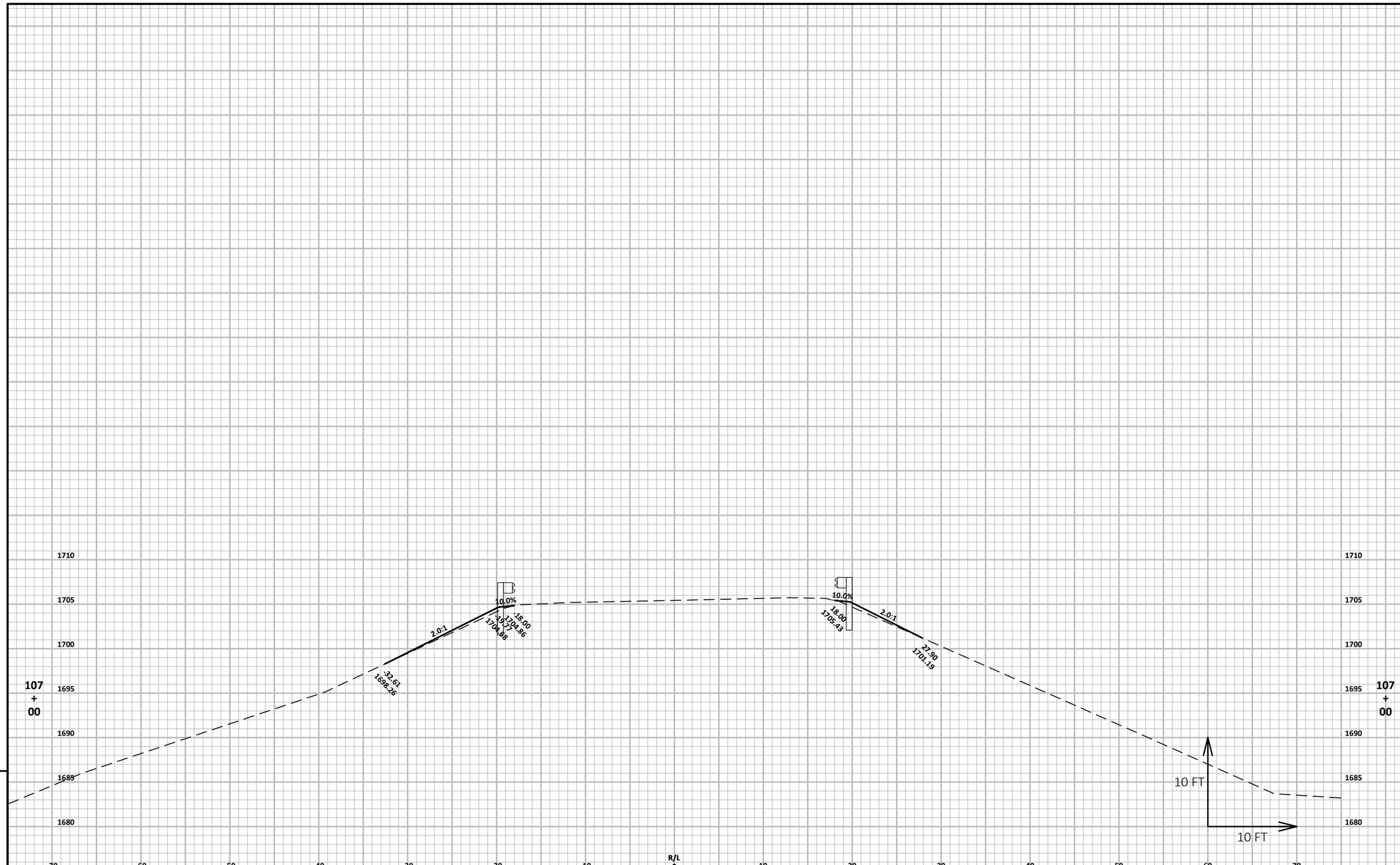

9

9

PROJECT NO: 9216-07-61	HWY: STH 86	COUNTY: PRICE	CROSS SECTIONS: STH 86 (500860200)	SHEET 156	E

FILE NAME : F:\TR\JOBS\E2271A17\CIVIL 3D 2016 STH 86\SHEETSPLAN\92160761-090201-XS.DWG
LAYOUT NAME - 92160761-090237-xs

PLOT DATE : 6/26/2019 2:48 PM PLOT BY : JAIRO MAZARIEGOS PLOT NAME : PLOT SCALE : 1 IN:10 FT HORZ. / 1 IN:10 FT VERT.

WISDOT/CADDS SHEET 49

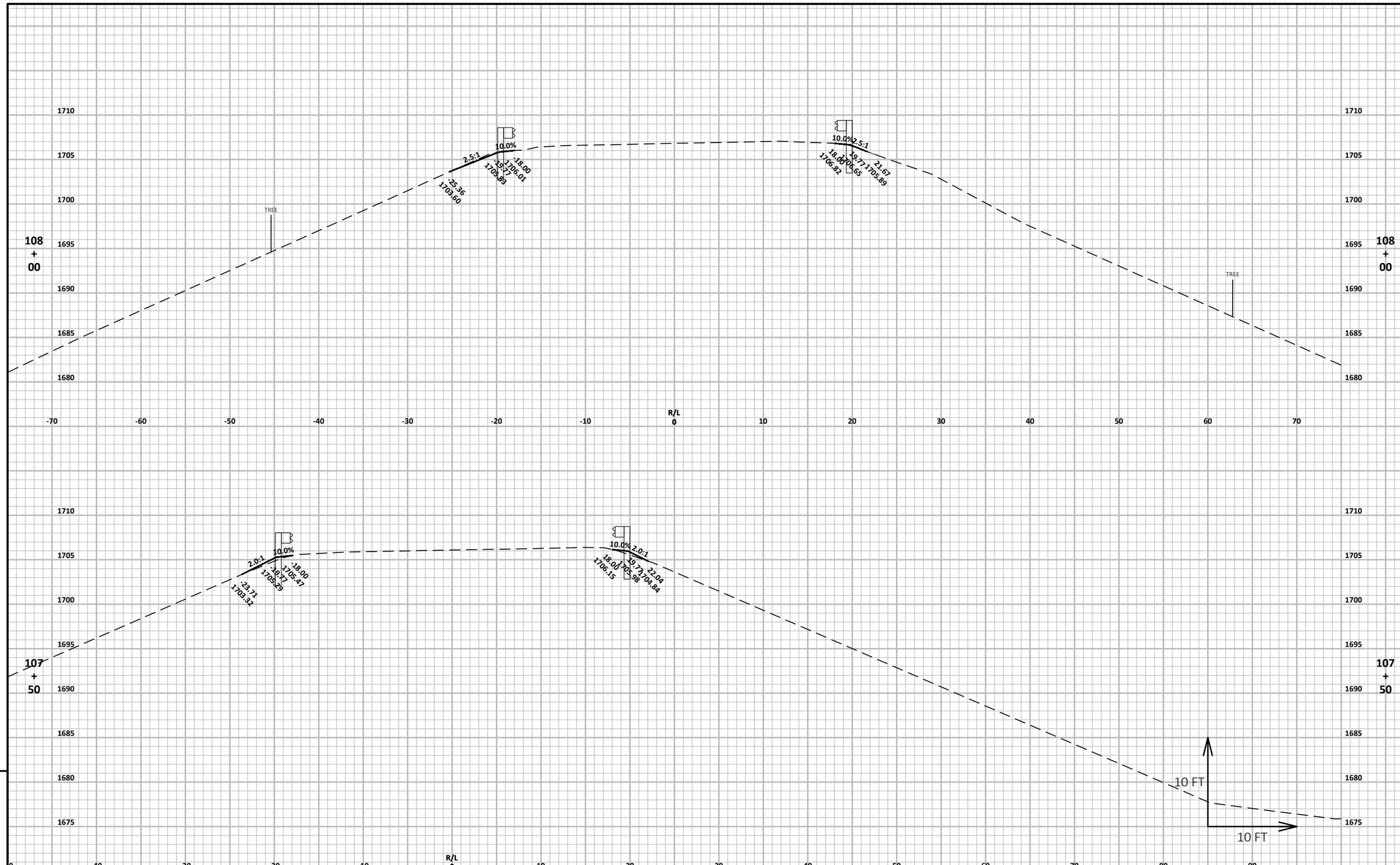

PROJECT NO: 9216-07-61	HWY: STH 86	COUNTY: PRICE	CROSS SECTIONS: STH 86 (500860200)	SHEET 157	E

FILE NAME : F:\TR\JOBS\E2271A17\CIVIL 3D 2016 STH 86\SHEETSPLAN\92160761-090201-XS.DWG
LAYOUT NAME - 92160761-090239-xs
PLOT DATE : 6/26/2019 2:48 PM
PLOT BY : JAIRO MAZARIEGOS
PLOT NAME :
PLOT SCALE : 1 IN:10 FT HORZ. / 1 IN:10 FT VERT.
WISDOT/CADDS SHEET 49

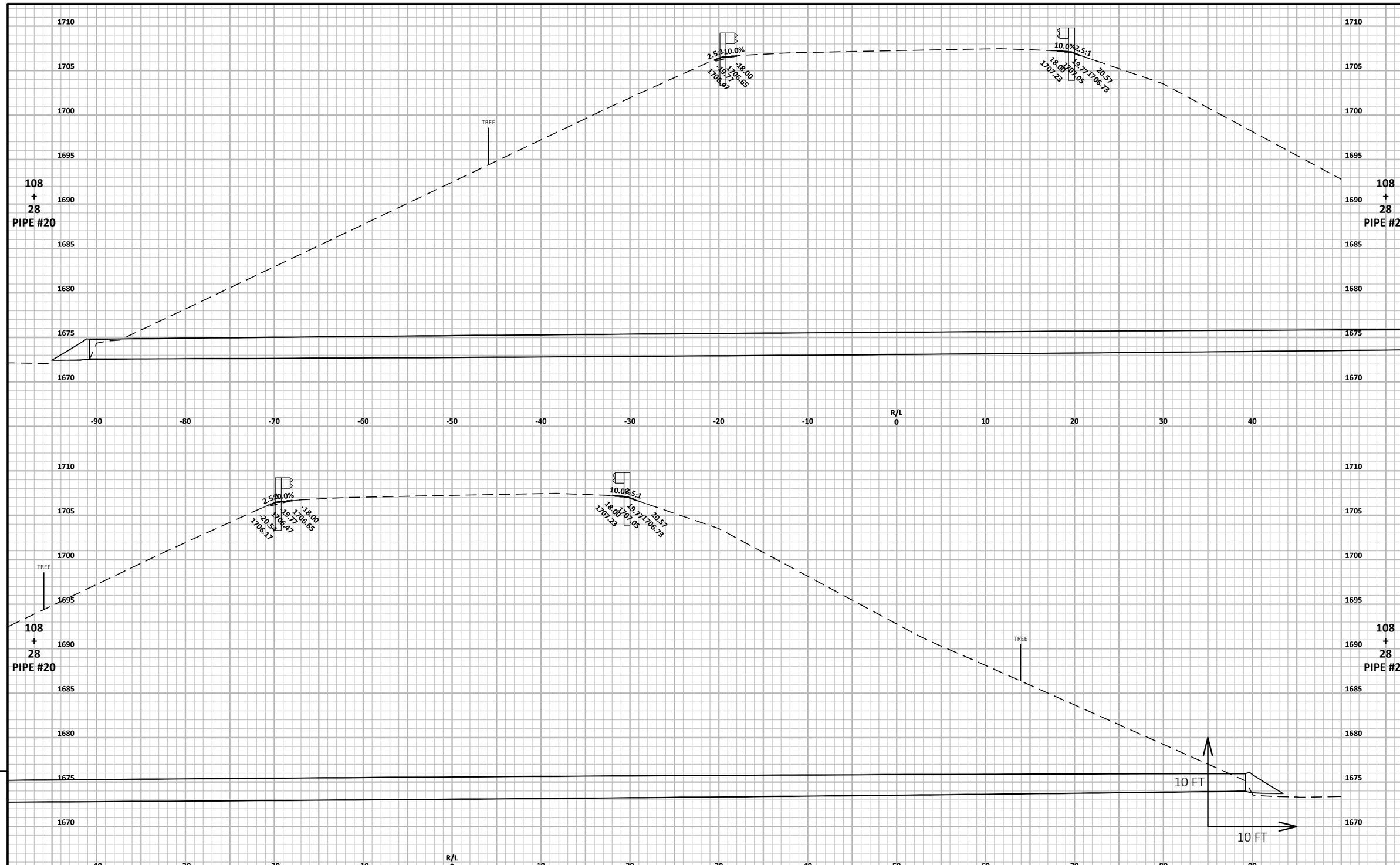

9

9

PROJECT NO: 9216-07-61	HWY: STH 86	COUNTY: PRICE	CROSS SECTIONS: STH 86 (500860200)	SHEET 158	E

FILE NAME : F:\TR\JOBS\E2271A17\CIVIL 3D 2016 STH 86\SHEETSPLAN\92160761-090201-XS.DWG
LAYOUT NAME - 92160761-090241-xs
PLOT DATE : 6/26/2019 2:48 PM
PLOT BY : JAIRO MAZARIEGOS
PLOT NAME :
PLOT SCALE : 1 IN:10 FT HORZ. / 1 IN:10 FT VERT.
WISDOT/CADDS SHEET 49

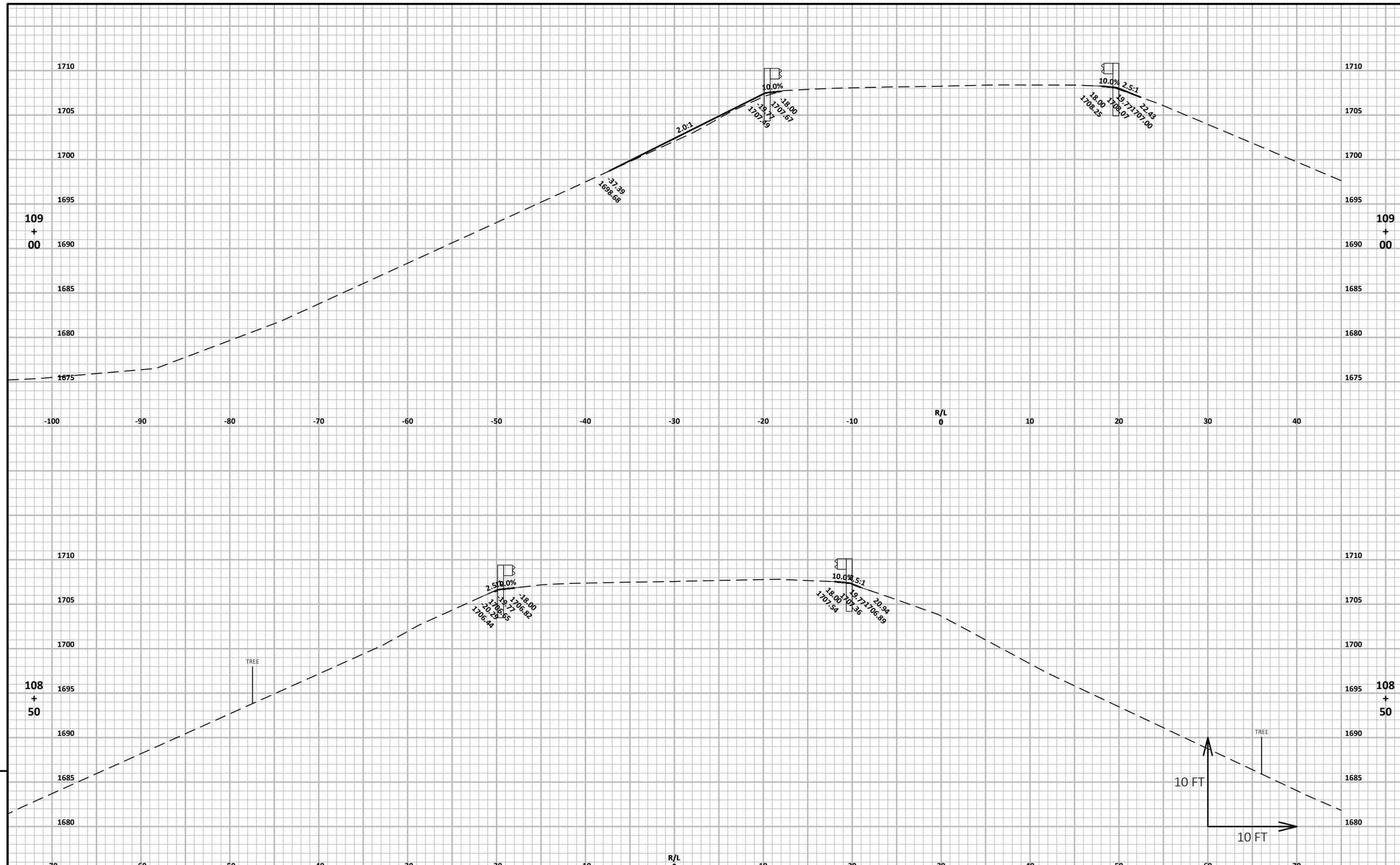

PROJECT NO: 9216-07-61	HWY: STH 86	COUNTY: PRICE	CROSS SECTIONS: STH 86 (500860200)	SHEET 159	E

FILE NAME : F:\TR\JOBS\E2271A17\CIVIL 3D 2016 STH 86\SHEETSPLAN\92160761-090201-XS.DWG
LAYOUT NAME - 92160761-090242-xs
PLOT DATE : 6/26/2019 2:49 PM
PLOT BY : JAIRO MAZARIEGOS
PLOT NAME :
PLOT SCALE : 1 IN:10 FT HORZ. / 1 IN:10 FT VERT.
WISDOT/CADDS SHEET 49

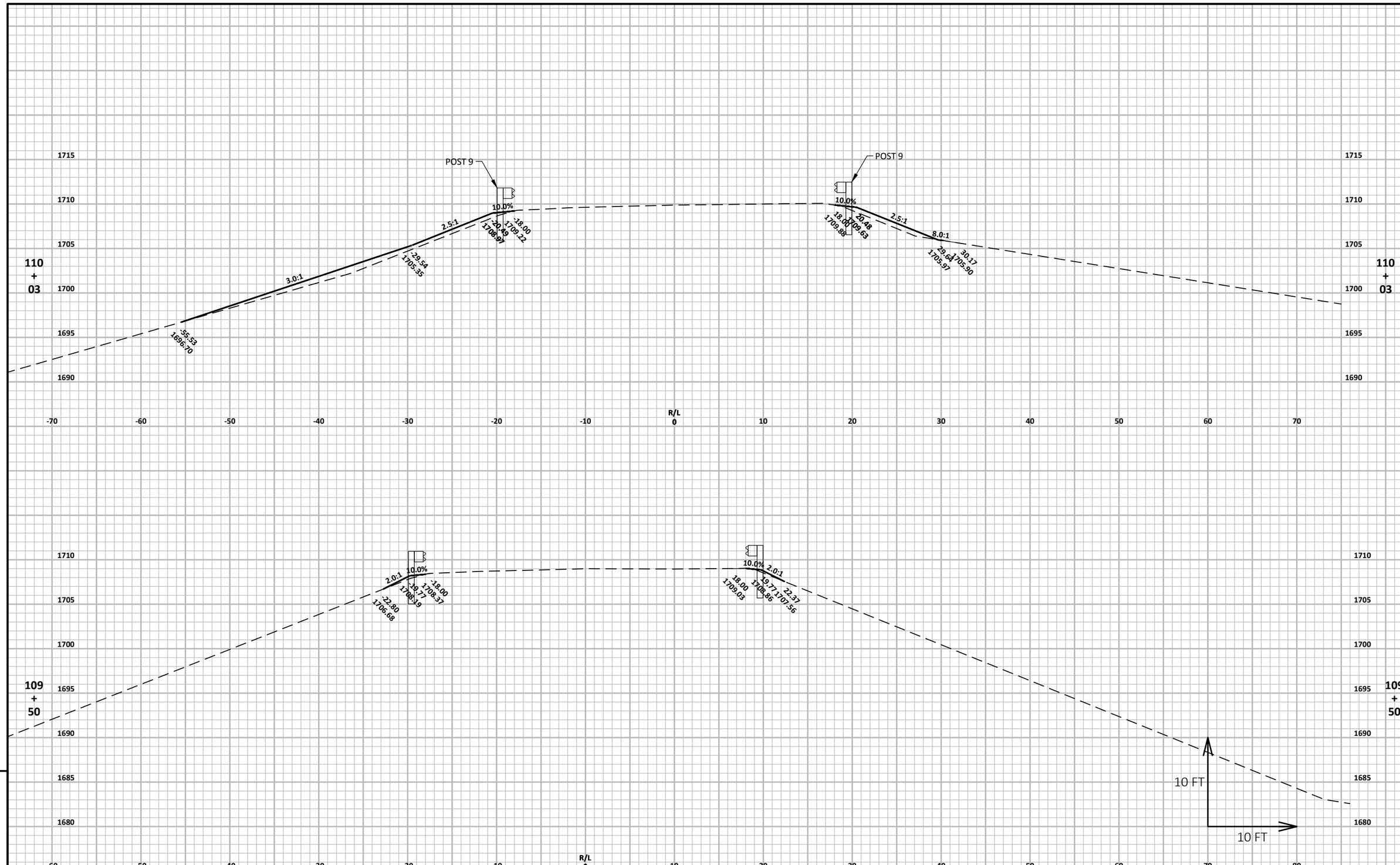

9

9

PROJECT NO: 9216-07-61	HWY: STH 86	COUNTY: PRICE	CROSS SECTIONS: STH 86 (500860200)	SHEET 160	E

FILE NAME : F:\TR\JOBS\E2271A17\CIVIL 3D 2016 STH 86\SHEETSPLAN\92160761-090201-XS.DWG
LAYOUT NAME - 92160761-090243-xs
PLOT DATE : 6/26/2019 2:49 PM
PLOT BY : JAIRO MAZARIEGOS
PLOT NAME :
PLOT SCALE : 1 IN:10 FT HORZ. / 1 IN:10 FT VERT.
WISDOT/CADDS SHEET 49

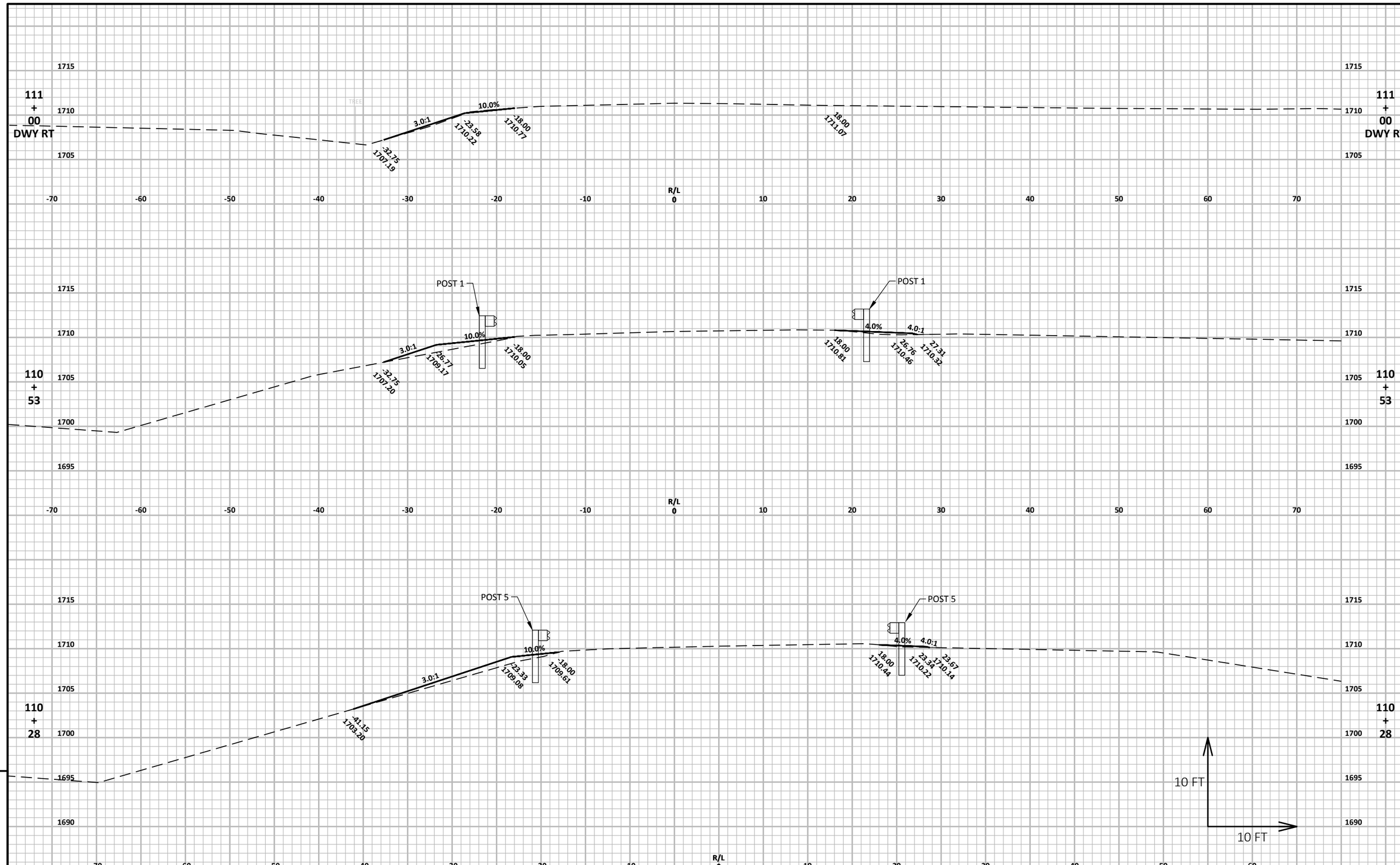

PROJECT NO: 9216-07-61	HWY: STH 86	COUNTY: PRICE	CROSS SECTIONS: STH 86 (500860200)	SHEET 161	E

FILE NAME : F:\TR\JOBS\E2271A17\CIVIL 3D 2016 STH 86\SHEETSPLAN\92160761-090201-XS.DWG
LAYOUT NAME - 92160761-090244-xs
PLOT DATE : 6/26/2019 2:49 PM PLOT BY : JAIRO MAZARIEGOS PLOT NAME : PLOT SCALE : 1 IN:10 FT HORZ. / 1 IN:10 FT VERT.

PROJECT NO: 9216-07-61	HWY: STH 86	COUNTY: PRICE	CROSS SECTIONS: STH 86 (500860200)	SHEET 162	E

FILE NAME : F:\TR\JOBS\E2271A17\CIVIL 3D 2016 STH 86\SHEETSPLAN\92160761-090201-XS.DWG
LAYOUT NAME - 92160761-090245-xs
PLOT DATE : 6/26/2019 2:49 PM
PLOT BY : JAIRO MAZARIEGOS
PLOT NAME :
PLOT SCALE : 1 IN:10 FT HORZ. / 1 IN:10 FT VERT.
WISDOT/CADDS SHEET 49

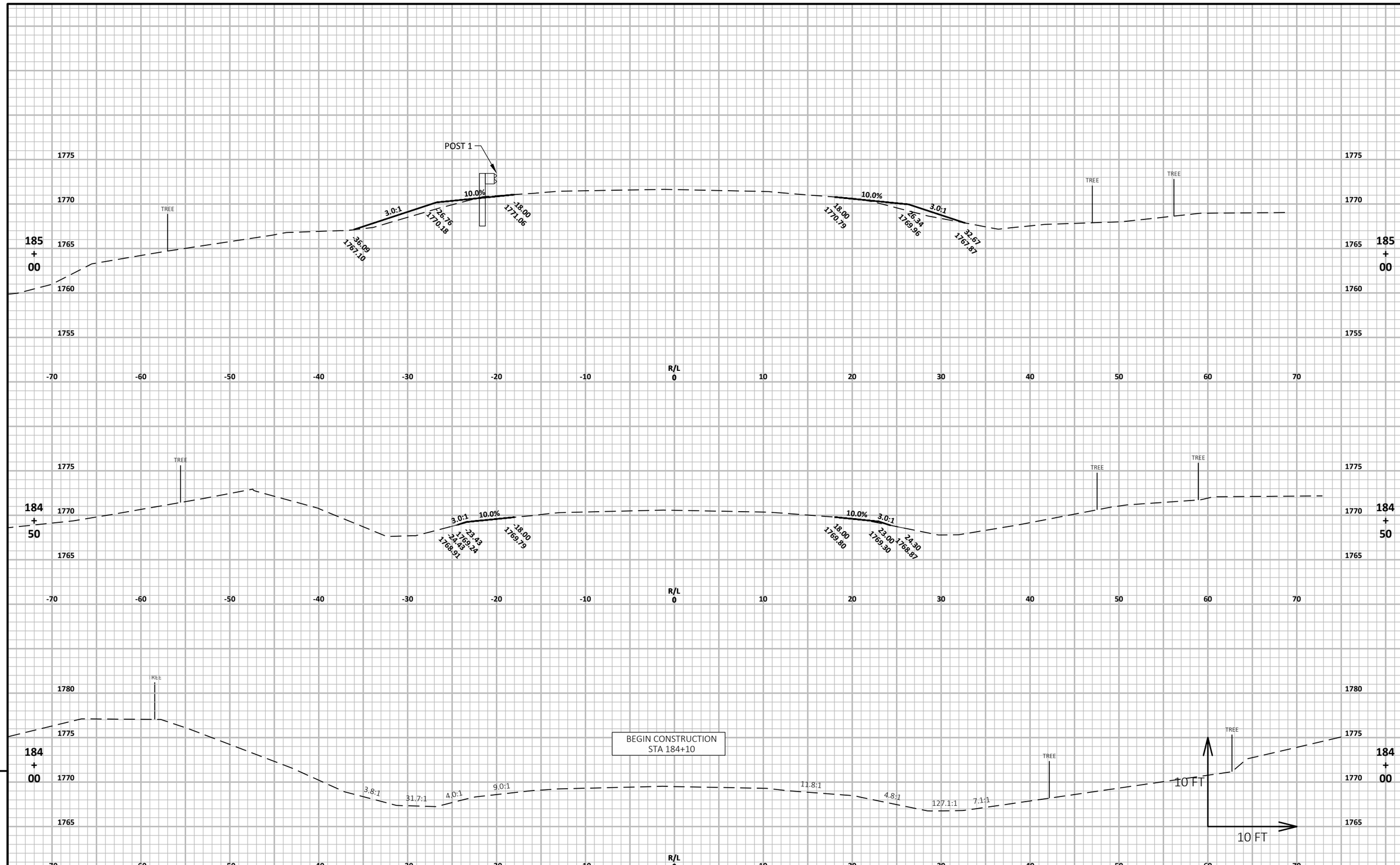

PROJECT NO: 9216-07-61	HWY: STH 86	COUNTY: PRICE	CROSS SECTIONS: STH 86 (500860290)	SHEET 163	E

FILE NAME : F:\TR\JOBS\E2271A17\CIVIL 3D 2016 STH 86\SHEETSPLAN\92160761-090201-XS.DWG
LAYOUT NAME - 92160761-090246-xs
PLOT DATE : 6/26/2019 2:49 PM
PLOT BY : JAIRO MAZARIEGOS
PLOT NAME :
PLOT SCALE : 1 IN:10 FT HORZ. / 1 IN:10 FT VERT.

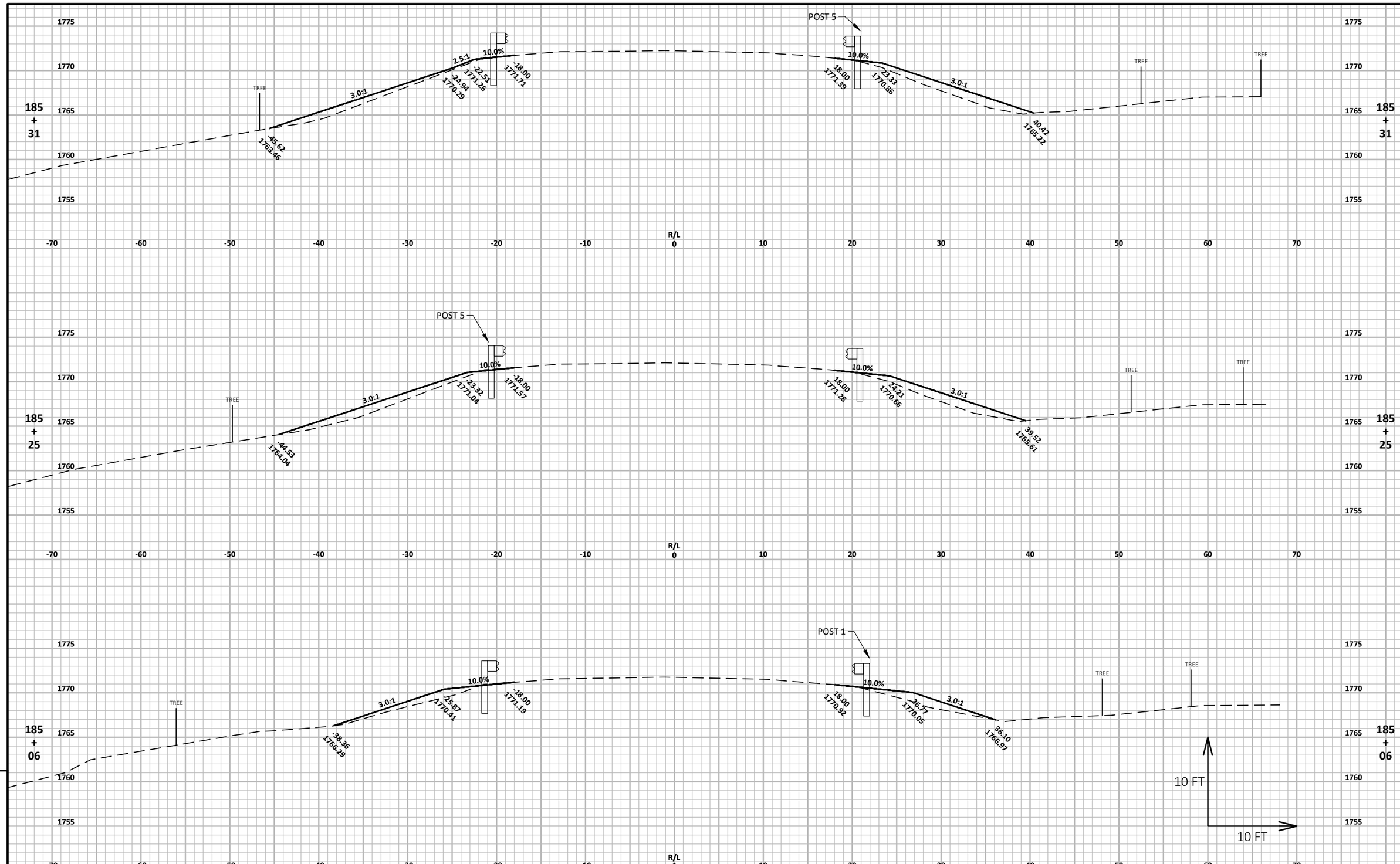

9

PROJECT NO: 9216-07-61	HWY: STH 86	COUNTY: PRICE	CROSS SECTIONS: STH 86 (500860290)	SHEET 164	E

FILE NAME : F:\TR\JOBS\E2271A17\CIVIL 3D 2016 STH 86\SHEETSPLAN\92160761-090201-XS.DWG
LAYOUT NAME - 92160761-090247-xs
PLOT DATE : 6/26/2019 2:50 PM PLOT BY : JAIRO MAZARIEGOS PLOT NAME : PLOT SCALE : 1 IN:10 FT HORZ. / 1 IN:10 FT VERT.

WISDOT/CADDS SHEET 49

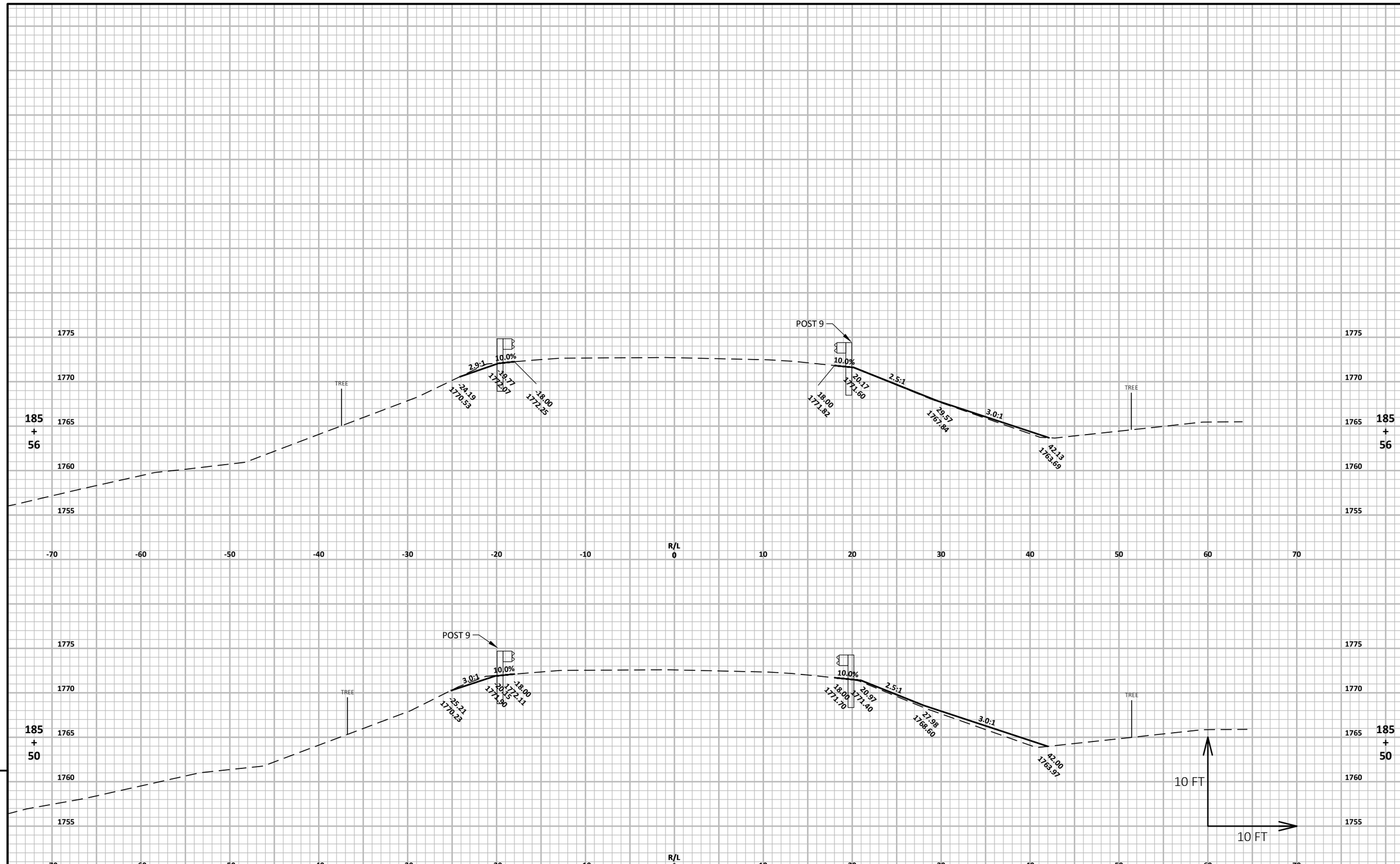

PROJECT NO: 9216-07-61	HWY: STH 86	COUNTY: PRICE	CROSS SECTIONS: STH 86 (500860290)	SHEET 165	E

FILE NAME : F:\TR\JOBS\E2271A17\CIVIL 3D 2016 STH 86\SHEETSPLAN\92160761-090201-XS.DWG
LAYOUT NAME - 92160761-090248-xs
PLOT DATE : 6/26/2019 2:50 PM
PLOT BY : JAIRO MAZARIEGOS
PLOT NAME :
PLOT SCALE : 1 IN:10 FT HORZ. / 1 IN:10 FT VERT.
WISDOT/CADDS SHEET 49

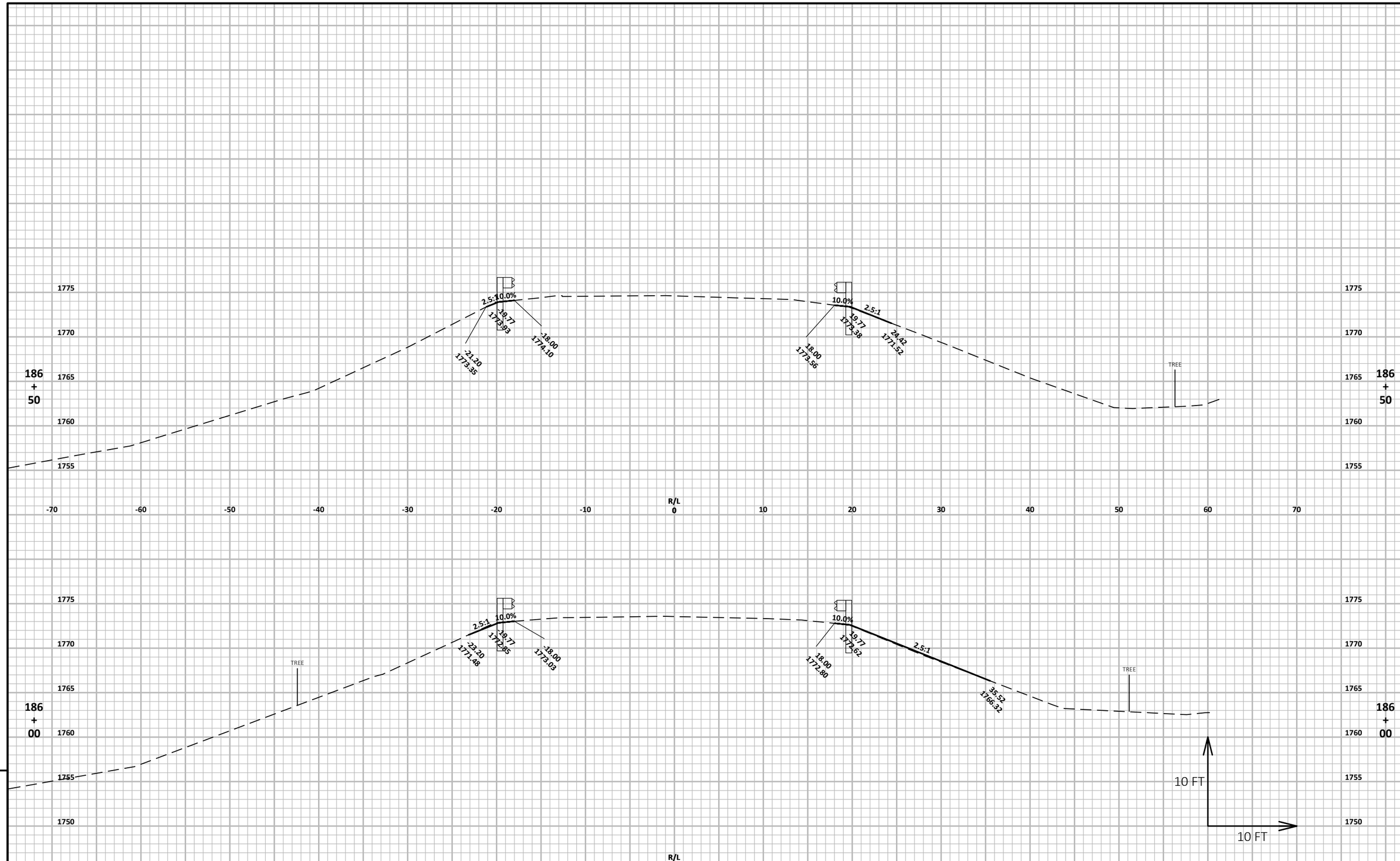

PROJECT NO: 9216-07-61	HWY: STH 86	COUNTY: PRICE	CROSS SECTIONS: STH 86 (500860290)	SHEET 166	E

FILE NAME : F:\TR\JOBS\E2271A17\CIVIL 3D 2016 STH 86\SHEETSPLAN\92160761-090201-XS.DWG
LAYOUT NAME - 92160761-090249-xs
PLOT DATE : 6/26/2019 2:50 PM
PLOT BY : JAIRO MAZARIEGOS
PLOT NAME :
PLOT SCALE : 1 IN:10 FT HORZ. / 1 IN:10 FT VERT.
WISDOT/CADDS SHEET 49

9

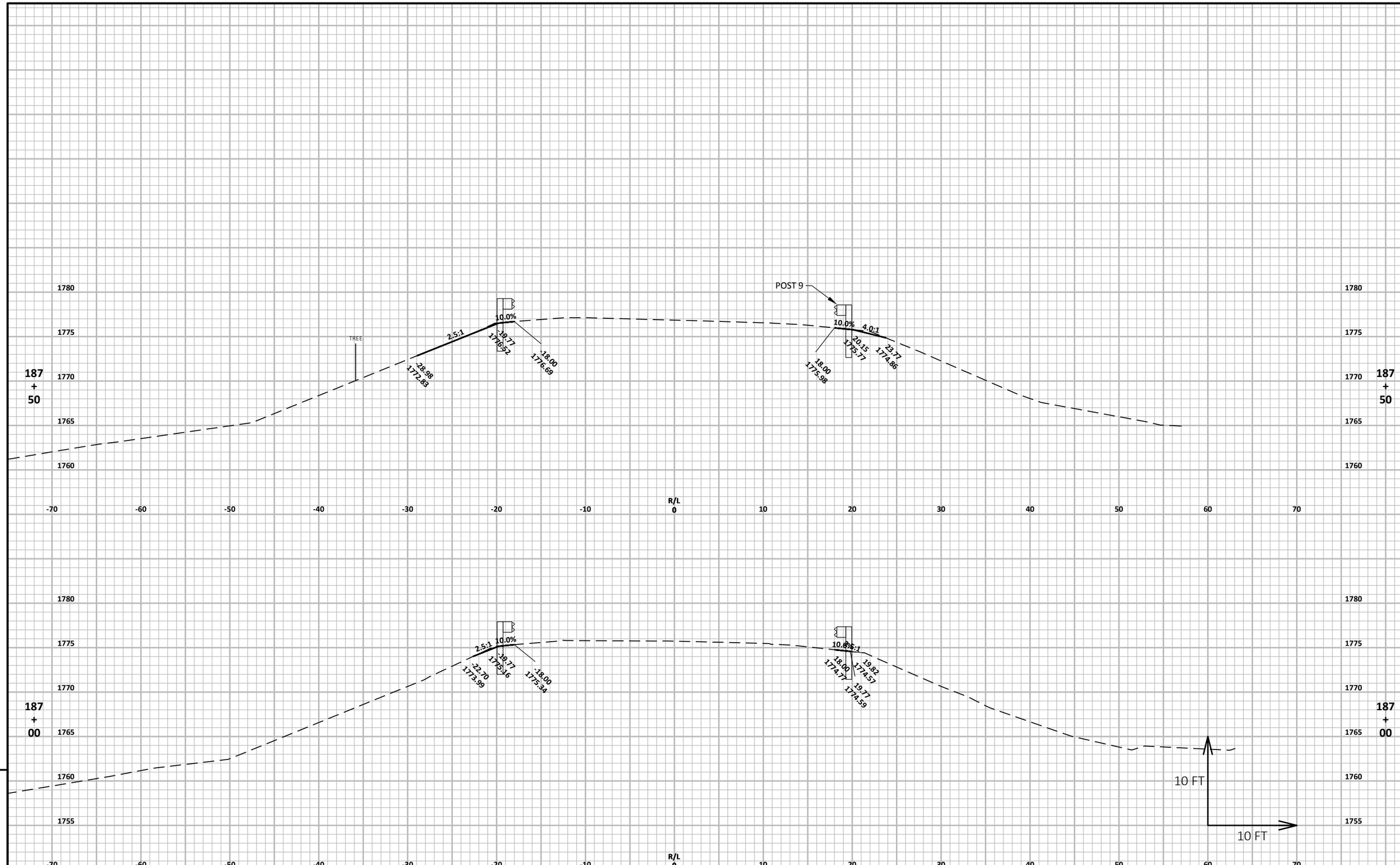

PROJECT NO: 9216-07-61	HWY: STH 86	COUNTY: PRICE	CROSS SECTIONS: STH 86 (500860290)	SHEET 167	E

FILE NAME : F:\TR\JOBS\E2271A17\CIVIL 3D 2016 STH 86\SHEETSPLAN\92160761-090201-XS.DWG
LAYOUT NAME - 92160761-090250-xs
PLOT DATE : 6/26/2019 2:50 PM PLOT BY : JAIRO MAZARIEGOS PLOT NAME : PLOT SCALE : 1 IN:10 FT HORZ. / 1 IN:10 FT VERT.

WISDOT/CADDS SHEET 49

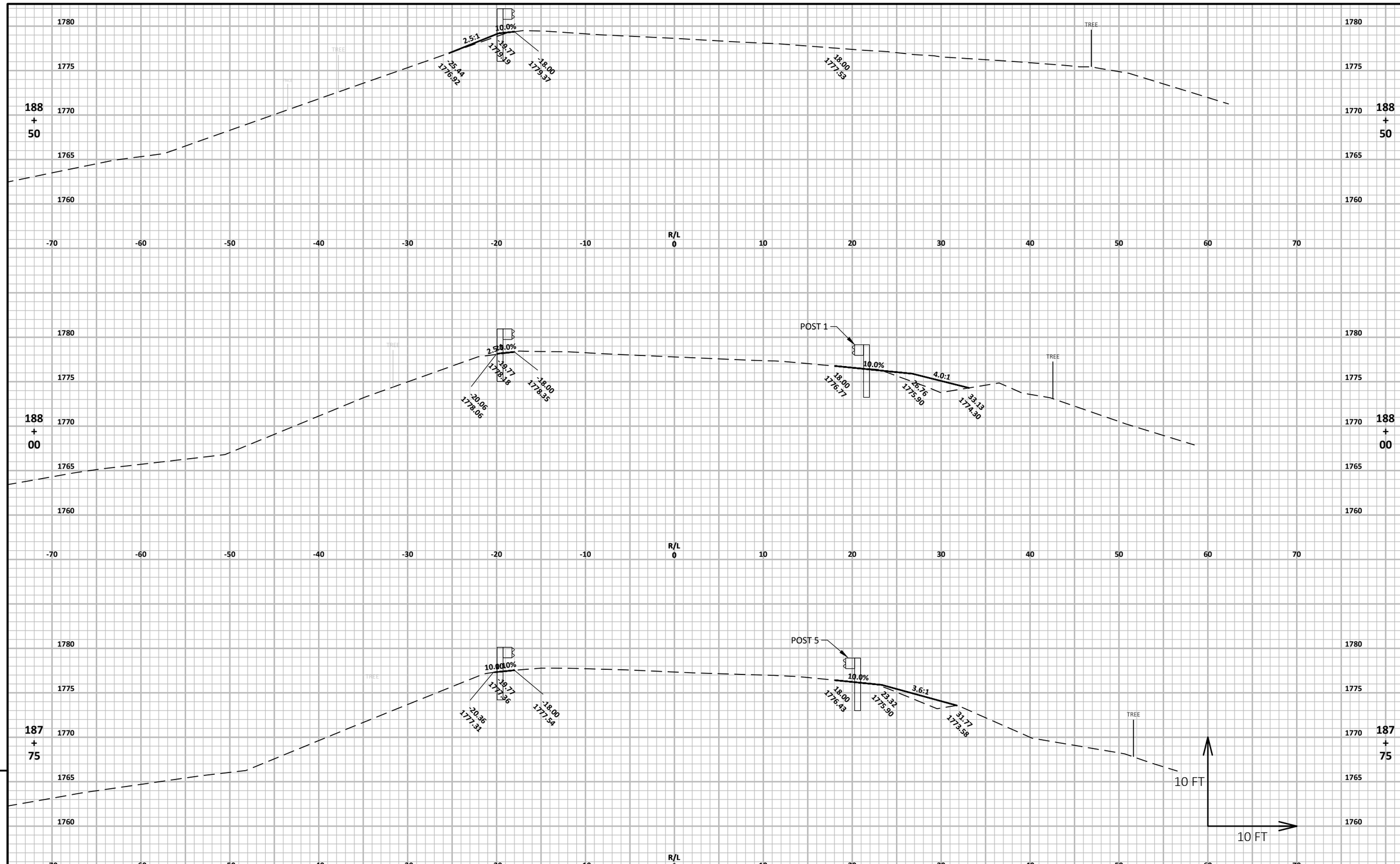

9

PROJECT NO: 9216-07-61	HWY: STH 86	COUNTY: PRICE	CROSS SECTIONS: STH 86 (500860290)	SHEET 168	E

FILE NAME : F:\TR\JOBS\E2271A17\CIVIL 3D 2016 STH 86\SHEETSPLAN\92160761-090201-XS.DWG
LAYOUT NAME - 92160761-090251-xs
PLOT DATE : 6/26/2019 2:50 PM PLOT BY : JAIRO MAZARIEGOS PLOT NAME : PLOT SCALE : 1 IN:10 FT HORZ. / 1 IN:10 FT VERT.

WISDOT/CADDS SHEET 49

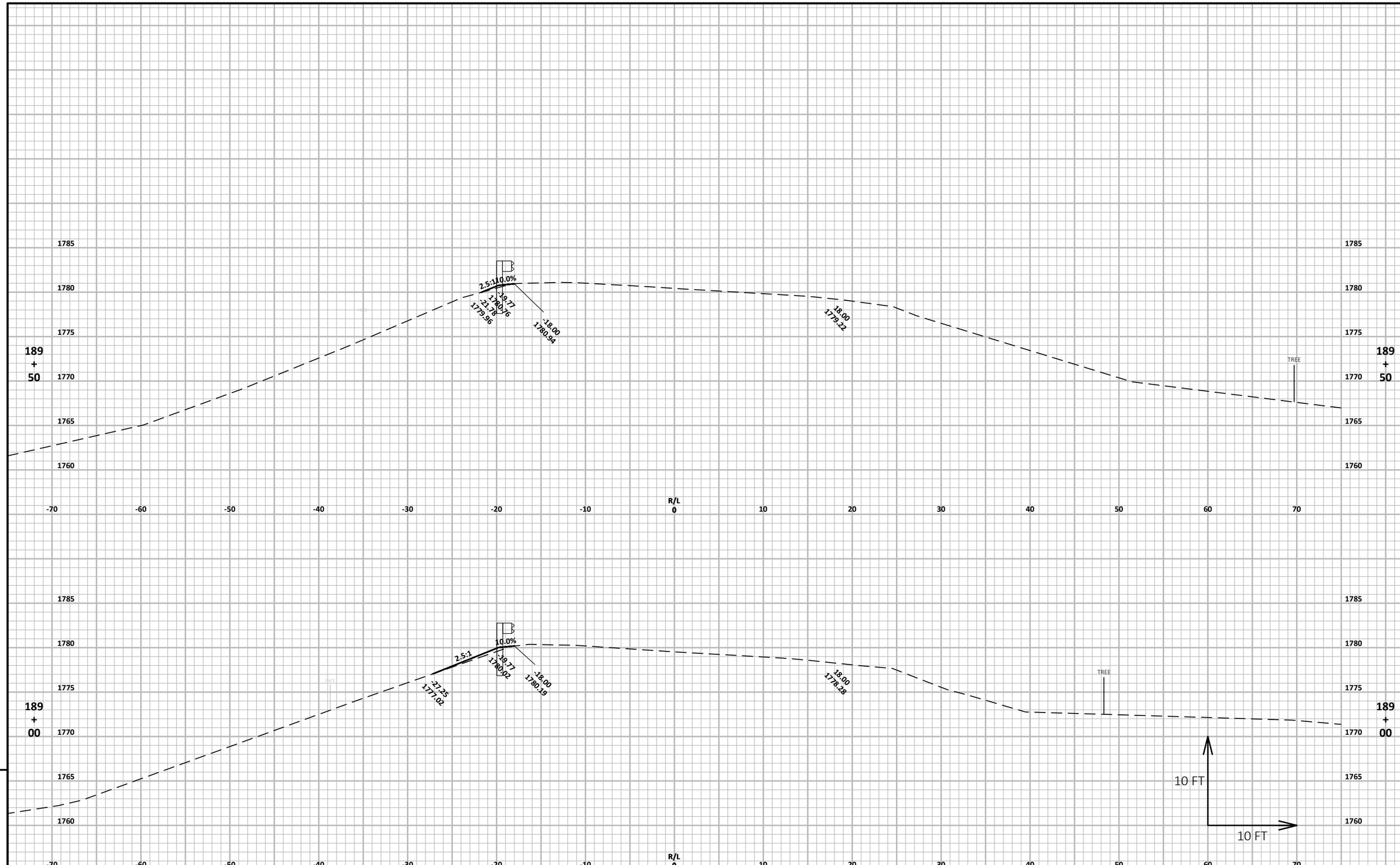

9

9

PROJECT NO: 9216-07-61	HWY: STH 86	COUNTY: PRICE	CROSS SECTIONS: STH 86 (500860290)	SHEET 169	E

FILE NAME : F:\TR\JOBS\E2271A17\CIVIL 3D 2016 STH 86\SHEETSPLAN\92160761-090201-XS.DWG
LAYOUT NAME - 92160761-090252-xs

PLOT DATE : 6/26/2019 2:51 PM PLOT BY : JAIRO MAZARIEGOS PLOT NAME : PLOT SCALE : 1 IN:10 FT HORZ. / 1 IN:10 FT VERT.

WISDOT/CADDS SHEET 49

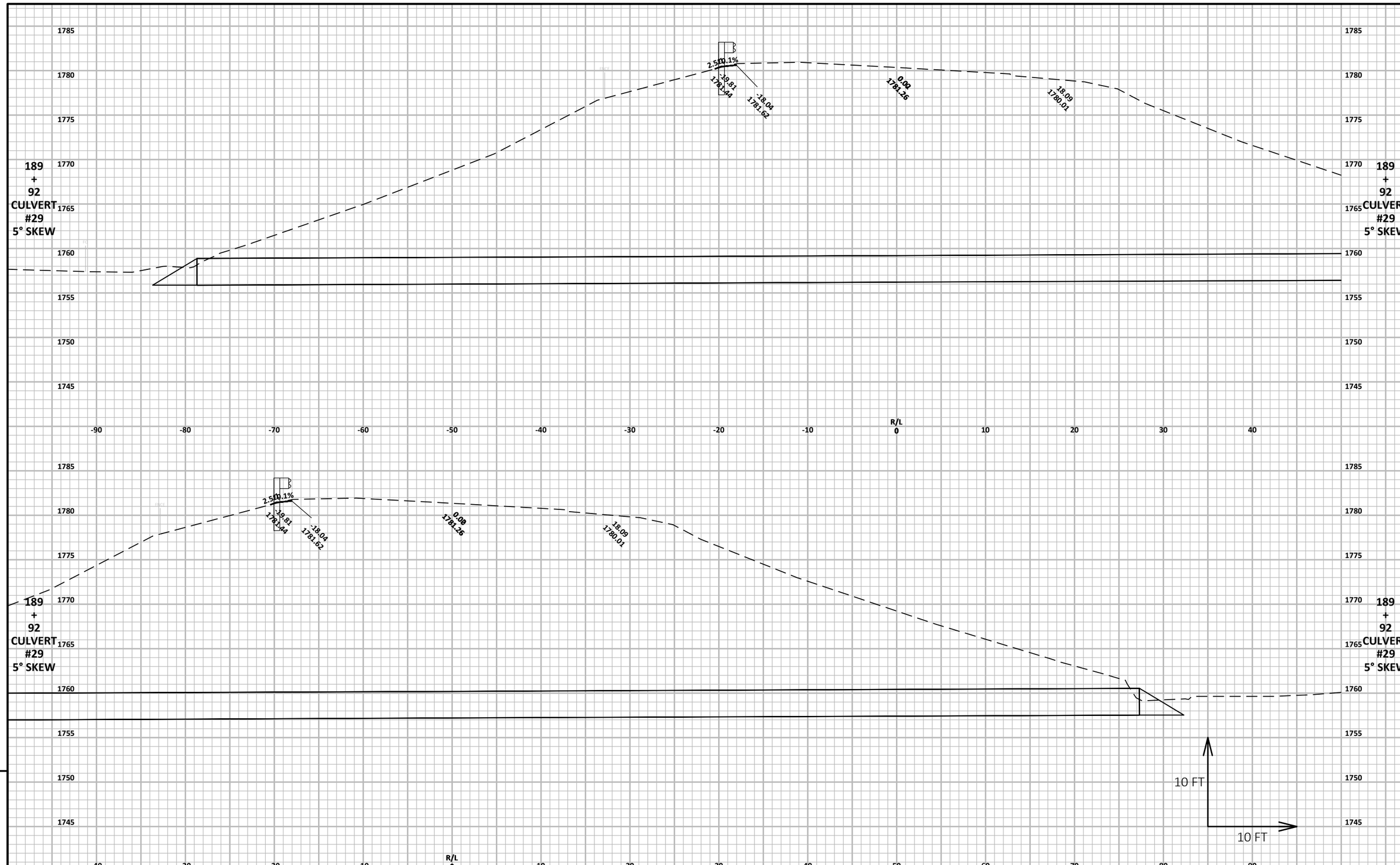

9

9

PROJECT NO: 9216-07-61	HWY: STH 86	COUNTY: PRICE	CROSS SECTIONS: STH 86 (500860290)	SHEET 170	E

FILE NAME : F:\TR\JOBS\E2271A17\CIVIL 3D 2016 STH 86\SHEETSPLAN\92160761-090201-XS.DWG
LAYOUT NAME - 92160761-090253-xs
PLOT DATE : 6/26/2019 2:51 PM
PLOT BY : JAIRO MAZARIEGOS
PLOT NAME :
PLOT SCALE : 1 IN:10 FT HORZ. / 1 IN:10 FT VERT.

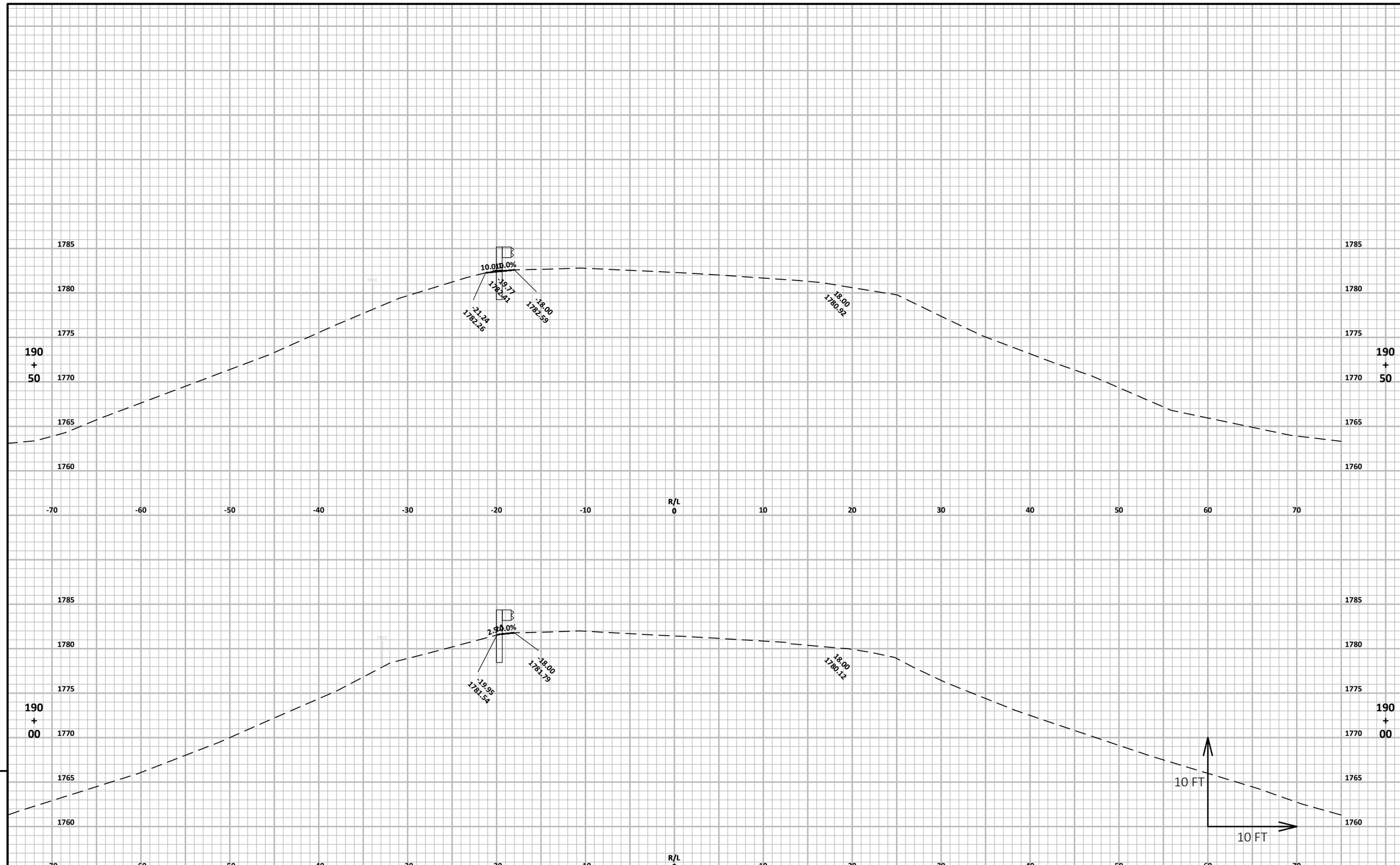

PROJECT NO: 9216-07-61	HWY: STH 86	COUNTY: PRICE	CROSS SECTIONS: STH 86 (500860290)	SHEET 171	E

FILE NAME : F:\TR\JOBS\E2271A17\CIVIL 3D 2016 STH 86\SHEETSPLAN\92160761-090201-XS.DWG
LAYOUT NAME - 92160761-090254-xs
PLOT DATE : 6/26/2019 2:51 PM
PLOT BY : JAIRO MAZARIEGOS
PLOT NAME :
PLOT SCALE : 1 IN:10 FT HORZ. / 1 IN:10 FT VERT.

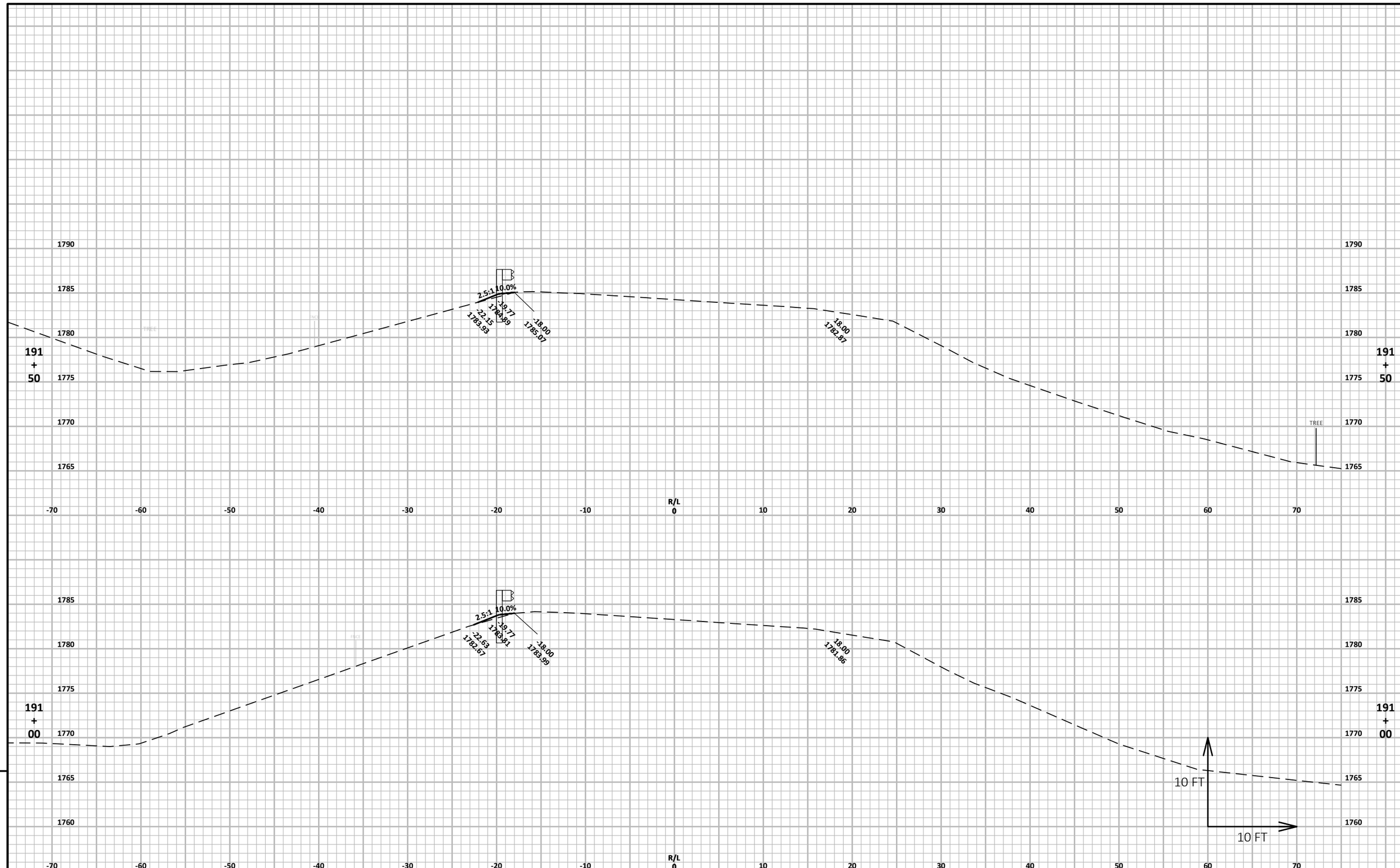

9

9

PROJECT NO: 9216-07-61	HWY: STH 86	COUNTY: PRICE	CROSS SECTIONS: STH 86 (500860290)	SHEET 172	E

FILE NAME : F:\TR\JOBS\E2271A17\CIVIL 3D 2016 STH 86\SHEETSPLAN\92160761-090201-XS.DWG
LAYOUT NAME - 92160761-090258-xs

PLOT DATE : 6/26/2019 2:51 PM PLOT BY : JAIRO MAZARIEGOS PLOT NAME : PLOT SCALE : 1 IN:10 FT HORZ. / 1 IN:10 FT VERT.

WISDOT/CADDS SHEET 49

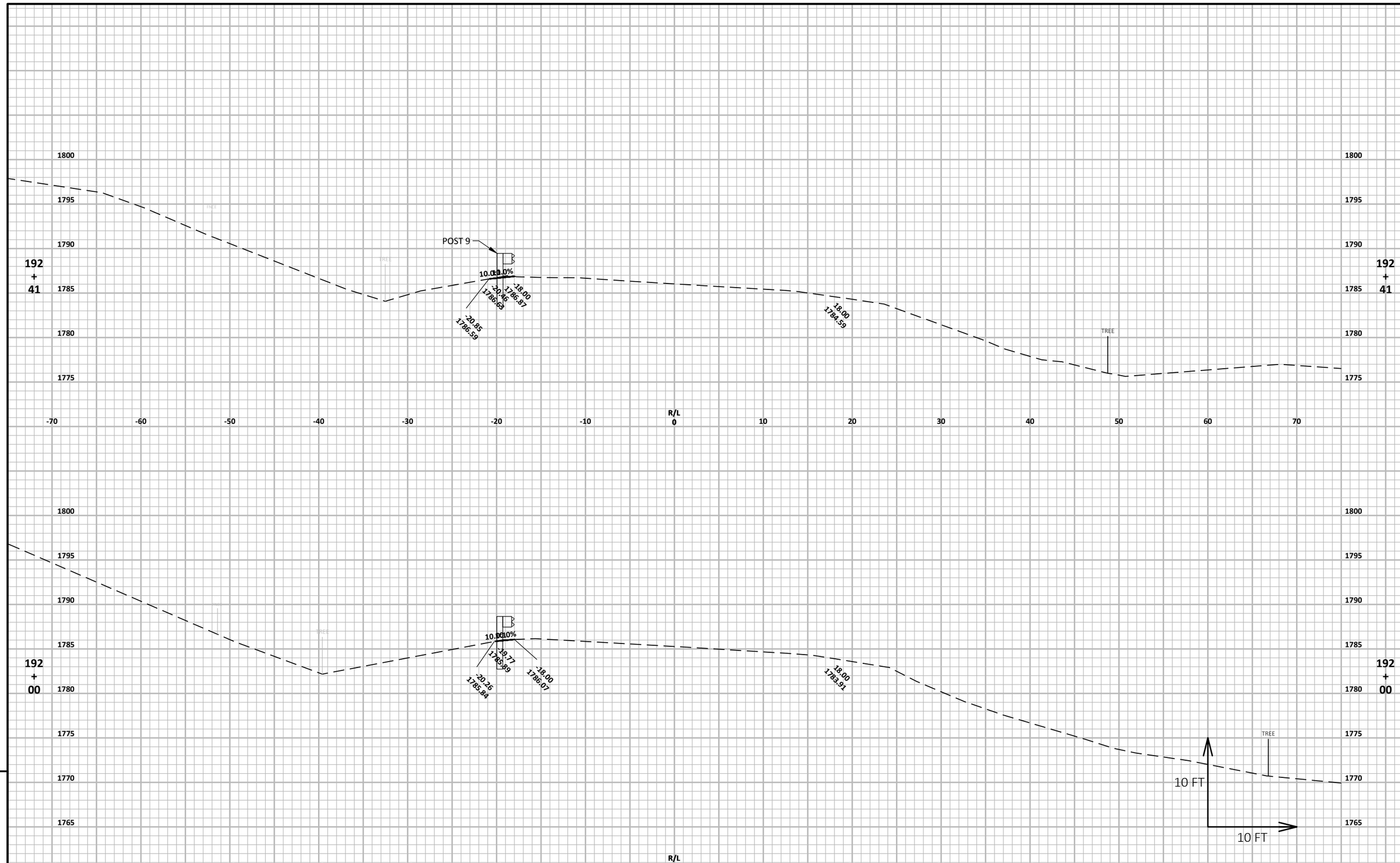

9

9

PROJECT NO: 9216-07-61	HWY: STH 86	COUNTY: PRICE	CROSS SECTIONS: STH 86 (500860290)	SHEET 173	E

FILE NAME : F:\TR\JOBS\E2271A17\CIVIL 3D 2016 STH 86\SHEETSPLAN\92160761-090201-XS.DWG
LAYOUT NAME - 92160761-090259-xs
PLOT DATE : 6/26/2019 2:51 PM
PLOT BY : JAIRO MAZARIEGOS
PLOT NAME :
PLOT SCALE : 1 IN:10 FT HORZ. / 1 IN:10 FT VERT.

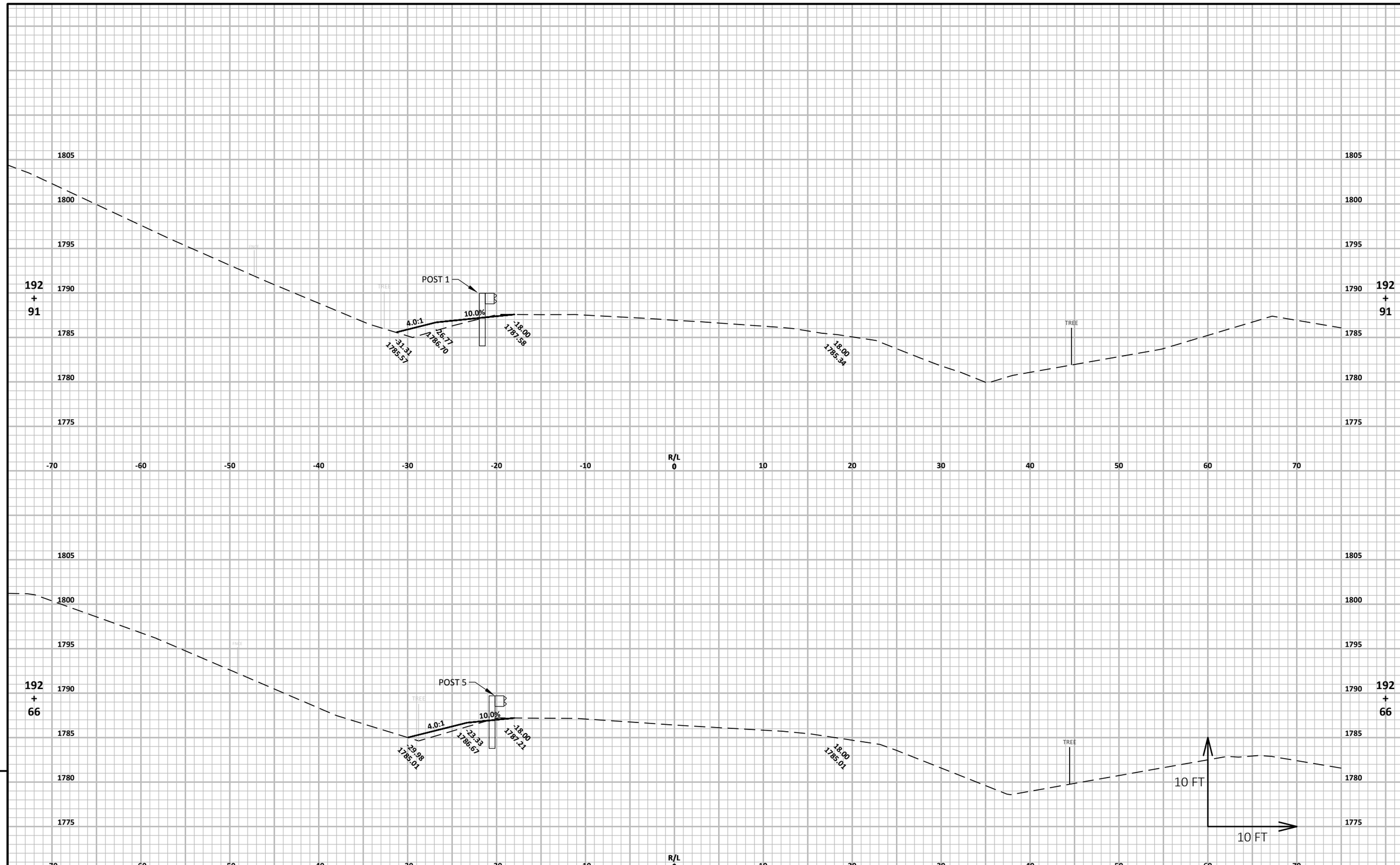

9

PROJECT NO: 9216-07-61	HWY: STH 86	COUNTY: PRICE	CROSS SECTIONS: STH 86 (500860290)	SHEET 174	E

FILE NAME : F:\TR\JOBS\E2271A17\CIVIL 3D 2016 STH 86\SHEETSPLAN\92160761-090201-XS.DWG
LAYOUT NAME - 92160761-090260-xs
PLOT DATE : 6/26/2019 2:52 PM
PLOT BY : JAIRO MAZARIEGOS
PLOT NAME :
PLOT SCALE : 1 IN:10 FT HORZ. / 1 IN:10 FT VERT.
WISDOT/CADDS SHEET 49

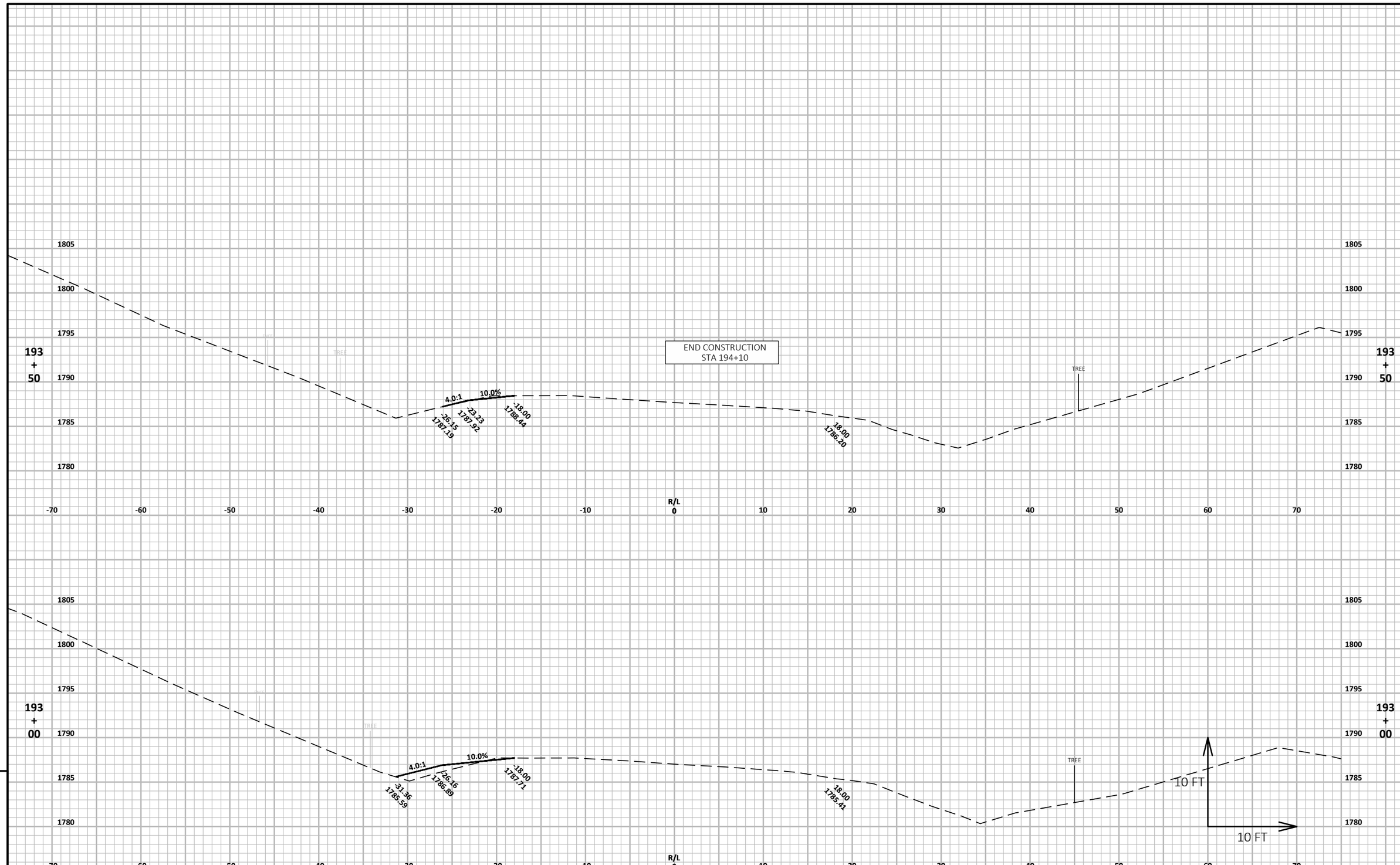

9

9

PROJECT NO: 9216-07-61	HWY: STH 86	COUNTY: PRICE	CROSS SECTIONS: STH 86 (500860290)	SHEET 175	E

FILE NAME : F:\TR\JOBS\E2271A17\CIVIL 3D 2016 STH 86\SHEETSPLAN\92160761-090201-XS.DWG
LAYOUT NAME - 92160761-090261-xs
PLOT DATE : 6/26/2019 2:52 PM
PLOT BY : JAIRO MAZARIEGOS
PLOT NAME :
PLOT SCALE : 1 IN:10 FT HORZ. / 1 IN:10 FT VERT.

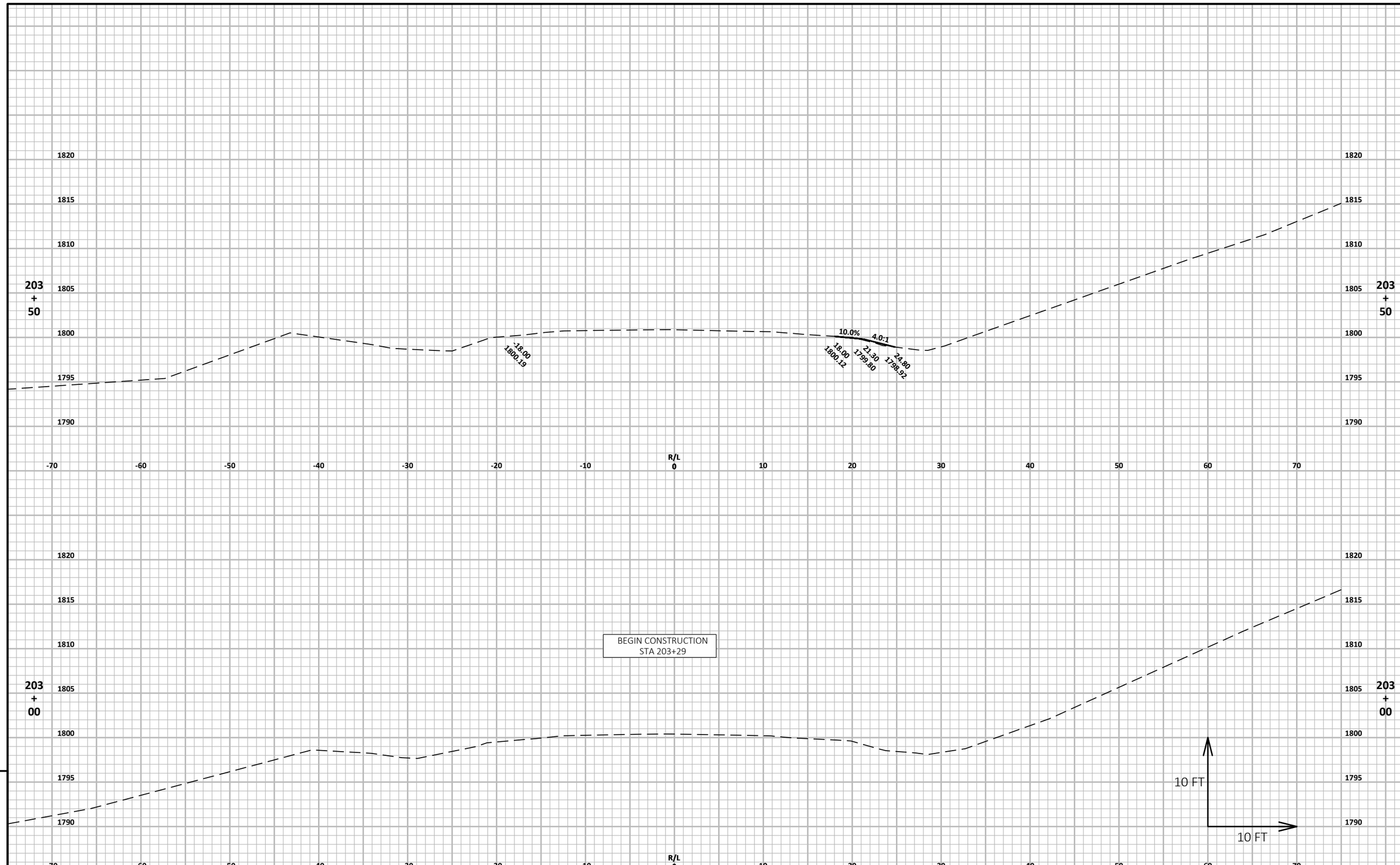

9

9

PROJECT NO: 9216-07-61	HWY: STH 86	COUNTY: PRICE	CROSS SECTIONS: STH 86 (500860310 & 500860320)	SHEET 176	E

FILE NAME : F:\TR\JOBS\E2271A17\CIVIL 3D 2016 STH 86\SHEETSPLAN\92160761-090201-XS.DWG
LAYOUT NAME - 92160761-090262-xs
PLOT DATE : 6/26/2019 2:52 PM
PLOT BY : JAIRO MAZARIEGOS
PLOT NAME :
PLOT SCALE : 1 IN:10 FT HORZ. / 1 IN:10 FT VERT.
WISDOT/CADDS SHEET 49

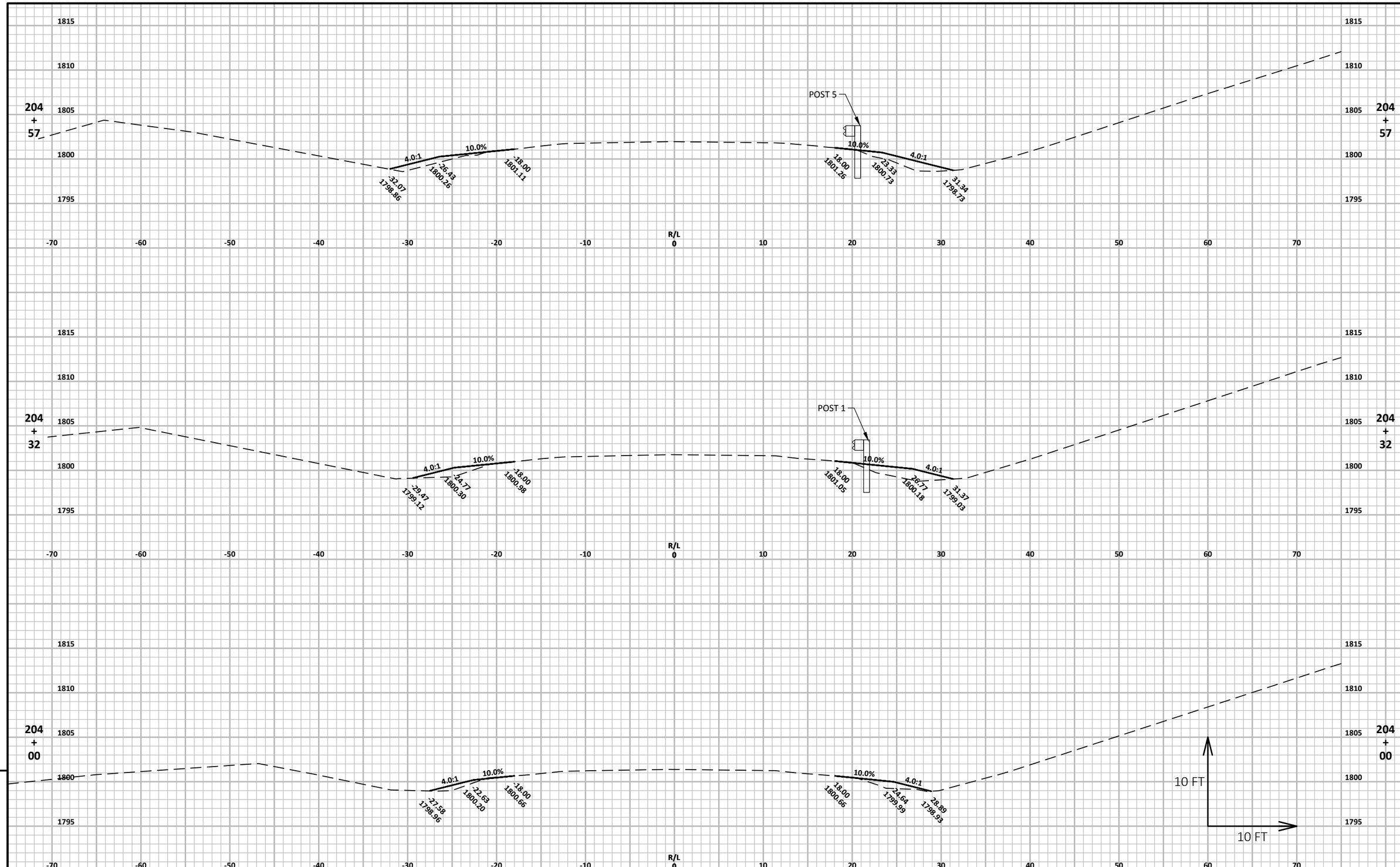

PROJECT NO: 9216-07-61	HWY: STH 86	COUNTY: PRICE	CROSS SECTIONS: STH 86 (500860310 & 500860320)	SHEET 177	E

FILE NAME : F:\TR\JOBS\E2271A17\CIVIL 3D 2016 STH 86\SHEETSPLAN\92160761-090201-XS.DWG
LAYOUT NAME - 92160761-090263-xs
PLOT DATE : 6/26/2019 2:52 PM PLOT BY : JAIRO MAZARIEGOS PLOT NAME : PLOT SCALE : 1 IN:10 FT HORZ. / 1 IN:10 FT VERT.

WISDOT/CADDS SHEET 49

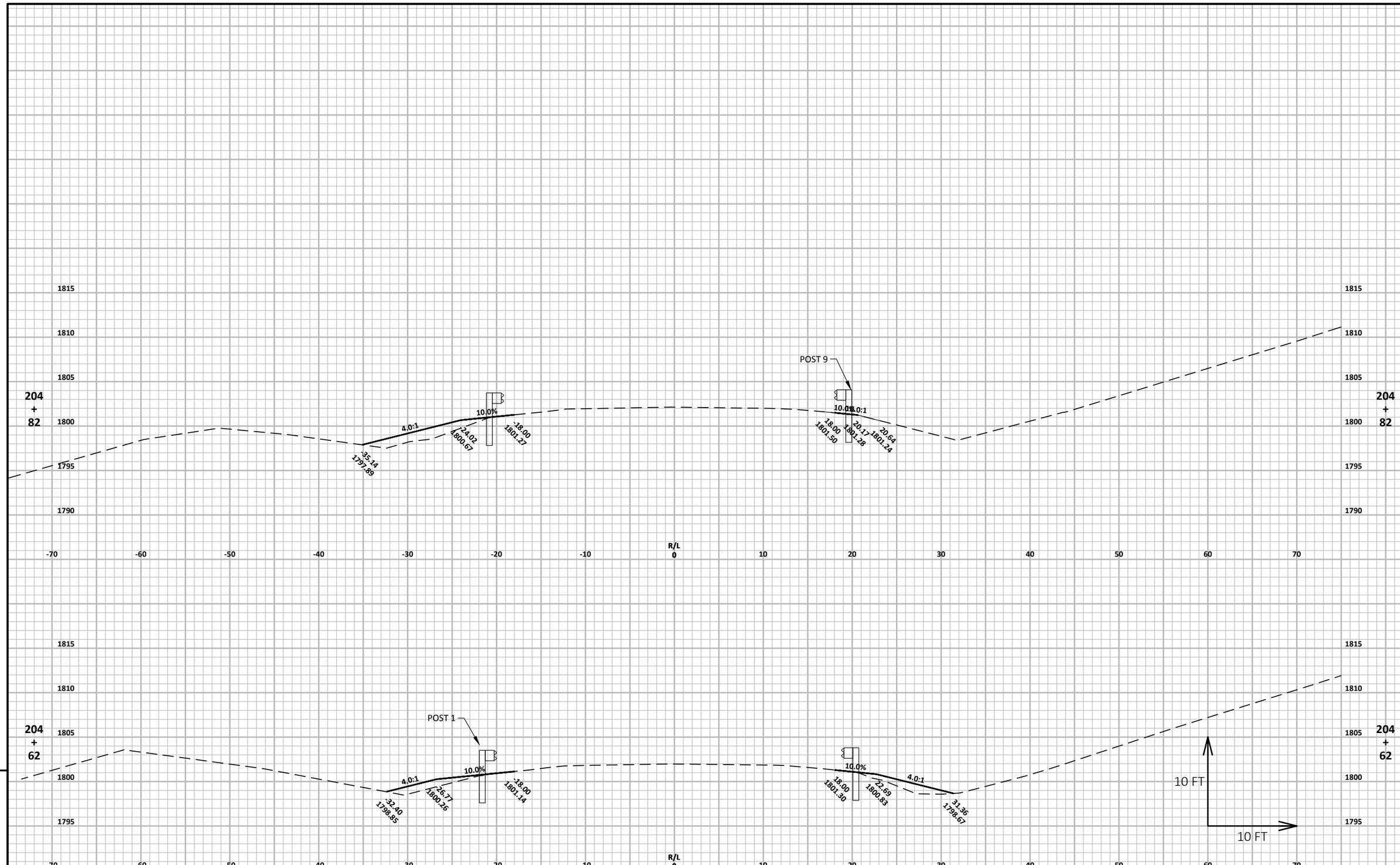

9

9

PROJECT NO: 9216-07-61	HWY: STH 86	COUNTY: PRICE	CROSS SECTIONS: STH 86 (500860310 & 500860320)	SHEET 178	E

FILE NAME : F:\TR\JOBS\E2271A17\CIVIL 3D 2016 STH 86\SHEETSPLAN\92160761-090201-XS.DWG
LAYOUT NAME - 92160761-090264-xs

PLOT DATE : 6/26/2019 2:52 PM PLOT BY : JAIRO MAZARIEGOS PLOT NAME : PLOT SCALE : 1 IN:10 FT HORZ. / 1 IN:10 FT VERT.

WISDOT/CADDS SHEET 49

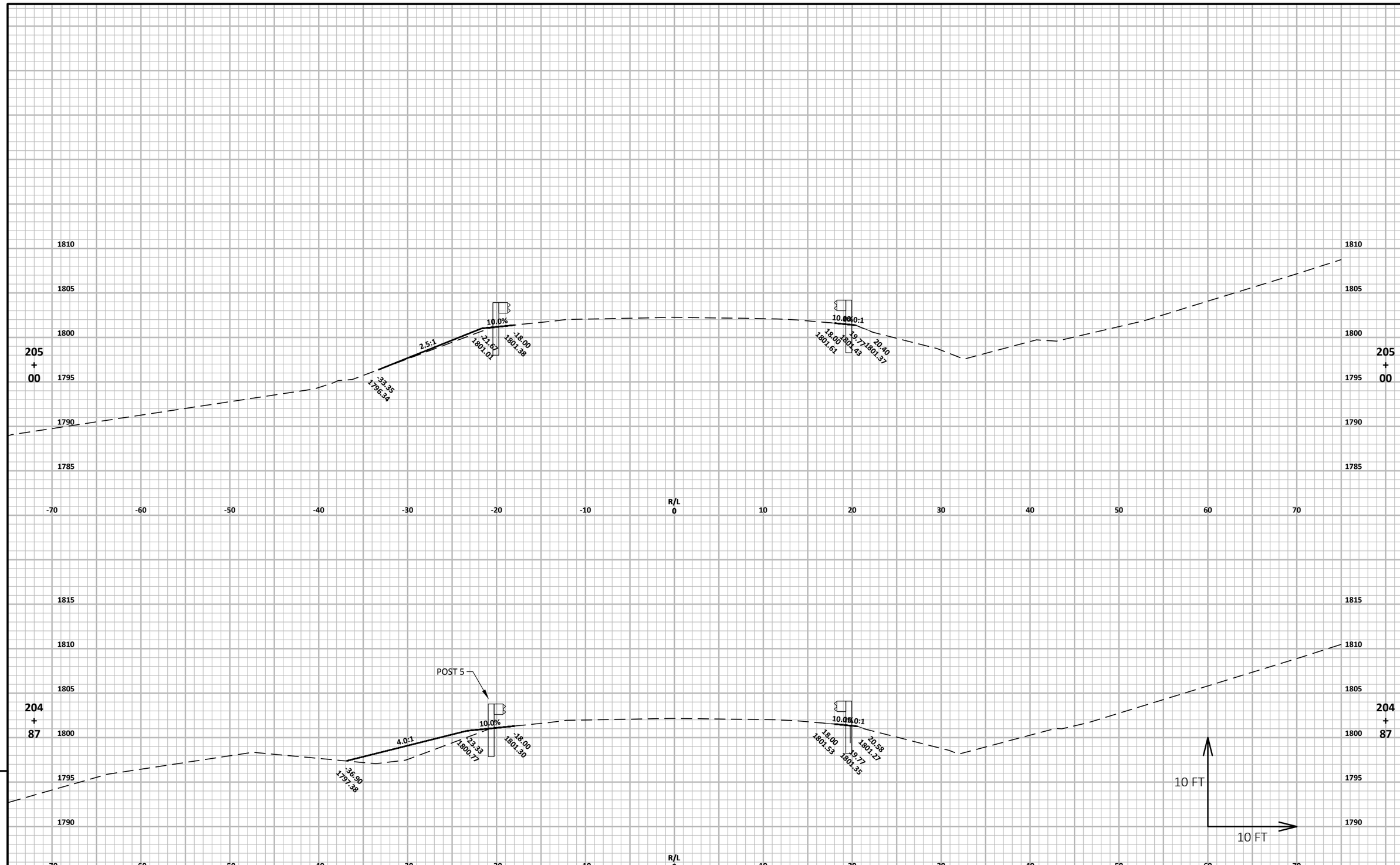

9

9

PROJECT NO: 9216-07-61	HWY: STH 86	COUNTY: PRICE	CROSS SECTIONS: STH 86 (500860310 & 500860320)	SHEET 179	E

FILE NAME : F:\TR\JOBS\E2271A17\CIVIL 3D 2016 STH 86\SHEETSPLAN\92160761-090201-XS.DWG
LAYOUT NAME - 92160761-090265-xs
PLOT DATE : 6/26/2019 2:52 PM
PLOT BY : JAIRO MAZARIEGOS
PLOT NAME :
PLOT SCALE : 1 IN:10 FT HORZ. / 1 IN:10 FT VERT.

WISDOT/CADDS SHEET 49

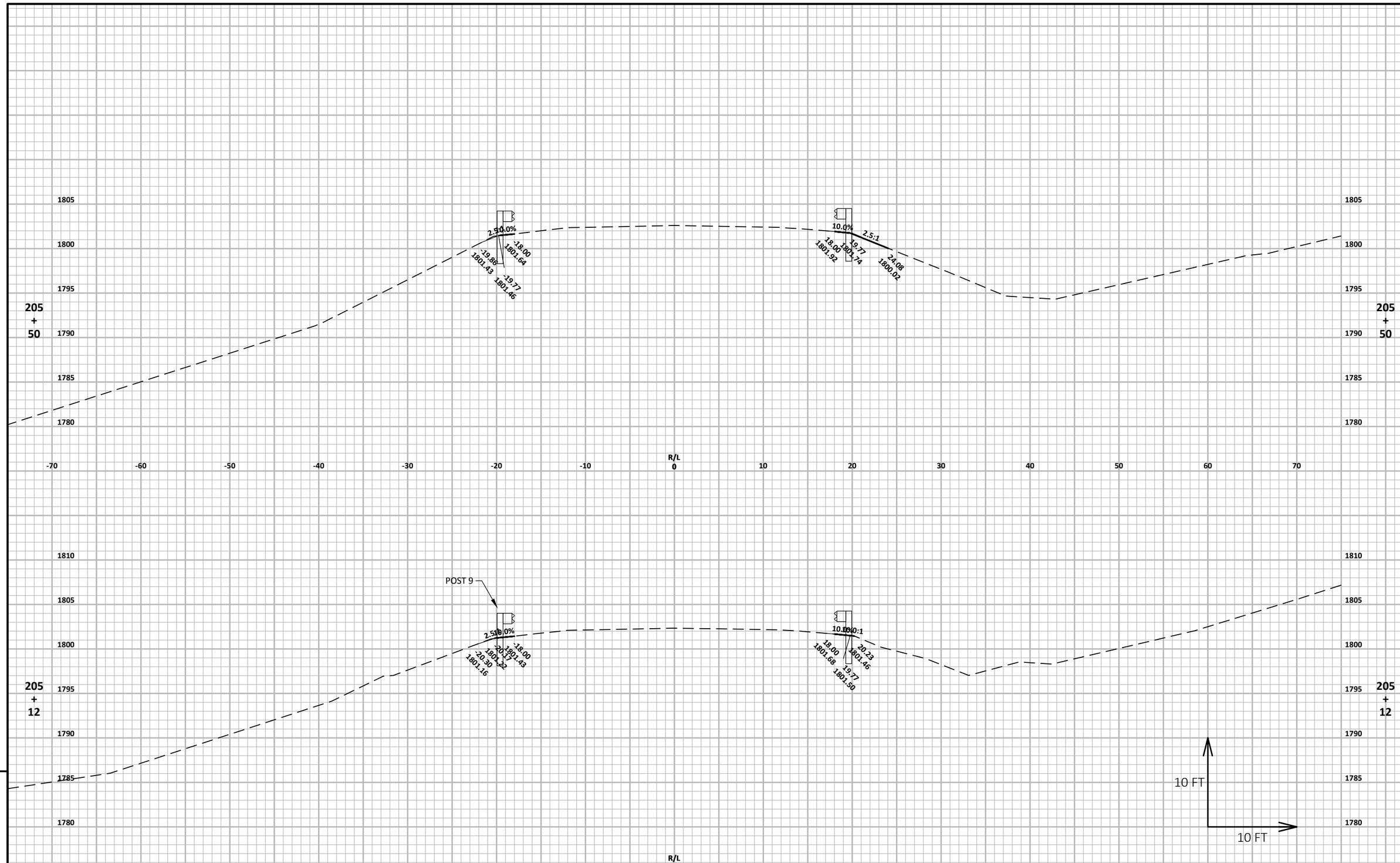

PROJECT NO: 9216-07-61	HWY: STH 86	COUNTY: PRICE	CROSS SECTIONS: STH 86 (500860310 & 500860320)	SHEET 180	E

FILE NAME : F:\TR\JOBS\E2271A17\CIVIL 3D 2016 STH 86\SHEETSPLAN\92160761-090201-XS.DWG
LAYOUT NAME - 92160761-090266-xs
PLOT DATE : 6/26/2019 2:53 PM
PLOT BY : JAIRO MAZARIEGOS
PLOT NAME :
PLOT SCALE : 1 IN:10 FT HORZ. / 1 IN:10 FT VERT.
WISDOT/CADDS SHEET 49

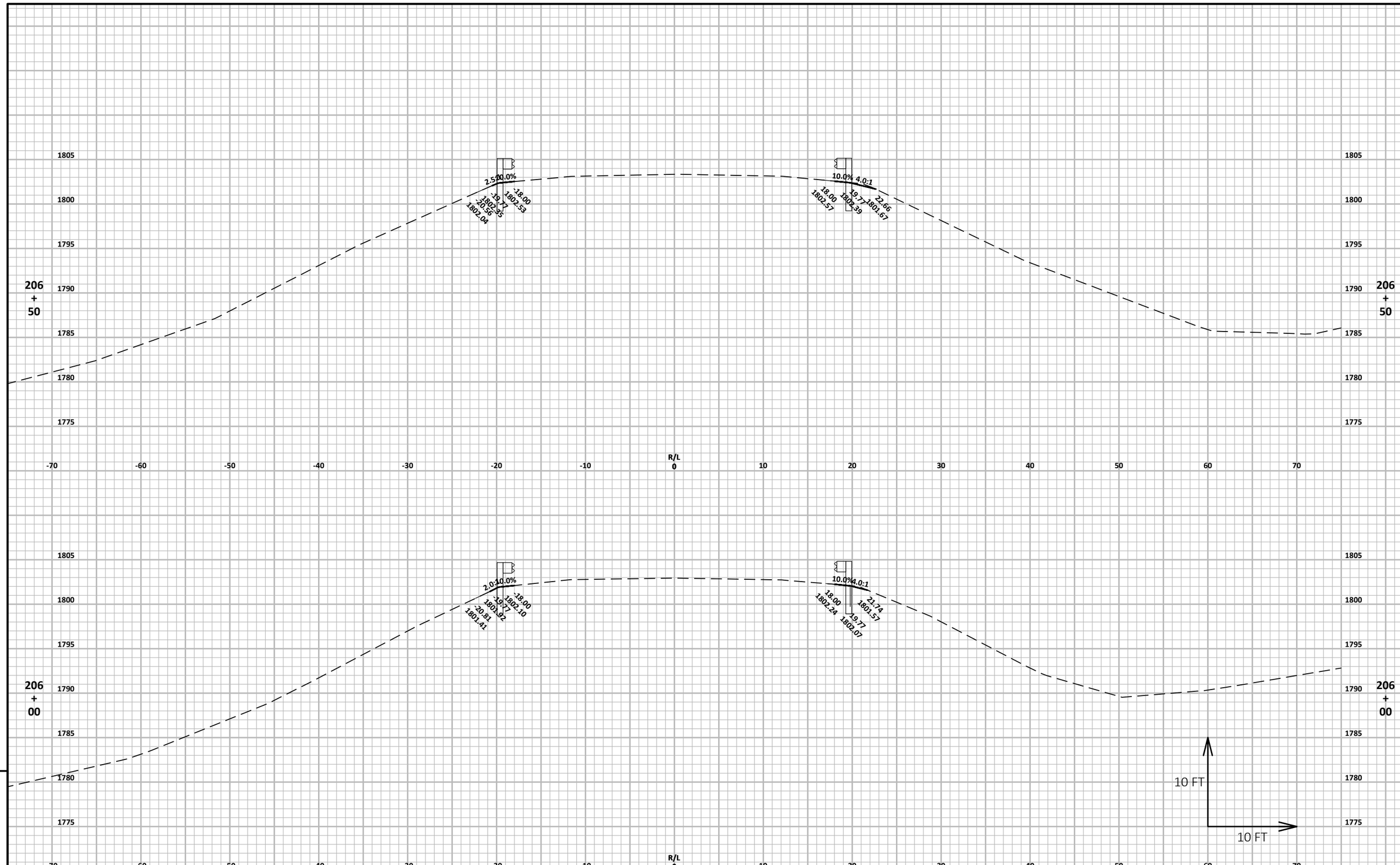

PROJECT NO: 9216-07-61	HWY: STH 86	COUNTY: PRICE	CROSS SECTIONS: STH 86 (500860310 & 500860320)	SHEET 181	E

FILE NAME : F:\TR\JOBS\E2271A17\CIVIL 3D 2016 STH 86\SHEETSPLAN\92160761-090201-XS.DWG
LAYOUT NAME - 92160761-090267-xs
PLOT DATE : 6/26/2019 2:53 PM
PLOT BY : JAIRO MAZARIEGOS
PLOT NAME :
PLOT SCALE : 1 IN:10 FT HORZ. / 1 IN:10 FT VERT.

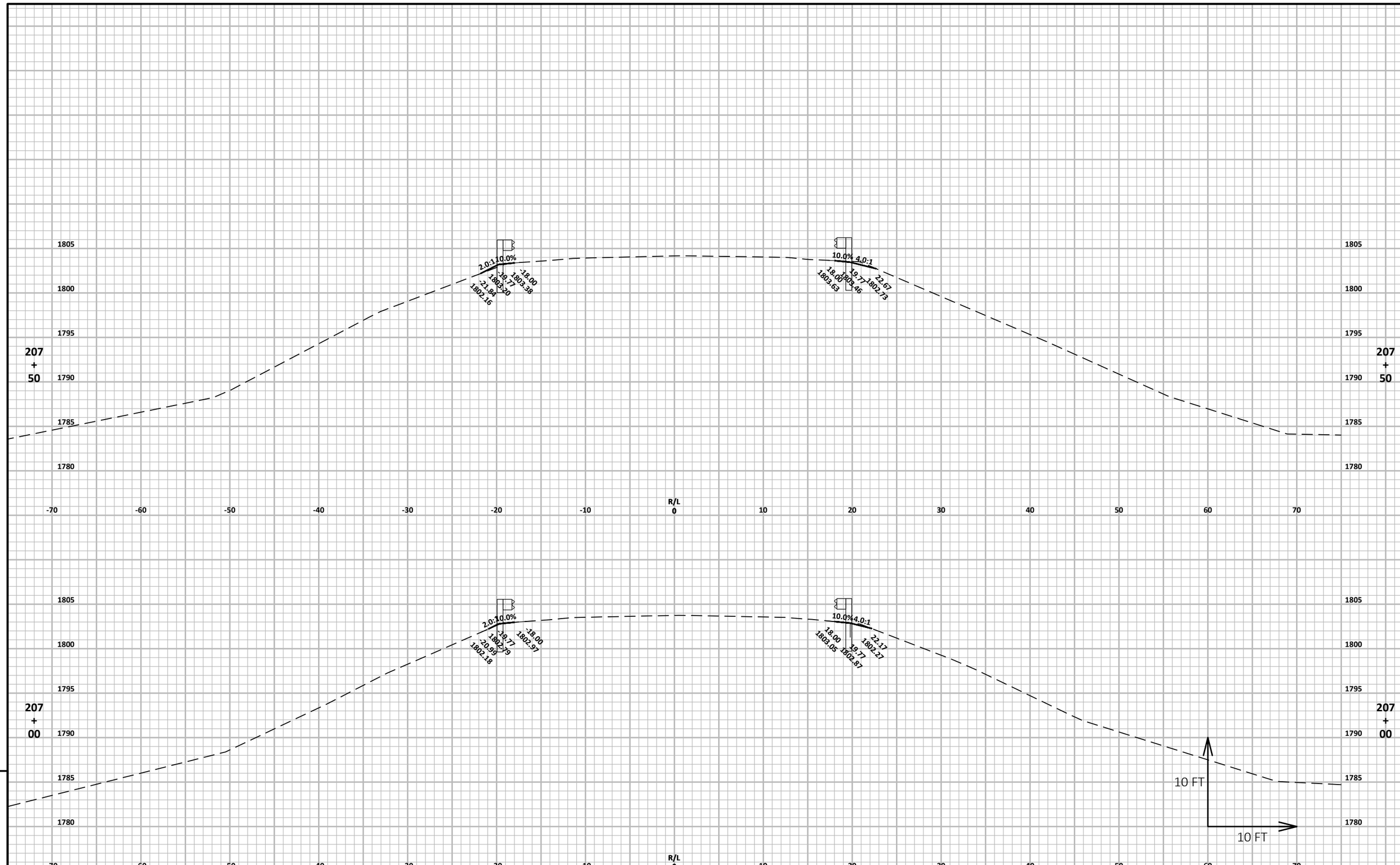

PROJECT NO: 9216-07-61	HWY: STH 86	COUNTY: PRICE	CROSS SECTIONS: STH 86 (500860310 & 500860320)	SHEET 182	E

FILE NAME : F:\TR\JOBS\E2271A17\CIVIL 3D 2016 STH 86\SHEETSPLAN\92160761-090201-XS.DWG
LAYOUT NAME - 92160761-090268-xs
PLOT DATE : 6/26/2019 2:53 PM
PLOT BY : JAIRO MAZARIEGOS
PLOT NAME :
PLOT SCALE : 1 IN:10 FT HORZ. / 1 IN:10 FT VERT.
WISDOT/CADDS SHEET 49

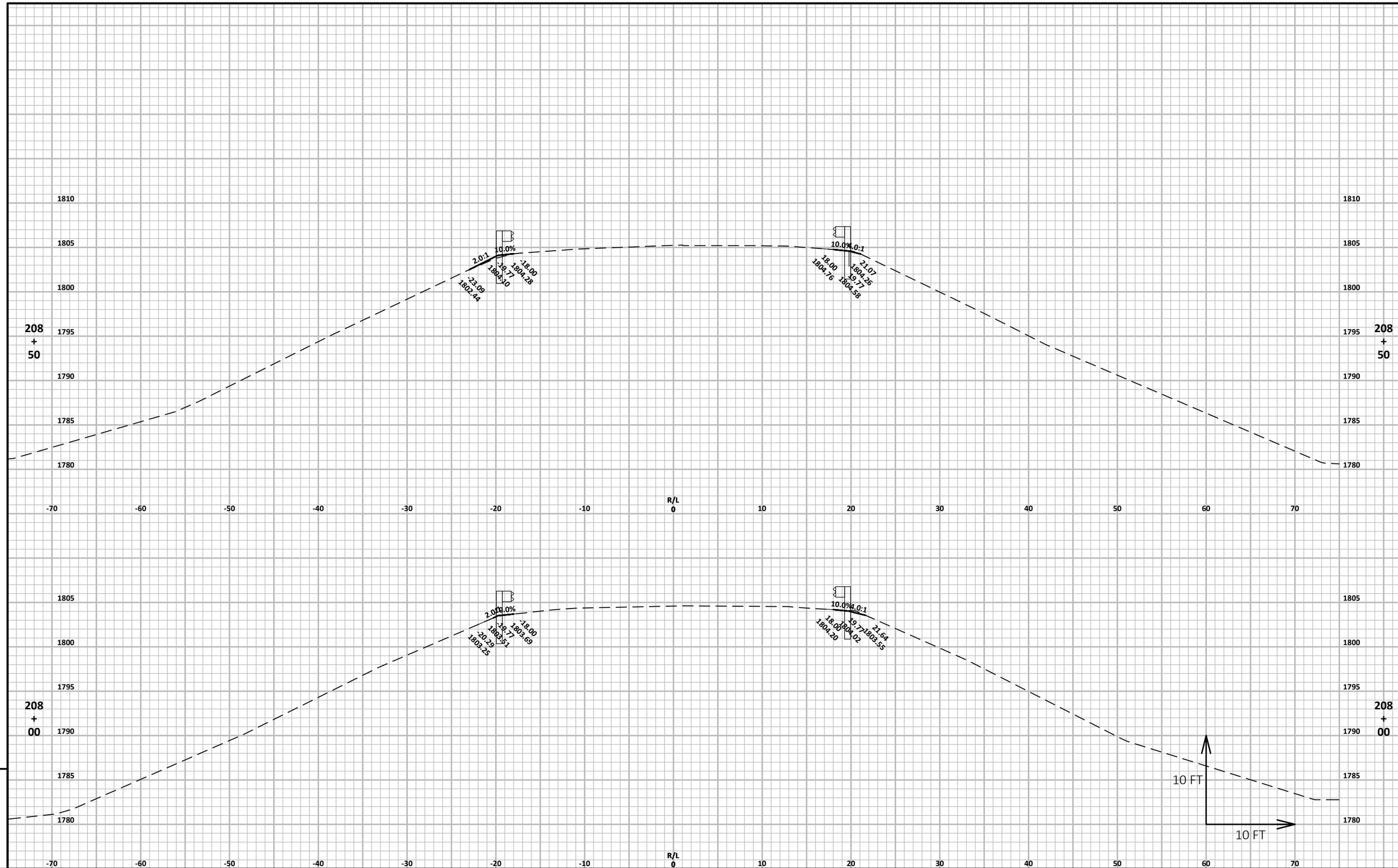

9

9

PROJECT NO: 9216-07-61	HWY: STH 86	COUNTY: PRICE	CROSS SECTIONS: STH 86 (500860310 & 500860320)	SHEET 183	E

FILE NAME : F:\TR\JOBS\E2271A17\CIVIL 3D 2016 STH 86\SHEETSPLAN\92160761-090201-XS.DWG
LAYOUT NAME - 92160761-090269-xs
PLOT DATE : 6/26/2019 2:53 PM PLOT BY : JAIRO MAZARIEGOS PLOT NAME : PLOT SCALE : 1 IN:10 FT HORZ. / 1 IN:10 FT VERT.

WISDOT/CADDS SHEET 49

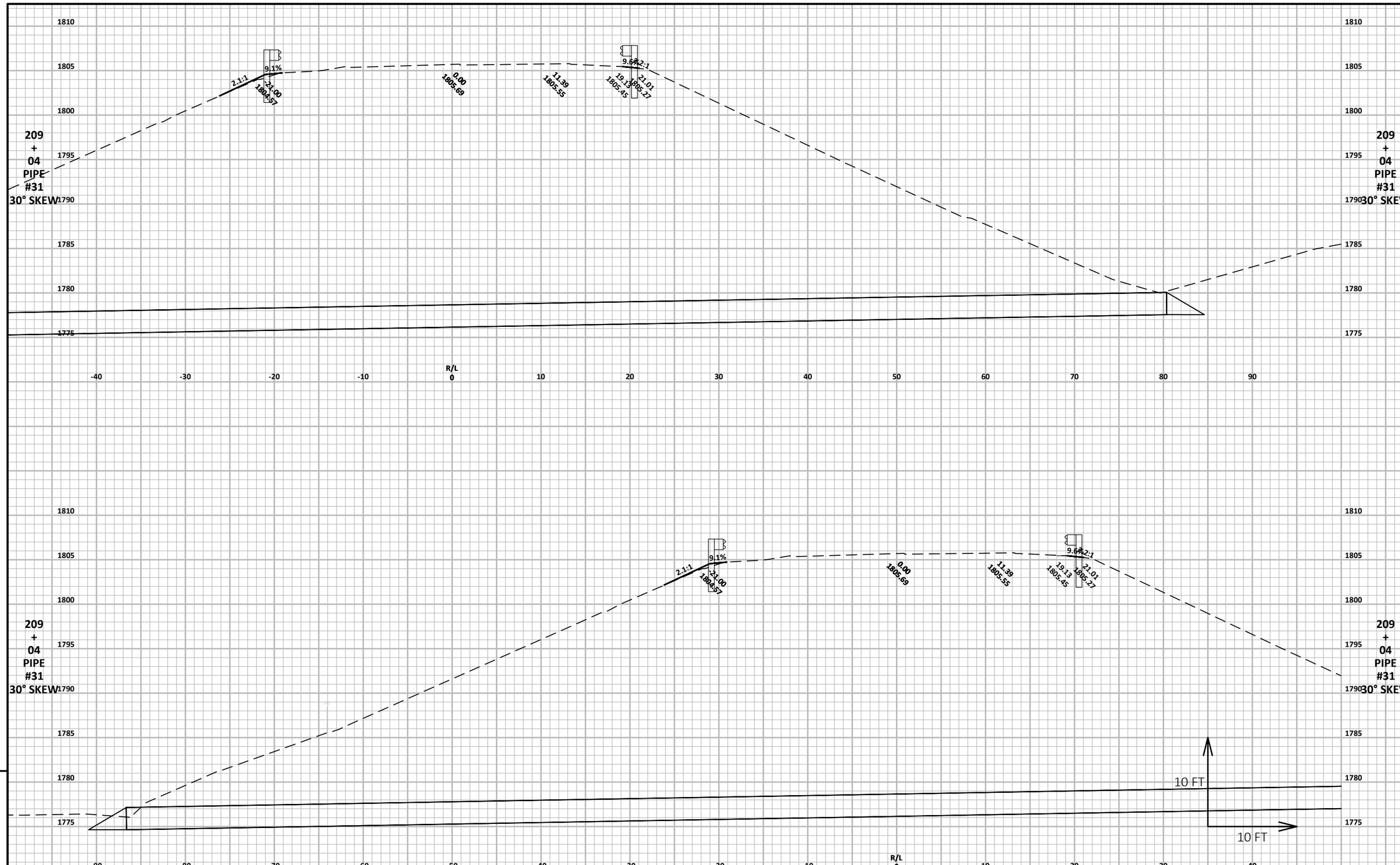

PROJECT NO: 9216-07-61	HWY: STH 86	COUNTY: PRICE	CROSS SECTIONS: STH 86 (500860310 & 500860320)	SHEET 184	E

FILE NAME : F:\TR\JOBS\E2271A17\CIVIL 3D 2016 STH 86\SHEETSPLAN\92160761-090201-XS.DWG
LAYOUT NAME - 92160761-090270-xs
PLOT DATE : 6/26/2019 2:53 PM
PLOT BY : JAIRO MAZARIEGOS
PLOT NAME :
PLOT SCALE : 1 IN:10 FT HORZ. / 1 IN:10 FT VERT.

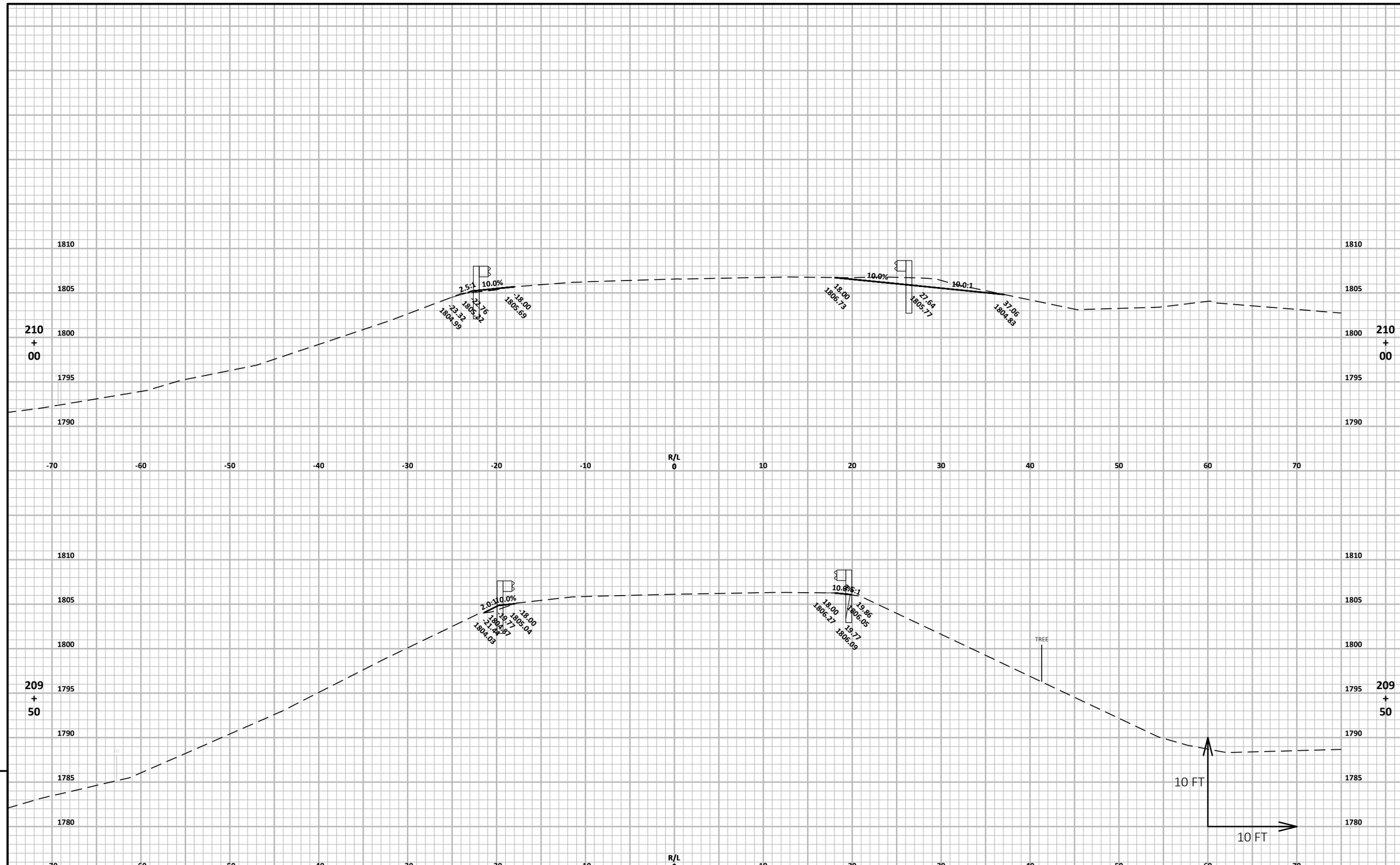

9

PROJECT NO: 9216-07-61	HWY: STH 86	COUNTY: PRICE	CROSS SECTIONS: STH 86 (500860310 & 500860320)	SHEET 185	E

FILE NAME : F:\TR\JOBS\E2271A17\CIVIL 3D 2016 STH 86\SHEETSPLAN\92160761-090201-XS.DWG
LAYOUT NAME - 92160761-090271-xs
PLOT DATE : 6/26/2019 2:54 PM
PLOT BY : JAIRO MAZARIEGOS
PLOT NAME :
PLOT SCALE : 1 IN:10 FT HORZ. / 1 IN:10 FT VERT.

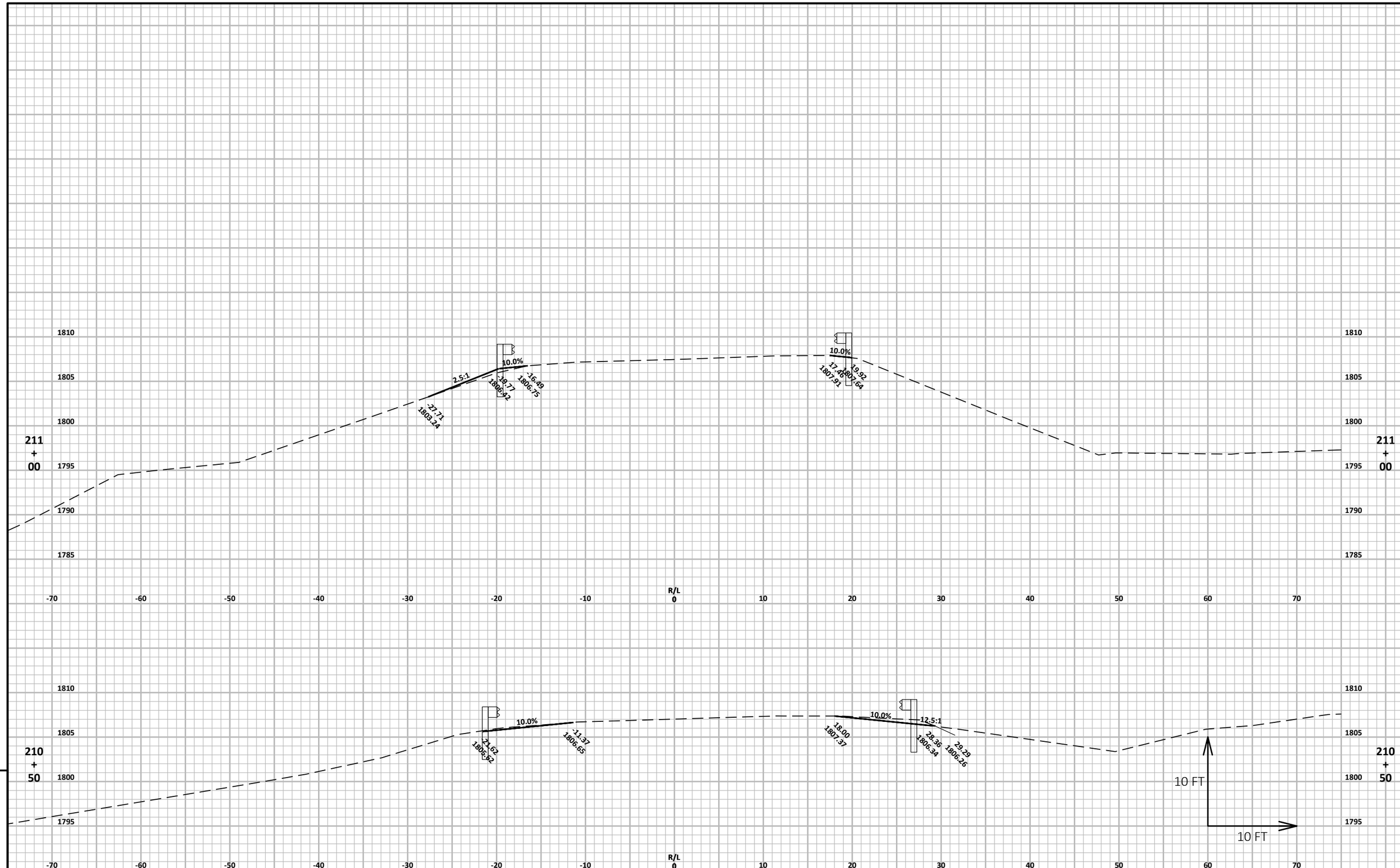

PROJECT NO: 9216-07-61	HWY: STH 86	COUNTY: PRICE	CROSS SECTIONS: STH 86 (500860310 & 500860320)	SHEET 186	E

FILE NAME : F:\TR\JOBS\E2271A17\CIVIL 3D 2016 STH 86\SHEETSPLAN\92160761-090201-XS.DWG
LAYOUT NAME - 92160761-090272-xs
PLOT DATE : 7/16/2019 11:59 AM PLOT BY : MATT TOMSOVIC PLOT NAME : PLOT SCALE : 1 IN:10 FT HORZ. / 1 IN:10 FT VERT.

WISDOT/CADDS SHEET 49

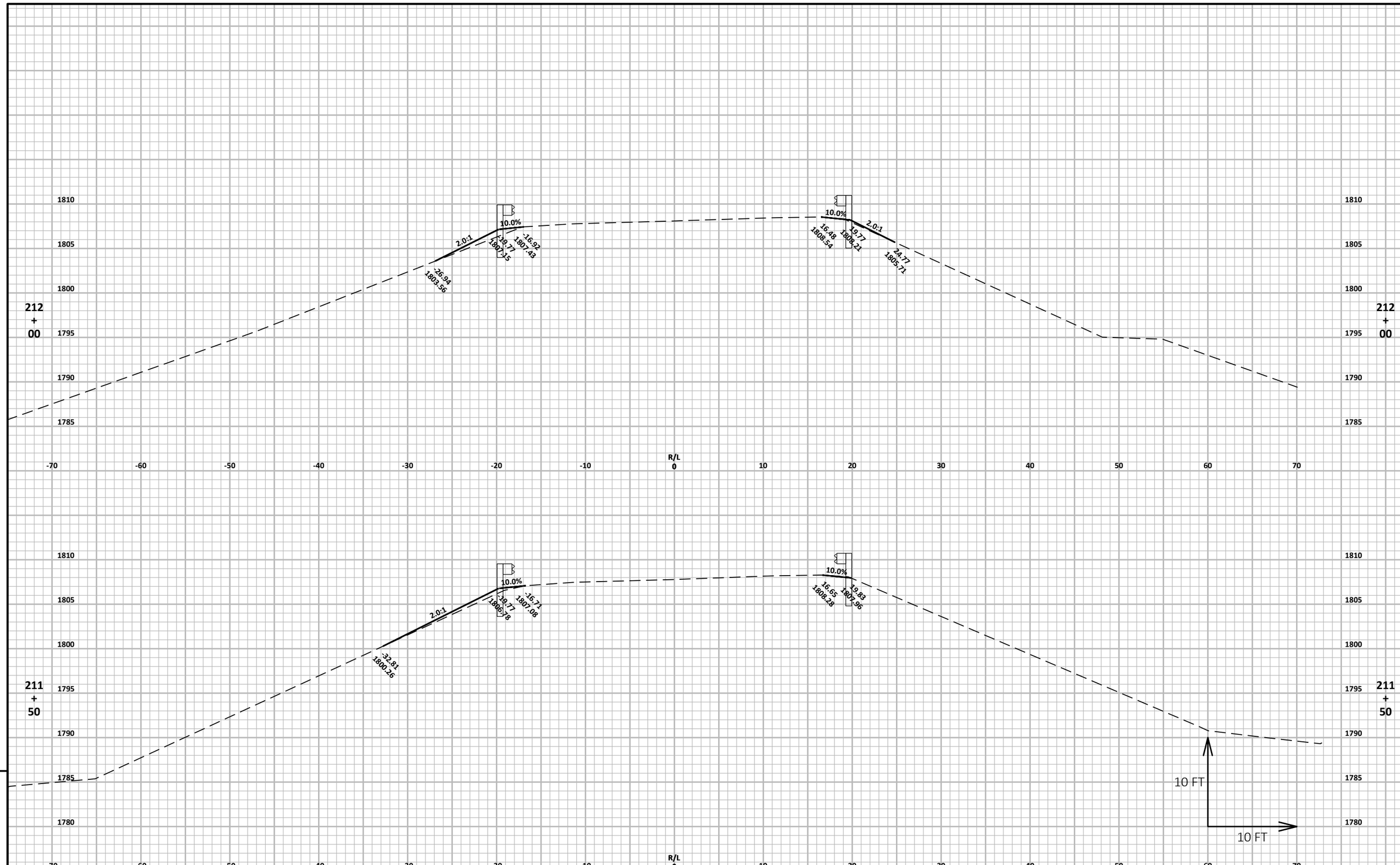

PROJECT NO: 9216-07-61	HWY: STH 86	COUNTY: PRICE	CROSS SECTIONS: STH 86 (500860310 & 500860320)	SHEET 187	E

FILE NAME : F:\TR\JOBS\E2271A17\CIVIL 3D 2016 STH 86\SHEETSPLAN\92160761-090201-XS.DWG
LAYOUT NAME - 92160761-090273-xs
PLOT DATE : 7/16/2019 11:59 AM
PLOT BY : MATT TOMSOVIC
PLOT NAME :
PLOT SCALE : 1 IN:10 FT HORZ. / 1 IN:10 FT VERT.

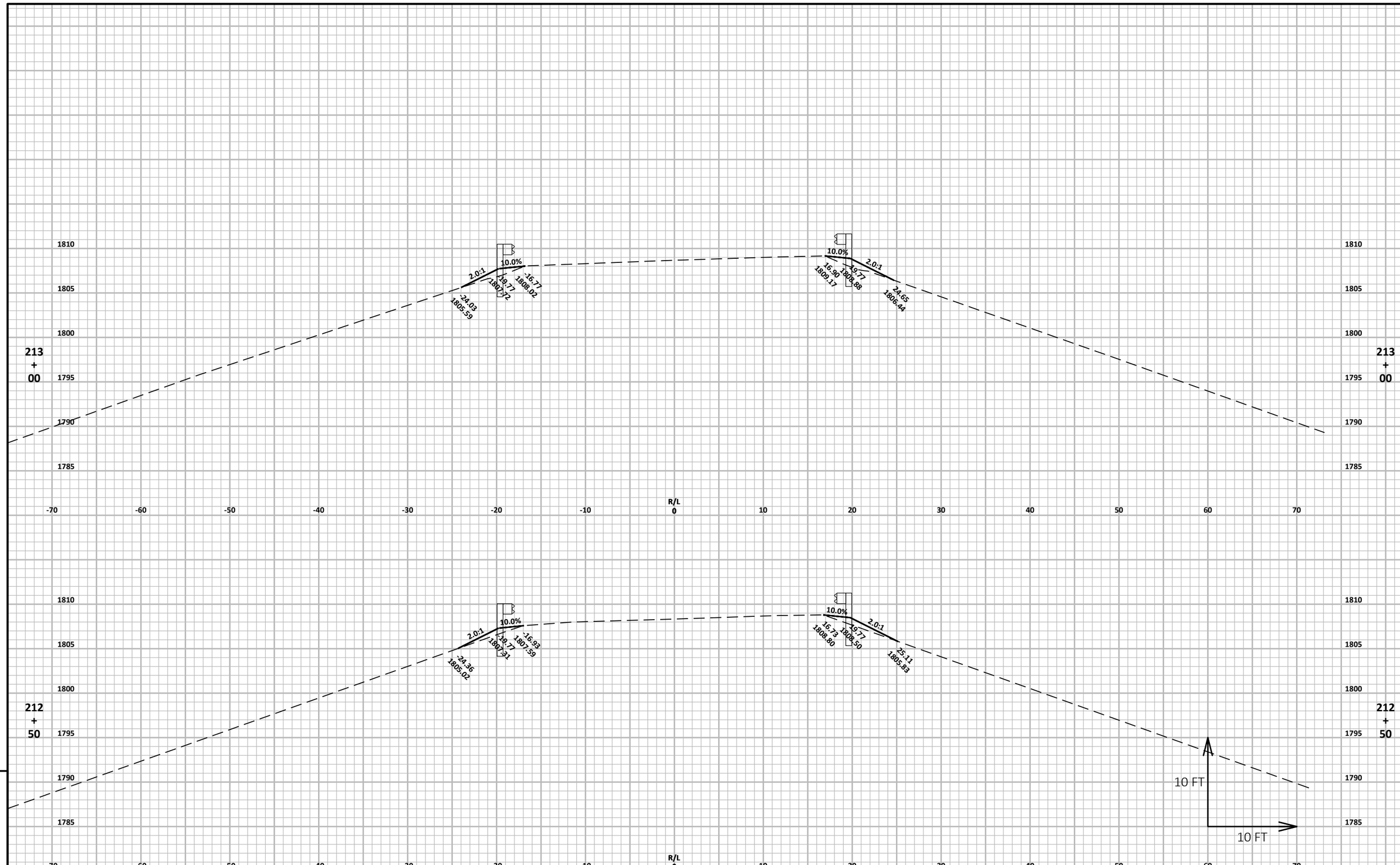

PROJECT NO: 9216-07-61	HWY: STH 86	COUNTY: PRICE	CROSS SECTIONS: STH 86 (500860310 & 500860320)	SHEET 188	E

FILE NAME : F:\TR\JOBS\E2271A17\CIVIL 3D 2016 STH 86\SHEETSPLAN\92160761-090201-XS.DWG
LAYOUT NAME - 92160761-090274-xs
PLOT DATE : 7/16/2019 11:59 AM
PLOT BY : MATT TOMSOVIC
PLOT NAME :
PLOT SCALE : 1 IN:10 FT HORZ. / 1 IN:10 FT VERT.
WISDOT/CADDS SHEET 49

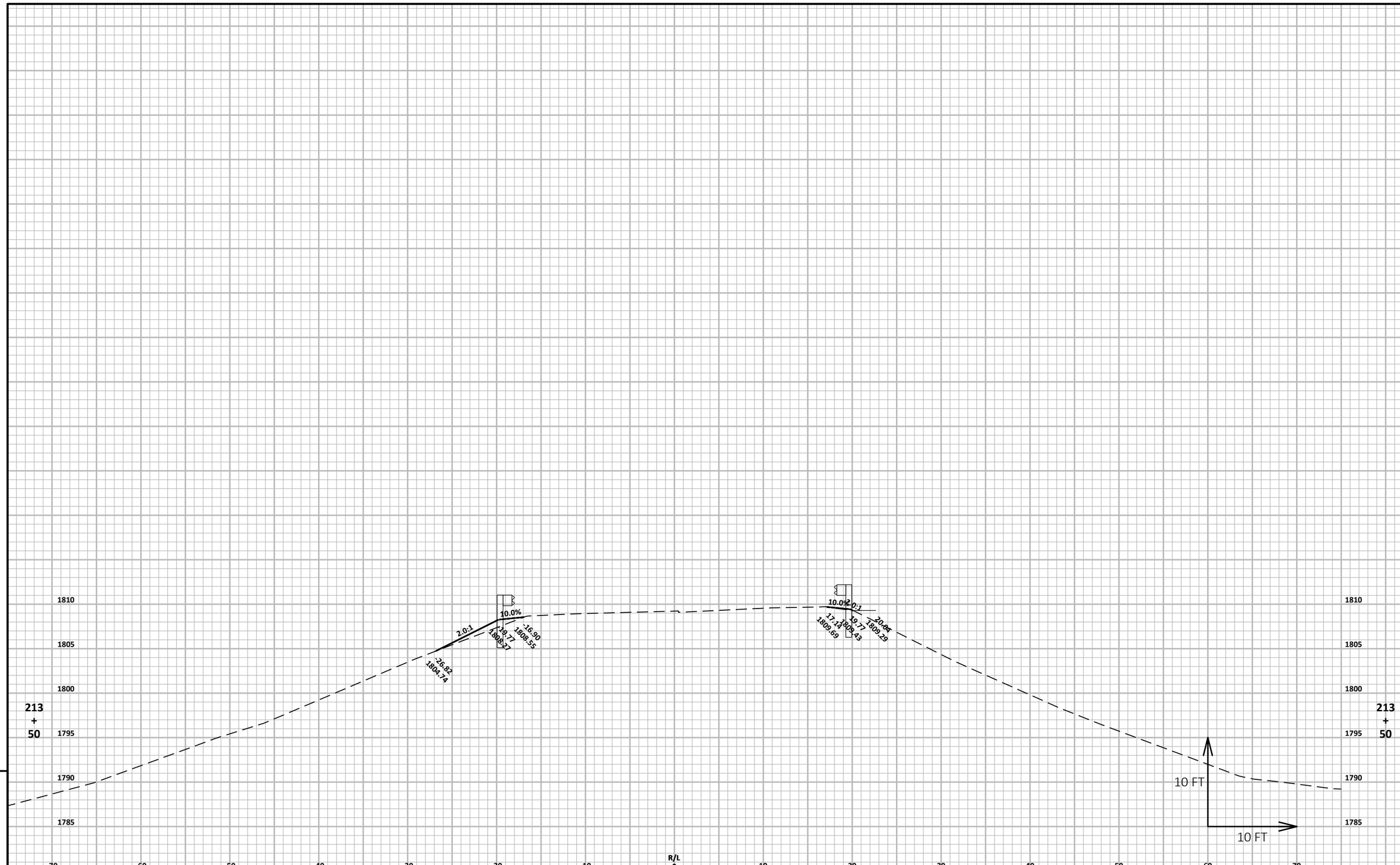

9

9

PROJECT NO: 9216-07-61	HWY: STH 86	COUNTY: PRICE	CROSS SECTIONS: STH 86 (500860310 & 500860320)	SHEET 189	E

FILE NAME : F:\TR\JOBS\E2271A17\CIVIL 3D 2016 STH 86\SHEETSPLAN\92160761-090201-XS.DWG
LAYOUT NAME - 92160761-090275-xs

PLOT DATE : 7/16/2019 11:59 AM PLOT BY : MATT TOMSOVIC PLOT NAME : PLOT SCALE : 1 IN:10 FT HORZ. / 1 IN:10 FT VERT.

WISDOT/CADDS SHEET 49

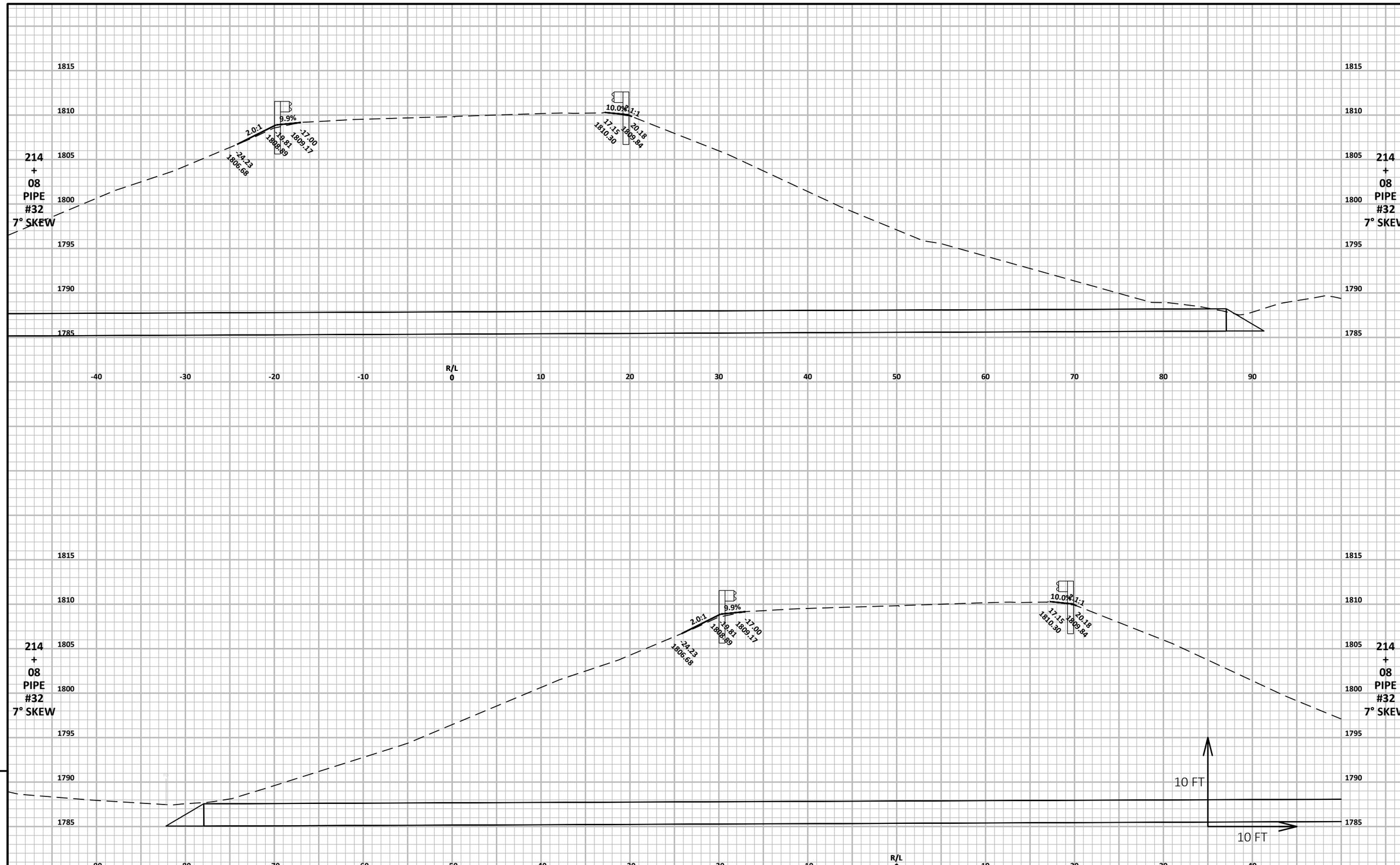

9

9

PROJECT NO: 9216-07-61	HWY: STH 86	COUNTY: PRICE	CROSS SECTIONS: STH 86 (500860310 & 500860320)	SHEET 190	E

FILE NAME : F:\TR\JOBS\E2271A17\CIVIL 3D 2016 STH 86\SHEETSPLAN\92160761-090201-XS.DWG
LAYOUT NAME - 92160761-090276-xs
PLOT DATE : 7/16/2019 11:59 AM PLOT BY : MATT TOMSOVIC PLOT NAME : PLOT SCALE : 1 IN:10 FT HORZ. / 1 IN:10 FT VERT.

WISDOT/CADDS SHEET 49

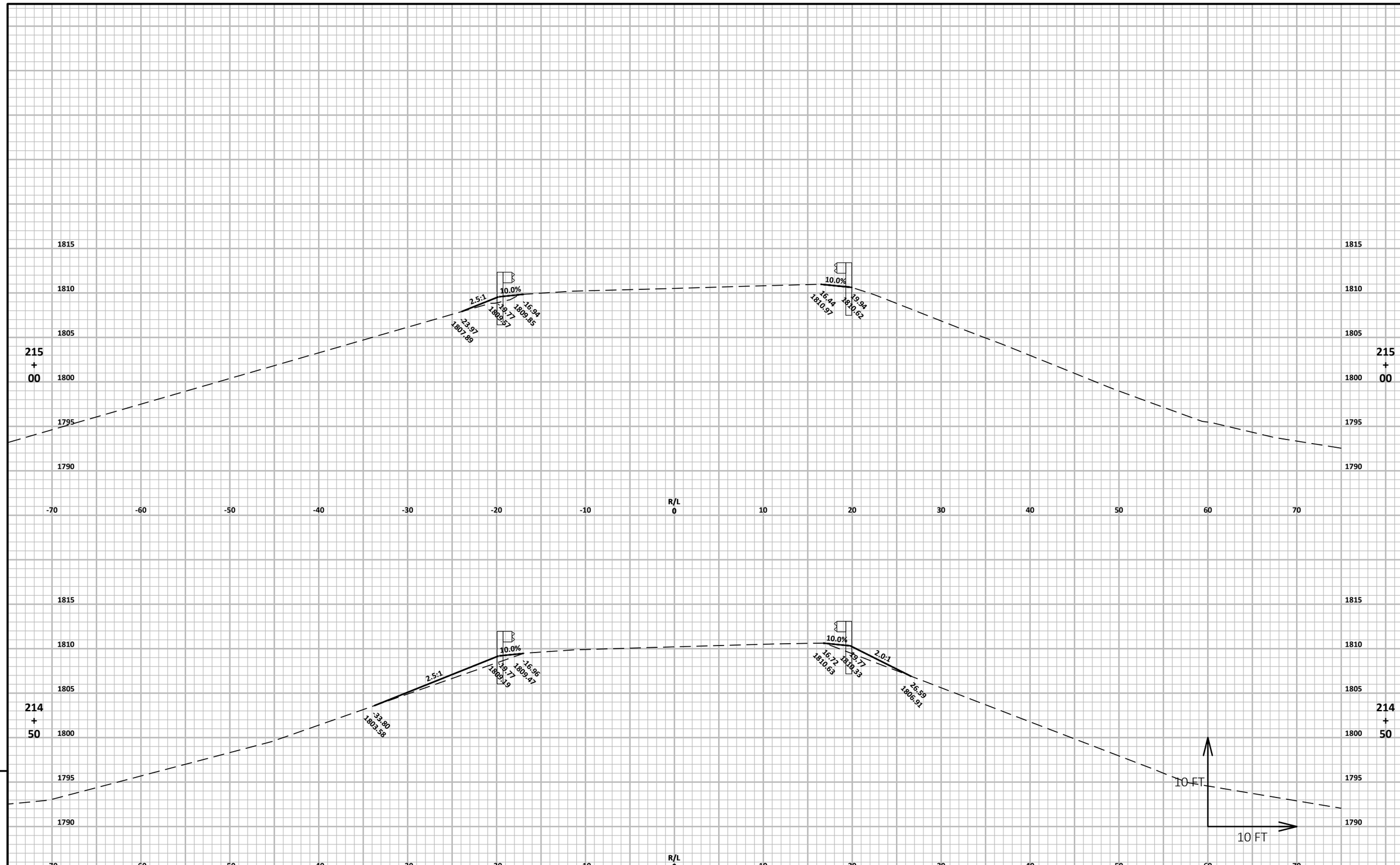

9

9

PROJECT NO: 9216-07-61	HWY: STH 86	COUNTY: PRICE	CROSS SECTIONS: STH 86 (500860310 & 500860320)	SHEET 191	E

FILE NAME : F:\TR\JOBS\E2271A17\CIVIL 3D 2016 STH 86\SHEETSPLAN\92160761-090201-XS.DWG
LAYOUT NAME - 92160761-090277-xs
PLOT DATE : 7/16/2019 11:59 AM
PLOT BY : MATT TOMSOVIC
PLOT NAME :
PLOT SCALE : 1 IN:10 FT HORZ. / 1 IN:10 FT VERT.

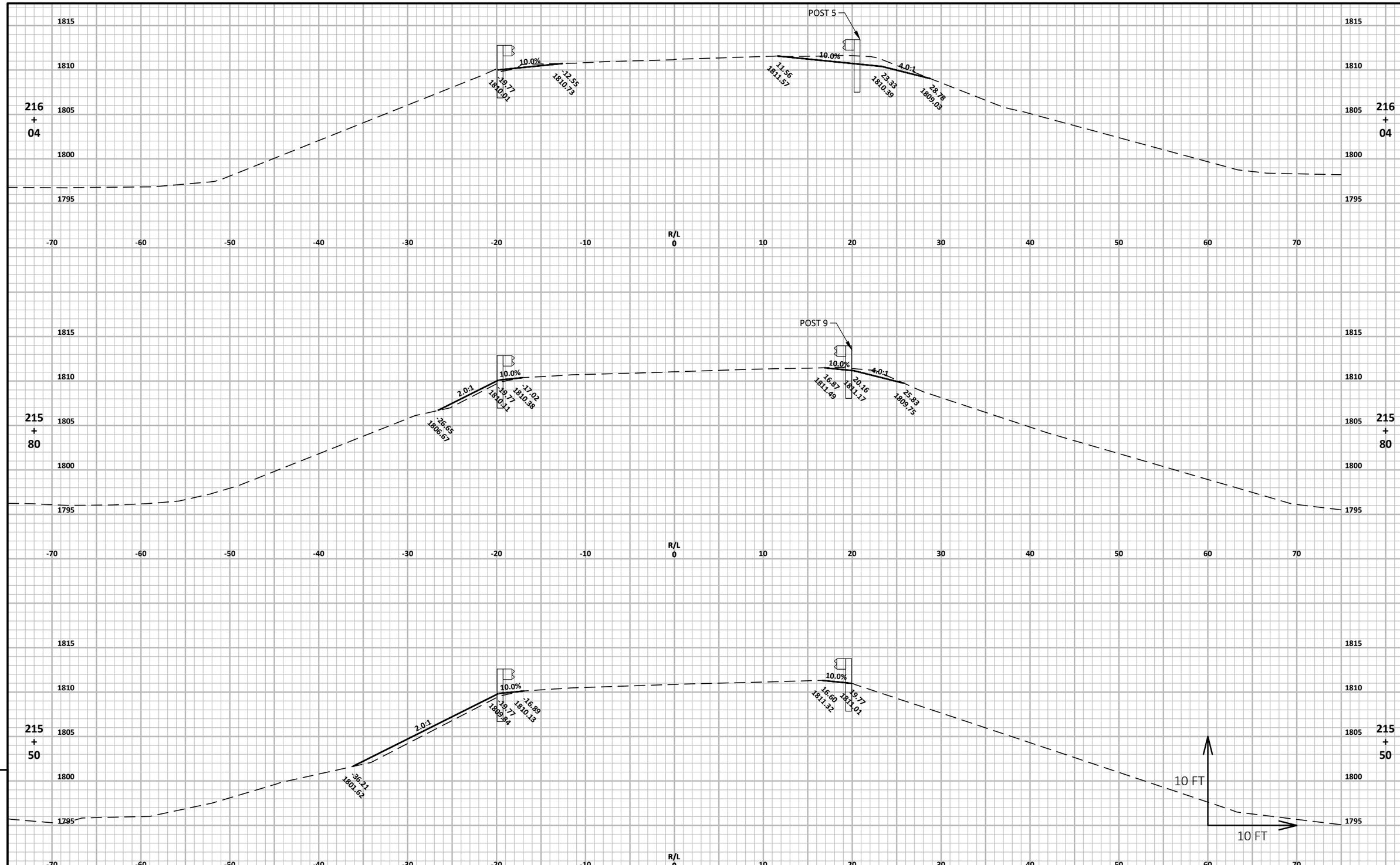

9

PROJECT NO: 9216-07-61	HWY: STH 86	COUNTY: PRICE	CROSS SECTIONS: STH 86 (500860310 & 500860320)	SHEET 192	E

FILE NAME : F:\TR\JOBS\E2271A17\CIVIL 3D 2016 STH 86\SHEETSPLAN\92160761-090201-XS.DWG
LAYOUT NAME - 92160761-090278-xs
PLOT DATE : 7/16/2019 11:59 AM
PLOT BY : MATT TOMSOVIC
PLOT NAME :
PLOT SCALE : 1 IN:10 FT HORZ. / 1 IN:10 FT VERT.
WISDOT/CADDS SHEET 49

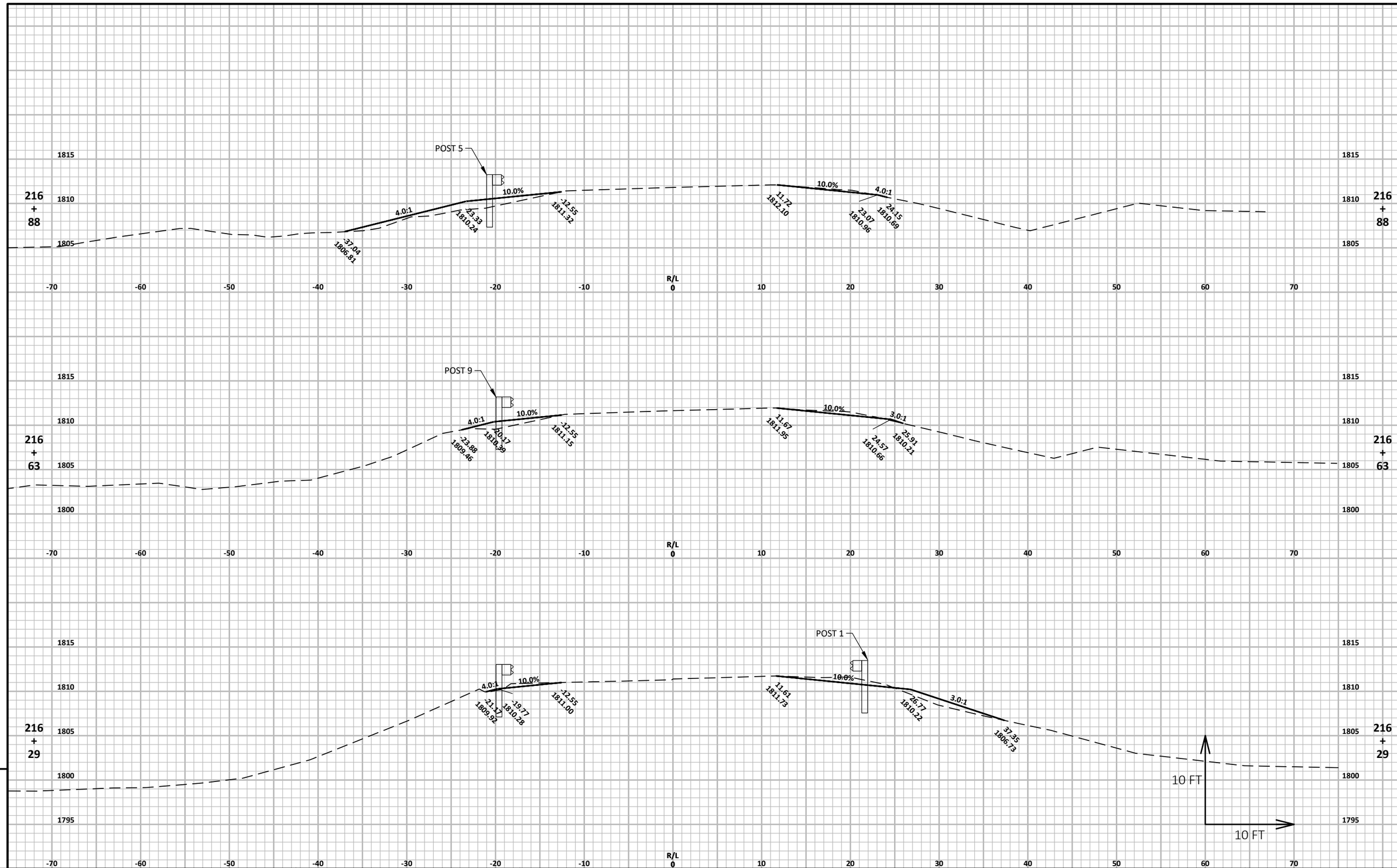

9

PROJECT NO: 9216-07-61	HWY: STH 86	COUNTY: PRICE	CROSS SECTIONS: STH 86 (500860310 & 500860320)	SHEET 193	E

FILE NAME : F:\TR\JOBS\E2271A17\CIVIL 3D 2016 STH 86\SHEETSPLAN\92160761-090201-XS.DWG
LAYOUT NAME - 92160761-090279-xs
PLOT DATE : 7/16/2019 11:59 AM
PLOT BY : MATT TOMSOVIC
PLOT NAME :
PLOT SCALE : 1 IN:10 FT HORZ. / 1 IN:10 FT VERT.
WISDOT/CADDS SHEET 49

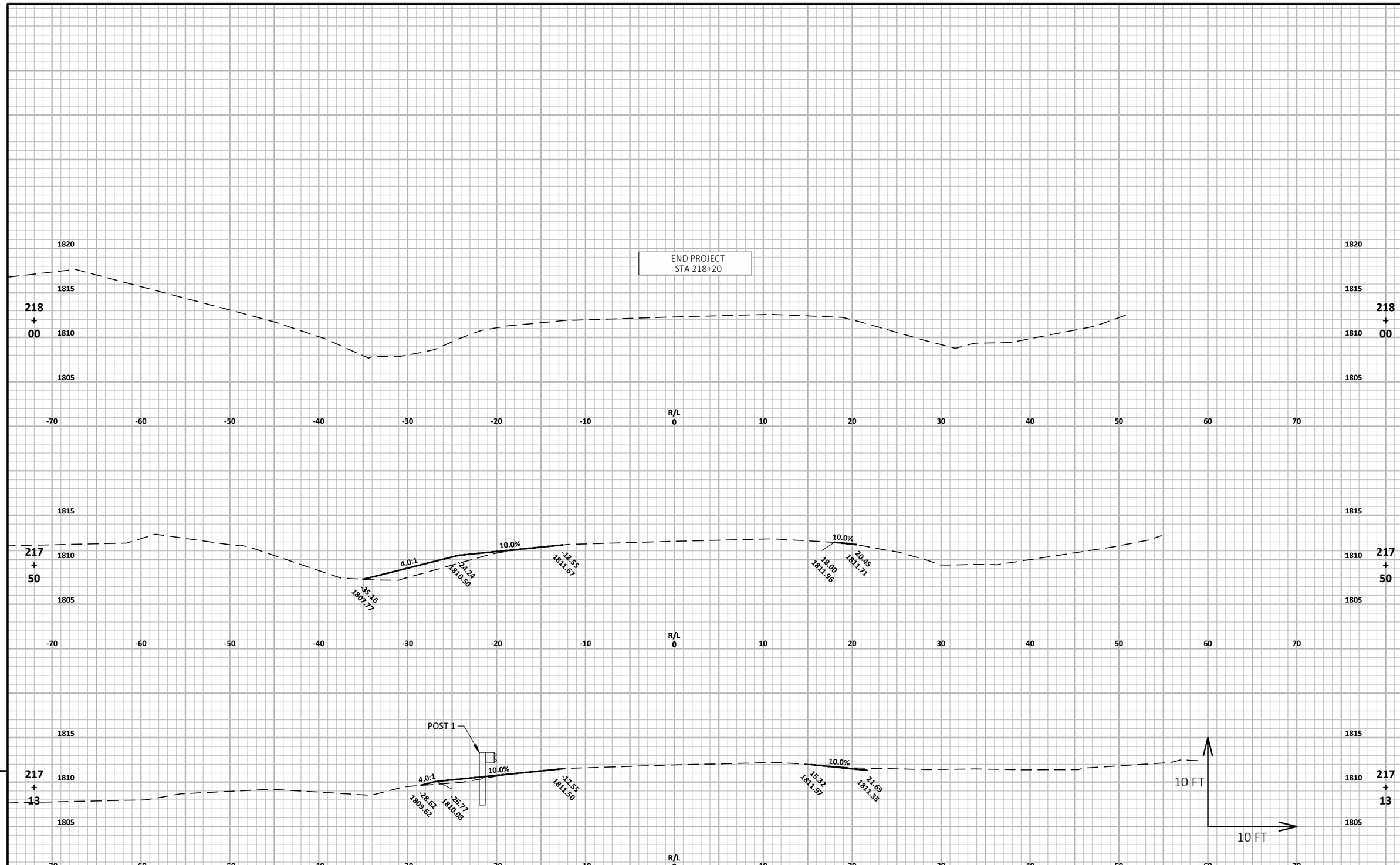

9

9

PROJECT NO: 9216-07-61	HWY: STH 86	COUNTY: PRICE	CROSS SECTIONS: STH 86 (500860310 & 500860320)	SHEET 194	E

FILE NAME : F:\TR\JOBS\E2271A17\CIVIL 3D 2016 STH 86\SHEETSPLAN\92160761-090201-XS.DWG
LAYOUT NAME - 92160761-090280-xs
PLOT DATE : 7/16/2019 11:59 AM
PLOT BY : MATT TOMSOVIC
PLOT NAME :
PLOT SCALE : 1 IN:10 FT HORZ. / 1 IN:10 FT VERT.

WISDOT/CADDS SHEET 49

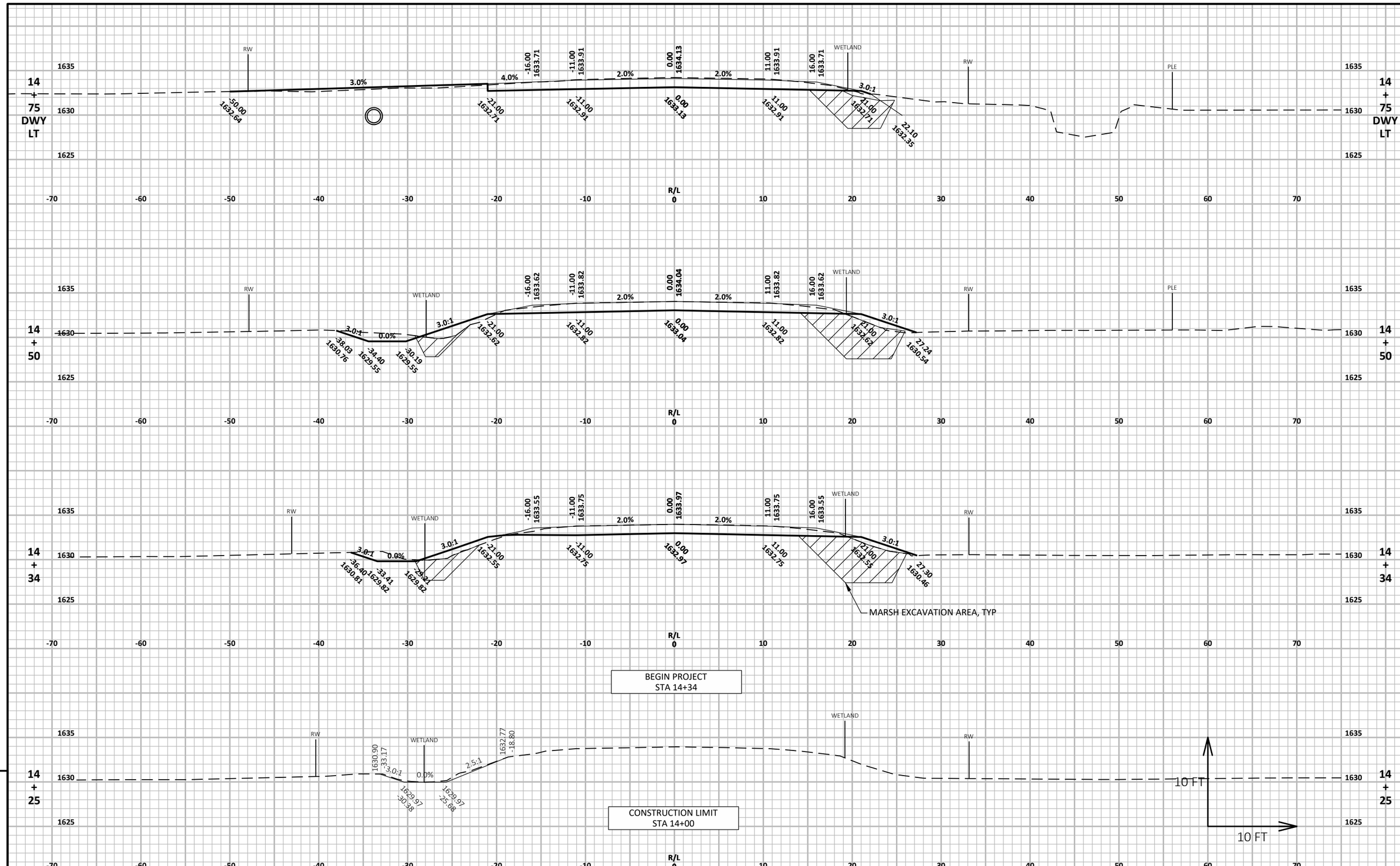

9

PROJECT NO: 9225-06-61	HWY: STH 102	COUNTY: PRICE	CROSS SECTIONS: STH 102	SHEET 195	E

FILE NAME : F:\TR\JOBS\E2271A17\CIVIL 3D 2016 STH 102\SHEETSPLAN\92250661-090201-XS.DWG
LAYOUT NAME - 92250661-090281-xs
PLOT DATE : 6/20/2019 8:34 AM
PLOT BY : MATT TOMSOVIC
PLOT NAME :
PLOT SCALE : 1 IN:10 FT HORZ. / 1 IN:10 FT VERT.
WISDOT/CADDS SHEET 49

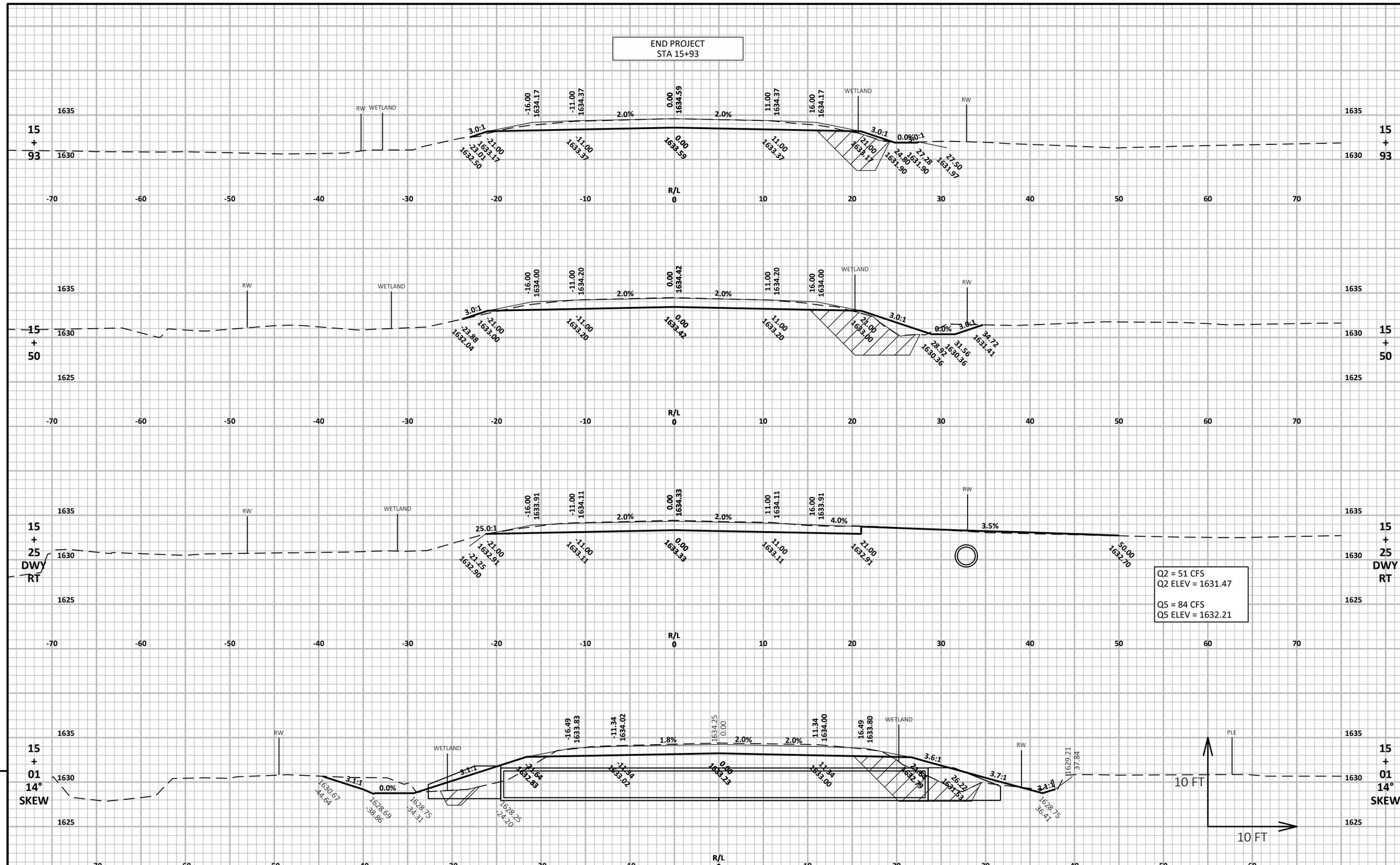

PROJECT NO: 9225-06-61	HWY: STH 102	COUNTY: PRICE	CROSS SECTIONS: STH 102	SHEET 196	E

FILE NAME : F:\TR\JOBS\E2271A17\CIVIL 3D 2016 STH 102\SHEETSPLAN\92250661-090201-XS.DWG
LAYOUT NAME - 92250661-090282-xs
PLOT DATE : 6/20/2019 8:34 AM
PLOT BY : MATT TOMSOVIC
PLOT NAME :
PLOT SCALE : 1 IN:10 FT HORZ. / 1 IN:10 FT VERT.

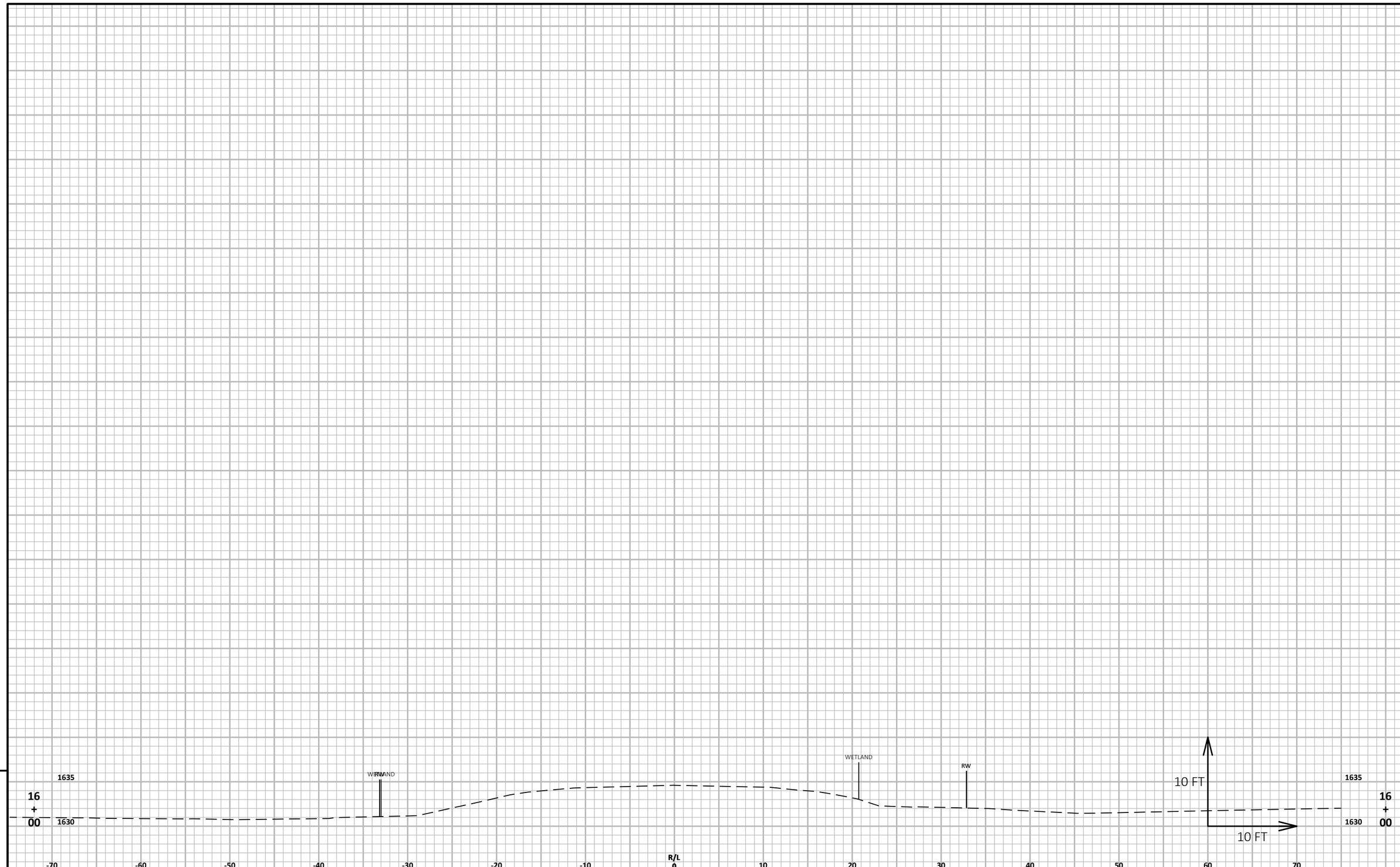

PROJECT NO: 9225-06-61	HWY: STH 102	COUNTY: PRICE	CROSS SECTIONS: STH 102	SHEET 197	E

FILE NAME : F:\TR\JOBS\E2271A17\CIVIL 3D 2016 STH 102\SHEETSPLAN\92250661-090201-XS.DWG
LAYOUT NAME - 92250661-090283-xs
PLOT DATE : 6/20/2019 8:34 AM
PLOT BY : MATT TOMSOVIC
PLOT NAME :
PLOT SCALE : 1 IN:10 FT HORZ. / 1 IN:10 FT VERT.

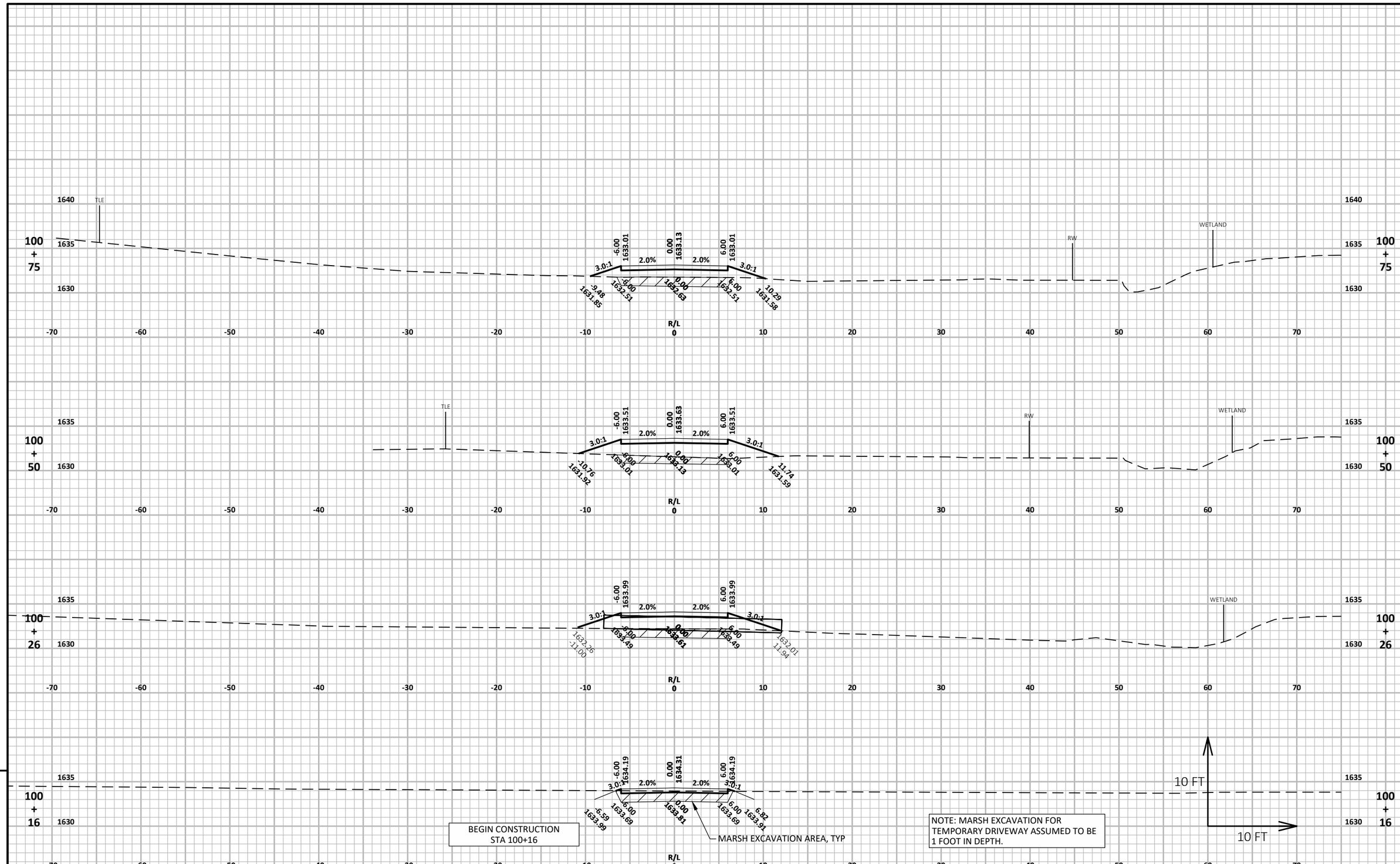

9

PROJECT NO: 9225-06-61	HWY: STH 102	COUNTY: PRICE	CROSS SECTIONS: TEMPORARY DRIVEWAY	SHEET 198	E

FILE NAME : F:\TR\JOBS\E2271A17\CIVIL 3D 2016 STH 102\SHEETSPLAN\92250661-090201-XS.DWG
LAYOUT NAME - 92250661-090284-xs
PLOT DATE : 6/24/2019 1:31 PM PLOT BY : MATT TOMSOVIC PLOT NAME : PLOT SCALE : 1 IN:10 FT HORZ. / 1 IN:10 FT VERT.

WISDOT/CADDS SHEET 49

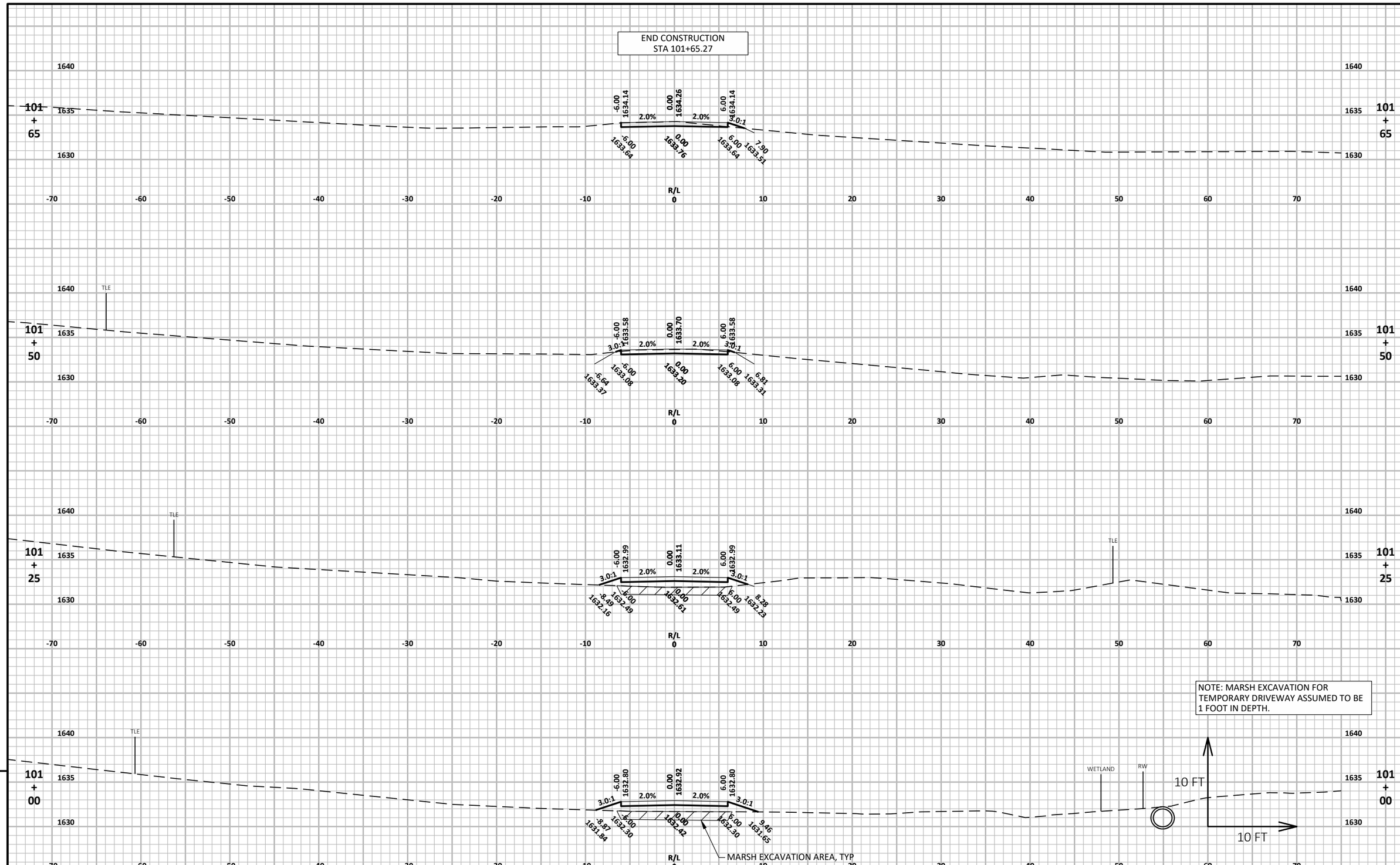

9

PROJECT NO: 9225-06-61	HWY: STH 102	COUNTY: PRICE	CROSS SECTIONS: TEMPORARY DRIVEWAY	SHEET 199	E

FILE NAME : F:\TR\JOBS\E2271A17\CIVIL 3D 2016 STH 102\SHEETSPLAN\92250661-090201-XS.DWG
LAYOUT NAME - 92250661-090285-xs
PLOT DATE : 6/24/2019 1:31 PM PLOT BY : MATT TOMSOVIC PLOT NAME : PLOT SCALE : 1 IN:10 FT HORZ. / 1 IN:10 FT VERT.

Wisconsin Department of Transportation

Dedicated people creating transportation solutions through innovation and exceptional service.

http://www.dot.wisconsin.gov