MAD APRIL 2020

PROJECT ID: 5944-01-60

MITH: - N/A

COUNTY: LAFAYETTE & GREEN

ORDER OF SHEETS

Section No.	1	Title
Section No.	2	Typical Sections and Details
Section No.	3	Estimate of Quantities
Section No.	3	Miscellaneous Quantities
~~Section No.~~	~~4~~	~~Right of Way Plat~~
~~Section No.~~	~~5~~	~~Plan and Profile~~
Section No.	6	Standard Detail Drawings
~~Section No.~~	~~7~~	~~Sign Plates~~
~~Section No.~~	~~8~~	~~Structure Plans~~
Section No.	9	Computer Earthwork Data
Section No.	9	Cross Sections

TOTAL SHEETS = 108

STATE OF WISCONSIN
DEPARTMENT OF TRANSPORTATION

PLAN OF PROPOSED IMPROVEMENT

ARGYLE - MONROE

WEST JUNCTION OLD WIS 81 TO PLEASANT VIEW

STH 81

LAFAYETTE & GREEN COUNTY

STATE PROJECT	FEDERAL PROJECT	
	PROJECT	CONTRACT
5944-01-60	WISC 2020131	1

N

DESIGN DESIGNATION

A.A.D.T.	2020	=	4,370
A.A.D.T.	2040	=	5,030
D.H.V.		=	543
D.D.		=	50/50
T.		=	12.8%
DESIGN SPEED		=	30/60 MPH
ESALS		=	1,100,000

CONVENTIONAL SYMBOLS

PLAN: CORPORATE LIMITS; PROPERTY LINE; LOT LINE; LIMITED HIGHWAY EASEMENT; EXISTING RIGHT OF WAY; PROPOSED OR NEW R/W LINE; SLOPE INTERCEPT; REFERENCE LINE (300FEET); EXISTING CULVERT; PROPOSED CULVERT (Box or Pipe); COMBUSTIBLE FLUIDS (CAUTION); MARSH AREA; WOODED OR SHRUB AREA

PROFILE: GRADE LINE; ORIGINAL GROUND; MARSH OR ROCK PROFILE (To be noted as such) (ROCK); SPECIAL DITCH (LABEL); GRADE ELEVATION (9536); CULVERT (Profile View)

UTILITIES: ELECTRIC (E); FIBER OPTIC (FO); GAS (G); SANITARY SEWER (SAN); STORM SEWER (SS); TELEPHONE (T); WATER (W); UTILITY PEDESTAL; POWER POLE; TELEPHONE POLE

STATE PROJECT NUMBER
5944-01-60

LAFAYETTE COUNTY | GREEN COUNTY

BEGIN PROJECT
STA 21+37
X=552,231.92
Y=172,631.46

STRUCTURE B-33-017
NET EXCEPTION TO ℄ LENGTH
STA 35+70 - STA 36+60

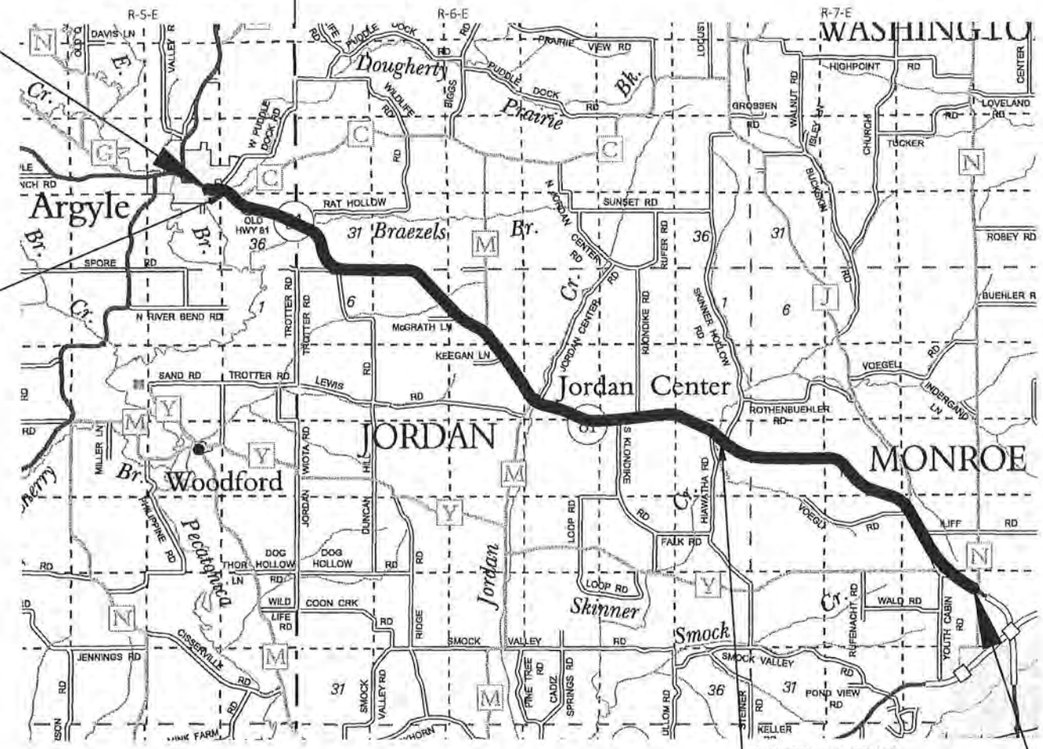

STRUCTURE B-23-043
NET EXCEPTION TO ℄ LENGTH
STA 445+10 - STA 446+82

END PROJECT
STA 673+00

LAYOUT
SCALE 0 — 2 MI

TOTAL NET LENGTH OF CENTERLINE = 12.292 MI

HORIZONTAL POSTITIONS SHOWN ON THIS PLAN ARE WISCONSIN COUNTY COORDINATES, GREEN COUNTY, NAD83 (2011), IN U.S. SURVEY FEET. VALUES ARE GRID COORDINATES, GRID BEARINGS, AND GRID DISTANCES. GRID DISTANCE MAY BE USED AS GROUND DISTANCES. ELEVATION SHOWN ON THIS PLAN ARE REFERENCE TO THE NORTH AMERICAN VERTIAL DATUM OF 1988, NAVD (2012.)

ORIGINAL PLANS PREPARED BY:

OES
An Oneida ESC Group Company

WISCONSIN
ZACHARY M. FREEMAN
E-37609
McFARLAND, WI
PROFESSIONAL ENGINEER

DATE: 7/22/2019 (Signature)

STATE OF WISCONSIN
DEPARTMENT OF TRANSPORTATION

PREPARED BY

Surveyor	OES
Designer	OES
Project Manager	MAHESH SHRESTHA
Regional Examiner	SW REGION
Regional Supervisor	WILLIAM STROBEL

APPROVED FOR THE DEPARTMENT
DATE: 7/15/2019 (Signature)

E

GENERAL NOTES:

HMA PAVEMENT WEIGHT CALCULATIONS ARE BASED ON 112 LB/SY/IN.

THE CONTRACTOR'S PAVING OPERATIONS SHALL BE CONSISTENT WITH THE PLAN TYPICAL SECTIONS AND CONSTRUCTED TO PREVENT HMA LONGITUDINAL JOINTS FROM BEING LOCATED WITHIN A DRIVING, TURNING, OR PASSING LANE.

THE RATE OF APPLICATION FOR TACK COAT IS 0.050 GAL/YD² BETWEEN LAYERS, 0.07 GAL/YD² ON MILLED SURFACE, OR AS DIRECTED BY THE ENGINEER.

PAVING LIMITS AT INTERSECTIONS ARE TO BE DETERMINED IN THE FIELD BY THE ENGINEER.

THE EXACT LOCATIONS AND LIMITS OF PRIVATE ENTRANCES AND FIELD ENTRANCES SHALL BE DETERMINED BY THE ENGINEER IN THE FIELD.

EXISTING SHOULDER AGGREGATE SHALL BE INCORPORATED INTO THE NEW SHOULDERS UNLESS OTHERWISE DIRECTED BY THE ENGINEER IN THE FIELD.

THE LOCATION OF STOP LINES SHALL BE DETERMINED IN THE FIELD BY THE ENGINEER.

FLAGGERS SHALL BE IN SIGHT OF EACH OTHER OR IN DIRECT COMMUNICATION AT ALL TIMES. THEY SHALL BE EQUIPPED WITH STOP/SLOW PADDLES FASTENED ON SUPPORT STAFFS. WHEN THE FLAGGING OPERATION IS NOT IN EFFECT, ALL SIGNS RELATING TO THIS OPERATION SHALL BE COVERED OR REMOVED AND FACILITY RESTORED TO NORMAL OPERATIONS.

EROSION CONTROL ITEMS IN THE MISCELLANEOUS QUANTITIES ARE SUGGESTED. EXACT LOCATIONS WILL BE DETERMINED BY THE ENGINEER IN THE FIELD. MAINTAIN EROSION CONTROL ITEMS UNTIL SUCH TIME AS THE ENGINEER DETERMINES THE MEASURE IS NO LONGER NECESSARY. PROTECT WETLANDS AND OTHER WATERWAYS THAT ARE PRESENT WITHIN THE PROJECT LIMITS.

DO NOT STORE EQUIPMENT OR MATERIAL IN THE CLEAR ZONE, ENVIRONMENTALLY SENSITIVE AREAS, WETLANDS OR WATERWAYS.

HAND MILLING OPERATIONS MAY BE NECESSARY TO ENSURE THAT SURFACE MONUMENTS ARE NOT DISTURBED DURING MILLING OPERATIONS. PAYMENT IS INCLUDED AS PART OF REMOVING ASPHALTIC SURFACE MILLING.

THE LOCATIONS OF EXISTING AND PROPOSED UTILITY INSTALLATIONS AS SHOWN ON THE PLANS ARE APPROXIMATE. THERE MAY BE OTHER UTILITY INSTALLATIONS WITHIN THE PROJECT AREA THAT ARE NOT SHOWN.

CONSTRUCT HMA PAVEMENT WITH THE FOLLOWING LAYERS AND GRADATIONS

TOTAL DEPTH	PAVEMENT TYPE	LAYER DEPTH
4"	4 LT 58-28 S	1.75" UPPER LAYER
	3 LT 58-28 S	2.25" LOWER LAYER

CONTROL POINTS

NORTHING	EASTING	ELEVATION	DESCRIPTION
144,294.288	623,007.242	1,091.848	MONROE GPS
139,573.385	604,450.693	1,057.812	DL6213
157,707.524	593,506.109	977.225	DH5207
175,293.369	598,973.051	1,095.089	DH5223
183,002.491	581,574.249	1,093.894	DH5222
188,986.216	561,145.914	1,042.462	DH5221
166,481.591	550,565.833	931.411	DH5211
163,020.399	570,980.156	1,024.652	DH5209
151,058.048	578,135.460	1,015.817	DH5208
147,893.536	563,675.954	1,003.382	DH5210

UTILITY CONTACTS:

LENNY KLAAS
NORTHERN NATURAL GAS CO. - GAS/PETROLEUM
5557 COUNTY HIGHWAY D
PLATTEVILLE, WI 53818
(402)530-2806
(608)778-8514 MOBILE
LEONARD.KLAAS@NNGCO.COM

CHAD OLMSTEAD
SCENIC RIVERS ENERGY COOPERATIVE - ELECTRICITY
231 N SHERIDAN ST
LANCASTER, WI 53813
(608)723-2121 EXT:561
COLMSTREAD@SREC.NET

DOUG VOSBERG
ATC MANAGEMENT, INC - ELECTRICITY TRANSMISSION
5303 FEN OAK DRIVE
MADISON, WI 53718
(608)877-7650
DVOSBERG@ATCLLC.COM

KEVIN PARRIS
WINDSTREAM KDL, LLC - COMMUNICATION LINE
1858 WRIGHT ST
MADISON, WI 53704
(608)819-5016
(608)416-3291 MOBILE
KEVIN.J.PARRIS@WINDSTREAM.COM

MICHAEL HAMMEL
TDS TELECOM - COMMUNICATION LINE
827 16TH AVENUE
MONROE, WI 53566
(608)328-5262
MICHAEL.HAMMEL@TDSTELECOM.COM

BETSI BASS
ALLIANT ENERGY - ELECTRICITY
1915 STATE ROAD 69 S
MONROE, WI 53566
(608)328-5323
(608)333-4343 MOBILE
BETSIBASS@ALLIANTENERGY.COM

BETSI BASS
ALLIANT ENERGY - GAS/PETROLEUM
1915 STATE ROAD 69 S
MONROE, WI 53566
(608)328-5323
(608)333-4343 MOBILE
BETSIBASS@ALLIANTENERGY.COM

STEVE BISHOP
CENTURYLINK - COMMUNICATION LINE
130 4TH STREET
BARABOO, WI 53913
(608)355-7501
(608)963-8594 MOBILE
STEVEN.BISHOP@CENTURYLINK.COM

BRIAN MUELLER
MID-AMERICA PIPELINE COMPANY - GAS/PETROLEUM
5354 AMERICAN LEGION ROAD
IOWA CITY, IA 52240
(319)341-4615
(319)430-6967 MOBILE
BMEULLER@EPROD.COM

WISDOT CONTACT:

MAHESH SHRESTHA
WISCONSIN DOT - PROJECT MANAGER
2101 WRIGHT ST
MADISON, WI 53704
(608) 245-2674
MAHESH.SHRESTHA@DOT.WI.GOV

JACOB ROCKWEILER
WISCONSIN DOT - WI HEIGHT MODERNIZATION
3502 KINSMAN BOULEVARD
MADISON, WI 53704
(608)516-6362
JACOB.ROCKWEILER@DOT.WI.GOV

CONSULTANT CONTACT:

ZACH FREEMAN
ONEIDA ENGINEERING SOLUTIONS - PROJECT MANAGER
5100 EASTPARK BLVD, SUITE 300
MADISON, WI 53718
(608) 243-6479
ZFREEMAN@OESLLC.COM

DNR CONTACT:

SHELLEY WARWICK
3911 FISH HATCHERY RD
FITCHBURG, WI 53711
(608) 444-2835
SHELLEY.WARWICK@WISCONSIN.GOV

STANDARD ABBREVIATIONS:

AADT	ANNUAL AVERAGE DAILY TRAFFIC
ASPH	ASPHALTIC
BM	BENCH MARK
BLDG	BUILDING
C/L	CENTERLINE
CONC	CONCRETE
CTH	COUNTY TRUNK HIGHWAY
CY	CUBIC YARD
CWT	HUNDREDWEIGHT
C&G	CURB AND GUTTER
D	DEGREE OF CURVE
DHV	DESIGN HOUR VOLUME
DIA	DIAMETER
DD	DIRECTION DISTRIBUTION
Δ	DELTA
EL	ELEVATION
ESALS	EQUIVALENT SINGLE AXLE LOADS
FT	FOOT
GRT	GRATE
INL	INLET
IP	IRON PIPE OR PIN
LT	LEFT
L	LENGTH OF CURVE
LF	LINEAR FOOT
LS	LUMP SUM
MAX.	MAXIMUM
MH	MANHOLE
MIN.	MINIMUM
N	NORTH
NC	NORMAL CROWN
NOR.	NORMAL
PC	POINT OF CURVATURE
PI	POINT OF INTERSECTION
PL	PROPERTY LINE
PT	POINT OF TANGENCY
R	RADIUS
R/L	REFERENCE LINE
R/W	RIGHT-OF-WAY
REQD	REQUIRED
RT	RIGHT
SDD	STANDARD DETAIL DRAWING
SF	SQUARE FEET
STA	STATION
STH	STATE TRUNK HIGHWAY
SY	SQUARE YARD
T	TANGENT
TLE	TEMPORARY LIMITED EASEMENT
T	TON
T	TRUCKS (PERCENT OF)
TYP	TYPICAL
VAR	VARIABLE
WV	WATER VALVE

DIGGERS HOTLINE
Dial 811 or (800)242-8511
www.DiggersHotline.com

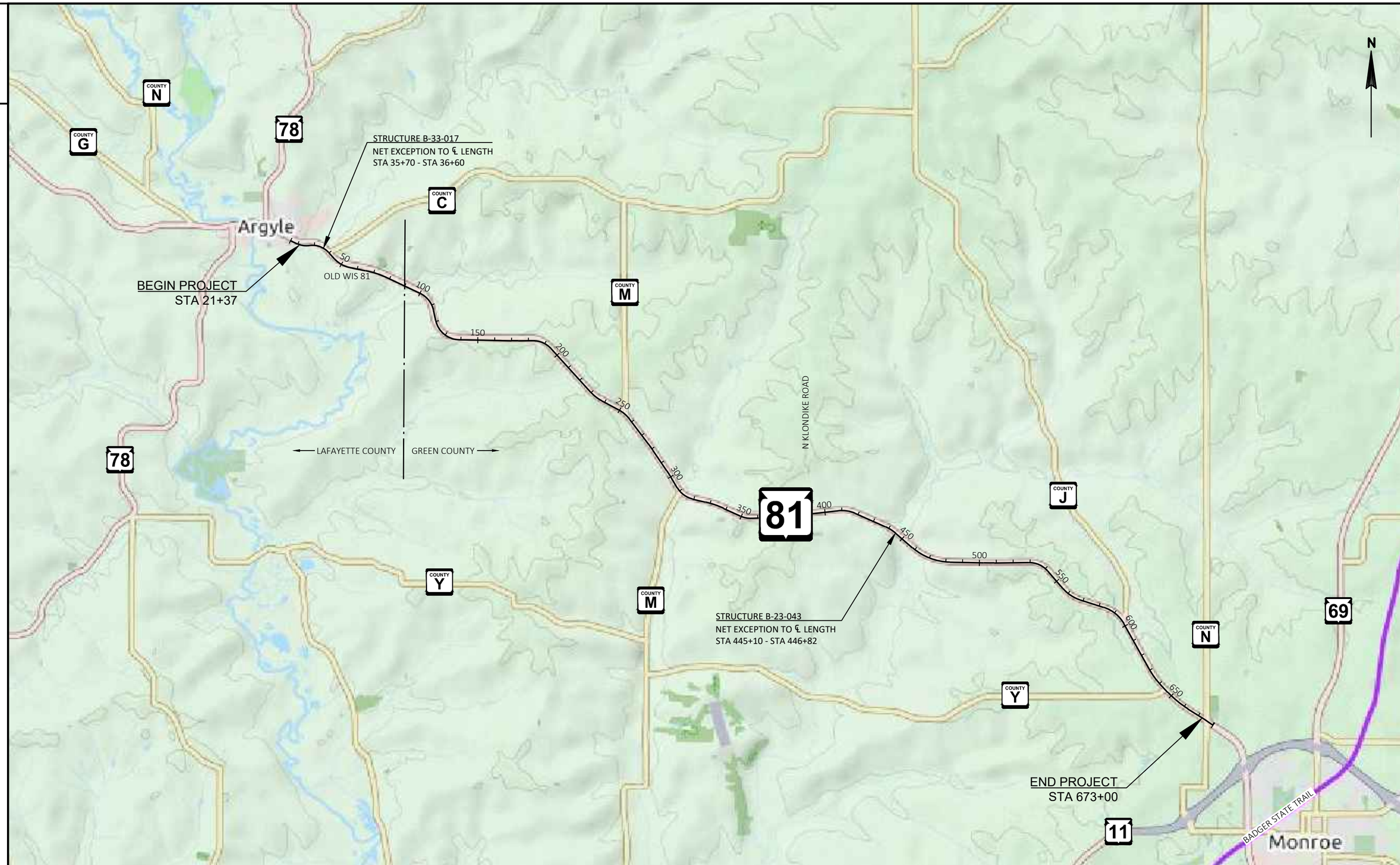

PROJECT NO: 5944-01-60	HWY: STH 81	COUNTY: LAFAYETTE & GREEN	PROJECT OVERVIEW	SHEET 3	E

FILE NAME : Q:\2018 PROJECTS\5018038 - WISDOT SWR_STH 81 DESIGN\CIVIL3D\SHEETSPLAN\020201_PO.DWG
LAYOUT NAME - 01
PLOT DATE : 6/11/2019 3:23 PM
PLOT BY : PATRICK SMITH
PLOT NAME :
PLOT SCALE : 1 IN:1 MI
WISDOT/CADDS SHEET 42

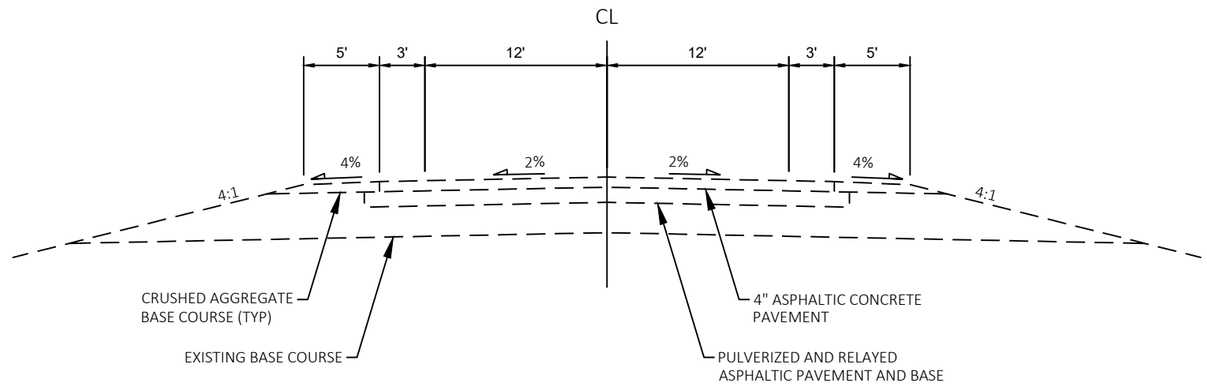

EXISTING TYPICAL SECTION STH 81

STA 21+37 TO STA 34+27
STA 39+85 TO STA 105+83
STA 116+12 TO STA 443+86
STA 448+08 TO STA 581+22
STA 601+84 TO STA 673+00

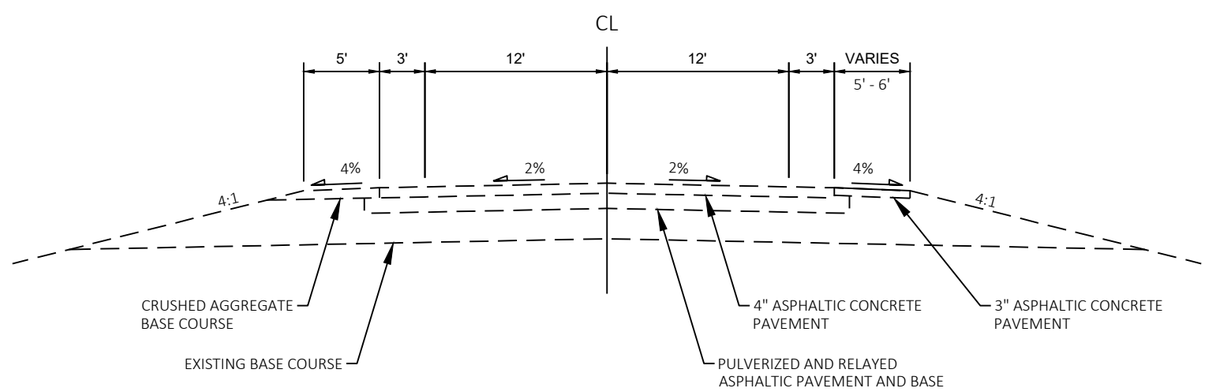

EXISTING TYPICAL SECTION STH 81

STA 105+83 TO STA 116+12
STA 581+22 TO STA 591+06
STA 594+50 TO STA 601+84

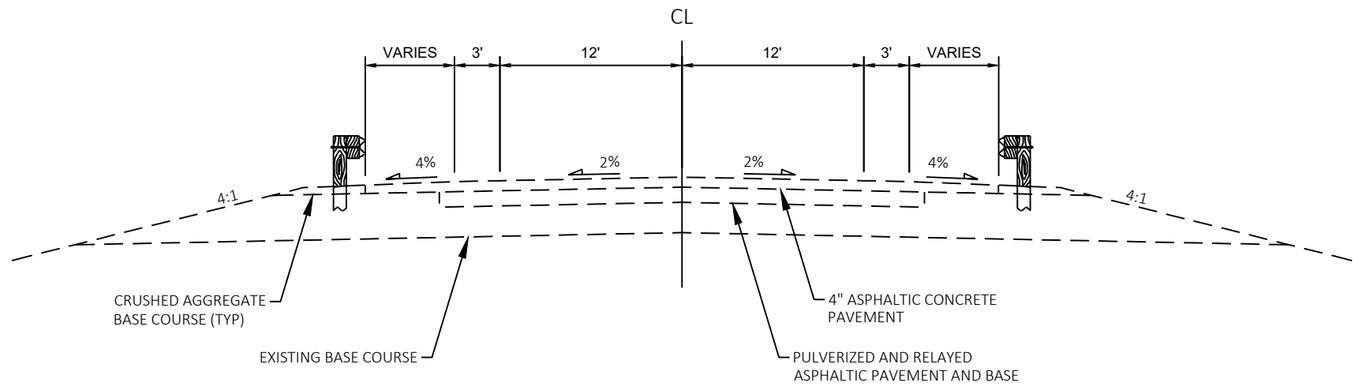

EXISTING TYPICAL SECTION STH 81 (GUARDRAIL LOCATIONS)

STA 34+27 TO STA 35+70
STA 36+60 TO STA 39+85
STA 443+86 TO STA 445+10
STA 446+82 TO STA 448+08
STA 591+06 TO STA 594+50

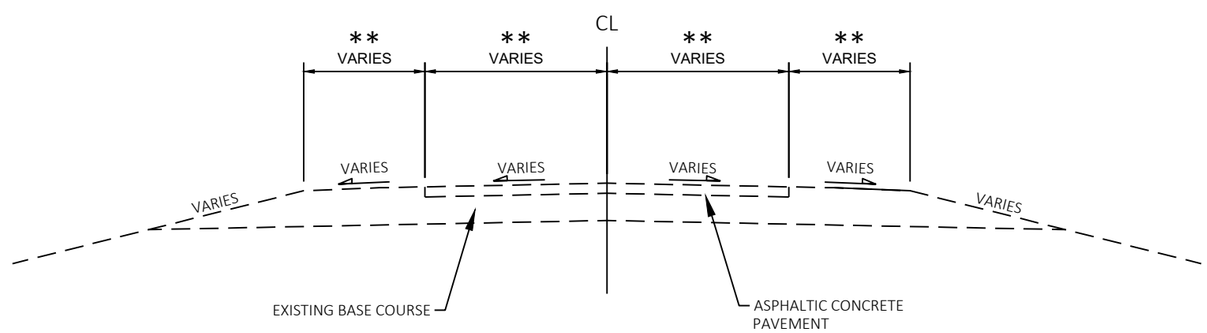

EXISTING TYPICAL SECTION SIDEROADS

SIDEROADS

** SIDEROAD DIMENSIONS

SIDEROAD	LANE	SHOULDER
PD - OLD 81, STA 23+00	11'	3'
W PUDDLE DOCK RD	11'	3'
CTH C	11'	4'
E - OLD 81, STA 49+00	11'	3'
EE - OLD 81, STA 68+00	11'	3'
RAT HOLLOW RD	11'	3'
DH - TROTTER RD	11'	3'
MC GRATH LANE	14'	0
KEEGAN LANE	11'	3'
CTH M	11'	4'
JC - JORDAN CENTER RD	11'	3'
SK - SOUTH KLONDIKE RD	11'	3'
NK - NORTH KLONDIKE RD	11'	3'
SSH - HIAWATHA RD	11'	3'
NSH - SKINNER HOLLOW RD	11'	3'
DOLAN RD	11'	3'
CTH J	11'	6'
VOEGLI RD	10'	3'
ILIFF RD	11'	3'
JOY DEL RD WEST	11'	3'
CTH Y	11'	6'
JOY DEL RD EAST	11'	3'
CTH N	11'	4'

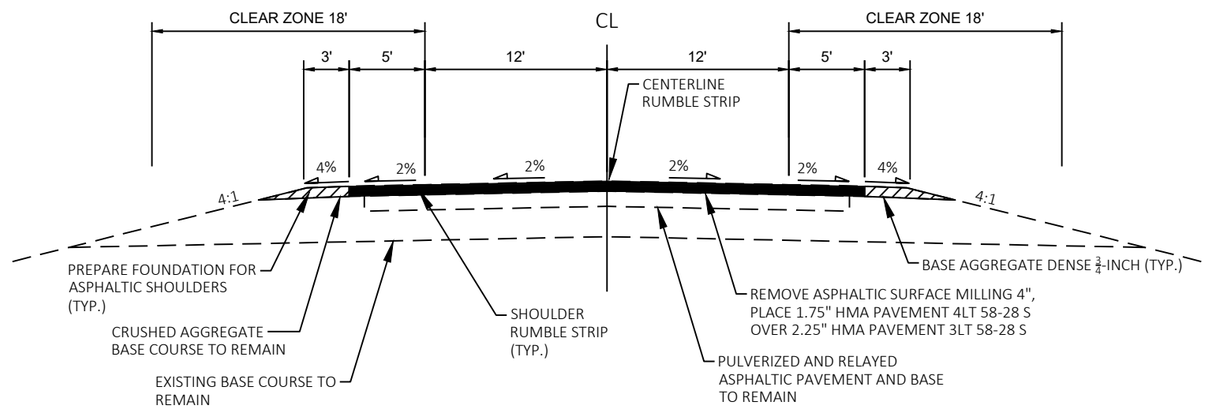

FINISHED TYPICAL SECTION STH 81

STA 21+37 TO STA 34+27
STA 39+85 TO STA 105+83
STA 116+12 TO STA 443+86
STA 448+08 TO STA 581+22
STA 601+84 TO STA 673+00

NOTE:
PAVE SHOULDERS AT SAME TIME AND
SLOPE AS MAINLINE TRAVEL LANES.

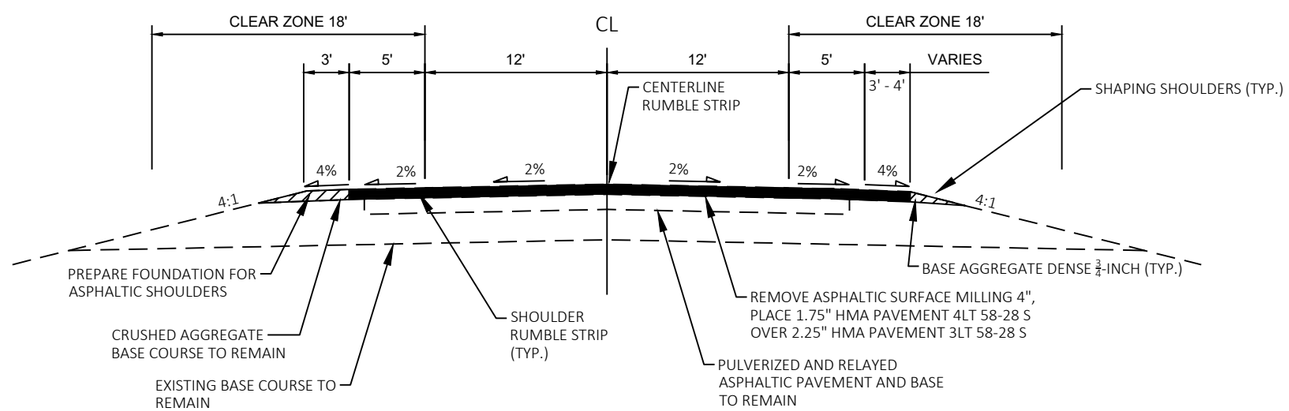

FINISHED TYPICAL SECTION STH 81

STA 105+83 TO STA 116+12
STA 581+22 TO STA 591+06
STA 594+50 TO STA 601+84

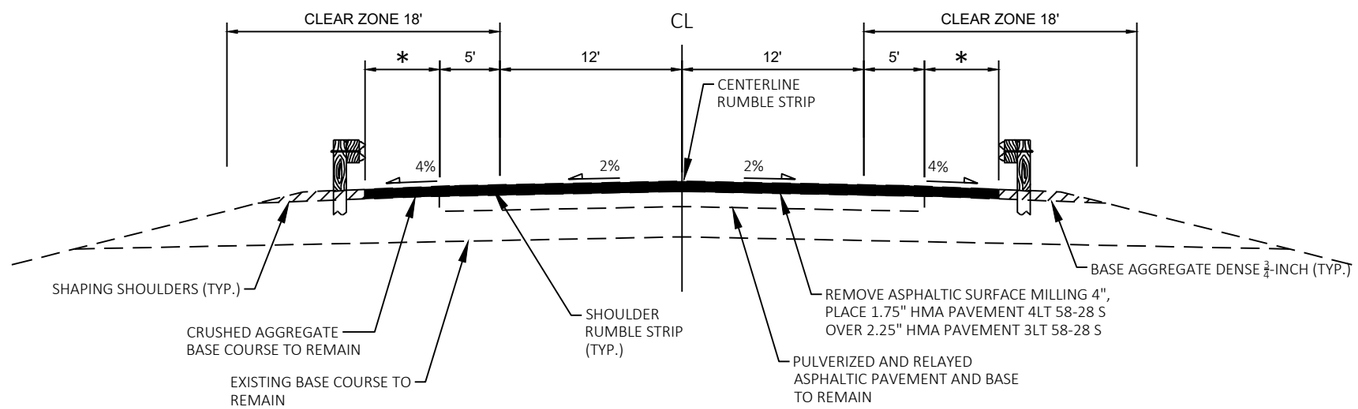

FINISHED TYPICAL SECTION STH 81
(GUARDRAIL LOCATIONS)

	* LT	* RT
STA 34+27 TO STA 35+70	6'	1'
STA 36+60 TO STA 39+85	4'	2' (TO STA 37+84)
STA 443+86 TO STA 445+10	4'	2.5'-1.5'
STA 446+82 TO STA 448+08	6'	2'
STA 591+06 TO STA 594+50	5'	-

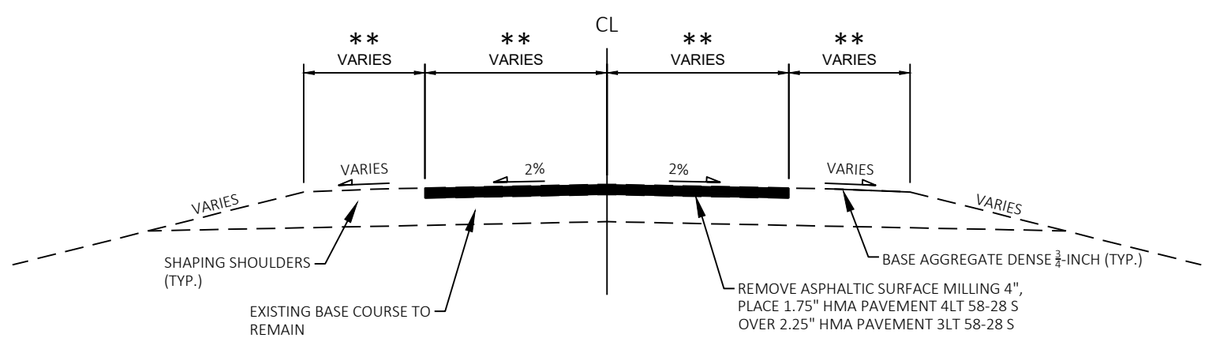

FINISHED TYPICAL SECTION SIDEROADS

SIDEROADS

** SIDEROAD DIMENSIONS

SIDEROAD	LANE	SHOULDER
PD - OLD 81, STA 23+00	11'	3'
W PUDDLE DOCK RD	11'	3'
CTH C	11'	4'
E - OLD 81, STA 49+00	11'	3'
EE - OLD 81, STA 68+00	11'	3'
RAT HOLLOW RD	11'	3'
DH - TROTTER RD	11'	3'
MC GRATH LANE	14'	0
KEEGAN LANE	11'	3'
CTH M	11'	4'
JC - JORDAN CENTER RD	11'	3'
SK - SOUTH KLONDIKE RD	11'	3'
NK - NORTH KLONDIKE RD	11'	3'
SSH - HIAWATHA RD	11'	3'
NSH - SKINNER HOLLOW RD	11'	3'
DOLAN RD	11'	3'
CTH J	11'	6'
VOEGLI RD	10'	3'
ILIFF RD	11'	3'
JOY DEL RD WEST	11'	3'
CTH Y	11'	6'
JOY DEL RD EAST	11'	3'
CTH N	11'	4'

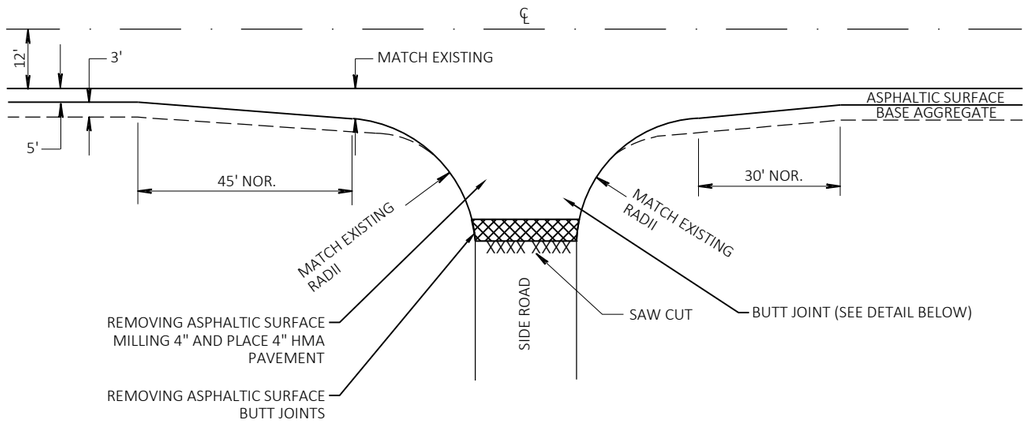

SIDE ROAD DETAIL

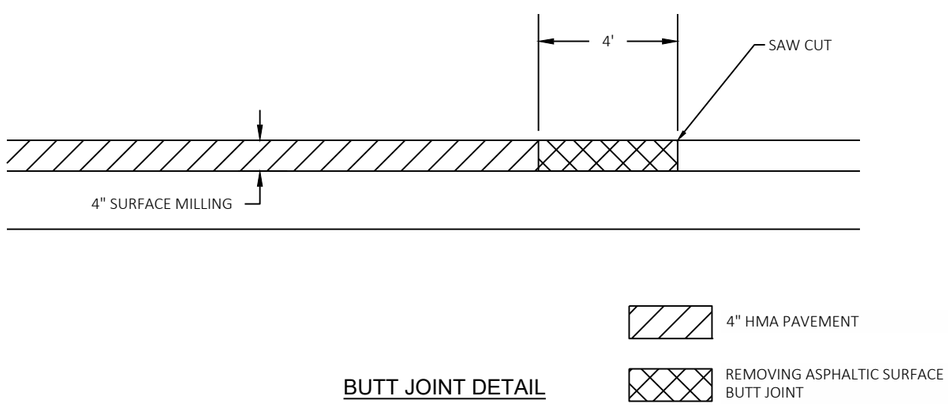

BUTT JOINT DETAIL

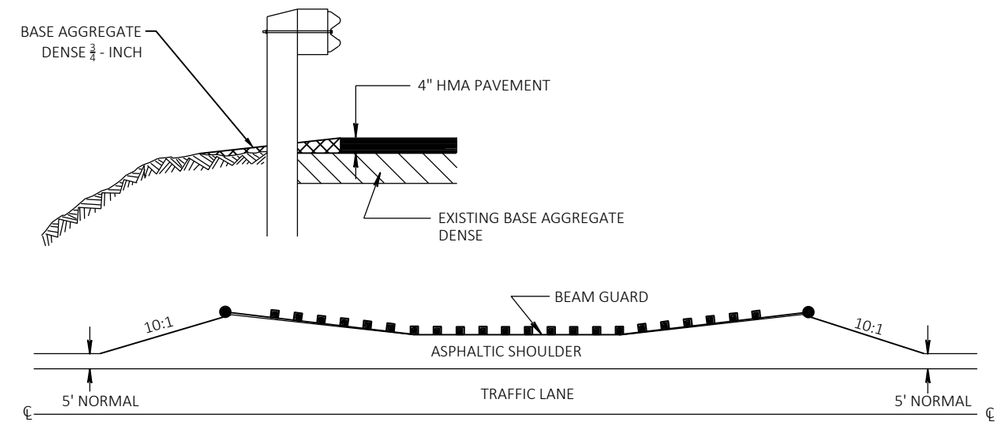

DETAIL FOR ASPHALTIC SHOULDER AT BEAM GUARD

2

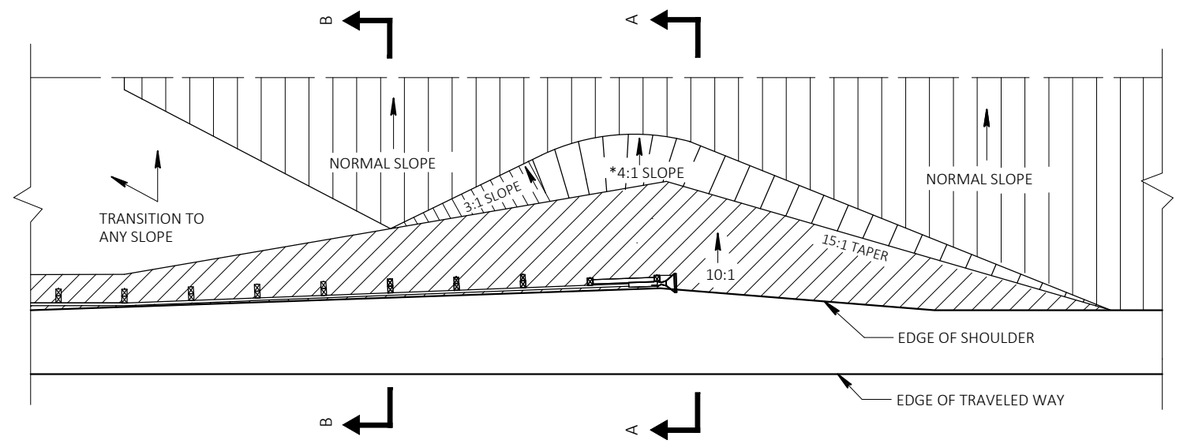

PLAN VIEW

*A 3:1 MAXIMUM SLOPE MAY BE USED FOR INSTALLATIONS ON EXISTING HIGHWAYS.

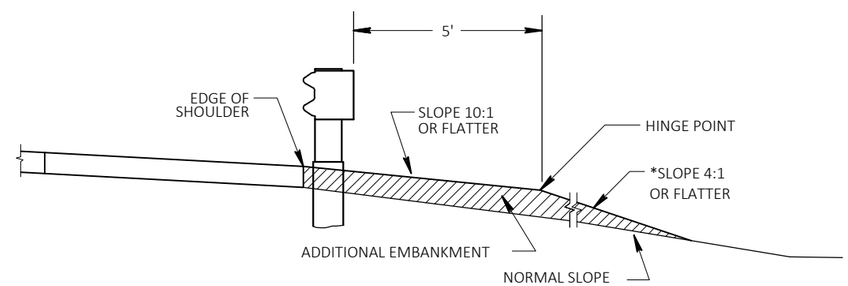

SECTION A-A

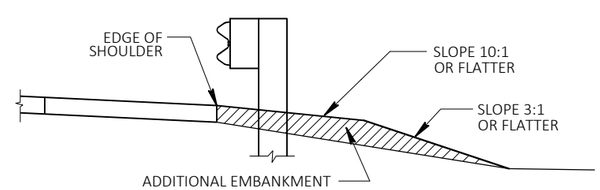

SECTION B-B

FILL AREA AT BEAM GUARD EAT

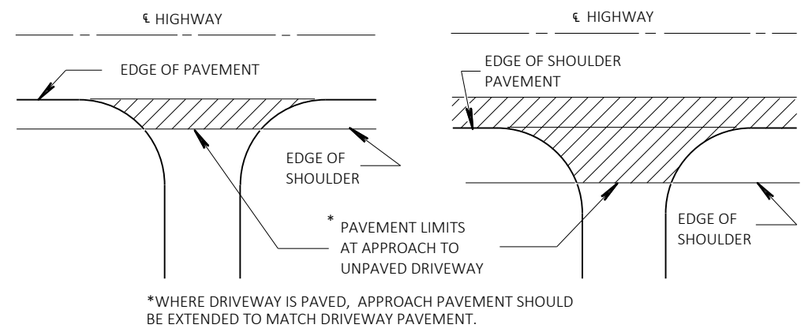

RURAL DRIVEWAY INTERSECTION DETAIL

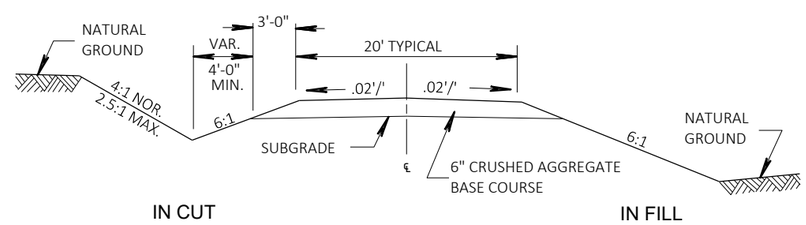

TYPICAL CROSS SECTION FOR PRIVATE DRIVE OR FIELD ENTRANCE

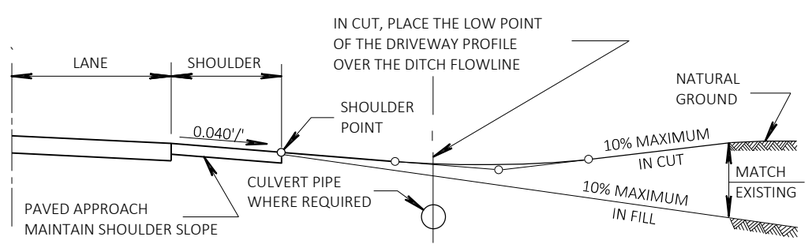

TYPICAL DRIVEWAY PROFILES

2

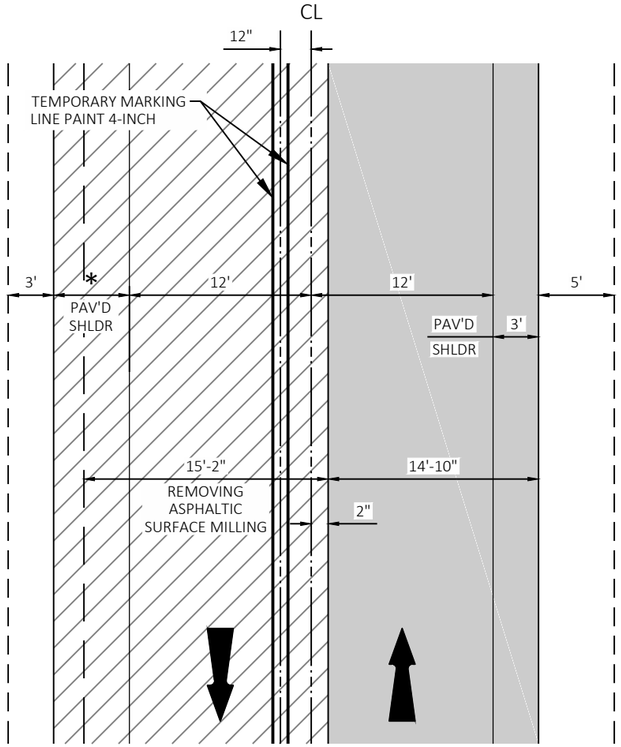

PLAN VIEW

EXISTING ASPHALTIC SURFACE TO REMAIN

FIRST PASS 2.25" HMA PAVEMENT 3LT 58-28 S

* PAVED SHOULDER WIDTH VARIES BASED ON TYPICAL SECTIONS

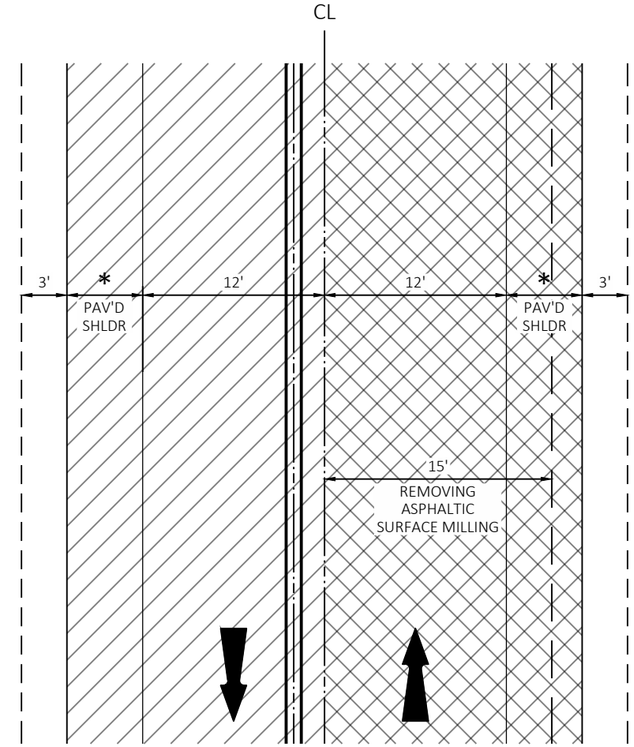

PLAN VIEW

EXISTING ASPHALTIC SURFACE TO REMAIN

FIRST PASS 2.25" HMA PAVEMENT 3LT 58-28 S

SECOND PASS 2.25" HMA PAVEMENT 3LT 58-28 S

* PAVED SHOULDER WIDTH VARIES BASED ON TYPICAL SECTIONS

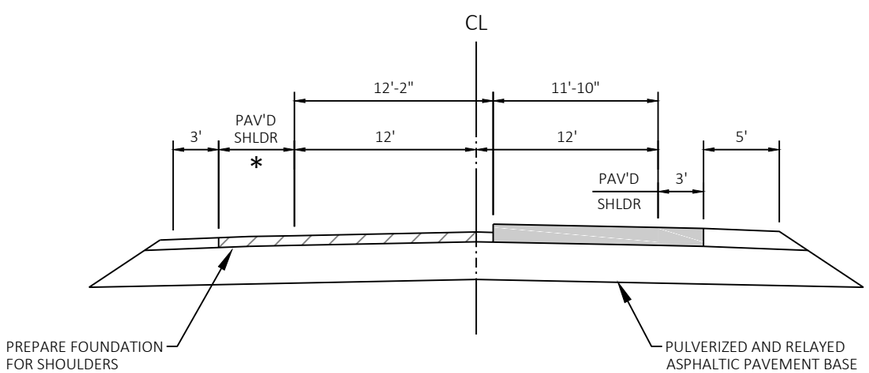

* PAVED SHOULDER WIDTH VARIES BASED ON TYPICAL SECTIONS

CROSS SECTION VIEW
FIRST PASS DETAIL

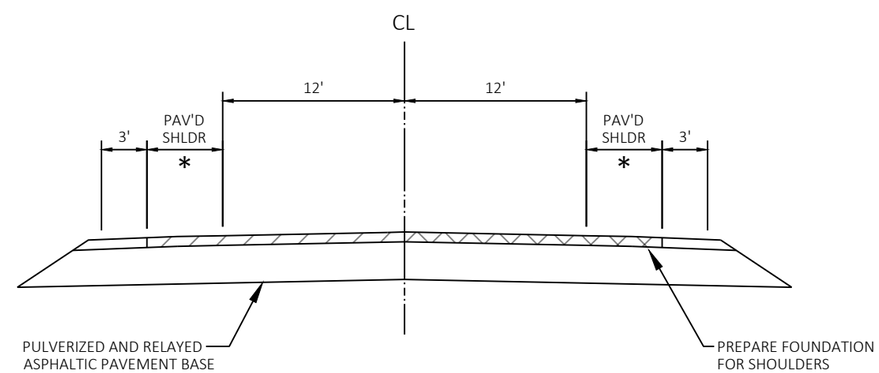

CROSS SECTION VIEW
SECOND PASS DETAIL

* PAVED SHOULDER WIDTH VARIES BASED ON TYPICAL SECTIONS

2

PROJECT NO: 5944-01-60	HWY: STH 81	COUNTY: LAFAYETTE & GREEN	CONSTRUCTION DETAILS	SHEET 11	E

2

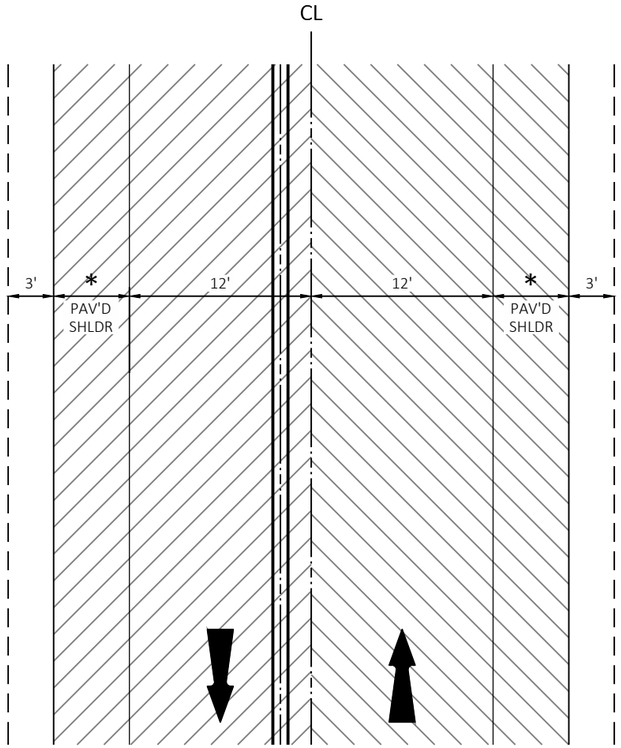

PLAN VIEW

EXISTING ASPHALTIC SURFACE TO REMAIN

FIRST PASS 2.25" HMA PAVEMENT 3LT 58-28 S

SECOND PASS 2.25" HMA PAVEMENT 3LT 58-28 S

THIRD PASS 1.75" HMA PAVEMENT 4LT 58-28 S

* PAVED SHOULDER WIDTH VARIES BASED ON TYPICAL SECTIONS

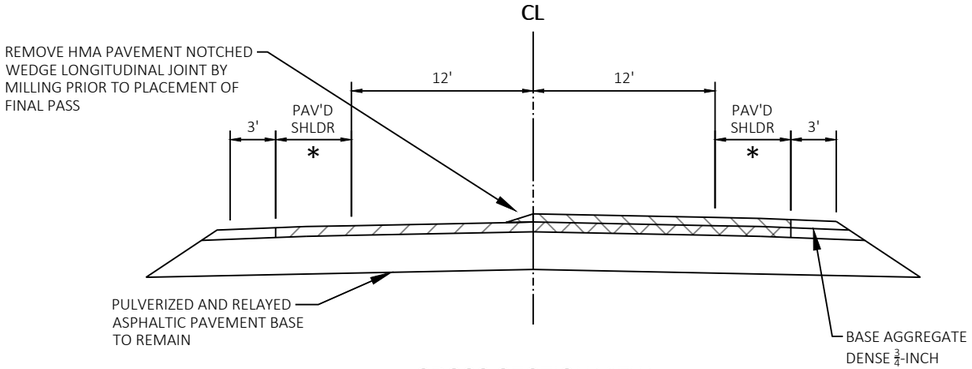

* PAVED SHOULDER WIDTH VARIES BASED ON TYPICAL SECTIONS

CROSS SECTION VIEW
THIRD PASS DETAIL

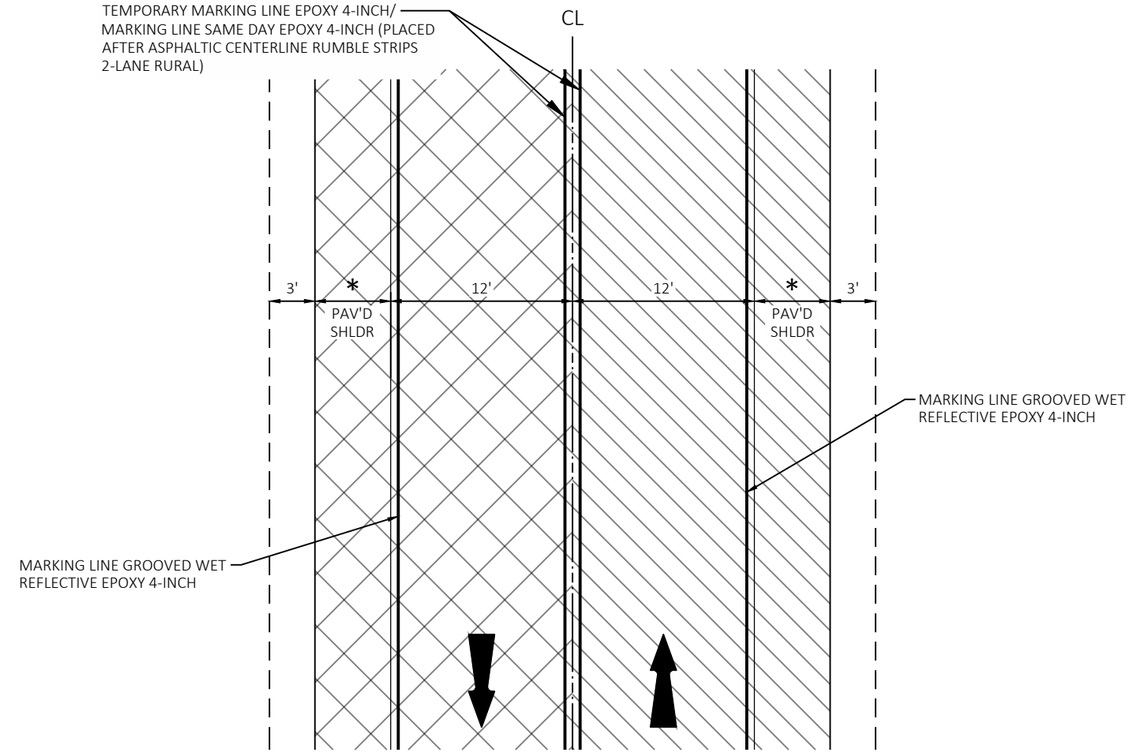

PLAN VIEW

EXISTING ASPHALTIC SURFACE TO REMAIN

FIRST PASS 2.25" HMA PAVEMENT 3LT 58-28 S

SECOND PASS 2.25" HMA PAVEMENT 3LT 58-28 S

THIRD PASS 1.75" HMA PAVEMENT 4LT 58-28 S

FOURTH PASS 1.75" HMA PAVEMENT 4LT 58-28 S

* PAVED SHOULDER WIDTH VARIES BASED ON TYPICAL SECTIONS

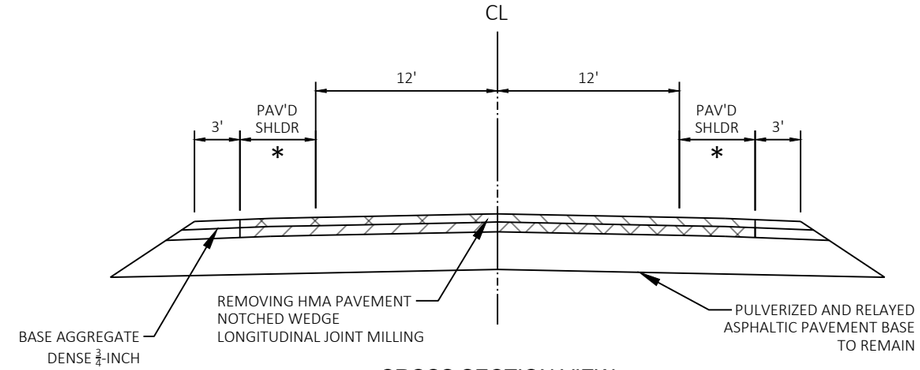

CROSS SECTION VIEW
FOURTH PASS DETAIL

* PAVED SHOULDER WIDTH VARIES BASED ON TYPICAL SECTIONS

2

PROJECT NO: 5944-01-60	HWY: STH 81	COUNTY: LAFAYETTE & GREEN	CONSTRUCTION DETAILS	SHEET 12	E

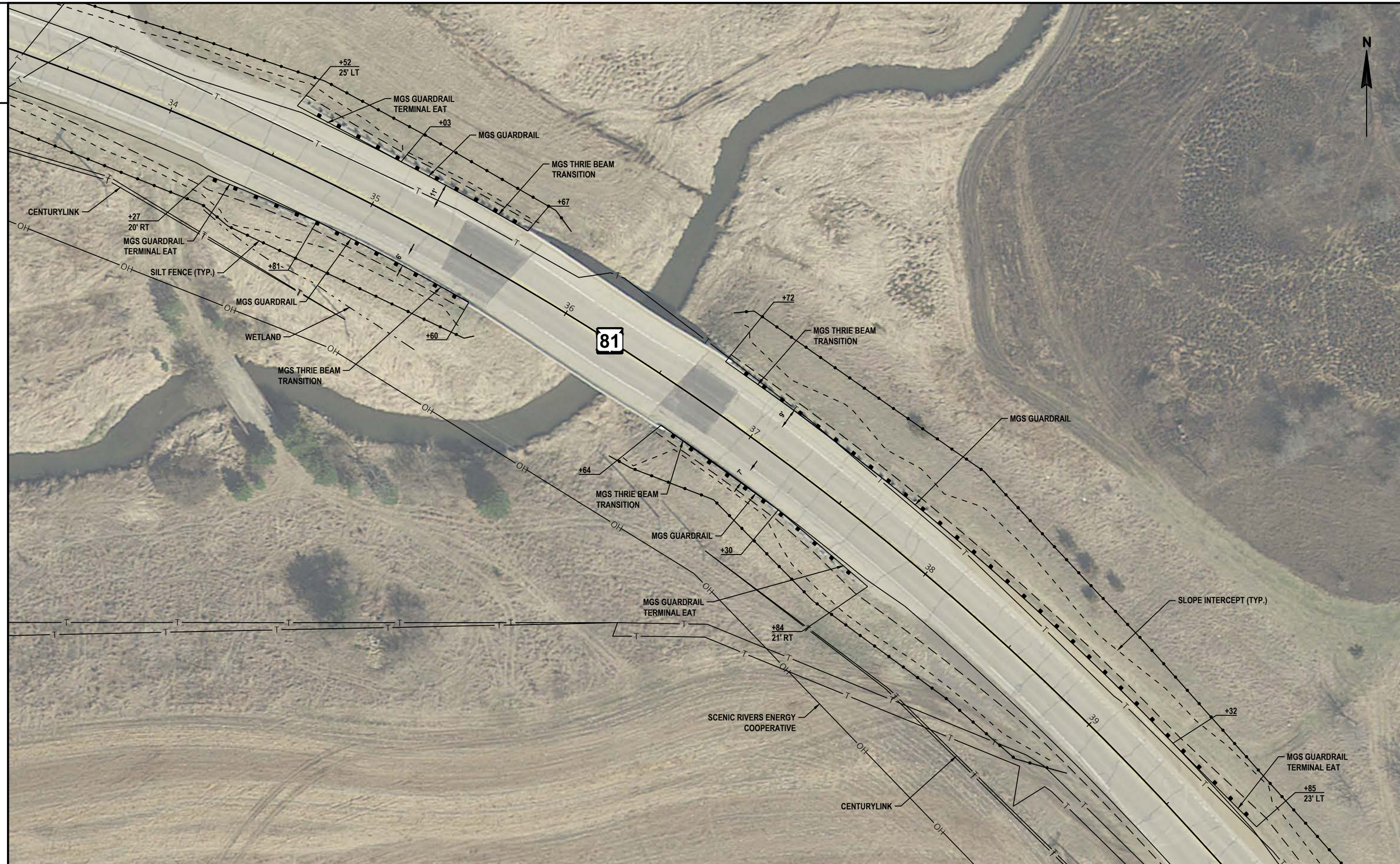

PROJECT NO: 5944-01-60	HWY: STH 81	COUNTY: LAFAYETTE & GREEN	CONSTRUCTION DETAILS: BEAM GUARD INSTALLATION	SHEET 13	E

FILE NAME : Q:\2018 PROJECTS\5018038 - WISDOT SWR_STH 81 DESIGN\CIVIL3D\SHEETSPLAN\021002_CD.DWG
LAYOUT NAME - 01
PLOT DATE : 6/13/2019 3:07 PM
PLOT BY : PATRICK SMITH
PLOT NAME :
PLOT SCALE : 1 IN:40 FT

WISDOT/CADDS SHEET 42

PROJECT NO: 5944-01-60	HWY: STH 81	COUNTY: LAFAYETTE & GREEN	CONSTRUCTION DETAILS: BEAM GUARD INSTALLATION	SHEET 14	E

FILE NAME : Q:\2018 PROJECTS\5018038 - WISDOT SWR_STH 81 DESIGN\CIVIL3D\SHEETSPLAN\021002_CD.DWG
LAYOUT NAME - 02
PLOT DATE : 6/13/2019 3:08 PM
PLOT BY : PATRICK SMITH
PLOT NAME :
PLOT SCALE : 1 IN:40 FT

PROJECT NO: 5944-01-60	HWY: STH 81	COUNTY: LAFAYETTE & GREEN	CONSTRUCTION DETAILS: BEAM GUARD INSTALLATION	SHEET 15	E

FILE NAME : Q:\2018 PROJECTS\5018038 - WISDOT SWR_STH 81 DESIGN\CIVIL3D\SHEETSPLAN\021002_CD.DWG
LAYOUT NAME - 03
PLOT DATE : 6/13/2019 3:08 PM
PLOT BY : PATRICK SMITH
PLOT NAME :
PLOT SCALE : 1 IN:40 FT
WISDOT/CADDS SHEET 42

2

2

PROJECT NO: 5944-01-60	HWY: STH 81	COUNTY: LAFAYETTE & GREEN	CONSTRUCTION DETAILS: BEAM GUARD INSTALLATION	SHEET 16	E

FILE NAME : Q:\2018 PROJECTS\5018038 - WISDOT SWR_STH 81 DESIGN\CIVIL3D\SHEETSPLAN\021002_CD.DWG
LAYOUT NAME - 04
PLOT DATE : 6/13/2019 3:14 PM
PLOT BY : PATRICK SMITH
PLOT NAME :
PLOT SCALE : 1 IN:40 FT

2

PI STA = 22+94.89
Y = 172550.866
X = 552368.970
DELTA = 31°46'00"
D = 4°58'56"
T = 327.22'
L = 637.60'
R = 1150.00'
PC STA = 19+67.67
Y = 172694.158
X = 552074.789
PT STA = 26+05.27
Y = 172583.915
X = 552694.521
BK = S64°01'47.9"E
AH = N84°12'12.4"E

SUPERELEVATION TABLE

STATION	LT SLOPE	RT SLOPE	REMARKS
18+07.67	-2.0%	-2.0%	NORMAL CROWN
18+61.00	-2.0%	0.0%	ZERO SUPER
19+14.33	-2.0%	+2.0%	REVERSE CROWN
20+21.00	-6.0%	+6.0%	FULL SUPER
25+51.94	-6.0%	+6.0%	FULL SUPER

PI STA = 34+07.68
Y = 172664.956
X = 553492.832
DELTA = 53°28'05"
D = 4°24'27"
T = 654.80'
L = 1213.15'
R = 1300.00'
PC STA = 27+52.88
Y = 172598.823
X = 552841.381
PT STA = 39+66.03
Y = 172180.865
X = 553933.762
BK = N84°12'12.4"E
AH = S42°19'42.7"E

SUPERELEVATION TABLE

STATION	LT SLOPE	RT SLOPE	REMARKS
28+06.21	+6.0%	-6.0%	FULL SUPER
39+12.71	+6.0%	-6.0%	FULL SUPER
40+19.37	+2.0%	-2.0%	REVERSE CROWN
40+72.71	0.0%	-2.0%	ZERO SUPER
41+26.04	-2.0%	-2.0%	NORMAL CROWN

2

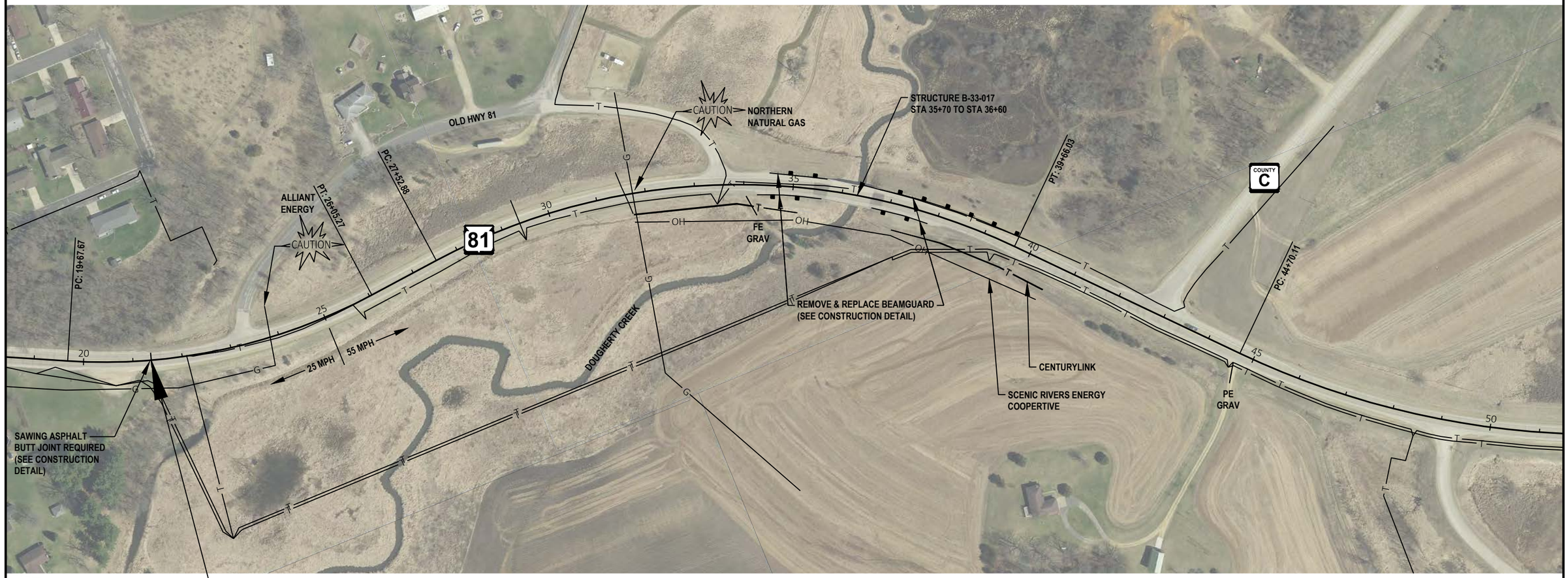

BEGIN PROJECT
STA 21+37
X= 552,231.92
Y=172,631.46

SUPERELEVATION TABLE

STATION	LT SLOPE	RT SLOPE	REMARKS
43+13.32	-2.0%	-2.0%	NORMAL CROWN
43+66.77	-2.0%	0.0%	ZERO SUPER
44+20.21	-2.0%	+2.0%	REVERSE CROWN
45+21.77	-5.8%	+5.8%	FULL SUPER
55+02.30	-5.8%	+5.8%	FULL SUPER
56+03.85	-2.0%	+2.0%	REVERSE CROWN
56+57.30	-2.0%	0.0%	ZERO SUPER
57+10.75	-2.0%	-2.0%	NORMAL CROWN

PI STA = 50+31.17
Y = 171393.415
X = 554651.003
DELTA = 36°31'47"
D = 3°22'13"
T = 561.06'
L = 1083.86'
R = 1700.00'
PC STA = 44+70.11
Y = 171808.207
X = 554273.193
PT STA = 55+53.96
Y = 171284.996
X = 555201.493
BK = S42°19'42.7"E
AH = S78°51'29.6"E

SUPERELEVATION TABLE

STATION	LT SLOPE	RT SLOPE	REMARKS
63+96.17	-2.0%	-2.0%	NORMAL CROWN
64+49.27	0.0%	-2.0%	ZERO SUPER
65+02.37	+2.0%	-2.0%	REVERSE CROWN
65+26.27	+2.9%	-2.9%	FULL SUPER
78+16.09	+2.9%	-2.9%	FULL SUPER
78+39.99	+2.0%	-2.0%	REVERSE CROWN
78+93.09	0.0%	-2.0%	ZERO SUPER
79+46.20	-2.0%	-2.0%	NORMAL CROWN

PI STA = 71+74.65
Y = 170971.818
X = 556791.634
DELTA = 14°13'48"
D = 1°03'40"
T = 674.05'
L = 1341.15'
R = 5400.00'
PC STA = 65+00.61
Y = 171102.069
X = 556130.293
PT STA = 78+41.76
Y = 170682.996
X = 557400.664
BK = S78°51'29.6"E
AH = S64°37'41.3"E

N

SUPERELEVATION TABLE

STATION	LT SLOPE	RT SLOPE	REMARKS
89+43.36	-2.0%	-2.0%	NORMAL CROWN
98+96.70	0.0%	-2.0%	ZERO SUPER
99+50.03	+2.0%	-2.0%	REVERSE CROWN
100+56.70	+6.0%	-6.0%	FULL SUPER
112+69.90	+6.0%	-6.0%	FULL SUPER
113+76.56	+2.0%	-2.0%	REVERSE CROWN
114+29.90	0.0%	-2.0%	ZERO SUPER
114+83.23	-2.0%	-2.0%	NORMAL CROWN

PI STA = 107+12.98
Y = 169452.700
X = 559994.947
DELTA = 52°09'12"
D = 3°57'05"
T = 709.62'
L = 1319.86'
R = 1450.00'
PC STA = 100+03.37
Y = 169756.765
X = 559353.777
PT STA = 113+23.23
Y = 168759.839
X = 560148.231
BK = S64°37'41.3"E
AH = S12°28'29.4"E

2

SUPERELEVATION TABLE

STATION	LT SLOPE	RT SLOPE	REMARKS
117+98.09	-2.0%	-2.0%	NORMAL CROWN
118+51.42	-2.0%	0.0%	ZERO SUPER
119+04.76	-2.0%	+2.0%	REVERSE CROWN
120+11.42	-6.0%	+6.0%	FULL SUPER
138+39.07	-6.0%	+6.0%	FULL SUPER
139+45.74	-2.0%	+2.0%	REVERSE CROWN
139+99.07	-2.0%	0.0%	ZERO SUPER
140+52.40	-2.0%	-2.0%	NORMAL CROWN

PI STA = 130+99.80
Y = 167025.206
X = 560531.991
DELTA = 76°25'58"
D = 3°57'05"
T = 1141.71'
L = 1934.30'
R = 1450.00'
PC STA = 119+58.09
Y = 168139.959
X = 560285.370
PT STA = 138+92.40
Y = 167003.438
X = 561673.491
BK = S12°28'29.4"E
AH = S88°54'27.1"E

PROJECT NO: 5944-01-60	HWY: STH 81	COUNTY: LAFAYETTE & GREEN	PLAN DETAILS	SHEET 20	E

2

2

N

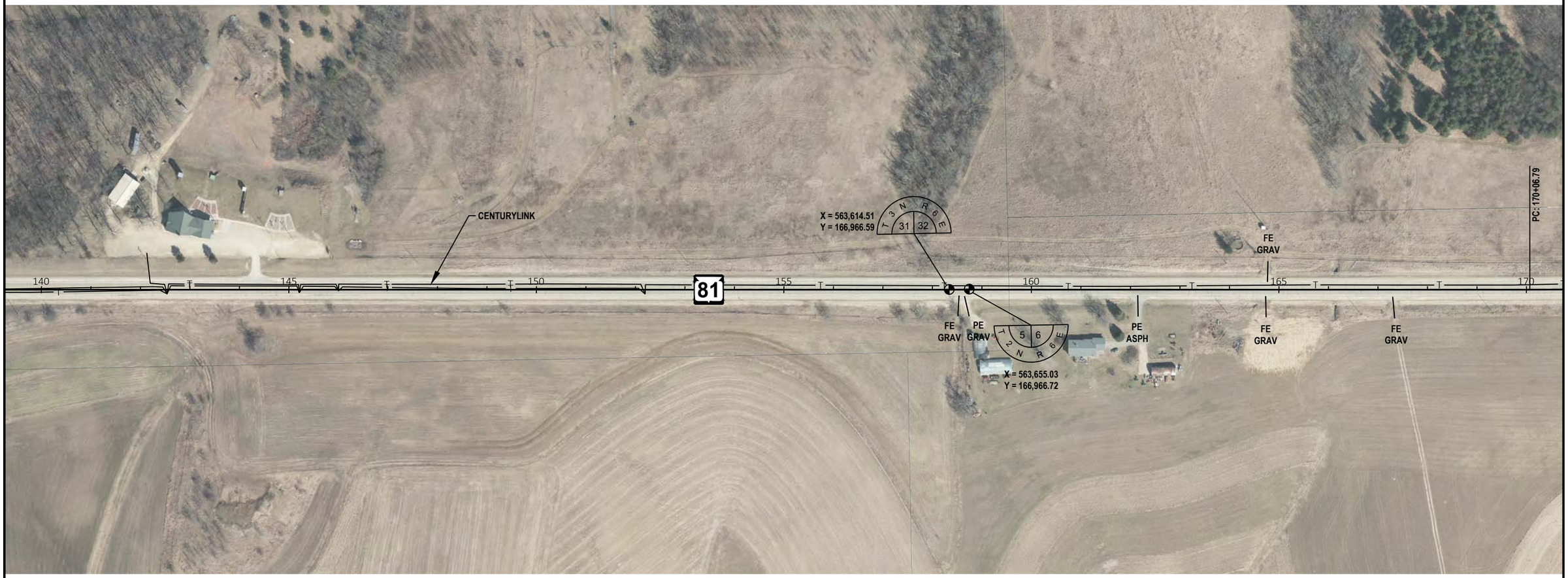

PROJECT NO: 5944-01-60	HWY: STH 81	COUNTY: LAFAYETTE & GREEN	PLAN DETAILS	SHEET 21	E

FILE NAME : Q:\2018 PROJECTS\5018038 - WISDOT SWR_STH 81 DESIGN\CIVIL3D\SHEETSPLAN\021201_PD.DWG
LAYOUT NAME - 05
PLOT DATE : 6/12/2019 10:40 AM
PLOT BY : PATRICK SMITH
PLOT NAME :
PLOT SCALE : 1 IN:200 FT

WISDOT/CADDS SHEET 42

2

PI STA = 172+04.11
Y = 166940.296
X = 564984.602
DELTA = 1°36'54"
D = 0°24'33"
T = 197.32'
L = 394.61'
R = 14000.00'
PC STA = 170+06.79
Y = 166944.058
X = 564787.319
PT STA = 174+01.40
Y = 166942.095
X = 565181.913
BK = S88°54'27.1"E
AH = N89°28'39.0"E

PI STA = 189+11.72
Y = 166955.868
X = 566692.171
DELTA = 48°12'34"
D = 3°57'05"
T = 648.76'
L = 1220.05'
R = 1450.00'
PC STA = 182+62.97
Y = 166949.952
X = 566043.439
PT STA = 194+83.01
Y = 166476.125
X = 567128.904
BK = N89°28'39.0"E
AH = S42°18'47.0"E

SUPERELEVATION TABLE

STATION	LT SLOPE	RT SLOPE	REMARKS
181+02.96	-2.0%	-2.0%	NORMAL CROWN
181+56.29	0.0%	-2.0%	ZERO SUPER
182+09.63	+2.0%	-2.0%	REVERSE CROWN
183+16.29	+6.0%	-6.0%	FULL SUPER
194+29.69	+6.0%	-6.0%	FULL SUPER
195+36.35	+2.0%	-2.0%	REVERSE CROWN
195+89.69	0.0%	-2.0%	ZERO SUPER
196+43.02	-2.0%	-2.0%	NORMAL CROWN

N

ENVIRONMENTALLY SENSITIVE AREA

2

PROJECT NO: 5944-01-60	HWY: STH 81	COUNTY: LAFAYETTE & GREEN	PLAN DETAILS	SHEET 22	E

2

PROJECT NO: 5944-01-60	HWY: STH 81	COUNTY: LAFAYETTE & GREEN	PLAN DETAILS	SHEET 23	E

FILE NAME : Q:\2018 PROJECTS\5018038 - WISDOT SWR_STH 81 DESIGN\CIVIL3D\SHEETSPLAN\021201_PD.DWG
LAYOUT NAME - 07
PLOT DATE : 6/12/2019 10:40 AM
PLOT BY : PATRICK SMITH
PLOT NAME :
PLOT SCALE : 1 IN:200 FT
WISDOT/CADDS SHEET 42

NOTE:
CONTRACTOR TO PROTECT JORDAN CENTER DH5209 GPS AND KEEP CONSTRUCTION EQUIPMENT AT LEAST 10 FEET AWAY FROM JORDAN CENTER DH5209 GPS.
ENSURE THAT JORDAN CENTER DH5209 GPS IS/ARE NOT DISTURBED, BUMPED OR MOVED DURING THE DURATION OF THE PROJECT. NOTIFY JACOB ROCKWEILER IMMEDIATELY IF JORDAN CENTER DH5209 GPS IS/ARE DISTURBED, BUMPED OR MOVED DURING CONSTRUCTION OPERATIONS.

PI STA = 253+75.34
Y = 162645.652
X = 571515.540
DELTA = 24°42'03"
D = 2°47'42"
T = 448.86'
L = 883.78'
R = 2050.00'
PC STA = 249+26.47
Y = 162857.270
X = 571119.690
PT STA = 258+10.25
Y = 162287.977
X = 571786.739
BK = S61°52'16.9"E
AH = S37°10'13.4"E

SUPERELEVATION TABLE

STATION	LT SLOPE	RT SLOPE	REMARKS
247+77.13	-2.0%	-2.0%	NORMAL CROWN
248+30.47	0.0%	-2.0%	ZERO SUPER
248+83.80	+2.0%	-2.0%	REVERSE CROWN
249+74.47	+5.4%	-5.4%	FULL SUPER
257+62.26	+5.4%	-5.4%	FULL SUPER
258+52.93	+2.0%	-2.0%	REVERSE CROWN
259+06.26	0.0%	-2.0%	ZERO SUPER
259+59.59	-2.0%	-2.0%	NORMAL CROWN

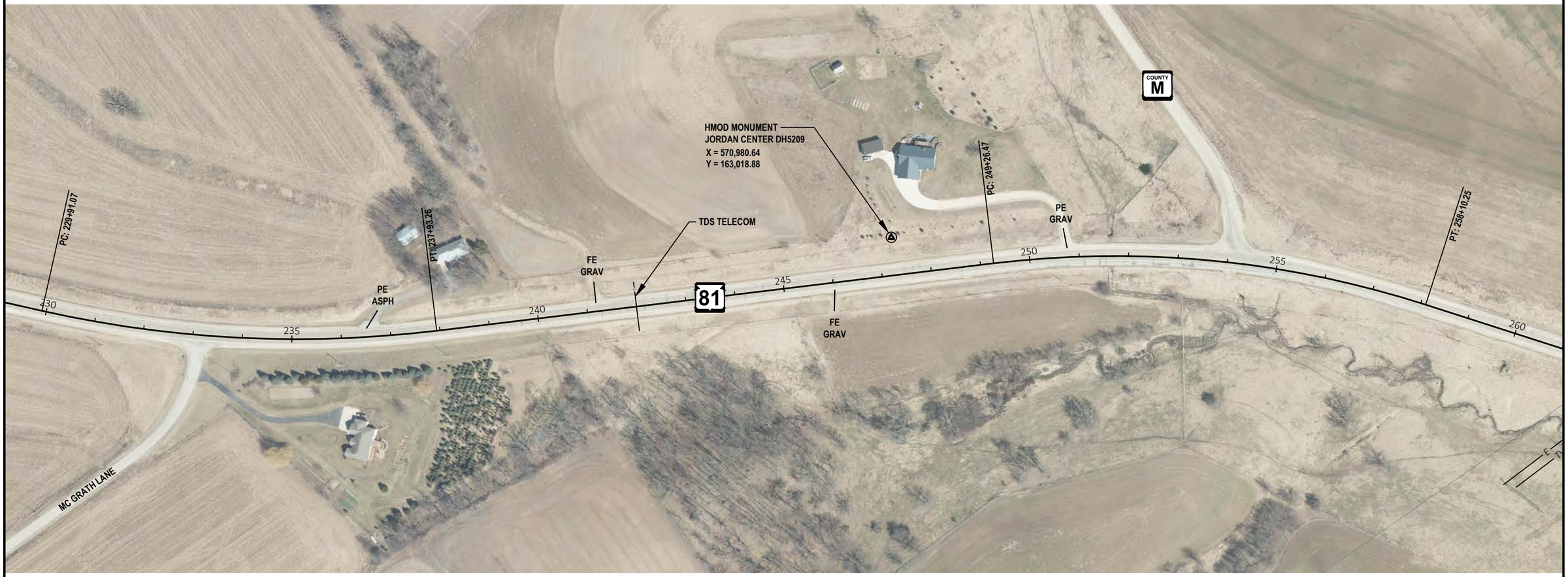

SUPERELEVATION TABLE

STATION	LT SLOPE	RT SLOPE	REMARKS
228+49.20	-2.0%	-2.0%	NORMAL CROWN
229+02.40	-2.0%	0.0%	ZERO SUPER
229+55.60	-2.0%	+2.0%	REVERSE CROWN
230+35.40	-5.0%	+5.0%	FULL SUPER
237+48.93	-5.0%	+5.0%	FULL SUPER
238+28.73	-2.0%	+2.0%	REVERSE CROWN
238+81.93	-2.0%	0.0%	ZERO SUPER
239+35.13	-2.0%	-2.0%	NORMAL CROWN

PI STA = 233+96.11
Y = 163582.481
X = 569763.124
DELTA = 19°33'30"
D = 2°26'17"
T = 405.03'
L = 802.19'
R = 2350.00'
PC STA = 229+91.07
Y = 163881.995
X = 569490.462
PT STA = 237+93.26
Y = 163391.526
X = 570120.320
BK = S42°18'47.0"E
AH = S61°52'16.9"E

PI STA = 278+76.25
Y = 160641.703
X = 573034.989
DELTA = 3°00'58"
D = 0°38'12"
T = 236.94'
L = 473.77'
R = 9000.00'
PC STA = 276+39.31
Y = 160830.508
X = 572891.832
PT STA = 281+13.09
Y = 160445.626
X = 573168.014
BK = S37°10'13.4"E
AH = S34°09'15.3"E

SUPERELEVATION TABLE

STATION	LT SLOPE	RT SLOPE	REMARKS
275+50.98	-2.0%	-2.0%	NORMAL CROWN
276+03.98	0.0%	-2.0%	ZERO SUPER
276+56.98	+2.0%	-2.0%	FULL SUPER
280+95.42	+2.0%	-2.0%	FULL SUPER
281+48.42	0.0%	-2.0%	ZERO SUPER
282+01.42	-2.0%	-2.0%	NORMAL CROWN

2

SUPERELEVATION TABLE

STATION	LT SLOPE	RT SLOPE	REMARKS
294+81.68	-2.0%	-2.0%	NORMAL CROWN
295+34.68	-2.0%	0.0%	ZERO SUPER
295+87.68	-2.0%	+2.0%	FULL SUPER
300+79.03	-2.0%	+2.0%	FULL SUPER
301+32.03	-2.0%	0.0%	ZERO SUPER
301+85.03	-2.0%	-2.0%	NORMAL CROWN

PI STA = 298+33.43
Y = 159021.991
X = 574133.855
DELTA = 3°21'11"
D = 0°38'12"
T = 263.42'
L = 526.68'
R = 9000.00'
PC STA = 295+70.01
Y = 159239.976
X = 573985.967
PT STA = 300+96.70
Y = 158795.730
X = 574268.740
BK = S34°09'15.3"E
AH = S30°48'04.7"E

SUPERELEVATION TABLE

STATION	LT SLOPE	RT SLOPE	REMARKS
306+08.26	-2.0%	-2.0%	NORMAL CROWN
306+61.60	-2.0%	0.0%	ZERO SUPER
307+14.93	-2.0%	+2.0%	REVERSE CROWN
308+21.60	-6.0%	+6.0%	FULL SUPER
318+77.51	-6.0%	+6.0%	FULL SUPER
319+84.17	-2.0%	+2.0%	REVERSE CROWN
320+37.51	-2.0%	0.0%	ZERO SUPER
320+90.84	-2.0%	-2.0%	NORMAL CROWN

PI STA = 313+82.83
Y = 157691.006
X = 574927.322
DELTA = 45°56'17"
D = 3°57'05"
T = 614.56'
L = 1162.57'
R = 1450.00'
PC STA = 307+68.27
Y = 158218.884
X = 574612.627
PT STA = 319+30.83
Y = 157550.036
X = 575525.499
BK = S30°48'04.7"E
AH = S76°44'21.6"E

PI STA = 332+78.00
Y = 157241.020
X = 576836.746
DELTA = 11°25'58"
D = 0°59'16"
T = 580.60'
L = 1157.34'
R = 5800.00'
PC STA = 326+97.40
Y = 157374.199
X = 576271.628
PT STA = 338+54.75
Y = 156998.466
X = 577364.252
BK = S76°44'21.6"E
AH = S65°18'23.1"E

SUPERELEVATION TABLE

STATION	LT SLOPE	RT SLOPE	REMARKS
325+96.07	-2.0%	-2.0%	NORMAL CROWN
326+49.40	0.0%	-2.0%	ZERO SUPER
327+02.73	+2.0%	-2.0%	REVERSE CROWN
327+21.40	+2.7%	-2.7%	FULL SUPER
338+30.75	+2.7%	-2.7%	FULL SUPER
338+49.41	+2.0%	-2.0%	REVERSE CROWN
339+02.75	0.0%	-2.0%	ZERO SUPER
339+56.08	-2.0%	-2.0%	NORMAL CROWN

PROJECT NO: 5944-01-60	HWY: STH 81	COUNTY: LAFAYETTE & GREEN	PLAN DETAILS	SHEET 27	E

2

PI STA = 352+98.69
Y = 156395.238
X = 578676.152
DELTA = 27°14'37"
D = 3°57'05"
T = 351.38'
L = 689.46'
R = 1450.00'
PC STA = 349+47.31
Y = 156542.031
X = 578356.908
PT STA = 356+36.77
Y = 156410.871
X = 579027.180
BK = S65°18'23.1"E
AH = N87°27'00.0"E

SUPERELEVATION TABLE

STATION	LT SLOPE	RT SLOPE	REMARKS
347+87.31	-2.0%	-2.0%	NORMAL CROWN
348+40.64	-2.0%	0.0%	ZERO SUPER
348+93.97	-2.0%	+2.0%	REVERSE CROWN
350+00.64	-6.0%	+6.0%	FULL SUPER
355+83.44	-6.0%	+6.0%	FULL SUPER
356+90.11	-2.0%	+2.0%	REVERSE CROWN
357+43.44	-2.0%	0.0%	ZERO SUPER
357+96.78	-2.0%	-2.0%	NORMAL CROWN

PI STA = 375+43.61
Y = 156495.709
X = 580932.125
DELTA = 3°54'31"
D = 0°28'39"
T = 409.48'
L = 818.64'
R = 12000.00'
PC STA = 371+34.13
Y = 156477.490
X = 580523.054
PT STA = 379+52.76
Y = 156541.769
X = 581339.003
BK = N87°27'00.0"E
AH = N83°32'28.7"E

2

2

N

ENVIRONMENTALLY SENSITIVE AREA

PROJECT NO: 5944-01-60	HWY: STH 81	COUNTY: LAFAYETTE & GREEN	PLAN DETAILS	SHEET 29	E

FILE NAME : Q:\2018 PROJECTS\5018038 - WISDOT SWR_STH 81 DESIGN\CIVIL3D\SHEETSPLAN\021201_PD.DWG
LAYOUT NAME - 13
PLOT DATE : 6/12/2019 10:41 AM PLOT BY : PATRICK SMITH PLOT NAME : PLOT SCALE : 1 IN:200 FT

WISDOT/CADDS SHEET 42

2

ENVIRONMENTALLY SENSITIVE AREA

PI STA = 413+22.27
Y = 156920.796
X = 584687.124
DELTA = 30°21'28"
D = 2°56'18"
T = 529.03'
L = 1033.20'
R = 1950.00'
PC STA = 407+93.24
Y = 156861.286
X = 584161.449
PT STA = 418+26.43
Y = 156706.470
X = 585170.798
BK = N83°32'28.7"E
AH = S66°06'03.1"E

SUPERELEVATION TABLE

STATION	LT SLOPE	RT SLOPE	REMARKS
406+41.78	-2.0%	-2.0%	NORMAL CROWN
406+95.23	0.0%	-2.0%	ZERO SUPER
407+48.69	+2.0%	-2.0%	REVERSE CROWN
408+42.23	+5.5%	-5.5%	FULL SUPER
417+77.44	+5.5%	-5.5%	FULL SUPER
418+70.99	+2.0%	-2.0%	REVERSE CROWN
419+24.44	0.0%	-2.0%	ZERO SUPER
419+77.89	-2.0%	-2.0%	NORMAL CROWN

2

PI STA = 441+35.41
Y = 155771.040
X = 587281.801
DELTA = 16°57'11"
D = 2°23'14"
T = 357.68'
L = 710.13'
R = 2400.00'
PC STA = 437+77.73
Y = 155915.946
X = 586954.789
PT STA = 444+87.86
Y = 155537.079
X = 587552.348
BK = S66°06'03.1"E
AH = S49°08'51.9"E

SUPERELEVATION TABLE

STATION	LT SLOPE	RT SLOPE	REMARKS
436+35.86	-2.0%	-2.0%	NORMAL CROWN
436+89.06	0.0%	-2.0%	ZERO SUPER
437+42.26	+2.0%	-2.0%	REVERSE CROWN
438+22.06	+5.0%	-5.0%	FULL SUPER
444+43.53	+5.0%	-5.0%	FULL SUPER
445+23.33	+2.0%	-2.0%	REVERSE CROWN
445+76.53	0.0%	-2.0%	ZERO SUPER
446+29.73	-2.0%	-2.0%	NORMAL CROWN

N

2

SUPERELEVATION TABLE

STATION	LT SLOPE	RT SLOPE	REMARKS
456+98.26	-2.0%	-2.0%	NORMAL CROWN
457+51.59	-2.0%	0.0%	ZERO SUPER
458+04.93	-2.0%	+2.0%	REVERSE CROWN
458+55.59	-3.9%	+3.9%	FULL SUPER
482+10.61	-3.9%	+3.9%	FULL SUPER
482+61.28	-2.0%	+2.0%	REVERSE CROWN
483+14.61	-2.0%	0.0%	ZERO SUPER
483+67.95	-2.0%	-2.0%	NORMAL CROWN

PI STA = 470+84.01
Y = 153838.908
X = 589516.075
DELTA = 39°41'13"
D = 1°38'13"
T = 1263.08'
L = 2424.34'
R = 3500.00'
PC STA = 458+20.93
Y = 154665.103
X = 588560.682
PT STA = 482+45.27
Y = 153813.223
X = 590778.896
BK = S49°08'51.9"E
AH = S88°50'05.3"E

2

2

N

PROJECT NO: 5944-01-60	HWY: STH 81	COUNTY: LAFAYETTE & GREEN	PLAN DETAILS	SHEET 32	E

FILE NAME : Q:\2018 PROJECTS\5018038 - WISDOT SWR_STH 81 DESIGN\CIVIL3D\SHEETSPLAN\021201_PD.DWG
LAYOUT NAME - 16
PLOT DATE : 6/12/2019 10:42 AM PLOT BY : PATRICK SMITH PLOT NAME : PLOT SCALE : 1 IN:200 FT

WISDOT/CADDS SHEET 42

2

N

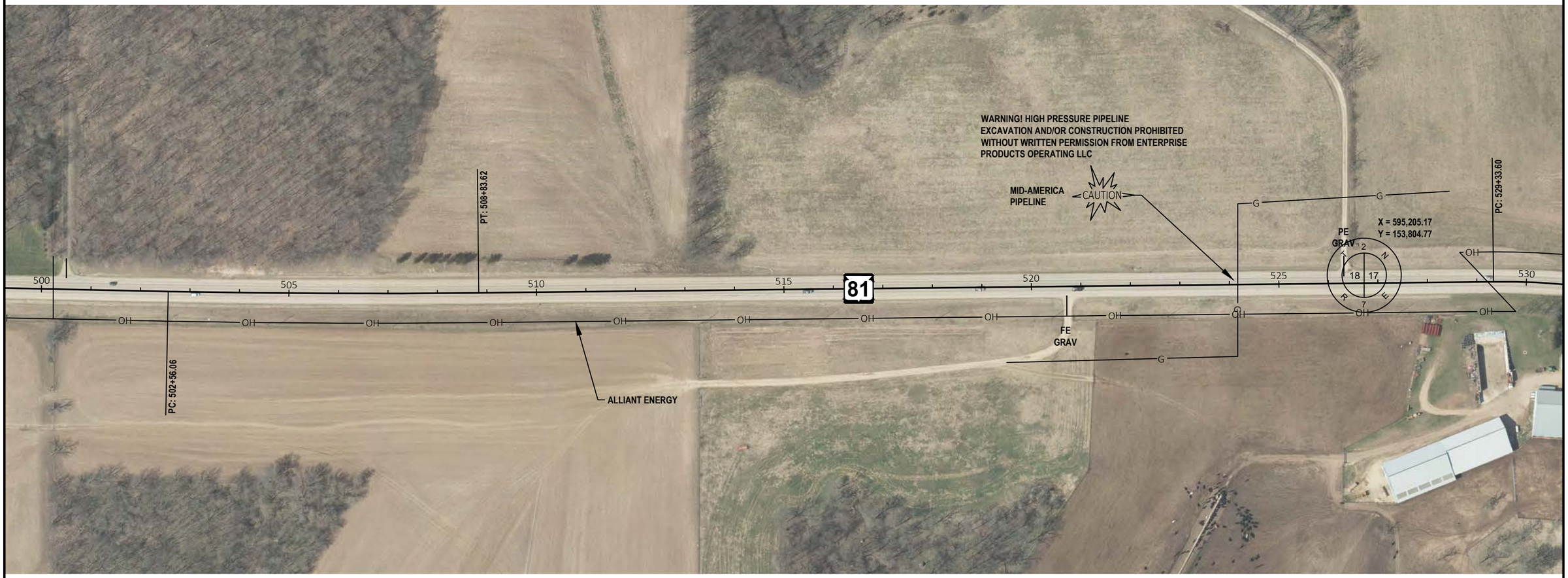

PI STA = 505+69.86
Y = 153765.952
X = 593103.003
DELTA = 1°47'52"
D = 0°17'11"
T = 313.81'
L = 627.56'
R = 20000.00'
PC STA = 502+56.06
Y = 153772.333
X = 592789.262
PT STA = 508+83.62
Y = 153769.416
X = 593416.789
BK = S88°50'05.3"E
AH = N89°22'02.6"E

PROJECT NO: 5944-01-60	HWY: STH 81	COUNTY: LAFAYETTE & GREEN	PLAN DETAILS	SHEET 33	E

SUPERELEVATION TABLE

STATION	LT SLOPE	RT SLOPE	REMARKS
527+73.60	-2.0%	-2.0%	NORMAL CROWN
528+26.93	0.0%	-2.0%	ZERO SUPER
528+80.27	+2.0%	-2.0%	REVERSE CROWN
529+86.93	+6.0%	-6.0%	FULL SUPER
541+38.47	+6.0%	-6.0%	FULL SUPER
542+45.14	+2.0%	-2.0%	REVERSE CROWN
542+98.47	0.0%	-2.0%	ZERO SUPER
543+51.80	-2.0%	-2.0%	NORMAL CROWN

PI STA = 536+05.39
Y = 153799.468
X = 596138.396
DELTA = 49°43'00"
D = 3°57'05"
T = 671.79'
L = 1258.19'
R = 1450.00'
PC STA = 529+33.60
Y = 153792.050
X = 595466.651
PT STA = 541+91.80
Y = 153291.819
X = 596578.384
BK = N89°22'02.6"E
AH = S40°54'57.5"E

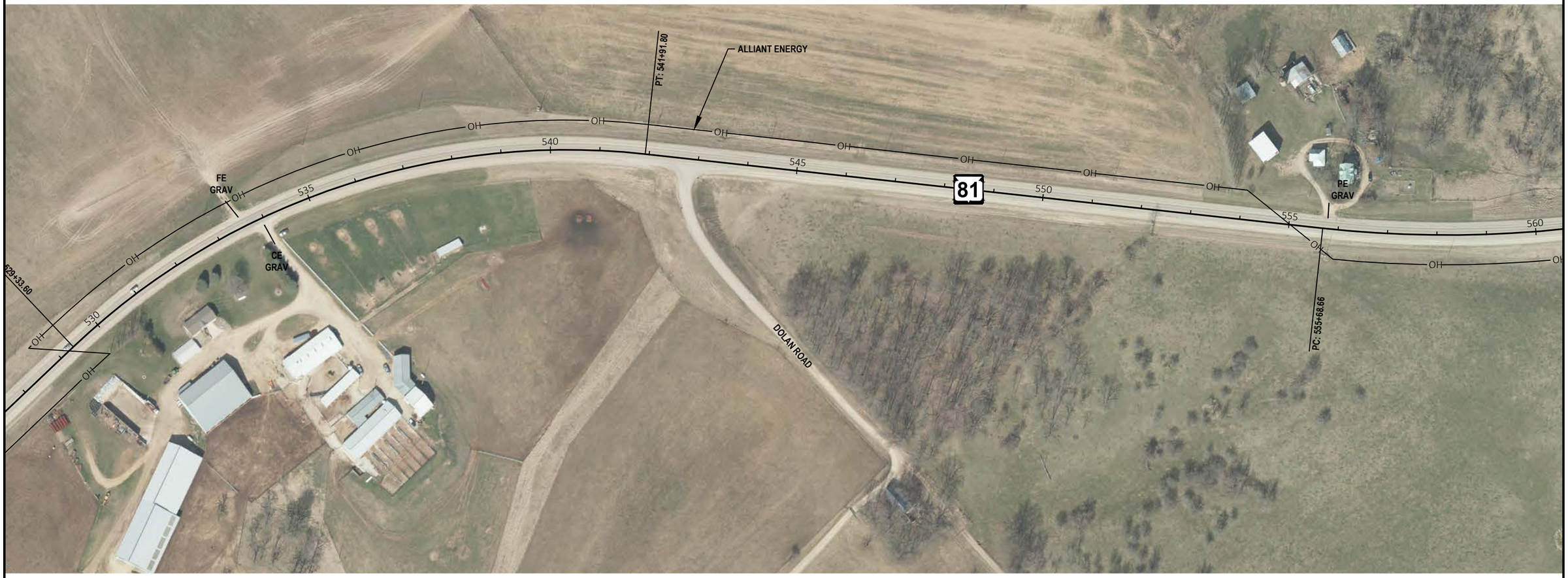

PI STA = 562+17.98
Y = 151760.693
X = 597905.434
DELTA = 31°31'49"
D = 2°29'28"
T = 649.32'
L = 1265.70'
R = 2300.00'
PC STA = 555+68.66
Y = 152251.366
X = 597480.160
PT STA = 568+34.36
Y = 151564.856
X = 598524.518
BK = S40°54'57.5"E
AH = S72°26'46.1"E

SUPERELEVATION TABLE

STATION	LT SLOPE	RT SLOPE	REMARKS
554+24.65	-2.0%	-2.0%	NORMAL CROWN
554+77.99	-2.0%	0.0%	ZERO SUPER
555+31.32	-2.0%	+2.0%	REVERSE CROWN
556+13.99	-5.1%	+5.1%	FULL SUPER
567+89.03	-5.1%	+5.1%	FULL SUPER
568+71.70	-2.0%	+2.0%	REVERSE CROWN
569+25.03	-2.0%	0.0%	ZERO SUPER
569+78.36	-2.0%	-2.0%	NORMAL CROWN

PI STA = 591+18.10
Y = 150876.075
X = 600701.914
DELTA = 43°20'24"
D = 2°43'42"
T = 834.42'
L = 1588.49'
R = 2100.00'
PC STA = 582+83.68
Y = 151127.737
X = 599906.353
PT STA = 598+72.17
Y = 150147.029
X = 601107.800
BK = S72°26'46.1"E
AH = S29°06'22.4"E

SUPERELEVATION TABLE

STATION	LT SLOPE	RT SLOPE	REMARKS
581+36.47	-2.0%	-2.0%	NORMAL CROWN
581+89.68	0.0%	-2.0%	ZERO SUPER
582+42.89	+2.0%	-2.0%	REVERSE CROWN
583+30.68	+5.3%	-5.3%	FULL SUPER
598+25.18	+5.3%	-5.3%	FULL SUPER
599+12.97	+2.0%	-2.0%	REVERSE CROWN
599+66.18	0.0%	-2.0%	ZERO SUPER
600+19.39	-2.0%	-2.0%	NORMAL CROWN

2

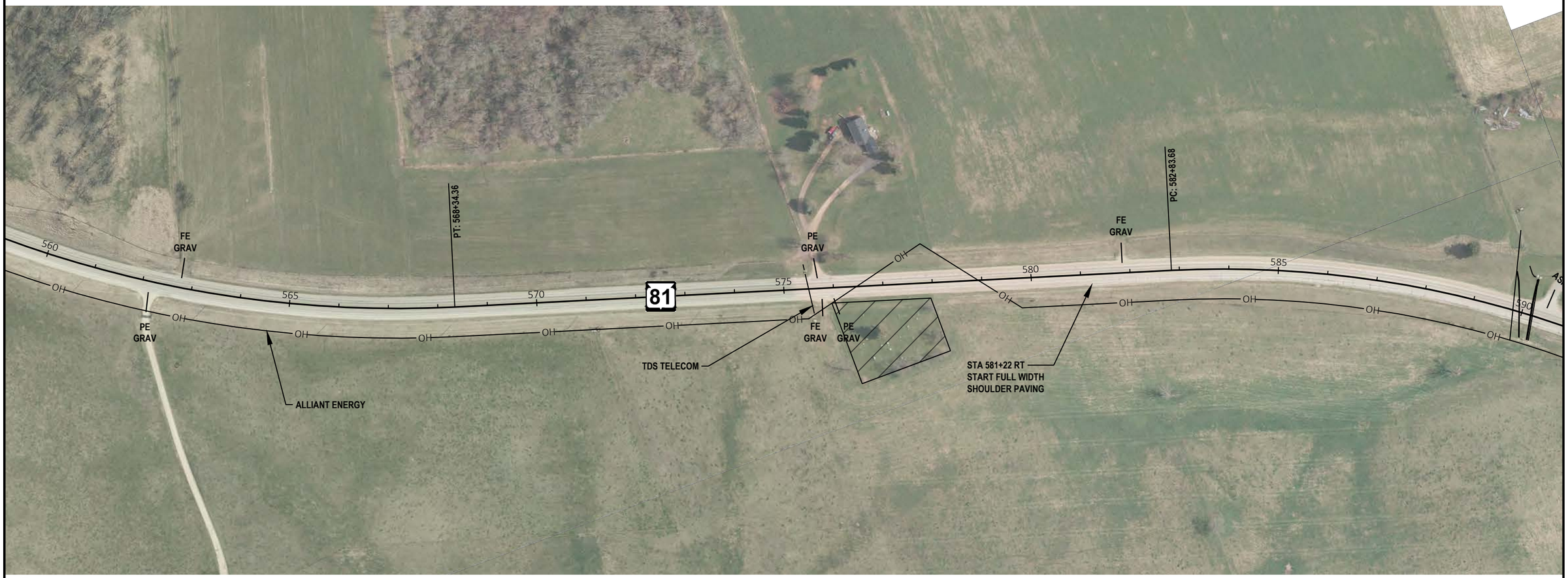

ENVIRONMENTALLY SENSITIVE AREA

PROJECT NO: 5944-01-60	HWY: STH 81	COUNTY: LAFAYETTE & GREEN	PLAN DETAILS	SHEET 35	E

2

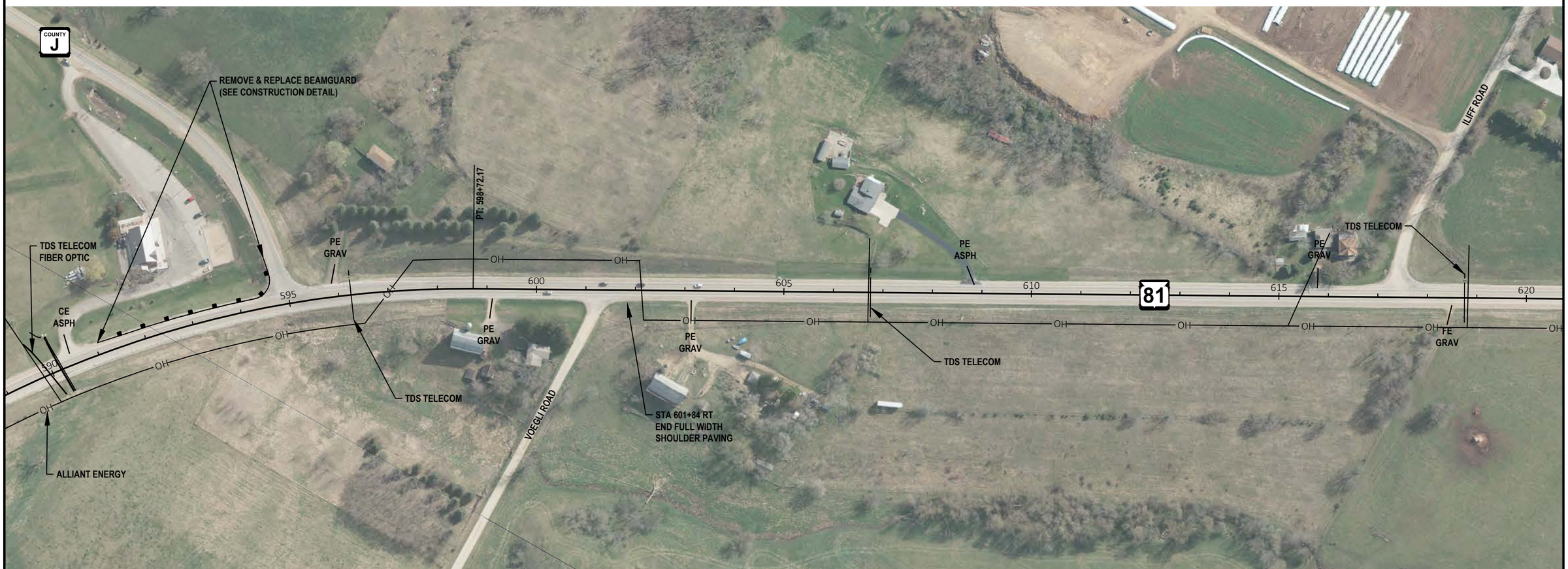

PROJECT NO: 5944-01-60	HWY: STH 81	COUNTY: LAFAYETTE & GREEN	PLAN DETAILS	SHEET 36	E

FILE NAME : Q:\2018 PROJECTS\5018038 - WISDOT SWR_STH 81 DESIGN\CIVIL3D\SHEETSPLAN\021201_PD.DWG
LAYOUT NAME - 20
PLOT DATE : 6/12/2019 10:43 AM
PLOT BY : PATRICK SMITH
PLOT NAME :
PLOT SCALE : 1 IN:200 FT
WISDOT/CADDS SHEET 42

2

SUPERELEVATION TABLE

STATION	LT SLOPE	RT SLOPE	REMARKS
629+07.41	-2.0%	-2.0%	NORMAL CROWN
629+60.74	-2.0%	0.0%	ZERO SUPER
630+14.08	-2.0%	+2.0%	REVERSE CROWN
630+56.74	-3.6%	+3.6%	FULL SUPER
639+82.76	-3.6%	+3.6%	FULL SUPER
640+25.42	-2.0%	+2.0%	REVERSE CROWN
640+78.76	-2.0%	0.0%	ZERO SUPER
641+32.09	-2.0%	-2.0%	NORMAL CROWN

PI STA = 635+22.29
Y = 146957.851
X = 602883.327
DELTA = 14°10'51"
D = 1°25'57"
T = 497.55'
L = 990.01'
R = 4000.00'
PC STA = 630+24.75
Y = 147392.566
X = 602641.305
PT STA = 640+14.75
Y = 146595.673
X = 603224.471
BK = S29°06'22.4"E
AH = S43°17'13.3"E

2

SUPERELEVATION TABLE

STATION	LT SLOPE	RT SLOPE	REMARKS
646+27.17	-2.0%	-2.0%	NORMAL CROWN
646+80.24	-2.0%	0.0%	ZERO SUPER
647+33.32	-2.0%	+2.0%	REVERSE CROWN
647+49.24	-2.6%	+2.6%	FULL SUPER
662+35.88	-2.6%	+2.6%	FULL SUPER
662+51.81	-2.0%	+2.0%	REVERSE CROWN
663+04.88	-2.0%	0.0%	ZERO SUPER
663+57.96	-2.0%	-2.0%	NORMAL CROWN

PI STA = 654+96.76
Y = 145516.880
X = 604240.613
DELTA = 14°38'08"
D = 0°57'18"
T = 770.51'
L = 1532.64'
R = 6000.00'
PC STA = 647+26.24
Y = 146077.758
X = 603712.308
PT STA = 662+58.88
Y = 145107.689
X = 604893.493
BK = S43°17'13.3"E
AH = S57°55'21.5"E

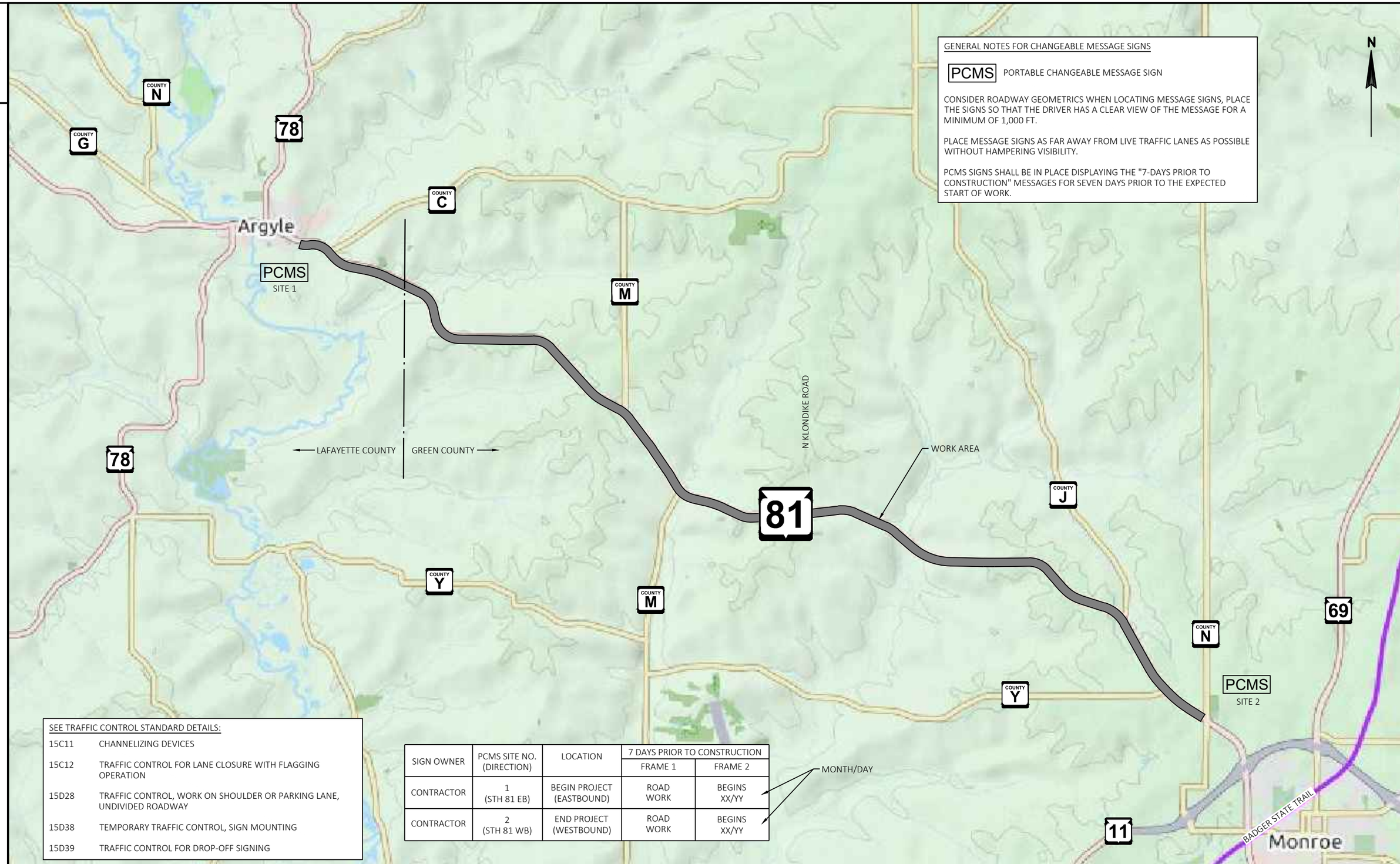

GENERAL NOTES FOR CHANGEABLE MESSAGE SIGNS

PCMS PORTABLE CHANGEABLE MESSAGE SIGN

CONSIDER ROADWAY GEOMETRICS WHEN LOCATING MESSAGE SIGNS, PLACE THE SIGNS SO THAT THE DRIVER HAS A CLEAR VIEW OF THE MESSAGE FOR A MINIMUM OF 1,000 FT.

PLACE MESSAGE SIGNS AS FAR AWAY FROM LIVE TRAFFIC LANES AS POSSIBLE WITHOUT HAMPERING VISIBILITY.

PCMS SIGNS SHALL BE IN PLACE DISPLAYING THE "7-DAYS PRIOR TO CONSTRUCTION" MESSAGES FOR SEVEN DAYS PRIOR TO THE EXPECTED START OF WORK.

SEE TRAFFIC CONTROL STANDARD DETAILS:

15C11	CHANNELIZING DEVICES
15C12	TRAFFIC CONTROL FOR LANE CLOSURE WITH FLAGGING OPERATION
15D28	TRAFFIC CONTROL, WORK ON SHOULDER OR PARKING LANE, UNDIVIDED ROADWAY
15D38	TEMPORARY TRAFFIC CONTROL, SIGN MOUNTING
15D39	TRAFFIC CONTROL FOR DROP-OFF SIGNING

SIGN OWNER	PCMS SITE NO. (DIRECTION)	LOCATION	7 DAYS PRIOR TO CONSTRUCTION	
			FRAME 1	FRAME 2
CONTRACTOR	1 (STH 81 EB)	BEGIN PROJECT (EASTBOUND)	ROAD WORK	BEGINS XX/YY
CONTRACTOR	2 (STH 81 WB)	END PROJECT (WESTBOUND)	ROAD WORK	BEGINS XX/YY

MONTH/DAY

PROJECT NO: 5944-01-60	HWY: STH 81	COUNTY: LAFAYETTE & GREEN	TRAFFIC CONTROL	SHEET 39	E

Estimate Of Quantities

5944-01-60

Line	Item	Item Description	Unit	Total	Qty
0002	204.0115	Removing Asphaltic Surface Butt Joints	SY	317.000	317.000
0004	204.0120	Removing Asphaltic Surface Milling	SY	227,570.000	227,570.000
0006	204.0165	Removing Guardrail	LF	1,197.000	1,197.000
0008	205.0100	Excavation Common	CY	797.000	797.000
0010	211.0100	Prepare Foundation for Asphaltic Paving (project) 01. 5944-01-60	LS	1.000	1.000
0012	211.0400	Prepare Foundation for Asphaltic Shoulders	STA	1,298.000	1,298.000
0014	213.0100	Finishing Roadway (project) 01. 5944-01-60	EACH	1.000	1.000
0016	305.0110	Base Aggregate Dense 3/4-Inch	TON	10,137.000	10,137.000
0018	305.0500	Shaping Shoulders	STA	1,298.000	1,298.000
0020	455.0605	Tack Coat	GAL	14,141.000	14,141.000
0022	460.0105.S	HMA Percent Within Limits (PWL) Test Strip Volumetrics	EACH	2.000	2.000
0024	460.0110.S	HMA Percent Within Limits (PWL) Test Strip Density	EACH	2.000	2.000
0026	460.2005	Incentive Density PWL HMA Pavement	DOL	38,770.000	38,770.000
0028	460.2010	Incentive Air Voids HMA Pavement	DOL	56,910.000	56,910.000
0030	460.5223	HMA Pavement 3 LT 58-28 S	TON	32,000.000	32,000.000
0032	460.5224	HMA Pavement 4 LT 58-28 S	TON	24,910.000	24,910.000
0034	465.0425	Asphaltic Shoulder Rumble Strips 2-Lane Rural	LF	127,652.000	127,652.000
0036	465.0475	Asphalt Centerline Rumble Strips 2-Lane Rural	LF	64,901.000	64,901.000
0038	614.2300	MGS Guardrail 3	LF	762.500	762.500
0040	614.2310	MGS Guardrail 3 HS	LF	112.500	112.500
0042	614.2500	MGS Thrie Beam Transition	LF	315.200	315.200
0044	614.2610	MGS Guardrail Terminal EAT	EACH	8.000	8.000
0046	614.2620	MGS Guardrail Terminal Type 2	EACH	1.000	1.000
0048	618.0100	Maintenance And Repair of Haul Roads (project) 01. 5944-01-60	EACH	1.000	1.000
0050	619.1000	Mobilization	EACH	1.000	1.000
0052	624.0100	Water	MGAL	152.000	152.000
0054	625.0500	Salvaged Topsoil	SY	2,624.000	2,624.000
0056	628.1504	Silt Fence	LF	2,677.000	2,677.000
0058	628.1520	Silt Fence Maintenance	LF	2,677.000	2,677.000
0060	628.2004	Erosion Mat Class I Type B	SY	2,624.000	2,624.000
0062	629.0210	Fertilizer Type B	CWT	1.650	1.650
0064	630.0120	Seeding Mixture No. 20	LB	71.000	71.000
0066	630.0500	Seed Water	MGAL	58.000	58.000
0068	642.5001	Field Office Type B	EACH	1.000	1.000
0070	643.0300	Traffic Control Drums	DAY	118.000	118.000
0072	643.0900	Traffic Control Signs	DAY	95.000	95.000
0074	643.1050	Traffic Control Signs PCMS	DAY	14.000	14.000
0076	643.5000	Traffic Control	EACH	1.000	1.000

5944-01-60

Line	Item	Item Description	Unit	Total	Qty
0078	646.1020	Marking Line Epoxy 4-Inch	LF	85,363.000	85,363.000
0080	646.1040	Marking Line Grooved Wet Ref Epoxy 4-Inch	LF	128,629.000	128,629.000
0082	646.3020	Marking Line Epoxy 8-Inch	LF	265.000	265.000
0084	646.4520	Marking Line Same Day Epoxy 4-Inch	LF	85,237.000	85,237.000
0086	648.0100	Locating No-Passing Zones	MI	12.300	12.300
0088	649.0105	Temporary Marking Line Paint 4-Inch	LF	81,717.000	81,717.000
0090	649.0120	Temporary Marking Line Epoxy 4-Inch	LF	81,717.000	81,717.000
0092	650.8000	Construction Staking Resurfacing Reference	LF	65,163.000	65,163.000
0094	650.9910	Construction Staking Supplemental Control (project) 01. 5944-01-60	LS	1.000	1.000
0096	690.0150	Sawing Asphalt	LF	826.000	826.000
0098	740.0440	Incentive IRI Ride	DOL	49,400.000	49,400.000
0100	SPV.0060	Special 01. Verify Landmark Reference Monuments	EACH	5.000	5.000
0102	SPV.0090	Special 01. Removing HMA Pavement Notched Wedge Longitudinal Joint Milling	LF	64,901.000	64,901.000

3

204.0115
REMOVING ASPHALTIC SURFACE BUTT JOINTS

CATEGORY	STATION	LOCATION	SY
0010	21+37	STH 81, BEGIN PROJECT	13
0010	23+25	OLD HWY 81 (WEST)	10
0010	33+50	OLD HWY 81 (EAST)	10
0010	35+40	STH 81, DOUGHERTY CREEK BRIDGE	15
0010	36+60	STH 81, DOUGHERTY CREEK BRIDGE	15
0010	42+71	CTH C	10
0010	49+10	OLD HWY 81 (WEST)	10
0010	68+00	OLD HWY 81 (EAST)	10
0010	94+40	RAT HOLLOW ROAD	10
0010	137+90	TROTTER ROAD	10
0010	233+10	MCGRATH LANE	12
0010	254+15	CTH M	10
0010	276+20	KEEGAN LANE	10
0010	311+50	CTH M	10
0010	315+15	JORDAN CENTER ROAD	10
0010	374+80	KLONDIKE ROAD	10
0010	388+10	N KLONDIKE ROAD	10
0010	443+75	HIAWATHA ROAD	10
0010	445+10	STH 81, STRUCTURE B-23-043	15
0010	446+80	STH 81, STRUCTURE B-23-043	15
0010	454+85	SKINNER HOLLOW ROAD	10
0010	542+75	DOLAN ROAD	10
0010	595+95	CTH J	10
0010	601+45	VOEGLI ROAD	9
0010	617+35	ILIFF ROAD	10
0010	630+55	JOY DEL ROAD	10
0010	643+60	CTH Y	10
0010	654+45	JOY DEL ROAD	10
0010	673+00	STH 81, END PROJECT	13
		TOTAL:	317

204.0120
REMOVING ASPHALTIC SURFACE MILLING

CATEGORY	STATION	TO	STATION	LOCATION	LENGTH (LF)	WIDTH (LF)	SY
0010	21+37	-	35+70	STH 81	1,433	30	4,777
0010	36+60	-	445+10	STH 81	40,850	30	136,167
0010	446+83	-	673+00	STH 81	22,617	30	75,390
0010	34+00	-	38+15	STH 81 (BEAMGUARD WIDENING)	325	6/4	361
0010	40+00	-	45+00	STH 81 (CTH C BYPASS LANE)	500	10	556
0010	105+83	-	116+12	STH 81 (WIDE SHOULDER)	1,029	6	686
0010	248+50	-	258+00	STH 81 (CTH M BYPASS LANE)	950	7	739
0010	443+90	-	448+05	STH 81 (BEAMGUARD WIDENING)	242	7/4	296
0010	581+22	-	601+84	STH 81 (WIDE SHOULDER)	2,062	6	1,375
0010	592+50	-	594+50	STH 81 (BEAMGUARD WIDENING)	200	7	156
0010	642+00	-	646+00	STH 81 (CTH Y BYPASS LANE)	400	12	533
0010	VARIES	-	-	SIDE ROAD MATCHING	-	-	6,534
				TOTAL:			227,570

305.0110
BASE AGGREGATE DENSE 3/4-INCH

CATEGORY	STATION	TO	STATION	LOCATION	TON
0010	21+37	-	673+00	STH 81 SHOULDERS	9,654
0010	AS-NEEDED	-	-	UNDISDRIBUTED	483
				TOTAL:	10,137

624.0100
WATER

CATEGORY	STATION	TO	STATION	LOCATION	MGAL
0010	21+37	-	673+00	STH 81 SHOULDERS	145
0010	AS-NEEDED	-	-	UNDISDRIBUTED	7
				TOTAL:	152

211.0400
PREPARE FOUNDATION FOR ASPHALTIC SHOULDER

CATEGORY	STATION	TO	STATION	LOCATION	STA
0010	21+37	-	35+70	STH 81	29
0010	36+60	-	445+10	STH 81	817
0010	446+82	-	673+00	STH 81	452
				TOTAL:	1,298

305.0500
SHAPING SHOULDERS

CATEGORY	STATION	TO	STATION	LOCATION	STA
0010	21+37	-	35+70	STH 81	29
0010	36+60	-	445+10	STH 81	817
0010	446+82	-	673+00	STH 81	452
				TOTAL:	1,298

EARTHWORK SUMMARY

Division	From/To Station	Location	Excavation Common (1)	item 205.0100	Salvaged/ Unusable Pavement Material (2)	Available Material (4)	Reduced EBS in Fill (5)	Expanded EBS Backfill (6)	Unexpanded Fill	Expanded Fill (7)	Mass Ordinate +/- (8)	Waste	Borrow	Comment:
			Cut (2)	EBS Excavation (3)			Factor 0.80	Factor 1.30		Factor 1.20			item 208.0100	
	33+10 to 35+67	STH 81 GAURDRAIL LT/RT	148	0	0	148	0	0	26	31	117	117	0	
	36+64 to 40+92	STH 81 GAURDRAIL LT/RT	258	0	0	258	0	0	189	227	32	32	0	
	442+71 to 445+03	STH 81 GAURDRAIL LT/RT	101	0	0	101	0	0	75	90	11	11	0	
	446+90 to 449+23	STH 81 GAURDRAIL LT/RT	165	0	0	165	0	0	43	51	114	114	0	
	589+92 to 594+15	STH 81 GAURDRAIL LT/RT	124	0	0	124	0	0	108	130	-6	-6	0	
Grand Total			797	0	0	797	0	0	441	529	268	268	0	
		Total Common Exc	797											

NOTES:
1) Common Excavation is the sum of the Cut and EBS Excavation columns. Item number 205.0100.
2) Salvaged/Unusable Pavement Material is included in Cut.
3) EBS Excavation to be backfilled with Breaker Run.
4) Available Material = Cut - Salvaged/Unusable Pavement Material.
5) Reduced EBS in Fill - Excavated EBS material is unusable in Fills outside the 1:1 slope. EBS in Fill Reduction factor = 0.80
6) Expanded EBS Backfill - This is to be filled with Breaker Run. EBS Backfill Factor = 1.3.
7) Expanded Fill. Factor = 1.20. Expanded Fill = (Unexpanded Fill - Reduced EBS) * Fill Factor.Remaining volume or reduced EBS is considered waste.
8) The Mass Ordinate + or - Qty calculated for the Division. Plus quantity indicates an excess of material within the Division. Minus indicates a shortage of material within the Division.

3

HMA PAVEMENT ITEMS

CATEGORY	LOCATION	STATION	TO	STATION	455.0605 TACK COAT GAL	460.5223 3 LT 58-28 S TON	460.5224 4 LT 58-28 S TON
0010	STH 81	21+37	-	100+00	1,483	3,300	2,560
0010	STH 81	100+00	-	200+00	1,914	4,260	3,320
0010	STH 81	200+00	-	300+00	1,889	4,200	3,270
0010	STH 81	300+00	-	400+00	1,889	4,200	3,270
0010	STH 81	400+00	-	500+00	1,868	4,150	3,230
0010	STH 81	500+00	-	600+00	1,941	4,330	3,370
0010	STH 81	600+00	-	673+00	1,383	3,080	2,390
0010	SIDE ROAD MATCH	VARIES	-	-	300	760	590
0010	DRIVEWAY MATCH	VARIES	-	-	27	70	50
				TOTAL:	12,694	28,350	22,050

CATEGORY	LOCATION	STATION	TO	STATION	GAL	TON	TON
0020	STH 81 (SHOULDER WIDENING)	21+37	-	100+00	175	440	340
0020	STH 81 (SHOULDER WIDENING)	100+00	-	200+00	222	560	440
0020	STH 81 (SHOULDER WIDENING)	200+00	-	300+00	222	560	440
0020	STH 81 (SHOULDER WIDENING)	300+00	-	400+00	222	560	440
0020	STH 81 (SHOULDER WIDENING)	400+00	-	500+00	222	560	440
0020	STH 81 (SHOULDER WIDENING)	500+00	-	600+00	222	560	440
0020	STH 81 (SHOULDER WIDENING)	600+00	-	673+00	162	410	320
				TOTAL:	1,447	3,650	2,860
				PROJECT TOTAL:	14,141	32,000	24,910

INCENTIVE HMA PAVEMENT

CATEGORY	STATION	TO	STATION	LOCATION	BID ITEM	TONS	460.2005 DENSITY PWL HMA PAVEMENT DOL	460.2010 AIR VOIDS HMA PAVEMENT DOL
0010	21+37	-	673+00	12' TRAVEL LANE	3LT 58-28S	21,810	21,810	21,810
0010	21+37	-	673+00	5' SHOULDER	3LT 58-28S	9,090	-	9,090
0010	21+37	-	673+00	MISCELLANEOUS /SIDE ROADS	3LT 58-28S	1,100	-	1,100
0010	21+37	-	673+00	12' TRAVEL LANE	4LT 58-28S	16,960	16,960	16,960
0010	21+37	-	673+00	5' SHOULDER	4LT 58-28S	7,070	-	7,070
0010	21+37	-	673+00	MISCELLANEOUS /SIDE ROADS	4LT 58-28S	880	-	880
						TOTAL:	38,770	56,910

3

HMA PAVEMENT PWL

CATEGORY	LOCATION	460.0105.S TEST STRIP VOLUMETRICS EACH	460.0110.S TEST STRIP DENSITY EACH
0010	PROJECT - 3 LT 58-28 S	1	1
0010	PROJECT - 4 LT 58-28 S	1	1
		2	2

PWL MIXTURE USE TABLE

LOCATION	STATION	TO	STATION	UNDERLYING SURFACE	BID ITEM	TONS	THICKNESS	MIXTURE ACCEPTANCE	DENSITY ACCEPTANCE
12' TRAVEL LANE	21+37	-	673+00	EXISTING BASE COURSE	3LT 58-28S	21,810	2.25 ''	PWL INCENTIVE AIR VOIDS HMA PAVEMENT 460.2010	INCENTIVE DENSITY PWL HMA PAVEMENT 460.2005
5' SHOULDER	21+37	-	673+00	EXISTING BASE COURSE	3LT 58-28S	9,090	2.25 ''	PWL INCENTIVE AIR VOIDS HMA PAVEMENT 460.2010	DEPARTMENT TESTED, NOT ELIGIBLE FOR INCENTIVE
MISCELLANEOUS /SIDE ROADS	21+37	-	673+00	EXISTING BASE COURSE	3LT 58-28S	1,100	2.25 ''	PWL INCENTIVE AIR VOIDS HMA PAVEMENT 460.2010	DEPARTMENT TESTED, NOT ELIGIBLE FOR INCENTIVE
12' TRAVEL LANE	21+37	-	673+00	2.25" 3LT 58-28S	4LT 58-28S	16,960	1.75 ''	PWL INCENTIVE AIR VOIDS HMA PAVEMENT 460.2010	INCENTIVE DENSITY PWL HMA PAVEMENT 460.2005
5' SHOULDER	21+37	-	673+00	2.25" 3LT 58-28S	4LT 58-28S	7,070	1.75 ''	PWL INCENTIVE AIR VOIDS HMA PAVEMENT 460.2010	DEPARTMENT TESTED, NOT ELIGIBLE FOR INCENTIVE
MISCELLANEOUS /SIDE ROADS	21+37	-	673+00	2.25" 3LT 58-28S	4LT 58-28S	880	1.75 ''	PWL INCENTIVE AIR VOIDS HMA PAVEMENT 460.2010	DEPARTMENT TESTED, NOT ELIGIBLE FOR INCENTIVE

3

465.0425
ASPHALTIC SHOULDER RUMBLE STRIPS 2-LANE RURAL

CATEGORY	STATION	TO	STATION	LOCATION	(TYPE 1) LF
0020	21+37	-	35+70	STH 81	2,779
0020	36+60	-	445+10	STH 81	80,439
0020	446+82	-	673+00	STH 81	44,434
				TOTAL:	127,652

465.0475
ASPHALTIC CENTERLINE RUMBLE STRIPS 2-LANE RURAL

CATEGORY	STATION	TO	STATION	LOCATION	LF
0010	21+37	-	35+70	STH 81	1,433
0010	36+60	-	445+10	STH 81	40,850
0010	446+82	-	673+00	STH 81	22,618
				TOTAL:	64,901

GUARDRAIL ITEMS

CATEGORY	STATION	TO	STATION	LOCATION	204.0165 REMOVING GUARDRAIL LF	614.2300 MGS GUARDRAIL 3 LF	614.2310 MGS GUARDRAIL 3 (TYPE) HS LF	614.2500 MGS THRIE BEAM TRANSITION LF	614.2610 MGS GUARDRAIL TERMINAL EAT EACH	614.2620 MGS GUARDRAIL TERMINAL TYPE 2 EACH
0010	34+27	-	35+60	STH 81, RIGHT	113	37.5	-	39.4	1	-
0010	34+52	-	35+67	STH 81, LEFT	113	25.0	-	39.4	1	-
0010	36+64	-	37+84	STH 81, RIGHT	107	25.0	-	39.4	1	-
0010	36+72	-	39+85	STH 81, LEFT	107	225.0	-	39.4	1	-
0010	443+86	-	445+03	STH 81, LEFT	113	25.0	-	39.4	1	-
0010	444+02	-	445+03	STH 81, RIGHT	150	62.5	50.0	39.4	-	1
0010	446+90	-	448+08	STH 81, LEFT	112	25.0	-	39.4	1	-
0010	446+90	-	448+08	STH 81, RIGHT	112	25.0	-	39.4	1	-
0010	591+06	-	594+65	STH 81, LEFT	270	312.5	62.5	-	1	-
				TOTAL:	1,197	762.5	112.5	315.2	8	1

3

SILT FENCE

CATEGORY	STATION	TO	STATION	LOCATION	628.1504 SILT FENCE LF	628.1520 SILT FENCE MAINTENANCE LF
0010	32+99	-	35+70	STH 81, RIGHT	269	269
0010	33+32	-	35+83	STH 81, LEFT	259	259
0010	36+52	-	39+09	STH 81, RIGHT	255	255
0010	36+62	-	41+04	STH 81, LEFT	455	455
0010	442+57	-	445+19	STH 81, LEFT	281	281
0010	444+00	-	445+25	STH 81, RIGHT	180	180
0010	446+77	-	449+28	STH 81, LEFT	255	255
0010	446+86	-	449+39	STH 81, RIGHT	259	259
0010	590+62	-	594+65	STH 81, LEFT	464	464
				TOTAL:	2,677	2,677

RESTORATION ITEMS

CATEGORY	STATION	TO	STATION	LOCATION	625.0500 SALVAGED TOPSOIL SY	628.2004 EROSION MAT CLASS I TYPE B SY	629.0210 FERTILIZER TYPE B CWT	630.0120 SEEDING MIXTURE NO. 20 LB	630.0500 SEED WATER MGAL
0010	34+27	-	35+60	STH 81, RIGHT	144	144	0.09	0.0	3
0010	34+52	-	35+67	STH 81, LEFT	61	61	0.04	0.0	1
0010	36+64	-	37+84	STH 81, RIGHT	193	193	0.12	0.0	4
0010	36+72	-	39+85	STH 81, LEFT	457	457	0.29	0.0	10
0010	443+86	-	445+03	STH 81, LEFT	432	432	0.27	0.0	10
0010	444+02	-	445+03	STH 81, RIGHT	123	123	0.08	0.0	3
0010	446+90	-	448+08	STH 81, LEFT	176	176	0.11	0.0	4
0010	446+90	-	448+08	STH 81, RIGHT	146	146	0.09	0.0	3
0010	591+06	-	594+65	STH 81, LEFT	367	367	0.23	0.0	8
0010	VARIES	-	-	UNDISTRIBUTED	525	525	0.33	0.0	12
				TOTAL:	2,624	2,624	1.65	0	58

3

618.0100
MAINTENANCE AND REPAIR OF HAUL ROADS

CATEGORY	STATION	TO	STATION	LOCATION	LS
0010	21+37	-	673+00	STH 81	1
				TOTAL:	1

TRAFFIC CONTROL

CATEGORY	LOCATION	643.0300 DRUMS DAYS	643.0900 SIGNS DAYS	643.1050 PCMS DAYS
0010	STA 21+37 EB	-	40	7
0010	STA 34+27 to STA 37+84 EB	22	3	-
0010	STA 34+52 to STA 39+85 WB	25	3	-
0010	STA 443+86 to STA 448+08 WB	23	3	-
0010	STA 443+96 to STA 448+08 EB	23	3	-
0010	STA 591+06 to STA 594+80 WB	25	3	-
0010	STA 673+00 WB	-	40	7
	TOTAL:	118	95	14

643.5000
TRAFFIC CONTROL

CATEGORY	LOCATION	EACH
0010	PROJECT	1
	TOTAL:	1

3

PAVEMENT MARKING ITEMS

					646.1020			646.1040		646.3020	646.4520	649.0105	649.0120
CATEGORY	STATION	TO	STATION	LOCATION	EPOXY 4-INCH (YELLOW) LF	EPOXY 4-INCH 12.5' SKIPS (YELLOW) LF	EPOXY 4-INCH 12.5' SKIPS (WHITE) LF	GROOVED WET REF EPOXY 4-INCH (WHITE) LF	GROOVED WET REF EPOXY 4-INCH 3' SKIPS (WHITE) LF	EPOXY 8-INCH (WHITE) LF	SAME DAY EPOXY 4-INCH (YELLOW) LF	TEMPORARY PAINT 4-INCH (YELLOW) LF	TEMPORARY EPOXY 4-INCH (YELLOW) LF
0010	21+37	-	673+00	CENTERLINE	75,459	9,778	-	-	-	-	85,237	81,717	81,717
0010	21+37	-	673+00	EASTBOUND	-	-	63	63,891	180	-	-	-	-
0010	21+37	-	673+00	WESTBOUND	-	-	63	64,474	84	265	-	-	-
				SUBTOTAL:	75,459	9,778	126	128,365	264	265	85,237	81,717	81,717
				TOTAL:		85,363		128,629		265	85,237	81,717	81,717

642.5001
FIELD OFFICE TYPE B

CATEGORY	LOCATION	EACH
0010	PROJECT	1
	TOTAL:	1

648.0100
LOCATING NO-PASSING ZONES

CATEGORY	STATION	TO	STATION	LOCATION	MI
0010	21+37	-	673+00	STH 81	12.3
				TOTAL:	12.3

650.8000
CONSTRUCTION STAKING RESURFACING REFERENCE

CATEGORY	STATION	TO	STATION	LOCATION	LF
0010	21+37	-	673+00	STH 81	65,163
				TOTAL:	65,163

3

650.9910
CONSTRUCTION STAKING SUPPLEMENTAL CONTROL

CATEGORY	STATION	TO	STATION	LOCATION	LS
0010	21+37	-	673+00	STH 81	1
				TOTAL:	1

690.0150
SAWING ASPHALT

CATEGORY	STATION	LOCATION	LF
0010	21+37	STH 81, BEGIN PROJECT	30
0010	23+25	OLD HWY 81 (WEST)	22
0010	33+50	OLD HWY 81 (EAST)	22
0010	42+71	CTH C	22
0010	49+10	OLD HWY 81 (WEST)	22
0010	68+00	OLD HWY 81 (EAST)	22
0010	94+40	RAT HOLLOW ROAD	22
0010	137+90	TROTTER ROAD	22
0010	233+10	MCGRATH LANE	28
0010	254+15	CTH M	22
0010	276+20	KEEGAN LANE	22
0010	311+50	CTH M	22
0010	315+15	JORDAN CENTER ROAD	22
0010	374+80	KLONDIKE ROAD	22
0010	388+10	N KLONDIKE ROAD	22
0010	443+75	HIAWATHA ROAD	22
0010	454+85	SKINNER HOLLOW ROAD	22
0010	542+75	DOLAN ROAD	22
0010	595+95	CTH J	22
0010	601+45	VOEGLI ROAD	20
0010	617+35	ILIFF ROAD	22
0010	630+55	JOY DEL ROAD	22
0010	643+60	CTH Y	22
0010	654+45	JOY DEL ROAD	22
0010	673+00	STH 81, END PROJECT	30
0010	673+00	MISCELLANEOUS/DRIVEWAYS	256
		TOTAL:	826

SPV.0060.01
VERIFY LANDMARK REFERENCE MONUMENT

CATEGORY	STATION	LOCATION	EACH
0010	158+33	STH 81	1
0010	158+73	STH 81	1
0010	185+30	STH 81	1
0010	361+67	STH 81	1
0010	526+73	STH 81	1
		TOTAL:	5

SPV.0090.01
REMOVING HMA PAVEMENT NOTCHED WEDGE LONGITUDINAL JOINT

CATEGORY	STATION	TO	STATION	LOCATION	LF
0010	21+37	-	35+70	STH 81	1,433
0010	36+60	-	445+10	STH 81	40,850
0010	446+82	-	673+00	STH 81	22,618
				TOTAL:	64,901

Standard Detail Drawing List

08E09-06	SILT FENCE
13A10-02A	2-LANE RURAL SHOULDER RUMBLE STRIP, MILLING
13A10-02C	2-LANE RURAL SHOULDER RUMBLE STRIP, MILLING
13A10-02D	2-LANE RURAL SHOULDER RUMBLE STRIP, MILLING
13A11-03A	2-LANE RURAL CENTER LINE RUMBLE STRIP, MILLING
13A11-03B	2-LANE RURAL CENTER LINE RUMBLE STRIP, MILLING
14B42-06A	MIDWEST GUARDRAIL SYSTEM (MGS) GUARDRAIL
14B42-06B	MIDWEST GUARDRAIL SYSTEM (MGS) GUARDRAIL
14B42-06C	MIDWEST GUARDRAIL SYSTEM (MGS) GUARDRAIL
14B42-06D	MIDWEST GUARDRAIL SYSTEM (MGS) GUARDRAIL
14B44-04A	MIDWEST GUARDRAIL SYSTEM ENERGY ABSORBING TERMINAL (MGS)
14B44-04B	MIDWEST GUARDRAIL SYSTEM ENERGY ABSORBING TERMINAL (MGS)
14B44-04C	MIDWEST GUARDRAIL SYSTEM ENERGY ABSORBING TERMINAL (MGS)
14B45-05A	MIDWEST GUARDRAIL SYSTEM THRIE BEAM TRANSITION (MGS)
14B45-05B	MIDWEST GUARDRAIL SYSTEM THRIE BEAM TRANSITION (MGS)
14B45-05C	MIDWEST GUARDRAIL SYSTEM THRIE BEAM TRANSITION (MGS)
14B45-05F	MIDWEST GUARDRAIL SYSTEM THRIE BEAM TRANSITION (MGS)
14B47-02A	MIDWEST GUARDRAIL SYSTEM (MGS) TYPE 2 TERMINAL
14B47-02B	MIDWEST GUARDRAIL SYSTEM (MGS) TYPE 2 TERMINAL
14B47-02C	MIDWEST GUARDRAIL SYSTEM (MGS) TYPE 2 TERMINAL
15A04-04C	DELINEATOR POST WITH REFLECTIVE SHEETING
15C04-05	TRAFFIC CONTROL, ADVANCE WARNING SIGNS 45 M.P.H. OR GREATER TWO-WAY UNDIVIDED ROAD OPEN TO TRAFFIC
15C05-05	TRAFFIC CONTROL, ADVANCE WARNING SIGNS 40 M.P.H. OR LESS
15C08-19A	LONGITUDINAL MARKING (MAINLINE)
15C11-07A	CHANNELIZING DEVICES FLEXIBLE TUBULAR MARKER POST
15C11-07B	CHANNELIZING DEVICES DRUMS, CONES, BARRICADES AND VERTICAL PANELS
15C12-07	TRAFFIC CONTROL FOR LANE CLOSURE WITH FLAGGING OPERATION
15C19-05A	MOVING PAVEMENT MARKING OPERATION TWO-LANE TWO-WAY ROADWAY
15C33-03	STOP LINE AND CROSSWALK PAVEMENT MARKING
15C35-03A	PAVEMENT MARKING (INTERSECTIONS)
15D28-03	TRAFFIC CONTROL, WORK ON SHOULDER OR PARKING LANE, UNDIVIDED ROADWAY
15D38-02A	TEMPORARY TRAFFIC CONTROL SIGN MOUNTING
15D38-02B	ATTACHMENT OF SIGNS TO POSTS
15D39-02	TRAFFIC CONTROL, DROP-OFF SIGNING
16A01-07	LANDMARK REFERENCE MONUMENTS AND COVERS

6

6

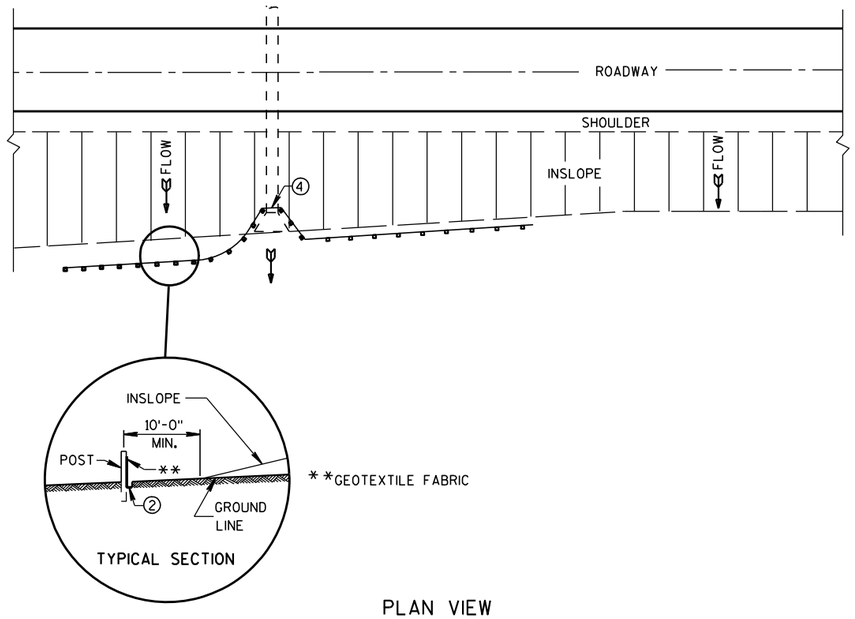

PLAN VIEW

TYPICAL APPLICATION OF SILT FENCE

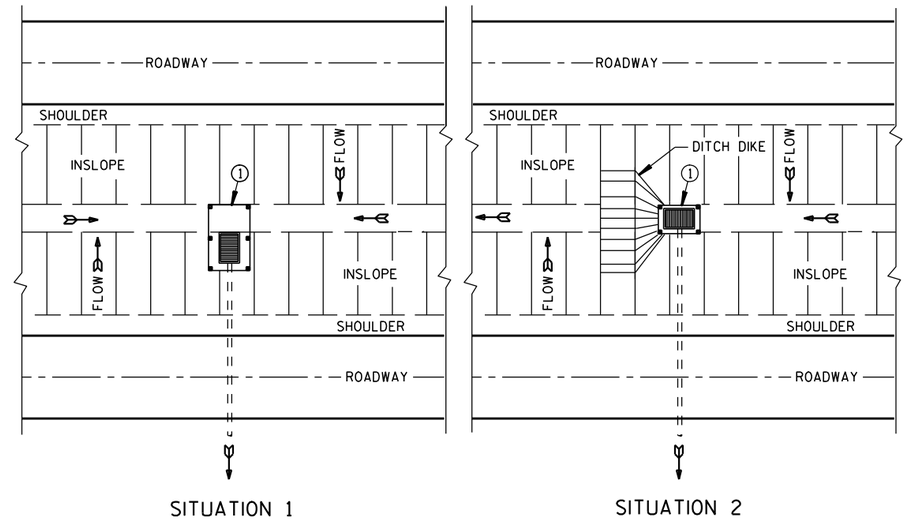

PLAN VIEW

SILT FENCE AT MEDIAN SURFACE DRAINS

GENERAL NOTES

DETAILS OF CONSTRUCTION NOT SHOWN ON THIS DRAWING SHALL CONFORM TO THE PERTINENT REQUIREMENTS OF THE STANDARD SPECIFICATIONS AND APPLICABLE SPECIAL PROVISIONS.

① HORIZONTAL BRACE REQUIRED WITH 2" X 4" WOODEN FRAME OR EQUIVALENT AT TOP OF POSTS.

② FOR MANUAL INSTALLATIONS THE TRENCH SHALL BE A MINIMUM OF 4" WIDE & 6" DEEP TO BURY AND ANCHOR THE GEOTEXTILE FABRIC. FOLD MATERIAL TO FIT TRENCH AND BACKFILL & COMPACT TRENCH WITH EXCAVATED SOIL.

③ WOOD POSTS SHALL BE A MINIMUM SIZE OF 1⅛" X 1⅛" OF OAK OR HICKORY.

④ SILT FENCE TO EXTEND ACROSS THE TOP OF THE PIPE.

⑤ CONSTRUCT SILT FENCE FROM A CONTINUOUS ROLL IF POSSIBLE BY CUTTING LENGTHS TO AVOID JOINTS. IF A JOINT IS NECESSARY USE ONE OF THE FOLLOWING TWO METHODS; A) OVERLAP THE END POSTS AND TWIST, OR ROTATE, AT LEAST 180 DEGREES. B) HOOK THE END OF EACH SILT FENCE LENGTH.

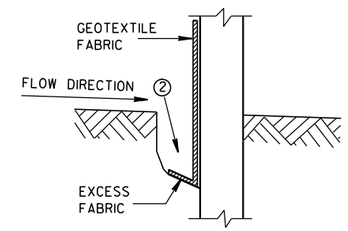

TRENCH DETAIL

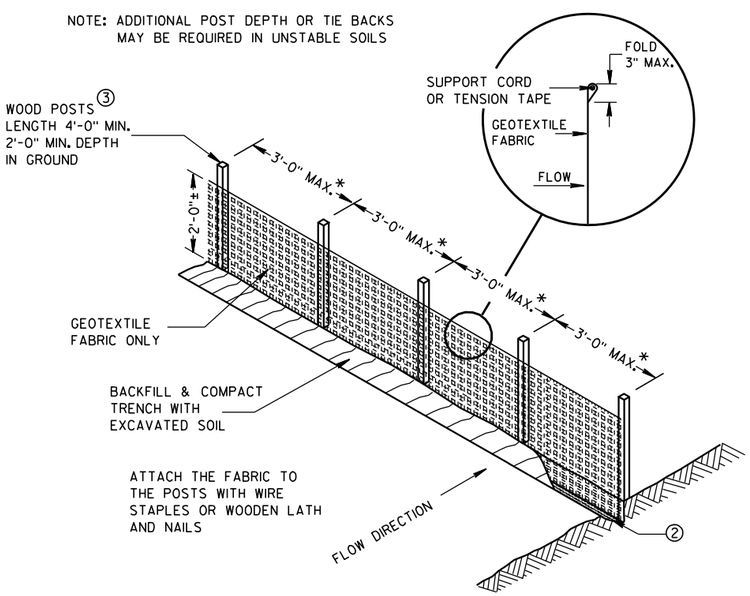

*NOTE: 8'-0" POST SPACING ALLOWED IF A WOVEN GEOTEXTILE FABRIC IS USED.

SILT FENCE

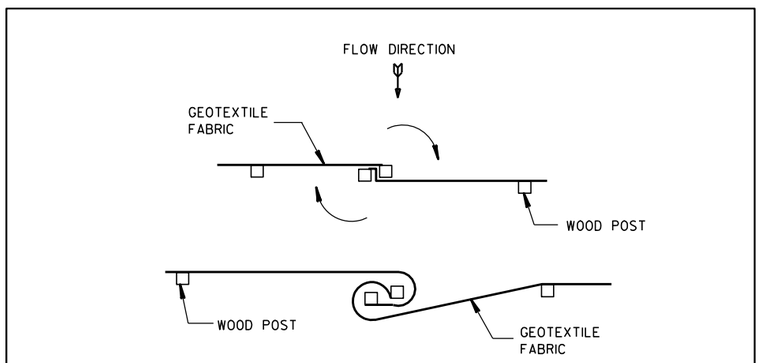

TWIST METHOD

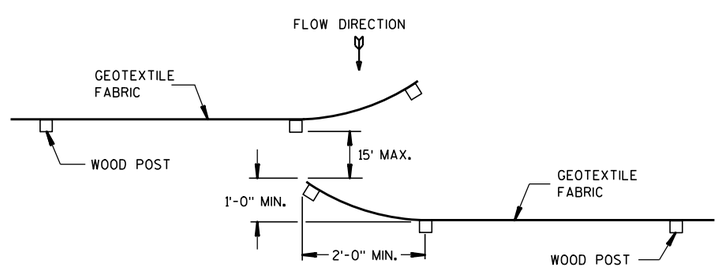

HOOK METHOD

JOINING TWO LENGTHS OF SILT FENCE ⑤

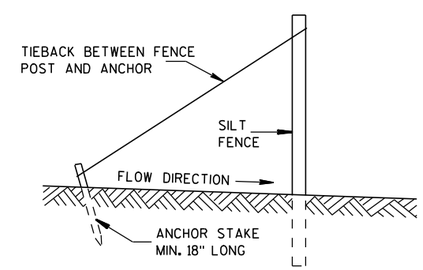

SILT FENCE TIE BACK

(WHEN REQUIRED BY THE ENGINEER)

SILT FENCE
STATE OF WISCONSIN DEPARTMENT OF TRANSPORTATION
APPROVED 4-29-05 /S/ Beth Cann----- DATE CHIEF ROADWAY DEVELOP ENGINEER FHWA

6

6

S.D.D. 8 E 9-6

S.D.D. 8 E 9-6

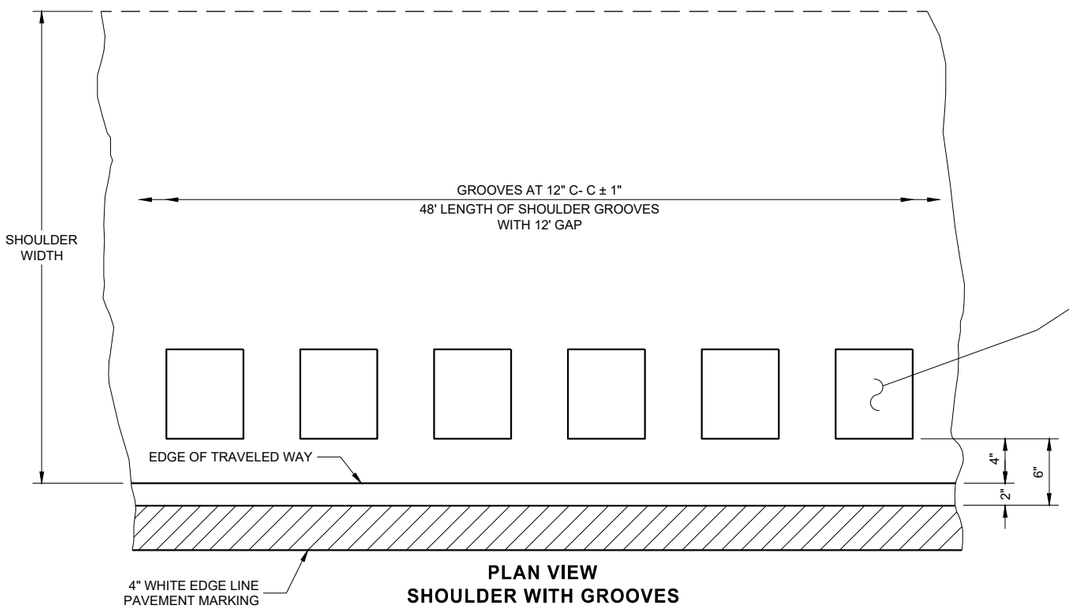

PLAN VIEW
SHOULDER WITH GROOVES

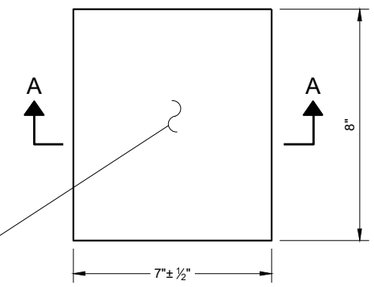

PLAN VIEW
(SINGLE GROOVE)

GENERAL NOTES

DETAILS OF CONSTRUCTION NO SHOWN ON THIS DRAWING SHALL CONFORM TO THE PERTINENT REQUIREMENTS OF THE STANDARD SPECIFICATIONS AND APPLICABLE SPECIAL PROVISIONS.

DO NOT MILL SHOULDER GROOVES THROUGH ANY INTERSECTION, MARKED CROSSWALK, NON-MOTORIZED PATH CROSSING, OR SNOWMOBILE CROSSING.

(1) SHOULDER GROOVES MAY BE OMITTED IN AREAS WITH HIGH CONCENTRATIONS OF DRIVEWAYS. WHEN DIRECTED BY THE ENGINEER.

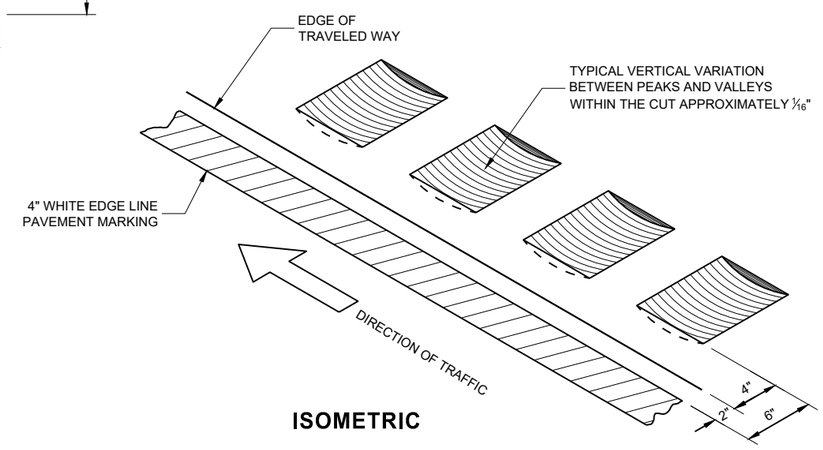

ISOMETRIC

PLACEMENT DETAIL FOR TYPE 1 MILLED RUMBLE STRIP

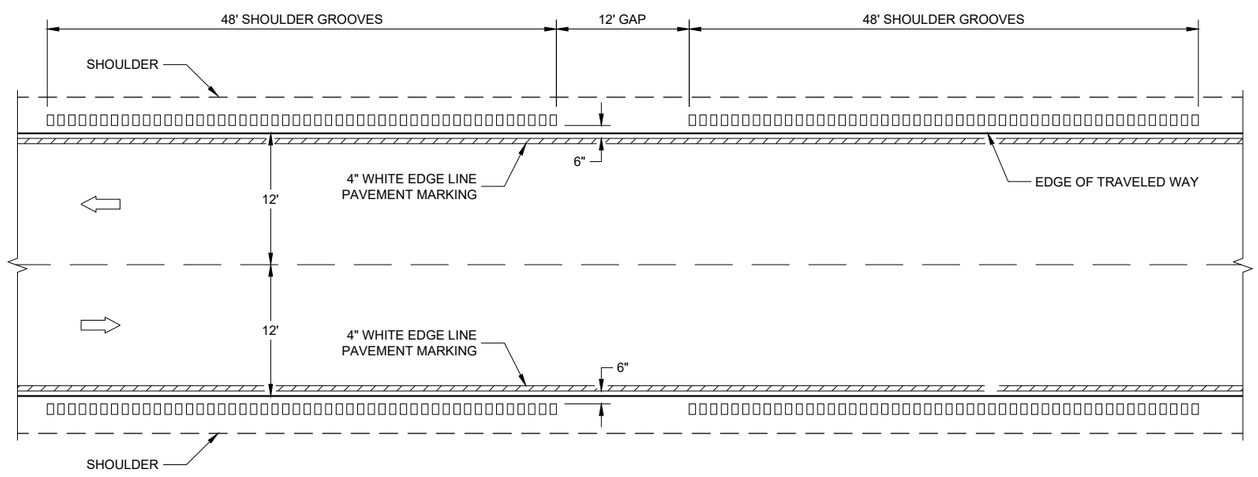

TYPE 1
2 - LANE SHOULDER RUMBLE STRIP

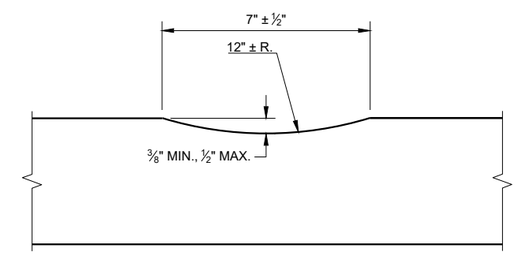

SECTION A - A

2-LANE RURAL SHOULDER RUMBLE STRIP, MILLING

STATE OF WISCONSIN
DEPARTMENT OF TRANSPORTATION

6

SDD 13A10 - 02a

6

SDD 13A10 - 02a

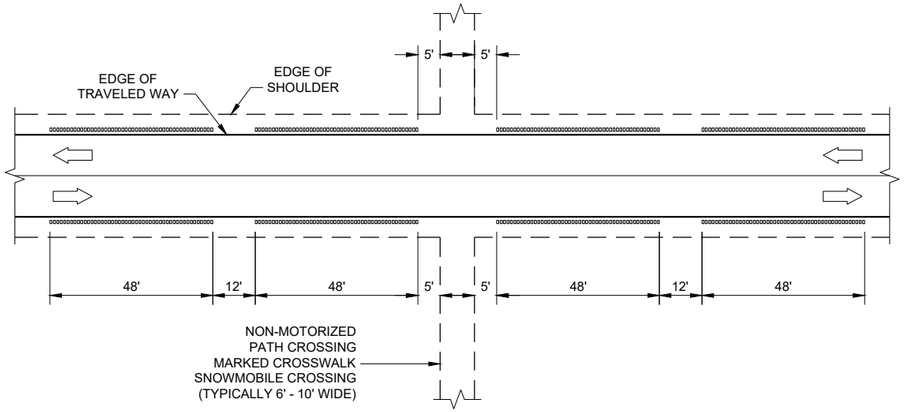

SHOULDER GROOVES AT MISCELLANEOUS CROSSINGS

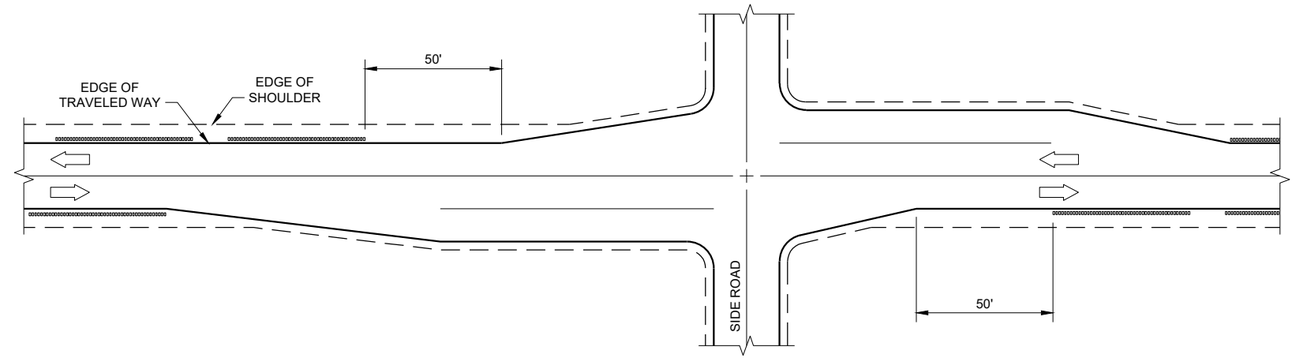

SHOULDER GROOVES AT RIGHT TURN LANE

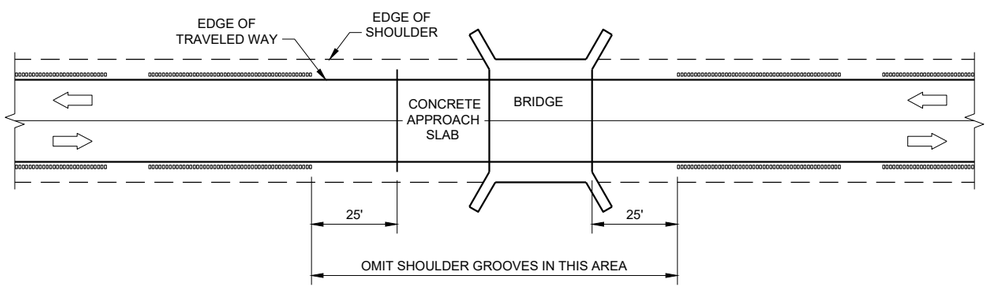

SHOULDER GROOVES AT BRIDGES

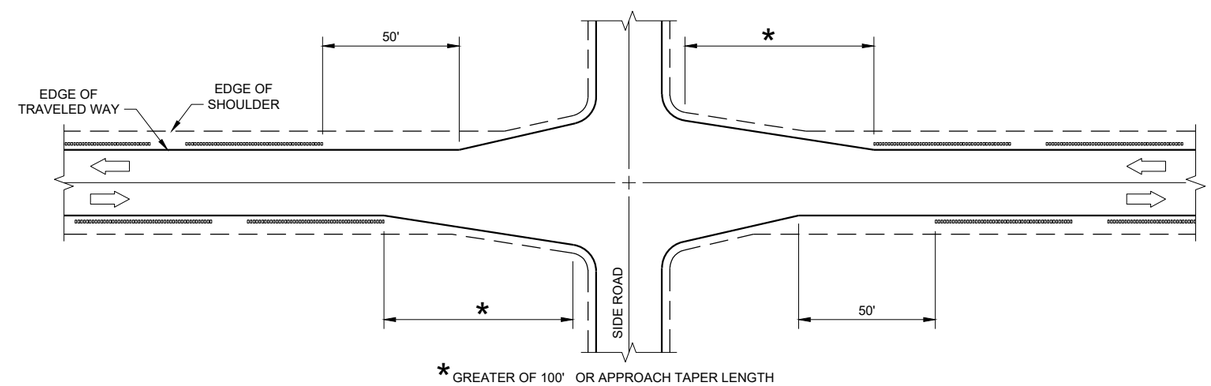

SHOULDER GROOVES AT INTERSECTIONS WITH APPROACH TAPER

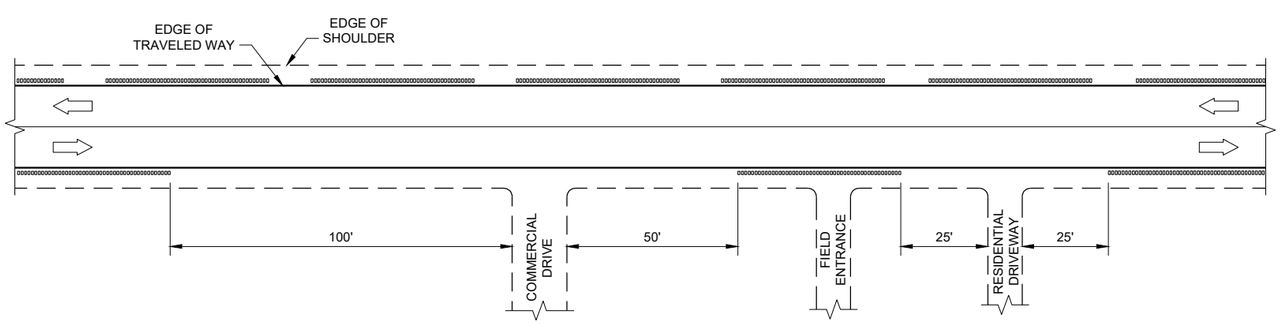

SHOULDER GROOVES AT DRIVEWAYS (1)

GENERAL NOTES

(1) SHOULDER GROOVES MAY BE OMITTED IN AREAS WITH HIGH CONCENTRATIONS OF DRIVEWAYS. WHEN DIRECTED BY THE ENGINEER.

2-LANE RURAL SHOULDER RUMBLE STRIP, MILLING

STATE OF WISCONSIN
DEPARTMENT OF TRANSPORTA

6

SDD 13A10 - 02c

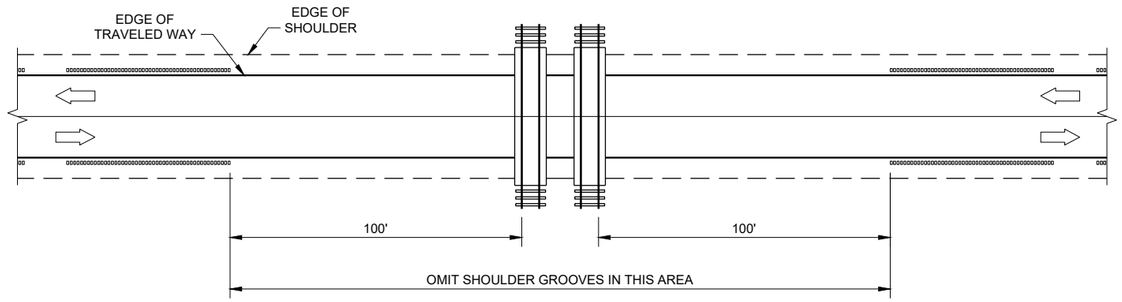

SHOULDER GROOVES AT RAILROADS

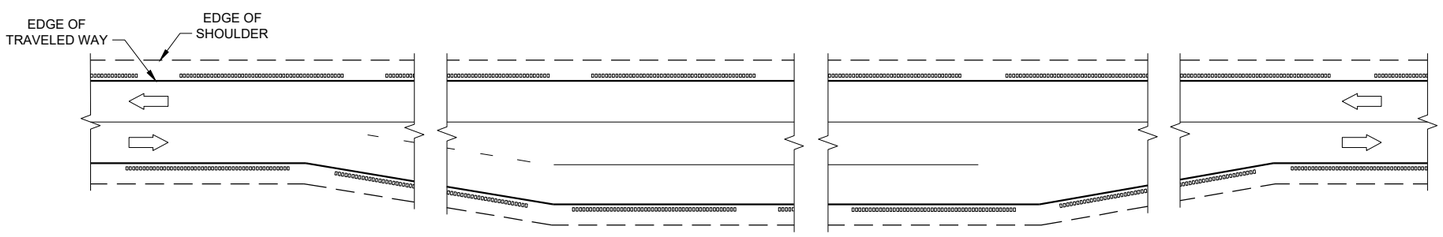

SHOULDER GROOVES AT PASSING AND CLIMBING LANES

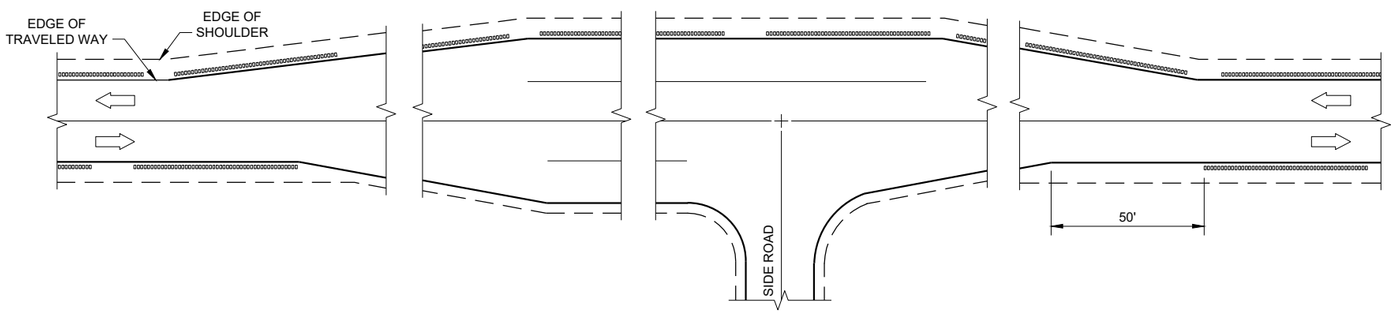

SHOULDER GROOVES AT BYPASS LANES

6

6

2-LANE RURAL SHOULDER RUMBLE STRIP, MILLING

STATE OF WISCONSIN
DEPARTMENT OF TRANSPORTATION

APPROVED
7/2018 — DATE
/S/ Rodney Taylor — ROADWAY STANDARDS DEVE ENGINEER

FHWA

SDD 13A10 - 02d

SDD 13A10 - 02d

GENERAL NOTES

DETAILS OF CONSTRUCTION NO SHOWN ON THIS DRAWING SHALL CONFORM TO THE PERTINENT REQUIREMENTS OF THE STANDARD SPECIFICATIONS AND APPLICABLE SPECIAL PROVISIONS.

DO NOT MILL CENTERLINE GROOVES THROUGH ANY INTERSECTION, MARKED CROSSWALK, NON-MOTORIZED PATH CROSSING, OR SNOWMOBILE CROSSING.

INSTALL PAVEMENT MARKING AFTER THE GROOVES ARE INSTALLED.

SEE SIGNING PLAN FOR SIGN REQUIREMENTS THAT MAY BE NEEDED.

(1) CENTERLINE GROOVES MAY BE OMITTED IN AREAS WITH HIGH CONCENTRATIONS OF DRIVEWAYS. WHEN DIRECTED BY THE ENGINEER.

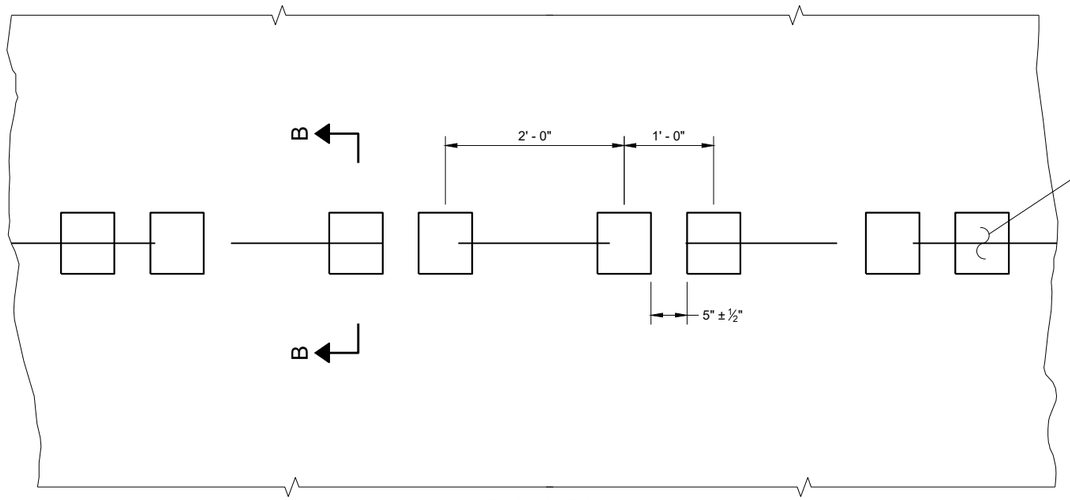

PLAN VIEW
SHOULDER WITH GROOVES

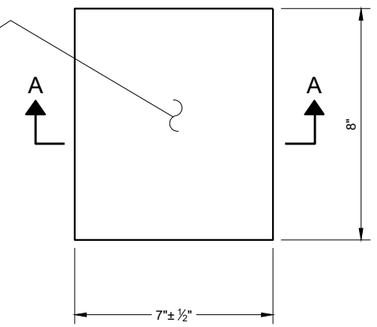

PLAN VIEW
(SINGLE GROOVE)

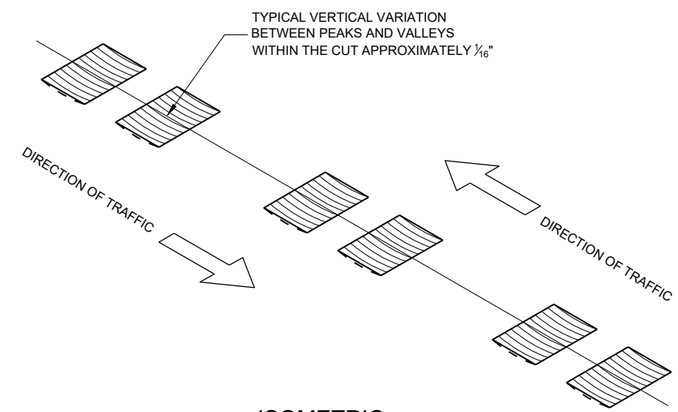

ISOMETRIC

PLACEMENT DETAIL FOR TYPE 1 MILLED RUMBLE STRIP

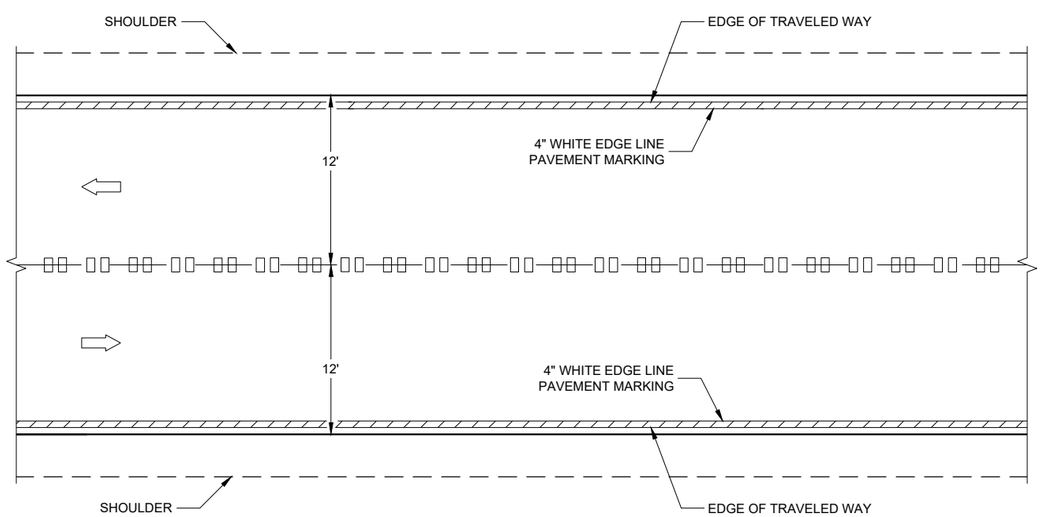

CENTERLINE GROOVES ON TWO-WAY ROADWAYS

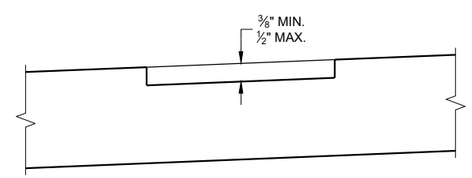

SECTION B - B
SUPERELEVATED ROADWAY

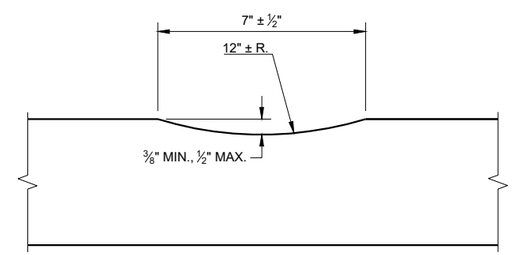

SECTION A - A

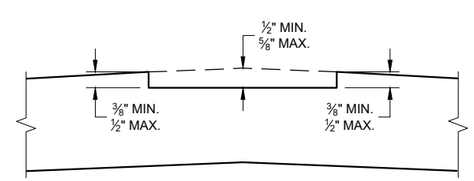

SECTION B - B
CROWNED ROADWAY

2-LANE RURAL
CENTER LINE RUMBLE STRIP, MILLING

STATE OF WISCONSIN
DEPARTMENT OF TRANSPORTAT

6

6

SDD 13A11 - 03a

SDD 13A11 - 03a

GENERAL NOTES

1. CENTERLINE GROOVES MAY BE OMITTED IN AREAS WITH HIGH CONCENTRATIONS OF DRIVEWAYS. WHEN DIRECTED BY THE ENGINEER.

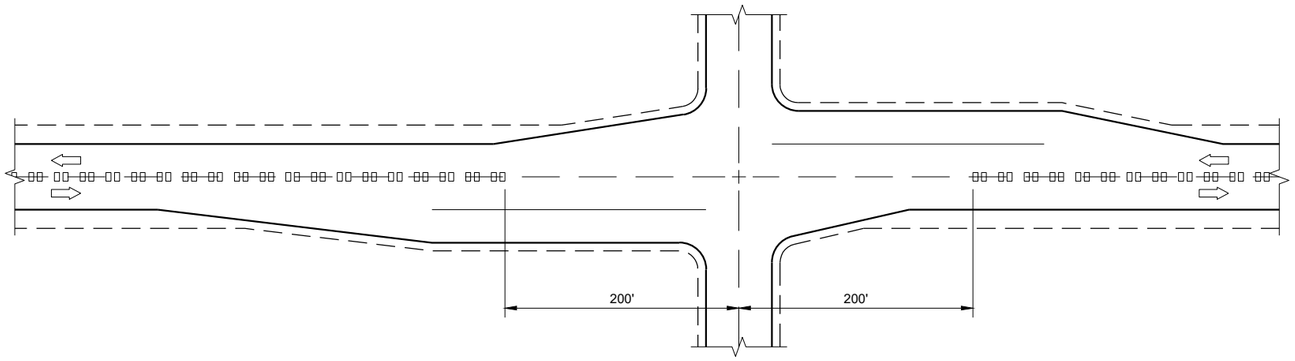

CENTERLINE GROOVES AT INTERSECTIONS

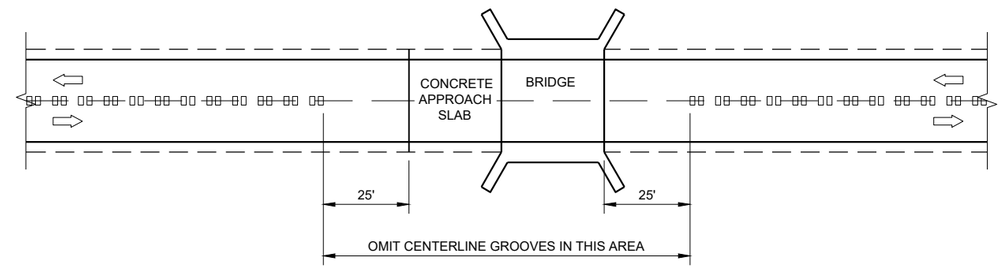

CENTERLINE GROOVES AT BRIDGES

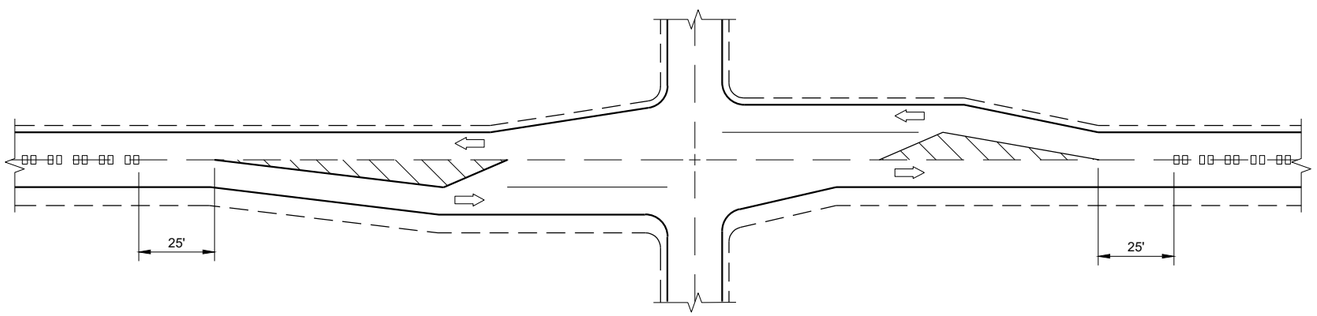

CENTERLINE GROOVES AT INTERSECTIONS (WITH LEFT TURN LANES)

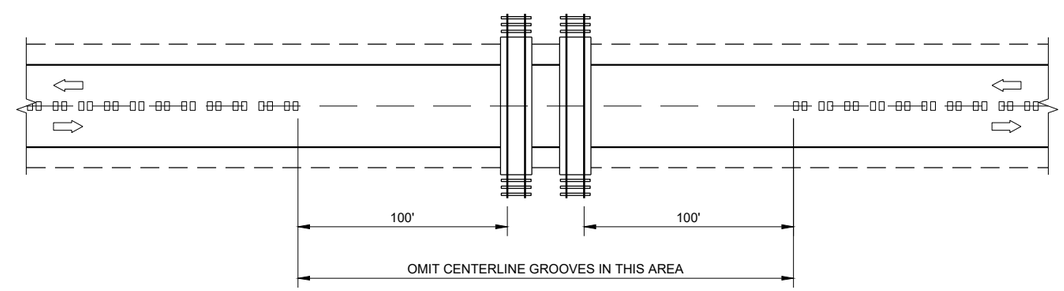

CENTERLINE GROOVES AT RAILROADS

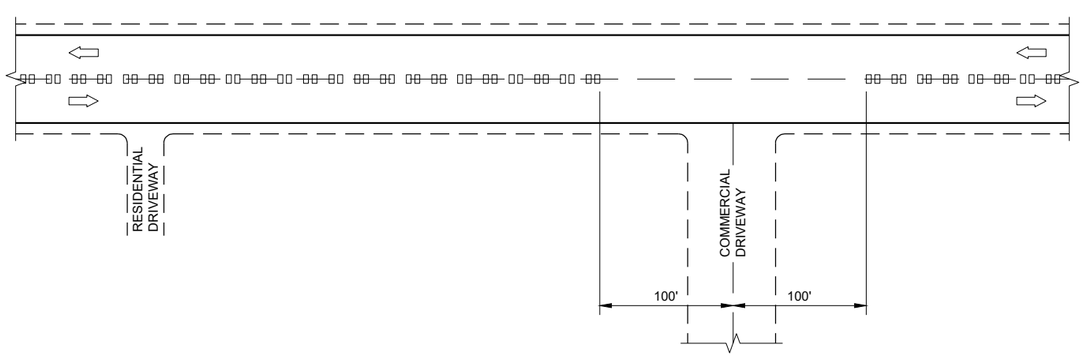

CENTERLINE GROOVES AT DRIVEWAYS (1)

6

6

SDD 13A11 - 03b

SDD 13A11 - 03b

2-LANE RURAL CENTERLINE RUMBLE STRIP, MILLING

STATE OF WISCONSIN
DEPARTMENT OF TRANSPORTATION

APPROVED

7/2018 — DATE

/S/ Rodney Taylor — ROADWAY STANDARDS DEVE ENGINEER

FHWA

1. WOOD OR STEEL POSTS (w6X9 OR w6X8.5) MAY BE USED. DO NOT INTERMIX WOOD AND STEEL POSTS. INSTALL STEEL POSTS WITH HOLES ON APPROACHING TRAFFIC SIDE.
2. USE WOOD OR APPROVED PLASTIC BLOCKOUTS. WOOD BLOCKOUTS MAY BE CONSTRUCTED OUT OF TWO OR MORE WOOD BLOCKOUTS. SEE ALTERNATE WOOD BLOCKOUT DETAIL. DIMENSIONS OF APPROVED PLASTIC BLOCKOUTS MAY VARY.
3. IF ROCK IS ENCOUNTERED DURING EXCAVATION, PROVIDE A HOLE 12 INCHES IN DIAMETER EXTENDING 20 INCHES DEEP INTO THE ROCK. PLACE APPROXIMATELY 2 1/2" INCHES OF GRANULAR MATERIAL IN THE BOTTOM OF THE HOLE. CUT THE POSTS THE TO LENGTH AMD INSTALL. BACKFILL WITH EXCAVATED MATERIAL AND COMPACT. BACKFILL IS TO BE FREE OF LARGE ROCKS.
4. WHEN THE DISTANCE FROM BACK OF POST TO SHOULDER HINGE POINT IS LESS THAN 2 FEET INSTALL LONGER POST AT HALF POST SPACING (K).
5. FOR NEW MGS INSTALLATION TOP OF W-BEAM RAIL TOLERANCE IS +1". FOR EXISTING MGS INSTALLATION TOP OF W-BEAM IS BETWEEN 27 ¾" TO 32".
6. WHEN USING STEEL POST AND WOOD BLOCKOUTS INSTALL FOUR 16D GALVANIZED NAILS. INSTALL NAILS AT THE BACK CORNERS OF THE BLOCK AND BEND THE NAILS OVER THE FLANGE OF THE STEEL POST.
7. TOTAL POST LENGTH FOR TYPE K IS 7' - 0". TOTAL POST LENGTH FOR OTHER MGS TYPES IS 6' - 0".

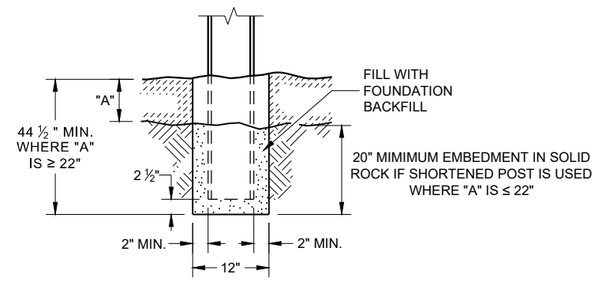

END VIEW
SETTING STEEL OR WOOD POST IN ROCK (3)

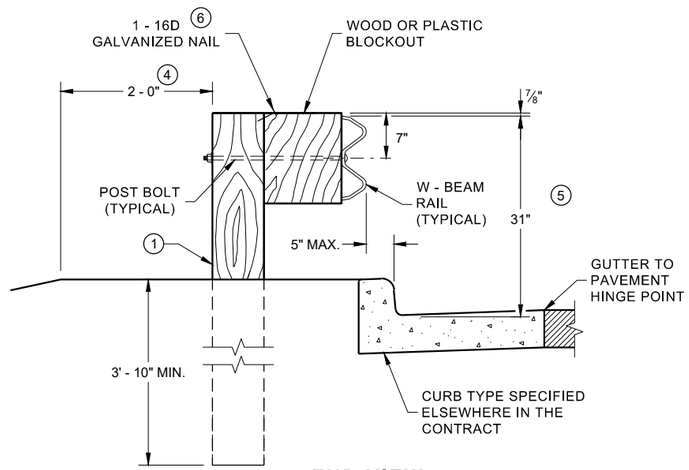

END VIEW
LOCATED ALONG A CURBED ROADWAY

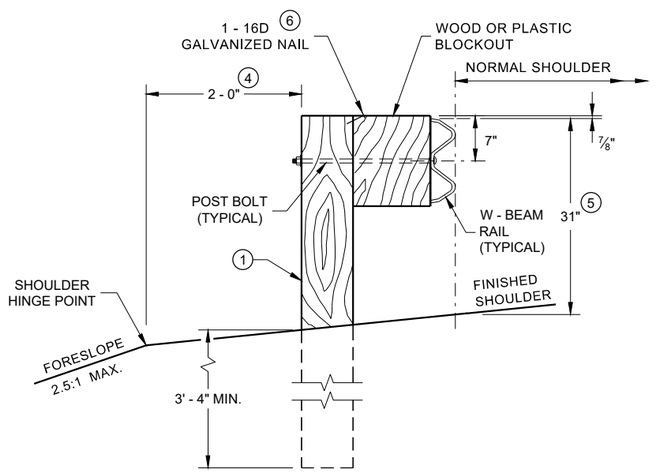

END VIEW
LOCATED ALONG A ROADWAY SHOULDER STANDARD INSTALLATION

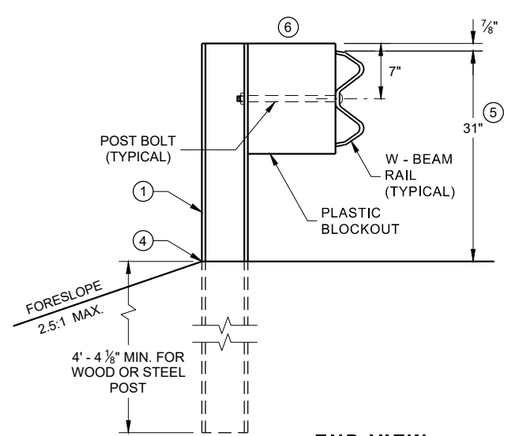

END VIEW
MGS LONGER POST AT HALFPOST SPACING W BEAM (K)

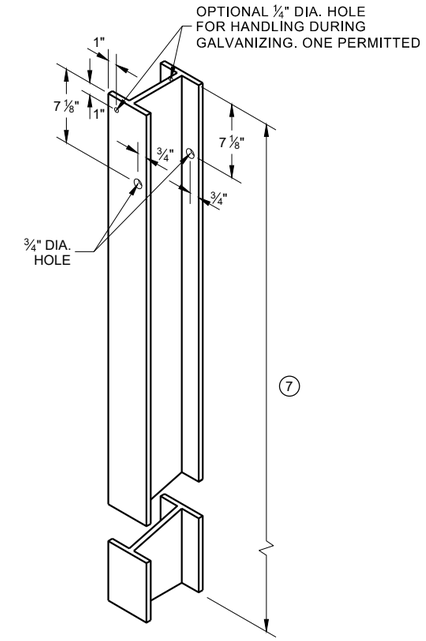

STEEL POST & HOLE PUNCHING DETAIL (W 6 X 9) (1)

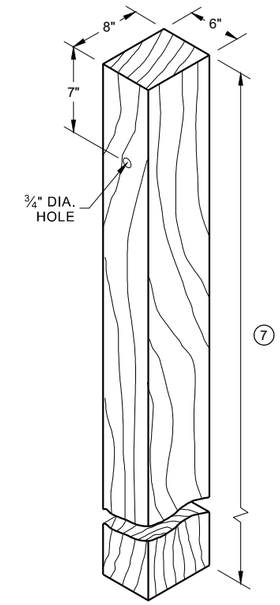

WOOD POST (6" X 8") NOMINAL (1)

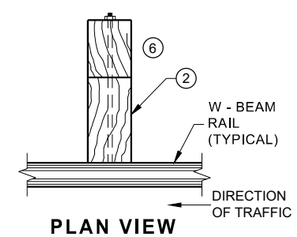

PLAN VIEW WOOD POST, BLOCKOUT & BEAM

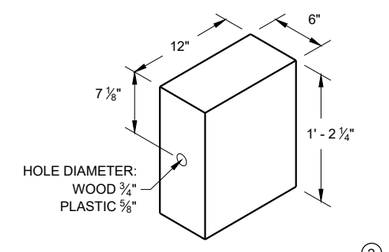

WOOD OR PLASTIC BLOCKOUT (2)

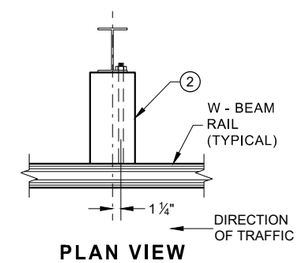

PLAN VIEW STEEL POST, PLASTIC BLOCKOUT & BEAM

MIDWEST GUARDRAIL SYSTEM (MGS) GUARDRAIL

STATE OF WISCONSIN
DEPARTMENT OF TRANSPORTA

6

SDD 14B42 - 06a

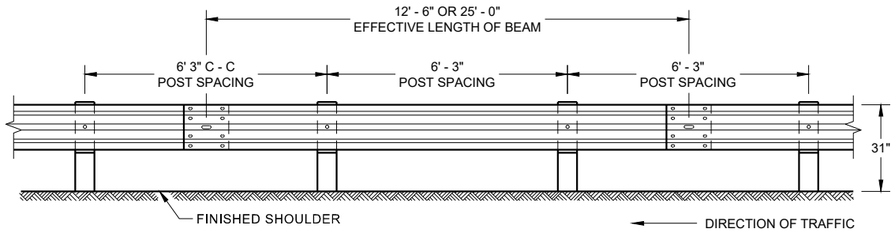

FRONT VIEW
POST SPACING STANDARD INSTALLATION

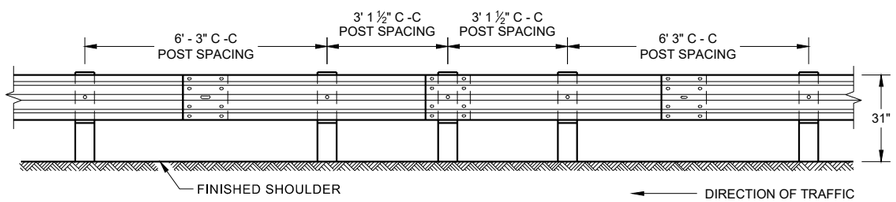

FRONT VIEW
HALF POST SPACING (HS) AND HALF POST SPACING WITH LONGER POSTS (K)

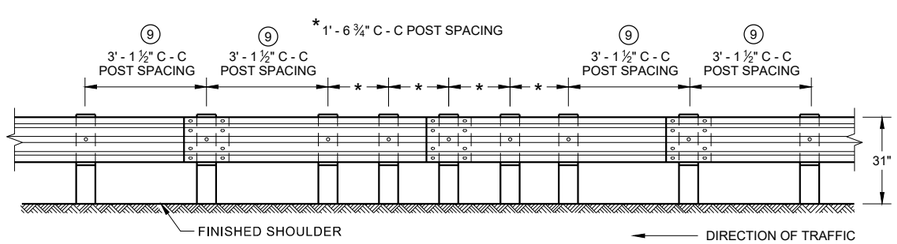

FRONT VIEW
QUARTER POST SPACING (QS)

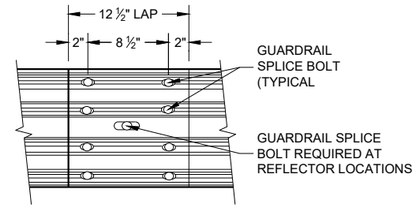

FRONT VIEW
MID-SPAN BEAM SPLICE

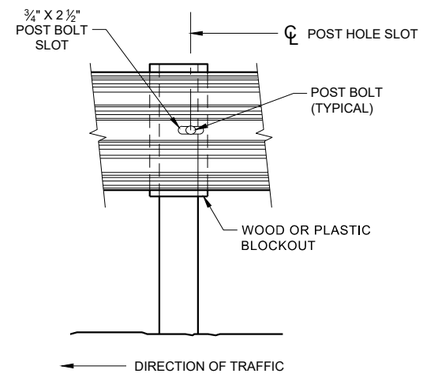

FRONT VIEW AT STEEL POST

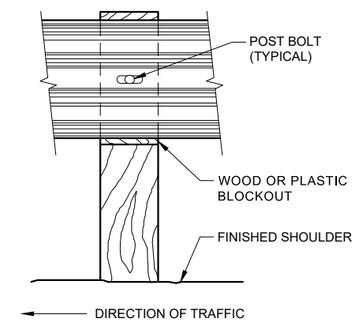

FRONT VIEW AT WOOD POST

GENERAL NOTES

8 DO NOT INSTALL REFLECTORS ON THE FIRST 50 FEET OF THE APPROACH END OF THE ENERGY ABSORBING TERMINAL. RAIL SPLICE LOCATIONS ARE THE ONLY ACCEPTABLE LOCATIONS FOR REFLECTORS.

9 25 FEET OF HALF POST SPACING IS REQUIRED ON APPROACH AND DEPARTURE ENDS OF QUARTER POST SPACING.

POST BOLTS ARE A ⅝" DIAMETER ASTM A307 GUARDRAIL BOLT. A POST BOLT REQUIRES ⅝" DIAMETER A563A DOUBLE RECESSED (DR) HEAVY HEX NUT AND ⅝" DIAMETER F844 FLAT WASHER. POST BOLTS MAY BE LONGER IF MULTIPLE BLOCKOUTS ARE BEING USED.

GUARD RAIL SPLICE BOLTS ARE A ⅝" DIAMETER ASTM A307 GUARDRAIL HEAD BOLT. A GUARDRAIL SPLICE BOLT REQUIRES ⅝" DIAMETER A563A DOUBLE RECESSED (DR) HEAVY HEX NUT.

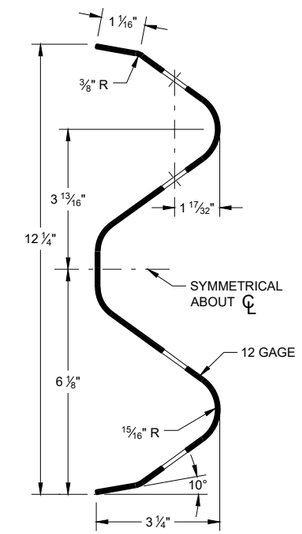

SECTION THRU W-BEAM RAIL

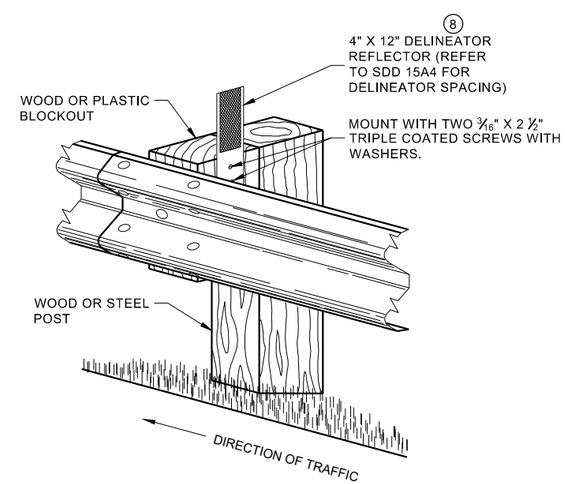

ONE SIDED REFLECTOR DETAIL AND TYPICAL INSTALLATION

MIDWEST GUARDRAIL SYSTEM (MGS) GUARDRAIL

STATE OF WISCONSIN
DEPARTMENT OF TRANSPORTA

6

SDD 14B42 - 06b

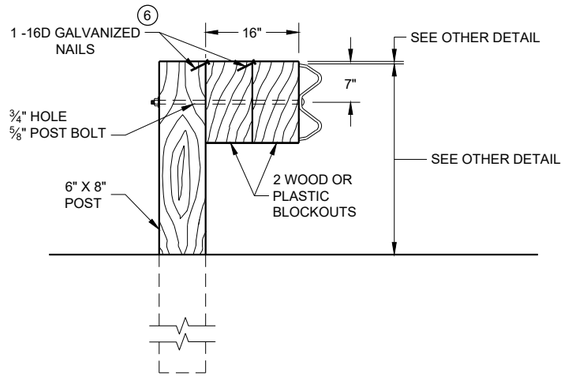

DETAIL FOR 16" BLOCKOUT DEPTH

IT IS ACCEPTABLE TO USE BLOCKOUTS UP TO 16" DEEP TO INCREASE THE POST OFFSET TO AVOID UNDERGROUND OBSTACLES. THERE IS NO LIMIT TO THE NUMBER OF POSTS THAT CAN HAVE ADDITIONAL BLOCKOUTS UP TO 16" DEEP.

NOTE:

1. ALL FILLETS SHALL HAVE A MINIMUM RADIUS OF 3/16".
2. IF THE BOLT EXTENDS MORE THAN ¼" FROM THE NUT THE BOLT SHOULD BE TRIMMED BACK.

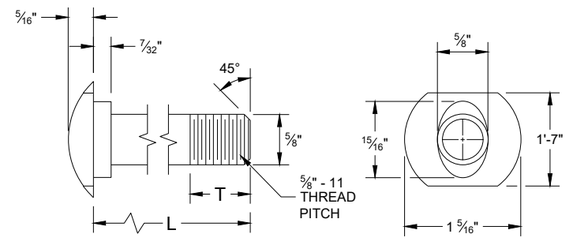

POST BOLT TABLE

L	T (MIN.)
1 ¼"	1 ⅛"
2"	1 ¾"
10"	4"
14"	4 1/16"
18"	4"
21"	4 1/16"
25"	4"

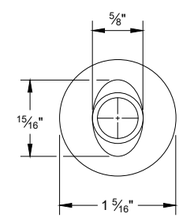

ALTERNATE BOLT HEAD

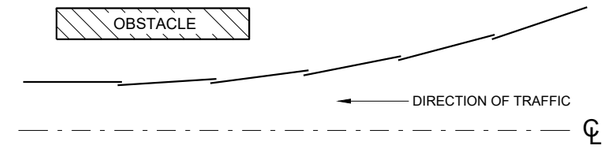

PLAN VIEW
BEAM LAPPING DETAIL

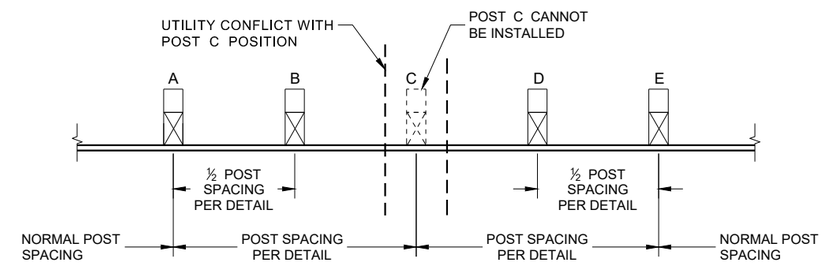

POST DRIVING FOR CONTINUOUS UNDERGROUND OBSTRUCTION

6

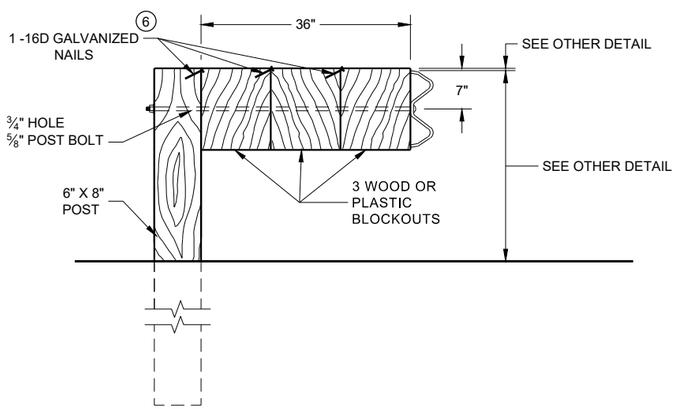

DETAIL FOR 36" BLOCKOUT DEPTH

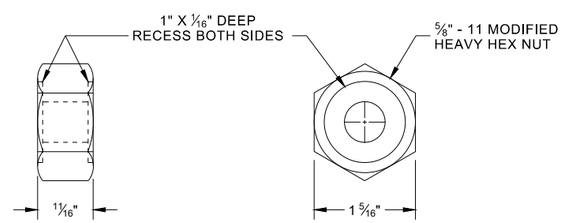

POST BOLT, SPLICE BOLT AND RECESS NUT

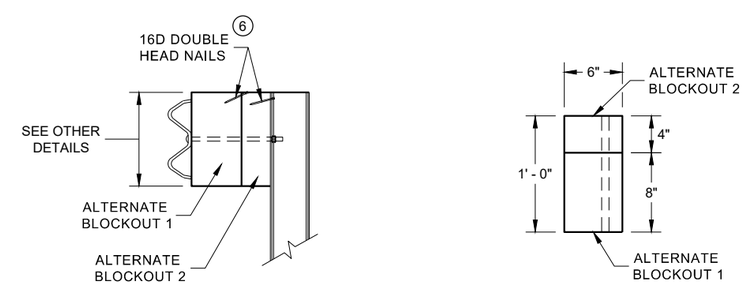

SIDE VIEW

PLAN VIEW

ALTERNATE WOOD BLOCKOUT DETAIL

NOTES: UNDER SPECIAL CIRCUMSTANCES, SUCH AS AVOIDING OBSTACLES THAT ARE NOT RELOCATED, IT IS ACCEPTABLE TO INSTALL ADDITIONAL BLOCKOUTS TO OBTAIN UP TO 36" DEPTH FOR ONE OR TWO POSTS IN A SECTION OF GUARDRAIL.

DO NOT USE 16" OR 36" BLOCKOUTS IF IT CAUSES THE POST TO BE DRIVEN BEYOND SHOULDER HINGE POINT OR CAUSES A FIXED OBJECT TO BE WITHIN THE DEFLECTION DISTANCE OF THE BARRIER.

(6) WHEN USING STEEL POST AD WOOD BLOCKOUTS, INSTALL FOUR 16D GALVANIZED NAILS. INSTALL NAILS AT THE BACK CORNERS OF THE BLOCK AND BEND THE NAILS OVER THE FLANGE OF THE STEEL POST.

MIDWEST GUARDRAIL SYSTEM (MGS) GUARDRAIL

STATE OF WISCONSIN
DEPARTMENT OF TRANSPORTA

SDD 14B42 - 06c

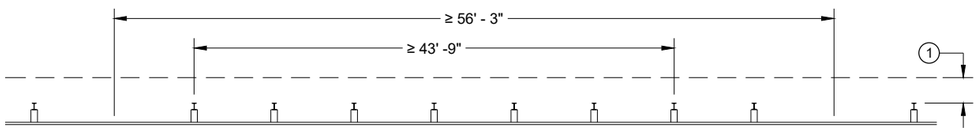

MISSING POST IN NORMAL BEAM GUARD RUN

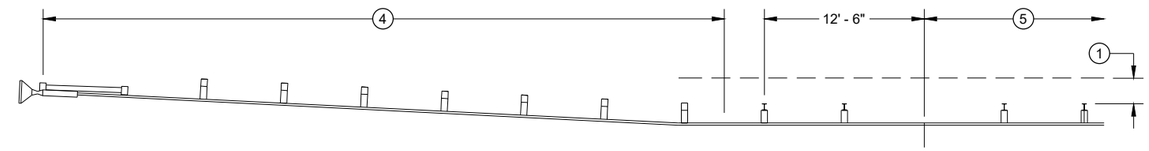

MISSING POST IN NORMAL BEAM GUARD RUN NEAR EAT

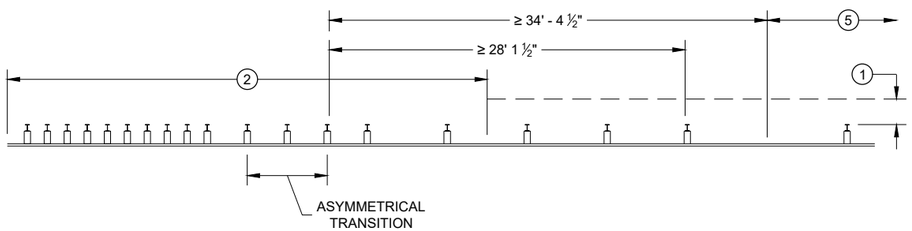

MISSING POST NEAR APPROACH THRIE BEAM TRANSITION

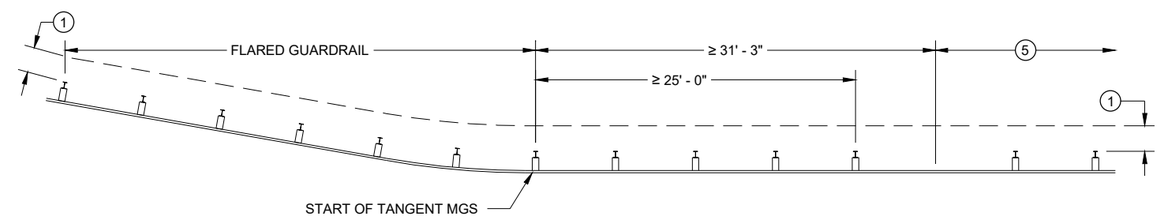

MISSING POST IN NORMAL BEAM GUARD RUN NEAR FLARED BEAM GUARD

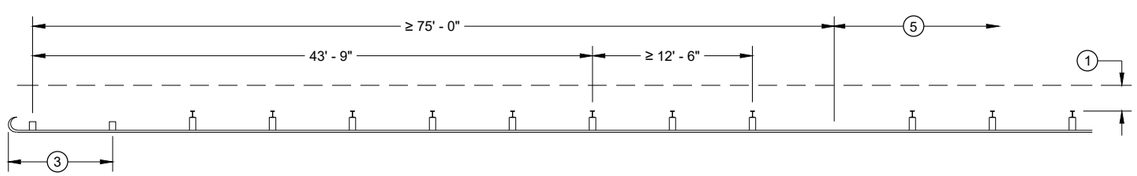

MISSING POST IN NORMAL BEAM GUARD RUN NEAR TYPE 2 TERMINAL

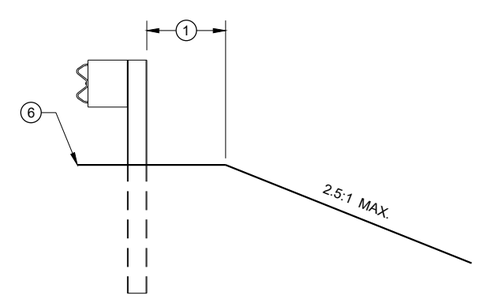

CROSS SECTION VIEW

1. MINIMUM OF 2 FEET OF GRADING BEHIND POST.
2. SEE SDD 14B45 FOR MORE DETAILS.
3. SEE SDD 14B47 FOR MORE DETAILS.
4. SEE SDD 14B44 FOR MORE DETAILS.
5. SEE MISSING POST IN NORMAL BEAM GUARD RUN FOR DISTANCE TO NEXT MISSING POST AND AREA FOR WELL DRAINED, COMPACTED SOILS.
6. SEE PLAN FOR SHOULDER DESIGN.

MIDWEST GUARDRAIL SYSTEM (MGS) GUARDRAIL

STATE OF WISCONSIN
DEPARTMENT OF TRANSPORTATION

APPROVED
7/2018 — DATE
/S/ Rodney Taylor — ROADWAY STANDARDS DEVE UNIT SUPERVISOR
FHWA

6

SDD 14B42 - 06d

GENERAL NOTES

(A) THE SLOPE IN THE AREA BOUNDED BY THE GRADELINE, THE HINGE POINT LINE (HPL) AND THE CLEAR ZONE LIMITS (CZL) SHALL BE 4:1 OR FLATTER.

(B) AFTER FINAL ASSEMBLY, RECHECK CABLE TO BE SURE IT IS TAUT AND HAS NOT RELAXED

(C) DIFFERENT MANUFACTURERS REQUIRE DIFFERENT PERFORATED W - BEAM RAIL END PANELS. SEE MANUFACTURER'S INFORMATION.

(D) ATTACH ALUMINUM SHEET TO E.A.T. HEAD USING 4 STAINLESS STEEL SELF - TAPPING SCREWS. ONE SCREW PER CORNER.

(E) HARDWARE MAY VARY BETWEEN MANUFACTURER. SEE MANUFACTURER'S DRAWING FOR INFORMATION.

DIMENSIONS MAY VARY, MANUFACTURER'S INFORMATION.

SEE SDD 14B42 FOR MORE INFORMATION.

* DO NOT ATTACH BLOCKOUTS TO POST 1 AND 2.

DO NOT INSTALL REFLECTORS ON THE FIRST 50 FEET OF THE APPROACH END OF THE ENERGY ABSORBING TERMINAL.

SEE MANUFACTURER'S DRAWING FOR SPLICE LOCATION, HARDWARE DIMENSIONS AND INSTALLATION INSTRUCTIONS.

THE CENTER OF THE UPPER 3 ½" DIAMETER HOLE ON POST NUMBER 3 THROUGH POST 9 IS TO BE FLUSH WITH THE GROUND LINE UP TO A MAXIMUM OF 2" ABOVE GROUND LINE. WOOD BLOCKS ON POSTS NUMBERED 3 THROUGH 9 MAY BE ADJUSTED UP TO 3" ABOVE THE TOP OF POST.

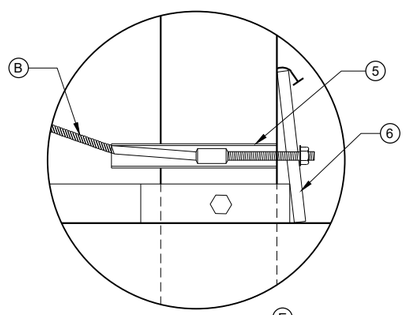

DETAIL "A" (E)

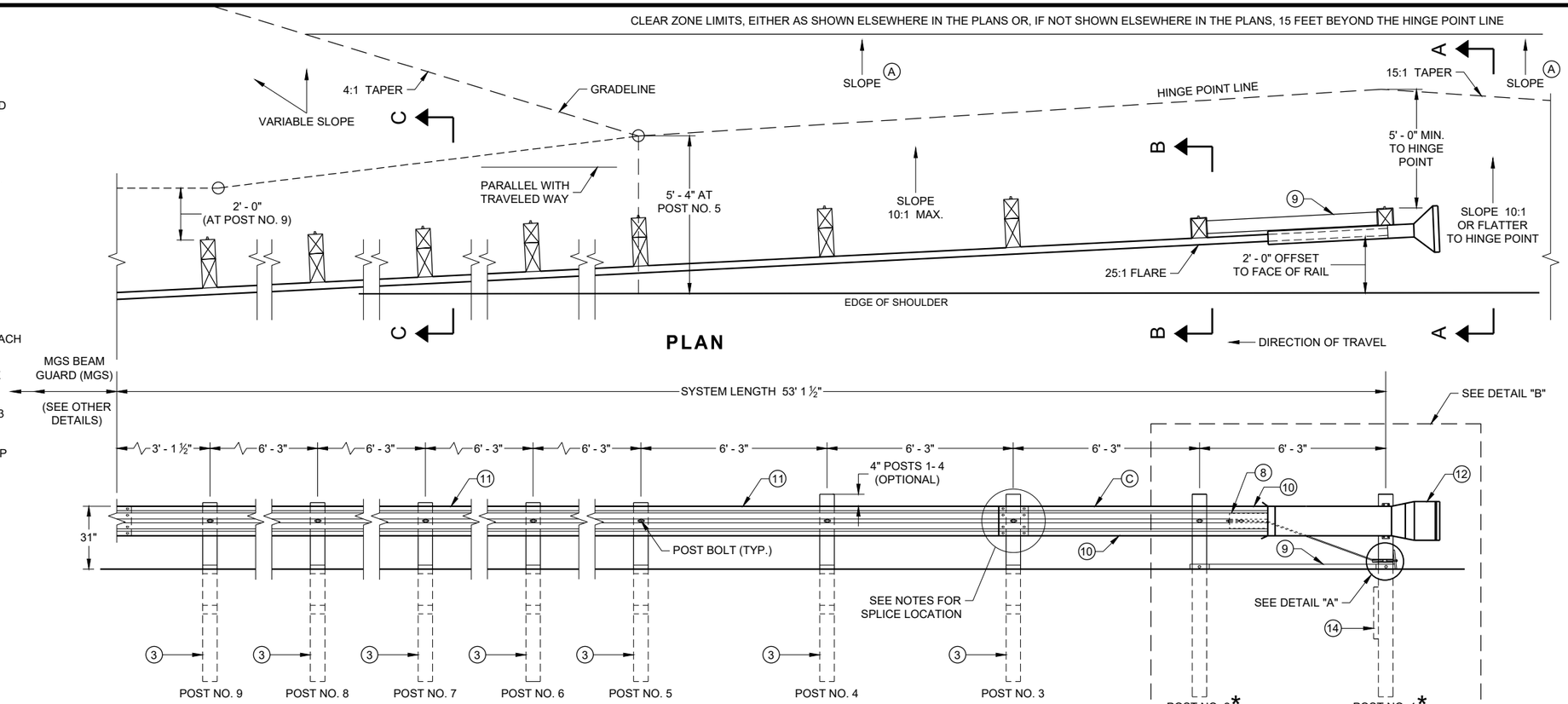

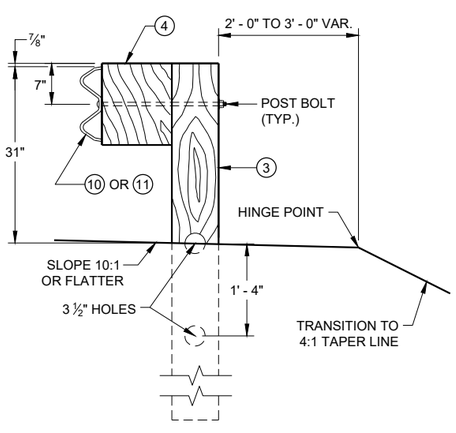

SECTION C - C
TYPICAL AT POST NOS. 3 - 9

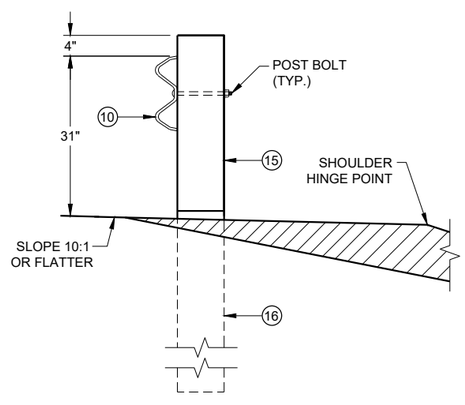

SECTION B - B
TYPICAL AT POST NO. 2*

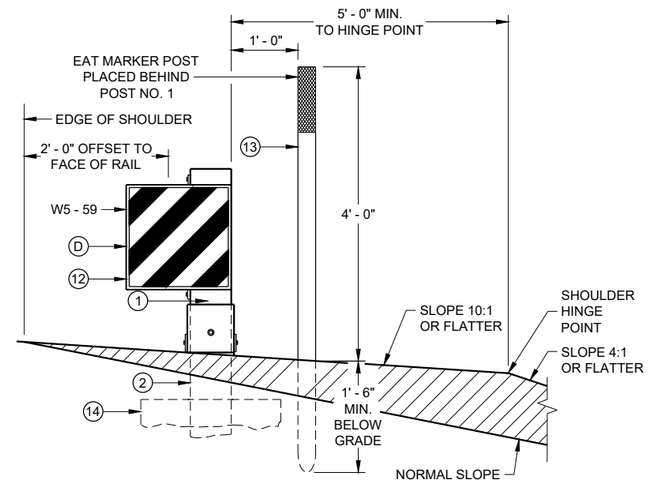

SECTION A - A
TYPICAL AT POST NO. 1*

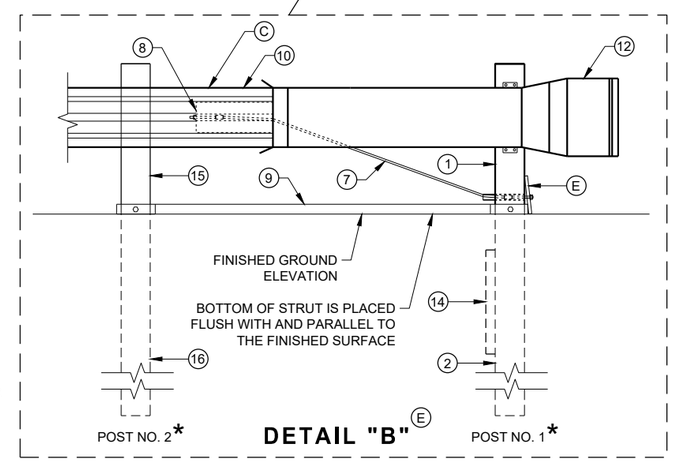

DETAIL "B" (E)

MIDWEST GUARDRAIL SYSTEM ENERGY ABSORBING TERMINAL (MGS)

STATE OF WISCONSIN
DEPARTMENT OF TRANSPORTATION

6

6

SDD 14B44 - 04a

SDD 14B44 - 04a

BILL OF MATERIALS

PART NO.	DESCRIPTION MATERIALS PROVIDED BY MGS EAT MANUFACTURER. SEE MANUGACTURER'S DETAILS FOR MORE INFORMATION.
1	UPPER POST NO. 1 6" X 6" TUBE
2	LOWER POST NO. 1
3	WOOD CRT
4	WOOD BLOCKOUT
5	PIPE SLEEVE
6	BEARING PLATE
7	BCT CABLE ASSEMBLY
8	ANCHOR CABLE BOX
9	GROUND STRUT
10	PERFORATED W-BEAM RAIL END PANEL, 12'-6" LONG.
11	STANDARD W-BEAM RAIL. MULTIPLE SECTIONS REQUIRED. SECTIONS VARY IN LENGTH.
12	IMPACT HEAD
13	EAT MARKER POST - YELLOW (SEE APPROVED PRODUCTS LIST)
14	SOIL PLATE
15	UPPER POST NO. 2
16	LOWER POST NO. 2

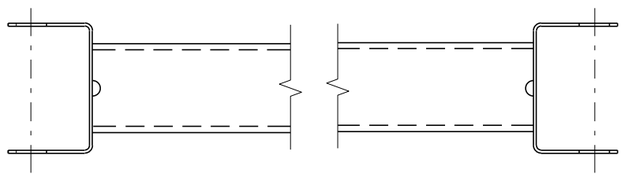

GENERIC GROUND STRUT 9 E

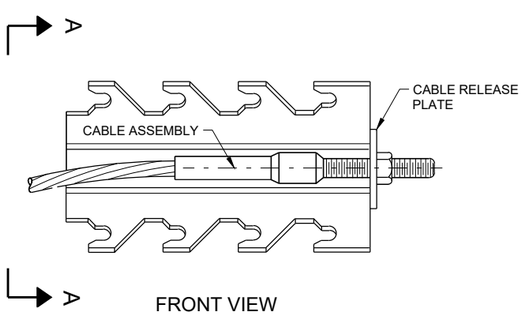

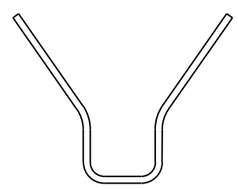

SECTION A - A

GENERIC ANCHOR CABLE BOX 9 E

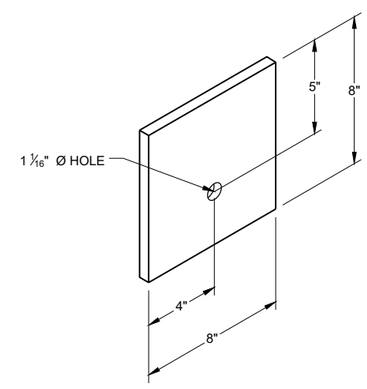

BEARING PLATE 6 E

6

6

SDD 14B44 - 04b

SDD 14B44 - 04b

MIDWEST GUARDRAIL SYSTEM ENERGY ABSORBING TERMINAL (MGS)

STATE OF WISCONSIN
DEPARTMENT OF TRANSPORTAT

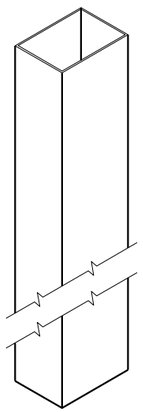

UPPER POST NO. 1 (1) (E)

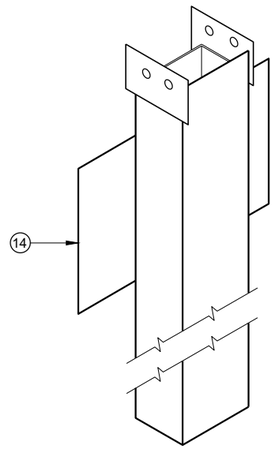

LOWER POST NO. 1 (2) (E)

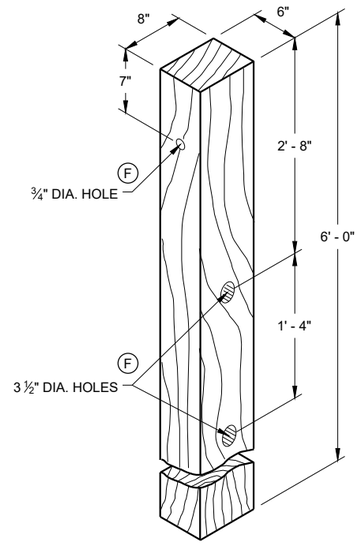

WOOD CRT POST (3) (E)

POSTS NUMBER 3-9

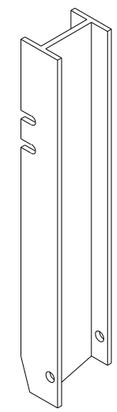

UPPER POST NO. 2 (15) (E)

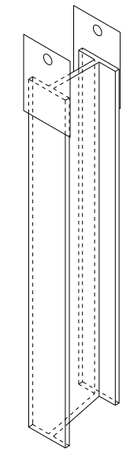

LOWER POST NO. 2 (16) (E)

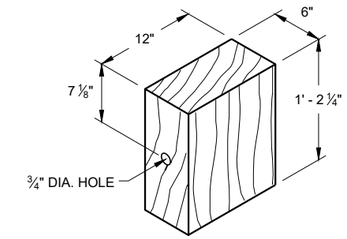

WOOD BLOCKOUT (4)

REQ'D. AT ALL POSTS EXCEPT POST NO'S 1 & 2

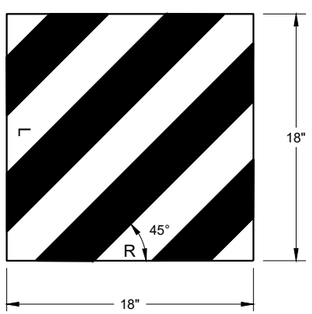

W5 - 59

REFLECTIVE SHEETING DETAIL (E)

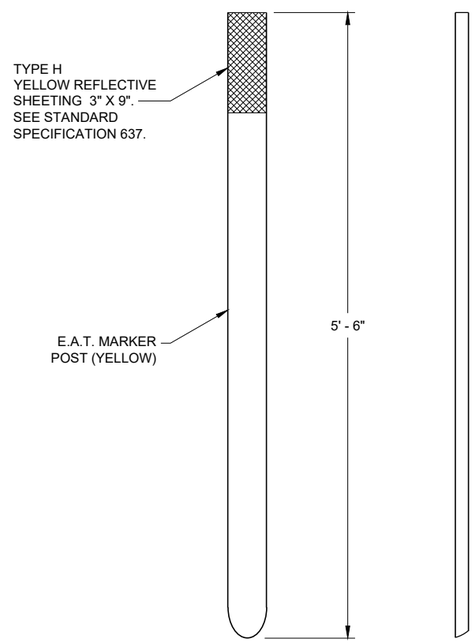

FRONT VIEW SIDE VIEW

E.A.T. MARKER POST (13)

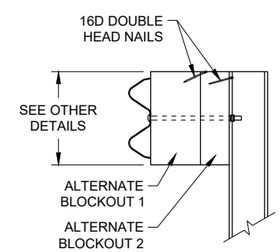

SIDE VIEW

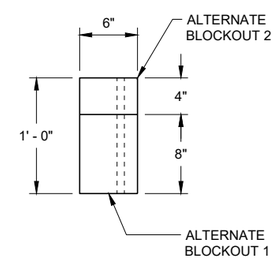

TOP VIEW

ALTERNATE WOOD BLOCKOUT DETAIL

MIDWEST GUARDRAIL SYSTEM ENERGY ABSORBING TERMINAL (MGS)

STATE OF WISCONSIN
DEPARTMENT OF TRANSPORTATION

APPROVED
7/2018 — DATE
/S/ Rodney Taylor — ROADWAY STANDARDS DEVE UNIT SUPERVISOR
FHWA

6

6

SDD 14B44 - 04c

SDD 14B44 - 04c

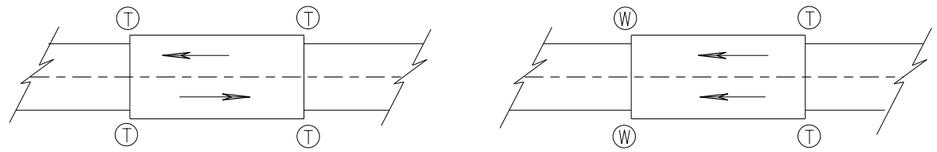

TWO WAY TRAFFIC **ONE WAY TRAFFIC**

(T) THRIE BEAM CONNECTION

(W) W-BEAM CONNECTION WHEN REQUIRED

TYPICAL LOCATIONS OF THRIE BEAM AND W-BEAM CONNECTIONS TO BRIDGE

GENERAL NOTES

IF ROCK IS ENCOUNTERED, REMOVE ROCK TO FULL DEPTH OF POST PLUS 2½", AND 12" DIAMETER AROUND POST. SEE 14B42 FOR MORE DETAILS.

TRANSITION USES STEEL POSTS ONLY.

SEE STANDARD DETAIL DRAWING 14 B 42 FOR MORE INFORMATION.

POST 2 THROUGH 17 USES STEEL POST ONLY

(1) BRIDGE RAILING TYPE "W" DOES NOT REQUIRE A TERMINAL CONNECTOR.

(2) OPTIONAL CURB AND GUTTER OR DRAINAGE FEATURE SEE PLAN FOR INFORMATION.

(13) STEEL OR WOOD POST IS ACCEPTABLE AT POST 1. SEE SDD14B42

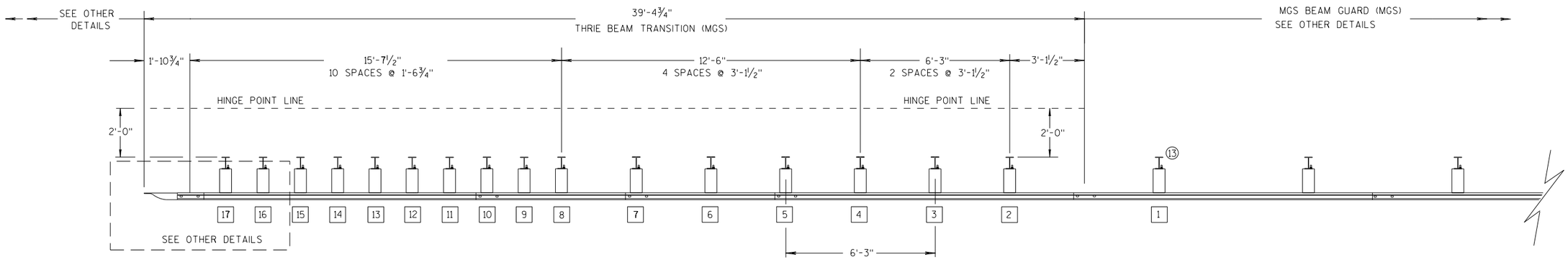

PLAN VIEW

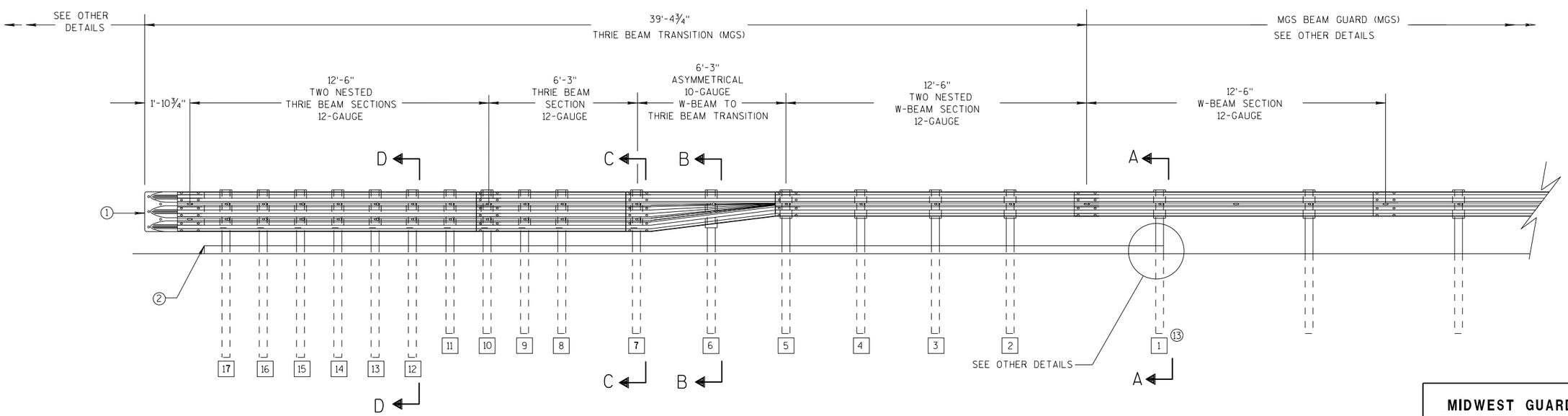

ELEVATION VIEW

MIDWEST GUARDRAIL SYSTEM THRIE BEAM TRANSITION

MIDWEST GUARDRAIL SYSTEM THRIE BEAM TRANSITION (MGS)

STATE OF WISCONSIN
DEPARTMENT OF TRANSPOR

6

S.D.D. 14 B 45-5a

GENERAL NOTES

(2) OPTIONAL CURB AND GUTTER OR DRAINAGE FEATURE SEE PLAN FOR INFORMATION.

(3) WHEN USING STEEL POSTS AND WOOD BLOCKOUTS INSTALL FOUR 10D GALVANIZED NAILS. INSTALL NAILS AT THE BACK CORNERS OF THE BLOCK AND BEND THE NAILS OVER THE FLANGE OF THE STEEL POST.

(4) TOLERANCE FOR TOP OF W-BEAM RAIL IS ± 1".

(13) STEEL OR WOOD POST IS ACCEPTABLE AT POST 1. SEE SDD 14B42

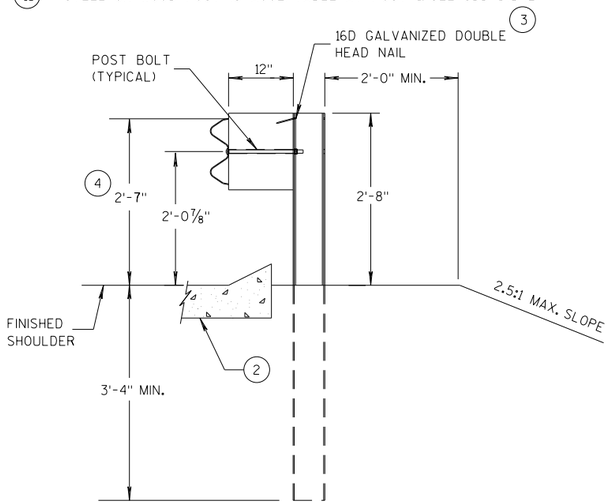

SECTION A-A (13)

POSTS 1-5

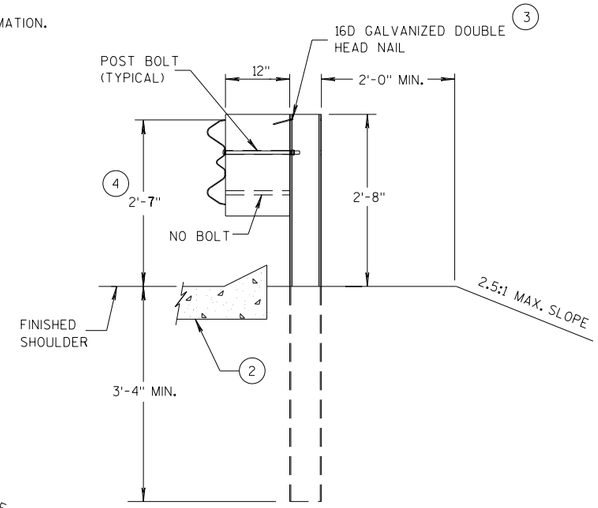

SECTION B-B

POST 6

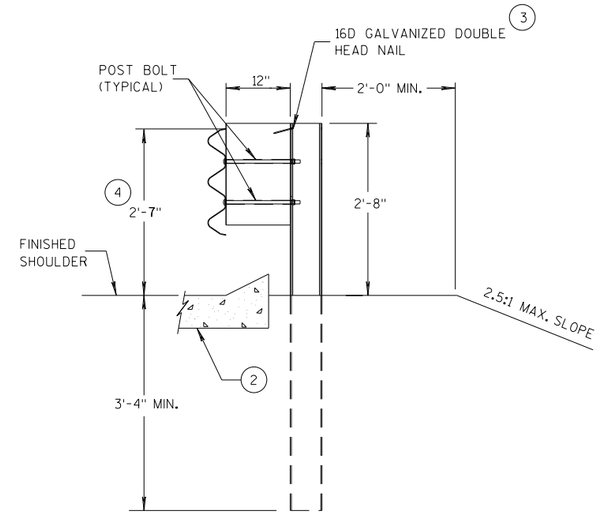

SECTION C-C

POSTS 7-11

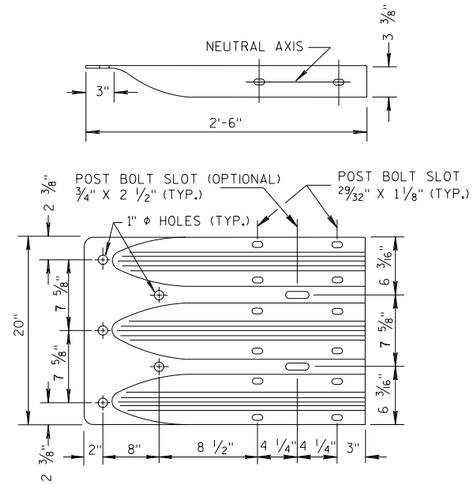

THRIE BEAM TERMINAL CONNECTOR

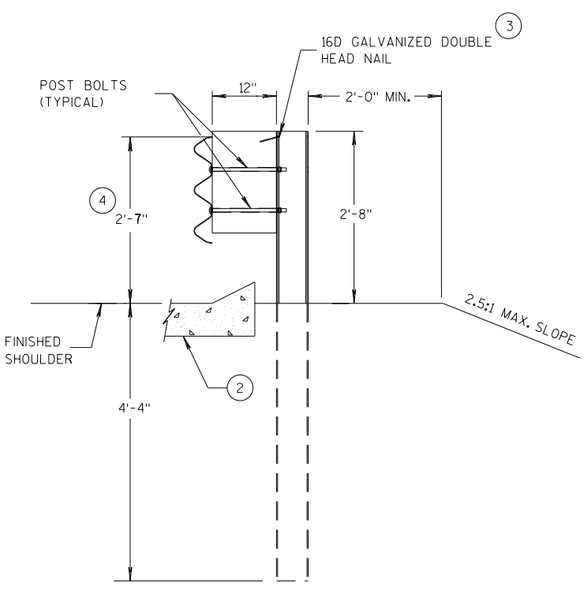

SECTION D-D

POSTS 12-17

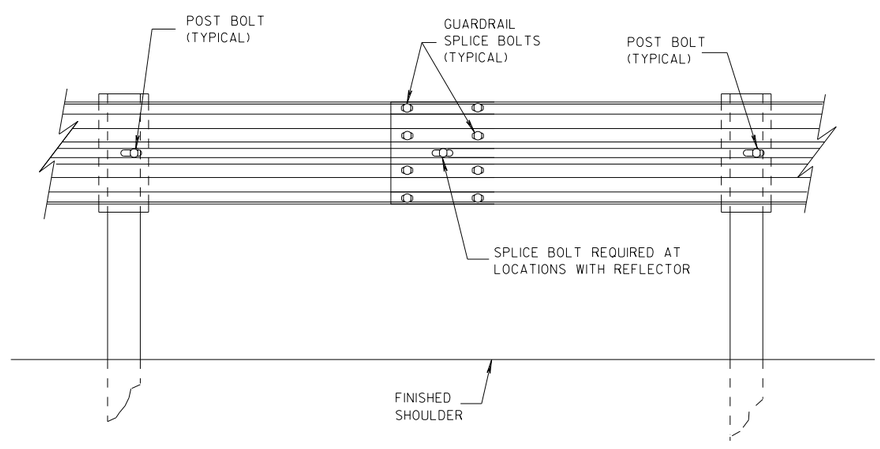

SPLICE DETAIL

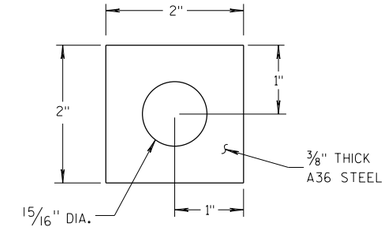

PLATE WASHER DETAIL

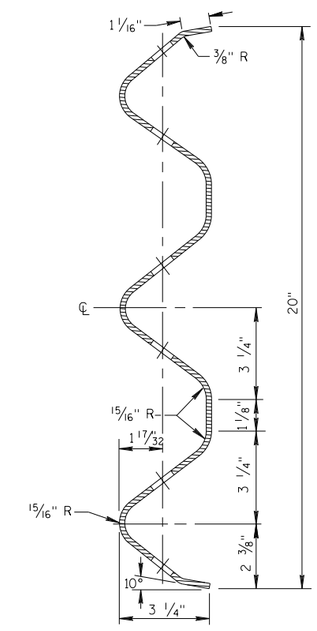

SECTION THRU THRIE BEAM RAIL ELEMENT

MIDWEST GUARDRAIL SYSTEM
THRIE BEAM TRANSITION (MGS)

STATE OF WISCONSIN
DEPARTMENT OF TRANSPORT

6

S.D.D. 14 B 45-5b

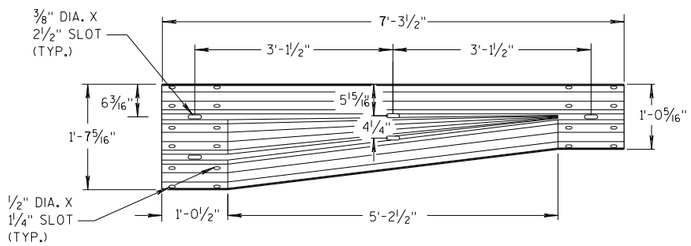

W-BEAM TO THRIE BEAM TRANSITION SECTION

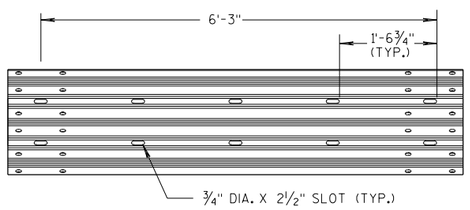

6'-3" THRIE BEAM SECTION

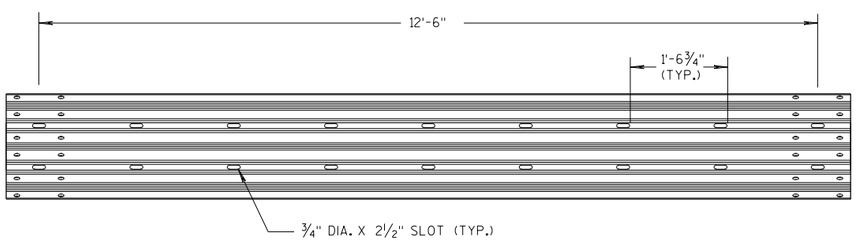

12'-6" THRIE BEAM SECTION

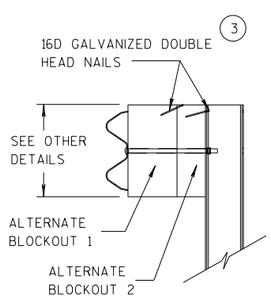

SIDE VIEW

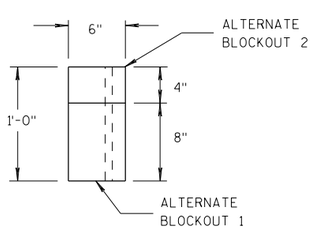

TOP VIEW

ALTERNATE WOOD BLOCKOUT DETAIL

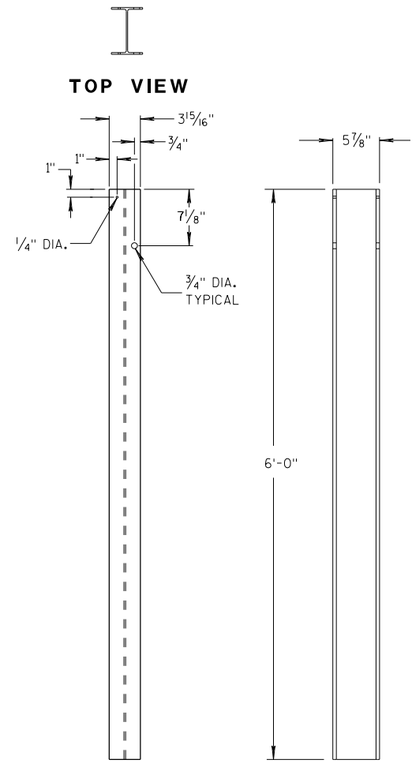

STEEL POSTS 1-5 (13)

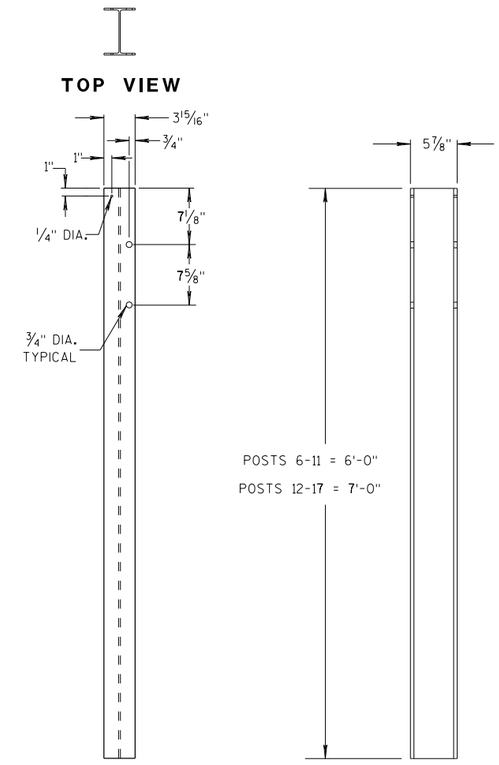

STEEL POSTS 6-17

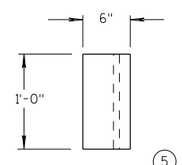

TOP VIEW (5)

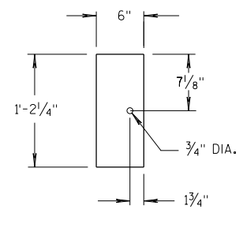

FRONT VIEW

BLOCKOUT POSTS 1-5

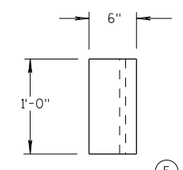

TOP VIEW (5)

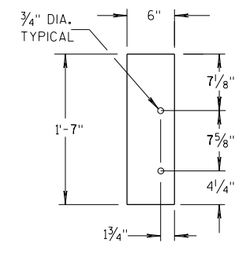

FRONT VIEW

BLOCKOUT POSTS 6-17

GENERAL NOTES

STEEL POSTS ARE W6X9 OR W6X8.5.

BOLT HOLES FOR POST ARE ON FRONT AND OF SIDE OF POST.

(3) WHEN USING STEEL POSTS AND WOOD BLOCKOUTS INSTALL FOUR 16D GALVANIZED NAILS. INSTALL NAILS AT THE BACK CORNERS OF THE BLOCK AND BEND THE NAILS OVER THE FLANGE OF THE STEEL POST.

(5) WOOD BLOCKS MAY BE CONSTRUCTED OUT OF 2 WOOD BLOCKS. SEE ALTERNATE WOOD BLOCK DETAIL.

(13) STEEL OR WOOD POST IS ACCEPTABLE AT POST 1. SEE SDD 14B42.

MIDWEST GUARDRAIL SYSTEM THRIE BEAM TRANSITION (MGS)

STATE OF WISCONSIN
DEPARTMENT OF TRANSPOR

6

S.D.D. 14 B 45-5c

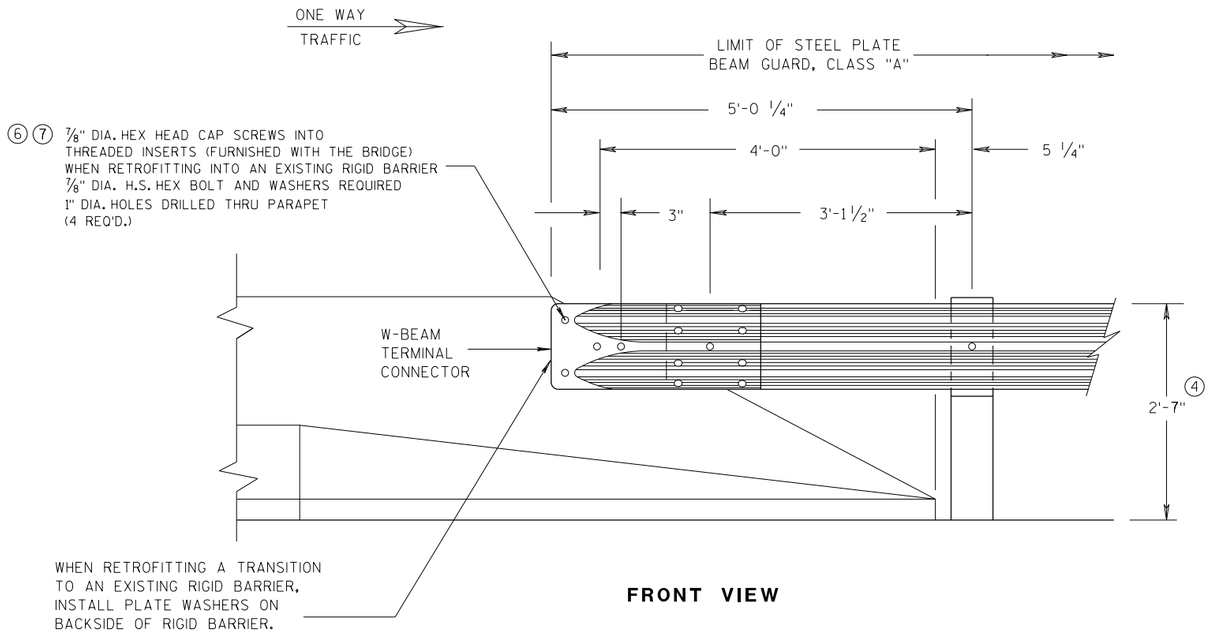

FRONT VIEW

W BEAM CONNECTION TO PARAPETS WITH SLOPED ENDS

(USE ONLY AT TRAFFIC EXIT END OF ONE WAY BRIDGE)

GENERAL NOTES

② OPTIONAL CURB AND GUTTER OR DRAINAGE FEATURE SEE PLAN FOR INFORMATION.

④ TOLERANCE FOR TOP OF BEAM IS ± 1".

⑥ DRILLING BOLT HOLES THROUGH THE PARAPET, BOLTS, NUTS, WASHERS AND REPAIRING DAMAGED CONCRETE ARE INCIDENTAL TO THE CONTRACT.

⑦ BOLTS MAY BE A325 BOLTS OR A449 BOLTS. BOLT LENGTH AND THREADING LENGTH ARE TO ALLOW FOR A TIGHT CONNECTION BETWEEN RIGID BARRIER AND THRIE BEAM CONNECTION PLATE. CONTRACTOR IS TO FIELD VERIFY BOLT LENGTH AND THREAD LENGTH. ONE ROUND WASHER REQUIRED BETWEEN BOLT HEAD AND THRIE BEAM CONNECTOR PLATE. BOLTS THAT EXTEND THROUGH THE PARAPET AND OUT THE BACK FACE REQUIRE A HARDENED ROUND STEEL WASHER THAT IS 2" O.D. X 5/8" THICK AND ONE PLATE WASHER. REPAIR ANY DAMAGED CONCRETE FROM BOLT INSTALLATION.

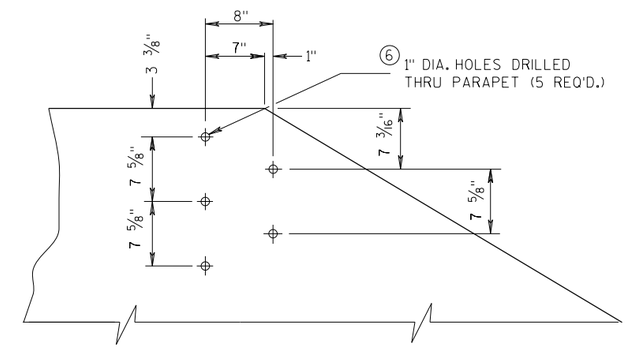

DRILL HOLE LOCATION AND PATTERN
FOR THRIE BEAM CONNECTION

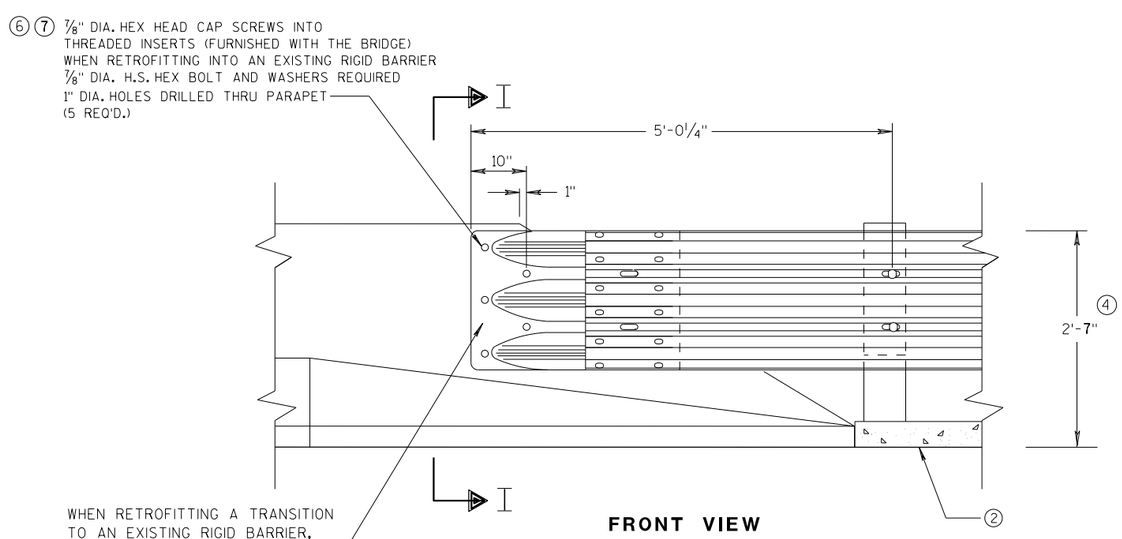

FRONT VIEW

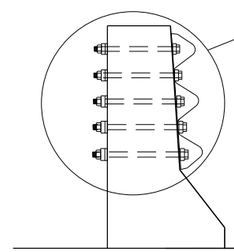

SECTION I-I

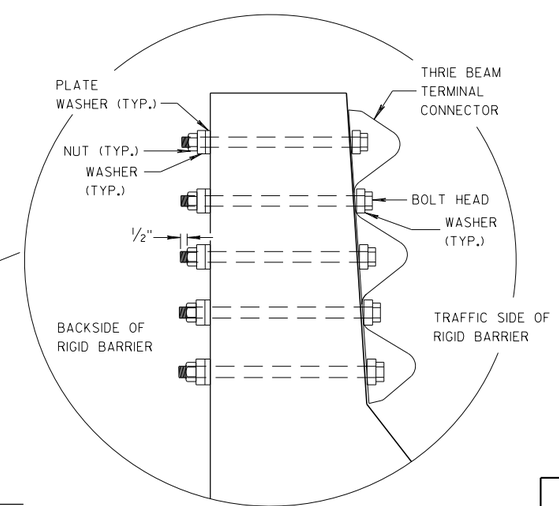

THRIE BEAM CONNECTION TO BRIDGE PARAPETS WITH SLOPED ENDS

MIDWEST GUARDRAIL SYSTEM THRIE BEAM TRANSITION (MGS)

STATE OF WISCONSIN
DEPARTMENT OF TRANSPORTATION

APPROVED
07/2018 — DATE
/S/ Rodney Taylor
ROADWAY STANDARDS DEVELOPMENT UNIT SUPERVISOR
FHWA

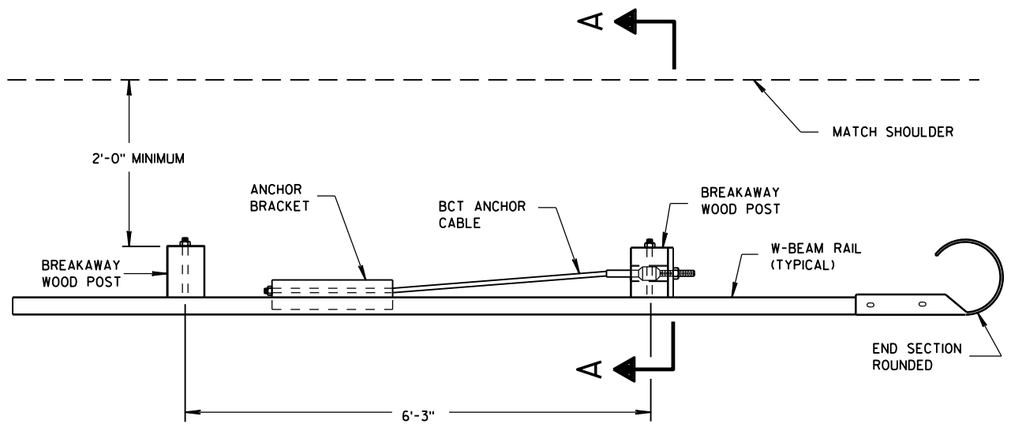

PLAN VIEW

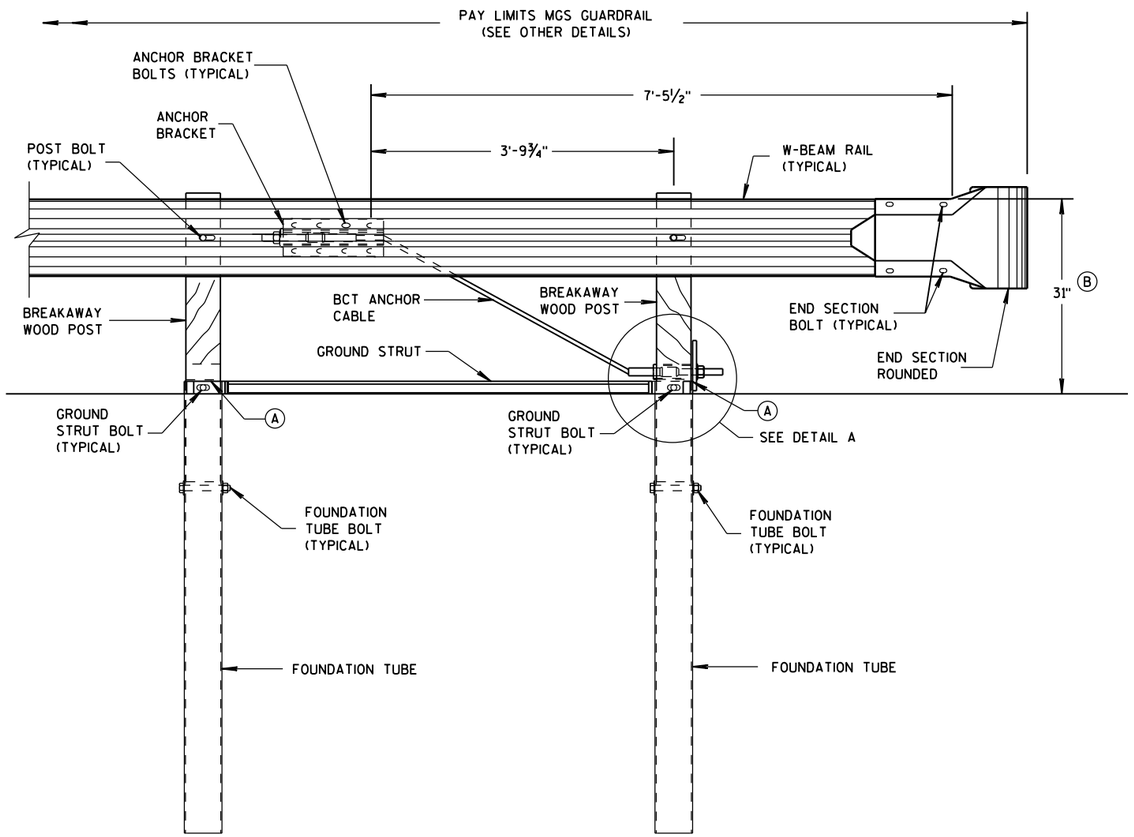

FRONT VIEW

END RAIL DETAIL

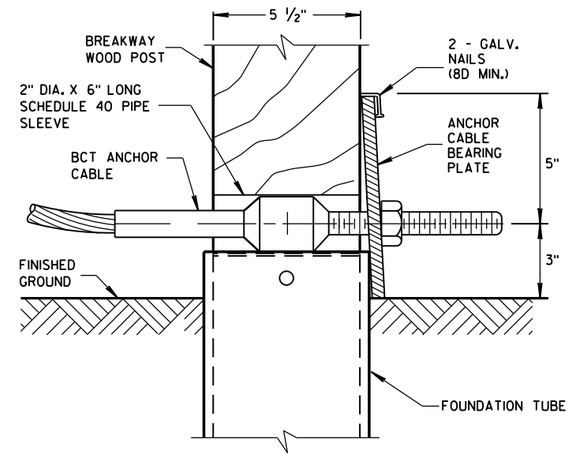

DETAIL A

POST NO. 1
GROUNG STRUT NOT SHOWN FOR CLARITY.

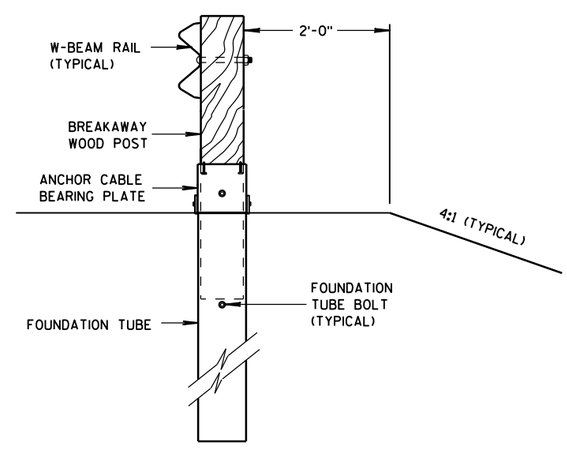

SECTION A-A

GENERAL NOTES

SEE SDD 14 B 42 FOR MORE INFORMATION.

END SECTION BOLTS AND NUTS HAVE THE SAME MATERIAL REQUIREMENTS AS SPLICE BOLTS.

FOUNDATION TUBE BOLTS ARE ⅞" DIAMETER ASTM A307 HEX HEAD BOLT. FOUNDATION TUBE BOLTS REQUIRE ASTM A563 A NUT AND TWO ASTM F844 ⅞" DIAMETER FLAT WASHERS. INSTALL ONE WASHER UNDER BOLT HEAD AND ONE WASHER UNDER NUT.

ANCHOR BRACKET AND GROUND STRUT BOLTS ARE A ⅝" DIAMETER ASTM A307 HEX HEAD BOLT. ANCHOR BRACKET BOLTS REQUIRE ASTM A563 A NUT AND TWO ASTM F844 ⅝" DIAMETER FLAT WASHERS. INSTALL ONE WASHER UNDER BOLT HEAD AND ONE WASHER UNDER NUT.

W-BEAM END SECTION ROUNDED HAS THE SAME MATERIAL PROPERTIES AS STANDARD STEEL RAIL.

(A) TOP OF FOUNDATION TUBE SHALL BE NO MORE THAN 3" ABOVE FINISHED GROUND.

(B) FOR NEW CONSTRUCTION TOP OF RAIL IS 31" ± 1".
FOR EXISTING INSTALLATIONS TOP OF RAIL IS BETWEEN 27¾" TO 32" ± 1".

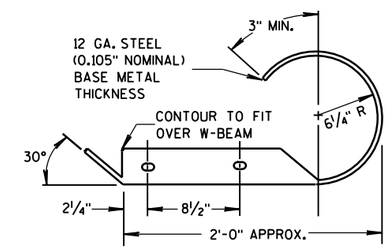

PLAN VIEW

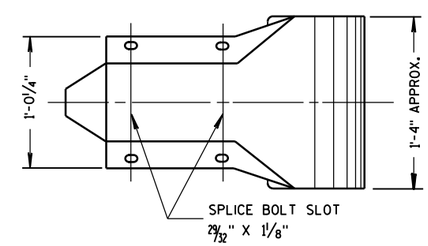

FRONT VIEW

W BEAM END SECTION ROUNDED

MIDWEST GUARDRAIL SYSTEM (MGS) TYPE 2 TERMINAL

STATE OF WISCONSIN
DEPARTMENT OF TRANSPO

6

S.D.D. 14 B 47-2a

GENERAL NOTES

BCT ANCHOR CABLE IS A ¾" DIAMETER 6X19 IWRC IPS GALVANIZED WIRE ROPE. THE SWAGED FITTINGS AND STUD ARE REQUIRED. END FITTING SHALL BE MACHINED FROM HOT-ROLLED CARBON STEEL CONFORMING TO ASTM A576 GRADE 1035 AND GALVANIZED ACCORDING TO ASTM A123. TREADED STUD SHALL CONFORM TO ASTM A325 OR SAE GRADE 5. MINIMUM BREAKING STRENGTH OF WIRE ROPE IS 43,000 LB. WIRE ROPE IS TO BE TAUT.

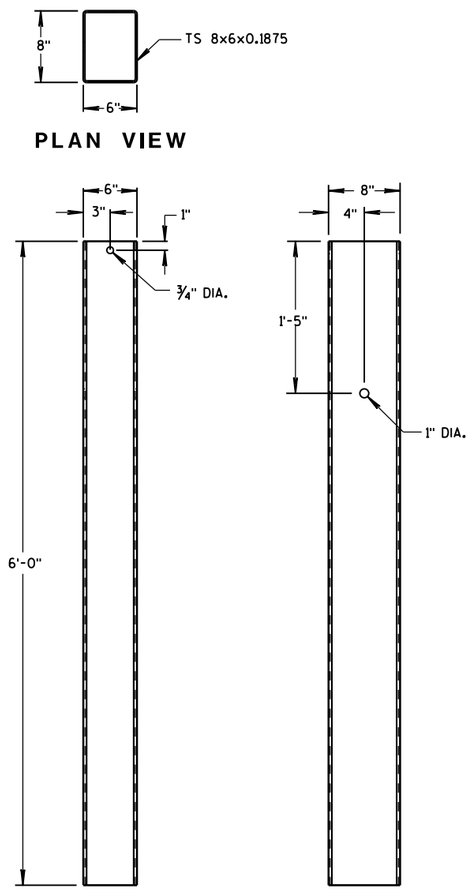

FOUNDATION TUBE

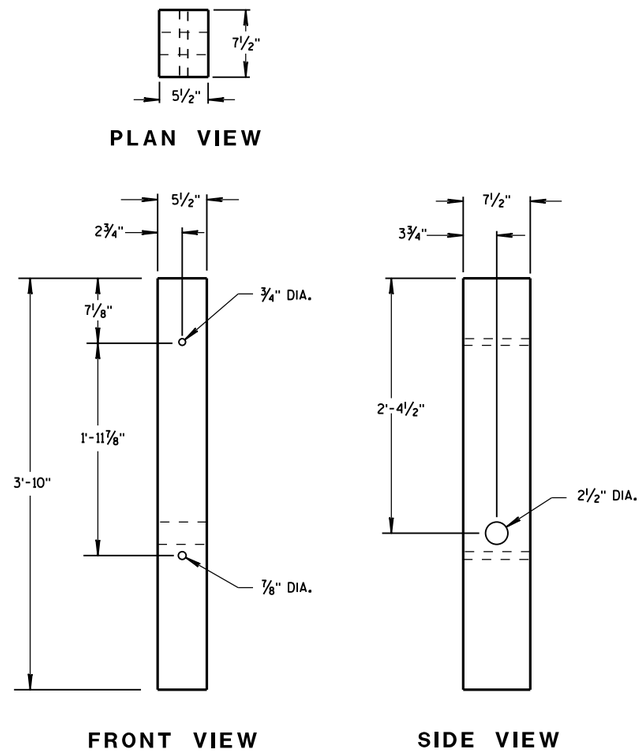

BREAKAWAY WOOD POST

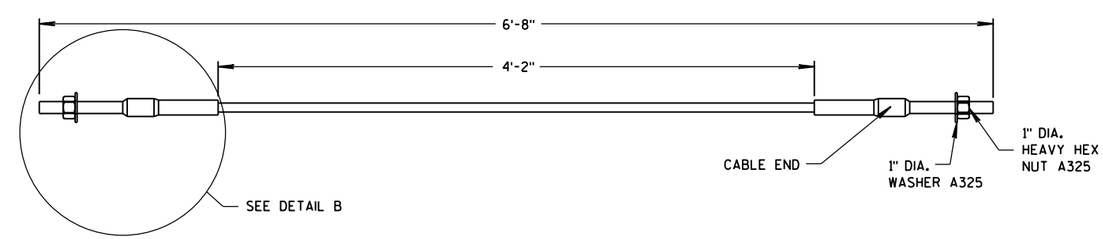

BCT ANCHOR CABLE

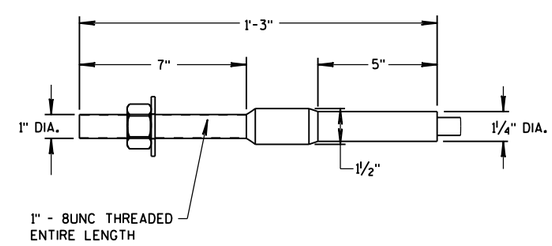

DETAIL B

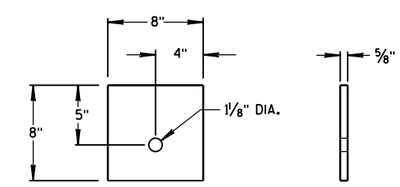

ANCHOR CABLE BEARING PLATE

MIDWEST GUARDRAIL SYSTEM (MGS) TYPE 2 TERMINAL

STATE OF WISCONSIN
DEPARTMENT OF TRANSPO

6

S.D.D. 14 B 47-2b

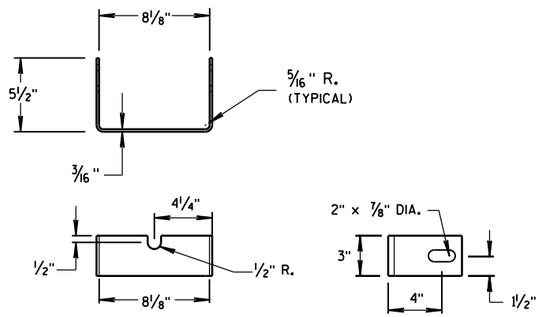

YOKE DETAIL

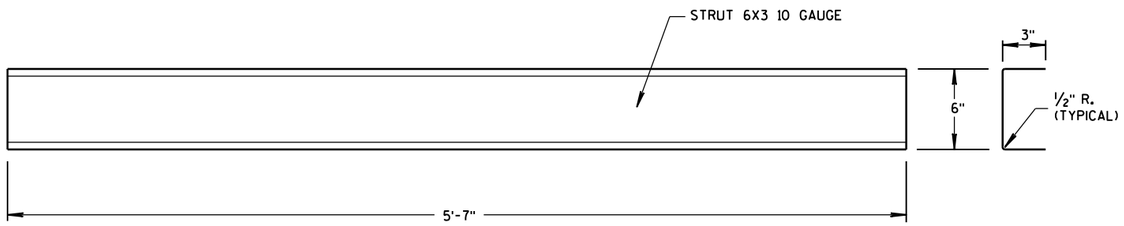

STRUT DETAIL

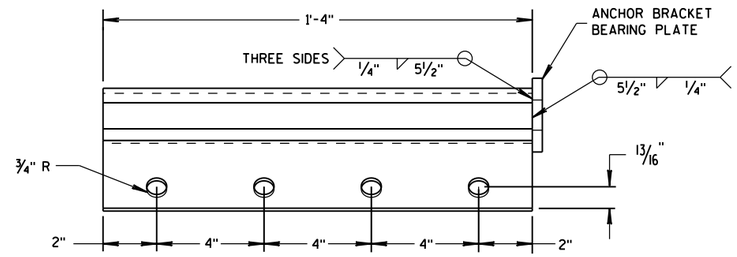

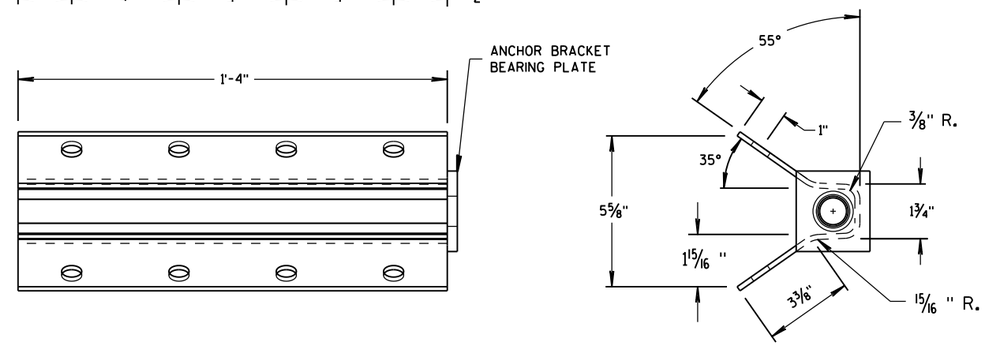

ANCHOR BRACKET

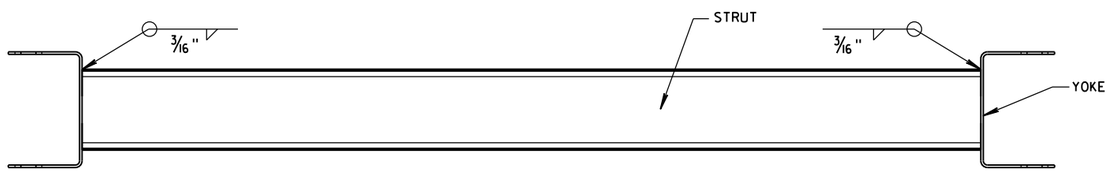

PLAN VIEW

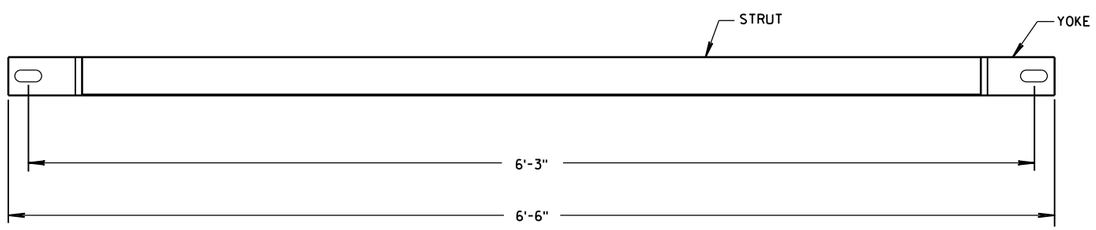

FRONT VIEW

GROUND STRUT DETAIL

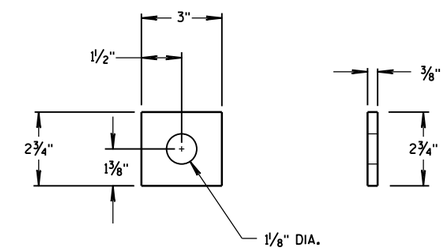

ANCHOR BRACKET
BEARING PLATE

MIDWEST GUARDRAIL
SYSTEM (MGS) TYPE 2 TERMINAL

STATE OF WISCONSIN
DEPARTMENT OF TRANSPORTATION

APPROVED
June 2014 — DATE
/S/ Jerry H. Zogg — ROADWAY STANDARDS ENGINEER
FHWA

6

S.D.D. 14 B 47-2c

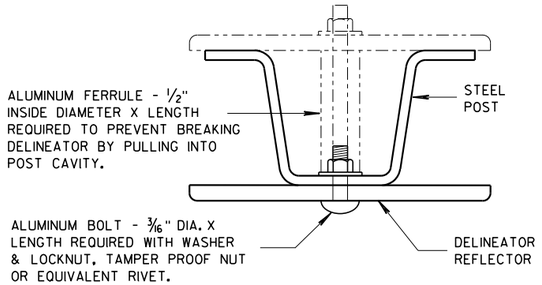

MOUNTING DETAIL FOR DELINEATOR REFLECTOR

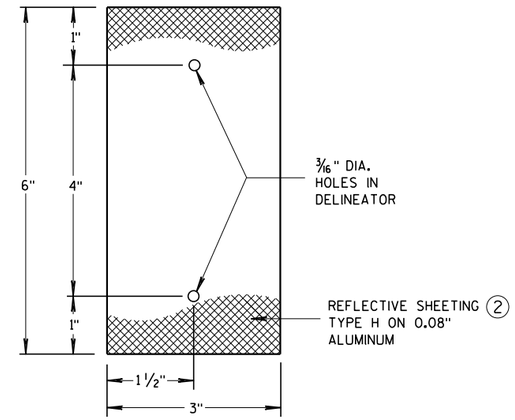

DETAIL "A"
3" X 6" DELINEATOR REFLECTOR

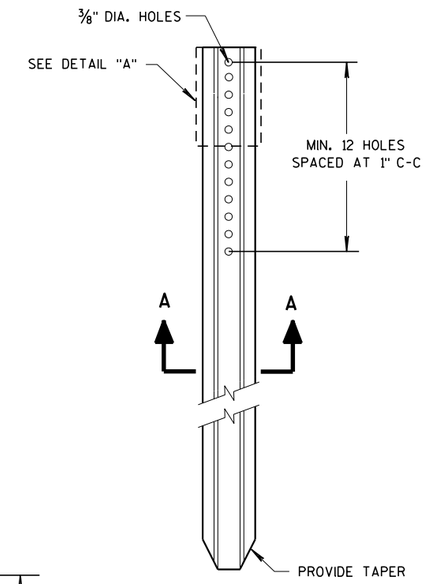

DELINEATOR POST

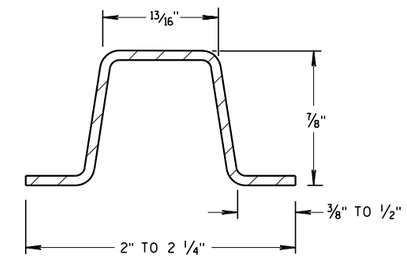

SECTION A-A

WEIGHT 1.12 LBS PER FT. ± 0.1 LB.

REFLECTOR SPACING TABLE

REFLECTOR SPACING	LOCATION
400'	MAINLINE
100'	RAMPS *

* START AT BEGINNING OF RAMP TAPER AND END AT END OF RAMP TAPER.

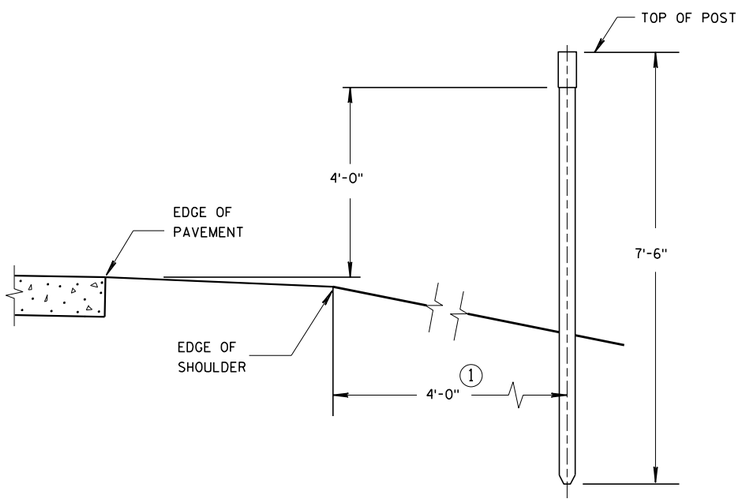

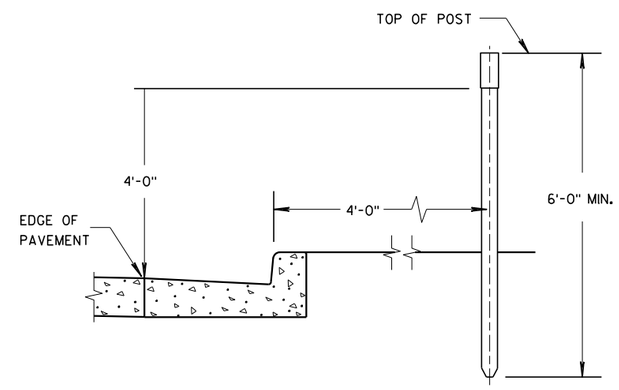

TYPICAL INSTALLATIONS OF DELINEATOR POSTS

GENERAL NOTES

DETAILS OF CONSTRUCTION NOT SHOWN ON THIS DRAWING SHALL CONFORM TO THE PERTINENT REQUIREMENTS OF THE STANDARD SPECIFICATIONS AND THE APPLICABLE SPECIAL PROVISIONS.

(1) DELINEATORS SHALL BE PLACED AT A CONSTANT DISTANCE FROM THE EDGE OF THE SHOULDER FOR THE LENGTH OF THE INSTALLATION.

(2) FURNISH TYPE H SHEETING FROM THE APPROVED PRODUCTS LIST.

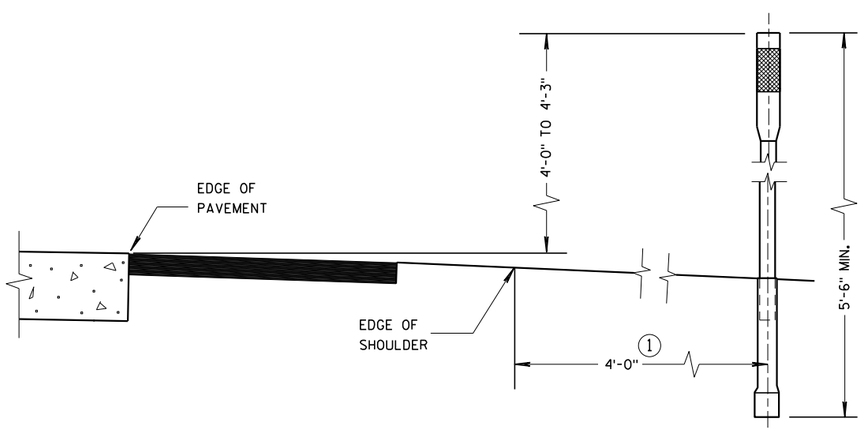

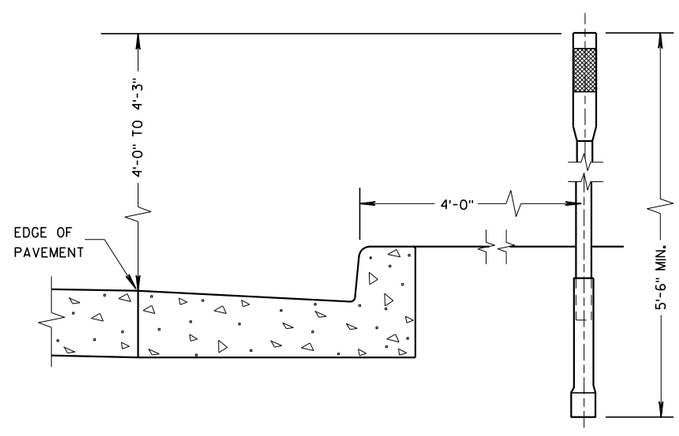

TYPICAL INSTALLATIONS OF FLEXIBLE DELINEATOR POSTS

DELINEATOR POST WITH REFLECTIVE SHEETING

STATE OF WISCONSIN
DEPARTMENT OF TRANSPORTATION

APPROVED
March 2018 /S/ Matthew P. Rauch
DATE STATE SIGNING AND MARKING ENGINEER
FHWA

GENERAL NOTES

THE EXACT NUMBER, LOCATION, AND SPACING OF ALL SIGNS AND DEVICES SHALL BE ADJUSTED TO FIT FIELD CONDITIONS.

THE SPACING BETWEEN TRAFFIC CONTROL SIGNS SHOULD BE ADJUSTED TO NOT CONFLICT WITH AND SHOULD PROVIDE A MINIMUM OF 200 FEET (500 FEET DESIRABLE) CLEARANCE TO EXISTING SIGNS THAT WILL REMAIN IN PLACE.

ALL SIGNS ARE 48" X 48" UNLESS OTHERWISE NOTED.

SIGNS THAT WILL BE IN PLACE LESS THAN SEVEN CONTINUOUS DAYS AND NIGHTS MAY BE MOUNTED ON PORTABLE SUPPORTS.

IF A "STOP" SIGN MUST BE REMOVED FOR A WORK OPERATION, A TEMPORARY "STOP" SIGN SHALL BE PLACED PRIOR TO THE SIGN REMOVAL, OR A FLAGGER SHALL BE PROVIDED UNTIL THE SIGN IS REESTABLISHED.

* OMIT G20-1 SIGNS IF LENGTH OF WORK AREA IS 2 MILES OR LESS

** PLACE AN ADDITIONAL W20-1A "ROAD WORK AHEAD" SIGN IF WORK AREA WITHIN THE PROJECT IS SEPARATED BY MORE THAN 2 MILES FROM PREVIOUS WORK AREA.

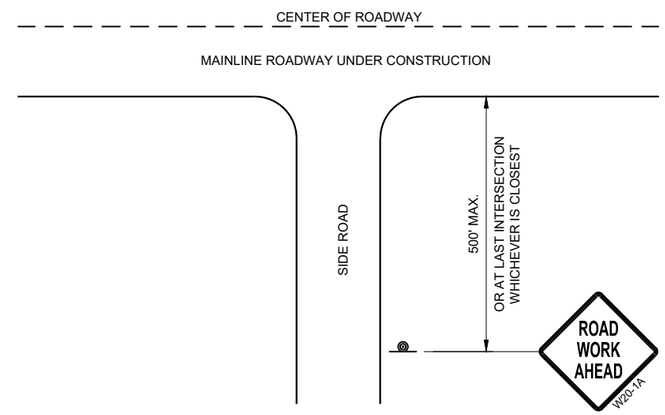

TYPICAL SIDE ROAD APPROACH WARNING SIGN DETAIL

LEGEND

- SIGN ON PERMANENT SUPPORT
- DIRECTION OF TRAFFIC
- WORK AREA

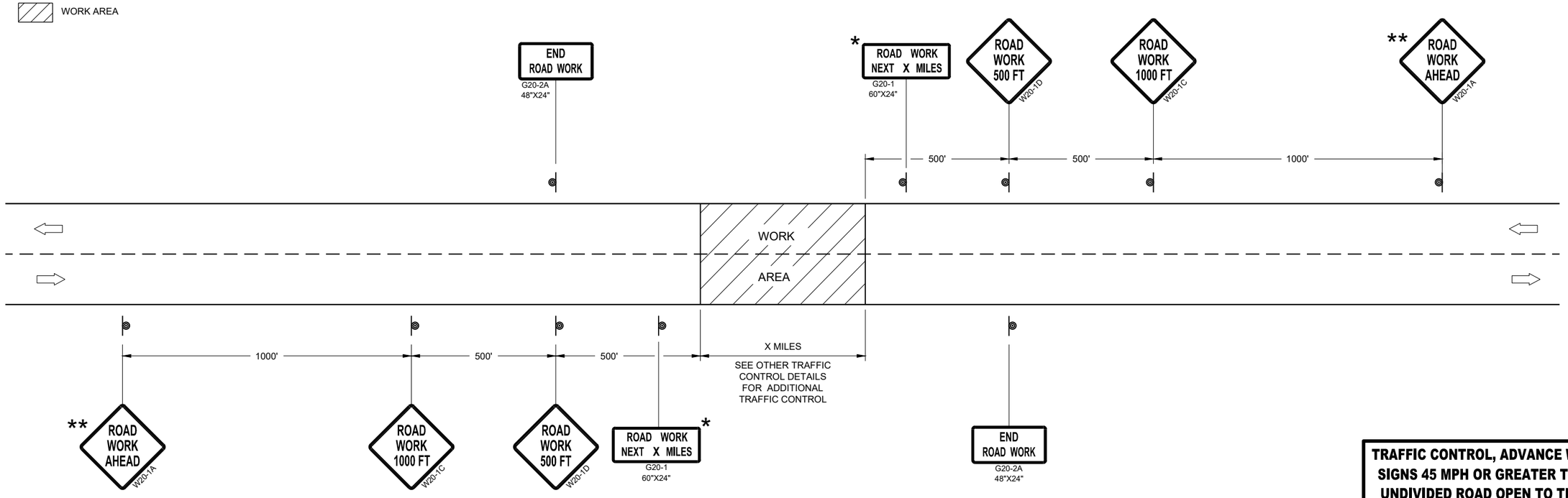

TRAFFIC CONTROL, ADVANCE WARNING SIGNS 45MPH OR GREATER

TRAFFIC CONTROL, ADVANCE WARNING SIGNS 45 MPH OR GREATER TWO-WAY UNDIVIDED ROAD OPEN TO TRAFFICE

STATE OF WISCONSIN
DEPARTMENT OF TRANSPORTATION

APPROVED
July 2018 — DATE
/S/ Andrew Heidtke — WORK ZONE ENGINEE
FHWA

6
SDD 15C04 - 05

GENERAL NOTES

THE EXACT NUMBER, LOCATION, AND SPACING OF ALL SIGNS AND DEVICES SHALL BE ADJUSTED TO FIT FIELD CONDITIONS.

THE SPACING BETWEEN TRAFFIC CONTROL SIGNS SHOULD BE ADJUSTED TO NOT CONFLICT WITH AND SHOULD PROVIDE A MINIMUM OF 200 FEET (500 FEET DESIRABLE) CLEARANCE TO EXISTING SIGNS THAT WILL REMAIN IN PLACE.

ALL SIGNS ARE 48" X 48" UNLESS OTHERWISE NOTED. IF NECESSARY DUE TO SPACE CONSTRAINTS, 36"X36" SIGNS MAY BE USED INSTEAD OF 48" X 48" SIGNS.

SIGNS THAT WILL BE IN PLACE LESS THAN SEVEN CONTINUOUS DAYS AND NIGHTS MAY BE MOUNTED ON PORTABLE SUPPORTS.

IF A "STOP" SIGN MUST BE REMOVED FOR A WORK OPERATION, A TEMPORARY "STOP" SIGN SHALL BE PLACED PRIOR TO THE SIGN REMOVAL, OR A FLAGGER SHALL BE PROVIDED UNTIL THE SIGN IS REESTABLISHED.

* THE THIRD W20-1 SIGN IS REQUIRED ONLY IF THERE IS AN INTERSECTION BETWEEN THE "ROAD WORK 500 FEET" SIGN AND THE WORK ZONE. ADJUST THE PLACEMENT OF THIS SIGN BASED ON INTERSECTION LOCATION AND OTHER FIELD CONDITIONS.

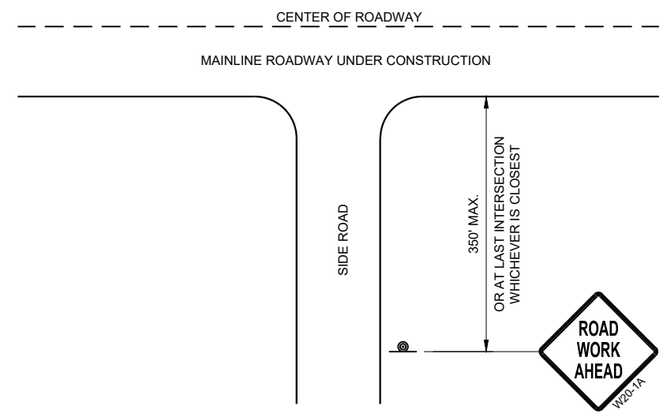

TYPICAL SIDE ROAD APPROACH WARNING SIGN DETAIL

LEGEND

- SIGN ON PERMANENT SUPPORT
- DIRECTION OF TRAFFIC
- WORK AREA

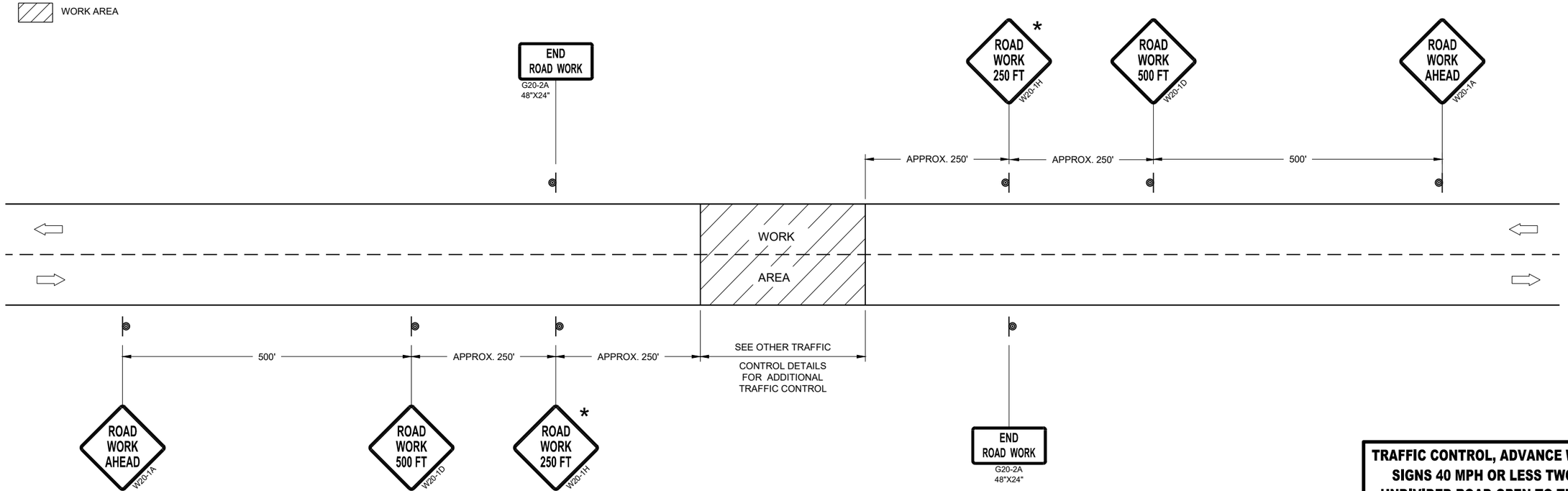

TRAFFIC CONTROL, ADVANCE WARNING SIGNS 40MPH OR LESS

TRAFFIC CONTROL, ADVANCE WARNING SIGNS 40 MPH OR LESS TWO-WAY UNDIVIDED ROAD OPEN TO TRAFFICE

STATE OF WISCONSIN
DEPARTMENT OF TRANSPORTATION

APPROVED
July 2018 — DATE
/S/ Andrew Heidtke — WORK ZONE ENGINEE
FHWA

6

SDD 15C05 - 05

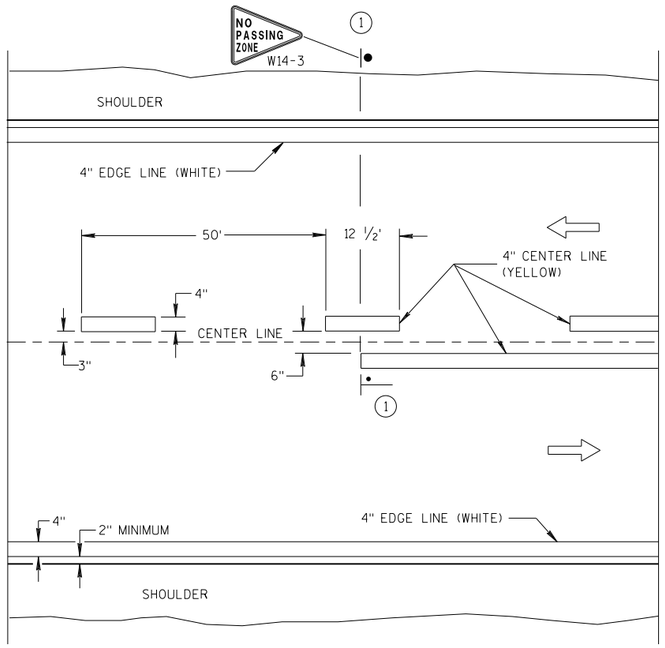

TWO WAY TRAFFIC

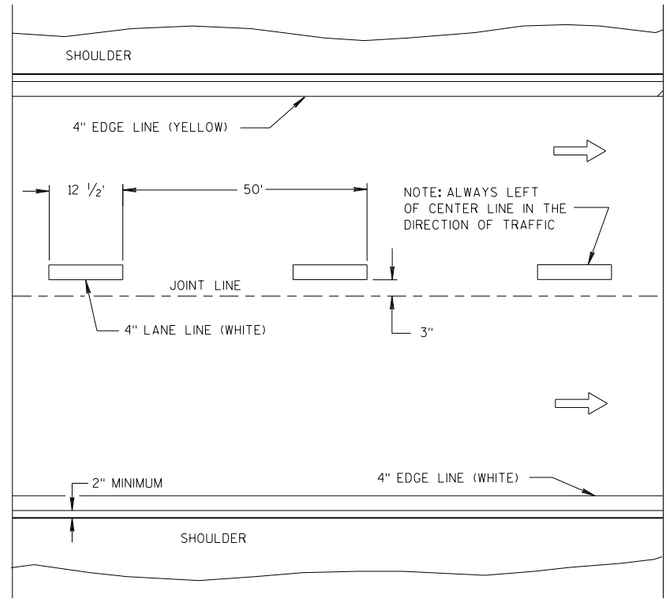

ONE WAY TRAFFIC

PERMANENT PAVEMENT MARKING

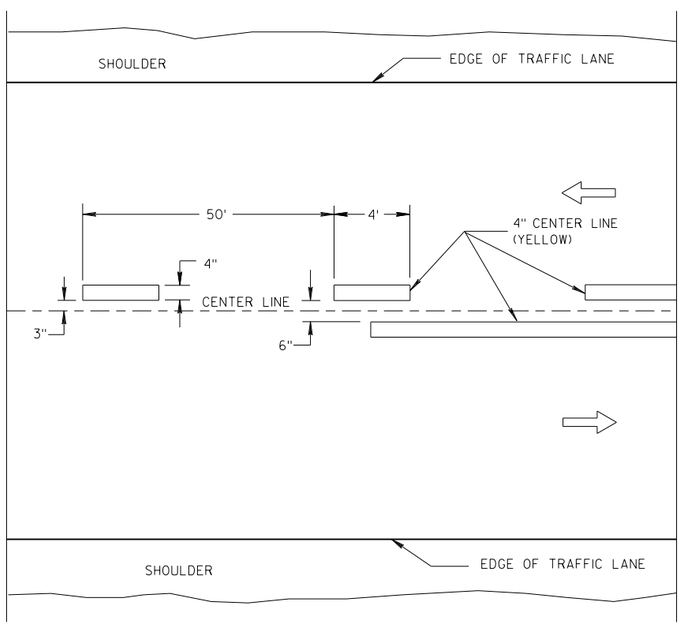

TWO WAY TRAFFIC

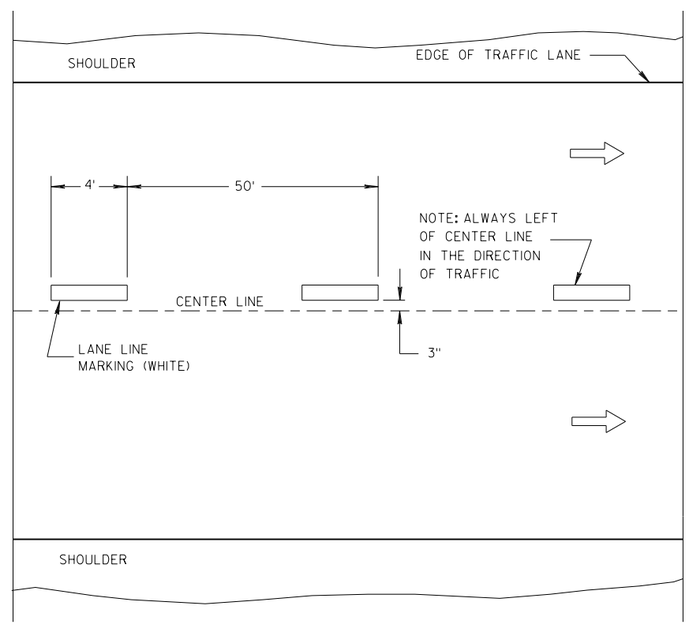

ONE WAY TRAFFIC

TEMPORARY PAVEMENT MARKING

GENERAL NOTES

DETAILS OF CONSTRUCTION NOT SHOWN ON THIS DRAWING SHALL CONFORM TO STANDARD SPECIFICATIONS AND SPECIAL PROVISIONS.

(1) LOCATE THE NO PASSING ZONE W14-3 SIGN WITHIN 50 FEET OF THE "T" MARKING.

NOTE

ARROW SYMBOL (⇨) SHOWS DIRECTION OF TRAVEL

LEGEND

"T" MARKING

POST MOUNTED SIGN

LONGITUDINAL MARKING (MAINLINE)

STATE OF WISCONSIN
DEPARTMENT OF TRANSPORTATION

APPROVED
7/2018 — DATE
/S/ Matthew R. Rauch — STATE SIGNING AND MAR INEER
FHWA

6

S.D.D. 15 C 8-19a

GENERAL NOTES

DETAILS OF CONSTRUCTION NOT SHOWN ON THIS DRAWING SHALL CONFORM TO THE PERTINENT REQUIREMENTS OF THE STANDARD SPECIFICATIONS AND THE APPLICABLE SPECIAL PROVISIONS.

SURFACE MOUNTED BASES SHALL BE FURNISHED IN ACCORDANCE WITH MANUFACTURERS RECOMMENDATIONS TO BE COMPATIBLE WITH FLEXIBLE TUBULAR MARKER POSTS TO A SIZE AND SHAPE THAT WILL PROVIDE A STABLE POST FOUNDATION WHEN SECURED TO THE PAVEMENT.

THE ASPHALTIC ADHESIVE OR BUTYL PAD FURNISHED SHALL BE IN ACCORDANCE WITH MANUFACTURERS RECOMMENDATIONS, UNLESS DIRECTED BY THE ENGINEER TO USE BOLTS.

(1) REFLECTIVE SHEETING SHALL FOLLOW THE REQUIREMENTS IN THE APPROVED PRODUCTS LISTING FOR SIGN SHEETING.

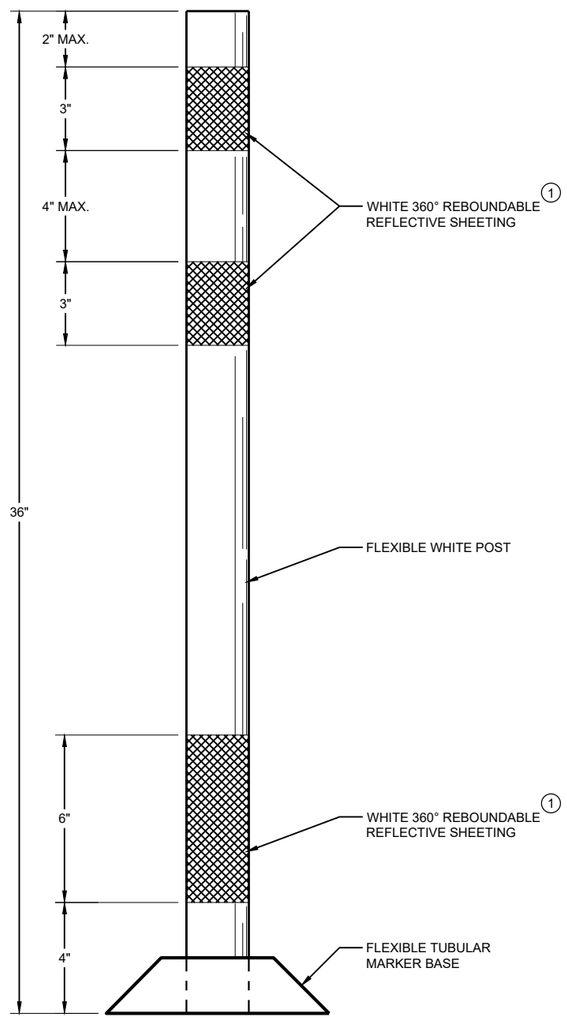

FLEXIBLE TUBULAR MARKER POST PERMANENT CROSSOVER

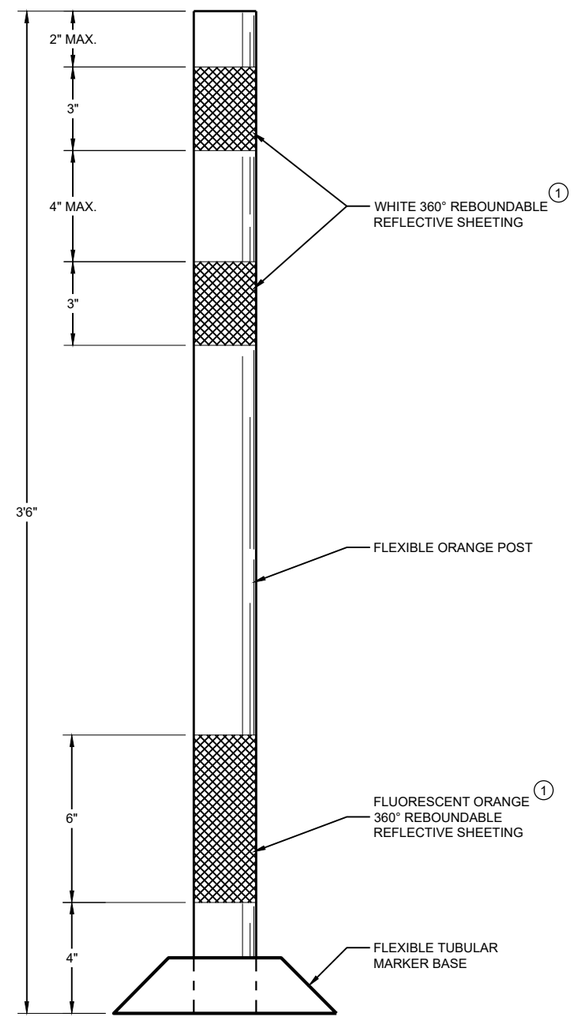

FLEXIBLE TUBULAR MARKER POST WORK ZONE

6

SDD 15C11 - 07a

CHANNELIZING DEVICES FLEXIBLE TUBULAR MARKER POST

STATE OF WISCONSIN
DEPARTMENT OF TRANSPORTATION

APPROVED
June 2017 — DATE
/S/ Andrew Heidtke — WORK ZONE ENGINEE
FHWA

6

SDD 15C11 - 07a

GENERAL NOTES

1. REFLECTIVE SHEETING SHALL FOLLOW THE REQUIREMENTS IN THE APPROVED PRODUCTS LISTING FOR SIGN SHEETING.
2. LOCATION OF WARNING LIGHTS WHEN SHOWN ON THE PLAN.

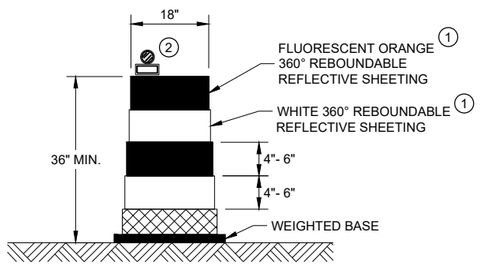

DRUM

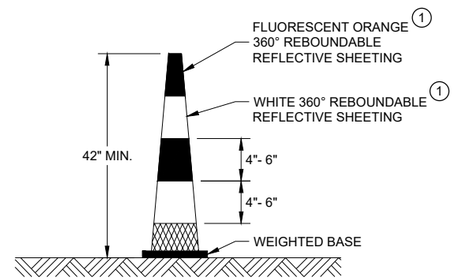

42" CONE

DO NOT USE IN TAPERS
½ SPACING OF DRUMS

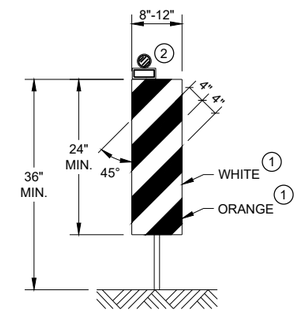

VERTICAL PANEL

THE STRIPES SHALL SLOPE DOWNWARD TO
THE TRAFFIC SIDE FOR CHANNELIZATION.

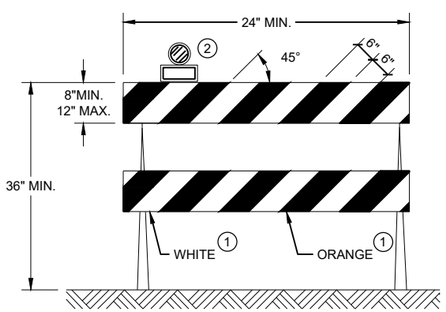

TYPE II BARRICADE

FOR RAILS LESS THAN 36" LONG, 4" WIDE STRIPES
MAY BE USED. ALL STRIPES SHALL SLOPE DOWNWARD
TO THE TRAFFIC SIDE FOR CHANNELIZATION.

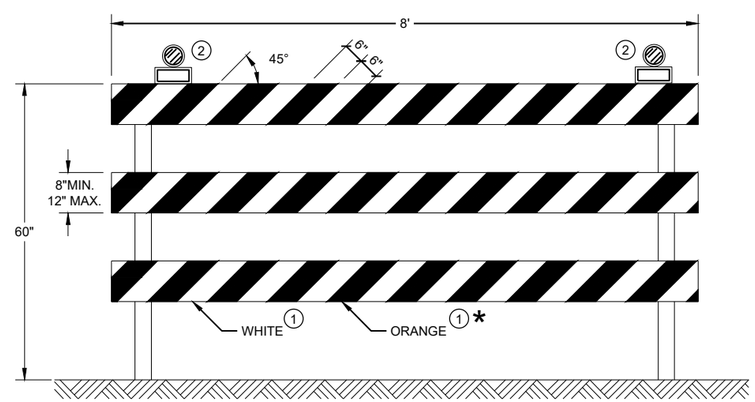

TYPE III BARRICADE

IF SIGN MOUNTED, DO NOT COVER MORE THAN 50% OF THE TOP
TWO RAILS OR 33% OF THE TOTAL AREA OF THE THREE RAILS.

* IF USED FOR A PERMANENT APPLICATION USE RED SHEETING.

CHANNELIZING DEVICES DRUMS, CONES, BARRICADES AND VERTICAL PANELS

STATE OF WISCONSIN
DEPARTMENT OF TRANSPORTATION

APPROVED
June 2017 — DATE
/S/ Andrew Heidtke — WORK ZONE ENGINEE
FHWA

6

SDD 15C11 - 07b

LEGEND

SIGN ON PORTABLE OR PERMANENT SUPPORT

TEMPORARY PORTABLE RUMBLE STRIP ARRAY

DIRECTION OF TRAFFIC

WORK AREA

FLAGGER, EQUIPPED WITH STOP/SLOW PADDLE FASTENED ON SUPPORT STAFF

GENERAL NOTES

DETAILS OF TRAFFIC CONTROL DEVICES AND INSTALLATION NOT SHOWN ON THIS DRAWING SHALL CONFORM TO THE PERTINENT REQUIREMENTS OF THE STANDARD SPECIFICATIONS, THE SPECIAL PROVISIONS, AND THE MANUAL ON UNIFORM TRAFFIC CONTROL DEVICES.

ALL SIGNS ARE 48" X 48" UNLESS OTHERWISE NOTED.

"WO" SIGNS ARE THE SAME AS "W" SIGNS EXCEPT THE BACKGROUND IS ORANGE.

THE EXACT NUMBER, LOCATION AND SPACING OF ALL SIGNS, DEVICES, AND LOCATION OF ALL FLAGGERS SHALL BE ADJUSTED TO FIT FIELD CONDITIONS AS APPROVED BY THE ENGINEER.

THE FIRST ADVANCE WARNING SIGN SHOULD TYPICALLY BE LOCATED IN ADVANCE OF THE ANTICIPATED TRAFFIC BACKUP OR QUEUE.

WHEN A SIDE ROAD OR RAMP INTERSECTS THE FACILITY ON WHICH THE WORK IS BEING PERFORMED, ADDITIONAL TRAFFIC CONTROLS SHALL BE PROVIDED AS SPECIFIED IN THE PLANS AND/OR THE SPECIAL PROVISIONS OR AS APPROVED BY THE ENGINEER.

FLAGGING

FLAGGERS SHALL BE IN SIGHT OF EACH OTHER OR IN DIRECT COMMUNICATION AT ALL TIMES. THEY SHALL BE EQUIPPED WITH STOP/SLOW PADDLES FASTENED ON SUPPORT STAFFS. WHEN THE FLAGGING OPERATION IS NOT IN EFFECT REMOVE TEMPORARY PORTABLE RUMBLE STRIPS PRIOR TO COVERING OR REMOVING ALL ADVANCE SIGNING.

(1) FOR MOVING WORK OPERATIONS, POST ADDITIONAL W20-7A FLAGGER SIGNS AT APPROXIMATELY 3,500' INTERVALS IN THE MOVING WORK OPERATION OR AS APPROVED BY THE ENGINEER.

(2) SIGN NOT REQUIRED IF FLAGGING OPERATION OCCURS WITHIN A SIGNED ROAD WORK ZONE AREA.

WHEN THE DISTANCE BETWEEN FLAGGERS EXCEEDS 2 MILES, A PILOT CAR IS REQUIRED. WHEN CURVES REDUCE SIGHT DISTANCE BELOW 400', A PILOT CAR IS REQUIRED.

TEMPORARY PORTABLE RUMBLE STRIPS

UTILIZE TEMPORARY PORTABLE RUMBLE STRIPS ON ALL FLAGGING OPERATIONS.

(3) EACH TEMPORARY PORTABLE RUMBLE STRIP ARRAY CONSISTS OF THREE RUMBLE STRIPS SPACED ACCORDING TO MANUFACTURER'S RECOMMENDATION, PLACED TRANSVERSE ACROSS THE LANE AT LOCATIONS SHOWN.

ONLY USE TEMPORARY PORTABLE RUMBLE STRIPS FOR THE APPROVED PRODUCTS LIST.

INSTALL TEMPORARY RUMBLE STRIPS PER MANUFACTURER'S RECOMMENDATIONS.

PLACE ADVANCE SIGNING PRIOR TO INSTALLING TEMPORARY RUMBLE STRIPS.

DO NOT INSTALL TEMPORARY PORTABLE RUMBLE STRIPS ON GRAVEL, MILLED SURFACES, OR ASPHALT THAT HAS BEEN PAVED LESS THAN 12 HOURS.

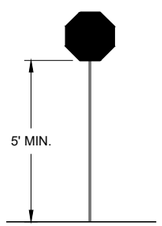

STOP/SLOW PADDLE ON SUPPORT STAFF

SIGN AND TEMPORARY RUMBLE STRIP ARRAY SPACING TABLE

SPEED LIMIT	SPACING "A"
25-30 MPH	200'
35-40 MPH	350'
45-55 MPH	500'

USE OF WO3-4 SIGN IS OPTIONAL. WHEN USED, THIS SIGN SHALL BE LOCATED BETWEEN THE W20-7A AND W20-4A SIGNS, USING SPACING "A".

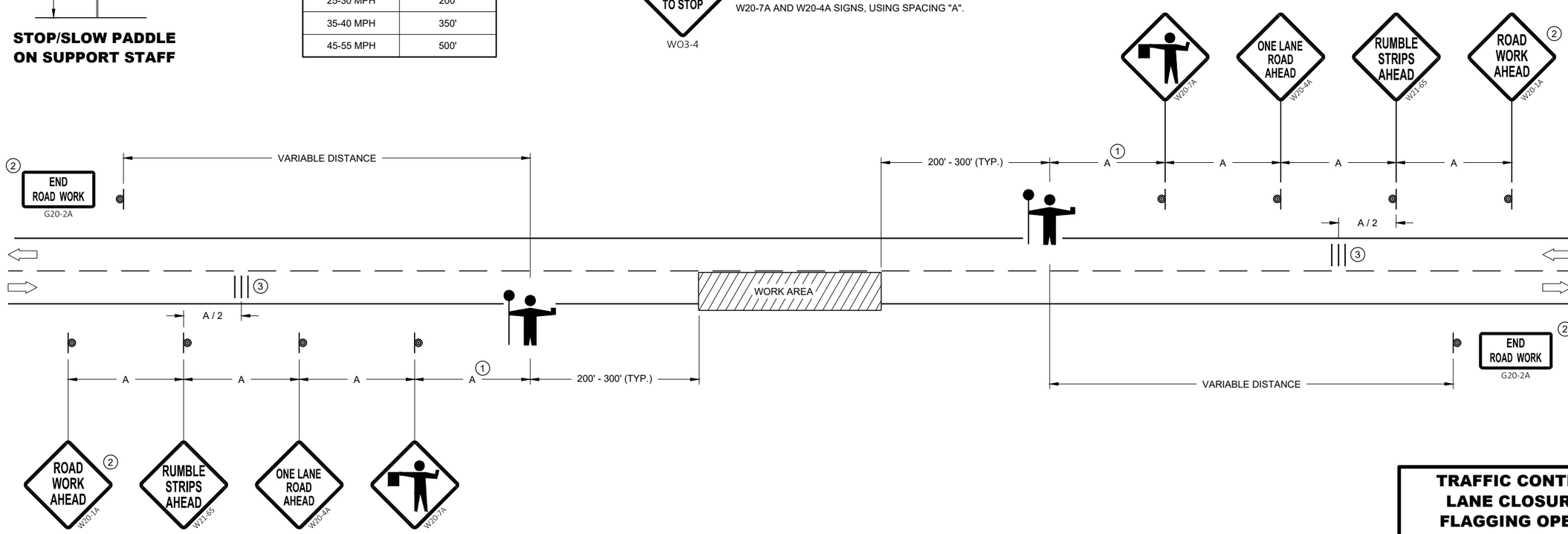

TRAFFIC CONTROL FOR LANE CLOSURE WITH FLAGGING OPERATION

TRAFFIC CONTROL FOR LANE CLOSURE WITH FLAGGING OPERATION

STATE OF WISCONSIN
DEPARTMENT OF TRANSPORTATION

APPROVED
May 2019 — DATE
/S/ Andrew Heidtke — WORK ZONE ENGINEE
FHWA

6
SDD 15C12 - 07

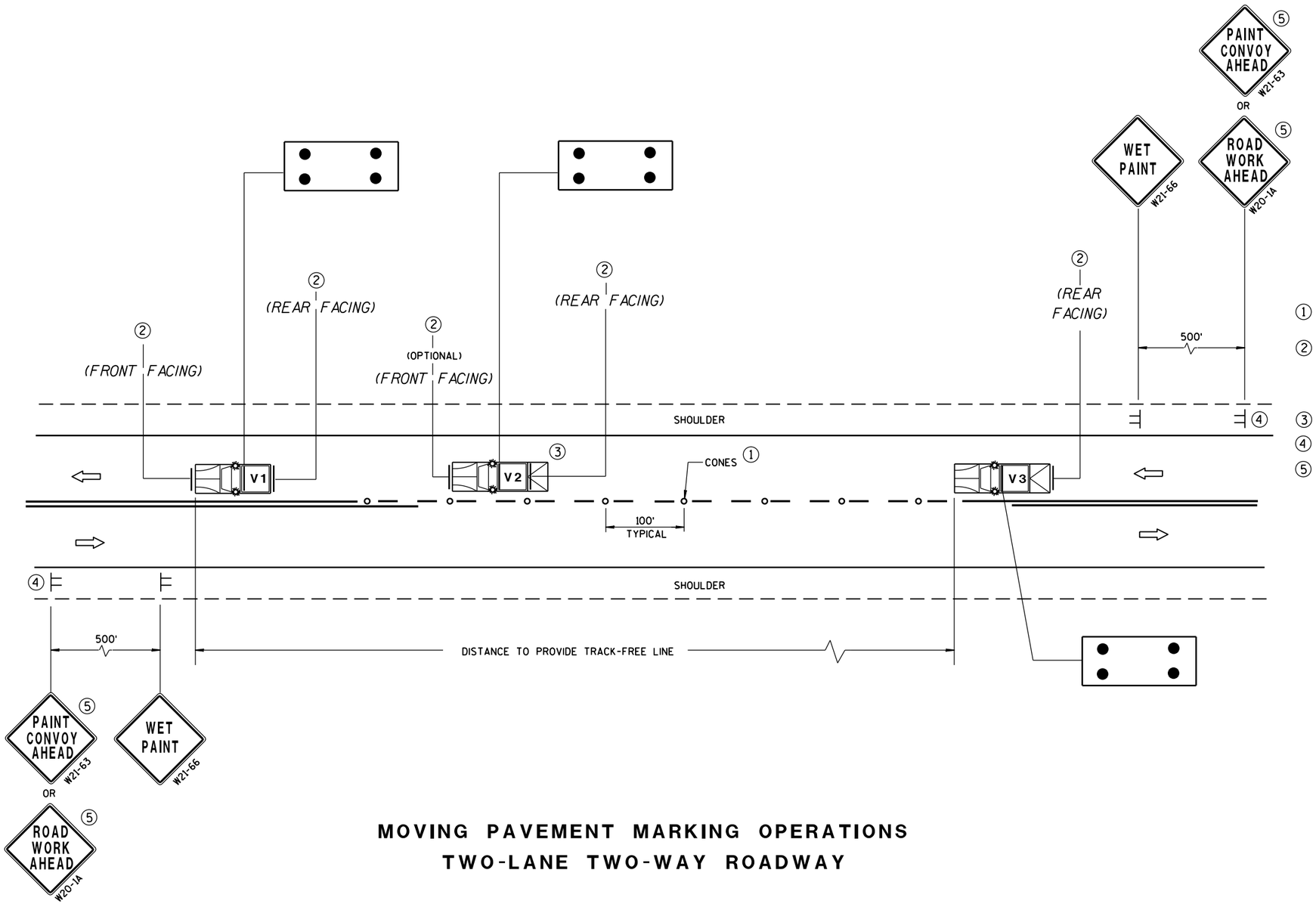

GENERAL NOTES

ALL VEHICLES SHALL BE EQUIPPED WITH TWO 360 DEGREE HIGH INTENSITY YELLOW FLASHING LIGHTS OR STROBE LIGHTS AND OPERATED WITH HEADLIGHTS TURNED ON.

VEHICLES SHALL BE EQUIPPED WITH REAR FACING TYPE B OR C FLASHING ARROW PANEL OPERATING IN CAUTION MODE. SIGNS PLACED ON VEHICLES MUST NOT OBSCURE THE ARROW PANEL.

ALL SIGNS ARE 48" X 48" UNLESS OTHERWISE SPECIFIED.

IF SPEED LIMIT IS 40 MPH OR LESS STATIONARY SIGNS MAY BE OMITTED IF CONES ARE USED.

ALTERNATE SIGN MESSAGES, SUCH AS "PAINT CREW AHEAD" OR "ROAD PAINTING AHEAD" MAY BE USED.

DISTANCE BETWEEN VEHICLES MAY VARY ACCORDING TO TERRAIN, SIGHT DISTANCE, PAINT DRYING TIME, AND OTHER FACTORS. WHENEVER ADEQUATE STOPPING SIGHT DISTANCE EXISTS TO THE REAR, SHADOW VEHICLES SHOULD MAINTAIN THE MINIMUM DISTANCE FROM THE WORK VEHICLE AND PROCEED AT THE SAME SPEED AS THE WORK VEHICLE. SHADOW VEHICLES SHOULD SLOW DOWN IN ADVANCE OF VERTICAL OR HORIZONTAL CURVES THAT RESTRICT SIGHT DISTANCE.

THE WORK AND SHADOW VEHICLES SHOULD PULL OVER PERIODICALLY TO ALLOW TRAFFIC TO PASS.

THIS DRAWING SHALL BE USED FOR CENTERLINE OR EDGELINE MARKING.

WHEN NO WORK ACTIVITY IS TAKING PLACE, REMOVE OR TURN THE STATIONARY WARNING SIGNS AWAY FROM TRAFFIC.

1. CONES MAY BE OMITTED ON PAINTED LINE IF APPROVED BY THE ENGINEER. CONSIDER PAVEMENT MARKING DRY OR CURE TIMES AND TRAFFIC VOLUME.
2. USE STANDARD SIGN W21-64 WITH APPROPRIATE ARROW.

   WET PAINT (W21-64) OR WET PAINT (W21-64)

3. OPTIONAL TRUCK-MOUNTED ATTENUATOR.
4. SIGNS SHALL BE REPEATED APPROXIMATELY EVERY THREE MILES.
5. IF CONSTRUCTION WORK ZONE SIGNS ARE IN PLACE, W20-1 OR W21-63 ARE NOT REQUIRED.

LEGEND

V1	LEAD VEHICLE
V2	SHADOW VEHICLE
V3	TRAIL VEHICLE WITH TMA
TMA	TRUCK-MOUNTED ATTENUATOR
	SIGN ON TEMPORARY SUPPORT
	DIRECTION OF TRAFFIC
	CONES
	FLASHING ARROW PANEL (CAUTION)

MOVING PAVEMENT MARKING OPERATIONS
TWO-LANE TWO-WAY ROADWAY

MOVING PAVEMENT MARKING OPERATION
TWO-LANE TWO-WAY ROADWAY

STATE OF WISCONSIN
DEPARTMENT OF TRANSPORTATION

APPROVED
Sept., 2017 — DATE
/S/ Andrew Heldtke — WORK ZONE ENG'R
FHWA

6

S.D.D. 15 C 19-5a

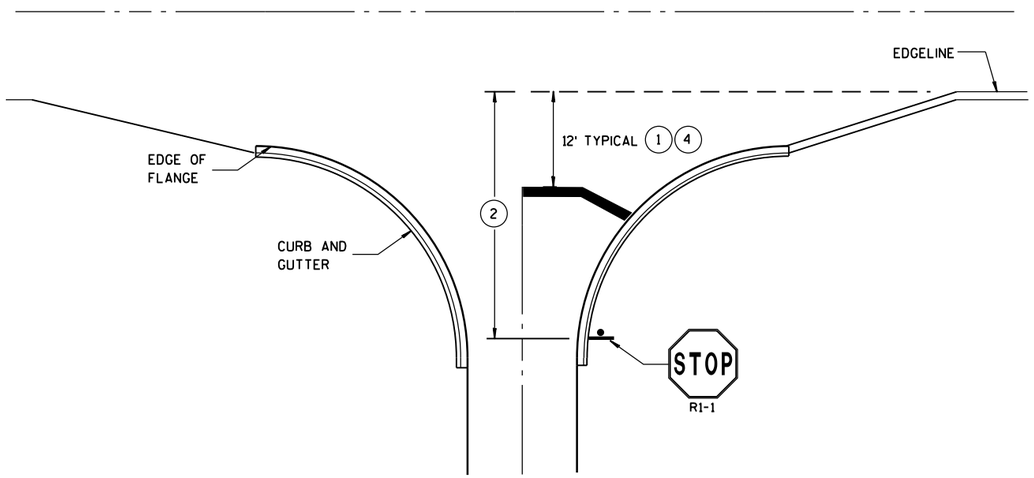

TYPICAL STOP LINE PAVEMENT MARKING WITH CURB AND GUTTER

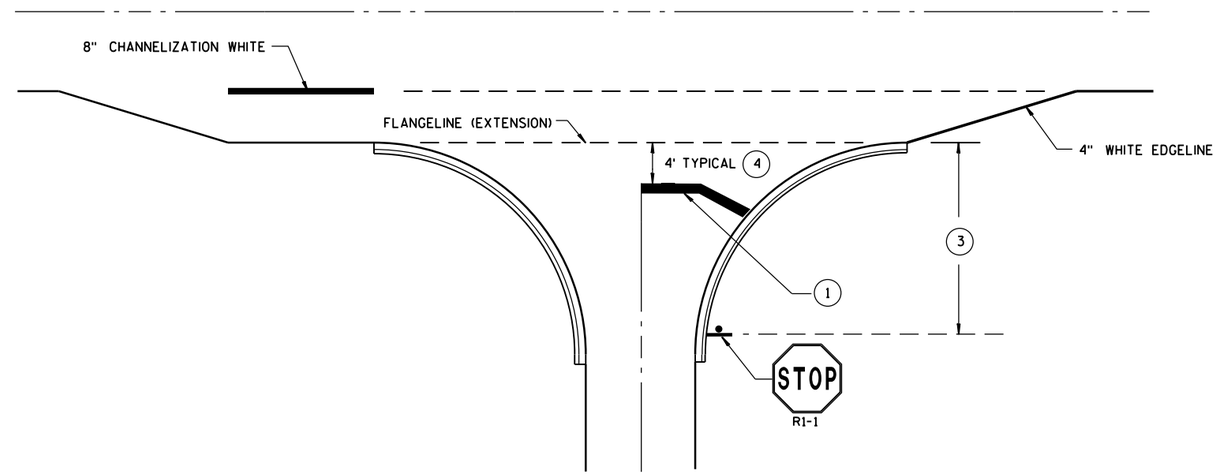

TYPICAL STOP LINE PAVEMENT MARKING FOR SIDEROADS WITH RIGHT TURN LANE

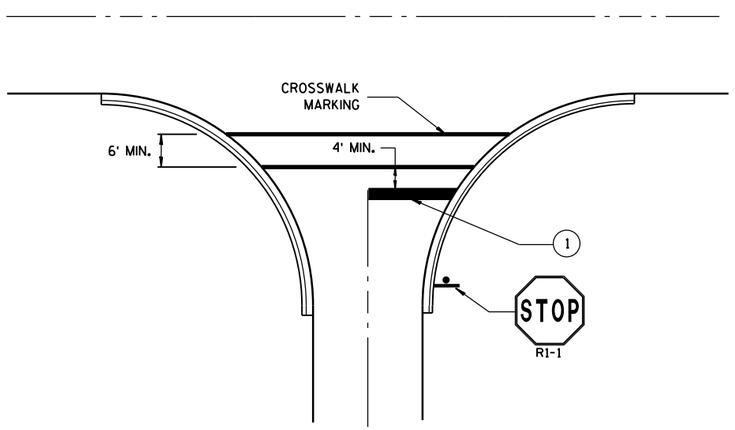

TYPICAL STOP LINE PAVEMENT MARKING FOR SIDEROADS WITH CROSSWALK MARKING

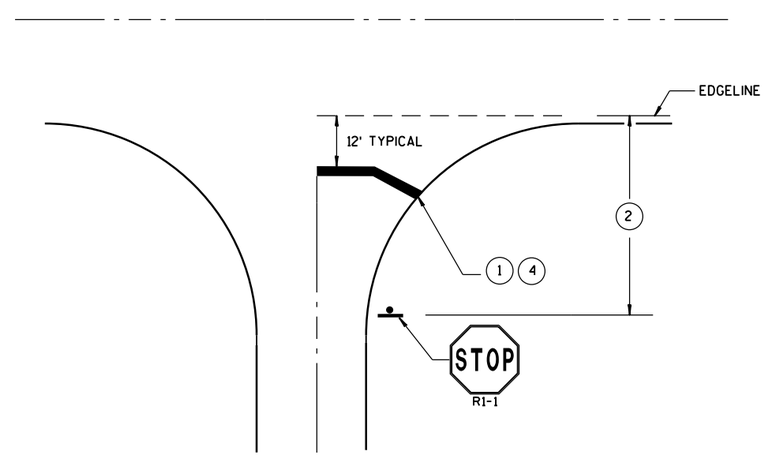

TYPICAL STOP LINE PAVEMENT MARKING WITHOUT CURB AND GUTTER

GENERAL NOTES

STOP SIGN SHALL BE PLACED A MINIMUM OF 6 FEET TO A MAXIMUM OF 50 FEET FROM THE EDGELINE LOCATION.

1. 18-INCH STOP LINES MAY BE DELETED OR ADDED BY THE PROJECT ENGINEER BASED ON VISIBILITY AND SIGHT LINES.
2. IF STOP SIGN IS LESS THAN OR EQUAL TO 40 FEET FROM THE EDGELINE THAN NO STOP LINE IS REQUIRED.
3. IF STOP SIGN IS LESS THAN OR EQUAL TO 30 FEET FROM THE FLANGELINE EXTENSION THAN NO STOP LINE IS REQUIRED.
4. MOVE CLOSER TO EDGE OF TRAVEL LANE AS NEEDED FOR VISIBILITY AND SIGHT LINES. (NO CLOSER THAN 4 FEET).

STOP LINE AND CROSSWALK PAVEMENT MARKING

STATE OF WISCONSIN
DEPARTMENT OF TRANSPORTATION

APPROVED

Sept., 2017	/S/ Matthew R. Rauch
DATE	STATE SIGNING AND MAR[illegible]NEER

FHWA

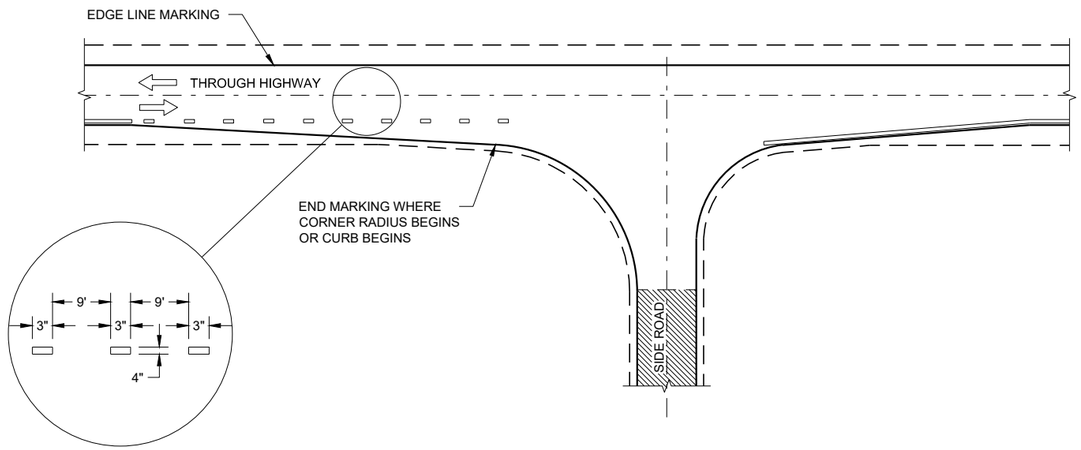

MINOR INTERSECTION

GENERAL NOTES

OMIT EDGE LINES THROUGH INTERSECTIONS. CONTINUE EDGE LINES THROUGH DRIVEWAYS.

1. WHEN DISTANCE "A" IS LESS THAN 250 FEET, OMIT LANE LINE.
2. WHEN DISTANCE "B" IS LESS THAN 100 FEET, OMIT CHANNELIZING LANE LINE.
3. BARRIER LINE ENDS AT SIDE ROAD PAVEMENT / SURFACE EDGE EXTENSION.
4. BARRIER LINE STARTS 500 FEET PRIOR TO THE BYPASS TAPER

ARROW SYMBOL (⇨) SHOWS DIRECTION OF TRAVEL

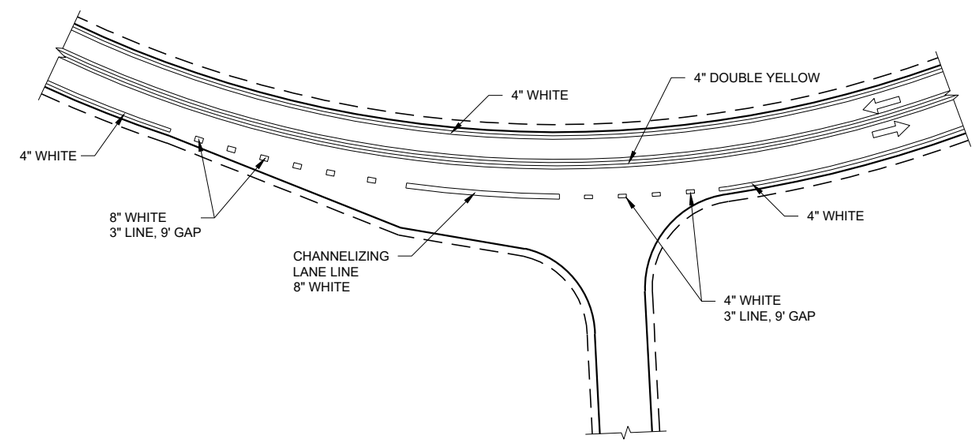

INTERSECTION ON OUTSIDE OF CURVE

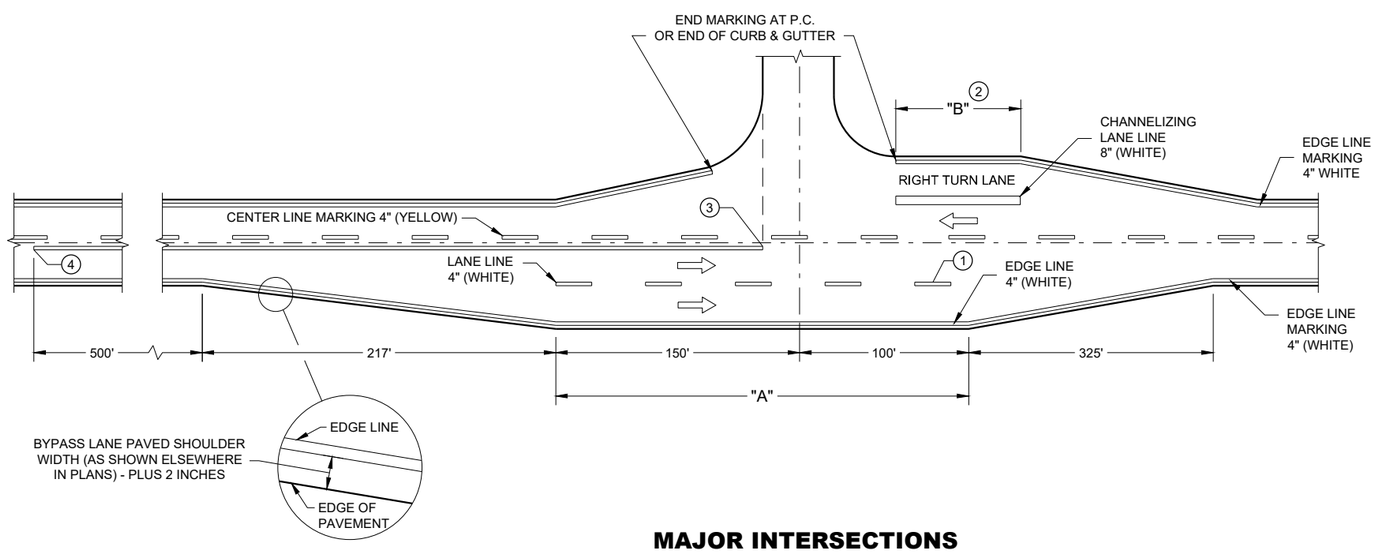

MAJOR INTERSECTIONS

(INTERSECTION WITH FULL RIGHT TURN LANE OR BYPASS LANE)

PAVEMENT MARKING (INTERSECTIONS)

STATE OF WISCONSIN
DEPARTMENT OF TRANSPORTATION

6
SDD 15C35 - 03a

LEGEND

- SIGN ON PERMANENT SUPPORT
- TRAFFIC CONTROL DRUM
- DIRECTION OF TRAFFIC
- WORK ZONE

TABLE A

S \ W	SHOULDER TAPER LENGTH (FEET) 4	6	8	10	BUFFER SPACE (FEET)
30	20	30	40	50	200
35	30	45	55	70	250
40	40	55	75	90	305
45	60	90	120	150	360
50	70	100	135	170	425
55	75	110	150	185	495

W = SHOULDER WIDTH (FEET
S = NON-CONSTRUCTION SPEED LIMIT (MPH)

TAPER LENGTH

L= WS AT 45 MPH OR GREATER
L = WS^2 / 60 AT 40 MPH OR LESS

SHOULDER TAPER LENGTH = 1/3L

GENERAL NOTES

ALL SIGNS ARE 48"X48" UNLESS OTHERWISE NOTED. IF NECESSARY DUE TO SPACE CONSTRAINTS IN URBAN AREAS, 36" X 36" SIGNS MAY BE USED IF APPROVED BY THE REGIONAL TRAFFIC UNIT.

"WO" IS THE SAME AS "W" EXCEPT THE BACKGROUND IS ORANGE.

ANY SIGNS TEMPORARY OR EXISTING, WHICH CONFLICT WITH THE TRAFFIC CONTROL "IN USE" SHALL BE REMOVED OR COVERED AS NEEDED AND AS APPROVED BY THE ENGINEER.

THE EXACT NUMBER, LOCATION, AND SPACING OF ALL SIGNS AND DEVICES SHALL BE ADJUSTED TO FIT FIELD CONDITIONS AS APPROVED BY THE ENGINEER.

CHANNELIZING DEVICES PLACED ADJACENT TO WORK AREA SHALL BE PULLED BACK FROM THE TRAVEL LANE WHEN WORK IS NOT IN PROGRESS.

SIGNS THAT WILL BE IN PLACE LESS THAN 7 CONTINUOUS DAYS AND NIGHTS MAY BE MOUNTED ON PORTABLE SUPPORTS.

W20-1A AND G20-2A SIGNS ARE NOT REQUIRED IF THE WORK AREA IS WITHN A LARGER WORK ZONE WHERE THESE SIGNS ARE ALREADY RESENT. G20-2A SIGNS MAY ALSO BE OMITTED IF DURATION OF WORK IS LESS THAN 7 CONTINUOUS DAYS AND NIGHTS.

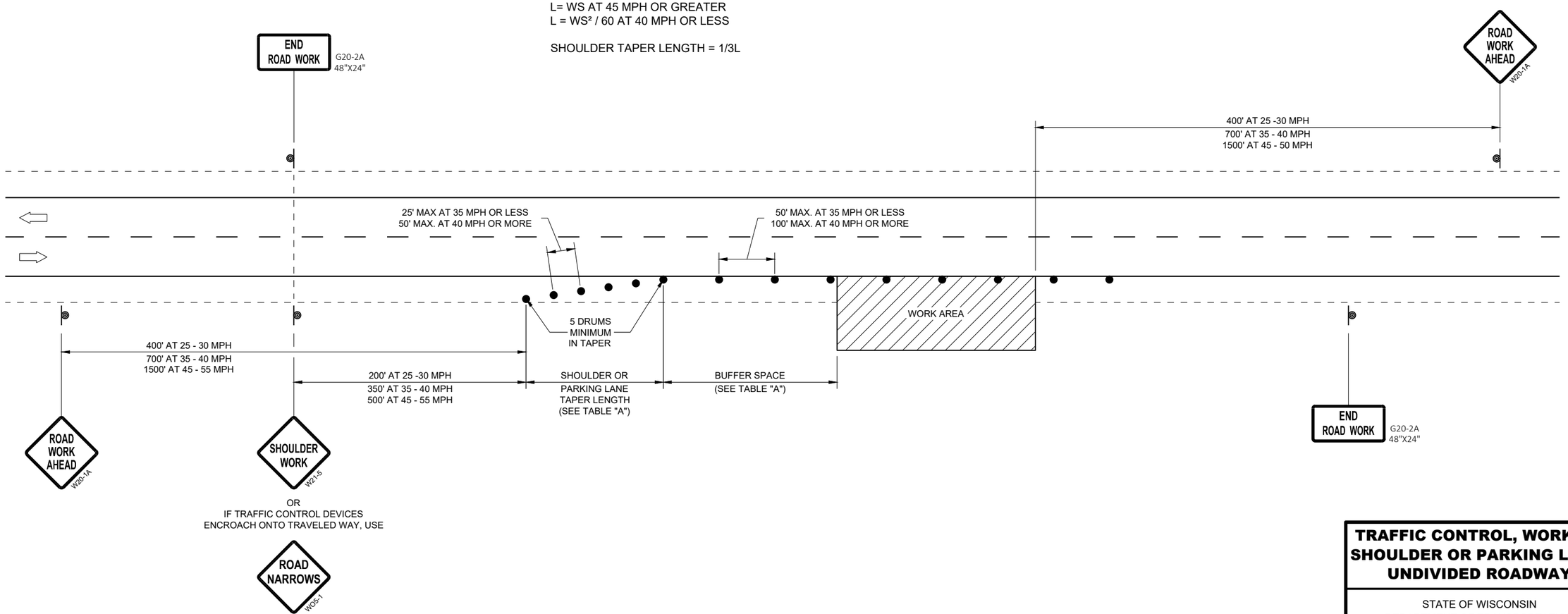

TRAFFIC CONTROL, WORK ON SHOULDER OR PARKING LANE, UNDIVIDED ROADWAY

STATE OF WISCONSIN
DEPARTMENT OF TRANSPORTATION

APPROVED
August 2019 — DATE
/S/ Andrew Heidtke — STATEWIDE WORK ZONE T SAFETY ENGINEER
FHWA

6

SDD 15D28 - 03

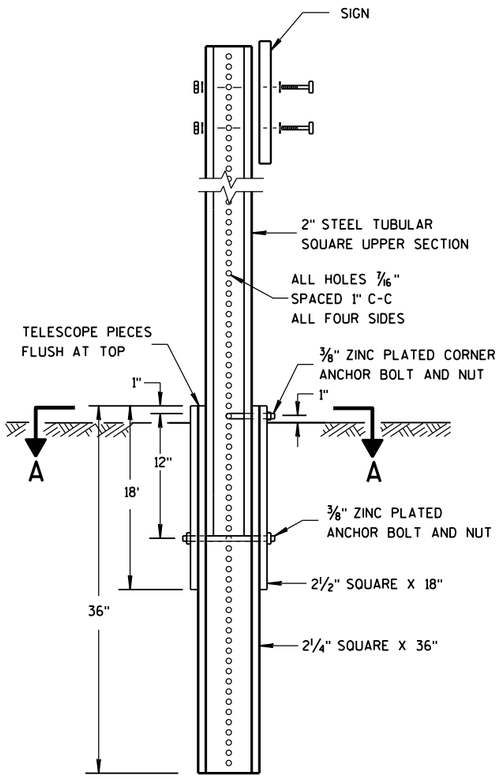

DETAIL OF TUBULAR STEEL SIGN POST

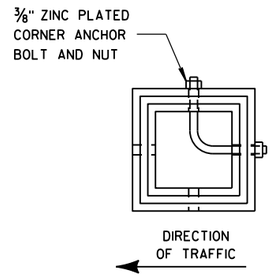

SECTION A-A

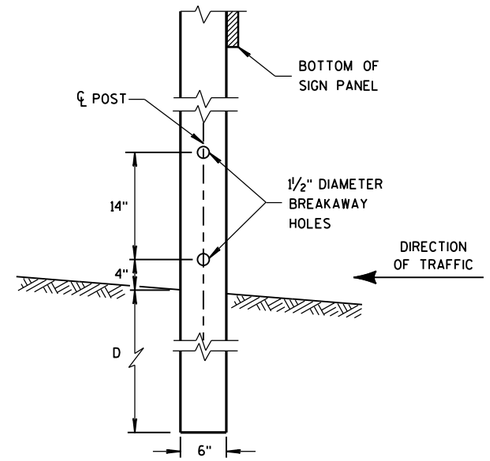

4"x6" WOOD POST MODIFICATION

GENERAL NOTES

1. 6 FEET FROM THE EDGE OF PAVEMENT (EDGE LINE LOCATION) UNLESS OTHERWISE DIRECTED BY THE PROJECT ENGINEER. LATERAL OFFSET SHOULD BE ADJUSTED TO AVOID THE DITCH FLOWLINE.
2. THE EXISTENCE OF CURB AND GUTTER DOES NOT IN ITSELF MANDATE THE VERTICAL CLEARANCE ILLUSTRATED. THAT HEIGHT IS TYPICALLY MEASURED WHERE THERE IS SIDEWALK ADJACENT TO THE ROADWAY OR PARKING IS PERMITTED. IN THE ABSENCE OF SIDEWALK, VERTICAL CLEARANCE IS MEASURED FROM THE TOP OF THE CURB. IF NO SIDEWALK AND NO PARKING, VERTICAL CLEARANCE MAY BE REDUCED TO 5 FOOT MINIMUM. OFFSET OF SIGNS IS MEASURED FROM THE CURB FLOWLINE.
3. FOR SIGNS REQUIRING 4 POSTS, SPACE INTERMEDIATE POSTS EVENLY.

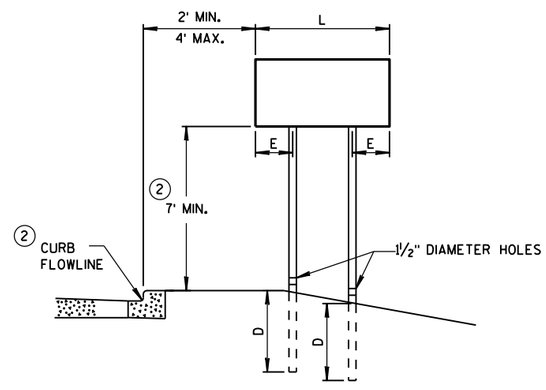

URBAN AREA

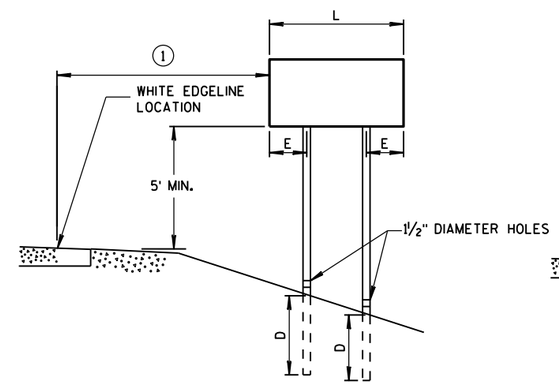

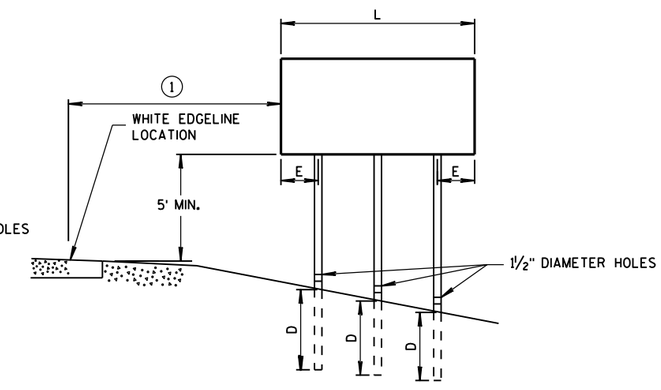

RURAL AREA

POST MOUNTING DETAIL FOR TEMPORARY TRAFFIC CONTROL FIXED MESSAGE SIGNS

TUBULAR STEEL POSTS

AREA OF SIGN INSTALLATION (SQ. FT.)	NUMBER OF REQUIRED TUBULAR STEEL POSTS
9 OR LESS	1
GREATER THAN 9 LESS THAN OR EQUAL TO 18	2
GREATER THAN 18 LESS THAN OR EQUAL TO 27	3

SIGNS WIDER THAN 3 FEET OR LARGER THAN 9 SQ. FT. SHALL BE MOUNTED ON MULTIPLE POSTS (SEE ABOVE TABLE).

SIGNS LARGER THAN 27 SQ. FT. SHALL NOT BE MOUNTED ON TUBULAR STEEL POSTS.

WOOD POST EMBEDMENT DEPTH

AREA OF SIGN INSTALLATION (SQ. FT.)	D (MIN)
20 OR LESS	4'
GREATER THAN 20	5'

4" X 6" WOOD POST

POST SPACING REQUIREMENTS		NUMBER OF WOOD POSTS REQUIRED
L	E	
48" OR LESS AND LESS THAN 20 SQ. FT.	-	1
LESS THAN 60"	12"	2
60" TO 120"	L/5	2
GREATER THAN 120" LESS THAN 168"	12"	3
168" AND GREATER	12"	4

SEE NOTE 3

TEMPORARY TRAFFIC CONTROL SIGN MOUNTING

STATE OF WISCONSIN
DEPARTMENT OF TRANSPO

6

S.D.D. 15 D 38-2a

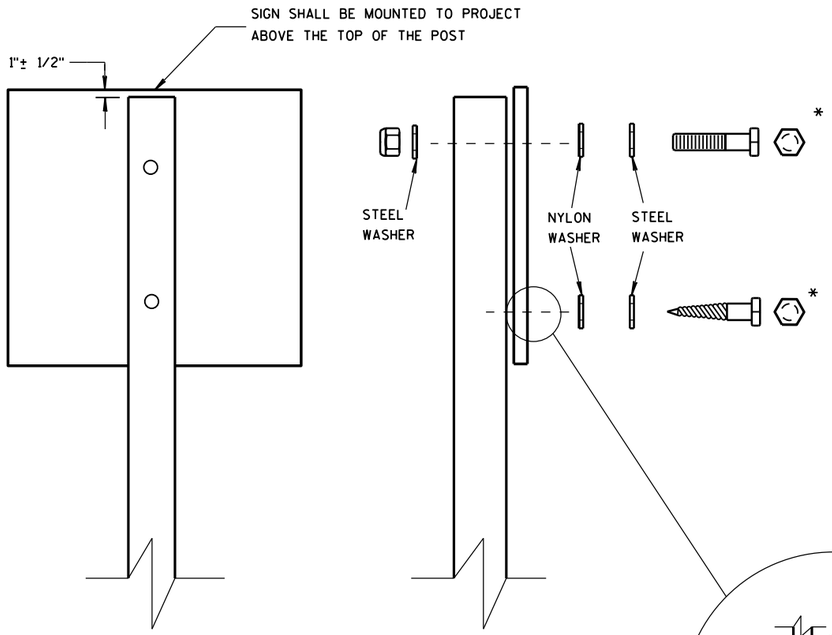

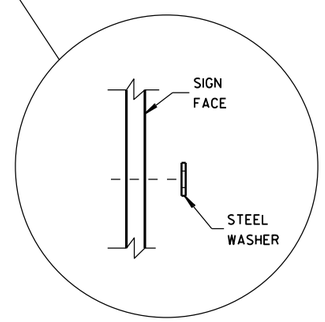

WASHER PLACEMENT WHEN SIGN HAS OTHER THAN TYPE H OR TYPE F FACE

NUTS, BOLTS AND LAGS USED FOR MOUNTING SIGNS SHALL HAVE HEXAGONAL HEADS AND SHALL BE EITHER:

A. HOT DIP GALVANIZED IN ACCORDANCE WITH ASTM DESIGNATION: A 153, CLASS D, OR SC 3

B. ELECTRO-GALVANIZED IN ACCORDANCE WITH ASTM DESIGNATION: B 633, TYPE III, SC 3

THREADS ON BOLTS AND NUTS SHALL BE MANUFACTURED WITH SUFFICIENT ALLOWANCE FOR THE CADMIUM PLATE OR GALVANIZED COATING TO PERMIT THE NUTS TO RUN FREELY ON THE BOLTS.

WOOD POSTS (4" x 4" or 4" x 6")

LAG SCREWS - 3/8" X 3"

MACHINE BOLTS - 5/16" X 6-1/2" OR 7" LENGTH W/ NUTS

SQUARE STEEL POSTS (2" x 2")

MACHINE BOLTS - 3/8" X 3-1/4" LENGTH W/ NUTS

RIVETS - 9/32" (6605-9-6) BULB-TITE, TRI-FOLD, ALUMINUM BODY/MANDREL O.D. FLANGE .720-.765 INCH, GRIP RANGE .042-.375 INCH

WASHERS (ALL POSTS) -

1-1/4" O.D. X 3/8" I.D. X 1/16" STEEL

1-1/4" O.D. X 3/8" I.D. X .080 NYLON FOR ALL TYPE H SIGNS

* TWO DIFFERENT FASTENING SYSTEMS ARE SHOWN FOR ILLUSTRATION PURPOSES. ON ANY INDIVIDUAL SIGN, EITHER ONE OR THE OTHER SYSTEM SHALL BE USED. ACTUAL NUMBER OF FASTENERS PER SIGN VARIES WITH THE SIGN AREA. FOR A SINGLE POST INSTALLATION, ALL SIGNS GREATER THAN 9 SQ. FT. REQUIRE THE USE OF 3 FASTENERS.

6

6

S.D.D. 15 D 38-2b

S.D.D. 15 D 38-2b

ATTACHMENT OF SIGNS TO POSTS

STATE OF WISCONSIN
DEPARTMENT OF TRANSPORTATION

APPROVED

June 2017 — /S/ Andrew Heldtke
DATE — WORK ZONE ENG

FHWA

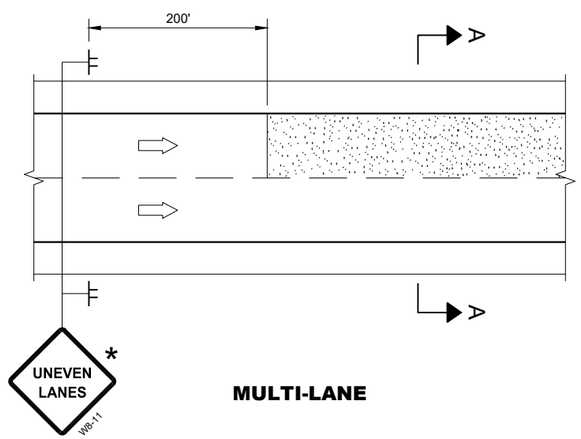

MULTI-LANE

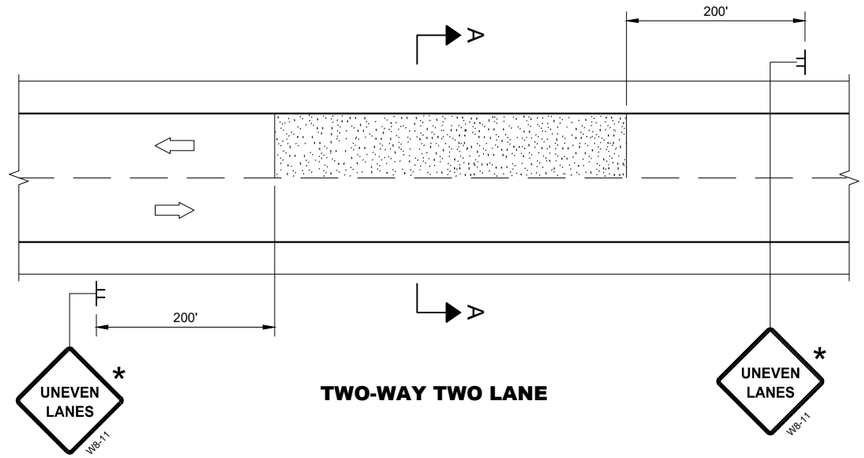

TWO-WAY TWO LANE

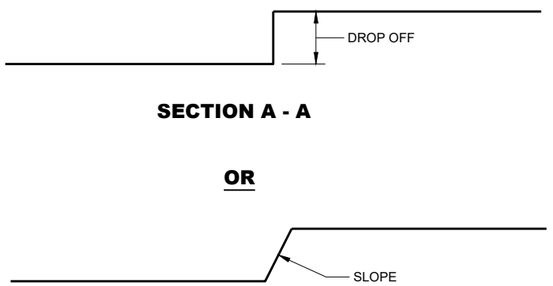

SECTION A - A

OR

SECTION A - A

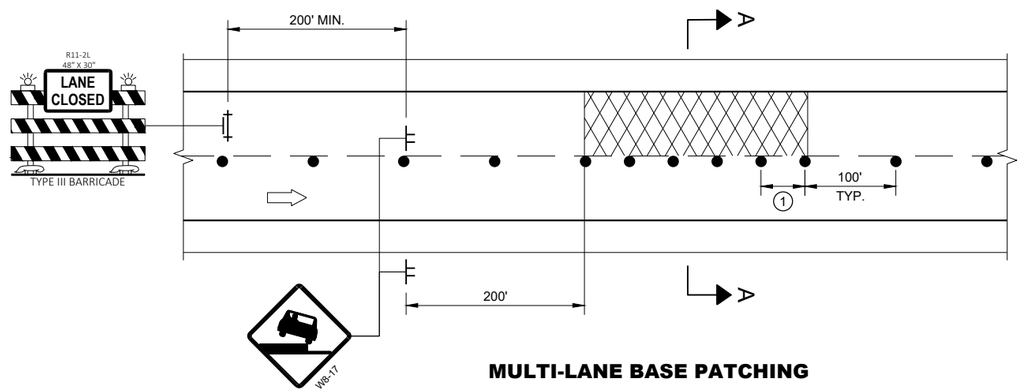

MULTI-LANE BASE PATCHING

ADJACENT LANE DROP-OFFS

GENERAL NOTES

FOR SPOT LOCATIONS USE ENGINEERING JUDGEMENT WHEN PLACING ADDITIONAL SIGNS.

ALL SIGNS ARE 48" X 48" UNLESS OTHERWISE NOTED.

"WO" SIGNS ARE THE SAME AS "W" SIGNS EXCEPT THE BACKGROUND IS ORANGE.

WARNING LIGHTS ARE NOT REQUIRED IF THE LANE CLOSURE IS A DAYTIME ONLY OPERATION.

* IF THE DROP-OFF IS CONTINUOUS ALONG THE PROJECT, PLACE ADDITIONAL SIGNS EVERY 1 MILE AND AFTER EVERY ENTRANCE RAMP.

(1) USE CLOSER SPACING WHEN DELINEATING DROP-OFF.

LEGEND

- SIGN ON TEMPORARY SUPPORT
- TRAFFIC CONTROL DRUM
- TYPE III BARRICADE WITH ATTACHED SIGN
- TYPE "A" WARNING LIGHT (FLASHING)
- DIRECTION OF TRAFFIC
- WORK AREA WITH DROP-OFF
- MILLED SURFACE

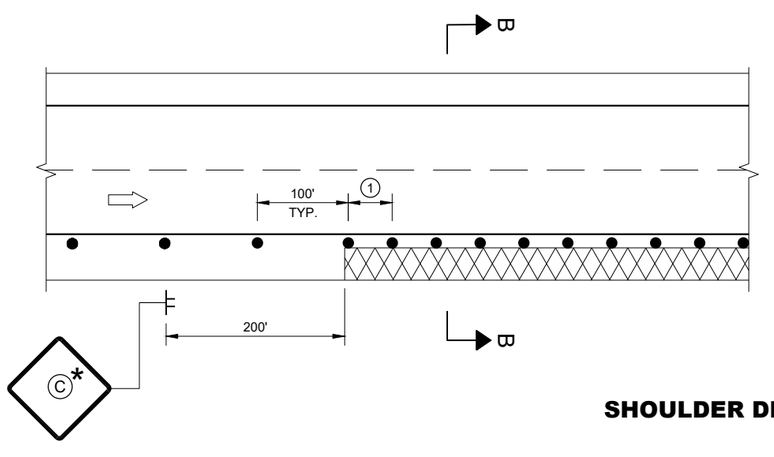

SHOULDER DROP-OFFS

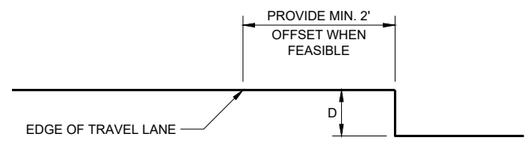

SECTION B - B

D	SIGN (C)
< 2" WITH A SLOPE STEEPER THAN 3:1	LOW SHOULDER WO8-9
2" < 6" WITH A SLOPE STEEPER THAN 3:1	SHOULDER DROP - OFF W8-9A PROVIDE A 3:1 OR FLATTER SLOPE OF MATERIAL ADJACENT TO THE PAVEMENT

TRAFFIC CONTROL, DROP-OFF SIGNING

STATE OF WISCONSIN
DEPARTMENT OF TRANSPORTATION

APPROVED
March 2018 — DATE
/S/ Andrew Heidtke — WORK ZONE ENGINEE
FHWA

6

SDD 15D39 - 02

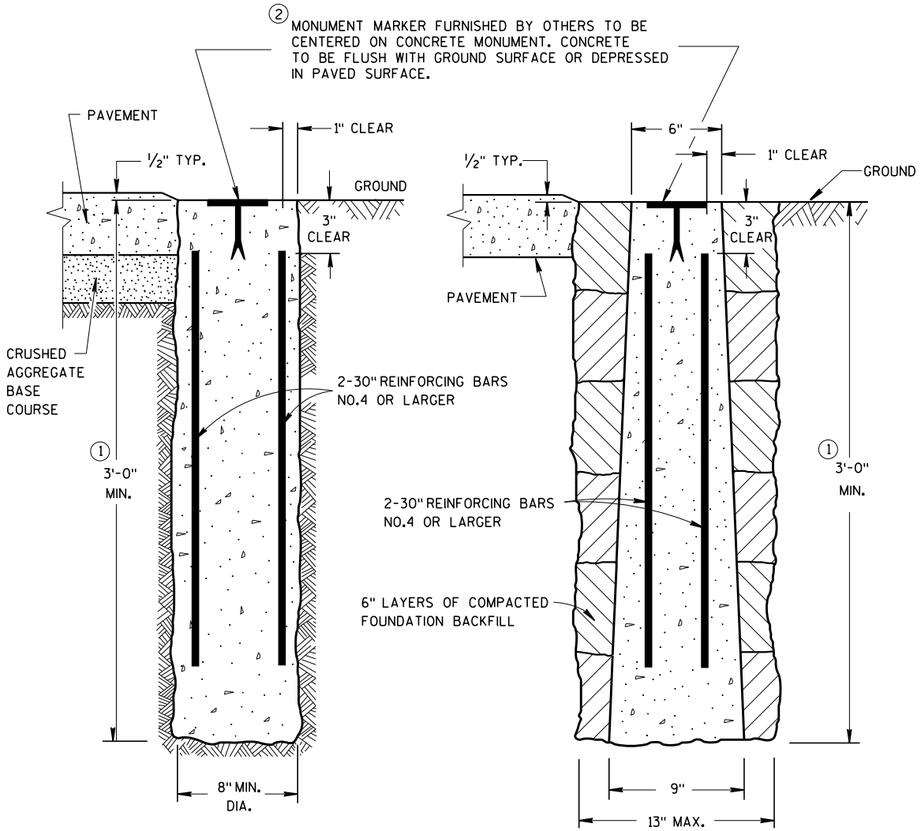

CAST-IN-PLACE

PRECAST

CONCRETE MONUMENTS

TYPE A

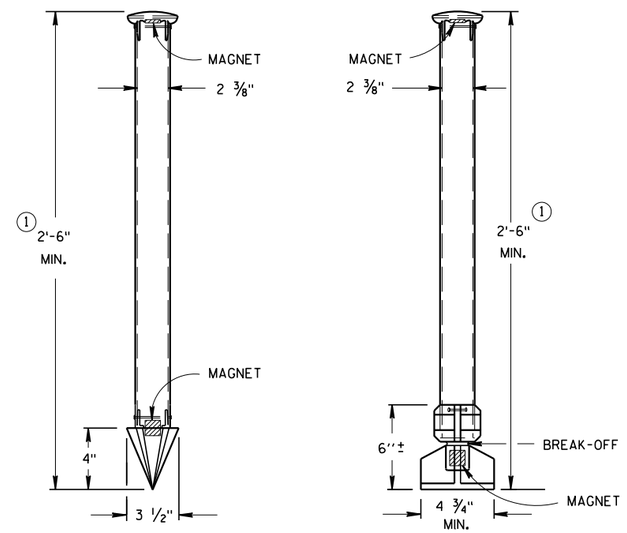

TYPE C

DRIVE-IN MONUMENT

TYPE D
NON-DRIVEN
BREAK-OFF MONUMENT

ALUMINUM MONUMENTS

(INCLUDES MARKER)

GENERAL NOTES

DETAILS OF CONSTRUCTION, MATERIALS AND WORKMANSHIP NOT SHOWN ON THIS DRAWING SHALL CONFORM TO THE PERTINENT REQUIREMENTS OF THE STANDARD SPECIFICATIONS AND THE APPLICABLE SPECIAL PROVISIONS.

DETAILED DRAWINGS OF PROPOSED ALTERNATE DESIGNS FOR METAL MONUMENTS OR MONUMENT COVERS SHALL BE SUBMITTED TO THE ENGINEER FOR APPROVAL.

PERMANENT MAGNETS SHALL BE INSERTED NEAR THE TOP AND BOTTOM OF ALL ALUMINUM MONUMENTS SO THE MONUMENT CAN EASILY BE DETECTED BY A METAL DETECTOR.

THE CAST IRON MONUMENT COVER SHALL BE A "NON-ROCKING" TYPE. ADJUSTMENT OF THE COVER TO GRADE MAY BE ACCOMPLISHED BY THE USE OF MORTAR AND BRICK, OR BY EITHER PRECAST OR CAST-IN-PLACE REINFORCED CONCRETE GRADE RINGS.

MONUMENTS SHALL BE LOCATED AND PLACED AT THE DIRECTION OF THE ENGINEER.

ALUMINUM MONUMENTS AND MONUMENT COVERS SHALL BE MADE FROM AN ALUMINUM AND MAGNESIUM ALLOY AS DETERMINED BY THE MANUFACTURER.

THE MONUMENT COVERS DETAILED ON THIS DRAWING ARE NOT EQUAL ALTERNATES. MONUMENT COVERS SHALL BE CAST IRON UNLESS ALUMINUM IS SPECIFIED ELSEWHERE IN THE CONTRACT.

MONUMENT SHALL BE CAST-IN-PLACE CONCRETE UNLESS PRECAST CONCRETE OR ALUMINUM MONUMENTS ARE SPECIFIED IN THE CONTRACT OR PERMITTED BY THE ENGINEER

① MINIMUM LENGTH SHALL BE 4'-0" FOR MONUMENTS INSTALLED IN PAVED AREAS.

② AN OFFICIAL COUNTY MONUMENT MARKER SUPPLIED BY A COUNTY MAY BE REQUIRED FOR SOME SECTION CORNERS AND WITNESS MONUMENTS INSTEAD OF THIS WIS DOT MARKER.

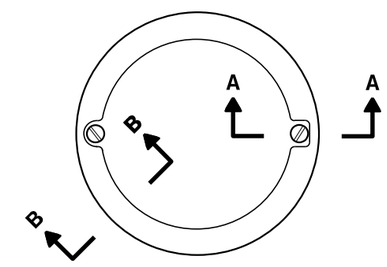

TOP VIEW

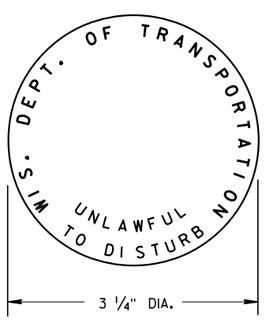

② **WIS DOT MONUMENT MARKER LOGO**

FOR TYPES "A", "C", & "D"

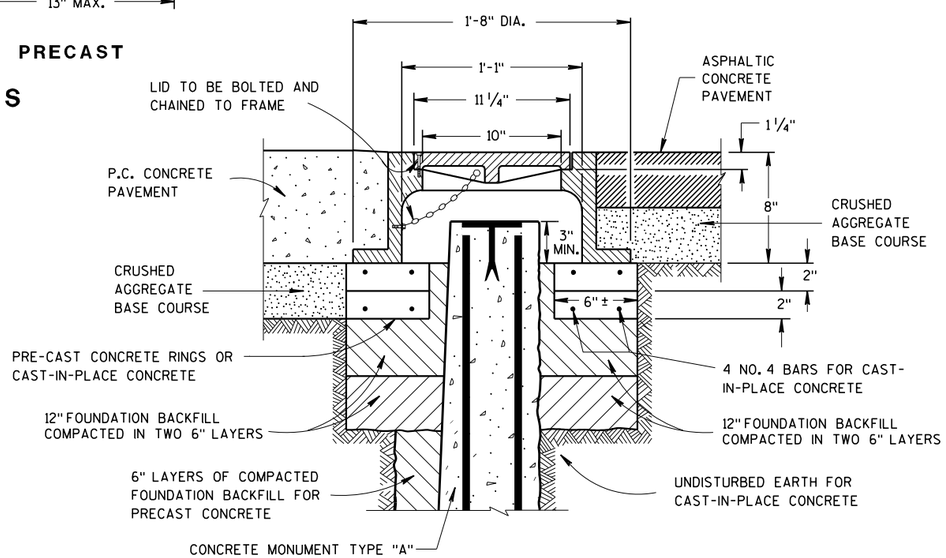

CAST IRON MONUMENT COVER

(APPROXIMATE WEIGHT 95 LBS)

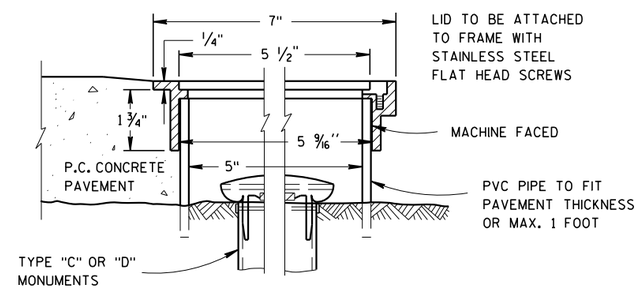

SECTION B-B SECTION A-A

ALUMINUM MONUMENT COVER

(APPROXIMATE WEIGHT 2 LBS)
(FOR CONCRETE PAVEMENT ONLY)

LANDMARK REFERENCE MONUMENTS AND COVERS

STATE OF WISCONSIN
DEPARTMENT OF TRANSPORTATION

APPROVED
March 2018 /S/ Raymond A. Kumanayl
DATE CHIEF SURVEYING AND M ENGINEER
FHWA

6

6

S.D.D. 16 A 1-7

S.D.D. 16 A 1-7

STH 81 - GUARDRAIL

		AREA (SF)				INCREMENTAL VOL (CY) (UNADJUSTED)				CUMULATIVE VOL (CY)				
STATION	DISTANCE	CUT	SALVAGED/ UNUSABLE PAVEMENT MATERIAL	FILL	EBS	CUT	SALVAGED/ UNUSABLE PAVEMENT MATERIAL	FILL	EBS	CUT 1.00	EXPANDED FILL 1.20	EXPANDED EBS BACKFILL 1.30	REDUCED EBS IN FILL 0.80	MASS ORDINATE
33+10	0	3	0	0	0	0	0	0	0	0	0	0	0	0
33+36	26	12	0	0	0	7	0	0	0	7	0	0	0	7
33+50	14	15	0	0	0	7	0	0	0	14	0	0	0	14
34+00	50	14	0	2	0	27	0	2	0	41	2	0	0	39
34+50	50	21	0	8	0	32	0	9	0	73	13	0	0	60
35+00	50	18	0	1	0	36	0	9	0	109	24	0	0	85
35+50	50	12	0	0	0	28	0	2	0	137	26	0	0	111
35+60	10	23	0	3	0	6	0	1	0	143	26	0	0	117
35+67	7	16	0	29	0	5	0	4	0	148	31	0	0	117
					TOTAL:	148	0	26	0					

STH 81 - GUARDRAIL

		AREA (SF)				INCREMENTAL VOL (CY) (UNADJUSTED)				CUMULATIVE VOL (CY)				
STATION	DISTANCE	CUT	SALVAGED/ UNUSABLE PAVEMENT MATERIAL	FILL	EBS	CUT	SALVAGED/ UNUSABLE PAVEMENT MATERIAL	FILL	EBS	CUT 1.00	EXPANDED FILL 1.20	EXPANDED EBS BACKFILL 1.30	REDUCED EBS IN FILL 0.80	MASS ORDINATE
36+64	0	16	0	85	0	0	0	0	0	0	0	0	0	0
36+72	8	16	0	21	0	5	0	15	0	5	18	0	0	-13
37+00	28	13	0	7	0	16	0	15	0	20	36	0	0	-15
37+50	50	15	0	17	0	27	0	22	0	47	62	0	0	-15
38+00	50	15	0	19	0	28	0	33	0	75	101	0	0	-26
38+50	50	13	0	11	0	25	0	27	0	100	133	0	0	-33
38+99	49	8	0	11	0	19	0	20	0	119	157	0	0	-38
39+00	1	9	0	12	0	0	0	0	0	120	158	0	0	-38
39+50	50	31	0	18	0	37	0	28	0	157	191	0	0	-34
40+00	50	25	0	7	0	53	0	23	0	209	218	0	0	-9
40+50	50	12	0	1	0	35	0	7	0	244	226	0	0	18
40+92	42	6	0	0	0	14	0	0	0	258	227	0	0	32
					TOTAL:	258	0	189	0					

STH 81 - GUARDRAIL

		AREA (SF)				INCREMENTAL VOL (CY) (UNADJUSTED)				CUMULATIVE VOL (CY)				
STATION	DISTANCE	CUT	SALVAGED/ UNUSABLE PAVEMENT MATERIAL	FILL	EBS	CUT	SALVAGED/ UNUSABLE PAVEMENT MATERIAL	FILL	EBS	CUT 1.00	EXPANDED FILL 1.20	EXPANDED EBS BACKFILL 1.30	REDUCED EBS IN FILL 0.80	MASS ORDINATE
442+71	0	6	0	1	0	0	0	0	0	0	0	0	0	0
443+00	29	6	0	7	0	6	0	4	0	6	5	0	0	2
443+50	50	8	0	16	0	13	0	21	0	20	29	0	0	-10
444+00	50	14	0	11	0	21	0	24	0	41	59	0	0	-18
444+27	27	15	0	3	0	14	0	7	0	55	67	0	0	-12
444+50	23	16	0	5	0	14	0	4	0	69	71	0	0	-3
445+00	50	17	0	10	0	30	0	14	0	99	88	0	0	11
445+03	3	18	0	23	0	2	0	2	0	101	90	0	0	11
					TOTAL:	101	0	75	0					

STH 81 - GUARDRAIL

		AREA (SF)				INCREMENTAL VOL (CY) (UNADJUSTED)				CUMULATIVE VOL (CY)				
STATION	DISTANCE	CUT	SALVAGED/ UNUSABLE PAVEMENT MATERIAL	FILL	EBS	CUT	SALVAGED/ UNUSABLE PAVEMENT MATERIAL	FILL	EBS	CUT 1.00	EXPANDED FILL 1.20	EXPANDED EBS BACKFILL 1.30	REDUCED EBS IN FILL 0.80	MASS ORDINATE
446+90	0	26	0	8	0	0	0	0	0	0	0	0	0	0
447+00	10	23	0	0	0	9	0	2	0	9	2	0	0	8
447+50	50	21	0	2	0	41	0	2	0	50	4	0	0	46
448+00	50	21	0	17	0	38	0	17	0	88	24	0	0	64
448+50	50	18	0	1	0	36	0	17	0	124	44	0	0	80
449+00	50	14	0	3	0	30	0	4	0	154	49	0	0	105
449+23	23	12	0	1	0	11	0	2	0	165	51	0	0	114
					TOTAL:	165	0	43	0					

STH 81 - GUARDRAIL

		AREA (SF)				INCREMENTAL VOL (CY) (UNADJUSTED)				CUMULATIVE VOL (CY)				
STATION	DISTANCE	CUT	SALVAGED/ UNUSABLE PAVEMENT MATERIAL	FILL	EBS	CUT	SALVAGED/ UNUSABLE PAVEMENT MATERIAL	FILL	EBS	CUT 1.00	EXPANDED FILL 1.20	EXPANDED EBS BACKFILL 1.30	REDUCED EBS IN FILL 0.80	MASS ORDINATE
589+92	0	6	0	1	0	0	0	0	0	0	0	0	0	0
590+00	8	5	0	2	0	2	0	0	0	2	0	0	0	1
590+50	50	5	0	10	0	9	0	11	0	11	13	0	0	-3
591+00	50	11	0	9	0	14	0	17	0	25	34	0	0	-9
591+50	50	8	0	6	0	17	0	14	0	42	51	0	0	-9
592+00	50	6	0	3	0	13	0	8	0	55	61	0	0	-7
592+50	50	9	0	3	0	14	0	6	0	69	68	0	0	1
593+00	50	9	0	9	0	17	0	12	0	86	82	0	0	4
593+50	50	10	0	11	0	17	0	19	0	103	104	0	0	-2
594+00	50	8	0	9	0	17	0	18	0	119	127	0	0	-7
594+15	15	9	0	2	0	5	0	3	0	124	130	0	0	-6
					TOTAL:	124	0	108	0					

9

9

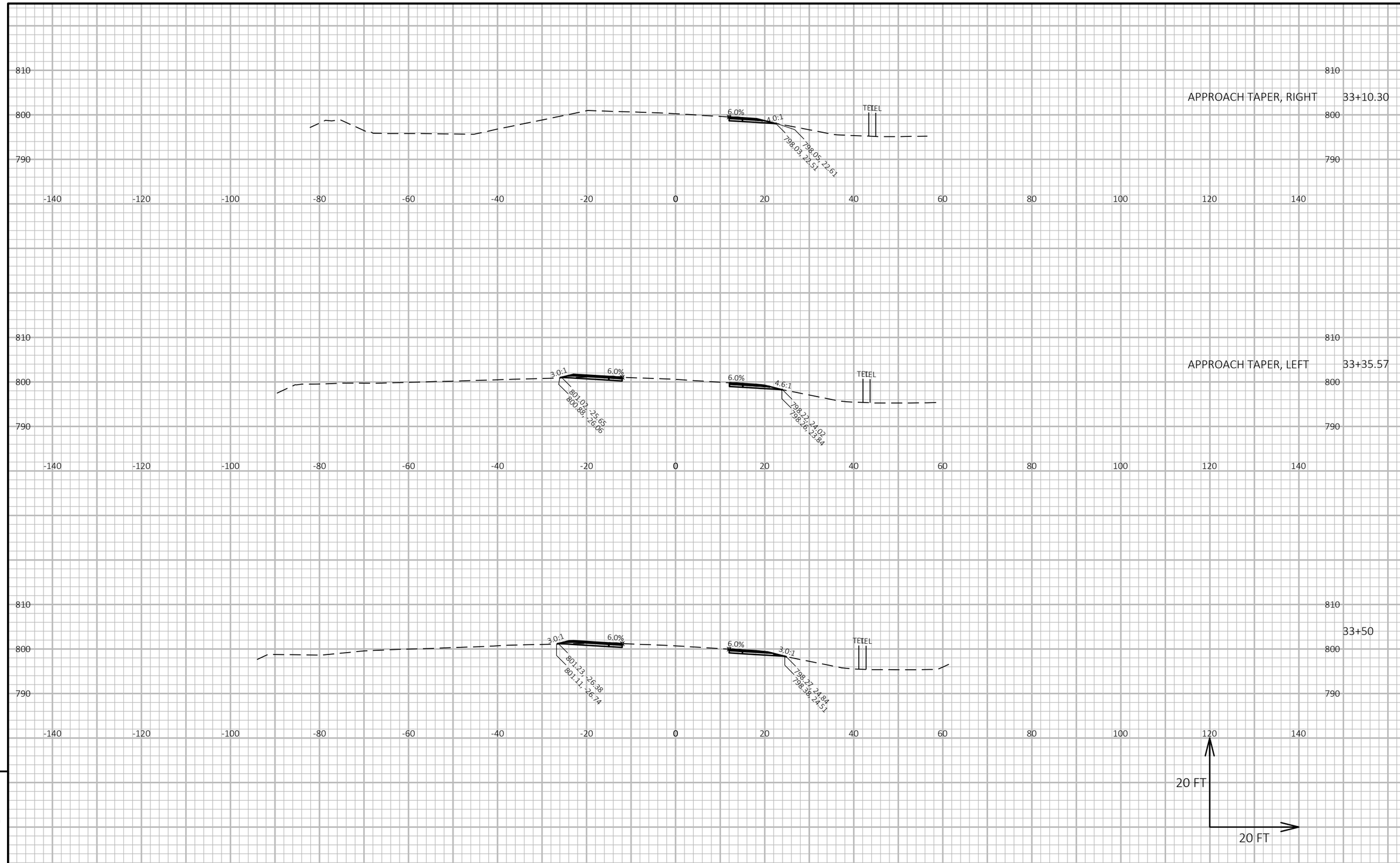

9

9

PROJECT NO: 5944-01-60	HWY: STH 81	COUNTY: LAFAYETTE & GREEN	CROSS SECTIONS: STH 81 GUARDRAIL IMPROVEMENT	SHEET 87	E

FILE NAME : Q:\2018 PROJECTS\5018038 - WISDOT SWR_STH 81 DESIGN\CIVIL3D\SHEETSPLAN\090201_XS.DWG
LAYOUT NAME - 01
PLOT DATE : 7/24/2019 7:17 AM
PLOT BY : PATRICK SMITH
PLOT NAME :
PLOT SCALE : 1 IN:20 FT HORZ. / 1 IN:20 FT VERT.
WISDOT/CADDS SHEET 49

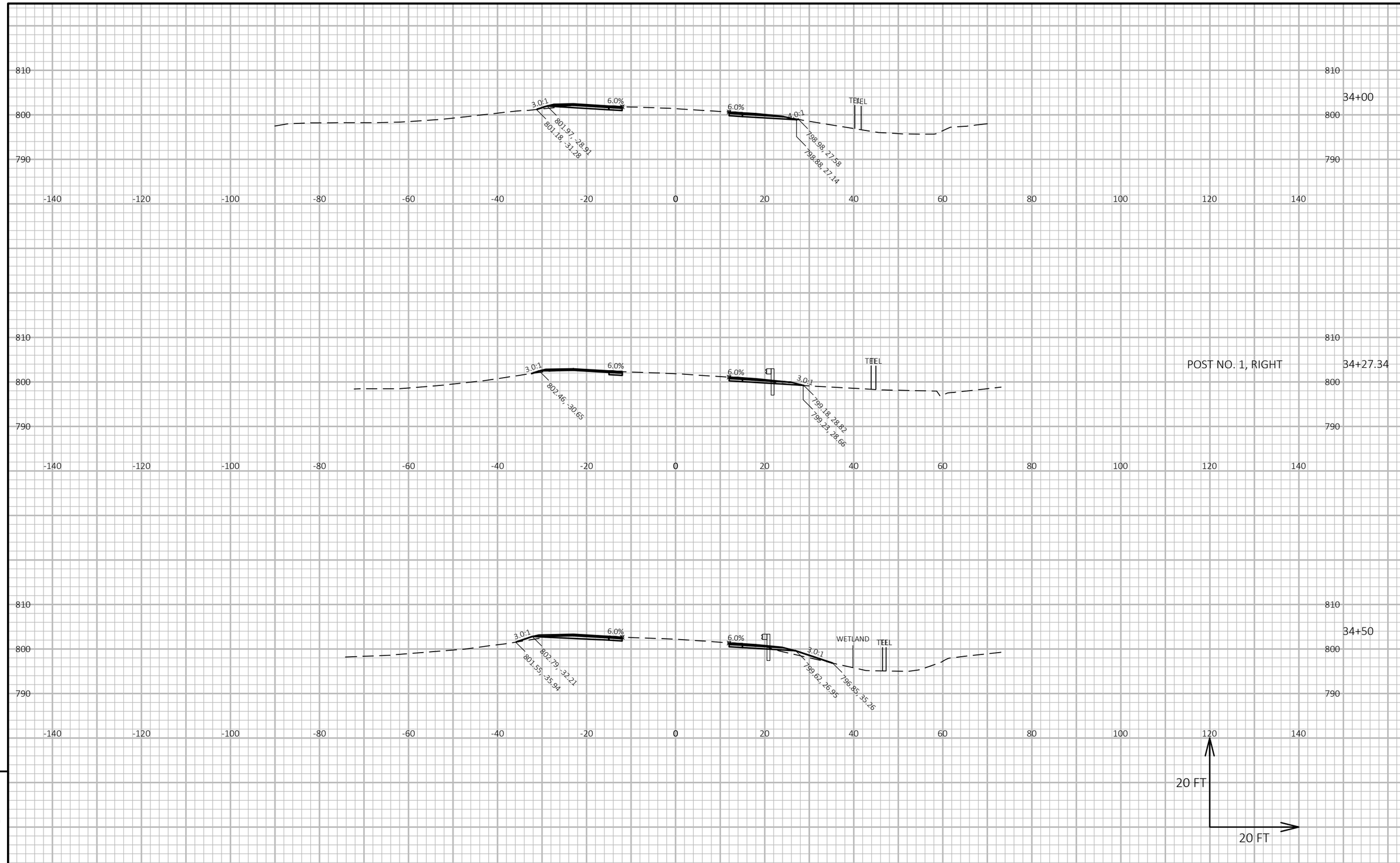

9

9

PROJECT NO: 5944-01-60	HWY: STH 81	COUNTY: LAFAYETTE & GREEN	CROSS SECTIONS: STH 81 GUARDRAIL IMPROVEMENT	SHEET 88	E

FILE NAME : Q:\2018 PROJECTS\5018038 - WISDOT SWR_STH 81 DESIGN\CIVIL3D\SHEETSPLAN\090201_XS.DWG
LAYOUT NAME - 02
PLOT DATE : 7/24/2019 7:17 AM
PLOT BY : PATRICK SMITH
PLOT NAME :
PLOT SCALE : 1 IN:20 FT HORZ. / 1 IN:20 FT VERT.
WISDOT/CADDS SHEET 49

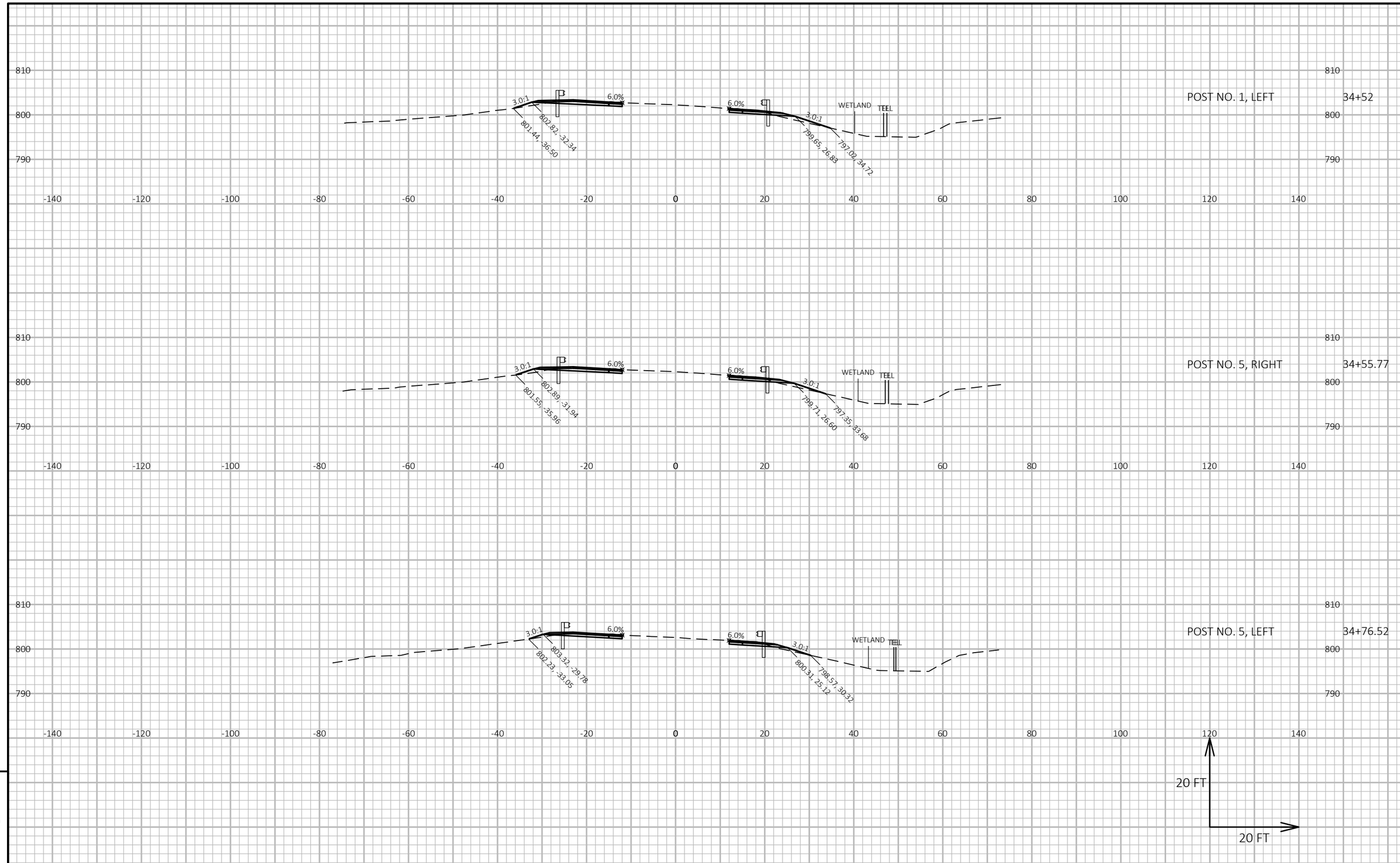

9

9

PROJECT NO: 5944-01-60	HWY: STH 81	COUNTY: LAFAYETTE & GREEN	CROSS SECTIONS: STH 81 GUARDRAIL IMPROVEMENT	SHEET 89	E

FILE NAME : Q:\2018 PROJECTS\5018038 - WISDOT SWR_STH 81 DESIGN\CIVIL3D\SHEETSPLAN\090201_XS.DWG
LAYOUT NAME - 03
PLOT DATE : 7/24/2019 7:18 AM
PLOT BY : PATRICK SMITH
PLOT NAME :
PLOT SCALE : 1 IN:20 FT HORZ. / 1 IN:20 FT VERT.
WISDOT/CADDS SHEET 49

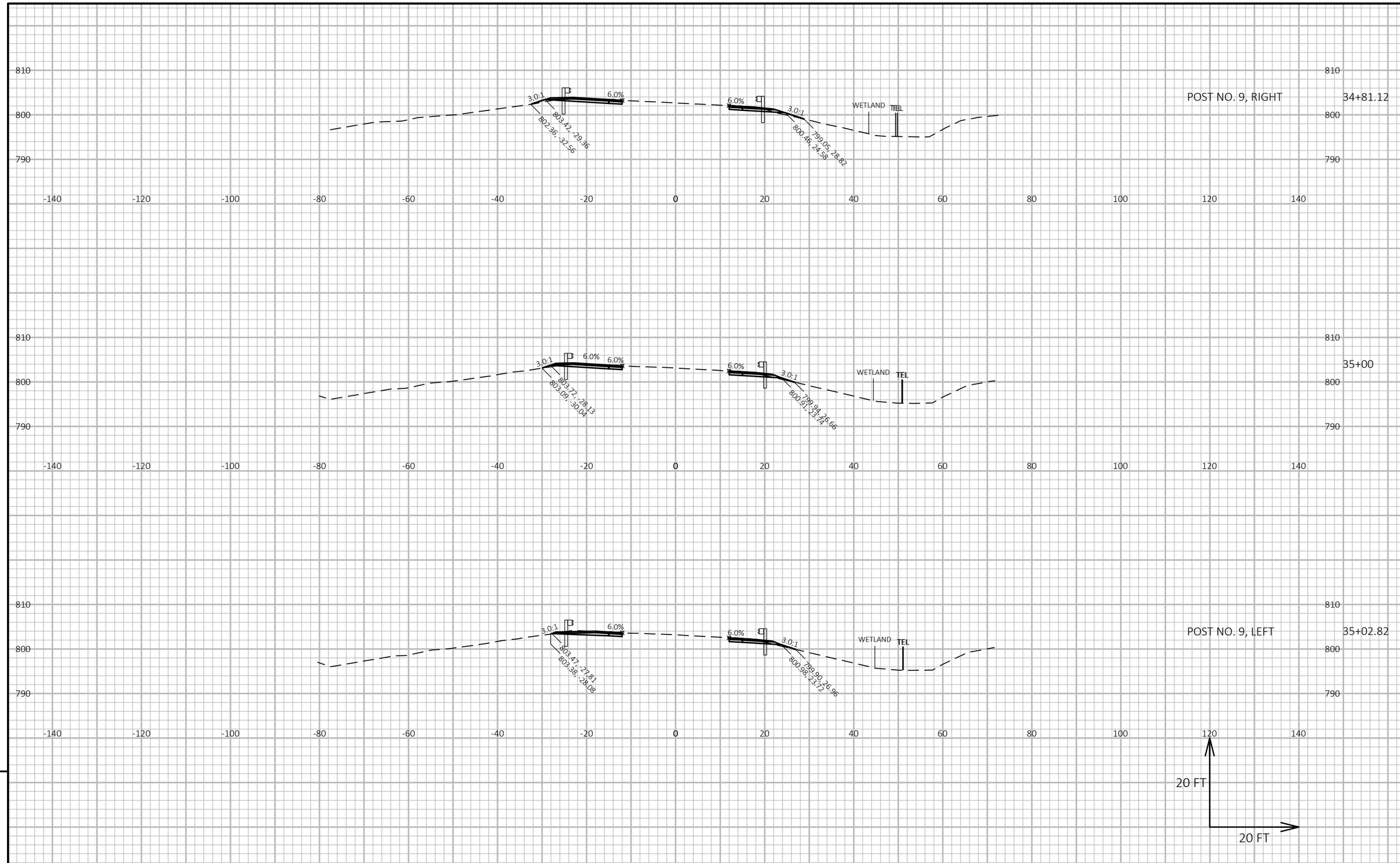

9

9

PROJECT NO: 5944-01-60	HWY: STH 81	COUNTY: LAFAYETTE & GREEN	CROSS SECTIONS: STH 81 GUARDRAIL IMPROVEMENT	SHEET 90	E

FILE NAME : Q:\2018 PROJECTS\5018038 - WISDOT SWR_STH 81 DESIGN\CIVIL3D\SHEETSPLAN\090201_XS.DWG
LAYOUT NAME - 04
PLOT DATE : 7/24/2019 7:18 AM
PLOT BY : PATRICK SMITH
PLOT NAME :
PLOT SCALE : 1 IN:20 FT HORZ. / 1 IN:20 FT VERT.
WISDOT/CADDS SHEET 49

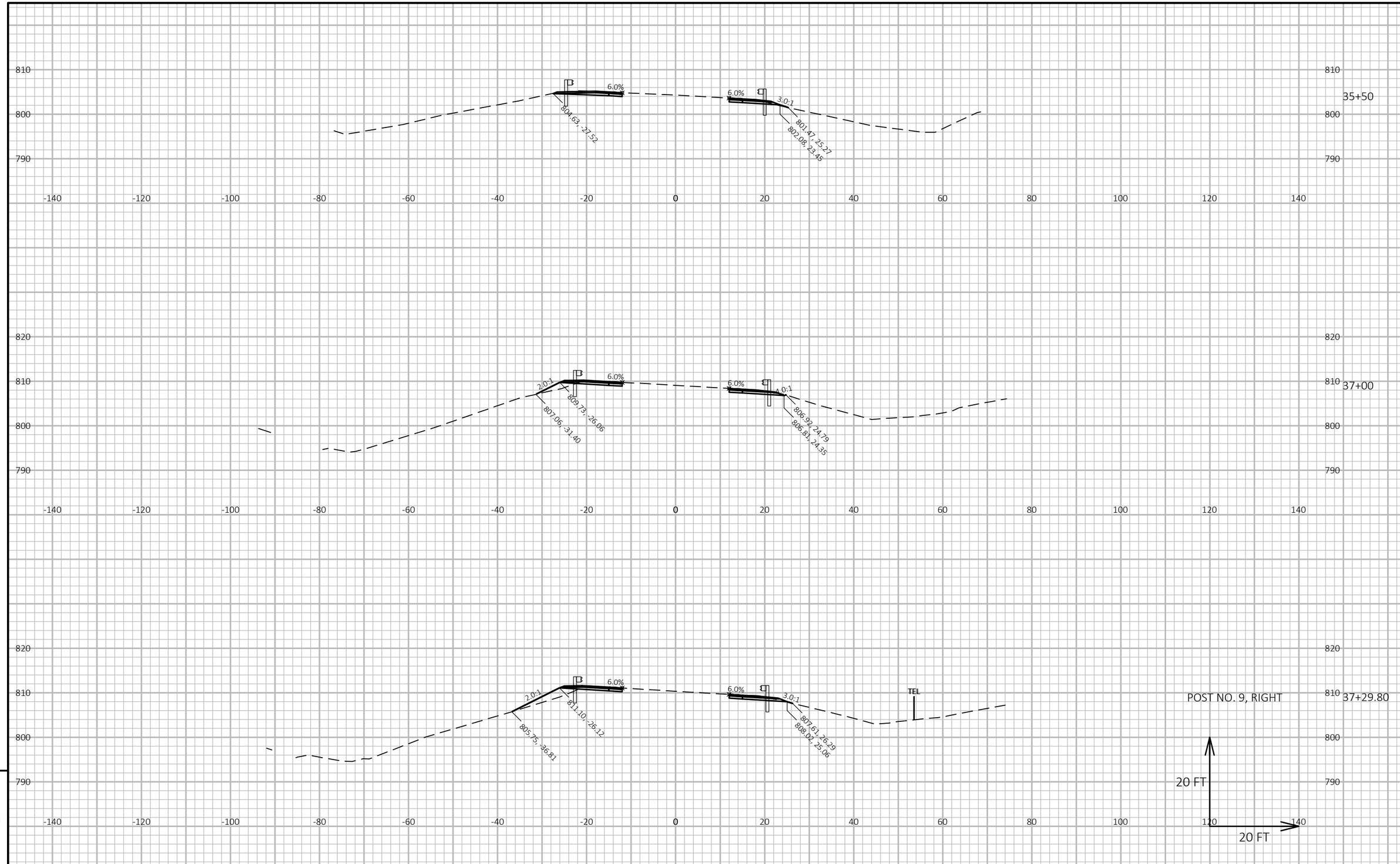

9

9

PROJECT NO: 5944-01-60	HWY: STH 81	COUNTY: LAFAYETTE & GREEN	CROSS SECTIONS: STH 81 GUARDRAIL IMPROVEMENT	SHEET 91	E

FILE NAME : Q:\2018 PROJECTS\5018038 - WISDOT SWR_STH 81 DESIGN\CIVIL3D\SHEETSPLAN\090201_XS.DWG
LAYOUT NAME - 05
PLOT DATE : 7/24/2019 7:18 AM
PLOT BY : PATRICK SMITH
PLOT NAME :
PLOT SCALE : 1 IN:20 FT HORZ. / 1 IN:20 FT VERT.

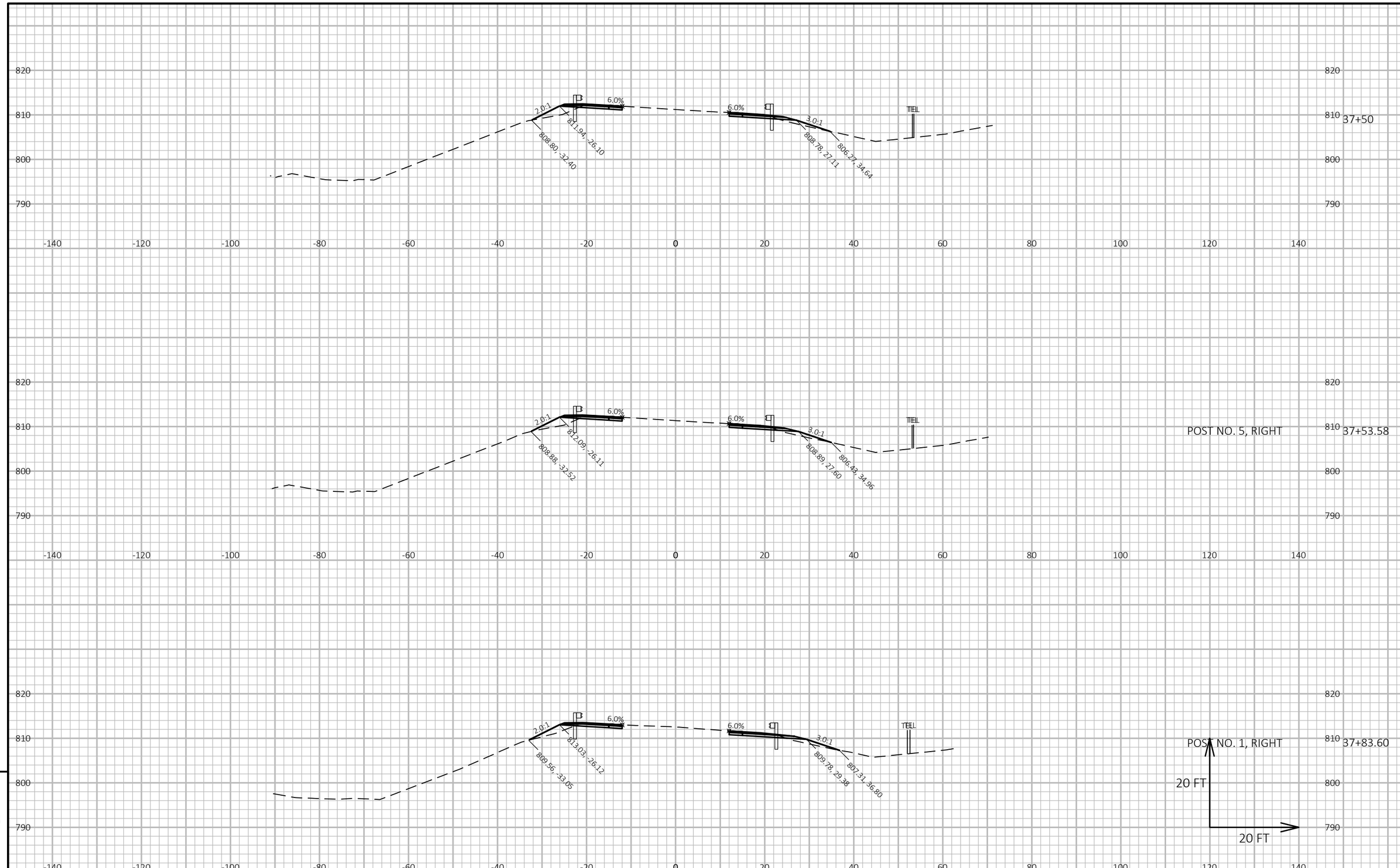

9

9

PROJECT NO: 5944-01-60	HWY: STH 81	COUNTY: LAFAYETTE & GREEN	CROSS SECTIONS: STH 81 GUARDRAIL IMPROVEMENT	SHEET 92	E

FILE NAME : Q:\2018 PROJECTS\5018038 - WISDOT SWR_STH 81 DESIGN\CIVIL3D\SHEETSPLAN\090201_XS.DWG
LAYOUT NAME - 06
PLOT DATE : 7/24/2019 7:18 AM
PLOT BY : PATRICK SMITH
PLOT NAME :
PLOT SCALE : 1 IN:20 FT HORZ. / 1 IN:20 FT VERT.
WISDOT/CADDS SHEET 49

9

9

PROJECT NO: 5944-01-60	HWY: STH 81	COUNTY: LAFAYETTE & GREEN	CROSS SECTIONS: STH 81 GUARDRAIL IMPROVEMENT	SHEET 93	E

FILE NAME : Q:\2018 PROJECTS\5018038 - WISDOT SWR_STH 81 DESIGN\CIVIL3D\SHEETSPLAN\090201_XS.DWG
LAYOUT NAME - 07
PLOT DATE : 7/24/2019 7:19 AM PLOT BY : PATRICK SMITH PLOT NAME : PLOT SCALE : 1 IN:20 FT HORZ. / 1 IN:20 FT VERT.

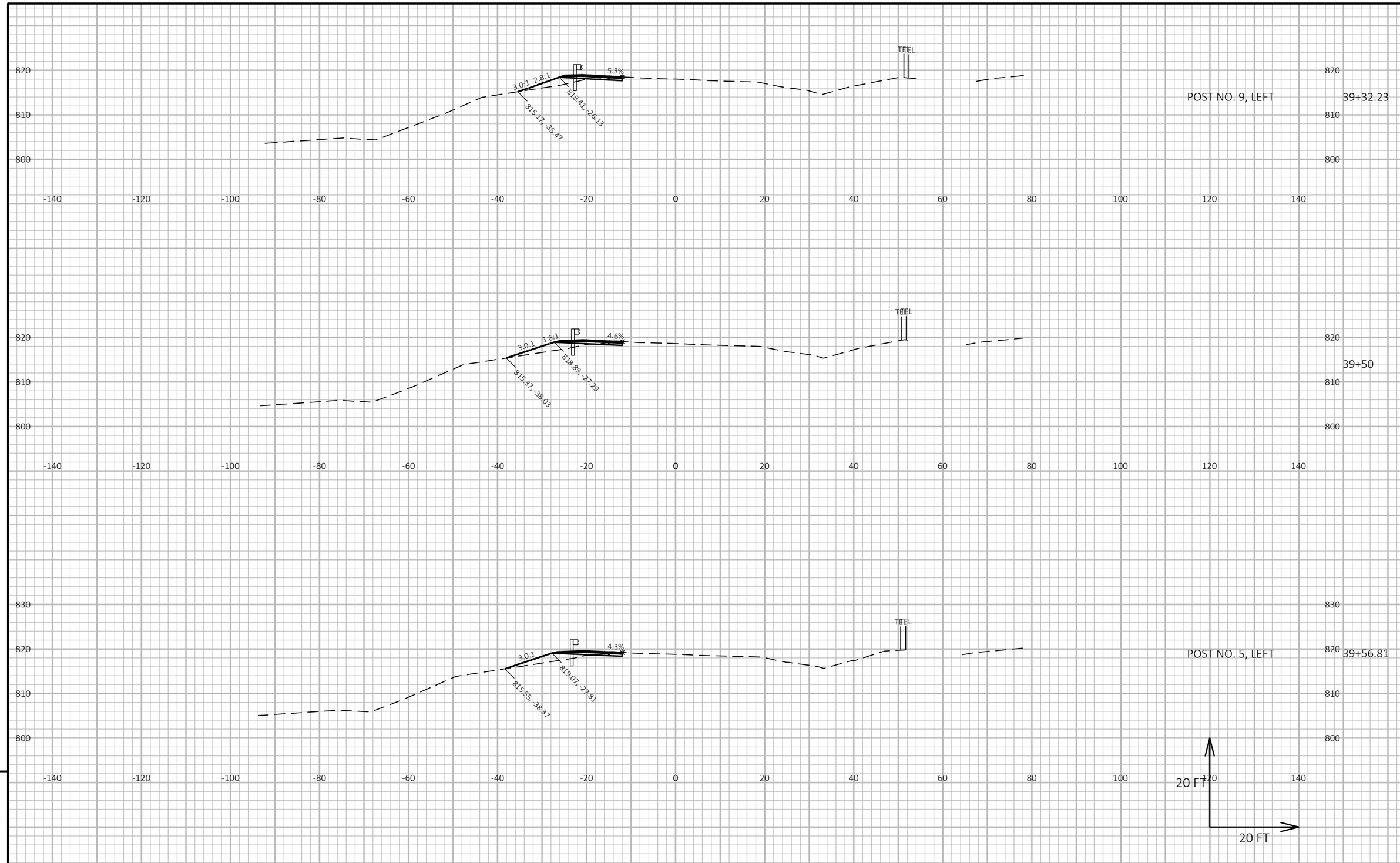

9

9

PROJECT NO: 5944-01-60	HWY: STH 81	COUNTY: LAFAYETTE & GREEN	CROSS SECTIONS: STH 81 GUARDRAIL IMPROVEMENT	SHEET 94	E

FILE NAME : Q:\2018 PROJECTS\5018038 - WISDOT SWR_STH 81 DESIGN\CIVIL3D\SHEETSPLAN\090201_XS.DWG
LAYOUT NAME - 08
PLOT DATE : 7/24/2019 7:19 AM
PLOT BY : PATRICK SMITH
PLOT NAME :
PLOT SCALE : 1 IN:20 FT HORZ. / 1 IN:20 FT VERT.

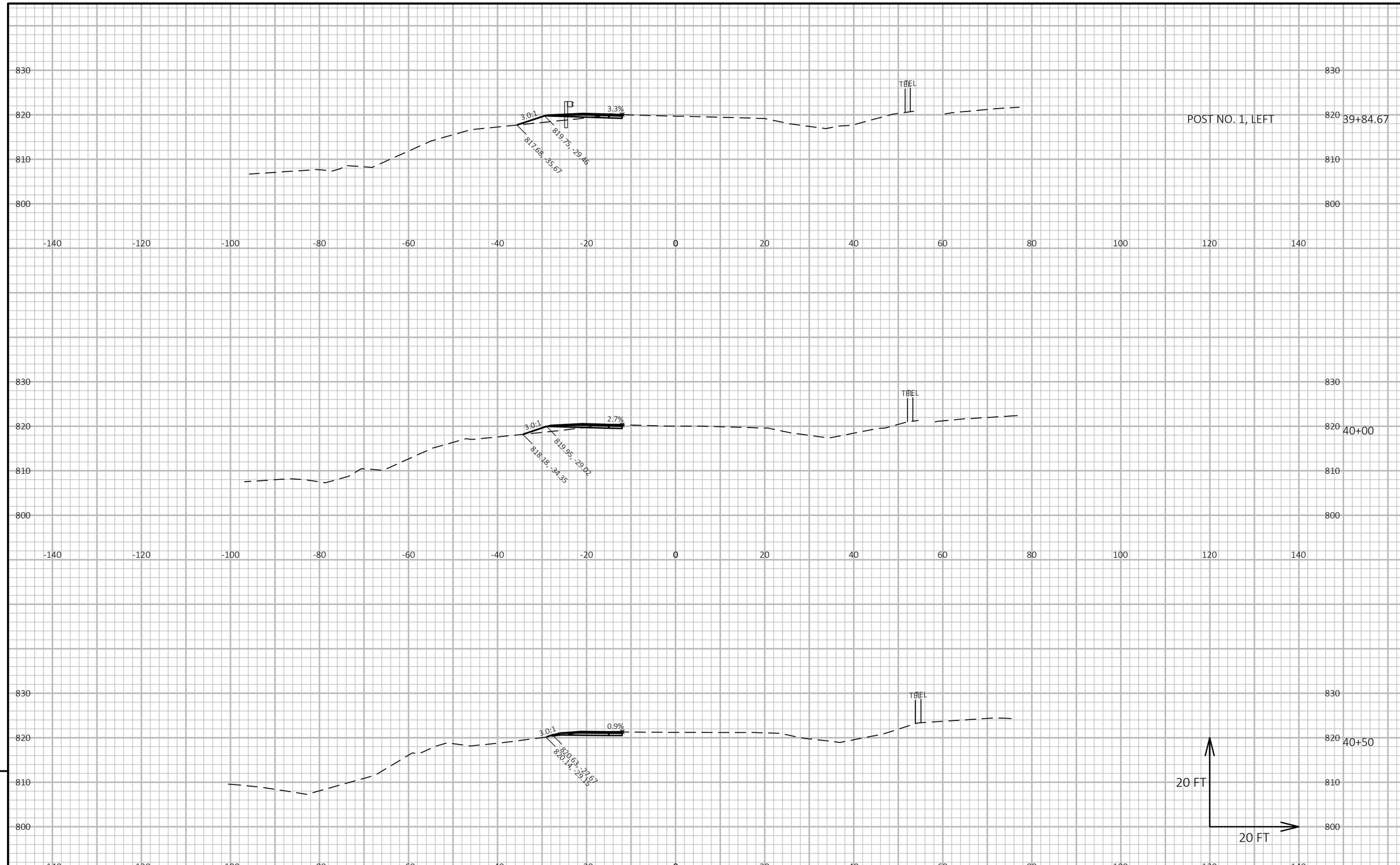

9

9

PROJECT NO: 5944-01-60	HWY: STH 81	COUNTY: LAFAYETTE & GREEN	CROSS SECTIONS: STH 81 GUARDRAIL IMPROVEMENT	SHEET 95	E

FILE NAME : Q:\2018 PROJECTS\5018038 - WISDOT SWR_STH 81 DESIGN\CIVIL3D\SHEETSPLAN\090201_XS.DWG
LAYOUT NAME - 09
PLOT DATE : 7/24/2019 7:19 AM
PLOT BY : PATRICK SMITH
PLOT NAME :
PLOT SCALE : 1 IN:20 FT HORZ. / 1 IN:20 FT VERT.
WISDOT/CADDS SHEET 49

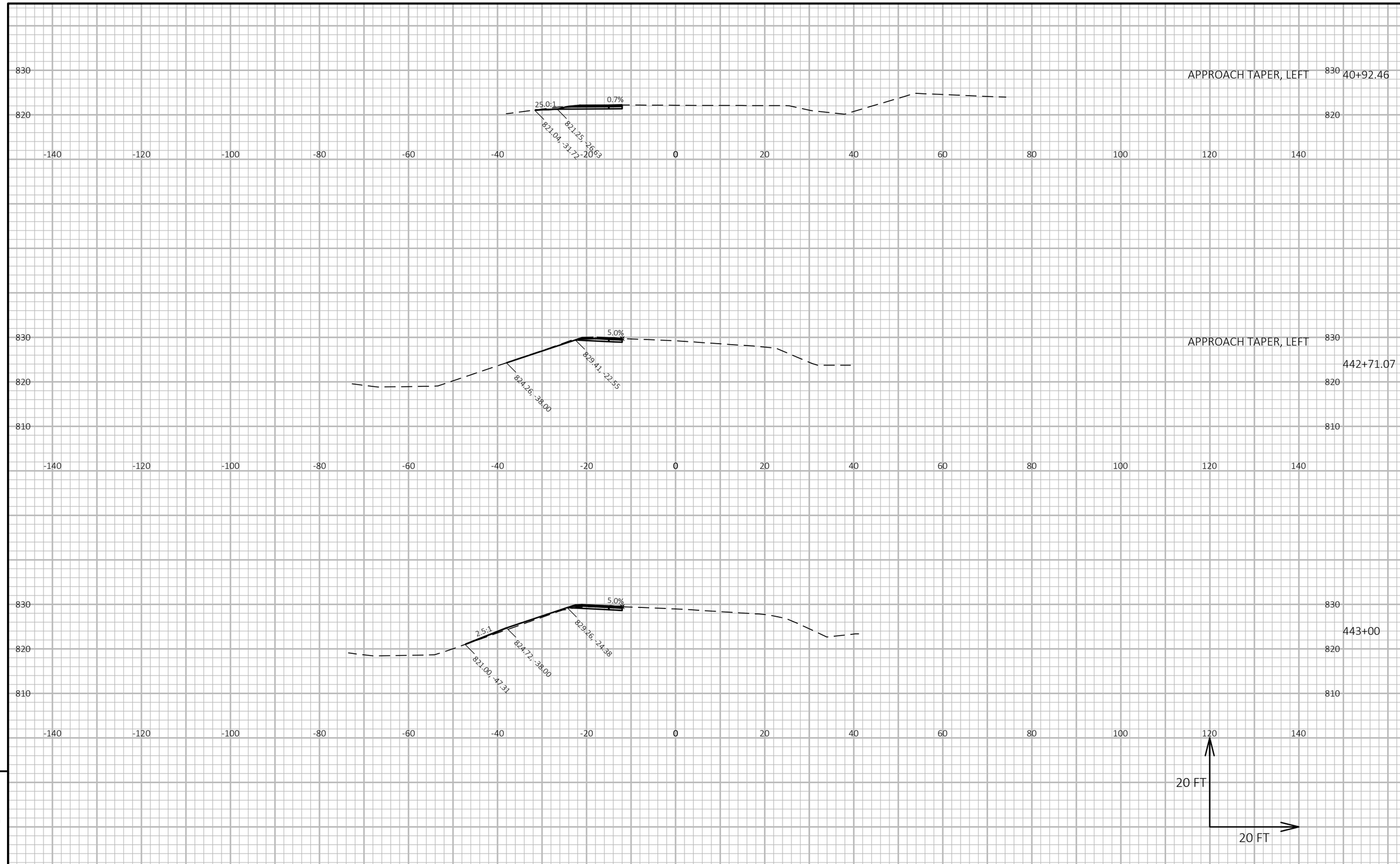

9

9

PROJECT NO: 5944-01-60	HWY: STH 81	COUNTY: LAFAYETTE & GREEN	CROSS SECTIONS: STH 81 GUARDRAIL IMPROVEMENT	SHEET 96	E

FILE NAME : Q:\2018 PROJECTS\5018038 - WISDOT SWR_STH 81 DESIGN\CIVIL3D\SHEETSPLAN\090201_XS.DWG
LAYOUT NAME - 10
PLOT DATE : 7/24/2019 7:19 AM
PLOT BY : PATRICK SMITH
PLOT NAME :
PLOT SCALE : 1 IN:20 FT HORZ. / 1 IN:20 FT VERT.
WISDOT/CADDS SHEET 49

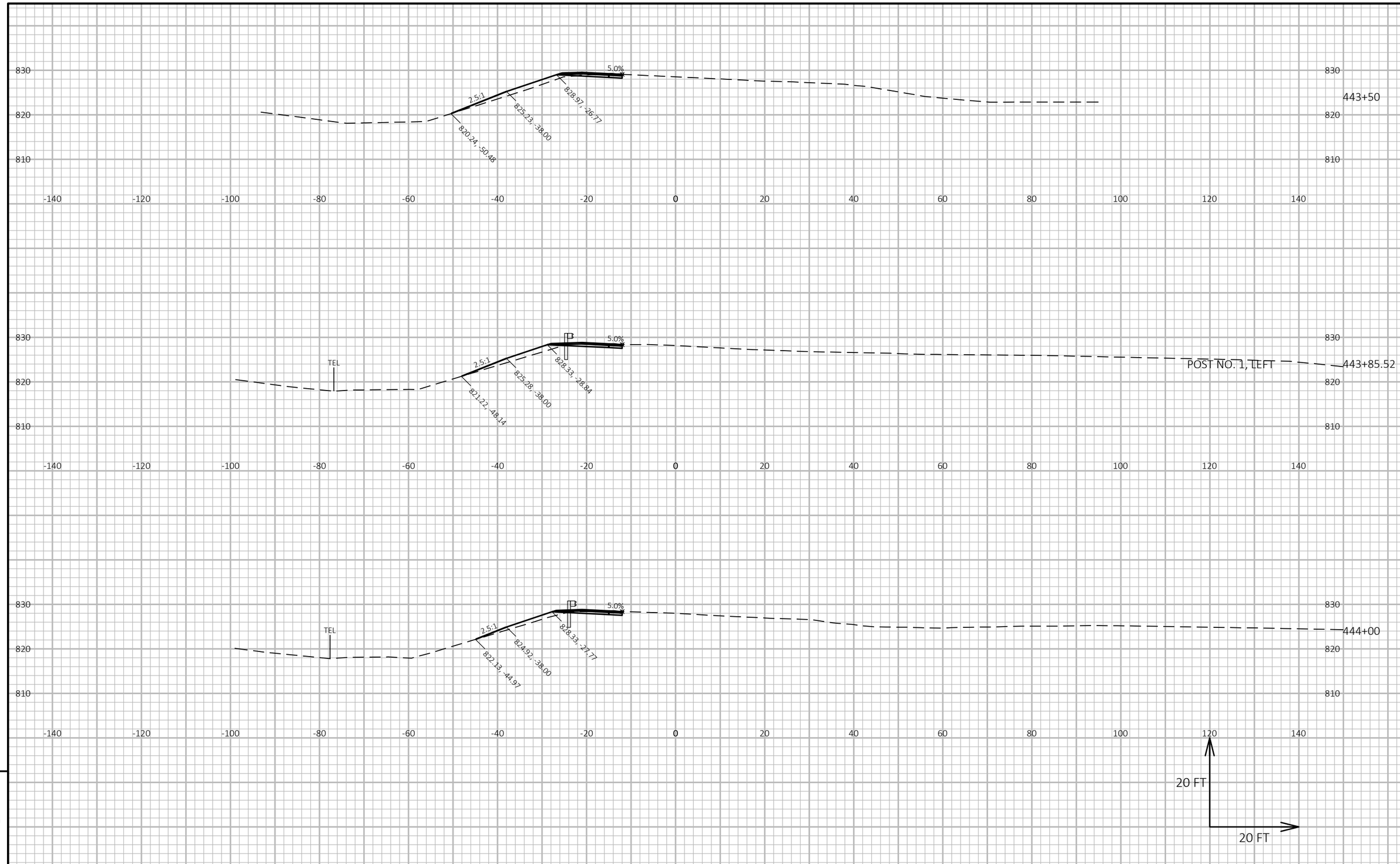

9

9

PROJECT NO: 5944-01-60	HWY: STH 81	COUNTY: LAFAYETTE & GREEN	CROSS SECTIONS: STH 81 GUARDRAIL IMPROVEMENT	SHEET 97	E

FILE NAME : Q:\2018 PROJECTS\5018038 - WISDOT SWR_STH 81 DESIGN\CIVIL3D\SHEETSPLAN\090201_XS.DWG
LAYOUT NAME - 11
PLOT DATE : 7/24/2019 7:20 AM
PLOT BY : PATRICK SMITH
PLOT NAME :
PLOT SCALE : 1 IN:20 FT HORZ. / 1 IN:20 FT VERT.
WISDOT/CADDS SHEET 49

9

9

PROJECT NO: 5944-01-60	HWY: STH 81	COUNTY: LAFAYETTE & GREEN	CROSS SECTIONS: STH 81 GUARDRAIL IMPROVEMENT	SHEET 98	E

FILE NAME : Q:\2018 PROJECTS\5018038 - WISDOT SWR_STH 81 DESIGN\CIVIL3D\SHEETSPLAN\090201_XS.DWG
LAYOUT NAME - 12
PLOT DATE : 7/24/2019 7:20 AM
PLOT BY : PATRICK SMITH
PLOT NAME :
PLOT SCALE : 1 IN:20 FT HORZ. / 1 IN:20 FT VERT.
WISDOT/CADDS SHEET 49

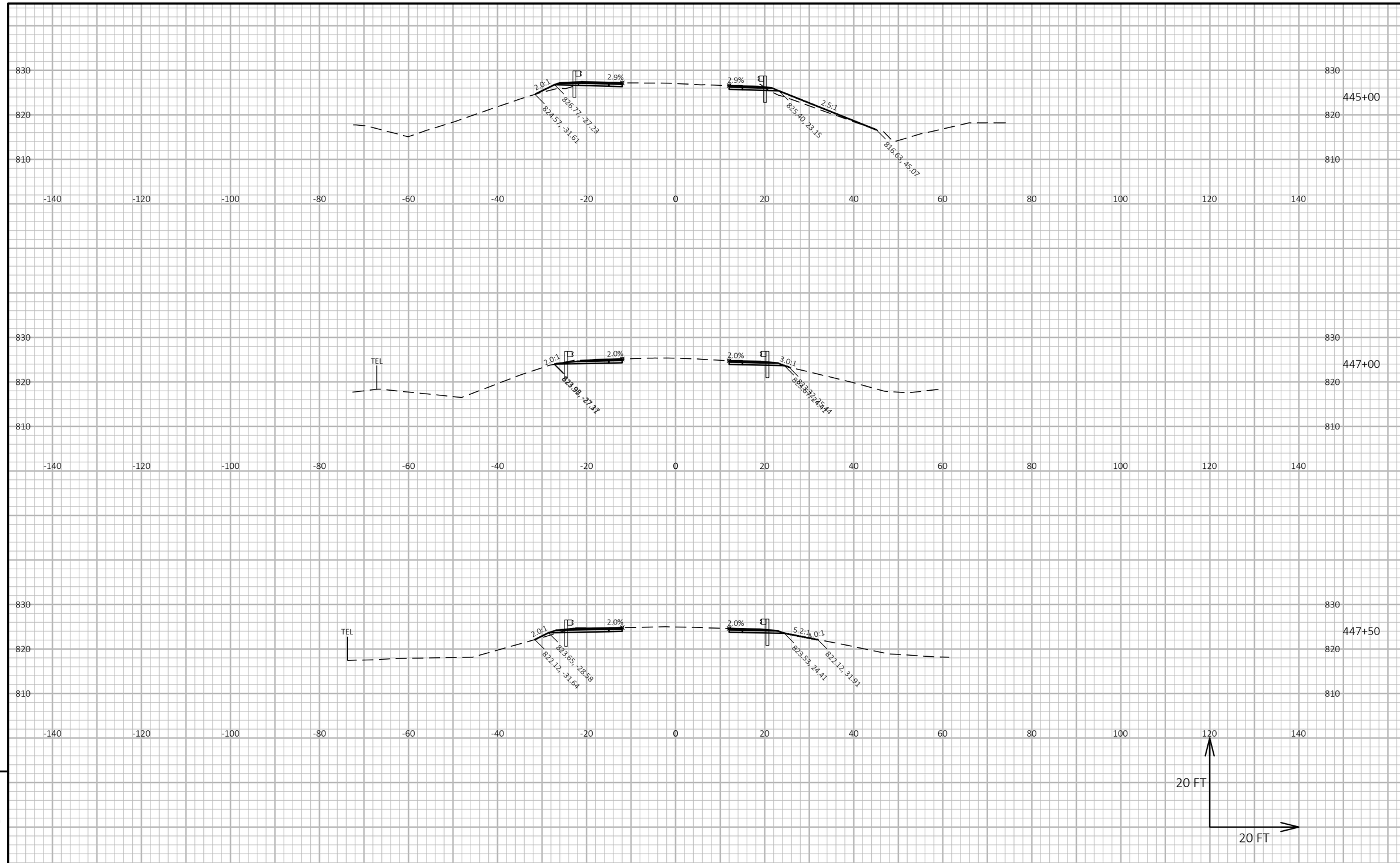

9

9

PROJECT NO: 5944-01-60	HWY: STH 81	COUNTY: LAFAYETTE & GREEN	CROSS SECTIONS: STH 81 GUARDRAIL IMPROVEMENT	SHEET 99	E

FILE NAME : Q:\2018 PROJECTS\5018038 - WISDOT SWR_STH 81 DESIGN\CIVIL3D\SHEETSPLAN\090201_XS.DWG
LAYOUT NAME - 13
PLOT DATE : 7/24/2019 7:20 AM
PLOT BY : PATRICK SMITH
PLOT NAME :
PLOT SCALE : 1 IN:20 FT HORZ. / 1 IN:20 FT VERT.

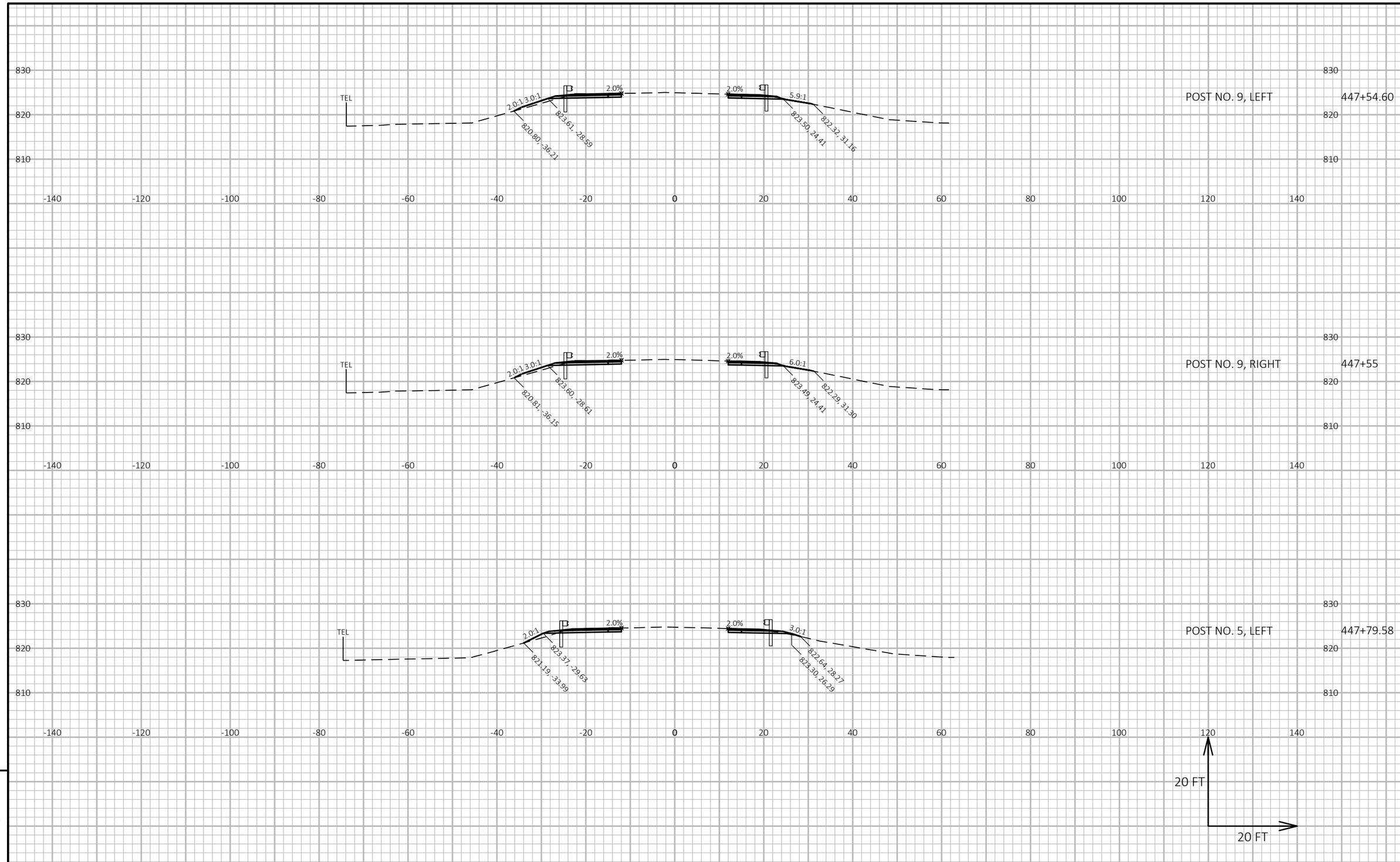

9

9

PROJECT NO: 5944-01-60	HWY: STH 81	COUNTY: LAFAYETTE & GREEN	CROSS SECTIONS: STH 81 GUARDRAIL IMPROVEMENT	SHEET 100	E

FILE NAME : Q:\2018 PROJECTS\5018038 - WISDOT SWR_STH 81 DESIGN\CIVIL3D\SHEETSPLAN\090201_XS.DWG
LAYOUT NAME - 14
PLOT DATE : 7/24/2019 7:20 AM
PLOT BY : PATRICK SMITH
PLOT NAME :
PLOT SCALE : 1 IN:20 FT HORZ. / 1 IN:20 FT VERT.
WISDOT/CADDS SHEET 49

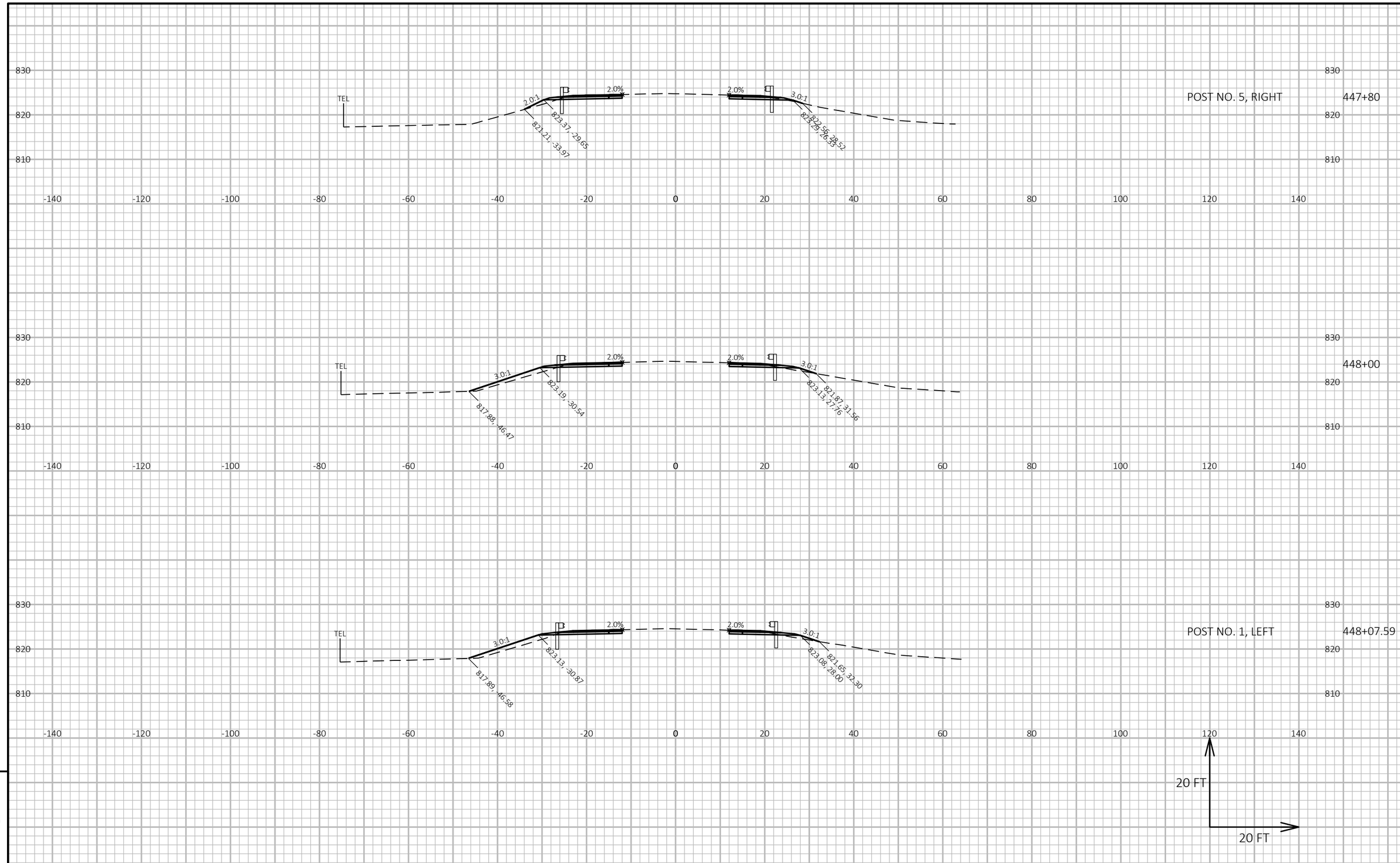

9

9

PROJECT NO: 5944-01-60	HWY: STH 81	COUNTY: LAFAYETTE & GREEN	CROSS SECTIONS: STH 81 GUARDRAIL IMPROVEMENT	SHEET 101	E

FILE NAME : Q:\2018 PROJECTS\5018038 - WISDOT SWR_STH 81 DESIGN\CIVIL3D\SHEETSPLAN\090201_XS.DWG
LAYOUT NAME - 15
PLOT DATE : 7/24/2019 7:21 AM
PLOT BY : PATRICK SMITH
PLOT NAME :
PLOT SCALE : 1 IN:20 FT HORZ. / 1 IN:20 FT VERT.
WISDOT/CADDS SHEET 49

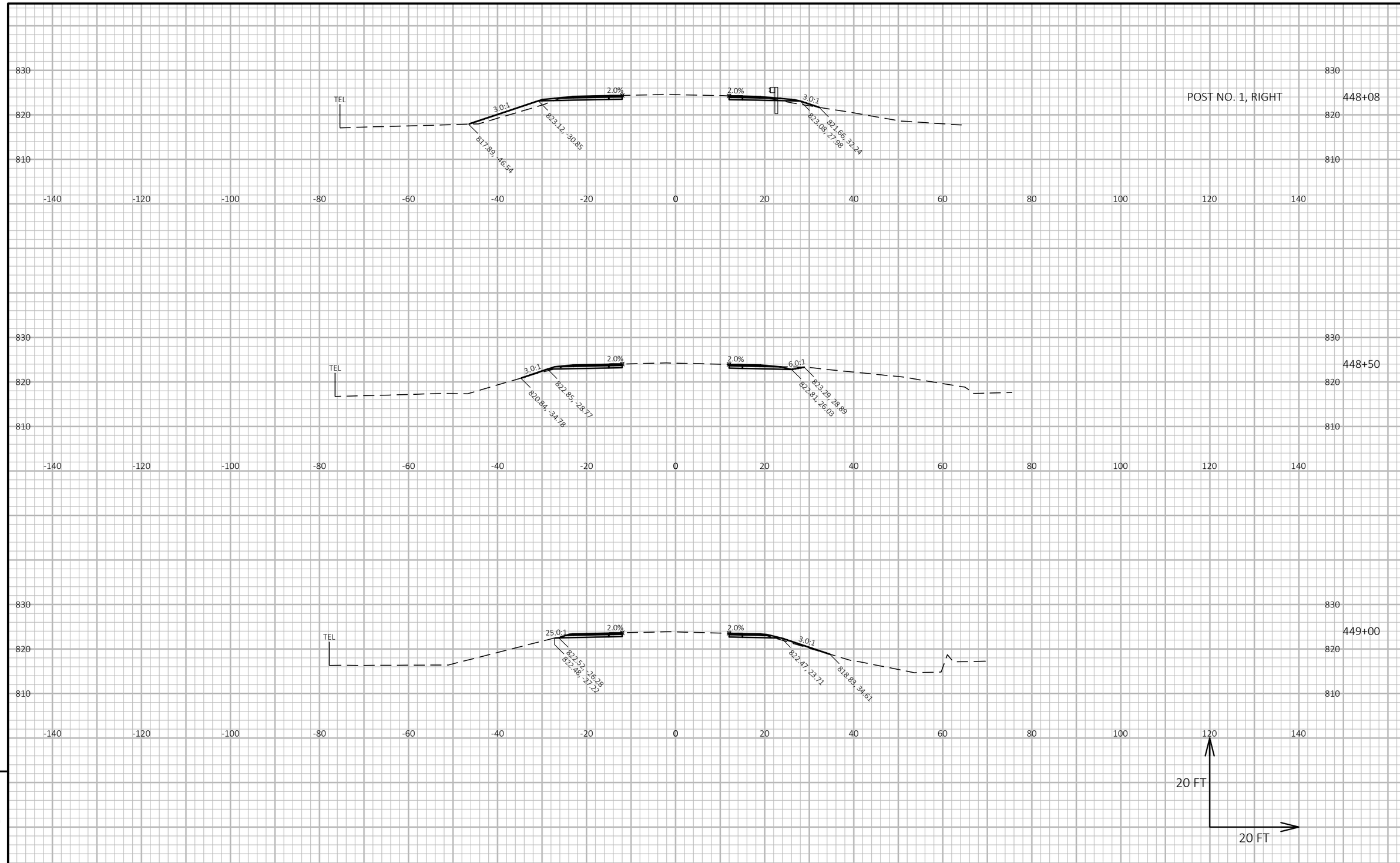

9

9

PROJECT NO: 5944-01-60	HWY: STH 81	COUNTY: LAFAYETTE & GREEN	CROSS SECTIONS: STH 81 GUARDRAIL IMPROVEMENT	SHEET 102	E

FILE NAME : Q:\2018 PROJECTS\5018038 - WISDOT SWR_STH 81 DESIGN\CIVIL3D\SHEETSPLAN\090201_XS.DWG
LAYOUT NAME - 16
PLOT DATE : 7/24/2019 7:21 AM
PLOT BY : PATRICK SMITH
PLOT NAME :
PLOT SCALE : 1 IN:20 FT HORZ. / 1 IN:20 FT VERT.

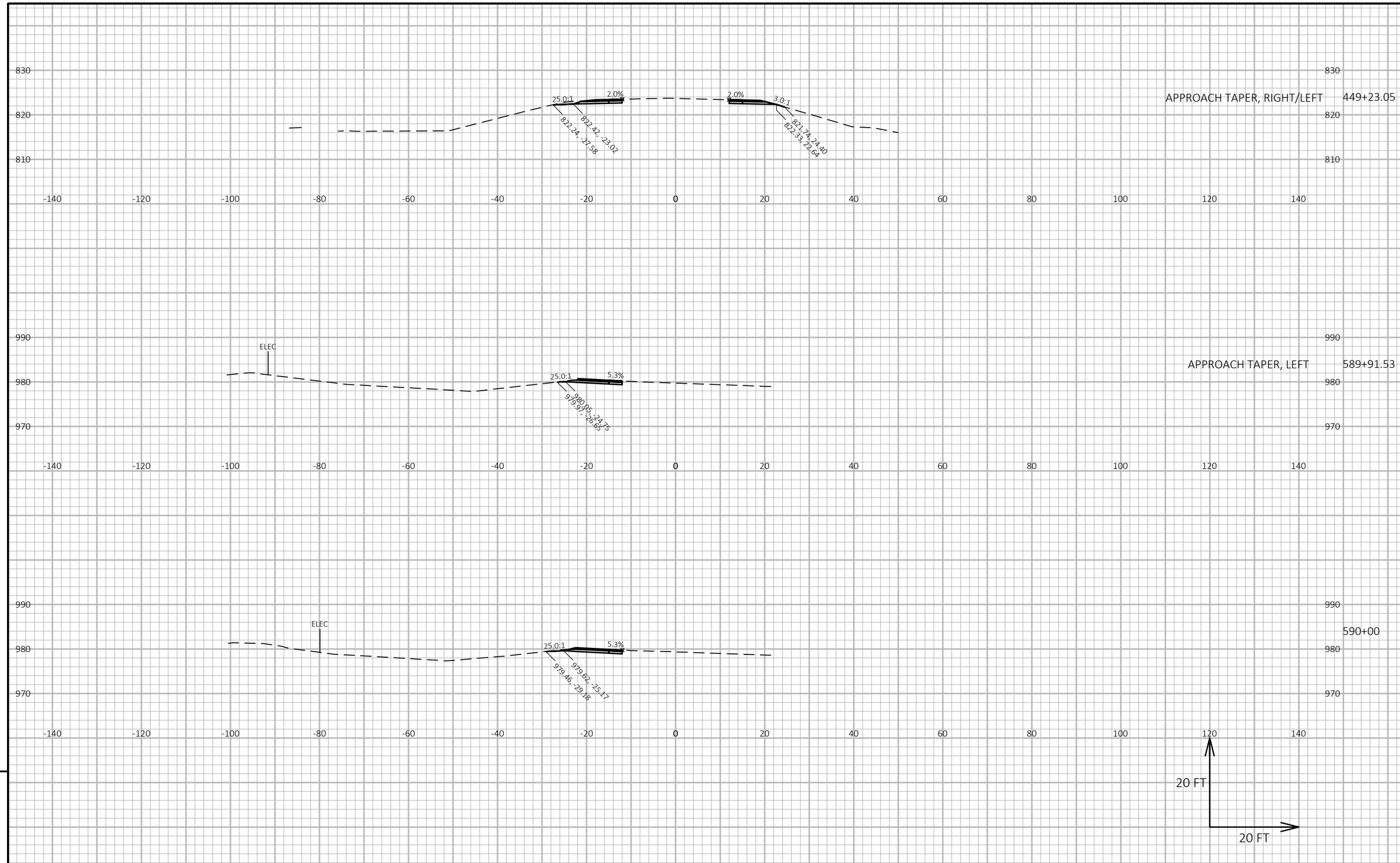

PROJECT NO: 5944-01-60	HWY: STH 81	COUNTY: LAFAYETTE & GREEN	CROSS SECTIONS: STH 81 GUARDRAIL IMPROVEMENT	SHEET 103	E

FILE NAME : Q:\2018 PROJECTS\5018038 - WISDOT SWR_STH 81 DESIGN\CIVIL3D\SHEETSPLAN\090201_XS.DWG
LAYOUT NAME - 17
PLOT DATE : 7/24/2019 7:21 AM PLOT BY : PATRICK SMITH PLOT NAME : PLOT SCALE : 1 IN:20 FT HORZ. / 1 IN:20 FT VERT.

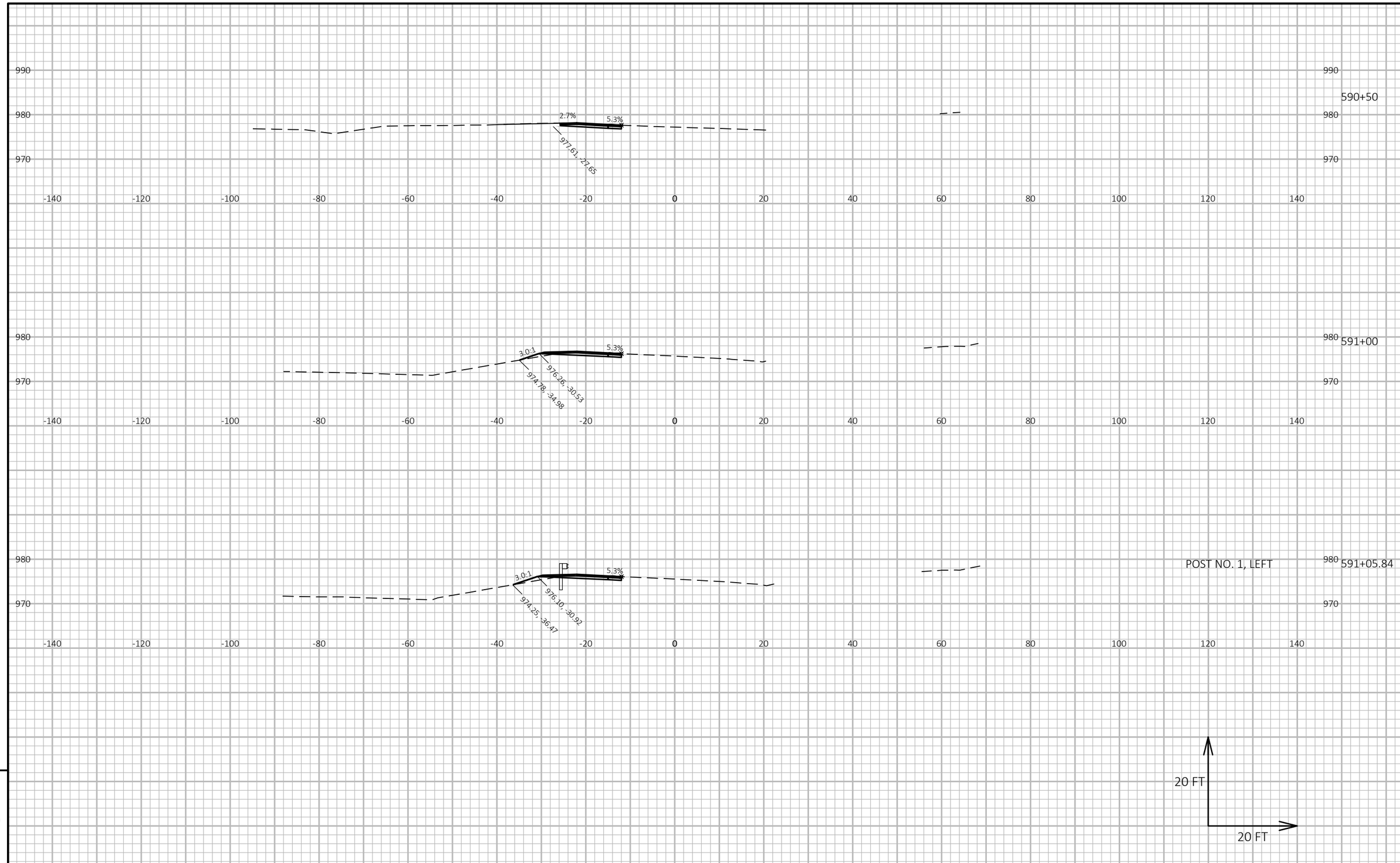

9

9

PROJECT NO: 5944-01-60	HWY: STH 81	COUNTY: LAFAYETTE & GREEN	CROSS SECTIONS: STH 81 GUARDRAIL IMPROVEMENT	SHEET 104	E

FILE NAME : Q:\2018 PROJECTS\5018038 - WISDOT SWR_STH 81 DESIGN\CIVIL3D\SHEETSPLAN\090201_XS.DWG
LAYOUT NAME - 18
PLOT DATE : 7/24/2019 7:21 AM
PLOT BY : PATRICK SMITH
PLOT NAME :
PLOT SCALE : 1 IN:20 FT HORZ. / 1 IN:20 FT VERT.
WISDOT/CADDS SHEET 49

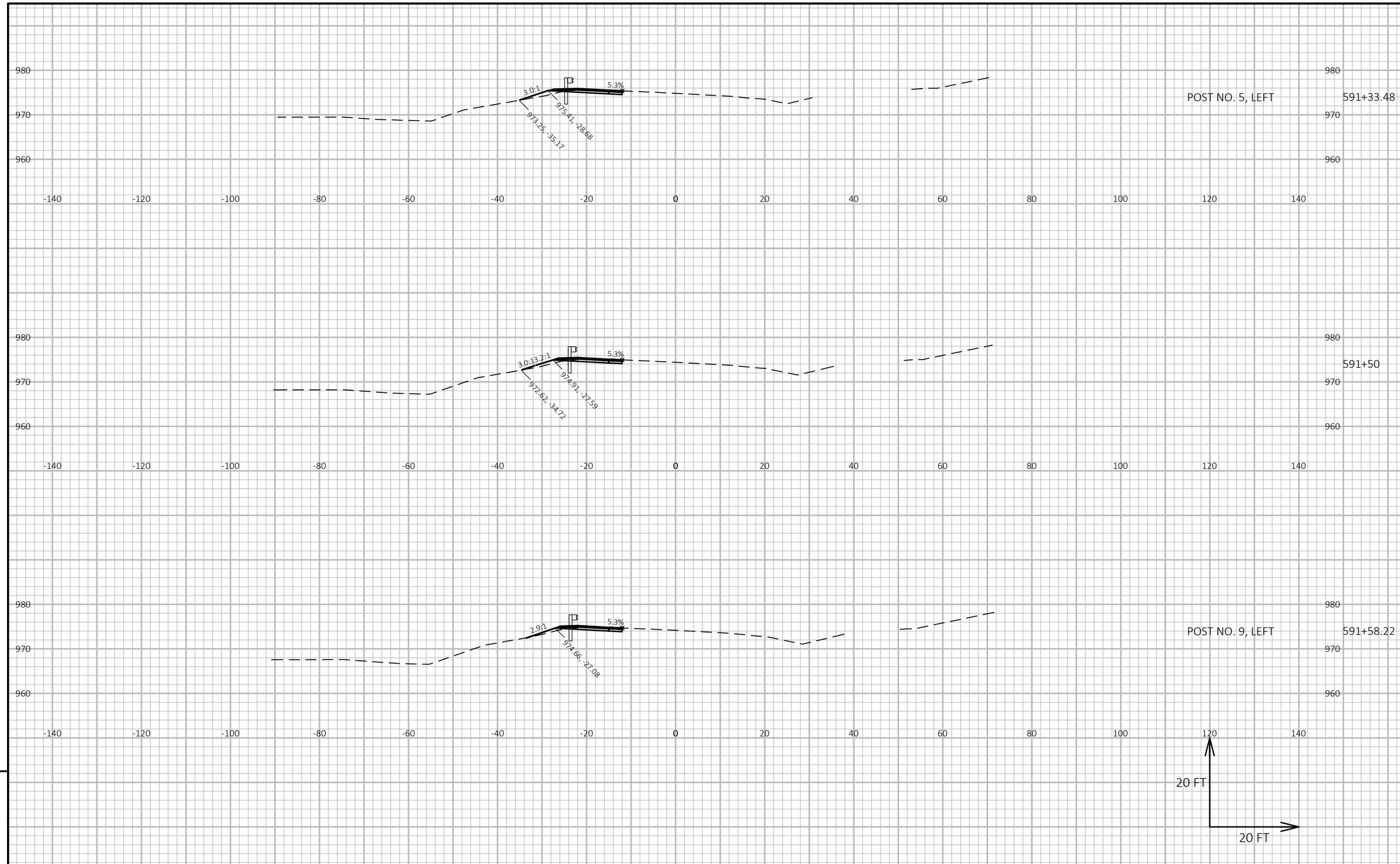

9

9

PROJECT NO: 5944-01-60	HWY: STH 81	COUNTY: LAFAYETTE & GREEN	CROSS SECTIONS: STH 81 GUARDRAIL IMPROVEMENT	SHEET 105	E

FILE NAME : Q:\2018 PROJECTS\5018038 - WISDOT SWR_STH 81 DESIGN\CIVIL3D\SHEETSPLAN\090201_XS.DWG
LAYOUT NAME - 19
PLOT DATE : 7/24/2019 7:22 AM
PLOT BY : PATRICK SMITH
PLOT NAME :
PLOT SCALE : 1 IN:20 FT HORZ. / 1 IN:20 FT VERT.
WISDOT/CADDS SHEET 49

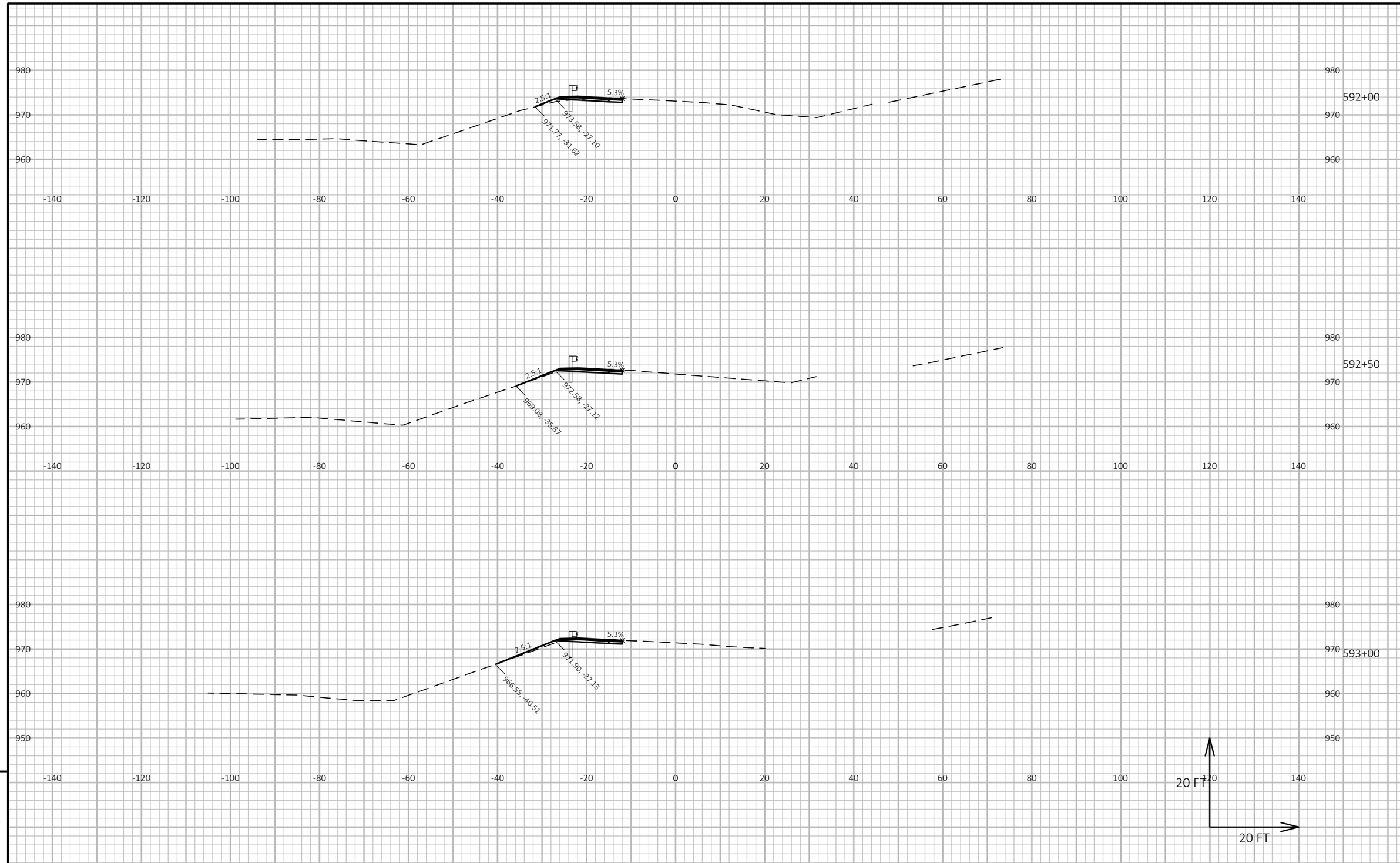

PROJECT NO: 5944-01-60	HWY: STH 81	COUNTY: LAFAYETTE & GREEN	CROSS SECTIONS: STH 81 GUARDRAIL IMPROVEMENT	SHEET 106	E

FILE NAME : Q:\2018 PROJECTS\5018038 - WISDOT SWR_STH 81 DESIGN\CIVIL3D\SHEETSPLAN\090201_XS.DWG
LAYOUT NAME - 20
PLOT DATE : 7/24/2019 7:22 AM
PLOT BY : PATRICK SMITH
PLOT NAME :
PLOT SCALE : 1 IN:20 FT HORZ. / 1 IN:20 FT VERT.

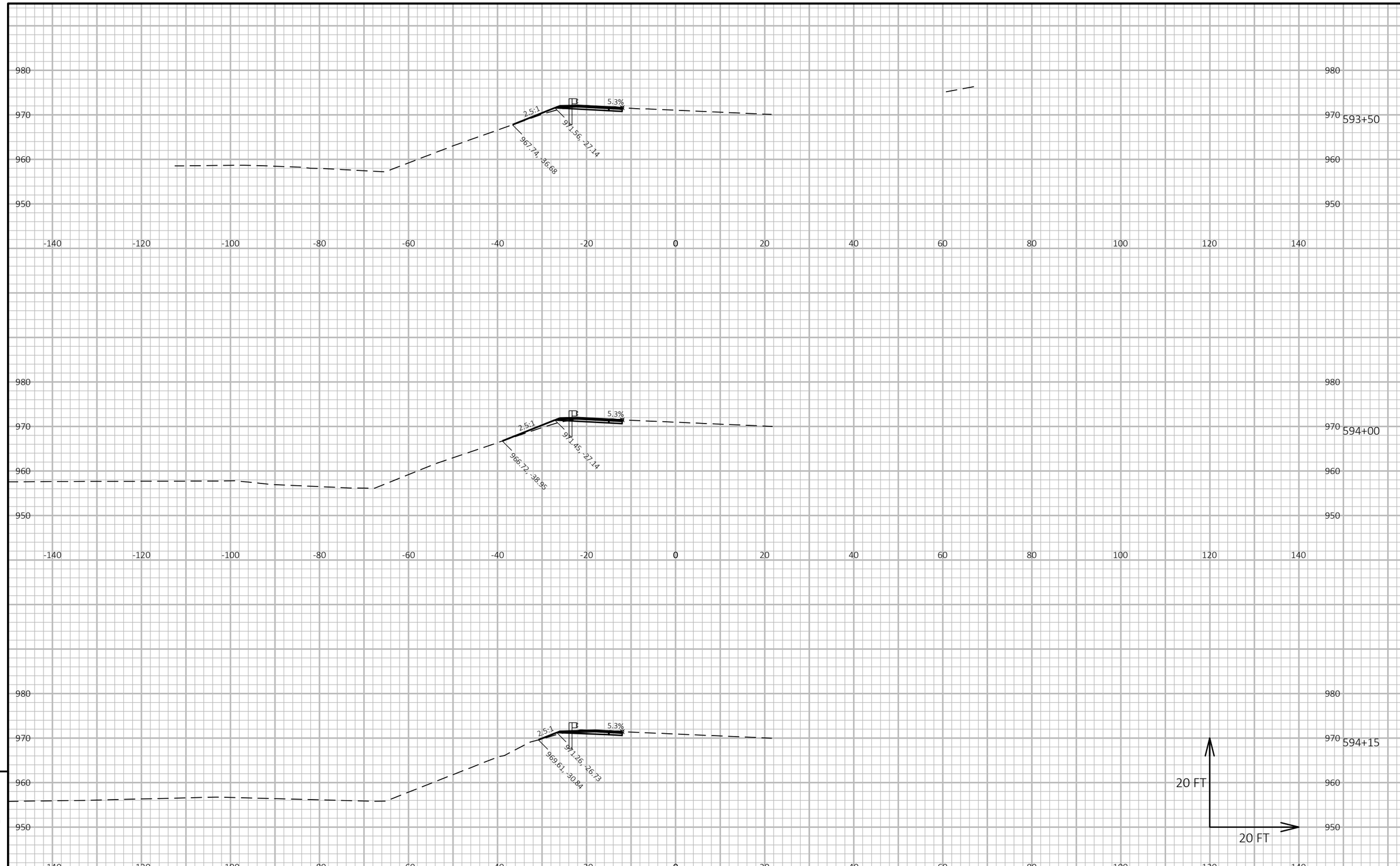

9

9

PROJECT NO: 5944-01-60	HWY: STH 81	COUNTY: LAFAYETTE & GREEN	CROSS SECTIONS: STH 81 GUARDRAIL IMPROVEMENT	SHEET 107	E

FILE NAME : Q:\2018 PROJECTS\5018038 - WISDOT SWR_STH 81 DESIGN\CIVIL3D\SHEETSPLAN\090201_XS.DWG
LAYOUT NAME - 21
PLOT DATE : 7/24/2019 7:22 AM
PLOT BY : PATRICK SMITH
PLOT NAME :
PLOT SCALE : 1 IN:20 FT HORZ. / 1 IN:20 FT VERT.
WISDOT/CADDS SHEET 49

Wisconsin Department of Transportation

Dedicated people creating transportation solutions through innovation and exceptional service.

http://www.dot.wisconsin.gov