EAU

PROJECT ID: 7090-00-74

COUNTY: EAU CLAIRE

DECEMBER 2019

ORDER OF SHEETS

Section No.	1	Title
Section No.	2	Typical Sections and Details
Section No.	3	Estimate of Quantities
Section No.	3	Miscellaneous Quantities
Section No.	4	Right of Way Plat
Section No.	5	Plan and Profile
Section No.	6	Standard Detail Drawings
Section No.	7	Sign Plates
~~Section No.~~	~~8~~	~~Structure Plans~~
Section No.	9	Computer Earthwork Data
Section No.	9	Cross Sections

TOTAL SHEETS = 230

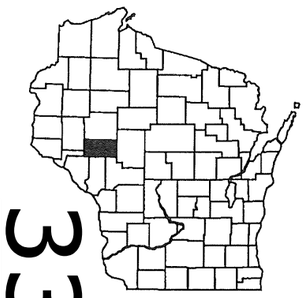

33

18

DESIGN DESIGNATION USH 12

A.A.D.T. (2020)	=	15,600
A.A.D.T. (2040)	=	24,100
D.H.V. (2040)	=	2,700
D.D.	=	59/41
T. (% A.A.D.T.)	=	5.3%
DESIGN SPEED (MPH)	=	55
ESALS	=	5,389,100

CONVENTIONAL SYMBOLS

PLAN		PROFILE	
CORPORATE LIMITS		GRADE LINE	
PROPERTY LINE		ORIGINAL GROUND	
LOT LINE		MARSH OR ROCK PROFILE (To be noted as such)	ROCK
LIMITED HIGHWAY EASEMENT		SPECIAL DITCH	LABEL
EXISTING RIGHT OF WAY		GRADE ELEVATION	95.36
PROPOSED OR NEW R/W LINE		CULVERT (Profile View)	
SLOPE INTERCEPT		UTILITIES	
REFERENCE LINE		ELECTRIC	E
EXISTING CULVERT		FIBER OPTIC	FO
PROPOSED CULVERT (Box or Pipe)		GAS	G
COMBUSTIBLE FLUIDS	CAUTION	SANITARY SEWER	SAN
		STORM SEWER	SS
MARSH AREA		TELEPHONE	T
		WATER	W
		UTILITY PEDESTAL	
WOODED OR SHRUB AREA		POWER POLE	
		TELEPHONE POLE	

STATE OF WISCONSIN
DEPARTMENT OF TRANSPORTATION

PLAN OF PROPOSED IMPROVEMENT

MENOMONIE - EAU CLAIRE

CTH EE/TOWN HALL ROAD INTERSECTION

USH 12

EAU CLAIRE COUNTY

STATE PROJECT	FEDERAL PROJECT	
	PROJECT	CONTRACT
7090-00-74	WISC 2019757	1

STATE PROJECT NUMBER
7090-00-74

END PROJECT 7090-00-74
STA. 192+25.49

BEGIN PROJECT 7090-00-74
STA. 176+33.31

T-27-N

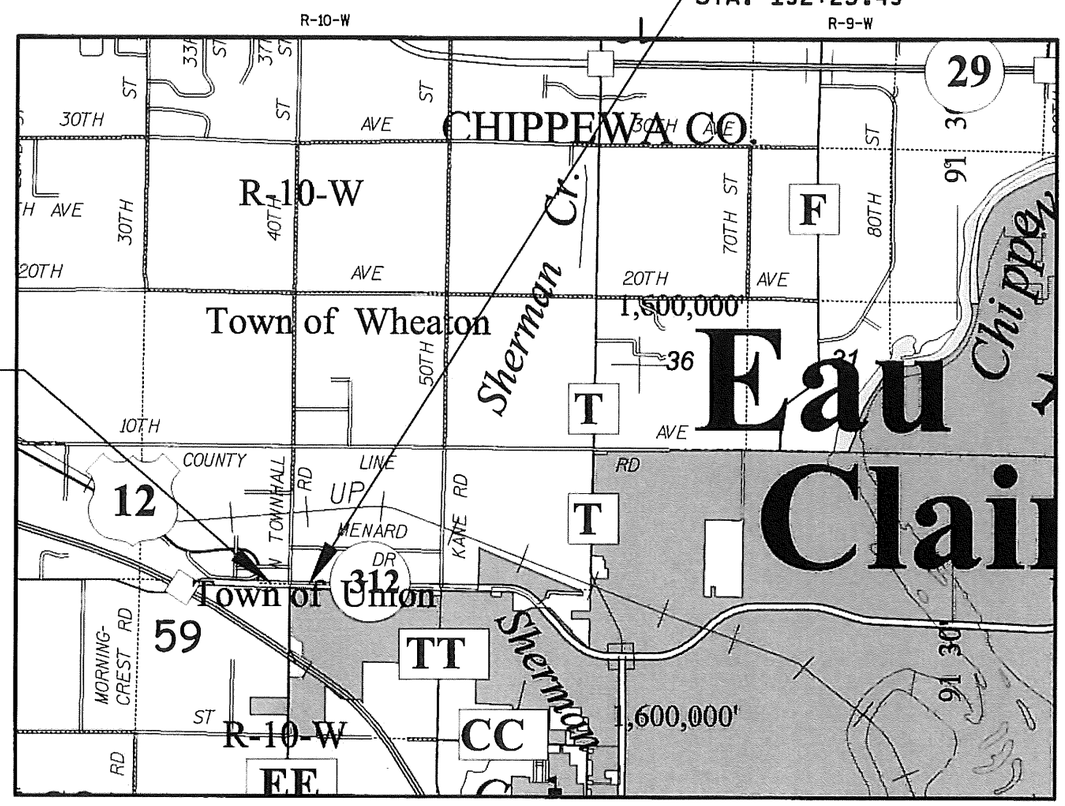

LAYOUT
SCALE 0 1 MI

TOTAL NET LENGTH OF CENTERLINE = 0.301 MI

COORDINATES SHOWN ON THIS PLAN ARE REFERENCED TO THE WISCONSIN COUNTY COORDINATE SYSTEM (WCCS) EAU CLAIRE COUNTY, NAD 83 (2011)

ELEVATIONS SHOWN ON THIS PLAN ARE REFERENCED TO THE NAVD 88 DATUM.

ORIGINAL PLANS PREPARED BY
AECOM

WISCONSIN
SEAN M. HADFIELD
E - 34941
MADISON, WI
PROFESSIONAL ENGINEER

7-31-19
(Date) (Signature)

STATE OF WISCONSIN
DEPARTMENT OF TRANSPORTATION

PREPARED BY

Surveyor	AECOM
Designer	AECOM
Project Manager	DAVID KOEPP
Regional Examiner	JENNIFER OLDENBURG
Regional Supervisor	JIM KOENIG
C.O. Examiner	

APPROVED FOR THE DEPARTMENT
DATE 8/1/19 (Signature)

E

2

GENERAL NOTES

SALVAGED TOPSOIL, SEEDING, MULCHING, AND FERTILIZER HAVE BEEN COMPUTED BY A DIRECT MEASUREMENT ON THE CROSS SECTIONS PLUS FIVE (5) FEET BEYOND THE TOE OF SLOPE.

THE CONTRACTOR SHALL NOT OPERATE BEYOND THE SLOPE INTERCEPTS AS SHOWN IN THE PLANS WHEN ADJACENT TO WETLANDS OR ENVIRONMENTALLY SENSITIVE AREAS.

THE CONTRACTOR'S PAVING OPERATIONS SHALL BE CONSISTENT WITH THE PLAN TYPICAL SECTIONS AND CONSTRUCTED TO PREVENT HMA LONGITUDAL JOINTS FROM BEING LOCATED WITHIN A DRIVING, TURNING, PASSING, OR PARKING LANE.

ADJUST TRAFFIC CONTROL DEVICE LOCATIONS TO FIT FIELD CONDITIONS AS DIRECTED BY THE ENGINEER.

EROSION CONTROL ITEMS SHOWN IN THE MISCELLANEOUS QUANTITIES ARE AT SUGGESTED LOCATIONS. THE ENGINEER MAY MODIFY LOCATIONS TO FIT FIELD CONDITIONS.

WATERWAYS AND OTHER ENVIRONMENTALLY SENSITIVE AREAS SHALL BE PROTECTED AT ALL TIMES. DO NOT STORE EQUIPMENT OR MATERIALS NEAR THESE SITES UNLESS APPROVED BY THE ENGINEER.

THE BASE AGGREGATE DENSE (BAD) CALCULATIONS ARE BASED ON A UNIT WEIGHT OF 2.1 TONS/CY FOR 3/4-INCH BAD AND 2.0 TONS/CY FOR 1 1/4-INCH BAD

THE HMA PAVEMENT WEIGHT CALCULATIONS ARE BASED ON A UNIT WEIGHT OF 112 LBS/SY/IN OF DEPTH.

THE LOCATIONS OF EXISTING AND PROPOSED UTILITY INSTALLATIONS AS SHOWN ON THE PLANS ARE APPROXIMATE. THERE MAY BE OTHER UTILITY INSTALLATIONS WITHIN THE PROJECT AREA THAT ARE NOT SHOWN.

RADII, ELEVATIONS, AND DIMENSIONS ARE GIVEN AT THE PAVEMENT EDGES/CURB FLANGES, UNLESS OTHERWISE NOTED IN THE PLANS.

ASPHALTIC SURFACE OF ANY THICKNESS THROUGHOUT THE PROJECT SHALL BE OF MIX TYPE 4 MT 58-34 S.

ASPHALTIC SURFACE

THICKNESS	HMA MIX TYPE
2-INCHES	4 MT 58-34 S
3-INCHES	4 MT 58-34 S
4-INCHES	4 MT 58-34 S

WISDOT

WisDOT DESIGN PROJECT MANAGER
DAVID KOEPP
718 W CLAIREMONT AVE
EAU CLAIRE, WI 54701
PHONE: (715) 563-8402
david.koepp@dot.wi.gov

WisDOT CONSTRUCTION PROJECT MANAGER
DAVID KOEPP
718 W CLAIREMONT AVE
EAU CLAIRE, WI 54701
PHONE: (715) 563-8402
david.koepp@dot.wi.gov

DESIGN CONTACT

SEAN HADFIELD
AECOM
130 DEMING WAY, SUITE 100
MIDDLETON, WI 53562
(608) 828-8141
sean.hadfield@aecom.com

WISDNR

WISCONSIN DEPARTMENT OF NATURAL RESOURCES
ENVIRONMENTAL ANALYSIS & REVIEW SPECIALIST
LEAH NICOL
1300 WEST CLAIRMONT AVENUE
EAU CLAIRE, WI 54701
leah.nicol@wisconsin.gov

UTILITIES AND OTHER AGENCIES

CENTURYLINK COMMUNICATIONS, LLC - COMMUNICATION LINE
KIRK THOELKE
11111 DORSETT RD
MARYLAND HEIGHTS, MO 63043
(636) 887-4752
kirkthoelke@centurylink.com

CHARTER COMMUNICATIONS- COMMUNICATION LINE
JAMEY OLDEEN
2304 S MAIN ST
RICE LAKE, WI 54868
(715) 719-0561
Jamey.Oldeen@charter.com

DAIRYLAND POWER COOPERATIVE - ELECTRICITY
ROB MALY
3200 EAST AVE S
P.O. BOX 817
LA CROSSE, WI 54602-0817
(608) 788-4000
Rob.Maly@DairylandPower.com

WEST WISCONSIN TELECOM - COMMUNICATION LINE
BRADLEY SCHMIDTKNECHT
5808 OLD MILL PLAZA
EAU CLAIRE, WI 54703
(715) 231-0504
brads@wwt.net

WINDSTREAM - COMMUNICATION LINE
AARON GRODI
1858 WRIGHT ST
MADISON, WI 53703
(919) 770-1778
aarib.grodi@windstream.com

XCEL ENERGY - ELECTRICITY
CORISSA SEELY
1414 W HAMILTON AVENUE
P.O. BOX 8
EAU CLAIRE, WI 54702-0008
(715) 737-4097
corissa.e.seely@xcelenergy.com

XCEL ENERGY - GAS/PETROLEUM
CORISSA SEELY
1414 W HAMILTON AVENUE
P.O. BOX 8
EAU CLAIRE, WI 54702-0008
(715) 737-4097
corissa.e.seely@xcelenergy.com

XCEL ENERGY - GAS/PETROLEUM
24-HOUR EMERGENCY
(800) 895-2999

ORDER OF SECTION 2 SHEETS

GENERAL NOTES
PROJECT OVERVIEW
TYPICAL SECTIONS
CONSTRUCTION DETAILS
REMOVAL PLANS
PLAN DETAILS
EROSION CONTROL
SIGNAL REMOVAL PLAN
SIGNAL PLAN
PAVEMENT MARKING AND SIGNING
TRAFFIC CONTROL
ALIGNMENT DIAGRAM

DIGGERS HOTLINE
Dial 811 or (800) 242-8511
www.DiggersHotline.com

ABBREVIATIONS

A.A.D.T.	ANNUAL AVERAGE DAILY TRAFFIC
AC	ACRES
ASPH.	ASPHALTIC
ET. AL.	AND OTHERS
B.A.D.	BASE AGGREGATE DENSE
BM	BENCH MARK
BOC	BACK OF CURB
C & G	CURB AND GUTTER
℄ OR CL	CENTERLINE
C.A.B.C.	CRUSHED AGGREGATE BASE COURSE
C.P.	CULVERT PIPE
C.P.C.S.	CULVERT PIPE CORRUGATED STEEL
C.P.R.C.	CULVERT PIPE REINFORCED CONCRETE
C.P.R.C.H.E.	CULVERT PIPE REINFORCED CONCRETE, HORIZONTAL ELLIPTICAL
C.T.H.	COUNTY TRUNK HIGHWAY
CE	COMMERCIAL ENTRANCE
C.M.C.P.	CORRUGATED METAL CULVERT PIPE
CONC.	CONCRETE
CSM	CERTIFIED SURVEY MAP
CWT.	HUNDREDWEIGHT
D	DEGREE OF CURVE
D.D.	DIRECTIONAL DISTRIBUTION
D.H.V.	DESIGN HOUR VOLUME
DIA.	DIAMETER
DOC.	DOCUMENT
E.B.S.	EXCAVATION BELOW SUBGRADE
E.S.A.L.	EQUIVALENT SINGLE AXLE LOAD
EASE.	EASEMENT
EB	EASTBOUND
EL OR ELEV	ELEVATION
ELEC.	ELECTRIC (AL)
EXC.	EXCAVATION
EXIST.	EXISTING
F.E.	FIELD ENTRANCE
F.L. OR F/L	FLOW LINE
FT.	FOOT
HMA	HOT MIX ASPHALT
INL.	INLET
INV.	INVERT
L	LENGTH OF CURVE
L.H.F.	LEFT-HAND FORWARD
L.S.	LUMP SUM
LB.	POUND
LN	LANE
LT. OR LT	LEFT
M.L. OR M/L	MATCH LINE
MATL.	MATERIAL
MAX.	MAXIMUM
MH.	MANHOLE
MIN.	MINIMUM
MON.	MONUMENT
MP	ROADWAY MILEAGE
N.	NORTH
N.C.	NORMAL CROWN
NB	NORTH BOUND
OBLIT	OBLITERATE
P.	PAGE
P.C.	POINT OF CURVATURE
P.C.C.	POINT OF COMPOUND CURVE
P.E.	PRIVATE ENTRANCE
P.I.	POINT OF INTERSECTION
P.L.	PROPERTY LINE

ABBREVIATIONS CONT.

P.L.E.	PERMANENT LIMITED EASEMENT
P.T.	POINT OF TANGENCY
PAVT.	PAVEMENT
PROJ.	PROJECT
PT.	POINT
R	RADIUS
R.H.F.	RIGHT-HAND FORWARD
℄ OR R/L	REFERENCE LINE
R/W	RIGHT-OF-WAY
R.C.C.P.	REINFORDCED CONCRETE CULVERT PIPE
RD.	ROAD
REBAR.	REINFORCEMENT BAR
REINF	REINFORCING OR REINFORCEMENT
REM.	REMAINING
REQ'D.	REQUIRED
ROR	RELEASE OF RIGHTS
RR.	RAILROAD
RRSP	RAILROAD SPIKE
RT OR RT.	RIGHT
S.	SOUTH
S.D.D.	STANDARD DETAIL DRAWINGS
S.E.	SUPERELEVATION
S.F.OR SQ.FT.	SQUARE FEET
S.S.	STORM SEWER
S.S.P.R.C.	STORM SEWER PIPE REINFORCED CONCRETE
S.T.H.	STATE TRUNK HIGHWAYS
S.Y.OR SQ.YD.	SQUARE YARD
SALV.	SALVAGED
SB	SOUTHBOUND
SEC.	SECTION
SHLDR.	SHOULDER
SPECS.	SPECIFICATIONS
STA.	STATION
STD.	STANDARD
T	TANGENT
T. %	TRUCKS (PERCENT OF)
T.L.E.	TEMPORARY LIMITED EASEMENT
T.P.M.	TEMPORARY PAVEMENT MARKING
T.P.M.R.T.	TEMPORARY PAVEMENT MARKING, REMOVABLE TAPE
TEL.	TELEPHONE
TEMP.	TEMPORARY
TYP.	TYPICAL
U.S.H.	UNITED STATES HIGHWAY
UG.	UNDERGROUND
V	VOLUME
V.C.	VERTICAL CURVE
W.	WEST
WB	WESTBOUND
X	EAST GRID COORDINATE
Y	NORTH GRID COORDINATE

2

N

N TOWN HALL RD

END CONSTRUCTION
STA. 34+38.38'EE'

BEGIN CONSTRUCTION
STA. 10+00.00'OM'

BP: 10+00.00'OM'
PC: 10+28.76'OM'
EP: 11+65.39'OM'

END CONSTRUCTION
STA. 11+54.10'OM'

BEGIN CONSTRUCTION
STA. 30+80.01'EE'

STA. 32+50.00'EE' =
STA. 10+00.00'OM'

34'EE

END CONSTRUCTION
STA. 181+38.41'EB'

STA. 30+54.00'EE' =
STA. 184+51.67'WB'

32'EE

OLD MILL PLAZA

END CONSTRUCTION
STA. 191+46.73'EB'

END PROJECT 7090-00-74
STA. 192+25.49'EB'

BEGIN CONSTRUCTION
STA. 186+86.73'EB'

USH 12 WB

174'EB' 176'EB' 178'EB' 180'EB' 182'EB' 184'EB' 186'EB' 188'EB' 190'EB' 192'EB' 194'EB' 196'EB'

182'WB' 184'WB' 186'WB' 188'WB' 190'WB' 192'WB' 194'WB'

30'EE

USH 12 EB

BEGIN CONSTRUCTION
STA. 187+70.39'EB'

BEGIN CONSTRUCTION
STA. 177+69.00'EB'

END CONSTRUCTION
STA. 182+34.59'EB'

BEGIN PROJECT 7090-00-74
STA. 176+33.31'EB'

28'EE

STA. 30+00.00'EE' =
STA. 184+52.45'EB'

CTH EE

PROJECT NO: 7090-00-74	HWY: USH 12	COUNTY: EAU CLAIRE	PROJECT OVERVIEW	SHEET 4	E

FILE NAME : 020201_PO.DWG PLOT DATE : 3/25/2019 8:52 AM PLOT BY : CZECH, ANDREW PLOT NAME : PLOT SCALE : 1 IN:150 FT

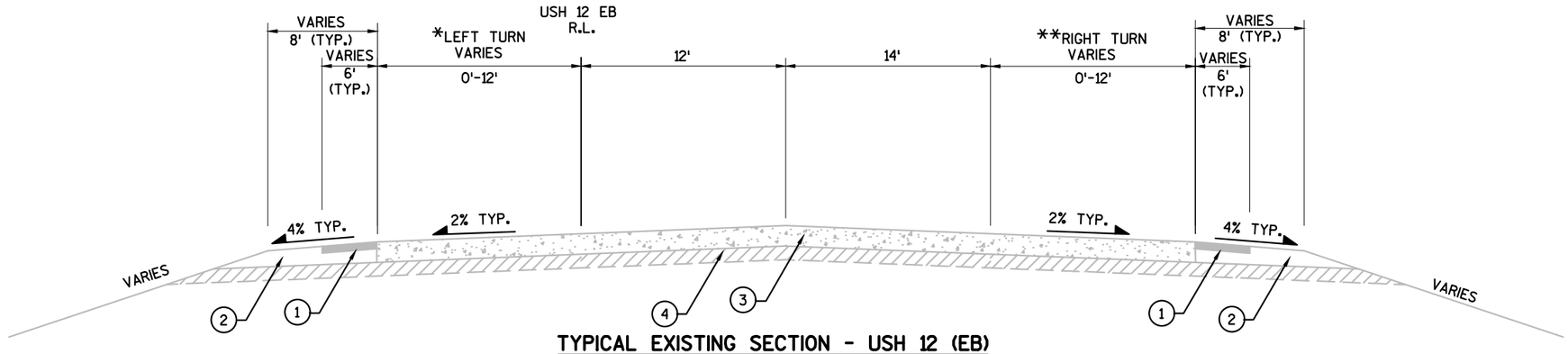

TYPICAL EXISTING SECTION - USH 12 (EB)

STA 176+33.31'EB' - STA 182+34.59'EB'

*LEFT TURN FROM
STA 180+04.00'EB' - STA 181+38.41'EB'

**RIGHT TURN FROM
STA 180+50.00'EB' - STA 182+34.59'EB'

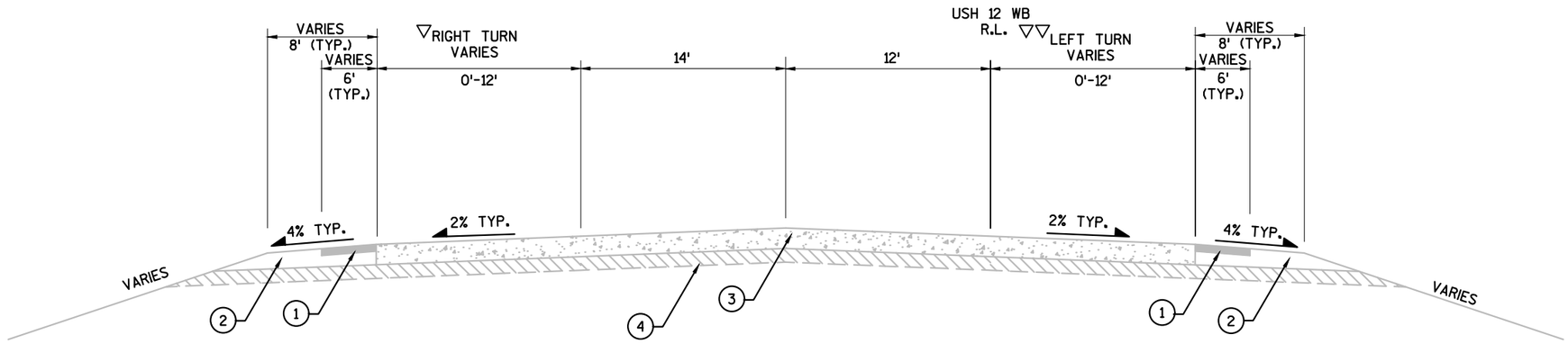

TYPICAL EXISTING SECTION - USH 12 (WB)

STA 186+86.73'WB' - STA 192+25.49'WB'

▽RIGHT TURN FROM
STA 186+86.73'WB' - STA 188+51.81'WB'

▽▽ LEFT TURN FROM
STA 187+70.39'WB' - STA 189+05.31'WB'

LEGEND

1. 3-INCHES ASPHALTIC CONCRETE PAVEMENT
2. CRUSHED AGGREGATE BASE COURSE
3. 9-INCH NON-REINFORCED CONCRETE PAV'T (DOWELED & TINED)
4. 6-INCHES CRUSHED AGGREGATE BASE COURSE

PROJECT NO: 7090-00-74	HWY: USH 12	COUNTY: EAU CLAIRE	TYPICAL SECTION: USH 12 MAINLINE	SHEET 5	E

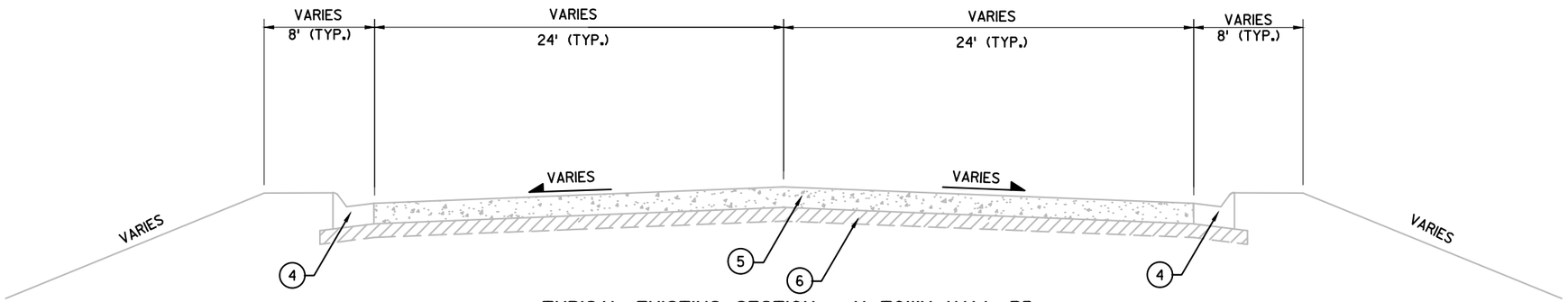

TYPICAL EXISTING SECTION - N TOWN HALL RD

STA 30+80.01'EE' - STA 31+63.10'EE'

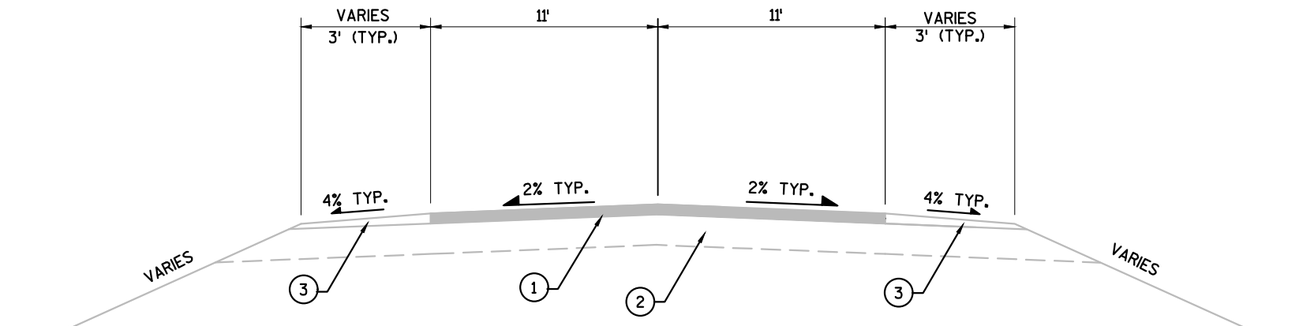

TYPICAL EXISTING SECTION - N TOWN HALL RD

STA 31+63.10'EE' - STA 34+38.38'EE'

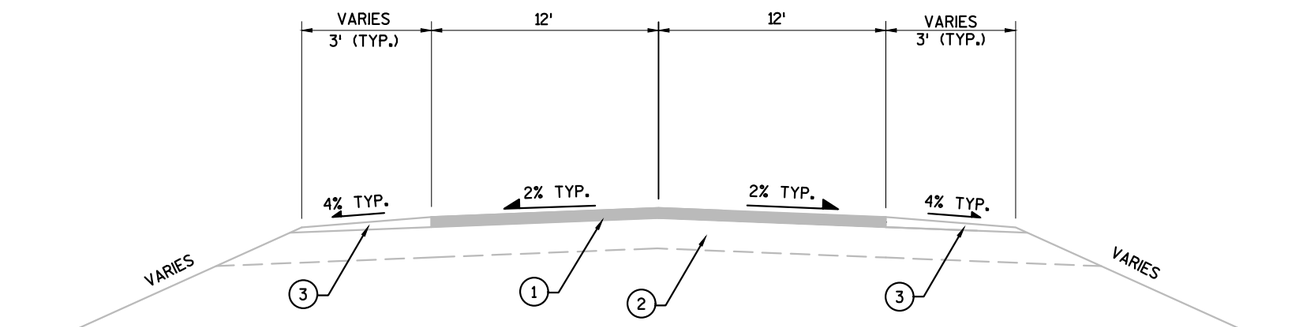

TYPICAL EXISTING SECTION - OLD MILL PLAZA

STA 10+00.00'OM' - STA 11+54.10'OM'

LEGEND

1. 4-INCHES ASPHALTIC CONCRETE PAVEMENT
2. 8-INCH CRUSHED AGGREGATE BASE COURSE
3. CRUSHED AGGREGATE BASE COURSE
4. CONCRETE CURB AND GUTTER 30-INCH TYPE D
5. 9-INCH NON-REINFORCED CONCRETE PAV'T (DOWELED & TINED)
6. 6-INCHES CRUSHED AGGREGATE BASE COURSE

PROJECT NO: 7090-00-74	HWY: USH 12	COUNTY: EAU CLAIRE	TYPICAL SECTION: TOWNHALL RD & OLD MILL PLAZA	SHEET 6	E

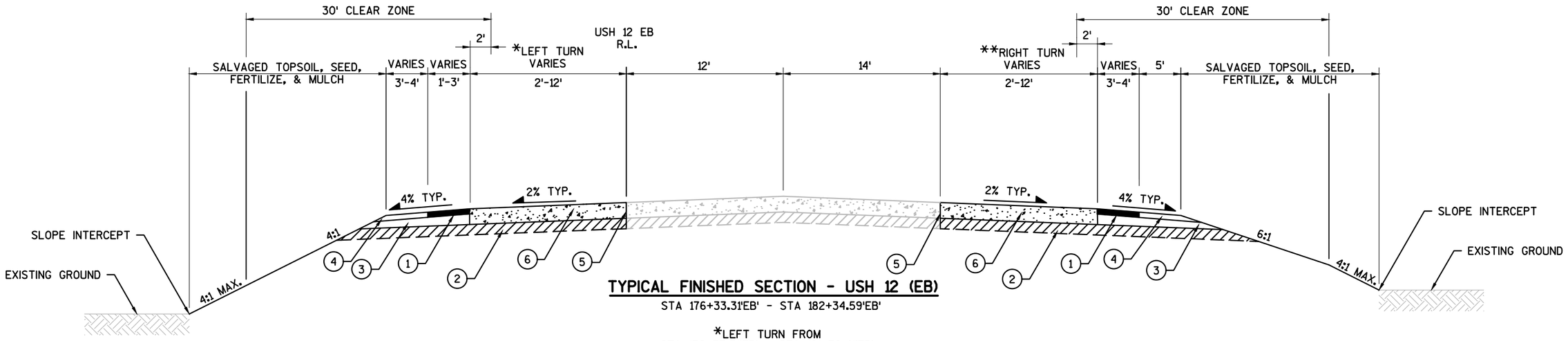

TYPICAL FINISHED SECTION - USH 12 (EB)

STA 176+33.31'EB' - STA 182+34.59'EB'

*LEFT TURN FROM
STA 176+33.31'EB' - STA 181+38.41'EB'

**RIGHT TURN FROM
STA 177+69.00'EB' - STA 182+34.59'EB'

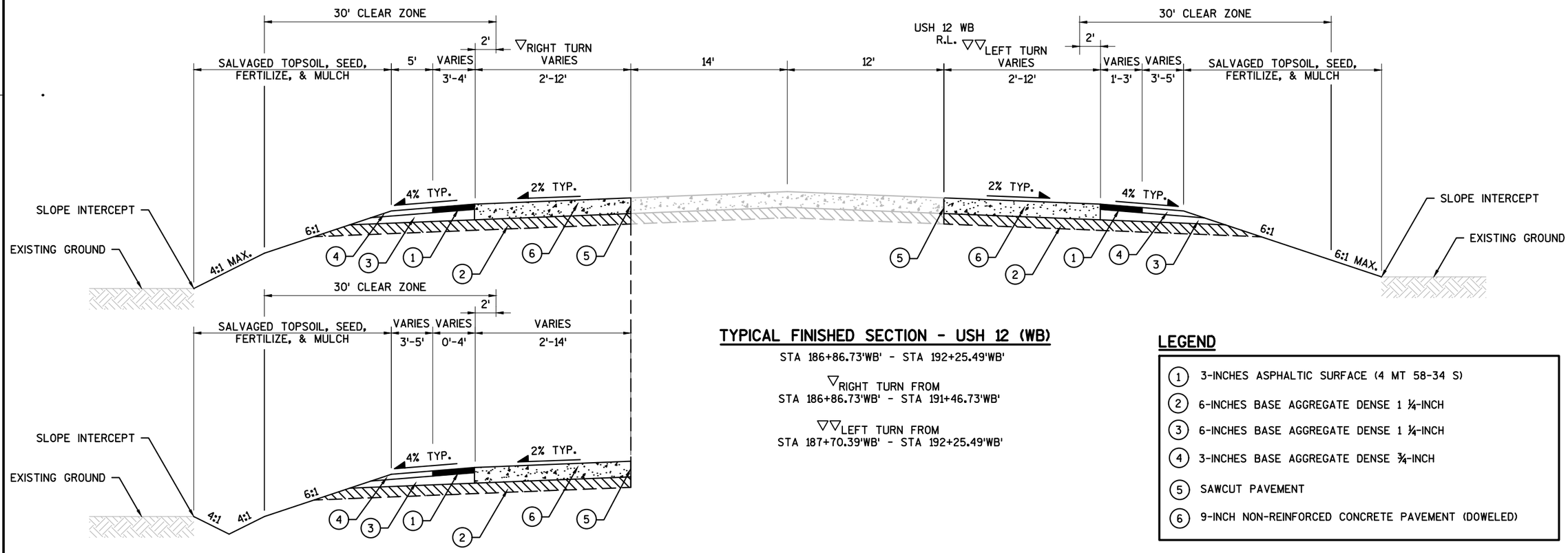

TYPICAL FINISHED SECTION - USH 12 (WB)

STA 186+86.73'WB' - STA 192+25.49'WB'

▽RIGHT TURN FROM
STA 186+86.73'WB' - STA 191+46.73'WB'

▽▽LEFT TURN FROM
STA 187+70.39'WB' - STA 192+25.49'WB'

STA 182+54.23 - STA 183+54.76

LEGEND

1. 3-INCHES ASPHALTIC SURFACE (4 MT 58-34 S)
2. 6-INCHES BASE AGGREGATE DENSE 1 ¼-INCH
3. 6-INCHES BASE AGGREGATE DENSE 1 ¼-INCH
4. 3-INCHES BASE AGGREGATE DENSE ¾-INCH
5. SAWCUT PAVEMENT
6. 9-INCH NON-REINFORCED CONCRETE PAVEMENT (DOWELED)

PROJECT NO: 7090-00-74	HWY: USH 12	COUNTY: EAU CLAIRE	TYPICAL SECTION: USH 12 MAINLINE	SHEET 7	E

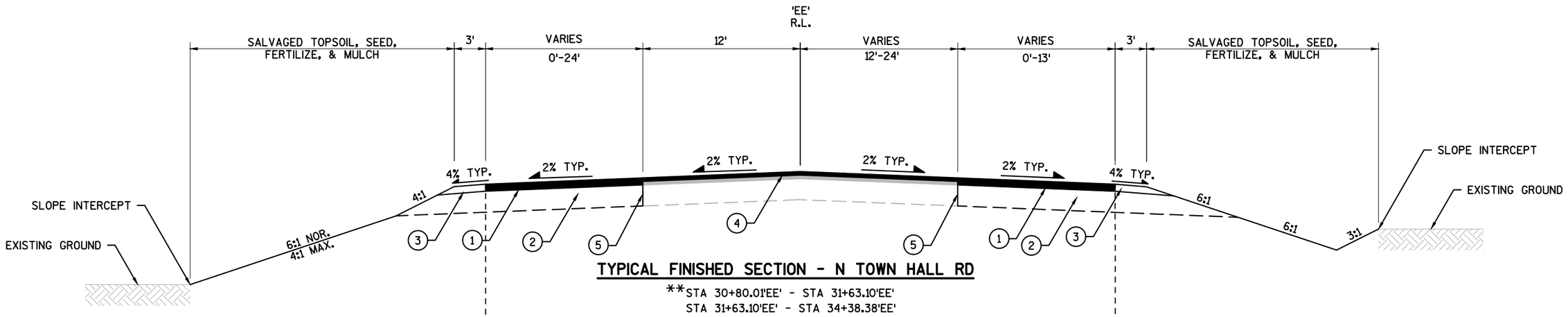

TYPICAL FINISHED SECTION - N TOWN HALL RD

**STA 30+80.01'EE' - STA 31+63.10'EE'
STA 31+63.10'EE' - STA 34+38.38'EE'

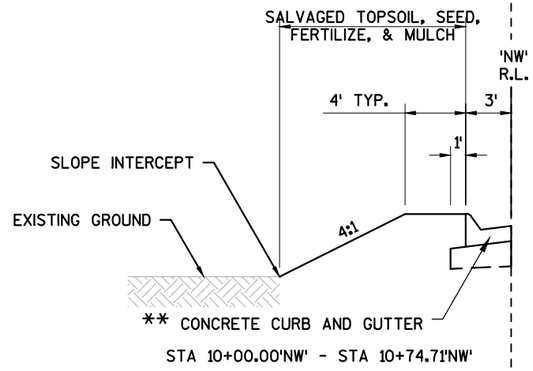

STA 10+00.00'NW' - STA 10+74.71'NW'

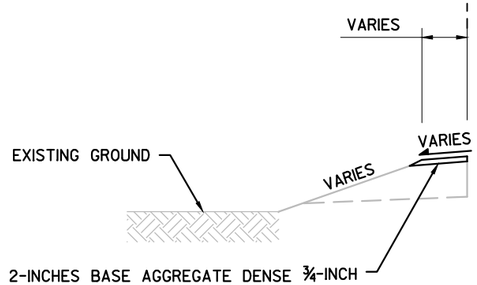

STA 32+84.17'EE' - STA 33+69.50'EE'
STA 34+08.54'EE' - STA 34+38.38'EE'

** SEE "PLAN DETAILS" AND "PLAN AND PROFILE" SHEETS FOR ADDITIONAL INFORMATION ON PAVEMENT, SIDEWALK, AND CURB AND GUTTER LOCATION, TYPE, AND DIMENSIONS

LEGEND

1. 4-INCHES ASPHALTIC SURFACE (4 MT 58-34 S)
2. 8-INCHES BASE AGGREGATE DENSE 1 ¼-INCH
3. 4-INCHES BASE AGGREGATE DENSE ¾-INCH
4. REMOVING ASPHALTIC SURFACE MILLING, 2-INCH DEPTH
   2-INCHES ASPHALTIC SURFACE (4 MT 58-34 S)
5. SAWCUT PAVEMENT
6. 5-INCH CONCRETE SIDEWALK

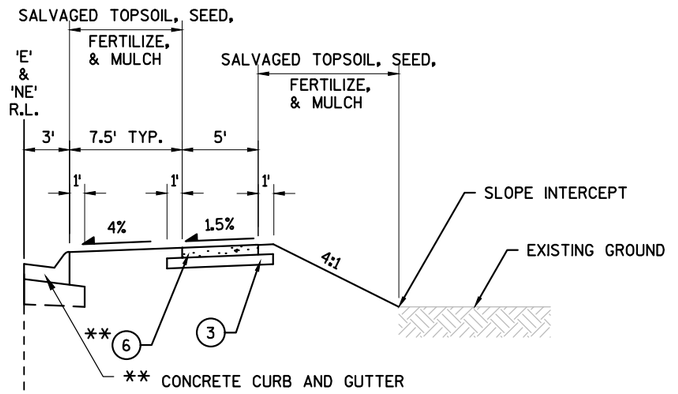

STA 10+00.00'E' - STA 12+05.16'E'
STA 10+00.00'NE' - STA 10+59.42'NE'

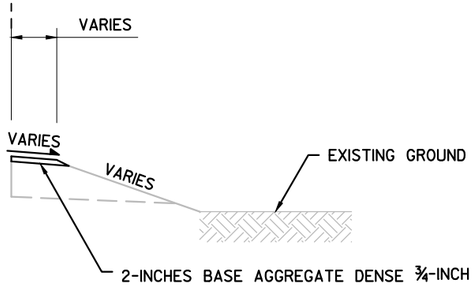

STA 33+90.48'EE' - STA 34+00.00'EE'
STA 34+27.09'EE' - STA 34+38.38'EE'

PROJECT NO: 7090-00-74	HWY: USH 12	COUNTY: EAU CLAIRE	TYPICAL SECTION: TOWNHALL RD	SHEET 8	E

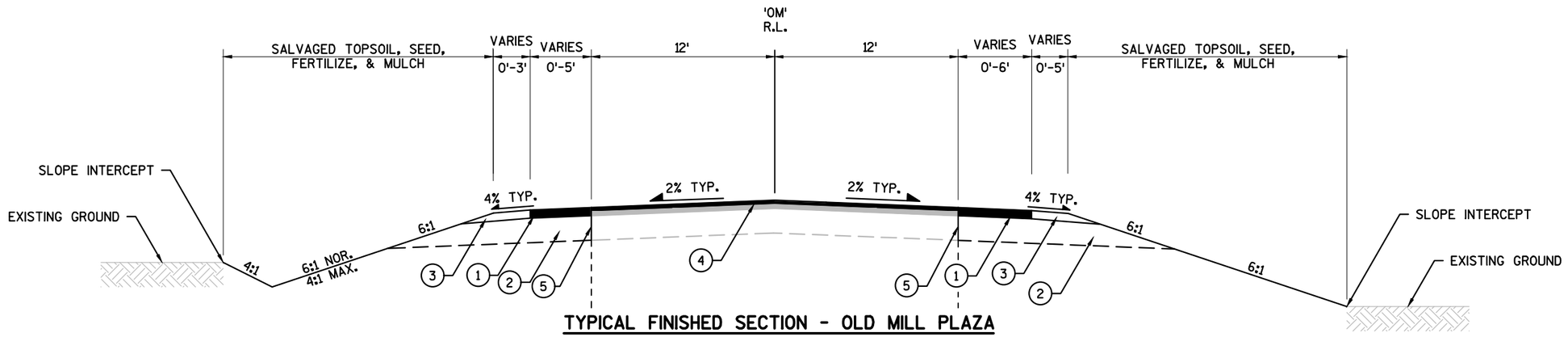

TYPICAL FINISHED SECTION - OLD MILL PLAZA

STA 10+12.00'0M' - STA 11+54.10'0M'

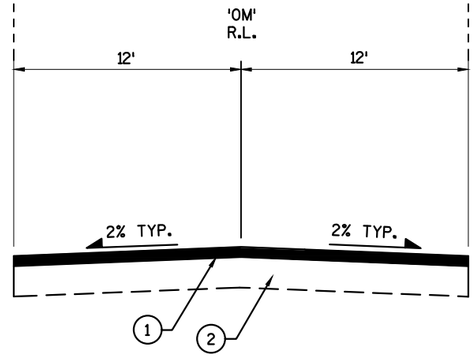

TYPICAL FINISHED SECTION - OLD MILL PLAZA

STA. 10+45.00'0M' TO STA. 10+67.00'0M'

FULL-DEPTH PAVEMENT REPLACEMENT OF OLD MILL PLAZA
REQUIRED WITHIN LIMITS OF STORM SEWER INSTALLATION

LEGEND

1. 4-INCHES ASPHALTIC SURFACE (4 MT 58-34 S)
2. 8-INCHES BASE AGGREGATE DENSE 1 ¼-INCH
3. 4-INCHES BASE AGGREGATE DENSE ¾-INCH
4. REMOVING ASPHALTIC SURFACE MILLING, 2-INCH DEPTH
   2-INCHES ASPHALTIC SURFACE (4 MT 58-34 S)
5. SAWCUT PAVEMENT
6. 5-INCH CONCRETE SIDEWALK

PROJECT NO: 7090-00-74	HWY: USH 12	COUNTY: EAU CLAIRE	TYPICAL SECTION: OLD MILL PLAZA	SHEET 9	E

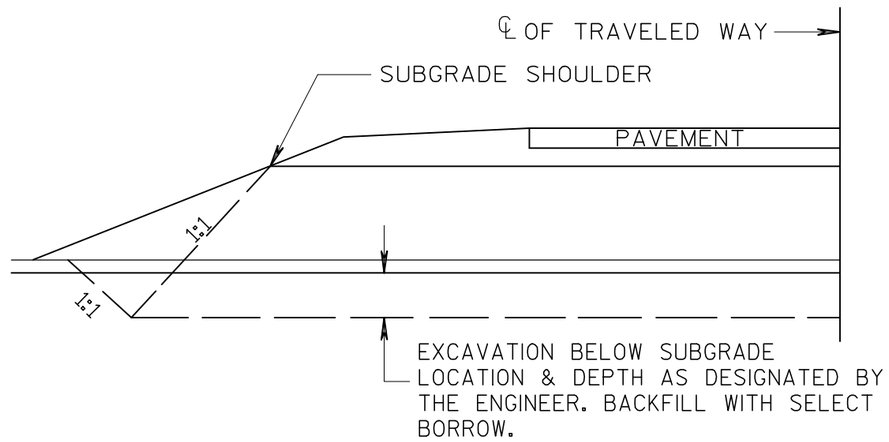

DETAIL FOR EXCAVATION BELOW SUBGRADE

PROJECT NO: 7090-00-74	HWY: USH 12	COUNTY: EAU CLAIRE	CONSTRUCTION DETAILS	SHEET 10	E

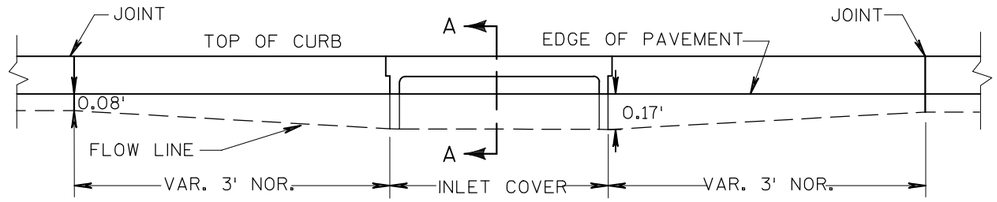

ELEVATION

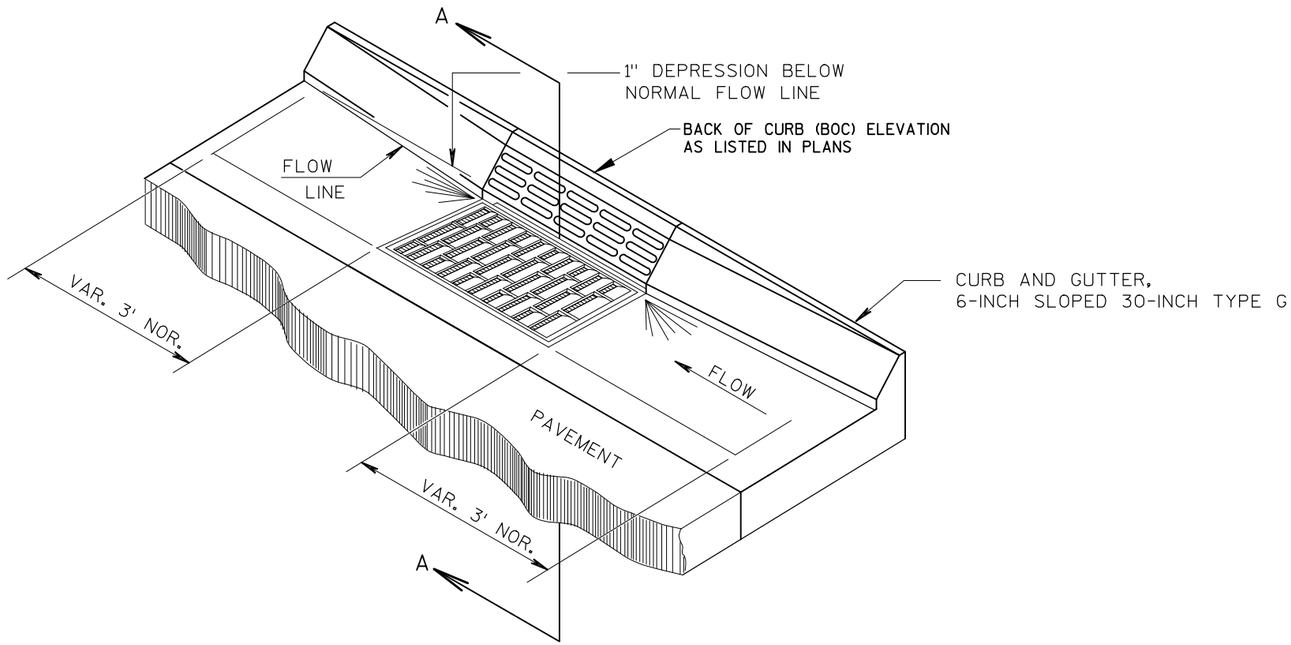

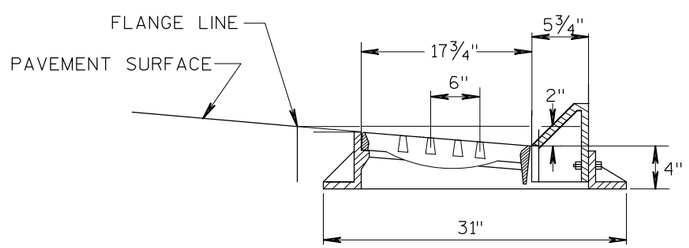

SECTION A-A

DETAIL OF CURB AND GUTTER AT INLETS

(TYPE HM INLET SHOWN)

2

N

2

*176+33.31'EB', 3.00' LT
917.11

176+48.21'EB', 7.00' LT

EXISTING FIELD INLET
(TO REMAIN)

SLOPE INTERCEPT (TYP.)

178+13.41'EB', 12.00' LT
918.33

BAD SHOULDER

3-INCHES ASPHALTIC SURFACE

176+63.41'EB', 2.00' LT
917.39

4'

2'

3'

3'

3'

3'

12'

177+00'EB'

178+00'EB'

179+00'EB'

SAWCUT REQ'D

9-INCH CONCRETE PAVEMENT

USH 12 EB

MATCHLINE STA. 179+40.00

*176+33.31'EB', 0.00'
917.19

BEGIN PROJECT 7090-00-74
STA. 176+33.31

*177+69.00'EB', 26.00' RT
918.26

*177+69.00'EB', 32.00' RT
918.06

SAWCUT REQ'D

9-INCH CONCRETE PAVEMENT

4'

2'

5'

3'

5'

179+19.59'EB', 38.00' RT
919.46

12'

3'

5'

BEGIN CONSTRUCTION
STA. 177+69.00'EB'

177+84.49'EB', 32.00' RT

3-INCHES ASPHALTIC SURFACE

BAD SHOULDER

179+19.49'EB', 41.00' RT

CENTURY LINK (TELEPHONE)

R/W

* = MATCH EXISTING

PROJECT NO:7090-00-74	HWY:USH 12	COUNTY:EAU CLAIRE	PLAN DETAILS:USH 12 EB	SHEET 12	E

2

2

N

USH 12 WB

180+00'WB'

181+00'WB'

182+00'WB'

END CONSTRUCTION
STA. 181+38.41'EB'

SLOPE INTERCEPT (TYP.)

BAD SHOULDER
3-INCHES ASPHALTIC SURFACE

3"

3'

12'

* 181+38.41'EB', 12.00' LT
921.50

* 181+38.41'EB', 0.00'
921.74

MATCHLINE STA. 179+40.00

180+00'EB'

181+00'EB'

182+00'EB'

9-INCH CONCRETE PAVEMENT

USH 12 EB

SAWCUT REQ'D

SAWCUT REQ'D

9-INCH CONCRETE PAVEMENT

* 182+34.59'EB', 26.00' RT
922.87

* 182+34.59'EB', 38.00' RT
922.63

12'

3'

5'

3-INCHES ASPHALTIC SURFACE

BAD SHOULDER

END CONSTRUCTION
STA. 182+34.59'EB'

CENTURY LINK (TELEPHONE)

R/W

* = MATCH EXISTING

PROJECT NO:7090-00-74	HWY:USH 12	COUNTY:EAU CLAIRE	PLAN DETAILS:USH 12 EB	SHEET 13	E

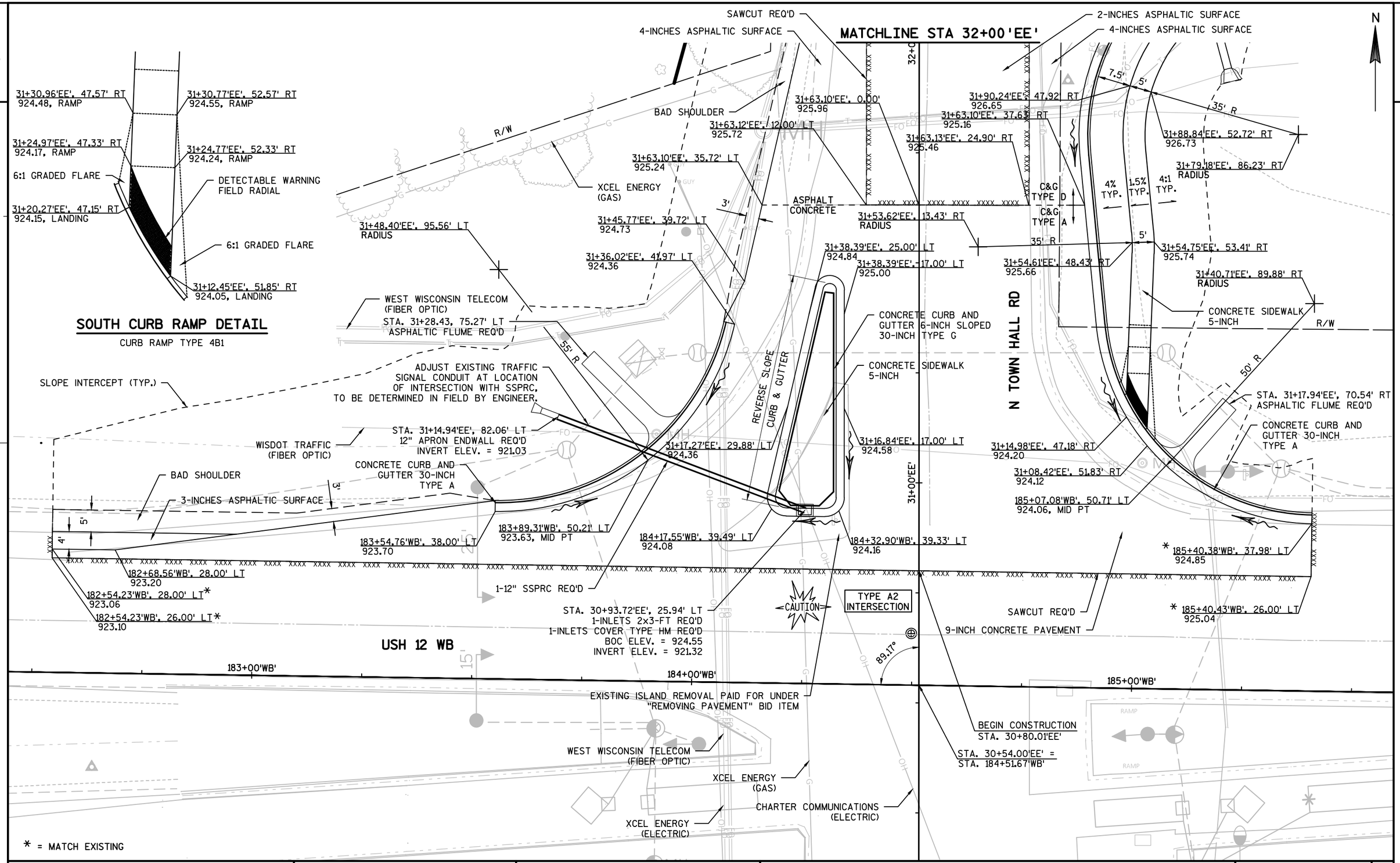

PROJECT NO: 7090-00-74	HWY: USH 12	COUNTY: EAU CLAIRE	PLAN DETAILS: USH 12 WB / N TOWN HALL RD	SHEET 14	E

2

N

R/W

SLOPE INTERCEPT (TYP.)

4-INCHES ASPHALTIC SURFACE
SAWCUT REQ'D
32+44.26'EE', 16.99' LT
927.39

2-INCHES ASPHALTIC SURFACE

BAD SHOULDER

*33+69.50'EE', 18.54' LT
930.01

*34+08.54'EE', 18.36' LT
931.13

*34+38.42'EE', 13.21' LT
932.81

SAWCUT REQ'D

32+80.06'EE', 13.41' LT
928.27

*33+63.98'EE', 13.38' LT
930.27

*34+13.71'EE', 13.22' LT
932.04

SAWCUT REQ'D

32+84.17'EE', 12.00' LT
928.40

BEGIN CONSTRUCTION
STA. 10+00.00'0M'

MATCHLINE STA 32+00'EE'

0'EE'

10+00.00M

TYPE D
INTERSECTION
(MODIFIED)

33+00'EE'

N TOWN HALL RD

34+00'EE'

90.00°

32+62.00'EE', 12.00' RT
928.10

33+03.54'EE', 23.00' RT
928.63

33+90.48'EE', 12.00' RT
931.24

SAWCUT REQ'D

END CONSTRUCTION
STA. 34+38.38'EE'

32+38.00'EE', 25.00' RT
927.47

33+13.54'EE', 21.94' RT
928.89

10+33.20'0M', 26.52' LT
927.60, MID PT

34+38.35'EE', 13.49' RT*
932.89

CONCRETE CURB AND
GUTTER 30-INCH
TYPE D

4-INCHES ASPHALTIC SURFACE

*33+99.99'EE', 23.87' RT
931.14

BAD SHOULDER

BAD SHOULDER

R/W

10+55.50'0M', 32.77' RT
927.16, MID PT

CONCRETE CURB AND
GUTTER 30-INCH
TYPE D

34+27.09'EE', 24.73' RT*
931.82

WEST WISCONSIN TELECOM
(FIBER OPTIC)

10+53.94'0M', 42.46' RT
RADIUS

10+59.57'0M', 41.71' RT
927.42, PC

CONCRETE SIDEWALK
5-INCH

10+45.00'0M', 12.00' RT
927.86

10+45.00'0M', 12.00' LT
928.11

10+59.52'0M', 43.53' RT
927.47, MID PT

10+59.22'0M', 39.78' RT
927.33, RAMP

STA. 33+03.54'EE', 37.26' RT
1-18" SSPRC REQ'D
1-APRON ENDWALL REQ'D
INVERT ELEV. = 927.00

10+58.72'0M', 45.72' RT
927.53, PCC

6:1 GRADED FLARE

STA. 10+77.76'0M', 52.96' RT
1-21" SSPRC REQ'D
1-APRON ENDWALL REQ'D
INVERT ELEV. = 923.80

10+57.88'0M', 30.63' RT
927.21

R/W

40' R

5' R

10+58.18'0M', 33.86' RT
927.08 LANDING

50' R

STA. 32+86.65'EE', 43.06' RT
ASPHALTIC FLUME REQ'D

DETECTABLE WARNING
FIELD NATURAL PATINA

10+62.72'0M', 26.87' RT
927.25

10+58.35'0M', 55.00' LT
RADIUS

10+63.58'0M', 47.90' RT
927.60, PCC

10+63.04'0M', 29.82' RT
927.14, LANDING

STA. 32+84.73'EE', 46.40' RT
1-INLETS MEDIAN 2 GRATE NO SLOPE OPTION REQ'D
2-INLET COVERS TYPE MS REQ'D
RIM ELEV. = 927.00
INVERT ELEV. = 924.30

10+58.35'0M', 15.00' LT
927.98

10+67.94'0M', 15.00' LT
928.03

10+67.00'0M', 12.00' LT
928.09

10+67.00'0M', 12.00' RT
928.09

12'

12'

5'

10+65.10'0M', 44.58' RT
927.55, MID PT

6:1 GRADED
FLARE

11+00.08'0M', 15.00' RT
928.31

CAUTION

STA. 10+55.95'0M', 32.18' LT
1-18" SSPRC REQ'D
1-APRON ENDWALL REQ'D
INVERT ELEV. = 926.00

10+65.17'0M', 40.89' RT
927.49, PC

BAD SHOULDER

4-INCHES ASPHALTIC SURFACE

OLD MILL PLAZA

11+00'0M

XCEL ENERGY (GAS)

10+64.79'0M', 38.96' RT
927.41, RAMP

10+63.65'0M', 33.05' RT
927.15, LANDING

11+00.08'0M', 65.00' RT
RADIUS

WEST WISCONSIN TELECOM
COOPERATIVE (TELEPHONE)

3'

3'

SAWCUT REQ'D

XCEL ENERGY
(ELECTRIC)
CHARTER COMMUNICATIONS
(FIBER OPTIC)

MATCHLINE STA 11+25'0M'

11+35.65'0M', 12.00' RT
928.62

11+35.65'0M', 12.85' RT
928.60

SAWCUT REQ'D

2-INCHES ASPHALTIC SURFACE

R/W

5'

R/W

11+54.10'0M', 12.00' LT*
929.04

*11+54.10'0M', 11.80' RT
928.73

11+54.10'0M', 15.00' LT*
929.03

2-INCHES ASPHALTIC SURFACE

BAD SHOULDER

4-INCHES ASPHALTIC SURFACE

MATCHLINE STA 11+25'0M'

END CONSTRUCTION
STA. 11+54.10'0M'

N

NORTH CURB RAMP DETAIL

CURB RAMP TYPE 4B1

* = MATCH EXISTING

PROJECT NO:7090-00-74	HWY:USH 12	COUNTY:EAU CLAIRE	PLAN DETAILS:N TOWN HALL RD / OLD MILL PLAZA	SHEET 15	E

FILE NAME : P:\60563458 - USH 12 CTH EE INTERSECTION\900_WORK\910_CAD\20-SHEETS\021201_PD.DWG PLOT DATE : 10/1/2019 8:30 AM PLOT BY : OLSON, JOSHUA PLOT NAME : PLOT SCALE : 1 IN:20 FT

2

N

POST

R/W

DAIRYLAND POWER
COOPERATIVE
(ELECTRIC)

R/W

WEST WISCONSIN TELECOM
(FIBER OPTIC)

SLOPE INTERCEPT (TYP.)

BEGIN CONSTRUCTION
STA. 186+86.73'EB'

WISDOT TRAFFIC
(FIBER OPTIC)

BAD SHOULDER

3-INCHES ASPHALTIC SURFACE

WEST WISCONSIN TELECOM
(FIBER OPTIC)

5"

3"

12"

*186+86.73'WB', 38.00' LT
925.22

*186+86.73'WB', 26.00' LT
925.46

USH 12 WB

9-INCH CONCRETE PAVEMENT

SAWCUT REQ'D

MATCHLINE STA. 189+25.00

21

BEGIN CONSTRUCTION
STA. 187+70.39'EB'

SAWCUT REQ'D

9-INCH CONCRETE PAVEMENT

187+00'WB'

188+00'WB'

189+00'WB'

12"

3"

3"

*187+70.39'WB', 0.00'
925.52

*187+70.39'WB', 12.00' RT
925.28

3-INCHES ASPHALTIC SURFACE

BAD SHOULDER

187+00'EB'

188+00'EB'

189+00'EB'

USH 12 EB

* = MATCH EXISTING

PROJECT NO: 7090-00-74	HWY: USH 12	COUNTY: EAU CLAIRE	PLAN DETAILS: USH 12 WB	SHEET 16	E

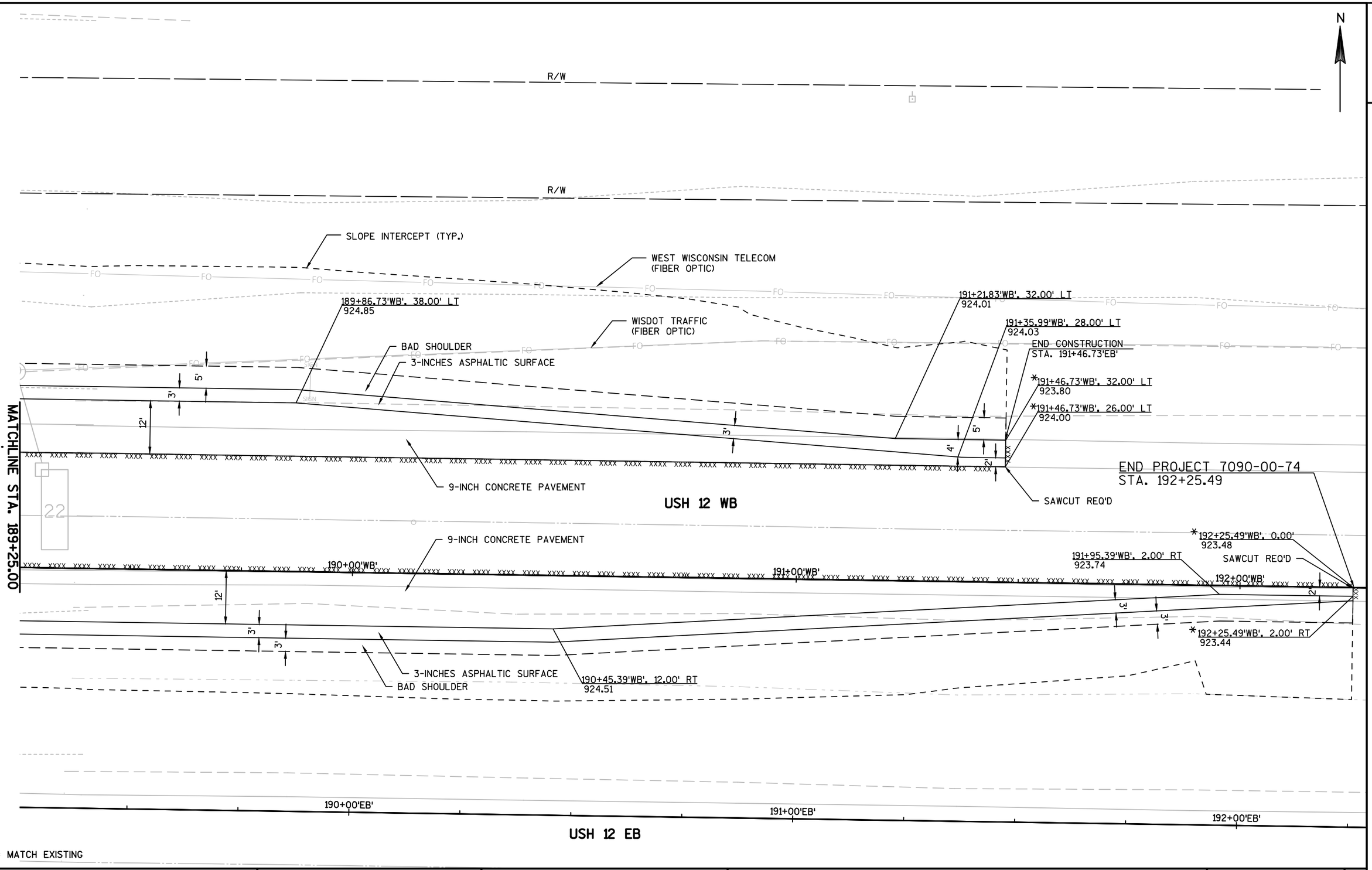

PROJECT NO:7090-00-74	HWY:USH 12	COUNTY:EAU CLAIRE	PLAN DETAILS:USH 12 WB	SHEET 17	E

FILE NAME : P:\60563458 - USH 12 CTH EE INTERSECTION\900_WORK\910_CAD\20-SHEETS\021201_PD.DWG PLOT DATE : 10/1/2019 8:30 AM PLOT BY : OLSON, JOSHUA PLOT NAME : PLOT SCALE : 1 IN:20 FT

WISDOT/CADDS SHEET 42

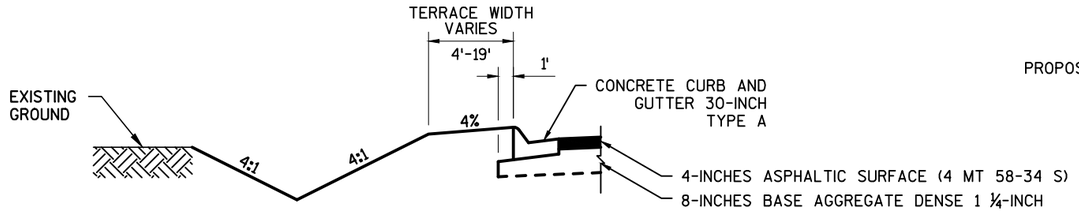

GRADING DETAIL
(TYPICAL AT CURB & GUTTER)

PROPOSED DITCH FLOWLINE

10+00.00'NW', 6.54' RT
924.17

10+15.00'NW', 20.41' RT
923.60

10+20.00'NW', 21.17' RT
923.42

SLOPE INTERCEPT (TYP.)

VARIABLE TERRACE
WIDTH

10+40.00'NW', 17.14' RT
923.50

PROPOSED DITCH FLOWLINE

GRADE TERRACE TO ALLOW
EXISTING CABINET
TO REMAIN IN PLACE

10+55.00'NW', 13.92' RT
923.72

10+60.00'NW', 10.55' RT
923.86

GRADE TERRACE TO ALLOW
EXISTING PULL BOX
TO REMAIN IN PLACE

VARIABLE TERRACE
WIDTH

N TOWN HALL RD

31+00'EE'

USH 12 WB

2

N

N TOWN HALL RD

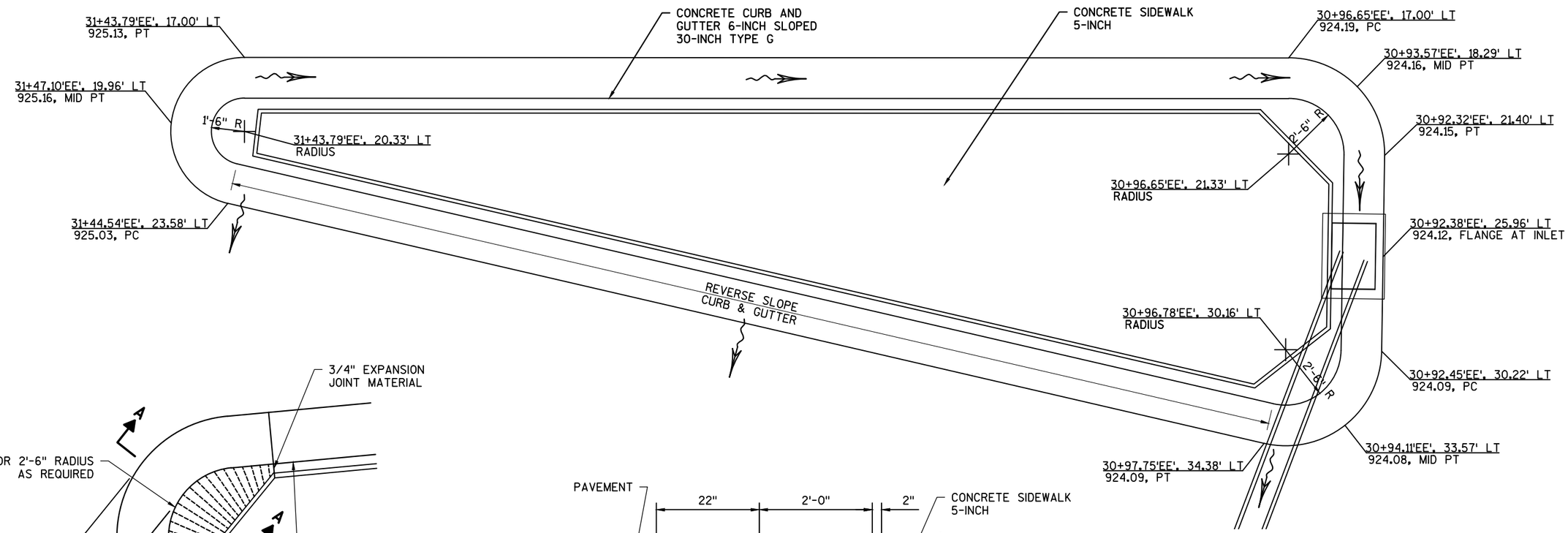

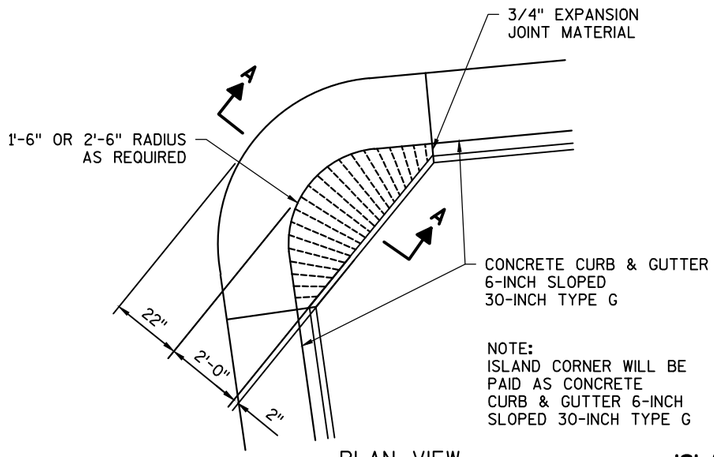

PLAN VIEW

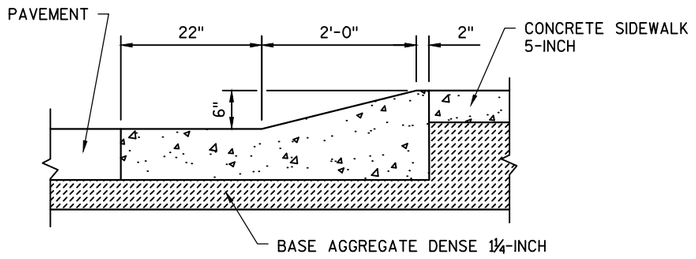

SECTION A - A

ISLAND CORNER DETAIL

PROJECT NO: 7090-00-74	HWY: USH 12	COUNTY: EAU CLAIRE	PLAN DETAILS: PORK CHOP ISLAND	SHEET 19	E

FILE NAME : \\USMSN1FS001\PROD\DATA\PROJECTS\60563458 - USH 12 CTH EE INTERSECTION\900_WORK\910_CAD\20-SHEETS\021203_PD_PORK CHOP ISLAND.DWG PLOT DATE : 6/3/2019 9:33 AM PLOT BY : CZECH, ANDREW PLOT NAME : PLOT SCALE : 1 IN:20 FT

2

2

N

R/W

POST

USH 12 WB

180+00'WB'

181+00'WB'

182+00'WB'

SIGN

SIGN

177+00'EB'

178+00'EB'

179+00'EB'

180+00'EB'

181+00'EB'

182+00'EB'

USH 12 EB

SAWCUT REQ'D
(TYP.)

180+03.80'EB', 1.50' LT

180+03.80'EB', 0.00'

181+38.41'EB', 12.48' LT

181+38.40'EB', 0.00'

REMOVING PAVEMENT

180+50.05'EB', 26.00' RT

180+50.05'EB', 28.00' RT

182+34.59'EB', 26.00' RT

182+34.59'EB', 38.00' RT

R/W

PROJECT NO: 7090-00-74	HWY: USH 12	COUNTY: EAU CLAIRE	REMOVAL DETAILS: USH 12 EB	SHEET 20	E

2

N

182+58.30'WB', 27.50' LT

182+58.30'WB', 26.00' LT

183+00'EB'

183+00'WB'

184+00'EB'

184+00'WB'

R/W

REMOVE CURB & GUTTER
(PAID FOR AS REMOVING PAVEMENT)

STA. 31+00'EE' - STA. 33+00'EE'
CLEARING & GRUBBING

REMOVING ASPHALTIC SURFACE MILLING

SAWCUT REQ'D
(TYP.)

R/W

XCEL ENERGY
(GAS)
CAUTION

REMOVE EXISTING
PORK CHOP ISLAND
(PAID FOR AS
REMOVING PAVEMENT)

30+00'EE'

31+00'EE'

32+00'EE'

33+00'EE'

34+00'EE'

35+00'EE'

35+30'EE'

CTH EE

N TOWN HALL RD

REMOVING PAVEMENT

10+00'OM'

STA. 10+41'OM', 19' LT
REMOVE LIGHTING EQUIPMENT

R/W

STA. 31+98'EE', 42' RT
REMOVE
LIGHTING EQUIPMENT
REMOVE CURB & GUTTER
(PAID FOR AS REMOVING PAVEMENT)

R/W

STA. 10+51'OM'
REMOVE 18" CMCP

185+00'EB'

185+00'WB'

185+40.43'WB', 26.00' LT

185+40.43'WB', 38.00' LT

XCEL ENERGY
(GAS)
CAUTION

11+00'OM'

REMOVING ASPHALTIC SURFACE MILLING

USH 12 EB

USH 12 WB

186+00'EB'

186+00'WB'

R/W

OLD MILL PLAZA

R/W

10+59'OM'

R/W

PROJECT NO: 7090-00-74	HWY: USH 12	COUNTY: EAU CLAIRE	REMOVAL DETAILS: N TOWN HALL RD / OLD MILL PLAZA	SHEET 21	E

FILE NAME : \\USMSN1FS001\PROD\DATA\PROJECTS\60563458 - USH 12 CTH EE INTERSECTION\900_WORK\910_CAD\20-SHEETS\021101_RD.DWG PLOT DATE : 5/21/2019 3:22 PM PLOT BY : CZECH, ANDREW PLOT NAME : PLOT SCALE : 1 IN:40 FT

2

N

POST

R/W

186+86.73'WB', 38.00' LT

188+49.27'WB', 26.00' LT

186+86.73'WB', 26.00' LT

REMOVING PAVEMENT

187+70.39'WB', 0.00' LT

187+00'WB'

188+00'WB'

189+00'WB'

189+05.69'WB', 0.00' LT

USH 12 WB

SAWCUT REQ'D
(TYP.)

190+00'WB'

191+00'WB'

192+00'WB'

189+05.69'WB', 1.50' RT

187+70.39'WB', 12.00' RT

187+00'EB'

188+00'EB'

189+00'EB'

USH 12 EB

190+00'EB'

191+00'EB'

192+00'EB'

SIGN

POST

R/W

PROJECT NO: 7090-00-74	HWY: USH 12	COUNTY: EAU CLAIRE	REMOVAL DETAILS: USH 12 WB	SHEET 22	E

FILE NAME : \\USMSN1FS001\PROD\DATA\PROJECTS\60563458 - USH 12 CTH EE INTERSECTION\900_WORK\910_CAD\20-SHEETS\021101_RD.DWG PLOT DATE : 5/21/2019 3:22 PM PLOT BY : CZECH, ANDREW PLOT NAME : PLOT SCALE : 1 IN:40 FT

LEGEND

- EROSION MAT URBAN CLASS I, TYPE B
- SILT FENCE
- SURFACE WATER FLOW
- SLOPE INTERCEPT
- INLET PROTECTION
- Ⓐ/Ⓒ INLET PROTECTION TYPE
- TEMPORARY DITCH CHECK
- CULVERT PIPE CHECK
- RIPRAP MEDIUM

N

NOTE:

THREE TYPE C INLET PROTECTIONS REQUIRED WEST OF THE PROJECT LIMITS AT THE INTERSECTION OF TRUAX LANE AND USH 12/TEXACO DRIVE.

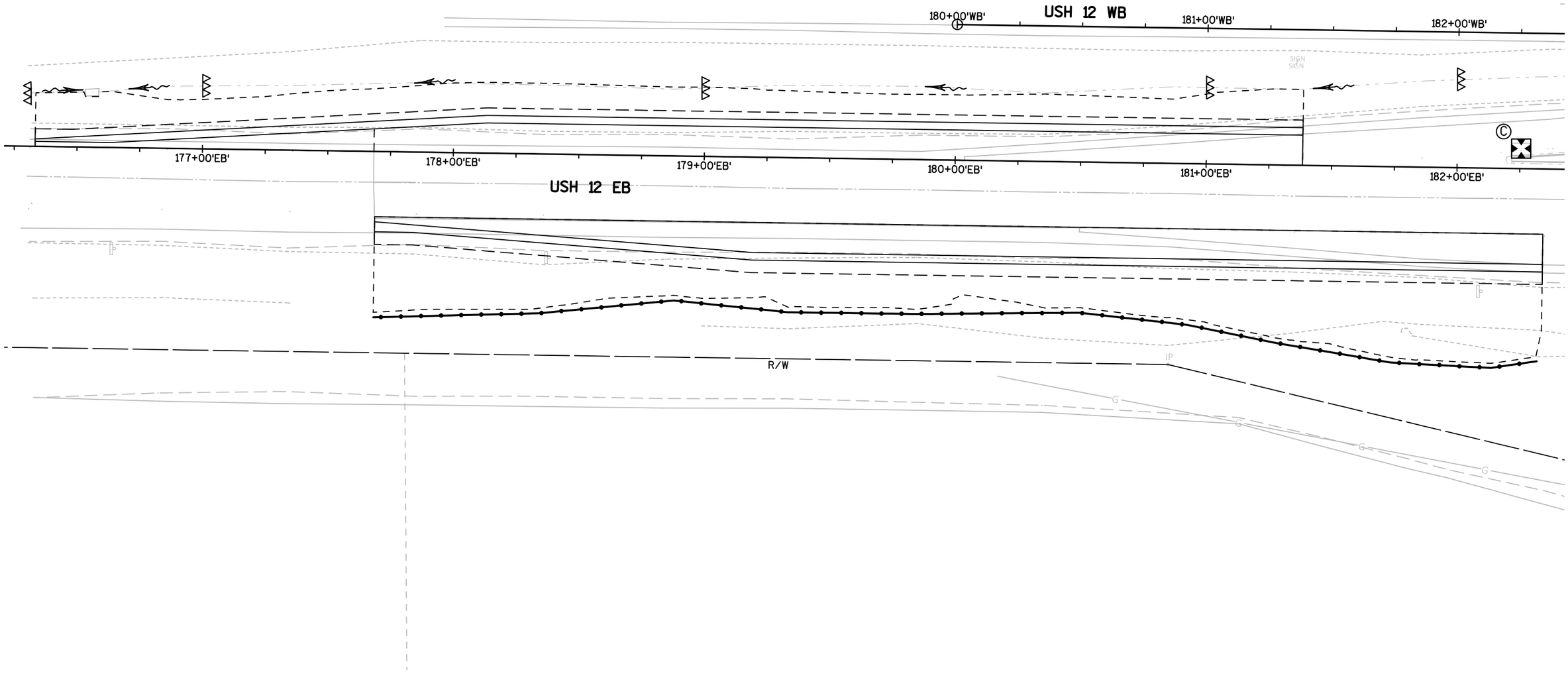

PROJECT NO: 7090-00-74	HWY: USH 12	COUNTY: EAU CLAIRE	EROSION CONTROL: USH 12 EB	SHEET 23	E

2

LEGEND

- EROSION MAT URBAN CLASS I, TYPE B
- SILT FENCE
- SURFACE WATER FLOW
- SLOPE INTERCEPT
- INLET PROTECTION
- Ⓐ/Ⓒ INLET PROTECTION TYPE
- TEMPORARY DITCH CHECK
- CULVERT PIPE CHECK
- RIPRAP MEDIUM

N

NOTE:
TYPE A INLET PROTECTION REQUIRED PRIOR TO SETTING THE CASTING.
TYPE C INLET PROTECTION REQUIRED AFTER INLET CASTING IS IN PLACE.

CTH EE

N TOWN HALL RD

USH 12 EB

USH 12 WB

OLD MILL PLAZA

R/W

183+00'EB'
184+00'EB'
185+00'EB'
186+00'EB'
183+00'WB'
184+00'WB'
185+00'WB'
186+00'WB'
30+00'EE'
31+00'EE'
32+00'EE'
10+00'OM'
33+00'EE'
34+00'EE'
35+00'EE'
35+30'EE'
11+00'OM'
11+65'OM'

PROJECT NO: 7090-00-74	HWY: USH 12	COUNTY: EAU CLAIRE	EROSION CONTROL: N TOWN HALL RD / OLD MILL PLAZA	SHEET 24	E

FILE NAME : \\USMSN1FS001\PROD\DATA\PROJECTS\60563458 - USH 12 CTH EE INTERSECTION\900_WORK\910_CAD\20-SHEETS\022001_EC.DWG PLOT DATE : 5/21/2019 3:09 PM PLOT BY : CZECH, ANDREW PLOT NAME : PLOT SCALE : 1 IN:40 FT

LEGEND

- EROSION MAT URBAN CLASS I, TYPE B
- SILT FENCE
- SURFACE WATER FLOW
- SLOPE INTERCEPT
- INLET PROTECTION
- Ⓐ/Ⓒ INLET PROTECTION TYPE
- TEMPORARY DITCH CHECK
- CULVERT PIPE CHECK
- RIPRAP MEDIUM

N

POST

R/W

187+00'WB' 188+00'WB' 189+00'WB' 190+00'WB' 191+00'WB' 192+00'WB'

USH 12 WB

187+00'EB' 188+00'EB' 189+00'EB' 190+00'EB' 191+00'EB' 192+00'EB'

USH 12 EB

SIGN

POST

IP

R/W

PROJECT NO: 7090-00-74	HWY: USH 12	COUNTY: EAU CLAIRE	EROSION CONTROL: USH 12 WB	SHEET 25	E

FILE NAME : \\USMSN1FS001\PROD\DATA\PROJECTS\60563458 - USH 12 CTH EE INTERSECTION\900_WORK\910_CAD\20-SHEETS\022001_EC.DWG PLOT DATE : 5/21/2019 3:09 PM PLOT BY : CZECH, ANDREW PLOT NAME : PLOT SCALE : 1 IN:40 FT

WISDOT/CADDS SHEET 42

LEGEND

- CONTROL CABINET
- NONMETALLIC CONDUIT 2", UNLESS OTHERWISE NOTED
- LOOP DETECTOR CONDUIT 1" NONMETALLIC
- SIGNAL HEAD, TRAFFIC SIGNAL STANDARD, PEDESTAL BASE
- (XX) SIGNAL HEAD, TRAFFIC SIGNAL POLE, TRANSFORMER BASE
- LOOP DETECTOR IN 1" NONMETALLIC CONDUIT
- LOOP DETECTOR W/ 8" X 8" X 8" JUNCTION BOX
- X SIGNAL HEAD NUMBER
- R RED CIRCULAR INDICATOR
- Y YELLOW CIRCULAR INDICATOR
- G GREEN CIRCULAR INDICATOR
- R RED ARROW
- Y YELLOW ARROW
- FY FLASHING YELLOW ARROW
- G GREEN ARROW
- LUMINAIRE, TRAFFIC POLE, TRANSFORMER BASE
- EVP DETECTOR HEAD
- X EVP DESIGNATOR
- PULL BOX, 24" X 42"
- PULL BOX, 24" X 36"

SPEED LIMIT 35

NOTE: BOLD REPRESENTS ITEMS TO BE REMOVED
GRAYSHADE REPRESENTS EXISTING

CONSTRUCTION NOTES:

1. ABANDONED LOOP DETECTOR CONDUIT TO REMAIN IN PLACE AND LOOP DETECTOR WIRE TO BE REMOVED BY THE CONTRACTOR.
2. REMOVE ALL TRAFFIC SIGNAL CABLE, LIGHTING WIRE AND CABLE, LOOP DETECTOR LEAD-IN CABLE, AND GROUND WIRES FROM EXISTING CONDUIT TO BE ABANDONED.
3. SEE MISCELLANEOUS QUANTITIES FOR A SCHEDULE OF EQUIPMENT TO BE REMOVED, SALVAGED AND REINSTALLED, SALVAGED AND RETURNED TO WISDOT, AND REMOVED AND DISPOSED.

N

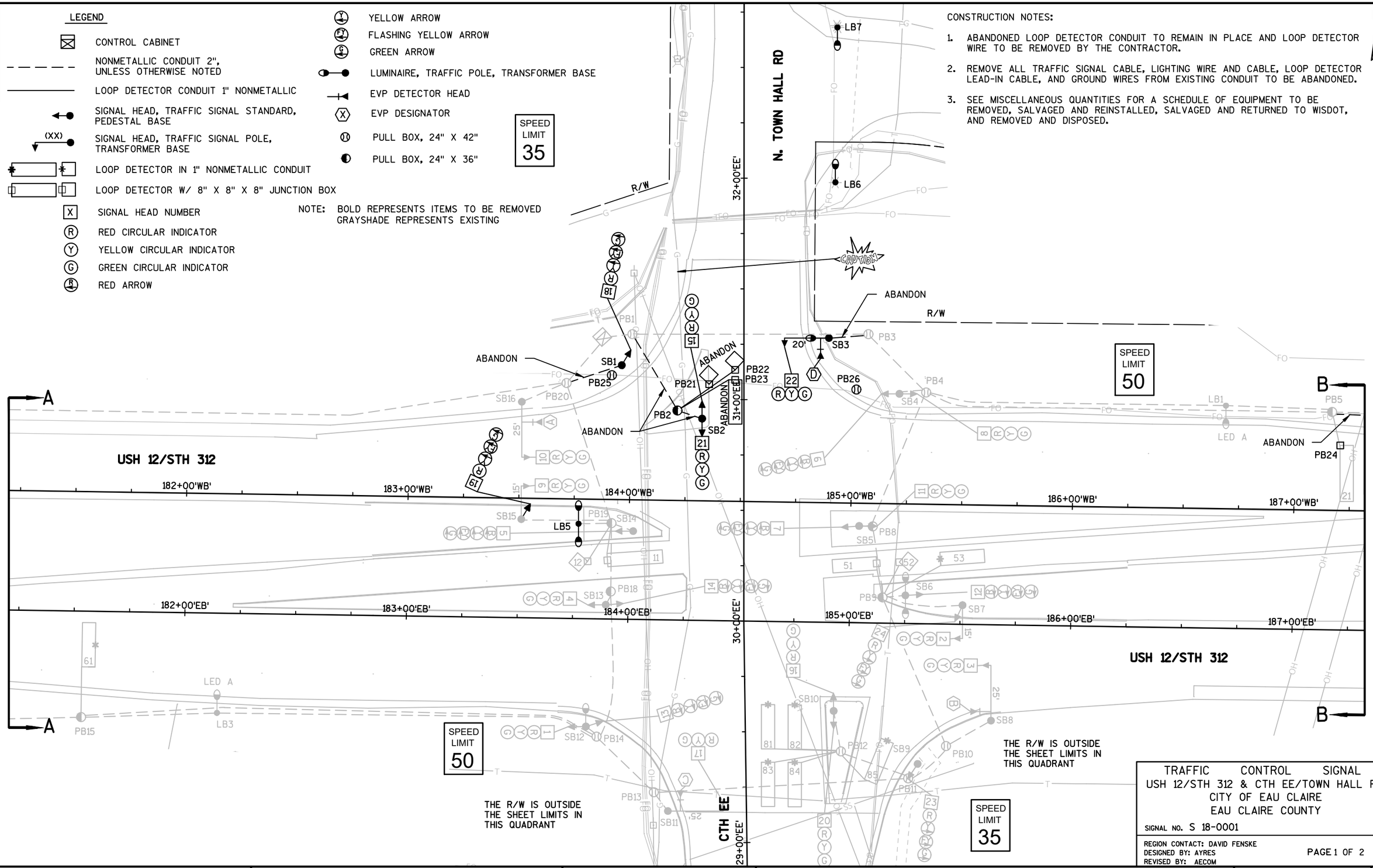

TRAFFIC CONTROL SIGNAL
USH 12/STH 312 & CTH EE/TOWN HALL RD
CITY OF EAU CLAIRE
EAU CLAIRE COUNTY

SIGNAL NO. S 18-0001

REGION CONTACT: DAVID FENSKE
DESIGNED BY: AYRES
REVISED BY: AECOM

PAGE 1 OF 2

PROJECT NO: 7090-00-04	HWY: USH 12/STH 312 & CTH EE	COUNTY: EAU CLAIRE	TRAFFIC SIGNAL REMOVAL PLAN	SCALE, FEET 0 20 40	SHEET 26	E

FILE NAME : P:\60563458 - USH 12 CTH EE INTERSECTION\900_WORK\910_CAD\20-SHEETS\024001_SR.DWG PLOT DATE : 7/17/2019 12:36 PM PLOT BY : GIESE, BENJAMIN PLOT NAME :

WISDOT/CADDS SHEET 42

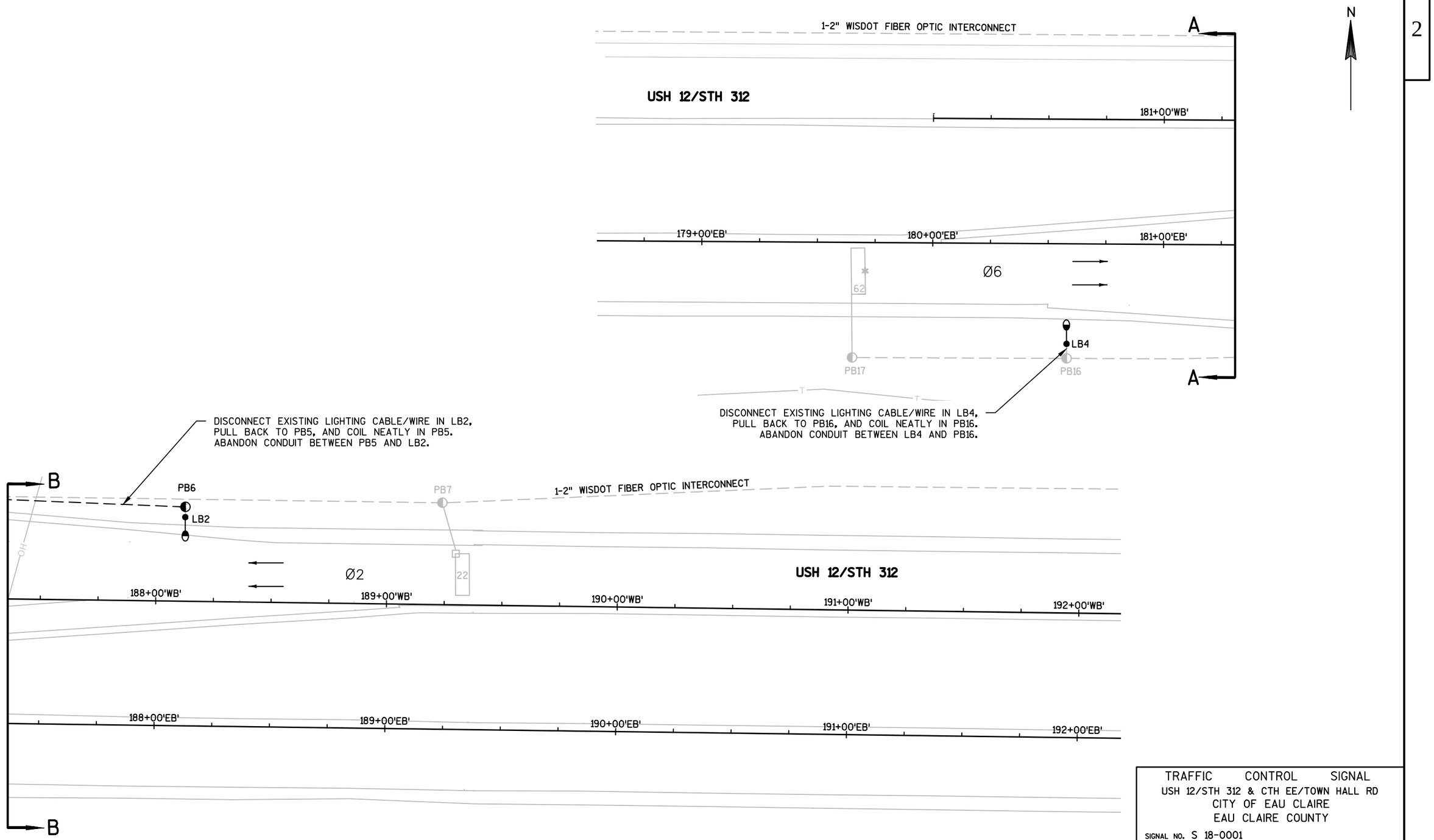

TRAFFIC CONTROL SIGNAL
USH 12/STH 312 & CTH EE/TOWN HALL RD
CITY OF EAU CLAIRE
EAU CLAIRE COUNTY

SIGNAL NO. S 18-0001

REGION CONTACT: DAVID FENSKE
DESIGNED BY: AYRES
REVISED BY: AECOM

PAGE 2 OF 2

PROJECT NO: 7090-00-04	HWY: USH 12/STH 312 & CTH EE	COUNTY: EAU CLAIRE	TRAFFIC SIGNAL REMOVAL PLAN	SCALE, FEET 0 20 40	SHEET 27	E

FILE NAME : P:\60563458 - USH 12 CTH EE INTERSECTION\900_WORK\910_CAD\20-SHEETS\024001_SR.DWG PLOT DATE : 7/17/2019 12:36 PM PLOT BY : GIESE, BENJAMIN PLOT NAME :

WISDOT/CADDS SHEET 42

LEGEND

- CONTROL CABINET
- NONMETALLIC CONDUIT 2", UNLESS OTHERWISE NOTED
- LOOP DETECTOR CONDUIT 1" NONMETALLIC
- SIGNAL HEAD, TRAFFIC SIGNAL STANDARD, PEDESTAL BASE
- (XX) SIGNAL HEAD, TRAFFIC SIGNAL POLE, TRANSFORMER BASE
- LOOP DETECTOR IN 1" NONMETALLIC CONDUIT
- LOOP DETECTOR W/ 8" X 8" X 8" JUNCTION BOX
- PULL BOX, 24" X 42"
- PULL BOX, 24" X 36"
- LUMINAIRE, TRAFFIC POLE, TRANSFORMER BASE LED C (UNLESS OTHERWISE NOTED)
- PEDESTRIAN PUSH BUTTON

NOTE: ALL LENSES ARE 12-INCH GRAYSHADE REPRESENTS EXISTING

- X SIGNAL HEAD NUMBER
- WALK / DON'T WALK INDICATOR 16" (COUNTDOWN TIMER)
- R RED CIRCULAR INDICATOR
- Y YELLOW CIRCULAR INDICATOR
- G GREEN CIRCULAR INDICATOR
- RA RED ARROW
- YA YELLOW ARROW
- FYA FLASHING YELLOW ARROW
- GA GREEN ARROW
- EVP DETECTOR HEAD
- X EVP DESIGNATOR
- LANE DESIGNATION FOR INFO ONLY

CONSTRUCTION NOTES:

1. * LOCATION IS TO FRONT OF CENTER OF DETECTOR LOOP
2. THE CONTRACTOR SHALL HAVE THE PULL BOXES AND CONDUIT RUNS INSPECTED 5 WORKING DAYS PRIOR TO PLACING SIGNAL CABLE INTO SYSTEM. CONTACT THE DEPARTMENT'S ELECTRICAL SHOP AT (715)-577-0662.
3. THE LOCATIONS OF EXISTING AND PROPOSED UTILITY INSTALLATIONS ARE APPROXIMATE. THERE MAY BE OTHER UTILITY INSTALLATIONS WITHIN THE PROJECT WHICH ARE NOT SHOWN.
4. THE ENGINEER MAY ADJUST THE LOCATIONS OF ITEMS UNDER THIS CONTRACT TO AVOID CONFLICT WITH EXISTING UTILITY FACILITIES.
5. A MAXIMUM OF ONE SIGNAL FACE FOR EACH APPROACH MAY BE OUT OF SERVICE AT ONE TIME. EACH SIGNAL FACE SHALL BE IN OPERATION AT ALL TIMES WORK IS NOT BEING ACTIVELY PERFORMED ON THAT FACE.
6. BAG SIGNAL FACES FACING APPROACHES THAT ARE CLOSED TO TRAFFIC.
7. REINSTALL SALVAGED SIGNAL AND LIGHTING EQUIPMENT AT SB1, SB2, SB3, SB17, LB2, AND LB4, INCLUDING FOLDING STOP SIGNS (R1-1F) ON SB1 AND SB2 AND DIVIDED HIGHWAY SIGN (R6-3) ON SB2.
8. CONTRACTOR TO INSTALL STATE FURNISHED CAT-5E CABLE.

N

USH 12/STH 312

N. TOWN HALL RD

CTH EE

SPEED LIMIT 35

SPEED LIMIT 50

SPEED LIMIT 50

SPEED LIMIT 35

Ø1/OL"E"

Ø2

Ø4/OL"J"

Ø5/OL"G"

Ø6

Ø8/OL"L"

OL"A/P"

OL"C/N"

ADJUSTING PULL BOXES

NOTE: LOOP 45 NOT USED

NOTE: LOOP 85 NOT USED

THE R/W IS OUTSIDE THE SHEET LIMITS IN THIS QUADRANT

THE R/W IS OUTSIDE THE SHEET LIMITS IN THIS QUADRANT

REINSTALL EXISTING LIGHTING CABLE/WIRE FROM PB3 TO SB3 AND MAKE NECESSARY CONNECTIONS IN SB3.

REVISION				
REV. NO.	ADJUST SIGNAL EQUIPMENT FOR RECONFIGURED NORTH APPROACH AND EXTENDED MAINLINE TURN LANES. ADD PEDESTRIAN SIGNAL HEADS AND PUSH BUTTONS.			
	APPROVAL RECOMMENDED		APPROVED	
	REGION		CENTRAL OFFICE	
1	DATE	BY	DATE	BY

TRAFFIC CONTROL SIGNAL

USH 12/STH 312 & CTH EE/N. TOWN HALL RD
CITY OF EAU CLAIRE
EAU CLAIRE COUNTY

CABINET TYPE: TS2
SIGNAL NO. S 18-0001 CONTROLLER TYPE: COBALT

WISCONSIN DEPARTMENT OF TRANSPORTATION

APPROVAL RECOMMENDED
DATE _____ REGION TRAFFIC ENGINEER

APPROVED
DATE _____ STATE TRAFFIC SIGNAL ENGINEER

REGION CONTACT: DAVID FENSKE
DESIGNED BY: AYRES
REVISED BY: AECOM

PAGE 1 OF 3

PROJECT NO: 7090-00-04	HWY: USH 12/STH 312 & CTH EE	COUNTY: EAU CLAIRE	TRAFFIC SIGNAL PLAN	SCALE, FEET 0 20 40	SHEET 28	E

FILE NAME : P:\60563458 - USH 12 CTH EE INTERSECTION\900_WORK\910_CAD\20-SHEETS\024201_SP.DWG PLOT DATE : 7/17/2019 12:30 PM PLOT BY : GIESE, BENJAMIN PLOT NAME :

WISDOT/CADDS SHEET 42

2

N

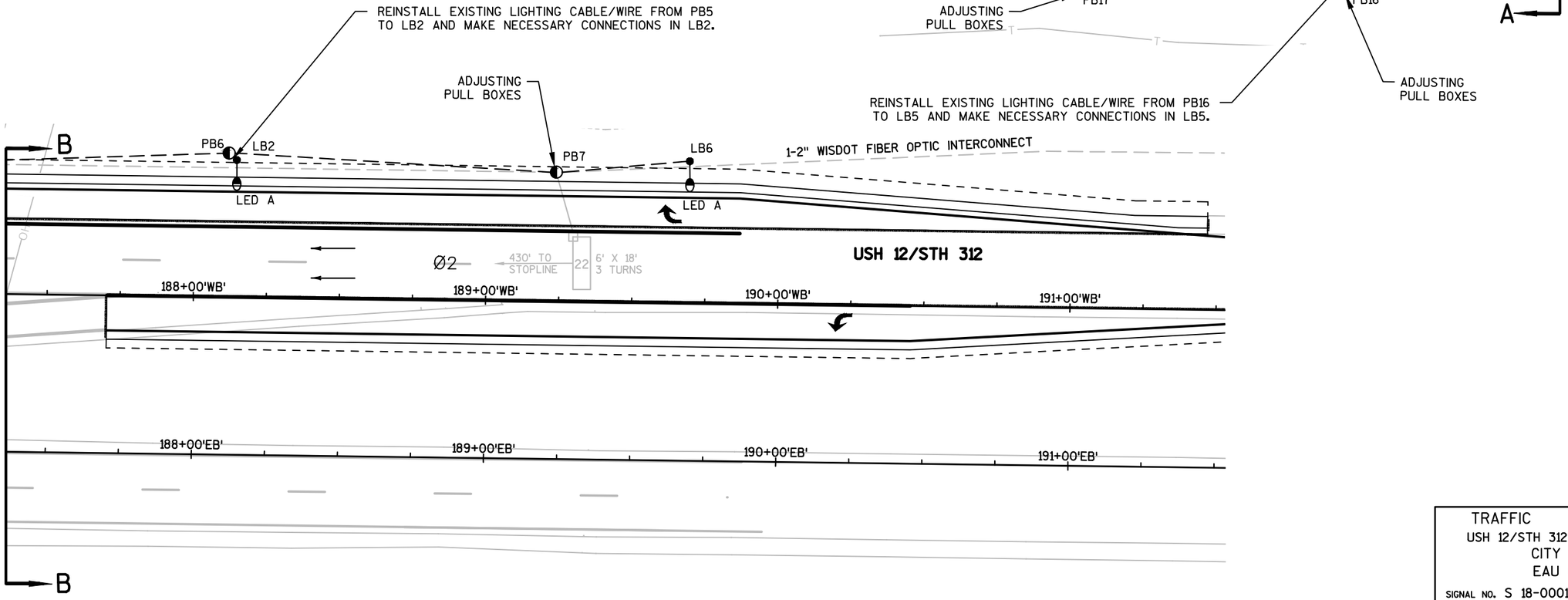

TRAFFIC CONTROL SIGNAL
USH 12/STH 312 & CTH EE/TOWN HALL RD
CITY OF EAU CLAIRE
EAU CLAIRE COUNTY

SIGNAL NO. S 18-0001

REGION CONTACT: DAVID FENSKE
DESIGNED BY: AYRES
REVISED BY: AECOM

PAGE 2 OF 3

PROJECT NO: 7090-00-04	HWY: USH 12/STH 312 & CTH EE	COUNTY: EAU CLAIRE	TRAFFIC SIGNAL PLAN	SCALE, FEET 0 20 40	SHEET 29	E

	HEAD NUMBERS	FLASH
Ø1	5,6,7	R
Ø2	8,9,10,11	R
Ø4	15,16,17	R
Ø5	12,13,14	R
Ø6	1,2,3,4	R
Ø8	20,21,22	R
Ø8P	81,82	-
OLA	18,19	R
OLC	23,24	R
OLE	5,6,7	-
OLG	12,13,14	-
OLJ	15,16,17	-
OLL	20,21,22	-
OLN	23,24	-
OLP	18,19	-

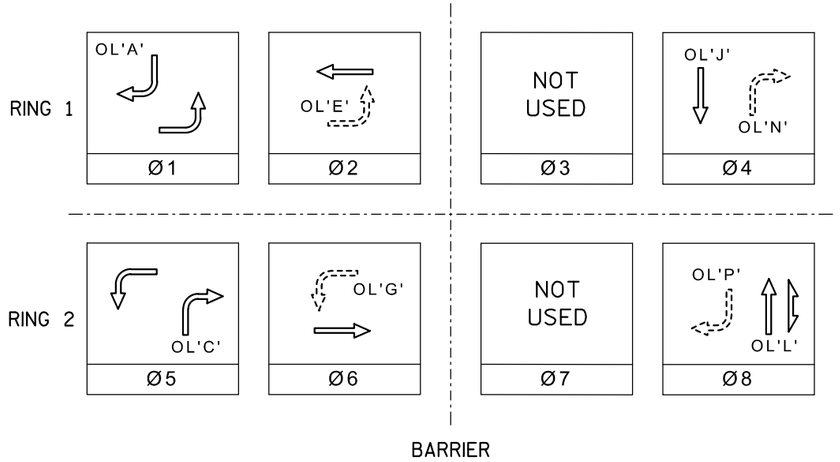

SPECIAL OVERLAPS

	PROTECTED	PERMISSIVE
OL'E'	1	2
OL'G'	5	6
OL'N'	OL'C'	OL'J'
OL'P'	OL'A'	OL'L'

OVERLAPS

O.L. "A" = Ø1 + Ø12
O.L. "C" = Ø5 + Ø16
O.L. "J" = Ø4 + Ø12
O.L. "L" = Ø8 + Ø16

N

CONTROLLER LOGIC

PHASE NUMBER	PHASE LOCKING	DUAL ENTRY W/Ø	PHASE RECALL	PHASE ACTIVE
1		6		X
2	X	6	MIN.	X
4		8		X
5		2		X
6	X	2	MIN.	X
8		4		X

GENERAL NOTES:

1. OL'A' PROTECTED PHASE TO TIME WITH Ø1 WHILE IN NORMAL OPERATIONS AND Ø4 (OL'J') WHEN THE SB (CHANNEL 5) EVP HAS BEEN ACTIVATED. OL'N' PERMISSIVE FYA TO TIME WHEN Ø4 AND Ø8 ARE TIMING CONCURRENTLY. OL'J' IS Ø4.
2. OL'C' PROTECTED PHASE TO TIME WITH Ø5 WHILE IN NORMAL OPERATIONS AND Ø8 (OL'L') WHEN THE NB (CHANNEL 6) EVP HAS BEEN ACTIVATED. OL'P' PERMISSIVE FYA TO TIME WHEN Ø4 AND Ø8 ARE TIMING CONCURRENTLY. OL'L' IS Ø8.
3. OMIT OL'N' PERMISSIVE PHASE WHEN Ø8 PEDESTRIAN PHASE ACTIVATED.
4. Ø12 IS A DUMMY PHASE COPY OF Ø4/OL'J'.
5. Ø16 IS A DUMMY PHASE COPY OF Ø8/OL'L'.
6. WHEN Ø4 AND Ø8 ARE TIMING CONCURRENTLY THEY SHALL TERMINATE TOGETHER DUE TO PERMISSIVE LEFT TURN CONFLICT.

TYPE OF INTERCONNECT/COMMUNICATION

NONE	
CLOSED LOOP	
TWISTED PAIR	
FIBER OPTIC*	
FIBER OPTIC (ETHERNET)	X
RADIO	
CELL MODEM	

TYPE OF COORDINATION

NONE	X
TBC	
TRAFFIC RESPONSIVE	
ADAPTIVE	
*LOCATION OF MASTER CONTROLER NUMBER	S -
SIGNAL SYSTEM NUMBER	SS-18-0142

TYPE OF LIGHTING

BY OTHER AGENCY	
IN TRAFFIC SIGNAL CABINET	X
IN SEPARATE DOT LIGHTING CABINET	

TYPE OF PRE-EMPT

NONE	
RAILROAD	
EMERGENCY VEHICLE	X
GTT	X
TOMAR	
HARDWARE	
OTHER	
LIFT BRIDGE	
QUEUE DETECTOR	

DETECTOR LOGIC

DETECTOR INPUT	3	1	7	5	11	9	15	13	19	17	23	21	27	25	31	29	DETECTOR INPUT
PLAN LOOP DETECTOR*(S)	11	21	41	43	45*	52	61	81	83	85*							PLAN LOOP DETECTOR*(S)
CALLED PHASE	1	2	4	4		5	6	8	8								CALLED PHASE
CALL OPTION	X	X	X	X		X	X	X	X								CALL OPTION
DELAY TIME			3"					3"									DELAY TIME
EXTENSION OPTION	X	X	X	X		X	X	X	X								EXTENSION OPTION
EXTEND TIME																	EXTEND TIME
USE ADDED INITIAL	X	X	X	X		X	X	X	X								USE ADDED INITIAL
CROSS SWITCH PHASE																	CROSS SWITCH PHASE

DETECTOR INPUT	4	2	8	6	12	10	16	14	20	18	24	22	28	26	32	30	DETECTOR INPUT
PLAN LOOP DETECTOR*(S)	12	22	42	44	51**	53	62	82	84								PLAN LOOP DETECTOR*(S)
CALLED PHASE	1	2	4	4		5	6	8	8								CALLED PHASE
CALL OPTION	X	X	X	X		X	X	X	X								CALL OPTION
DELAY TIME																	DELAY TIME
EXTENSION OPTION	X	X	X	X		X	X	X	X								EXTENSION OPTION
EXTEND TIME																	EXTEND TIME
USE ADDED INITIAL	X	X	X	X		X	X	X	X								USE ADDED INITIAL
CROSS SWITCH PHASE																	CROSS SWITCH PHASE

*LOOP NOT USED.
**LOOP ABANDONED - NOT USED.

EMERGENCY VEHICLE PREEMPTION SEQUENCE

EMERGENCY VEHICLE PREEMPTOR	A	B	C	D
PREEMPTION CHANNEL	3	4	5	6
MOVEMENT				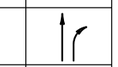
DIRECTION	WB	EB	SB	NB
PHASES	2+5	1+6	4 + OL'A' + OL'J'	16 + OL'C' + OL'L'

NOTE: FULL CLEARANCE AND MINIMUM GREEN INTERVAL SHALL ALWAYS BE PROVIDED

TRAFFIC CONTROL SIGNAL
USH 12/STH 312 & CTH EE/TOWN HALL RD
CITY OF EAU CLAIRE
EAU CLAIRE COUNTY

SIGNAL NO. S 18-0001 CONTROLLER TYPE: COBALT

REGION CONTACT: DAVID FENSKE
DESIGNED BY: AYRES
REVISED BY: AECOM

PAGE 3 OF 3

2

PROJECT ID:	7090-00-04
INTERSECTION:	USH 12/STH 312 & CTH EE

SIGNAL WIRE COLOR CODING	BLK-BLACK	RED-RED	GRN-GREEN
	WHT-WHITE	BLU-BLUE	ORG-ORANGE

DATE: Jul-19

CB1 TO	AWG 14 # OF COND.	HEAD NO.	SIGNAL INDICATION WIRE COLOR RED	YELLOW	GREEN	<RED>	<YELLOW>	<FLASH YEL>	<GREEN>	D/WALK	WALK	PED BUTTON	OTHER
SB1	7	18	RED				ORG	BLK	GRN				
SB2	12	15	RED	ORG	GRN								
		21	RED/BLK	ORG/BLK	GRN/BLK								
SB3	7	22	RED	ORG	GRN								
SB4	EXISTING	6	EXISTING										
		8	EXISTING										
SB5	12	7				RED/BLK	ORG/BLK	BLU/BLK	GRN/BLK				
		11	RED	ORG	GRN								
		PB (PED)										WHT/BLK	
SB6	EXISTING	12	EXISTING										
SB7	EXISTING	2	EXISTING										
		24	EXISTING										
SB8	EXISTING	3	EXISTING										
SB9	EXISTING	23	EXISTING										
SB10	12	16	RED	ORG	GRN								
		20	RED/BLK	ORG/BLK	GRN/BLK								
		81								BLK	BLU		
		PB (PED)										WHT/BLK	
SB11	EXISTING	17	EXISTING										
SB12	EXISTING	1	EXISTING										
		13	EXISTING										
SB13	EXISTING	4	EXISTING										
		14	EXISTING										
SB14	EXISTING	5	EXISTING										
SB15	EXISTING	9	EXISTING										
SB16	EXISTING	10	EXISTING										
SB17	7	19	RED				ORG	BLK	GRN				
SB18	5	82								RED	GRN		
		PB (PED)										BLK	

EQUIPMENT GROUNDING CONDUCTORS 10 AWG GRN XLP	
FROM	TO
CB1	SB1
SB1	SB2
SB2	SB3
SB3	SB18
SB18	SB4
SB14	SB17
SB17	SB15
SB16	CB1

EQUIPMENT GROUNDING CONDUCTORS 10 AWG GRN XLP	
FROM	TO
PB1	SB1
PB2	SB2
PB3	SB18
PB20	SB16

LIGHTING UF 12 AWG W/ GROUND	
FROM	TO
LB4	LB5
LB2	LB6

EMERGENCY VEHICLE PREEMPTION		
HEAD	FROM	TO
D	CB1	SB3

CAT-5E CABLE	
FROM	TO
CB1	SB6
CB1	SB17

NOTES:

1. USE WHITE CONDUCTOR IN THE SIGNAL CABLE AS THE GROUNDED CONDUCTOR FOR ALL TRAFFIC SIGNAL INDICATIONS.
2. ENSURE THE GROUNDED CONDUCTOR IN THE FEEDER CABLE AND THE POLE CABLES ARE BOTH 18" LONGER THAN THE UNGROUNDED CONDUCTORS.
3. AT THE SIGNAL BASES, CONNECT ONE TERMINAL FROM THE PEDESTRIAN PUSH BUTTONS TO THE COLOR INDICATED IN THE CHART. CONNECT THE OTHER TERMINAL TO THE GROUNDED CONDUCTOR.
4. REESTABLISH THE EXISTING EQUIPMENT GROUNDING CONDUCTOR FROM BASE TO BASE FOR ALL SIGNAL BASES, IN ACCORDANCE WITH THE WISCONSIN ELECTRIC CODE.

USH 12/STH 312 & CTH EE
EAU CLAIRE COUNTY

CONTROLLER TYPE: COBALT

SIGNAL NO: S 18–0001 CABINET TYPE: TS2

DATE: JULY 2019 PAGE NO. 1 OF 1

LEGEND

CW	MARKING CROSSWALK EPOXY TRANSVERSE LINE 6-INCH, WHITE
SL	MARKING STOP LINE EPOXY 18-INCH, WHITE
A1	MARKING ARROW EPOXY, TYPE 1, WHITE
A2	MARKING ARROW EPOXY, TYPE 2, WHITE

N

NEW

REMOVE

BEGIN LEFT TURN LANE

MOVE
FROM STATION
180+00'EB'

PAVEMENT MARKING, LANE EDGELINE,
4-INCH, EPOXY, YELLOW

PAVEMENT MARKING, LANE EDGELINE,
8-INCH, EPOXY, WHITE

177+00'EB'

178+00'EB'

179+00'EB'

+33.31'EB'
0.00'

+13.41'EB'
-12.00'

+13.41'EB'
0.00'

A2

12'

12'

12'

12'

REMOVING PAVEMENT MARKING
STA. 176+33.31'EB' TO STA. 180+00.00'EB'

USH 12 EB

PAVEMENT MARKING, LANE EDGELINE,
8-INCH, EPOXY, WHITE

REMOVING PAVEMENT MARKING
STA. 177+39.73'EB' TO STA. 180+50.00'EB'

+39.73'EB'
24.00'

+19.56'EB'
24.00'

+19.66'EB'
36.00'

NEW

REMOVE

N TOWN HALL RD

MOVE
FROM STATION
179+90'EB'

PAVEMENT MARKING, LANE EDGELINE,
4-INCH, EPOXY, WHITE

COUNTY EE

MOVE

PROJECT NO: 7090-00-74	HWY: USH 12	COUNTY: EAU CLAIRE	PAVEMENT MARKING: USH 12 EB TURN LANES	SHEET 32	E

LEGEND

CW	MARKING CROSSWALK EPOXY TRANSVERSE LINE 6-INCH, WHITE
SL	MARKING STOP LINE EPOXY 18-INCH, WHITE
A1	MARKING ARROW EPOXY, TYPE 1, WHITE
A2	MARKING ARROW EPOXY, TYPE 2, WHITE

N

USH 12 WB

180+00'WB'

181+00'WB'

182+00'WB'

PAVEMENT MARKING, LANE EDGELINE,
4-INCH, EPOXY, YELLOW

PAVEMENT MARKING, LANE EDGELINE,
8-INCH, EPOXY, WHITE

12'

12'

12'

12'

180+00'EB'

181+00'EB'

+38.41'EB'
-12.00'

+38.41'EB'
0.00'

182+00'EB'

REMOVING PAVEMENT MARKING
STA. 176+33.31'EB' TO STA. 180+00.00'EB'

USH 12 EB

REMOVING PAVEMENT MARKING
STA. 177+39.73'EB' TO STA. 180+50.00'EB'

A2

+34.59'EB'
24.00'

+34.59'EB'
36.00'

PAVEMENT MARKING, LANE EDGELINE,
8-INCH, EPOXY, WHITE

PAVEMENT MARKING, LANE EDGELINE,
4-INCH, EPOXY, WHITE

COUNTY
EE

TO REMAIN

PROJECT NO: 7090-00-74	HWY: USH 12	COUNTY: EAU CLAIRE	PAVEMENT MARKING: USH 12 EB TURN LANES	SHEET 33 E

MATCHLINE STA 30+25'EE'

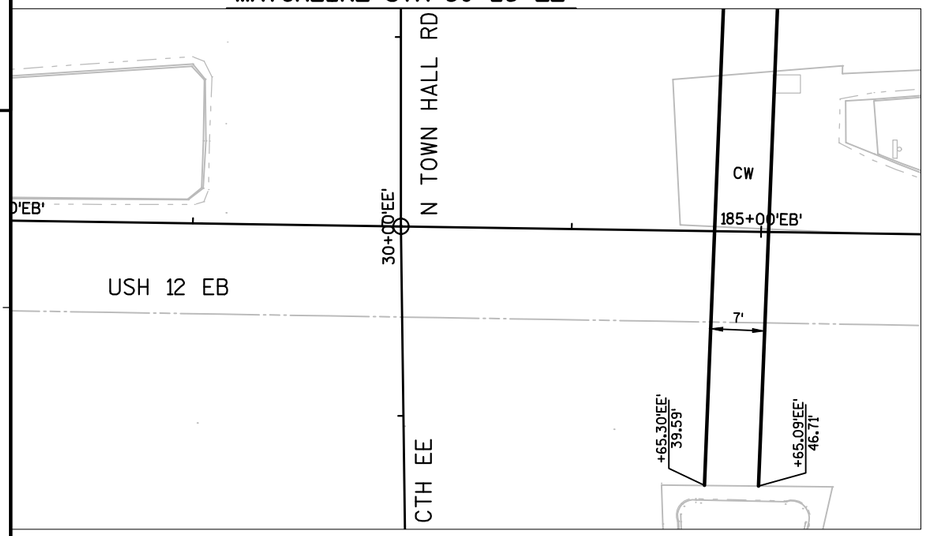

MATCHLINE STA 32+00'EE'

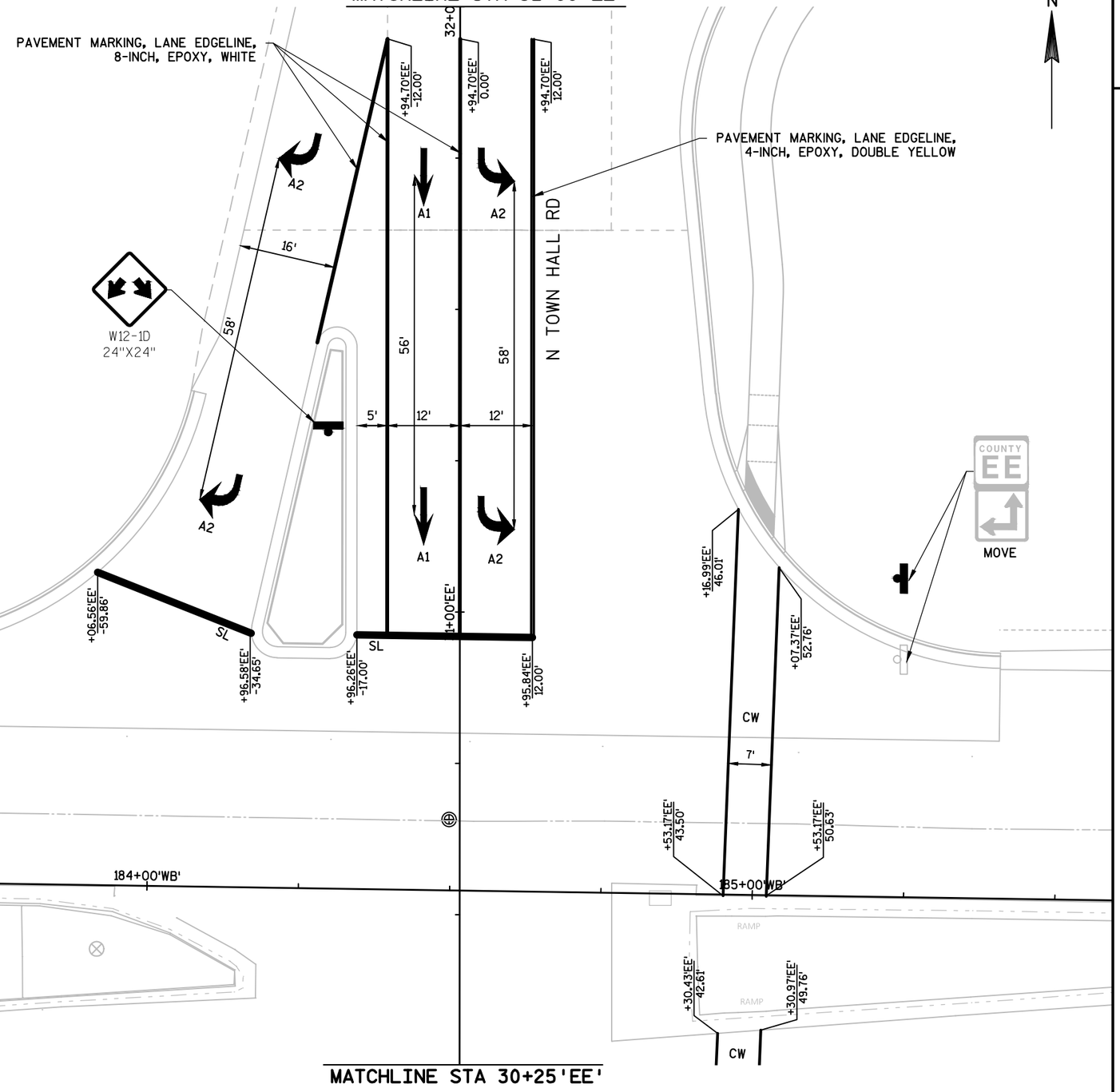

MATCHLINE STA 30+25'EE'

LEGEND

CW	MARKING CROSSWALK EPOXY TRANSVERSE LINE 6-INCH, WHITE
SL	MARKING STOP LINE EPOXY 18-INCH, WHITE
A1	MARKING ARROW EPOXY, TYPE 1, WHITE
A2	MARKING ARROW EPOXY, TYPE 2, WHITE

2

PROJECT NO: 7090-00-74	HWY: USH 12	COUNTY: EAU CLAIRE	PAVEMENT MARKING: USH 12 / N TOWN HALL RD	SHEET 34	E

FILE NAME : \\USMSN1FS001\PROD\DATA\PROJECTS\60563458 - USH 12 CTH EE INTERSECTION\900_WORK\910_CAD\20-SHEETS\024501_PM.DWG PLOT DATE : 4/29/2019 12:19 PM PLOT BY : CZECH, ANDREW PLOT NAME : PLOT SCALE : 1" = 20'_XREF
WISDOT/CADDS SHEET 42

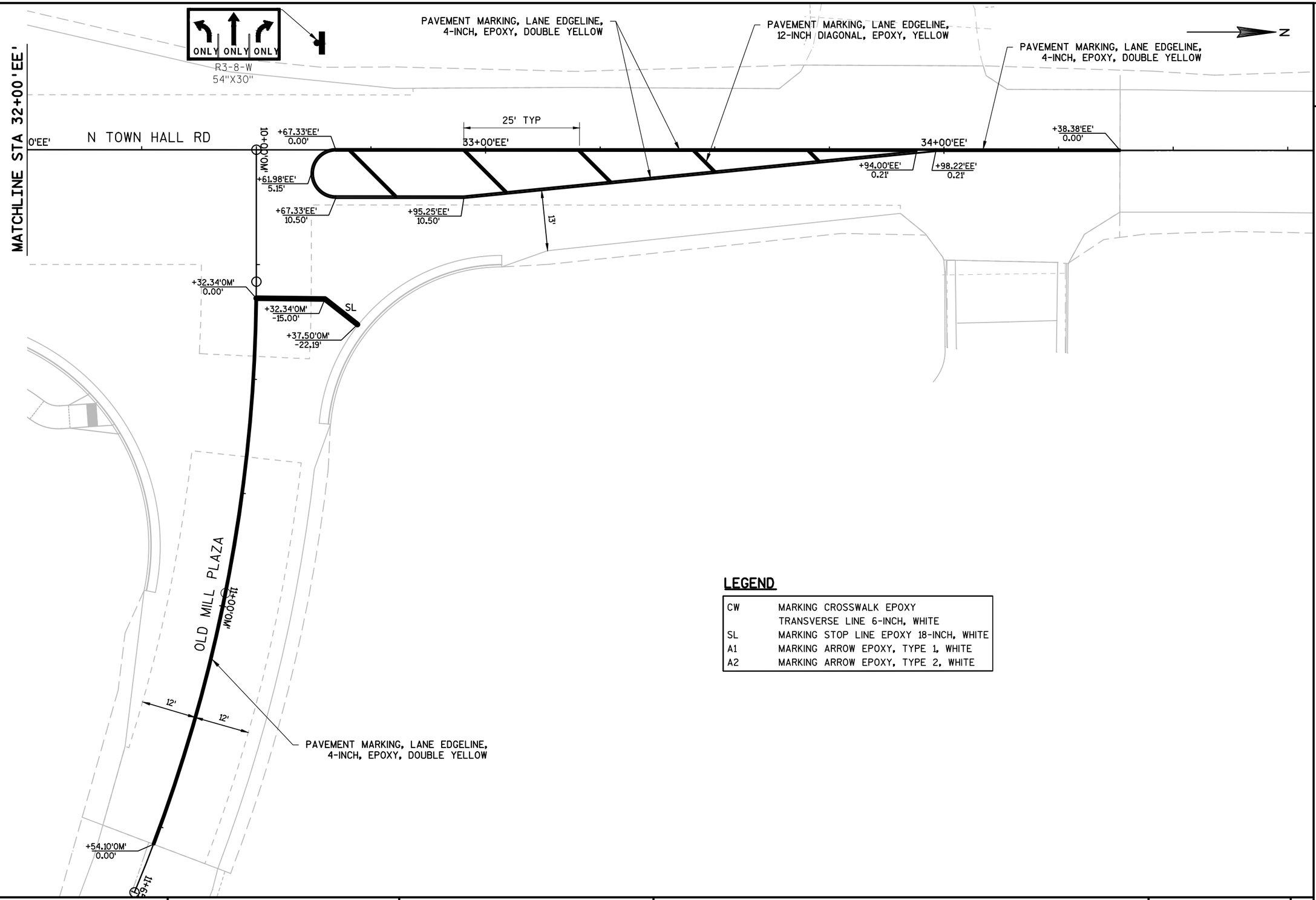

LEGEND

CW	MARKING CROSSWALK EPOXY TRANSVERSE LINE 6-INCH, WHITE
SL	MARKING STOP LINE EPOXY 18-INCH, WHITE
A1	MARKING ARROW EPOXY, TYPE 1, WHITE
A2	MARKING ARROW EPOXY, TYPE 2, WHITE

PROJECT NO: 7090-00-74	HWY: USH 12	COUNTY: EAU CLAIRE	PAVEMENT MARKING: N TOWN HALL RD / OLD MILL PLAZA	SHEET 35	E

2

LEGEND

CW	MARKING CROSSWALK EPOXY TRANSVERSE LINE 6-INCH, WHITE
SL	MARKING STOP LINE EPOXY 18-INCH, WHITE
A1	MARKING ARROW EPOXY, TYPE 1, WHITE
A2	MARKING ARROW EPOXY, TYPE 2, WHITE

N

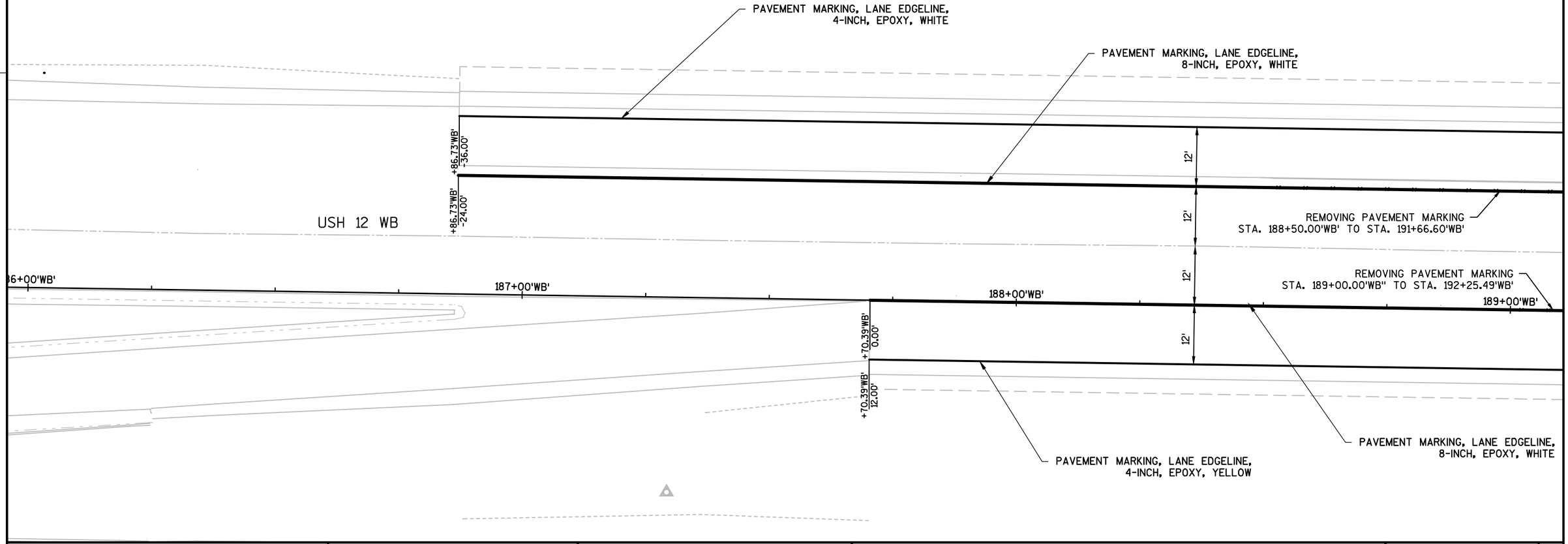

PROJECT NO: 7090-00-74	HWY: USH 12	COUNTY: EAU CLAIRE	PAVEMENT MARKING: USH 12 WB TURN LANES	SHEET 36	E

2

2

LEGEND

CW	MARKING CROSSWALK EPOXY TRANSVERSE LINE 6-INCH, WHITE
SL	MARKING STOP LINE EPOXY 18-INCH, WHITE
A1	MARKING ARROW EPOXY, TYPE 1, WHITE
A2	MARKING ARROW EPOXY, TYPE 2, WHITE

N

PAVEMENT MARKING, LANE EDGELINE,
8-INCH, EPOXY, WHITE

PAVEMENT MARKING, LANE EDGELINE,
4-INCH, EPOXY, WHITE

N TOWN HALL RD

MOVE
FROM STATION
190+00'WB'

12'
12'
12'
12'

A2

+86.66'WB'
+36.00'

+86.73'WB'
-24.00'

USH 12 WB

REMOVING PAVEMENT MARKING
STA. 188+50.00'WB' TO STA. 191+66.60'WB'

+66.60'WB'
-24.00'

REMOVING PAVEMENT MARKING
STA. 189+00.00'WB' TO STA. 192+25.49'WB'

190+00'WB'

191+00'WB'

192+00'WB'

A2

+45.39'WB'
0.00'

+45.39'WB'
12.00'

+25.49'WB'
0.00'

BEGIN
LEFT
TURN
LANE

MOVE
FROM STATION
189+00'WB'

PAVEMENT MARKING, LANE EDGELINE,
8-INCH, EPOXY, WHITE

PAVEMENT MARKING, LANE EDGELINE,
4-INCH, EPOXY, YELLOW

PROJECT NO: 7090-00-74	HWY: USH 12	COUNTY: EAU CLAIRE	PAVEMENT MARKING: USH 12 WB TURN LANES	SHEET 37	E

NOTE: ROADWAY LINEWORK OUTSIDE OF SURVEY LIMITS IS APPROXIMATE ONLY
SURVEY LIMITS FROM STA 176+30 TO STA 192+95

LEGEND: TRAFFIC CONTROL SYMBOLS

- TRAFFIC CONTROL BARRICADES TYPE III WITH/WITHOUT ATTACHED SIGN
- TRAFFIC CONTROL DRUM WITH/WITHOUT WARNING LIGHTS TYPE C
- TRAFFIC CONTROL FLASHING ARROW BOARD
- SIGN ON PERMANENT SUPPORT (MIN. 5' MOUNTING HEIGHT)
- SIGN ON TEMPORARY SUPPORT (MIN. 5' MOUNTING HEIGHT)
- WORK ZONE
- DIRECTION OF TRAFFIC

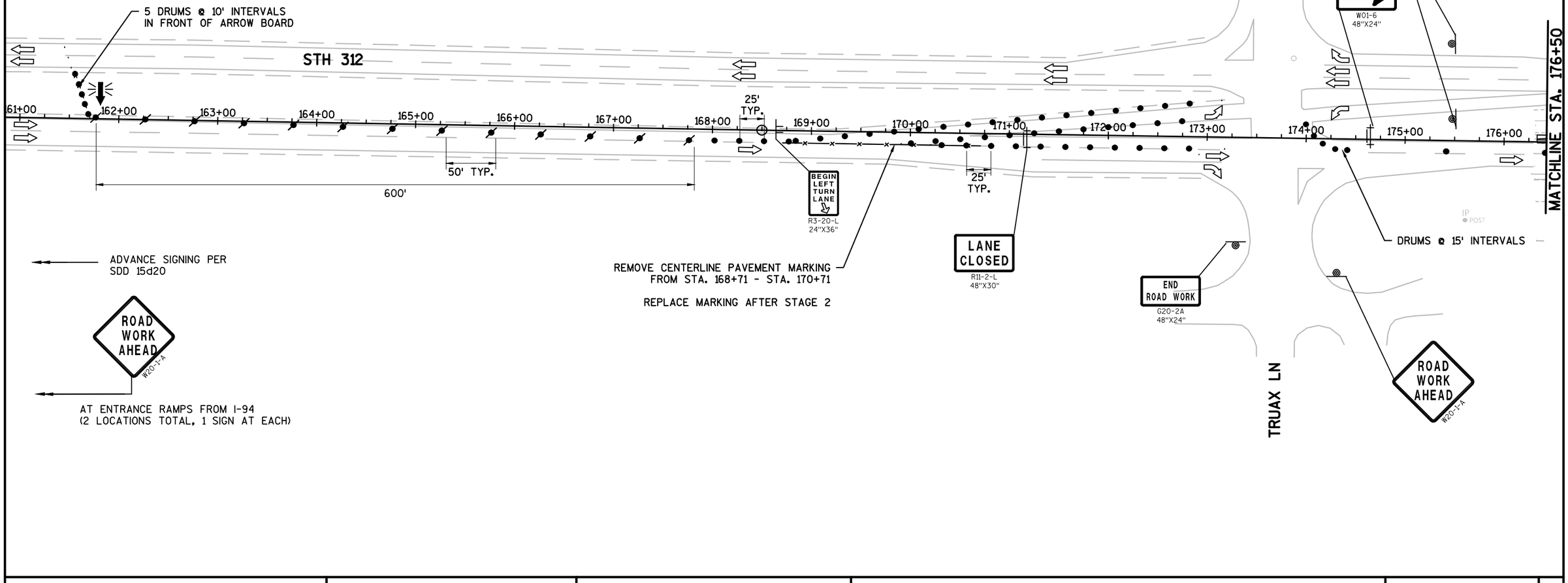

PROJECT NO:7090-00-74	HWY:USH 12	COUNTY:EAU CLAIRE	TRAFFIC CONTROL - STAGE 1	SHEET 38	E

NOTE: ROADWAY LINEWORK OUTSIDE OF SURVEY LIMITS IS APPROXIMATE ONLY
SURVEY LIMITS FROM STA 176+30 TO STA 192+95

LEGEND: TRAFFIC CONTROL SYMBOLS

- TRAFFIC CONTROL BARRICADES TYPE III WITH/WITHOUT ATTACHED SIGN
- TRAFFIC CONTROL DRUM WITH/WITHOUT WARNING LIGHTS TYPE C
- TRAFFIC CONTROL FLASHING ARROW BOARD
- SIGN ON PERMANENT SUPPORT (MIN. 5' MOUNTING HEIGHT)
- SIGN ON TEMPORARY SUPPORT (MIN. 5' MOUNTING HEIGHT)
- WORK ZONE
- DIRECTION OF TRAFFIC

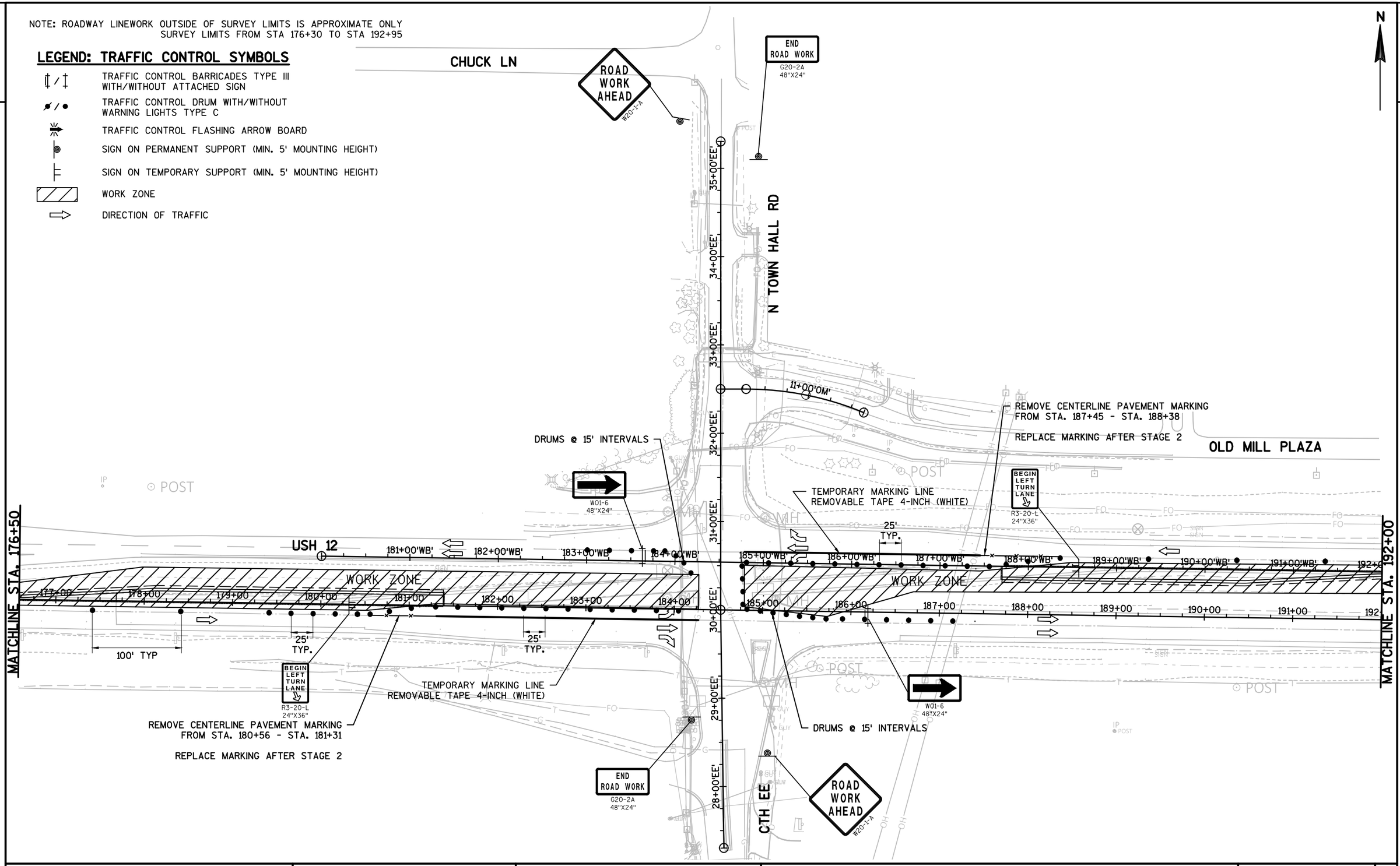

PROJECT NO:7090-00-74	HWY:USH 12	COUNTY:EAU CLAIRE	TRAFFIC CONTROL - STAGE 1	SHEET 39	E

FILE NAME : \\USMSN1FS001\PROD\DATA\PROJECTS\60563458 - USH 12 CTH EE INTERSECTION\900_WORK\910_CAD\20-SHEETS\025001_TC.DWG
LAYOUT NAME - ****
PLOT DATE : 7/19/2019 1:24 PM PLOT BY : CZECH, ANDREW PLOT NAME : PLOT SCALE : 1 IN:100 FT

WISDOT/CADDS SHEET 42

NOTE: ROADWAY LINEWORK OUTSIDE OF SURVEY LIMITS IS APPROXIMATE ONLY
SURVEY LIMITS FROM STA 176+30 TO STA 192+95

2

N

MILL RUN RD

OLD MILL PLAZA

ROAD WORK AHEAD
W20-1A

DRUMS @ 15' INTERVALS

END ROAD WORK
G20-2A
48"X24"

W01-6
48"X24"

100' TYP.

25' TYP.

USH 12

MATCHLINE STA. 192+00

MATCHLINE STA. 207+00

192+00 193+00 194+00 195+00 196+00 197+00 198+00 199+00 200+00 201+00 202+00 203+00 204+00 205+00 206+00 207+00

193+00'WB' 194+00'WB'

END ROAD WORK
G20-2A
48"X24"

END ROAD WORK
G20-2A
48"X24"

MILL RUN RD

ROAD WORK AHEAD
W20-1A

LEGEND: TRAFFIC CONTROL SYMBOLS

- TRAFFIC CONTROL BARRICADES TYPE III WITH/WITHOUT ATTACHED SIGN
- TRAFFIC CONTROL DRUM WITH/WITHOUT WARNING LIGHTS TYPE C
- TRAFFIC CONTROL FLASHING ARROW BOARD
- SIGN ON PERMANENT SUPPORT (MIN. 5' MOUNTING HEIGHT)
- SIGN ON TEMPORARY SUPPORT (MIN. 5' MOUNTING HEIGHT)
- WORK ZONE
- DIRECTION OF TRAFFIC

PROJECT NO:7090-00-74	HWY:USH 12	COUNTY:EAU CLAIRE	TRAFFIC CONTROL - STAGE 1	SHEET 40	E

NOTE: ROADWAY LINEWORK OUTSIDE OF SURVEY LIMITS IS APPROXIMATE ONLY
SURVEY LIMITS FROM STA 176+30 TO STA 192+95

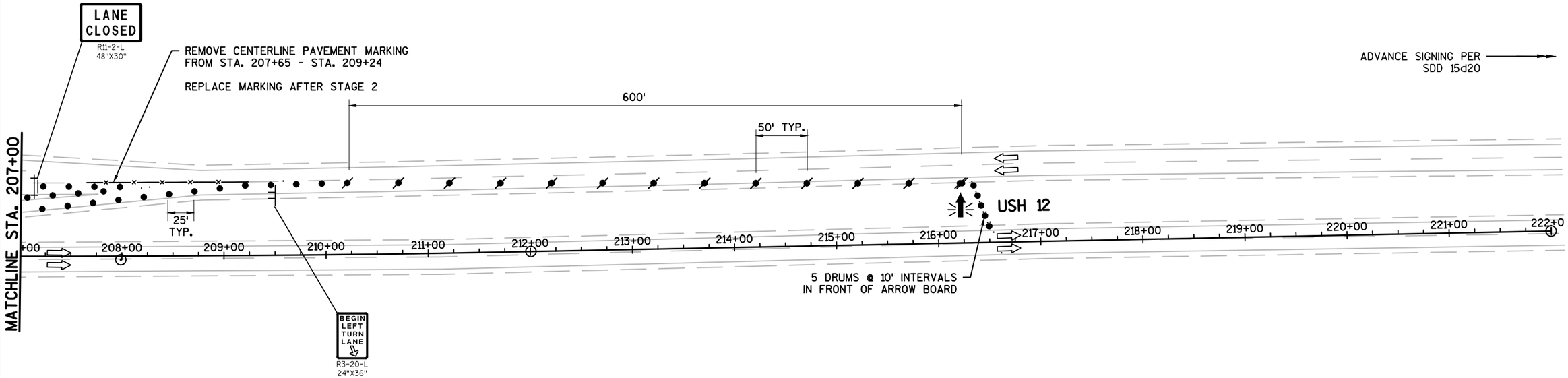

LEGEND: TRAFFIC CONTROL SYMBOLS

- TRAFFIC CONTROL BARRICADES TYPE III WITH/WITHOUT ATTACHED SIGN
- TRAFFIC CONTROL DRUM WITH/WITHOUT WARNING LIGHTS TYPE C
- TRAFFIC CONTROL FLASHING ARROW BOARD
- SIGN ON PERMANENT SUPPORT (MIN. 5' MOUNTING HEIGHT)
- SIGN ON TEMPORARY SUPPORT (MIN. 5' MOUNTING HEIGHT)
- WORK ZONE
- DIRECTION OF TRAFFIC

PROJECT NO:7090-00-74	HWY:USH 12	COUNTY:EAU CLAIRE	TRAFFIC CONTROL - STAGE 1	SHEET 41	E

NOTE: ROADWAY LINEWORK OUTSIDE OF SURVEY LIMITS IS APPROXIMATE ONLY
SURVEY LIMITS FROM STA 176+30 TO STA 192+95

LEGEND: TRAFFIC CONTROL SYMBOLS

- TRAFFIC CONTROL BARRICADES TYPE III WITH/WITHOUT ATTACHED SIGN
- TRAFFIC CONTROL DRUM WITH/WITHOUT WARNING LIGHTS TYPE C
- TRAFFIC CONTROL FLASHING ARROW BOARD
- SIGN ON PERMANENT SUPPORT (MIN. 5' MOUNTING HEIGHT)
- SIGN ON TEMPORARY SUPPORT (MIN. 5' MOUNTING HEIGHT)
- WORK ZONE
- DIRECTION OF TRAFFIC

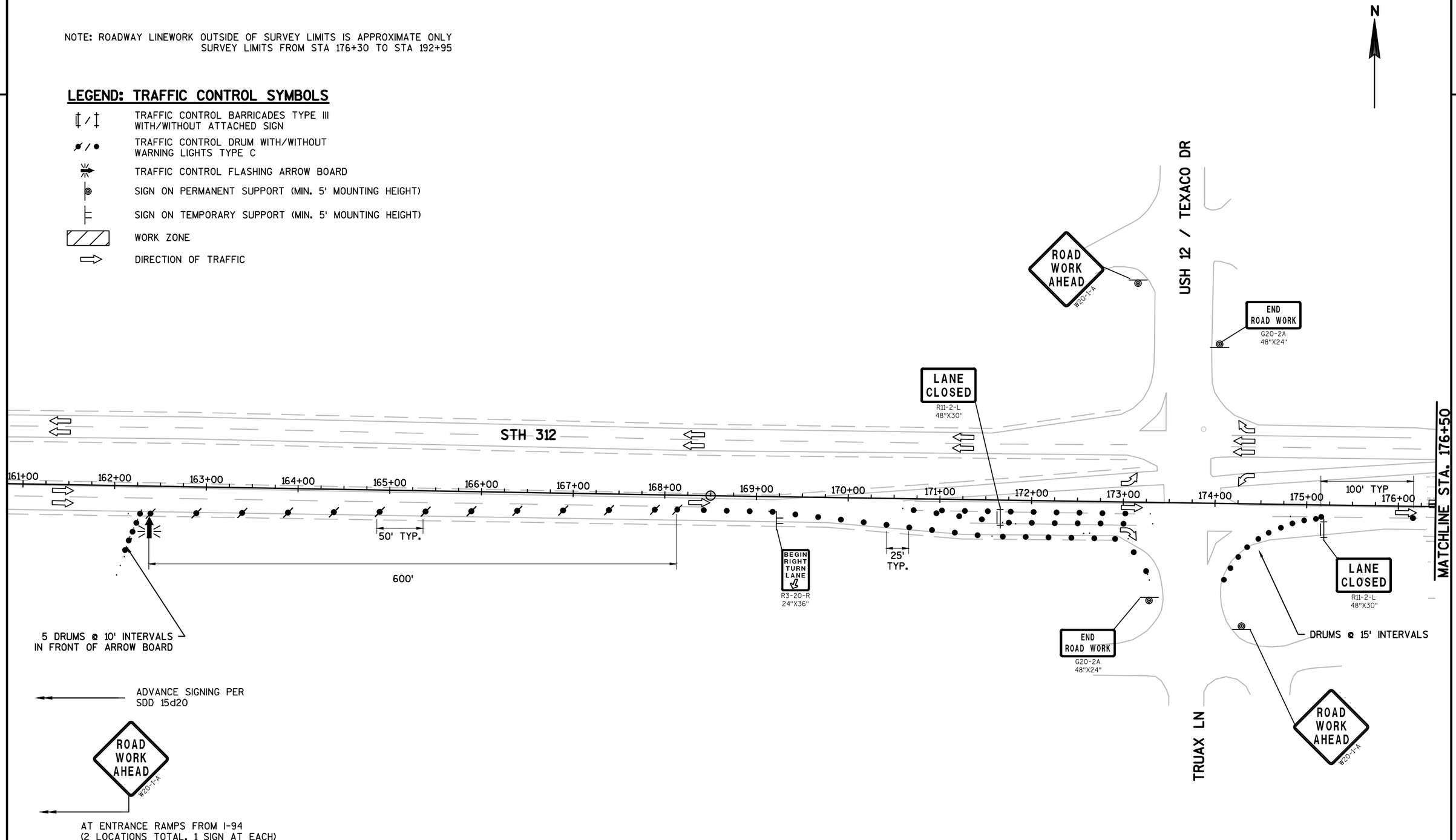

PROJECT NO:7090-00-74	HWY:USH 12	COUNTY:EAU CLAIRE	TRAFFIC CONTROL - STAGE 2	SHEET 42	E

NOTE: ROADWAY LINEWORK OUTSIDE OF SURVEY LIMITS IS APPROXIMATE ONLY
SURVEY LIMITS FROM STA 176+30 TO STA 192+95

LEGEND: TRAFFIC CONTROL SYMBOLS

- TRAFFIC CONTROL BARRICADES TYPE III WITH/WITHOUT ATTACHED SIGN
- TRAFFIC CONTROL DRUM WITH/WITHOUT WARNING LIGHTS TYPE C
- TRAFFIC CONTROL FLASHING ARROW BOARD
- SIGN ON PERMANENT SUPPORT (MIN. 5' MOUNTING HEIGHT)
- SIGN ON TEMPORARY SUPPORT (MIN. 5' MOUNTING HEIGHT)
- WORK ZONE
- DIRECTION OF TRAFFIC

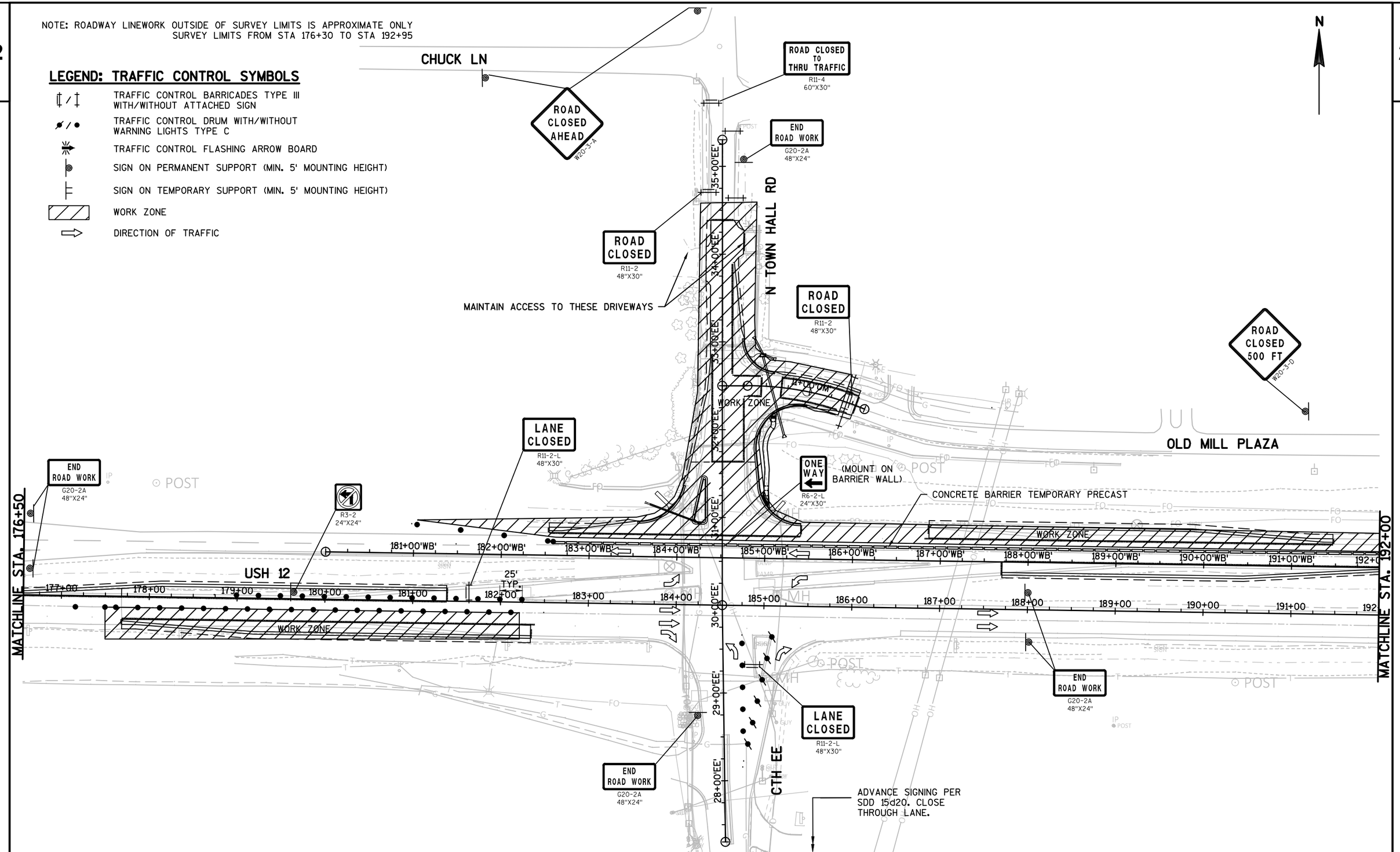

PROJECT NO:7090-00-74	HWY:USH 12	COUNTY:EAU CLAIRE	TRAFFIC CONTROL - STAGE 2	SHEET 43	E

NOTE: ROADWAY LINEWORK OUTSIDE OF SURVEY LIMITS IS APPROXIMATE ONLY
SURVEY LIMITS FROM STA 176+30 TO STA 192+95

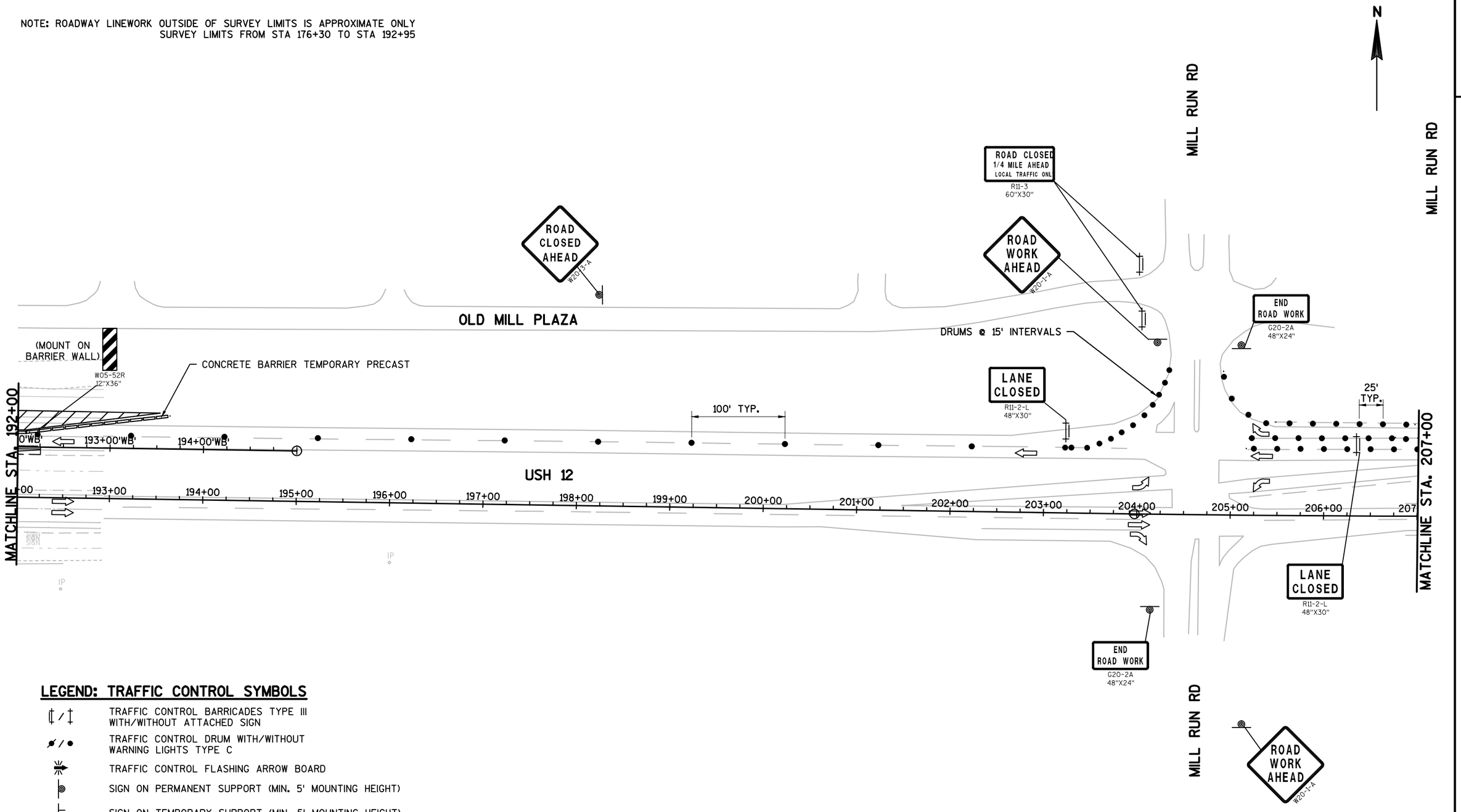

LEGEND: TRAFFIC CONTROL SYMBOLS

- TRAFFIC CONTROL BARRICADES TYPE III WITH/WITHOUT ATTACHED SIGN
- TRAFFIC CONTROL DRUM WITH/WITHOUT WARNING LIGHTS TYPE C
- TRAFFIC CONTROL FLASHING ARROW BOARD
- SIGN ON PERMANENT SUPPORT (MIN. 5' MOUNTING HEIGHT)
- SIGN ON TEMPORARY SUPPORT (MIN. 5' MOUNTING HEIGHT)
- WORK ZONE
- DIRECTION OF TRAFFIC

PROJECT NO:7090-00-74	HWY:USH 12	COUNTY:EAU CLAIRE	TRAFFIC CONTROL - STAGE 2	SHEET 44	E

NOTE: ROADWAY LINEWORK OUTSIDE OF SURVEY LIMITS IS APPROXIMATE ONLY
SURVEY LIMITS FROM STA 176+30 TO STA 192+95

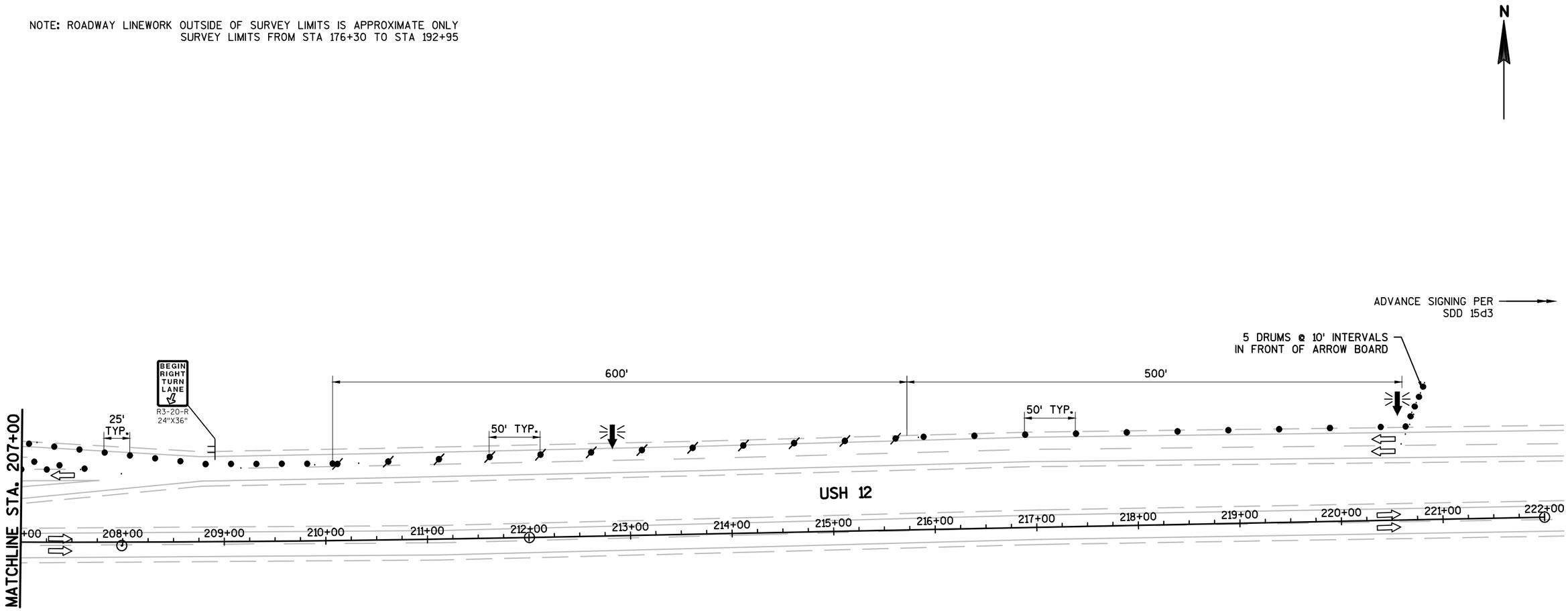

LEGEND: TRAFFIC CONTROL SYMBOLS

- TRAFFIC CONTROL BARRICADES TYPE III WITH/WITHOUT ATTACHED SIGN
- TRAFFIC CONTROL DRUM WITH/WITHOUT WARNING LIGHTS TYPE C
- TRAFFIC CONTROL FLASHING ARROW BOARD
- SIGN ON PERMANENT SUPPORT (MIN. 5' MOUNTING HEIGHT)
- SIGN ON TEMPORARY SUPPORT (MIN. 5' MOUNTING HEIGHT)
- WORK ZONE
- DIRECTION OF TRAFFIC

2

N

N TOWN HALL RD

BP: 180+00.00'WB'

EP: 35+30.27'EE'

NO° 01' 44"E
530.27'

S89° 08' 35"E
1500.00'

USH 12 WB

EP: 195+00.00'WB'

153'EB'
160'EB'
170'EB'
180'EB'
180'WB'
190'WB'
195'WB'
190'EB'
200'EB'
210'EB'

S89° 00' 27"E
1550.00'

S89° 08' 35"E
3547.52'

CURVE 1

N88° 50' 57"E
999.42'

220'EB'

PI: 30+00.00'EE'

NO° 47' 09"W
269.73'

BP: 27+30.27'EE'

USH 12 EB

PI

BP: 153+00.00'EB'

PI: 168+50.00'EB'

PC: 203+97.52'EB'

PT: 212+00.59'EB'

EP: 222+00.01'EB'

CTH EE

T 27 N
4 3
9 1.0
R 1.0 W

Y = 290495.297
X = 315983.798

CURVE 1

PI STA = 207+99.09'EB'
Y = 290394.450
X = 318331.914
DELTA = 2°00'28"
D = 0°15'00"
T = 401.58'
L = 803.07'
R = 22918.31'
PC STA = 203+97.52'EB'
Y = 290400.456
X = 317930.384
PT STA = 212+00.59'EB'
Y = 290402.516
X = 318733.408

PROJECT NO: 7090-00-74	HWY: USH 12	COUNTY: EAU CLAIRE	ALIGNMENT DIAGRAM	SHEET 46	E

CURVE 2

PI STA = 10+97.97'0M'
Y = 290679.493
X = 316083.632
DELTA = 22°32'38"
D = 16°30'00"
T = 69.21'
L = 136.63'
R = 347.25'
PC STA = 10+28.76'0M'
Y = 290679.529
X = 316014.422
PT STA = 11+65.39'0M'
Y = 290652.924
X = 316147.540

CURVE 3

PI STA = 10+36.73'NE'
Y = 290696.344
X = 316008.670
DELTA = 85°06'57"
D = 143°14'22"
T = 36.73'
L = 59.42'
R = 40.00'
PC STA = 10+00.00'NE'
Y = 290693.198
X = 316045.263
PT STA = 10+59.42'NE'
Y = 290733.071
X = 316008.689

CURVE 4

PI STA = 10+44.76'E'
Y = 290520.887
X = 316030.131
DELTA = 83°39'54"
D = 114°35'30"
T = 44.76'
L = 73.01'
R = 50.00'
PC STA = 10+00.00'E'
Y = 290520.218
X = 316074.882
PT STA = 10+73.01'E'
Y = 290565.439
X = 316025.858

CURVE 5

PI STA = 11+79.45'E'
Y = 290671.396
X = 316015.697
DELTA = 107°16'37"
D = 114°35'30"
T = 67.91'
L = 93.62'
R = 50.00'
PC STA = 11+11.54'E'
Y = 290603.792
X = 316022.180
PT STA = 12+05.16'E'
Y = 290657.509
X = 316082.175

CURVE 6

PI STA = 10+44.40'NW'
Y = 290522.330
X = 315933.627
DELTA = 77°49'41"
D = 104°10'27"
T = 44.40'
L = 74.71'
R = 55.00'
PC STA = 10+00.00'NW'
Y = 290565.589
X = 315943.637
PT STA = 10+74.71'NW'
Y = 290522.994
X = 315889.231

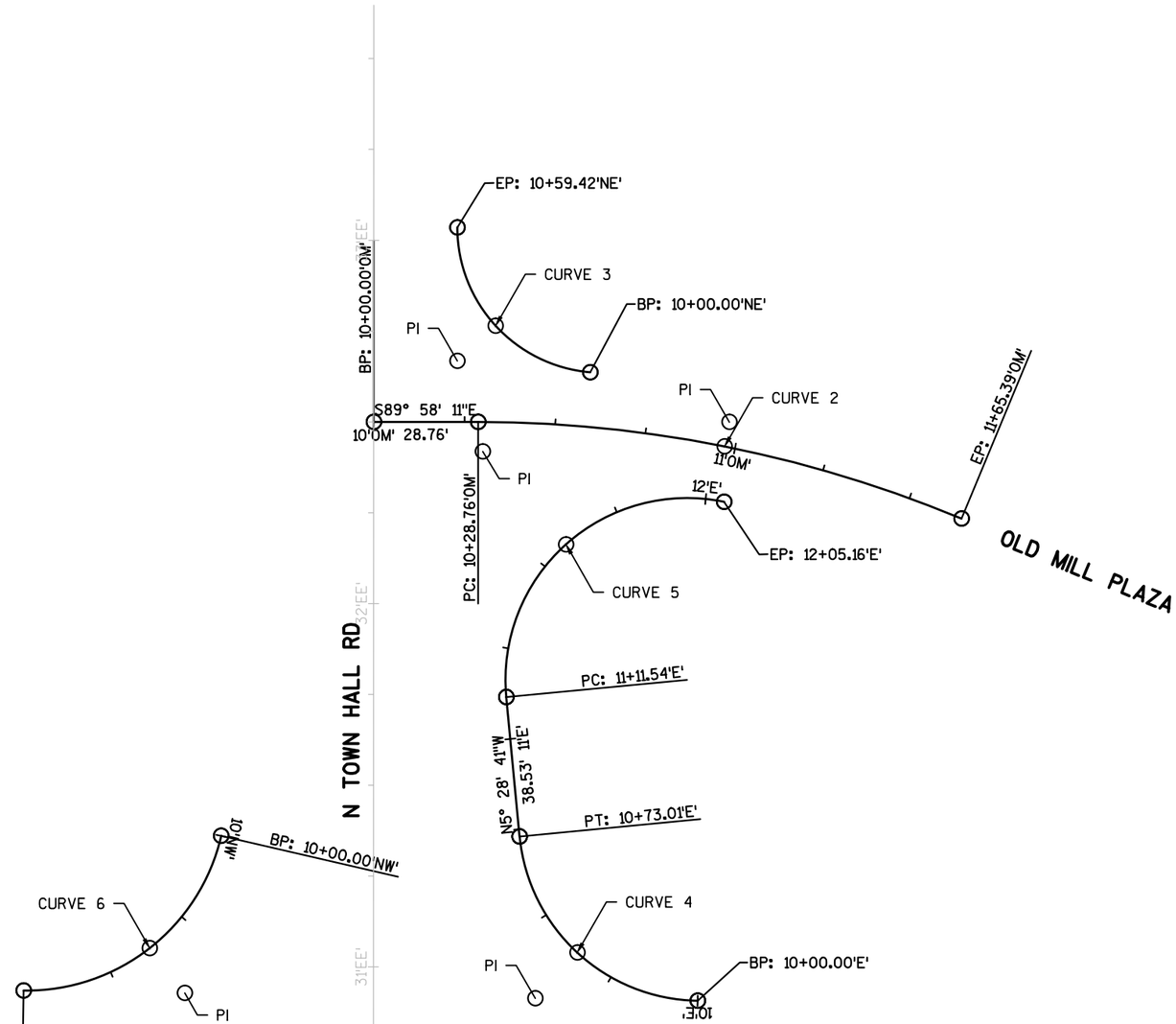

NOTE: 'EE' ALIGNMENT FOR REFERENCE ONLY

PROJECT NO: 7090-00-74	HWY: USH 12	COUNTY: EAU CLAIRE	ALIGNMENT DIAGRAM	SHEET 47	E

7090-00-74

Line	Item	Item Description	Unit	Total	Qty
0002	201.0105	Clearing	STA	2.000	2.000
0004	201.0205	Grubbing	STA	2.000	2.000
0006	203.0100	Removing Small Pipe Culverts	EACH	1.000	1.000
0008	204.0100	Removing Pavement	SY	1,415.000	1,415.000
0010	204.0120	Removing Asphaltic Surface Milling	SY	1,265.000	1,265.000
0012	204.0150	Removing Curb & Gutter	LF	200.000	200.000
0014	204.0195	Removing Concrete Bases	EACH	8.000	8.000
0016	205.0100	Excavation Common	CY	2,848.000	2,848.000
0018	208.1100	Select Borrow	CY	371.000	371.000
0020	213.0100	Finishing Roadway (project) 01. 7090-00-74	EACH	1.000	1.000
0022	305.0110	Base Aggregate Dense 3/4-Inch	TON	275.000	275.000
0024	305.0120	Base Aggregate Dense 1 1/4-Inch	TON	2,825.000	2,825.000
0026	415.0090	Concrete Pavement 9-Inch	SY	3,105.000	3,105.000
0028	416.0610	Drilled Tie Bars	EACH	868.000	868.000
0030	416.0620	Drilled Dowel Bars	EACH	50.000	50.000
0032	455.0605	Tack Coat	GAL	135.000	135.000
0034	465.0105	Asphaltic Surface	TON	385.000	385.000
0036	465.0315	Asphaltic Flumes	SY	27.000	27.000
0038	522.1012	Apron Endwalls for Culvert Pipe Reinforced Concrete 12-Inch	EACH	1.000	1.000
0040	522.1018	Apron Endwalls for Culvert Pipe Reinforced Concrete 18-Inch	EACH	2.000	2.000
0042	522.1021	Apron Endwalls for Culvert Pipe Reinforced Concrete 21-Inch	EACH	1.000	1.000
0044	601.0409	Concrete Curb & Gutter 30-Inch Type A	LF	175.000	175.000
0046	601.0411	Concrete Curb & Gutter 30-Inch Type D	LF	165.000	165.000
0048	601.0413	Concrete Curb & Gutter 6-Inch Sloped 30-Inch Type G	LF	128.000	128.000
0050	602.0410	Concrete Sidewalk 5-Inch	SF	905.000	905.000
0052	602.0515	Curb Ramp Detectable Warning Field Natural Patina	SF	10.000	10.000
0054	602.0605	Curb Ramp Detectable Warning Field Radial Yellow	SF	20.000	20.000
0056	603.8000	Concrete Barrier Temporary Precast Delivered	LF	1,125.000	1,125.000
0058	603.8125	Concrete Barrier Temporary Precast Installed	LF	1,125.000	1,125.000
0060	606.0200	Riprap Medium	CY	9.000	9.000
0062	608.0218	Storm Sewer Pipe Reinforced Concrete Class II 18-Inch	LF	30.000	30.000
0064	608.0421	Storm Sewer Pipe Reinforced Concrete Class IV 21-Inch	LF	92.000	92.000
0066	608.0512	Storm Sewer Pipe Reinforced Concrete Class V 12-Inch	LF	60.000	60.000
0068	611.0630	Inlet Covers Type HM-GJ	EACH	1.000	1.000
0070	611.0642	Inlet Covers Type MS	EACH	2.000	2.000
0072	611.3230	Inlets 2x3-FT	EACH	1.000	1.000
0074	611.3902	Inlets Median 2 Grate	EACH	1.000	1.000

7090-00-74

Line	Item	Item Description	Unit	Total	Qty
0076	618.0100	Maintenance And Repair of Haul Roads (project) 01. 7090-00-74	EACH	1.000	1.000
0078	619.1000	Mobilization	EACH	1.000	1.000
0080	624.0100	Water	MGAL	47.000	47.000
0082	625.0500	Salvaged Topsoil	SY	4,700.000	4,700.000
0084	627.0200	Mulching	SY	4,700.000	4,700.000
0086	628.1504	Silt Fence	LF	1,235.000	1,235.000
0088	628.1520	Silt Fence Maintenance	LF	1,235.000	1,235.000
0090	628.1905	Mobilizations Erosion Control	EACH	6.000	6.000
0092	628.1910	Mobilizations Emergency Erosion Control	EACH	3.000	3.000
0094	628.2008	Erosion Mat Urban Class I Type B	SY	75.000	75.000
0096	628.7005	Inlet Protection Type A	EACH	2.000	2.000
0098	628.7015	Inlet Protection Type C	EACH	7.000	7.000
0100	628.7504	Temporary Ditch Checks	LF	430.000	430.000
0102	628.7555	Culvert Pipe Checks	EACH	4.000	4.000
0104	629.0210	Fertilizer Type B	CWT	3.000	3.000
0106	630.0130	Seeding Mixture No. 30	LB	85.000	85.000
0108	630.0500	Seed Water	MGAL	2.000	2.000
0110	633.5200	Markers Culvert End	EACH	4.000	4.000
0112	634.0614	Posts Wood 4x6-Inch X 14-FT	EACH	2.000	2.000
0114	634.0805	Posts Tubular Steel 2x2-Inch X 5-FT	EACH	1.000	1.000
0116	637.2210	Signs Type II Reflective H	SF	11.250	11.250
0118	637.2230	Signs Type II Reflective F	SF	4.000	4.000
0120	638.2102	Moving Signs Type II	EACH	8.000	8.000
0122	638.2602	Removing Signs Type II	EACH	4.000	4.000
0124	638.3000	Removing Small Sign Supports	EACH	2.000	2.000
0126	638.4000	Moving Small Sign Supports	EACH	8.000	8.000
0128	642.5201	Field Office Type C	EACH	1.000	1.000
0130	643.0300	Traffic Control Drums	DAY	9,280.000	9,280.000
0132	643.0420	Traffic Control Barricades Type III	DAY	440.000	440.000
0134	643.0705	Traffic Control Warning Lights Type A	DAY	880.000	880.000
0136	643.0715	Traffic Control Warning Lights Type C	DAY	1,300.000	1,300.000
0138	643.0800	Traffic Control Arrow Boards	DAY	100.000	100.000
0140	643.0900	Traffic Control Signs	DAY	1,910.000	1,910.000
0142	643.1050	Traffic Control Signs PCMS	DAY	160.000	160.000
0144	643.5000	Traffic Control	EACH	1.000	1.000
0146	645.0130	Geotextile Type R	SY	41.000	41.000
0148	646.1020	Marking Line Epoxy 4-Inch	LF	3,015.000	3,015.000
0150	646.3020	Marking Line Epoxy 8-Inch	LF	1,465.000	1,465.000
0152	646.5020	Marking Arrow Epoxy	EACH	12.000	12.000

7090-00-74

Line	Item	Item Description	Unit	Total	Qty
0154	646.5120	Marking Word Epoxy	EACH	2.000	2.000
0156	646.6120	Marking Stop Line Epoxy 18-Inch	LF	80.000	80.000
0158	646.7120	Marking Diagonal Epoxy 12-Inch	LF	45.000	45.000
0160	646.7420	Marking Crosswalk Epoxy Transverse Line 6-Inch	LF	250.000	250.000
0162	646.9010	Marking Removal Line Water Blasting 4-Inch	LF	1,320.000	1,320.000
0164	649.0150	Temporary Marking Line Removable Tape 4-Inch	LF	575.000	575.000
0166	650.4000	Construction Staking Storm Sewer	EACH	6.000	6.000
0168	650.4500	Construction Staking Subgrade	LF	1,918.000	1,918.000
0170	650.5000	Construction Staking Base	LF	406.000	406.000
0172	650.5500	Construction Staking Curb Gutter and Curb & Gutter	LF	468.000	468.000
0174	650.7000	Construction Staking Concrete Pavement	LF	1,512.000	1,512.000
0176	650.8000	Construction Staking Resurfacing Reference	LF	384.000	384.000
0178	650.9000	Construction Staking Curb Ramps	EACH	2.000	2.000
0180	650.9910	Construction Staking Supplemental Control (project) 01. 7090-00-74	LS	1.000	1.000
0182	650.9920	Construction Staking Slope Stakes	LF	1,631.000	1,631.000
0184	652.0225	Conduit Rigid Nonmetallic Schedule 40 2-Inch	LF	370.000	370.000
0186	652.0235	Conduit Rigid Nonmetallic Schedule 40 3-Inch	LF	62.000	62.000
0188	652.0700.S	Install Conduit into Existing Item	EACH	8.000	8.000
0190	652.0800	Conduit Loop Detector	LF	490.000	490.000
0192	653.0135	Pull Boxes Steel 24x36-Inch	EACH	2.000	2.000
0194	653.0900	Adjusting Pull Boxes	EACH	9.000	9.000
0196	653.0905	Removing Pull Boxes	EACH	8.000	8.000
0198	654.0101	Concrete Bases Type 1	EACH	3.000	3.000
0200	654.0102	Concrete Bases Type 2	EACH	2.000	2.000
0202	654.0105	Concrete Bases Type 5	EACH	4.000	4.000
0204	655.0230	Cable Traffic Signal 5-14 AWG	LF	341.000	341.000
0206	655.0240	Cable Traffic Signal 7-14 AWG	LF	444.000	444.000
0208	655.0260	Cable Traffic Signal 12-14 AWG	LF	933.000	933.000
0210	655.0320	Cable Type UF 2-10 AWG Grounded	LF	354.000	354.000
0212	655.0515	Electrical Wire Traffic Signals 10 AWG	LF	829.000	829.000
0214	655.0700	Loop Detector Lead In Cable	LF	260.000	260.000
0216	655.0800	Loop Detector Wire	LF	1,910.000	1,910.000
0218	655.0900	Traffic Signal EVP Detector Cable	LF	217.000	217.000
0220	657.0100	Pedestal Bases	EACH	1.000	1.000
0222	657.0255	Transformer Bases Breakaway 11 1/2-Inch Bolt Circle	EACH	4.000	4.000
0224	657.0310	Poles Type 3	EACH	1.000	1.000
0226	657.0315	Poles Type 4	EACH	1.000	1.000
0228	657.0322	Poles Type 5-Aluminum	EACH	2.000	2.000
0230	657.0430	Traffic Signal Standards Aluminum 10-FT	EACH	1.000	1.000

7090-00-74

Line	Item	Item Description	Unit	Total	Qty
0232	657.0595	Trombone Arms 25-FT	EACH	1.000	1.000
0234	657.0714	Luminaire Arms Truss Type 4-Inch Clamp 15-FT	EACH	5.000	5.000
0236	658.0173	Traffic Signal Face 3S 12-Inch	EACH	1.000	1.000
0238	658.0416	Pedestrian Signal Face 16-Inch	EACH	2.000	2.000
0240	658.0500	Pedestrian Push Buttons	EACH	3.000	3.000
0242	659.1115	Luminaires Utility LED A	EACH	2.000	2.000
0244	690.0150	Sawing Asphalt	LF	910.000	910.000
0246	690.0250	Sawing Concrete	LF	2,235.000	2,235.000
0248	715.0415	Incentive Strength Concrete Pavement	DOL	932.000	932.000
0250	ASP.1T0A	On-the-Job Training Apprentice at $5.00/HR	HRS	600.000	600.000
0252	ASP.1T0G	On-the-Job Training Graduate at $5.00/HR	HRS	300.000	300.000
0254	SPV.0090	Special 001. Install State-Supplied CAT-5E Cable	LF	534.000	534.000
0256	SPV.0105	Special 001. Remove Lighting Equipment Town Hall Road & Old Mill Plaza	LS	1.000	1.000
0258	SPV.0105	Special 002. Salvage Traffic Signal and Lighting Equipment USH 12 & CTH EE	LS	1.000	1.000
0260	SPV.0105	Special 003. Reinstall Existing Traffic Signal and Lighting Equipment USH 12 & CTH EE	LS	1.000	1.000
0262	SPV.0105	Special 004. Concrete Pavement Joint Layout	LS	1.000	1.000

3

CLEARING AND GRUBBING

ROADWAY	STATION	-	STATION	201.0105 CLEARING (STA)	201.0205 GRUBBING (STA)
N TOWN HALL ROAD	31+00'EE'	-	33+00'EE'	2	2
PROJECT TOTALS				2	2

REMOVING SMALL PIPE CULVERTS

LOCATION	STATION	-	STATION	SIDE	DESCRIPTION	203.0100 REMOVING SMALL PIPE CULVERTS (EACH)	REMARKS
OLD MILL PLAZA	10+51'OM'			LT/RT	18" CMCP	1	APPROX LENGTH 68'
PROJECT TOTALS						1	

REMOVING CURB & GUTTER

ROADWAY	STATION	-	STATION	SIDE	204.0150 REMOVING CURB & GUTTER (LF)
N TOWN HALL RD	30+80'EE'	-	31+63'EE'	RT	95
N TOWN HALL RD	30+80'EE'	-	31+63'EE'	LT	105
PROJECT TOTALS					200

REMOVING PAVEMENT

ROADWAY	STATION	-	STATION	SIDE	204.0100 REMOVING PAVEMENT (SY)
USH 12 EB	180+00'EB'	-	182+35'EB'	LT/RT	260
USH 12 WB	186+85'WB'	-	189+05'WB'	LT/RT	210
N TOWN HALL RD	30+80'EE'	-	31+63'EE'	LT/RT	945
PROJECT TOTALS					1,415

NOTES:
1. REMOVING ASPHALT IS PAID FOR AS COMMON EXCAVATION.

REMOVING ASPHALTIC SURFACE MILLING

ROADWAY	STATION	-	STATION	SIDE	204.0120 REMOVING ASPHALTIC SURFACE MILLING (SY)
N TOWN HALL RD	30+80'EE'	-	31+63'EE'	LT/RT	1265
PROJECT TOTALS					1,265

FINISHING ROADWAY

PROJECT ID	213.0100 FINISHING ROADWAY (EACH)
7090-00-74	1
PROJECT TOTAL	1

*****ALL ITEMS CATEGORY 1000 UNLESS OTHERWISE NOTED.**

3

EARTHWORK SUMMARY

From/To Station	Location	205.0100 Excavation Common (1) CY		Unexpanded Fill	Expanded Fill CY	208.1100 Select Borrow CY	Mass Ordinate +/- (4)
		Cut (2)	EBS Excavation (3)		Factor 1.3	Factor 1.0	
176+33'EB' - 182+35'EB'	USH 12 EB	723	0	135	176	0	547
182+54'WB' - 192+25'WB'	USH 12 WB	797	0	321	417	0	380
30+94'EE' - 34+38'EE'	CTH EE / N Town Hall Rd	440	0	3	4	0	435
10+25'OM' - 11+54'OM'	Old Mill Plaza	98	0	4	6	0	92
10+00'E' - 12+05'E'	East Curb Return	176	0	157	204	0	-27
10+00'NE' - 10+59'NE'	Northeast Curb Return	30	0	23	30	0	-1
10+00'NW' - 10+74'NW'	Northwest Curb Return	172	0	5	7	0	166
	Pork Chop Island	40	0	0	0	0	40
Undistributed EBS Excavation			371			371	
Project Totals		2,476	371	649	844	371	1,633
Total Excavation Common		2,848					

(1) Excavation Common is the sum of the Cut and EBS Excavation columns. Item number 205.0100.

(2) Salvaged/Unsuable Pavement Material is included in Cut.

(3) EBS Excavation to be backfilled with Select Borrow unless otherwise noted in the plans. All EBS material is assumed to be wasted offsite.

(4) The Mass Ordinate + or - Qty calculated for the Division. Plus quantity indicates an excess of material within the Division. Minus indicates a shortage of material within the Division.

*****ALL ITEMS CATEGORY 1000 UNLESS OTHERWISE NOTED.**

CONCRETE PAVEMENT

ROADWAY	STATION - STATION	SIDE	305.0110 BASE AGGREGATE DENSE 3/4 (TON)	305.0120 BASE AGGREGATE DENSE 1 1/4 (TON)	415.0090 CONCRETE PAVEMENT 9-INCH (SY)	415.5110.S CONCRETE PAVEMENT JOINT LAYOUT (LS)	416.0610 DRILLED TIE BARS (EA)	416.0620 DRILLED DOWEL BARS (EA)	602.0410 CONCRETE SIDEWALK 5-INCH (SF)	624.0100 WATER (MGAL)
USH 12 EB	176+33'EB' - 181+38'EB'	LT	39	510	556	-	202	10	-	8
USH 12 EB	177+69'EB' - 182+34'EB'	RT	54	516	536	-	186	10	-	9
USH 12 WB	182+54'WB' - 185+40'WB'	LT	-	-	-	-	114	10	-	-
USH 12 WB	186+86'WB' - 191+46'WB'	LT	54	498	505	-	184	10	-	8
USH 12 WB	187+70'WB' - 192+25'WB'	RT	36	451	490	-	182	10	-	7
N TOWN HALL RD	30+80'EE' - 34+38'EE'	LT/RT	50	735	1,018	1	-	-	347	12
N TOWN HALL RD	31+10'EE' - 32+20'EE'	RT	26	-	-	-	-	-	558	1
OLD MILL PLAZA	10+45'OM' - 11+54'OM'	LT/RT	16	115	-	-	-	-	-	2
PROJECT TOTALS			275	2,825	3,105	1	868	50	905	47

ASPHALTIC ITEMS

ROADWAY	STATION - STATION	SIDE	455.0605 TACK COAT (GAL)	465.0105 ASPHALTIC SURFACE (TONS)	465.0315 ASPHALTIC FLUME (SY)
USH 12 EB	176+33'EB' - 181+38'EB'	LT	-	28	-
USH 12 EB	177+69'EB' - 182+34'EB'	RT	-	26	-
USH 12 WB	186+86'WB' - 191+46'WB'	LT	-	26	-
USH 12 WB	187+70'WB' - 192+25'WB'	RT	-	25	-
N TOWN HALL RD / OLD MILL PLAZA	30+80'EE' - 34+38'EE'	LT/RT	135	280	27
PROJECT TOTALS			135	385	27

CONCRETE CURB & GUTTER AND CURB RAMPS

STATION	- STATION	LOCATION	601.0409 CONCRETE CURB & GUTTER 30-INCH TYPE A (LF)	601.0411 CONCRETE CURB & GUTTER 30-INCH TYPE D (LF)	601.0413 CONCRETE CURB & GUTTER 6-INCH SLOPED 30-INCH TYPE G (LF)	602.0515 CURB RAMP DETECTABLE WARNING FIELD NATURAL PATINA (SF)	602.0605 CURB RAMP DETECTABLE WARNING FIELD RADIAL YELLOW (SF)
30+90'EE'	- 31+63'EE'	RT	100	-	-	-	20
30+93'EE'	- 31+47'EE'	LT	75	-	128	-	-
10+23'OM'	- 10+58'OM'	LT	-	60	-	-	-
10+40'OM'	- 11+00'OM'	RT	-	105	-	10	-
PROJECT TOTALS			175	165	128	10	20

INCENTIVE STRENGTH

PROJECT ID	715.0415 INCENTIVE STRENGTH CONCRETE PAVEMENT (DOL)
7090-00-74	932
PROJECT TOTALS	932

*****ALL ITEMS CATEGORY 1000 UNLESS OTHERWISE NOTED.**

3

3

RIPRAP AND GEOTEXTILE

STATION	SIDE	606.0200 RIPRAP MEDIUM (CY)	645.0130 GEOTEXTILE TYPE R (SY)	REMARK
31+15'EE'	LT	2.00	8.0	APRON ENDWALL
31+18'EE'	RT	1.00	7.0	FLUME
31+28'EE'	LT	1.00	7.0	FLUME
10+78'OM'	RT	3.00	11.0	APRON ENDWALL
SUBTOTAL		7	33	
UNDISTRIBUTED		2	8	
PROJECT TOTALS		9	41	

MOBILIZATION

PROJECT ID	619.1000 MOBILIZATION (EACH)	628.1905 MOBILIZATIONS EROSION CONTROL (EACH)	628.1910 MOBILIZATIONS EMERGENCY EROSION CONTROL (EACH)
7090-00-74	1	6	3
PROJECT TOTALS	1	6	3

STORM SEWER PIPES AND STRUCTURES

LOCATION	SIDE	522.1012 APRON ENDWALLS FOR CULVERT REINFORCED CONCRETE 12-INCH (EACH)	522.1018 APRON ENDWALLS FOR CULVERT REINFORCED CONCRETE 18-INCH (EACH)	522.1021 APRON ENDWALLS FOR CULVERT REINFORCED CONCRETE 21-INCH (EACH)	608.0218 STORM SEWER PIPE REINFORCED CONCRETE CLASS II 18-INCH (LF)	608.0421 STORM SEWER PIPE REINFORCED CONCRETE CLASS IV 21-INCH (LF)	608.0512 STORM SEWER PIPE REINFORCED CONCRETE CLASS V 12-INCH (LF)	611.0630 INLET COVERS TYPE HM-GJ (EACH)	611.0642 INLET COVERS TYPE MS (EACH)	611.3230 INLETS 2X3-FT (EACH)	611.3902 INLET MEDIAN 2 GRATE (EACH)	633.5200 MARKERS CULVERT END (EACH)
OLD MILL PLAZA	LT/RT	-	2	1	30	92	-	-	2	-	1	3
N TOWN HALL RD	LT	1	-	-	-	-	60	1	-	1	-	1
PROJECT TOTALS		1	2	1	30	92	60	1	2	1	1	4

EROSION CONTROL

LOCATION	628.1504 SILT FENCE (LF)	628.1520 SILT FENCE MAINTENANCE (LF)	628.2008 EROSION MAT URBAN CLASS I TYPE B (SY)	628.7005 INLET PROTECTION TYPE A (EACH)	628.7015 INLET PROTECTION TYPE C (EACH)	628.7504 TEMPORARY DITCH CHECKS (LF)	628.7555 CULVERT PIPE CHECKS (EACH)
USH 12	935	935	-	-	6	220	-
N TOWN HALL RD	260	260	75	2	1	180	3
OLD MILL PLAZA	40	40	-	-	-	30	1
PROJECT TOTALS	1,235	1,235	75	2	7	430	4

*****ALL ITEMS CATEGORY 1000 UNLESS OTHERWISE NOTED.**

PERMANENT SIGNING

SIGN #	SIGN CODE	SIGN TYPE	SIGN SIZE INCHES	637.2210 SIGNS TYPE II REFLECTIVE H (SF)	637.2230 SIGNS TYPE II REFLECTIVE F (SF)	634.0614 POSTS WOOD 4X6-INCH 14-FT (EACH)	634.0805 POSTS TUBULAR STEEL 2X2-INCH X 5-FT (LB)	REMARKS
01-01	W12-1D	II	24X24	-	4.00	-	1	DIAGONAL DOUBLE ARROW
02-01	R3-8W	II	53X30	11.25	-	2	-	LANE DESIGNATION
PROJECT TOTALS				11.25	4.00	2	1	

MAINTENANCE AND REPAIR OF HAUL ROADS

PROJECT ID	618.0100 MAINTENTANCE AND REPAIR OF HAUL ROADS (EACH)
7090-00-74	1
PROJECT TOTALS	1

MOVING SIGNS

LOCATION	638.2102 MOVING SIGNS TYPE II (EACH)	638.4000 MOVING SMALL SIGN SUPPORTS (EACH)	DESCRIPTION
179+90'EB'	1	2	N TOWN HALL RD
178+35'EB'	2	1	COUNTY EE, RIGHT AHEAD
180+00'EB'	1	1	BEGIN LEFT TURN LANE
185+25'WB'	2	1	COUNTY EE, UP/LEFT
189+00'WB'	1	1	BEGIN LEFT TURN LANE
190+00'WB'	1	2	N TOWN HALL RD
PROJECT TOTALS	8	8	

REMOVING SIGNS

SIGN #	638.2602 REMOVING SIGNS TYPE II (EACH)	638.3000 REMOVING SMALL SIGN SUPPORTS (EACH)	* MOUNTED ON SAME SIGN AS	MESSAGE
R1-01	1	1	-	SIGNAL AHEAD, W3-3
R1-02	1	-	R1-01	NEW
R1-03	1	1	-	SIGNAL AHEAD, W3-3
R1-04	1	-	R1-03	NEW
PROJECT TOTALS	4	2		

*FOR INFORMATION ONLY

FINISHING

LOCATION	625.0500 SALVAGED TOPSOIL (SY)	627.0200 MULCHING (SY)	629.0210 FERTILIZER TYPE B (CWT)	630.0130 SEEDING MIXTURE NO. 30 (LB)	630.0500 SEED WATER (MGAL)
USH 12	3,140	3,140	2	57	1
TOWNHALL / OLD MILL	1,560	1,560	1	28	1
PROJECT TOTALS	4,700	4,700	3	85	2

FIELD OFFICE

PROJECT ID	642.5201 FIELD OFFICE TYPE C (EACH)
7090-00-74	1
PROJECT TOTAL	1

***ALL ITEMS CATEGORY 1000 UNLESS OTHERWISE NOTED.

TRAFFIC CONTROL

ROADWAY	DAYS IN SERVICE	603.8000 CONCRETE BARRIER TEMPORARY PRECAST DELIVERED (LF)	603.8125 CONCRETE BARRIER TEMPORARY PRECAST INSTALLED (LF)	643.0300 DRUMS NO.	643.0300 DRUMS (DAYS)	643.0420 BARRICADES TYPE III NO.	643.0420 BARRICADES TYPE III (DAYS)	643.0705 WARNING LIGHTS TYPE A NO.	643.0705 WARNING LIGHTS TYPE A (DAYS)	643.0715 WARNING LIGHTS TYPE C NO.	643.0715 WARNING LIGHTS TYPE C (DAYS)	643.0800 TRAFFIC CONTROL ARROW BOARDS NO.	643.0800 TRAFFIC CONTROL ARROW BOARDS (DAYS)	643.0900 SIGNS NO.	643.0900 SIGNS (DAYS)	643.1050 TRAFFIC CONTROL SIGNS PCMS NO.	643.1050 TRAFFIC CONTROL SIGNS PCMS (DAYS)
PRE-WARN																	
USH 12	10	-	-	-	-	-	-	-	-	-	-	-	-	-	-	2	20
STAGE 1																	
USH 12	20	-	-	194	3880	4	80	8	160	26	520	2	40	22	440	2	56
MILL RUN RD	20	-	-	-	-	-	-	-	-	-	-	-	-	4	80	-	-
CTH EE / N TOWN HALL RD	20	-	-	-	-	-	-	-	-	-	-	-	-	4	80	-	-
TRUAX LN / TEXACO DR	20	-	-	-	-	-	-	-	-	-	-	-	-	4	80	-	-
STAGE 2																	
USH 12	30	1125	1125	180	5400	5	150	10	300	26	780	2	60	23	690	2	84
MILL RUN RD	30	-	-	-	-	-	-	-	-	-	-	-	-	4	120	-	-
OLD MILL PLAZA	30	-	-	-	-	5	150	10	300	-	-	-	-	4	120	-	-
CTH EE / N TOWN HALL RD	30	-	-	-	-	2	60	4	120	-	-	-	-	6	180	-	-
TRUAX LN / TEXACO DR	30	-	-	-	-	-	-	-	-	-	-	-	-	4	120	-	-
PROJECT TOTALS		1,125	1,125	9,280		440		880		1,300		100		1,910		160	

PAVEMENT MARKING

LOCATION	ALIGNMENT	646.1020 MARKING LINE EPOXY 4-INCH YELLOW (LF)	646.1020 MARKING LINE EPOXY 4-INCH WHITE (LF)	646.3020 MARKING LINE EPOXY 8-INCH WHITE (LF)	646.5020 MARKING ARROW EPOXY WHITE (EACH)	646.5120 MARKING WORD EPOXY WHITE (EACH)	646.6120 MARKING STOP LINE EPOXY 18-INCH WHITE (LF)	646.7120 MARKING DIAGONAL EPOXY 12-INCH YELLOW (LF)	646.7420 MARKING CROSSWALK EPOXY TRANSVERSE LINE 6-INCH WHITE (LF)
USH 12	'EB'	505	495	640	3	1	-	-	120
USH 12	'WB'	455	480	575	3	1	-	-	130
N TOWN HALL RD	'EE'	835	-	250	6	-	56	45	-
OLD MILL PLAZA	'OM'	245	-	-	-	-	24	-	-
PROJECT TOTALS		3,015		1,465	12	2	80	45	250

***ALL ITEMS CATEGORY 1000 UNLESS OTHERWISE NOTED.

REMOVING PAVEMENT MARKING

LOCATION	646.9010 MARKING REMOVAL LINE WATER BLASTING 4-INCH (LF)	DESCRIPTION
USH 12 EB	367	EXISTING LANE EDGELINE (YELLOW)
USH 12 EB	310	EXISTING LANE EDGELINE (WHITE)
USH 12 WB	326	EXISTING LANE EDGELINE (YELLOW)
USH 12 WB	317	EXISTING LANE EDGELINE (WHITE)
PROJECT TOTALS	1,320	

REMOVING PAVEMENT MARKING

STAGE	LOCATION	649.0150 TEMPORARY MARKING LINE REMOVABLE TAPE 4-INCH (LF)
1	USH 12 EB	300
1	USH 12 WB	275
PROJECT TOTALS		575

3

CONSTRUCTION STAKING

STATION	-	STATION	LOCATION	650.4000 CONSTRUCTION STAKING STORM SEWER (EACH)	650.4500 CONSTRUCTION STAKING SUBGRADE (LF)	650.5000 CONSTRUCTION STAKING BASE (LF)	650.5500 CONSTRUCTION STAKING CURB, GUTTER, CURB & GUTTER (LF)	650.7000 CONSTRUCTION STAKING CONCRETE PAVEMENT (LF)	650.8000 CONSTRUCTION STAKING RESURFACING REFERENCE (LF)	650.9000 CONSTRUCTION STAKING CURB RAMPS (EACH)	650.9920 CONSTRUCTION STAKING SLOPE STAKES (LF)
176+33'EB'	-	182+35'EB'	LT/RT	-	602	-	-	602	-	-	602
182+54'WB'	-	185+41'WB'	LT	-	287	-	-	287	-	-	-
186+86'WB'	-	192+26'WB'	LT/RT	-	540	-	-	540	-	-	540
30+80'EE'	-	31+63'EE'	LT/RT	2	83	-	303	83	-	1	83
31+63'EE'	-	34+39'EE'	LT/RT	-	276	276	165	-	276	-	276
10+25'OM'	-	11+55'OM'	LT/RT	4	130	130	-	-	108	1	130
PROJECT TOTALS				6	1,918	406	468	1,512	384	2	1,631

SAWING PAVEMENT

STATION	-	STATION	LOCATION	690.0150 SAWING ASPHALT (LF)	690.0250 SAWING CONCRETE (LF)
176+33'EB'	-	182+35'EB	LT/RT	150	995
182+54'WB'	-	185+41'WB'	LT	10	298
186+86'WB'	-	192+26'WB'	LT/RT	15	942
31+63'EE'	-	34+39'EE'	LT/RT	530	--
10+67'OM'	-	11+55'OM'	LT/RT	205	--
PROJECT TOTALS				910	2,235

*****ALL ITEMS CATEGORY 1000 UNLESS OTHERWISE NOTED.**

REMOVING CONCRETE BASES

SIGNAL BASE NO.	LOCATION	204.0195 REMOVING CONCRETE BASES EACH
SB1	31+15 'EE', 55' LT	1
SB2	30+91 'EE', 19' LT	1
SB3	31+28 'EE', 38' RT	1
LB2	188+12 'WB', 36' LT	1
LB4	180+58 'EB', 43' RT	1
LB5	183+77 'WB', 11' RT	1
LB6	31+98 'EE', 41' RT	1
LB7	32+68 'EE', 42' RT	1
	TOTAL	8

REMOVING PULL BOXES

PULL BOX NO.	LOCATION	653.0905 REMOVING PULL BOXES EACH
PB2	30+95 'EE', 30' LT	1
PB6	188+12 'WB', 41' LT	1
PB21	31+07 'EE', 16' LT	1
PB22	31+13 'EE', 4' LT	1
PB23	31+09 'EE', 4' LT	1
PB24	187+20 'WB', 29' LT	1
	TOTAL	6

CONDUIT

LOC.	TO	LOC.	652.0225 CONDUIT RIGID NONMETALLIC SCHEDULE 40 2-INCH L.F.	652.0235 CONDUIT RIGID NONMETALLIC SCHEDULE 40 3-INCH L.F.
PB1		PB2		62
PB1		SB1	13	
PB2		SB2	12	
PB3		SB3	11	
PB3		SB18	6	
PB5		PB6	95	
PB6		LB2	4	
PB6		PB7	112	
PB7		LB6	46	
PB16		LB4	5	
PB17		LB5	66	
		TOTAL	370	62

INSTALL CONDUIT INTO EXISTING ITEM

PULL BOX NO.	LOCATION	652.0700.S INSTALL CONDUIT INTO EXISTING ITEM EACH
PB1	31+30 'EE', 50' LT	1
PB3	31+30 'EE', 56' RT	2
PB5	187+17 'WB', 44' LT	1
PB7	189+24 'WB', 44' LT	2
PB16	180+58 'EB', 50' RT	1
PB17	179+65 'EB', 50' RT	1
	TOTAL	8

REMOVALS

** LOCATION	SPV.0105.001 REMOVE LIGHTING EQUIPMENT L.S.
TOWN HALL ROAD & OLD MILL PLAZA	1
TOTAL	1

TRAFFIC SIGNAL FACES

SIG. HEAD NO.	SIG. BASE NO.	658.0173 TRAFFIC SIGNAL FACE 3S 12-INCH EACH	658.0416 PEDESTRIAN SIGNAL FACE 16-INCH EACH
22	SB3	1	
81	SB10		1
82	SB18		1
TOTAL		1	2

ADJUSTING PULL BOXES

PULL BOX NO.	LOCATION	653.0900 ADJUSTING PULL BOXES EACH
PB1	31+30 'EE', 50' LT	1
PB3	31+30 'EE', 56' RT	1
PB4	185+33 'WB', 50' LT	1
PB5	187+17 'WB', 44' LT	1
PB7	189+24 'WB', 44' LT	1
PB15	181+54 'EB', 48' RT	1
PB16	180+58 'EB', 50' RT	1
PB17	179+65 'EB', 50' RT	1
PB20	183+71 'WB', 52' LT	1
	TOTAL	9

PULL BOXES

PULL BOX NO.	** LOCATION	653.0135 PULL BOXES STEEL 24"x36" EACH
PB2	31+13 'EE', 24' LT	1
PB6	188+12 'WB', 49' LT	1
	TOTAL	2

CONCRETE BASES

SIGNAL BASE NO.	LOCATION	654.0101 CONCRETE BASE TYPE 1 EACH	654.0102 CONCRETE BASE TYPE 2 EACH	654.0105 CONCRETE BASE TYPE 5 EACH
SB1	31+18 'EE', 56' LT	1		
SB2	31+05 'EE', 23' LT	1		
SB3	31+35 'EE', 46' RT		1	
SB17	183+77 'WB', 11' RT		1	
SB18	31+24 'EE', 55' RT	1		
LB2	188+14 'WB', 47' LT			1
LB4	180+54 'EB', 47' RT			1
LB5	178+99 'EB', 46' RT			1
LB6	189+69 'WB', 49' LT			1
	TOTAL	3	2	4

LEGEND

** FINAL LOCATION TO BE DETERMINED BY THE ENGINEER IN THE FIELD

ALL ITEMS ON THIS SHEET ARE CATEGORY 1000

TRAFFIC SIGNALS & LIGHTING

PAGE 1 OF 4

TRAFFIC DETECTOR LOOPS

LOOP NO.	HOME RUN PB	** LOCATION	SIZE (FT)	X	(FT)	NO. OF TURNS	PAVEMENT TYPE	SDD INSTALLATION REFERENCE	652.0800 CONDUIT LOOP DETECTOR L.F.	655.0700 LOOP DETECTOR LEAD IN CABLE L.F.	655.0800 LOOP DETECTOR WIRE L.F.
41	PB2	30+91 'EE', 6' RT	6	X	20	4	CONCRETE	LOOP DETECTOR INSTALLED IN BASE COURSE WITH PULL (SPLICE) BOX OFF ROADWAY (OPTION 2)	106	52	436
42	PB2	31+17 'EE', 6' RT	6	X	20	4	CONCRETE	LOOP DETECTOR INSTALLED IN BASE COURSE WITH PULL (SPLICE) BOX OFF ROADWAY (OPTION 2)	106	52	436
43	PB2	30+91 'EE', 6' LT	6	X	20	3	CONCRETE	LOOP DETECTOR INSTALLED IN BASE COURSE WITH PULL (SPLICE) BOX OFF ROADWAY (OPTION 2)	82	52	258
44	PB2	31+17 'EE', 6' LT	6	X	20	3	CONCRETE	LOOP DETECTOR INSTALLED IN BASE COURSE WITH PULL (SPLICE) BOX OFF ROADWAY (OPTION 2)	82	52	258
45	PB2	30+97 'EE', 49' LT	6	X	20	3	CONCRETE	LOOP DETECTOR INSTALLED IN BASE COURSE WITH PULL (SPLICE) BOX OFF ROADWAY (OPTION 2)	84	52	264
21	PB5	187+21 'WB', 17' LT	6	X	20	3	CONCRETE	EXISTING	30	0	258
								TOTAL	490	260	1910

TRAFFIC SIGNAL CABLE AND ELECTRICAL WIRE

LOC.	TO	LOC.	655.0230 CABLE TRAFFIC SIGNAL 5-14 AWG L.F.	655.0240 CABLE TRAFFIC SIGNAL 7-14 AWG L.F.	655.0260 CABLE TRAFFIC SIGNAL 12-14 AWG L.F.	655.0320 CABLE TYPE UF 2-10 AWG GROUNDED L.F.	655.0515 ELECTRICAL WIRE TRAFFIC SIGNALS 10 AWG L.F.	655.0900 TRAFFIC SIGNAL EVP DETECTOR CABLE L.F.	SPV.0090.001 INSTALL STATE-SUPPLIED CAT-5E CABLE L.F.
CB1		SB1		53			53		
CB1		SB2			99				
CB1		SB3		174				217	
CB1		SB5			301				
CB1		SB6							354
CB1		SB10			533				
CB1		SB17		151					180
CB1		SB18	168						
SB1		SB2					95		
SB2		SB3					215		
SB3		SB18					42		
SB16		CB1					76		
SB14		SB17					50		
SB17		SB15					81		
SB18		SB4					95		
PB1		SB1					29		
PB2		SB2					28		
PB3		SB3					27		
PB20		SB16					38		
LB2		LB6				176			
LB4		LB5				178			
SB1		HEAD 18		22					
SB2		HEAD 15	19						
SB2		HEAD 21	19						
SB3		HEAD 22	46						
SB5		HEAD 7		22					
SB5		HEAD 11	21						

CONTINUED ON NEXT PAGE

LEGEND

** FINAL LOCATION TO BE DETERMINED BY THE ENGINEER IN THE FIELD

ALL ITEMS ON THIS SHEET ARE CATEGORY 1000

TRAFFIC SIGNALS & LIGHTING

PAGE 2 OF 4

TRAFFIC SIGNAL CABLE AND ELECTRICAL WIRE (CONTINUED)

LOC.	TO	LOC.	655.0230 CABLE TRAFFIC SIGNAL 5-14 AWG L.F.	655.0240 CABLE TRAFFIC SIGNAL 7-14 AWG L.F.	655.0260 CABLE TRAFFIC SIGNAL 12-14 AWG L.F.	655.0320 CABLE TYPE UF 2-10 AWG GROUNDED L.F.	655.0515 ELECTRICAL WIRE TRAFFIC SIGNALS 10 AWG L.F.	655.0900 TRAFFIC SIGNAL EVP DETECTOR CABLE L.F.	SPV.0090.001 INSTALL STATE-SUPPLIED CAT-5E CABLE L.F.
SB10		HEAD 16	19						
SB10		HEAD 20	19						
SB10		HEAD 81	15						
SB17		HEAD 19		22					
SB18		HEAD 82	15						
		TOTAL	341	444	933	354	829	217	534

TRAFFIC SIGNAL EQUIPMENT

SIG. BASE NO.	657.0100 PEDESTAL BASES EACH	657.0255 TRANSFORMER BASES BREAKAWAY 11 1/2-INCH BOLT CIRCLE EACH	657.0310 POLES TYPE 3 EACH	657.0315 POLES TYPE 4 EACH	657.0322 POLES TYPE 5-ALUMINUM EACH	657.0430 TRAFFIC SIGNAL STANDARDS ALUMINUM 10-FT EACH	657.0595 TROMBONE ARMS 25-FT EACH	657.0714 LUMINAIRE ARMS TRUSS TYPE 4-INCH CLAMP 15-FT EACH	658.0500 PEDESTRIAN PUSH BUTTONS EACH	659.1115 LUMINAIRES UTILITY LED A EACH
SB3		1	1				1	1		
SB5									1	
SB10									1	
SB17		1		1				2		
SB18	1					1			1	
LB5		1			1			1		1
LB6		1			1			1		1
TOTAL	1	4	1	1	2	1	1	5	3	2

ALL ITEMS ON THIS SHEET ARE CATEGORY 1000

TRAFFIC SIGNALS & LIGHTING

PAGE 3 OF 4

3

3

ITEMS TO BE SALVAGED AND REINSTALLED (FOR INFORMATION ONLY)

SALVAGED LOCATION	TO REINSTALLED LOCATION	PEDESTAL BASES EACH	TRANSFORMER BASES EACH	TRAFFIC SIGNAL STANDARD ALUMINUM 13-FT EACH	TRAFFIC SIGNAL STANDARD ALUMINUM 15-FT EACH	TRAFFIC SIGNAL FACE 3S 12-INCH EACH	TRAFFIC SIGNAL FACE 4S 12-INCH EACH	POLES TYPE 5 EACH	LUMINAIRE ARM EACH	LUMINAIRE LED EACH	EVP DETECTOR HEAD EACH	FOLDING STOP SIGN (R1-1F) EACH	DIVIDED HIGHWAY SIGN (R6-3) EACH
SB1	SB1	1			1		1					1	
SB2	SB2	1		1		2						1	1
SB3	SB3									1	1		
SB15	SB17						1						
LB2	LB2		1					1	1				
LB4	LB4		1					1	1				
LB5	SB17									2			
TOTAL		2	2	1	1	2	2	2	2	3	1	2	1

ITEMS TO BE REMOVED AND DISPOSED (FOR INFORMATION ONLY)

REMOVED LOCATION	LIGHTING* ASSEMBLY EACH
LB6	1
LB7	1
TOTAL	2

*INCLUDES LOCATING AND REMOVING EXISTING POWER SOURCE

ITEMS TO BE SALVAGED AND RETURNED TO WISDOT (FOR INFORMATION ONLY)

SALVAGED LOCATION	TRANSFORMER BASES EACH	TRAFFIC SIGNAL FACE 3S 12-INCH EACH	POLES TYPE 3 EACH	POLES TYPE 5 EACH	TROMBONE ARM 20-FT EACH	LUMINAIRE ARM EACH
SB3	1	1	1		1	1
LB5	1			1		2
TOTAL	2	1	1	1	1	3

REINSTALL EXISTING SIGNAL AND LIGHTING

** LOCATION	SPV.0105.003 REINSTALL EXISTING TRAFFIC SIGNAL AND LIGHTING EQUIPMENT L.S.
USH 12 & CTH EE	1
TOTAL	1

SALVAGE TRAFFIC SIGNALS AND LIGHTING

** LOCATION	SPV.0105.002 SALVAGE TRAFFIC SIGNAL AND LIGHTING EQUIPMENT L.S.
USH 12 & CTH EE	1
TOTAL	1

LEGEND

** FINAL LOCATION TO BE DETERMINED BY THE ENGINEER IN THE FIELD

ALL ITEMS ON THIS SHEET ARE CATEGORY 1000

TRAFFIC SIGNALS & LIGHTING

PAGE 4 OF 4

TRANSPORTATION PROJECT PLAT NO: 7090-00-24 - 4.01

THAT PART OF LOT 1, CSM 179, VOLUME 1, PAGE 231 IN THE SW 1/4 OF THE SW 1/4 OF SECTION 3, AND PART OF LOT 4, CSM 187, VOLUME 1, PAGE 243 IN THE SE 1/4 OF THE SE 1/4 OF SECTION 4, ALL IN TOWNSHIP 27 NORTH, RANGE 10 WEST, TOWN OF UNION, EAU CLAIRE COUNTY, WISCONSIN

RELOCATION ORDER USH 12 EAU CLAIRE COUNTY MENOMONIE - EAU CLAIRE (CTH EE/TOWNHALL ROAD INTERSECTION)

TO PROPERLY ESTABLISH, LAY OUT, WIDEN, ENLARGE, EXTEND, CONSTRUCT, RECONSTRUCT, IMPROVE, OR MAINTAIN A PORTION OF THE HIGHWAY DESIGNATED ABOVE, THE STATE OF WISCONSIN DEPARTMENT OF TRANSPORTATION DEEMS IT NECESSARY TO RELOCATE OR CHANGE SAID HIGHWAY AND ACQUIRE CERTAIN LANDS AND INTERESTS OR RIGHTS IN LANDS FOR THE ABOVE PROJECT.

TO EFFECT THIS CHANGE, PURSUANT TO AUTHORITY GRANTED UNDER SECTION 84.02 (3), 84.09, AND 84.30, WISCONSIN STATUTES, THE DEPARTMENT OF TRANSPORTATION HEREBY ORDERS THAT:
1. THAT PORTION OF SAID HIGHWAY AS SHOWN ON THIS PLAT IS LAID OUT AND ESTABLISHED TO THE LINES AND WIDTHS AS SO SHOWN FOR THE ABOVE PROJECT.
2. THE LANDS OR INTERESTS OR RIGHTS IN LANDS AS SHOWN ON THIS PLAT ARE REQUIRED BY THE DEPARTMENT FOR THE ABOVE PROJECT AND SHALL BE ACQUIRED IN THE NAME OF THE STATE OF WISCONSIN, PURSUANT TO THE PROVISIONS OF SECTION 84.09 (1) OR (2), WISCONSIN STATUTES.

1171823
KATHRYN A. CHRISTENSON
EAU CLAIRE COUNTY WI
REGISTER OF DEEDS
RECORDED ON
02/22/2019 01:27 PM
REC FEE:
TRANS FEE:
EXEMPT #:
PAGES: 1
This document was electronically recorded and returned to submitter

RESERVED FOR REGISTER OF DEEDS
PROJECT NUMBER 7090-00-24-4.01
AMENDMENT NO:

SCHEDULE OF LANDS & INTERST REQUIRED

OWNERS NAMES ARE SHOWN FOR REFERENCE PURPOSES ONLY AND ARE SUBJECT TO CHANGE PRIOR TO THE TRANSFER OF LAND INTERESTS TO THE DEPARTMENT.

PARCEL NUMBER	OWNER	INTEREST REQUIRED	AREAS ACRES REQUIRED NEW	EXISTING	TOTAL	TLE ACRES	PLE ACRES
1	RONALD A. HORLACHER, RANDALL G. HORLACHER & SANDRA J. DEGRASSE	FEE/AR	0.019	-----	0.019	-----	-----
2	WEST WISCONSIN TELCOM COOPERATIVE, INC.	FEE	0.029	-----	0.029	-----	-----

UTILITY SCHEDULE & INTEREST REQUIRED

UTILITY NUMBER	UTILITY OWNER	INTEREST REQUIRED
200	WEST WISCONSIN TELCOM COOPERATIVE, INC.	RELEASE OF RIGHTS
201	NORTHERN STATES POWER COMPANY D/B/A XCEL ENERGY (ELECTRIC)	RELEASE OF RIGHTS

RIGHT OF WAY COURSE TABLE

FROM - TO	BEARING	DISTANCE
104 - 26	S 90°00'00" W	33.00'
26 - 100	S 71°43'22" W	23.06'
100 - 101	N 15°16'50" E	85.34'
101 - 27	N 36°21'23" E	56.12'
27 - 106	N 36°21'23" E	0.15'
106 - 102	N 36°21'23" E	56.27'
102 - 107	S 22°57'40" E	47.56'
107 - 108	S 0°01'44" W	18.00'
108 - 103	S 38°06'11" E	25.39'
103 - 17011	SEE CURVE DATA	
17011 - 17001	N 89°29'18" W	25.59'
17001 - 28	S 90°00'00" W	32.82'
28 - 105	S 90°00'00" W	0.18'
105 - 104	S 0°27'03" W	84.41'
101 - 26	S 0°27'03" W	75.10'
17001 - 102	N 0°27'03" E	81.33'
14108 - 104	N 0°27'03" E	132.29'
105 - 106	N 0°27'03" E	36.01'
106 - 14184	N 0°27'03" E	2388.86'
14693 - 14108	S 89°32'46" E	2643.23'
17253 - 14108	N 89°27'37" W	2639.36'
14108 - 14184	N 0°27'03" E	1641.57'

R/W CURVE TABLE

FROM - TO	RADIUS	LENGTH	CHORD	CHORD BEARING
103 - 17011	320.93'	9.26'	9.26'	N88° 38' 42"W

R/W STATION AND OFFSET TABLE

POINT	STATION	OFFSET	Y	X
26	31+98.02'EE'	33.80'	290627.582	315951.839
27	33+18.32'EE'	0.00'	290747.869	315985.696
28	32+82.44'EE'	0.00'	290711.986	315985.678
100	31+90.78'EE'	55.69'	290620.349	315929.938
101	32+73.11'EE'	33.24'	290702.675	315952.430
102	33+63.78'EE'	33.42'	290793.309	316019.144
103	32+82.03'EE'	67.68'	290711.538	316053.356
104	31+98.04'EE'	0.80'	290627.582	315984.839
105	32+82.44'EE'	0.18'	290711.986	315985.503
106	33+18.45'EE'	0.09'	290747.991	315985.786
107	33+20.00'EE'	52.00'	290749.518	316037.697
108	33+02.00'EE'	52.00'	290731.518	316037.688
17001	32+82.46'EE'	32.83'	290711.986	316018.504
17011	32+82.24'EE'	58.42'	290711.757	316044.094

EXISTING MONUMENTS

POINT	Y	X	DESCRIPTION
16934	290626.913	316136.313	1.25" REBAR
16963	290711.755	316018.323	1.25" REBAR
16981	290688.209	316161.100	1.25" REBAR
17608	290611.197	316175.444	1.25" REBAR

CONVENTIONAL ABBREVIATIONS

ACCESS RIGHTS	AR	POINT OF BEGINNING	POB
ACRES	AC	POINT OF CURVATURE	PC
AHEAD	AH	POINT OF COMPOUND CURVE	PCC
ALUMINUM	ALUM	POINT OF INTERSECTION	PI
AND OTHERS	ET AL	PROPERTY LINE	PL
BACK	BK	RECORDED AS	(100')
BLOCK	BLK	REEL / IMAGE	R/I
BEGIN PROJECT	BP	REFERENCE LINE	R/L
CENTERLINE	C/L	REMAINING	REM
CERTIFIED SURVEY MAP	CSM	RESTICTIVE DEVELOPMENT EASEMENT	RDE
CONCRETE	CONC	RIGHT	RT
COUNTY	CO	RIGHT OF WAY	R/W
COUNTY TRUNK HIGHWAY	CTH	SECTION	SEC
DISTANCE	DIST	SEPTIC VENT	SEPV
CORNER	COR	SQUARE FEET	SF
DOCUMENT NUMBER	DOC	STATE TRUNK HIGHWAY	STH
EASEMENT	EASE	STATION	STA
END PROJECT	EP	TELEPHONE PEDESTAL	TP
EXISTING	EX	TEMPORARY LIMITED EASEMENT	TLE
GAS VALVE	GV	TRANSPORTATION PROJECT PLAT	TPP
GRID NORTH	GN	UNITED STATES HIGHWAY	USH
HIGHWAY EASEMENT	HE	VOLUME	V
IDENTIFICATION	ID		
LAND CONTRACT	LC		
LEFT	LT		
MONUMENT	MON		
NATIONAL GEODETIC SURVEY NUMBER	NGS NO		
NOT TO SCALE	NTS		
OUTLOT	OL		
PAGE	P		
POINT OF TANGENCY	PT		
PERMANENT LIMITED EASEMENT	PLE		

CURVE DATA

LONG CHORD	LCH
LONG CHORD BEARING	LCB
RADIUS	R
DEGREE OF CURVE	D
CENTRAL ANGLE	Δ/DELTA
LENGTH OF CURVE	L
TANGENT	T
DIRECTION AHEAD	DA
DIRECTION BACK	DB

CONVENTIONAL SYMBOLS

SECTION LINE
QUARTER LINE
SIXTEENTH LINE
NEW REFERENCE LINE
NEW R/W LINE
EXISTING R/W OR HE LINE
PROPERTY LINE
LOT, TIE & OTHER MINOR LINES
SLOPE INTERCEPT
CORPORATE LIMITS
UNDERGROUND FACILITY (COMMUNICATIONS, ELECTRIC, ETC)
NEW R/W (FEE OR HE) (HATCHING VARIES BY OWNER)
TEMPORARY LIMITED EASEMENT AREA
EASEMENT AREA (PERMANENT LIMITED OR RESTRICTED DEVELOPMENT)
TRANSMISSION STRUCTURES
BUILDING TO BE REMOVED
BRIDGE

SECTION CORNER SYMBOL
SECTION CORNER MONUMENT
GEODETIC SURVEY MONUMENT
SIXTEENTH CORNER MONUMENT
SIGN
OFF-PREMISE SIGN

R/W MONUMENT (TO BE SET)
NON-MONUMENTED R/W POINT
FOUND IRON PIN (1-INCH UNLESS NOTED)

	COMPENSABLE	NON-COMPENSABLE
ELECTRIC POLE	■	○
TELEPHONE POLE	■	⌀
PEDESTAL (LABEL TYPE) (TV, TEL, ELEC, ETC.)	✕	✕
GUY WIRE	● GUY	⊙ GUY
UTILITY METER	⧗	⧗
LIGHT POLE	✶	✶
UTILITY PULL BOX	●	⊗
UTILITY MANHOLE	●	⊗

ACCESS RESTRICTED BY ACQUISITION
NO ACCESS (BY STATUTORY AUTHORITY)
ACCESS RESTRICTED (BY PREVIOUS PROJECT OR CONTROL)
NO ACCESS (NEW HIGHWAY)

PARCEL NUMBER (25) UTILITY NUMBER (40)
R/W POINT NUMBER (999) PROPERTY IRON NUMBER 999
PARALLEL OFFSETS

CONVENTIONAL UTILITY SYMBOLS

WATER —W—
GAS —G—
TELEPHONE —T—
OVERHEAD TRANSMISSION LINES —OH—
ELECTRIC —E—
CABLE TELEVISION —TV—
FIBER OPTIC —FO—
SANITARY SEWER —SAN—
STORM SEWER —SS—

DETAIL A

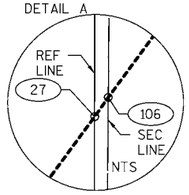

DETAIL B

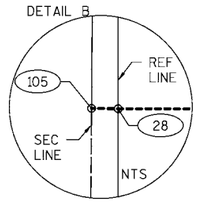

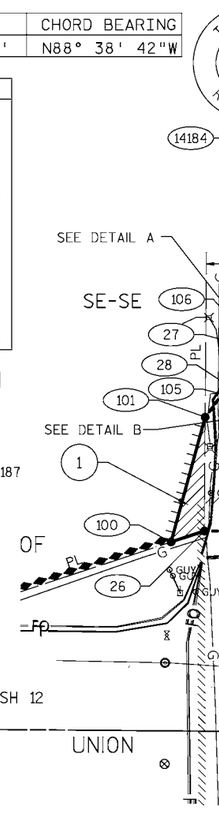

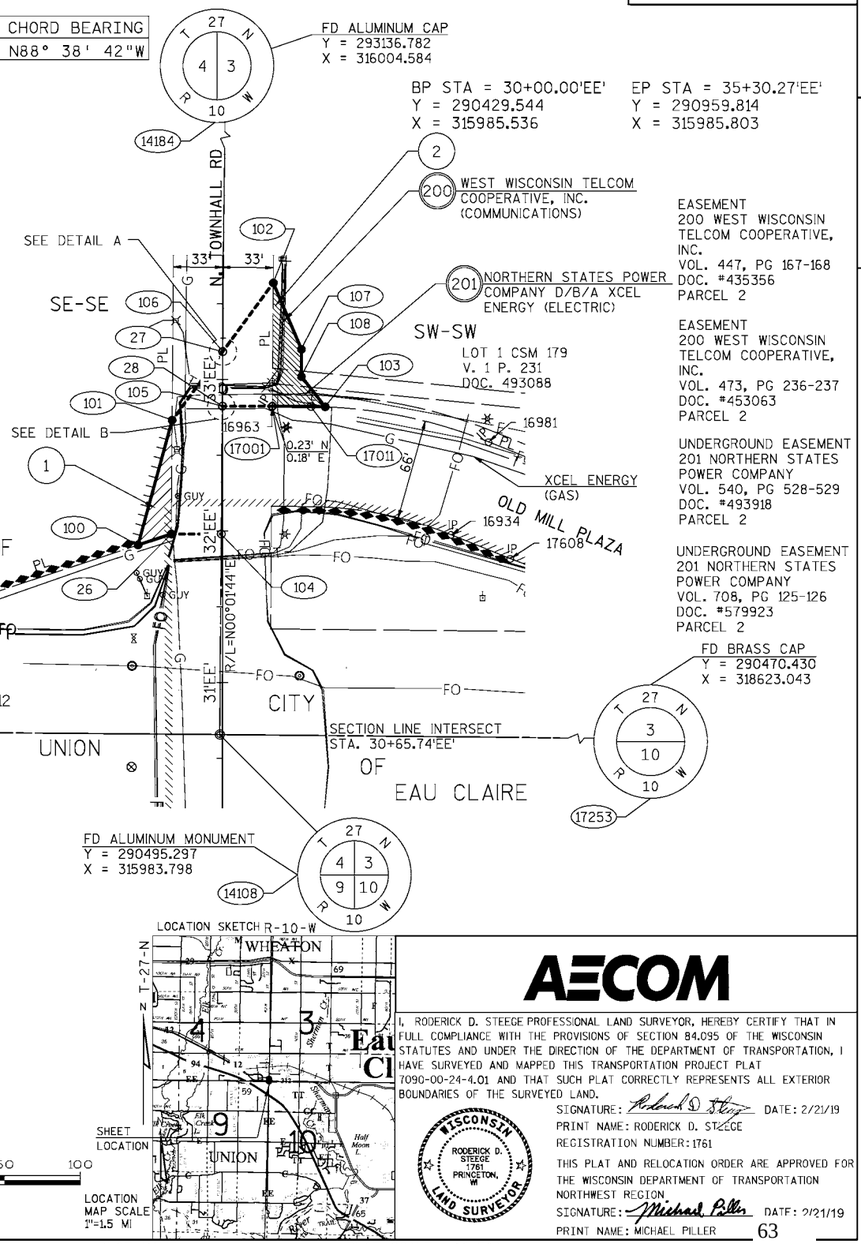

EXISTING HIGHWAY RIGHT OF WAY SHOWN HEREIN IS BASED ON THE FOLLOWING POINTS OF REFERENCE:
EXISTING RIGHT OF WAY FOR USH 12 IS ESTABLISHED FROM 7091-00-00, 7092-02-21, & 7256-01-23.
EXISTING RIGHT OF WAY FOR NORTH TOWNHALL ROAD ESTABLISHED FROM CSM 187 V. 1 CSM P. 243 DOC. NO. 494619, CSM 179 V. 1 CSM P. 231, DOC. NO. 493088
EXISTING ACCESS CONTROL ALONG USH 12 ESTABLISHED FROM PREVIOUS PROJECT 7092-02-21 & 7256-01-23.

NOTES:

POSITIONS SHOWN ON THIS PLAT ARE WISCONSIN COORDINATE REFERENCE SYSTEM COORDINATES (WISCORS), EAU CLAIRE COUNTY, NAD83 (2011) IN US SURVEY FEET. VALUES SHOWN ARE GRID COORDINATES, GRID BEARINGS, AND GRID DISTANCES. GRID DISTANCES MAY BE USED AS GROUND DISTANCES.

ALL NEW RIGHT-OF-WAY MONUMENTS WILL BE TYPE 2 (TYPICALLY 3/4"X24" IRON REBARS) UNLESS OTHERWISE NOTED, AND WILL BE PLACED PRIOR TO THE COMPLETION OF THE PROJECT.

RIGHT-OF-WAY BOUNDARIES ARE DEFINED WITH COURSES OF THE PERIMETER OF THE HIGHWAY LANDS REFERENCED TO THE U.S. PUBLIC LAND SURVEY SYSTEM OR OTHER "SURVEYS" OF PUBLIC RECORD.

DIMENSIONING FOR THE NEW RIGHT-OF-WAY IS MEASURED ALONG AND PERPENDICULAR TO THE NEW REFERENCE LINE.

PROPERTY LINES SHOWN ON THIS PLAT ARE DRAWN FROM DATA DERIVED FROM MAPS AND DOCUMENTS OF PUBLIC RECORD AND/OR EXISTING OCCUPATIONAL LINES. THIS PLAT MAY NOT BE A TRUE REPRESENTATION OF EXISTING PROPERTY LINES, EXCLUDING RIGHT-OF-WAY, AND SHOULD NOT BE USED AS A SUBSTITUTE FOR AN ACCURATE FIELD SURVEY.

DIMENSIONS TO EXISTING RIGHT OF WAY ARE FROM SECTION LINE TO EXISTING RIGHT OF WAY.

FOR THE LATEST ACCESS/DRIVEWAY INFORMATION, CONTACT THE PLANNING UNIT OF THE WISCONSIN DEPARTMENT OF TRANSPORTATION OFFICE IN EAU CLAIRE.

ALL RIGHT-OF-WAY LINES DEPICTED IN THE NON-AQUISITION AREAS ARE INTENDED TO RE-ESTABLISH EXISTING RIGHT-OF-WAY LINES AS DETERMINED FROM PREVIOUS PROJECTS, OTHER RECORDED DOCUMENTS, OR FROM CENTERLINE OF EXISTING PAVEMENTS.

GN

SCALE, FEET 0 50 100

LOCATION SKETCH R-10-W

LOCATION MAP SCALE 1"=1.5 MI

AECOM

I, RODERICK D. STEEGE PROFESSIONAL LAND SURVEYOR, HEREBY CERTIFY THAT IN FULL COMPLIANCE WITH THE PROVISIONS OF SECTION 84.095 OF THE WISCONSIN STATUTES AND UNDER THE DIRECTION OF THE DEPARTMENT OF TRANSPORTATION, I HAVE SURVEYED AND MAPPED THIS TRANSPORTATION PROJECT PLAT 7090-00-24-4.01 AND THAT SUCH PLAT CORRECTLY REPRESENTS ALL EXTERIOR BOUNDARIES OF THE SURVEYED LAND.

SIGNATURE: Roderick D. Steege DATE: 2/21/19
PRINT NAME: RODERICK D. STEEGE
REGISTRATION NUMBER: 1761

WISCONSIN RODERICK D. STEEGE 1761 PRINCETON, WI LAND SURVEYOR

THIS PLAT AND RELOCATION ORDER ARE APPROVED FOR THE WISCONSIN DEPARTMENT OF TRANSPORTATION NORTHWEST REGION.
SIGNATURE: Michael Piller DATE: 2/21/19
PRINT NAME: MICHAEL PILLER

7090-00-24-4.01

FILE NAME :\\USMSN1FS001\PROD\DATA\PROJECTS\60563458 - USH 12 CTH EE INTERSECTION\400_TECHNICAL\433_SURVEY-MAP\60563458\60563458\60563458.DWG DATE : 2/21/2019 1:11 PM PLOT BY : ARBUCKLE, ADRIAN PLOT NAME : PLOT SCALE : 1":50'
APPRAISAL PLAT DATE : FEBRUARY 21, 2019

WISCONSIN TRAFFIC (FIBER OPTIC)

BEGIN CONSTRUCTION STA. 30+80.01'EE'

XCEL ENERGY (GAS)

PI: 30+00.00'EE'

184+00.00'EB

184+00.00'WB

STA. 32+50.00'EE' = STA. 10+00.00'OM'

R/W

CONCRETE

ASPHALT

END CONSTRUCTION STA. 34+38.38'EE'

EP: 35+80.27'EE'

R/W

30+00'EE'

31+00'EE'

32+00'EE'

33+00'EE'

N TOWN HALL RD

34+00'EE'

35+00'EE'

BP: 10+00.00'OM'

USH 12

STA. 30+54.00'EE' = STA. 184+51.67'WB'

PC: 10+26.76'OM'

R/W

STA. 30+00.00'EE' = STA. 184+52.45'EB'

185+00.00'EB

185+00.00'WB

OLD MILL PLAZA

SLOPE INTERCEPT

R/W

WEST WISCONSIN TELECOM COOPERATIVE (FIBER OPTIC)

XCEL ENERGY (ELECTRICITY)

WEST WISCONSIN TELECOM COOPERATIVE (TELEPHONE)

XCEL ENERGY (GAS)

SLOPE INTERCEPTS (TYP.)

SEE "PLAN AND PROFILE: CURB RETURNS" FOR ADDITIONAL GRADE INFORMATION ALONG CURB

960
950
940
930
920
910
900

STA 30+80.00 EL 924.50

STA 30+94.00 EL 924.22

STA 31+63.10 EL 925.96

2.00%

2.51%

EXISTING GROUND

FINISHED PROFILE

END CONSTRUCTION STA. 34+38.38'EE'

BEGIN CONSTRUCTION STA. 30+80.01'EE'

EXISTING GROUND ELEVATION

FINISHED ELEVATION

924.37

925.63

29'EE'
30'EE'
31'EE'
32'EE'
33'EE'
34'EE'
35'EE'
35'EE'

PROJECT NO: 7090-00-74	HWY: USH 12	COUNTY: EAU CLAIRE	PLAN AND PROFILE: N TOWN HALL RD	SHEET 64	E

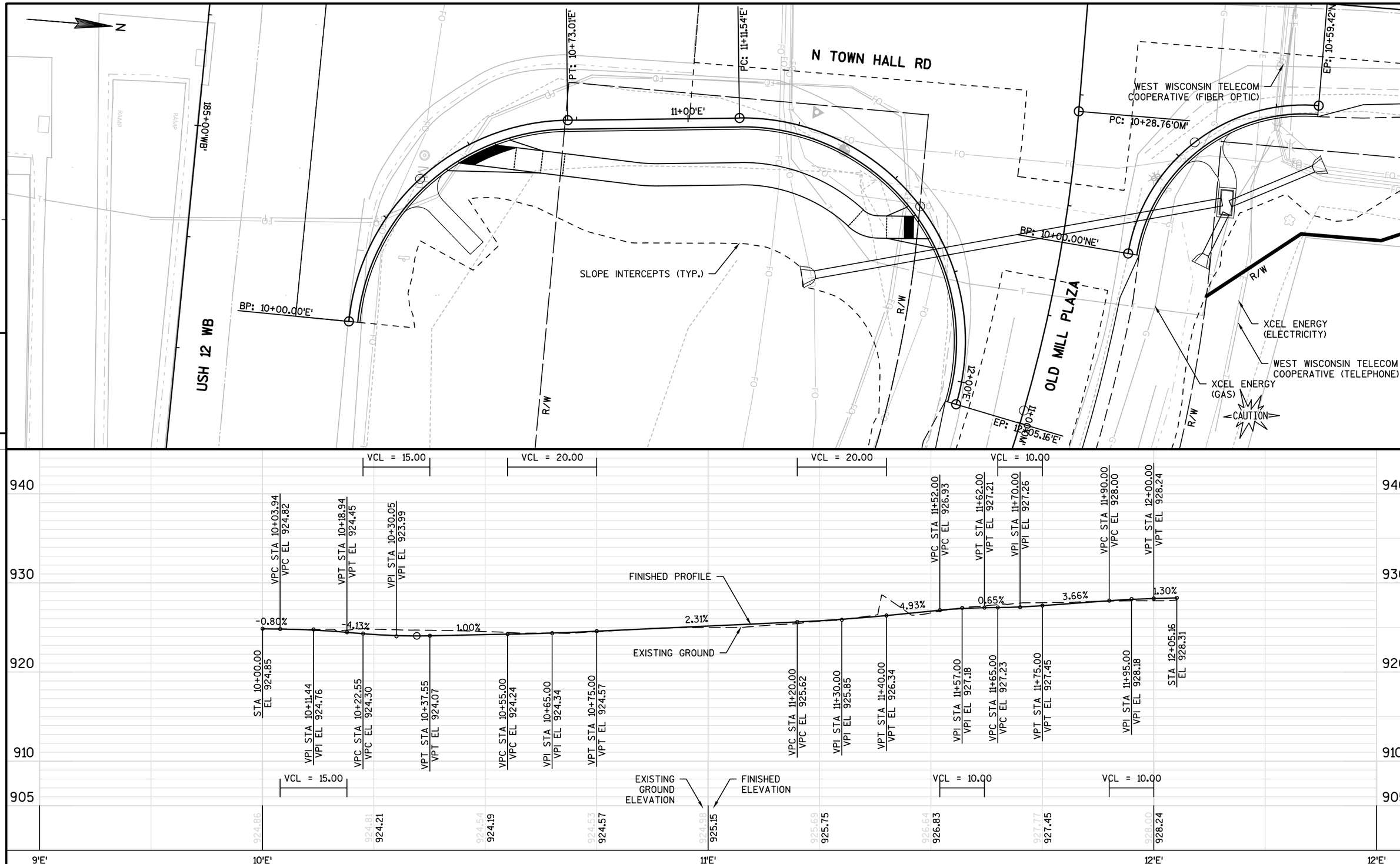

PROJECT NO:7090-00-74	HWY:USH 12	COUNTY:EAU CLAIRE	PLAN AND PROFILE: CURB RETURNS	SHEET 65	E

FILE NAME : \\USMSN1FS001\PROD\DATA\PROJECTS\60563458 - USH 12 CTH EE INTERSECTION\900_WORK\910_CAD\20-SHEETS\050102_PP.DWG PLOT DATE : 4/29/2019 3:15 PM PLOT BY : CZECH, ANDREW PLOT NAME : PLOT SCALE : 1 IN:20 FT

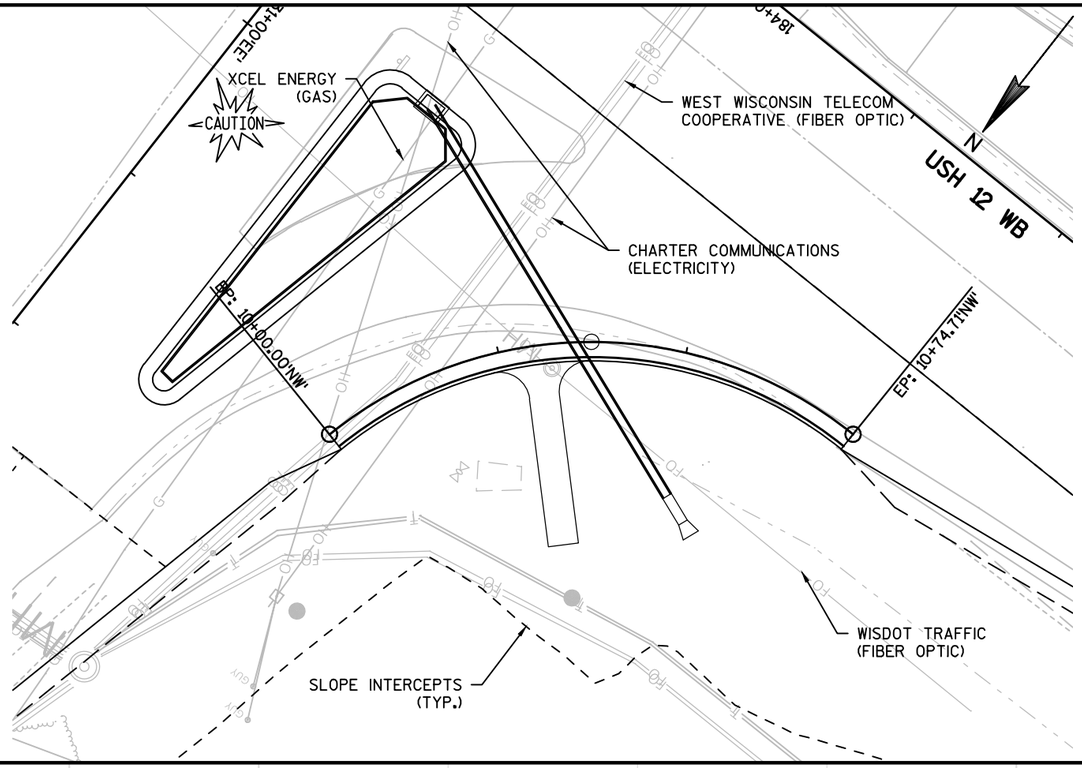

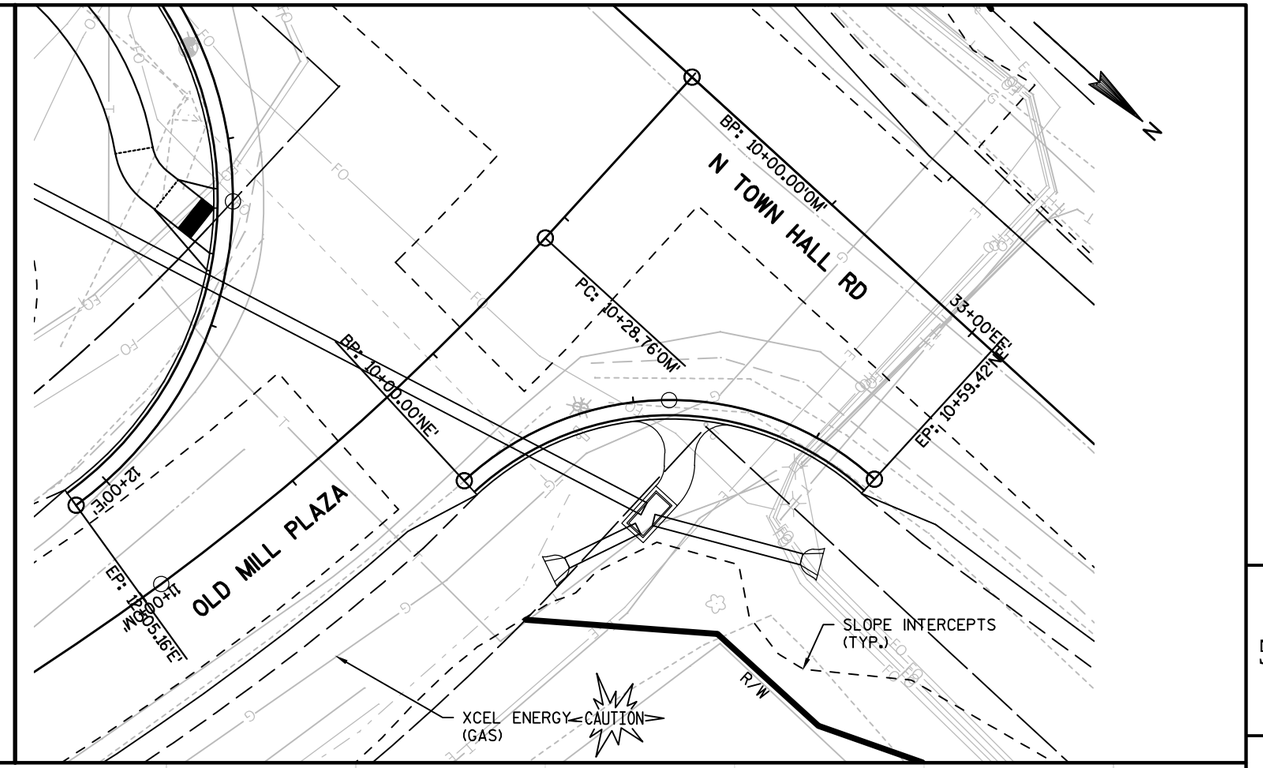

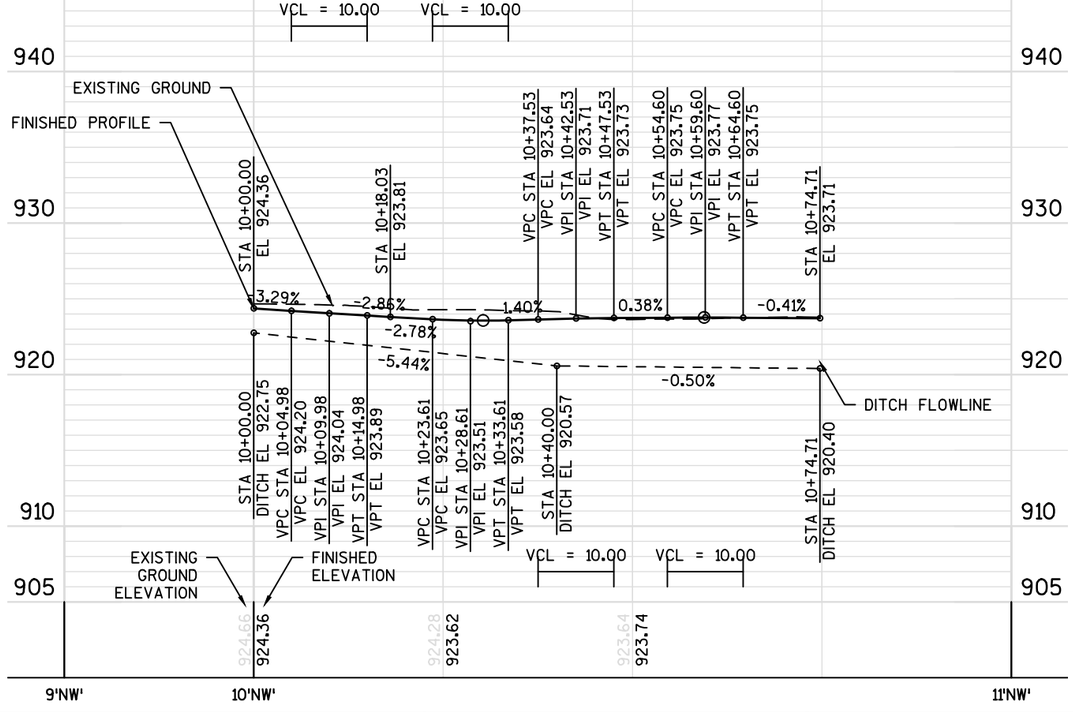

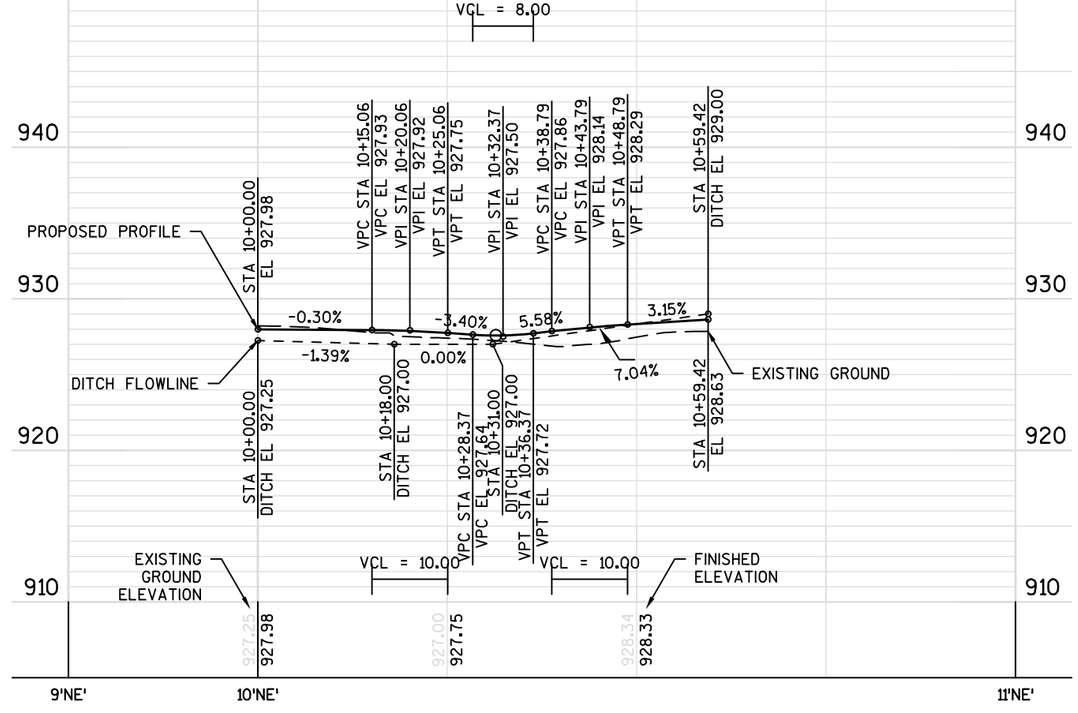

PROJECT NO: 7090-00-74	HWY: USH 12	COUNTY: EAU CLAIRE	PLAN AND PROFILE: CURB RETURNS	SHEET 66 E

Standard Detail Drawing List

08A05-19B	INLET COVERS TYPE B, B-A, C, MS, MS-A, & WM
08A05-19C	INLET COVERS TYPE F, HM, HM-S, S, T, V, HM-GJ, & HM-GJ-S
08C07-02	INLETS 2X2-FT, 2X2.5-FT, 2X3-FT AND 2.5X3-FT
08C08-02	INLETS MEDIAN 1 AND 2 GRATE
08D01-20A	CONCRETE CURB & GUTTER
08D01-20B	CONCRETE CURB, TIES AND CURB AND GUTTER APPLICATIONS
08D04-05	CONCRETE SURFACE DRAINS & ASPHALTIC FLUMES
08D05-20A	CURB RAMPS TYPES 1 AND 1-A
08D05-20B	CURB RAMPS TYPES 2 AND 3
08D05-20C	CURB RAMPS TYPES 4A AND 4A1
08D05-20D	CURB RAMPS TYPE 4B AND 4B1
08D05-20E	CURB RAMPS TYPES 5, 6, 7A, 7B & 8
08D05-20F	CURB RAMPS RADIAL DETECTABLE WARNING FIELD APPLICATIONS
08D05-20G	CURB RAMPS RECTANGULAR AND RADIAL DETECTABLE WARNING PLATES
08E08-03	TYPICAL INSTALLATIONS OF EROSION BALES / TEMPORARY DITCH CHECKS
08E09-06	SILT FENCE
08E10-02	INLET PROTECTION TYPE A, B, C AND D
08E15-01	CULVERT PIPE CHECK
08F01-11	APRON ENDWALLS FOR CULVERT PIPE
09A01-13A	AT-GRADE SIDE ROAD INTERSECTION, TYPES "B1", "B2", "C" AND D AND TEE INTERSECTION BYPASS LANE
09A01-13B	AT-GRADE SIDE ROAD INTERSECTION, TYPE "A1" & "A2"
09B02-10	CONDUIT
09B04-11	PULL BOX
09C02-09	CONCRETE BASES, TYPES 1, 2, 5, & 6
09C03-04	TRANSFORMER/PEDESTAL BASES
09E01-15A	POLE MOUNTINGS FOR TRAFFIC SIGNALS TYPE 2
09E01-15B	POLE MOUNTINGS FOR TRAFFIC SIGNALS AND LIGHTING UNITS, TYPE 3 (HEAVY DUTY)
09E01-15C	POLE MOUNTINGS FOR TRAFFIC SIGNALS AND LIGHTING UNITS, TYPE 4
09E01-15D	POLE MOUNTINGS FOR LIGHTING UNITS, TYPE 5 (30 FEET)
09E01-15G	HARDWARE DETAILS FOR POLE MOUNTINGS
09E03-06	NON-FREEWAY LIGHTING UNIT POLE WIRING
09E05-06	TRAFFIC SIGNAL STANDARD ORNAMENTAL BRACKET MOUNTINGS TYPICAL FOR 13 FT. OR 15 FT.
09E07-06	TRAFFIC SIGNAL STANDARD PEDESTRIAN AND FLASHER TYPICAL MOUNTING DETAILS
09F15-04B	LOOP DETECTOR INSTALLED IN BASE COURSE WITH PULL (SPLICE) BOX OFF ROADWAY (OPTION 2)
13C01-19	CONCRETE PAVEMENT LONGITUDINAL JOINTS AND TIES
13C11-12A	RURAL DOWELED CONCRETE PAVEMENT
13C11-12B	RURAL DOWELED CONCRETE PAVEMENT
13C18-07A	CONCRETE PAVEMENT JOINTING
13C18-07B	CONCRETE PAVEMENT STEEL REINFORCEMENT
13C18-07C	CONCRETE PAVEMENT JOINT TYPES
13C18-07D	CONCRETE PAVEMENT JOINT TYPES AT UTILITY FIXTURES
13C18-07F	CONCRETE PAVEMENT INTERSECTION BOXOUT FOR INTEGRAL CURB AND GUTTER
14B07-15A	CONCRETE BARRIER TEMPORARY PRECAST, 12'-6"
14B07-15B	CONCRETE BARRIER TEMPORARY PRECAST, 12'-6"
14B07-15C	CONCRETE BARRIER TEMPORARY PRECAST, 12'-6"
14B07-15D	CONCRETE BARRIER TEMPORARY PRECAST, 12'-6"
14B07-15E	CONCRETE BARRIER TEMPORARY PRECAST, 12'-6"
14B07-15F	CONCRETE BARRIER TEMPORARY PRECAST, 12'-6"
14B07-15G	CONCRETE BARRIER TEMPORARY PRECAST, 12'-6"
14B07-15H	CONCRETE BARRIER TEMPORARY PRECAST, 12'-6"
14B07-15I	CONCRETE BARRIER TEMPORARY PRECAST, 12'-6"
15A03-02A	FLEXIBLE MARKER POST FOR CULVERT END
15A03-02B	FLEXIBLE MARKER POST FOR CULVERT END
15C03-05	BARRICADES AND SIGNS FOR SIDEROAD CLOSURES
15C07-14B	PAVEMENT MARKING WORDS
15C07-14C	PAVEMENT MARKING ARROWS
15C08-19C	PAVEMENT MARKING (TURN LANES)
15C11-07B	CHANNELIZING DEVICES DRUMS, CONES, BARRICADES AND VERTICAL PANELS
15C18-04	MEDIAN ISLAND MARKING
15C27-03A	DOUBLE ARROW WARNING SIGN PLACEMENT
15D03-05	TRAFFIC CONTROL, LANE CLOSURE, SPEEDS GREATER THAN 40 M.P.H. WITH BARRIER
15D20-04	TRAFFIC CONTROL, SINGLE LANE CLOSURE, NON-FREEWAY/EXPRESSWAY
15D21-06	TRAFFIC CONTROL, INTERSECTION WITHIN SINGLE LANE CLOSURE
15D38-02A	TEMPORARY TRAFFIC CONTROL SIGN MOUNTING
15D38-02B	ATTACHMENT OF SIGNS TO POSTS

6

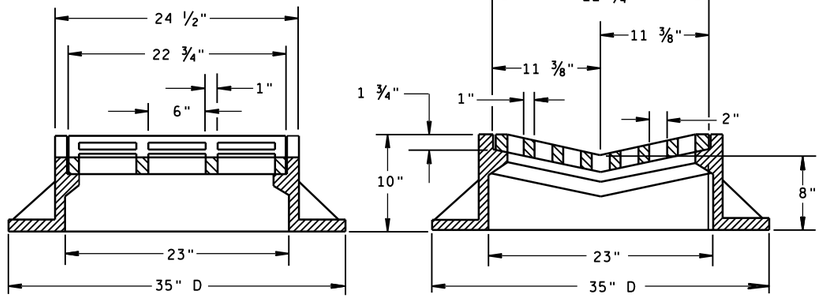

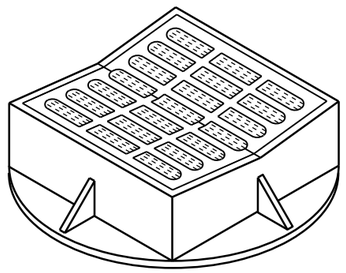

TYPE "B"

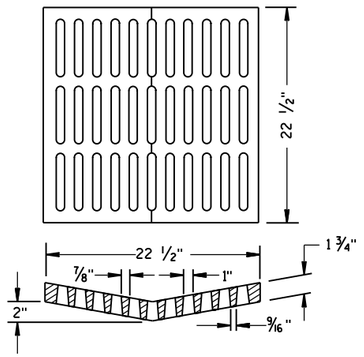

ALTERNATIVE GRATE FOR TYPE "B" COVER

USE WHERE PEDESTRIAN OR BICYCLE TRAFFIC IS POSSIBLE.
NOTED AS TYPE B-A ON THE DRAINAGE TABLE

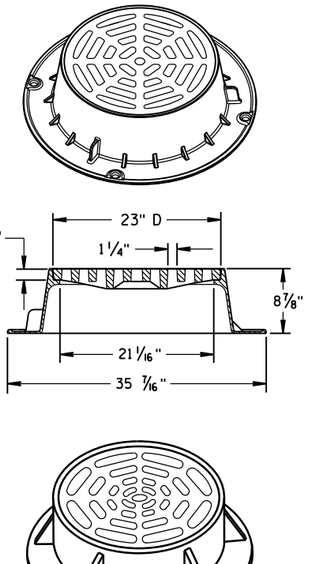

TYPE "C"

NOTE: EITHER CASTING IS ACCEPTABLE

GENERAL NOTES

DETAILS OF CONSTRUCTION, MATERIALS AND WORKMANSHIP NOT SHOWN ON THIS DRAWING SHALL CONFORM TO THE PERTINENT REQUIREMENTS OF THE STANDARD SPECIFICATIONS AND THE APPLICABLE SPECIAL PROVISIONS.

DETAIL DRAWINGS FOR PROPOSED ALTERNATE DESIGNS FOR CATCH BASIN, MANHOLE AND INLET COVERS SHALL BE SUBMITTED TO THE ENGINEER FOR APPROVAL PROVIDING THAT SUCH ALTERNATE DESIGNS MAKE PROVISION FOR EQUIVALENT CAPACITY AND STRENGTH.

ROUND FRAMES AND COVERS SHALL HAVE CONTINUOUSLY MACHINED BEARING SURFACES TO PREVENT ROCKING AND RATTLING.

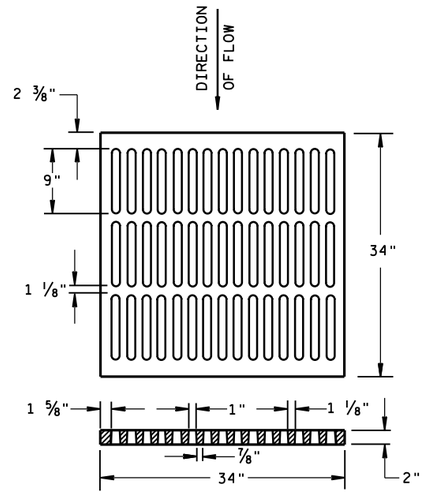

ALTERNATIVE TYPE "MS"

USE WHERE PEDESTRIAN OR BICYCLE TRAFFIC IS PERMITTED
NOTED AS TYPE MS-A ON THE DRAINAGE TABLE

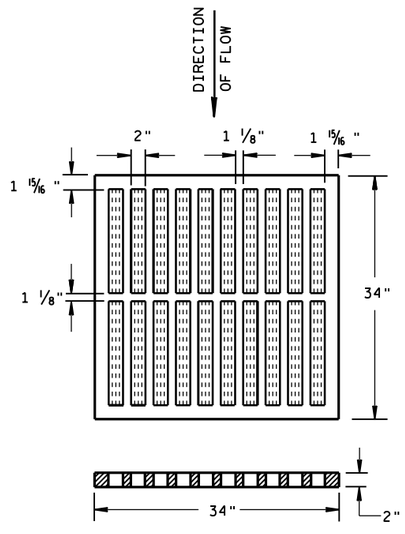

TYPE "MS"

USE ON FREEWAYS AND EXPRESSWAYS
NOTED AS TYPE MS ON DRAINAGE TABLE

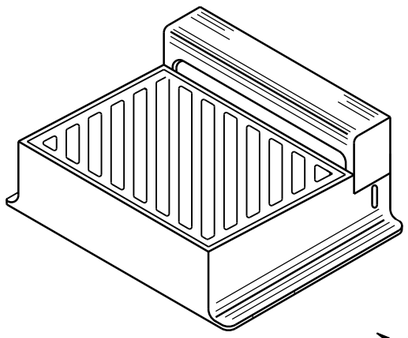

DIAGONAL SLOTS, SHALL BE ORIENTED TO THE DIRECTION OF FLOW AS ILLUSTRATED. GRATES ARE MANUFACTURED TO BE REVERSIBLE.

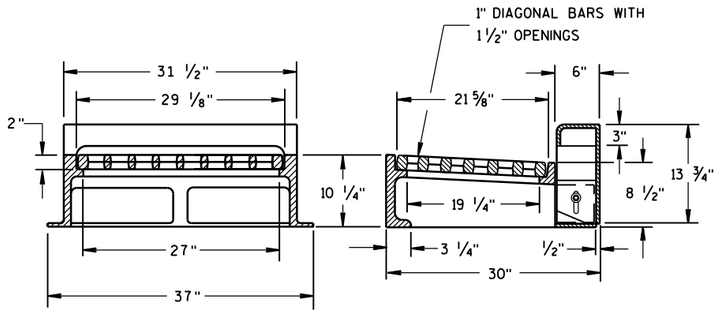

NOTE: CURB BOX HEIGHT ADJUSTABLE 6" TO 9"

TYPE "WM"

INLET COVERS
TYPE B, B-A, C, MS, MS-A, & WM

STATE OF WISCONSIN
DEPARTMENT OF TRANSPORTATION

APPROVED
11/27/2013 — DATE
/S/ Jerry H. Zogg — ROADWAY STANDARDS DEVELOPMENT ENGINEER
FHWA

6

S.D.D. 8 A 5-19b

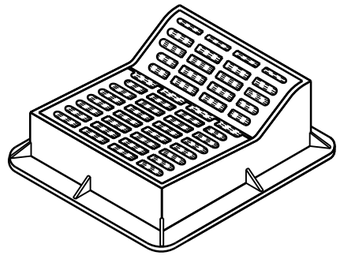

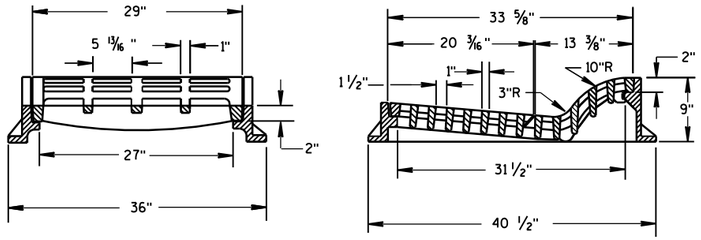

TYPE "F"

USE WITH TYPES A & D CONCRETE CURB & GUTTER, 36 INCH.

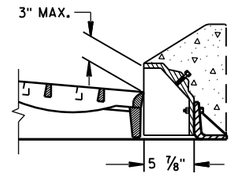

ALTERNATIVE CURB BOX FOR TYPE "HM" COVER

USE WITH TYPES G & J CONCRETE CURB & GUTTER, 30 INCH
NOTED AS TYPE HM-GJ ON DRAINAGE TABLE

NOTE:
SPECIAL GRATE FOR THE
TYPE "H" COVER MAY ALSO BE
USED FOR THE TYPE "HM-GJ" COVER
NOTED AS TYPE HM-GJ-S ON DRAINAGE TABLE

GENERAL NOTES

DETAILS OF CONSTRUCTION, MATERIALS AND WORKMANSHIP NOT SHOWN ON THIS DRAWING SHALL CONFORM TO THE PERTINENT REQUIREMENTS OF THE STANDARD SPECIFICATIONS AND THE APPLICABLE SPECIAL PROVISIONS.

DETAIL DRAWINGS FOR PROPOSED ALTERNATE DESIGNS FOR INLET COVERS SHALL BE SUBMITTED TO THE ENGINEER FOR APPROVAL PROVIDING THAT SUCH ALTERNATE DESIGNS MAKE PROVISION FOR EQUIVALENT CAPACITY AND STRENGTH.

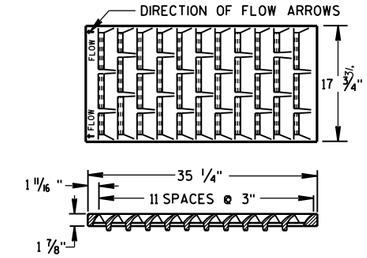

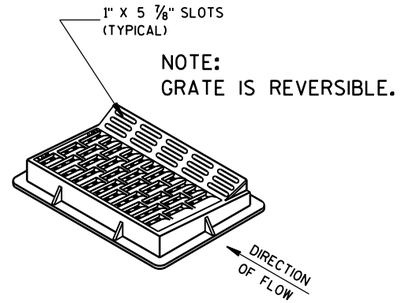

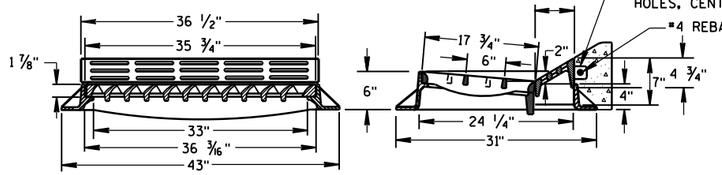

TYPE "HM"

USE WITH TYPES A & D CONCRETE CURB & GUTTER, 36 INCH.

NOTE:
SPECIAL GRATE FOR THE
TYPE "H" COVER MAY ALSO BE
USED FOR THE TYPE "HM" COVER
NOTED AS TYPE HM-S ON DRAINAGE TABLE

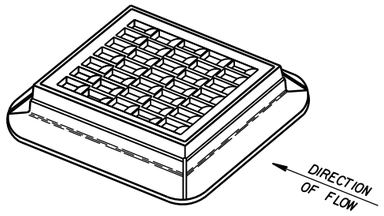

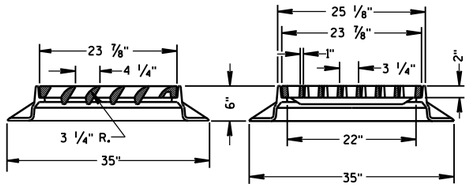

TYPE "S"

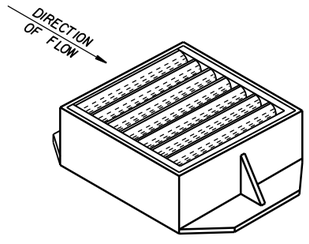

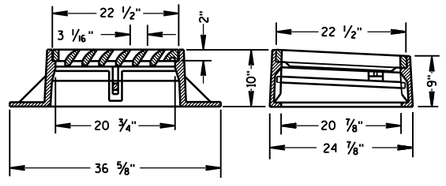

TYPE "V"

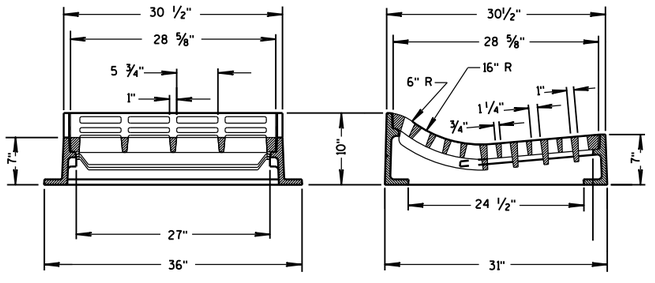

TYPE "T"

USE WITH TYPES R & T CONCRETE CURB & GUTTER, 36 INCH.

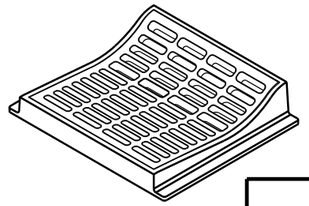

INLET COVERS
TYPE F, HM, HM-S, S, T, V, HM-GJ, & HM-GJ-S

STATE OF WISCONSIN
DEPARTMENT OF TRANSPORTATION

APPROVED
11/27/2013
DATE

/S/ Jerry H. Zogg
ROADWAY STANDARDS ENGINEER

FHWA

6

S.D.D. 8 A 5-19c

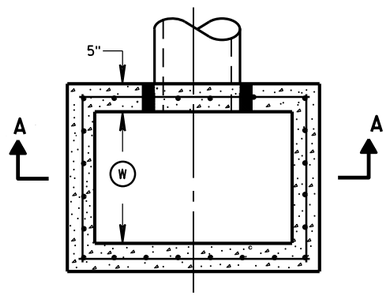

PLAN VIEW

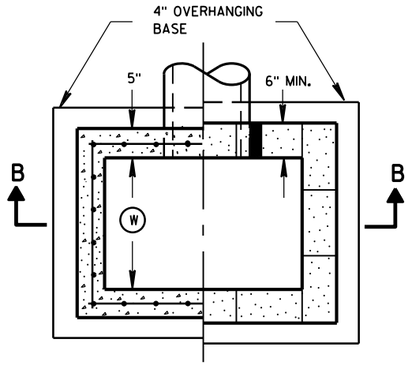

PLAN VIEW

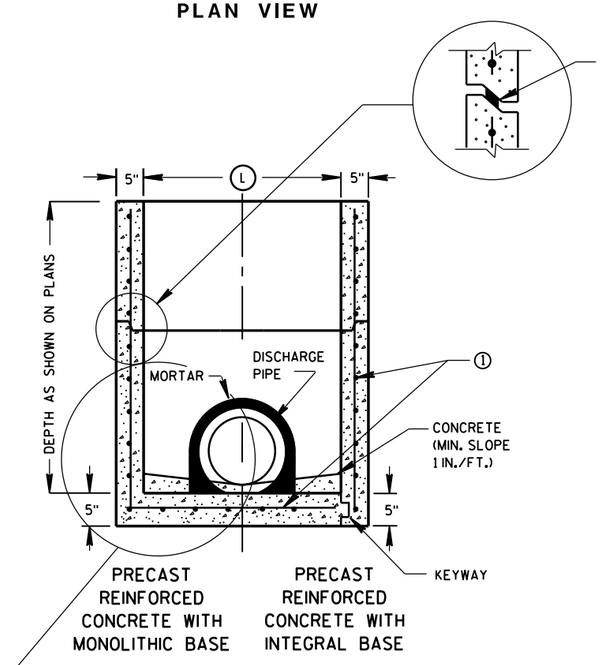

SECTION A-A

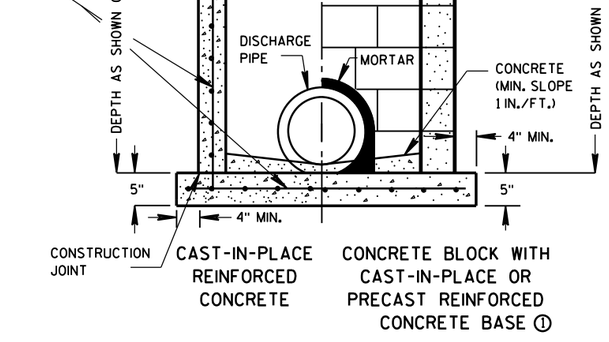

SECTION B-B

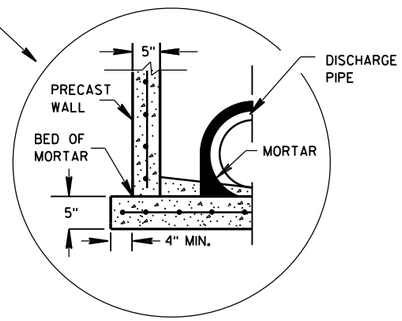

SEPARATE PRECAST REINFORCED CONCRETE BASE OPTION

GENERAL NOTES

DETAILS OF CONSTRUCTION, MATERIALS AND WORKMANSHIP NOT SHOWN ON THIS DRAWING SHALL CONFORM TO THE PERTINENT REQUIREMENTS OF THE STANDARD SPECIFICATIONS AND THE APPLICABLE SPECIAL PROVISIONS.

UNLESS OTHERWISE AUTHORIZED IN WRITING BY THE ENGINEER, THE CONTRACTOR SHALL NOT ORDER AND DELIVER PRECAST INLET UNITS REQUIRED FOR THE PROJECT UNTIL A LIST OF SIZES IS FURNISHED BY THE ENGINEER.

DETAILED DRAWINGS FOR PROPOSED ALTERNATE DESIGNS FOR UNDERGROUND DRAINAGE STRUCTURES SHALL BE SUBMITTED TO THE ENGINEER FOR APPROVAL PROVIDING THAT SUCH ALTERNATE DESIGNS MAKE PROVISION FOR EQUIVALENT CAPACITY AND STRENGTH.

ALL PRECAST INLET UNITS SHALL CONFORM TO THE PERTINENT REQUIREMENTS OF ASTM C 913.

ALL DRAINAGE STRUCTURES ARE DESIGNATED ON THE PLANS AS "MANHOLES 3X3-L", "CATCH BASINS 4-B", "INLETS 2X3-H", ETC. THE FIRST NUMBERS DESIGNATES THE SIZE OF THE STRUCTURE, AND THE FOLLOWING LETTER DESIGNATES THE TYPE OF COVER TO BE USED TO COMPRISE THE COMPLETE UNIT.

BASES SHALL BE PLACED ON A BED OF MATERIAL AT LEAST 6 INCHES IN DEPTH, WHICH MEETS THE REQUIREMENTS OF FOUNDATION BACKFILL. THIS BEDDING SHALL BE COMPACTED AND PROVIDE UNIFORM SUPPORT FOR THE ENTIRE AREA OF THE BASE.

ALL BAR STEEL REINFORCEMENT SHALL BE EMBEDDED 2 INCHES CLEAR UNLESS OTHERWISE SHOWN OR NOTED.

PRECAST REINFORCED RISERS SHALL HAVE A TONGUE AND GROOVE JOINT WITH TONGUE UP OR DOWN.

4" OVERHANGING BASES ARE REQUIRED FOR CAST-IN-PLACE REINFORCED CONCRETE AND CONCRETE BLOCK INSTALLATIONS.
4" OVERHANG IS REQUIRED WHEN SEPARATE PRECAST BASE IS PROVIDED.
OVERHANG IS NOT REQUIRED ON PRECAST STRUCTURES WITH AN INTEGRAL OR MONOLITHIC BASE.

MAXIMUM INSIDE PIPE DIAMETER DETERMINED BY 3 INCH CLEARANCE ON EACH SIDE OF THE OUTSIDE WALL OF THE PIPE. SEE DETAIL "A". ASSUMES PIPE ENTERS PERPENDICULAR TO THE STRUCTURE.

① FOR PRECAST INLETS PROVIDE REINFORCING STEEL IN ACCORDANCE TO ASTM C 913.

② CONTRACTOR TO PROVIDE DRAWING(S) STAMPED BY A PROFESSIONAL ENGINEER FOR STEEL REINFORCING DESIGN FOR CAST-IN-PLACE STRUCTURES.

INLET COVER MATRIX

INLET SIZE		INLET COVER TYPE	ALL A'S	ALL B'S	BW	F	ALL H'S	S	T	V	WM
	WIDTH (W) (FT)	LENGTH (L) (FT)									
2X2-FT	2	2	X	X				X		X	
2X2.5-FT	2	2.5			X			X	X	X	X
2X3-FT	2	3					X				
2.5X3-FT	2.5	3				X					

PIPE MATRIX

INLET SIZE	MAXIMUM INSIDE PIPE DIAMETER	
	WIDTH (IN)	LENGTH (IN)
2X2-FT	12	12
2X2.5-FT	12	18
2X3-FT	12	24
2.5X3-FT	18	24

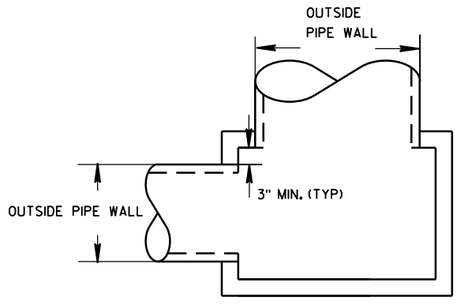

DETAIL "A"

INLETS 2X2-FT, 2X2.5-FT, 2X3-FT AND 2.5X3-FT

STATE OF WISCONSIN
DEPARTMENT OF TRANSPORTATION

APPROVED
Sept., 2016 — DATE
/S/ Rodney Taylor
ROADWAY STANDARDS D IT
UNIT SUPERVIS
FHWA

INLETS 2X2-FT, 2X2.5-FT, 2X3-FT AND 2.5X3-FT

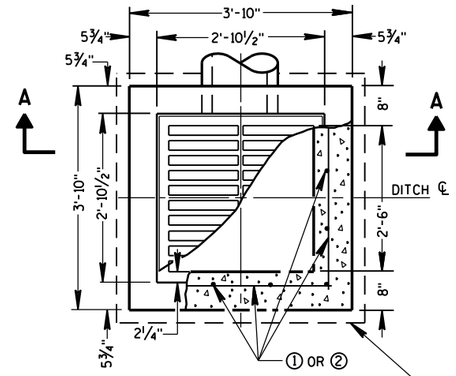

PLAN VIEW

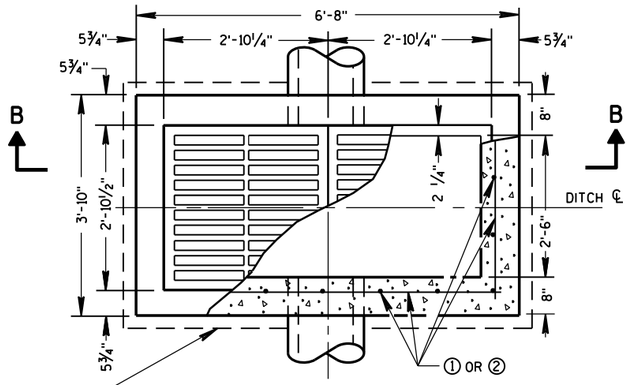

PLAN VIEW

4" OVERHANGING BASE ON REINFORCED CAST-IN-PLACE CONCRETE INLETS

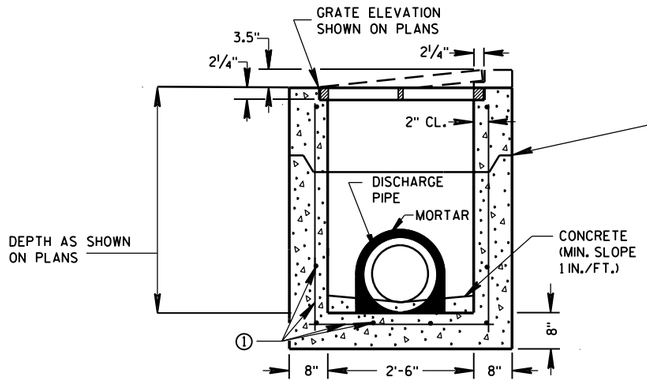

PRECAST REINFORCED CONCRETE SECTION A-A

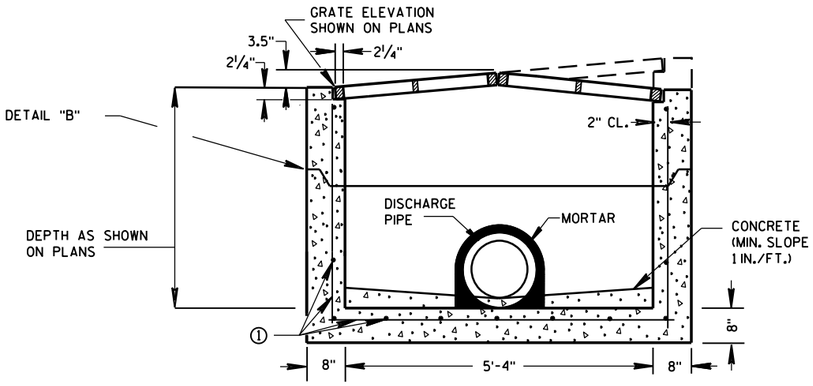

PRECAST REINFORCED CONCRETE SECTION B-B

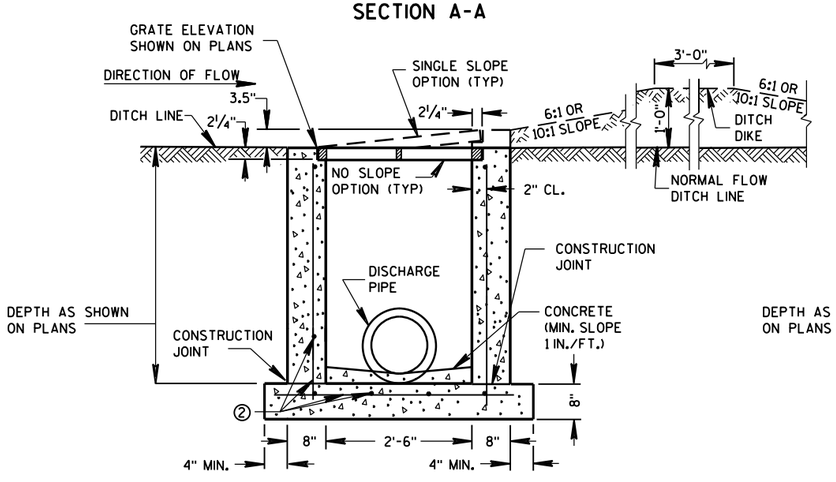

REINFORCED CAST-IN-PLACE CONCRETE SECTION A-A

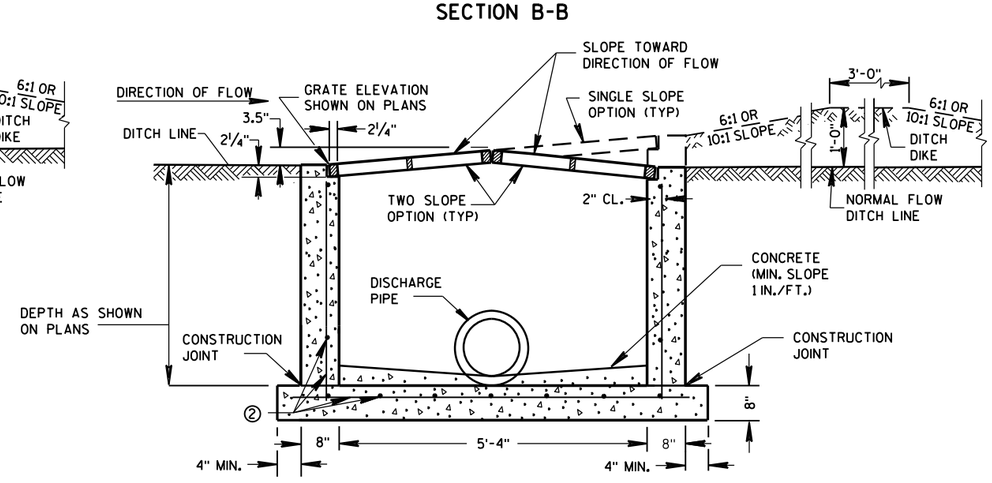

REINFORCED CAST-IN-PLACE CONCRETE SECTION B-B

GENERAL NOTES

DETAILS OF CONSTRUCTION, MATERIALS AND WORKMANSHIP NOT SHOWN ON THIS DRAWING SHALL CONFORM TO THE PERTINENT REQUIREMENTS OF THE STANDARD SPECIFICATIONS AND THE APPLICABLE SPECIAL PROVISIONS.

UNLESS OTHERWISE AUTHORIZED IN WRITING BY THE ENGINEER, THE CONTRACTOR SHALL NOT ORDER AND DELIVER PRECAST INLET UNITS REQUIRED FOR THE PROJECT UNTIL A LIST OF SIZES IS FURNISHED BY THE ENGINEER.

DETAILED DRAWINGS FOR PROPOSED ALTERNATE DESIGNS FOR INLETS WHICH MAY INCLUDE PRECAST REINFORCED CONCRETE INLETS, SHALL BE SUBMITTED TO THE ENGINEER FOR APPROVAL PROVIDING THAT SUCH ALTERNATE DESIGNS MAKE PROVISION FOR EQUIVALENT CAPACITY AND STRENGTH.

ALL MEDIAN INLETS ARE DESIGNATED ON THE PLANS AS "INLETS, 1G-MS", ETC. THE FIRST NUMBER AND LETTER DESIGNATE THE TYPE OF STRUCTURE, AND THE FOLLOWING LETTERS DESIGNATE THE TYPE OF COVER TO BE USED TO COMPRISE THE COMPLETE UNIT.

BASES SHALL BE PLACED ON A BED OF MATERIAL AT LEAST 6 INCHES IN DEPTH, WHICH MEETS THE REQUIREMENTS OF FOUNDATION BACKFILL. THIS BEDDING SHALL BE COMPACTED AND PROVIDE UNIFORM SUPPORT FOR THE ENTIRE AREA OF THE BASE.

ALL BAR STEEL REINFORCEMENT SHALL BE EMBEDDED 2 INCHES CLEAR UNLESS OTHERWISE SHOWN OR NOTED.

PRECAST REINFORCED RISERS SHALL HAVE A TONGUE AND GROOVE JOINT WITH TONGUE UP OR DOWN.

ALL PRECAST INLET UNITS SHALL CONFORM TO THE PERTINENT REQUIREMENTS OF ASTM C 913.

MAXIMUM INSIDE PIPE DIAMETER DETERMINED BY 3" CLEARANCE ON EACH SIDE OF THE OUTSIDE WALL OF THE PIPE. SEE DETAIL "A". ASSUMES PIPE ENTERS PERPENDICULAR TO THE STRUCTURE.

① FOR PRECAST INLETS PROVIDE REINFORCING STEEL IN ACCORDANCE TO ASTM C 913.

② CONTRACTOR TO PROVIDE DRAWING(S) STAMPED BY A PROFESSIONAL ENGINEER FOR STEEL REINFORCING DESIGN FOR CAST-IN-PLACE STRUCTURES.

PIPE MATRIX

	MAXIMUM INSIDE PIPE DIAMETER	
INLET SIZE	WIDTH (IN)	LENGTH (IN)
1 GRATE	18	18
2 GRATE	18	42

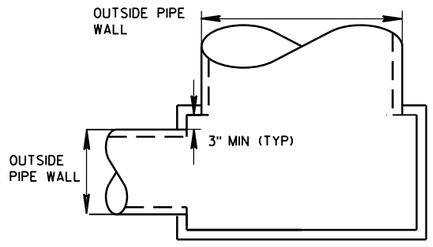

DETAIL "A"

JOINTS TO BE SEALED WITH A BUTYL RUBBER SEAL PER SEALANT MANUFACTURERS RECOMMENDATIONS CONFORMING TO ASTM C 990 (TYP)

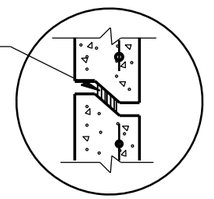

DETAIL "B"

INLETS MEDIAN 1 GRATE

INLETS MEDIAN 2 GRATE

INLETS MEDIAN 1 AND 2 GRATE

STATE OF WISCONSIN
DEPARTMENT OF TRANSPORTATION

APPROVED
Sept., 2016 — DATE
/S/ Rodney Taylor — ROADWAY STANDARDS UNIT SUPERVI ENT
FHWA

6
S.D.D. 8 C 8-2

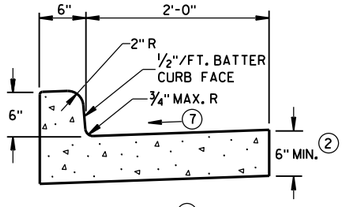

TYPES A (1) & D

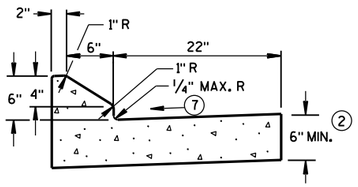

6" SLOPED CURB TYPES G (1) & J

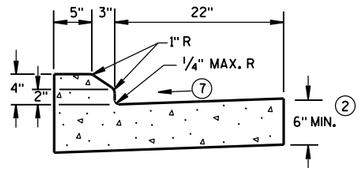

4" SLOPED CURB TYPES G (1) & J

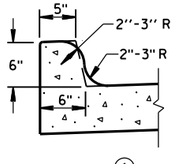

TYPES K (1) & L
(OPTIONAL CURB SHAPE)

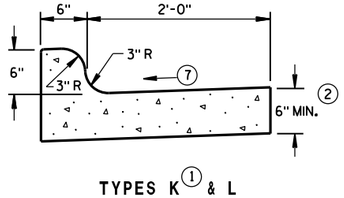

TYPES K (1) & L

CONCRETE CURB & GUTTER 30"

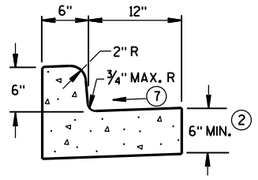

TYPES A (1) & D

CONCRETE CURB & GUTTER 18"

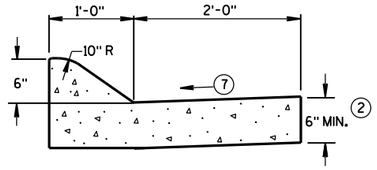

6" SLOPED CURB TYPES A (1) & D

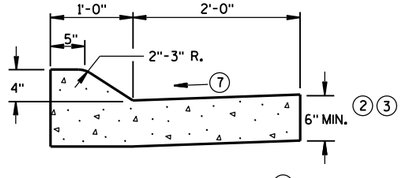

4" SLOPED CURB TYPES A (1) & D

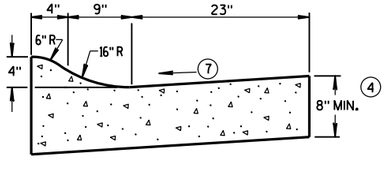

4" SLOPED CURB TYPES R (1) & T (5)

CONCRETE CURB & GUTTER 36"

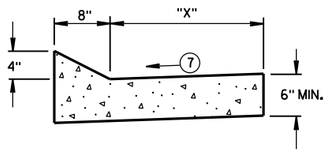

TYPES TBT & TBTT (1)

CONCRETE CURB & GUTTER

TBT & TBTT	"X"
30"	22"
36"	28"

GENERAL NOTES

DETAILS OF CONSTRUCTION, MATERIALS AND WORKMANSHIP NOT SHOWN ON THIS DRAWING SHALL CONFORM TO THE PERTINENT REQUIREMENTS OF THE CONTRACT.

PAVEMENT TIES AND TIE BARS SHALL BE EPOXY COATED IN CONFORMANCE WITH SUBSECTION 505.2.6.2 OF THE STANDARD SPECIFICATIONS.

INTEGRAL CURB & GUTTER SHALL CONFORM TO THE DETAILS SHOWN FOR CONCRETE CURB & GUTTER INCLUDING THE TRANSVERSE GUTTER SLOPE.

WHERE THE TRANSVERSE JOINTS IN THE PAVEMENT ARE REQUIRED TO BE SEALED, THE JOINTS IN THE INTEGRAL CURB AND GUTTER SHALL BE SEALED TO THE FACE OF CURB WITH THE SAME TYPE OF SEALANT. THE COST OF FURNISHING AND INSTALLING THIS SEALANT SHALL BE INCIDENTAL TO THE ITEM CONCRETE CURB AND GUTTER.

UNLESS OTHERWISE SHOWN ON THE TYPICAL CROSS SECTIONS, THE BASE AGGREGATE AND COMMON EXCAVATION LIMITS ARE 2'-0" BEHIND THE BACK OF CURBS.

(1) TIE BARS ARE REQUIRED FOR CURB AND GUTTER TYPES A, G, K, R AND TBTT.

(2) THE BOTTOM OF CURB AND GUTTER MAY BE CONSTRUCTED EITHER LEVEL OR PARALLEL TO THE SLOPE OF THE SUBGRADE OR BASE AGGREGATE PROVIDED A 6" MINIMUM GUTTER THICKNESS IS MAINTAINED.

(3) USE 8" MINIMUM GUTTER THICKNESS WHEN USED WITH AN ADJACENT CONCRETE TRUCK APRON PLACED BEHIND BACK OF CURB.

(4) THE BOTTOM OF CURB AND GUTTER MAY BE CONSTRUCTED EITHER LEVEL OR PARALLEL TO THE SLOPE OF THE SUBGRADE OR BASE AGGREGATE PROVIDED A 8" MINIMUM GUTTER THICKNESS IS MAINTAINED.

(5) THE FACE OF CURB IS 6" FROM THE BACK OF CURB.

(6) WHEN REVERSE SLOPE GUTTER IS REQUIRED, THE LOCATION(S) WILL BE SHOWN ELSEWHERE IN THE PLAN.

(7) USE 4% GUTTER CROSS SLOPE UNLESS OTHERWISE NOTED IN THE PLANS.

(8) INCLUDE LONGITUDINAL JOINT AND TIE BARS ALONG LANE EDGE WHEN CONCRETE PANEL WIDTH EXCEEDS THE MAXIMUM WIDTH PER TABLE BELOW. LONGITUDINAL JOINT(S) ARE NOT ALLOWED WITHIN TRAFFIC LANES AND BIKE LANES. LONGITUDINAL JOINT MAY BE SAWED.

PAVEMENT THICKNESS AND MAXIMUM CONCRETE PANEL WIDTH TABLE

PAVEMENT THICKNESS	MAXIMUM PANEL WIDTH
LESS THAN 10"	12'
10" & ABOVE	15'

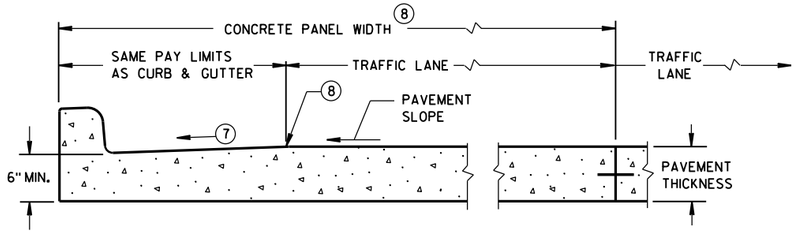

PARTIAL SECTION OF PAVEMENT * WITH INTEGRAL CURB & GUTTER

* BIKE LANE IS NOT SHOWN.

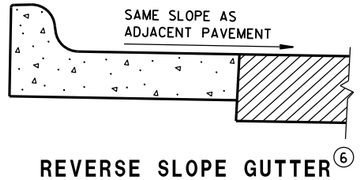

REVERSE SLOPE GUTTER (6)
(TYPICAL FOR ALL CURB & GUTTER TYPES)

CONCRETE CURB & GUTTER

STATE OF WISCONSIN
DEPARTMENT OF TRANSPO...

6

S.D.D. 8 D 1-20a

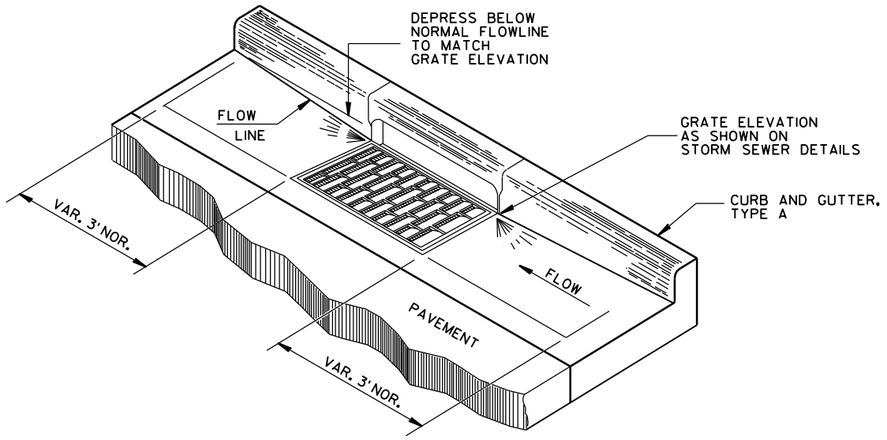

DETAIL OF CURB AND GUTTER AT INLETS

(TYPE H INLET COVER SHOWN)

GENERAL NOTES

DETAILS OF CONSTRUCTION, MATERIALS AND WORKMANSHIP NOT SHOWN ON THIS DRAWING SHALL CONFORM TO THE PERTINENT REQUIREMENTS OF THE CONTRACT.

PAVEMENT TIES AND TIE BARS SHALL BE EPOXY COATED IN CONFORMANCE WITH SUBSECTION 505.2.6.2 OF THE STANDARD SPECIFICATIONS.

UNLESS OTHERWISE SHOWN ON THE TYPICAL CROSS SECTIONS, THE BASE AGGREGATE AND COMMON EXCAVATION LIMITS ARE 2'-0" BEHIND THE BACK OF CURBS.

(1) TIE BARS ARE REQUIRED FOR CURB AND GUTTER TYPES A, G, K, R AND TBTT.

(2) THE BOTTOM OF CURB AND GUTTER MAY BE CONSTRUCTED EITHER LEVEL OR PARALLEL TO THE SLOPE OF THE SUBGRADE OR BASE AGGREGATE PROVIDED A 6" MINIMUM GUTTER THICKNESS IS MAINTAINED.

(9) REFER TO SDD 8D18 AND SDD 8D19 FOR ADDITIONAL DRIVEWAY ENTRANCE CURB DETAILS.

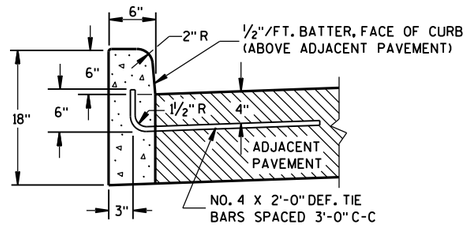

TYPES A(1) & D

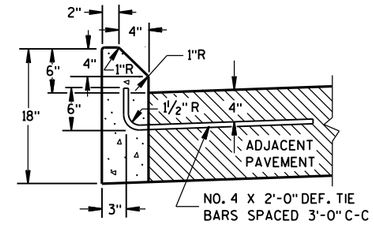

TYPES G(1) & J

CONCRETE CURB

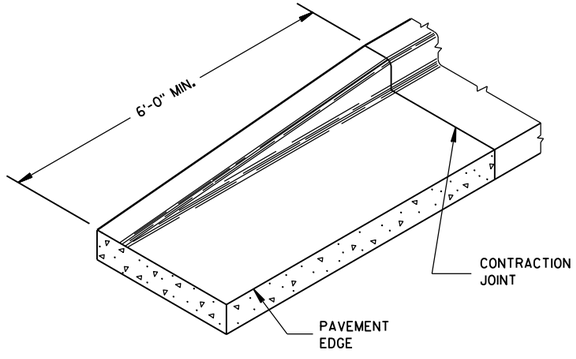

END SECTION CURB & GUTTER

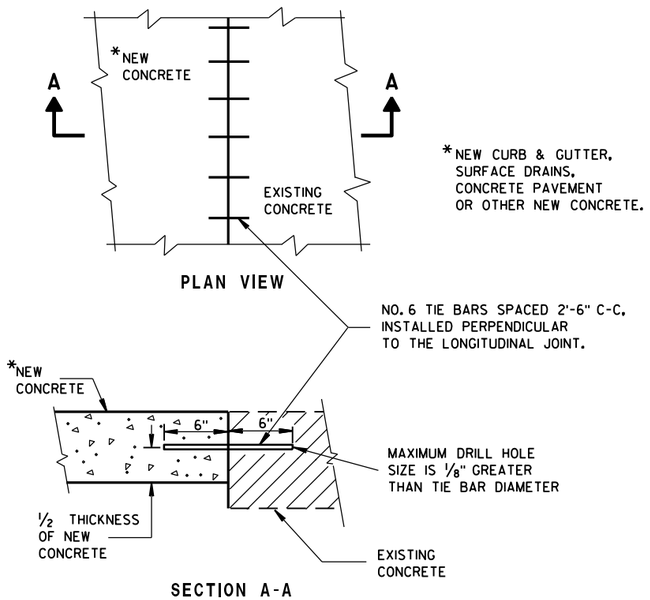

PLAN VIEW

SECTION A-A

TIE BARS DRILLED INTO EXISTING PAVEMENT

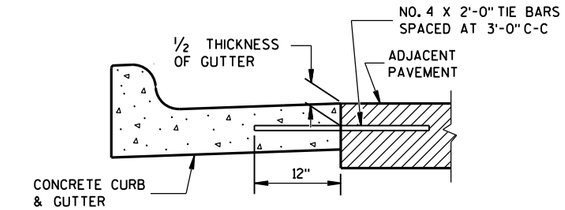

TYPICAL TIE BAR LOCATION (1)

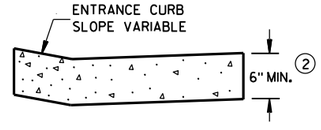

DRIVEWAY ENTRANCE CURB (9)

(WHEN DIRECTED BY THE ENGINEER)

CONCRETE CURB, TIES AND CURB AND GUTTER APPLICATIONS

STATE OF WISCONSIN
DEPARTMENT OF TRANSPORTATION

APPROVED
June, 2017 — DATE
/S/ Rodney Taylor
ROADWAY STANDARDS UNIT SUPERVISOR
FHWA

6

S.D.D. 8 D 1-20b

ASPHALTIC FLUME

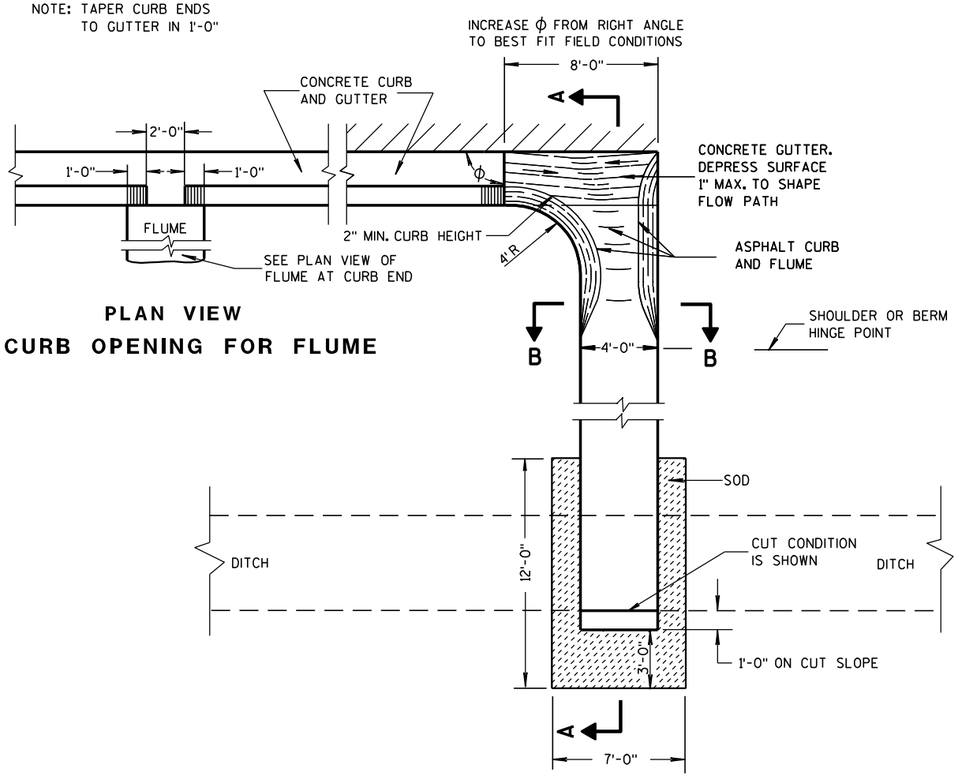

PLAN VIEW
CURB OPENING FOR FLUME

PLAN VIEW
FLUME AT CURB END

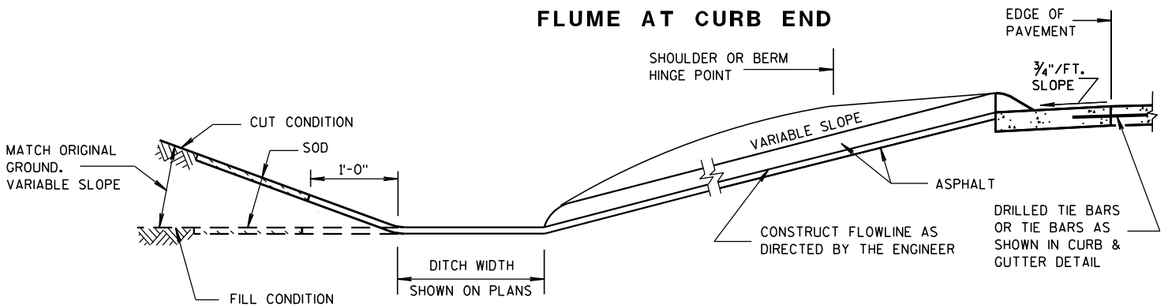

SECTION A-A

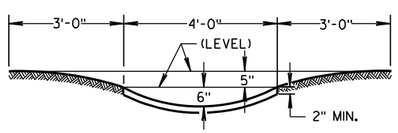

SECTION B-B

GENERAL NOTES

DETAILS OF CONSTRUCTION, MATERIALS AND WORKMANSHIP NOT SHOWN ON THIS DRAWING SHALL CONFORM TO PERTINENT REQUIREMENTS OF THE STANDARD SPECIFICATIONS AND APPLICABLE SPECIAL PROVISIONS.

WELDED STEEL WIRE FABRIC SHALL BE IN ACCORDANCE WITH AASHTO SPECIFICATION M55.

① JOINTS SHALL BE $\frac{1}{8}$ TO $\frac{1}{4}$ INCH WIDE BY $1\frac{1}{2}$ INCHES DEEP AND SPACED AT UNIFORM INTERVALS OF APPROXIMATELY 4 FEET.

② GEOTEXTILE FABRIC TYPE "R" SHALL UNDERLAY THE FULL LENGTH AND WIDTH OF THE CONCRETE SURFACE DRAIN AND RIPRAP.

③ CONCRETE SURFACE DRAIN WITHOUT CURB AND GUTTER MAY BE USED ON BACKSLOPES WHEN SPECIFIED

③ CONCRETE SURFACE DRAIN

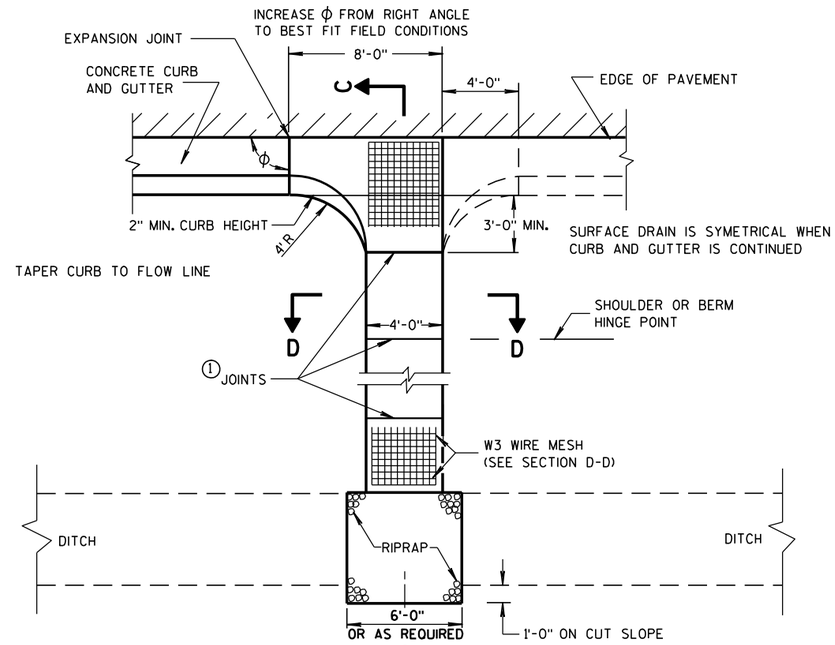

PLAN VIEW

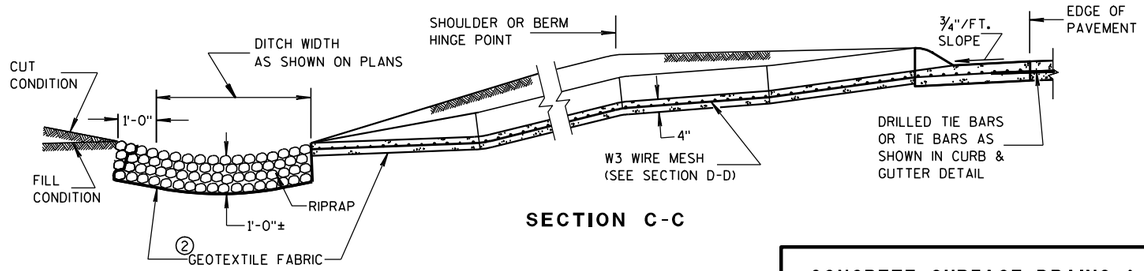

SECTION C-C

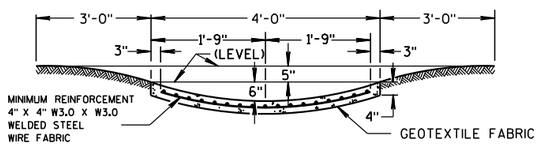

SECTION D-D

CONCRETE SURFACE DRAINS & ASPHALTIC FLUMES

STATE OF WISCONSIN
DEPARTMENT OF TRANSPORTATION

APPROVED
9-4-08 DATE
/S/ Jerry H. Zogg
ROADWAY STANDARDS ENGINEER
74
MENT
FHWA

6

S.D.D. 8 D 4-5

6

S.D.D. 8 D 4-5

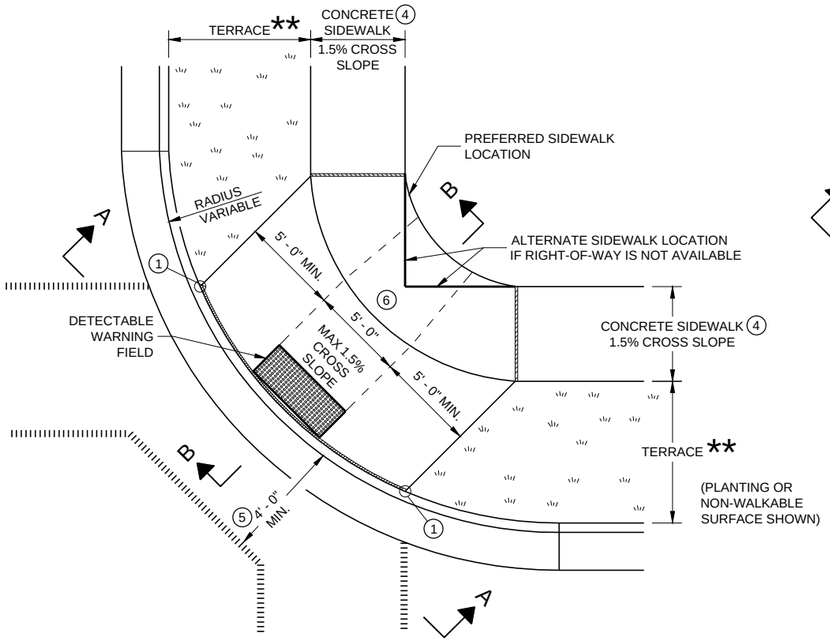

PLAN VIEW

CURB RAMP TYPE 1

(CENTER OF CORNER RADIUS)

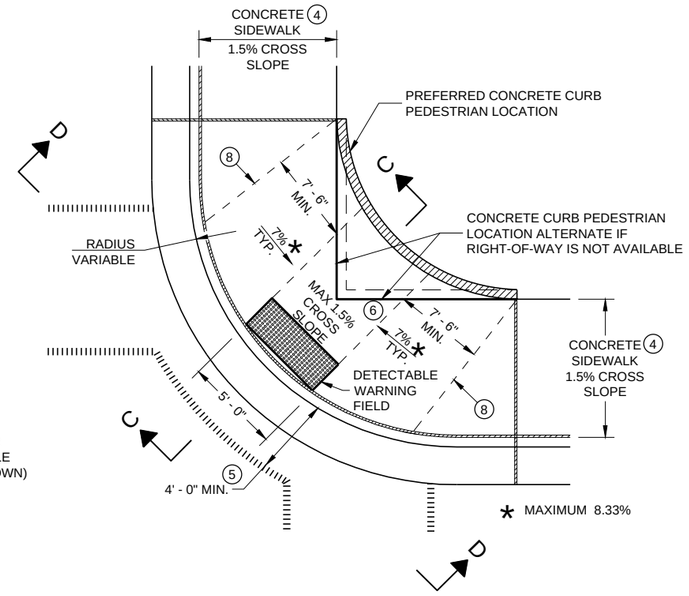

PLAN VIEW

CURB RAMP TYPE 1 - A

(NO TERRACE)

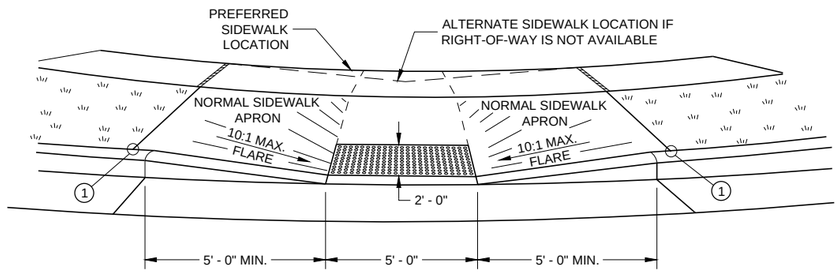

VIEW A - A FOR TYPE 1

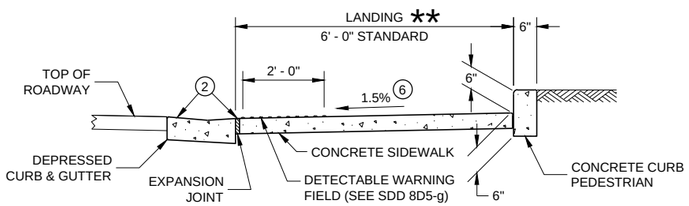

SECTION C - C FOR TYPE 1 - A

** WIDTH SHOWN ELSEWHERE IN THE PLANS

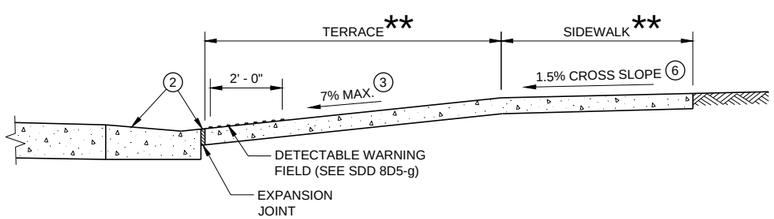

SECTION B - B FOR TYPE 1

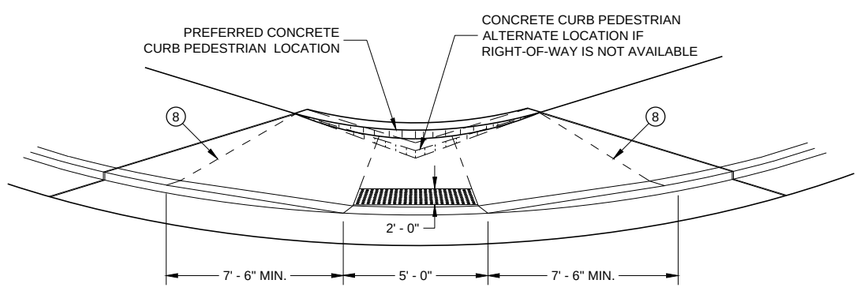

VIEW D - D FOR TYPE 1 - A

GENERAL NOTES

AVOID PLACING DRAINAGE STRUCTURES, JUNCTION BOXES OR OTHER OBSTRUCTIONS IN FRONT OF RAMP ACCESS AREAS.

DETAILS OF CONSTRUCTION, MATERIALS AND WORKMANSHIP NOT SHOWN ON THIS DRAWING SHALL CONFORM TO THE PERTINENT REQUIREMENTS OF THE STANDARD SPECIFICATIONS AND THE APPLICABLE SPECIAL PROVISIONS.

WHEN NECESSARY, THE SIDEWALK ELEVATION MAY BE LOWERED TO MEET THE HIGH POINT ON THE RAMP.

TYPE 1 CURB RAMPS SHALL HAVE A NORMAL SIDEWALK APRON AND CURB ON BOTH SIDES OF RAMP.

DETECTABLE WARNING FILED SHALL BE MEASURED AND PAID BY THE SQUARE FOOT AS "CURB RAMP DETECTABLE WARNING FIELD". THE CONCRETE PEDESTRIAN CURB, IF NEEDED, SHALL BE MEASURED AND PAID BY THE LINEAR FOOT AS "CONCRETE CURB PEDESTRIAN". CONCRETE SIDEWALK IN THE CURB RAMP AREA SHALL BE MEASURED AND PAID BY THE SQUARE FOOT AS CONCRETE SIDEWALK, INCLUDING THE AREA UNDER THE DETECTABLE WARNING FIELD.

SELECT CURB RAMP DETECTABLE WARNING FIELD MATERIALS AND DEVICES FROM THE DEPARTMENT'S APPROVED MATERIALS LIST. THE COLOR OF THE DETECTABLE WARNING FIELD IS SPECIFIED ELSEWHERE AND IS INCIDENTAL TO THE BID ITEM OF "CURB RAMP DETECTABLE WARNING FIELD"

DETECTABLE WARNING FIELDS THAT ARE INSTALLED AS A GROUP OR SIDE BY SIDE, SHALL BE FROM THE SAME MANUFACTURER.

SURFACE TEXTURE OF THE RAMP SHALL BE OBTAINED BY COARSE BROOMING TRANSVERSE TO THE SLOPE OF THE RAMP.

(1) THIS POINT IS AN EXTENSION OF OUTSIDE EDGE OF APPROACHING SIDEWALK WHERE IT MEETS THE BACK OF CONCRETE CURB. POINT LOCATION MAY BE ADJUSTED TO ALIGN WITH BEGINNING OF FULL-HEIGHT CURB IF THIS DISTANCE IS SHORT.

(2) GRADE CHANGE BETWEEN GUTTER FLAG SLOPE AND THE CURB RAMP SLOPE SHALL NOT EXCEED 11%. MAXIMUM GUTTER FLAG SLOPE IS 4%. PROVIDE LONGITUDINAL DRAINAGE AROUND CURB AND AWAY FROM CURB RAMP. NO VERTICAL LIPS OR DISCONTINUITIES GREATER THAN ¼ - INCH ARE ALLOWED. SLOPE OF CURB HEAD OPENING SHALL MATCH THE RAMP SLOPE, MINIMALLY 1.5% AND NOT TO EXCEED 7%. WHEN ADJACENT TO 1.5% LANDING, CONSTRUCT CURB HEAD OPENING AT 1.5% IN THE DIRECTION OF PEDESTRIAN TRAVEL.

(3) MAXIMUM 8.33% CURB RAMP SLOPE IS ALLOWABLE WITH FLATTENED GUTTER FLAG SLOPE AND NOT TO EXCEED 11% GRADE CHANGE.

(4) ±0.5% CONSTRUCTION TOLERANCE IN SIDEWALK CROSS SLOPE. THE SIDEWALK CROSS SLOPE SHALL NOT EXCEED 2% WITHOUT PRIOR APPROVAL FROM THE ENGINEER.

(5) PROVIDE A LEVEL LANDING IN THE STREET AND GUTTER AREA (2% MAXIMUM SLOPE IN ANY DIRECTION). WHEN THE GUTTER SLOPE EXCEEDS 2%, CONSTRUCT THE LEVEL LANDING IN THE STREET AREA.

(6) PROVIDE A LEVEL LANDING (MAXIMUM 2% SLOPE) IN ANY DIRECTION OF PEDESTRIAN TRAVEL. STANDARD LEVEL LANDING SIZE IS 5 FEET BY 5 FEET.

(8) PROVIDE GRADE BREAK PERPENDICULAR TO DIRECTION OF WHEELCHAIR TRAVEL.

LEGEND

- ½" EXPANSION JOINT SIDEWALK
- CONTRACTION JOINT FIELD LOCATED
- PAVEMENT MARKING CROSSWALK (WHITE)

CURB RAMPS TYPE 1 AND 1-A

STATE OF WISCONSIN
DEPARTMENT OF TRANSPORTATION

6

SDD 08D05 - 20a

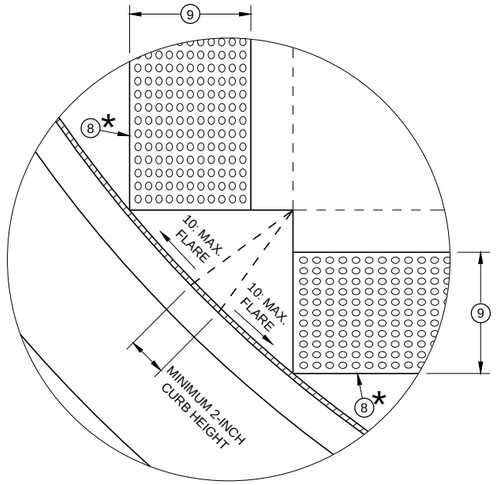

DETAIL A

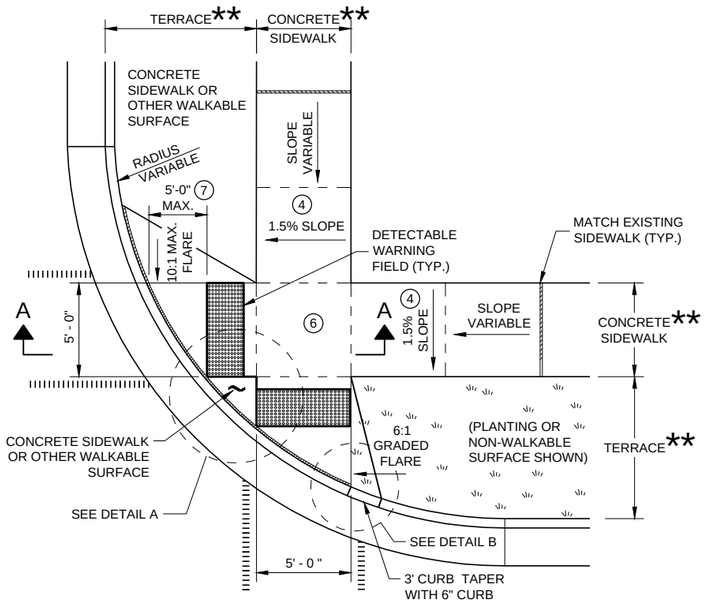

PLAN VIEW
CURB RAMP TYPE 2
(CENTER OF CORNER RADIUS)

GENERAL NOTES

AVOID PLACING DRAINAGE STRUCTURES, JUNCTION BOXES OR OTHER OBSTRUCTIONS IN FRONT OF RAMP ACCESS AREAS.

DETAILS OF CONSTRUCTION, MATERIALS AND WORKMANSHIP NOT SHOWN ON THIS DRAWING SHALL CONFORM TO THE PERTINENT REQUIREMENTS OF THE STANDARD SPECIFICATIONS AND THE APPLICABLE SPECIAL PROVISIONS.

DETECTABLE WARNING FIELDS THAT ARE INSTALLED AS A GROUP OR SIDE BY SIDE SHALL BE FROM THE SAME MANUFACTURER.

(2) GRADE CHANGE BETWEEN GUTTER FLAG SLOPE AND THE CURB RAMP SLOPE SHALL NOT EXCEED 11%. MAXIMUM GUTTER FLAG SLOPE IS 4%. PROVIDE LONGITUDINAL DRAINAGE AROUND CURB AND AWAY FROM CURB RAMP. NO VERTICAL LIPS OR DISCONTINUITIES GREATER THAN ¼ - INCH ARE ALLOWED. SLOPE OF CURB HEAD OPENING SHALL MATCH THE RAMP SLOPE, MINIMALLY 1.5% AND NOT TO EXCEED 7%. WHEN ADJACENT TO 1.5% LANDING, CONSTRUCT CURB HEAD OPENING AT 1.5% IN THE DIRECTION OF PEDESTRIAN TRAVEL.

(3) AN 8.33% CURB RAMP SLOPE IS ALLOWABLE WITH FLATTENED GUTTER FLAG SLOPE (2.67% OR LESS) AND NOT TO EXCEED 11% GRADE CHANGE.

(4) ±0.5% CONSTRUCTION TOLERANCE IN SIDEWALK CROSS SLOPE. THE SIDEWALK CROSS SLOPE SHALL NOT EXCEED 2% WITHOUT PRIOR APPROVAL FROM THE ENGINEER.

(6) PROVIDE A LEVEL LANDING (MAXIMUM 2% SLOPE) IN ANY DIRECTION OF PEDESTRIAN TRAVEL. STANDARD LEVEL LANDING SIZE IS 5 FEET X 5 FEET.

(7) WHEN GRADE BREAK DISTANCE EXCEEDS 5 FEET, USE RADIAL DETECTABLE WARNING FIELD PER SDD 8D5-f.

(8) PROVIDE GRADE BREAK PERPENDICULAR TO DIRECTION OF WHEELCHAIR TRAVEL.

(9) WHEN DISTANCE IS LESS THAN 6' - 0", IT MAY BE DIFFICULT TO ACHIEVE A 7% SLOPE OR FLATTER ALONG THE RAMP. REDUCE CURB HEIGHT IN TRIANGLE AREA TO ACHIEVE 7% SLOPE OR FLATTER ON RAMP. CONSTRUCT 2-INCH MINIMUM CURB HEIGHT BETWEEN 10:1 FLARES.

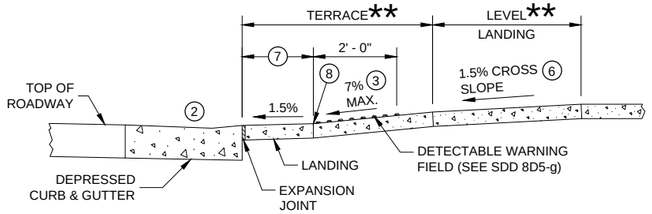

SECTION A - A FOR TYPE 2

* MAXIMUM 2.0% SLOPE IN ALL DIRECTIONS IN FRONT OF GRADE BREAK

** WIDTH SHOWN ELSEWHERE IN THE PLANS

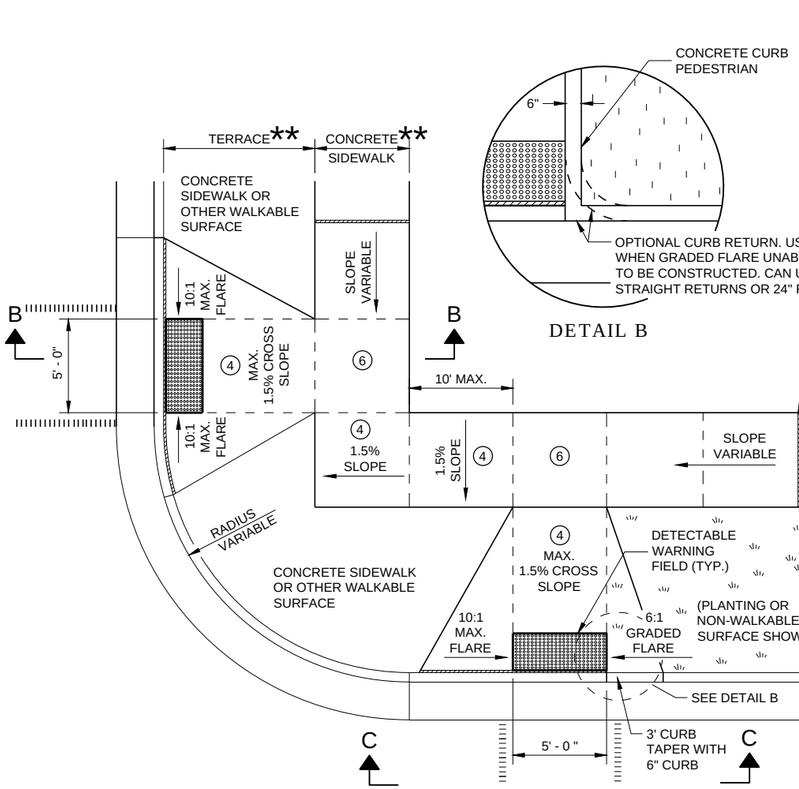

DETAIL B

PLAN VIEW
CURB RAMP TYPE 3
(OUTSIDE OF CROSSWALK AREA)

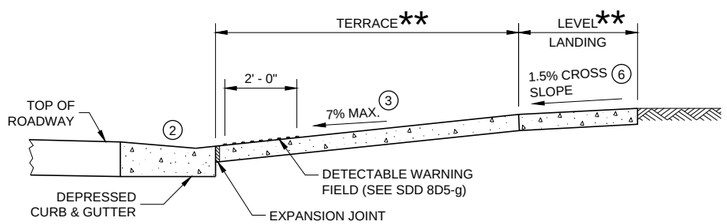

SECTION B - B FOR TYPE 3

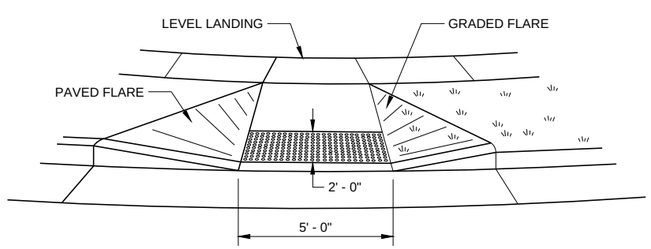

VIEW C - C FOR TYPE 3

LEGEND

½" EXPANSION JOINT SIDEWALK

CONTRACTION JOINT SIDEWALK

PAVEMENT MARKING CROSSWALK (WHITE)

CURB RAMPS
TYPE 2 AND 3

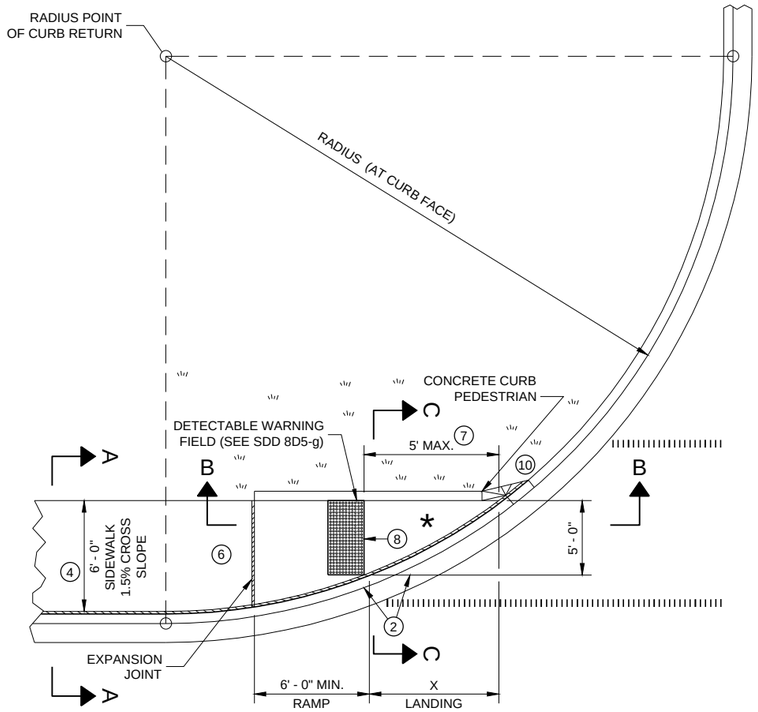

PLAN VIEW

CURB RAMP TYPE 4A

RADIUS (AT CURB FACE)	X
10 FEET	4' - 7"
15 FEET	6' - 5½"

INTERMEDIATE RADII CAN BE INTERPOLATED

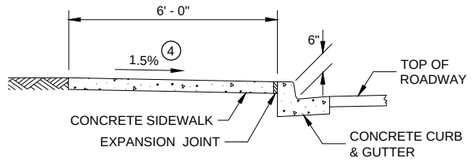

SECTION A - A FOR TYPE 4A

GENERAL NOTES

AVOID PLACING DRAINAGE STRUCTURES, JUNCTION BOXES OR OTHER OBSTRUCTIONS IN FRONT OF RAMP ACCESS AREAS.

DETAILS OF CONSTRUCTION, MATERIALS AND WORKMANSHIP NOT SHOWN ON THIS DRAWING SHALL CONFORM TO THE PERTINENT REQUIREMENTS OF THE STANDARD SPECIFICATIONS AND THE APPLICABLE SPECIAL PROVISIONS.

DETECTABLE WARNING FIELDS THAT ARE INSTALLED AS A GROUP OR SIDE BY SIDE, SHALL BE FROM THE SAME MANUFACTURER.

(2) GRADE CHANGE BETWEEN GUTTER FLAG SLOPE AND THE CURB RAMP SLOPE SHALL NOT EXCEED 11%. MAXIMUM GUTTER FLAG SLOPE IS 4%. PROVIDE LONGITUDINAL DRAINAGE AROUND CURB AND AWAY FROM CURB RAMP. NO VERTICAL LIPS OR DISCONTINUITIES GREATER THAN ¼ - INCH ARE ALLOWED. SLOPE OF CURB HEAD OPENING SHALL MATCH THE RAMP SLOPE, MINIMALLY 1.5% AND NOT TO EXCEED 7%. WHEN ADJACENT TO 1.5% LANDING, CONSTRUCT CURB HEAD OPENING AT 1.5% IN THE DIRECTION OF PEDESTRIAN TRAVEL.

(3) AN 8.33% CURB RAMP SLOPE IS ALLOWABLE WITH FLATTENED GUTTER FLAG SLOPE AND NOT TO EXCEED 11% GRADE CHANGE.

(4) ±0.5% CONSTRUCTION TOLERANCE IN SIDEWALK CROSS SLOPE. THE SIDEWALK CROSS SLOPE SHALL NOT EXCEED 2% WITHOUT PRIOR APPROVAL FROM THE ENGINEER.

(6) PROVIDE A LEVEL LANDING (MAXIMUM 2% SLOPE) IN ANY DIRECTION OF PEDESTRIAN TRAVEL. STANDARD LEVEL LANDING SIZE IS 5 FEET BY 5 FEET.

(7) WHEN THIS GRADE BREAK DISTANCE EXCEEDS 5 FEET, USE RADIAL DETECTABLE WARNING FIELD PER SDD 8D5-f.

(8) PROVIDE GRADE BREAK PERPENDICULAR TO DIRECTION OF WHEELCHAIR TRAVEL.

(10) INSTALL TRANSITION NOSE (INCIDENTAL TO OTHER PAY ITEMS). DO NOT MARK TRANSITION NOSE.

LEGEND

½" EXPANSION JOINT SIDEWALK

CONTRACTION JOINT SIDEWALK

PAVEMENT MARKING CROSSWALK (WHITE)

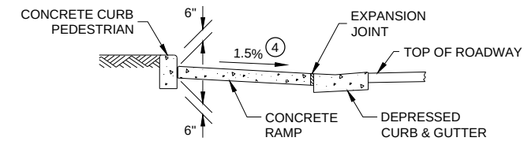

SECTION C - C FOR TYPE 4A

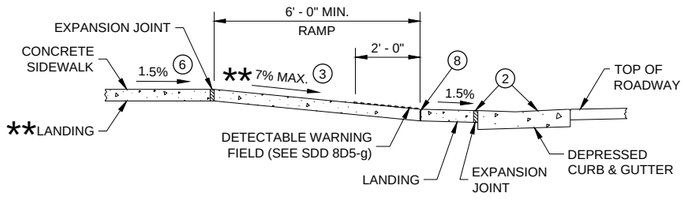

** IF RAMP SLOPE IS LESS THAN 5.0%, THEN NO ADJACENT UPHILL LANDING IS REQUIRED

SECTION B - B FOR
TYPE 4A AND TYPE 4A1

* MAXIMUM 2.0% SLOPE IN ALL DIRECTIONS IF FRONT OF GRADE BREAK

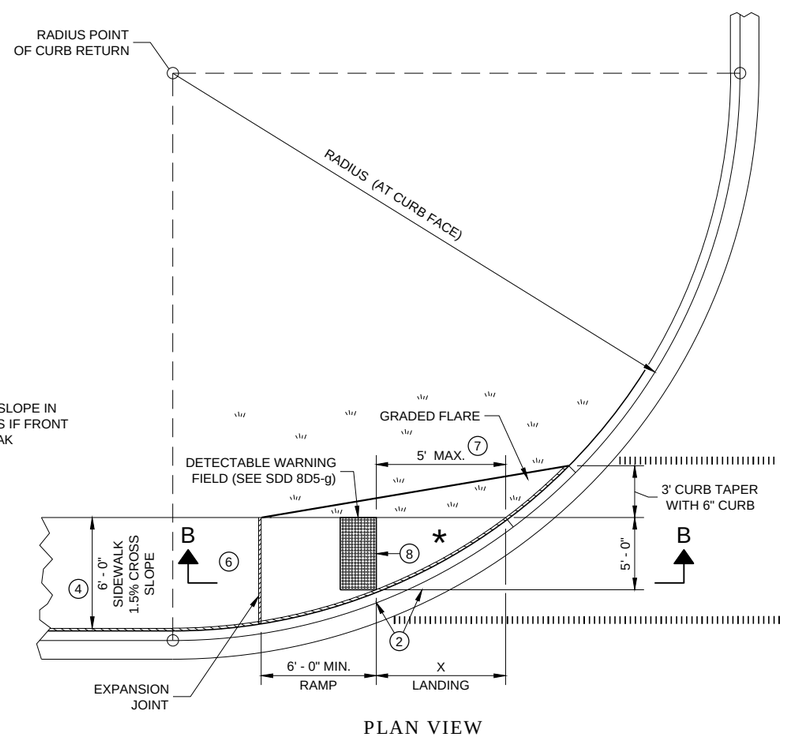

PLAN VIEW

CURB RAMP TYPE 4A1

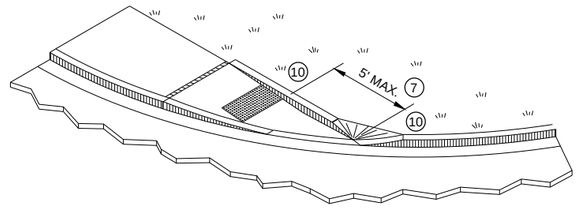

ISOMETRIC VIEW FOR TYPE 4A

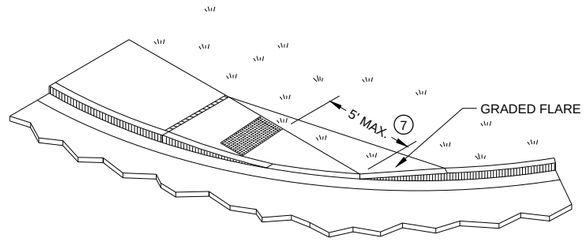

ISOMETRIC VIEW FOR TYPE 4A1

CURB RAMPS
TYPE 4A AND 4A1

STATE OF WISCONSIN
DEPARTMENT OF TRANSPORTATION

6

SDD 08D05 - 20c

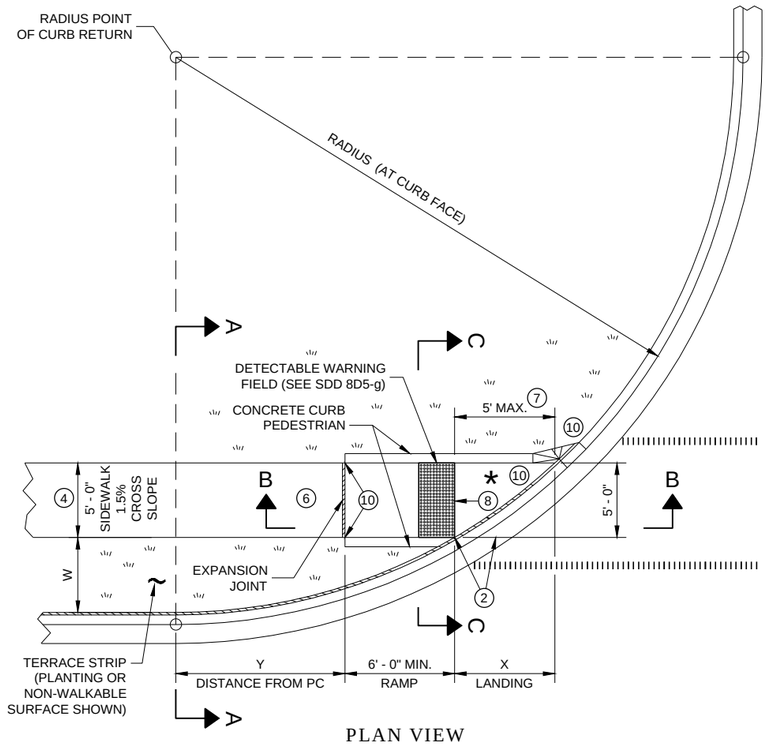

PLAN VIEW

CURB RAMP TYPE 4B

RADIUS (AT CURB FACE)	W = 3' - 0"		W = 4' - 0"		W = 5' - 0"		W = 6' - 0"		W = 7' - 0"		W = 8' - 0"		W = 9' - 0"		W = 10' - 0"	
	X	Y	X	Y	X	Y	X	Y	X	Y	X	Y	X	Y	X	Y
10 FEET	2' - 10 ¼"	0' - 5"	2' - 1"	1' - 4 ½"	1' - 5"	2' - 1"	0' - 10"	2' - 7 ½"	0' - 3 ¼"	3' - 0 ¼"						
15 FEET	4' - 6 ¾"	2' - 1 ¾"	3' - 9"	3' - 5 ¾"	3' - 1 ¼"	4' - 6"	2' - 6 ¾"	5' - 4 ½"	2' - 1"	6' - 1"	1' - 8"	6' - 8 ½"	1' - 3 ¼"	7' - 2 ½"	0' - 10 ¾"	7' - 7 ¼"
20 FEET	5' - 9 ¾"	3' - 6 ½"	4' - 11 ½"	5' - 1 ¾"	4' - 3 ¼"	6' - 5 ½"	3' - 8 ¾"	7' - 7"	3' - 3"	8' - 6 ½"	2' - 10"	9' - 4 ½"	2' - 5 ½"	10' - 1 ¼"	2' - 1 ¼"	10' - 9"
30 FEET			6' - 9 ¼"	7' - 11 ¼"	6' - 0 ¼"	9' - 8"	5' - 5"	11' - 1 ¾"	4' - 10 ¾"	12' - 5 ¾"	4' - 5 ½"	13' - 7 ¾"	4' - 0 ¾"	14' - 8 ½"	3' - 8 ½"	15' - 8 ¼"
40 FEET									6' - 1 ¾"	15' - 8 ½"	5' - 8"	17' - 2"	5' - 3"	18' - 5 ¾"	4' - 10 ¾"	19' - 8 ¼"
50 FEET															5' - 10 ¼"	23' - 2"

INTERMEDIATE RADII CAN BE INTERPOLATED
DIMENSION "Y" IS CALCULATED BASED ON 6'-0" RAMP LENGTH
DIMENSION "X" IS CALCULATED BASED ON 5'-0" SIDEWALK WIDTH

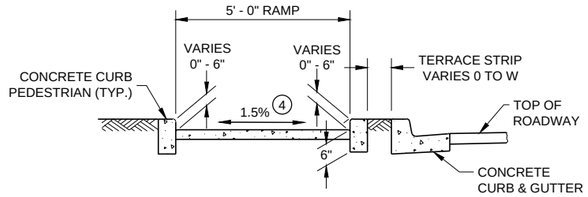

SECTION C - C FOR TYPE 4B

LEGEND

½" EXPANSION JOINT SIDEWALK

CONTRACTION JOINT SIDEWALK

PAVEMENT MARKING
CROSSWALK (WHITE)

GENERAL NOTES

AVOID PLACING DRAINAGE STRUCTURES, JUNCTION BOXES OR OTHER OBSTRUCTIONS IN FRONT OF RAMP ACCESS AREAS.

DETAILS OF CONSTRUCTION, MATERIALS AND WORKMANSHIP NOT SHOWN ON THIS DRAWING SHALL CONFORM TO THE PERTINENT REQUIREMENTS OF THE STANDARD SPECIFICATIONS AND THE APPLICABLE SPECIAL PROVISIONS.

DETECTABLE WARNING FIELDS THAT ARE INSTALLED AS A GROUP OR SIDE BY SIDE, SHALL BE FROM THE SAME MANUFACTURER.

(2) GRADE CHANGE BETWEEN GUTTER FLAG SLOPE AND THE CURB RAMP SLOPE SHALL NOT EXCEED 11%. MAXIMUM GUTTER FLAG SLOPE IS 4%. PROVIDE LONGITUDINAL DRAINAGE AROUND CURB AND AWAY FROM CURB RAMP. NO VERTICAL LIPS OR DISCONTINUITIES GREATER THAN ¼ - INCH ARE ALLOWED. SLOPE OF CURB HEAD OPENING SHALL MATCH THE RAMP SLOPE, MINIMALLY 1.5% AND NOT TO EXCEED 7%. WHEN ADJACENT TO 1.5% LANDING, CONSTRUCT CURB HEAD OPENING AT 1.5% IN THE DIRECTION OF PEDESTRIAN TRAVEL.

(3) AN 8.33% CURB RAMP SLOPE IS ALLOWABLE WITH FLATTENED GUTTER FLAG SLOPE AND NOT TO EXCEED 11% GRADE CHANGE.

(4) ±0.5% CONSTRUCTION TOLERANCE IN SIDEWALK CROSS SLOPE. THE SIDEWALK CROSS SLOPE SHALL NOT EXCEED 2% WITHOUT PRIOR APPROVAL FROM THE ENGINEER.

(6) PROVIDE A LEVEL LANDING (MAXIMUM 2% SLOPE) IN ANY DIRECTION OF PEDESTRIAN TRAVEL. STANDARD LEVEL LANDING SIZE IS 5 FEET BY 5 FEET.

(7) WHEN THIS GRADE BREAK DISTANCE EXCEEDS 5 FEET, USE RADIAL DETECTABLE WARNING FIELD PER SDD 8D5-f.

(8) PROVIDE GRADE BREAK PERPENDICULAR TO DIRECTION OF WHEELCHAIR TRAVEL.

(10) INSTALL TRANSITION NOSE (INCIDENTAL TO OTHER PAY ITEMS). DO NOT MARK TRANSITION NOSE.

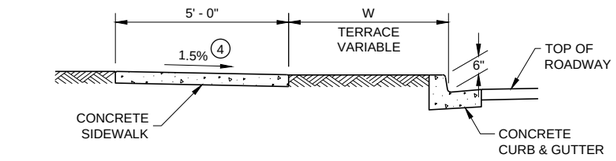

SECTION A - A FOR TYPE 4B

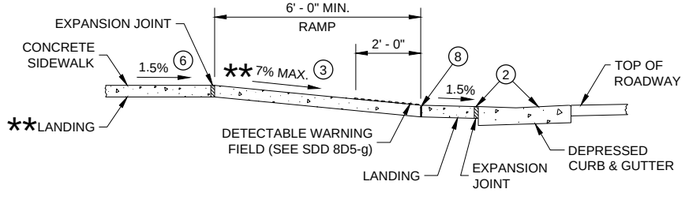

** IF RAMP SLOPE IS LESS THAN 5.0%, THEN NO ADJACENT UPHILL LANDING IS REQUIRED

SECTION B - B FOR
TYPE 4B AND TYPE 4B1

* MAXIMUM 2.0% SLOPE IN ALL DIRECTIONS IF FRONT OF GRADE BREAK

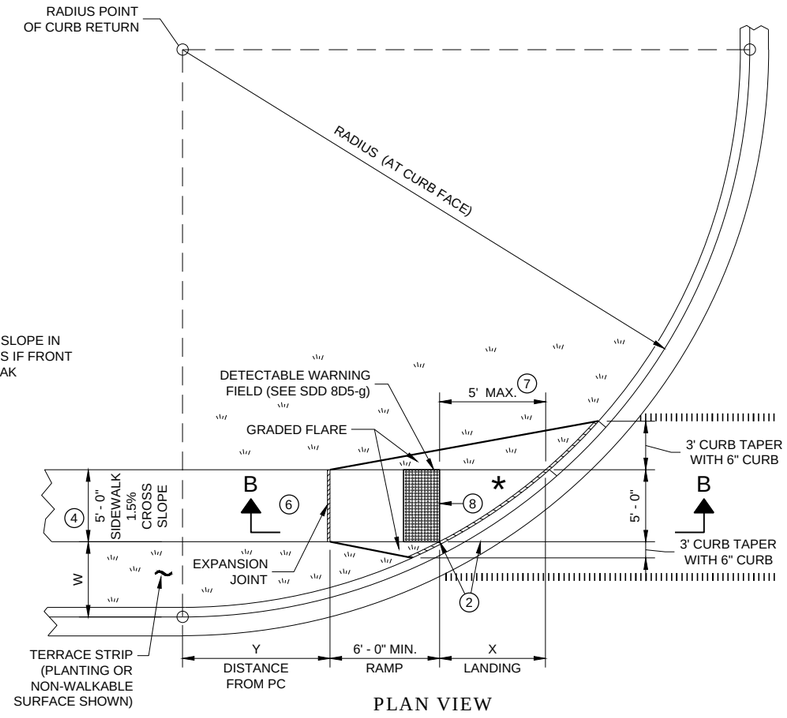

PLAN VIEW

CURB RAMP TYPE 4B1

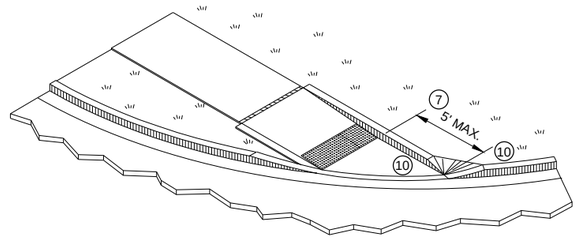

ISOMETRIC VIEW FOR TYPE 4B

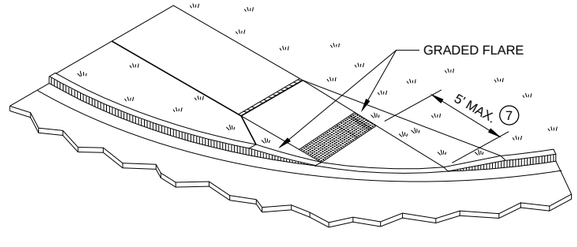

ISOMETRIC VIEW FOR TYPE 4B1

CURB RAMPS
TYPE 4B AND 4B1

STATE OF WISCONSIN
DEPARTMENT OF TRANSPORTATION

6

SDD 08D05 - 20d

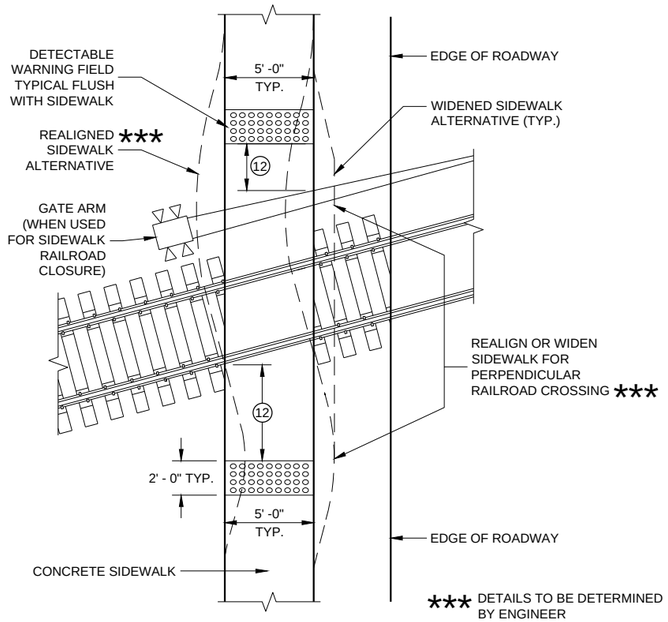

CURB RAMP TYPE 8

DETECTABLE WARNINGS
AT RAILROAD CROSSING

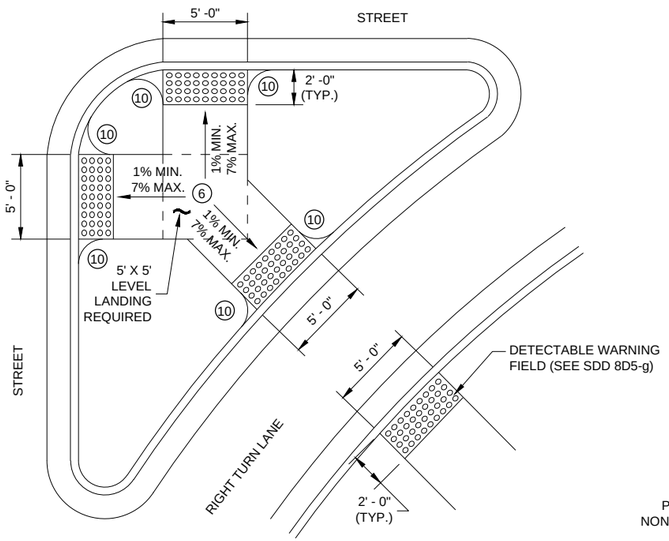

CURB RAMP TYPE 6

DETECTABLE WARNING AT ISLANDS

REFER TO GENERAL NOTES (2) AND (3)
FOR ALL ISLAND CURB RAMPS

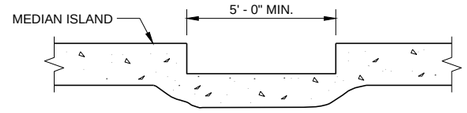

SECTION A - A FOR TYPE 5

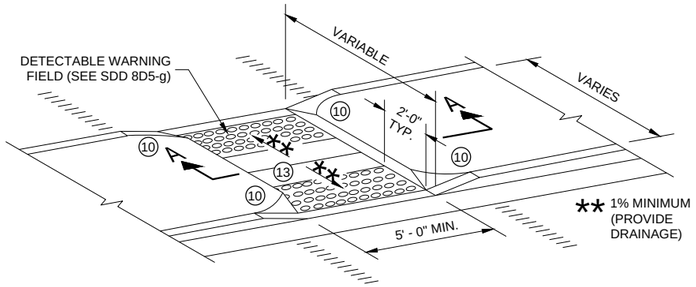

CURB RAMP TYPE 5

MEDIAN ISLAND
NON-ELEVATED PEDESTRIAN CROSSING

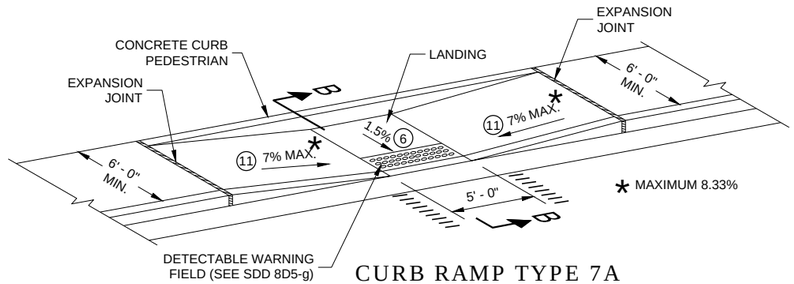

CURB RAMP TYPE 7A

MID BLOCK CROSSING

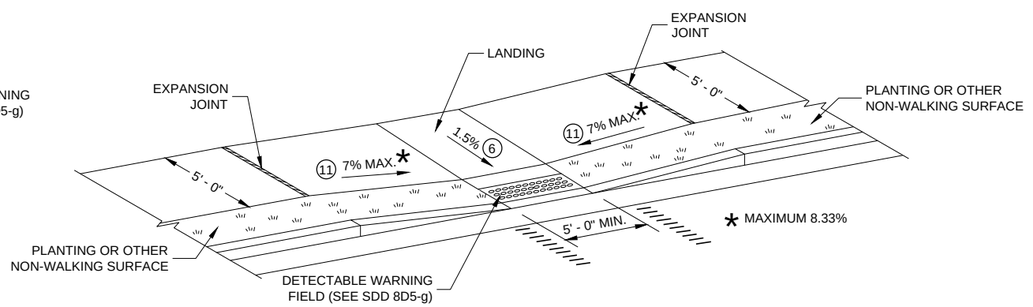

CURB RAMP TYPE 7B

MID BLOCK CROSSING

NOTE: THESE PARALLEL AND PARALLEL/PERPENDICULAR CURB RAMPS
MAY BE USED AT INTERSECTIONS AND MID BLOCK LOCATIONS.

GENERAL NOTES

AVOID PLACING DRAINAGE STRUCTURES, JUNCTION BOXES OR OTHER OBSTRUCTIONS IN FRONT OF RAMP ACCESS AREAS.

DETAILS OF CONSTRUCTION, MATERIALS AND WORKMANSHIP NOT SHOWN ON THIS DRAWING SHALL CONFORM TO THE PERTINENT REQUIREMENTS OF THE STANDARD SPECIFICATIONS AND THE APPLICABLE SPECIAL PROVISIONS.

SIDEWALK CROSS SLOPE SHALL NOT EXCEED 2%.

DETECTABLE WARNING FIELDS THAT ARE INSTALLED AS A GROUP OR SIDE BY SIDE, SHALL BE FROM THE SAME MANUFACTURER.

(2) GRADE CHANGE BETWEEN GUTTER FLAG SLOPE AND THE CURB RAMP SLOPE SHALL NOT EXCEED 11%. MAXIMUM GUTTER FLAG SLOPE IS 4%. PROVIDE LONGITUDINAL DRAINAGE AROUND CURB AND AWAY FROM CURB RAMP. NO VERTICAL LIPS OR DISCONTINUITIES GREATER THAN ½ - INCH ARE ALLOWED. SLOPE OF CURB HEAD OPENING SHALL MATCH THE RAMP SLOPE, MINIMALLY 1.5% AND NOT TO EXCEED 7%. WHEN ADJACENT TO 1.5% LANDING, CONSTRUCT CURB HEAD OPENING AT 1.5% IN THE DIRECTION OF PEDESTRIAN TRAVEL.

(3) AN 8.33% CURB RAMP SLOPE IS ALLOWABLE WITH FLATTENED GUTTER FLAG SLOPE AND NOT TO EXCEED 11% GRADE CHANGE.

(4) ±0.5% CONSTRUCTION TOLERANCE IN SIDEWALK CROSS SLOPE. THE SIDEWALK CROSS SLOPE SHALL NOT EXCEED 2% WITHOUT PRIOR APPROVAL FROM THE ENGINEER.

(6) PROVIDE A LEVEL LANDING (MAXIMUM 2% SLOPE) IN ANY DIRECTION OF PEDESTRIAN TRAVEL. STANDARD LEVEL LANDING SIZE IS 5 FEET BY 5 FEET.

(10) INSTALL TRANSITION NOSE (INCIDENTAL TO OTHER PAY ITEMS). DO NOT MARK TRANSITION NOSE.

(11) SLOPE SIDEWALK TOWARD LANDING AS SHOWN WHERE THERE IS NO TERRACE OR WHERE THE TERRACE WIDTH IS LESS THAN 6 FEET WIDE.

(12) THE EDGE OF THE DETECTABLE WARNING FIELD NEAREST TO A RAILROAD CROSSING SHALL BE 1.5 FEET ±0.1' FROM THE FACE OF THE GATE ARM IF THE GATE ARM EXTENDS ACROSS THE SIDEWALK. WHERE THERE IS NO PEDESTRIAN GATE, THE EDGE OF THE DETECTABLE WARNING FIELD NEAREST TO THE RAILROAD CROSSING SHALL BE 15 FEET FROM THE NEAREST RAIL.

(13) DO NOT INSTALL DETECTABLE WARNING FIELDS AT THE EDGES OF STEET-LEVEL PEDESTRIAN REFUGE ISLANDS IF A MINIMUM 2 FOOT CONCRETE SURFACE WITHOUT DETECTABLE WARNINGS (MEASURED IN THE DIRECTION OF PEDESTRIAN TRAVEL) CANNOT BE ACHIEVED.

LEGEND

- ½" EXPANSION JOINT SIDEWALK
- CONTRACTION JOINT FIELD LOCATED
- PAVEMENT MARKING CROSSWALK (WHITE)

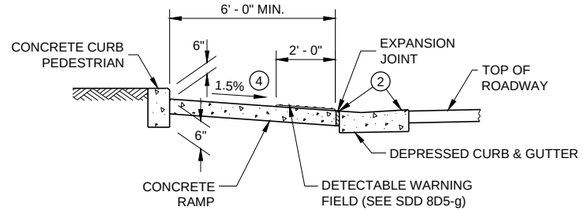

SECTION B - B FOR TYPE 7A

CURB RAMPS
TYPE 5, 6, 7A, 7B & 8

STATE OF WISCONSIN
DEPARTMENT OF TRANSPORTATION

6

SDD 08D05 - 20e

6

RADIAL DETECTABLE WARNING
FIELD PLACEMENT WHEN 5 FOOT
GRADE BREAK DISTANCE
PER SDD 8D5-c IS EXCEEDED

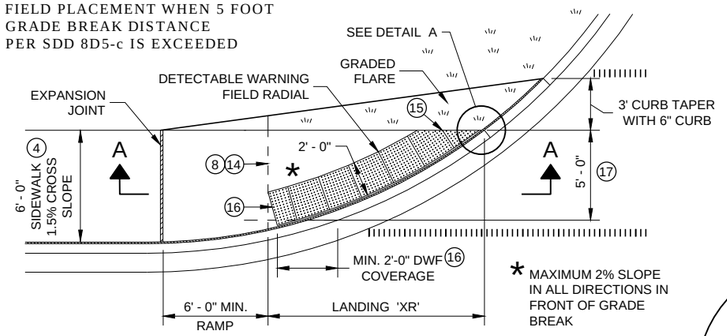

PLAN VIEW

CURB RAMP TYPE 4A1

(GRADE BREAK DISTANCE GREATER THAN 5 FEET)

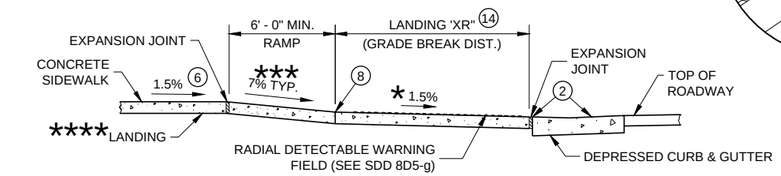

IF RAMP SLOPE IS LESS THAN 5.0%, THEN NO ADJACENT UPHILL LANDING IS REQUIRED

SECTION A - A FOR TYPE 4A1

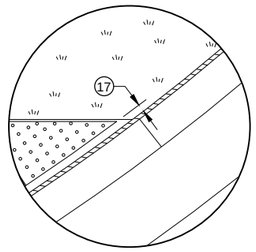

DETAIL A

LEGEND

½" EXPANSION JOINT SIDEWALK

CONTRACTION JOINT SIDEWALK

PAVEMENT MARKING CROSSWALK (WHITE)

GENERAL NOTES

AVOID PLACING DRAINAGE STRUCTURES, JUNCTION BOXES OR OTHER OBSTRUCTIONS IN FRONT OF RAMP ACCESS AREAS.

DETAILS OF CONSTRUCTION, MATERIALS AND WORKMANSHIP NOT SHOWN ON THIS DRAWING SHALL CONFORM TO THE PERTINENT REQUIREMENTS OF THE STANDARD SPECIFICATIONS AND THE APPLICABLE SPECIAL PROVISIONS.

DETECTABLE WARNING FIELDS THAT ARE INSTALLED AS A GROUP OR SIDE BY SIDE, SHALL BE FROM THE SAME MANUFACTURER.

APPLY RADIAL DETECTABLE WARNING PLACEMENT SIMILARLY FOR TYPE 4A AND 4A1 CURB RAMPS AND SIMILARLY FOR TYPE 4B AND 4B1 CURB RAMPS. TYPE 4A AND 4B CURB RAMPS ARE NOT SHOWN.

REFER TO SDD 8D5-g FOR ADDITIONAL RADIAL PLATE REQUIREMENTS.

FIELD CUTS AT INTERMEDIATE JOINTS WITHIN THE RADIAL DETECTABLE WARNING FILED ARE PROHIBITED.

DETERMINE FINAL RADIAL WARNING FIELD CONFIGURATION AD ITS INDIVIDUAL PLATE LOCATIONS. PERFORM PRE-LAYOUT PRIOR TO PLACEMENT IN PLASTIC CONCRETE. FOLLOW MANUFACTURER'S PRODUCT LIST AND INSTALLATION RECOMMENDATIONS.

(2) GRADE CHANGE BETWEEN GUTTER FLAG SLOPE AND THE CURB RAMP SLOPE SHALL NOT EXCEED 11%. MAXIMUM GUTTER FLAG SLOPE IS 4%. PROVIDE LONGITUDINAL DRAINAGE AROUND CURB AND AWAY FROM CURB RAMP. NO VERTICAL LIPS OR DISCONTINUITIES GREATER THAN ¼ - INCH ARE ALLOWED. SLOPE OF CURB HEAD OPENING SHALL MATCH THE RAMP SLOPE, MINIMALLY 1.5% AND NOT TO EXCEED 7%. WHEN ADJACENT TO 1.5% LANDING, CONSTRUCT CURB HEAD OPENING AT 1.5% IN THE DIRECTION OF PEDESTRIAN TRAVEL.

(3) AN 8.33% CURB RAMP SLOPE IS ALLOWABLE WITH FLATTENED GUTTER FLAG SLOPE AND NOT TO EXCEED 11% GRADE CHANGE.

(4) ±0.5% CONSTRUCTION TOLERANCE IN SIDEWALK CROSS SLOPE. THE SIDEWALK CROSS SLOPE SHALL NOT EXCEED 2% WITHOUT PRIOR APPROVAL FROM THE ENGINEER.

(6) PROVIDE A LEVEL LANDING (MAXIMUM 2% SLOPE) IN ANY DIRECTION OF PEDESTRIAN TRAVEL. STANDARD LANDING SIZE IS 5 FEET BY 5 FEET.

(8) PROVIDE GRADE BREAK PERPENDICULAR TO DIRECTION OF WHEELCHAIR TRAVEL.

(14) CONSULT ENGINEER IF GRADE BREAK LOCATION (END OF LANDING DIMENSION "XR") REQUIRES FIELD ADJUSTMENT WHEN ESTABLISHING FINAL RADIAL DETECTABLE WARNING FIELD LOCATION.

(15) FIELD SAW CUTS ALONG RADIAL DETECTABLE WARNING PLATES WILL BE NECESSARY TO MATCH EACH CURB RAMP EDGE. AVOID CUTTING THROUGH DOMES WHENEVER POSSIBLE. MAKE FIELD CUTS TRUE TO LINE AND WITHIN ⅛" DEVIATION. SMOOTH EDGES OF FIELD CUT PLATES.

(16) USE 1' X 2" RECTANGULAR END PLATE AT END OF TYPE 4A1 RAMP AND PROVIDE MINIMUM 2' - 0" DETECTABLE WARNING FIELD COVERAGE (IN DIRECTION OF PEDESTRIAN TRAVEL) ALONG THE ENTIRE CURB RAMP WIDTH.

(17) A MAXIMUM 3 INCH CONCRETE BORDER WITH IS ALLOWABLE IN FROM OF RADIAL DETECTABLE WARNING FIELD FOR CONSTRUCTABILITY PURPOSES. CONCRETE BORDER WIDTH MAY VARY UP TO 1 INCH.

RADIAL DETECTABLE WARNING
FIELD PLACEMENT WHEN 5 FOOT
GRADE BREAK DISTANCE
PER SDD 8D5-d IS EXCEEDED

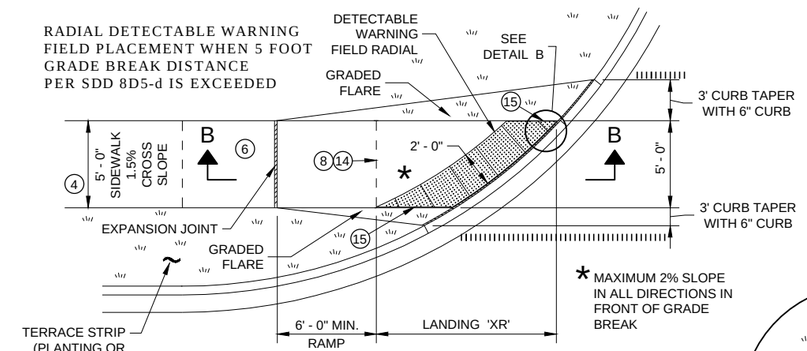

PLAN VIEW

CURB RAMP TYPE 4B1

(GRADE BREAK DISTANCE GREATER THAN 5 FEET)

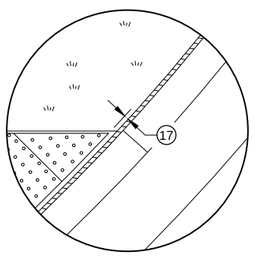

DETAIL B

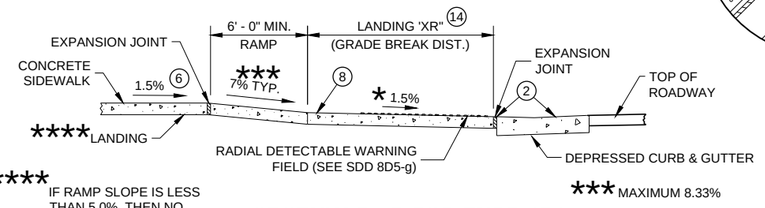

IF RAMP SLOPE IS LESS THAN 5.0%, THEN NO ADJACENT UPHILL LANDING IS REQUIRED

SECTION B - B FOR TYPE 4B1

RADIAL DETECTABLE WARNING
FIELD PLACEMENT WHEN 5 FOOT
GRADE BREAK DISTANCE
PER SDD 8D5-b IS EXCEEDED

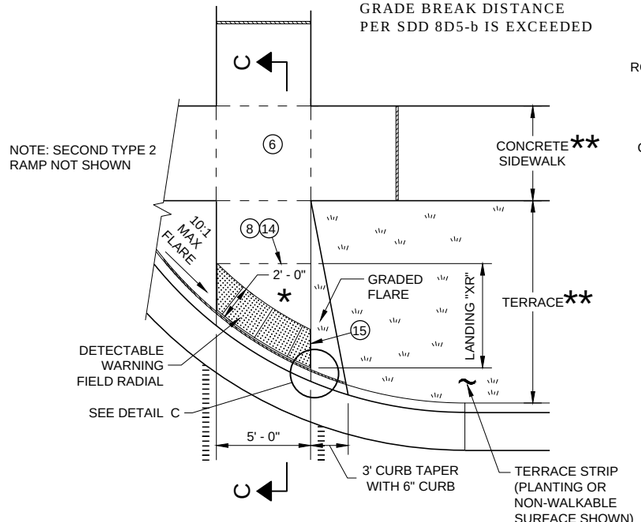

PLAN VIEW

CURB RAMP TYPE 2

(GRADE BREAK DISTANCE GREATER THAN 5 FEET)
(ON LINE WITH SIDEWALK)

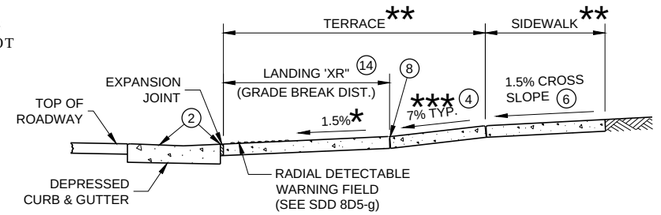

SECTION C - C FOR TYPE 2

MAXIMUM 2% SLOPE IN ALL DIRECTIONS IN FRONT OF GRADE BREAK

WIDTH SHOWN ELSEWHERE IN THE PLANS

MAXIMUM 8.33%

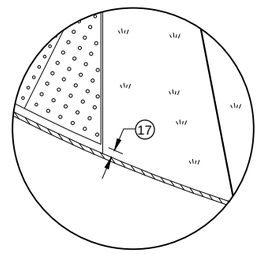

DETAIL C

CURB RAMPS
RADIAL DETECTABLE WARNING
FIELD APPLICATIONS

STATE OF WISCONSIN
DEPARTMENT OF TRANSPORTATION

	MIN.	MAX.
A	1.6"	2.4"
B	0.65"	1.5"
C	*	*
D	0.9"	1.4"

* THE C DIMENSION IS 50% TO 65% OF THE D DIMENSION.

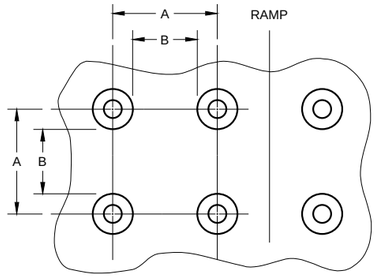

PLAN VIEW

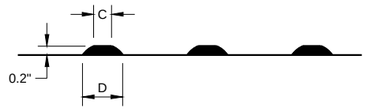

ELEVATION VIEW

TRUNCATED DOMES
DETECTABLE WARNING PATTERN DETAIL

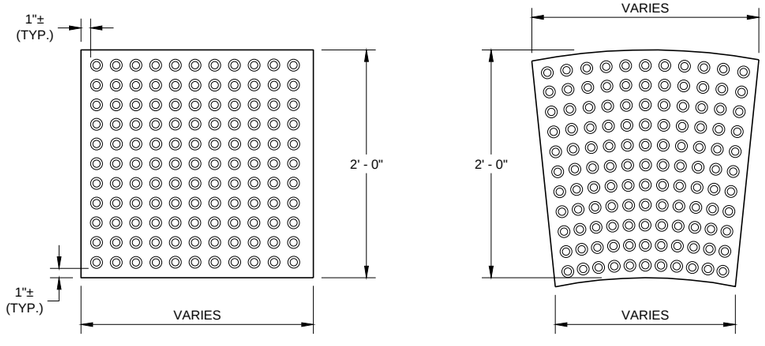

RECTANGULAR PLATES

RADIAL PLATES

PLAN VIEW
DETECTABLE WARNING FIELDS (TYPICAL)

GENERAL NOTES

DETECTABLE WARNING FIELDS THAT ARE INSTALLED AT A CURB RAMP SHALL BE FROM THE SAME MANUFACTURER.

PLACE ALL DETECTABLE WARNING FIELD SYSTEMS IN ACCORDANCE TO THE MANUFACTURER'S RECOMMENDATION.

FIELD CUTS AT INTERMEDIATE JOINTS WITHIN THE RADIAL DETECTABLE WARNING FILED ARE PROHIBITED.

DETERMINE FINAL RADIAL WARNING FIELD CONFIGURATION AND ITS INDIVIDUAL PLATE LOCATIONS. PERFORM PRE-LAYOUT PRIOR TO PLACEMENT IN PLASTIC CONCRETE. FOLLOW MANUFACTURER'S PRODUCT LIST AND INSTALLATION RECOMMENDATIONS.

FOR RADIAL DETECTABLE WARNING FIELD APPLICATIONS WHERE STANDARD RADIAL PLATES ARE NOT AVAILABLE AT AN INTERSECTION CURB RADIUS, A COMBINATION OF SQUARE OR RECTANGULAR PLATES AND RADIAL PLATES MAY BE USED TO FORM RADIAL CONFIGURATION. RADIAL WEDGE PLATES IN COMBINATION WITH SQUARE PLATES ARE ALSO ACCEPTABLE. FOLLOW MANUFACTURER'S RECOMMENDATIONS.

REFER TO CONTRACT AND STANDARD SPECIFICATIONS FOR FIELD CUTTING REQUIREMENTS.

DO NOT EMBED IN CONCRETE ANY FIELD-CUT PLATES WITH CUT EDGES SHORTER THAN 6 INCHES. CONSULT WITH MANUFACTURER FOR RE-DRILLING AND ANCHORING REQUIREMENTS OF FIELD-CUT PLATES.

(15) FIELD SAW CUTS ALONG RADIAL DETECTABLE WARNING PLATES WILL BE NECESSARY TO MATCH EACH CURB RAMP EDGE. AVOID CUTTING THROUGH DOMES WHENEVER POSSIBLE. MAKE FIELD CUTS TRUE TO LINE AND WITHIN ⅛" DEVIATION. SMOOTH EDGES OF FIELD CUT PLATES.

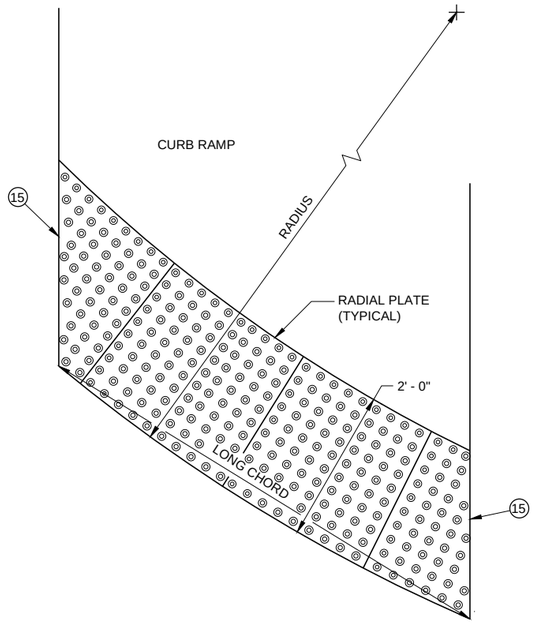

PLAN VIEW
RADIAL DETECTABLE
WARNING FIELD ATTRIBUTES

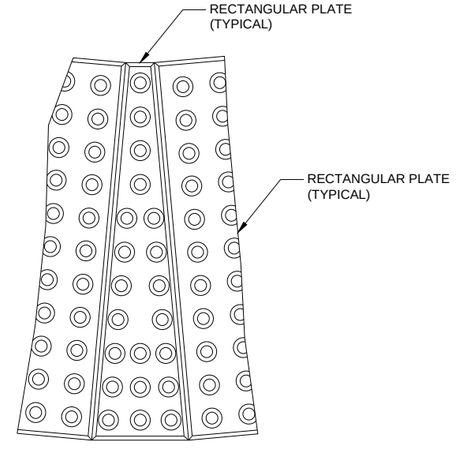

PLAN VIEW
RADIAL WEDGE PLATE
CONNECTION DETAIL

CURB RAMPS
RECTANGULAR AND RADIAL
DETECTABLE WARNING PLATES

STATE OF WISCONSIN
DEPARTMENT OF TRANSPORTATION

APPROVED
May 2019
DATE
/S/ Rodney Taylor
ROADWAY STANDARDS DEVE UNIT SUPERVISOR

FHWA

6

SDD 08D05 - 20g

6

SDD 08D05 - 20g

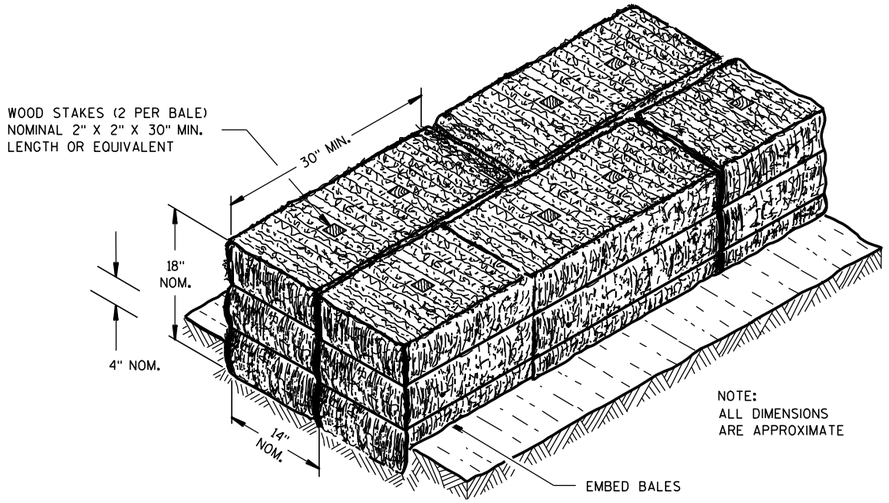

SECTION A-A

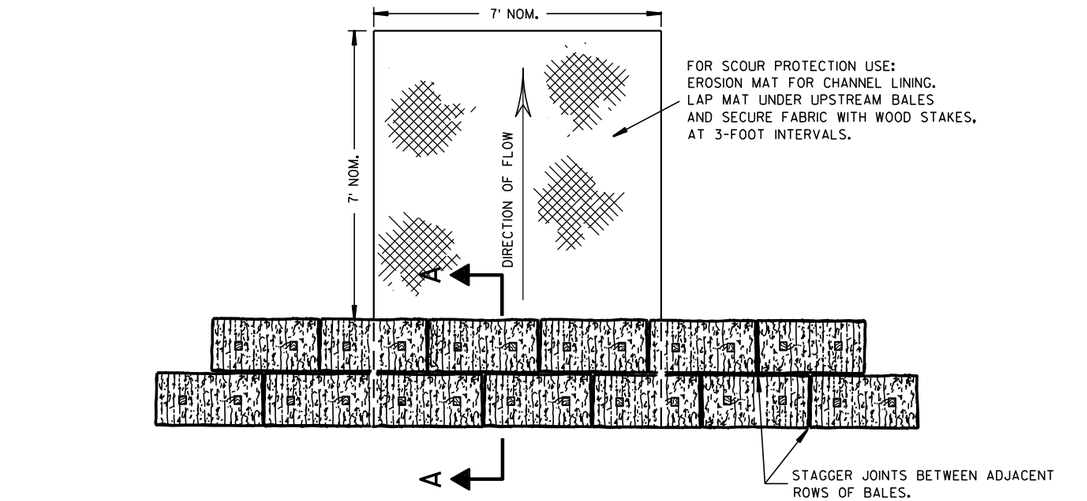

PLAN VIEW

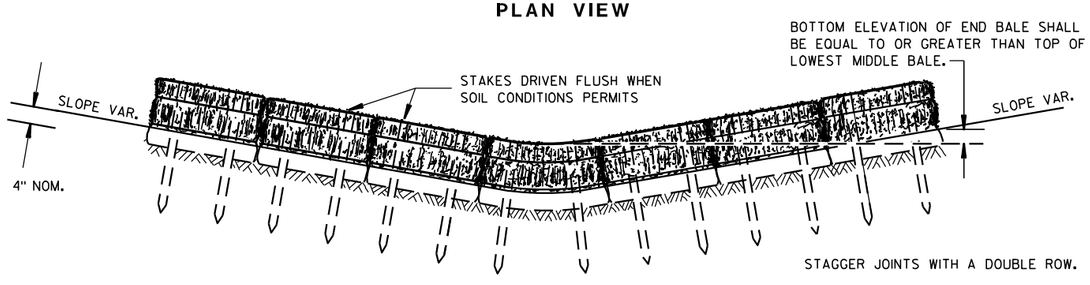

FRONT ELEVATION

TEMPORARY DITCH CHECK USING EROSION BALES ①

GENERAL NOTES

DETAILS OF CONSTRUCTION, MATERIALS AND WORKMANSHIP NOT SHOWN ON THIS DRAWING SHALL CONFORM TO THE PERTINENT REQUIREMENTS OF THE STANDARD SPECIFICATIONS AND THE APPLICABLE SPECIAL PROVISIONS.

① TEMPORARY DITCH CHECKS EITHER EROSION BALES OR MANUFACTURED SHALL BE PAID FOR UNDER THE BID ITEM OF TEMPORARY DITCH CHECK. THE DEPARTMENT WILL NOT PAY FOR TEMPORARY DITCH CHECKS CONSTRUCTED OF A SINGLE ROW OF EROSION BALES.

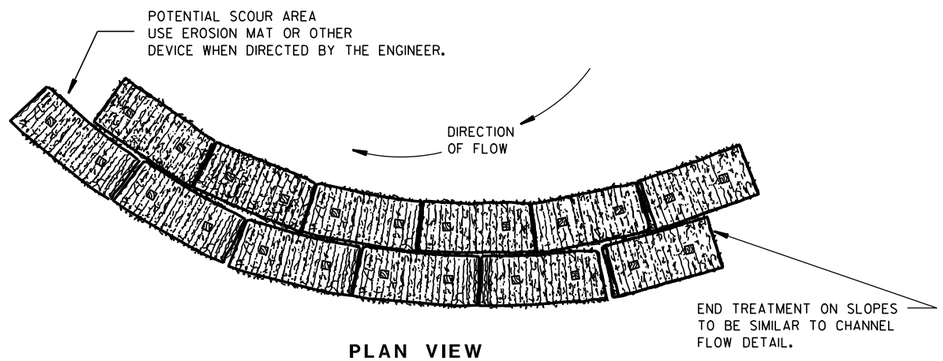

PLAN VIEW

WHEN ALTERING THE DIRECTION OF FLOW

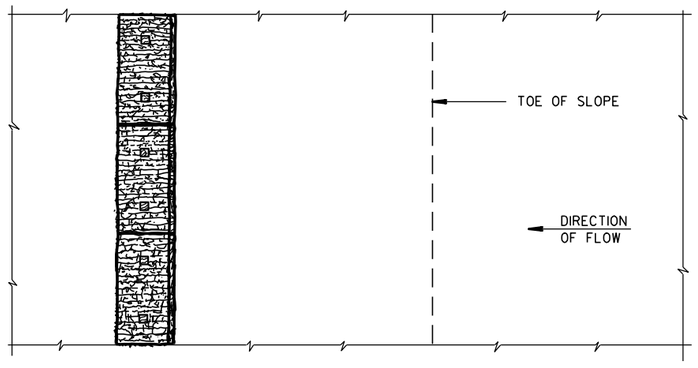

PLAN VIEW

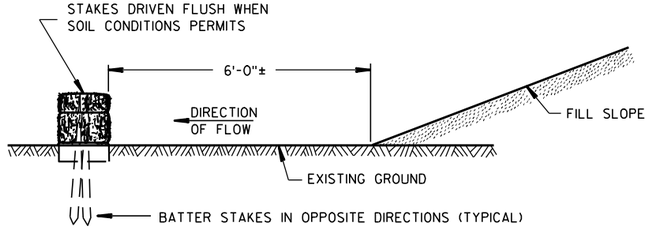

FRONT ELEVATION

WHEN EXISTING GROUND SLOPES AWAY FROM FILL SLOPE

EROSION BALES FOR SHEET FLOW

TYPICAL INSTALLATIONS OF EROSION BALES / TEMPORARY DITCH CHECKS

STATE OF WISCONSIN
DEPARTMENT OF TRANSPORTATION

APPROVED
6/04/02 DATE
/S/ Beth Cannestra
CHIEF ROADWAY DEVELOPMENT ENGINEER
FHWA

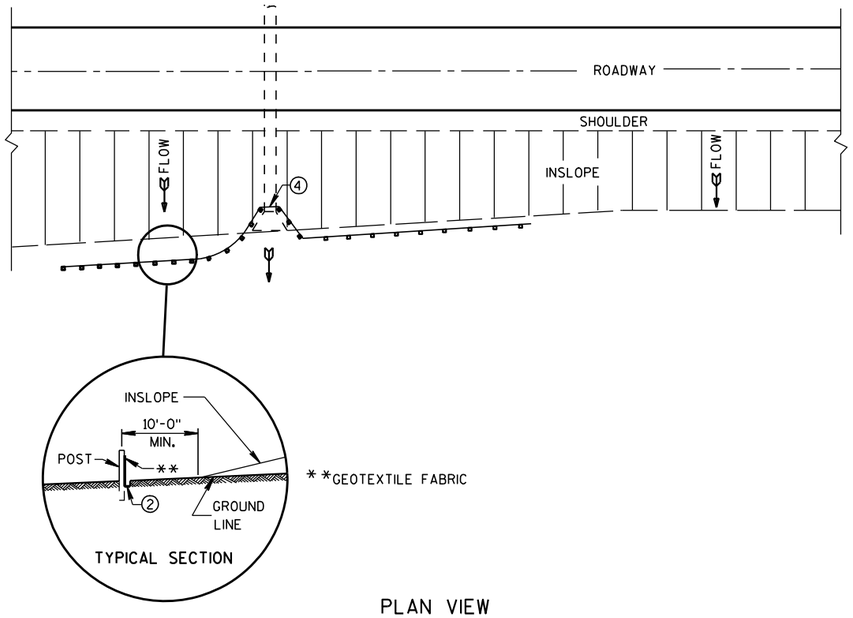

PLAN VIEW

TYPICAL APPLICATION OF SILT FENCE

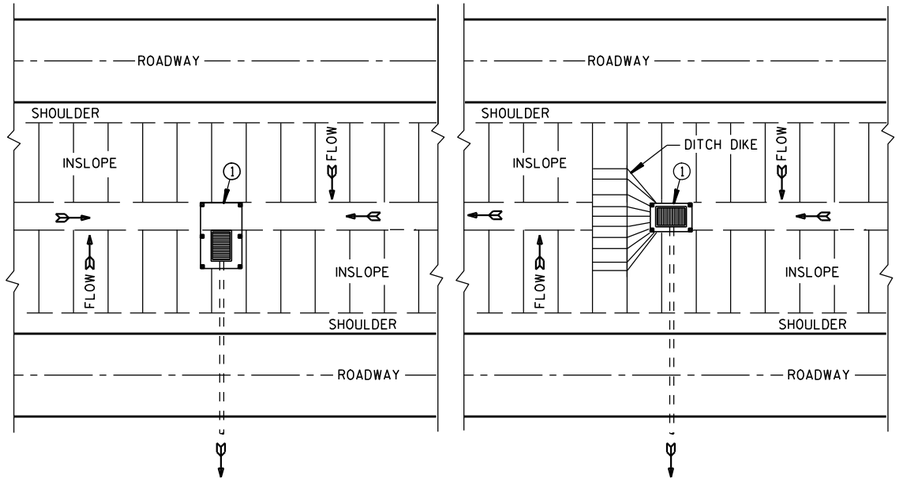

PLAN VIEW

SILT FENCE AT MEDIAN SURFACE DRAINS

GENERAL NOTES

DETAILS OF CONSTRUCTION NOT SHOWN ON THIS DRAWING SHALL CONFORM TO THE PERTINENT REQUIREMENTS OF THE STANDARD SPECIFICATIONS AND APPLICABLE SPECIAL PROVISIONS.

① HORIZONTAL BRACE REQUIRED WITH 2" X 4" WOODEN FRAME OR EQUIVALENT AT TOP OF POSTS.

② FOR MANUAL INSTALLATIONS THE TRENCH SHALL BE A MINIMUM OF 4" WIDE & 6" DEEP TO BURY AND ANCHOR THE GEOTEXTILE FABRIC. FOLD MATERIAL TO FIT TRENCH AND BACKFILL & COMPACT TRENCH WITH EXCAVATED SOIL.

③ WOOD POSTS SHALL BE A MINIMUM SIZE OF 1⅛" X 1⅛" OF OAK OR HICKORY.

④ SILT FENCE TO EXTEND ACROSS THE TOP OF THE PIPE.

⑤ CONSTRUCT SILT FENCE FROM A CONTINUOUS ROLL IF POSSIBLE BY CUTTING LENGTHS TO AVOID JOINTS. IF A JOINT IS NECESSARY USE ONE OF THE FOLLOWING TWO METHODS; A) OVERLAP THE END POSTS AND TWIST, OR ROTATE, AT LEAST 180 DEGREES, B) HOOK THE END OF EACH SILT FENCE LENGTH.

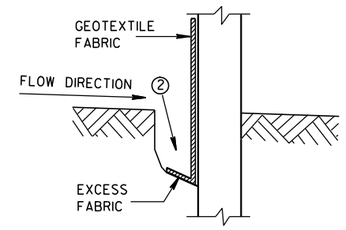

TRENCH DETAIL

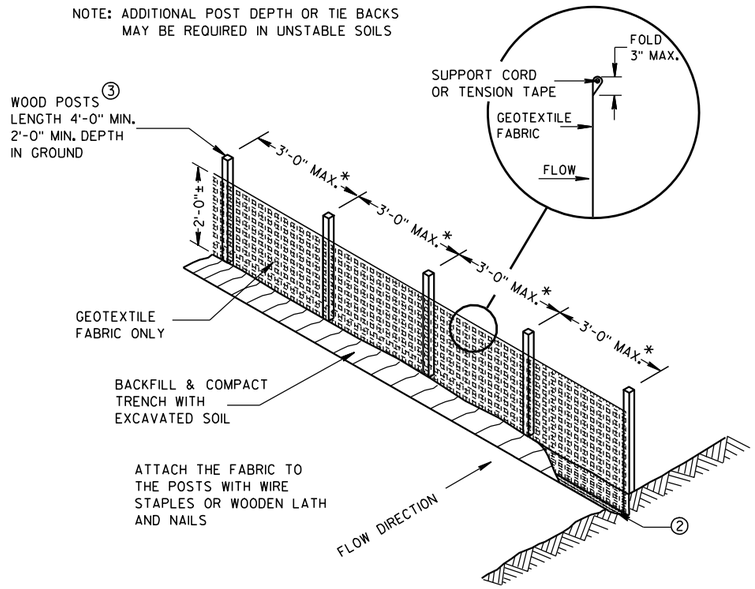

*NOTE: 8'-0" POST SPACING ALLOWED IF A WOVEN GEOTEXTILE FABRIC IS USED.

SILT FENCE

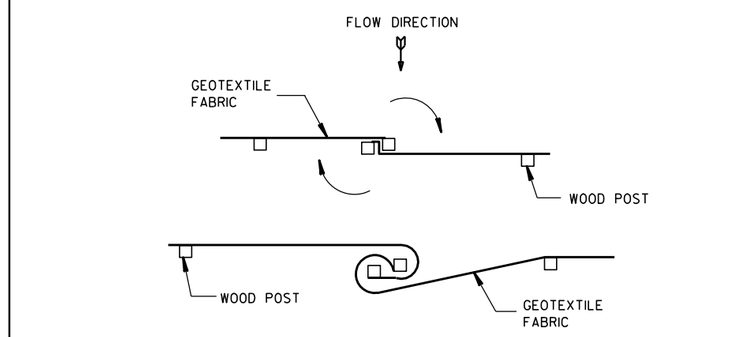

TWIST METHOD

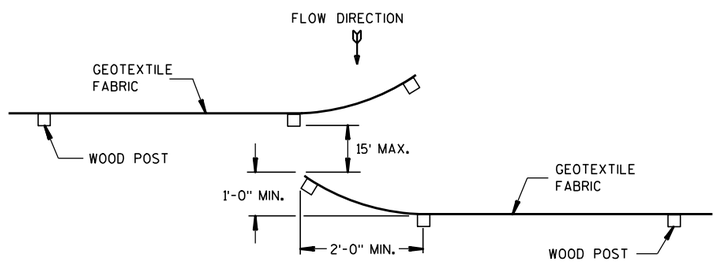

HOOK METHOD

JOINING TWO LENGTHS OF SILT FENCE ⑤

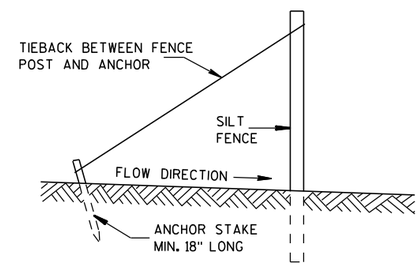

SILT FENCE TIE BACK

(WHEN REQUIRED BY THE ENGINEER)

SILT FENCE

STATE OF WISCONSIN
DEPARTMENT OF TRANSPORTATION

APPROVED
4-29-05 DATE
/S/ Beth Cannestra
CHIEF ROADWAY DEVELOPMENT ENGINEER
FHWA

6

S.D.D. 8 E 9-6

6

S.D.D. 8 E 9-6

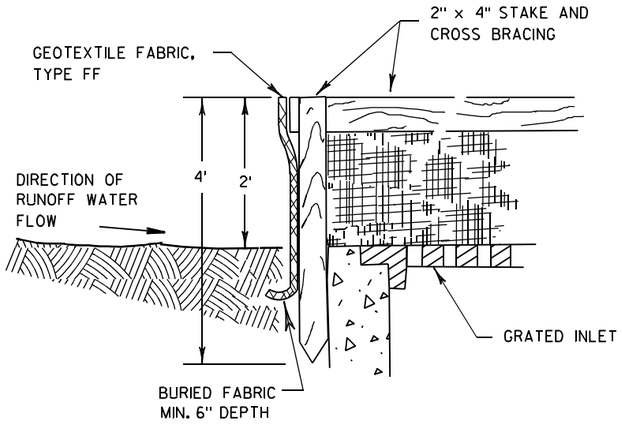

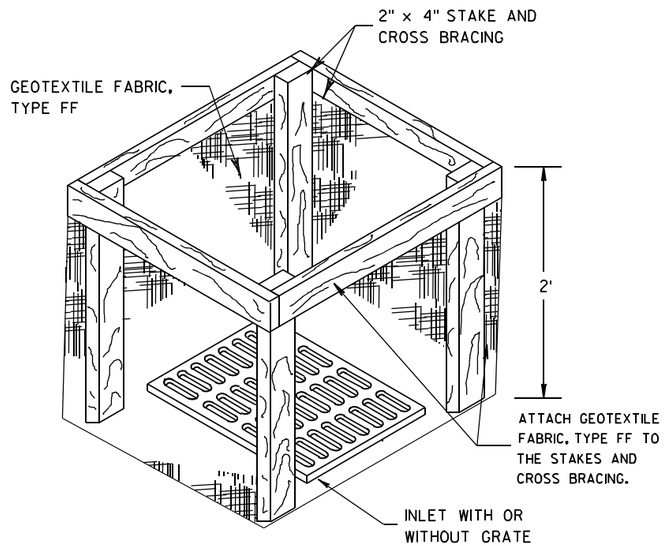

INLET PROTECTION, TYPE A

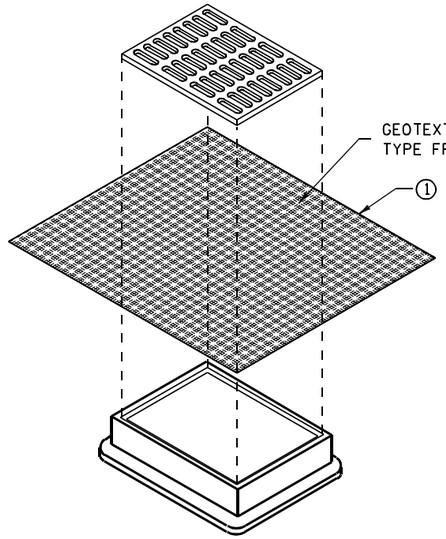

INLET PROTECTION, TYPE B
(WITHOUT CURB BOX)

(CAN BE INSTALLED IN ANY INLET WITHOUT A CURB BOX)

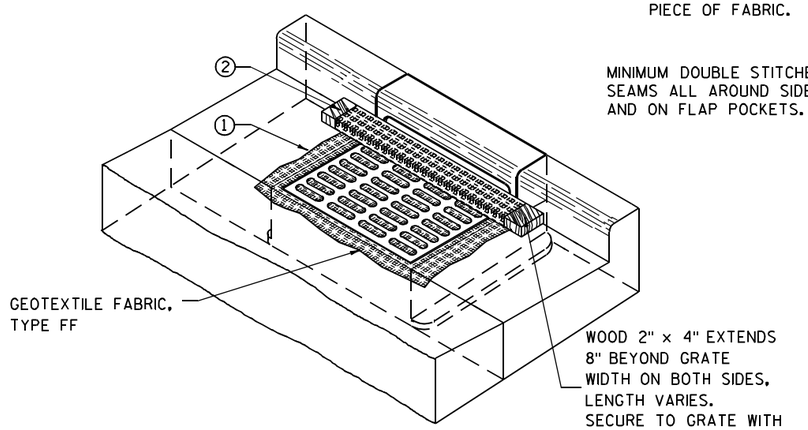

INLET PROTECTION, TYPE C (WITH CURB BOX)

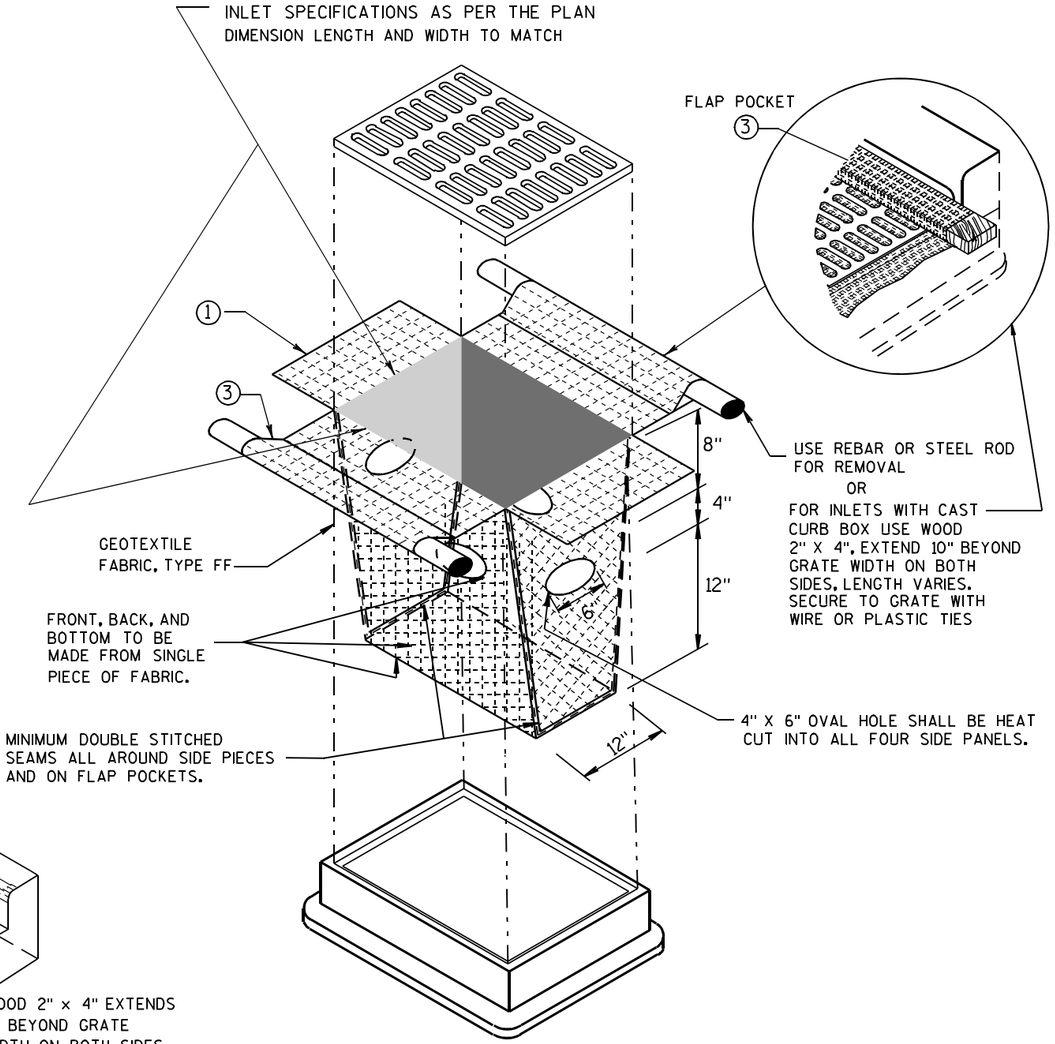

INLET PROTECTION, TYPE D

(CAN BE INSTALLED IN ANY INLET TYPE WITH
OR WITHOUT A CURB BOX AS PER NOTE ②)

GENERAL NOTES

INLET PROTECTION DEVICES SHALL BE MAINTAINED OR REPLACED AT THE DIRECTION OF THE ENGINEER.

MANUFACTURED ALTERNATIVES APPROVED AND LISTED ON THE DEPARTMENT'S EROSION CONTROL PRODUCT ACCEPTABILITY LIST MAY BE SUBSTITUTED.

WHEN REMOVING OR MAINTAINING INLET PROTECTION, CARE SHALL BE TAKEN SO THAT THE SEDIMENT TRAPPED ON THE GEOTEXTILE FABRIC DOES NOT FALL INTO THE INLET. ANY MATERIAL FALLING INTO THE INLET SHALL BE REMOVED IMMEDIATELY.

① FINISHED SIZE, INCLUDING FLAP POCKETS WHERE REQUIRED, SHALL EXTEND A MINIMUM OF 10" AROUND THE PERIMETER TO FACILITATE MAINTENANCE OR REMOVAL.

② FOR INLET PROTECTION, TYPE C (WITH CURB BOX), AN ADDITIONAL 18" OF FABRIC IS WRAPPED AROUND THE WOOD AND SECURED WITH STAPLES. THE WOOD SHALL NOT BLOCK THE ENTIRE HEIGHT OF THE CURB BOX OPENING.

③ FLAP POCKETS SHALL BE LARGE ENOUGH TO ACCEPT WOOD 2X4.

INSTALLATION NOTES

TYPE B & C

TRIM EXCESS FABRIC IN THE FLOW LINE TO WITHIN 3" OF THE GRATE.

THE CONTRACTOR SHALL DEMONSTRATE A METHOD OF MAINTENANCE, USING A SEWN FLAP, HAND HOLDS OR OTHER METHOD TO PREVENT ACCUMULATED SEDIMENT FROM ENTERING THE INLET.

TYPE D

DO NOT INSTALL INLET PROTECTION TYPE D IN INLETS SHALLOWER THAN 30", MEASURED FROM THE BOTTOM OF THE INLET TO THE TOP OF THE GRATE.

TRIM EXCESS FABRIC IN THE FLOW LINE TO WITHIN 3" OF THE GRATE.

THE INSTALLED BAG SHALL HAVE A MINIMUM SIDE CLEARANCE, BETWEEN THE INLET WALLS AND THE BAG, MEASURED AT THE BOTTOM OF THE OVERFLOW HOLES, OF 3". WHERE NECESSARY THE CONTRACTOR SHALL CINCH THE BAG, USING PLASTIC ZIP TIES, TO ACHIEVE THE 3" CLEARANCE. THE TIES SHALL BE PLACED AT A MAXIMUM OF 4" FROM THE BOTTOM OF THE BAG.

INLET PROTECTION
TYPE A, B, C, AND D

STATE OF WISCONSIN
DEPARTMENT OF TRANSPORTATION

APPROVED
10/16/02
DATE
/S/ Beth Cannestra
CHIEF ROADWAY DEVELOPMENT ENGINEER
FHWA

6
S.D.D. 8 E 10-2

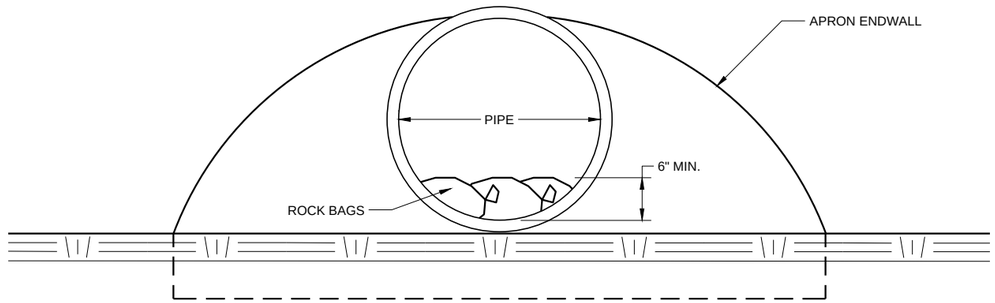

END VIEW

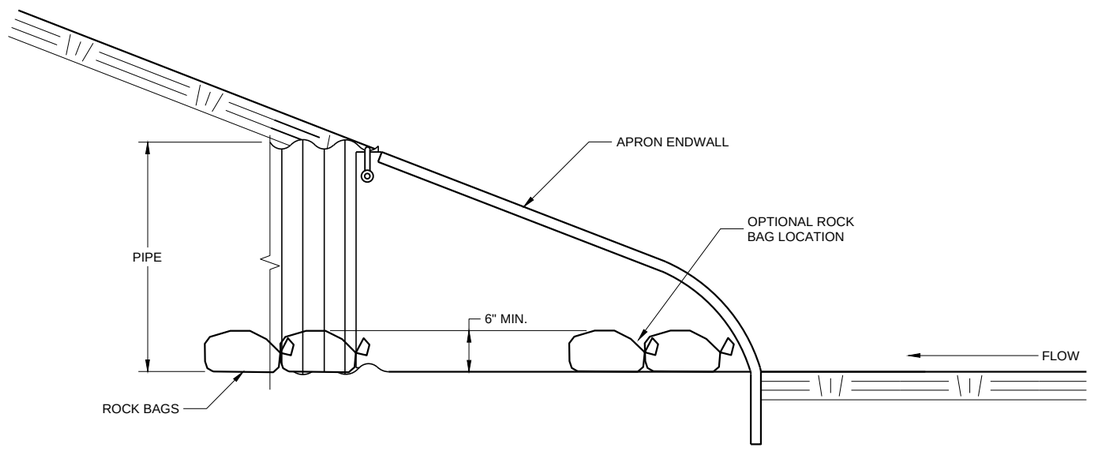

SIDE VIEW

CULVERT PIPE CHECK

(INSTALL ON INLET END ONLY)

CULVERT PIPE CHECK

STATE OF WISCONSIN
DEPARTMENT OF TRANSPORTATION

APPROVED

May 2019
DATE

/S/ Daniel Schave
EROSION CONTROL ENGI

FHWA

6

SDD 08E15 - 01

6

SDD 08E15 - 01

METAL APRON ENDWALLS

PIPE DIA. (IN.)	MIN. THICK. (Inches) STEEL	MIN. THICK. (Inches) ALUM.	DIMENSIONS (Inches) A (±1")	B (MAX.)	H (±1")	L (±1 1/2")	L1 ①	L2 ①	W (±2")	APPROX. SLOPE	BODY
12	.064	.060	6	6	6	21	12	17 1/2	24	2 1/2 to 1	1 Pc.
15	.064	.060	7	8	6	26	14	21 3/4	30	2 1/2 to 1	1 Pc.
18	.064	.060	8	10	6	31	15	28 1/4	36	2 1/2 to 1	1 Pc.
21	.064	.060	9	12	6	36	18	29 5/8	42	2 1/2 to 1	1 Pc.
24	.064	.075	10	13	6	41	18	37 1/4	48	2 1/2 to 1	1 Pc.
30	.079	.075	12	16	8	51	18	52 1/4	60	2 1/2 to 1	1 Pc.
36	.079	.105	14	19	9	60	24	59 3/4	72	2 1/2 to 1	2 Pc.
42	.109	.105	16	22	11	69	24	75 5/8	84	2 1/2 to 1	2 Pc.
48	.109	.105	18	27	12	78	24	81	90	2 1/4 to 1	3 Pc.
54	.109	.105	18	30	12	84	30	85 1/2	102	2 1/4 to 1	3 Pc.
60	.109×	.105×	18	33	12	87	—	—	114	2 to 1	3 Pc.
66	.109×	.105×	18	36	12	87	—	—	120	2 to 1	3 Pc.
72	.109×	.105×	18	39	12	87	—	—	126	2 to 1	3 Pc.
78	.109×	.105×	18	42	12	87	—	—	132	1 1/2 to 1	3 Pc.
84	.109×	.105×	18	45	12	87	—	—	138	1 1/2 to 1	3 Pc.
90	.109×	.105×	18	37	12	87	—	—	144	1 1/2 to 1	3 Pc.
96	.109×	.105×	18	35	12	87	—	—	150	1 1/2 to 1	3 Pc.

× EXCEPT CENTER PANEL SEE GENERAL NOTES

REINFORCED CONCRETE APRON ENDWALLS

PIPE DIA. (IN.)	DIMENSIONS (Inches) T	A	B	C	D	E	G	APPROX. SLOPE
12	2	4	24	48 7/8	72 1/8	24	2	3 to 1
15	2 1/4	6	27	46	73	30	2 1/4	3 to 1
18	2 1/2	9	27	46	73	36	2 1/2	3 to 1
21	2 3/4	9	36	37 1/2	73 1/2	42	2 3/4	3 to 1
24	3	9 1/2	43 1/2	30	73 1/2	48	3	3 to 1
27	3 1/4	10 1/2	49 1/2	24	73 1/2	54	3 1/4	3 to 1
30	3 1/2	12	54	19 3/4	73 1/2	60	3 1/2	3 to 1
36	4	15	63	34 3/4	97 3/4	72	4	3 to 1
42	4 1/2	21	63	35	98	78	4 1/2	3 to 1
48	5	24	72	26	98	84	5	3 to 1
54	5 1/2	27	65	* 33 1/4 - ** 35	* 98 1/4 - ** 100	90	5 1/2	2 2/5 to 1
60	6	* 30 - ** 35	60	39	99	96	5	2 to 1
66	6 1/2	* 24 - ** 30	* 72 - ** 78	* 21 - ** 27	99	102	5 1/2	2 to 1
72	7	* 24 - ** 36	78	21	99	108	6	2 to 1
78	7 1/2	* 24 - ** 36	78	21	99	114	6 1/2	2 to 1
84	8	36	90 1/2	21	111 1/2	120	6 1/2	1 1/2 to 1
90	8 1/2	41	87 1/2	24	111 1/2	132	6 1/2	1 1/2 to 1

* MINIMUM
** MAXIMUM

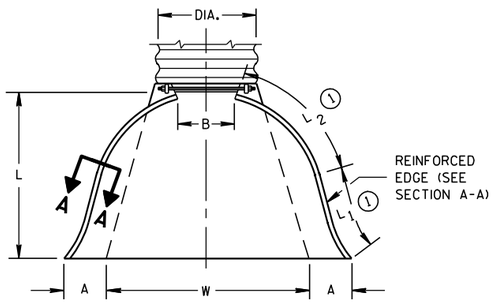

PLAN VIEW

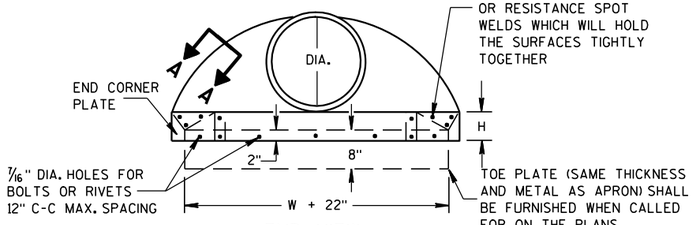

END VIEW

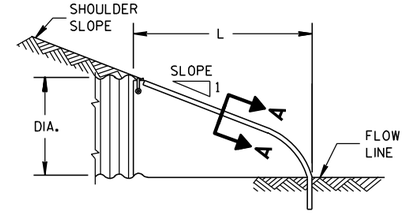

SIDE ELEVATION

METAL ENDWALLS

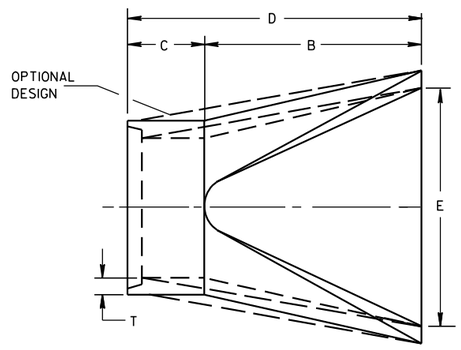

PLAN

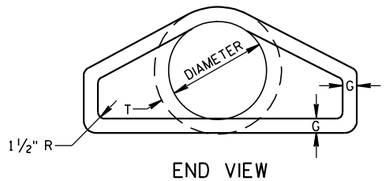

END VIEW

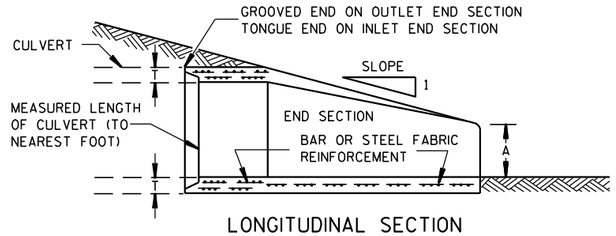

LONGITUDINAL SECTION

CONCRETE ENDWALLS

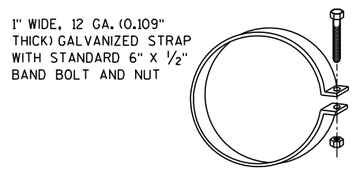

ALTERNATE FOR TYPE 1 CONNECTION

END SECTION CONNECTOR STRAP

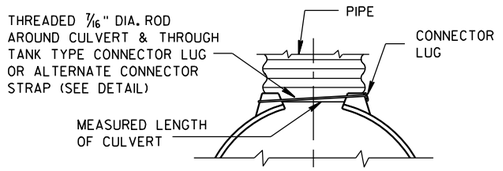

TYPE 1
FOR 12" THRU 24" CORR. PIPE

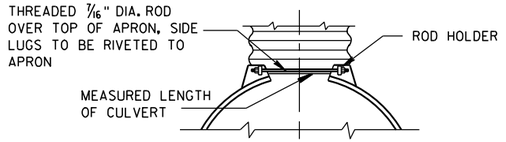

TYPE 2
FOR 30" THRU 96" CORR. PIPE

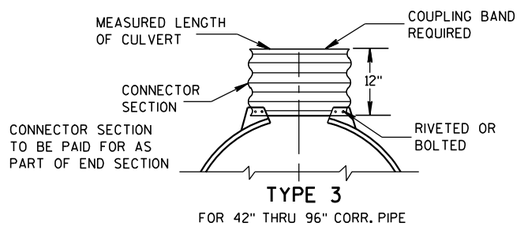

TYPE 3
FOR 42" THRU 96" CORR. PIPE

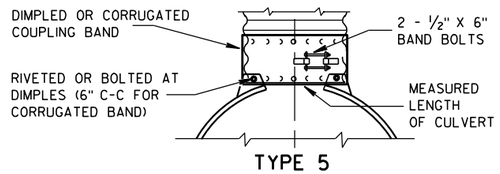

TYPE 5
ALTERNATE FOR:
ALL SIZES CORRUGATED CIRCULAR PIPE

NOTE: DIMPLED BAND FITS OVER OUTSIDE OF ENDWALL. AND CORRUGATED BAND FITS INSIDE ENDWALL. DIMPLED BAND MAY BE USED WITH HELICALLY CORRUGATED PIPE.

FOR CIRCUMFERENTIALLY CORRUGATED PIPE USE ENDWALL CONNECTION DETAILS 1, 2, 3 OR 5 AS APPLICABLE.

FOR HELICALLY CORRUGATED PIPE USE ENDWALL CONNECTION DETAILS 1, 2 OR 5.

FOR HELICALLY CORRUGATED PIPES WITH TWO CIRCUMFERENTIAL CORRUGATIONS AT EACH END USE ENDWALL CONNECTION DETAILS 1, 2 OR 3.

CONNECTION DETAILS

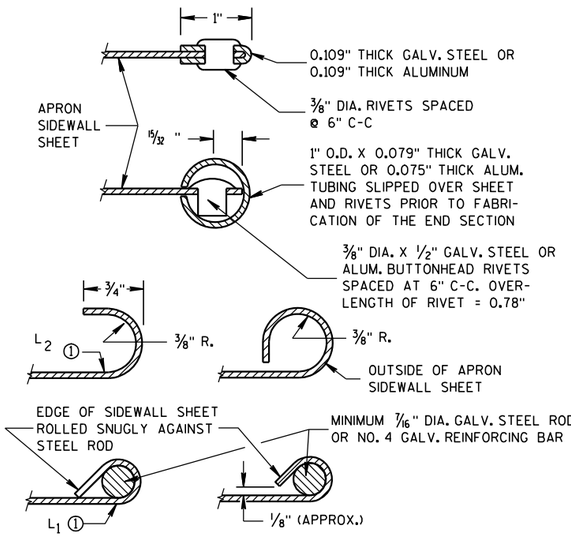

SECTION A-A

GENERAL NOTES

DETAILS OF CONSTRUCTION, MATERIALS AND WORKMANSHIP NOT SHOWN ON THIS DRAWING SHALL CONFORM TO THE PERTINENT REQUIREMENTS OF THE STANDARD SPECIFICATIONS AND THE APPLICABLE SPECIAL PROVISIONS.

CONCRETE CULVERT ENDWALLS MAY NOT BE USED WITH GALVANIZED STEEL OR ALUMINUM CULVERT PIPE OR VISE VERSA. GALVANIZED STEEL OR ALUMINUM ENDWALLS SHALL NORMALLY BE INSTALLED ON CULVERT PIPE OF THE SAME METAL.

ALL THREE PIECE STEEL APRON ENDWALLS FOR 60" DIAMETER PIPE AND LARGER SHALL HAVE 0.109" SIDES AND 0.138" CENTER PANELS. ALL THREE PIECE ALUMINUM APRON ENDWALLS FOR 60" DIAMETER PIPE AND LARGER SHALL HAVE 0.105" SIDES AND 0.134" CENTER PANELS. THE WIDTH OF CENTER PANELS SHALL BE GREATER THAN 20 PERCENT OF THE PIPE PERIMETER.

LAP SEAMS SHALL BE TIGHTLY JOINED BY GALVANIZED RIVETS OR BOLTS FOR STEEL UNITS AND ALUMINUM RIVETS AND BOLTS FOR ALUMINUM UNITS. FOR THE 60" THROUGH 96" DIAMETER APRON ENDWALL SIZES, THE REINFORCED EDGES AND CENTER PANEL SEAMS SHALL BE FURTHER REINFORCED WITH GALVANIZED STEEL OR ALUMINUM STIFFENER ANGLES. THE ANGLES SHALL BE ATTACHED BY GALVANIZED NUTS AND BOLTS FOR STEEL UNITS AND ALUMINUM NUTS AND BOLTS FOR ALUMINUM UNITS.

WHERE TWO OR MORE PIPES WITH APRON ENDWALLS ARE LAID ADJACENT TO EACH OTHER, THEY SHALL BE SEPARATED BY A DISTANCE SUFFICIENT TO PROVIDE A MINIMUM CLEARANCE OF 6 INCHES BETWEEN APRON ENDWALLS.

① FOR PIPE SIZES UP TO 60" DIAMETER, A 180° ROLLED EDGE MAY BE USED INSTEAD OF STEEL ROD REINFORCEMENT. SEE SECTION A-A.

APRON ENDWALLS FOR CULVERT PIPE

STATE OF WISCONSIN
DEPARTMENT OF TRANSPORTATION

APPROVED
11/30/94 DATE
/S/ Rory L. Rhinesmith
CHIEF ROADWAY DEVELOPMENT ENGINEER
FHWA

6
S.D.D. 8 F 1-11

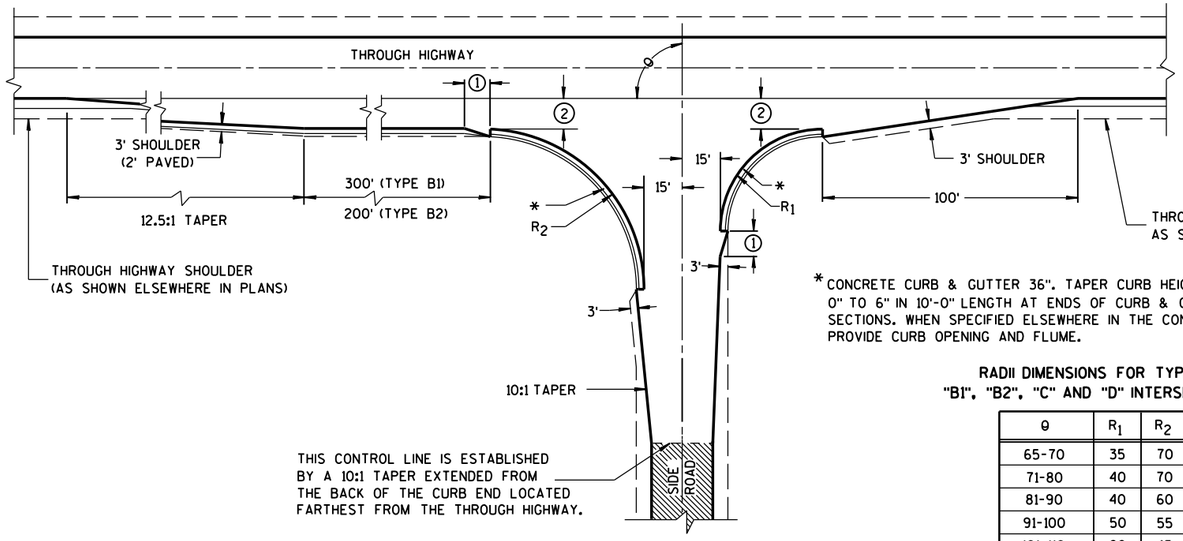

TYPE "B1" AND "B2"

*CONCRETE CURB & GUTTER 36". TAPER CURB HEIGHT 0" TO 6" IN 10'-0" LENGTH AT ENDS OF CURB & GUTTER SECTIONS. WHEN SPECIFIED ELSEWHERE IN THE CONTRACT, PROVIDE CURB OPENING AND FLUME.

RADII DIMENSIONS FOR TYPES "B1", "B2", "C" AND "D" INTERSECTIONS

θ	R_1	R_2
65-70	35	70
71-80	40	70
81-90	40	60
91-100	50	55
101-110	60	45

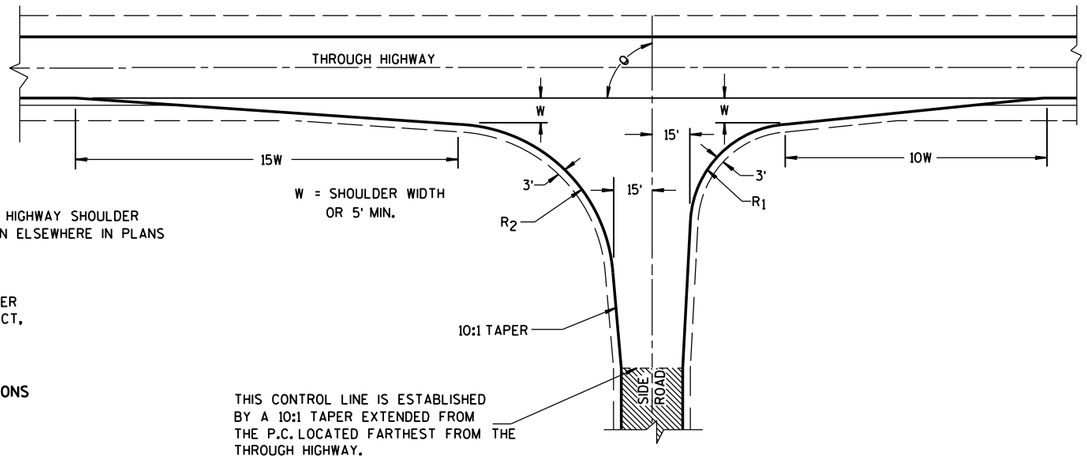

TYPE "C"

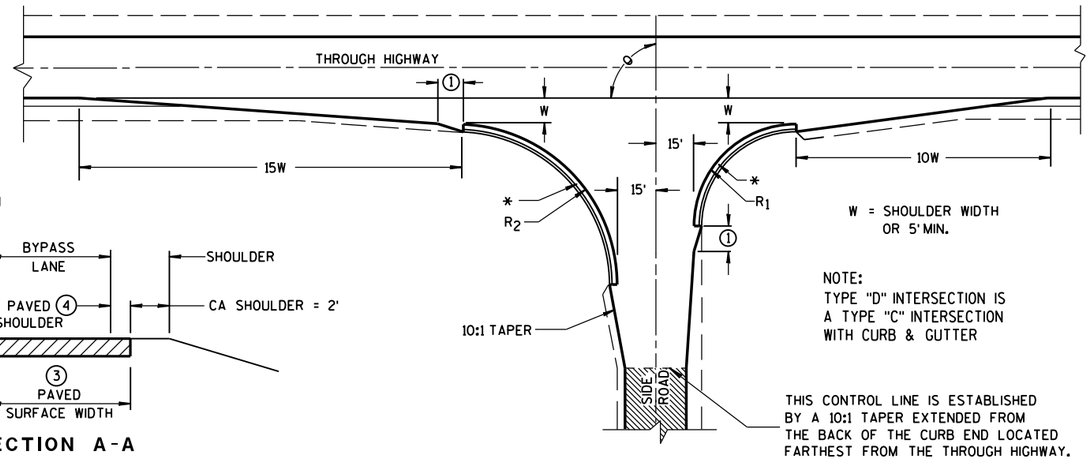

TYPE "D"

GENERAL NOTES

DESIGNS MAY BE USED INTERCHANGEABLY IN COMBINATION OR SEPARATELY FOR ANY ONE COMPLETE INTERSECTION DEPENDING UPON INTERSECTION ANGLE AND SURFACING OF EACH APPROACH ROADWAY.

SIDE ROAD SURFACING NOTE

WHEN THE SIDE ROAD IS NOT PRESENTLY PAVED, PAVEMENT SHALL BE PLACED TO THE LIMITS SHOWN UNLESS OTHERWISE PROVIDED IN THE CONTRACT. WHERE THE CONSTRUCTION LIMITS ARE BEYOND THE PAVING LIMITS, CRUSHED AGGREGATE SURFACING SHALL BE PLACED BETWEEN THE PAVING LIMITS AND CONSTRUCTION LIMITS.

WHEN THE SIDE ROAD IS PRESENTLY PAVED, NEW PAVEMENT SHALL BE PLACED TO THE LIMITS OF DESIGN AS SHOWN AND BEYOND, IF NECESSARY, TO MEET EXISTING PAVEMENT.

WHEN THE SIDE ROAD IS THE CONSTRUCTION PROJECT, THE INTERSECTION SURFACING SHALL BE THE SAME AS FOR THE PROJECT.

EXISTING PAVED SURFACE

BYPASS LANE

(1) 10-FT TYPICAL.

(2) 12-FT** PLUS ADDITIONAL WIDTH FOR BIKE LANE IF SHOWN ELSEWHERE IN THE PLAN.

**10-FT MAY BE USED ON TYPE B2 ON RESURFACING PROJECTS IF SPECIFIED IN THE CONTRACT.

(3) BYPASS LANE PAVED SURFACE WIDTH OUTSIDE OF TRAVEL LANE
-ASPHALT = 12-FT PLUS PAVED SHOULDER WIDTH.
-PC CPNCRETE = 13-FT PLUS PAVED SHOULDER WIDTH.

(4) BYPASS LANE PAVED SHOULDER WIDTH = THE GREATER OF 1-FT OR THE PAVED SHOULDER WIDTH OF THE THROUGH HIGHWAY.

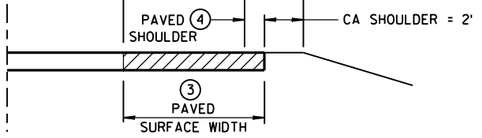

SECTION A-A
(SHOWING BYPASS LANE AND SHOULDER)

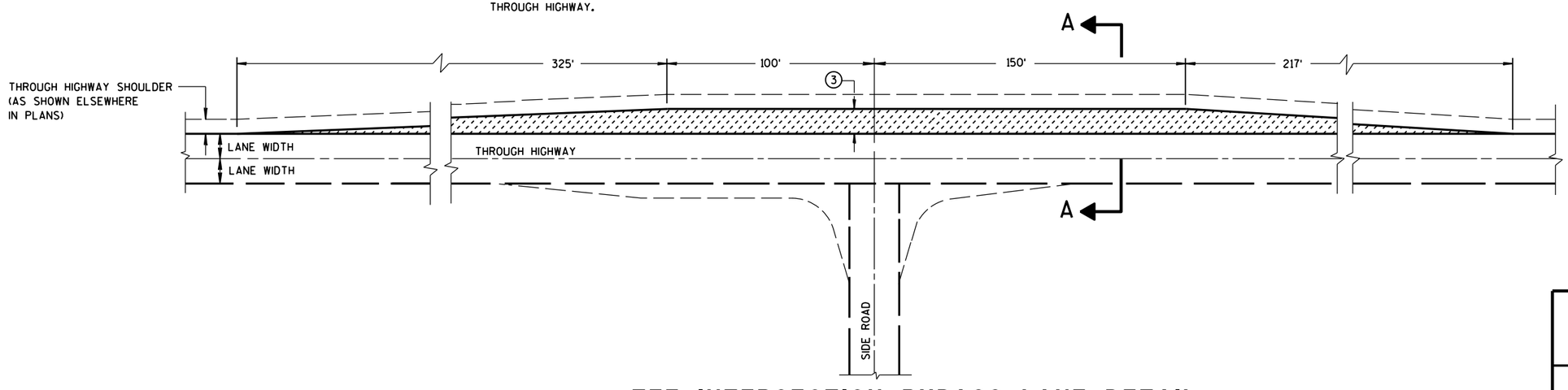

TEE INTERSECTION BYPASS LANE DETAIL

AT-GRADE SIDE ROAD INTERSECTION, TYPES "B1", "B2", "C" AND "D" AND TEE INTERSECTION BYPASS LANE

STATE OF WISCONSIN
DEPARTMENT OF TRANSPO

6
S.D.D. 9 A 1-13a

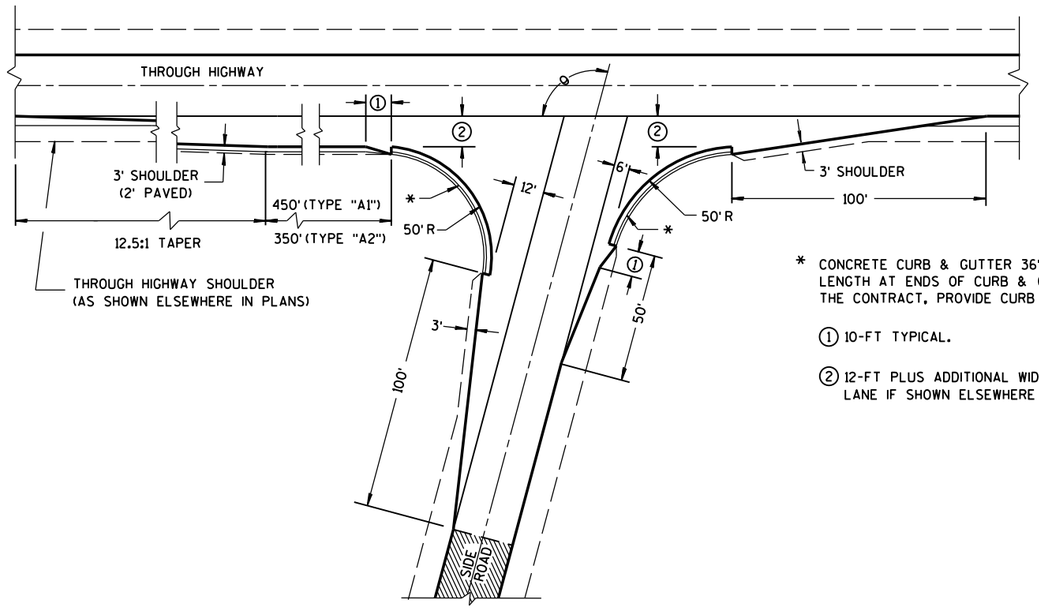

θ = MORE THAN 80°

* CONCRETE CURB & GUTTER 36". TAPER CURB HEIGHT 0" TO 6" IN 10'-0" LENGTH AT ENDS OF CURB & GUTTER SECTIONS. WHEN SPECIFIED ELSEWHERE IN THE CONTRACT, PROVIDE CURB OPENING AND FLUME.

① 10-FT TYPICAL.

② 12-FT PLUS ADDITIONAL WIDTH FOR BIKE LANE IF SHOWN ELSEWHERE IN THE PLANS.

EXISTING PAVED SURFACE

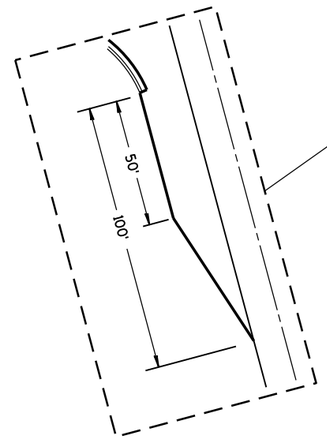

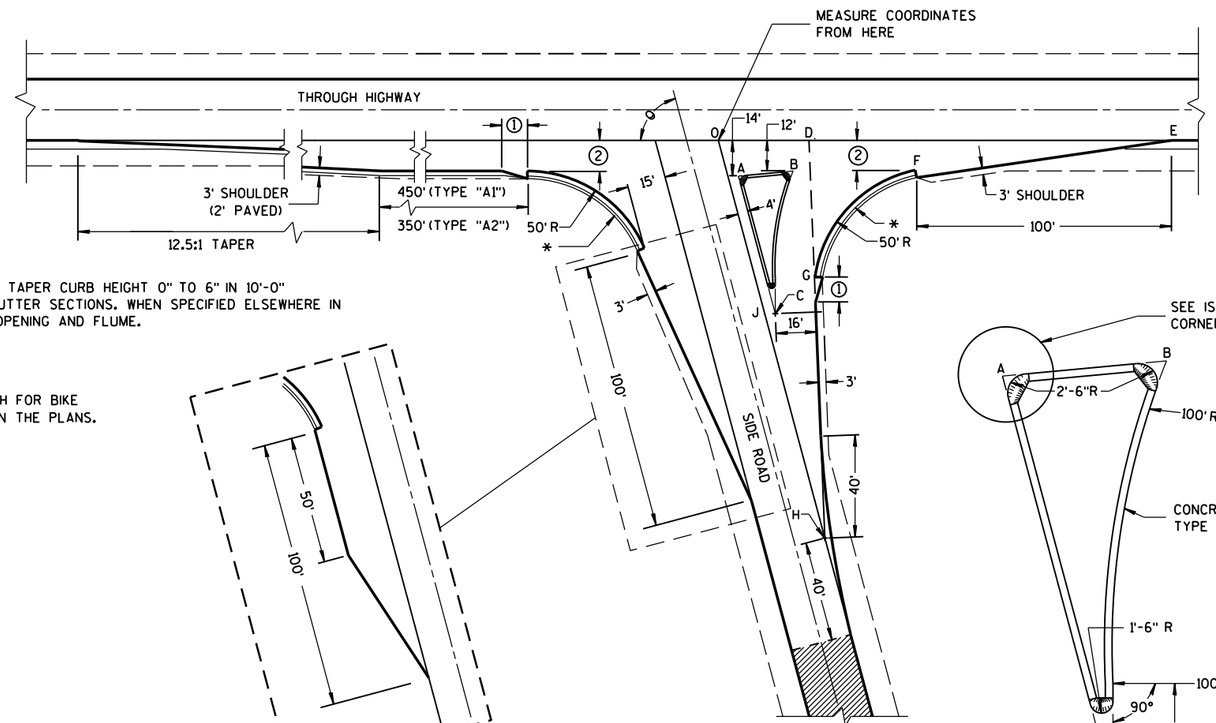

θ = ACUTE ANGLES 80° OR LESS

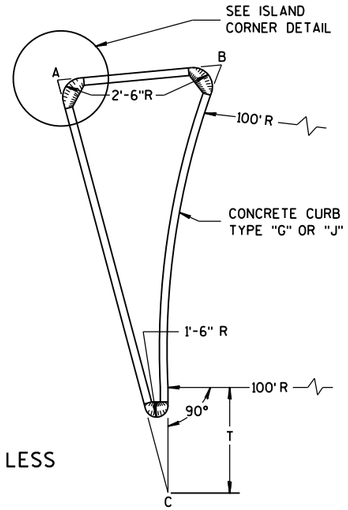

SIDE ROAD WIDENING AND TAPER REQUIRED WHERE
THE THROUGH HIGHWAY CARRIES TWO-WAY TRAFFIC
θ = ACUTE ANGLES 70° OR LESS

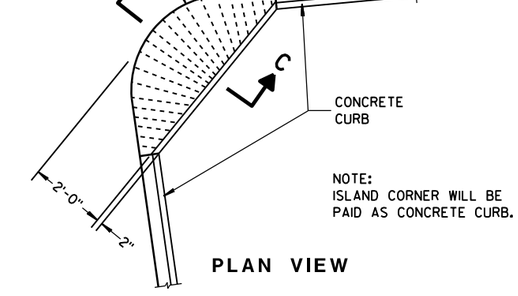

NOTE:
ISLAND CORNER WILL BE
PAID AS CONCRETE CURB.

PLAN VIEW

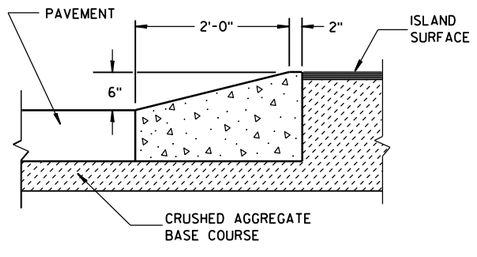

SECTION C-C

ISLAND CORNER DETAIL

(TO BE CONSTRUCTED AT ALL ISLAND CORNERS)

TABLE OF DIMENSIONS FOR
VARIABLE SIDE ROAD INTERSECTION ANGLES
(INTERPOLATE VALUES FOR ANGLES NOT SHOWN)

ANGLE θ DEGREES	COORDINATES IN FEET (MEASURED FROM POINT "O") X / Y								LENGTH IN FEET				
	A	B	C	D	E	F	G	H	AB	AC	T	OJ	OH
60	12.7 / -14.0	44.9 / -12.0	46.4 / -72.4	41.9 / 0.0	205.0 / 0.0	104.6 / -12.0	64.0 / -75.5	85.0 / -147.1	32.3	67.4	4.9	85.9	169.9
65	10.9 / -14.0	39.0 / -12.0	37.8 / -71.6	39.4 / 0.0	196.1 / 0.0	95.7 / -12.0	54.1 / -71.5	70.5 / -151.3	28.2	63.6	8.5	80.9	166.9
70	9.4 / -14.0	33.9 / -12.0	29.8 / -70.1	37.4 / 0.0	188.3 / 0.0	87.8 / -12.0	45.6 / -67.5	56.1 / -154.2	24.6	59.7	11.5	76.1	164.1
75	7.9 / -14.0	29.3 / -12.0	22.3 / -67.9	35.7 / 0.0	181.2 / 0.0	80.7 / -12.0	38.2 / -63.4	41.8 / -155.9	21.5	55.8	13.8	71.4	161.4
80	6.5 / -14.0	25.4 / -12.0	15.6 / -65.2	34.4 / 0.0	174.8 / 0.0	74.4 / -12.0	31.8 / -59.3	27.6 / -156.5	18.9	52.0	15.6	66.9	158.9

TYPE "A1" & "A2" SIDE ROAD INTERSECTION DETAILS

AT-GRADE SIDE ROAD
INTERSECTION, TYPE "A1" & "A2"

STATE OF WISCONSIN
DEPARTMENT OF TRANSPORTATION

APPROVED
12/18/12 — DATE
/S/ Jerry H. Zogg — ROADWAY STANDARDS DEVELOPMENT ENGINEER
FHWA

6
S.D.D. 9 A 1-13b

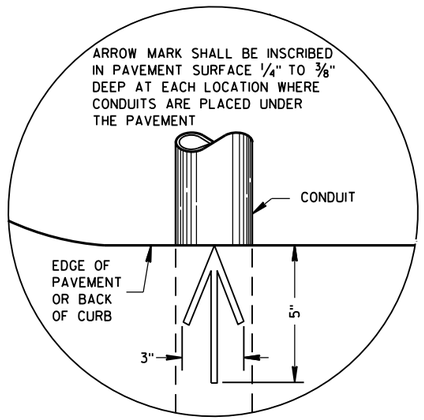

PLAN VIEW

ARROW MARK

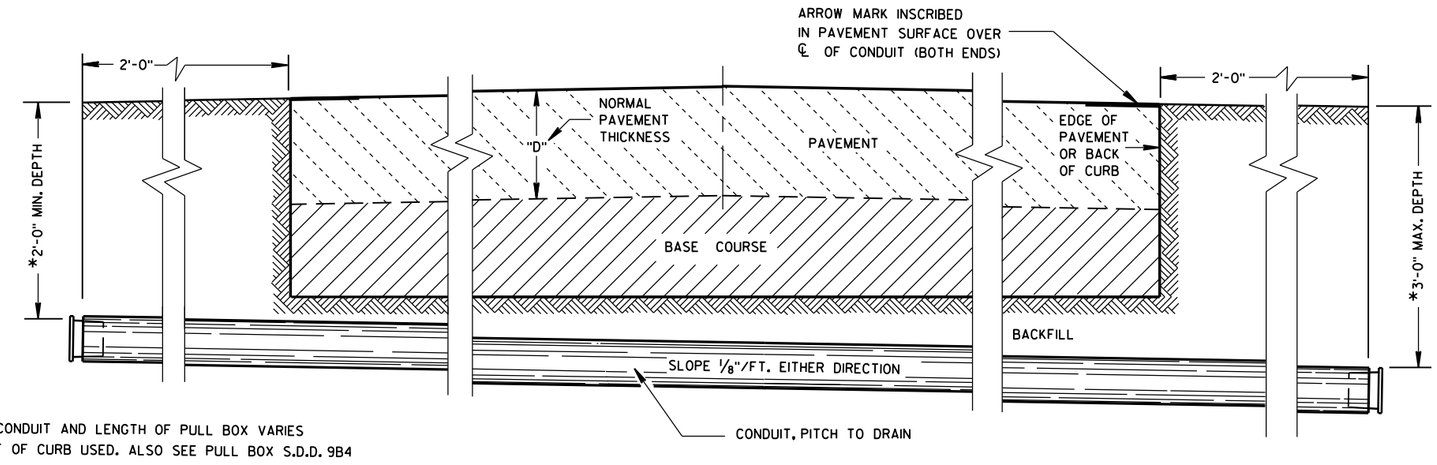

*DEPTH OF CONDUIT AND LENGTH OF PULL BOX VARIES WITH HEIGHT OF CURB USED. ALSO SEE PULL BOX S.D.D. 9B4

SIDE ELEVATION

DETAIL FOR CONDUIT UNDER PAVED HIGHWAYS

GENERAL NOTES

DETAILS OF CONSTRUCTION, MATERIALS AND WORKMANSHIP NOT SHOWN ON THIS DRAWING SHALL CONFORM TO THE PERTINENT REQUIREMENTS OF THE CONTRACT.

METALLIC (STANDARD SPECIFICATION 652.2.2) OR NONMETALLIC (STANDARD SPECIFICATION 652.2.3) CONDUIT SHALL BE FURNISHED AND PLACED AS SHOWN.

DEPTH OF CONDUIT INSTALLED BELOW THE TRAVELED WAY SHALL BE 24 INCHES MINIMUM AND 36 INCHES MAXIMUM.

DEPTH OF CONDUIT INSTALLED THAT IS NOT BELOW THE TRAVELED WAY SHALL BE 18 INCHES MINIMUM AND 36 INCHES MAXIMUM.

ANY EXCEPTION TO THE MAXIMUM DEPTH SHALL BE ONLY WITH THE WRITTEN APPROVAL OF THE ENGINEER.

THE TRENCH SHALL NOT BE BACKFILLED PRIOR TO INSPECTION OF THE CONDUIT.

ALL METALLIC CONDUIT RACEWAY ENDS SHALL BE REAMED AND THREADED.

ALL METALLIC CONDUIT IN WHICH WIRE OR CABLE IS TO BE INSTALLED SHALL BE BUSHED WITH APPROVED THREADED BUSHINGS BEFORE INSTALLATION OF THE WIRE OR CABLE.

ALL METALLIC CONDUITS IN WHICH WIRE OR CABLE IS NOT TO BE INSTALLED SHALL BE CAPPED WITH THREADED PROTECTIVE CAPS, AS APPROVED BY THE ENGINEER.

ALL NONMETALLIC CONDUIT SHALL BE CAPPED OR PLUGGED IMMEDIATELY AFTER INSTALLATION AND SHALL REMAIN CAPPED OR PLUGGED UNTIL WIRE/CABLES ARE INSTALLED.

NONMETALLIC CONDUITS IN WHICH WIRE OR CABLE IS NOT BEING INSTALLED SHALL REMAIN CAPPED OR PLUGGED.

BENDING OF PVC ELECTRICAL CONDUIT SHALL BE ACCOMPLISHED BY USING A BLANKET OR EMERSION TYPE TANK DESIGNED FOR THE PURPOSE OF BENDING PVC ELECTRICAL CONDUIT.

ALL CUT ENDS SHALL BE TRIMMED INSIDE AND OUTSIDE TO REMOVE ALL ROUGH EDGES ON NONMETALLIC CONDUIT. (SEE NEC 347.5)

WHEN REQUIRED TO CONNECT NONMETALLIC CONDUIT TO METALLIC CONDUIT, ONLY U.L. LISTED ADAPTER FITTINGS SHALL BE USED.

PRIOR TO CONDUIT ACCEPTANCE, CONDUIT CAPS OR PLUGS SHALL BE REMOVED, AND THE CAPS, PLUGS AND CONDUIT ENDS SHALL BE THOROUGHLY CLEANED AND THEN THE CAPS OR PLUGS REINSTALLED TO ENSURE THAT THE CAPS OR PLUGS CAN BE EASILY REMOVED IN THE FUTURE.

ALL CONDUIT BEING FURNISHED AND INSTALLED SHALL HAVE THE U.L. LABEL FIRMLY ATTACHED.

CONDUIT RUNS SHALL BE THE SAME SIZE OF CONDUIT FROM ONE END TO THE OTHER (FROM PULL BOX TO PULL BOX-OR-JUNCTION BOX TO JUNCTION BOX-OR-BASE TO BASE, ETC.).

TRACER WIRE SHALL BE INSTALLED AS STATED IN THE STANDARD SPECIFICATION, ITEM 652.3.1.1.

ALL CONDUIT RUNS SHALL BE STRAIGHT (WITHOUT BENDS) FROM PULL BOX TO PULL BOX, PULL BOX TO BASE AND BASE TO BASE AS SHOWN ON THE PLANS.

CONDUIT

STATE OF WISCONSIN
DEPARTMENT OF TRANSPORTATION

APPROVED
March, 2017 — DATE
/S/ Ahmet Demirbilek — STATE ELECTRICAL
FHWA

6

S.D.D. 9 B 2-10

TABLE OF NOMINAL DIMENSIONS AND WEIGHTS

DIMENSION IN INCHES		CORRUGATED STEEL PIPE								
PIPE DIAMETER (INSIDE)	A	12	12	12	18	18	18	24	24	24
PIPE LENGTH **	B	24	30	36	24	30	36	36	42	48
WALL THICKNESS	C	0.064	0.064	0.064	0.064	0.064	0.064	0.064	0.064	0.064
COVER	D	10 1/4	10 1/4	10 1/4	16 1/4	16 1/4	16 1/4	22 1/4	22 1/4	22 1/4
FRAME	E	14 1/2	14 1/2	14 1/2	20 1/2	20 1/2	20 1/2	26 1/2	26 1/2	26 1/2
FRAME	F	8 1/2	8 1/2	8 1/2	14 1/2	14 1/2	14 1/2	20 1/2	20 1/2	20 1/2
FRAME	G	11 1/2	11 1/2	11 1/2	17 1/2	17 1/2	17 1/2	23 1/2	23 1/2	23 1/2
WEIGHT IN POUNDS *										
FRAME AND COVER		60	60	60	110	110	110	155	155	155

* THE ACTUAL WEIGHT OF THE MANHOLE FRAME AND COVER MAY VARY WITHIN 5 PERCENT PLUS OR MINUS OF THE WEIGHTS SHOWN.

** NORMALLY USED LENGTHS. THE PROJECT ENGINEER SHALL DETERMINE IF PIPE LENGTHS, OTHER THAN THOSE SPECIFIED, SHALL BE USED, TO A MAXIMUM OF 48" (CONTINUOUS LENGTH, NON-SPLICED). THE ADDITIONAL LENGTH SHALL BE INCIDENTAL TO THE PULL BOX BID PRICE.

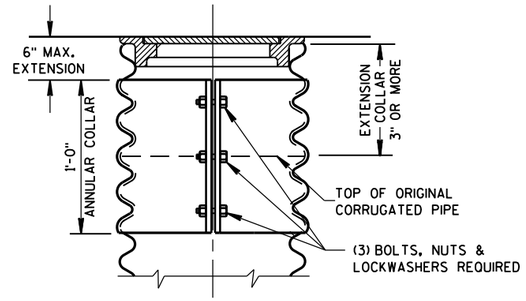

CORRUGATED PIPE EXTENDER

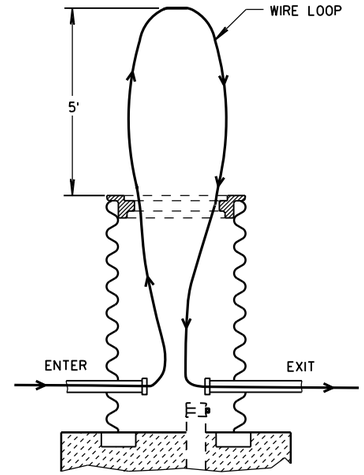

MEASUREMENT DETAIL FOR WIRE/CABLE IN THE PULL BOX

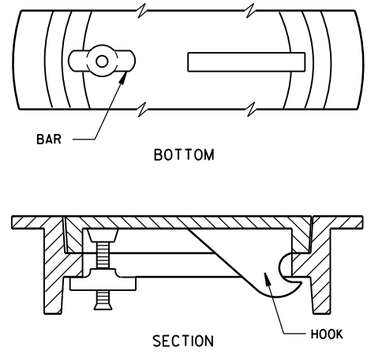

ALTERNATE COVER (LOCKING)

TIGHTENING BAR TYPE

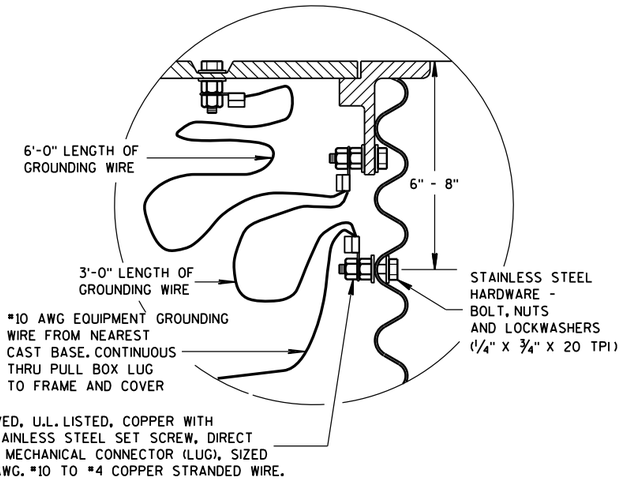

EQUIPMENT GROUNDING LUG AND LOCATION IN STEEL PULL BOXES

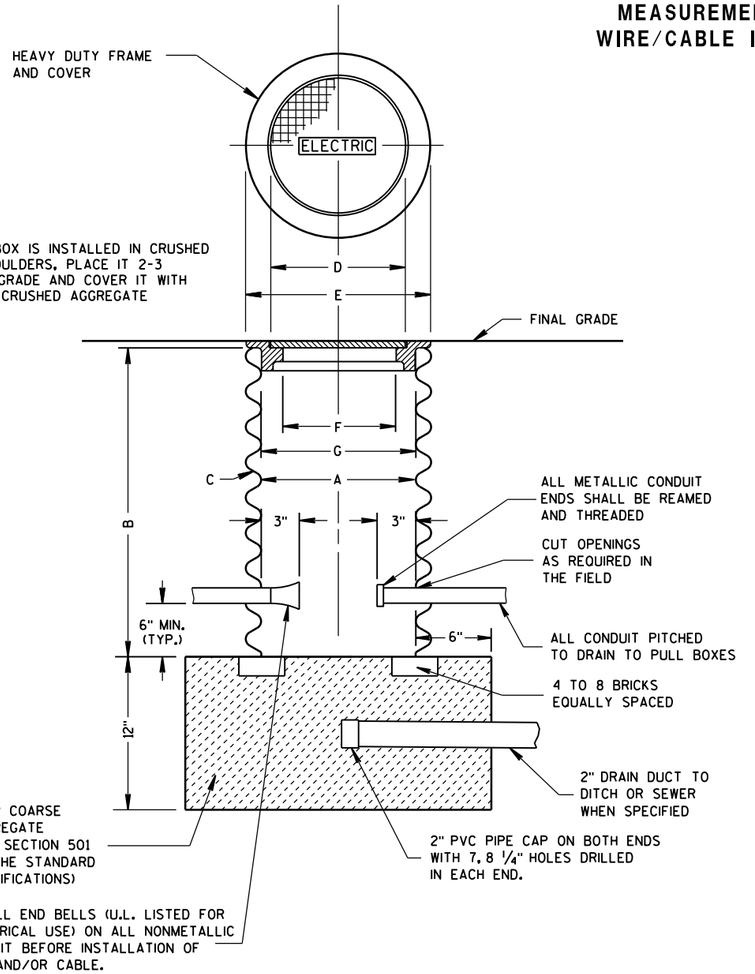

PULL BOX

GENERAL NOTES

DETAILS OF CONSTRUCTION, MATERIALS AND WORKMANSHIP NOT SHOWN ON THIS DRAWING SHALL CONFORM TO THE PERTINENT REQUIREMENTS OF THE CONTRACT.

ALL FRAMES AND COVERS SHALL BE HEAVY DUTY TYPE, SUITABLE FOR VEHICULAR TRAFFIC LOADS.

PULL BOXES LOCATED IN THE ROADWAYS SHALL HAVE LOCKING COVERS.

ENTRANCE HOLES INTO PULL BOXES SHALL BE CUT WITH A CIRCULAR HOLE SAW OR HYDRAULIC CONDUIT PUNCH. HOLE SIZE SHALL BE THE OUTSIDE DIAMETER OF THE CONDUIT THAT IS TO FIT IN THE OPENING PLUS NO MORE THAN 1/4".

THE CONTRACTOR SHALL NOT INSTALL WIRE IN ANY PULL BOX UNTIL ITS INSTALLATION HAS BEEN INSPECTED AND ACCEPTED BY THE ENGINEER.

GROUNDING LUGS (MECHANICAL CONNECTORS) SHALL BE U.L. LISTED AND APPROVED FOR USE WITH COPPER WIRE.

ALL METALLIC CONDUIT IN WHICH WIRE AND/OR CABLE IS TO BE INSTALLED, SHALL BE BUSHED BEFORE INSTALLATION OF THE WIRE AND/OR CABLE.

WHEN PULL BOXES ARE INSTALLED FOR FUTURE USE, DO NOT INSTALL THE EQUIPMENT GROUNDING LUG. THE EQUIPMENT GROUNDING LUG, THE EQUIPMENT GROUNDING ELECTRODE AND THE EQUIPMENT GROUNDING CONDUCTOR SHALL BE REQUIRED AND INSTALLED UNDER A FUTURE WIRING CONTRACT.

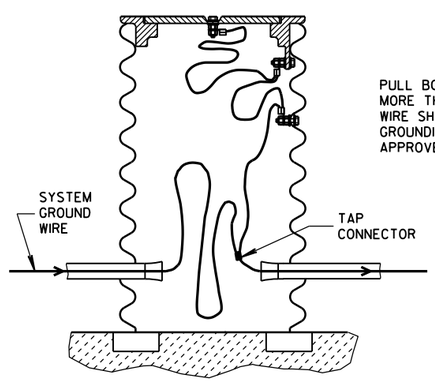

PULL BOX TO NEAREST BASE DISTANCE MORE THAN 20 FEET. PULL BOX GROUND WIRE SHALL CONNECT AT SYSTEM GROUNDING WIRE. USE DEPARTMENT APPROVED TAP CONNECTOR.

EQUIPMENT GROUNDING LUG AND LOCATION IN STEEL PULL BOXES

PULL BOX

STATE OF WISCONSIN
DEPARTMENT OF TRANSPORTATION

APPROVED
Sept. 2014 — DATE
/S/ Ahmet Demirbilek — STATE ELECTRICAL
FHWA

6

S.D.D. 9 B 4-11

FORM DEPTH SHALL BE NO MORE THAN 6" BELOW GRADE ON THE LOWER SIDE OF BASE

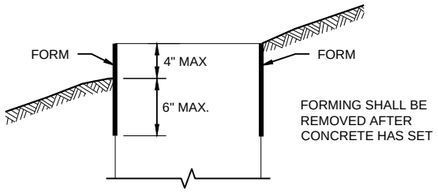

FORMING DETAIL

QUANTITY REQUIREMENTS	CONCRETE BASE TYPE		
	1	2	5 & 6
APPROX. CUBIC YARDS OF CONCRETE	0.40	0.57	0.40
LBS. OF HOOP BAR STEEL	NONE	23	16
LBS. OF VERTICAL BAR STEEL	NONE	60	18

GENERAL NOTES

DETAILS OF CONSTRUCTION, MATERIALS AND WORKMANSHIP NOT SHOWN ON THIS DRAWINGSHALL CONFORM TO THE PERTINENT REQUIREMENTS OF THE CONTRACT.

BASES SHALL BE EXCAVATED BY USE OF A CIRCULAR AUGER.

TOP SURFACES OF CONCRETE BASES SHALL BE TROWEL FINISHED SMOOTH AND LEVEL.

CONDUIT SIZES AND LOCATIONS SHALL BE SHOWN ON THE PLANS

THE FINAL OR TERMINATING CONCRETE BASE IN A CONDUIT RUN SHALL HAVE A 6" EXIT STUB INSTALLED FOR FUTURE CABLING USE. THE EXIT STUB SHALL BE SIZED AS USED THROUGHOUT THE CONDUIT RUN AS SHOWN A THE ENTRANCE OF THE BASE.

ENDS OF CONDUIT INSTALLED BELOW GRADE FRO FUTURE USE SHALL BE CAPPED IF METALLIC OR PLUGGED IF NON-METALLIC.

MINIMUM BENDING RADIUS OF CONDUIT IS EQUAL TO 6X THE DIAMETER.

CONDUIT HEIGHT ABOVE CONCRETE BASES SHALL BE 1 INCH. ALL METALLIC CONDUIT ENDS SHALL BE REAMED AND THREADED.

ALL CONDUIT ENDS AT THE TOP OF CONCRETE BASES SHALL BE CAPPED IF METALLIC OR PLUGGED IF NON-METALLIC IMMEDIATELY AFTER PLACEMENT AND BEFORE CONCRETE IS POURED. CONDUITS IN WHICH WIRE OR CABLE IS NOT INSTALLED SHALL REMAIN CAPPED OR PLUGGED.

BELL BENDS SHALL BE INSTALLED ON ALL PVC CONDUIT EXPOSED AT THE TOP OF CONCRETE BASES BEFORE INSTALLATION.

WHEN REQUIRED TO CONNECT NON-METALLIC CONDUIT TO METALLIC CONDUIT, ONLY ADAPTER FITTINGS, U.L. LISTED FOR ELECTRICAL USE, SHALL BE USED.

IF A BASE REQUIRES A DEEP FORM BECAUSE OF LOOSE DIRT OR FILL, THE FORM SHALL BE REMOVED BEFORE BACKFILLING AROUND THE BASE. BACKFILL SHALL BE TAMPED TIGHT AGAINST THE BARE CONCRETE BASE IN LAYERS OF 1 FOOT OR LESS.

A NO. 4 AWG STRANDED COPPER EQUIPMENT GROUNDING CONDUCTOR SHALL BE EXOTHERMICALLY WELDED TO THE EQUIPMENT GROUNDING ELECTRODE (GROUND ROD) FOR TYPE 2, TYPE 5 AND TYPE 6 BASES.

THE EQUIPMENT GROUNDING CONDUCTOR SHALL BE FURNISHED AND INSTALLED TO ENTER ALL BASE TYPES THROUGH A 1 INCH CONDUIT INSTALLED FOR GROUNDING PURPOSES, LEAVING A 4 FOOT COIL OF WIRE ABOVE THE CONCRETE BASE. THE EQUIPMENT GROUNDING CONDUCTOR SHALL BE NEATLY COILED AND THE COILS TIED TOGETHER.

ANCHOR RODS SHALL BE THREADED 12" IN LENGTH ON EACH END OF THE ROD. ANCHOR RODS SHALL BE MANUFACTURED IN ACCORDANCE WITH SECTION 654.2.1 OF THE STANDARD SPECIFICATIONS.

WASHERS AND LOCK WASHERS ARE REQUIRED ON ALL ANCHOR RODS.

WHEN ANCHOR RODS USING THE ALTERNATE "L" BEND ARE FURNISHED, THE 4 INCH"L" BEND SHALL BE IN ADDITION TO THE SPECIFIED ANCHOR ROD BAR LENGTH. THE "L" BEND SHALL NOT BE THREADED.

ANCHOR RODS SHALL BE INSTALLED WITH MISALIGNMENTS OF LESS THAN 1:40 FROM VERTICAL.

WELDING OF THE ANCHOR RODS TO THE CAGE IS UNACCEPTABLE. TIE WIRES SHALL BE USED.

BAR STEEL REINFORCEMENT SHALL BE COATED WITH POWDERED EPOXY RESIN IN ACCORDANCE WITH SECTION 505 OF THE STANDARD SPECIFICATIONS (LATEST EDITION).

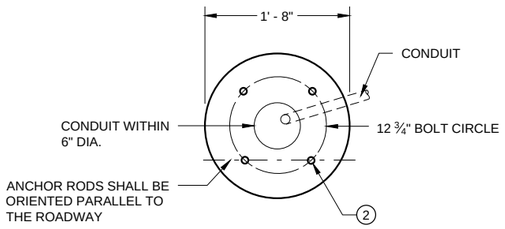

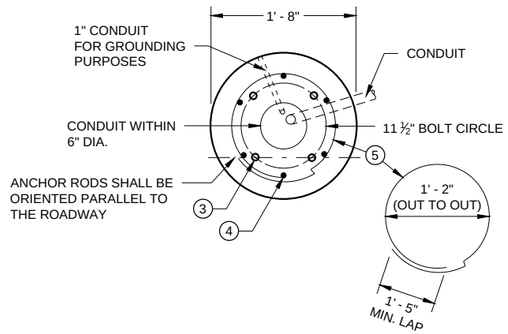

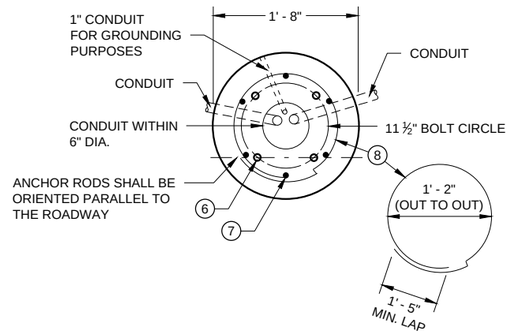

1 THE MINIMUM DEPTH OF CONDUIT EXITING THE CONCRETE BASE AND INSTALLED BELOW THE TRAVELED WAY SHALL BE 24 INCHES. THE MINIMUM DEPTH OF CONDUIT EXITING THE CONCRETE BASE THAT IS NOT INSTALLED BELOW THE TRAVELED WAY SHALL BE 18 INCHES. THE MAXIMUM DEPTH OF ALL CONDUIT SHALL BE 36 INCHES EXCEPT WITH WRITTEN APPROVAL OF THE ENGINEER.

2 (4) 1" DIA. X 3' - 6" ANCHOR RODS.

3 (4) 1" DIA. X 5' - 0" ANCHOR RODS.

4 (6) NO. 6 X 6' - 8" BAR STEEL REINFORCEMENT.

5 (7) NO. 4 X 5' - 1" BAR STEEL REINFORCEMENT @ 1' - 0" C - C.

6 (4) 1" DIA. X 3' - 6" ANCHOR RODS.

7 (6) NO. 4 X 4' - 8" BAR STEEL REINFORCEMENT.

8 (5) NO. 4 X 5' - 1" BAR STELL REINFORCEMENT @ 1' - 0" C -C.

9 EXOTHERMIC CONNECTION TO EUIPMENT GROUNDING CONDUCTOR

10 ⅝" DIA. X 8' -0" COPPERCLAD EQUIPMENT GROUNDING ELECTRODE REQUIRED

11 ANY ANCHOR ROD PROJECTION SHORTER THAN 2 ¾" OR LONGER THAN 3 ¼" SHALL REQUIRE THE BASE TO BE REMOVED AND REPLACED AT THE CONTRACTORS EXPENSE.

12 FOR NON - BREAKAWAY INSTALLATIONS, 4 ½" ± ANCHOR ROD PROJECTION WITH THE USE OF LEVELING NUTS. RODENT SCREEN REQUIRED.

HALF SECTION IN UNPAVED AREA
(TYPICAL FOR TYPES 1, 2, 5 & 6)

HALF SECTION IN PAVEMENT
(TYPICAL FOR TYPES 1, 2, 5 & 6)

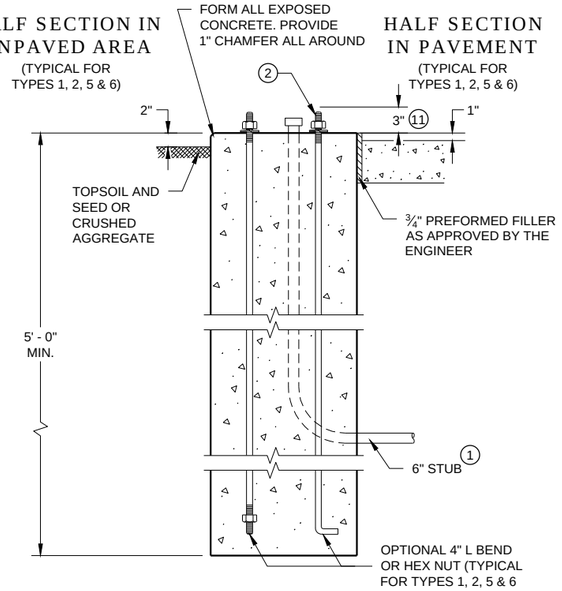

TYPE 1

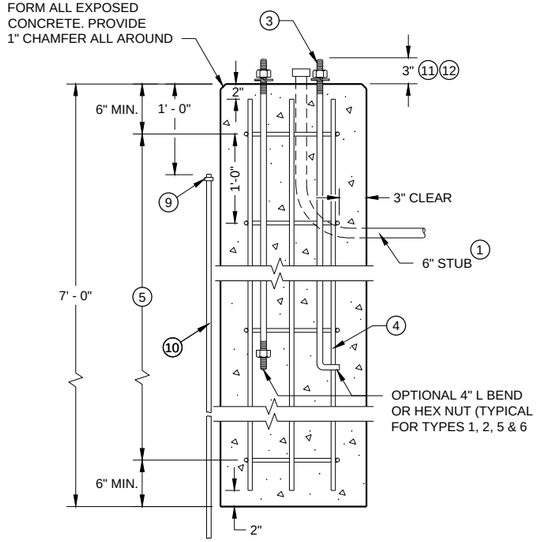

TYPE 2

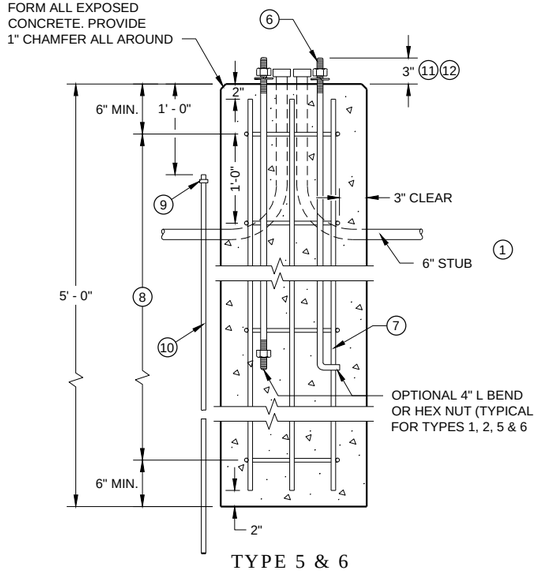

TYPE 5 & 6

CONCRETE BASES

CONCRETE BASES
TYPES 1, 2, 5, & 6

STATE OF WISCONSIN
DEPARTMENT OF TRANSPORTATION

APPROVED
May 2019
DATE

/S/ Ahmet Demirbilek
STATE ELECTRICAL ENGI

FHWA

6

SDD 09C02 - 09

GENERAL NOTES

DETAILS OF CONSTRUCTION, MATERIALS AND WORKMANSHIP NOT SHOWN ON THIS DRAWING SHALL CONFORM TO THE PERTINENT REQUIREMENTS OF THE CONTRACT.

FOUR (4) BOLTS SHALL BE FURNISHED WITH EACH TRANSFORMER BASE. BOLTS SHALL BE 1" DIAMETER, 4" IN LENGTH, WITH WASHERS, LOCK WASHERS AND NUTS. BOLTS, NUTS AND WASHERS SHALL BE MANUFACTURED IN ACCORDANCE WITH SECTION 641.2.2 OF THE STANDARD SPECIFICATIONS.

LEVELING SHIMS, IF NEEDED, SHALL BE DESIGNED FOR THE PURPOSE AND USED UNDER CAST BASES WHEN PLUMBING POLES OR STANDARDS DURING INSTALLATION. THE USE OF WASHERS IN LIEU OF PROPER LEVELING SHIMS IS NOT ACCEPTABLE.

SHIM LENGTH SHALL BE LONG ENOUGH TO COMPLETELY COVER THE AREA UNDER THE LENGTH AND WIDTH OF THE BASE MOUNTING FLANGE.

DOUBLE NUTTING IS NOT ACCEPTABLE FOR LEVELING OR MOUNTING PURPOSES.

A NEMA APPROVED, U.L. LISTED, COPPER WITH BRASS OR STAINLESS STEEL SET SCREW, DIRECT BURY RATED, MECHANICAL CONNECTOR (LUG), SIZED TO ACCEPT AWG. #10 TO #4 COPPER STRANDED WIRE SHALL BE FURNISHED AND INSTALLED IN THE PEDESTAL AND TRANSFORMER BASES.

THE MECHANICAL CONNECTOR SHALL BE INSTALLED USING A 1/4" - 20 (TPI) STAINLESS STEEL HEX HEAD BOLT OF SUFFICIENT LENGTH TO FIRMLY ATTACH THE LUG TO THE BASE.

SHOULD THE MANNER OF ATTACHMENT OF THE LUG REQUIRE WASHERS, HEX NUTS, LOCK WASHER - THEY SHALL BE STAINLESS STEEL AS IS THE BOLT. THE MANNER OF ATTACHMENT SHALL NOT BLOCK ACCESSIBILITY TO WIRE PLACEMENT IN THE CONNECTOR.

PEDESTAL BASE COLLAR THREADING SHALL BE TAPERED AND IN ACCORDANCE WITH NATIONAL PIPE THREADING DIMENSIONS.

BASE COLLAR THREADING SHALL EXTEND INTO THE BASE COLLAR WITH SUFFICIENT DEPTH TO ACCEPT THE INSTALLATION OF TRAFFIC SIGNAL STANDARDS TO A DEPTH OF 1 1/2", THEN TIGHTENING TO A POINT OF BEING IMMOVABLE.

THE ACCESS DOOR SHALL BE OF THE SAME MATERIAL AS THE BASE.

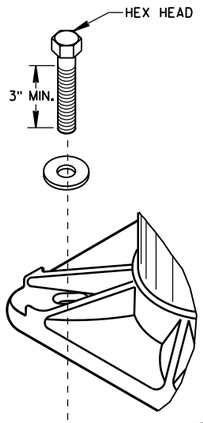

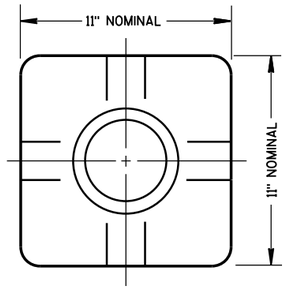

TOP VIEW
(PEDESTAL BASE)

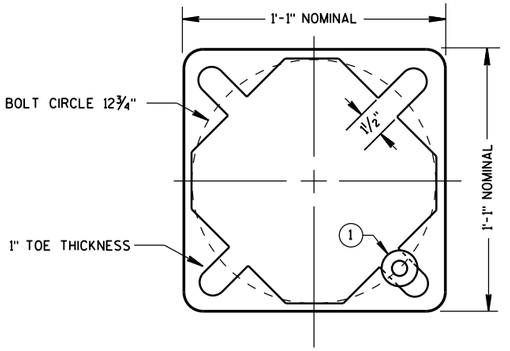

BOTTOM VIEW
(PEDESTAL BASE)

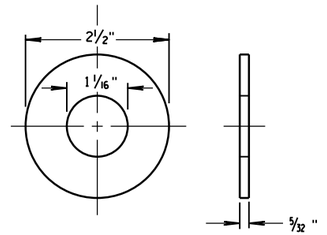

ZINC COATED STEEL WASHER
TO BE PROVIDED BY THE CONTRACTOR

PEDESTAL BASE WASHER (1)

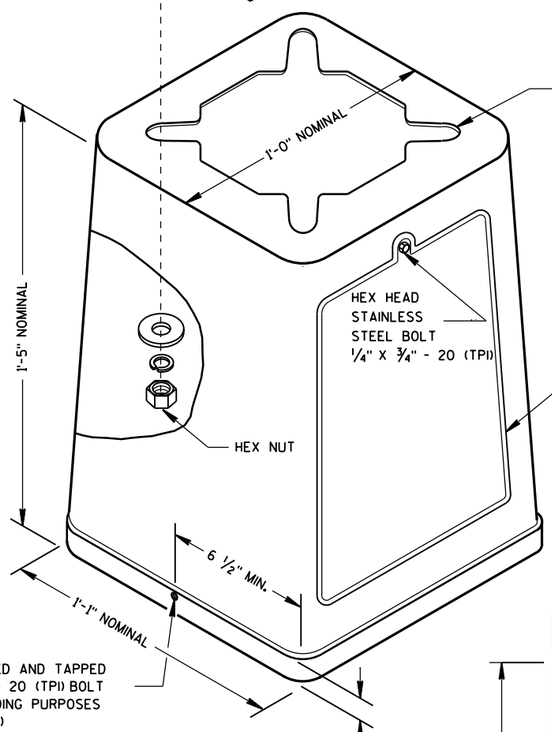

ISOMETRIC VIEW

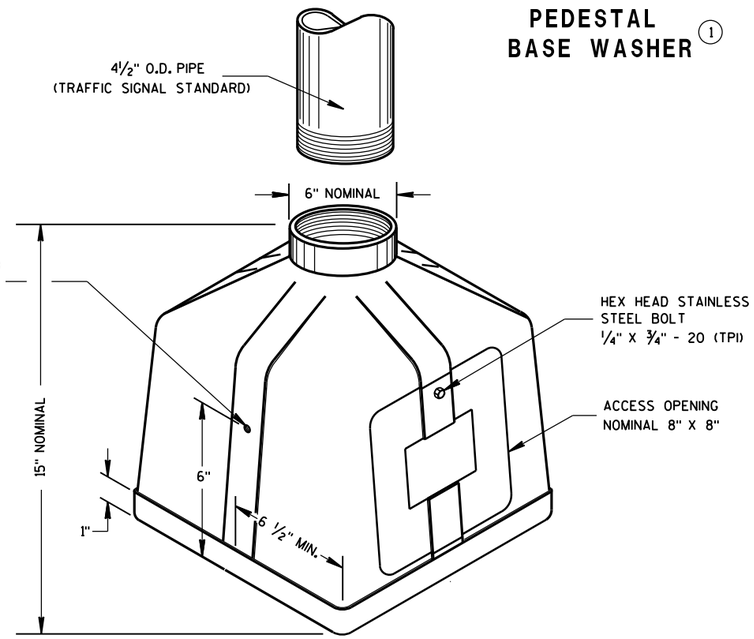

ISOMETRIC VIEW

PEDESTAL BASE

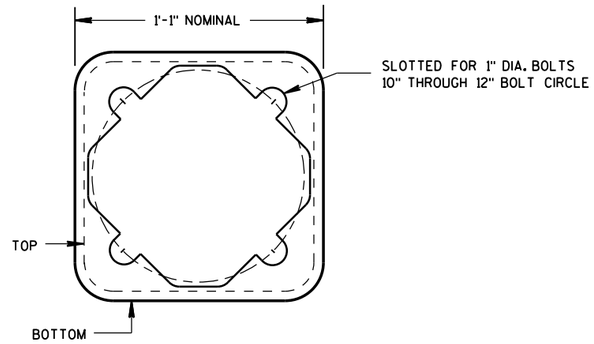

BOTTOM VIEW
(TRANSFORMER BASE)

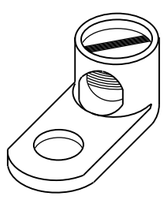

TYPICAL MECHANICAL CONNECTOR LUG

TO BE FURNISHED WITH EACH BASE

TRANSFORMER BASE

INTENDED FOR USE WITH TYPE 2, 3, 4, 5 & 6 POLES

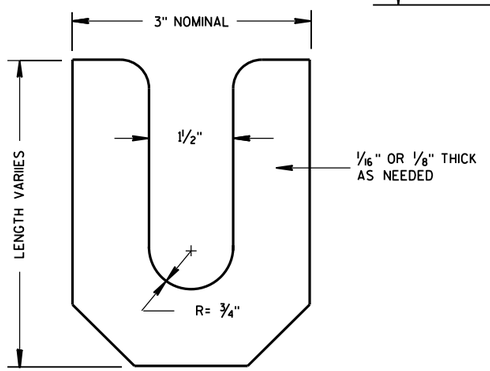

LEVELING SHIM

TRANSFORMER/PEDESTAL BASES

STATE OF WISCONSIN
DEPARTMENT OF TRANSPORTATION

APPROVED
Sept. 2014 — DATE
/S/ Ahmet Demirbilek — STATE ELECTRICAL
FHWA

6

S.D.D. 9 C 3-4

6

S.D.D. 9 C 3-4

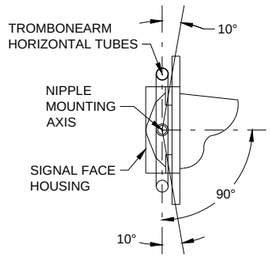

SECTION A-A

(10 DEGREES TILT REQUIREMENT OF FACE(S) IN THE TROMBONE MOUNTING)

FOR MANUFACTURERS USE ONLY

WELD TO BE 100% R.T. OR U.T. TESTED AS PER THE REQUIREMENTS OF AWS D 1.5-88. RECORDS OF COMPLIANCE OF SUCH TESTING SHALL BE FURNISHED TO THE OFFICE OF DESIGN / BRIDGE FOR VERIFICATION AND APPROVAL.

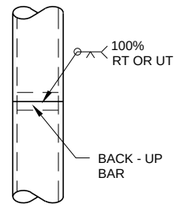

POLE SPLICE DETAIL

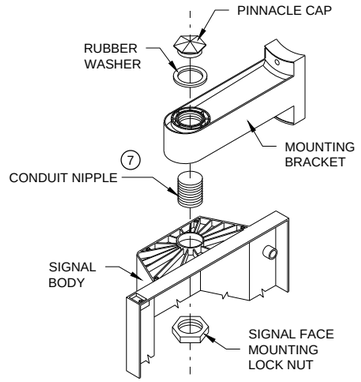

SIGNAL FACE MOUNTING DETAIL

(BANDED)

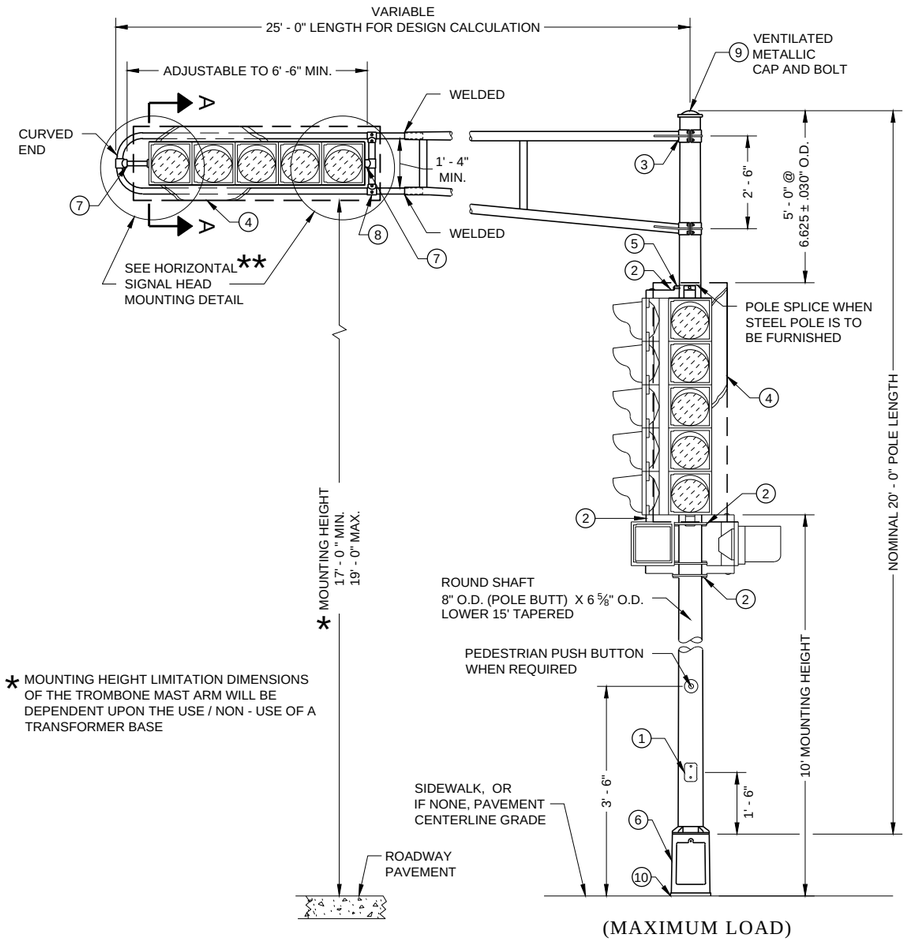

* MOUNTING HEIGHT LIMITATION DIMENSIONS OF THE TROMBONE MAST ARM WILL BE DEPENDENT UPON THE USE / NON - USE OF A TRANSFORMER BASE

(MAXIMUM LOAD)

GENERAL NOTES

DETAILS OF CONSTRUCTION, MATERIALS AND WORKMANSHIP NOT SHOWN ON THIS DRAWING SHALL CONFORM TO THEPERTINENT REQUIREMENTS OF THE CONTRACT.

POLES SHALL BE EITHER ALUMINUM OR GALVANIZED STEEL AS CALLED FOR IN THE CONTRACT.

SECTION 657, POLES, OF THE STANDARD SPECIFICATIONS SHALL APPLY TO THIS DRAWING.

A PULL WIRE / ROPE SHALL BE INSTALLED IN EACH TROMBONE ARM RACEWAY DURING THE MANUFACTURING PROCESS.

TYPE 2 ALUMINUM POLES SHALL BE CONSTRUCTED OF 6063 - T6 ALUMINUM ALLOY. SLEEVING INSIDE THE POLE IS NOT ACCEPTABLE.

WHEN TRANSFORMER BASES ARE USED, WIRE CONNECTIONS SHALL BE MADE IN THE TRANSFORMER BASE.

(1) 4" X 6" REINFORCED HANDHOLE AND COVER ASSEMBLY WITH TWO (2) ¼" X ¾" - 20 TPI , STAINLESS STEEL, HEX HEAD BOLTS.

(2) SIGNAL FACE MOUNTING BRACKETS. MOUNT WITH CAP SCREWS AND BANDING.

(3) GROMMETS. 1" CHASE NIPPLES OR 1" CLOSE CONDUIT NIPPLES WITH BUSHINGS SHALL BE PROVIDED FOR 1 ⅜" HOLE IN POLE SHAFT FOR WIRING.

(4) SECURELY MOUNT DULL BLACK POLYCARBONATE BACKPLATES, PROJECTING 5" BEYOND ALL SIDES OF THE SIGNAL FACE HOUSING,PER MANUFACTURER'S RECOMMENDATIONS.

(5) POLE MOUNTED SIGNAL FACES SHALL REQUIRE ONE OR MORE MOUNTING SPACERS UNDER THE TOP MOUNTING BRACKET(S) ASREQUIRED, TO PLUMB THE SIGNAL FACES.

(6) CAST ALUMINUM TRANSFORMER BASE, WHEN REQUIRED.

(7) USE 1 ½" ID NIPPLES ZINC-COATED RIGID METAL CONDUIT, LONG ENOUGH TO ACCOMMODATE FULL DEPTH THREADING INTO THE HEAD MOUNTING LOCK NUT IN ORDER TO TIGHTEN THE FACE, BUT THAT DO NOTINTERFERE WITH REFLECTOR CLOSURE. THREAD THE NIPPLE INTO THE MOUNTING BRACKET/ELBOW UNTIL TIGHT. USE APPROVED PINNACLE TYPE HARDWARE FROM A DEPARTMENT APPROVED MANUFACTURER TO CLOSE THE UNUSED 1 ½" OPENING IN SIGNAL FACES AND BRACKET ENDS.

(8) VERTICAL STRUT (ADJUSTABLE). ONE (1) SET SCREW (¼" X ¾" - 20 TPI STAINLESS STEEL, HEX HEAD) INTO EACH ARM MEMBER IF STRUTIS THE SLIDING TYPE.

(9) FURNISH AND INSTALL VENTILATED, CAST METALLIC (ALUMINUM ALLOY) CAPS. FASTEN CAPS WITH ONE (1) ¼" X ¾" - 20 TPI STAINLESS STEEL, HEX HEAD BOLT.

(10) SHIMMING, IF NEEDED, SHALL BE LOCATED BETWEEN THE CONCRETE FOUNDATION AND THE TRANSFORMER BASE.

(11) USE SERRATED LOCK WASHERS WITH NOTCHES BETWEEN END TEE AND SIGNAL HEAD.

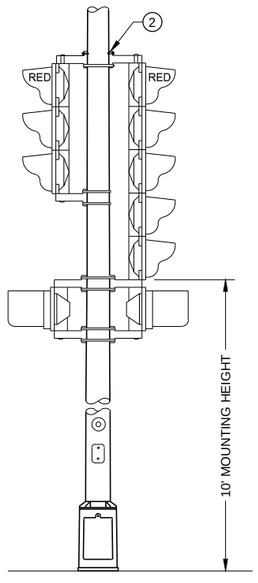

TYPICAL MOUNTING OF BACK TO BACK 3 AND 5 SECTION SIGNAL FACES

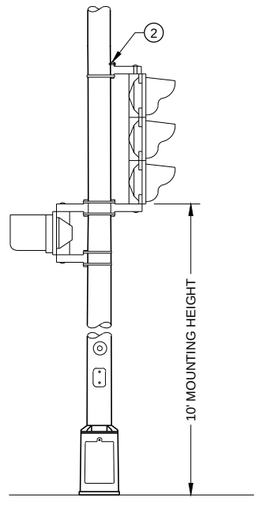

TYPICAL MOUNTING OF 3 SECTION SIGNAL FACE

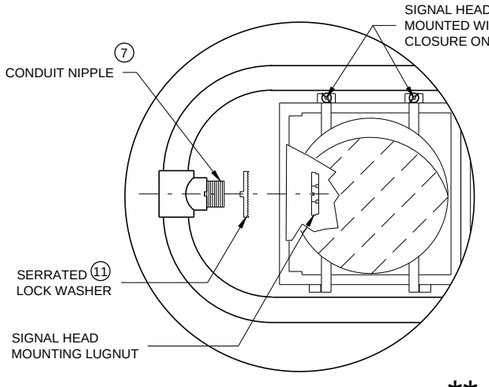

HORIZONTAL SIGNAL HEAD** MOUNTING DETAIL

** SIGNAL HEAD ATTACHMENT ALSO APPLIES TO MOUNTING AT CROSS BAR

TYPE 2 POLE MOUNTING CONFIGURATION

POLE MOUNTINGS FOR TRAFFIC SIGNALS

TYPE 2

STATE OF WISCONSIN
DEPARTMENT OF TRANSPORTATION

6

SDD 09E01 - 15a

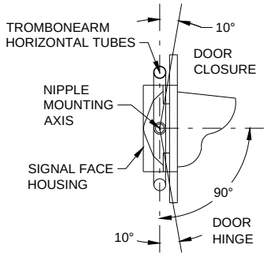

SECTION A-A

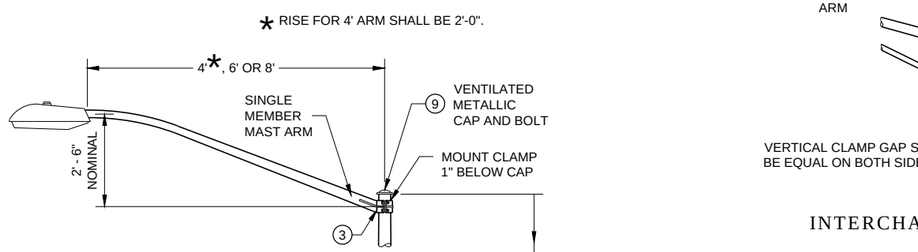

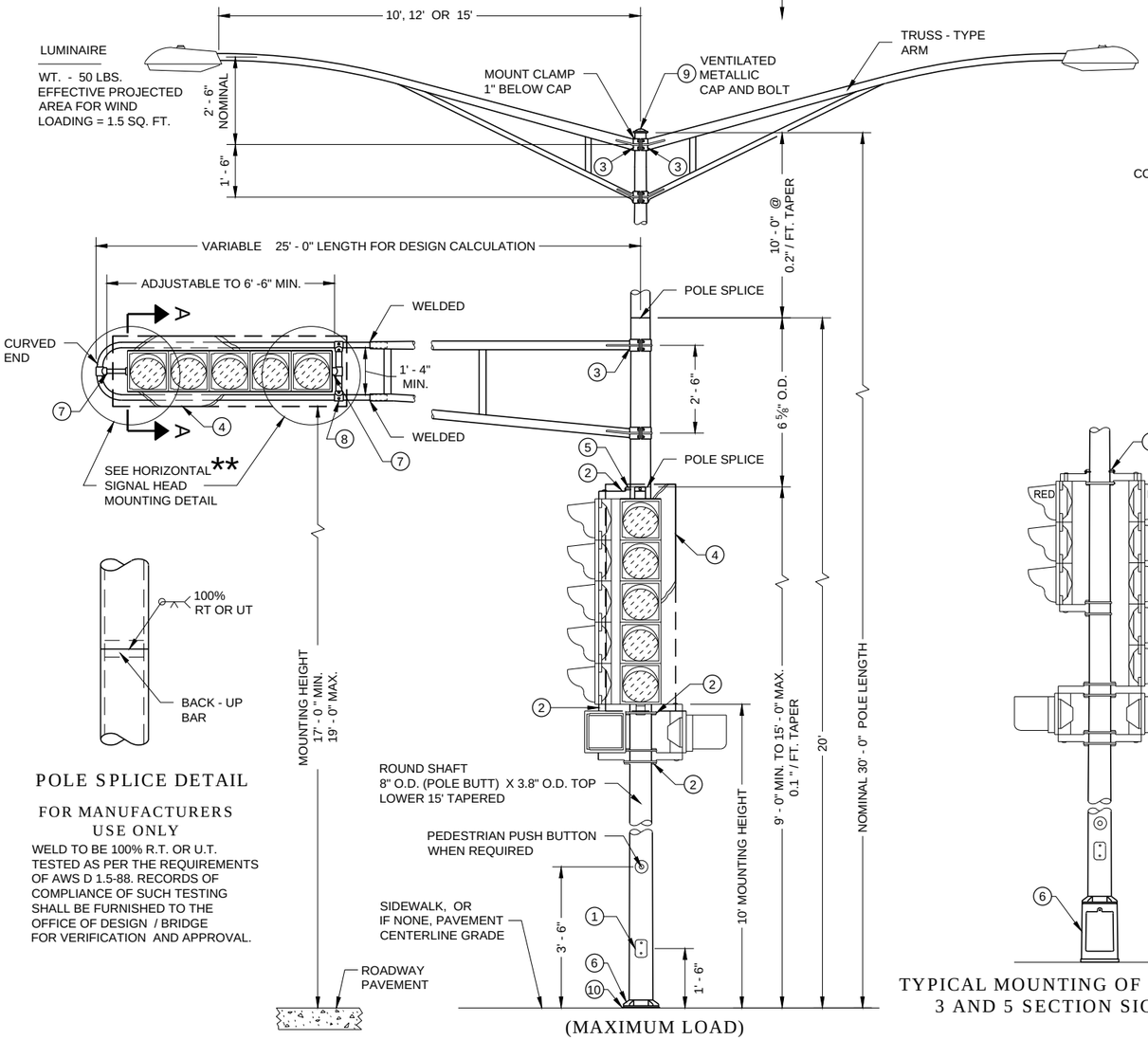

(MAXIMUM LOAD)

POLE SPLICE DETAIL

FOR MANUFACTURERS USE ONLY

WELD TO BE 100% R.T. OR U.T. TESTED AS PER THE REQUIREMENTS OF AWS D 1.5-88. RECORDS OF COMPLIANCE OF SUCH TESTING SHALL BE FURNISHED TO THE OFFICE OF DESIGN / BRIDGE FOR VERIFICATION AND APPROVAL.

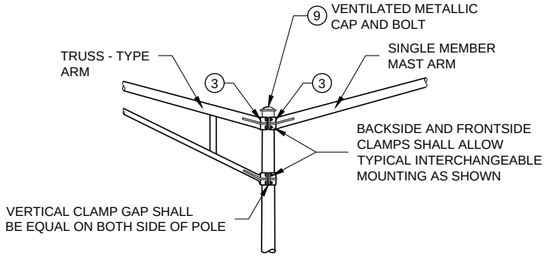

INTERCHANGEABLE MOUNTING DETAIL

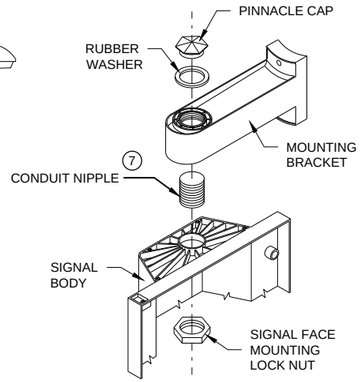

SIGNAL FACE MOUNTING DETAIL
(BANDED)

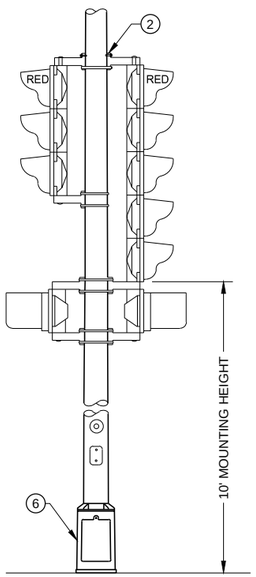

TYPICAL MOUNTING OF BACK TO BACK 3 AND 5 SECTION SIGNAL FACES

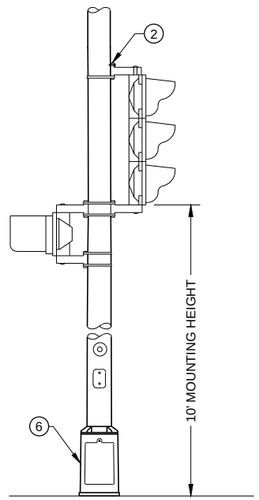

TYPICAL MOUNTING OF 3 SECTION SIGNAL FACE

GENERAL NOTES

DETAILS OF CONSTRUCTION, MATERIALS AND WORKMANSHIP NOT SHOWN ON THIS DRAWING SHALL CONFORM TO THE PERTINENT REQUIREMENTS OF THE CONTRACT.

ALL TYPE 3 POLE MOUNTINGS SHALL BE DESIGNED TO INCLUDE TWIN 15' ARMS WITH LUMINAIRES.

POLES SHALL BE GALVANIZED STEEL.

SECTION 657, POLES, OF THE STANDARD SPECIFICATIONS SHALL APPLY TO THIS DRAWING.

A PULL WIRE / ROPE SHALL BE INSTALLED IN EACH TROMBONE ARM RACEWAY DURING THE MANUFACTURING PROCESS.

THE SLIPFITTER END OF THE LUMINAIRE MAST ARM SHALL BE A NOMINAL 2 3/8 INCHES IN OUTSIDE DIAMETER. THE STRAIGHT PORTION OF THE SLIPFITTER END OF THE LUMINAIRE MAST ARM SHALL BE A NOMINAL 12 INCHES IN LENGTH.

WHEN TRANSFORMER BASES ARE USED, WIRE CONNECTIONS SHALL BE MADE IN THE TRANSFORMER BASE.

(1) 4" X 6" REINFORCED HANDHOLE AND COVER ASSEMBLY WITH TWO (2) 1/4" X 3/4" - 20 TPI , STAINLESS STEEL, HEX HEAD BOLTS.

(2) SIGNAL FACE MOUNTING BRACKETS. MOUNT WITH CAP SCREWS AND BANDING.

(3) GROMMETS. 1" CHASE NIPPLES OR 1" CLOSE CONDUIT NIPPLES WITH BUSHINGS SHALL BE PROVIDED FOR 1 3/8" HOLE IN POLE SHAFT FOR WIRING.

(4) SECURELY MOUNT DULL BLACK POLYCARBONATE BACKPLATES, PROJECTING 5" BEYOND ALL SIDES OF THE SIGNAL FACE HOUSING, PER MANUFACTURER'S RECOMMENDATIONS.

(5) POLE MOUNTED SIGNAL FACES SHALL REQUIRE ONE OR MORE MOUNTING SPACERS UNDER THE TOP MOUNTING BRACKET(S) AS REQUIRED, TO PLUMB THE SIGNAL FACE.

(6) CAST ALUMINUM TRANSFORMER BASE, WHEN REQUIRED. UNDER MAX LOADING, TYPE 3 POLE SHALL BE MOUNTED DIRECTLY TO ITS CONCRETE BASE.

(7) USE 1 1/2" ID NIPPLES ZINC-COATED RIGID METAL CONDUIT, LONG ENOUGH TO ACCOMMODATE FULL DEPTH THREADING INTO THE HEAD MOUNTING LOCK NUT IN ORDER TO TIGHTEN THE FACE, BUT THAT DO NOT INTERFERE WITH REFLECTOR CLOSURE. THREAD THE NIPPLE INTO THE MOUNTING BRACKET/ELBOW UNTIL TIGHT. USE APPROVED PINNACLE TYPE HARDWARE FROM A DEPARTMENT APPROVED MANUFACTURER TO CLOSE THE UNUSED 1 1/2" OPENING IN SIGNAL FACES AND BRACKET ENDS.

(8) VERTICAL STRUT (ADJUSTABLE). ONE (1) SET SCREW (1/4" X 3/4" - 20 TPI STAINLESS STEEL, HEX HEAD) INTO EACH ARM MEMBER IF STRUT IS THE SLIDING TYPE.

(9) FURNISH AND INSTALL VENTILATED, CAST METALLIC (ALUMINUM ALLOY) CAPS. FASTEN CAPS WITH ONE (1) 1/4" X 3/4" - 20 TPI STAINLESS STEEL, HEX HEAD BOLT.

(10) SHIMMING, IF NEEDED, SHALL BE LOCATED BETWEEN THE CONCRETE FOUNDATION AND POLE.

(11) USE SERRATED LOCK WASHERS WITH NOTCHES BETWEEN END TEE AND SIGNAL HEAD.

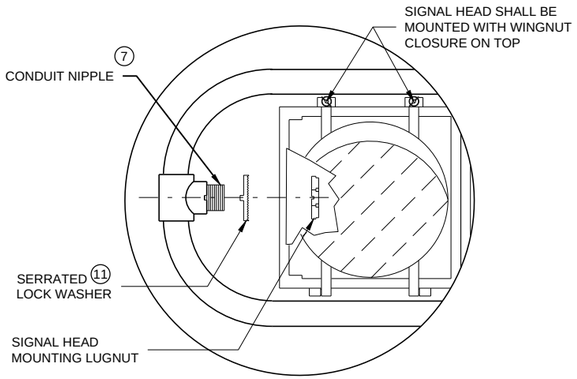

HORIZONTAL SIGNAL HEAD** MOUNTING DETAIL

** SIGNAL HEAD ATTACHMENT ALSO APPLIES TO MOUNTING AT CROSS BAR

POLE MOUNTINGS FOR TRAFFIC SIGNALS AND LIGHTING UNITS

TYPE 3 (HEAVY DUTY)

TYPE 3 POLE MOUNTING CONFIGURATION

STATE OF WISCONSIN
DEPARTMENT OF TRANSPORTATION

6

SDD 09E01 - 15b

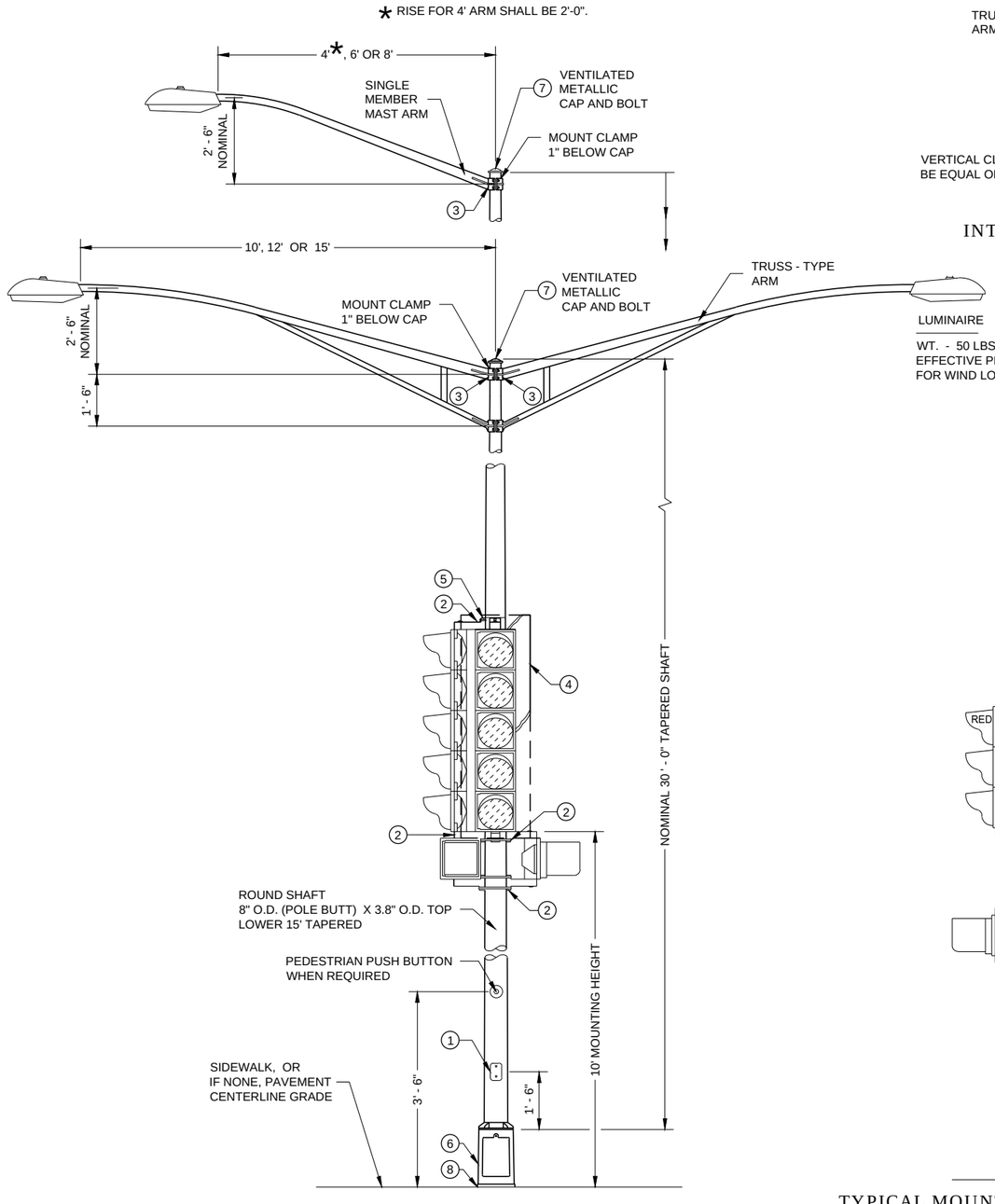

(MAXIMUM LOAD)

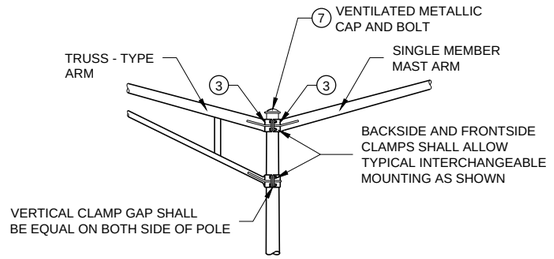

INTERCHANGEABLE MOUNTING DETAIL

GENERAL NOTES

DETAILS OF CONSTRUCTION, MATERIALS AND WORKMANSHIP NOT SHOWN ON THIS DRAWING SHALL CONFORM TO THE PERTINENT REQUIREMENTS OF THE CONTRACT.

ALL TYPE 4 POLE MOUNTINGS SHALL BE DESIGNED TO INCLUDE TWIN 15' ARMS WITH LUMINAIRES.

POLES SHALL BE GALVANIZED STEEL WITH A MINIMUM WALL THICKNESS OF U.S. STANDARD 11 GAGE (.1196").

SECTION 657, POLES, OF THE STANDARD SPECIFICATIONS SHALL APPLY TO THIS DRAWING.

A PULL WIRE / ROPE SHALL BE INSTALLED IN EACH TROMBONE ARM RACEWAY DURING THE MANUFACTURING PROCESS.

THE SLIPFITTER END OF THE LUMINAIRE MAST ARM SHALL BE A NOMINAL 2 3/8 INCHES IN OUTSIDE DIAMETER. THE STRAIGHT PORTION OF THE SLIPFITTER END OF THE LUMINAIRE MAST ARM SHALL BE A NOMINAL 12 INCHES IN LENGTH.

WHEN TRANSFORMER BASES ARE USED, WIRE CONNECTIONS SHALL BE MADE IN THE TRANSFORMER BASE.

(1) 4" X 6" REINFORCED HANDHOLE AND COVER ASSEMBLY WITH TWO (2) ¼" X ¾" - 20 TPI , STAINLESS STEEL, HEX HEAD BOLTS.

(2) SIGNAL FACE MOUNTING BRACKETS. MOUNT WITH CAP SCREWS AND BANDING.

(3) GROMMETS. 1" CHASE NIPPLES OR 1" CLOSE CONDUIT NIPPLES WITH BUSHINGS SHALL BE PROVIDED FOR 1 3/8" HOLE IN POLE SHAFT FOR WIRING.

(4) SECURELY MOUNT DULL BLACK POLYCARBONATE BACKPLATES, PROJECTING 5" BEYOND ALL SIDES OF THE SIGNAL FACE HOUSING, PER MANUFACTURER'S RECOMMENDATIONS.

(5) POLE MOUNTED SIGNAL FACES SHALL REQUIRE ONE OR MORE MOUNTING SPACERS UNDER THE TOP MOUNTING BRACKET(S) AS REQUIRED, TO PLUMB THE SIGNAL FACE.

(6) CAST ALUMINUM TRANSFORMER BASE, WHEN REQUIRED.

(7) FURNISH AND INSTALL VENTILATED, CAST METALLIC (ALUMINUM ALLOY) CAPS. FASTEN CAPS WITH ONE (1) ¼" X ¾" - 20 TPI STAINLESS STEEL, HEX HEAD BOLT.

(8) SHIMMING, IF NEEDED, SHALL BE LOCATED BETWEEN THE CONCRETE FOUNDATION AND POLE.

(9) USE 1 ½" ID NIPPLES ZINC-COATED RIGID METAL CONDUIT, LONG ENOUGH TO ACCOMMODATE FULL DEPTH THREADING INTO THE HEAD MOUNTING LOCK NUT IN ORDER TO TIGHTEN THE FACE, BUT THAT DO NOT INTERFERE WITH REFLECTOR CLOSURE. THREAD THE NIPPLE INTO THE MOUNTING BRACKET/ELBOW UNTIL TIGHT. USE APPROVED PINNACLE TYPE HARDWARE FROM A DEPARTMENT APPROVED MANUFACTURER TO CLOSE THE UNUSED 1 ½" OPENING IN SIGNAL FACES AND BRACKET ENDS.

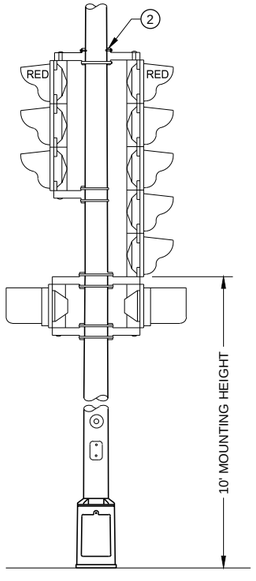

TYPICAL MOUNTING OF BACK TO BACK 3 AND 5 SECTION SIGNAL FACES

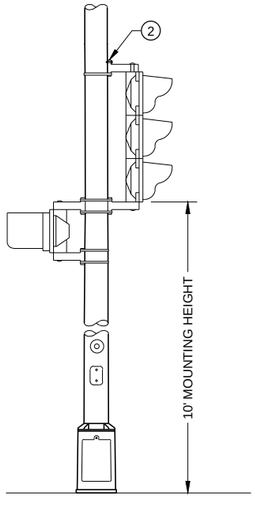

TYPICAL MOUNTING OF 3 SECTION SIGNAL FACE

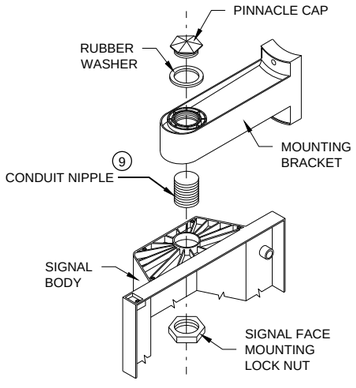

SIGNAL FACE MOUNTING DETAIL
(BANDED)

TYPE 4 POLE MOUNTING CONFIGURATION

POLE MOUNTINGS FOR TRAFFIC SIGNALS AND LIGHTING UNITS, TYPE 4

STATE OF WISCONSIN
DEPARTMENT OF TRANSPORTATION

6

SDD 09E01 - 15c

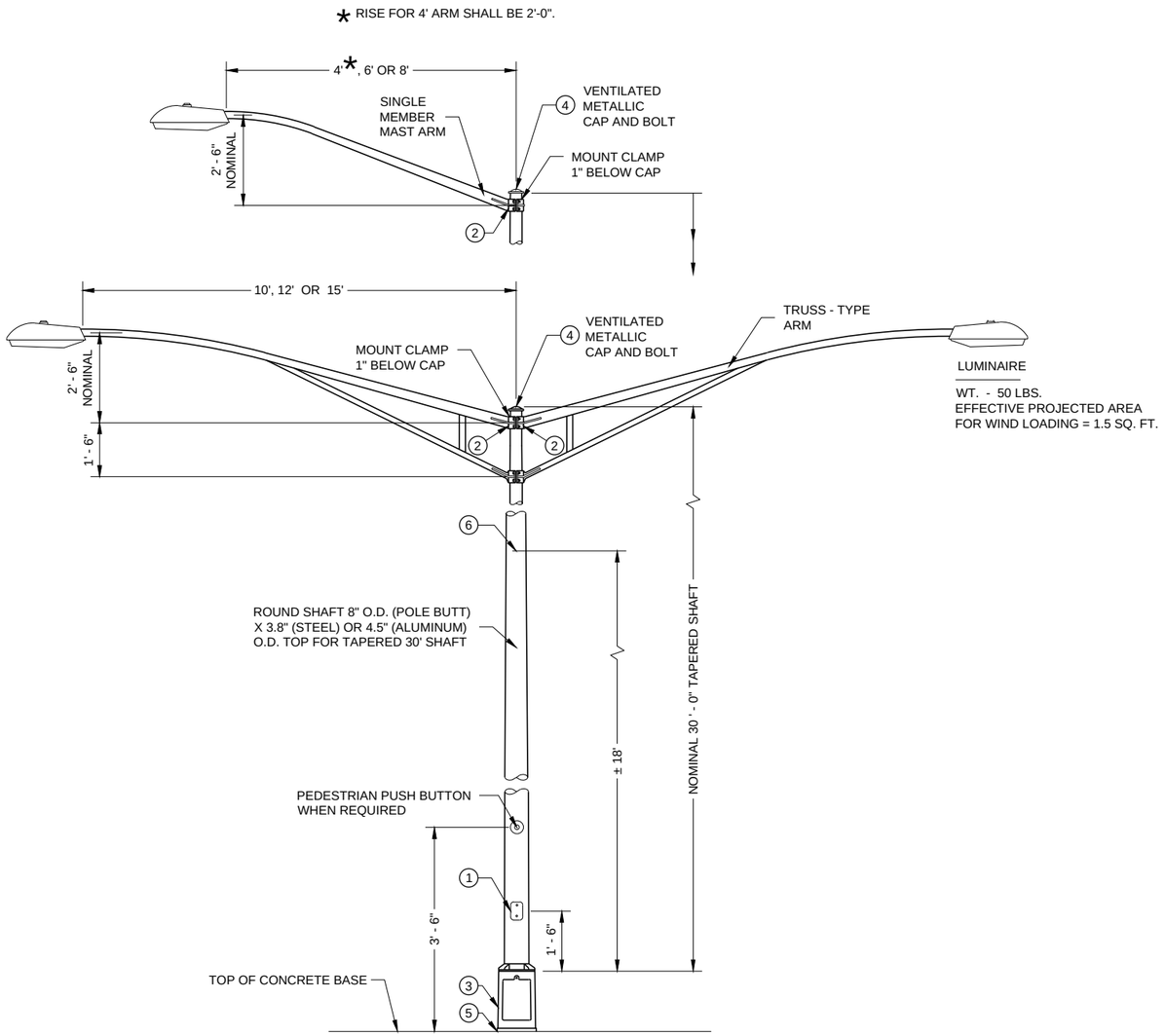

TYPE 5 POLE MOUNTING CONFIGURATION

(MAXIMUM LOAD)

LIGHTING ONLY

GENERAL NOTES

DETAILS OF CONSTRUCTION, MATERIALS AND WORKMANSHIP NOT SHOWN ON THIS DRAWING SHALL CONFORM TO THE PERTINENT REQUIREMENTS OF THE CONTRACT.

SECTION 657, POLES, OF THE STANDARD SPECIFICATIONS SHALL APPLY TO THIS DRAWING.

ALL TYPE 5 POLE MOUNTINGS SHALL BE DESIGNED TO INCLUDE TWIN 15' ARMS WITH LUMINAIRES.

POLES SHALL BE GALVANIZED STEEL OR ALUMINUM, AS CALLED FOR IN THE CONTRACT.

TYPE 5 ALUMINUM POLES SHALL BE CONSTRUCTED OF 6063 - T6 ALUMINUM ALLOY. SLEEVING INSIDE THE POLE IS NOT ACCEPTABLE.

TYPE 5 ALUMINUM POLES SHALL HAVE A MINIMUM WALL THICKNESS OF 0.1888".

TYPE 5 STEEL POLES SHALL HAVE A MINIMUM WALL THICKNESS OF U.S. STANDARD 11 GAGE (0.1196").

THE SLIPFITTER END OF THE LUMINAIRE MAST ARM SHALL BE A NOMINAL 2 ⅜ INCHES IN OUTSIDE DIAMETER. THE STRAIGHT PORTION OF THE SLIPFITTER END OF THE LUMINAIRE MAST ARM SHALL BE A NOMINAL 12 INCHES IN LENGTH.

WHEN TRANSFORMER BASES ARE USED, WIRE CONNECTIONS SHALL BE MADE IN THE TRANSFORMER BASE.

(1) 4" X 6" REINFORCED HANDHOLE AND COVER ASSEMBLY WITH TWO (2) ¼" X ¾" - 20 TPI , STAINLESS STEEL, HEX HEAD BOLTS.

(2) GROMMETS. 1" CHASE NIPPLES OR 1" CLOSE CONDUIT NIPPLES WITH BUSHINGS SHALL BE PROVIDED FOR 1 ⅜" HOLE IN POLE SHAFT FOR WIRING.

(3) CAST ALUMINUM TRANSFORMER BASE, WHEN REQUIRED.

(4) FURNISH AND INSTALL VENTILATED, CAST METALLIC (ALUMINUM ALLOY) CAPS. FASTEN CAPS WITH ONE (1) ¼" X ¾" - 20 TPI STAINLESS STEEL, HEX HEAD BOLT.

(5) SHIMMING, IF NEEDED, SHALL BE LOCATED BETWEEN THE CONCRETE FOUNDATION AND POLE.

(6) INTERNAL DUMBBELL - TYPE VIBRATION DAMPER.

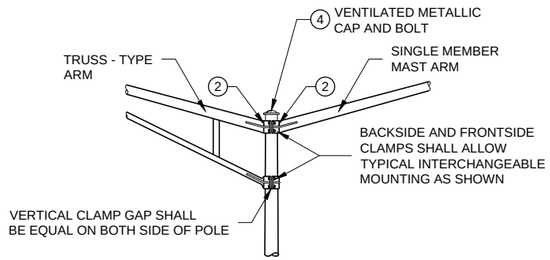

INTERCHANGEABLE MOUNTING DETAIL

POLE MOUNTINGS FOR LIGHTING UNITS, TYPE 5

(30 FEET)

STATE OF WISCONSIN
DEPARTMENT OF TRANSPORTATION

6

SDD 09E01 - 15d

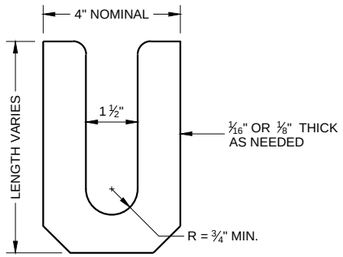

LEVELING SHIM (1)
SHALL BE ALUMINUM

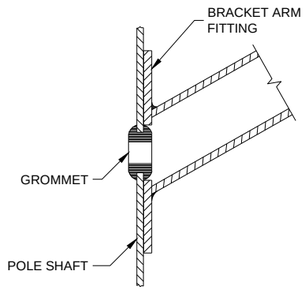

TYPICAL APPLICATION OF GROMMET IN POLE SHAFT

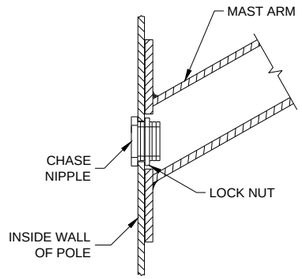

TYPICAL APPLICATION OF CHASE NIPPLE IN POLE SHAFT

GENERAL NOTES

CLAMP BOLT-NUT TIGHTENING TORQUE SHALL BE INDICATED BY INDENT STAMPING (1/2 INCH NUMERALS AND LETTERS) OR WEATHERPROOF PRINTING ON THE INSIDE OF THE CLAMP THAT IS WELDED TO THE ARM MEMBER.

(1) 4.5" I.D. FOR LUMINAIRE MAST ARM CLAMP. 6.625" I.D. FOR TROMBONE MAST ARM CLAMP.

(2) INDIVIDUAL BASE PLATE ANCHOR ROD COVERS. (4 REQUIRED)

(3) BASE PLATE SLOTTED TO ACCEPT 11" THROUGH 12" BOLT CIRCLE USING 1" DIAMETER ANCHOR RODS.

(4) LEVELING SHIMS, DESIGNED FOR THE PURPOSE, SHALL BE USED WHEN PLUMBING POLES. THE USE OF WASHERS IN LIEU OF PROPER LEVELING SHIMS IS NOT ACCEPTABLE. LEVELING SHIMS SHALL BE USED ONLY BETWEEN THE TOP OF THE CONCRETE BASE AND A METALLIC BASE PLATE.

SHIMS SHALL BE LONG ENOUGH AND WIDE ENOUGH TO COMPLETELY COVER THE AREA UNDER THE LENGTH AND WIDTH OF THE BASE MOUNTING FLANGE.

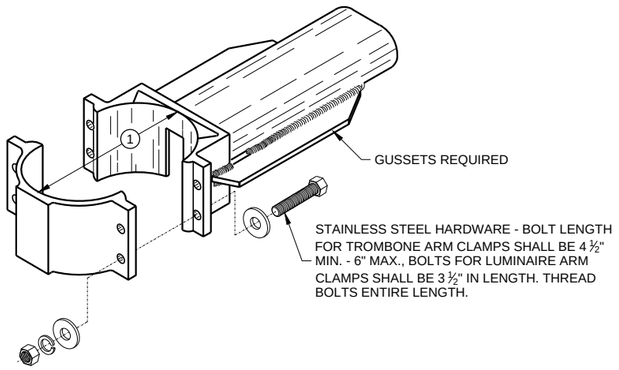

TYPICAL TROMBONE MAST ARM AND SINGLE LUMINAIRE MAST ARM MOUNTING CLAMP

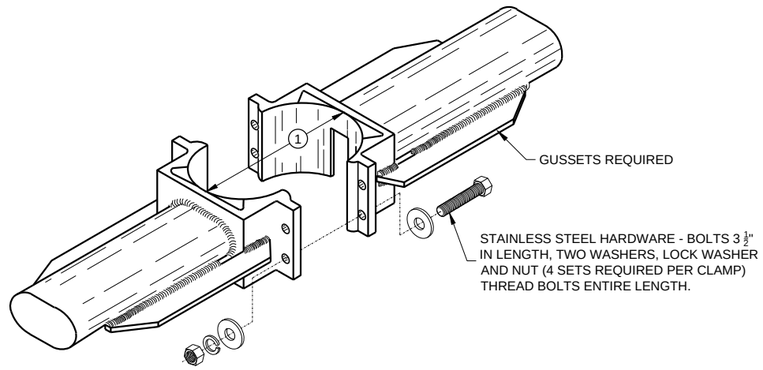

TYPICAL LUMINAIRE MAST ARM (DOUBLE) MOUNTING BRACKETS

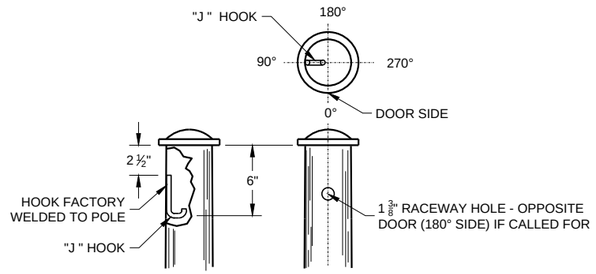

TYPICAL "J" HOOK LOCATION

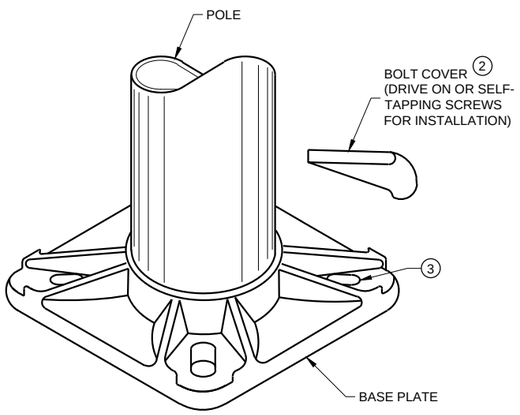

BASE PLATE

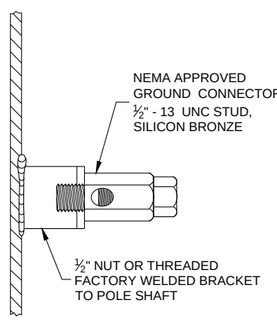

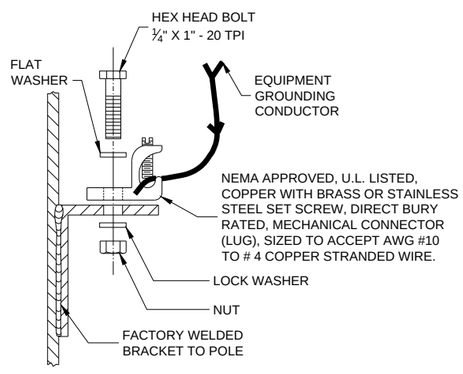

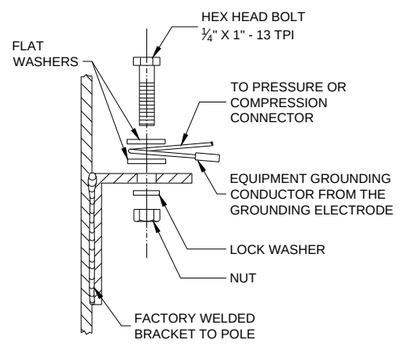

TYPICAL GROUNDING CONNECTIONS

NUT, BOLT AND WASHERS SHALL BE STAINLESS STEEL

HARDWARE DETAILS FOR POLE MOUNTING

STATE OF WISCONSIN
DEPARTMENT OF TRANSPORTATION

APPROVED
November 2018
DATE

/S/ Ahmet Demirbilek
STATE ELECTRICAL ENGI

FHWA

6
SDD09A01 - 15g

GENERAL NOTES

DETAILS OF CONSTRUCTION, MATERIALS AND WORKMANSHIP NOT SHOWN ON THIS DRAWING SHALL CONFORM TO THE PERTINENT REQUIREMENTS OF THE CONTRACT.

THE EQUIPMENT GROUND CONNECTOR SHALL BE TAPED WITH 3 WRAPS (MINIMUM) OF APPROVED RUBBER TAPE AND 3 WRAPS (MINIMUM) OF APPROVED VINYL TAPE TO COVER SHARP WIRE ENDS AFTER THE CONNECTION IS COMPLETED.

WHEN TRANSFORMER BASES ARE USED, ALL WIRING CONNECTIONS SHALL OCCUR WITHIN THE TRANSFORMER BASES.

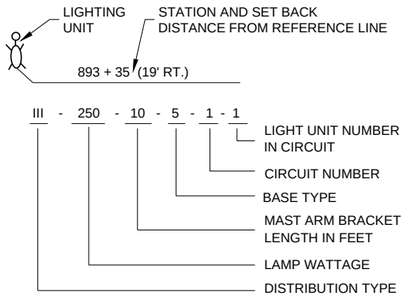

LIGHTING UNIT CODE
(TYPICAL)

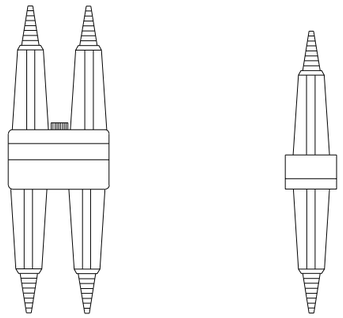

DETAIL "A"
BREAKAWAY DOUBLE POLE WITH WATERPROOF INSULATING BOOT

DETAIL "B"
BREAKAWAY SINGLE POLE WITH WATERPROOF INSULATING BOOT

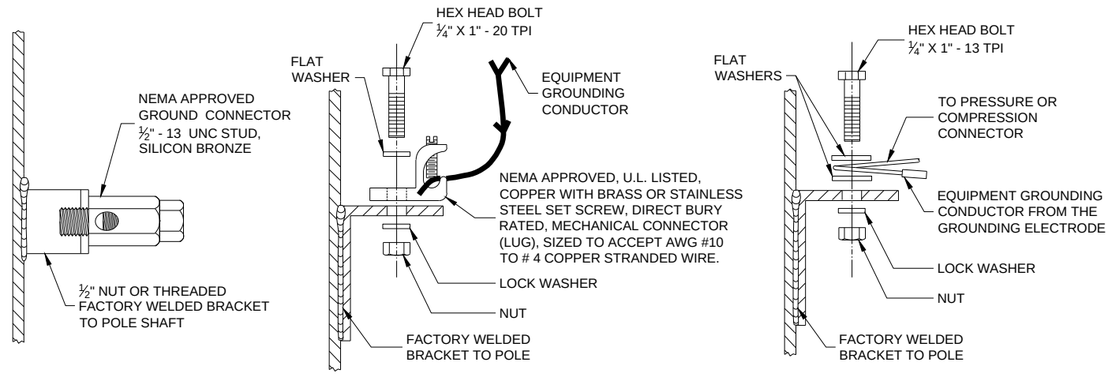

TYPICAL GROUNDING CONNECTIONS
NUT, BOLT AND WASHERS SHALL BE STAINLESS STEEL

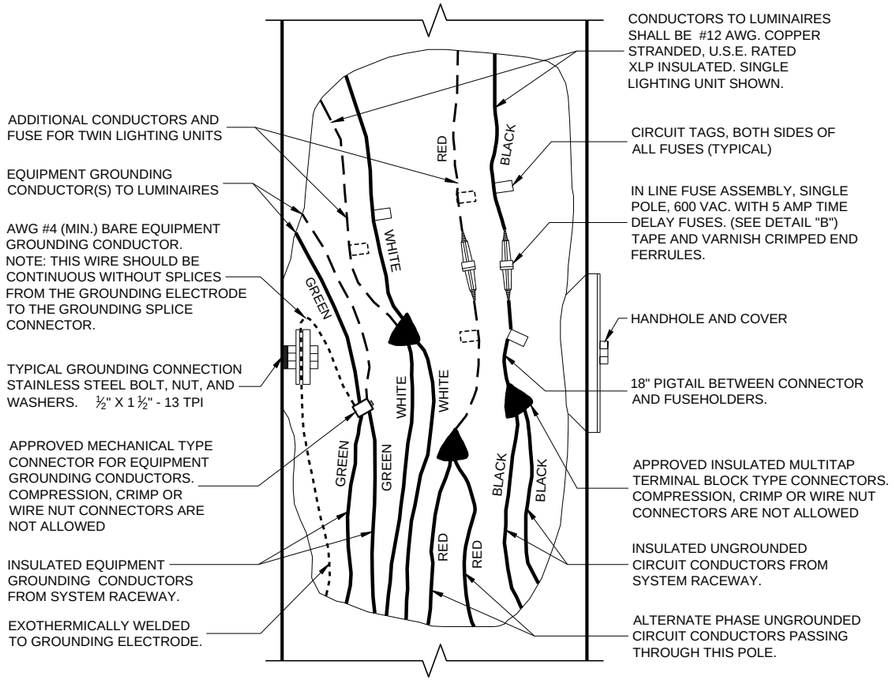

3 WIRE - 120, 240 OR 480 VAC (UNGROUNDED CONDUCTORS) WITH GROUNDING CONDUCTOR AND EQUIPMENT GROUNDING CONDUCTOR

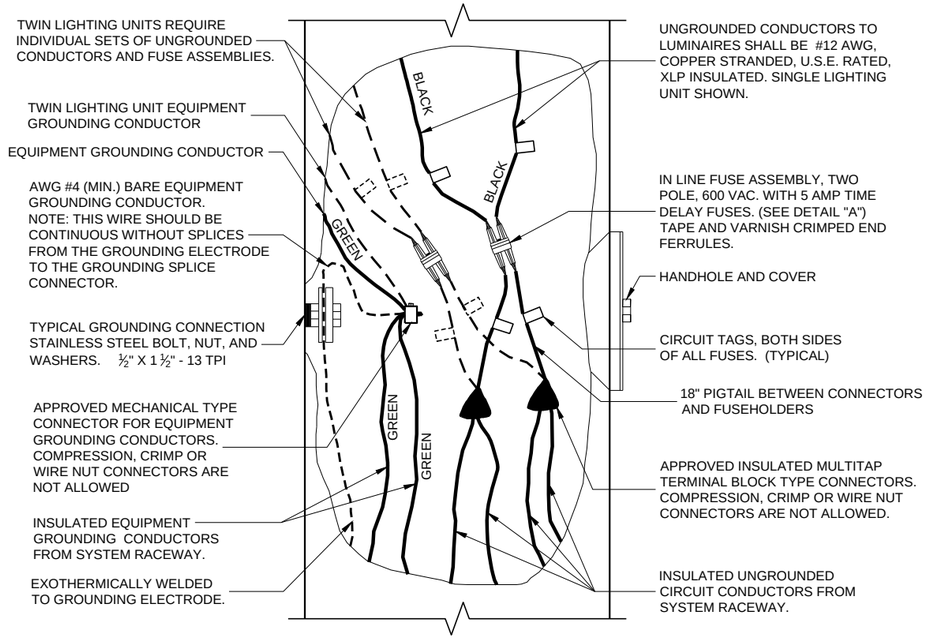

2 WIRE - 240 OR 480 VAC (UNGROUNDED CONDUCTORS) WITH EQUIPMENT GROUNDING CONDUCTOR

NON - FREEWAY LIGHTING UNIT
POLE WIRING

STATE OF WISCONSIN
DEPARTMENT OF TRANSPORTATION

APPROVED
November 2018
DATE
/S/ Ahmet Demirbilek
STATE ELECTRICAL ENGI

FHWA

6
SDD 09E03 - 06

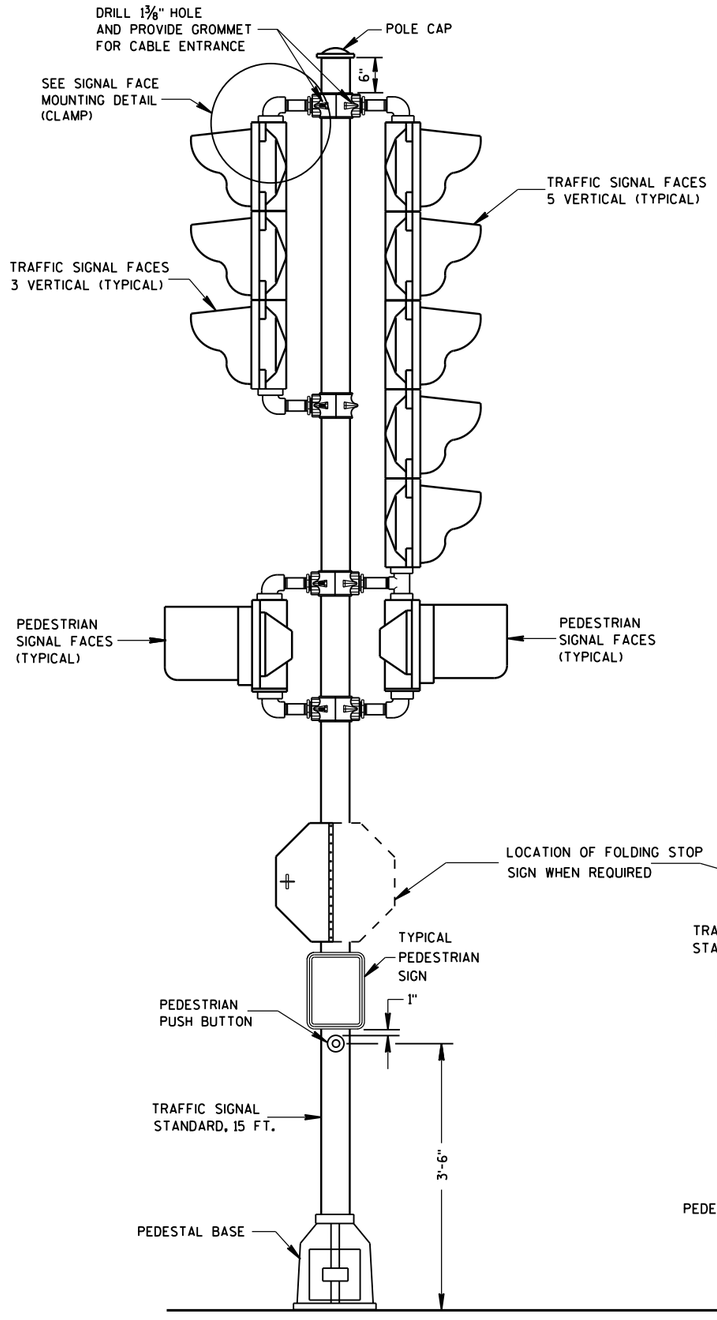

TRAFFIC SIGNAL STANDARD-15 FT.

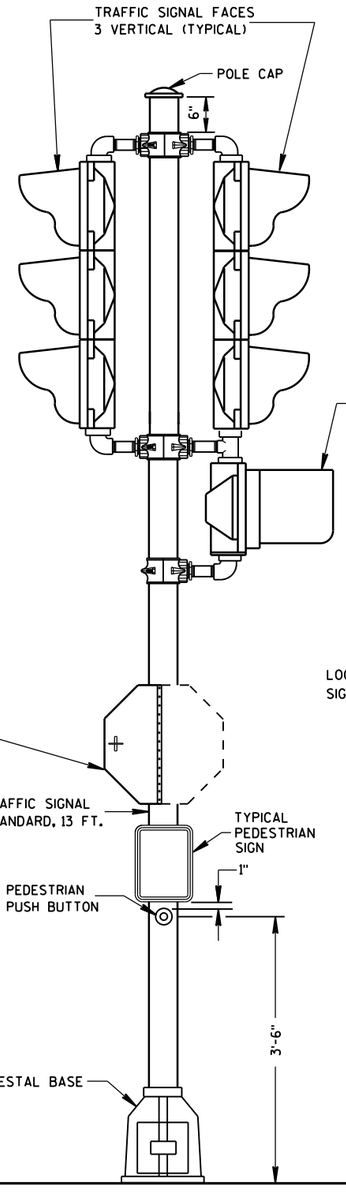

TRAFFIC SIGNAL STANDARD-13 FT.

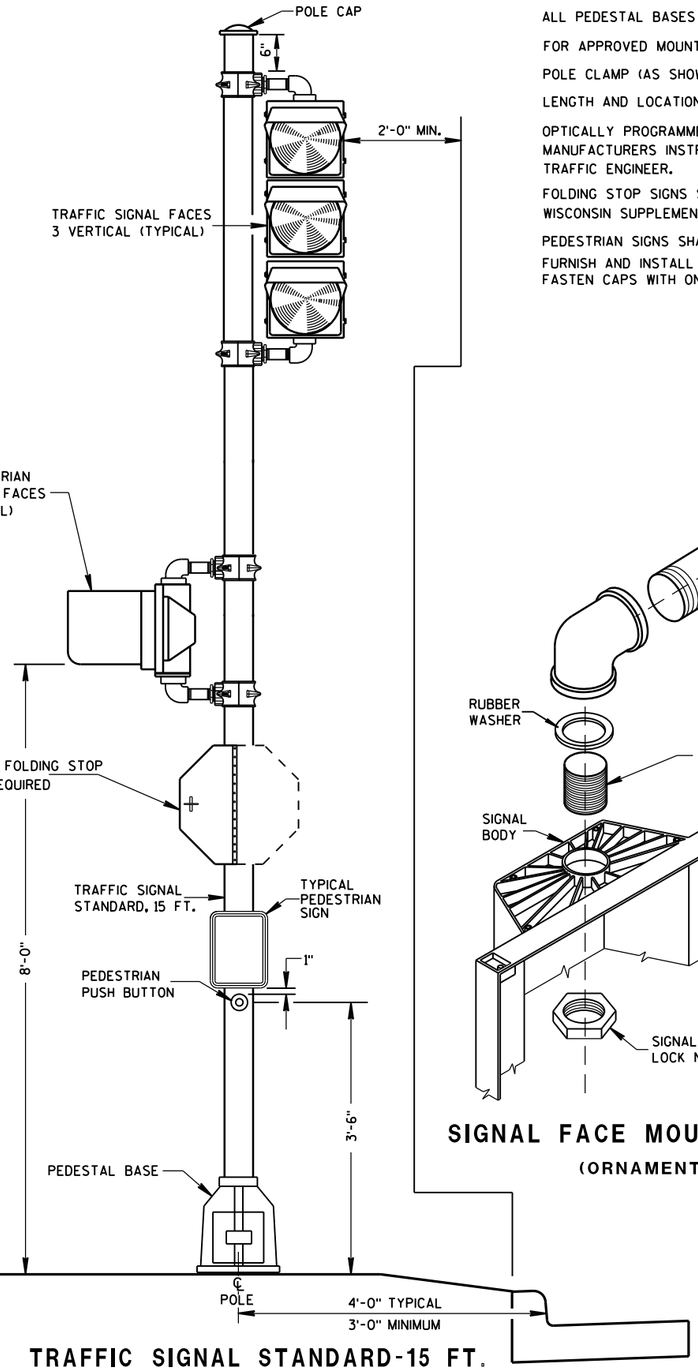

TRAFFIC SIGNAL STANDARD-15 FT.
3M MOUNTING (TYPICAL)

GENERAL NOTES

DETAILS OF CONSTRUCTION, MATERIALS AND WORKMANSHIP NOT SHOWN ON THIS DRAWING SHALL CONFORM TO THE PERTINENT REQUIREMENTS OF THE CONTRACT.

SEE THE SIGNAL PLAN FOR REQUIRED SIGNAL FACE SIZES.

ALL PEDESTAL BASES SHALL BE MOUNTED ON CONCRETE BASE - TYPE 1.

FOR APPROVED MOUNTING HARDWARE, SEE THE CONTRACT SPECIAL PROVISIONS.

POLE CLAMP (AS SHOWN) MOUNTING BRACKETS SHALL BE USED.

LENGTH AND LOCATION OF TRAFFIC SIGNAL STANDARDS SHALL BE AS SHOWN ON THE PLANS.

OPTICALLY PROGRAMMED SIGNAL FACES SHALL BE MASKED IN ACCORDANCE WITH MANUFACTURERS INSTRUCTIONS, AND UNDER THE DIRECTIONS OF THE REGION TRAFFIC ENGINEER.

FOLDING STOP SIGNS SHALL BE IN ACCORDANCE WITH THE MUTCD AND/OR THE LATEST WISCONSIN SUPPLEMENT. THE SIGNS SHALL BE SIZED AND LOCATED AS CALLED FOR IN THE PLANS.

PEDESTRIAN SIGNS SHALL BE AS DESIGNATED IN THE PLANS.

FURNISH AND INSTALL VENTILATED, CAST, METALLIC (ALUMINUM ALLOY) CAPS. FASTEN CAPS WITH ONE (1) 1/4" X 3/4" - 20 TPI STAINLESS STEEL, HEX HEAD BOLT.

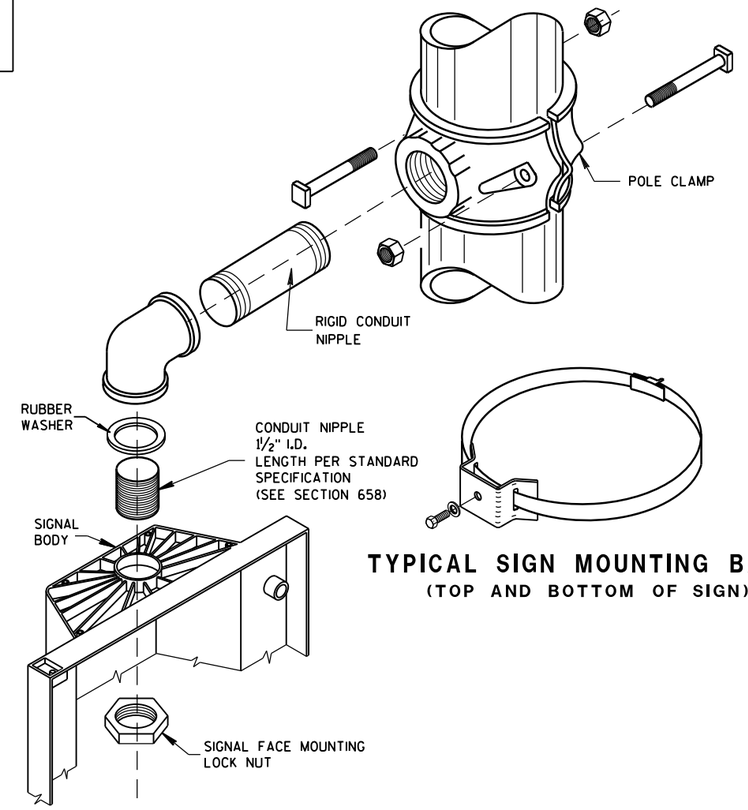

SIGNAL FACE MOUNTING DETAIL
(ORNAMENTAL)

TYPICAL SIGN MOUNTING BAND
(TOP AND BOTTOM OF SIGN)

TRAFFIC SIGNAL STANDARD
ORNAMENTAL BRACKET MOUNTINGS
TYPICAL FOR 13 FT. OR 15 FT.

STATE OF WISCONSIN
DEPARTMENT OF TRANSPORTATION

APPROVED
2/28/2013
DATE
/S/ Ahmet Demirbilek
STATE ELECTRICAL

FHWA

6

S.D.D. 9 E 5-6

S.D.D. 9 E 5-6

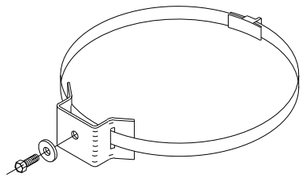

TYPICAL SIGN MOUNTING BAND
(TOP AND BOTTOM OF SIGN)

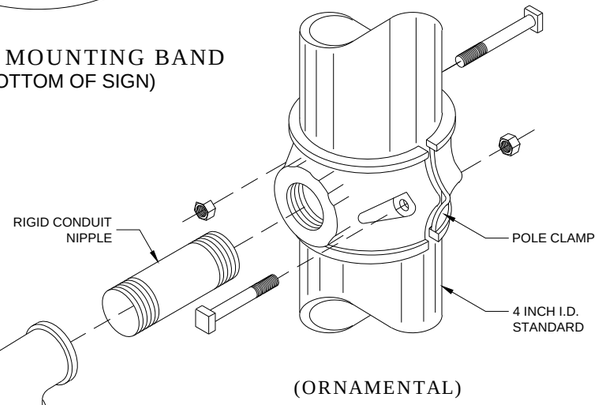

(ORNAMENTAL)

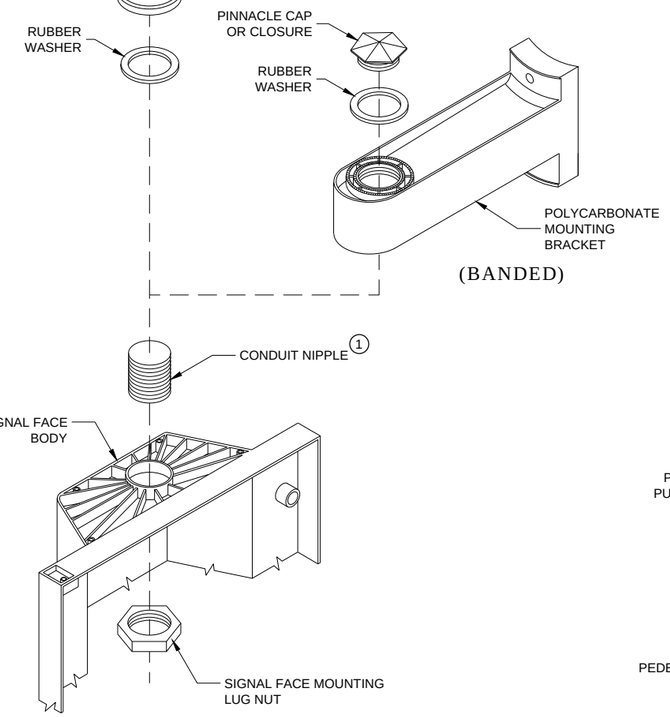

(BANDED)

SIGNAL FACE MOUNTING DETAILS

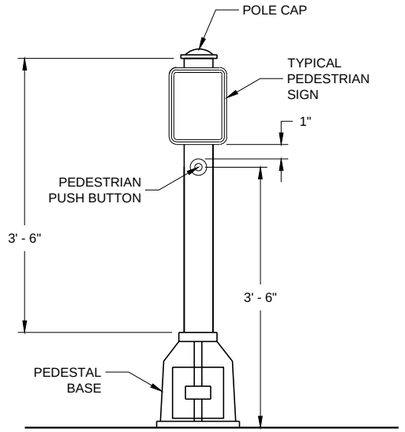

PEDESTRIAN PUSH BUTTON
TYPICAL MOUNTING

GENERAL NOTES

DETAILS OF CONSTRUCTION, MATERIALS AND WORKMANSHIP NOT SHOWN ON THIS DRAWING SHALL CONFORM TO THE PERTINENT REQUIREMENTS OF THE CONTRACT.

SEE THE SIGNAL PLAN FOR REQUIRED SIGNAL FACE SIZES.

LOCATIONS SHALL BE AS SHOWN ON THE PLANS, UNLESS APPROVED BY THE ENGINEER IN THE FIELD.

ALL PEDESTAL BASES SHALL BE MOUNTED ON CONCRETE BASE - TYPE 1.

FOR APPROVED MOUNTING HARDWARE, SEE THE CONTRACT SPECIFICATIONS.

POLYCARBONATE SIGNAL FACE MOUNTING BRACKETS SHALL BE USED UNLESS ORNAMENTAL POLE CLAMPS ARE SPECIFIED.

LENGTH OF TRAFFIC STANDARDS SHALL BE AS SHOWN ON THE PLANS.

MOUNTINGS AND BRACKETS SHALL BE AS SHOWN ON THE PLANS OR DESCRIBED IN THE SPECIAL PROVISIONS (BY THE REGION TRAFFIC ENGINEER).

PEDESTRIAN SIGNS SHALL BE AS DESIGNATED IN THE PLANS.

FURNISH AND INSTALL VENTILATED, CAST, METALLIC (ALUMINUM ALLOY) CAPS. FASTEN CAPS WITH ONE (1) ¼" X ¾" - 20 TPI STAINLESS STEEL, HEX HEAD BOLT.

(1) USE 1 ½" ID NIPPLES ZINC-COATED RIGID METAL CONDUIT, LONG ENOUGH TO ACCOMMODATE FULL DEPTH THREADING INTO THE HEAD MOUNTING LOCK NUT IN ORDER TO TIGHTEN THE FACE, BUT THAT DO NOT INTERFERE WITH REFLECTOR CLOSURE. THREAD THE NIPPLE INTO THE MOUNTING BRACKET/ELBOW UNTIL TIGHT. USE APPROVED PINNACLE TYPE HARDWARE FROM A DEPARTMENT APPROVED MANUFACTURER TO CLOSE THE UNUSED 1 ½" OPENING IN SIGNAL FACESAND BRACKET ENDS.

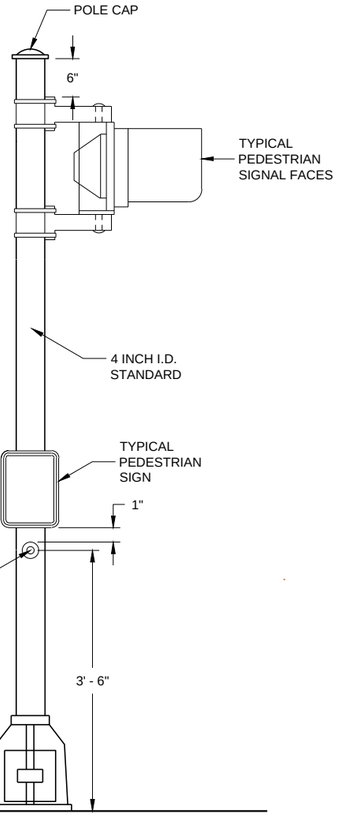

PEDESTRIAN FACE STANDARD - 10 FT.
(WALK - DON'T WALK)

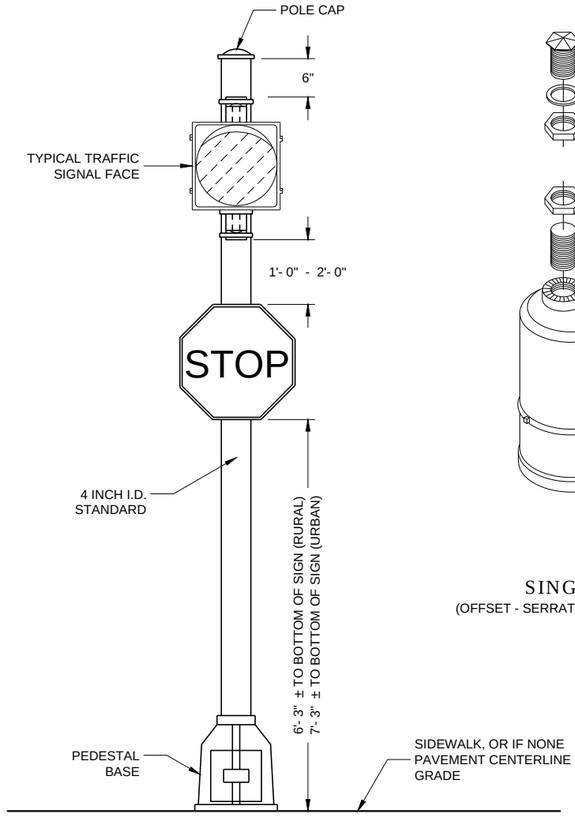

STANDARD FLASHER
10 FOOT, 13 FOOT OR 15 FOOT AS REQUIRED

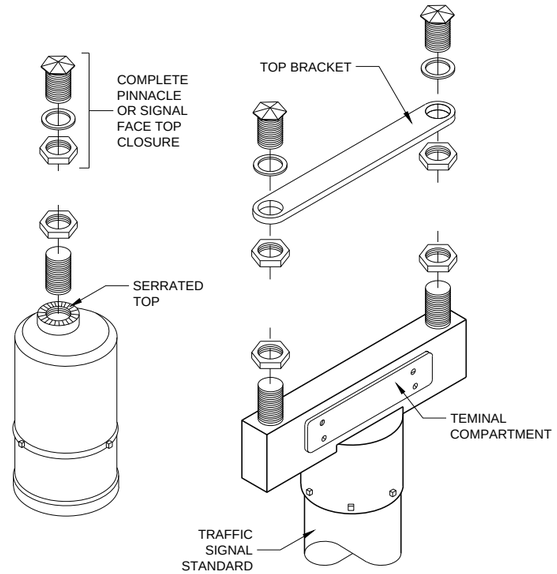

SINGLE
(OFFSET - SERRATED MOUNTING)

DOUBLE
(SERRATED MOUNTING)

SLIPFITTERS

TRAFFIC SIGNAL STANDARD
PEDESTRIAN AND FLASHER
TYPICAL MOUNTING DETAILS

STATE OF WISCONSIN
DEPARTMENT OF TRANSPORTATION

APPROVED
November 2018
DATE

/S/ Ahmet Demirbilek
STATE ELECTRICAL ENGI 100

FHWA

6

SDD 09E07 - 06

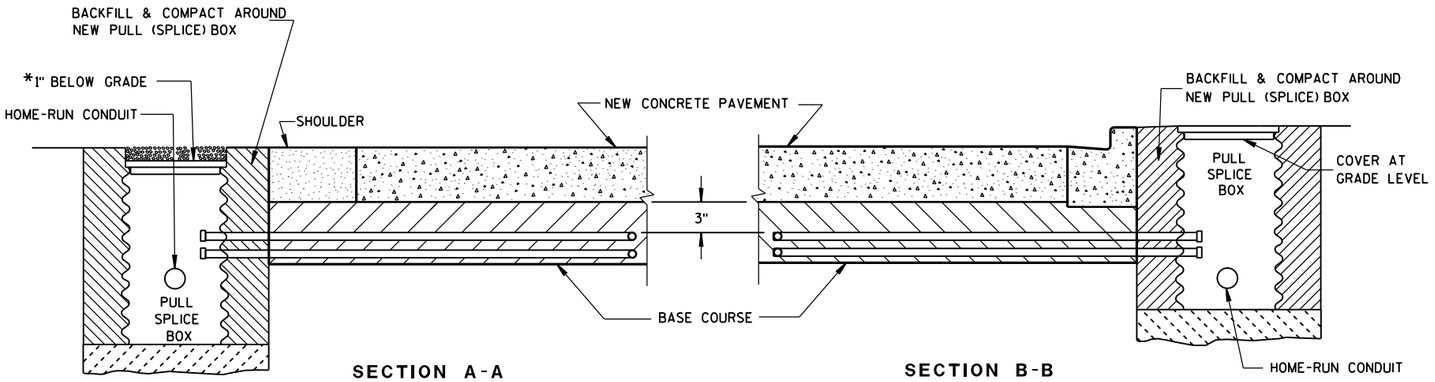

SECTION A-A
NO CURB & GUTTER

SECTION B-B
CURB & GUTTER

*RECESS PULL (SPLICE) BOX SO THAT THE COVER IS 3" BELOW GRADE IN SHOULDER AREAS OF CRUSHED AGGREGATE. BACKFILL OVER COVER WITH THE CRUSHED AGGREGATE TO BRING THE AREA TO GRADE LEVEL.

LOOP DETECTOR INSTALLATION DETAIL

GENERAL NOTES

DETAILS OF CONSTRUCTION, MATERIALS AND WORKMANSHIP NOT SHOWN ON THIS DRAWING SHALL CONFORM TO THE PERTINENT REQUIREMENTS OF THE CONTRACT.

LOOP SIZE, CONFIGURATION LOCATION, NUMBER OF TURNS OF WIRE AND ASSOCIATED SIGNAL PHASE SHALL BE AS SHOWN ON THE PLANS.

PITCH LEAD OUT CONDUIT TO DRAIN TO ROADSIDE PULL (SPLICE) BOX.

SPLICES SHALL BE INSTALLED BY USING CAST IN PLACE SPLICE KITS LISTED ON THE DEPARTMENTS APPROVED PRODUCTS LIST OR AN ENGINEER APPROVED EQUAL. NON-INSULATED BUTT SPLICES TO FIT #12 AWG STRANDED WIRE SHALL BE USED. SPLICES SHALL BE SOLDERED AND INSULATED FROM EACH OTHER AS PER INSTRUCTIONS INCLUDED IN THE SPLICE KIT.

MEASURE GROUND RESISTANCE USING A MEGGER. REPLACE LOOP WIRE NOT ATTAINING A READING OF INFINITY TO GROUND.

AFTER SPLICING THE LOOP WIRE TO THE LOOP LEAD-IN CABLE, THE CONTRACTOR SHALL MEASURE INDUCTANCE, GROUND RESISTANCE AND WIRE RESISTANCE AT THE CABINET END OF THE LEAD-IN CABLE AND FURNISH A COPY OF THE READINGS TO THE PROJECT ENGINEER FOR EVALUATION.

LOOP DETECTOR LEADS SHALL BE IDENTIFIED WITH THEIR ASSOCIATED LOOP BY USE OF WATERPROOF TAGS AT BOTH ENDS OF THE CABLE. A LISTING OF THE CABLE IDENTIFICATION PER INDIVIDUAL LOOP LEAD-IN SHALL BE PLACED IN THE CABINET.

THE #12 AWG. LOOP WIRE IN THE PULL (SPLICE) BOX SHALL BE HAND TWISTED AT LEAST 3 TWISTS PER FOOT BEFORE BEING SPLICED TO THE LOOP LEAD-IN CABLE.

SPLICES OF LOOP WIRE TO LEAD-IN CABLE SHALL BE MADE ONLY IN PULL (SPLICE) BOXES AT THE SIDE OF THE ROAD.

THE #12 AWG LOOP WIRE SHALL BE INSTALLED FROM THE ROADSIDE PULL (SPLICE) BOX, THROUGH THE LOOP CONDUIT, BACK TO THE ROADSIDE PULL (SPLICE) BOX, AND BE INSTALLED IN ONE, NON-SPLICED CONTINUOUS LENGTH.

PROTECTION OF THE CONDUITS IN THE BASE COURSE SHALL BE REQUIRED AFTER INSTALLATION AND BEFORE NEW PAVEMENT IS INSTALLED.

SHOULD INSTALLATION REPAIR BE REQUIRED, IT SHALL BE DONE UNDER THE DIRECTION OF THE PROJECT ENGINEER.

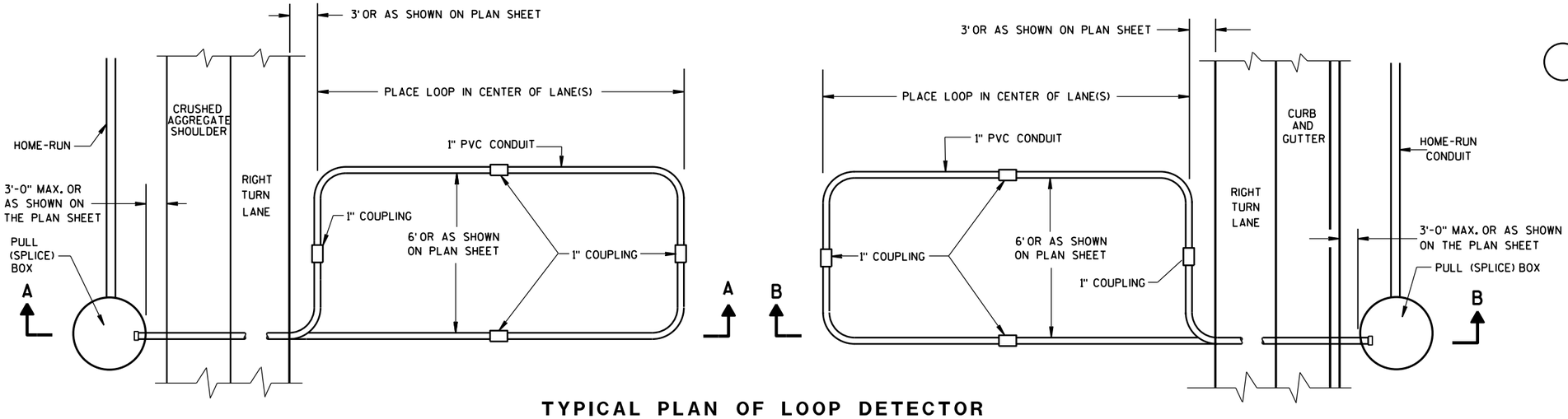

TYPICAL PLAN OF LOOP DETECTOR WITH 24" PULL (SPLICE) BOX

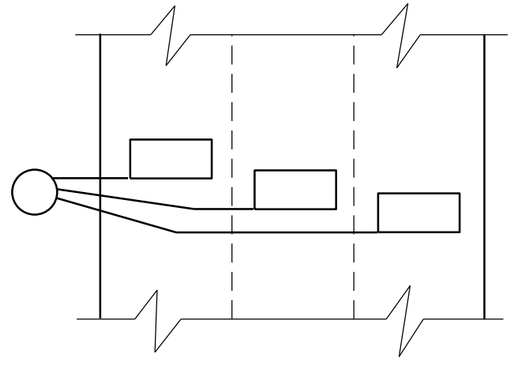

MULTI-LANE INSTALLATION

LOOP DETECTOR INSTALLED IN BASE COURSE WITH PULL (SPLICE) BOX OFF ROADWAY (OPTION 2)
STATE OF WISCONSIN DEPARTMENT OF TRANSPORTATION
APPROVED Sept. 2014 — DATE /S/ Ahmet Demirbilek — STATE ELECTRICAL FHWA

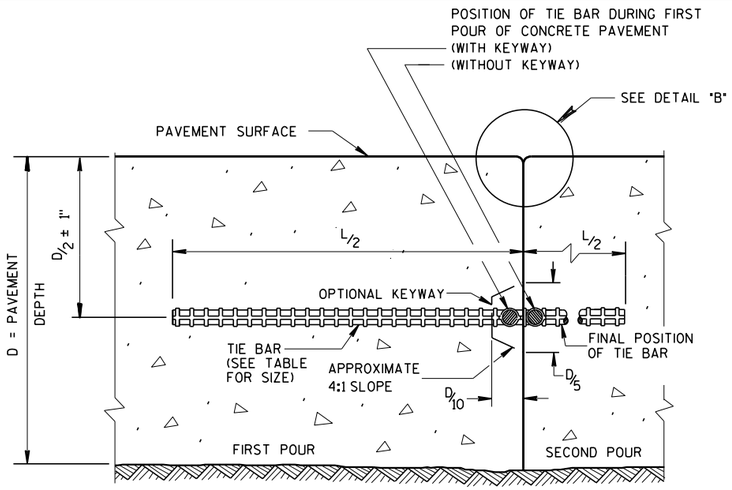

CONSTRUCTION JOINT

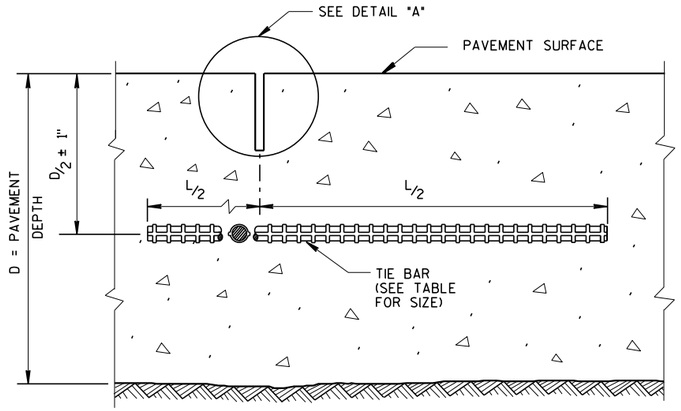

SAWED JOINT

GENERAL NOTES

CREATE A LONGITUDINAL JOINT FOR PAVEMENT WIDTHS GREATER THAN 15 FEET.

CORRELATE LONGITUDINAL JOINTS WITH LANE LINES WHEN POSSIBLE.

(1) ANCHOR TIE BARS INTO DRILLED HOLES WITH AN EPOXY.

(2) PAVEMENT THAT WAS IN PLACE PRIOR TO THE CONTRACT.

PLAN VIEW

SECTION A-A

LONGITUDINAL CONSTRUCTION JOINT TIE BARS ANCHORED INTO EXISTING PAVEMENT

DETAIL "A"

DETAIL "B"

DETAIL "C"

TIE BAR TABLE

PAVEMENT DEPTH (D)	TIE BAR SIZE	TIE BAR LENGTH (L)	MAX. TIE BAR SPACING
< 10 1/2"	NO. 4	30"	36"
≥ 10 1/2"	NO. 5	36"	36"
	NO. 4 *	30"	24" **

* SUBSTITUTE BENT BARS AT LONGITUDINAL JOINTS WHEN EQUIPMENT LIMITATIONS DURING CONSTRUCTION WARRANT (e.g. AUXILIARY LANES OR TURN LANES)

** CONFORM TO 15" MINUMUM SPACING FROM TRANSVERSE JOINTS; SPACING BETWEEN TIE BARS WILL BE 30" AT TRANSVERSE JOINTS.

PLAN VIEW
SHOWING LOCATION OF TIE BARS

CONCRETE PAVEMENT LONGITUDINAL JOINTS AND TIES

STATE OF WISCONSIN
DEPARTMENT OF TRANSPORTATION

APPROVED
March 2018 — DATE
/S/ Peter Kerr, P.E. — PAVEMENT SUPE
FHWA

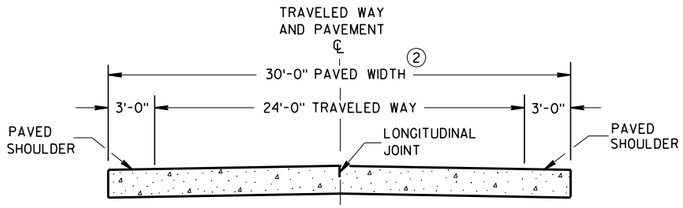

SECTION A-A ①

TWO-LANE TWO-WAY HIGHWAY

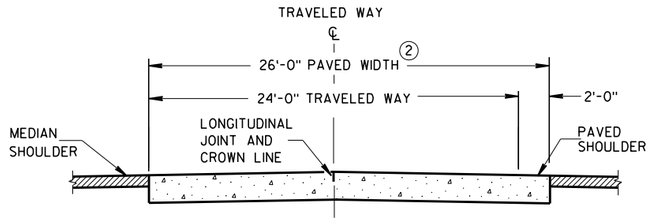

SECTION B-B

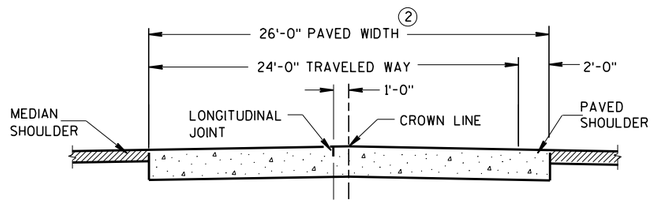

ALTERNATIVE SECTION B-B

①

DIVIDED HIGHWAY

GENERAL NOTES

CONTRACTION JOINTS

CONSTRUCT TRANSVERSE CONTRACTION JOINTS NORMAL TO THE CENTERLINE. SHOW THE LOCATION OF CONTRACTION JOINTS THROUGH INTERSECTIONS ON THE PLANS OR AS DIRECTED BY THE ENGINEER.

INSTALL DOWEL BARS PARALLEL TO THE PAVEMENT CENTERLINE AND PAVEMENT SURFACE.

FOR PAVEMENT SLABS OF VARYING WIDTHS, LOCATE THE OUTER MOST DOWEL BAR SO THAT THE CENTER OF THE BAR IS A MINIMUM OF 6 INCHES AND A MAXIMUM OF 18 INCHES FROM THE FREE EDGE OF PAVEMENT.

CONSTRUCTION JOINTS

LOCATE CONSTRUCTION JOINTS A MINIMUM OF 6 FEET FROM THE NEAREST CONTRACTION JOINT AND ALIGN PARALLEL TO CONTRACTION JOINTS.

① REFER TO TYPICAL CROSS SECTIONS FOR ADDITIONAL DETAILS.

② MEASURE THE ENTIRE PAVED WIDTH INCLUDING THE PORTION(S) LABELED PAVED SHOULDER AS CONCRETE PAVEMENT.

PAVEMENT DEPTH, DOWEL BAR SIZE AND JOINT SPACING TABLE

PAVEMENT DEPTH (D)	DOWEL BAR DIAMETER	CONTRACTION JOINT SPACING
5 ½", 6", 6 ½"	NONE	12'
7", 7 ½"	1"	14'
8", 8 ½"	1 ¼"	15'
9", 9 ½"	1 ¼"	15'
10" & ABOVE	1 ½"	15'

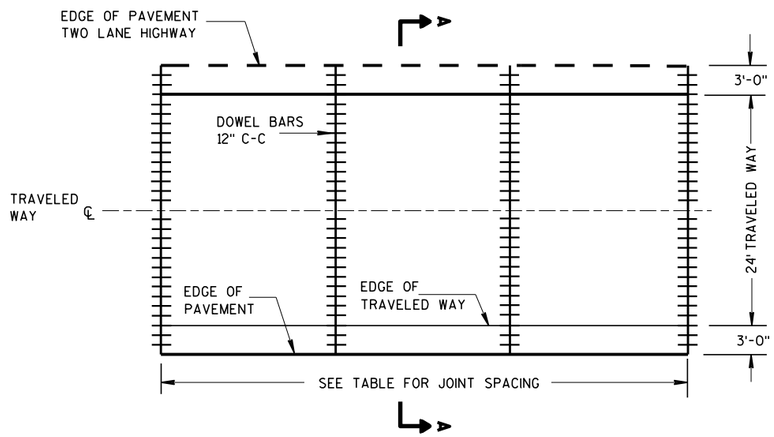

CONTRACTION JOINT LAYOUT FOR TWO-LANE TWO-WAY HIGHWAY

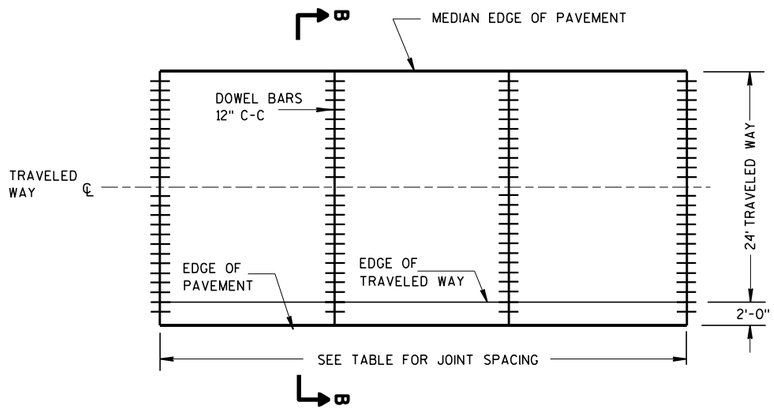

CONTRACTION JOINT LAYOUT FOR DIVIDED HIGHWAY

RURAL DOWELED CONCRETE PAVEMENT

STATE OF WISCONSIN
DEPARTMENT OF TRANSPORTATION

6

S.D.D. 13 C 11-12a

6

S.D.D. 13 C 11-12a

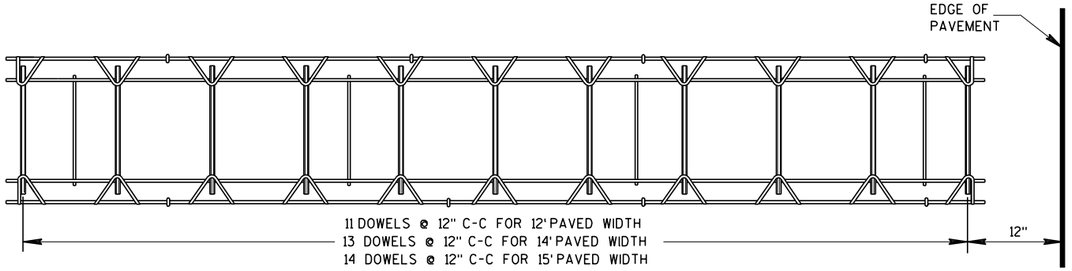

PLAN VIEW

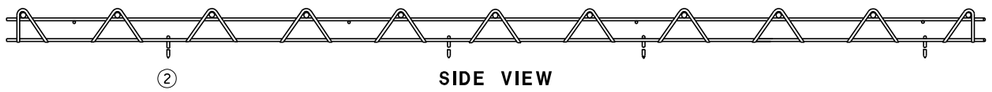

SIDE VIEW

(NORMAL TO CENTERLINE)

CONTRACTION JOINT DOWEL ASSEMBLY ①

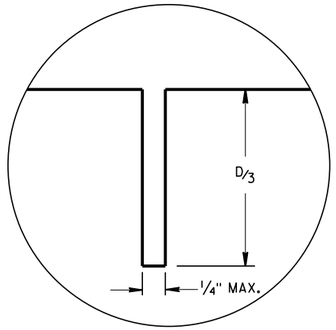

JOINT DETAIL

GENERAL NOTES

① OBTAIN THE ENGINEER'S APPROVAL FOR THE USE OF ALTERNATIVE DESIGNS OF THE DOWEL ASSEMBLY. USE MECHANICAL DOWEL BAR INSERTERS OR DOWEL ASSEMBLIES WHEN CONSTRUCTING CONTRACTION JOINTS.

② SECURE BASKETS WITH ANCHORS TO HOLD DOWEL BARS IN THE CORRECT POSITION AND ALIGNMENT. TYPE, LOCATION, NUMBER AND LENGTH OF ANCHORS ARE DEPENDENT UPON FIELD CONDITIONS.

③ FORM OR SAW CONSTRUCTION JOINTS. PROVIDE A 1/4-INCH RADIUS AT FORMED JOINTS.

④ PROVIDE A SMOOTH VERTICAL FACE FOR THE ENTIRE DEPTH OF THE PAVEMENT WHEN FORMING CONSTRUCTION JOINTS.

⑤ INSTALL DOWEL BARS AT CONSTRUCTION JOINTS BY FORMING OR DRILLING. INSTALL FORMED DOWEL BARS 12 INCHES C-C AND 12 INCHES FROM PAVEMENT EDGE. REMOVE EXCESS CONCRETE FROM THE FREE END OF THE DOWEL BAR IF DOWEL BARS ARE FORMED THROUGH A HEADER BOARD. INSTALL DRILLED DOWEL BARS ACCORDING TO *DRILLED DOWEL BAR CONSTRUCTION JOINT* DETAIL.

⑥ APPLY A THIN UNIFORM COATING OF SURFACE TREATMENT TO THE FREE END OF DOWEL BARS TO PREVENT BONDING.

⑦ ANCHOR DOWEL BARS INTO DRILLED HOLES WITH AN EPOXY. MAXIMUM DRILLED HOLE SIZE IS 1/8-INCH GREATER THAN DOWEL BAR DIAMETER, 9 INCHES IN LENGTH.

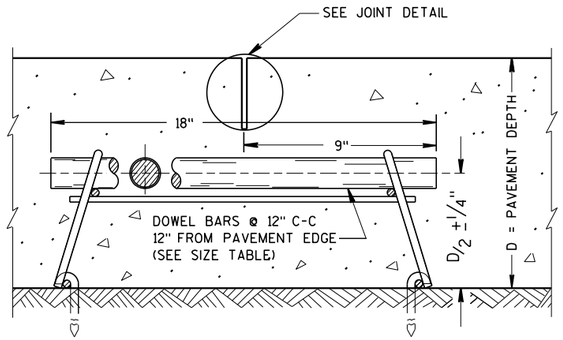

DOWELED CONTRACTION JOINT

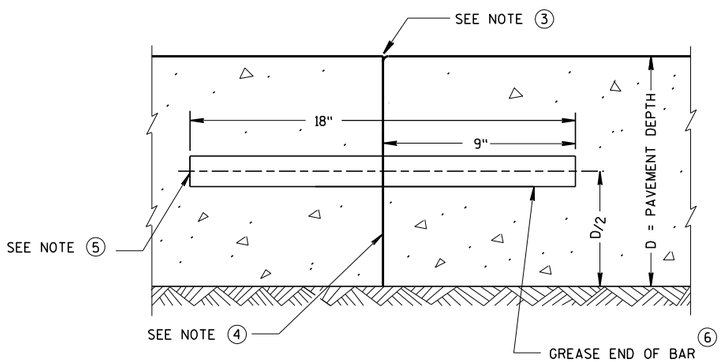

TRANSVERSE CONSTRUCTION JOINT

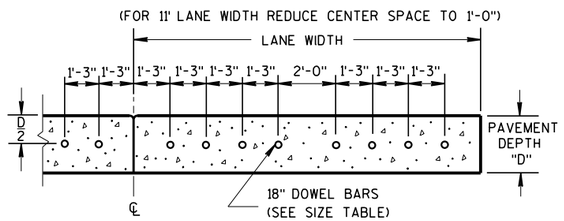

DRILLED DOWEL BAR CONSTRUCTION JOINT ⑦

RURAL DOWELED CONCRETE PAVEMENT

STATE OF WISCONSIN
DEPARTMENT OF TRANSPORTATION

APPROVED
March 2018 — DATE
/S/ Peter Kemp P.E. — PAVEMENT SUP
FHWA

6

S.D.D. 13 C 11-12b

6

S.D.D. 13 C 11-12b

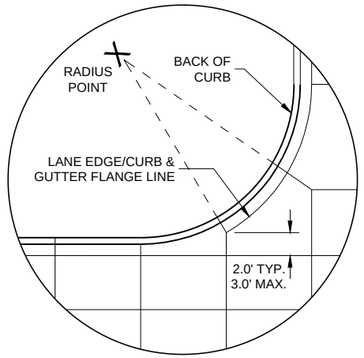

DETAIL "A"

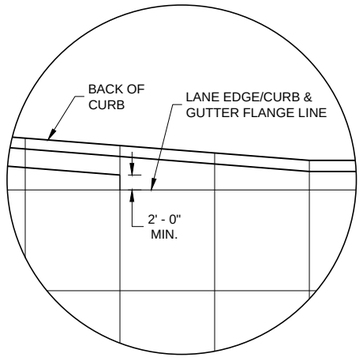

DETAIL "B"

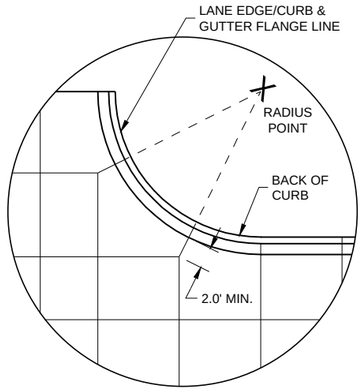

DETAIL "C"

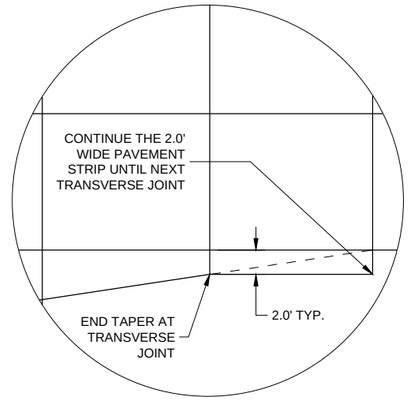

DETAIL "D"

GENERAL NOTES

THE PRIMARY ROADWAY CONTROLS THE TRANSVERSE JOINT PATTERN.

ALIGN NEW JOINTS WITH EXISTING JOINTS OR CRACKS.

CONSTRUCT TRANSVERSE JOINTS PERPENDICULAR TO THE ROADWAY.

ADJUST TRANSVERSE JOINTS TO ALIGN WITH UTILITY FIXTURES (E.G MANHOLES AND INLETS) IN THE PAVEMENT STRUCTURE WHEN POSSIBLE. WATER VALVES DO NOT REQUIRE JOINT ADJUSTMENT.

AVOID SLABS LESS THAN 2 FEET WIDE OR GREATER THAN 15 FEET WIDE.

SEE TABLE FOR TRANSVERSE JOINT SPACING. JOINT SPACING SPECIFIED IS MAXIMUM AND ACTUAL SPACING CAN BE ADJUSTED TO ACCOMMODATE INTERSECTIONS.

AVOID ANGLES LESS THAN 60° BY DOGLEGGING JOINTS THROUGH CURVE RADIUS POINTS. USE 90° ANGLES WHEN POSSIBLE.

CORRELATE LONGITUDINAL JOINTS WITH LANE LINES WHEN POSSIBLE.

1. PROVIDE TRANSVERSE JOINTS AT ALL PAVEMENT WIDTH CHANGES.
2. CONSTRUCT DOWELED EXPANSION JOINT ON THE SIDE ROAD OF AN INTERSECTION IF THE SIDE ROAD IS CONCRETE PAVEMENT AND GREATER THAN 300 FEET IN LENGTH. ALIGN EXPANSION JOINT WITHEDGE OF RADIUS.
3. THE ENGINEER MAY APPROVE SLIGHT VARIATIONS FROM THESE JOINTING DETAILS.

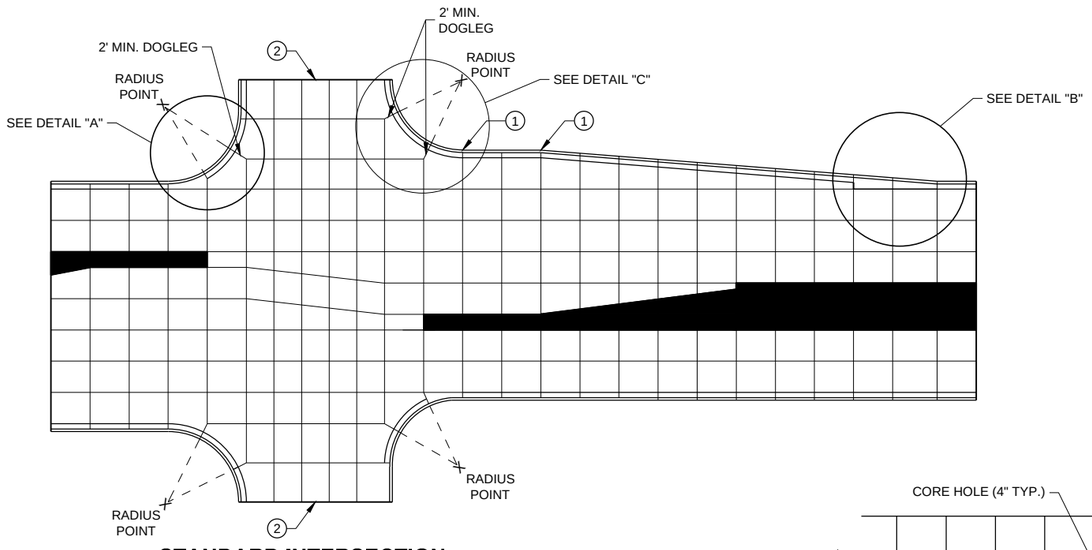

STANDARD INTERSECTION

PAVEMENT DEPTH AND JOINT SPACING TABLE

PAVEMENT DEPTH (D)	CONTRACTION JOINT SPACING
6", 6 ½"	12'
7", 7 ½"	14'
8" & ABOVE	15'

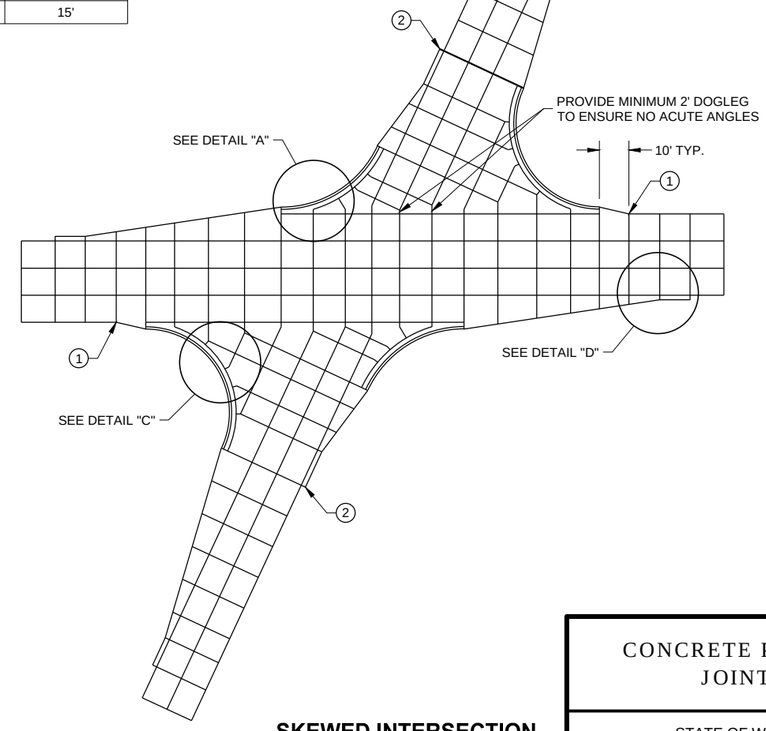

SKEWED INTERSECTION

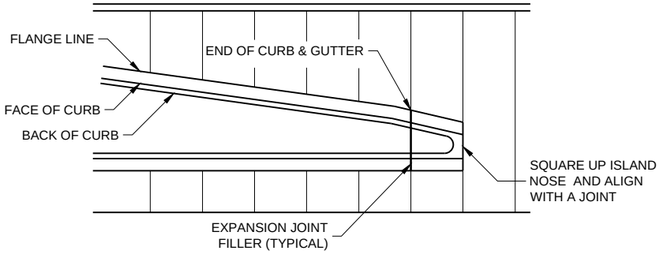

APPROACH TO MEDIAN

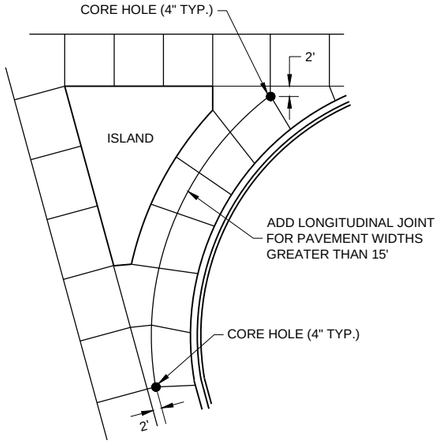

LARGE RIGHT TURN

CONCRETE PAVEMENT JOINTING

STATE OF WISCONSIN
DEPARTMENT OF TRANSPORTATION

SDD 13C18 - 07a

SDD 13C18 - 07a

LEGEND

POTENTIAL DOWELED EXPANSION JOINT

DOWELED JOINT

TIED JOINT

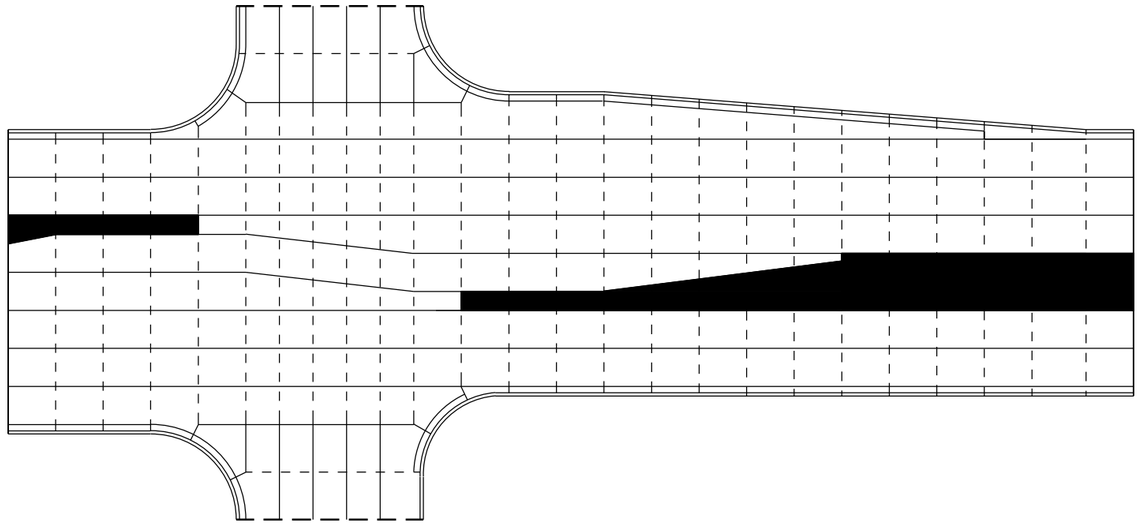

STANDARD INTERSECTION

GENERAL NOTES

USE AN EXPANSION JOINT FILLER MEETING THE REQUIREMENTS OF STANDARD SPECIFICATION 415.

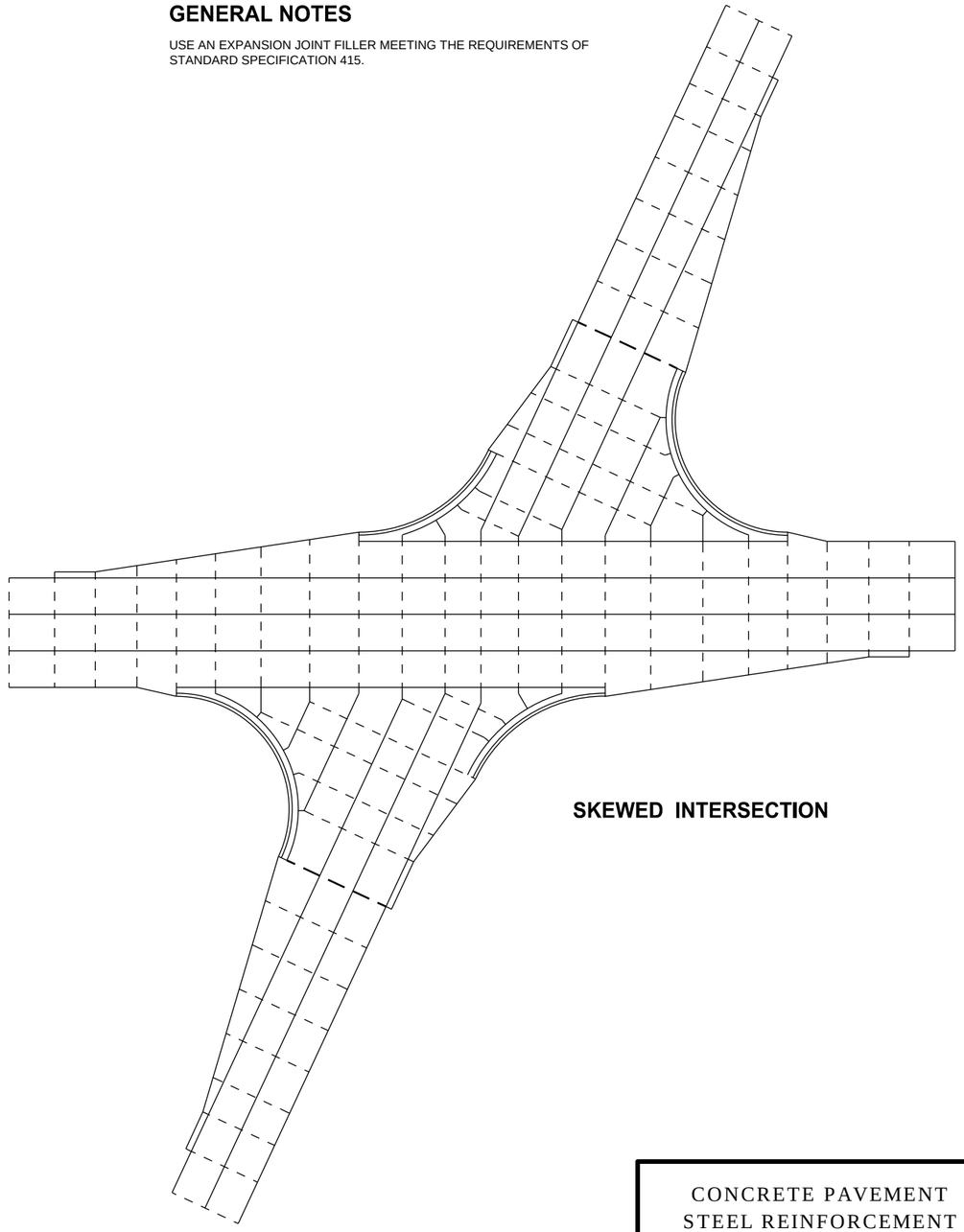

SKEWED INTERSECTION

6

SDD 13C18 - 07b

CONCRETE PAVEMENT
STEEL REINFORCEMENT

6

SDD 13C18 - 07b

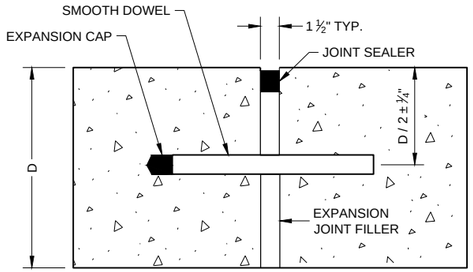

DOWELED TRANSVERSE (1)

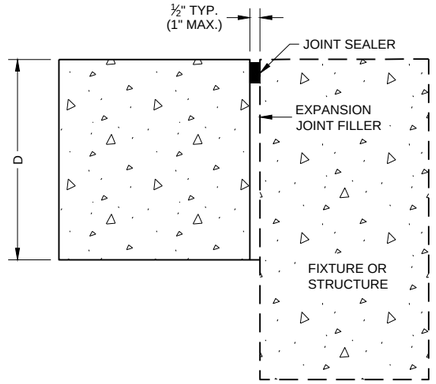

UNTIED - LONGITUDINAL

EXPANSION JOINTS

TIE BAR TABLE

PAVEMENT DEPTH (D)	TIE BAR SIZE	TIE BAR LENGTH (L)	MAX. TIE BAR SPACING
< 10 ½"	NO. 4	30"	36"
≥ 10 ½"	NO. 5	36"	36"
	NO. 4 *	30"	24" **

* SUBSTITUTE BENT BARS AT LONGITUDINAL JOINTS WHEN EQUIPMENT LIMITATIONS DURING CONSTRUCTION WARRANT (e.g. AUXILIARY LANES OR TURN LANES)

** CONFORM TO 15" MINIMUM SPACING FROM TRANSVERSE JOINTS; SPACING BETWEEN TIE BARS WILL BE 30" AT TRANSVERSE JOINTS.

GENERAL NOTES

1. USE DOWELED EXPANSION JOINTS ON SIDE ROADS AT INTERSECTIONS (TO ISOLATETHE SIDE ROAD FROM THE THROUGH STREET) IF THE SIDE ROAD IS CONCRETE PAVEMENT AND GREATER THAN 300 FEET IN LENGTH.
2. SPACE CONTRACTION JOINTS IN ACCORDANCE WITH SDD 13C4, 13C11 OR 13C13.
3. LOCATE CONSTRUCTION JOINTS A MINIMUM OF 6 FEET FROM THE NEAREST CONTRACTION JOINT AND ALIGN PARALLEL TO CONTRACTION JOINTS.
4. CONSTRUCTION JOINTS CAN BE FORMED OR SAWED.
5. IF JOINT IS FORMED, PROVIDE A ¼" RADIUS.
6. ANCHOR TIE BARS INTO DRILLED HOLES WITH AN EPOXY.

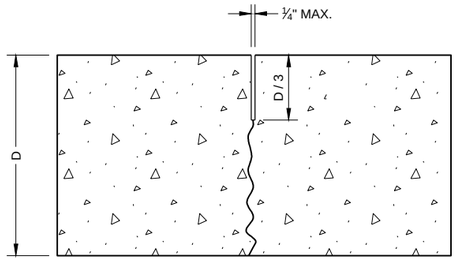

UNDOWELED TRANSVERSE

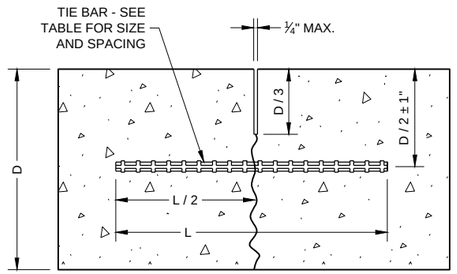

TIED LONGITUDINAL

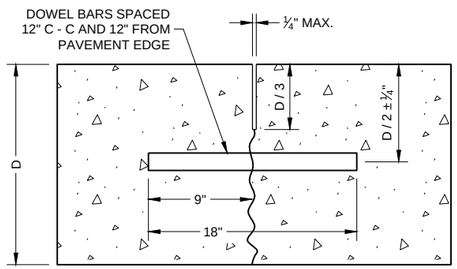

DOWELED TRANSVERSE

CONTRACTION JOINTS (2)

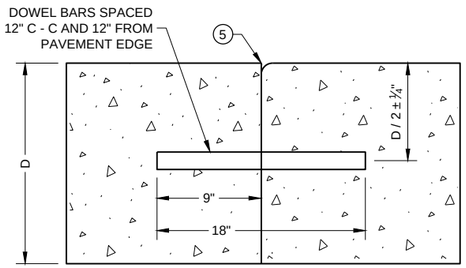

DOWELED TRANSVERSE (3)

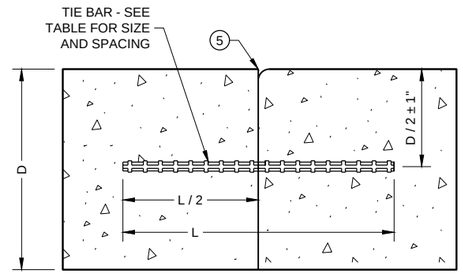

TIED LONGITUDINAL

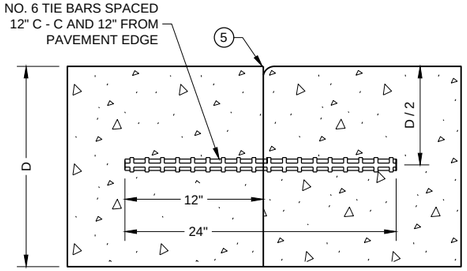

TIED TRANSVERSE (3)
(FOR USE ON NON-DOWELED PAVEMENTS ONLY)

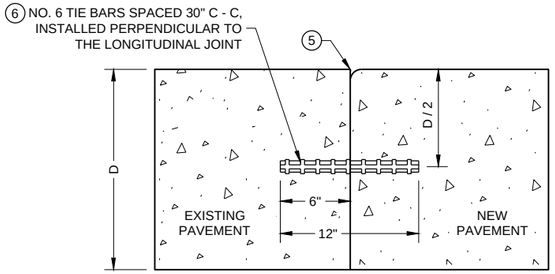

TIED LONGITUDINAL TO EXISTING

CONSTRUCTION JOINTS (4)

CONCRETE PAVEMENT
JOINT TYPES

STATE OF WISCONSIN
DEPARTMENT OF TRANSPORTATION

6

SDD 13C18 - 07c

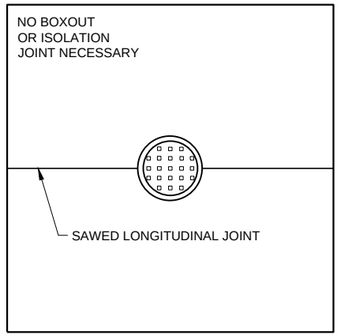

MANHOLE WITH LONGITUDINAL JOINT

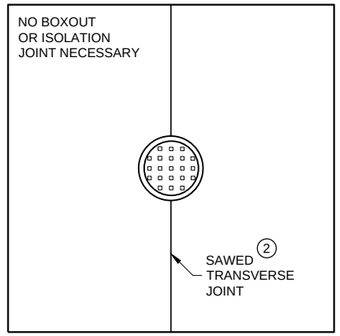

MANHOLE WITH TRANSVERSE JOINT

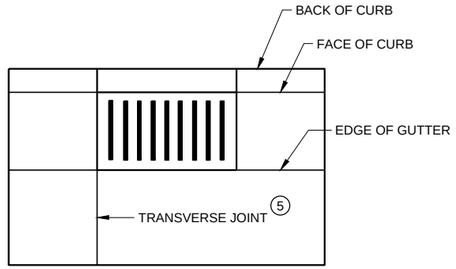

INLET WITH TRANSVERSE JOINT

GENERAL NOTES

1. USE BOXOUTS WHEN UTILITY STRUCTURE IS IN THE PATH OF CONSTRUCTION JOINTS. PROVIDE A 1 FOOT MINIMUM CLEARANCE BETWEEN THE EXTERIOR LIMIT OF THE STRUCTURE TO THE DIAMOND BOXOUT.
2. ADJUST TRANSVERSE JOINT TO INTERSECT MANHOLE IF POSSIBLE.
3. IF DISTANCE BETWEEN THE LONGITUDINAL JOINT AND THE EDGE OF MANHOLE IS 2 FEET OR LESS, DIVERT THE LONGITUDINAL JOINT AT A 2:1 TAPER RATE TO THE CENTER OF THE MANHOLE. IF THE DISTANCE IS GREATER THAN 2 FEET, DO NOT DIVERT THE JOINT AND SAW AS NORMAL. PLACE REINFORCEMENT REBAR AROUND THE MANHOLE.
4. IF THE DISTANCE FROM THE EDGE OF THE MANHOLE TO THE NEAREST TRANSVERSE JOINT IS LESS 4 FEET OR LESS, REDIRECT JOINT TO INTERSECT THE CENTER OF THE MANHOLE. IF DISTANCE IS GREATER THAN 4 FEET, DO NOT DIVERT THE JOINT AND SAW AS NORMAL. PLACE REINFORCEMENT REBAR AROUND THE MANHOLE.
5. ALIGN TRANSVERSE JOINT WITH ONE EDGE OF INLET WHEN PRACTICAL.

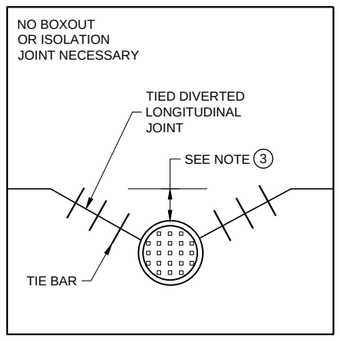

MANHOLE WITH DIVERTED LONGITUDINAL CONTRACTION JOINT

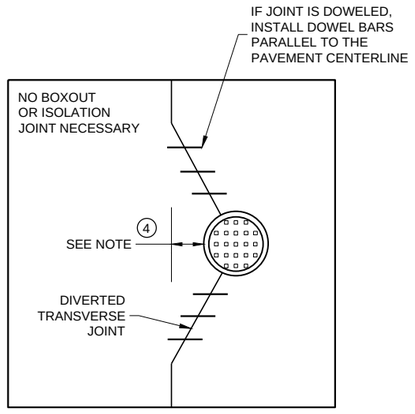

MANHOLE WITH DIVERTED TRANSVERSE CONTRACTION JOINT

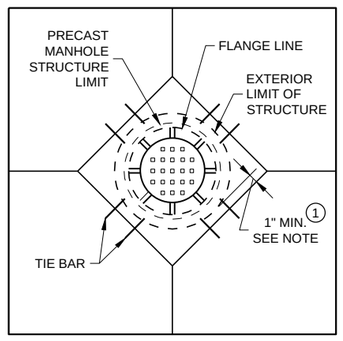

DIAGONAL MANHOLE BOXOUT FOR CONSTRUCTION JOINTS

CONCRETE PAVEMENT JOINTING AT UTILITY FIXTURES

STATE OF WISCONSIN
DEPARTMENT OF TRANSPORTATION

APPROVED
November 2018
DATE

/S/ Peter Kemp P.E.
PAVEMENT SUPERVIS

FHWA

6

SDD 13C18 - 07d

LEGEND

- DOWELED JOINT
- TIED JOINT
- EXPANSION JOINT
- POTENTIAL DOWELED EXPANSION JOINT (1)
- DIRECTION OF TRAFFIC

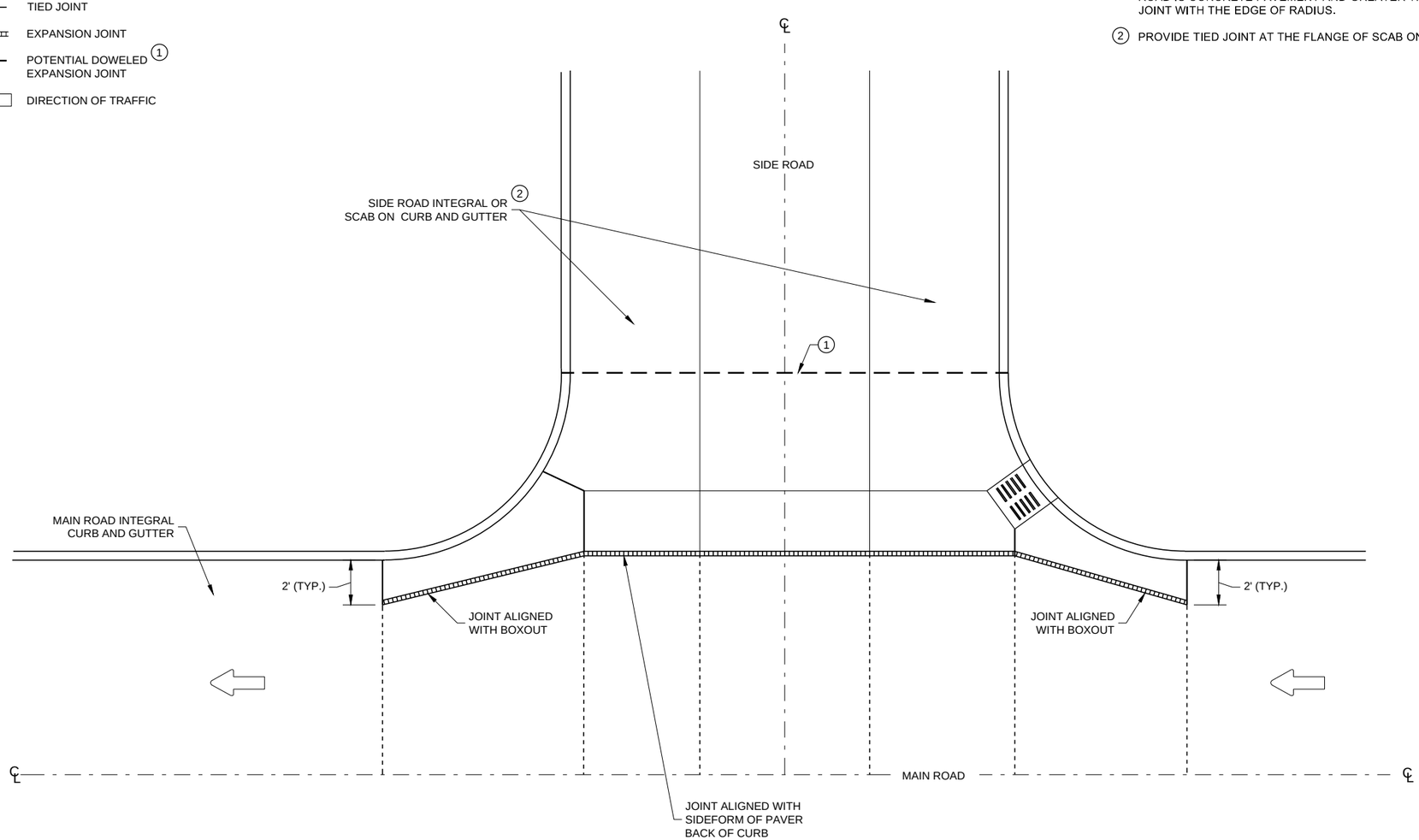

GENERAL NOTES

1. CONSTRUCT DOWELED EXPANSION JOINT ON THE SIDE ROAD OF AN INTERSECTION IF THE SIDE ROAD IS CONCRETE PAVEMENT AND GREATER THAN 300 FEET IN LENGTH. ALIGN EXPANSION JOINT WITH THE EDGE OF RADIUS.
2. PROVIDE TIED JOINT AT THE FLANGE OF SCAB ON CURB IF SCAB ON CURB AND GUTTER IS USE.

INTERSECTION BOXOUT FOR INTEGRAL CURB AND GUTTER

CONCRETE PAVEMENT INTERSECTION BOXOUT FOR INTEGRAL CURB AND GUTTER

STATE OF WISCONSIN
DEPARTMENT OF TRANSPORTATION

APPROVED
November 2018
DATE

/S/ Peter Kemp P.E.
ROADWAY STANDARDS DEVE ENGINEER

FHWA

6

SDD 13C18 - 07f

6

SDD 13C18 - 07f

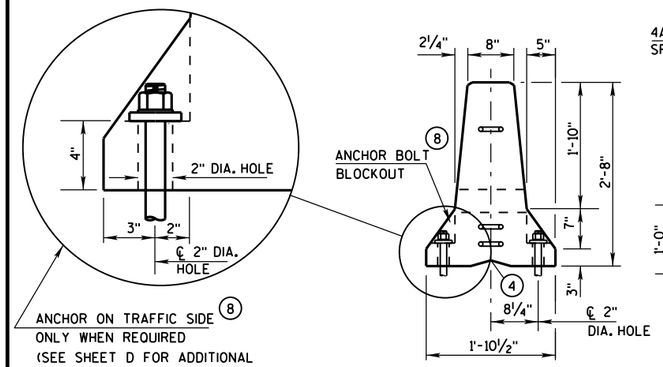

END VIEW

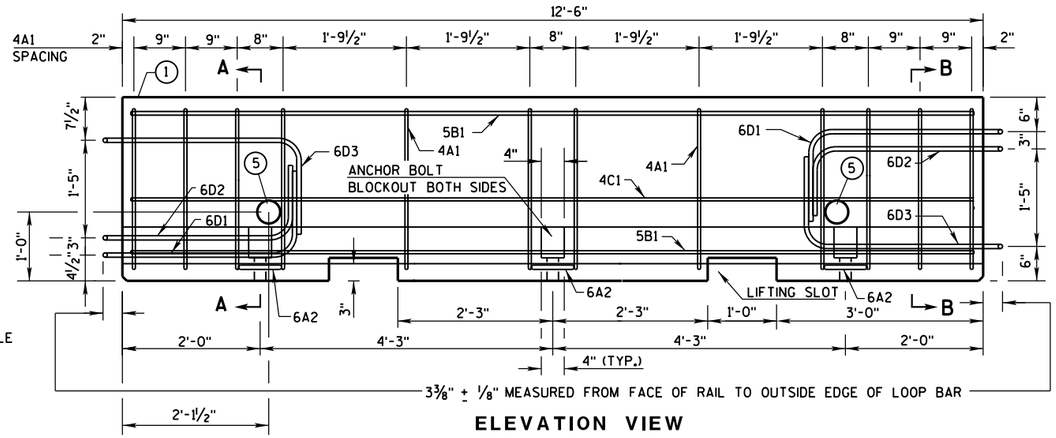

ELEVATION VIEW

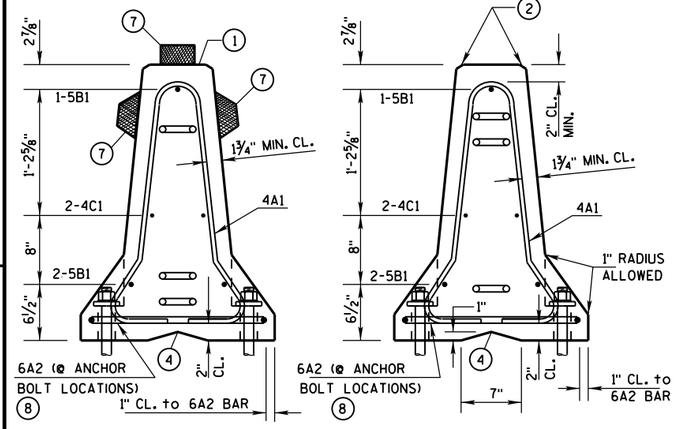

SECTION A-A
(STIRRUP PLACEMENT)

SECTION B-B
(STIRRUP PLACEMENT)

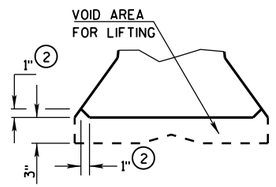

DETAIL "B"
LIFTING SLOT DETAIL

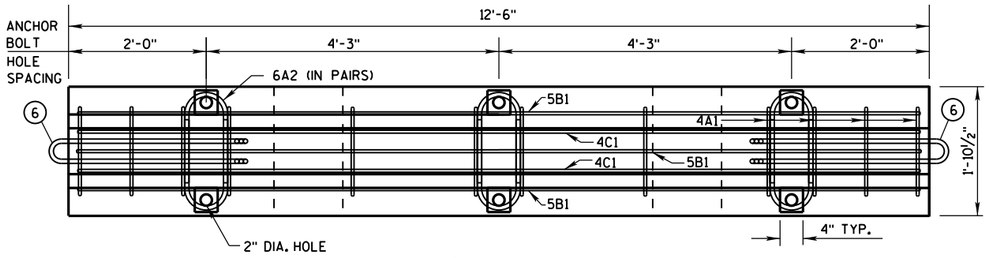

PLAN VIEW

DETAILS OF BARRIER SECTION

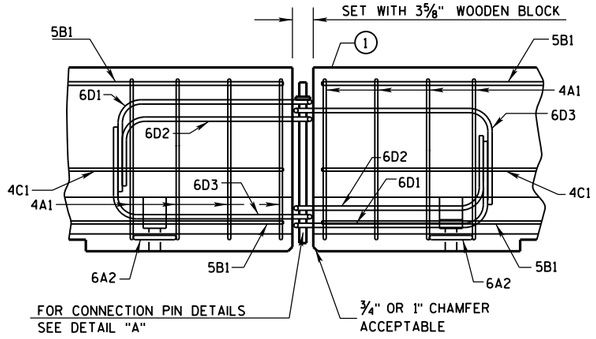

DETAILS OF BARRIER CONNECTION

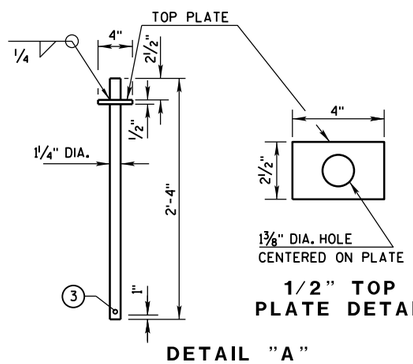

1/2" TOP
PLATE DETAIL

DETAIL "A"
CONNECTION PIN
(A36 STEEL (10.9 LB EACH))

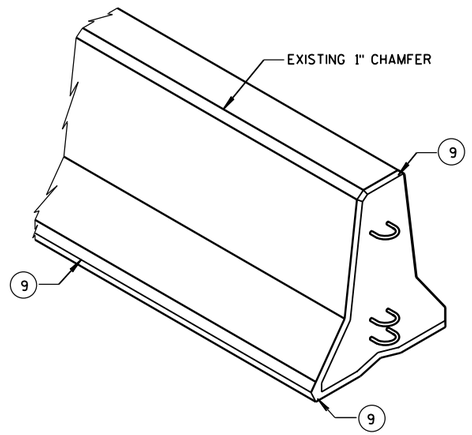

GENERAL NOTES

THESE GENERAL NOTES APPLY TO SHEETS 14B7-15(a) THRU 14B7-15(i).

DO NOT INTERMIX CONCRETE BARRIER TEMPORARY PRCAST, 12'-6" (CBTP12.5) WITH OTHER TEMPORARY CONCRETE BARRIERS.

USE ASTM A-615, GRADE 60, DEFORMED STEEL BARS FOR BARS 4A1, 6A2, 5B1 AND 4C1 IN THE BARRIER SECTION AND FOR 4V1, 4V2, 4V3, 4V4, 4V5, 4V6, 4F1, 4F2 AND 5F3 IN THE BARRIER TAPER SECTION.

LOOP BARS 6D1, 6D2 AND 6D3 SHALL BE ¾" SMOOTH STEEL BARS WITH A MINIMUM YIELD STRENGTH OF 60 KSI, A TENSILE STRENGTH OF NOT LESS THAN 1.25 TIMES THE YIELD STRENGTH BUT A MINIMUM OF 80 KSI, A MINIMUM 14% ELONGATION IN 8 INCHES AND PASSING A 180 DEGREE BEND TEST USING A 3-½" PIN BEND DIAMETER FOR BEND TESTS. THE LOOPS SHALL BE INSTALLED WITHIN ⅛" OF THE PLAN DIMENSION.

CONSTRUCT LIFTING SLOTS AS SPECIFIED ON THE PLANS TO FACILITATE THE DRAINAGE OF WATER AFTER INSTALLATION.

PLACE BARRIER ON A PAVED SURFACE. REMOVE ALL LOOSE DIRT AND SAND FROM THE ROADWAY SURFACE PRIOR TO PLACEMENT OF THE BARRIER.

INSTALL MECHANICAL OR ADHESIVE ANCHORS PER MANUFACTURER'S RECOMMENDATIONS. PROVIDE MANUFACTURER'S INFORMATION TO PROJECT ENGINEER.

(1) MARK ONE END OF EACH BARRIER PERMANENTLY BY FORMING INTO THE BARRIER THE FOLLOWING INFORMATION:
- a. TYPE: WI CBTP
- b. MANUFACTURER
- c. DATE MANUFACTURED (MONTH AND YEAR)

(2) 1" CHAMFER TO PREVENT SPALLING.

(3) A ⅜" HOLE IN THE CONNECTION PIN, AT THE LOCATION SHOWN, IS ACCEPTABLE, BUT NOT REQUIRED..

(4) "V" NOTCH IS OPTIONAL.

(5) THE 4" DIAMETER, 11 GAUGE STEEL, ROUND MECHANICAL TUBING SLEEVE FOR LIFTING (OPTIONAL).

(6) NEVER USE LOOP BARS (6D1, 6D2 OR 6D3) TO LIFT, MOVE OR REPOSITION THE BARRIER.

(7) USE DELINEATORS CONFORMING TO SECTION 633 OF THE STANDARD SPECIFICATIONS. CONTRACTOR MAY USE ALTERNATE SHAPES AND HOUSING. INSTALL DELINEATORS ACCORDING TO MANUFACTURES INSTRUCTION. INSTALL YELLOW REFLECTORS WHEN BARRIER IS LOCATED TO THE LEFT OF TRAFFIC AND WHITE REFLECTORS WHEN BARRIER IS LOCATED TO THE RIGHT OF TRAFFIC. SPACE DELINEATORS A MAXIMUM OF 25 FEET APART. PROVIDE TOP MOUNTED DELINEATORS IN ADDITION TO THE SIDE MOUNTED DELINEATORS ON ALL BARRIER INSTALLATIONS LOCATED ON A CURVED ALIGNMENT LONGER THAN 200 FEET AND ON BARRIERS USED TO SEPARATE OPPOSING TRAFFIC.

(8) SEE SHEET D FOR HOW TO ANCHOR BARRIER. SEE SHEET E FOR WHEN TO ANCHOR BARRIER.

(9) 1" CHAMFER OPTIONAL.

f'c = 4,000 psi

CONCRETE BARRIER TEMPORARY PRECAST, 12'-6"

STATE OF WISCONSIN
DEPARTMENT OF TRANSPOR

6

S.D.D. 14 B 7-15a

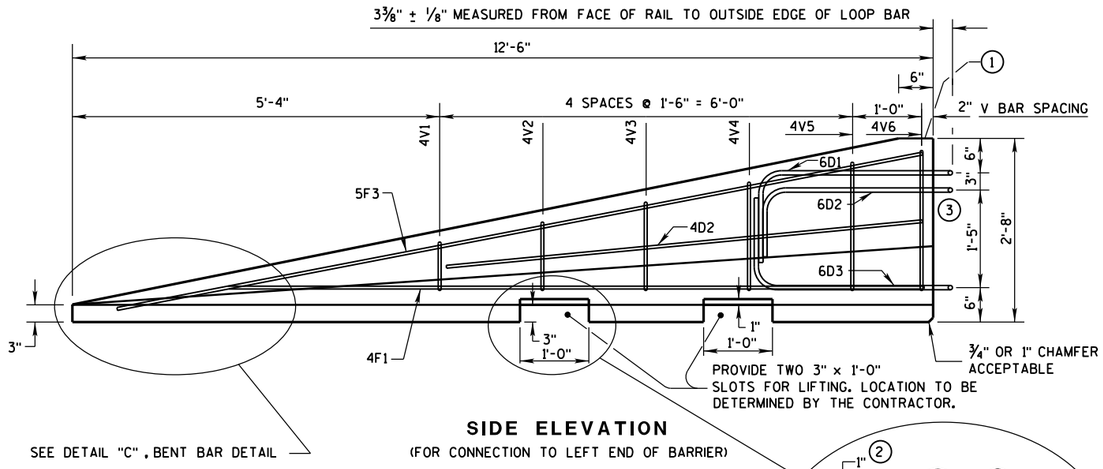

SIDE ELEVATION
(FOR CONNECTION TO LEFT END OF BARRIER)

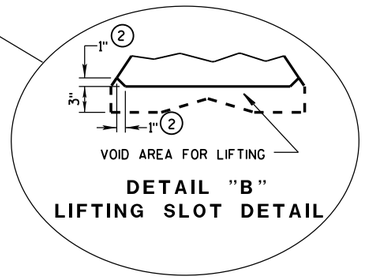

DETAIL "B"
LIFTING SLOT DETAIL

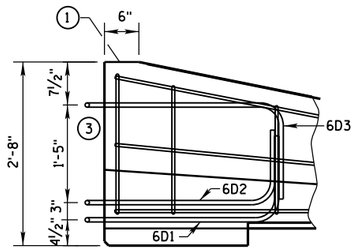

SIDE ELEVATION
LOOP BAR ASSEMBLY INVERTED
FOR OPPOSITE END.
(FOR CONNECTION TO RIGHT END OF BARRIER)

GENERAL NOTES

1. MARK ONE END OF EACH BARRIER PERMANENTLY BY FORMING INTO THE BARRIER THE FOLLOWING INFORMATION:
   a. TYPE WICBTP
   b. MANUFACTURER
   c. DATE MANUFACTURED (MONTH AND YEAR)
2. 1" CHAMFER TO PREVENT SPALLING.
3. NEVER USE LOOP BARS (6D1, 6D2 OR 6D3) TO LIFT, MOVE OR REPOSITION THE BARRIER.

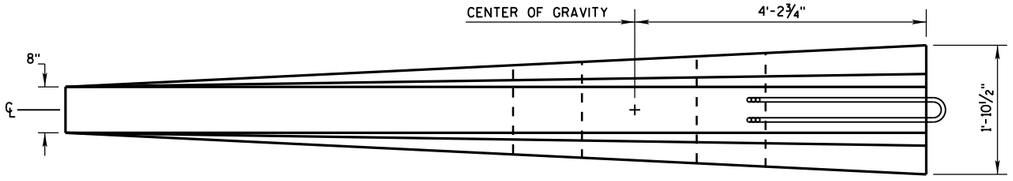

PLAN VIEW

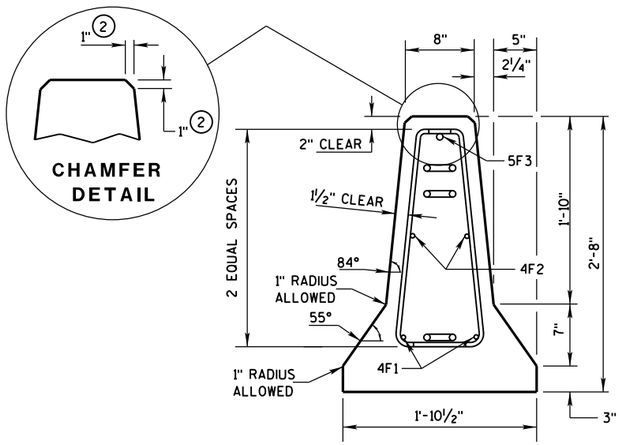

END SECTION

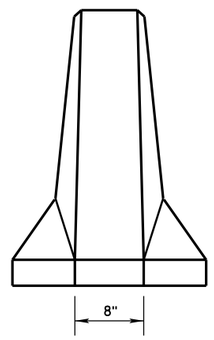

FRONT ELEVATION

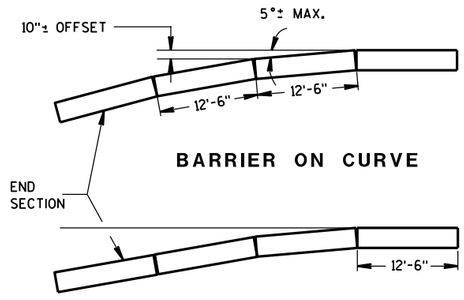

BARRIER ON CURVE

FLARE AT BARRIER END

POSTED SPEED, (MPH)	FLARE RATE
40 OR LESS	6:1
45 OR GREATER	8:1

DETAILS OF BARRIER TAPER SECTION

CONCRETE BARRIER
TEMPORARY PRECAST, 12'-6"

STATE OF WISCONSIN
DEPARTMENT OF TRANSPOI

6

S.D.D. 14 B 7-15b

BARRIER TAPER SECTION BILL OF MATERIALS

(PER 12'-6" BARRIER TAPER SECTION)

BAR	BAR SIZE	NO. OF BARS	LENGTH FT.
4V1	4	2	1'-11"
4V2	4	2	2'-2"
4V3	4	2	2'-6"
4V4	4	2	2'-9"
4V5	4	2	3'-2"
4V6	4	2	3'-4"
4F1	4	2	12'-0"
4F2	4	2	7'-6"
5F3	5	1	11'-9"
LOOP ASSEMBLY			
6D1	6	1	8'-5"
6D2	6	1	7'-7"
6D3	6	1	8'-6"

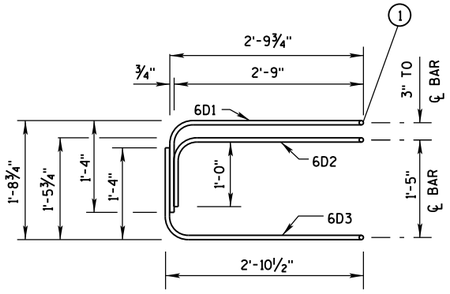

ELEVATION
LOOP BAR ASSEMBLY

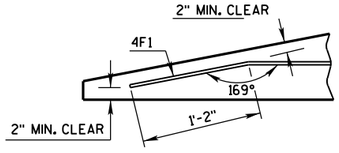

DETAIL "C"
BENT BAR DETAIL

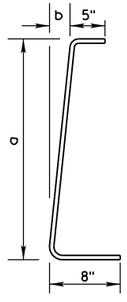

BAR	a	b
V1	10"	1"
V2	1'-1"	1¼"
V3	1'-5"	1⅝"
V4	1'-8"	1⅞"
V5	2'-0½"	2⅜"
V6	2'-3"	2¾"

4V BARS
2 AT EACH SIZE REQUIRED
FOR STIRRUP ASSEMBLY

TAPER BARRIER SECTION

GENERAL NOTES

(1) NEVER USE LOOP BARS (6D1, 6D2 OR 6D3) TO LIFT, MOVE OR REPOSITION THE BARRIER.

BARRIER SECTION BILL OF MATERIALS

(PER 12'-6" BARRIER SECTION)

BAR	BAR SIZE	NO. OF BARS	LENGTH FT.
4A1	4	12	6'-0"
6A2	6	6	2'-11"
5B1	5	3	12'-2"
4C1	4	2	12'-2"
LOOP ASSEMBLY			
6D1	6	2	8'-5"
6D2	6	2	7'-7"
6D3	6	2	8'-6"

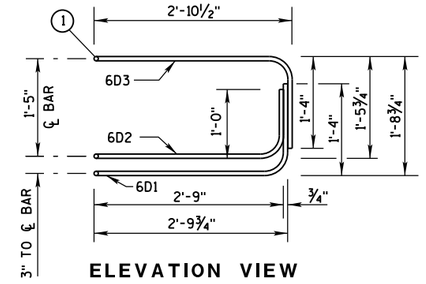

ELEVATION VIEW

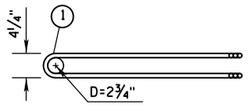

PLAN VIEW
LOOP BAR ASSEMBLY
(MARKED END SHOWN, INVERT FOR OTHER END)

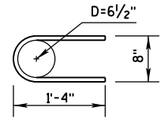

6A2

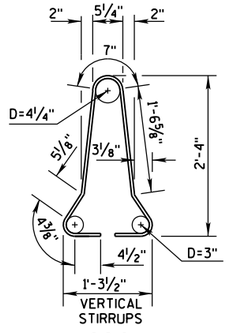

4A1

BARRIER SECTION

CONCRETE BARRIER
TEMPORARY PRECAST, 12'-6"

STATE OF WISCONSIN
DEPARTMENT OF TRANSPOR

6

S.D.D. 14 B 7-15c

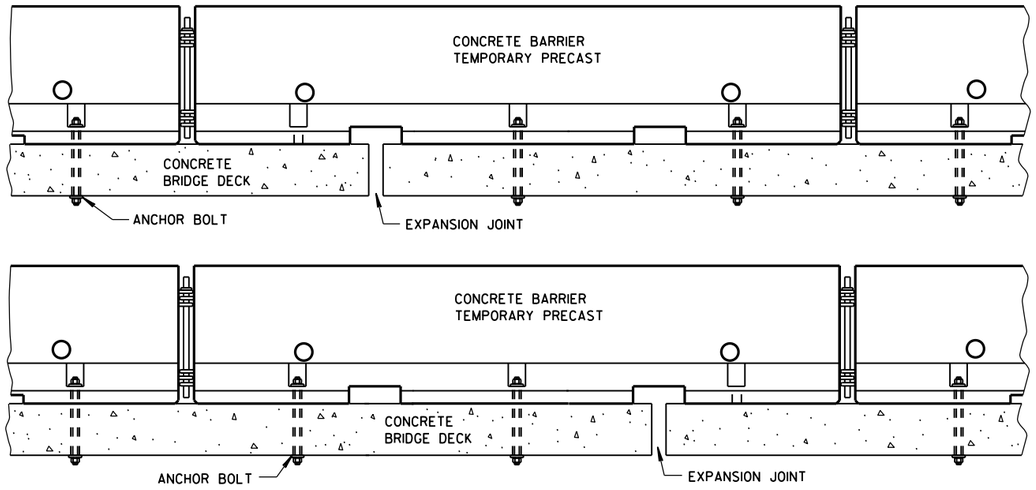

TREATMENT AT BRIDGE DECK EXPANSION JOINTS

(NO SINGLE CONCRETE BARRIER SECTION SHALL BE ANCHORED TO BOTH THE BRIDGE DECK AND THE APPROACH SLAB. ALL ANCHOR BOLT LOCATIONS SHALL BE ANCHORED TO THE DECK IN ACCORDANCE WITH THE DETAIL. NO MORE THAN ONE ANCHOR BOLT SHALL BE ELIMINATED FROM A BARRIER SECTION WHEN SPANNING AN EXPANSION JOINT.)

GENERAL NOTES

SEE SHEET E FOR WHEN TO ANCHOR. OTHER PARTS OF THE PLAN MAY SHOW ADDITIONAL LOCATIONS REQUIRING ANCHORING.

REMOVE ALL ANCHORS WHEN NO LONGER NEEDED. FILL CONCRETE PAVEMENTS, DECKS AND APPROACH SLABS WITH NON-SHRINK COMMERICAL GROUT FROM THE APPROVED PRODUCT LIST. FILL ASPHALT PAVEMENTS WITH ASTM D6690 TYPE II RUBBERIZED CRACK FILLER.

(1) 1⅛" DIAMENTER A307 THREADED ROD. ½" X 3" X 3" SQUARE PLATE WASHER WITH ASTM A36 STEEL. ASTM A563A HEAVY HEX NUT.

(2) ADHESIVE ANCHORS WITH A MINIMUM BOND STRENGTH OF 1,800 PSI AND 5¼" EMBEDMENT. SEE 603.2 AND 603.3.1.2 OF THE WISCONSIN STANDARD SPECIFICATIONS FOR MORE INFORMATION ON ADHESIVE ANCHORS.

(3) ASPHALT SURFACE SHOWN. CONTRACTOR MAY DRILL THROUGH CONCRETE PAVEMENT AND THAN DRIVE ASPHALT ANCHOR PIN.

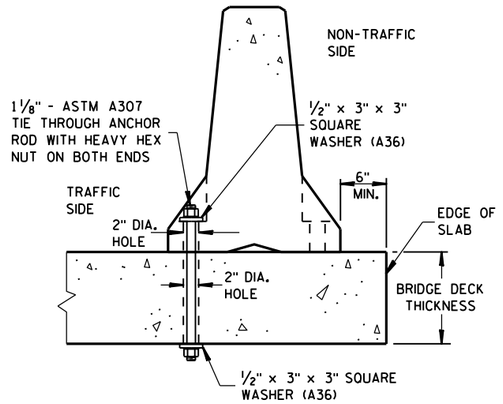

THROUGH BOLTED ANCHOR INSTALLATION ON BRIDGE DECK

(DO NOTUSE ON CONCRETE BRIDGE DECK WITH ASPHALT OVERLAY)

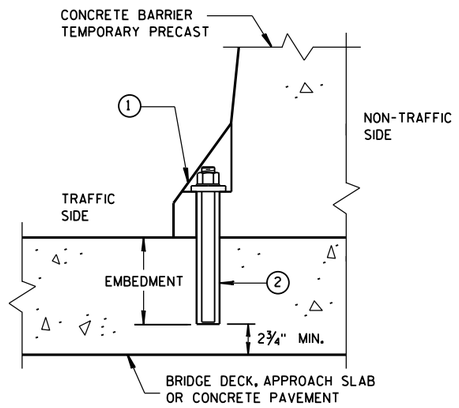

REMOVABLE ADHESIVE ANCHOR INSTALLATION ON CONCRETE BRIDGE DECK, CONCRETE APPROACH SLAB, OR CONCRETE PAVEMENT

(DO NOT USE ON CONCRETE WITH AN ASPHALTIC OVERLAY)

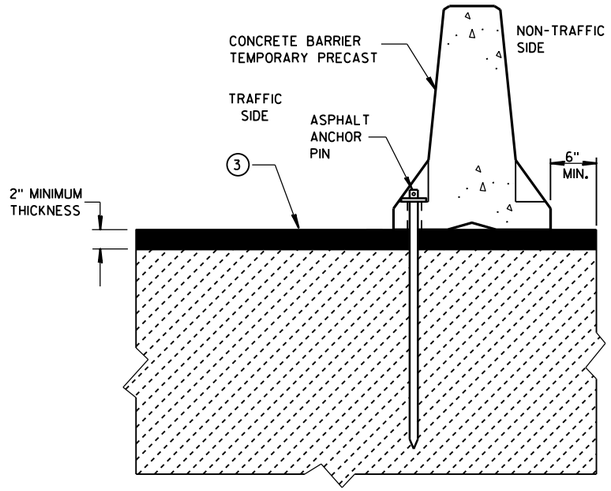

STAKE DOWN INSTALLATION FOR ASPHALTIC SURFACE

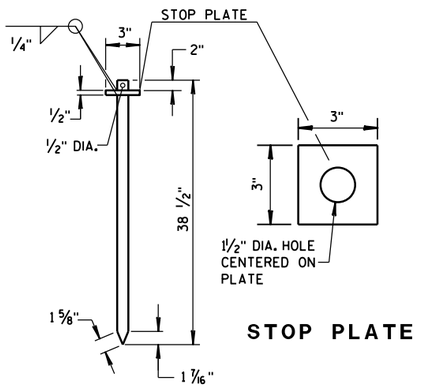

STOP PLATE

ASPHALT ANCHOR PIN

(ASTM A36 STEEL)

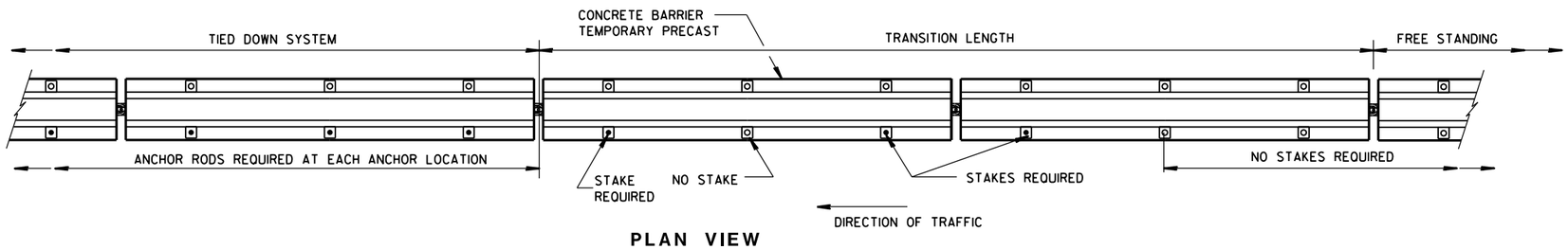

PLAN VIEW

FREE STANDING TRANSITION TO TIED-DOWN SYSTEM

(PLACE TRANSITION IN A TANGENT SECTION OF BARRIER PARALLEL TO THE ROADWAY. IF TRANSITION OCCURS ON STRUCTURAL SLAB, ANCHOR AS SHOWN.)

CONCRETE BARRIER
TEMPORARY PRECAST, 12'-6"

STATE OF WISCONSIN
DEPARTMENT OF TRANSPOI

6
S.D.D. 14 B 7-15d

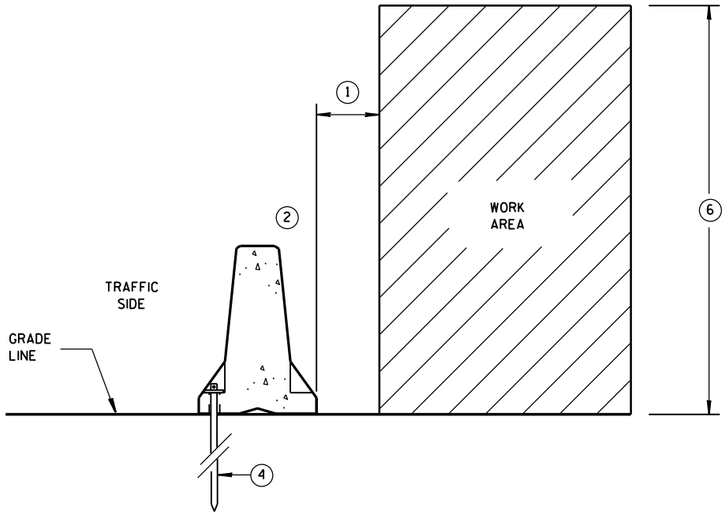

ANCHORED BARRIER SPACE REQUIREMENTS FOR HAZARDS EXTENDED ABOVE THE GRADE LINE

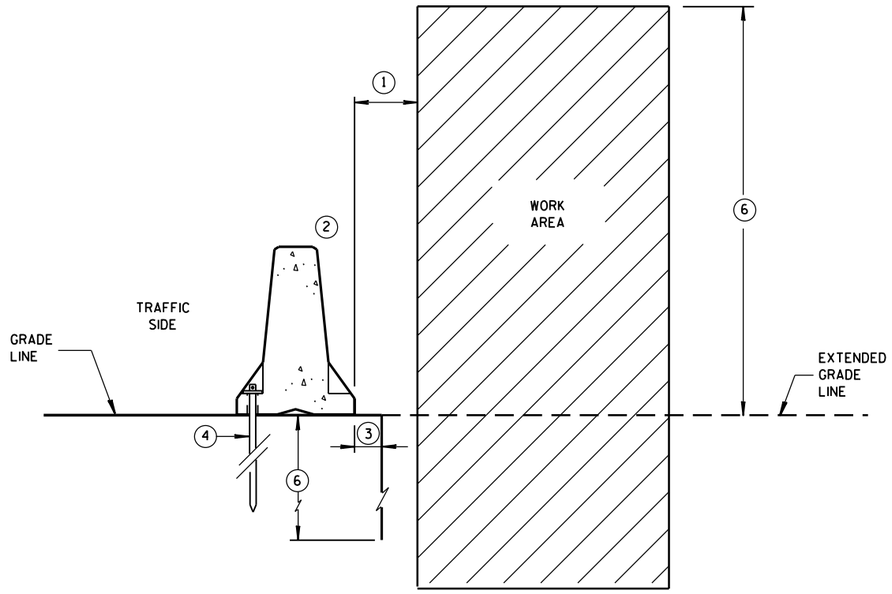

ANCHORED BARRIER SPACE REQUIREMENTS ON VERTICAL DROP OFFS

GENERAL NOTES

1. WHEN OBJECTS EXTEND ABOVE THE GRADE, A MINIMUM OF 1 FOOT IS REQUIRED FROM BACK OF BARRIER TO OBJECT. SEE OTHER DETAILS FOR FOR THE MINIMUM OFFSET FROM BACK OF BARRIER TO SLOPES OR VERTICAL DROPS.
2. OBJECTS ARE NOT TO BE PLACED ON, MOUNTED TO, OR LEANED AGAINST THE BARRIER WITHOUT PERMISSION OF THE PROJECT ENGINEER.
3. SEE OTHER DETAIL ON SHEET "D" FOR SPACE REQUIREMENTS.
4. SEE BOLT THROUGH DECK, REMOVABLE ADHESIVE ANCHOR, OR A STAKE DOWN FOR ASPHALTIC SURFACE TREATMENT DETAILS. ASPHALTIC ANCHOR SHOWN.
5. DEPTH OF 3 FEET OR MORE.
6. Y = 6'-6".

POSTED SPEED MPH	X
45 OR GREATER	4'
40 OR LESS	2'

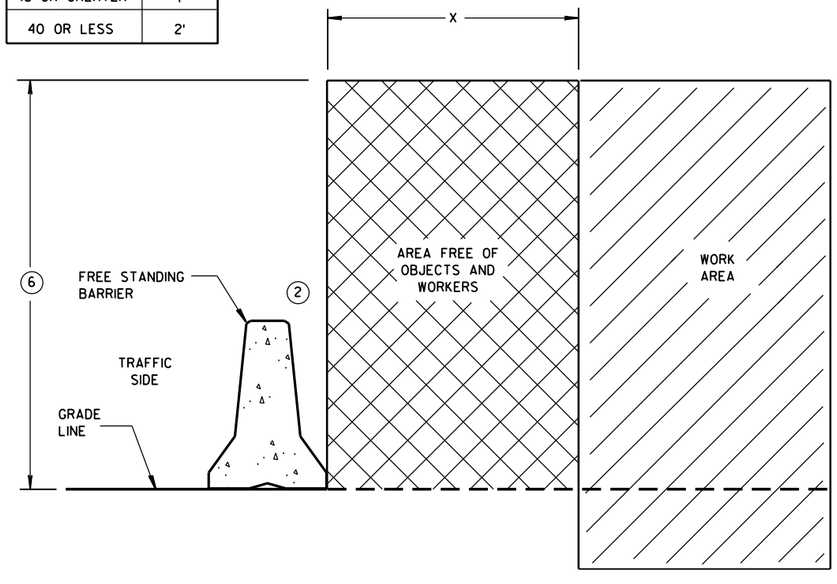

FREE STANDING BARRIER SPACE REQUIREMENTS

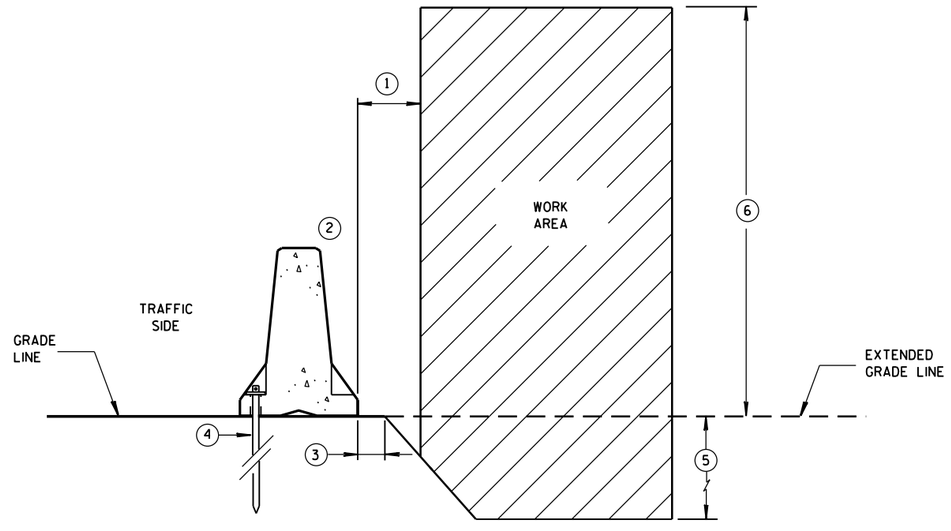

ANCHORED BARRIER SPACE REQUIREMENTS ON SLOPES

CONCRETE BARRIER
TEMPORARY PRECAST, 12'-6"

STATE OF WISCONSIN
DEPARTMENT OF TRANSPOI

6

S.D.D. 14 B 7-15e

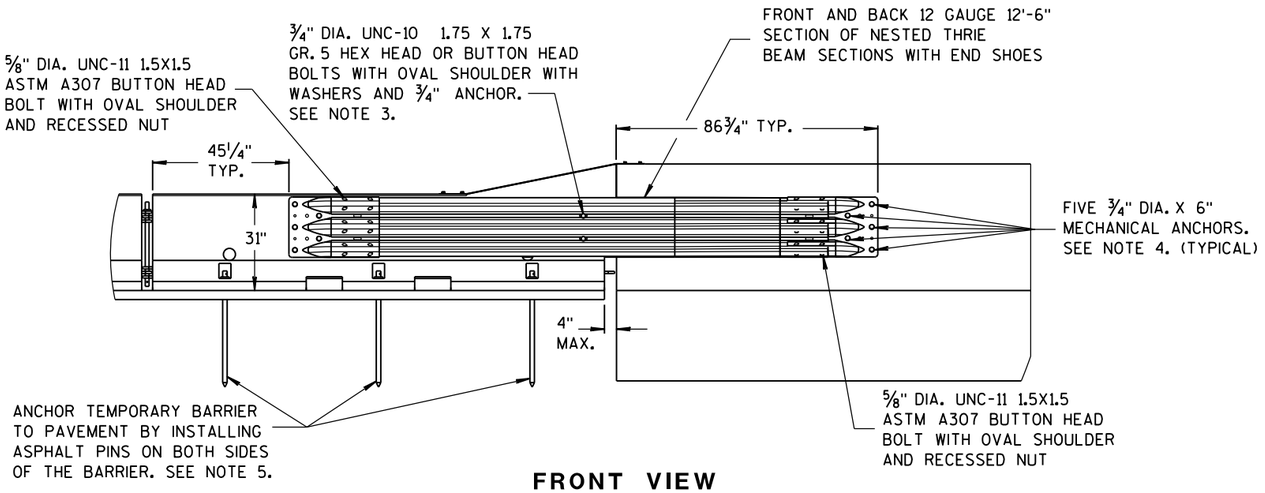

FRONT VIEW

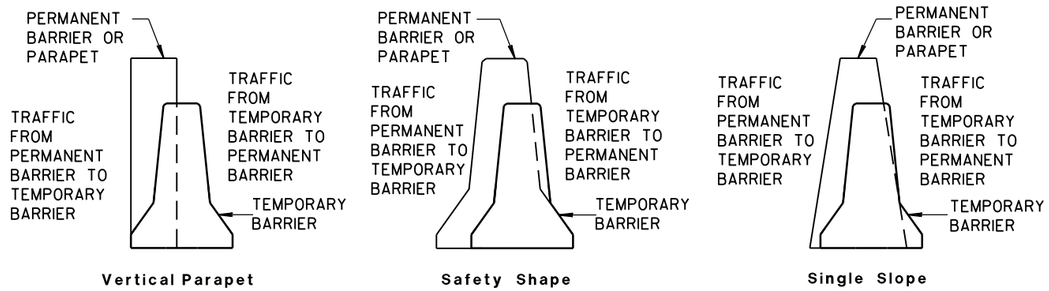

TEMPORARY BARRIER PLACEMENT FOR BI-DIRECTIONAL TRANSITION TO TIED-DOWN SYSTEM

NOTES

NESTED THRIE BEAM IS REQUIRED ON BOTH SIDES OF THE TEMPORARY BARRIER FOR ALL INSTALLATIONS REGARDLESS OF TRAFFIC.

1. CAP END PLATE PLACED FLUSH WITH UPSTREAM END OF PERMANENT BARRIER OR PARAPET.
2. THRIE BEAM PIECES ARE OFFSET 15 1/4" TO PREVENT INTERFERENCE FROM THE ANCHORS ON OPPOSING SIDES.
3. MINIMUM MECHANICAL OR ADHESIVE ANCHOR STRENGTH REQUIREMENTS: ULTIMATE TENSILE LOAD 9.48 KIPS AND ULTIMATE SHEAR LOAD 10.48 KIPS.
4. MINIMUM MECHANICAL OR ADHESIVE ANCHOR STRENGTH REQUIREMENTS: ULTIMATE TENSILE LOAD 17.9 KIPS AND ULTIMATE SHEAR LOAD 21.96 KIPS.
5. MAY BE USED ON CONCRETE OR ASPHALT PAVEMENTS. ASPHALT OPTION SHOWN. FOR CONCRETE OPTION SEE OTHER DETAILS.
6. MINIMUM MECHANICAL OR ADHESIVE ANCHOR STRENGTH REQUIREMENTS: ULTIMATE TENSILE LOAD 12.14 KIPS AND ULTIMATE SHEAR LOAD 17.5 KIPS.

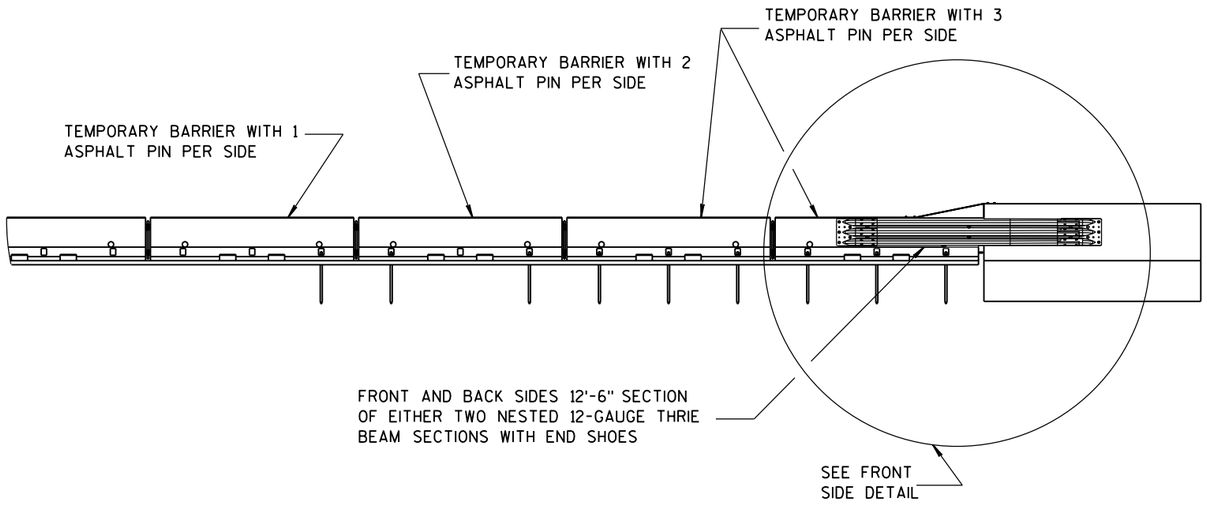

FRONT VIEW

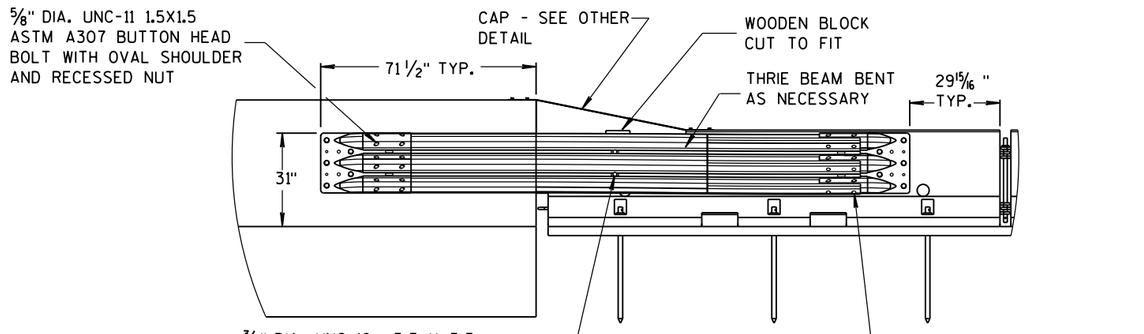

BACK VIEW

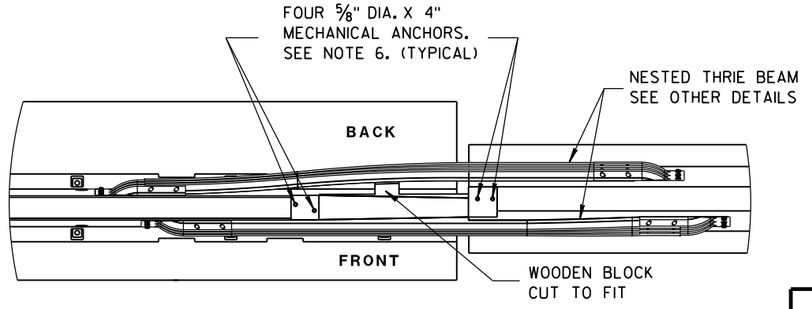

PLAN VIEW

BI-DIRECTIONAL TRANSITION TO TIED-DOWN SYSTEM

CONCRETE BARRIER
TEMPORARY PRECAST, 12'-6"

STATE OF WISCONSIN
DEPARTMENT OF TRANSPO

6

S.D.D. 14 B 7-15f

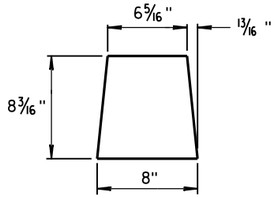

GUSSET 1

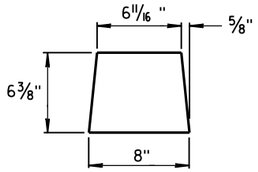

GUSSET 2

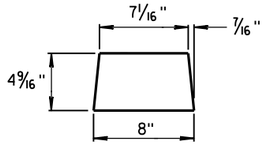

GUSSET 3

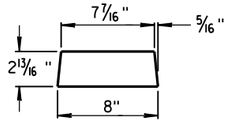

GUSSET 4

GUSSETS

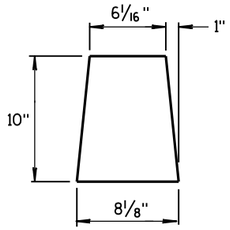

END PLATE

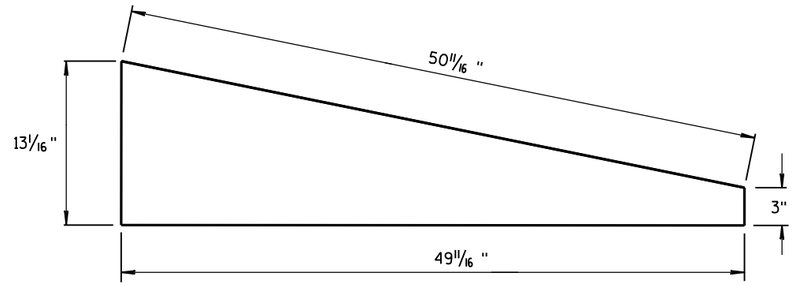

SIDE PLATE

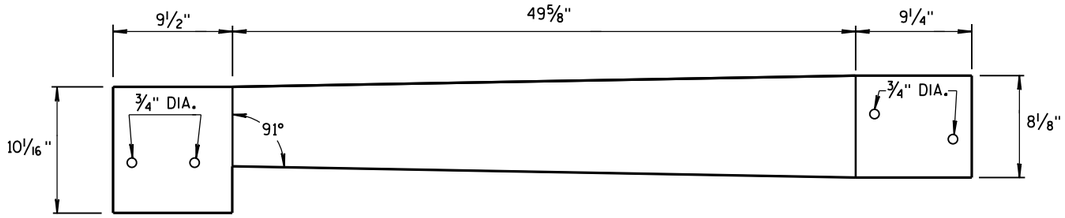

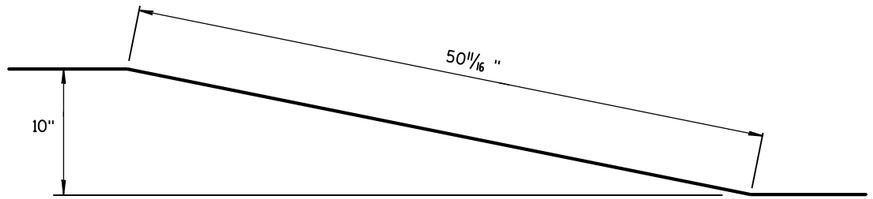

TOP PLATE

SIDE, TOP AND END PLATES FOR CAP FROM TEMPORARY CONCRETE BARRIER TO 42" PERMANENT CONCRETE BARRIER

SIDE PLATES, TOP PLATE, END PLATE AND GUSSETS ARE 12 GAUGE ASTM A36 GALVANIZED STEEL.

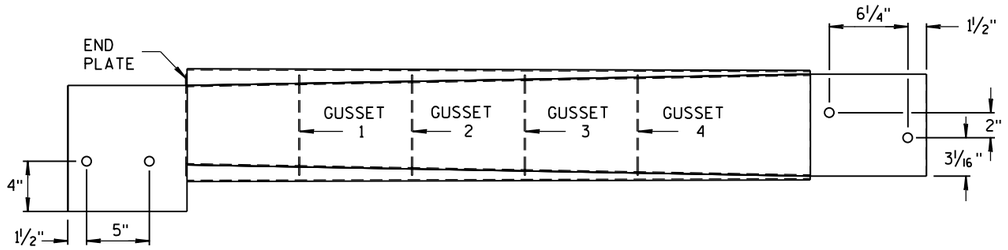

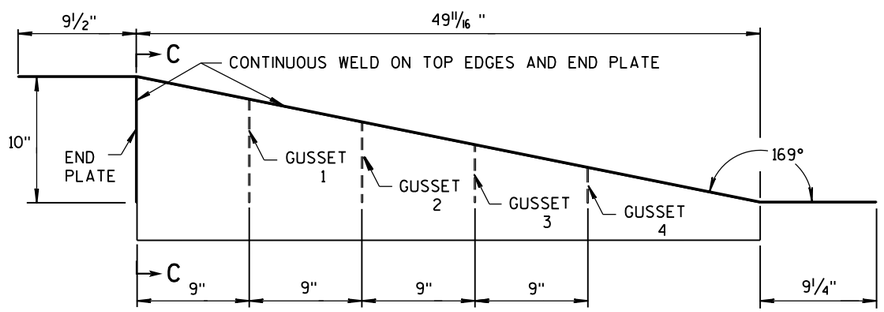

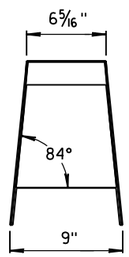

SECTION C-C

NOTES

1. FOUR GUSSETS AND END PLATE ARE STITCH WELDED ON THREE SIDES.
2. TWO TRIANGULAR SIDE PLATES ARE STITCH WELDED TO TOP PLATE, END PLATE, AND GUSSETS.

CAP DETAILS FOR TEMPORARY CONCRETE BARRIER TO 42" PERMANENT CONCRETE BARRIER

CONCRETE BARRIER
TEMPORARY PRECAST, 12'-6"

STATE OF WISCONSIN
DEPARTMENT OF TRANSPOI

6
S.D.D. 14 B 7-15g

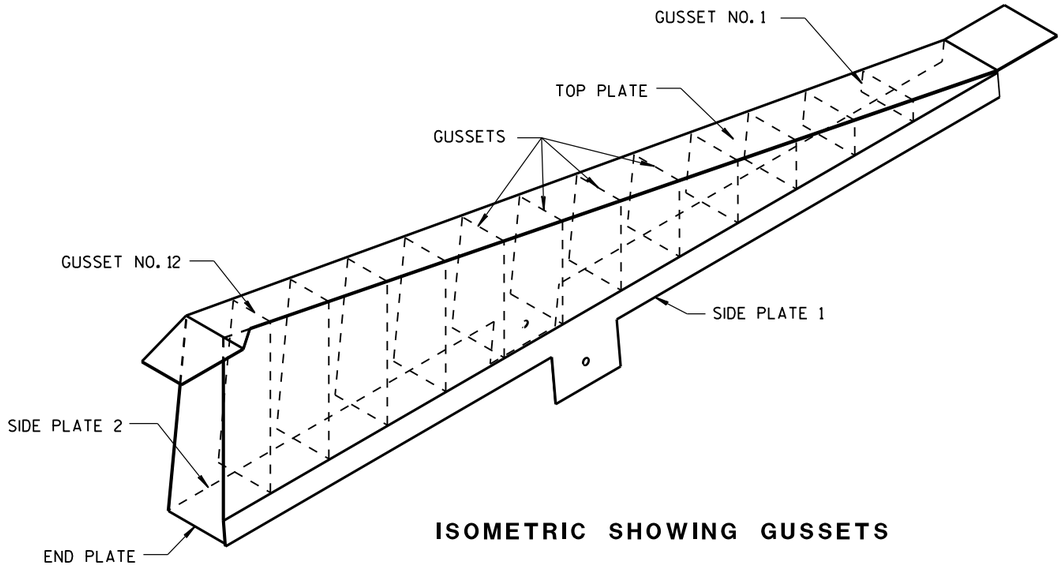

ISOMETRIC SHOWING GUSSETS

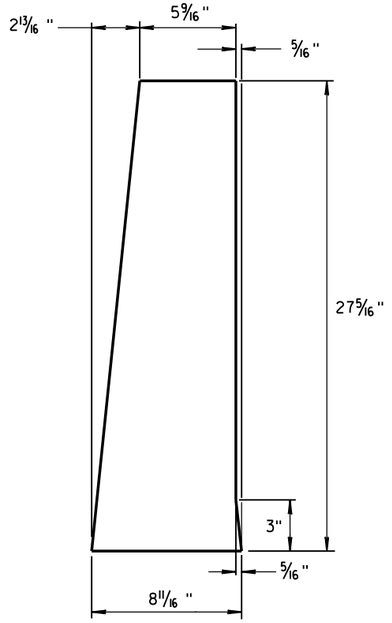

END PLATE

1/8" STEEL PLATE

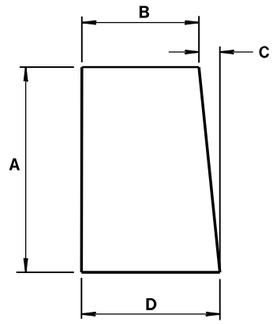

GUSSETS 1 - 12

ALL GUSSETS 1/8" STEEL PLATE

GUSSET DIMENSIONS				
GUSSET NO.	A	B	C	D
1	2 7/8"	7 3/4"	1/4"	8
2	4 11/16 "	7 9/16 "	1/2"	8
3	6 1/2"	7 3/8"	11/16 "	8 1/16 "
4	8 5/16 "	7 3/16 "	7/8"	8 1/16 "
5	10 1/8"	7"	1 1/16 "	8 1/16 "
6	11 15/16 "	6 13/16 "	1 1/4"	8 1/16 "
7	13 3/4"	6 5/8"	1 7/16 "	8 1/16 "
8	15 9/16 "	6 7/16 "	1 9/16 "	8 1/16 "
9	17 3/8"	6 1/4"	1 13/16 "	8 1/16 "
10	19 3/16 "	6 1/16 "	1 15/16 "	8 1/16 "
11	21"	5 7/8"	2 3/16 "	8 1/16 "
12	22 13/16 "	5 11/16 "	2 5/16 "	8 1/16 "

SIDE PLATES, TOP PLATE, END PLATE AND GUSSETS ARE 12 GAUGE ASTM A36 STEEL AND GALVANIZED.

GUSSETS AND END PLATE ARE STITCH WELDED ON 3 SIDES. TWO TRIANGULAR SIDE PLATES ARE STITCH WELDED TO TOP PLATE, END PLATE AND GUSSETS.

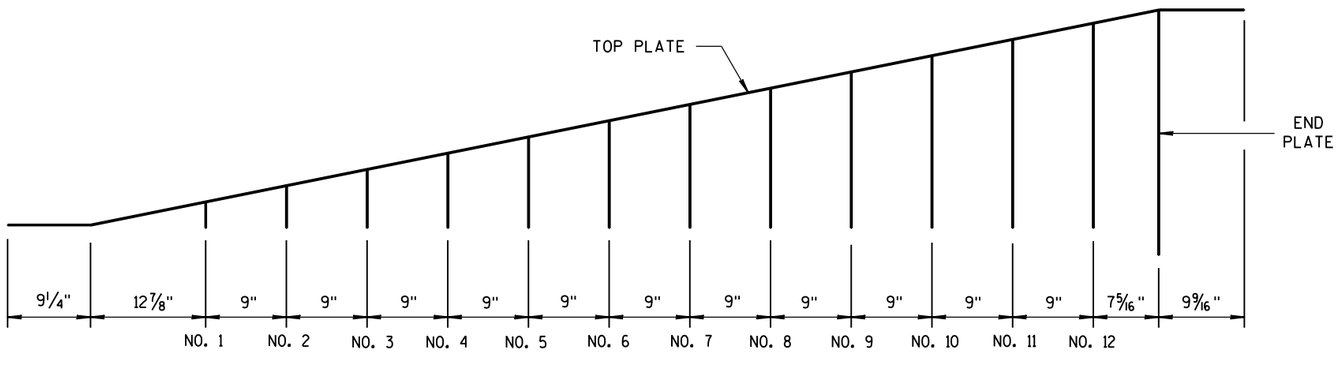

GUSSET LOCATION

CAP DETAILS FOR TEMPORARY CONCRETE BARRIER TO 56" PERMANENT CONCRETE BARRIER

CONCRETE BARRIER
TEMPORARY PRECAST, 12'-6"

STATE OF WISCONSIN
DEPARTMENT OF TRANSPOI

6
S.D.D. 14 B 7-15h

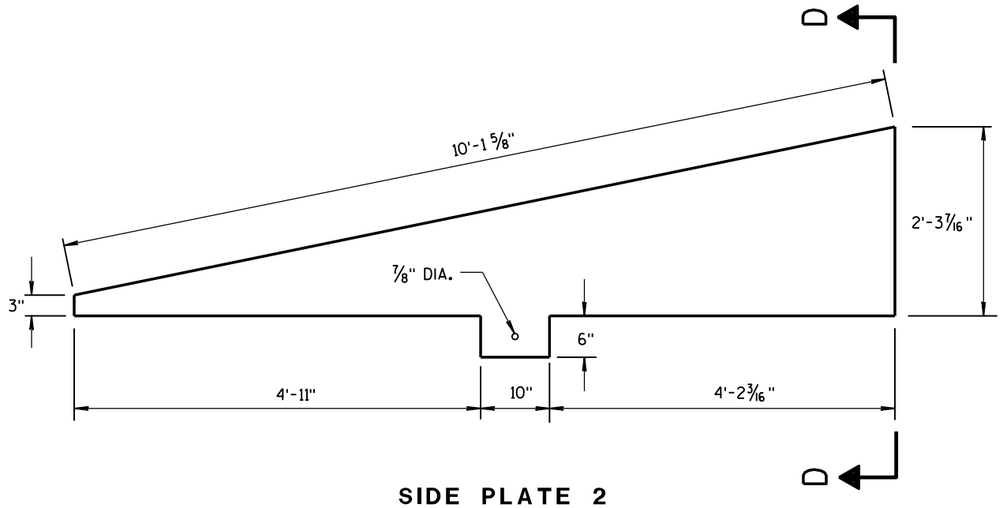

SIDE PLATE 2

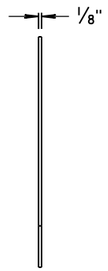

END VIEW

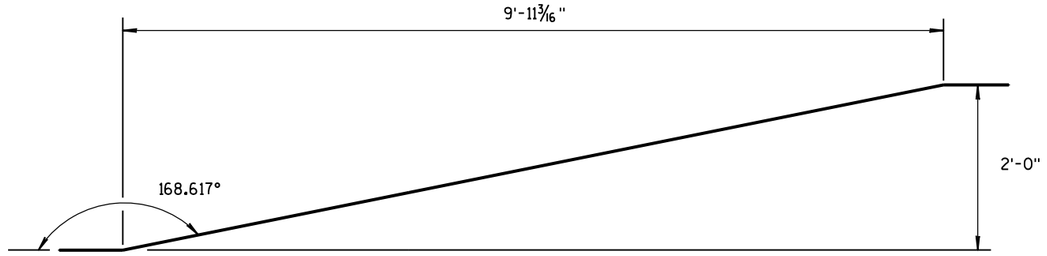

SIDE VIEW

TOP PLATE

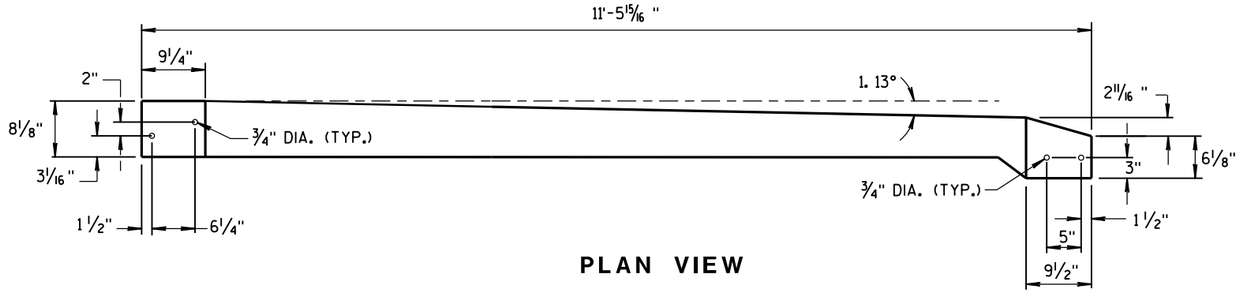

PLAN VIEW

TOP PLATE

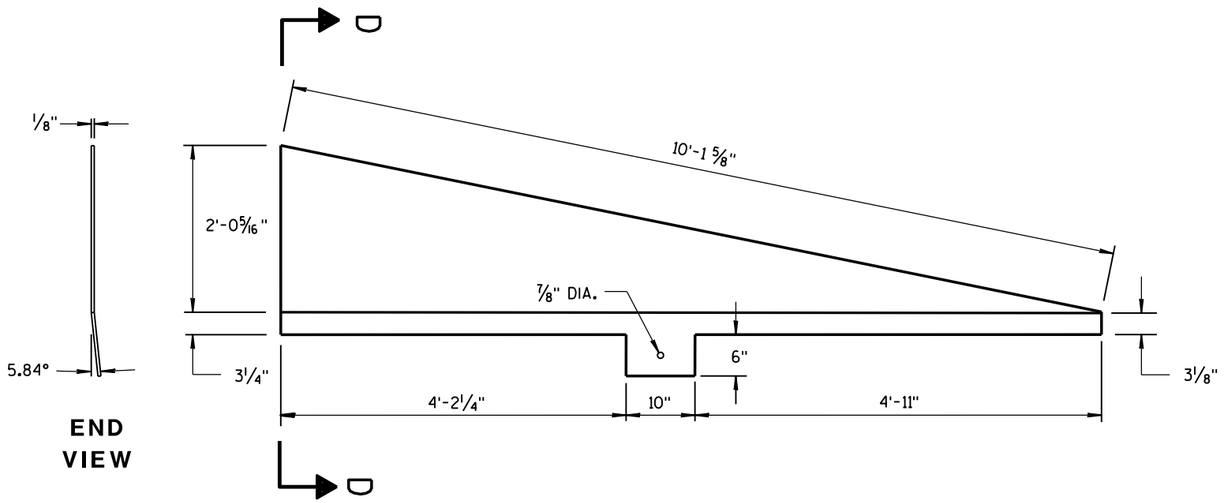

END VIEW

SIDE PLATE 1

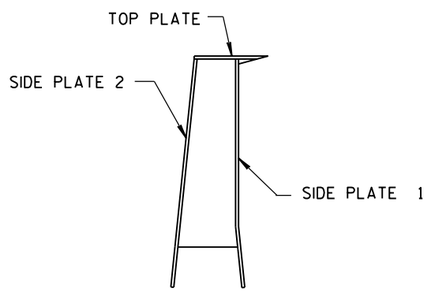

SECTION D-D

CAP DETAILS FOR TEMPORARY CONCRETE BARRIER TO 56" PERMANENT CONCRETE BARRIER

CONCRETE BARRIER
TEMPORARY PRECAST, 12'-6"

STATE OF WISCONSIN
DEPARTMENT OF TRANSPORTATION

APPROVED
June 2017
DATE

/S/ Rodney Taylor
ROADWAY STANDARDS DEVELOPMENT ENGINEER

FHWA

6

S.D.D. 14 B 7-15i

6

S.D.D. 14 B 7-15i

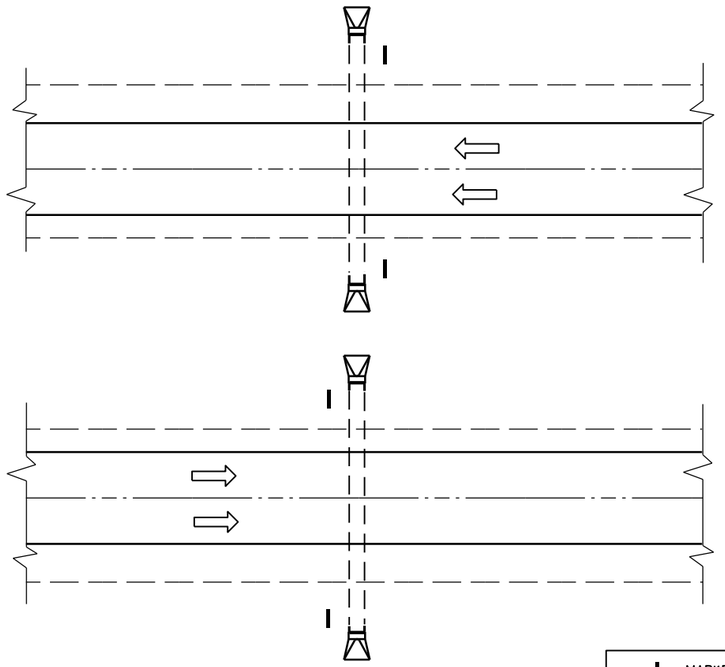

PLAN VIEW

DIVIDED HIGHWAY

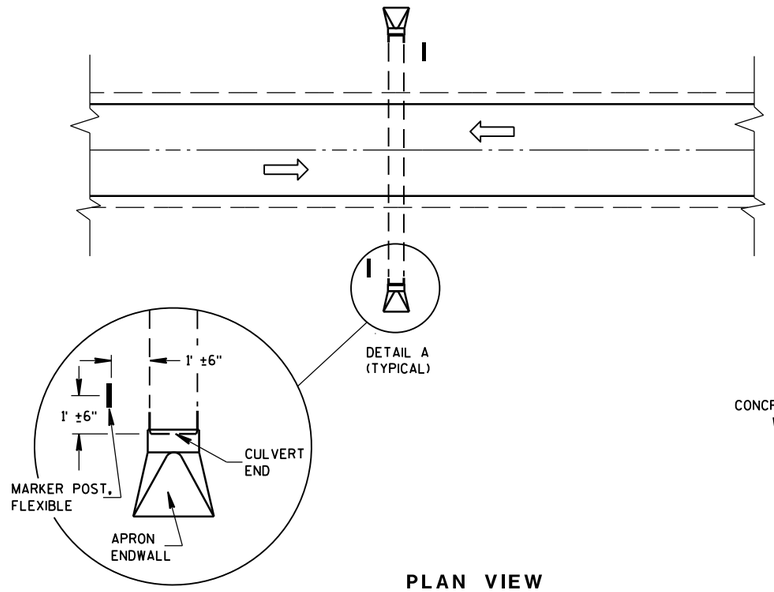

DETAIL A
(TYPICAL)

PLAN VIEW

UNDIVIDED HIGHWAY

MARKER POST, FLEXIBLE

DIRECTION OF TRAFFIC FLOW

GENERAL NOTES

DETAILS OF CONSTRUCTION, MATERIALS AND WORKMANSHIP NOT SHOWN ON THIS DRAWING SHALL CONFORM TO THE PERTINENT REQUIREMENTS OF THE STANDARD SPECIFICATIONS AND THE APPLICABLE SPECIAL PROVISIONS.

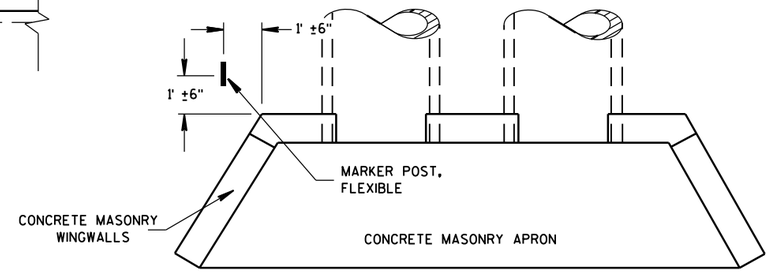

PLAN VIEW

CONCRETE MASONRY ENDWALLS FOR CULVERT PIPE AND PIPE ARCH

FLEXIBLE MARKER POST LOCATION

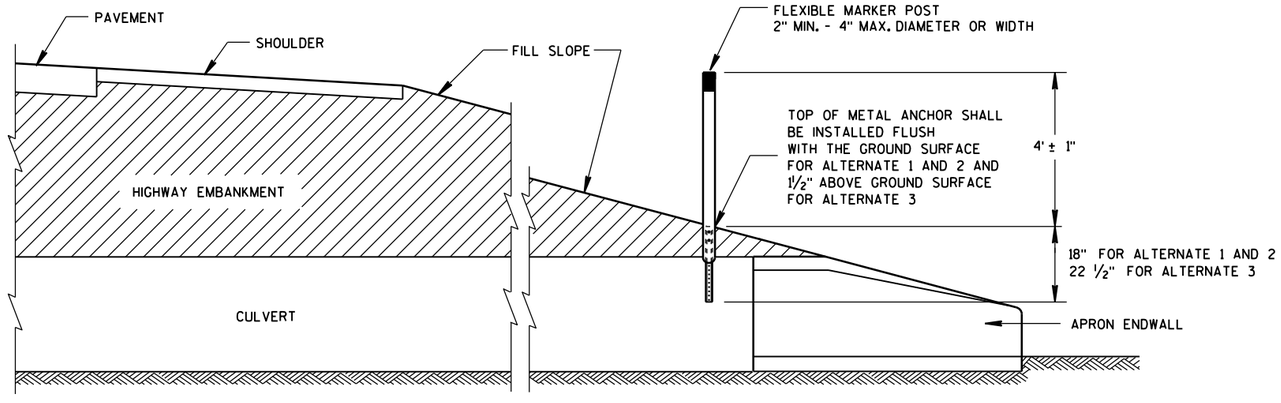

CROSS SECTION

FLEXIBLE MARKER POST

FLEXIBLE MARKER POST FOR CULVERT END

STATE OF WISCONSIN
DEPARTMENT OF TRANSPOI

6

S.D.D. 15 A 3-2a

6

S.D.D. 15 A 3-2a

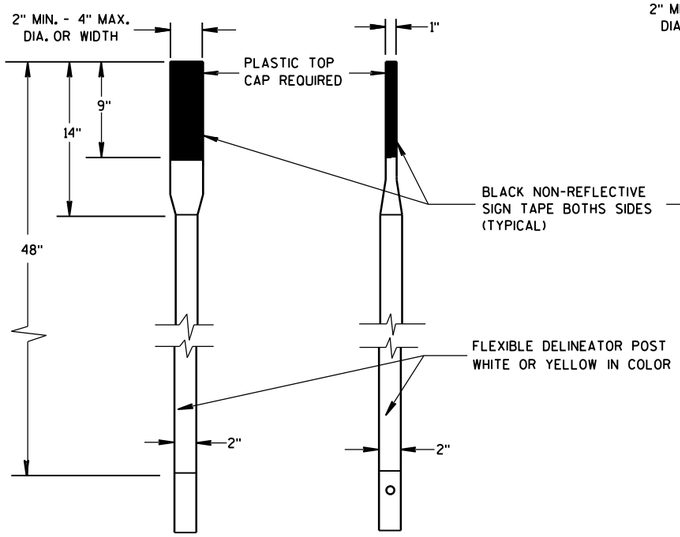

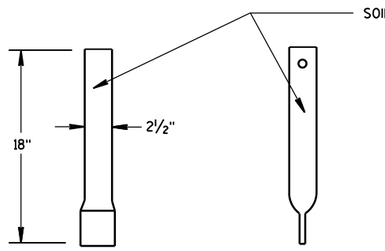

FRONT VIEW SIDE VIEW

ALTERNATE 1

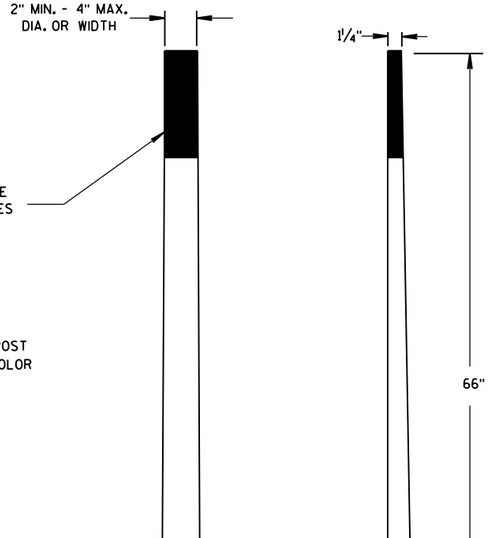

FRONT VIEW SIDE VIEW

ALTERNATE 2

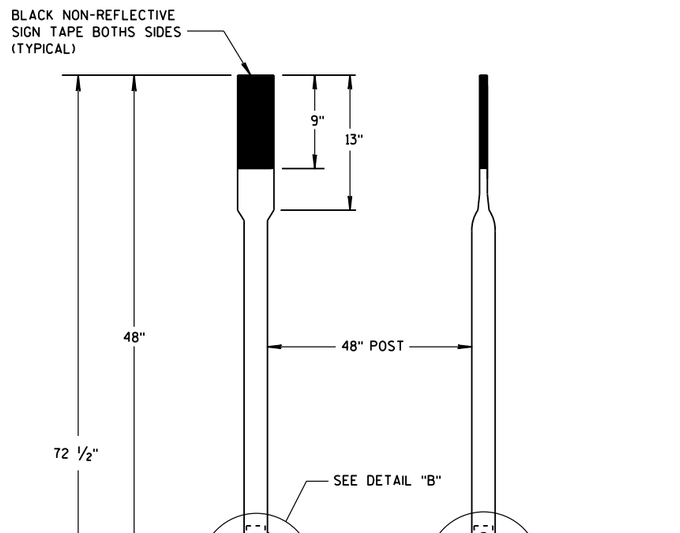

FRONT VIEW SIDE VIEW

ALTERNATE 3

FLEXIBLE MARKER POSTS

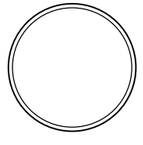

SECTION A-A

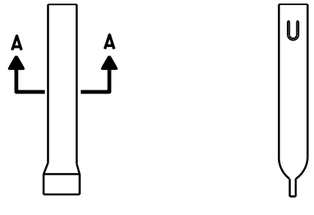

FRONT VIEW SIDE VIEW

ALTERNATE 1

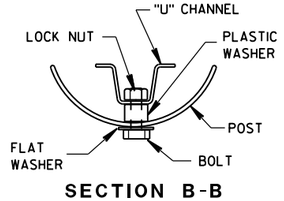

SECTION B-B

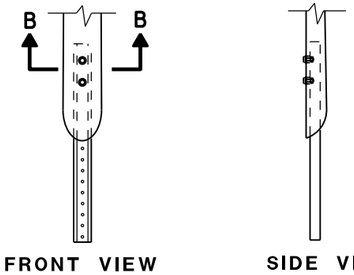

FRONT VIEW SIDE VIEW

ALTERNATE 2

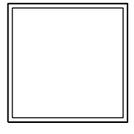

SECTION C-C

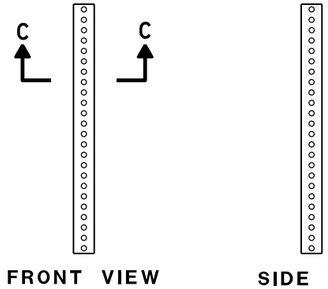

FRONT VIEW SIDE VIEW

ALTERNATE 3

FLEXIBLE MARKER POST ANCHORS

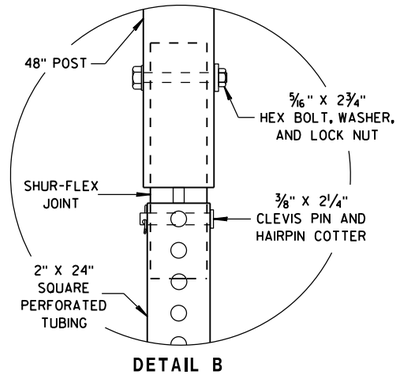

DETAIL B

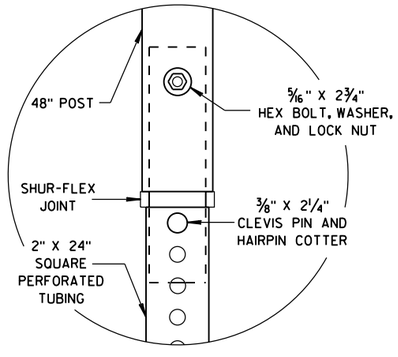

DETAIL C

FLEXIBLE MARKER POST
FOR CULVERT END

STATE OF WISCONSIN
DEPARTMENT OF TRANSPORTATION

APPROVED
10/1/2012 — DATE
/S/ Travis Feltes — STATE TRAFFIC ENGINEER
FHWA

6

S.D.D. 15 A 3-2b

6

S.D.D. 15 A 3-2b

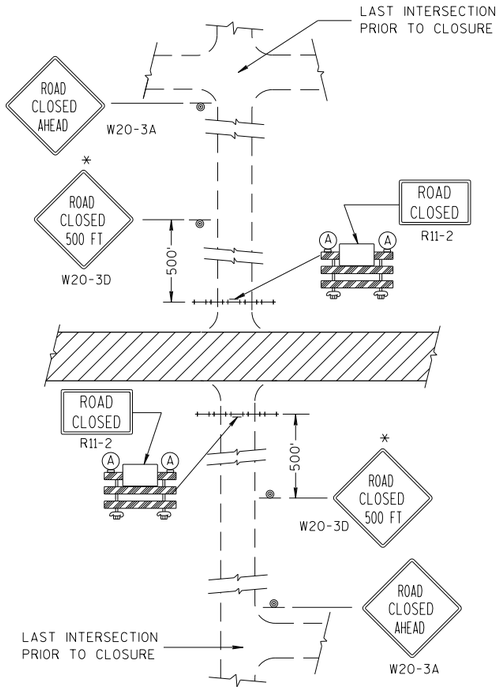

DETAIL 1

(NO ACCESS TO PROJECT)

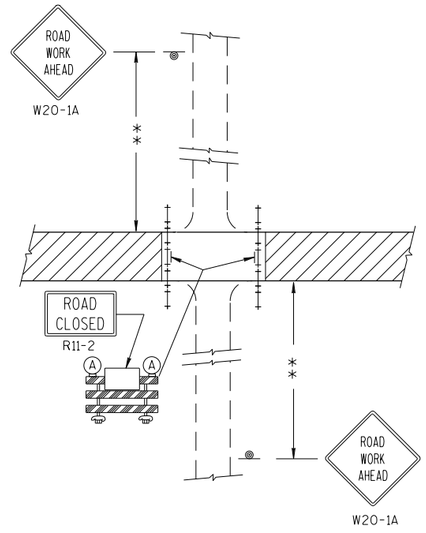

DETAIL 2

(PUBLIC CROSS-TRAFFIC MAINTAINED.
NO ACCESS TO PROJECT).

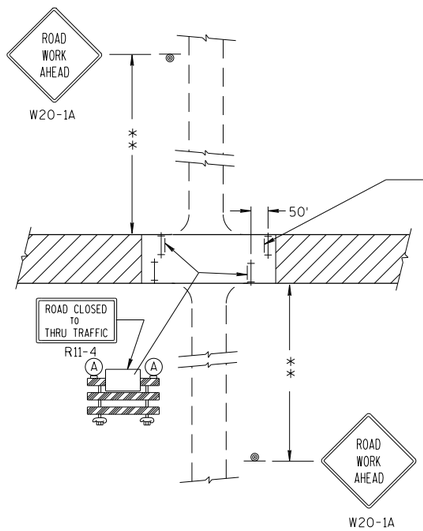

DETAIL 3

(PUBLIC CROSS-TRAFFIC MAINTAINED. CONTRACTOR,
LOCAL BUSINESS AND RESIDENT ACCESS).

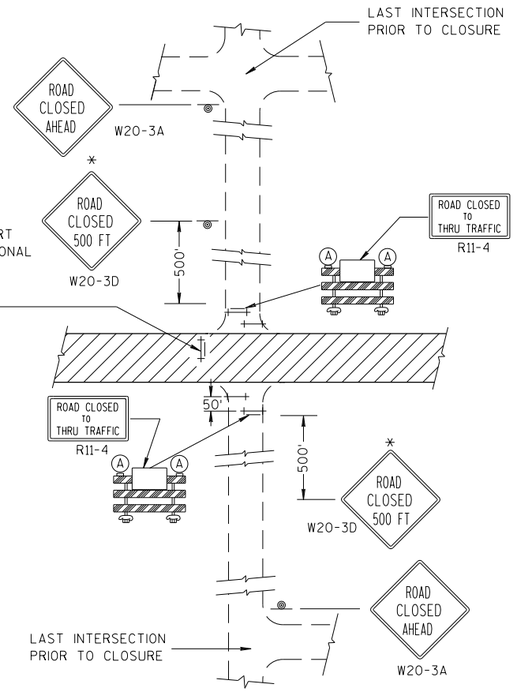

DETAIL 4

(CONTRACTOR, LOCAL BUSINESS AND
RESIDENT ACCESS TO PROJECT)

GENERAL NOTES

THE EXACT NUMBER, LOCATION, AND SPACING OF ALL SIGNS AND BARRICADES SHALL BE ADJUSTED TO FIT FIELD CONDITIONS AS APPROVED BY THE ENGINEER.

ANY SIGNS TEMPORARY OR EXISTING, WHICH CONFLICT WITH TRAFFIC CONTROL "IN USE" SHALL BE REMOVED OR COVERED AS NEEDED AND AS APPROVED BY THE ENGINEER.

THE SPACING BETWEEN TRAFFIC CONTROL SIGNS SHOULD BE ADJUSTED TO NOT CONFLICT WITH AND SHOULD PROVIDE A DESIRABLE MINIMUM OF 200 FEET CLEARANCE TO EXISTING SIGNS THAT WILL REMAIN IN PLACE.

IF A "STOP" SIGN MUST BE REMOVED FOR A WORK OPERATION, A TEMPORARY "STOP" SIGN SHALL BE PLACED PRIOR TO THE SIGN REMOVAL, OR A FLAGGER SHALL BE PROVIDED UNTIL THE SIGN IS RE-ESTABLISHED.

BARRICADES THAT MUST BE MOVED FOR A WORK OPERATION SHALL BE IMMEDIATELY RE-ESTABLISHED UPON COMPLETION OF THE OPERATION OR, FOR CONTINUING OPERATIONS, AT THE END OF EACH WORKING DAY.

SIGNS THAT WILL BE IN PLACE LESS THAN 7 CONTINUOUS DAYS AND NIGHTS MAY BE MOUNTED ON PORTABLE SUPPORTS.

ALL TYPE III BARRICADES SHALL HAVE RAILS REFLECTORIZED ON BOTH FACES. STRIPES SHALL BE PROPERLY SLOPED DOWN TOWARD THE TRAFFIC SIDE OR AS SHOWN IN THE ROAD CLOSURE BARRICADE DETAIL D FOR FULL ROAD CLOSURES.

TYPE "A" LOW-INTENSITY FLASHING WARNING LIGHTS SHALL BE VISIBLE ON BOTH SIDES OF THE BARRICADE.

THE R11-2, R11-3 AND R11-4 SIGNS PLACED ON BARRICADES SHALL COVER NO MORE THAN THE TOP RAIL. THE SIGNS SHALL NOT COVER ANY PORTION OF THE MIDDLE OR BOTTOM RAILS.

ALL SIGNS SHALL BE 48" X 48" UNLESS OTHERWISE NOTED BELOW:
R11-2 SHALL BE 48" X 30".
R11-4 AND R11-3 SHALL BE 60" X 30".

*OMIT THE "ROAD CLOSED 500 FT." SIGN IF THE LAST INTERSECTION IS 500 FT. OR LESS FROM THE WORK ZONE.

**500' MAX. OR AT LAST INTERSECTION WHICHEVER IS CLOSER.

LEGEND

- SIGN ON PERMANENT SUPPORT
- TYPE III BARRICADE
- TYPE III BARRICADE WITH ATTACHED SIGN
- (A) TYPE "A" WARNING LIGHT (FLASHING)
- WORK AREA

BARRICADES AND SIGNS FOR SIDEROAD CLOSURES

STATE OF WISCONSIN
DEPARTMENT OF TRANSPORTATION

APPROVED
7/2018 — DATE
/S/ Andrew Heidtke — WORK ZONE ENGI
FHWA

6

S.D.D. 15 C 3-5

6

S.D.D. 15 C 3-5

GENERAL NOTES

DETAILS OF INSTALLATION, MATERIALS AND WORKMANSHIP NOT SHOWN ON THIS DRAWING SHALL CONFORM TO THE PERTINENT REQUIREMENTS OF THE STANDARD SPECIFICATIONS AND APPLICABLE SPECIAL PROVISIONS.

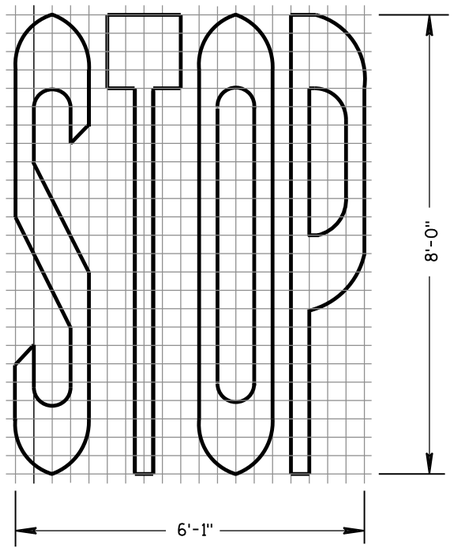

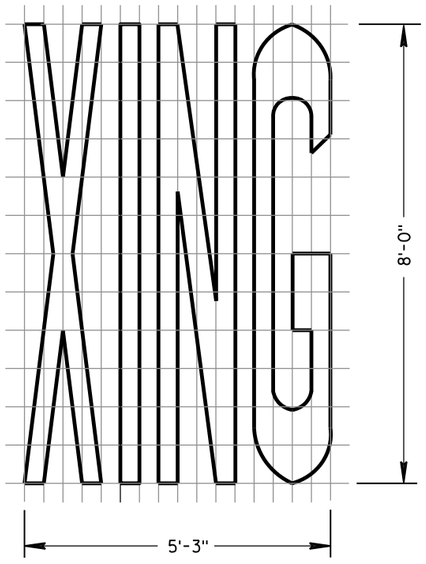

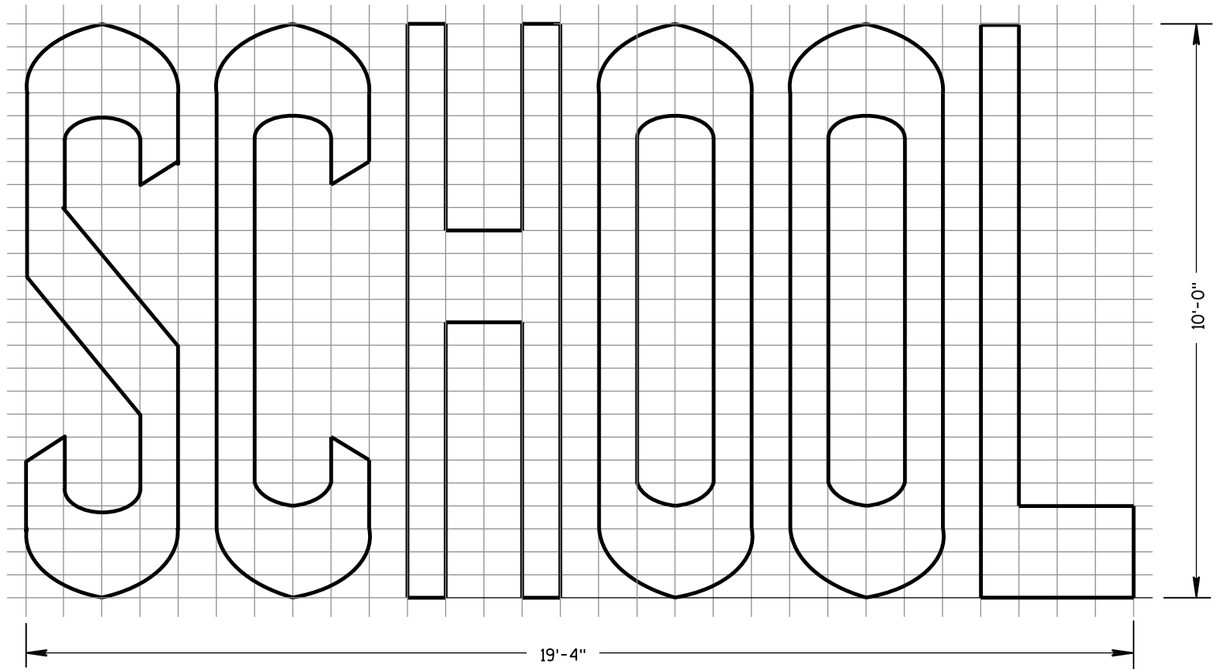

TWO-LANE

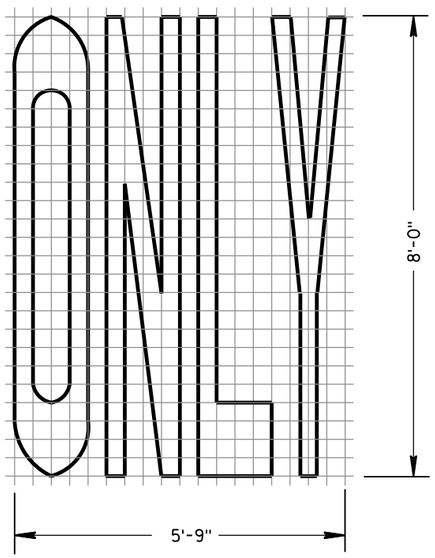

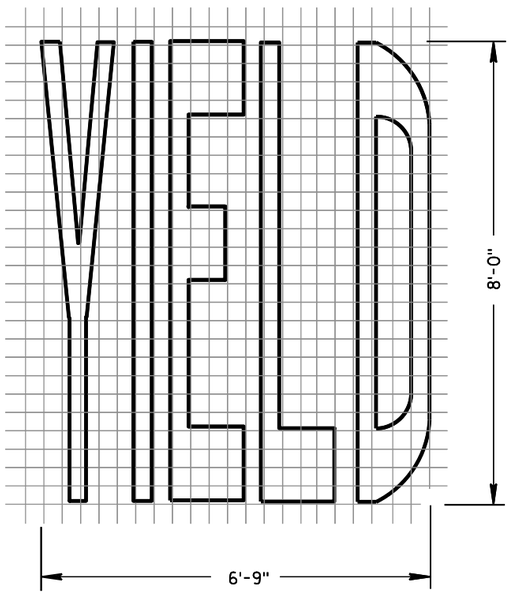

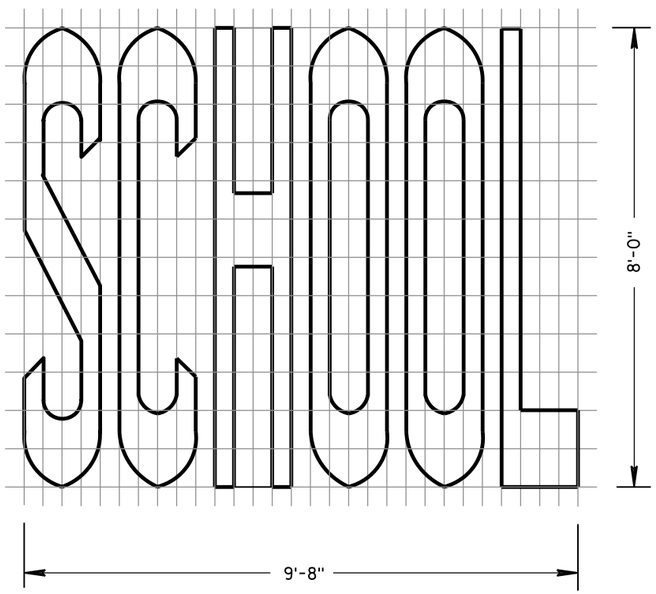

SINGLE-LANE

PAVEMENT MARKING WORDS

STATE OF WISCONSIN
DEPARTMENT OF TRANSPORTATION

APPROVED
June 2017 — DATE
/S/ Matthew R. Rauch — STATE SIGNING AND MARK
EER
FHWA

6

S.D.D. 15 C 7-14b

6

S.D.D. 15 C 7-14b

GENERAL NOTES

DETAILS OF INSTALLATION, MATERIALS AND WORKMANSHIP NOT SHOWN ON THIS DRAWING SHALL CONFORM TO THE PERTINENT REQUIREMENTS OF THE STANDARD SPECIFICATIONS AND APPLICABLE SPECIAL PROVISIONS.

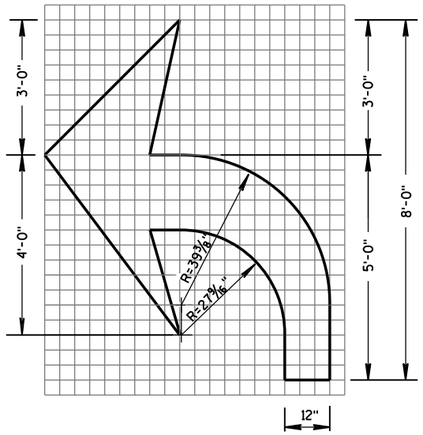

TYPE 2

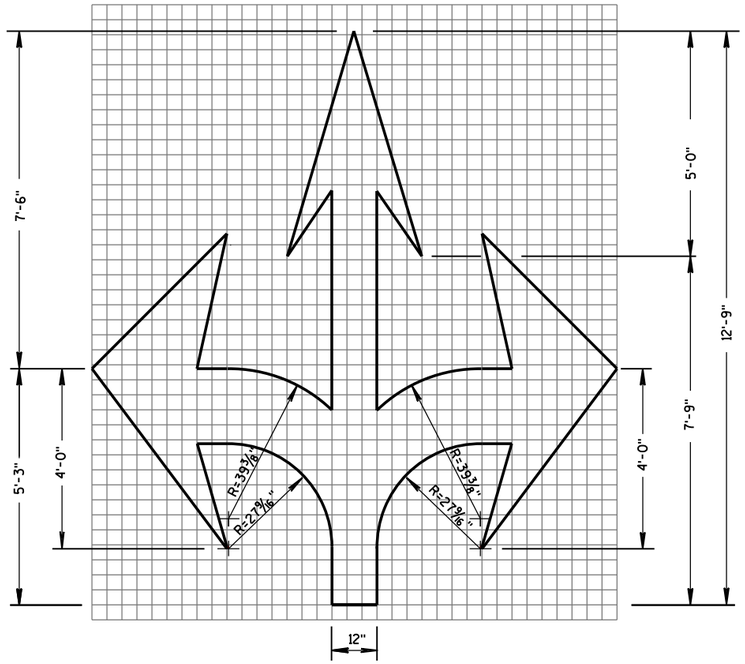

TYPE 6

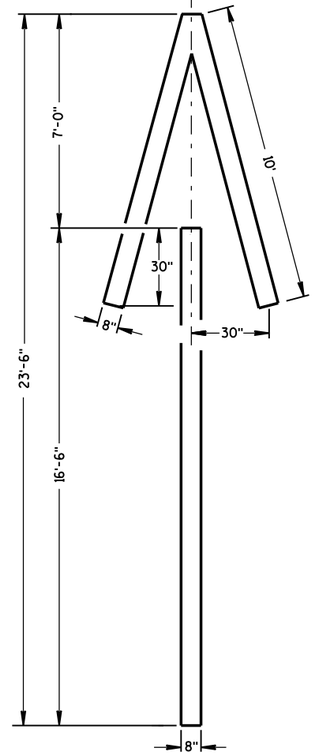

TYPE 4

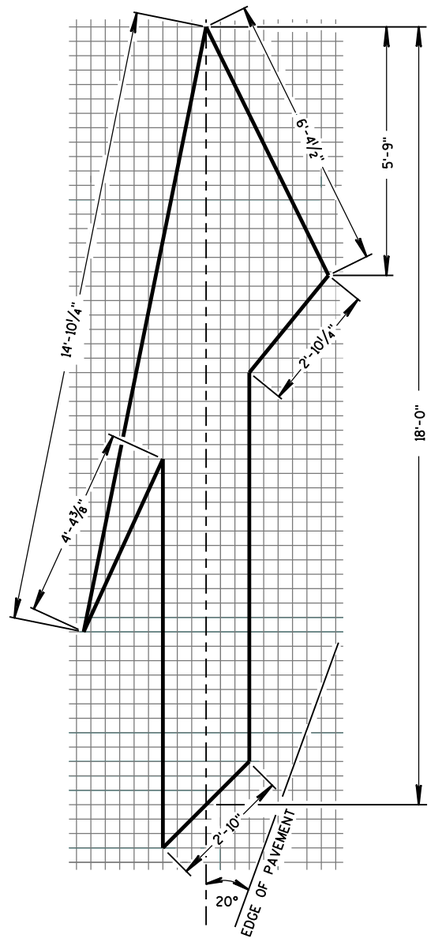

TYPE 5 LANE DROP ARROW

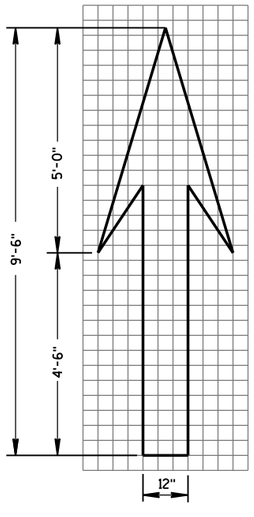

TYPE 1

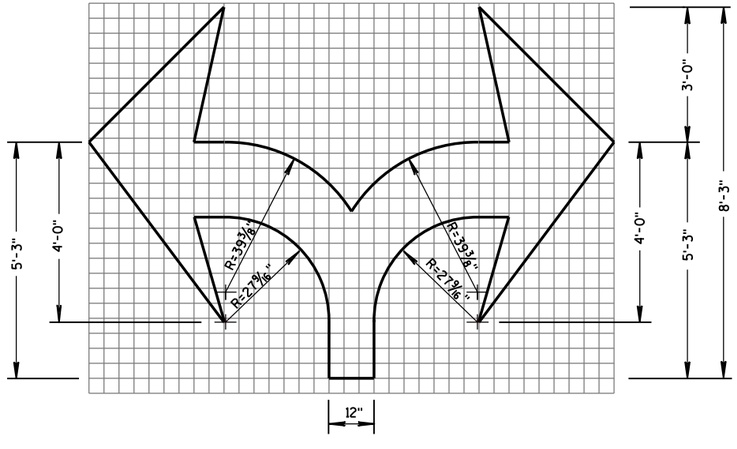

TYPE 7

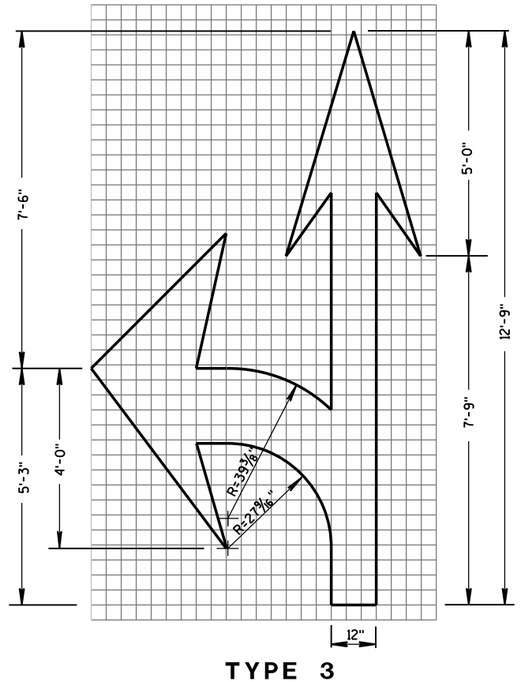

TYPE 3

PAVEMENT MARKING ARROWS

STATE OF WISCONSIN
DEPARTMENT OF TRANSPORTATION

APPROVED
June 2017 — DATE
/S/ Matthew R. Rauch — STATE SIGNING AND MAR[illegible]NEER
FHWA

6

S.D.D. 15 C 7-14c

6

S.D.D. 15 C 7-14c

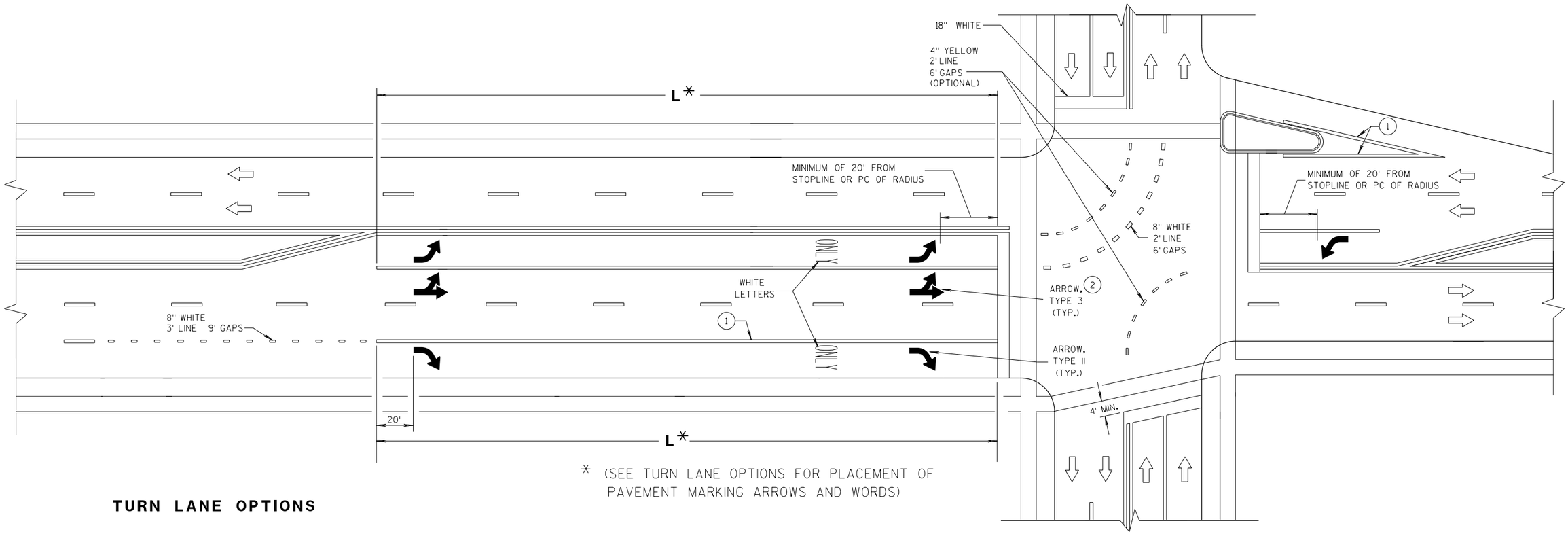

* (SEE TURN LANE OPTIONS FOR PLACEMENT OF PAVEMENT MARKING ARROWS AND WORDS)

TURN LANE OPTIONS

LENGTH OF TURN BAY (**L**) OF 0-47' DOES NOT REQUIRE PAVEMENT MARKING ARROWS OR WORDS

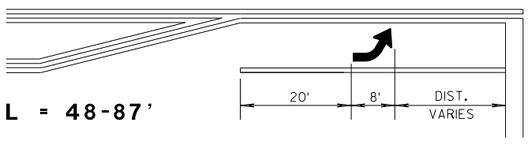

L = 48-87'

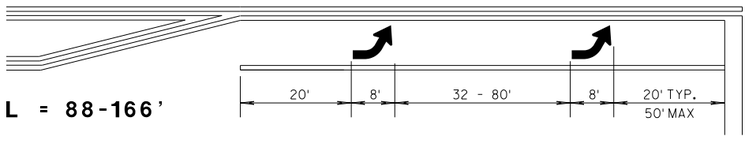

L = 88-166'

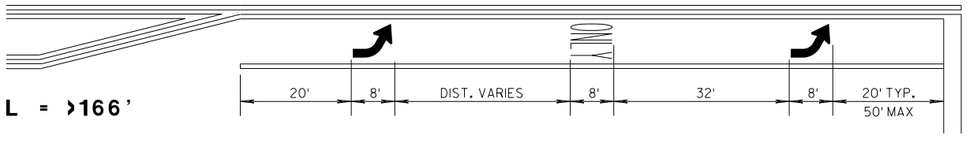

L = >166'

GENERAL NOTES

(1) 8" WHITE

(2) QUANTITY AND LOCATION OF TYPE 3 ARROW ARE THE SAME AS THE TYPE II ARROWS IN THE ADJACENT TURN LANE. FOR TURN LANES WITH A PHYSICAL SEPARATION, THE ARROWS AND ONLY MARKING ARE ELIMINATED.

⇨ DIRECTION OF TRAFFIC

L = LENGTH OF TURN BAY

PAVEMENT MARKING (TURN LANES)

GENERAL NOTES

1. REFLECTIVE SHEETING SHALL FOLLOW THE REQUIREMENTS IN THE APPROVED PRODUCTS LISTING FOR SIGN SHEETING.
2. LOCATION OF WARNING LIGHTS WHEN SHOWN ON THE PLAN.

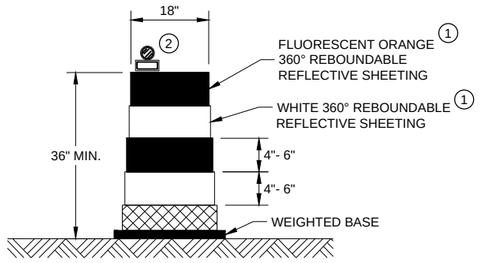

DRUM

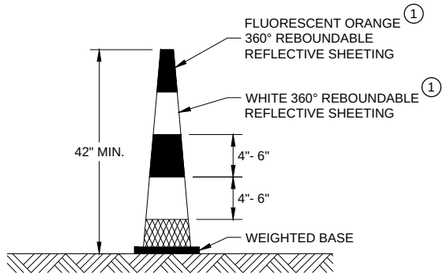

42" CONE

DO NOT USE IN TAPERS
½ SPACING OF DRUMS

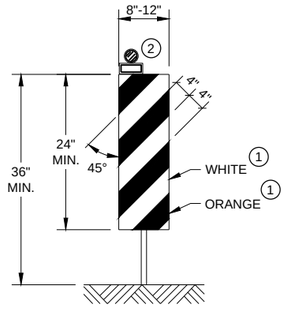

VERTICAL PANEL

THE STRIPES SHALL SLOPE DOWNWARD TO
THE TRAFFIC SIDE FOR CHANNELIZATION.

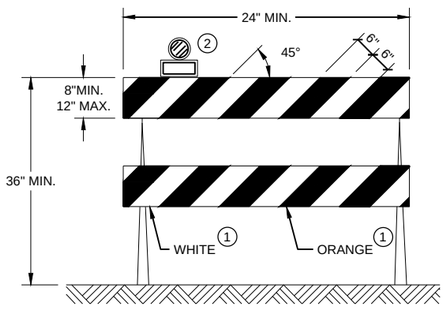

TYPE II BARRICADE

FOR RAILS LESS THAN 36" LONG, 4" WIDE STRIPES MAY BE USED. ALL STRIPES SHALL SLOPE DOWNWARD TO THE TRAFFIC SIDE FOR CHANNELIZATION.

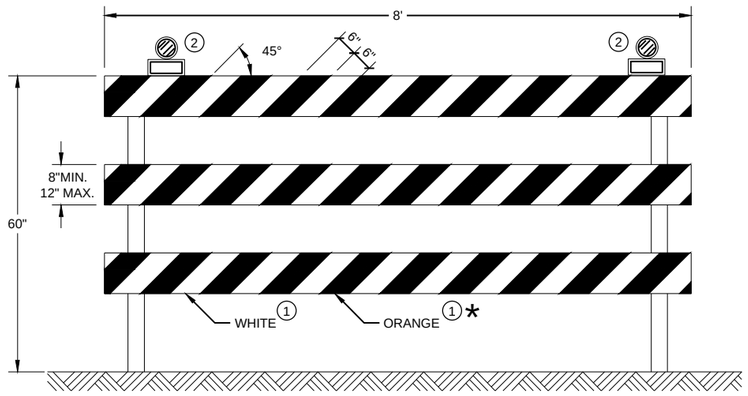

TYPE III BARRICADE

IF SIGN MOUNTED, DO NOT COVER MORE THAN 50% OF THE TOP TWO RAILS OR 33% OF THE TOTAL AREA OF THE THREE RAILS.

* IF USED FOR A PERMANENT APPLICATION USE RED SHEETING.

CHANNELIZING DEVICES
DRUMS, CONES, BARRICADES
AND VERTICAL PANELS

STATE OF WISCONSIN
DEPARTMENT OF TRANSPORTATION

APPROVED
June 2017
DATE

/S/ Andrew Heidtke
WORK ZONE ENGINEE

FHWA

6

SDD 15C11 - 07b

6

SDD 15C11 - 07b

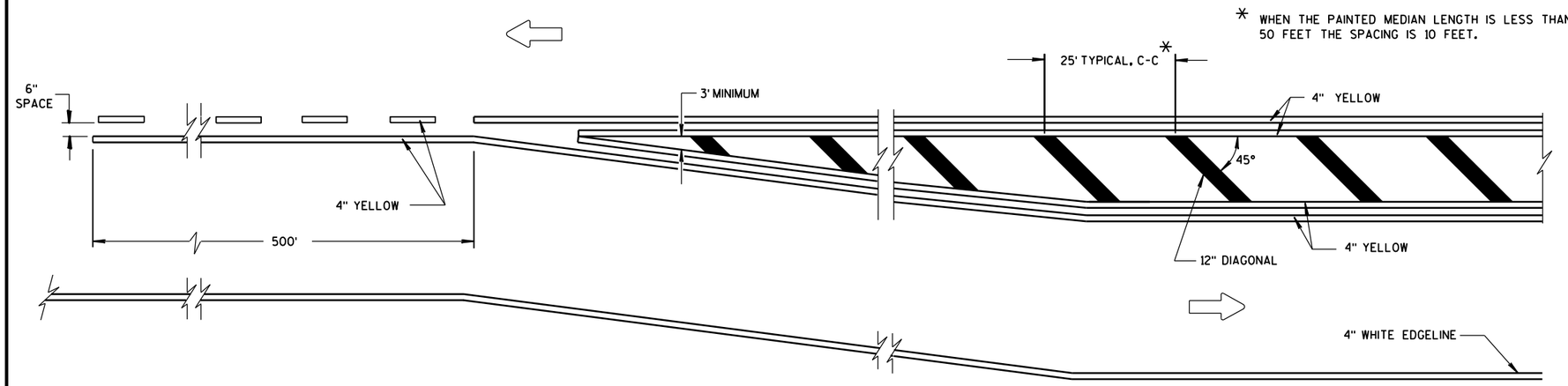

MEDIAN ISLAND DETAIL

GENERAL NOTE

DIAGONALS ARE OPTIONAL WHEN PAINTED ISLAND IS LESS THAN 6 FEET AT WIDEST POINT.

DIRECTION OF TRAVEL

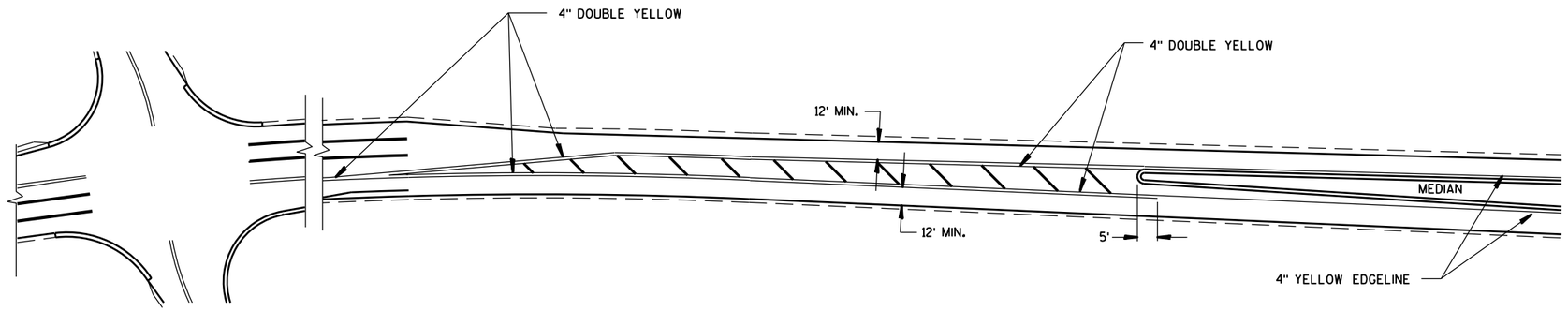

APPROACH MARKINGS FOR OTHER MEDIAN TYPES

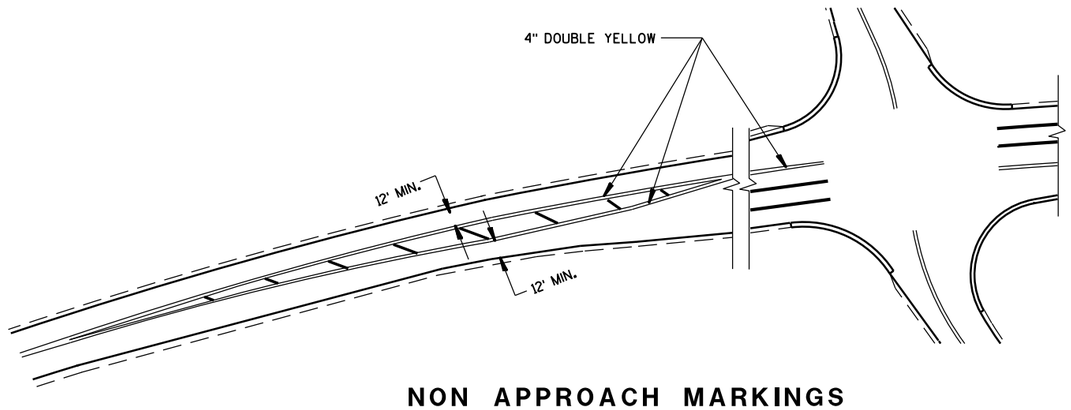

NON APPROACH MARKINGS

MEDIAN ISLAND MARKING	
STATE OF WISCONSIN DEPARTMENT OF TRANSPORTATION	
APPROVED June 2017 DATE	/S/ Matthew Rauch STATE SIGNING AND MARK EER
FHWA	

6

S.D.D. 15 C 18-4

6

S.D.D. 15 C 18-4

REQUIREMENTS FOR EDGE LINES		
POSTED SPEED	IS THERE CONTINUOUS LIGHTING?	
	YES	NO
≤ 30 MPH	NO	OPTIONAL
35 OR 40 MPH	OPTIONAL	RECOMMENDED
≥ 45 MPH	RECOMMENDED	REQUIRED

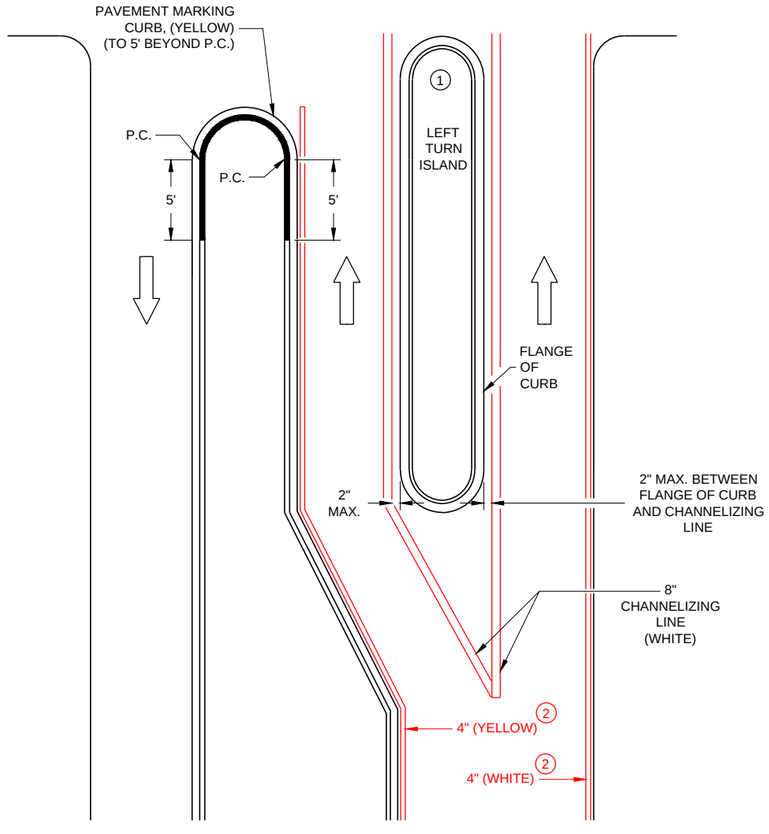

LEFT TURN & MEDIAN ISLAND

GENERAL NOTES

APPLIES TO ISLANDS AT LEFT TURNS AT ONE WAY ROADWAYS AS WELL.

SEE MISCELLANEOUS QUANTITIES FOR SIGN SIZE.

1. MARK CURB NOSES YELLOW.
2. MARK ACCORDING TO TABLE.

DIRECTION OF TRAVEL

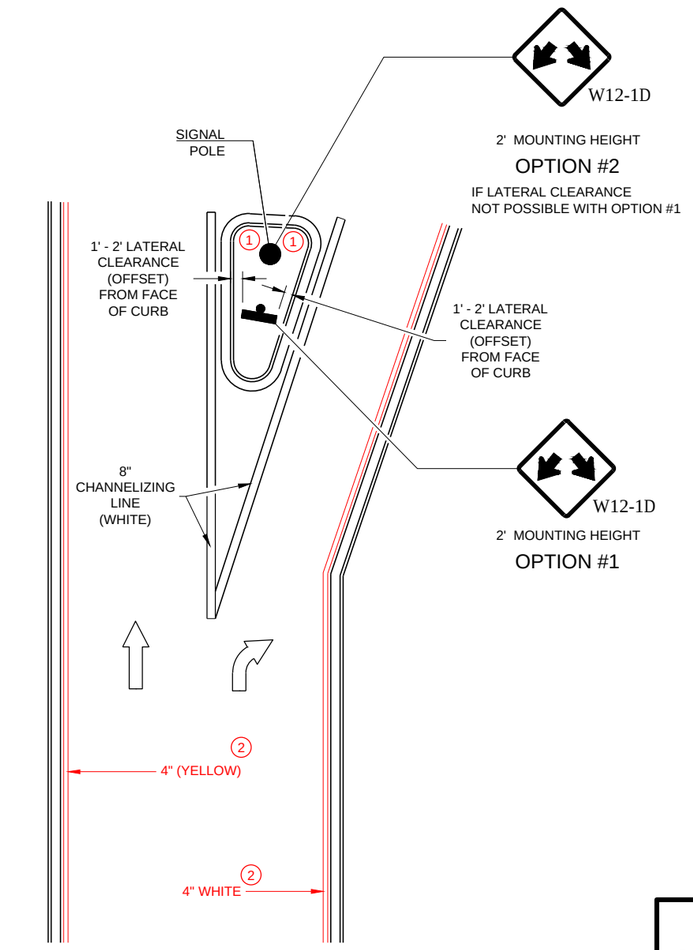

RIGHT TURN ISLAND

DOUBLE ARROW
WARNING SIGN PLACEMENT

STATE OF WISCONSIN
DEPARTMENT OF TRANSPORTATION

APPROVED
7/2018
DATE
/S/ Matthew R. Rauch
STATE SIGNING AND MAF ENGINEER

FHWA

6

SDD 15C27 - 03a

6

SDD 15C27 - 03a

GENERAL NOTES

THIS LANE CLOSURE IS TYPICAL FOR CLOSING RIGHT LANE - REVERSE FOR CLOSING LEFT LANE

THE EXACT NUMBER, LOCATION, AND SPACING OF ALL SIGNS AND DEVICES SHALL BE ADJUSTED TO FIT FIELD CONDITIONS AS APPROVED BY THE ENGINEER.

THE SPACING BETWEEN SIGNS SHOULD BE ADJUSTED TO NOT CONFLICT WITH AND TO PROVIDE A MINIMUM OF 200 FEET (500 FEET DESIRABLE) CLEARANCE TO EXISTING SIGNS.

ALL SIGNS ARE 48" x 48" UNLESS OTHERWISE NOTED.

"WO" IS THE SAME AS "W" EXCEPT THE BACKGROUND IS ORANGE.

ANY SIGNS TEMPORARY OR EXISTING, WHICH CONFLICT WITH TRAFFIC CONTROL "IN USE" SHALL BE REMOVED OR COVERED AS NEEDED OR AS APPROVED BY THE ENGINEER.

FOR A LANE CLOSURE THAT IS IN PLACE LESS THAN 7 CONTINUOUS DAYS AND NIGHTS, THE ADVANCED WARNING SIGNS MAY BE MOUNTED ON PORTABLE SUPPORTS.

REMOVE PAVEMENT MARKINGS IF LANE CLOSURE IS TO BE IN PLACE 4 OR MORE CONTINUOUS DAYS AND NIGHTS.

IF THE HORIZONTAL ALIGNMENT IS SUCH THAT A CURVE MAY REQUIRE ADDITIONAL DELINEATION, THE DEVICE SPACING MAY BE DECREASED TO 50 FEET.

ADJUSTMENTS IN BUFFER SPACE NEED TO BE INCORPORATED WHEN THE LANE CLOSURE OCCURS NEAR AN INTERCHANGE EXIT OR ENTRANCE RAMP OR INTERSECTION. THE LANE CLOSURE MUST TAKE PLACE FAR ENOUGH IN ADVANCE OF AN EXIT OR ENTRANCE RAMP TO STILL ALLOW FOR ADEQUATE BUFFER SPACE. THE MINIMUM LENGTH OF THE BUFFER SPACE BEFORE AN EXIT RAMP SHOULD BE ONE HALF THE LENGTH OF THE TRANSITION AREA. THE ENTRANCE RAMP SHOULD BE FOLLOWED BY THE ORIGINAL BUFFER SPACE LENGTH OF 800 FEET DESIRABLE PRIOR TO ANOTHER TRAFFIC CONTROL CHANGE SUCH AS A CROSSOVER MANEUVER.

(1) CONSIDER ROADWAY GEOMETRICS WHEN LOCATING SIGNS AND ARROW BOARD SO THE DRIVER HAS A CLEAR VIEW OF THE ARROW BOARD AND LANE CLOSURE DRUMS.

(2) IF NEEDED. USE ONLY IF DESIGN SPEED IS 10 MPH LESS THAN POSTED SPEED.

LEGEND

- SIGN ON PERMANENT SUPPORT
- TRAFFIC CONTROL DRUM WITH TYPE "C" STEADY BURN LIGHT
- TRAFFIC CONTROL DRUM
- FLASHING ARROW BOARD
- REMOVING PAVEMENT MARKING
- CONCRETE BARRIER TEMPORARY PRECAST
- DIRECTION OF TRAFFIC
- WORK AREA

OR

LOCATED 400 FEET BEYOND THE W20- 5G SIGN.

SEE SDD 15D12b FOR SIGN PLACEMENT.

R2-1
48"X60"

OR

R2-1
48"X60"

(BLACK AND WHITE)

LOCATED 700 FEET BEYOND W03-5 SIGN

IF THE REGULATORY SPEED HAS BEEN REDUCED, A SPEED LIMIT SIGN SHALL BE LOCATED 1500 FEET BEYOND THE END OF THE ACCELERATION LANE OF EACH ENTRANCE RAMP. PLACE A SPEED LIMIT SIGN A MINIMUM OF EVERY 3 MILES.

WO13-1
36"X36"

WO13-1
36"X36"

* INCLUDE RESUME SPEED LIMIT SIGN A MINIMUM OF 200 FEET (500 FEET DESIRABLE) AFTER END ROAD WORK SIGNS.

G20-2A
48"X24"

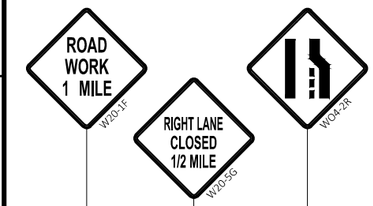

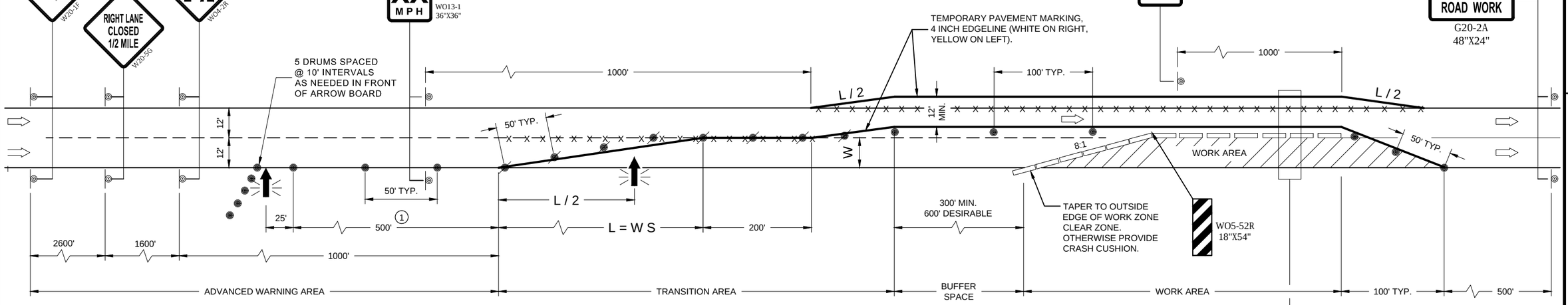

L, TAPER LENGTH (MPH)												
SPEED (MPH)	W, LATERAL OFFSET (FT)											
	1	2	3	4	5	6	7	8	9	10	11	12
45	45	90	135	180	225	270	315	360	405	450	495	540
50	50	100	150	200	250	300	350	400	450	500	550	600
55	55	110	165	220	275	330	385	440	495	550	605	660
60	60	120	180	240	300	360	420	480	540	600	660	720
65	65	130	195	260	325	390	455	520	585	650	715	780
70	70	140	210	280	350	420	490	560	630	700	770	840

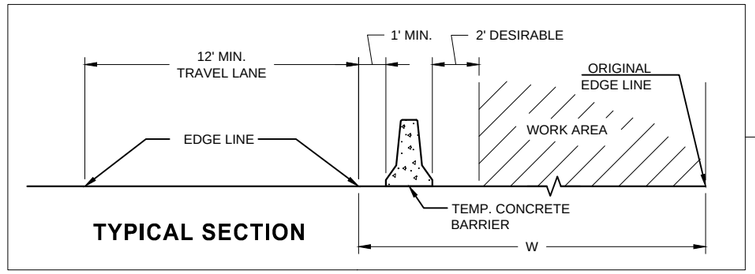

TYPICAL SECTION

TRAFFIC CONTROL LANE CLOSURE, SPEEDS GREATER THAN 40 MPH WITH BARRIER

STATE OF WISCONSIN
DEPARTMENT OF TRANSPORTATION

APPROVED
November 2018 — DATE
/S/ Andrew Heidtke — WORK ZONE ENGINE

FHWA

SDD 15D03-05

SDD 15D03-05

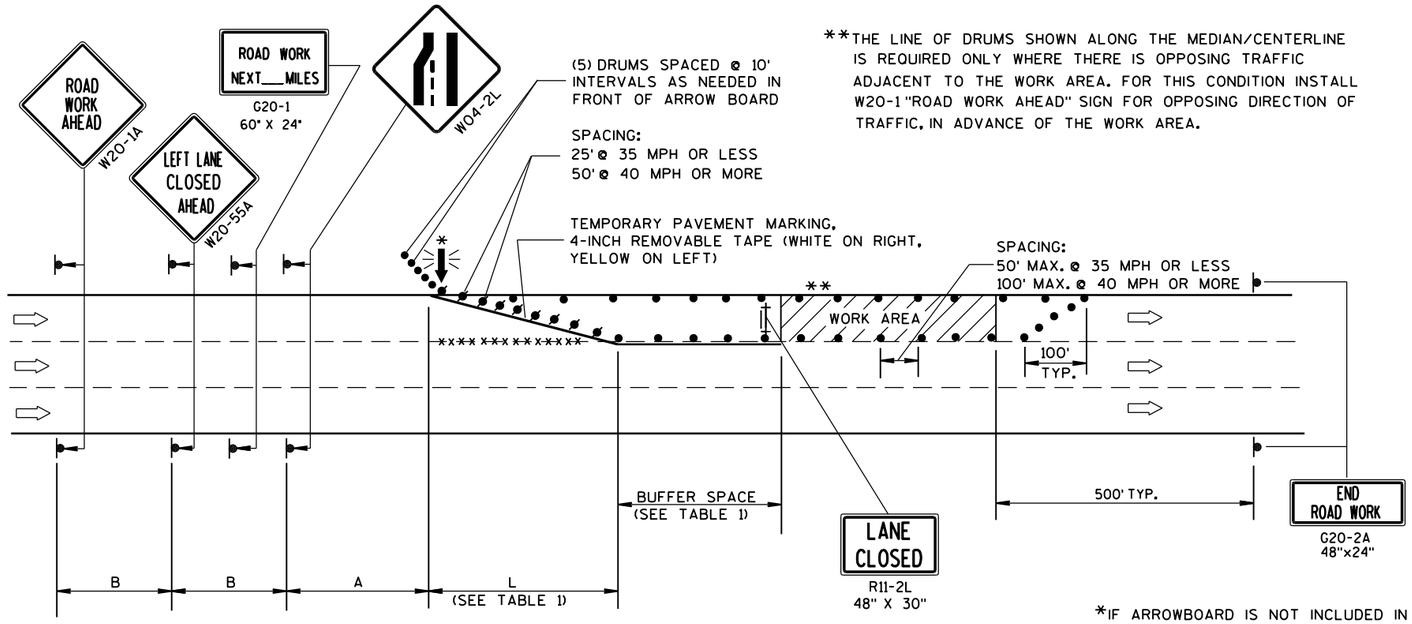

**THE LINE OF DRUMS SHOWN ALONG THE MEDIAN/CENTERLINE IS REQUIRED ONLY WHERE THERE IS OPPOSING TRAFFIC ADJACENT TO THE WORK AREA. FOR THIS CONDITION INSTALL W20-1 "ROAD WORK AHEAD" SIGN FOR OPPOSING DIRECTION OF TRAFFIC, IN ADVANCE OF THE WORK AREA.

B=400' AT 25-30 MPH
700' AT 35-40 MPH
1000' AT 45-55 MPH

A=200' AT 25-30 MPH
350' AT 35-40 MPH
500' AT 45-55 MPH

(PLACE BARRICADE AND SIGN APPROX. EVERY 1000' ACROSS THE CLOSED LANE)

*IF ARROWBOARD IS NOT INCLUDED IN MISCELLANEOUS QUANTITIES, SUBSTITUTE A TYPE III BARRICADE WITH W01-6 SIGN IN THE LANE CLOSURE TAPER.

W01-6
48"x24"

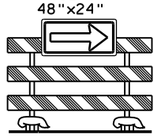

TABLE 1
TAPER AND BUFFER SPACE FOR 12' LANE WIDTH

S	L	BUFFER SPACE
25	125'	55'
30	180'	85'
35	245'	120'
40	320'	170'
45	540'	220'
50	600'	280'
55	660'	335'

FOR LANE WIDTH OTHER THAN 12':

L = WS AT 45 MPH OR GREATER

$L = \frac{WS^2}{60}$ AT 40 MPH OR LESS

L = TAPER LENGTH IN FEET

S = NON-CONSTRUCTION SPEED LIMIT (MPH)

W = WIDTH OF LANE CLOSURE

LEGEND

- TYPE III BARRICADE WITH ATTACHED SIGN
- SIGN ON PERMANENT SUPPORT
- TRAFFIC CONTROL DRUM WITH TYPE "C" STEADY BURN LIGHT
- TRAFFIC CONTROL DRUM
- FLASHING ARROW BOARD
- DIRECTION OF TRAFFIC
- REMOVING PAVEMENT MARKING (SEE GENERAL NOTES)
- WORK AREA

GENERAL NOTES

THIS LANE CLOSURE DETAIL IS TYPICAL FOR CLOSING THE LEFT LANE. FOR A RIGHT LANE CLOSURE, REVERSE THE TRAFFIC CONTROL.

THIS DETAIL MAY BE USED FOR ROADWAYS WITH EITHER TWO OR THREE LANES IN EACH DIRECTION.

THE EXACT NUMBER, LOCATION, AND SPACING OF ALL SIGNS AND DEVICES SHALL BE ADJUSTED TO FIT FIELD CONDITIONS AS APPROVED BY THE ENGINEER.

THE SPACING BETWEEN TRAFFIC CONTROL SIGNS SHOULD BE ADJUSTED TO NOT CONFLICT WITH AND SHOULD PROVIDE A DESIRABLE MINIMUM OF 200 FEET CLEARANCE TO EXISTING SIGNS THAT WILL REMAIN IN PLACE.

ALL SIGNS ARE 48"x48" UNLESS OTHERWISE NOTED. IF NECESSARY DUE TO SPACE CONSTRAINTS IN URBAN AREAS, 36" X 36" SIGNS MAY BE USED IF APPROVED BY DISTRICT TRAFFIC UNIT.

"WO" SIGNS ARE THE SAME AS "W" SIGNS EXCEPT THE BACKGROUND IS ORANGE.

SIGNS THAT WILL BE IN PLACE LESS THAN 7 CONTINUOUS DAYS AND NIGHTS, OR THAT WILL BE PLACED IN A CLOSED LANE, MAY BE MOUNTED ON PORTABLE SUPPORTS.

ANY SIGNS TEMPORARY OR EXISTING, WHICH CONFLICT WITH TRAFFIC CONTROL "IN USE" SHALL BE REMOVED OR COVERED AS NEEDED AND AS APPROVED BY THE ENGINEER.

REMOVE PAVEMENT MARKINGS AND PLACE TEMPORARY PAVEMENT MARKING, REMOVABLE TAPE IF LANE CLOSURE IS TO BE IN PLACE FOR 4 OR MORE CONTINUOUS DAYS AND NIGHTS.

ON UNDIVIDED ROADWAYS, OMIT THE SIGNS SHOWN ON LEFT SIDE OF ROAD.

W20-1A, G20-1 AND G20-2A SIGNS ARE NOT REQUIRED IF THE LANE CLOSURE IS WITHIN A LARGER WORK ZONE WHERE THESE SIGNS ARE ALREADY PRESENT.

OMIT G20-1 SIGNS IF LENGTH OF WORK AREA IS 2 MILES OR LESS.

CONSIDER GEOMETRICS WHEN LOCATING SIGNS AND ARROWBOARDS SO THE APPROACHING DRIVER HAS A CLEAR VIEW OF THE ARROWBOARDS AND LANE CLOSURE DRUMS.

PLACE THE ARROWBOARD AS CLOSE AS POSSIBLE TO THE BEGINNING OF THE LANE CLOSURE TAPER, PREFERABLY ON THE SHOULDER OR TERRACE.

CHANNELIZING DEVICES PLACED ADJACENT TO WORK AREA SHALL BE PULLED BACK FROM THE TRAVEL LANE WHEN WORK IS NOT IN PROGRESS.

BARRICADES IN A CLOSED LANE THAT MUST BE MOVED FOR A WORK OPERATION SHALL BE IMMEDIATELY RE-ESTABLISHED UPON COMPLETION OF THE OPERATION OR, FOR CONTINUING OPERATIONS, AT THE END OF EACH WORKING DAY.

WARNING LIGHTS ARE NOT REQUIRED IF THE LANE CLOSURE IS A DAYTIME ONLY OPERATION.

TRAFFIC CONTROL, SINGLE LANE CLOSURE, NON-FREEWAY/EXPRESSWAY

STATE OF WISCONSIN
DEPARTMENT OF TRANSPORTATION

APPROVED
June 2016 — DATE
/S/ Peter Amakobe Atepe — STATEWIDE WORK ZONE SAFETY ENGINEER
FHWA

6

S.D.D. 15 D 20-4

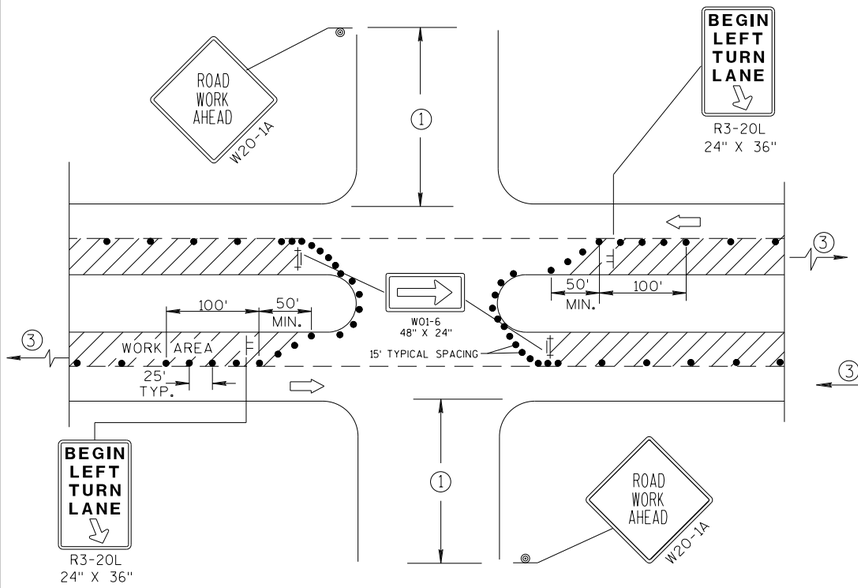

DETAIL A

FOR LEFT LANE CLOSURE AT INTERSECTION OR MEDIAN OPENING

PROVIDE TURN LANES AT INTERSECTIONS WHENEVER STAGING OF WORK ALLOWS. TAPER AND TURN LANE LENGTHS BASED ON FIELD CONDITIONS AS APPROVED BY THE ENGINEER.

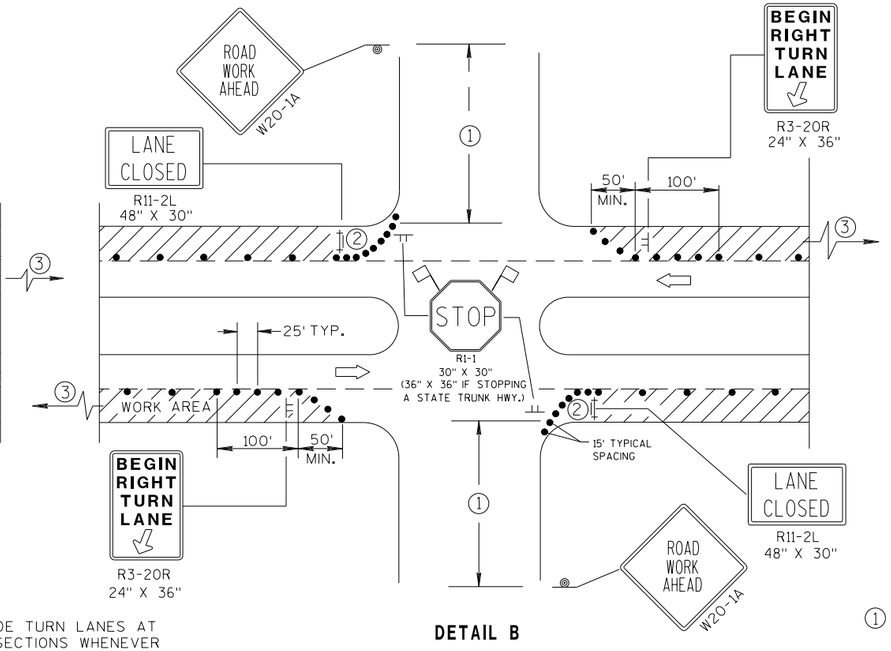

DETAIL B

FOR RIGHT LANE CLOSURE AT INTERSECTION

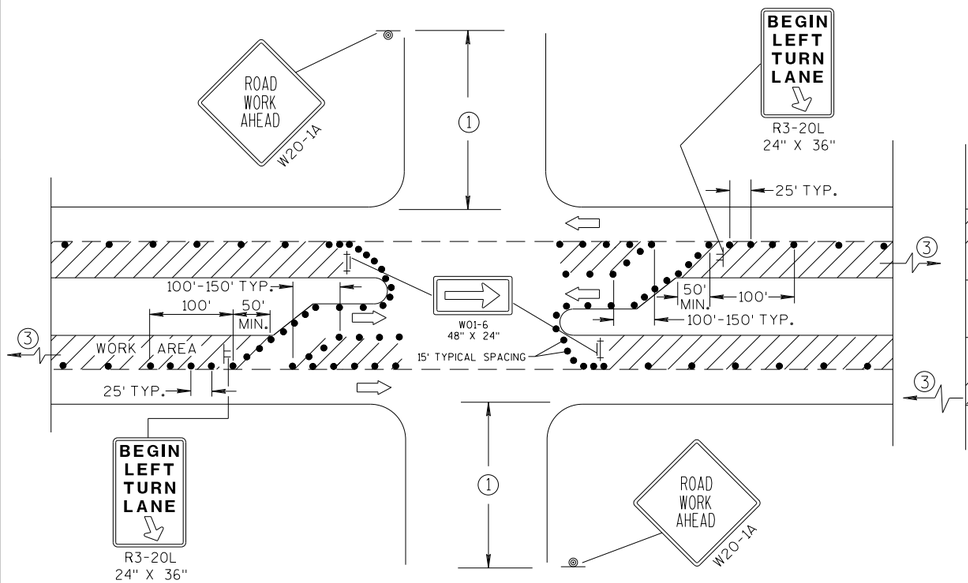

DETAIL C

FOR LEFT LANE CLOSURE AT INTERSECTION OR MEDIAN OPENING (WITH LEFT TURN BAY OPEN)

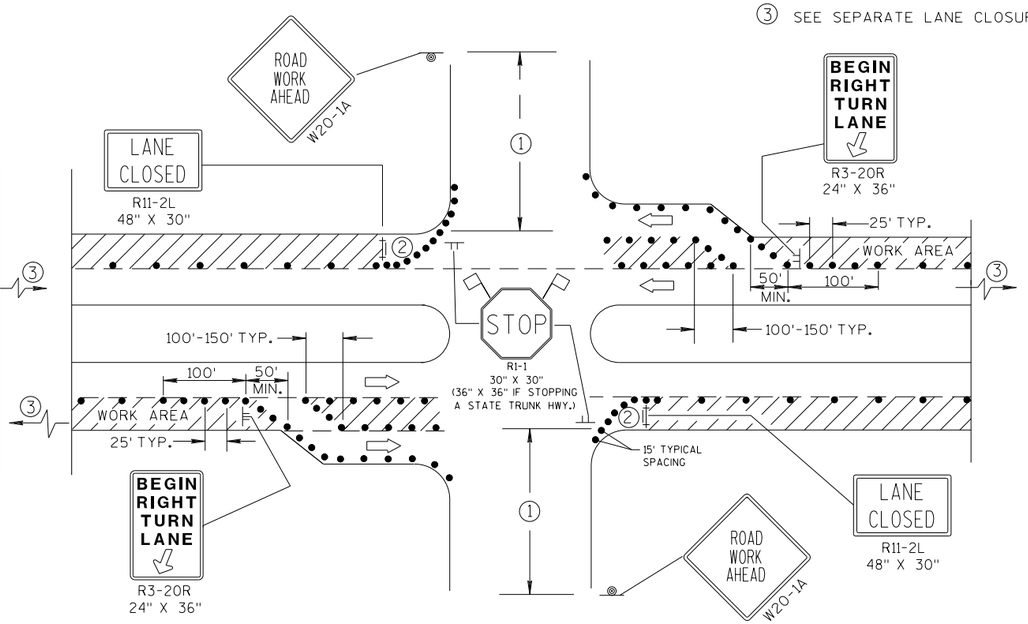

DETAIL D

FOR RIGHT LANE CLOSURE AT INTERSECTION (WITH RIGHT TURN BAY OPEN)

GENERAL NOTES

THE EXACT NUMBER, LOCATION, AND SPACING OF ALL SIGNS AND DEVICES SHALL BE ADJUSTED TO FIT FIELD CONDITIONS AS APPROVED BY THE ENGINEER.

THE SPACING BETWEEN SIGNS SHOULD BE ADJUSTED TO NOT CONFLICT WITH AND SHOULD PROVIDE A DESIRABLE MINIMUM OF 200 FEET CLEARANCE TO EXISTING SIGNS THAT WILL REMAIN IN PLACE.

ALL SIGNS ARE 48"x48" UNLESS OTHERWISE NOTED. IF NECESSARY DUE TO SPACE CONSTRAINTS IN URBAN AREAS, 36" X 36" SIGNS MAY BE USED IF APPROVED BY DISTRICT TRAFFIC UNIT.

"WO" SIGNS ARE THE SAME AS "W" SIGNS EXCEPT THE BACKGROUND IS ORANGE.

SIGN LAYOUTS SHALL BE IN ACCORDANCE WITH THE FHWA'S MANUAL OF STANDARD HIGHWAY SIGNS OR THE WISCONSIN STANDARD SIGN PLATES.

SIGNS THAT WILL BE IN PLACE LESS THAN 7 CONTINUOUS DAYS AND NIGHTS, OR THAT WILL BE PLACED IN A CLOSED LANE, MAY BE MOUNTED ON PORTABLE SUPPORTS.

ANY SIGNS TEMPORARY OR EXISTING, WHICH CONFLICT WITH TRAFFIC CONTROL "IN USE" SHALL BE REMOVED OR COVERED AS NEEDED AND AS APPROVED BY THE ENGINEER.

CHANNELIZING DEVICES PLACED ADJACENT TO WORK AREA SHALL BE PULLED BACK FROM THE TRAVEL LANE WHEN WORK IS NOT IN PROGRESS.

BARRICADES IN A CLOSED LANE THAT MUST BE MOVED FOR A WORK OPERATION SHALL BE IMMEDIATELY RE-ESTABLISHED UPON COMPLETION OF THE OPERATION OR, FOR CONTINUING OPERATIONS, AT THE END OF EACH WORKING DAY.

① 500' TYPICAL OR AT LAST INTERSECTION, WHICHEVER IS CLOSER.
350' IF 35-40 MPH.
200' IF 25-30 MPH.

② ALSO USE BARRICADE AND 15-FOOT TYPICAL DRUM SPACING AT COMMERCIAL DRIVEWAYS.

③ SEE SEPARATE LANE CLOSURE DETAIL FOR ADDITIONAL TRAFFIC CONTROL.

LEGEND

- TRAFFIC CONTROL DRUM
- SIGN ON PERMANENT SUPPORT
- SIGN ON TEMPORARY SUPPORT (5' MIN. MOUNTING HEIGHT)
- TYPE III BARRICADE WITH ATTACHED SIGN AND TYPE "A" WARNING LIGHT (FLASHING)
- DIRECTION OF TRAFFIC
- FLAGS, 16" X 16" MIN., (ORANGE)
- WORK AREA

TRAFFIC CONTROL, INTERSECTION WITHIN SINGLE LANE CLOSURE

STATE OF WISCONSIN
DEPARTMENT OF TRANSPORTATION

APPROVED

7/2018
DATE

/S/ Andrew Heldtke
WORK ZONE ENG

FHWA

6

S.D.D. 15 D 21-6

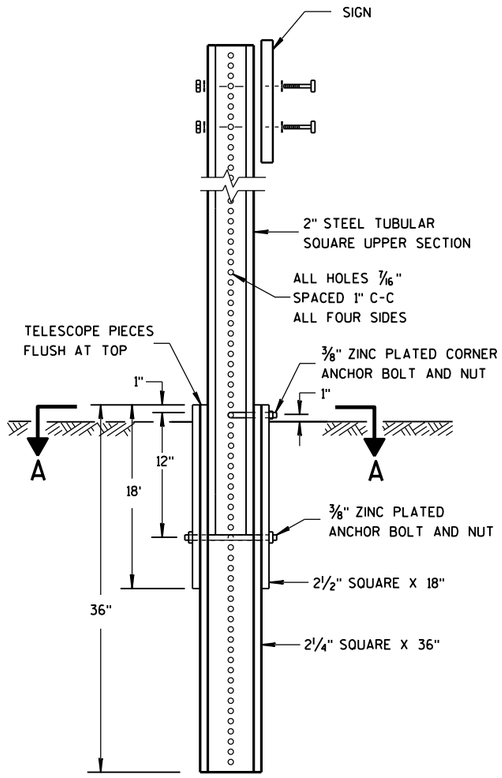

DETAIL OF TUBULAR STEEL SIGN POST

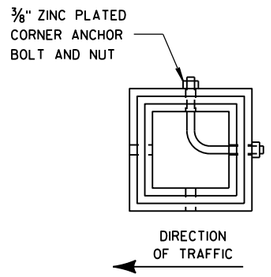

SECTION A-A

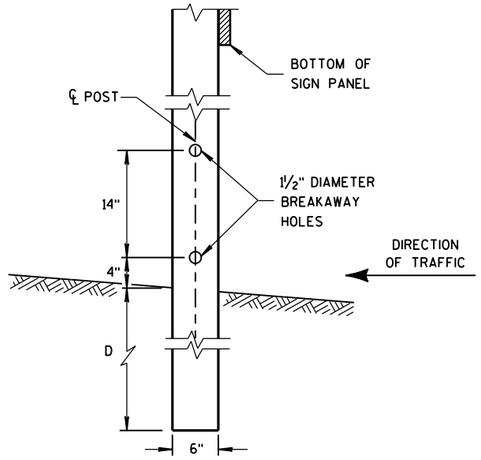

4"x6" WOOD POST MODIFICATION

GENERAL NOTES

(1) 6 FEET FROM THE EDGE OF PAVEMENT (EDGE LINE LOCATION) UNLESS OTHERWISE DIRECTED BY THE PROJECT ENGINEER. LATERAL OFFSET SHOULD BE ADJUSTED TO AVOID THE DITCH FLOWLINE.

(2) THE EXISTENCE OF CURB AND GUTTER DOES NOT IN ITSELF MANDATE THE VERTICAL CLEARANCE ILLUSTRATED. THAT HEIGHT IS TYPICALLY MEASURED WHERE THERE IS SIDEWALK ADJACENT TO THE ROADWAY OR PARKING IS PERMITTED. IN THE ABSENCE OF SIDEWALK, VERTICAL CLEARANCE IS MEASURED FROM THE TOP OF THE CURB. IF NO SIDEWALK AND NO PARKING, VERTICAL CLEARANCE MAY BE REDUCED TO 5 FOOT MINIMUM. OFFSET OF SIGNS IS MEASURED FROM THE CURB FLOWLINE.

(3) FOR SIGNS REQUIRING 4 POSTS, SPACE INTERMEDIATE POSTS EVENLY.

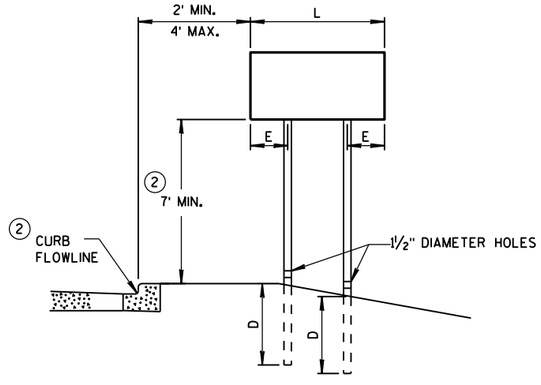

URBAN AREA

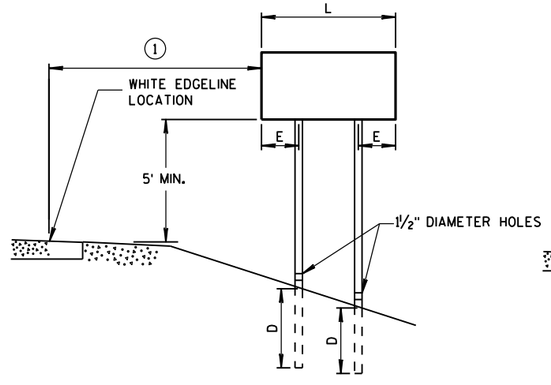

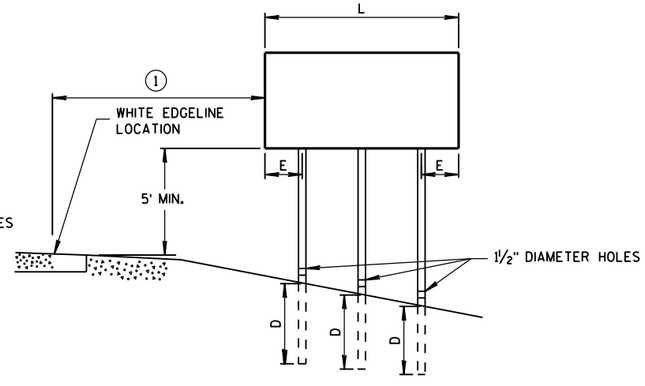

RURAL AREA

POST MOUNTING DETAIL FOR TEMPORARY TRAFFIC CONTROL FIXED MESSAGE SIGNS

TUBULAR STEEL POSTS

AREA OF SIGN INSTALLATION (SQ. FT.)	NUMBER OF REQUIRED TUBULAR STEEL POSTS
9 OR LESS	1
GREATER THAN 9 LESS THAN OR EQUAL TO 18	2
GREATER THAN 18 LESS THAN OR EQUAL TO 27	3

SIGNS WIDER THAN 3 FEET OR LARGER THAN 9 SQ. FT. SHALL BE MOUNTED ON MULTIPLE POSTS (SEE ABOVE TABLE).

SIGNS LARGER THAN 27 SQ. FT. SHALL NOT BE MOUNTED ON TUBULAR STEEL POSTS.

WOOD POST EMBEDMENT DEPTH

AREA OF SIGN INSTALLATION (SQ. FT.)	D (MIN)
20 OR LESS	4'
GREATER THAN 20	5'

4" X 6" WOOD POST

POST SPACING REQUIREMENTS		NUMBER OF WOOD POSTS REQUIRED
L	E	
48" OR LESS AND LESS THAN 20 SQ. FT.	-	1
LESS THAN 60"	12"	2
60" TO 120"	L/5	2
GREATER THAN 120" LESS THAN 168"	12"	3
168" AND GREATER	12"	4

SEE NOTE (3)

TEMPORARY TRAFFIC CONTROL SIGN MOUNTING

STATE OF WISCONSIN
DEPARTMENT OF TRANSPOI

6
S.D.D. 15 D 38-2a

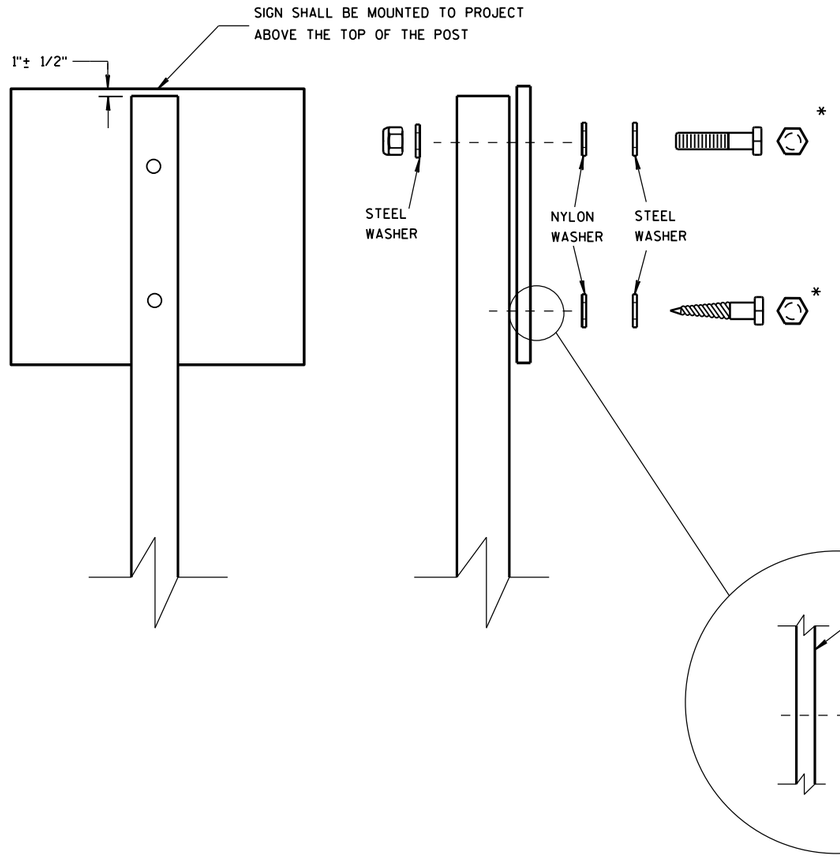

WASHER PLACEMENT WHEN SIGN HAS OTHER THAN TYPE H OR TYPE F FACE

NUTS, BOLTS AND LAGS USED FOR MOUNTING SIGNS SHALL HAVE HEXAGONAL HEADS AND SHALL BE EITHER:

A. HOT DIP GALVANIZED IN ACCORDANCE WITH ASTM DESIGNATION: A 153, CLASS D, OR SC 3

B. ELECTRO-GALVANIZED IN ACCORDANCE WITH ASTM DESIGNATION: B 633, TYPE III, SC 3

THREADS ON BOLTS AND NUTS SHALL BE MANUFACTURED WITH SUFFICIENT ALLOWANCE FOR THE CADMIUM PLATE OR GALVANIZED COATING TO PERMIT THE NUTS TO RUN FREELY ON THE BOLTS.

WOOD POSTS (4" x 4" or 4" x 6")

LAG SCREWS - 3/8" X 3"

MACHINE BOLTS - 5/16" X 6-1/2" OR 7" LENGTH W/ NUTS

SQUARE STEEL POSTS (2" x 2")

MACHINE BOLTS - 3/8" X 3-1/4" LENGTH W/ NUTS

RIVETS - 9/32" (6605-9-6) BULB-TITE, TRI-FOLD, ALUMINUM BODY/MANDREL O.D. FLANGE .720-.765 INCH, GRIP RANGE .042-.375 INCH

WASHERS (ALL POSTS) -

1-1/4" O.D. X 3/8" I.D. X 1/16" STEEL

1-1/4" O.D. X 3/8" I.D. X .080 NYLON FOR ALL TYPE H SIGNS

* TWO DIFFERENT FASTENING SYSTEMS ARE SHOWN FOR ILLUSTRATION PURPOSES. ON ANY INDIVIDUAL SIGN, EITHER ONE OR THE OTHER SYSTEM SHALL BE USED. ACTUAL NUMBER OF FASTENERS PER SIGN VARIES WITH THE SIGN AREA. FOR A SINGLE POST INSTALLATION, ALL SIGNS GREATER THAN 9 SQ. FT. REQUIRE THE USE OF 3 FASTENERS.

6

6

S.D.D. 15 D 38-2b

S.D.D. 15 D 38-2b

ATTACHMENT OF SIGNS TO POSTS

STATE OF WISCONSIN
DEPARTMENT OF TRANSPORTATION

APPROVED

June 2017
DATE

/S/ Andrew Heldtke
WORK ZONE ENG

FHWA

URBAN AREA

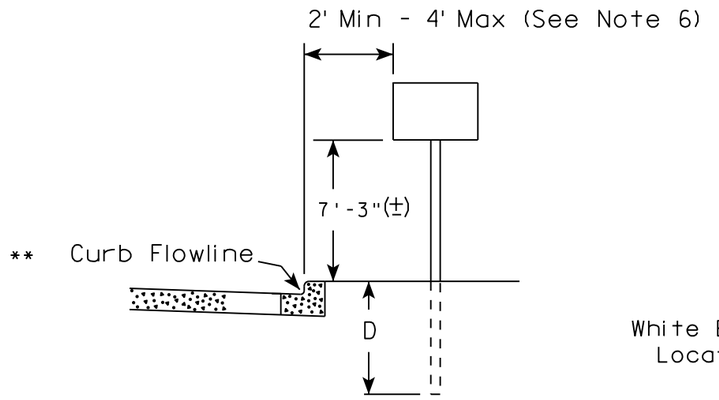

RURAL AREA (See Note 2)

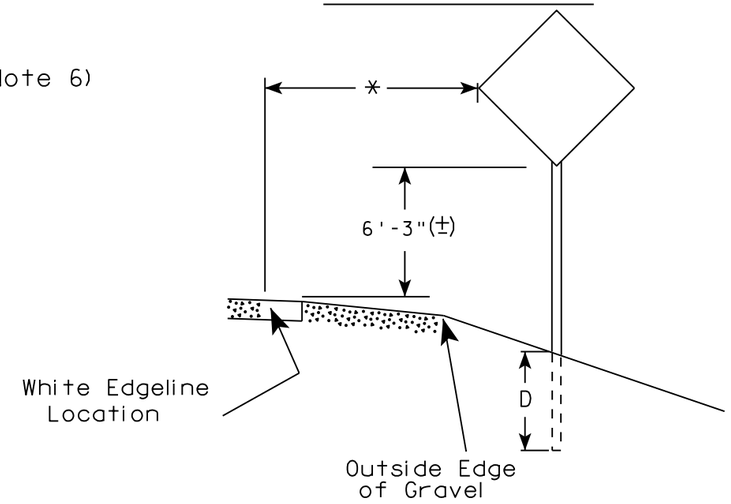

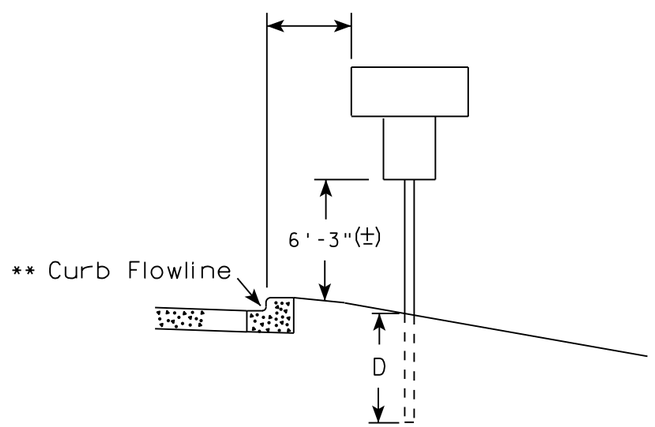

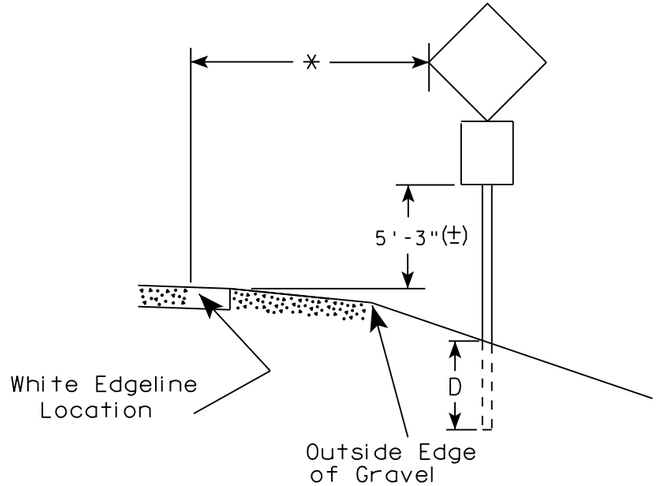

** The existence of curb and gutter does not in itself mandate the vertical clearance illustrated. That height is typically measured where there is sidewalk adjacent to the roadway or parking is permitted. In the absence of sidewalk vertical clearance is measured from the top of the curb. Offset of signs is measured from the flow line.

* 6 feet from edge of a paved shoulder or 12 feet from the edge of pavement (edge line location) or 2 feet from outside edge of gravel, whichever is greater unless directed by project engineer.

POST EMBEDMENT DEPTH

Area of Sign Installation (Sq.Ft.)	D (Min)
20 or Less	4'
Greater than 20	5'

GENERAL NOTES

1. Signs wider than 4 feet or 20 sq.ft or larger, shall be mounted on multiple posts. Refer to plate A4-4.
2. If signs are mounted on barrier wall, see A4-10 sign plate.
3. For expressways and freeways, mounting height is 7'- 3" (±) or 6'-3" (±) depending upon existence of a sub-sign.
4. J-Assemblies are considered to be one sign for mounting height.
5. Minimum mounting height for signs mounted on traffic signal poles is 5'- 3" (±).
6. Offset distance shall be consistent with existing signs or consistent throughout length of project.
7. The (±) tolerance for mounting height is 3 inches.
8. Folding signs shall be mounted at a height of 5'-3" (±) or as directd by the Engineer.
9. The Double Arrow sign (W12-1) shall be mounted at a height of 2'-3" (±). The Chevron sign (W1-8), Roundabout Chevron panel (R6-4B), Enhanced Reference Markers, Clearance Markers (W5-52), Mile Markers (D10 series), In Road Object Markers (W5-54) & End of Road Markers (W5-56) shall be mounted at a height of 4'-3" (±).

TYPICAL INSTALLATION OF PERMANENT TYPE II SIGNS ON SINGLE POSTS

WISCONSIN DEPT OF TRANSPORTATION

APPROVED Matthew R Rauch
for State Traffic Engineer

DATE 8/21/17 PLATE NO. A4-3.21

7

7

PROJECT NO:	HWY:	COUNTY:		SHEET NO: 133	E

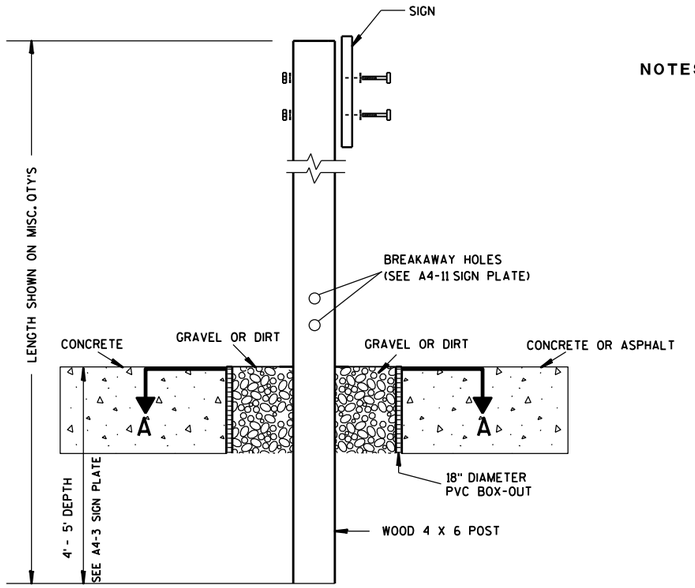

ELEVATION VIEW

DETAIL OF WOOD 4 X 6 SIGN POST IN BOX-OUT

NOTES:
1. ALL MATERIAL TO BE APPROVED BY ENGINEER PRIOR TO INSTALLATION
2. SEE SIGN PLATE A4-8 FOR SIGN HARDWARE REQUIREMENTS
3. 18 INCH X 18 INCH SQUARE BOX-OUTS MAY BE USED FOR INSTALLATIONS IN EXISTING CONCRETE OR ASPHALT LOCATIONS.

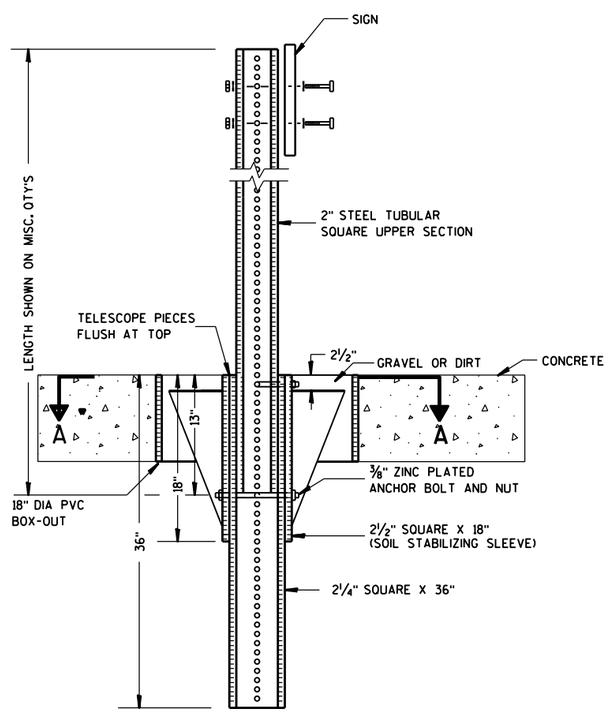

ELEVATION VIEW

DETAIL OF STEEL 2 X 2 SIGN POST IN BOX-OUT

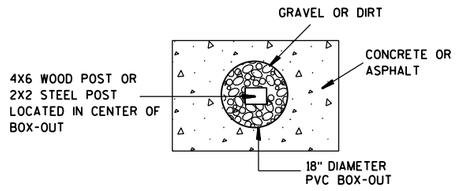

PLAN VIEW

FOR NEW CONCRETE/ASPHALT INSTALLATIONS

SIGN POST BOX-OUTS A4-3B

WISCONSIN DEPT OF TRANSPORTATION

APPROVED Matthew R Rauch
for State Traffic Engineer

DATE 1/27/14 PLATE NO. A4-3B.1

PROJECT NO:	HWY:	COUNTY:		SHEET NO:	E

FILE NAME : C:\CAEFiles\Projects\tr_stdplate\A43B.DGN PLOT DATE : 27-JAN-2014 09:48 PLOT BY : mscsja PLOT NAME : PLOT SCALE : 13.659812:1.000000 WISDOT/CADDS SHEET 42

URBAN AREA

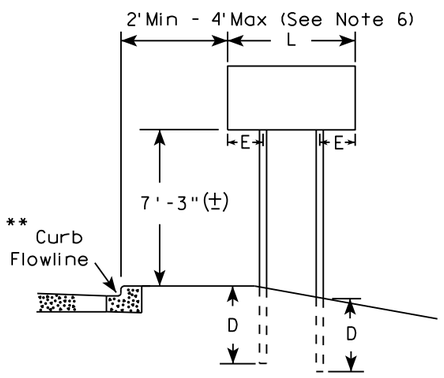

RURAL AREA (See Note 3)

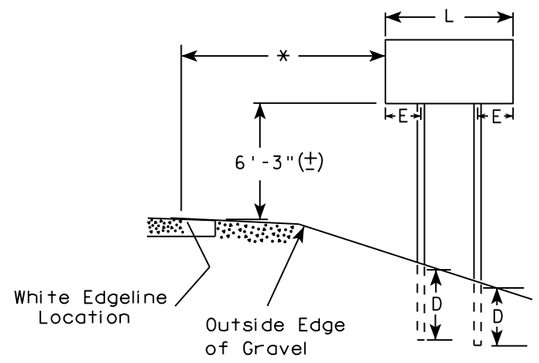

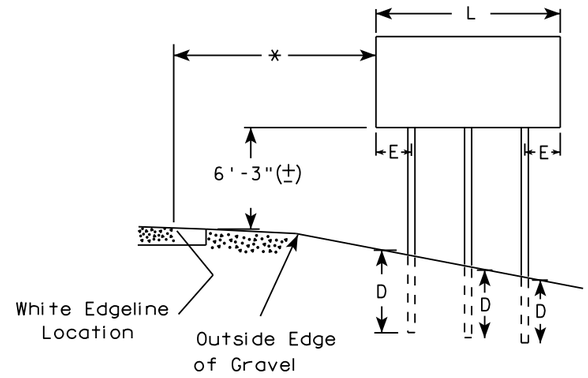

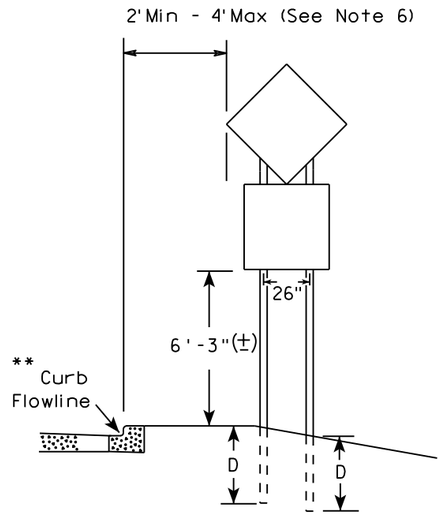

48" DIAMOND WARNING SIGN

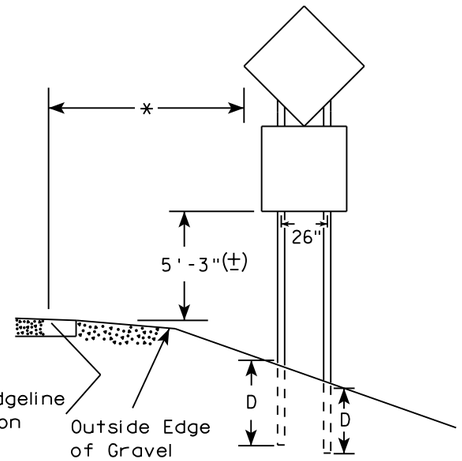

48" DIAMOND WARNING SIGN

SIGN SHAPE OTHER THAN DIAMOND (TWO POSTS REQUIRED)		
	L	E
***	Greater than 48" Less than 60"	12"
	60" to 108"	L/5

SIGN SHAPE OTHER THAN DIAMOND (THREE POSTS REQUIRED)	
L	E
Greater than 108" to 144"	12"

GENERAL NOTES

1. For 3 or 4 post installations, individual post spacing shall be greater than 3'-6".
2. See tables below for required number of posts.
3. For expressways and freeways, mounting height is 7'-3" (±) or 6'-3" (±) depending upon existence of sub-sign.
4. The (±) tolerance for mounting height is 3 inches.
5. J-Assemblies are considered to be one sign for mounting height.
6. Offset distance shall be consistent with existing signs or consistent throughout length of project.
7. Folding signs shall be mounted at a height of 5'-3" (±) or as directed by the engineer.
8. The Double Arrow sign (W12-1) shall be mounted at a height of 2'-3" (±). The Chevron sign (W1-8), Roundabout Chevron panel (R6-4B), Clearance Markers (W5-52), Mile Markers (D10 series), In Road Object Markers (W5-54) & End of Road Markers (W5-56) shall be mounted at a height of 4"-3" (±).

* 6 feet from edge of a paved shoulder or 12 feet from the edge of pavement (edge line location) or 2 feet from outside edge of gravel, whichever is greater unless directed by project engineer.

** The existence of curb and gutter does not in itself mandate the vertical clearance illustrated. That height is typically measured where there is sidewalk adjacent to the roadway or parking is permitted. In the absence of sidewalk vertical clearance is measured from the top of the curb. Offset of signs is measured from the flow line.

*** See A4-3 sign plate for signs 4' or less in width and less than 20 S.F. in area.

POST EMBEDMENT DEPTH

Area of Sign Installation (Sq. Ft.)	D (Min)
20 or Less	4'
Greater than 20	5'

TYPICAL INSTALLATION OF TYPE II SIGNS ON MULTIPLE POSTS

WISCONSIN DEPT OF TRANSPORTATION

APPROVED Matthew R Rauch
For State Traffic Engineer

DATE 8/21/17 PLATE NO. A4-4.15

PROJECT NO:	HWY:	COUNTY:		SHEET NO: 135	E

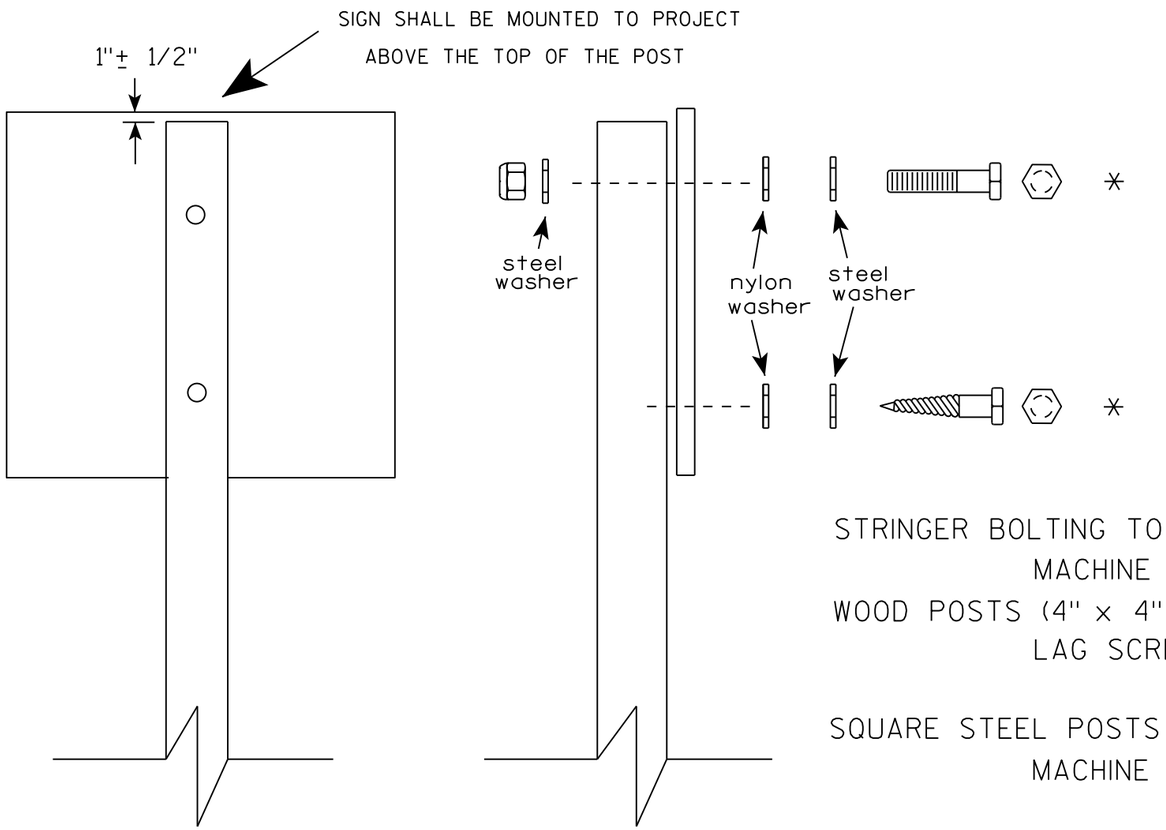

Nuts, bolts and lags used for mounting signs shall have hexagonal heads and shall be either :

a. Hot dip galvanized in accordance with ASTM Designation: A 153, Class D, or SC 3

b. Electro-galvanized in accordance with ASTM Designation : B 633, TYPE III, SC 3.

Threads on bolts and nuts shall be manufactured with sufficient allowance for the cadmium plate or galvanized coating to permit the nuts to run freely on the bolts.

STRINGER BOLTING TO ALUMINUM SIGNS (SEE SIGN PLATE A4-18)

MACHINE BOLTS - 5/16" X 1-3/4" Length w/ lock nuts

WOOD POSTS (4" x 4" or 4" x 6")

LAG SCREWS - 3/8" X 3" (NO STRINGERS ON BACK OF SIGN)

3/8" X 4" (STRINGERS ON BACK OF SIGN)

SQUARE STEEL POSTS (2" x 2")

MACHINE BOLTS - 3/8" X 3-1/4" Length w/ nuts (NO STRINGER ON BACK OF SIGN)

3/8" X 5" Length w/ nuts (STRINGERS ON BACK OF SIGN)

RIVETS - 9/32 " (6605-9-6) BULB-TITE, TRI-FOLD, ALUMINUM BODY/MANDREL O.D. FLANGE .720-.765 INCH, GRIP RANGE .042-.375 INCH

WASHERS (ALL POSTS) -

1-1/4" O.D. X 3/8" I.D. X 1/16" STEEL

1-1/4" O.D. X 3/8" I.D. X .080 NYLON

* Two different fastening systems are shown for illustration purposes. On any individual sign, either one or the other system shall be used. Actual number of fasteners per sign varies with the sign area, but normally there are two. For a single post installation, all signs greater than 9 sq. ft. require the use of 3 fasteners.

ATTACHMENT OF SIGNS TO POSTS

WISCONSIN DEPT OF TRANSPORTATION

APPROVED Matthew R Rauch
For State Traffic Engineer

DATE 8/11/16 PLATE NO. A4-8.8

PROJECT NO: SHEET NO: E

FILE NAME : C:\CAEfiles\Projects\tr_stdplate\A48.DGN PLOT DATE : 11-AUG-2016 11:35 PLOT BY : $$ plotuser $$

TELESCOPIC TUBING ANCHORS
TWO PIECE SYSTEM

2 1/4 " SQUARE
12 GAUGE
PERFORATED
GALVANIZED FINISH

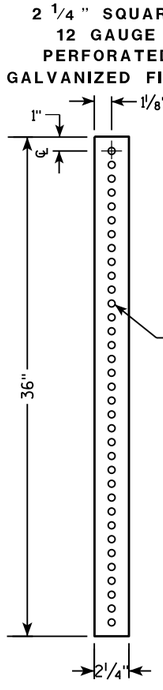

2 1/2 " SQUARE
12 GAUGE
OMNI-DIRECTIONAL
PERFORATED
SOIL STABILIZING SLEEVE
GALVANIZED FINISH

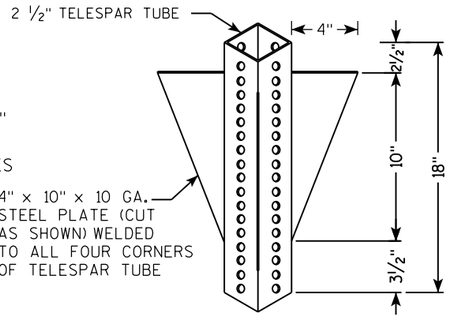

DETAIL OF TUBULAR STEEL SIGN POST
(IN POURED CONCRETE OR ASPHALT)

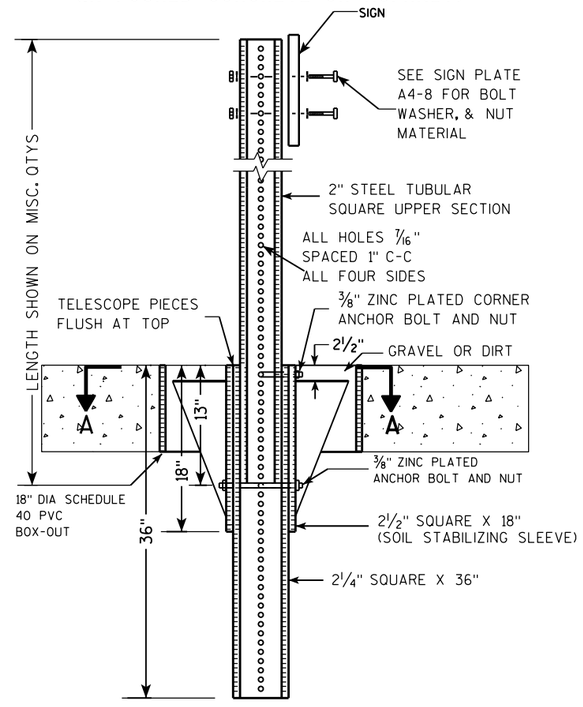

DETAIL OF TUBULAR STEEL SIGN POST
(IN LOCATIONS OTHER THAN POURED CONCRETE OR ASPHALT)

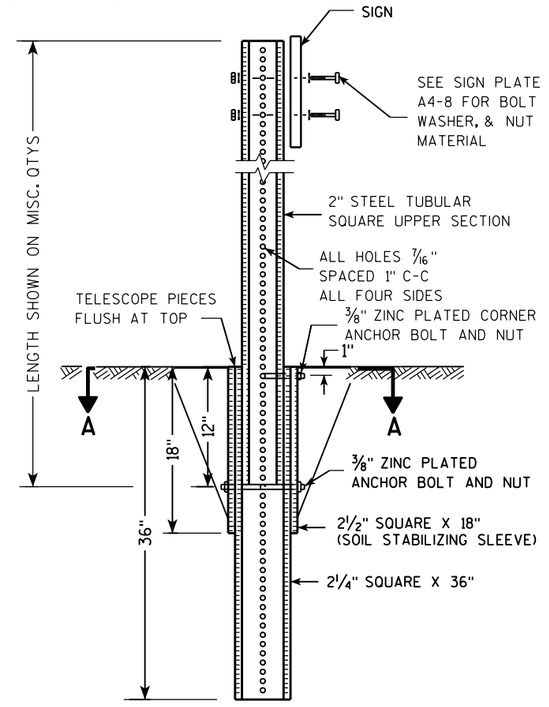

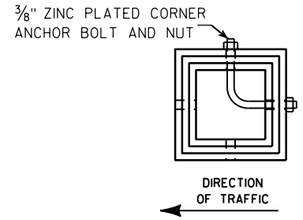

SECTION A-A

Area of Sign Installation (Sq. Ft.)	Number of Required Posts
9 or less	1
Greater than 9 less than or equal to 18	2
Greater than 18 less than or equal to 27	3

Signs wider than 3 feet or larger than 9 sq. ft shall be mounted on multiple posts (see above table).

TUBULAR STEEL
SIGN POST
A4-9

WISCONSIN DEPT OF TRANSPORTATION

APPROVED Matthew R Rauch
for State Traffic Engineer

DATE 2/05/15 PLATE A4-9.9

PROJECT NO:	HWY:	COUNTY:		SHEET NO:	E

FILE NAME : C:\CAEFiles\Projects\tr_stdplate\A49.DGN PLOT DATE : 05-FEB-2015 17:09 PLOT BY : mscsja PLOT NAME : PLOT SCALE : 13.659812:1.000000 WISDOT/CADDS SHEET 42

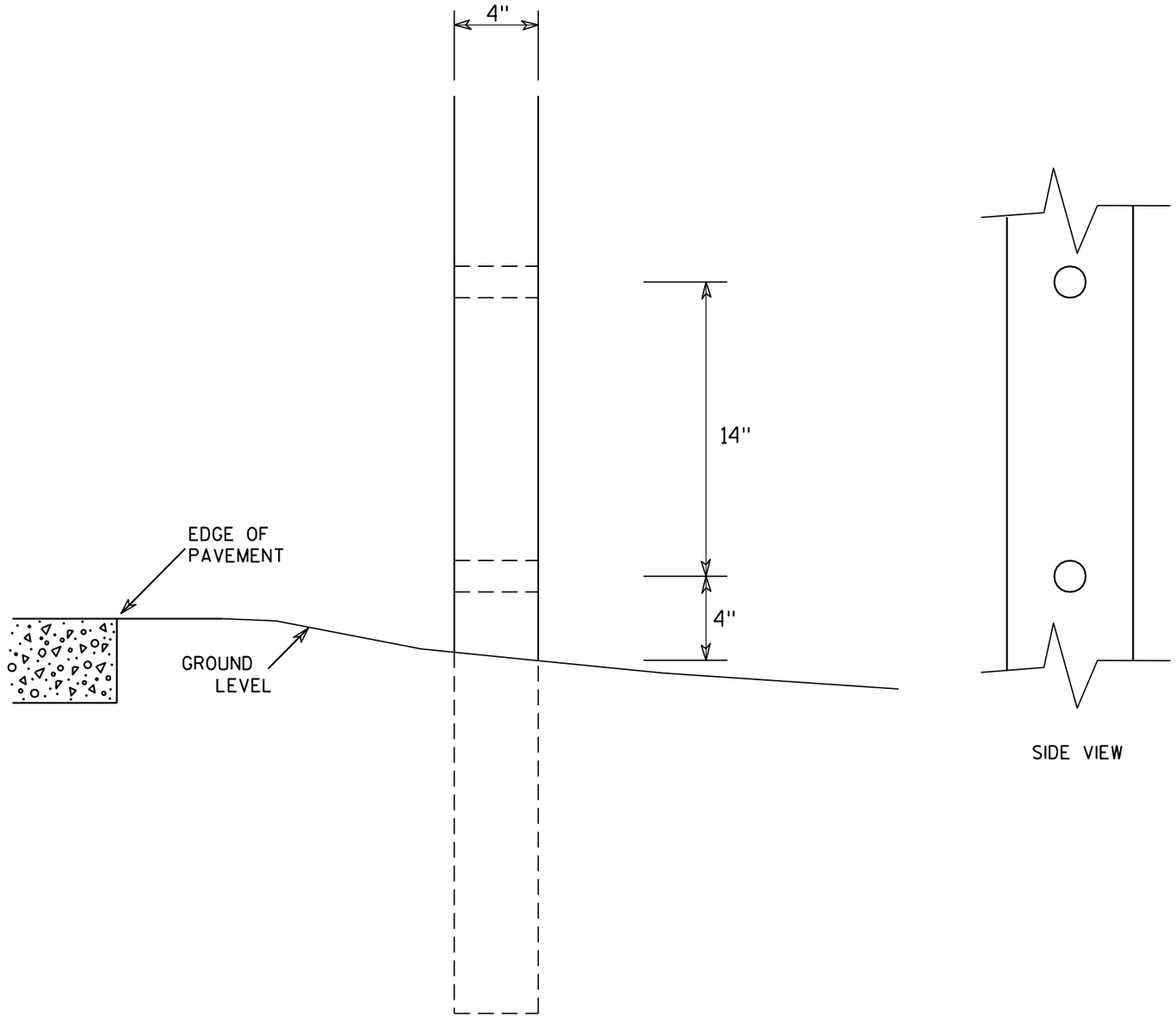

SIDE VIEW

GENERAL NOTES

1. All 4 x 6 Wood Posts shall be modified by having two 1½" diameter holes drilled perpendicular to the roadway centerline.

7

7

4 X 6 WOOD POST MODIFICATIONS

WISCONSIN DEPT OF TRANSPORTATION

APPROVED Chester J Spang for State Traffic Engineer

DATE 3/27/97 PLATE NO. A4-11.2

PROJECT NO:	HWY:	COUNTY:		SHEET NO: 138	E

BANDING

SINGLE SIGN

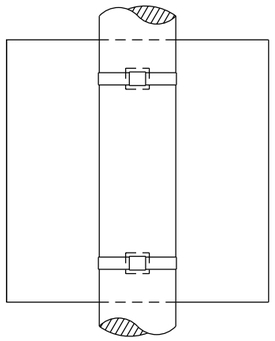

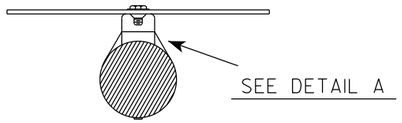

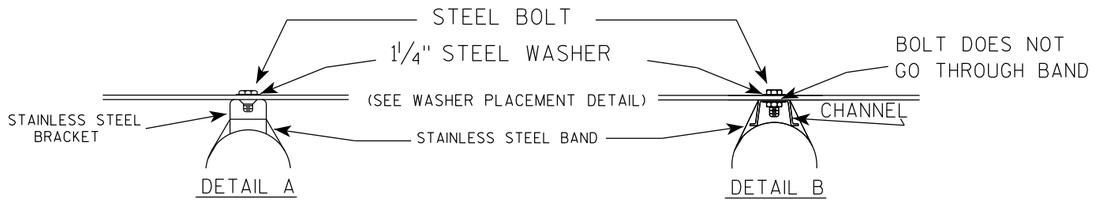

GENERAL NOTES

1. Any sign over 3 feet in width shall use the V-Block banding method. See A5-10 standard plate.
2. Signs 3 feet or greater in height shall have three bracket bands installed. Signs less than 3 feet in height shall have two bracket bands installed.
3. Banding and assembly bracket shall be stainless steel. All bands shall be ¾" in width and 0.025" thickness.
4. ALL SIGN MOUNTING BOLTS AND WASHERS SHALL BE EITHER:
   a. Hot dip or mechanically galvanized in accordance with ASTM Designation: A 153, Class D
   b. Electro-galvanized in accordance with ASTM designation: B 633, Type III, SC 3

"J" ASSEMBLY

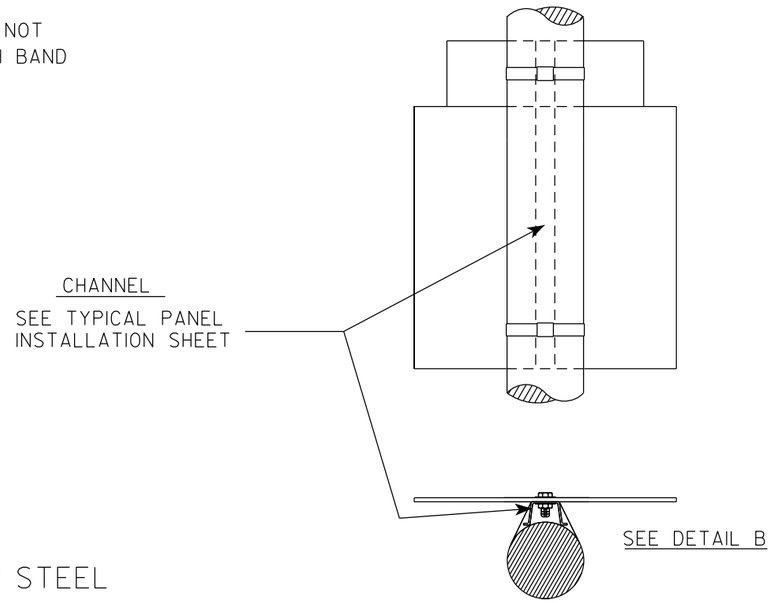

WASHER PLACEMENT

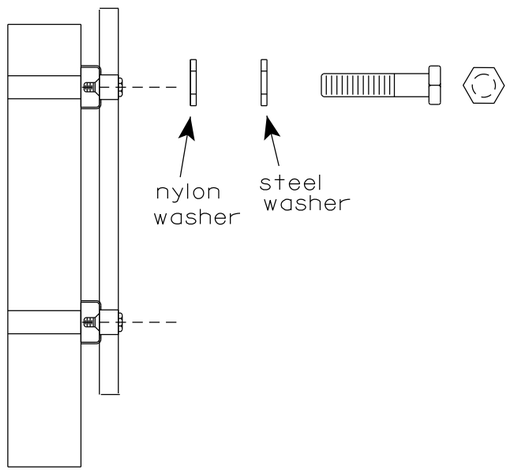

WASHERS (ALL POSTS) -
1-1/4" O.D. X ⅜" I.D. X 1/16" STEEL
1-1/4" O.D. X ⅜" I.D. X .080 NYLON
FOR ALL TYPE H SIGNS

STANDARD SIGN
SIGN BANDING DETAILS

WISCONSIN DEPT OF TRANSPORTATION

APPROVED Matthew R Rauch
for State Traffic Engineer

DATE 6/10/19 PLATE NO. A5-9.4

PROJECT NO:	HWY:	COUNTY:		SHEET NO: 139	E

FILE NAME : C:\CAEfiles\Projects\tr_stdplate\A59.dgn PLOT DATE : 10-JUN 2019 4:10 PLOT BY : mscj9h PLOT NAME : PLOT SCALE : $$.....plotscale.....$$ WISDOT/CADDS SHEET 42

7

7

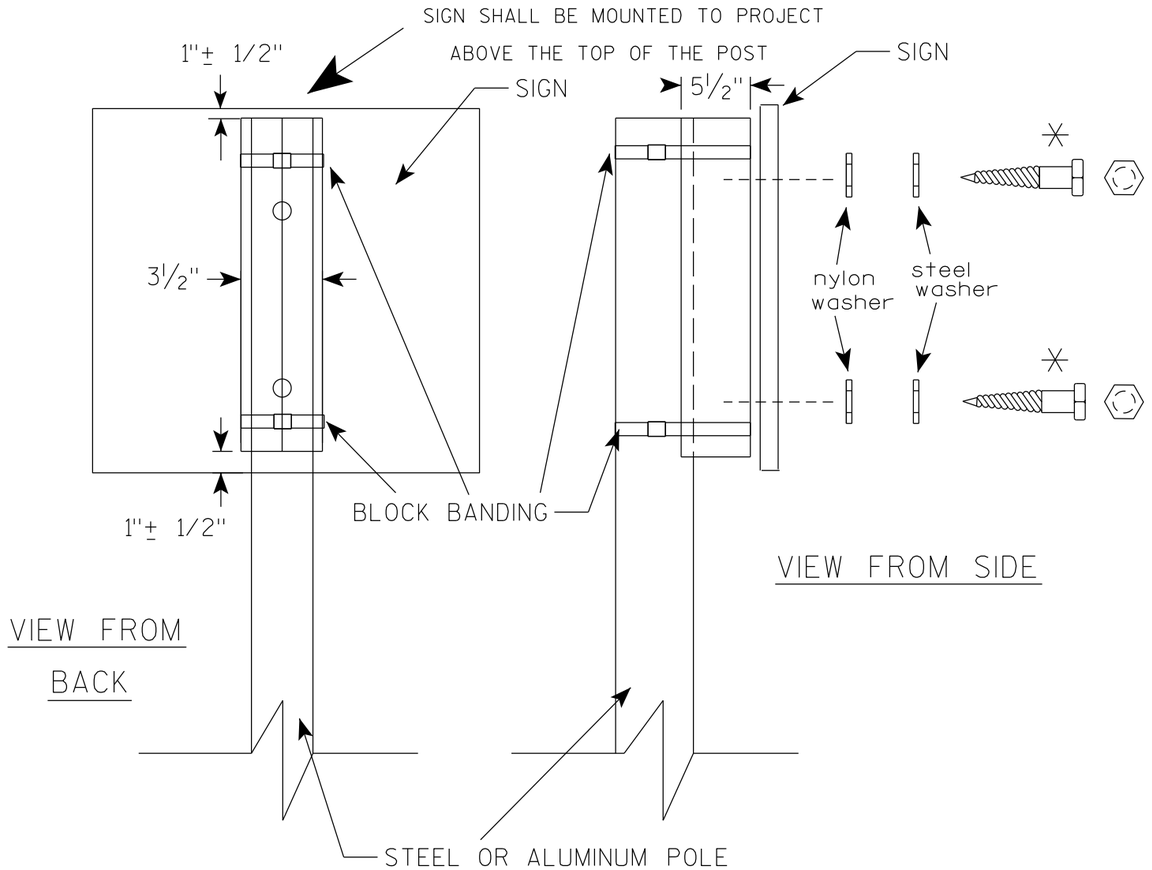

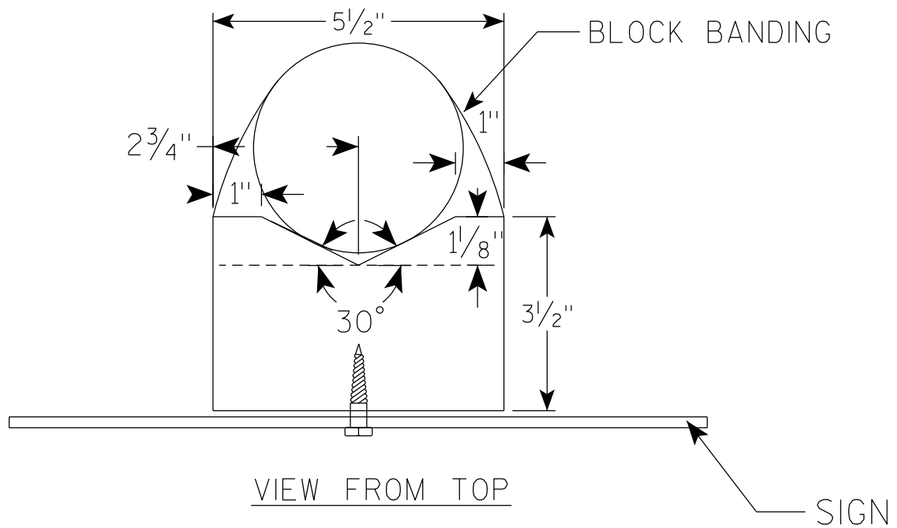

GENERAL NOTES

1. WOOD 4"X6" POST MATERIAL SHALL CONFORM TO 507.2.2 OF THE WisDOT STANDARD SPECIFICATIONS
2. BLOCK BANDING AND CLIPS SHALL BE STAINLESS STEEL, ¾" WIDTH AND 0.025" THICKNESS
3. SIGNS 3' OR GREATER IN HEIGHT SHALL UTILIZE 3 BLOCK BANDS. SIGNS UNDER 3' IN HEIGHT SHALL UTILIZE 2 BLOCK BANDS
4. ACTUAL NUMBER OF FASTENERS PER SIGN VARIES WITH THE SIGN AREA, BUT NORNALLY THERE ARE TWO. FOR SIGNS GREATER THAN 9 S.F. 3 FASTENERS SHALL BE USED.
5. ALL SIGN MOUNTING BOLTS AND WASHERS SHALL BE EITHER:
   a. Hot dip or mechanically galvanized in accordance with ASTM Designation: A 153, Class D
   b. Electro-galvanized in accordance with ASTM Designation : B 633, TYPE III, SC 3
6. ALL BOLTS SHALL HAVE HEXAGONAL HEADS.
7. STEEL WASHERS SHALL BE 1¼" O.D. X ⅜" I.D. X 1/16"
8. NYLON WASHERS SHALL BE 1¼" O.D. X ⅜" I.D. X .080 FOR TYPE H OR TYPE F FACE SIGN

✳ LAG BOLTS SHALL BE ⅜" X 2½"

BLOCK BANDING DETAIL (V-BLOCK OPTION)

WISCONSIN DEPT OF TRANSPORTATION

APPROVED Matthew R Rauch
For State Traffic Engineer

DATE 6/10/19 PLATE NO. A5-10.2

PROJECT NO:				SHEET NO: 140	E

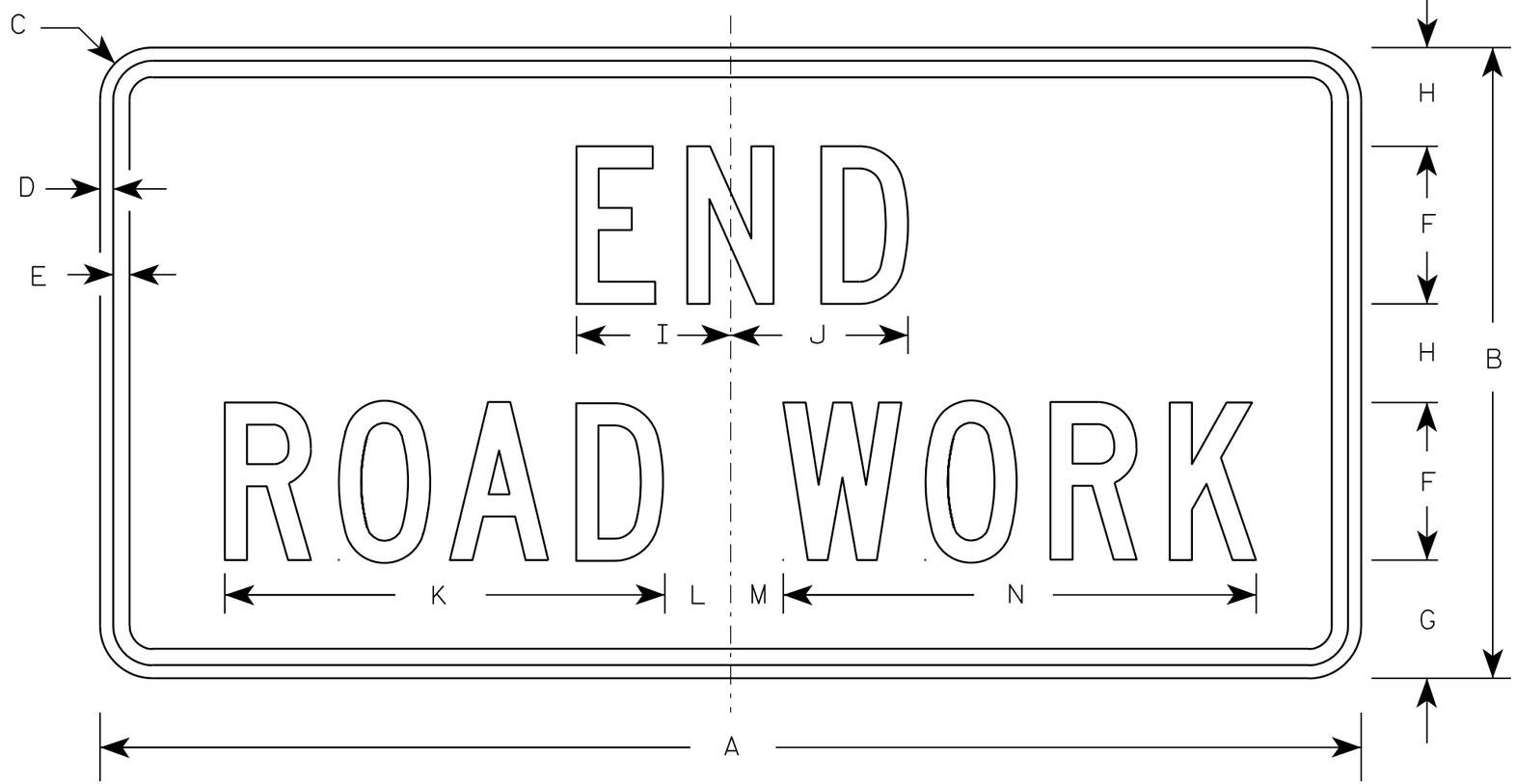

G20-2A

NOTES

1. Sign is Type II - Type F Reflective - reference WIS DOT Standard Specification for HIGHWAY and STRUCTURE CONSTRUCTION latest edition.
2. Color:
   Background - Orange
   Message - Black
3. Message Series - C
4. Corners may be square or rounded when base material is plywood but borders shall be rounded as shown. When base material is metal, the corners and borders shall be rounded.

Metric equivalent for this sign is:

SIZE	
1	900 mm X 450 mm
2	1200 mm X 600 mm
3	1200 mm X 600 mm
4	1200 mm X 600 mm
5	1200 mm X 600 mm

SIZE	A	B	C	D	E	F	G	H	I	J	K	L	M	N	O	P	Q	R	S	T	U	V	W	X	Y	Z	Area sq. ft.	Area m2
1	36	18	1 1/8	3/8	1/2	4	3 3/4	2 1/2	4 1/8	4 1/8	11 1/8	2	1	12 1/8													4.5	0.41
2	48	24	1 1/2	1/2	5/8	6	4 1/2	3 3/4	5 7/8	6 3/4	16 3/4	2 1/2	1 3/4	18 1/2													8.0	0.72
3	48	24	1 1/2	1/2	5/8	6	4 1/2	3 3/4	5 7/8	6 3/4	16 3/4	2 1/2	1 3/4	18 1/2													8.0	0.72
4	48	24	1 1/2	1/2	5/8	6	4 1/2	3 3/4	5 7/8	6 3/4	16 3/4	2 1/2	1 3/4	18 1/2													8.0	0.72
5	48	24	1 1/2	1/2	5/8	6	4 1/2	3 3/4	5 7/8	6 3/4	16 3/4	2 1/2	1 3/4	18 1/2													8.0	0.72

STANDARD SIGN
G20-2A

WISCONSIN DEPT OF TRANSPORTATION

APPROVED Matthew R Rauch
for State Traffic Engineer

DATE 9/30/09 PLATE NO. G20-2A.8

PROJECT NO:	HWY:	COUNTY:		SHEET NO: 141	E

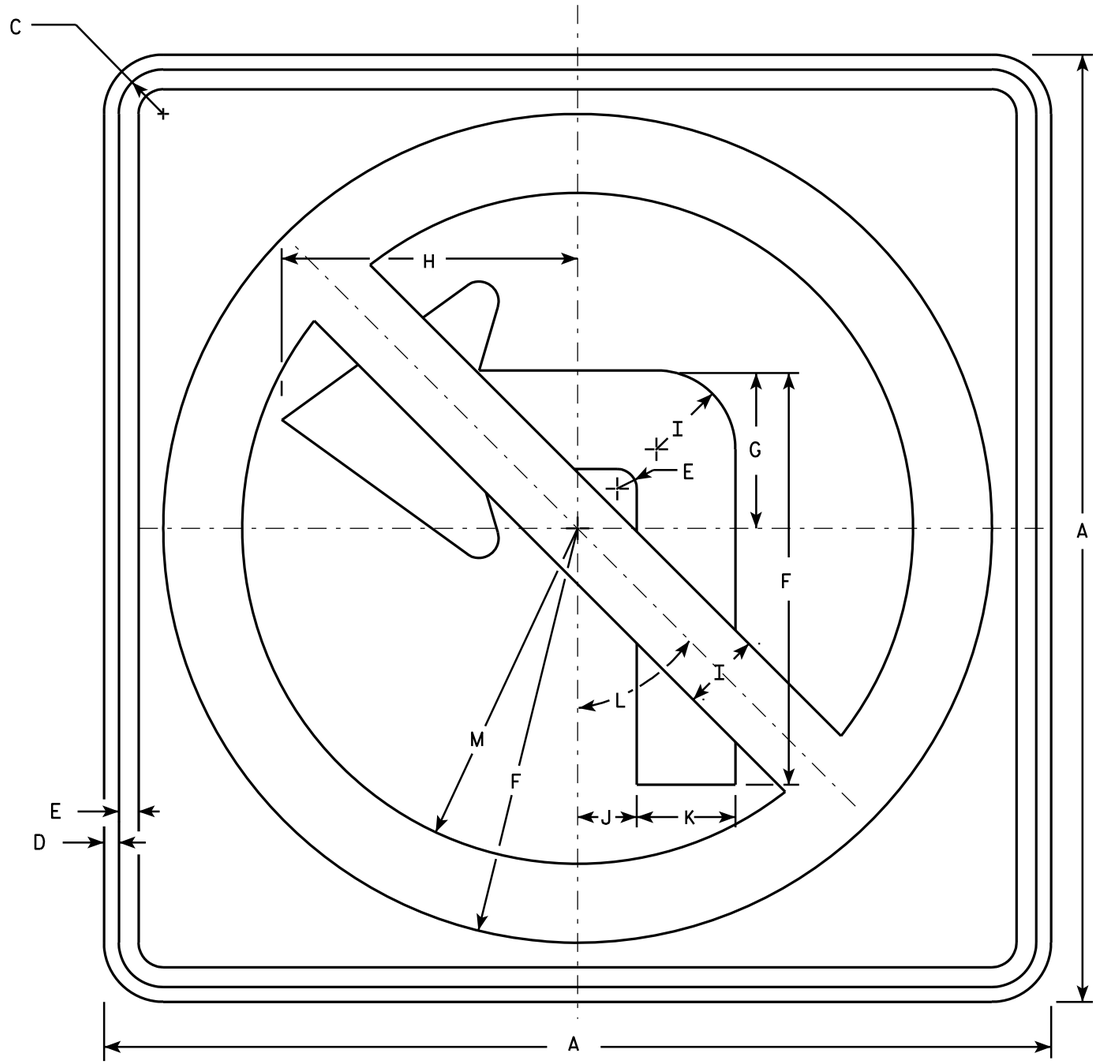

R3-2

NOTES

1. Sign is Type II - Type H Reflective - reference WIS DOT Standard Specification for HIGHWAY and STRUCTURE CONSTRUCTION latest edition.
2. Color:
   Background - White
   Message - See note 4
3. Corners may be square or rounded when base material is plywood but borders shall be rounded as shown. When base material is metal, the corners and borders shall be rounded.
4. Border & Arrow are non reflective black, the circle with diagonal bar is reflective red.

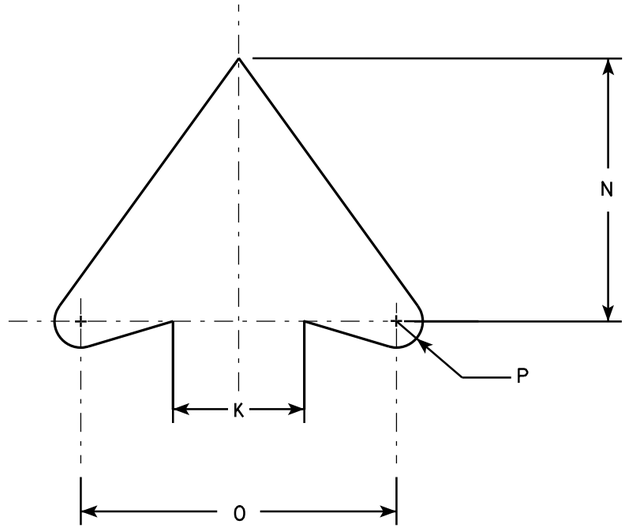

ARROW DETAIL

SIZE	A	B	C	D	E	F	G	H	I	J	K	L	M	N	O	P	Q	R	S	T	U	V	W	X	Y	Z	Area sq. ft.
1	24		1 1/8	3/8	1/2	10 1/2	4	7 1/2	2	1 1/2	2 1/2	45°	8 1/2	5	6	1/2											4.0
2S	24		1 1/8	3/8	1/2	10 1/2	4	7 1/2	2	1 1/2	2 1/2	45°	8 1/2	5	6	1/2											4.0
2M	36		1 5/8	5/8	3/4	15 3/4	6	11 1/4	3	2 1/4	3 3/4	45°	12 3/4	7 1/2	9	3/4											9.0
3	36		1 5/8	5/8	3/4	15 3/4	6	11 1/4	3	2 1/4	3 3/4	45°	12 3/4	7 1/2	9	3/4											9.0
4	36		1 5/8	5/8	3/4	15 3/4	6	11 1/4	3	2 1/4	3 3/4	45°	12 3/4	7 1/2	9	3/4											9.0
5	48		2 1/4	3/4	1	21	8	15	4	3	5	45°	17	10	12	1											16.0

STANDARD SIGN
R3-2

WISCONSIN DEPT OF TRANSPORTATION

APPROVED Matthew R Rauch
for State Traffic Engineer

DATE 12/08/10 PLATE NO. R3-2.10

PROJECT NO:	HWY:	COUNTY:		SHEET NO: 142	E

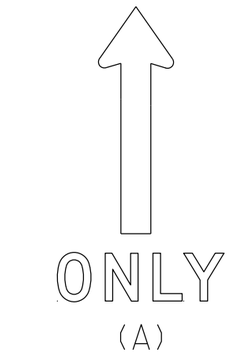

(A)

(B)

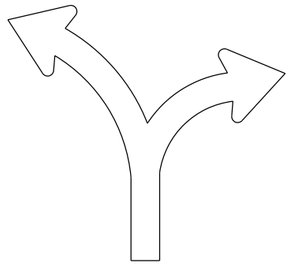
(C)

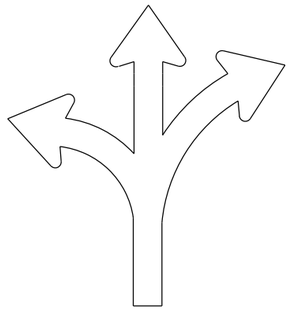
(D)

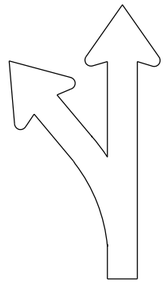
(E)

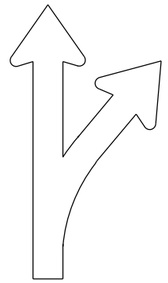
(F)

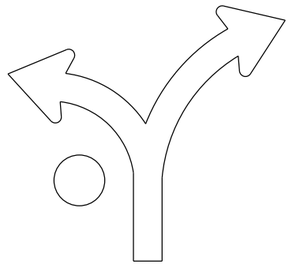
(G)

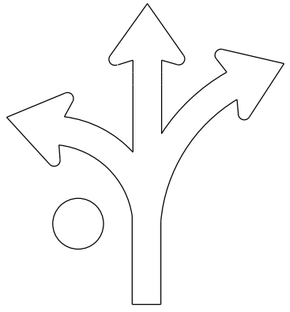
(H)

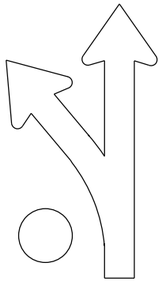
(I)

(L)

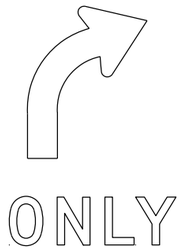

(R)

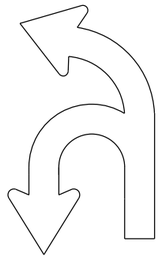
(U)

NOTES

1. Sigs are Type II - Type H Reflective
2. Color:
   Background - White
   Message - Black
3. Message Series - D
4. Use appropriate Letter for Sign Code
   Each letter added makes sign wider. Example R3-8EAR
5. Square footage of sign varies by letters

1 Letter =	3.75 sq ft	for Size 2
	6.0 sq ft	for Size 3
	10.0 sq ft	for Size 4 or 5
2 Letters =	7.5 sq ft	for Size 2
	12.0 sq ft	for Size 3
	20.0 sq ft	for Size 4 or 5
3 Letters =	11.25 sq ft	for Size 2
	18.0 sq ft	for Size 3
	30.0 sq ft	for Size 4 or 5
4 Letters =	15.0 sq ft	for Size 2
	24.0 sq ft	for Size 3
	40.0 sq ft	for Size 4 or 5
5 Letters =	18.75 sq ft	for Size 2
	30.0 sq ft	for Size 3
	50.0 sq ft	for Size 4 or 5
6 Letters =	22.5 sq ft	for Size 2
	36.0 sq ft	for Size 3
	60.0 sq ft	for Size 4 or 5

6. When letters C,D,G,H are used on the Left or Right end of the sign the Sq. Ft. changes.
   Add the amounts when these letters are used:
   1.25 sq ft for Size 2
   1.5 sq ft for Size 3
   2.0 sq ft for Size 4 or 5

STANDARD SIGN
R3-8 Series

WISCONSIN DEPT OF TRANSPORTATION

APPROVED Matthew R Rauch
For State Traffic Engineer

DATE 5/21/19 PLATE NO. R3-8.1

7

7

PROJECT NO:

SHEET NO: 143 E

NOTES

1. Sign is Type II - Type H Reflective
2. Color:
   Background - White
   Message - Black
3. Message Series - D

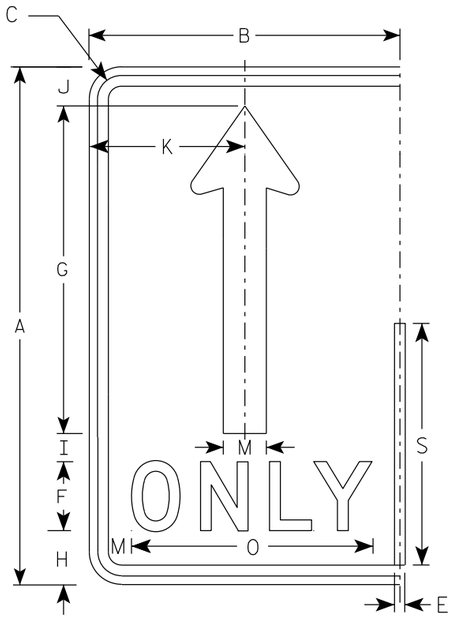

(A)

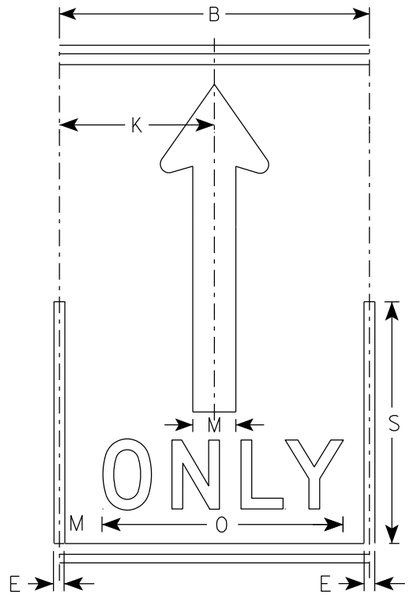

(A)

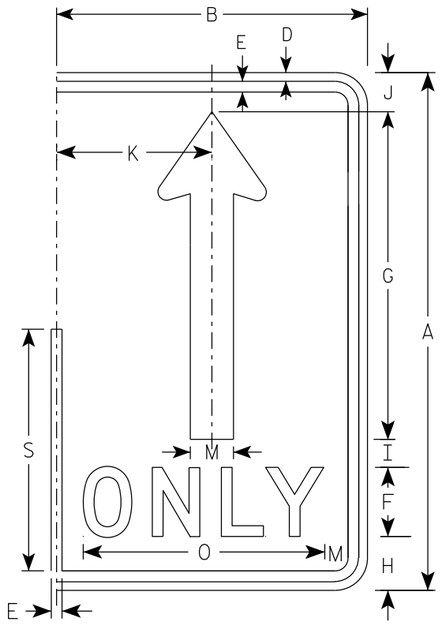

(A)

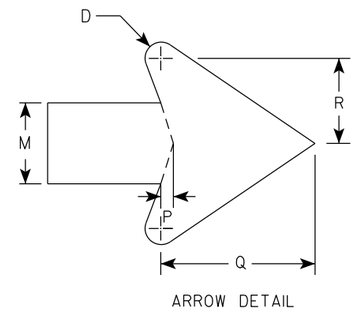

ARROW DETAIL

SIZE	A	B	C	D	E	F	G	H	I	J	K	L	M	N	O	P	Q	R	S	T	U	V	W	X	Y	Z	Area sq. ft.
1																											
2S	30	18	1 3/8	1/2	5/8	4	19	3 1/8	1 5/8	2 1/4	9		2 1/2		14	3/8	4 3/4	2 5/8	14								3.75
2M	30	18	1 3/8	1/2	5/8	4	19	3 1/8	1 5/8	2 1/4	9		2 1/2		14	3/8	4 3/4	2 5/8	14								3.75
3	36	24	1 3/8	1/2	5/8	5	22 3/4	3 3/4	1 3/4	2 3/4	12		3		17 5/8	1/2	5 3/4	3 1/8	16 3/4								6.0
4	48	30	2 1/4	3/4	1	6	30 3/8	5 1/8	2 7/8	3 5/8	15		4		21 3/4	5/8	7 5/8	4 1/4	22 3/8								10.0
5	48	30	2 1/4	3/4	1	6	30 3/8	5 1/8	2 7/8	3 5/8	15		4		21 3/4	5/8	7 5/8	4 1/4	22 3/8								10.0

STANDARD SIGN
R3-8 (A) Arrow

WISCONSIN DEPT OF TRANSPORTATION

APPROVED Matthew R Rauch
for State Traffic Engineer

DATE 5/21/19 PLATE NO. R3-8.1

PROJECT NO: | HWY: | COUNTY: | SHEET NO: 144 | E

NOTES

1. Sign is Type II - Type H Reflective
2. Color:
   Background - White
   Message - Black
   Message Series - D

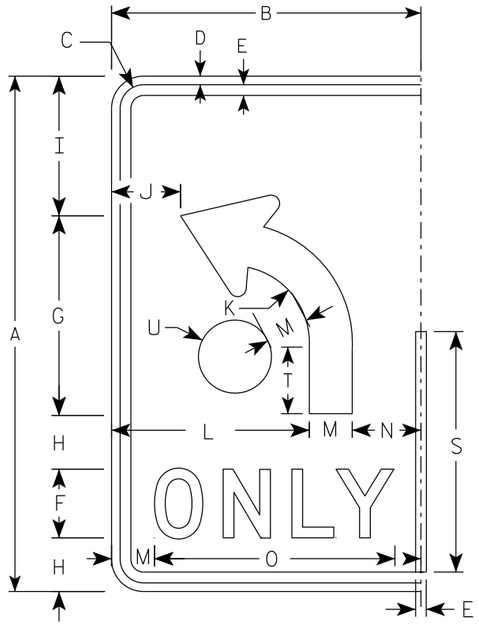

(B)

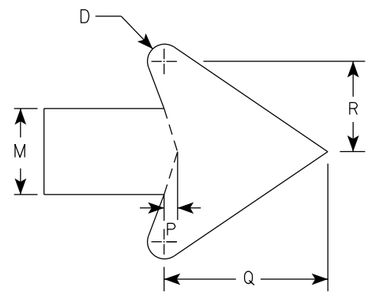

ARROW DETAIL

SIZE	A	B	C	D	E	F	G	H	I	J	K	L	M	N	O	P	Q	R	S	T	U	V	W	X	Y	Z	Area sq. ft.
1																											
2S	30	18	1 3/8	1/2	5/8	4	11 5/8	3 1/8	8 1/8	4	4 1/2	11 1/2	2 1/2	4	14	3/8	4 3/4	2 5/8	14	3 7/8	2 1/8						3.75
2M	30	18	1 3/8	1/2	5/8	4	11 5/8	3 1/8	8 1/8	4	4 1/2	11 1/2	2 1/2	4	14	3/8	4 3/4	2 5/8	14	3 7/8	2 1/8						3.75
3	36	24	1 3/8	1/2	5/8	5	14	3 1/2	9 3/4	6	5 3/8	15	3	6	17 5/8	1/2	5 3/4	3 1/8	16 3/4	4 5/8	2 1/2						6.0
4	48	30	2 1/4	3/4	1	6	18 5/8	5 1/8	13 1/8	6 1/8	7 1/4	18	4	8	21 3/4	5/8	7 5/8	4 1/4	22 3/8	6 1/4	3 3/8						10.0
5	48	30	2 1/4	3/4	1	6	18 5/8	5 1/8	13 1/8	6 1/8	7 1/4	18	4	8	21 3/4	5/8	7 5/8	4 1/4	22 3/8	6 1/4	3 3/8						10.0

STANDARD SIGN

R3-8 (B) Arrow

WISCONSIN DEPT OF TRANSPORTATION

APPROVED Matthew R Rauch

for State Traffic Engineer

DATE 5/21/19 PLATE NO. R3-8.1

PROJECT NO:

SHEET NO: 145 E

NOTES

1. Sign is Type II - Type H Reflective
2. Color:
   Background - White
   Message - Black
3. Message Series - None

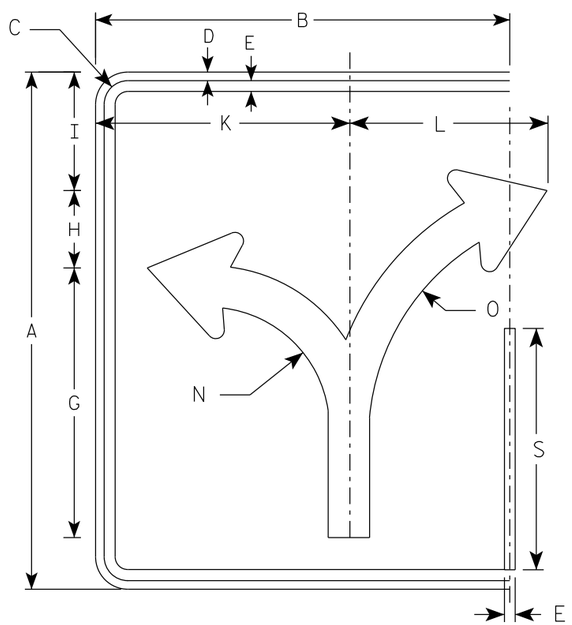

(C)

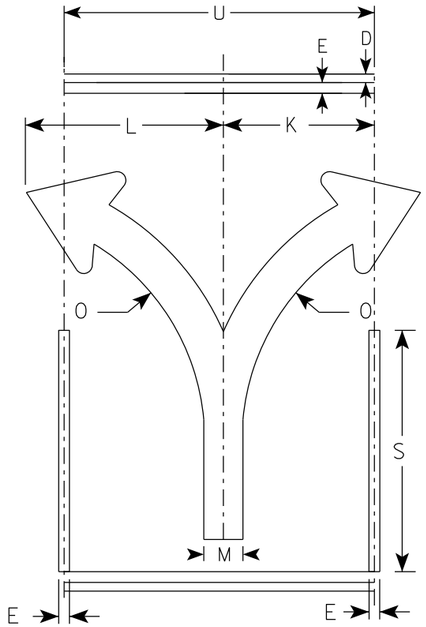

(C)

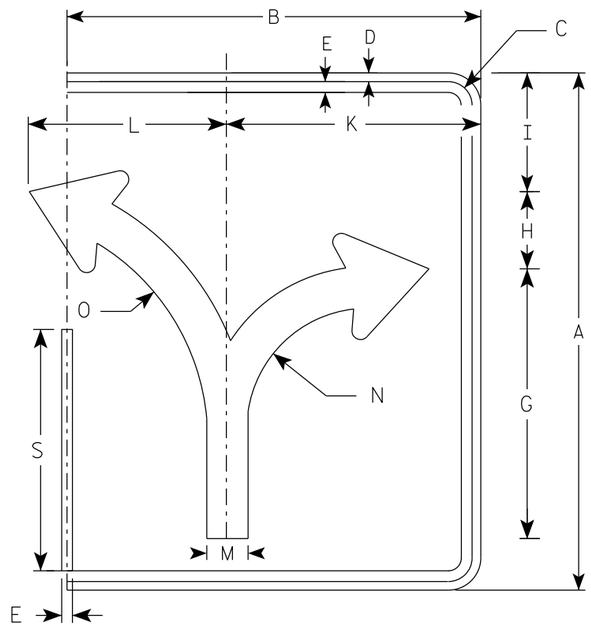

(C)

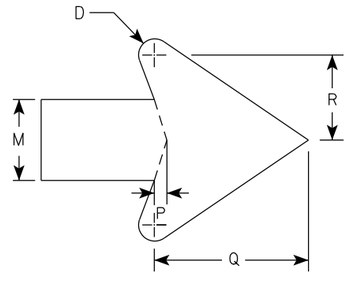

ARROW DETAIL

SIZE	A	B	C	D	E	F	G	H	I	J	K	L	M	N	O	P	Q	R	S	T	U	V	W	X	Y	Z	ENDS Area sq. ft.	MIDDLE Area sq. ft.
1																												
2S	30	24	1 3/8	1/2	5/8		15 5/8	4 1/2	6 7/8		14 3/4	11 1/2	2 3/8	7	13 1/4	3/8	4 1/2	2 1/2	14		18						5.0	3.75
2M	30	24	1 3/8	1/2	5/8		15 5/8	4 1/2	6 7/8		14 3/4	11 1/2	2 3/8	7	13 1/4	3/8	4 1/2	2 1/2	14		18						5.0	3.75
3	36	30	1 3/8	1/2	5/8		18 3/4	5 1/2	8 1/4		17 1/4	17 1/4	2 7/8	8 3/8	16	1/2	5 1/2	3	16 3/4		24						7.5	6.0
4	48	36	2 1/4	3/4	1		24 7/8	7 1/4	11		23 1/8	18	3 3/4	11 1/8	21 1/4	5/8	7 1/8	4	22 3/8		30						12.0	10.0
5	48	36	2 1/4	3/4	1		24 7/8	7 1/4	11		23 1/8	18	3 3/4	11 1/8	21 1/4	5/8	7 1/8	4	22 3/8		30						12.0	10.0

STANDARD SIGN
R3-8 (C) Arrow

WISCONSIN DEPT OF TRANSPORTATION

APPROVED Matthew R Rauch
for State Traffic Engineer

DATE 5/21/19 PLATE NO. R3-8.1

PROJECT NO: | HWY: | COUNTY: | SHEET NO: 146 | E

NOTES

1. Sign is Type II - Type H Reflective
2. Color:
   Background - White
   Message - Black
3. Message Series - None

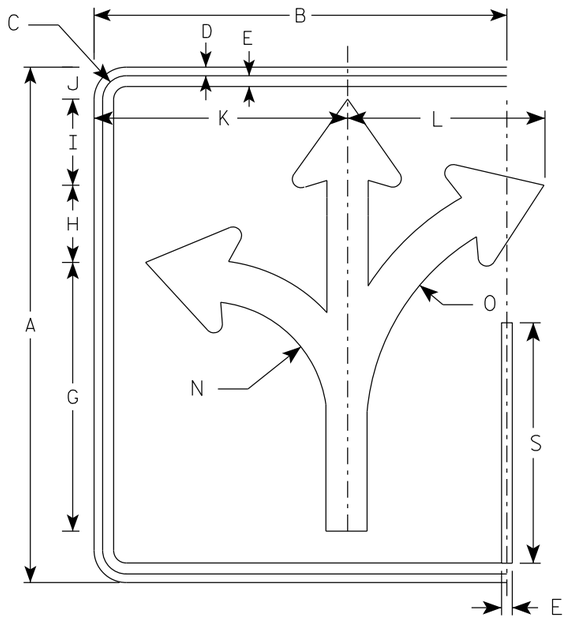

(D)

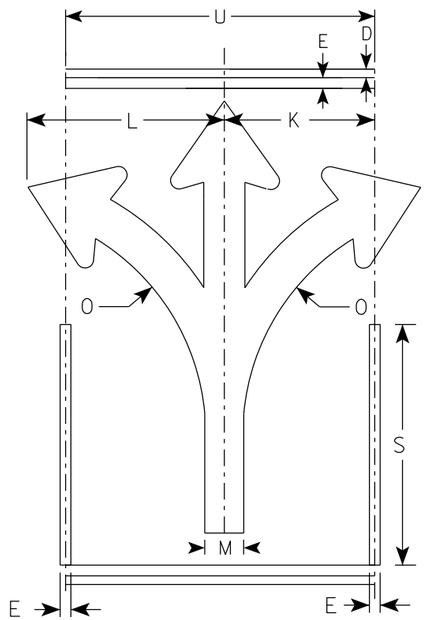

(D)

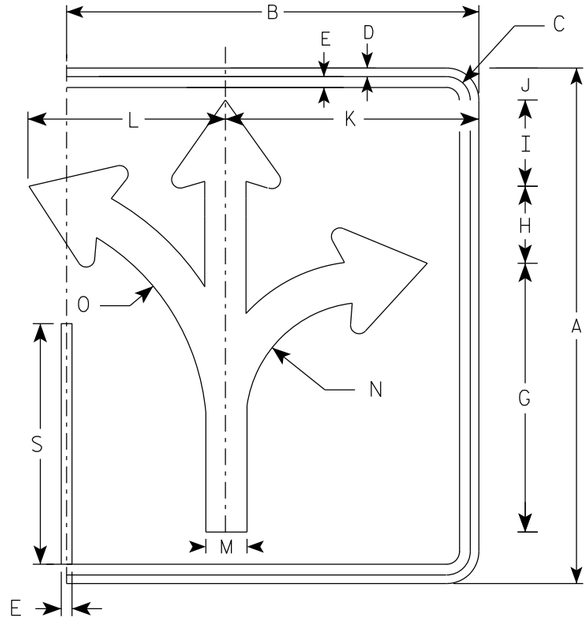

(D)

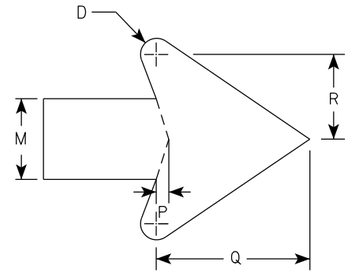

ARROW DETAIL

SIZE	A	B	C	D	E	F	G	H	I	J	K	L	M	N	O	P	Q	R	S	T	U	V	W	X	Y	Z	ENDS Area sq. ft.	MIDDLE Area sq. ft.
1																												
2S	30	24	1 3/8	1/2	5/8		15 5/8	4 1/2	5	1 7/8	14 3/4	11 1/2	2 3/8	7	13 1/4	3/8	4 1/2	2 1/2	14		18						5.0	3.75
2M	30	24	1 3/8	1/2	5/8		15 5/8	4 1/2	5	1 7/8	14 3/4	11 1/2	2 3/8	7	13 1/4	3/8	4 1/2	2 1/2	14		18						5.0	3.75
3	36	30	1 3/8	1/2	5/8		18 3/4	5 1/2	6	2 1/4	17 1/4	17 1/4	2 7/8	8 3/8	16	1/2	5 1/2	3	16 3/4		24						7.5	6.0
4	48	36	2 1/4	3/4	1		24 7/8	7 1/4	7 7/8	3 1/8	23 1/8	18	3 3/4	11 1/8	21 1/4	5/8	7 1/8	4	22 3/8		30						12.0	10.0
5	48	36	2 1/4	3/4	1		24 7/8	7 1/4	7 7/8	3 1/8	23 1/8	18	3 3/4	11 1/8	21 1/4	5/8	7 1/8	4	22 3/8		30						12.0	10.0

STANDARD SIGN
R3-8 (D) Arrow

WISCONSIN DEPT OF TRANSPORTATION

APPROVED Matthew R Rauch
for State Traffic Engineer

DATE 5/21/19 PLATE NO. R3-8.1

PROJECT NO: | HWY: | COUNTY: | SHEET NO: 147 | E

NOTES

1. Sign is Type II - Type H Reflective
2. Color:
   Background - White
   Message - Black
3. Message Series - None

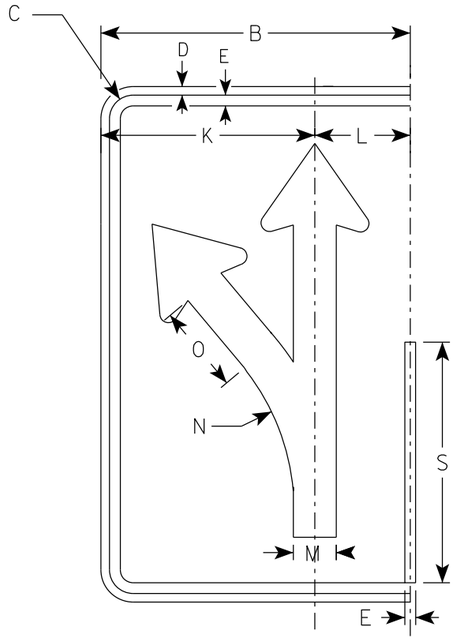

(E)

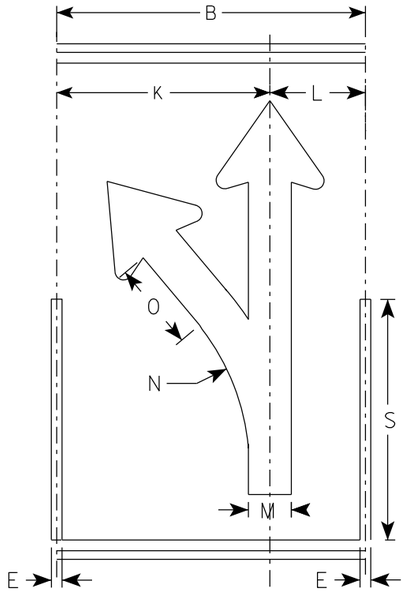

(E)

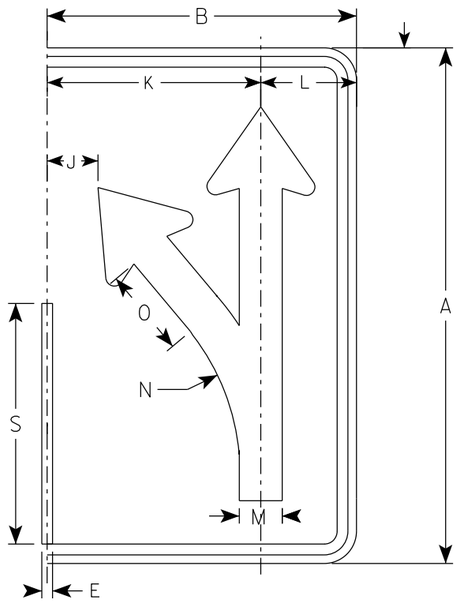

(E)

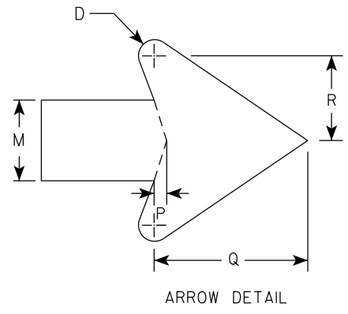

ARROW DETAIL

SIZE	A	B	C	D	E	F	G	H	I	J	K	L	M	N	O	P	Q	R	S	T	U	V	W	X	Y	Z	Area sq. ft.
1																											
2S	30	18	1 3/8	1/2	5/8		18 1/4	4 3/4	3 1/4	3	12 1/2	5 1/2	2 1/2	13 1/4	5 1/8	3/8	4 3/4	2 5/8	14								3.75
2M	30	18	1 3/8	1/2	5/8		18 1/4	4 3/4	3 1/4	3	12 1/2	5 1/2	2 1/2	13 1/4	5 1/8	3/8	4 3/4	2 5/8	14								3.75
3	36	24	1 3/8	1/2	5/8		21 7/8	5 5/8	4	4 7/8	16 1/8	7 3/4	3	15 7/8	6 1/8	1/2	5 3/4	3 1/8	16 3/4								6.0
4	48	30	2 1/4	3/4	1		29 1/8	7 1/2	5 1/4	5 3/8	20 1/2	9 1/2	4	21 1/4	8 1/4	5/8	7 5/8	4 1/4	22 3/8								10.0
5	48	30	2 1/4	3/4	1		29 1/8	7 1/2	5 1/4	5 3/8	20 1/2	9 1/2	4	21 1/4	8 1/4	5/8	7 5/8	4 1/4	22 3/8								10.0

STANDARD SIGN
R3-8 (E) Arrow

WISCONSIN DEPT OF TRANSPORTATION

APPROVED Matthew R Rauch
For State Traffic Engineer

DATE 5/21/19 PLATE NO. R3-8.1

PROJECT NO: | HWY: | COUNTY: | SHEET NO: 148 | E

NOTES

1. Sign is Type II - Type H Reflective
2. Color:
   Background - White
   Message - Black
3. Message Series - None

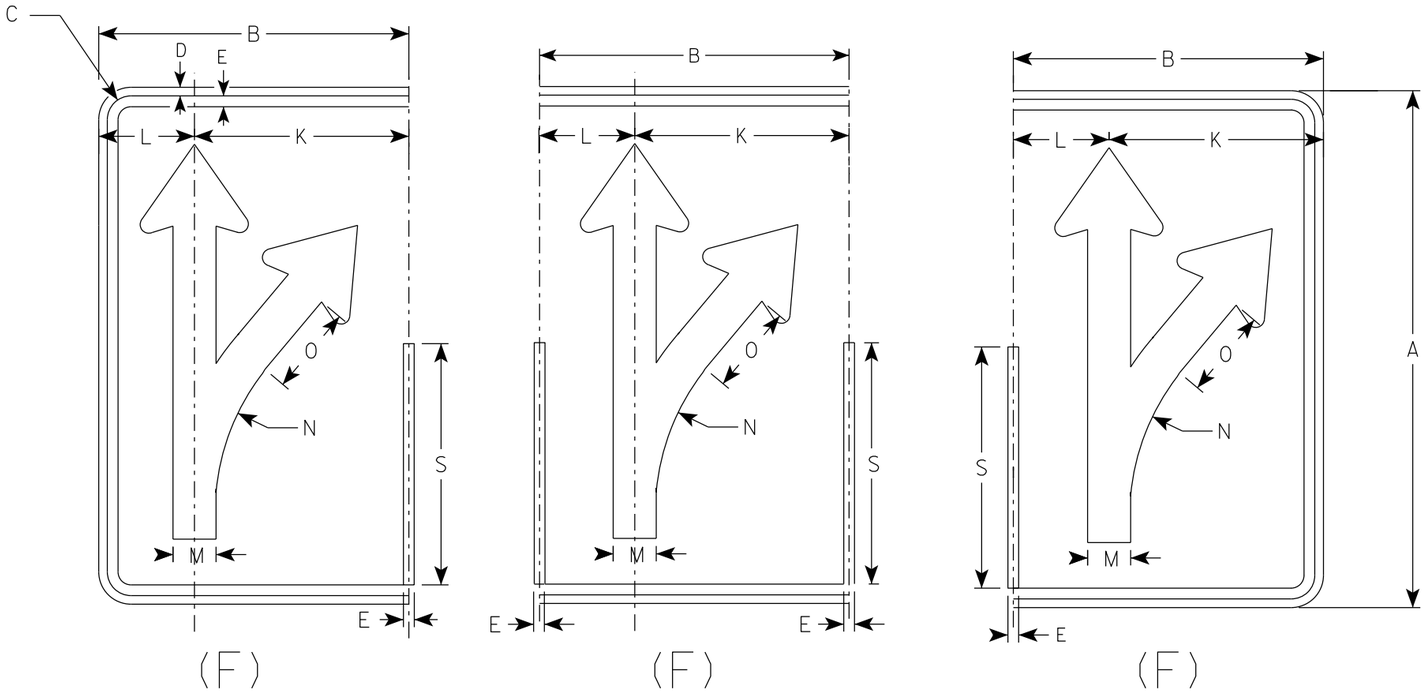

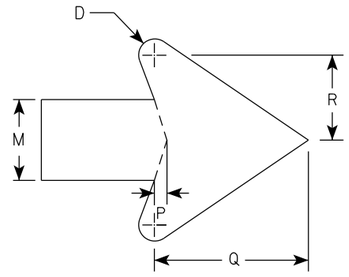

ARROW DETAIL

SIZE	A	B	C	D	E	F	G	H	I	J	K	L	M	N	O	P	Q	R	S	T	U	V	W	X	Y	Z	Area sq. ft.
1																											
2S	30	18	1 3/8	1/2	5/8		18 1/4	4 3/4	3 1/4	3	12 1/2	5 1/2	2 1/2	13 1/4	5 1/8	3/8	4 3/4	2 5/8	14								3.75
2M	30	18	1 3/8	1/2	5/8		18 1/4	4 3/4	3 1/4	3	12 1/2	5 1/2	2 1/2	13 1/4	5 1/8	3/8	4 3/4	2 5/8	14								3.75
3	36	24	1 3/8	1/2	5/8		21 7/8	5 5/8	4	4 7/8	16 1/8	7 3/4	3	15 7/8	6 1/8	1/2	5 3/4	3 1/8	16 3/4								6.0
4	48	30	2 1/4	3/4	1		29 1/8	7 1/2	5 1/4	5 3/8	20 1/2	9 1/2	4	21 1/4	8 1/4	5/8	7 5/8	4 1/4	22 3/8								10.0
5	48	30	2 1/4	3/4	1		29 1/8	7 1/2	5 1/4	5 3/8	20 1/2	9 1/2	4	21 1/4	8 1/4	5/8	7 5/8	4 1/4	22 3/8								10.0

STANDARD SIGN
R3-8 (F) Arrow

WISCONSIN DEPT OF TRANSPORTATION

APPROVED Matthew R Rauch
for State Traffic Engineer

DATE 5/21/19 PLATE NO. R3-8.1

PROJECT NO: | HWY: | COUNTY: | SHEET NO: 149 | E

NOTES

1. Sign is Type II - Type H Reflective
2. Color:
   Background - White
   Message - Black
3. Message Series - None

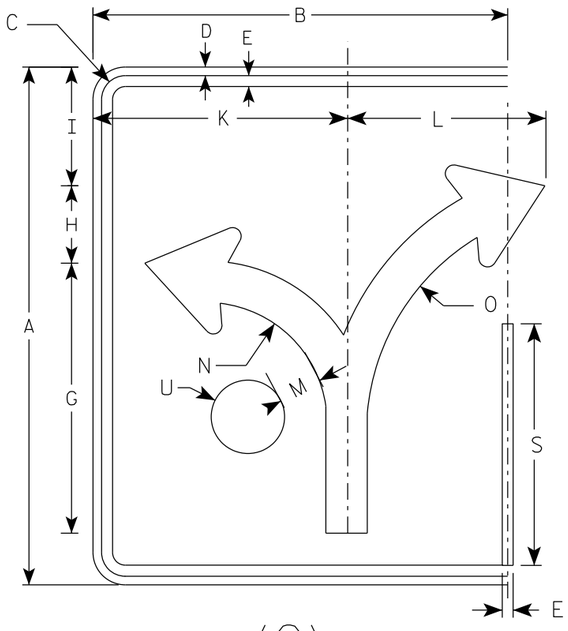

(G)

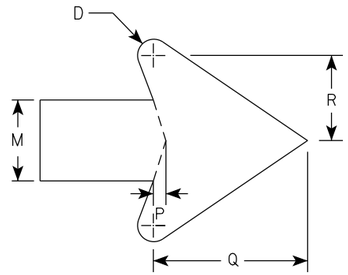

ARROW DETAIL

SIZE	A	B	C	D	E	F	G	H	I	J	K	L	M	N	O	P	Q	R	S	T	U	V	W	X	Y	Z	Area sq. ft.
1																											
2S	30	24	1 3/8	1/2	5/8		15 5/8	4 1/2	6 7/8		14 3/4	11 1/2	2 3/8	7	13 1/4	3/8	4 1/2	2 1/2	14		2 1/8						5.0
2M	30	24	1 3/8	1/2	5/8		15 5/8	4 1/2	6 7/8		14 3/4	11 1/2	2 3/8	7	13 1/4	3/8	4 1/2	2 1/2	14		2 1/8						5.0
3	36	30	1 3/8	1/2	5/8		18 3/4	5 1/2	8 1/4		17 1/4	17 1/4	2 7/8	8 3/8	16	1/2	5 1/2	3	16 3/4		2 1/2						7.5
4	48	36	2 1/4	3/4	1		24 7/8	7 1/4	11		23 1/8	18	3 3/4	11 1/8	21 1/4	5/8	7 1/8	4	22 3/8		3 3/8						12.0
5	48	36	2 1/4	3/4	1		24 7/8	7 1/4	11		23 1/8	18	3 3/4	11 1/8	21 1/4	5/8	7 1/8	4	22 3/8		3 3/8						12.0

STANDARD SIGN
R3-8 (G) Arrow

WISCONSIN DEPT OF TRANSPORTATION

APPROVED Matthew R Rauch
for State Traffic Engineer

DATE 5/21/19 PLATE NO. R3-8.1

PROJECT NO:	HWY:	COUNTY:		SHEET NO: 150	E

NOTES

1. Sign is Type II - Type H Reflective
2. Color:
   Background - White
   Message - Black
3. Message Series - None

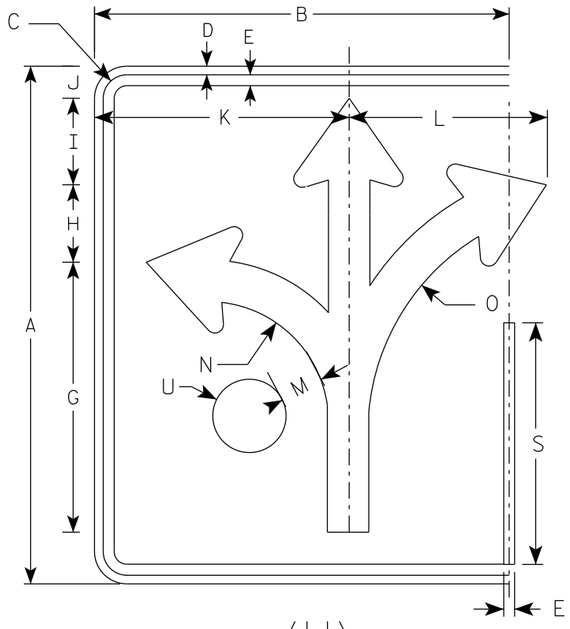

(H)

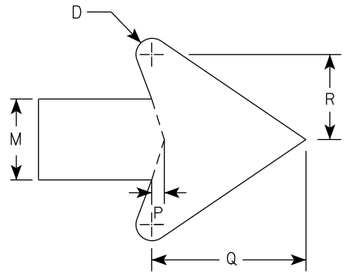

ARROW DETAIL

SIZE	A	B	C	D	E	F	G	H	I	J	K	L	M	N	O	P	Q	R	S	T	U	V	W	X	Y	Z	Area sq. ft.
1																											
2S	30	24	1 3/8	1/2	5/8		15 5/8	4 1/2	5	1 7/8	14 3/4	11 1/2	2 3/8	7	13 1/4	3/8	4 1/2	2 1/2	14		2 1/8						5.0
2M	30	24	1 3/8	1/2	5/8		15 5/8	4 1/2	5	1 7/8	14 3/4	11 1/2	2 3/8	7	13 1/4	3/8	4 1/2	2 1/2	14		2 1/8						5.0
3	36	30	1 3/8	1/2	5/8		18 3/4	5 1/2	6	3 1/8	17 1/4	17 1/4	2 7/8	8 3/8	16	1/2	5 1/2	3	16 3/4		2 1/2						7.5
4	48	36	2 1/4	3/4	1		24 7/8	7 1/4	7 7/8	3 1/8	23 1/8	18	3 3/4	11 1/8	21 1/4	5/8	7 1/8	4	22 3/8		3 3/8						12.0
5	48	36	2 1/4	3/4	1		24 7/8	7 1/4	7 7/8	3 1/8	23 1/8	18	3 3/4	11 1/8	21 1/4	5/8	7 1/8	4	22 3/8		3 3/8						12.0

STANDARD SIGN
R3-8 (H) Arrow

WISCONSIN DEPT OF TRANSPORTATION

APPROVED Matthew R Rauch
for State Traffic Engineer

DATE 5/21/19 PLATE NO. R3-8.1

PROJECT NO:	HWY:	COUNTY:		SHEET NO: 151	E

NOTES

1. Sign is Type II - Type H Reflective
2. Color:
   Background - White
   Message - Black
3. Message Series - None

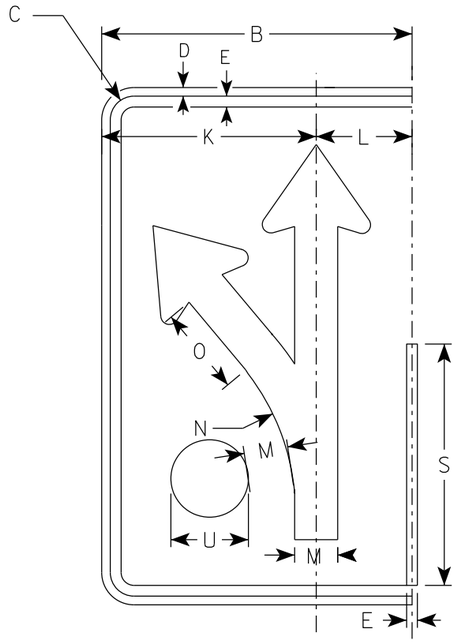

(I)

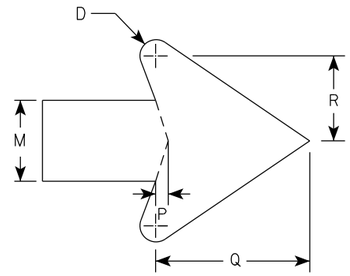

ARROW DETAIL

SIZE	A	B	C	D	E	F	G	H	I	J	K	L	M	N	O	P	Q	R	S	T	U	V	W	X	Y	Z	Area sq. ft.
1																											
2S	30	18	1 3/8	1/2	5/8		18 1/4	4 3/4	3 1/4	3	12 1/2	5 1/2	2 1/2	13 1/4	5 1/8	3/8	4 3/4	2 5/8	14		2 1/8						3.75
2M	30	18	1 3/8	1/2	5/8		18 1/4	4 3/4	3 1/4	3	12 1/2	5 1/2	2 1/2	13 1/4	5 1/8	3/8	4 3/4	2 5/8	14		2 1/8						3.75
3	36	24	1 3/8	1/2	5/8		21 7/8	5 5/8	4	4 7/8	16 1/8	7 3/4	3	15 7/8	6 1/8	1/2	5 3/4	3 1/8	16 3/4		2 1/2						6.0
4	48	30	2 1/4	3/4	1		29 1/8	7 1/2	5 1/4	5 3/8	20 1/2	9 1/2	4	21 1/4	8 1/4	5/8	7 5/8	4 1/4	22 3/8		3 3/8						10.0
5	48	30	2 1/4	3/4	1		29 1/8	7 1/2	5 1/4	5 3/8	20 1/2	9 1/2	4	21 1/4	8 1/4	5/8	7 5/8	4 1/4	22 3/8		3 3/8						10.0

STANDARD SIGN
R3-8 (I) Arrow

WISCONSIN DEPT OF TRANSPORTATION

APPROVED Matthew R Rauch
For State Traffic Engineer

DATE 5/21/19 PLATE NO. R3-8.1

PROJECT NO: | HWY: | COUNTY: | SHEET NO: 152 | E

NOTES

1. Sign is Type II - Type H Reflective
2. Color:
   Background - White
   Message - Black
3. Message Series - D

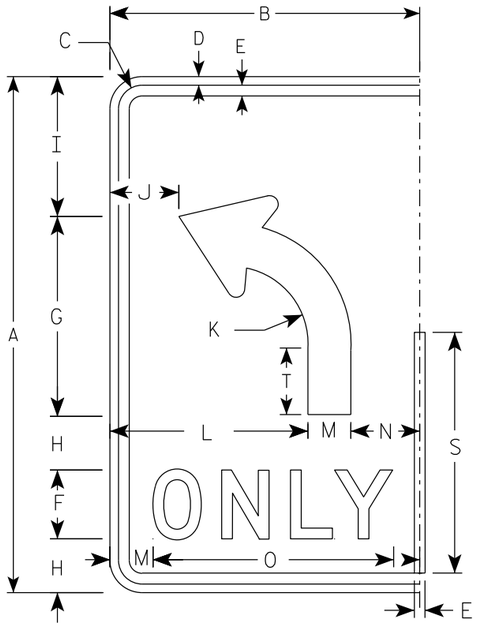

(L)

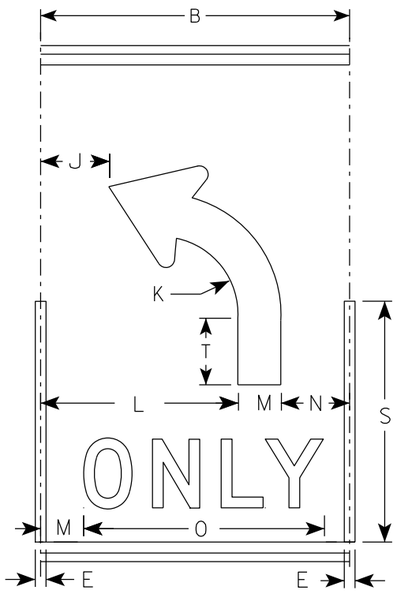

(L)

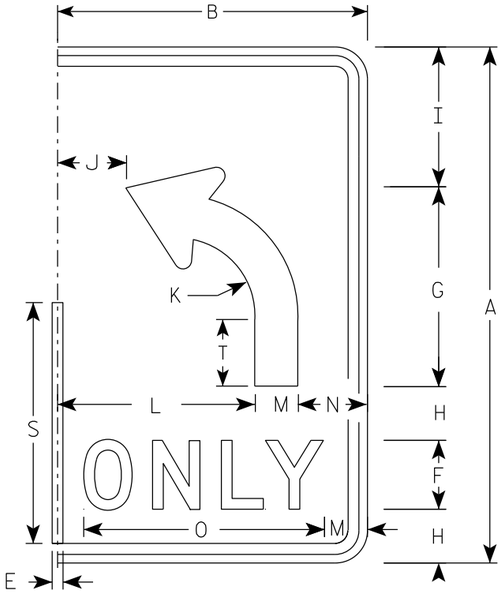

(L)

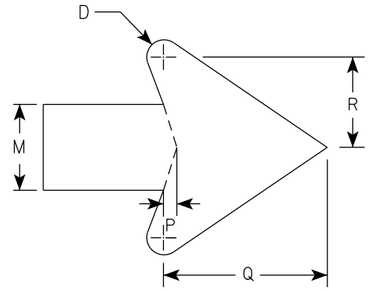

ARROW DETAIL

SIZE	A	B	C	D	E	F	G	H	I	J	K	L	M	N	O	P	Q	R	S	T	U	V	W	X	Y	Z	Area sq. ft.
1																											
2S	30	18	1 3/8	1/2	5/8	4	11 5/8	3 1/8	8 1/8	4	4 1/2	11 1/2	2 1/2	4	14	3/8	4 3/4	2 5/8	14	3 7/8							3.75
2M	30	18	1 3/8	1/2	5/8	4	11 5/8	3 1/8	8 1/8	4	4 1/2	11 1/2	2 1/2	4	14	3/8	4 3/4	2 5/8	14	3 7/8							3.75
3	36	24	1 3/8	1/2	5/8	5	14	3 1/2	9 3/4		5 3/8	15	3	6	17 5/8	1/2	5 3/4	3 1/8	16 3/4	4 5/8							6.0
4	48	30	2 1/4	3/4	1	6	18 5/8	5 1/8	13 1/8	6 1/8	7 1/4	18	4	8	21 3/4	5/8	7 5/8	4 1/4	22 3/8	6 1/4							10.0
5	48	30	2 1/4	3/4	1	6	18 5/8	5 1/8	13 1/8	6 1/8	7 1/4	18	4	8	21 3/4	5/8	7 5/8	4 1/4	22 3/8	6 1/4							10.0

STANDARD SIGN

R3-8 (L) Arrow

WISCONSIN DEPT OF TRANSPORTATION

APPROVED Matthew R Rauch
for State Traffic Engineer

DATE 5/21/19 PLATE NO. R3-8.1

PROJECT NO:

SHEET NO: 153 E

NOTES

1. Sign is Type II - Type H Reflective
2. Color:
   Background - White
   Message - Black
3. Message Series - D

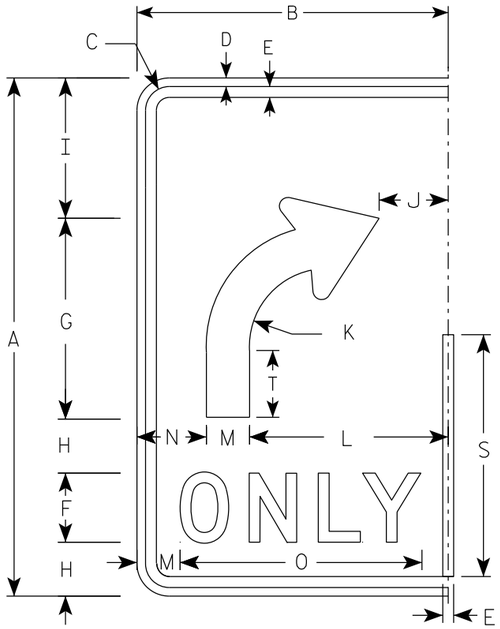

(R)

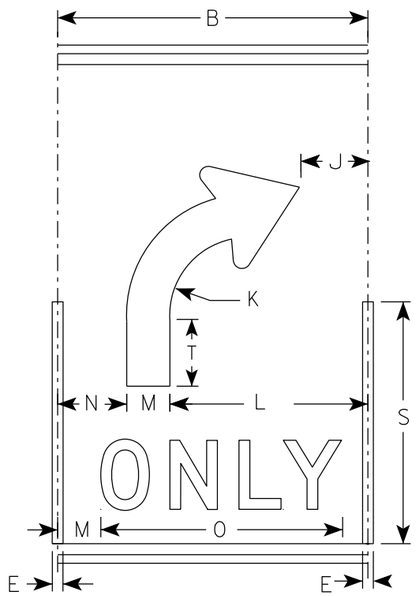

(R)

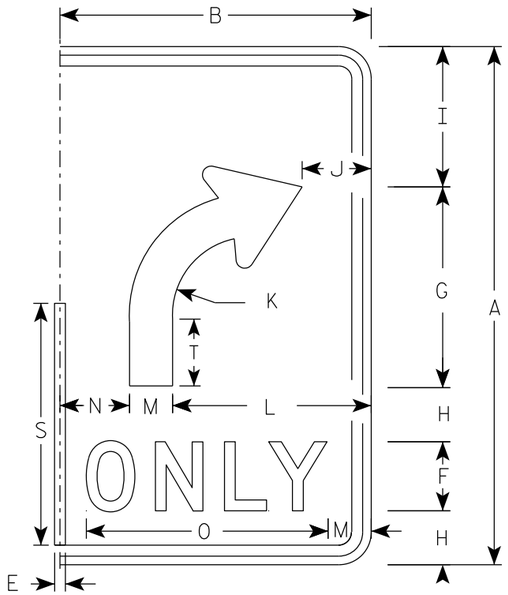

(R)

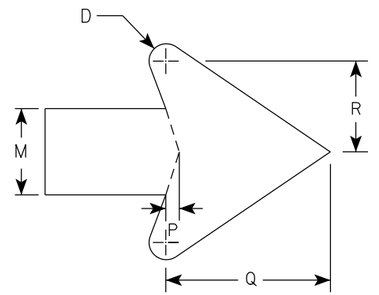

ARROW DETAIL

SIZE	A	B	C	D	E	F	G	H	I	J	K	L	M	N	O	P	Q	R	S	T	U	V	W	X	Y	Z	Area sq. ft.
1																											
2S	30	18	1 3/8	1/2	5/8	4	11 5/8	3 1/8	8 1/8	4	4 1/2	11 1/2	2 1/2	4	14	3/8	4 3/4	2 5/8	14	3 7/8							3.75
2M	30	18	1 3/8	1/2	5/8	4	11 5/8	3 1/8	8 1/8	4	4 1/2	11 1/2	2 1/2	4	14	3/8	4 3/4	2 5/8	14	3 7/8							3.75
3	36	24	1 3/8	1/2	5/8	5	14	3 1/2	9 3/4	6	5 3/8	15	3	6	17 5/8	1/2	5 3/4	3 1/8	16 3/4	4 5/8							6.0
4	48	30	2 1/4	3/4	1	6	18 5/8	5 1/8	13 1/8	6 1/8	7 1/4	18	4	8	21 3/4	5/8	7 5/8	4 1/4	22 3/8	6 1/4							10.0
5	48	30	2 1/4	3/4	1	6	18 5/8	5 1/8	13 1/8	6 1/8	7 1/4	18	4	8	21 3/4	5/8	7 5/8	4 1/4	22 3/8	6 1/4							10.0

STANDARD SIGN

R3-8 (R) Arrow

WISCONSIN DEPT OF TRANSPORTATION

APPROVED Matthew R Rauch
for State Traffic Engineer

DATE 5/21/19 PLATE NO. R3-8.1

PROJECT NO:

SHEET NO: 154 **E**

NOTES

1. Sign is Type II - Type H Reflective
2. Color:
   Background - White
   Message - Black
3. Message Series - None

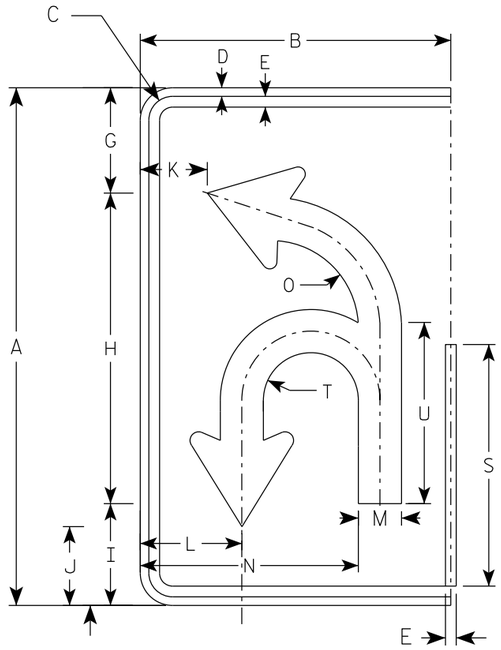

(U)

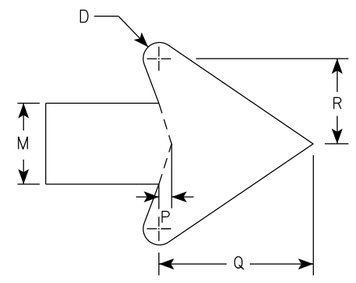

ARROW DETAIL

SIZE	A	B	C	D	E	F	G	H	I	J	K	L	M	N	O	P	Q	R	S	T	U	V	W	X	Y	Z	Area sq. ft.
1																											
2S	30	18	1 3/8	1/2	5/8		6 1/8	18	5 7/8	4 5/8	3 7/8	5 7/8	2 1/2	12 5/8	5 1/8	3/8	4 3/4	2 5/8	14	2 3/4	10 1/2						3.75
2M	30	18	1 3/8	1/2	5/8		6 1/8	18	5 7/8	4 5/8	3 7/8	5 7/8	2 1/2	12 5/8	5 1/8	3/8	4 3/4	2 5/8	14	2 3/4	10 1/2						3.75
3	36	24	1 3/8	1/2	5/8		21 7/8	21 5/8	7 1/8	5 1/2	5 7/8	8 1/4	3	16 3/8	6 1/8	1/2	5 3/4	3 1/8	16 3/4	3 1/4	12 5/8						6.0
4	48	30	2 1/4	3/4	1		29 1/8	28 3/4	9 3/8	7 1/4	6 7/8	10	4	20 7/8	8 1/8	5/8	7 5/8	4 1/4	22 3/8	4 3/8	16 3/4						10.0
5	48	30	2 1/4	3/4	1		29 1/8	28 3/4	9 3/8	7 1/4	6 7/8	10	4	20 7/8	8 1/8	5/8	7 5/8	4 1/4	22 3/8	4 3/8	16 3/4						10.0

STANDARD SIGN
R3-8 (U) Arrow

WISCONSIN DEPT OF TRANSPORTATION

APPROVED Matthew R Rauch
for State Traffic Engineer

DATE 5/21/19 PLATE NO. R3-8.1

PROJECT NO: | HWY: | COUNTY: | SHEET NO: 155 | E

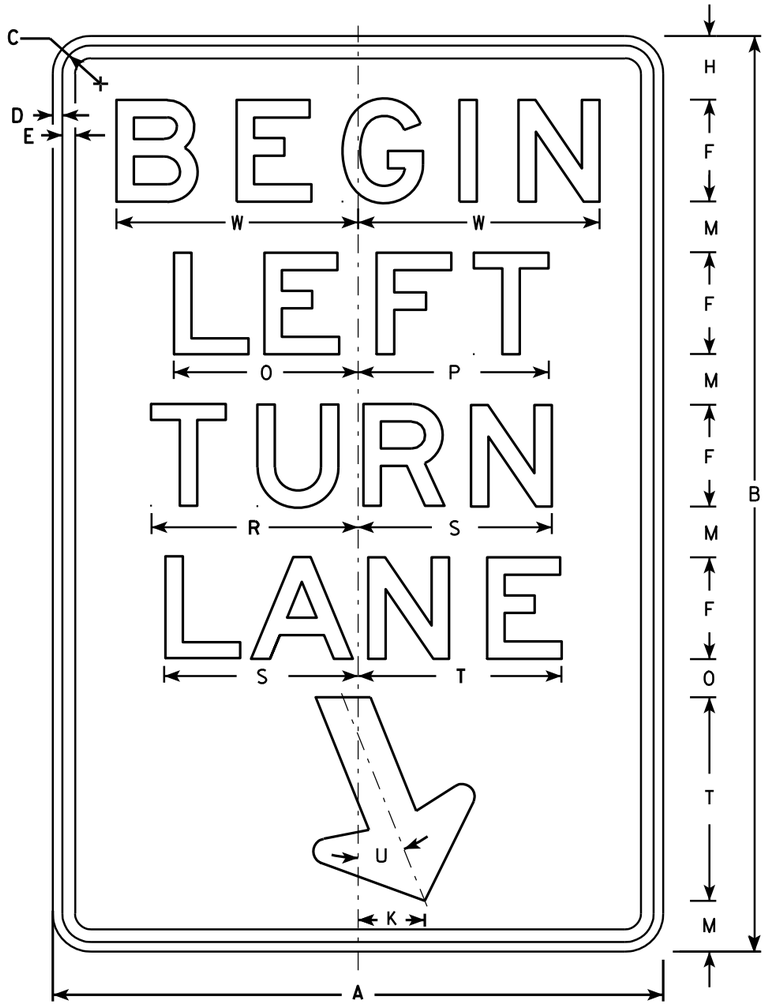

R3-20L

NOTES

1. Sign is Type II - Type H Reflective - reference WIS DOT Standard Specification for HIGHWAY and STRUCTURE CONSTRUCTION latest edition.
2. Color:
   Background - White
   Message - Black
3. Message Series - E
4. Corners may be square or rounded when base material is plywood but borders shall be rounded as shown. When base material is metal, the corners and borders shall be rounded.

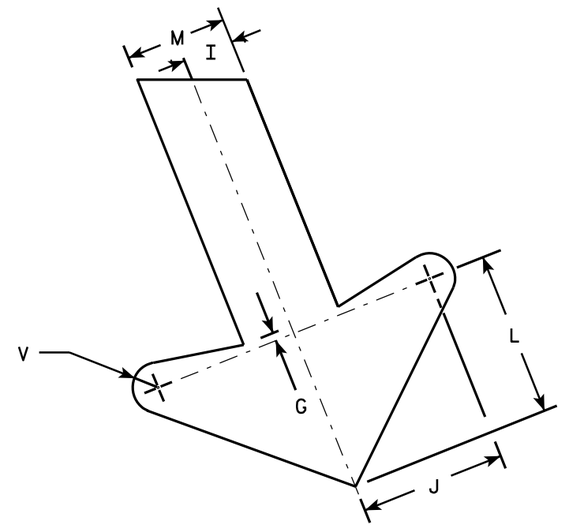

ARROW DETAIL

SIZE	A	B	C	D	E	F	G	H	I	J	K	L	M	N	O	P	Q	R	S	T	U	V	W	X	Y	Z	Area sq. ft.
1																											
2S	24	36	1 1/8	3/8	1/2	4	1/4	2 1/2	1	2 7/8	2 5/8	3 1/4	2	1 1/2	7 1/4	7 1/2		8 1/8	7 5/8	8	22°	1/2	9 1/2				6.0
2M	24	36	1 1/8	3/8	1/2	4	1/4	2 1/2	1	2 7/8	2 5/8	3 1/4	2	1 1/2	7 1/4	7 1/2		8 1/8	7 5/8	8	22°	1/2	9 1/2				6.0
3	36	54	1 3/4	1/2	5/8	6	3/8	3 3/4	1 1/2	4 1/4	4	4 7/8	3	2 1/4	10 7/8	11 1/4		12 1/4	11 1/2	12	22°	3/4	13 1/4				13.5
4																											
5																											

STANDARD SIGN
R3-20L

WISCONSIN DEPT OF TRANSPORTATION

APPROVED Matthew R Rauch
for State Traffic Engineer

DATE 10/18/10 PLATE NO. R3-20L.7

PROJECT NO: | HWY: | COUNTY: | SHEET NO: 156 | E

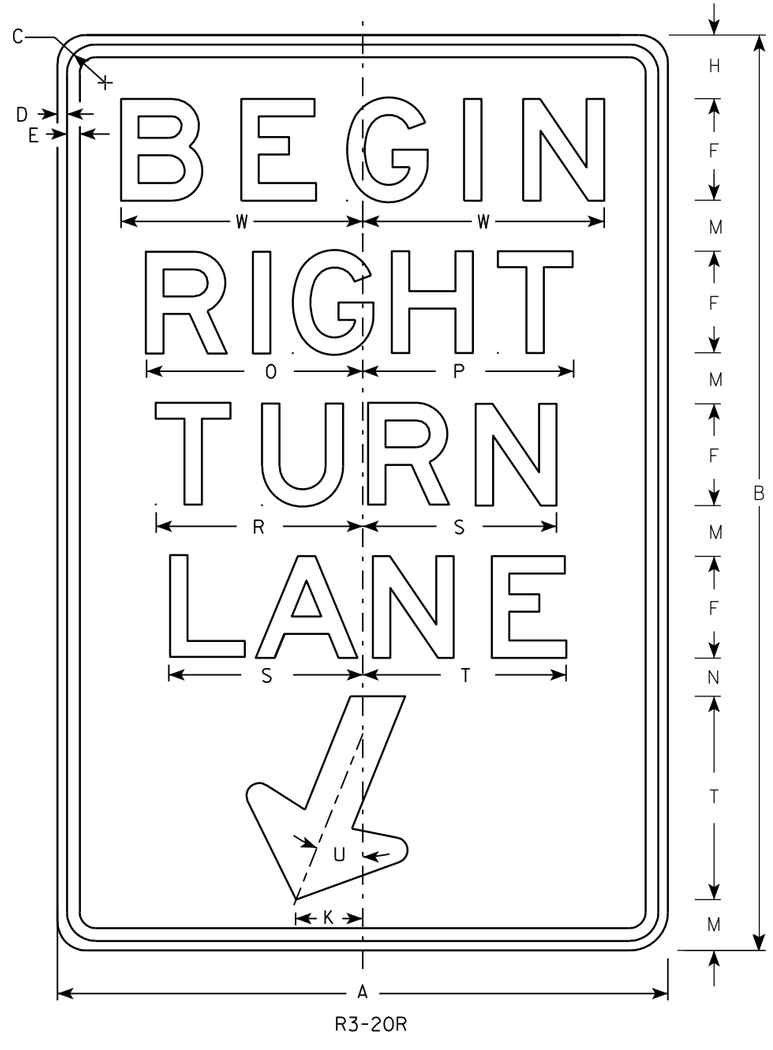

R3-20R

NOTES

1. Sign is Type II - Type H Reflective - reference WIS DOT Standard Specification for HIGHWAY and STRUCTURE CONSTRUCTION latest edition.
2. Color:
   Background - White
   Message - Black
3. Message Series - E
4. Corners may be square or rounded when base material is plywood but borders shall be rounded as shown. When base material is metal, the corners and borders shall be rounded.

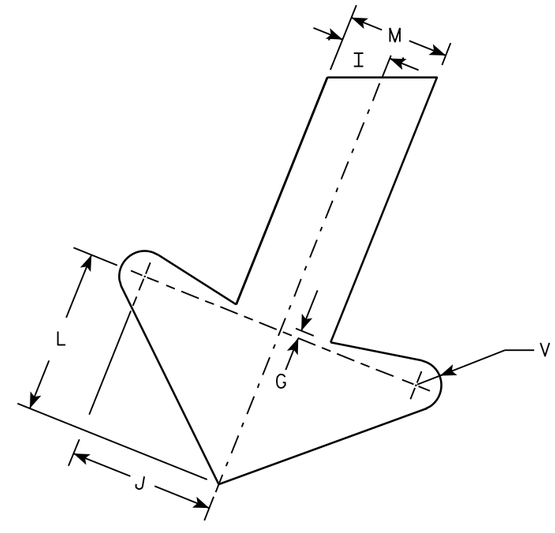

ARROW DETAIL

SIZE	A	B	C	D	E	F	G	H	I	J	K	L	M	N	O	P	Q	R	S	T	U	V	W	X	Y	Z	Area sq. ft.
1																											
2S	24	36	1 1/8	3/8	1/2	4	1/4	2 1/2	1	2 7/8	2 5/8	3 1/4	2	1 1/2	8 1/2	8 1/4		8 1/8	7 5/8	8	22°	1/2	9 1/2				6.0
2M	24	36	1 1/8	3/8	1/2	4	1/4	2 1/2	1	2 7/8	2 5/8	3 1/4	2	1 1/2	8 1/2	8 1/4		8 1/8	7 5/8	8	22°	1/2	9 1/2				6.0
3	36	54	1 3/4	1/2	5/8	6	3/8	3 3/4	1 1/2	4 1/4	4	4 7/8	3	2 1/4	12 3/4	12 1/2		12 1/4	11 1/2	12	22°	3/4	13 1/4				13.5
4																											
5																											

STANDARD SIGN
R3-20R

WISCONSIN DEPT OF TRANSPORTATION

APPROVED Matthew R Rauch
for State Traffic Engineer

DATE 10/18/10 PLATE NO. R3-20R.6

PROJECT NO: | HWY: | COUNTY: | SHEET NO: 157 | E

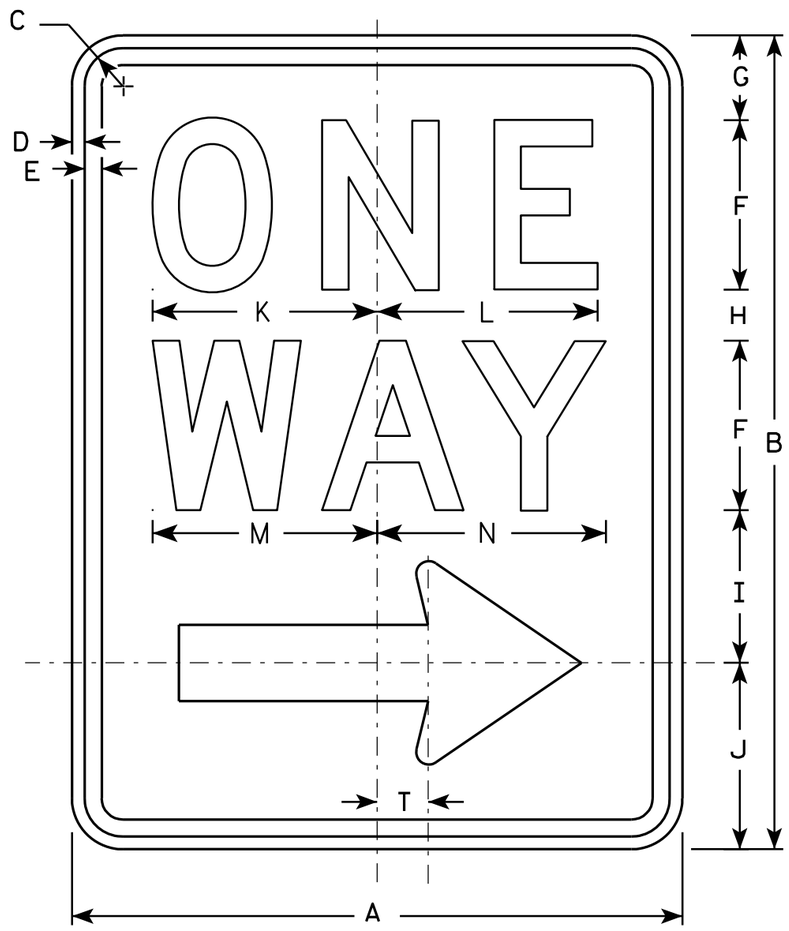

R6-2R

NOTES

1. Sign is Type II - Type H Reflective - reference WIS DOT Standard Specification for HIGHWAY and STRUCTURE CONSTRUCTION latest edition.
2. Color:
   Background - White
   Message - Black
3. Message Series - D
4. Corners may be square or rounded when base material is plywood but borders shall be rounded as shown. When base material is metal, the corners and borders shall be rounded.
5. R6-2L same as R6-2R except arrow points to the left.

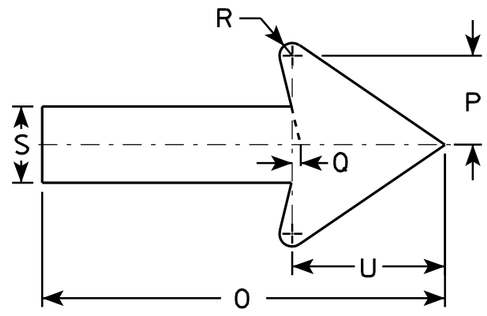

SIZE	A	B	C	D	E	F	G	H	I	J	K	L	M	N	O	P	Q	R	S	T	U	V	W	X	Y	Z
1	18	24	1 1/8	3/8	1/2	5	2 1/2	1 1/2	4 1/2	5 1/2	6 5/8	6 1/2	6 5/8	6 3/4	11 7/8	2 5/8	1/4	3/8	2 1/4	1 1/2	4 1/2					
2S	24	30	1 1/8	3/8	1/2	6	3	2 1/2	5 1/2	7	8 1/8	8 1/8	8 1/2	8 5/8	16	3 1/2	3/8	1/2	3	2	6					
2M	30	36	1 3/8	1/2	5/8	8	2 1/2	2 5/8	6 7/8	8	10 1/2	10 1/2	11 1/4	11 1/4	20	4 3/8	1/2	5/8	3 3/4	2 1/2	7 1/2					
3	36	48	1 7/8	1/2	5/8	10	5 1/4	3 1/4	9	10 1/2	12 3/4	12 3/4	13 1/4	13 1/2	24	5 5/8	1/2	3/4	4 3/4	3	9					
4	36	48	1 7/8	1/2	5/8	10	5 1/4	3 1/4	9	10 1/2	12 3/4	12 3/4	13 1/4	13 1/2	24	5 5/8	1/2	3/4	4 3/4	3	9					
5																										

STANDARD SIGN
R6-2 R&L

WISCONSIN DEPT OF TRANSPORTATION

APPROVED Matthew R Rauch
for State Traffic Engineer

DATE 11/2/10 PLATE NO. R6-2.8

PROJECT NO:	HWY:	COUNTY:		SHEET NO: 158	E

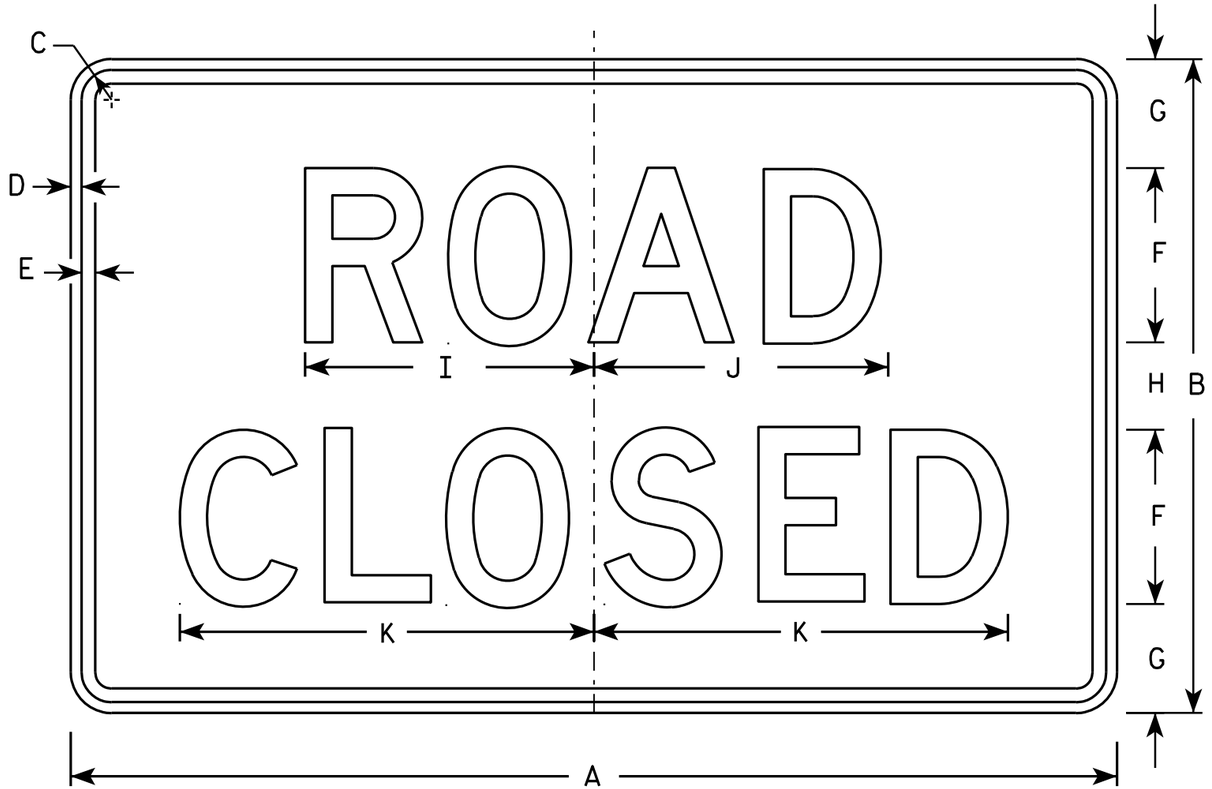

R11-2

NOTES

1. Sign is Type II - Type H Reflective - reference WIS DOT Standard Specification for HIGHWAY and STRUCTURE CONSTRUCTION latest edition.
2. Color:
   Background - White
   Message - Black
3. Message Series - D
4. Corners may be square or rounded when base material is plywood but borders shall be rounded as shown. When base material is metal, the corners and borders shall be rounded.
5. Modify the message as required.

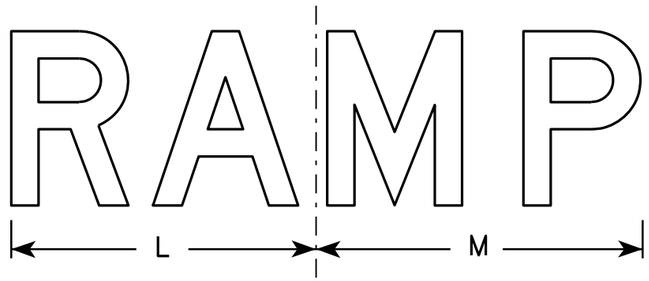

R11-2R

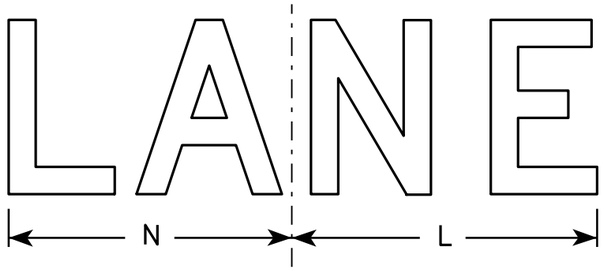

R11-2L

SIZE	A	B	C	D	E	F	G	H	I	J	K	L	M	N	O	P	Q	R	S	T	U	V	W	X	Y	Z	Area sq. ft.
1																											
2S	48	30	1 3/8	1/2	5/8	8	5	4	13 1/4	13 1/2	19	14	15	13													10.0
2M	48	30	1 3/8	1/2	5/8	8	5	4	13 1/4	13 1/2	19	14	15	13													10.0
3	48	30	1 3/8	1/2	5/8	8	5	4	13 1/4	13 1/2	19	14	15	13													10.0
4	48	30	1 3/8	1/2	5/8	8	5	4	13 1/4	13 1/2	19	14	15	13													10.0
5	48	30	1 3/8	1/2	5/8	8	5	4	13 1/4	13 1/2	19	14	15	13													10.0

STANDARD SIGN
R11-2

WISCONSIN DEPT OF TRANSPORTATION

APPROVED Matthew R Rauch
for State Traffic Engineer

DATE 4/1/11 PLATE NO. R11-2.10

PROJECT NO: | HWY: | COUNTY: | SHEET NO: 159 | E

NOTES

1. Sign is Type II - Type H Reflective
2. Color:
   Background - White
   Message - Black
3. Message Series - C
4. Corners may be square or rounded when base material is plywood but borders shall be rounded as shown. When base material is metal, the corners and borders shall be rounded.
5. Substitute appropriate numerals to nearest quarter mile and optically adjust spacing to achieve proper balance.

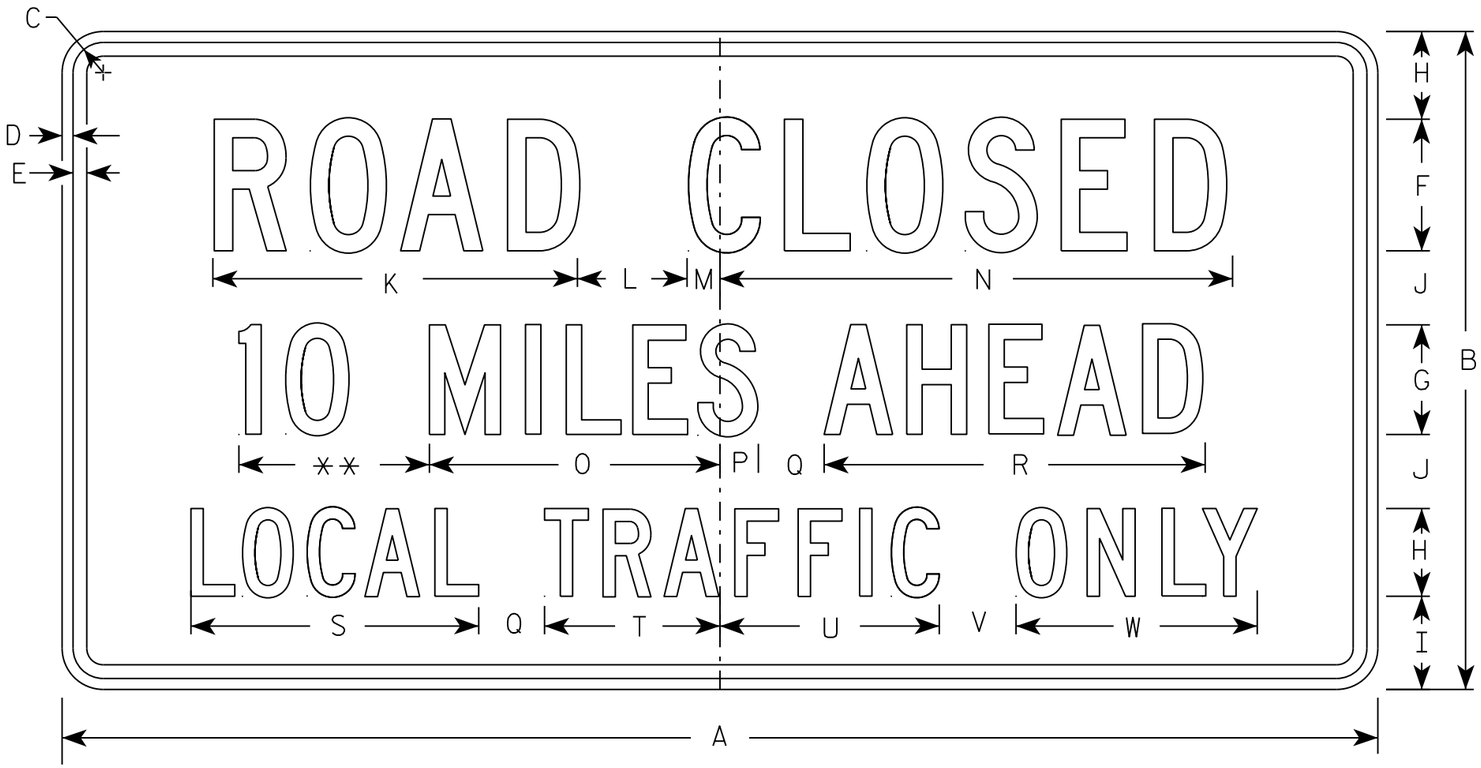

R11-3

** See Note 5

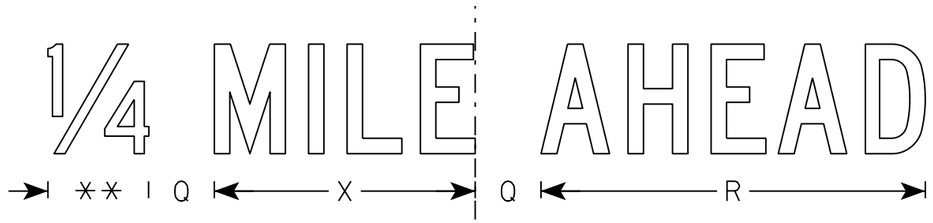

SIZE	A	B	C	D	E	F	G	H	I	J	K	L	M	N	O	P	Q	R	S	T	U	V	W	X	Y	Z	Area sq. ft.
1	36	18	1 3/8	1/2	5/8	4	3	2 1/2	2	2	11 1/8	3	1 1/8	15 1/4	8	1 1/2	2	10 3/4	8 3/8	4 3/4	6 1/2	2	6 3/4	7 1/8			4.5
2S	60	30	1 3/8	1/2	5/8	6	5	4	4 1/4	3 3/8	16 5/8	5	1 1/2	23	13 1/4	1 3/4	3	17 3/8	13 1/8	8	10	3 1/2	11	11 7/8			12.5
2M	60	30	1 3/8	1/2	5/8	6	5	4	4 1/4	3 3/8	16 5/8	5	1 1/2	23	13 1/4	1 3/4	3	17 3/8	13 1/8	8	10	3 1/2	11	11 7/8			12.5
3																											
4																											
5																											

STANDARD SIGN
R11-3

WISCONSIN DEPT OF TRANSPORTATION

APPROVED Matthew R Rauch
for State Traffic Engineer

DATE 3/15/17 PLATE NO. R11-3.8

PROJECT NO:	HWY:	COUNTY:		SHEET NO: 160	E

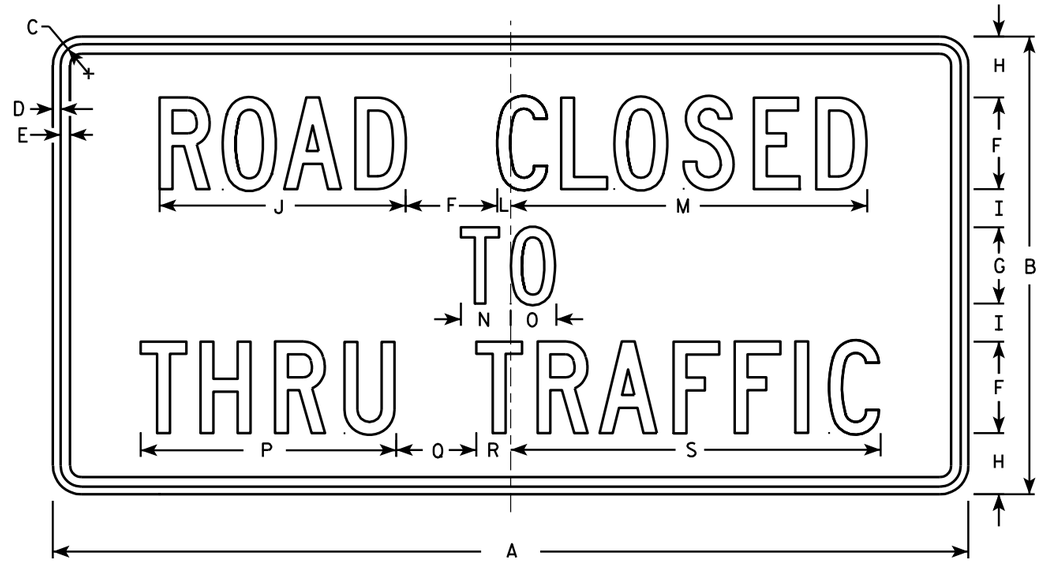

R11-4

NOTES

1. Sign is Type II - Type H Reflective - reference WIS DOT Standard Specification for HIGHWAY and STRUCTURE CONSTRUCTION latest edition.
2. Color:
   Background - White
   Message - Black
3. Message Series - C
4. Corners may be square or rounded when base material is plywood but borders shall be rounded as shown. When base material is metal, the corners and borders shall be rounded.

SIZE	A	B	C	D	E	F	G	H	I	J	K	L	M	N	O	P	Q	R	S	T	U	V	W	X	Y	Z	Area sq. ft.
1																											
2S	60	30	1 3/8	1/2	5/8	6	5	4	2 1/2	16 1/8		7/8	23 3/8	3 1/4	3	16 3/4	5 1/4	2 1/4	24 1/4								12.5
2M	60	30	1 3/8	1/2	5/8	6	5	4	2 1/2	16 1/8		7/8	23 3/8	3 1/4	3	16 3/4	5 1/4	2 1/4	24 1/4								12.5
3																											
4																											
5																											

STANDARD SIGN
R11 - 4

WISCONSIN DEPT OF TRANSPORTATION

APPROVED Matthew R Rauch for State Traffic Engineer

DATE 4/1/11 PLATE NO. R11-4.3

PROJECT NO: | HWY: | COUNTY: | SHEET NO: 161 | E

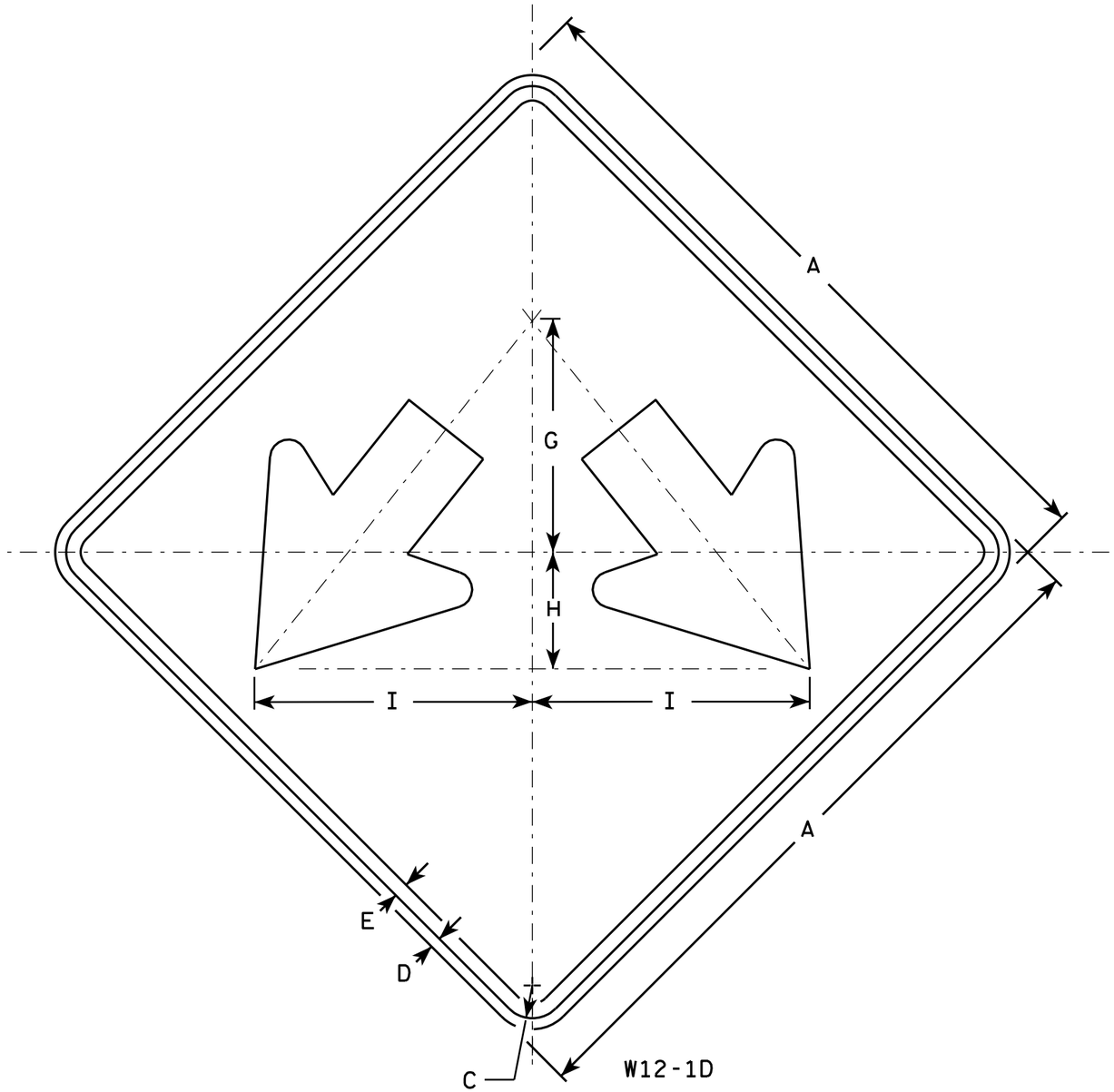

W12-1D

NOTES

1. Sign is Type II - Type F Reflective - reference WIS DOT Standard Specification for HIGHWAY and STRUCTURE CONSTRUCTION latest edition.
2. Color:
   Background - Yellow
   Message - Black
3. Corners may be square or rounded when base material is plywood but borders shall be rounded as shown. When base material is metal, the corners and borders shall be rounded.

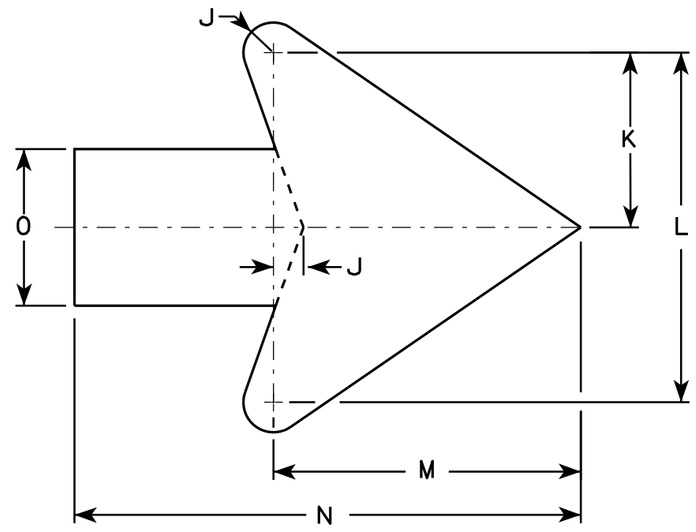

Arrow Detail

SIZE	A	B	C	D	E	F	G	H	I	J	K	L	M	N	O	P	Q	R	S	T	U	V	W	X	Y	Z	Area sq. ft.
1																											
2S	24		1 1/8	1/2	3/8		8	4	9 1/2	3/8	3 3/8	7 1/4	6 3/8	10 3/8	3 1/4												4.0
2M	24		1 1/8	1/2	3/8		8	4	9 1/2	3/8	3 3/8	7 1/4	6 3/8	10 3/8	3 1/4												4.0
3	30		1 3/8	1/2	5/8		10	5	11 7/8	3/4	4 1/2	9	7 7/8	13	4												6.25
4	36		1 3/8	1/2	5/8		12	6	14 1/4	1	5 1/2	10 7/8	9 5/8	15 3/4	4 3/4												9.0
5	48		2 1/4	3/4	1		16	8	19	1 1/4	7 1/4	14 1/2	12 3/4	21	6 1/4												16.0

STANDARD SIGN
W12-1D

WISCONSIN DEPT OF TRANSPORTATION

APPROVED Matthew R Rauch
for State Traffic Engineer

DATE 3/13/13 PLATE NO. W12-1D.15

PROJECT NO:	HWY:	COUNTY:		SHEET NO: 162	E

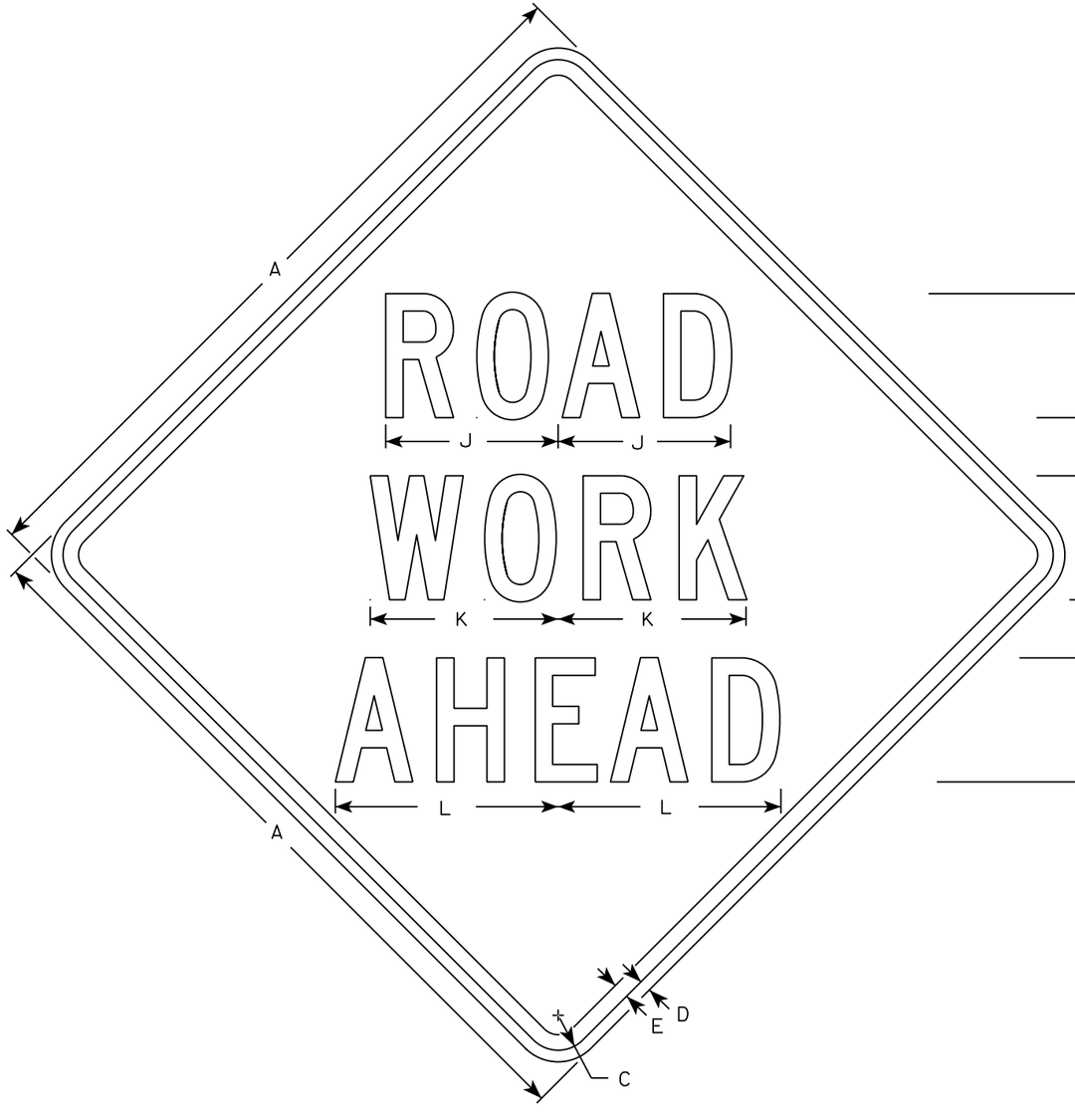

W20-1A

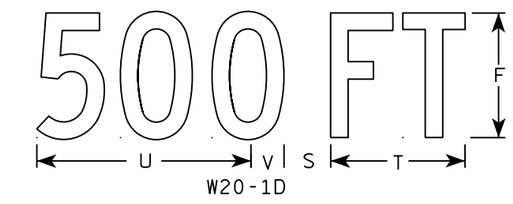

W20-1D

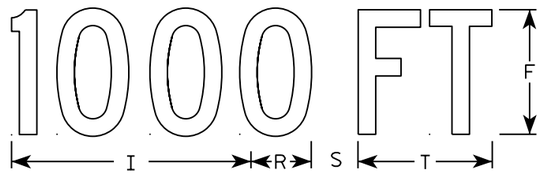

W20-1C

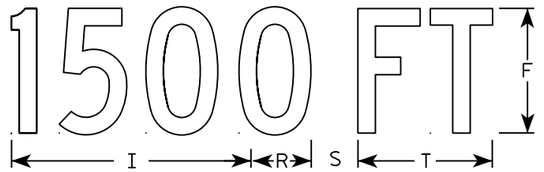

W20-1B

W20-1G

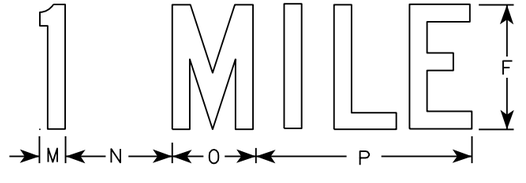

W20-1F

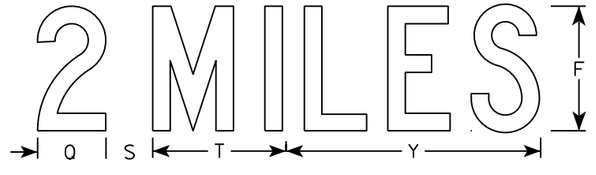

W20-1E

NOTES

1. Sign is Type II - Type F Reflective
2. Color:
   Background - Orange
   Message - Black
3. Message Series - C
4. Corners may be square or rounded when base material is plywood but borders shall be rounded as shown. When base material is metal, the corners and borders shall be rounded.

SIZE	A	B	C	D	E	F	G	H	I	J	K	L	M	N	O	P	Q	R	S	T	U	V	W	X	Y	Z	Area sq. ft.
1	36		1 3/8	1/2	5/8	5	2 5/8	3 1/4	10 1/8	7	7 5/8	8 7/8	1 1/8	4 1/2	3 1/2	9		2 1/2	2 1/4	5 5/8	9	1 3/8	8	1 3/4	10 3/4	6	9.0
2S	48		2 1/4	3/4	1	8	3 3/4	5 1/8	15 3/8	11 1/8	12 1/8	14 3/8	1 5/8	6 7/8	5 3/8	13 7/8	4 3/8	3 7/8	3	8 5/8	13 3/4	2 1/8	11 7/8	2 3/4	16 3/8	9	16.0
2M	48		2 1/4	3/4	1	8	3 3/4	5 1/8	15 3/8	11 1/8	12 1/8	14 3/8	1 5/8	6 7/8	5 3/8	13 7/8	4 3/8	3 7/8	3	8 5/8	13 3/4	2 1/8	11 7/8	2 3/4	16 3/8	9	16.0
3	48		2 1/4	3/4	1	8	3 3/4	5 1/8	15 3/8	11 1/8	12 1/8	14 3/8	1 5/8	6 7/8	5 3/8	13 7/8	4 3/8	3 7/8	3	8 5/8	13 3/4	2 1/8	11 7/8	2 3/4	16 3/8	9	16.0
4	48		2 1/4	3/4	1	8	3 3/4	5 1/8	15 3/8	11 1/8	12 1/8	14 3/8	1 5/8	6 7/8	5 3/8	13 7/8	4 3/8	3 7/8	3	8 5/8	13 3/4	2 1/8	11 7/8	2 3/4	16 3/8	9	16.0
5	48		2 1/4	3/4	1	8	3 3/4	5 1/8	15 3/8	11 1/8	12 1/8	14 3/8	1 5/8	6 7/8	5 3/8	13 7/8	4 3/8	3 7/8	3	8 5/8	13 3/4	2 1/8	11 7/8	2 3/4	16 3/8	9	16.0

STANDARD SIGN
W20-1A, B, C, D, F & G

WISCONSIN DEPT OF TRANSPORTATION

APPROVED Matthew R Rauch
for State Traffic Engineer

DATE 5/07/15 PLATE NO. W20-1.10

PROJECT NO:

SHEET NO: E

FILE NAME : C:\CAEfiles\Projects\tr_stdplate\W201.DGN PLOT DATE : 01-DEC-2015 18:24 PLOT BY : $$ plotuser $$

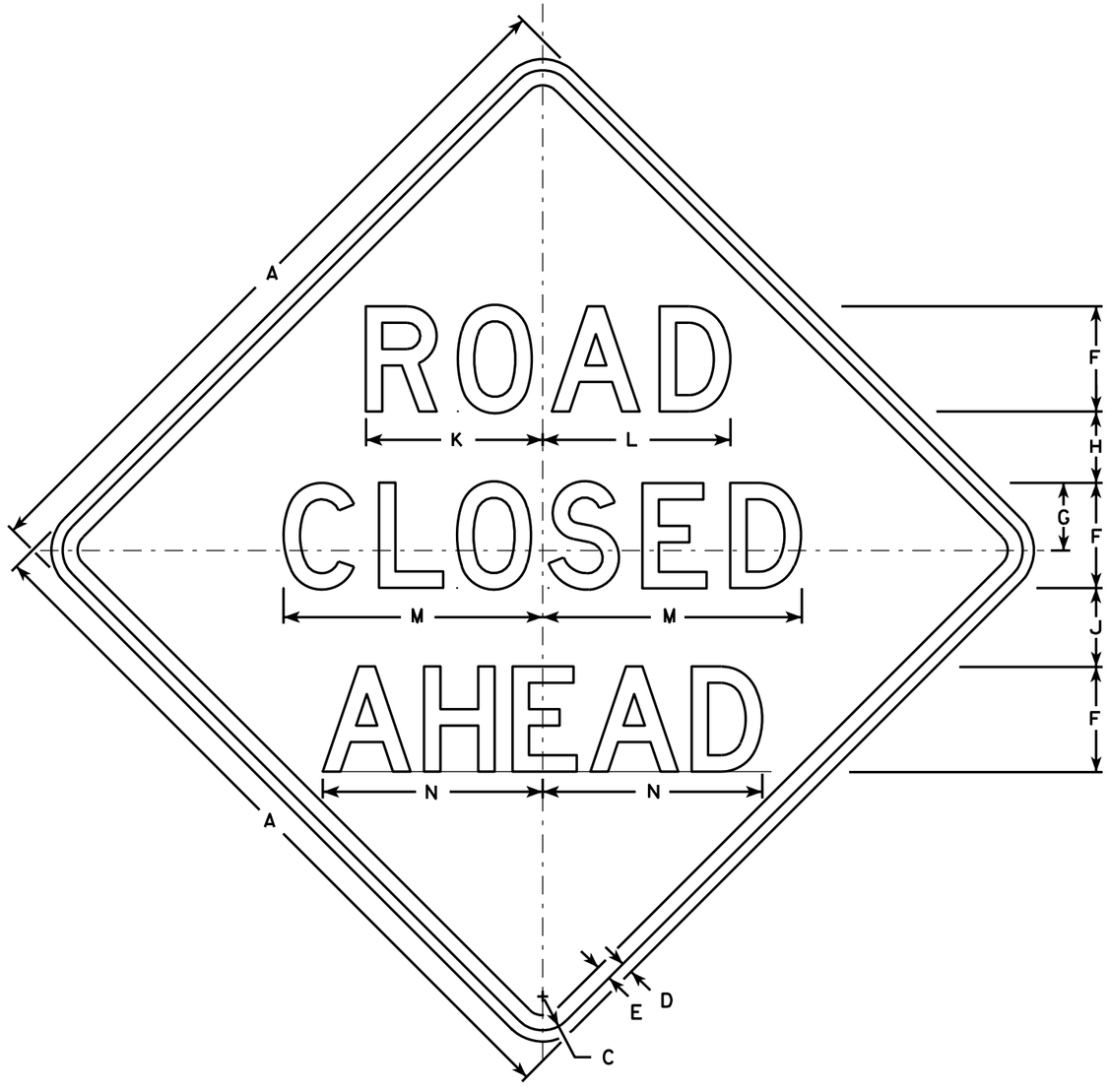

W20-3A

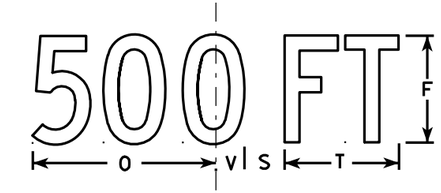

W20-3D

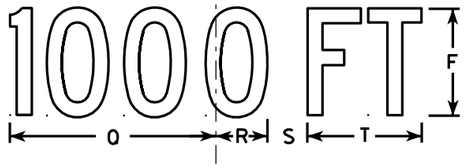

W20-3C

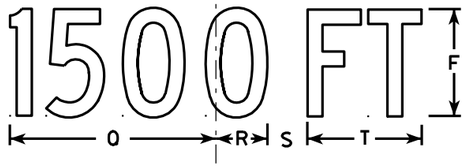

W20-3B

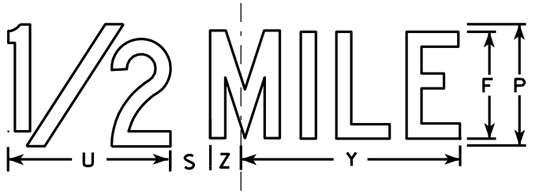

W20-3G

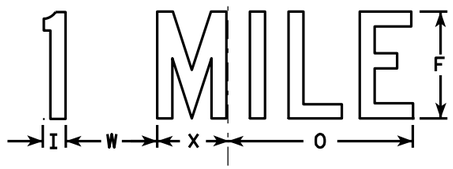

W20-3F

NOTES

1. Sign is Type II - Type F Reflective - reference WIS DOT Standard Specification for HIGHWAY and STRUCTURE CONSTRUCTION latest edition.
2. Color:
   Background - Orange
   Message - Black
3. Message Series - see note 5
4. Corners may be square or rounded when base material is plywood but borders shall be rounded as shown. When base material is metal, the corners and borders shall be rounded.
5. Lines 1 and 2 are Series D.
   Line 3 is Series D for AHEAD and Series C for all other distances.

SIZE	A	B	C	D	E	F	G	H	I	J	K	L	M	N	O	P	Q	R	S	T	U	V	W	X	Y	Z	Area sq. ft.
1	36		1 5/8	5/8	3/4	5	3 3/8	3 1/2	1 1/8	4	8 3/8	8 7/8	12 1/2	11	9	6	10 1/8	2 1/2	1 7/8	5 5/8	8	1 3/8	4 1/2	3 1/2	10 3/4	1 3/4	9.0
2S	48		2 1/4	3/4	1	7	4 1/2	4 3/4	1 1/2	5 1/4	11 3/4	12 1/2	17 1/4	14 5/8	12	8	13 1/2	3 3/8	2 5/8	7 1/2	10 5/8	1 7/8	6	4 5/8	14 3/8	2 3/8	16.0
2M	48		2 1/4	3/4	1	7	4 1/2	4 3/4	1 1/2	5 1/4	11 3/4	12 1/2	17 1/4	14 5/8	12	8	13 1/2	3 3/8	2 5/8	7 1/2	10 5/8	1 7/8	6	4 5/8	14 3/8	2 3/8	16.0
3	48		2 1/4	3/4	1	7	4 1/2	4 3/4	1 1/2	5 1/4	11 3/4	12 1/2	17 1/4	14 5/8	12	8	13 1/2	3 3/8	2 5/8	7 1/2	10 5/8	1 7/8	6	4 5/8	14 3/8	2 3/8	16.0
4	48		2 1/4	3/4	1	7	4 1/2	4 3/4	1 1/2	5 1/4	11 3/4	12 1/2	17 1/4	14 5/8	12	8	13 1/2	3 3/8	2 5/8	7 1/2	10 5/8	1 7/8	6	4 5/8	14 3/8	2 3/8	16.0
5	48		2 1/4	3/4	1	7	4 1/2	4 3/4	1 1/2	5 1/4	11 3/4	12 1/2	17 1/4	14 5/8	12	8	13 1/2	3 3/8	2 5/8	7 1/2	10 5/8	1 7/8	6	4 5/8	14 3/8	2 3/8	16.0

STANDARD SIGN
W20-3A, B, C, D, F & G

WISCONSIN DEPT OF TRANSPORTATION

APPROVED Matthew R Rauch
for State Traffic Engineer

DATE 3/18/11 PLATE NO. W20-3.7

PROJECT NO: | HWY: | COUNTY: | SHEET NO: 164 | E

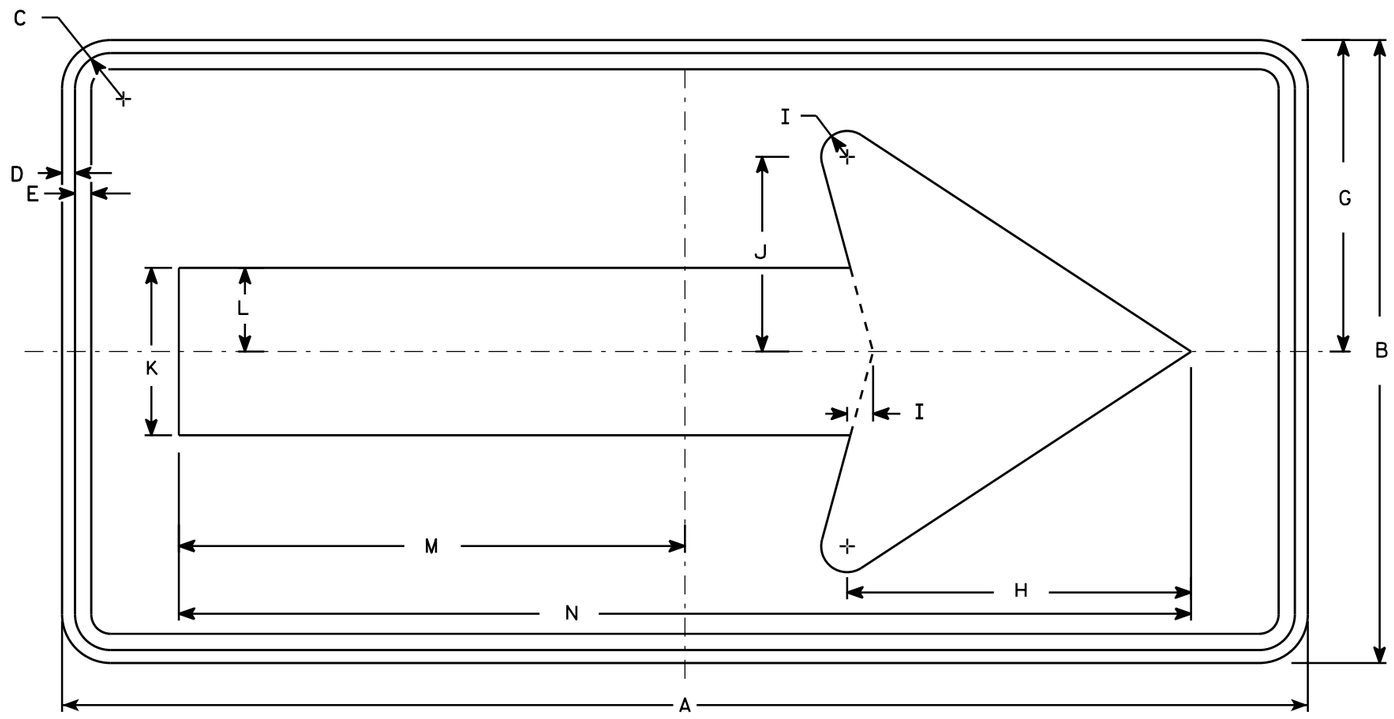

W01-6

NOTES

1. Sign is Type II - Type F Reflective - reference WIS DOT Standard Specification for HIGHWAY and STRUCTURE CONSTRUCTION latest edition.
2. Color:
   Background - Orange
   Message - Black
3. Corners may be square or rounded when base material is plywood but borders shall be rounded as shown. When base material is metal, the corners and borders shall be rounded.

SIZE	A	B	C	D	E	F	G	H	I	J	K	L	M	N	O	P	Q	R	S	T	U	V	W	X	Y	Z	Area sq. ft.
1																											
2S	48	24	1 3/8	1/2	5/8		12	13 1/4	1	7 1/2	6 1/2	3 1/4	19 1/2	39													8.0
2M	48	24	1 3/8	1/2	5/8		12	13 1/4	1	7 1/2	6 1/2	3 1/4	19 1/2	39													8.0
3	60	30	1 3/8	1/2	5/8		15	16 1/4	1 1/4	9 1/4	8	4	24 3/8	48 3/4													12.5
4	60	30	1 3/8	1/2	5/8		15	16 1/4	1 1/4	9 1/4	8	4	24 3/8	48 3/4													12.5
5	60	30	1 3/8	1/2	5/8		15	16 1/4	1 1/4	9 1/4	8	4	24 3/8	48 3/4													12.5

STANDARD SIGN
W01-6

WISCONSIN DEPT OF TRANSPORTATION

APPROVED Matthew R Rauch
for State Traffic Engineer

DATE 11/18/13 PLATE NO. W01-6.1

PROJECT NO: | HWY: | COUNTY: | SHEET NO: E

FILE NAME : C:\CAEfiles\Projects\tr_stdplate\W016.DGN PLOT DATE : 28-FEB-2014 11:37 PLOT BY : mscj9h PLOT NAME : PLOT SCALE : 5.837526:1.000000 WISDOT/CADDS SHEET 42

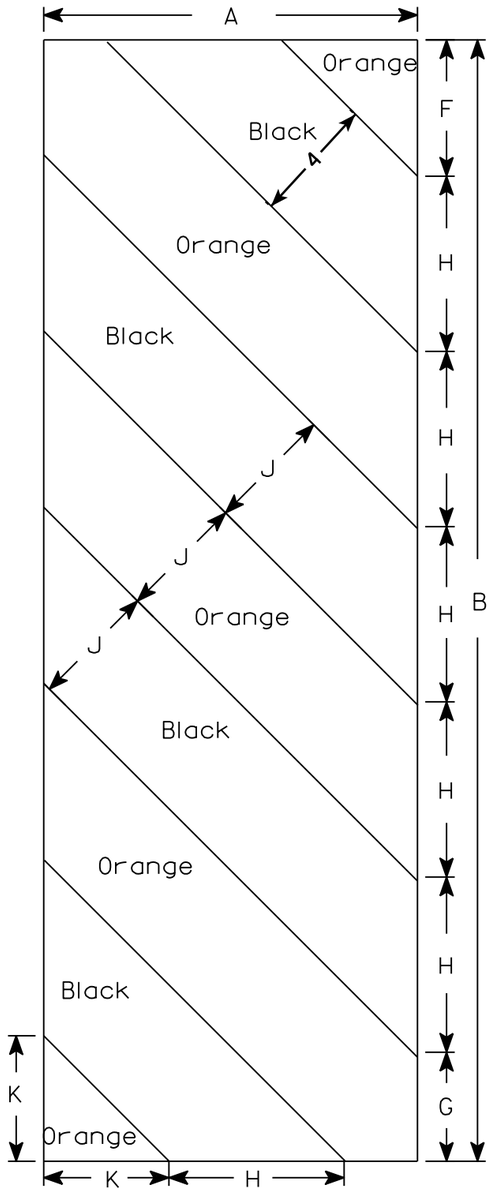

W05-52L

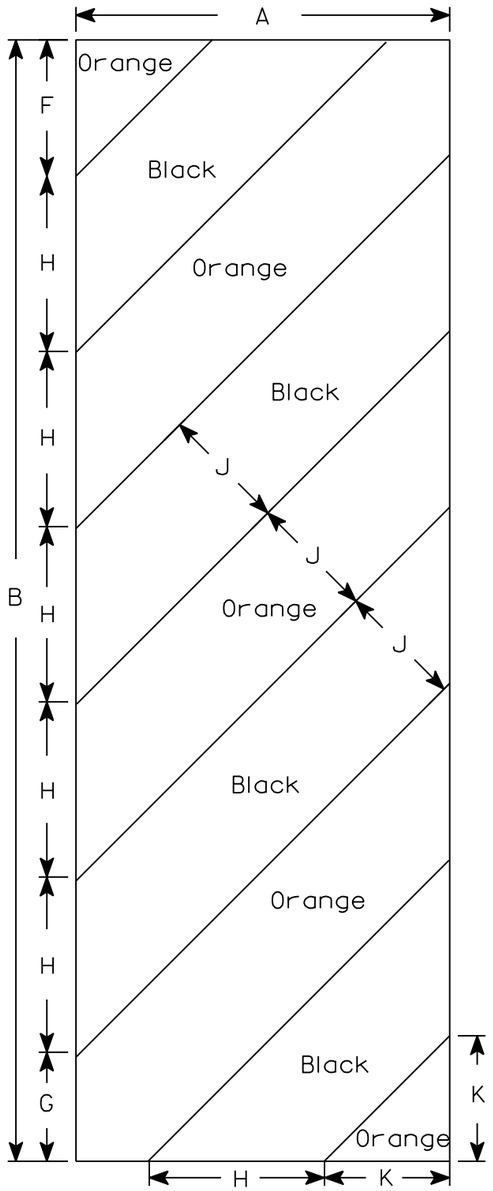

W05-52R

NOTES

1. Sign is Type II - Type F Reflective - reference WIS DOT Standard Specification for HIGHWAY and STRUCTURE CONSTRUCTION latest edition.
2. Color:
   Background - Orange
   Message - Black
3. Corners may be square or rounded when base material is plywood but borders shall be rounded as shown. When base material is metal, the corners and borders shall be rounded.
4. Alternate colors of stripes as shown.

SIZE	A	B	C	D	E	F	G	H	I	J	K	L	M	N	O	P	Q	R	S	T	U	V	W	X	Y	Z	Area sq. ft.
1																											
2S	12	36				4 3/8	3 1/2	5 5/8	45°	4	4																3.0
2M	12	36				4 3/8	3 1/2	5 5/8	45°	4	4																3.0
3	18	54				6	5 1/2	8 1/2	45°	6	6 9/16																6.75
4																											
5																											

STANDARD SIGN

W05-52L & W05-52R

WISCONSIN DEPT OF TRANSPORTATION

APPROVED Matthew R Rauch
for State Traffic Engineer

DATE 11/20/13 PLATE W05-52.1

PROJECT NO:	HWY:	COUNTY:		SHEET NO:	E

FILE NAME : C:\CAEfiles\Projects\tr_stdplate\W0552.DGN PLOT DATE : 28-FEB-2014 11:39 PLOT BY : mscj9h PLOT NAME : PLOT SCALE : 4.864607:1.000000 WISDOT/CADDS SHEET 42

USH 12 EB - STA. 176+33'EB' TO STA. 182+35'EB'

STATION	Distance	AREA (SF) Cut	AREA (SF) Fill	Incremental Vol (CY) Cut	Incremental Vol (CY) Fill	Cumulative Vol (CY) Cut 1.00	Cumulative Vol (CY) Fill 1.3	Mass Ordinate Note 1
176+33'EB'		13	0	0	0	0	0	0
176+50'EB'	17	12	0	8	0	8	0	8
176+63'EB'	13	12	2	6	1	14	1	13
177+00'EB'	37	12	2	17	3	30	5	26
177+00'EB'	0	0	0	0	0	30	5	26
177+50'EB'	50	15	2	13	2	44	7	36
177+59'EB'	9	15	3	5	1	49	8	40
177+60'EB'	1	34	4	1	0	49	9	41
177+70'EB'	10	34	4	13	2	62	11	51
177+84'EB'	15	35	4	19	2	81	13	68
178+00'EB'	16	36	5	20	2	101	16	85
178+13'EB'	13	37	6	18	3	119	20	99
178+50'EB'	37	39	4	52	7	171	29	142
179+00'EB'	50	44	3	77	6	248	37	211
179+20'EB'	20	43	2	32	2	280	39	241
179+50'EB'	30	52	1	54	2	334	41	292
180+00'EB'	50	38	2	83	3	417	45	372
180+50'EB'	50	37	7	70	8	487	55	432
181+00'EB'	50	45	11	76	16	563	76	487
181+38'EB'	38	50	17	67	20	631	102	528
181+39'EB'	1	22	17	1	0	631	103	529
181+50'EB'	11	23	18	9	7	641	112	528
182+00'EB'	50	27	19	46	35	687	157	529
182+35'EB'	35	29	3	36	14	723	176	547
				723	135			

Notes: 1 - MASS ORDINATE = CUT - FILL

9

9

***ALL ITEMS CATEGORY 1000 UNLESS OTHERWISE NOTED.

USH 12 WB - STA. 182+54'WB' TO STA. 192+25'WB'

STATION	Distance	AREA (SF) Cut	AREA (SF) Fill	Incremental Vol (CY) Cut	Incremental Vol (CY) Fill	Cumulative Vol (CY) Cut 1.00	Cumulative Vol (CY) Fill 1.3	Mass Ordinate Note 1
182+54'WB'		18	0	0	0	0	0	0
182+69'WB'	14	20	0	10	0	10	0	10
183+00'WB'	31	28	0	28	0	38	0	38
183+10'WB'	10	36	0	12	0	49	0	49
183+44'WB'	35	65	0	65	0	114	0	114
183+50'WB'	6	62	0	13	0	128	0	128
183+55'WB'	5	16	0	7	0	135	0	135
184+00'WB'	45	15	0	26	0	160	0	160
184+33'WB'	33	18	0	20	0	180	0	180
184+34'WB'	1	20	0	1	0	181	0	181
184+50'WB'	16	18	0	11	0	192	0	192
184+76'WB'	26	19	0	18	0	210	0	210
184+77'WB'	1	15	0	0	0	210	0	210
185+00'WB'	23	14	0	13	0	223	0	223
185+40'WB'	40	15	0	22	0	245	0	245
185+41'WB'	1	0	0	0	0	245	0	245
186+86'WB'	145	0	0	0	0	245	0	245
186+87'WB'	1	28	3	0	0	246	0	246
187+00'WB'	13	26	4	13	2	259	2	257
187+50'WB'	50	21	12	44	15	303	22	281
187+69'WB'	19	20	16	14	10	317	35	283
187+70'WB'	2	53	16	2	1	319	36	284
188+00'WB'	30	48	19	56	19	375	61	314
188+50'WB'	50	39	25	81	41	456	113	342
189+00'WB'	50	31	29	65	49	521	178	343
189+50'WB'	50	30	26	57	51	578	244	334
189+87'WB'	37	27	30	39	38	617	294	323
190+00'WB'	13	26	28	13	14	629	313	317
190+45'WB'	45	24	23	41	43	671	368	302
190+50'WB'	5	24	22	4	4	675	373	301
191+00'WB'	50	25	7	45	26	719	408	312
191+12'WB'	12	25	4	11	2	730	411	319
191+37'WB'	25	25	3	23	3	753	415	338
191+47'WB'	10	25	2	9	1	762	416	346
191+48'WB'	1	11	1	1	0	763	416	347
191+50'WB'	2	11	1	1	0	764	416	348
191+95'WB'	45	12	0	19	1	783	417	366
191+96'WB'	0	12	0	0	0	783	417	366
192+00'WB'	4	12	0	2	0	785	417	368
192+25'WB'	25	13	0	12	0	797	417	380
				797	321			

Notes: 1 - MASS ORDINATE = CUT - FILL

***ALL ITEMS CATEGORY 1000 UNLESS OTHERWISE NOTED.

CTH EE / N TOWN HALL RD - STA. 30+94'EE' TO STA. 34+38'EE'

STATION	Distance	AREA (SF) Cut	AREA (SF) Fill	Incremental Vol (CY) Cut	Incremental Vol (CY) Fill	Cumulative Vol (CY) Cut 1.00	Cumulative Vol (CY) Fill 1.3	Mass Ordinate Note 1
30+94'EE'		60	0	0	0	0	0	0
31+00'EE'	6	60	0	13	0	13	0	13
31+25'EE'	25	58	0	55	0	68	0	68
31+35'EE'	10	58	0	22	0	90	0	90
31+37'EE'	2	68	0	4	0	94	0	94
31+46'EE'	9	116	0	31	0	125	0	125
31+50'EE'	4	115	0	18	0	143	0	143
31+63'EE'	13	109	0	54	0	197	0	197
31+64'EE'	1	65	0	3	0	200	0	200
31+75'EE'	11	55	0	24	0	225	0	225
32+00'EE'	25	48	0	47	0	272	0	272
32+25'EE'	25	32	0	37	0	309	0	309
32+44'EE'	19	21	0	19	0	328	0	328
32+50'EE'	6	18	0	4	0	332	0	332
32+59'EE'	9	16	1	6	0	338	0	338
32+62'EE'	3	13	1	1	0	339	0	339
32+64'EE'	2	12	1	1	0	340	0	340
32+75'EE'	11	11	1	5	0	345	1	344
32+80'EE'	5	11	2	2	0	347	2	345
32+84'EE'	4	8	3	1	0	348	2	346
33+00'EE'	16	5	0	4	1	352	3	349
33+04'EE'	4	51	3	4	0	356	4	352
33+14'EE'	10	29	0	15	1	370	4	366
33+25'EE'	11	26	0	12	0	382	4	378
33+50'EE'	25	21	0	22	0	404	4	399
33+64'EE'	14	18	0	10	0	414	4	410
33+69'EE'	5	18	0	4	0	418	4	413
33+75'EE'	6	17	0	4	0	421	4	417
33+90'EE'	15	11	0	8	0	429	4	425
33+91'EE'	0	6	0	0	0	429	4	425
34+00'EE'	9	7	0	2	0	431	4	427
34+09'EE'	9	7	0	2	0	433	4	429
34+14'EE'	5	7	0	1	0	435	4	430
34+25'EE'	11	6	0	3	0	437	4	433
34+31'EE'	6	5	0	1	0	438	4	434
34+38'EE'	8	4	0	1	0	440	4	435
				440	3			

Notes: 1 - MASS ORDINATE = CUT - FILL

***ALL ITEMS CATEGORY 1000 UNLESS OTHERWISE NOTED.

OLD MILL PLAZA - STA. 10+25'OM' TO STA. 11+54'OM'

STATION	Distance	AREA (SF) Cut	AREA (SF) Fill	Incremental Vol (CY) Cut	Incremental Vol (CY) Fill	Cumulative Vol (CY) Cut 1.00	Cumulative Vol (CY) Fill 1.3	Mass Ordinate Note 1
10+25'OM'		5	0	0	0	0	0	0
10+29'OM'	4	5	0	1	0	1	0	1
10+45'OM'	16	6	0	3	0	4	0	4
10+46'OM'	1	25	0	1	0	5	0	5
10+50'OM'	4	25	0	4	0	8	0	8
10+53'OM'	3	25	0	3	0	11	0	11
10+58'OM'	5	33	14	6	1	17	2	15
10+66'OM'	8	39	0	10	2	27	4	23
10+67'OM'	1	19	0	1	0	28	4	24
10+71'OM'	4	19	0	3	0	31	4	27
10+75'OM'	4	19	0	3	0	34	4	30
10+77'OM'	2	19	0	2	0	35	4	31
11+00'OM'	23	19	0	16	0	51	4	47
11+01'OM'	1	26	1	1	0	52	4	48
11+11'OM'	10	26	2	9	1	61	5	56
11+24'OM'	13	28	0	13	0	74	6	68
11+25'OM'	1	28	0	1	0	75	6	70
11+36'OM'	11	22	1	10	0	85	6	80
11+37'OM'	1	19	0	1	0	86	6	81
11+50'OM'	13	18	0	9	0	95	6	89
11+54'OM'	4	18	0	3	0	98	6	92
				98	4			

Notes: 1 - MASS ORDINATE = CUT - FILL

9

9

***ALL ITEMS CATEGORY 1000 UNLESS OTHERWISE NOTED.

EAST CURB RETURN - STA. 10+00'E' TO STA. 12+05'E'

STATION	Distance	AREA (SF) Cut	AREA (SF) Fill	Incremental Vol (CY) Cut	Incremental Vol (CY) Fill	Cumulative Vol (CY) Cut 1.00	Cumulative Vol (CY) Fill 1.3	Mass Ordinate Note 1
10+00'E'		6	3	0	0	0	0	0
10+10'E'	10	8	2	2	1	2	1	1
10+30'E'	20	24	1	12	1	14	3	11
10+37'E'	7	31	2	7	0	21	3	17
10+40'E'	3	36	2	4	0	25	4	21
10+50'E'	10	46	2	15	1	40	5	35
10+60'E'	10	34	4	15	1	55	6	49
10+70'E'	10	29	12	12	3	66	10	57
10+73'E'	3	28	14	3	1	70	12	58
10+80'E'	7	28	25	7	5	77	18	59
10+90'E'	10	25	35	10	11	87	33	54
11+00'E'	10	21	36	9	13	95	50	46
11+10'E'	10	15	37	7	14	102	67	35
11+12'E'	2	15	37	1	2	103	70	33
11+20'E'	8	14	38	4	12	107	85	22
11+30'E'	10	19	40	6	15	113	104	9
11+40'E'	10	33	48	10	16	123	126	-3
11+50'E'	10	38	45	13	17	136	148	-12
11+58'E'	8	37	36	12	13	148	164	-17
11+60'E'	2	35	34	2	2	150	167	-17
11+70'E'	10	25	22	11	10	161	181	-20
11+80'E'	10	15	14	7	7	168	189	-21
11+90'E'	10	9	13	4	5	173	196	-23
12+00'E'	10	6	11	3	4	175	202	-26
12+05'E'	5	6	6	1	2	176	204	-27
				176	157			

Notes: 1 - MASS ORDINATE = CUT - FILL

9

9

***ALL ITEMS CATEGORY 1000 UNLESS OTHERWISE NOTED.

NORTHEAST CURB RETURN - STA. 10+00'NE' TO STA. 10+59'NE'

STATION	Distance	AREA (SF) Cut	AREA (SF) Fill	Incremental Vol (CY) Cut	Incremental Vol (CY) Fill	Cumulative Vol (CY) Cut 1.00	Cumulative Vol (CY) Fill 1.3	Mass Ordinate Note 1
10+00'NE'		7	14	0	0	0	0	0
10+10'NE'	10	8	19	3	6	3	8	-5
10+20'NE'	10	11	9	3	5	6	15	-8
10+25'NE'	5	17	7	3	2	9	17	-8
10+30'NE'	5	26	7	4	1	13	18	-6
10+32'NE'	2	31	7	2	1	15	19	-4
10+40'NE'	8	15	8	7	2	22	22	0
10+50'NE'	10	10	8	5	3	26	26	1
10+59'NE'	9	9	12	3	3	30	30	-1
				30	23			

Notes: 1 - MASS ORDINATE = CUT - FILL

NORTHWEST CURB RETURN - STA. 10+00'NW' TO STA. 10+74'NW'

STATION	Distance	AREA (SF) Cut	AREA (SF) Fill	Incremental Vol (CY) Cut	Incremental Vol (CY) Fill	Cumulative Vol (CY) Cut 1.00	Cumulative Vol (CY) Fill 1.3	Mass Ordinate Note 1
10+00'NW'		47	1	0	0	0	0	0
10+10'NW'	10	59	1	20	0	20	0	19
10+20'NW'	10	75	0	25	0	44	1	44
10+29'NW'	9	92	0	27	0	72	1	71
10+30'NW'	1	88	0	4	0	76	1	75
10+37'NW'	7	75	1	22	0	98	1	97
10+40'NW'	3	74	2	7	0	105	1	104
10+50'NW'	10	61	5	25	1	130	3	128
10+60'NW'	10	48	3	20	2	150	5	146
10+70'NW'	10	39	2	16	1	166	6	160
10+74'NW'	4	34	3	6	0	172	7	166
				172	5			

Notes: 1 - MASS ORDINATE = CUT - FILL

9

9

***ALL ITEMS CATEGORY 1000 UNLESS OTHERWISE NOTED.

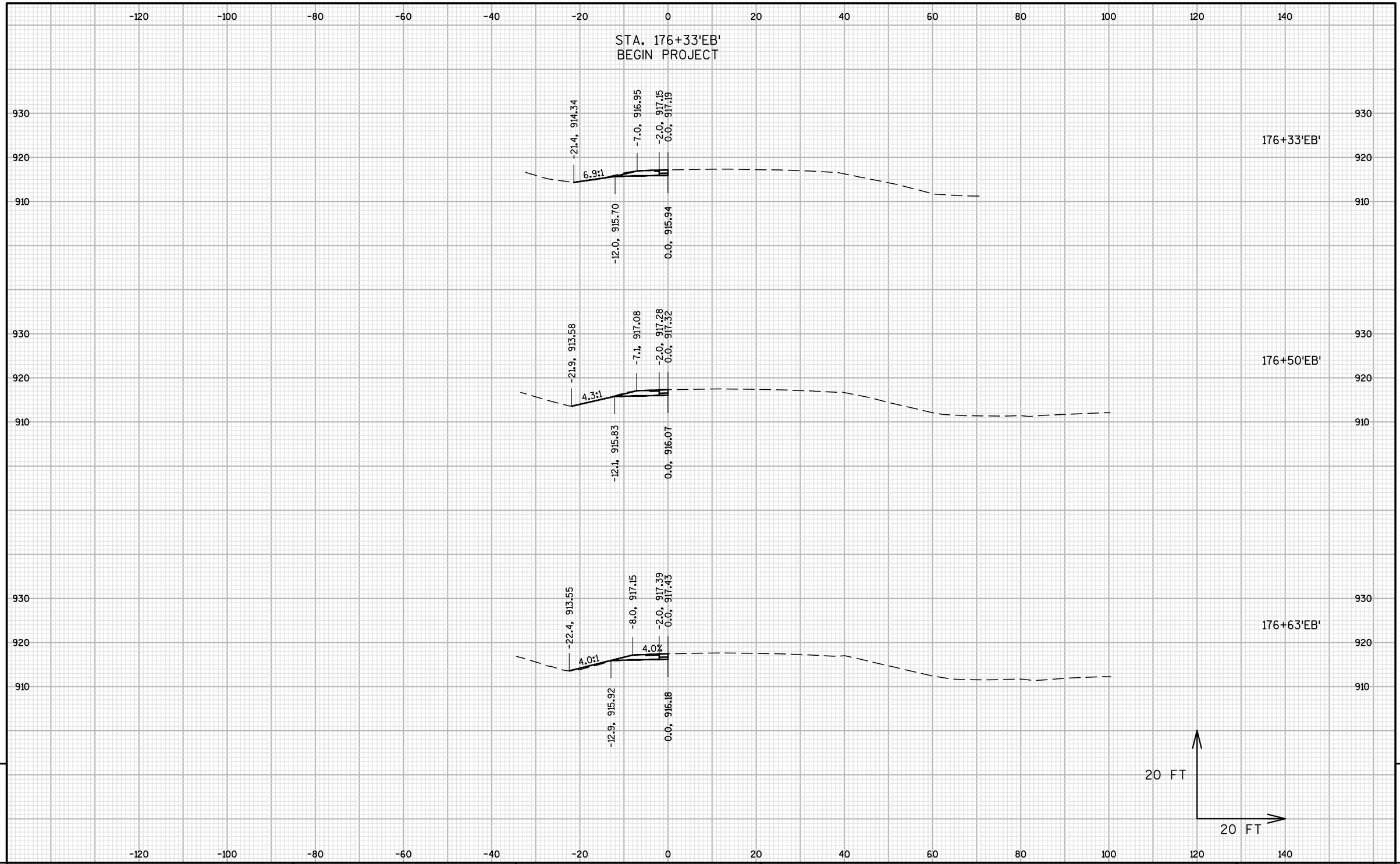

9

9

PROJECT NO:7090-00-74	HWY:USH 12	COUNTY:EAU CLAIRE	CROSS SECTIONS:USH 12 EB	SHEET	E

FILE NAME : \\USMSN1FS001\PROD\DATA\PROJECTS\60563458 - USH 12 CTH EE INTERSECTION\900_WORK\910_CAD\20-SHEETS\090201_XS.DWG
LAYOUT NAME - EB-1
PLOT DATE : 6/3/2019 10:24 AM
PLOT BY : CZECH, ANDREW
PLOT NAME :
PLOT SCALE : 1 IN:20 FT

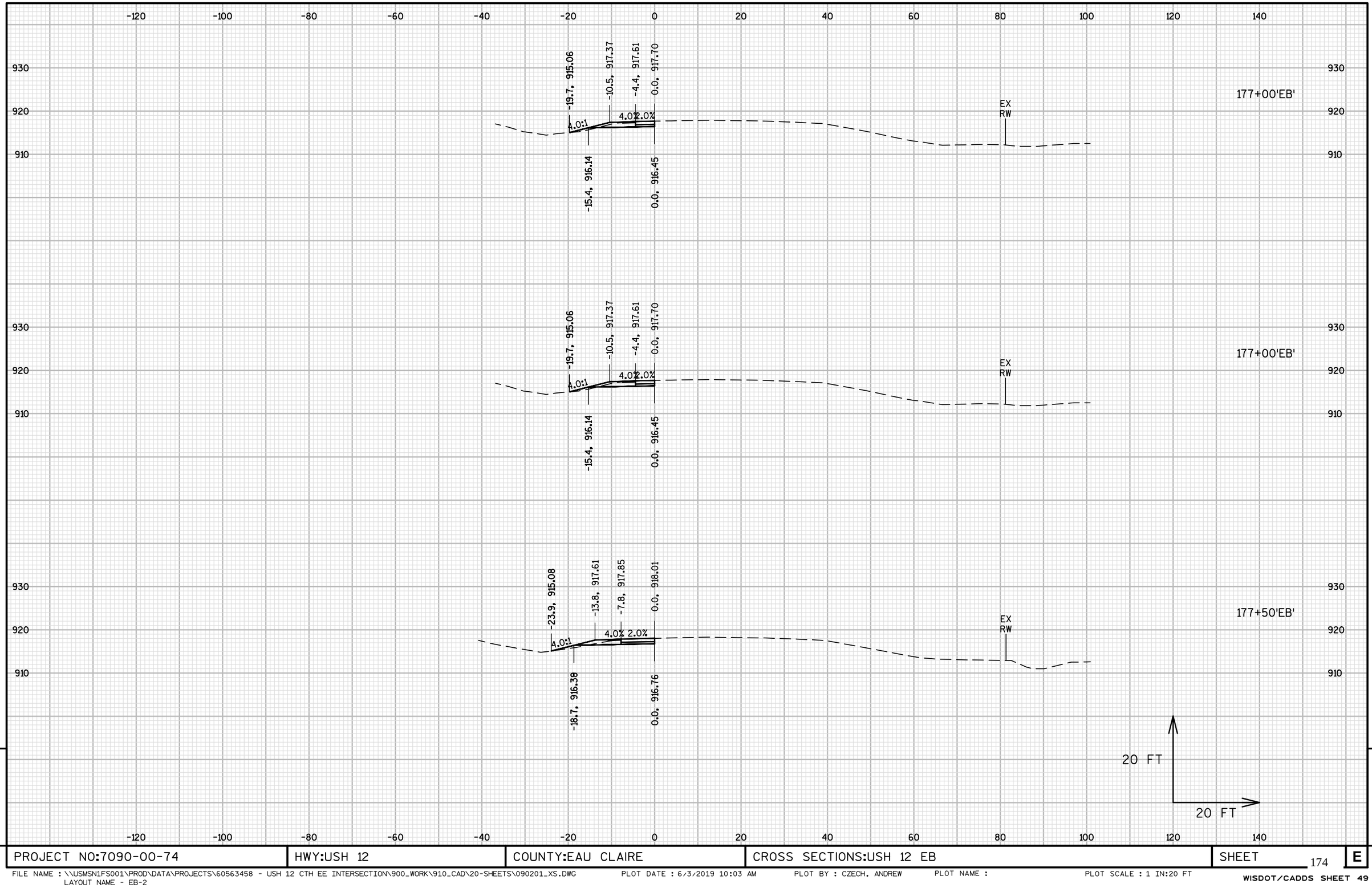

PROJECT NO:7090-00-74	HWY:USH 12	COUNTY:EAU CLAIRE	CROSS SECTIONS:USH 12 EB	SHEET	E

FILE NAME : \\USMSN1FS001\PROD\DATA\PROJECTS\60563458 - USH 12 CTH EE INTERSECTION\900_WORK\910_CAD\20-SHEETS\090201_XS.DWG
LAYOUT NAME - EB-2
PLOT DATE : 6/3/2019 10:03 AM
PLOT BY : CZECH, ANDREW
PLOT NAME :
PLOT SCALE : 1 IN:20 FT

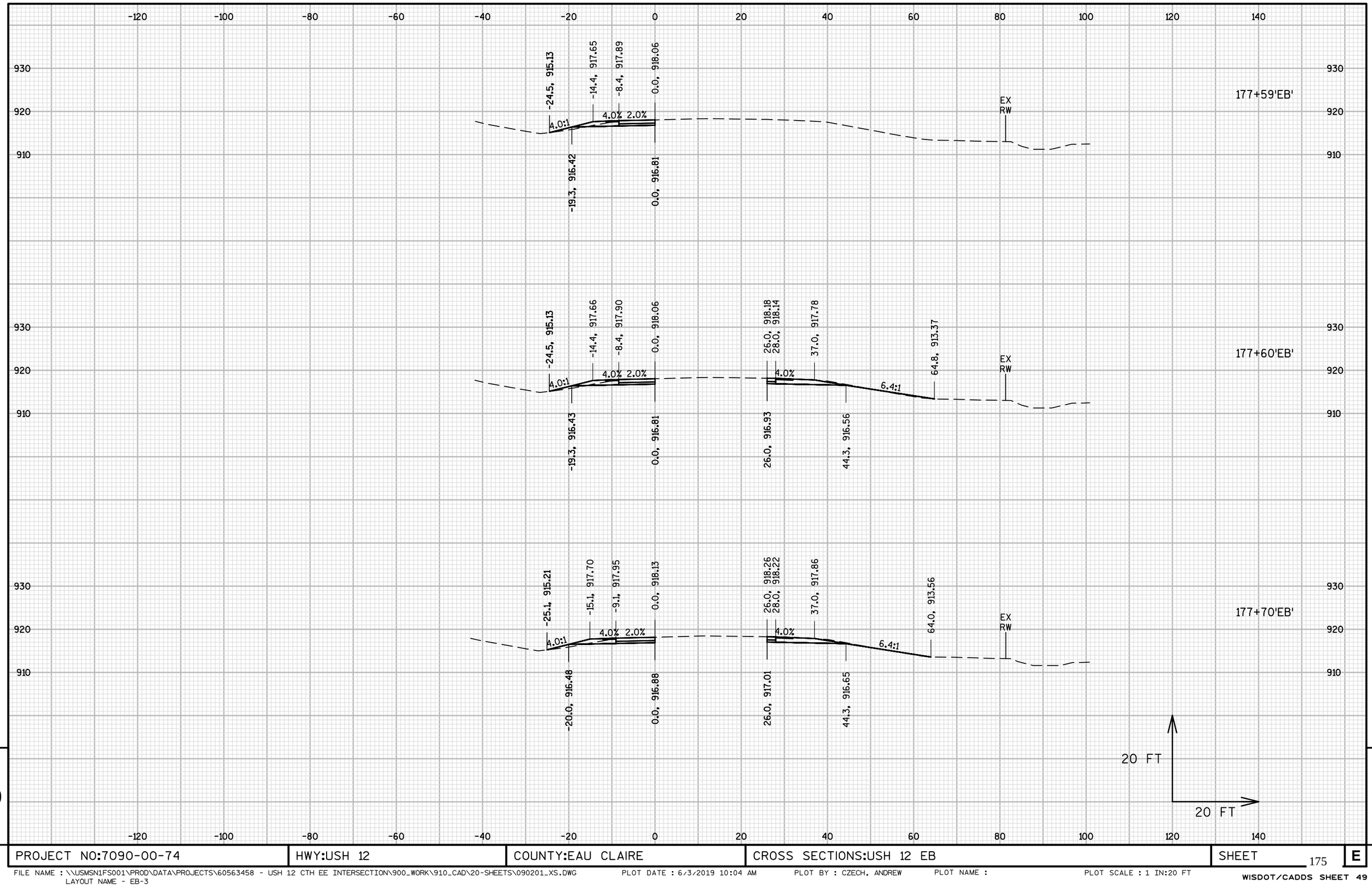

9

9

PROJECT NO:7090-00-74	HWY:USH 12	COUNTY:EAU CLAIRE	CROSS SECTIONS:USH 12 EB	SHEET	E

FILE NAME : \\USMSN1FS001\PROD\DATA\PROJECTS\60563458 - USH 12 CTH EE INTERSECTION\900_WORK\910_CAD\20-SHEETS\090201_XS.DWG
LAYOUT NAME - EB-3

PLOT DATE : 6/3/2019 10:04 AM PLOT BY : CZECH, ANDREW PLOT NAME : PLOT SCALE : 1 IN:20 FT

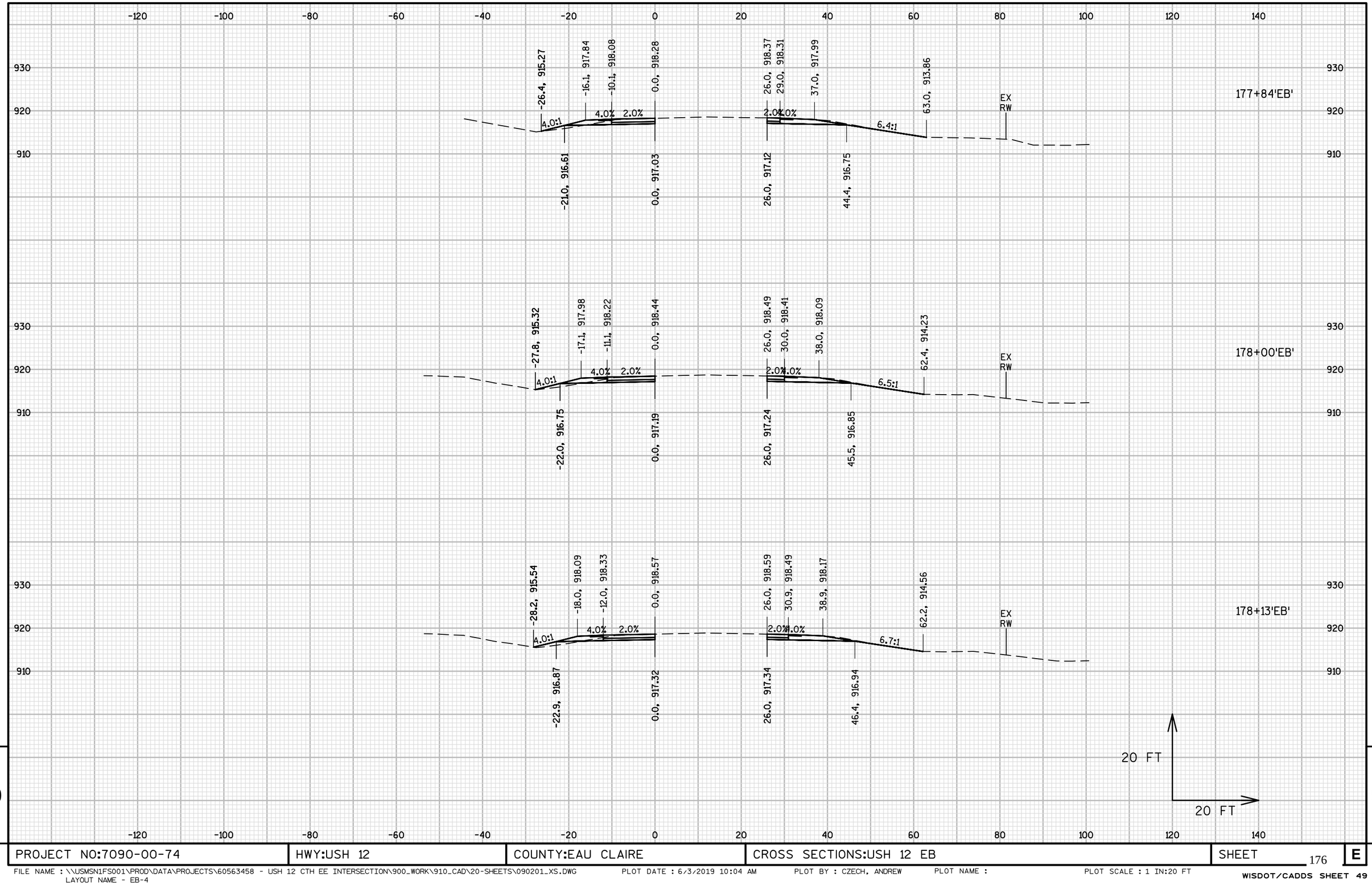

9

9

PROJECT NO:7090-00-74	HWY:USH 12	COUNTY:EAU CLAIRE	CROSS SECTIONS:USH 12 EB	SHEET	E

FILE NAME : \\USMSN1FS001\PROD\DATA\PROJECTS\60563458 - USH 12 CTH EE INTERSECTION\900_WORK\910_CAD\20-SHEETS\090201_XS.DWG
LAYOUT NAME - EB-4

PLOT DATE : 6/3/2019 10:04 AM PLOT BY : CZECH, ANDREW PLOT NAME : PLOT SCALE : 1 IN:20 FT

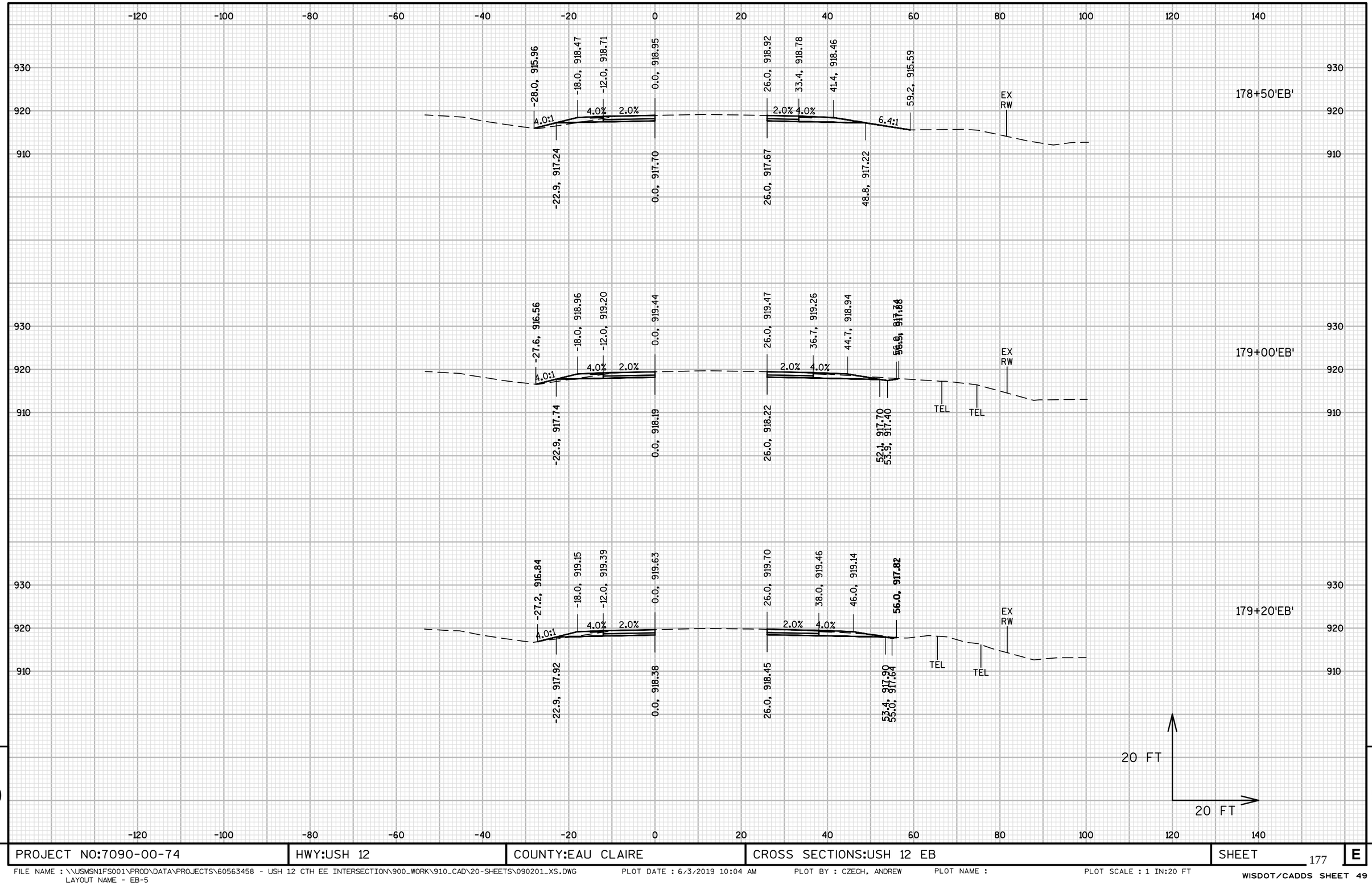

9 9

PROJECT NO:7090-00-74	HWY:USH 12	COUNTY:EAU CLAIRE	CROSS SECTIONS:USH 12 EB	SHEET 177	E

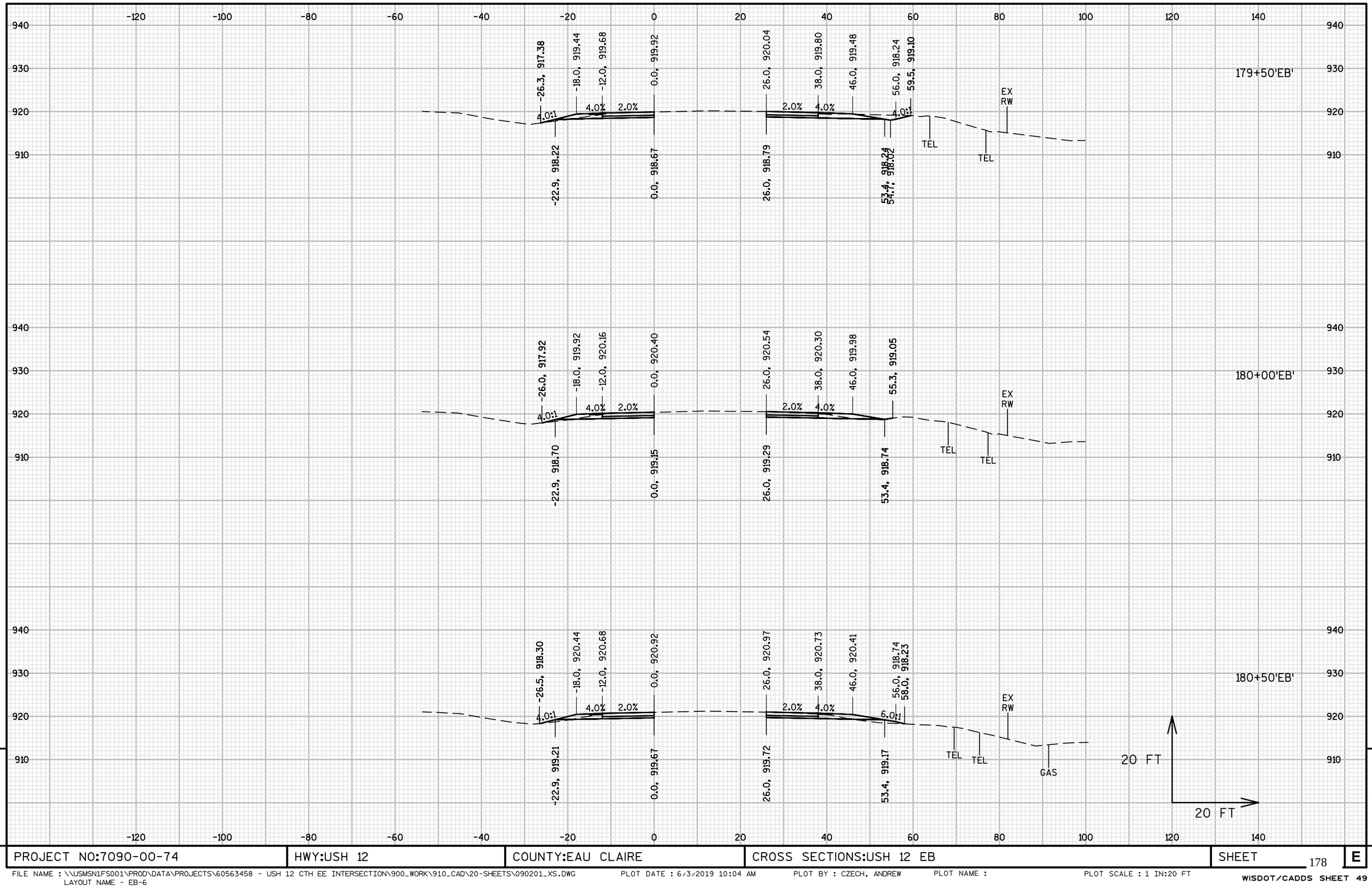

9

9

PROJECT NO:7090-00-74	HWY:USH 12	COUNTY:EAU CLAIRE	CROSS SECTIONS:USH 12 EB	SHEET	E

FILE NAME : \\USMSN1FS001\PROD\DATA\PROJECTS\60563458 - USH 12 CTH EE INTERSECTION\900_WORK\910_CAD\20-SHEETS\090201_XS.DWG
LAYOUT NAME - EB-6

PLOT DATE : 6/3/2019 10:04 AM PLOT BY : CZECH, ANDREW PLOT NAME : PLOT SCALE : 1 IN:20 FT

WISDOT/CADDS SHEET 49

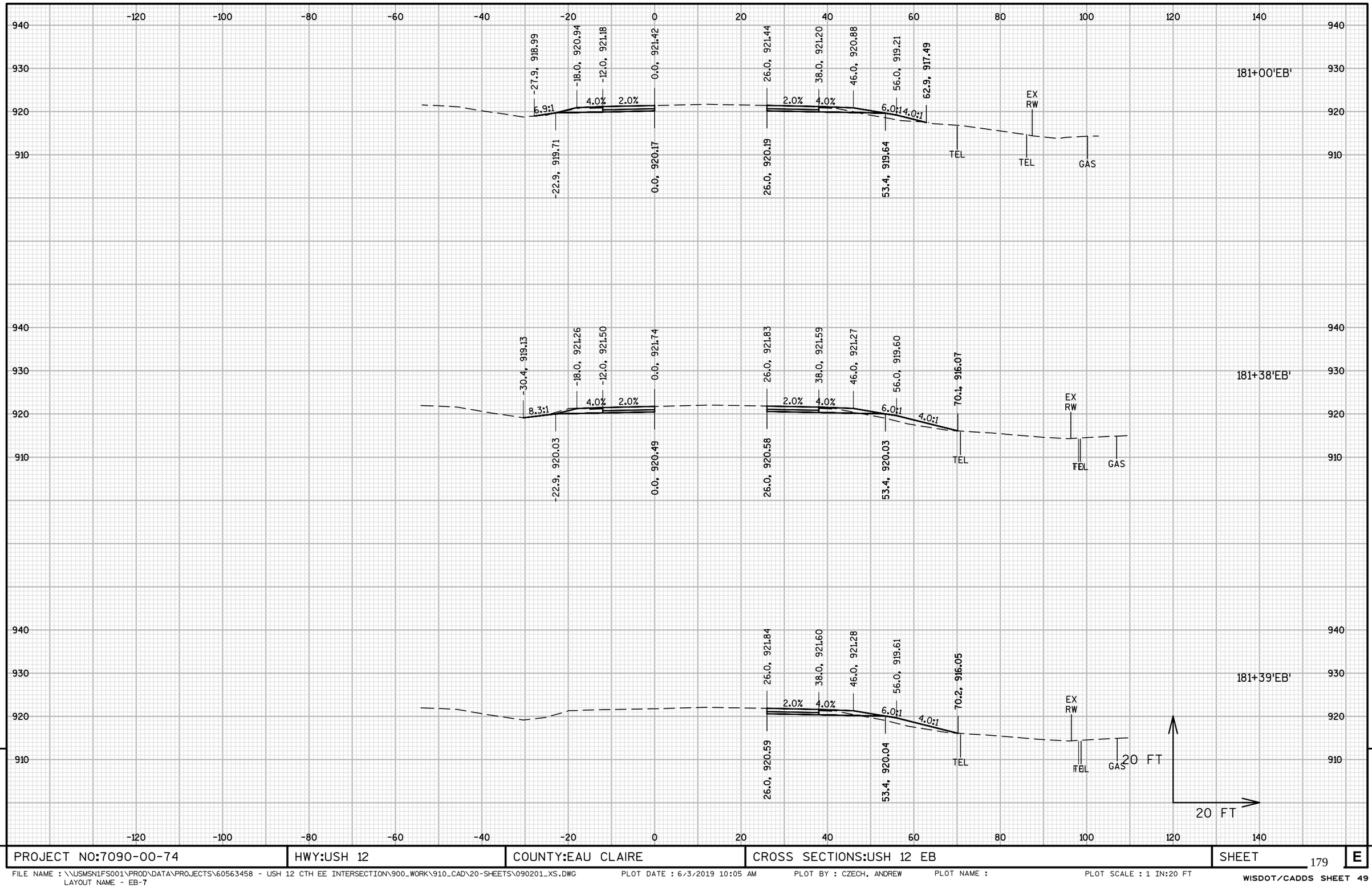

9

9

PROJECT NO:7090-00-74	HWY:USH 12	COUNTY:EAU CLAIRE	CROSS SECTIONS:USH 12 EB	SHEET 179	E

FILE NAME : \\USMSN1FS001\PROD\DATA\PROJECTS\60563458 - USH 12 CTH EE INTERSECTION\900_WORK\910_CAD\20-SHEETS\090201_XS.DWG
LAYOUT NAME - EB-7
PLOT DATE : 6/3/2019 10:05 AM
PLOT BY : CZECH, ANDREW
PLOT NAME :
PLOT SCALE : 1 IN:20 FT

WISDOT/CADDS SHEET 49

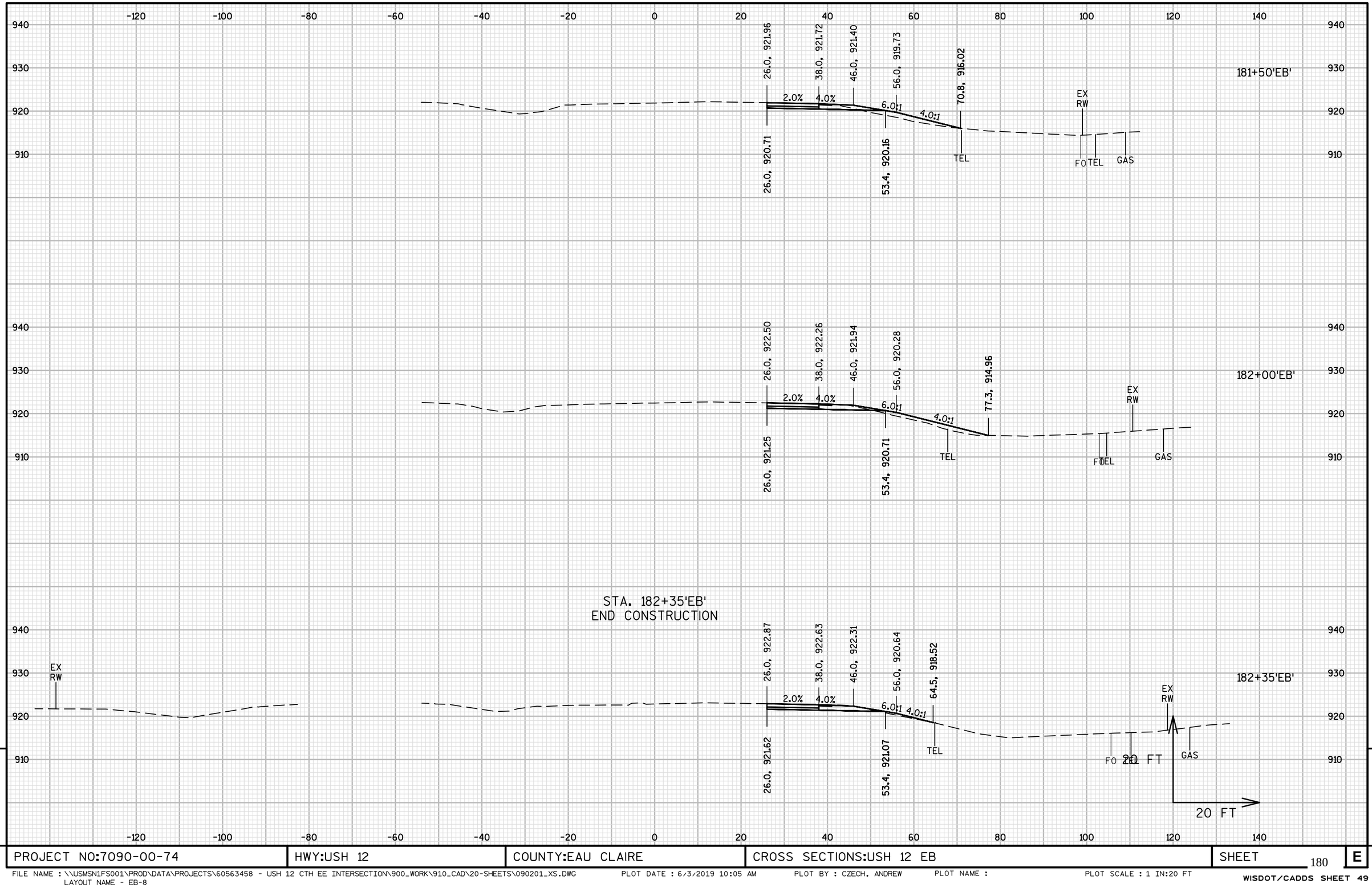

9

9

PROJECT NO:7090-00-74	HWY:USH 12	COUNTY:EAU CLAIRE	CROSS SECTIONS:USH 12 EB	SHEET 180	E

FILE NAME : \\USMSN1FS001\PROD\DATA\PROJECTS\60563458 - USH 12 CTH EE INTERSECTION\900_WORK\910_CAD\20-SHEETS\090201_XS.DWG
LAYOUT NAME - EB-8
PLOT DATE : 6/3/2019 10:05 AM
PLOT BY : CZECH, ANDREW
PLOT NAME :
PLOT SCALE : 1 IN:20 FT
WISDOT/CADDS SHEET 49

STA. 182+54'WB'
BEGIN CONSTRUCTION

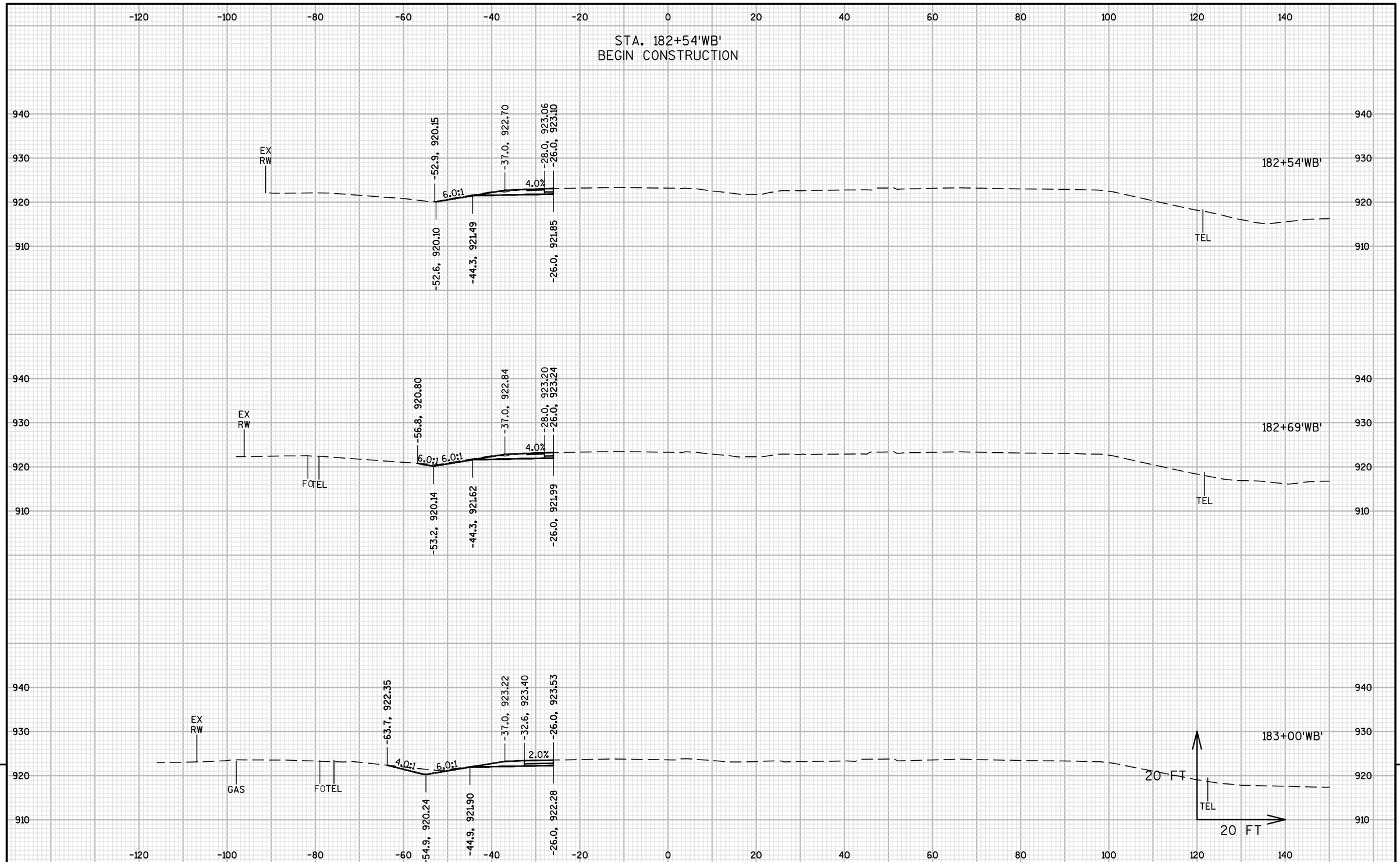

PROJECT NO:7090-00-74	HWY:USH 12	COUNTY:EAU CLAIRE	CROSS SECTIONS:USH 12 WB	SHEET 181	E

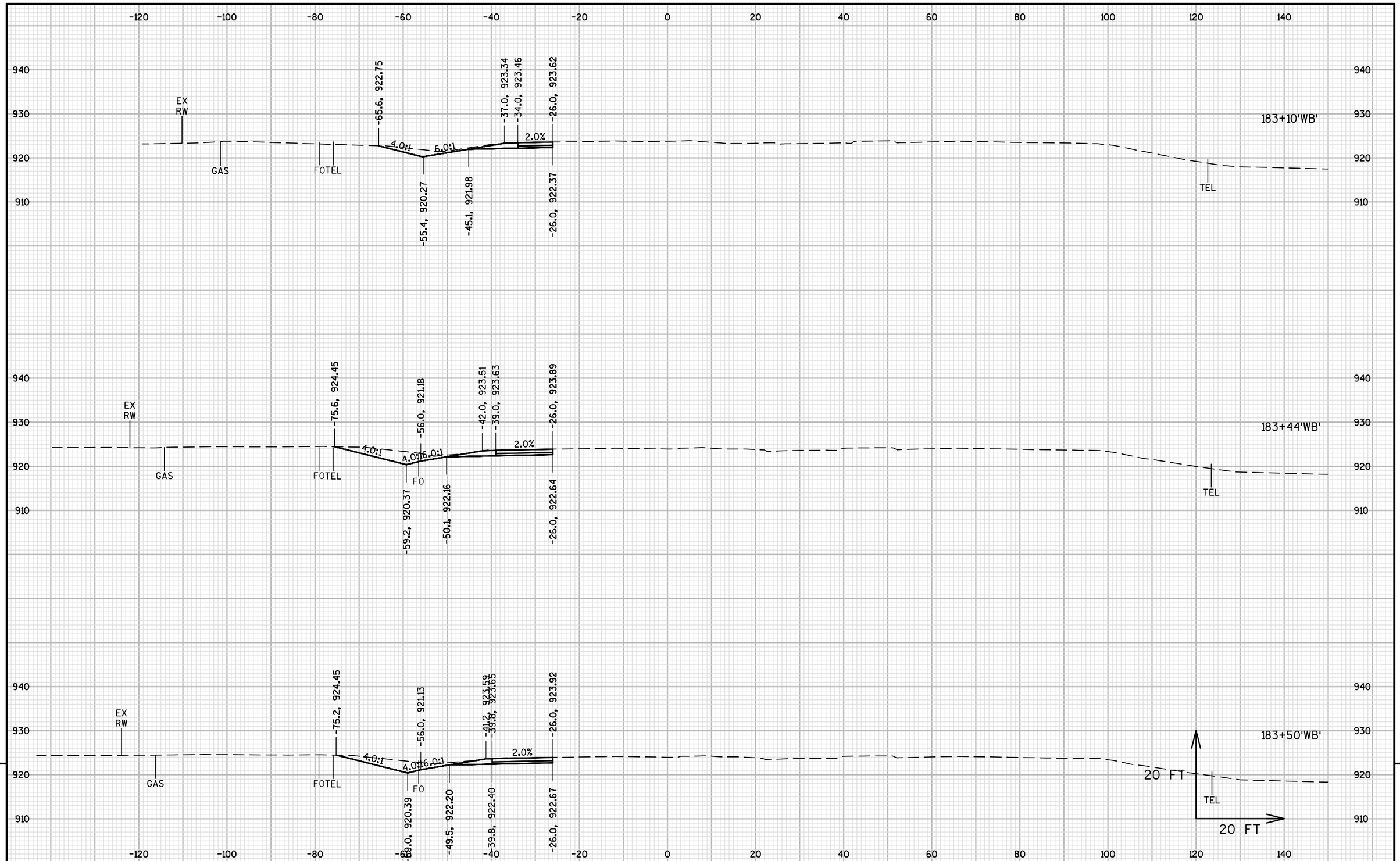

9 9

PROJECT NO:7090-00-74	HWY:USH 12	COUNTY:EAU CLAIRE	CROSS SECTIONS:USH 12 WB	SHEET E

FILE NAME : \\USMSN1FS001\PROD\DATA\PROJECTS\60563458 - USH 12 CTH EE INTERSECTION\900_WORK\910_CAD\20-SHEETS\090201_XS.DWG
LAYOUT NAME - WB-2
PLOT DATE : 6/3/2019 10:05 AM PLOT BY : CZECH, ANDREW PLOT NAME : PLOT SCALE : 1 IN:20 FT

-120 -100 -80 -60 -40 -20 0 20 40 60 80 100 120 140

SEE 'NW' CROSS SECTIONS

-38.0, 923.71 | -26.0, 923.95

2.0%

940 930 920 910

183+55'WB'

TEL

-38.0, 922.46 | -26.0, 922.70

SEE 'NW' CROSS SECTIONS

-38.0, 923.97 | -26.0, 924.21

940 930 920

184+00'WB'

2.0%

TEL

-38.0, 922.72 | -26.0, 922.96

SEE PORK CHOP ISLAND PLAN DETAIL

-38.0, 924.17 | -26.0, 924.41

940 930 920

184+33'WB'

OH

2.0%

TEL

20 FT

20 FT

-38.0, 922.92 | -26.0, 923.16

-120 -100 -80 -60 -40 -20 0 20 40 60 80 100 120 140

9

9

PROJECT NO:7090-00-74	HWY:USH 12	COUNTY:EAU CLAIRE	CROSS SECTIONS:USH 12 WB	SHEET	E

FILE NAME : \\USMSN1FS001\PROD\DATA\PROJECTS\60563458 - USH 12 CTH EE INTERSECTION\900_WORK\910_CAD\20-SHEETS\090201_XS.DWG
LAYOUT NAME - WB-3
PLOT DATE : 6/3/2019 10:06 AM
PLOT BY : CZECH, ANDREW
PLOT NAME :
PLOT SCALE : 1 IN:20 FT
WISDOT/CADDS SHEET 49

-120 -100 -80 -60 -40 -20 0 20 40 60 80 100 120 140

SEE 'EE' CROSS SECTIONS

-39.8, 924.14 | -26.0, 924.42

940 930 920

184+34'WB'

OH

2.0%

TEL

-39.8, 922.89 | -26.0, 923.17

SEE 'EE' CROSS SECTIONS

-40.0, 924.22 | -26.0, 924.50

940 930 920

184+50'WB'

OH

2.0%

TEL

-40.0, 922.97 | -26.0, 923.25

SEE 'EE' CROSS SECTIONS

-40.4, 924.39 | -26.0, 924.67

940 930 920

184+76'WB'

OH

2.0%

TEL SS

-40.4, 923.14 | -26.0, 923.42

20 FT

20 FT

-120 -100 -80 -60 -40 -20 0 20 40 60 80 100 120 140

9 9

PROJECT NO:7090-00-74	HWY:USH 12	COUNTY:EAU CLAIRE	CROSS SECTIONS:USH 12 WB	SHEET 184	E

FILE NAME : \\USMSN1FS001\PROD\DATA\PROJECTS\60563458 - USH 12 CTH EE INTERSECTION\900_WORK\910_CAD\20-SHEETS\090201_XS.DWG
LAYOUT NAME - WB-4

PLOT DATE : 6/3/2019 10:06 AM PLOT BY : CZECH, ANDREW PLOT NAME : PLOT SCALE : 1 IN:20 FT

-120 -100 -80 -60 -40 -20 0 20 40 60 80 100 120 140

SEE 'E'
CROSS SECTIONS

-38.0, 924.44
-26.0, 924.68
2.0%
-38.0, 923.19
-26.0, 923.43

940
930
920

184+77'WB'
OH
TEL
SS

SEE 'E'
CROSS SECTIONS

-38.0, 924.61
-26.0, 924.85
2.0%
-38.0, 923.36
-26.0, 923.60

185+00'WB'
OH
TEL SS

STA. 185+40'WB'
END CONSTRUCTION

SEE 'E'
CROSS SECTIONS

-38.0, 924.85
-26.0, 925.04
1.5%
-38.0, 923.60
-26.0, 923.79

185+40'WB'
FO
FO
FO
SS
TEL

20 FT
20 FT

9

9

PROJECT NO:7090-00-74	HWY:USH 12	COUNTY:EAU CLAIRE	CROSS SECTIONS:USH 12 WB	SHEET 185	E

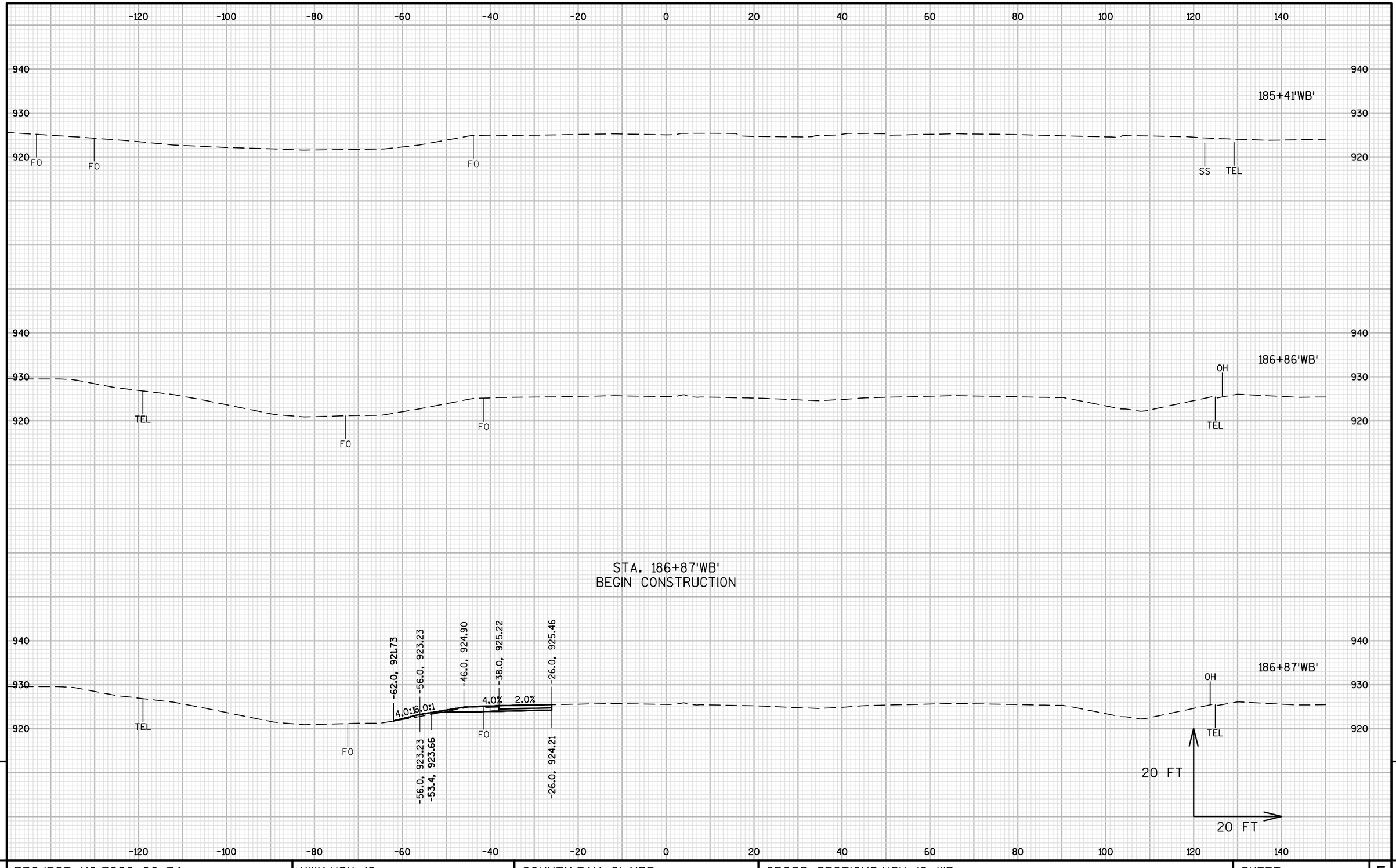

PROJECT NO:7090-00-74	HWY:USH 12	COUNTY:EAU CLAIRE	CROSS SECTIONS:USH 12 WB	SHEET 186	E

FILE NAME : \\USMSN1FS001\PROD\DATA\PROJECTS\60563458 - USH 12 CTH EE INTERSECTION\900_WORK\910_CAD\20-SHEETS\090201_XS.DWG
LAYOUT NAME - WB-6

PLOT DATE : 6/3/2019 10:06 AM PLOT BY : CZECH, ANDREW PLOT NAME : PLOT SCALE : 1 IN:20 FT

WISDOT/CADDS SHEET 49

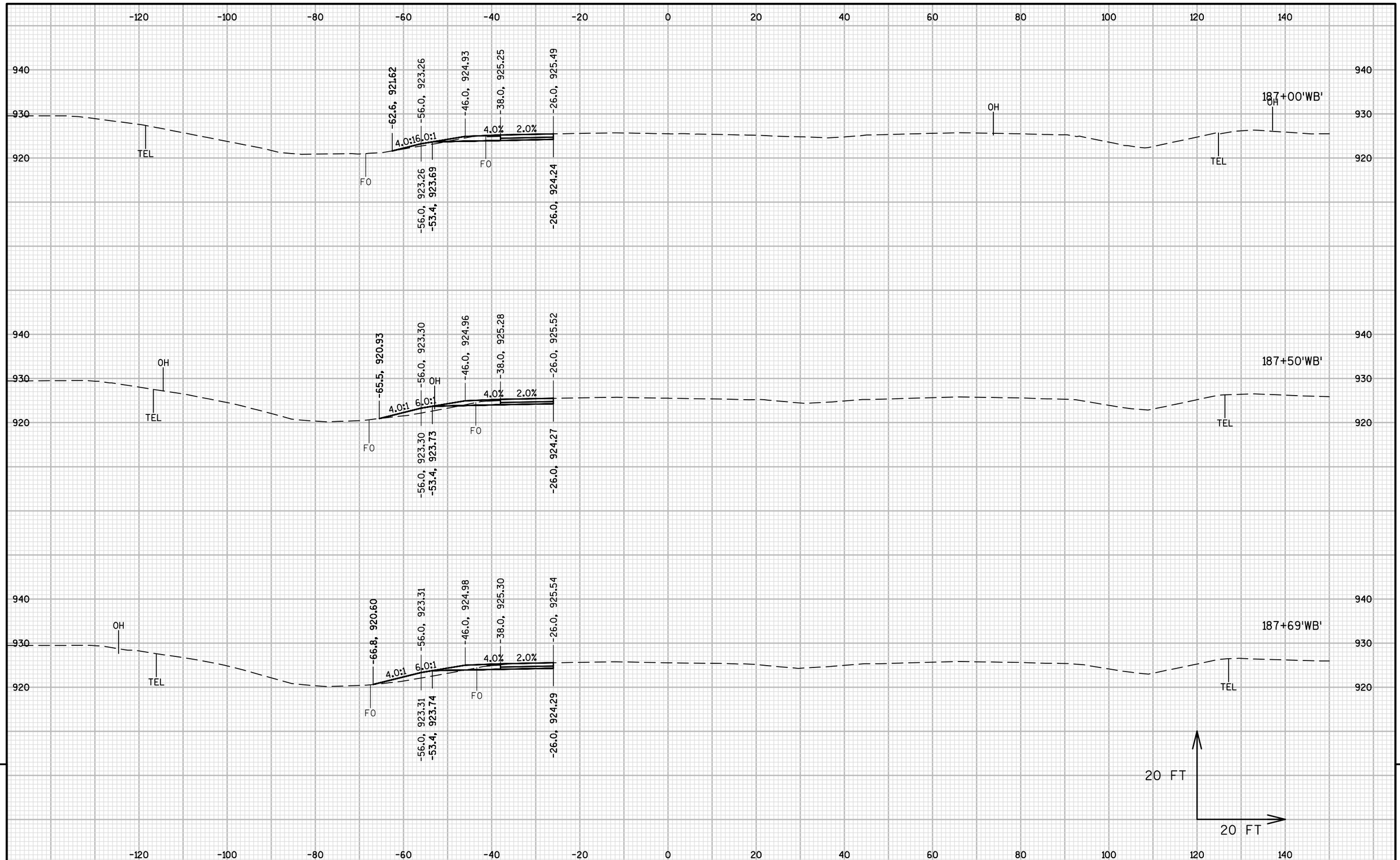

9

9

PROJECT NO:7090-00-74	HWY:USH 12	COUNTY:EAU CLAIRE	CROSS SECTIONS:USH 12 WB	SHEET 187	E

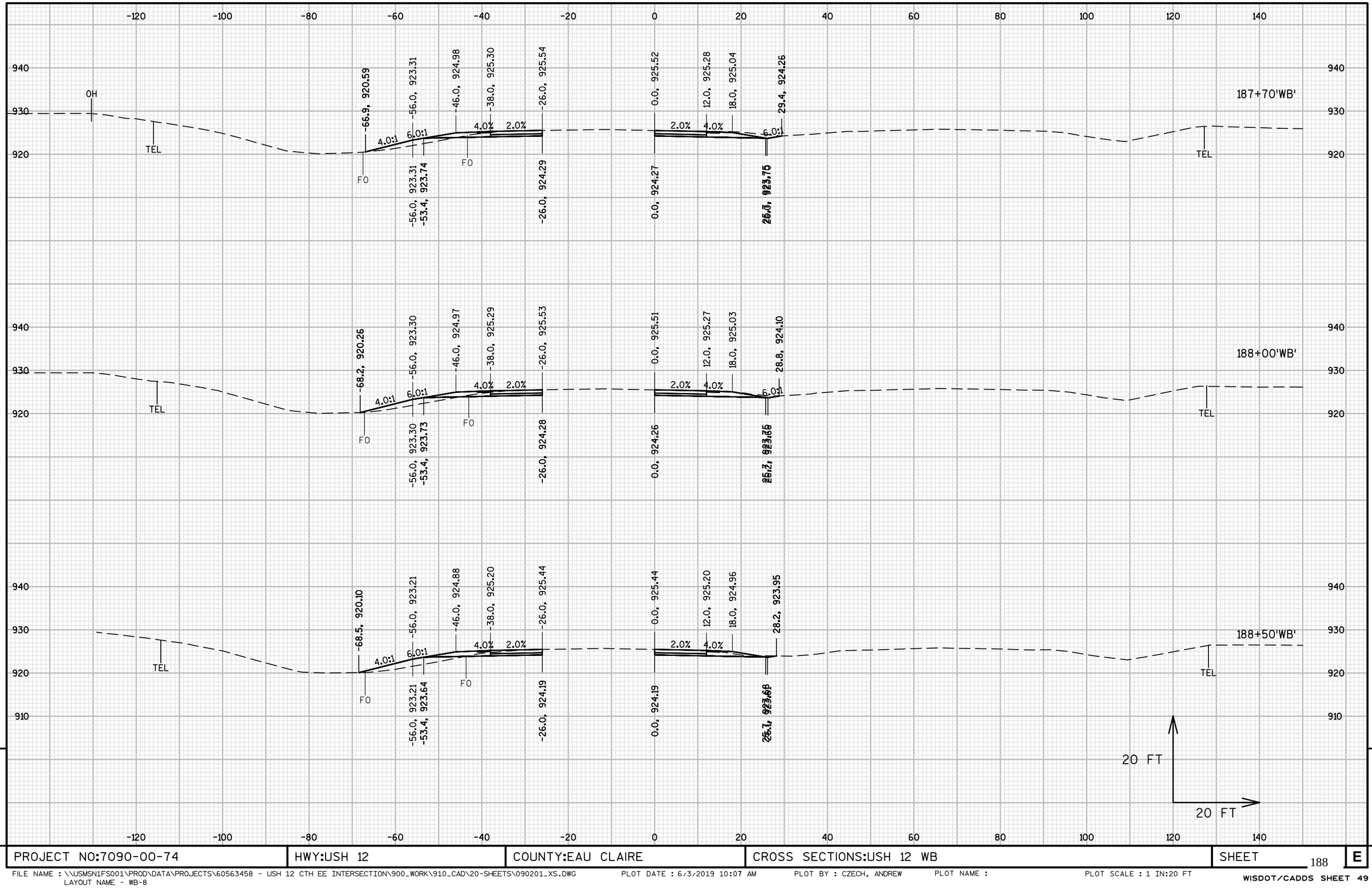

9 9

PROJECT NO:7090-00-74	HWY:USH 12	COUNTY:EAU CLAIRE	CROSS SECTIONS:USH 12 WB	SHEET 188	E

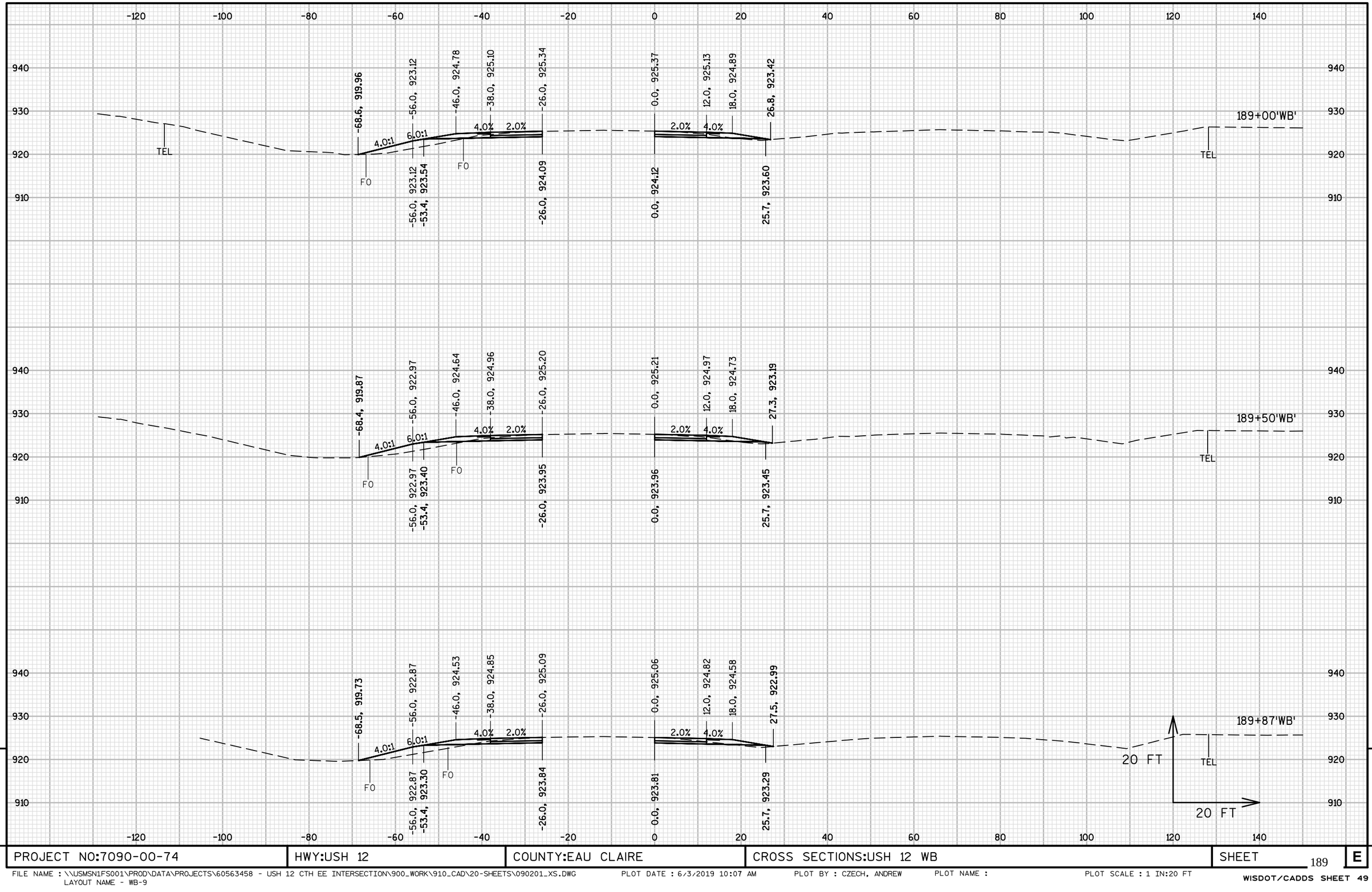

PROJECT NO:7090-00-74	HWY:USH 12	COUNTY:EAU CLAIRE	CROSS SECTIONS:USH 12 WB	SHEET 189	E

FILE NAME : \\USMSN1FS001\PROD\DATA\PROJECTS\60563458 - USH 12 CTH EE INTERSECTION\900_WORK\910_CAD\20-SHEETS\090201_XS.DWG
LAYOUT NAME - WB-9

PLOT DATE : 6/3/2019 10:07 AM PLOT BY : CZECH, ANDREW PLOT NAME : PLOT SCALE : 1 IN:20 FT

WISDOT/CADDS SHEET 49

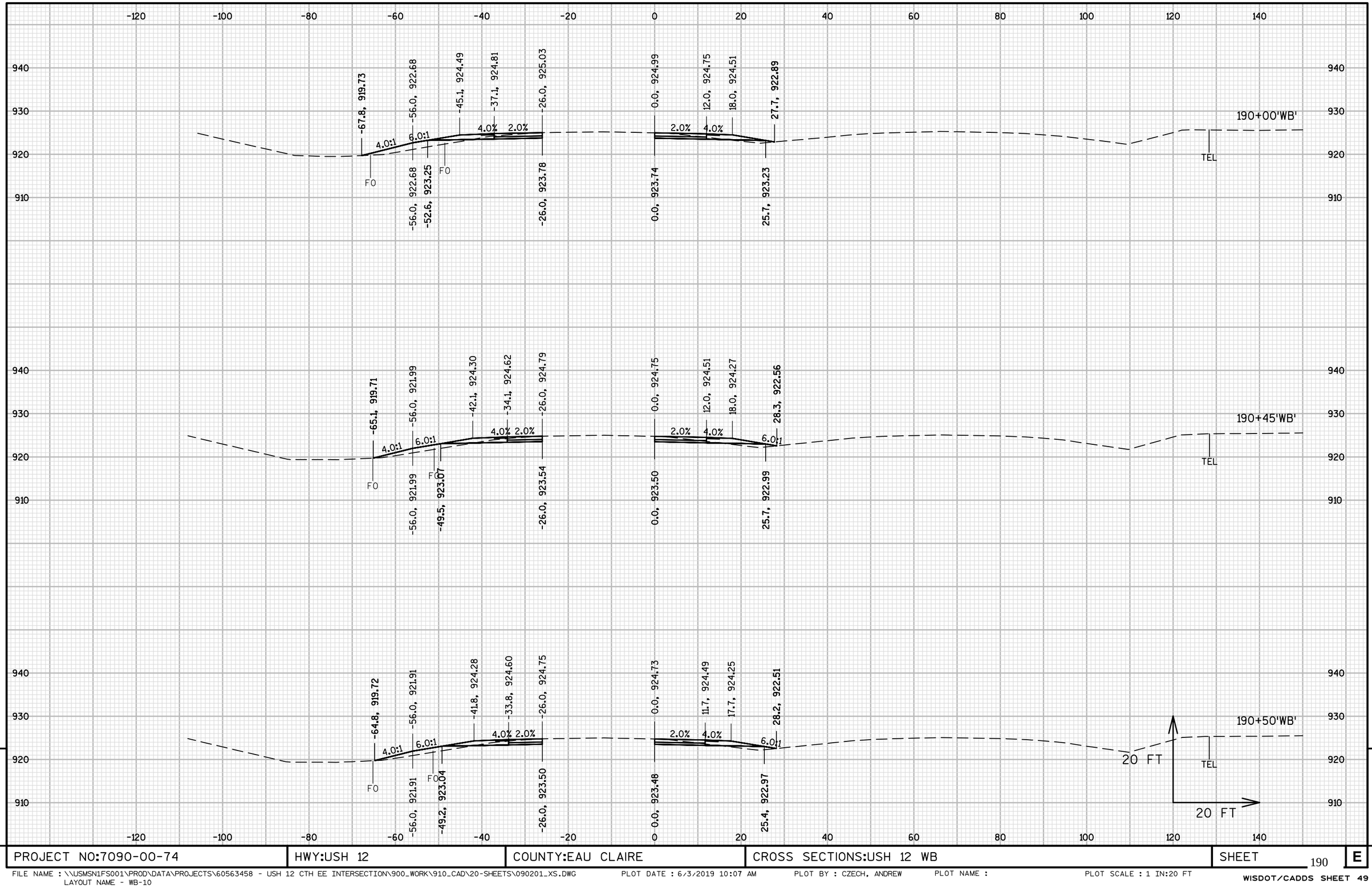

PROJECT NO:7090-00-74	HWY:USH 12	COUNTY:EAU CLAIRE	CROSS SECTIONS:USH 12 WB	SHEET 190	E

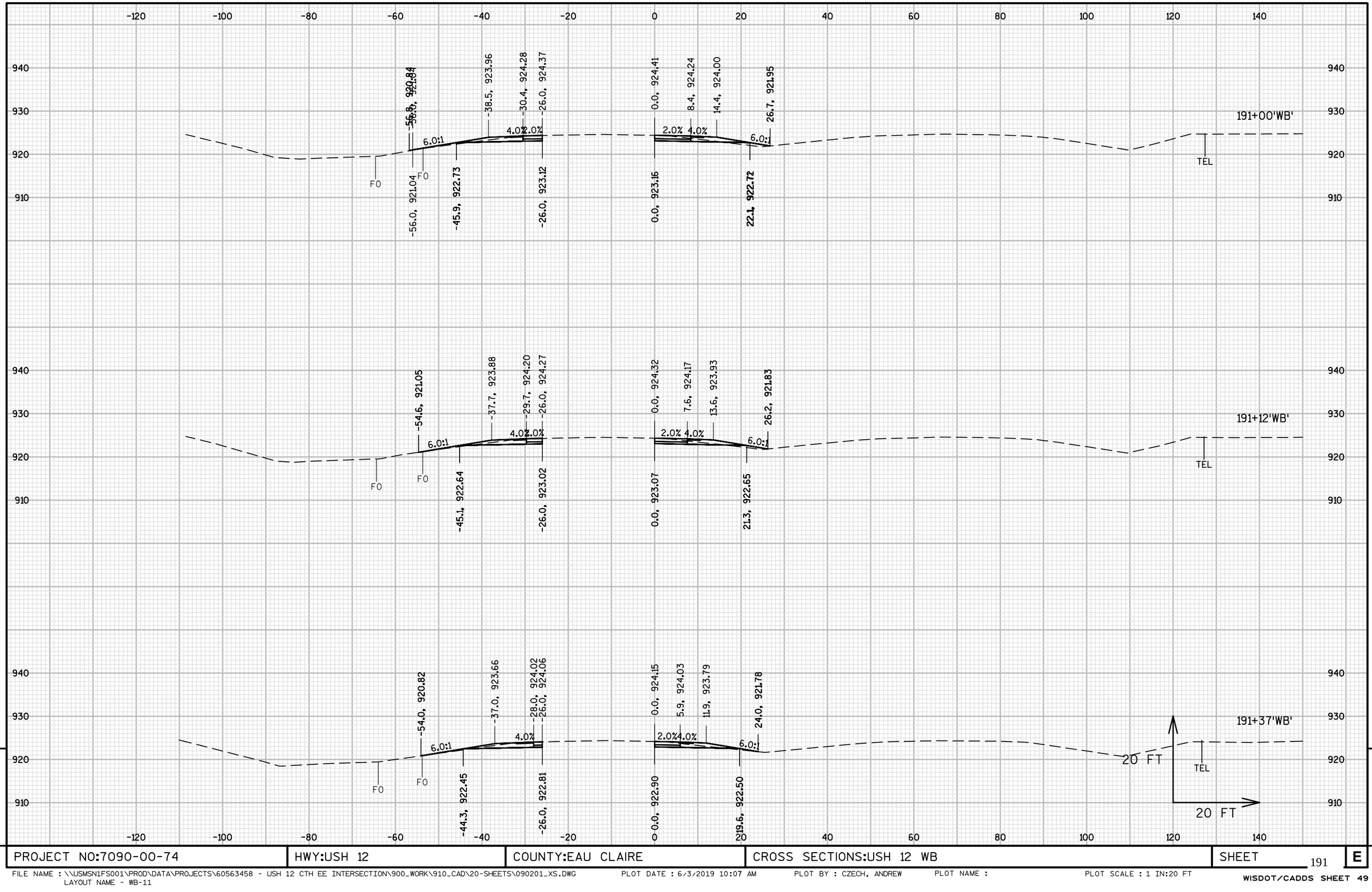

9

9

PROJECT NO:7090-00-74	HWY:USH 12	COUNTY:EAU CLAIRE	CROSS SECTIONS:USH 12 WB	SHEET 191	E

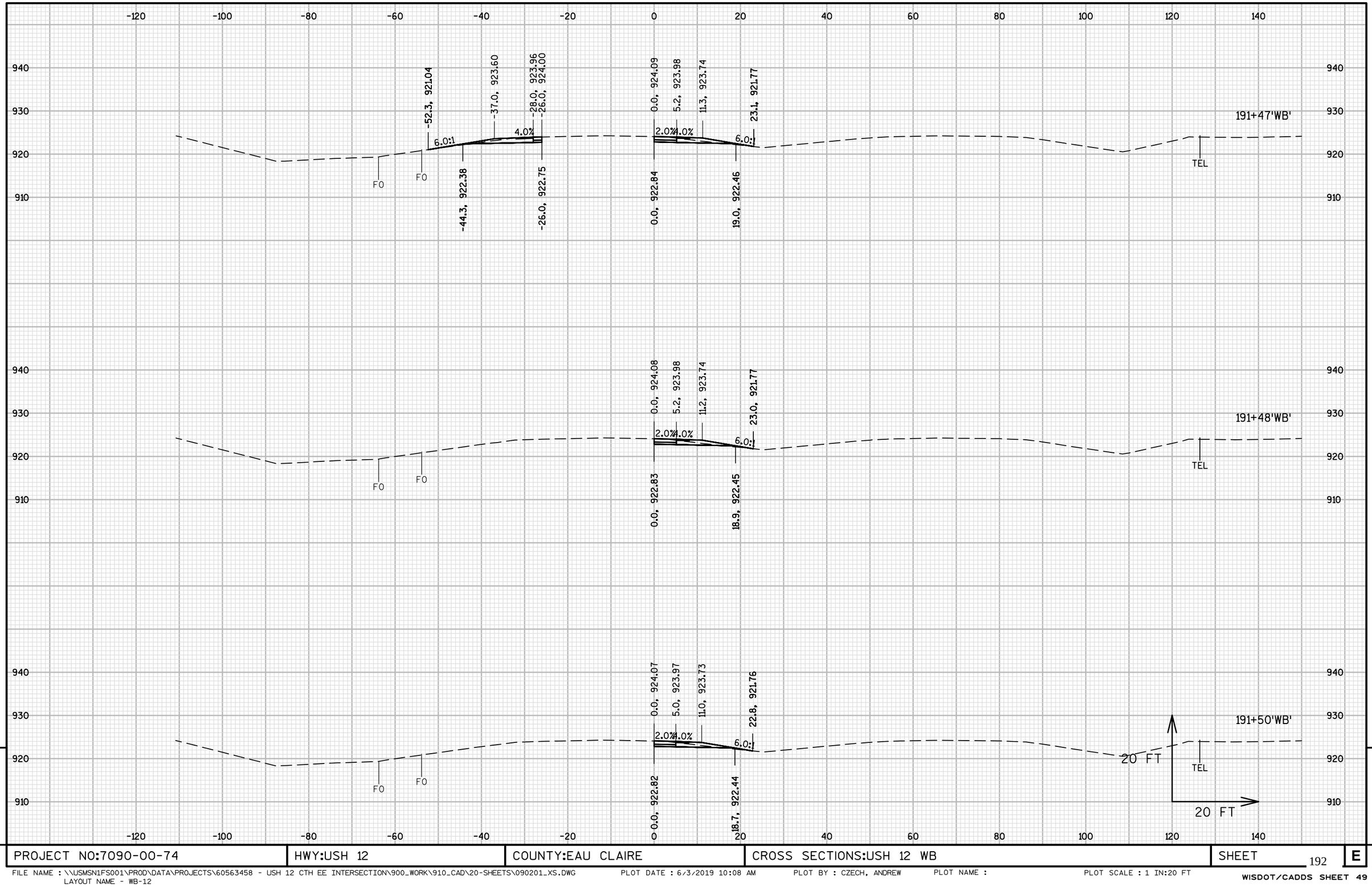

9

9

PROJECT NO:7090-00-74	HWY:USH 12	COUNTY:EAU CLAIRE	CROSS SECTIONS:USH 12 WB	SHEET	E

FILE NAME : \\USMSN1FS001\PROD\DATA\PROJECTS\60563458 - USH 12 CTH EE INTERSECTION\900_WORK\910_CAD\20-SHEETS\090201_XS.DWG
LAYOUT NAME - WB-12
PLOT DATE : 6/3/2019 10:08 AM
PLOT BY : CZECH, ANDREW
PLOT NAME :
PLOT SCALE : 1 IN:20 FT
WISDOT/CADDS SHEET 49

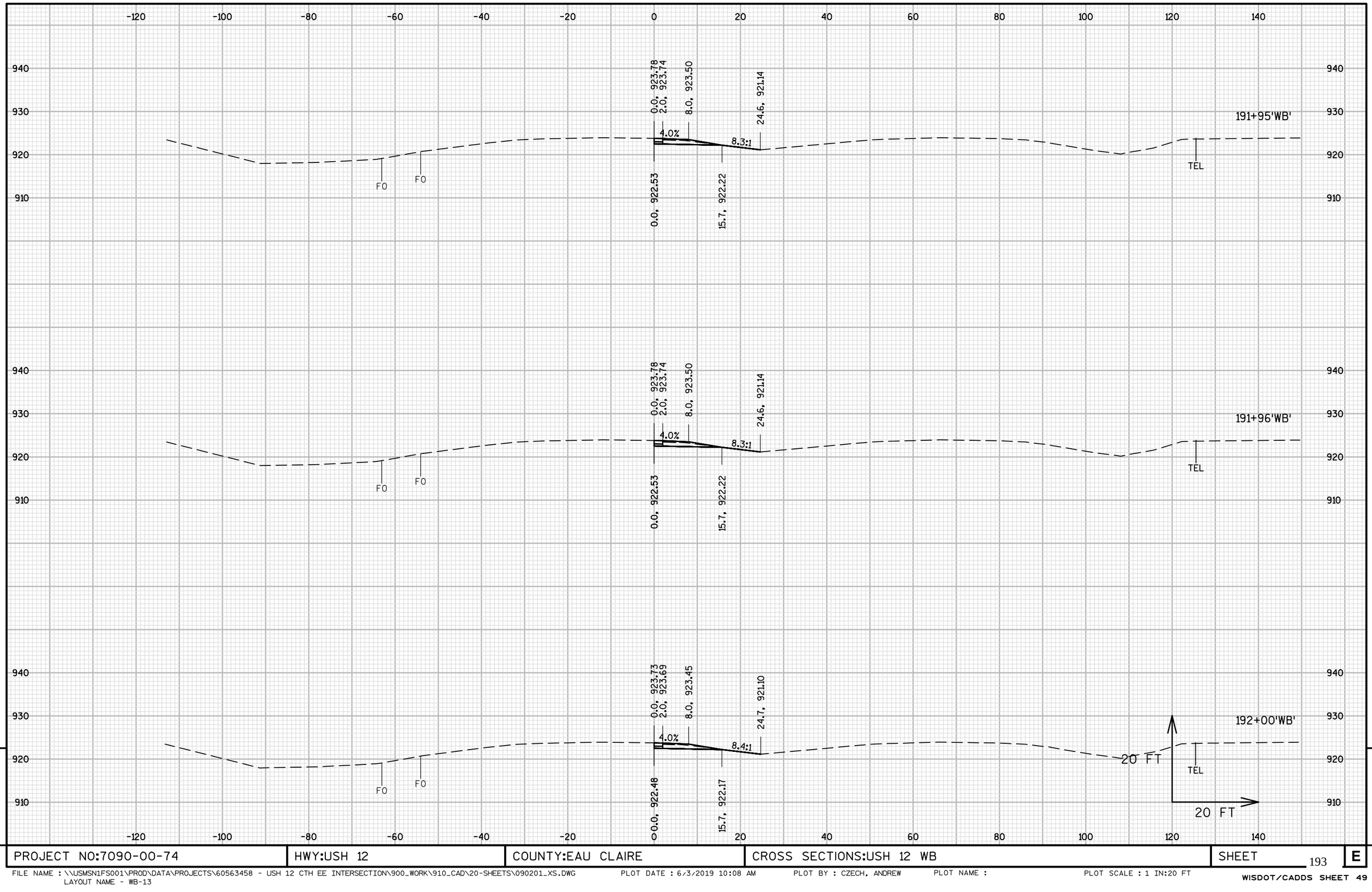

PROJECT NO:7090-00-74	HWY:USH 12	COUNTY:EAU CLAIRE	CROSS SECTIONS:USH 12 WB	SHEET 193 E

FILE NAME : \\USMSN1FS001\PROD\DATA\PROJECTS\60563458 - USH 12 CTH EE INTERSECTION\900_WORK\910_CAD\20-SHEETS\090201_XS.DWG
LAYOUT NAME - WB-13
PLOT DATE : 6/3/2019 10:08 AM PLOT BY : CZECH, ANDREW PLOT NAME : PLOT SCALE : 1 IN:20 FT

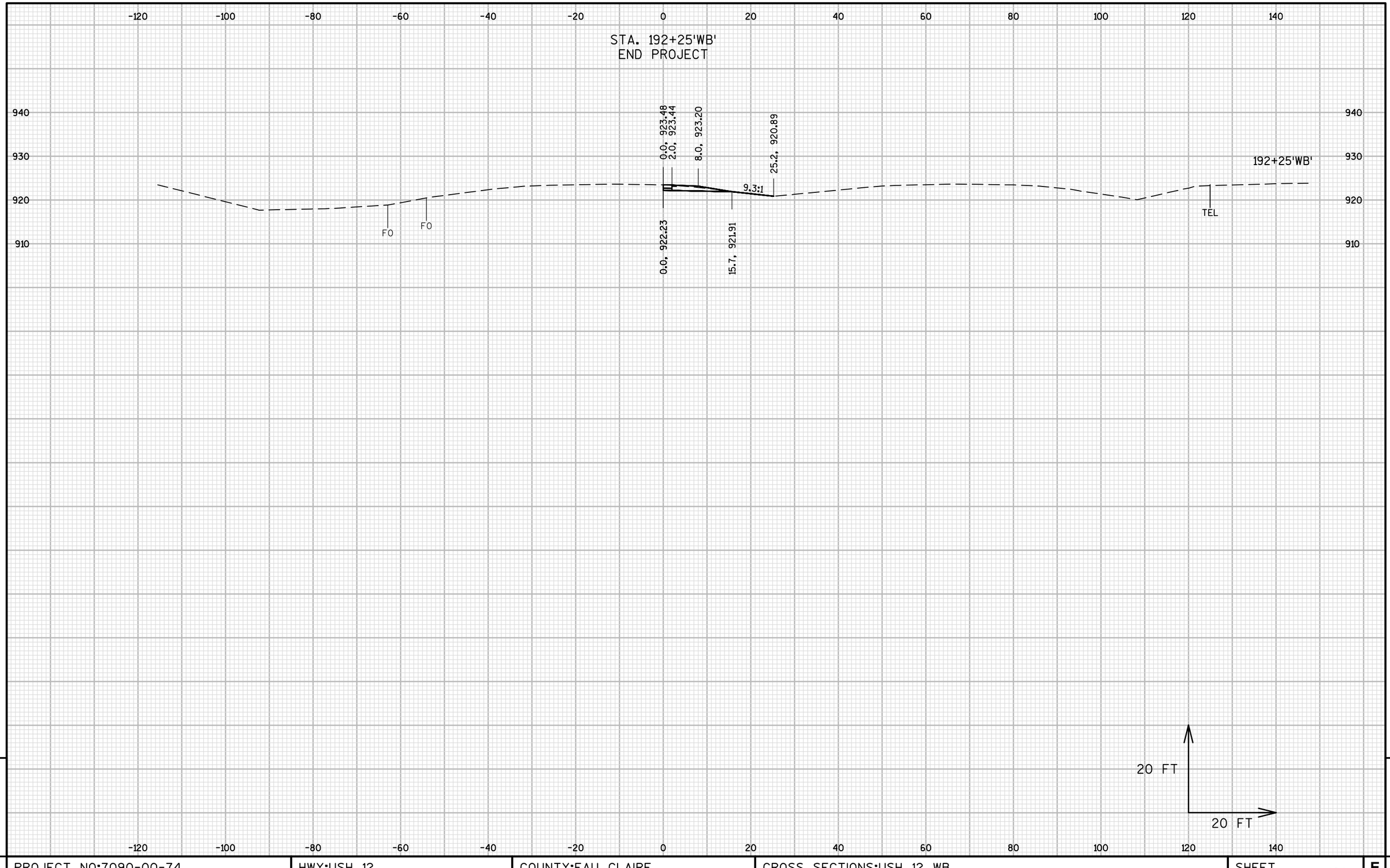

PROJECT NO:7090-00-74	HWY:USH 12	COUNTY:EAU CLAIRE	CROSS SECTIONS:USH 12 WB	SHEET 194	E

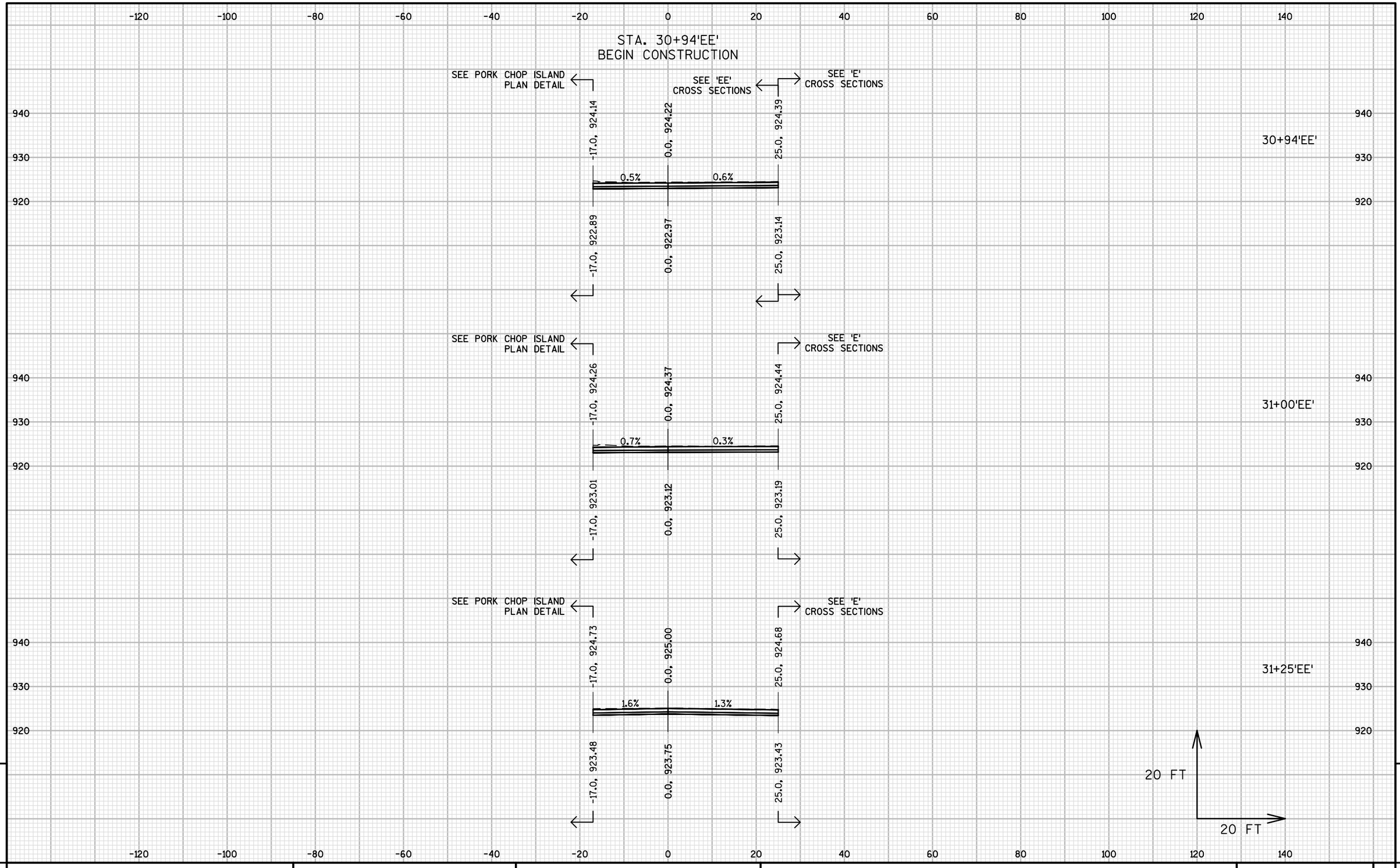

9

9

PROJECT NO:7090-00-74	HWY:USH 12	COUNTY:EAU CLAIRE	CROSS SECTIONS:N TOWN HALL RD	SHEET 195	E

FILE NAME : \\USMSN1FS001\PROD\DATA\PROJECTS\60563458 - USH 12 CTH EE INTERSECTION\900_WORK\910_CAD\20-SHEETS\090201_XS.DWG PLOT DATE : 6/3/2019 10:08 AM PLOT BY : CZECH, ANDREW PLOT NAME : PLOT SCALE : 1 IN:20 FT
LAYOUT NAME - EE-1

WISDOT/CADDS SHEET 49

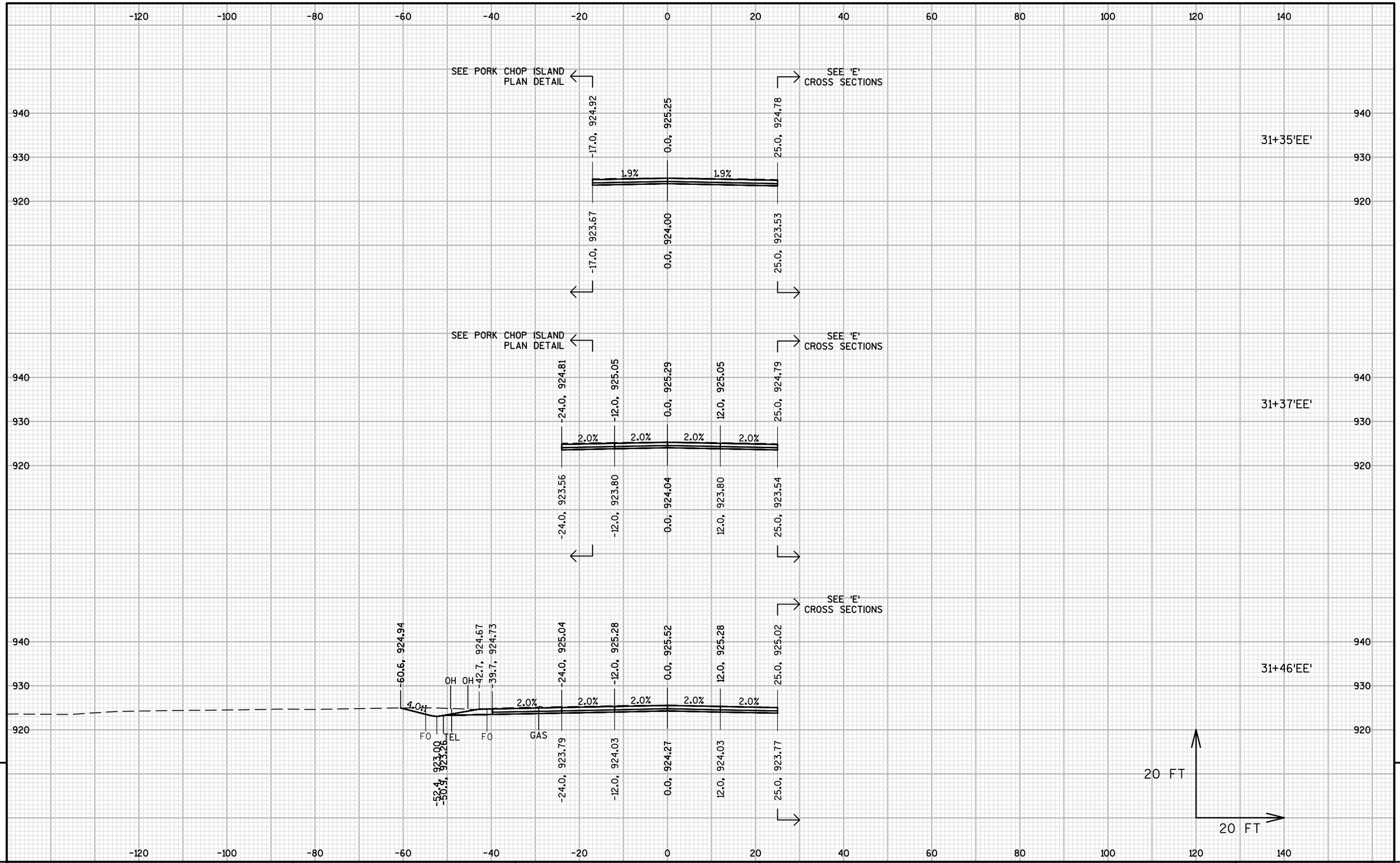

9

9

PROJECT NO:7090-00-74	HWY:USH 12	COUNTY:EAU CLAIRE	CROSS SECTIONS:N TOWN HALL RD	SHEET 196	E

FILE NAME : \\USMSN1FS001\PROD\DATA\PROJECTS\60563458 - USH 12 CTH EE INTERSECTION\900_WORK\910_CAD\20-SHEETS\090201_XS.DWG PLOT DATE : 6/3/2019 10:08 AM PLOT BY : CZECH, ANDREW PLOT NAME : PLOT SCALE : 1 IN:20 FT

LAYOUT NAME - EE-2

WISDOT/CADDS SHEET 49

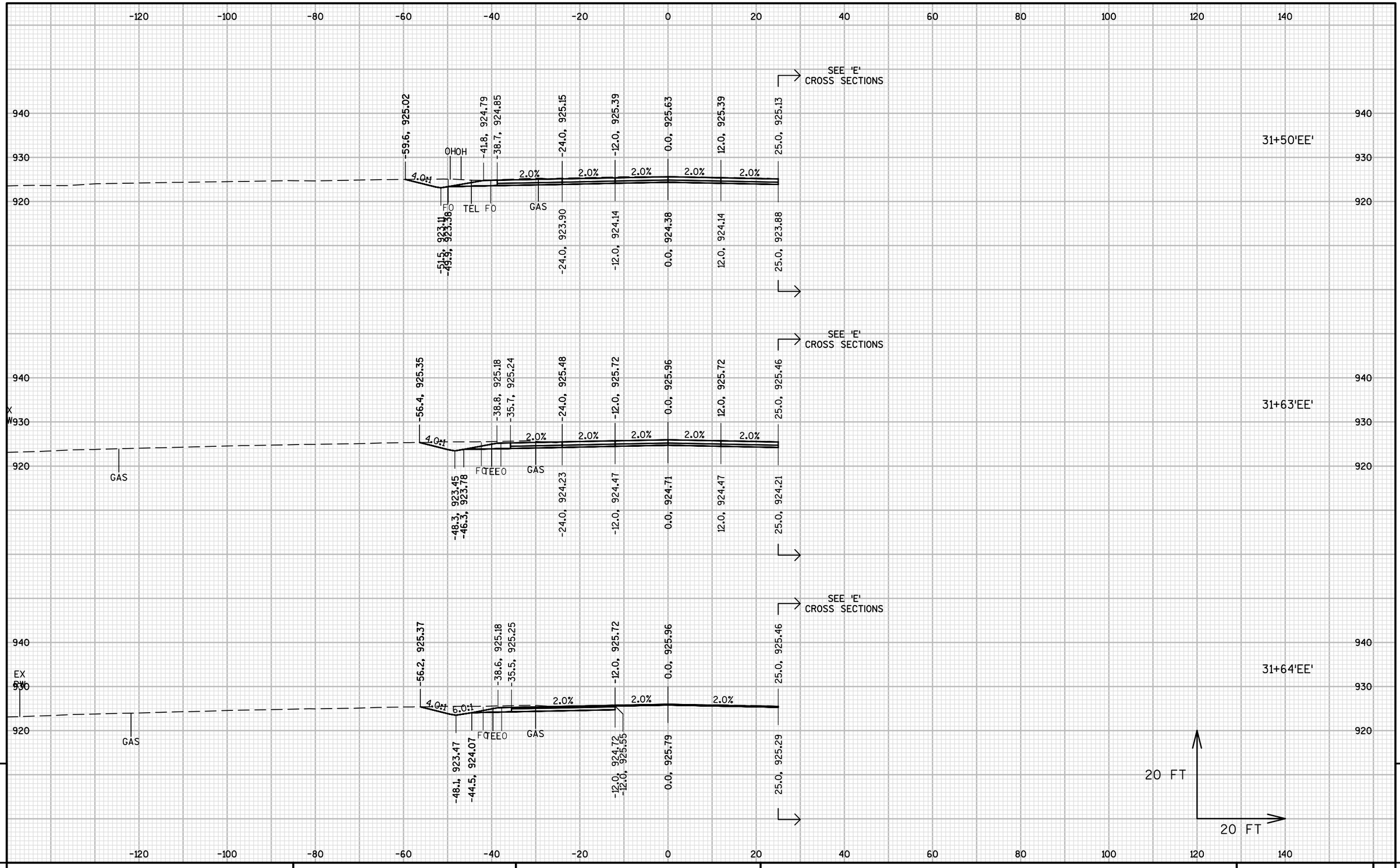

PROJECT NO:7090-00-74	HWY:USH 12	COUNTY:EAU CLAIRE	CROSS SECTIONS:N TOWN HALL RD	SHEET	E

FILE NAME : \\USMSN1FS001\PROD\DATA\PROJECTS\60563458 - USH 12 CTH EE INTERSECTION\900_WORK\910_CAD\20-SHEETS\090201_XS.DWG
LAYOUT NAME - EE-3
PLOT DATE : 6/3/2019 10:09 AM
PLOT BY : CZECH, ANDREW
PLOT NAME :
PLOT SCALE : 1 IN:20 FT

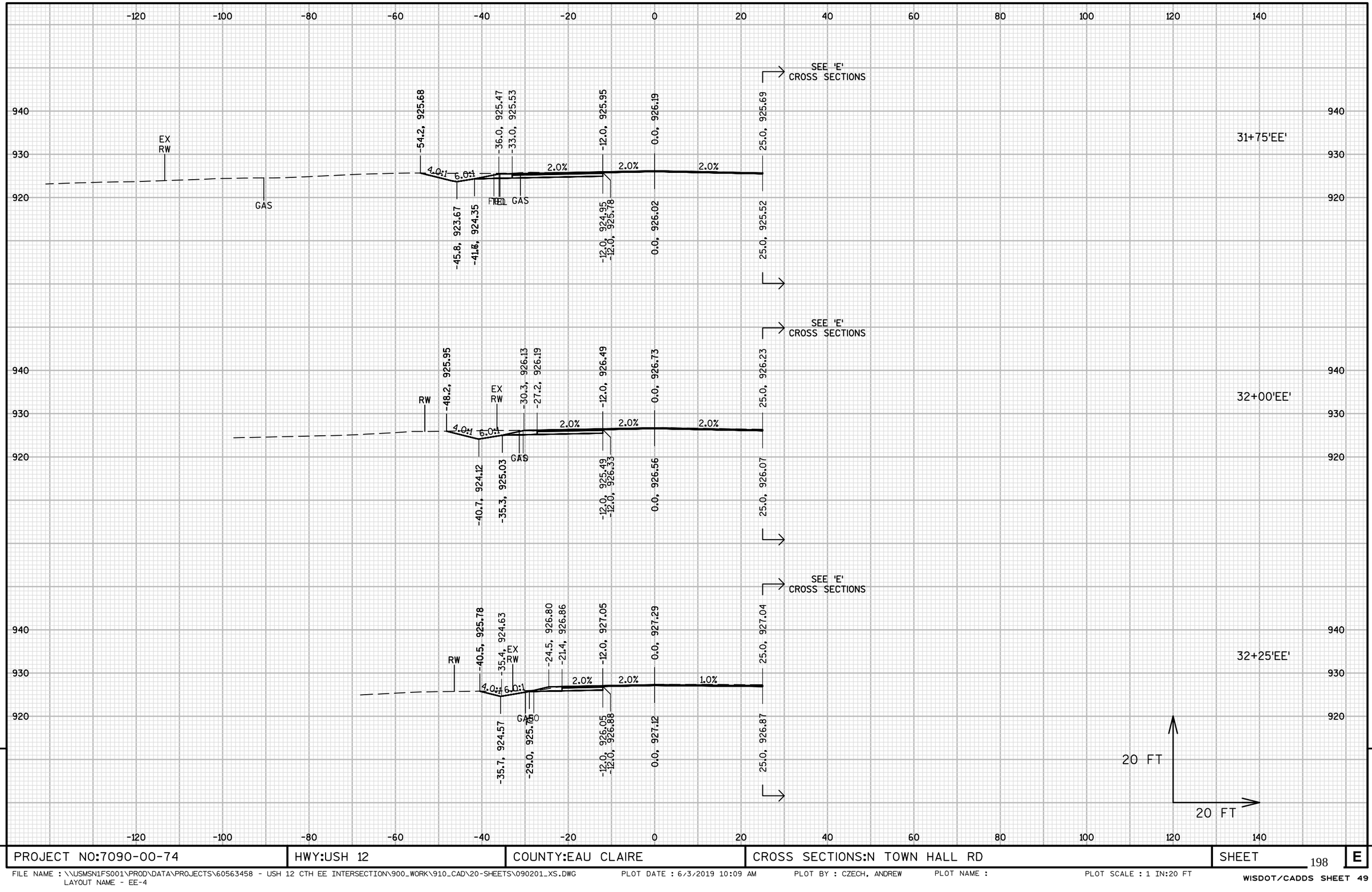

PROJECT NO:7090-00-74	HWY:USH 12	COUNTY:EAU CLAIRE	CROSS SECTIONS:N TOWN HALL RD	SHEET	E

FILE NAME : \\USMSN1FS001\PROD\DATA\PROJECTS\60563458 - USH 12 CTH EE INTERSECTION\900_WORK\910_CAD\20-SHEETS\090201_XS.DWG
LAYOUT NAME - EE-4
PLOT DATE : 6/3/2019 10:09 AM
PLOT BY : CZECH, ANDREW
PLOT NAME :
PLOT SCALE : 1 IN:20 FT

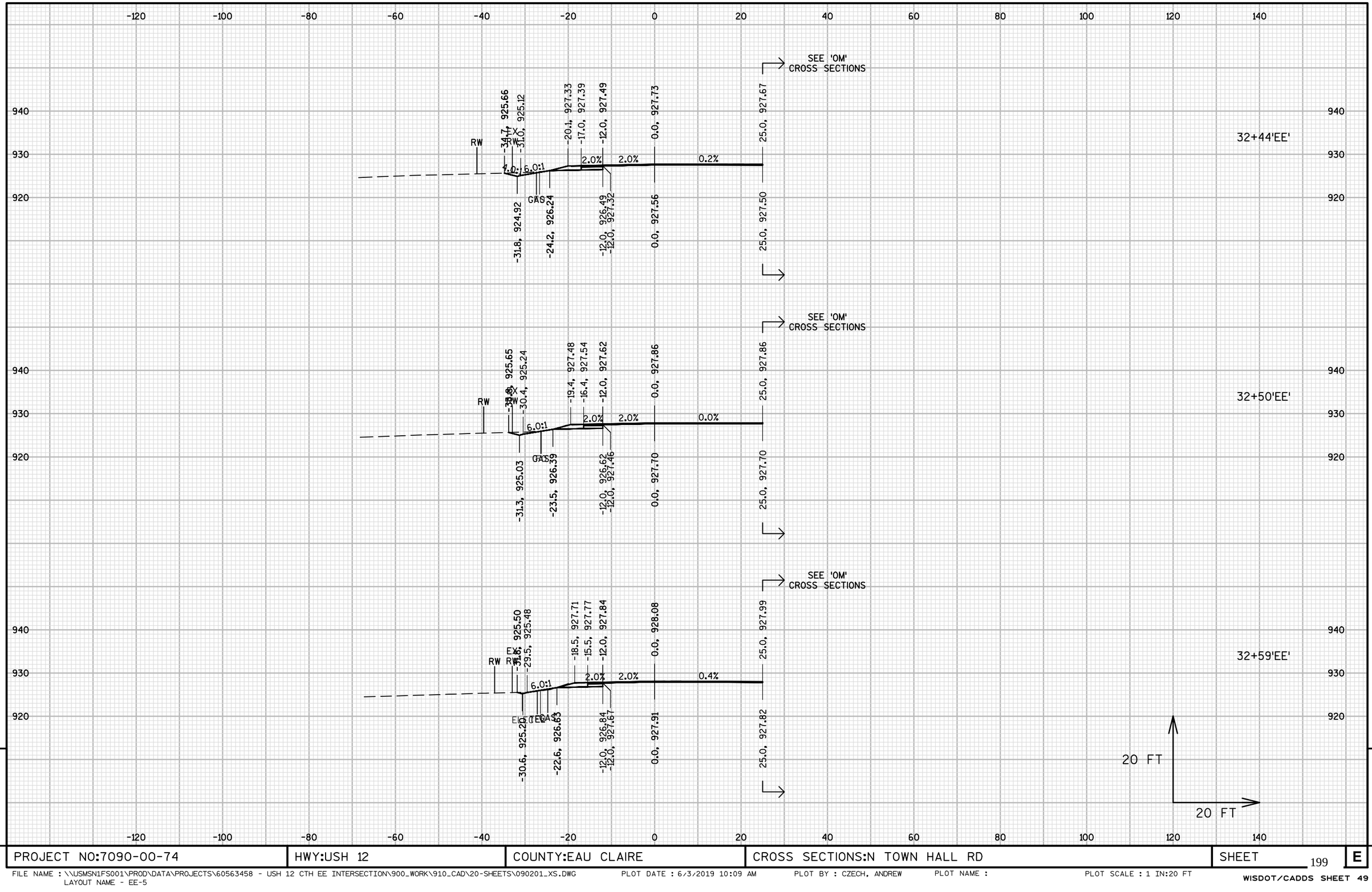

9 9

PROJECT NO:7090-00-74	HWY:USH 12	COUNTY:EAU CLAIRE	CROSS SECTIONS:N TOWN HALL RD	SHEET	E

FILE NAME : \\USMSN1FS001\PROD\DATA\PROJECTS\60563458 - USH 12 CTH EE INTERSECTION\900_WORK\910_CAD\20-SHEETS\090201_XS.DWG
LAYOUT NAME - EE-5
PLOT DATE : 6/3/2019 10:09 AM PLOT BY : CZECH, ANDREW PLOT NAME : PLOT SCALE : 1 IN:20 FT

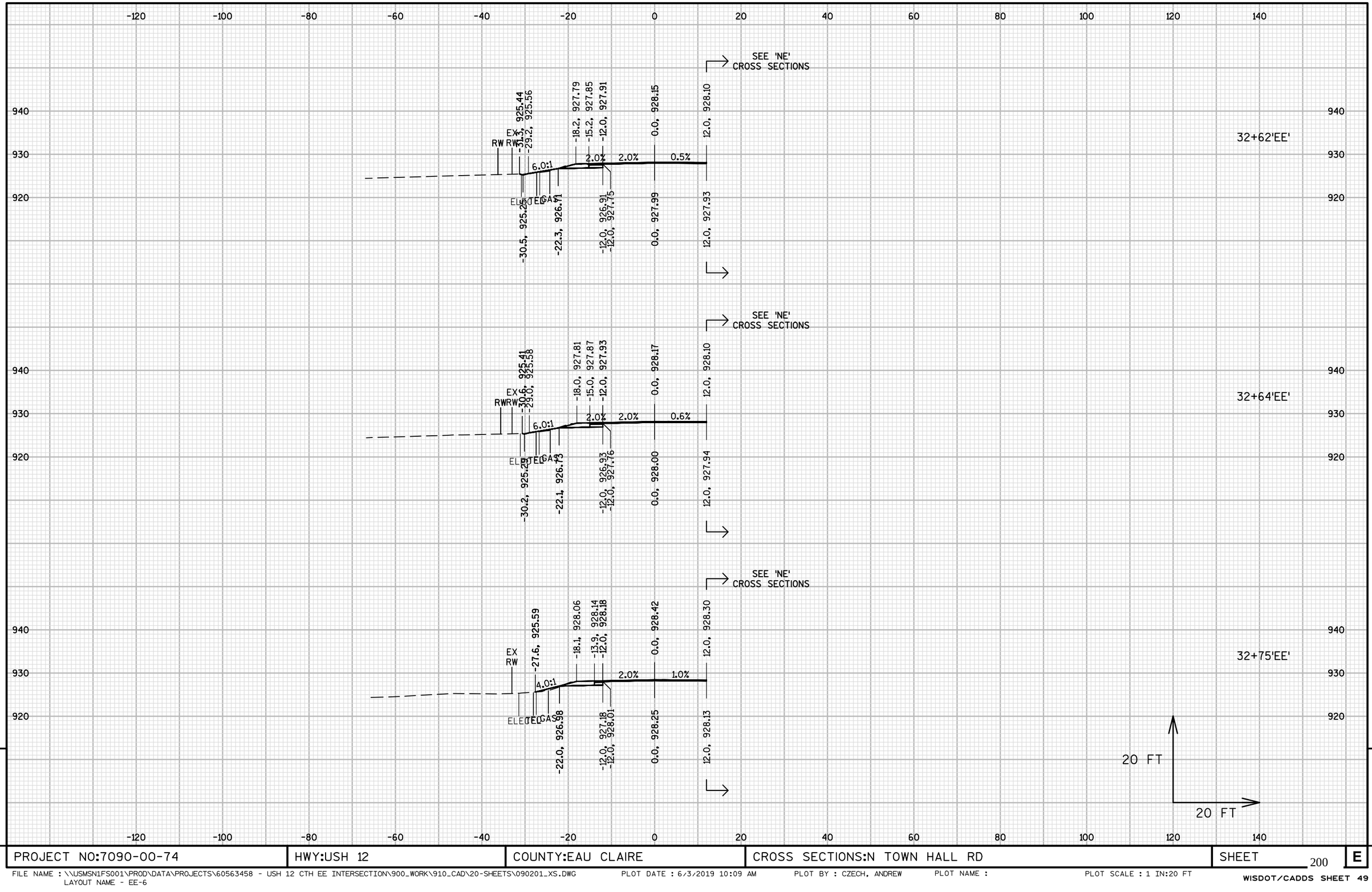

9 9

PROJECT NO:7090-00-74	HWY:USH 12	COUNTY:EAU CLAIRE	CROSS SECTIONS:N TOWN HALL RD	SHEET	E

FILE NAME : \\USMSN1FS001\PROD\DATA\PROJECTS\60563458 - USH 12 CTH EE INTERSECTION\900_WORK\910_CAD\20-SHEETS\090201_XS.DWG
LAYOUT NAME - EE-6
PLOT DATE : 6/3/2019 10:09 AM PLOT BY : CZECH, ANDREW PLOT NAME : PLOT SCALE : 1 IN:20 FT
WISDOT/CADDS SHEET 49

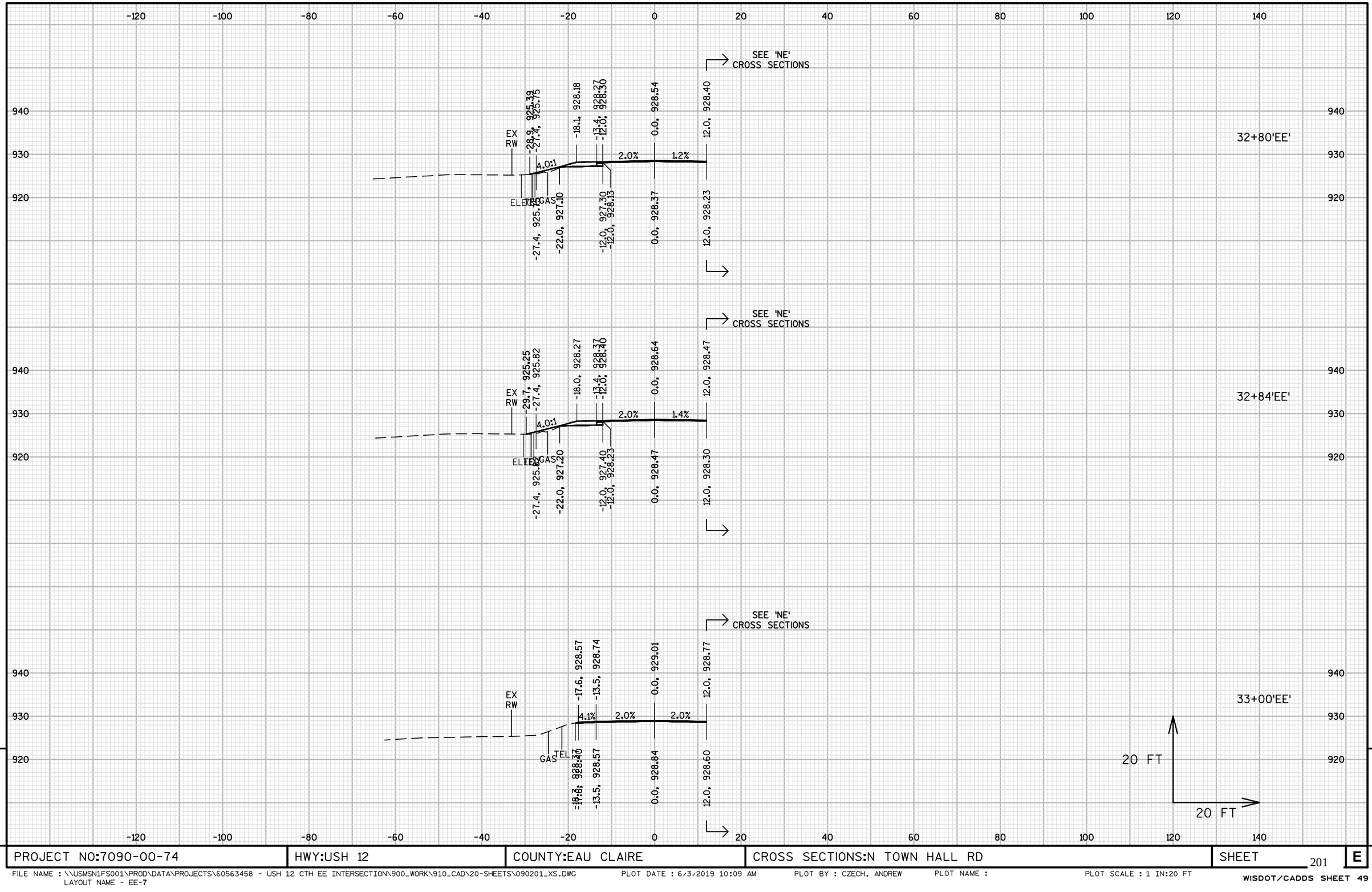

9

9

PROJECT NO:7090-00-74	HWY:USH 12	COUNTY:EAU CLAIRE	CROSS SECTIONS:N TOWN HALL RD	SHEET 201	E

FILE NAME : \\USMSN1FS001\PROD\DATA\PROJECTS\60563458 - USH 12 CTH EE INTERSECTION\900_WORK\910_CAD\20-SHEETS\090201_XS.DWG
LAYOUT NAME - EE-7

PLOT DATE : 6/3/2019 10:09 AM PLOT BY : CZECH, ANDREW PLOT NAME : PLOT SCALE : 1 IN:20 FT

WISDOT/CADDS SHEET 49

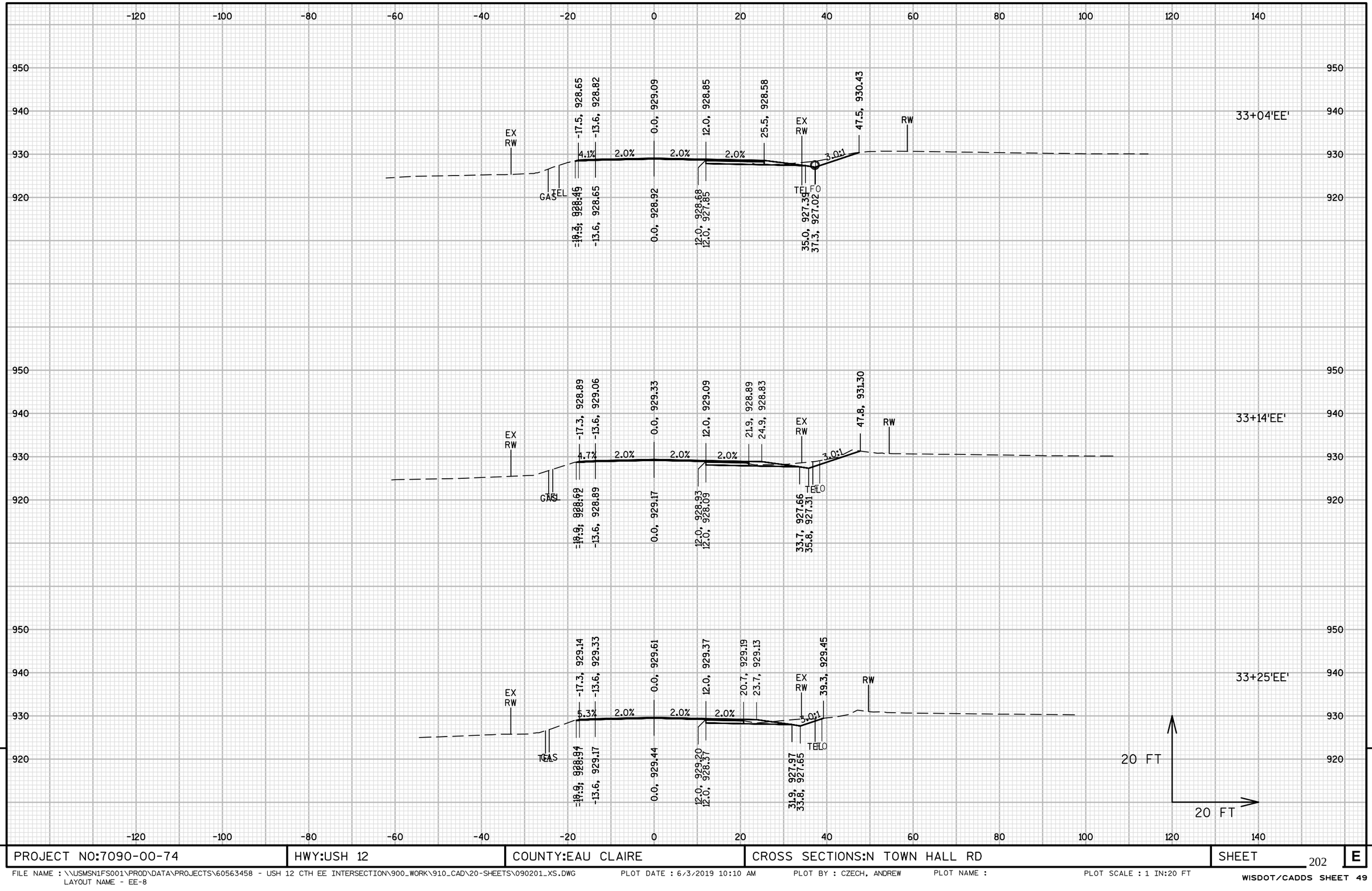

9

9

PROJECT NO:7090-00-74	HWY:USH 12	COUNTY:EAU CLAIRE	CROSS SECTIONS:N TOWN HALL RD	SHEET 202	E

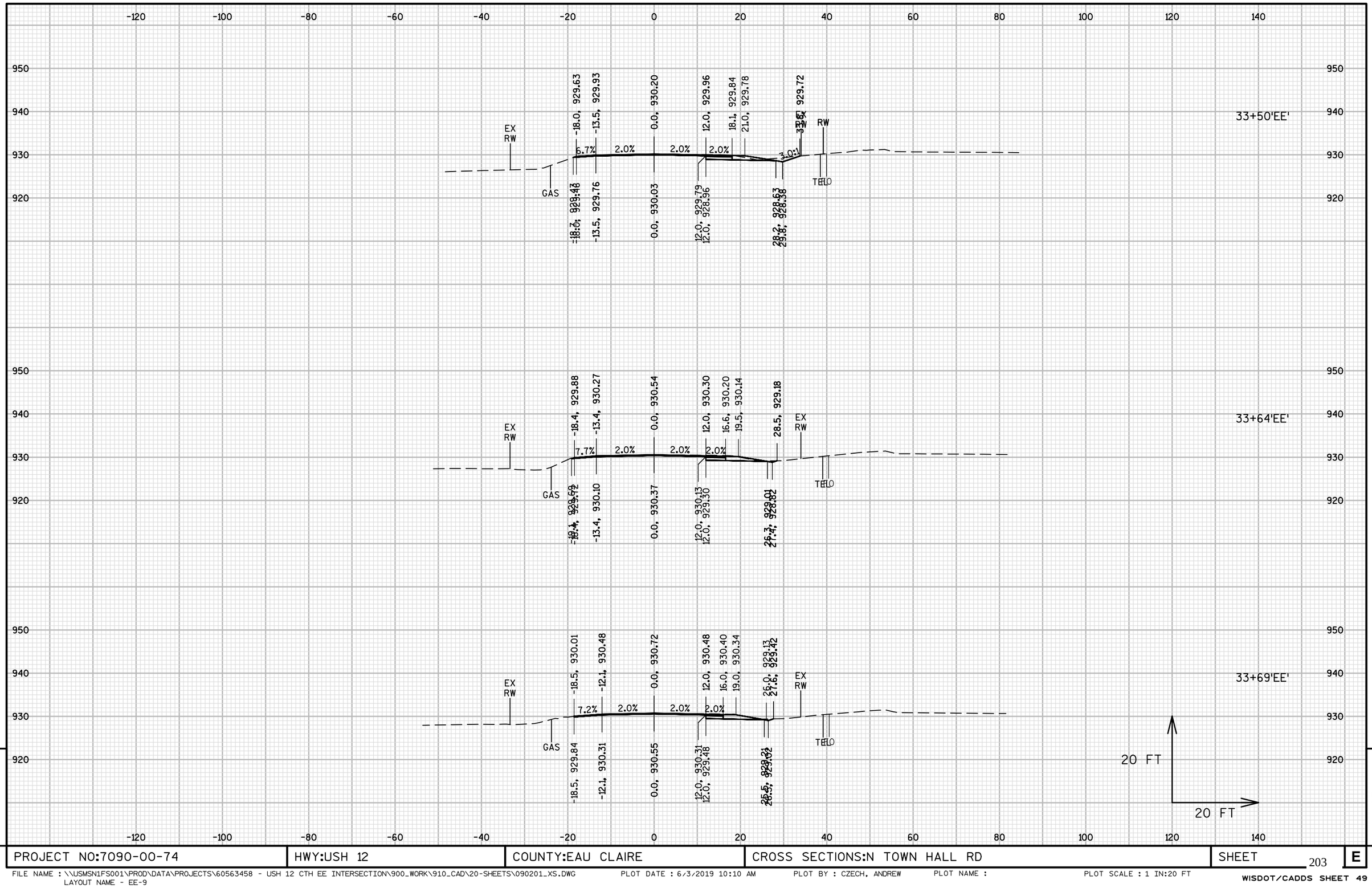

PROJECT NO:7090-00-74	HWY:USH 12	COUNTY:EAU CLAIRE	CROSS SECTIONS:N TOWN HALL RD	SHEET	E

FILE NAME : \\USMSN1FS001\PROD\DATA\PROJECTS\60563458 - USH 12 CTH EE INTERSECTION\900_WORK\910_CAD\20-SHEETS\090201_XS.DWG
LAYOUT NAME - EE-9
PLOT DATE : 6/3/2019 10:10 AM
PLOT BY : CZECH, ANDREW
PLOT NAME :
PLOT SCALE : 1 IN:20 FT

PROJECT NO:7090-00-74	HWY:USH 12	COUNTY:EAU CLAIRE	CROSS SECTIONS:N TOWN HALL RD	SHEET 204	E

FILE NAME : \\USMSN1FS001\PROD\DATA\PROJECTS\60563458 - USH 12 CTH EE INTERSECTION\900_WORK\910_CAD\20-SHEETS\090201_XS.DWG
LAYOUT NAME - EE-10
PLOT DATE : 6/3/2019 10:10 AM PLOT BY : CZECH, ANDREW PLOT NAME : PLOT SCALE : 1 IN:20 FT

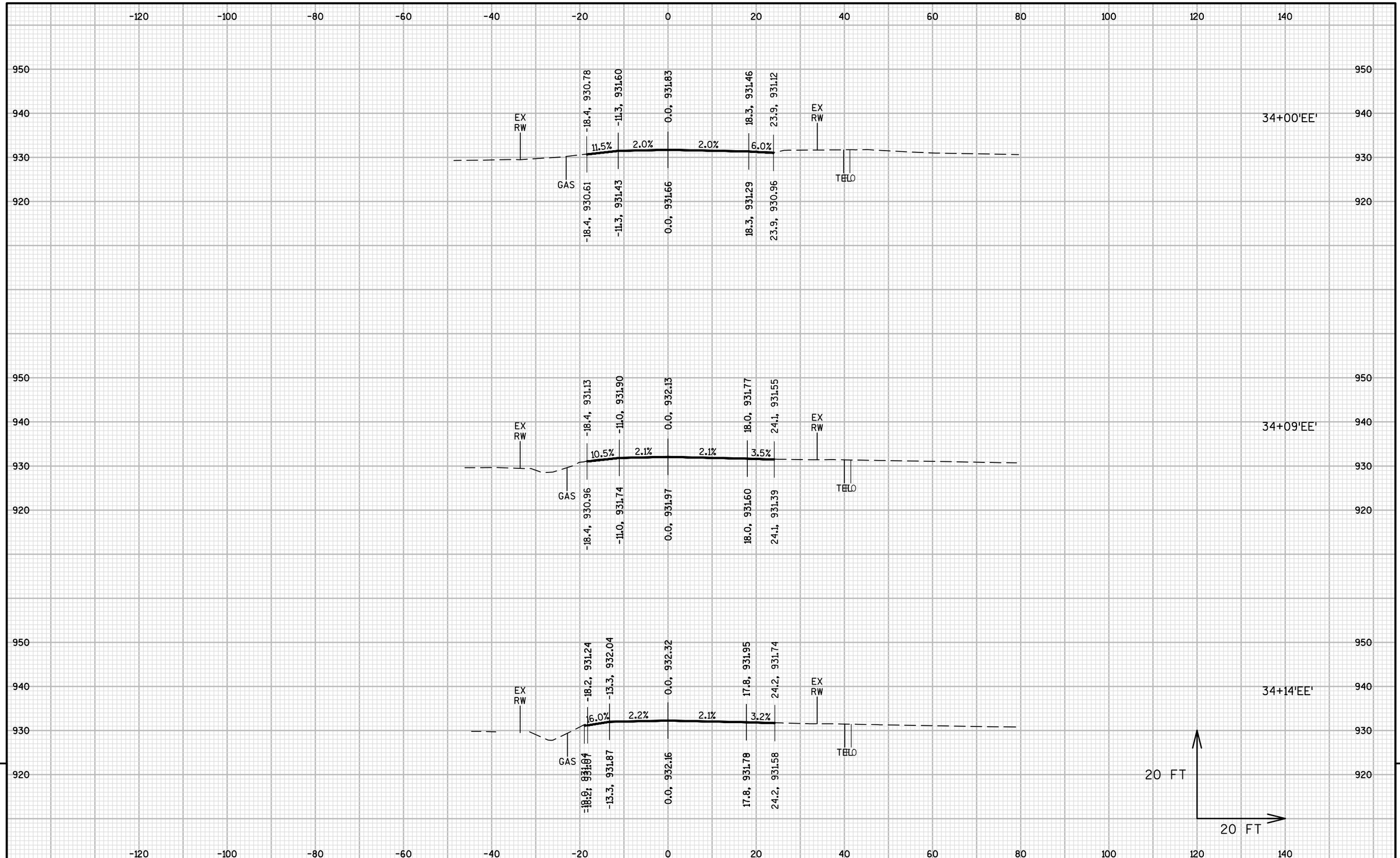

9 9

PROJECT NO:7090-00-74	HWY:USH 12	COUNTY:EAU CLAIRE	CROSS SECTIONS:N TOWN HALL RD	SHEET	E

FILE NAME : \\USMSN1FS001\PROD\DATA\PROJECTS\60563458 - USH 12 CTH EE INTERSECTION\900_WORK\910_CAD\20-SHEETS\090201_XS.DWG
LAYOUT NAME - EE-11
PLOT DATE : 6/3/2019 10:10 AM PLOT BY : CZECH, ANDREW PLOT NAME : PLOT SCALE : 1 IN:20 FT

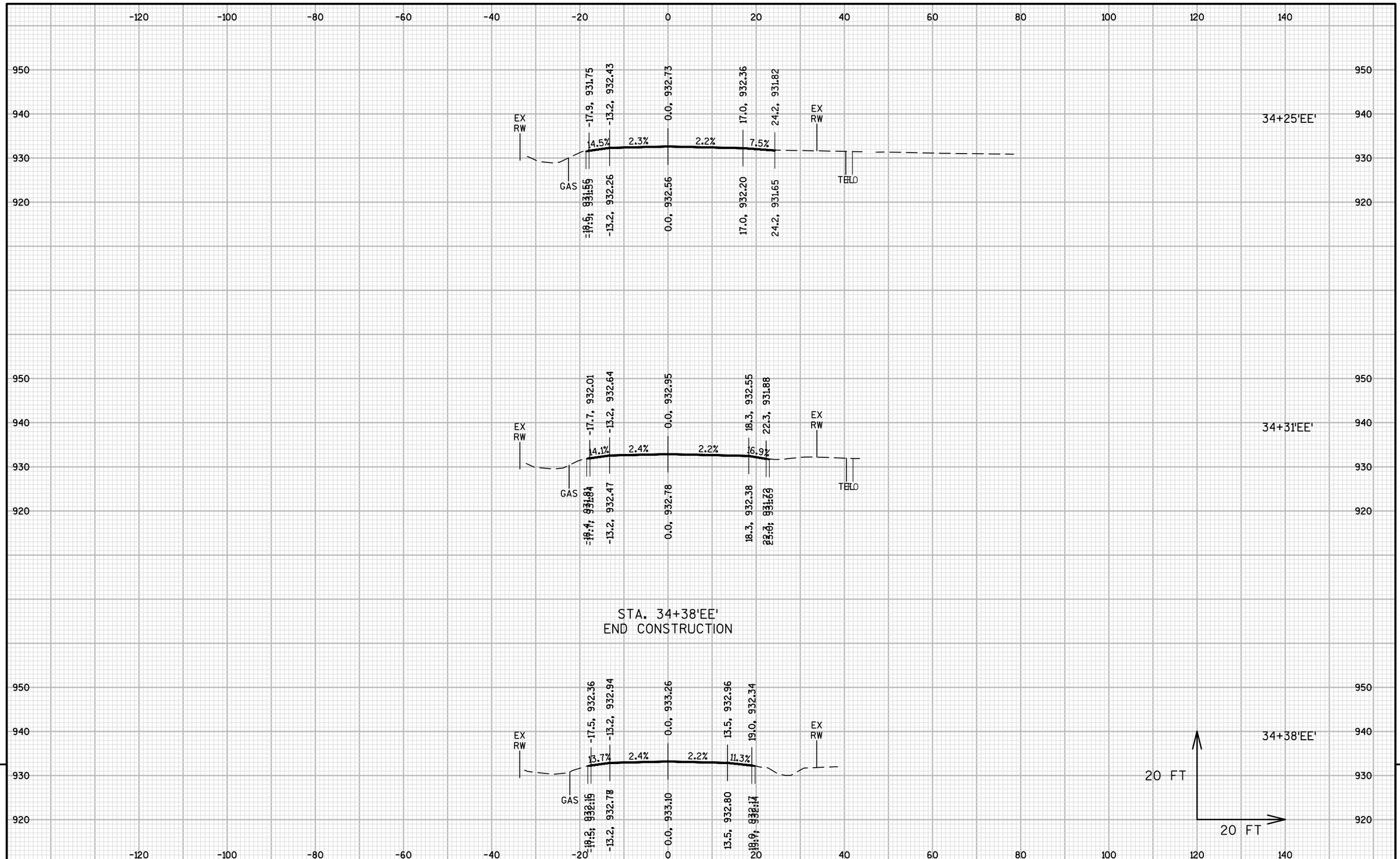

PROJECT NO:7090-00-74	HWY:USH 12	COUNTY:EAU CLAIRE	CROSS SECTIONS:N TOWN HALL RD	SHEET	E

FILE NAME : \\USMSN1FS001\PROD\DATA\PROJECTS\60563458 - USH 12 CTH EE INTERSECTION\900_WORK\910_CAD\20-SHEETS\090201_XS.DWG
LAYOUT NAME - EE-12
PLOT DATE : 6/3/2019 10:10 AM PLOT BY : CZECH, ANDREW PLOT NAME : PLOT SCALE : 1 IN:20 FT

STA. 10+25'0M'
BEGIN CONSTRUCTION

SEE 'NE' CROSS SECTIONS

SEE 'E' CROSS SECTIONS

-12.0, 928.03
0.0, 927.87
12.0, 927.47
1.4%
3.4%
-12.0, 927.87
0.0, 927.70
12.0, 927.30

10+25'0M'

SEE 'NE' CROSS SECTIONS

SEE 'E' CROSS SECTIONS

-12.0, 928.06
0.0, 927.94
12.0, 927.55
1.0%
3.2%
-12.0, 927.89
0.0, 927.77
12.0, 927.39

10+29'0M'

SEE 'NE' CROSS SECTIONS

SEE 'E' CROSS SECTIONS

-12.0, 928.11
0.0, 928.17
12.0, 927.86
0.5%
2.6%
-12.0, 927.94
0.0, 928.00
12.0, 927.69

10+45'0M'

20 FT
20 FT

PROJECT NO:7090-00-74	HWY:USH 12	COUNTY:EAU CLAIRE	CROSS SECTIONS:OLD MILL PLAZA	SHEET 207	E

FILE NAME : \\USMSN1FS001\PROD\DATA\PROJECTS\60563458 - USH 12 CTH EE INTERSECTION\900_WORK\910_CAD\20-SHEETS\090201_XS.DWG
LAYOUT NAME - OM-1
PLOT DATE : 6/3/2019 10:11 AM
PLOT BY : CZECH, ANDREW
PLOT NAME :
PLOT SCALE : 1 IN:20 FT

WISDOT/CADDS SHEET 49

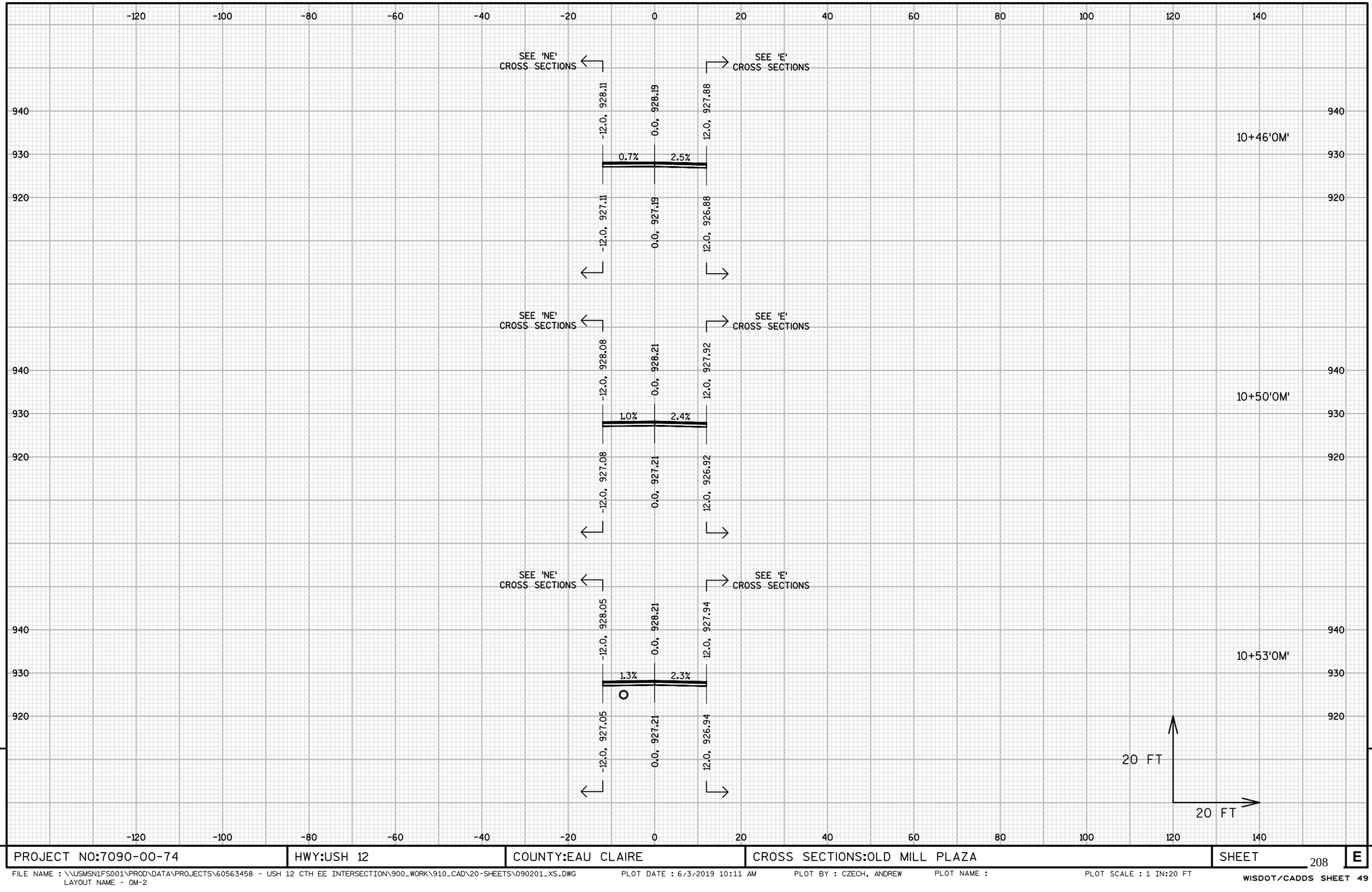

9

9

PROJECT NO:7090-00-74	HWY:USH 12	COUNTY:EAU CLAIRE	CROSS SECTIONS:OLD MILL PLAZA	SHEET	E

FILE NAME : \\USMSN1FS001\PROD\DATA\PROJECTS\60563458 - USH 12 CTH EE INTERSECTION\900_WORK\910_CAD\20-SHEETS\090201_XS.DWG
LAYOUT NAME - OM-2
PLOT DATE : 6/3/2019 10:11 AM
PLOT BY : CZECH, ANDREW
PLOT NAME :
PLOT SCALE : 1 IN:20 FT
WISDOT/CADDS SHEET 49

STA. 10+58'0M'
SSPRC REQ'D

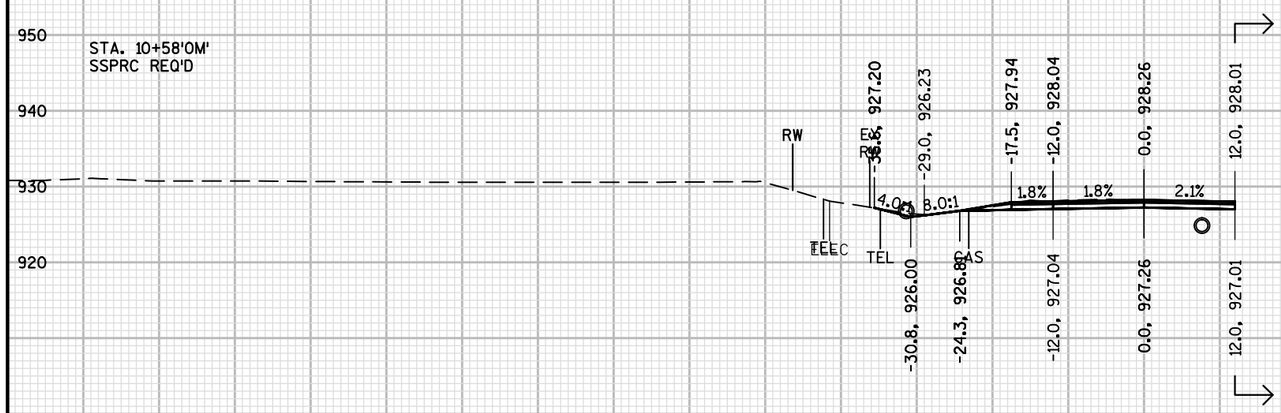

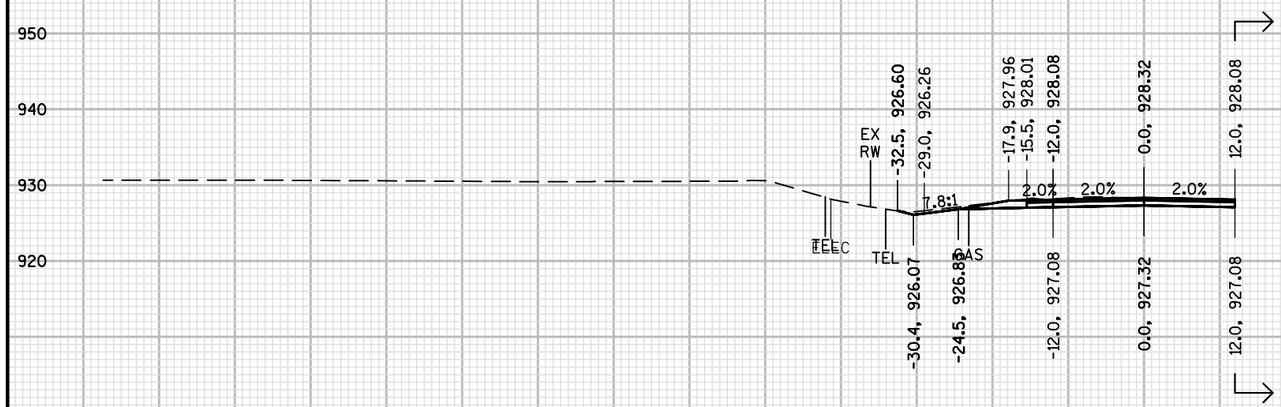

9

9

PROJECT NO:7090-00-74	HWY:USH 12	COUNTY:EAU CLAIRE	CROSS SECTIONS:OLD MILL PLAZA	SHEET 209	E

FILE NAME : \\USMSN1FS001\PROD\DATA\PROJECTS\60563458 - USH 12 CTH EE INTERSECTION\900_WORK\910_CAD\20-SHEETS\090201_XS.DWG
LAYOUT NAME - OM-3
PLOT DATE : 6/3/2019 10:11 AM PLOT BY : CZECH, ANDREW PLOT NAME : PLOT SCALE : 1 IN:20 FT

WISDOT/CADDS SHEET 49

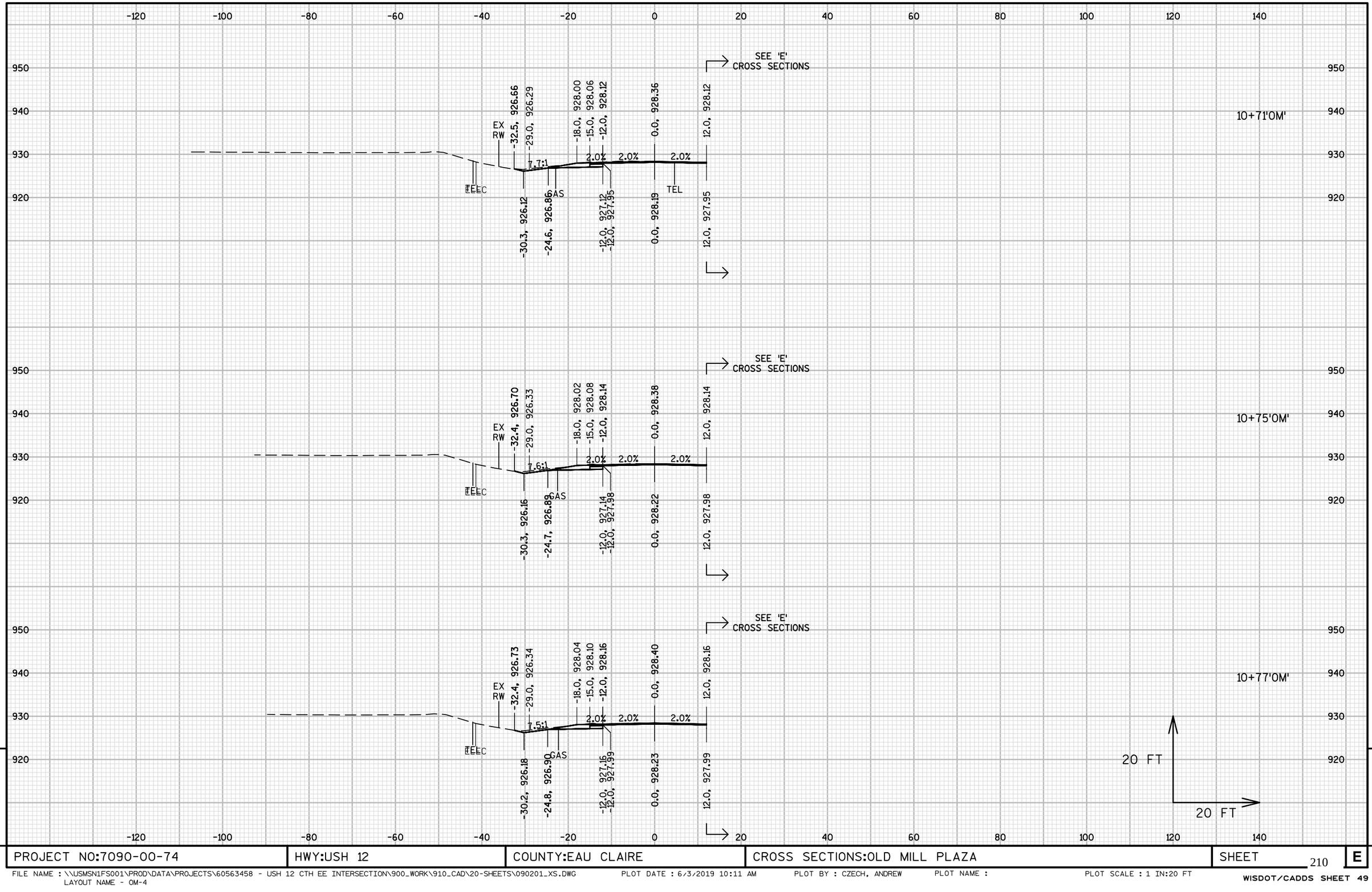

9

9

PROJECT NO:7090-00-74	HWY:USH 12	COUNTY:EAU CLAIRE	CROSS SECTIONS:OLD MILL PLAZA	SHEET 210	E

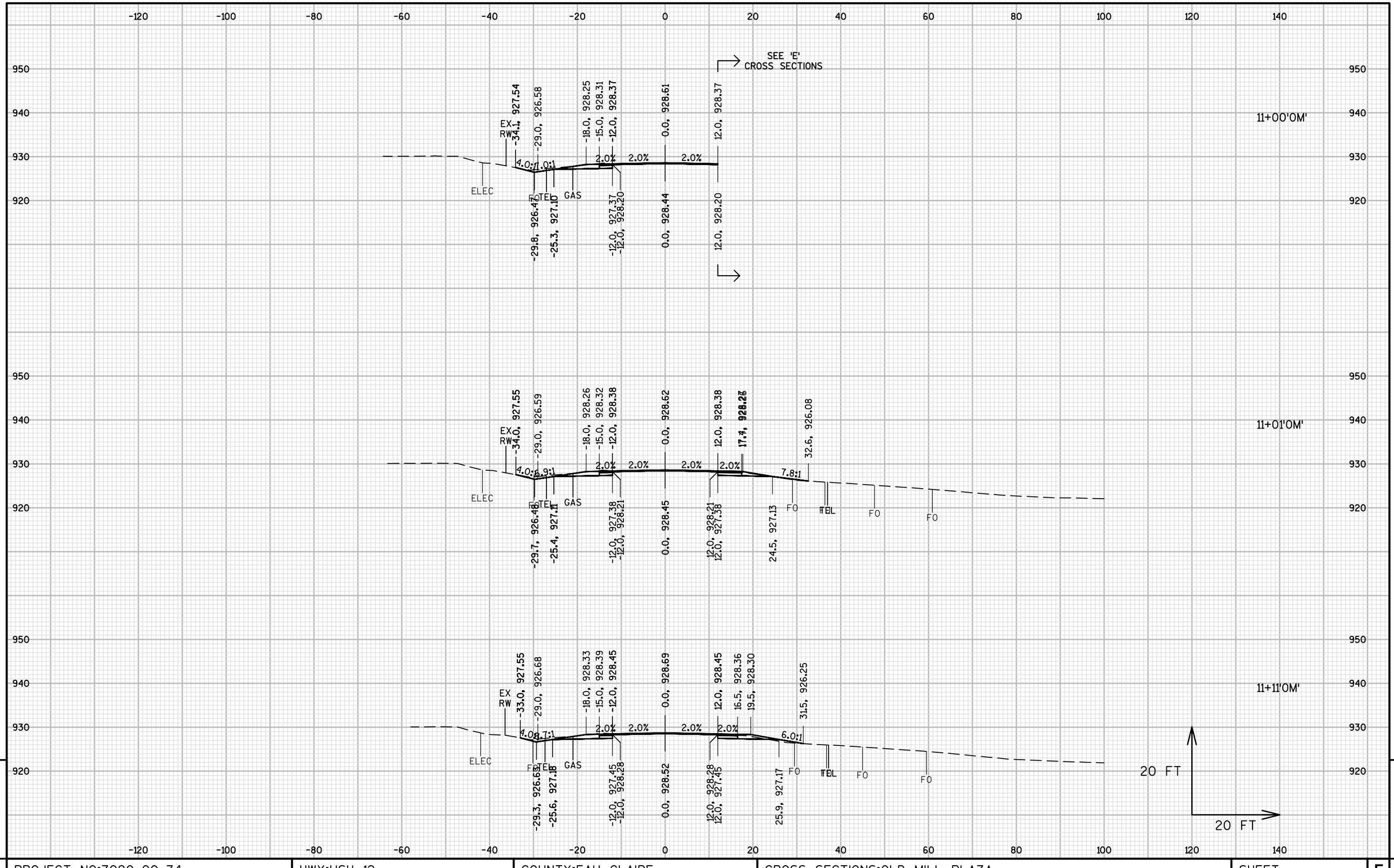

9

9

PROJECT NO:7090-00-74	HWY:USH 12	COUNTY:EAU CLAIRE	CROSS SECTIONS:OLD MILL PLAZA	SHEET 211	E

FILE NAME : \\USMSN1FS001\PROD\DATA\PROJECTS\60563458 - USH 12 CTH EE INTERSECTION\900_WORK\910_CAD\20-SHEETS\090201_XS.DWG PLOT DATE : 6/3/2019 10:12 AM PLOT BY : CZECH, ANDREW PLOT NAME : PLOT SCALE : 1 IN:20 FT
LAYOUT NAME - OM-5

WISDOT/CADDS SHEET 49

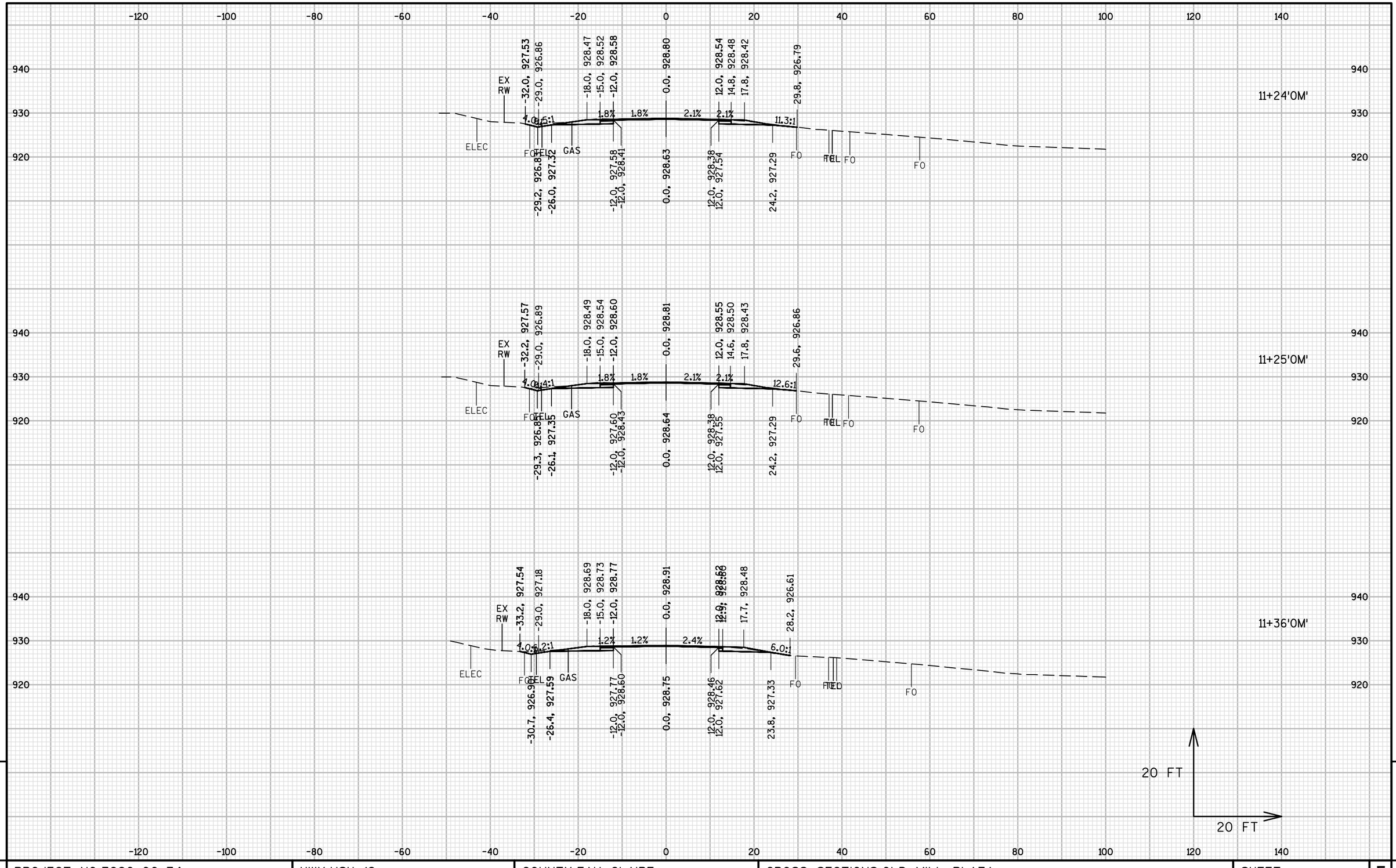

PROJECT NO:7090-00-74	HWY:USH 12	COUNTY:EAU CLAIRE	CROSS SECTIONS:OLD MILL PLAZA	SHEET 212	E

FILE NAME : \\USMSN1FS001\PROD\DATA\PROJECTS\60563458 - USH 12 CTH EE INTERSECTION\900_WORK\910_CAD\20-SHEETS\090201_XS.DWG
LAYOUT NAME - OM-6
PLOT DATE : 6/3/2019 10:12 AM
PLOT BY : CZECH, ANDREW
PLOT NAME :
PLOT SCALE : 1 IN:20 FT

WISDOT/CADDS SHEET 49

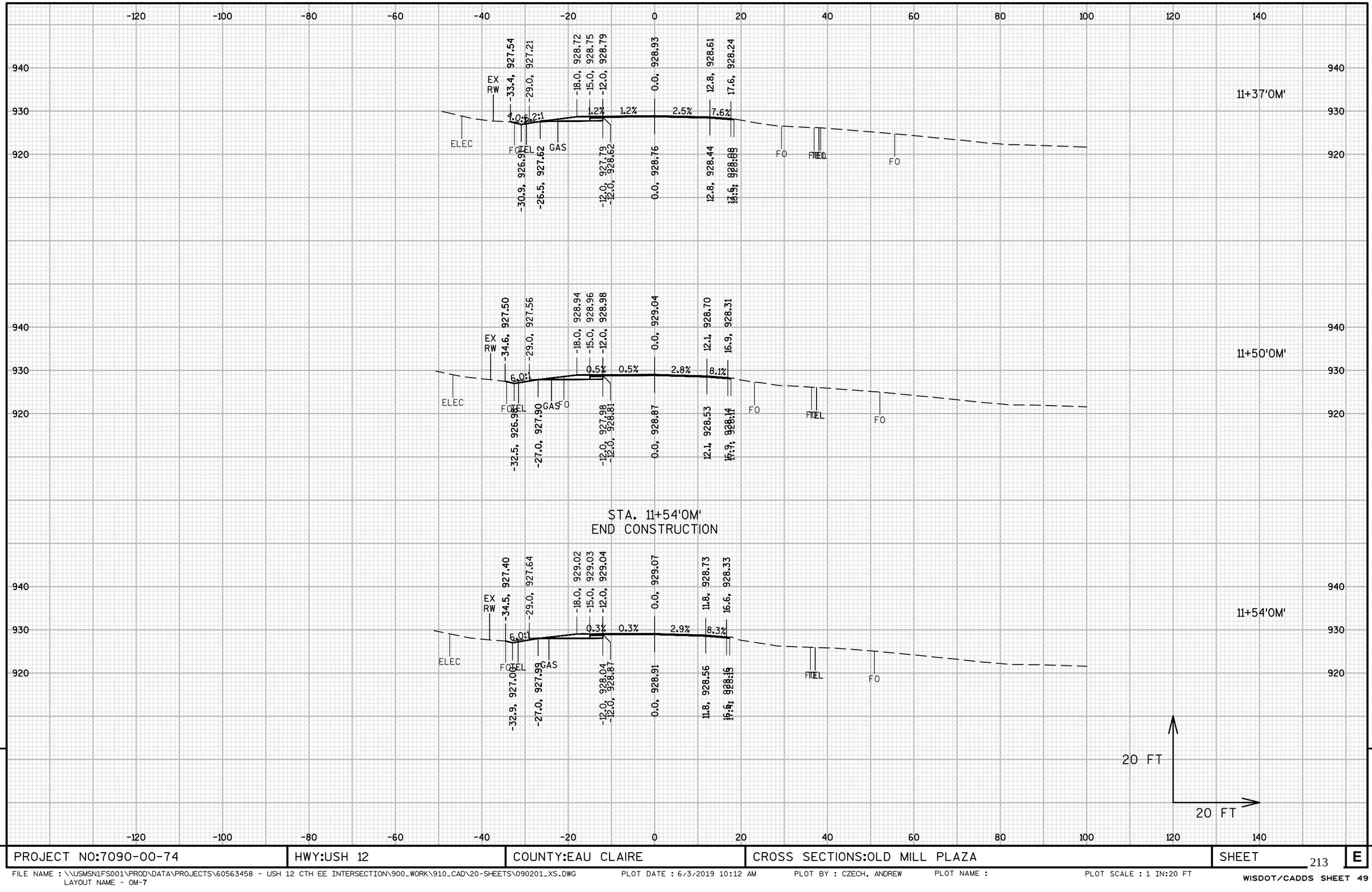

9

9

PROJECT NO:7090-00-74	HWY:USH 12	COUNTY:EAU CLAIRE	CROSS SECTIONS:OLD MILL PLAZA	SHEET 213	E

FILE NAME : \\USMSN1FS001\PROD\DATA\PROJECTS\60563458 - USH 12 CTH EE INTERSECTION\900_WORK\910_CAD\20-SHEETS\090201_XS.DWG
LAYOUT NAME - OM-7

PLOT DATE : 6/3/2019 10:12 AM PLOT BY : CZECH, ANDREW PLOT NAME : PLOT SCALE : 1 IN:20 FT

-120 -100 -80 -60 -40 -20 0 20 40 60 80 100 120 140

STA. 10+00'E'
BEGIN CONSTRUCTION

SEE 'WB'
CROSS SECTIONS

940
930
920

0.0, 924.85
4.5, 925.35
6.5, 925.43
14.8, 923.56

4.0:1

FO

0.0, 923.60
4.5, 923.51

10+00'E'

SEE 'WB'
CROSS SECTIONS

940
930
920

0.0, 924.73
4.5, 925.23
6.5, 925.31
11.8, 923.98

4.0:1

FO

0.0, 923.54
4.5, 923.39

10+10'E'

SEE 'WB'
CROSS SECTIONS

940
930
920

-10.6, 924.62
0.0, 924.09
4.5, 924.59
6.5, 924.67
9.2, 923.99

5.0%
4.0:1

FOTED

-10.6, 923.37
0.0, 922.84
4.5, 922.75

10+30'E'

20 FT
20 FT

-120 -100 -80 -60 -40 -20 0 20 40 60 80 100 120 140

9

9

PROJECT NO:7090-00-74	HWY:USH 12	COUNTY:EAU CLAIRE	CROSS SECTIONS:EAST CURB RETURN	SHEET 214	E

FILE NAME : \\USMSN1FS001\PROD\DATA\PROJECTS\60563458 - USH 12 CTH EE INTERSECTION\900_WORK\910_CAD\20-SHEETS\090202_XS.DWG
LAYOUT NAME - E-1

PLOT DATE : 6/3/2019 10:03 AM PLOT BY : CZECH, ANDREW PLOT NAME : PLOT SCALE : 1 IN:20 FT

-120 -100 -80 -60 -40 -20 0 20 40 60 80 100 120 140

940
930
920

SEE 'WB'
CROSS SECTIONS

-17.1, 924.58
0.0, 924.06
4.5, 924.56
6.5, 924.64
9.6, 923.86

3.0%
4.0%
FO
TED

-17.1, 923.33
0.0, 922.81
4.5, 922.72

10+37'E'

SEE 'WB'
CROSS SECTIONS

-21.8, 924.53
0.0, 924.09
4.5, 924.59
6.5, 924.67
10.0, 923.81

2.0%
4.0%
FO
TED

-21.8, 923.28
0.0, 922.84
4.5, 922.75

10+40'E'

SEE 'EE'
CROSS SECTIONS

SEE SIDEWALK
PLAN DETAIL

-26.6, 924.45
0.0, 924.19
2.0, 924.06

1.0%
FO
TED

-26.6, 923.20
0.0, 922.94
2.0, 922.81

10+50'E'

20 FT
20 FT

9 9

-120 -100 -80 -60 -40 -20 0 20 40 60 80 100 120 140

PROJECT NO:7090-00-74	HWY:USH 12	COUNTY:EAU CLAIRE	CROSS SECTIONS:EAST CURB RETURN	SHEET	E

FILE NAME : \\USMSN1FS001\PROD\DATA\PROJECTS\60563458 - USH 12 CTH EE INTERSECTION\900_WORK\910_CAD\20-SHEETS\090202_XS.DWG
LAYOUT NAME - E-2
PLOT DATE : 6/3/2019 10:03 AM
PLOT BY : CZECH, ANDREW
PLOT NAME :
PLOT SCALE : 1 IN:20 FT
WISDOT/CADDS SHEET 49

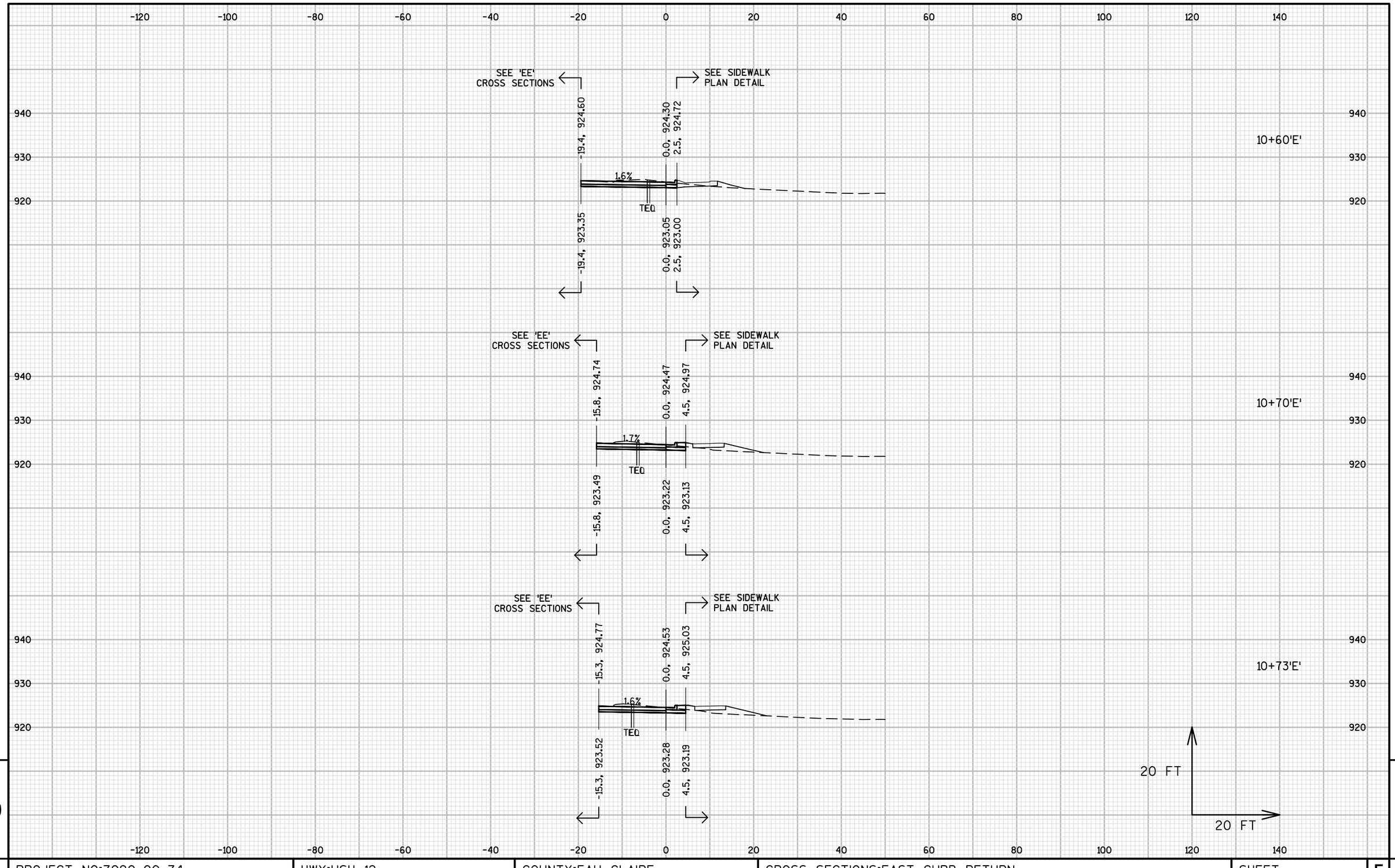

PROJECT NO:7090-00-74	HWY:USH 12	COUNTY:EAU CLAIRE	CROSS SECTIONS:EAST CURB RETURN	SHEET	E

FILE NAME : \\USMSN1FS001\PROD\DATA\PROJECTS\60563458 - USH 12 CTH EE INTERSECTION\900_WORK\910_CAD\20-SHEETS\090202_XS.DWG
LAYOUT NAME - E-3

PLOT DATE : 6/3/2019 10:03 AM PLOT BY : CZECH, ANDREW PLOT NAME : PLOT SCALE : 1 IN:20 FT

WISDOT/CADDS SHEET 49

-120 -100 -80 -60 -40 -20 0 20 40 60 80 100 120 140

940 930 920

SEE 'EE' CROSS SECTIONS

SEE SIDEWALK PLAN DETAIL

-14.7, 924.92 | 0.0, 924.69 | 4.5, 925.19

1.5%

TEO

-14.6, 923.67 | 0.0, 923.44 | 4.5, 923.35

10+80'E'

SEE 'EE' CROSS SECTIONS

SEE SIDEWALK PLAN DETAIL

-13.7, 925.17 | 0.0, 924.92 | 4.5, 925.42

1.8%

TEO

-13.7, 923.92 | 0.0, 923.67 | 4.5, 923.58

10+90'E'

SEE 'EE' CROSS SECTIONS

-12.7, 925.42 | 0.0, 925.15 | 4.5, 925.65 | 9.0, 925.83 | 16.0, 925.91 | 27.9, 922.93

2.1% | 4.0% | 1.5% | 4.0:1

TEL

-12.7, 924.17 | 0.0, 923.90 | 4.5, 923.81 | 9.0, 924.94 | 16.0, 925.05

11+00'E'

20 FT

20 FT

9 9

PROJECT NO:7090-00-74	HWY:USH 12	COUNTY:EAU CLAIRE	CROSS SECTIONS:EAST CURB RETURN	SHEET 217	E

FILE NAME : \\USMSN1FS001\PROD\DATA\PROJECTS\60563458 - USH 12 CTH EE INTERSECTION\900_WORK\910_CAD\20-SHEETS\090202_XS.DWG
LAYOUT NAME - E-4

PLOT DATE : 6/3/2019 10:04 AM PLOT BY : CZECH, ANDREW PLOT NAME : PLOT SCALE : 1 IN:20 FT

WISDOT/CADDS SHEET 49

-120 -100 -80 -60 -40 -20 0 20 40 60 80 100 120 140

SEE 'EE'
CROSS SECTIONS

940
930
920

-11.8, 925.61 | 0.0, 925.38 | 4.5, 925.88 | 9.0, 926.06 | 16.0, 926.14 | 28.1, 923.12

2.0% | 4.0% | 1.5% | 4.0:1

FEL

-11.8, 924.61 | 0.0, 924.38 | 4.5, 924.29 | 9.0, 925.17 | 16.0, 925.28

11+10'E'

SEE 'EE'
CROSS SECTIONS

940
930
920

-11.6, 925.65 | 0.0, 925.42 | 4.5, 925.92 | 9.0, 926.10 | 16.0, 926.17 | 28.1, 923.15

2.0% | 4.0% | 1.5% | 4.0:1

FEL

-11.6, 924.65 | 0.0, 924.42 | 4.5, 924.33 | 9.0, 925.21 | 16.0, 925.31

11+12'E'

SEE 'EE'
CROSS SECTIONS

940
930
920

-11.5, 925.87 | 0.0, 925.62 | 4.5, 926.12 | 9.0, 926.30 | 16.0, 926.37 | 28.2, 923.32

2.2% | 4.0% | 1.5% | 4.0:1

FC FEL FO

-11.5, 924.87 | 0.0, 924.62 | 4.5, 924.53 | 9.0, 925.40 | 16.0, 925.51

11+20'E'

20 FT
20 FT

-120 -100 -80 -60 -40 -20 0 20 40 60 80 100 120 140

9 9

PROJECT NO:7090-00-74	HWY:USH 12	COUNTY:EAU CLAIRE	CROSS SECTIONS:EAST CURB RETURN	SHEET	E

FILE NAME : \\USMSN1FS001\PROD\DATA\PROJECTS\60563458 - USH 12 CTH EE INTERSECTION\900_WORK\910_CAD\20-SHEETS\090202_XS.DWG
LAYOUT NAME - E-5

PLOT DATE : 6/3/2019 10:04 AM PLOT BY : CZECH, ANDREW PLOT NAME : PLOT SCALE : 1 IN:20 FT

WISDOT/CADDS SHEET 49

-120 -100 -80 -60 -40 -20 0 20 40 60 80 100 120 140

940
930
920

SEE 'EE'
CROSS SECTIONS

-13.7, 926.15
0.0, 925.91
4.5, 926.41
9.0, 926.59
16.0, 926.67
28.4, 923.56

1.7% 4.0% 1.5% 4.0:1

TEL FO FO TEL FO FO

-13.7, 925.15
0.0, 924.91
4.5, 924.82
9.0, 925.74
16.0, 925.81

11+30'E'

SEE 'EE'
CROSS SECTIONS

-18.9, 926.57
0.0, 926.34
4.5, 926.84
9.0, 927.02
16.0, 927.09
28.9, 923.88

1.2% 4.0% 1.5% 4.0:1

TEL FO FO TEL FO FO

-18.9, 925.57
0.0, 925.34
4.5, 925.25
9.0, 926.15
16.0, 926.23

11+40'E'

SEE 'EE'
CROSS SECTIONS

SEE SIDEWALK
PLAN DETAIL

-28.4, 927.13
0.0, 926.83
2.5, 927.25
29.7, 924.15

1.1%

FO TEL FO TEL FO FO

-28.4, 926.13
0.0, 925.83
2.5, 925.78

11+50'E'

STA. 11+50'E'
APRON ENDWALL REQ'D

20 FT
20 FT

9 9

PROJECT NO:7090-00-74	HWY:USH 12	COUNTY:EAU CLAIRE	CROSS SECTIONS:EAST CURB RETURN	SHEET	E

FILE NAME : \\USMSN1FS001\PROD\DATA\PROJECTS\60563458 - USH 12 CTH EE INTERSECTION\900_WORK\910_CAD\20-SHEETS\090202_XS.DWG
LAYOUT NAME - E-6
PLOT DATE : 6/3/2019 10:04 AM
PLOT BY : CZECH, ANDREW
PLOT NAME :
PLOT SCALE : 1 IN:20 FT
WISDOT/CADDS SHEET 49

-120 -100 -80 -60 -40 -20 0 20 40 60 80 100 120 140

940 930 920

SEE 'OM' CROSS SECTIONS

SEE SIDEWALK PLAN DETAIL

11+58'E'

-29.1, 927.65
-29.1, 926.65
0.0, 927.16
0.0, 926.16
2.9, 927.08
2.9, 926.08
29.1, 924.36
1.7%
FO FO FO TEL TEL FO FO

SEE 'OM' CROSS SECTIONS

SEE SIDEWALK PLAN DETAIL

11+60'E'

-26.8, 927.73
-26.8, 926.73
0.0, 927.19
0.0, 926.19
2.6, 927.09
2.6, 926.09
28.8, 924.40
2.0%
FO FO FO TEL TEL FO FO

SEE 'OM' CROSS SECTIONS

SEE SIDEWALK PLAN DETAIL

11+70'E'

-15.9, 927.98
-15.9, 926.98
0.0, 927.30
0.0, 926.30
4.5, 927.80
4.5, 926.21
6.5, 927.88
26.2, 924.73
4.2%
FO FO TEL TEL FO FO

20 FT
20 FT

9 9

PROJECT NO:7090-00-74	HWY:USH 12	COUNTY:EAU CLAIRE	CROSS SECTIONS:EAST CURB RETURN	SHEET 220	E

FILE NAME : \\USMSN1FS001\PROD\DATA\PROJECTS\60563458 - USH 12 CTH EE INTERSECTION\900_WORK\910_CAD\20-SHEETS\090202_XS.DWG
LAYOUT NAME - E-7

PLOT DATE : 6/3/2019 10:04 AM PLOT BY : CZECH, ANDREW PLOT NAME : PLOT SCALE : 1 IN:20 FT

-120 -100 -80 -60 -40 -20 0 20 40 60 80 100 120 140

940 930 920

SEE 'OM' CROSS SECTIONS

SEE SIDEWALK PLAN DETAIL

-9.1, 928.11
0.0, 927.63
4.5, 928.13
6.5, 928.21
23.3, 925.18
5.3%
TEL
FO
TEL
FO
FO
-9.1, 927.11
0.0, 926.63
4.5, 926.54

11+80'E'

SEE 'OM' CROSS SECTIONS

SEE SIDEWALK PLAN DETAIL

-5.1, 928.22
0.0, 928.00
4.5, 928.50
6.5, 928.58
20.7, 925.68
4.4%
FO
TEL
FO
FO
-5.1, 927.22
0.0, 927.00
4.5, 926.91

11+90'E'

SEE 'OM' CROSS SECTIONS

SEE SIDEWALK PLAN DETAIL

-3.2, 928.33
0.0, 928.24
4.5, 928.74
6.5, 928.82
18.6, 925.96
2.6%
FO
TEL
FO
FO
-3.2, 927.33
0.0, 927.24
4.5, 927.15

12+00'E'

20 FT
20 FT

9 9

PROJECT NO:7090-00-74	HWY:USH 12	COUNTY:EAU CLAIRE	CROSS SECTIONS:EAST CURB RETURN	SHEET E

FILE NAME : \\USMSN1FS001\PROD\DATA\PROJECTS\60563458 - USH 12 CTH EE INTERSECTION\900_WORK\910_CAD\20-SHEETS\090202_XS.DWG
LAYOUT NAME - E-8
PLOT DATE : 6/3/2019 10:04 AM
PLOT BY : CZECH, ANDREW
PLOT NAME :
PLOT SCALE : 1 IN:20 FT
WISDOT/CADDS SHEET 49

STA. 12+05'E'
END CONSTRUCTION

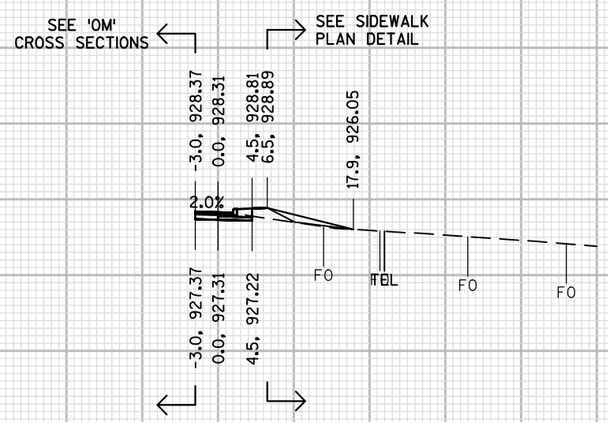

12+05'E'

-120 -100 -80 -60 -40 -20 0 20 40 60 80 100 120 140

940
930
920

20 FT
20 FT

9

PROJECT NO:7090-00-74	HWY:USH 12	COUNTY:EAU CLAIRE	CROSS SECTIONS:EAST CURB RETURN	SHEET 222	E

FILE NAME : \\USMSN1FS001\PROD\DATA\PROJECTS\60563458 - USH 12 CTH EE INTERSECTION\900_WORK\910_CAD\20-SHEETS\090202_XS.DWG
LAYOUT NAME - E-9
PLOT DATE : 6/3/2019 10:04 AM PLOT BY : CZECH, ANDREW PLOT NAME : PLOT SCALE : 1 IN:20 FT

WISDOT/CADDS SHEET 49

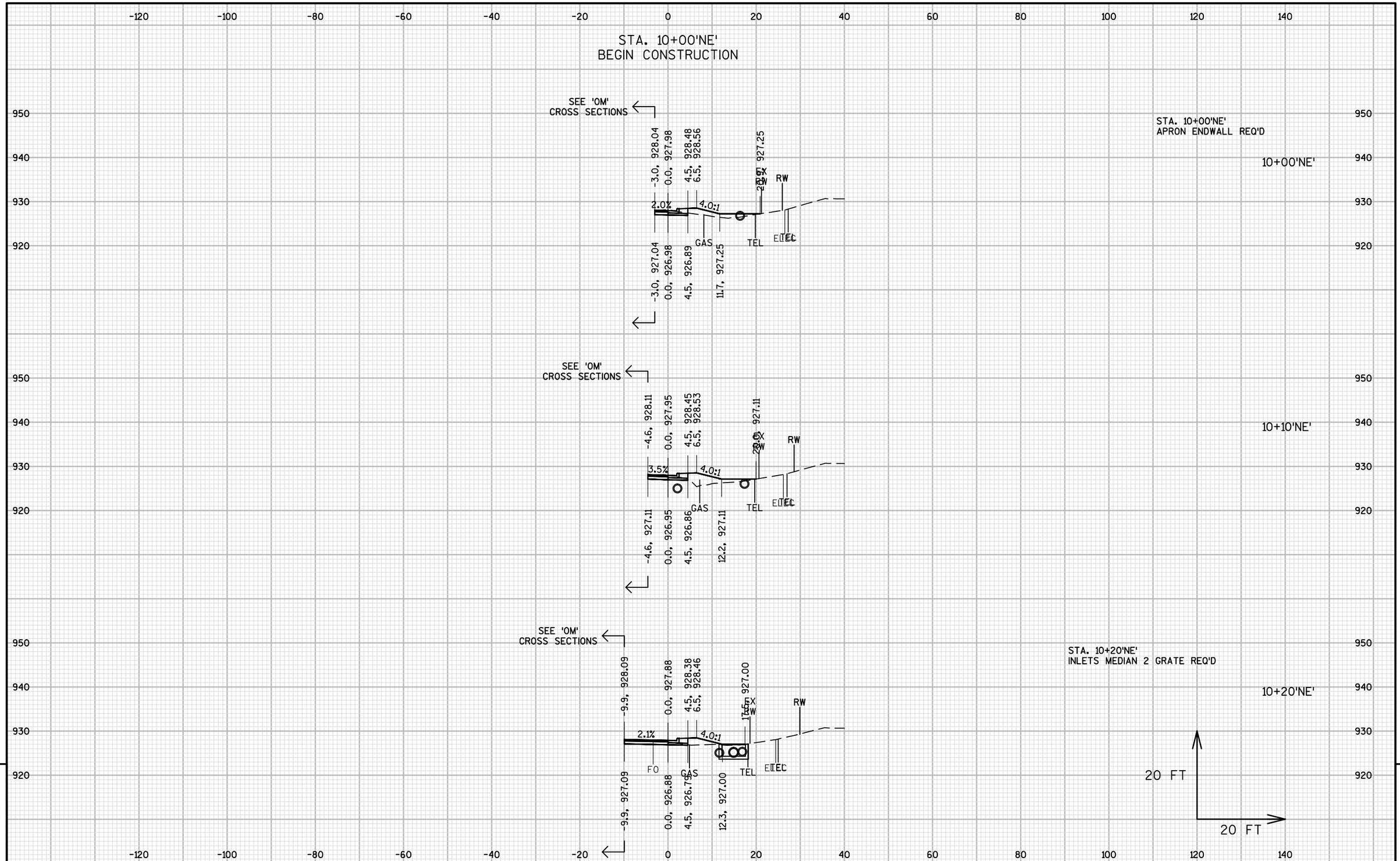

PROJECT NO:7090-00-74	HWY:USH 12	COUNTY:EAU CLAIRE	CROSS SECTIONS:NE CURB RETURN	SHEET	E

FILE NAME : \\USMSN1FS001\PROD\DATA\PROJECTS\60563458 - USH 12 CTH EE INTERSECTION\900_WORK\910_CAD\20-SHEETS\090202_XS.DWG
LAYOUT NAME - NE-1
PLOT DATE : 6/3/2019 10:04 AM
PLOT BY : CZECH, ANDREW
PLOT NAME :
PLOT SCALE : 1 IN:20 FT

WISDOT/CADDS SHEET 49

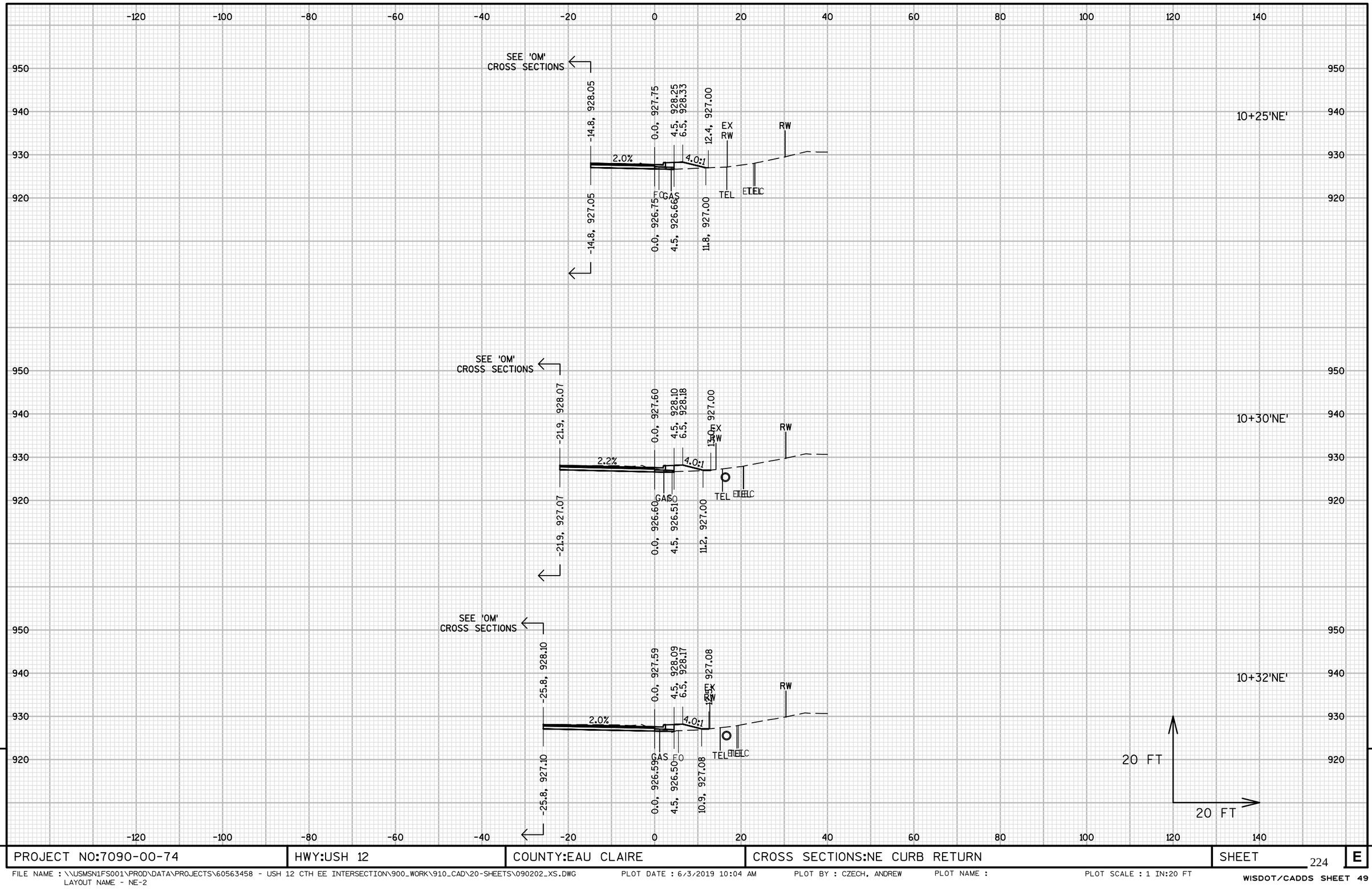

9 9

PROJECT NO:7090-00-74	HWY:USH 12	COUNTY:EAU CLAIRE	CROSS SECTIONS:NE CURB RETURN	SHEET 224	E

FILE NAME : \\USMSN1FS001\PROD\DATA\PROJECTS\60563458 - USH 12 CTH EE INTERSECTION\900_WORK\910_CAD\20-SHEETS\090202_XS.DWG
LAYOUT NAME - NE-2

PLOT DATE : 6/3/2019 10:04 AM PLOT BY : CZECH, ANDREW PLOT NAME : PLOT SCALE : 1 IN:20 FT

WISDOT/CADDS SHEET 49

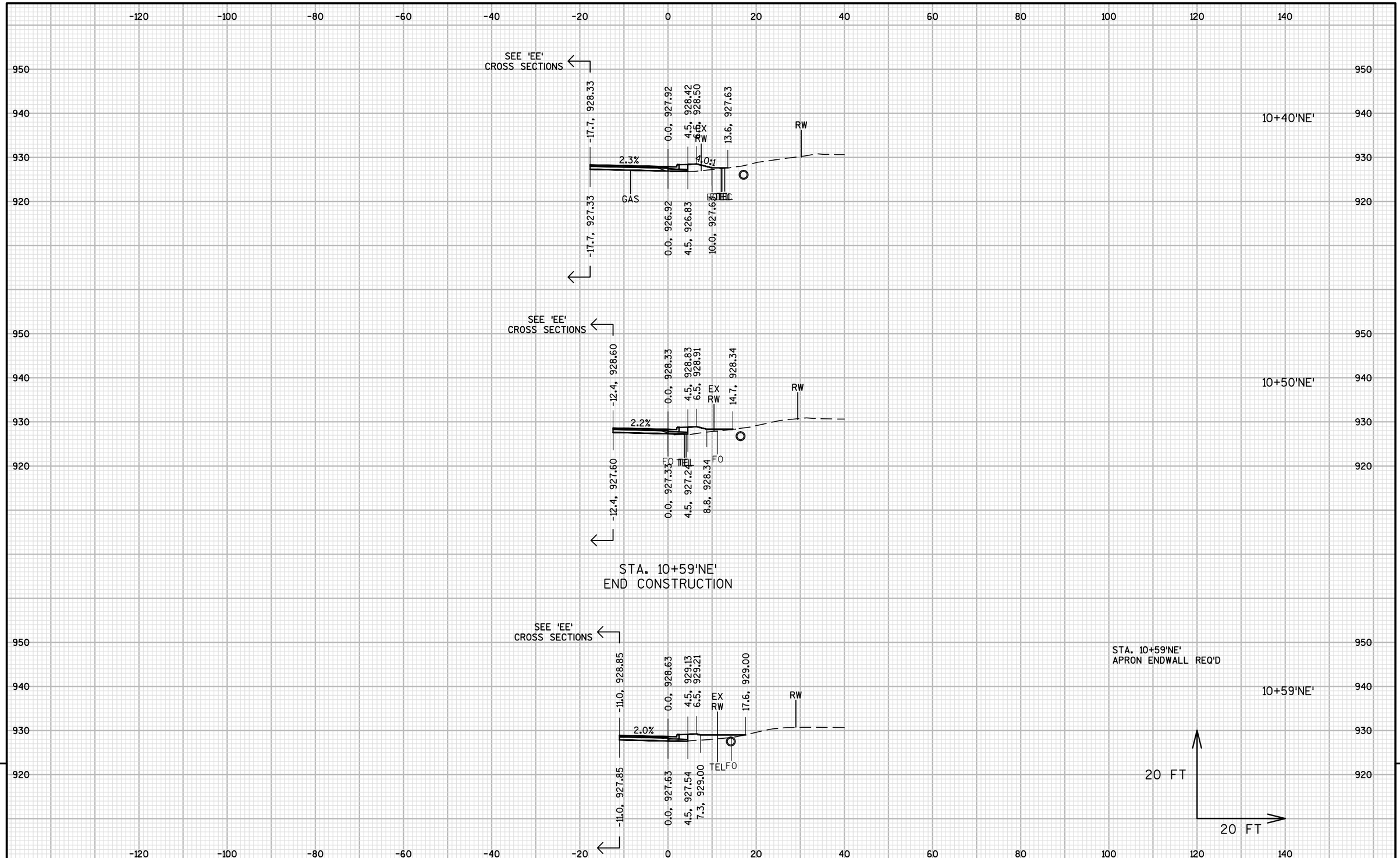

9

9

PROJECT NO:7090-00-74	HWY:USH 12	COUNTY:EAU CLAIRE	CROSS SECTIONS:NE CURB RETURN	SHEET 225	E

FILE NAME : \\USMSN1FS001\PROD\DATA\PROJECTS\60563458 - USH 12 CTH EE INTERSECTION\900_WORK\910_CAD\20-SHEETS\090202_XS.DWG
LAYOUT NAME - NE-3

PLOT DATE : 6/3/2019 10:05 AM PLOT BY : CZECH, ANDREW PLOT NAME : PLOT SCALE : 1 IN:20 FT

WISDOT/CADDS SHEET 49

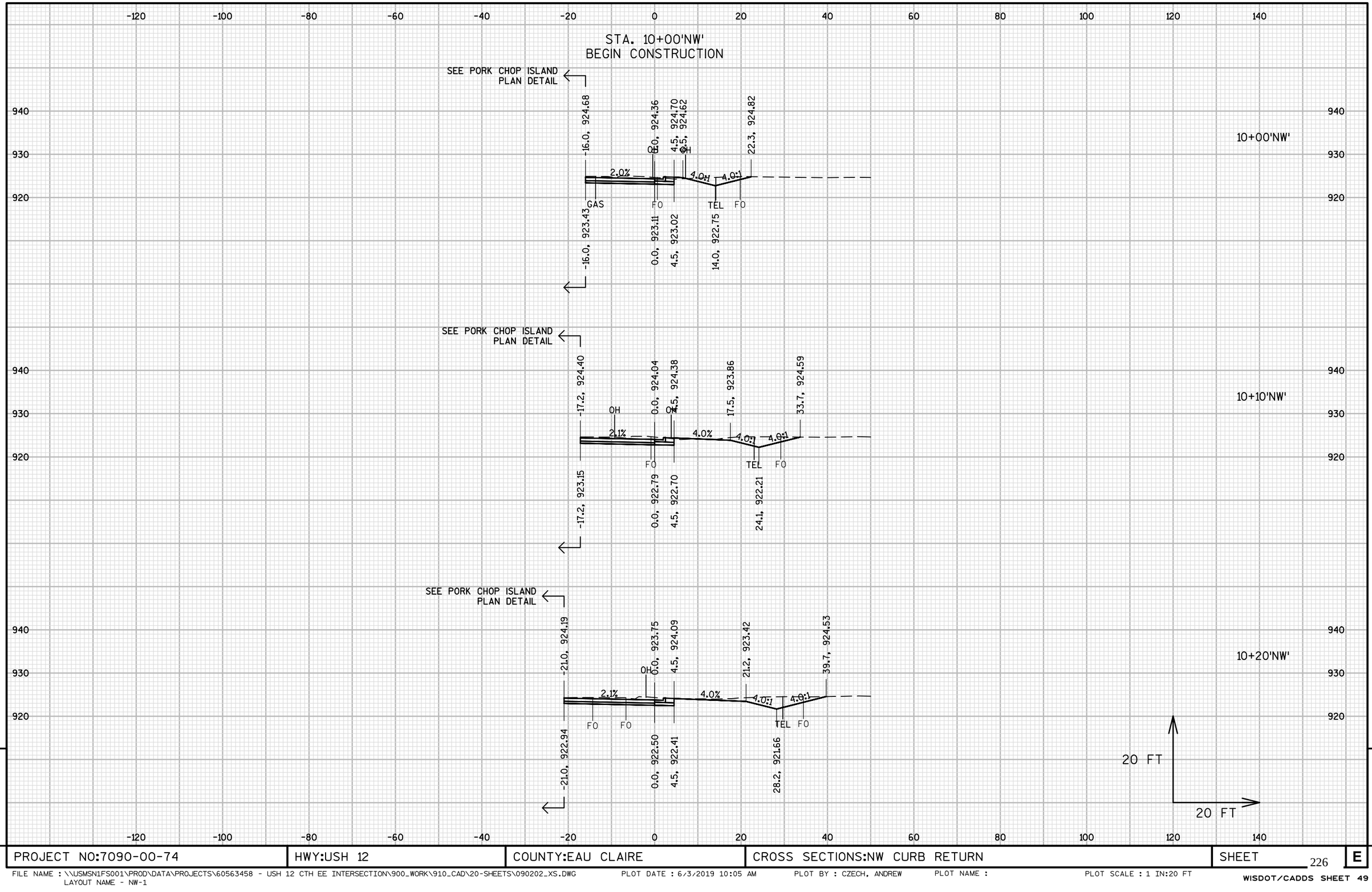

9

9

PROJECT NO:7090-00-74	HWY:USH 12	COUNTY:EAU CLAIRE	CROSS SECTIONS:NW CURB RETURN	SHEET	E

FILE NAME : \\USMSN1FS001\PROD\DATA\PROJECTS\60563458 - USH 12 CTH EE INTERSECTION\900_WORK\910_CAD\20-SHEETS\090202_XS.DWG
LAYOUT NAME - NW-1

PLOT DATE : 6/3/2019 10:05 AM PLOT BY : CZECH, ANDREW PLOT NAME : PLOT SCALE : 1 IN:20 FT

STA. 10+29'NW'
SSPRC REQ'D

SEE 'WB'
CROSS SECTIONS

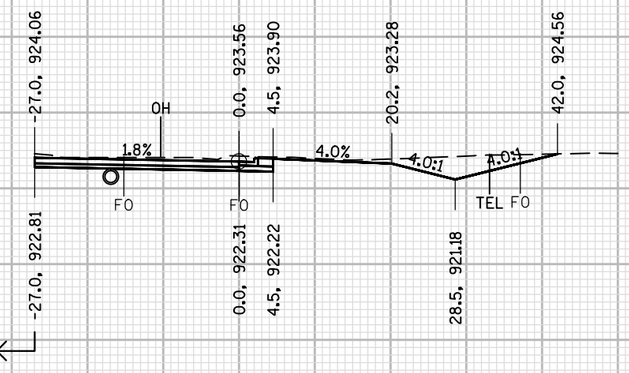

10+29'NW'

SEE 'WB'
CROSS SECTIONS

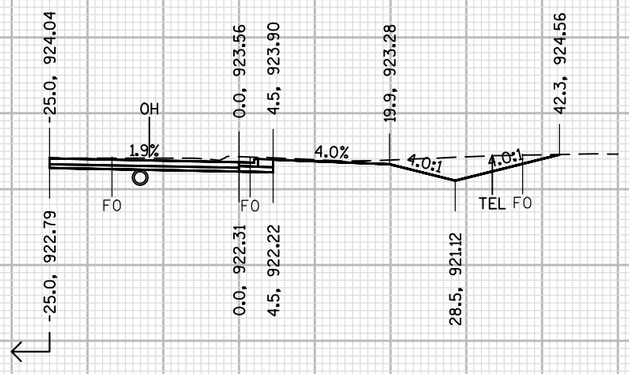

10+30'NW'

SEE 'WB'
CROSS SECTIONS

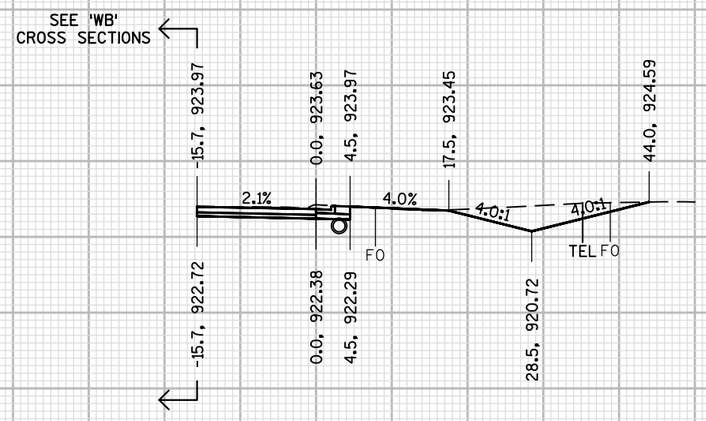

10+37'NW'

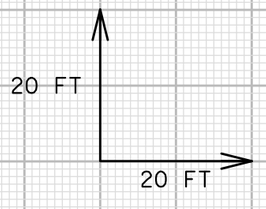

PROJECT NO:7090-00-74	HWY:USH 12	COUNTY:EAU CLAIRE	CROSS SECTIONS:NW CURB RETURN	SHEET 227	E

FILE NAME : \\USMSN1FS001\PROD\DATA\PROJECTS\60563458 - USH 12 CTH EE INTERSECTION\900_WORK\910_CAD\20-SHEETS\090202_XS.DWG
LAYOUT NAME - NW-2
PLOT DATE : 6/3/2019 10:05 AM
PLOT BY : CZECH, ANDREW
PLOT NAME :
PLOT SCALE : 1 IN:20 FT

WISDOT/CADDS SHEET 49

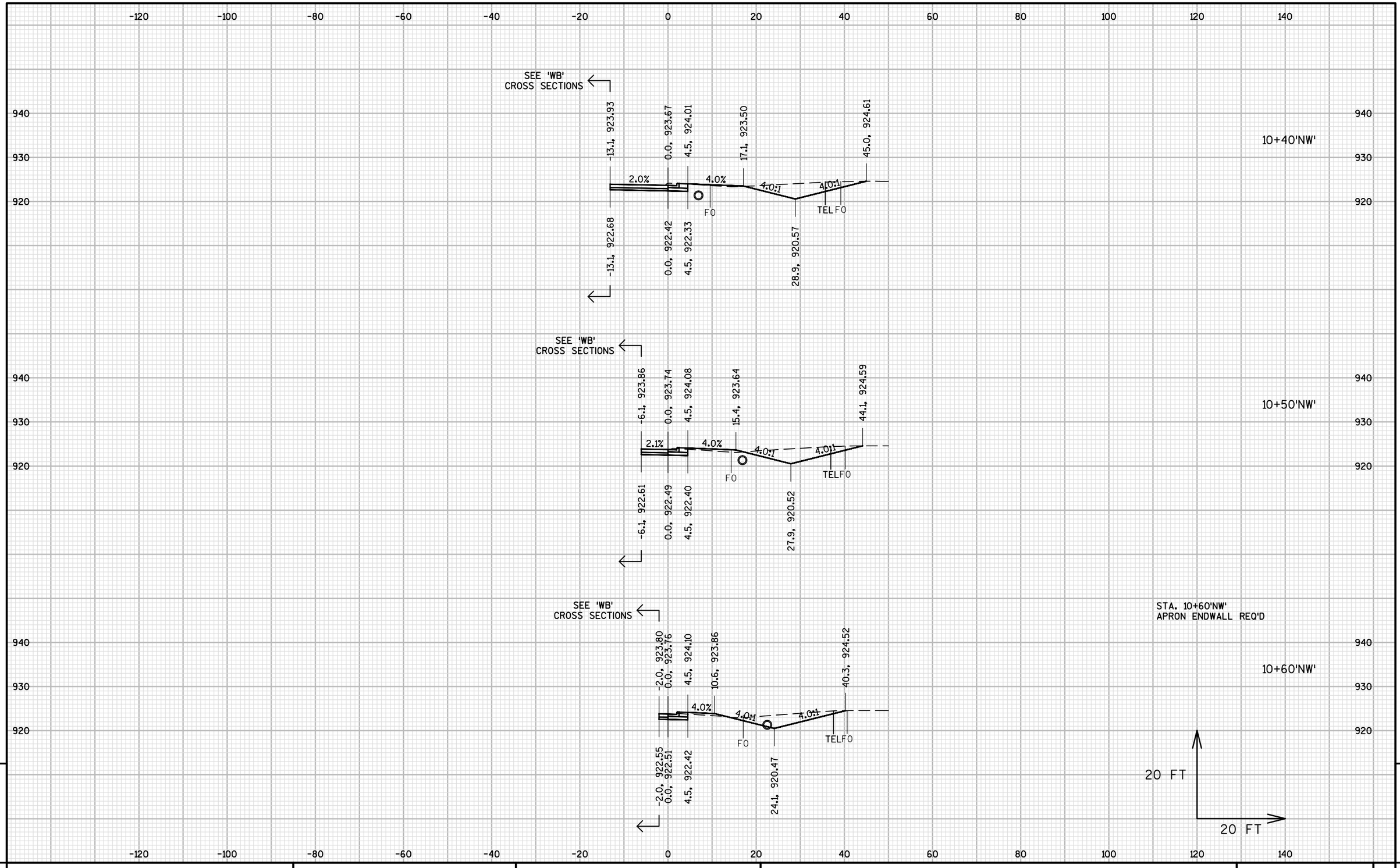

9

9

PROJECT NO:7090-00-74	HWY:USH 12	COUNTY:EAU CLAIRE	CROSS SECTIONS:NW CURB RETURN	SHEET	E

FILE NAME : \\USMSN1FS001\PROD\DATA\PROJECTS\60563458 - USH 12 CTH EE INTERSECTION\900_WORK\910_CAD\20-SHEETS\090202_XS.DWG
LAYOUT NAME - NW-3

PLOT DATE : 6/3/2019 10:05 AM PLOT BY : CZECH, ANDREW PLOT NAME : PLOT SCALE : 1 IN:20 FT

WISDOT/CADDS SHEET 49

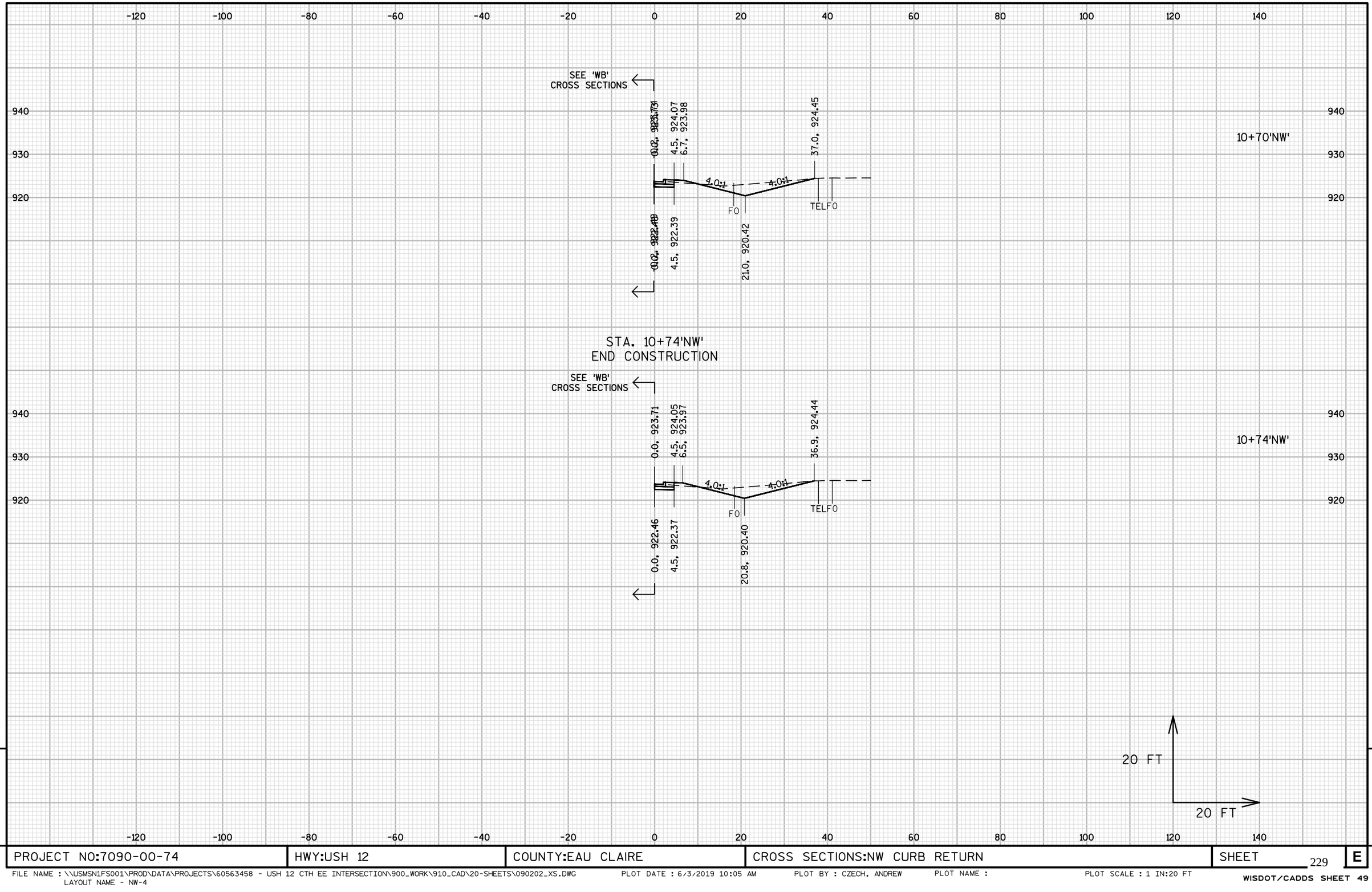

PROJECT NO:7090-00-74	HWY:USH 12	COUNTY:EAU CLAIRE	CROSS SECTIONS:NW CURB RETURN	SHEET	E

FILE NAME : \\USMSN1FS001\PROD\DATA\PROJECTS\60563458 - USH 12 CTH EE INTERSECTION\900_WORK\910_CAD\20-SHEETS\090202_XS.DWG
LAYOUT NAME - NW-4
PLOT DATE : 6/3/2019 10:05 AM
PLOT BY : CZECH, ANDREW
PLOT NAME :
PLOT SCALE : 1 IN:20 FT
WISDOT/CADDS SHEET 49

Wisconsin Department of Transportation

Dedicated people creating transportation solutions
through innovation and exceptional service.

http://www.dot.wisconsin.gov