GRE

DECEMBER 2019

PROJECT ID: 4991-00-97

WITH: N/A

COUNTY: MANITOWOC

ORDER OF SHEETS

Section No.	1	Title
Section No.	2	Typical Sections and Details(Includes Erosion Control Plan)
Section No.	3	Estimate of Quantities
Section No.	3	Miscellaneous Quantities
Section No.	4	Right of Way Plat
Section No.	5	Plan and Profile
Section No.	6	Standard Detail Drawings
Section No.	7	Sign Plates
~~Section No.~~	~~8~~	~~Structure Plans~~
Section No.	9	Computer Earthwork Data
Section No.	9	Cross Sections

TOTAL SHEETS = 130

STATE PROJECT	FEDERAL PROJECT	
	PROJECT	CONTRACT
4991-00-97	WISC 2019744	1

STATE OF WISCONSIN

DEPARTMENT OF TRANSPORTATION

PLAN OF PROPOSED IMPROVEMENT

C MANITOWOC, HECKER ROAD

USH 151-VIEBAHN STREET

CTH CL

MANITOWOC COUNTY

STATE PROJECT NUMBER
4991-00-97

PROJECT LOCATION

N

END PROJECT
STA. 55+40.3

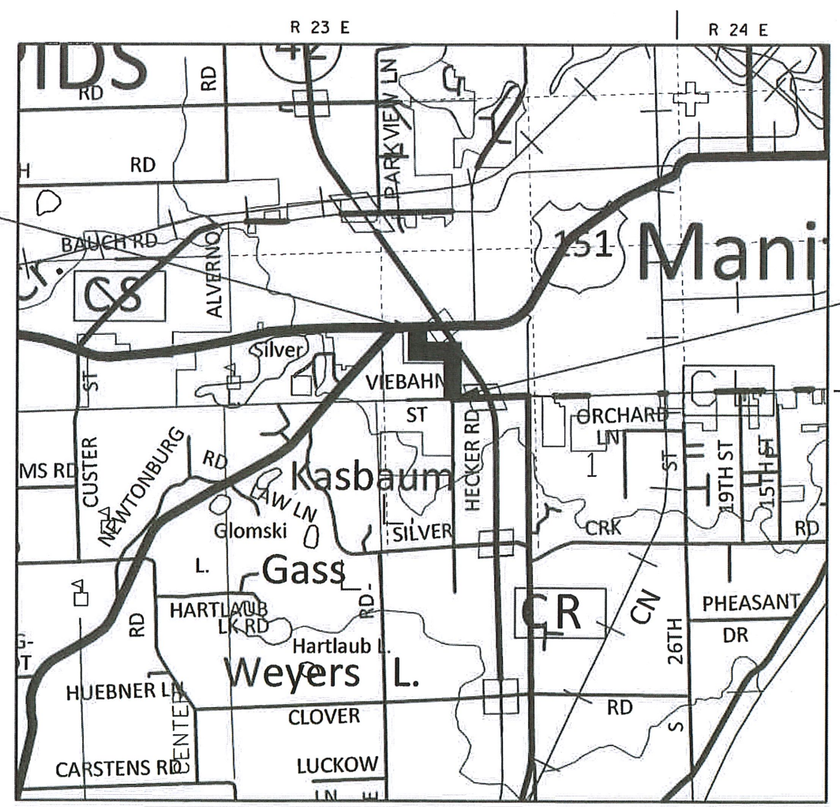

BEGIN PROJECT
STA. 20+75.00
Y=291648.642
X=219624.628

DESIGN DESIGNATION

A.A.D.T.	2020	=	1200
A.A.D.T.	(2040)	=	1350
D.H.V.	(2040)	=	243
D.D.		=	59/41
T.		=	3.3%
DESIGN SPEED		=	35 MPH/45 MPH
ESALS		=	95,000

CONVENTIONAL SYMBOLS

PLAN
- CORPORATE LIMITS
- PROPERTY LINE
- LOT LINE
- LIMITED HIGHWAY EASEMENT
- EXISTING RIGHT OF WAY
- PROPOSED OR NEW R/W LINE
- SLOPE INTERCEPT
- REFERENCE LINE (300'EB')
- EXISTING CULVERT
- PROPOSED CULVERT (Box or Pipe)
- COMBUSTIBLE FLUIDS (CAUTION)
- MARSH AREA
- WOODED OR SHRUB AREA

PROFILE
- GRADE LINE
- ORIGINAL GROUND
- MARSH OR ROCK PROFILE (To be noted as such) (ROCK)
- SPECIAL DITCH (LABEL)
- GRADE ELEVATION (95.36)
- CULVERT (Profile View)

UTILITIES
- ELECTRIC — E —
- FIBER OPTIC — FO —
- GAS — G —
- SANITARY SEWER — SAN —
- STORM SEWER — SS —
- TELEPHONE — T —
- WATER — W —
- UTILITY PEDESTAL
- POWER POLE
- TELEPHONE POLE

LAYOUT
SCALE 0 — 1 MILE

TOTAL NET LENGTH OF CENTERLINE = 0.656 MI.

HORIZONTAL POSITIONS SHOWN ON THIS PLAN ARE WISCONSIN COUNTY COORDINATES, MANITOWOC COUNTY, NAD83 (2011), IN U.S. SURVEY FEET. VALUES ARE GRID COORDINATES, GRID BEARINGS, AND GRID DISTANCES. GRID DISTANCES MAY BE USED AS GROUND DISTANCES.

ACCEPTED FOR
MANITOWOC COUNTY

7/24/19 — DATE — COUNTY HIGHWAY COMMISSIONER

ORIGINAL PLANS PREPARED BY
AYRES ASSOCIATES

WISCONSIN
ANDREW C. DANA
34172
OCONTO, WI
PROFESSIONAL ENGINEER
7-23-19
(Date)

STATE OF WISCONSIN
DEPARTMENT OF TRANSPORTATION

PREPARED BY

Surveyor	AYRES ASSOCIATES
Designer	AYRES ASSOCIATES
Regional Examiner	SCOTT EBEL
Regional Supervisor	JAMES THOMPSON

APPROVED FOR THE DEPARTMENT
DATE: 7/24/19 (Signature)

E

2

GENERAL NOTES

THE LOCATION OF EXISTING AND PROPOSED UTILITY FACILITIES AS SHOWN ON THE PLANS ARE APPROXIMATE. THERE MAY BE OTHER UTILITY FACILITIES WITHIN THE PROJECT AREA THAT ARE NOT SHOWN.

ALL DISTANCES ARE GROUND DISTANCES.

ALL TIES ON THIS PLAN ARE HORIZONTAL UNLESS DESCRIBED OTHERWISE.

PROPERTY LINES AS SHOWN ARE APPROXIMATE.

THE EXACT LOCATION OF SILT FENCE SHALL BE DETERMINED IN THE FIELD.

DISTURBED AREAS WITHIN THE RIGHT OF WAY, EXCEPT THE AREAS WITHIN THE FINISHED SHOULDER POINTS, ARE TO BE TOPSOILED, FERTILIZED, SEEDED, AND EROSION MAT/MULCH AS DIRECTED BY THE ENGINEER IN THE FIELD.

ELEVATIONS SHOWN ON THE ROADWAY CROSS SECTIONS ARE SUBGRADE ELEVATIONS AT THE CENTERLINE OF THE ROADWAY.

CURVE DATA IS BASED ON ARC DEFINITION.

NO TREES AND/OR SHRUBS ARE TO BE REMOVED WITHOUT THE APPROVAL OF THE COUNTY.

ELEVATIONS SHOWN ON THIS PLAN ARE REFERENCED TO THE NORTH AMERICAN VERTICAL DATUM OF NAVD 88 (2012).

MEETING EXISTING PAVEMENT WITH NEW PAVEMENT SHALL BE PERFORMED WITH A SAW CUT.

RADIUS POINTS UNLESS NOTED ARE TO THE EDGE OF PAVEMENT.

THE EXACT LOCATION AND WIDTH OF DRIVEWAYS SHALL BE DETERMINED IN THE FIELD.

RUNOFF COEFFICIENT TABLE

	HYDROLOGIC SOIL GROUP											
	A			B			C			D		
	SLOPE RANGE (PERCENT)			SLOPE RANGE (PERCENT)			SLOPE RANGE (PERCENT)			SLOPE RANGE (PERCENT)		
LAND USE:	0-2	2-6	6 & OVER	0-2	2-6	6 & OVER	0-2	2-6	6 & OVER	0-2	2-6	6 & OVER
ROW CROPS	.08 .22	.16 .30	.22 .38	.12 .26	.20 .34	.27 .44	.15 .30	.24 .37	.33 .50	.19 .34	.28 .41	.38 .56
MEDIAN STRIP-TURF	.19 .24	.20 .26	.24 .30	.19 .25	.22 .28	.26 .33	.20 .26	.23 .30	.30 .37	.20 .27	.25 .32	.30 .40
SIDE SLOPE-TURF			.25 .32			.27 .34			.28 .36			.30 .38
PAVEMENT:												
ASPHALT	.70 - .95											
CONCRETE	.80 - .95											
BRICK	.70 - .80											
DRIVES, WALKS	.75 - .85											
ROOFS	.75 - .95											
GRAVEL ROADS, SHOULDERS	.40 - .60											

TOTAL AREA EXPECTED TO BE DISTURBED BY CONSTRUCTION ACTIVITIES = 3.7 ACRES
SOIL GROUP B AND C

UTILITIES

* COMCAST — TELEPHONE 612-462-7911
4255 LEXINGTON AVENUE
ARDEN HILLS, MINNESOTA 55126
ATTENTION: BEN UELAND
E-MAIL: benjamin_ueland@comcast.com

* WISCONSIN PUBLIC SERVICE - ELECTRIC — TELEPHONE 920-617-5151
2850 S ASHLAND AVENUE
GREEN BAY, WISCONSIN 54307
ATTENTION: SCOTT GAUGER
E-MAIL: scott.gauger@wisconsinpublicservice.com

* WISCONSIN PUBLIC SERVICE - GAS-PETROLEUM — TELEPHONE 920-655-6042
800 COLUMBUS STREET
PO BOX 236
TWO RIVERS, WISCONSIN 54241
ATTENTION: DONALD CONNER
E-MAIL: donald.conner@wisconsinpublicservice.com

* MANITOWOC PUBLIC UTILITIES - ELECTRIC — TELEPHONE 920-686-4310
1303 S. 8TH STREET
PO BOX 1090
MANITOWOC, WISCONSIN 54221-1090
ATTENTION: STEVE BACALZO
E-MAIL: sbacalzo@mpu.org

* MANITOWOC PUBLIC UTILITIES - WATER — TELEPHONE 920-686-4354
1303 S. 8TH STREET
PO BOX 1090
MANITOWOC, WISCONSIN 54221-1090
ATTENTION: ROB MICHAELSON
E-MAIL: rmichaelson@mpu.org

* AT&T WISCONSIN — TELEPHONE 920-227-8871
205 S. JEFFERSON STREET
GREEN BAY, WISCONSIN 54301
ATTENTION: SHEA GORZELANCZYK
E-MAIL: sg2528@att.net

* CITY OF MANITOWOC-SEWER — TELEPHONE 920-686-6910
900 QUAY STREET
MANITOWOC, WISCONSIN 54220-4533
ATTENTION: GREG MINIKEL
E-MAIL: gminikel@manitowoc.org

* CITY OF MANITOWOC-DEPT. OF PUBLIC WORKS — TELEPHONE 920-683-4550
900 QUAY STREET
MANITOWOC, WISCONSIN 54220-4533
ATTENTION:RANDY JUNK
E-MAIL: rjunk@manitowoc.org

DIGGERS HOTLINE
Dial 811 or (800)242-8511
www.DiggersHotline.com

*-MEMBER OF DIGGERS HOTLINE

STANDARD ABBREVIATIONS

ADT	AVERAGE DAILY TRAFFIC	NC	NORMAL CROWN
AC	ASPHALT CEMENT	PT	POINT OF TANGENCY
AGG	AGGREGATE	PC	POINT OF CURVATURE
ASPH	ASPHALT	PI	POINT OF INTERSECTION
BM	BENCH MARK	PE	PRIVATE ENTRANCE
C/L	CENTERLINE	R	RADIUS
CONC	CONCRETE	REM	REMOVE
CMP	CORRUGATED METAL PIPE	R/L OR RL	REFERENCE LINE
CR.	CREEK	RCCP	REINFORCED CONCRETE CULVERT PIPE
D	DEGREE OF CURVE	RCPSS	REINFORCED CONCRETE PIPE STORM SEWER
DHV	DESIGN HOUR VOLUME	R.O.	RUNOUT
ESALS	EQUIVALENT SINGLE AXIS LOADS	R/W	RIGHT-OF-WAY
EXIST	EXISTING	STA	STATION
FE	FIELD ENTRANCE	SE	SUPER ELEVATION
HYD	HYDRANT	SS	STORM SEWER
IP	IRON PIPE OR PIN	T	TANGENT
L	LENGTH OF CURVE	TEL	TELEPHONE
LC	LONG CHORD OF CURVE	TLE	TEMPORARY LIMITED EASEMENT
LR	LENGTH OF RUNOFF	T	TRUCKS
MH	MANHOLE	VC	VERTICAL CURVE
		W	WELL

DEPARTMENT OF NATURAL RESOURCES

WDNR — TELEPHONE 920-366-1544
P.O. BOX 10448
GREEN BAY, WISCONSIN 54307
ATTENTION: MATT SCHAEVE
E-MAIL: MATT.SCHAEVE@WISCONSIN.GOV

2

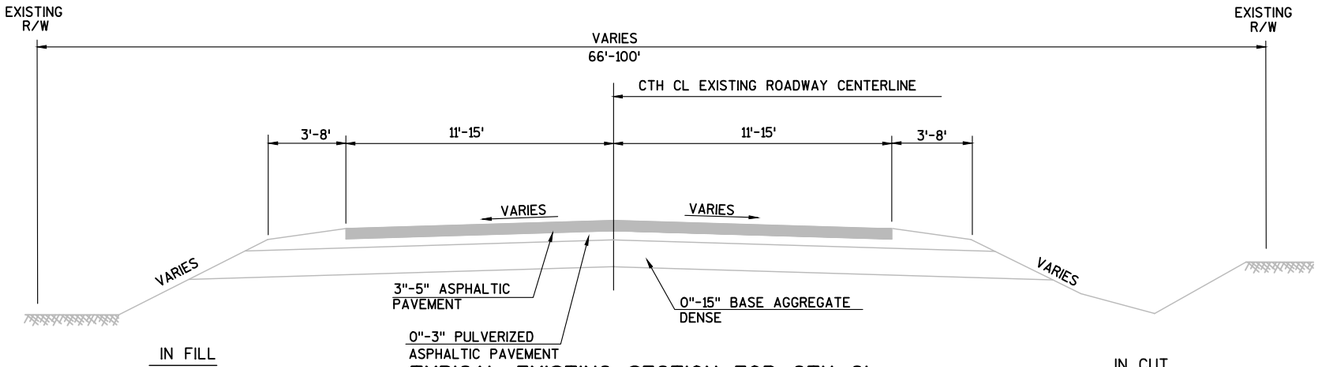

TYPICAL EXISTING SECTION FOR CTH CL

STA. 20+75-STA. 55+40.3

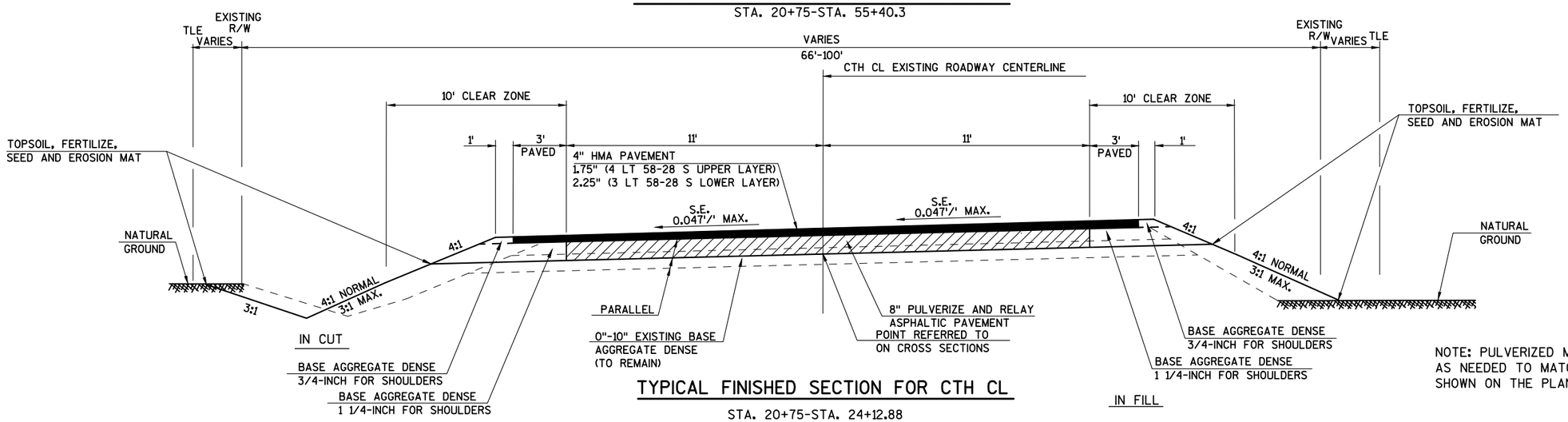

TYPICAL FINISHED SECTION FOR CTH CL

STA. 20+75-STA. 24+12.88

NOTE: PULVERIZED MATERIAL TO BE REMOVED AS NEEDED TO MATCH FINISHED GRADES AS SHOWN ON THE PLANS.

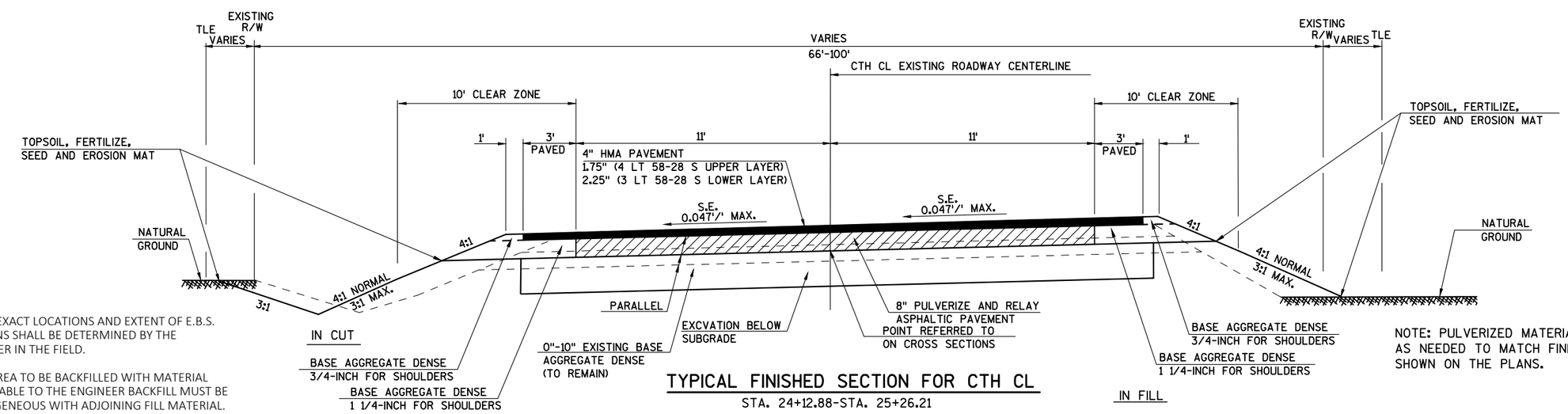

TYPICAL FINISHED SECTION FOR CTH CL

STA. 24+12.88-STA. 25+26.21

NOTE: PULVERIZED MATERIAL TO BE REMOVED AS NEEDED TO MATCH FINISHED GRADES AS SHOWN ON THE PLANS.

NOTE: EXACT LOCATIONS AND EXTENT OF E.B.S. SECTIONS SHALL BE DETERMINED BY THE ENGINEER IN THE FIELD.

E.B.S. AREA TO BE BACKFILLED WITH MATERIAL ACCEPTABLE TO THE ENGINEER BACKFILL MUST BE HOMOGENEOUS WITH ADJOINING FILL MATERIAL.

PROJECT NO:4991-00-97	HWY:CTH CL	COUNTY:MANITOWOC	TYPICAL SECTIONS	SHEET 3	E

2

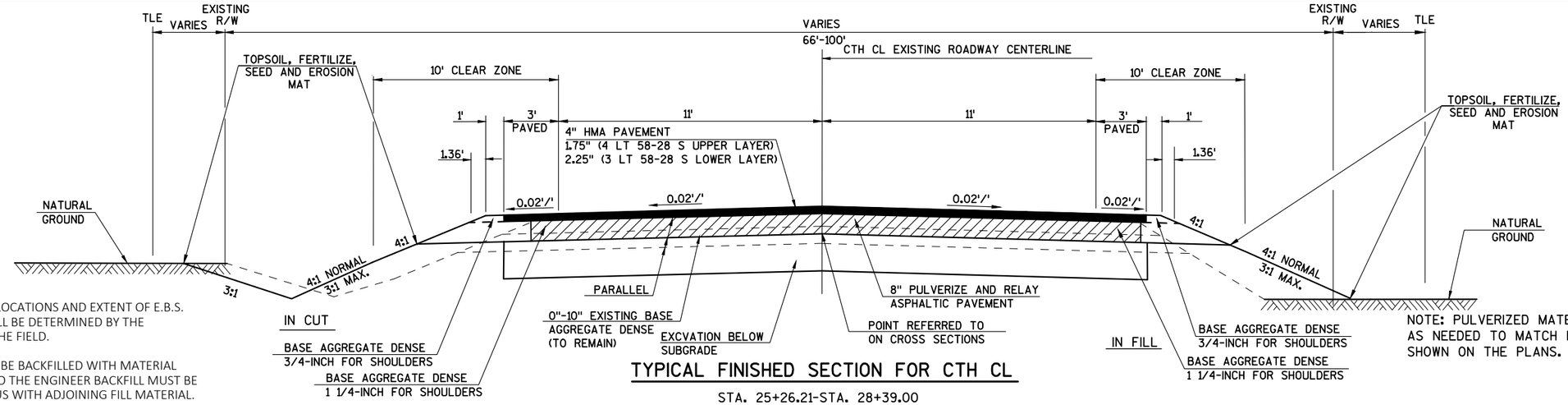

NOTE: EXACT LOCATIONS AND EXTENT OF E.B.S. SECTIONS SHALL BE DETERMINED BY THE ENGINEER IN THE FIELD.

E.B.S. AREA TO BE BACKFILLED WITH MATERIAL ACCEPTABLE TO THE ENGINEER BACKFILL MUST BE HOMOGENEOUS WITH ADJOINING FILL MATERIAL.

NOTE: PULVERIZED MATERIAL TO BE REMOVED AS NEEDED TO MATCH FINISHED GRADES AS SHOWN ON THE PLANS.

TYPICAL FINISHED SECTION FOR CTH CL

STA. 25+26.21-STA. 28+39.00

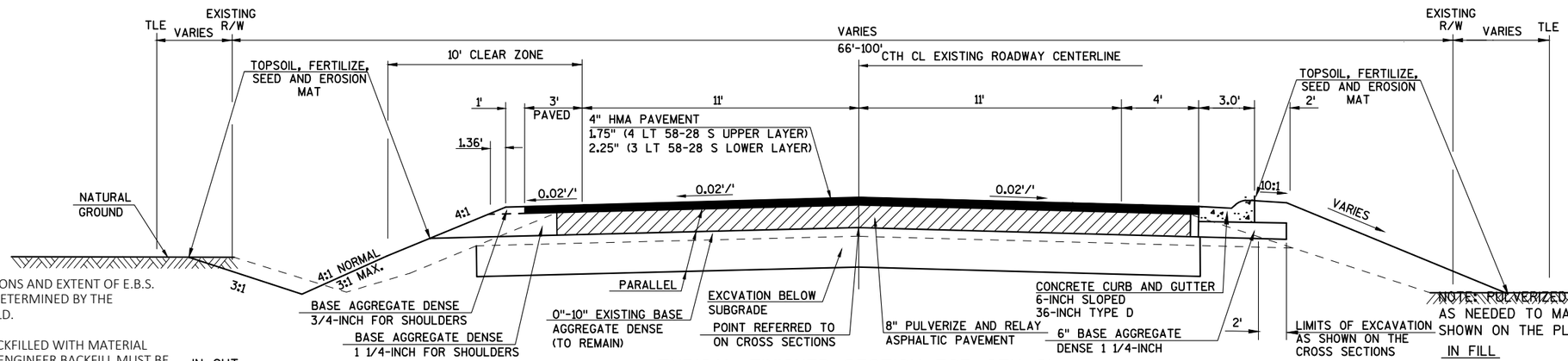

NOTE: EXACT LOCATIONS AND EXTENT OF E.B.S. SECTIONS SHALL BE DETERMINED BY THE ENGINEER IN THE FIELD.

E.B.S. AREA TO BE BACKFILLED WITH MATERIAL ACCEPTABLE TO THE ENGINEER BACKFILL MUST BE HOMOGENEOUS WITH ADJOINING FILL MATERIAL.

NOTE: PULVERIZED MATERIAL TO BE REMOVED AS NEEDED TO MATCH FINISHED GRADES AS SHOWN ON THE PLANS.

TYPICAL FINISHED SECTION FOR CTH CL

STA. 28+39.00-STA. 31+50

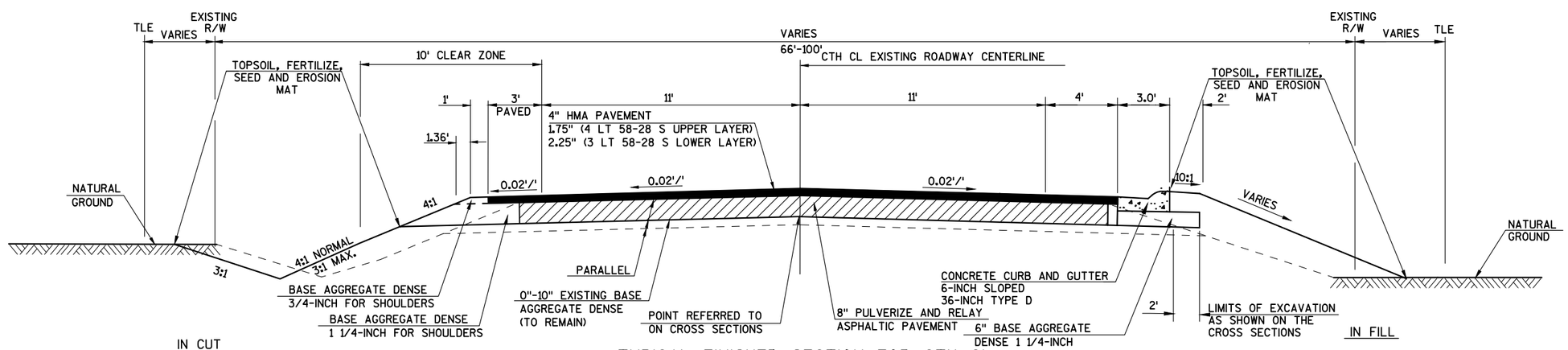

TYPICAL FINISHED SECTION FOR CTH CL

STA. 31+50-STA. 33+78

PROJECT NO:4991-00-97	HWY:CTH CL	COUNTY:MANITOWOC	TYPICAL SECTIONS	SHEET 4	E

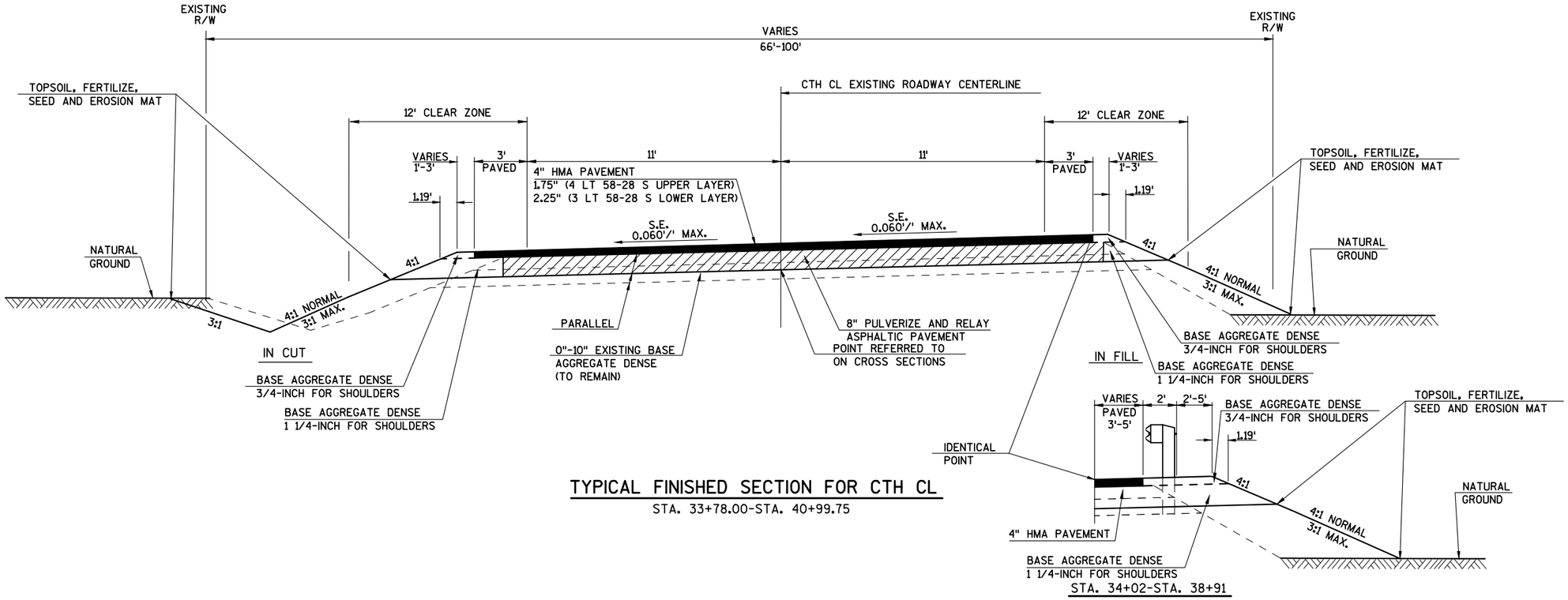

TYPICAL FINISHED SECTION FOR CTH CL

STA. 33+78.00-STA. 40+99.75

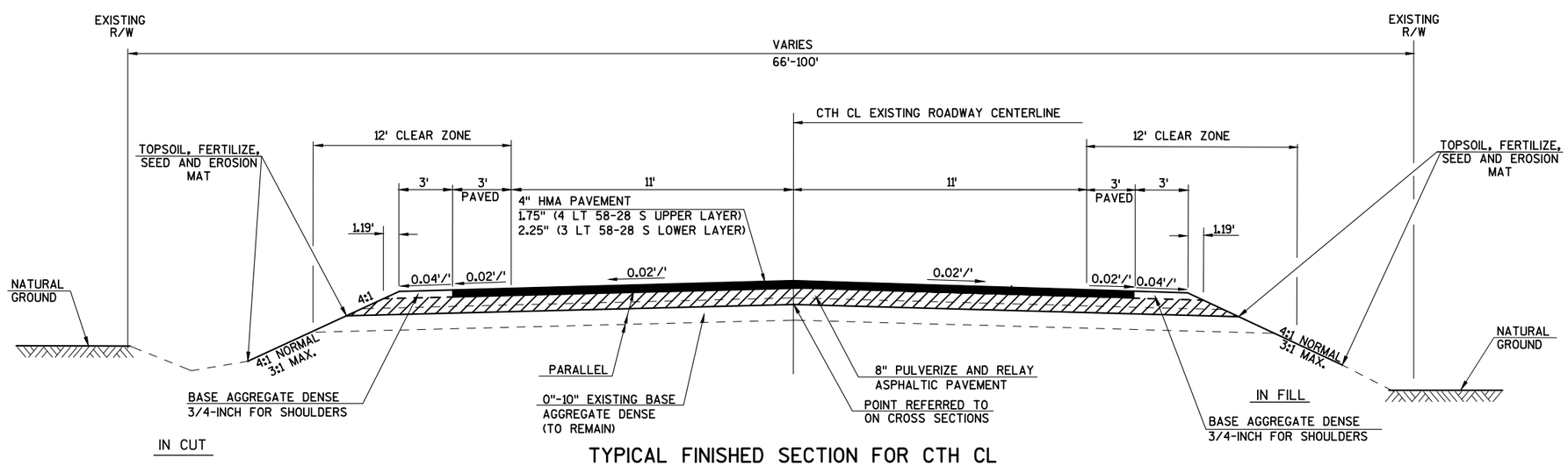

TYPICAL FINISHED SECTION FOR CTH CL

STA. 40+99.75-STA. 45+81.99

PROJECT NO:4991-00-97	HWY:CTH CL	COUNTY:MANITOWOC	TYPICAL SECTIONS	SHEET 5	E

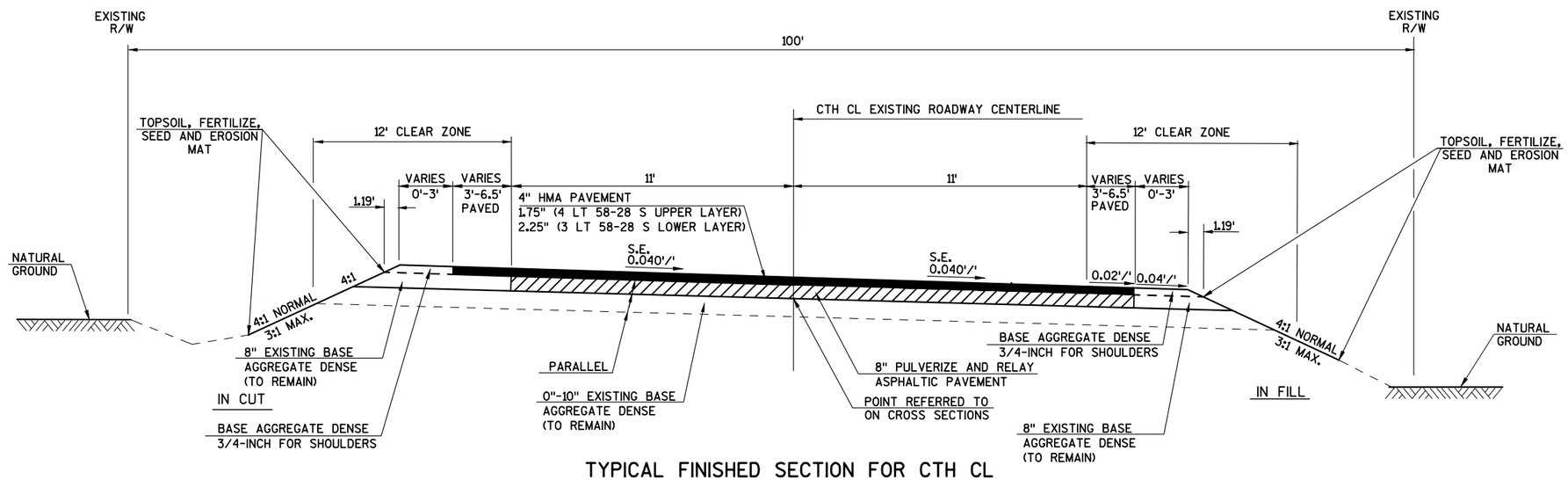

TYPICAL FINISHED SECTION FOR CTH CL

STA. 45+81.99-STA. 46+97.99

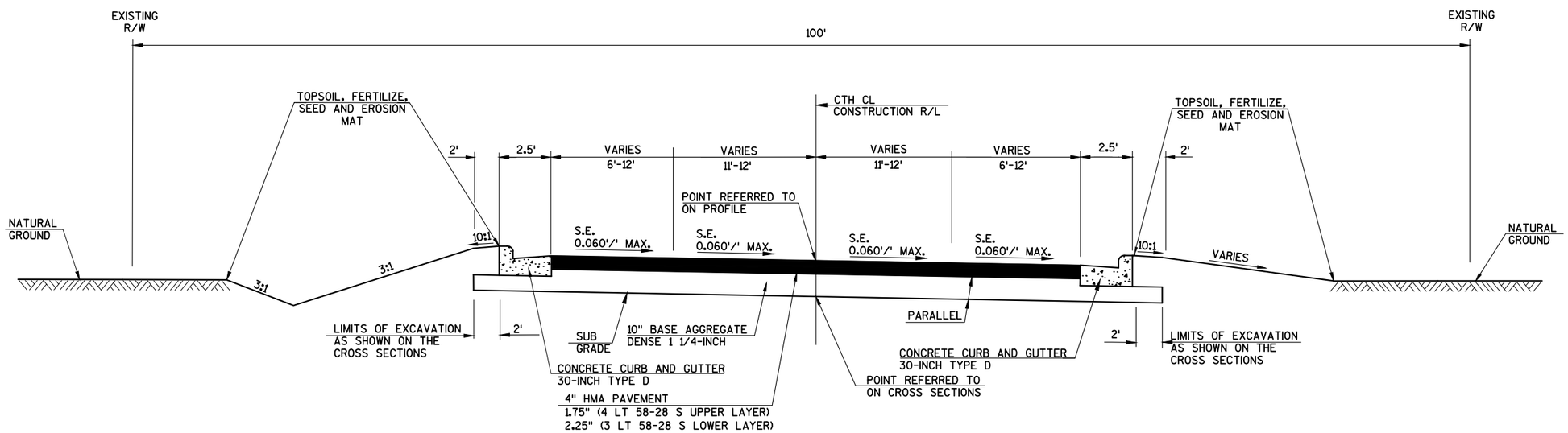

TYPICAL FINISHED SECTION FOR CTH CL

STA. 46+97.99 - STA. 51+07.82

PROJECT NO:4991-00-97	HWY:CTH CL	COUNTY:MANITOWOC	TYPICAL SECTIONS	SHEET 6	E

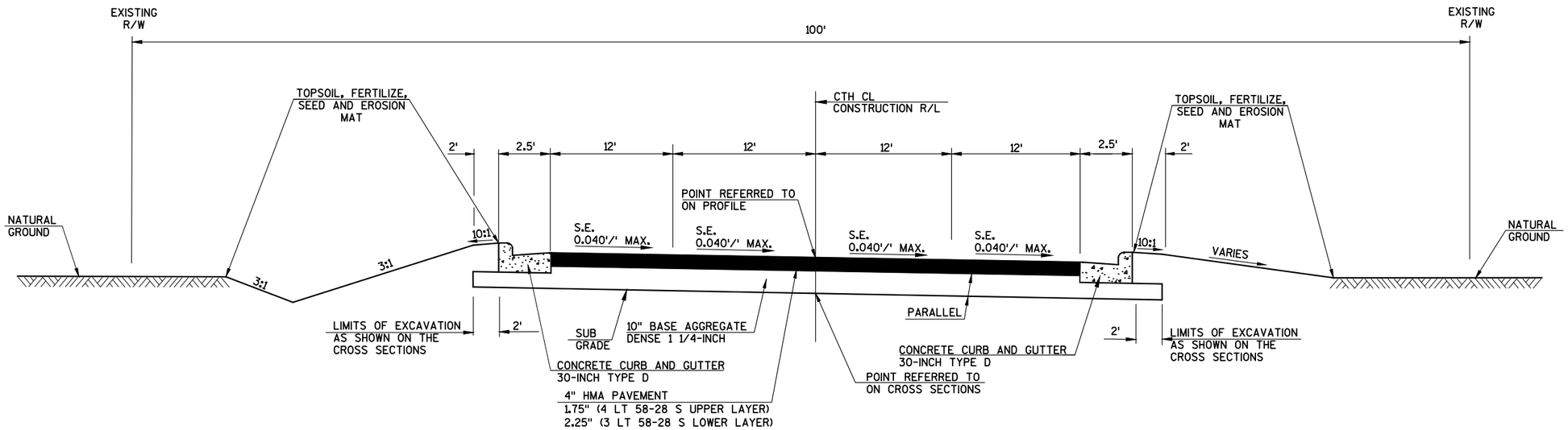

TYPICAL FINISHED SECTION FOR CTH CL

STA. 51+07.82 - STA. 52+16.49

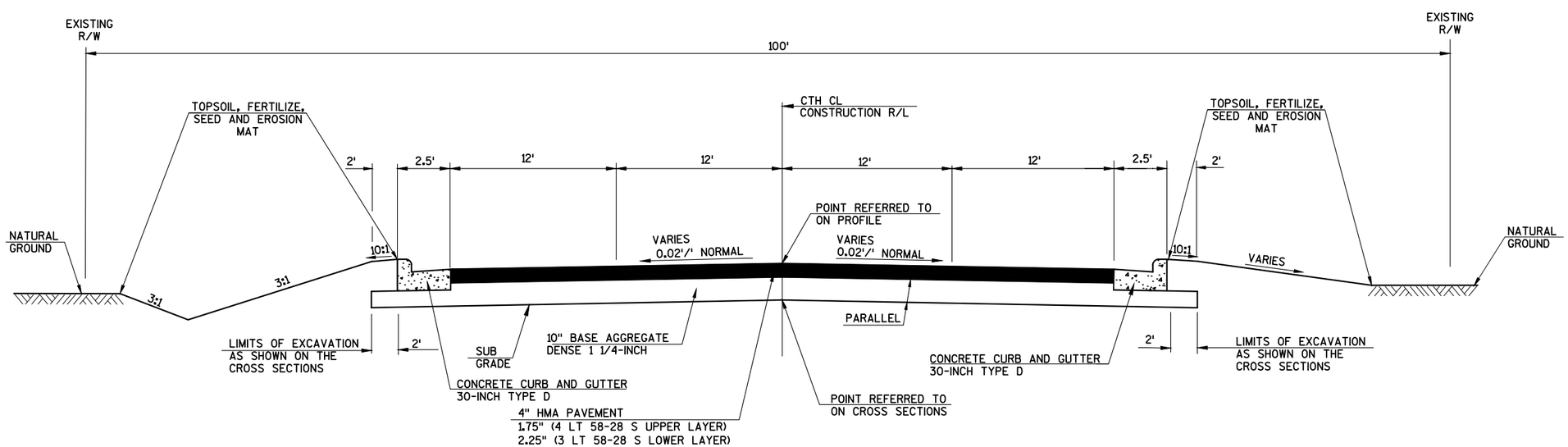

TYPICAL FINISHED SECTION FOR CTH CL

STA. 52+16.49 - STA. 55+40.3

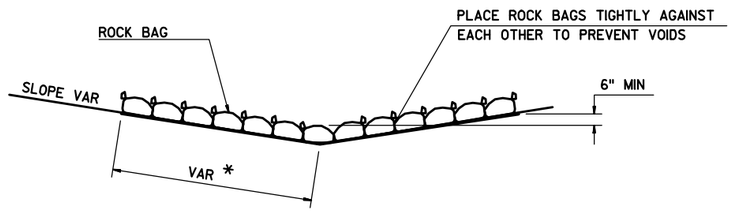

SIDE VIEW (SINGLE LAYER)

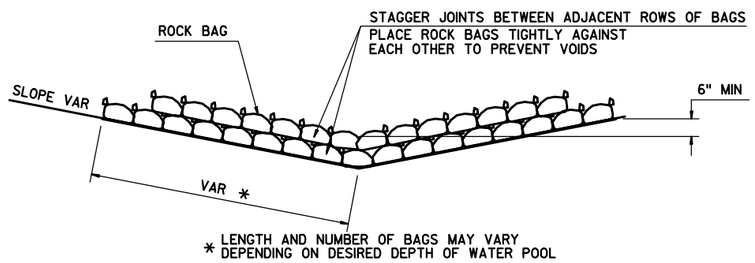

SIDE VIEW (MULTIPLE LAYER)

ROCK BAGS DITCH CHECK

PAID AS ROCK BAGS
(SEE MISCELLANEOUS QUANTITIES FOR LOCATIONS)

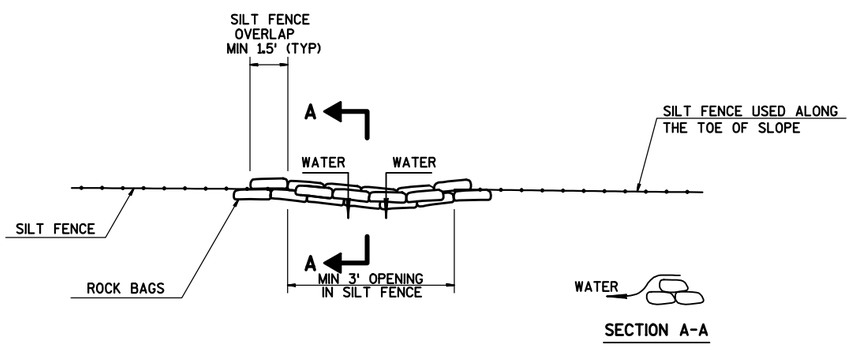

ROCK BAGS USED FOR SILT FENCE RELIEF DETAIL

PAID AS ROCK BAGS
(SEE MISCELLANEOUS QUANTITIES FOR LOCATIONS)

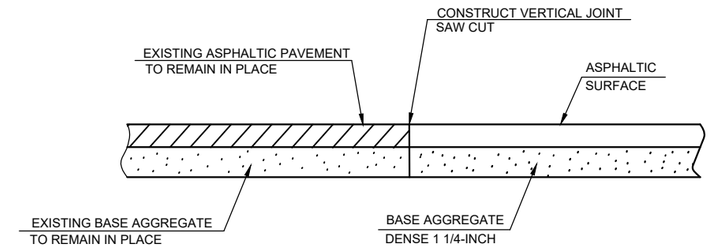

SAW CUT DETAIL

STA. 20+75
STA. 55+50

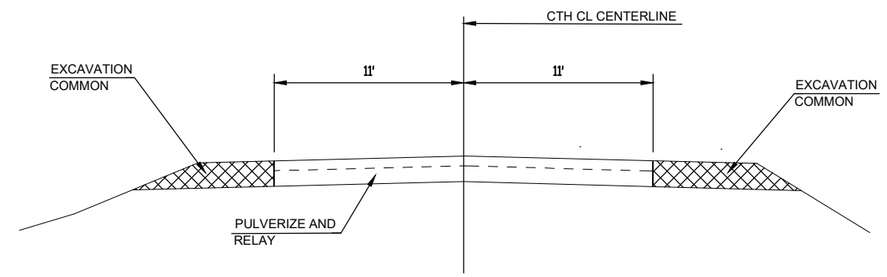

EXCAVATION COMMON

PAY LIMITS FOR
SHOULDERS

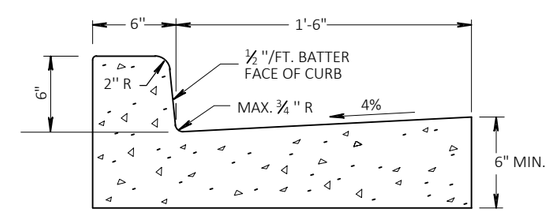

CONCRETE CURB AND GUTTER, 24-INCH, TYPE D

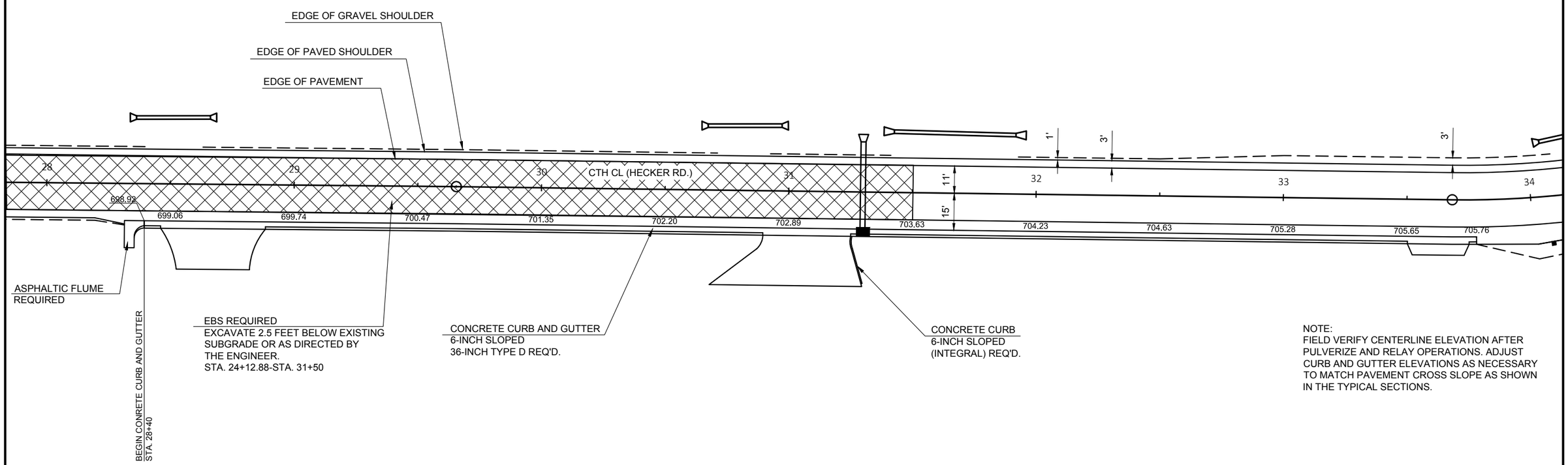

NOTE:
FIELD VERIFY CENTERLINE ELEVATION AFTER PULVERIZE AND RELAY OPERATIONS. ADJUST CURB AND GUTTER ELEVATIONS AS NECESSARY TO MATCH PAVEMENT CROSS SLOPE AS SHOWN IN THE TYPICAL SECTIONS.

PROJECT NO: 4991-00-96	HWY: CTH CL	COUNTY: MANITOWOC	PLAN DETAIL-GRADES	SHEET 9	E

FILE NAME : V:\TRANS-GB\450432 CTH CL\C3D\SHEETSPLAN\021201 PD.DWG
LAYOUT NAME - 021201 pd
PLOT DATE : 7/19/2019 9:01 AM
PLOT BY : SOUFAL, KEVIN
PLOT NAME :
PLOT SCALE : 1 IN:40 FT

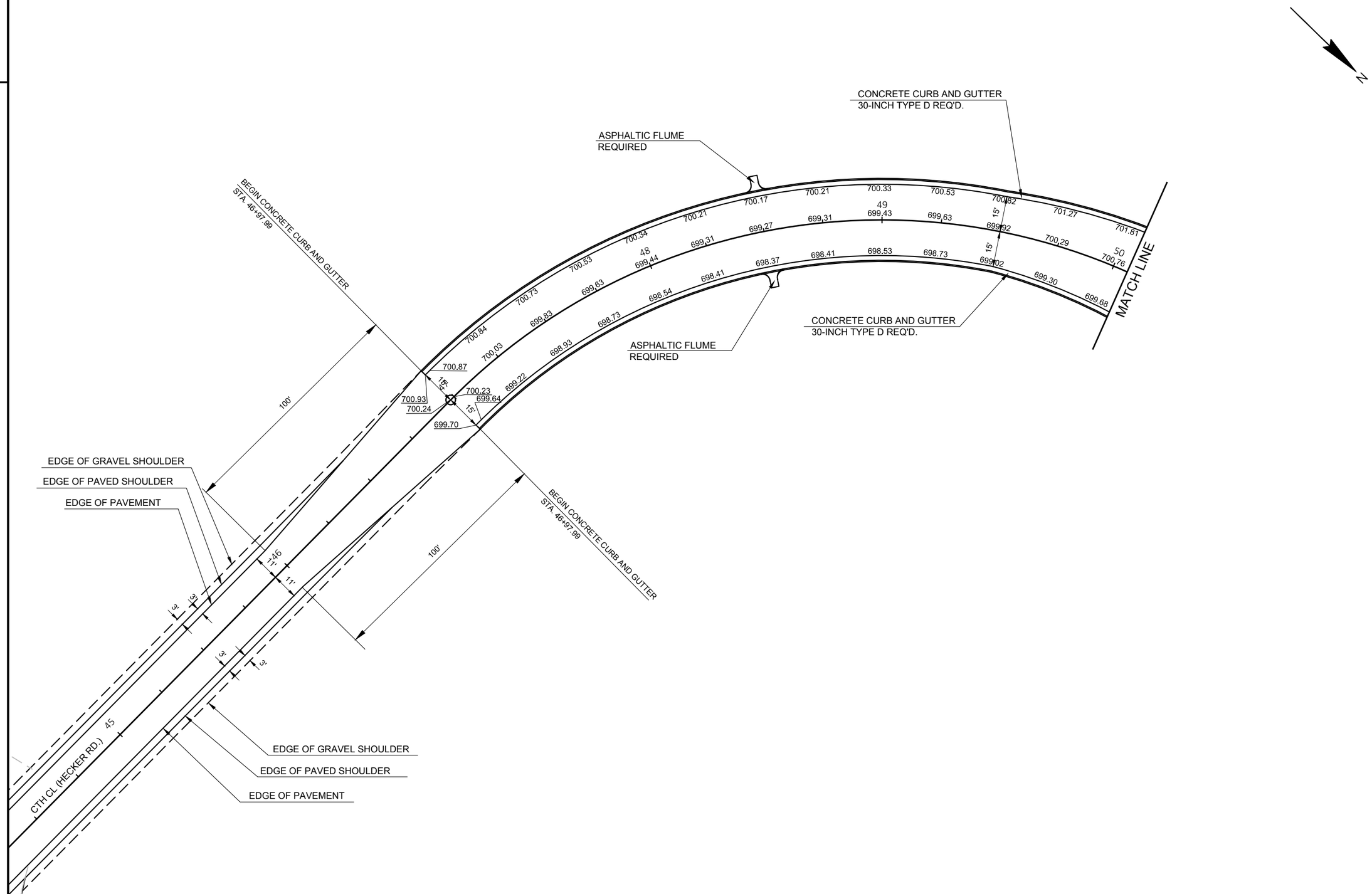

PROJECT NO: 4991-00-96	HWY: CTH CL	COUNTY: MANITOWOC	PLAN DETAIL-GRADES	SHEET 10	E

FILE NAME : V:\TRANS-GB\450432 CTH CL\C3D\SHEETSPLAN\021202 PD.DWG
LAYOUT NAME - 021202 pd
PLOT DATE : 7/19/2019 9:02 AM
PLOT BY : SOUFAL, KEVIN
PLOT NAME :
PLOT SCALE : 1 IN:40 FT

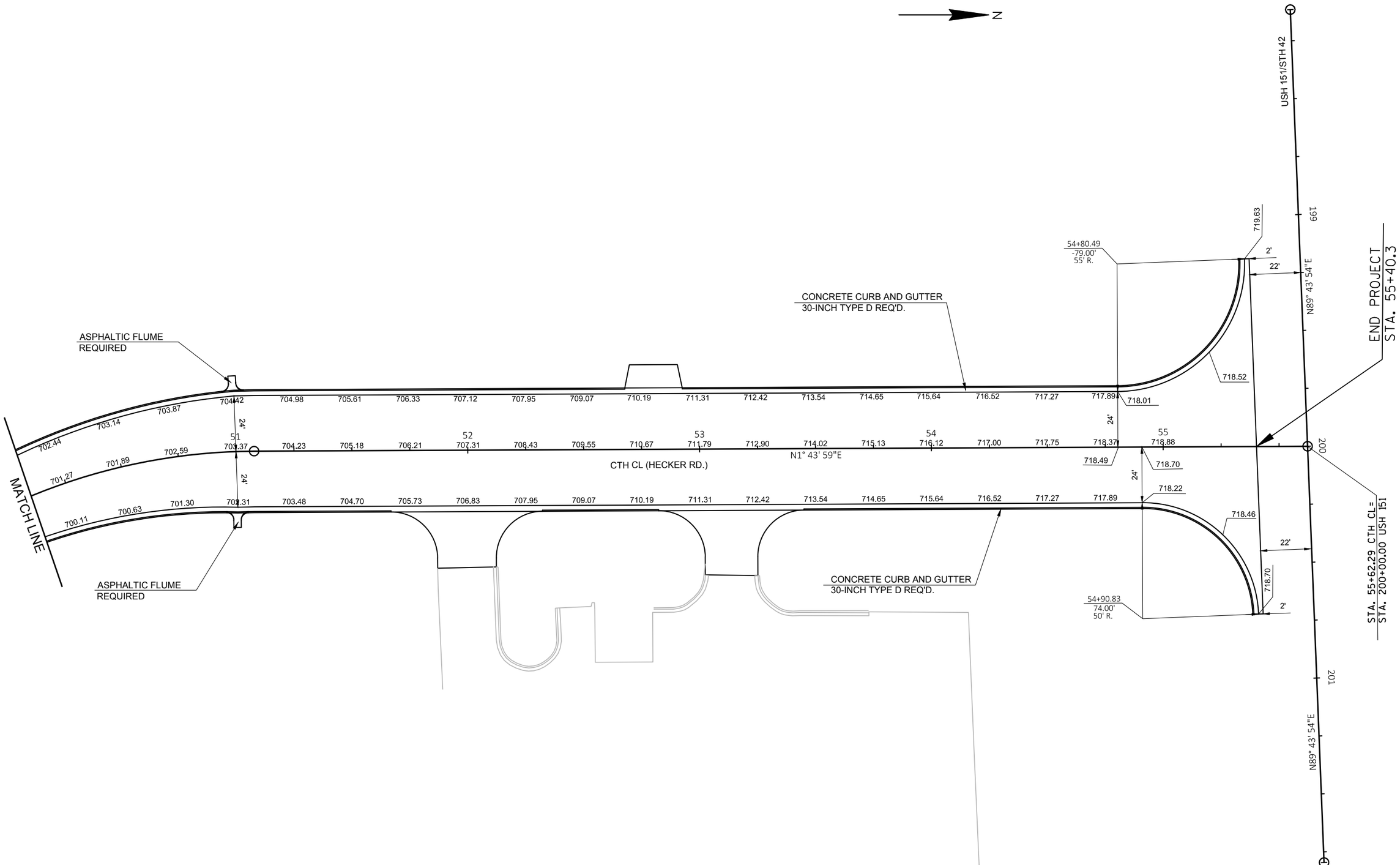

PROJECT NO: 4991-00-96	HWY: CTH CL	COUNTY: MANITOWOC	PLAN DETAIL-GRADES	SHEET 11	E

FILE NAME : V:\TRANS-GB\450432 CTH CL\C3D\SHEETSPLAN\021203 PD.DWG
LAYOUT NAME - 021203 pd
PLOT DATE : 7/19/2019 9:02 AM
PLOT BY : SOUFAL, KEVIN
PLOT NAME :
PLOT SCALE : 1 IN:40 FT
WISDOT/CADDS SHEET 42

2

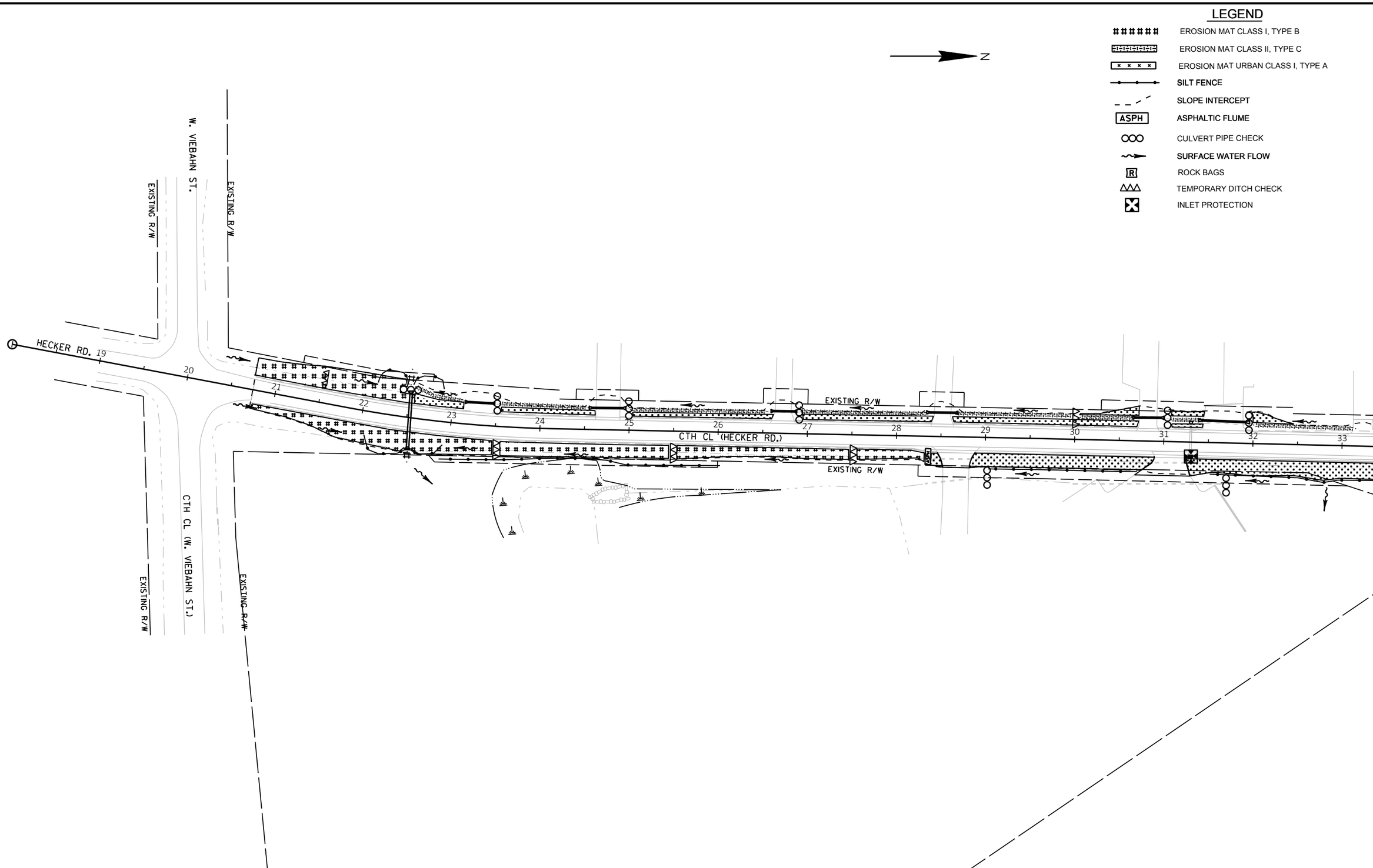

2

PROJECT NO: 4991-00-96	HWY: CTH CL	COUNTY: MANITOWOC	EROSION CONTROL	SHEET 12	E

FILE NAME : V:\TRANS-GB\450432 CTH CL\C3D\SHEETSPLAN\022001 EC.DWG
LAYOUT NAME - 022001 ec
PLOT DATE : 7/19/2019 9:02 AM PLOT BY : SOUFAL, KEVIN PLOT NAME : PLOT SCALE : 1 IN:100 FT

WISDOT/CADDS SHEET 42

2

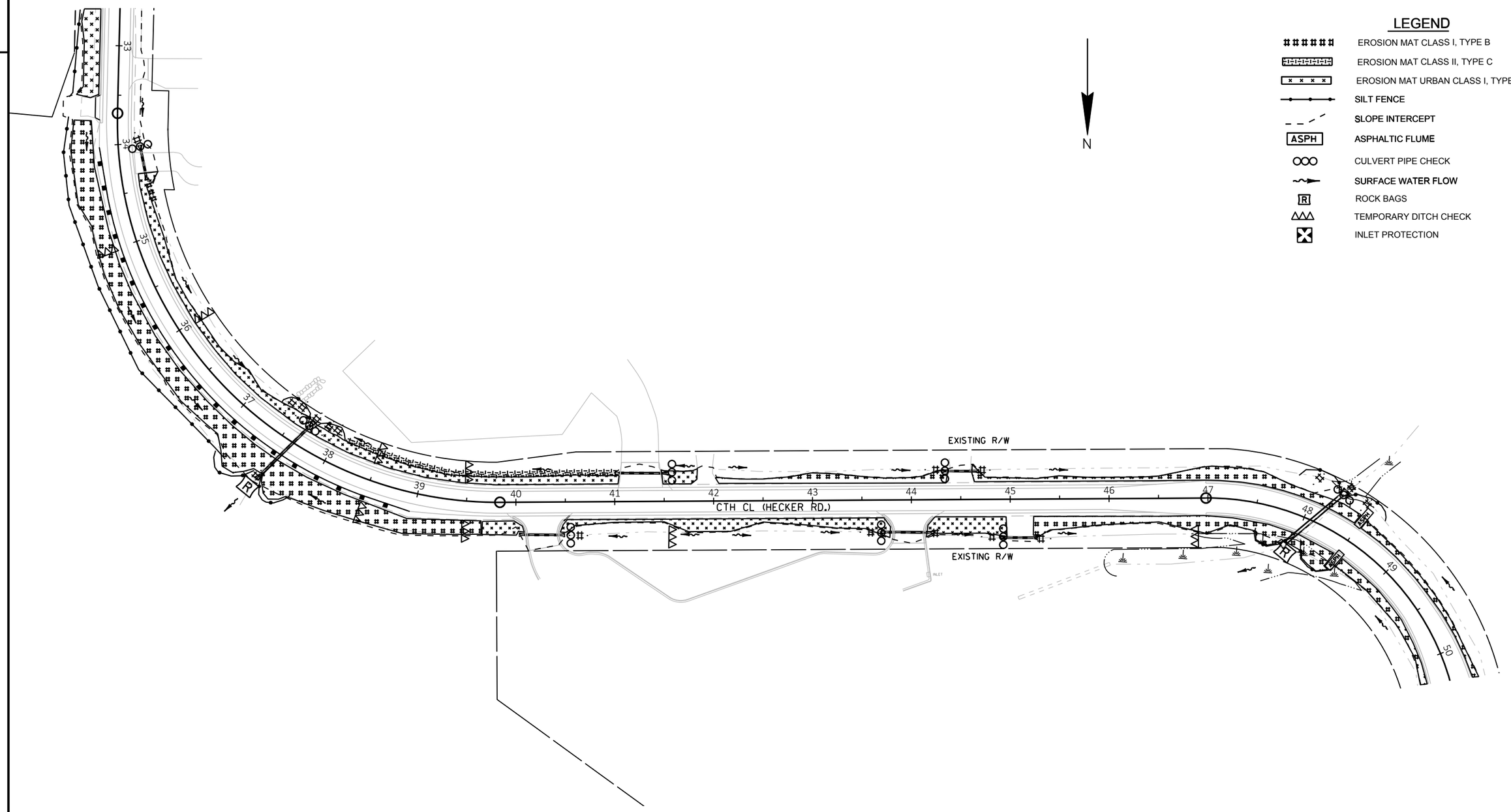

2

PROJECT NO: 4991-00-96	HWY: CTH CL	COUNTY: MANITOWOC	EROSION CONTROL	SHEET 13	E

FILE NAME : V:\TRANS-GB\450432 CTH CL\C3D\SHEETSPLAN\022002 EC.DWG
LAYOUT NAME - 022002 ec
PLOT DATE : 7/19/2019 9:02 AM
PLOT BY : SOUFAL, KEVIN
PLOT NAME :
PLOT SCALE : 1 IN:100 FT
WISDOT/CADDS SHEET 42

LEGEND

- EROSION MAT CLASS I, TYPE B
- EROSION MAT CLASS II, TYPE C
- EROSION MAT URBAN CLASS I, TYPE A
- SILT FENCE
- SLOPE INTERCEPT
- ASPH — ASPHALTIC FLUME
- CULVERT PIPE CHECK
- SURFACE WATER FLOW
- R — ROCK BAGS
- TEMPORARY DITCH CHECK
- INLET PROTECTION

N

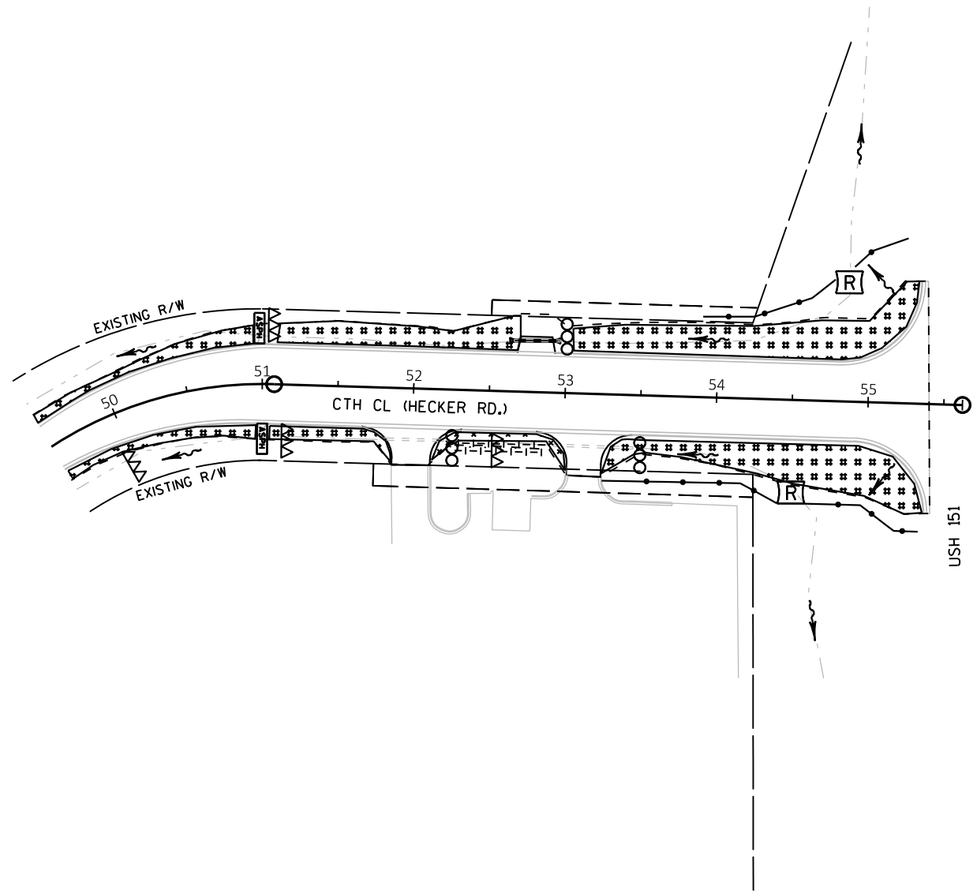

PROJECT NO: 4991-00-96	HWY: CTH CL	COUNTY: MANITOWOC	EROSION CONTROL	SHEET 14	E

FILE NAME : V:\TRANS-GB\450432 CTH CL\C3D\SHEETSPLAN\022003 EC.DWG
LAYOUT NAME - 022003 ec
PLOT DATE : 7/19/2019 9:03 AM PLOT BY : SOUFAL, KEVIN PLOT NAME : PLOT SCALE : 1 IN:100 FT

2

SIGNING NOTES

WHEN AN EXISTING STOP SIGN AND SUPPORT IS TO BE REMOVED AND A NEW STOP SIGN AND SUPPORT ERECTED THE WORK SHALL BE DONE CONCURRENTLY. FOR OTHER SIGNS AND SUPPORTS THAT ARE TO BE REMOVED AND NEW SIGNS AND SUPPORTS ERECTED, THE REMOVAL OF THE EXISTING SIGN/SUPPORT AND ERECTION OF THE NEW SIGN/SUPPORT SHOULD BE DONE AS CONCURRENTLY AS POSSIBLE. IN NO CASE SHALL A NEW SIGN/SUPPORT BE DOWN FOR MORE THAN 24 HOURS AND THERE SHALL NOT BE MORE THAN ONE SIGN OF THE SAME LEGEND MISSING IN A ROW.

WOOD POSTS SIZES, FOR TYPE II SIGNING, ARE ESTIMATED LENGTHS AND THE ACTUAL LENGTH WILL BE DETERMINED IN THE FIELD.

MULTIPLE TYPE II SIGNS MOUNTED TOGETHER, STACKED OR BACK TO BACK, WILL BE PAID AS ONE (1) SIGN REMOVAL.

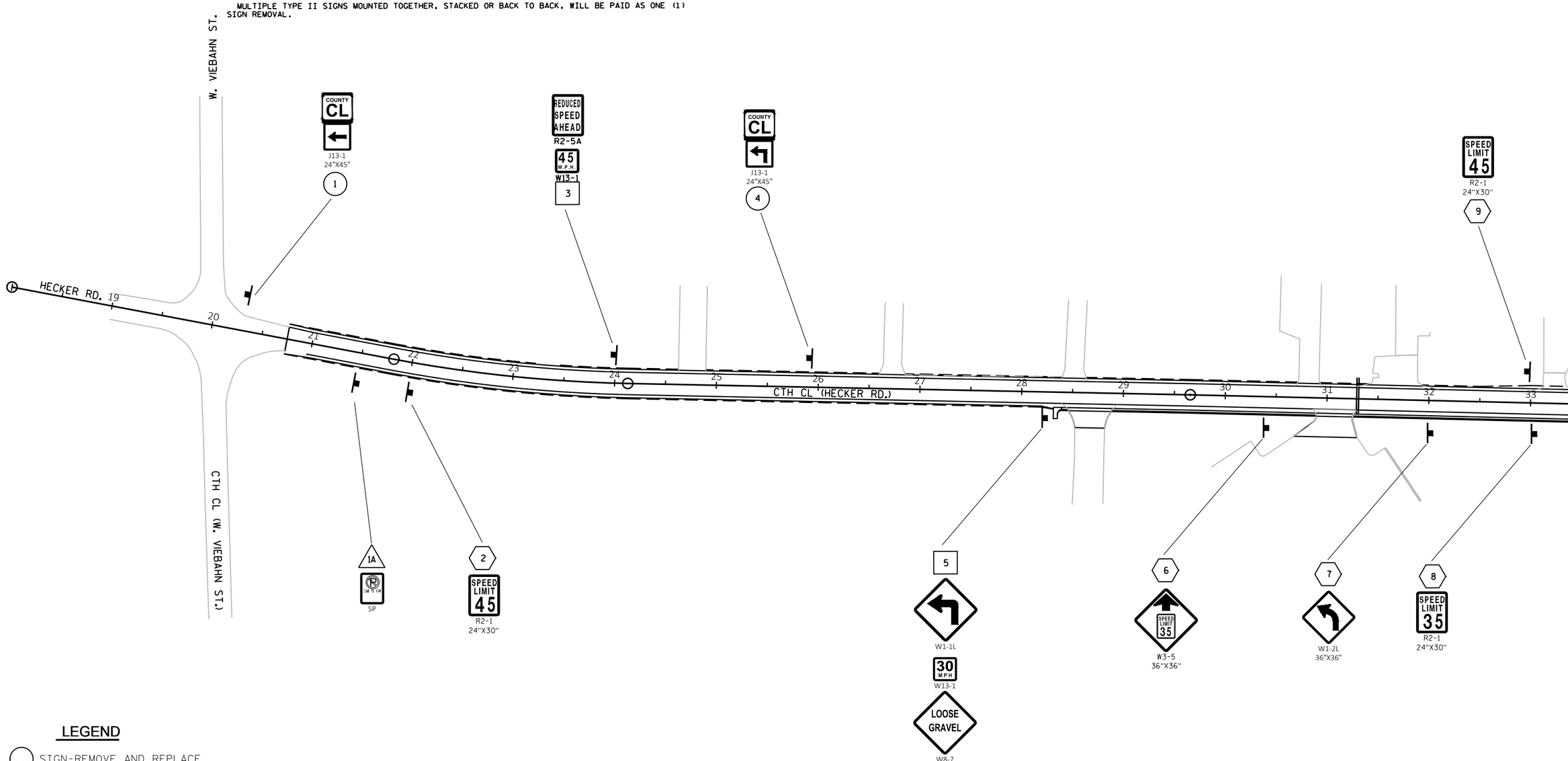

LEGEND

- SIGN-REMOVE AND REPLACE
- SIGN-REMOVE EXISTING
- SIGN-PLACE NEW
- SIGN-MOVE FOR CONSTRUCTION RE-INSTALL IN SAME LOCATION

SHEET 1 OF 3 TYPE II SIGNING

PROJECT NO: 4991-00-96	HWY: CTH CL	COUNTY: MANITOWOC	PERMANENT SIGNING	SHEET 15	E

SIGNING NOTES

WHEN AN EXISTING STOP SIGN AND SUPPORT IS TO BE REMOVED AND A NEW STOP SIGN AND SUPPORT ERECTED THE WORK SHALL BE DONE CONCURRENTLY. FOR OTHER SIGNS AND SUPPORTS THAT ARE TO BE REMOVED AND NEW SIGNS AND SUPPORTS ERECTED, THE REMOVAL OF THE EXISTING SIGN/SUPPORT AND ERECTION OF THE NEW SIGN/SUPPORT SHOULD BE DONE AS CONCURRENTLY AS POSSIBLE. IN NO CASE SHALL A NEW SIGN/SUPPORT BE DOWN FOR MORE THAN 24 HOURS AND THERE SHALL NOT BE MORE THAN ONE SIGN OF THE SAME LEGEND MISSING IN A ROW.

WOOD POSTS SIZES, FOR TYPE II SIGNING, ARE ESTIMATED LENGTHS AND THE ACTUAL LENGTH WILL BE DETERMINED IN THE FIELD.

MULTIPLE TYPE II SIGNS MOUNTED TOGETHER, STACKED OR BACK TO BACK, WILL BE PAID AS ONE (1) SIGN REMOVAL.

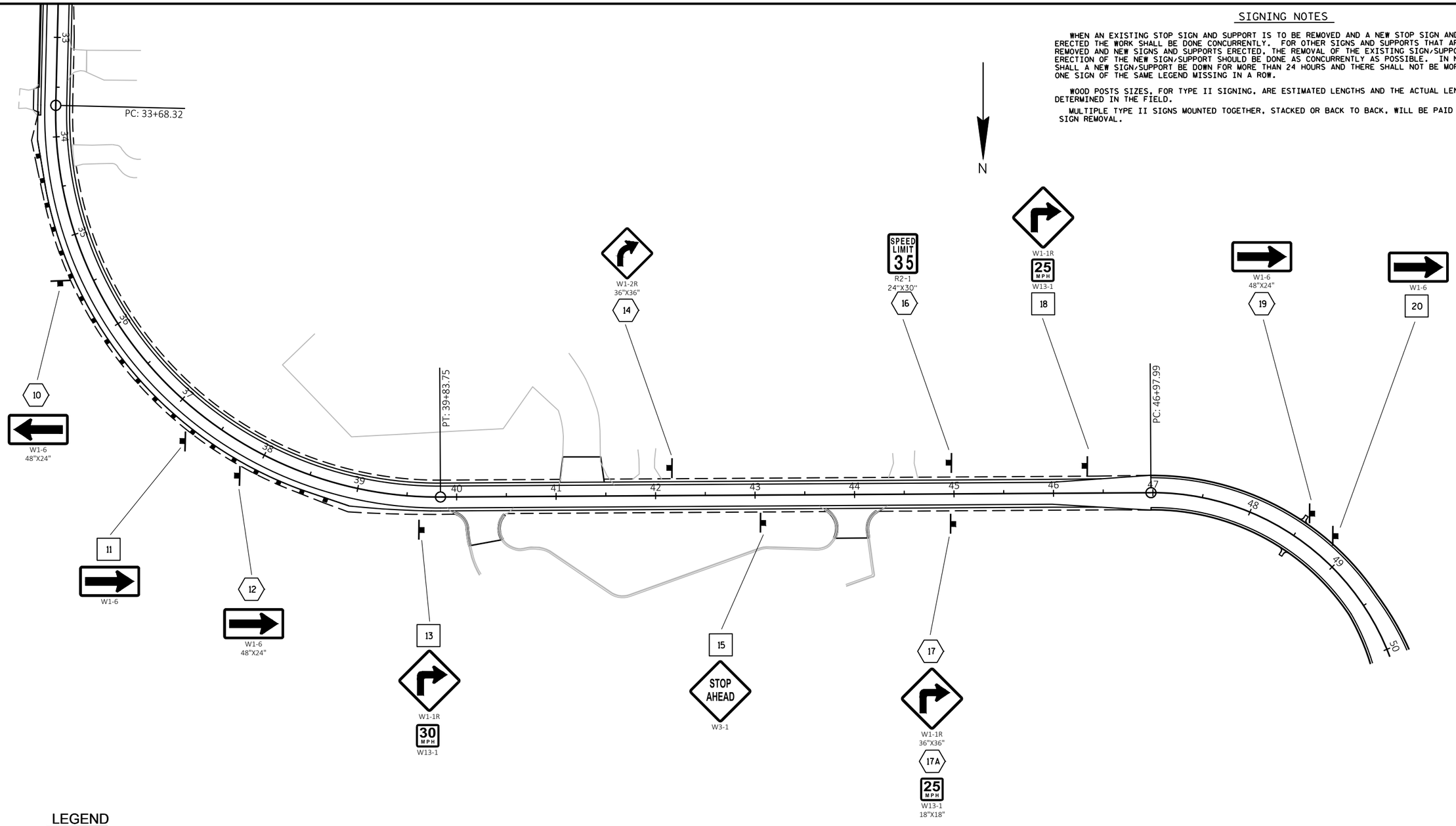

LEGEND

- (---) SIGN-REMOVE AND REPLACE
- [---] SIGN-REMOVE EXISTING
- ⟨---⟩ SIGN-PLACE NEW
- △--- SIGN-MOVE FOR CONSTRUCTION RE-INSTALL IN SAME LOCATION

SHEET 2 OF 3 TYPE II SIGNING

PROJECT NO: 4991-00-96	HWY: CTH CL	COUNTY: MANITOWOC	PERMANENT SIGNING	SHEET 16	E

SIGNING NOTES

WHEN AN EXISTING STOP SIGN AND SUPPORT IS TO BE REMOVED AND A NEW STOP SIGN AND SUPPORT ERECTED THE WORK SHALL BE DONE CONCURRENTLY. FOR OTHER SIGNS AND SUPPORTS THAT ARE TO BE REMOVED AND NEW SIGNS AND SUPPORTS ERECTED, THE REMOVAL OF THE EXISTING SIGN/SUPPORT AND ERECTION OF THE NEW SIGN/SUPPORT SHOULD BE DONE AS CONCURRENTLY AS POSSIBLE. IN NO CASE SHALL A NEW SIGN/SUPPORT BE DOWN FOR MORE THAN 24 HOURS AND THERE SHALL NOT BE MORE THAN ONE SIGN OF THE SAME LEGEND MISSING IN A ROW.

WOOD POSTS SIZES, FOR TYPE II SIGNING, ARE ESTIMATED LENGTHS AND THE ACTUAL LENGTH WILL BE DETERMINED IN THE FIELD.

MULTIPLE TYPE II SIGNS MOUNTED TOGETHER, STACKED OR BACK TO BACK, WILL BE PAID AS ONE (1) SIGN REMOVAL.

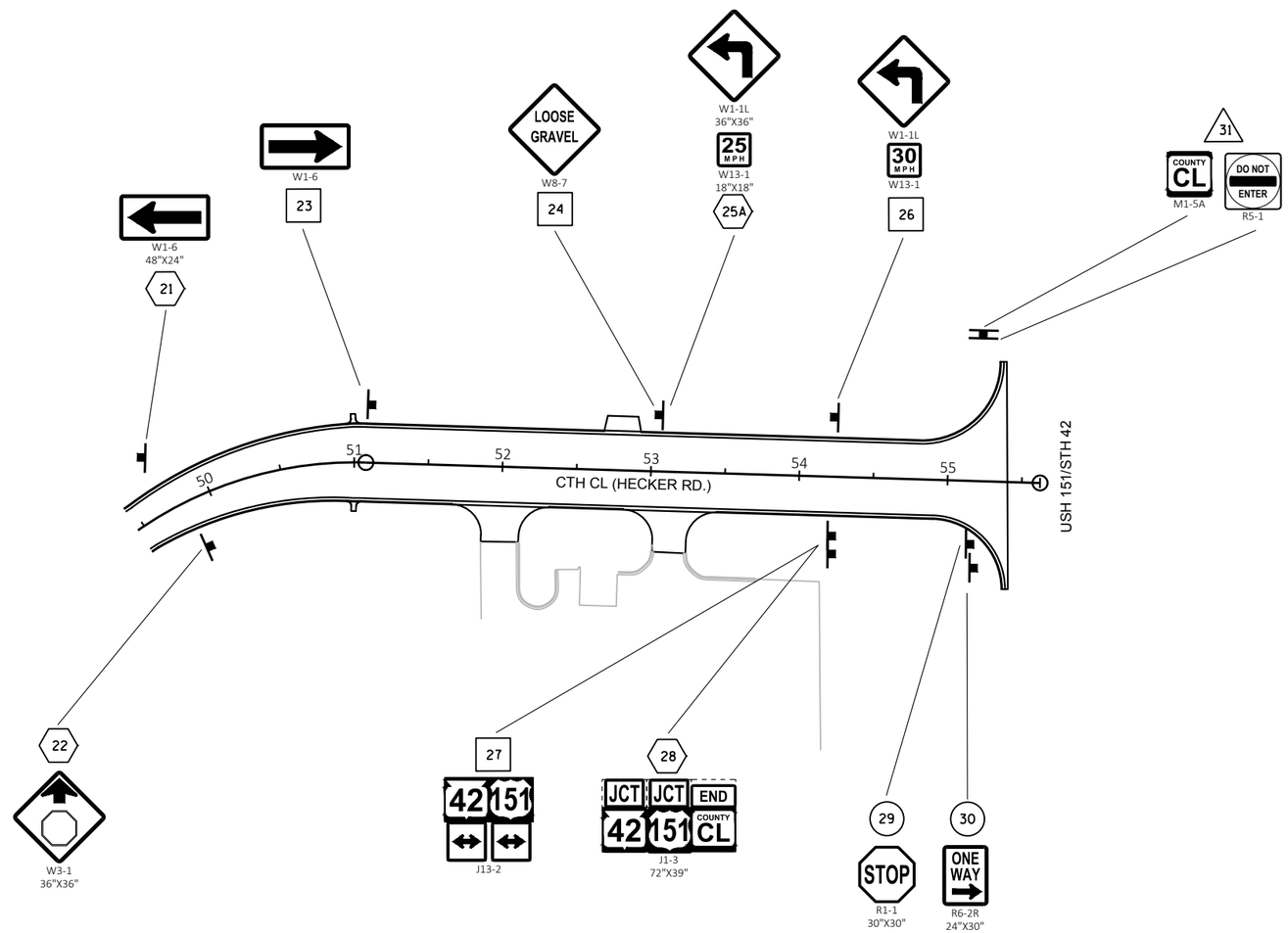

LEGEND

- SIGN-REMOVE AND REPLACE
- SIGN-REMOVE EXISTING
- SIGN-PLACE NEW
- SIGN-MOVE FOR CONSTRUCTION RE-INSTALL IN SAME LOCATION

SHEET 3 OF 3 TYPE II SIGNING

PROJECT NO: 4991-00-96	HWY: CTH CL	COUNTY: MANITOWOC	PERMANENT SIGNING	SHEET 17	E

Estimate Of Quantities

4991-00-97

Line	Item	Item Description	Unit	Total	Qty
0002	203.0100	Removing Small Pipe Culverts	EACH	17.000	17.000
0004	204.0100	Removing Pavement	SY	525.000	525.000
0006	204.0150	Removing Curb & Gutter	LF	165.000	165.000
0008	204.0165	Removing Guardrail	LF	606.000	606.000
0010	205.0100	Excavation Common	CY	3,504.000	3,504.000
0012	208.0100	Borrow	CY	1,274.000	1,274.000
0014	208.1100	Select Borrow	CY	2,080.000	2,080.000
0016	213.0100	Finishing Roadway (project) 01. 4991-00-97	EACH	1.000	1.000
0018	305.0110	Base Aggregate Dense 3/4-Inch	TON	530.000	530.000
0020	305.0120	Base Aggregate Dense 1 1/4-Inch	TON	4,345.000	4,345.000
0022	325.0100	Pulverize and Relay	SY	8,160.000	8,160.000
0024	416.0160	Concrete Driveway 6-Inch	SY	290.000	290.000
0026	416.0260	Concrete Driveway HES 6-Inch	SY	205.000	205.000
0028	455.0605	Tack Coat	GAL	755.000	755.000
0030	460.2000	Incentive Density HMA Pavement	DOL	2,320.000	2,320.000
0032	460.5223	HMA Pavement 3 LT 58-28 S	TON	1,625.000	1,625.000
0034	460.5224	HMA Pavement 4 LT 58-28 S	TON	1,265.000	1,265.000
0036	465.0120	Asphaltic Surface Driveways and Field Entrances	TON	55.000	55.000
0038	465.0315	Asphaltic Flumes	SY	25.000	25.000
0040	521.1018	Apron Endwalls for Culvert Pipe Steel 18-Inch	EACH	28.000	28.000
0042	521.3118	Culvert Pipe Corrugated Steel 18-Inch	LF	530.000	530.000
0044	522.0124	Culvert Pipe Reinforced Concrete Class III 24-Inch	LF	64.000	64.000
0046	522.0424	Culvert Pipe Reinforced Concrete Class IV 24-Inch	LF	76.000	76.000
0048	522.0448	Culvert Pipe Reinforced Concrete Class IV 48-Inch	LF	73.000	73.000
0050	522.1012	Apron Endwalls for Culvert Pipe Reinforced Concrete 12-Inch	EACH	1.000	1.000
0052	522.1024	Apron Endwalls for Culvert Pipe Reinforced Concrete 24-Inch	EACH	4.000	4.000
0054	522.1048	Apron Endwalls for Culvert Pipe Reinforced Concrete 48-Inch	EACH	2.000	2.000
0056	601.0411	Concrete Curb & Gutter 30-Inch Type D	LF	1,736.000	1,736.000
0058	601.0557	Concrete Curb & Gutter 6-Inch Sloped 36-Inch Type D	LF	455.000	455.000
0060	608.0412	Storm Sewer Pipe Reinforced Concrete Class IV 12-Inch	LF	35.000	35.000
0062	611.0627	Inlet Covers Type HM	EACH	1.000	1.000
0064	611.3230	Inlets 2x3-FT	EACH	1.000	1.000
0066	614.2300	MGS Guardrail 3	LF	337.500	337.500
0068	614.2610	MGS Guardrail Terminal EAT	EACH	2.000	2.000
0070	619.1000	Mobilization	EACH	1.000	1.000
0072	624.0100	Water	MGAL	79.000	79.000
0074	625.0100	Topsoil	SY	17,500.000	17,500.000

Line	Item	Item Description	Unit	Total	Qty
0076	627.0200	Mulching	SY	1,000.000	1,000.000
0078	628.1504	Silt Fence	LF	3,050.000	3,050.000
0080	628.1520	Silt Fence Maintenance	LF	6,100.000	6,100.000
0082	628.1905	Mobilizations Erosion Control	EACH	4.000	4.000
0084	628.1910	Mobilizations Emergency Erosion Control	EACH	2.000	2.000
0086	628.2004	Erosion Mat Class I Type B	SY	9,795.000	9,795.000
0088	628.2006	Erosion Mat Urban Class I Type A	SY	6,730.000	6,730.000
0090	628.2027	Erosion Mat Class II Type C	SY	975.000	975.000
0092	628.7005	Inlet Protection Type A	EACH	1.000	1.000
0094	628.7015	Inlet Protection Type C	EACH	6.000	6.000
0096	628.7504	Temporary Ditch Checks	LF	220.000	220.000
0098	628.7555	Culvert Pipe Checks	EACH	110.000	110.000
0100	628.7570	Rock Bags	EACH	40.000	40.000
0102	629.0210	Fertilizer Type B	CWT	12.000	12.000
0104	630.0120	Seeding Mixture No. 20	LB	275.000	275.000
0106	630.0140	Seeding Mixture No. 40	LB	145.000	145.000
0108	630.0200	Seeding Temporary	LB	275.000	275.000
0110	630.0300	Seeding Borrow Pit	LB	40.000	40.000
0112	630.0500	Seed Water	MGAL	425.000	425.000
0114	633.5200	Markers Culvert End	EACH	7.000	7.000
0116	634.0614	Posts Wood 4x6-Inch X 14-FT	EACH	3.000	3.000
0118	634.0616	Posts Wood 4x6-Inch X 16-FT	EACH	16.000	16.000
0120	637.2210	Signs Type II Reflective H	SF	64.680	64.680
0122	637.2230	Signs Type II Reflective F	SF	90.500	90.500
0124	638.2102	Moving Signs Type II	EACH	4.000	4.000
0126	638.2602	Removing Signs Type II	EACH	15.000	15.000
0128	638.3000	Removing Small Sign Supports	EACH	15.000	15.000
0130	642.5001	Field Office Type B	EACH	1.000	1.000
0132	643.0300	Traffic Control Drums	DAY	1,885.000	1,885.000
0134	643.0420	Traffic Control Barricades Type III	DAY	496.000	496.000
0136	643.0705	Traffic Control Warning Lights Type A	DAY	812.000	812.000
0138	643.0715	Traffic Control Warning Lights Type C	DAY	140.000	140.000
0140	643.0900	Traffic Control Signs	DAY	2,012.000	2,012.000
0142	643.1050	Traffic Control Signs PCMS	DAY	14.000	14.000
0144	643.5000	Traffic Control	EACH	1.000	1.000
0146	646.1020	Marking Line Epoxy 4-Inch	LF	13,900.000	13,900.000
0148	646.6120	Marking Stop Line Epoxy 18-Inch	LF	24.000	24.000
0150	646.8120	Marking Curb Epoxy	LF	20.000	20.000
0152	650.4000	Construction Staking Storm Sewer	EACH	2.000	2.000
0154	650.4500	Construction Staking Subgrade	LF	852.000	852.000

4991-00-97

Line	Item	Item Description	Unit	Total	Qty
0156	650.5000	Construction Staking Base	LF	1,391.000	1,391.000
0158	650.5500	Construction Staking Curb Gutter and Curb & Gutter	LF	2,275.000	2,275.000
0160	650.6000	Construction Staking Pipe Culverts	EACH	3.000	3.000
0162	650.8000	Construction Staking Resurfacing Reference	LF	2,926.000	2,926.000
0164	650.9910	Construction Staking Supplemental Control (project) 01. 4991-00-97	LS	1.000	1.000
0166	650.9920	Construction Staking Slope Stakes	LF	3,475.000	3,475.000
0168	690.0150	Sawing Asphalt	LF	638.000	638.000
0170	690.0250	Sawing Concrete	LF	150.000	150.000
0172	740.0440	Incentive IRI Ride	DOL	2,640.000	2,640.000
0174	ASP.1T0A	On-the-Job Training Apprentice at $5.00/HR	HRS	300.000	300.000
0176	ASP.1T0G	On-the-Job Training Graduate at $5.00/HR	HRS	600.000	600.000
0178	SPV.0060	Special 01. Salvaging Culvert Pipe	EACH	2.000	2.000
0180	SPV.0060	Special 02. Adjusting Sanitary Manhole Cover	EACH	5.000	5.000
0182	SPV.0060	Special 03. Adjusting Water Valve Box	EACH	8.000	8.000
0184	SPV.0090	Special 01. Concrete Curb & Gutter 6-Inch Sloped 36-Inch HES Type D	LF	85.000	85.000
0186	SPV.0090	Special 02. Concrete Curb & Gutter Integral 6-Inch Sloped 36-Inch HES	LF	20.000	20.000
0188	SPV.0090	Special 03. Concrete Curb & Gutter 24-Inch Type D	LF	140.000	140.000

3

EARTHWORK SUMMARY

Division	From/To Station	Location	Excavation Common (1)	(item # 205.0100)	Unusable Pavement Material (4)	Available Material (5)	Expanded EBS Backfill (11) (item #208.1100)	Unexpanded Fill	Expanded Fill (13)	Mass Ordinate +/- (14)	Borrow	Comment:
			Cut	EBS Excavation (3)			Factor 1.30		Factor 1.30		(item #208.0100)	
1	20+75 - 55+00	CTH CL	1,904	0	184	1,720	0	2,303	2,994	-1,274	1,274	
	24+12.88 - 31+50	CTH CL	0	1,200	0	0	1,560	0	0	0	0	
		UNDISTRIBUTED	0	400	0	0	520	0	0	0	0	
Division 1 Total			1,904	1,600	184	1,720	2,080	2,303	2,994	-1,274	1,274	
			Total Common Exc	3,504								

1) Excavation Common is the sum of the Cut and EBS Excavation columns. Item number 205.0100
2) Existing asphalt and asphalt driveways is included in Cut.
3) EBS Excavation to be backfilled with Select Borrow material.
4) Unusable Pavement Material not shown in cross sections.
5) Available Material = Cut - Unusable Pavement Material
11) Expanded EBS Backfill - This is to be backfilled with Select Borrow material. EBS Backfill Factor = 1.3 Expanded EBS Backfill = EBS Excavation * Backfill Factor
13) Expanded Fill Factor = 1.3 Expanded Fill = Unexpanded Fill * Fill Factor
14) The Mass Ordinate + or - Qty calculated for the Division. Plus quantity indicates an excess of material within the Division. Minus indicates a shortage of material within the Division.

REMOVING SMALL PIPE CULVERTS

STATION	LOCATION	203.0100 REMOVING SMALL PIPE CULVERTS EACH	SPV.0060.01 SALVAGING CULVERT PIPE EACH	DESCRIPTION
22+52	CTH CL	-	1	24" CMP
23+25	CTH CL, LT	1	-	18" CMP
24+75	CTH CL, LT	1	-	18" CMP
26+75	CTH CL, LT	1	-	18" CMP
28+50	CTH CL, LT	1	-	18" CMP
28+75	CTH CL, RT	1	-	12" CMP
30+75	CTH CL, LT	1	-	18" CMP
31+00	CTH CL, RT	1	-	12" CMP
31+75	CTH CL, LT	1	-	18" CMP
34+25	CTH CL, LT	1	-	18" CMP
37+63	CTH CL	-	1	24" CMP
40+25	CTH CL, RT	1	-	18" CMP
41+25	CTH CL, LT	1	-	18" CMP
44+00	CTH CL, RT	1	-	18" CMP
44+50	CTH CL, LT	1	-	18" CMP
48+12	CTH CL	1	-	48" CMP
52+00	CTH CL, RT	1	-	18" CMP
52+75	CTH CL, LT	1	-	18" CMP
53+10	CTH CL, RT	1	-	18" CMP
TOTAL		17	2	

REMOVING PAVEMENT

STATION	LOCATION	204.0100 SY
24+75	CTH CL, LT	75
26+75	CTH CL, LT	50
28+25	CTH CL, LT	55
30+75	CTH CL, LT	60
31+00	CTH CL, RT	130
34+25	CTH CL, LT	50
41+25	CTH CL, LT	105
TOTAL		525

REMOVING CURB & GUTTER

STATION	LOCATION	204.0150 LF	DESCRIPTION
31+26	CTH CL, RT	25	CE
40+25	CTH CL, RT	70	CE
44+00	CTH CL, RT	70	CE
TOTAL		165	

REMOVING GUARDRAIL

STATION	TO	STATION	LOCATION	204.0165 LF
33+76	-	39+82	CTH CL, RT	606
TOTAL				606

3

3

BASE AGGREGATE DENSE AND WATER

STATION	TO	STATION	LOCATION	305.0110 3/4-INCH TON	305.0120 1 1/4-INCH TON	624.0100 WATER MGAL	REMARKS
20+75	-	46+98	CTH CL, LT	210	565	8	SHOULDER
20+75	-	28+39	CTH CL, RT	45	140	2	SHOULDER
24+12	-	31+50	CTH CL	0	265	3	EBS*
28+39	-	33+78	CTH CL, RT	-	90	1	CURB & GUTTER
33+78	-	46+98	CTH CL, RT	160	370	5	SHOULDER
20+75	-	46+98	CTH CL	-	-	30	PULVERIZE & RELAY
46+98	-	55+40	CTH CL	20	2,915	30	RECONSTRUCT
ENTIRE PROJECT			FIELD ENTRANCES	95	-	-	
TOTALS				530	4,345	79	

* ADDITIONAL 2" BASE AGGREGATE DENSE TO BE MIXED WITH PULVERIZED MATERIAL IN EBS LOCATIONS.

PULVERIZE & RELAY

STATION	TO	STATION	LOCATION	325.0100 SY
20+75	-	46+98	CTH CL	8,160
TOTAL				8,160

3

CONCRETE DRIVEWAY

STATION	LOCATION	416.0160 6-INCH SY	416.0260 HES 6-INCH SY
24+75	CTH CL, LT	75	-
26+75	CTH CL, LT	50	-
28+25	CTH CL, LT	55	-
30+75	CTH CL, LT	60	-
31+00	CTH CL, RT	-	100
34+25	CTH CL, LT	50	-
41+25	CTH CL, LT	-	105
TOTAL		290	205

HMA PAVEMENT ITEMS

STATION	TO	STATION	LOCATION	455.0605 TACK COAT GAL	460.5223 HMA PAVEMENT 3 LT 58-28 S TON	460.5224 HMA PAVEMENT 4 LT 58-28 S TON	465.0120 ASPHALTIC SURFACE DRIVEWAYS AND FIELD ENTRANCES TON
20+75	-	46+98	CTH CL	515	1,105	860	30
46+98	-	55+40	CTH CL	240	520	405	25
TOTALS				755	1,625	1,265	55

ASPHALTIC FLUMES

STATION	LOCATION	465.0315 SY
28+30	CTH CL, RT	5
48+50	CTH CL, LT	5
48+50	CTH CL, RT	5
51+00	CTH CL, LT	5
51+00	CTH CL, RT	5
TOTAL		25

CONCRETE CURB AND CURB & GUTTER

STATION	TO	STATION	LOCATION	601.0411 30-INCH TYPE D LF	601.0557 6-INCH SLOPED 36-INCH TYPE D LF	SPV.0090.01 6-INCH SLOPED 36-INCH HES TYPE D LF	SPV.0090.02 INTEGRAL 6-INCH SLOPED 36-INCH HES LF	SPV.0090.03 24-INCH TYPE D LF	DESCRIPTION
28+39	-	33+78	CTH CL, RT	-	455	85	-	-	
46+98	-	55+34	CTH CL, LT	899	-	-	-	-	
46+98	-	55+39	CTH CL, RT	837	-	-	-	-	
	31+26		CTH CL, RT	-	-	-	20	-	CE
	40+25		CTH CL, RT	-	-	-	-	70	CE
	44+00		CTH CL, RT	-	-	-	-	70	CE
TOTALS				1,736	455	85	20	140	

MGS GUARDRAIL

STATION	TO	STATION	LOCATION	614.2300 GUARDRAIL 3 LF	614.2610 TERMINAL EAT EACH
34+01.9	-	38+45.7	CTH CL, RT	337.5	2
TOTALS				337.5	2

3

CULVERT PIPES AND ENDWALLS

STATION	LOCATION	521.3118 CULVERT PIPE CORRUGATED STEEL 18-INCH LF	522.0124 CULVERT PIPE REINFORCED CONCRETE CLASS III 24-INCH LF	522.0424 CULVERT PIPE REINFORCED CONCRETE CLASS IV 24-INCH LF	522.0448 CULVERT PIPE REINFORCED CONCRETE CLASS IV 48-INCH LF	521.1018 APRON ENDWALLS CULVERT PIPE STEEL 18-INCH EACH	522.1024 APRON ENDWALLS CULVERT PIPE REINFORCED CONCRETE 24-INCH EACH	522.1048 APRON ENDWALLS CULVERT PIPE REINFORCED CONCRETE 48-INCH EACH	633.5200 MARKERS CULVERT END EACH	THICKNESS STEEL INCH	ELEVATION INLET	ELEVATION OUTLET	END OF PIPE OFFSETS INLET	END OF PIPE OFFSETS OUTLET
22+52	CTH CL	-	64	-	-	-	2	-	2	0.064	689.76	688.13	22+50.6, 30.9' LT	22+56.1, 39.2' RT
23+25	CTH CL, LT	25	-	-	-	2	-	-	-	0.064				
24+75	CTH CL, LT	35	-	-	-	2	-	-	-	0.064				
26+75	CTH CL, LT	25	-	-	-	2	-	-	-	0.064				
28+50	CTH CL, LT	35	-	-	-	2	-	-	-	0.064				
30+75	CTH CL, LT	35	-	-	-	2	-	-	-	0.064				
31+75	CTH CL, LT	50	-	-	-	2	-	-	-	0.064				
34+25	CTH CL, LT	30	-	-	-	2	-	-	-	0.064				
37+63	CTH CL	-	-	76	-	-	2	-	2	-	691.79	689.00	37+70.6, 31.3' LT	37+52.1, 54.9' RT
40+25	CTH CL, RT	45	-	-	-	2	-	-	-	0.064				
41+25	CTH CL, LT	50	-	-	-	2	-	-	-	0.064				
44+00	CTH CL, RT	45	-	-	-	2	-	-	-	0.064				
44+50	CTH CL, LT	30	-	-	-	2	-	-	-	0.064				
48+12	CTH CL	-	-	-	73	-	-	2	2	-	692.58	692.50	48+25.3, 41.2' LT	47+85.4, 38.5' RT
52+00	CTH CL, RT	40	-	-	-	2	-	-	-	0.064				
52+75	CTH CL, LT	30	-	-	-	2	-	-	-	0.064				
53+10	CTH CL, RT	55	-	-	-	2	-	-	-	0.064				
TOTALS		530	64	76	73	28	4	2	6					

NOTES:
-PIPE OFFSETS MEASURED FROM END OF APRON ENDWALL.

STORM SEWER

STATION	LOCATION	608.0412 STORM SEWER PIPE REINFORCED CONCRETE CLASS IV 12-INCH LF	522.1012 APRON ENDWALLS CULVERT PIPE REINFORCED CONCRETE 12-INCH EACH	611.0627 INLET COVERS TYPE HM EACH	611.3230 INLETS 2X3-FT EACH	633.5200 MARKERS CULVERT END EACH	ELEVATIONS GRATE	ELEVATIONS INVERT	ELEVATIONS ENDWALL	STRUCTURE OFFSETS INLET	STRUCTURE OFFSETS OUTLET	STRUCTURE DEPTH FT
31+30	CTH CL, RT	35	1	1	1	1	703.27	700.54	700.35	18' RT	23.4' LT	2.1
TOTALS		35	1	1	1	1						

NOTES:
-STRUCTURE OFFSETS MEASURED TO BACK OF CURB FOR INLETS, END OF APRON ENDWALL.
-GRATE ELEVATION IS FIGURED TO FLOWLINE FOR INLETS.
-ENDWALL ELEVATION IS FIGURED TO INVERT OF ENDWALL.
-STRUCTURE DEPTHS COMPUTED WITH A MINIMUM OF 6-INCHES ADJUTMENT TO COVERS.

3

TOPSOIL, MULCHING, FERTILIZER, AND SEED

STATION	TO	STATION	LOCATION	625.0100 TOPSOIL SY	627.0200 MULCHING SY	629.0210 FERTILIZER, TYPE B CWT	630.0120 SEEDING MIXTURE NO. 20 LB	630.0140 SEEDING MIXTURE NO. 40 LB	630.0200 SEEDING TEMPORARY LB	630.0300 SEEDING BORROW PIT LB	630.0500 SEED WATER MGAL
20+75	-	27+10	CTH CL, RT	1,515	-	1.0	40	-	40	-	35
27+10	-	34+04	CTH CL, RT	1,490	-	1.0	-	30	-	-	35
34+04	-	39+40	CTH CL, RT	2,170	-	1.4	60	-	60	-	50
39+40	-	45+45	CTH CL, RT	1,165	-	0.8	-	20	-	-	25
45+45	-	51+03	CTH CL, RT	695	-	0.5	20	-	20	-	15
51+03	-	53+62	CTH CL, RT	275	-	0.2	-	5	-	-	5
53+62	-	55+50	CTH CL, RT	645	-	0.4	20	-	20	-	15
20+75	-	22+50	CTH CL, LT	605	-	0.4	20	-	20	-	15
22+50	-	42+25	CTH CL, LT	3,230	-	2.0	-	60	-	-	75
42+25	-	55+50	CTH CL, LT	2,205	-	1.4	60	-	60	-	50
BORROW SITE				-	1,000	0.6	-	-	-	30	25
UNDISTRIBUTED				3,505	-	2.3	55	30	55	10	80
TOTALS				17,500	1,000	12.0	275	145	275	40	425

SILT FENCE

STATION	TO	STATION	LOCATION	628.1504 SILT FENCE LF	628.1520 MAINTENANCE LF
22+00	-	23+00	CTH CL, LT & RT	200	400
23+00	-	26+00	CTH CL, RT	300	600
29+00	-	37+00	CTH CL, RT	800	1600
37+00	-	38+00	CTH CL, LT & RT	200	400
47+50	-	48+50	CTH CL, LT & RT	200	400
53+50	-	55+40	CTH CL, RT	300	600
54+00	-	55+40	CTH CL, LT	300	600
BORROW PIT				300	600
UNDISTRIBUTED				450	900
TOTALS				3,050	6,100

3

TEMPORARY DITCH CHECKS

STATION	TO	STATION	LOCATION	628.7504 EACH
20+75	-	46+98	CTH CL, LT & RT	160
46+98	-	55+40	CTH CL, LT & RT	40
UNDISTRIBUTED				20
TOTAL				220

EROSON MAT

STATION	TO	STATION	LOCATION	628.2004 CLASS I TYPE B SY	628.2006 URBAN CLASS I TYPE A SY	628.2027 CLASS II TYPE C SY
20+75	-	27+10	CTH CL, RT	1,515	-	-
27+10	-	34+04	CTH CL, RT	-	1,490	-
34+04	-	39+40	CTH CL, RT	2,170	-	-
39+40	-	45+45	CTH CL, RT	-	1,165	-
45+45	-	51+03	CTH CL, RT	695	-	-
51+03	-	53+62	CTH CL, RT	-	240	35
53+62	-	55+50	CTH CL, RT	645	-	-
20+75	-	22+50	CTH CL, LT	605	-	-
22+50	-	42+25	CTH CL, LT	-	2,490	745
42+25	-	55+40	CTH CL, LT	2,205	-	-
UNDISTRIBUTED				1,960	1,345	195
TOTALS				9,795	6,730	975

MOBILIZATIONS EROSION CONTROL

LOCATION	628.1905 MOBILIZATIONS EROSION CONROL EACH	628.1910 MOBILIZATIONS EMERGENCY EROSION CONTROL EACH
CTH CL	4	2
TOTALS	4	2

CULVERT PIPE DITCH CHECKS

STATION	TO	STATION	LOCATION	628.7555 EACH
20+75	-	46+98	CTH CL, LT & RT	75
46+98	-	55+40	CTH CL, LT & RT	20
UNDISTRIBUTED				15
TOTAL				110

INLET PROTECTION

STATION	LOCATION	628.7005 TYPE A EACH	628.7015 TYPE C EACH
28+94	CTH CL, RT	1	1
	CALUMET AVE, MEDIAN	-	2
	UNDISTRIBUTED	-	3
TOTALS		1	6

ROCK BAGS

STATION	LOCATION	628.7570 EACH
37+50	CTH CL, RT	5
48+00	CTH CL, RT	5
54+50	CTH CL, RT	5
55+00	CTH CL, LT	5
UNDISTRIBUTED		20
TOTAL		40

3

ERECTION AND REMOVAL OF TYPE II SIGNS AND SUPPORTS

SIGN NO.	LOCATION	SIGN CODE	W X H	637.2210 SIGNS TYPE II REFLECTIVE H S.F.	637.2230 SIGNS TYPE II REFLECTIVE F S.F.	634.0614 POSTS WOOD 4x6x14 EACH	634.0616 POSTS WOOD 4x6x16 EACH	638.2102 MOVING SIGNS TYPE II EACH	638.2602 REMOVING SIGNS TYPE II EACH	638.3000 REMOVING SMALL SIGN SUPPORTS EACH	REMARKS
1	CTH CL	J13-1	24" X 45"	7.50	-	-	1	-	1	1	SEE PLAN SHEET
1A	"	-	- -	-	-	-	-	1	-	-	NO PARKING
2	"	R2-1	24" X 30"	5.00	-	-	1	-	-	-	45 MPH
3	"	W3-5	---	-	-	-	-	-	1	1	
4	"	J13-1	24" X 45"	7.50	-	-	1	-	1	1	SEE PLAN SHEET
5	"	W1-1	---	-	-	-	-	-	1	1	
6	"	W3-5	36" x 36"	-	9.00	-	1	-	-	-	35 MPH
7	"	W1-2L	36" X 36"	-	9.00	-	1	-	-	-	
8	"	R2-1	24" X 30"	5.00	-	-	1	-	-	-	35 MPH
9	"	R2-1	24" X 30"	5.00	-	-	1	-	-	-	45 MPH
10	"	W1-6	48" X 24"	-	8.00	1		-	-	-	
11	"	W1-6	---	-	-	-	-	-	1	1	
12	"	W1-6	48" X 24"	-	8.00	1	-	-	-	-	
13	"	W1-1	---	-	-	-	-	-	1	1	
14	"	W1-2R	36" X 36"	-	9.00	-	1	-	-	-	
15	"	W3-1	---	-	-	-	-	-	1	1	
16	"	R2-1	24" X 30"	5.00	-	-	1	-	-	-	35 MPH
17	"	W1-1R	36" X 36"	-	9.00	1	-	-	-	-	
17A	"	W13-1	18" X 18"	-	2.25	-	-	-	-	-	25 MPH, MOUNT BELOW SIGN 17
18	"	W1-1	---	-	-	-	-	-	1	1	
19	"	W1-6	48" X 24"	-	8.00	-	1	-	-	-	
20	"	W1-6	---	-	-	-	-	-	1	1	
21	"	W1-6	48" X 24"	-	8.00	-	1	-	-	-	
22	"	W3-1	36" X 36"	-	9.00	-	1	-	1	1	
23	"	W1-6	---	-	-	-	-	-	1	1	
24	"	W8-7	---	-	-	-	-	-	1	1	
25	"	W1-1L	36" X 36"	-	9.00	-	1	-	-	-	
25A	"	W13-1	18" X 18"	-	2.25	-	-	-	-	-	25 MPH, MOUNT BELOW SIGN 25
26	"	W1-1	---	-	-	-	-	-	1	1	
27	"	J1-2	---	-	-	-	-	-	1	1	
28	"	J1-3	72" X 39"	19.50	-	-	1	-	-	-	SEE PLAN SHEET
29	"	R1-1	30" X 30"	5.18	-	-	1	-	1	1	
30	"	R6-2R	24" X 30"	5.00	-	-	1	-	1	1	
31	STH 151	-	- -	-	-	-	-	1	-	-	CTH CL / DO NOT ENTER
	Kingdom Hall of Jehovah's Witnesses Driveway	R1-1	- -	-	-	-	-	1	-	-	
	AmericInn Driveway	R1-1	- -	-	-	-	-	1	-	-	
	TOTALS			64.68	90.50	3	16	4	15	15	

3

3

TRAFFIC CONTROL SUMMARY

LOCATION	APPROXIMATE SERVICE DAYS	643.0300 DRUMS NO. IN SERVICE	643.0300 DRUMS DAYS	643.0420 BARRICADES TYPE III NO. IN SERVICE	643.0420 BARRICADES TYPE III DAYS	643.0705 WARNING LIGHTS TYPE A NO. IN SERVICE	643.0705 WARNING LIGHTS TYPE A DAYS	643.0715 WARNING LIGHTS TYPE C NO. IN SERVICE	643.0715 WARNING LIGHTS TYPE C DAYS	643.0900 SIGNS NO. IN SERVICE	643.0900 SIGNS DAYS	643.1050 SIGNS PCMS NO. IN SERVICE	643.1050 SIGNS PCMS DAYS	REMARKS
ADVANCE WARNING														
CTH CL	7	-	-	-	-	-	-			-	-	2	14	BEFORE PROJECT START
CTH CL / VIEBAHN ST	55	-	-	-	-	-	-	-	-	4	220	-	-	ADVANCE WARNING SIGNS
CTH CL / HECKER RD	55	-	-	-	-	-	-	-	-	4	220	-	-	ADVANCE WARNING SIGNS
CTH CL / VIEBAHN STREET	55	-	-	2	110	4	220	-	-	4	220	-	-	SEE BARRICADES AND SIGNS FOR MAINLINE CLOSURES, DETAIL C & E
CTH CL / USH 151	55	-	-	2	110	4	220	-	-	4	220	-	-	SEE BARRICADES AND SIGNS FOR MAINLINE CLOSURES, DETAIL C & E
USH 151, EB & WB	55	-	-	-	-	-	-	-	-	4	220	-	-	ROAD WORK AHEAD, END ROAD WORK
SUBTOTALS			0		220		440		0		1100		14	
RECONSTRUCTION														
CTH CL - STA 46+97	30	-	-	4	120	5	150	-	-	1	30	-	-	SEE BARRICADES AND SIGNS FOR MAINLINE CLOSURES, DETAIL D
CTH CL - STA 55+50	30	-	-	4	120	5	150	-	-	1	30	-	-	SEE BARRICADES AND SIGNS FOR MAINLINE CLOSURES, DETAIL D
USH 151, EB	30	15	450	1	30	2	60	4	120	6	180	-	-	SHOULDER CLOSURE
USH 151, WB	2	10	20	1	2	2	4	-	-	1	2	-	-	TURNING LANE CLOSURE, 25' DRUM SPACING
USH 151, EB	2	20	40	2	4	4	8	10	20	5	10	-	-	TURNING LANE CLOSURE, 25' DRUM SPACING
SUBTOTALS			510		276		372		140		252		0	
PULVERIZE & PAVE														
CTH CL / HECKER ROAD	55	-	-	-	-	-	-	-	-	3	165	-	-	TRAFFIC CONTROL FOR LANE CLOSURE WITH FLAGGING OPERATION
CTH CL / VIEBAHN STREET	55	-	-	-	-	-	-	-	-	3	165	-	-	TRAFFIC CONTROL FOR LANE CLOSURE WITH FLAGGING OPERATION
CTH CL, START LIMITS	55	-	-	-	-	-	-	-	-	3	165	-	-	LOW SHOULDER & UNEVEN LANES, NO PASSING ZONE, NO CENTER STRIPE
CTH CL, END LIMITS	55	-	-	-	-	-	-	-	-	3	165	-	-	LOW SHOULDER & UNEVEN LANES, NO PASSING ZONE, NO CENTER STRIPE
UNDISTRIBUTED	55	25	1,375	-	-	-	-	-	-	-	-	-	-	
SUBTOTALS			1,375		0		0		0		660		0	
TOTALS			1,885		496		812		140		2,012		14	

3

MARKING LINE

STATION	TO	STATION	LOCATION	646.1020 EPOXY 4-INCH WHITE LF	646.1020 EPOXY 4-INCH YELLOW LF	646.6120 STOP LINE EPOXY 18-INCH LF	646.8120 MARKING CURB EPOXY LF	DESCRIPTION
20+75	-	55+40	CTH CL	6,950	6,950	24	-	
	31+26		CTH CL, RT	-	-	-	20	CE
TOTAL				13,900		24	20	

SAWING PAVEMENT

STATION	LOCATION	690.0150 ASPHALT LF	690.0250 CONCRETE LF
12+00	CTH CL	24	-
23+01	CTH CL	324	-
PROJECT LIMITS	DRIVEWAYS	290	150
	TOTALS	638	150

3

CONSTRUCTION STAKING

STATION	TO	STATION	LOCATION	650.4000 STORM SEWER EACH	650.4500 SUBGRADE LF	650.5000 BASE LF	650.5500 CURB, GUTTER, AND CURB AND GUTTER LF	650.6000 PIPE CULVERTS EACH	650.8000 RESURFACING REFERENCE LF	650.9910 SUPPLEMENTAL CONTROL LS	650.9920 SLOPE STAKES LF
20+75	-	46+98	CTH CL	2	-	539	539	2	2,623	1	2,623
46+98	-	55+40	CTH CL	-	852	852	1,736	1	-	-	852
198+68	-	201+71	STH 151	-	-	-	-	-	303	-	-
TOTALS				2	852	1,391	2,275	3	2,926	1	3,475

ADJUSTING SANITARY MANHOLE COVER

CATEGORY	STATION	LOCATION	SPV.0060.02 EACH
0020	23+12	CTH CL	1
0020	27+11	CTH CL	1
0020	31+11	CTH CL	1
0020	34+02	CTH CL	1
0020	35+10	CTH CL	1
	TOTALS		5

ADJUSTING WATER VALVE BOX

CATEGORY	STATION	LOCATION	SPV.0060.03 EACH
0020	25+60	CTH CL, RT	2
0020	29+65	CTH CL, RT	2
0020	51+50	CTH CL, LT	2
0020	54+50	CTH CL, LT	2
	TOTALS		8

R/W PROJECT NUMBER	SHEET NUMBER	TOTAL SHEETS
4991-00-96		
FEDERAL PROJECT NUMBER N/A	4.01	4

PLAT OF RIGHT-OF-WAY REQUIRED FOR

C MANITOWOC, HECKER ROAD

(STH 151-VIEBAHN STREET)

CTH CL MANITOWOC COUNTY

CONSTRUCTION PROJECT NUMBER 4991-00-96

NOTES:

POSITIONS SHOWN ON THIS PLAT ARE WISCONSIN COORDINATE REFERENCE SYSTEM COORDINATES (WISCRS), MANITOWOC COUNTY, NAD83 (2011), IN U.S. SURVEY FEET. VALUES SHOWN ARE GRID COORDINATES, GRID BEARINGS, AND GRID DISTANCES. GRID DISTANCES MAY BE USED AS GROUND DISTANCES.

ALL RIGHT-OF-WAY LINES ARE INTENDED TO RE-ESTABLISH EXISTING RIGHT-OF-WAY LINES AS DETERMINED FROM PREVIOUS PROJECTS, OTHER RECORDED DOCUMENTS, OR FROM CENTERLINE OF EXISTING PAVEMENTS.

RIGHT-OF-WAY BOUNDARIES ARE DEFINED WITH COURSES OF THE PERIMETER OF THE HIGHWAY LANDS REFERENCED TO THE U.S. PUBLIC LAND SURVEY SYSTEM OR OTHER "SURVEYS" OF PUBLIC RECORD.

PROPERTY LINES SHOWN ON THIS PLAT ARE DRAWN FROM DATA DERIVED FROM MAPS AND DOCUMENTS OF PUBLIC RECORD AND/OR EXISTING OCCUPATIONAL LINES. THIS PLAT MAY NOT BE A TRUE REPRESENTATION OF EXISTING PROPERTY LINES, EXCLUDING RIGHT-OF-WAY, AND SHOULD NOT BE USED AS A SUBSTITUTE FOR AN ACCURATE FIELD SURVEY.

EXISTING HIGHWAY RIGHT-OF-WAY SHOWN HEREIN IS BASED ON THE FOLLOWING POINTS OF REFERENCE:

EXISTING HIGHWAY RIGHT OF WAY FOR CTH CL ESTABLISHED FROM PREVIOUS STATE PROJECT ID 1225-01-21, CERTIFIED SURVEY MAPS RECORDED IN VOLUME 31 OF CERTIFIED SURVEY MAPS, PAGE 223, DOCUMENT NO. 1149634, VOLUME 8 OF CERTIFIED SURVEY MAPS, PAGE 307, DOCUMENT NO. 540364, VOLUME 19 OF CERTIFIED SURVEY MAPS, PAGE 291, DOCUMENT NO. 862005, VOLUME 6 OF CERTIFIED SURVEY MAPS, PAGE 171, DOCUMENT NO. 499843 AND VOLUME 16 OF CERTIFIED SURVEY MAPS, PAGE 397, DOCUMENT NO. 791134, AND QUIT CLAIM DEEDS RECORDED ON VOLUME 2157, PAGE 122, DOCUMENT NO. 1006414, VOLUME 2175, PAGE 105, DOCUMENT NO. 1008011 AND VOLUME 2175, PAGE 688, DOCUMENT NO. 1008147.

A **TEMPORARY LIMITED EASEMENT** (TLE) IS A RIGHT FOR CONSTRUCTION PURPOSES, AS DEFINED HEREIN, INCLUDING THE RIGHT TO OPERATE NECESSARY EQUIPMENT THEREON AND THE RIGHT OF INGRESS AND EGRESS, AS LONG AS REQUIRED FOR SUCH PUBLIC PURPOSE, INCLUDING THE RIGHT TO PRESERVE, PROTECT, REMOVE, OR PLANT THEREON ANY VEGETATION THAT THE HIGHWAY AUTHORITIES MAY DEEM NECESSARY OR DESIRABLE. ALL TLES EXPIRE AT THE COMPLETION OF THE CONSTRUCTION PROJECT FOR WHICH THIS INSTRUMENT IS GIVEN.

CONVENTIONAL SYMBOLS

SECTION LINE
QUARTER LINE
SIXTEENTH LINE
NEW REFERENCE LINE
NEW R/W LINE
EXISTING R/W OR HE LINE
PROPERTY LINE
LOT, TIE & OTHER MINOR LINES
SLOPE INTERCEPT
CORPORATE LIMITS
UNDERGROUND FACILITY (COMMUNICATIONS, ELECTRIC, ETC) (TYPE)
NEW R/W (FEE OR HE) (HATCHING VARIES BY OWNER)
TEMPORARY LIMITED EASEMENT AREA
EASEMENT AREA (PERMANENT LIMITED OR RESTRICTED DEVELOPMENT)
TRANSMISSION STRUCTURES
BUILDING — TO BE REMOVED
BRIDGE

SECTION CORNER SYMBOL
SECTION CORNER MONUMENT
R/W MONUMENT (TO BE SET)
NON-MONUMENTED R/W POINT
FOUND IRON PIN (1-INCH UNLESS NOTED)
GEODETIC SURVEY MONUMENT
SIXTEENTH CORNER MONUMENT
SIGN
OFF-PREMISE SIGN

	COMPENSABLE	NON-COMPENSABLE
ELECTRIC POLE		
TELEPHONE POLE		
PEDESTAL (LABEL TYPE) (TV, TEL, ELEC, ETC.)		

ACCESS RESTRICTED BY ACQUISITION
NO ACCESS (BY STATUTORY AUTHORITY)
ACCESS RESTRICTED (BY PREVIOUS PROJECT OR CONTROL)
NO ACCESS (NEW HIGHWAY)
PARCEL NUMBER 25 — UTILITY NUMBER 40
TLE POINT NUMBER 25
PARALLEL OFFSETS

END RELOCATION ORDER
SEGMENT NO. 2
STA. 54+26.03
Y = 293908.381
X = 218341.144
LOCATED 288.83 FEET SOUTH AND 1367.87 FEET WEST OF THE CENTER OF SECTION 35, T 19 N, R 23 E.

END RELOCATION ORDER
SEGMENT NO. 1
STA. 33+07.30
Y = 292877.388
X = 219687.498
LOCATED 1319.82 FEET SOUTH AND 21.52 FEET WEST OF THE CENTER OF SECTION 35, T 19 N, R 23 E.

BEGIN RELOCATION ORDER
SEGMENT NO. 2
STA. 51+75.00
Y = 293657.464
X = 218333.552
LOCATED 539.74 FEET SOUTH AND 1375.47 FEET WEST OF THE CENTER OF SECTION 35, T 19 N, R 23 E.

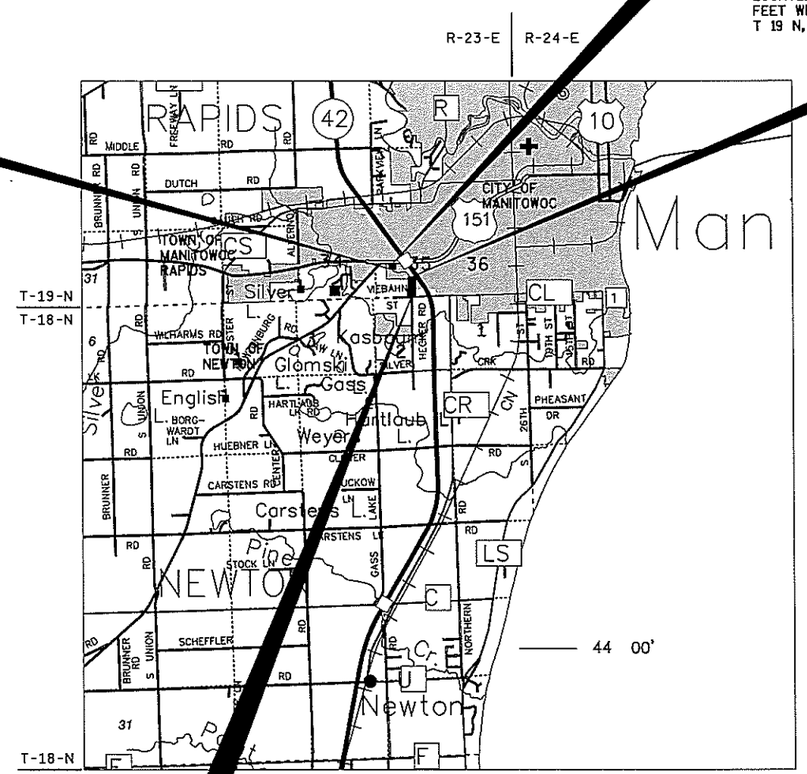

BEGIN RELOCATION ORDER
SEGMENT NO. 1
STA. 21+25.00
Y = 291697.775
X = 219633.900
LOCATED 121.61 FEET NORTH AND 22.85 FEET WEST OF THE SOUTH QUARTER CORNER OF SECTION 35, T 19 N, R 23 E.

TOTAL LENGTH OF RELOCATION ORDER = 0.272 MI.

CONVENTIONAL ABBREVIATIONS

ACCESS RIGHTS	AR	POINT OF CURVATURE	PC
ACRES	AC	POINT OF COMPOUND CURVE	PCC
AHEAD	AH	POINT OF INTERSECTION	PI
ALUMINUM	ALUM	PROPERTY LINE	PL
AND OTHERS	ET AL	RECORDED AS	(100')
BACK	BK	REFERENCE LINE	R/L
BLDG	BLDG	REMAINING	REM
BLOCK	BLK	RIGHT	RT
CENTERLINE	C/L	RIGHT OF WAY	R/W
CERTIFIED SURVEY MAP	CSM	SECTION	SEC
CONCRETE	CONC	SEPTIC VENT	SEPV
COUNTY	CO	SQUARE FEET	SF
COUNTY TRUNK HIGHWAY	CTH	STATE TRUNK HIGHWAY	STH
DISTANCE	DIST	STATION	STA
CORNER	COR	SUBDIVISION	SUBD
DOCUMENT NUMBER	DOC	TANGENT	TAN
EASEMENT	EASE	TELEPHONE PEDESTAL	TP
EXISTING	EX	TEMPORARY LIMITED EASEMENT	TLE
GAS VALVE	GV	TRANSPORTATION PROJECT PLAT	TPP
GRID NORTH	GN	UNITED STATES HIGHWAY	USH
HIGHWAY EASEMENT	HE	VOLUME	V
HOUSE	HSE		
IDENTIFICATION	ID		
LAND CONTRACT	LC		
LEFT	LT		
MONUMENT	MON		
NATIONAL GEODETIC SURVEY	NGS		
NUMBER	NO		
OUTLOT	OL		
PAGE	P		
POINT OF TANGENCY	PT		
PERMANENT LIMITED EASEMENT	PLE		
POINT OF BEGINNING	POB		

CURVE DATA

LONG CHORD	LC
LONG CHORD BEARING	LCB
RADIUS	R
DEGREE OF CURVE	D
CENTRAL ANGLE OR DELTA	Δ
LENGTH OF CURVE	L
TANGENT	T
DIRECTION AHEAD	DA
DIRECTION BACK	DB

ACCEPTED FOR MANITOWOC COUNTY

11/21/2018 (Date) — County Highway Commissioner

ORIGINAL PLAT PREPARED BY

AYRES ASSOCIATES

THIS SURVEY IS PREPARED AT THE REQUEST OF THE COUNTY OF MANITOWOC.

THE FIELD SURVEY WAS PERFORMED IN OCTOBER 2017.

THIS SURVEY IS CORRECT TO THE BEST OF MY KNOWLEDGE AND BELIEF.

WISCONSIN — James R. Cappeart S-3044 Green Bay Wis. — LAND SURVEYOR

(SIGNATURE) James Cappeart
DATE: 11/20/2018
(PRINTED NAME) JAMES R. CAPPEART
(REGISTRATION NUMBER) S-3044

REVISION DATE

E

FILE NAME : V:\TRANS-GB\450432 CTH CL\C3D\RW\040101 RP.DWG PLOT DATE : 11/20/2018 1:23 PM PLOT BY : CAPPEART, JAMES PLOT NAME :

WISDOT/CADDS SHEET 10

SCHEDULE OF LANDS & INTERESTS REQUIRED

OWNER'S NAMES ARE SHOWN FOR REFERENCE PURPOSED ONLY AND ARE SUBJECT TO CHANGE PRIOR TO THE TRANSFER OF LAND INTERESTS TO THE COUNTY.

4

PARCEL NUMBER	SHEET NUMBER	OWNER (S)	INTEREST REQUIRED	R/W REQUIRED ACRES OR S.F. NEW	EXIST	TOTAL	TLE SQUARE FEET
1	4.03	CYNTHIA HAEFKE	TLE	----	----	----	703
2	4.03	BELINDA VAN ZON	TLE	----	----	----	474
3	4.03	LORETTA I. HECKER REVOCABLE TRUST	TLE	----	----	----	813
4	4.03	WAP INVESTMENTS, LLC	TLE	----	----	----	8308
5	4.03	KAREN ROBLEY	TLE	----	----	----	828
6	4.03	JACK AND MARCIA CHRISTIANSEN	TLE	----	----	----	825
7	4.03	CHOU AND AH HER	TLE	----	----	----	1270
8	4.04	MANITOWOC VENTURE LLC	TLE	----	----	----	384
9	4.04	3WC, LLC	TLE	----	----	----	3356
10	4.04	SYLVIA G. EBERHARDT AS TRUSTEE OF THE SYLVIA G. EBERHARDT REVOCABLE LIVING TRUST, et al.	TLE	----	----	----	1759
200	4.04	MANITOWOC PUBLIC UTILITIES	RELEASE	----	----	----	----
201	4.04	AT&T WISCONSIN	RELEASE	----	----	----	----

4

REVISION DATE	DATE 11/05/2018	SCALE, FEET	HWY: CTH CL	STATE R/W PROJECT NUMBER 4991-00-96	PLAT SHEET 4.02	
	GRID FACTOR N/A	NO SCALE	COUNTY: MANITOWOC	CONSTRUCTION PROJECT NUMBER 4991-00-96	PS&E SHEET	E

POSITIONS SHOWN ON THIS PLAT ARE WISCONSIN COORDINATE REFERENCE SYSTEM COORDINATES (WISCRS), MANITOWOC COUNTY, NAD83 (2011), IN U.S. SURVEY FEET. VALUES SHOWN ARE GRID COORDINATES, GRID BEARINGS, AND GRID DISTANCES. GRID DISTANCES MAY BE USED AS GROUND DISTANCES.

TOWN OF NEWTON

TOWN OF CITY OF MANITOWOC RAPIDS

FOUND MAG. NAIL STA. 19+96.36-24.02' LT. Y=291576.162 X=219656.746

FOUND MAG. NAIL STA.20+09.73-45.00' RT. Y=291575.820 X=219586.447

W. VIEBAHN ST.

SE-SW SECTION 35 T19N R23E

SW-SE SECTION 35 T19N R23E

TRACT 3 16 CSM 397 DOC. 791134

STA. 20+00.00 CTH CL= STA. 100+00.00 W. VIERBAHN ST. Y=291341.923 X=219670.344

TRACT 1 6 CSM 171 DOC. 499843

TRACT 6 8 CSM 307 DOC. 540364

TRACT 5 8 CSM 307 DOC. 540364

TRACT 4 8 CSM 307 DOC. 540364

TRACT 3 8 CSM 307 DOC. 540364

CYNTHIA HAEFKE (1) TLE FOR SLOPING

BELINDA VAN ZON (2) TLE FOR SLOPING

LORETTA I. HECKER REVOCABLE TRUST (3) TLE FOR DRIVEWAY CONSTRUCTION

KAREN ROBLEY (5) TLE FOR DRIVEWAY CONSTRUCTION

JACK AND MARCIA CHRISTIANSEN (6) TLE FOR DRIVEWAY CONSTRUCTION

CHOU AND AH HER (7) TLE FOR DRIVEWAY CONSTRUCTION

RUSSELL P. AND SUSAN K. KOCH

HUSSAIN ALTAF

SLOPE INTERCEPTS

SIXTEENTH LINE

PC: 21+81.71

PT: 24+12.88

PI: 29+65.54 Y=292535.717 X=219679.405

PC: 33+68.32

HECKER RD.

R/L=N10°41'11"E

R/L=N89°43'03"E

EXISTING R/W

MPU-ELECTRIC

CTH CL (HECKER RD.)

R/L=N01°09'28"E

ONE-QUARTER LINE N01°08'33"E 2621.56'

R/L=N01°21'25"E

32+08.36 31.31'

AT&T WISCONSIN

WPSC

STA. 20+01.01

N01°08'33"E 272.35'

STA. 23+16.35

CTH CL (W. VIEBAHN ST.)

R/L=N88°20'20"E

VARIES

BEGIN RELOCATION ORDER
STA. 21+25.00
SEGMENT NO. 1
Y=291697.775
X=219633.900

TLE FOR SLOPING

SLOPE INTERCEPTS

TLE FOR SLOPING AND DRIVEWAY CONSTRUCTION

END RELOCATION ORDER
STA. 33+07.30
SEGMENT NO. 1
Y=292877.388
X=219687.498

MANITOWOC HD DEVELOPMENT LLC
LOT 3 AND 4
31 CSM 223
DOC. 1149634

TRACT 1.3
19 CSM 291
DOC. 862005

LOT 2
31 CSM 223
DOC. 1149634

WAP INVESTMENTS, LLC (4)
LOT 1
31 CSM 223
DOC. 1149634

PI STA = 22+97.56
Y = 291867.346
X = 219665.899
DELTA = 9°31'43"
D = 4°07'19"
T = 115.85'
L = 231.17'
R = 1390.00'
PC STA = 21+81.71
Y = 291753.505
X = 219644.416
PT STA = 24+12.88
Y = 291983.173
X = 219668.239
BK = N10°41'11"E
AH = N01°09'28"E

SECTION LINE

IH 43

FOUND MAG. NAIL Y=294197.208 X=219709.018

R/W WIDTH VARIES

MANITOWOC

REVISION DATE	DATE 11/05/2018	SCALE, FEET 0 50 100	HWY: CTH CL	STATE R/W PROJECT NUMBER 4991-00-96	PLAT SHEET 4.03	
	GRID FACTOR N/A		COUNTY: MANITOWOC	CONSTRUCTION PROJECT NUMBER 4991-00-96	PS&E SHEET --	E

FILE NAME : 040103 RP.DWG
LAYOUT NAME - 040103 RP
PLOT DATE : 7/19/2019 9:09 AM PLOT BY : SOUFAL, KEVIN PLOT NAME : PLOT SCALE : 1 IN:100 FT

WISDOT/CADDS SHEET 75

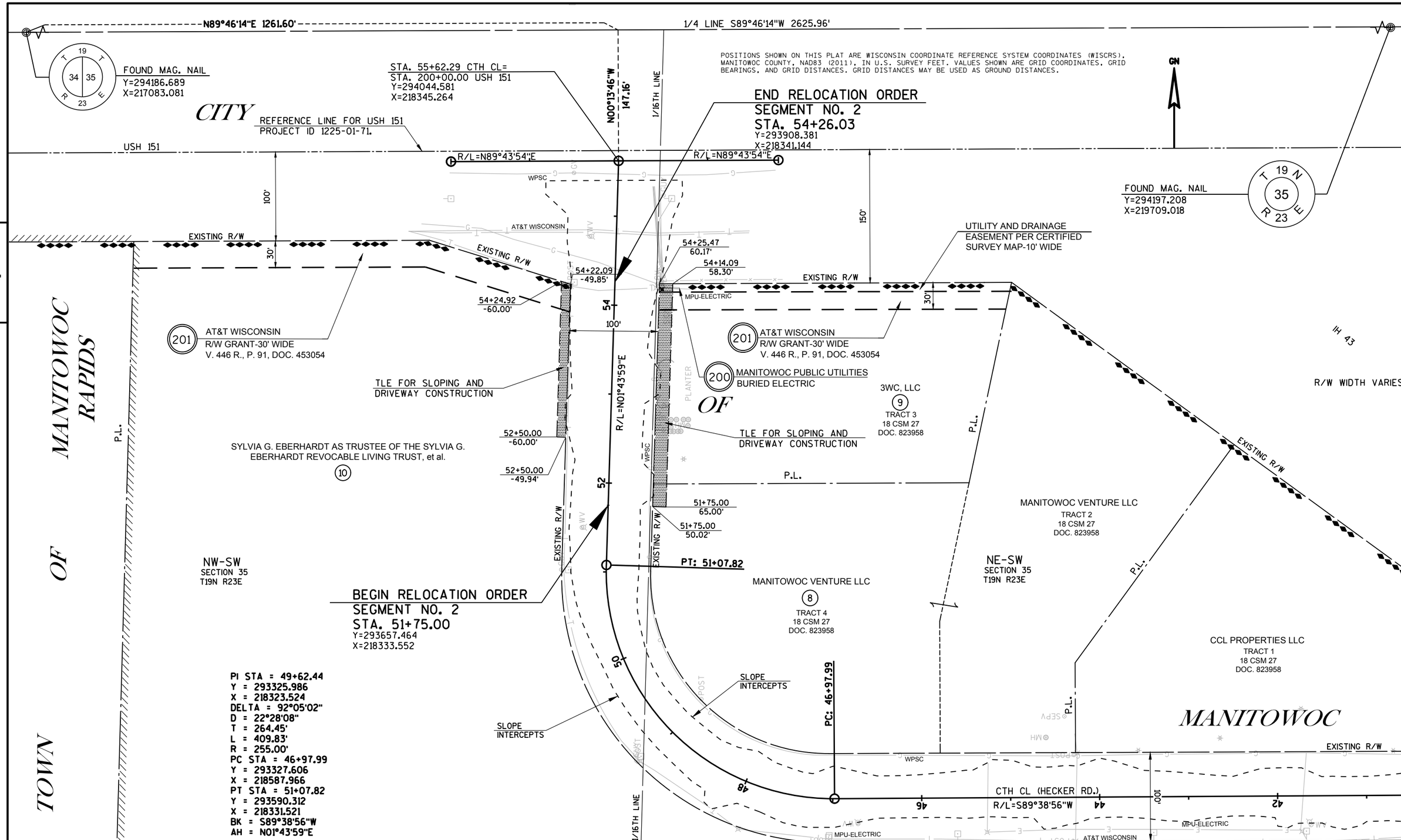

REVISION DATE	DATE 11/05/2018	SCALE, FEET 0 50' 100'	HWY: CTH CL	STATE R/W PROJECT NUMBER 4991-00-96	PLAT SHEET 4.04	
	GRID FACTOR N/A		COUNTY: MANITOWOC	CONSTRUCTION PROJECT NUMBER 4991-00-96	PS&E SHEET --	E

FILE NAME : 040104 RP.DWG
LAYOUT NAME - 040104 RP
PLOT DATE : 7/19/2019 9:09 AM PLOT BY : SOUFAL, KEVIN PLOT NAME : PLOT SCALE : 1 IN:100 FT

WISDOT/CADDS SHEET 75

BENCH MARKS

NO.	STATION	DESCRIPTION	ELEV.
205	18+47	RR SPK. IN PP-29' LT.	699.21
204	27+88	RR SPK. IN PP-30' LT.	697.22
203	32+76	NW BOLT SIGN BASE-159' RT.	701.46

CTH CL CURVE NOTES
CURVE NO. 1

PI STA = 22+97.56
Y = 291867.346
X = 219665.899
DELTA = 9°31'43"
D = 4°07'19"
T = 115.85'
L = 231.17'
R = 1390.00'
PC STA = 21+81.71
Y = 291753.505
X = 219644.416
PT STA = 24+12.88
Y = 291983.173
X = 219668.239
BK = N10°41'10.7"E
AH = N01°09'27.5"E
SE = 4.7%
RO = 45'
SE TRANSITION = 104'

LEGEND
LIMITS OF CONCRETE
LIMITS OF HMA PAVEMENT
XXXX SAW CUT
EBS REQUIRED

N

BP: 97+00.00
Y=291573.464
X=219310.725

STA. 20+00.00 CTH CL=
STA. 100+00.00 W. VIERBAHN ST.
Y=291574.943
X=219610.721

BEGIN PROJECT
STA. 20+75.00
Y=291648.642
X=219624.628

BP: 18+00.00
Y=291378.412
X=219573.635

PC: 21+81.71

PT: 24+12.88

BURIED TELEPHONE CABLE
(APPROXIMATE LOCATION)
CENTURYLINK

SLOPE INTERCEPTS

STA. 22+52
1-24" CULVERT PIPE
CLASS III-A REQ'D.
2-APRON ENDWALLS REQ'D.

(REMOVE AND SALVAGE)

LIMITS OF WETLANDS

CAUTION
BURIED GAS LINE
(APPROXIMATE LOCATION)

EBS REQUIRED
EXCAVATE 1.5 FEET BELOW SUBGRADE
STA. 24+12.88-STA. 31+50

ASPHALTIC FLUME REQUIRED

BEGIN CONCRETE CURB AND GUTTER
STA. 28+75

PI: 29+65.54
Y=292535.717
X=219679.405

STA. 31+30
1-12" STORM SEWER REINFORCED CONCRETE CLASS IV REQ'D.
1-INLETS 2X3-HM REQ'D.
1-APRON ENDWALL REQ'D.

CONCRETE CURB AND GUTTER
6-INCH SLOPED
36-INCH TYPE D REQ'D.

EP: 103+00.00
Y=291583.640
X=219910.595

W. VIEBAHN ST.
N88°43'03"E
CTH CL (W. VIEBAHN ST.)
N88°20'20"E
HECKER RD.
N10°41'11"E
CTH CL (HECKER RD.)
N01°09'28"E
N01°21'25"E
EXISTING R/W
TLE LINE
(REMOVE)
(ADJUST)
(TO REMAIN)
WOODS
HOUSE
CABC
FE
12" CMP
ASPHALT
CE
CONC
PE
CONC PILLAR
PLANTER
RIPRAP
SAN
MH
SEPV
WELL
POST
OH
G
18" CMP
12" CMP

5

PROJECT NO:4991-00-97 | HWY:CTH CL | COUNTY:MANITOWOC | PLAN | SHEET 32 | E

BENCH MARKS

NO.	STATION	DESCRIPTION	ELEV.
202	41+65	BURY BOLT ON HYD.-30' LT.	702.43
201	49+05	RR SPK. IN PP-44' LT.	699.85

LEGEND

LIMITS OF CONCRETE

LIMITS OF HMA PAVEMENT

XXXX SAW CUT

N

CTH CL CURVE NOTES
CURVE NO. 2

PI STA = 37+64.45
Y = 293334.407
X = 219698.322
DELTA = 91°42'28"
D = 14°54'05"
T = 396.14'
L = 615.43'
R = 384.50'
PC STA = 33+68.32
Y = 292938.384
X = 219688.942
PT STA = 39+83.75
Y = 293331.981
X = 219302.195
BK = N01°21'24.6"E
AH = S89°38'56.5"W
SE = 6%
RO = 39'
SE TRANSITION = 116'

CTH CL CURVE NOTES
CURVE NO. 3

PI STA = 49+62.44
Y = 293325.986
X = 218323.524
DELTA = 92°05'02"
D = 22°28'08"
T = 264.45'
L = 409.83'
R = 255.00'
PC STA = 46+97.99
Y = 293327.606
X = 218587.966
PT STA = 51+07.82
Y = 293590.312
X = 218331.521
BK = S89°38'56.5"W
AH = N01°43'58.5"E
SE = 6%
RO = 39'
SE TRANSITION = 116'

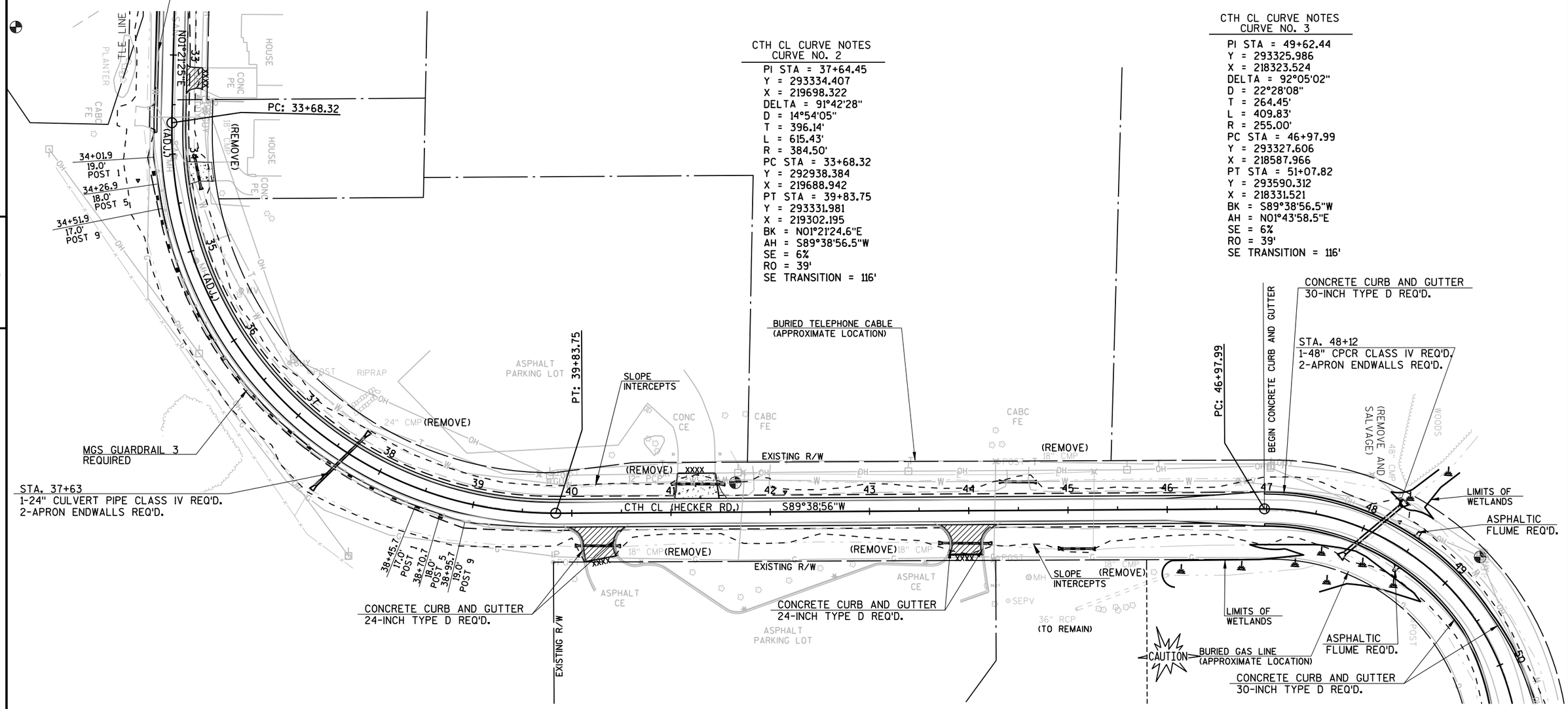

PROJECT NO:4991-00-97	HWY:CTH CL	COUNTY:MANITOWOC	PLAN	SHEET 33	E

FILE NAME : V:\TRANS-GB\450432 CTH CL\C3D\SHEETSPLAN\050102 PN.DWG
LAYOUT NAME - 050102 PN
PLOT DATE : 7/19/2019 9:04 AM PLOT BY : SOUFAL, KEVIN PLOT NAME : PLOT SCALE : 1 IN:100 FT

BENCH MARKS

NO.	STATION	DESCRIPTION	ELEV.
201	49+05	RR SPK. IN PP-44' LT.	699.85

CTH CL CURVE NOTES
CURVE NO. 3

PI STA = 49+62.44
Y = 293325.986
X = 218323.524
DELTA = 92°05'02"
D = 22°28'08"
T = 264.45'
L = 409.83'
R = 255.00'
PC STA = 46+97.99
Y = 293327.606
X = 218587.966
PT STA = 51+07.82
Y = 293590.312
X = 218331.521
BK = S89°38'56.5"W
AH = N01°43'58.5"E
SE = 6%
RO = 39'
SE TRANSITION = 116'

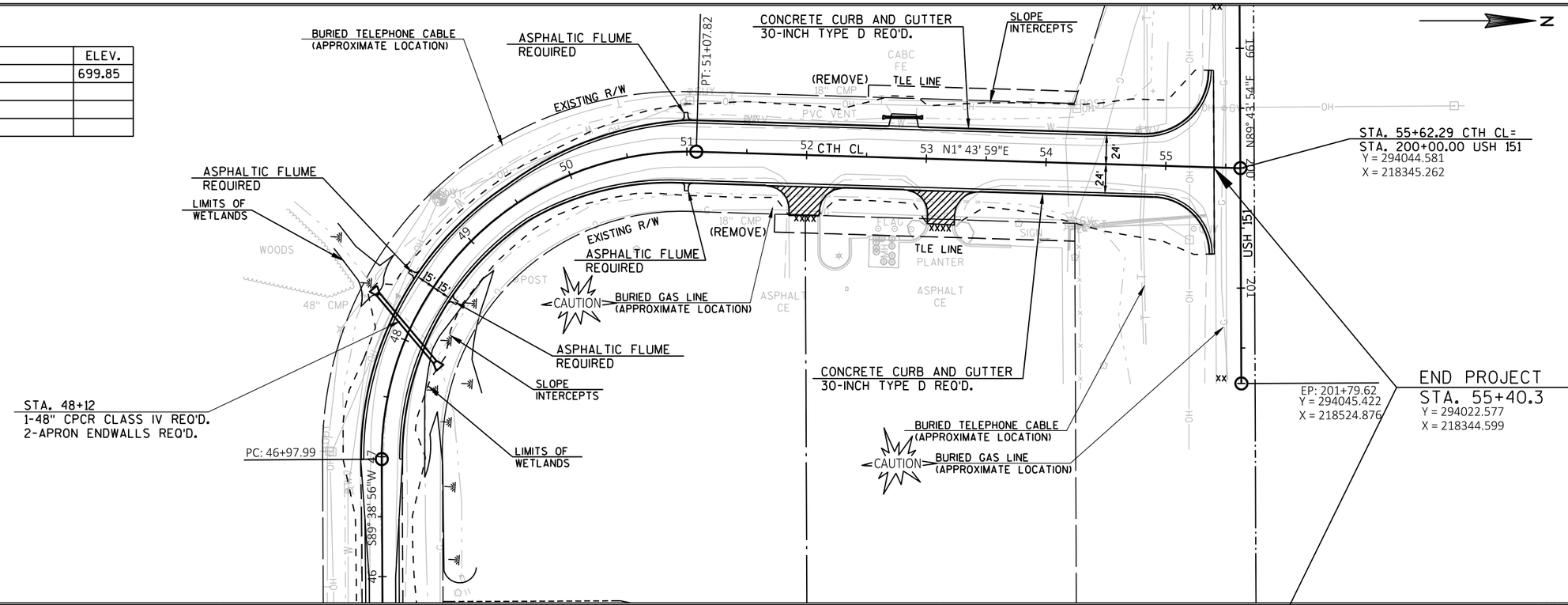

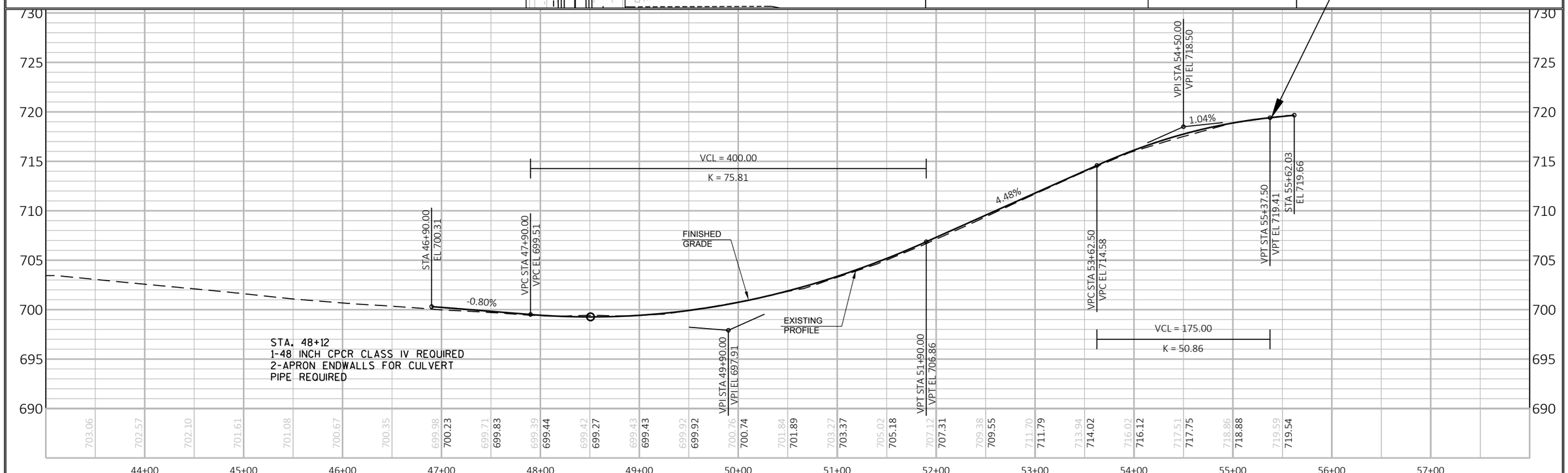

PROJECT NO: 4991-00-96	HWY: CTH CL	COUNTY: MANITOWOC	PLAN AND PROFILE:	SHEET 34	E

Standard Detail Drawing List

08A05-19C	INLET COVERS TYPE F, HM, HM-S, S, T, V, HM-GJ, & HM-GJ-S
08C07-02	INLETS 2X2-FT, 2X2.5-FT, 2X3-FT AND 2.5X3-FT
08D01-20A	CONCRETE CURB & GUTTER
08D01-20B	CONCRETE CURB, TIES AND CURB AND GUTTER APPLICATIONS
08D04-05	CONCRETE SURFACE DRAINS & ASPHALTIC FLUMES
08D20-01	DRIVEWAYS WITH CURB & GUTTER RETURNS
08D21-01	DRIVEWAYS WITHOUT CURB & GUTTER
08D22-01	DRIVEWAYS WITHOUT CURB & GUTTER RESURFACING PROJECTS RURAL
08E08-03	TYPICAL INSTALLATIONS OF EROSION BALES / TEMPORARY DITCH CHECKS
08E09-06	SILT FENCE
08E10-02	INLET PROTECTION TYPE A, B, C AND D
08E15-01	CULVERT PIPE CHECK
08F01-11	APRON ENDWALLS FOR CULVERT PIPE
08F04-07	JOINT TIES FOR CONCRETE PIPE AND CONCRETE COLLAR DETAIL
14B42-06A	MIDWEST GUARDRAIL SYSTEM (MGS) GUARDRAIL
14B42-06B	MIDWEST GUARDRAIL SYSTEM (MGS) GUARDRAIL
14B42-06C	MIDWEST GUARDRAIL SYSTEM (MGS) GUARDRAIL
14B42-06D	MIDWEST GUARDRAIL SYSTEM (MGS) GUARDRAIL
14B44-04A	MIDWEST GUARDRAIL SYSTEM ENERGY ABSORBING TERMINAL (MGS)
14B44-04B	MIDWEST GUARDRAIL SYSTEM ENERGY ABSORBING TERMINAL (MGS)
14B44-04C	MIDWEST GUARDRAIL SYSTEM ENERGY ABSORBING TERMINAL (MGS)
15A03-02A	FLEXIBLE MARKER POST FOR CULVERT END
15A03-02B	FLEXIBLE MARKER POST FOR CULVERT END
15C02-07A	BARRICADES AND SIGNS FOR MAINLINE CLOSURES
15C02-07B	BARRICADES AND SIGNS FOR VARIOUS CLOSURES
15C04-05	TRAFFIC CONTROL, ADVANCE WARNING SIGNS 45 M.P.H. OR GREATER TWO-WAY UNDIVIDED ROAD OPEN TO TRAFFIC
15C08-19A	LONGITUDINAL MARKING (MAINLINE)
15C11-07B	CHANNELIZING DEVICES DRUMS, CONES, BARRICADES AND VERTICAL PANELS
15C19-05A	MOVING PAVEMENT MARKING OPERATION TWO-LANE TWO-WAY ROADWAY
15C33-03	STOP LINE AND CROSSWALK PAVEMENT MARKING
15D20-04	TRAFFIC CONTROL, SINGLE LANE CLOSURE, NON-FREEWAY/EXPRESSWAY
15D21-06	TRAFFIC CONTROL, INTERSECTION WITHIN SINGLE LANE CLOSURE
15D27-03	TRAFFIC CONTROL, SHOULDER CLOSURE ON DIVIDED ROADWAY, SPEEDS GREATER THAN 40 MPH
15D38-02A	TEMPORARY TRAFFIC CONTROL SIGN MOUNTING
15D38-02B	ATTACHMENT OF SIGNS TO POSTS

6

6

GENERAL NOTES

DETAILS OF CONSTRUCTION, MATERIALS AND WORKMANSHIP NOT SHOWN ON THIS DRAWING SHALL CONFORM TO THE PERTINENT REQUIREMENTS OF THE STANDARD SPECIFICATIONS AND THE APPLICABLE SPECIAL PROVISIONS.

DETAIL DRAWINGS FOR PROPOSED ALTERNATE DESIGNS FOR INLET COVERS SHALL BE SUBMITTED TO THE ENGINEER FOR APPROVAL PROVIDING THAT SUCH ALTERNATE DESIGNS MAKE PROVISION FOR EQUIVALENT CAPACITY AND STRENGTH.

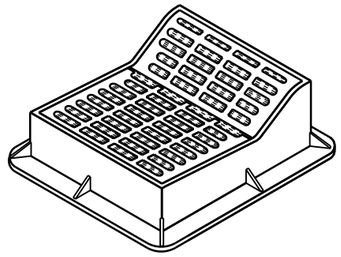

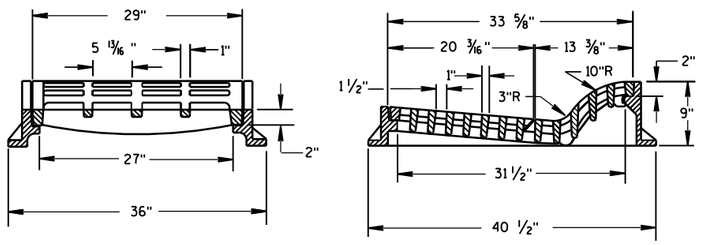

TYPE "F"

USE WITH TYPES A & D CONCRETE CURB & GUTTER, 36 INCH.

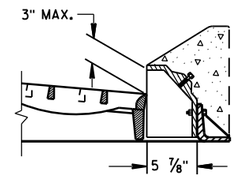

ALTERNATIVE CURB BOX FOR TYPE "HM" COVER

USE WITH TYPES G & J CONCRETE CURB & GUTTER, 30 INCH
NOTED AS TYPE HM-GJ ON DRAINAGE TABLE

NOTE:
SPECIAL GRATE FOR THE
TYPE "H" COVER MAY ALSO BE
USED FOR THE TYPE "HM-GJ" COVER
NOTED AS TYPE HM-GJ-S ON DRAINAGE TABLE

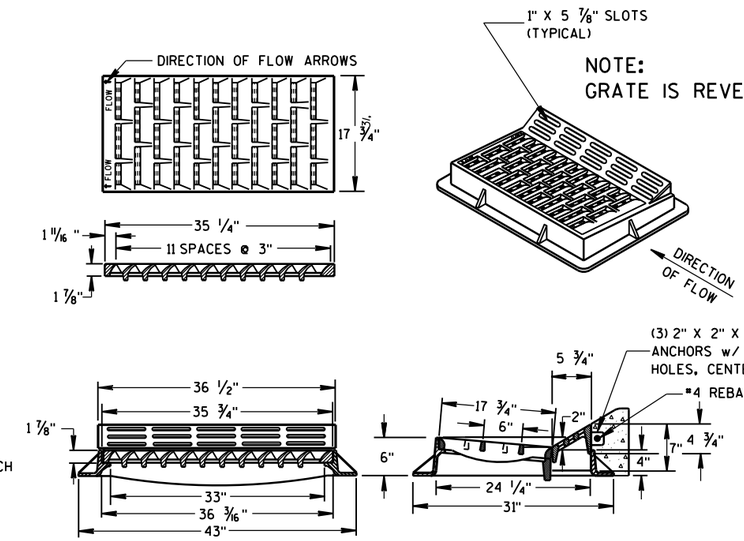

NOTE:
GRATE IS REVERSIBLE.

TYPE "HM"

USE WITH TYPES A & D CONCRETE CURB & GUTTER, 36 INCH.

NOTE:
SPECIAL GRATE FOR THE
TYPE "H" COVER MAY ALSO BE
USED FOR THE TYPE "HM" COVER
NOTED AS TYPE HM-S ON DRAINAGE TABLE

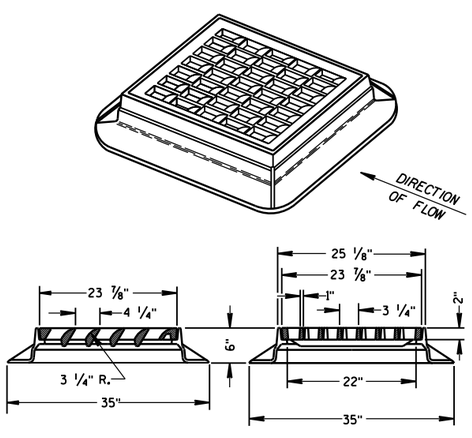

TYPE "S"

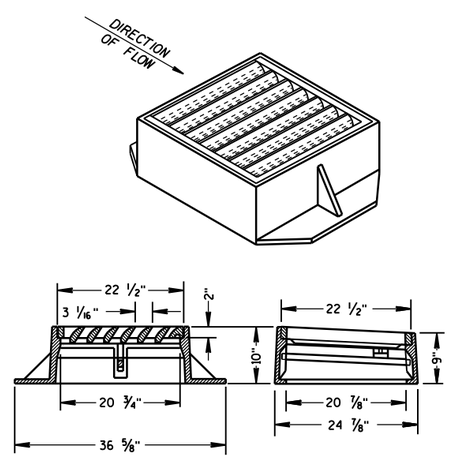

TYPE "V"

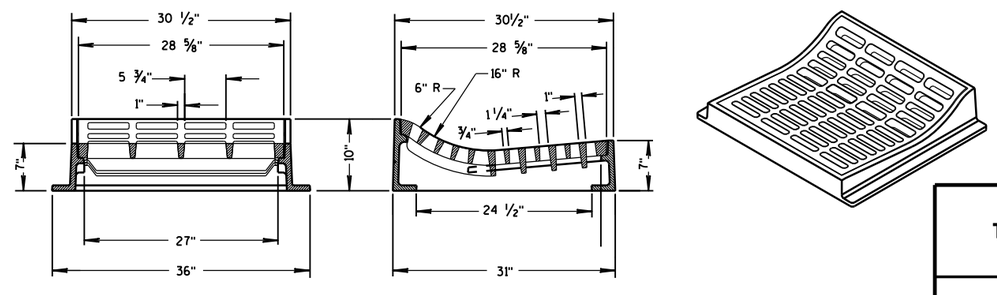

TYPE "T"

USE WITH TYPES R & T CONCRETE CURB & GUTTER, 36 INCH.

INLET COVERS
TYPE F, HM, HM-S, S, T, V, HM-GJ, & HM-GJ-S

STATE OF WISCONSIN
DEPARTMENT OF TRANSPORTATION

APPROVED
11/27/2013 — DATE
/S/ Jerry H. Zogg — ROADWAY STANDARDS ENGINEER
FHWA

6

S.D.D. 8 A 5-19c

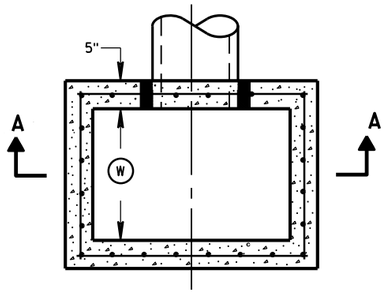

PLAN VIEW

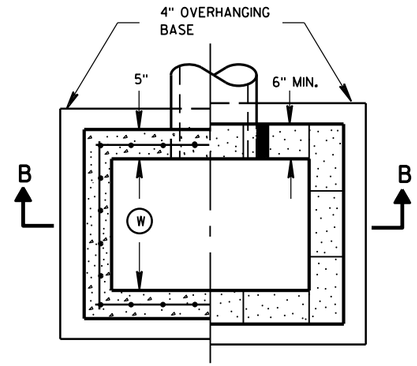

PLAN VIEW

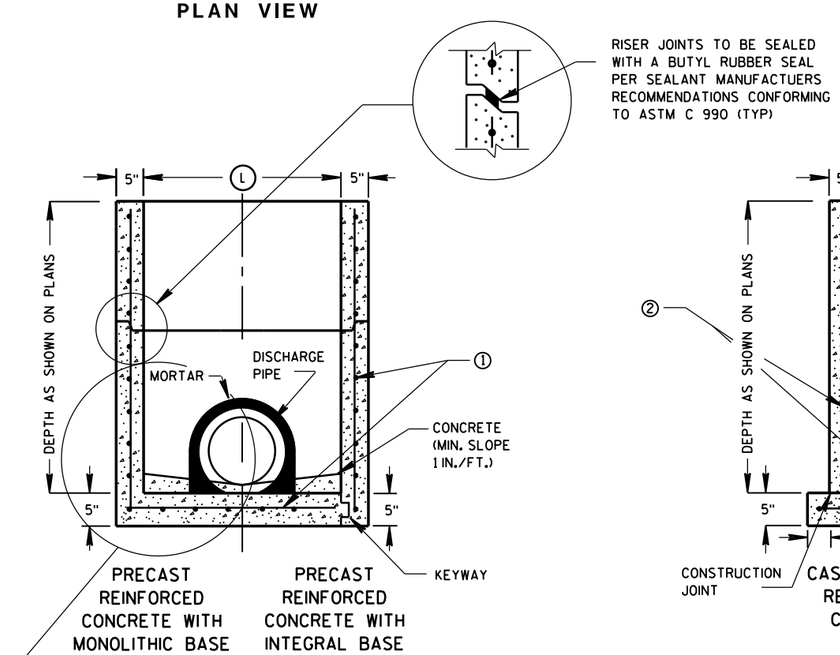

SECTION A-A

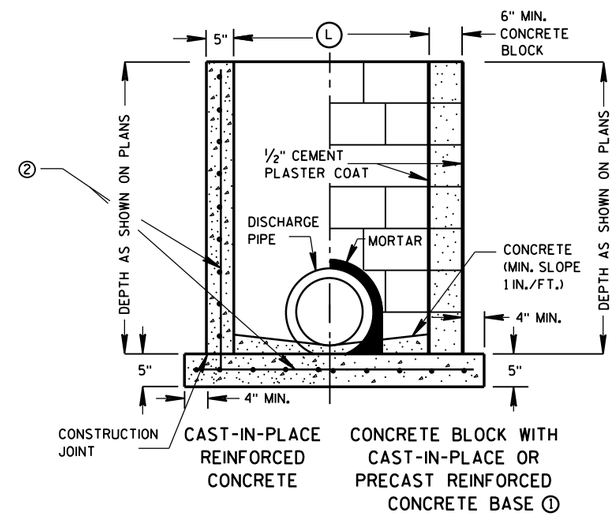

SECTION B-B

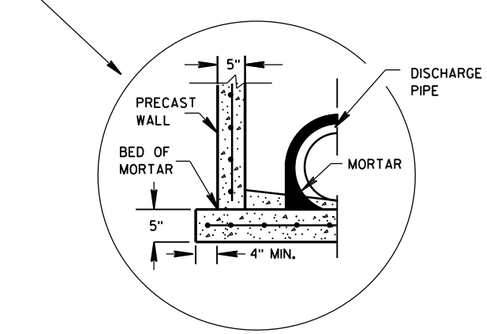

SEPARATE PRECAST REINFORCED CONCRETE BASE OPTION

GENERAL NOTES

DETAILS OF CONSTRUCTION, MATERIALS AND WORKMANSHIP NOT SHOWN ON THIS DRAWING SHALL CONFORM TO THE PERTINENT REQUIREMENTS OF THE STANDARD SPECIFICATIONS AND THE APPLICABLE SPECIAL PROVISIONS.

UNLESS OTHERWISE AUTHORIZED IN WRITING BY THE ENGINEER, THE CONTRACTOR SHALL NOT ORDER AND DELIVER PRECAST INLET UNITS REQUIRED FOR THE PROJECT UNTIL A LIST OF SIZES IS FURNISHED BY THE ENGINEER.

DETAILED DRAWINGS FOR PROPOSED ALTERNATE DESIGNS FOR UNDERGROUND DRAINAGE STRUCTURES SHALL BE SUBMITTED TO THE ENGINEER FOR APPROVAL PROVIDING THAT SUCH ALTERNATE DESIGNS MAKE PROVISION FOR EQUIVALENT CAPACITY AND STRENGTH.

ALL PRECAST INLET UNITS SHALL CONFORM TO THE PERTINENT REQUIREMENTS OF ASTM C 913.

ALL DRAINAGE STRUCTURES ARE DESIGNATED ON THE PLANS AS "MANHOLES 3X3-L", "CATCH BASINS 4-B", "INLETS 2X3-H", ETC. THE FIRST NUMBERS DESIGNATES THE SIZE OF THE STRUCTURE, AND THE FOLLOWING LETTER DESIGNATES THE TYPE OF COVER TO BE USED TO COMPRISE THE COMPLETE UNIT.

BASES SHALL BE PLACED ON A BED OF MATERIAL AT LEAST 6 INCHES IN DEPTH, WHICH MEETS THE REQUIREMENTS OF FOUNDATION BACKFILL. THIS BEDDING SHALL BE COMPACTED AND PROVIDE UNIFORM SUPPORT FOR THE ENTIRE AREA OF THE BASE.

ALL BAR STEEL REINFORCEMENT SHALL BE EMBEDDED 2 INCHES CLEAR UNLESS OTHERWISE SHOWN OR NOTED.

PRECAST REINFORCED RISERS SHALL HAVE A TONGUE AND GROOVE JOINT WITH TONGUE UP OR DOWN.

4" OVERHANGING BASES ARE REQUIRED FOR CAST-IN-PLACE REINFORCED CONCRETE AND CONCRETE BLOCK INSTALLATIONS.
4" OVERHANG IS REQUIRED WHEN SEPARATE PRECAST BASE IS PROVIDED.
OVERHANG IS NOT REQUIRED ON PRECAST STRUCTURES WITH AN INTEGRAL OR MONOLITHIC BASE.

MAXIMUM INSIDE PIPE DIAMETER DETERMINED BY 3 INCH CLEARANCE ON EACH SIDE OF THE OUTSIDE WALL OF THE PIPE. SEE DETAIL "A". ASSUMES PIPE ENTERS PERPENDICULAR TO THE STRUCTURE.

① FOR PRECAST INLETS PROVIDE REINFORCING STEEL IN ACCORDANCE TO ASTM C 913.

② CONTRACTOR TO PROVIDE DRAWING(S) STAMPED BY A PROFESSIONAL ENGINEER FOR STEEL REINFORCING DESIGN FOR CAST-IN-PLACE STRUCTURES.

INLET COVER MATRIX

INLET SIZE		INLET COVER TYPE	ALL A'S	ALL B'S	BW	F	ALL H'S	S	T	V	WM
	WIDTH Ⓦ (FT)	LENGTH Ⓛ (FT)									
2X2-FT	2	2	X	X				X		X	
2X2.5-FT	2	2.5			X			X	X	X	X
2X3-FT	2	3					X				
2.5X3-FT	2.5	3				X					

PIPE MATRIX

INLET SIZE	MAXIMUM INSIDE PIPE DIAMETER	
	WIDTH (IN)	LENGTH (IN)
2X2-FT	12	12
2X2.5-FT	12	18
2X3-FT	12	24
2.5X3-FT	18	24

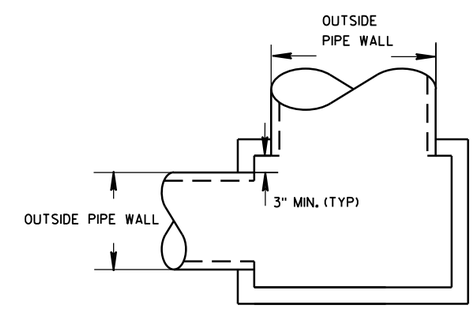

DETAIL "A"

INLETS 2X2-FT, 2X2.5-FT, 2X3-FT AND 2.5X3-FT

INLETS 2X2-FT, 2X2.5-FT, 2X3-FT AND 2.5X3-FT

STATE OF WISCONSIN
DEPARTMENT OF TRANSPORTATION

APPROVED
Sept., 2016 — DATE
/S/ Rodney Taylor
ROADWAY STANDARDS D IT
UNIT SUPERVIS
FHWA

6

S.D.D. 8 C 7-2

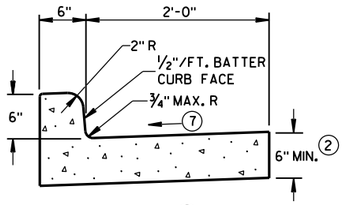

TYPES A[1] & D

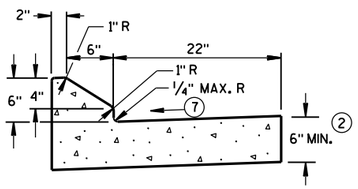

6" SLOPED CURB TYPES G[1] & J

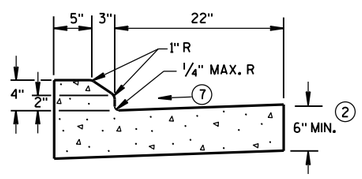

4" SLOPED CURB TYPES G[1] & J

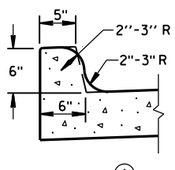

TYPES K[1] & L
(OPTIONAL CURB SHAPE)

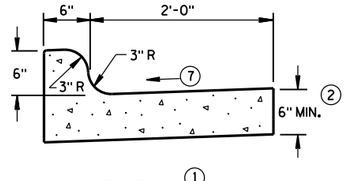

TYPES K[1] & L

CONCRETE CURB & GUTTER 30"

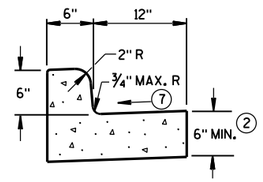

TYPES A[1] & D

CONCRETE CURB & GUTTER 18"

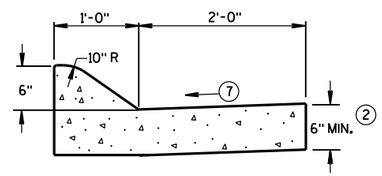

6" SLOPED CURB TYPES A[1] & D

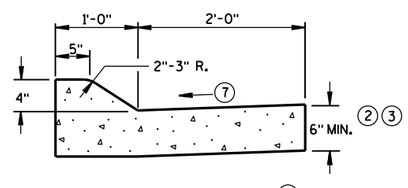

4" SLOPED CURB TYPES A[1] & D

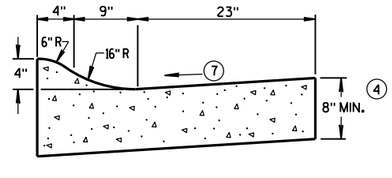

4" SLOPED CURB TYPES R[1] & T[5]

CONCRETE CURB & GUTTER 36"

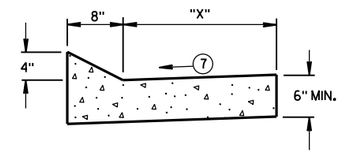

TYPES TBT & TBTT[1]

CONCRETE CURB & GUTTER

TBT & TBTT	"X"
30"	22"
36"	28"

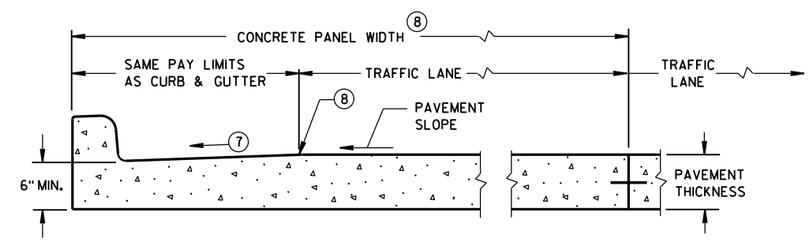

PARTIAL SECTION OF PAVEMENT*
WITH INTEGRAL CURB & GUTTER

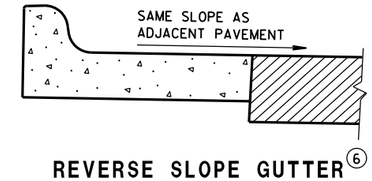

REVERSE SLOPE GUTTER[6]
(TYPICAL FOR ALL CURB & GUTTER TYPES)

GENERAL NOTES

DETAILS OF CONSTRUCTION, MATERIALS AND WORKMANSHIP NOT SHOWN ON THIS DRAWING SHALL CONFORM TO THE PERTINENT REQUIREMENTS OF THE CONTRACT.

PAVEMENT TIES AND TIE BARS SHALL BE EPOXY COATED IN CONFORMANCE WITH SUBSECTION 505.2.6.2 OF THE STANDARD SPECIFICATIONS.

INTEGRAL CURB & GUTTER SHALL CONFORM TO THE DETAILS SHOWN FOR CONCRETE CURB & GUTTER INCLUDING THE TRANSVERSE GUTTER SLOPE.

WHERE THE TRANSVERSE JOINTS IN THE PAVEMENT ARE REQUIRED TO BE SEALED, THE JOINTS IN THE INTEGRAL CURB AND GUTTER SHALL BE SEALED TO THE FACE OF CURB WITH THE SAME TYPE OF SEALANT. THE COST OF FURNISHING AND INSTALLING THIS SEALANT SHALL BE INCIDENTAL TO THE ITEM CONCRETE CURB AND GUTTER.

UNLESS OTHERWISE SHOWN ON THE TYPICAL CROSS SECTIONS, THE BASE AGGREGATE AND COMMON EXCAVATION LIMITS ARE 2'-0" BEHIND THE BACK OF CURBS.

1. TIE BARS ARE REQUIRED FOR CURB AND GUTTER TYPES A, G, K, R AND TBTT.
2. THE BOTTOM OF CURB AND GUTTER MAY BE CONSTRUCTED EITHER LEVEL OR PARALLEL TO THE SLOPE OF THE SUBGRADE OR BASE AGGREGATE PROVIDED A 6" MINIMUM GUTTER THICKNESS IS MAINTAINED.
3. USE 8" MINIMUM GUTTER THICKNESS WHEN USED WITH AN ADJACENT CONCRETE TRUCK APRON PLACED BEHIND BACK OF CURB.
4. THE BOTTOM OF CURB AND GUTTER MAY BE CONSTRUCTED EITHER LEVEL OR PARALLEL TO THE SLOPE OF THE SUBGRADE OR BASE AGGREGATE PROVIDED A 8" MINIMUM GUTTER THICKNESS IS MAINTAINED.
5. THE FACE OF CURB IS 6" FROM THE BACK OF CURB.
6. WHEN REVERSE SLOPE GUTTER IS REQUIRED, THE LOCATION(S) WILL BE SHOWN ELSEWHERE IN THE PLAN.
7. USE 4% GUTTER CROSS SLOPE UNLESS OTHERWISE NOTED IN THE PLANS.
8. INCLUDE LONGITUDINAL JOINT AND TIE BARS ALONG LANE EDGE WHEN CONCRETE PANEL WIDTH EXCEEDS THE MAXIMUM WIDTH PER TABLE BELOW. LONGITUDINAL JOINT(S) ARE NOT ALLOWED WITHIN TRAFFIC LANES AND BIKE LANES. LONGITUDINAL JOINT MAY BE SAWED.

PAVEMENT THICKNESS AND MAXIMUM CONCRETE PANEL WIDTH TABLE

PAVEMENT THICKNESS	MAXIMUM PANEL WIDTH
LESS THAN 10"	12'
10" & ABOVE	15'

* BIKE LANE IS NOT SHOWN.

CONCRETE CURB & GUTTER

STATE OF WISCONSIN
DEPARTMENT OF TRANSPORTATION

GENERAL NOTES

DETAILS OF CONSTRUCTION, MATERIALS AND WORKMANSHIP NOT SHOWN ON THIS DRAWING SHALL CONFORM TO THE PERTINENT REQUIREMENTS OF THE CONTRACT.

PAVEMENT TIES AND TIE BARS SHALL BE EPOXY COATED IN CONFORMANCE WITH SUBSECTION 505.2.6.2 OF THE STANDARD SPECIFICATIONS.

UNLESS OTHERWISE SHOWN ON THE TYPICAL CROSS SECTIONS, THE BASE AGGREGATE AND COMMON EXCAVATION LIMITS ARE 2'-0" BEHIND THE BACK OF CURBS.

(1) TIE BARS ARE REQUIRED FOR CURB AND GUTTER TYPES A, G, K, R AND TBTT.

(2) THE BOTTOM OF CURB AND GUTTER MAY BE CONSTRUCTED EITHER LEVEL OR PARALLEL TO THE SLOPE OF THE SUBGRADE OR BASE AGGREGATE PROVIDED A 6" MINIMUM GUTTER THICKNESS IS MAINTAINED.

(9) REFER TO SDD 8D18 AND SDD 8D19 FOR ADDITIONAL DRIVEWAY ENTRANCE CURB DETAILS.

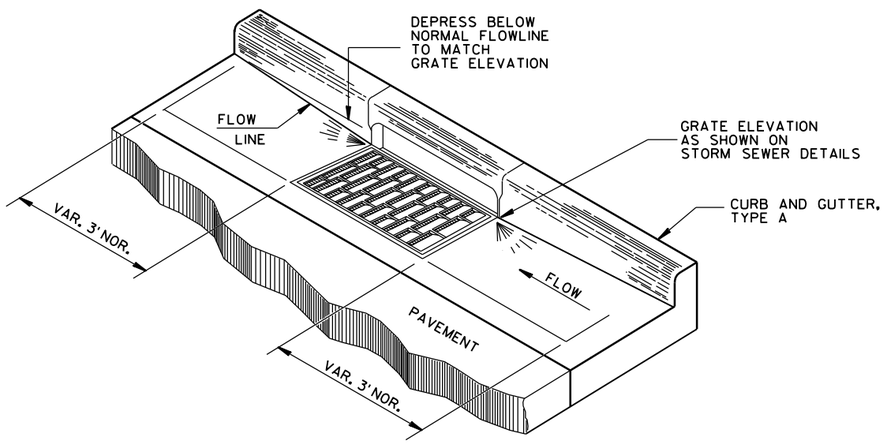

DETAIL OF CURB AND GUTTER AT INLETS

(TYPE H INLET COVER SHOWN)

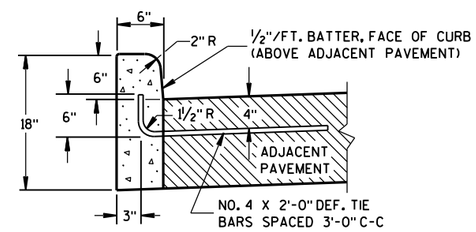

TYPES A (1) & D

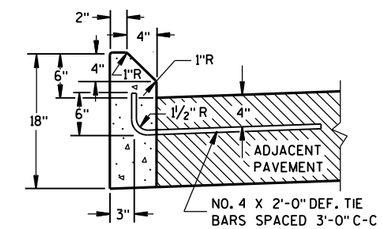

TYPES G (1) & J

CONCRETE CURB

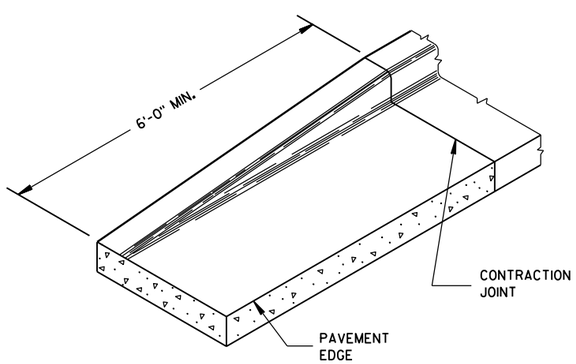

END SECTION CURB & GUTTER

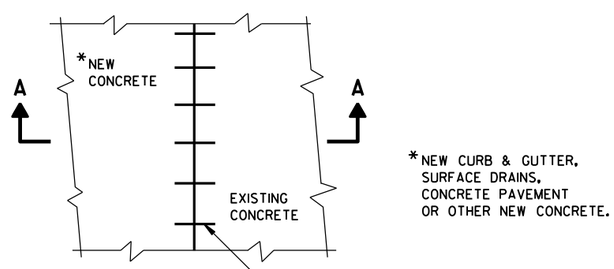

PLAN VIEW

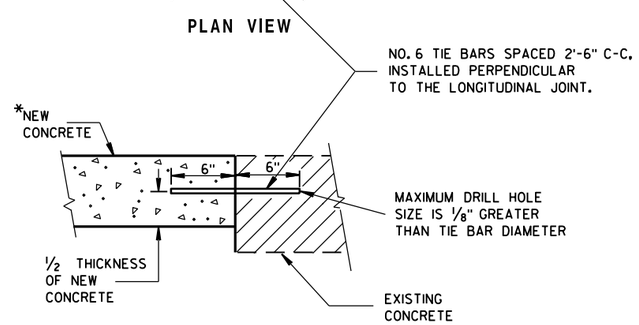

SECTION A-A

TIE BARS DRILLED INTO EXISTING PAVEMENT

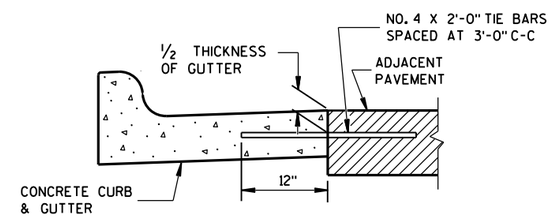

TYPICAL TIE BAR LOCATION (1)

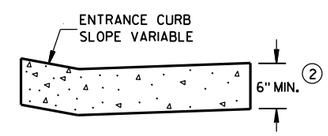

DRIVEWAY ENTRANCE CURB (9)

(WHEN DIRECTED BY THE ENGINEER)

CONCRETE CURB, TIES AND CURB AND GUTTER APPLICATIONS

STATE OF WISCONSIN
DEPARTMENT OF TRANSPORTATION

APPROVED
June, 2017 — DATE
/S/ Rodney Taylor — ROADWAY STANDARDS UNIT SUPERVISOR
ENT
FHWA

GENERAL NOTES

DETAILS OF CONSTRUCTION, MATERIALS AND WORKMANSHIP NOT SHOWN ON THIS DRAWING SHALL CONFORM TO PERTINENT REQUIREMENTS OF THE STANDARD SPECIFICATIONS AND APPLICABLE SPECIAL PROVISIONS.

WELDED STEEL WIRE FABRIC SHALL BE IN ACCORDANCE WITH AASHTO SPECIFICATION M55.

① JOINTS SHALL BE 1/8 TO 1/4 INCH WIDE BY 1 1/2 INCHES DEEP AND SPACED AT UNIFORM INTERVALS OF APPROXIMATELY 4 FEET.

② GEOTEXTILE FABRIC TYPE "R" SHALL UNDERLAY THE FULL LENGTH AND WIDTH OF THE CONCRETE SURFACE DRAIN AND RIPRAP.

③ CONCRETE SURFACE DRAIN WITHOUT CURB AND GUTTER MAY BE USED ON BACKSLOPES WHEN SPECIFIED

ASPHALTIC FLUME

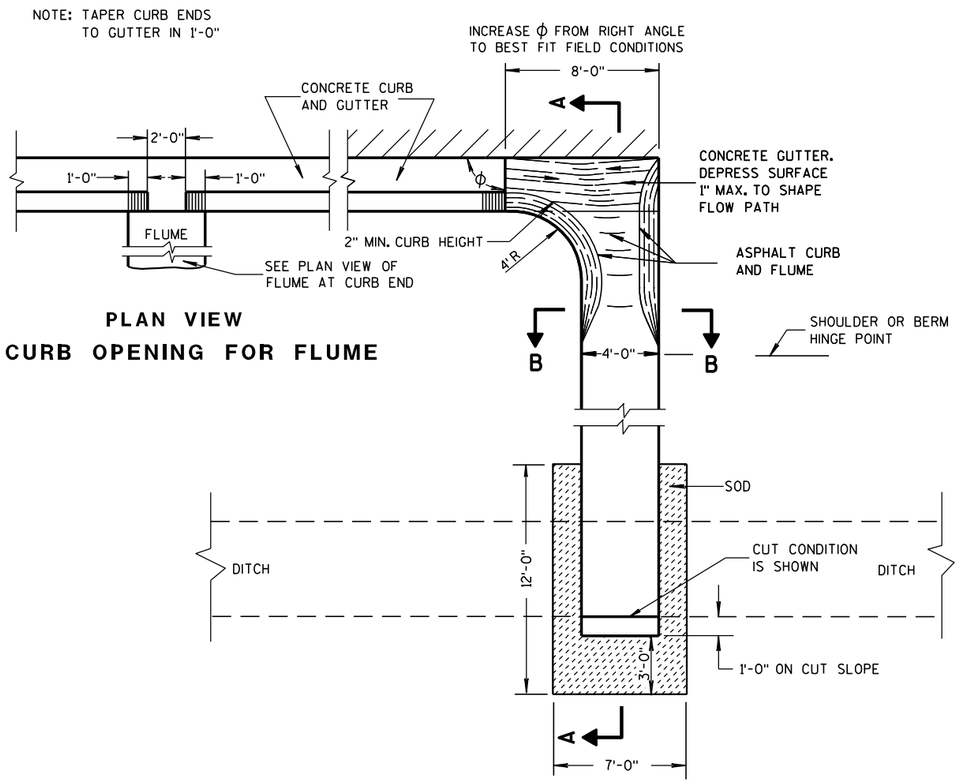

PLAN VIEW
CURB OPENING FOR FLUME

PLAN VIEW
FLUME AT CURB END

③ CONCRETE SURFACE DRAIN

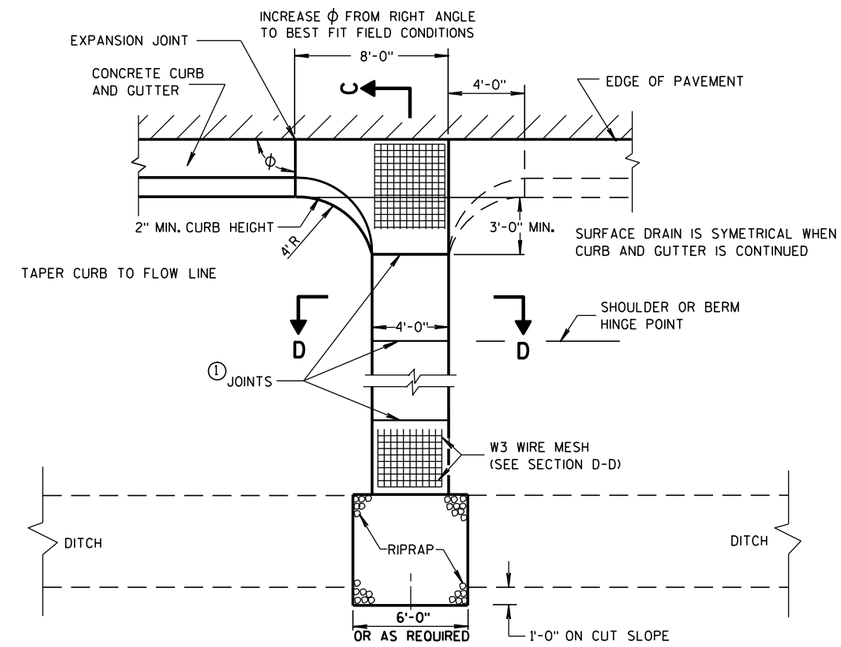

PLAN VIEW

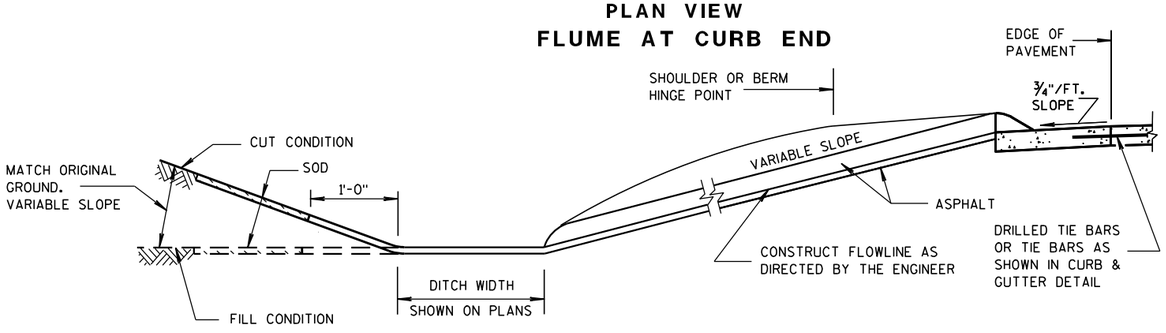

SECTION A-A

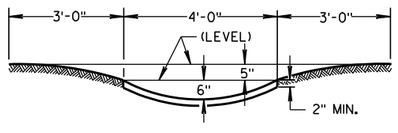

SECTION B-B

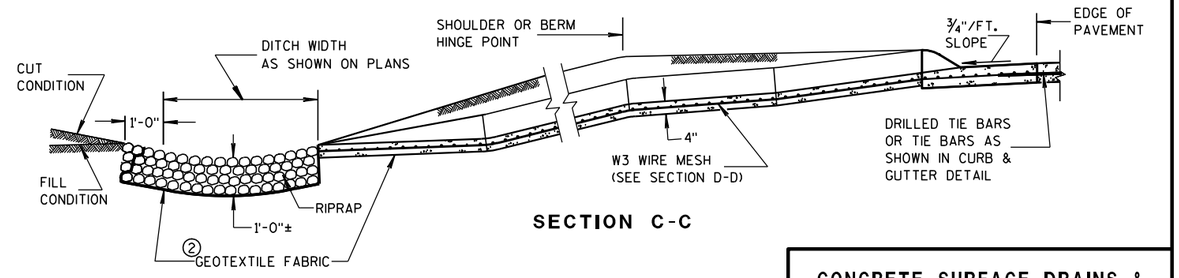

SECTION C-C

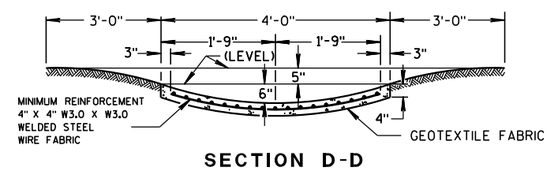

SECTION D-D

CONCRETE SURFACE DRAINS & ASPHALTIC FLUMES	
STATE OF WISCONSIN DEPARTMENT OF TRANSPORTATION	
APPROVED	
9-4-08 DATE	/S/ Jerry H. Zogg ROADWAY STANDARDS ENGINEER
FHWA	MENT

6

6

S.D.D. 8 D 4-5

S.D.D. 8 D 4-5

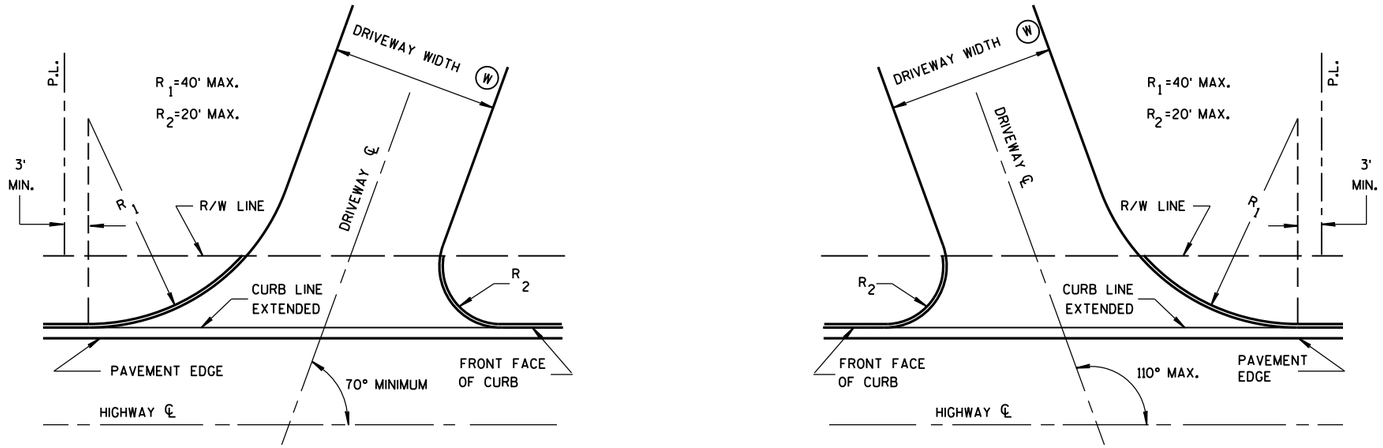

SKEWED DRIVEWAY DETAILS
(COMMERCIAL AND NON-COMMERCIAL)

SIDEWALK NOT SHOWN

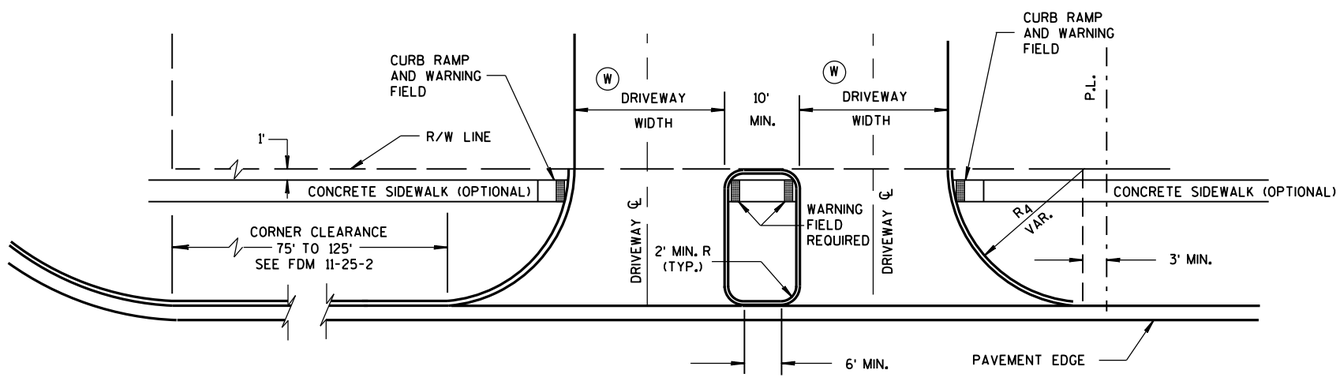

DRIVEWAY LOCATION AND SPACING DETAILS

SIDEWALK SHOWN

NOTES

A MAXIMUM RADIUS OF 10 FEET SHALL BE USED FOR NON-COMMERCIAL PRIVATE ENTRANCES. RADII FOR COMMERCIAL DRIVEWAYS SHALL BE DETERMINED BY THE ENGINEER BASED ON TRAFFIC AND DRIVEWAY PERMIT RESTRICTIONS.

THE MINIMUM ANGLE OF INTERSECTION BETWEEN THE DRIVEWAY AND HIGHWAY CENTERLINES SHALL BE 70°.

ALL CURVILINEAR PRIVATE ENTRANCE OUTLINES SHALL BE CONTAINED WITHIN THE HIGHWAY R/W.

NO DRIVEWAY SHALL BE BUILT WITHIN 3 FEET OF THE PROPERTY LINE EXCEPT FOR EXISTING JOINT DRIVEWAY SHARED BY TWO OWNERS.

(W) DRIVEWAY WIDTHS:

COMMERCIAL - 35' MAX., 16' MIN.

RESIDENTIAL AND NON-COMMERCIAL - 24' MAX., 12' MIN.

DRIVEWAYS WITH CURB & GUTTER RETURNS

STATE OF WISCONSIN
DEPARTMENT OF TRANSPORTATION

APPROVED
December, 2016 /S/ Rodney Taylor
DATE ROADWAY STANDARDS UNIT SUPERV ENT
FHWA

6

6

S.D.D. 8 D 20-1

S.D.D. 8 D 20-1

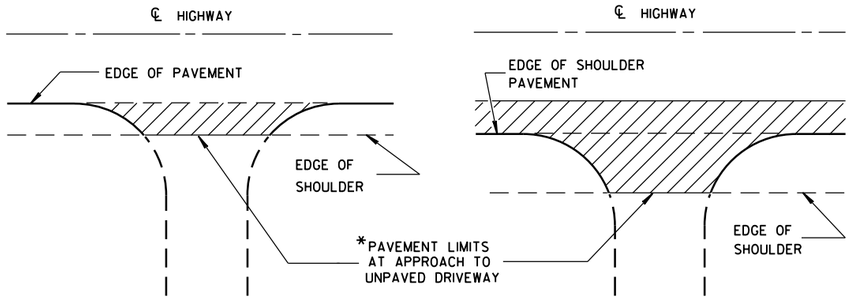

*WHERE DRIVEWAY IS PAVED, APPROACH PAVEMENT SHOULD BE EXTENDED TO MATCH DRIVEWAY PAVEMENT.

PLAN VIEW
(UNPAVED SHOULDER ON HIGHWAY)

PLAN VIEW
(PAVED SHOULDER ON HIGHWAY)

RURAL DRIVEWAY INTERSECTION DETAIL
(NO CURB & GUTTER OR SIDEWALK)

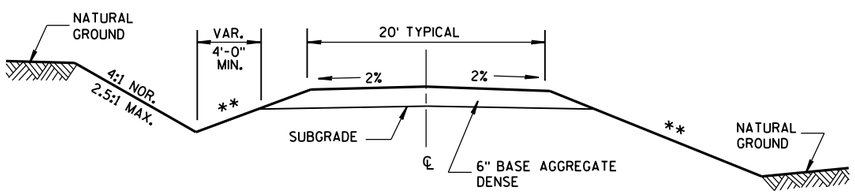

IN CUT IN FILL

TYPICAL CROSS SECTION FOR PRIVATE DRIVE OR FIELD ENTRANCE AGGREGATE SURFACE

** SLOPE CAN VARY WITH SPEED. SEE 11-45-2.6.2.

POSTED SPEED MPH	MAX. SLOPE
<35	4:1
≥35 TO <60	6:1
≥60	10:1

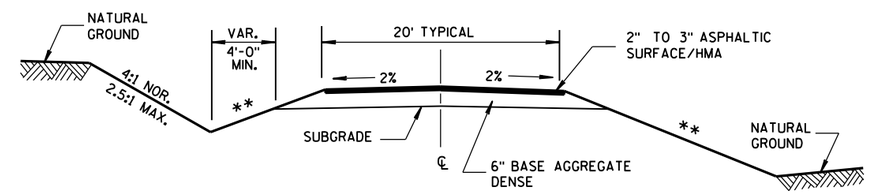

IN CUT IN FILL

TYPICAL CROSS SECTION FOR PRIVATE DRIVE OR FIELD ENTRANCE ASPHALTIC SURFACE

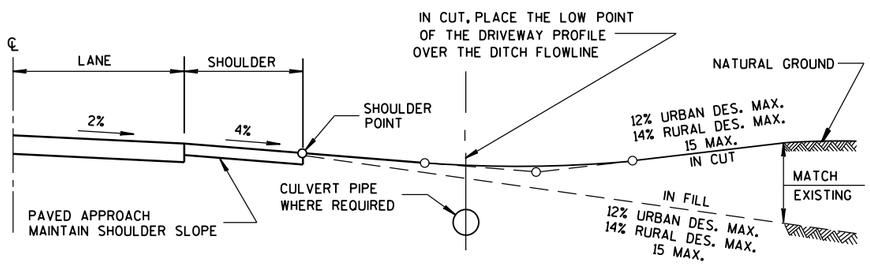

TYPICAL DRIVEWAY PROFILES

DRIVEWAYS WITHOUT CURB & GUTTER

STATE OF WISCONSIN
DEPARTMENT OF TRANSPORTATION

APPROVED
December, 2016 /S/ Rodney Taylor
DATE ROADWAY STANDARDS UNIT SUPERV ENT
FHWA

6

6

S.D.D. 8 D 21-1

S.D.D. 8 D 21-1

W MIN. = 16'
W MAX. = 24'

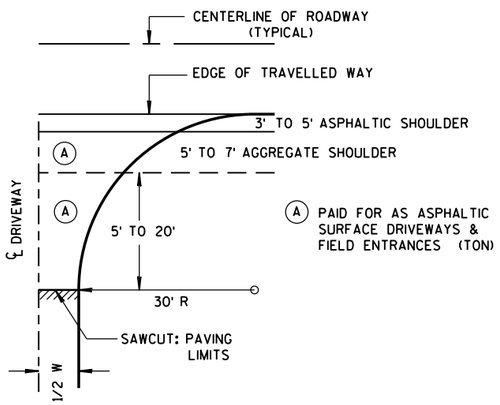

PLAN VIEW
HALF SECTION

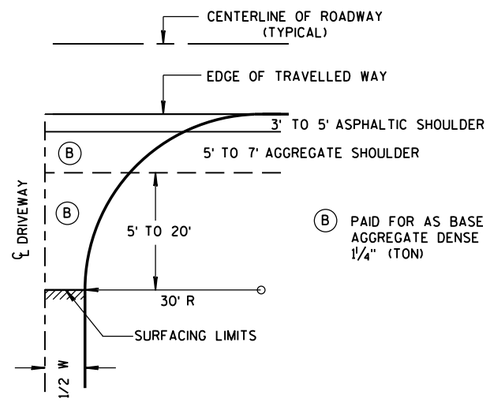

PLAN VIEW
HALF SECTION

GENERAL NOTES

1. DESIGN WILL DETERMINE FINAL DRIVEWAY ASPHALTIC THICKNESS BASED ON TYPE OF USAGE AND LOADINGS.

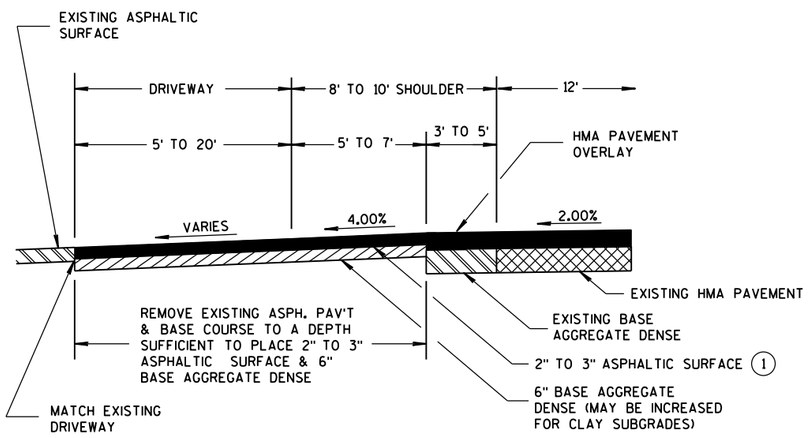

PROFILE VIEW

RURAL ENTRANCE WITH ASPHALTIC SURFACE

RESURFACING PROJECTS

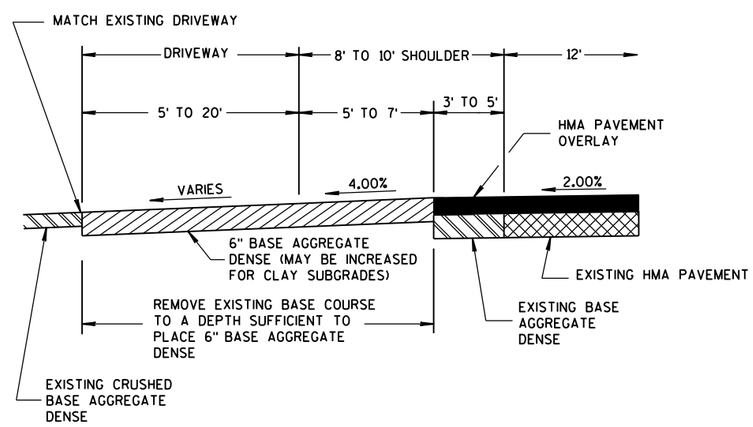

PROFILE VIEW

RURAL ENTRANCE WITH AGGREGATE SURFACE

6" BASE AGGREGATE DENSE
RESURFACING PROJECTS

DRIVEWAYS WITHOUT CURB & GUTTER RESURFACING PROJECTS RURAL	
STATE OF WISCONSIN DEPARTMENT OF TRANSPORTATION	
APPROVED December, 2016 /S/ Rodney Taylor	
DATE ROADWAY STANDARDS UNIT SUPERV	ENT
FHWA	

6
S.D.D. 8 D 22-1

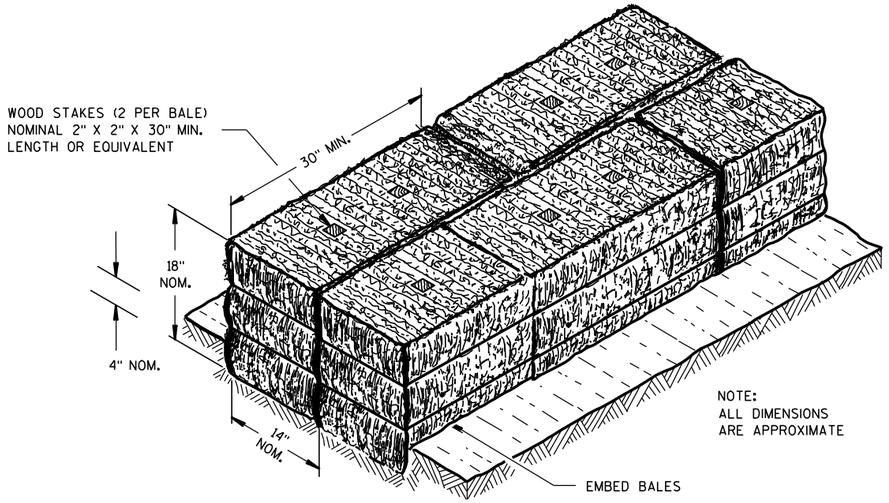

SECTION A-A

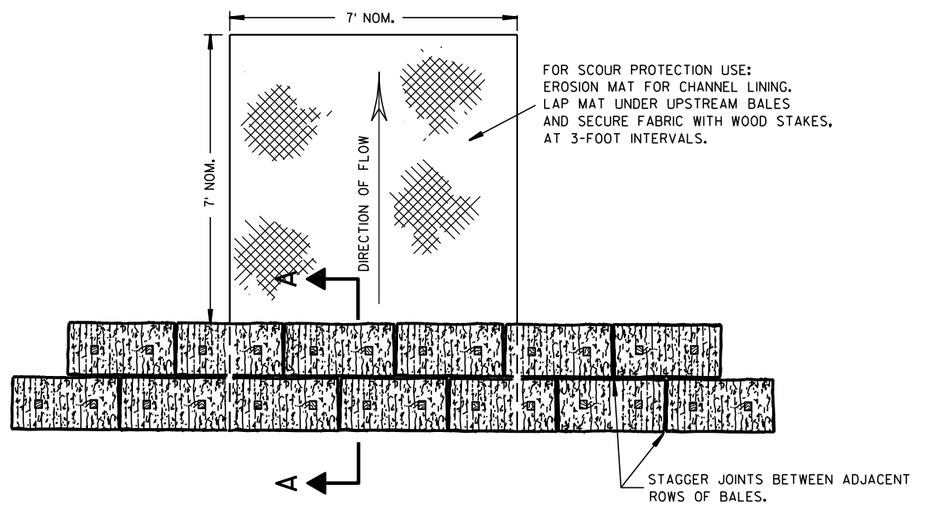

PLAN VIEW

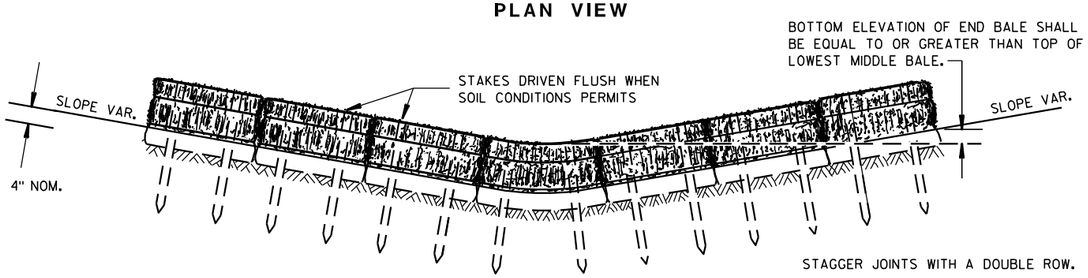

FRONT ELEVATION

TEMPORARY DITCH CHECK USING EROSION BALES ①

GENERAL NOTES

DETAILS OF CONSTRUCTION, MATERIALS AND WORKMANSHIP NOT SHOWN ON THIS DRAWING SHALL CONFORM TO THE PERTINENT REQUIREMENTS OF THE STANDARD SPECIFICATIONS AND THE APPLICABLE SPECIAL PROVISIONS.

① TEMPORARY DITCH CHECKS EITHER EROSION BALES OR MANUFACTURED SHALL BE PAID FOR UNDER THE BID ITEM OF TEMPORARY DITCH CHECK. THE DEPARTMENT WILL NOT PAY FOR TEMPORARY DITCH CHECKS CONSTRUCTED OF A SINGLE ROW OF EROSION BALES.

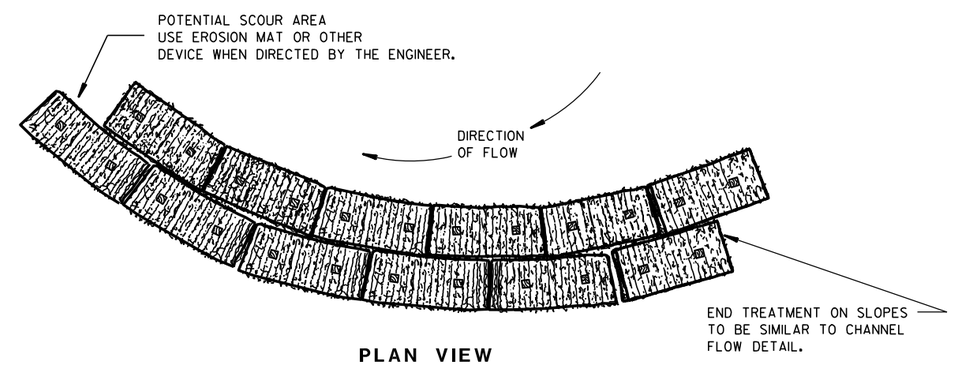

PLAN VIEW

WHEN ALTERING THE DIRECTION OF FLOW

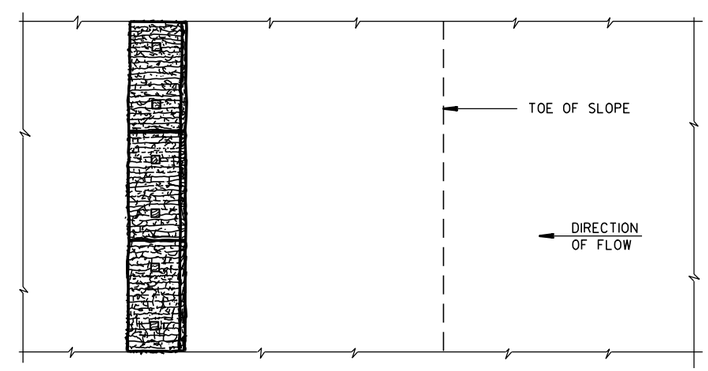

PLAN VIEW

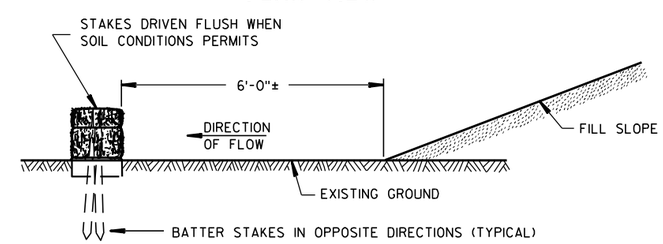

FRONT ELEVATION

WHEN EXISTING GROUND SLOPES AWAY FROM FILL SLOPE

EROSION BALES FOR SHEET FLOW

TYPICAL INSTALLATIONS OF EROSION BALES / TEMPORARY DITCH CHECKS

STATE OF WISCONSIN
DEPARTMENT OF TRANSPORTATION

APPROVED
6/04/02 — DATE
/S/ Beth Cann — CHIEF ROADWAY DEVELOPMENT ENGINEER
FHWA

6

6

S.D.D. 8 E 8-3

S.D.D. 8 E 8-3

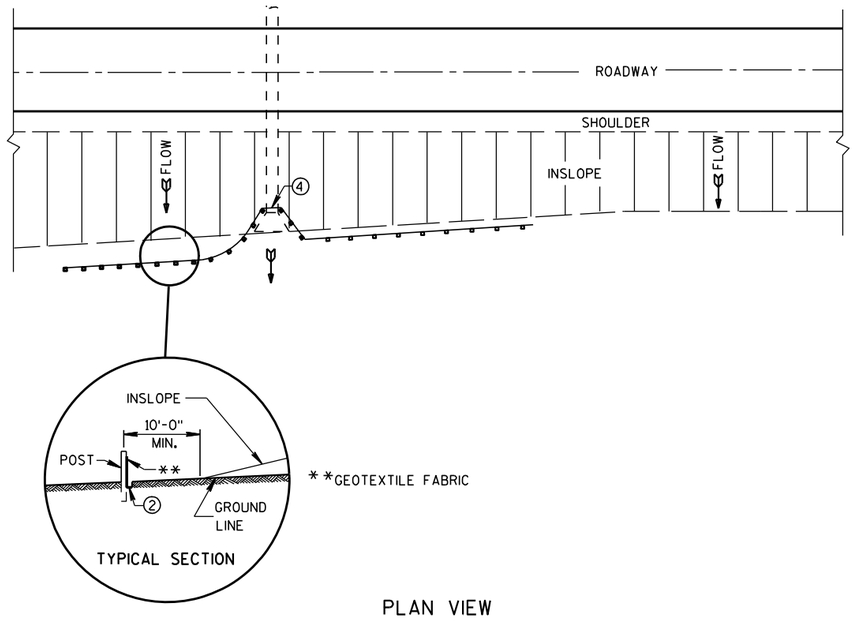

PLAN VIEW

TYPICAL APPLICATION OF SILT FENCE

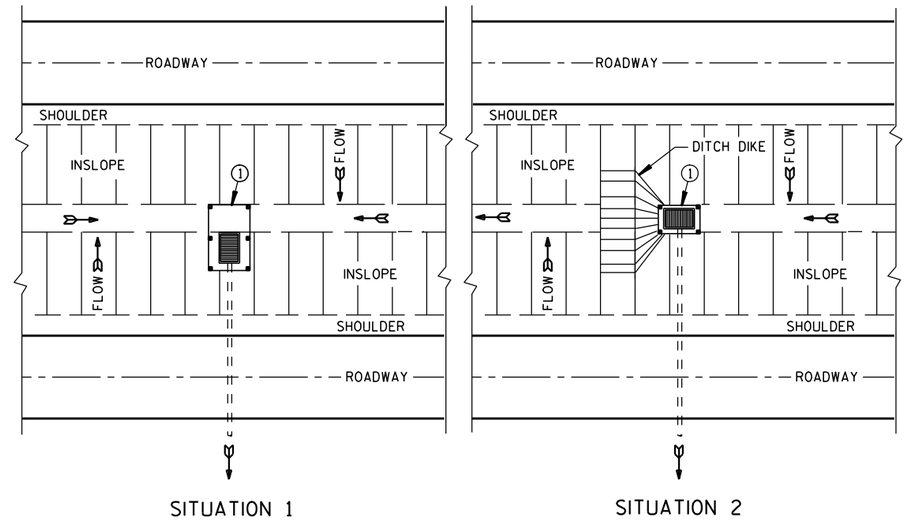

PLAN VIEW

SILT FENCE AT MEDIAN SURFACE DRAINS

GENERAL NOTES

DETAILS OF CONSTRUCTION NOT SHOWN ON THIS DRAWING SHALL CONFORM TO THE PERTINENT REQUIREMENTS OF THE STANDARD SPECIFICATIONS AND APPLICABLE SPECIAL PROVISIONS.

① HORIZONTAL BRACE REQUIRED WITH 2" X 4" WOODEN FRAME OR EQUIVALENT AT TOP OF POSTS.

② FOR MANUAL INSTALLATIONS THE TRENCH SHALL BE A MINIMUM OF 4" WIDE & 6" DEEP TO BURY AND ANCHOR THE GEOTEXTILE FABRIC. FOLD MATERIAL TO FIT TRENCH AND BACKFILL & COMPACT TRENCH WITH EXCAVATED SOIL.

③ WOOD POSTS SHALL BE A MINIMUM SIZE OF 1⅛" X 1⅛" OF OAK OR HICKORY.

④ SILT FENCE TO EXTEND ACROSS THE TOP OF THE PIPE.

⑤ CONSTRUCT SILT FENCE FROM A CONTINUOUS ROLL IF POSSIBLE BY CUTTING LENGTHS TO AVOID JOINTS. IF A JOINT IS NECESSARY USE ONE OF THE FOLLOWING TWO METHODS; A) OVERLAP THE END POSTS AND TWIST, OR ROTATE, AT LEAST 180 DEGREES. B) HOOK THE END OF EACH SILT FENCE LENGTH.

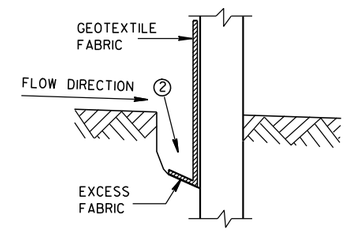

TRENCH DETAIL

NOTE: ADDITIONAL POST DEPTH OR TIE BACKS MAY BE REQUIRED IN UNSTABLE SOILS

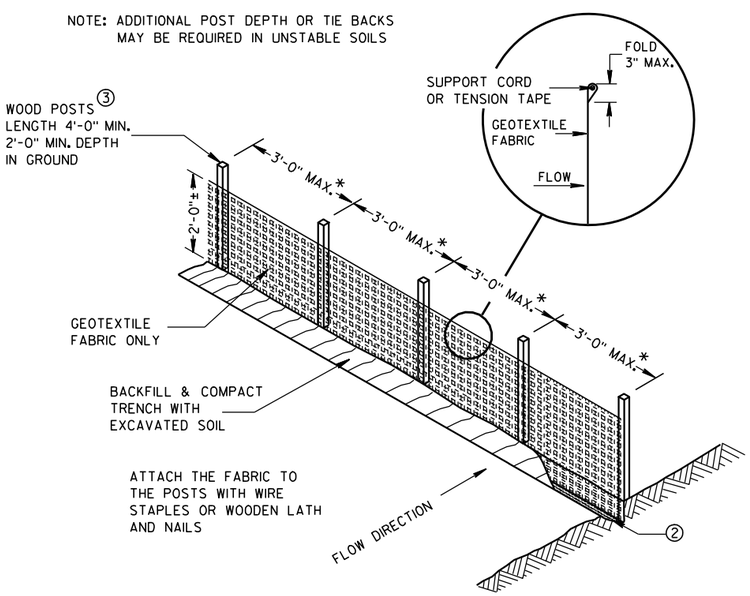

*NOTE: 8'-0" POST SPACING ALLOWED IF A WOVEN GEOTEXTILE FABRIC IS USED.

SILT FENCE

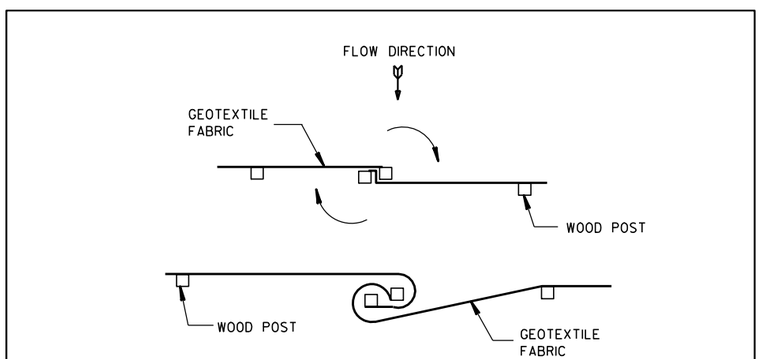

TWIST METHOD

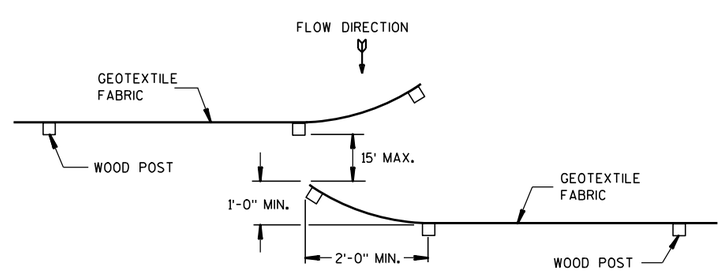

HOOK METHOD

JOINING TWO LENGTHS OF SILT FENCE ⑤

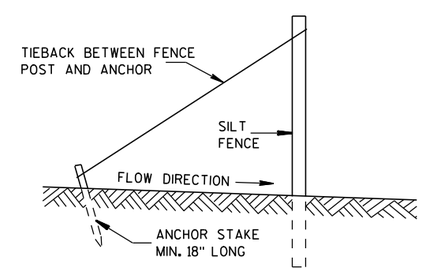

SILT FENCE TIE BACK

(WHEN REQUIRED BY THE ENGINEER)

SILT FENCE
STATE OF WISCONSIN DEPARTMENT OF TRANSPORTATION
APPROVED 4-29-05 /S/ Beth Cann----- DATE CHIEF ROADWAY DEVELOP ENGINEER FHWA

6

6

S.D.D. 8 E 9-6

S.D.D. 8 E 9-6

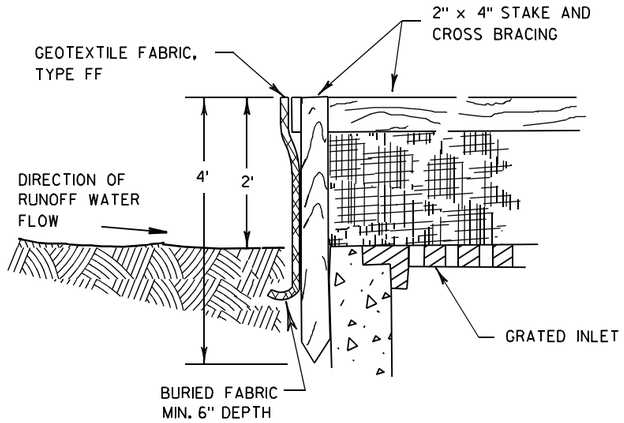

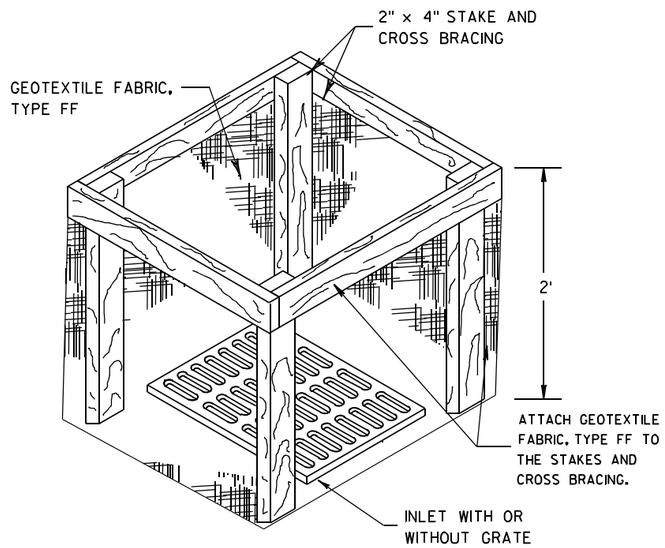

INLET PROTECTION, TYPE A

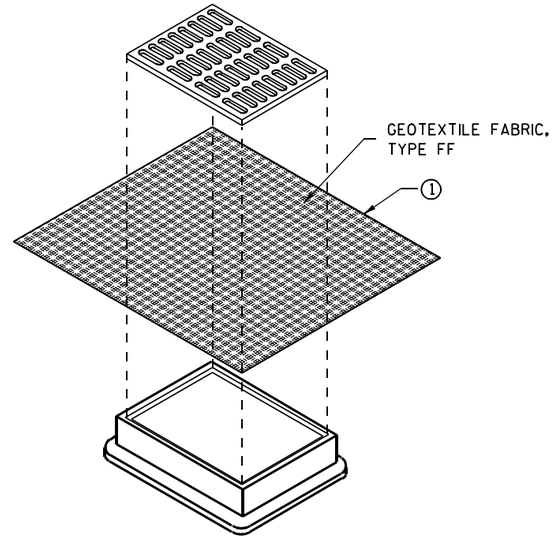

INLET PROTECTION, TYPE B (WITHOUT CURB BOX)

(CAN BE INSTALLED IN ANY INLET WITHOUT A CURB BOX)

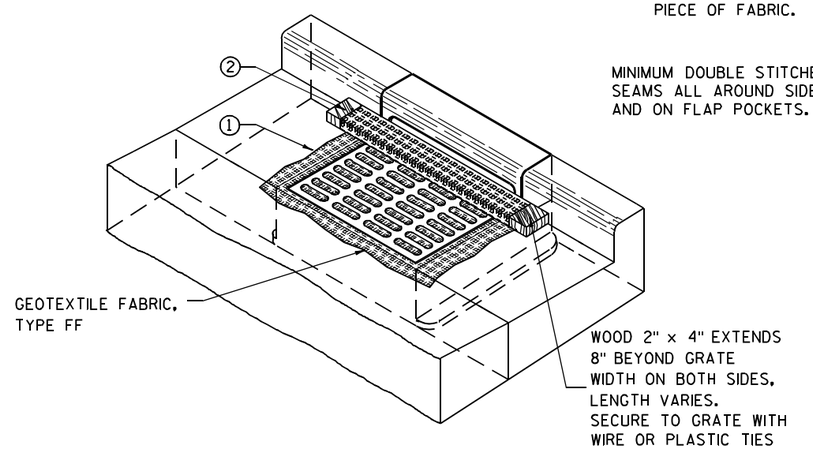

INLET PROTECTION, TYPE C (WITH CURB BOX)

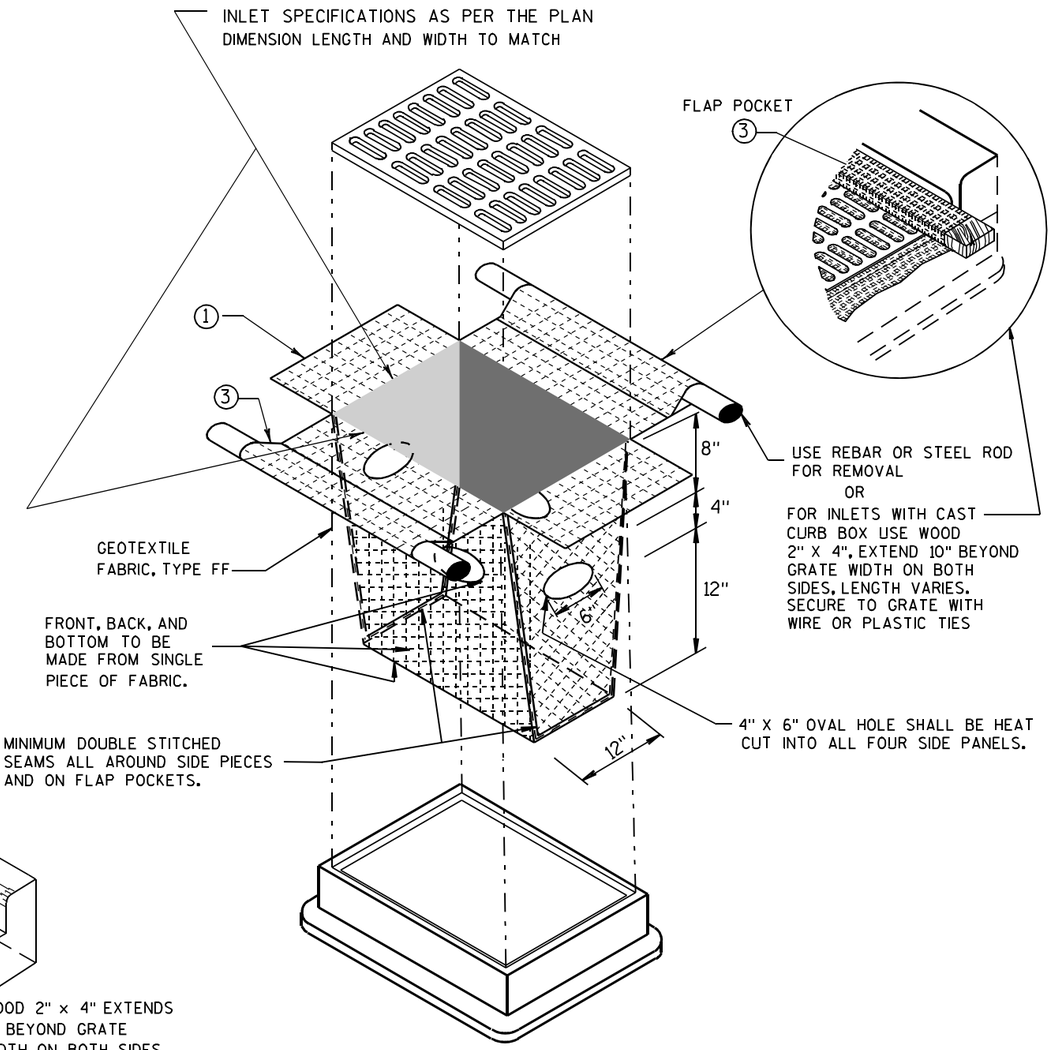

INLET PROTECTION, TYPE D

(CAN BE INSTALLED IN ANY INLET TYPE WITH OR WITHOUT A CURB BOX AS PER NOTE ②)

GENERAL NOTES

INLET PROTECTION DEVICES SHALL BE MAINTAINED OR REPLACED AT THE DIRECTION OF THE ENGINEER.

MANUFACTURED ALTERNATIVES APPROVED AND LISTED ON THE DEPARTMENT'S EROSION CONTROL PRODUCT ACCEPTABILITY LIST MAY BE SUBSTITUTED.

WHEN REMOVING OR MAINTAINING INLET PROTECTION, CARE SHALL BE TAKEN SO THAT THE SEDIMENT TRAPPED ON THE GEOTEXTILE FABRIC DOES NOT FALL INTO THE INLET. ANY MATERIAL FALLING INTO THE INLET SHALL BE REMOVED IMMEDIATELY.

① FINISHED SIZE, INCLUDING FLAP POCKETS WHERE REQUIRED, SHALL EXTEND A MINIMUM OF 10" AROUND THE PERIMETER TO FACILITATE MAINTENANCE OR REMOVAL.

② FOR INLET PROTECTION, TYPE C (WITH CURB BOX), AN ADDITIONAL 18" OF FABRIC IS WRAPPED AROUND THE WOOD AND SECURED WITH STAPLES. THE WOOD SHALL NOT BLOCK THE ENTIRE HEIGHT OF THE CURB BOX OPENING.

③ FLAP POCKETS SHALL BE LARGE ENOUGH TO ACCEPT WOOD 2X4.

INSTALLATION NOTES

TYPE B & C

TRIM EXCESS FABRIC IN THE FLOW LINE TO WITHIN 3" OF THE GRATE.

THE CONTRACTOR SHALL DEMONSTRATE A METHOD OF MAINTENANCE, USING A SEWN FLAP, HAND HOLDS OR OTHER METHOD TO PREVENT ACCUMULATED SEDIMENT FROM ENTERING THE INLET.

TYPE D

DO NOT INSTALL INLET PROTECTION TYPE D IN INLETS SHALLOWER THAN 30", MEASURED FROM THE BOTTOM OF THE INLET TO THE TOP OF THE GRATE.

TRIM EXCESS FABRIC IN THE FLOW LINE TO WITHIN 3" OF THE GRATE.

THE INSTALLED BAG SHALL HAVE A MINIMUM SIDE CLEARANCE, BETWEEN THE INLET WALLS AND THE BAG, MEASURED AT THE BOTTOM OF THE OVERFLOW HOLES, OF 3". WHERE NECESSARY THE CONTRACTOR SHALL CINCH THE BAG, USING PLASTIC ZIP TIES, TO ACHIEVE THE 3" CLEARANCE. THE TIES SHALL BE PLACED AT A MAXIMUM OF 4" FROM THE BOTTOM OF THE BAG.

INLET PROTECTION TYPE A, B, C, AND D

STATE OF WISCONSIN
DEPARTMENT OF TRANSPORTATION

APPROVED
10/16/02 — DATE
/S/ Beth Cannestra — CHIEF ROADWAY DEVELOPMENT ENGINEER
FHWA

6

S.D.D. 8 E 10-2

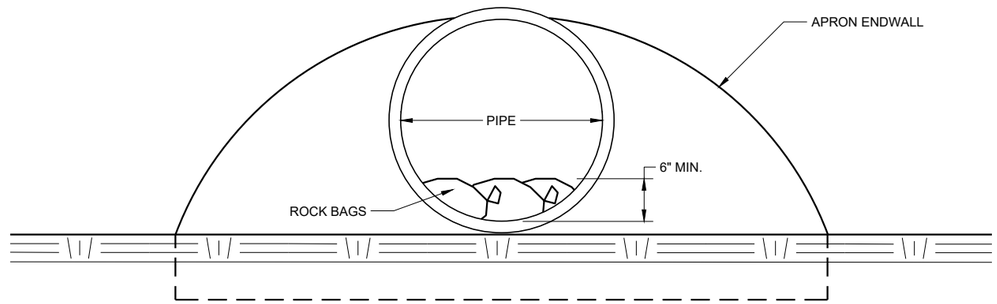

END VIEW

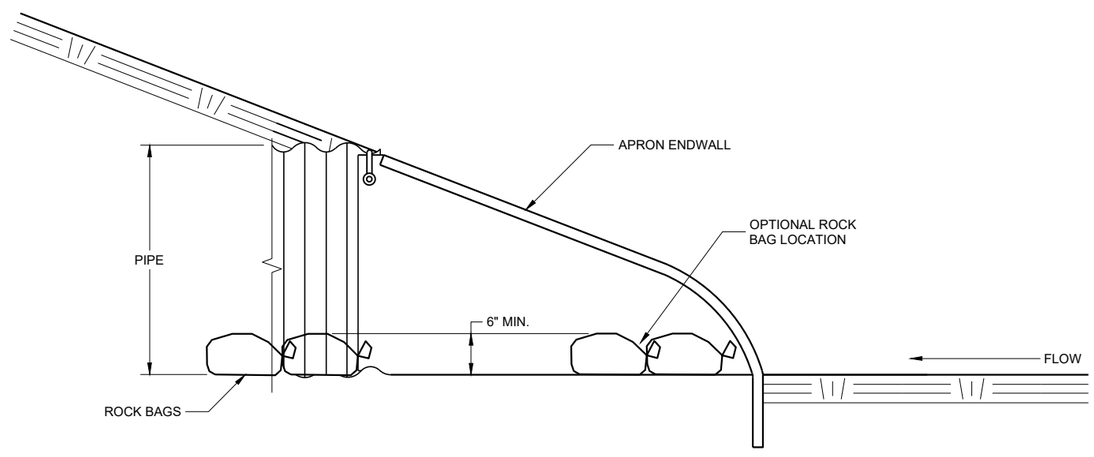

SIDE VIEW

CULVERT PIPE CHECK

(INSTALL ON INLET END ONLY)

CULVERT PIPE CHECK

STATE OF WISCONSIN
DEPARTMENT OF TRANSPORTATION

APPROVED
May 2019 — DATE
/S/ Daniel Schave — EROSION CONTROL ENGI
FHWA

6

6

SDD 08E15 - 01

SDD 08E15 - 01

METAL APRON ENDWALLS

PIPE DIA. (IN.)	MIN. THICK. (Inches) STEEL	MIN. THICK. (Inches) ALUM.	DIMENSIONS (Inches) A (±1")	B (MAX.)	H (±1")	L (±1 1/2")	L1 ①	L2 ①	W (±2")	APPROX. SLOPE	BODY
12	.064	.060	6	6	6	21	12	17 1/2	24	2 1/2 to 1	1 Pc.
15	.064	.060	7	8	6	26	14	21 3/4	30	2 1/2 to 1	1 Pc.
18	.064	.060	8	10	6	31	15	28 1/4	36	2 1/2 to 1	1 Pc.
21	.064	.060	9	12	6	36	18	29 5/8	42	2 1/2 to 1	1 Pc.
24	.064	.075	10	13	6	41	18	37 1/4	48	2 1/2 to 1	1 Pc.
30	.079	.075	12	16	8	51	18	52 1/4	60	2 1/2 to 1	1 Pc.
36	.079	.105	14	19	9	60	24	59 3/4	72	2 1/2 to 1	2 Pc.
42	.109	.105	16	22	11	69	24	75 5/8	84	2 1/2 to 1	2 Pc.
48	.109	.105	18	27	12	78	24	81	90	2 1/4 to 1	3 Pc.
54	.109	.105	18	30	12	84	30	85 1/2	102	2 1/4 to 1	3 Pc.
60	.109×	.105×	18	33	12	87	—	—	114	2 to 1	3 Pc.
66	.109×	.105×	18	36	12	87	—	—	120	2 to 1	3 Pc.
72	.109×	.105×	18	39	12	87	—	—	126	2 to 1	3 Pc.
78	.109×	.105×	18	42	12	87	—	—	132	1 1/2 to 1	3 Pc.
84	.109×	.105×	18	45	12	87	—	—	138	1 1/2 to 1	3 Pc.
90	.109×	.105×	18	37	12	87	—	—	144	1 1/2 to 1	3 Pc.
96	.109×	.105×	18	35	12	87	—	—	150	1 1/2 to 1	3 Pc.

× EXCEPT CENTER PANEL
SEE GENERAL NOTES

REINFORCED CONCRETE APRON ENDWALLS

PIPE DIA. (IN.)	DIMENSIONS (Inches) T	A	B	C	D	E	G	APPROX. SLOPE
12	2	4	24	48 7/8	72 7/8	24	2	3 to 1
15	2 1/4	6	27	46	73	30	2 1/4	3 to 1
18	2 1/2	9	27	46	73	36	2 1/2	3 to 1
21	2 3/4	9	36	37 1/2	73 1/2	42	2 3/4	3 to 1
24	3	9 1/2	43 1/2	30	73 1/2	48	3	3 to 1
27	3 1/4	10 1/2	49 1/2	24	73 1/2	54	3 1/4	3 to 1
30	3 1/2	12	54	19 3/4	73 1/2	60	3 1/2	3 to 1
36	4	15	63	34 3/4	97 3/4	72	4	3 to 1
42	4 1/2	21	63	35	98	78	4 1/2	3 to 1
48	5	24	72	26	98	84	5	3 to 1
54	5 1/2	27	65	*33 1/4-**35	*98 1/4-**100	90	5 1/2	2 2/5 to 1
60	6	*30-**35	60	39	99	96	5	2 to 1
66	6 1/2	*24-**30	*72-**78	*21-**27	99	102	5 1/2	2 to 1
72	7	*24-**36	78	21	99	108	6	2 to 1
78	7 1/2	*24-**36	78	21	99	114	6 1/2	2 to 1
84	8	36	90 1/2	21	111 1/2	120	6 1/2	1 1/2 to 1
90	8 1/2	41	87 1/2	24	111 1/2	132	6 1/2	1 1/2 to 1

*MINIMUM
**MAXIMUM

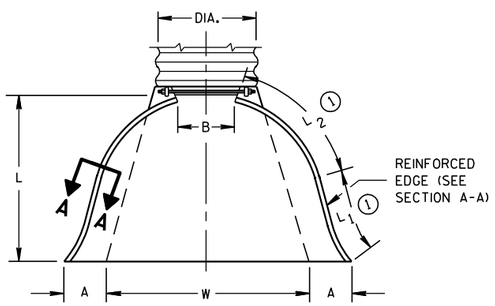

PLAN VIEW

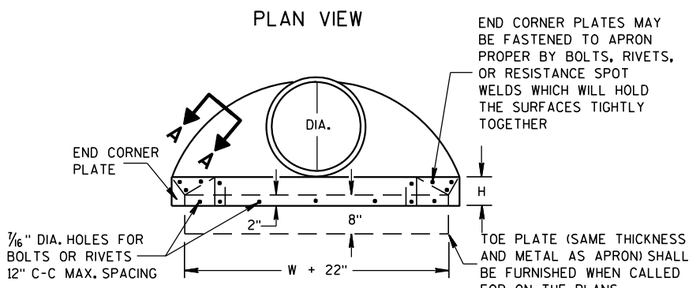

END VIEW

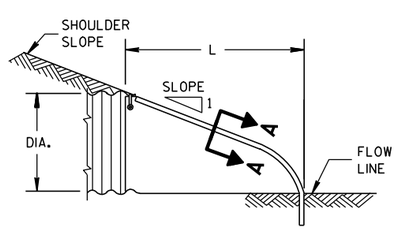

SIDE ELEVATION

METAL ENDWALLS

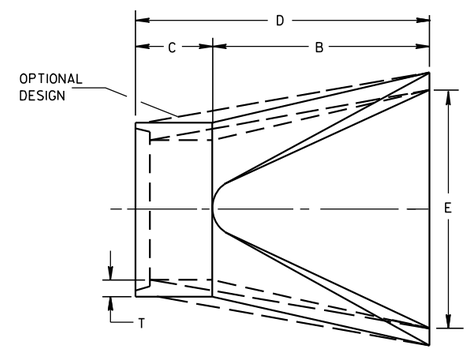

PLAN

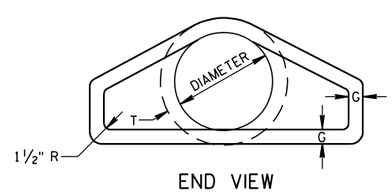

END VIEW

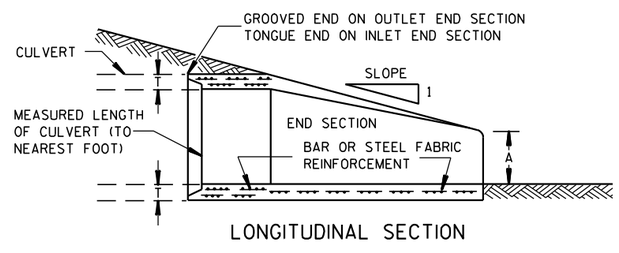

LONGITUDINAL SECTION

CONCRETE ENDWALLS

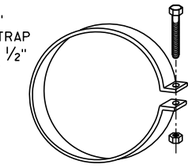

ALTERNATE FOR TYPE 1 CONNECTION

END SECTION CONNECTOR STRAP

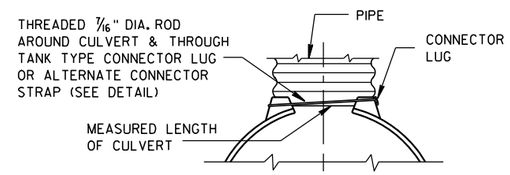

TYPE 1
FOR 12" THRU 24" CORR. PIPE

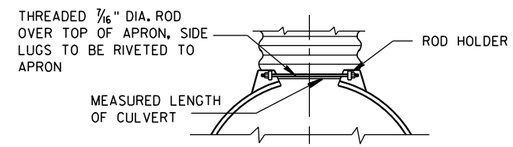

TYPE 2
FOR 30" THRU 96" CORR. PIPE

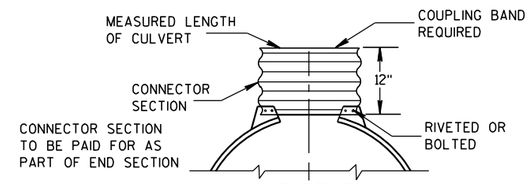

TYPE 3
FOR 42" THRU 96" CORR. PIPE

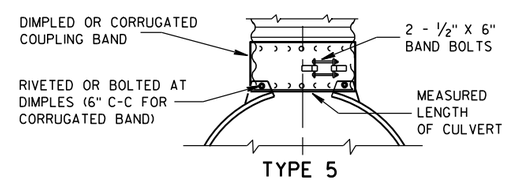

TYPE 5
ALTERNATE FOR:
ALL SIZES CORRUGATED CIRCULAR PIPE

NOTE: DIMPLED BAND FITS OVER OUTSIDE OF ENDWALL, AND CORRUGATED BAND FITS INSIDE ENDWALL. DIMPLED BAND MAY BE USED WITH HELICALLY CORRUGATED PIPE.

FOR CIRCUMFERENTIALLY CORRUGATED PIPE USE ENDWALL CONNECTION DETAILS 1, 2, 3 OR 5 AS APPLICABLE.

FOR HELICALLY CORRUGATED PIPE USE ENDWALL CONNECTION DETAILS 1, 2 OR 5.

FOR HELICALLY CORRUGATED PIPES WITH TWO CIRCUMFERENTIAL CORRUGATIONS AT EACH END USE ENDWALL CONNECTION DETAILS 1, 2 OR 3.

CONNECTION DETAILS

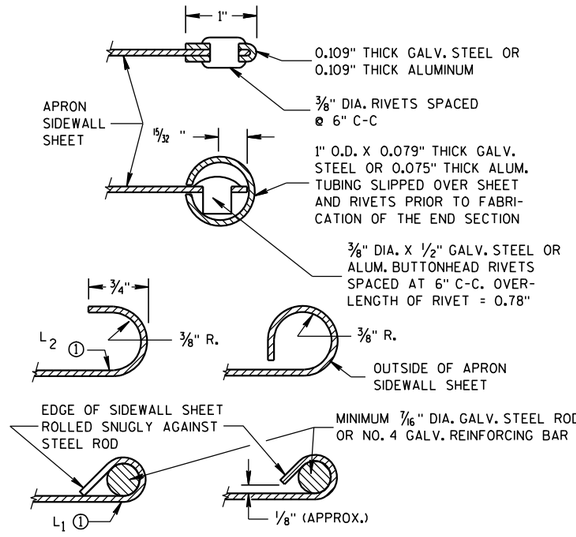

SECTION A-A

GENERAL NOTES

DETAILS OF CONSTRUCTION, MATERIALS AND WORKMANSHIP NOT SHOWN ON THIS DRAWING SHALL CONFORM TO THE PERTINENT REQUIREMENTS OF THE STANDARD SPECIFICATIONS AND THE APPLICABLE SPECIAL PROVISIONS.

CONCRETE CULVERT ENDWALLS MAY NOT BE USED WITH GALVANIZED STEEL OR ALUMINUM CULVERT PIPE OR VISE VERSA. GALVANIZED STEEL OR ALUMINUM ENDWALLS SHALL NORMALLY BE INSTALLED ON CULVERT PIPE OF THE SAME METAL.

ALL THREE PIECE STEEL APRON ENDWALLS FOR 60" DIAMETER PIPE AND LARGER SHALL HAVE 0.109" SIDES AND 0.138" CENTER PANELS. ALL THREE PIECE ALUMINUM APRON ENDWALLS FOR 60" DIAMETER PIPE AND LARGER SHALL HAVE 0.105" SIDES AND 0.134" CENTER PANELS. THE WIDTH OF CENTER PANELS SHALL BE GREATER THAN 20 PERCENT OF THE PIPE PERIMETER.

LAP SEAMS SHALL BE TIGHTLY JOINED BY GALVANIZED RIVETS OR BOLTS FOR STEEL UNITS AND ALUMINUM RIVETS AND BOLTS FOR ALUMINUM UNITS. FOR THE 60" THROUGH 96" DIAMETER APRON ENDWALL SIZES, THE REINFORCED EDGES AND CENTER PANEL SEAMS SHALL BE FURTHER REINFORCED WITH GALVANIZED STEEL OR ALUMINUM STIFFENER ANGLES. THE ANGLES SHALL BE ATTACHED BY GALVANIZED NUTS AND BOLTS FOR STEEL UNITS AND ALUMINUM NUTS AND BOLTS FOR ALUMINUM UNITS.

WHERE TWO OR MORE PIPES WITH APRON ENDWALLS ARE LAID ADJACENT TO EACH OTHER, THEY SHALL BE SEPARATED BY A DISTANCE SUFFICIENT TO PROVIDE A MINIMUM CLEARANCE OF 6 INCHES BETWEEN APRON ENDWALLS.

① FOR PIPE SIZES UP TO 60" DIAMETER, A 180° ROLLED EDGE MAY BE USED INSTEAD OF STEEL ROD REINFORCEMENT. SEE SECTION A-A.

APRON ENDWALLS FOR CULVERT PIPE

STATE OF WISCONSIN
DEPARTMENT OF TRANSPORTATION

APPROVED
11/30/94 — DATE
/S/ Rory L. Rhinesmith — CHIEF ROADWAY DEVELOPMENT ENGINEER
FHWA

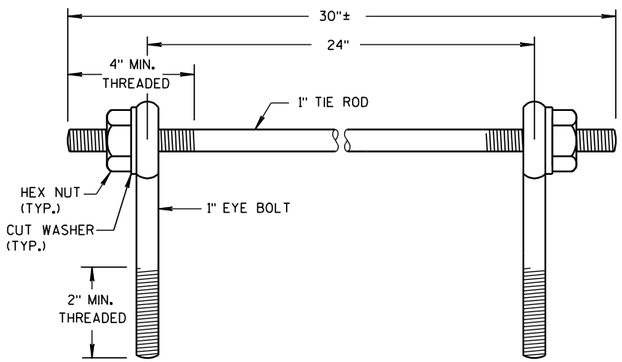

EYE BOLTS AND TIE ROD

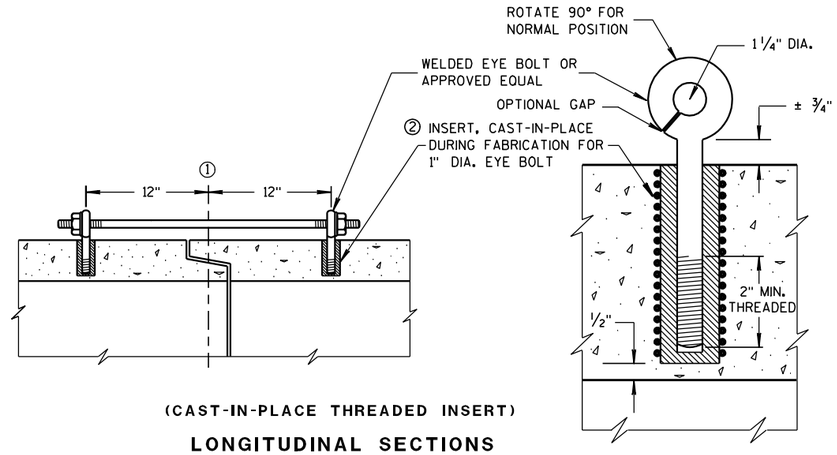

(CAST-IN-PLACE THREADED INSERT)

LONGITUDINAL SECTIONS

EYE BOLT AND TIE ROD ASSEMBLY (ALTERNATE NO. 1)

GENERAL NOTES

DETAILS OF CONSTRUCTION, MATERIALS, AND WORKMANSHIP NOT SHOWN ON THIS DRAWING SHALL CONFORM TO THE PERTINENT REQUIREMENTS OF THE STANDARD SPECIFICATIONS AND APPLICABLE SPECIAL PROVISIONS.

CONCRETE CULVERT AND STORM SEWER PIPE SHALL BE TIED TOGETHER IN THE MANNER ILLUSTRATED BY THIS DETAIL AT LOCATIONS DESIGNATED IN THE STANDARD SPECIFICATIONS AND THE PLAN. THE CONTRACTOR MAY USE EITHER ALTERNATE 1, 2 OR 3 FOR DRAINAGE STRUCTURES. ONLY ALTERNATE 1 AND 3 MAY BE USED FOR CATTLE PASSES, UNLESS OTHERWISE STATED IN THE CONTRACT. THE MATERIALS, FABRICATION AND WORK NECESSARY TO TIE THE PIPE BY THIS DETAIL WILL BE CONSIDERED INCIDENTAL TO THE PIPE AND APRON ENDWALLS IF REQUIRED.

DETAILED DRAWINGS FOR PROPOSED ALTERNATE DESIGNS FOR JOINT TIES SHALL BE SUBMITTED TO THE ENGINEER FOR APPROVAL.

JOINT TIES TO BE HOT-DIP GALVANIZED PER ASTM A 153.

① ℄ OF TONGUE AND GROOVE OR BELL AND SPIGOT JOINTS.

② THE INSIDE OF THE THREADED INSERTS SHALL BE CLEAN TO ALLOW THE INSERTION OF THREADED EYE BOLTS.

③ HOLES SHALL BE CAST-IN-PLACE OR DRILLED 12 INCHES FROM ℄ OF TONGUE AND GROOVE.

④ BOLT PROJECTION INSIDE OF PIPE SHALL NOT EXCEED 2 INCHES.

⑤ OPENING TO BE ROD DIAMETER PLUS 1 INCH.

⑥ LENGTH ADEQUATE TO EXTEND TO WITHIN 1/2 INCH OF THE INNER SURFACE OF THE PIPE.

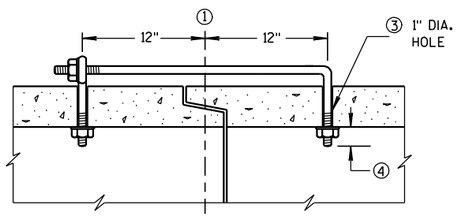

(TONGUE & GROOVE PIPE)

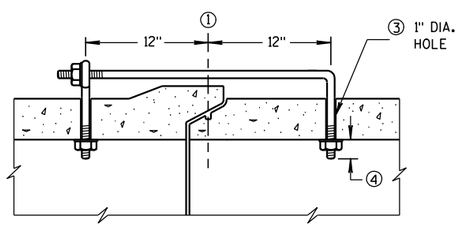

(MODIFIED BELL PIPE)

LONGITUDINAL SECTION

EYE BOLT DIMENSION TABLE

PIPE SIZE	L = LENGTH	
	TONGUE & GROOVE PIPE	MODIFIED BELL PIPE
18" TO 24"	4 1/2"	6 1/4"
30"	5"	7"
36"	5 1/2"	7"
42"	6"	
48"	6 1/2"	
60"	7 1/2"	
66"	8"	

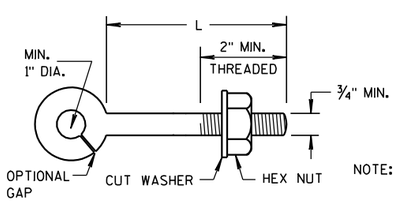

EYE BOLT

NOTE: TWO EYE BOLTS MAY BE USED WITH A 30" LONG THREADED ROD IN LIEU OF THE 90° BENT TIE ROD.

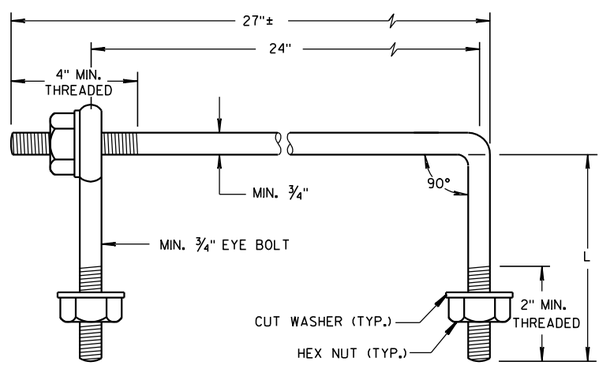

EYE BOLT AND TIE ROD

(JOINT TIES FOR 18" TO 66" DIA. CONCRETE PIPE)

EYE BOLT AND TIE ROD ASSEMBLY (ALTERNATE NO. 2)

ADJUSTABLE TIE ROD TABLE

PIPE DIAMETER	TIE ROD DIAMETER	D	L_1	N
12-60	5/8	5/8	5	1/2
66-84	3/4	3/4	5	1/2
90-108	1	1	7	1 7/16

DIMENSIONS SHOWN ARE IN INCHES

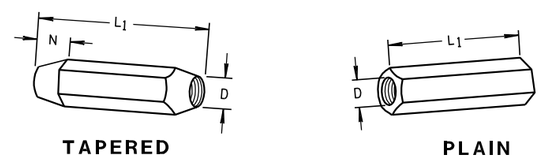

TAPERED PLAIN

RIGHT AND LEFT THREADS

SLEEVE NUTS

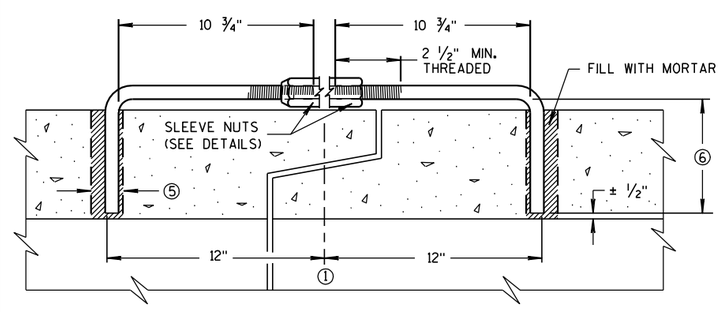

LONGITUDINAL SECTION

(JOINT TIES FOR 12" TO 108" DIA. CONCRETE PIPE)

ADJUSTABLE TIE ROD (ALTERNATE NO. 3)

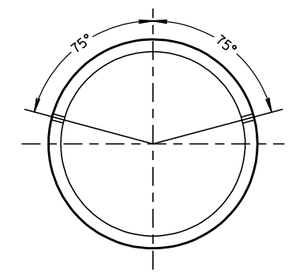

PLACEMENT OF (2) CAST-IN-PLACE INSERTS OR HOLES DURING FABRICATION FOR PIPE SECTIONS REQUIRING TIE RODS

TRANSVERSE SECTION

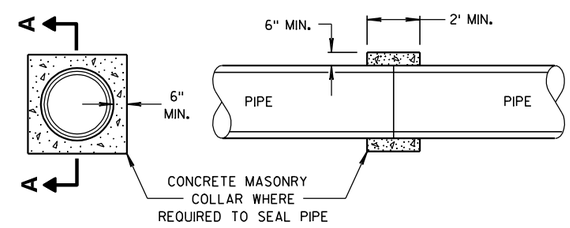

SECTION A-A

CONCRETE COLLAR DETAIL

JOINT TIES FOR CONCRETE PIPE AND CONCRETE COLLAR DETAIL

STATE OF WISCONSIN
DEPARTMENT OF TRANSPORTATION

APPROVED
6/5/2012 /S/ Jerry H. Zogg
DATE ROADWAY STANDARDS DEVELOPMENT ENGINEER
FHWA

1. WOOD OR STEEL POSTS (w6X9 OR w6X8.5) MAY BE USED. DO NOT INTERMIX WOOD AND STEEL POSTS. INSTALL STEEL POSTS WITH HOLES ON APPROACHING TRAFFIC SIDE.
2. USE WOOD OR APPROVED PLASTIC BLOCKOUTS. WOOD BLOCKOUTS MAY BE CONSTRUCTED OUT OF TWO OR MORE WOOD BLOCKOUTS. SEE ALTERNATE WOOD BLOCKOUT DETAIL. DIMENSIONS OF APPROVED PLASTIC BLOCKOUTS MAY VARY.
3. IF ROCK IS ENCOUNTERED DURING EXCAVATION, PROVIDE A HOLE 12 INCHES IN DIAMETER EXTENDING 20 INCHES DEEP INTO THE ROCK. PLACE APPROXIMATELY 2 1/2" INCHES OF GRANULAR MATERIAL IN THE BOTTOM OF THE HOLE. CUT THE POSTS THE TO LENGTH AMD INSTALL. BACKFILL WITH EXCAVATED MATERIAL AND COMPACT. BACKFILL IS TO BE FREE OF LARGE ROCKS.
4. WHEN THE DISTANCE FROM BACK OF POST TO SHOULDER HINGE POINT IS LESS THAN 2 FEET INSTALL LONGER POST AT HALF POST SPACING (K).
5. FOR NEW MGS INSTALLATION TOP OF W-BEAM RAIL TOLERANCE IS ±1". FOR EXISTING MGS INSTALLATION TOP OF W-BEAM IS BETWEEN 27 ¾" TO 32".
6. WHEN USING STEEL POST AND WOOD BLOCKOUTS INSTALL FOUR 16D GALVANIZED NAILS. INSTALL NAILS AT THE BACK CORNERS OF THE BLOCK AND BEND THE NAILS OVER THE FLANGE OF THE STEEL POST.
7. TOTAL POST LENGTH FOR TYPE K IS 7' - 0".
   TOTAL POST LENGTH FOR OTHER MGS TYPES IS 6' - 0".

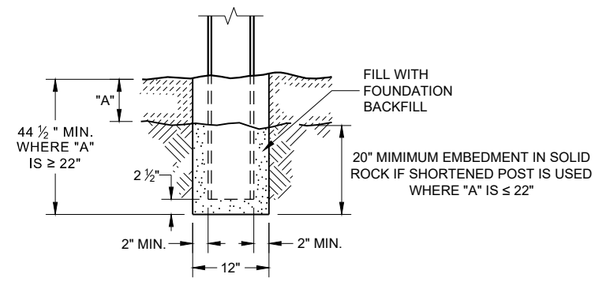

END VIEW
SETTING STEEL OR WOOD POST IN ROCK (3)

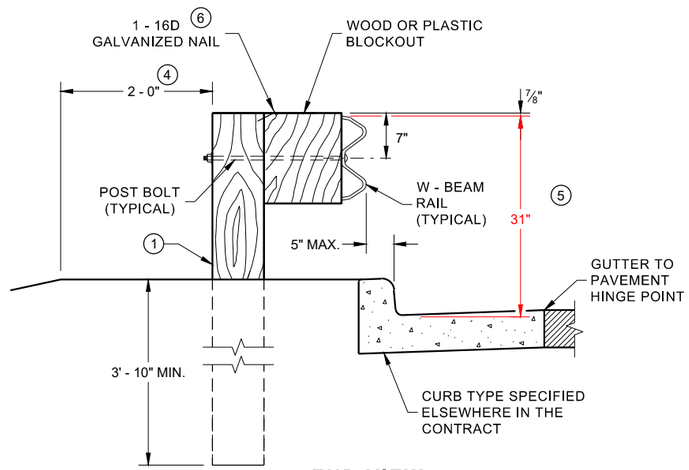

END VIEW
LOCATED ALONG A CURBED ROADWAY

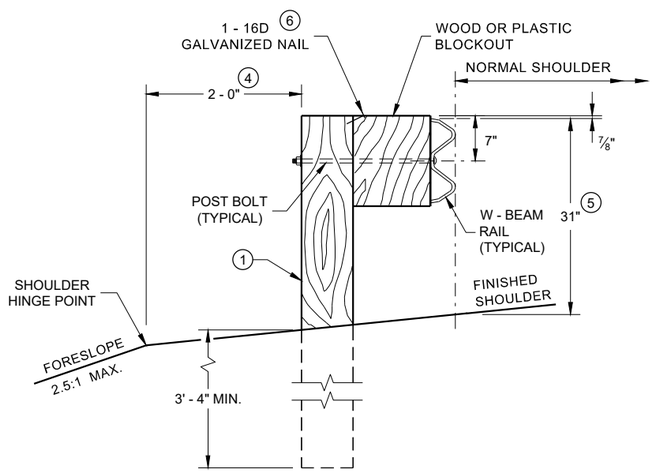

END VIEW
LOCATED ALONG A ROADWAY SHOULDER STANDARD INSTALLATION

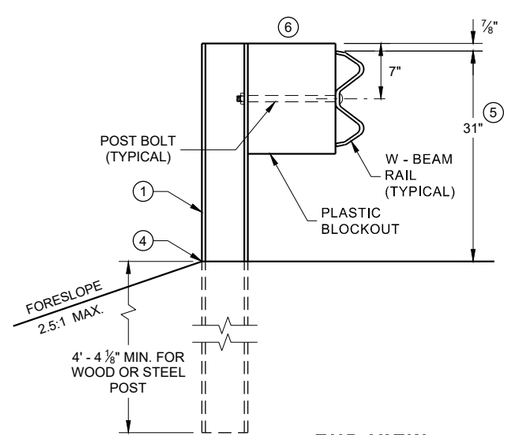

END VIEW
MGS LONGER POST AT HALFPOST SPACING W BEAM (K)

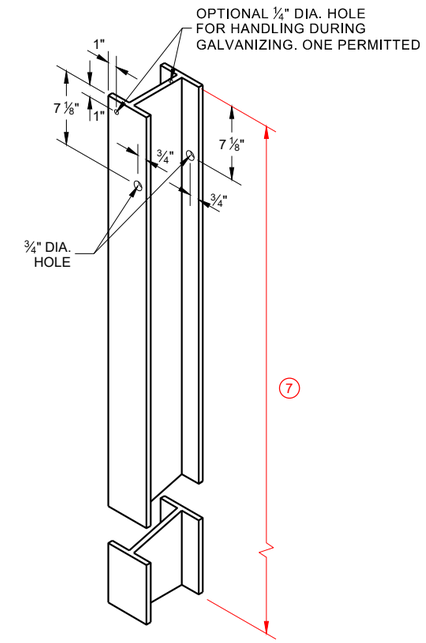

STEEL POST & HOLE PUNCHING DETAIL (W 6 X 9) (1)

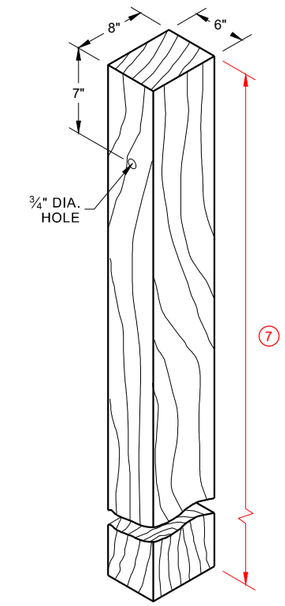

WOOD POST (6" X 8") NOMINAL (1)

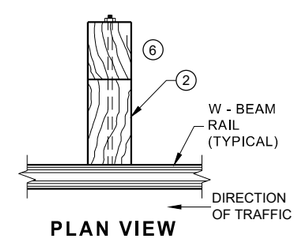

PLAN VIEW WOOD POST, BLOCKOUT & BEAM

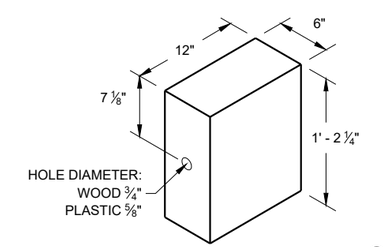

WOOD OR PLASTIC BLOCKOUT (2)

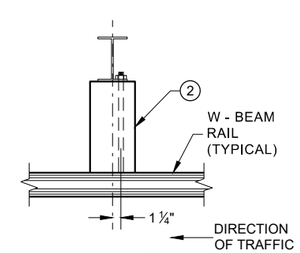

PLAN VIEW STEEL POST, PLASTIC BLOCKOUT & BEAM

MIDWEST GUARDRAIL SYSTEM (MGS) GUARDRAIL

STATE OF WISCONSIN
DEPARTMENT OF TRANSPORTA

6

SDD 14B42 - 06a
SDD 14B42 - 06a

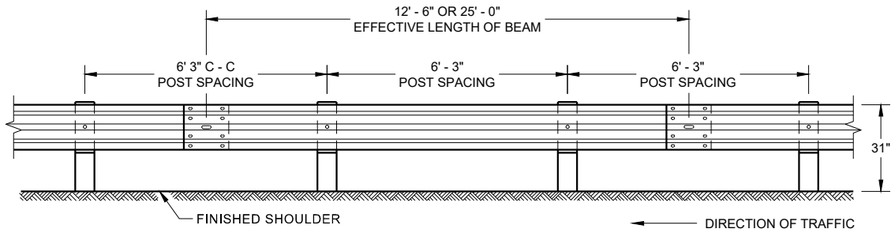

FRONT VIEW
POST SPACING STANDARD INSTALLATION

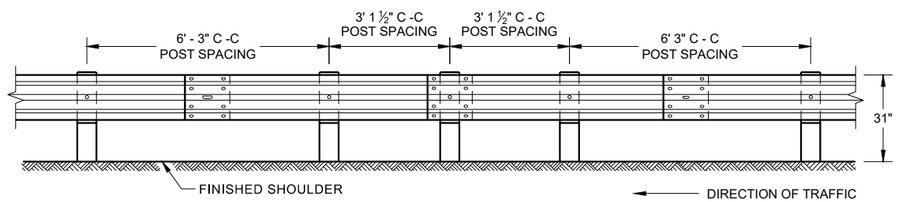

FRONT VIEW
HALF POST SPACING (HS) AND HALF POST SPACING WITH LONGER POSTS (K)

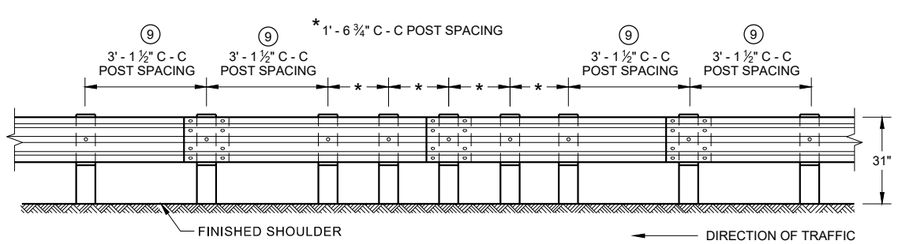

FRONT VIEW
QUARTER POST SPACING (QS)

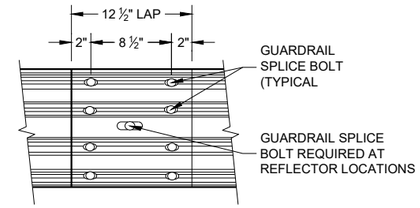

FRONT VIEW
MID-SPAN BEAM SPLICE

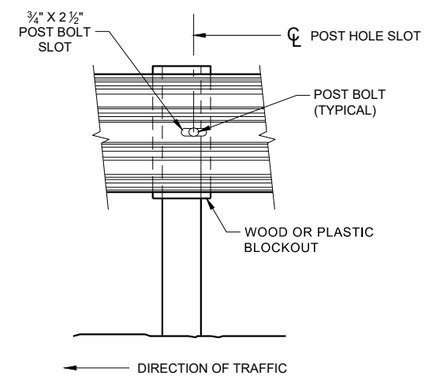

FRONT VIEW AT STEEL POST

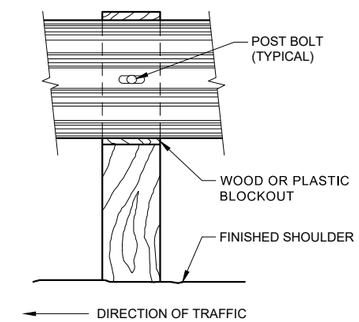

FRONT VIEW AT WOOD POST

GENERAL NOTES

(8) DO NOT INSTALL REFLECTORS ON THE FIRST 50 FEET OF THE APPROACH END OF THE ENERGY ABSORBING TERMINAL. RAIL SPLICE LOCATIONS ARE THE ONLY ACCEPTABLE LOCATIONS FOR REFLECTORS.

(9) 25 FEET OF HALF POST SPACING IS REQUIRED ON APPROACH AND DEPARTURE ENDS OF QUARTER POST SPACING.

POST BOLTS ARE A ⅝" DIAMETER ASTM A307 GUARDRAIL BOLT. A POST BOLT REQUIRES ⅝" DIAMETER A563A DOUBLE RECESSED (DR) HEAVY HEX NUT AND ⅝" DIAMETER F844 FLAT WASHER. POST BOLTS MAY BE LONGER IF MULTIPLE BLOCKOUTS ARE BEING USED.

GUARD RAIL SPLICE BOLTS ARE A ⅝" DIAMETER ASTM A307 GUARDRAIL HEAD BOLT. A GUARDRAIL SPLICE BOLT REQUIRES ⅝" DIAMETER A563A DOUBLE RECESSED (DR) HEAVY HEX NUT.

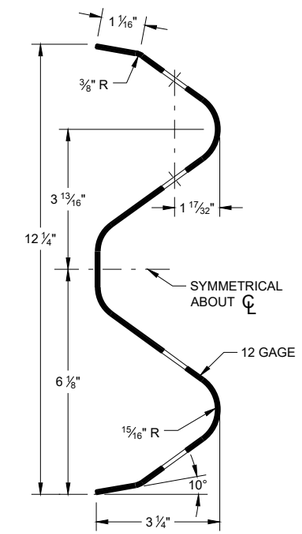

SECTION THRU W-BEAM RAIL

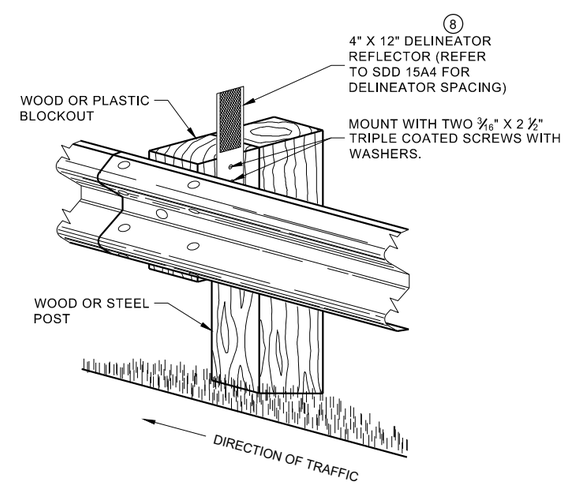

ONE SIDED REFLECTOR DETAIL AND TYPICAL INSTALLATION

MIDWEST GUARDRAIL SYSTEM (MGS) GUARDRAIL

STATE OF WISCONSIN
DEPARTMENT OF TRANSPORTA

6

SDD 14B42 - 06b

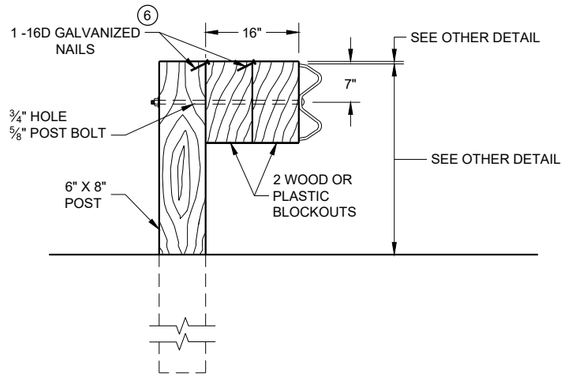

DETAIL FOR 16" BLOCKOUT DEPTH

IT IS ACCEPTABLE TO USE BLOCKOUTS UP TO 16" DEEP TO INCREASE THE POST OFFSET TO AVOID UNDERGROUND OBSTACLES. THERE IS NO LIMIT TO THE NUMBER OF POSTS THAT CAN HAVE ADDITIONAL BLOCKOUTS UP TO 16" DEEP.

NOTE:

1. ALL FILLETS SHALL HAVE A MINIMUM RADIUS OF 3/16".
2. IF THE BOLT EXTENDS MORE THAN ¼" FROM THE NUT THE BOLT SHOULD BE TRIMMED BACK.

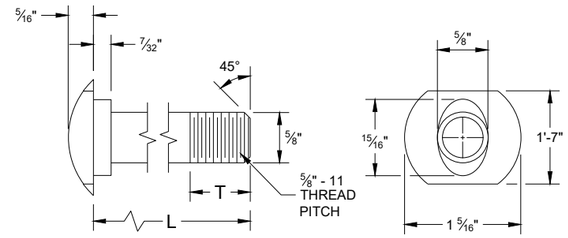

POST BOLT TABLE

L	T (MIN.)
1 ¼"	1 ⅛"
2"	1 ¾"
10"	4"
14"	4 1/16"
18"	4"
21"	4 1/16"
25"	4"

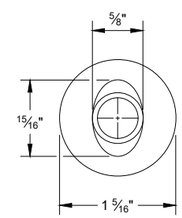

ALTERNATE BOLT HEAD

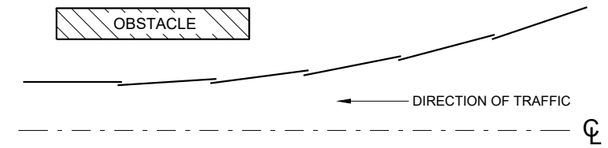

PLAN VIEW
BEAM LAPPING DETAIL

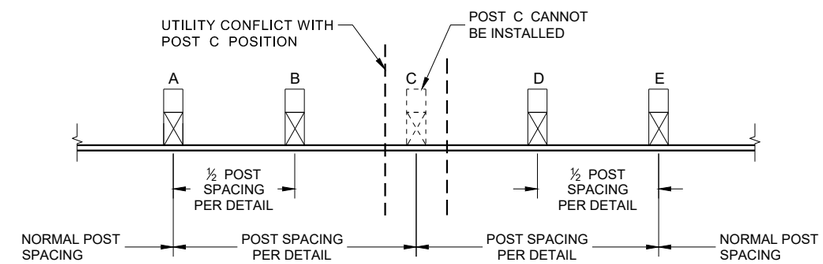

POST DRIVING FOR CONTINUOUS UNDERGROUND OBSTRUCTION

6

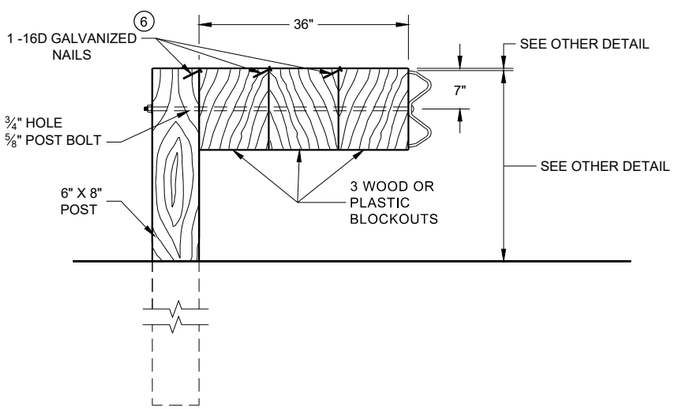

DETAIL FOR 36" BLOCKOUT DEPTH

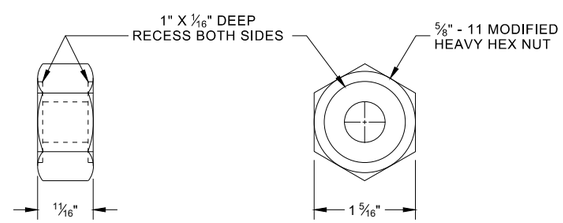

POST BOLT, SPLICE BOLT AND RECESS NUT

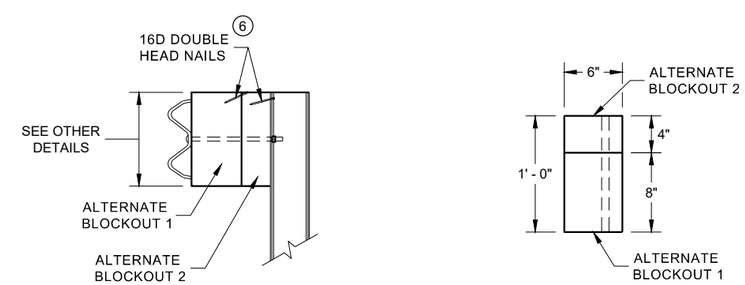

SIDE VIEW

PLAN VIEW

ALTERNATE WOOD BLOCKOUT DETAIL

NOTES: UNDER SPECIAL CIRCUMSTANCES, SUCH AS AVOIDING OBSTACLES THAT ARE NOT RELOCATED, IT IS ACCEPTABLE TO INSTALL ADDITIONAL BLOCKOUTS TO OBTAIN UP TO 36" DEPTH FOR ONE OR TWO POSTS IN A SECTION OF GUARDRAIL.

DO NOT USE 16" OR 36" BLOCKOUTS IF IT CAUSES THE POST TO BE DRIVEN BEYOND SHOULDER HINGE POINT OR CAUSES A FIXED OBJECT TO BE WITHIN THE DEFLECTION DISTANCE OF THE BARRIER.

(6) WHEN USING STEEL POST AD WOOD BLOCKOUTS, INSTALL FOUR 16D GALVANIZED NAILS. INSTALL NAILS AT THE BACK CORNERS OF THE BLOCK AND BEND THE NAILS OVER THE FLANGE OF THE STEEL POST.

MIDWEST GUARDRAIL SYSTEM (MGS) GUARDRAIL

STATE OF WISCONSIN
DEPARTMENT OF TRANSPORTA

SDD 14B42 - 06c

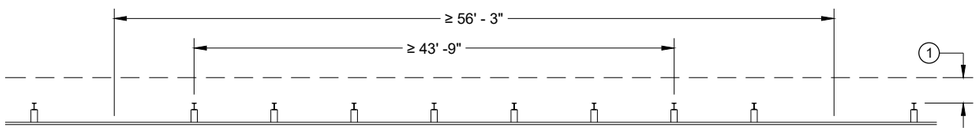

MISSING POST IN NORMAL BEAM GUARD RUN

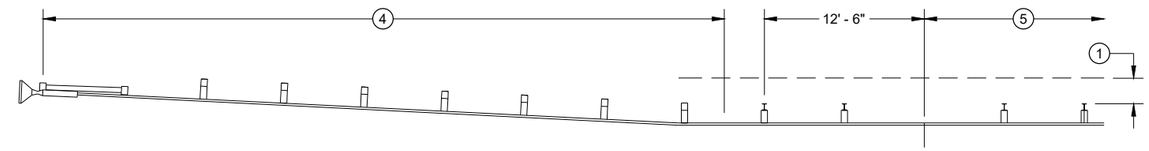

MISSING POST IN NORMAL BEAM GUARD RUN NEAR EAT

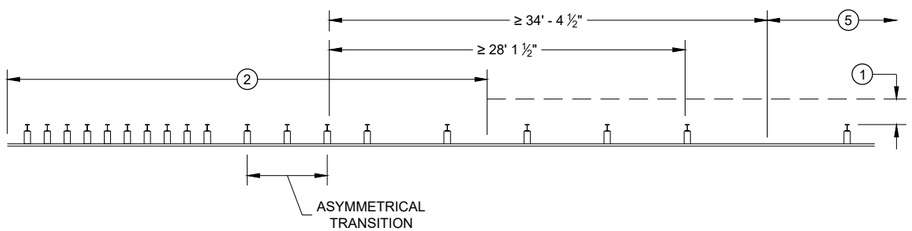

MISSING POST NEAR APPROACH THRIE BEAM TRANSITION

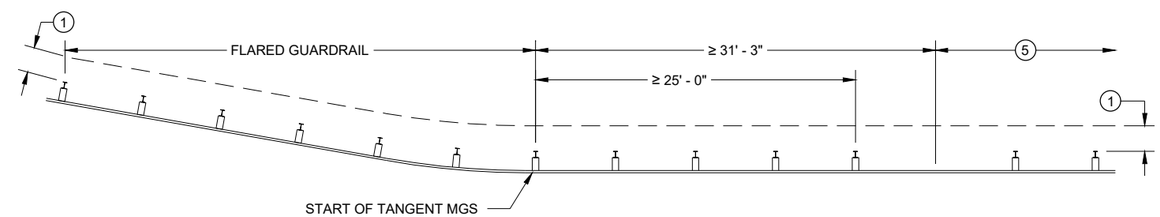

MISSING POST IN NORMAL BEAM GUARD RUN NEAR FLARED BEAM GUARD

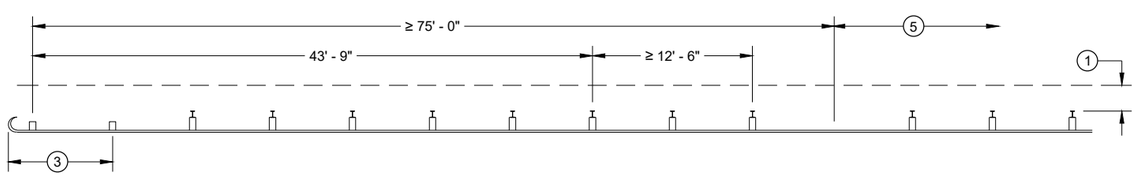

MISSING POST IN NORMAL BEAM GUARD RUN NEAR TYPE 2 TERMINAL

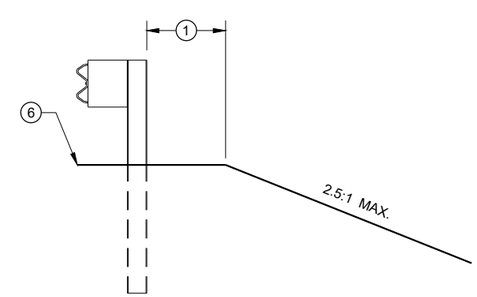

CROSS SECTION VIEW

1. MINIMUM OF 2 FEET OF GRADING BEHIND POST.
2. SEE SDD 14B45 FOR MORE DETAILS.
3. SEE SDD 14B47 FOR MORE DETAILS.
4. SEE SDD 14B44 FOR MORE DETAILS.
5. SEE MISSING POST IN NORMAL BEAM GUARD RUN FOR DISTANCE TO NEXT MISSING POST AND AREA FOR WELL DRAINED, COMPACTED SOILS.
6. SEE PLAN FOR SHOULDER DESIGN.

MIDWEST GUARDRAIL SYSTEM (MGS) GUARDRAIL

STATE OF WISCONSIN
DEPARTMENT OF TRANSPORTATION

APPROVED
7/2018 — DATE
/S/ Rodney Taylor — ROADWAY STANDARDS DEVE UNIT SUPERVISOR
FHWA

6

SDD 14B42 - 06d

GENERAL NOTES

(A) THE SLOPE IN THE AREA BOUNDED BY THE GRADELINE, THE HINGE POINT LINE (HPL) AND THE CLEAR ZONE LIMITS (CZL) SHALL BE 4:1 OR FLATTER.

(B) AFTER FINAL ASSEMBLY, RECHECK CABLE TO BE SURE IT IS TAUT AND HAS NOT RELAXED

(C) DIFFERENT MANUFACTURERS REQUIRE DIFFERENT PERFORATED W - BEAM RAIL END PANELS. SEE MANUFACTURER'S INFORMATION.

(D) ATTACH ALUMINUM SHEET TO E.A.T. HEAD USING 4 STAINLESS STEEL SELF - TAPPING SCREWS. ONE SCREW PER CORNER.

(E) HARDWARE MAY VARY BETWEEN MANUFACTURER. SEE MANUFACTURER'S DRAWING FOR INFORMATION.

DIMENSIONS MAY VARY, MANUFACTURER'S INFORMATION.

SEE SDD 14B42 FOR MORE INFORMATION.

* DO NOT ATTACH BLOCKOUTS TO POST 1 AND 2.

DO NOT INSTALL REFLECTORS ON THE FIRST 50 FEET OF THE APPROACH END OF THE ENERGY ABSORBING TERMINAL.

SEE MANUFACTURER'S DRAWING FOR SPLICE LOCATION, HARDWARE DIMENSIONS AND INSTALLATION INSTRUCTIONS.

THE CENTER OF THE UPPER 3 ½" DIAMETER HOLE ON POST NUMBER 3 THROUGH POST 9 IS TO BE FLUSH WITH THE GROUND LINE UP TO A MAXIMUM OF 2" ABOVE GROUND LINE. WOOD BLOCKS ON POSTS NUMBERED 3 THROUGH 9 MAY BE ADJUSTED UP TO 3" ABOVE THE TOP OF POST.

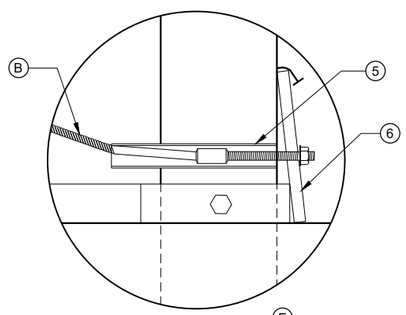

DETAIL "A" (E)

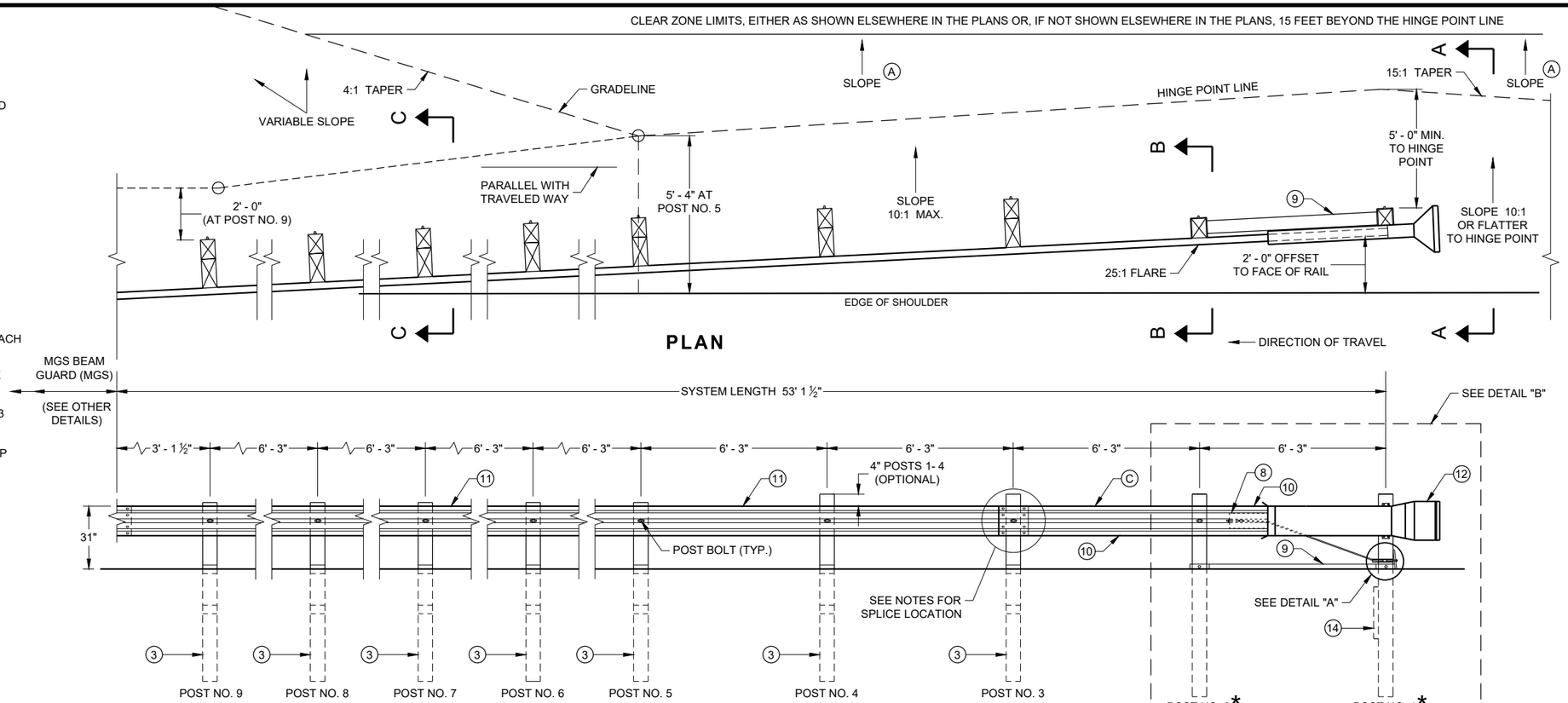

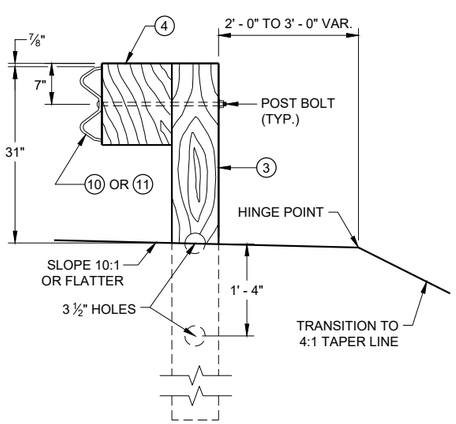

SECTION C - C
TYPICAL AT POST NOS. 3 - 9

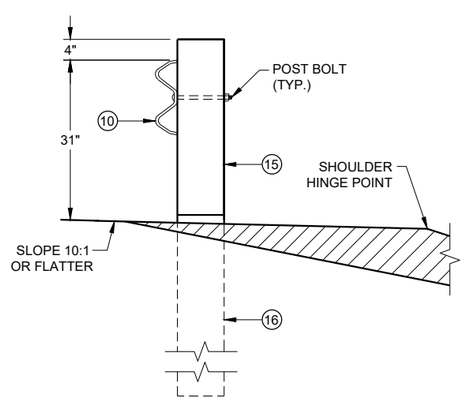

SECTION B - B
TYPICAL AT POST NO. 2*

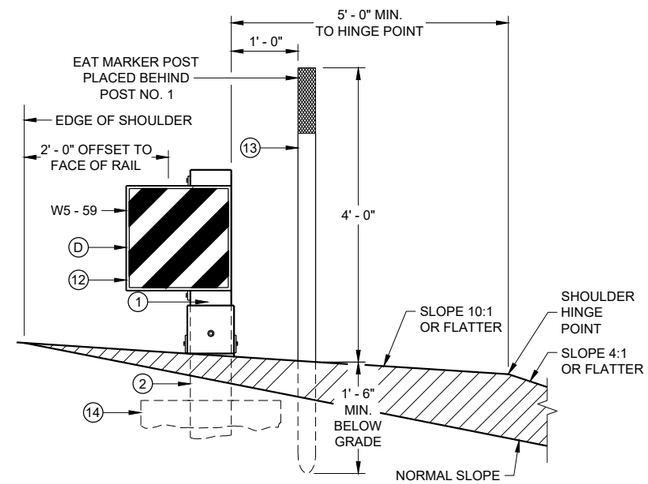

SECTION A - A
TYPICAL AT POST NO. 1*

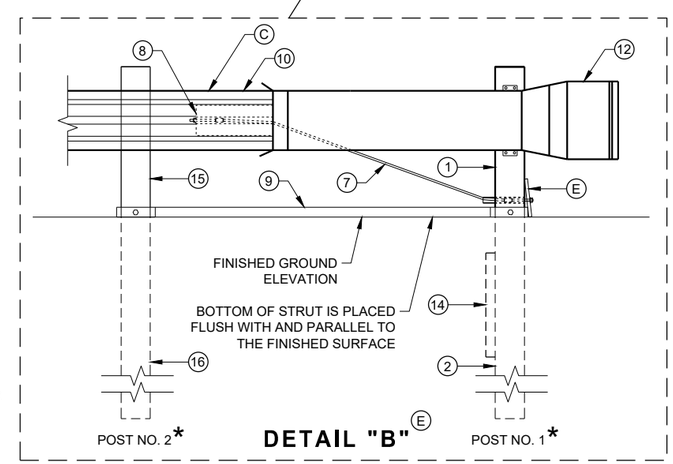

DETAIL "B" (E)

MIDWEST GUARDRAIL SYSTEM ENERGY ABSORBING TERMINAL (MGS)

STATE OF WISCONSIN
DEPARTMENT OF TRANSPORTATION

6

6

SDD 14B44 - 04a

SDD 14B44 - 04a

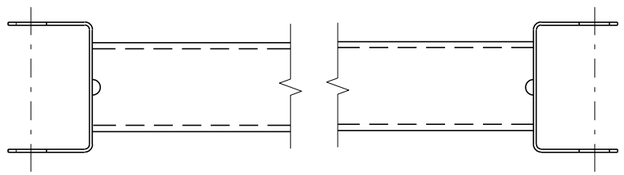

GENERIC GROUND STRUT (9)(E)

BILL OF MATERIALS

PART NO.	DESCRIPTION MATERIALS PROVIDED BY MGS EAT MANUFACTURER. SEE MANUGACTURER'S DETAILS FOR MORE INFORMATION.
1	UPPER POST NO. 1 6" X 6" TUBE
2	LOWER POST NO. 1
3	WOOD CRT
4	WOOD BLOCKOUT
5	PIPE SLEEVE
6	BEARING PLATE
7	BCT CABLE ASSEMBLY
8	ANCHOR CABLE BOX
9	GROUND STRUT
10	PERFORATED W-BEAM RAIL END PANEL, 12'-6" LONG.
11	STANDARD W-BEAM RAIL. MULTIPLE SECTIONS REQUIRED. SECTIONS VARY IN LENGTH.
12	IMPACT HEAD
13	EAT MARKER POST - YELLOW (SEE APPROVED PRODUCTS LIST)
14	SOIL PLATE
15	UPPER POST NO. 2
16	LOWER POST NO. 2

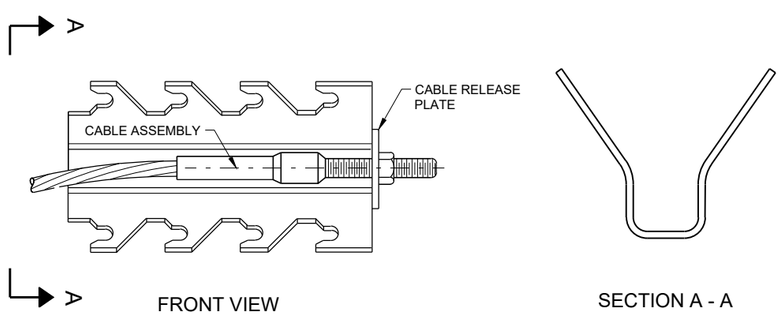

GENERIC ANCHOR CABLE BOX (9)(E)

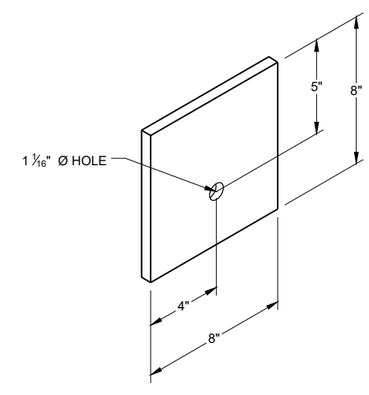

BEARING PLATE (6)(E)

MIDWEST GUARDRAIL SYSTEM ENERGY ABSORBING TERMINAL (MGS)

STATE OF WISCONSIN
DEPARTMENT OF TRANSPORTAT

6

SDD 14B44 - 04b

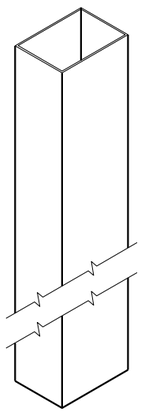

UPPER POST NO. 1 (1) (E)

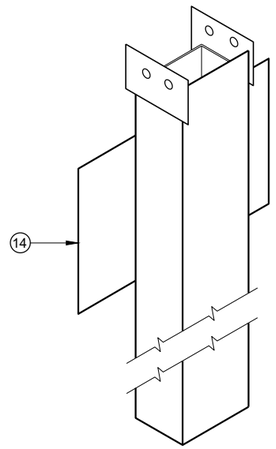

LOWER POST NO. 1 (2) (E)

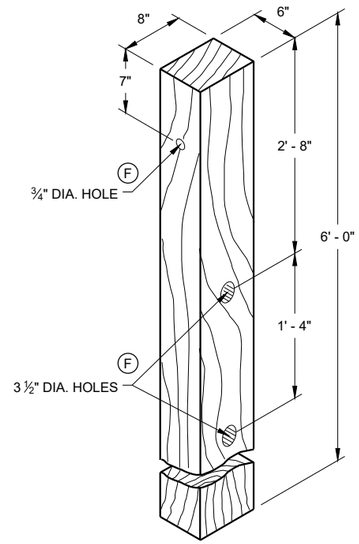

WOOD CRT POST (3) (E)
POSTS NUMBER 3-9

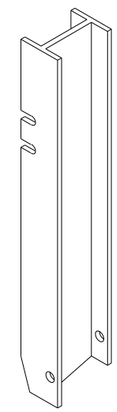

UPPER POST NO. 2 (15) (E)

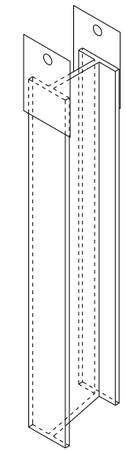

LOWER POST NO. 2 (16) (E)

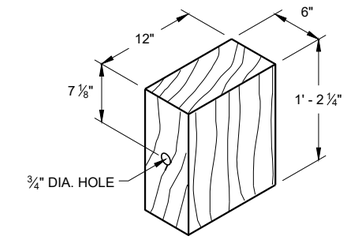

WOOD BLOCKOUT (4)
REQ'D. AT ALL POSTS EXCEPT POST NO'S 1 & 2

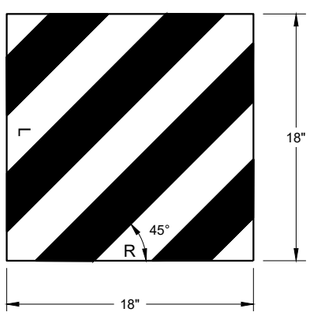

W5 - 59

REFLECTIVE SHEETING DETAIL (E)

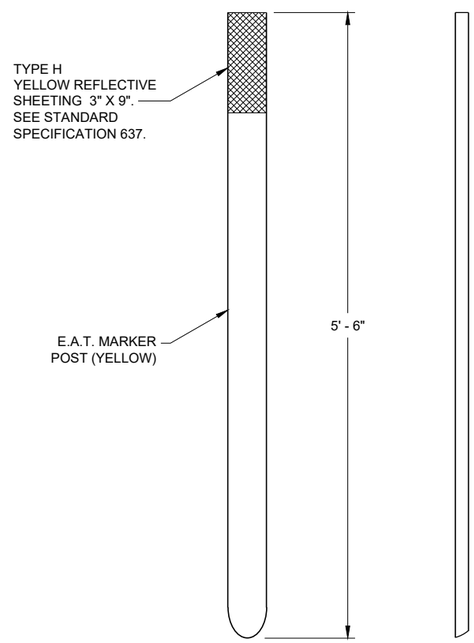

FRONT VIEW SIDE VIEW

E.A.T. MARKER POST (13)

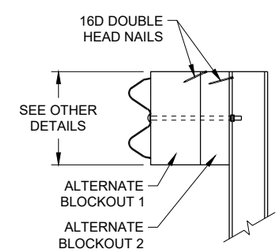

SIDE VIEW

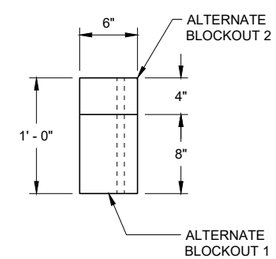

TOP VIEW

ALTERNATE WOOD BLOCKOUT DETAIL

MIDWEST GUARDRAIL SYSTEM ENERGY ABSORBING TERMINAL (MGS)

STATE OF WISCONSIN
DEPARTMENT OF TRANSPORTATION

APPROVED
7/2018 — DATE
/S/ Rodney Taylor — ROADWAY STANDARDS DEVE UNIT SUPERVISOR
FHWA

6

SDD 14B44 - 04c

GENERAL NOTES

DETAILS OF CONSTRUCTION, MATERIALS AND WORKMANSHIP NOT SHOWN ON THIS DRAWING SHALL CONFORM TO THE PERTINENT REQUIREMENTS OF THE STANDARD SPECIFICATIONS AND THE APPLICABLE SPECIAL PROVISIONS.

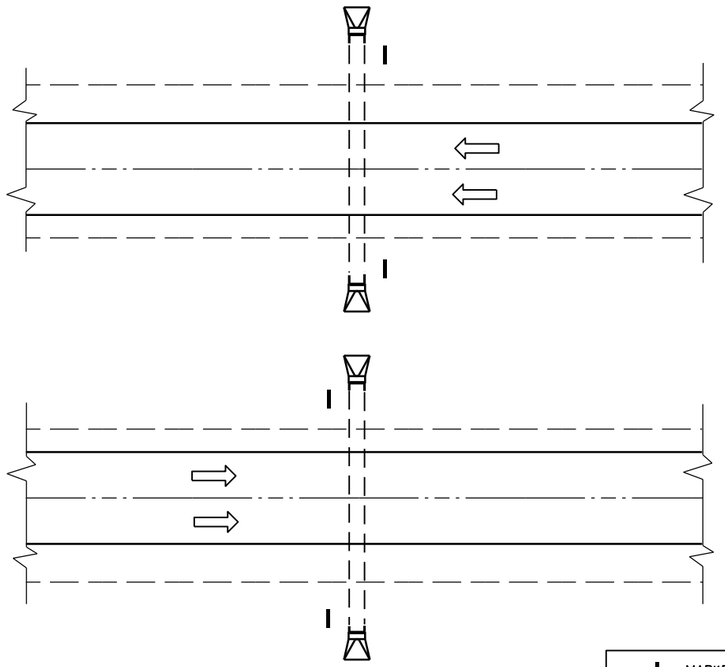

PLAN VIEW

DIVIDED HIGHWAY

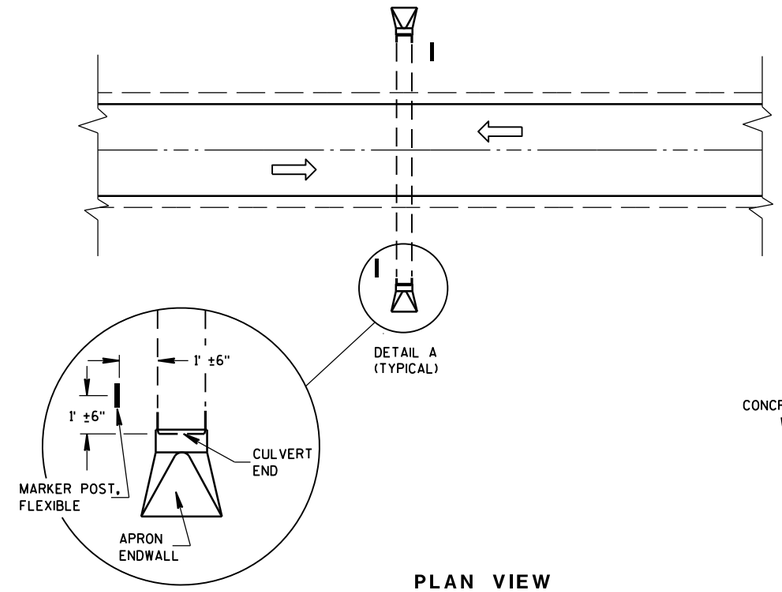

DETAIL A
(TYPICAL)

PLAN VIEW

UNDIVIDED HIGHWAY

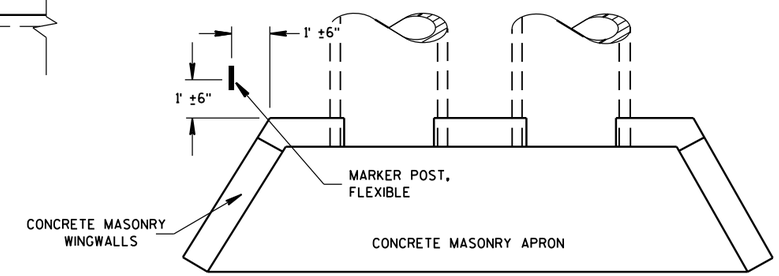

PLAN VIEW

CONCRETE MASONRY ENDWALLS FOR CULVERT PIPE AND PIPE ARCH

MARKER POST, FLEXIBLE

DIRECTION OF TRAFFIC FLOW

FLEXIBLE MARKER POST LOCATION

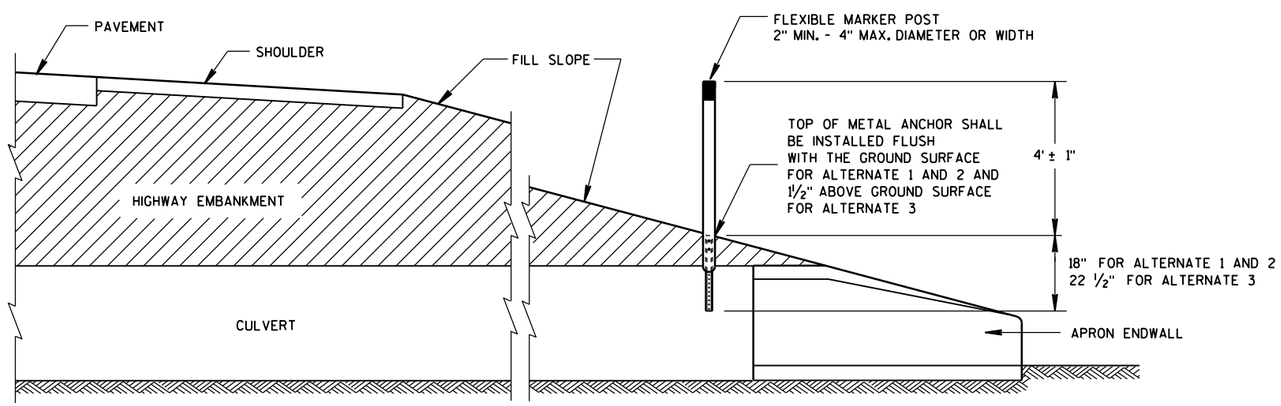

CROSS SECTION

FLEXIBLE MARKER POST

FLEXIBLE MARKER POST FOR CULVERT END

STATE OF WISCONSIN
DEPARTMENT OF TRANSPOR

6

S.D.D. 15 A 3-2a

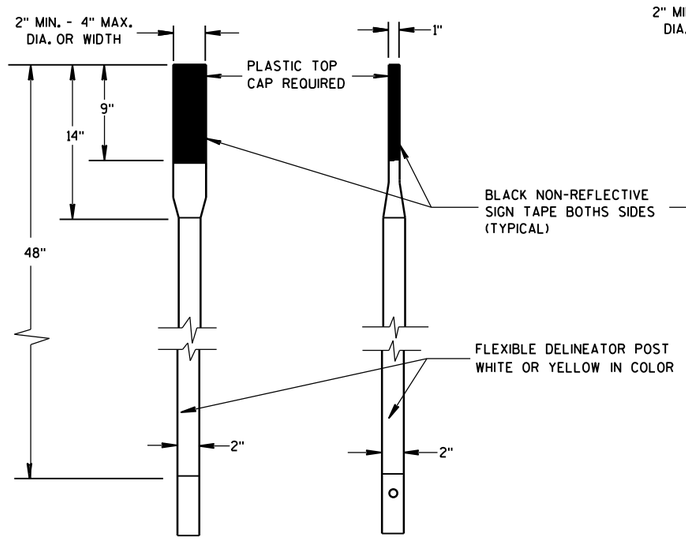

FRONT VIEW SIDE VIEW

ALTERNATE 1

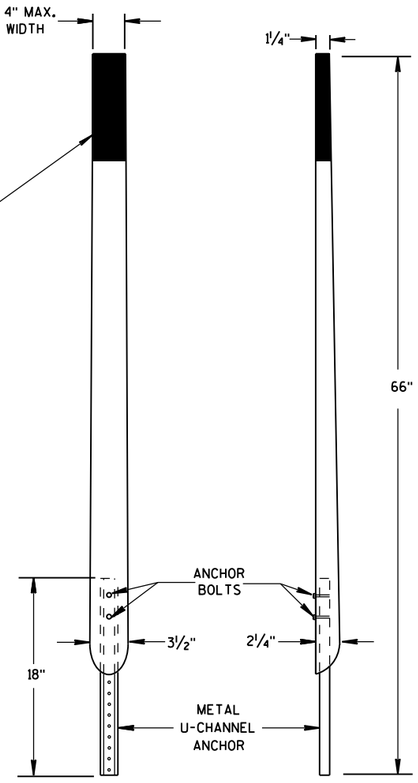

FRONT VIEW SIDE VIEW

ALTERNATE 2

FLEXIBLE MARKER POSTS

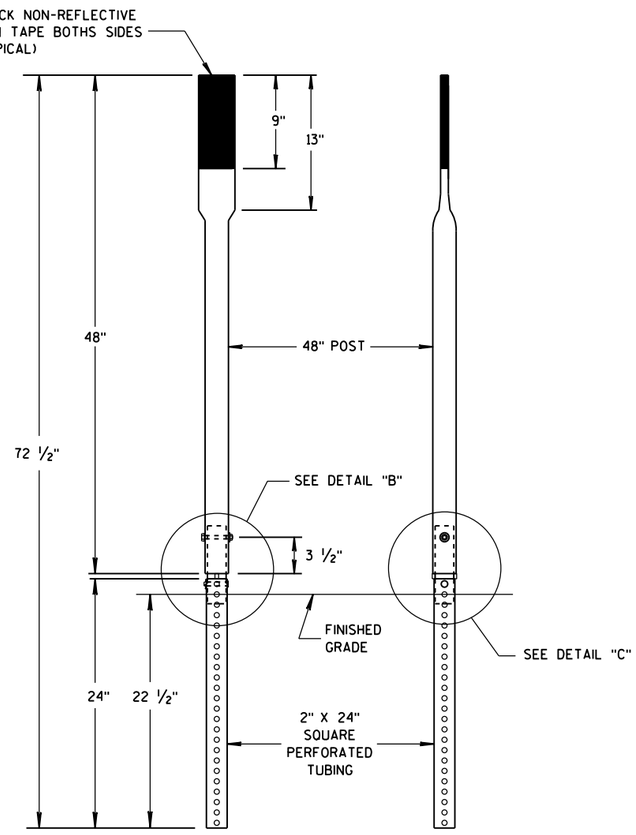

FRONT VIEW SIDE VIEW

ALTERNATE 3

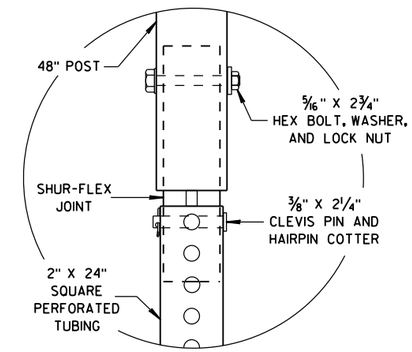

DETAIL B

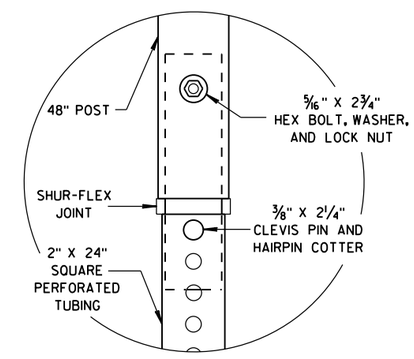

DETAIL C

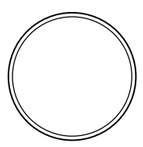

SECTION A-A

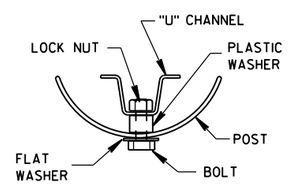

SECTION B-B

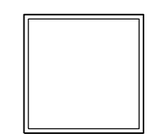

SECTION C-C

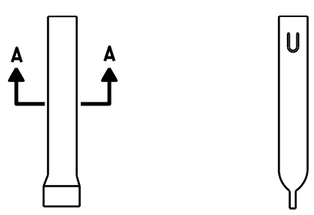

FRONT VIEW SIDE VIEW

ALTERNATE 1

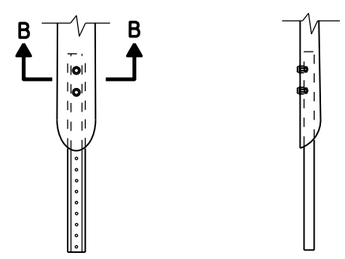

FRONT VIEW SIDE VIEW

ALTERNATE 2

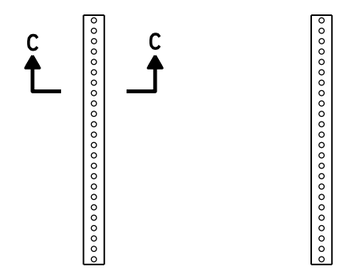

FRONT VIEW SIDE VIEW

ALTERNATE 3

FLEXIBLE MARKER POST ANCHORS

FLEXIBLE MARKER POST
FOR CULVERT END

STATE OF WISCONSIN
DEPARTMENT OF TRANSPORTATION

APPROVED
10/1/2012 /S/ Travis Feltes
DATE STATE TRAFFIC ENGINEER
FHWA

6

6

S.D.D. 15 A 3-2b

S.D.D. 15 A 3-2b

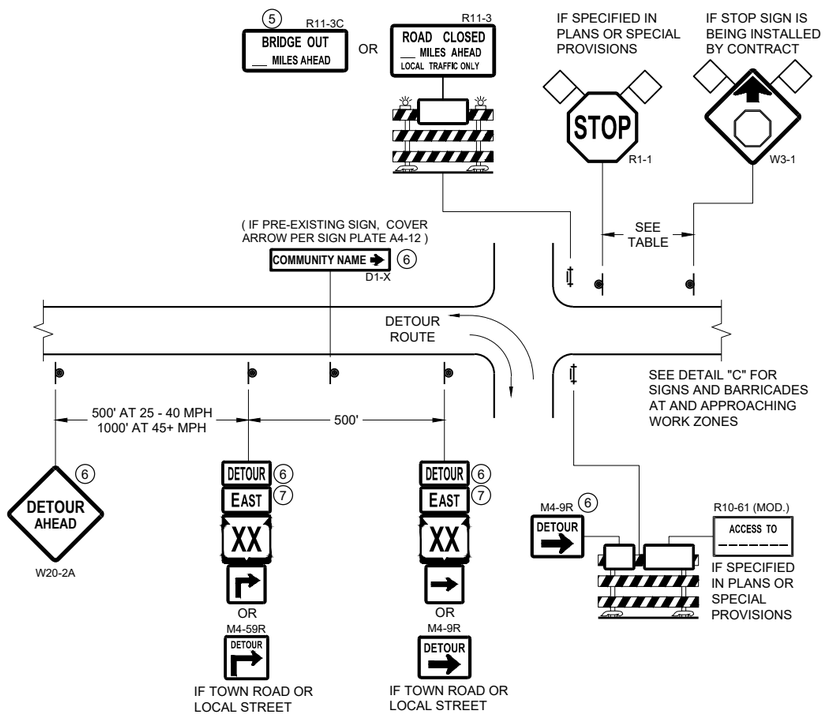

DETAIL A
MAINLINE CLOSURE WITH POSTED DETOUR

WORK ZONE GREATER THAN OR EQUAL TO ½ MILE FROM DETOUR ROUTE (1000 FEET IF URBAN)

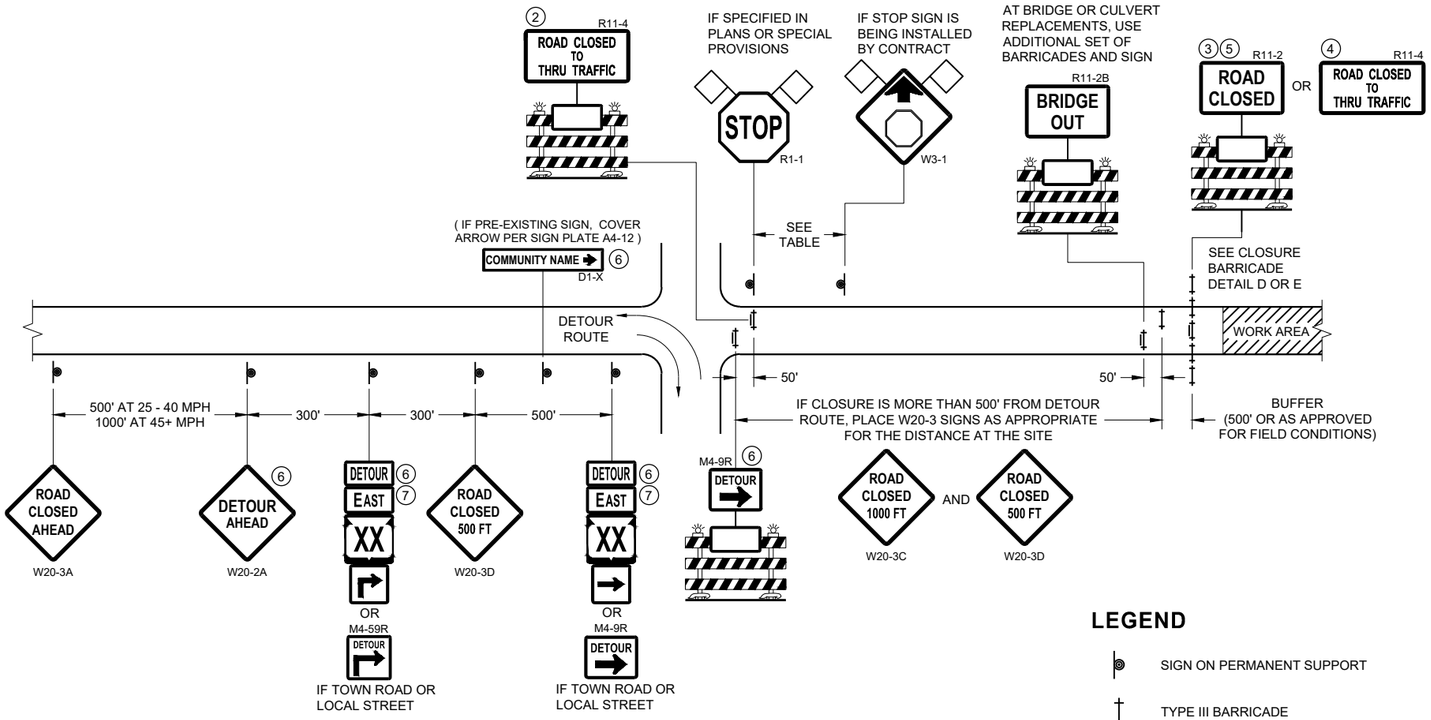

DETAIL B
MAINLINE CLOSURE WITH POSTED DETOUR

WORK ZONE LESS THAN ½ MILE FROM DETOUR ROUTE (1000 FEET IF URBAN)

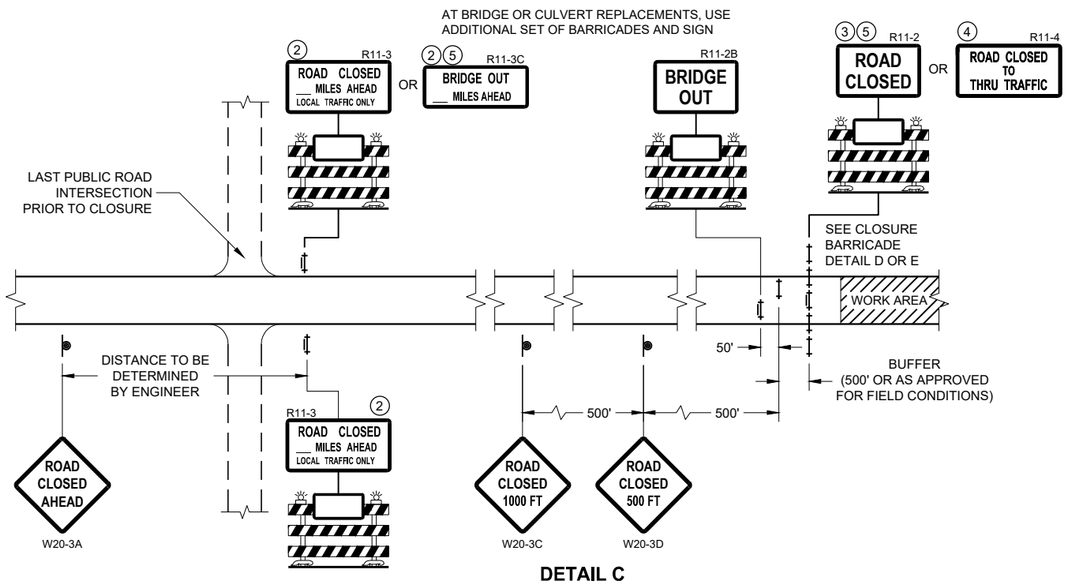

DETAIL C
MAINLINE CLOSURE, NO POSTED DETOUR

SPEED LIMIT (MPH)	"STOP AHEAD" ADVANCE WARNING DISTANCE (FT)
25	200
30	200
35	350
40	350
45	500
50	550
55	750

SEE SDD 15C2-SHEET "b" FOR GENERAL NOTES AND FOOTNOTES 1 THROUGH 7

LEGEND

- SIGN ON PERMANENT SUPPORT
- TYPE III BARRICADE
- TYPE III BARRICADE WITH ATTACHED SIGN
- TYPE "A" WARNING LIGHT (FLASHING)
- WORK AREA
- FLAGS, 16" X 16" MIN. (ORANGE)
- DETOUR M4 - 8
- EAST M3 - X
- XX M1 - 4 OR XX M1 - 6 OR COUNTY X M1 - 5A
- M05 - 1 OR M06 - 1

BARRICADES AND SIGNS FOR MAINLINE CLOSURES

STATE OF WISCONSIN
DEPARTMENT OF TRANSPORTATION

APPROVED
November 2018 — DATE
/S/ Andrew Heidtke — WORK ZONE ENGINEER
FHWA

6

SDD 15C02 - 07a

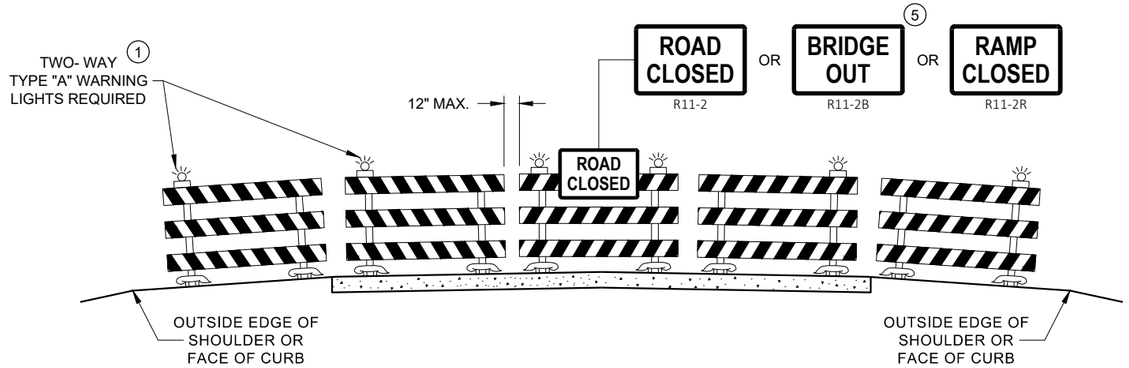

DETAIL D
ROAD CLOSURE BARRICADE DETAIL
APPROACH VIEW

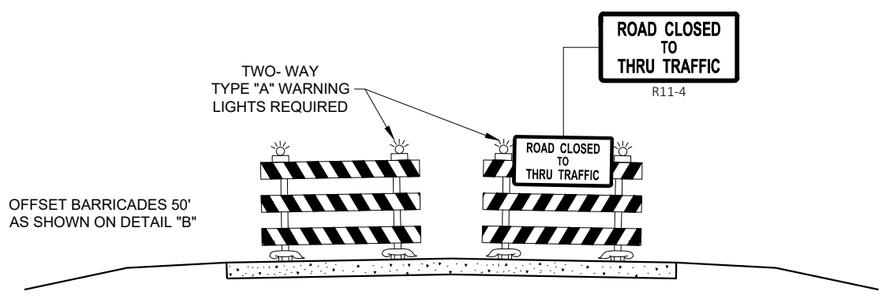

DETAIL E
LANE CLOSURE BARRICADE DETAIL
APPROACH VIEW

SEE SDD 15C2 - SHEET "a" FOR LEGEND

GENERAL NOTES

THE EXACT NUMBER, LOCATION, AND SPACING OF ALL SIGNS AND BARRICADES SHALL BE ADJUSTED TO FIT FIELD CONDITIONS AS APPROVED BY THE ENGINEER.

ANY SIGNS TEMPORARY OR EXISTING, WHICH CONFLICT WITH TRAFFIC CONTROL "IN USE", SHALL BE REMOVED OR COVERED AS NEEDED AND AS APPROVED BY THE ENGINEER.

THE SPACING BETWEEN TRAFFIC CONTROL SIGNS SHOULD BE ADJUSTED TO NOT CONFLICT WITH AND SHOULD PROVIDE A DESIRABLE MINIMUM OF 200 FEET CLEARANCE TO EXISTING SIGNS THAT WILL REMAIN IN PLACE.

BARRICADES THAT MUST BE MOVED FOR A WORK OPERATION SHALL BE IMMEDIATELY RE-ESTABLISHED UPON COMPLETION OF THE OPERATION, OR FOR CONTINUING OPERATIONS, AT THE END OF EACH WORKING DAY.

SIGNS THAT WILL BE IN PLACE LESS THAN 7 CONTINUOUS DAYS AND NIGHTS MAY BE MOUNTED ON PORTABLE SUPPORTS.

ALL TYPE III BARRICADES SHALL HAVE RAILS REFLECTORIZED ON BOTH FACES. STRIPES SHALL BE PROPERLY SLOPED DOWN TOWARD THE TRAFFIC SIDE OR AS SHOWN IN THE ROAD CLOSURE BARRICADE DETAIL "D" FOR FULL ROAD CLOSURES.

TYPE "A" LOW - INTENSITY FLASHING WARNING LIGHTS SHALL BE VISIBLE ON BOTH SIDES OF THE BARRICADE.

THE R11 - 2, R11 - 3, M4 - 9, R11 - 4, AND R10 - 61 SIGNS PLACED ON THE BARRICADES SHALL COVER NO MORE THAN THE TOP RAIL. THE SIGNS SHALL NOT COVER ANY PORTION OF THE MIDDLE RAIL OR BOTTOM RAILS.

"WO" AND "MO" SIGNS ARE THE SAME AS "W" AND "M" SIGNS EXCEPT THE BACKGROUND IS ORANGE.

ALL SIGNS SHALL BE 48" X 48" UNLESS OTHERWISE NOTED BELOW:
- R11 - 2 SHALL BE 48" X 30"
- R11 - 3 SHALL, R11 - 4 AND R10 - 61 SHALL BE 60 " X 30"
- M4 - 9 SHALL BE 30" X 24"
- M3 - X SHALL BE 24" X 12" (36" X 18" IF NEEDED TO MATCH EXISTING SIGNS)
- M4 - 8 SHALL BE 24" X 12" (36" X 18" IF NEEDED TO MATCH EXISTING SIGNS)
- M1 - 4, M1 - 5A AND M1 - 6 SHALL BE 24" X 24" (36" X 36" IF NEEDED TO MATCH EXISTING SIGNS)
- MO5 - 1 AND MO6 - 1 SHALL BE 21" X 21" (30" X 30" IF NEEDED TO MATCH EXISTING SIGNS)
- D1 - X SHALL BE AS SHOWN ON SPECIFIC PROJECT SIGNING DETAIL SHEETS.
- R1 - 1 SHALL BE 36" X 36"

1. TWO WARNING LIGHTS SHALL BE PROVIDED ON THE CENTER BARRICADE AND A MINIMUM OF ONE WARNING LIGHT SHALL BE PROVIDED ON EACH OF THE OTHER BARRICADES WITHIN THE ROADWAY LIMITS. SPACING OF THE WARNING LIGHTS SHALL BE UNIFORM TO THE EDGE OF ROADWAY AS SHOWN (APPROX. 8 FOOT LIGHT SPACING.
2. THESE SIGNS AND BARRICADES ARE NOT REQUIRED IF ROAD CLOSURE BEGINS AT AN INTERSECTION.
3. FOR ROAD CLOSURE WITHOUT LOCAL ACCESS TO PROJECT, SEE ROAD CLOSURE BARRICADE DETAIL "D".
4. FOR ROAD CLOSURE WITH LOCAL ACCESS TO PROJECT, SEE ROAD CLOSURE BARRICADE DETAIL "E".
5. FOR BRIDGE OR CULVERT REPLACEMENTS, SUBSTITUTE "BRIDGE OUT" INSTEAD OF "ROAD CLOSED" ON R11 - 2 AND R11 - 3 SIGNS.
6. INSTALL DETOUR AND COMMUNITY GUIDE SIGNS AND ARROWS ONLY IF SPECIFIED IN THE CONTRACT. IF THERE ARE EXISTING ROUTE MARKER ASSEMBLIES THAT WILL REMAIN IN PLACE, ADJUST THE LOCATION OF THE DETOUR ROUTE SIGNS TO CORRESPOND WITH THE EXISTING ASSEMBLIES. MODIFY EXISTING SIGNS WHERE POSSIBLE. SEE SPECIFIC PROJECT DETOUR SIGNING DETAIL SHEETS. IF DETOUR SIGNS ARE BEING INSTALLED BY OTHERS, PLACE THE CONTRACTED TRAFFIC CONTROL SIGNS TO ALLOW FOR PLACEMENT OF ALL WARNING, DETOUR AND GUIDE SIGNS AS SHOWN.
7. "EAST" CARDINAL DIRECTION MARKERS AND RIGHT TURN ARROWS ARE SHOWN. USE OTHER CARDINAL DIRECTIONS AND ARROWS AS APPROPRIATE.

BARRICADES AND SIGNS FOR VARIOUS CLOSURES

STATE OF WISCONSIN
DEPARTMENT OF TRANSPORTATION

APPROVED
November 2018 /S/ Andrew Heidtke
DATE WORK ZONE ENGINEE
FHWA

6

SDD 15C02 - 07b

TYPICAL SIDEROAD APPROACH WARNING SIGN DETAIL

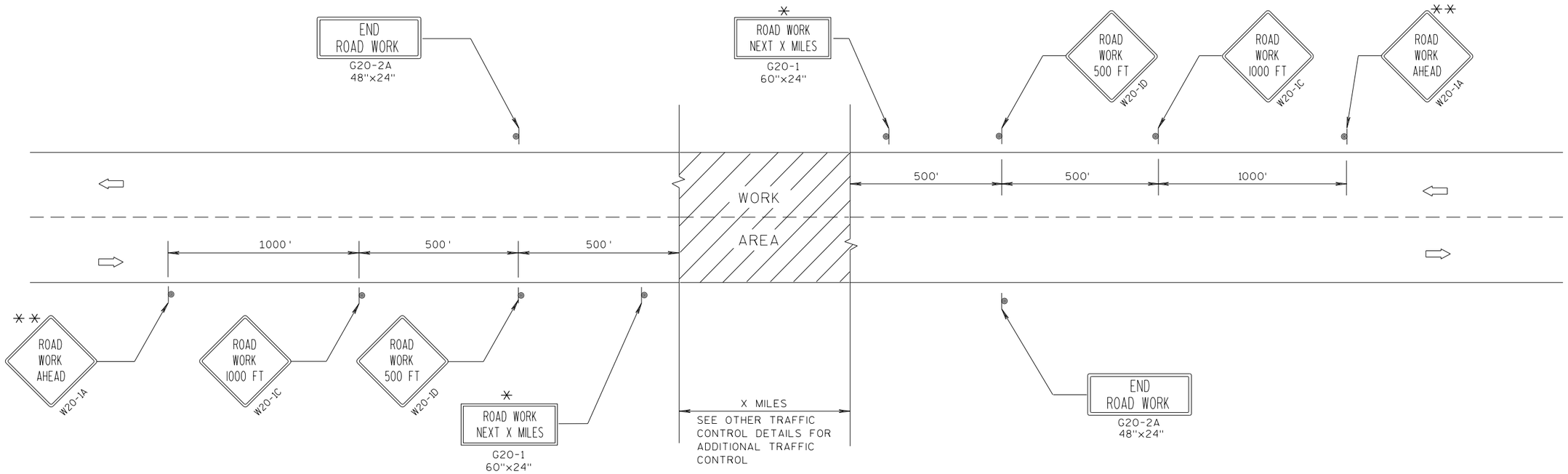

GENERAL NOTES

THE EXACT NUMBER, LOCATION, AND SPACING OF ALL SIGNS AND DEVICES SHALL BE ADJUSTED TO FIT FIELD CONDITIONS.

THE SPACING BETWEEN TRAFFIC CONTROL SIGNS SHOULD BE ADJUSTED TO NOT CONFLICT WITH AND SHOULD PROVIDE A MINIMUM OF 200 FEET (500 FEET DESIRABLE) CLEARANCE TO EXISTING SIGNS THAT WILL REMAIN IN PLACE.

ALL SIGNS ARE 48"x48" UNLESS OTHERWISE NOTED.

SIGNS THAT WILL BE IN PLACE LESS THAN 7 CONTINUOUS DAYS AND NIGHTS MAY BE MOUNTED ON PORTABLE SUPPORTS.

IF A "STOP" SIGN MUST BE REMOVED FOR A WORK OPERATION, A TEMPORARY "STOP" SIGN SHALL BE PLACED PRIOR TO THE SIGN REMOVAL, OR A FLAGGER SHALL BE PROVIDED UNTIL THE SIGN IS RE-ESTABLISHED.

* OMIT G20-1 SIGNS IF LENGTH OF WORK AREA IS 2 MILES OR LESS.

** PLACE ADDITIONAL W20-1A "ROAD WORK AHEAD" SIGN IF WORK AREA WITHIN THE PROJECT IS SEPARATED BY MORE THAN 2 MILES FROM PREVIOUS WORK AREA.

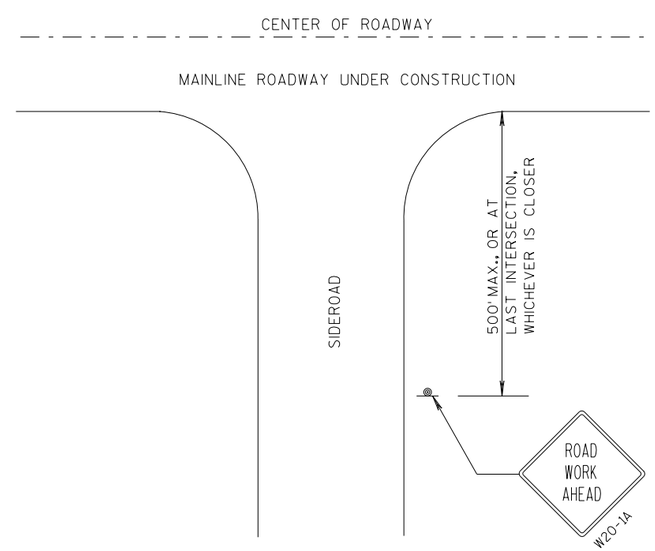

LEGEND

- SIGN ON PERMANENT SUPPORT
- DIRECTION OF TRAFFIC
- WORK AREA

TRAFFIC CONTROL, ADVANCE WARNING SIGNS 45 M.P.H. OR GREATER TWO-WAY UNDIVIDED ROAD OPEN TO TRAFFIC

STATE OF WISCONSIN
DEPARTMENT OF TRANSPORTATION

APPROVED
7/2018 — DATE
/S/ Andrew Heldtke — WORK ZONE ENGI
FHWA

6

S.D.D. 15 C 4-5

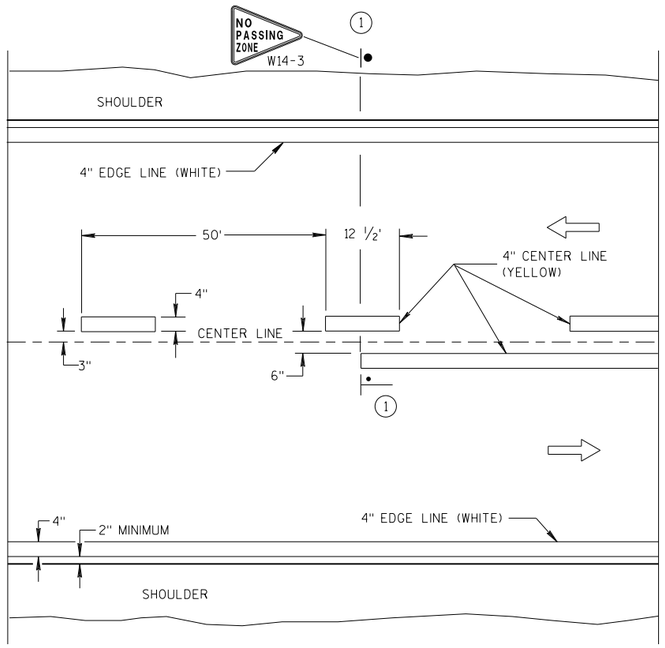

TWO WAY TRAFFIC

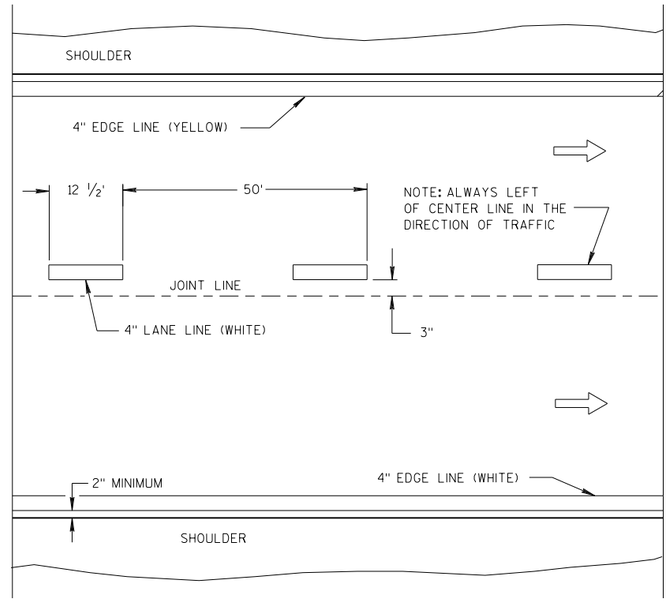

ONE WAY TRAFFIC

PERMANENT PAVEMENT MARKING

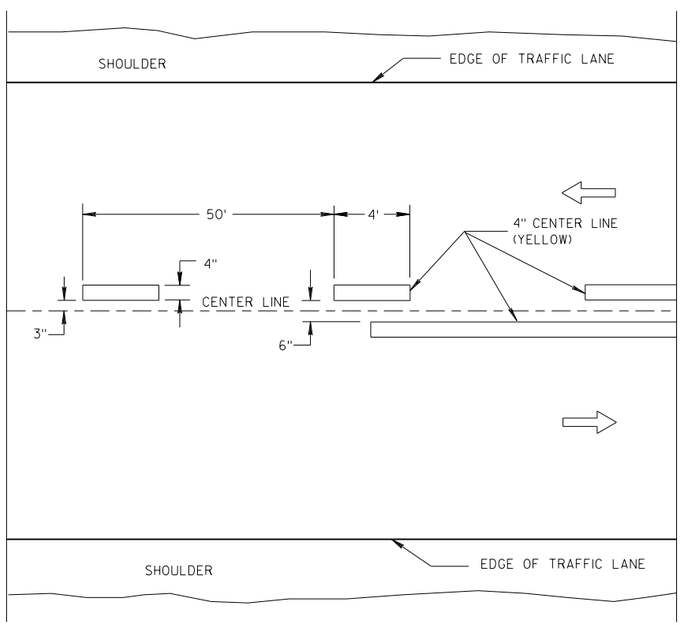

TWO WAY TRAFFIC

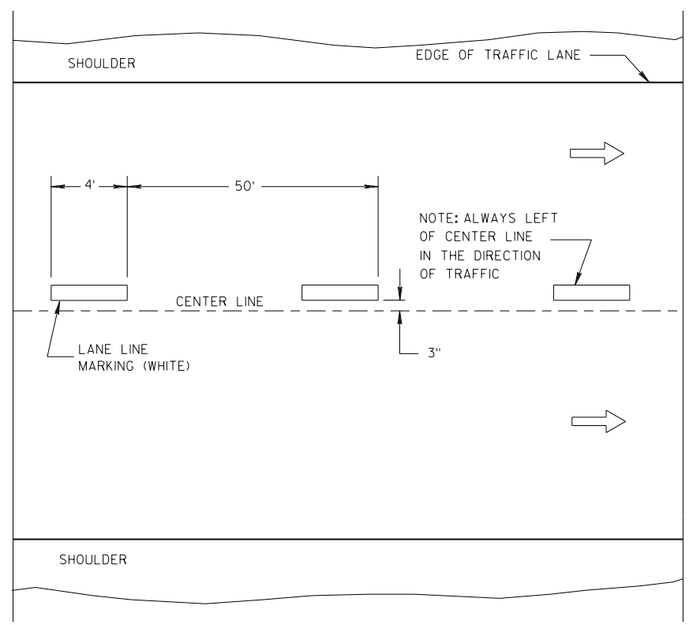

ONE WAY TRAFFIC

TEMPORARY PAVEMENT MARKING

GENERAL NOTES

DETAILS OF CONSTRUCTION NOT SHOWN ON THIS DRAWING SHALL CONFORM TO STANDARD SPECIFICATIONS AND SPECIAL PROVISIONS.

(1) LOCATE THE NO PASSING ZONE W14-3 SIGN WITHIN 50 FEET OF THE "T" MARKING.

NOTE

ARROW SYMBOL (⇨) SHOWS DIRECTION OF TRAVEL

LEGEND

"T" MARKING

POST MOUNTED SIGN

LONGITUDINAL MARKING (MAINLINE)

STATE OF WISCONSIN
DEPARTMENT OF TRANSPORTATION

APPROVED
7/2018 — DATE
/S/ Matthew R. Rauch — STATE SIGNING AND MAR INEER
FHWA

6

S.D.D. 15 C 8-19a

GENERAL NOTES

1. REFLECTIVE SHEETING SHALL FOLLOW THE REQUIREMENTS IN THE APPROVED PRODUCTS LISTING FOR SIGN SHEETING.
2. LOCATION OF WARNING LIGHTS WHEN SHOWN ON THE PLAN.

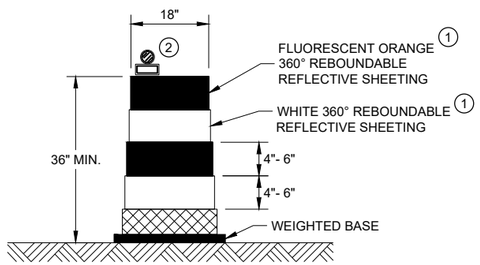

DRUM

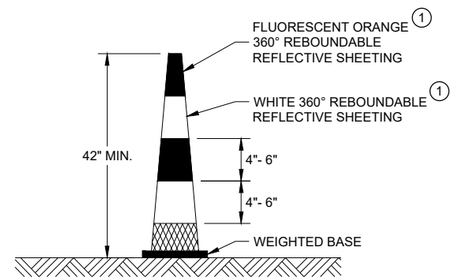

42" CONE

DO NOT USE IN TAPERS
½ SPACING OF DRUMS

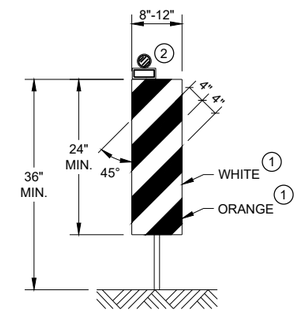

VERTICAL PANEL

THE STRIPES SHALL SLOPE DOWNWARD TO
THE TRAFFIC SIDE FOR CHANNELIZATION.

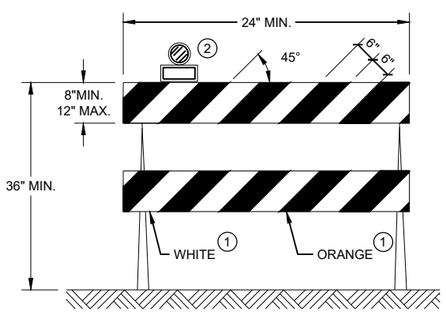

TYPE II BARRICADE

FOR RAILS LESS THAN 36" LONG, 4" WIDE STRIPES
MAY BE USED. ALL STRIPES SHALL SLOPE DOWNWARD
TO THE TRAFFIC SIDE FOR CHANNELIZATION.

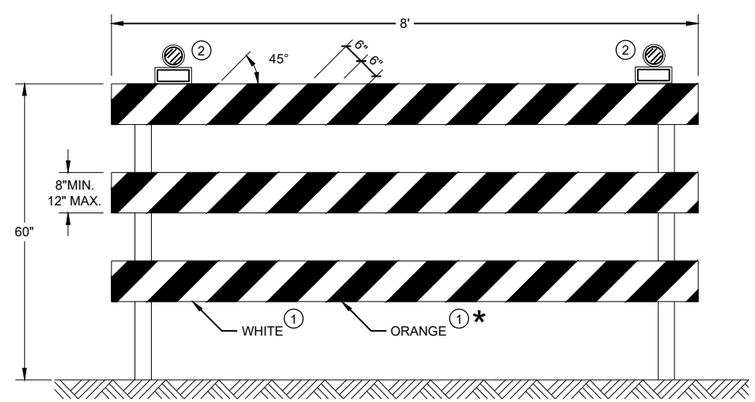

TYPE III BARRICADE

IF SIGN MOUNTED, DO NOT COVER MORE THAN 50% OF THE TOP
TWO RAILS OR 33% OF THE TOTAL AREA OF THE THREE RAILS.

* IF USED FOR A PERMANENT APPLICATION USE RED SHEETING.

CHANNELIZING DEVICES DRUMS, CONES, BARRICADES AND VERTICAL PANELS

STATE OF WISCONSIN
DEPARTMENT OF TRANSPORTATION

APPROVED
June 2017 — DATE
/S/ Andrew Heidtke — WORK ZONE ENGINEE
FHWA

6

6

SDD 15C11 - 07b

SDD 15C11 - 07b

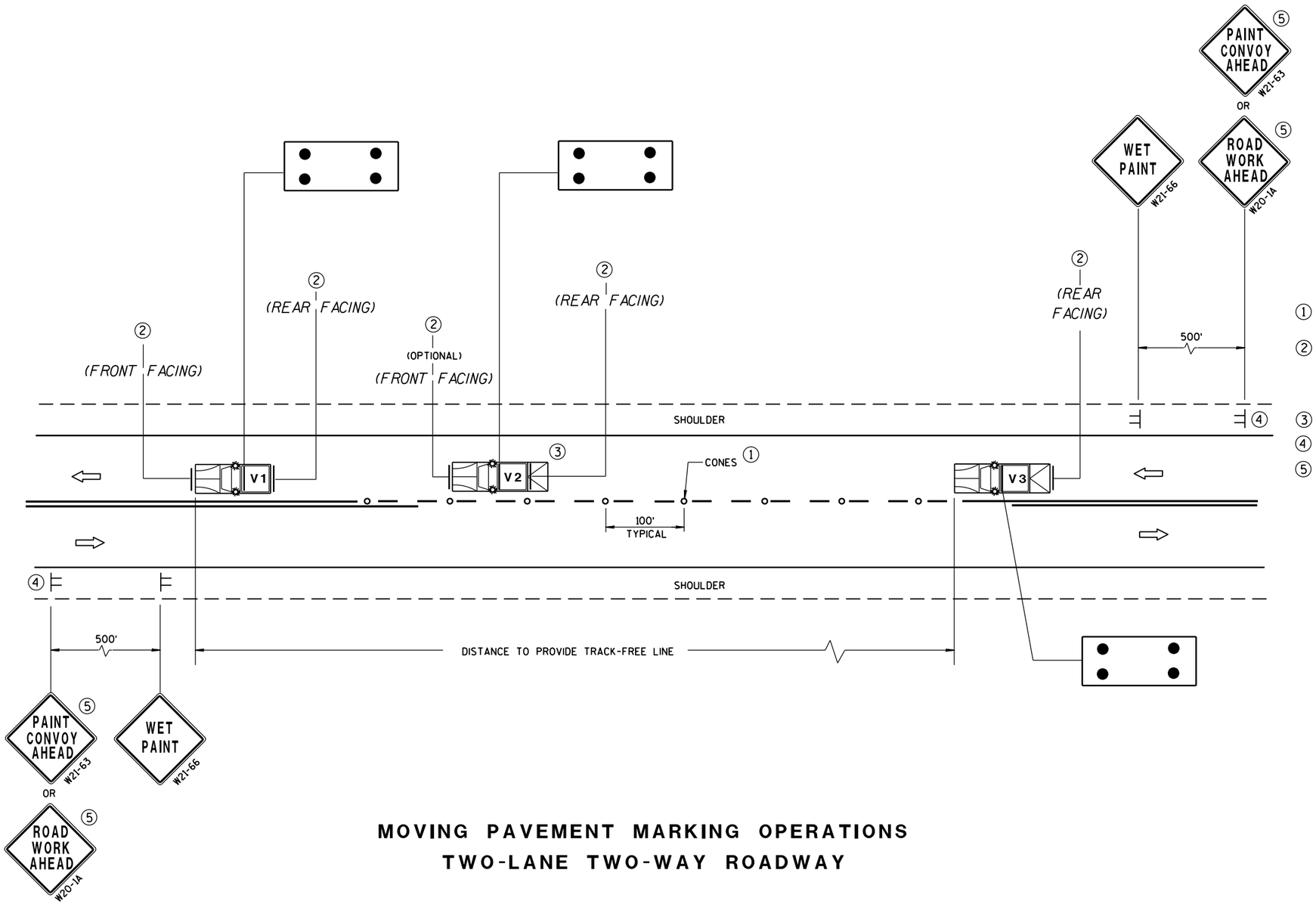

GENERAL NOTES

ALL VEHICLES SHALL BE EQUIPPED WITH TWO 360 DEGREE HIGH INTENSITY YELLOW FLASHING LIGHTS OR STROBE LIGHTS AND OPERATED WITH HEADLIGHTS TURNED ON.

VEHICLES SHALL BE EQUIPPED WITH REAR FACING TYPE B OR C FLASHING ARROW PANEL OPERATING IN CAUTION MODE. SIGNS PLACED ON VEHICLES MUST NOT OBSCURE THE ARROW PANEL.

ALL SIGNS ARE 48" X 48" UNLESS OTHERWISE SPECIFIED.

IF SPEED LIMIT IS 40 MPH OR LESS STATIONARY SIGNS MAY BE OMITTED IF CONES ARE USED.

ALTERNATE SIGN MESSAGES, SUCH AS "PAINT CREW AHEAD" OR "ROAD PAINTING AHEAD" MAY BE USED.

DISTANCE BETWEEN VEHICLES MAY VARY ACCORDING TO TERRAIN, SIGHT DISTANCE, PAINT DRYING TIME, AND OTHER FACTORS. WHENEVER ADEQUATE STOPPING SIGHT DISTANCE EXISTS TO THE REAR, SHADOW VEHICLES SHOULD MAINTAIN THE MINIMUM DISTANCE FROM THE WORK VEHICLE AND PROCEED AT THE SAME SPEED AS THE WORK VEHICLE. SHADOW VEHICLES SHOULD SLOW DOWN IN ADVANCE OF VERTICAL OR HORIZONTAL CURVES THAT RESTRICT SIGHT DISTANCE.

THE WORK AND SHADOW VEHICLES SHOULD PULL OVER PERIODICALLY TO ALLOW TRAFFIC TO PASS.

THIS DRAWING SHALL BE USED FOR CENTERLINE OR EDGELINE MARKING.

WHEN NO WORK ACTIVITY IS TAKING PLACE, REMOVE OR TURN THE STATIONARY WARNING SIGNS AWAY FROM TRAFFIC.

1. CONES MAY BE OMITTED ON PAINTED LINE IF APPROVED BY THE ENGINEER. CONSIDER PAVEMENT MARKING DRY OR CURE TIMES AND TRAFFIC VOLUME.
2. USE STANDARD SIGN W21-64 WITH APPROPRIATE ARROW.

   WET PAINT (W21-64) OR WET PAINT (W21-64)

3. OPTIONAL TRUCK-MOUNTED ATTENUATOR.
4. SIGNS SHALL BE REPEATED APPROXIMATELY EVERY THREE MILES.
5. IF CONSTRUCTION WORK ZONE SIGNS ARE IN PLACE, W20-1 OR W21-63 ARE NOT REQUIRED.

LEGEND

V1	LEAD VEHICLE
V2	SHADOW VEHICLE
V3	TRAIL VEHICLE WITH TMA
TMA	TRUCK-MOUNTED ATTENUATOR
	SIGN ON TEMPORARY SUPPORT
	DIRECTION OF TRAFFIC
	CONES
	FLASHING ARROW PANEL (CAUTION)

MOVING PAVEMENT MARKING OPERATIONS
TWO-LANE TWO-WAY ROADWAY

MOVING PAVEMENT MARKING OPERATION
TWO-LANE TWO-WAY ROADWAY

STATE OF WISCONSIN
DEPARTMENT OF TRANSPORTATION

APPROVED
Sept., 2017 — DATE
/S/ Andrew Heldtke — WORK ZONE ENGR
FHWA

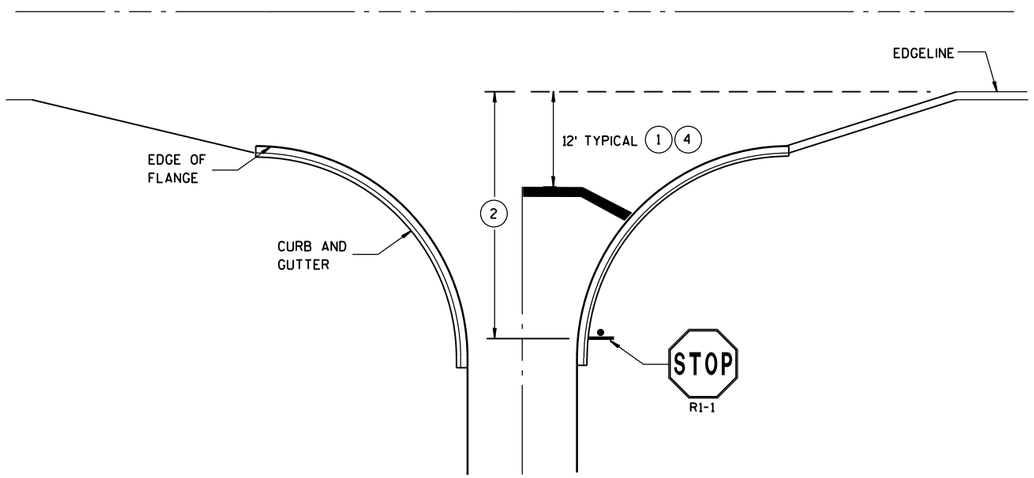

TYPICAL STOP LINE PAVEMENT MARKING WITH CURB AND GUTTER

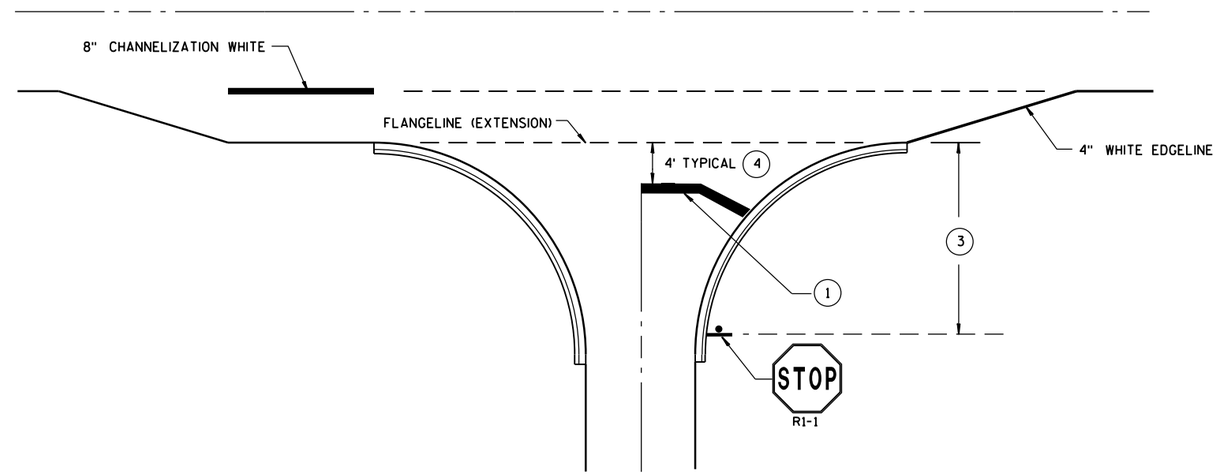

TYPICAL STOP LINE PAVEMENT MARKING FOR SIDEROADS WITH RIGHT TURN LANE

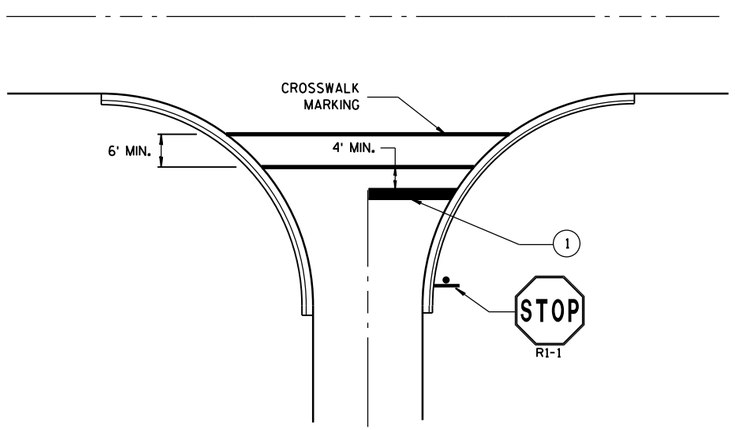

TYPICAL STOP LINE PAVEMENT MARKING FOR SIDEROADS WITH CROSSWALK MARKING

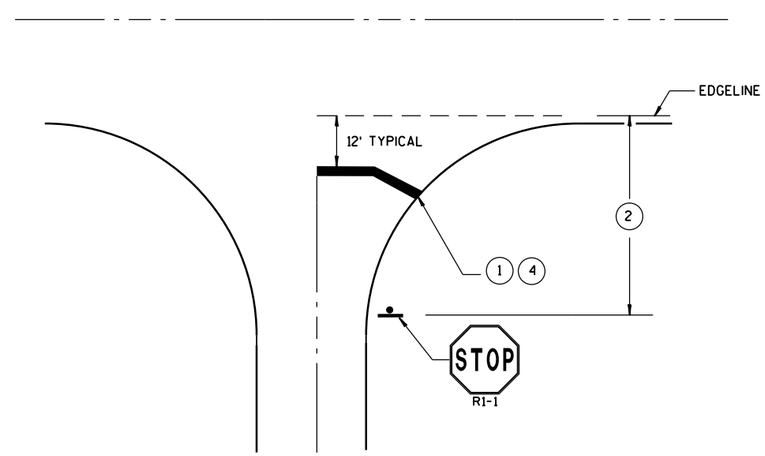

TYPICAL STOP LINE PAVEMENT MARKING WITHOUT CURB AND GUTTER

GENERAL NOTES

STOP SIGN SHALL BE PLACED A MINIMUM OF 6 FEET TO A MAXIMUM OF 50 FEET FROM THE EDGELINE LOCATION.

1. 18-INCH STOP LINES MAY BE DELETED OR ADDED BY THE PROJECT ENGINEER BASED ON VISIBILITY AND SIGHT LINES.
2. IF STOP SIGN IS LESS THAN OR EQUAL TO 40 FEET FROM THE EDGELINE THAN NO STOP LINE IS REQUIRED.
3. IF STOP SIGN IS LESS THAN OR EQUAL TO 30 FEET FROM THE FLANGELINE EXTENSION THAN NO STOP LINE IS REQUIRED.
4. MOVE CLOSER TO EDGE OF TRAVEL LANE AS NEEDED FOR VISIBILITY AND SIGHT LINES. (NO CLOSER THAN 4 FEET).

STOP LINE AND CROSSWALK PAVEMENT MARKING

STATE OF WISCONSIN
DEPARTMENT OF TRANSPORTATION

APPROVED

Sept., 2017	/S/ Matthew R. Rauch
DATE	STATE SIGNING AND MAR[illegible]NEER

FHWA

6

S.D.D. 15 C 33-3

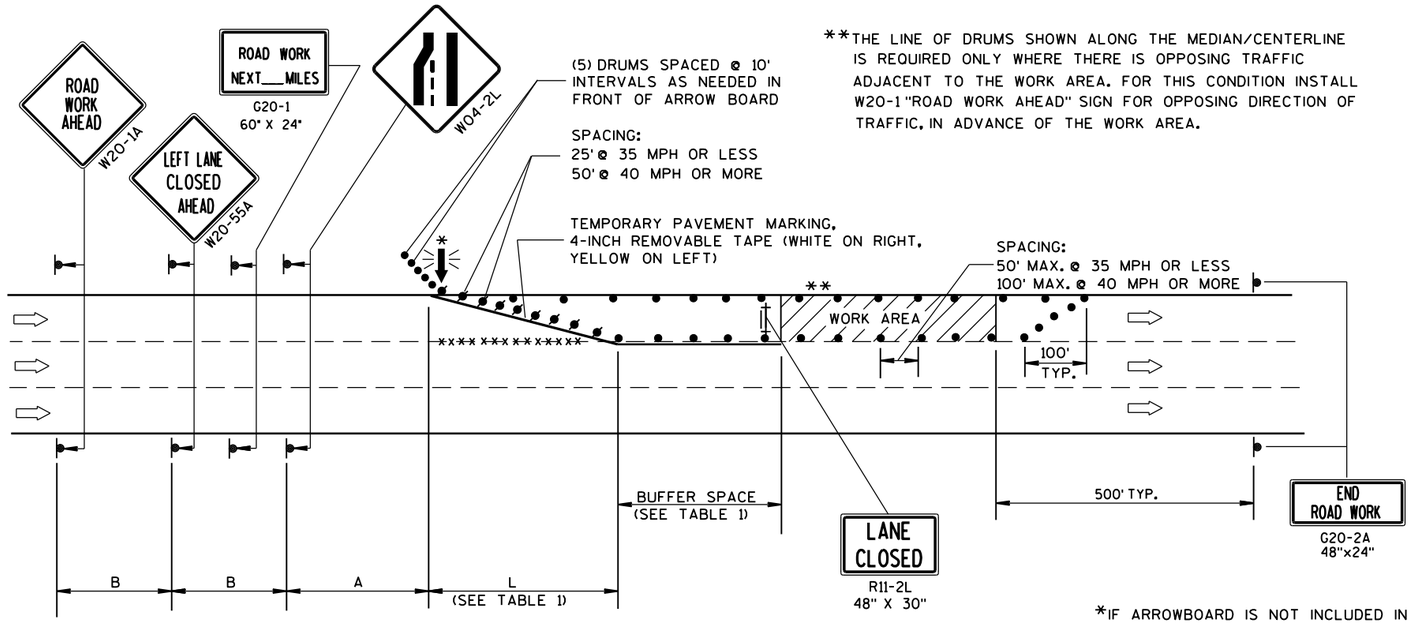

**THE LINE OF DRUMS SHOWN ALONG THE MEDIAN/CENTERLINE IS REQUIRED ONLY WHERE THERE IS OPPOSING TRAFFIC ADJACENT TO THE WORK AREA. FOR THIS CONDITION INSTALL W20-1 "ROAD WORK AHEAD" SIGN FOR OPPOSING DIRECTION OF TRAFFIC, IN ADVANCE OF THE WORK AREA.

B=400' AT 25-30 MPH
700' AT 35-40 MPH
1000' AT 45-55 MPH

A=200' AT 25-30 MPH
350' AT 35-40 MPH
500' AT 45-55 MPH

(PLACE BARRICADE AND SIGN APPROX. EVERY 1000' ACROSS THE CLOSED LANE)

*IF ARROWBOARD IS NOT INCLUDED IN MISCELLANEOUS QUANTITIES, SUBSTITUTE A TYPE III BARRICADE WITH W01-6 SIGN IN THE LANE CLOSURE TAPER.

W01-6
48"x24"

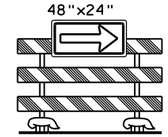

GENERAL NOTES

THIS LANE CLOSURE DETAIL IS TYPICAL FOR CLOSING THE LEFT LANE. FOR A RIGHT LANE CLOSURE, REVERSE THE TRAFFIC CONTROL.

THIS DETAIL MAY BE USED FOR ROADWAYS WITH EITHER TWO OR THREE LANES IN EACH DIRECTION.

THE EXACT NUMBER, LOCATION, AND SPACING OF ALL SIGNS AND DEVICES SHALL BE ADJUSTED TO FIT FIELD CONDITIONS AS APPROVED BY THE ENGINEER.

THE SPACING BETWEEN TRAFFIC CONTROL SIGNS SHOULD BE ADJUSTED TO NOT CONFLICT WITH AND SHOULD PROVIDE A DESIRABLE MINIMUM OF 200 FEET CLEARANCE TO EXISTING SIGNS THAT WILL REMAIN IN PLACE.

ALL SIGNS ARE 48"x48" UNLESS OTHERWISE NOTED. IF NECESSARY DUE TO SPACE CONSTRAINTS IN URBAN AREAS, 36" X 36" SIGNS MAY BE USED IF APPROVED BY DISTRICT TRAFFIC UNIT.

"WO" SIGNS ARE THE SAME AS "W" SIGNS EXCEPT THE BACKGROUND IS ORANGE.

SIGNS THAT WILL BE IN PLACE LESS THAN 7 CONTINUOUS DAYS AND NIGHTS, OR THAT WILL BE PLACED IN A CLOSED LANE, MAY BE MOUNTED ON PORTABLE SUPPORTS.

ANY SIGNS TEMPORARY OR EXISTING, WHICH CONFLICT WITH TRAFFIC CONTROL "IN USE" SHALL BE REMOVED OR COVERED AS NEEDED AND AS APPROVED BY THE ENGINEER.

REMOVE PAVEMENT MARKINGS AND PLACE TEMPORARY PAVEMENT MARKING, REMOVABLE TAPE IF LANE CLOSURE IS TO BE IN PLACE FOR 4 OR MORE CONTINUOUS DAYS AND NIGHTS.

ON UNDIVIDED ROADWAYS, OMIT THE SIGNS SHOWN ON LEFT SIDE OF ROAD.

W20-1A, G20-1 AND G20-2A SIGNS ARE NOT REQUIRED IF THE LANE CLOSURE IS WITHIN A LARGER WORK ZONE WHERE THESE SIGNS ARE ALREADY PRESENT.

OMIT G20-1 SIGNS IF LENGTH OF WORK AREA IS 2 MILES OR LESS.

CONSIDER GEOMETRICS WHEN LOCATING SIGNS AND ARROWBOARDS SO THE APPROACHING DRIVER HAS A CLEAR VIEW OF THE ARROWBOARDS AND LANE CLOSURE DRUMS.

PLACE THE ARROWBOARD AS CLOSE AS POSSIBLE TO THE BEGINNING OF THE LANE CLOSURE TAPER, PREFERABLY ON THE SHOULDER OR TERRACE.

CHANNELIZING DEVICES PLACED ADJACENT TO WORK AREA SHALL BE PULLED BACK FROM THE TRAVEL LANE WHEN WORK IS NOT IN PROGRESS.

BARRICADES IN A CLOSED LANE THAT MUST BE MOVED FOR A WORK OPERATION SHALL BE IMMEDIATELY RE-ESTABLISHED UPON COMPLETION OF THE OPERATION OR, FOR CONTINUING OPERATIONS, AT THE END OF EACH WORKING DAY.

WARNING LIGHTS ARE NOT REQUIRED IF THE LANE CLOSURE IS A DAYTIME ONLY OPERATION.

TABLE 1
TAPER AND BUFFER SPACE
FOR 12' LANE WIDTH

S	L	BUFFER SPACE
25	125'	55'
30	180'	85'
35	245'	120'
40	320'	170'
45	540'	220'
50	600'	280'
55	660'	335'

FOR LANE WIDTH OTHER THAN 12':

L = WS AT 45 MPH OR GREATER

$L = \frac{WS^2}{60}$ AT 40 MPH OR LESS

L = TAPER LENGTH IN FEET

S = NON-CONSTRUCTION SPEED LIMIT (MPH)

W = WIDTH OF LANE CLOSURE

LEGEND

TYPE III BARRICADE WITH ATTACHED SIGN

SIGN ON PERMANENT SUPPORT

TRAFFIC CONTROL DRUM WITH TYPE "C" STEADY BURN LIGHT

TRAFFIC CONTROL DRUM

FLASHING ARROW BOARD

DIRECTION OF TRAFFIC

REMOVING PAVEMENT MARKING (SEE GENERAL NOTES)

WORK AREA

TRAFFIC CONTROL,
SINGLE LANE CLOSURE,
NON-FREEWAY/EXPRESSWAY

STATE OF WISCONSIN
DEPARTMENT OF TRANSPORTATION

APPROVED
June 2016 — DATE
/S/ Peter Amakobe Atepe — STATEWIDE WORK ZONE SAFETY ENGINEER
FHWA

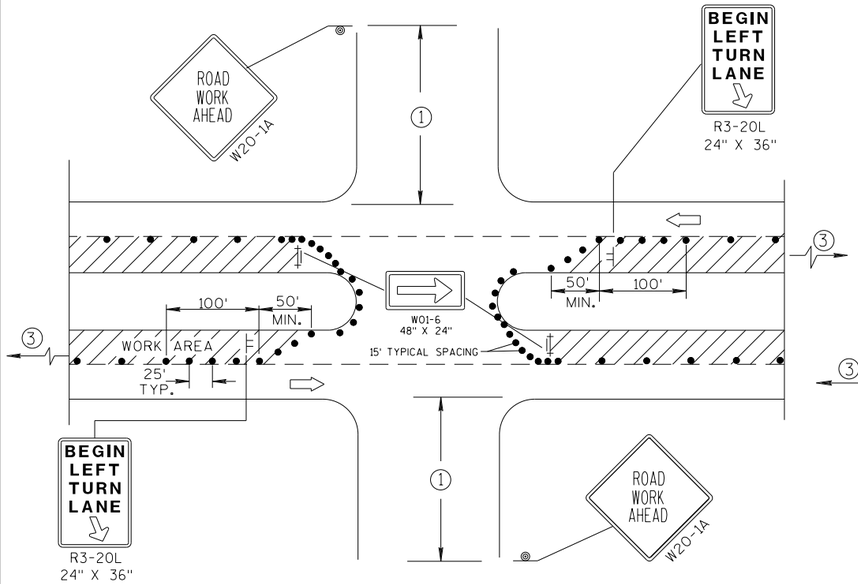

DETAIL A

FOR LEFT LANE CLOSURE AT INTERSECTION OR MEDIAN OPENING

PROVIDE TURN LANES AT INTERSECTIONS WHENEVER STAGING OF WORK ALLOWS. TAPER AND TURN LANE LENGTHS BASED ON FIELD CONDITIONS AS APPROVED BY THE ENGINEER.

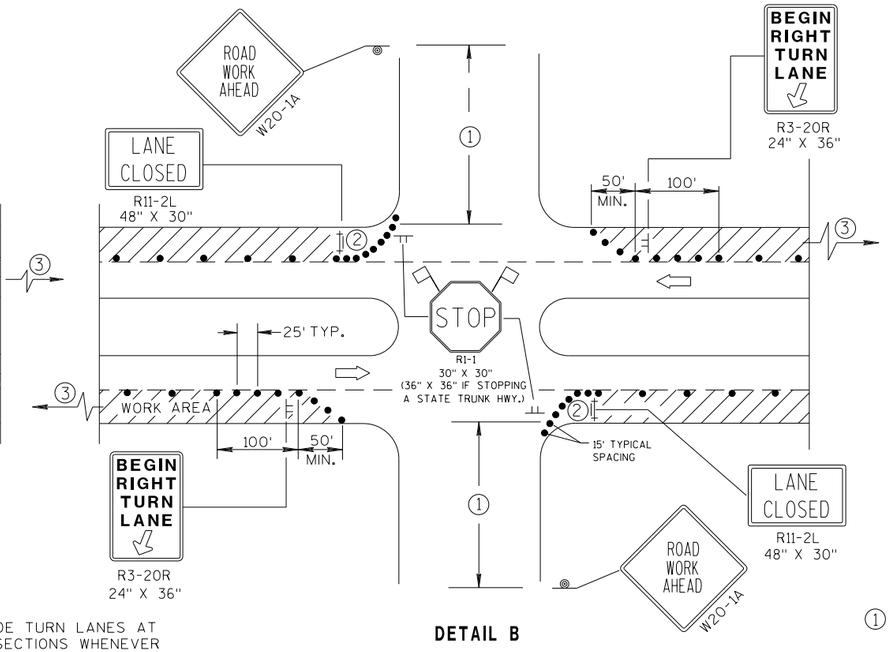

DETAIL B

FOR RIGHT LANE CLOSURE AT INTERSECTION

GENERAL NOTES

THE EXACT NUMBER, LOCATION, AND SPACING OF ALL SIGNS AND DEVICES SHALL BE ADJUSTED TO FIT FIELD CONDITIONS AS APPROVED BY THE ENGINEER.

THE SPACING BETWEEN SIGNS SHOULD BE ADJUSTED TO NOT CONFLICT WITH AND SHOULD PROVIDE A DESIRABLE MINIMUM OF 200 FEET CLEARANCE TO EXISTING SIGNS THAT WILL REMAIN IN PLACE.

ALL SIGNS ARE 48"×48" UNLESS OTHERWISE NOTED. IF NECESSARY DUE TO SPACE CONSTRAINTS IN URBAN AREAS, 36" X 36" SIGNS MAY BE USED IF APPROVED BY DISTRICT TRAFFIC UNIT.

"WO" SIGNS ARE THE SAME AS "W" SIGNS EXCEPT THE BACKGROUND IS ORANGE.

SIGN LAYOUTS SHALL BE IN ACCORDANCE WITH THE FHWA'S MANUAL OF STANDARD HIGHWAY SIGNS OR THE WISCONSIN STANDARD SIGN PLATES.

SIGNS THAT WILL BE IN PLACE LESS THAN 7 CONTINUOUS DAYS AND NIGHTS, OR THAT WILL BE PLACED IN A CLOSED LANE, MAY BE MOUNTED ON PORTABLE SUPPORTS.

ANY SIGNS TEMPORARY OR EXISTING, WHICH CONFLICT WITH TRAFFIC CONTROL "IN USE" SHALL BE REMOVED OR COVERED AS NEEDED AND AS APPROVED BY THE ENGINEER.

CHANNELIZING DEVICES PLACED ADJACENT TO WORK AREA SHALL BE PULLED BACK FROM THE TRAVEL LANE WHEN WORK IS NOT IN PROGRESS.

BARRICADES IN A CLOSED LANE THAT MUST BE MOVED FOR A WORK OPERATION SHALL BE IMMEDIATELY RE-ESTABLISHED UPON COMPLETION OF THE OPERATION OR, FOR CONTINUING OPERATIONS, AT THE END OF EACH WORKING DAY.

(1) 500' TYPICAL OR AT LAST INTERSECTION, WHICHEVER IS CLOSER.
350' IF 35-40 MPH.
200' IF 25-30 MPH.

(2) ALSO USE BARRICADE AND 15-FOOT TYPICAL DRUM SPACING AT COMMERCIAL DRIVEWAYS.

(3) SEE SEPARATE LANE CLOSURE DETAIL FOR ADDITIONAL TRAFFIC CONTROL.

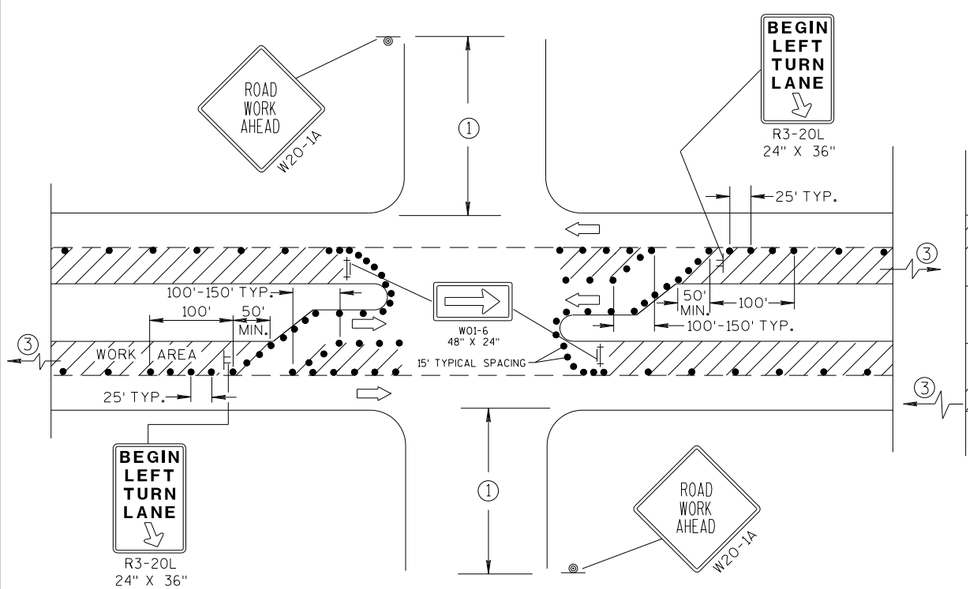

DETAIL C

FOR LEFT LANE CLOSURE AT INTERSECTION OR MEDIAN OPENING (WITH LEFT TURN BAY OPEN)

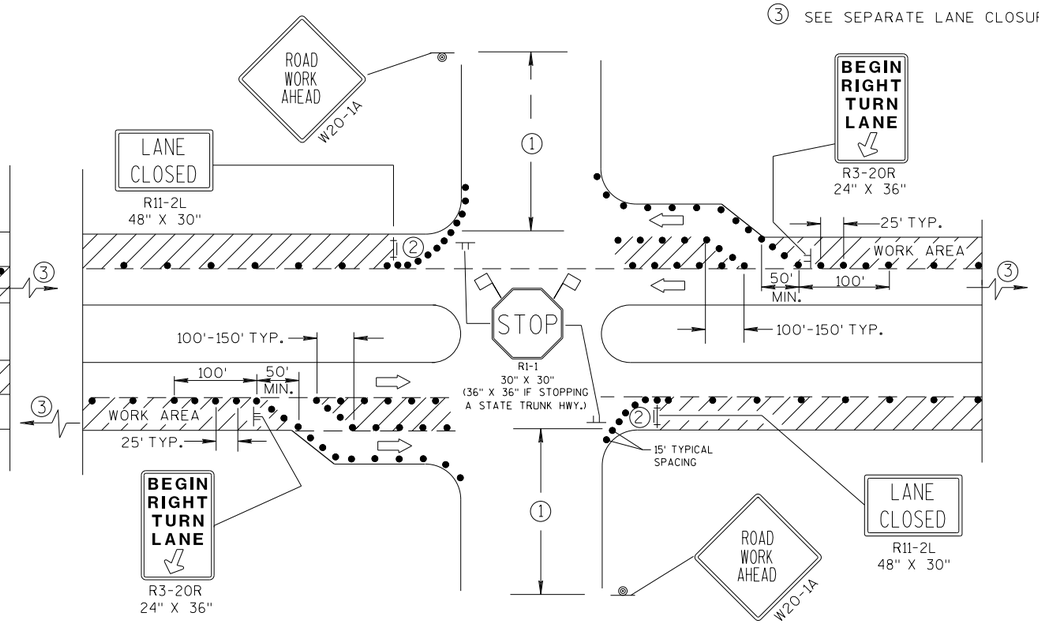

DETAIL D

FOR RIGHT LANE CLOSURE AT INTERSECTION (WITH RIGHT TURN BAY OPEN)

LEGEND

- TRAFFIC CONTROL DRUM
- SIGN ON PERMANENT SUPPORT
- SIGN ON TEMPORARY SUPPORT (5' MIN. MOUNTING HEIGHT)
- TYPE III BARRICADE WITH ATTACHED SIGN AND TYPE "A" WARNING LIGHT (FLASHING)
- DIRECTION OF TRAFFIC
- FLAGS, 16" X 16" MIN., (ORANGE)
- WORK AREA

TRAFFIC CONTROL, INTERSECTION WITHIN SINGLE LANE CLOSURE

STATE OF WISCONSIN
DEPARTMENT OF TRANSPORTATION

APPROVED
7/2018 — DATE
/S/ Andrew Heldtke — WORK ZONE ENG
FHWA

LEGEND

- TRAFFIC CONTROL DRUM
- SIGN ON PERMANENT SUPPORT
- DIRECTION OF TRAFFIC
- FLASHING ARROW BOARD
- WORK AREA

GENERAL NOTES

THIS DETAIL IS TYPICAL FOR CLOSING THE RIGHT SHOULDER. FOR CLOSING THE LEFT SHOULDER, REVERSE THE TRAFFIC CONTROL.

THIS DETAIL MAY BE USED FOR DIVIDED ROADWAYS WITH ANY NUMBER OF TRAVEL LANES.

THE EXACT NUMBER, LOCATION AND SPACING OF ALL SIGNS AND DEVICES SHALL BE ADJUSTED TO FIT FIELD CONDITIONS AS APPROVED BY THE ENGINEER.

ALL SIGNS ARE 48" X 48" UNLESS OTHERWISE NOTED.

SIGN LAYOUTS SHALL BE IN ACCORDANCE WITH THE FHWA'S MANUAL OF STANDARD HIGHWAY SIGNS OR THE WISCONSIN STANDARD SIGN PLATES.

SIGNS THAT WILL BE IN PLACE LESS THAN 7 CONTINUOUS DAYS AND NIGHTS MAY BE MOUNTED ON PORTABLE SUPPORTS.

ANY SIGNS TEMPORARY OR EXISTING, WHICH CONFLICT WITH TRAFFIC CONTROL "IN USE" SHALL BE REMOVED OR COVERED AS NEEDED AND AS APPROVED BY THE ENGINEER.

CHANNELIZING DEVICES PLACED ADJACENT TO THE WORK AREA SHALL BE PULLED BACK FROM THE TRAVEL LANE WHEN WORK IS NOT IN PROGRESS.

WHEN A RAMP INTERSECTS THE FACILITY ON WHICH THE WORK IS BEING PERFORMED, ADDITIONAL TRAFFIC CONTROLS SHALL BE PROVIDED AS SPECIFIED IN THE PLANS AND/OR THE SPECIAL PROVISIONS OR AS APPROVED BY THE ENGINEER.

*FOR SHORT DURATION SHOULDER WORK OF LESS THAN ONE HOUR, THE W21-5a SIGN MAY BE OMITTED.

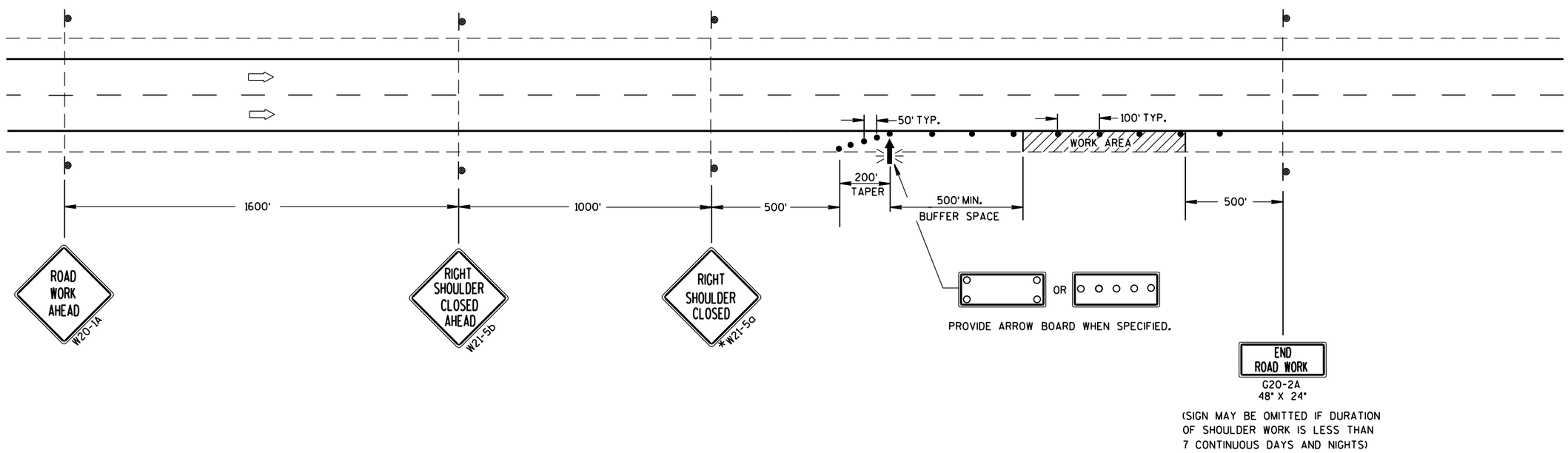

TRAFFIC CONTROL SHOULDER CLOSURE ON DIVIDED ROADWAY, SPEEDS GREATER THAN 40 MPH

STATE OF WISCONSIN
DEPARTMENT OF TRANSPORTATION

APPROVED

June 2016 — DATE

/S/ Peter Amakobe Atepe — STATEWIDE WORK ZONE TRAFFIC SAFETY ENGINEER

FHWA

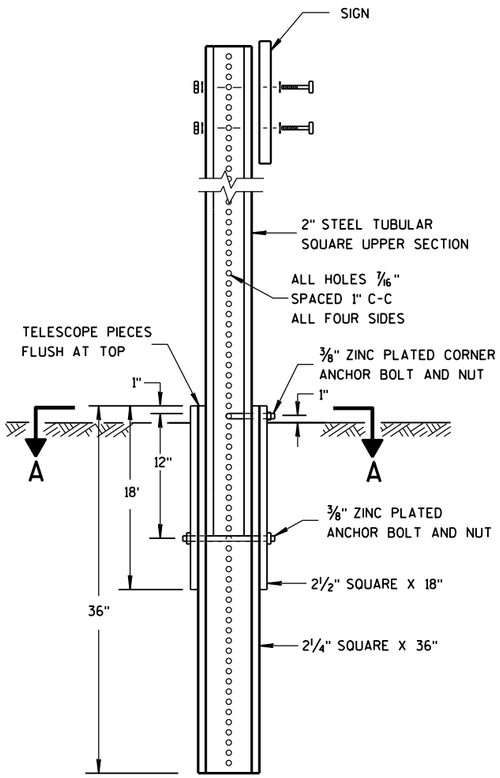

DETAIL OF TUBULAR STEEL SIGN POST

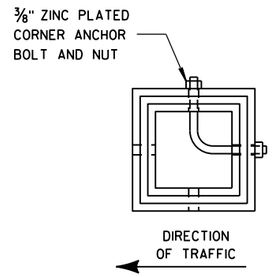

SECTION A-A

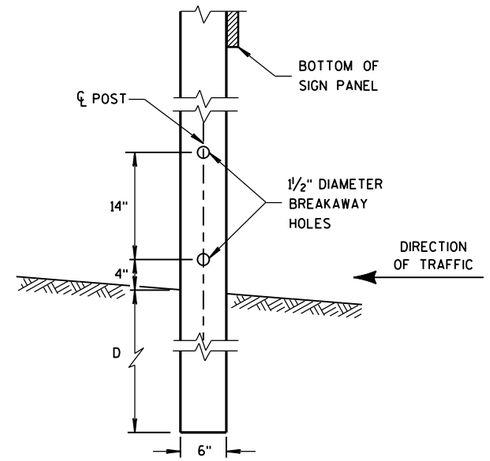

4"x6" WOOD POST MODIFICATION

GENERAL NOTES

1. 6 FEET FROM THE EDGE OF PAVEMENT (EDGE LINE LOCATION) UNLESS OTHERWISE DIRECTED BY THE PROJECT ENGINEER. LATERAL OFFSET SHOULD BE ADJUSTED TO AVOID THE DITCH FLOWLINE.
2. THE EXISTENCE OF CURB AND GUTTER DOES NOT IN ITSELF MANDATE THE VERTICAL CLEARANCE ILLUSTRATED. THAT HEIGHT IS TYPICALLY MEASURED WHERE THERE IS SIDEWALK ADJACENT TO THE ROADWAY OR PARKING IS PERMITTED. IN THE ABSENCE OF SIDEWALK, VERTICAL CLEARANCE IS MEASURED FROM THE TOP OF THE CURB. IF NO SIDEWALK AND NO PARKING, VERTICAL CLEARANCE MAY BE REDUCED TO 5 FOOT MINIMUM. OFFSET OF SIGNS IS MEASURED FROM THE CURB FLOWLINE.
3. FOR SIGNS REQUIRING 4 POSTS, SPACE INTERMEDIATE POSTS EVENLY.

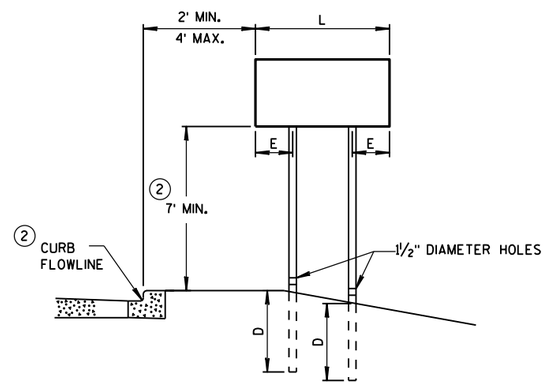

URBAN AREA

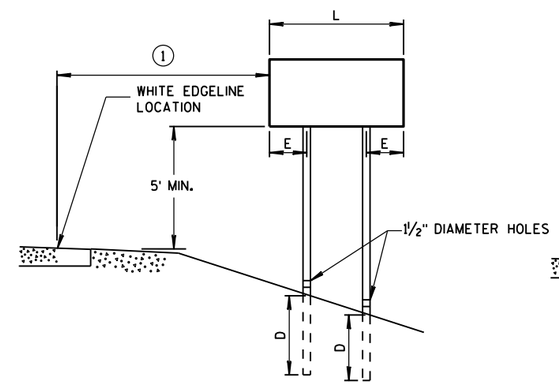

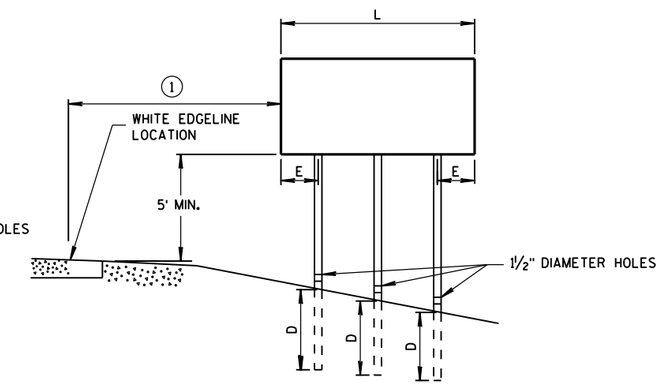

RURAL AREA

POST MOUNTING DETAIL FOR TEMPORARY TRAFFIC CONTROL FIXED MESSAGE SIGNS

TUBULAR STEEL POSTS

AREA OF SIGN INSTALLATION (SQ. FT.)	NUMBER OF REQUIRED TUBULAR STEEL POSTS
9 OR LESS	1
GREATER THAN 9 LESS THAN OR EQUAL TO 18	2
GREATER THAN 18 LESS THAN OR EQUAL TO 27	3

SIGNS WIDER THAN 3 FEET OR LARGER THAN 9 SQ. FT. SHALL BE MOUNTED ON MULTIPLE POSTS (SEE ABOVE TABLE).

SIGNS LARGER THAN 27 SQ. FT. SHALL NOT BE MOUNTED ON TUBULAR STEEL POSTS.

WOOD POST EMBEDMENT DEPTH

AREA OF SIGN INSTALLATION (SQ. FT.)	D (MIN)
20 OR LESS	4'
GREATER THAN 20	5'

4" X 6" WOOD POST

POST SPACING REQUIREMENTS		NUMBER OF WOOD POSTS REQUIRED
L	E	
48" OR LESS AND LESS THAN 20 SQ. FT.	-	1
LESS THAN 60"	12"	2
60" TO 120"	L/5	2
GREATER THAN 120" LESS THAN 168"	12"	3
168" AND GREATER	12"	4

SEE NOTE 3

TEMPORARY TRAFFIC CONTROL SIGN MOUNTING

STATE OF WISCONSIN
DEPARTMENT OF TRANSPO

6

S.D.D. 15 D 38-2a

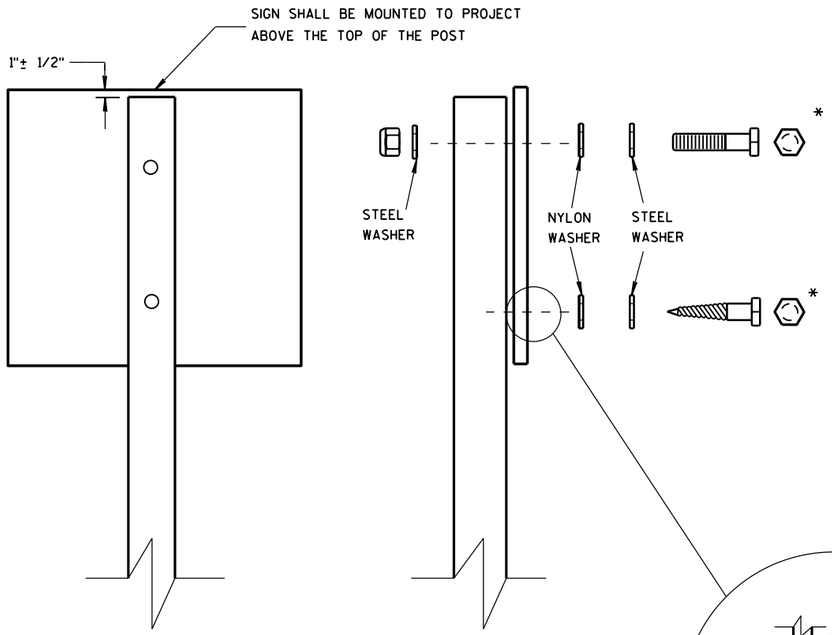

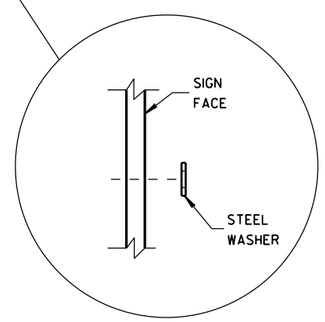

WASHER PLACEMENT WHEN SIGN HAS OTHER THAN TYPE H OR TYPE F FACE

NUTS, BOLTS AND LAGS USED FOR MOUNTING SIGNS SHALL HAVE HEXAGONAL HEADS AND SHALL BE EITHER:

A. HOT DIP GALVANIZED IN ACCORDANCE WITH ASTM DESIGNATION: A 153, CLASS D, OR SC 3

B. ELECTRO-GALVANIZED IN ACCORDANCE WITH ASTM DESIGNATION: B 633, TYPE III, SC 3

THREADS ON BOLTS AND NUTS SHALL BE MANUFACTURED WITH SUFFICIENT ALLOWANCE FOR THE CADMIUM PLATE OR GALVANIZED COATING TO PERMIT THE NUTS TO RUN FREELY ON THE BOLTS.

WOOD POSTS (4" x 4" or 4" x 6")

LAG SCREWS - 3/8" X 3"

MACHINE BOLTS - 5/16" X 6-1/2" OR 7" LENGTH W/ NUTS

SQUARE STEEL POSTS (2" x 2")

MACHINE BOLTS - 3/8" X 3-1/4" LENGTH W/ NUTS

RIVETS - 9/32" (6605-9-6) BULB-TITE, TRI-FOLD, ALUMINUM BODY/MANDREL O.D. FLANGE .720-.765 INCH, GRIP RANGE .042-.375 INCH

WASHERS (ALL POSTS) -

1-1/4" O.D. X 3/8" I.D. X 1/16" STEEL

1-1/4" O.D. X 3/8" I.D. X .080 NYLON FOR ALL TYPE H SIGNS

* TWO DIFFERENT FASTENING SYSTEMS ARE SHOWN FOR ILLUSTRATION PURPOSES. ON ANY INDIVIDUAL SIGN, EITHER ONE OR THE OTHER SYSTEM SHALL BE USED. ACTUAL NUMBER OF FASTENERS PER SIGN VARIES WITH THE SIGN AREA. FOR A SINGLE POST INSTALLATION, ALL SIGNS GREATER THAN 9 SQ. FT. REQUIRE THE USE OF 3 FASTENERS.

6

6

S.D.D. 15 D 38-2b

S.D.D. 15 D 38-2b

ATTACHMENT OF SIGNS TO POSTS

STATE OF WISCONSIN
DEPARTMENT OF TRANSPORTATION

APPROVED

June 2017 — /S/ Andrew Heldtke
DATE — WORK ZONE ENG

FHWA

TYPICAL ASSEMBLIES

J1-1

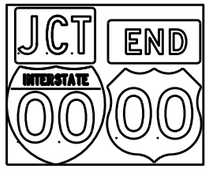

J1-2

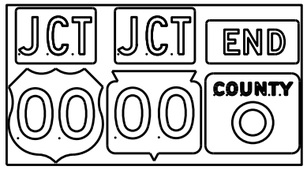

J1-3

J2-1

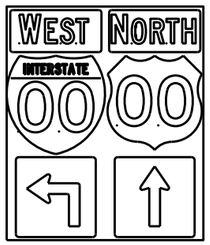

J2-2

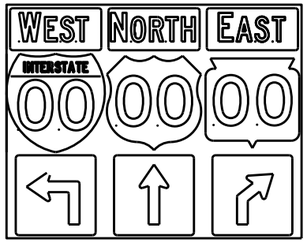

J2-3

JV

(Typical Vertical J-Assembly
See Note 10 and 11)

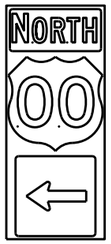

J3-1

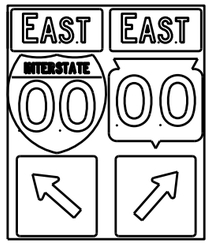

J3-2

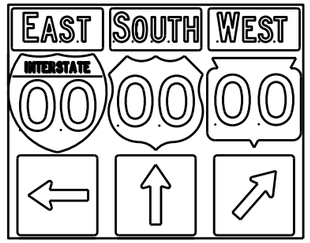

J3-3

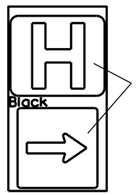

Blue Background

JH-1

J4-1

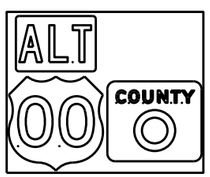

J4-2

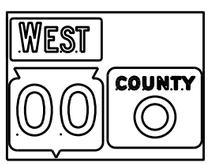

J4-2

J13-1

J12-1

J32-1

J33-1

J23-1

J22-1

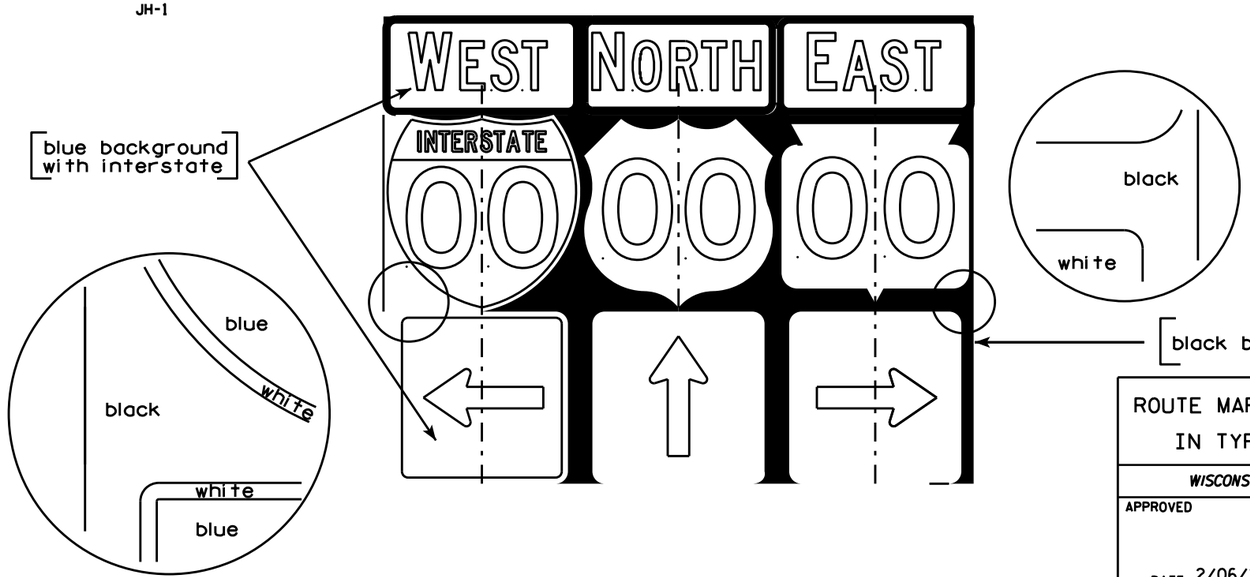

NOTES

1. Signs are Type II - Type H Reflective - reference WIS DOT Standard Specification for HIGHWAY and STRUCTURE CONSTRUCTION latest edition.
2. Color:
   Background - Black Non-reflective
   Message - see Note 5
3. Message Series - See Note 5
4. Corners shall be square or rounded if base material is plywood. If base material is metal the corners shall be rounded.
5. The colors and message spacing on each marker shall be according to the applicable route marker panel specifications.
6. Certain marker heads require the component pieces to be the same color. As an example, all the components used with an M1-1 Interstate marker shall be blue.
7. Single panel j-assemblies shall only be used with route marker shields that are same size. If the route marker shields are different size use multiple piece component.
8. Route assemblies that have 24 inch route shields and have dimensions greater than 48 inches (both vertical and horizontal) shall have one horizontal splice between the arrows and route shields. Vertical splices shall not be used on route assemblies with a horizontal dimension of 144 inches or less. The contractor shall not use more than one vertical joint per sign and the joint shall be between route shields.
9. Route assemblies that have 36 inch shields and have dimensions greater than 48 inchs (both vertical and horizontal) shall have two horizontal splices. One horizontal splice shall be between the cardinal direction and route shields and the other horizontal splice shall be between the arrows and route shields. Vertical splices shall not be used on route assemblies with a horizontal dimension of 144 or less. The contractor shall not use more than one vertical joint per sign and the joint shall be between route shields.
10. All Vertical J Assemblies are given a Sign Code of JV
11. For JV Assemblies that have a mixture of Interstate and non Interstate shields, arrows and cardinals shall be white on blue.

ROUTE MARKERS & COMPONENTS
IN TYPICAL ASSEMBLIES

WISCONSIN DEPT OF TRANSPORTATION

APPROVED Matthew R Rauch
for State Traffic Engineer

DATE 2/06/14 PLATE A2-1S.8

PROJECT NO: | SHEET NO: E

URBAN AREA

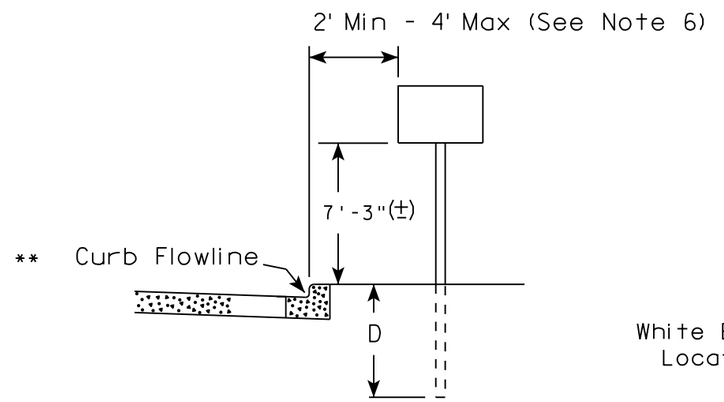

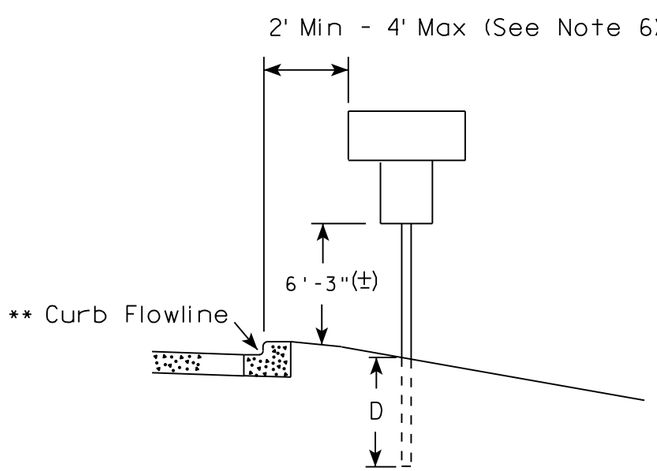

RURAL AREA (See Note 2)

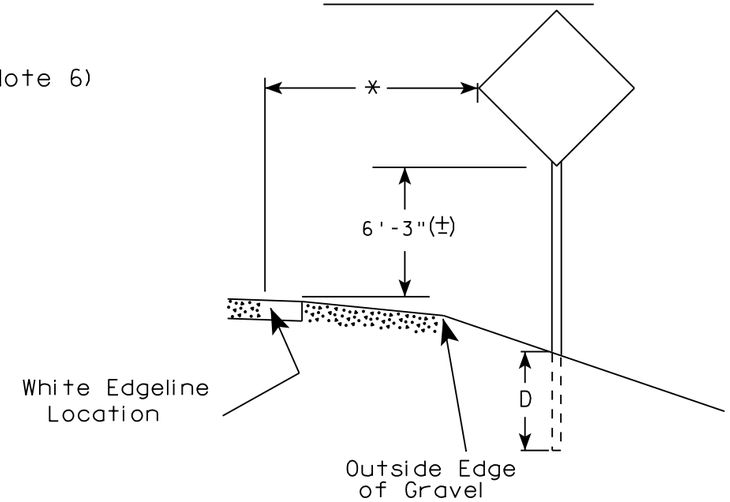

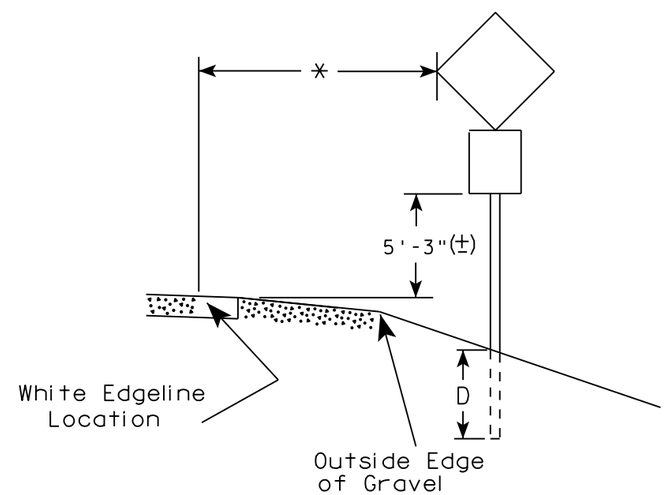

** The existence of curb and gutter does not in itself mandate the vertical clearance illustrated. That height is typically measured where there is sidewalk adjacent to the roadway or parking is permitted. In the absence of sidewalk vertical clearance is measured from the top of the curb. Offset of signs is measured from the flow line.

* 6 feet from edge of a paved shoulder or 12 feet from the edge of pavement (edge line location) or 2 feet from outside edge of gravel, whichever is greater unless directed by project engineer.

GENERAL NOTES

1. Signs wider than 4 feet or 20 sq.ft or larger, shall be mounted on multiple posts. Refer to plate A4-4.
2. If signs are mounted on barrier wall, see A4-10 sign plate.
3. For expressways and freeways, mounting height is 7'- 3" (±) or 6'-3" (±) depending upon existence of a sub-sign.
4. J-Assemblies are considered to be one sign for mounting height.
5. Minimum mounting height for signs mounted on traffic signal poles is 5'- 3" (±).
6. Offset distance shall be consistent with existing signs or consistent throughout length of project.
7. The (±) tolerance for mounting height is 3 inches.
8. Folding signs shall be mounted at a height of 5'-3" (±) or as directd by the Engineer.
9. The Double Arrow sign (W12-1) shall be mounted at a height of 2'-3" (±). The Chevron sign (W1-8), Roundabout Chevron panel (R6-4B), Enhanced Reference Markers, Clearance Markers (W5-52), Mile Markers (D10 series), In Road Object Markers (W5-54) & End of Road Markers (W5-56) shall be mounted at a height of 4'-3" (±).

POST EMBEDMENT DEPTH

Area of Sign Installation (Sq. Ft.)	D (Min)
20 or Less	4'
Greater than 20	5'

TYPICAL INSTALLATION OF PERMANENT TYPE II SIGNS ON SINGLE POSTS

WISCONSIN DEPT OF TRANSPORTATION

APPROVED Matthew R Rauch for State Traffic Engineer

DATE 8/21/17 PLATE NO. A4-3.21

7 7

PROJECT NO:	HWY:	COUNTY:		SHEET NO: 72	E

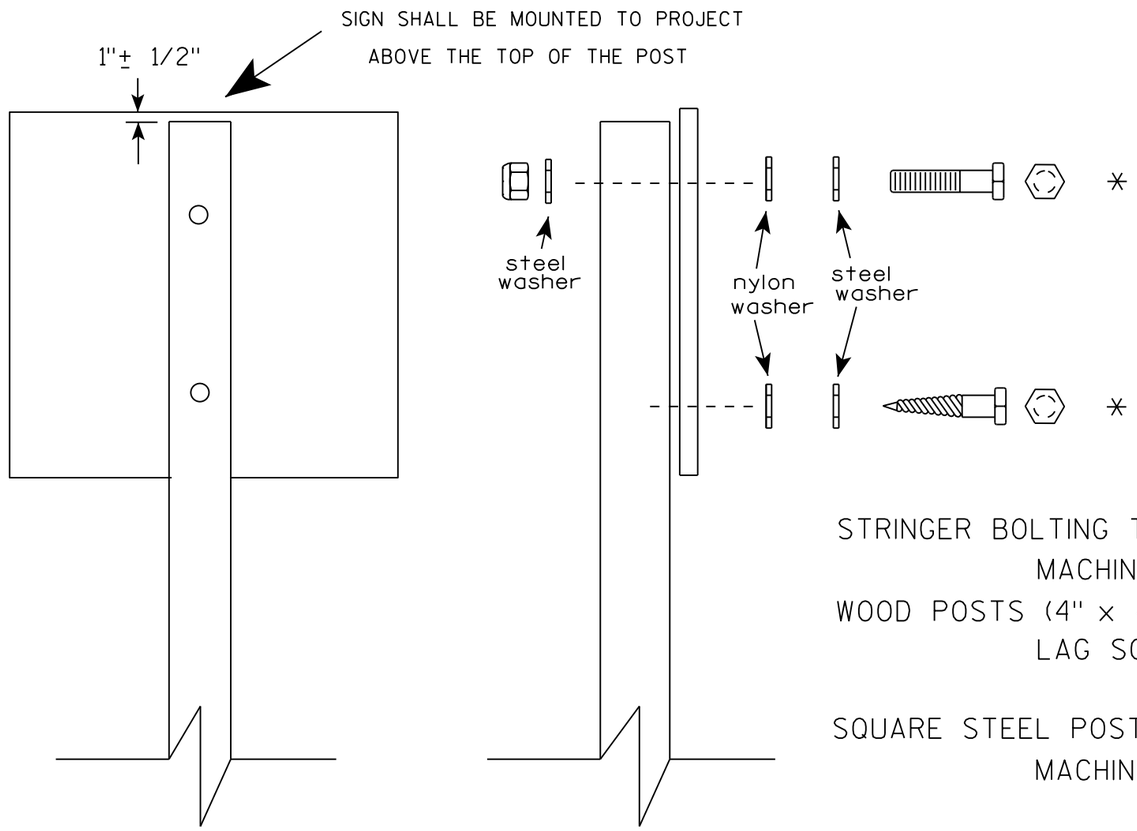

Nuts, bolts and lags used for mounting signs shall have hexagonal heads and shall be either :

a. Hot dip galvanized in accordance with ASTM Designation: A 153, Class D, or SC 3

b. Electro-galvanized in accordance with ASTM Designation : B 633, TYPE III, SC 3.

Threads on bolts and nuts shall be manufactured with sufficient allowance for the cadmium plate or galvanized coating to permit the nuts to run freely on the bolts.

STRINGER BOLTING TO ALUMINUM SIGNS (SEE SIGN PLATE A4-18)

MACHINE BOLTS - 5/16" X 1-3/4" Length w/ lock nuts

WOOD POSTS (4" x 4" or 4" x 6")

LAG SCREWS - 3/8" X 3" (NO STRINGERS ON BACK OF SIGN)

3/8" X 4" (STRINGERS ON BACK OF SIGN)

SQUARE STEEL POSTS (2" x 2")

MACHINE BOLTS - 3/8" X 3-1/4" Length w/ nuts (NO STRINGER ON BACK OF SIGN)

3/8" X 5" Length w/ nuts (STRINGERS ON BACK OF SIGN)

RIVETS - 9/32 " (6605-9-6) BULB-TITE, TRI-FOLD, ALUMINUM BODY/MANDREL

O.D. FLANGE .720-.765 INCH, GRIP RANGE .042-.375 INCH

WASHERS (ALL POSTS) -

1-1/4" O.D. X 3/8" I.D. X 1/16" STEEL

1-1/4" O.D. X 3/8" I.D. X .080 NYLON

* Two different fastening systems are shown for illustration purposes. On any individual sign, either one or the other system shall be used. Actual number of fasteners per sign varies with the sign area, but normally there are two. For a single post installation, all signs greater than 9 sq. ft. require the use of 3 fasteners.

ATTACHMENT OF SIGNS TO POSTS

WISCONSIN DEPT OF TRANSPORTATION

APPROVED Matthew R Rauch
for State Traffic Engineer

DATE 8/11/16 PLATE NO. A4-8.8

PROJECT NO:

SHEET NO: E

TELESCOPIC TUBING ANCHORS
TWO PIECE SYSTEM

2 1/4" SQUARE
12 GAUGE
PERFORATED
GALVANIZED FINISH

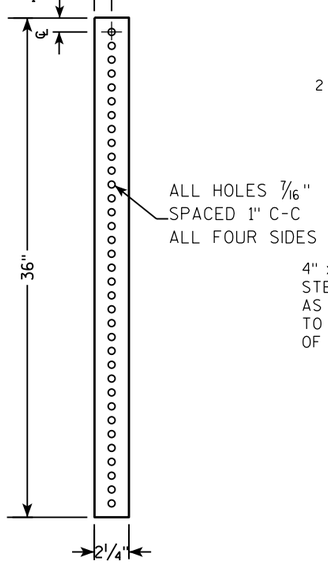

2 1/2" SQUARE
12 GAUGE
OMNI-DIRECTIONAL
PERFORATED
SOIL STABILIZING SLEEVE
GALVANIZED FINISH

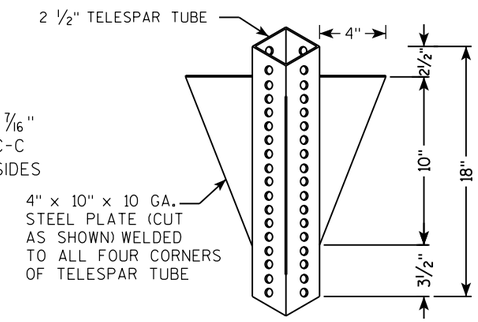

DETAIL OF TUBULAR STEEL SIGN POST
(IN POURED CONCRETE OR ASPHALT)

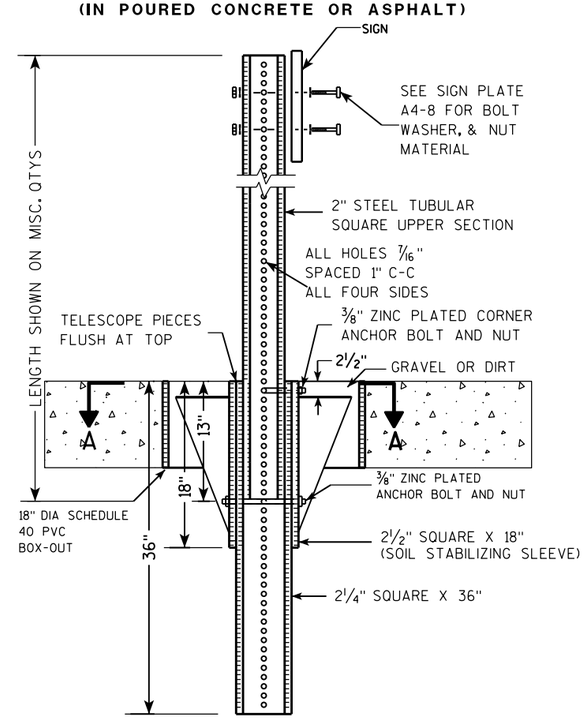

DETAIL OF TUBULAR STEEL SIGN POST
(IN LOCATIONS OTHER THAN POURED CONCRETE OR ASPHALT)

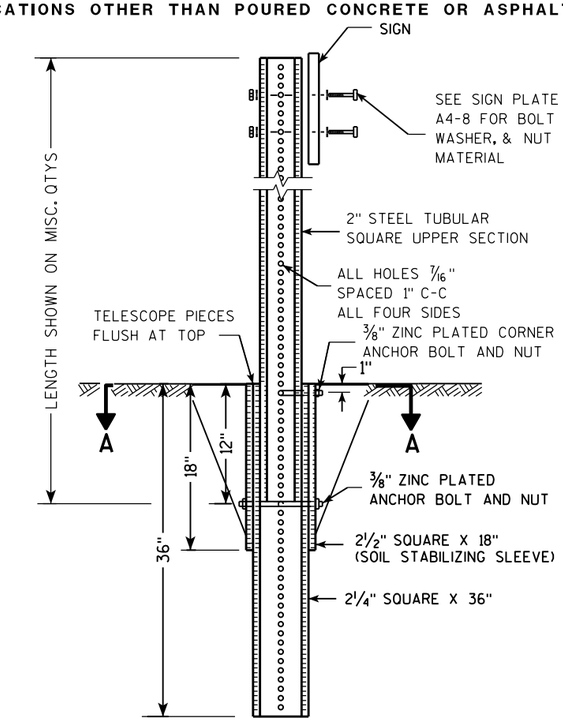

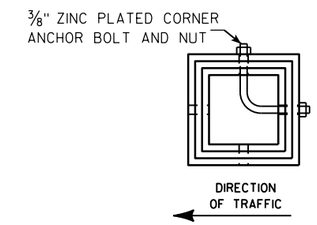

SECTION A-A

Area of Sign Installation (Sq. Ft.)	Number of Required Posts
9 or less	1
Greater than 9 less than or equal to 18	2
Greater than 18 less than or equal to 27	3

Signs wider than 3 feet or larger than 9 sq. ft shall be mounted on multiple posts (see above table).

TUBULAR STEEL
SIGN POST
A4-9

WISCONSIN DEPT OF TRANSPORTATION

APPROVED Matthew R Rauch
for State Traffic Engineer

DATE 2/05/15 PLATE A4-9.9

7 7

PROJECT NO:	HWY:	COUNTY:		SHEET NO:	E

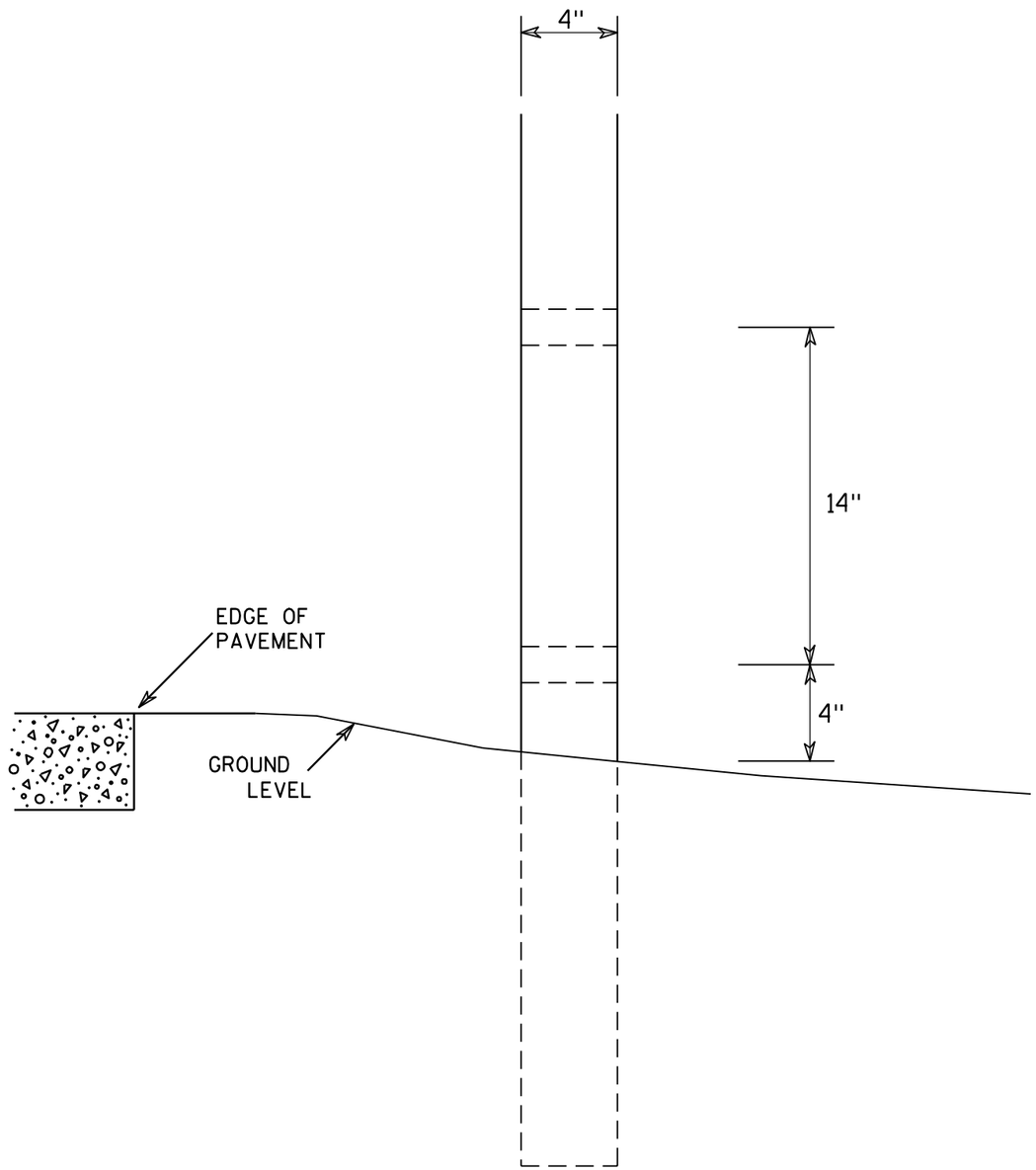

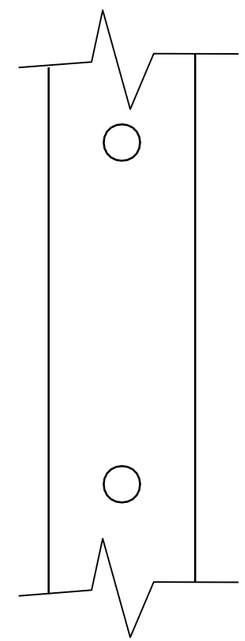

SIDE VIEW

GENERAL NOTES

1. All 4 x 6 Wood Posts shall be modified by having two 1½" diameter holes drilled perpendicular to the roadway centerline.

7

7

4 X 6 WOOD POST MODIFICATIONS

WISCONSIN DEPT OF TRANSPORTATION

APPROVED Chester J Spang for State Traffic Engineer

DATE 3/27/97 PLATE NO. A4-11.2

PROJECT NO:	HWY:	COUNTY:		SHEET NO: 75	E

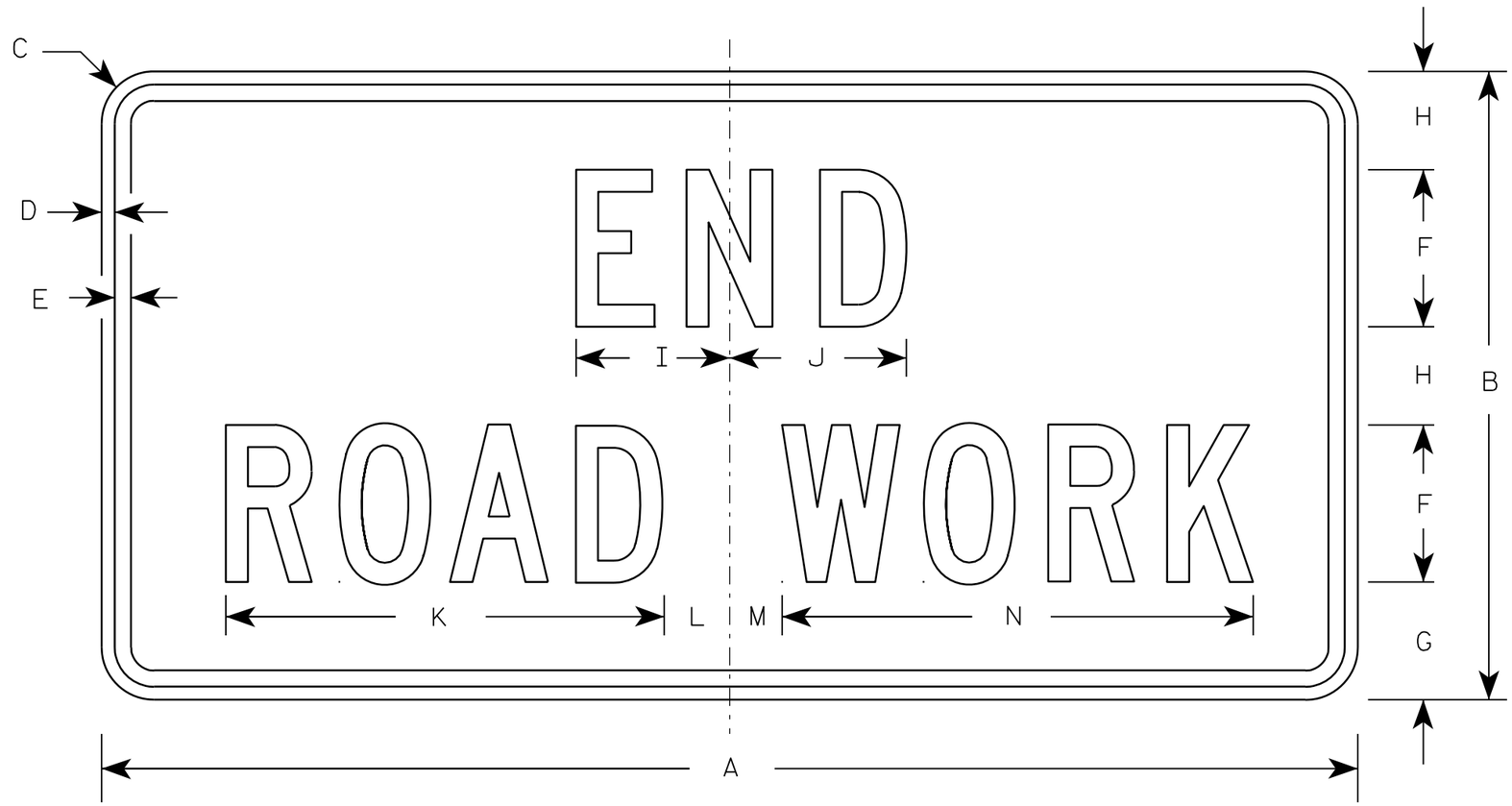

G20-2A

NOTES

1. Sign is Type II - Type F Reflective - reference WIS DOT Standard Specification for HIGHWAY and STRUCTURE CONSTRUCTION latest edition.
2. Color:
   Background - Orange
   Message - Black
3. Message Series - C
4. Corners may be square or rounded when base material is plywood but borders shall be rounded as shown. When base material is metal, the corners and borders shall be rounded.

Metric equivalent for this sign is:

SIZE	
1	900 mm X 450 mm
2	1200 mm X 600 mm
3	1200 mm X 600 mm
4	1200 mm X 600 mm
5	1200 mm X 600 mm

SIZE	A	B	C	D	E	F	G	H	I	J	K	L	M	N	O	P	Q	R	S	T	U	V	W	X	Y	Z	Area sq. ft.	Area m2
1	36	18	1 1/8	3/8	1/2	4	3 3/4	2 1/2	4 1/8	4 1/8	11 1/8	2	1	12 1/8													4.5	0.41
2	48	24	1 1/2	1/2	5/8	6	4 1/2	3 3/4	5 7/8	6 3/4	16 3/4	2 1/2	1 3/4	18 1/2													8.0	0.72
3	48	24	1 1/2	1/2	5/8	6	4 1/2	3 3/4	5 7/8	6 3/4	16 3/4	2 1/2	1 3/4	18 1/2													8.0	0.72
4	48	24	1 1/2	1/2	5/8	6	4 1/2	3 3/4	5 7/8	6 3/4	16 3/4	2 1/2	1 3/4	18 1/2													8.0	0.72
5	48	24	1 1/2	1/2	5/8	6	4 1/2	3 3/4	5 7/8	6 3/4	16 3/4	2 1/2	1 3/4	18 1/2													8.0	0.72

STANDARD SIGN

G20-2A

WISCONSIN DEPT OF TRANSPORTATION

APPROVED Matthew R Rauch
for State Traffic Engineer

DATE 9/30/09 PLATE NO. G20-2A.8

PROJECT NO:	HWY:	COUNTY:		SHEET NO: 76	E

NOTES

1. Sign is Type II - Type H Reflective
2. Color:
   Background - White
   Message - Black
3. Message Series - D except 3 number signs Series C
4. Corners may be square or rounded when base material is plywood but borders shall be rounded as shown. When base material is metal, the corners and borders shall be rounded.

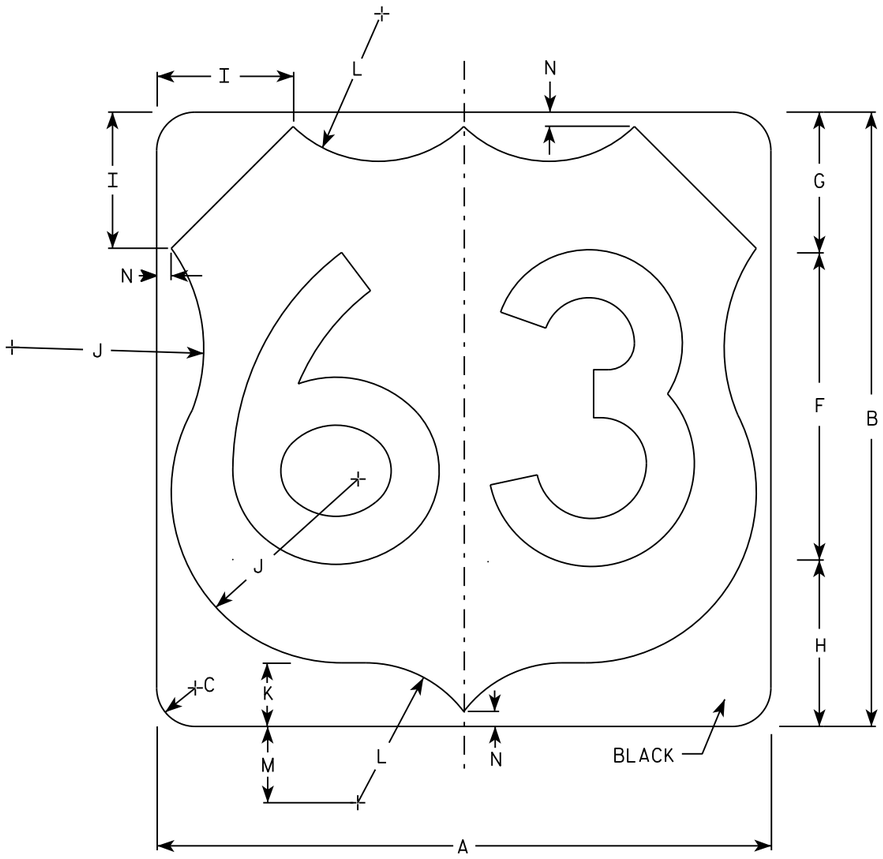

M1-4

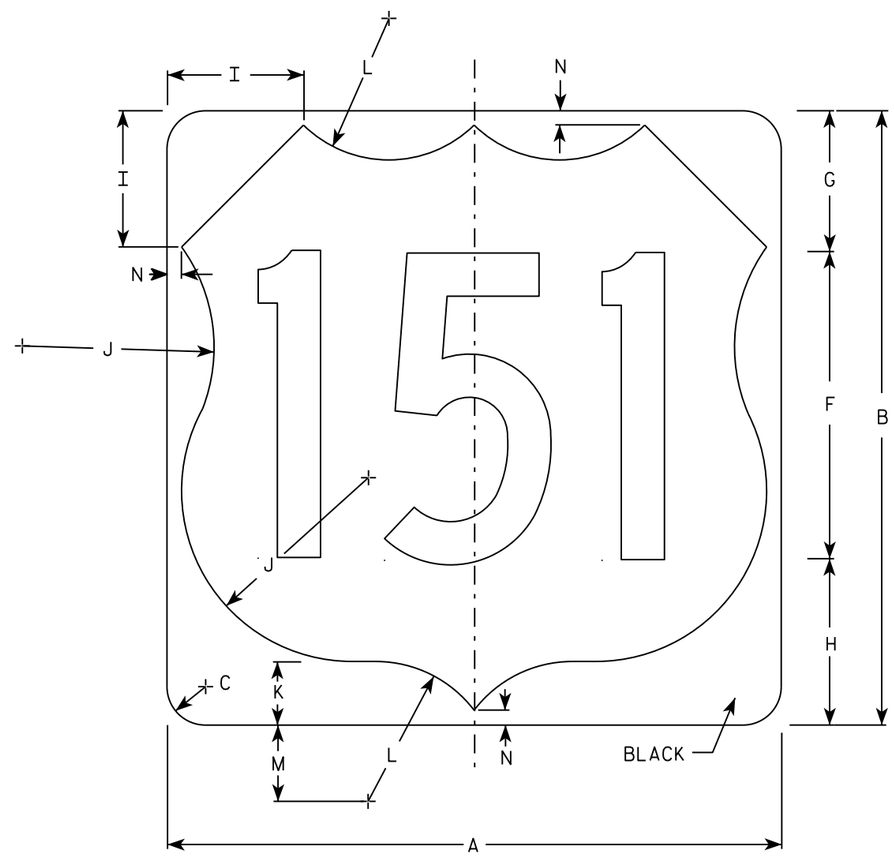

M1-4

SIZE	A	B	C	D	E	F	G	H	I	J	K	L	M	N	O	P	Q	R	S	T	U	V	W	X	Y	Z	Area sq. ft.
1																											
2	24	24	1 1/2			12	5 1/2	6 1/2	5	7 1/2	2 1/2	5 1/2	3	1/2													4.0
3	36	36	2 1/4			18	8 1/4	9 1/4	7 1/4	11 1/4	3 3/4	8 1/4	4 1/2	3/4													9.0
4	36	36	2 1/4			18	8 1/4	9 1/4	7 1/4	11 1/4	3 3/4	8 1/4	4 1/2	3/4													9.0
5	36	36	2 1/4			18	8 1/4	9 1/4	7 1/4	11 1/4	3 3/4	8 1/4	4 1/2	3/4													9.0

USH MARKER
M1-4 FOR ASSEMBLIES

WISCONSIN DEPT OF TRANSPORTATION

APPROVED Matthew R Rauch
for State Traffic Engineer

DATE 3/16/18 PLATE NO. M1-4.10

PROJECT NO:	HWY:	COUNTY:		SHEET NO: 77	E

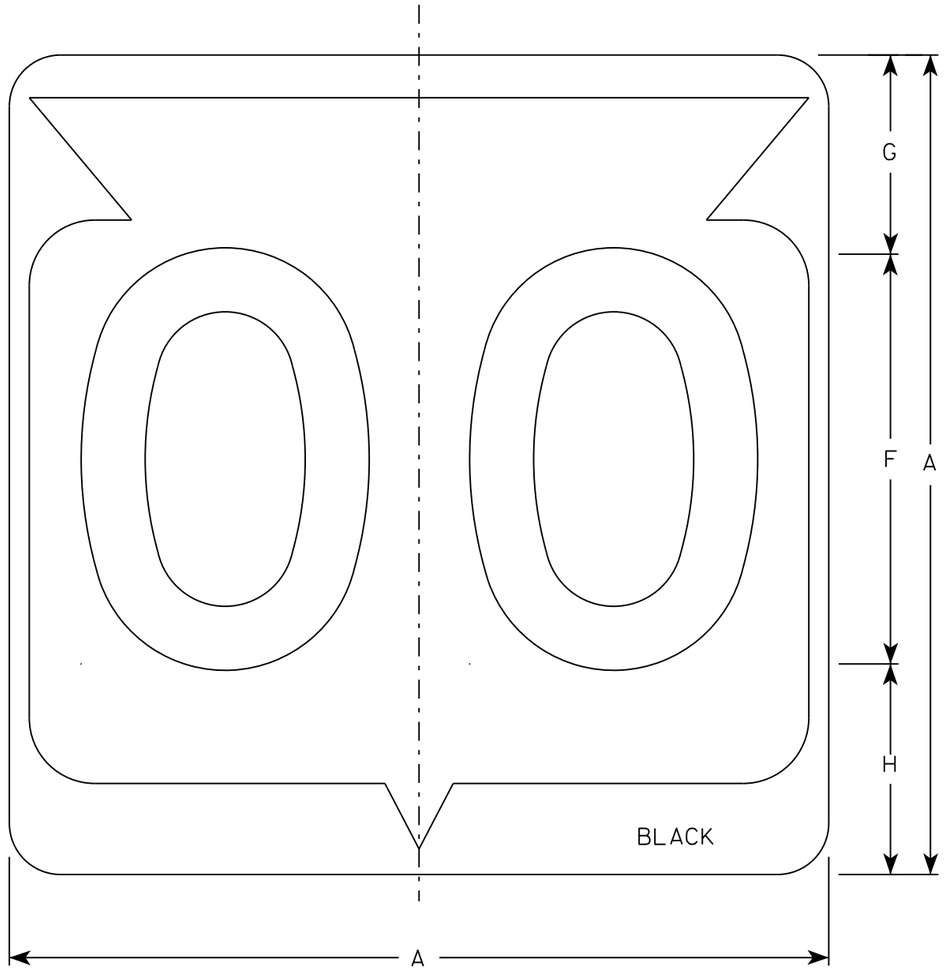

M1-6

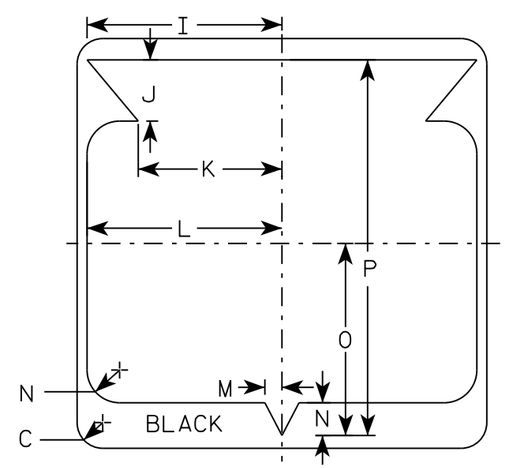

NOTES

1. Sign is Type II - Type H Reflective
2. Color:
   Background - White
   Message - Black
3. Message Series - D except 3 number signs Series C
4. Corners may be square or rounded when base material is plywood but borders shall be rounded as shown. When base material is metal, the corners and borders shall be rounded.

SIZE	A	B	C	D	E	F	G	H	I	J	K	L	M	N	O	P	Q	R	S	T	U	V	W	X	Y	Z	Area sq. ft.
1																											
2	24		1 1/2			12	5 1/2	6 1/2	10 1/4	2 1/2	8 7/8	11 1/2	1	1 7/8	11 1/4	21 7/8											4.0
3	36		2 1/4			18	8 3/4	9 1/4	15 3/8	5 3/8	12 5/8	17 1/8	1 1/2	2 7/8	16 7/8	33											9.0
4	36		2 1/4			18	8 3/4	9 1/4	15 3/8	5 3/8	12 5/8	17 1/8	1 1/2	2 7/8	16 7/8	33											9.0
5	36		2 1/4			18	8 3/4	9 1/4	15 3/8	5 3/8	12 5/8	17 1/8	1 1/2	2 7/8	16 7/8	33											9.0

STATE ROUTE MARKER
M1-6 FOR ASSEMBLIES

WISCONSIN DEPT OF TRANSPORTATION

APPROVED Matthew R Rauch
for State Traffic Engineer

DATE 3/16/18 PLATE NO. M1-6.10

PROJECT NO: | HWY: | COUNTY: | SHEET NO: 78 | E

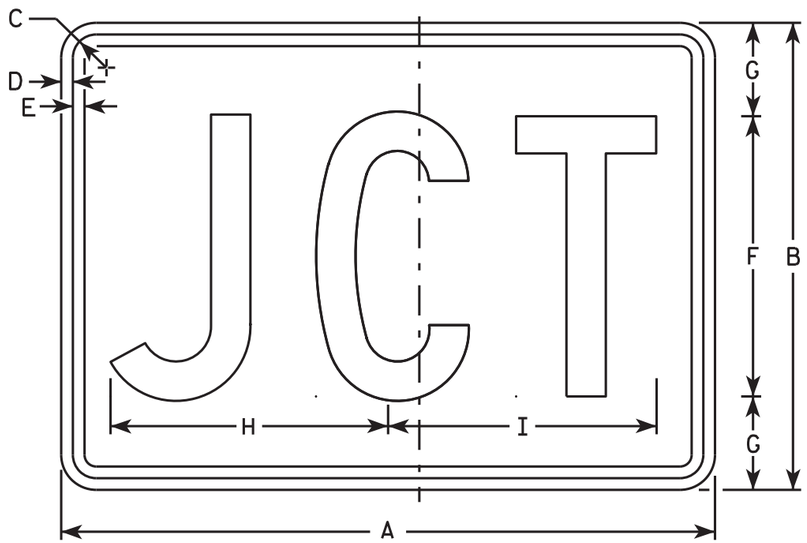

M2-1
MM2-1
MP2-1

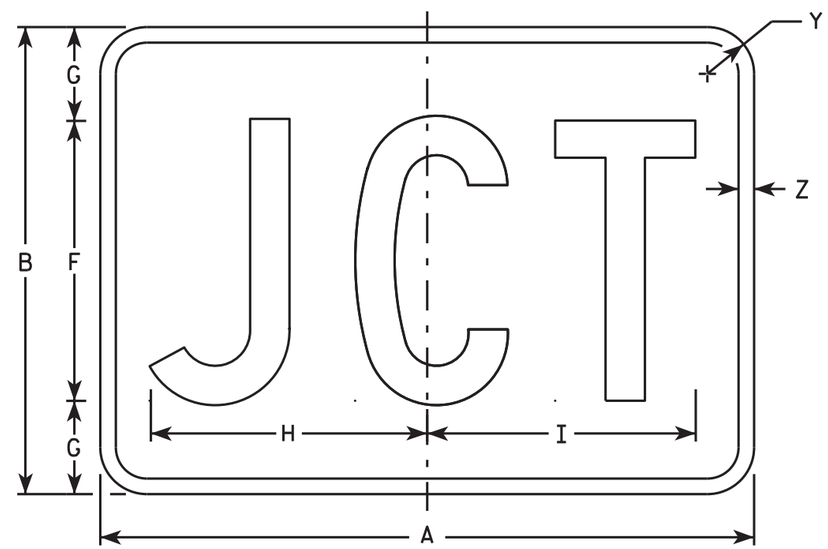

MB2-1
MK2-1
MN2-1
MR2-1

NOTES

1. Sign is Type II - Type H
2. Color:
   Background - See note 5
   Message - See note 5
3. Message Series - C
4. Corners may be square or rounded when base material is plywood but borders shall be rounded as shown. When base material is metal, the corners and borders shall be rounded.
5. M2-1 Background - White
   Message - Black
   MB2-1 Background - Blue
   Message - White
   MK2-1 Background - Green
   Message - White
   MM2-1 Background - White
   Message - Green
   MN2-1 Background - Brown
   Message - White
   MP2-1 Background - White
   Message - Blue
   MR2-1 Background - Brown
   Message - Yellow

SIZE	A	B	C	D	E	F	G	H	I	J	K	L	M	N	O	P	Q	R	S	T	U	V	W	X	Y	Z	Area sq. ft.
1																											
2	21	15	1 1/8	3/8	3/8	9	3	8 7/8	8 5/8																1 1/2	1/2	2.20
3	30	21	1 1/8	3/8	3/8	13	4	12 7/8	12 3/8																1 1/2	1/2	4.40
4	30	21	1 1/8	3/8	3/8	13	4	12 7/8	12 3/8																1 1/2	1/2	4.40
5	30	21	1 1/8	3/8	3/8	13	4	12 7/8	12 3/8																1 1/2	1/2	4.40

STANDARD SIGN
M2-1

WISCONSIN DEPT OF TRANSPORTATION

APPROVED Matthew R Rauch
for State Traffic Engineer

DATE 10/15/15 PLATE NO. M2-1.12

PROJECT NO: | HWY: | COUNTY: | SHEET NO: | E

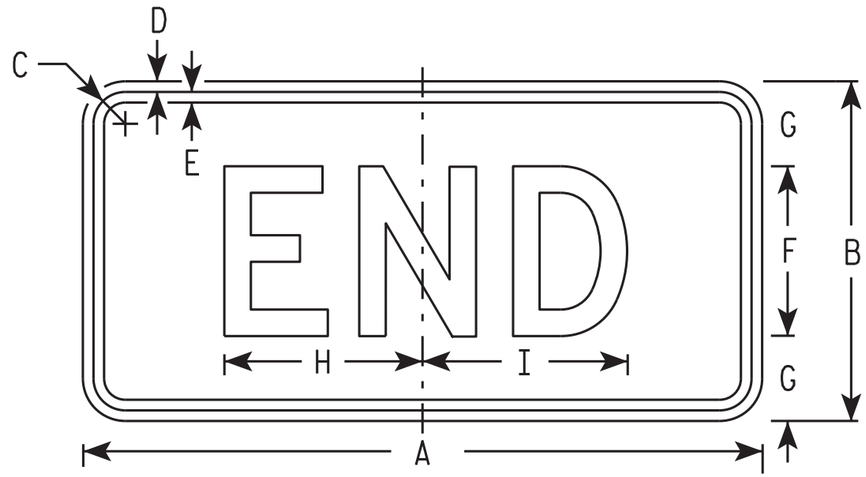

M4-6
MM4-6
MP4-6

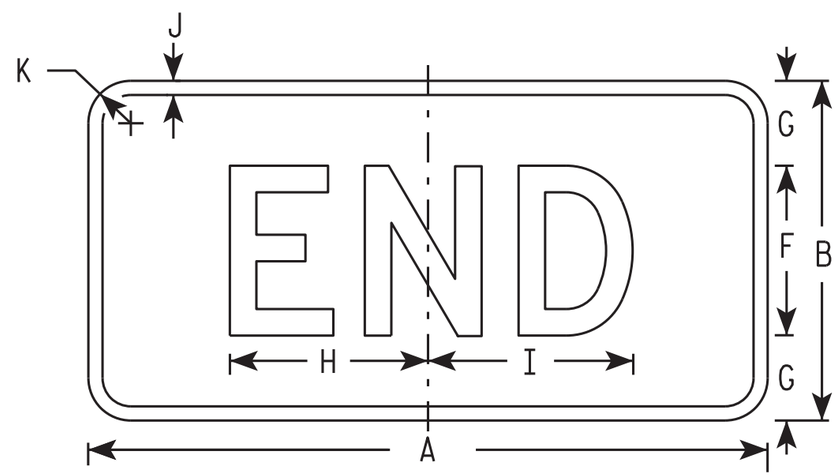

MB4-6
MK4-6
MN4-6
MR4-6

NOTES

1. Sign is Type II - Type H
2. Color:
   Background - See note 5
   Message - See note 5
3. Message Series - D
4. Corners may be square or rounded when base material is plywood but borders shall be rounded as shown. When base material is metal, the corners and borders shall be rounded.
5. M4-6 Background - White
   Message - Black

   MB4-6 Background - Blue
   Message - White

   MK4-6 Background - Green
   Message - White

   MM4-6 Background - White
   Message - Green

   MN4-6 Background - Brown
   Message - White

   MP4-6 Background - White
   Message - Blue

   MR4-6 Background - Brown
   Message - Yellow

SIZE	A	B	C	D	E	F	G	H	I	J	K	L	M	N	O	P	Q	R	S	T	U	V	W	X	Y	Z	Area sq. ft.
1																											
2	24	12	1 1/8	3/8	3/8	6	3	7	7 1/4	1/2	1 1/2																2.00
3	36	18	1 1/8	3/8	1/2	9	4 1/2	12	11 7/8	1/2	1 1/2																4.5
4	36	18	1 1/8	3/8	1/2	9	4 1/2	12	11 7/8	1/2	1 1/2																4.5
5	36	18	1 1/8	3/8	1/2	9	4 1/2	12	11 7/8	1/2	1 1/2																4.5

STANDARD SIGN
M4-6

WISCONSIN DEPT OF TRANSPORTATION

APPROVED Matthew R Rauch
for State Traffic Engineer

DATE 10/15/15 PLATE NO. M4-7.9

PROJECT NO: | HWY: | COUNTY: | SHEET NO: | E

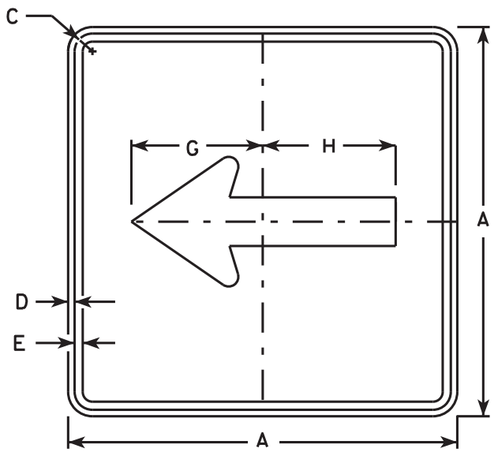

M6-1
MM6-1
MO6-1
MP6-1

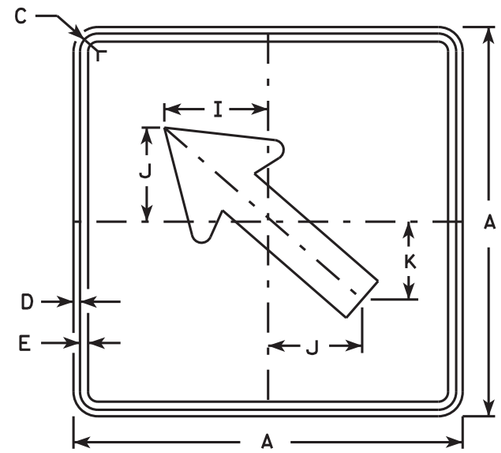

M6-2
MM6-2
MO6-2
MP6-2

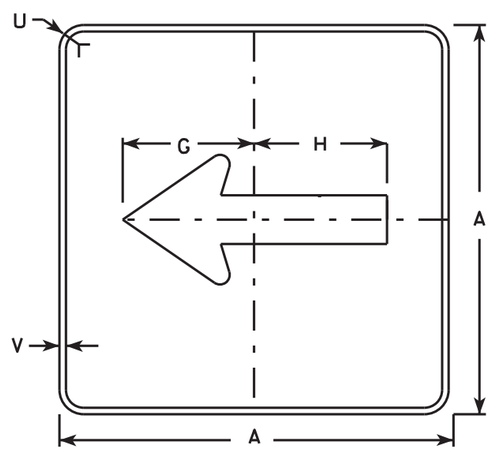

MB6-1
MK6-1
MN6-1
MR6-1

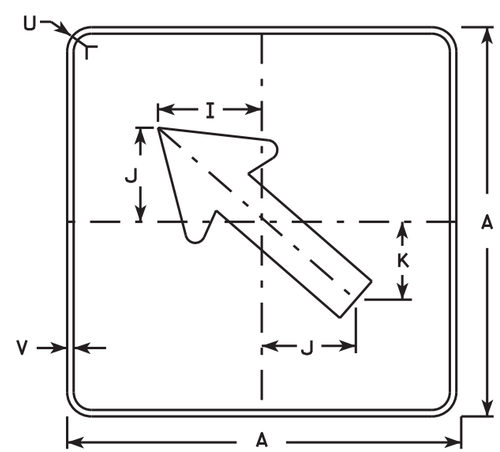

MB6-2
MK6-2
MN6-2
MR6-2

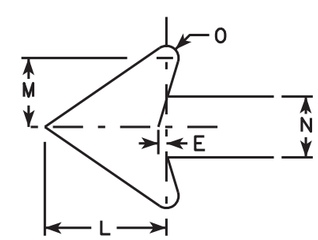

NOTES

1. Signs are Type II - Type H except as Shown
2. Color:
   Background - See note 4
   Message - See note 4
3. Corners may be square or rounded when base material is plywood but borders shall be rounded as shown. When base material is metal, the corners and borders shall be rounded.
4. M6-1 and M6-2 Background - White
   Message - Black
   MB6-1 and MB6-2 Background - Blue
   Message - White
   MK6-1 and MK6-2 Background - Green
   Message - White
   MM6-1 and MM6-2 Background - White
   Message - Green
   MN6-1 and MN6-2 Background - Brown
   Message - White
   MO6-1 and MO6-2 Background - Orange - Type F Reflective
   Message - Black
   MP6-1 and MP6-2 Background - White
   Message - Blue
   MR6-1 and MR6-2 Background - Brown
   Message - Yellow

SIZE	A	B	C	D	E	F	G	H	I	J	K	L	M	N	O	P	Q	R	S	T	U	V	W	X	Y	Z	Area sq. ft.
1																											
2	21		1 1/8	3/8	3/8		7 1/2	7 1/8	5 5/8	5	4 1/4	5 1/4	3	2 5/8	1/2						1 1/2	1/2					3.06
3	30		1 3/8	1/2	5/8		10 3/4	10 1/4	8	7 1/4	6	7 1/2	4 1/4	3 3/4	3/4						1 7/8	1/2					6.25
4	30		1 3/8	1/2	5/8		10 3/4	10 1/4	8	7 1/4	6	7 1/2	4 1/4	3 3/4	3/4						1 7/8	1/2					6.25
5	30		1 3/8	1/2	5/8		10 3/4	10 1/4	8	7 1/4	6	7 1/2	4 1/4	3 3/4	3/4						1 7/8	1/2					6.25

STANDARD SIGN
M6-1 & M6-2
SERIES

WISCONSIN DEPT OF TRANSPORTATION

APPROVED Matthew R Rauch
for State Traffic Engineer

DATE 10/15/15 PLATE NO. M6-1.15

PROJECT NO:	HWY:	COUNTY:		SHEET NO:	E

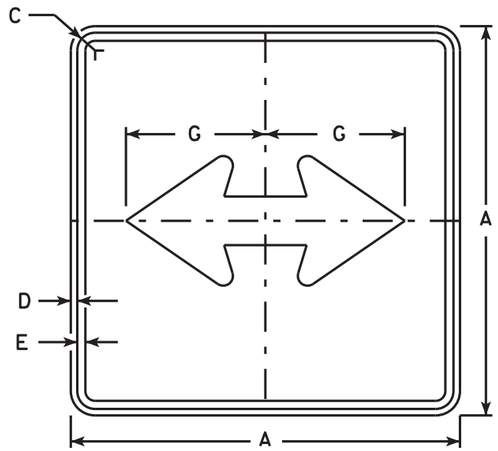

M6-4
MM6-4
MO6-4
MP6-4

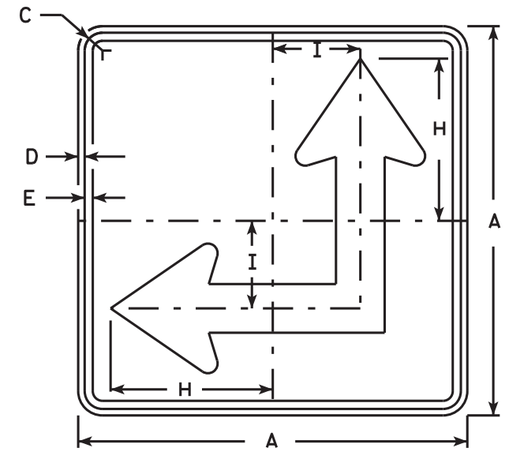

M6-6
MM6-6
MO6-6
MP6-6

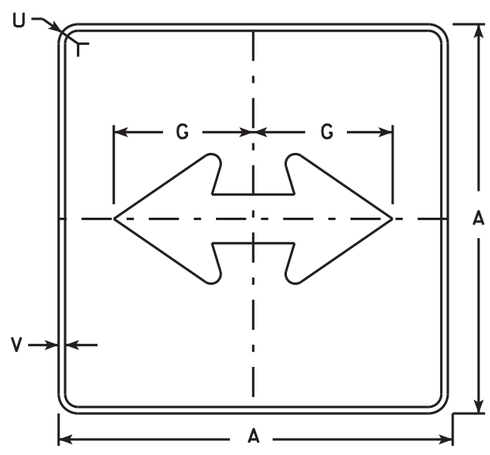

MB6-4
MK6-4
MN6-4
MR6-4

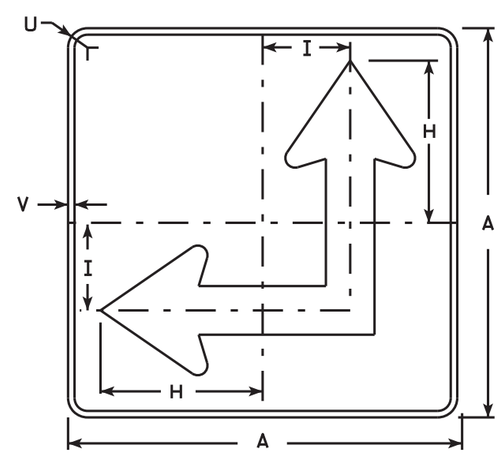

MB6-6
MK6-6
MN6-6
MR6-6

NOTES

1. Signs are Type II - Type H except as Shown
2. Color:
   Background - See Note 4
   Message - See Note 4
3. Corners may be square or rounded when base material is plywood but borders shall be rounded as shown. When base material is metal, the corners and borders shall be rounded.
4. M6-4 and M6-6 Background - White
   Message - Black
   MB6-4 and MB6-6 Background - Blue
   Message - White
   MK6-4 and MK6-6 Background - Green
   Message - White
   MM6-4 and MM6-6 Background - White
   Message - Green
   MN6-4 and MN6-6 Background - Brown
   Message - White
   MO6-4 and MO6-6 Background - Orange - Type F Reflective
   Message - Black
   MP6-4 and MP6-6 Background - White
   Message - Blue
   MR6-4 and MR6-6 Background - Brown
   Message - Yellow
5. M6-6R same as M6-6L except arrow points ahead and right.

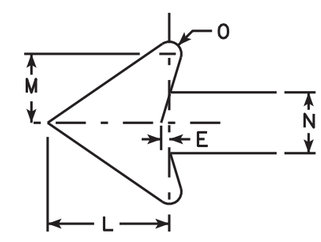

SIZE	A	B	C	D	E	F	G	H	I	J	K	L	M	N	O	P	Q	R	S	T	U	V	W	X	Y	Z	Area sq. ft.
1																											
2	21		1 1/8	3/8	3/8		7 1/2	8 3/4	4 1/4			5 1/4	3	2 5/8	1/2						1 1/2	1/2					3.06
3	30		1 3/8	1/2	5/8		10 3/4	12 1/2	6 3/4			7 1/2	4 1/4	3 3/4	3/4						1 7/8	1/2					6.25
4	30		1 3/8	1/2	5/8		10 3/4	12 1/2	6 3/4			7 1/2	4 1/4	3 3/4	3/4						1 7/8	1/2					6.25
5	30		1 3/8	1/2	5/8		10 3/4	12 1/2	6 3/4			7 1/2	4 1/4	3 3/4	3/4						1 7/8	1/2					6.25

STANDARD SIGN
M6-4 & M6-6
SERIES

WISCONSIN DEPT OF TRANSPORTATION

APPROVED Matthew R Rauch for State Traffic Engineer

DATE 10/15/15 PLATE NO. M6-4.10

PROJECT NO: HWY: COUNTY: SHEET NO: E

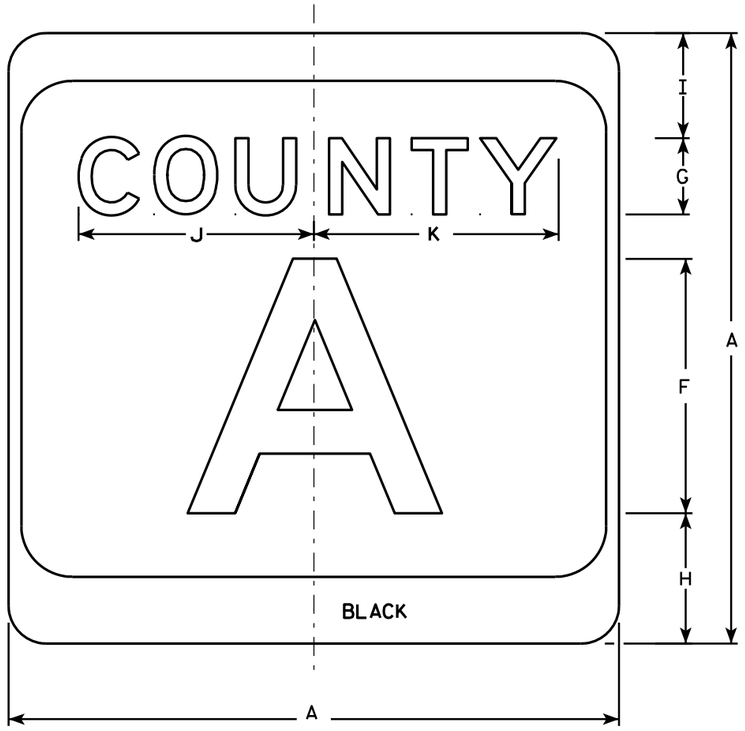

M1-5A

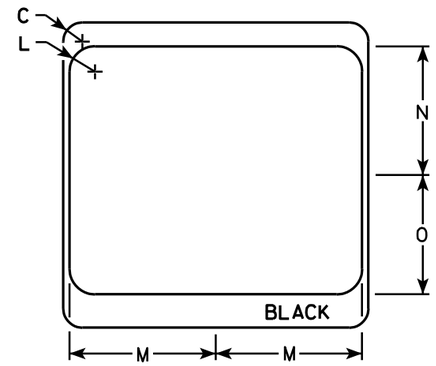

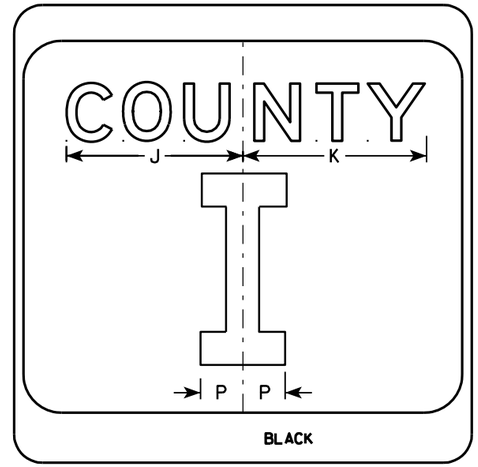

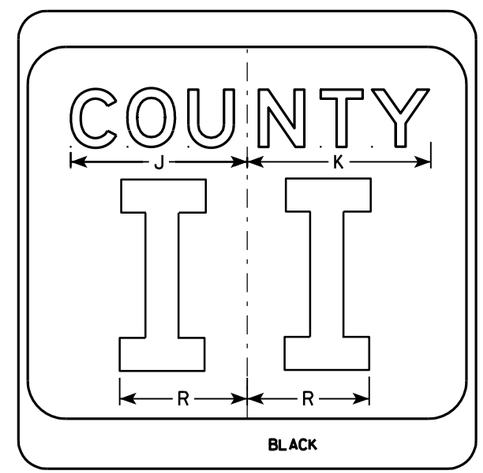

NOTES

1. Sign is Type II - see Note 7 - reference WIS DOT Standard Specification for HIGHWAY and STRUCTURE CONSTRUCTION latest edition.
2. Color:
   Background - White & Black - See Note 7
   Message - Black
3. Message Series - see Note 5
4. Corners may be square or rounded when base material is plywood but borders shall be rounded as shown. When base material is metal, the corners and borders shall be rounded.
5. Message Series E for 1 letter.
   Message Series D for 2 letters unless message is too big then Series C.
   Message Series C for 3 letters unless message is too big then Series B.
6. Substitute appropriate letters & optically center to achieve proper balance.
7. Permanent Signs
   Background - Type H Reflective
   Detour or temporary Signs
   Background - Reflective

SIZE	A	B	C	D	E	F	G	H	I	J	K	L	M	N	O	P	Q	R	S	T	U	V	W	X	Y	Z	Area sq. ft.
1																											
2	24		1 1/2			10	3	5 1/8	4 1/8	9 1/4	9 5/8	2	11 1/2	10 1/8	9 3/8	2 1/4		6 5/8									4.0
3	36		2 1/4			16	4	7 5/8	5 5/8	12 1/4	12 7/8	3	17 1/8	15 1/4	14	3 3/8		10									9.0
4	36		2 1/4			16	4	7 5/8	5 5/8	12 1/4	12 7/8	3	17 1/8	15 1/4	14	3 3/8		10									9.0
5	36		2 1/4			16	4	7 5/8	5 5/8	12 1/4	12 7/8	3	17 1/8	15 1/4	14	3 3/8		10									9.0

CTH MARKER
M1-5A FOR ASSEMBLIES

WISCONSIN DEPT OF TRANSPORTATION

APPROVED Matthew R Rauch
for State Traffic Engineer

DATE 9/27/11 PLATE NO. M1-5A.8

PROJECT NO:	HWY:	COUNTY:		SHEET NO: 83	E

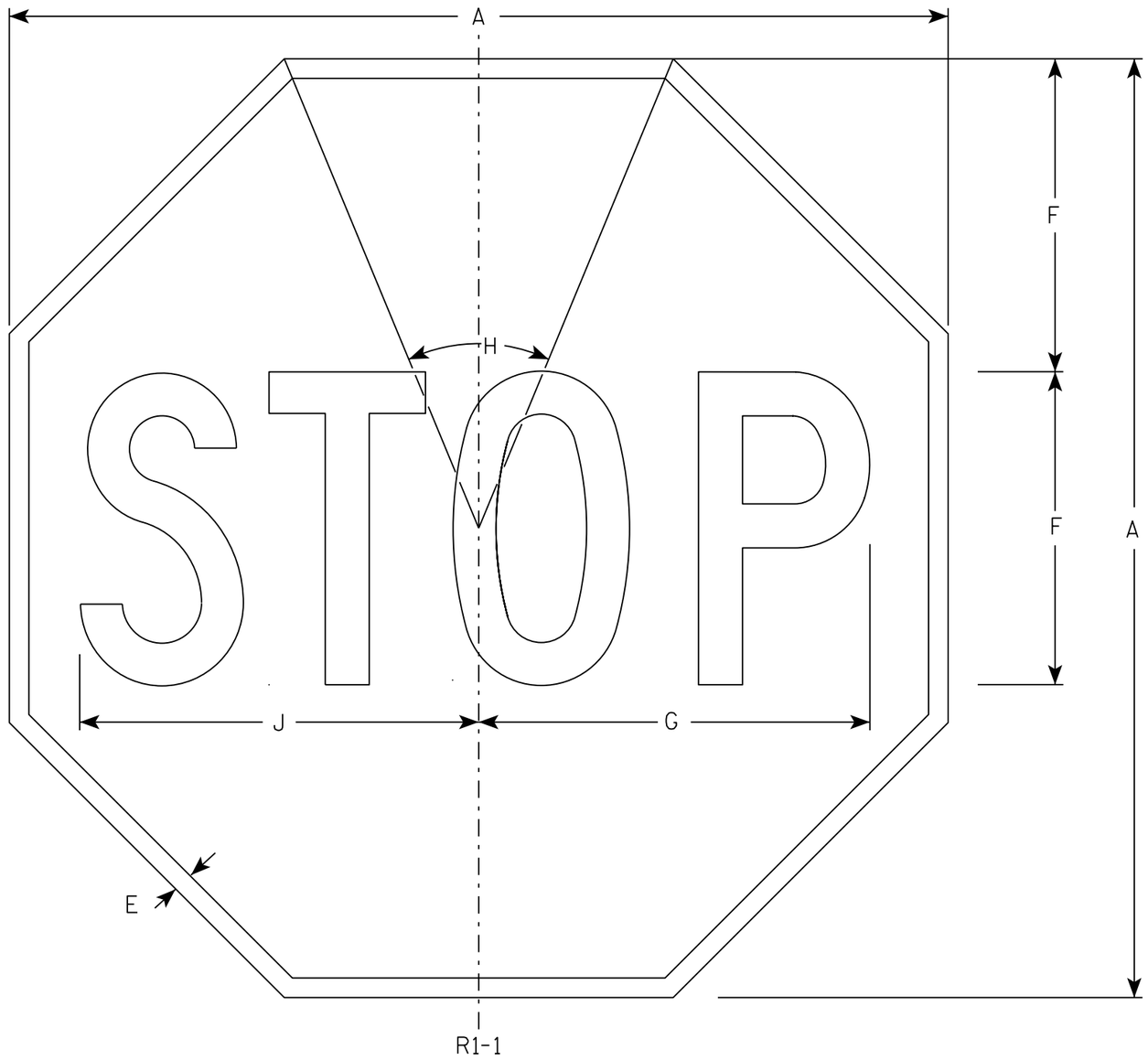

NOTES

1. Sign is Type II - Type H Reflective - reference WIS DOT Standard Specification for HIGHWAY and STRUCTURE CONSTRUCTION latest edition.
2. Color:
   Background - Red
   Message - White
3. Message Series - C

SIZE	A	B	C	D	E	F	G	H	I	J	K	L	M	N	O	P	Q	R	S	T	U	V	W	X	Y	Z	Area sq. ft.
1	30				5/8	10	12 1/2	45°		12 3/4																	5.18
2S	30				5/8	10	12 1/2	45°		12 3/4																	5.18
2M	36				3/4	12	15	45°		15 3/8																	7.46
3	36				3/4	12	15	45°		15 3/8																	7.46
4	48				1	16	20	45°		20 1/2																	13.25
5	48				1	16	20	45°		20 1/2																	13.25
6	18				3/8	6	7 3/4	45°		7 3/4																	1.86
7	12				1/4	4	5	45°		5 1/8																	0.78

STANDARD SIGN
R1-1

WISCONSIN DEPT OF TRANSPORTATION

APPROVED Matthew R Rauch
for State Traffic Engineer

DATE 11/12/15 PLATE NO. R1-1.13

PROJECT NO: | HWY: | COUNTY: | SHEET NO: 84 | E

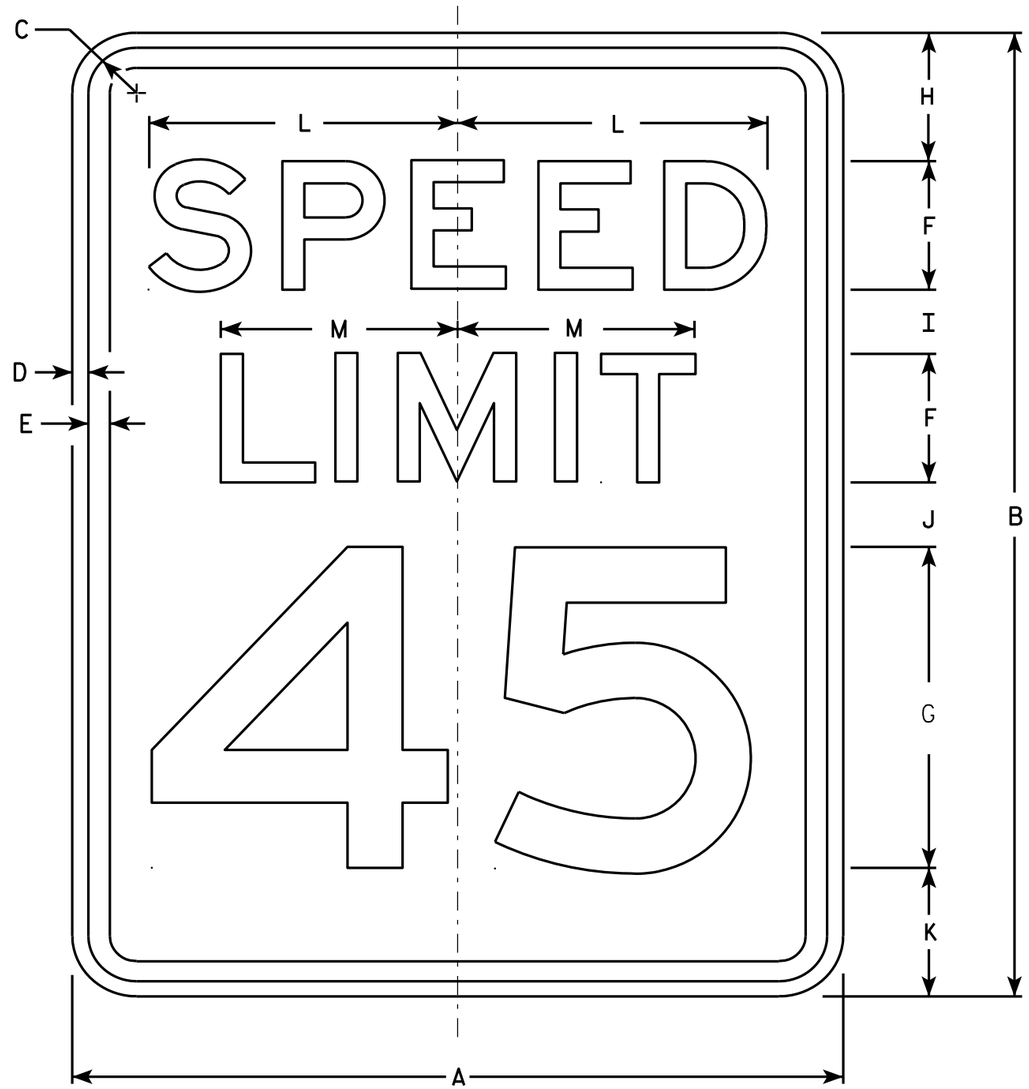

R2-1

NOTES

1. Sign is Type II - Type H Reflective - reference WIS DOT Standard Specification for HIGHWAY and STRUCTURE CONSTRUCTION latest edition.
2. Color:
   Background - White
   Message - Black
3. Message Series - E
4. Corners may be square or rounded when base material is plywood but borders shall be rounded as shown. When base material is metal, the corners and borders shall be rounded.
5. Substitute appropriate numerals and optically adjust spacing to achieve proper balance.

SIZE	A	B	C	D	E	F	G	H	I	J	K	L	M	N	O	P	Q	R	S	T	U	V	W	X	Y	Z	Area sq. ft.
1	18	24	1 1/8	3/8	1/2	3	8	3	2	2	3	7 1/4	5 1/2														3.0
2S	24	30	1 1/8	3/8	1/2	4	10	3	2 1/4	3 3/8	3 3/8	9 5/8	7 3/8														5.0
2M	30	36	1 3/8	1/2	5/8	5	12	5	2 1/2	2 1/2	4	12	9 1/4														7.5
3	36	48	1 3/8	1/2	5/8	6	14	6	5	5	6	14 3/8	11														12.0
4	36	48	1 3/8	1/2	5/8	6	14	6	5	5	6	14 3/8	11														12.0
5	48	60	2 1/4	3/4	1	8	20	6	4 1/2	6 3/4	6 3/4	19 1/4	14 5/8														20.0

STANDARD SIGN
R2-1

WISCONSIN DEPT OF TRANSPORTATION

APPROVED Matthew R Rauch
for State Traffic Engineer

DATE 5/26/10 PLATE NO. R2-1.13

PROJECT NO: | HWY: | COUNTY: | SHEET NO: 85 | E

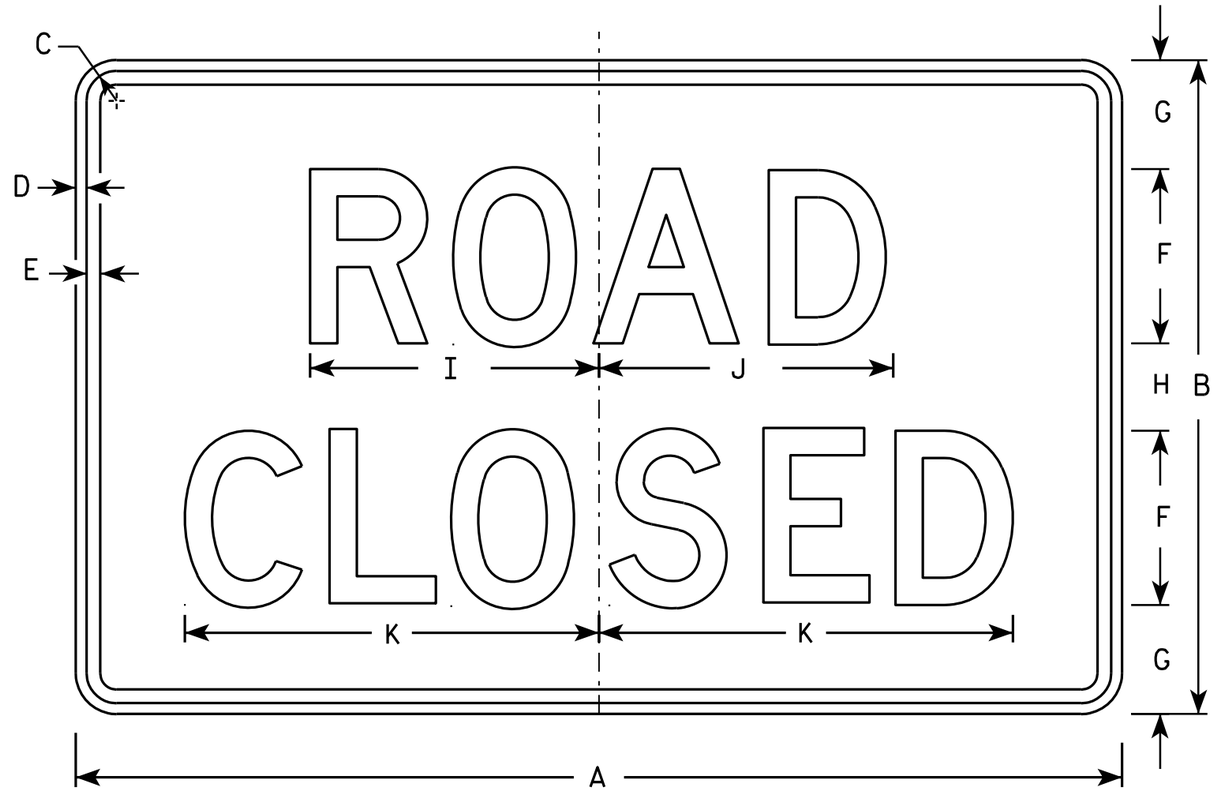

R11-2

NOTES

1. Sign is Type II - Type H Reflective - reference WIS DOT Standard Specification for HIGHWAY and STRUCTURE CONSTRUCTION latest edition.
2. Color:
   Background - White
   Message - Black
3. Message Series - D
4. Corners may be square or rounded when base material is plywood but borders shall be rounded as shown. When base material is metal, the corners and borders shall be rounded.
5. Modify the message as required.

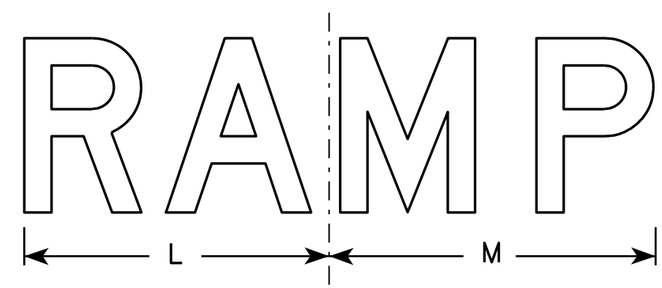

R11-2R

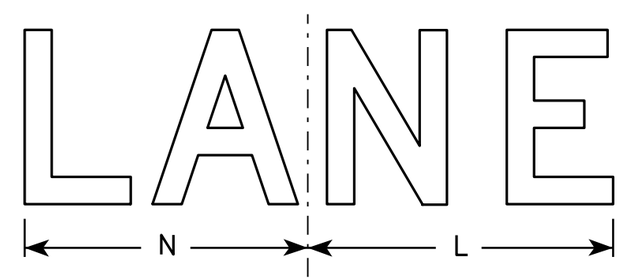

R11-2L

SIZE	A	B	C	D	E	F	G	H	I	J	K	L	M	N	O	P	Q	R	S	T	U	V	W	X	Y	Z	Area sq. ft.
1																											
2S	48	30	1 3/8	1/2	5/8	8	5	4	13 1/4	13 1/2	19	14	15	13													10.0
2M	48	30	1 3/8	1/2	5/8	8	5	4	13 1/4	13 1/2	19	14	15	13													10.0
3	48	30	1 3/8	1/2	5/8	8	5	4	13 1/4	13 1/2	19	14	15	13													10.0
4	48	30	1 3/8	1/2	5/8	8	5	4	13 1/4	13 1/2	19	14	15	13													10.0
5	48	30	1 3/8	1/2	5/8	8	5	4	13 1/4	13 1/2	19	14	15	13													10.0

STANDARD SIGN
R11-2

WISCONSIN DEPT OF TRANSPORTATION

APPROVED Matthew R Rauch
for State Traffic Engineer

DATE 4/1/11 PLATE NO. R11-2.10

PROJECT NO: | HWY: | COUNTY: | SHEET NO: 86 | E

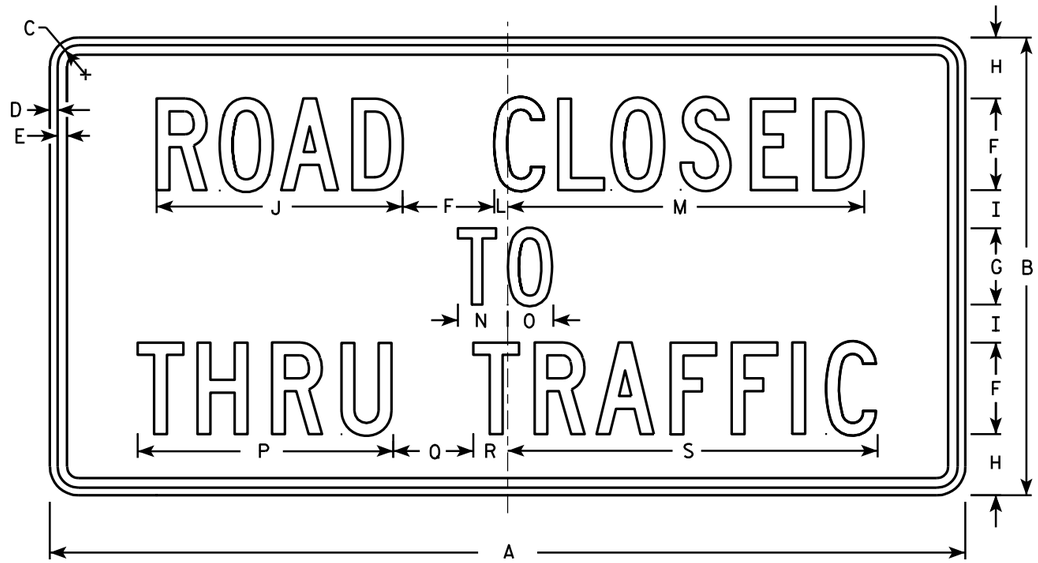

R11-4

NOTES

1. Sign is Type II - Type H Reflective - reference WIS DOT Standard Specification for HIGHWAY and STRUCTURE CONSTRUCTION latest edition.
2. Color:
   Background - White
   Message - Black
3. Message Series - C
4. Corners may be square or rounded when base material is plywood but borders shall be rounded as shown. When base material is metal, the corners and borders shall be rounded.

SIZE	A	B	C	D	E	F	G	H	I	J	K	L	M	N	O	P	Q	R	S	T	U	V	W	X	Y	Z	Area sq. ft.
1																											
2S	60	30	1 3/8	1/2	5/8	6	5	4	2 1/2	16 1/8		7/8	23 3/8	3 1/4	3	16 3/4	5 1/4	2 1/4	24 1/4								12.5
2M	60	30	1 3/8	1/2	5/8	6	5	4	2 1/2	16 1/8		7/8	23 3/8	3 1/4	3	16 3/4	5 1/4	2 1/4	24 1/4								12.5
3																											
4																											
5																											

STANDARD SIGN
R11 - 4

WISCONSIN DEPT OF TRANSPORTATION

APPROVED Matthew R Rauch for State Traffic Engineer

DATE 4/1/11 PLATE NO. R11-4.3

PROJECT NO: | HWY: | COUNTY: | SHEET NO: 87 | E

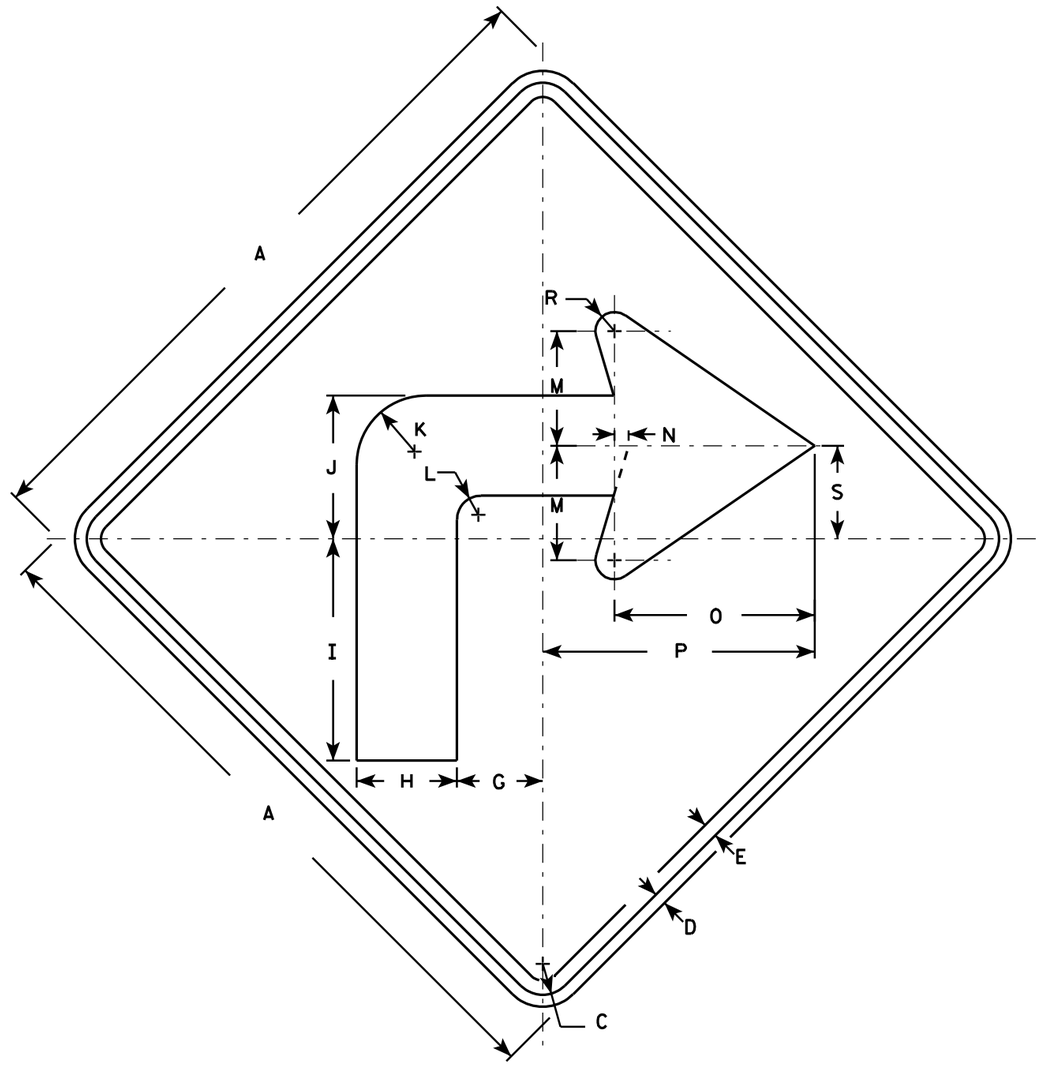

W1-1R

NOTES

1. Sign is Type II - Type F Reflective - reference WIS DOT Standard Specification for HIGHWAY and STRUCTURE CONSTRUCTION latest edition.
2. Color:
   Background - Yellow
   Message - Black
3. Corners may be square or rounded when base material is plywood but borders shall be rounded as shown. When base material is metal, the corners and borders shall be rounded.
4. W1-1L is the same as W1-1R except the arrow is reversed along the vertical centerline.

SIZE	A	B	C	D	E	F	G	H	I	J	K	L	M	N	O	P	Q	R	S	T	U	V	W	X	Y	Z	Area sq. ft.
1	24		1 1/8	3/8	1/2		3	3 1/2	7 3/4	5	2 1/2	7/8	4	1/2	7	9 1/2		5/8	3 1/4								4.0
2S	36		1 5/8	5/8	3/4		4 1/2	5 1/4	11 5/8	7 1/2	3 5/8	1 1/4	6	3/4	10 1/2	14 1/4		1	4 7/8								9.0
2M	36		1 5/8	5/8	3/4		4 1/2	5 1/4	11 5/8	7 1/2	3 5/8	1 1/4	6	3/4	10 1/2	14 1/4		1	4 7/8								9.0
3	36		1 5/8	5/8	3/4		4 1/2	5 1/4	11 5/8	7 1/2	3 5/8	1 1/4	6	3/4	10 1/2	14 1/4		1	4 7/8								9.0
4	48		2 1/4	3/4	1		6	7	15 1/2	10	4 7/8	1 5/8	8	1	14	19		1 1/4	6 1/2								16.0
5	48		2 1/4	3/4	1		6	7	15 1/2	10	4 7/8	1 5/8	8	1	14	19		1 1/4	6 1/2								16.0

STANDARD SIGN
W1-1

WISCONSIN DEPT OF TRANSPORTATION

APPROVED Matthew R Rauch
for State Traffic Engineer

DATE 5/15/12 PLATE NO. W1-1.11

PROJECT NO: | HWY: | COUNTY: | SHEET NO: 88 | E

NOTES

1. Sign is Type II - Type F Reflective - reference WIS DOT Standard Specification for HIGHWAY and STRUCTURE CONSTRUCTION latest edition.
2. Color:
   Background - Yellow
   Message - Black
3. Corners may be square or rounded when base material is plywood but borders shall be rounded as shown. When base material is metal, the corners and borders shall be rounded.
4. W1-2L is the same as W1-2R except the arrow is reversed along the vertical centerline.

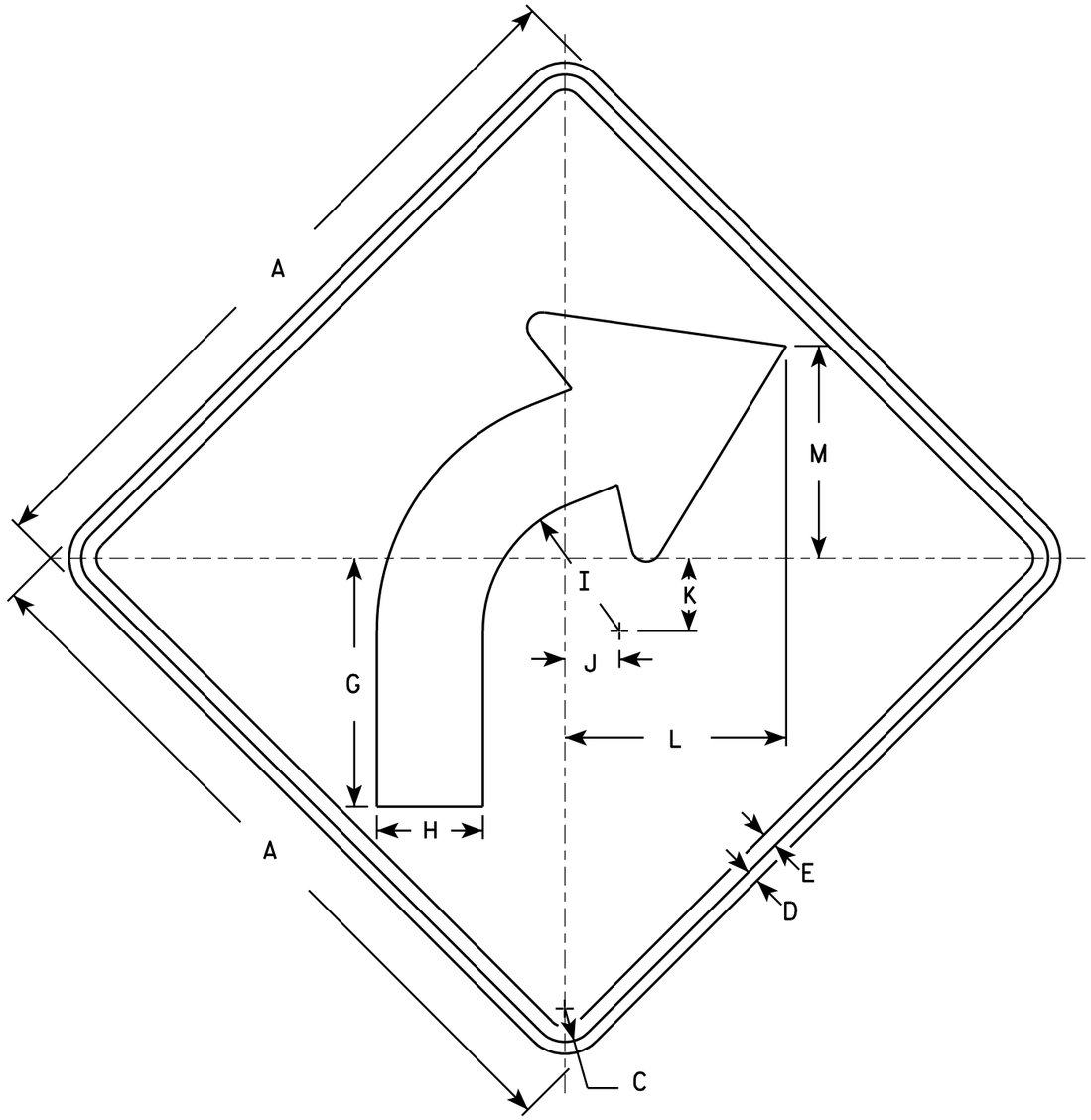

W1-2R

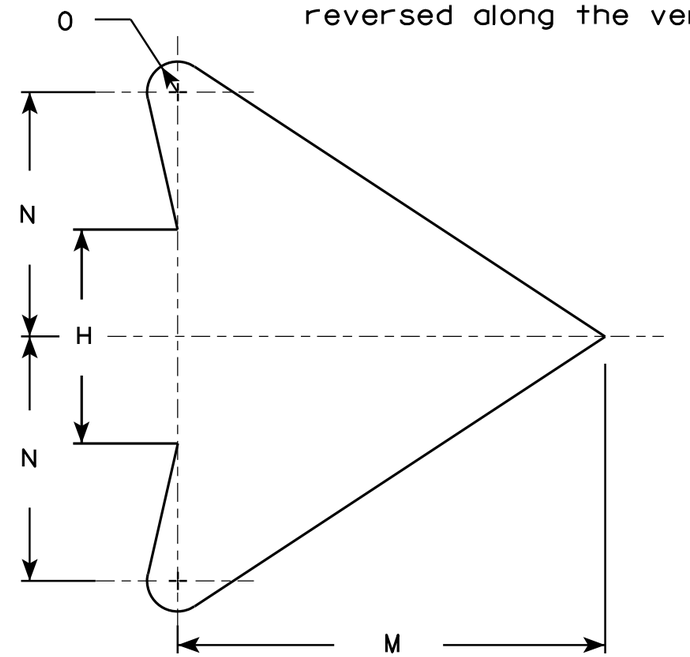

ARROW DETAIL

SIZE	A	B	C	D	E	F	G	H	I	J	K	L	M	N	O	P	Q	R	S	T	U	V	W	X	Y	Z	Area sq. ft.
1	24		1 1/8	3/8	1/2		8 1/4	3 1/2	4 1/2	1 3/4	2 3/8	7 1/4	7	4	1/2												4.0
2S	30		1 3/8	1/2	5/8		10 1/4	4 3/8	5 5/8	2 1/4	3	9 1/8	8 3/4	5	5/8												6.25
2M	36		1 5/8	5/8	3/4		12 3/8	5 1/4	6 3/4	2 5/8	3 1/2	10 7/8	10 1/2	6	3/4												9.0
3	36		1 5/8	5/8	3/4		12 3/8	5 1/4	6 3/4	2 5/8	3 1/2	10 7/8	10 1/2	6	3/4												9.0
4	36		1 5/8	5/8	3/4		12 3/8	5 1/4	6 3/4	2 5/8	3 1/2	10 7/8	10 1/2	6	3/4												9.0
5	48		2 1/4	3/4	1		16 1/2	7	9	3 1/2	4 5/8	14 1/2	14	8	1												16.0

STANDARD SIGN
W1-2

WISCONSIN DEPT OF TRANSPORTATION

APPROVED Matthew R Rauch
for State Traffic Engineer

DATE 5/15/12 PLATE NO. W1-2.10

PROJECT NO:	HWY:	COUNTY:		SHEET NO: 89	E

NOTES

1. Sign is Type II - Type F Reflective - reference WIS DOT Standard Specification for HIGHWAY and STRUCTURE CONSTRUCTION latest edition.
2. Color:
   Background - Yellow
   Message - Black
3. Corners may be square or rounded when base material is plywood but borders shall be rounded as shown. When base material is metal, the corners and borders shall be rounded.

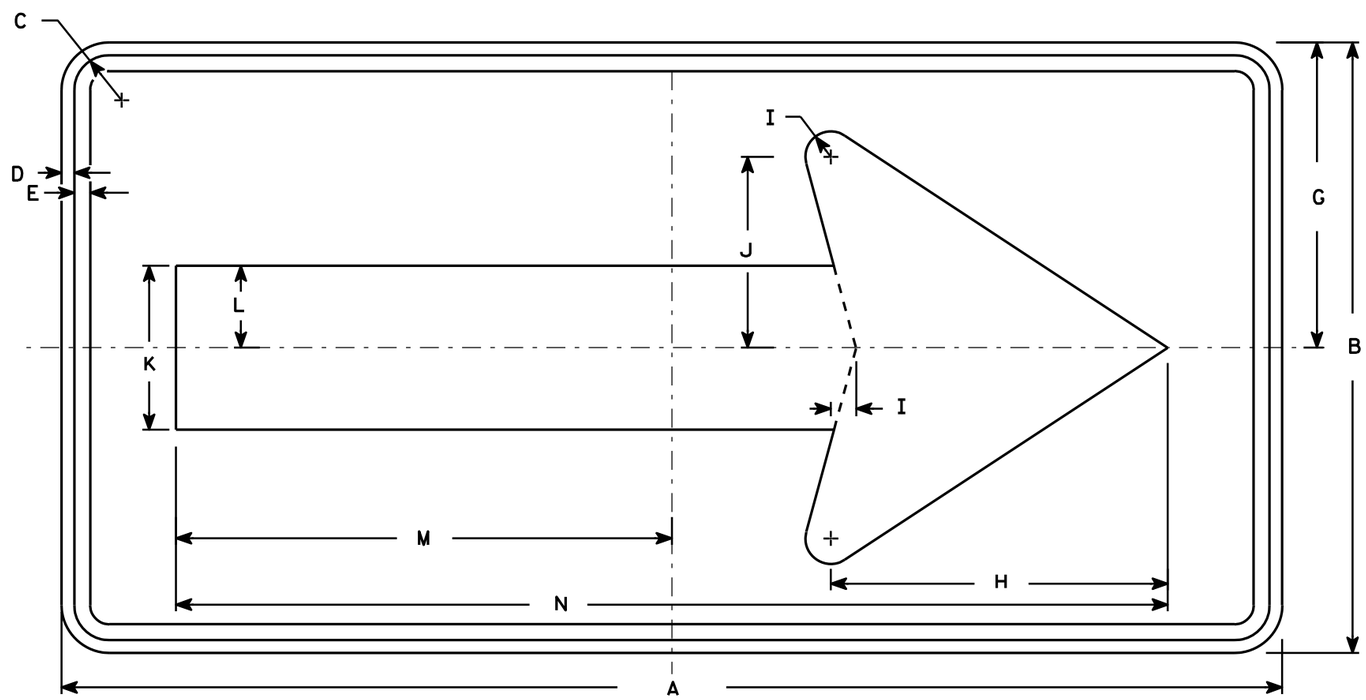

W1-6

SIZE	A	B	C	D	E	F	G	H	I	J	K	L	M	N	O	P	Q	R	S	T	U	V	W	X	Y	Z	Area sq. ft.
1	36	18	1 1/8	3/8	3/8		9	10	3/4	5 5/8	4 3/4	2 3/8	14 5/8	29 1/4													4.5
2S	48	24	1 3/8	1/2	5/8		12	13 1/4	1	7 1/2	6 1/2	3 1/4	19 1/2	39													8.0
2M	48	24	1 3/8	1/2	5/8		12	13 1/4	1	7 1/2	6 1/2	3 1/4	19 1/2	39													8.0
3	60	30	1 3/8	1/2	5/8		15	16 1/4	1 1/4	9 1/4	8	4	24 3/8	48 3/4													12.5
4	60	30	1 3/8	1/2	5/8		15	16 1/4	1 1/4	9 1/4	8	4	24 3/8	48 3/4													12.5
5	96	48	2 1/4	3/4	1		24	26 1/2	2	15	13	6 1/2	39	78													32.0

STANDARD SIGN
W1-6

WISCONSIN DEPT OF TRANSPORTATION

APPROVED Matthew R Rauch
for State Traffic Engineer

DATE 6/7/10 PLATE NO. W1-6.8

PROJECT NO:	HWY:	COUNTY:		SHEET NO: 90	E

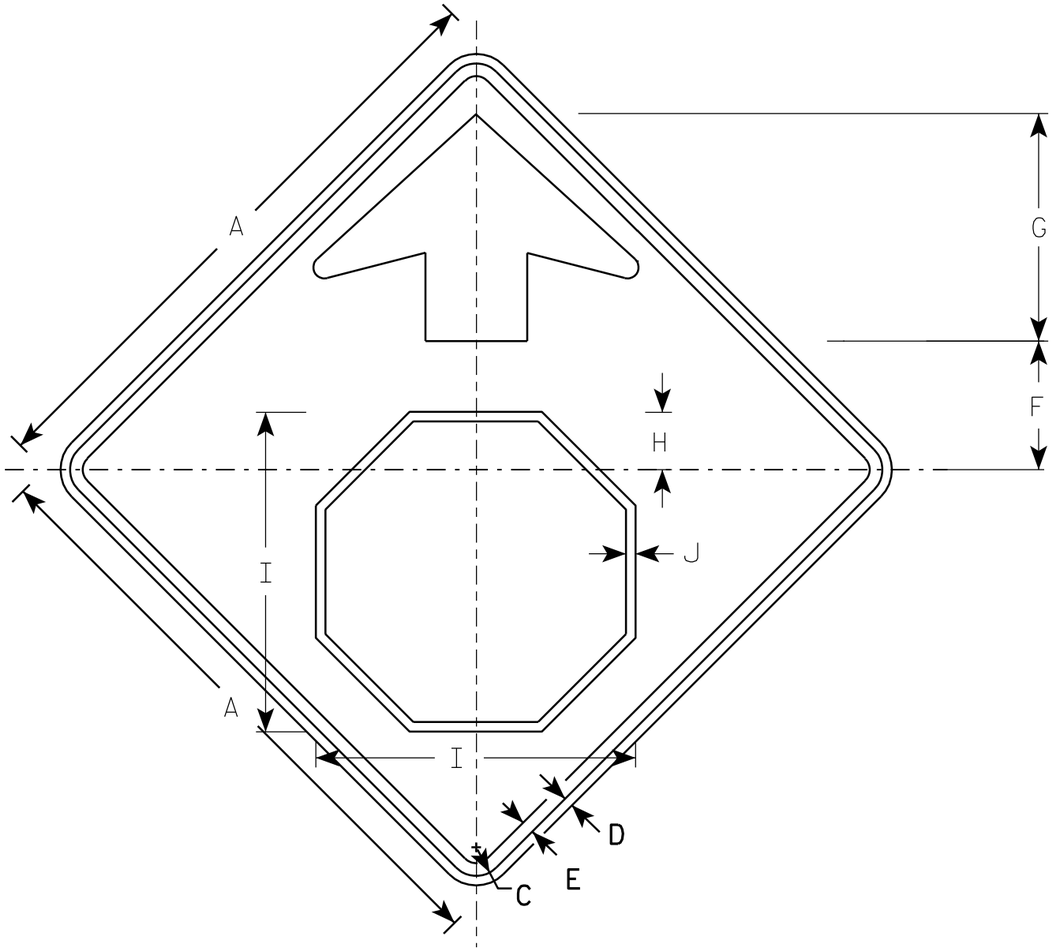

W3-1

NOTES

1. All Signs Type II - Type F Reflective - reference WIS DOT Standard Specification for HIGHWAY and STRUCTURE CONSTRUCTION latest edition.
2. Color:
   - Background - YELLOW
   - Arrow & Border - BLACK
   - Stop Symbol - WHITE BORDER ON RED BACKGROUND

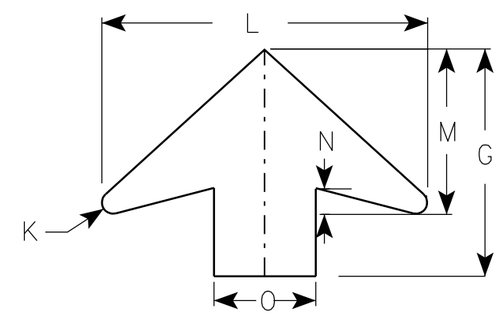

ARROW DETAIL

SIZE	A	B	C	D	E	F	G	H	I	J	K	L	M	N	O	P	Q	R	S	T	U	V	W	X	Y	Z	Area sq. ft.
1	30		1 3/8	1/2	5/8	6 1/4	11 1/4	2 7/8	15 3/4	1/2	1/2	16	8	1 1/4	5												6.25
2S	36		1 5/8	5/8	3/4	7 1/2	13 1/2	3 1/2	19	5/8	5/8	19 1/4	9 3/4	1 5/8	6												9.0
2M	36		1 5/8	5/8	3/4	7 1/2	13 1/2	3 1/2	19	5/8	5/8	19 1/4	9 3/4	1 5/8	6												9.0
3	36		1 5/8	5/8	3/4	7 1/2	13 1/2	3 1/2	19	5/8	5/8	19 1/4	9 3/4	1 5/8	6												9.0
4	48		2 1/4	3/4	1	10	17 7/8	4 1/2	25 1/8	3/4	7/8	25 5/8	13	2	8												16.0
5	48		2 1/4	3/4	1	10	17 7/8	4 1/2	25 1/8	3/4	7/8	25 5/8	13	2	8												16.0

STANDARD SIGN
W3-1

WISCONSIN DEPT OF TRANSPORTATION

APPROVED Matthew R Rauch
for State Traffic Engineer

DATE 6/7/10 PLATE NO. W3-1.12

PROJECT NO:

SHEET NO: 91 E

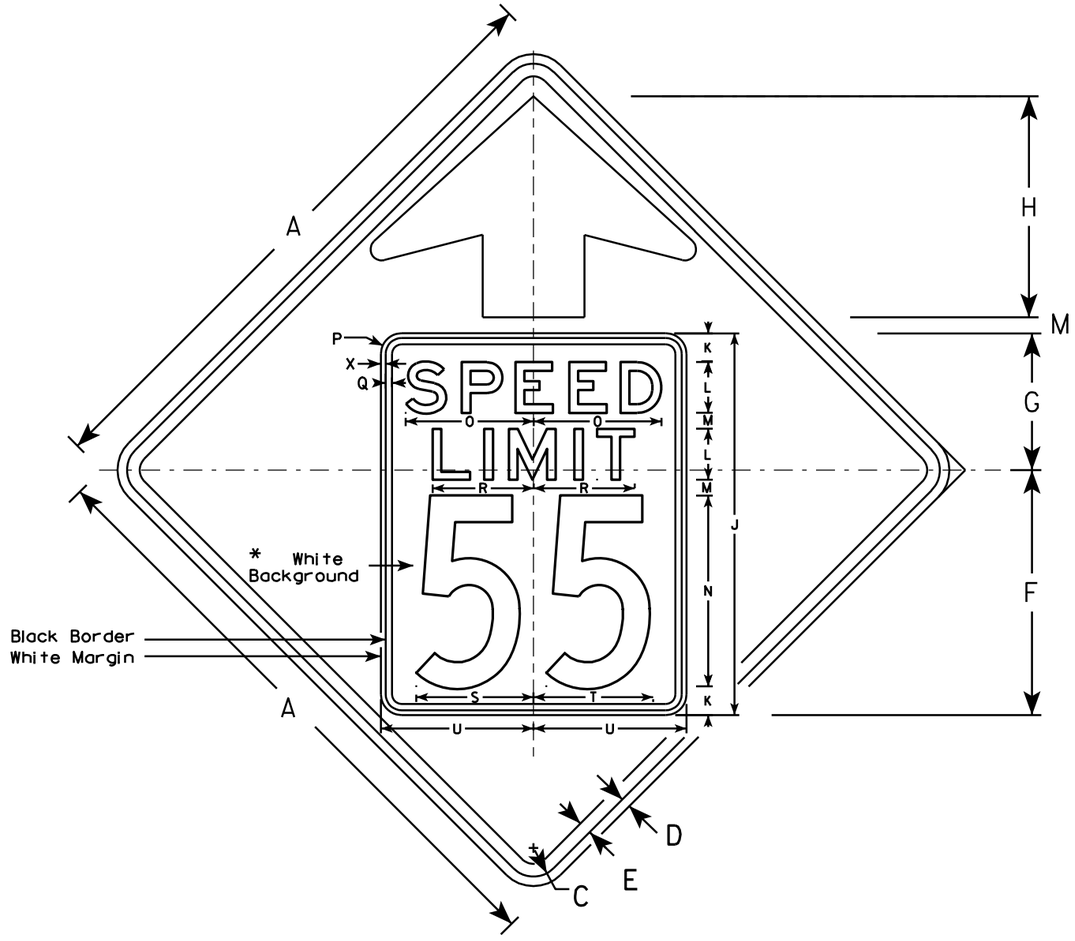

W3-5

NOTES

1. Sign is Type II - Type F Reflective - reference WIS DOT Standard Specification for HIGHWAY and STRUCTURE CONSTRUCTION latest edition.
2. Color: *
   Background - YELLOW*
   Message - BLACK
3. Message Series - C for numbers Series E for wording
4. Substitute appropriate numerals and optically adjust spacing to achieve proper balance

*Speed Limit Sign shall have a White Background

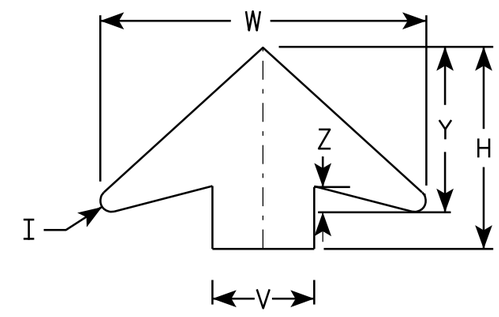

ARROW DETAIL

SIZE	A	B	C	D	E	F	G	H	I	J	K	L	M	N	O	P	Q	R	S	T	U	V	W	X	Y	Z	Area sq. ft.
1																											
2S	36		1 5/8	5/8	3/4	14 1/2	9 1/2	11 1/2	5/8	24	2	3	1	12	7 1/8	1 1/2	3/8	5 3/4	7 1/4	7 1/8	9	6	19 1/4	3/8	9 3/4	1 5/8	9.0
2M	36		1 5/8	5/8	3/4	14 1/2	9 1/2	11 1/2	5/8	24	2	3	1	12	7 1/8	1 1/2	3/8	5 3/4	7 1/4	7 1/8	9	6	19 1/4	3/8	9 3/4	1 5/8	9.0
3	36		1 5/8	5/8	3/4	14 1/2	9 1/2	11 1/2	5/8	24	2	3	1	12	7 1/8	1 1/2	3/8	5 3/4	7 1/4	7 1/8	9	6	19 1/4	3/8	9 3/4	1 5/8	9.0
4	48		2 1/4	3/4	1	19 1/4	10 3/4	17 3/8	7/8	30	2 1/4	4	1 1/4	15	10	1 5/8	1/2	8	9 1/4	9 3/8	12	8	25 5/8	3/8	13	2	16.0
5	48		2 1/4	3/4	1	19 1/4	10 3/4	17 3/8	7/8	30	2 1/4	4	1 1/4	15	10	1 5/8	1/2	8	9 1/4	9 3/8	12	8	25 5/8	3/8	13	2	16.0

STANDARD SIGN
W3-5

WISCONSIN DEPT OF TRANSPORTATION

APPROVED Matthew R Rauch
for State Traffic Engineer

DATE 5/29/12 PLATE NO. W3-5.5

PROJECT NO:

SHEET NO: 92 E

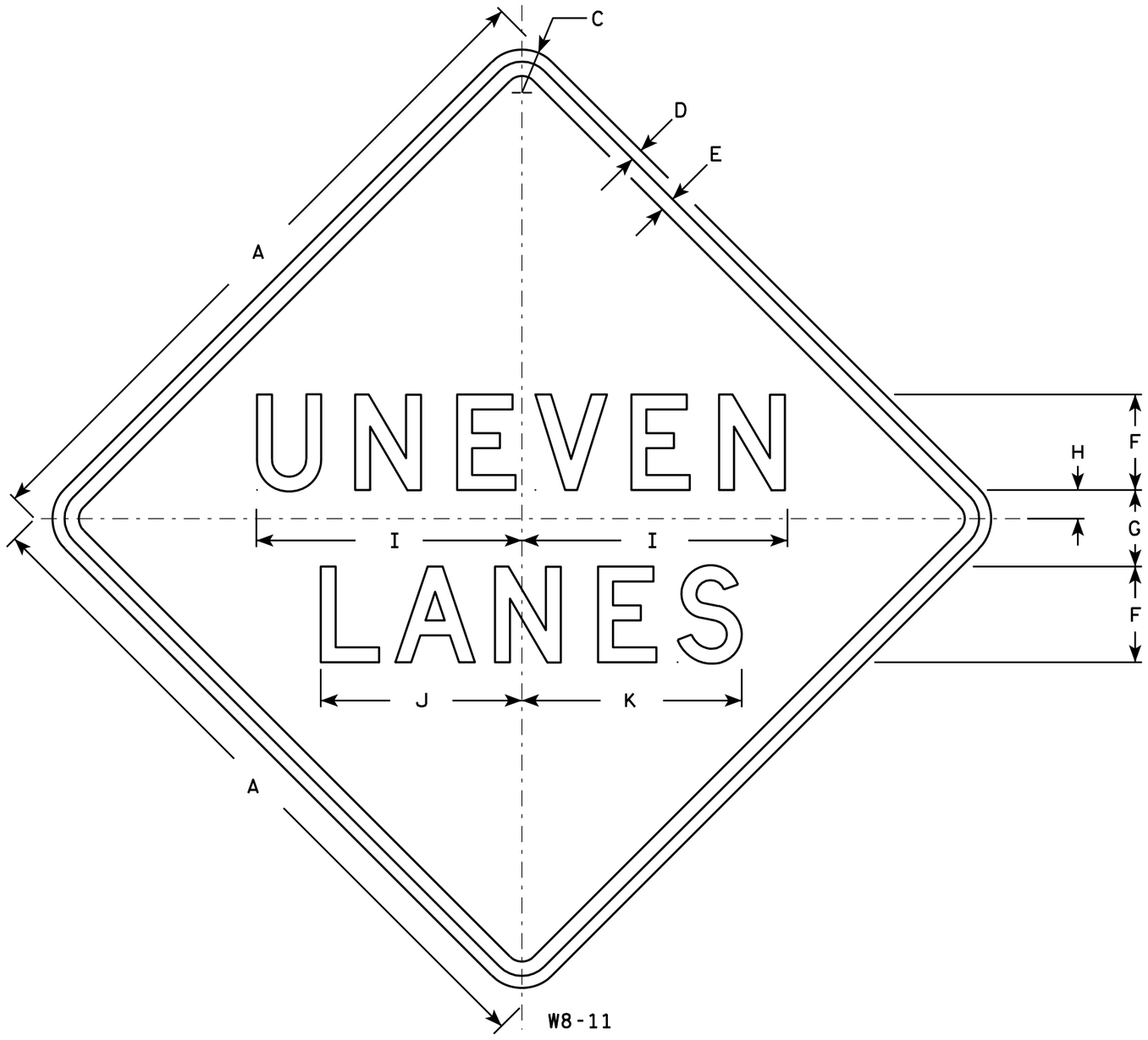

NOTES

1. Sign is Type II - Type F Reflective - reference WIS DOT Standard Specification for HIGHWAY and STRUCTURE CONSTRUCTION latest edition.
2. Color:
   Background - Orange
   Message - Black
3. Message Series - D
4. Corners may be square or rounded when base material is plywood but borders shall be rounded as shown. When base material is metal, the corners and borders shall be rounded.

SIZE	A	B	C	D	E	F	G	H	I	J	K	L	M	N	O	P	Q	R	S	T	U	V	W	X	Y	Z	Area sq. ft.
1																											
2S	36		1 5/8	5/8	3/4	5	4	1 1/2	13 7/8	10 1/2	11 1/2																9.0
2M	36		1 5/8	5/8	3/4	5	4	1 1/2	13 7/8	10 1/2	11 1/2																9.0
3																											
4	36		1 5/8	5/8	3/4	5	4	1 1/2	13 7/8	10 1/2	11 1/2																9.0
5	48		2 1/4	3/4	1	7	5	2	18 1/2	14	15 3/8																16.0

STANDARD SIGN
W8-11

WISCONSIN DEPT OF TRANSPORTATION

APPROVED Matthew R Rauch
for State Traffic Engineer

DATE 3/22/11 PLATE NO. W8-11.4

PROJECT NO: | HWY: | COUNTY: | SHEET NO: 93 | E

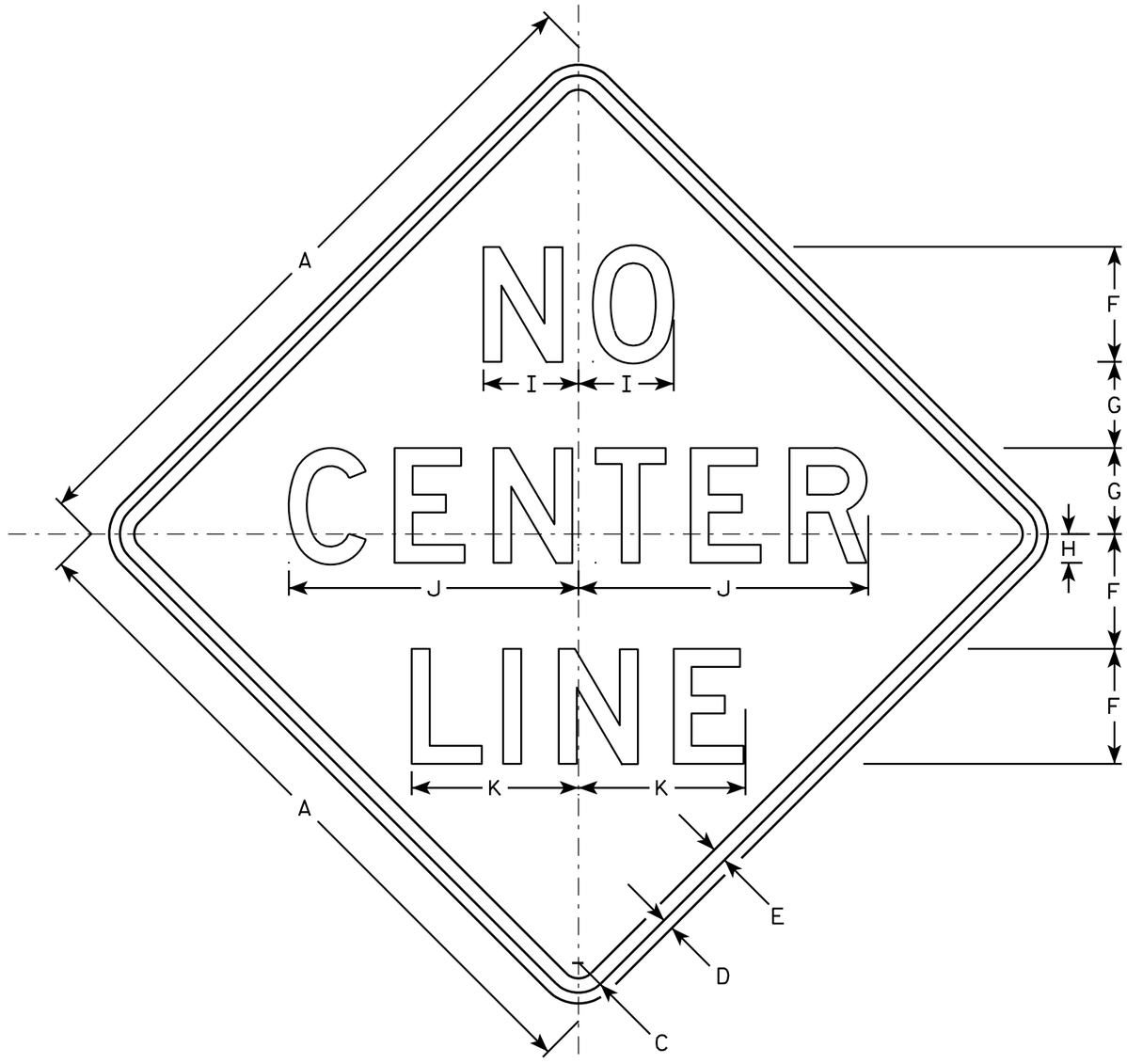

W8-12

NOTES

1. Sign is Type II - Type F Reflective - reference WIS DOT Standard Specification for HIGHWAY and STRUCTURE CONSTRUCTION latest edition.
2. Color:
   Background - Orange
   Message - Black
3. Message Series - D
4. Corners may be square or rounded when base material is plywood but borders shall be rounded as shown. When base material is metal, the corners and borders shall be rounded.

SIZE	A	B	C	D	E	F	G	H	I	J	K	L	M	N	O	P	Q	R	S	T	U	V	W	X	Y	Z	Area sq. ft.
1																											
2S	36		1 5/8	5/8	3/4	6	4 1/2	1 1/2	5 1/8	16	9																9.0
2M	36		1 5/8	5/8	3/4	6	4 1/2	1 1/2	5 1/8	16	9																9.0
3	48		2 1/4	3/4	1	8	6	2	6 5/8	20 1/4	11 5/8																16.0
4	48		2 1/4	3/4	1	8	6	2	6 5/8	20 1/4	11 5/8																16.0
5	48		2 1/4	3/4	1	8	6	2	6 5/8	20 1/4	11 5/8																16.0

STANDARD SIGN
W8-12

WISCONSIN DEPT OF TRANSPORTATION

APPROVED Matthew R Rauch
for State Traffic Engineer

DATE 8/24/10 PLATE NO. W8-12.3

PROJECT NO:	HWY:	COUNTY:		SHEET NO: 94	E

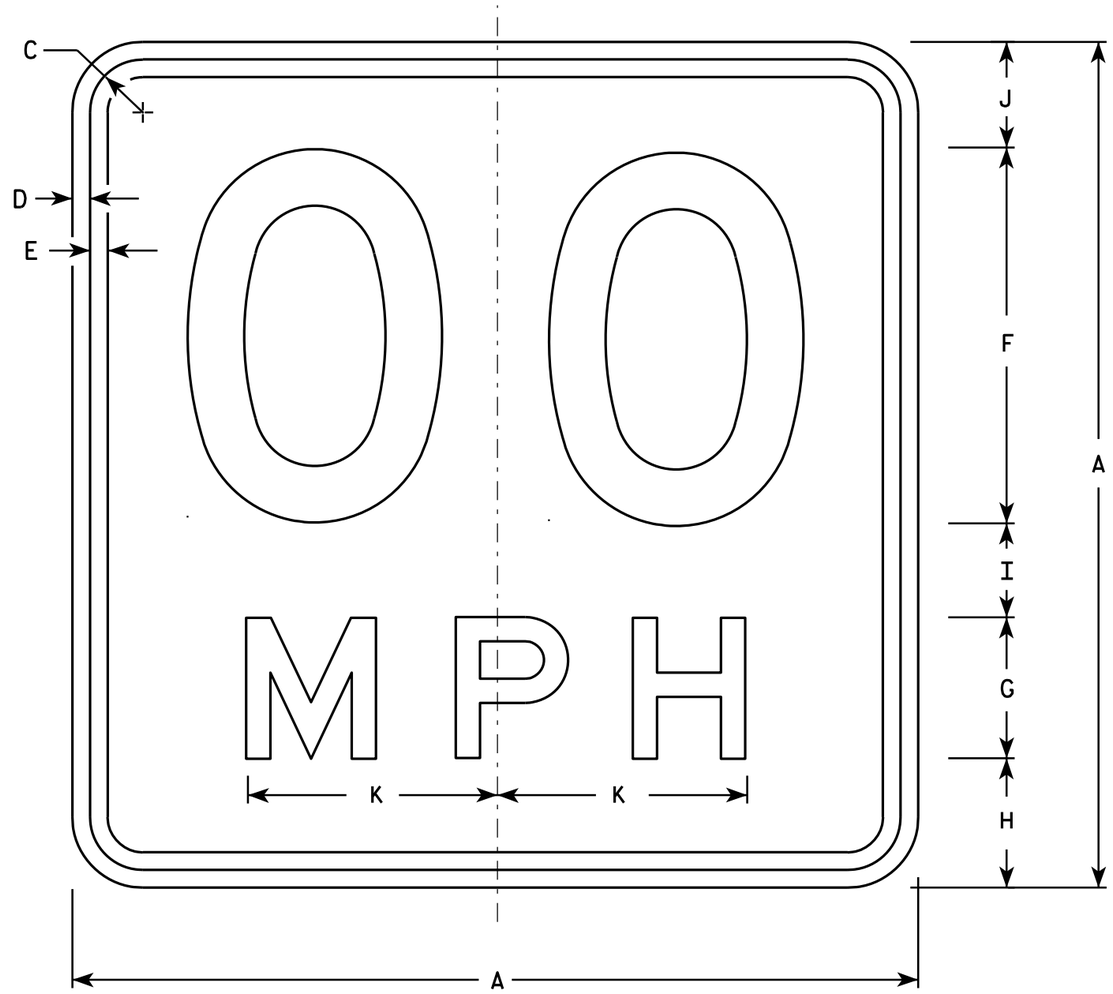

W13-1

* For 30" x 30" Warning Signs, use 18" x 18" W13-1 signs.
For 36" x 36" Warning Signs, use 24" x 24" W13-1 signs.

NOTES

1. Sign is Type II - Type F Reflective - reference WIS DOT Standard Specification for HIGHWAY and STRUCTURE CONSTRUCTION latest edition.
2. Color:
   Background - Yellow
   Message - Black
3. Message Series - See Note 6
4. Corners may be square or rounded when base material is plywood but borders shall be rounded as shown. When base material is metal, the corners and borders shall be rounded.
5. Substitute appropriate numerals and optically space about centerline to achieve proper balance.
6. Line 1 is Series D
   Line 2 is Series E

SIZE	A	B	C	D	E	F	G	H	I	J	K	L	M	N	O	P	Q	R	S	T	U	V	W	X	Y	Z	Area sq. ft.
1	18		1 1/8	3/8	3/8	8	3	2 3/4	2	2 1/4	5 3/8																2.25
* 2S	18		1 1/8	3/8	3/8	8	3	2 3/4	2	2 1/4	5 3/8																2.25
* 2M	18		1 1/8	3/8	3/8	8	3	2 3/4	2	2 1/4	5 3/8																2.25
3	24		1 1/8	3/8	1/2	10	4	4	2 3/4	3 1/4	6 5/8																4.00
4	36		1 5/8	5/8	3/4	16	6	5 1/2	4	4 1/2	10 5/8																9.00
5	36		1 5/8	5/8	3/4	16	6	5 1/2	4	4 1/2	10 5/8																9.00

STANDARD SIGN
W13-1

WISCONSIN DEPT OF TRANSPORTATION

APPROVED Matthew R Rauch
For State Traffic Engineer

DATE 5/31/12 PLATE NO. W13-1.16

PROJECT NO: | HWY: | COUNTY: | SHEET NO: 95 | E

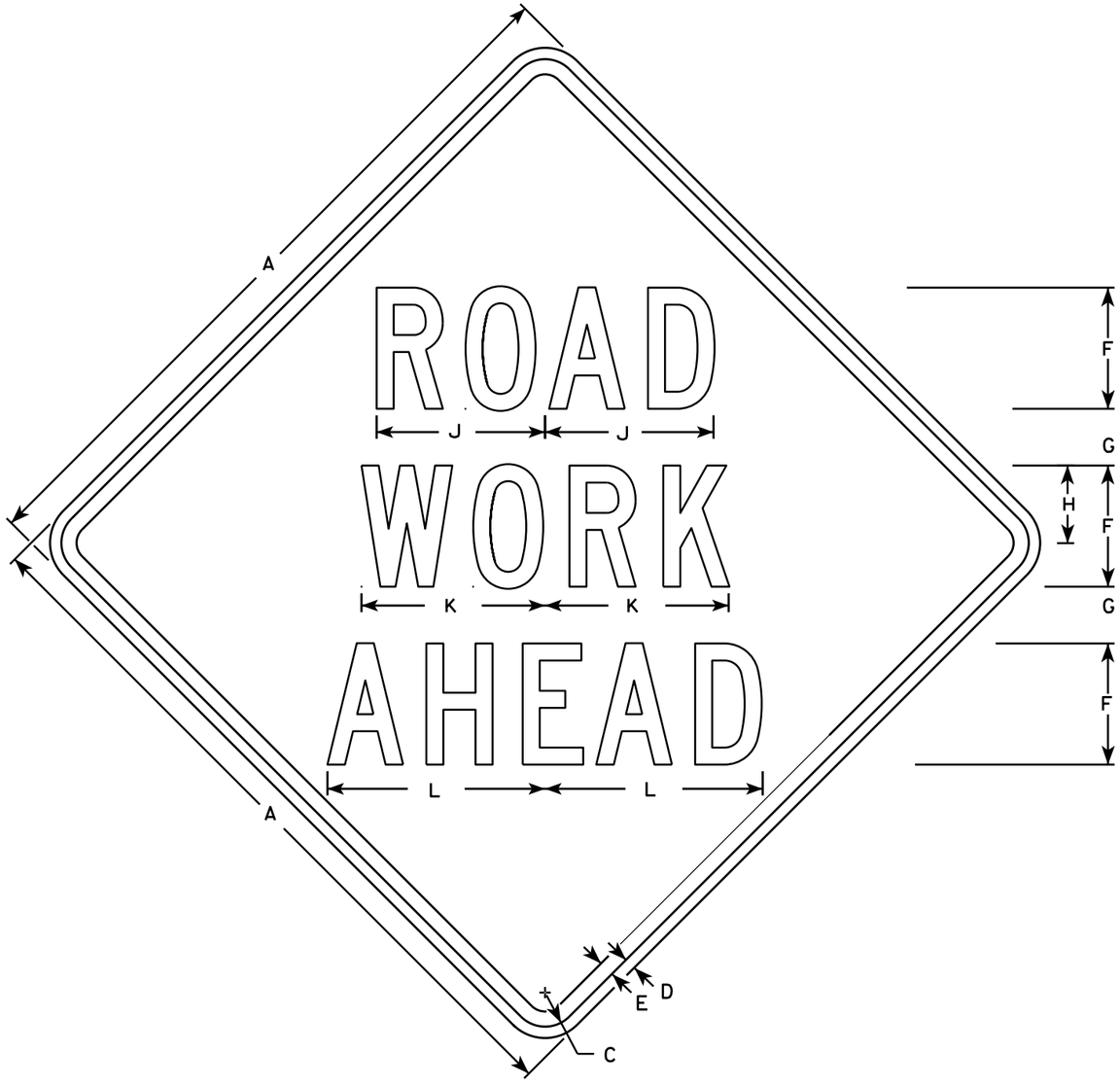

W20-1A

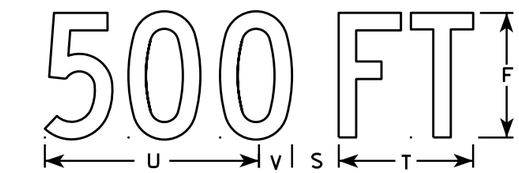

W20-1D

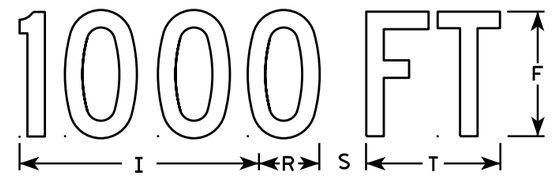

W20-1C

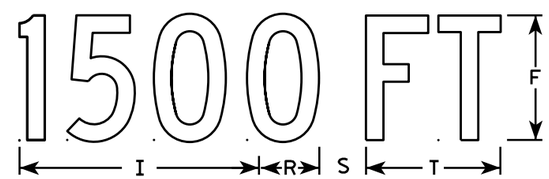

W20-1B

W20-1G

W20-1F

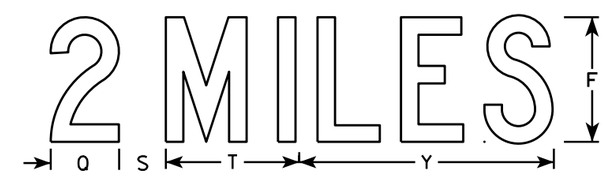

W20-1E

NOTES

1. Sign is Type II - Type F Reflective
2. Color:
   Background - Orange
   Message - Black
3. Message Series - C
4. Corners may be square or rounded when base material is plywood but borders shall be rounded as shown. When base material is metal, the corners and borders shall be rounded.

SIZE	A	B	C	D	E	F	G	H	I	J	K	L	M	N	O	P	Q	R	S	T	U	V	W	X	Y	Z	Area sq. ft.
1	36		1 3/8	1/2	5/8	5	2 5/8	3 1/4	10 1/8	7	7 5/8	8 7/8	1 1/8	4 1/2	3 1/2	9		2 1/2	2 1/4	5 5/8	9	1 3/8	8	1 3/4	10 3/4	6	9.0
2S	48		2 1/4	3/4	1	8	3 3/4	5 1/8	15 3/8	11 1/8	12 1/8	14 3/8	1 5/8	6 7/8	5 3/8	13 7/8	4 3/8	3 7/8	3	8 5/8	13 3/4	2 1/8	11 7/8	2 3/4	16 3/8	9	16.0
2M	48		2 1/4	3/4	1	8	3 3/4	5 1/8	15 3/8	11 1/8	12 1/8	14 3/8	1 5/8	6 7/8	5 3/8	13 7/8	4 3/8	3 7/8	3	8 5/8	13 3/4	2 1/8	11 7/8	2 3/4	16 3/8	9	16.0
3	48		2 1/4	3/4	1	8	3 3/4	5 1/8	15 3/8	11 1/8	12 1/8	14 3/8	1 5/8	6 7/8	5 3/8	13 7/8	4 3/8	3 7/8	3	8 5/8	13 3/4	2 1/8	11 7/8	2 3/4	16 3/8	9	16.0
4	48		2 1/4	3/4	1	8	3 3/4	5 1/8	15 3/8	11 1/8	12 1/8	14 3/8	1 5/8	6 7/8	5 3/8	13 7/8	4 3/8	3 7/8	3	8 5/8	13 3/4	2 1/8	11 7/8	2 3/4	16 3/8	9	16.0
5	48		2 1/4	3/4	1	8	3 3/4	5 1/8	15 3/8	11 1/8	12 1/8	14 3/8	1 5/8	6 7/8	5 3/8	13 7/8	4 3/8	3 7/8	3	8 5/8	13 3/4	2 1/8	11 7/8	2 3/4	16 3/8	9	16.0

STANDARD SIGN
W20-1A, B, C, D, F & G

WISCONSIN DEPT OF TRANSPORTATION

APPROVED

State Traffic Engineer

DATE 5/07/15 PLATE NO. W20-1.10

PROJECT NO:

SHEET NO: E

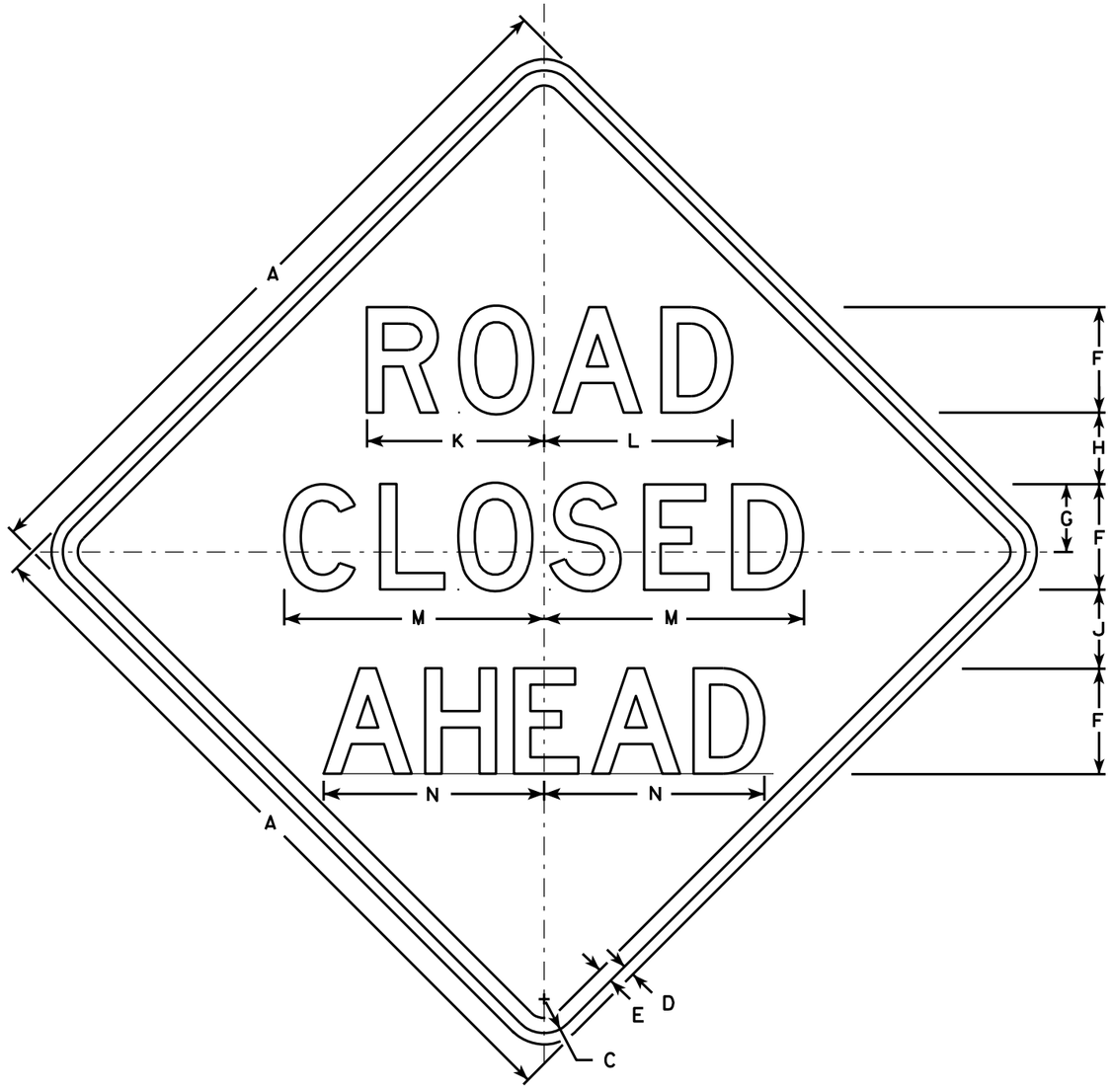

W20-3A

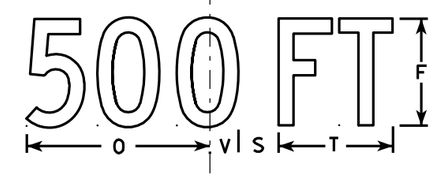

W20-3D

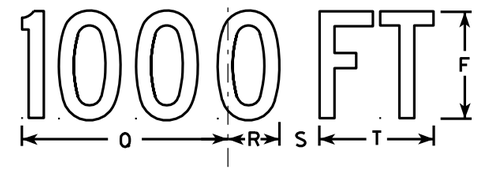

W20-3C

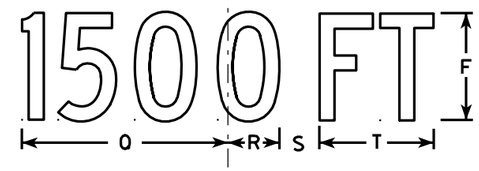

W20-3B

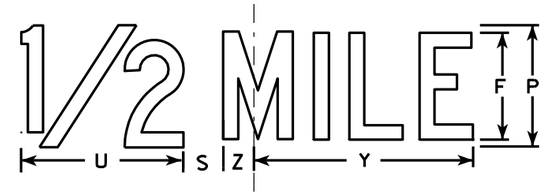

W20-3G

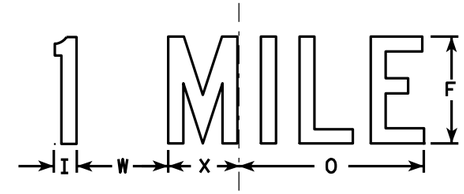

W20-3F

NOTES

1. Sign is Type II - Type F Reflective - reference WIS DOT Standard Specification for HIGHWAY and STRUCTURE CONSTRUCTION latest edition.
2. Color:
   Background - Orange
   Message - Black
3. Message Series - see note 5
4. Corners may be square or rounded when base material is plywood but borders shall be rounded as shown. When base material is metal, the corners and borders shall be rounded.
5. Lines 1 and 2 are Series D.
   Line 3 is Series D for AHEAD and Series C for all other distances.

SIZE	A	B	C	D	E	F	G	H	I	J	K	L	M	N	O	P	Q	R	S	T	U	V	W	X	Y	Z	Area sq. ft.
1	36		1 5/8	5/8	3/4	5	3 3/8	3 1/2	1 1/8	4	8 3/8	8 7/8	12 1/2	11	9	6	10 1/8	2 1/2	1 7/8	5 5/8	8	1 3/8	4 1/2	3 1/2	10 3/4	1 3/4	9.0
2S	48		2 1/4	3/4	1	7	4 1/2	4 3/4	1 1/2	5 1/4	11 3/4	12 1/2	17 1/4	14 5/8	12	8	13 1/2	3 3/8	2 5/8	7 1/2	10 5/8	1 7/8	6	4 5/8	14 3/8	2 3/8	16.0
2M	48		2 1/4	3/4	1	7	4 1/2	4 3/4	1 1/2	5 1/4	11 3/4	12 1/2	17 1/4	14 5/8	12	8	13 1/2	3 3/8	2 5/8	7 1/2	10 5/8	1 7/8	6	4 5/8	14 3/8	2 3/8	16.0
3	48		2 1/4	3/4	1	7	4 1/2	4 3/4	1 1/2	5 1/4	11 3/4	12 1/2	17 1/4	14 5/8	12	8	13 1/2	3 3/8	2 5/8	7 1/2	10 5/8	1 7/8	6	4 5/8	14 3/8	2 3/8	16.0
4	48		2 1/4	3/4	1	7	4 1/2	4 3/4	1 1/2	5 1/4	11 3/4	12 1/2	17 1/4	14 5/8	12	8	13 1/2	3 3/8	2 5/8	7 1/2	10 5/8	1 7/8	6	4 5/8	14 3/8	2 3/8	16.0
5	48		2 1/4	3/4	1	7	4 1/2	4 3/4	1 1/2	5 1/4	11 3/4	12 1/2	17 1/4	14 5/8	12	8	13 1/2	3 3/8	2 5/8	7 1/2	10 5/8	1 7/8	6	4 5/8	14 3/8	2 3/8	16.0

STANDARD SIGN
W20-3A, B, C, D, F & G

WISCONSIN DEPT OF TRANSPORTATION

APPROVED Matthew R Rauch
for State Traffic Engineer
DATE 3/18/11 PLATE NO. W20-3.7

PROJECT NO:	HWY:	COUNTY:		SHEET NO: 97	E

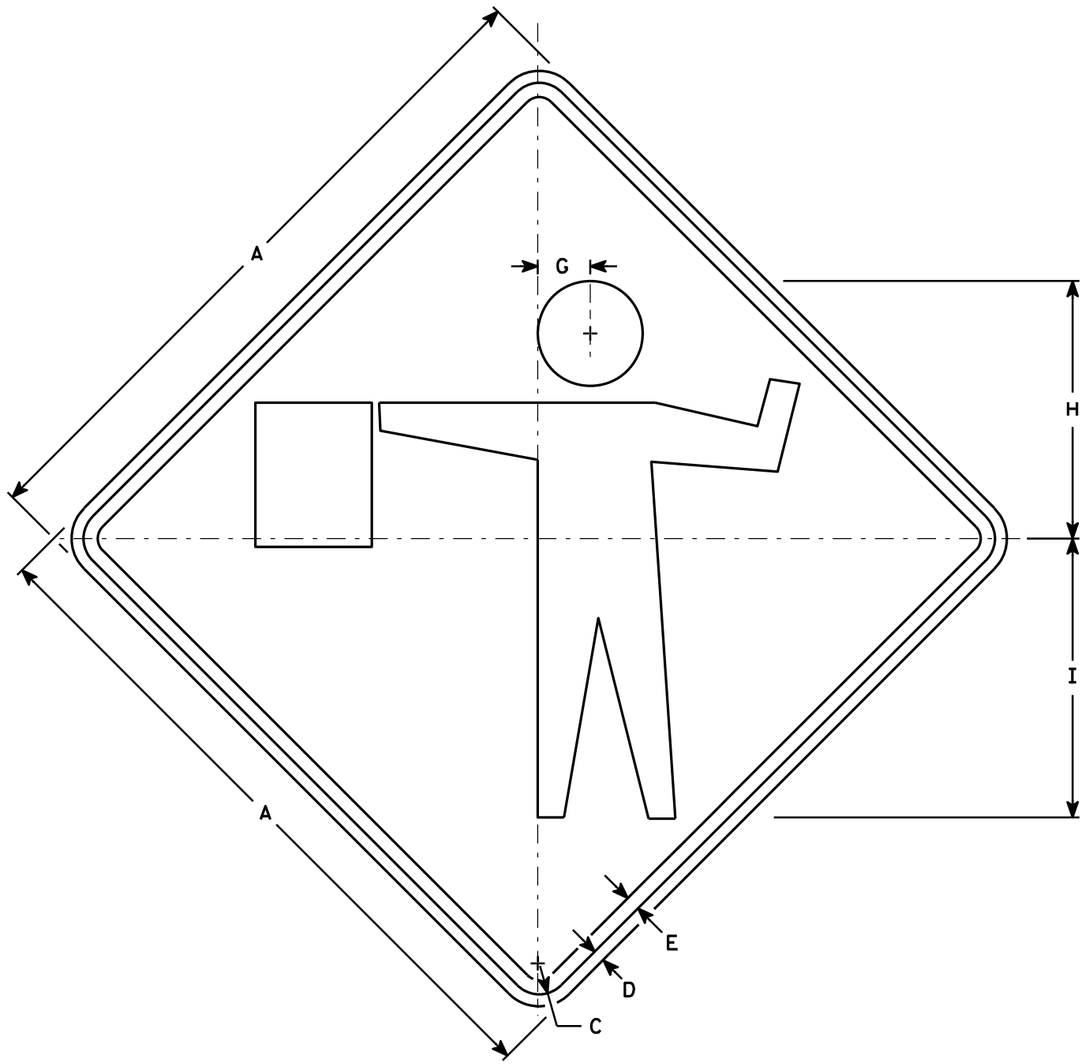

W20-7A

NOTES

1. Sign is Type II - Type F Reflective - reference WIS DOT Standard Specification for HIGHWAY and STRUCTURE CONSTRUCTION latest edition.
2. Color:
   Background - Orange
   Message - Black
3. Corners may be square or rounded when base material is plywood but borders shall be rounded as shown. When base material is metal, the corners and borders shall be rounded.

SIZE	A	B	C	D	E	F	G	H	I	J	K	L	M	N	O	P	Q	R	S	T	U	V	W	X	Y	Z	Area sq. ft.
1	36		1 5/8	5/8	3/4		2 3/4	13 1/2	14 5/8																		9.00
2S	48		2 1/4	3/4	1		3 3/4	18	19 1/2																		16.00
2M	48		2 1/4	3/4	1		3 3/4	18	19 1/2																		16.00
3	48		2 1/4	3/4	1		3 3/4	18	19 1/2																		16.00
4	48		2 1/4	3/4	1		3 3/4	18	19 1/2																		16.00
5	48		2 1/4	3/4	1		3 3/4	18	19 1/2																		16.00

STANDARD SIGN
W20-7A

WISCONSIN DEPT OF TRANSPORTATION

APPROVED Matthew R Rauch
for State Traffic Engineer

DATE 3/18/11 PLATE NO. W20-7A.5

PROJECT NO: | HWY: | COUNTY: | SHEET NO: 98 | E

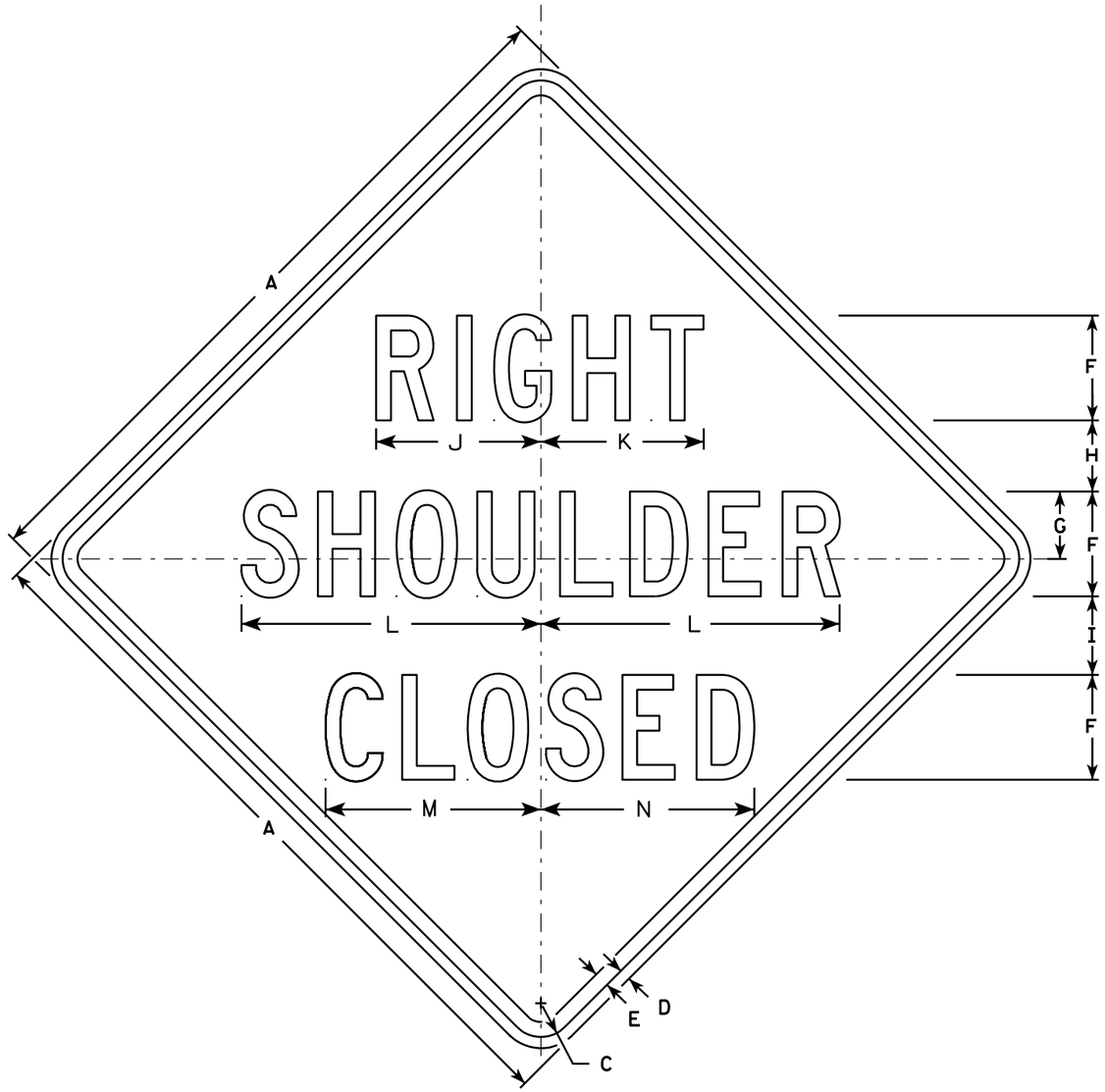

W21-5A

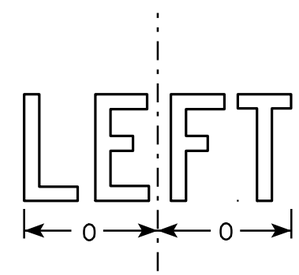

W21-5AL

NOTES

1. Sign is Type II - Type F Reflective - reference WIS DOT Standard Specification for HIGHWAY and STRUCTURE CONSTRUCTION latest edition.
2. Color:
   Background - Orange
   Message - Black
3. Message Series - D
4. Corners may be square or rounded when base material is plywood but borders shall be rounded as shown. When base material is metal, the corners and borders shall be rounded.

SIZE	A	B	C	D	E	F	G	H	I	J	K	L	M	N	O	P	Q	R	S	T	U	V	W	X	Y	Z	Area sq. ft.
1	36		1 5/8	5/8	3/4	5	3 3/8	3 1/2	4	7 7/8	7 3/4	14 1/4	10 1/4	10 1/8	6 1/4												9.0
2S	48		2 1/4	3/4	1	7	4 1/2	4 3/4	5 1/4	11	10 7/8	20	14 3/8	14 1/4	8 3/4												16.0
2M	48		2 1/4	3/4	1	7	4 1/2	4 3/4	5 1/4	11	10 7/8	20	14 3/8	14 1/4	8 3/4												16.0
3	48		2 1/4	3/4	1	7	4 1/2	4 3/4	5 1/4	11	10 7/8	20	14 3/8	14 1/4	8 3/4												16.0
4	48		2 1/4	3/4	1	7	4 1/2	4 3/4	5 1/4	11	10 7/8	20	14 3/8	14 1/4	8 3/4												16.0
5	48		2 1/4	3/4	1	7	4 1/2	4 3/4	5 1/4	11	10 7/8	20	14 3/8	14 1/4	8 3/4												16.0

STANDARD SIGN
W21-5A

WISCONSIN DEPT OF TRANSPORTATION

APPROVED Matthew R Rauch
for State Traffic Engineer

DATE 3/21/11 PLATE NO. W21-5A.3

PROJECT NO:	HWY:	COUNTY:		SHEET NO: 99	E

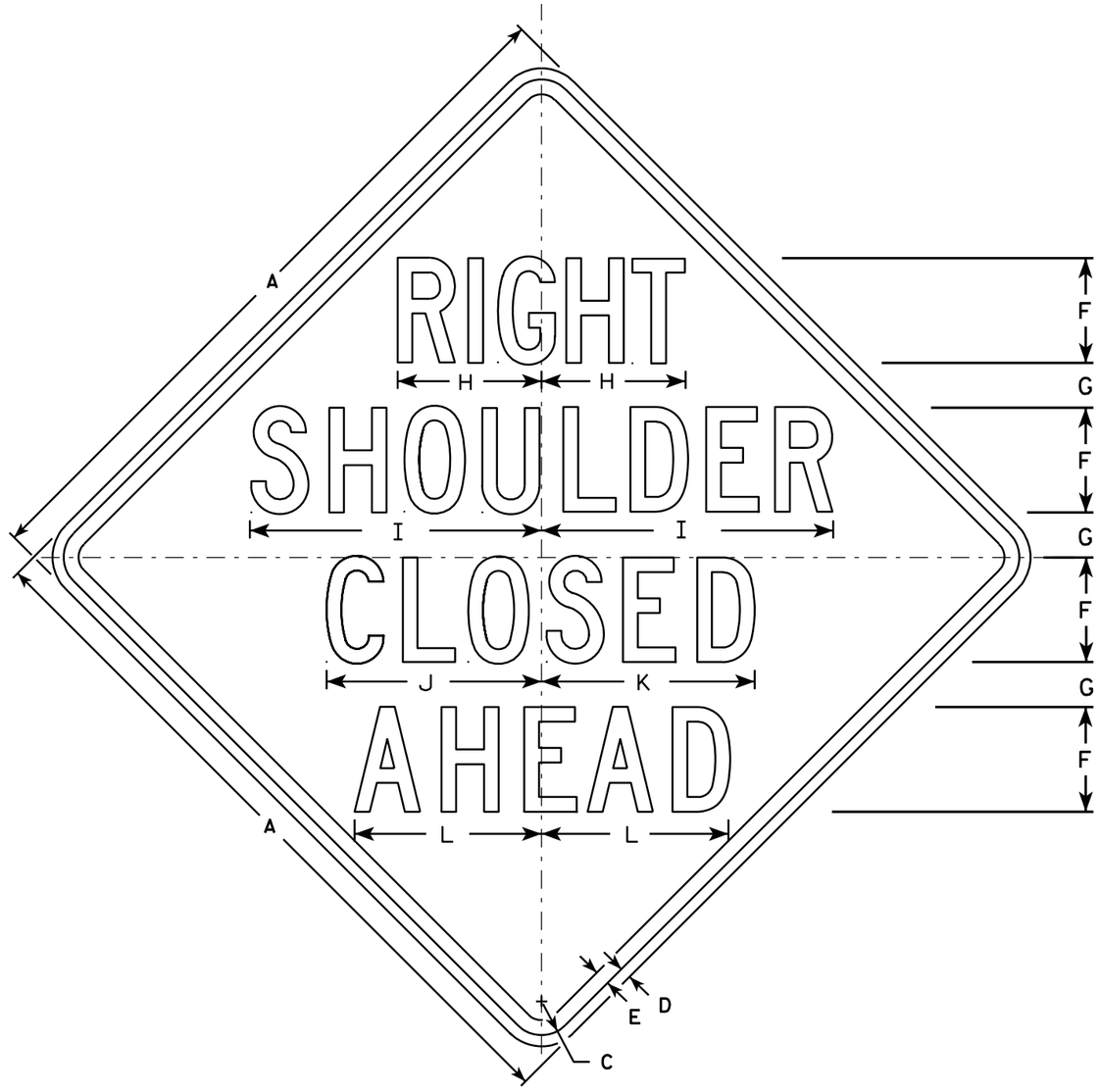

W21-5B

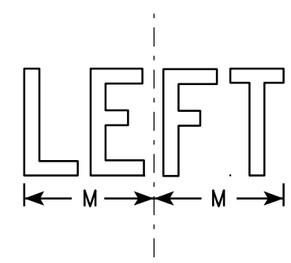

W21-5BL

NOTES

1. Sign is Type II - Type F Reflective - reference WIS DOT Standard Specification for HIGHWAY and STRUCTURE CONSTRUCTION latest edition.
2. Color:
   Background - Orange
   Message - Black
3. Message Series - C
4. Corners may be square or rounded when base material is plywood but borders shall be rounded as shown. When base material is metal, the corners and borders shall be rounded.

SIZE	A	B	C	D	E	F	G	H	I	J	K	L	M	N	O	P	Q	R	S	T	U	V	W	X	Y	Z	Area sq. ft.
1	36		1 5/8	5/8	3/4	5	2 1/4	7 3/8	14 1/4	10 1/4	10 1/8	8 7/8	6 1/4														9.0
2S	48		2 1/4	3/4	1	7	3	9 5/8	19 1/2	14 3/8	14 1/4	12 1/2	8 1/2														16.0
2M	48		2 1/4	3/4	1	7	3	9 5/8	19 1/2	14 3/8	14 1/4	12 1/2	8 1/2														16.0
3	48		2 1/4	3/4	1	7	3	9 5/8	19 1/2	14 3/8	14 1/4	12 1/2	8 1/2														16.0
4	48		2 1/4	3/4	1	7	3	9 5/8	19 1/2	14 3/8	14 1/4	12 1/2	8 1/2														16.0
5	48		2 1/4	3/4	1	7	3	9 5/8	19 1/2	14 3/8	14 1/4	12 1/2	8 1/2														16.0

STANDARD SIGN
W21-5B

WISCONSIN DEPT OF TRANSPORTATION

APPROVED Matthew R Rauch
for State Traffic Engineer

DATE 3/21/11 PLATE NO. W21-5B.3

PROJECT NO: | HWY: | COUNTY: | SHEET NO: 100 | E

EARTHWORK - CTH CL

STATION	AREA (SF) Cut	AREA (SF) Unusable Pavement Material	AREA (SF) Fill	Incremental Vol (CY) (Unadjuste Cut Note 1	Incremental Vol (CY) (Unadjuste Unusable Pavement Material Note 2	Incremental Vol (CY) (Unadjuste Fill Note 3	Cumulative Vol (CY) Cut 1.00 Note 1	Cumulative Vol (CY) Expanded Fill 1.30	Cumulative Vol (CY) Mass Ordinate Note 8
20+75	4	0	11	0	0	0	0	0	0
21+00	3	0	16	3	0	13	3	16	-13
21+50	7	0	23	10	0	37	13	64	-51
22+00	9	0	32	16	0	51	28	131	-103
22+50	5	0	36	14	0	63	42	214	-172
23+00	1	0	31	2	0	58	45	289	-244
23+50	0	0	29	0	0	54	45	359	-315
24+00	0	0	22	0	0	47	45	421	-376
24+50	1	0	18	1	0	37	46	468	-423
24+75	32	0	13	15	0	14	61	487	-426
25+00	2	0	13	16	0	12	77	502	-426
25+50	2	0	10	3	0	21	80	529	-449
26+00	0	0	10	2	0	19	82	553	-472
26+50	0	0	9	0	0	18	82	577	-495
26+75	24	0	7	11	0	7	93	587	-494
27+00	0	0	8	11	0	7	105	596	-491
27+50	1	0	6	1	0	14	106	613	-508
28+00	0	0	4	1	0	9	107	625	-519
28+50	36	0	2	33	0	5	140	632	-492
28+75	0	0	5	17	0	3	157	636	-480
29+00	1	0	26	1	0	14	157	655	-498
29+50	0	0	31	1	0	53	158	724	-566
30+00	0	0	37	0	0	63	158	806	-648
30+50	1	0	38	1	0	69	159	895	-736
30+75	39	0	15	18	0	24	177	927	-750
31+00	7	0	7	21	0	10	199	941	-742
31+50	26	0	40	30	0	44	229	998	-768
31+75	29	0	42	25	0	38	254	1,047	-793
32+00	7	0	40	17	0	38	271	1,097	-825
32+50	0	0	42	7	0	76	278	1,195	-918
33+00	0	0	46	0	0	81	278	1,301	-1,023
33+25	3	0	45	2	0	42	280	1,356	-1,076
33+50	0	0	24	2	0	32	281	1,397	-1,115
34+00	14	0	13	26	0	23	308	1,427	-1,119
34+50	10	0	26	18	0	48	326	1,489	-1,164
35+00	0	0	26	0	0	49	326	1,553	-1,227
35+50	0	0	19	0	0	42	326	1,607	-1,282
36+00	0	0	12	0	0	28	326	1,644	-1,318
36+50	0	0	11	0	0	21	326	1,671	-1,345
37+00	0	0	8	0	0	18	326	1,694	-1,368
37+50	0	0	30	0	0	36	326	1,740	-1,414
38+00	0	0	24	0	0	50	326	1,805	-1,479
38+50	0	0	24	0	0	44	326	1,863	-1,537
38+66	0	0	28	0	0	15	326	1,883	-1,557
39+00	0	0	30	0	0	37	326	1,931	-1,605

EARTHWORK - CTH CL (CONTINUED)

STATION	AREA (SF) Cut	AREA (SF) Unusable Pavement Material	AREA (SF) Fill	Incremental Vol (CY) (Unadjuste Cut Note 1	Incremental Vol (CY) (Unadjuste Unusable Pavement Material Note 2	Incremental Vol (CY) (Unadjuste Fill Note 3	Cumulative Vol (CY) Cut 1.00 Note 1	Cumulative Vol (CY) Expanded Fill 1.30	Cumulative Vol (CY) Mass Ordinate Note 8
39+50	0	0	14	0	0	41	326	1,984	-1,658
40+00	0	0	7	0	0	19	326	2,009	-1,683
40+25	47	0	7	22	0	7	348	2,017	-1,669
40+50	5	0	6	24	0	6	372	2,025	-1,653
41+00	1	0	1	5	0	7	377	2,034	-1,656
41+25	24	0	0	12	0	1	389	2,034	-1,646
41+50	12	0	0	17	0	0	405	2,034	-1,629
42+00	18	0	0	27	0	0	433	2,034	-1,602
42+50	0	0	0	16	0	0	449	2,034	-1,586
43+00	0	0	2	0	0	1	449	2,036	-1,587
43+50	0	0	2	0	0	3	449	2,040	-1,591
44+00	34	0	0	32	0	2	481	2,042	-1,562
44+50	12	0	3	43	0	3	523	2,046	-1,523
45+00	27	0	0	36	0	3	559	2,050	-1,490
45+50	0	0	2	25	0	2	585	2,052	-1,468
46+00	0	0	1	0	0	2	585	2,055	-1,471
46+50	0	0	1	0	0	1	585	2,057	-1,472
46+98	10	6	16	9	5	15	594	2,077	-1,488
47+50	33	6	12	42	12	27	636	2,112	-1,493
48+00	35	6	30	64	11	39	700	2,162	-1,491
48+25	41	6	10	35	6	19	735	2,186	-1,485
48+50	47	6	6	41	6	7	776	2,196	-1,460
49+00	44	6	3	84	11	8	860	2,207	-1,397
49+50	44	6	2	81	11	5	941	2,214	-1,334
50+00	45	6	3	82	11	5	1,024	2,220	-1,269
50+50	47	6	9	85	11	11	1,109	2,235	-1,210
51+00	42	6	26	82	11	33	1,191	2,277	-1,181
51+50	47	6	21	83	11	43	1,274	2,334	-1,166
52+00	55	6	12	95	11	31	1,368	2,374	-1,122
52+50	49	6	24	96	11	34	1,464	2,417	-1,082
53+00	61	6	13	101	11	35	1,565	2,463	-1,036
53+10	53	6	20	21	2	6	1,586	2,471	-1,025
53+50	50	6	48	76	9	50	1,663	2,536	-1,023
54+00	44	6	78	87	11	116	1,750	2,687	-1,098
54+50	37	6	74	75	11	140	1,825	2,869	-1,217
55+00	49	6	29	79	11	96	1,904	2,993	-1,273

Notes:	
1 - Cut	Cut includes existing asphalt and base material
2 - Unusable Pavement Material	Does not show up in cross sections
3 - Fill	Does not include Unusable Pavement Material
8 - Mass Ordinate	Cut - Unusable Pavement Material - (Fill * Fill Factor)

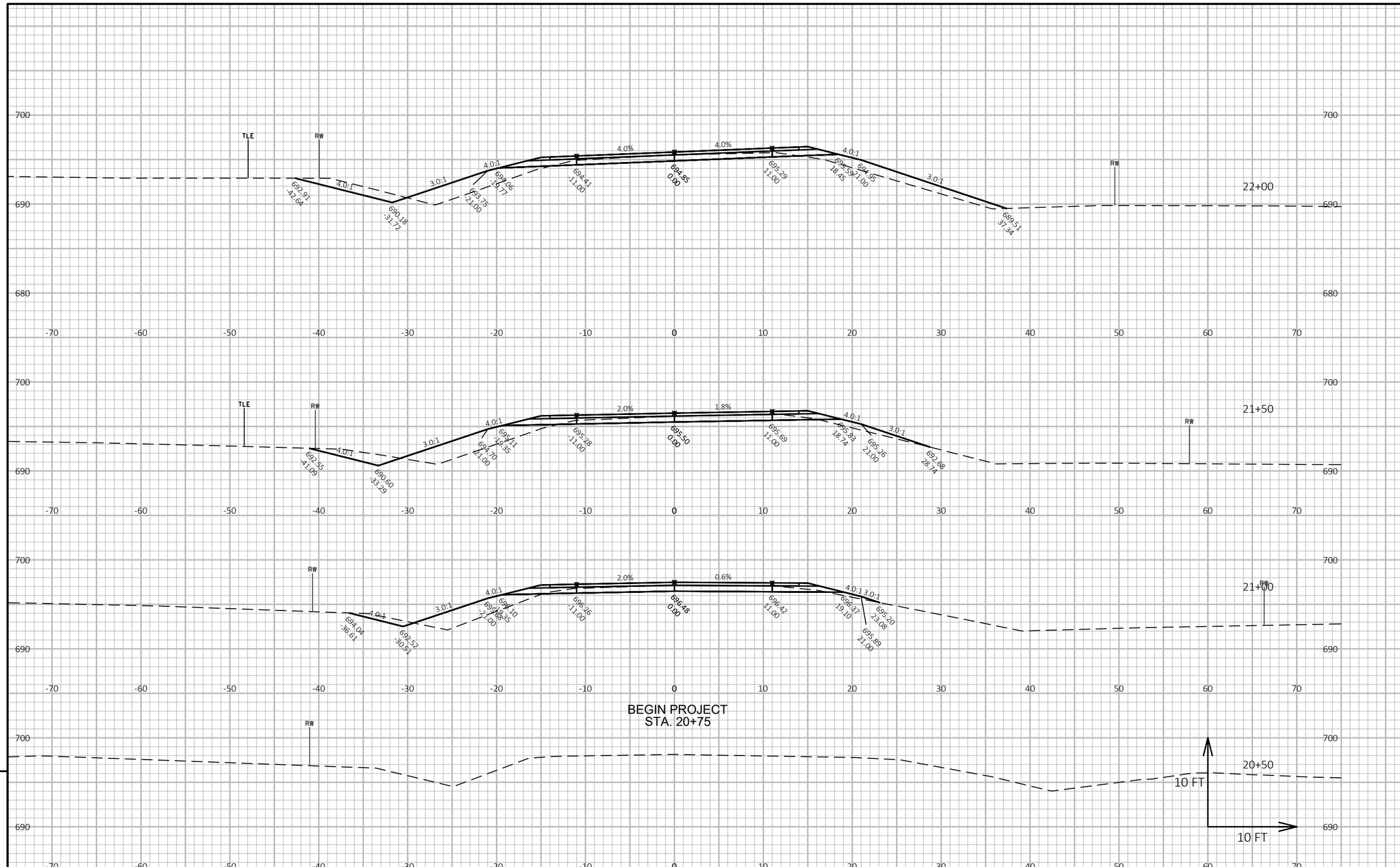

PROJECT NO: 4991-00-96	HWY: CTH CL	COUNTY: MANITOWOC	CROSS SECTIONS: CTH CL	SHEET 102	E

FILE NAME : V:\TRANS-GB\450432 CTH CL\C3D\SHEETSPLAN\090201 XS.DWG
LAYOUT NAME - CTH CL - (1)
PLOT DATE : 7/23/2019 11:29 AM
PLOT BY : SCHAITEL, RYAN
PLOT NAME :
PLOT SCALE : 1 IN:10 FT HORZ. / 1 IN:10 FT VERT.
WISDOT/CADDS SHEET 49

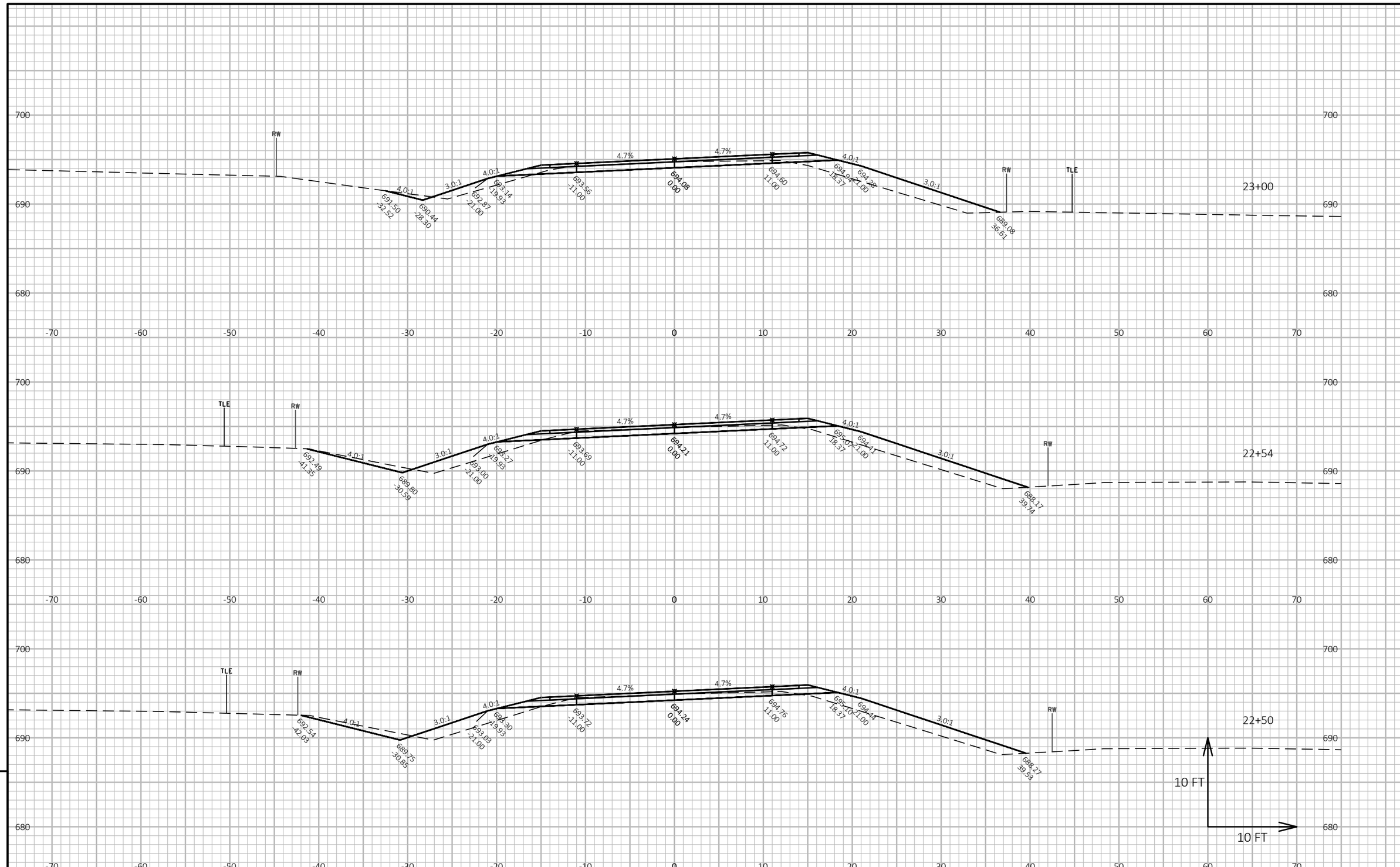

9

9

PROJECT NO: 4991-00-96	HWY: CTH CL	COUNTY: MANITOWOC	CROSS SECTIONS: CTH CL	SHEET 103	E

FILE NAME : V:\TRANS-GB\450432 CTH CL\C3D\SHEETSPLAN\090201 XS.DWG
LAYOUT NAME - CTH CL - (2)
PLOT DATE : 7/23/2019 11:29 AM
PLOT BY : SCHAITEL, RYAN
PLOT NAME :
PLOT SCALE : 1 IN:10 FT HORZ. / 1 IN:10 FT VERT.
WISDOT/CADDS SHEET 49

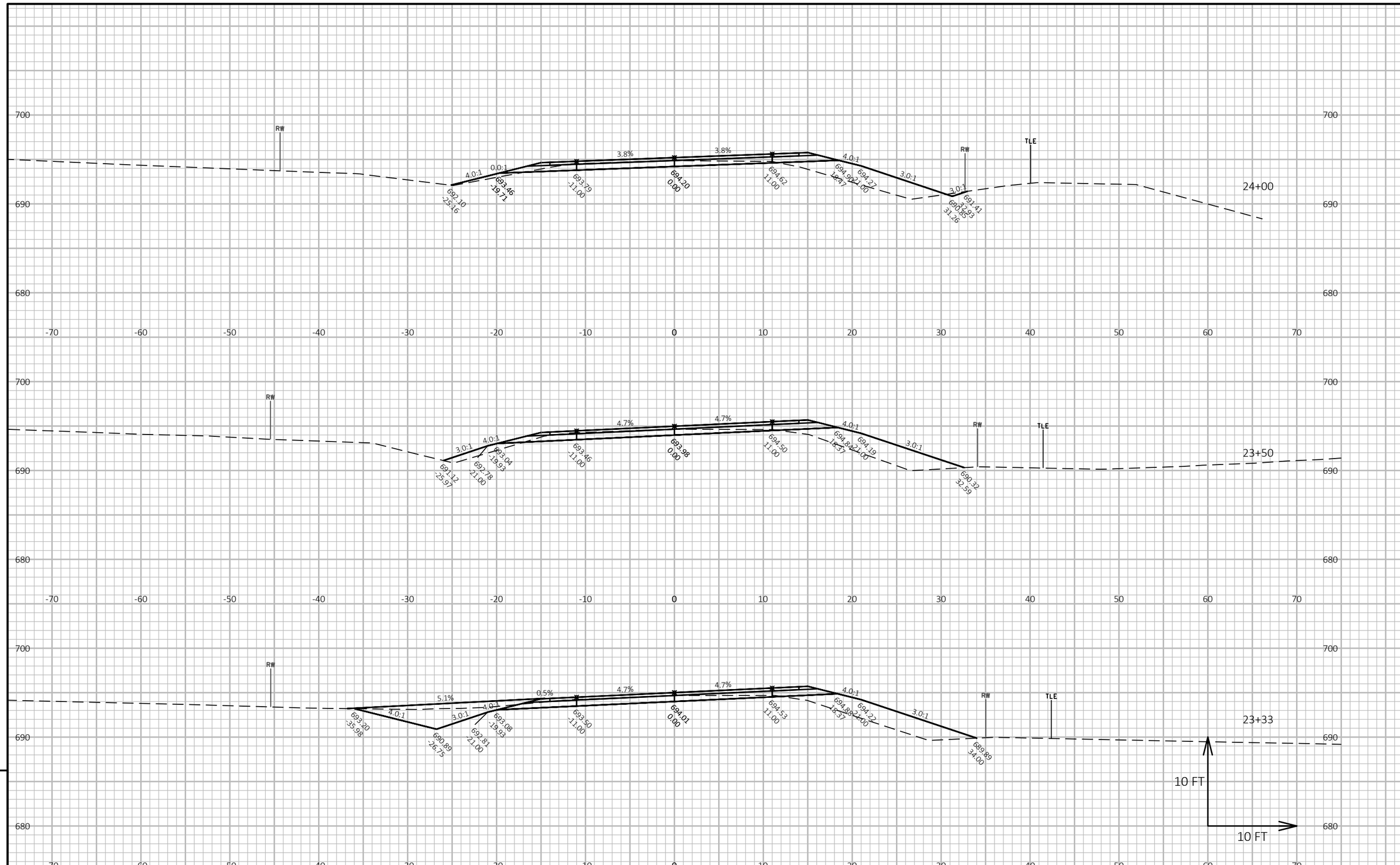

9

9

PROJECT NO: 4991-00-96	HWY: CTH CL	COUNTY: MANITOWOC	CROSS SECTIONS: CTH CL	SHEET 104	E

FILE NAME : V:\TRANS-GB\450432 CTH CL\C3D\SHEETSPLAN\090201 XS.DWG
LAYOUT NAME - CTH CL - (3)
PLOT DATE : 7/23/2019 11:29 AM
PLOT BY : SCHAITEL, RYAN
PLOT NAME :
PLOT SCALE : 1 IN:10 FT HORZ. / 1 IN:10 FT VERT.
WISDOT/CADDS SHEET 49

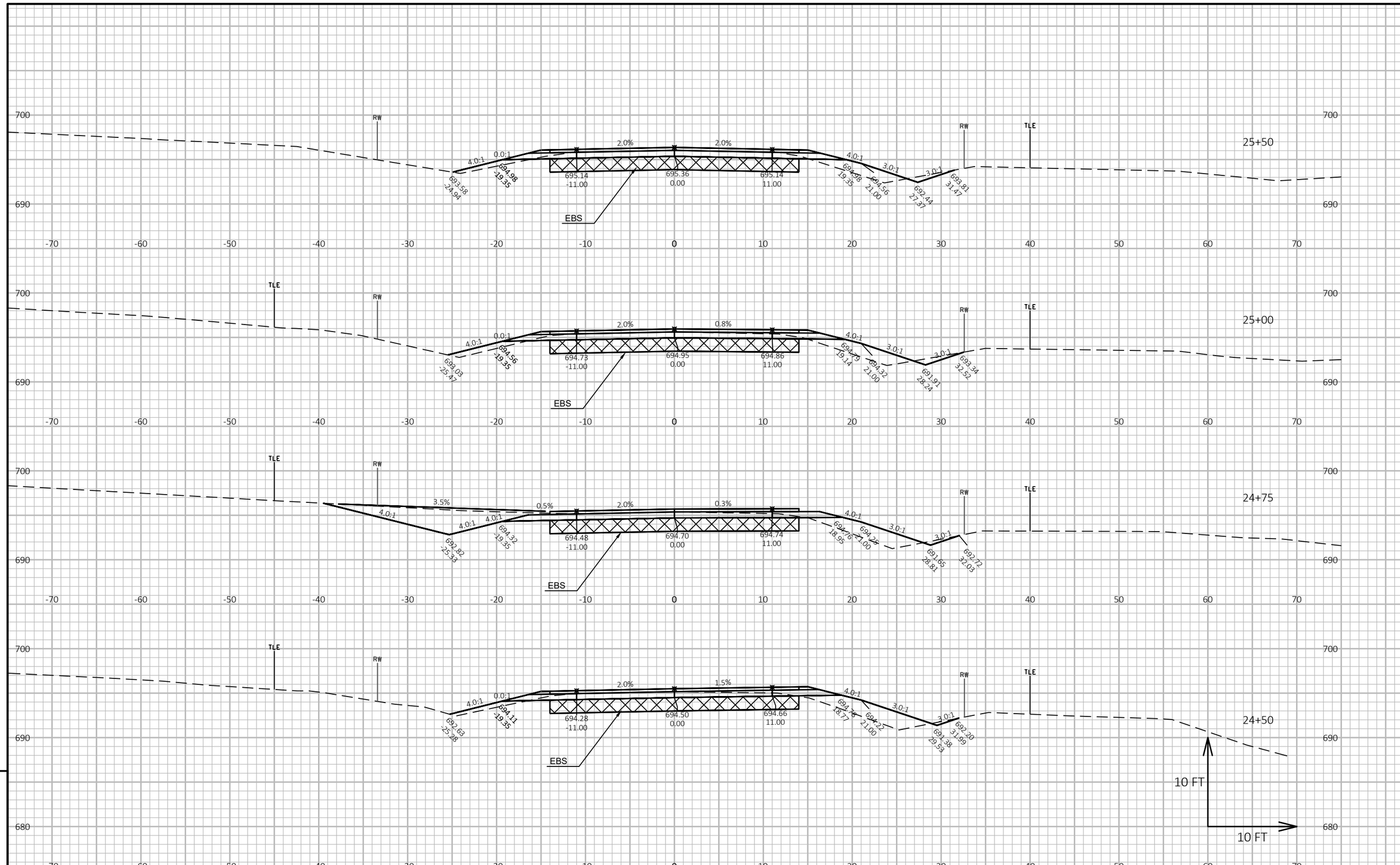

9

9

PROJECT NO: 4991-00-96	HWY: CTH CL	COUNTY: MANITOWOC	CROSS SECTIONS: CTH CL	SHEET 105	E

FILE NAME : V:\TRANS-GB\450432 CTH CL\C3D\SHEETSPLAN\090201 XS.DWG
LAYOUT NAME - CTH CL - (4)
PLOT DATE : 7/23/2019 11:29 AM
PLOT BY : SCHAITEL, RYAN
PLOT NAME :
PLOT SCALE : 1 IN:10 FT HORZ. / 1 IN:10 FT VERT.

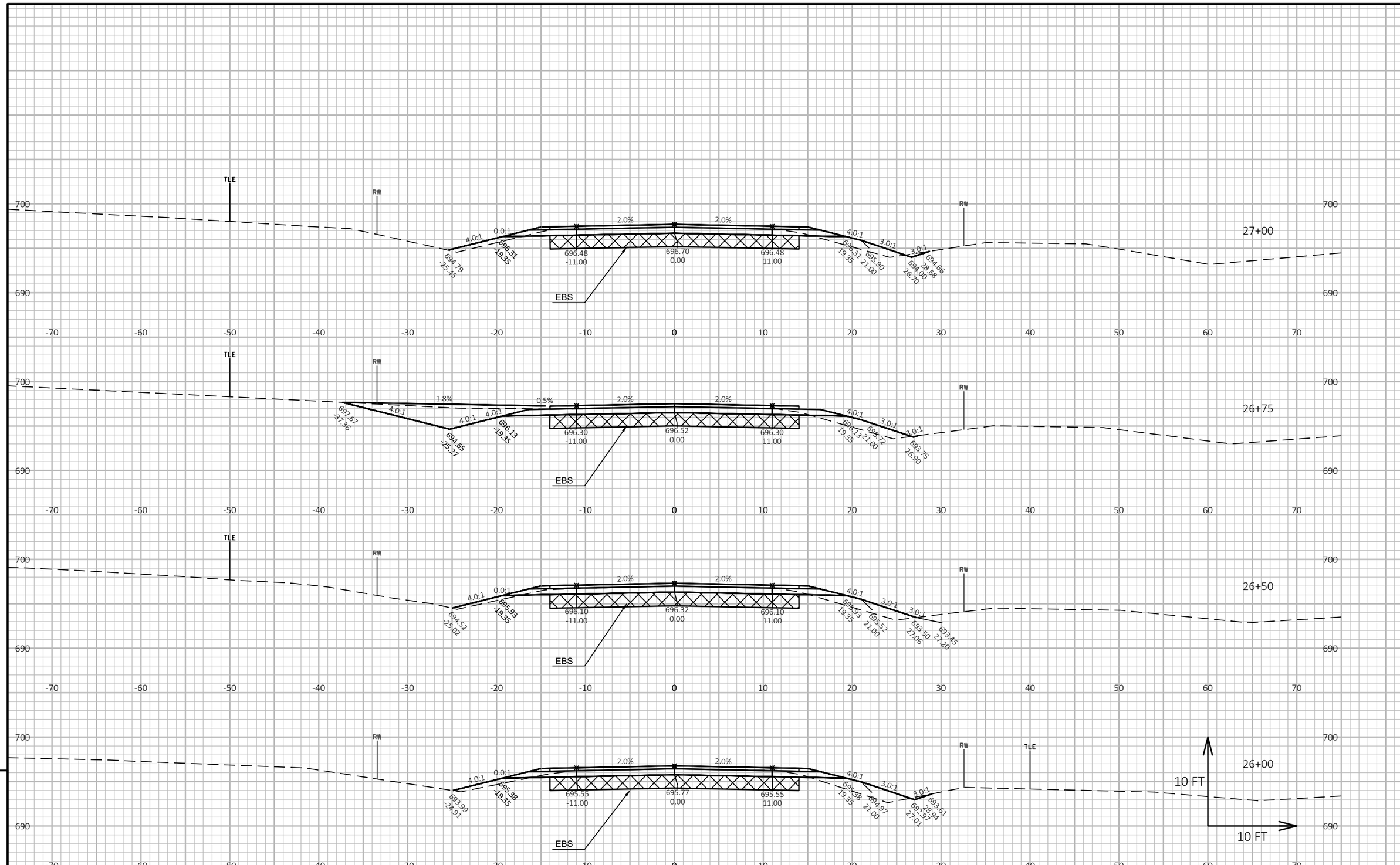

9

9

PROJECT NO: 4991-00-96	HWY: CTH CL	COUNTY: MANITOWOC	CROSS SECTIONS: CTH CL	SHEET 106	E

FILE NAME : V:\TRANS-GB\450432 CTH CL\C3D\SHEETSPLAN\090201 XS.DWG
LAYOUT NAME - CTH CL - (5)
PLOT DATE : 7/23/2019 11:29 AM
PLOT BY : SCHAITEL, RYAN
PLOT NAME :
PLOT SCALE : 1 IN:10 FT HORZ. / 1 IN:10 FT VERT.
WISDOT/CADDS SHEET 49

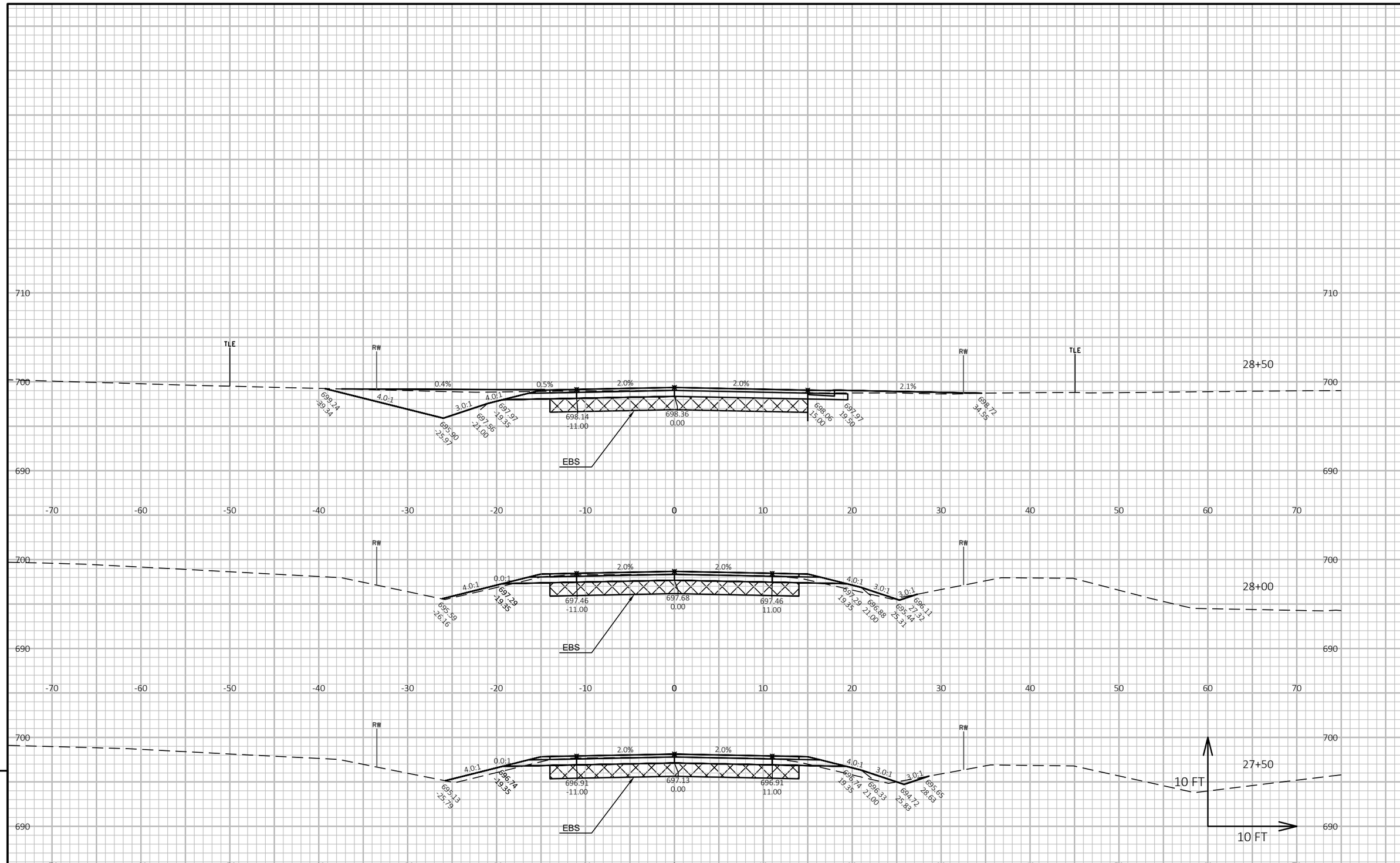

PROJECT NO: 4991-00-96	HWY: CTH CL	COUNTY: MANITOWOC	CROSS SECTIONS: CTH CL	SHEET 107	E

FILE NAME : V:\TRANS-GB\450432 CTH CL\C3D\SHEETSPLAN\090201 XS.DWG
LAYOUT NAME - CTH CL - (6)
PLOT DATE : 7/23/2019 11:29 AM
PLOT BY : SCHAITEL, RYAN
PLOT NAME :
PLOT SCALE : 1 IN:10 FT HORZ. / 1 IN:10 FT VERT.

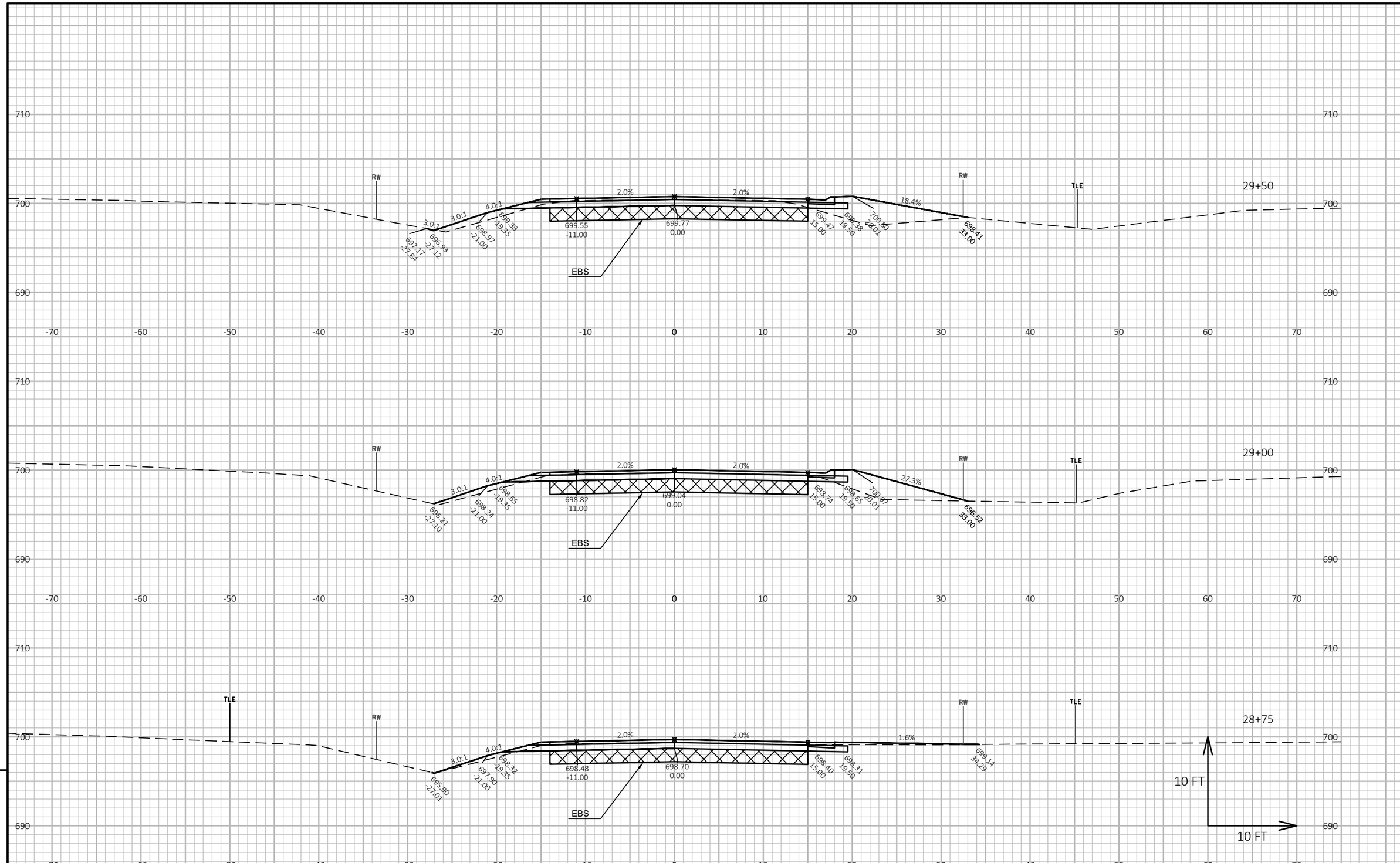

PROJECT NO: 4991-00-96	HWY: CTH CL	COUNTY: MANITOWOC	CROSS SECTIONS: CTH CL	SHEET 108	E

FILE NAME : V:\TRANS-GB\450432 CTH CL\C3D\SHEETSPLAN\090201 XS.DWG
LAYOUT NAME - CTH CL - (7)
PLOT DATE : 7/23/2019 11:29 AM
PLOT BY : SCHAITEL, RYAN
PLOT NAME :
PLOT SCALE : 1 IN:10 FT HORZ. / 1 IN:10 FT VERT.
WISDOT/CADDS SHEET 49

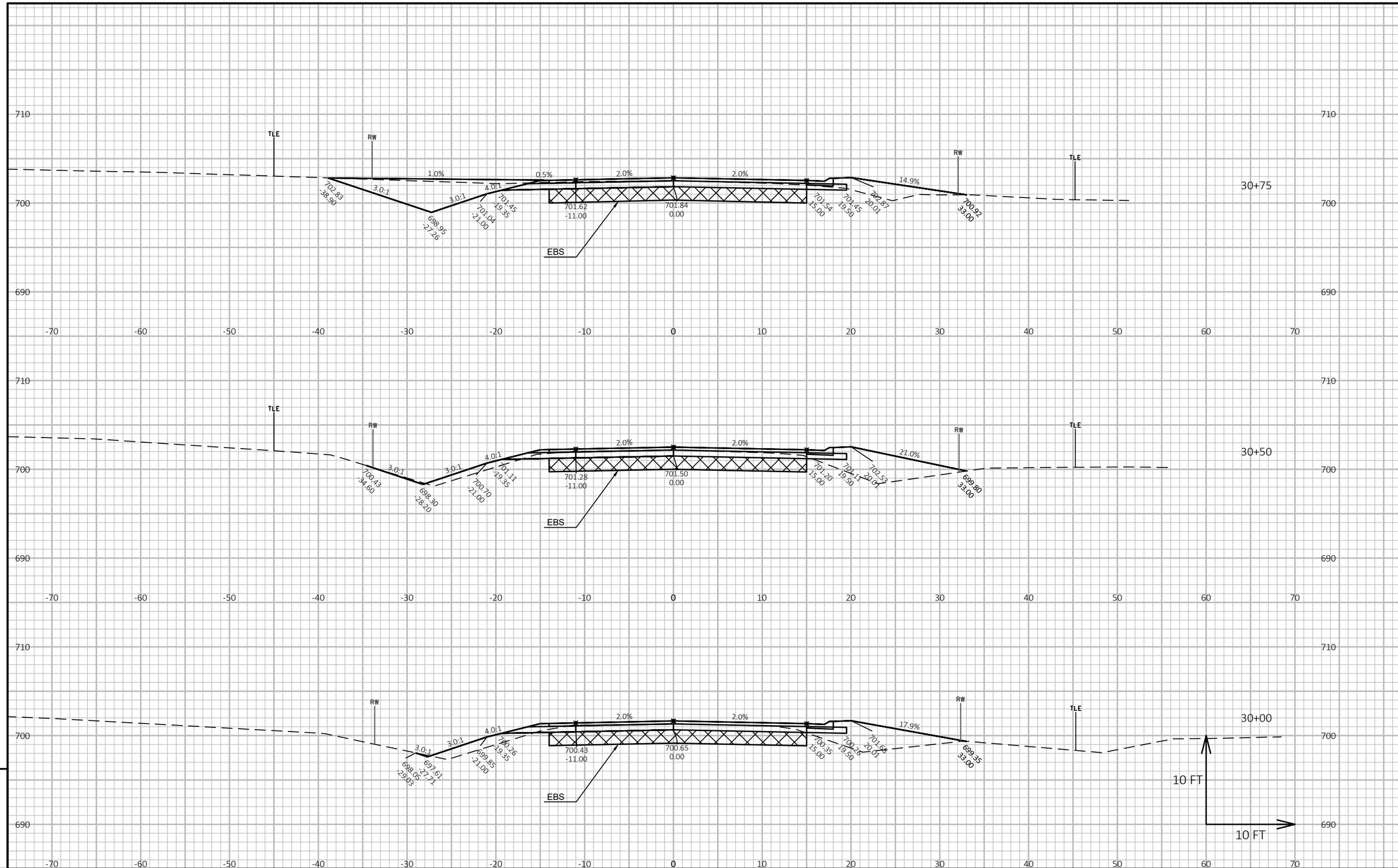

PROJECT NO: 4991-00-96	HWY: CTH CL	COUNTY: MANITOWOC	CROSS SECTIONS: CTH CL	SHEET 109	E

FILE NAME : V:\TRANS-GB\450432 CTH CL\C3D\SHEETSPLAN\090201 XS.DWG
LAYOUT NAME - CTH CL - (8)
PLOT DATE : 7/23/2019 11:29 AM
PLOT BY : SCHAITEL, RYAN
PLOT NAME :
PLOT SCALE : 1 IN:10 FT HORZ. / 1 IN:10 FT VERT.

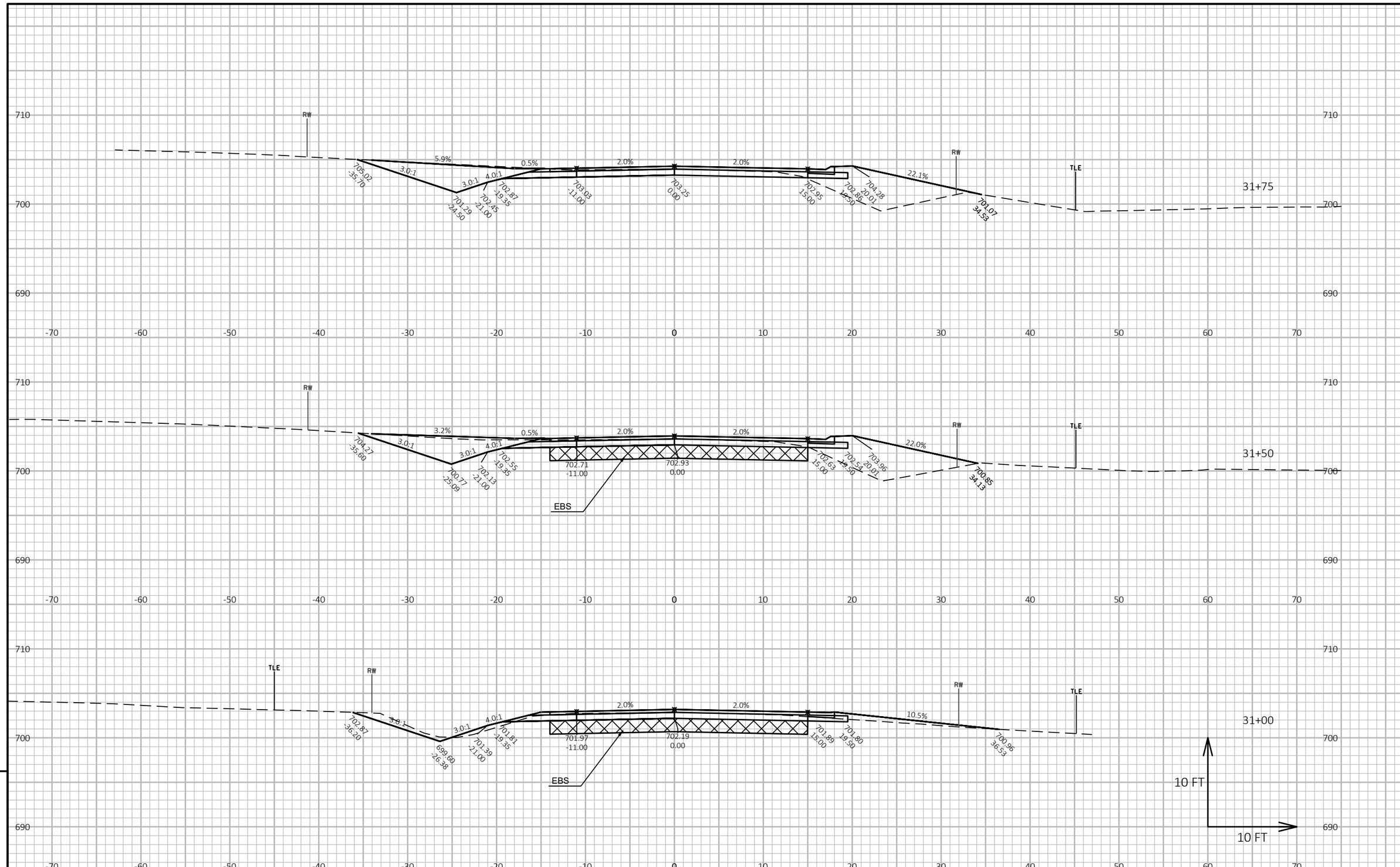

PROJECT NO: 4991-00-96	HWY: CTH CL	COUNTY: MANITOWOC	CROSS SECTIONS: CTH CL	SHEET 110	E

FILE NAME : V:\TRANS-GB\450432 CTH CL\C3D\SHEETSPLAN\090201 XS.DWG
LAYOUT NAME - CTH CL - (9)
PLOT DATE : 7/23/2019 11:30 AM PLOT BY : SCHAITEL, RYAN PLOT NAME : PLOT SCALE : 1 IN:10 FT HORZ. / 1 IN:10 FT VERT.

WISDOT/CADDS SHEET 49

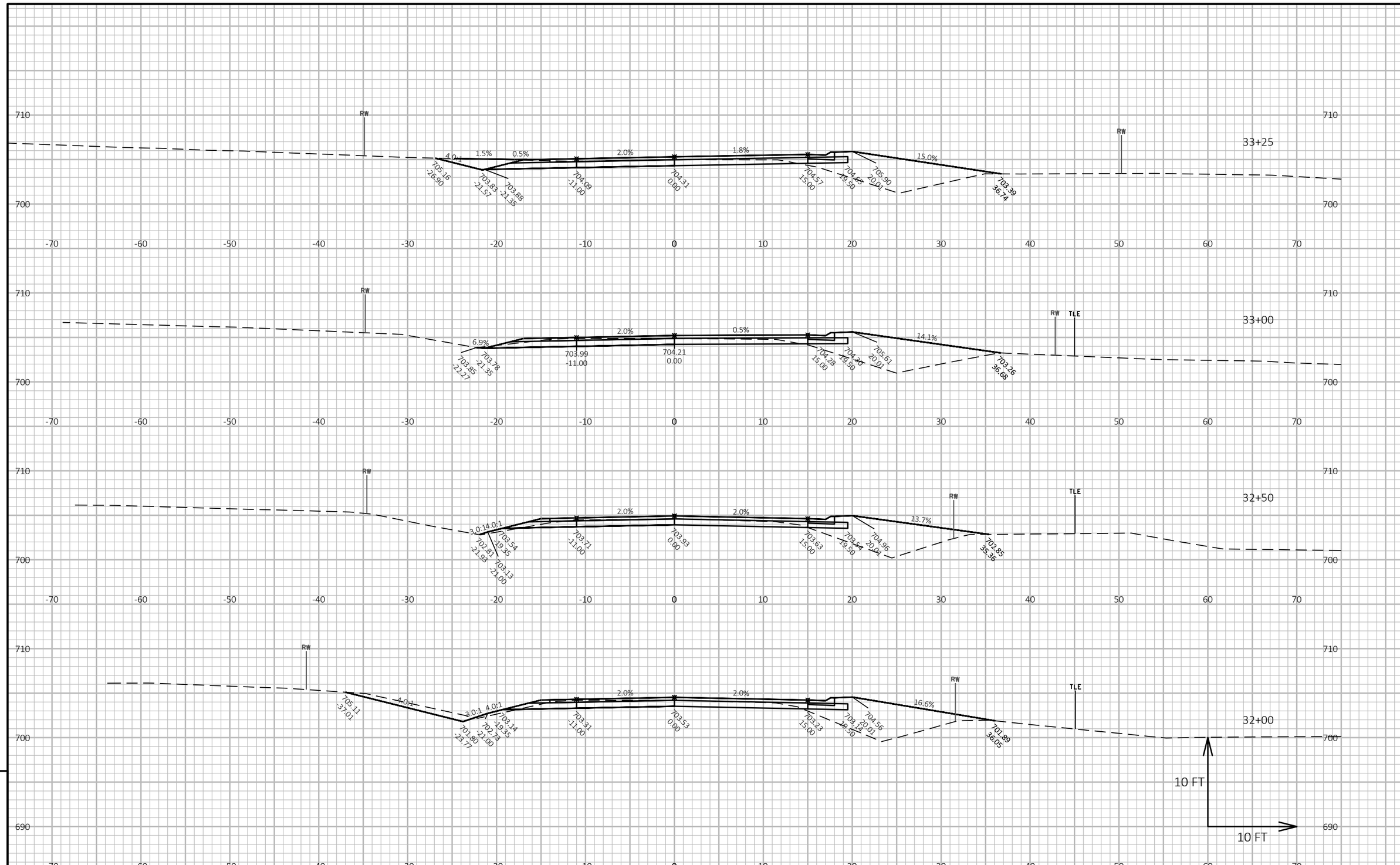

9

9

PROJECT NO: 4991-00-96	HWY: CTH CL	COUNTY: MANITOWOC	CROSS SECTIONS: CTH CL	SHEET 111	E

FILE NAME : V:\TRANS-GB\450432 CTH CL\C3D\SHEETSPLAN\090201 XS.DWG
LAYOUT NAME - CTH CL - (10)
PLOT DATE : 7/23/2019 11:30 AM
PLOT BY : SCHAITEL, RYAN
PLOT NAME :
PLOT SCALE : 1 IN:10 FT HORZ. / 1 IN:10 FT VERT.

WISDOT/CADDS SHEET 49

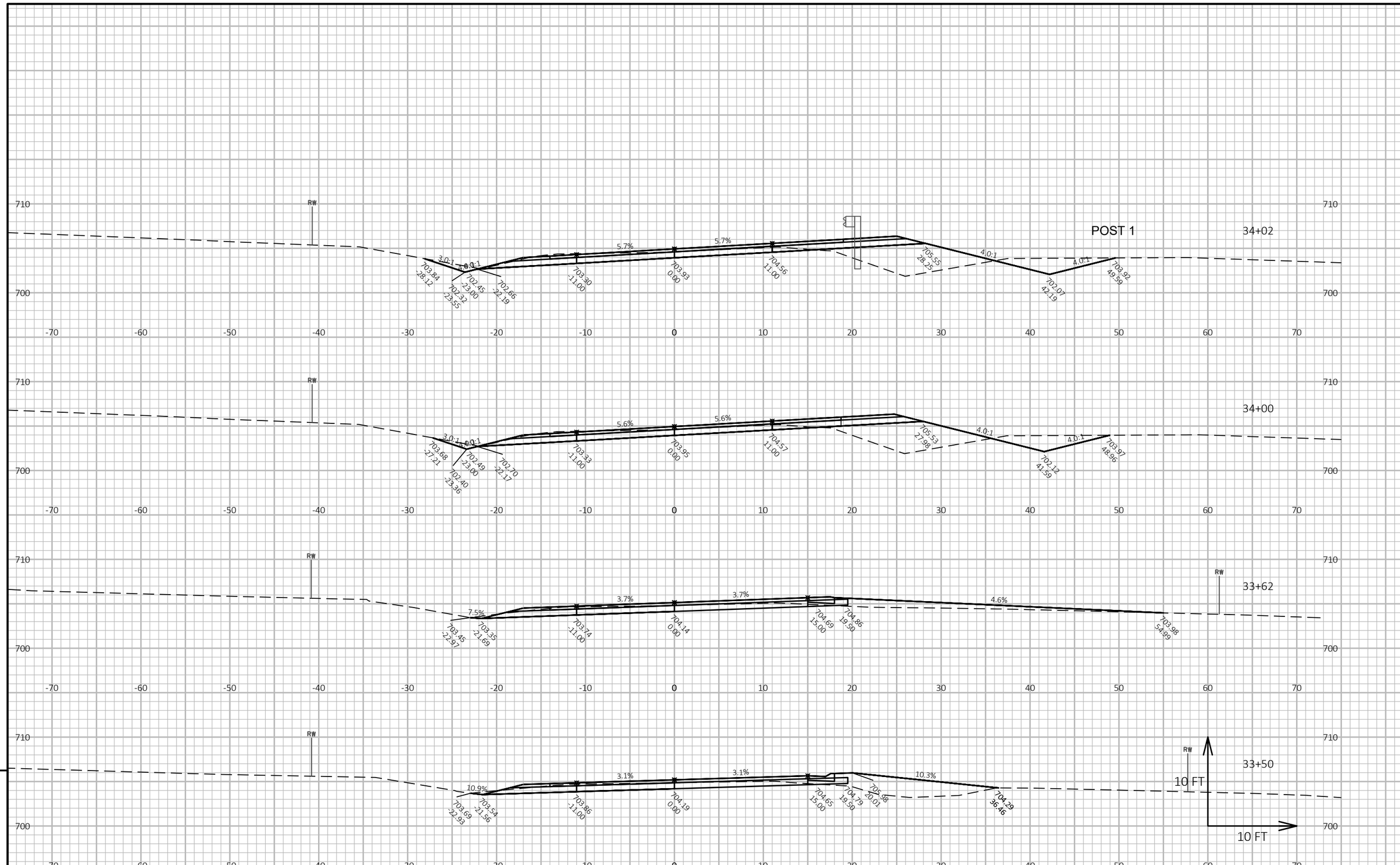

9

9

PROJECT NO: 4991-00-96	HWY: CTH CL	COUNTY: MANITOWOC	CROSS SECTIONS: CTH CL	SHEET 112	E

FILE NAME : V:\TRANS-GB\450432 CTH CL\C3D\SHEETSPLAN\090201 XS.DWG
LAYOUT NAME - CTH CL - (11)
PLOT DATE : 7/23/2019 11:30 AM
PLOT BY : SCHAITEL, RYAN
PLOT NAME :
PLOT SCALE : 1 IN:10 FT HORZ. / 1 IN:10 FT VERT.
WISDOT/CADDS SHEET 49

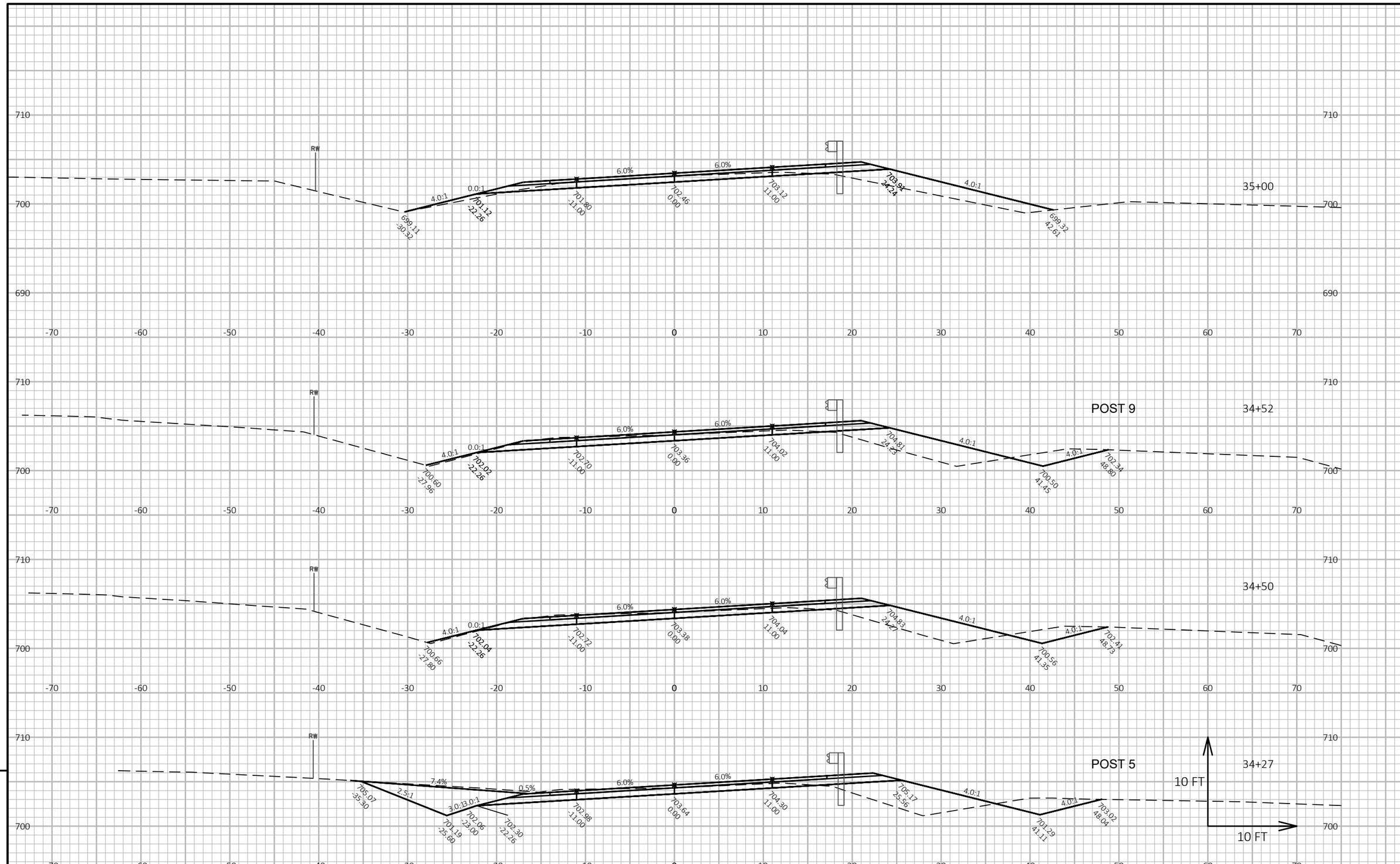

9

9

PROJECT NO: 4991-00-96	HWY: CTH CL	COUNTY: MANITOWOC	CROSS SECTIONS: CTH CL	SHEET 113	E

FILE NAME : V:\TRANS-GB\450432 CTH CL\C3D\SHEETSPLAN\090201 XS.DWG
LAYOUT NAME - CTH CL - (12)
PLOT DATE : 7/23/2019 11:30 AM
PLOT BY : SCHAITEL, RYAN
PLOT NAME :
PLOT SCALE : 1 IN:10 FT HORZ. / 1 IN:10 FT VERT.
WISDOT/CADDS SHEET 49

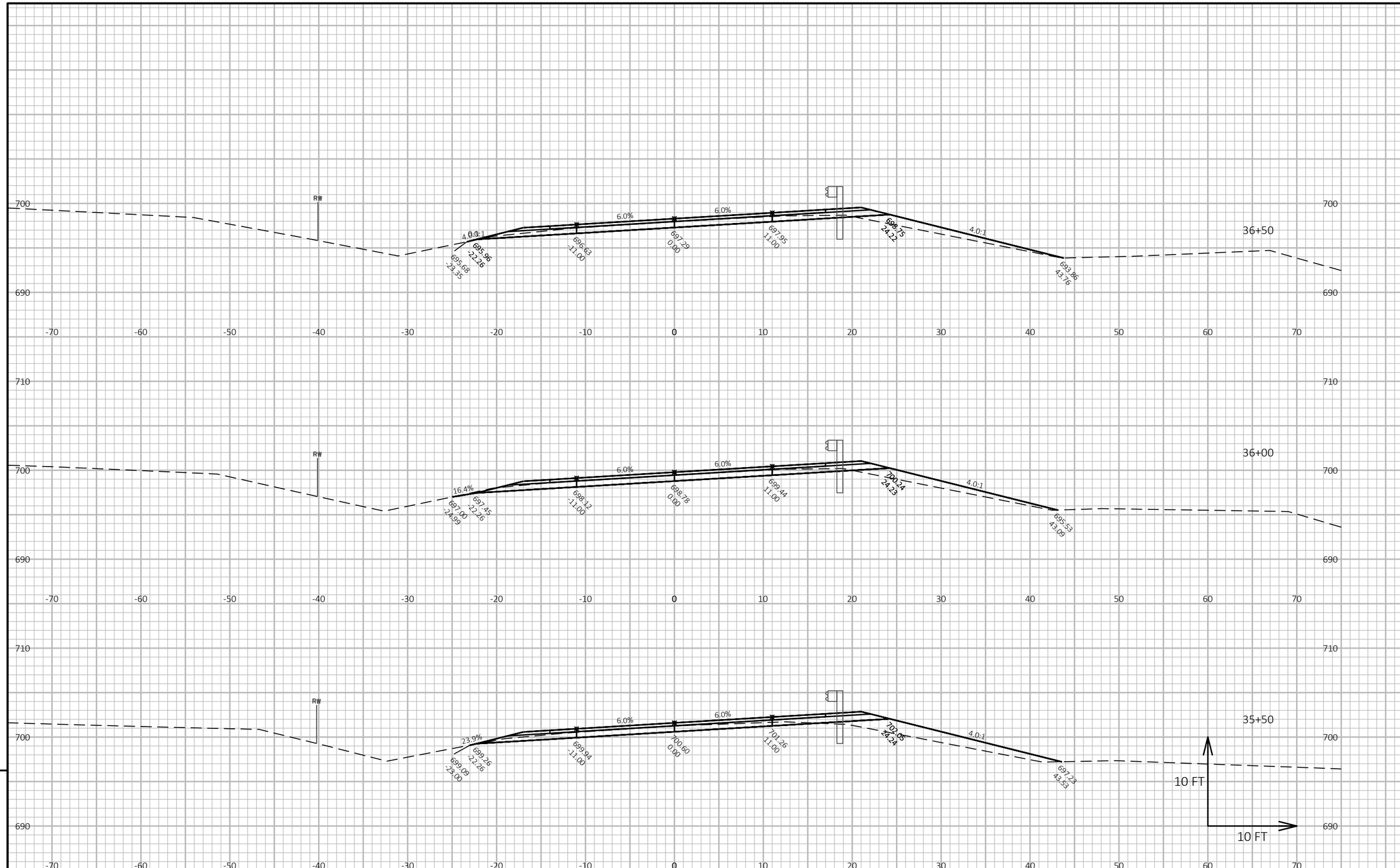

9

9

PROJECT NO: 4991-00-96	HWY: CTH CL	COUNTY: MANITOWOC	CROSS SECTIONS: CTH CL	SHEET 114	E

FILE NAME : V:\TRANS-GB\450432 CTH CL\C3D\SHEETSPLAN\090201 XS.DWG
LAYOUT NAME - CTH CL - (13)
PLOT DATE : 7/23/2019 11:30 AM
PLOT BY : SCHAITEL, RYAN
PLOT NAME :
PLOT SCALE : 1 IN:10 FT HORZ. / 1 IN:10 FT VERT.

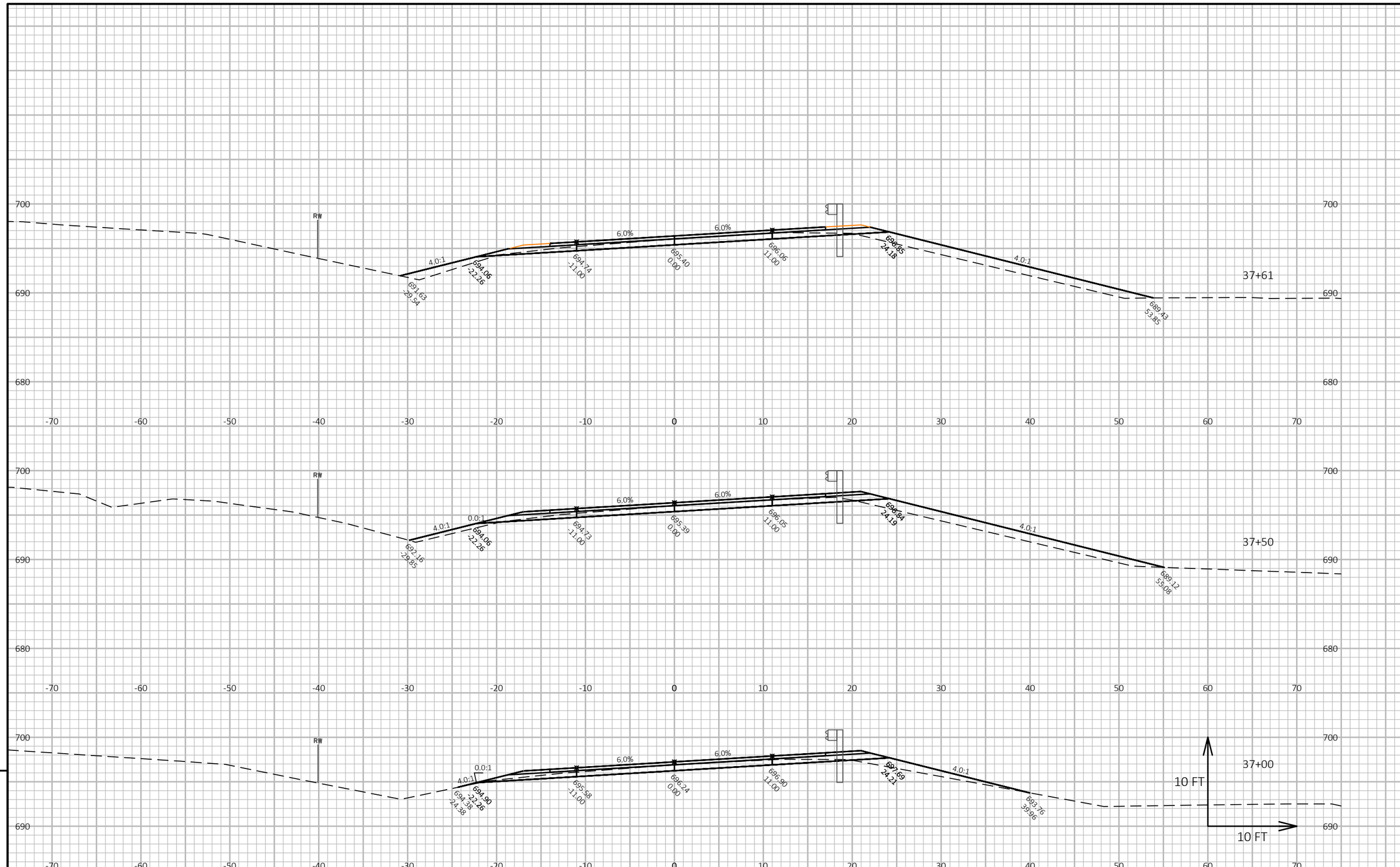

9

9

PROJECT NO: 4991-00-96	HWY: CTH CL	COUNTY: MANITOWOC	CROSS SECTIONS: CTH CL	SHEET 115	E

FILE NAME : V:\TRANS-GB\450432 CTH CL\C3D\SHEETSPLAN\090201 XS.DWG
LAYOUT NAME - CTH CL - (14)
PLOT DATE : 7/23/2019 11:30 AM
PLOT BY : SCHAITEL, RYAN
PLOT NAME :
PLOT SCALE : 1 IN:10 FT HORZ. / 1 IN:10 FT VERT.

WISDOT/CADDS SHEET 49

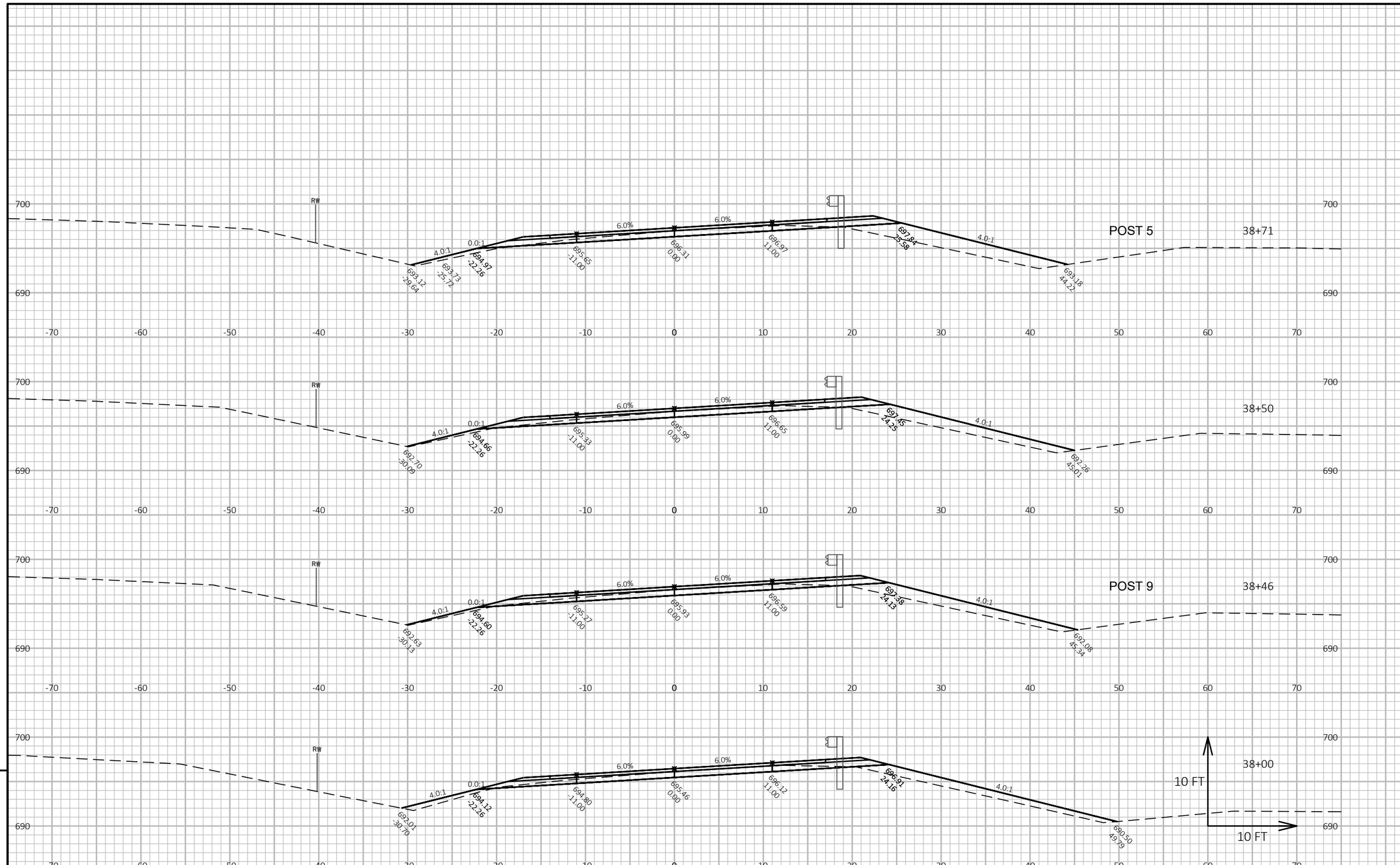

PROJECT NO: 4991-00-96	HWY: CTH CL	COUNTY: MANITOWOC	CROSS SECTIONS: CTH CL	SHEET 116	E

FILE NAME : V:\TRANS-GB\450432 CTH CL\C3D\SHEETSPLAN\090201 XS.DWG
LAYOUT NAME - CTH CL - (15)
PLOT DATE : 7/23/2019 11:30 AM
PLOT BY : SCHAITEL, RYAN
PLOT NAME :
PLOT SCALE : 1 IN:10 FT HORZ. / 1 IN:10 FT VERT.

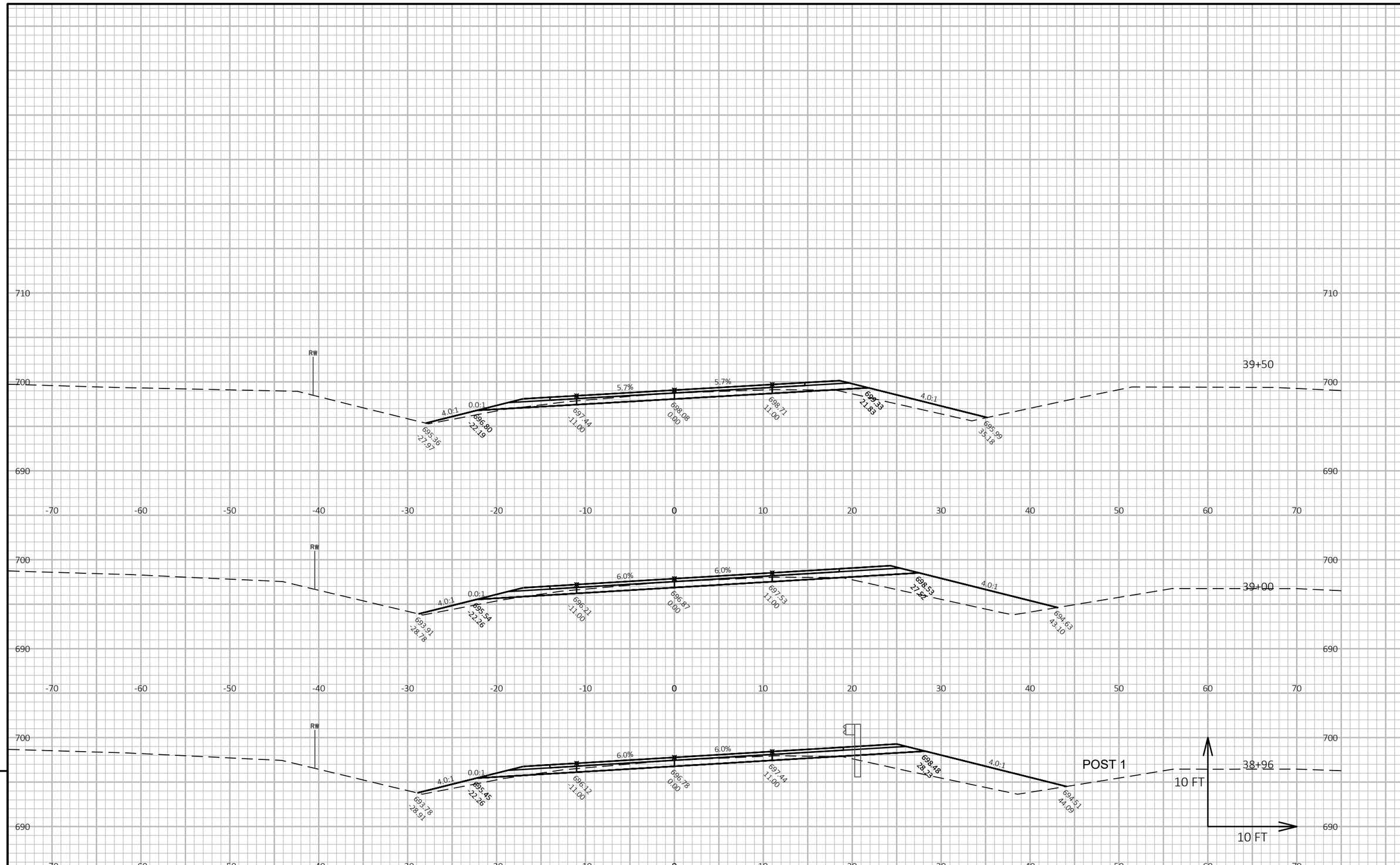

9

9

PROJECT NO: 4991-00-96	HWY: CTH CL	COUNTY: MANITOWOC	CROSS SECTIONS: CTH CL	SHEET 117	E

FILE NAME : V:\TRANS-GB\450432 CTH CL\C3D\SHEETSPLAN\090201 XS.DWG
LAYOUT NAME - CTH CL - (16)
PLOT DATE : 7/23/2019 11:30 AM
PLOT BY : SCHAITEL, RYAN
PLOT NAME :
PLOT SCALE : 1 IN:10 FT HORZ. / 1 IN:10 FT VERT.

WISDOT/CADDS SHEET 49

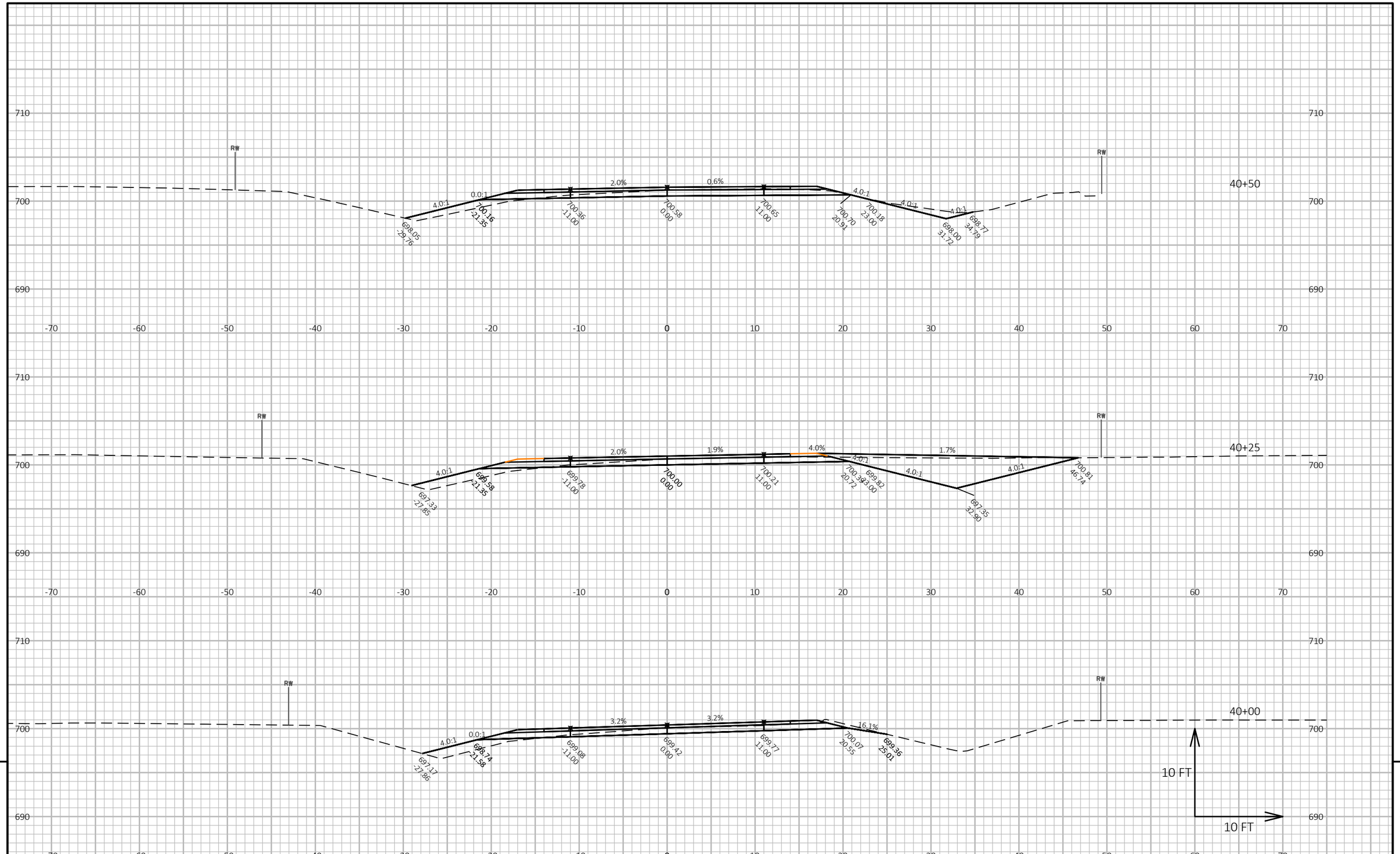

9

9

PROJECT NO: 4991-00-96	HWY: CTH CL	COUNTY: MANITOWOC	CROSS SECTIONS: CTH CL	SHEET 118	E

FILE NAME : V:\TRANS-GB\450432 CTH CL\C3D\SHEETSPLAN\090201 XS.DWG
LAYOUT NAME - CTH CL - (17)
PLOT DATE : 7/23/2019 11:30 AM
PLOT BY : SCHAITEL, RYAN
PLOT NAME :
PLOT SCALE : 1 IN:10 FT HORZ. / 1 IN:10 FT VERT.
WISDOT/CADDS SHEET 49

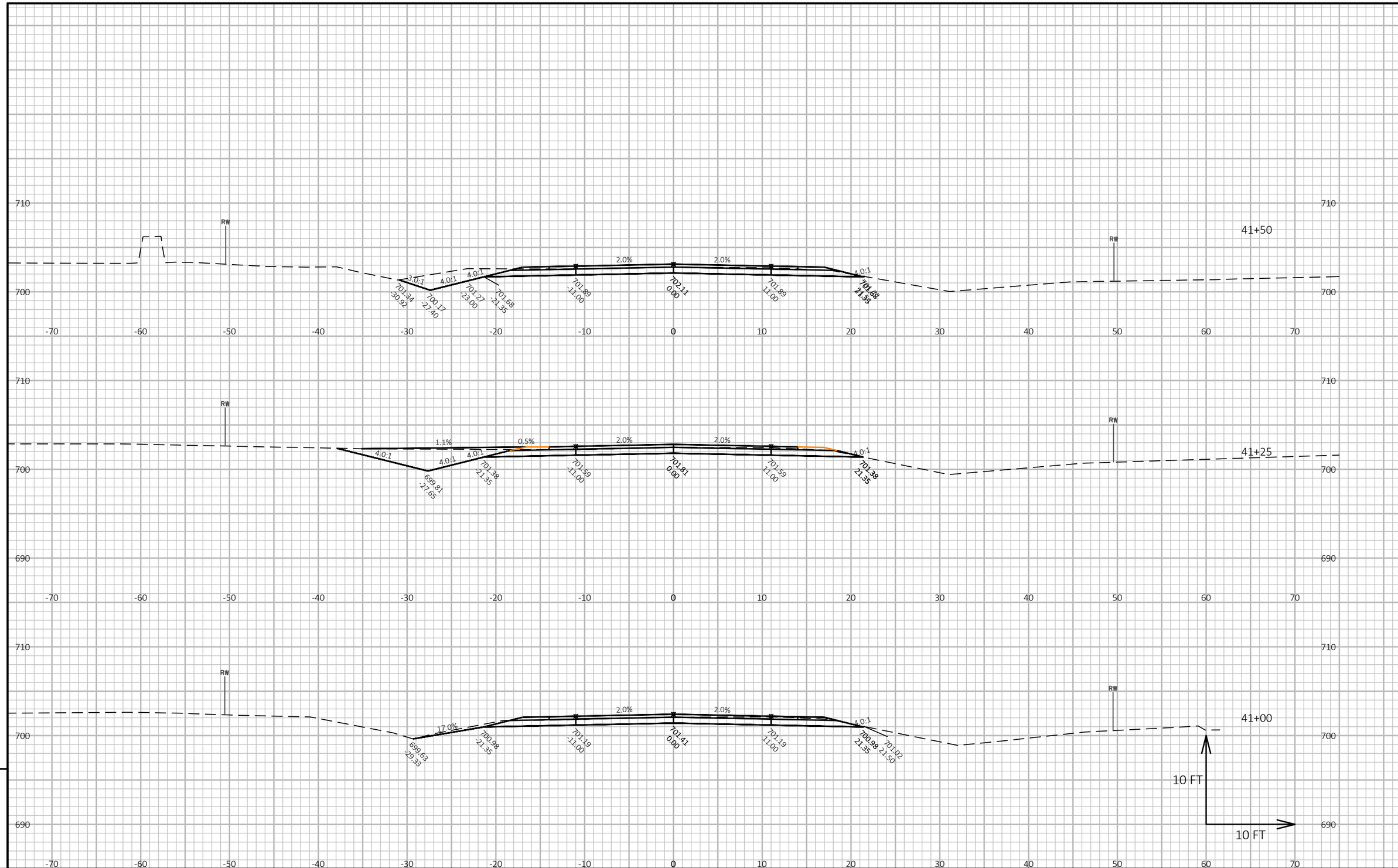

9

9

PROJECT NO: 4991-00-96	HWY: CTH CL	COUNTY: MANITOWOC	CROSS SECTIONS: CTH CL	SHEET 119	E

FILE NAME : V:\TRANS-GB\450432 CTH CL\C3D\SHEETSPLAN\090201 XS.DWG
LAYOUT NAME - CTH CL - (18)
PLOT DATE : 7/23/2019 11:31 AM
PLOT BY : SCHAITEL, RYAN
PLOT NAME :
PLOT SCALE : 1 IN:10 FT HORZ. / 1 IN:10 FT VERT.

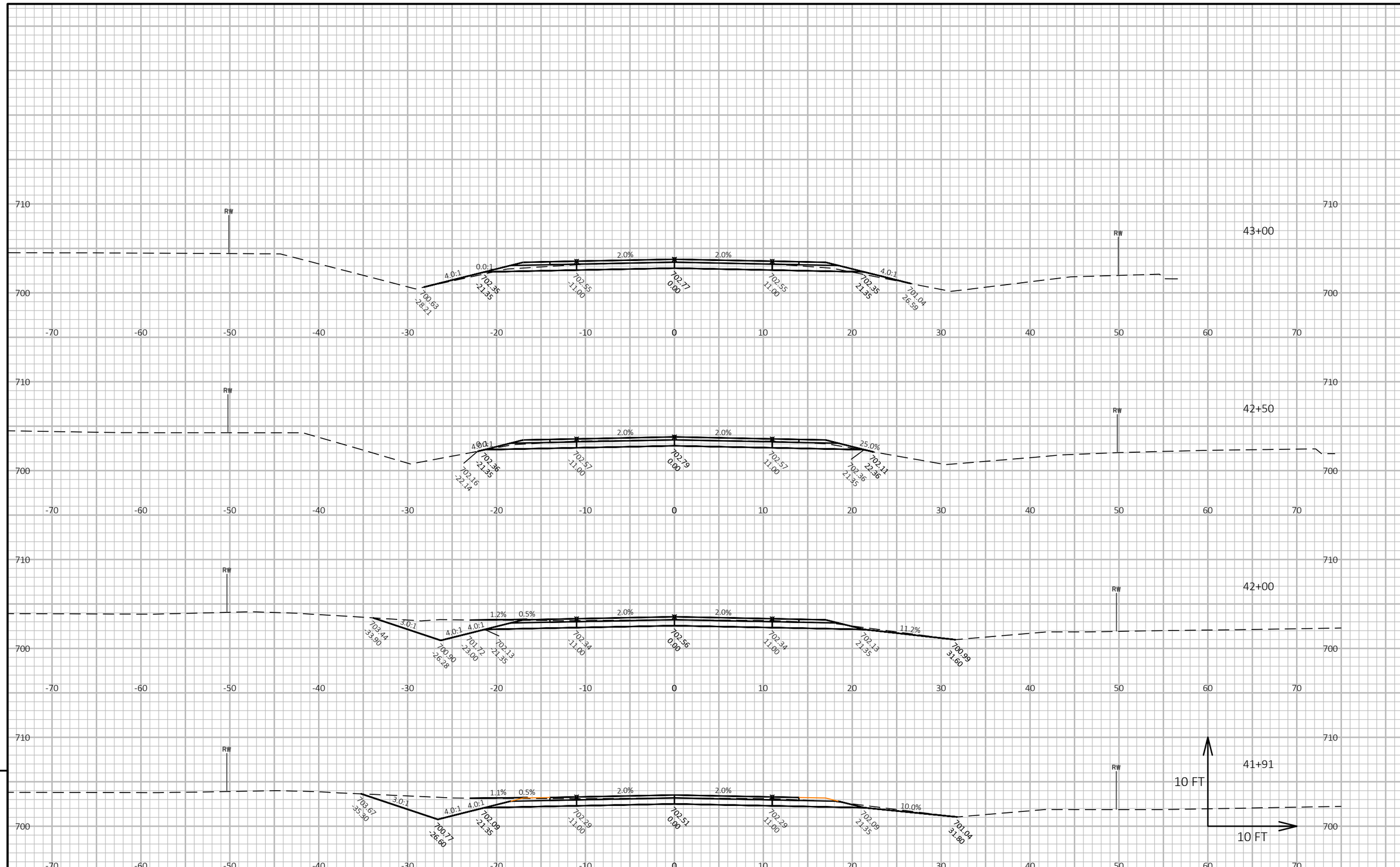

9

9

PROJECT NO: 4991-00-96	HWY: CTH CL	COUNTY: MANITOWOC	CROSS SECTIONS: CTH CL	SHEET 120	E

FILE NAME : V:\TRANS-GB\450432 CTH CL\C3D\SHEETSPLAN\090201 XS.DWG
LAYOUT NAME - CTH CL - (19)

PLOT DATE : 7/23/2019 11:31 AM PLOT BY : SCHAITEL, RYAN PLOT NAME : PLOT SCALE : 1 IN:10 FT HORZ. / 1 IN:10 FT VERT.

WISDOT/CADDS SHEET 49

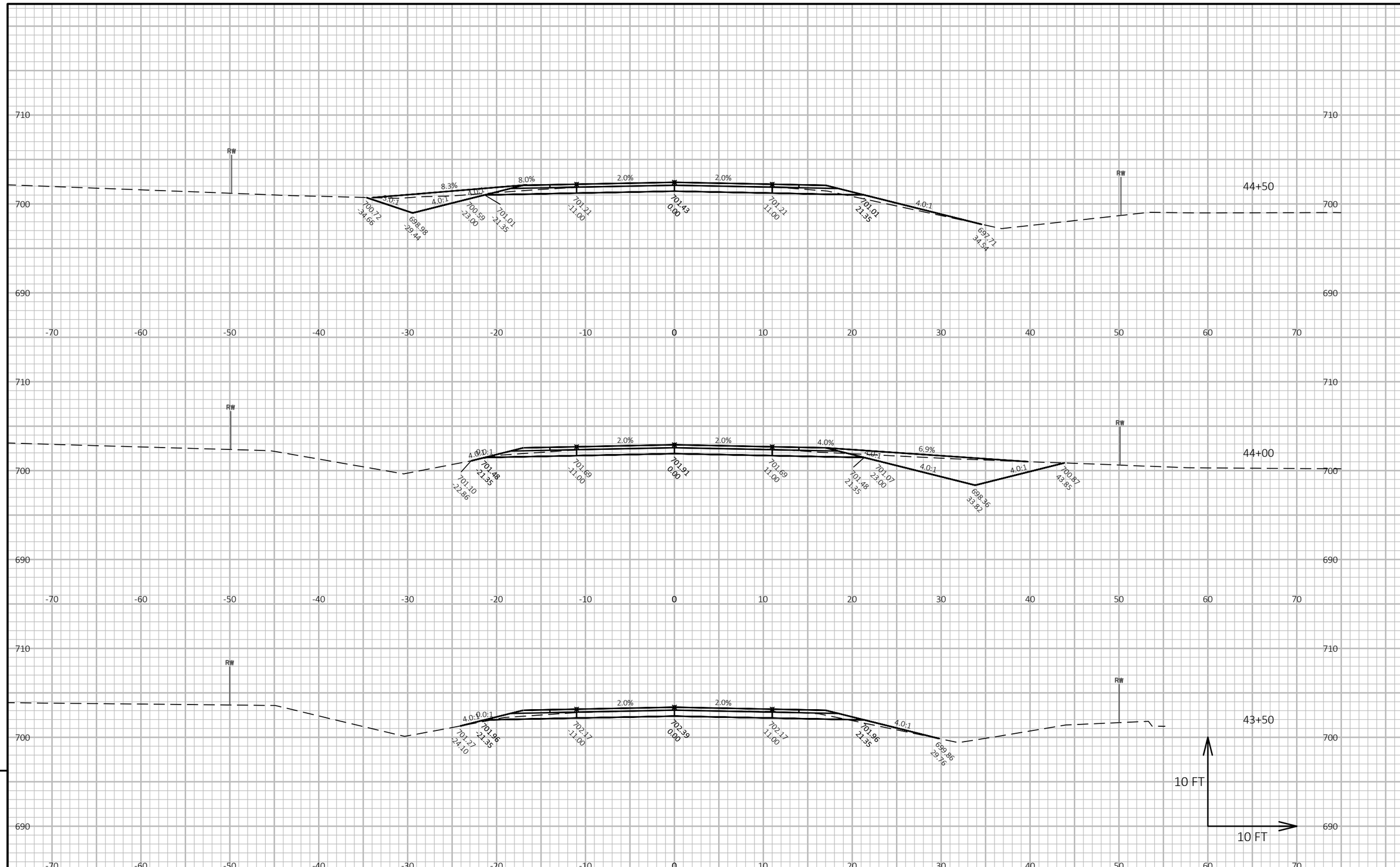

9

9

PROJECT NO: 4991-00-96	HWY: CTH CL	COUNTY: MANITOWOC	CROSS SECTIONS: CTH CL	SHEET 121	E

FILE NAME : V:\TRANS-GB\450432 CTH CL\C3D\SHEETSPLAN\090201 XS.DWG
LAYOUT NAME - CTH CL - (20)
PLOT DATE : 7/23/2019 11:31 AM
PLOT BY : SCHAITEL, RYAN
PLOT NAME :
PLOT SCALE : 1 IN:10 FT HORZ. / 1 IN:10 FT VERT.
WISDOT/CADDS SHEET 49

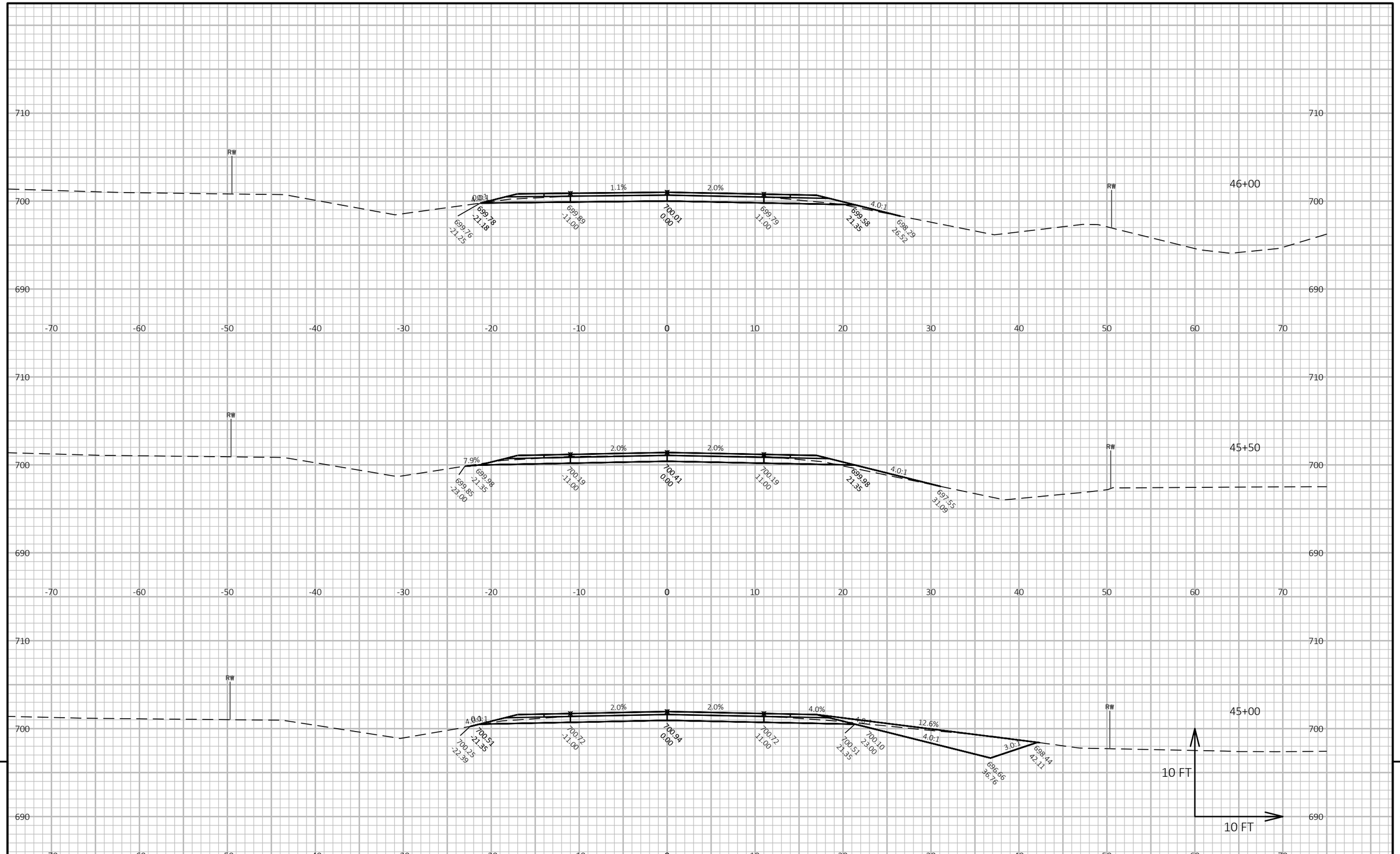

9

9

PROJECT NO: 4991-00-96	HWY: CTH CL	COUNTY: MANITOWOC	CROSS SECTIONS: CTH CL	SHEET 122	E

FILE NAME : V:\TRANS-GB\450432 CTH CL\C3D\SHEETSPLAN\090201 XS.DWG
LAYOUT NAME - CTH CL - (21)
PLOT DATE : 7/23/2019 11:31 AM
PLOT BY : SCHAITEL, RYAN
PLOT NAME :
PLOT SCALE : 1 IN:10 FT HORZ. / 1 IN:10 FT VERT.

WISDOT/CADDS SHEET 49

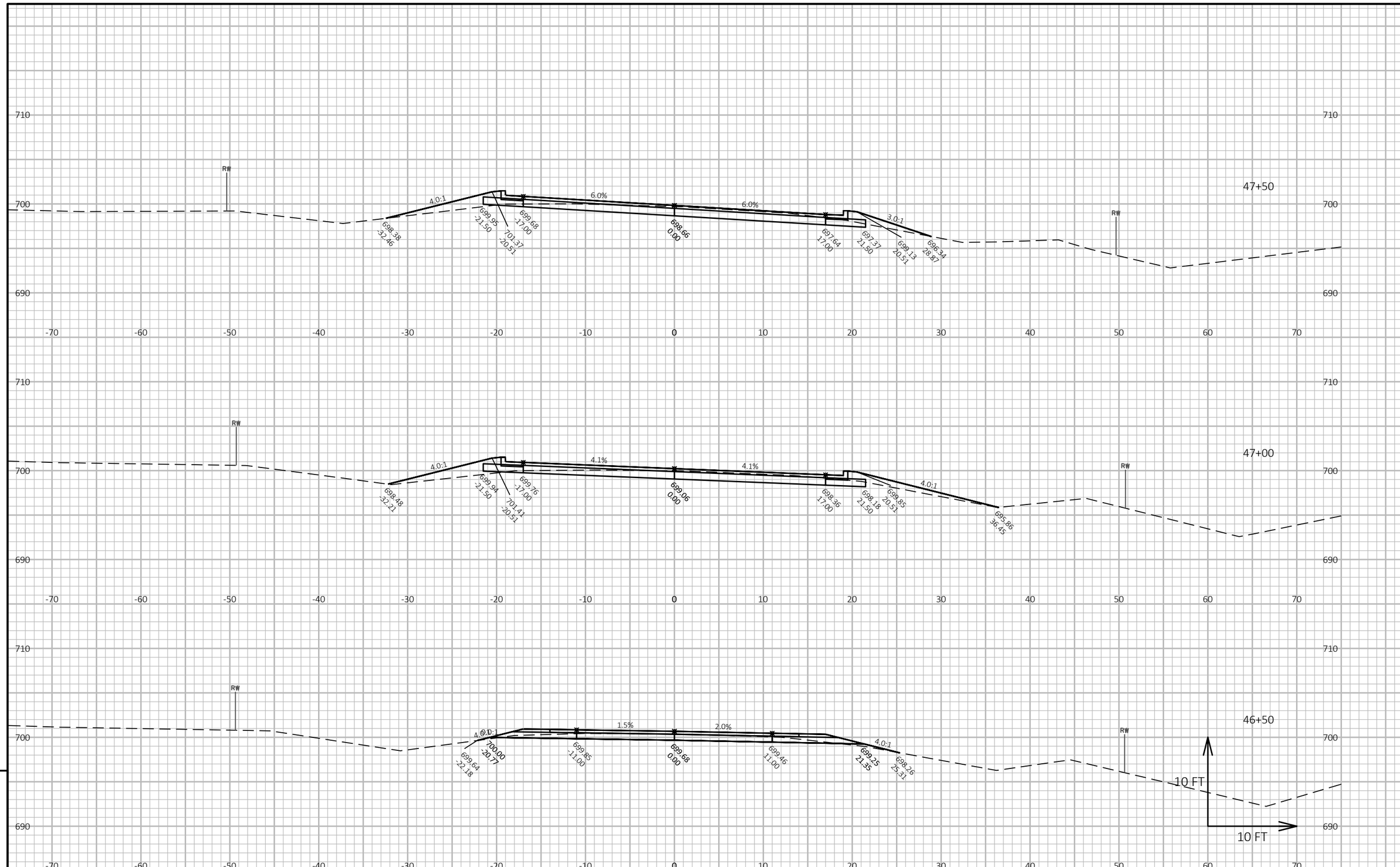

9

9

PROJECT NO: 4991-00-96	HWY: CTH CL	COUNTY: MANITOWOC	CROSS SECTIONS: CTH CL	SHEET 123	E

FILE NAME : V:\TRANS-GB\450432 CTH CL\C3D\SHEETSPLAN\090201 XS.DWG
LAYOUT NAME - CTH CL - (22)

PLOT DATE : 7/23/2019 11:31 AM PLOT BY : SCHAITEL, RYAN PLOT NAME : PLOT SCALE : 1 IN:10 FT HORZ. / 1 IN:10 FT VERT.

WISDOT/CADDS SHEET 49

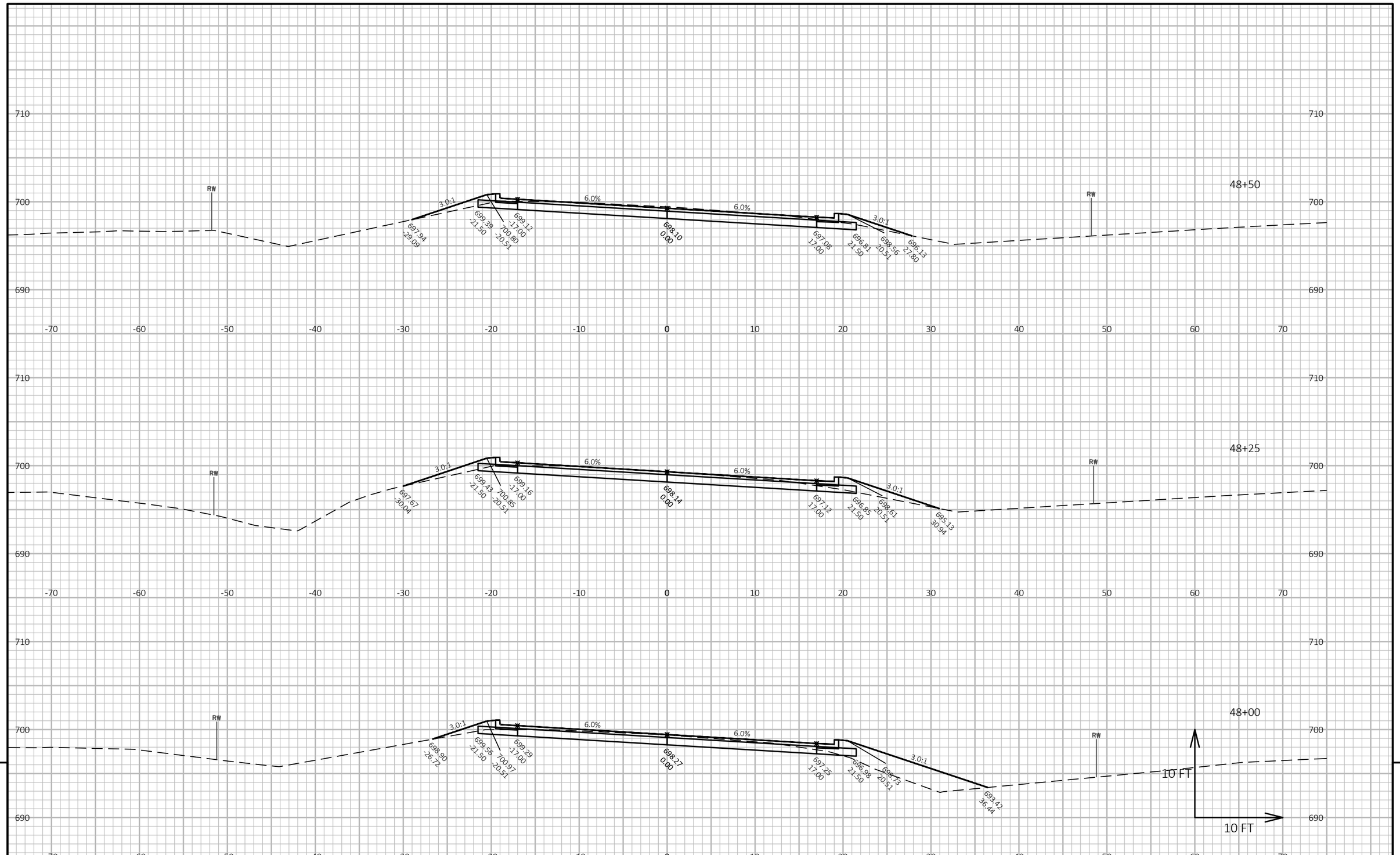

9

9

PROJECT NO: 4991-00-96	HWY: CTH CL	COUNTY: MANITOWOC	CROSS SECTIONS: CTH CL	SHEET 124	E

FILE NAME : V:\TRANS-GB\450432 CTH CL\C3D\SHEETSPLAN\090201 XS.DWG
LAYOUT NAME - CTH CL - (23)

PLOT DATE : 7/23/2019 11:31 AM PLOT BY : SCHAITEL, RYAN PLOT NAME : PLOT SCALE : 1 IN:10 FT HORZ. / 1 IN:10 FT VERT.

WISDOT/CADDS SHEET 49

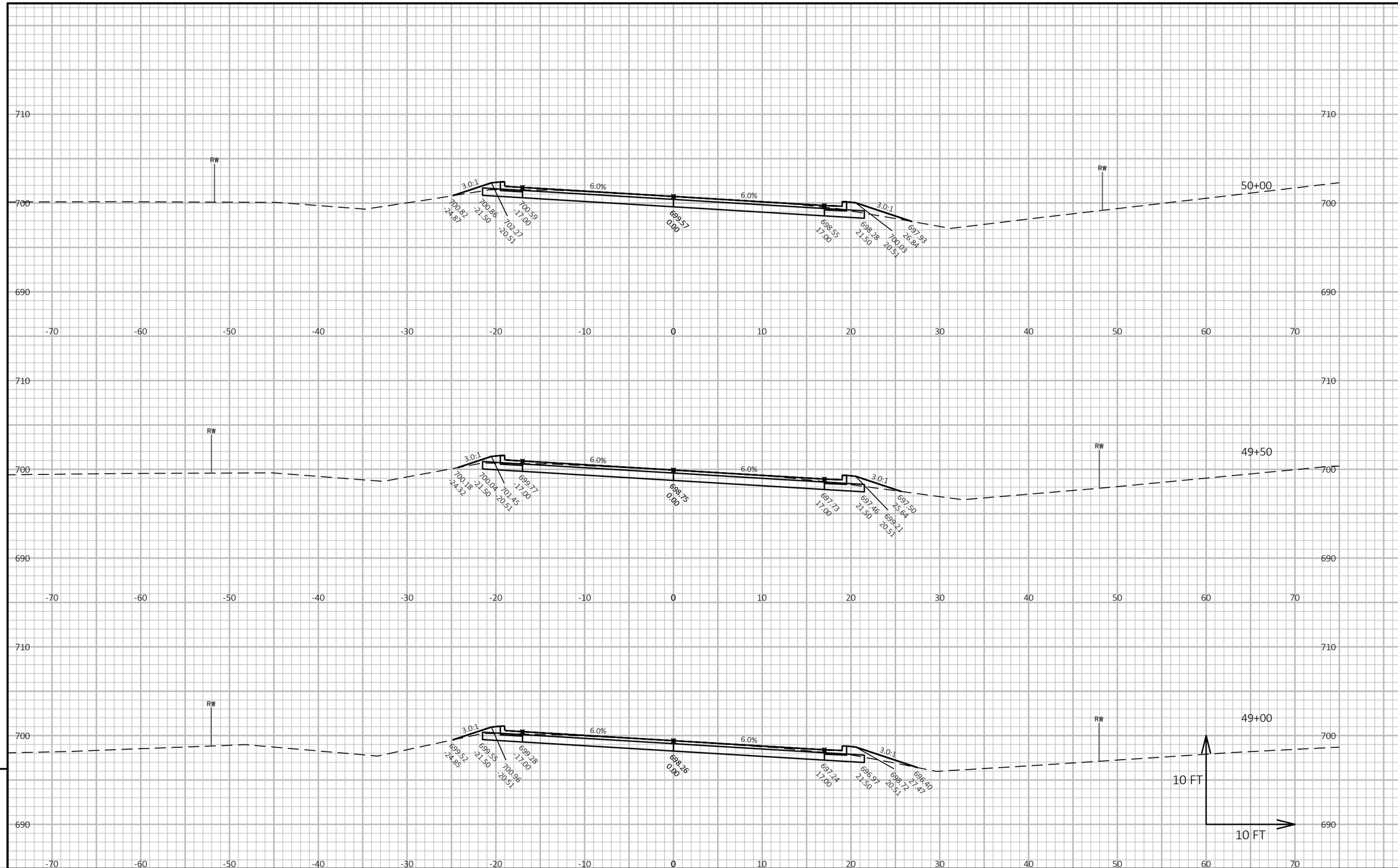

9

9

PROJECT NO: 4991-00-96	HWY: CTH CL	COUNTY: MANITOWOC	CROSS SECTIONS: CROSS SECTIONS	SHEET 125	E

FILE NAME : V:\TRANS-GB\450432 CTH CL\C3D\SHEETSPLAN\090201 XS.DWG
LAYOUT NAME - CTH CL - (24)
PLOT DATE : 7/23/2019 11:31 AM
PLOT BY : SCHAITEL, RYAN
PLOT NAME :
PLOT SCALE : 1 IN:10 FT HORZ. / 1 IN:10 FT VERT.

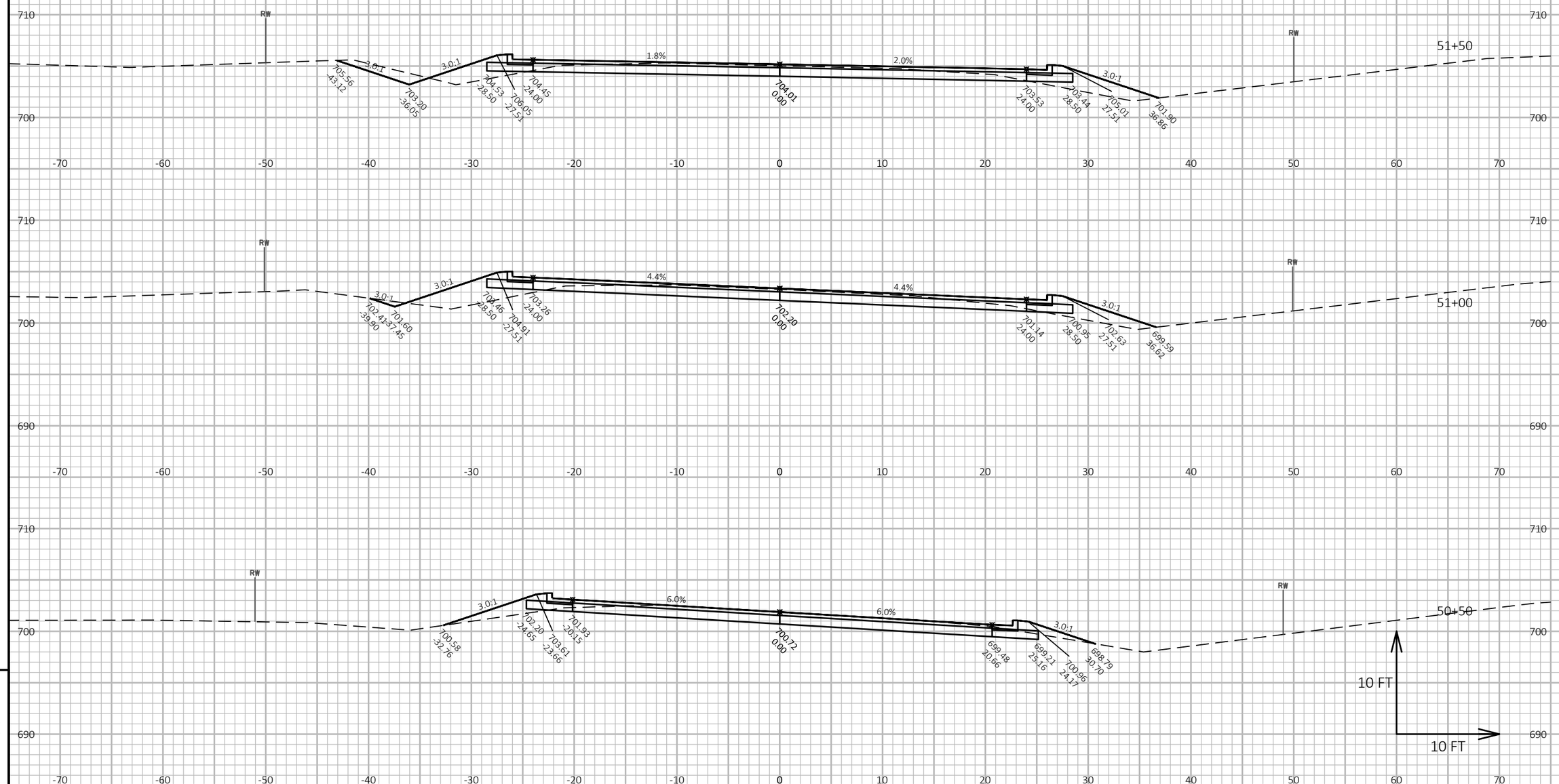

9

9

PROJECT NO: 4991-00-96	HWY: CTH CL	COUNTY: MANITOWOC	CROSS SECTIONS: CROSS SECTIONS	SHEET 126	E

FILE NAME : V:\TRANS-GB\450432 CTH CL\C3D\SHEETSPLAN\090201 XS.DWG
LAYOUT NAME - CTH CL - (25)
PLOT DATE : 7/23/2019 11:31 AM
PLOT BY : SCHAITEL, RYAN
PLOT NAME :
PLOT SCALE : 1 IN:10 FT HORZ. / 1 IN:10 FT VERT.
WISDOT/CADDS SHEET 49

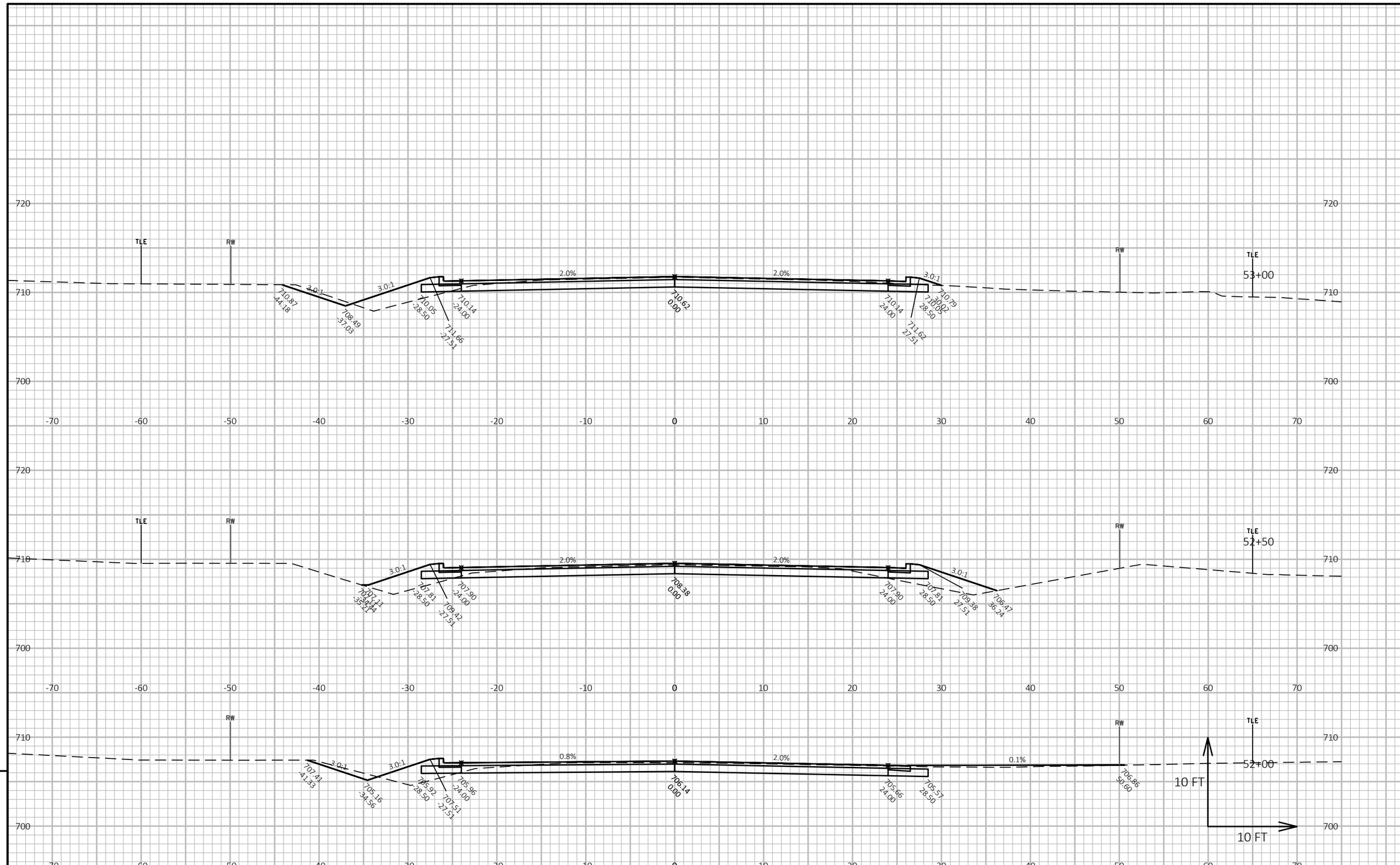

PROJECT NO: 4991-00-96	HWY: CTH CL	COUNTY: MANITOWOC	CROSS SECTIONS: CROSS SECTIONS	SHEET 127	E

FILE NAME : V:\TRANS-GB\450432 CTH CL\C3D\SHEETSPLAN\090201 XS.DWG
LAYOUT NAME - CTH CL - (26)
PLOT DATE : 7/23/2019 11:31 AM
PLOT BY : SCHAITEL, RYAN
PLOT NAME :
PLOT SCALE : 1 IN:10 FT HORZ. / 1 IN:10 FT VERT.

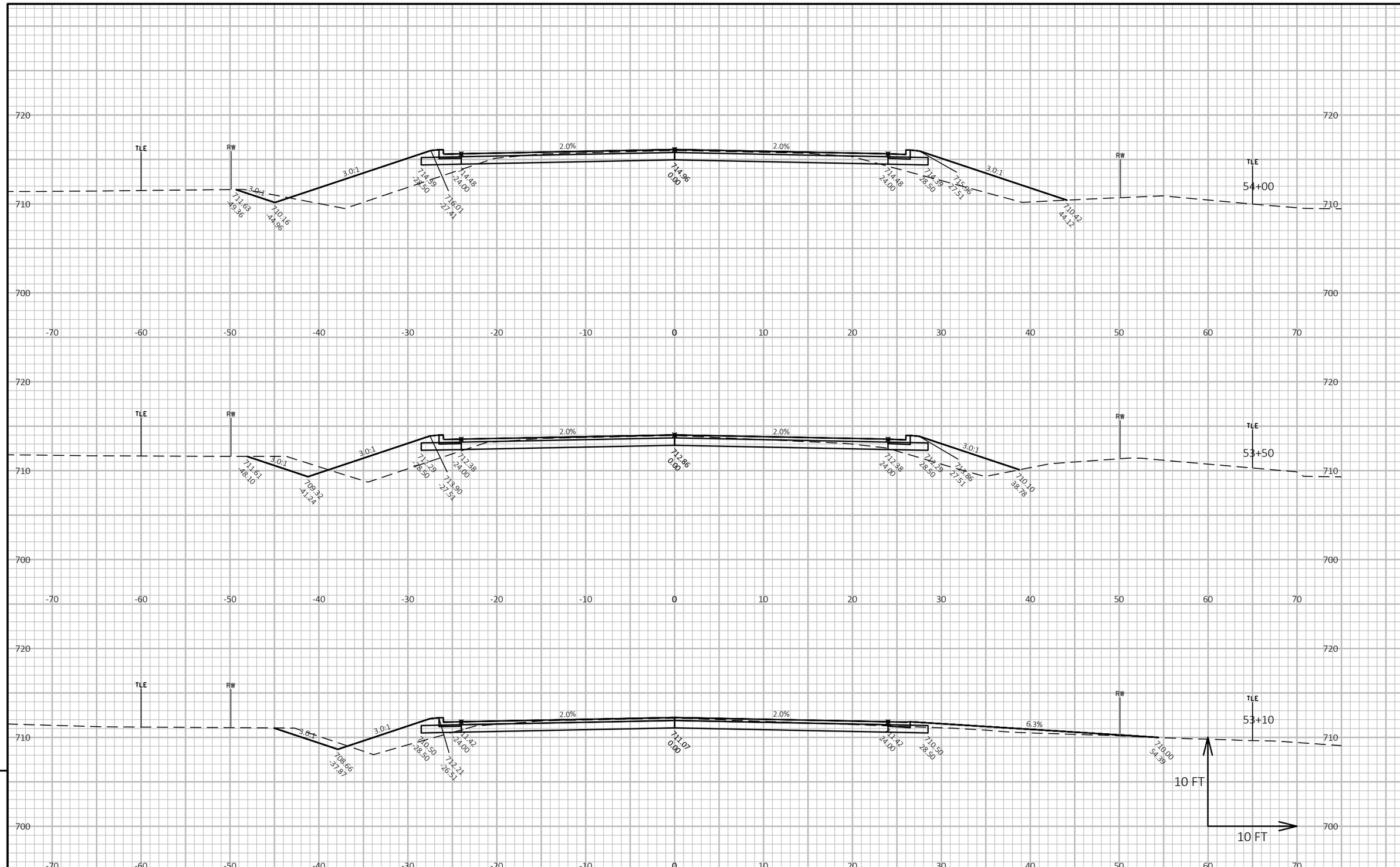

PROJECT NO: 4991-00-96	HWY: CTH CL	COUNTY: MANITOWOC	CROSS SECTIONS: CROSS SECTIONS	SHEET 128	E

FILE NAME : V:\TRANS-GB\450432 CTH CL\C3D\SHEETSPLAN\090201 XS.DWG
LAYOUT NAME - CTH CL - (27)
PLOT DATE : 7/23/2019 11:31 AM
PLOT BY : SCHAITEL, RYAN
PLOT NAME :
PLOT SCALE : 1 IN:10 FT HORZ. / 1 IN:10 FT VERT.
WISDOT/CADDS SHEET 49

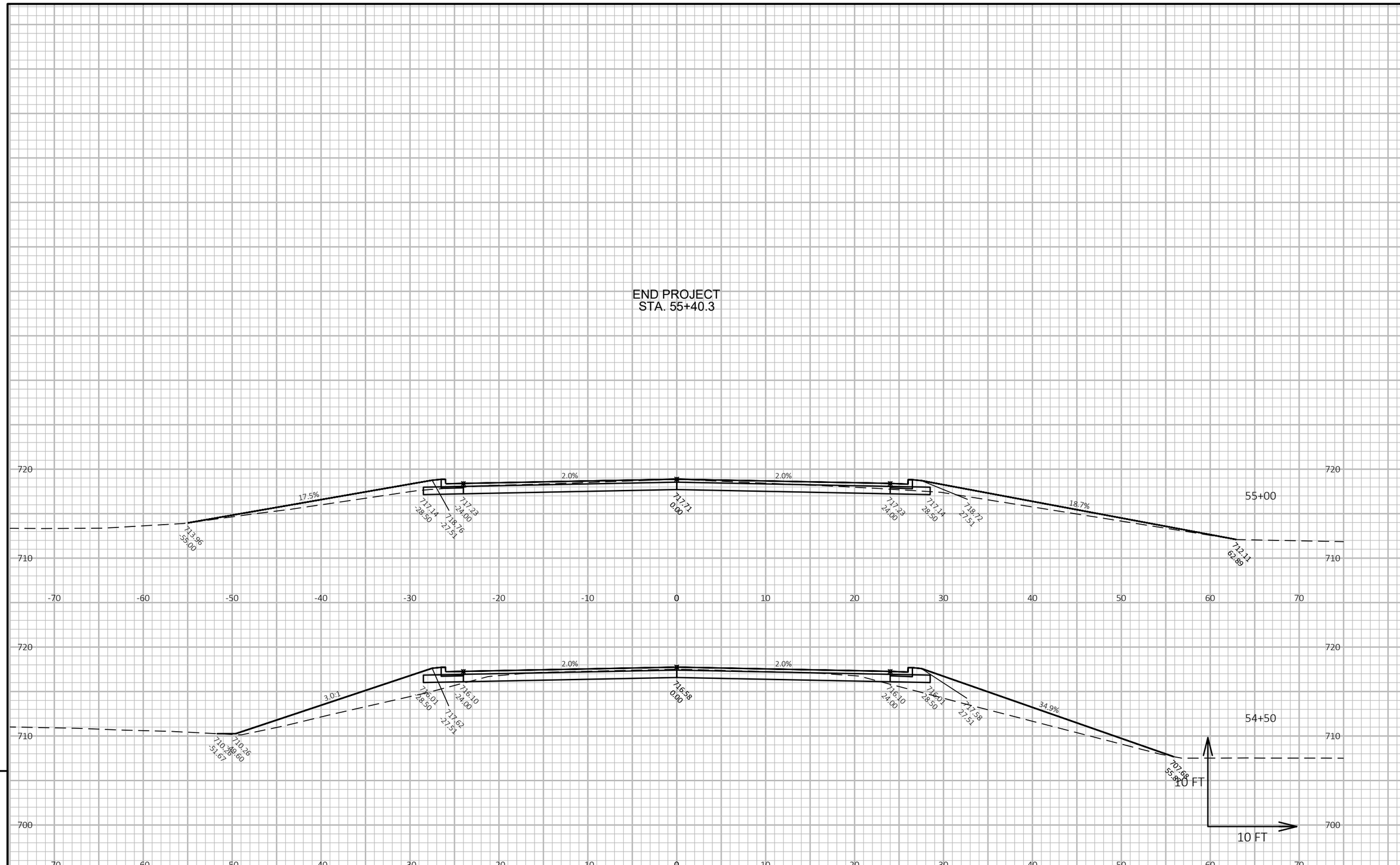

9

9

PROJECT NO: 4991-00-96	HWY: CTH CL	COUNTY: MANITOWOC	CROSS SECTIONS: CROSS SECTIONS	SHEET 129	E

FILE NAME : V:\TRANS-GB\450432 CTH CL\C3D\SHEETSPLAN\090201 XS.DWG
LAYOUT NAME - CTH CL - (28)
PLOT DATE : 7/23/2019 11:32 AM
PLOT BY : SCHAITEL, RYAN
PLOT NAME :
PLOT SCALE : 1 IN:10 FT HORZ. / 1 IN:10 FT VERT.

Wisconsin Department of Transportation

Dedicated people creating transportation solutions through innovation and exceptional service.

http://www.dot.wisconsin.gov