EAU

PROJECT ID: 7130-00-71, 7130-00-78

WITH: N/A

COUNTY: TREMPEALEAU

NOVEMBER 2019

ORDER OF SHEETS

Section No.	1	Title
Section No.	2	Typical Sections and Details (Includes Erosion Control)
Section No.	3	Estimate of Quantities
Section No.	3	Miscellaneous Quantities
~~Section No.~~	~~4~~	~~Right of Way Plat~~
Section No.	5	Plan and Profile
Section No.	6	Standard Detail Drawings
Section No.	7	Sign Plates
~~Section No.~~	~~8~~	~~Structure Plans~~
~~Section No.~~	~~9~~	~~Computer Earthwork Data~~
Section No.	9	Cross Sections

TOTAL SHEETS = 96

STATE OF WISCONSIN
DEPARTMENT OF TRANSPORTATION

PLAN OF PROPOSED IMPROVEMENT

CENTERVILLE - INDEPENDENCE

SWENSON LN TO BLASCHKO AVE

STH 93

TREMPEALEAU COUNTY

STATE PROJECT	FEDERAL PROJECT	
	PROJECT	CONTRACT
7130-00-71	WISC 2019696	1
7130-00-78	WISC 2019697	1

STATE PROJECT NUMBER	STATE PROJECT NUMBER
7130-00-71	7130-00-78

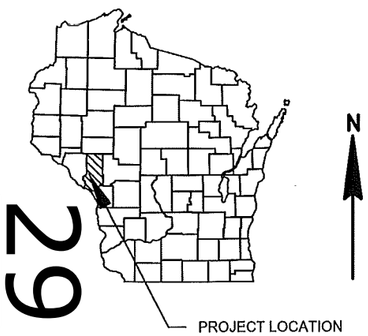

END PROJECT 7130-00-71/78
STA. 681+91
Y= 394,454.08
X= 815,019.86

BEGIN PROJECT 7130-00-71/78
STA. 424+50
Y= 370,409.43
X= 821,118.85

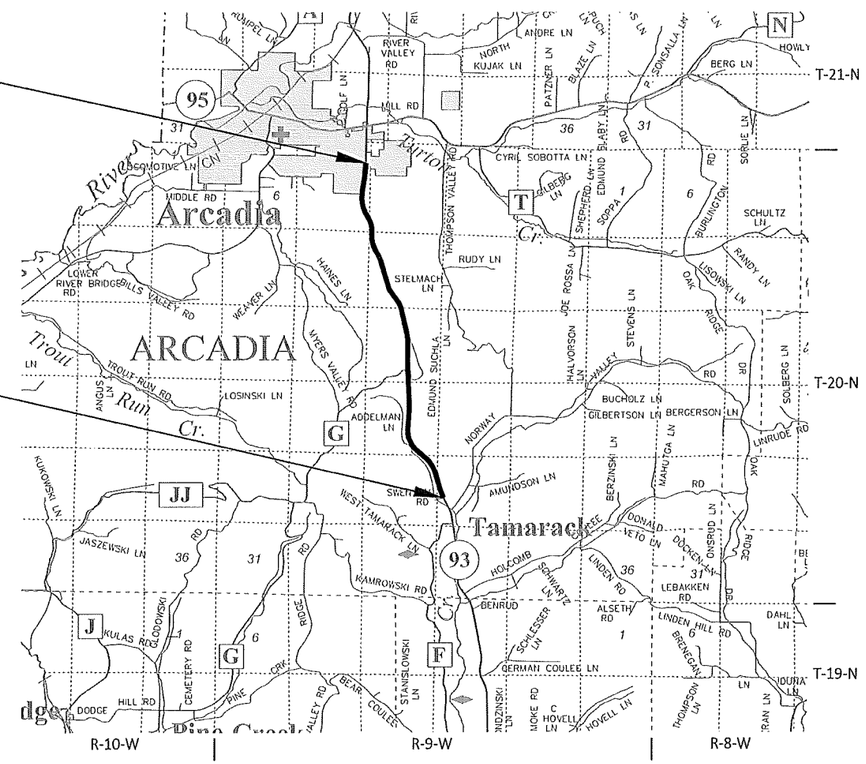

LAYOUT

SCALE 0 2 MI

TOTAL NET LENGTH OF CENTERLINE = 4.875 MI

HORIZONTAL POSITIONS SHOWN ON THIS PLAN ARE WISCONSIN COUNTY COORDINATES, TREMPEALEAU COUNTY, USGS NAD83 (2011), IN U.S. SURVEY FEET. VALUES ARE GRID COORDINATES, GRID BEARINGS, AND GRID DISTANCES. GRID DISTANCES MAY BE USED AS GROUND DISTANCES. ELEVATIONS SHOWN ON THIS PLAN ARE REFERENCED TO USGS NAVD88.

DESIGN DESIGNATION

A.A.D.T.	(2021)	=	5,200
A.A.D.T.	(2041)	=	6,500
D.H.V.		=	634
D.D.		=	60/40
T.		=	14.8%
DESIGN SPEED		=	55 MPH
ESALS		=	2,500,000

CONVENTIONAL SYMBOLS

PLAN
- CORPORATE LIMITS
- PROPERTY LINE
- LOT LINE
- LIMITED HIGHWAY EASEMENT
- EXISTING RIGHT OF WAY
- PROPOSED OR NEW R/W LINE
- SLOPE INTERCEPT
- REFERENCE LINE (300'EB')
- EXISTING CULVERT
- PROPOSED CULVERT (Box or Pipe)
- COMBUSTIBLE FLUIDS (CAUTION)
- MARSH AREA
- WOODED OR SHRUB AREA

PROFILE
- GRADE LINE
- ORIGINAL GROUND
- MARSH OR ROCK PROFILE (To be noted as such) (ROCK)
- SPECIAL DITCH (LABEL)
- GRADE ELEVATION (95.36)
- CULVERT (Profile View)

UTILITIES
- ELECTRIC (E)
- FIBER OPTIC (FO)
- GAS (G)
- SANITARY SEWER (SAN)
- STORM SEWER (SS)
- TELEPHONE (T)
- WATER (W)
- UTILITY PEDESTAL
- POWER POLE
- TELEPHONE POLE

ORIGINAL PLANS PREPARED BY

MSA
146 North Central Ave. Marshfield, WI 54449
715-384-2133 1-877-204-0572 Fax: 715-384-9787

WISCONSIN SEAN M. SPROMBERG E-37771-008 SCHOFIELD, WI PROFESSIONAL ENGINEER

DATE: 12/20/18 (Professional Engineer Signature)

STATE OF WISCONSIN
DEPARTMENT OF TRANSPORTATION

PREPARED BY

Surveyor	MSA PROFESSIONAL SERVICES, INC
Designer	MSA PROFESSIONAL SERVICES, INC
Project Manager	MATTHEW THORNSEN, PE
Regional Examiner	
Regional Supervisor	WILLIAM KURTZ, PE

APPROVED FOR THE DEPARTMENT

DATE: 12/20/18 (Signature)

E

FILE NAME : P:\90S\93\00093390\CADD\SHEETSPLAN\010101_TI.DWG PLOT DATE : 11/13/2018 3:34 PM PLOT BY : SHAWN DOLENS PLOT NAME :

GENERAL NOTES

NO TREES OR SHRUBS ARE TO BE REMOVED UNLESS SUCH TREES OR SHRUBS HAVE BEEN DESIGNATED FOR REMOVAL BY THE ENGINEER.

DISTURBED AREAS WITHIN THE RIGHT-OF-WAY, EXCEPT THE AREAS WITHIN THE FINISHED SHOULDER POINTS, SHALL BE FERTILIZED, SEEDED AND MULCHED AS DIRECTED BY ENGINEER.

THE LOCATIONS OF EXISTING AND PROPOSED UTILITY INSTALLATIONS AS SHOWN ON THE PLANS ARE APPROXIMATE. THERE ARE UTILITIES WITHIN THE PROJECT AREA THAT ARE NOT SHOWN ON THE PLANS. THE CONTRACTOR SHALL COORDINATE CONSTRUCTION ACTIVITIES WITH A CALL TO DIGGERS HOTLINE AND/OR A DIRECT CALL TO UTILITIES THAT HAVE FACILITIES IN THE AREA.

R/W APPROXIMATED ON PLAN SHEETS BASED ON AS-BUILTS.

SECTION 2 ORDER

GENERAL NOTES
PROJECT OVERVIEW
TYPICAL SECTIONS
CONSTRUCTION DETAILS
PERMANENT SIGNING AND PAVEMENT MARKING
TRAFFIC CONTROL

AS-BUILTS

PROJECT: 7132-01-72 (1995)
PROJECT: 7130-04-60 (2008)
PLAT: 7132-01-72

DNR LIAISON

DEPARTMENT OF NATURAL RESOURCES
AMY LESIK
1300 W CLAIREMONT AVENUE
EAU CLAIRE, WI, 54701
PHONE: (715) 839-6571
EMAIL: amyl.lesik@wisconsin.gov

UTILITY CONTACTS

GAS/PETROLEUM

MIDWEST NATURAL GAS, INC
MIKE MARGAN
23389 WHITEHALL RD
INDEPENDENCE, WI 54747
PHONE: (715) 985-5500 (OFFICE)
PHONE: (608) 769-5840 (MOBILE)
EMAIL: MIKEM@MIDWESTNATURALGAS.COM
24-HOUR EMERGENCY (GAS) 877-817-3119

COMMUNICATIONS

CENTURYLINK INC.
BRIAN STELPLUGH
333 N FRONT ST
LA CROSSE, WI, 54601
PHONE: (608) 796-5142 (OFFICE)
PHONE: (608) 780-1238
EMAIL: BRIAN.STELPLUGH@CENTURYLINK.COM
24-HOUR EMERGENCY REPAIR 800-824-2877

TRI-COUNTY COMMUNICATIONS COOPERATIVE
BRIAN MELSNESS
23451 WHITEHALL RD
PO BOX 727
INDEPENDENCE WI 54747-0727
PHONE: (715) 695-2691 (OFFICE)
PHONE: (715) 530-0081 (MOBILE)
EMAIL: BMELSNESS@TCC.COOP

ELECTRIC

ARCADIA ELECTRIC & WATER UTILITY
TIM PUTZ
203 WEST MAIN ST.
ARCADIA, WI, 54612
PHONE: 608-323-7347
EMAIL: electricsupp@cityofarcadiawi.com

RIVERLAND ENERGY COOPERATIVE
TIM HOLTAN
N28988 STATE ROAD 93
ARCADIA, WI, 54612
PHONE: (608) 323-3381
EMAIL: tholtan@riverlandenergy.com

2

* - NOT A MEMBER OF DIGGERS HOTLINE

DIGGERS HOTLINE
Dial 811 or (800)242-8511
www.DiggersHotline.com

EROSION CONTROL NOTES

RUNOFF COEFFICIENTS FOR THIS PROJECT: EXISTING SIDE SLOPES 0.30, PROPOSED SIDE SLOPES 0.30, EXISTING PAVEMENT 0.95, PROPOSED PAVEMENT 0.95.

TOTAL PROJECT AREA - 29.01 ACRES
TOTAL AREA EXPECTED TO BE DISTURBED BY CONSTRUCTION ACTIVITIES - 26.37 ACRES

PROJECT NO: 7130-00-71/78	HWY: STH 93	COUNTY: TREMPEALEAU	PROJECT OVERVIEW	SHEET 3	E

FILE NAME : P:\90S\93\00093390\CADD\SHEETSPLAN\020201_PO.DWG
LAYOUT NAME - 020201_po
PLOT DATE : 11/13/2018 3:27 PM PLOT BY : SHAWN DOLENS PLOT NAME : PLOT SCALE : 1 IN:1000 FT

WISDOT/CADDS SHEET 42

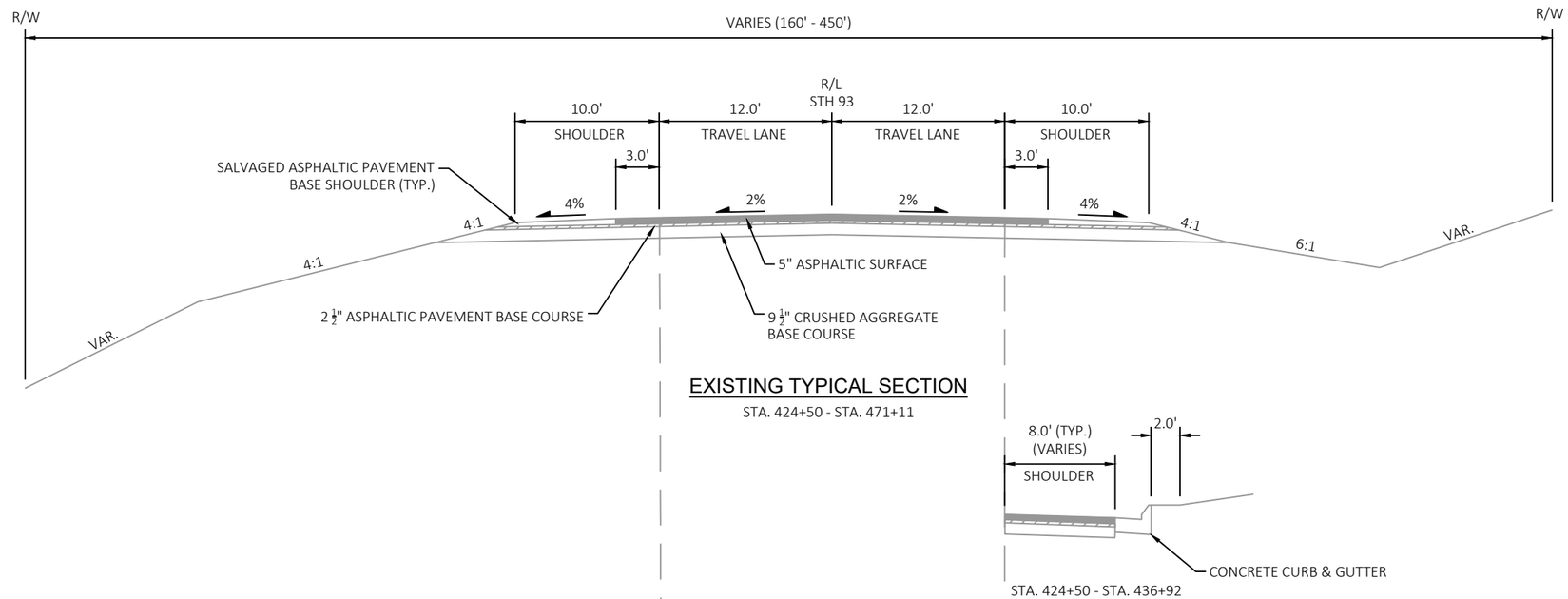

EXISTING TYPICAL SECTION

STA. 424+50 - STA. 471+11

STA. 424+50 - STA. 436+92

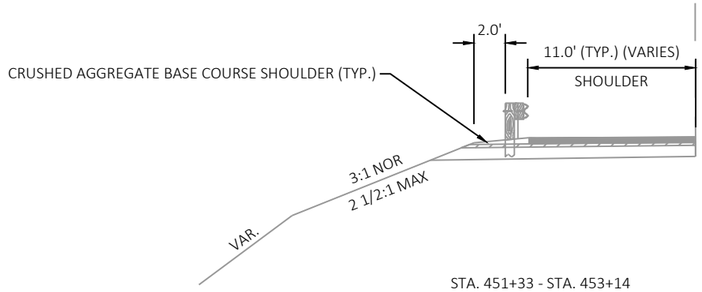

STA. 451+33 - STA. 453+14

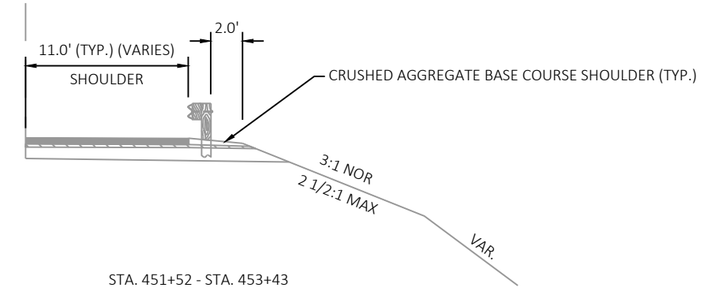

STA. 451+52 - STA. 453+43
STA. 463+84 - STA. 465+39

NOTE
EXISTING TYPICAL SECTIONS BASED
ON 7130-04-60 AS-BUILT PLANS

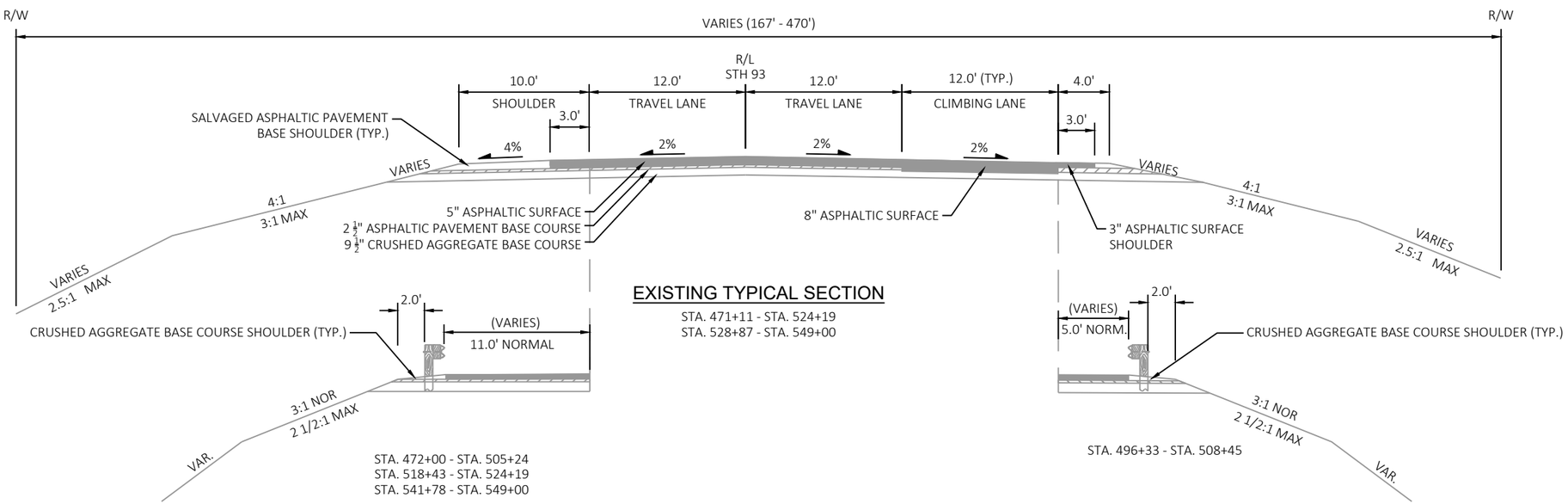

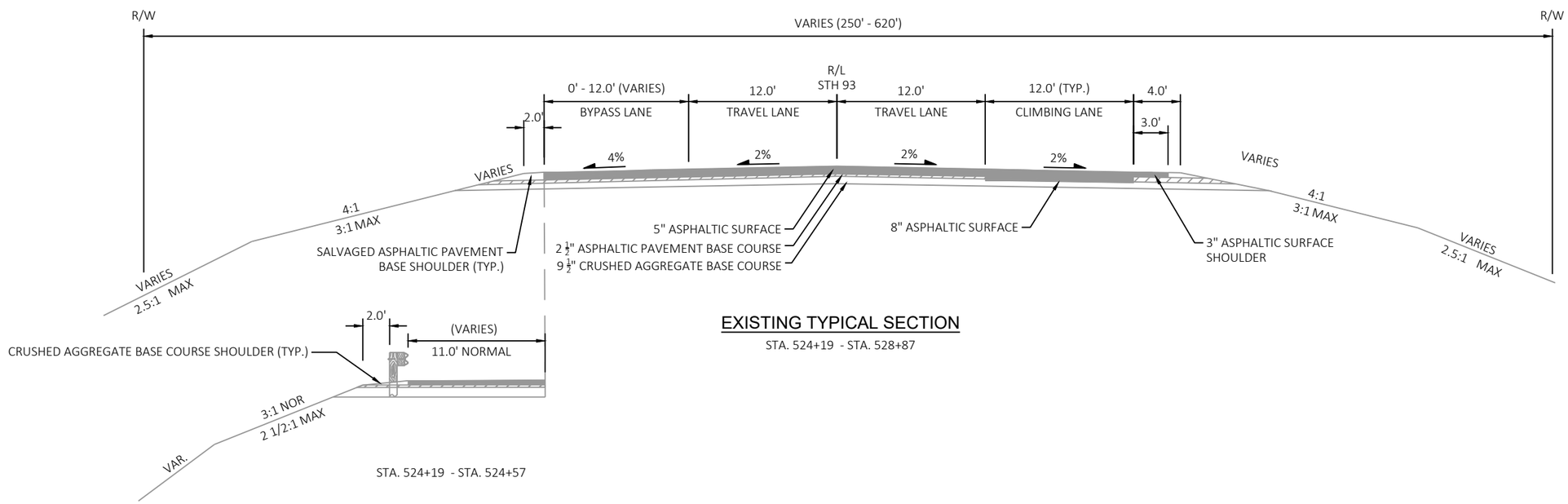

NOTE
EXISTING TYPICAL SECTIONS BASED
ON 7130-04-60 AS-BUILT PLANS

PROJECT NO: 7130-00-71/78	HWY: STH 93	COUNTY: TREMPEALEAU	EXISTING TYPICAL SECTIONS	SHEET 5	E

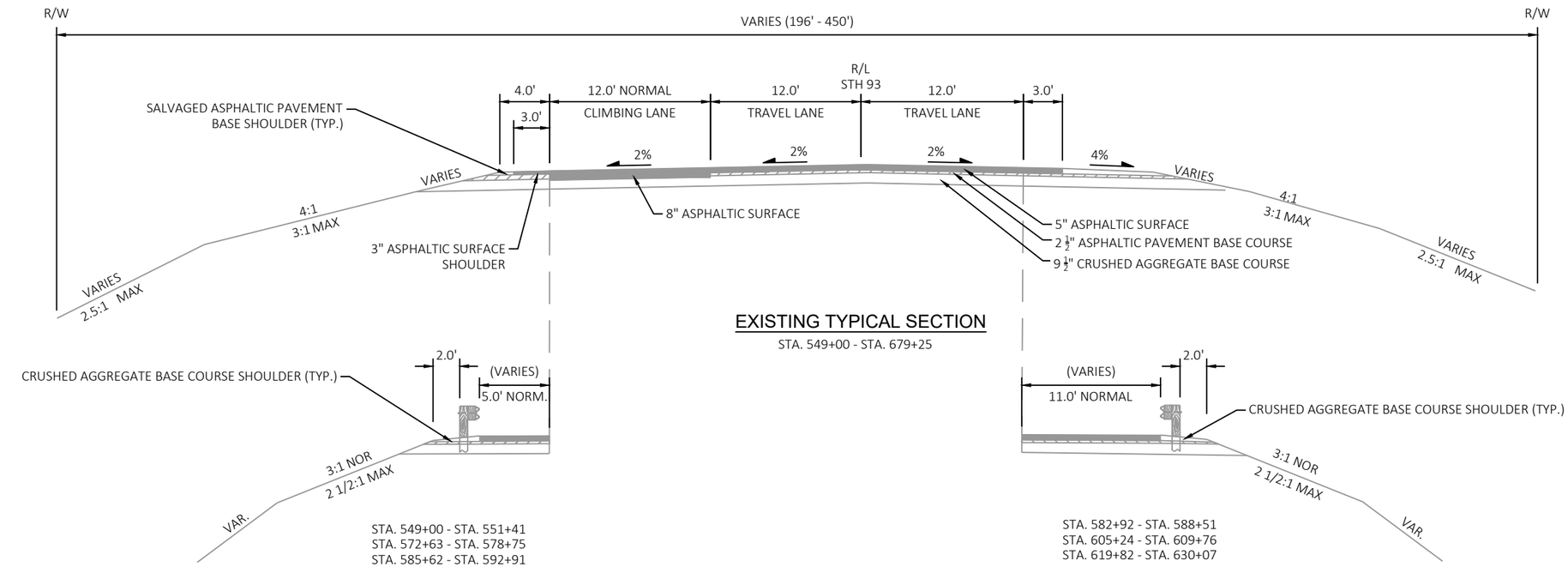

EXISTING TYPICAL SECTION

STA. 549+00 - STA. 679+25

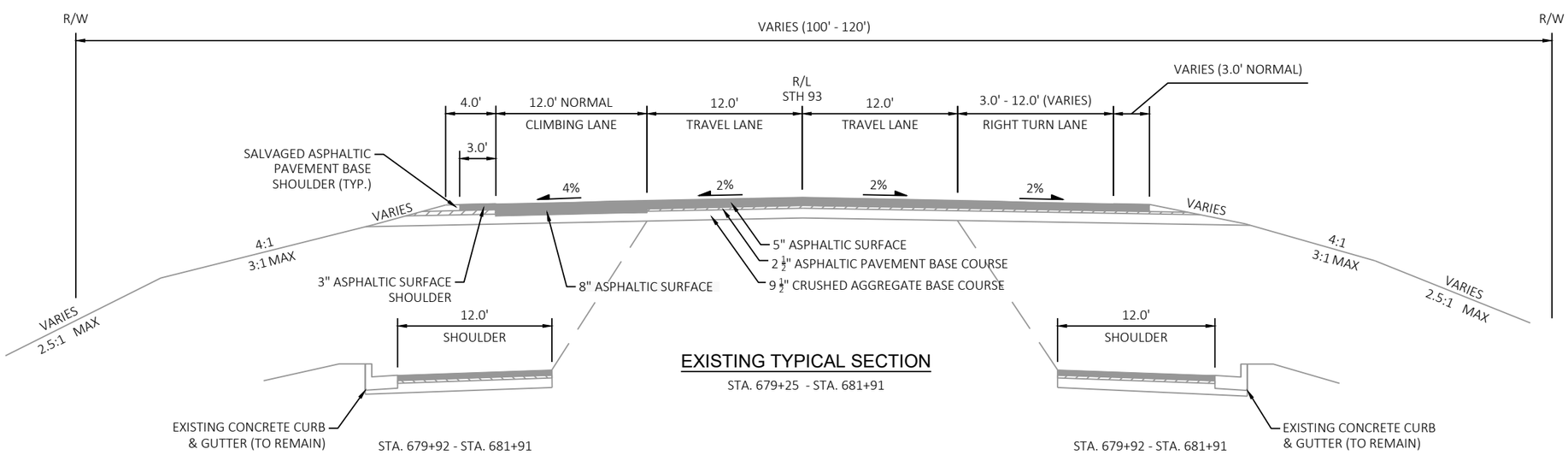

EXISTING TYPICAL SECTION

STA. 679+25 - STA. 681+91

NOTE
EXISTING TYPICAL SECTIONS BASED ON 7130-04-60 AS-BUILT PLANS

PROJECT NO: 7130-00-71/78	HWY: STH 93	COUNTY: TREMPEALEAU	EXISTING TYPICAL SECTIONS	SHEET 6	E

FILE NAME : P:\90S\93\00093390\CADD\SHEETSPLAN\020301_TS.DWG
LAYOUT NAME - 020303_ts
PLOT DATE : 1/8/2019 4:03 PM PLOT BY : SHAWN DOLENS PLOT NAME : PLOT SCALE : 1 IN:10 FT
WISDOT/CADDS SHEET 42

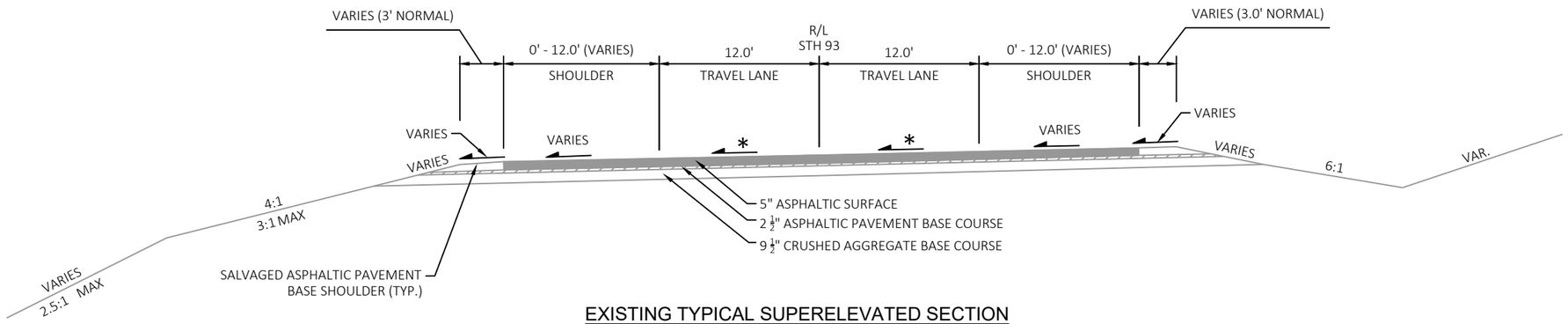

EXISTING TYPICAL SUPERELEVATED SECTION

CURVE TO LEFT SHOWN, CURVE TO RIGHT SIMILAR

NOTE

* SEE PROPOSED SUPER ELEVATION TABLE IN FINISHED TYPICAL SECTIONS

EXISTING TYPICAL SECTIONS BASED ON 7130-04-60 AS-BUILT PLANS

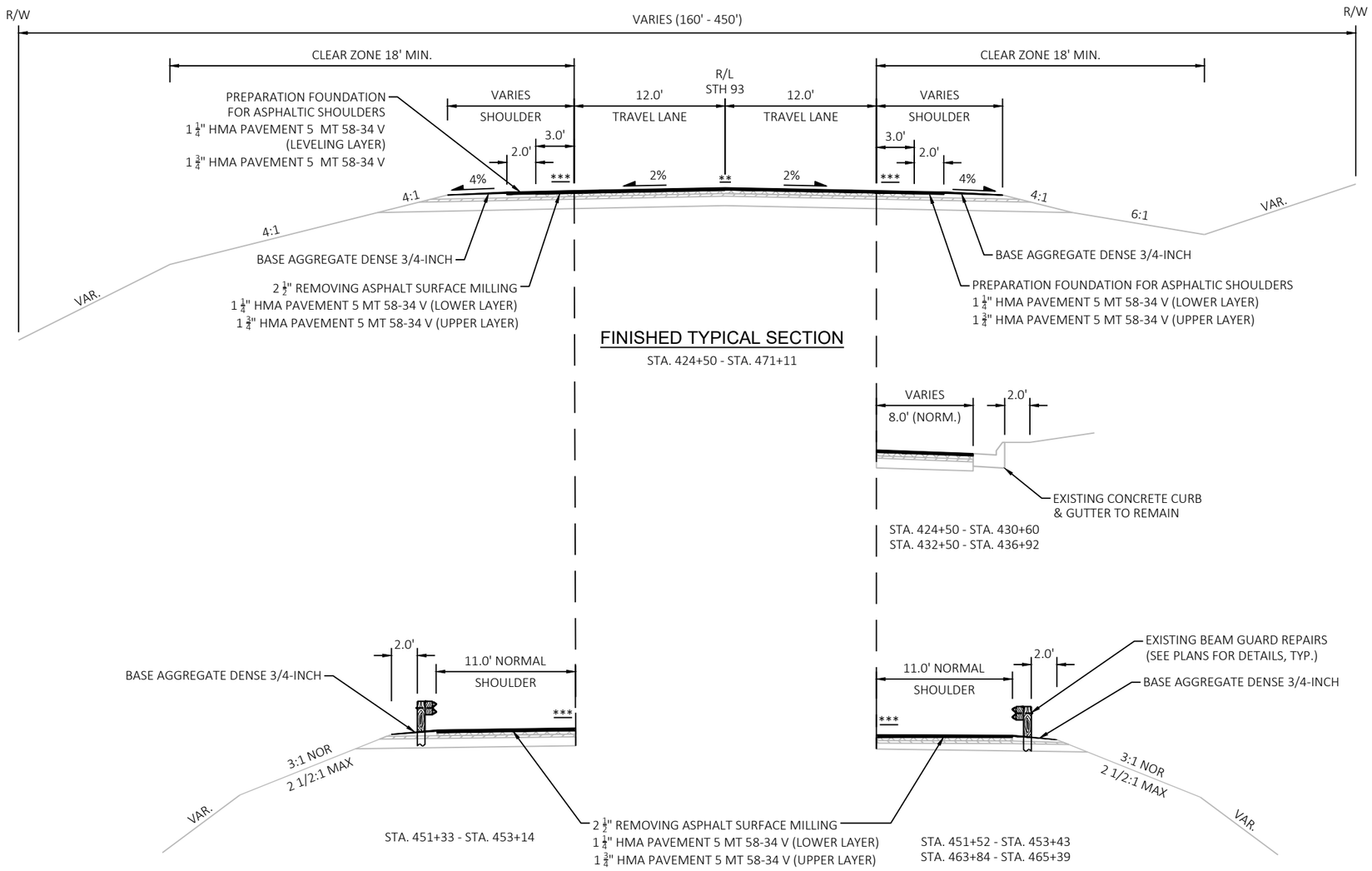

** ASPHALTIC CENTER LINE RUMBLE STRIPS 2 LANE RURAL
*** ASPHALTIC SHOULDER RUMBLE STRIPS 2 LANE RURAL

PROJECT NO: 7130-00-71/78	HWY: STH 93	COUNTY: TREMPEALEAU	FINISHED TYPICAL SECTIONS	SHEET 8	E

FILE NAME : P:\90S\93\00093390\CADD\SHEETSPLAN\020301_TS.DWG
LAYOUT NAME - 020305_ts
PLOT DATE : 1/24/2019 12:56 PM PLOT BY : ZACH RICKMAN PLOT NAME : PLOT SCALE : ##########
WISDOT/CADDS SHEET 42

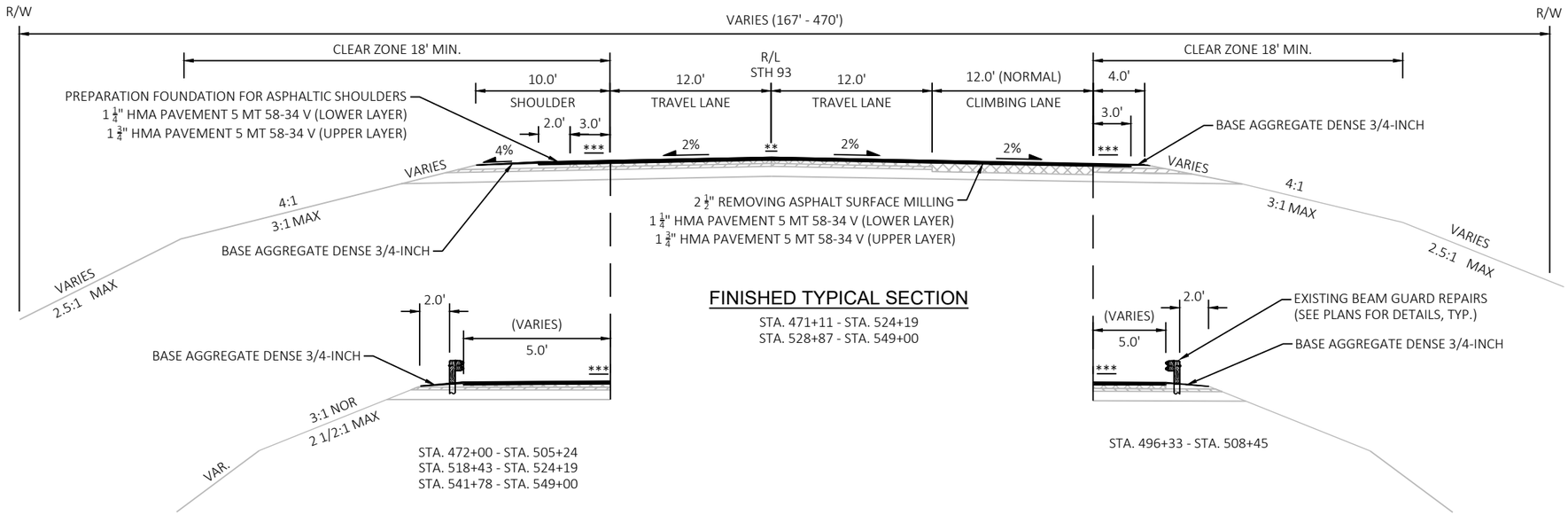

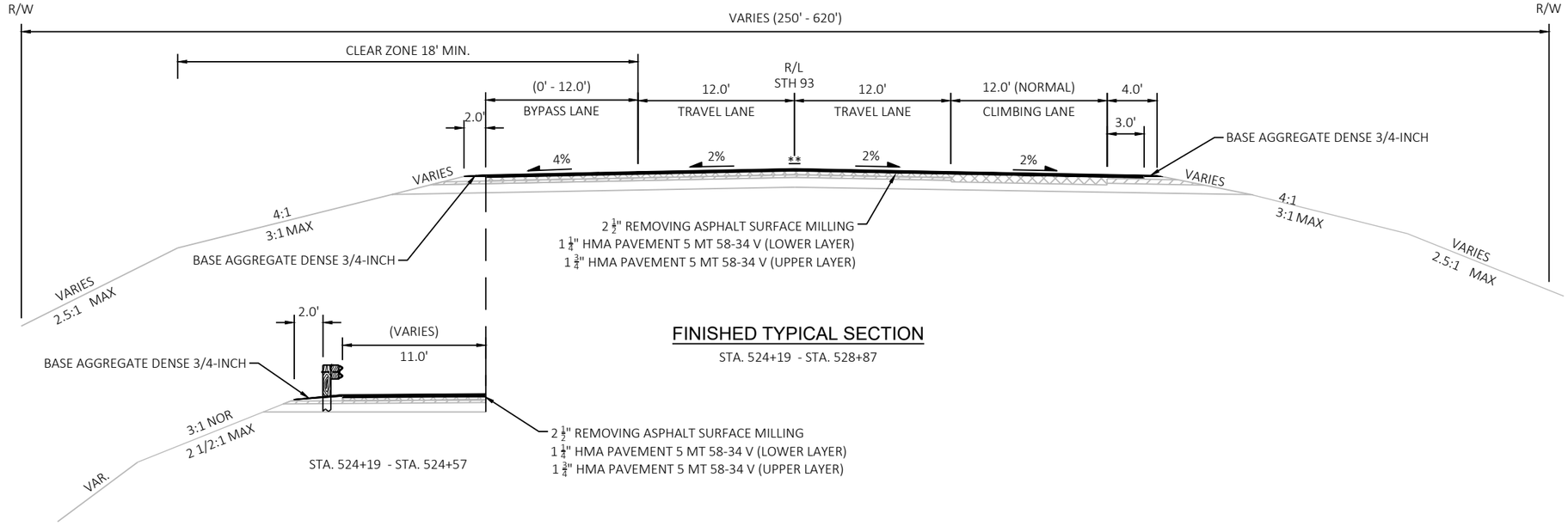

** ASPHALTIC CENTER LINE RUMBLE STRIPS 2 LANE RURAL
*** ASPHALTIC SHOULDER RUMBLE STRIPS 2 LANE RURAL

PROJECT NO: 7130-00-71/78	HWY: STH 93	COUNTY: TREMPEALEAU	FINISHED TYPICAL SECTIONS	SHEET 9	E

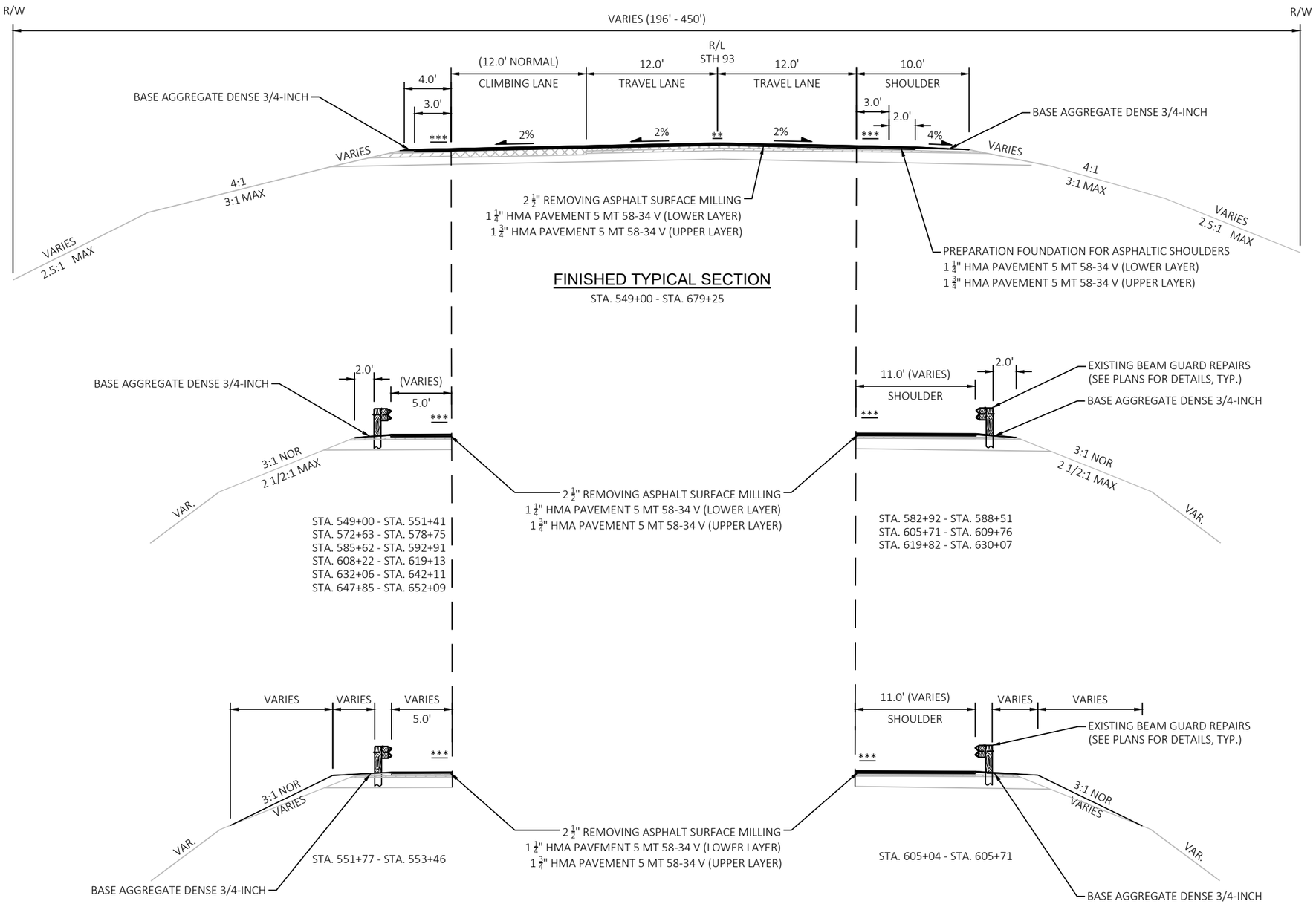

** ASPHALTIC CENTER LINE RUMBLE STRIPS 2 LANE RURAL
*** ASPHALTIC SHOULDER RUMBLE STRIPS 2 LANE RURAL

PROJECT NO: 7130-00-71/78	HWY: STH 93	COUNTY: TREMPEALEAU	FINISHED TYPICAL SECTIONS	SHEET 10	E

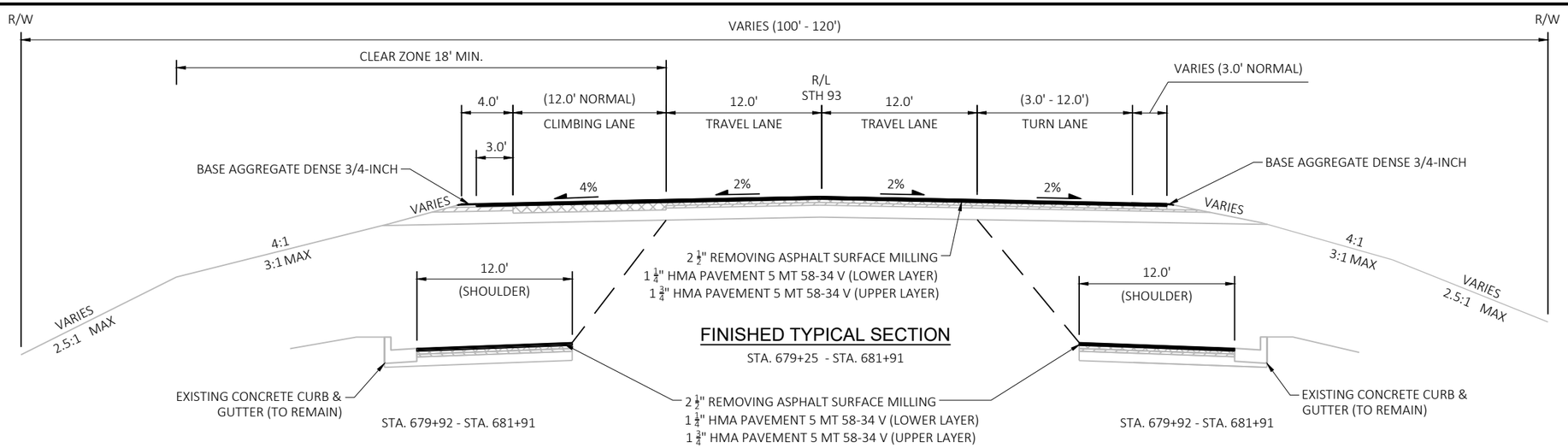

FINISHED TYPICAL SECTION

STA. 679+25 - STA. 681+91

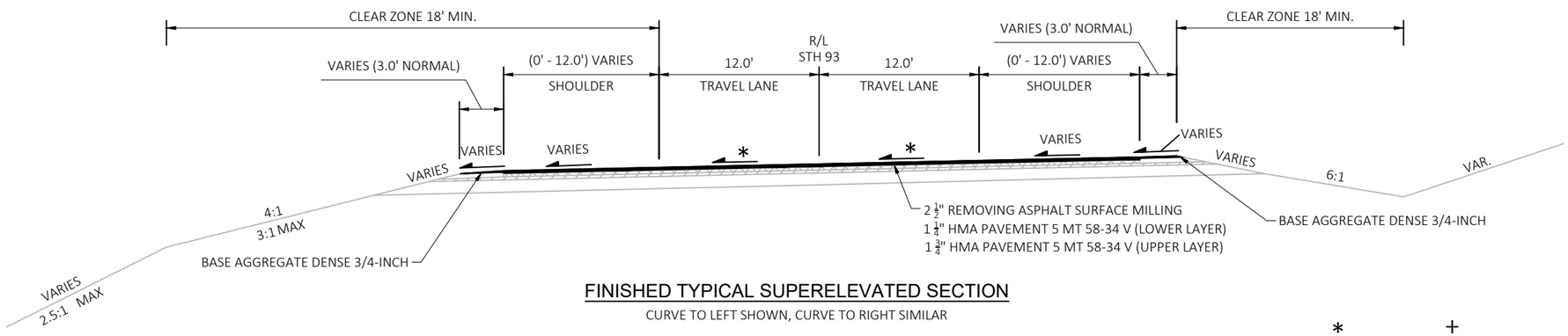

FINISHED TYPICAL SUPERELEVATED SECTION

CURVE TO LEFT SHOWN, CURVE TO RIGHT SIMILAR

CURVE #	PC STA	PT STA	Radius (FT)	NC	FC	RC	FS	FS	RC	FC	NC	* Max Super (%)	+ Design Speed
1	424+36.12	430+22.91	3000	423+05.12	423+58.12	424+11.30	424+75.12	429+83.91	430+47.73	431+00.91	431+53.91	4.4	60
2	443+80.20	458+48.55	2550	442+41.87	442+94.87	443+48.20	444+22.87	458+05.88	458+80.55	459+33.88	459+86.88	4.8	60
3	465+31.49	483+77.04	1910	463+80.49	464+33.49	464+86.94	465+80.49	483+28.04	484+21.59	484+75.04	485+28.04	5.5	60
4	491+65.93	502+42.38	8000	490+75.60	491+28.60	491+81.93	491+84.60	502+23.71	502+26.38	502+79.71	503+32.71	2.1	60
5	530+05.88	535+84.55	7700	529+15.55	529+68.55	530+21.88	530+24.55	535+65.88	535+68.55	536+21.88	536+74.88	2.1	60
6	542+66.75	552+35.71	3820	541+46.75	542+00.75	542+54.26	542+99.75	552+02.71	552+48.20	553+01.71	553+55.71	3.7	60
7	568+74.68	577+41.17	1910	567+23.68	567+76.68	568+30.13	569+23.68	576+92.17	577+85.72	578+39.17	578+92.17	5.5	60
8	581+26.21	590+92.77	2292	579+82.54	580+35.54	580+88.88	581+71.54	590+47.44	591+30.10	591+83.44	592+36.44	5.1	60
9	606+78.15	613+13.89	2865	605+45.15	605+98.15	606+51.48	607+18.15	612+73.89	613+40.56	613+93.89	614+46.89	4.5	60
10	617+57.49	627+21.22	1910	616+06.49	616+59.49	617+12.94	618+06.49	626+72.22	627+65.77	628+19.22	628+72.22	5.5	60
11	631+48.51	641+70.38	1910	629+97.51	630+50.51	631+03.96	631+97.51	641+21.38	642+14.93	642+68.38	643+21.38	5.5	60
12	644+59.53	660+12.49	2292	643+46.20	643+94.20	644+42.00	644+92.20	659+79.82	660+30.02	660+77.82	661+25.82	4.1	50
13	674+38.18	681+38.79	5730	673+53.18	674+04.18	674+55.18	674+55.18	681+21.79	681+21.79	681+72.79	682+23.79	2	50

NC = Normal Crown
FC = Flat on High side of super and -2% on low side of Super
RC = Reverse Crown
FS = Full Super
+ = Super Transitions are designed to 60 mph even though design speed is 55 mph

2

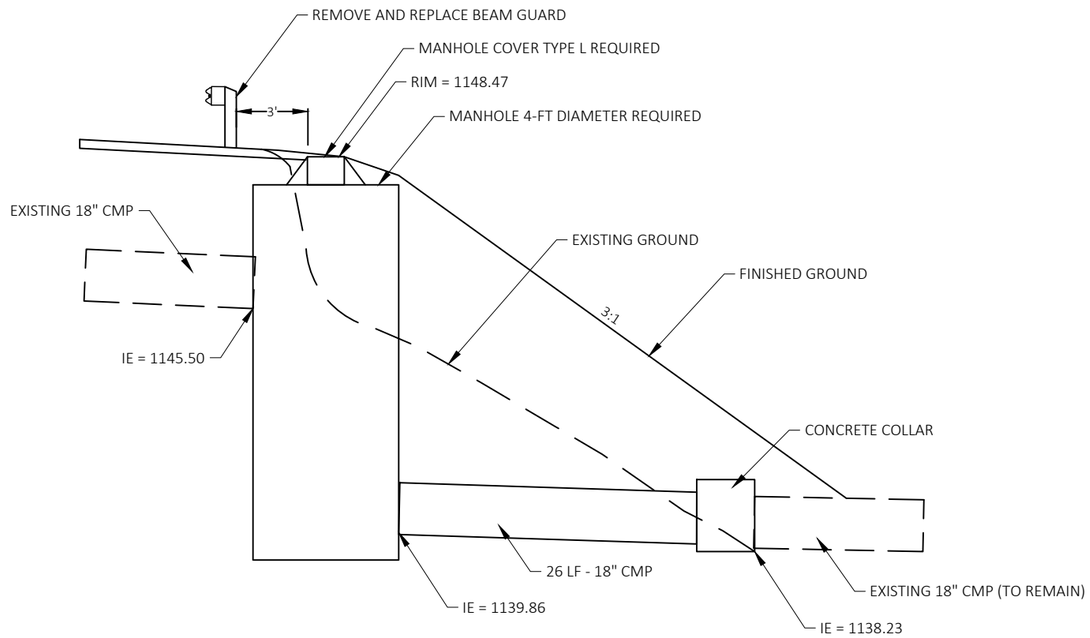

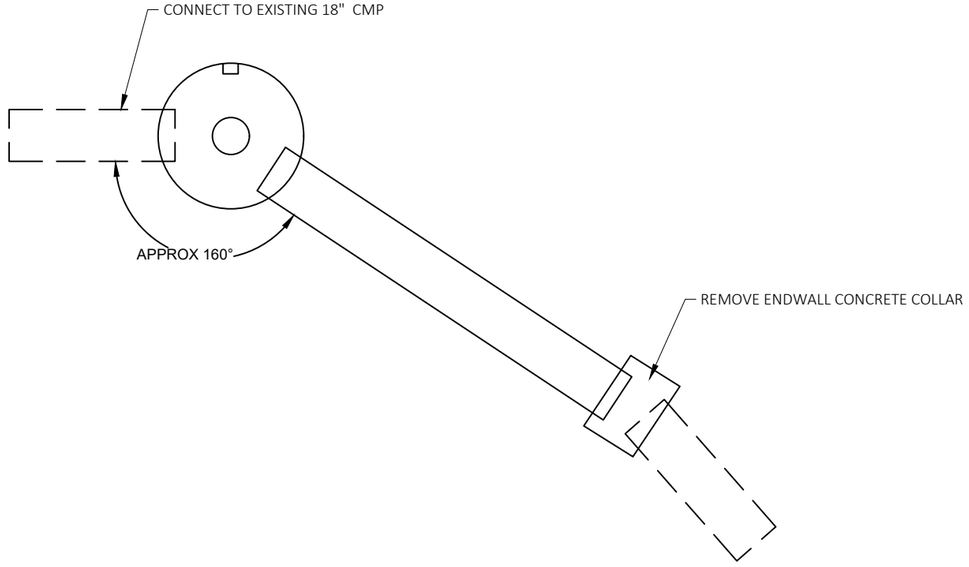

STORM SEWER DETAIL

STA 605+12.5, 37' RT

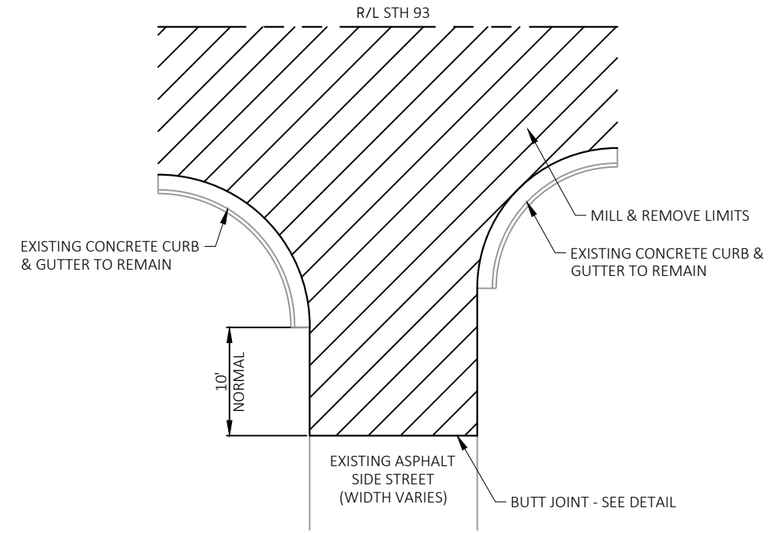

RURAL ASPHALTIC SURFACE SIDE ROAD DETAIL

SIDE ROAD WITH CURB AND GUTTER TO REMAIN

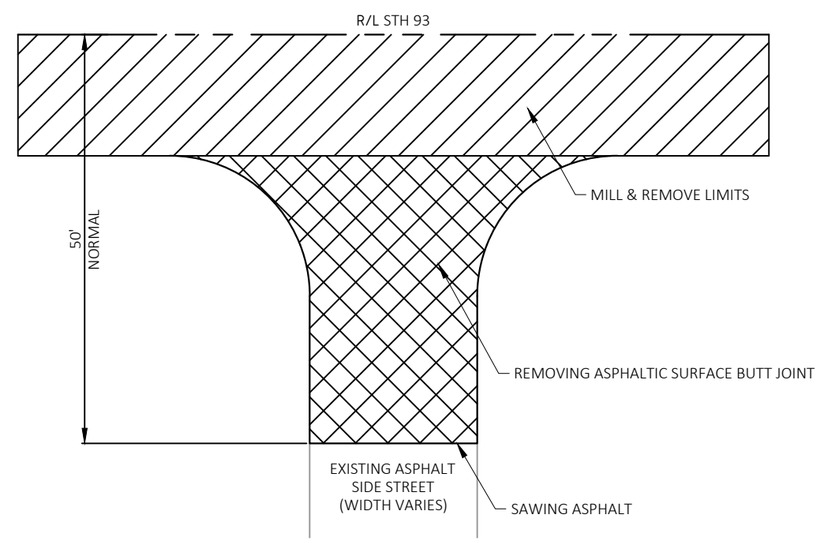

RURAL ASPHALTIC SURFACE SIDE ROAD DETAIL

SIDE ROAD WITH NO CURB AND GUTTER

2

PROJECT NO: 7130-00-71/78	HWY: STH 93	COUNTY: TREMPEALEAU	CONSTRUCTION DETAILS	SHEET 12	E

2

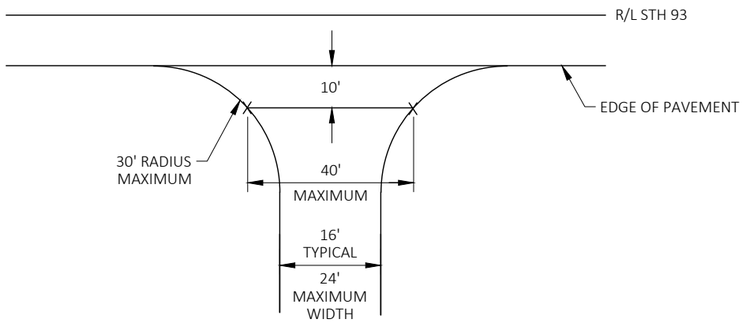

TYPICAL DRIVEWAY DETAIL
(NON-COMMERCIAL RURAL)

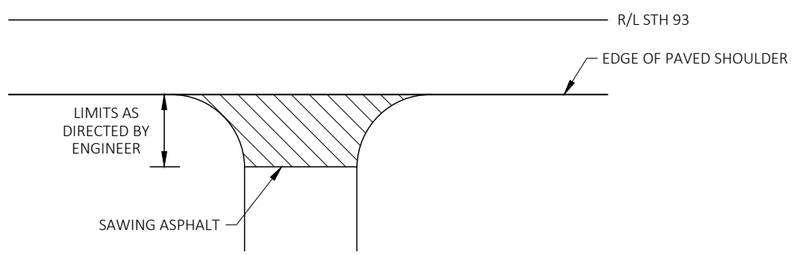

RURAL DRIVEWAY DETAIL - ASPHALT

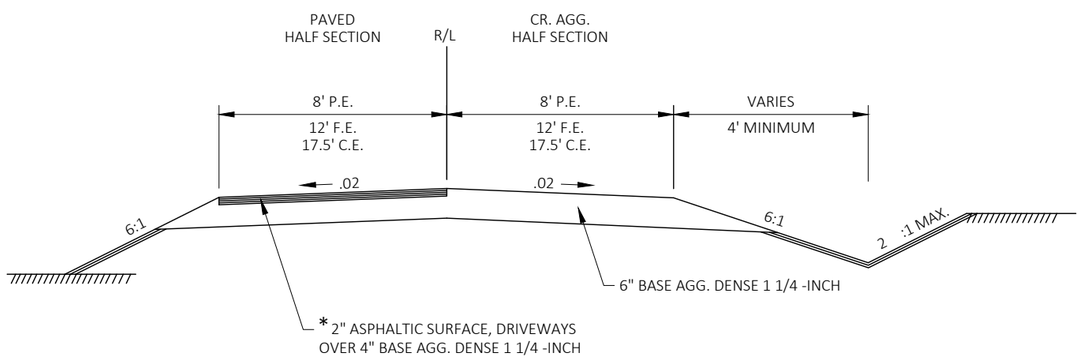

* OR MATCH EXIST.
ASPH. DEPTH

TYPICAL SECTION
FOR PRIVATE ENTRANCES

NOTE:
DRIVEWAY PROFILES NOT EXPECTED TO EXCEED 10%, PLACE LOW POINT OF DRIVEWAY PROFILE OVER DITCH FLOW LINE.

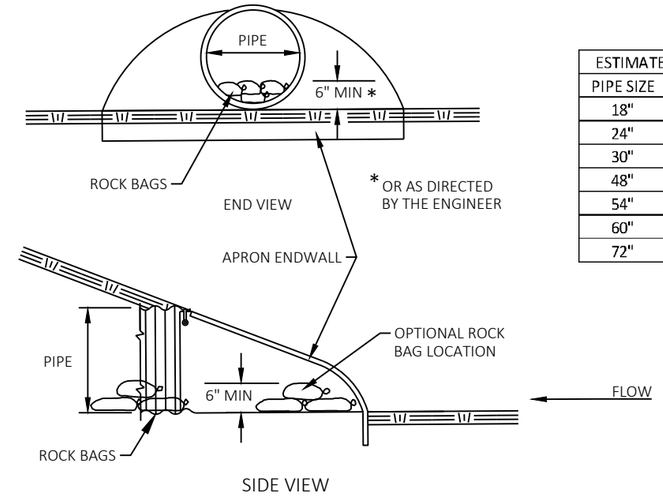

ESTIMATED BAG SIZE = 24" X 12" X 6"	
PIPE SIZE	ESTIMATED NO OF BAGS
18"	2
24"	3
30"	5
48"	10
54"	10
60"	13
72"	16

CULVERT PIPE CHECK

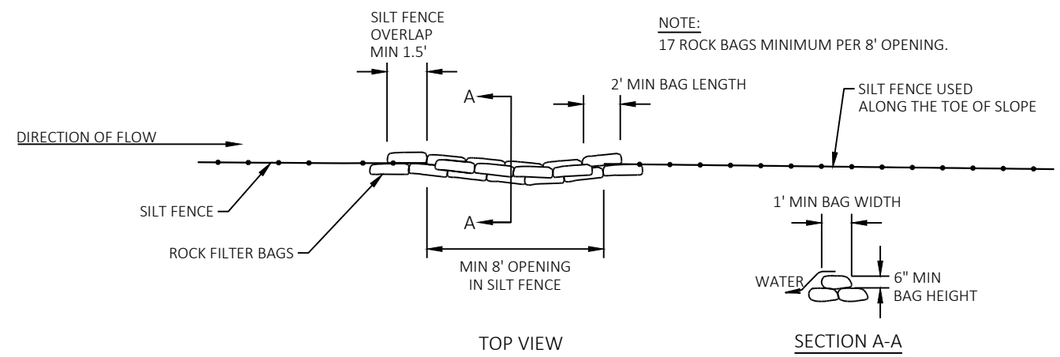

ROCK BAGS USED FOR SILT FENCE RELIEF

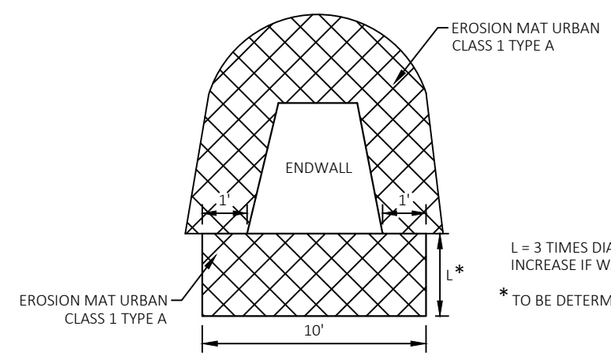

L = 3 TIMES DIAMETER OR 10' MIN.
INCREASE IF WARRANTED

* TO BE DETERMINED BY ENGINEER IN FIELD

EROSION CONTROL AT PIPE ENDS

2

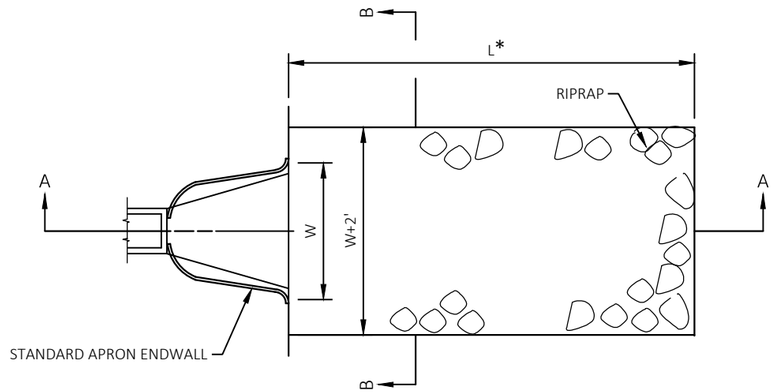

* L = 3 TIMES DIAMETER (NOR.) OR 10' MIN. OR AS DIRECTED BY THE ENGINEER

** USE GEOTEXTILE FABRIC TYPE HR FOR RIPRAP MEDIUM. DO NOT EXCAVATE OR PLACE GEOTEXTILE FABRIC BELOW RIPRAP IN SENSITIVE AREAS.

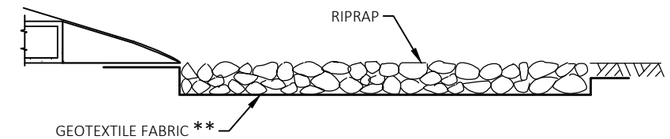

SECTION A-A

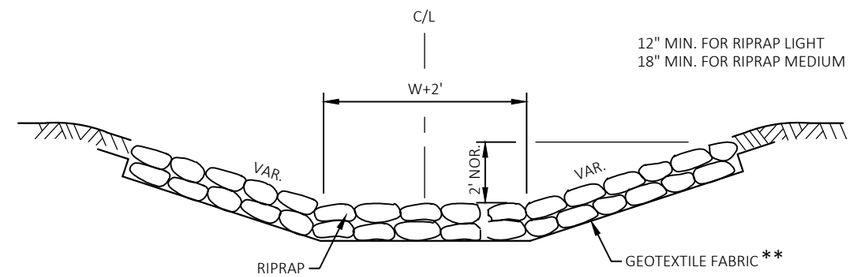

SECTION A-A

RIPRAP AND GEOTEXTILE FABRIC DETAIL AT APRON ENDWALLS

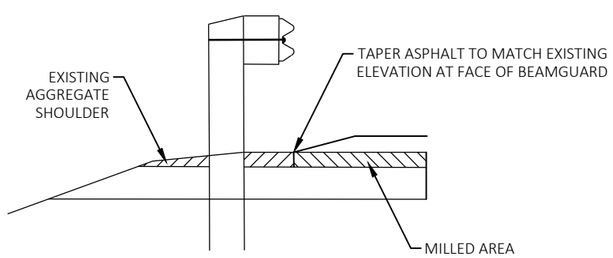

SECTION A-A

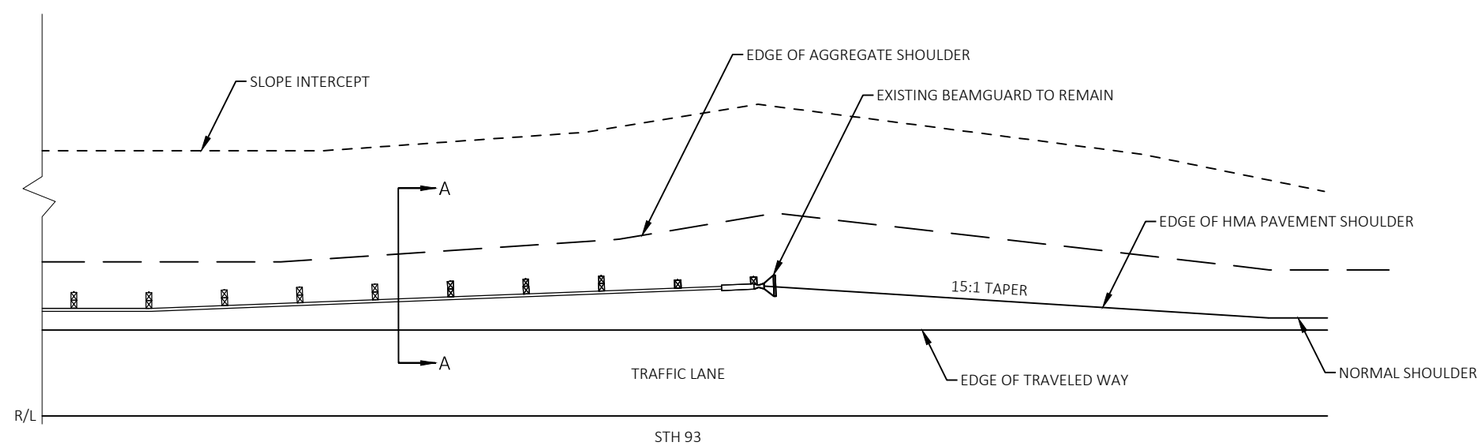

SHOULDER PAVING FOR GUARDRAIL

PROJECT NO: 7130-00-71/78	HWY: STH 93	COUNTY: TREMPEALEAU	CONSTRUCTION DETAILS	SHEET 14	E

2

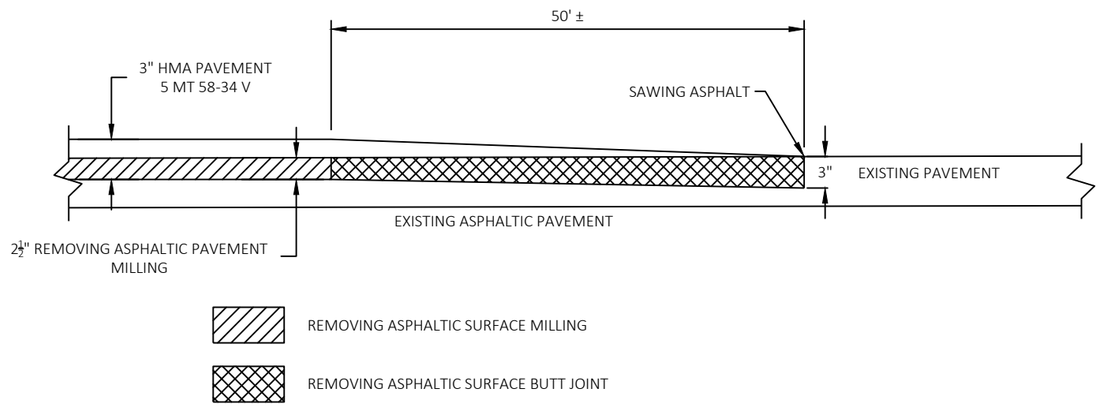

BUTT JOINT DETAIL

AT PROJECT LIMITS
* EXACT DIMENSIONS TO BE DETERMINED
BY ENGINEER IN THE FIELD

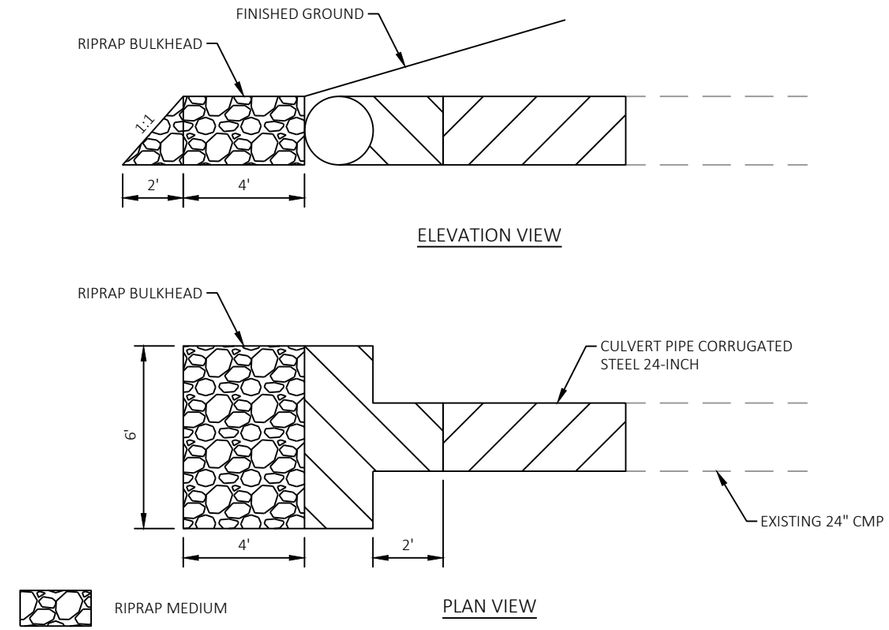

CULVERT PIPE CORRUGATED STEEL 24-INCH TEE DETAIL

STA. 543+20, 615+75, 639+90

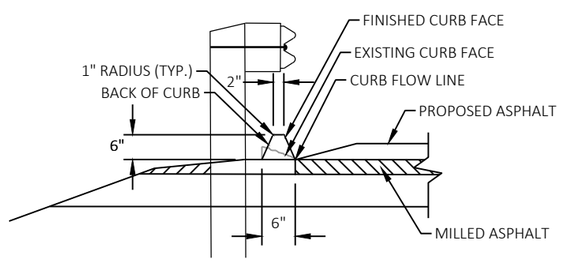

SECTION A-A

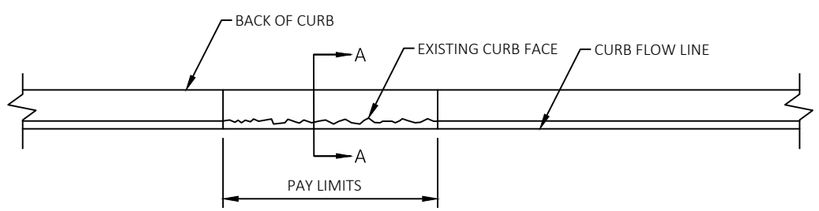

PLAN VIEW

REPAIR EXISTING ASPHALT CURB DETAIL

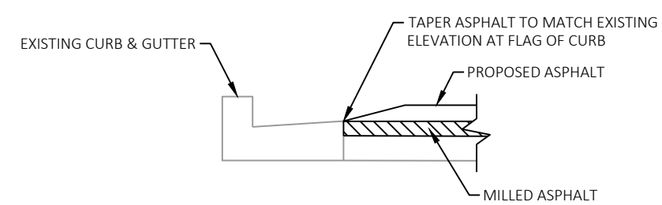

PAVING AT CURB AND GUTTER DETAIL

2

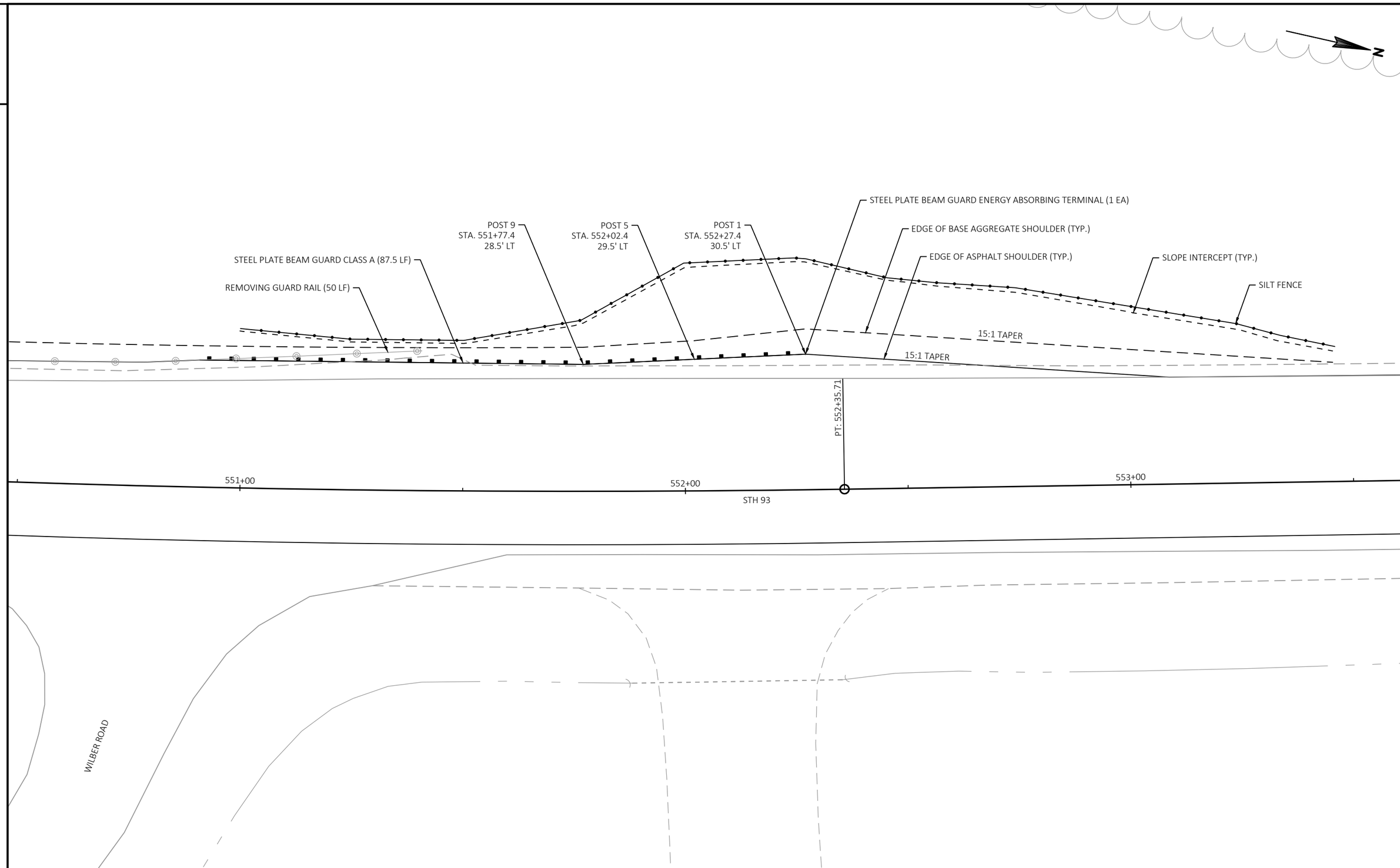

2

PROJECT NO: 7130-00-71/78	HWY: STH 93	COUNTY: TREMPEALEAU	BEAMGUARD CONSTRUCTION DETAIL	SHEET 16	E

FILE NAME : P:\90S\93\00093390\CADD\SHEETSPLAN\021005_CD.DWG
LAYOUT NAME - 021005_cd
PLOT DATE : 1/9/2019 10:41 AM
PLOT BY : SHAWN DOLENS
PLOT NAME :
PLOT SCALE : 1 IN:20 FT

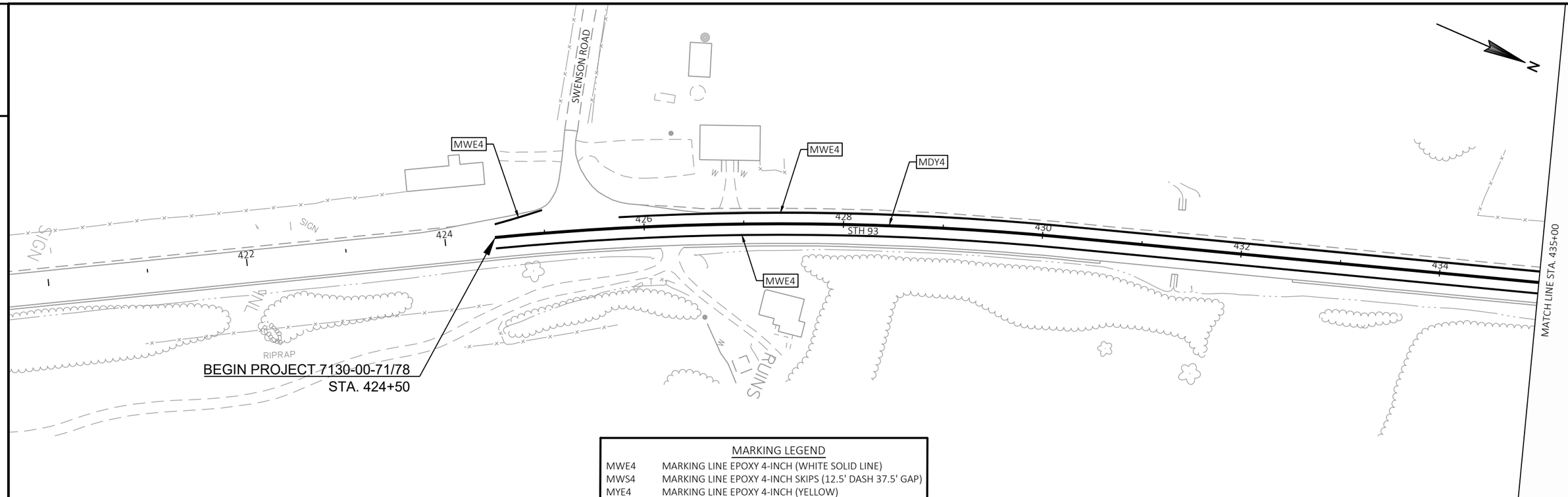

MARKING LEGEND

MWE4	MARKING LINE EPOXY 4-INCH (WHITE SOLID LINE)
MWS4	MARKING LINE EPOXY 4-INCH SKIPS (12.5' DASH 37.5' GAP)
MYE4	MARKING LINE EPOXY 4-INCH (YELLOW)
MDY4	MARKING LINE EPOXY 4-INCH (DOUBLE YELLOW)
MYS4	MARKING LINE EPOXY 4-INCH SKIPS (12.5' DASH 37.5' GAP)
MWE8	MARKING LINE EPOXY 8-INCH (WHITE)
MDWE12	MARKING DIAGONAL EPOXY 12-INCH (WHITE)
MDYE12	MARKING DIAGONAL EPOXY 12-INCH (YELLOW)

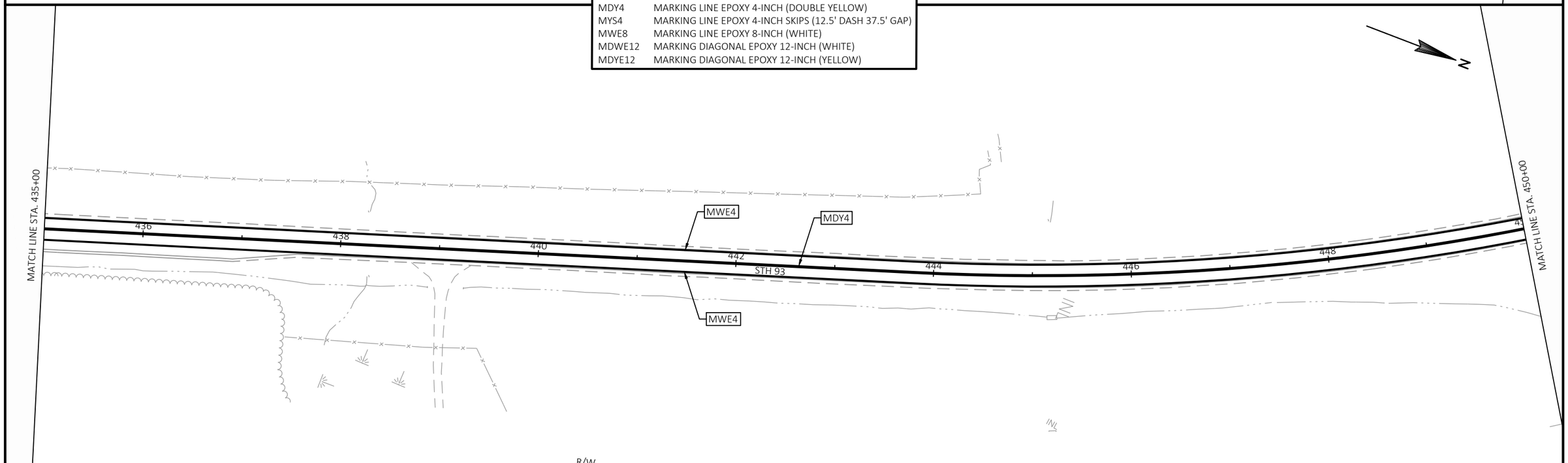

PROJECT NO: 7130-00-71/78	HWY: STH 93	COUNTY: TREMPEALEAU	PAVEMENT MARKING	SHEET 17	E

2

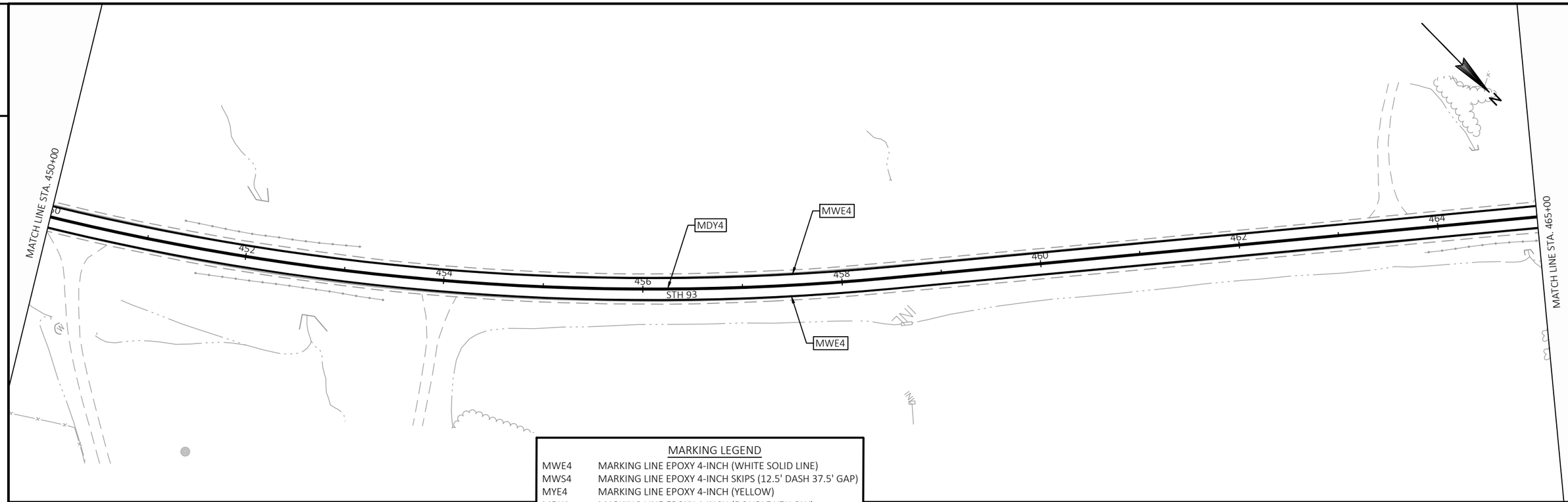

MARKING LEGEND

MWE4	MARKING LINE EPOXY 4-INCH (WHITE SOLID LINE)
MWS4	MARKING LINE EPOXY 4-INCH SKIPS (12.5' DASH 37.5' GAP)
MYE4	MARKING LINE EPOXY 4-INCH (YELLOW)
MDY4	MARKING LINE EPOXY 4-INCH (DOUBLE YELLOW)
MYS4	MARKING LINE EPOXY 4-INCH SKIPS (12.5' DASH 37.5' GAP)
MWE8	MARKING LINE EPOXY 8-INCH (WHITE)
MDWE12	MARKING DIAGONAL EPOXY 12-INCH (WHITE)
MDYE12	MARKING DIAGONAL EPOXY 12-INCH (YELLOW)

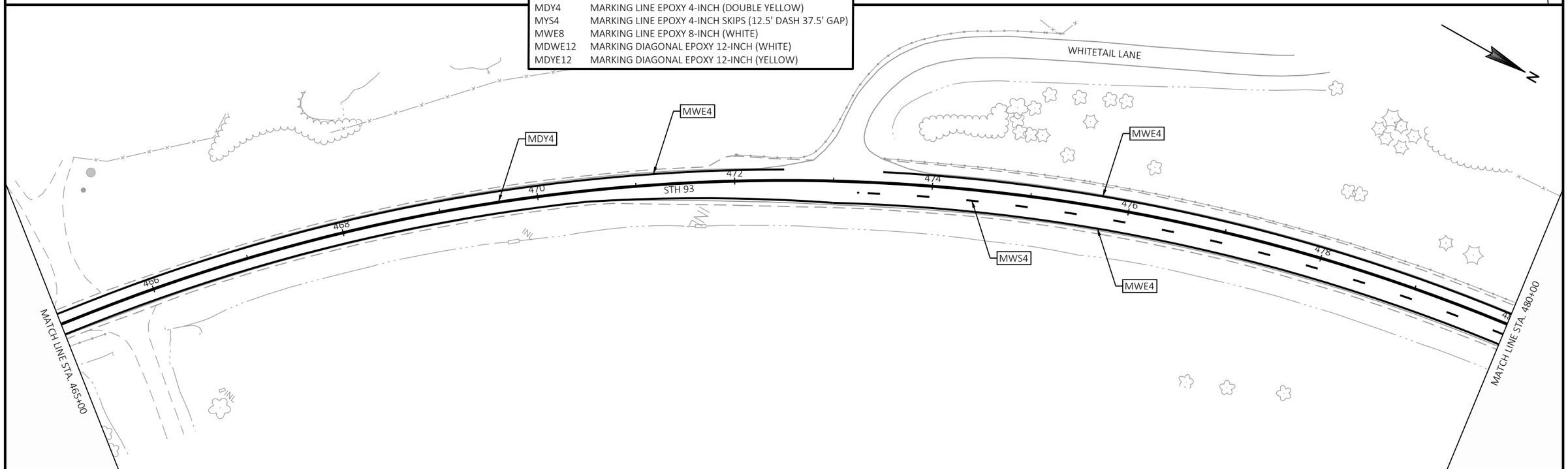

2

PROJECT NO: 7130-00-71/78	HWY: STH 93	COUNTY: TREMPEALEAU	PAVEMENT MARKING	SHEET 18	E

FILE NAME : P:\90S\93\00093390\CADD\SHEETSPLAN\023201_PS.DWG
LAYOUT NAME - 023202_ps
PLOT DATE : 8/28/2019 7:14 AM PLOT BY : SHAWN DOLENS PLOT NAME : PLOT SCALE : 1IN:100 FT

2

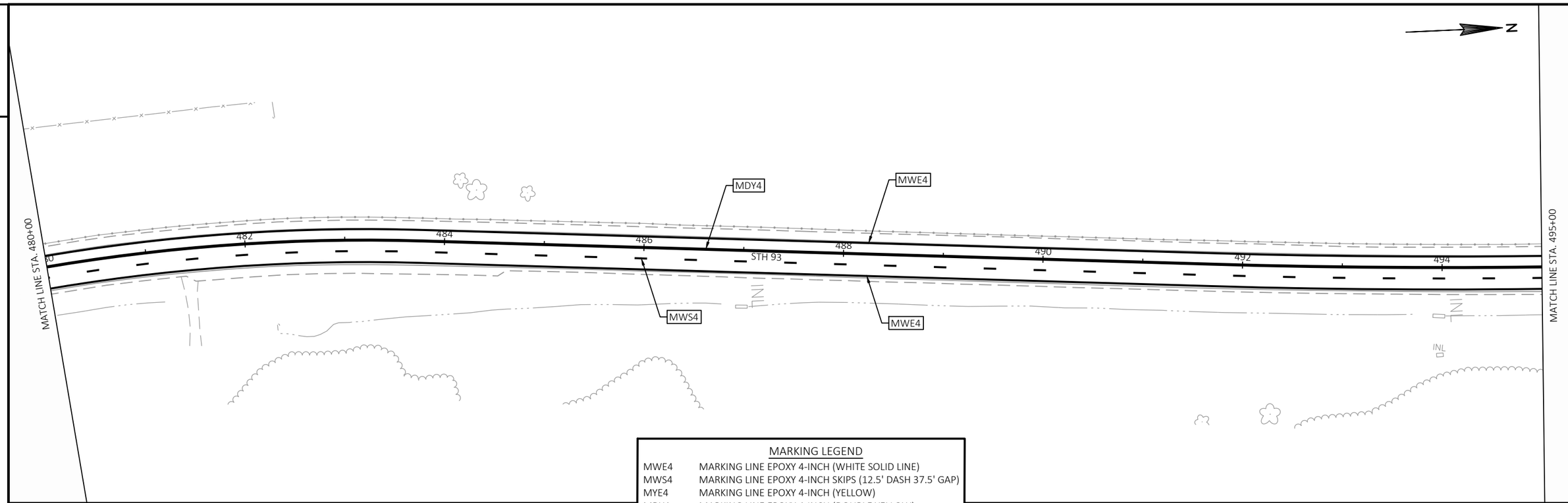

MARKING LEGEND

MWE4	MARKING LINE EPOXY 4-INCH (WHITE SOLID LINE)
MWS4	MARKING LINE EPOXY 4-INCH SKIPS (12.5' DASH 37.5' GAP)
MYE4	MARKING LINE EPOXY 4-INCH (YELLOW)
MDY4	MARKING LINE EPOXY 4-INCH (DOUBLE YELLOW)
MYS4	MARKING LINE EPOXY 4-INCH SKIPS (12.5' DASH 37.5' GAP)
MWE8	MARKING LINE EPOXY 8-INCH (WHITE)
MDWE12	MARKING DIAGONAL EPOXY 12-INCH (WHITE)
MDYE12	MARKING DIAGONAL EPOXY 12-INCH (YELLOW)

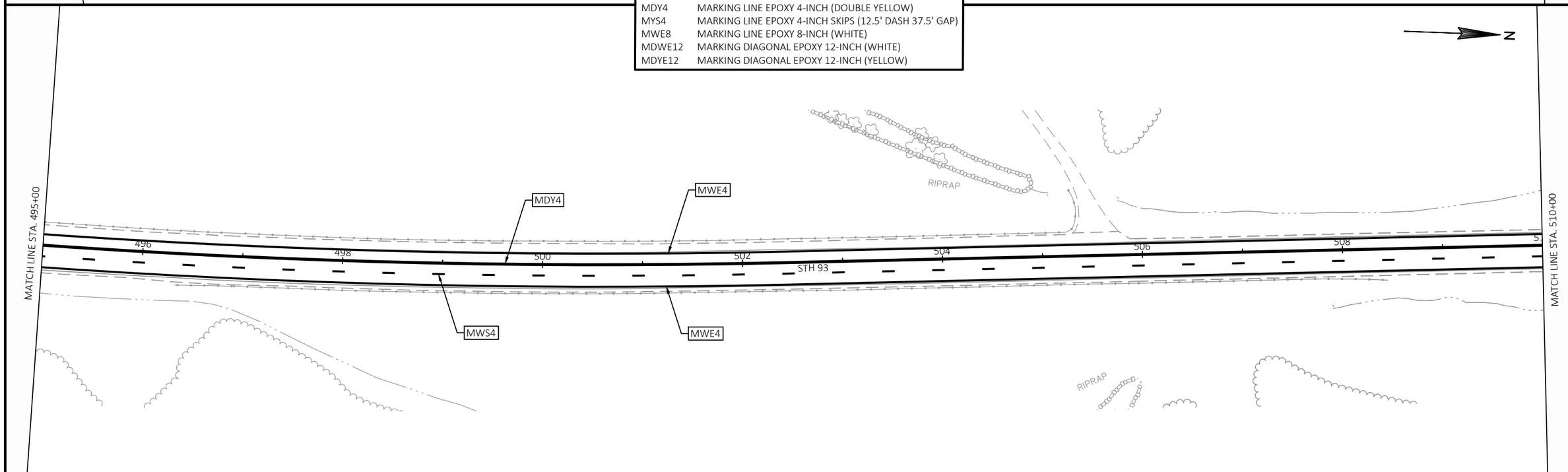

PROJECT NO: 7130-00-71/78	HWY: STH 93	COUNTY: TREMPEALEAU	PAVEMENT MARKING	SHEET 19	E

2

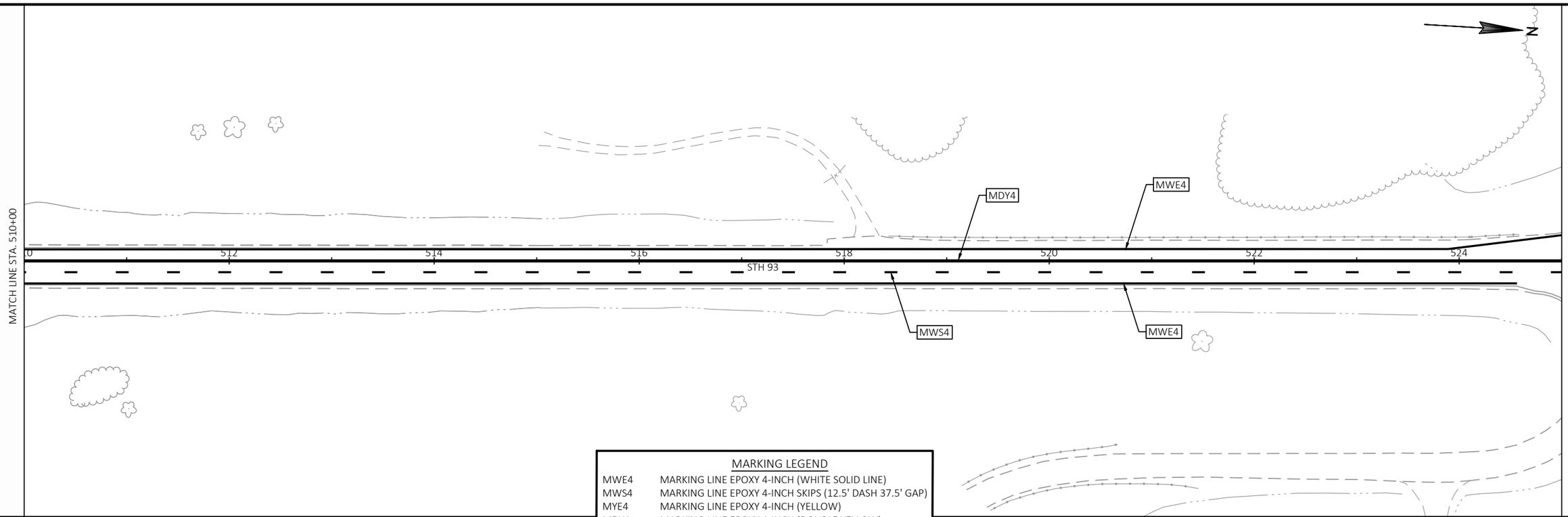

MARKING LEGEND

MWE4	MARKING LINE EPOXY 4-INCH (WHITE SOLID LINE)
MWS4	MARKING LINE EPOXY 4-INCH SKIPS (12.5' DASH 37.5' GAP)
MYE4	MARKING LINE EPOXY 4-INCH (YELLOW)
MDY4	MARKING LINE EPOXY 4-INCH (DOUBLE YELLOW)
MYS4	MARKING LINE EPOXY 4-INCH SKIPS (12.5' DASH 37.5' GAP)
MWE8	MARKING LINE EPOXY 8-INCH (WHITE)
MDWE12	MARKING DIAGONAL EPOXY 12-INCH (WHITE)
MDYE12	MARKING DIAGONAL EPOXY 12-INCH (YELLOW)

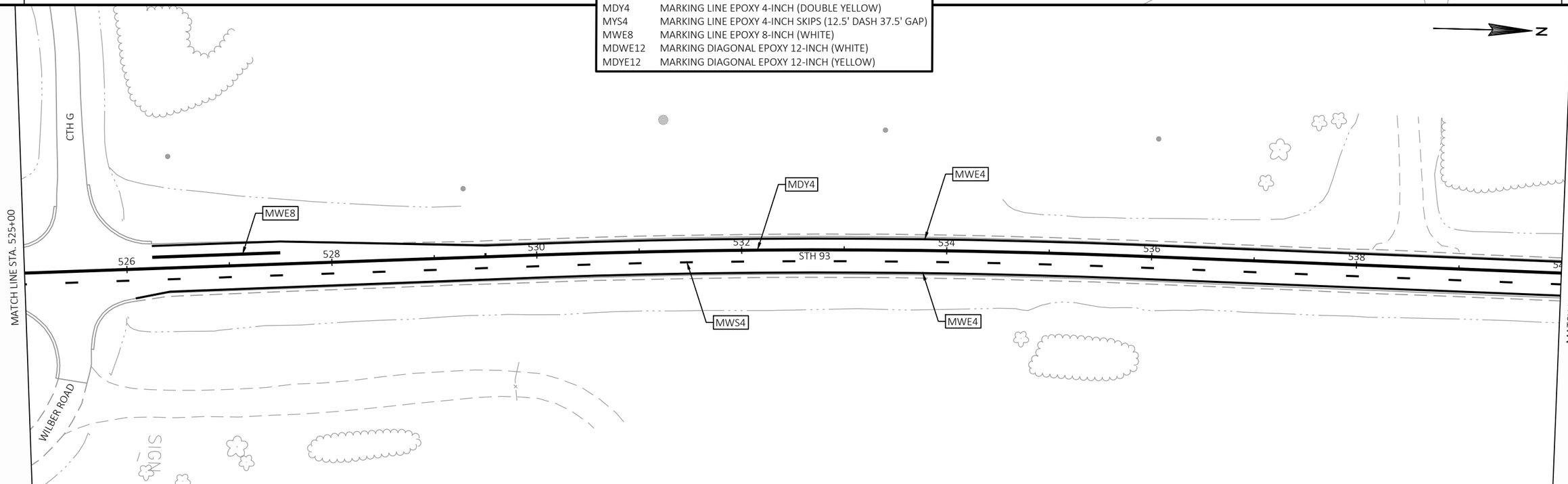

2

PROJECT NO: 7130-00-71/78	HWY: STH 93	COUNTY: TREMPEALEAU	PAVEMENT MARKING	SHEET 20	E

FILE NAME : P:\90S\93\00093390\CADD\SHEETSPLAN\023201_PS.DWG
LAYOUT NAME - 023204_ps
PLOT DATE : 8/28/2019 7:14 AM PLOT BY : SHAWN DOLENS PLOT NAME : PLOT SCALE : 1IN:100 FT

WISDOT/CADDS SHEET 42

2

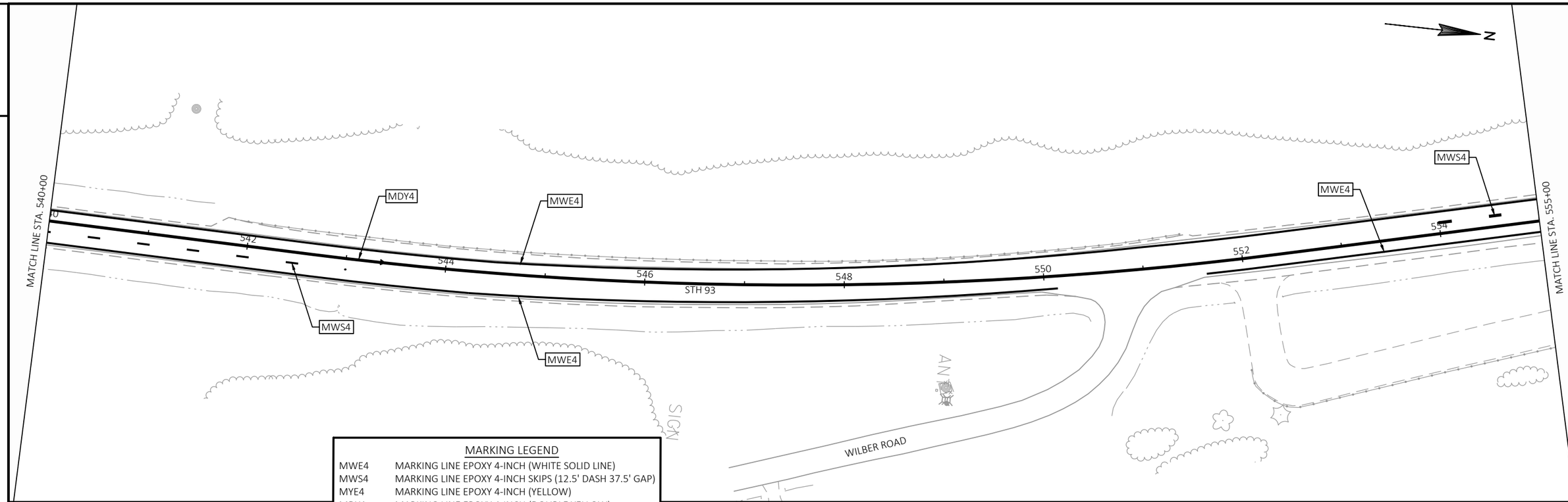

MARKING LEGEND

MWE4	MARKING LINE EPOXY 4-INCH (WHITE SOLID LINE)
MWS4	MARKING LINE EPOXY 4-INCH SKIPS (12.5' DASH 37.5' GAP)
MYE4	MARKING LINE EPOXY 4-INCH (YELLOW)
MDY4	MARKING LINE EPOXY 4-INCH (DOUBLE YELLOW)
MYS4	MARKING LINE EPOXY 4-INCH SKIPS (12.5' DASH 37.5' GAP)
MWE8	MARKING LINE EPOXY 8-INCH (WHITE)
MDWE12	MARKING DIAGONAL EPOXY 12-INCH (WHITE)
MDYE12	MARKING DIAGONAL EPOXY 12-INCH (YELLOW)

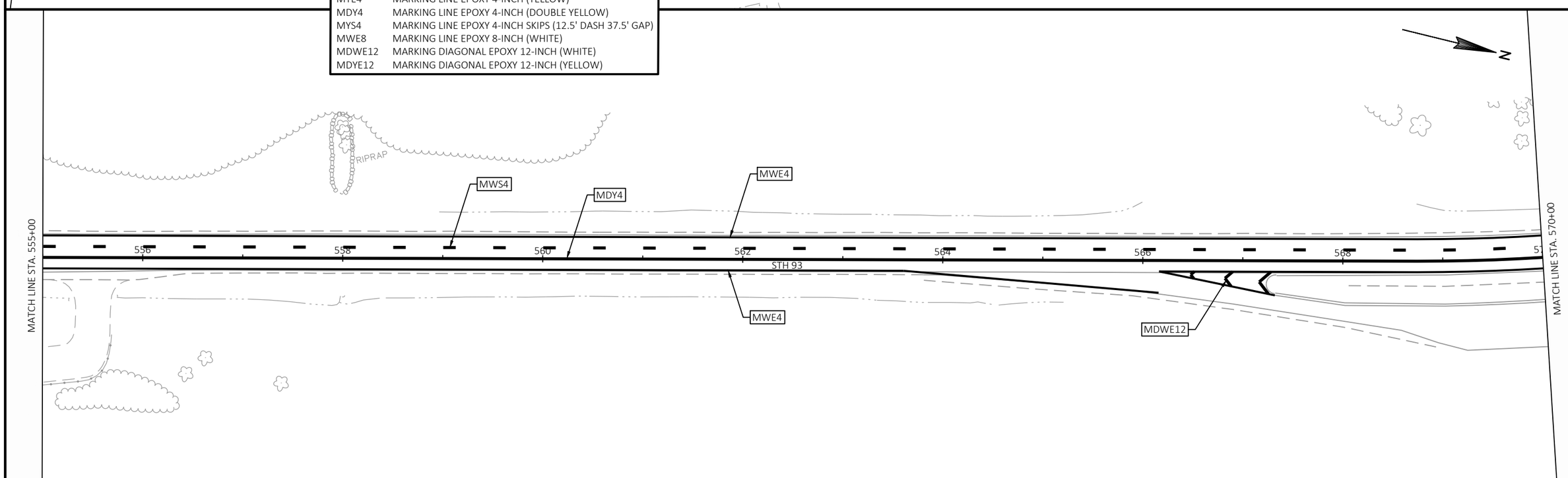

PROJECT NO: 7130-00-71/78	HWY: STH 93	COUNTY: TREMPEALEAU	PAVEMENT MARKING	SHEET 21	E

FILE NAME : P:\90S\93\00093390\CADD\SHEETSPLAN\023201_PS.DWG
LAYOUT NAME - 023205_ps
PLOT DATE : 8/28/2019 7:14 AM PLOT BY : SHAWN DOLENS PLOT NAME : PLOT SCALE : 1IN:100 FT

WISDOT/CADDS SHEET 42

2

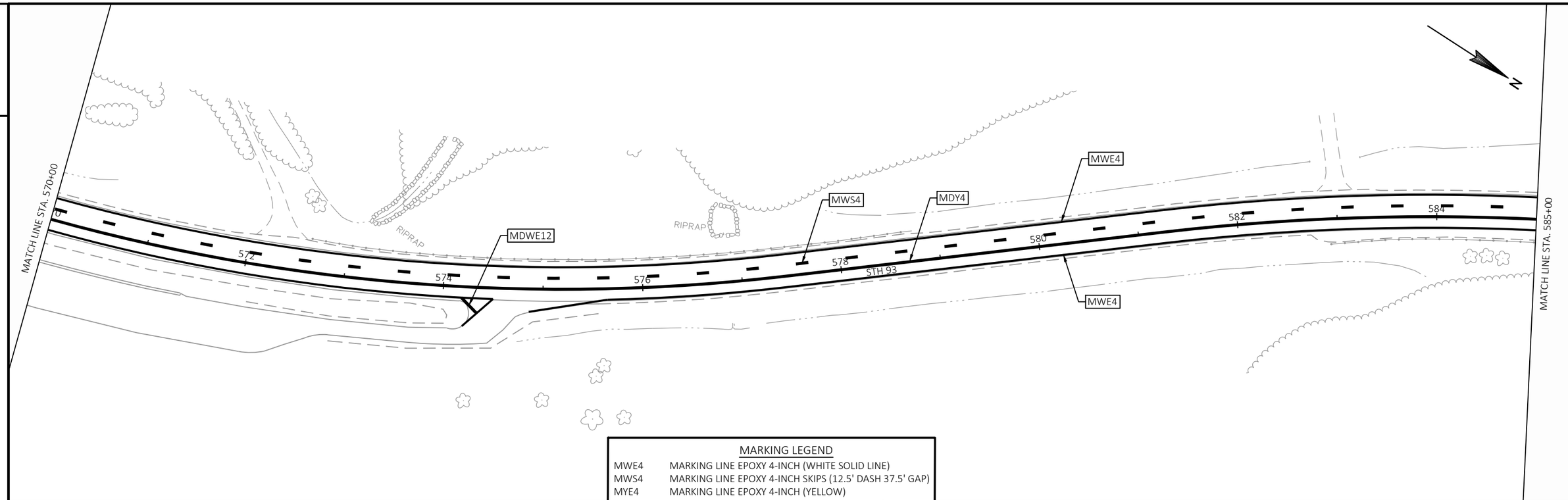

MARKING LEGEND

MWE4	MARKING LINE EPOXY 4-INCH (WHITE SOLID LINE)
MWS4	MARKING LINE EPOXY 4-INCH SKIPS (12.5' DASH 37.5' GAP)
MYE4	MARKING LINE EPOXY 4-INCH (YELLOW)
MDY4	MARKING LINE EPOXY 4-INCH (DOUBLE YELLOW)
MYS4	MARKING LINE EPOXY 4-INCH SKIPS (12.5' DASH 37.5' GAP)
MWE8	MARKING LINE EPOXY 8-INCH (WHITE)
MDWE12	MARKING DIAGONAL EPOXY 12-INCH (WHITE)
MDYE12	MARKING DIAGONAL EPOXY 12-INCH (YELLOW)

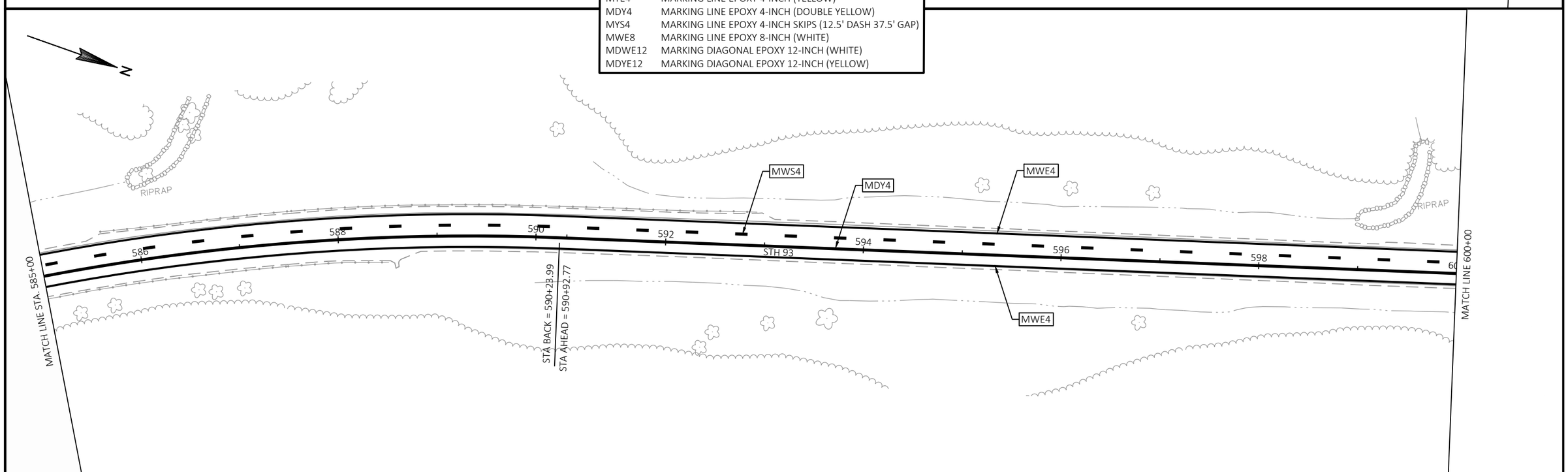

2

PROJECT NO: 7130-00-71/78	HWY: STH 93	COUNTY: TREMPEALEAU	PAVEMENT MARKING	SHEET 22	E

FILE NAME : P:\90S\93\00093390\CADD\SHEETSPLAN\023201_PS.DWG
LAYOUT NAME - 023206_ps
PLOT DATE : 8/28/2019 7:14 AM PLOT BY : SHAWN DOLENS PLOT NAME : PLOT SCALE : 1IN:100 FT

2

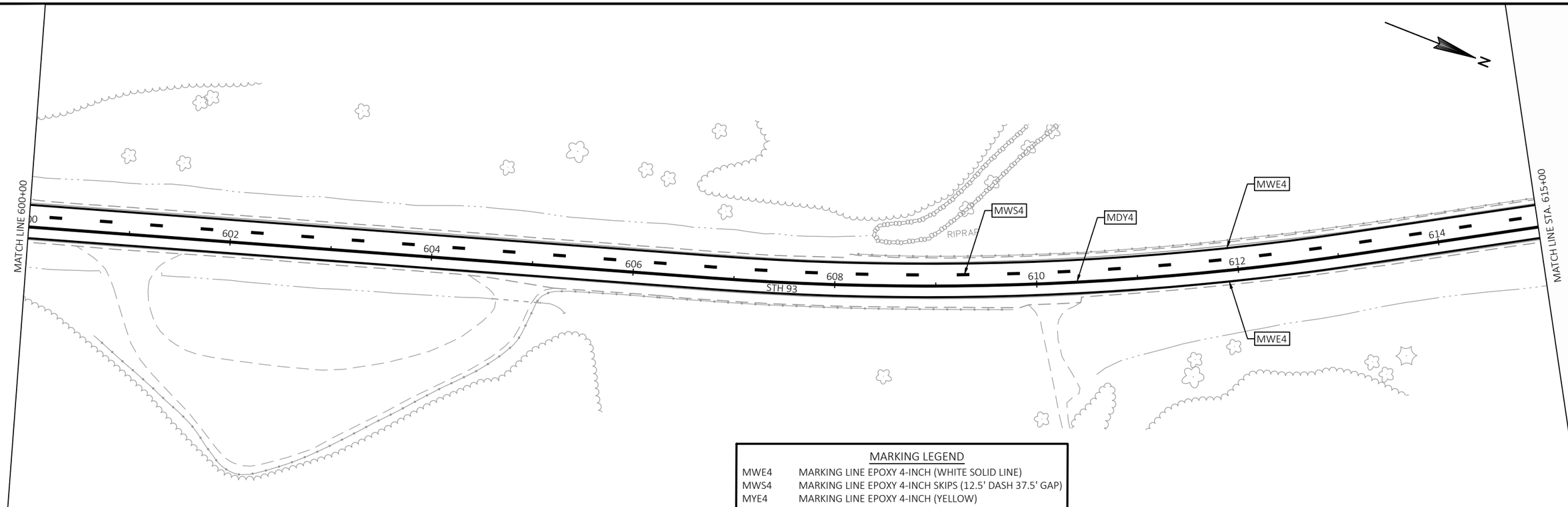

2

MARKING LEGEND

MWE4	MARKING LINE EPOXY 4-INCH (WHITE SOLID LINE)
MWS4	MARKING LINE EPOXY 4-INCH SKIPS (12.5' DASH 37.5' GAP)
MYE4	MARKING LINE EPOXY 4-INCH (YELLOW)
MDY4	MARKING LINE EPOXY 4-INCH (DOUBLE YELLOW)
MYS4	MARKING LINE EPOXY 4-INCH SKIPS (12.5' DASH 37.5' GAP)
MWE8	MARKING LINE EPOXY 8-INCH (WHITE)
MDWE12	MARKING DIAGONAL EPOXY 12-INCH (WHITE)
MDYE12	MARKING DIAGONAL EPOXY 12-INCH (YELLOW)

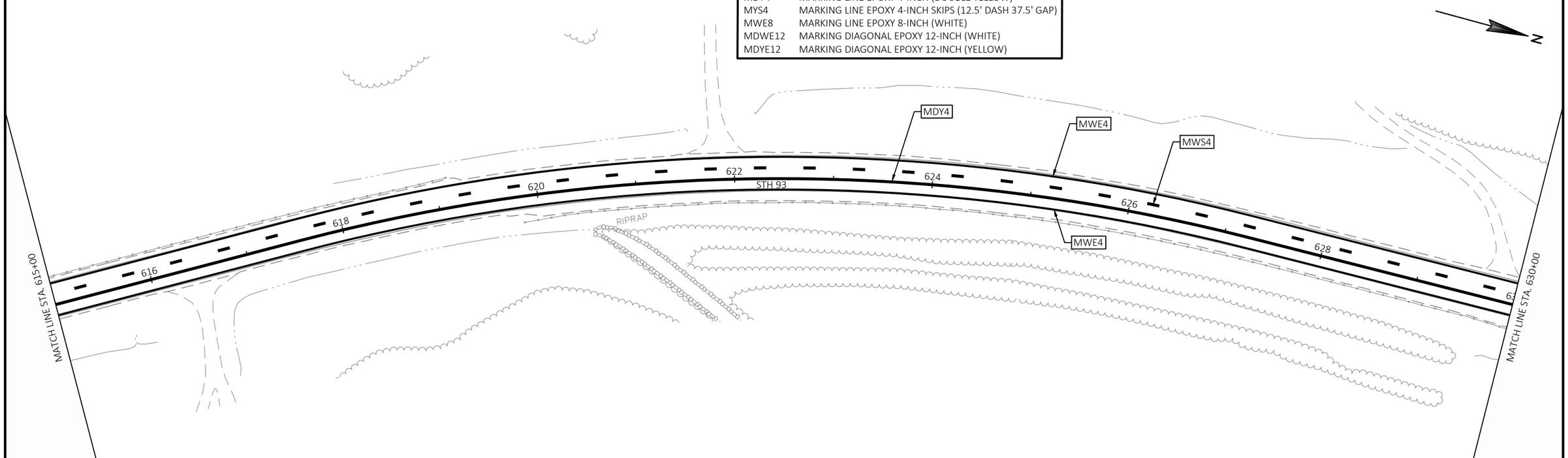

PROJECT NO: 7130-00-71/78	HWY: STH 93	COUNTY: TREMPEALEAU	PAVEMENT MARKING	SHEET 23	E

FILE NAME : P:\90S\93\00093390\CADD\SHEETSPLAN\023201_PS.DWG
LAYOUT NAME - 023207_ps
PLOT DATE : 8/28/2019 7:14 AM PLOT BY : SHAWN DOLENS PLOT NAME : PLOT SCALE : 1IN:100 FT

WISDOT/CADDS SHEET 42

2

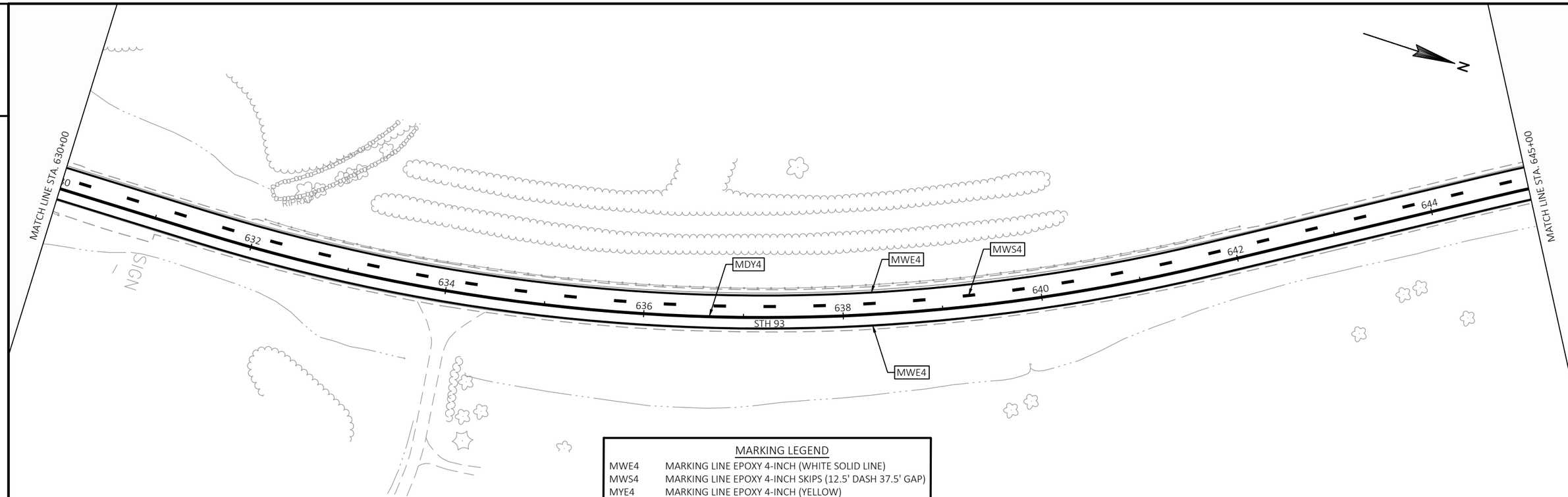

MARKING LEGEND

MWE4	MARKING LINE EPOXY 4-INCH (WHITE SOLID LINE)
MWS4	MARKING LINE EPOXY 4-INCH SKIPS (12.5' DASH 37.5' GAP)
MYE4	MARKING LINE EPOXY 4-INCH (YELLOW)
MDY4	MARKING LINE EPOXY 4-INCH (DOUBLE YELLOW)
MYS4	MARKING LINE EPOXY 4-INCH SKIPS (12.5' DASH 37.5' GAP)
MWE8	MARKING LINE EPOXY 8-INCH (WHITE)
MDWE12	MARKING DIAGONAL EPOXY 12-INCH (WHITE)
MDYE12	MARKING DIAGONAL EPOXY 12-INCH (YELLOW)

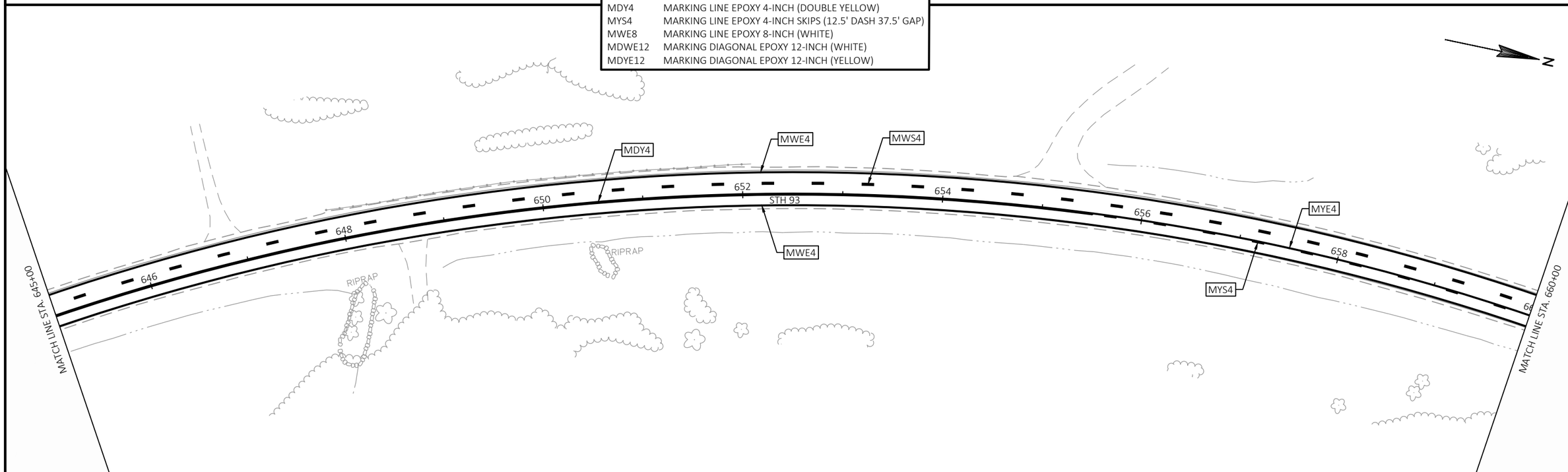

PROJECT NO: 7130-00-71/78	HWY: STH 93	COUNTY: TREMPEALEAU	PAVEMENT MARKING	SHEET 24	E

FILE NAME : P:\90S\93\00093390\CADD\SHEETSPLAN\023201_PS.DWG
LAYOUT NAME - 023208_ps
PLOT DATE : 8/28/2019 7:14 AM PLOT BY : SHAWN DOLENS PLOT NAME : PLOT SCALE : 1IN:100 FT

2

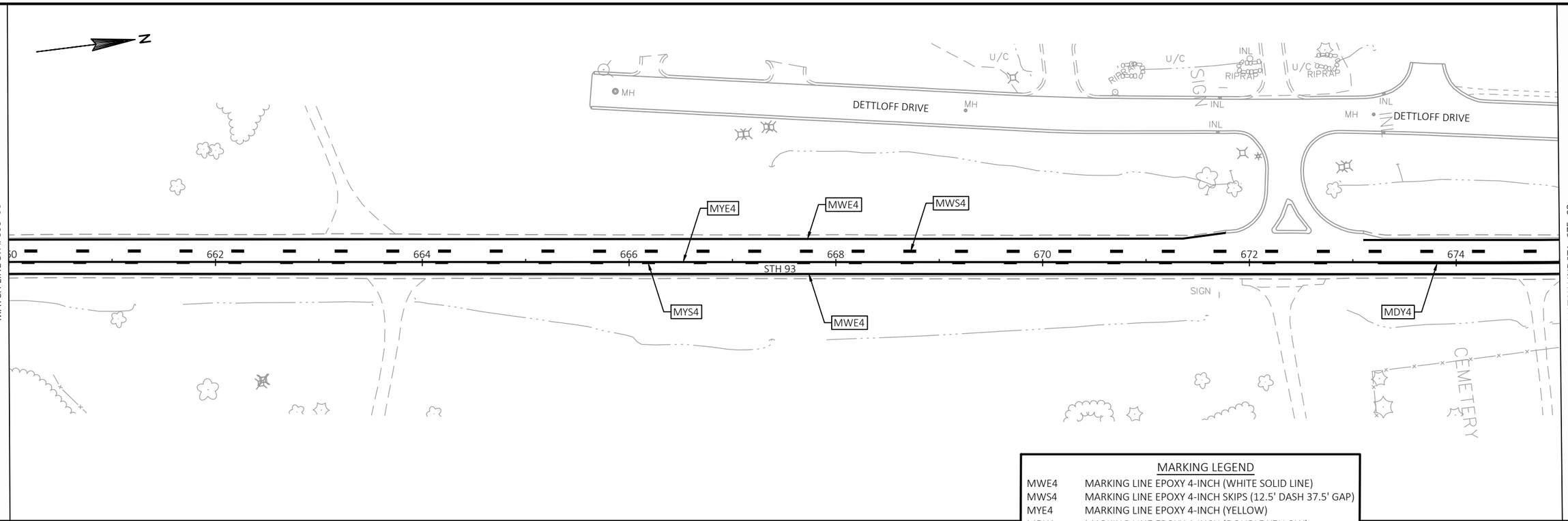

MARKING LEGEND

MWE4	MARKING LINE EPOXY 4-INCH (WHITE SOLID LINE)
MWS4	MARKING LINE EPOXY 4-INCH SKIPS (12.5' DASH 37.5' GAP)
MYE4	MARKING LINE EPOXY 4-INCH (YELLOW)
MDY4	MARKING LINE EPOXY 4-INCH (DOUBLE YELLOW)
MYS4	MARKING LINE EPOXY 4-INCH SKIPS (12.5' DASH 37.5' GAP)
MWE8	MARKING LINE EPOXY 8-INCH (WHITE)
MDWE12	MARKING DIAGONAL EPOXY 12-INCH (WHITE)
MDYE12	MARKING DIAGONAL EPOXY 12-INCH (YELLOW)

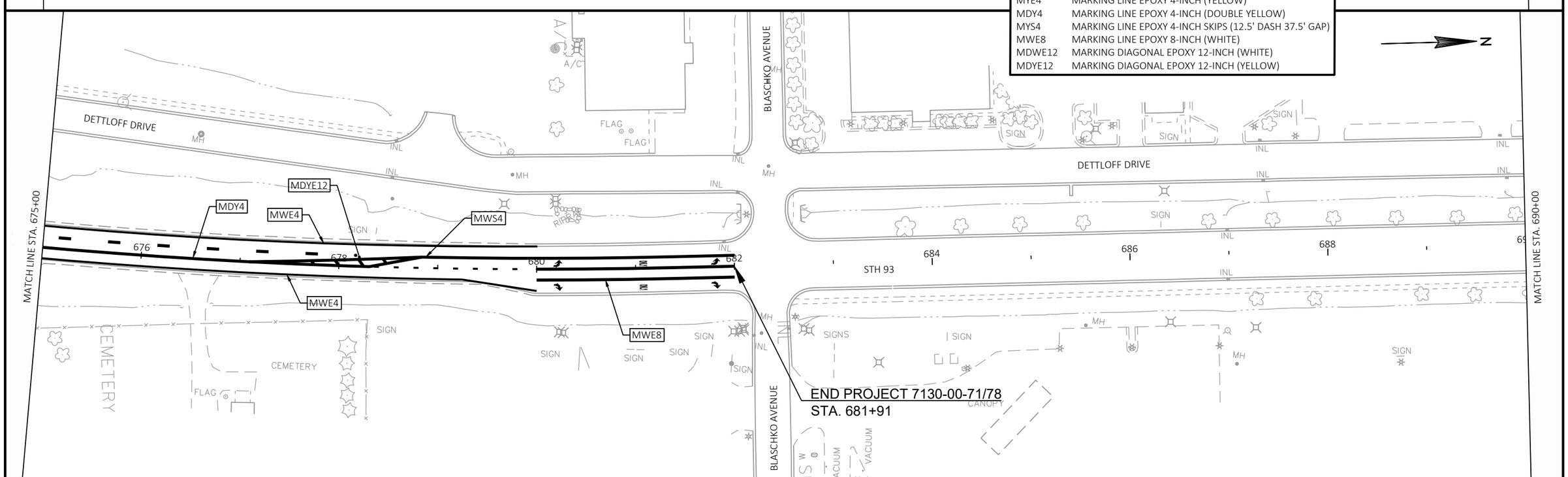

2

PROJECT NO: 7130-00-71/78	HWY: STH 93	COUNTY: TREMPEALEAU	PAVEMENT MARKING	SHEET 25	E

FILE NAME : P:\90S\93\00093390\CADD\SHEETSPLAN\023201_PS.DWG
LAYOUT NAME - 023209_ps
PLOT DATE : 8/28/2019 7:14 AM
PLOT BY : SHAWN DOLENS
PLOT NAME :
PLOT SCALE : 1IN:100 FT

WISDOT/CADDS SHEET 42

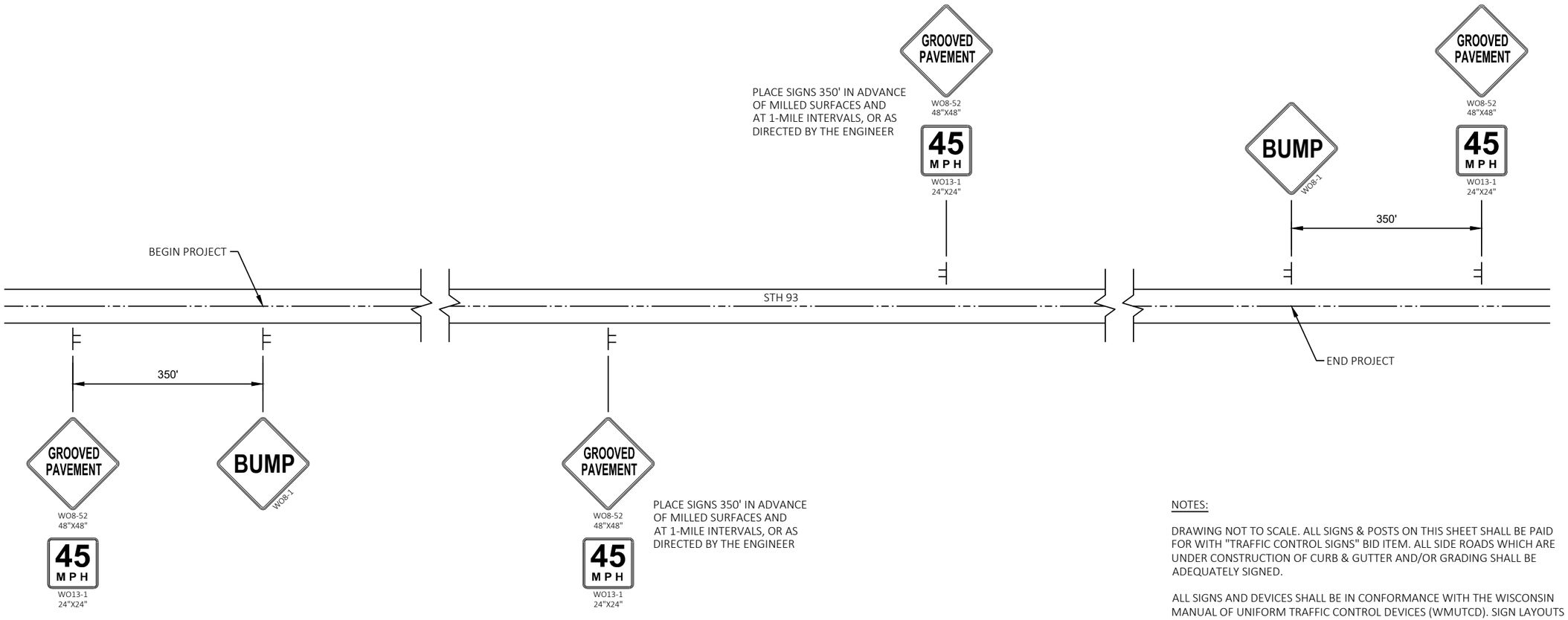

NOTES:

DRAWING NOT TO SCALE. ALL SIGNS & POSTS ON THIS SHEET SHALL BE PAID FOR WITH "TRAFFIC CONTROL SIGNS" BID ITEM. ALL SIDE ROADS WHICH ARE UNDER CONSTRUCTION OF CURB & GUTTER AND/OR GRADING SHALL BE ADEQUATELY SIGNED.

ALL SIGNS AND DEVICES SHALL BE IN CONFORMANCE WITH THE WISCONSIN MANUAL OF UNIFORM TRAFFIC CONTROL DEVICES (WMUTCD). SIGN LAYOUTS SHALL BE IN ACCORDANCE WITH THE WISDOT STANDARD SIGN PLATES.

"WO" SIGNS ARE THE SAME AS "W" SIGNS EXCEPT THE BACKGROUND IS ORANGE. ALL SIGNS ARE 48" X 48" UNLESS OTHERWISE NOTED.

THE EXACT NUMBER, LOCATION AND SPACING OF ALL SIGNS AND DEVICES SHALL BE ADJUSTED TO FIT FIELD CONDITIONS AS DIRECTED BY THE ENGINEER.

DETAIL FOR SIGNING ON MAINLINE MILLED SURFACE

Estimate Of Quantities

Line	Item	Item Description	Unit	Total	7130-00-71 Qty	7130-00-78 Qty
0002	203.0100	Removing Small Pipe Culverts	EACH	3.000	3.000	
0004	204.0115	Removing Asphaltic Surface Butt Joints	SY	3,430.000	3,430.000	
0006	204.0120	Removing Asphaltic Surface Milling	SY	123,738.000	123,738.000	
0008	204.0165	Removing Guardrail	LF	113.000	113.000	
0010	204.0180	Removing Delineators and Markers	EACH	9.000	9.000	
0012	205.0100	Excavation Common	CY	2.000	2.000	
0014	208.0100	Borrow	CY	49.000	49.000	
0016	211.0100	Prepare Foundation for Asphaltic Paving (project) 01. 7130-01-71	LS	1.000	1.000	
0018	211.0400	Prepare Foundation for Asphaltic Shoulders	STA	196.000		196.000
0020	213.0100	Finishing Roadway (project) 01. 7130-00-71	EACH	1.000	1.000	
0022	213.0100	Finishing Roadway (project) 02. 7130-00-78	EACH	1.000		1.000
0024	305.0110	Base Aggregate Dense 3/4-Inch	TON	5,750.000	5,750.000	
0026	305.0120	Base Aggregate Dense 1 1/4-Inch	TON	130.000	130.000	
0028	455.0605	Tack Coat	GAL	15,445.000	15,170.000	275.000
0030	460.0105.S	HMA Percent Within Limits (PWL) Test Strip Volumetrics	EACH	1.000	1.000	
0032	460.0110.S	HMA Percent Within Limits (PWL) Test Strip Density	EACH	2.000	2.000	
0034	460.2005	Incentive Density PWL HMA Pavement	DOL	16,260.000	16,260.000	
0036	460.2010	Incentive Air Voids HMA Pavement	DOL	21,950.000	21,950.000	
0038	460.4110.S	Reheating HMA Pavement Longitudinal Joints	LF	25,741.000	25,741.000	
0040	460.6645	HMA Pavement 5 MT 58-34 V	TON	22,207.000	21,427.000	780.000
0042	465.0110	Asphaltic Surface Patching	TON	100.000	100.000	
0044	465.0120	Asphaltic Surface Driveways and Field Entrances	TON	130.000	130.000	
0046	465.0425	Asphaltic Shoulder Rumble Strips 2-Lane Rural	LF	47,356.000		47,356.000
0048	465.0475	Asphalt Centerline Rumble Strips 2-Lane Rural	LF	22,780.000	22,780.000	
0050	520.8000	Concrete Collars for Pipe	EACH	1.000	1.000	
0052	520.8700	Cleaning Culvert Pipes	EACH	2.000	2.000	
0054	520.9700.S	Culvert Pipe Liners (size) 01. 24-Inch	LF	213.000	213.000	
0056	520.9700.S	Culvert Pipe Liners (size) 02. 30-Inch	LF	143.000	143.000	
0058	520.9700.S	Culvert Pipe Liners (size) 03. 36-Inch	LF	232.000	232.000	
0060	520.9750.S	Cleaning Culvert Pipes for Liner Verification	EACH	6.000	6.000	
0062	521.1024	Apron Endwalls for Culvert Pipe Steel 24-Inch	EACH	2.000	2.000	
0064	521.1030	Apron Endwalls for Culvert Pipe Steel 30-Inch	EACH	1.000	1.000	
0066	521.1036	Apron Endwalls for Culvert Pipe Steel 36-Inch	EACH	2.000	2.000	
0068	521.3118	Culvert Pipe Corrugated Steel 18-Inch	LF	26.000	26.000	
0070	521.3124	Culvert Pipe Corrugated Steel 24-Inch	LF	50.000	50.000	
0072	606.0100	Riprap Light	CY	1.300	1.300	
0074	606.0200	Riprap Medium	CY	8.400	8.400	
0076	611.0545	Manhole Covers Type L	EACH	1.000	1.000	
0078	611.2004	Manholes 4-FT Diameter	EACH	1.000	1.000	

Line	Item	Item Description	Unit	Total	7130-00-71 Qty	7130-00-78 Qty
0080	614.0010	Barrier System Grading Shaping Finishing	EACH	1.000	1.000	
0082	614.0305	Steel Plate Beam Guard Class A	LF	188.000	188.000	
0084	614.0370	Steel Plate Beam Guard Energy Absorbing Terminal	EACH	1.000	1.000	
0086	614.0400	Adjusting Steel Plate Beam Guard	LF	7,561.000	7,561.000	
0088	614.0950	Replacing Guardrail Posts and Blocks	EACH	83.000	83.000	
0090	614.0951	Replacing Guardrail Rail and Hardware	LF	1,625.000	1,625.000	
0092	618.0100	Maintenance And Repair of Haul Roads (project) 01. 7130-00-71	EACH	1.000	1.000	
0094	619.1000	Mobilization	EACH	1.000	0.800	0.200
0096	624.0100	Water	MGAL	177.000	177.000	
0098	625.0100	Topsoil	SY	83.000	83.000	
0100	628.1504	Silt Fence	LF	500.000	500.000	
0102	628.1520	Silt Fence Maintenance	LF	500.000	500.000	
0104	628.1905	Mobilizations Erosion Control	EACH	3.000	3.000	
0106	628.1910	Mobilizations Emergency Erosion Control	EACH	3.000	3.000	
0108	628.2006	Erosion Mat Urban Class I Type A	SY	242.000	242.000	
0110	628.7504	Temporary Ditch Checks	LF	60.000	60.000	
0112	628.7555	Culvert Pipe Checks	EACH	25.000	25.000	
0114	628.7570	Rock Bags	EACH	25.000	25.000	
0116	629.0205	Fertilizer Type A	CWT	0.050	0.050	
0118	630.0120	Seeding Mixture No. 20	LB	2.200	2.200	
0120	630.0200	Seeding Temporary	LB	2.200	2.200	
0122	633.5200	Markers Culvert End	EACH	54.000	54.000	
0124	638.2102	Moving Signs Type II	EACH	1.000	1.000	
0126	642.5201	Field Office Type C	EACH	1.000	1.000	
0128	643.0300	Traffic Control Drums	DAY	2,867.000	2,867.000	
0130	643.0310.S	Temporary Portable Rumble Strips	LS	1.000	1.000	
0132	643.0420	Traffic Control Barricades Type III	DAY	34.000	34.000	
0134	643.0715	Traffic Control Warning Lights Type C	DAY	370.000	370.000	
0136	643.0800	Traffic Control Arrow Boards	DAY	30.000	30.000	
0138	643.0900	Traffic Control Signs	DAY	2,700.000	2,700.000	
0140	643.1000	Traffic Control Signs Fixed Message	SF	64.000	64.000	
0142	643.5000	Traffic Control	EACH	1.000	1.000	
0144	645.0120	Geotextile Type HR	SY	30.000	30.000	
0146	646.1020	Marking Line Epoxy 4-Inch	LF	105,526.000	105,526.000	
0148	646.3020	Marking Line Epoxy 8-Inch	LF	531.000	531.000	
0150	646.4505	Marking Line Same Day Paint 4-Inch	LF	103,530.000	103,530.000	
0152	646.4520	Marking Line Same Day Epoxy 4-Inch	LF	55,353.000	55,353.000	
0154	646.5020	Marking Arrow Epoxy	EACH	4.000	4.000	
0156	646.5120	Marking Word Epoxy	EACH	2.000	2.000	

Line	Item	Item Description	Unit	Total	7130-00-71 Qty	7130-00-78 Qty
0158	646.7120	Marking Diagonal Epoxy 12-Inch	LF	109.000	109.000	
0160	648.0100	Locating No-Passing Zones	MI	4.900	4.900	
0162	650.4000	Construction Staking Storm Sewer	EACH	1.000	1.000	
0164	650.8000	Construction Staking Resurfacing Reference	LF	25,741.000	25,741.000	
0166	650.9910	Construction Staking Supplemental Control (project) 01. 7130-00-71	LS	1.000	1.000	
0168	650.9920	Construction Staking Slope Stakes	LF	173.000	173.000	
0170	690.0150	Sawing Asphalt	LF	1,022.000	1,022.000	
0172	740.0440	Incentive IRI Ride	DOL	26,980.000	26,980.000	
0174	ASP.1T0A	On-the-Job Training Apprentice at $5.00/HR	HRS	2,000.000	2,000.000	
0176	ASP.1T0G	On-the-Job Training Graduate at $5.00/HR	HRS	630.000	630.000	
0178	SPV.0060	Special 01. Cleaning Endwalls	EACH	12.000	12.000	
0180	SPV.0060	Special 02. Cleaning Inlets	EACH	5.000	5.000	
0182	SPV.0060	Special 03. Culvert Pipe Corrugated Steel 24-Inch Tee	EACH	3.000	3.000	
0184	SPV.0060	Special 04. Replace EAT Reflective Sheeting	EACH	6.000	6.000	
0186	SPV.0060	Special 05. Replace EAT Impact Head	EACH	2.000	2.000	
0188	SPV.0060	Special 07. Ditch Cleaning	EACH	1.000	1.000	
0190	SPV.0090	Special 02. Shoulder Existing Beamguard	LF	12,571.000	12,571.000	
0192	SPV.0090	Special 03. Repair Existing Asphalt Curb	LF	100.000	100.000	
0194	SPV.0090	Special 04. Cured-In-Place Pipe Lining 36-Inch	LF	216.000	216.000	
0196	SPV.0105	Special 01. Material Transfer Vehicle	LS	1.000	1.000	
0198	SPV.0105	Special 02. Milling and Removing Temporary Joint	LS	1.000	1.000	

3

REMOVING ASPHALTIC SURFACE

STATION	STATION	LOCATION	204.0115 BUTT JOINTS SY	204.0120 MILLING SY
424+50	471+11	MAINLINE	217	16,638
471+11	524+19	MAINLINE	--	28,596
524+19	528+87	MAINLINE	--	2,174
528+87	549+00	MAINLINE	--	9,844
549+00	679+25	MAINLINE	--	65,331
679+25	681+91	MAINLINE	217	1,155
SWENSON LANE		SIDEROAD	390	--
WHITETAIL LANE		SIDEROAD	312	--
CTH G		SIDEROAD	670	--
WILBER RD		SIDEROAD	470	--
WILBER RD		SIDEROAD	236	--
DETTLOFF DRIVE		SIDEROAD	143	--
DRIVEWAYS		LT AND RT	775	--
		TOTALS	3,430	123,738

REMOVING DELINEATORS AND MARKERS

STATION	204.0180 EA
630+50 RT	9
TOTAL	9

EARTHWORK SUMMARY

STATION	205.0100 EXCAVATION COMMON CUT (1) CY	EBS CY	SALVAGED/ UNUSABLE PAVEMENT MATERIAL (2) CY	AVAILABLE MATERIAL (3) CY	UNEXPANDED FILL CY	EXPANDED FILL (4) CY	MASS ORDINATE +/- (5) CY	208.0100 BORROW CY
605+00 - 605+71 RT	2	--	--	2	41	51	-49	49
TOTALS	2	0	0	2	41	51	-49	49

(1) EXCAVATION COMMON IS THE SUM OF THE CUT AND EBS EXCAVATION COLUMNS. ITEM 205.0100
(2) SALVAGED/UNUSEABLE PAVEMENT MATERIAL
(3) AVAILABLE MATERIAL = CUT - SALVAGED/UNUSEABLE PAVEMENT MATERIAL
(4) EXPANDED FILL FACTOR = 1.25
(5) THE MASS ORDINATE + OR - QUANTITY CALCULATED FOR THE DIVISION. PLUS QUANTITY INDICATES AN EXCESS OF MATERIAL WITHIN THE D
MINUS QUANTITY INDICATES A SHORTAGE OF MATERIAL WITHIN THE DIVISION.

3

PREPARE FOUNDATION FOR ASPHALTIC SHOULDERS

PROJECT	STA	STA	LOCATION	211.0400 STA	REMARKS
7130-00-78	426+49	451+16	LT	25	SHOULDER WIDENING
7130-00-78	437+46	451+34	RT	14	SHOULDER WIDENING
7130-00-78	453+31	471+82	LT	19	SHOULDER WIDENING
7130-00-78	453+61	463+66	RT	11	SHOULDER WIDENING
7130-00-78	465+97	471+18	RT	6	SHOULDER WIDENING
7130-00-78	505+88	517+83	LT	12	SHOULDER WIDENING
7130-00-78	528+59	538+15	LT	10	SHOULDER WIDENING
7130-00-78	539+00	541+59	LT	3	SHOULDER WIDENING
7130-00-78	556+42	564+10	RT	8	SHOULDER WIDENING
7130-00-78	567+27	574+22	RT	7	SHOULDER WIDENING
7130-00-78	575+34	582+75	RT	8	SHOULDER WIDENING
7130-00-78	588+82	600+50	RT	12	SHOULDER WIDENING
7130-00-78	601+52	604+40	RT	3	SHOULDER WIDENING
7130-00-78	609+90	619+64	RT	10	SHOULDER WIDENING
7130-00-78	631+04	633+75	RT	3	SHOULDER WIDENING
7130-00-78	634+41	663+47	RT	30	SHOULDER WIDENING
7130-00-78	664+03	671+93	RT	8	SHOULDER WIDENING
7130-00-78	672+74	674+61	RT	2	SHOULDER WIDENING
7130-00-78	675+02	676+38	RT	2	SHOULDER WIDENING
7130-00-78	676+79	679+49	RT	3	SHOULDER WIDENING
			TOTAL	196	

BASE AGGREGATE DENSE

STATION	LOCATION	305.0110 3/4-INCH TON	305.0120 1 1/4-INCH TON	624.0100 WATER MGAL
424+50 - 681+91	SHOULDERS	4,450	--	134
PROJECT	GRAVEL SIDEROADS AND DRIVEWAYS	300	--	9
PROJECT	BEAM GUARD LOCATIONS	740	--	22
605+12	RT	--	30	1
UNDISTRIBUTED	LT & RT	260	100	11
	TOTALS	5,750	130	177

ALL ITEMS ARE PROJECT 7130-00-71 UNLESS NOTED OTHERWISE

3

HMA

PROJECT	STATION	STATION	LOCATION	* 455.0605 TACK COAT GAL	460.6445 HMA PAVEMENT 5 MT 58-34 V TON	465.0110 ASPHALTIC SURFACE PATCHING TON	465.0120 ASPHALTIC SURFACE DRIVEWAYS AND FIELD ENTRANCES TON	REMARKS
7130-00-71	424+50	471+11	MAINLINE	2,023	2,857	--	--	
7130-00-71	471+11	524+19	MAINLINE	3,432	4,847	--	--	
7130-00-71	524+19	528+87	MAINLINE	261	369	--	--	
7130-00-71	528+87	549+00	MAINLINE	1,181	1,669	--	--	
7130-00-71	549+00	679+25	MAINLINE	7,840	11,074	--	--	
7130-00-71	679+25	681+91	MAINLINE	165	233	--	--	
7130-00-71	SWENSON LANE		SIDEROAD	47	66	--	--	
7130-00-71	WHITETAIL LANE		SIDEROAD	38	53	--	--	
7130-00-71	CTH G		SIDEROAD	81	114	--	--	
7130-00-71	WILBER RD		SIDEROAD	57	80	--	--	
7130-00-71	WILBER RD		SIDEROAD	28	40	--	--	
7130-00-71	DETTLOFF DRIVE		SIDEROAD	17	25	--	--	
7130-00-71	DRIVEWAYS		LT & RT	--	--	--	130	
7130-00-71	UNDISTRIBUTED			--	--	100	--	
7130-00-71 SUBTOTALS				15,170	21,427	100	130	
7130-00-78	426+49	451+16	LT	33	93	--	--	SHOULDER WIDENING
7130-00-78	437+46	451+34	RT	19	52	--	--	SHOULDER WIDENING
7130-00-78	453+31	471+82	LT	25	70	--	--	SHOULDER WIDENING
7130-00-78	453+61	463+66	RT	13	38	--	--	SHOULDER WIDENING
7130-00-78	465+97	471+18	RT	7	20	--	--	SHOULDER WIDENING
7130-00-78	505+88	517+83	LT	16	45	--	--	SHOULDER WIDENING
7130-00-78	528+59	538+15	LT	13	36	--	--	SHOULDER WIDENING
7130-00-78	539+00	541+59	LT	3	10	--	--	SHOULDER WIDENING
7130-00-78	556+42	564+10	RT	10	29	--	--	SHOULDER WIDENING
7130-00-78	567+27	574+22	RT	9	26	--	--	SHOULDER WIDENING
7130-00-78	575+34	582+75	RT	10	28	--	--	SHOULDER WIDENING
7130-00-78	588+82	600+50	RT	16	44	--	--	SHOULDER WIDENING
7130-00-78	601+52	604+40	RT	4	11	--	--	SHOULDER WIDENING
7130-00-78	609+90	619+64	RT	13	37	--	--	SHOULDER WIDENING
7130-00-78	631+04	633+75	RT	4	10	--	--	SHOULDER WIDENING
7130-00-78	634+41	663+47	RT	39	109	--	--	SHOULDER WIDENING
7130-00-78	664+03	671+93	RT	11	30	--	--	SHOULDER WIDENING
7130-00-78	672+74	674+61	RT	2	7	--	--	SHOULDER WIDENING
7130-00-78	675+02	676+38	RT	2	5	--	--	SHOULDER WIDENING
7130-00-78	676+79	679+49	RT	4	10	--	--	SHOULDER WIDENING
7130-00-78	UNDISTRIBUTED			24	71	--	--	
7130-00-78 SUBTOTALS				275	780	0	0	
TOTALS				15,445	22,207	100	130	

*NOTE: TACK CALCULATED AT 0.06 GAL/SY

RUMBLE STRIPS

PROJECT	STATION TO STATION	465.0425 ASPHALTIC SHOULDER RUMBLE STRIPS 2-LANE RURAL TYPE 1 LF	465.0475 ASPHALTIC CENTERLINE RUMBLE STRIPS 2-LANE RURAL LF
7130-00-71	424+50 - 679+25	--	22,780
7130-00-78	424+50 - 676+80	47,356	--
	PROJECT TOTALS	47,356	22,780

LOCATION	460.4110.S REHEATING HMA LONGITUDINAL JOINTS LF	REMARKS
424+50 - 681+91	25,741	CENTERLINE
TOTAL	25,741	

HMA MIXTURE ACCEPTANCE

LOCATION	STA - STA	MIXTURE USE	UNDERLYING SURFACE	BID ITEM	TONS	THICKNESS	QUALITY MANAGEMENT PROGRAM TO BE USED: MIXTURE ACCEPTANCE	QUALITY MANAGEMENT PROGRAM TO BE USED: DENSITY ACCEPTANCE
12 FOOT DRIVING LANE	424+50 -681+91	UPPER LAYER	5MT 58-34V	5MT 58-34V	6,787	1 3/4"	PWL INCENTIVE AIR VOIDS HMA PAVEMENT 460.2010	INCENTIVE DENSITY PWL HMA PAVEMENT 460.2005
12 FOOT DRIVING LANE	424+50 -681+91	LOWER LAYER	MILLED EXISTING HMA SURFACE	5MT 58-34V	4,848	1 1/4"	PWL INCENTIVE AIR VOIDS HMA PAVEMENT 460.2010	INCENTIVE DENSITY PWL HMA PAVEMENT 460.2005
PASSING LANE	471+00 - 550+82 RT, 546+75 - 681+91 LT	UPPER LAYER	5MT 58-34V	5MT 58-34V	2,696	1 3/4"	PWL INCENTIVE AIR VOIDS HMA PAVEMENT 460.2010	INCENTIVE DENSITY PWL HMA PAVEMENT 460.2005
PASSING LANE	471+00 - 550+82 RT, 546+75 - 681+91 LT	LOWER LAYER	MILLED EXISTING HMA SURFACE	5MT 58-34V	1,926	1 1/4"	PWL INCENTIVE AIR VOIDS HMA PAVEMENT 460.2010	INCENTIVE DENSITY PWL HMA PAVEMENT 460.2005
SHOULDERS / SIDEROADS	VARIOUS	UPPER LAYER	5MT 58-34V	5MT 58-34V	2,723	1 3/4"	PWL INCENTIVE AIR VOIDS HMA PAVEMENT 460.2010	ACCEPTANCE TESTING BY DEPARTMENT; NOT ELIGIBLE FOR INCENTIVE
SHOULDERS / SIDEROADS	VARIOUS	LOWER LAYER	MILLED EXISTING HMA SURFACE OR BASE AGGREGATE	5MT 58-34V	1,945	1 1/4"	PWL INCENTIVE AIR VOIDS HMA PAVEMENT 460.2010	ACCEPTANCE TESTING BY DEPARTMENT; NOT ELIGIBLE FOR INCENTIVE
BEAMGUARD WIDENINGS	VARIOUS	UPPER LAYER	5MT 58-34V	5MT 58-34V	593	1 3/4"	PWL INCENTIVE AIR VOIDS HMA PAVEMENT 460.2010	ACCEPTANCE TESTING BY DEPARTMENT; NOT ELIGIBLE FOR INCENTIVE
BEAMGUARD WIDENINGS	VARIOUS	LOWER LAYER	MILLED EXISTING HMA SURFACE	5MT 58-34V	424	1 1/4"	PWL INCENTIVE AIR VOIDS HMA PAVEMENT 460.2010	ACCEPTANCE TESTING BY DEPARTMENT; NOT ELIGIBLE FOR INCENTIVE

ALL ITEMS ARE PROJECT 7130-00-71 UNLESS NOTED OTHERWISE

3

CULVERT PIPE CLEANING AND LINING ITEMS

STATION	520.8700 CLEANING CULVERT PIPE EA	SPV.0060.01 CLEANING ENDWALLS EA	SPV.0060.02 CLEANING INLETS EA	520.9700.S CULVERT PIPE LINER 24-INCH LF	520.9700.S CULVERT PIPE LINER 30-INCH LF	520.9700.S CULVERT PIPE LINER 36-INCH LF	SPV.0090.04 CURED-IN-PLACE PIPE LINING 36-INCH LF	PIPE SLOPE %	520.9750.S CLEANING CULVERT PIPES FOR LINER VERIFICATION EA	REMARKS
431+40	1	--	--	--	--	--	--	--	--	
431+60	--	2	--	--	--	--	--	--	--	
438+25	--	--	--	--	--	66	--	0.8	1	
445+20	--	--	1	96	--	--	--	1.1	1	
452+50	--	1	--	--	--	--	--	--	--	
458+50	--	--	1	--	143	--	--	1.9	1	
464+75	--	2	--	--	--	--	--	--	--	
469+75	--	1	2	--	--	--	--	--	--	
482+20	--	--	--	--	--	--	216	17.6	1	
494+00	--	--	1	--	--	--	--	--	--	
543+20	--	1	--	--	--	--	--	--	--	
555+50	--	2	--	--	--	--	--	--	--	DRIVEWAY PIPE RT
576+90	--	1	--	--	--	--	--	--	--	
615+75	--	1	--	--	--	--	--	--	--	
639+90	--	1	--	--	--	--	--	--	--	
661+50	1	--	--	--	--	--	--	--	--	
667+40	--	--	--	--	--	166	--	1.8	1	
671+60	--	--	--	117	--	--	--	2.6	1	
TOTALS	2	12	5	213	143	232	216		6	

3

CULVERT PIPE ITEMS

STATION	LOCATION	520.8000 CONCRETE COLLARS FOR PIPE EA	521.3118 CULVERT PIPE CORRUGATED STEEL 18-INCH LF	521.3124 CULVERT PIPE CORRUGATED STEEL 24-INCH LF	MINIMUM WALL THICKNESS (INCHES) STEEL	MINIMUM WALL THICKNESS (INCHES) ALUM.	611.0545 MANHOLE COVERS TYPE L EA	611.2004 MANHOLES 4-FT DIAMETER EA	SPV.0060.03 CULVERT PIPE CORRUGATED STEEL 24-INCH TEE EA	203.0100 REMOVING SMALL PIPE CULVERTS EA	REMARKS
543+20	LT	--	--	20	0.064	0.075	--	--	1	1	PARTIAL REMOVAL
605+12	RT	1	26	--	0.064	0.060	1	1	---	--	
615+75	LT	--	--	20	0.064	0.075	--	--	1	1	PARTIAL REMOVAL
639+90	LT	--	--	10	0.064	0.075	--	--	1	1	PARTIAL REMOVAL
TOTALS		1	26	50	--	--	1	1	3	3	

ENDWALLS

STATION	LOCATION	521.1024 APRON ENDWALLS FOR CULVERT PIPE STEEL 24-INCH EA	521.1030 APRON ENDWALLS FOR CULVERT PIPE STEEL 30-INCH EA	521.1036 APRON ENDWALLS FOR CULVERT PIPE STEEL 36-INCH EA
445+20	LT	1	--	--
458+50	LT	--	1	--
482+20	RT	--	--	1
667+40	LT	--	--	1
671+60	LT	1	--	--
TOTALS		2	1	2

BARRIER SYSTEM GRADING SHAPING FINISHING

LOCATION	* CUT CY	* FILL CY	* TOPSOIL SY	* FERTILIZER TYPE A CWT	* SEEDING MIXTURE #20 LBS	* SEEDING TEMPORARY LBS	614.0010 BARRIER SYSTEM GRADING SHAPING FINISHING EA
STA 551+77 - 553+50 LT	34.6	17.4	159.1	0.1	4.3	4.3	1
TOTAL							1

* FOR INFORMATIONAL PURPOSES ONLY

MOBILIZATION

PROJECT	619.1000 EACH
7130-00-71	0.8
7130-00-78	0.2
TOTAL	1

RIPRAP

STATION	LOCATION	606.0100 RIPRAP LIGHT CY	606.0200 RIPRAP MEDIUM CY	645.0120 GEOTEXTILE TYPE HR SY
458+50	LT	1.3	--	--
464+80	RT	--	2.8	10.6
661+50	RT	--	5.6	19.4
TOTALS		1.3	8.4	30.0

ALL ITEMS ARE PROJECT 7130-00-71 UNLESS NOTED OTHERWISE

3

BEAM GUARD ITEMS

LOCATION	204.0165 REMOVING GUARDRAIL LF	614.0305 STEEL PLATE BEAM GUARD CLASS A LF	614.0370 STEEL PLATE BEAM GUARD ENERGY ABSORBING TERMINAL EA	** 614.0400 ADJUSTING STEEL PLATE BEAM GUARD LF	614.0400 ADJUSTING STEEL PLATE BEAM GUARD LF	614.0950 REPLACING GUARDRAIL POSTS AND BLOCKS EA	614.0951 REPLACING GUARDRAIL RAIL AND HARDWARE LF	SPV.0060.04 REPLACE EAT REFLECTIVE SHEETING EA	SPV.0060.05 REPLACE EAT IMPACT HEAD EA	REMARKS
451+35 - 453+14 LT	---	---	---	---	25	1	---	---	---	
451+52 - 453+42 RT	---	---	---	---	---	---	50	1	---	
463+84 - 465+39 RT	---	---	---	75	---	---	50	1	---	INCLUDING EAT
472+00 - WHITETAIL LANE LT	---	---	---	13	75	3	---	---	---	INCLUDING EAT
473+50 - 505+33 LT	---	---	---	2,433	550	12	300	---	---	
496+33 - 508+45 RT	---	---	---	800	363	37	150	1	---	
518+43 - 524+49 LT	---	---	---	381	125	2	50	---	1	
541+78 - 552+27 LT	50	88	1	---	125	4	125	---	---	NORTH EAT
572+62 - 578+75 LT	---	---	---	50	81	2	75	---	---	
582+92 - 588+50 RT	---	---	---	---	82	---	50	---	---	
585+62 - 592+91 LT	---	---	---	---	144	5	---	1	---	
SCENIC OOVERLOOK - 609+76 RT	50	50	---	---	13	7	125	---	---	25' OF CLASS A HAS 25' RAD
608+21 - 619+13 LT	---	---	---	800	144	1	150	1	---	
619+82 - 630+07 RT	---	---	---	---	94	---	100	1	---	
632+05 - 642+10 LT	---	---	---	---	463	---	50	---	1	INCLUDING EAT
647+85 - 652+09 LT	---	---	---	75	50	1	200	---	---	INCLUDING EAT
UNDISTRIBUTED	13	50	---	400	200	8	150	---	---	
TOTALS	113	188	1	5,027	2,534	83	1,625	6	2	
				7,561						

**NOTE: ADJUST FOR HEIGHT

RESTORATION

STATION	LOCATION	625.0100 TOPSOIL SY	628.2006 EROSION MAT URBAN CLASS I TYPE A SY	629.0205 FERTILIZER TYPE A CWT	630.0120 SEEDING MIXTURE #20 LB	630.0200 SEEDING TEMPORARY LB
551+77 - 553+50	LT	--	159	--	--	--
605+04 - 605+71	RT	83	83	0.05	2.2	2.2
TOTALS		83	242	0.05	2.2	2.2

EROSION CONTROL

STATION	628.1504 SILT FENCE LF	628.1520 SILT FENCE MAINTENANCE LF	628.1905 MOBILIZATION EA	628.1910 MOBILIZATION EMERGENCY EA	628.7504 TEMPORARY DITCH CHECKS LF	628.7570 ROCK BAGS EA	628.7555 CULVERT PIPE CHECKS EA
CULVERT REHABILITATIONS	200	200	--	--	--	--	--
551+77 - 553+50	200	200	--	--	--	--	--
PROJECT 7130-00-71	--	--	3	3	--	--	--
UNDISTRIBUTED	100	100	--	--	60	25	25
TOTALS	500	500	3	3	60	25	25

MARKERS CULVERT END

LOCATION	633.5200 EA
STH 93	54
TOTAL	54

PERMANENT SIGNS

LOCATION	SIGN CODE	SIGN SIZE IN X IN	638.2102 MOVING SIGNS TYPE II EACH	MESSAGE
UNDISTRIBUTED	W14-3	48 X 36	1	NO PASSING ZONE
		TOTAL	1	

ALL ITEMS ARE PROJECT 7130-00-71 UNLESS NOTED OTHERWISE

3

TRAFFIC CONTROL

STA	STA	LOCATION	DURATION (DAYS)	643.5000 TRAFFIC CONTROL PROJECT 7130-00-71 EACH	643.0300 DRUMS EACH	643.0300 DRUMS DAY	643.0420 BARRICADES TYPE III EACH	643.0420 BARRICADES TYPE III DAY	643.0715 WARNING LIGHTS TYPE C EACH	643.0715 WARNING LIGHTS TYPE C DAY	643.0800 ARROW BOARDS EACH	643.0800 ARROW BOARDS DAY	643.0900 SIGNS EACH	643.0900 SIGNS DAY	* 643.1000 SIGNS FIXED MESSAGE SF	REMARKS
PROJECT		--	--	--	--	--	--	--	--	--	--	--	--	--	64	HWY 93 ROAD WORK BEGINS XX-XX
424+50	681+91	LT & RT	106	1	--	--	--	--	--	--	--	--	22	2,332	--	ADVANCED WARNING
438+00	505+33	LT	10	--	76	760	--	--	--	--	--	--	1	10	--	BEAMGUARD AND CULVERT MAINTENANCE
438+00	470+00	RT	10	--	41	410	--	--	--	--	--	--	1	10	--	BEAMGUARD AND CULVERT MAINTENANCE
482+00	508+45	RT	5	--	48	240	1	5	14	70	1	5	5	25	--	BEAMGUARD AND CULVERT MAINTENANCE
518+43	524+49	LT	2	--	15	30	--	--	--	--	--	--	1	2	--	BEAMGUARD MAINTENANCE
541+78	553+50	LT	5	--	21	105	--	--	--	--	--	--	1	5	--	BEAMGUARD AND CULVERT MAINTENANCE
542+50	543+50	RT	2	--	23	46	1	2	14	28	1	2	5	10	--	CULVERT MAINTENANCE
572+62	592+91	LT	5	--	42	210	1	5	14	70	1	5	5	25	--	BEAMGUARD MAINTENANCE
582+92	588+50	RT	5	--	15	75	--	--	--	--	--	--	1	5	--	BEAMGUARD AND CURB MAINTENANCE
605+00	630+07	RT	5	--	34	170	--	--	--	--	--	--	1	5	--	BEAMGUARD AND CULVERT MAINTENANCE
608+21	619+13	LT	2	--	33	66	1	2	14	28	1	2	5	10	--	BEAMGUARD AND CULVERT MAINTENANCE
632+05	652+09	LT	5	--	42	210	1	5	14	70	1	5	5	25	--	BEAMGUARD AND CULVERT MAINTENANCE
639+50	640+50	RT	2	--	10	20	--	--	--	--	--	--	1	2	--	CULVERT MAINTENANCE
661+00	672+00	LT	5	--	33	165	1	5	14	70	1	5	5	25	--	CULVERT MAINTENANCE
661+00	672+00	RT	5	--	20	100	--	--	--	--	--	--	1	5	--	CULVERT MAINTENANCE
UNDISTRIBUTED (ACCESS)				--		260		10		34		6		204	--	
	TOTALS			1		2,867		34		370		30		2,700	64	

* INSTALL ONE G20-57 SIGN READING " HWY 93 ROAD WORK BEGINS XX-XX" AT EACH END OF THE PROJECT ONE WEEK PRIOR TO THE START OF CONSTRUCTION.

TEMPORARY PORTABLE RUMBLE STRIPS

LOCATION	643.0310.S LS
PROJECT	1
TOTAL	1

LOCATING NO-PASSING ZONES

LOCATION	648.0100 MI
PROJECT	4.9
TOTAL	4.9

MARKING

STATION	LOCATION	646.1020 LINE EPOXY 4-INCH (YELLOW) LF	646.1020 LINE EPOXY 4-INCH (WHITE) LF	646.3020 LINE EPOXY 8-INCH LF	646.5020 MARKING ARROW EPOXY EA	646.5120 MARKING WORD EPOXY EA	646.7120 MARKING DIAGONAL EPOXY 12-INCH LF	646.4505 SAME DAY PAINT 4-INCH (YELLOW) LF	646.4505 SAME DAY PAINT 4-INCH (WHITE) LF	646.4520 SAME DAY EPOXY 4-INCH (YELLOW) LF	646.4520 SAME DAY EPOXY 4-INCH (WHITE) LF	REMARKS
424+50 - 655+50	CL	46,200	---	---	---	---	---	92,400	---	46,200	---	
424+50 - 425+00	LT	---	50	---	---	---	---	---	---	---	---	
425+76 - 472+50	LT	---	4,674	---	---	---	---	---	---	---	---	
424+50 - 524+57	RT	---	10,007	---	---	---	---	---	---	---	---	
473+25 - 543+00	RT	---	1,744	---	---	---	---	---	1,116	---	1,744	SKIPS
473+44 - 525+00	LT	---	5,156	---	---	---	---	---	---	---	---	
526+08 - 550+12	RT	---	2,206	--	---	---	---	---	---	---	---	
526+24 - 671+78	LT	---	14,554	125	---	---	---	---	---	---	---	
551+62 - 680+00	RT	---	12,838	---	---	---	83	---	---	---	---	
554+00 - 677+50	LT	---	3,088	---	---	---	---	---	1,976	---	3,088	SKIPS
655+50 - 673+25	CL	2,219	---	---	---	---	---	3,834	---	2,219	---	
673+25 - 677+09	CL	768	---	---	---	---	---	1,536	---	768	---	
677+09 - 681+91	CL	1,334	---	---	---	---	---	2,668		1,334	---	
673+11 - 680+00	LT	---	689	---	---	---	---	---	---	---	---	
678+32 - 681+91	RT	---	---	406	4	2	26	---	---	---	---	
TOTALS		50,521	55,005	531	4	2	109	100,438	3,092	50,521	4,832	
		105,526						103,530		55,353		

ALL ITEMS ARE PROJECT 7130-00-71 UNLESS NOTED OTHERWISE

3

CONSTRUCTION STAKING

STATION	LOCATION	650.4000 STORM SEWER EACH	650.8000 RESURFACING REFERENCE LF	650.9910 SUPPLEMENTAL CONTROL LS	650.9920 SLOPE STAKES LF
424+50 - 681+91	STH 93	--	25,741	1	--
551+77 - 553+50	LT	--	--	--	173
605+12	RT	1	--	--	--
TOTALS		1	25,741	1	173

SAWING

STATION	LOCATION	690.0150 ASPHALT LF
424+50		39
SWENSON LN		13
WHITETAIL LN		26
CTH G		28
WILBER RD SOUTH		29
WILBER RD NORTH		32
DETTLOFF DR		36
679+51 - 681+91	RT	240
681+91		39
DRIVEWAYS	LT & RT	540
		--
TOTAL		1,022

LOCATION	SPV.0060.07 DITCH CLEANING EA
464+75 - 465+50 RT	1
TOTAL	1

STATION	STATION	LOCATION	SPV.0090.02 SHOULDER EXISTING BEAMGUARD LF
451+35	453+14	LT	179
451+52	453+42	RT	190
463+84	465+39	RT	155
472+00	505+33	LT	3,333
496+33	508+45	RT	1,212
518+43	524+49	LT	606
541+78	551+46	LT	968
572+62	578+75	LT	613
582+92	588+50	RT	558
585+62	592+91	LT	729
604+95	609+76	RT	481
608+21	619+13	LT	1,092
619+82	630+07	RT	1,025
632+05	642+11	LT	1,006
647+85	652+09	LT	424
		TOTALS	12,571

LOCATION	SPV.0105.02 MILLING AND REMOVING TEMPORARY JOINT LS
424+50 - 681+91	1
TOTAL	1

LOCATION	SPV.0090.03 REPAIR EXISTING ASPHALT CURB LF	REMARKS
586+00 - 588+00 RT	100	SPOT LOCATIONS
TOTAL	100	

LOCATION	SPV.0105.01 MATERIAL TRANSFER VEHICLE LS	REMARKS
424+50 - 681+91	1	UPPER LAYER
TOTAL	1	

ALL ITEMS ARE PROJECT 7130-00-71 UNLESS NOTED OTHERWISE

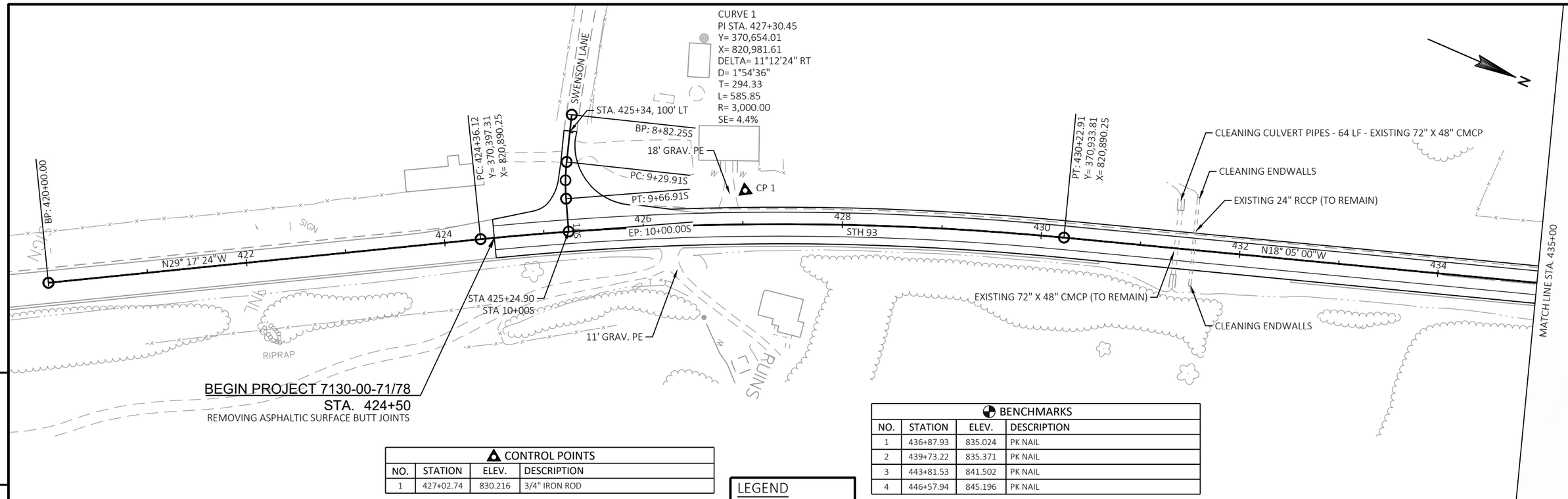

CONTROL POINTS			
NO.	STATION	ELEV.	DESCRIPTION
1	427+02.74	830.216	3/4" IRON ROD

BENCHMARKS			
NO.	STATION	ELEV.	DESCRIPTION
1	436+87.93	835.024	PK NAIL
2	439+73.22	835.371	PK NAIL
3	443+81.53	841.502	PK NAIL
4	446+57.94	845.196	PK NAIL

LEGEND

SENSITIVE AREA

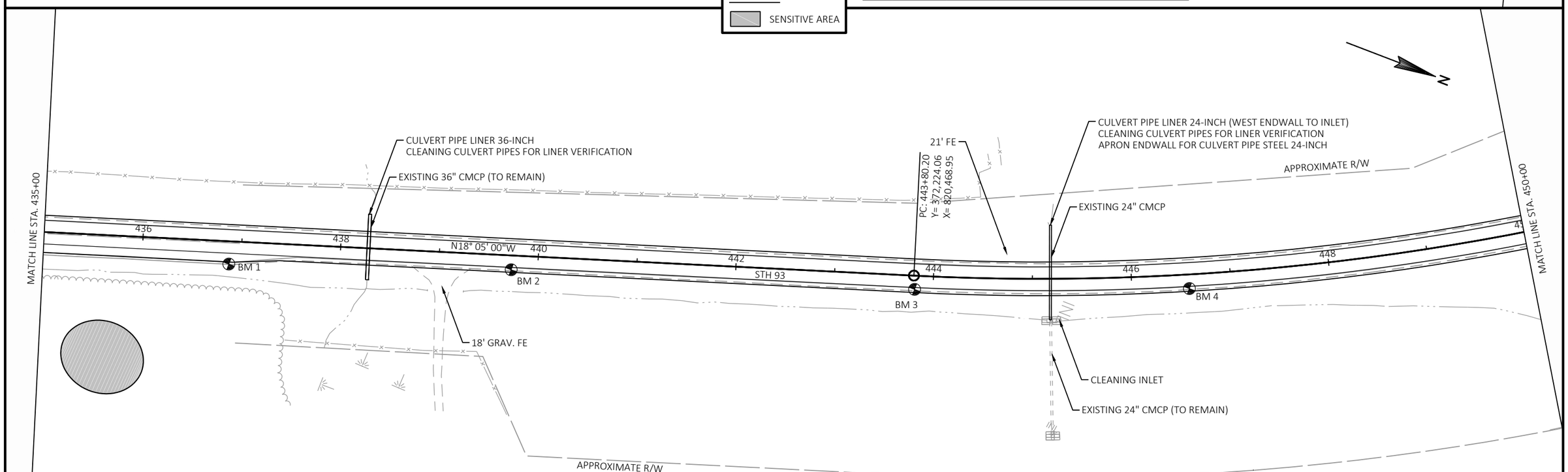

PROJECT NO: 7130-00-71/78	HWY: STH 93	COUNTY: TREMPEALEAU	PLAN	SHEET 36	E

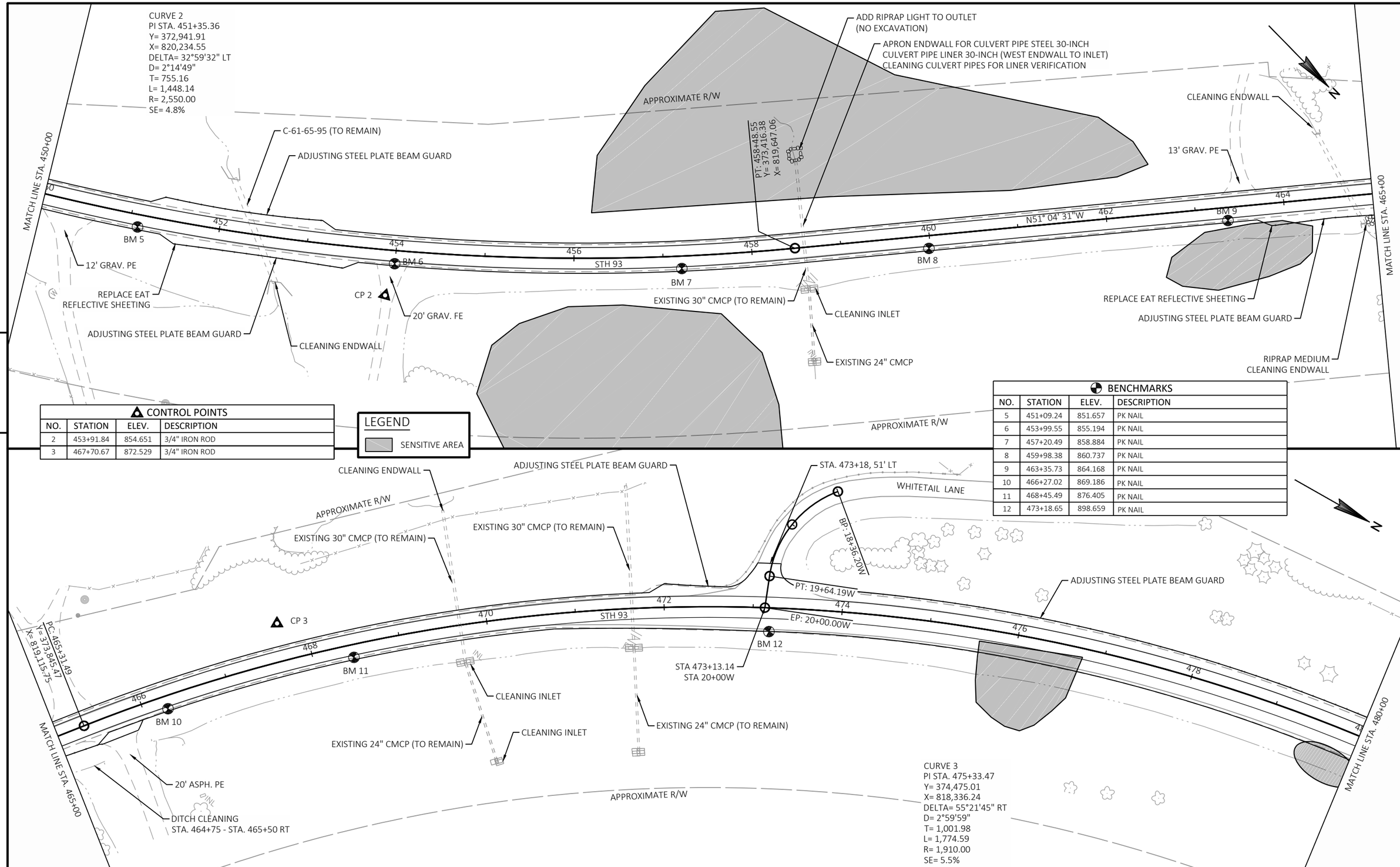

CONTROL POINTS

NO.	STATION	ELEV.	DESCRIPTION
2	453+91.84	854.651	3/4" IRON ROD
3	467+70.67	872.529	3/4" IRON ROD

LEGEND

SENSITIVE AREA

BENCHMARKS

NO.	STATION	ELEV.	DESCRIPTION
5	451+09.24	851.657	PK NAIL
6	453+99.55	855.194	PK NAIL
7	457+20.49	858.884	PK NAIL
8	459+98.38	860.737	PK NAIL
9	463+35.73	864.168	PK NAIL
10	466+27.02	869.186	PK NAIL
11	468+45.49	876.405	PK NAIL
12	473+18.65	898.659	PK NAIL

PROJECT NO: 7130-00-71/78	HWY: STH 93	COUNTY: TREMPEALEAU	PLAN	SHEET 37	E

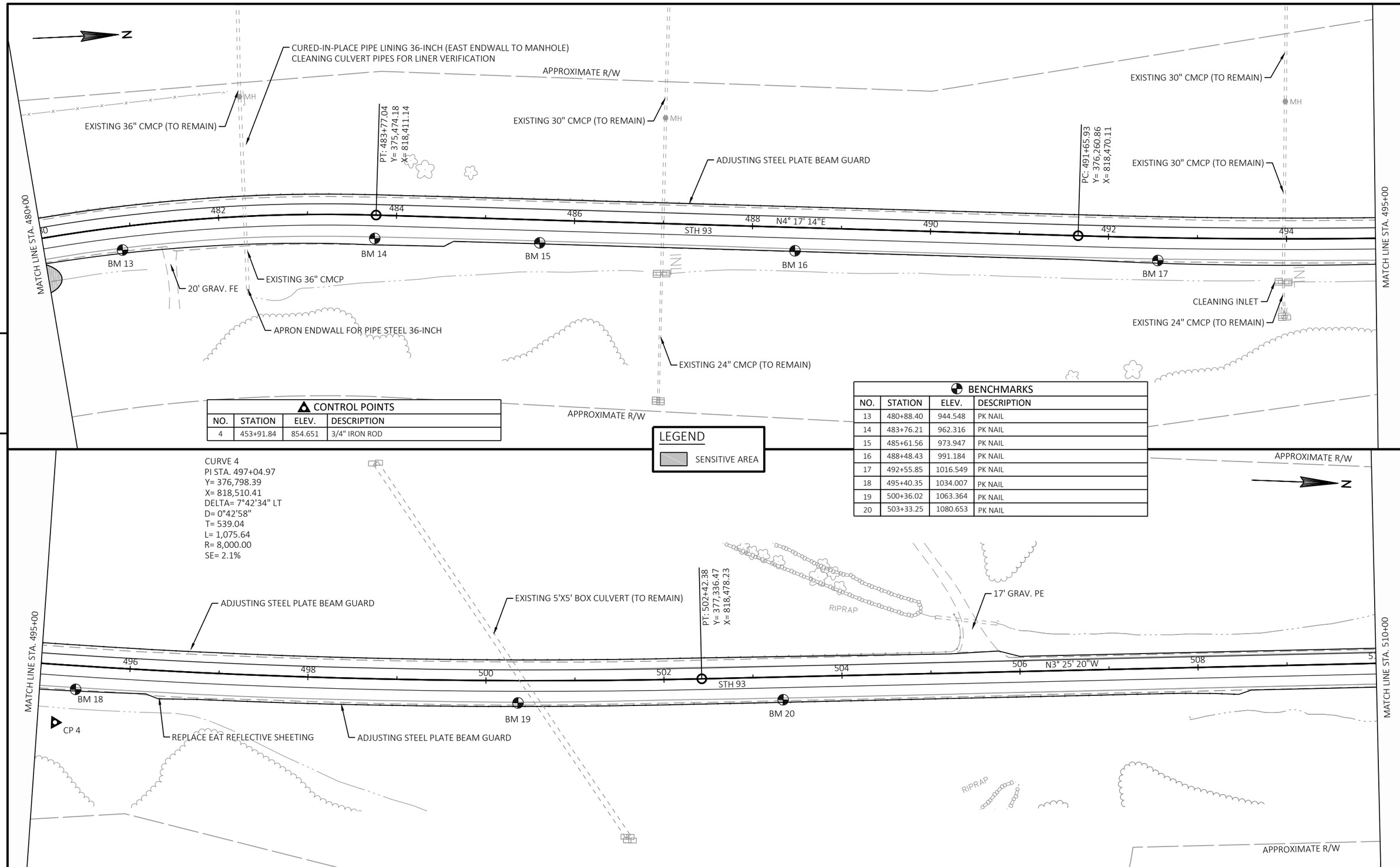

PROJECT NO: 7130-00-71/78	HWY: STH 93	COUNTY: TREMPEALEAU	PLAN	SHEET 38	E

FILE NAME : P:\90S\93\00093390\CADD\SHEETSPLAN\050201_PN.DWG
LAYOUT NAME - 050203_pn
PLOT DATE : 9/3/2019 12:40 PM
PLOT BY : SHAWN DOLENS
PLOT NAME :
PLOT SCALE : 1IN:100 FT
WISDOT/CADDS SHEET 44

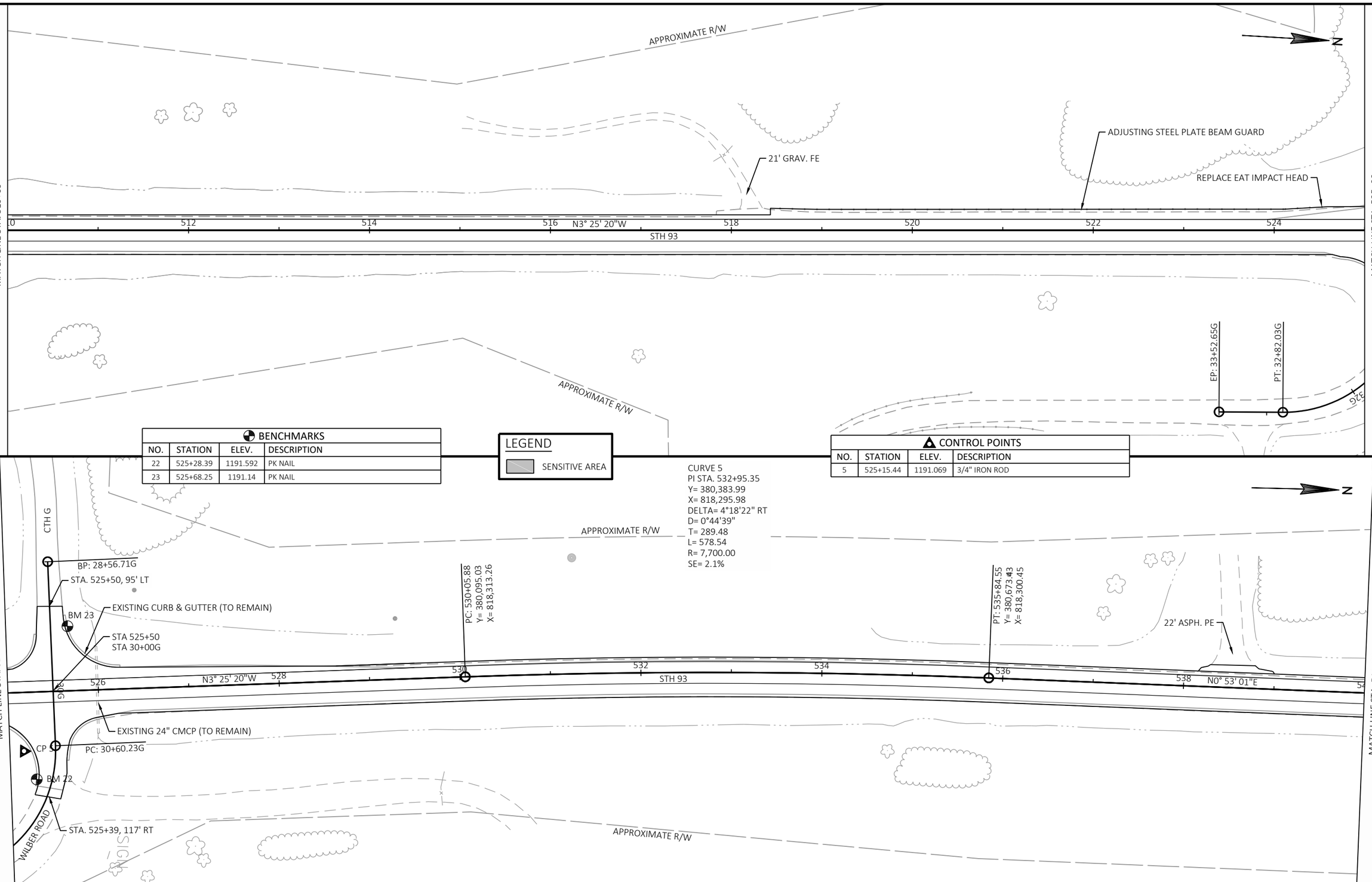

BENCHMARKS

NO.	STATION	ELEV.	DESCRIPTION
22	525+28.39	1191.592	PK NAIL
23	525+68.25	1191.14	PK NAIL

CONTROL POINTS

NO.	STATION	ELEV.	DESCRIPTION
5	525+15.44	1191.069	3/4" IRON ROD

PROJECT NO: 7130-00-71/78	HWY: STH 93	COUNTY: TREMPEALEAU	PLAN	SHEET 39	E

FILE NAME : P:\90S\93\00093390\CADD\SHEETSPLAN\050201_PN.DWG
LAYOUT NAME - 050204_pn
PLOT DATE : 9/3/2019 12:40 PM PLOT BY : SHAWN DOLENS PLOT NAME : PLOT SCALE : 1IN:100 FT

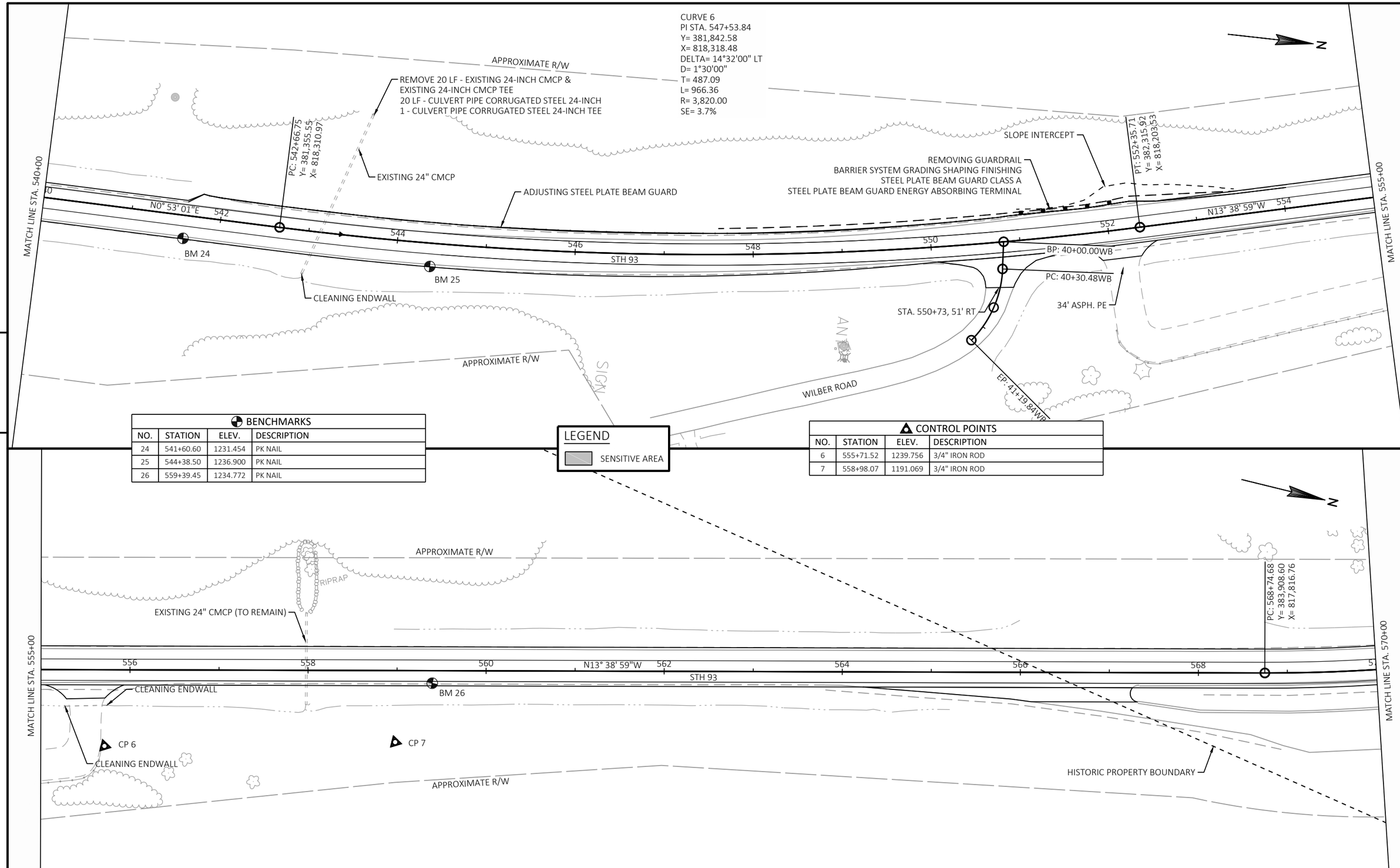

PROJECT NO: 7130-00-71/78	HWY: STH 93	COUNTY: TREMPEALEAU	PLAN	SHEET 40	E

FILE NAME : P:\90S\93\00093390\CADD\SHEETSPLAN\050201_PN.DWG
LAYOUT NAME - 050205_pn
PLOT DATE : 9/3/2019 12:40 PM PLOT BY : SHAWN DOLENS PLOT NAME : PLOT SCALE : 1IN:100 FT

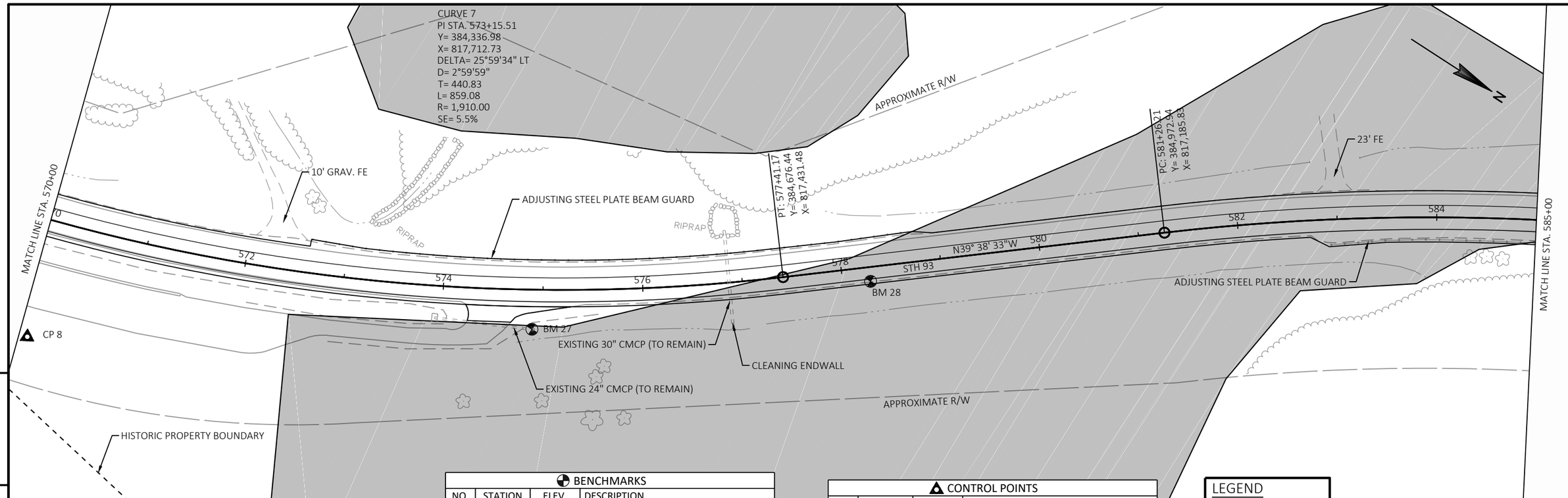

BENCHMARKS			
NO.	STATION	ELEV.	DESCRIPTION
27	574+89.39	1211.003	REINFORCED CONCRETE PIPE
28	578+27.83	1236.900	PK NAIL

CONTROL POINTS			
NO.	STATION	ELEV.	DESCRIPTION
8	570+08.12	1222.892	3/4" IRON ROD

LEGEND

SENSITIVE AREA

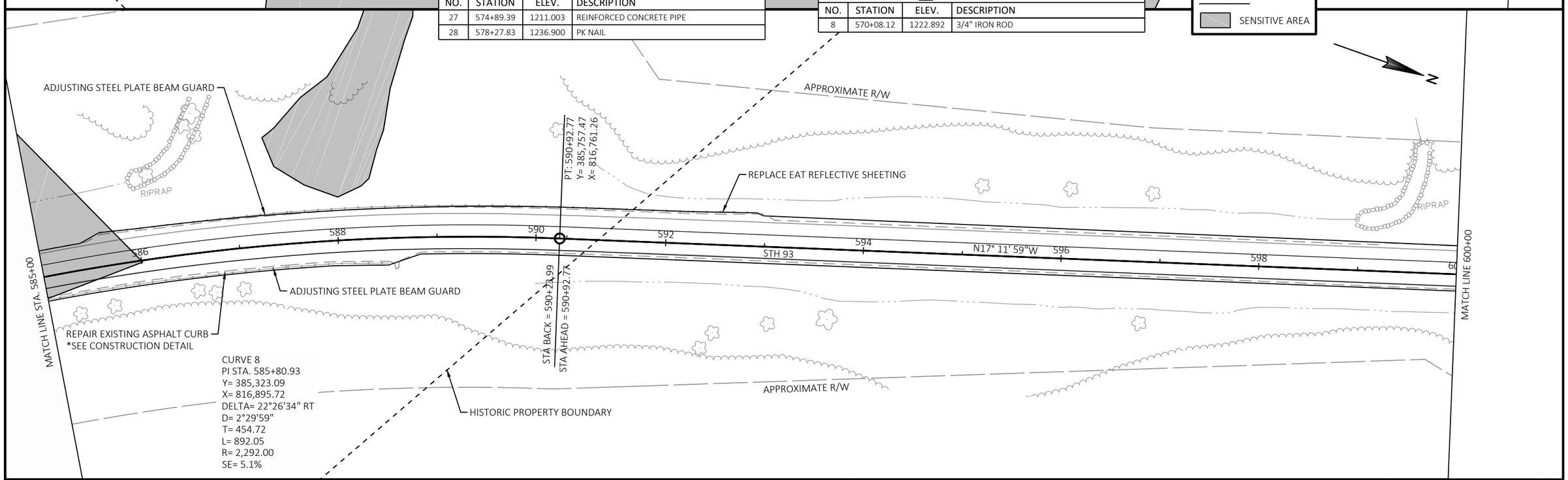

PROJECT NO: 7130-00-71/78	HWY: STH 93	COUNTY: TREMPEALEAU	PLAN	SHEET 41	E

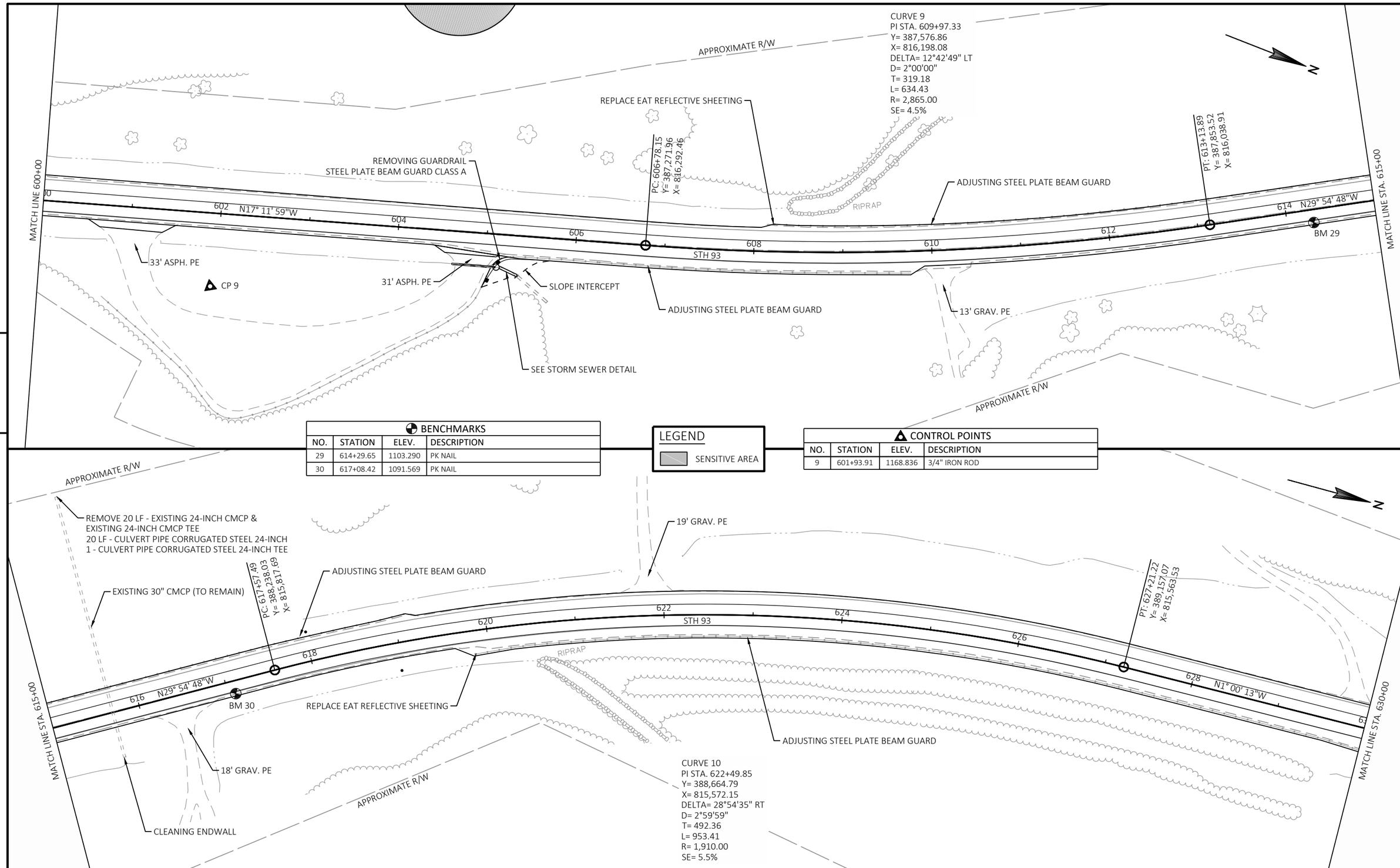

5

5

BENCHMARKS

NO.	STATION	ELEV.	DESCRIPTION
29	614+29.65	1103.290	PK NAIL
30	617+08.42	1091.569	PK NAIL

LEGEND

SENSITIVE AREA

CONTROL POINTS

NO.	STATION	ELEV.	DESCRIPTION
9	601+93.91	1168.836	3/4" IRON ROD

PROJECT NO: 7130-00-71/78	HWY: STH 93	COUNTY: TREMPEALEAU	PLAN	SHEET 42	E

FILE NAME : P:\90S\93\00093390\CADD\SHEETSPLAN\050201_PN.DWG
LAYOUT NAME - 050207_pn
PLOT DATE : 9/3/2019 12:40 PM PLOT BY : SHAWN DOLENS PLOT NAME : PLOT SCALE : 1IN:100 FT

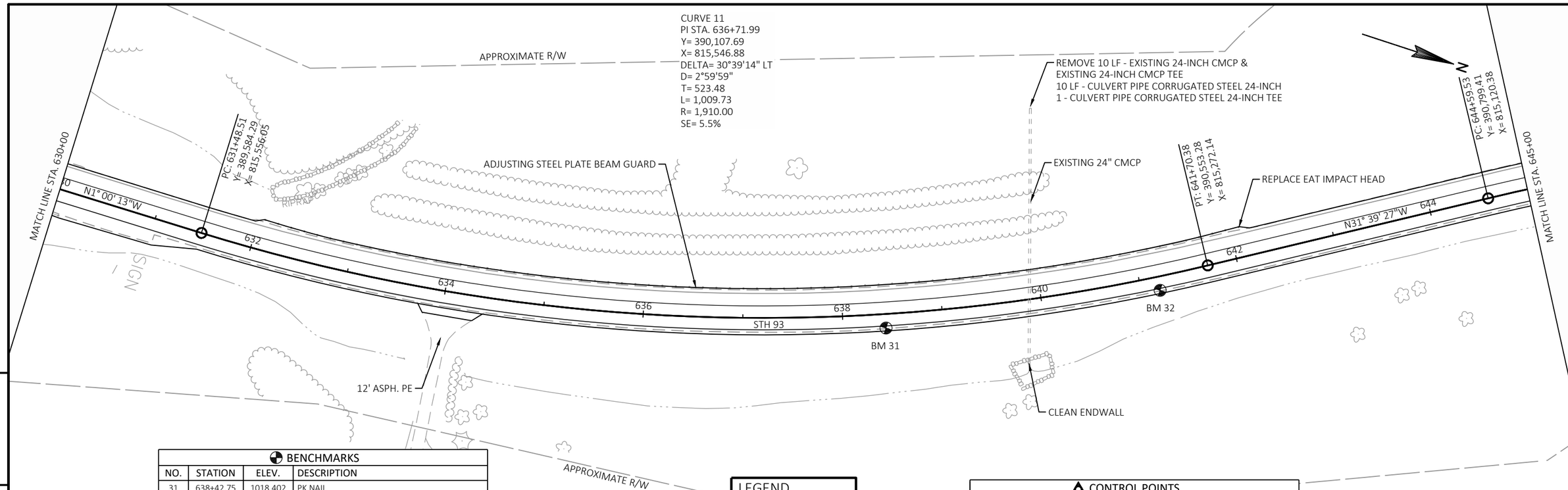

5

5

BENCHMARKS			
NO.	STATION	ELEV.	DESCRIPTION
31	638+42.75	1018.402	PK NAIL
32	641+18.47	1007.693	PK NAIL
33	646+76.93	977.593	PK NAIL
34	649+73.05	991.184	PK NAIL
35	659+81.25	899.677	PK NAIL

LEGEND

SENSITIVE AREA

CONTROL POINTS			
NO.	STATION	ELEV.	DESCRIPTION
10	646+55.60	977.390	3/4" IRON ROD

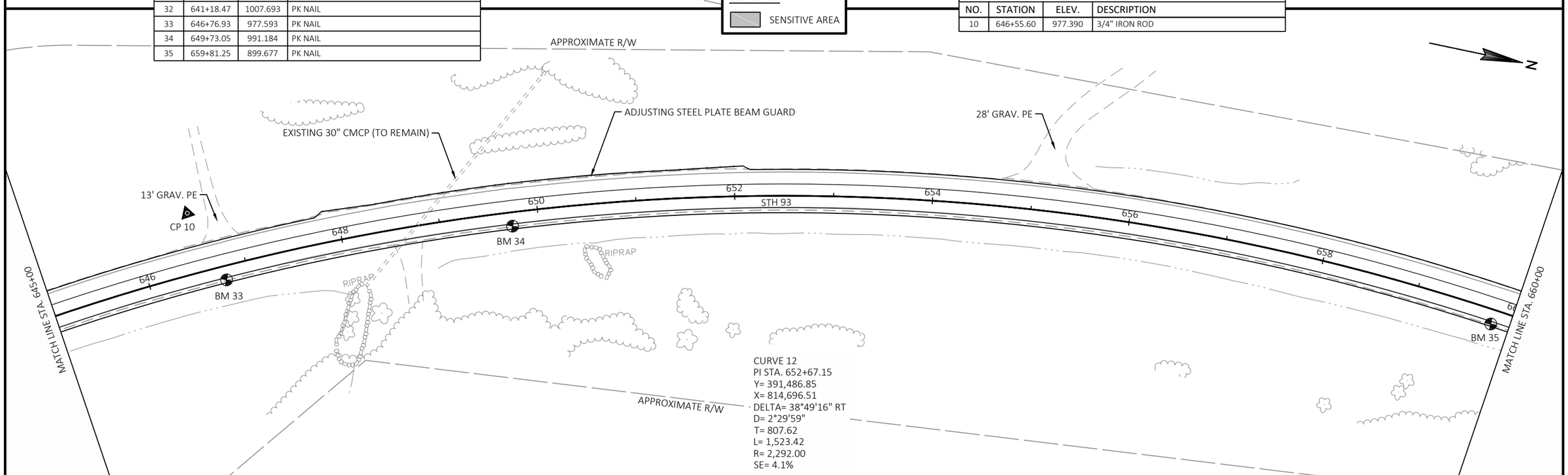

PROJECT NO: 7130-00-71/78	HWY: STH 93	COUNTY: TREMPEALEAU	PLAN	SHEET 43	E

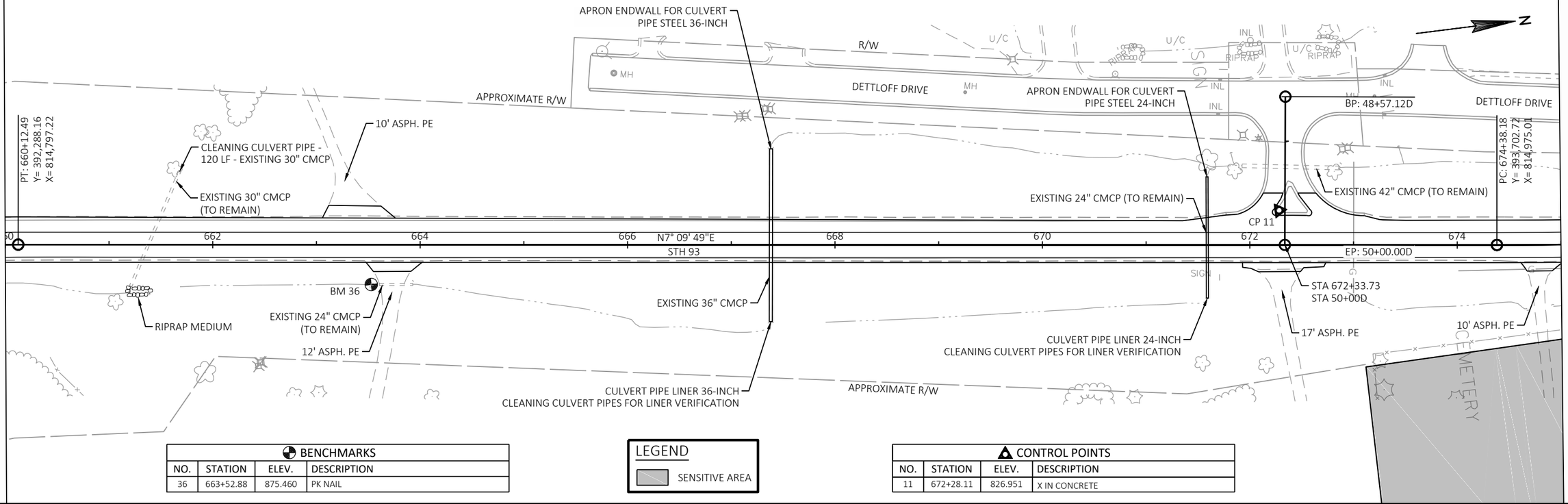

5

5

BENCHMARKS			
NO.	STATION	ELEV.	DESCRIPTION
36	663+52.88	875.460	PK NAIL

LEGEND

SENSITIVE AREA

CONTROL POINTS			
NO.	STATION	ELEV.	DESCRIPTION
11	672+28.11	826.951	X IN CONCRETE

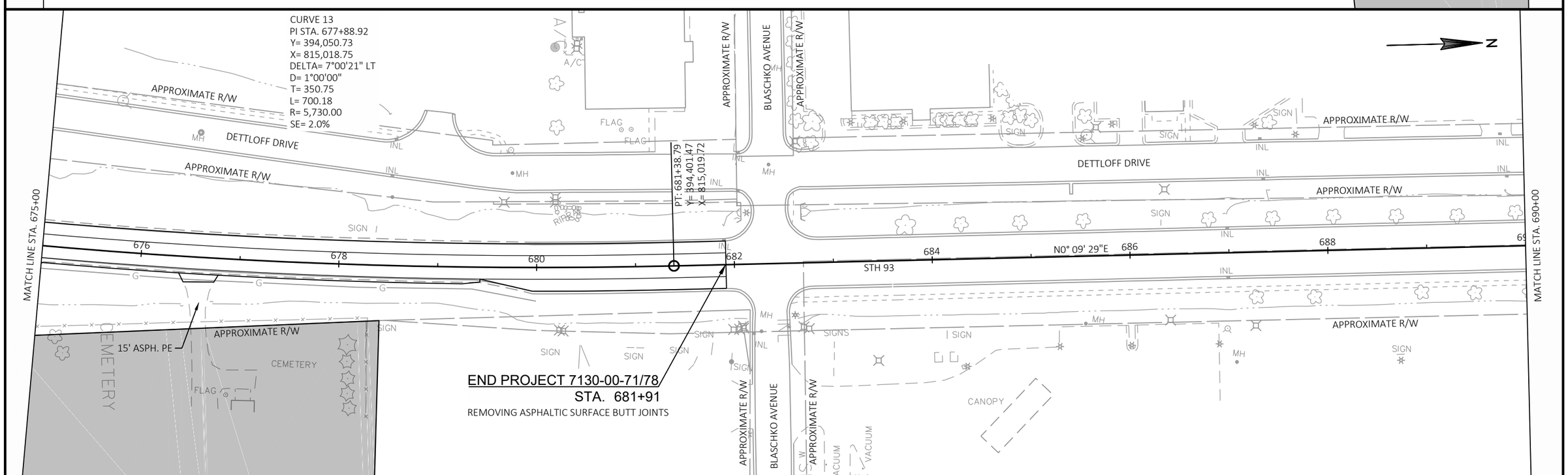

PROJECT NO: 7130-00-71/78	HWY: STH 93	COUNTY: TREMPEALEAU	PLAN	SHEET 44	E

Standard Detail Drawing List

08A05-19D	INLET COVER TYPE BW, MANHOLE COVERS, TYPE K, J, J-S, L & M
08B09-02	MANHOLES 3-FT, 4-FT, 5-FT, 6-FT, 7-FT AND 8-FT DIAMETER
08D21-01	DRIVEWAYS WITHOUT CURB & GUTTER
08D22-01	DRIVEWAYS WITHOUT CURB & GUTTER RESURFACING PROJECTS RURAL
08E08-03	TYPICAL INSTALLATIONS OF EROSION BALES / TEMPORARY DITCH CHECKS
08E09-06	SILT FENCE
08F01-11	APRON ENDWALLS FOR CULVERT PIPE
08F04-07	JOINT TIES FOR CONCRETE PIPE AND CONCRETE COLLAR DETAIL
13A10-02A	2-LANE RURAL SHOULDER RUMBLE STRIP, MILLING
13A10-02B	2-LANE RURAL SHOULDER RUMBLE STRIP, MILLING
13A10-02C	2-LANE RURAL SHOULDER RUMBLE STRIP, MILLING
13A10-02D	2-LANE RURAL SHOULDER RUMBLE STRIP, MILLING
13A11-03A	2-LANE RURAL CENTER LINE RUMBLE STRIP, MILLING
13A11-03B	2-LANE RURAL CENTER LINE RUMBLE STRIP, MILLING
14B15-11A	STEEL PLATE BEAM GUARD, CLASS "A" INSTALLATION & ELEMENTS
14B15-11B	STEEL PLATE BEAM GUARD, CLASS "A" INSTALLATION & ELEMENTS
14B15-11C	STEEL PLATE BEAM GUARD, CLASS "A", INSTALLATION & ELEMENTS
14B24-09A	STEEL PLATE BEAM GUARD ENERGY ABSORBING TERMINAL
14B24-09B	STEEL PLATE BEAM GUARD ENERGY ABSORBING TERMINAL
14B24-09C	STEEL PLATE BEAM GUARD ENERGY ABSORBING TERMINAL
14B29-01	SAFETY EDGE
15A03-02A	FLEXIBLE MARKER POST FOR CULVERT END
15A03-02B	FLEXIBLE MARKER POST FOR CULVERT END
15C04-05	TRAFFIC CONTROL, ADVANCE WARNING SIGNS 45 M.P.H. OR GREATER TWO-WAY UNDIVIDED ROAD OPEN TO TRAFFIC
15C07-14B	PAVEMENT MARKING WORDS
15C07-14C	PAVEMENT MARKING ARROWS
15C08-19A	LONGITUDINAL MARKING (MAINLINE)
15C11-07B	CHANNELIZING DEVICES DRUMS, CONES, BARRICADES AND VERTICAL PANELS
15C12-06	TRAFFIC CONTROL FOR LANE CLOSURE WITH FLAGGING OPERATION
15C19-05A	MOVING PAVEMENT MARKING OPERATION TWO-LANE TWO-WAY ROADWAY
15D20-04	TRAFFIC CONTROL, SINGLE LANE CLOSURE, NON-FREEWAY/EXPRESSWAY
15D28-03	TRAFFIC CONTROL, WORK ON SHOULDER OR PARKING LANE, UNDIVIDED ROADWAY
15D38-02A	TEMPORARY TRAFFIC CONTROL SIGN MOUNTING
15D38-02B	ATTACHMENT OF SIGNS TO POSTS
15D39-02	TRAFFIC CONTROL, DROP-OFF SIGNING

6

6

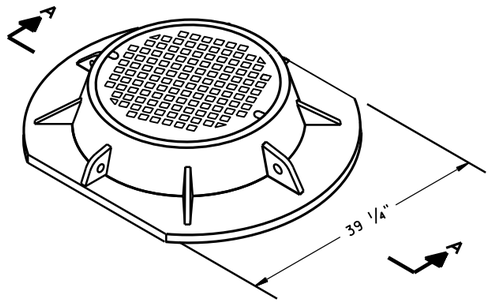

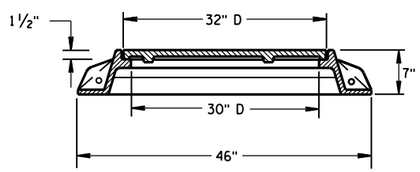

SECTION A-A
TYPE "K"

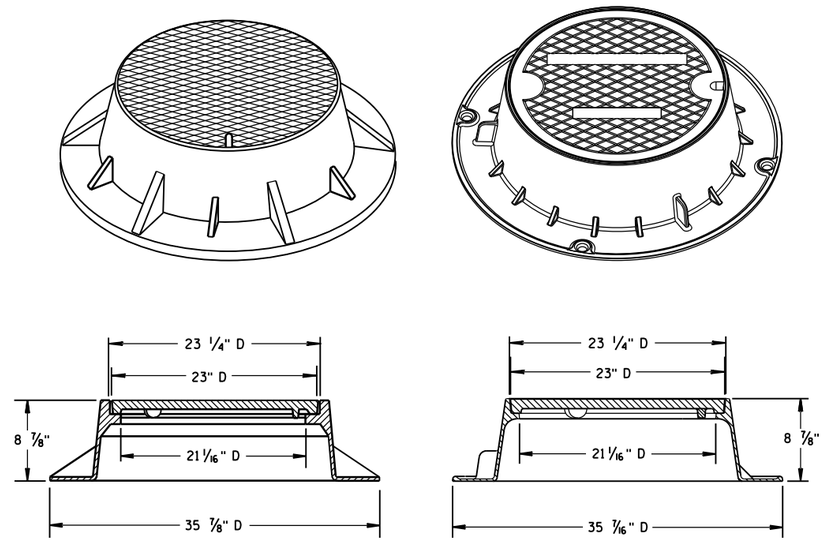

TYPE "J"
NOTE: EITHER CASTING IS ACCEPTABLE

GENERAL NOTES

DETAILS OF CONSTRUCTION, MATERIALS AND WORKMANSHIP NOT SHOWN ON THIS DRAWING SHALL CONFORM TO THE PERTINENT REQUIREMENTS OF THE STANDARD SPECIFICATIONS AND THE APPLICABLE SPECIAL PROVISIONS.

DETAIL DRAWINGS FOR PROPOSED ALTERNATE DESIGNS FOR MANHOLE COVERS SHALL BE SUBMITTED TO THE ENGINEER FOR APPROVAL PROVIDING THAT SUCH ALTERNATE DESIGNS MAKE PROVISION FOR EQUIVALENT CAPACITY AND STRENGTH.

ROUND FRAMES AND COVERS SHALL HAVE CONTINUOUSLY MACHINED BEARING SURFACES TO PREVENT ROCKING AND RATTLING.

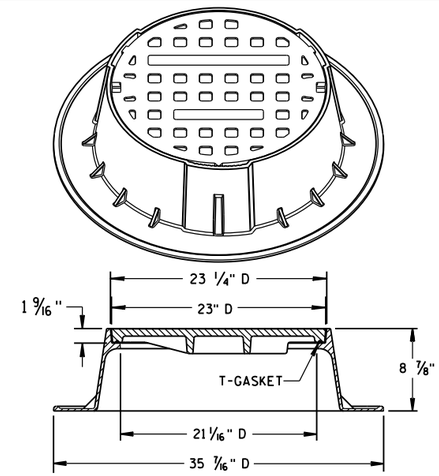

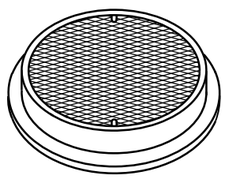

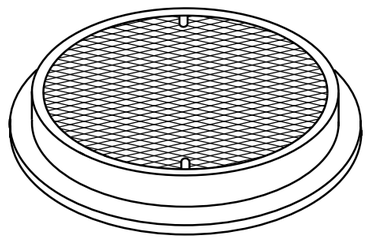

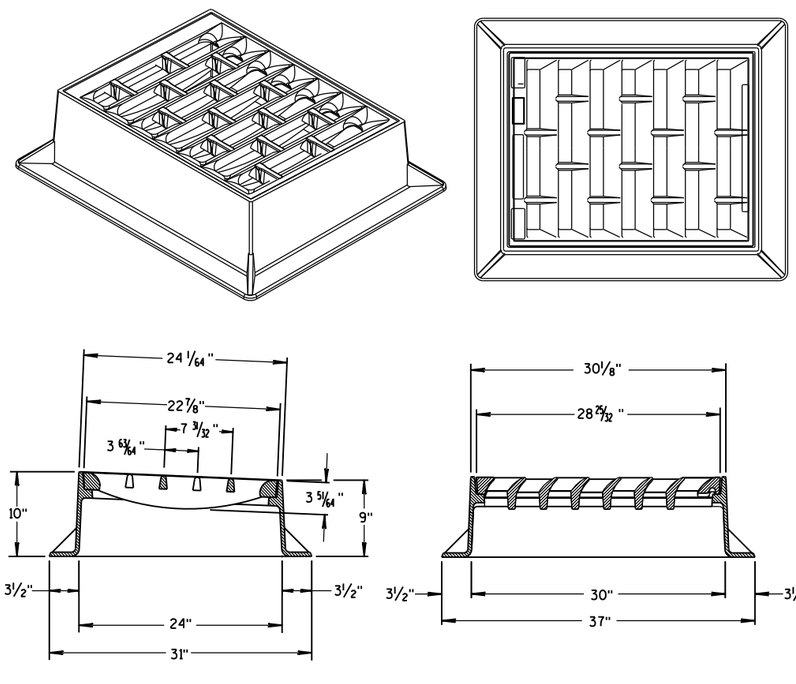

INLET COVER TYPE "BW"

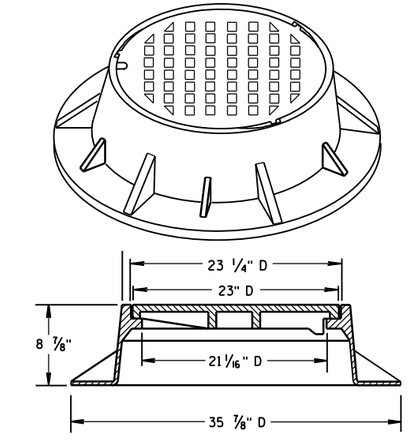

TYPE "J" SPECIAL
TYPE "B" NON-ROCKING SELF-SEAL LID
(NOTED AS TYPE J-S ON THE DRAINAGE TABLE)
NOTE: EITHER CASTING IS ACCEPTABLE

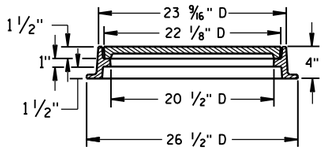

TYPE "L"

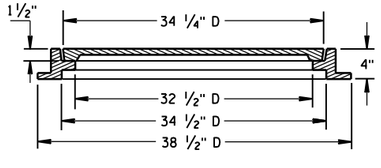

TYPE "M"

INLET COVER TYPE BW
MANHOLE COVERS, TYPE K, J, J-S, L & M

STATE OF WISCONSIN
DEPARTMENT OF TRANSPORTATION

APPROVED
11/27/2013 — DATE
/S/ Jerry H. Zogg — ROADWAY STANDARDS DEVELOPMENT ENGINEER
FHWA

6

S.D.D. 8 A 5-19d

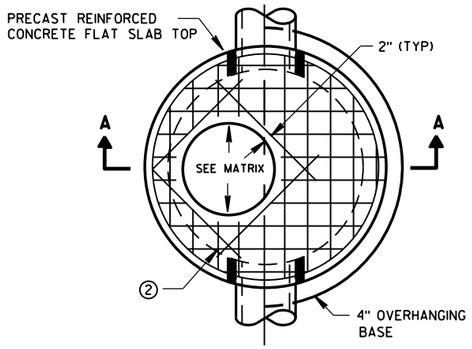

PLAN VIEW CIRCULAR OPENING

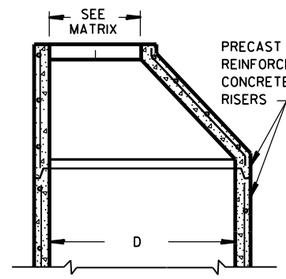

OPTIONAL PRECAST REINFORCED CONCRETE ECCENTRIC TOP

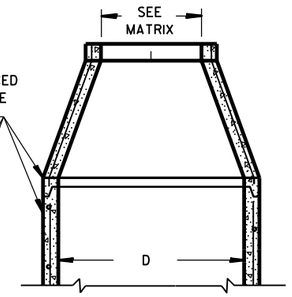

OPTIONAL PRECAST REINFORCED CONCRETE CONCENTRIC TOP

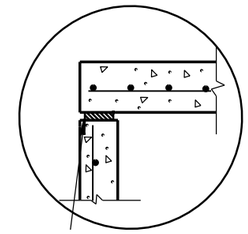

TOP WITH PLAIN END JOINT

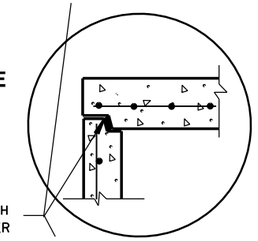

JOINTS TO BE SEALED WITH A BUTYL RUBBER SEAL PER SEALANT MANUFACTURERS RECOMMENDATIONS CONFORMING TO ASTM C990 (TYP)

TOP WITH TONGUE AND GROOVE JOINT

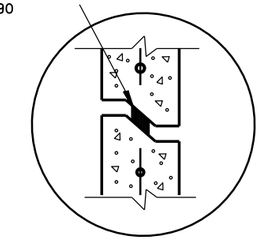

RISER WITH TONGUE AND GROOVE JOINT

DETAIL "B"

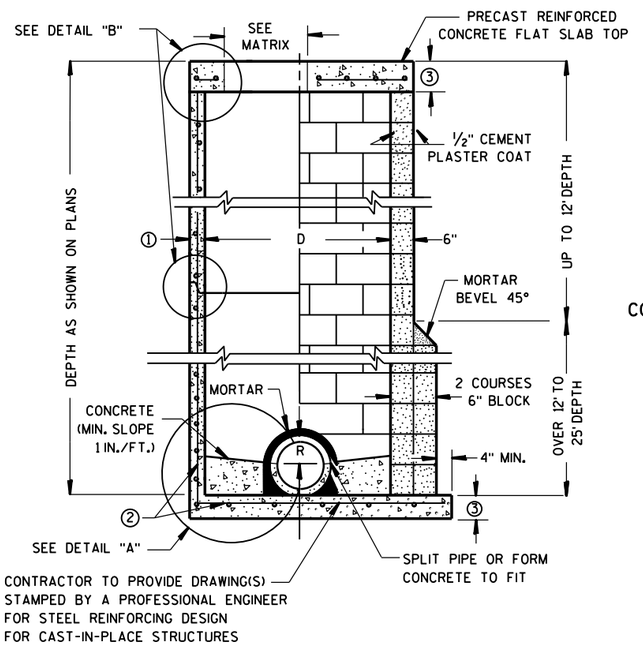

PRECAST REINFORCED CONCRETE WITH MONOLITHIC BASE

CONCRETE BLOCK WITH CAST-IN-PLACE OR PRECAST REINFORCED CONCRETE BASE ②

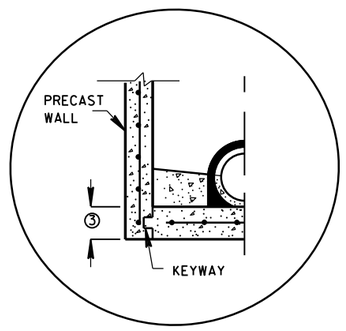

PRECAST REINFORCED CONCRETE WITH INTEGRAL BASE OPTION

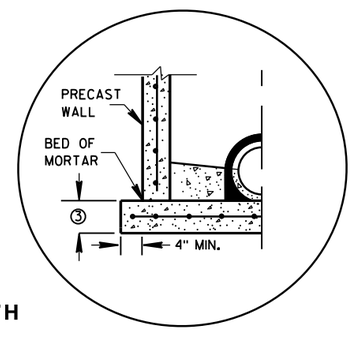

SEPARATE PRECAST REINFORCED CONCRETE BASE OPTION

DETAIL "A"

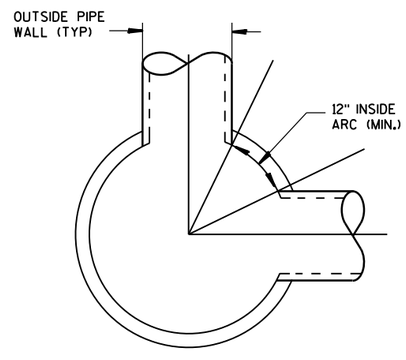

DETAIL "C"

GENERAL NOTES

DETAILS OF CONSTRUCTION, MATERIALS AND WORKMANSHIP NOT SHOWN ON THIS DRAWING SHALL CONFORM TO THE PERTINENT REQUIREMENTS OF THE STANDARD SPECIFICATIONS AND THE APPLICABLE SPECIAL PROVISIONS.

UNLESS OTHERWISE AUTHORIZED IN WRITING BY THE ENGINEER, THE CONTRACTOR SHALL NOT ORDER AND DELIVER PRECAST MANHOLE UNITS REQUIRED FOR THE PROJECT UNTIL A LIST OF SIZES IS FURNISHED BY THE ENGINEER.

DETAILED DRAWINGS FOR PROPOSED ALTERNATE DESIGNS FOR UNDERGROUND DRAINAGE STRUCTURES SHALL BE SUBMITTED TO THE ENGINEER FOR APPROVAL PROVIDING THAT SUCH ALTERNATE DESIGNS MAKE PROVISION FOR EQUIVALENT CAPACITY AND STRENGTH.

ALL DRAINAGE STRUCTURES ARE DESIGNATED ON THE PLANS AS "MANHOLES 3X3-L", "CATCH BASINS 4-B", "INLETS 2X3-H", ETC. THE FIRST NUMBERS DESIGNATE THE SIZE OF THE STRUCTURE, AND THE FOLLOWING LETTER DESIGNATES THE TYPE OF COVER TO BE USED TO COMPRISE THE COMPLETE UNIT.

BASES SHALL BE PLACED ON A BED OF MATERIAL AT LEAST 6 INCHES IN DEPTH, WHICH MEETS THE REQUIREMENTS OF FOUNDATION BACKFILL. THIS BEDDING SHALL BE COMPACTED AND PROVIDE UNIFORM SUPPORT FOR THE ENTIRE AREA OF THE BASE.

PRECAST REINFORCED CONE TOPS (ECCENTRIC OR CONCENTRIC) OR PRECAST REINFORCED FLAT SLAB TOPS MAY BE USED ON CONCRETE BLOCK STRUCTURES.

ECCENTRIC CONE TOPS MAY BE USED ON ALL STRUCTURES, AND CONCENTRIC CONE TOPS SHALL BE USED ONLY ON STRUCTURES 5 FEET OR LESS IN DEPTH, UNLESS OTHERWISE DIRECTED BY THE ENGINEER.

STEPS MEETING AASHTO M199 AND THE FOLLOWING REQUIREMENTS SHALL BE INSTALLED IN ALL STRUCTURES OVER 5 FEET IN DEPTH: 16 INCH C-C MAXIMUM SPACING; PROJECT A MINIMUM CLEAR DISTANCE OF 4 INCHES FROM THE WALL AT THE POINT OF EMBEDMENT; MINIMUM LENGTH OF 10 INCHES; MINIMUM WALL EMBEDMENT OF 3 INCHES. FERROUS METAL STEPS NOT PAINTED OR TREATED TO RESIST CORROSION SHALL HAVE A MINIMUM CROSS SECTIONAL DIMENSION OF 1 INCH.

STEPS OF APPROVED POLYPROPYLENE PLASTIC COATED REINFORCEMENT BAR ARE ACCEPTABLE. REINFORCING BAR MUST BE A MINIMUM OF ½" AND MEET THE REQUIREMENTS OF ASTM A615.

CERTIFICATION SHALL BE PROVIDED THAT INSTALLED STEPS WHEN TESTED IN ACCORDANCE WITH SECTION 10 OF AASHTO T280 CAN WITHSTAND A VERTICAL LOAD OF 800 LBS. AND A HORIZONTAL LOAD OF 400 LBS.

ALL BAR STEEL REINFORCEMENT SHALL BE EMBEDDED 2 INCHES CLEAR UNLESS OTHERWISE SHOWN OR NOTED.

CONCRETE BLOCK WILL NOT BE PERMITED FOR STRUCTURES GREATER THAN 4 FEET IN DIAMETER.

PRECAST REINFORCED RISERS SHALL HAVE A TONGUE AND GROOVE JOINT WITH TONGUE UP OR DOWN.

ALL PRECAST MANHOLE UNITS SHALL CONFORM TO THE PERTINENT REQUIREMENTS OF AASHTO DESIGNATION M 199.

4" OVERHANGING BASES ARE REQUIRED FOR ALL CONCRETE BLOCK INSTALLATIONS. 4" OVERHANG IS REQUIRED WHEN SEPARATE PRECAST BASE IS PROVIDED. OVERHANG IS NOT REQUIRED ON PRECAST STRUCTURES WITH AN INTEGRAL OR MONOLITHIC BASE.

FOR ADDITIONAL CONFIGURATIONS, MAINTAIN A MINIMUM OF 12 INCHES AS MEASURED FROM THE INSIDE OF THE STRUCTURE WALL BETWEEN THE OUTSIDE PIPE WALLS OF ADJACENT PIPES. SEE DETAIL "C".

① MINIMUM WALL THICKNESS SHALL BE 4 INCHES FOR 3-FT, 5 INCHES FOR 4-FT, 6 INCHES FOR 5-FT, 7 INCHES FOR 6-FT, 8 INCHES FOR 7-FT AND 9 INCHES FOR 8-FT DIAMETER PRECAST MANHOLES.

② FOR PRECAST MANHOLES PROVIDE REINFORCING STEEL IN ACCORDANCE TO AASHTO M199.

③ PRECAST FLAT SLAB TOPS AND BASES WITH A DIAMETER OF 48" AND LESS SHALL HAVE A MINIMUM THICKNESS OF 6". PRECAST FLAT SLAB TOPS AND BASES WITH A DIAMETER LARGER THAN 48" SHALL HAVE A MINIMUM THICKNESS OF 8".

MANHOLE COVER OPENING MATRIX

MANHOLE COVER TYPE	C	ALL J'S	K	L	M
OPENING SIZE (FT)					
2 DIA.	X	X		X	
3 DIA.			X		X

PIPE MATRIX

MANHOLE SIZE	MAXIMUM INSIDE PIPE DIAMETER FOR TWO PIPES	
	180° SEPARATION (IN)	90° SEPARATION (IN)
3-FT	15	12
4-FT	24	18
5-FT	36	24
6-FT	42	36
7-FT	48	36
8-FT	60	42

MANHOLES 3-FT, 4-FT, 5-FT, 6-FT, 7-FT AND 8-FT DIAMETER

STATE OF WISCONSIN
DEPARTMENT OF TRANSPORTATION

APPROVED
Sept., 2016 — DATE
/S/ Rodney Taylor — ROADWAY STANDARDS DEVELOPMENT UNIT SUPERV
FHWA

MANHOLES 3-FT, 4-FT, 5-FT, 6-FT, 7-FT AND 8-FT DIAMETER

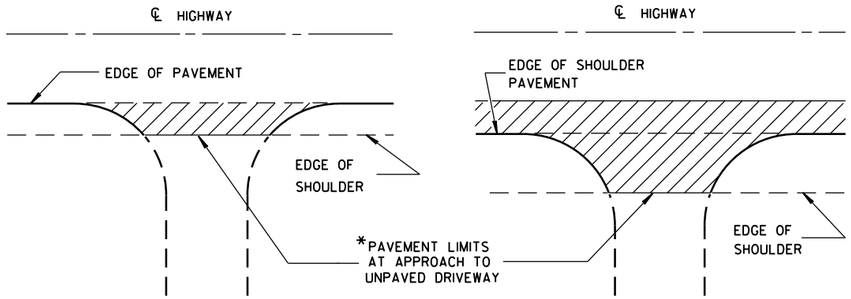

*WHERE DRIVEWAY IS PAVED, APPROACH PAVEMENT SHOULD BE EXTENDED TO MATCH DRIVEWAY PAVEMENT.

PLAN VIEW
(UNPAVED SHOULDER ON HIGHWAY)

PLAN VIEW
(PAVED SHOULDER ON HIGHWAY)

RURAL DRIVEWAY INTERSECTION DETAIL
(NO CURB & GUTTER OR SIDEWALK)

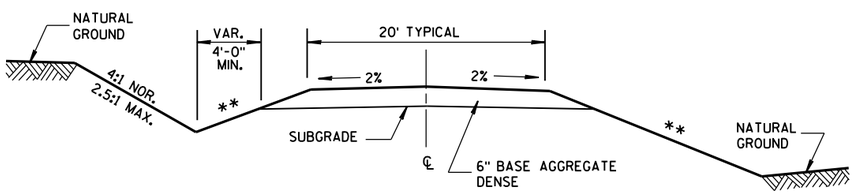

IN CUT IN FILL

TYPICAL CROSS SECTION FOR PRIVATE DRIVE OR FIELD ENTRANCE AGGREGATE SURFACE

** SLOPE CAN VARY WITH SPEED. SEE 11-45-2.6.2.

POSTED SPEED MPH	MAX. SLOPE
<35	4:1
≥35 TO <60	6:1
≥60	10:1

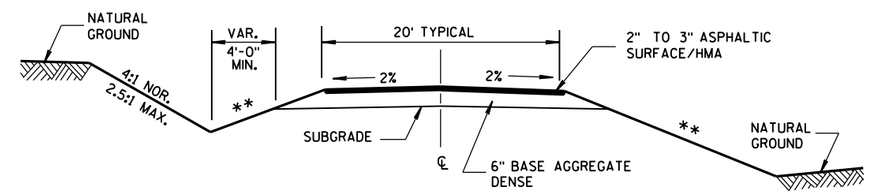

IN CUT IN FILL

TYPICAL CROSS SECTION FOR PRIVATE DRIVE OR FIELD ENTRANCE ASPHALTIC SURFACE

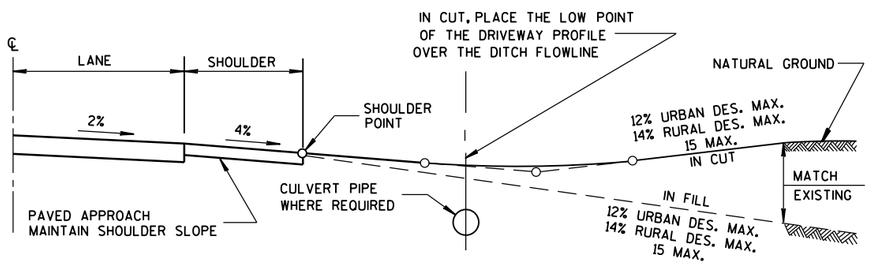

TYPICAL DRIVEWAY PROFILES

DRIVEWAYS WITHOUT CURB & GUTTER

STATE OF WISCONSIN
DEPARTMENT OF TRANSPORTATION

APPROVED
December, 2016 /S/ Rodney Taylor
DATE ROADWAY STANDARDS UNIT SUPERV ENT
FHWA

6

S.D.D. 8 D 21-1

W MIN. = 16'
W MAX. = 24'

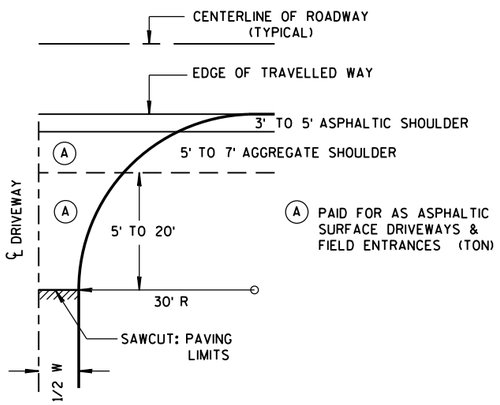

PLAN VIEW
HALF SECTION

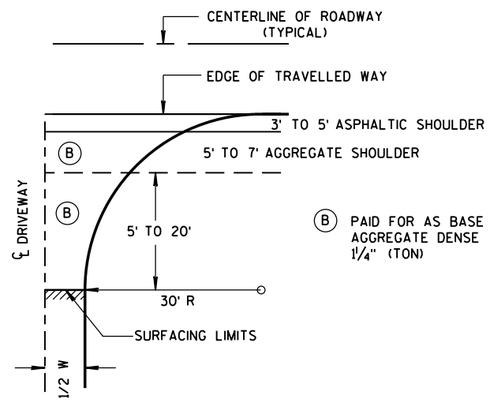

PLAN VIEW
HALF SECTION

GENERAL NOTES

1. DESIGN WILL DETERMINE FINAL DRIVEWAY ASPHALTIC THICKNESS BASED ON TYPE OF USAGE AND LOADINGS.

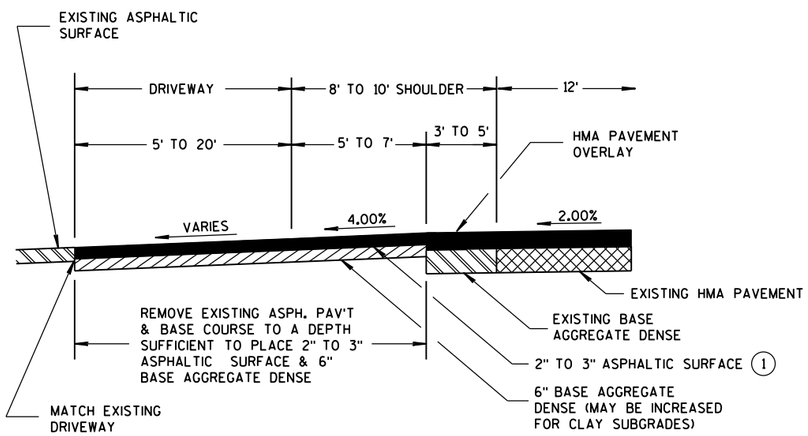

PROFILE VIEW

RURAL ENTRANCE WITH ASPHALTIC SURFACE

RESURFACING PROJECTS

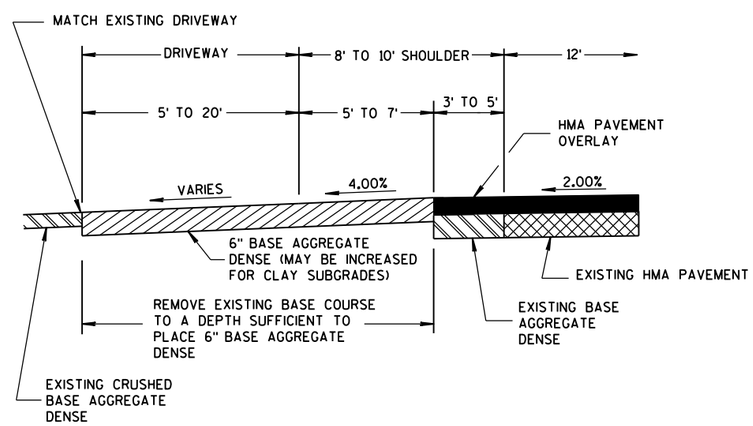

PROFILE VIEW

RURAL ENTRANCE WITH AGGREGATE SURFACE

6" BASE AGGREGATE DENSE
RESURFACING PROJECTS

DRIVEWAYS WITHOUT CURB & GUTTER RESURFACING PROJECTS RURAL	
STATE OF WISCONSIN DEPARTMENT OF TRANSPORTATION	
APPROVED December, 2016 /S/ Rodney Taylor	
DATE ROADWAY STANDARDS UNIT SUPERV	ENT
FHWA	

6

S.D.D. 8 D 22-1

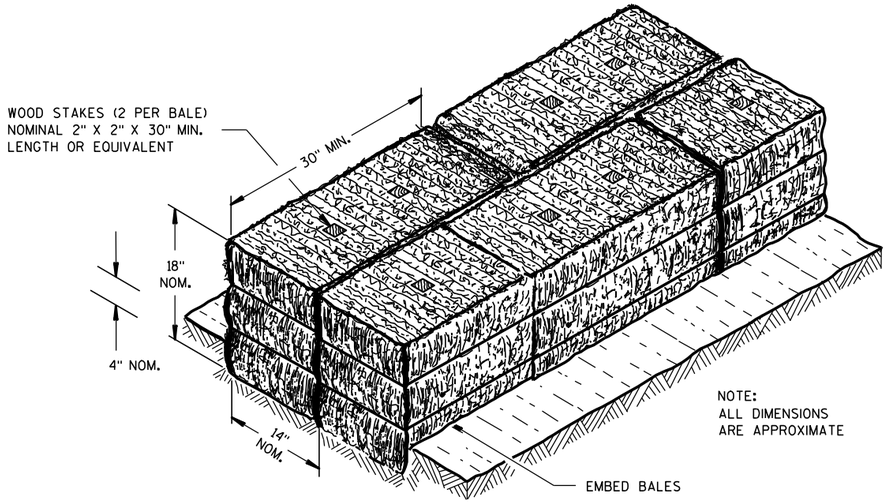

SECTION A-A

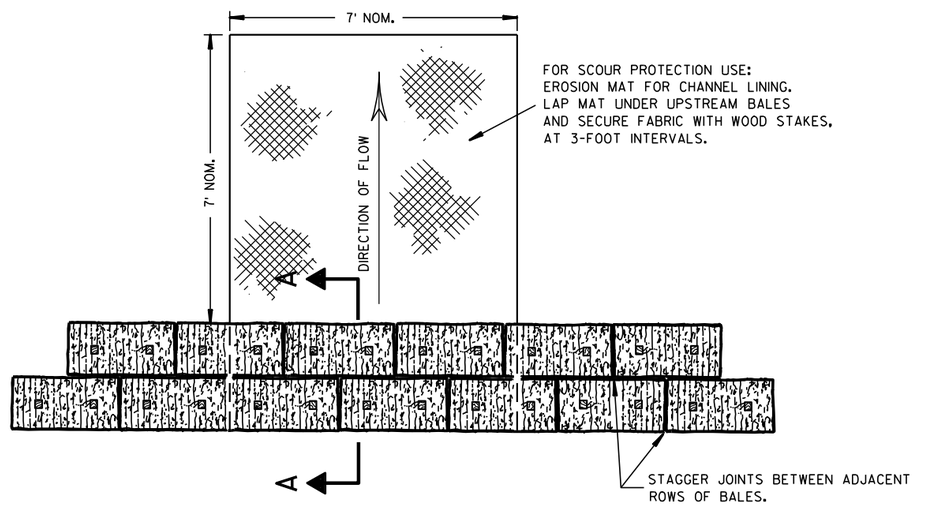

PLAN VIEW

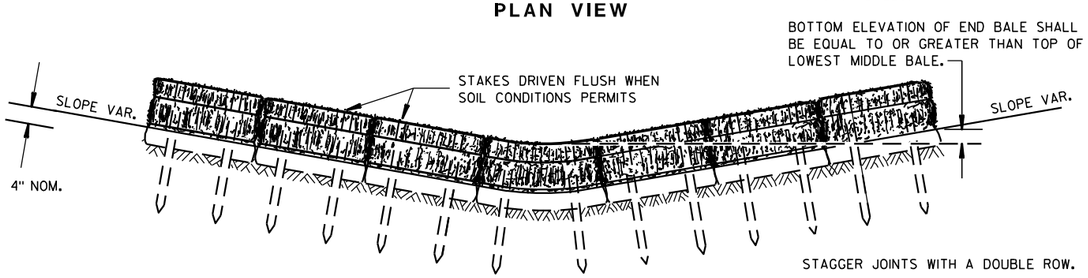

FRONT ELEVATION

TEMPORARY DITCH CHECK USING EROSION BALES ①

GENERAL NOTES

DETAILS OF CONSTRUCTION, MATERIALS AND WORKMANSHIP NOT SHOWN ON THIS DRAWING SHALL CONFORM TO THE PERTINENT REQUIREMENTS OF THE STANDARD SPECIFICATIONS AND THE APPLICABLE SPECIAL PROVISIONS.

① TEMPORARY DITCH CHECKS EITHER EROSION BALES OR MANUFACTURED SHALL BE PAID FOR UNDER THE BID ITEM OF TEMPORARY DITCH CHECK. THE DEPARTMENT WILL NOT PAY FOR TEMPORARY DITCH CHECKS CONSTRUCTED OF A SINGLE ROW OF EROSION BALES.

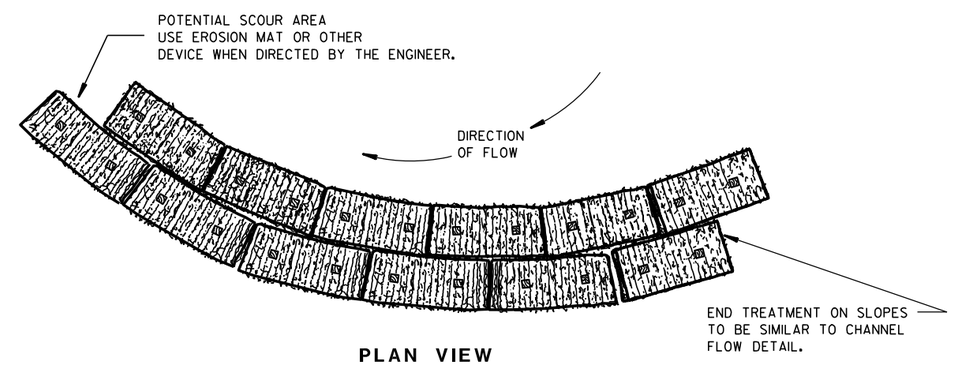

PLAN VIEW

WHEN ALTERING THE DIRECTION OF FLOW

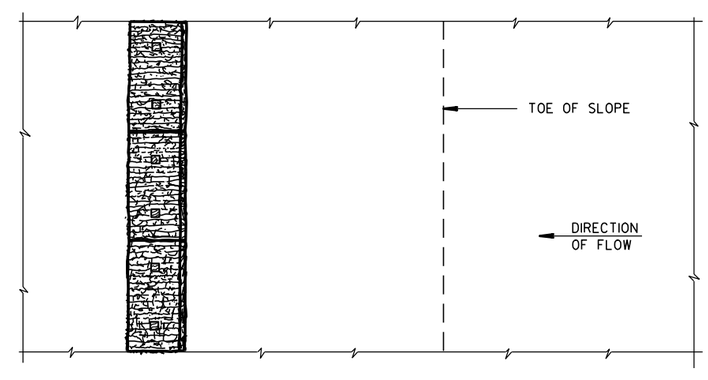

PLAN VIEW

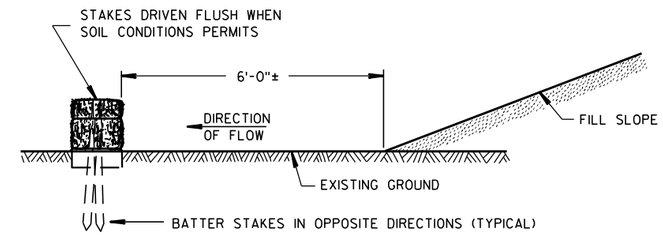

FRONT ELEVATION

WHEN EXISTING GROUND SLOPES AWAY FROM FILL SLOPE

EROSION BALES FOR SHEET FLOW

TYPICAL INSTALLATIONS OF EROSION BALES / TEMPORARY DITCH CHECKS

STATE OF WISCONSIN
DEPARTMENT OF TRANSPORTATION

APPROVED
6/04/02 — DATE
/S/ Beth Cann — CHIEF ROADWAY DEVELOPMENT ENGINEER
FHWA

6

6

S.D.D. 8 E 8-3

S.D.D. 8 E 8-3

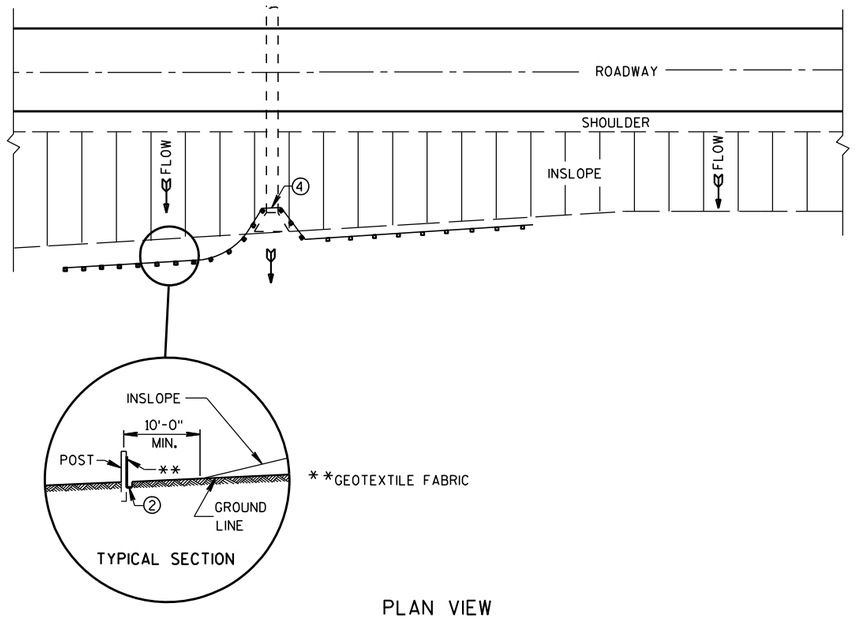

PLAN VIEW

TYPICAL APPLICATION OF SILT FENCE

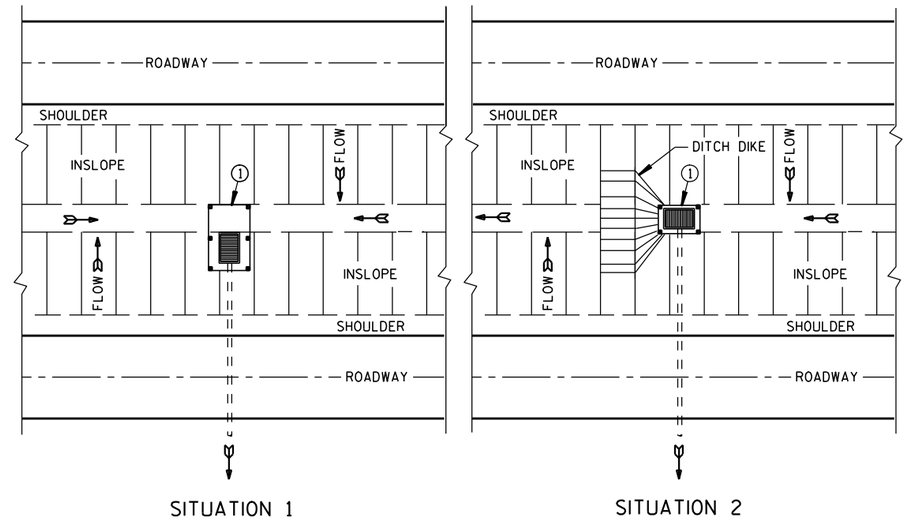

PLAN VIEW

SILT FENCE AT MEDIAN SURFACE DRAINS

GENERAL NOTES

DETAILS OF CONSTRUCTION NOT SHOWN ON THIS DRAWING SHALL CONFORM TO THE PERTINENT REQUIREMENTS OF THE STANDARD SPECIFICATIONS AND APPLICABLE SPECIAL PROVISIONS.

① HORIZONTAL BRACE REQUIRED WITH 2" X 4" WOODEN FRAME OR EQUIVALENT AT TOP OF POSTS.

② FOR MANUAL INSTALLATIONS THE TRENCH SHALL BE A MINIMUM OF 4" WIDE & 6" DEEP TO BURY AND ANCHOR THE GEOTEXTILE FABRIC. FOLD MATERIAL TO FIT TRENCH AND BACKFILL & COMPACT TRENCH WITH EXCAVATED SOIL.

③ WOOD POSTS SHALL BE A MINIMUM SIZE OF 1⅛" X 1⅛" OF OAK OR HICKORY.

④ SILT FENCE TO EXTEND ACROSS THE TOP OF THE PIPE.

⑤ CONSTRUCT SILT FENCE FROM A CONTINUOUS ROLL IF POSSIBLE BY CUTTING LENGTHS TO AVOID JOINTS. IF A JOINT IS NECESSARY USE ONE OF THE FOLLOWING TWO METHODS; A) OVERLAP THE END POSTS AND TWIST, OR ROTATE, AT LEAST 180 DEGREES. B) HOOK THE END OF EACH SILT FENCE LENGTH.

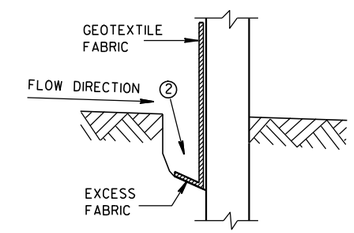

TRENCH DETAIL

NOTE: ADDITIONAL POST DEPTH OR TIE BACKS MAY BE REQUIRED IN UNSTABLE SOILS

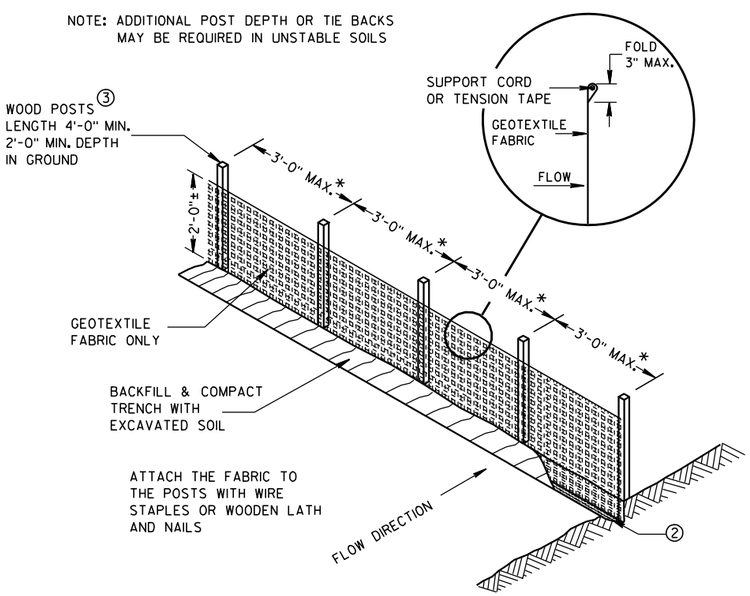

*NOTE: 8'-0" POST SPACING ALLOWED IF A WOVEN GEOTEXTILE FABRIC IS USED.

SILT FENCE

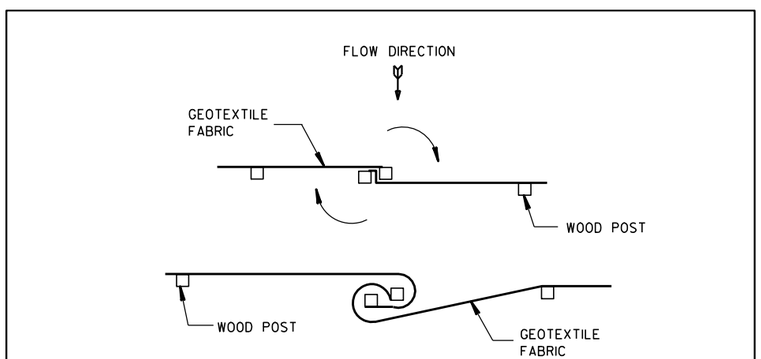

TWIST METHOD

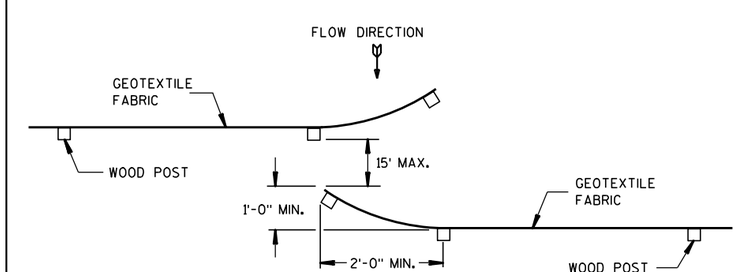

HOOK METHOD

JOINING TWO LENGTHS OF SILT FENCE ⑤

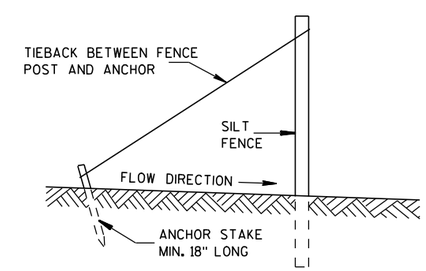

SILT FENCE TIE BACK

(WHEN REQUIRED BY THE ENGINEER)

SILT FENCE
STATE OF WISCONSIN DEPARTMENT OF TRANSPORTATION
APPROVED 4-29-05 /S/ Beth Cann----- DATE CHIEF ROADWAY DEVELOP ENGINEER FHWA

6

6

S.D.D. 8 E 9-6

S.D.D. 8 E 9-6

METAL APRON ENDWALLS

PIPE DIA. (IN.)	MIN. THICK. (Inches) STEEL	MIN. THICK. (Inches) ALUM.	DIMENSIONS (Inches) A (±1")	B (MAX.)	H (±1")	L (±1 1/2")	L1 ①	L2 ①	W (±2")	APPROX. SLOPE	BODY
12	.064	.060	6	6	6	21	12	17 1/2	24	2 1/2 to 1	1 Pc.
15	.064	.060	7	8	6	26	14	21 3/4	30	2 1/2 to 1	1 Pc.
18	.064	.060	8	10	6	31	15	28 1/4	36	2 1/2 to 1	1 Pc.
21	.064	.060	9	12	6	36	18	29 5/8	42	2 1/2 to 1	1 Pc.
24	.064	.075	10	13	6	41	18	37 1/4	48	2 1/2 to 1	1 Pc.
30	.079	.075	12	16	8	51	18	52 1/4	60	2 1/2 to 1	1 Pc.
36	.079	.105	14	19	9	60	24	59 3/4	72	2 1/2 to 1	2 Pc.
42	.109	.105	16	22	11	69	24	75 5/8	84	2 1/2 to 1	2 Pc.
48	.109	.105	18	27	12	78	24	81	90	2 1/4 to 1	3 Pc.
54	.109	.105	18	30	12	84	30	85 1/2	102	2 1/4 to 1	3 Pc.
60	.109×	.105×	18	33	12	87	—	—	114	2 to 1	3 Pc.
66	.109×	.105×	18	36	12	87	—	—	120	2 to 1	3 Pc.
72	.109×	.105×	18	39	12	87	—	—	126	2 to 1	3 Pc.
78	.109×	.105×	18	42	12	87	—	—	132	1 1/2 to 1	3 Pc.
84	.109×	.105×	18	45	12	87	—	—	138	1 1/2 to 1	3 Pc.
90	.109×	.105×	18	37	12	87	—	—	144	1 1/2 to 1	3 Pc.
96	.109×	.105×	18	35	12	87	—	—	150	1 1/2 to 1	3 Pc.

× EXCEPT CENTER PANEL
SEE GENERAL NOTES

REINFORCED CONCRETE APRON ENDWALLS

PIPE DIA. (IN.)	DIMENSIONS (Inches) T	A	B	C	D	E	G	APPROX. SLOPE
12	2	4	24	48 7/8	72 7/8	24	2	3 to 1
15	2 1/4	6	27	46	73	30	2 1/4	3 to 1
18	2 1/2	9	27	46	73	36	2 1/2	3 to 1
21	2 3/4	9	36	37 1/2	73 1/2	42	2 3/4	3 to 1
24	3	9 1/2	43 1/2	30	73 1/2	48	3	3 to 1
27	3 1/4	10 1/2	49 1/2	24	73 1/2	54	3 1/4	3 to 1
30	3 1/2	12	54	19 3/4	73 1/2	60	3 1/2	3 to 1
36	4	15	63	34 3/4	97 3/4	72	4	3 to 1
42	4 1/2	21	63	35	98	78	4 1/2	3 to 1
48	5	24	72	26	98	84	5	3 to 1
54	5 1/2	27	65	*33 1/4-**35	*98 1/4-**100	90	5 1/2	2 2/5 to 1
60	6	*30-**35	60	39	99	96	5	2 to 1
66	6 1/2	*24-**30	*72-**78	*21-**27	99	102	5 1/2	2 to 1
72	7	*24-**36	78	21	99	108	6	2 to 1
78	7 1/2	*24-**36	78	21	99	114	6 1/2	2 to 1
84	8	36	90 1/2	21	111 1/2	120	6 1/2	1 1/2 to 1
90	8 1/2	41	87 1/2	24	111 1/2	132	6 1/2	1 1/2 to 1

*MINIMUM
**MAXIMUM

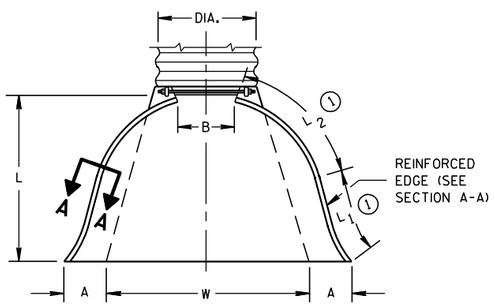

PLAN VIEW

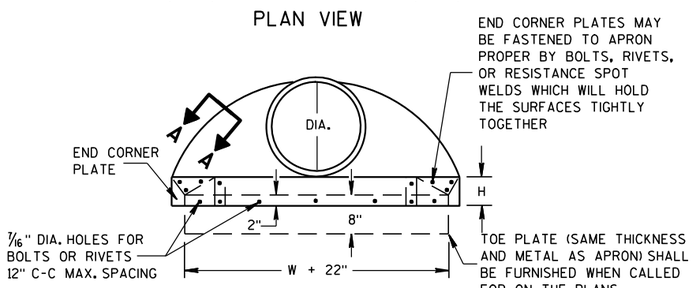

END VIEW

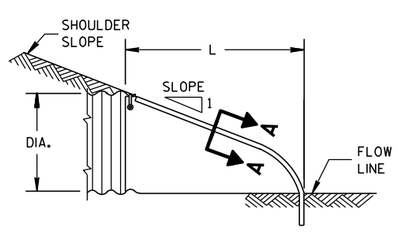

SIDE ELEVATION

METAL ENDWALLS

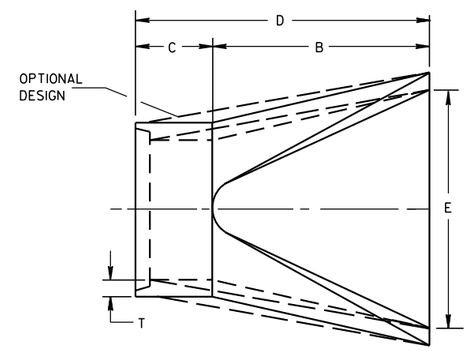

PLAN

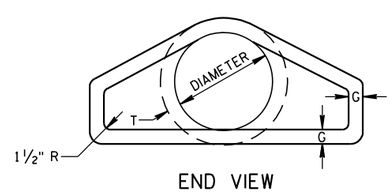

END VIEW

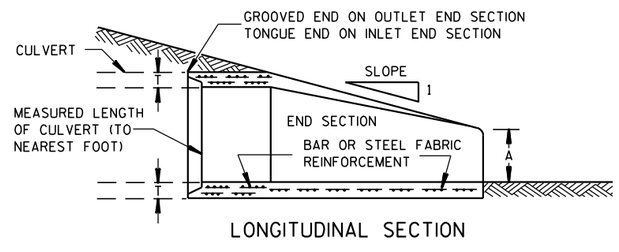

LONGITUDINAL SECTION

CONCRETE ENDWALLS

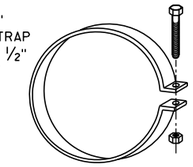

ALTERNATE FOR TYPE 1 CONNECTION

END SECTION CONNECTOR STRAP

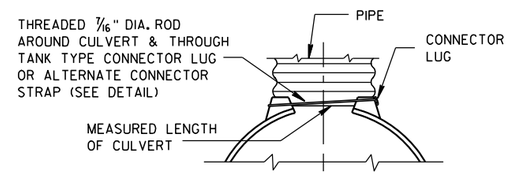

TYPE 1
FOR 12" THRU 24" CORR. PIPE

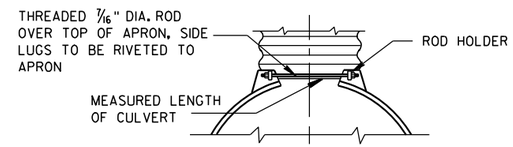

TYPE 2
FOR 30" THRU 96" CORR. PIPE

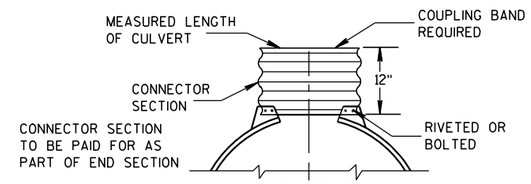

TYPE 3
FOR 42" THRU 96" CORR. PIPE

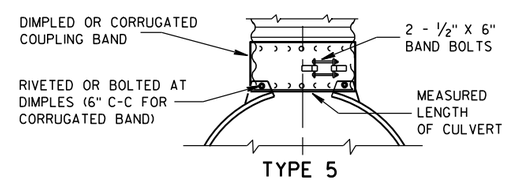

TYPE 5
ALTERNATE FOR:
ALL SIZES CORRUGATED CIRCULAR PIPE

NOTE: DIMPLED BAND FITS OVER OUTSIDE OF ENDWALL, AND CORRUGATED BAND FITS INSIDE ENDWALL. DIMPLED BAND MAY BE USED WITH HELICALLY CORRUGATED PIPE.

FOR CIRCUMFERENTIALLY CORRUGATED PIPE USE ENDWALL CONNECTION DETAILS 1, 2, 3 OR 5 AS APPLICABLE.

FOR HELICALLY CORRUGATED PIPE USE ENDWALL CONNECTION DETAILS 1, 2 OR 5.

FOR HELICALLY CORRUGATED PIPES WITH TWO CIRCUMFERENTIAL CORRUGATIONS AT EACH END USE ENDWALL CONNECTION DETAILS 1, 2 OR 3.

CONNECTION DETAILS

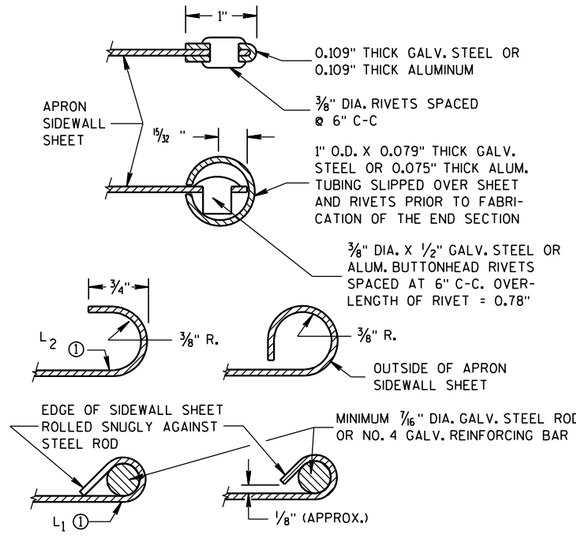

SECTION A-A

GENERAL NOTES

DETAILS OF CONSTRUCTION, MATERIALS AND WORKMANSHIP NOT SHOWN ON THIS DRAWING SHALL CONFORM TO THE PERTINENT REQUIREMENTS OF THE STANDARD SPECIFICATIONS AND THE APPLICABLE SPECIAL PROVISIONS.

CONCRETE CULVERT ENDWALLS MAY NOT BE USED WITH GALVANIZED STEEL OR ALUMINUM CULVERT PIPE OR VISE VERSA. GALVANIZED STEEL OR ALUMINUM ENDWALLS SHALL NORMALLY BE INSTALLED ON CULVERT PIPE OF THE SAME METAL.

ALL THREE PIECE STEEL APRON ENDWALLS FOR 60" DIAMETER PIPE AND LARGER SHALL HAVE 0.109" SIDES AND 0.138" CENTER PANELS. ALL THREE PIECE ALUMINUM APRON ENDWALLS FOR 60" DIAMETER PIPE AND LARGER SHALL HAVE 0.105" SIDES AND 0.134" CENTER PANELS. THE WIDTH OF CENTER PANELS SHALL BE GREATER THAN 20 PERCENT OF THE PIPE PERIMETER.

LAP SEAMS SHALL BE TIGHTLY JOINED BY GALVANIZED RIVETS OR BOLTS FOR STEEL UNITS AND ALUMINUM RIVETS AND BOLTS FOR ALUMINUM UNITS. FOR THE 60" THROUGH 96" DIAMETER APRON ENDWALL SIZES, THE REINFORCED EDGES AND CENTER PANEL SEAMS SHALL BE FURTHER REINFORCED WITH GALVANIZED STEEL OR ALUMINUM STIFFENER ANGLES. THE ANGLES SHALL BE ATTACHED BY GALVANIZED NUTS AND BOLTS FOR STEEL UNITS AND ALUMINUM NUTS AND BOLTS FOR ALUMINUM UNITS.

WHERE TWO OR MORE PIPES WITH APRON ENDWALLS ARE LAID ADJACENT TO EACH OTHER, THEY SHALL BE SEPARATED BY A DISTANCE SUFFICIENT TO PROVIDE A MINIMUM CLEARANCE OF 6 INCHES BETWEEN APRON ENDWALLS.

① FOR PIPE SIZES UP TO 60" DIAMETER, A 180° ROLLED EDGE MAY BE USED INSTEAD OF STEEL ROD REINFORCEMENT. SEE SECTION A-A.

APRON ENDWALLS FOR CULVERT PIPE

STATE OF WISCONSIN
DEPARTMENT OF TRANSPORTATION

APPROVED
11/30/94 — DATE
/S/ Rory L. Rhinesmith — CHIEF ROADWAY DEVELOPMENT ENGINEER
FHWA

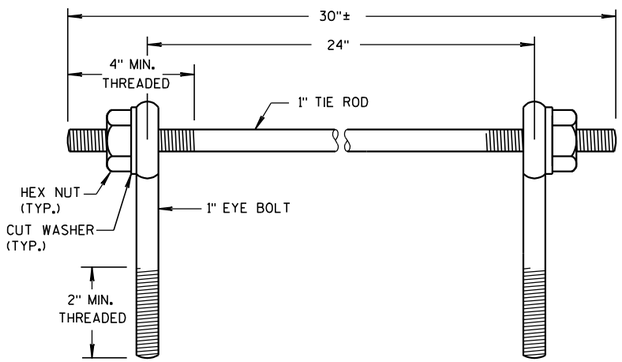

EYE BOLTS AND TIE ROD

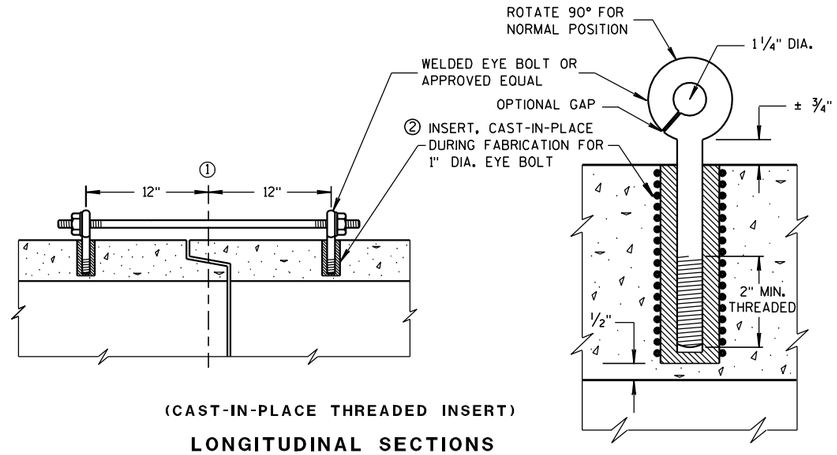

(CAST-IN-PLACE THREADED INSERT)

LONGITUDINAL SECTIONS

EYE BOLT AND TIE ROD ASSEMBLY (ALTERNATE NO. 1)

GENERAL NOTES

DETAILS OF CONSTRUCTION, MATERIALS, AND WORKMANSHIP NOT SHOWN ON THIS DRAWING SHALL CONFORM TO THE PERTINENT REQUIREMENTS OF THE STANDARD SPECIFICATIONS AND APPLICABLE SPECIAL PROVISIONS.

CONCRETE CULVERT AND STORM SEWER PIPE SHALL BE TIED TOGETHER IN THE MANNER ILLUSTRATED BY THIS DETAIL AT LOCATIONS DESIGNATED IN THE STANDARD SPECIFICATIONS AND THE PLAN. THE CONTRACTOR MAY USE EITHER ALTERNATE 1, 2 OR 3 FOR DRAINAGE STRUCTURES. ONLY ALTERNATE 1 AND 3 MAY BE USED FOR CATTLE PASSES, UNLESS OTHERWISE STATED IN THE CONTRACT. THE MATERIALS, FABRICATION AND WORK NECESSARY TO TIE THE PIPE BY THIS DETAIL WILL BE CONSIDERED INCIDENTAL TO THE PIPE AND APRON ENDWALLS IF REQUIRED.

DETAILED DRAWINGS FOR PROPOSED ALTERNATE DESIGNS FOR JOINT TIES SHALL BE SUBMITTED TO THE ENGINEER FOR APPROVAL.

JOINT TIES TO BE HOT-DIP GALVANIZED PER ASTM A 153.

① ℄ OF TONGUE AND GROOVE OR BELL AND SPIGOT JOINTS.

② THE INSIDE OF THE THREADED INSERTS SHALL BE CLEAN TO ALLOW THE INSERTION OF THREADED EYE BOLTS.

③ HOLES SHALL BE CAST-IN-PLACE OR DRILLED 12 INCHES FROM ℄ OF TONGUE AND GROOVE.

④ BOLT PROJECTION INSIDE OF PIPE SHALL NOT EXCEED 2 INCHES.

⑤ OPENING TO BE ROD DIAMETER PLUS 1 INCH.

⑥ LENGTH ADEQUATE TO EXTEND TO WITHIN 1/2 INCH OF THE INNER SURFACE OF THE PIPE.

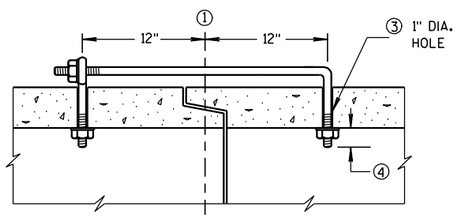

(TONGUE & GROOVE PIPE)

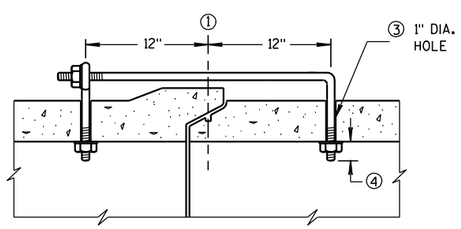

(MODIFIED BELL PIPE)

LONGITUDINAL SECTION

EYE BOLT DIMENSION TABLE

PIPE SIZE	L = LENGTH	
	TONGUE & GROOVE PIPE	MODIFIED BELL PIPE
18" TO 24"	4 1/2"	6 1/4"
30"	5"	7"
36"	5 1/2"	7"
42"	6"	
48"	6 1/2"	
60"	7 1/2"	
66"	8"	

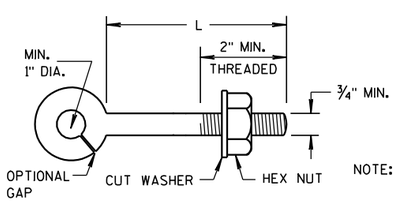

EYE BOLT

NOTE:

NOTE: TWO EYE BOLTS MAY BE USED WITH A 30" LONG THREADED ROD IN LIEU OF THE 90° BENT TIE ROD.

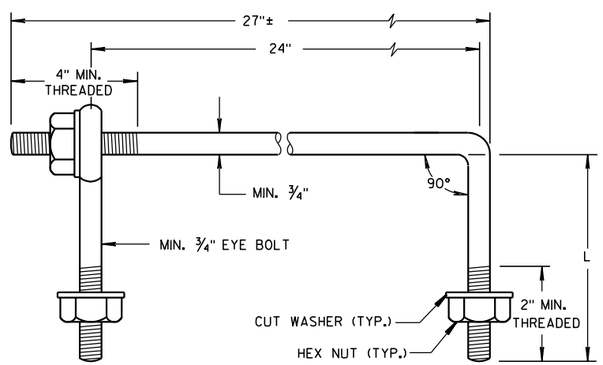

EYE BOLT AND TIE ROD

(JOINT TIES FOR 18" TO 66" DIA. CONCRETE PIPE)

EYE BOLT AND TIE ROD ASSEMBLY (ALTERNATE NO. 2)

ADJUSTABLE TIE ROD TABLE

PIPE DIAMETER	TIE ROD DIAMETER	D	L_1	N
12-60	5/8	5/8	5	1/2
66-84	3/4	3/4	5	1/2
90-108	1	1	7	1 7/16

DIMENSIONS SHOWN ARE IN INCHES

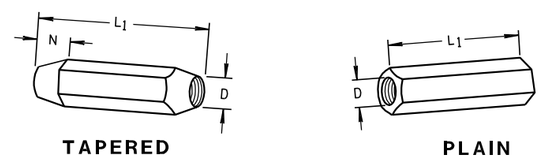

TAPERED PLAIN

RIGHT AND LEFT THREADS

SLEEVE NUTS

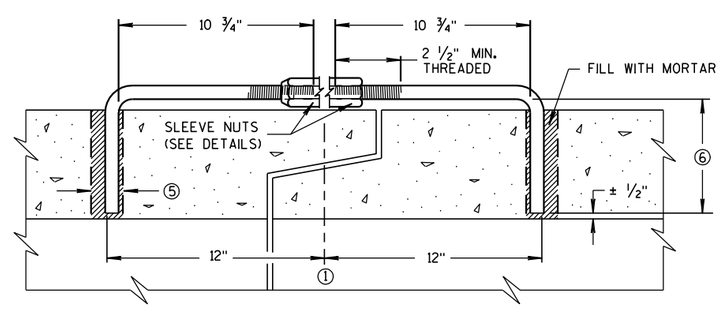

LONGITUDINAL SECTION

(JOINT TIES FOR 12" TO 108" DIA. CONCRETE PIPE)

ADJUSTABLE TIE ROD (ALTERNATE NO. 3)

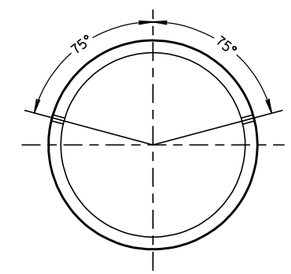

PLACEMENT OF (2) CAST-IN-PLACE INSERTS OR HOLES DURING FABRICATION FOR PIPE SECTIONS REQUIRING TIE RODS

TRANSVERSE SECTION

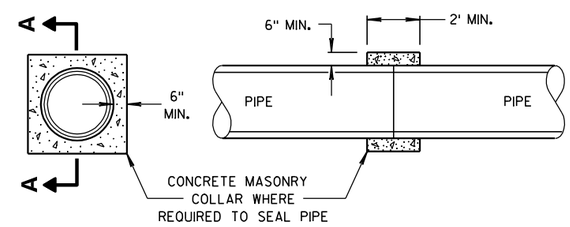

SECTION A-A

CONCRETE COLLAR DETAIL

JOINT TIES FOR CONCRETE PIPE AND CONCRETE COLLAR DETAIL

STATE OF WISCONSIN
DEPARTMENT OF TRANSPORTATION

APPROVED
6/5/2012 /S/ Jerry H. Zogg
DATE ROADWAY STANDARDS DEVELOPMENT ENGINEER
FHWA

6

6

S.D.D. 8 F 4-7

S.D.D. 8 F 4-7

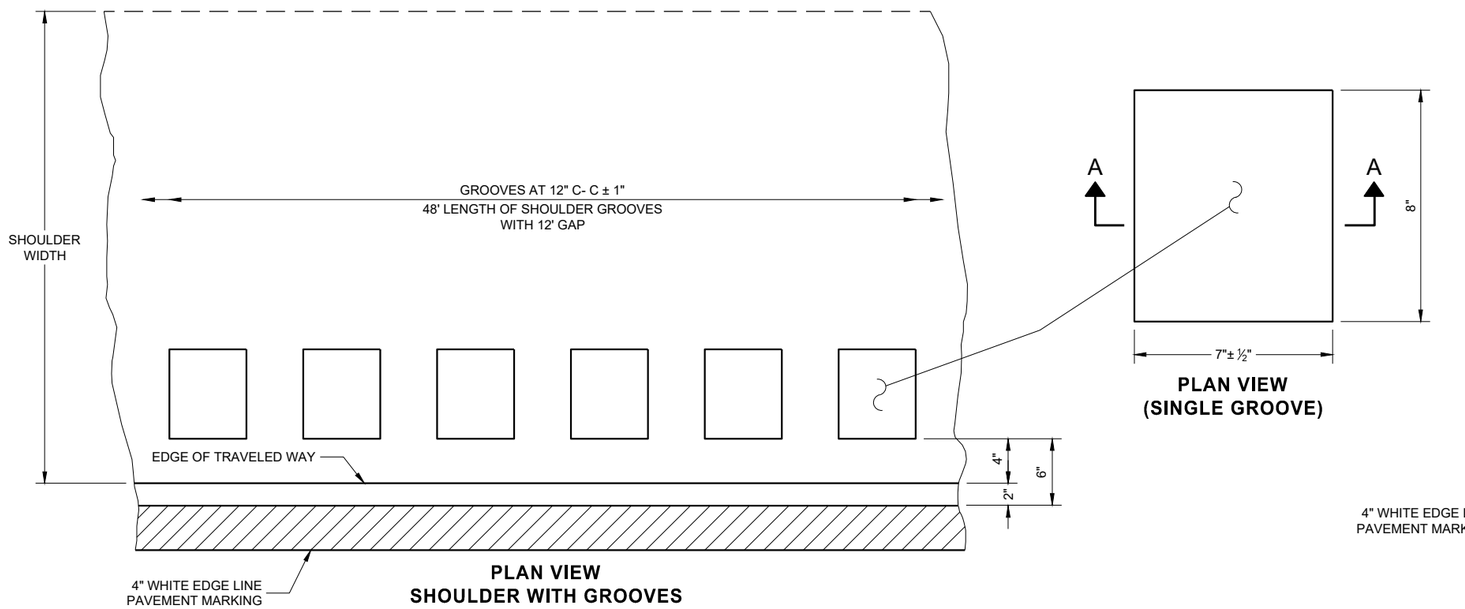

PLAN VIEW
SHOULDER WITH GROOVES

PLAN VIEW
(SINGLE GROOVE)

PLACEMENT DETAIL FOR TYPE 1 MILLED RUMBLE STRIP

GENERAL NOTES

DETAILS OF CONSTRUCTION NO SHOWN ON THIS DRAWING SHALL CONFORM TO THE PERTINENT REQUIREMENTS OF THE STANDARD SPECIFICATIONS AND APPLICABLE SPECIAL PROVISIONS.

DO NOT MILL SHOULDER GROOVES THROUGH ANY INTERSECTION, MARKED CROSSWALK, NON-MOTORIZED PATH CROSSING, OR SNOWMOBILE CROSSING.

(1) SHOULDER GROOVES MAY BE OMITTED IN AREAS WITH HIGH CONCENTRATIONS OF DRIVEWAYS. WHEN DIRECTED BY THE ENGINEER.

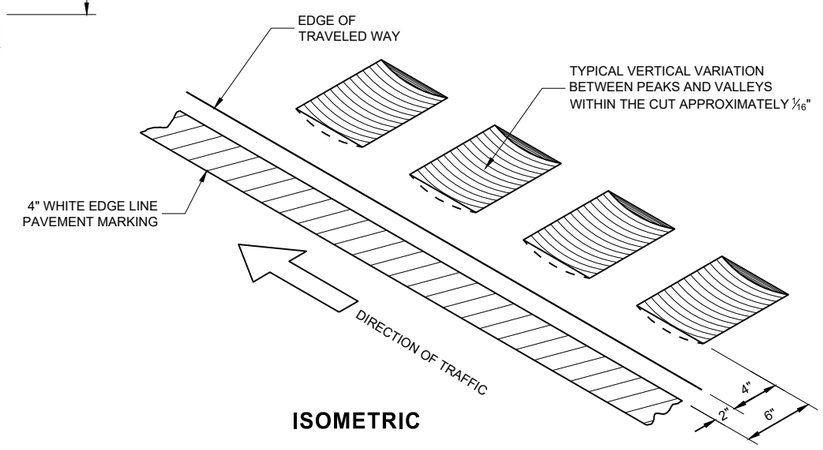

ISOMETRIC

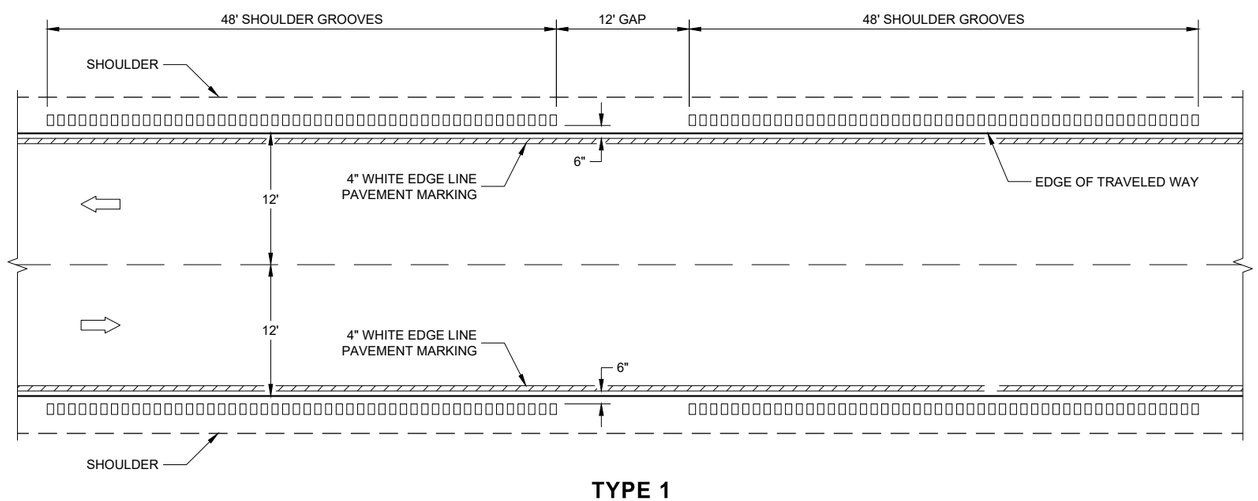

TYPE 1
2 - LANE SHOULDER RUMBLE STRIP

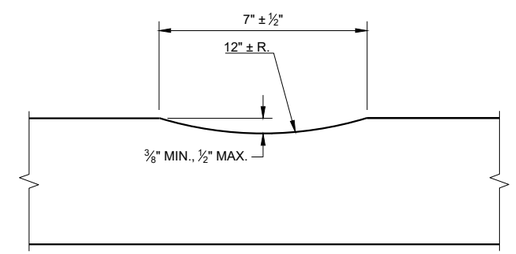

SECTION A - A

2-LANE RURAL SHOULDER RUMBLE STRIP, MILLING

STATE OF WISCONSIN
DEPARTMENT OF TRANSPORTA

6

SDD 13A10 - 02a

6

SDD 13A10 - 02a

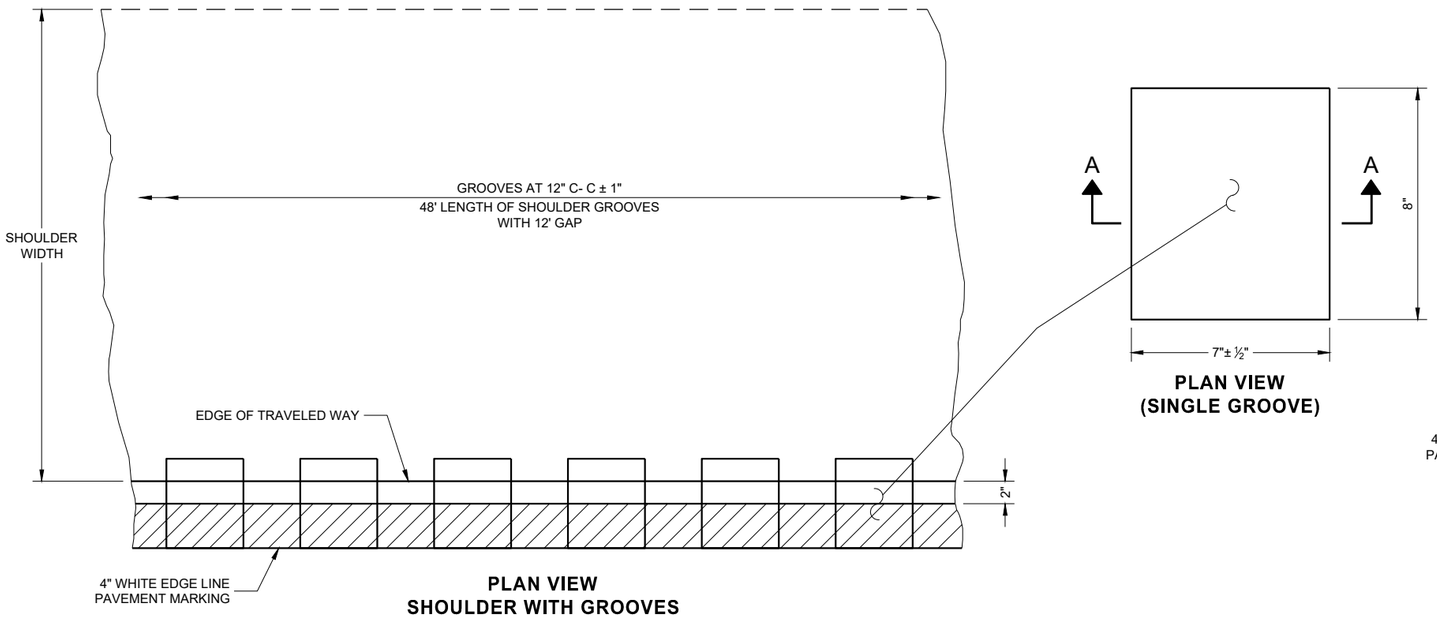

PLAN VIEW
SHOULDER WITH GROOVES

PLAN VIEW
(SINGLE GROOVE)

PLACEMENT DETAIL FOR TYPE 2 MILLED RUMBLE STRIP

GENERAL NOTES

DETAILS OF CONSTRUCTION NO SHOWN ON THIS DRAWING SHALL CONFORM TO THE PERTINENT REQUIREMENTS OF THE STANDARD SPECIFICATIONS AND APPLICABLE SPECIAL PROVISIONS.

DO NOT MILL SHOULDER GROOVES THROUGH ANY INTERSECTION, MARKED CROSSWALK, NON-MOTORIZED PATH CROSSING, OR SNOWMOBILE CROSSING.

(1) SHOULDER GROOVES MAY BE OMITTED IN AREAS WITH HIGH CONCENTRATIONS OF DRIVEWAYS. WHEN DIRECTED BY THE ENGINEER.

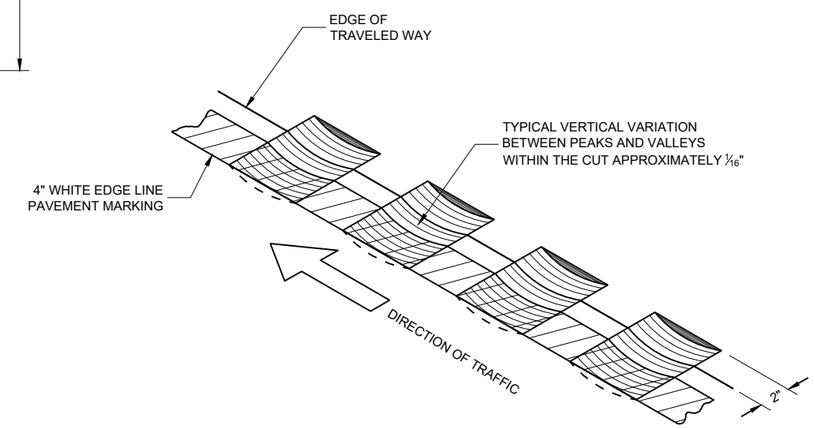

ISOMETRIC

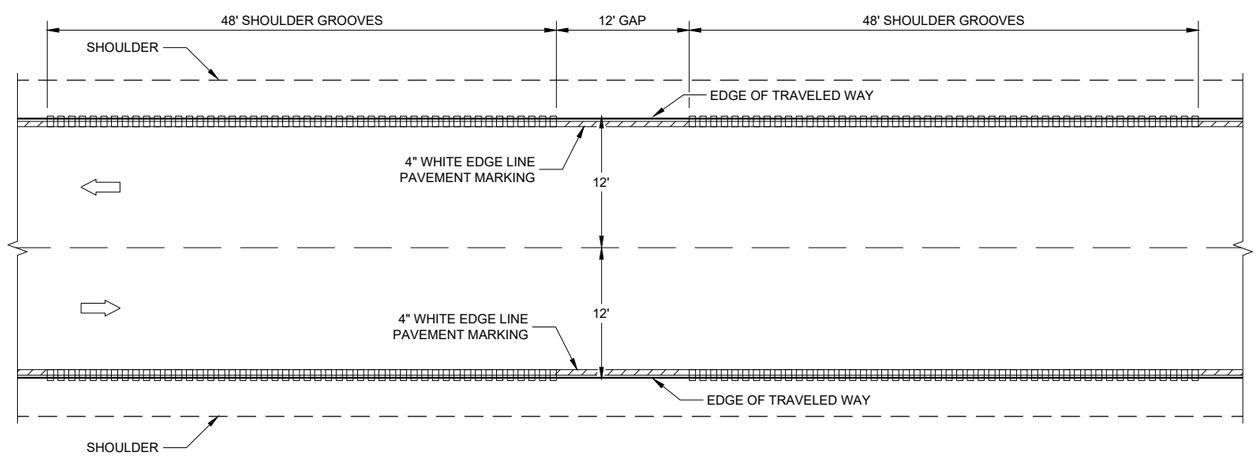

TYPE 2
2 - LANE SHOULDER RUMBLE STRIP

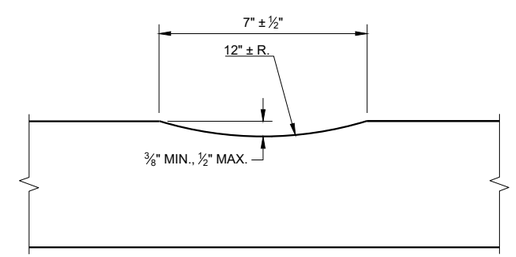

SECTION A - A

2-LANE RURAL SHOULDER RUMBLE STRIP, MILLING

STATE OF WISCONSIN
DEPARTMENT OF TRANSPORTATION

6

6

SDD 13A10 - 02b

SDD 13A10 - 02b

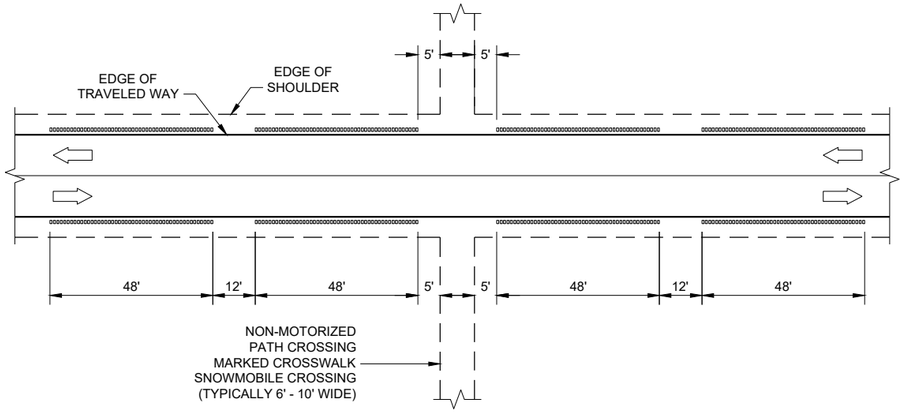

SHOULDER GROOVES AT MISCELLANEOUS CROSSINGS

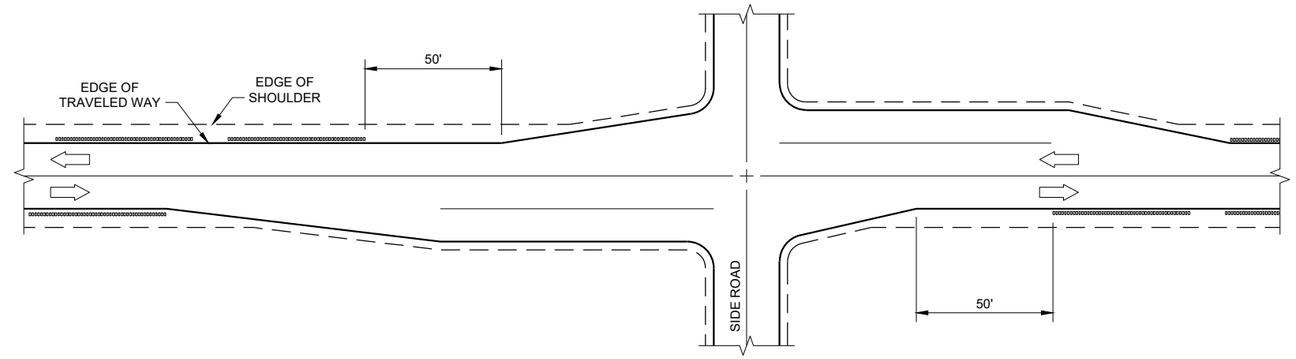

SHOULDER GROOVES AT RIGHT TURN LANE

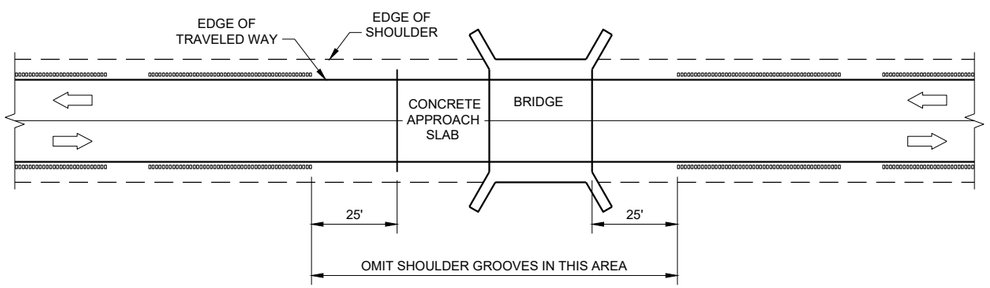

SHOULDER GROOVES AT BRIDGES

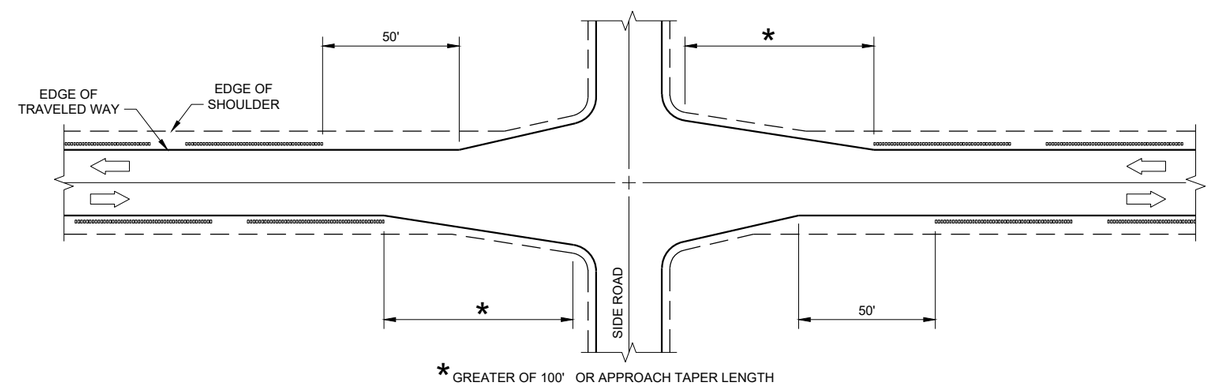

SHOULDER GROOVES AT INTERSECTIONS WITH APPROACH TAPER

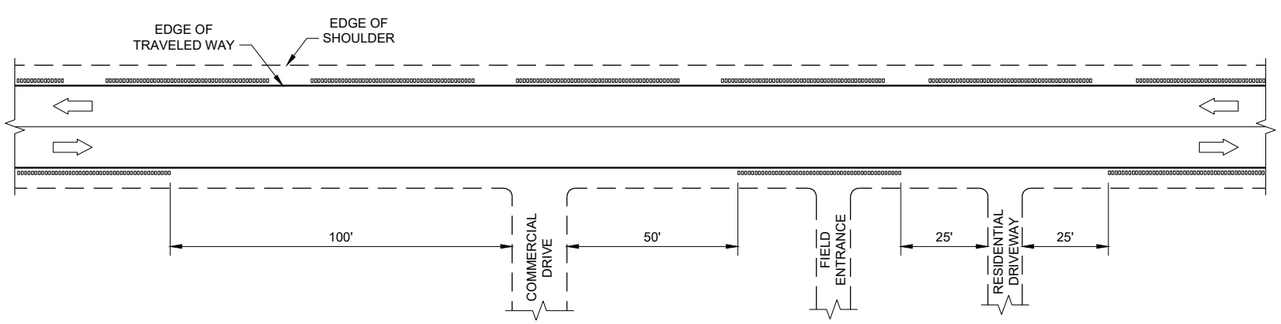

SHOULDER GROOVES AT DRIVEWAYS (1)

GENERAL NOTES

(1) SHOULDER GROOVES MAY BE OMITTED IN AREAS WITH HIGH CONCENTRATIONS OF DRIVEWAYS. WHEN DIRECTED BY THE ENGINEER.

2-LANE RURAL SHOULDER RUMBLE STRIP, MILLING

STATE OF WISCONSIN
DEPARTMENT OF TRANSPORTA

6

SDD 13A10 - 02c

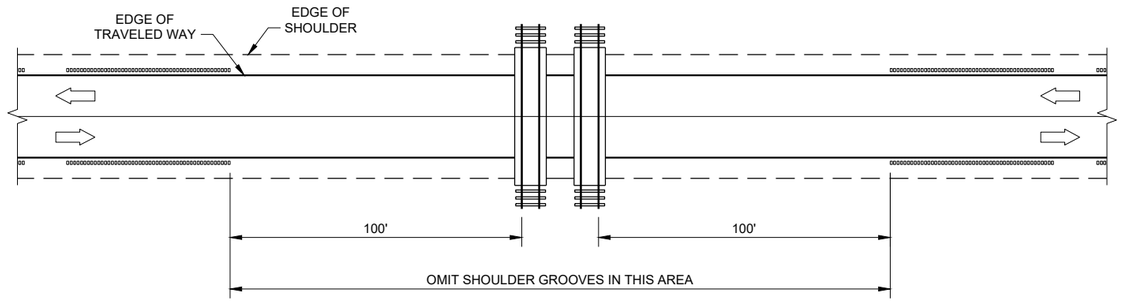

SHOULDER GROOVES AT RAILROADS

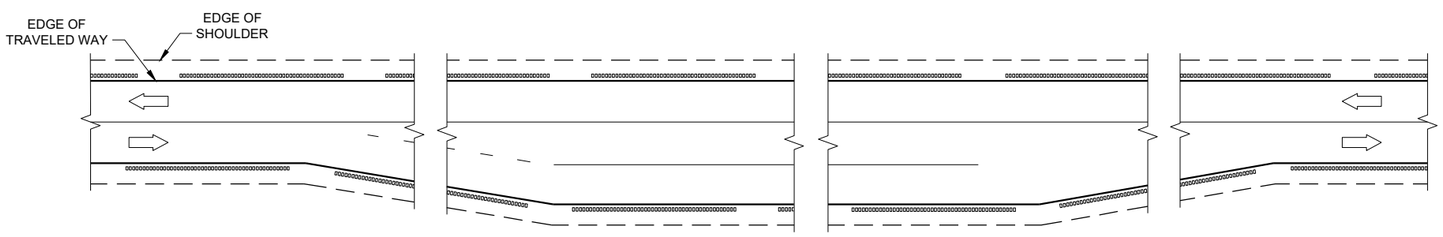

SHOULDER GROOVES AT PASSING AND CLIMBING LANES

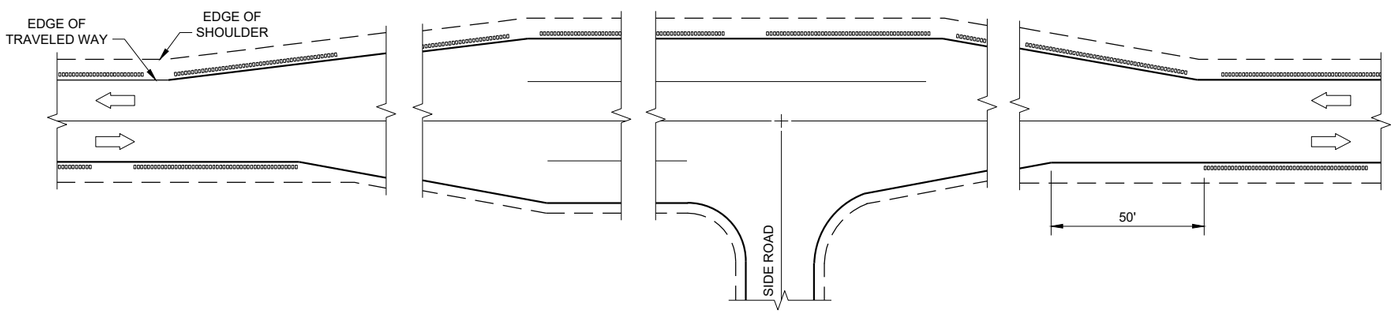

SHOULDER GROOVES AT BYPASS LANES

6

6

2-LANE RURAL SHOULDER RUMBLE STRIP, MILLING

STATE OF WISCONSIN
DEPARTMENT OF TRANSPORTATION

APPROVED
7/2018 — DATE
/S/ Rodney Taylor — ROADWAY STANDARDS DEVE ENGINEER

FHWA

SDD 13A10 - 02d

SDD 13A10 - 02d

GENERAL NOTES

DETAILS OF CONSTRUCTION NO SHOWN ON THIS DRAWING SHALL CONFORM TO THE PERTINENT REQUIREMENTS OF THE STANDARD SPECIFICATIONS AND APPLICABLE SPECIAL PROVISIONS.

DO NOT MILL CENTERLINE GROOVES THROUGH ANY INTERSECTION, MARKED CROSSWALK, NON-MOTORIZED PATH CROSSING, OR SNOWMOBILE CROSSING.

INSTALL PAVEMENT MARKING AFTER THE GROOVES ARE INSTALLED.

SEE SIGNING PLAN FOR SIGN REQUIREMENTS THAT MAY BE NEEDED.

(1) CENTERLINE GROOVES MAY BE OMITTED IN AREAS WITH HIGH CONCENTRATIONS OF DRIVEWAYS. WHEN DIRECTED BY THE ENGINEER.

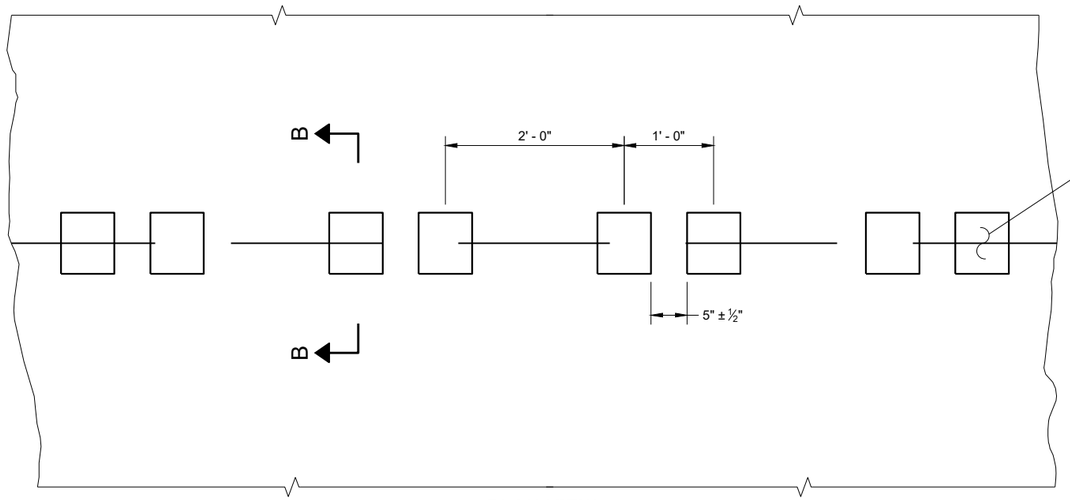

PLAN VIEW
SHOULDER WITH GROOVES

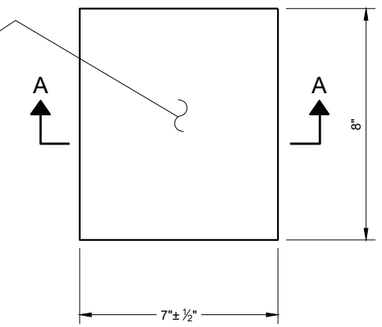

PLAN VIEW
(SINGLE GROOVE)

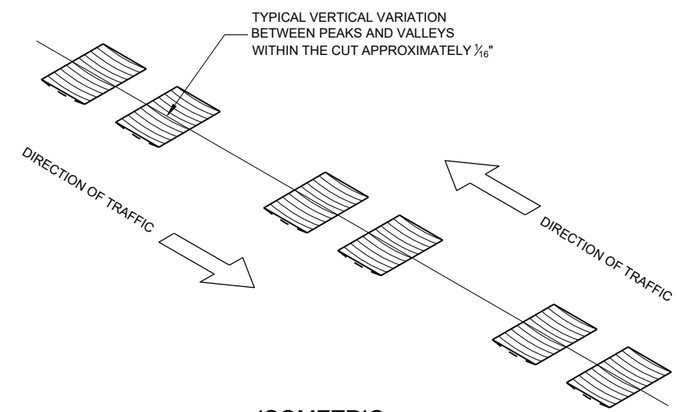

ISOMETRIC

PLACEMENT DETAIL FOR TYPE 1 MILLED RUMBLE STRIP

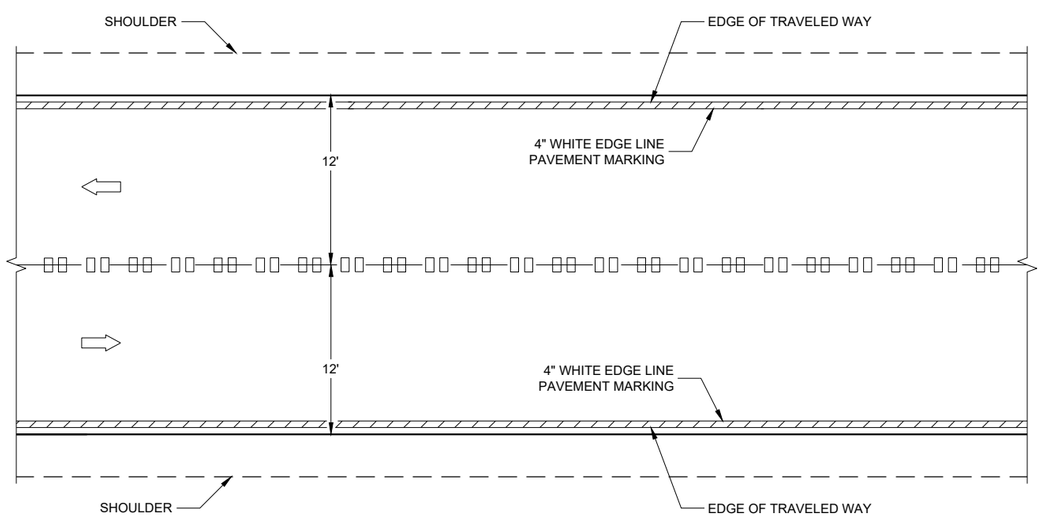

CENTERLINE GROOVES ON TWO-WAY ROADWAYS

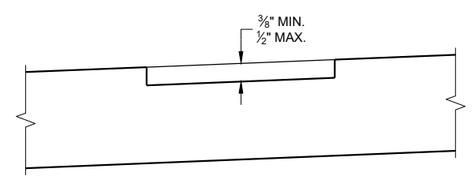

SECTION B - B
SUPERELEVATED ROADWAY

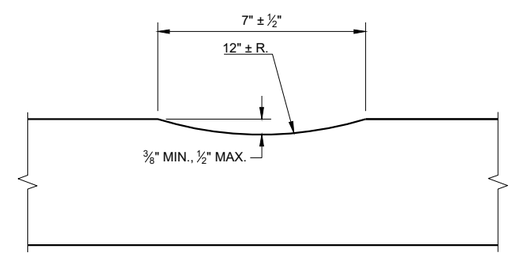

SECTION A - A

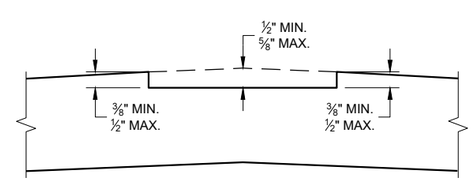

SECTION B - B
CROWNED ROADWAY

2-LANE RURAL
CENTER LINE RUMBLE STRIP, MILLING

STATE OF WISCONSIN
DEPARTMENT OF TRANSPORTAT

6

6

SDD 13A11 - 03a

SDD 13A11 - 03a

GENERAL NOTES

1. CENTERLINE GROOVES MAY BE OMITTED IN AREAS WITH HIGH CONCENTRATIONS OF DRIVEWAYS. WHEN DIRECTED BY THE ENGINEER.

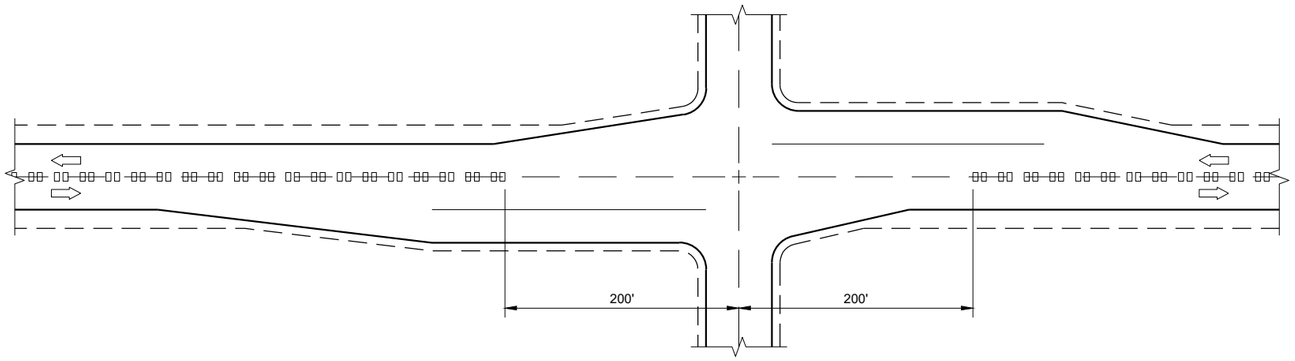

CENTERLINE GROOVES AT INTERSECTIONS

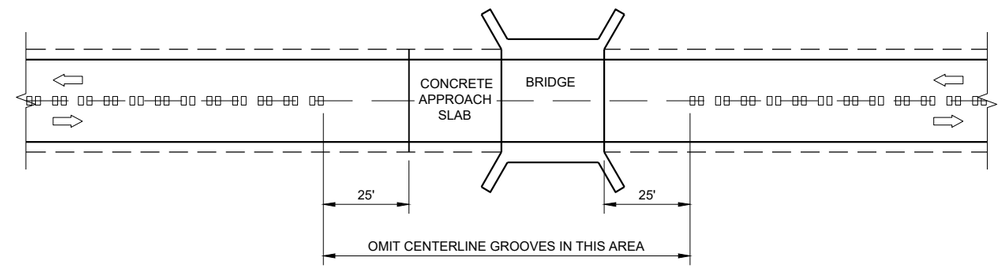

CENTERLINE GROOVES AT BRIDGES

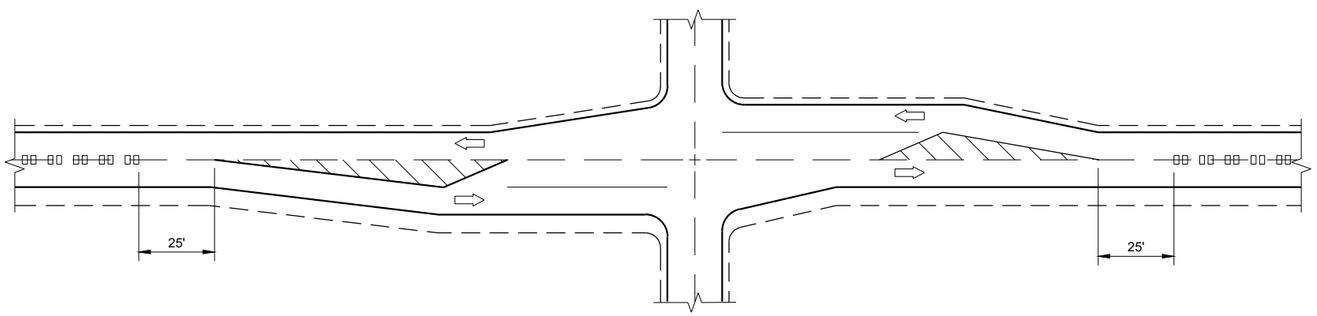

CENTERLINE GROOVES AT INTERSECTIONS (WITH LEFT TURN LANES)

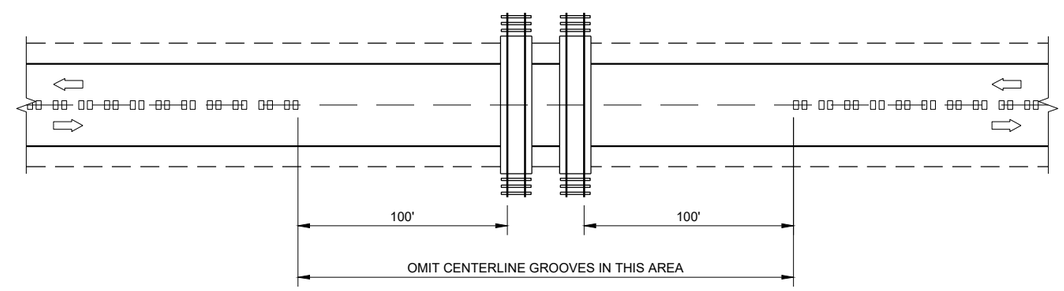

CENTERLINE GROOVES AT RAILROADS

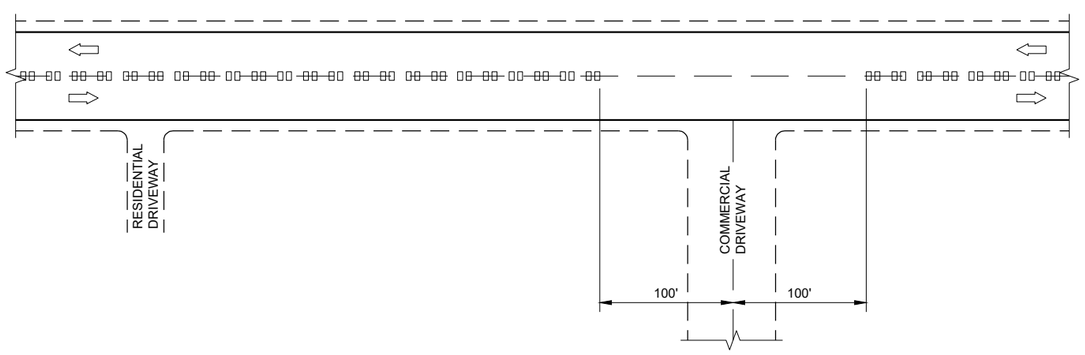

CENTERLINE GROOVES AT DRIVEWAYS (1)

2-LANE RURAL CENTERLINE RUMBLE STRIP, MILLING

STATE OF WISCONSIN
DEPARTMENT OF TRANSPORTATION

APPROVED
7/2018 — DATE
/S/ Rodney Taylor — ROADWAY STANDARDS DEVE ENGINEER
FHWA

6

SDD 13A11 - 03b

GENERAL NOTES

1. W6 X 9 OR W6 X 8.5 STEEL POSTS AND NOTCHED PLASTIC BLOCKOUTS ARE ACCEPTABLE ALTERNATIVES FOR 6" X 8" WOOD POSTS WITH WOOD OR PLASTIC BLOCKOUTS. USE APPROVED NOTCHED PLASTIC BLOCKOUTS WITH STEEL POSTS. APPROVED PLASTIC BLOCKOUT DESIGNS MAY VARY FROM THIS TYPICAL DETAIL WHEN USED IN CONJUNCTION WITH STEEL POSTS.

   DO NOT MIX STEEL POSTS AND WOOD POSTS IN A SINGLE INSTALLATION.
2. USE STRUCTURAL STEEL POSTS CONFORMING TO ASTM A 36. GALVANIZED POSTS ACCORDING TO AASHTO M 111. EITHER SET THE POSTS IN DRILLED HOLES OR DRIVE TO GRADE. REMOVE MUSHROOMING CAUSED BY DRIVING AND REPAIR DAMAGED SPELTER COATING ON GALVANIZED POSTS.
3. INSTALL STEEL POSTS WITH HOLES ON APPROACHING TRAFFIC SIDE.
4. USE EITHER WOOD OR APPROVED PLASTIC BLOCKOUTS ON WOOD POSTS.
5. IF THE DISTANCE FROM BACK OF POST TO SHOULDER HINGE POINT IS LESS THAN 2 FEET INSTALL LONGER POST AT HALF POST SPACING, W BEAM (LHW).
6. IF ROCK IS ENCOUNTERED DURING EXCAVATION, THE ENGINEER MAY APPROVE USING A 12 INCH DIAMETER POST HOLE EXTENDING 20 INCHES DEEP INTO THE ROCK. PLACE GRANULAR MATERIAL IN THE BOTTOM OF THE HOLE APPROXIMATELY 2½ INCHES DEEP. CUT THE POSTS TO LENGTH AND PLACE IN YHE HOLE. BACKFILL WITH MATERIAL EXCAVATED FROM THE HOLE AND COMPACT ADEQUATEY.
7. WHEN USING STEEL POSTS AND WOOD BLOCKOUTS INSTALL FOUR 16D GALVANIZED NAILS. INSTALL NAILS AT THE BACK CORNERS OF THE BLOCK AND BEND THE NAILS OVER THE FLANGE OF THE STEEL POST.

INSTALL BEAM GUARD SECTIONS AND ALL NECESSARY HARDWARE ACCORDING TO THE APPLICABLE PLAN AND CURRENT STANDARD AND SUPPLEMENTAL SPECIFICATIONS.

ALL DIMENSIONS ARE SUBJECT TO MANUFACTURER'S TOLERANCES EXCEPT WHERE ALLOWABLE TOLERANCES ARE SHOWN.

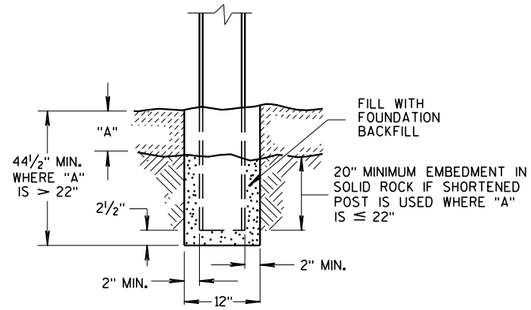

END VIEW
SETTING STEEL OR WOOD POST IN ROCK (6)

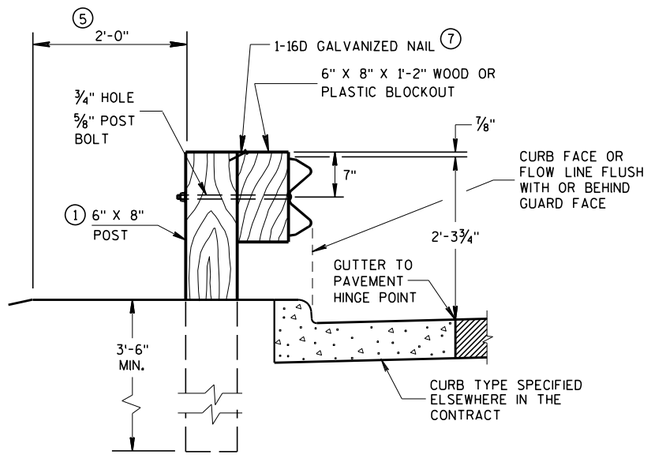

END VIEW
LOCATED ALONG A CURBED ROADWAY

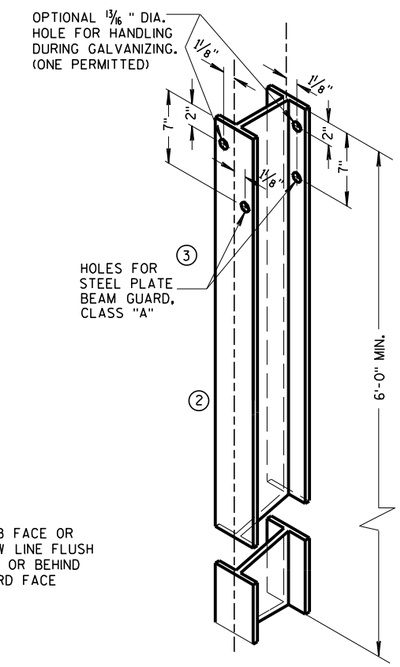

STEEL POST &
HOLE PUNCHING DETAIL
(W6 X 9) (1)

ALL HOLES 13/16" DIAMETER EXCEPT AS NOTED

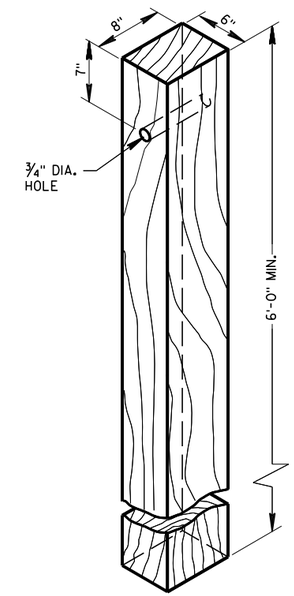

WOOD POST
(6"X8") NOMINAL

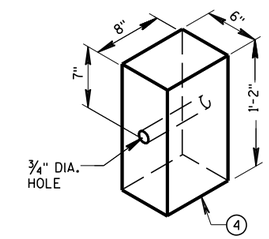

WOOD OR PLASTIC
BLOCKOUT FOR
WOOD POSTS

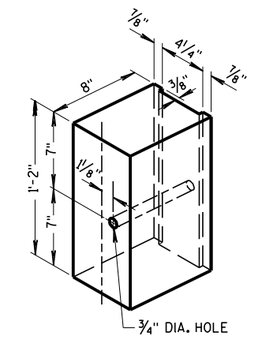

TYPICAL NOTCHED (1)
PLASTIC BLOCKOUT
FOR STEEL POSTS

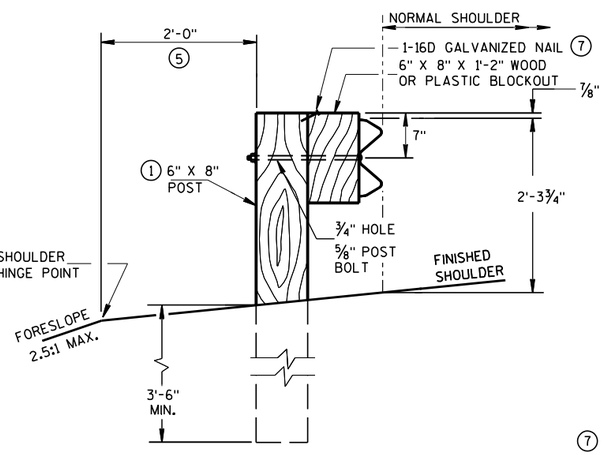

END VIEW
LOCATED ALONG A ROADWAY SHOULDER
STANDARD INSTALLATION

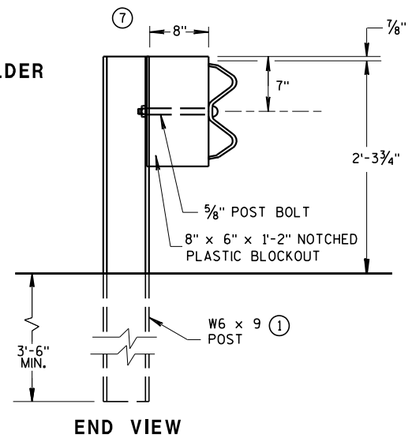

END VIEW
STEEL POST & NOTCHED
PLASTIC BLOCKOUT ALTERNATIVE
STANDARD INSTALLATION

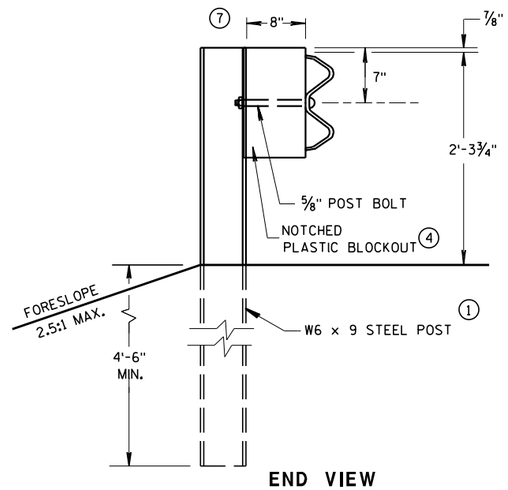

END VIEW
LONGER POST AT HALF
POST SPACING W BEAM
(LHW)

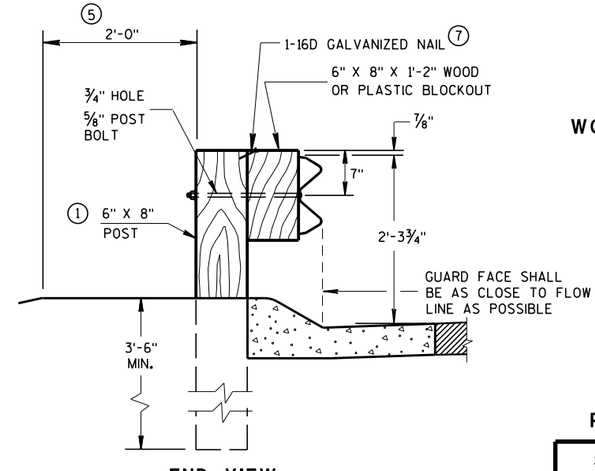

END VIEW
LOCATED ALONG A
MOUNTABLE CURBED ROADWAY

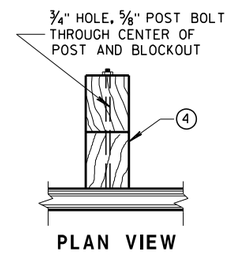

PLAN VIEW
WOOD POST, BLOCKOUT & BEAM

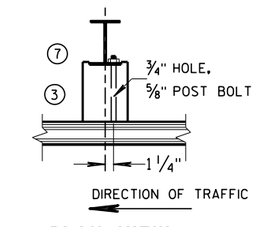

PLAN VIEW
STEEL POST, NOTCHED
PLASTIC BLOCKOUT & BEAM

TYPICAL INSTALLATION OF STEEL PLATE BEAM GUARD

STEEL PLATE BEAM GUARD,
CLASS "A"
INSTALLATION & ELEMENTS

STATE OF WISCONSIN
DEPARTMENT OF TRANSPORTATION

6

S.D.D. 14 B 15-11a

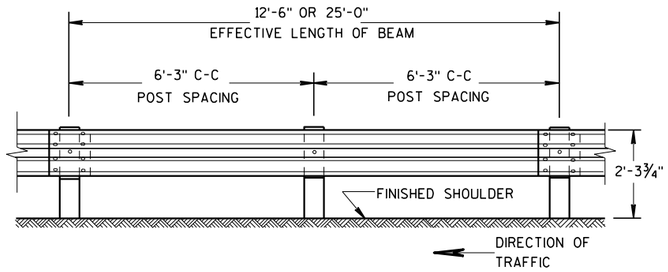

FRONT VIEW

POST SPACING STANDARD INSTALLATION

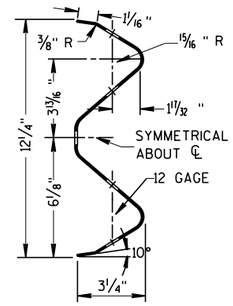

SECTION THRU W BEAM

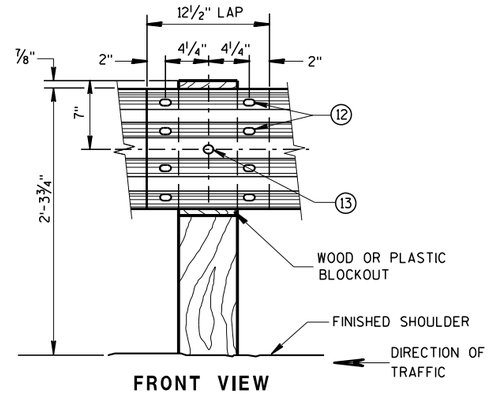

FRONT VIEW

BEAM SPLICE AT WOOD POST AND POST MOUNTING DETAIL

GENERAL NOTES

FURNISH GUARDRAIL DEFLECTORS FROM APPROVED PRODUCTS LIST.

(9) DO NOT INSTALL REFLECTORS ON THE FIRST 50 FEET OF THE APPROACH END OF THE ENERGY ABSORBING TERMINA. START REFLECTORS AT POST #9 AND SPACE EVENLY EVERY 100 FEET (MAX.) TO THE END OF GUARDRAIL RUN, USING A MINIMUM OF 3 REFLECTORS.

(12) 8 -5/8" Φ X 2" BUTTON HEAD BOLTS WITH OVAL SHOULDERS & RECESS NUTS.

(13) 5/8" DIA. BUTTON HEAD BOLT AND RECESS NUT WITH 5/8" DIA. F844 FLAT WASHER UNDER NUT.

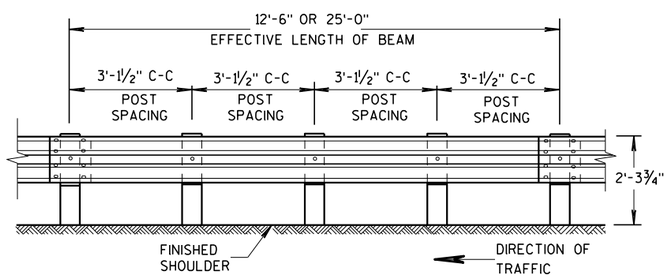

FRONT VIEW

POST SPACING FOR LONGER POST AT HALF POST SPACING W BEAM (LHW)

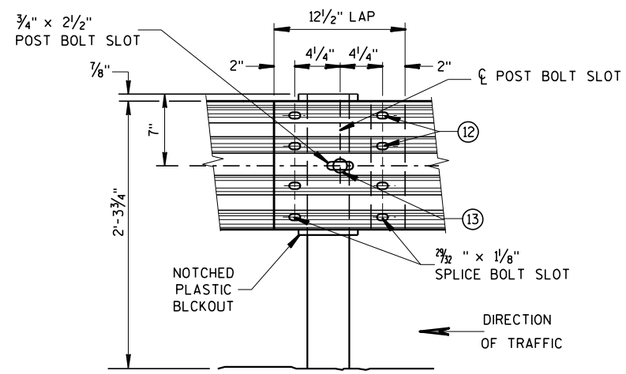

FRONT VIEW
BEAM SPLICE AT STEEL POST

TYPICAL SPLICING DETAILS OF STEEL PLATE BEAM GUARD

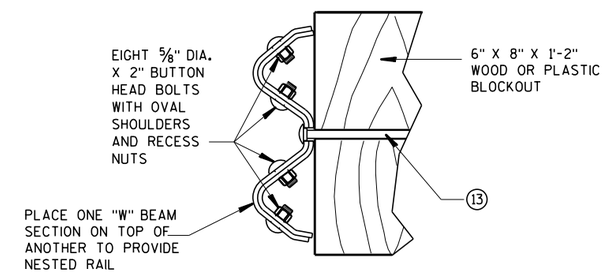

NESTED W BEAM (NW)

USE ALL OTHER STANDARD BEAM GUARD DETAILS FOR CONSTRUCTING NESTED W BEAM (NW)

* USE DOUBLE SIDED WHITE GUADRAIL REFLECTORS ON ROADWAYS WITH BI-DIRECTIONAL TRAFFIC (NO MEDIAN). USE SINGLE SIDED WHITE (RIGHT SIDE) AND SINGLE SIDED YELLOW (LEFT SIDE) ON ROADWAYS WITH MEDIAN SEPARATION.

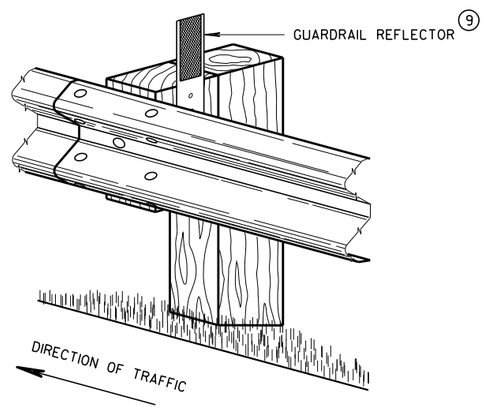

4" X 12" GUARDRAIL REFLECTOR DETAIL AND TYPICAL INSTALLATION *

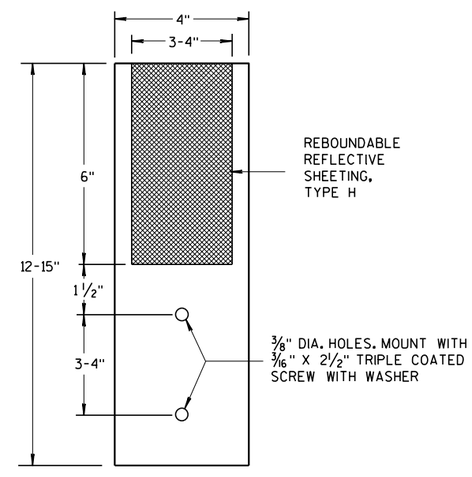

4"x 12" GUARDRAIL REFLECTOR

STEEL PLATE BEAM GUARD, CLASS "A", INSTALLATION & ELEMENTS

STATE OF WISCO 61
DEPARTMENT OF TRANSPORTATION

6

6

S.D.D. 14 B 15-11b

S.D.D. 14 B 15-11b

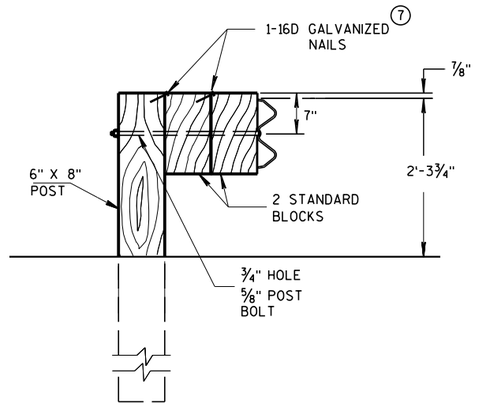

DETAIL FOR DOUBLE BLOCKS

THE NUMBER OF DOUBLE BLOCK POSTS WITHIN A BARRIER RUN IS UNLIMITED

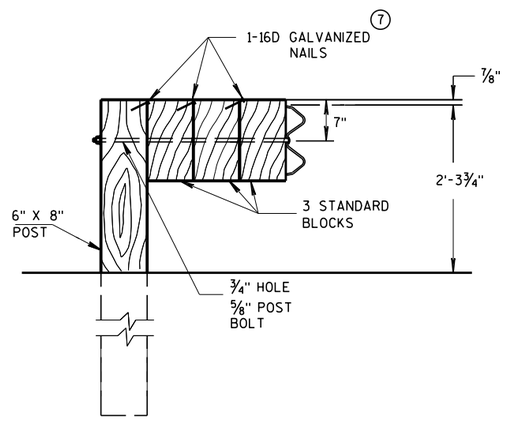

DETAIL FOR TRIPLE BLOCKS

TRIPLE BLOCK DETAIL IS LIMITED TO ONE LOCATION WITHIN A BEAM GUARD RUN.

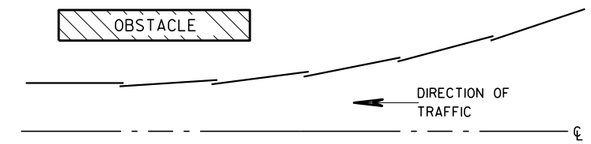

PLAN VIEW
BEAM LAPPING DETAIL

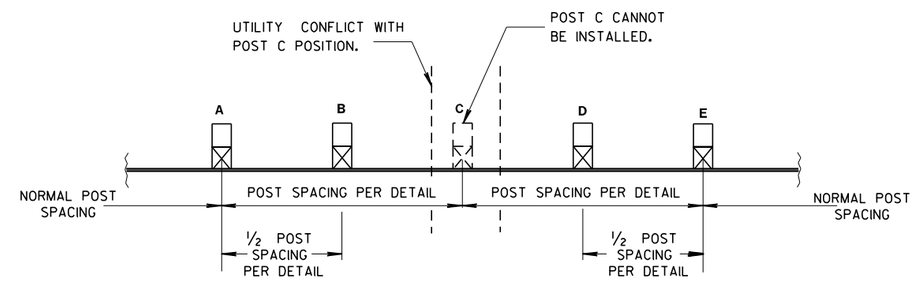

POST DRIVING FOR CONTINUOUS UNDERGROUND OBSTRUCTION

NOTES: USE DOUBLE OR TRIPLE BLOCKS WHEN UNDERGROUND OBSTACLES PREVENT THE POST FROM BEING INSTALLED.

DO NOT USE EXTRA BLOCKOUTS IF IT CAUSES THE POST TO BE DRIVEN BEYOND SHOULDER HINGE POINT OR CAUSES A FIXED OBJECT TO BE WITHIN THE DEFLECTION DISTANCE OF THE BARRIER.

STEEL PLATE BEAM GUARD, CLASS "A", INSTALLATION & ELEMENTS

STATE OF WISCONSIN
DEPARTMENT OF TRANSPORTATION

APPROVED
June 2017 — DATE
/S/ Rodney Taylor — ROADWAY STANDARDS DEVELOPMENT UNIT SUPERVISOR
FHWA

BILL OF MATERIALS

NOTE NO.	DESCRIPTION
1	WOOD BREAKAWAY TERMINAL POST: 5½" X 7½" X 3'-9"
2	STEEL TUBE TS 8" X 6" X 0.188", 6'-0"
4	WOOD BREAKAWAY CRT POST: 6" X 8" X 6'-0"
5	WOOD OFFSET BLOCKS: 6' X 8" X 1'-2"
6	PIPE SLEEVE: 2" X 5 ½" STANDARD PIPE
7	BEARING PLATE
8	BCT CABLE ASSEMBLY
9	CABLE ANCHOR BOX
10	STRUT & YOKE
11	STEEL PLATE BEAM, END PANEL 12 GA.
12	STEEL PLATE BEAM: 12 GA. 13'-6½"
13	IMPACT HEAD
14	0.040" ALUMINUM SHEET WITH REFLECTIVE SHEETING TYPE F PER SECTION 637 OF THE STANDARD SPECIFICATIONS

GENERAL NOTES

FOLLOW MANUFACTURE'S BOLTING RECOMMENDATIONS.

(A) THE SLOPE IN THE AREA BOUNDED BY THE GRADELINE, THE HINGE POINT LINE (HPL), AND THE CLEAR ZONE LIMITS (CZL) SHALL BE 4:1 OR FLATTER.

(B) AFTER FINAL ASSEMBLY, RECHECK CABLE TO BE SURE IT IS TAUT AND HAS NOT RELAXED.

(D) THE TOP OF THE STEEL TUBE ON POSTS 1 AND 2 SHALL NOT BE MORE THAN 3" ABOVE THE FINISH GROUND ELEVATION.

(E) THE CENTER OF THE UPPER 3½" DIAMETER HOLE ON POST 3 THROUGH 8 SHALL BE ¾" ABOVE THE FINISHED GROUND LINE.

(F) ATTACH ALUMINUM SHEET TO E.A.T. HEAD USING 4 STAINLESS STEEL SELF-TAPPING SCREWS. ONE SCREW PER CORNER.

STEEL POSTS SHALL NOT BE ALLOWED FOR USE WITH ENERGY ABSORBING TERMINALS.

DO NOT INSTALL REFLECTORS ON THE FIRST 50 FEET OF THE APPROACH END OF THE ENERGY ABSORBING TERMINAL.

* DO NOT ATTACH BLOCKOUTS TO POSTS 1 AND 2.

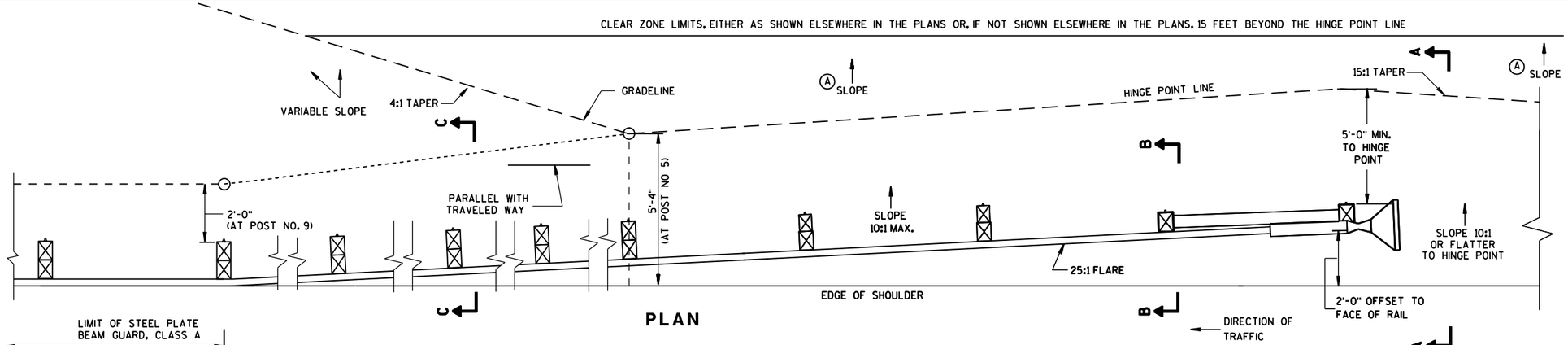

PLAN

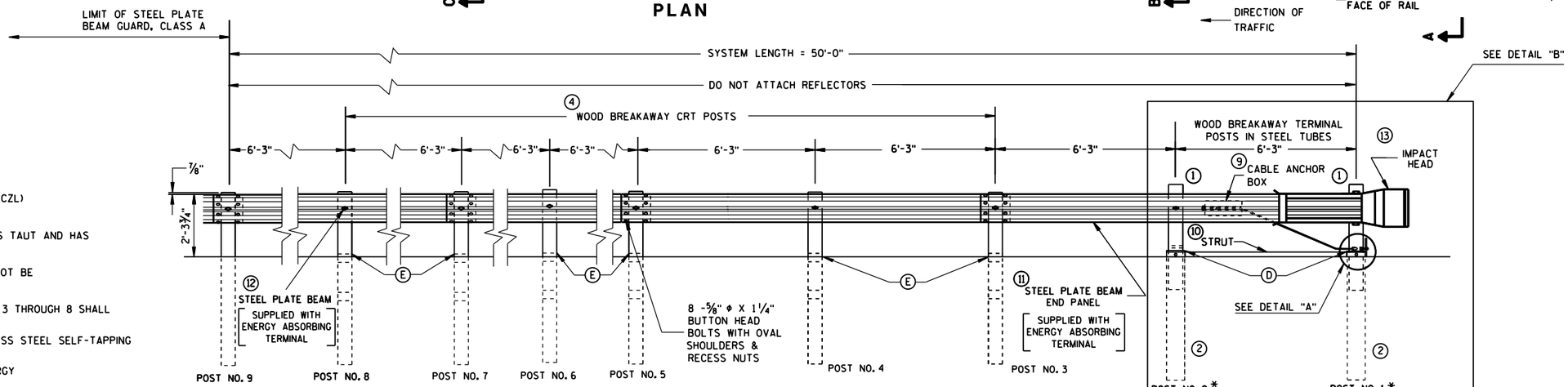

ELEVATION

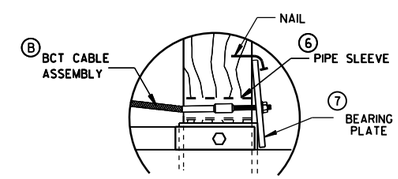

DETAIL "A"

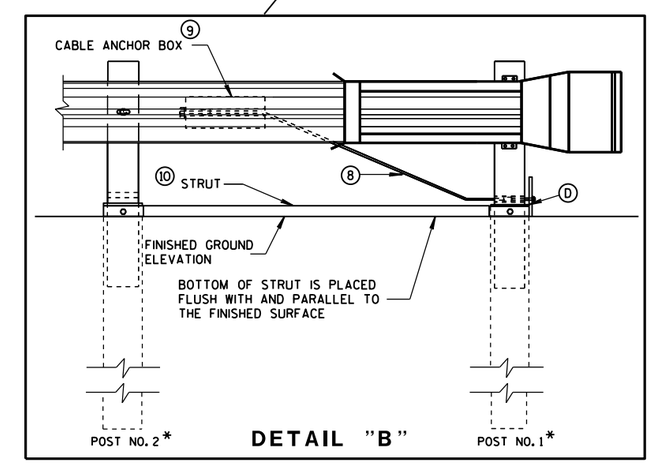

DETAIL "B"

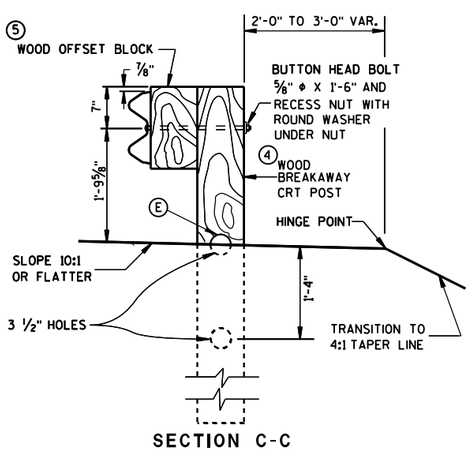

SECTION C-C
TYPICAL AT POST NOS. 6, 8

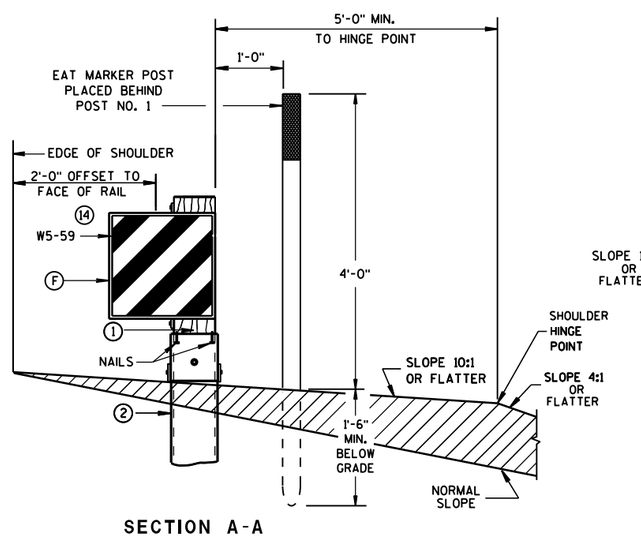

SECTION A-A
TYPICAL AT POST NO. 1*

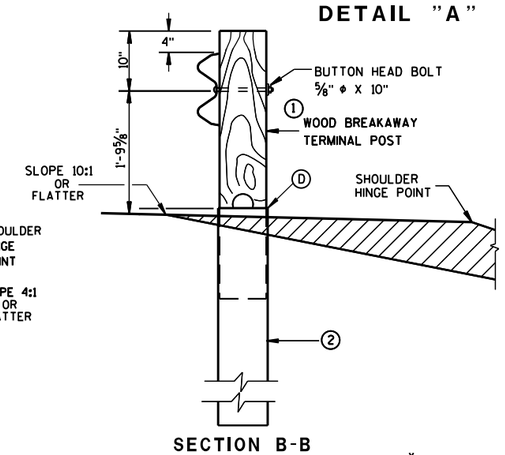

SECTION B-B
TYPICAL AT POST NO. 2*

STEEL PLATE BEAM GUARD
ENERGY ABSORBING TERMINAL

STATE OF WISCONSIN
DEPARTMENT OF TRANSPORTATION

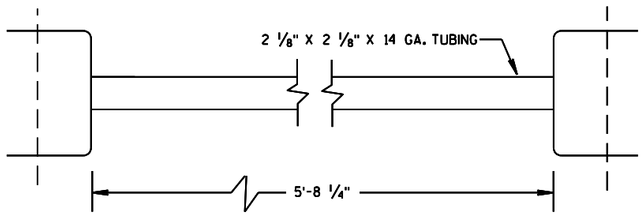

⑩ STRUT DETAIL

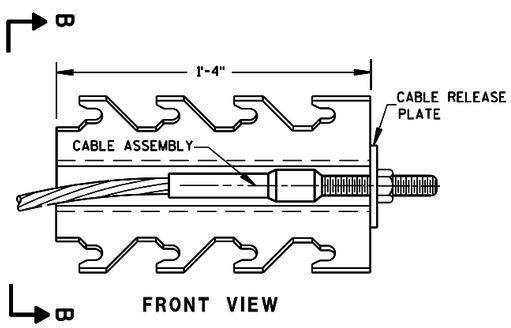

FRONT VIEW

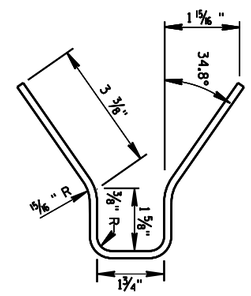

SECTION B-B

⑨ CABLE ANCHOR BOX

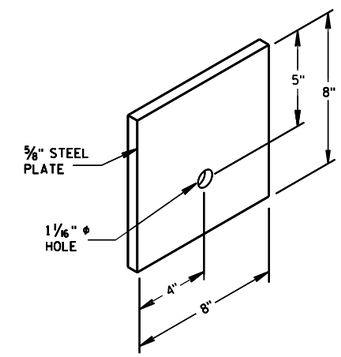

⑦ STEEL BEARING PLATE

6

6

S.D.D. 14 B 24-9b

S.D.D. 14 B 24-9b

STEEL PLATE BEAM GUARD
ENERGY ABSORBING TERMINAL

STATE OF WISCONSIN
DEPARTMENT OF TRANSPO

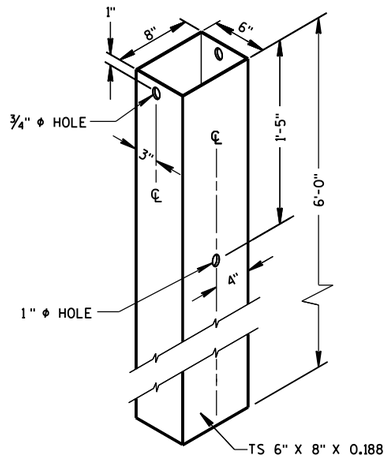

② 72" STEEL TUBE
(POSTS NO. 1-4

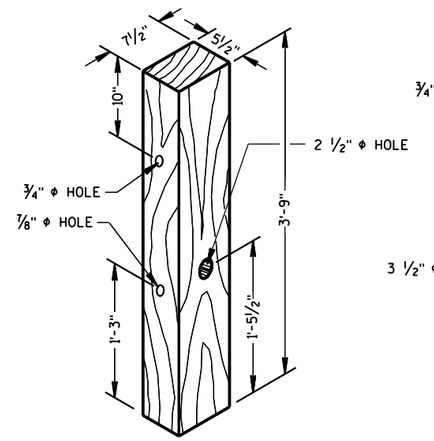

① TERMINAL POST

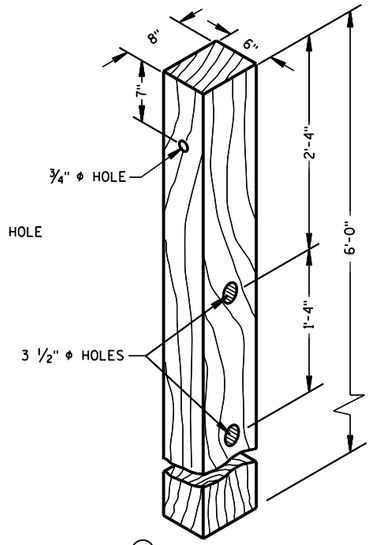

④ CRT POST
(POSTS NO'S 5-8

WOOD BREAKAWAY POSTS

GENERAL NOTES

WHEN ROCK IS ENCOUNTERED DURING EXCAVATION, A 12 INCH DIA. POST HOLE EXTENDING 20 INCHES DEEP INTO THE ROCK MAY BE USED IF APPROVED BY THE ENGINEER. GRANULAR MATERIAL SHALL BE PLACED IN THE BOTTOM OF THE HOLE APPROXIMATELY 2 1/2" INCHES DEEP TO PROVIDE DRAINAGE. THE SOIL TUBES SHALL BE FIELD CUT TO LENGTH, PLACED IN THE HOLE AND BACKFILLED WITH ADEQUATELY COMPACTED MATERIAL EXCAVATED FROM THE HOLE.

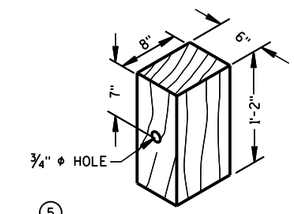

⑤ WOOD OFFSET BLOCK
REQ'D. AT ALL POSTS EXCEPT POST NO'S 1 & 2

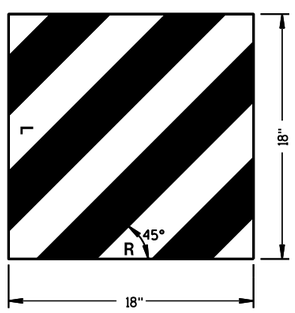

⑭ REFLECTIVE SHEETING DETAILS

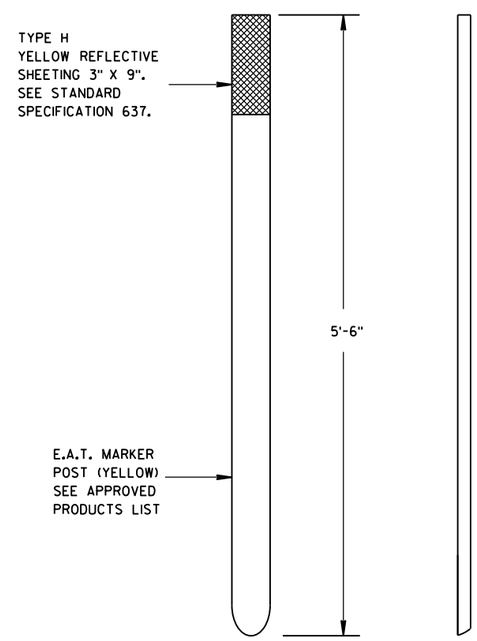

E.A.T. MARKER POST

6

6

S.D.D. 14 B 24-9c

S.D.D. 14 B 24-9c

STEEL PLATE BEAM GUARD
ENERGY ABSORBING TERMINAL

STATE OF WISCONSIN
DEPARTMENT OF TRANSPORTATION

APPROVED
June 2017
DATE
FHWA

/S/ Rodney Taylor
ROADWAY STANDARDS
UNIT SUPERV

ENT

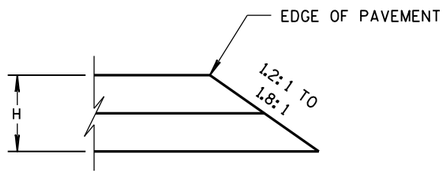

CONSTRUCTED WITH FINAL TWO LAYERS

FOR H 5" OR LESS

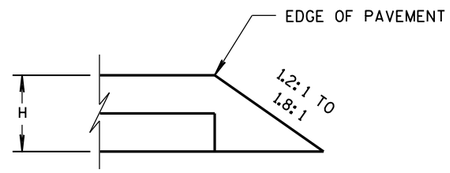

CONSTRUCTED WITH FINAL LAYER

FOR H 5" OR LESS

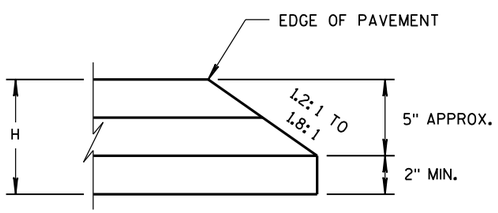

CONSTRUCTED WITH FINAL TWO LAYERS

FOR H GREATER THAN 5"

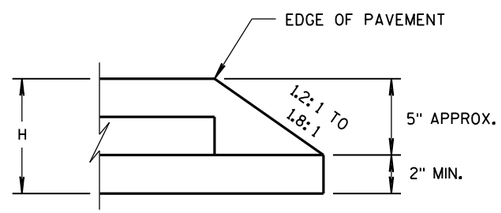

CONSTRUCTED WITH FINAL LAYER

FOR H GREATER THAN 5"

HMA PAVEMENT AND HMA OVERLAYS

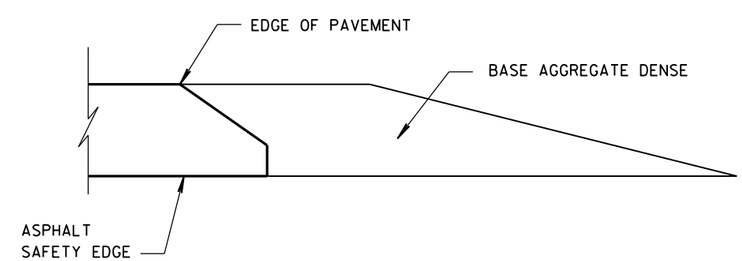

FINISHED SHOULDER AGGREGATE PLACEMENT

6

6

S.D.D. 14 B 29-1

S.D.D. 14 B 29-1

SAFETY EDGE SM

STATE OF WISCONSIN
DEPARTMENT OF TRANSPORTATION

APPROVED

11/30/2012
DATE

/S/ Jerry H. Zogg
ROADWAY STANDARDS DEVELOPMENT ENGINEER

FHWA

GENERAL NOTES

DETAILS OF CONSTRUCTION, MATERIALS AND WORKMANSHIP NOT SHOWN ON THIS DRAWING SHALL CONFORM TO THE PERTINENT REQUIREMENTS OF THE STANDARD SPECIFICATIONS AND THE APPLICABLE SPECIAL PROVISIONS.

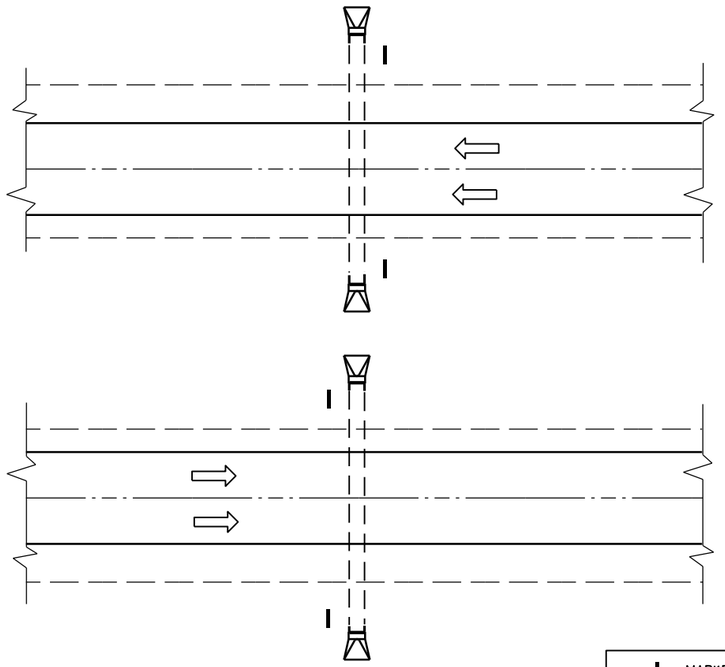

PLAN VIEW

DIVIDED HIGHWAY

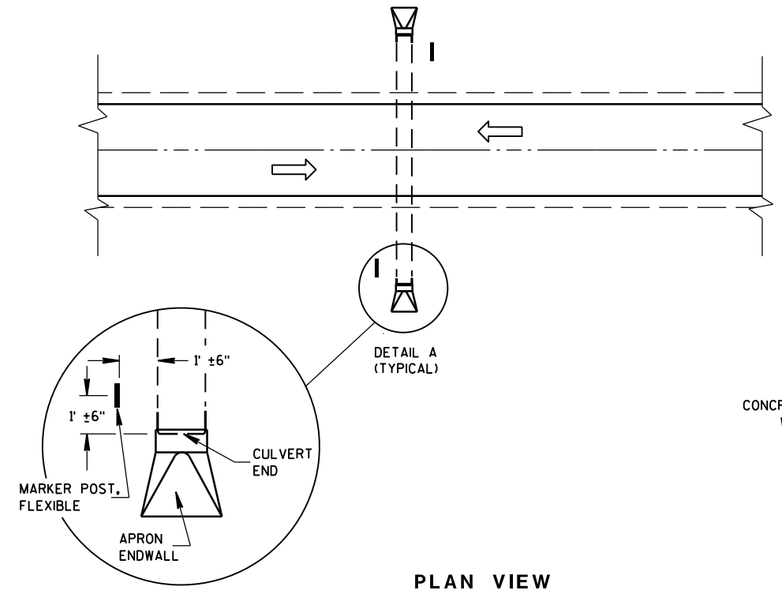

DETAIL A
(TYPICAL)

PLAN VIEW

UNDIVIDED HIGHWAY

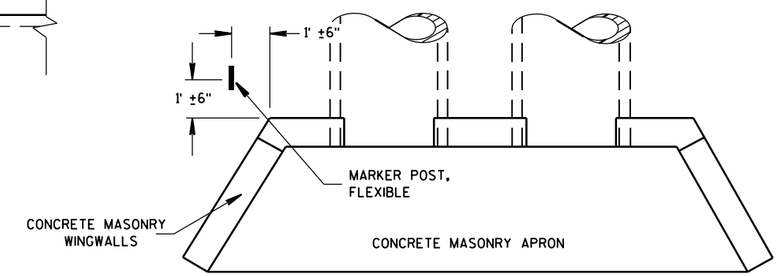

PLAN VIEW

CONCRETE MASONRY ENDWALLS FOR CULVERT PIPE AND PIPE ARCH

MARKER POST, FLEXIBLE

DIRECTION OF TRAFFIC FLOW

FLEXIBLE MARKER POST LOCATION

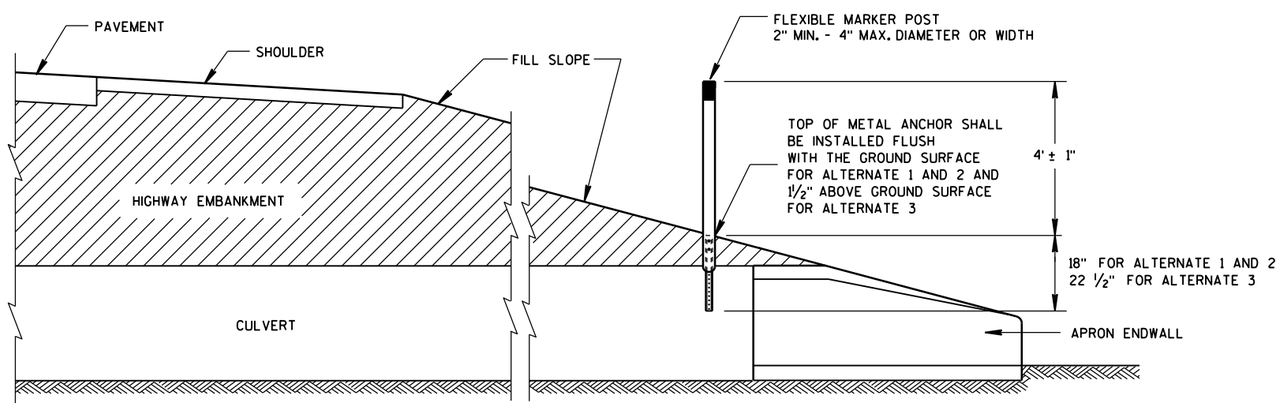

CROSS SECTION

FLEXIBLE MARKER POST

FLEXIBLE MARKER POST FOR CULVERT END

STATE OF WISCONSIN
DEPARTMENT OF TRANSPOR

6

S.D.D. 15 A 3-2a

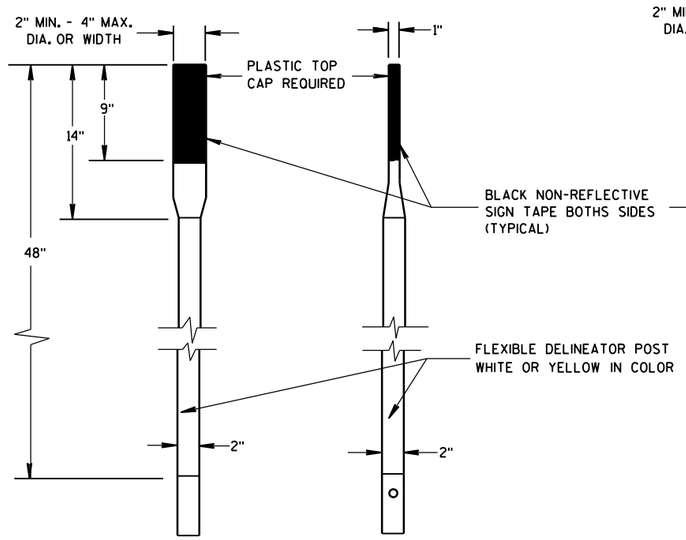

FRONT VIEW SIDE VIEW

ALTERNATE 1

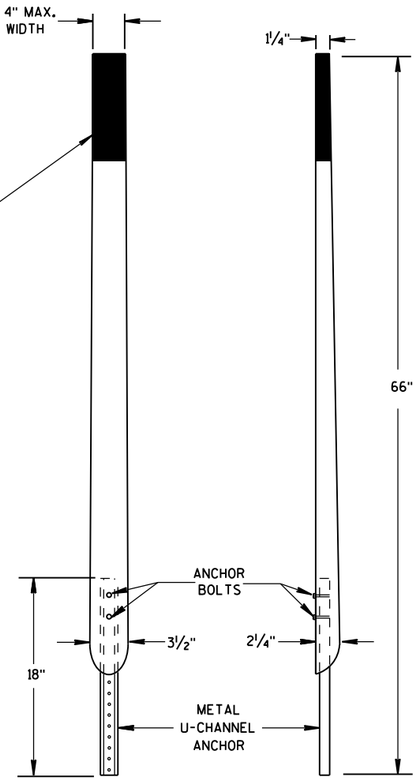

FRONT VIEW SIDE VIEW

ALTERNATE 2

FLEXIBLE MARKER POSTS

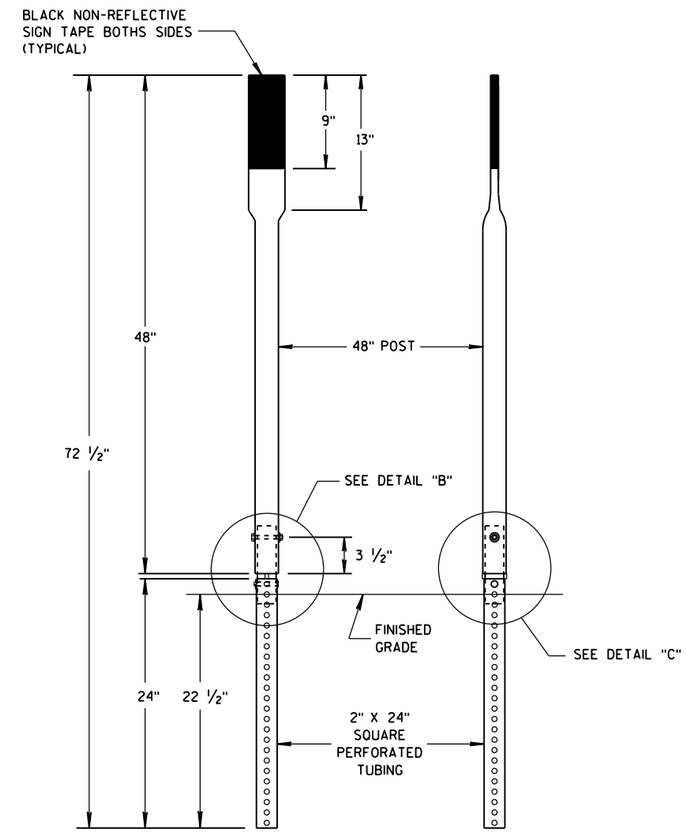

FRONT VIEW SIDE VIEW

ALTERNATE 3

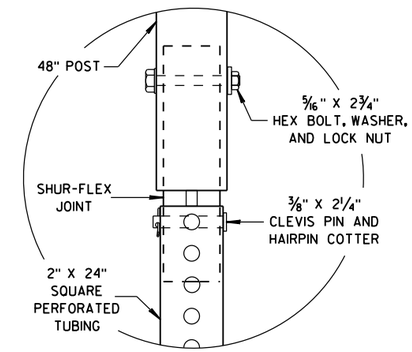

DETAIL B

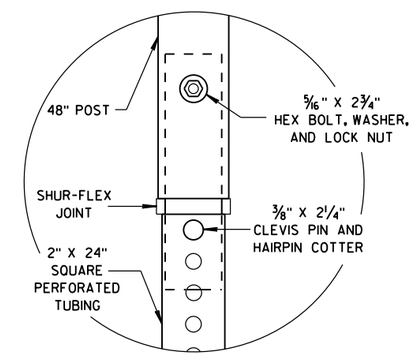

DETAIL C

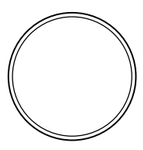

SECTION A-A

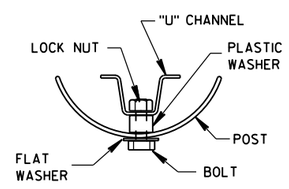

SECTION B-B

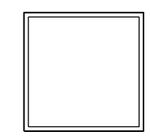

SECTION C-C

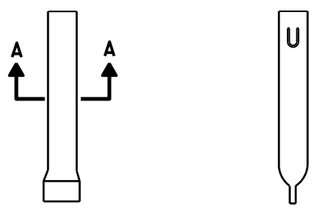

FRONT VIEW SIDE VIEW

ALTERNATE 1

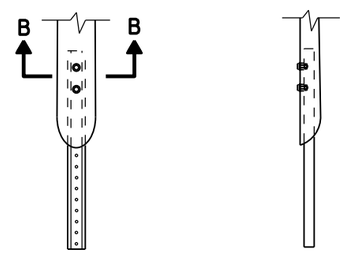

FRONT VIEW SIDE VIEW

ALTERNATE 2

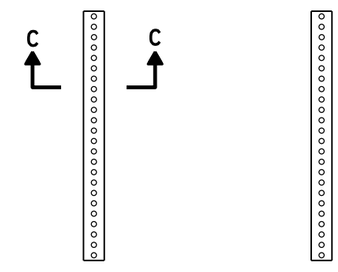

FRONT VIEW SIDE VIEW

ALTERNATE 3

FLEXIBLE MARKER POST ANCHORS

FLEXIBLE MARKER POST
FOR CULVERT END

STATE OF WISCONSIN
DEPARTMENT OF TRANSPORTATION

APPROVED
10/1/2012 /S/ Travis Feltes
DATE STATE TRAFFIC ENGINEER
FHWA

6

6

S.D.D. 15 A 3-2b

S.D.D. 15 A 3-2b

TYPICAL SIDEROAD APPROACH WARNING SIGN DETAIL

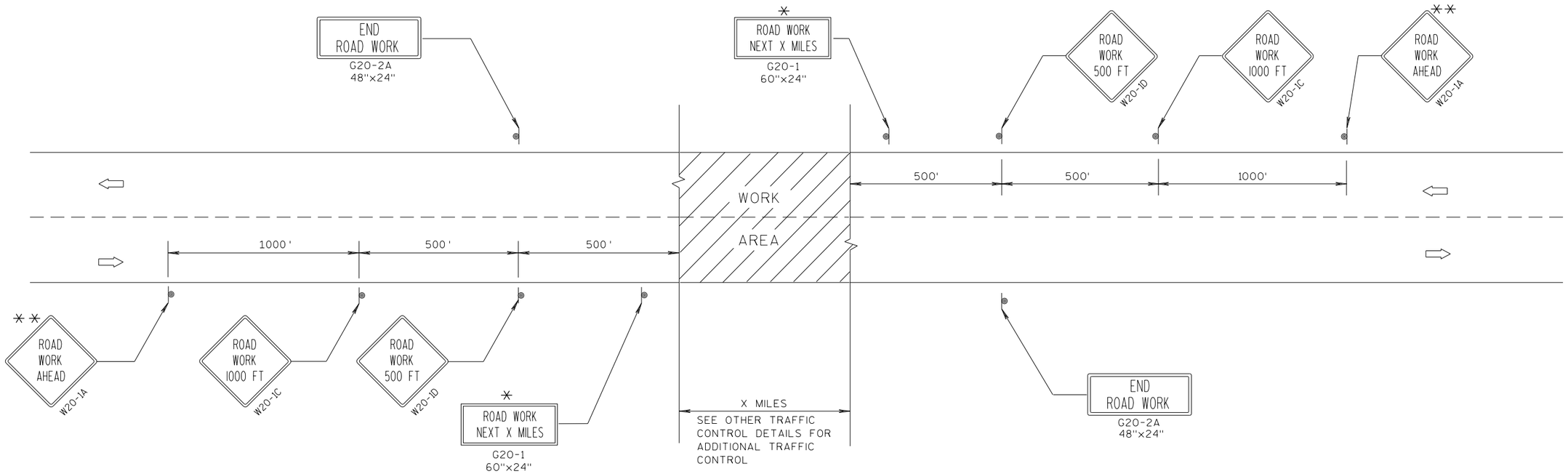

GENERAL NOTES

THE EXACT NUMBER, LOCATION, AND SPACING OF ALL SIGNS AND DEVICES SHALL BE ADJUSTED TO FIT FIELD CONDITIONS.

THE SPACING BETWEEN TRAFFIC CONTROL SIGNS SHOULD BE ADJUSTED TO NOT CONFLICT WITH AND SHOULD PROVIDE A MINIMUM OF 200 FEET (500 FEET DESIRABLE) CLEARANCE TO EXISTING SIGNS THAT WILL REMAIN IN PLACE.

ALL SIGNS ARE 48"x48" UNLESS OTHERWISE NOTED.

SIGNS THAT WILL BE IN PLACE LESS THAN 7 CONTINUOUS DAYS AND NIGHTS MAY BE MOUNTED ON PORTABLE SUPPORTS.

IF A "STOP" SIGN MUST BE REMOVED FOR A WORK OPERATION, A TEMPORARY "STOP" SIGN SHALL BE PLACED PRIOR TO THE SIGN REMOVAL, OR A FLAGGER SHALL BE PROVIDED UNTIL THE SIGN IS RE-ESTABLISHED.

* OMIT G20-1 SIGNS IF LENGTH OF WORK AREA IS 2 MILES OR LESS.

** PLACE ADDITIONAL W20-1A "ROAD WORK AHEAD" SIGN IF WORK AREA WITHIN THE PROJECT IS SEPARATED BY MORE THAN 2 MILES FROM PREVIOUS WORK AREA.

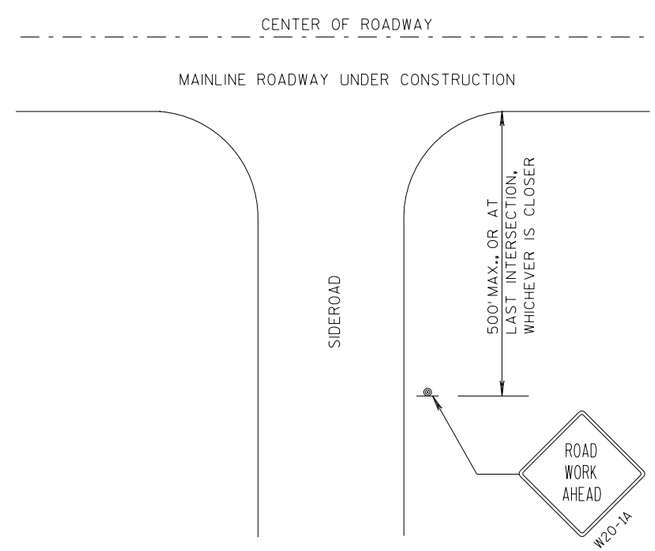

LEGEND

- SIGN ON PERMANENT SUPPORT
- DIRECTION OF TRAFFIC
- WORK AREA

TRAFFIC CONTROL, ADVANCE WARNING SIGNS 45 M.P.H. OR GREATER TWO-WAY UNDIVIDED ROAD OPEN TO TRAFFIC

STATE OF WISCONSIN
DEPARTMENT OF TRANSPORTATION

APPROVED
7/2018 — DATE
/S/ Andrew Heldtke — WORK ZONE ENGI
FHWA

6

S.D.D. 15 C 4-5

GENERAL NOTES

DETAILS OF INSTALLATION, MATERIALS AND WORKMANSHIP NOT SHOWN ON THIS DRAWING SHALL CONFORM TO THE PERTINENT REQUIREMENTS OF THE STANDARD SPECIFICATIONS AND APPLICABLE SPECIAL PROVISIONS.

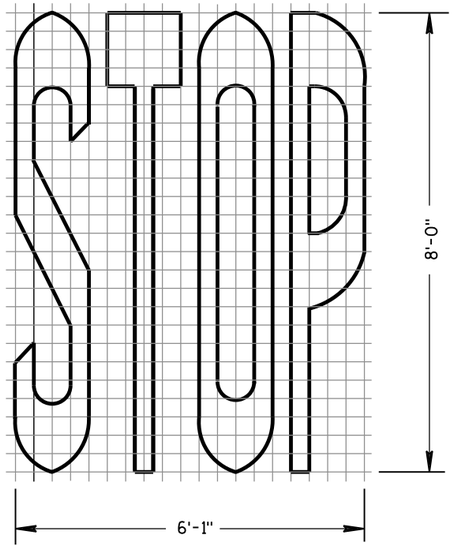

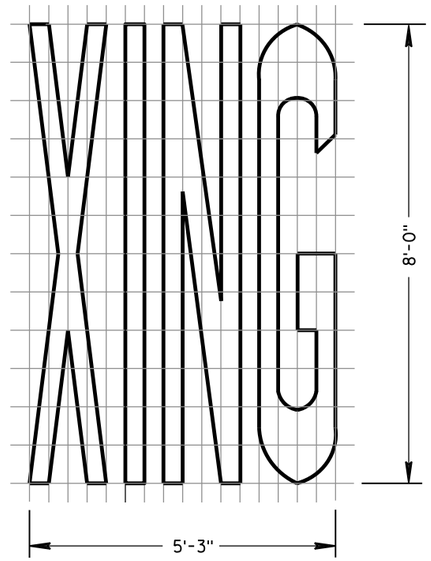

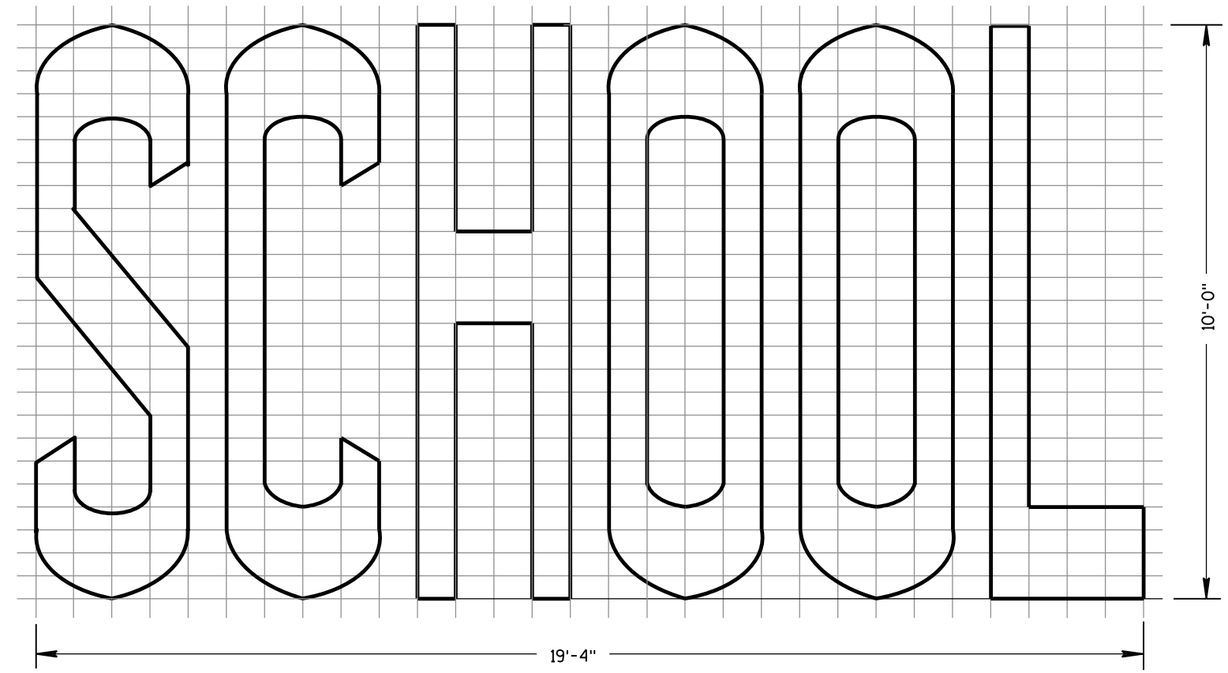

TWO-LANE

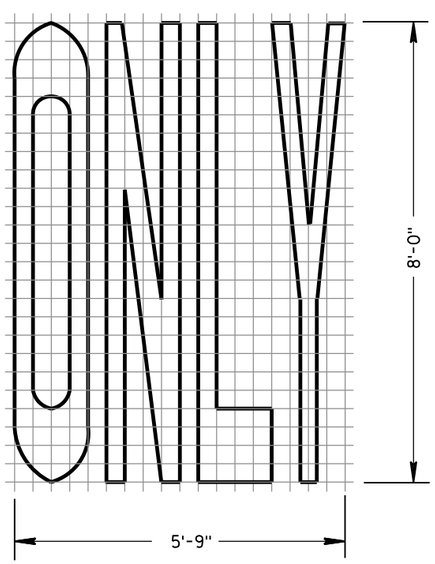

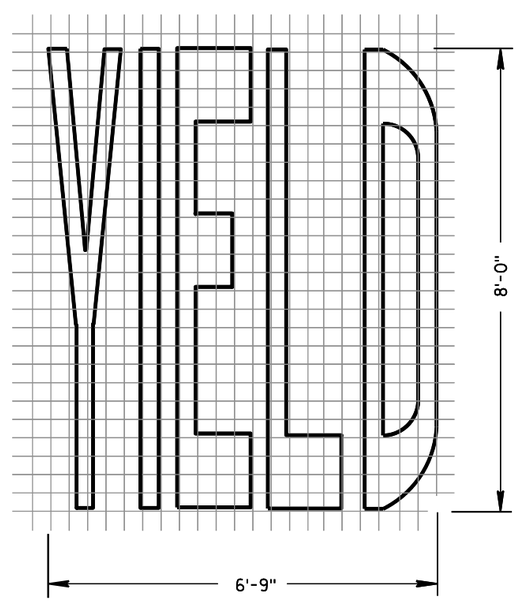

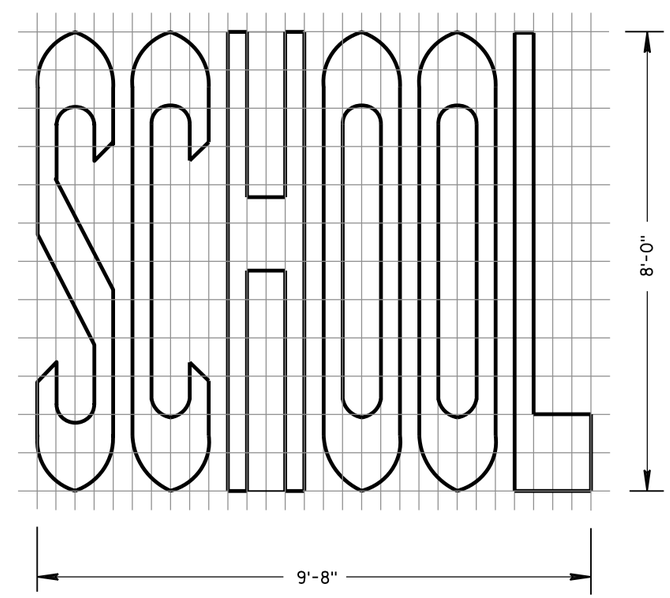

SINGLE-LANE

PAVEMENT MARKING WORDS	
STATE OF WISCONSIN DEPARTMENT OF TRANSPORTATION	
APPROVED June 2017 /S/ Matthew R. Rauch DATE STATE SIGNING AND MARK EER FHWA	

6

6

S.D.D. 15 C 7-14b

S.D.D. 15 C 7-14b

GENERAL NOTES

DETAILS OF INSTALLATION, MATERIALS AND WORKMANSHIP NOT SHOWN ON THIS DRAWING SHALL CONFORM TO THE PERTINENT REQUIREMENTS OF THE STANDARD SPECIFICATIONS AND APPLICABLE SPECIAL PROVISIONS.

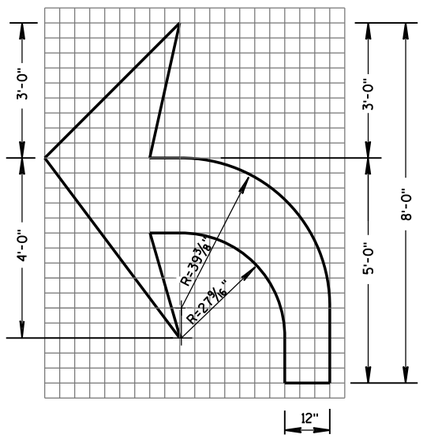

TYPE 2

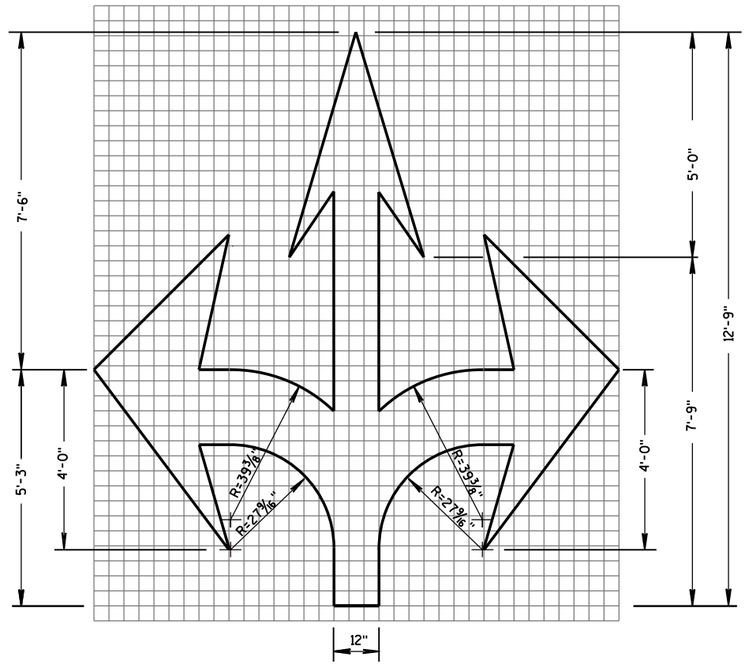

TYPE 6

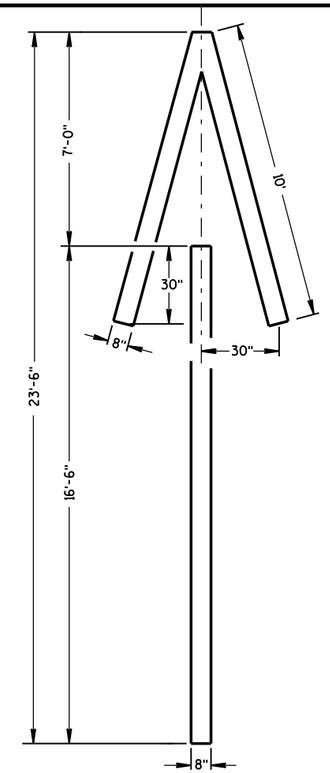

TYPE 4

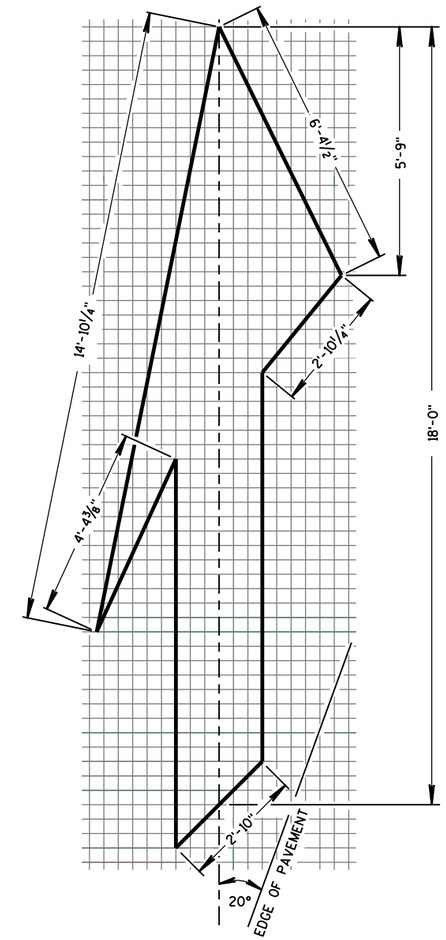

TYPE 5 LANE DROP ARROW

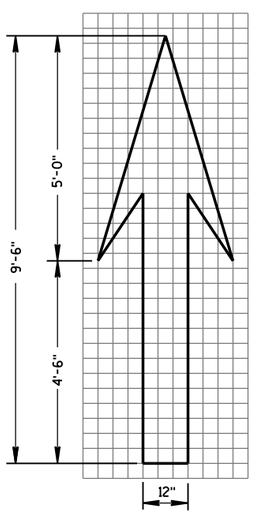

TYPE 1

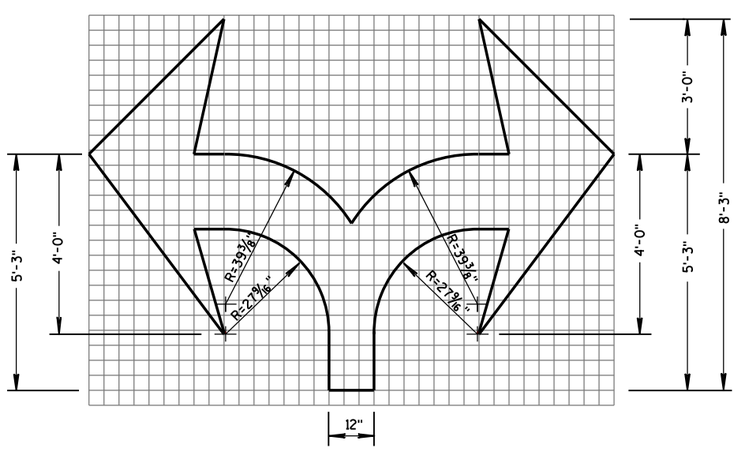

TYPE 7

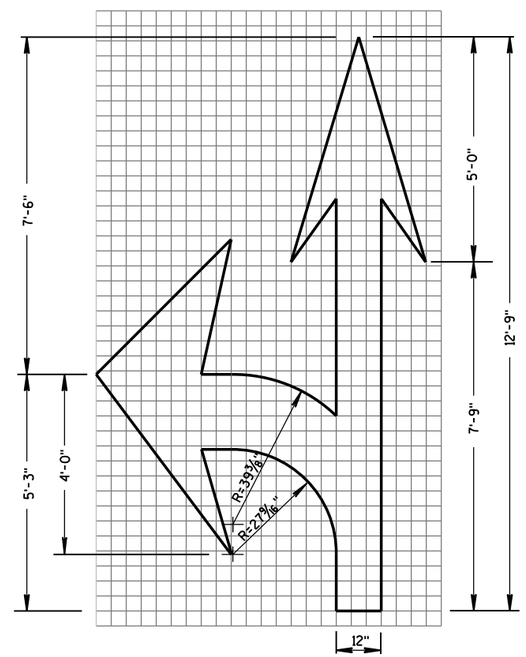

TYPE 3

PAVEMENT MARKING ARROWS

STATE OF WISCONSIN
DEPARTMENT OF TRANSPORTATION

APPROVED
June 2017 — DATE
/S/ Matthew R. Rauch — STATE SIGNING AND MAR ... NEER
FHWA

6

S.D.D. 15 C 7-14c

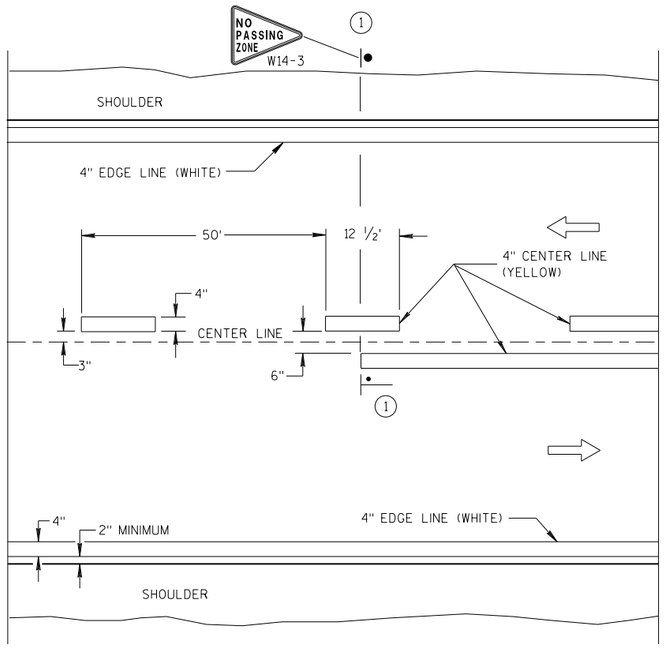

TWO WAY TRAFFIC

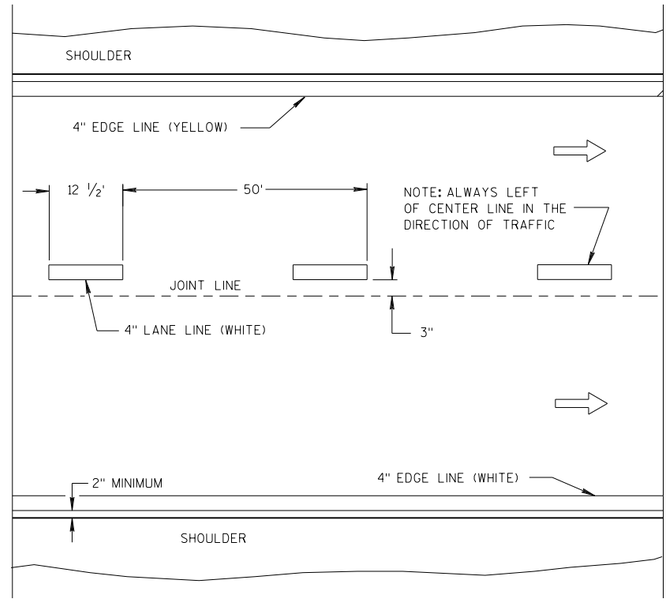

ONE WAY TRAFFIC

PERMANENT PAVEMENT MARKING

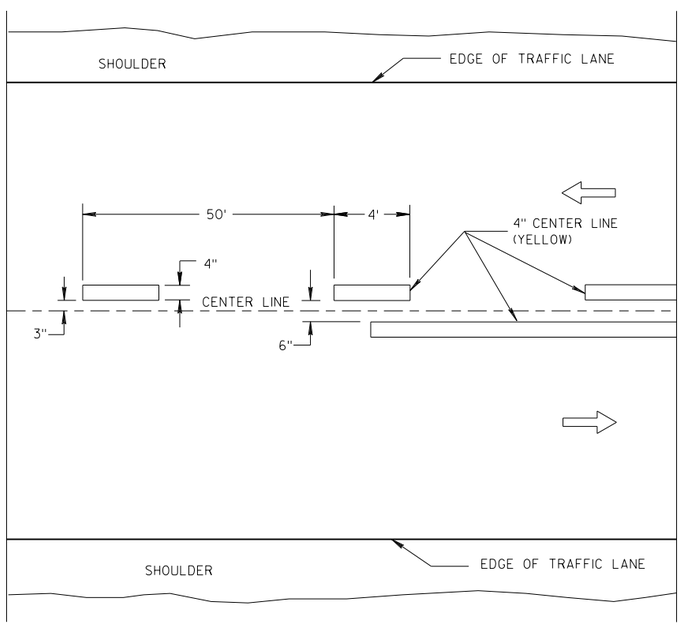

TWO WAY TRAFFIC

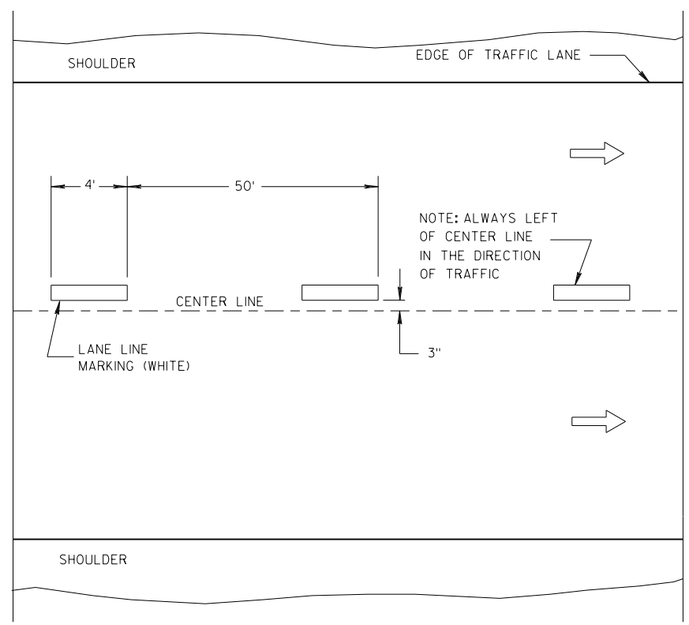

ONE WAY TRAFFIC

TEMPORARY PAVEMENT MARKING

GENERAL NOTES

DETAILS OF CONSTRUCTION NOT SHOWN ON THIS DRAWING SHALL CONFORM TO STANDARD SPECIFICATIONS AND SPECIAL PROVISIONS.

(1) LOCATE THE NO PASSING ZONE W14-3 SIGN WITHIN 50 FEET OF THE "T" MARKING.

NOTE

ARROW SYMBOL (⇨) SHOWS DIRECTION OF TRAVEL

LEGEND

"T" MARKING

POST MOUNTED SIGN

LONGITUDINAL MARKING (MAINLINE)

STATE OF WISCONSIN
DEPARTMENT OF TRANSPORTATION

APPROVED
7/2018 — DATE
/S/ Matthew R. Rauch — STATE SIGNING AND MAR INEER
FHWA

6

S.D.D. 15 C 8-19a

GENERAL NOTES

1. REFLECTIVE SHEETING SHALL FOLLOW THE REQUIREMENTS IN THE APPROVED PRODUCTS LISTING FOR SIGN SHEETING.
2. LOCATION OF WARNING LIGHTS WHEN SHOWN ON THE PLAN.

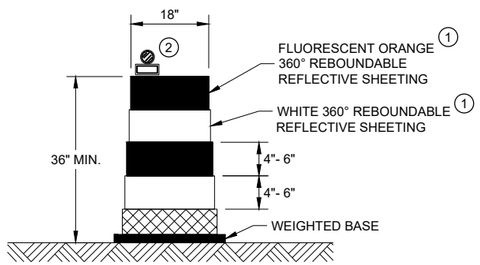

DRUM

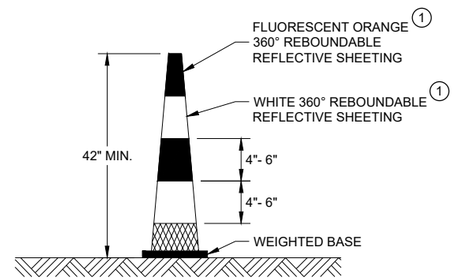

42" CONE

DO NOT USE IN TAPERS
½ SPACING OF DRUMS

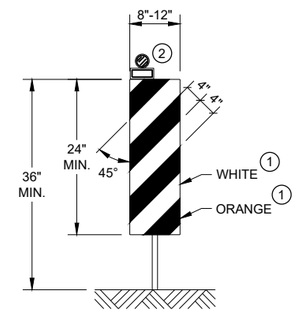

VERTICAL PANEL

THE STRIPES SHALL SLOPE DOWNWARD TO
THE TRAFFIC SIDE FOR CHANNELIZATION.

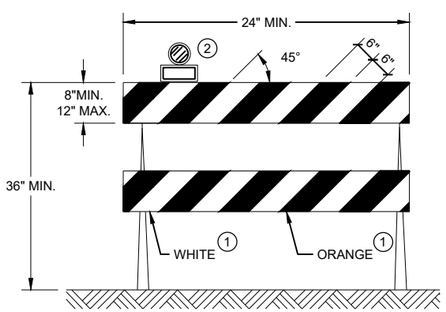

TYPE II BARRICADE

FOR RAILS LESS THAN 36" LONG, 4" WIDE STRIPES
MAY BE USED. ALL STRIPES SHALL SLOPE DOWNWARD
TO THE TRAFFIC SIDE FOR CHANNELIZATION.

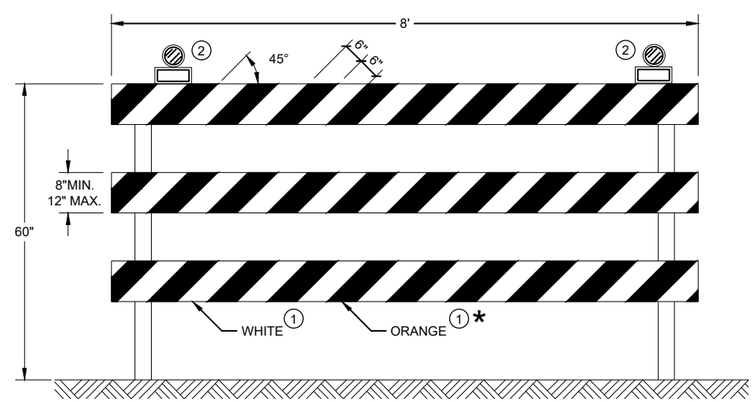

TYPE III BARRICADE

IF SIGN MOUNTED, DO NOT COVER MORE THAN 50% OF THE TOP
TWO RAILS OR 33% OF THE TOTAL AREA OF THE THREE RAILS.

* IF USED FOR A PERMANENT APPLICATION USE RED SHEETING.

CHANNELIZING DEVICES DRUMS, CONES, BARRICADES AND VERTICAL PANELS

STATE OF WISCONSIN
DEPARTMENT OF TRANSPORTATION

APPROVED
June 2017 — DATE
/S/ Andrew Heidtke — WORK ZONE ENGINEE
FHWA

6

SDD 15C11 - 07b

LEGEND

- SIGN ON PORTABLE OR PERMANENT SUPPORT
- DIRECTION OF TRAFFIC
- WORK AREA
- FLAGGER, EQUIPPED WITH STOP/SLOW PADDLE FASTENED ON SUPPORT STAFF

SIGN AND TEMPORARY RUMBLE STRIP ARRAY SPACING TABLE

SPEED LIMIT	SPACING A
25-35 MPH	200'
35-40 MPH	350'
45-55 MPH	500'

USE OF THE "BE PREPARED TO STOP" SIGN IS OPTIONAL. WHEN USED, THIS SIGN SHALL BE LOCATED BETWEEN THE W20-7A AND W20-4A SIGNS, USING SPACING A.

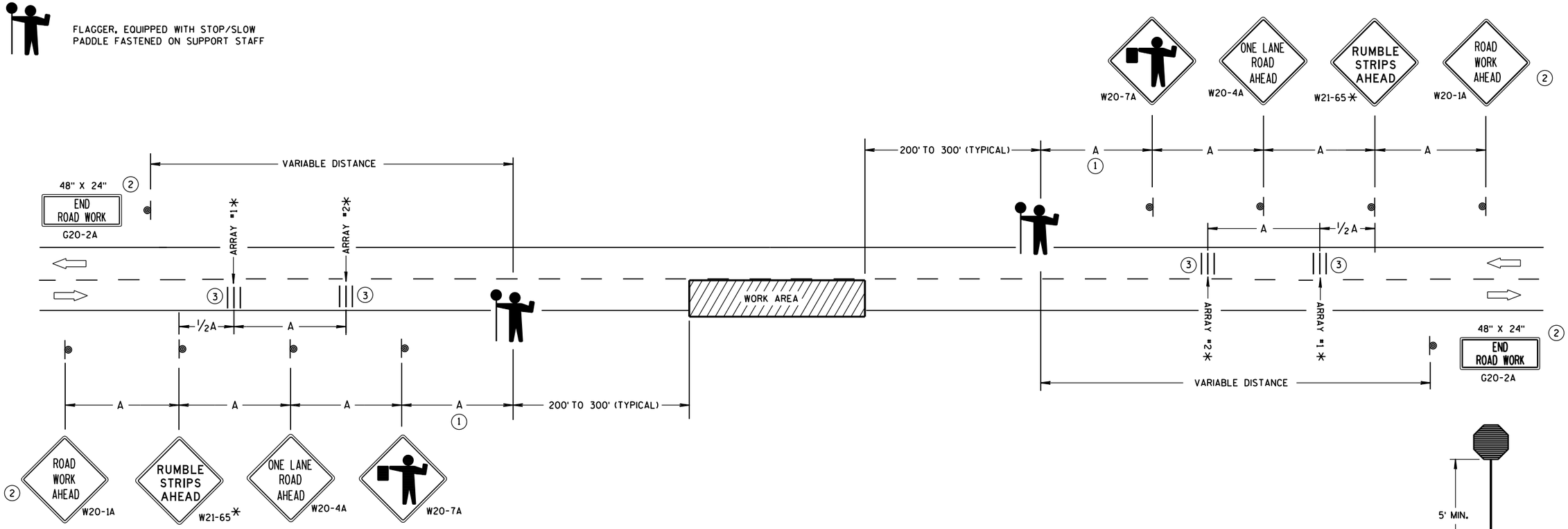

TRAFFIC CONTROL FOR LANE CLOSURE WITH FLAGGING OPERATION

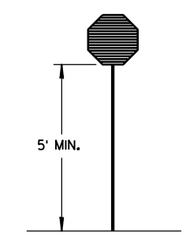

STOP/SLOW PADDLE ON SUPPORT STAFF

GENERAL NOTES

DETAILS OF TRAFFIC CONTROL DEVICES AND INSTALLATION NOT SHOWN ON THIS DRAWING SHALL CONFORM TO THE PERTINENT REQUIREMENTS OF THE STANDARD SPECIFICATIONS, THE SPECIAL PROVISIONS, AND THE MANUAL ON UNIFORM TRAFFIC CONTROL DEVICES.

THE EXACT NUMBER, LOCATION AND SPACING OF ALL SIGNS AND DEVICES (AND THE LOCATION OF ALL FLAGGERS) SHALL BE ADJUSTED TO FIT FIELD CONDITIONS AS APPROVED BY THE ENGINEER.

THE FIRST ADVANCE WARNING SIGN SHOULD TYPICALLY BE LOCATED IN ADVANCE OF THE ANTICIPATED TRAFFIC BACKUP OR QUEUE.

"WO" SIGNS ARE THE SAME AS "W" SIGNS EXCEPT THE BACKGROUND IS ORANGE.

WHEN A SIDE ROAD OR RAMP INTERSECTS THE FACILITY ON WHICH THE WORK IS BEING PERFORMED, ADDITIONAL TRAFFIC CONTROLS SHALL BE PROVIDED AS SPECIFIED IN THE PLANS AND/OR THE SPECIAL PROVISIONS OR AS APPROVED BY THE ENGINEER.

INSTALL TEMPORARY RUMBLE STRIPS PER MANUFACTURER'S RECOMMENDATIONS.

PLACE ADVANCE SIGNING PRIOR TO INSTALLING TEMPORARY RUMBLE STRIPS.

ALL SIGNS ARE 48" X 48" UNLESS OTHERWISE NOTED.

FLAGGERS SHALL BE IN SIGHT OF EACH OTHER OR IN DIRECT COMMUNICATION AT ALL TIMES. THEY SHALL BE EQUIPPED WITH STOP/SLOW PADDLES FASTENED ON SUPPORT STAFFS. WHEN THE FLAGGING OPERATION IS NOT IN EFFECT, REMOVE TEMPORARY RUMBLE STRIPS PRIOR TO COVERING OR REMOVING ALL ADVANCE SIGNING.

* UTILIZE TEMPORARY RUMBLE STRIPS WHEN FLAGGING OPERATION IS ANTICIPATED TO BE STATIONARY IN EXCESS OF TWO HOURS.

1. FOR A MOVING WORK OPERATION, SIGNING AND TEMPORARY RUMBLE STRIPS (IF USED) SHALL BE REESTABLISHED (AS SIMULTANEOUSLY AS PRACTICAL) AT APPROXIMATELY 3,500 FOOT INTERVALS IN THE MOVING WORK OPERATION OR AS APPROVED BY THE ENGINEER.
2. SIGN NOT REQUIRED IF FLAGGING OPERATION OCCURS WITHIN A SIGNED ROAD WORK ZONE AREA.
3. EACH TEMPORARY RUMBLE STRIP ARRAY CONSISTS OF THREE RUMBLE STRIPS SPACED ACCORDING TO MANUFACTURER'S RECOMMENDATION, PLACED TRANSVERSE ACROSS THE LANE AT LOCATIONS SHOWN.

TRAFFIC CONTROL FOR LANE CLOSURE WITH FLAGGING OPERATION

STATE OF WISCONSIN
DEPARTMENT OF TRANSPORTATION

APPROVED
June 2017 — DATE
/S/ Andrew Heldtke — WORK ZONE ENG
FHWA

6

S.D.D. 15 C 12-6

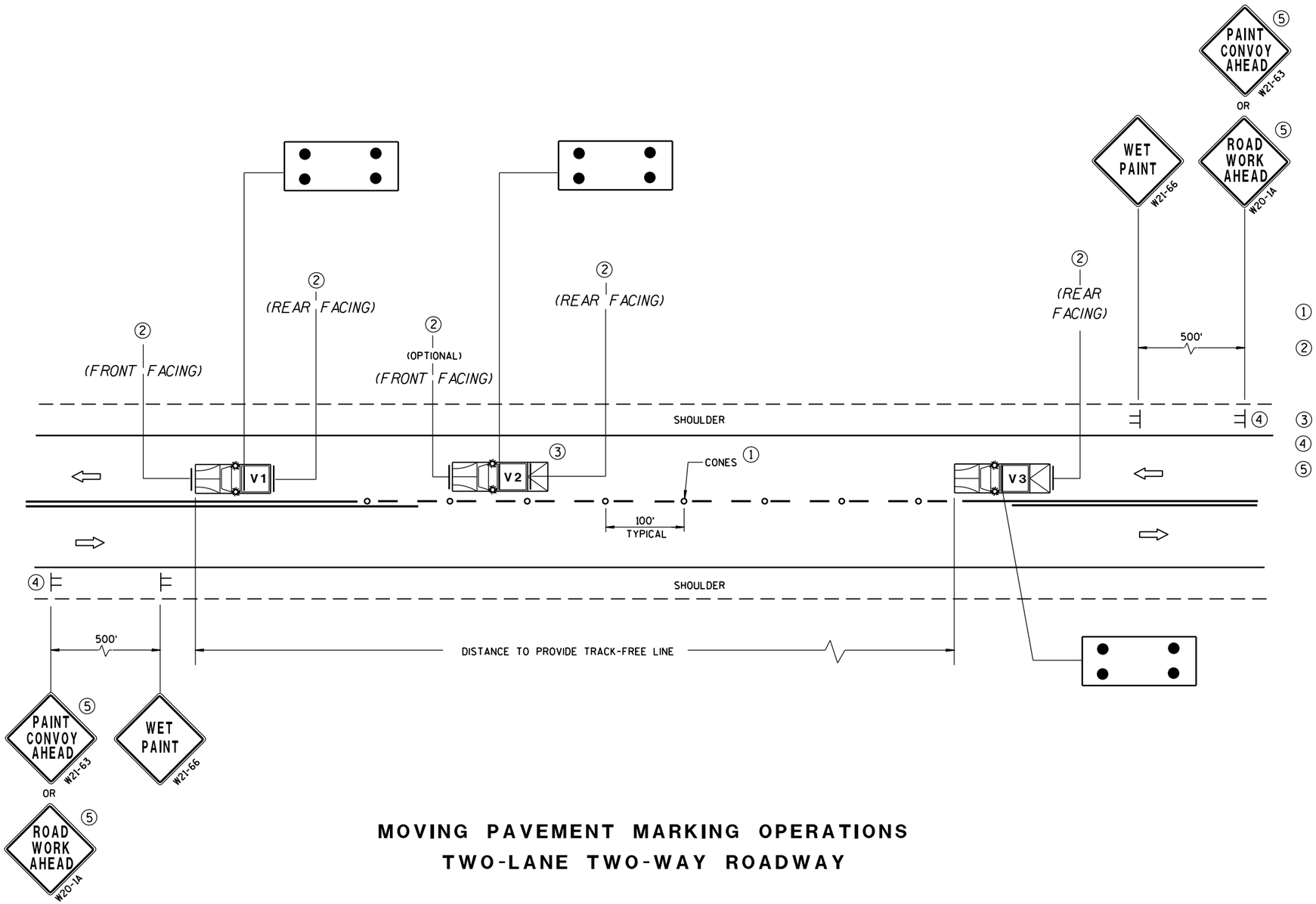

GENERAL NOTES

ALL VEHICLES SHALL BE EQUIPPED WITH TWO 360 DEGREE HIGH INTENSITY YELLOW FLASHING LIGHTS OR STROBE LIGHTS AND OPERATED WITH HEADLIGHTS TURNED ON.

VEHICLES SHALL BE EQUIPPED WITH REAR FACING TYPE B OR C FLASHING ARROW PANEL OPERATING IN CAUTION MODE. SIGNS PLACED ON VEHICLES MUST NOT OBSCURE THE ARROW PANEL.

ALL SIGNS ARE 48" X 48" UNLESS OTHERWISE SPECIFIED.

IF SPEED LIMIT IS 40 MPH OR LESS STATIONARY SIGNS MAY BE OMITTED IF CONES ARE USED.

ALTERNATE SIGN MESSAGES, SUCH AS "PAINT CREW AHEAD" OR "ROAD PAINTING AHEAD" MAY BE USED.

DISTANCE BETWEEN VEHICLES MAY VARY ACCORDING TO TERRAIN, SIGHT DISTANCE, PAINT DRYING TIME, AND OTHER FACTORS. WHENEVER ADEQUATE STOPPING SIGHT DISTANCE EXISTS TO THE REAR, SHADOW VEHICLES SHOULD MAINTAIN THE MINIMUM DISTANCE FROM THE WORK VEHICLE AND PROCEED AT THE SAME SPEED AS THE WORK VEHICLE. SHADOW VEHICLES SHOULD SLOW DOWN IN ADVANCE OF VERTICAL OR HORIZONTAL CURVES THAT RESTRICT SIGHT DISTANCE.

THE WORK AND SHADOW VEHICLES SHOULD PULL OVER PERIODICALLY TO ALLOW TRAFFIC TO PASS.

THIS DRAWING SHALL BE USED FOR CENTERLINE OR EDGELINE MARKING.

WHEN NO WORK ACTIVITY IS TAKING PLACE, REMOVE OR TURN THE STATIONARY WARNING SIGNS AWAY FROM TRAFFIC.

1. CONES MAY BE OMITTED ON PAINTED LINE IF APPROVED BY THE ENGINEER. CONSIDER PAVEMENT MARKING DRY OR CURE TIMES AND TRAFFIC VOLUME.
2. USE STANDARD SIGN W21-64 WITH APPROPRIATE ARROW.

   WET PAINT (W21-64) OR WET PAINT (W21-64)

3. OPTIONAL TRUCK-MOUNTED ATTENUATOR.
4. SIGNS SHALL BE REPEATED APPROXIMATELY EVERY THREE MILES.
5. IF CONSTRUCTION WORK ZONE SIGNS ARE IN PLACE, W20-1 OR W21-63 ARE NOT REQUIRED.

LEGEND

V1	LEAD VEHICLE
V2	SHADOW VEHICLE
V3	TRAIL VEHICLE WITH TMA
TMA	TRUCK-MOUNTED ATTENUATOR
	SIGN ON TEMPORARY SUPPORT
	DIRECTION OF TRAFFIC
	CONES
	FLASHING ARROW PANEL (CAUTION)

MOVING PAVEMENT MARKING OPERATIONS
TWO-LANE TWO-WAY ROADWAY

MOVING PAVEMENT MARKING OPERATION
TWO-LANE TWO-WAY ROADWAY

STATE OF WISCONSIN
DEPARTMENT OF TRANSPORTATION

APPROVED
Sept., 2017 — DATE
/S/ Andrew Heldtke — WORK ZONE ENG'R
FHWA

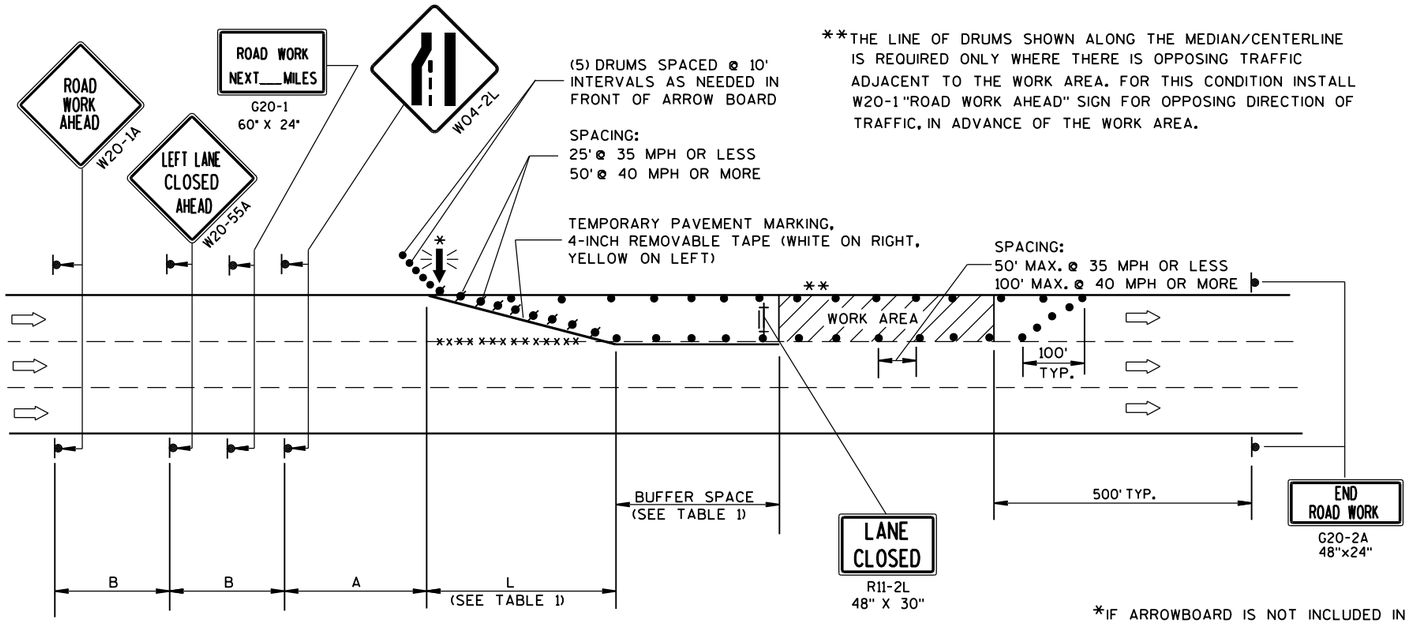

**THE LINE OF DRUMS SHOWN ALONG THE MEDIAN/CENTERLINE IS REQUIRED ONLY WHERE THERE IS OPPOSING TRAFFIC ADJACENT TO THE WORK AREA. FOR THIS CONDITION INSTALL W20-1 "ROAD WORK AHEAD" SIGN FOR OPPOSING DIRECTION OF TRAFFIC, IN ADVANCE OF THE WORK AREA.

B=400' AT 25-30 MPH
700' AT 35-40 MPH
1000' AT 45-55 MPH

A=200' AT 25-30 MPH
350' AT 35-40 MPH
500' AT 45-55 MPH

(PLACE BARRICADE AND SIGN APPROX. EVERY 1000' ACROSS THE CLOSED LANE)

*IF ARROWBOARD IS NOT INCLUDED IN MISCELLANEOUS QUANTITIES, SUBSTITUTE A TYPE III BARRICADE WITH W01-6 SIGN IN THE LANE CLOSURE TAPER.

W01-6
48"x24"

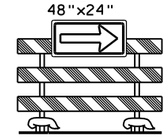

GENERAL NOTES

THIS LANE CLOSURE DETAIL IS TYPICAL FOR CLOSING THE LEFT LANE. FOR A RIGHT LANE CLOSURE, REVERSE THE TRAFFIC CONTROL.

THIS DETAIL MAY BE USED FOR ROADWAYS WITH EITHER TWO OR THREE LANES IN EACH DIRECTION.

THE EXACT NUMBER, LOCATION, AND SPACING OF ALL SIGNS AND DEVICES SHALL BE ADJUSTED TO FIT FIELD CONDITIONS AS APPROVED BY THE ENGINEER.

THE SPACING BETWEEN TRAFFIC CONTROL SIGNS SHOULD BE ADJUSTED TO NOT CONFLICT WITH AND SHOULD PROVIDE A DESIRABLE MINIMUM OF 200 FEET CLEARANCE TO EXISTING SIGNS THAT WILL REMAIN IN PLACE.

ALL SIGNS ARE 48"x48" UNLESS OTHERWISE NOTED. IF NECESSARY DUE TO SPACE CONSTRAINTS IN URBAN AREAS, 36" X 36" SIGNS MAY BE USED IF APPROVED BY DISTRICT TRAFFIC UNIT.

"WO" SIGNS ARE THE SAME AS "W" SIGNS EXCEPT THE BACKGROUND IS ORANGE.

SIGNS THAT WILL BE IN PLACE LESS THAN 7 CONTINUOUS DAYS AND NIGHTS, OR THAT WILL BE PLACED IN A CLOSED LANE, MAY BE MOUNTED ON PORTABLE SUPPORTS.

ANY SIGNS TEMPORARY OR EXISTING, WHICH CONFLICT WITH TRAFFIC CONTROL "IN USE" SHALL BE REMOVED OR COVERED AS NEEDED AND AS APPROVED BY THE ENGINEER.

REMOVE PAVEMENT MARKINGS AND PLACE TEMPORARY PAVEMENT MARKING, REMOVABLE TAPE IF LANE CLOSURE IS TO BE IN PLACE FOR 4 OR MORE CONTINUOUS DAYS AND NIGHTS.

ON UNDIVIDED ROADWAYS, OMIT THE SIGNS SHOWN ON LEFT SIDE OF ROAD.

W20-1A, G20-1 AND G20-2A SIGNS ARE NOT REQUIRED IF THE LANE CLOSURE IS WITHIN A LARGER WORK ZONE WHERE THESE SIGNS ARE ALREADY PRESENT.

OMIT G20-1 SIGNS IF LENGTH OF WORK AREA IS 2 MILES OR LESS.

CONSIDER GEOMETRICS WHEN LOCATING SIGNS AND ARROWBOARDS SO THE APPROACHING DRIVER HAS A CLEAR VIEW OF THE ARROWBOARDS AND LANE CLOSURE DRUMS.

PLACE THE ARROWBOARD AS CLOSE AS POSSIBLE TO THE BEGINNING OF THE LANE CLOSURE TAPER, PREFERABLY ON THE SHOULDER OR TERRACE.

CHANNELIZING DEVICES PLACED ADJACENT TO WORK AREA SHALL BE PULLED BACK FROM THE TRAVEL LANE WHEN WORK IS NOT IN PROGRESS.

BARRICADES IN A CLOSED LANE THAT MUST BE MOVED FOR A WORK OPERATION SHALL BE IMMEDIATELY RE-ESTABLISHED UPON COMPLETION OF THE OPERATION OR, FOR CONTINUING OPERATIONS, AT THE END OF EACH WORKING DAY.

WARNING LIGHTS ARE NOT REQUIRED IF THE LANE CLOSURE IS A DAYTIME ONLY OPERATION.

TABLE 1
TAPER AND BUFFER SPACE
FOR 12' LANE WIDTH

S	L	BUFFER SPACE
25	125'	55'
30	180'	85'
35	245'	120'
40	320'	170'
45	540'	220'
50	600'	280'
55	660'	335'

FOR LANE WIDTH OTHER THAN 12':

L = WS AT 45 MPH OR GREATER

$L = \frac{WS^2}{60}$ AT 40 MPH OR LESS

L = TAPER LENGTH IN FEET

S = NON-CONSTRUCTION SPEED LIMIT (MPH)

W = WIDTH OF LANE CLOSURE

LEGEND

TYPE III BARRICADE WITH ATTACHED SIGN

SIGN ON PERMANENT SUPPORT

TRAFFIC CONTROL DRUM WITH TYPE "C" STEADY BURN LIGHT

TRAFFIC CONTROL DRUM

FLASHING ARROW BOARD

DIRECTION OF TRAFFIC

REMOVING PAVEMENT MARKING (SEE GENERAL NOTES)

WORK AREA

TRAFFIC CONTROL, SINGLE LANE CLOSURE, NON-FREEWAY/EXPRESSWAY

STATE OF WISCONSIN
DEPARTMENT OF TRANSPORTATION

APPROVED
June 2016 — DATE
/S/ Peter Amakobe Atepe — STATEWIDE WORK ZONE SAFETY ENGINEER
FHWA

6

S.D.D. 15 D 20-4

LEGEND

- SIGN ON PERMANENT SUPPORT
- TRAFFIC CONTROL DRUM
- DIRECTION OF TRAFFIC
- WORK ZONE

TABLE A

S \ W	SHOULDER TAPER LENGTH (FEET) 4	6	8	10	BUFFER SPACE (FEET)
30	20	30	40	50	200
35	30	45	55	70	250
40	40	55	75	90	305
45	60	90	120	150	360
50	70	100	135	170	425
55	75	110	150	185	495

W = SHOULDER WIDTH (FEET
S = NON-CONSTRUCTION SPEED LIMIT (MPH)

TAPER LENGTH

L= WS AT 45 MPH OR GREATER
L = WS^2 / 60 AT 40 MPH OR LESS

SHOULDER TAPER LENGTH = 1/3L

GENERAL NOTES

ALL SIGNS ARE 48"X48" UNLESS OTHERWISE NOTED. IF NECESSARY DUE TO SPACE CONSTRAINTS IN URBAN AREAS, 36" X 36" SIGNS MAY BE USED IF APPROVED BY THE REGIONAL TRAFFIC UNIT.

"WO" IS THE SAME AS "W" EXCEPT THE BACKGROUND IS ORANGE.

ANY SIGNS TEMPORARY OR EXISTING, WHICH CONFLICT WITH THE TRAFFIC CONTROL "IN USE" SHALL BE REMOVED OR COVERED AS NEEDED AND AS APPROVED BY THE ENGINEER.

THE EXACT NUMBER, LOCATION, AND SPACING OF ALL SIGNS AND DEVICES SHALL BE ADJUSTED TO FIT FIELD CONDITIONS AS APPROVED BY THE ENGINEER.

CHANNELIZING DEVICES PLACED ADJACENT TO WORK AREA SHALL BE PULLED BACK FROM THE TRAVEL LANE WHEN WORK IS NOT IN PROGRESS.

SIGNS THAT WILL BE IN PLACE LESS THAN 7 CONTINUOUS DAYS AND NIGHTS MAY BE MOUNTED ON PORTABLE SUPPORTS.

W20-1A AND G20-2A SIGNS ARE NOT REQUIRED IF THE WORK AREA IS WITHN A LARGER WORK ZONE WHERE THESE SIGNS ARE ALREADY RESENT. G20-2A SIGNS MAY ALSO BE OMITTED IF DURATION OF WORK IS LESS THAN 7 CONTINUOUS DAYS AND NIGHTS.

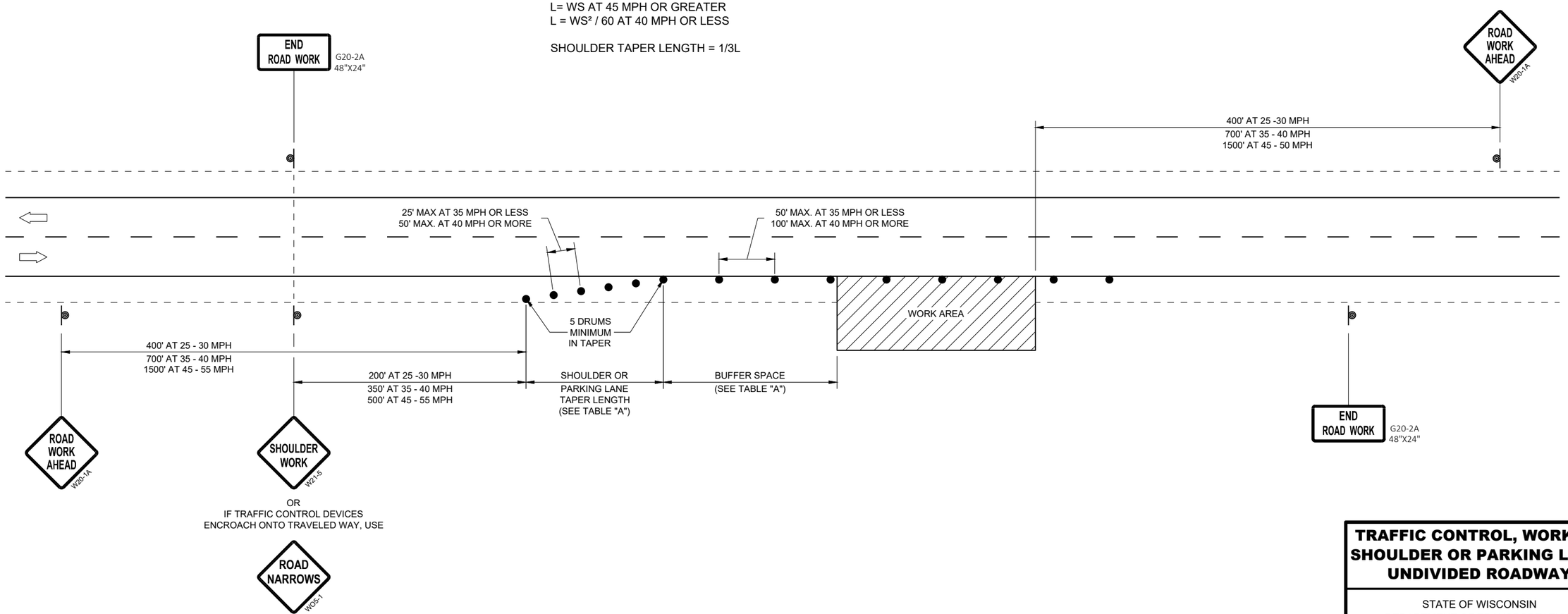

TRAFFIC CONTROL, WORK ON SHOULDER OR PARKING LANE, UNDIVIDED ROADWAY

STATE OF WISCONSIN
DEPARTMENT OF TRANSPORTATION

APPROVED
August 2019 — DATE
/S/ Andrew Heidtke — STATEWIDE WORK ZONE T SAFETY ENGINEER
FHWA

6

SDD 15D28 - 03

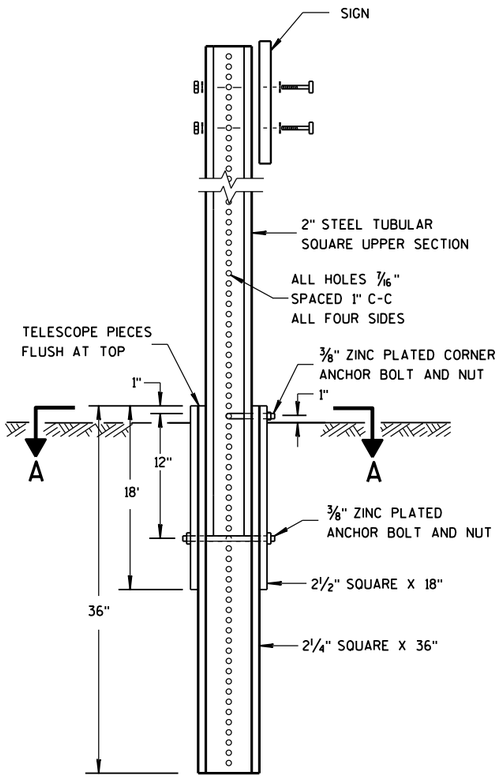

DETAIL OF TUBULAR STEEL SIGN POST

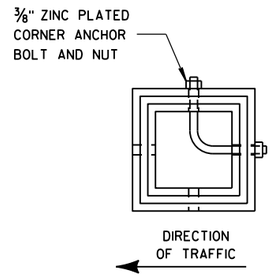

SECTION A-A

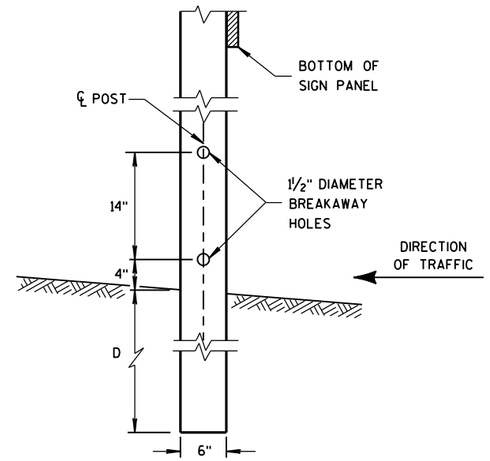

4"x6" WOOD POST MODIFICATION

GENERAL NOTES

1. 6 FEET FROM THE EDGE OF PAVEMENT (EDGE LINE LOCATION) UNLESS OTHERWISE DIRECTED BY THE PROJECT ENGINEER. LATERAL OFFSET SHOULD BE ADJUSTED TO AVOID THE DITCH FLOWLINE.
2. THE EXISTENCE OF CURB AND GUTTER DOES NOT IN ITSELF MANDATE THE VERTICAL CLEARANCE ILLUSTRATED. THAT HEIGHT IS TYPICALLY MEASURED WHERE THERE IS SIDEWALK ADJACENT TO THE ROADWAY OR PARKING IS PERMITTED. IN THE ABSENCE OF SIDEWALK, VERTICAL CLEARANCE IS MEASURED FROM THE TOP OF THE CURB. IF NO SIDEWALK AND NO PARKING, VERTICAL CLEARANCE MAY BE REDUCED TO 5 FOOT MINIMUM. OFFSET OF SIGNS IS MEASURED FROM THE CURB FLOWLINE.
3. FOR SIGNS REQUIRING 4 POSTS, SPACE INTERMEDIATE POSTS EVENLY.

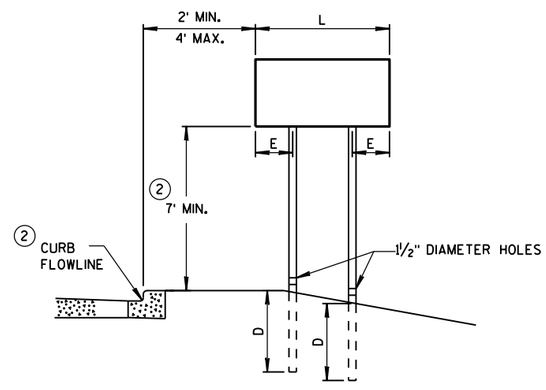

URBAN AREA

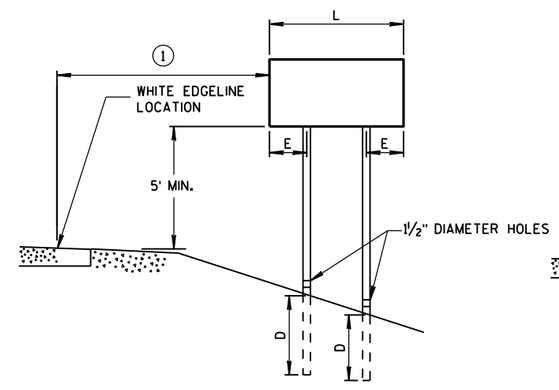

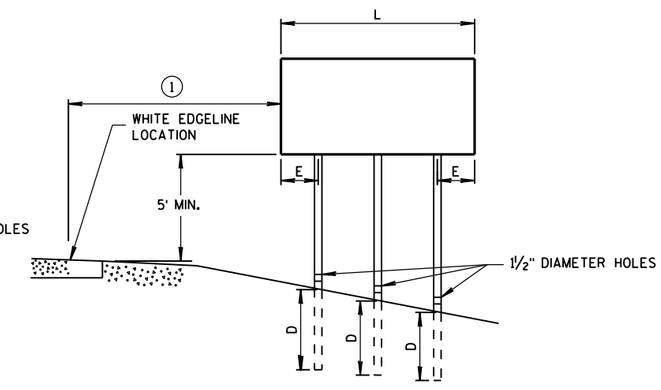

RURAL AREA

POST MOUNTING DETAIL FOR TEMPORARY TRAFFIC CONTROL FIXED MESSAGE SIGNS

TUBULAR STEEL POSTS

AREA OF SIGN INSTALLATION (SQ. FT.)	NUMBER OF REQUIRED TUBULAR STEEL POSTS
9 OR LESS	1
GREATER THAN 9 LESS THAN OR EQUAL TO 18	2
GREATER THAN 18 LESS THAN OR EQUAL TO 27	3

SIGNS WIDER THAN 3 FEET OR LARGER THAN 9 SQ. FT. SHALL BE MOUNTED ON MULTIPLE POSTS (SEE ABOVE TABLE).

SIGNS LARGER THAN 27 SQ. FT. SHALL NOT BE MOUNTED ON TUBULAR STEEL POSTS.

WOOD POST EMBEDMENT DEPTH

AREA OF SIGN INSTALLATION (SQ. FT.)	D (MIN)
20 OR LESS	4'
GREATER THAN 20	5'

4" X 6" WOOD POST

POST SPACING REQUIREMENTS		NUMBER OF WOOD POSTS REQUIRED
L	E	
48" OR LESS AND LESS THAN 20 SQ. FT.	-	1
LESS THAN 60"	12"	2
60" TO 120"	L/5	2
GREATER THAN 120" LESS THAN 168"	12"	3
168" AND GREATER	12"	4

SEE NOTE 3

TEMPORARY TRAFFIC CONTROL SIGN MOUNTING

STATE OF WISCONSIN
DEPARTMENT OF TRANSPO

6

S.D.D. 15 D 38-2a

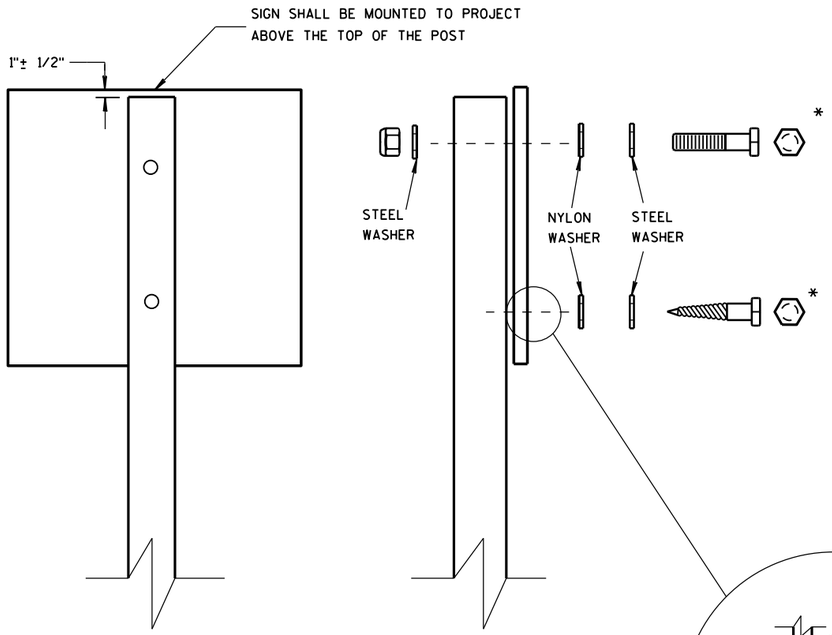

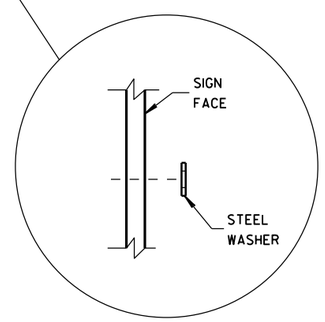

WASHER PLACEMENT WHEN SIGN HAS OTHER THAN TYPE H OR TYPE F FACE

NUTS, BOLTS AND LAGS USED FOR MOUNTING SIGNS SHALL HAVE HEXAGONAL HEADS AND SHALL BE EITHER:

A. HOT DIP GALVANIZED IN ACCORDANCE WITH ASTM DESIGNATION: A 153, CLASS D, OR SC 3

B. ELECTRO-GALVANIZED IN ACCORDANCE WITH ASTM DESIGNATION: B 633, TYPE III, SC 3

THREADS ON BOLTS AND NUTS SHALL BE MANUFACTURED WITH SUFFICIENT ALLOWANCE FOR THE CADMIUM PLATE OR GALVANIZED COATING TO PERMIT THE NUTS TO RUN FREELY ON THE BOLTS.

WOOD POSTS (4" x 4" or 4" x 6")

LAG SCREWS - 3/8" X 3"

MACHINE BOLTS - 5/16" X 6-1/2" OR 7" LENGTH W/ NUTS

SQUARE STEEL POSTS (2" x 2")

MACHINE BOLTS - 3/8" X 3-1/4" LENGTH W/ NUTS

RIVETS - 9/32" (6605-9-6) BULB-TITE, TRI-FOLD, ALUMINUM BODY/MANDREL O.D. FLANGE .720-.765 INCH, GRIP RANGE .042-.375 INCH

WASHERS (ALL POSTS) -

1-1/4" O.D. X 3/8" I.D. X 1/16" STEEL

1-1/4" O.D. X 3/8" I.D. X .080 NYLON FOR ALL TYPE H SIGNS

* TWO DIFFERENT FASTENING SYSTEMS ARE SHOWN FOR ILLUSTRATION PURPOSES. ON ANY INDIVIDUAL SIGN, EITHER ONE OR THE OTHER SYSTEM SHALL BE USED. ACTUAL NUMBER OF FASTENERS PER SIGN VARIES WITH THE SIGN AREA. FOR A SINGLE POST INSTALLATION, ALL SIGNS GREATER THAN 9 SQ. FT. REQUIRE THE USE OF 3 FASTENERS.

6

6

S.D.D. 15 D 38-2b

S.D.D. 15 D 38-2b

ATTACHMENT OF SIGNS TO POSTS

STATE OF WISCONSIN
DEPARTMENT OF TRANSPORTATION

APPROVED

June 2017 — /S/ Andrew Heldtke
DATE — WORK ZONE ENG

FHWA

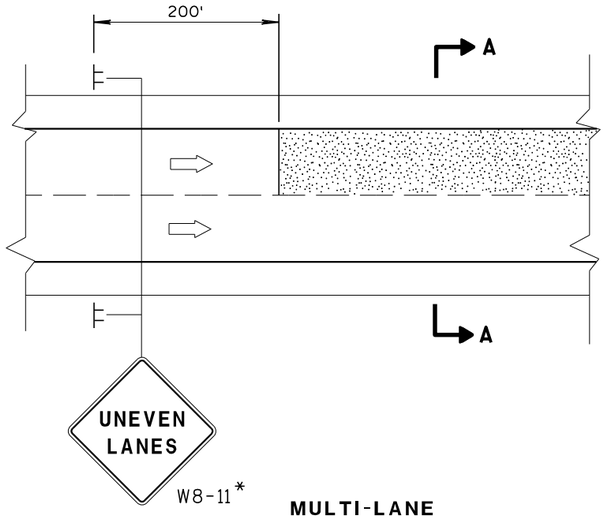

MULTI-LANE

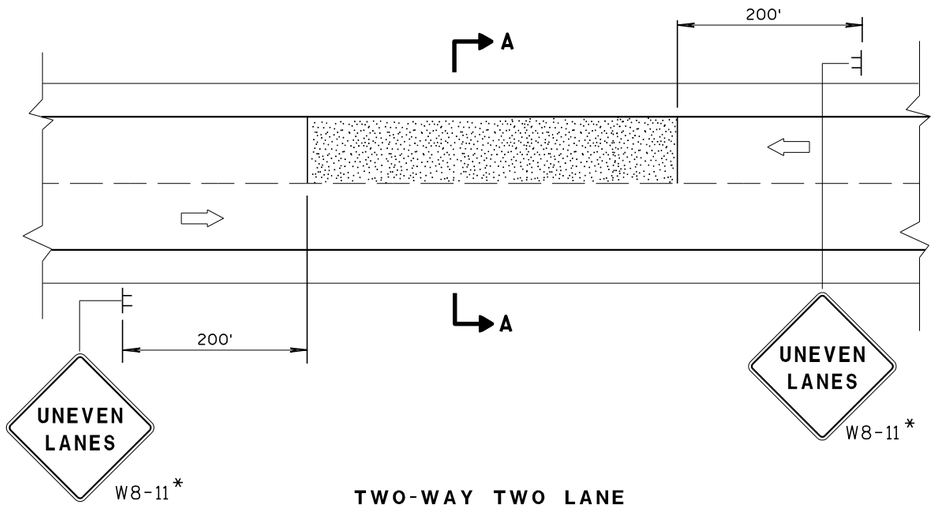

TWO-WAY TWO LANE

SECTION A-A

OR

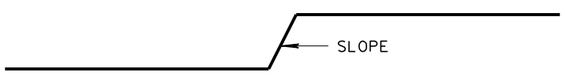

SECTION A-A

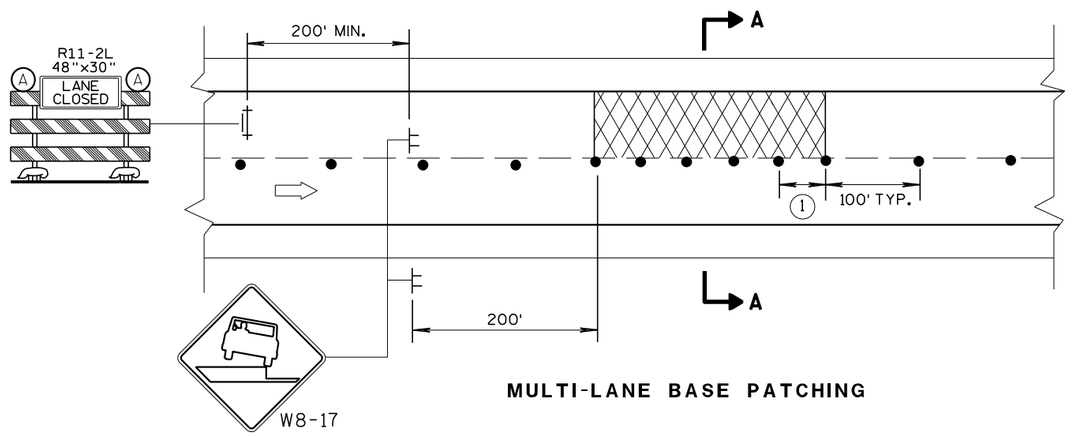

MULTI-LANE BASE PATCHING

ADJACENT LANE DROP-OFFS

GENERAL NOTES

FOR SPOT LOCATIONS USE ENGINEERING JUDGEMENT WHEN PLACING ADDITIONAL SIGNS.

ALL SIGNS ARE 48" X 48" UNLESS OTHERWISE NOTED.

"WO" SIGNS ARE THE SAME AS "W" SIGNS EXCEPT THE BACKGROUND IS ORANGE.

WARNING LIGHTS ARE NOT REQUIRED IF THE LANE CLOSURE IS A DAYTIME ONLY OPERATION.

* IF THE DROP-OFF IS CONTINUOUS ALONG THE PROJECT, PLACE ADDITIONAL SIGNS EVERY 1 MILE AND AFTER EACH ENTRANCE RAMP.

(1) USE CLOSER SPACING WHEN DELINEATING DROP-OFF.

LEGEND

- TYPE III BARRICADE WITH ATTACHED SIGN
- SIGN ON TEMPORARY SUPPORT
- TRAFFIC CONTROL DRUM
- (A) TYPE "A" WARNING LIGHT (FLASHING)
- DIRECTION OF TRAFFIC
- WORK AREA WITH DROP-OFF
- MILLED SURFACE

D	SIGN (C)
< 2" WITH A SLOPE STEEPER THAN 3:1	LOW SHOULDER WO8-9
2" < 6" WITH A SLOPE STEEPER THAN 3:1	SHOULDER DROP-OFF W8-9A PROVIDE A 3:1 OR FLATTER SLOPE OF MATERIAL ADJACENT TO THE PAVEMENT

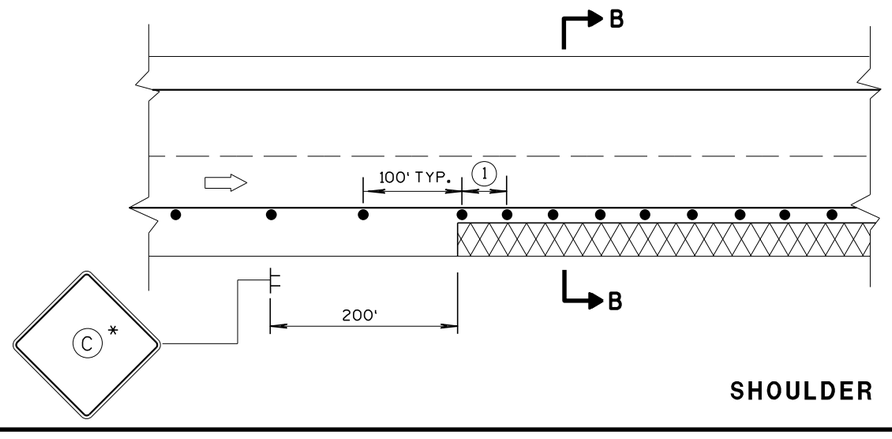

SHOULDER DROP-OFFS

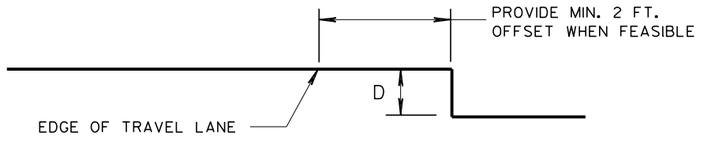

SECTION B-B

TRAFFIC CONTROL, DROP-OFF SIGNING

STATE OF WISCONSIN
DEPARTMENT OF TRANSPORTATION

APPROVED
March 2018 — DATE
/S/ Andrew H — WORK ZONE EN
FHWA

URBAN AREA

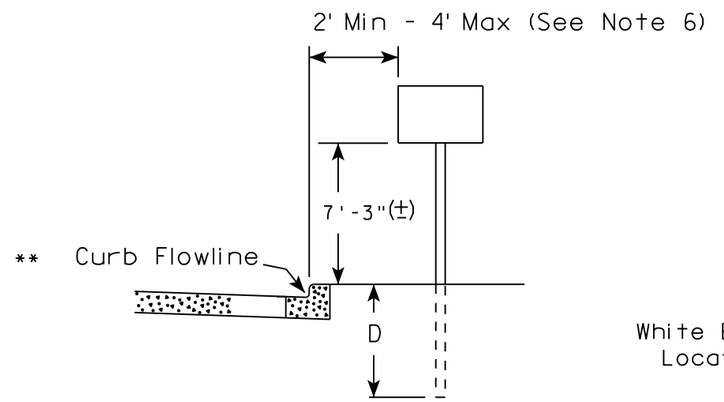

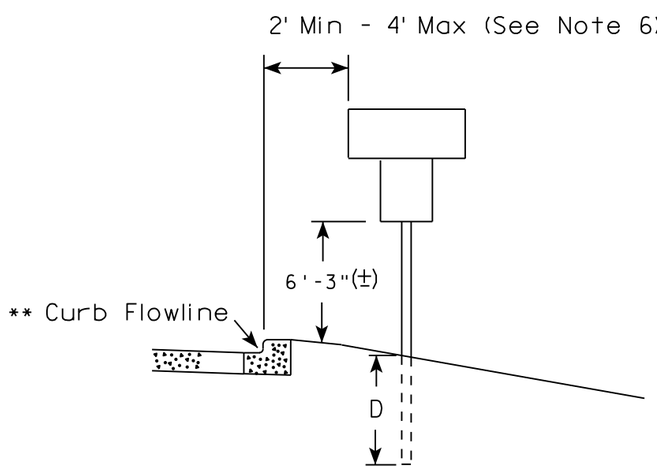

RURAL AREA (See Note 2)

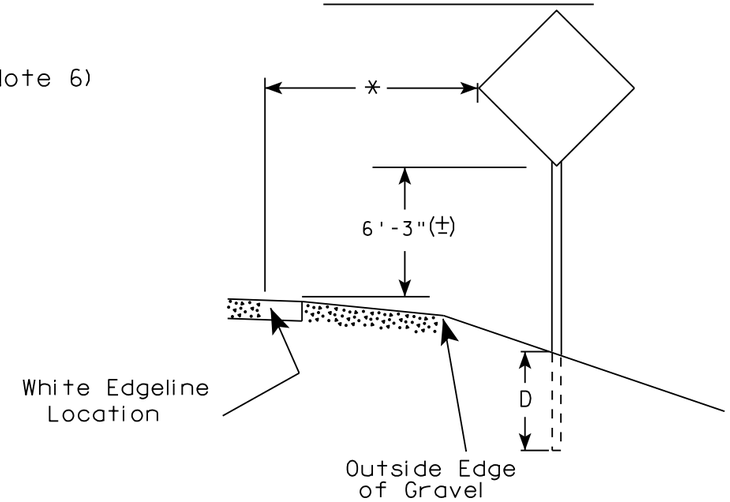

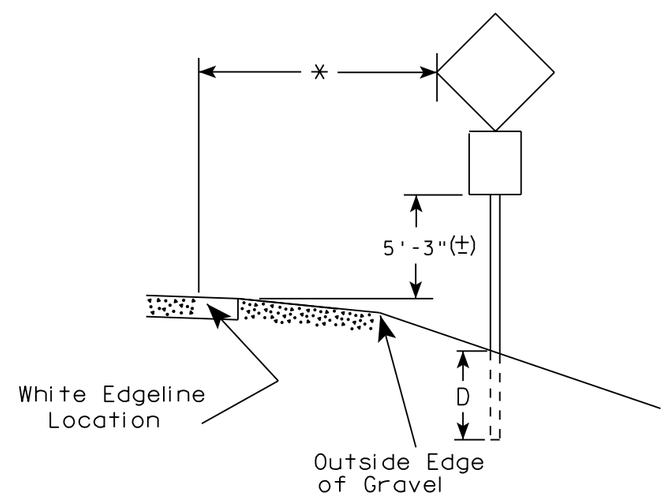

** The existence of curb and gutter does not in itself mandate the vertical clearance illustrated. That height is typically measured where there is sidewalk adjacent to the roadway or parking is permitted. In the absence of sidewalk vertical clearance is measured from the top of the curb. Offset of signs is measured from the flow line.

* 6 feet from edge of a paved shoulder or 12 feet from the edge of pavement (edge line location) or 2 feet from outside edge of gravel, whichever is greater unless directed by project engineer.

GENERAL NOTES

1. Signs wider than 4 feet or 20 sq.ft or larger, shall be mounted on multiple posts. Refer to plate A4-4.
2. If signs are mounted on barrier wall, see A4-10 sign plate.
3. For expressways and freeways, mounting height is 7'- 3" (±) or 6'-3" (±) depending upon existence of a sub-sign.
4. J-Assemblies are considered to be one sign for mounting height.
5. Minimum mounting height for signs mounted on traffic signal poles is 5'- 3" (±).
6. Offset distance shall be consistent with existing signs or consistent throughout length of project.
7. The (±) tolerance for mounting height is 3 inches.
8. Folding signs shall be mounted at a height of 5'-3" (±) or as directd by the Engineer.
9. The Double Arrow sign (W12-1) shall be mounted at a height of 2'-3" (±). The Chevron sign (W1-8), Roundabout Chevron panel (R6-4B), Enhanced Reference Markers, Clearance Markers (W5-52), Mile Markers (D10 series), In Road Object Markers (W5-54) & End of Road Markers (W5-56) shall be mounted at a height of 4'-3" (±).

POST EMBEDMENT DEPTH

Area of Sign Installation (Sq. Ft.)	D (Min)
20 or Less	4'
Greater than 20	5'

TYPICAL INSTALLATION OF PERMANENT TYPE II SIGNS ON SINGLE POSTS

WISCONSIN DEPT OF TRANSPORTATION

APPROVED Matthew R Rauch for State Traffic Engineer

DATE 8/21/17 PLATE NO. A4-3.21

7

7

PROJECT NO:	HWY:	COUNTY:		SHEET NO: 81	E

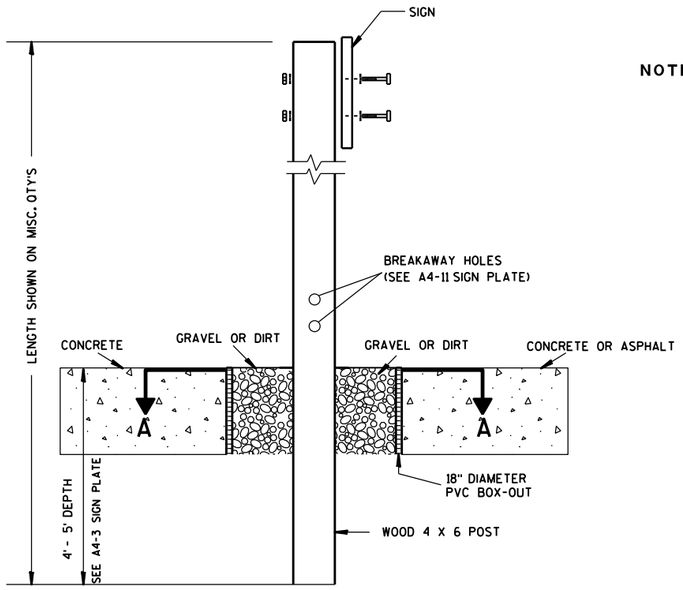

ELEVATION VIEW

DETAIL OF WOOD 4 X 6 SIGN POST IN BOX-OUT

NOTES:
1. ALL MATERIAL TO BE APPROVED BY ENGINEER PRIOR TO INSTALLATION
2. SEE SIGN PLATE A4-8 FOR SIGN HARDWARE REQUIREMENTS
3. 18 INCH X 18 INCH SQUARE BOX-OUTS MAY BE USED FOR INSTALLATIONS IN EXISTING CONCRETE OR ASPHALT LOCATIONS.

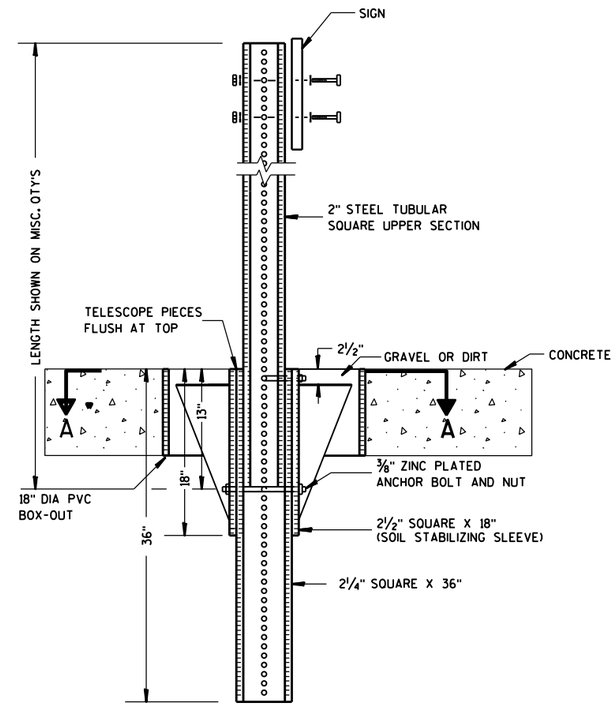

ELEVATION VIEW

DETAIL OF STEEL 2 X 2 SIGN POST IN BOX-OUT

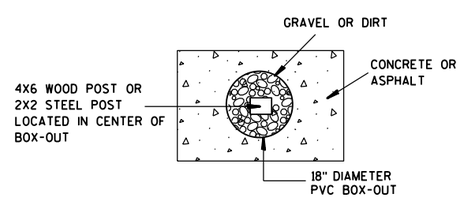

PLAN VIEW

FOR NEW CONCRETE/ASPHALT INSTALLATIONS

SIGN POST
BOX-OUTS
A4-3B

WISCONSIN DEPT OF TRANSPORTATION

APPROVED Matthew R Rauch
for State Traffic Engineer

DATE 1/27/14 PLATE NO. A4-3B.1

PROJECT NO:	HWY:	COUNTY:		SHEET NO:	E

URBAN AREA

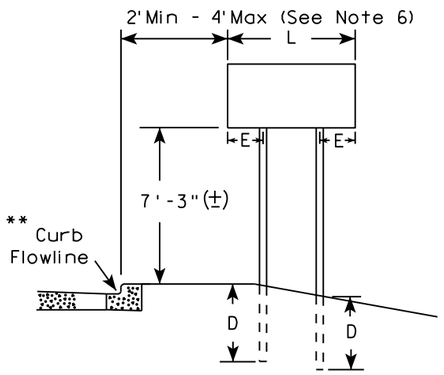

RURAL AREA (See Note 3)

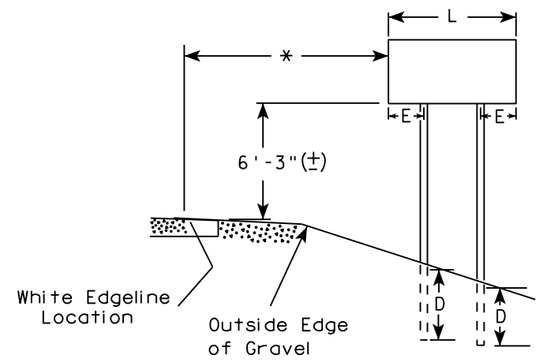

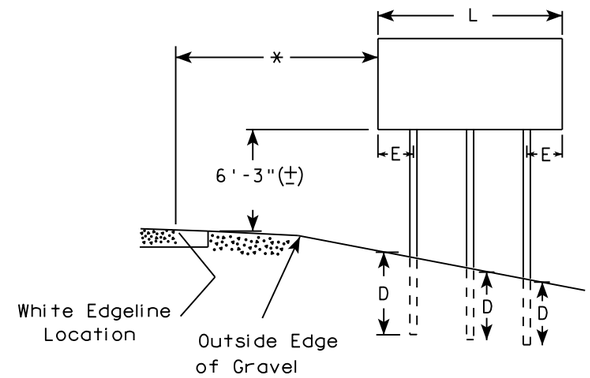

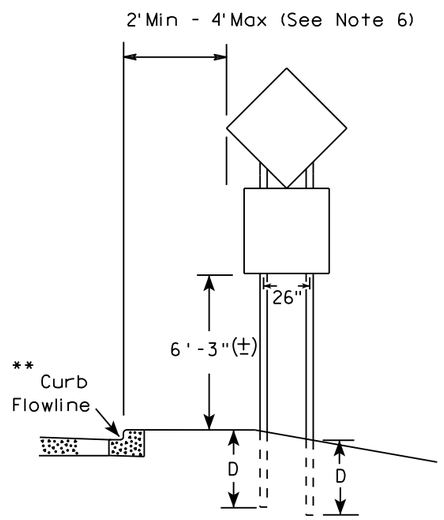

48" DIAMOND WARNING SIGN

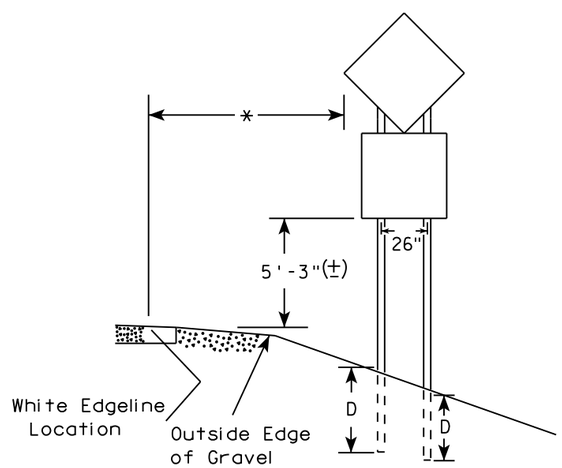

48" DIAMOND WARNING SIGN

SIGN SHAPE OTHER THAN DIAMOND (TWO POSTS REQUIRED)	
L	E
*** Greater than 48" Less than 60"	12"
60" to 108"	L/5

SIGN SHAPE OTHER THAN DIAMOND (THREE POSTS REQUIRED)	
L	E
Greater than 108" to 144"	12"

GENERAL NOTES

1. For 3 or 4 post installations, individual post spacing shall be greater than 3'-6".
2. See tables below for required number of posts.
3. For expressways and freeways, mounting height is 7'-3" (±) or 6'-3" (±) depending upon existence of sub-sign.
4. The (±) tolerance for mounting height is 3 inches.
5. J-Assemblies are considered to be one sign for mounting height.
6. Offset distance shall be consistent with existing signs or consistent throughout length of project.
7. Folding signs shall be mounted at a height of 5'-3" (±) or as directed by the engineer.
8. The Double Arrow sign (W12-1) shall be mounted at a height of 2'-3" (±). The Chevron sign (W1-8), Roundabout Chevron panel (R6-4B), Clearance Markers (W5-52), Mile Markers (D10 series), In Road Object Markers (W5-54) & End of Road Markers (W5-56) shall be mounted at a height of 4"-3" (±).

* 6 feet from edge of a paved shoulder or 12 feet from the edge of pavement (edge line location) or 2 feet from outside edge of gravel, whichever is greater unless directed by project engineer.

** The existence of curb and gutter does not in itself mandate the vertical clearance illustrated. That height is typically measured where there is sidewalk adjacent to the roadway or parking is permitted. In the absence of sidewalk vertical clearance is measured from the top of the curb. Offset of signs is measured from the flow line.

*** See A4-3 sign plate for signs 4' or less in width and less than 20 S.F. in area.

POST EMBEDMENT DEPTH

Area of Sign Installation (Sq. Ft.)	D (Min)
20 or Less	4'
Greater than 20	5'

TYPICAL INSTALLATION OF TYPE II SIGNS ON MULTIPLE POSTS

WISCONSIN DEPT OF TRANSPORTATION

APPROVED Matthew R Rauch
For State Traffic Engineer

DATE 8/21/17 PLATE NO. A4-4.15

7

7

PROJECT NO:	HWY:	COUNTY:		SHEET NO: 83	E

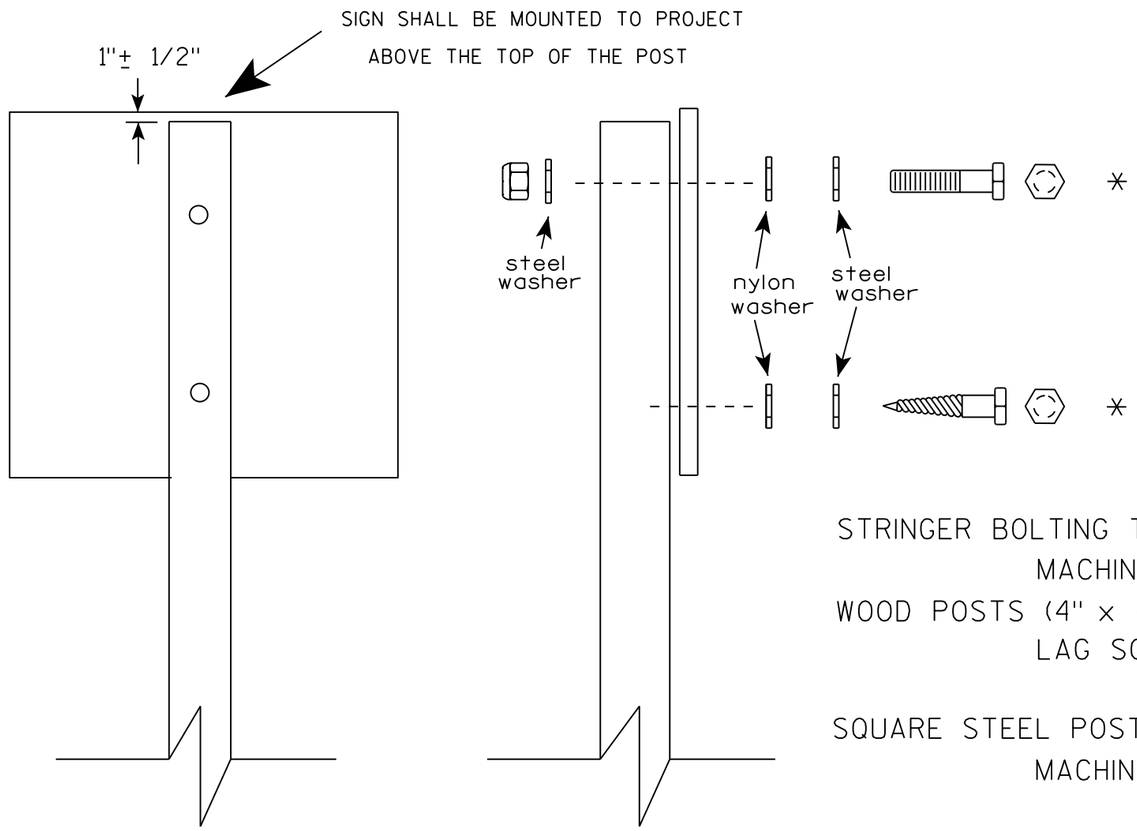

Nuts, bolts and lags used for mounting signs shall have hexagonal heads and shall be either :

a. Hot dip galvanized in accordance with ASTM Designation: A 153, Class D, or SC 3

b. Electro-galvanized in accordance with ASTM Designation : B 633, TYPE III, SC 3.

Threads on bolts and nuts shall be manufactured with sufficient allowance for the cadmium plate or galvanized coating to permit the nuts to run freely on the bolts.

STRINGER BOLTING TO ALUMINUM SIGNS (SEE SIGN PLATE A4-18)

MACHINE BOLTS - 5/16" X 1-3/4" Length w/ lock nuts

WOOD POSTS (4" x 4" or 4" x 6")

LAG SCREWS - 3/8" X 3" (NO STRINGERS ON BACK OF SIGN)

3/8" X 4" (STRINGERS ON BACK OF SIGN)

SQUARE STEEL POSTS (2" x 2")

MACHINE BOLTS - 3/8" X 3-1/4" Length w/ nuts (NO STRINGER ON BACK OF SIGN)

3/8" X 5" Length w/ nuts (STRINGERS ON BACK OF SIGN)

RIVETS - 9/32 " (6605-9-6) BULB-TITE, TRI-FOLD, ALUMINUM BODY/MANDREL

O.D. FLANGE .720-.765 INCH, GRIP RANGE .042-.375 INCH

WASHERS (ALL POSTS) -

1-1/4" O.D. X 3/8" I.D. X 1/16" STEEL

1-1/4" O.D. X 3/8" I.D. X .080 NYLON

* Two different fastening systems are shown for illustration purposes. On any individual sign, either one or the other system shall be used. Actual number of fasteners per sign varies with the sign area, but normally there are two. For a single post installation, all signs greater than 9 sq. ft. require the use of 3 fasteners.

ATTACHMENT OF SIGNS TO POSTS

WISCONSIN DEPT OF TRANSPORTATION

APPROVED Matthew R Rauch
for State Traffic Engineer

DATE 8/11/16 PLATE NO. A4-8.8

PROJECT NO: SHEET NO: E

TELESCOPIC TUBING ANCHORS
TWO PIECE SYSTEM

2 1/4" SQUARE
12 GAUGE
PERFORATED
GALVANIZED FINISH

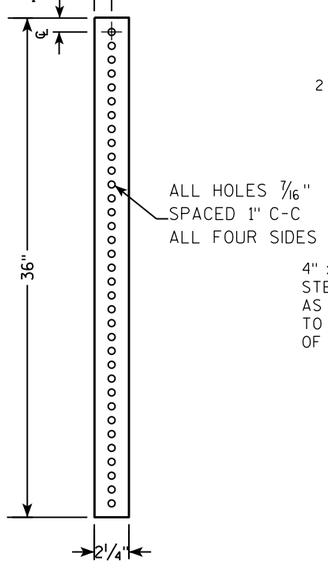

2 1/2" SQUARE
12 GAUGE
OMNI-DIRECTIONAL
PERFORATED
SOIL STABILIZING SLEEVE
GALVANIZED FINISH

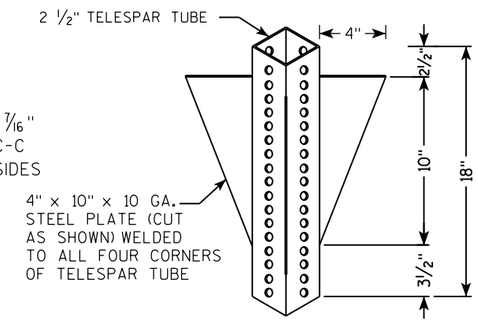

DETAIL OF TUBULAR STEEL SIGN POST
(IN POURED CONCRETE OR ASPHALT)

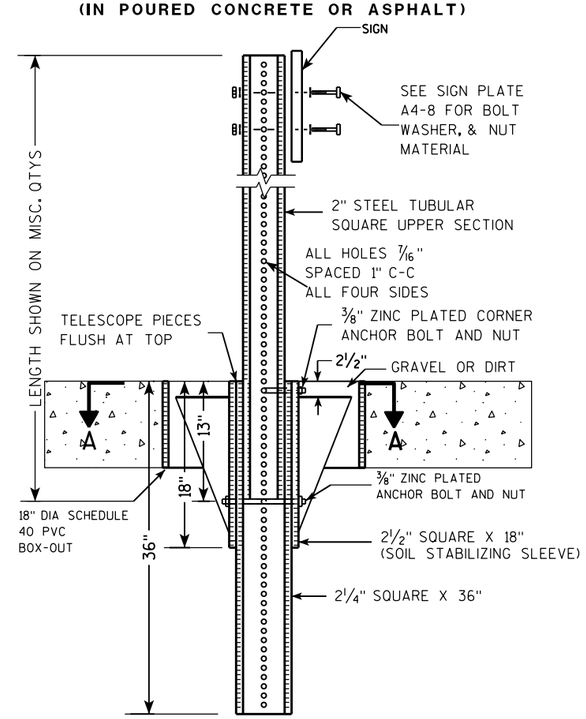

DETAIL OF TUBULAR STEEL SIGN POST
(IN LOCATIONS OTHER THAN POURED CONCRETE OR ASPHALT)

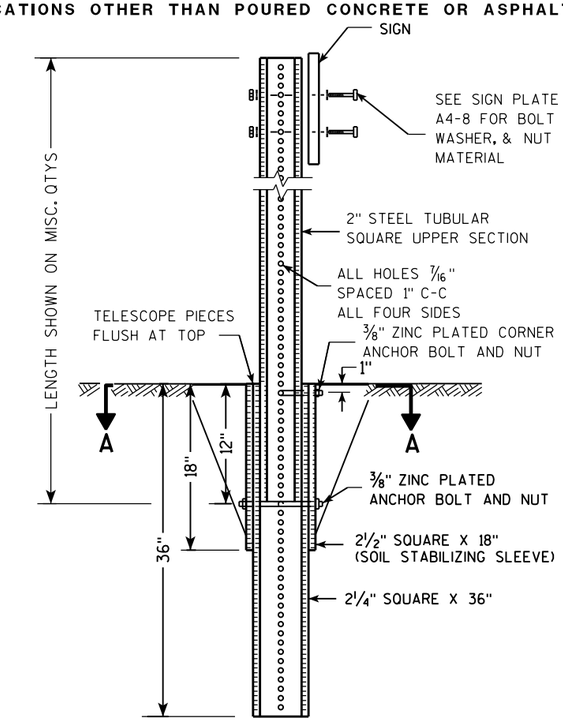

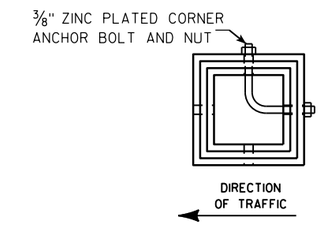

SECTION A-A

Area of Sign Installation (Sq. Ft.)	Number of Required Posts
9 or less	1
Greater than 9 less than or equal to 18	2
Greater than 18 less than or equal to 27	3

Signs wider than 3 feet or larger than 9 sq. ft shall be mounted on multiple posts (see above table).

TUBULAR STEEL
SIGN POST
A4-9

WISCONSIN DEPT OF TRANSPORTATION

APPROVED Matthew R Rauch
for State Traffic Engineer

DATE 2/05/15 PLATE A4-9.9

7

7

PROJECT NO:	HWY:	COUNTY:		SHEET NO:	E

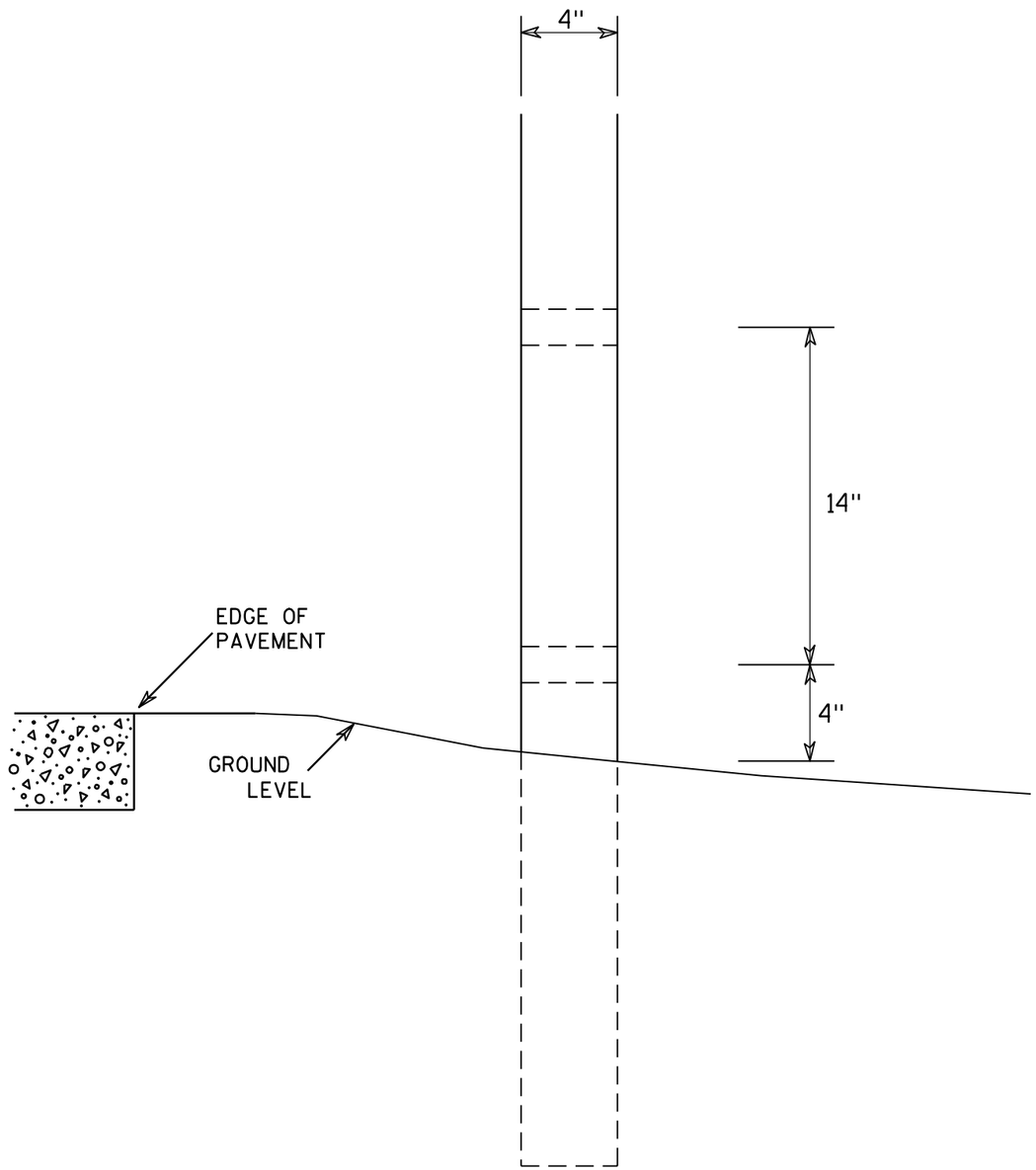

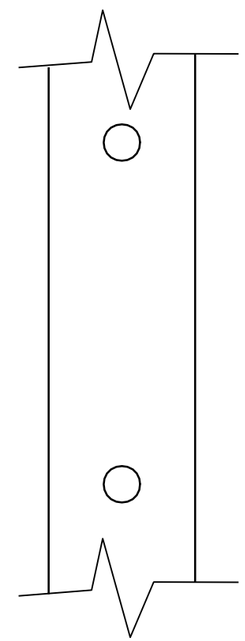

SIDE VIEW

GENERAL NOTES

1. All 4 x 6 Wood Posts shall be modified by having two 1½" diameter holes drilled perpendicular to the roadway centerline.

7

7

4 X 6 WOOD POST MODIFICATIONS

WISCONSIN DEPT OF TRANSPORTATION

APPROVED Chester J Spang for State Traffic Engineer

DATE 3/27/97 PLATE NO. A4-11.2

PROJECT NO:	HWY:	COUNTY:		SHEET NO: 86	E

BANDING

SINGLE SIGN

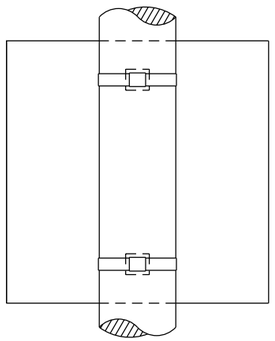

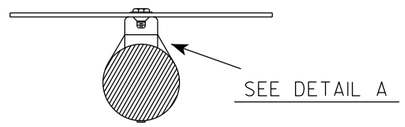

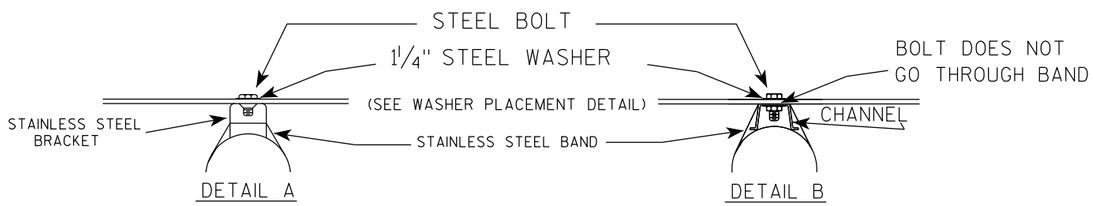

WASHER PLACEMENT

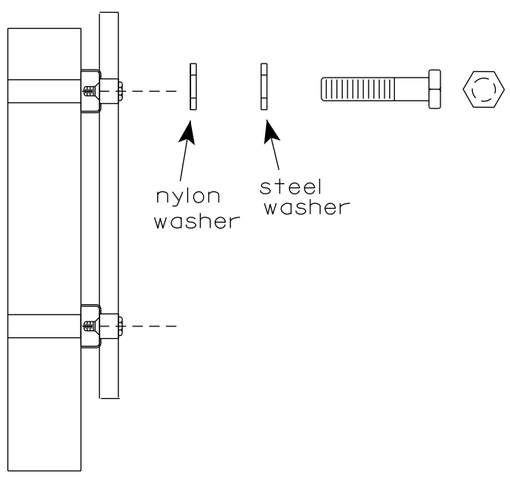

WASHERS (ALL POSTS) -
1-1/4" O.D. X 3/8" I.D. X 1/16" STEEL
1-1/4" O.D. X 3/8" I.D. X .080 NYLON
FOR ALL TYPE H SIGNS

GENERAL NOTES

1. Any sign over 3 feet in width shall use the V-Block banding method. See A5-10 standard plate.
2. Signs 3 feet or greater in height shall have three bracket bands installed. Signs less than 3 feet in height shall have two bracket bands installed.
3. Banding and assembly bracket shall be stainless steel. All bands shall be ¾" in width and 0.025" thickness.
4. ALL SIGN MOUNTING BOLTS AND WASHERS SHALL BE EITHER:
   a. Hot dip or mechanically galvanized in accordance with ASTM Designation: A 153, Class D
   b. Electro-galvanized in accordance with ASTM designation: B 633, Type III, SC 3

"J" ASSEMBLY

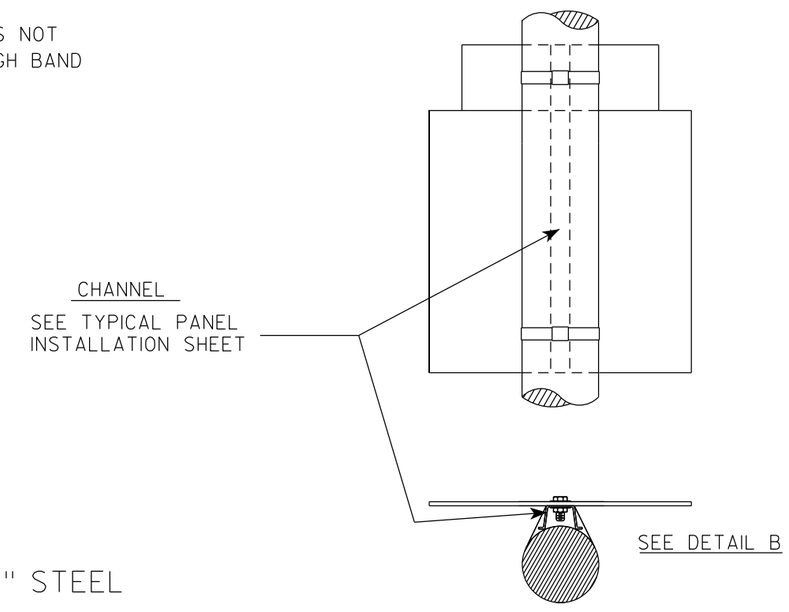

STANDARD SIGN
SIGN BANDING DETAILS

WISCONSIN DEPT OF TRANSPORTATION

APPROVED Matthew R Rauch for State Traffic Engineer

DATE 6/10/19 PLATE NO. A5-9.4

PROJECT NO:	HWY:	COUNTY:		SHEET NO: 87	E

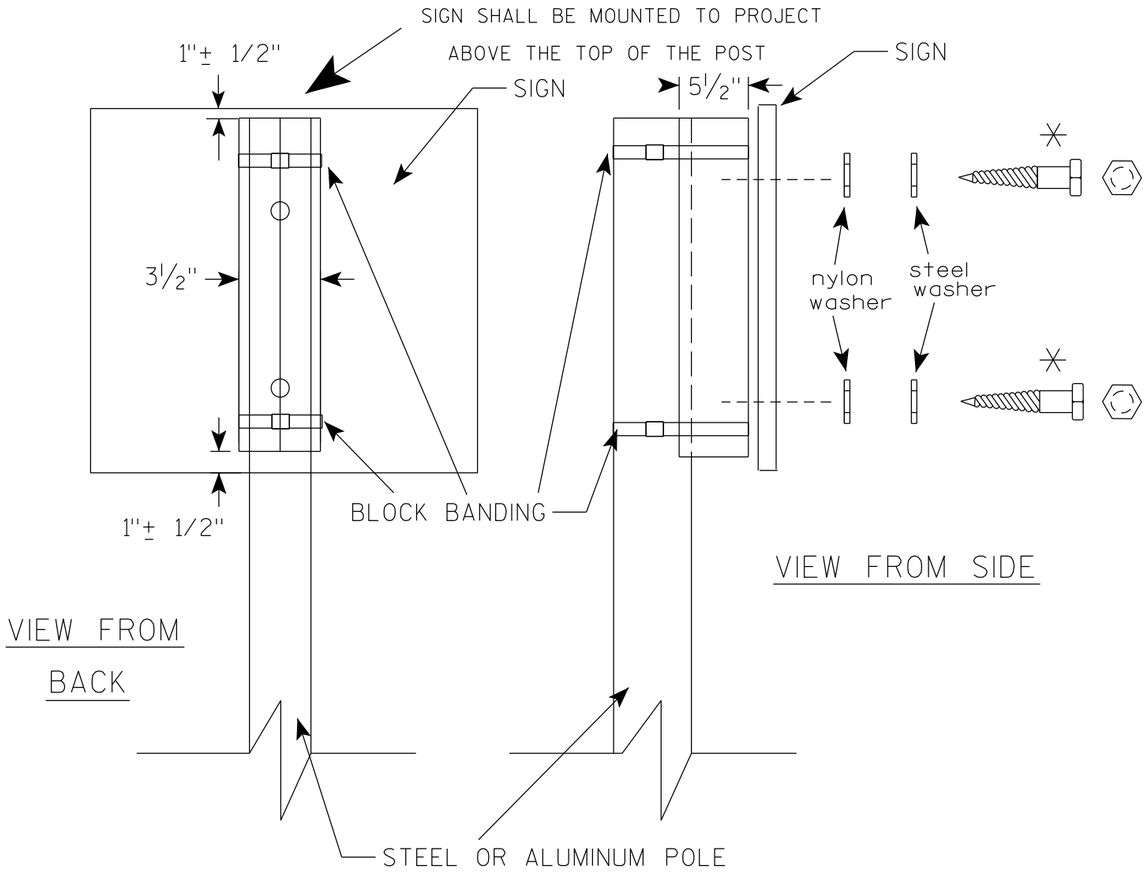

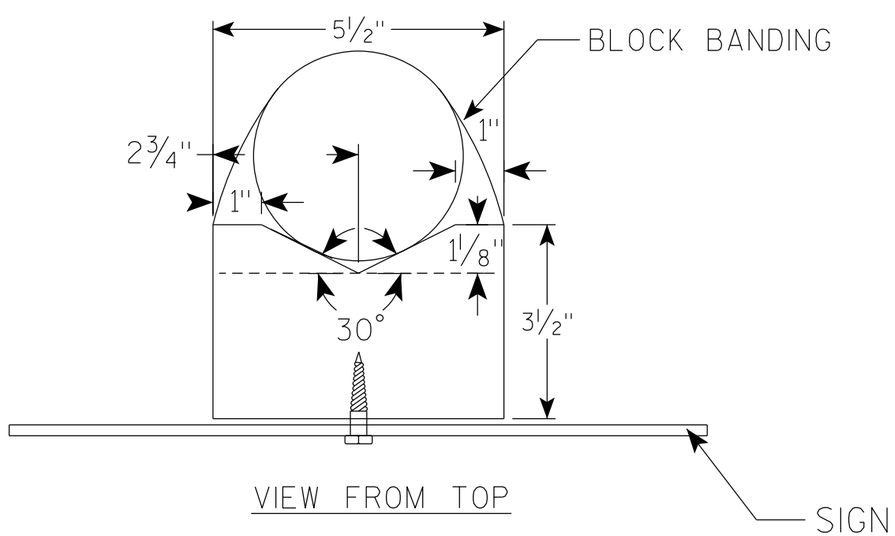

GENERAL NOTES

1. WOOD 4"X6" POST MATERIAL SHALL CONFORM TO 507.2.2 OF THE WisDOT STANDARD SPECIFICATIONS
2. BLOCK BANDING AND CLIPS SHALL BE STAINLESS STEEL, ¾" WIDTH AND 0.025" THICKNESS
3. SIGNS 3' OR GREATER IN HEIGHT SHALL UTILIZE 3 BLOCK BANDS. SIGNS UNDER 3' IN HEIGHT SHALL UTILIZE 2 BLOCK BANDS
4. ACTUAL NUMBER OF FASTENERS PER SIGN VARIES WITH THE SIGN AREA, BUT NORNALLY THERE ARE TWO. FOR SIGNS GREATER THAN 9 S.F. 3 FASTENERS SHALL BE USED.
5. ALL SIGN MOUNTING BOLTS AND WASHERS SHALL BE EITHER:
   a. Hot dip or mechanically galvanized in accordance with ASTM Designation: A 153, Class D
   b. Electro-galvanized in accordance with ASTM Designation : B 633, TYPE III, SC 3
6. ALL BOLTS SHALL HAVE HEXAGONAL HEADS.
7. STEEL WASHERS SHALL BE 1¼" O.D. X ⅜" I.D. X 1/16"
8. NYLON WASHERS SHALL BE 1¼" O.D. X ⅜" I.D. X .080 FOR TYPE H OR TYPE F FACE SIGN

✳ LAG BOLTS SHALL BE ⅜" X 2½"

BLOCK BANDING DETAIL
(V-BLOCK OPTION)

WISCONSIN DEPT OF TRANSPORTATION

APPROVED Matthew R Rauch
For State Traffic Engineer

DATE 6/10/19 PLATE NO. A5-10.2

PROJECT NO:				SHEET NO: 88	E

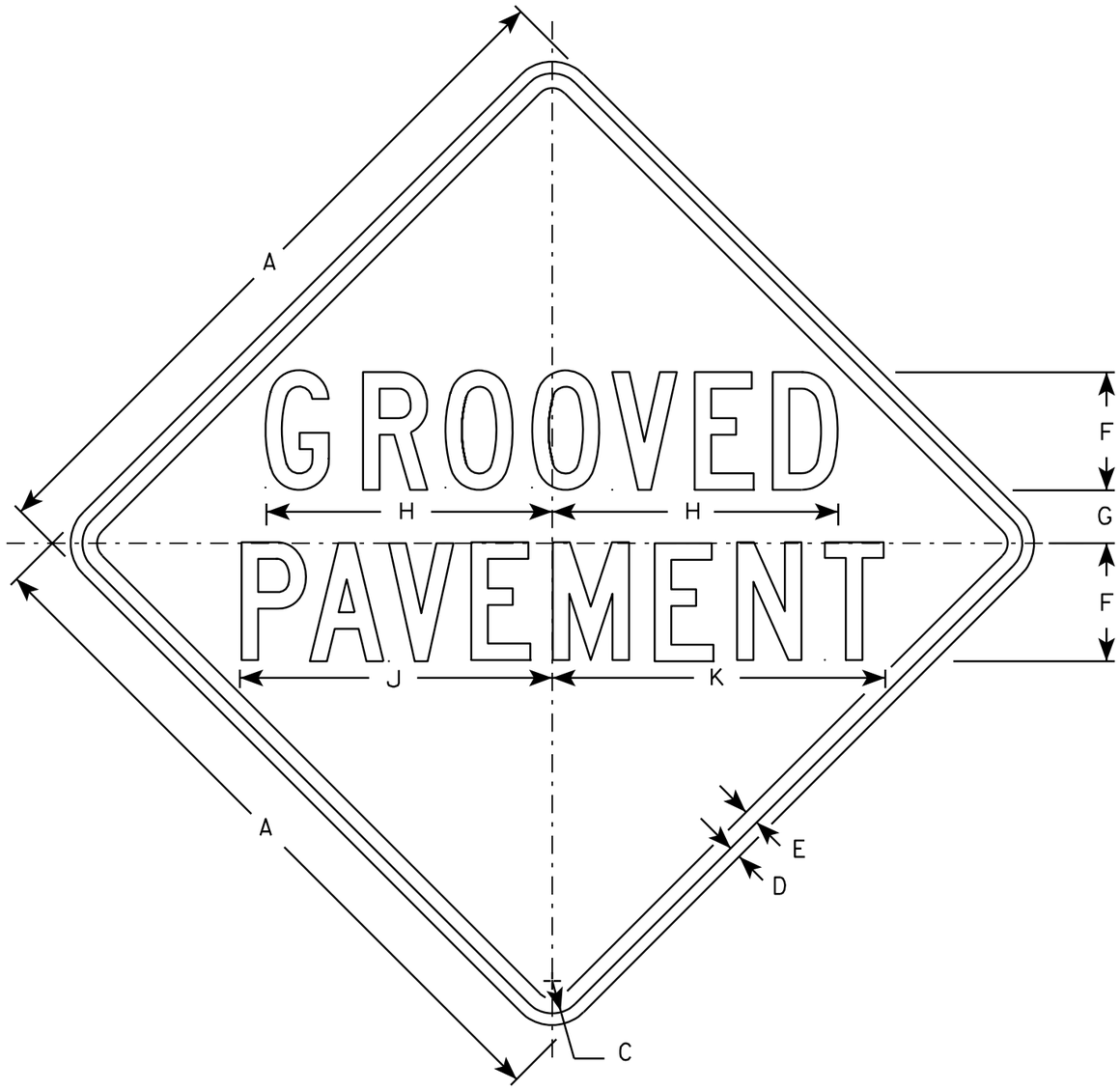

W8-52

NOTES

1. Sign is Type II - Type F Reflective - reference WIS DOT Standard Specification for HIGHWAY and STRUCTURE CONSTRUCTION latest edition.
2. Color:
   Background - Yellow
   Message - Black
3. Message Series - C
4. Corners may be square or rounded when base material is plywood but borders shall be rounded as shown. When base material is metal, the corners and borders shall be rounded.

SIZE	A	B	C	D	E	F	G	H	I	J	K	L	M	N	O	P	Q	R	S	T	U	V	W	X	Y	Z	Area sq. ft.
1																											
2S	30		1 3/8	1/2	5/8	5	2 1/4	12 1/8		13 1/4	14 1/8																6.25
2M	36		1 5/8	5/8	3/4	6	2 5/8	14 1/2		15 7/8	17																9.0
3	36		1 5/8	5/8	3/4	6	2 5/8	14 1/2		15 7/8	17																9.0
4	36		1 5/8	5/8	3/4	6	2 5/8	14 1/2		15 7/8	17																9.0
5	48		2 1/4	3/4	1	8	3 1/2	19 3/8		21 1/4	22 5/8																16.0

STANDARD SIGN
W8-52

WISCONSIN DEPT OF TRANSPORTATION

APPROVED Matthew R Rauch for State Traffic Engineer

DATE 03/14/13 PLATE NO. W8-52.8

PROJECT NO: | HWY: | COUNTY: | SHEET NO: 89 | E

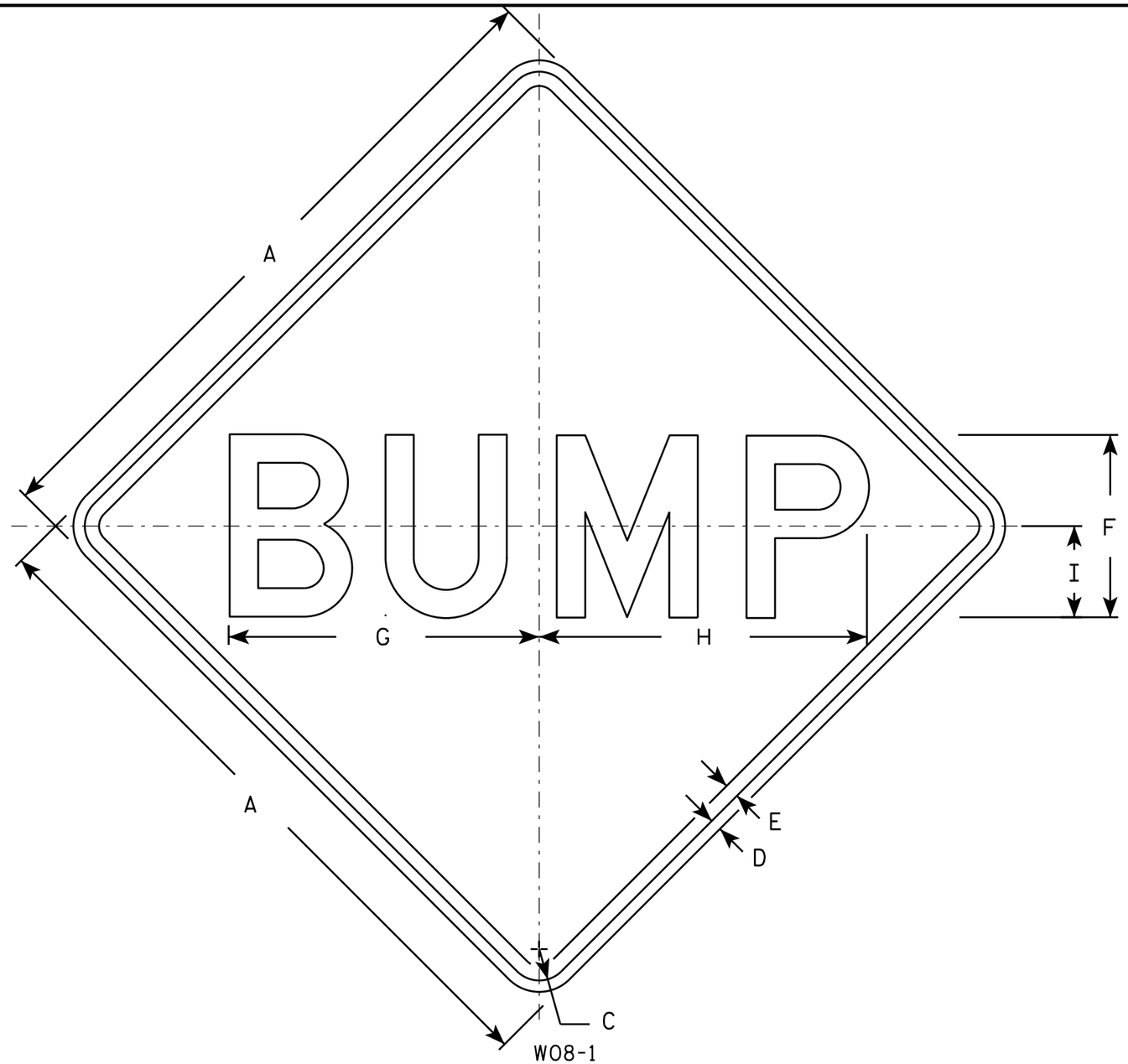

NOTES

1. Sign is Type II - Type F Reflective - reference WIS DOT Standard Specification for HIGHWAY and STRUCTURE CONSTRUCTION latest edition.
2. Color:
   Background - Orange
   Message - Black
3. Message Series - D
4. Corners may be square or rounded when base material is plywood but borders shall be rounded as shown. When base material is metal, the corners and borders shall be rounded.

SIZE	A	B	C	D	E	F	G	H	I	J	K	L	M	N	O	P	Q	R	S	T	U	V	W	X	Y	Z	Area sq. ft.
1	36		1 5/8	5/8	3/4	10	16 7/8	17 7/8	5																		9.0
2S	48		2 1/4	3/4	1	12	20 3/8	21 5/8	6																		16.0
2M	48		2 1/4	3/4	1	12	20 3/8	21 5/8	6																		16.0
3	48		2 1/4	3/4	1	12	20 3/8	21 5/8	6																		16.0
4	48		2 1/4	3/4	1	12	20 3/8	21 5/8	6																		16.0
5	48		2 1/4	3/4	1	12	20 3/8	21 5/8	6																		16.0

STANDARD SIGN
W08-1

WISCONSIN DEPT OF TRANSPORTATION

APPROVED Matthew R Rauch
for State Traffic Engineer

DATE 11/20/13 PLATE 190 W08-1.1

PROJECT NO: | HWY: | COUNTY: | SHEET NO: | E

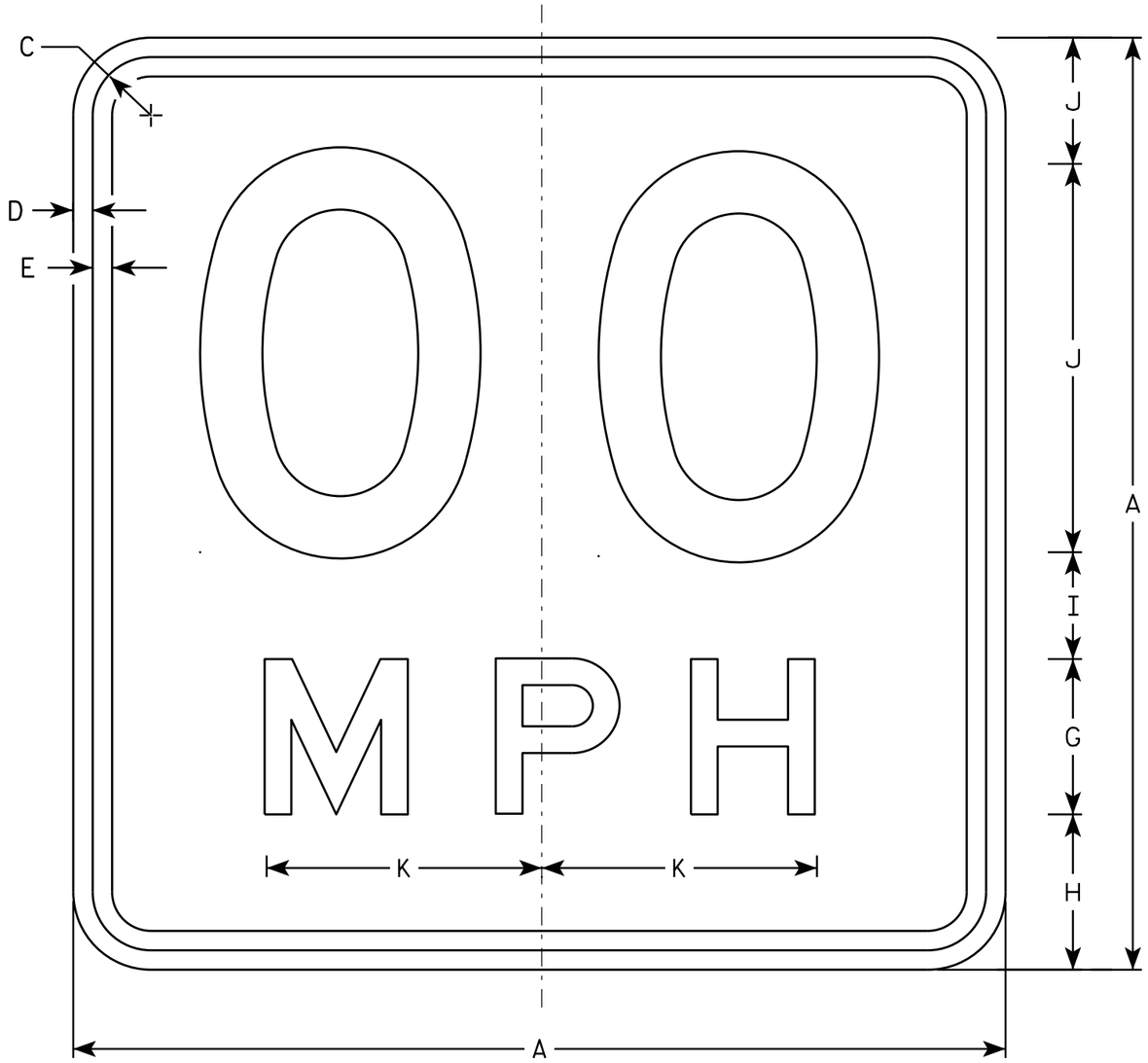

W013-1

NOTES

1. Sign is Type II - Type F Reflective - reference WIS DOT Standard Specification for HIGHWAY and STRUCTURE CONSTRUCTION latest edition.
2. Color:
   Background - Orange
   Message - Black
3. Message Series - See Note 6
4. Corners may be square or rounded when base material is plywood but borders shall be rounded as shown. When base material is metal, the corners and borders shall be rounded.
5. Substitute appropriate numerals and optically space about centerline to achieve proper balance.
6. Line 1 is Series D
   Line 2 is Series E

SIZE	A	B	C	D	E	F	G	H	I	J	K	L	M	N	O	P	Q	R	S	T	U	V	W	X	Y	Z	Area sq. ft.
1	24		1 1/8	3/8	1/2	10	4	4	2 3/4	3 1/4	7 1/8																4.00
2S	36		1 5/8	5/8	3/4	16	6	5 1/2	4	4 1/2	10 5/8																9.00
2M	36		1 5/8	5/8	3/4	16	6	5 1/2	4	4 1/2	10 5/8																9.00
3	36		1 5/8	5/8	3/4	16	6	5 1/2	4	4 1/2	10 5/8																9.00
4	36		1 5/8	5/8	3/4	16	6	5 1/2	4	4 1/2	10 5/8																9.00
5	36		1 5/8	5/8	3/4	16	6	5 1/2	4	4 1/2	10 5/8																9.00

STANDARD SIGN
W013-1

WISCONSIN DEPT OF TRANSPORTATION

APPROVED Matthew R Rauch
for State Traffic Engineer

DATE 11/21/13 PLATE 91 W013-1.1

PROJECT NO: | HWY: | COUNTY: | SHEET NO: | E

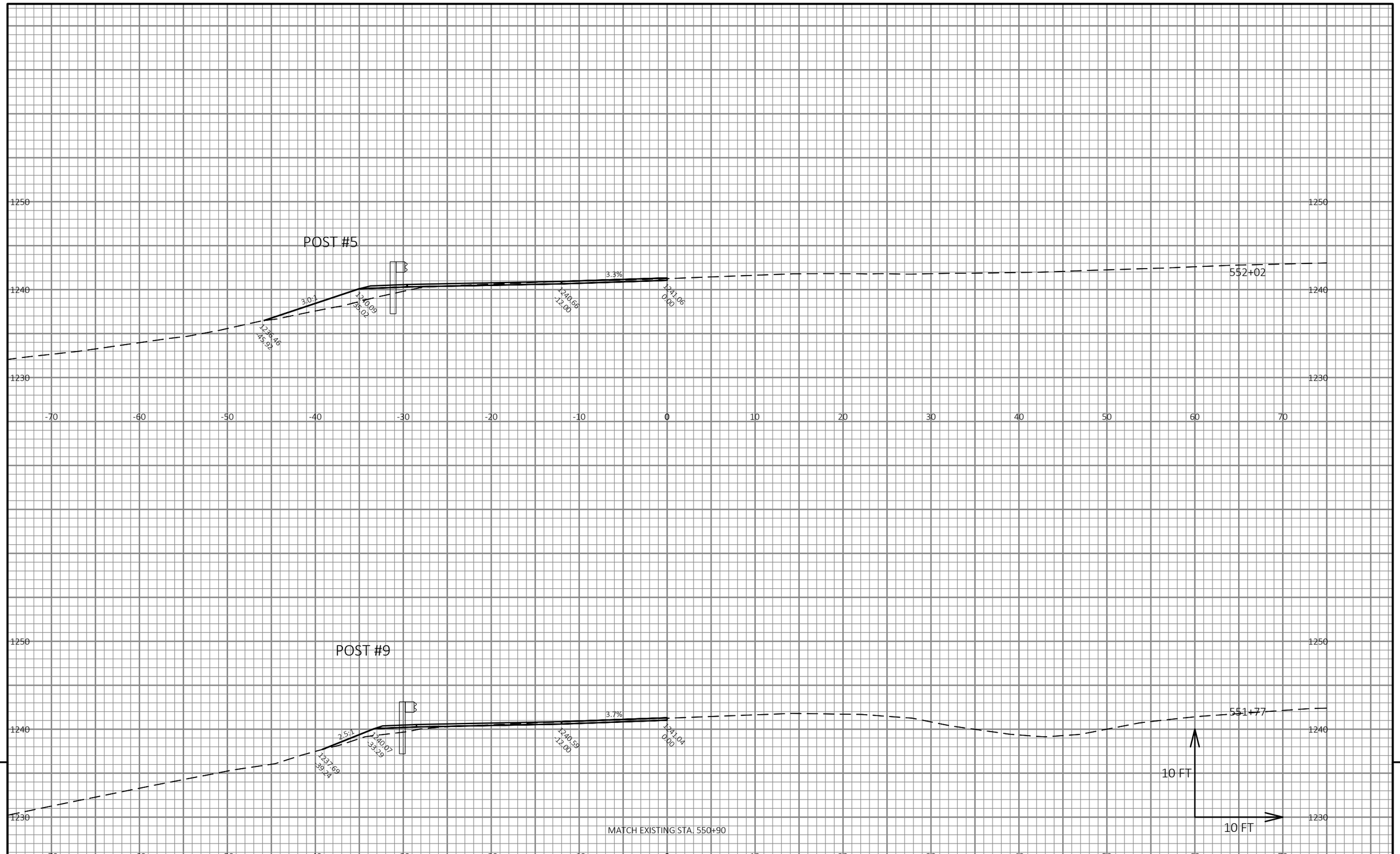

9

9

PROJECT NO: 7130-00-71/78	HWY: STH 93	COUNTY: TREMPEALEAU	CROSS SECTIONS: BEAM GUARD CROSS SECTIONS	SHEET 92	E

FILE NAME : P:\90S\93\00093390\CADD\SHEETSPLAN\090201_XS.DWG
LAYOUT NAME - 090201_xs
PLOT DATE : 11/13/2018 3:38 PM
PLOT BY : SHAWN DOLENS
PLOT NAME :
PLOT SCALE : 1 IN:10 FT HORZ. / 1 IN:10 FT VERT.
WISDOT/CADDS SHEET 49

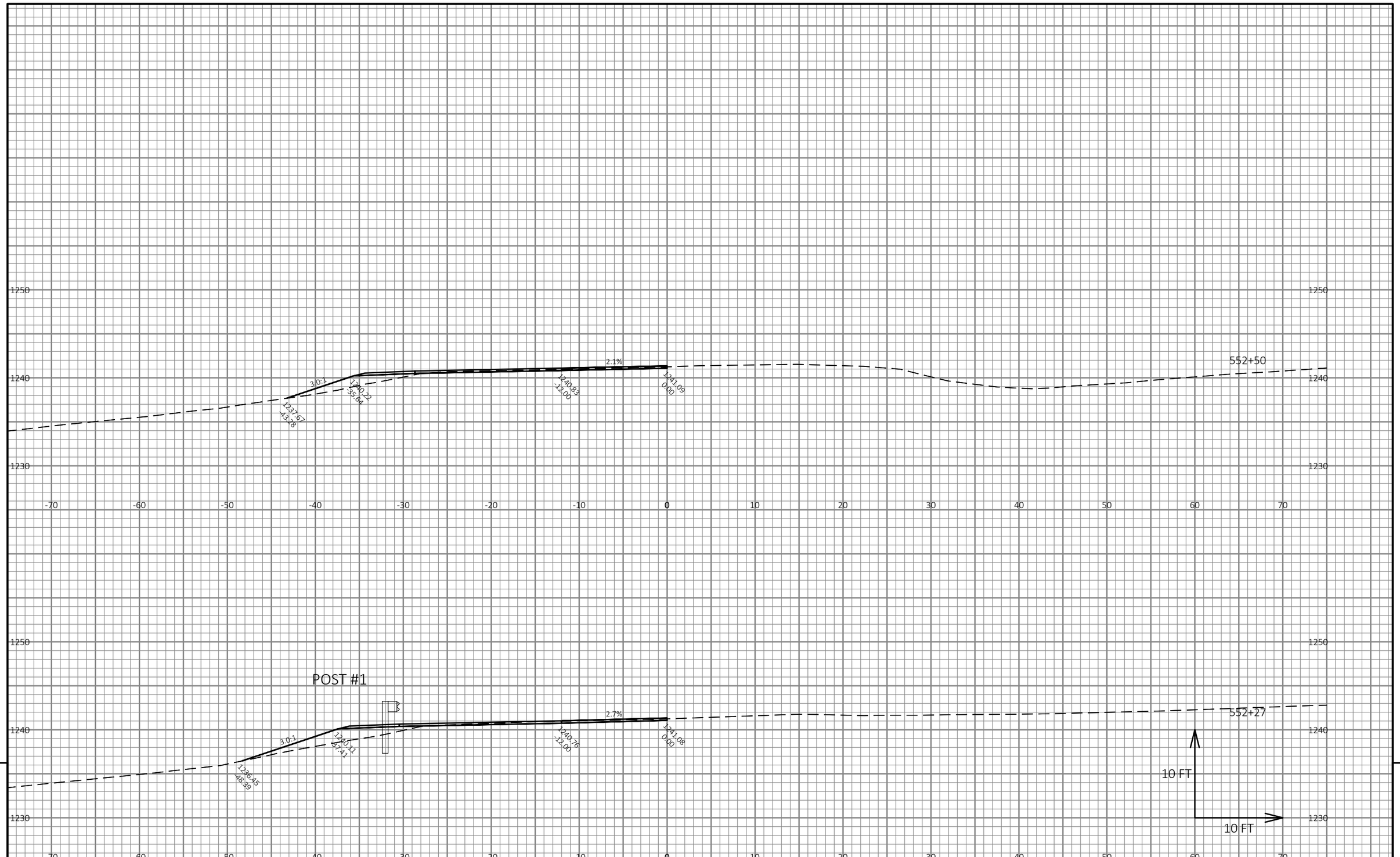

9

9

PROJECT NO: 7130-00-71/78	HWY: STH 93	COUNTY: TREMPEALEAU	CROSS SECTIONS: BEAM GUARD CROSS SECTIONS	SHEET 93	E

FILE NAME : P:\90S\93\00093390\CADD\SHEETSPLAN\090201_XS.DWG
LAYOUT NAME - 090202_xs
PLOT DATE : 11/13/2018 3:38 PM
PLOT BY : SHAWN DOLENS
PLOT NAME :
PLOT SCALE : 1 IN:10 FT HORZ. / 1 IN:10 FT VERT.
WISDOT/CADDS SHEET 49

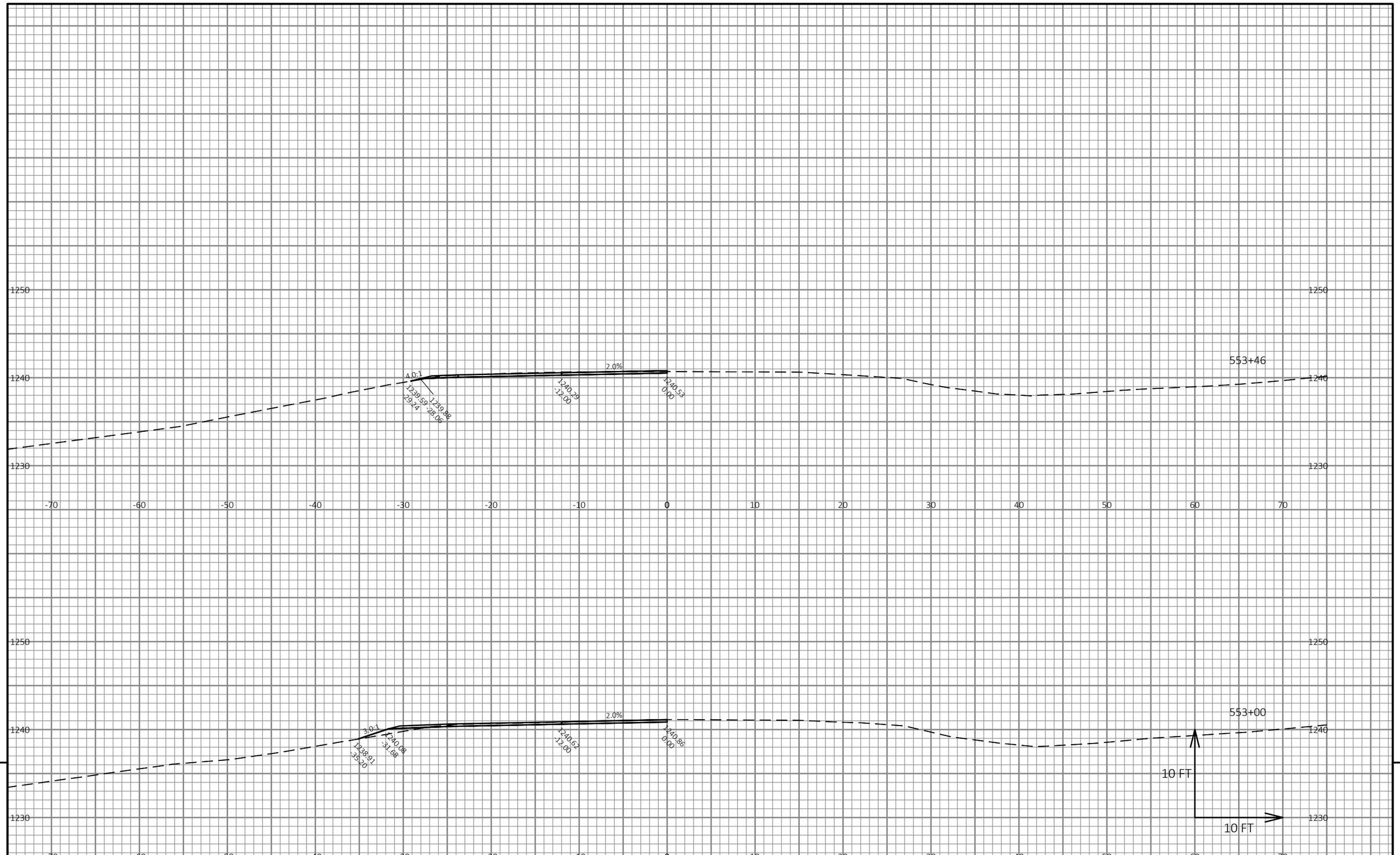

9

9

PROJECT NO: 7130-00-71/78	HWY: STH 93	COUNTY: TREMPEALEAU	CROSS SECTIONS: BEAM GUARD CROSS SECTIONS	SHEET 94	E

FILE NAME : P:\90S\93\00093390\CADD\SHEETSPLAN\090201_XS.DWG
LAYOUT NAME - 090203_xs
PLOT DATE : 11/13/2018 3:38 PM
PLOT BY : SHAWN DOLENS
PLOT NAME :
PLOT SCALE : 1 IN:10 FT HORZ. / 1 IN:10 FT VERT.
WISDOT/CADDS SHEET 49

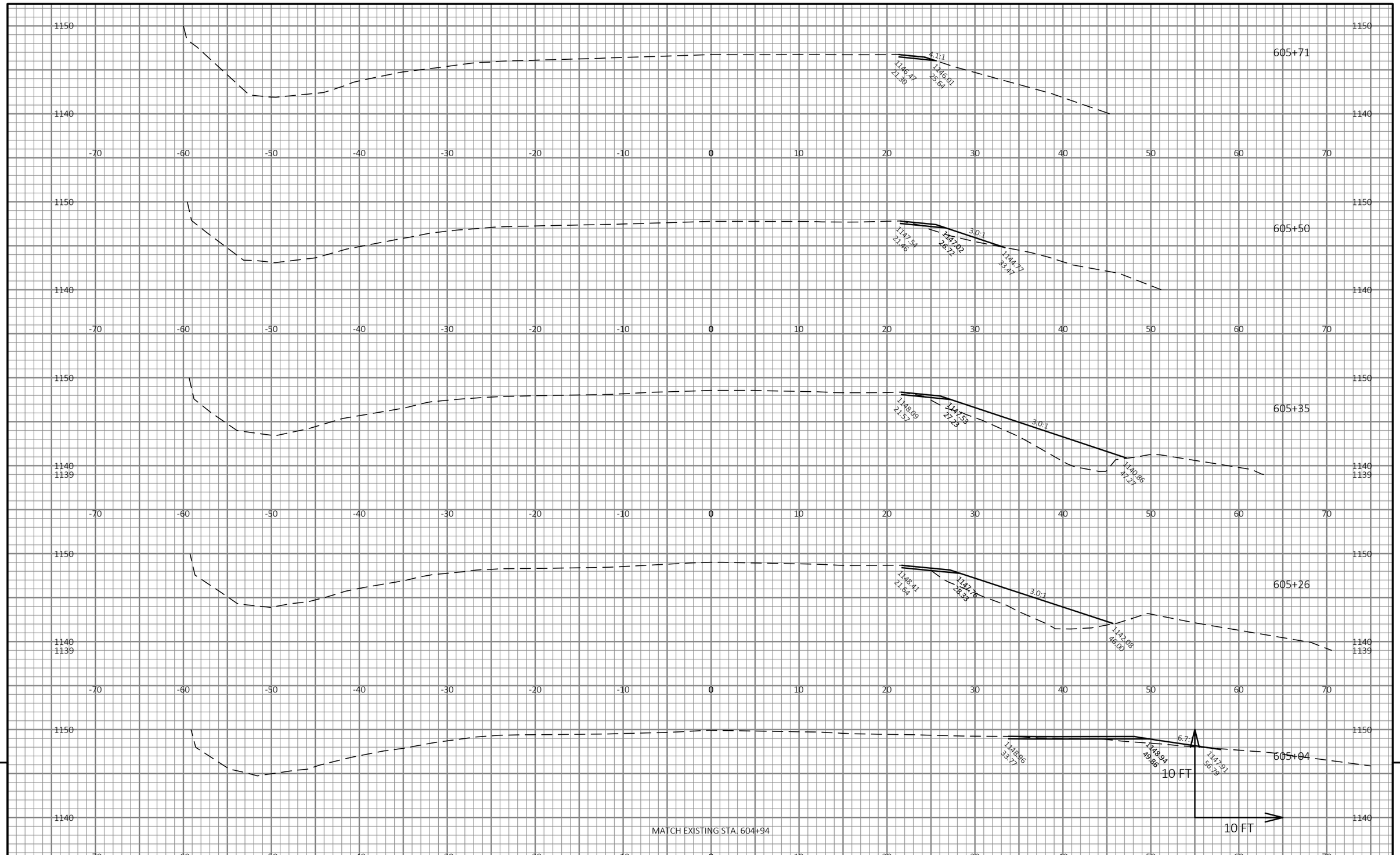

PROJECT NO: 7130-00-71/78	HWY: STH 93	COUNTY: TREMPEALEAU	CROSS SECTIONS: STORM SEWER AREA	SHEET 95	E

FILE NAME : P:\90S\93\00093390\CADD\SHEETSPLAN\090202_XS.DWG
LAYOUT NAME - 090204_xs
PLOT DATE : 11/13/2018 3:39 PM
PLOT BY : SHAWN DOLENS
PLOT NAME :
PLOT SCALE : 1 IN:10 FT HORZ. / 1 IN:10 FT VERT.

Wisconsin Department of Transportation

Dedicated people creating transportation solutions through innovation and exceptional service.

http://www.dot.wisconsin.gov