WIS

AUGUST 2019

PROJECT ID: 1620-00-63

WITH: 1620-03-75

COUNTY: WOOD

ORDER OF SHEETS

TOTAL SHEETS = 52

STATE PROJECT	FEDERAL PROJECT	
	PROJECT	CONTRACT
1620-00-63	WISC 2019585	1

STATE OF WISCONSIN
DEPARTMENT OF TRANSPORTATION

PLAN OF PROPOSED IMPROVEMENT

BABCOCK - PITTSVILLE

STH 173 NB TO POPLAR STREET CULVERTS

STH 80

WOOD COUNTY

STATE PROJECT NUMBER
1620-00-63

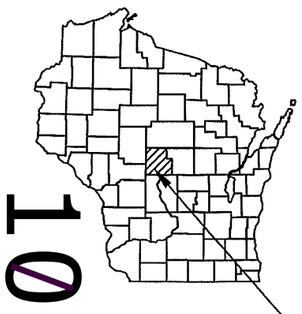

10

PROJECT LOCATION

N

DESIGN DESIGNATION

A.A.D.T.	2019	=	3100
A.A.D.T.	2039	=	3800
D.H.V.		=	437
D.D.		=	60/40
T.		=	34.5%
DESIGN SPEED		=	55 MPH
ESALS		=	1,511,100

BEGIN PROJECT
STA 1096+00
X = 654,965.4942
Y = 422,119.7255

END PROJECT
STA 1564+93
X = 650,775.0716
Y = 467,005.2503

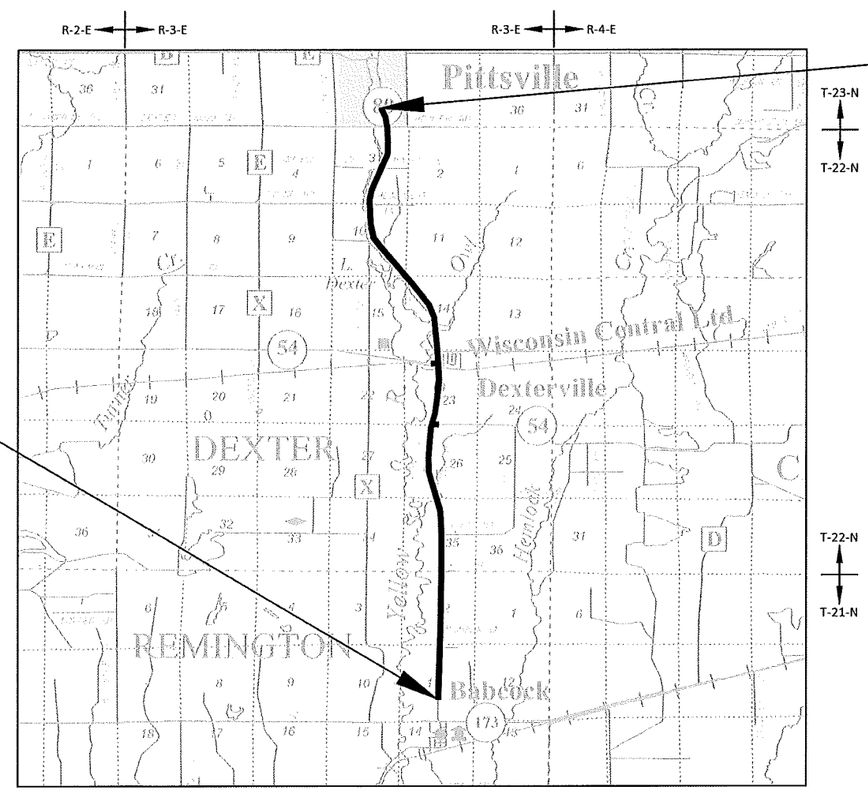

CONVENTIONAL SYMBOLS

PLAN

CORPORATE LIMITS
PROPERTY LINE
LOT LINE
LIMITED HIGHWAY EASEMENT
EXISTING RIGHT OF WAY
PROPOSED OR NEW R/W LINE
SLOPE INTERCEPT
REFERENCE LINE (300'FB')
EXISTING CULVERT
PROPOSED CULVERT (Box or Pipe)
COMBUSTIBLE FLUIDS (CAUTION)
MARSH AREA
WOODED OR SHRUB AREA

PROFILE

GRADE LINE
ORIGINAL GROUND
MARSH OR ROCK PROFILE (To be noted as such) (ROCK)
SPECIAL DITCH (LABEL)
GRADE ELEVATION (95.36)
CULVERT (Profile View)

UTILITIES

ELECTRIC — E —
FIBER OPTIC — FO —
GAS — G —
SANITARY SEWER — SAN —
STORM SEWER — SS —
TELEPHONE — T —
WATER — W —
UTILITY PEDESTAL
POWER POLE
TELEPHONE POLE

LAYOUT

SCALE 0 — 2 MI

TOTAL NET LENGTH OF CENTERLINE = 0

HORIZONTAL POSITIONS SHOWN ON THIS PLAN ARE WISCONSIN COUNTY COORDINATES, WOOD COUNTY, NAD83 (2011), IN U.S. SURVEY FEET. VALUES ARE GRID COORDINATES, GRID BEARINGS, AND GRID DISTANCES. GRID DISTANCES MAY BE USED AS GROUND DISTANCES. ELEVATIONS SHOWN ON THIS PLAN ARE REFERENCED TO USGS NAVD88.

ORIGINAL PLANS PREPARED BY

MSA
146 North Central Ave., Marshfield, WI 54449
715-384-2133 1-877-204-0572 Fax: 715-384-9787

WISCONSIN PROFESSIONAL ENGINEER SEAN M. SPROMBERG E-37771-008 SCHOFIELD, WI

DATE: 1/18/19 (Professional Engineer Signature)

STATE OF WISCONSIN
DEPARTMENT OF TRANSPORTATION

PREPARED BY

Surveyor	MSA PROFESSIONAL SERVICES
Designer	MSA PROFESSIONAL SERVICES
Project Manager	DANIEL HOLLOWAY, P.E.
Regional Examiner	CHERYL SIMON
Regional Supervisor	NICHOLE LYSNE

APPROVED FOR THE DEPARTMENT

DATE: 1/18/19 (Signature)

E

GENERAL NOTES

THE LOCATIONS OF EXISTING AND PROPOSED UTILITY INSTALLATIONS AS SHOWN ON THE PLANS ARE APPROXIMATE. IN AREAS WHERE NO WORK IS PROPOSED, UTILITIES SHOWN ON THE PLANS ARE LOCATED BY SYSTEM MAPS AND NOT FIELD LOCATES. THERE MAY BE OTHER UTILITY INSTALLATIONS WITHIN THE AREA THAT ARE NOT SHOWN.

SECTION 2 ORDER OF SHEETS

AS-BUILTS

ID 1620-02-60 BABCOCK - PITTSVILLE (OWL CREEK BRIDGE B-17-0017) 2015
ID 1620-02-61 BABCOCK - PITTSVILLE (DEXTERVILLE DITCH BRIDGE B-17-0016) 2015
ID 1628-00-73 BABCOCK - PITTSVILLE (NORTH JCT. 173 - POPLAR ROAD) 1998
ID 1624-03-71 STH 173 - STH 13 ROAD (YELLOW RIVER - LONESOME ROAD) 1981
S 044 (2) DEXTERVILLE - PITTSVILLE ROAD, STH 80 1961
S 044 (3) DEXTERVILLE - PITTSVILLE ROAD, STH 80 1961

RUNOFF COEFFICIENT TABLE

	HYDROLOGIC SOIL GROUP											
	A			B			C			D		
	SLOPE RANGE (PERCENT)			SLOPE RANGE (PERCENT)			SLOPE RANGE (PERCENT)			SLOPE RANGE (PERCENT)		
LAND USE:	0-2	2-6	6 & OVER	0-2	2-6	6 & OVER		2-6	6 & OVER	0-2	2-6	6 & OVER
MEDIAN STRIP TURF	0.19	0.20	0.24	0.19	0.22	0.26	0.20	0.23	0.30	0.20	0.25 0.32	0.30 0.40
SIDE SLOPE TURF			0.25			0.27			0.28			0.30 0.38
PAVEMENT:	0.40 - 0.60											
ASPHALT:	0.70 - 0.95											
CONCRETE:	0.80 - 0.95											
BRICK:	0.70 - 0.80											
DRIVES, WALKS:	0.75 - 0.85											
ROOFS:	0.75 - 0.95											
GRAVEL ROADS, SHOULDERS	0.40 - 0.60											

TOTAL PROJECT AREA = 0.20 ACRES
TOTAL AREA EXPECTED TO BE DISTURBED BY CONSTRUCTION ACTIVITIES - 0.20 ACRES

UTILITIES

RAILROAD:
WISCONSIN CENTRAL LTD. (CN)
ATTN: JACKIE MACEWICZ
1625 DEPOT STREET
STEVENS POINT, WI 54481
OFFICE: 715-345-2503
EMAIL: JACKIE.MACEWICZ@CN.CA

RAILROAD:
WISCONSIN CENTRAL LTD. (CN)
CALL BEFORE YOU DIG LINE
715-783-4533
RAILROAD IS NOT PART OF DIGGERS HOTLINE

ELECTRIC:
ALLIANT ENERGY
ATTN: MATTHEW HOSLER
2710 JEFFERSON ST.
WISCONSIN RAPIDS, WI 54495
OFFICE: 608-963-3655
EMAIL: MATTHEWHOSLER@ALLIANTENERGY.COM

COMMUNICATION:
WE ENERGIES - GAS
ATTN: RYAN MIENTKE
1921 8TH STREET SOUTH
WISCONSIN RAPIDS, WI 54494
OFFICE: 715-421-7249
MOBILE: 715-421-9293
EMAIL: RYAN.MIENTKE@WE-ENERGIES.COM

ELECTRIC:
OAKDALE ELECTRIC COOPERATIVE
ATTN: ROY BOYLES
PO BOX 40
OAKDALE, WI 54649
OFFICE: 608-372-4131
CELL: 608-343-3871
EMAIL: RBOYLES@OAKDALEREC.COM

COMMUNICATION:
TDS TELECOM
ATTN: STEVE JAKUBIEC
10 COLLEGE AVE., SUITE 218A
APPLETON, WI 54911
OFFICE: 920-882-4166
MOBILE: 920-562-7221
EMAIL: STEVE.JAKUBIEC@TDSTELECOM.COM

COMMUNICATION:
PACKERLAND BROADBAND
ATTN: ANDY HEIGL
PO BOX 885
IRON MOUNTAIN, MI 49801
OFFICE: 906-776-2609
MOBILE: 906-221-7536
EMAIL: ANDY.HEIGL@PLBB.NET

*WATER:
CITY OF PITTSVILLE
ATTN: PETE PETERSON
5388A 4TH AVE.
PO BOX 100
PITTSVILLE, WI 54466
OFFICE: 715-884-2474
EMAIL: PITTSWRANDSR@TDS.NET

*SEWER:
PITTSVILLE WATER AND SEWER DEPT WWFT
ATTN: PETE PETERSON
5388A 4TH AVE.
PO BOX 100
PITTSVILLE, WI 54466
OFFICE: 715-884-2474
EMAIL: PITTSWRANDSR@TDS.NET

* NOT A DIGGERS HOTLINE MEMBER

DIGGERS HOTLINE
Dial 811 or (800)242-8511
www.DiggersHotline.com

DNR LIAISON

WISCONSIN DEPARMENT OF NATURAL RESOURCES
ATTN: BRAD BETTHAUSER
ENVIRONMENTAL ANALYSIS & REVIEW SPECIALIST-ADV
NORTH CENTRAL REGION
473 GRIFFITH AVE.
WISCONSIN RAPIDS, WI 54494
OFFICE: 715-421-7851
EMAIL: BRADLEY.BETTHAUSER@WISCONSIN.GOV

SHEET LOCATIONS

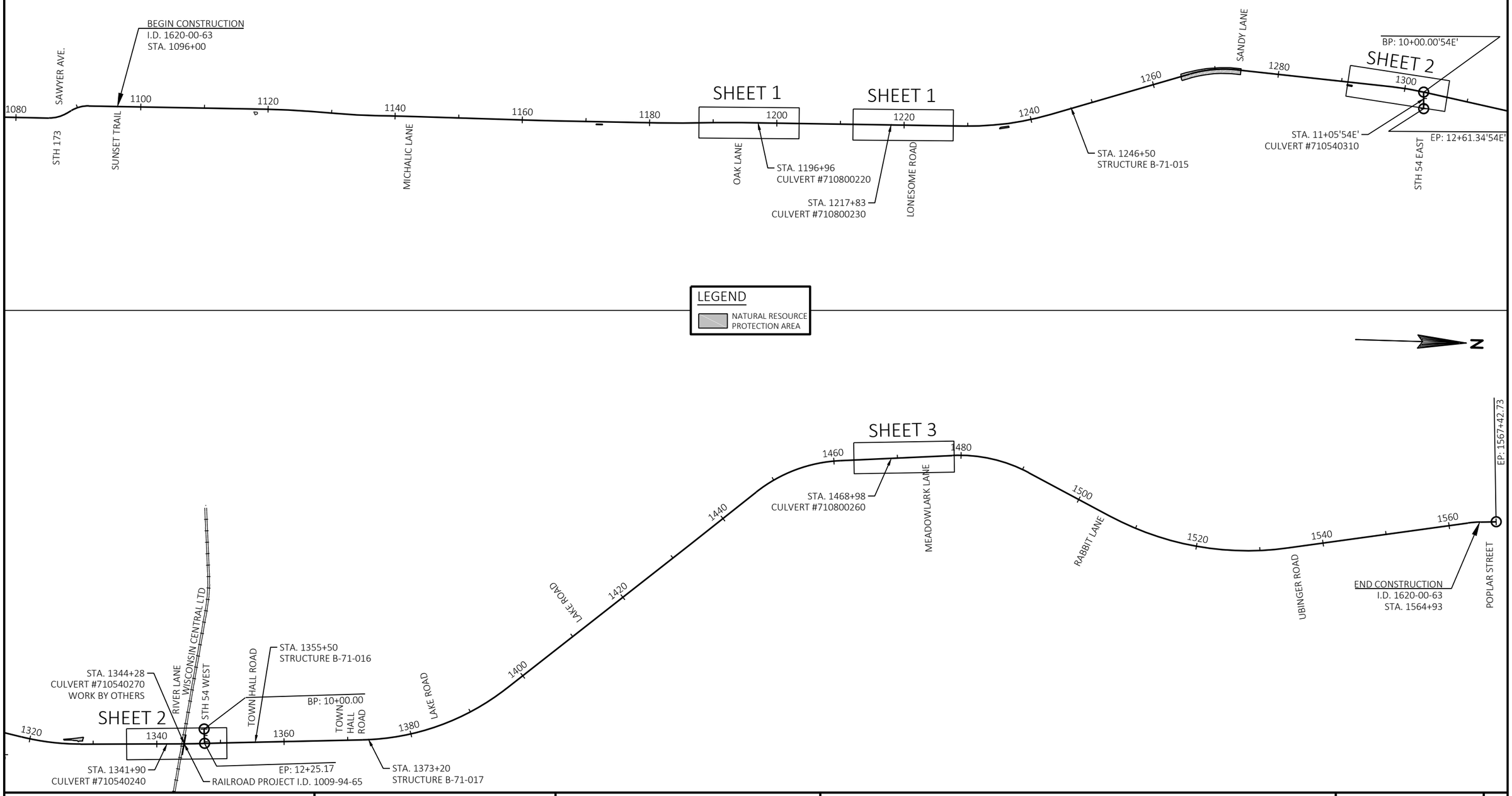

PROJECT NO: 1620-00-63	HWY: STH 80	COUNTY: WOOD	PROJECT OVERVIEW	SHEET 3	E

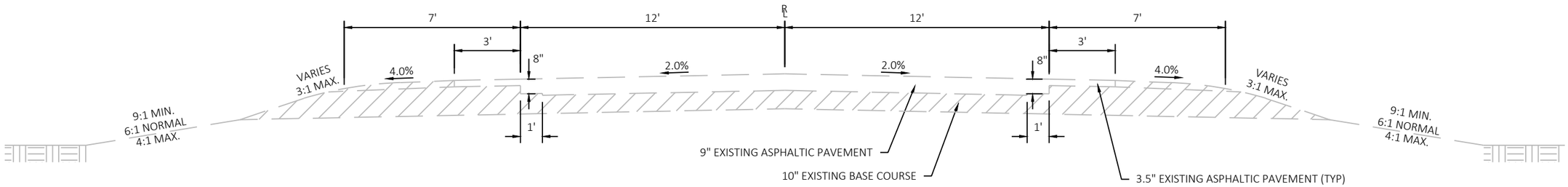

EXISTING TYPICAL SECTION

STH 80
STA. 1227+81 - STA. 1565+02

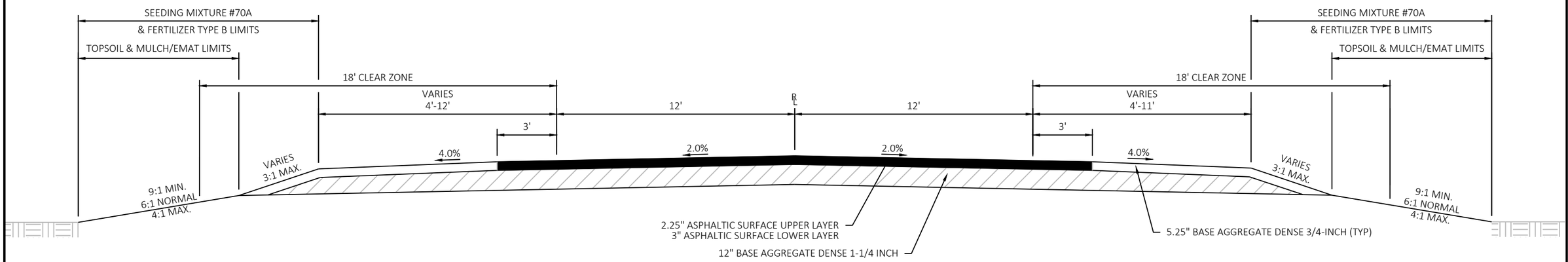

FINISHED TYPICAL SECTION FOR CULVERT REPLACEMENTS

STA. 1341+75 - STA. 1342+04
STA. 10+97'54E' - STA. 11+12'54E'

(SEE CROSS DRAIN INSTALLATION DETAIL)

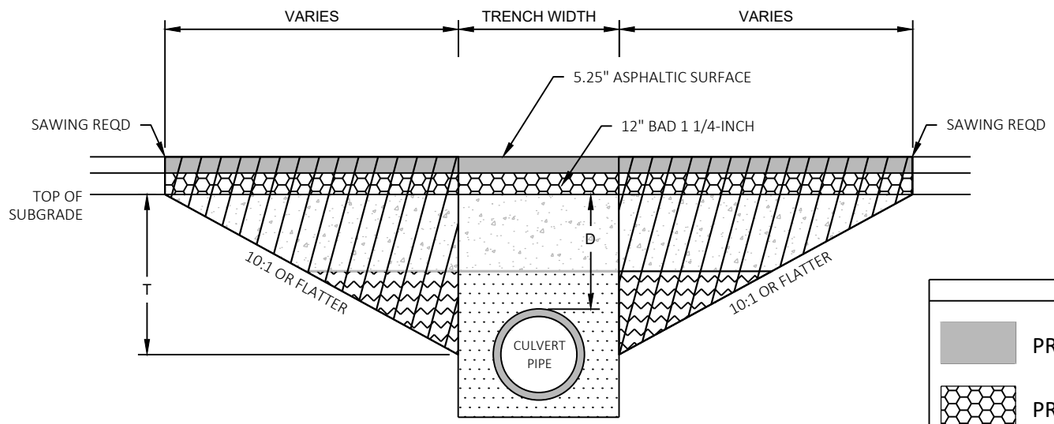

TRANSITION CUT DEPTH (T) = THE LESSER OF DEPTH TO CENTER OF PIPE OR 5 FT.
DO NOT EXTEND TRANSITION CUT BELOW HORIZONTAL CENTER OF PIPE.

DEPTH D < 6 FT

STA 1341+90
STA 11+05'54E'

KEY

- PROPOSED SURFACE
- PROPOSED BASE
- TRENCH BACKFILL
- TRENCH OR FOUNDATION BACKFILL
- FOUNDATION BACKFILL
- TRANSITION CUT

NOTES

TRANSITION CUT IS PAID AS EXCAVATION COMMON.
TRANSITION CUT WIDTH IS FROM SUBGRADE SHOULDER POINT TO SUBGRADE SHOULDER POINT.
BACKFILL THE TRANSITION CUT AREAS WITH FOUNDATION AND TRENCH BACKFILL AS SPECIFIED IN STANDARD SPEC 520.
PERFORM CULVERT PIPE INSTALLATION BEFORE MILLING AND PAVING.
PLACE 465.0105 AFTER CULVERT PIPE INSTALLATION.

CULVERT PIPE TRANSITION

ROUTE	STA (CL)	DEPTH D (FT)	PIPE DIA (IN)	REMARKS
STH 80	1341+90	1.1	24	C 710540240
STH 54	11+05'54E'	0.49	24	C 710540310

2

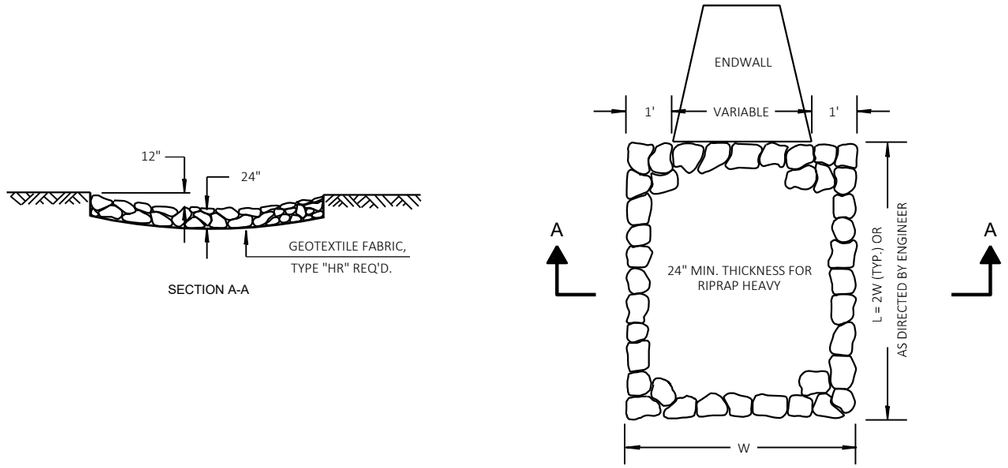

RIPRAP HEAVY TREATMENT AT CULVERTS

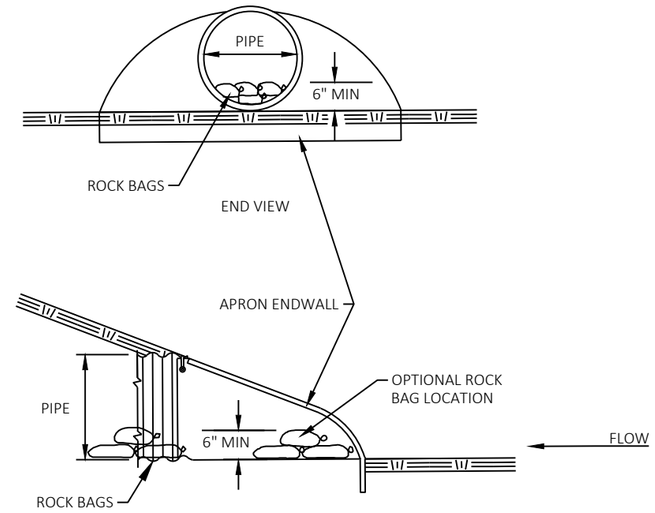

SIDE VIEW

CULVERT PIPE CHECK

(INSTALL ON INLET END ONLY)

2

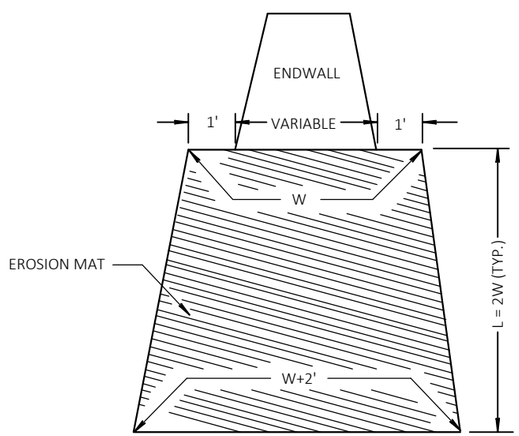

EROSION MAT TREATMENT AT CULVERTS

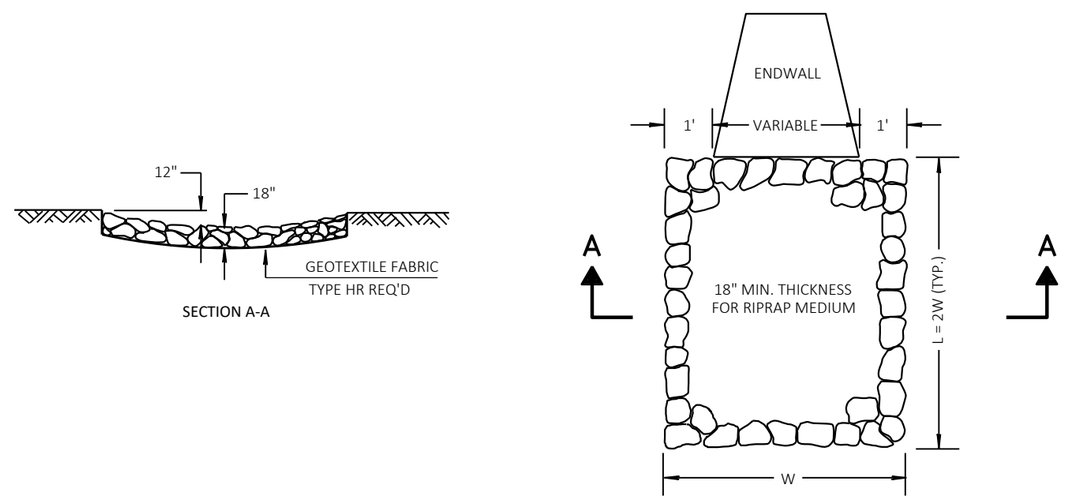

RIPRAP MEDIUM TREATMENT AT CULVERTS

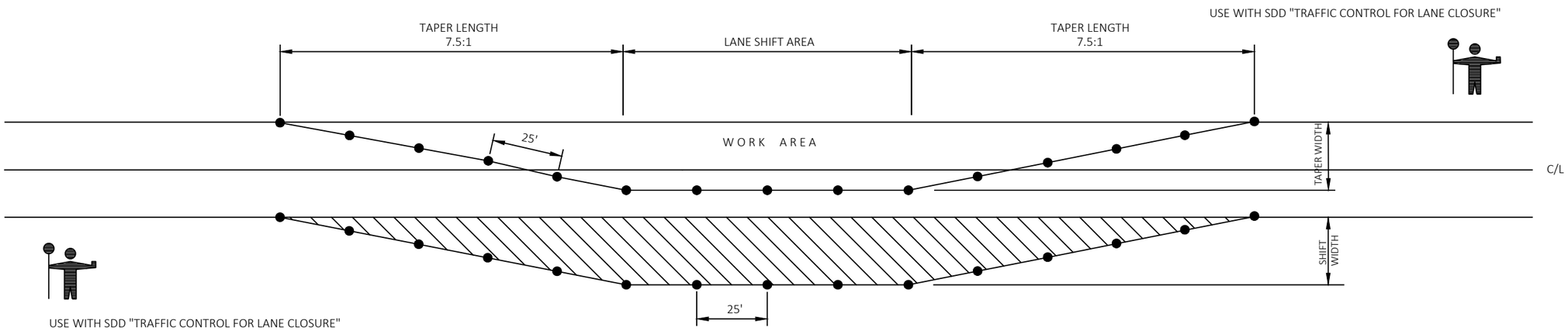

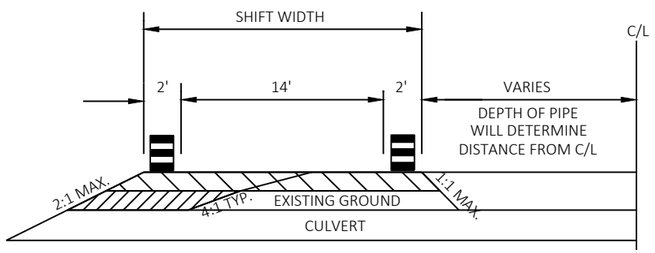

NOTES

1. THE TAPER SHOULD EXTEND ACROSS THE SHOULDER UNLESS DOING SO WOULD GREATLY CONFLICT THE WORK OPERATION.
2. ALL LANE CLOSURE SIGNS SHALL BE REMOVED OR COVERED AND ALL DEVICES REMOVED BEYOND THE SHOULDER WHEN WORK IS NOT IN PROGRESS AND THE LANE IS RESTORED TO A SAFE OPERATING CONDITION.
3. CHANNELIZING DEVICES PLACED ADJACENT TO WORK AREA SHALL BE PULLED BACK FROM TRAVEL LANE WHEN WORK IS NOT IN PROGRESS.
4. USE WITH STANDARD DETAIL DRAWING, "TRAFFIC CONTROL FOR LANE CLOSURE WITH FLAGGING OPERATION."
5. FLAGGERS ARE SPECIFIC TO THIS OPERATION.
6. LANE SHIFTS SHALL ONLY BE USED DURING DAYLIGHT HOURS.

KEY

- ● TRAFFIC CONTROL DRUM
- 6" BASE AGGREGATE DENSE 1 1/2-INCH (INCIDENTAL TO LANE SHIFT ITEM)
- FILL (INCIDENTAL TO LANE SHIFT ITEM)

LANE SHIFT DETAIL

CULVERT REPLACEMENTS
STA. 1341+90
STA. 11+05'54E'

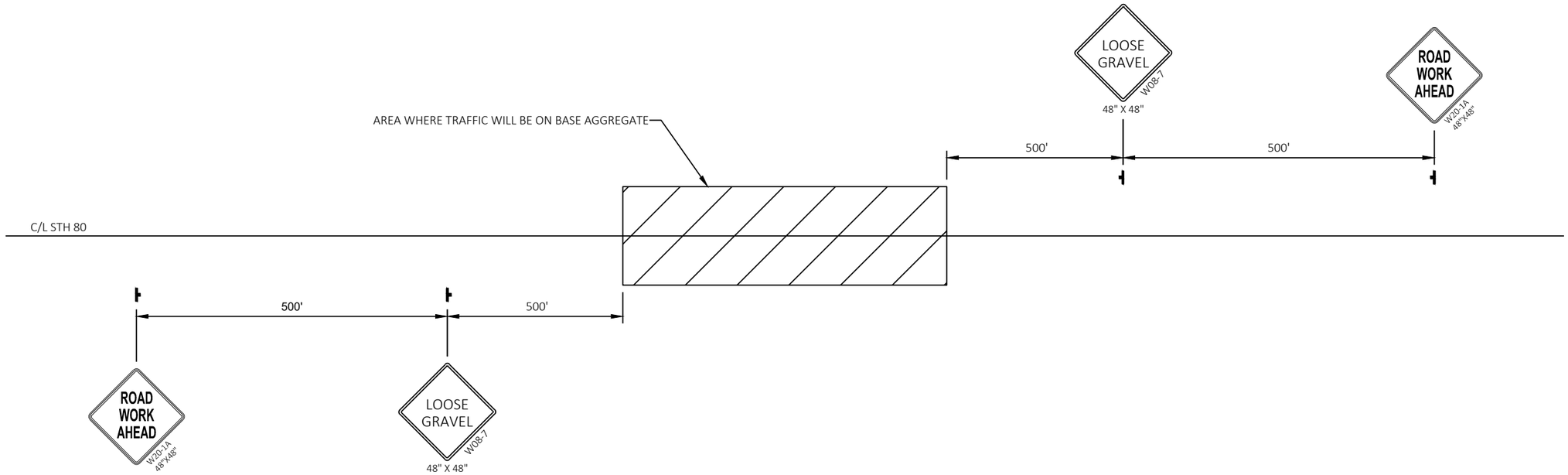

CULVERT PIPE TRANSITION AREA = 100'

TEMPORARY SIGNING AT CULVERT PIPE REPLACEMENTS

USE AT ALL CULVERT PIPE REPLACEMENTS WHERE ASPHALT PATCH IS
NOT PLACED THE SAME DAY

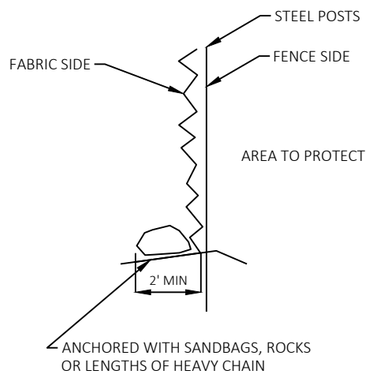

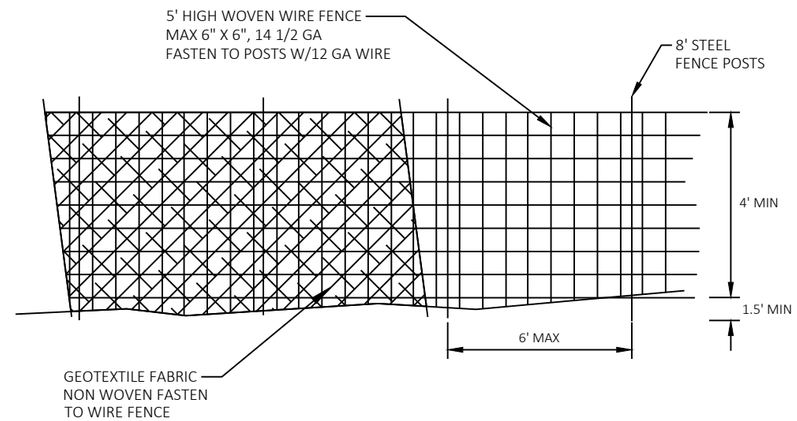

SILT FENCE HEAVY DUTY

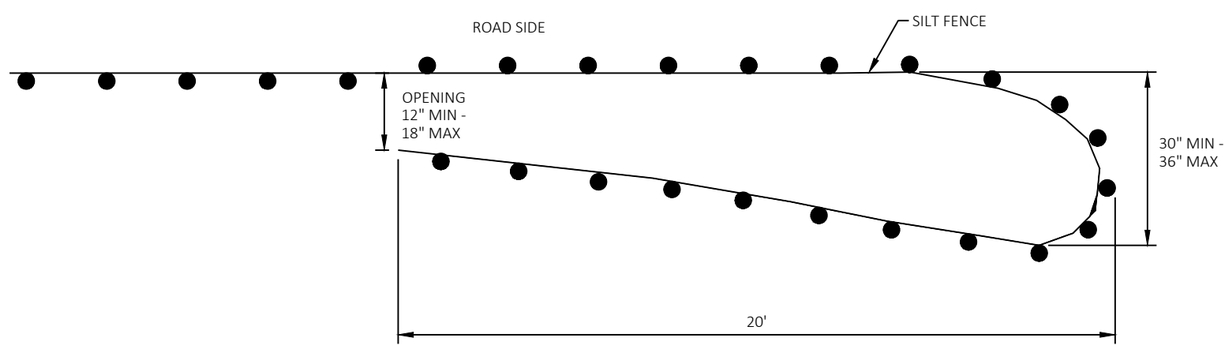

PLAN VIEW

GENERAL NOTES:

SILT FENCE POSTS FOR THE TURN-AROUND SHOULD BE ON THE OUTSIDE OF THE TURN-AROUND. AND TRENCHED IN ACCORDING TO SILT FENCE REQUIREMENTS.

TEMPORARY SMALL ANIMAL TURN-AROUND

TRAFFIC CONTROL

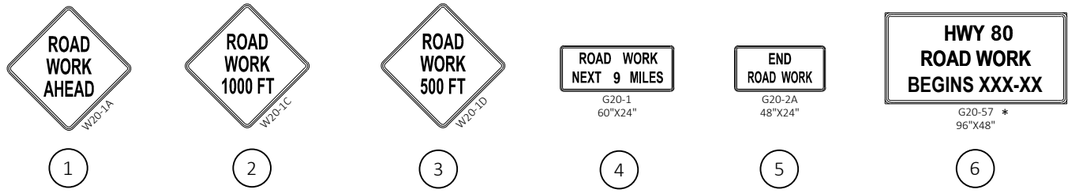

NOTE:

THE EXACT NUMBER, LOCATION, AND SPACING OF DEVICES SHALL BE ADJUSTED TO FIT FIELD CONDITIONS AS DIRECTED BY THE ENGINEER. FURTHER INFORMATION AVAILABLE IN SDD "TRAFFIC CONTROL, ADVANCE WARNING SIGNS 45 MPH OR GREATER TWO-WAY UNDIVIDED ROAD OPEN TO TRAFFIC."

ALL "W" AND "WO" SIGNS SHALL BE 48" X 48" UNLESS OTHERWISE NOTED.

* THIS SIGN TO BE REMOVED AT START OF CONSTRUCTION.

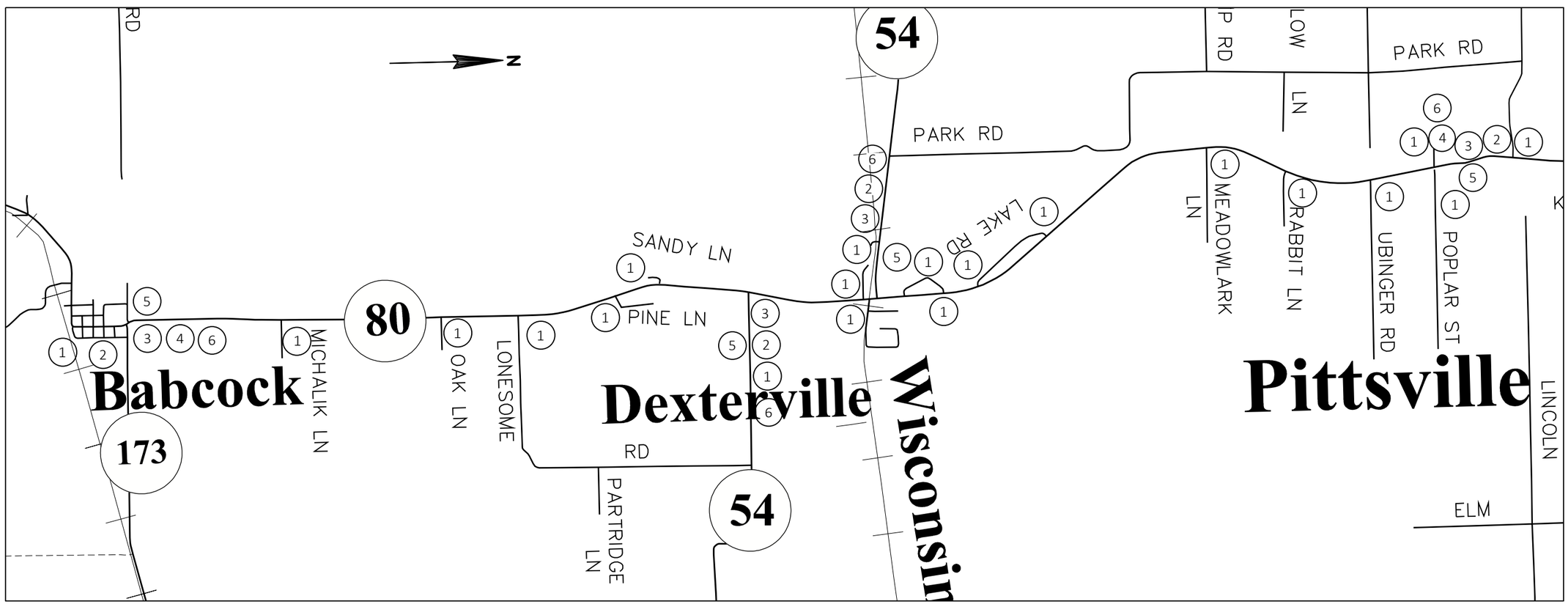

Estimate Of Quantities By Plan Sets

1620-00-63

Line	Item	Item Description	Unit	Total	Qty
0002	201.0105	Clearing	STA	2.000	2.000
0004	201.0205	Grubbing	STA	2.000	2.000
0006	203.0100	Removing Small Pipe Culverts	EACH	2.000	2.000
0020	204.9060.S	Removing (item description) 01. Apron Endwall	EACH	6.000	6.000
0022	205.0100	Excavation Common	CY	74.000	74.000
0028	213.0100	Finishing Roadway (project) 01. 1620-00-63	EACH	1.000	1.000
0032	305.0110	Base Aggregate Dense 3/4-Inch	TON	36.000	36.000
0034	305.0120	Base Aggregate Dense 1 1/4-Inch	TON	169.000	169.000
0048	465.0105	Asphaltic Surface	TON	50.000	50.000
0056	520.1030	Apron Endwalls for Culvert Pipe 30-Inch	EACH	2.000	2.000
0058	520.1036	Apron Endwalls for Culvert Pipe 36-Inch	EACH	4.000	4.000
0060	522.0424	Culvert Pipe Reinforced Concrete Class IV 24-Inch	LF	104.000	104.000
0062	522.1024	Apron Endwalls for Culvert Pipe Reinforced Concrete 24-Inch	EACH	4.000	4.000
0066	606.0200	Riprap Medium	CY	89.000	89.000
0068	606.0300	Riprap Heavy	CY	36.000	36.000
0084	618.0100	Maintenance And Repair of Haul Roads (project) 01. 1620-00-63	EACH	1.000	1.000
0088	619.1000	Mobilization	EACH	0.070	0.070
0094	624.0100	Water	MGAL	12.000	12.000
0096	625.0100	Topsoil	SY	467.000	467.000
0098	627.0200	Mulching	SY	200.000	200.000
0100	628.1504	Silt Fence	LF	300.000	300.000
0102	628.1520	Silt Fence Maintenance	LF	1,255.000	1,255.000
0104	628.1905	Mobilizations Erosion Control	EACH	1.000	1.000
0106	628.1910	Mobilizations Emergency Erosion Control	EACH	1.000	1.000
0108	628.2008	Erosion Mat Urban Class I Type B	SY	137.000	137.000
0112	628.7504	Temporary Ditch Checks	LF	30.000	30.000
0114	628.7555	Culvert Pipe Checks	EACH	33.000	33.000
0118	629.0210	Fertilizer Type B	CWT	0.300	0.300
0120	630.0171	Seeding Mixture No. 70A	LB	9.000	9.000
0122	633.5200	Markers Culvert End	EACH	10.000	10.000
0140	642.5001	Field Office Type B	EACH	1.000	1.000
0142	643.0300	Traffic Control Drums	DAY	220.000	220.000
0144	643.0310.S	Temporary Portable Rumble Strips 01. 1620-00-63	LS	1.000	1.000
0148	643.0900	Traffic Control Signs	DAY	590.000	590.000
0150	643.1000	Traffic Control Signs Fixed Message	SF	128.000	128.000
0152	643.5000	Traffic Control	EACH	0.070	0.070
0154	645.0120	Geotextile Type HR	SY	250.000	250.000
0172	649.0105	Temporary Marking Line Paint 4-Inch	LF	65.000	65.000

1620-00-63

Line	Item	Item Description	Unit	Total	Qty
0174	650.4500	Construction Staking Subgrade	LF	44.000	44.000
0176	650.5000	Construction Staking Base	LF	44.000	44.000
0180	650.6000	Construction Staking Pipe Culverts	EACH	2.000	2.000
0184	650.9910	Construction Staking Supplemental Control (project) 01. 1620-00-63	LS	1.000	1.000
0190	690.0150	Sawing Asphalt	LF	148.000	148.000
0194	ASP.1T0A	On-the-Job Training Apprentice at $5.00/HR	HRS	2,000.000	2,000.000
0196	ASP.1T0G	On-the-Job Training Graduate at $5.00/HR	HRS	1,260.000	1,260.000
0198	SPV.0060	Special 01. Lane Shift	EACH	2.000	2.000
0200	SPV.0060	Special 02. Grading and Shaping Apron Endwalls	EACH	6.000	6.000
0204	SPV.0090	Special 01. Heavy Duty Silt Fence	LF	930.000	930.000

3

CLEARING AND GRUBBING

CATEGORY	STATION	LOCATION	201.0105 CLEARING STA	201.0205 GRUBBING STA
0010	1344+75	PINE DR. R/W	1	1
	1468+98	LT	1	1
TOTAL PROJECT 1620-00-63			2	2

REMOVING SMALL PIPE CULVERTS

CATEGORY	STATION	LOCATION	203.0100 REMOVING SMALL PIPE CULVERTS EACH	204.9060.S.01 REMOVING APRON ENDWALL EACH	LF	REMARKS
0010	1196+96	CROSS DRAIN	---	2	---	36" CMP
	1217+83	CROSS DRAIN	---	2	---	36" CMP
	11+05'54E'	CROSS DRAIN	1	---	64	24" CMP
	1341+90	CROSS DRAIN	1	---	58	24" CMP
	1468+98	CROSS DRAIN	---	2	---	30" CMP
TOTAL PROJECT 1620-00-63			2	6		

COMMON EXCAVATION

CATEGORY	STATION - STATION	LOCATION	205.0100 EXCAVATION COMMON CY
0010	11+05'54E'	PIPE	17
	1341+90	PIPE	57
TOTAL PROJECT 1620-00-63			74

BASE AGGREGATE ITEMS

CATEGORY	STATION - STATION		305.0110 BASE AGGREGATE DENSE 3/4-INCH TON	305.0120 BASE AGGREGATE DENSE 1 1/4-INCH TON	624.0100 WATER MGAL	650.5000 CONSTRUCTION STAKING BASE LF
0010	10+97'54E' - 11+12'54E'	PIPE	5	39	---	15
	1341+75 - 1342+04	PIPE	25	102	---	29
	UNDISTRIBUTED		6	28	12	---
TOTAL PROJECT 1620-00-63			36	169	12	44

3

ASPHALT PAVEMENT ITEMS

CATEGORY	STATION - STATION	LOCATION	THICKNESS INCHES	465.0105 ASPHALTIC SURFACE TON
0010	10+97'54E' - 11+12'54E'	MAINLINE	5.25	22
	1341+75 - 1342+04	MAINLINE	5.25	28
TOTAL PROJECT 1620-00-63				50

CULVERT SUMMARY

CATEGORY	STATION	LOCATION	INVERT ELEV.	522.0424* CULVERT PIPE REINFORCED CONCRETE CLASS IV 24-INCH LF	520.1030 APRON ENDWALLS FOR CULVERT PIPE 30-INCH EACH	520.1036 APRON ENDWALLS FOR CULVERT PIPE 36-INCH EACH	522.1024 APRON ENDWALLS FOR CULVERT PIPE REINFORCED CONCRETE 24-INCH EACH	633.5200 MARKERS CULVERT END EACH	650.6000 CONSTRUCTION STAKING PIPE CULVERTS EACH	SPV.0060.02 GRADING AND SHAPING APRON ENDWALLS EACH
0010	1196+98	41.0' RT	---	---	---	1	---	1	---	1
	1196+94	49.9' LT	---	---	---	1	---	1	---	1
	1217+84	39.7' RT	---	---	---	1	---	1	---	1
	1217+81	41.5' LT	---	---	---	1	---	1	---	1
	11+09'54E'	32.76' LT	986.43	52	---	---	1	1	1	---
	11+02'54E'	21.97' RT	986.43	---	---	---	1	1	---	---
	1341+90	25.99' RT	991.16	52	---	---	1	1	1	---
	1341+89	25.26' LT	990.73	---	---	---	1	1	---	---
	1468+96	32.9' RT	---	---	1	---	---	1	---	1
	1468+99	44.0' LT	---	---	1	---	---	1	---	1
TOTAL PROJECT 1620-00-63				104	2	4	4	10	2	6

*NOTE: TIE ALL SECTIONS OF PIPE AND APRON ENDWALL.

3

RIPRAP

CATEGORY	STATION	LOCATION	606.0200 RIPRAP MEDIUM CY	606.0300 RIPRAP HEAVY CY	645.0120 GEOTEXTILE TYPE HR SY	REMARKS
0010	1468+98	LT	74	30	208	FILL SCOUR HOLE, APPROX. 4' DEEP
	UNDISTRIBUTED	---	15	6	42	
TOTAL PROJECT 1620-00-63			89	36	250	

RESTORATION ITEMS

CATEGORY	STATION - STATION	LOCATION	625.0100 TOPSOIL SY	627.0200 MULCHING SY	629.0210 FERTILIZER TYPE B CWT	630.0171 SEEDING MIXTURE NO. 70A LB
0010	1196+98	RT	39	17	0.02	1
	1196+94	LT	39	17	0.02	1
	1217+84	RT	39	17	0.02	1
	1217+81	LT	39	17	0.02	1
	11+09'54E'	LT	39	17	0.02	1
	11+02'54E'	RT	39	17	0.02	1
	1341+90	RT	39	17	0.02	1
	1341+89	LT	39	17	0.02	1
	1468+96	RT	39	17	0.02	1
	1468+99	LT	39	17	0.02	1
	UNDISTRIBUTED		78	33	0.05	1
	TOTAL PROJECT 1620-00-63		467	200	0.3	9

SILT FENCE

CATEGORY	STATION - STATION	LOCATION	628.1504 SILT FENCE LF	628.1520 SILT FENCE MAINTENANCE LF	SPV.0090.01 HEAVY DUTY SILT FENCE LF
0010	TURTLE TURN-AROUND	RT OR LT	100	100	—
	1196+96	RT & LT	—	170	170
	1217+83	RT & LT	—	125	125
	11+05'54E'	RT & LT	—	140	140
	1341+90	RT & LT	—	130	130
	1468+98	RT & LT	—	210	210
	UNDISTRIBUTED	RT & LT	200	380	155
	TOTAL PROJECT 1620-00-63		300	1,255	930

EROSION CONTROL ITEMS

CATEGORY	STATION - STATION	LOCATION	628.2008 EROSION MAT URBAN CLASS I TYPE B SY	628.7504 TEMPORARY DITCH CHECKS LF	628.7555 CULVERT PIPE CHECKS EACH
0010	1196+98	41.0' RT	16	—	7
	1196+94	49.9' LT	16	—	—
	1217+84	39.7' RT	16	—	7
	1217+81	41.5' LT	16	—	—
	11+09'54E'	32.76' LT	9	—	3
	11+02'54E'	21.97' RT	9	—	—
	1341+90	25.99' RT	9	—	3
	1341+89	25.26' LT	9	—	—
	1468+96	32.9' RT	12	—	5
	UNDISTRIBUTED		23	30	8
	TOTAL PROJECT 1620-00-63		137	30	33

TRAFFIC CONTROL ITEMS

CATEGORY	STATION	LOCATION	DAYS	TRAFFIC CONTROL DRUMS EACH	643.0300 TRAFFIC CONTROL DRUMS DAYS	643.0310.S.01 (1620-00-63) TEMPORARY PORTABLE RUMBLE STRIPS LS
0010	11+05'54E'	LANE SHIFT	2	30	60	—
	1341+90	LANE SHIFT	2	30	60	—
	UNDISTRIBUTED		5	20	100	1
	TOTAL PROJECT 1620-00-63				220	1

3

TRAFFIC CONTROL SIGNS

CATEGORY	LOCATION	DAYS	TRAFFIC CONTROL SIGNS EACH	643.0900 TRAFFIC CONTROL SIGNS DAY	643.1000 TRAFFIC CONTROL SIGNS FIXED MESSAGE SF	REMARKS
0010	BEGINNING OF PROJECT STH 80 1620-00-63	17	5	85	—	—
	MICHALIK LN	17	1	17	—	—
	OAK LN	17	1	17	—	—
	LONESOME RD	17	1	17	—	—
	PINE LN	17	1	17	—	—
	SANDY LN	17	1	17	—	—
	STH 54	17	4	68	—	—
	RIVER LN	17	1	17	—	—
	PINE DR	17	1	17	—	—
	STH 54	17	4	68	—	—
	TOWN HALL RD	17	2	34	—	—
	LAKE RD	17	2	34	—	—
	MEADOW LARK LN	17	1	17	—	—
	RABBIT LN	17	1	17	—	—
	UBINGER LANE	17	1	17	—	—
	POPLAR ST	17	2	34	—	—
	END OF PROJECT STH 80 1620-00-63	17	5	85	—	—
	TEMP. SIGNING AT CULVERT	3	4	12	—	—
	ADVANCE WARNING PROJECT ENDS (G20-57)	7	—	—	64	G20-57
	STH 54 ADVANCE WARNING EAST & WEST	7	—	—	64	G20-57
	TOTAL PROJECT 1620-00-63			590	128	

PAVEMENT MARKING

CATEGORY	STATION - STATION	LOCATION	649.0105 TEMPORARY MARKING LINE PAINT 4-INCH YELLOW LF
	10+90'54E' - 11+15'54E'	PIPE REPLACEMENT	25
	1341+70 - 1342+10	PIPE REPLACEMENT	40
	TOTAL PROJECT 1620-00-63		65

3

CONSTRUCTION STAKING

CATEGORY	STATION - STATION	650.4500 CONSTRUCTION STAKING SUBGRADE LF
0010	10+97'54E' - 11+12'54E'	15
	1341+75 - 1342+04	29
	TOTAL PROJECT 1620-00-63	44

SAWING PAVEMENT

CATEGORY	STATION	LOCATION	690.0150 SAWING ASPHALT LF
0010	10+97'54E'	MAINLINE	50
	11+12'54E'	MAINLINE	38
	1341+75	MAINLINE	30
	1342+04	MAINLINE	30
	TOTAL PROJECT 1620-00-63		148

LANE SHIFT

CATEGORY	STATION	LOCATION	SPV.0060.01 LANE SHIFT EACH
0010	11+05'54E'	PIPE REPLACEMENT	1
	1341+90	PIPE REPLACEMENT	1
	TOTAL PROJECT 1620-00-63		2

3

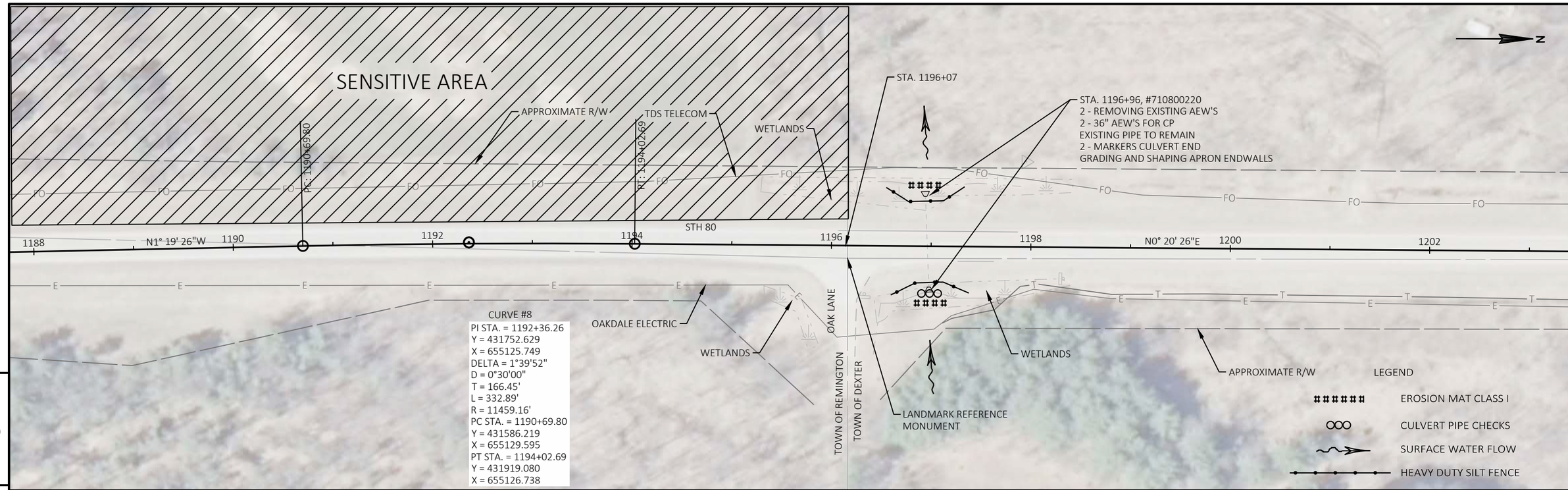

CURVE #8
PI STA. = 1192+36.26
Y = 431752.629
X = 655125.749
DELTA = 1°39'52"
D = 0°30'00"
T = 166.45'
L = 332.89'
R = 11459.16'
PC STA. = 1190+69.80
Y = 431586.219
X = 655129.595
PT STA. = 1194+02.69
Y = 431919.080
X = 655126.738

5

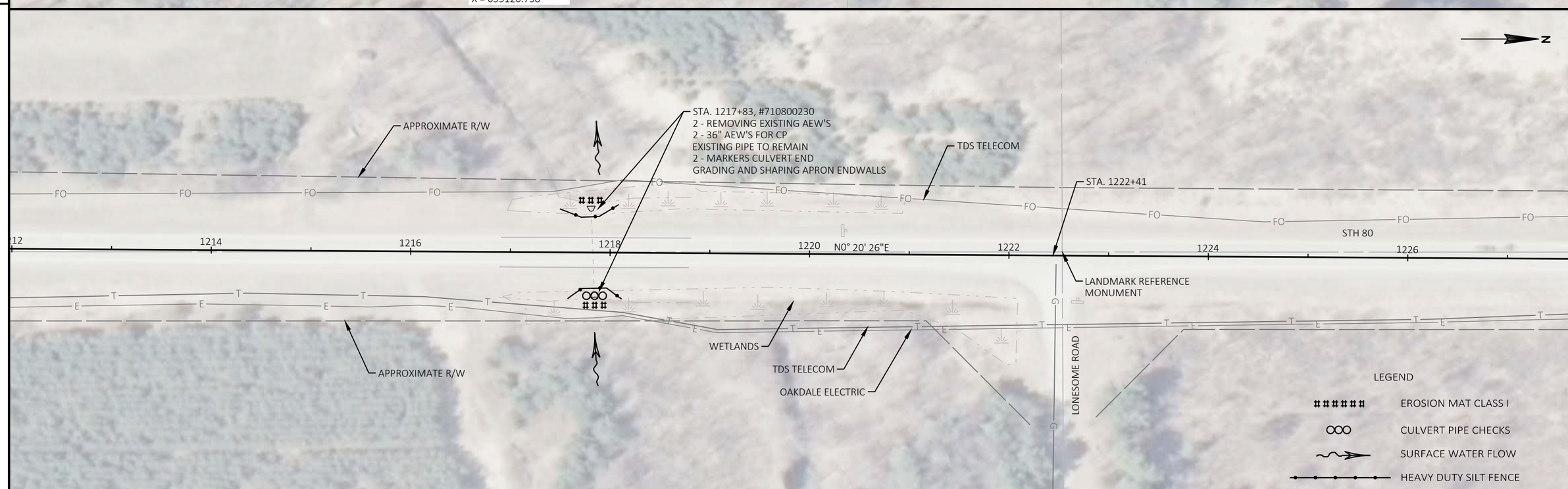

5

PROJECT NO: 1620-00-63	HWY: STH 80	COUNTY: WOOD	PLAN - SHEET 1 OF 3	SHEET 16	E

LEGEND

EROSION MAT CLASS I

CULVERT PIPE CHECKS

SURFACE WATER FLOW

HEAVY DUTY SILT FENCE

N

APPROXIMATE R/W

PC: 1297+92.77

TDS TELECOM

PT: 1303+08.25

10+00.00'54E'=
1303+00.18

WETLANDS

EXISTING PIPE TO REMAIN

1292 1294 1296 1298 1300 1302 1304 1306

N5° 42' 47"E

N12° 09' 23"E

STH 80

DO NOT DISTURB
EXISTING FLUME

EXCAVATION AREA

TDS TELECOM

OAKDALE ELECTRIC

APPROXIMATE R/W

CURVE #11
PI STA. = 1300+50.78
Y = 442429.949
X = 654495.114
DELTA = 6°26'37"
D = 1°15'00"
T = 258.01'
L = 515.48'
R = 4583.66'
PC STA. = 1297+92.77
Y = 442173.219
X = 654469.431
PT STA. = 1303+08.25
Y = 442682.175
X = 654549.447

CP 1003

N89° 46' 27"E

12°54'E

STH 54 EAST

STA. 11+04.67'54E', #710540310
REMOVE EXISTING PIPE
1 - 24" CPRC CL IV @ 0.00%, SKEW 6.7° LHF
2 - RC AEW'S FOR CPRC
2 - MARKERS CULVERT END
INV (I) = 986.43
INV (E) = 986.43

5

5

CONTROL POINTS			
NO.	STATION	ELEV.	DESCRIPTION
10003	1304+14, RT 121.6'	989.31	3/4" IRON ROD

LEGEND

NATURAL RESOURCE
PROTECTION AREA

LEGEND

EROSION MAT CLASS I

CULVERT PIPE CHECKS

SURFACE WATER FLOW

HEAVY DUTY SILT FENCE

N

BP: 10+00.00'54W'

STH 54 WEST

STA. 1342+79

CP 10004

RIVER LANE

WISCONSIN CENTRAL LTD

PI: 1343+67.87

PI: 1346+00.02

TDS TELECOM

N86° 24' 39"E

APPROXIMATE R/W

STA. 1344+87

12°54'W

1336 1338 1340 1342 1344 1346 1348 1350

N3° 13' 54"W

STH 80

12+25.17'54W'=
1347+49.89

STA. 1341+90, #710540240
REMOVE EXISTING PIPE
1 - 24" CPRC CL IV @0.83%
2 - RC AEW'S FOR CPRC
2 - MARKERS CULVERT END
INV (I) = 991.16
INV (E) = 990.73

EXCAVATION AREA

PINE DRIVE

STA. 1344+28, #710540270
WORK BY OTHERS
INV (I) = 986.90
INV (E) = 986.65

TDS TELECOM

APPROXIMATE R/W

EXISTING GEODETIC
SURVEY CONTROL
STATION ON CURB - DO
NOT REPLACE

OAKDALE ELECTRIC

94' RR
EXISTING R/W

CP 10005

CLEARING AND GRUBBING
WITHIN EXISTING R/W OF PINE DR.

WETLANDS

CONTROL POINTS			
NO.	STATION	ELEV.	DESCRIPTION
10004	1342+34, LT 68.5'	992.17	3/4" IRON ROD
10005	1344+51, RT 76.9'	992.62	3/4" IRON ROD

PROJECT NO: 1620-00-63	HWY: STH 80	COUNTY: WOOD	PLAN - SHEET 2 OF 3	SHEET 17	E

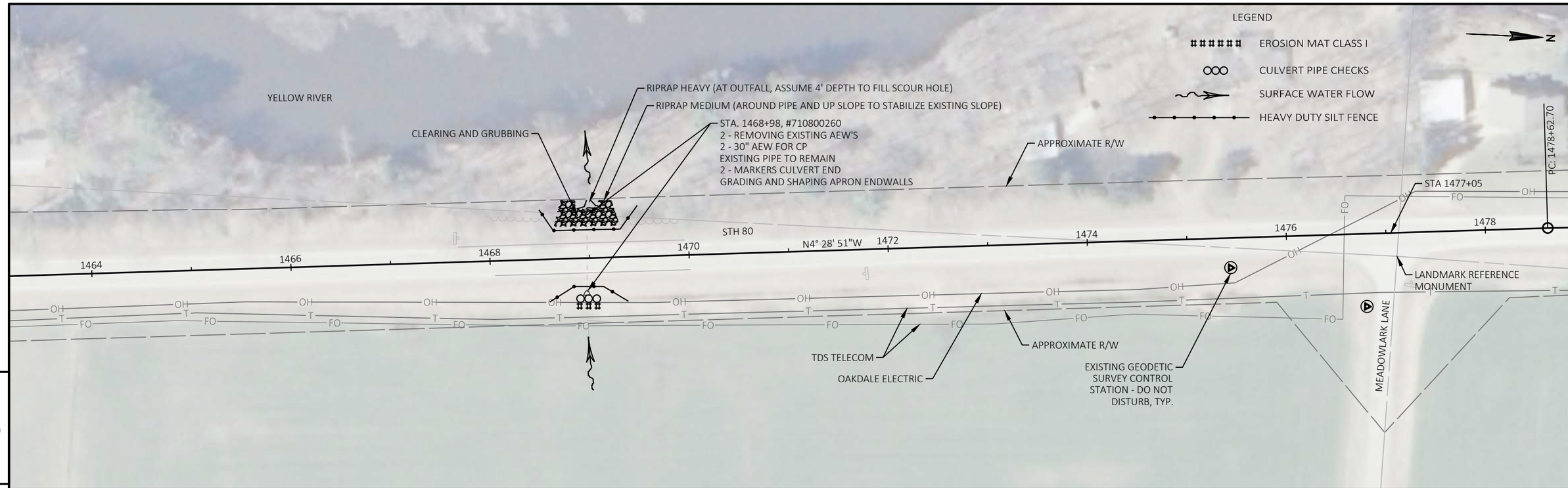

5

5

PROJECT NO: 1620-00-63	HWY: STH 80	COUNTY: WOOD	PLAN - SHEET 3 OF 3	SHEET 18	E

FILE NAME : P:\90S\93\00093433\CADD\SHEETSPLAN\050201_PN.DWG
LAYOUT NAME - 14
PLOT DATE : 5/22/2019 12:19 PM
PLOT BY : BOBBI MAXWELL
PLOT NAME :
PLOT SCALE : 1 IN: 100 FT

Standard Detail Drawing List

08E08-03	TYPICAL INSTALLATIONS OF EROSION BALES / TEMPORARY DITCH CHECKS
08E09-06	SILT FENCE
08F01-11	APRON ENDWALLS FOR CULVERT PIPE
08F04-07	JOINT TIES FOR CONCRETE PIPE AND CONCRETE COLLAR DETAIL
15A03-02A	FLEXIBLE MARKER POST FOR CULVERT END
15A03-02B	FLEXIBLE MARKER POST FOR CULVERT END
15C04-05	TRAFFIC CONTROL, ADVANCE WARNING SIGNS 45 M.P.H. OR GREATER TWO-WAY UNDIVIDED ROAD OPEN TO TRAFFIC
15C08-19A	LONGITUDINAL MARKING (MAINLINE)
15C09-11A	SIGNING AND PAVEMENT MARKING DETAILS FOR RAILROAD-HIGHWAY GRADE CROSSINGS
15C11-07B	CHANNELIZING DEVICES DRUMS, CONES, BARRICADES AND VERTICAL PANELS
15C12-06	TRAFFIC CONTROL FOR LANE CLOSURE WITH FLAGGING OPERATION
15D12-07A	TRAFFIC CONTROL, LANE CLOSURE
15D27-03	TRAFFIC CONTROL, SHOULDER CLOSURE ON DIVIDED ROADWAY, SPEEDS GREATER THAN 40 MPH
15D28-03	TRAFFIC CONTROL, WORK ON SHOULDER OR PARKING LANE, UNDIVIDED ROADWAY
15D38-02A	TEMPORARY TRAFFIC CONTROL SIGN MOUNTING
15D38-02B	ATTACHMENT OF SIGNS TO POSTS

6

6

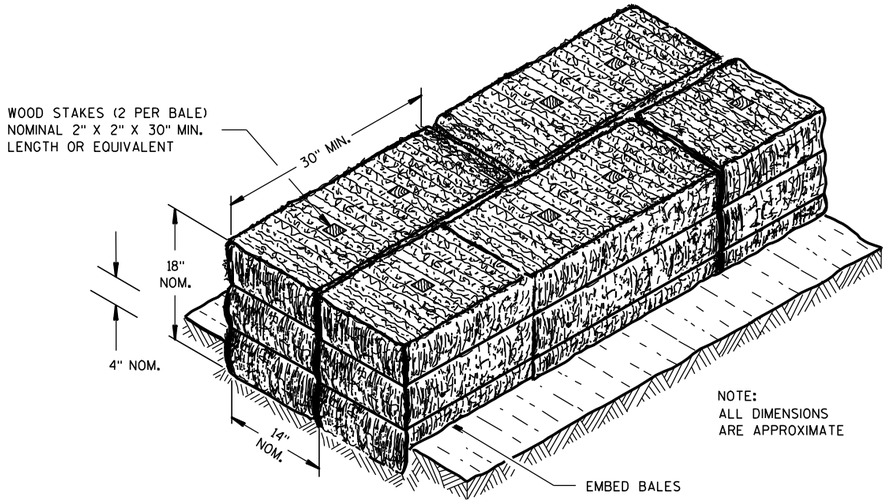

SECTION A-A

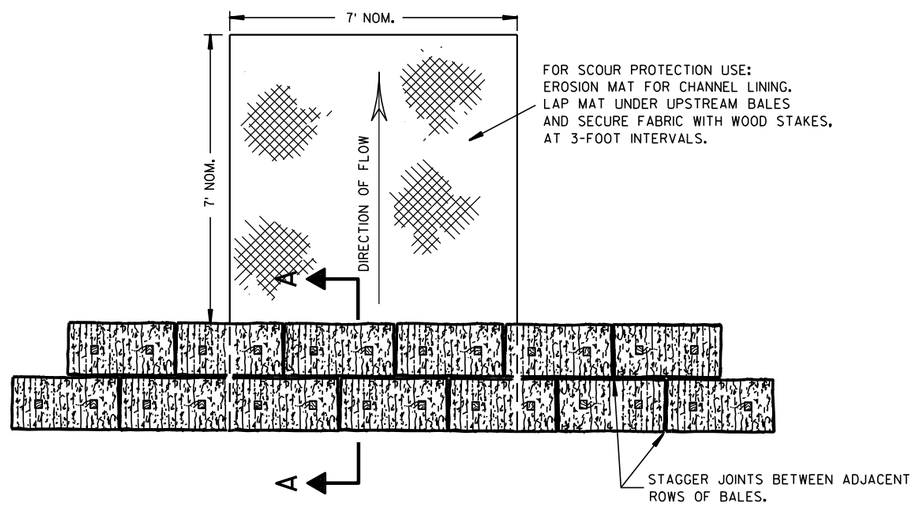

PLAN VIEW

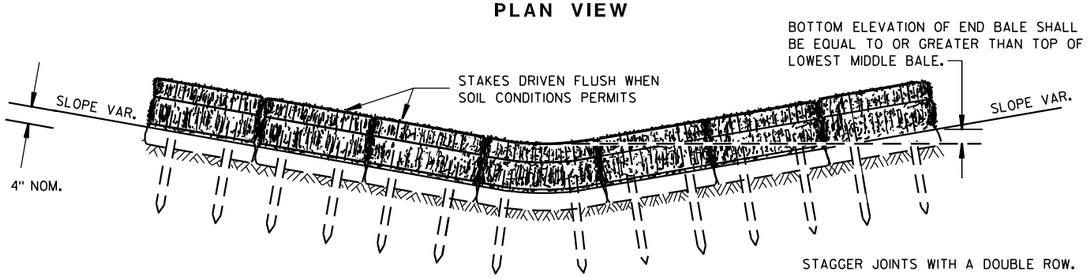

FRONT ELEVATION

TEMPORARY DITCH CHECK USING EROSION BALES ①

GENERAL NOTES

DETAILS OF CONSTRUCTION, MATERIALS AND WORKMANSHIP NOT SHOWN ON THIS DRAWING SHALL CONFORM TO THE PERTINENT REQUIREMENTS OF THE STANDARD SPECIFICATIONS AND THE APPLICABLE SPECIAL PROVISIONS.

① TEMPORARY DITCH CHECKS EITHER EROSION BALES OR MANUFACTURED SHALL BE PAID FOR UNDER THE BID ITEM OF TEMPORARY DITCH CHECK. THE DEPARTMENT WILL NOT PAY FOR TEMPORARY DITCH CHECKS CONSTRUCTED OF A SINGLE ROW OF EROSION BALES.

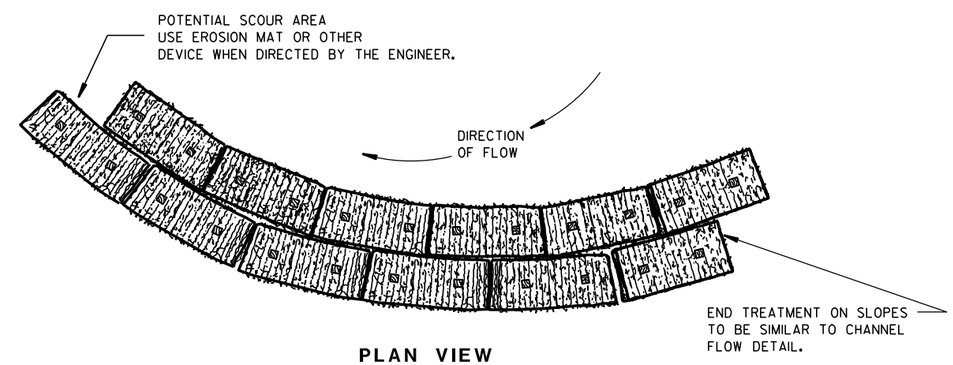

PLAN VIEW

WHEN ALTERING THE DIRECTION OF FLOW

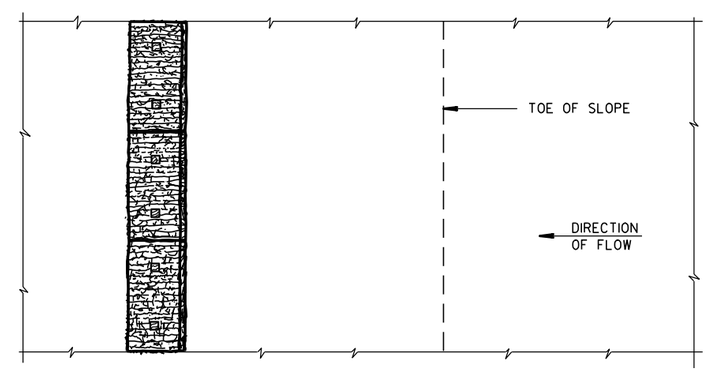

PLAN VIEW

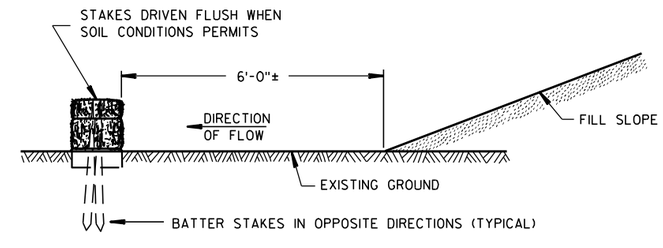

FRONT ELEVATION

WHEN EXISTING GROUND SLOPES AWAY FROM FILL SLOPE

EROSION BALES FOR SHEET FLOW

TYPICAL INSTALLATIONS OF EROSION BALES / TEMPORARY DITCH CHECKS

STATE OF WISCONSIN
DEPARTMENT OF TRANSPORTATION

APPROVED
6/04/02 — DATE
/S/ Beth Cann — CHIEF ROADWAY DEVELOPMENT ENGINEER
FHWA

6

6

S.D.D. 8 E 8-3

S.D.D. 8 E 8-3

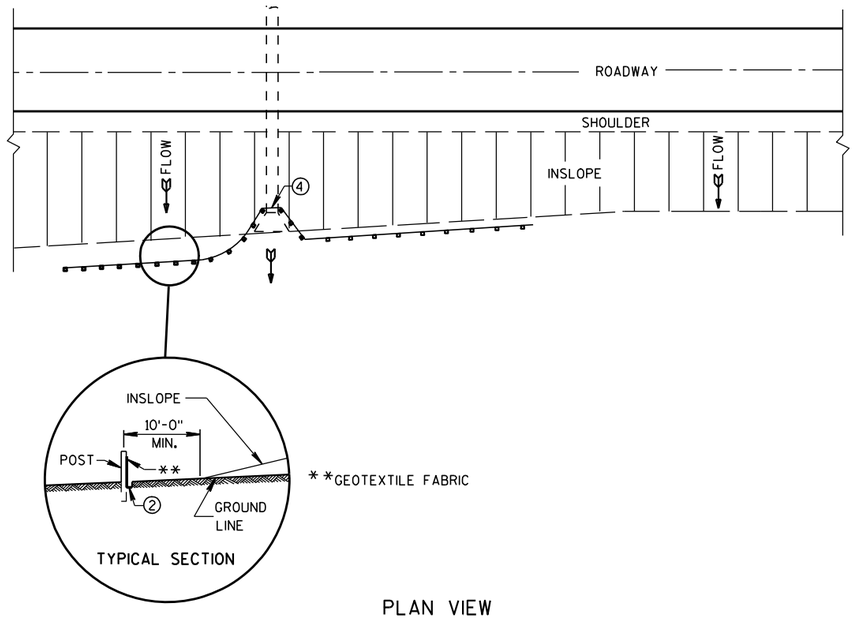

PLAN VIEW

TYPICAL APPLICATION OF SILT FENCE

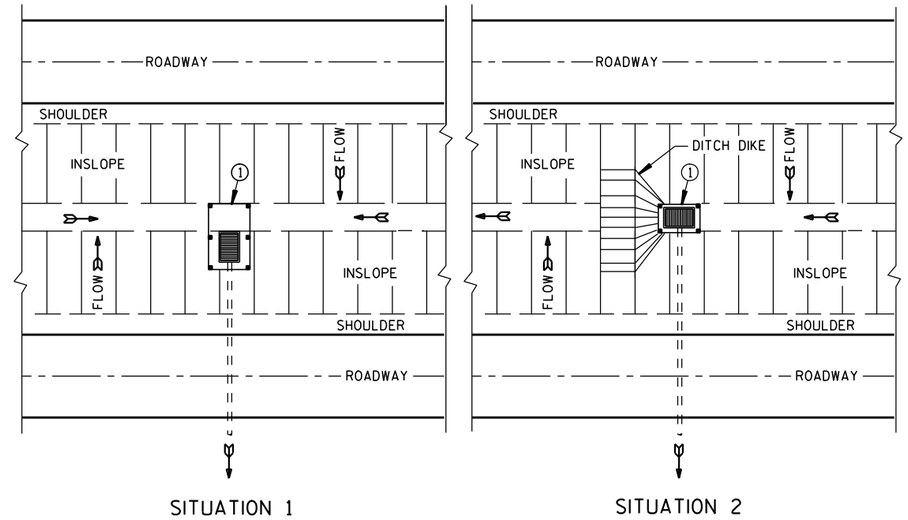

PLAN VIEW

SILT FENCE AT MEDIAN SURFACE DRAINS

GENERAL NOTES

DETAILS OF CONSTRUCTION NOT SHOWN ON THIS DRAWING SHALL CONFORM TO THE PERTINENT REQUIREMENTS OF THE STANDARD SPECIFICATIONS AND APPLICABLE SPECIAL PROVISIONS.

① HORIZONTAL BRACE REQUIRED WITH 2" X 4" WOODEN FRAME OR EQUIVALENT AT TOP OF POSTS.

② FOR MANUAL INSTALLATIONS THE TRENCH SHALL BE A MINIMUM OF 4" WIDE & 6" DEEP TO BURY AND ANCHOR THE GEOTEXTILE FABRIC. FOLD MATERIAL TO FIT TRENCH AND BACKFILL & COMPACT TRENCH WITH EXCAVATED SOIL.

③ WOOD POSTS SHALL BE A MINIMUM SIZE OF 1⅛" X 1⅛" OF OAK OR HICKORY.

④ SILT FENCE TO EXTEND ACROSS THE TOP OF THE PIPE.

⑤ CONSTRUCT SILT FENCE FROM A CONTINUOUS ROLL IF POSSIBLE BY CUTTING LENGTHS TO AVOID JOINTS. IF A JOINT IS NECESSARY USE ONE OF THE FOLLOWING TWO METHODS; A) OVERLAP THE END POSTS AND TWIST, OR ROTATE, AT LEAST 180 DEGREES. B) HOOK THE END OF EACH SILT FENCE LENGTH.

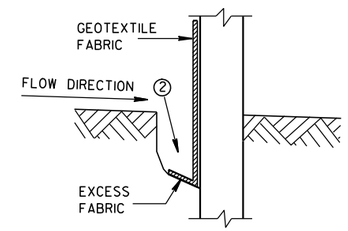

TRENCH DETAIL

NOTE: ADDITIONAL POST DEPTH OR TIE BACKS MAY BE REQUIRED IN UNSTABLE SOILS

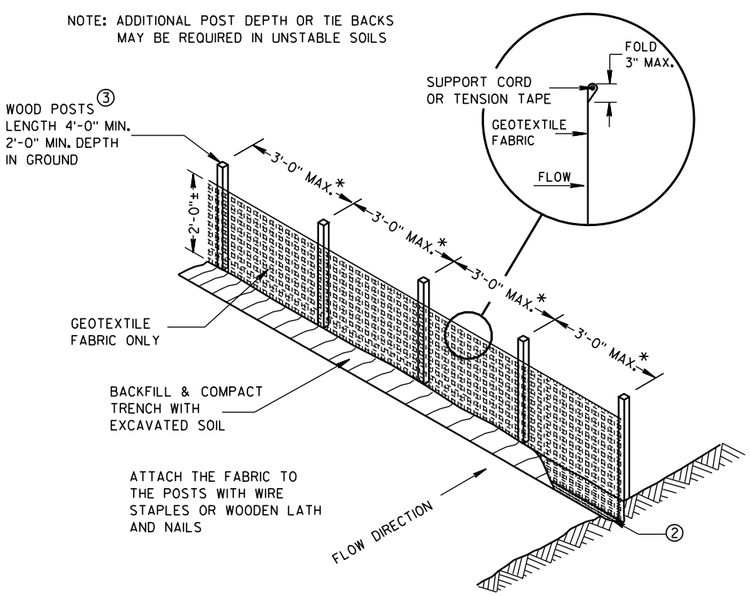

*NOTE: 8'-0" POST SPACING ALLOWED IF A WOVEN GEOTEXTILE FABRIC IS USED.

SILT FENCE

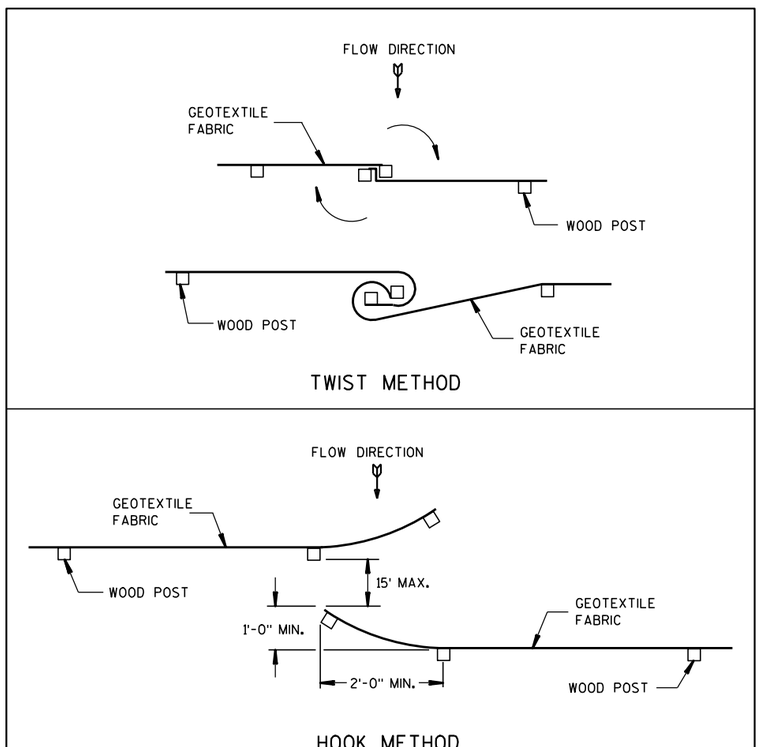

JOINING TWO LENGTHS OF SILT FENCE ⑤

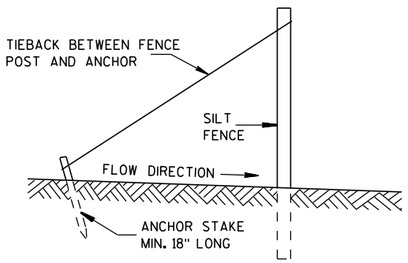

SILT FENCE TIE BACK

(WHEN REQUIRED BY THE ENGINEER)

SILT FENCE
STATE OF WISCONSIN DEPARTMENT OF TRANSPORTATION
APPROVED 4-29-05 /S/ Beth Cann----- DATE CHIEF ROADWAY DEVELOP ENGINEER FHWA

6

6

S.D.D. 8 E 9-6

S.D.D. 8 E 9-6

METAL APRON ENDWALLS

PIPE DIA. (IN.)	MIN. THICK. (Inches) STEEL	MIN. THICK. (Inches) ALUM.	DIMENSIONS (Inches) A (±1")	B (MAX.)	H (±1")	L (±1 1/2")	L1 ①	L2 ①	W (±2")	APPROX. SLOPE	BODY
12	.064	.060	6	6	6	21	12	17 1/2	24	2 1/2 to 1	1 Pc.
15	.064	.060	7	8	6	26	14	21 3/4	30	2 1/2 to 1	1 Pc.
18	.064	.060	8	10	6	31	15	28 1/4	36	2 1/2 to 1	1 Pc.
21	.064	.060	9	12	6	36	18	29 5/8	42	2 1/2 to 1	1 Pc.
24	.064	.075	10	13	6	41	18	37 1/4	48	2 1/2 to 1	1 Pc.
30	.079	.075	12	16	8	51	18	52 1/4	60	2 1/2 to 1	1 Pc.
36	.079	.105	14	19	9	60	24	59 3/4	72	2 1/2 to 1	2 Pc.
42	.109	.105	16	22	11	69	24	75 5/8	84	2 1/2 to 1	2 Pc.
48	.109	.105	18	27	12	78	24	81	90	2 1/4 to 1	3 Pc.
54	.109	.105	18	30	12	84	30	85 1/2	102	2 1/4 to 1	3 Pc.
60	.109×	.105×	18	33	12	87	—	—	114	2 to 1	3 Pc.
66	.109×	.105×	18	36	12	87	—	—	120	2 to 1	3 Pc.
72	.109×	.105×	18	39	12	87	—	—	126	2 to 1	3 Pc.
78	.109×	.105×	18	42	12	87	—	—	132	1 1/2 to 1	3 Pc.
84	.109×	.105×	18	45	12	87	—	—	138	1 1/2 to 1	3 Pc.
90	.109×	.105×	18	37	12	87	—	—	144	1 1/2 to 1	3 Pc.
96	.109×	.105×	18	35	12	87	—	—	150	1 1/2 to 1	3 Pc.

× EXCEPT CENTER PANEL
SEE GENERAL NOTES

REINFORCED CONCRETE APRON ENDWALLS

PIPE DIA. (IN.)	DIMENSIONS (Inches) T	A	B	C	D	E	G	APPROX. SLOPE
12	2	4	24	48 7/8	72 7/8	24	2	3 to 1
15	2 1/4	6	27	46	73	30	2 1/4	3 to 1
18	2 1/2	9	27	46	73	36	2 1/2	3 to 1
21	2 3/4	9	36	37 1/2	73 1/2	42	2 3/4	3 to 1
24	3	9 1/2	43 1/2	30	73 1/2	48	3	3 to 1
27	3 1/4	10 1/2	49 1/2	24	73 1/2	54	3 1/4	3 to 1
30	3 1/2	12	54	19 3/4	73 1/2	60	3 1/2	3 to 1
36	4	15	63	34 3/4	97 3/4	72	4	3 to 1
42	4 1/2	21	63	35	98	78	4 1/2	3 to 1
48	5	24	72	26	98	84	5	3 to 1
54	5 1/2	27	65	*33 1/4-**35	*98 1/4-**100	90	5 1/2	2 2/5 to 1
60	6	*30-**35	60	39	99	96	5	2 to 1
66	6 1/2	*24-**30	*72-**78	*21-**27	99	102	5 1/2	2 to 1
72	7	*24-**36	78	21	99	108	6	2 to 1
78	7 1/2	*24-**36	78	21	99	114	6 1/2	2 to 1
84	8	36	90 1/2	21	111 1/2	120	6 1/2	1 1/2 to 1
90	8 1/2	41	87 1/2	24	111 1/2	132	6 1/2	1 1/2 to 1

*MINIMUM
**MAXIMUM

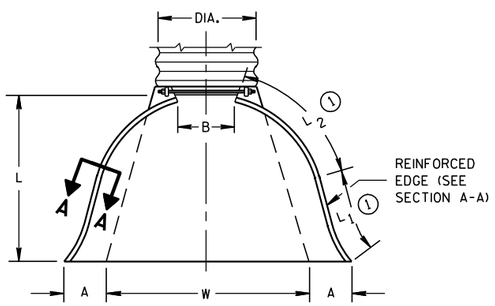

PLAN VIEW

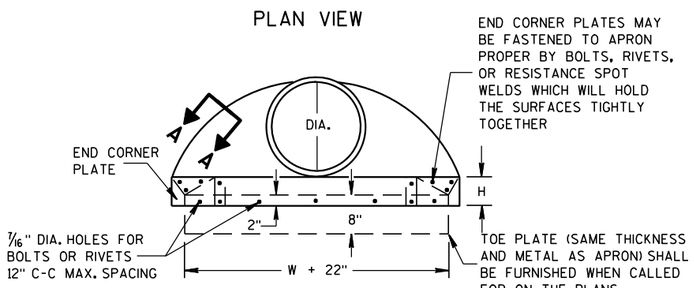

END VIEW

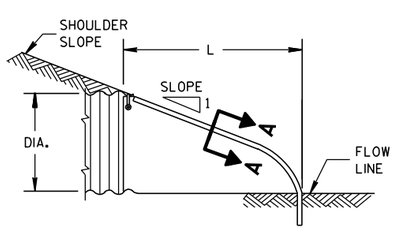

SIDE ELEVATION

METAL ENDWALLS

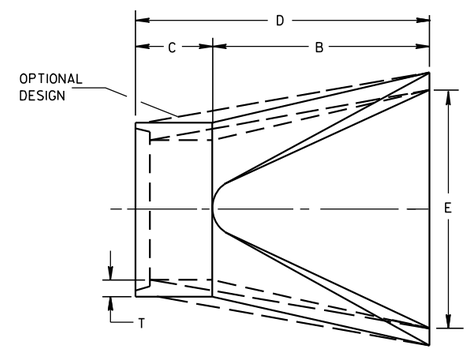

PLAN

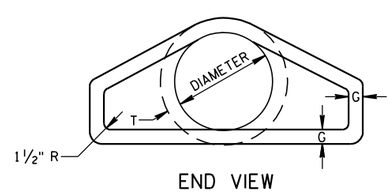

END VIEW

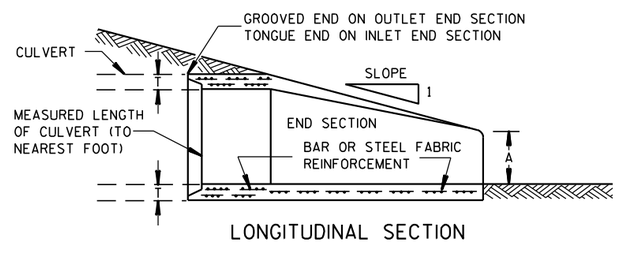

LONGITUDINAL SECTION

CONCRETE ENDWALLS

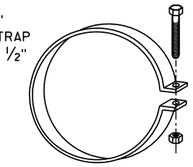

ALTERNATE FOR TYPE 1 CONNECTION

END SECTION CONNECTOR STRAP

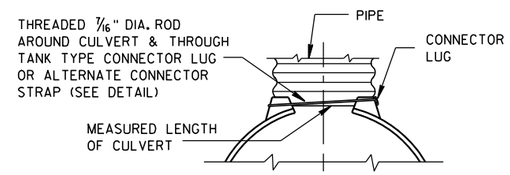

TYPE 1
FOR 12" THRU 24" CORR. PIPE

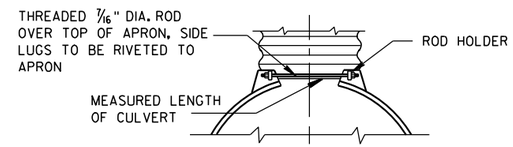

TYPE 2
FOR 30" THRU 96" CORR. PIPE

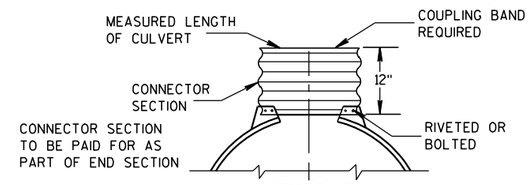

TYPE 3
FOR 42" THRU 96" CORR. PIPE

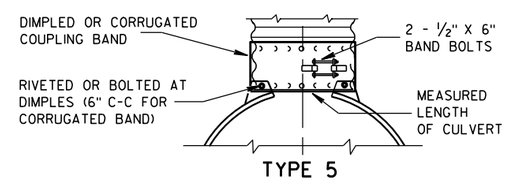

TYPE 5
ALTERNATE FOR:
ALL SIZES CORRUGATED CIRCULAR PIPE

NOTE: DIMPLED BAND FITS OVER OUTSIDE OF ENDWALL, AND CORRUGATED BAND FITS INSIDE ENDWALL. DIMPLED BAND MAY BE USED WITH HELICALLY CORRUGATED PIPE.

FOR CIRCUMFERENTIALLY CORRUGATED PIPE USE ENDWALL CONNECTION DETAILS 1, 2, 3 OR 5 AS APPLICABLE.

FOR HELICALLY CORRUGATED PIPE USE ENDWALL CONNECTION DETAILS 1, 2 OR 5.

FOR HELICALLY CORRUGATED PIPES WITH TWO CIRCUMFERENTIAL CORRUGATIONS AT EACH END USE ENDWALL CONNECTION DETAILS 1, 2 OR 3.

CONNECTION DETAILS

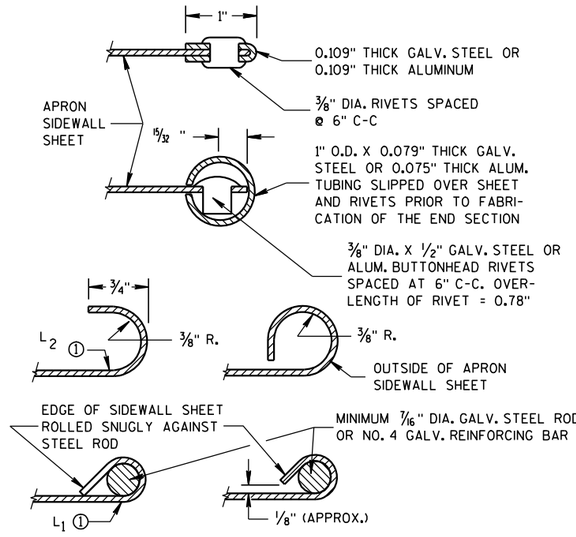

SECTION A-A

GENERAL NOTES

DETAILS OF CONSTRUCTION, MATERIALS AND WORKMANSHIP NOT SHOWN ON THIS DRAWING SHALL CONFORM TO THE PERTINENT REQUIREMENTS OF THE STANDARD SPECIFICATIONS AND THE APPLICABLE SPECIAL PROVISIONS.

CONCRETE CULVERT ENDWALLS MAY NOT BE USED WITH GALVANIZED STEEL OR ALUMINUM CULVERT PIPE OR VISE VERSA. GALVANIZED STEEL OR ALUMINUM ENDWALLS SHALL NORMALLY BE INSTALLED ON CULVERT PIPE OF THE SAME METAL.

ALL THREE PIECE STEEL APRON ENDWALLS FOR 60" DIAMETER PIPE AND LARGER SHALL HAVE 0.109" SIDES AND 0.138" CENTER PANELS. ALL THREE PIECE ALUMINUM APRON ENDWALLS FOR 60" DIAMETER PIPE AND LARGER SHALL HAVE 0.105" SIDES AND 0.134" CENTER PANELS. THE WIDTH OF CENTER PANELS SHALL BE GREATER THAN 20 PERCENT OF THE PIPE PERIMETER.

LAP SEAMS SHALL BE TIGHTLY JOINED BY GALVANIZED RIVETS OR BOLTS FOR STEEL UNITS AND ALUMINUM RIVETS AND BOLTS FOR ALUMINUM UNITS. FOR THE 60" THROUGH 96" DIAMETER APRON ENDWALL SIZES, THE REINFORCED EDGES AND CENTER PANEL SEAMS SHALL BE FURTHER REINFORCED WITH GALVANIZED STEEL OR ALUMINUM STIFFENER ANGLES. THE ANGLES SHALL BE ATTACHED BY GALVANIZED NUTS AND BOLTS FOR STEEL UNITS AND ALUMINUM NUTS AND BOLTS FOR ALUMINUM UNITS.

WHERE TWO OR MORE PIPES WITH APRON ENDWALLS ARE LAID ADJACENT TO EACH OTHER, THEY SHALL BE SEPARATED BY A DISTANCE SUFFICIENT TO PROVIDE A MINIMUM CLEARANCE OF 6 INCHES BETWEEN APRON ENDWALLS.

① FOR PIPE SIZES UP TO 60" DIAMETER, A 180° ROLLED EDGE MAY BE USED INSTEAD OF STEEL ROD REINFORCEMENT. SEE SECTION A-A.

APRON ENDWALLS FOR CULVERT PIPE

STATE OF WISCONSIN
DEPARTMENT OF TRANSPORTATION

APPROVED
11/30/94 — DATE
/S/ Rory L. Rhinesmith — CHIEF ROADWAY DEVELOPMENT ENGINEER
FHWA

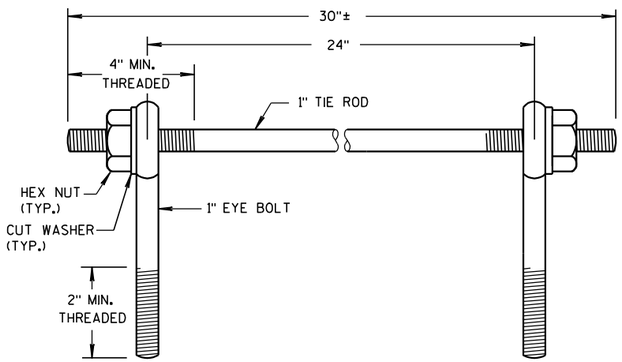

EYE BOLTS AND TIE ROD

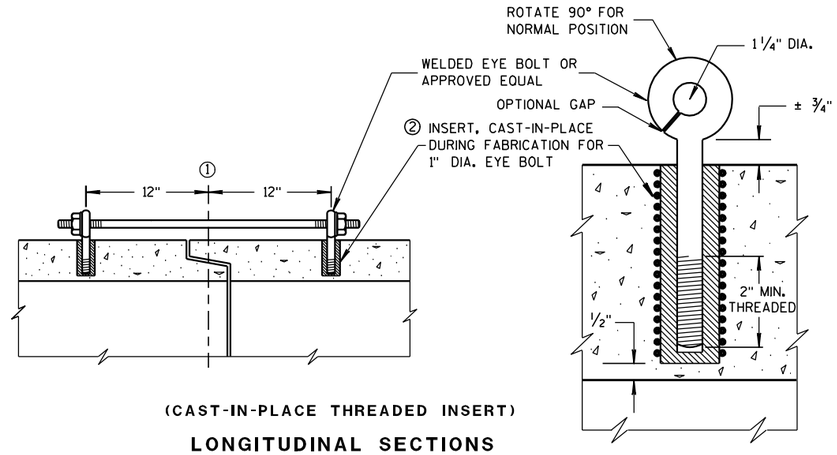

(CAST-IN-PLACE THREADED INSERT)

LONGITUDINAL SECTIONS

EYE BOLT AND TIE ROD ASSEMBLY (ALTERNATE NO. 1)

GENERAL NOTES

DETAILS OF CONSTRUCTION, MATERIALS, AND WORKMANSHIP NOT SHOWN ON THIS DRAWING SHALL CONFORM TO THE PERTINENT REQUIREMENTS OF THE STANDARD SPECIFICATIONS AND APPLICABLE SPECIAL PROVISIONS.

CONCRETE CULVERT AND STORM SEWER PIPE SHALL BE TIED TOGETHER IN THE MANNER ILLUSTRATED BY THIS DETAIL AT LOCATIONS DESIGNATED IN THE STANDARD SPECIFICATIONS AND THE PLAN. THE CONTRACTOR MAY USE EITHER ALTERNATE 1, 2 OR 3 FOR DRAINAGE STRUCTURES. ONLY ALTERNATE 1 AND 3 MAY BE USED FOR CATTLE PASSES, UNLESS OTHERWISE STATED IN THE CONTRACT. THE MATERIALS, FABRICATION AND WORK NECESSARY TO TIE THE PIPE BY THIS DETAIL WILL BE CONSIDERED INCIDENTAL TO THE PIPE AND APRON ENDWALLS IF REQUIRED.

DETAILED DRAWINGS FOR PROPOSED ALTERNATE DESIGNS FOR JOINT TIES SHALL BE SUBMITTED TO THE ENGINEER FOR APPROVAL.

JOINT TIES TO BE HOT-DIP GALVANIZED PER ASTM A 153.

① ℄ OF TONGUE AND GROOVE OR BELL AND SPIGOT JOINTS.

② THE INSIDE OF THE THREADED INSERTS SHALL BE CLEAN TO ALLOW THE INSERTION OF THREADED EYE BOLTS.

③ HOLES SHALL BE CAST-IN-PLACE OR DRILLED 12 INCHES FROM ℄ OF TONGUE AND GROOVE.

④ BOLT PROJECTION INSIDE OF PIPE SHALL NOT EXCEED 2 INCHES.

⑤ OPENING TO BE ROD DIAMETER PLUS 1 INCH.

⑥ LENGTH ADEQUATE TO EXTEND TO WITHIN 1/2 INCH OF THE INNER SURFACE OF THE PIPE.

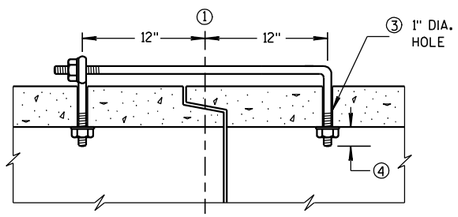

(TONGUE & GROOVE PIPE)

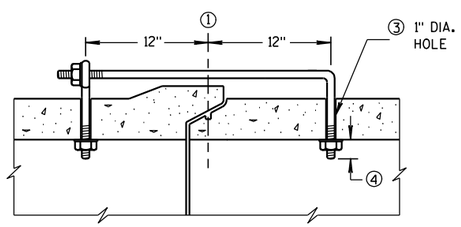

(MODIFIED BELL PIPE)

LONGITUDINAL SECTION

EYE BOLT DIMENSION TABLE

PIPE SIZE	L = LENGTH	
	TONGUE & GROOVE PIPE	MODIFIED BELL PIPE
18" TO 24"	4 1/2"	6 1/4"
30"	5"	7"
36"	5 1/2"	7"
42"	6"	
48"	6 1/2"	
60"	7 1/2"	
66"	8"	

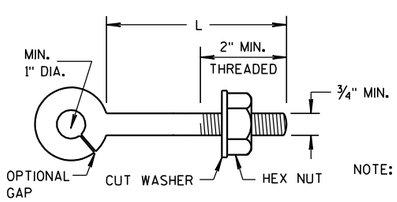

EYE BOLT

NOTE:

NOTE: TWO EYE BOLTS MAY BE USED WITH A 30" LONG THREADED ROD IN LIEU OF THE 90° BENT TIE ROD.

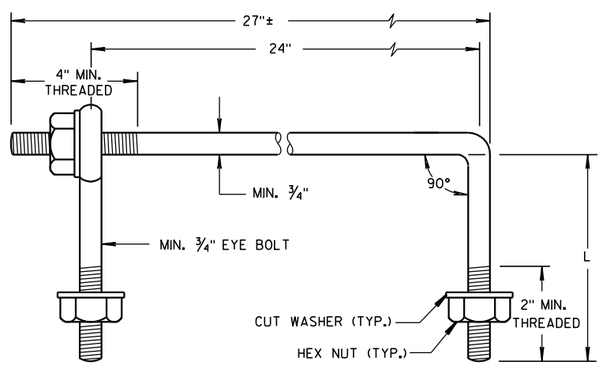

EYE BOLT AND TIE ROD

(JOINT TIES FOR 18" TO 66" DIA. CONCRETE PIPE)

EYE BOLT AND TIE ROD ASSEMBLY (ALTERNATE NO. 2)

ADJUSTABLE TIE ROD TABLE

PIPE DIAMETER	TIE ROD DIAMETER	D	L_1	N
12-60	5/8	5/8	5	1/2
66-84	3/4	3/4	5	1/2
90-108	1	1	7	1 7/16

DIMENSIONS SHOWN ARE IN INCHES

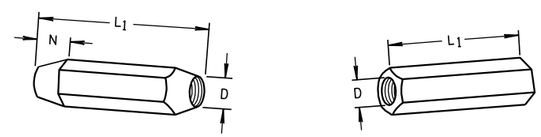

TAPERED PLAIN

RIGHT AND LEFT THREADS

SLEEVE NUTS

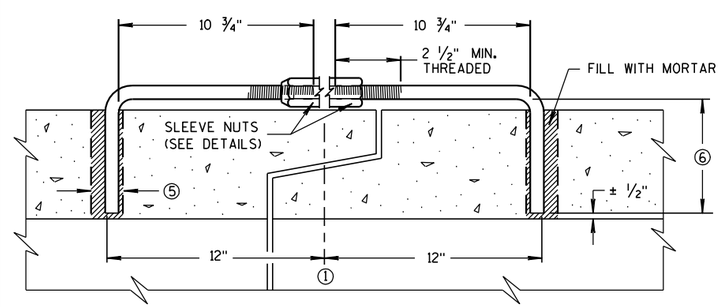

LONGITUDINAL SECTION

(JOINT TIES FOR 12" TO 108" DIA. CONCRETE PIPE)

ADJUSTABLE TIE ROD (ALTERNATE NO. 3)

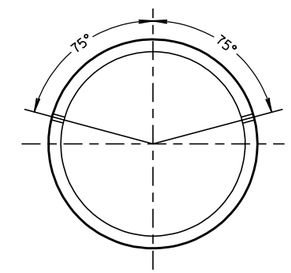

PLACEMENT OF (2) CAST-IN-PLACE INSERTS OR HOLES DURING FABRICATION FOR PIPE SECTIONS REQUIRING TIE RODS

TRANSVERSE SECTION

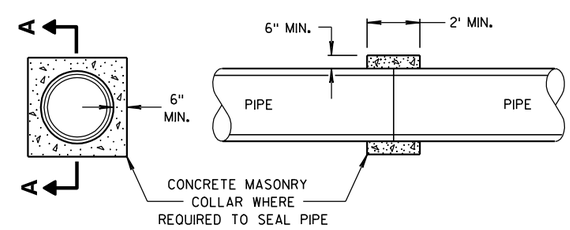

SECTION A-A

CONCRETE COLLAR DETAIL

JOINT TIES FOR CONCRETE PIPE AND CONCRETE COLLAR DETAIL

STATE OF WISCONSIN
DEPARTMENT OF TRANSPORTATION

APPROVED
6/5/2012 /S/ Jerry H. Zogg
DATE ROADWAY STANDARDS DEVELOPMENT ENGINEER
FHWA

6

6

S.D.D. 8 F 4-7

S.D.D. 8 F 4-7

GENERAL NOTES

DETAILS OF CONSTRUCTION, MATERIALS AND WORKMANSHIP NOT SHOWN ON THIS DRAWING SHALL CONFORM TO THE PERTINENT REQUIREMENTS OF THE STANDARD SPECIFICATIONS AND THE APPLICABLE SPECIAL PROVISIONS.

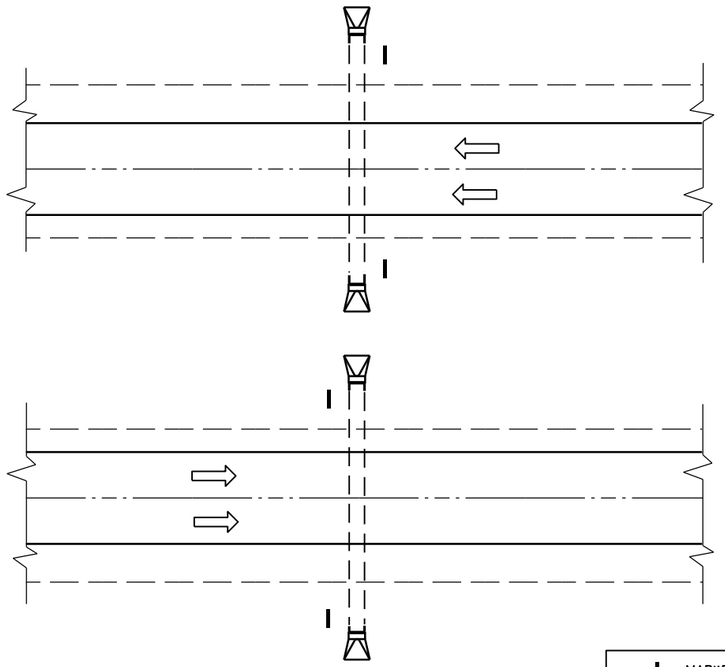

PLAN VIEW

DIVIDED HIGHWAY

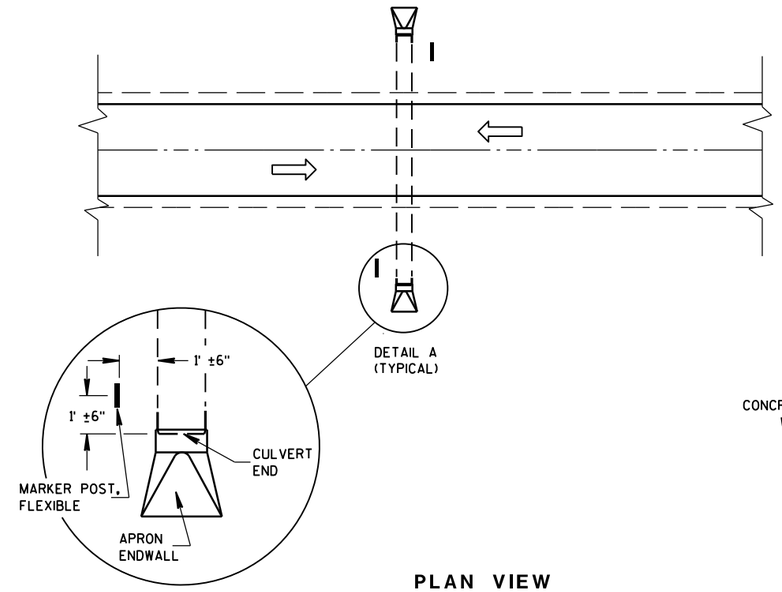

DETAIL A
(TYPICAL)

PLAN VIEW

UNDIVIDED HIGHWAY

MARKER POST, FLEXIBLE

DIRECTION OF TRAFFIC FLOW

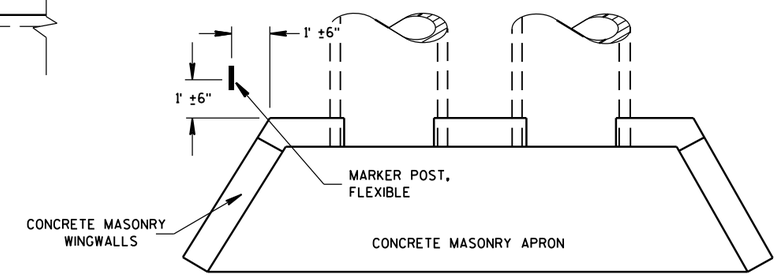

PLAN VIEW

CONCRETE MASONRY ENDWALLS FOR CULVERT PIPE AND PIPE ARCH

FLEXIBLE MARKER POST LOCATION

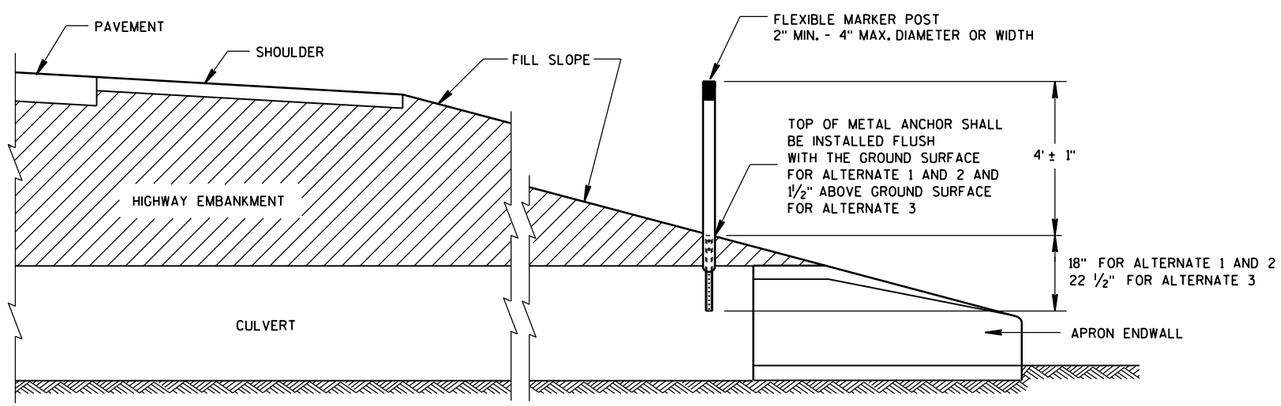

CROSS SECTION

FLEXIBLE MARKER POST

FLEXIBLE MARKER POST FOR CULVERT END

STATE OF WISCONSIN
DEPARTMENT OF TRANSPOR

6

6

S.D.D. 15 A 3-2a

S.D.D. 15 A 3-2a

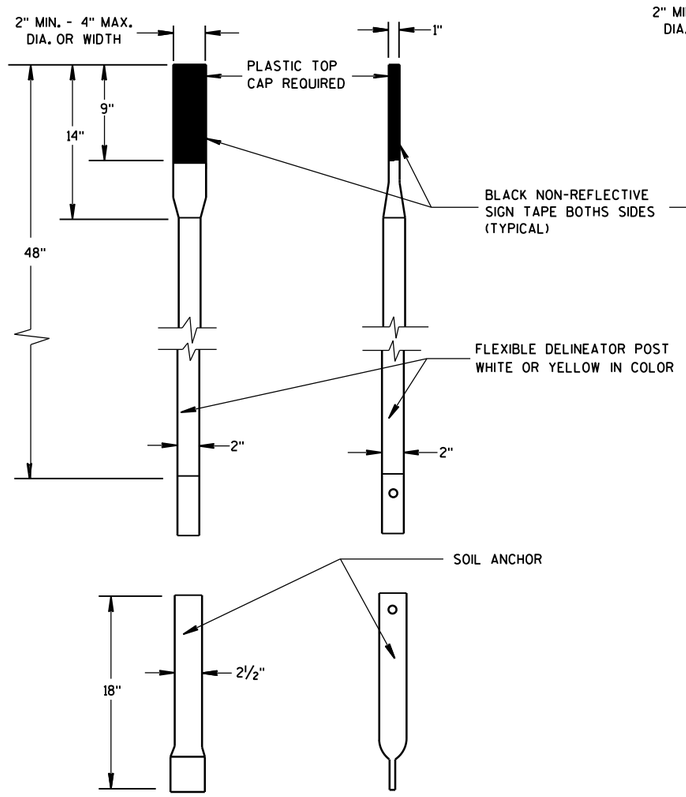

FRONT VIEW SIDE VIEW

ALTERNATE 1

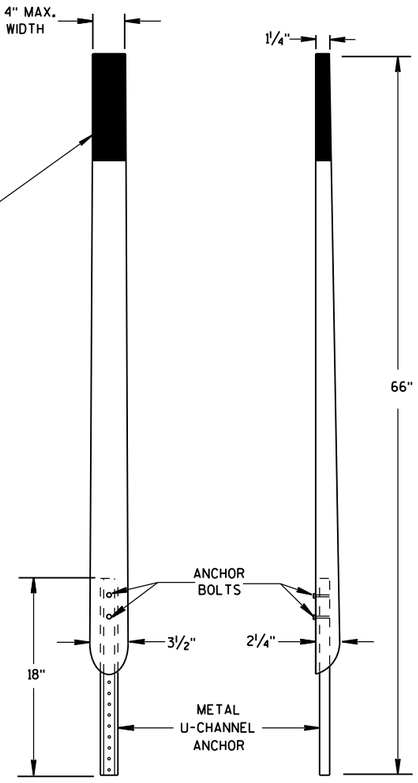

FRONT VIEW SIDE VIEW

ALTERNATE 2

FLEXIBLE MARKER POSTS

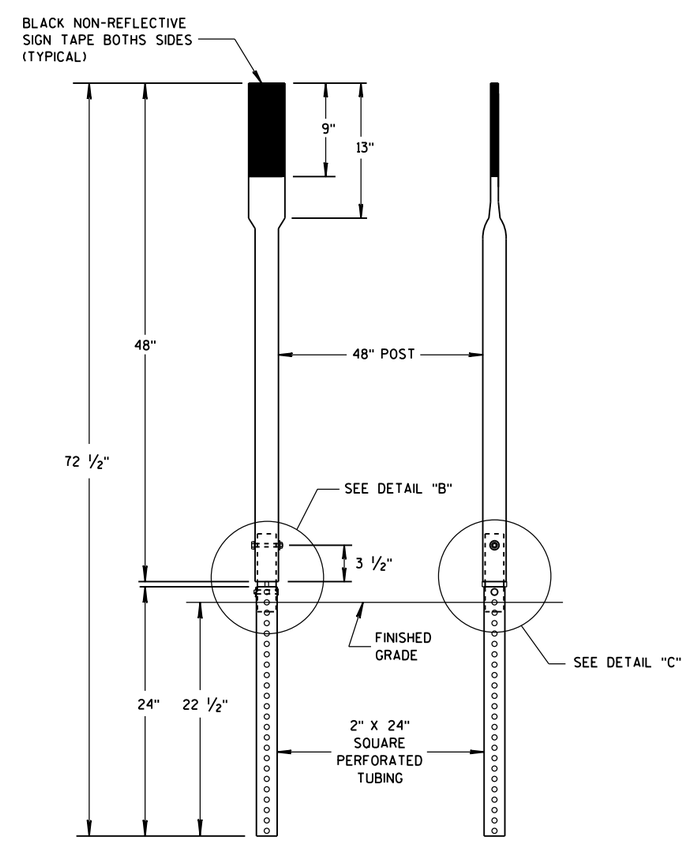

FRONT VIEW SIDE VIEW

ALTERNATE 3

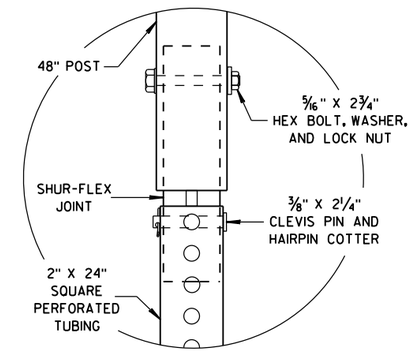

DETAIL B

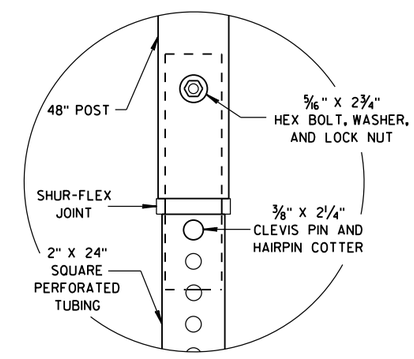

DETAIL C

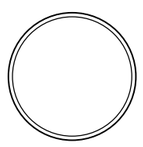

SECTION A-A

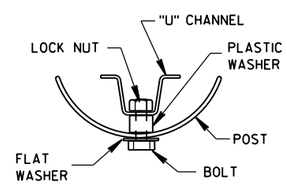

SECTION B-B

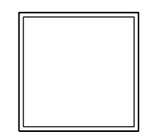

SECTION C-C

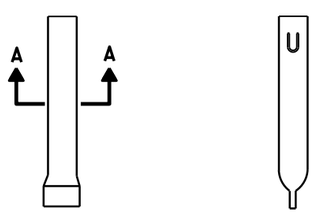

FRONT VIEW SIDE VIEW

ALTERNATE 1

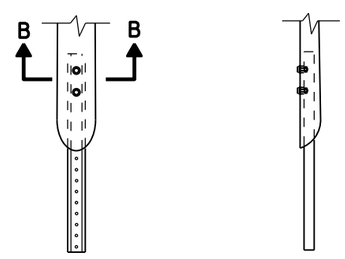

FRONT VIEW SIDE VIEW

ALTERNATE 2

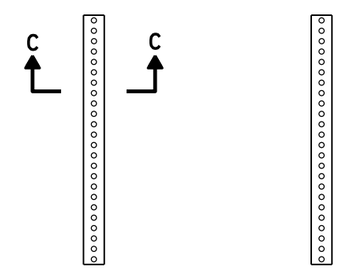

FRONT VIEW SIDE VIEW

ALTERNATE 3

FLEXIBLE MARKER POST ANCHORS

FLEXIBLE MARKER POST
FOR CULVERT END

STATE OF WISCONSIN
DEPARTMENT OF TRANSPORTATION

APPROVED
10/1/2012 /S/ Travis Feltes
DATE STATE TRAFFIC ENGINEER
FHWA

6

6

S.D.D. 15 A 3-2b

S.D.D. 15 A 3-2b

TYPICAL SIDEROAD APPROACH WARNING SIGN DETAIL

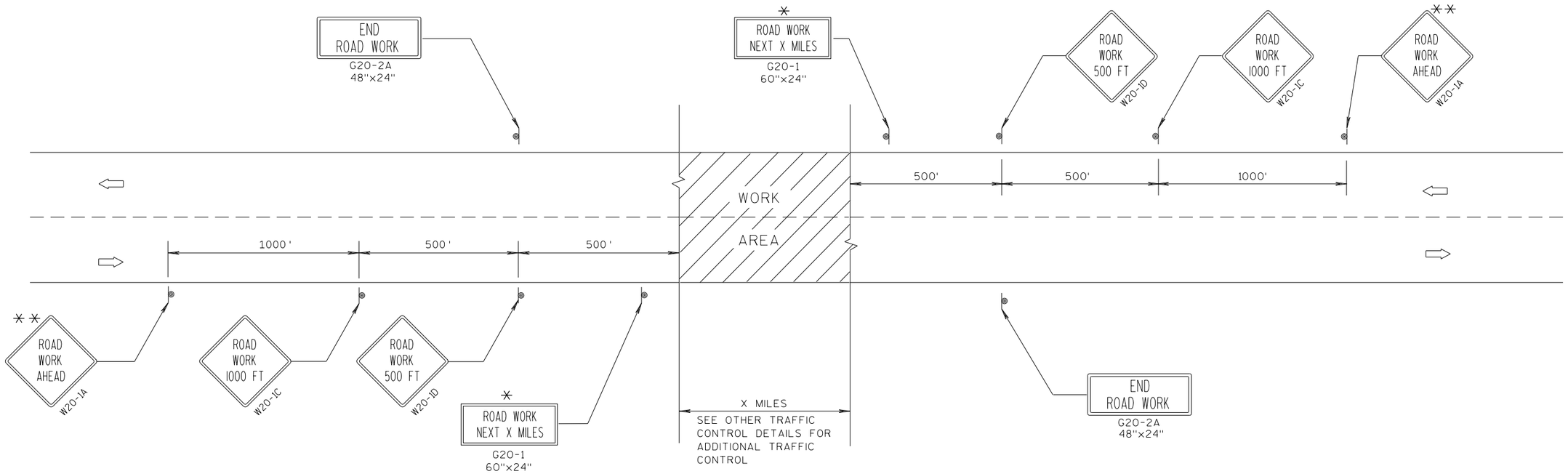

GENERAL NOTES

THE EXACT NUMBER, LOCATION, AND SPACING OF ALL SIGNS AND DEVICES SHALL BE ADJUSTED TO FIT FIELD CONDITIONS.

THE SPACING BETWEEN TRAFFIC CONTROL SIGNS SHOULD BE ADJUSTED TO NOT CONFLICT WITH AND SHOULD PROVIDE A MINIMUM OF 200 FEET (500 FEET DESIRABLE) CLEARANCE TO EXISTING SIGNS THAT WILL REMAIN IN PLACE.

ALL SIGNS ARE 48"x48" UNLESS OTHERWISE NOTED.

SIGNS THAT WILL BE IN PLACE LESS THAN 7 CONTINUOUS DAYS AND NIGHTS MAY BE MOUNTED ON PORTABLE SUPPORTS.

IF A "STOP" SIGN MUST BE REMOVED FOR A WORK OPERATION, A TEMPORARY "STOP" SIGN SHALL BE PLACED PRIOR TO THE SIGN REMOVAL, OR A FLAGGER SHALL BE PROVIDED UNTIL THE SIGN IS RE-ESTABLISHED.

* OMIT G20-1 SIGNS IF LENGTH OF WORK AREA IS 2 MILES OR LESS.

** PLACE ADDITIONAL W20-1A "ROAD WORK AHEAD" SIGN IF WORK AREA WITHIN THE PROJECT IS SEPARATED BY MORE THAN 2 MILES FROM PREVIOUS WORK AREA.

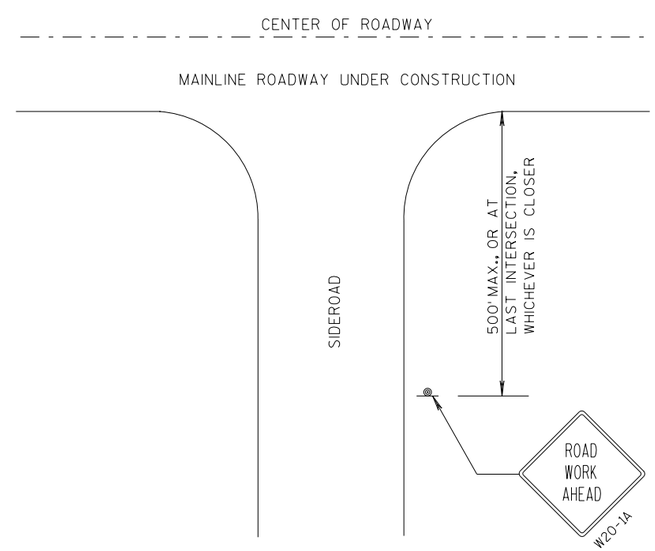

LEGEND

- SIGN ON PERMANENT SUPPORT
- DIRECTION OF TRAFFIC
- WORK AREA

TRAFFIC CONTROL, ADVANCE WARNING SIGNS 45 M.P.H. OR GREATER TWO-WAY UNDIVIDED ROAD OPEN TO TRAFFIC

STATE OF WISCONSIN
DEPARTMENT OF TRANSPORTATION

APPROVED
7/2018 — DATE
/S/ Andrew Heldtke — WORK ZONE ENGI
FHWA

S.D.D. 15 C 4-5
6

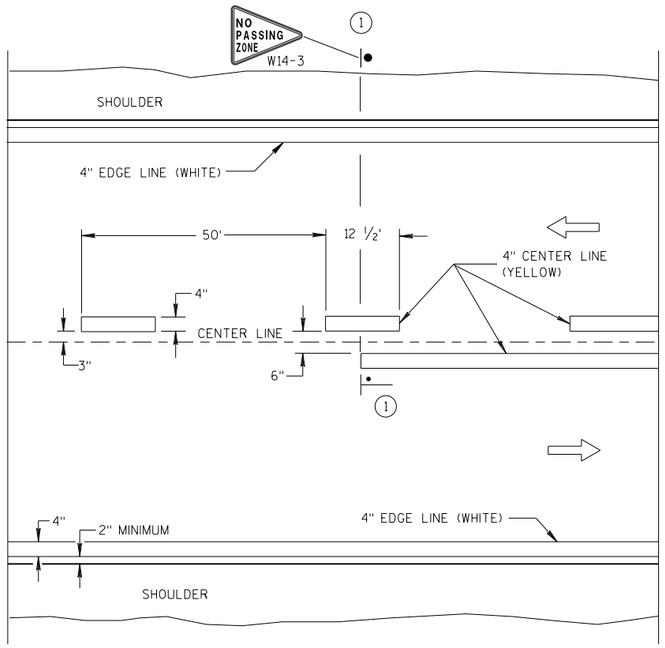

TWO WAY TRAFFIC

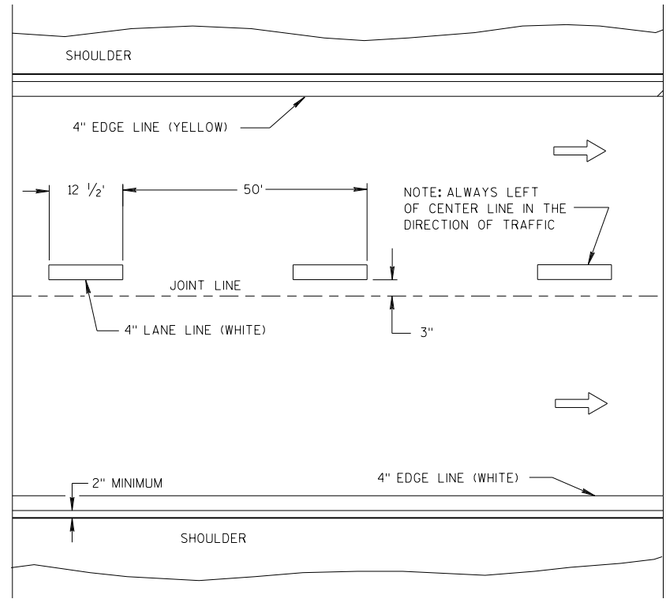

ONE WAY TRAFFIC

PERMANENT PAVEMENT MARKING

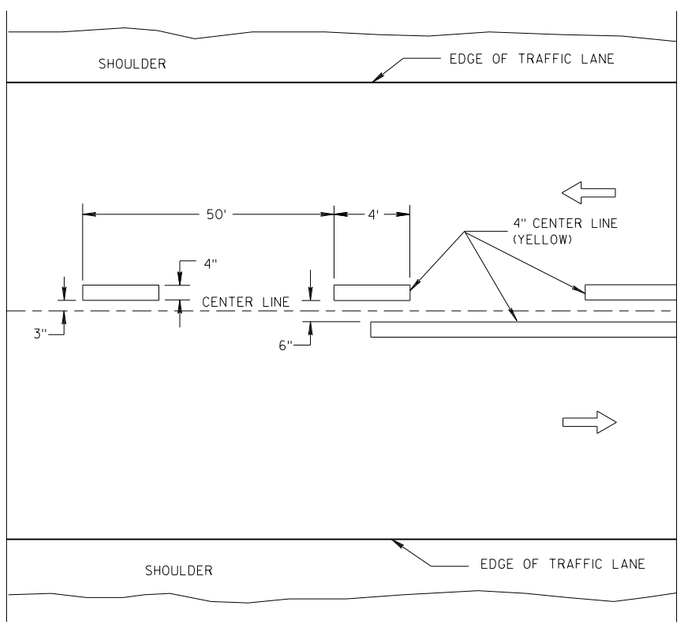

TWO WAY TRAFFIC

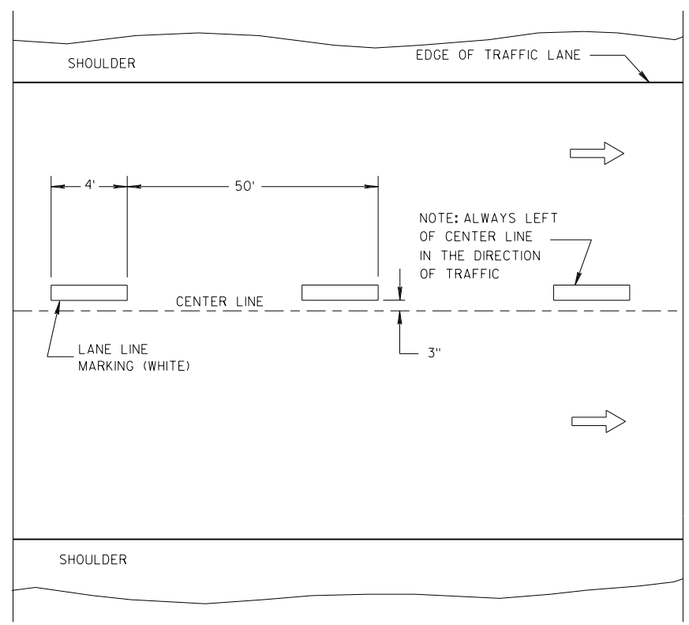

ONE WAY TRAFFIC

TEMPORARY PAVEMENT MARKING

GENERAL NOTES

DETAILS OF CONSTRUCTION NOT SHOWN ON THIS DRAWING SHALL CONFORM TO STANDARD SPECIFICATIONS AND SPECIAL PROVISIONS.

(1) LOCATE THE NO PASSING ZONE W14-3 SIGN WITHIN 50 FEET OF THE "T" MARKING.

NOTE

ARROW SYMBOL (⇨) SHOWS DIRECTION OF TRAVEL

LEGEND

"T" MARKING

POST MOUNTED SIGN

LONGITUDINAL MARKING (MAINLINE)

STATE OF WISCONSIN
DEPARTMENT OF TRANSPORTATION

APPROVED
7/2018 — DATE
/S/ Matthew R. Rauch — STATE SIGNING AND MAR INEER
FHWA

6

S.D.D. 15 C 8-19a

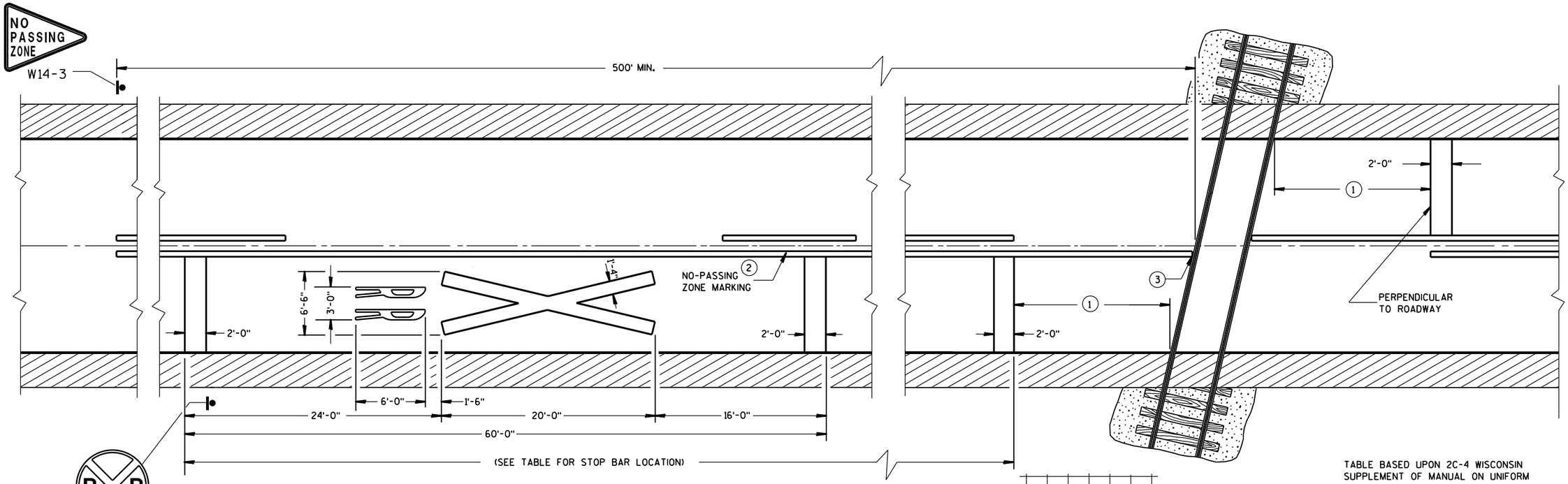

PAVEMENT MARKING

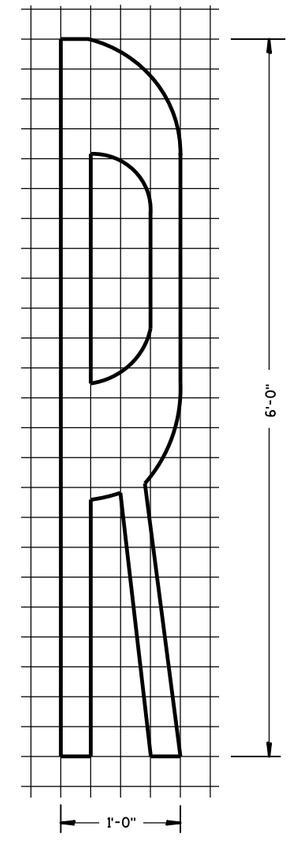

TABLE BASED UPON 2C-4 WISCONSIN SUPPLEMENT OF MANUAL ON UNIFORM TRAFFIC CONTROL DEVICES.

Posted Speed (M.P.H.)	Dimension Range (Feet)
25	150*- 250
30	200*- 300
35	250*- 450
40	300*- 500
45	400*- 650
50	550*- 800
55	750*- 1000
60	1000*- 1250
65	1000*- 1250

* THE MINIMUM DISTANCES IN THE TABLE ARE DESIRABLE AND SHOULD BE USED. THE DISTANCES MAY BE INCREASED UP TO THE MAXIMUM TO ALLOW FOR FIELD CONDITIONS SUCH AS THE CLOSE PROXIMITY OF DRIVEWAYS, BRIDGES, SIDEROADS OR OTHER FEATURES THAT WOULD PROHIBIT THE MINIMUM DISTANCES FROM BEING USED.

GENERAL NOTES

DETAILS OF CONSTRUCTION, MATERIALS, AND WORKMANSHIP NOT SHOWN ON THIS DRAWING SHALL CONFORM TO THE PERTINENT REQUIREMENTS OF THE STANDARD SPECIFICATIONS AND THE APPLICABLE SPECIAL PROVISIONS.

ON MULTI-LANE ROADS THE TRANSVERSE BANDS SHOULD EXTEND ACROSS ALL APPROACH LANES, AND INDIVIDUAL R X R SYMBOLS SHOULD BE USED IN EACH APPROACH LANE.

CENTER OR LANE LINES AND NO-PASSING ZONE MARKINGS SHOWN ON THIS DRAWING ARE REQUIRED AND PAID FOR UNDER OTHER ITEMS IN THE CONTRACT.

RETRACE EXISTING SYMBOL WHERE EXISTING SYMBOLS ARE PLACED.

1. MINIMUM 8' FROM ANY RAILROAD WARNING DEVICES (SIGNALS, GATES, ETC.) OR 25' FROM THE NEAREST RAIL, WHICHEVER DISTANCE IS GREATER.
2. 500' MINIMUM. MARKING LIMITS MAY BE EXTENDED AS DIRECTED BY THE ENGINEER TO MEET ADJACENT NO-PASSING ZONE MARKINGS.
3. FOR MULTIPLE TRACK CROSSINGS, THE BARRIER LINE SHALL EXTEND TO THE NEAR RAIL OF THE FURTHEST TRACK IN THE DIRECTION OF HIGHWAY TRAVEL.

SIGNING AND PAVEMENT MARKING DETAILS FOR RAILROAD-HIGHWAY GRADE CROSSINGS

STATE OF WISCONSIN
DEPARTMENT OF TRANSPORTATION

APPROVED

Sept., 2017 — /S/ Matthew R. Rauch
DATE — STATE SIGNING AND MAI[illegible]GINEER

FHWA

6

S.D.D. 15 C 9-11a

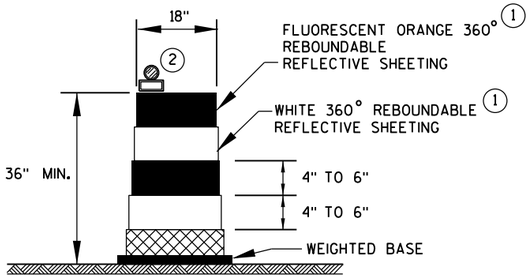

DRUM

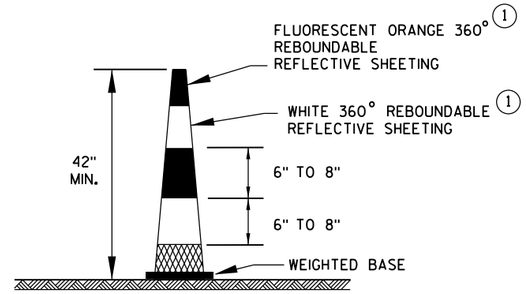

42" CONE

DO NOT USE IN TAPERS
½ SPACING OF DRUMS

GENERAL NOTES

(1) REFLECTIVE SHEETING SHALL FOLLOW THE REQUIREMENTS IN THE APPROVED PRODUCTS LISTING FOR SIGN SHEETING.

(2) LOCATION OF WARNING LIGHTS WHEN SHOWN ON THE PLAN.

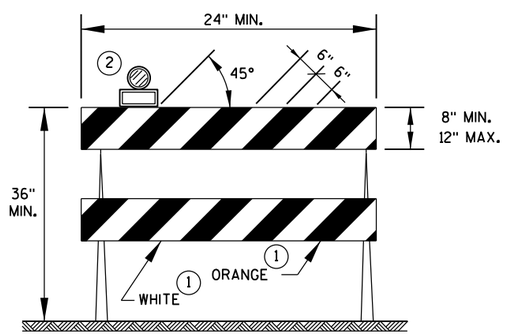

TYPE 2 BARRICADE

FOR RAILS LESS THAN 36" LONG, 4" WIDE STRIPES MAY BE USED. ALL STRIPES SHALL SLOPE DOWNWARD TO THE TRAFFIC SIDE FOR CHANNELIZATION.

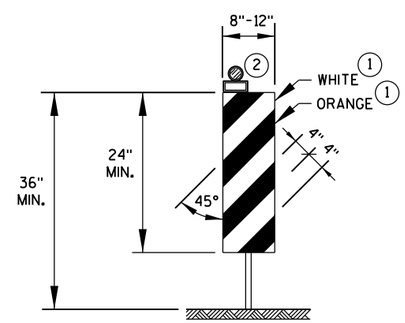

VERTICAL PANEL

THE STRIPES SHALL SLOPE DOWNWARD TO THE TRAFFIC SIDE FOR CHANNELIZATION.

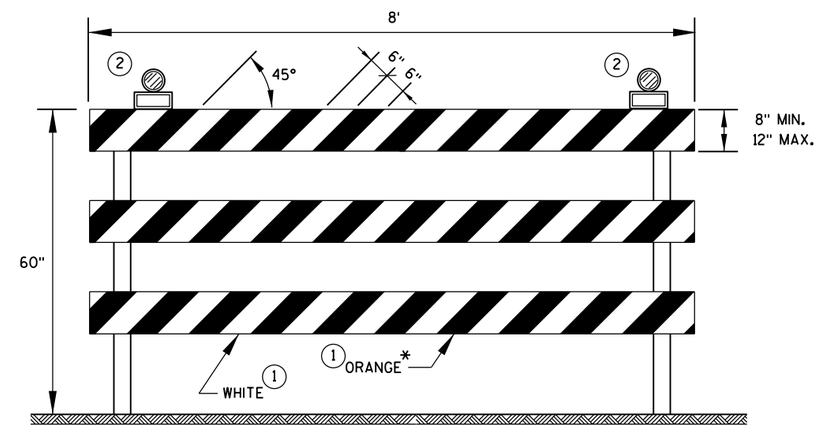

TYPE 3 BARRICADE

IF SIGN MOUNTED, DO NOT COVER MORE THAN 50% OF THE TOP TWO RAILS OR 33% OF THE TOTAL AREA OF THE THREE RAILS.

* IF USED FOR A PERMANENT APPLICATION, USE RED SHEETING.

CHANNELIZING DEVICES DRUMS, CONES, BARRICADES AND VERTICAL PANELS	
STATE OF WISCONSIN DEPARTMENT OF TRANSPORTATION	
APPROVED	
June 2017	/S/ Andrew Heldtke
DATE	WORK ZONE ENG
FHWA	

LEGEND

SIGN ON PORTABLE OR PERMANENT SUPPORT

DIRECTION OF TRAFFIC

WORK AREA

FLAGGER, EQUIPPED WITH STOP/SLOW PADDLE FASTENED ON SUPPORT STAFF

SIGN AND TEMPORARY RUMBLE STRIP ARRAY SPACING TABLE

SPEED LIMIT	SPACING A
25-35 MPH	200'
35-40 MPH	350'
45-55 MPH	500'

USE OF THE "BE PREPARED TO STOP" SIGN IS OPTIONAL. WHEN USED, THIS SIGN SHALL BE LOCATED BETWEEN THE W20-7A AND W20-4A SIGNS, USING SPACING A.

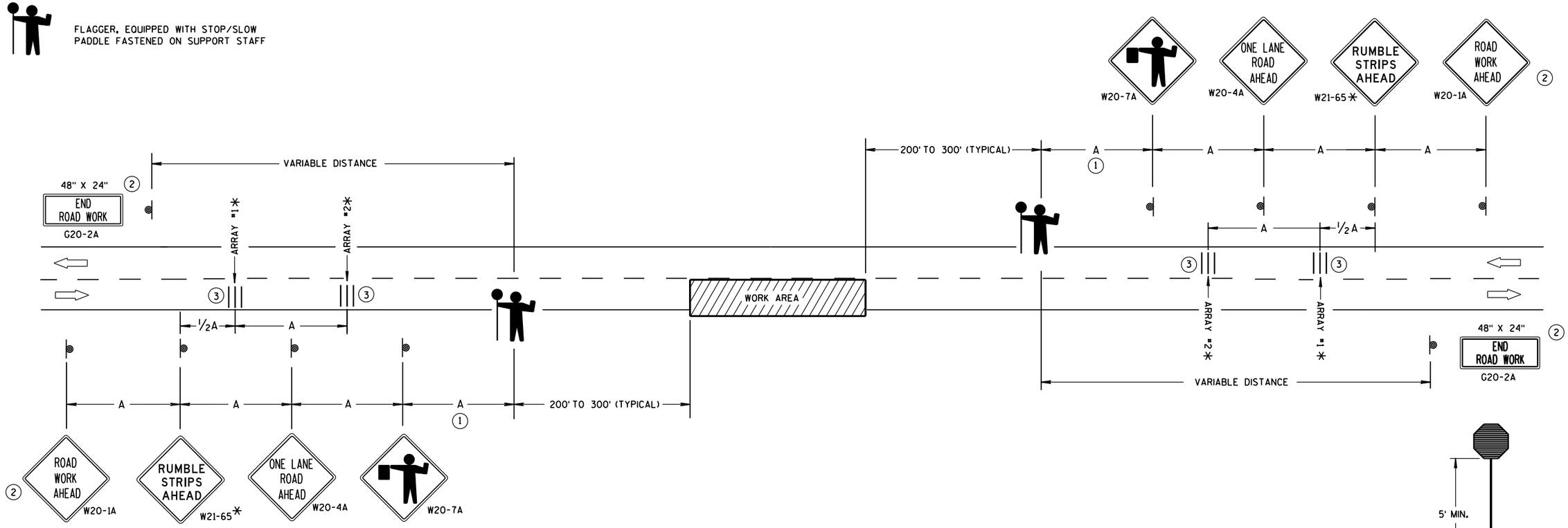

TRAFFIC CONTROL FOR LANE CLOSURE WITH FLAGGING OPERATION

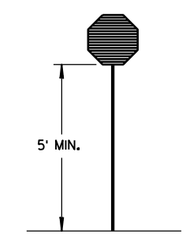

STOP/SLOW PADDLE ON SUPPORT STAFF

GENERAL NOTES

DETAILS OF TRAFFIC CONTROL DEVICES AND INSTALLATION NOT SHOWN ON THIS DRAWING SHALL CONFORM TO THE PERTINENT REQUIREMENTS OF THE STANDARD SPECIFICATIONS, THE SPECIAL PROVISIONS, AND THE MANUAL ON UNIFORM TRAFFIC CONTROL DEVICES.

THE EXACT NUMBER, LOCATION AND SPACING OF ALL SIGNS AND DEVICES (AND THE LOCATION OF ALL FLAGGERS) SHALL BE ADJUSTED TO FIT FIELD CONDITIONS AS APPROVED BY THE ENGINEER.

THE FIRST ADVANCE WARNING SIGN SHOULD TYPICALLY BE LOCATED IN ADVANCE OF THE ANTICIPATED TRAFFIC BACKUP OR QUEUE.

"WO" SIGNS ARE THE SAME AS "W" SIGNS EXCEPT THE BACKGROUND IS ORANGE.

WHEN A SIDE ROAD OR RAMP INTERSECTS THE FACILITY ON WHICH THE WORK IS BEING PERFORMED, ADDITIONAL TRAFFIC CONTROLS SHALL BE PROVIDED AS SPECIFIED IN THE PLANS AND/OR THE SPECIAL PROVISIONS OR AS APPROVED BY THE ENGINEER.

INSTALL TEMPORARY RUMBLE STRIPS PER MANUFACTURER'S RECOMMENDATIONS.

PLACE ADVANCE SIGNING PRIOR TO INSTALLING TEMPORARY RUMBLE STRIPS.

ALL SIGNS ARE 48" X 48" UNLESS OTHERWISE NOTED.

FLAGGERS SHALL BE IN SIGHT OF EACH OTHER OR IN DIRECT COMMUNICATION AT ALL TIMES. THEY SHALL BE EQUIPPED WITH STOP/SLOW PADDLES FASTENED ON SUPPORT STAFFS. WHEN THE FLAGGING OPERATION IS NOT IN EFFECT, REMOVE TEMPORARY RUMBLE STRIPS PRIOR TO COVERING OR REMOVING ALL ADVANCE SIGNING.

* UTILIZE TEMPORARY RUMBLE STRIPS WHEN FLAGGING OPERATION IS ANTICIPATED TO BE STATIONARY IN EXCESS OF TWO HOURS.

1. FOR A MOVING WORK OPERATION, SIGNING AND TEMPORARY RUMBLE STRIPS (IF USED) SHALL BE REESTABLISHED (AS SIMULTANEOUSLY AS PRACTICAL) AT APPROXIMATELY 3,500 FOOT INTERVALS IN THE MOVING WORK OPERATION OR AS APPROVED BY THE ENGINEER.
2. SIGN NOT REQUIRED IF FLAGGING OPERATION OCCURS WITHIN A SIGNED ROAD WORK ZONE AREA.
3. EACH TEMPORARY RUMBLE STRIP ARRAY CONSISTS OF THREE RUMBLE STRIPS SPACED ACCORDING TO MANUFACTURER'S RECOMMENDATION, PLACED TRANSVERSE ACROSS THE LANE AT LOCATIONS SHOWN.

TRAFFIC CONTROL FOR LANE CLOSURE WITH FLAGGING OPERATION

STATE OF WISCONSIN
DEPARTMENT OF TRANSPORTATION

APPROVED
June 2017 — DATE
/S/ Andrew Heldtke — WORK ZONE ENG
FHWA

6

S.D.D. 15 C 12-6

GENERAL NOTES

THE EXACT NUMBER, LOCATION, AND SPACING OF ALL SIGNS AND DEVICES SHALL BE ADJUSTED TO FIT FIELD CONDITIONS AS APPROVED BY THE ENGINEER.

THE SPACING BETWEEN SIGNS SHOULD BE ADJUSTED TO NOT CONFLICT WITH AND TO PROVIDE A MINIMUM OF 200 FEET (500 FEET DESIRABLE) CLEARANCE TO EXISTING SIGNS.

THIS LANE CLOSURE IS TYPICAL FOR CLOSING RIGHT LANE - REVERSE FOR CLOSING LEFT LANE.

ALL SIGNS ARE 48" x 48" UNLESS OTHERWISE NOTED.

"WO" IS THE SAME AS "W" EXCEPT THE BACKGROUND IS ORANGE.

ANY SIGNS TEMPORARY OR EXISTING, WHICH CONFLICT WITH TRAFFIC CONTROL "IN USE" SHALL BE REMOVED OR COVERED AS NEEDED OR AS APPROVED BY THE ENGINEER.

FOR A LANE CLOSURE THAT IS IN PLACE LESS THAN 7 CONTINUOUS DAYS AND NIGHTS, THE ADVANCED WARNING SIGNS MAY BE MOUNTED ON PORTABLE SUPPORTS.

REMOVE PAVEMENT MARKINGS IF LANE CLOSURE IS TO BE IN PLACE 4 OR MORE CONTINUOUS DAYS AND NIGHTS.

IF THE HORIZONTAL ALIGNMENT IS SUCH THAT A CURVE MAY REQUIRE ADDITIONAL DELINEATION, THE DEVICE SPACING MAY BE DECREASED TO 50 FEET.

WARNING LIGHTS ARE NOT REQUIRED IF THE LANE CLOSURE IS A DAYTIME ONLY OPERATION.

ADJUSTMENTS IN BUFFER SPACE NEED TO BE INCORPORATED WHEN THE LANE CLOSURE OCCURS NEAR AN INTERCHANGE EXIT OR ENTRANCE RAMP OR INTERSECTION. THE LANE CLOSURE MUST TAKE PLACE FAR ENOUGH IN ADVANCE OF AN EXIT OR ENTRANCE RAMP TO STILL ALLOW FOR ADEQUATE BUFFER SPACE. THE MINIMUM LENGTH OF THE BUFFER SPACE BEFORE AN EXIT RAMP SHOULD BE ONE HALF THE LENGTH OF THE TRANSITION AREA. THE ENTRANCE RAMP SHOULD BE FOLLOWED BY THE ORIGINAL BUFFER SPACE LENGTH OF 800 FEET DESIRABLE PRIOR TO ANOTHER TRAFFIC CONTROL CHANGE SUCH AS A CROSSOVER MANEUVER.

CONSIDER ROADWAY GEOMETRICS WHEN LOCATING SIGNS AND ARROW BOARD SO THE DRIVER HAS A CLEAR VIEW OF THE ARROW BOARD AND LANE CLOSURE DRUMS.

LEGEND

- TYPE III BARRICADE WITH ATTACHED SIGN
- SIGN ON PERMANENT SUPPORT
- TRAFFIC CONTROL DRUM WITH TYPE "C" STEADY BURN LIGHT
- TRAFFIC CONTROL DRUM
- TYPE "A" WARNING LIGHT (FLASHING)
- REMOVING PAVEMENT MARKING
- DIRECTION OF TRAFFIC
- WORK AREA
- FLASHING ARROW BOARD

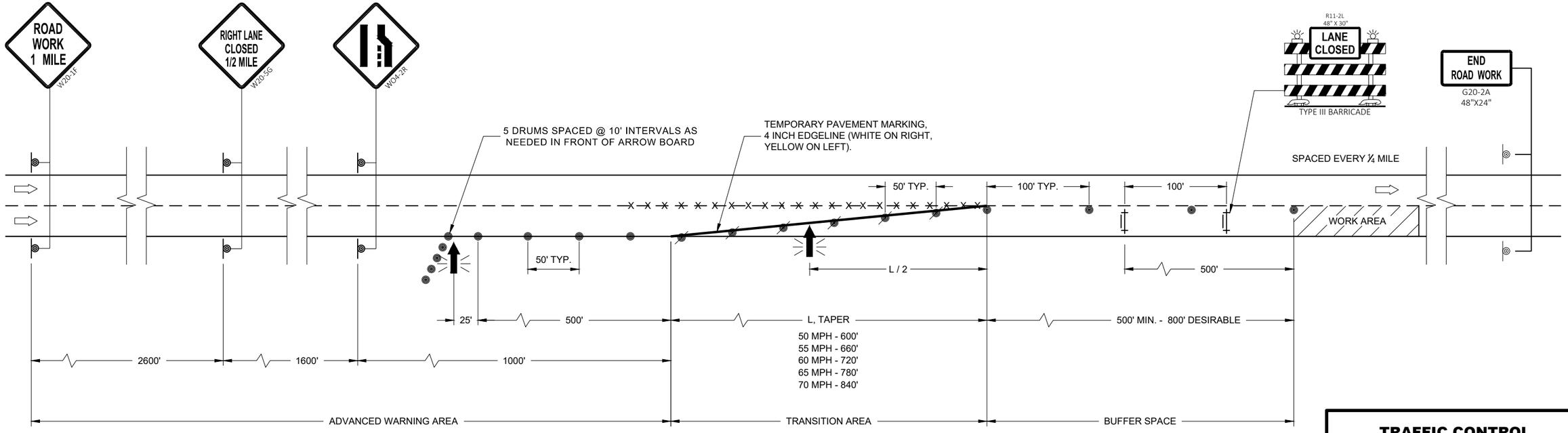

TRAFFIC CONTROL LANE CLOSURE

STATE OF WISCONSIN
DEPARTMENT OF TRANSPORTATION

APPROVED
Novermber 2018 — DATE
/S/ Andrew Heidtke — WORK ZONE ENGINEE
FHWA

6

SDD 15D12 - 07a

6

SDD 15D12 - 07a

LEGEND

- TRAFFIC CONTROL DRUM
- SIGN ON PERMANENT SUPPORT
- DIRECTION OF TRAFFIC
- FLASHING ARROW BOARD
- WORK AREA

GENERAL NOTES

THIS DETAIL IS TYPICAL FOR CLOSING THE RIGHT SHOULDER. FOR CLOSING THE LEFT SHOULDER, REVERSE THE TRAFFIC CONTROL.

THIS DETAIL MAY BE USED FOR DIVIDED ROADWAYS WITH ANY NUMBER OF TRAVEL LANES.

THE EXACT NUMBER, LOCATION AND SPACING OF ALL SIGNS AND DEVICES SHALL BE ADJUSTED TO FIT FIELD CONDITIONS AS APPROVED BY THE ENGINEER.

ALL SIGNS ARE 48" X 48" UNLESS OTHERWISE NOTED.

SIGN LAYOUTS SHALL BE IN ACCORDANCE WITH THE FHWA'S MANUAL OF STANDARD HIGHWAY SIGNS OR THE WISCONSIN STANDARD SIGN PLATES.

SIGNS THAT WILL BE IN PLACE LESS THAN 7 CONTINUOUS DAYS AND NIGHTS MAY BE MOUNTED ON PORTABLE SUPPORTS.

ANY SIGNS TEMPORARY OR EXISTING, WHICH CONFLICT WITH TRAFFIC CONTROL "IN USE" SHALL BE REMOVED OR COVERED AS NEEDED AND AS APPROVED BY THE ENGINEER.

CHANNELIZING DEVICES PLACED ADJACENT TO THE WORK AREA SHALL BE PULLED BACK FROM THE TRAVEL LANE WHEN WORK IS NOT IN PROGRESS.

WHEN A RAMP INTERSECTS THE FACILITY ON WHICH THE WORK IS BEING PERFORMED, ADDITIONAL TRAFFIC CONTROLS SHALL BE PROVIDED AS SPECIFIED IN THE PLANS AND/OR THE SPECIAL PROVISIONS OR AS APPROVED BY THE ENGINEER.

*FOR SHORT DURATION SHOULDER WORK OF LESS THAN ONE HOUR, THE W21-5a SIGN MAY BE OMITTED.

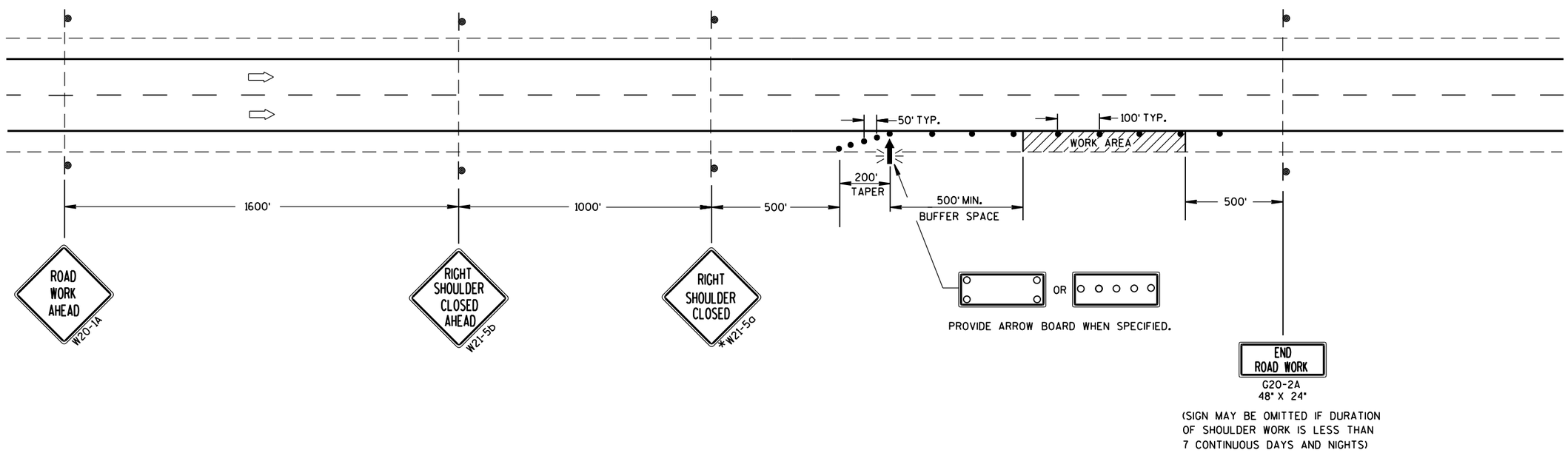

TRAFFIC CONTROL SHOULDER CLOSURE ON DIVIDED ROADWAY, SPEEDS GREATER THAN 40 MPH	
STATE OF WISCONSIN DEPARTMENT OF TRANSPORTATION	
APPROVED	
June 2016	/S/ Peter Amakobe Atepe
DATE	STATEWIDE WORK ZONE TRAFFIC SAFETY ENGINEER
FHWA	

6

S.D.D. 15 D 27-3

GENERAL NOTES

THE EXACT NUMBER, LOCATION AND SPACING OF ALL SIGNS AND DEVICES SHALL BE ADJUSTED TO FIT FIELD CONDITIONS AS APPROVED BY THE ENGINEER.

ALL SIGNS ARE 48" X 48" UNLESS OTHERWISE NOTED. IF NECESSARY DUE TO SPACE CONSTRAINTS IN URBAN AREAS, 36" X 36" SIGNS MAY BE USED IF APPROVED BY DISTRICT TRAFFIC UNIT.

"WO" SIGNS ARE THE SAME AS "W" SIGNS EXCEPT THE BACKGROUND IS ORANGE.

SIGNS THAT WILL BE IN PLACE LESS THAN 7 CONTINUOUS DAYS AND NIGHTS MAY BE MOUNTED ON PORTABLE SUPPORTS.

ANY SIGNS TEMPORARY OR EXISTING, WHICH CONFLICT WITH TRAFFIC CONTROL "IN USE" SHALL BE REMOVED OR COVERED AS NEEDED AND AS APPROVED BY THE ENGINEER.

W20-1A AND G20-2A SIGNS ARE NOT REQUIRED IF THE WORK AREA IS WITHIN A LARGER WORK ZONE WHERE THESE SIGNS ARE ALREADY PRESENT. G20-2A SIGNS MAY ALSO BE OMITTED IF DURATION OF WORK IS LESS THAN 7 CONTINUOUS DAYS AND NIGHTS.

CHANNELIZING DEVICES PLACED ADJACENT TO THE WORK AREA SHALL BE PULLED BACK FROM THE TRAVEL LANE WHEN WORK IS NOT IN PROGRESS.

TABLE A

S \ W	SHOULDER TAPER LENGTH (FEET) 4	6	8	10	BUFFER SPACE (FEET)
30	20	30	40	50	200
35	30	45	55	70	250
40	40	55	75	90	305
45	60	90	120	150	360
50	70	100	135	170	425
55	75	110	150	185	495

SHOULDER TAPER LENGTH = $\frac{1}{3}L$

W = SHOULDER WIDTH (FEET)
S = NON-CONSTRUCTION SPEED LIMIT (MPH)

TAPER LENGTH

$L = WS$ AT 45 MPH OR GREATER

$L = \frac{WS^2}{60}$ AT 40 MPH OR LESS

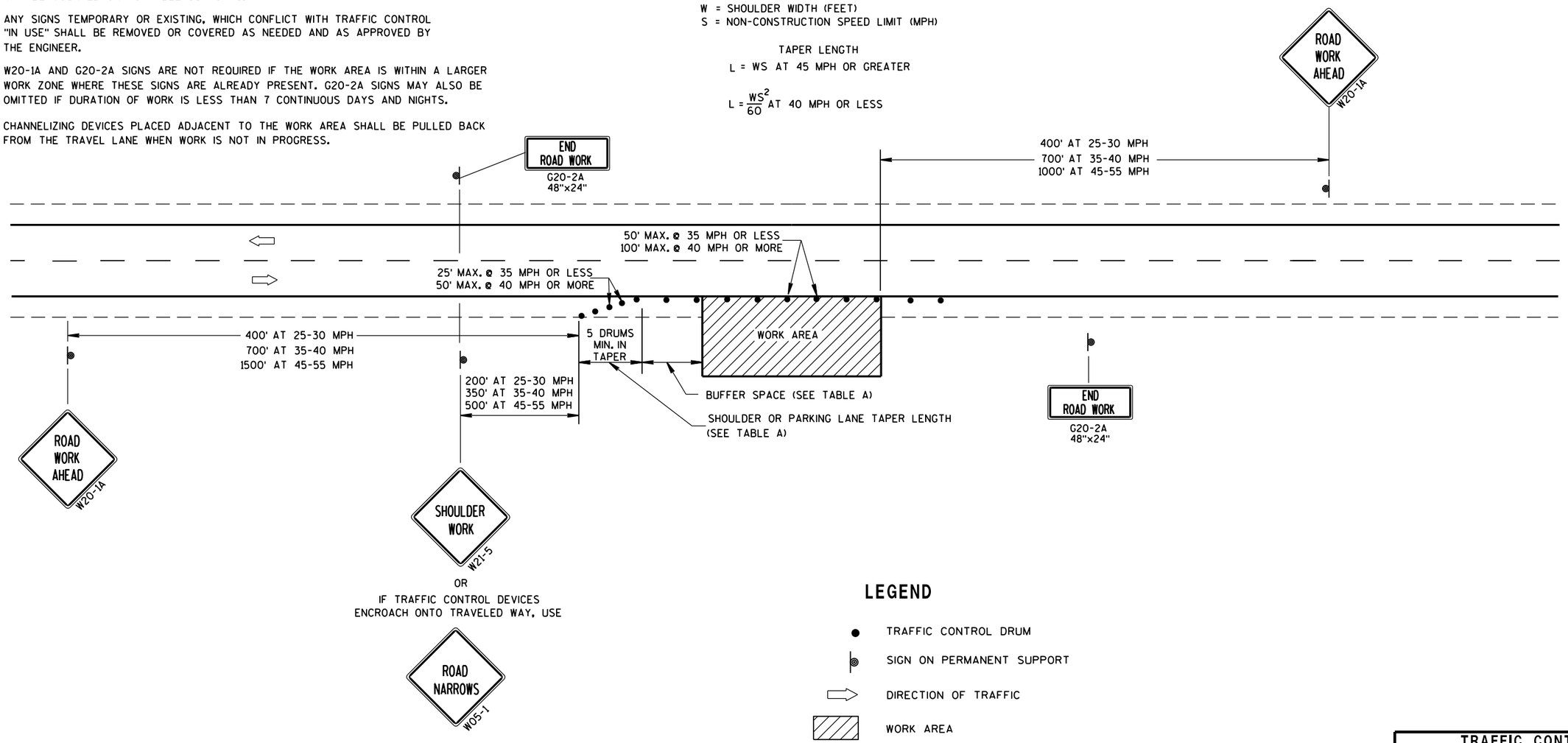

LEGEND

- TRAFFIC CONTROL DRUM
- SIGN ON PERMANENT SUPPORT
- DIRECTION OF TRAFFIC
- WORK AREA

TRAFFIC CONTROL, WORK ON SHOULDER OR PARKING LANE, UNDIVIDED ROADWAY

STATE OF WISCONSIN
DEPARTMENT OF TRANSPORTATION

APPROVED

July 14, 2015 — DATE

/S/ Peter Amakobe Atepe — STATEWIDE WORK ZONE TRAFFIC SAFETY ENGIN

FHWA

6

S.D.D. 15 D 28-3

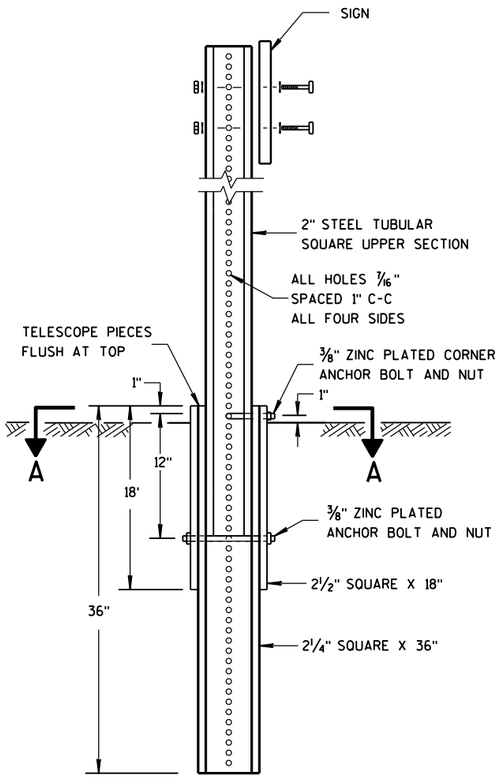

DETAIL OF TUBULAR STEEL SIGN POST

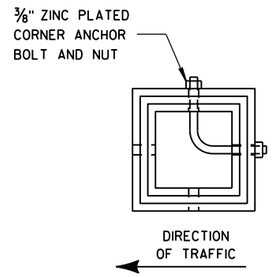

SECTION A-A

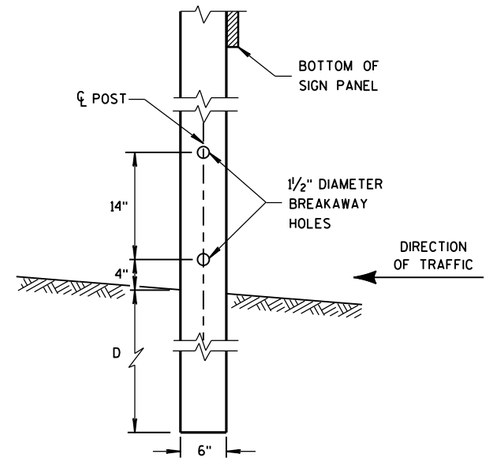

4"x6" WOOD POST MODIFICATION

GENERAL NOTES

1. 6 FEET FROM THE EDGE OF PAVEMENT (EDGE LINE LOCATION) UNLESS OTHERWISE DIRECTED BY THE PROJECT ENGINEER. LATERAL OFFSET SHOULD BE ADJUSTED TO AVOID THE DITCH FLOWLINE.
2. THE EXISTENCE OF CURB AND GUTTER DOES NOT IN ITSELF MANDATE THE VERTICAL CLEARANCE ILLUSTRATED. THAT HEIGHT IS TYPICALLY MEASURED WHERE THERE IS SIDEWALK ADJACENT TO THE ROADWAY OR PARKING IS PERMITTED. IN THE ABSENCE OF SIDEWALK, VERTICAL CLEARANCE IS MEASURED FROM THE TOP OF THE CURB. IF NO SIDEWALK AND NO PARKING, VERTICAL CLEARANCE MAY BE REDUCED TO 5 FOOT MINIMUM. OFFSET OF SIGNS IS MEASURED FROM THE CURB FLOWLINE.
3. FOR SIGNS REQUIRING 4 POSTS, SPACE INTERMEDIATE POSTS EVENLY.

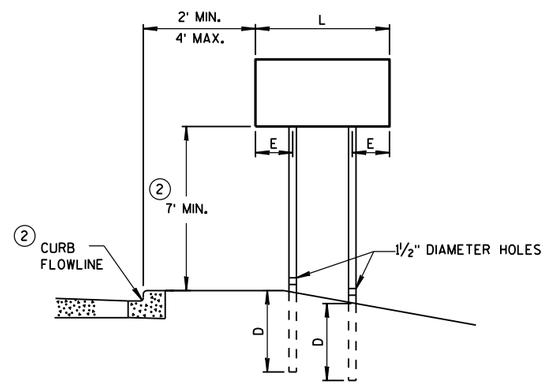

URBAN AREA

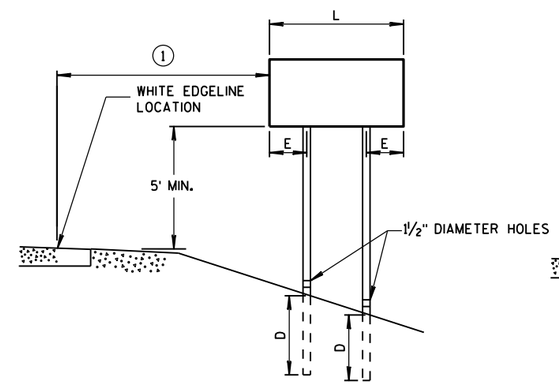

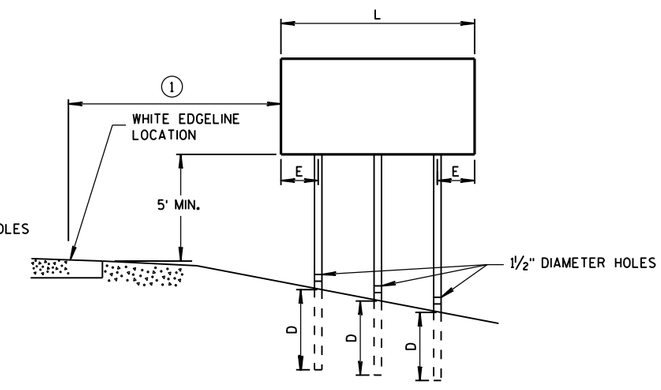

RURAL AREA

POST MOUNTING DETAIL FOR TEMPORARY TRAFFIC CONTROL FIXED MESSAGE SIGNS

TUBULAR STEEL POSTS

AREA OF SIGN INSTALLATION (SQ. FT.)	NUMBER OF REQUIRED TUBULAR STEEL POSTS
9 OR LESS	1
GREATER THAN 9 LESS THAN OR EQUAL TO 18	2
GREATER THAN 18 LESS THAN OR EQUAL TO 27	3

SIGNS WIDER THAN 3 FEET OR LARGER THAN 9 SQ. FT. SHALL BE MOUNTED ON MULTIPLE POSTS (SEE ABOVE TABLE).

SIGNS LARGER THAN 27 SQ. FT. SHALL NOT BE MOUNTED ON TUBULAR STEEL POSTS.

WOOD POST EMBEDMENT DEPTH

AREA OF SIGN INSTALLATION (SQ. FT.)	D (MIN)
20 OR LESS	4'
GREATER THAN 20	5'

4" X 6" WOOD POST

POST SPACING REQUIREMENTS		NUMBER OF WOOD POSTS REQUIRED
L	E	
48" OR LESS AND LESS THAN 20 SQ. FT.	-	1
LESS THAN 60"	12"	2
60" TO 120"	L/5	2
GREATER THAN 120" LESS THAN 168"	12"	3
168" AND GREATER	12"	4

SEE NOTE 3

TEMPORARY TRAFFIC CONTROL SIGN MOUNTING

STATE OF WISCONSIN
DEPARTMENT OF TRANSPO

6

S.D.D. 15 D 38-2a

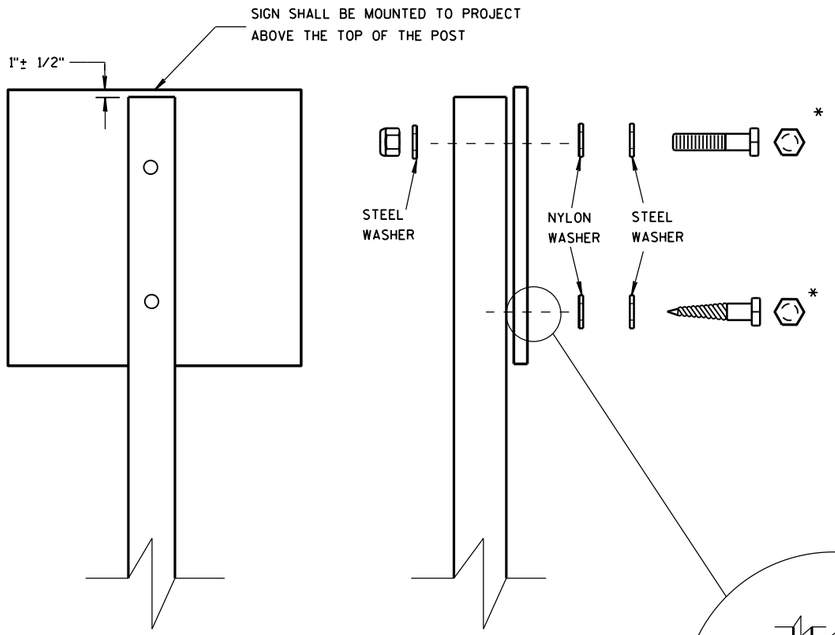

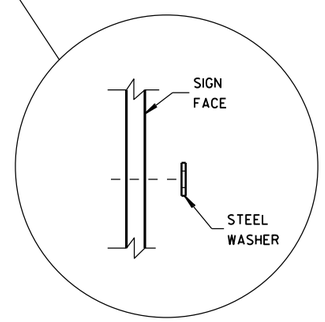

WASHER PLACEMENT WHEN SIGN HAS OTHER THAN TYPE H OR TYPE F FACE

NUTS, BOLTS AND LAGS USED FOR MOUNTING SIGNS SHALL HAVE HEXAGONAL HEADS AND SHALL BE EITHER:

A. HOT DIP GALVANIZED IN ACCORDANCE WITH ASTM DESIGNATION: A 153, CLASS D, OR SC 3

B. ELECTRO-GALVANIZED IN ACCORDANCE WITH ASTM DESIGNATION: B 633, TYPE III, SC 3

THREADS ON BOLTS AND NUTS SHALL BE MANUFACTURED WITH SUFFICIENT ALLOWANCE FOR THE CADMIUM PLATE OR GALVANIZED COATING TO PERMIT THE NUTS TO RUN FREELY ON THE BOLTS.

WOOD POSTS (4" x 4" or 4" x 6")

LAG SCREWS - 3/8" X 3"

MACHINE BOLTS - 5/16" X 6-1/2" OR 7" LENGTH W/ NUTS

SQUARE STEEL POSTS (2" x 2")

MACHINE BOLTS - 3/8" X 3-1/4" LENGTH W/ NUTS

RIVETS - 9/32" (6605-9-6) BULB-TITE, TRI-FOLD, ALUMINUM BODY/MANDREL O.D. FLANGE .720-.765 INCH, GRIP RANGE .042-.375 INCH

WASHERS (ALL POSTS) -

1-1/4" O.D. X 3/8" I.D. X 1/16" STEEL

1-1/4" O.D. X 3/8" I.D. X .080 NYLON FOR ALL TYPE H SIGNS

* TWO DIFFERENT FASTENING SYSTEMS ARE SHOWN FOR ILLUSTRATION PURPOSES. ON ANY INDIVIDUAL SIGN, EITHER ONE OR THE OTHER SYSTEM SHALL BE USED. ACTUAL NUMBER OF FASTENERS PER SIGN VARIES WITH THE SIGN AREA. FOR A SINGLE POST INSTALLATION, ALL SIGNS GREATER THAN 9 SQ. FT. REQUIRE THE USE OF 3 FASTENERS.

6

6

S.D.D. 15 D 38-2b

S.D.D. 15 D 38-2b

ATTACHMENT OF SIGNS TO POSTS

STATE OF WISCONSIN
DEPARTMENT OF TRANSPORTATION

APPROVED

June 2017 — /S/ Andrew Heldtke
DATE — WORK ZONE ENG

FHWA

URBAN AREA

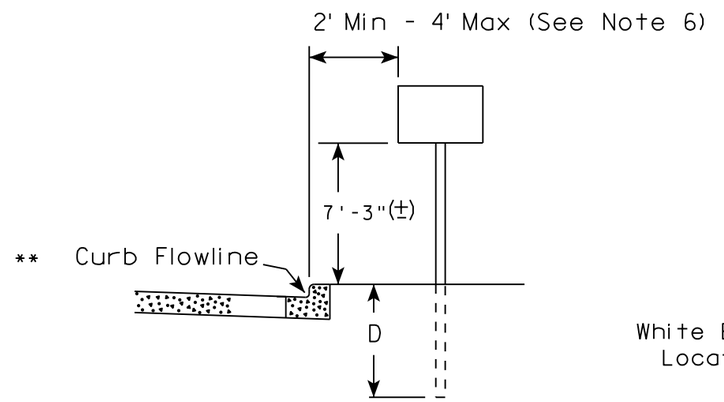

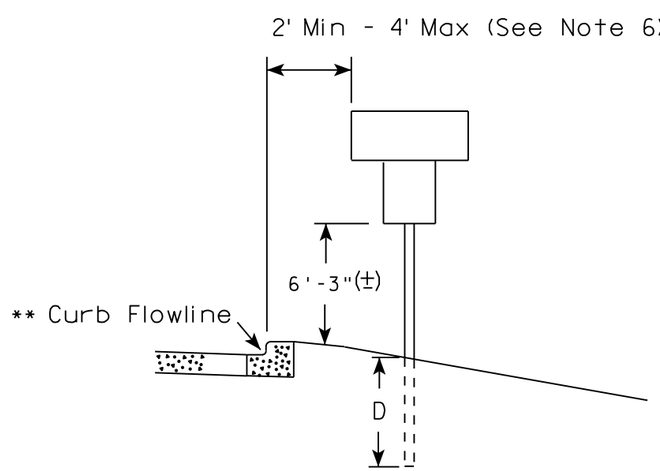

RURAL AREA (See Note 2)

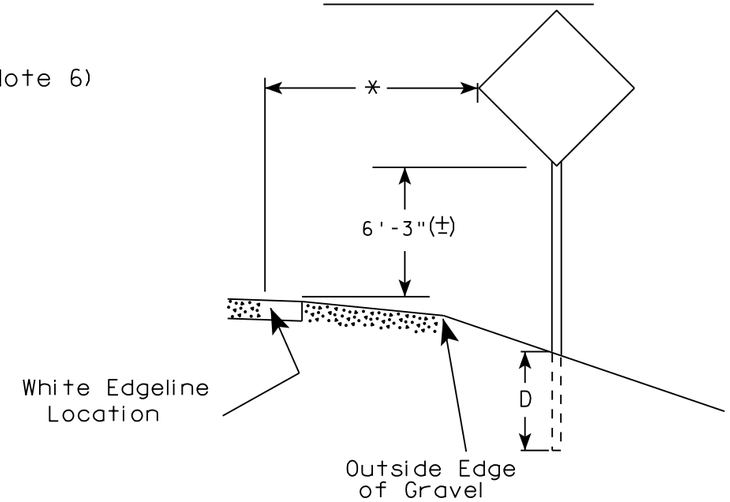

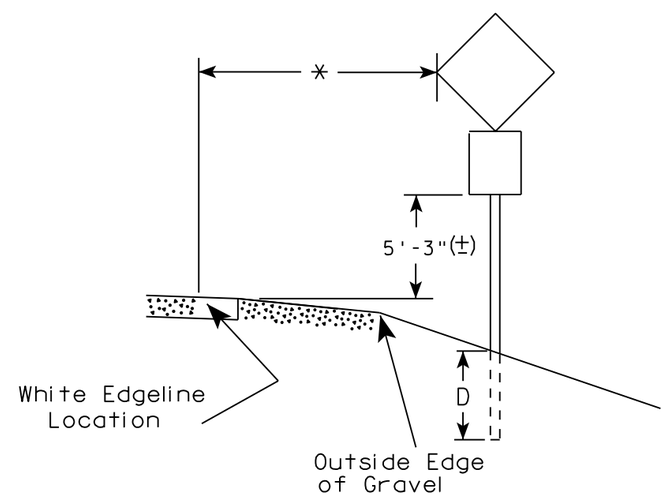

** The existence of curb and gutter does not in itself mandate the vertical clearance illustrated. That height is typically measured where there is sidewalk adjacent to the roadway or parking is permitted. In the absence of sidewalk vertical clearance is measured from the top of the curb. Offset of signs is measured from the flow line.

* 6 feet from edge of a paved shoulder or 12 feet from the edge of pavement (edge line location) or 2 feet from outside edge of gravel, whichever is greater unless directed by project engineer.

GENERAL NOTES

1. Signs wider than 4 feet or 20 sq.ft or larger, shall be mounted on multiple posts. Refer to plate A4-4.
2. If signs are mounted on barrier wall, see A4-10 sign plate.
3. For expressways and freeways, mounting height is 7'- 3" (±) or 6'-3" (±) depending upon existence of a sub-sign.
4. J-Assemblies are considered to be one sign for mounting height.
5. Minimum mounting height for signs mounted on traffic signal poles is 5'- 3" (±).
6. Offset distance shall be consistent with existing signs or consistent throughout length of project.
7. The (±) tolerance for mounting height is 3 inches.
8. Folding signs shall be mounted at a height of 5'-3" (±) or as directd by the Engineer.
9. The Double Arrow sign (W12-1) shall be mounted at a height of 2'-3" (±). The Chevron sign (W1-8), Roundabout Chevron panel (R6-4B), Enhanced Reference Markers, Clearance Markers (W5-52), Mile Markers (D10 series), In Road Object Markers (W5-54) & End of Road Markers (W5-56) shall be mounted at a height of 4'-3" (±).

POST EMBEDMENT DEPTH

Area of Sign Installation (Sq. Ft.)	D (Min)
20 or Less	4'
Greater than 20	5'

TYPICAL INSTALLATION OF PERMANENT TYPE II SIGNS ON SINGLE POSTS

WISCONSIN DEPT OF TRANSPORTATION

APPROVED Matthew R Rauch for State Traffic Engineer

DATE 8/21/17 PLATE NO. A4-3.21

7 7

PROJECT NO:	HWY:	COUNTY:		SHEET NO: 36	E

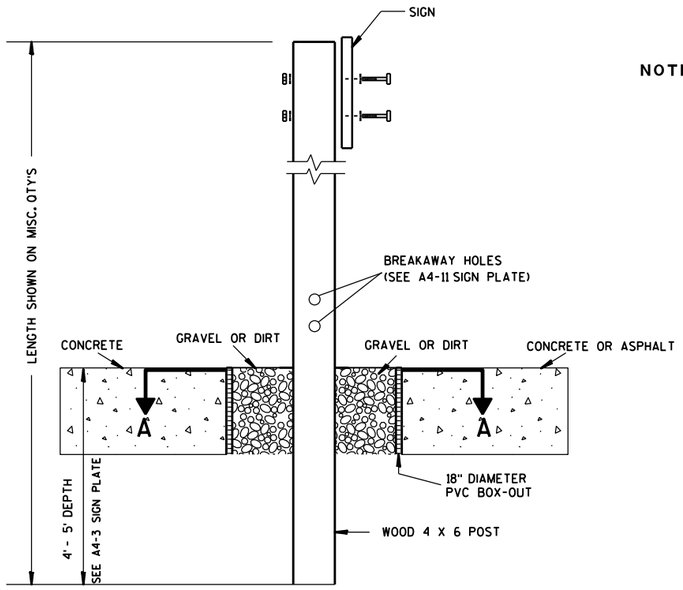

ELEVATION VIEW

DETAIL OF WOOD 4 X 6 SIGN POST IN BOX-OUT

NOTES:
1. ALL MATERIAL TO BE APPROVED BY ENGINEER PRIOR TO INSTALLATION
2. SEE SIGN PLATE A4-8 FOR SIGN HARDWARE REQUIREMENTS
3. 18 INCH X 18 INCH SQUARE BOX-OUTS MAY BE USED FOR INSTALLATIONS IN EXISTING CONCRETE OR ASPHALT LOCATIONS.

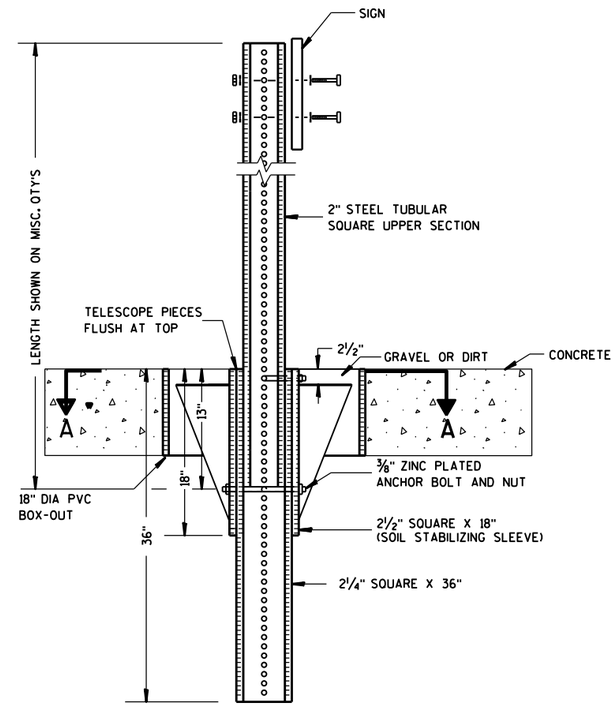

ELEVATION VIEW

DETAIL OF STEEL 2 X 2 SIGN POST IN BOX-OUT

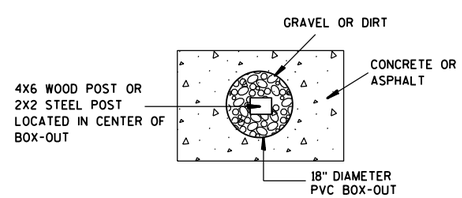

PLAN VIEW

FOR NEW CONCRETE/ASPHALT INSTALLATIONS

SIGN POST
BOX-OUTS
A4-3B

WISCONSIN DEPT OF TRANSPORTATION

APPROVED Matthew R Rauch
for State Traffic Engineer

DATE 1/27/14 PLATE NO. A4-3B.1

PROJECT NO:	HWY:	COUNTY:		SHEET NO:	E

URBAN AREA

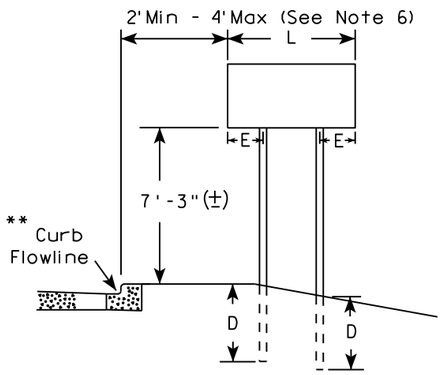

RURAL AREA (See Note 3)

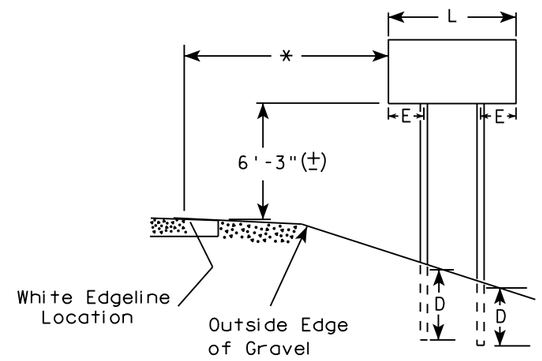

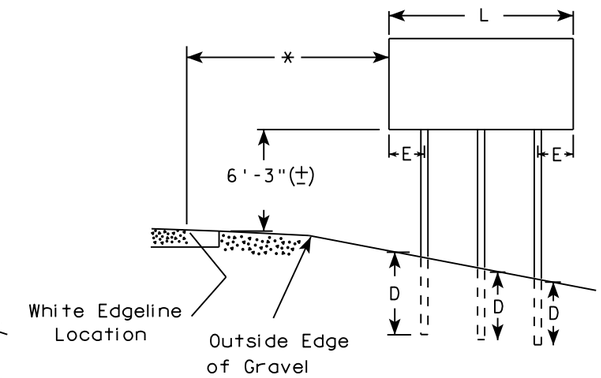

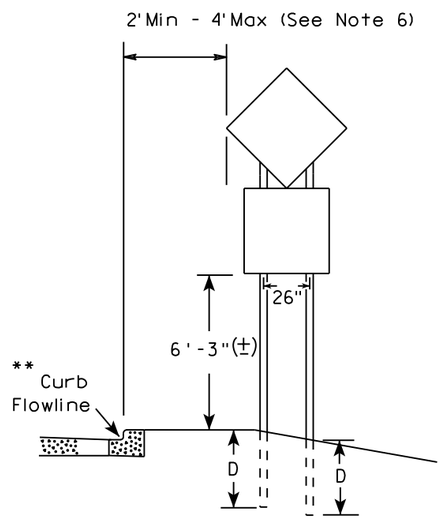

48" DIAMOND WARNING SIGN

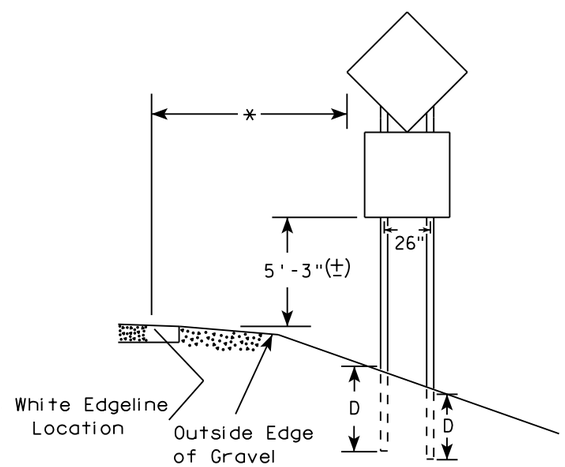

48" DIAMOND WARNING SIGN

SIGN SHAPE OTHER THAN DIAMOND (TWO POSTS REQUIRED)	
L	E
*** Greater than 48" Less than 60"	12"
60" to 108"	L/5

SIGN SHAPE OTHER THAN DIAMOND (THREE POSTS REQUIRED)	
L	E
Greater than 108" to 144"	12"

GENERAL NOTES

1. For 3 or 4 post installations, individual post spacing shall be greater than 3'-6".
2. See tables below for required number of posts.
3. For expressways and freeways, mounting height is 7'-3" (±) or 6'-3" (±) depending upon existence of sub-sign.
4. The (±) tolerance for mounting height is 3 inches.
5. J-Assemblies are considered to be one sign for mounting height.
6. Offset distance shall be consistent with existing signs or consistent throughout length of project.
7. Folding signs shall be mounted at a height of 5'-3" (±) or as directed by the engineer.
8. The Double Arrow sign (W12-1) shall be mounted at a height of 2'-3" (±). The Chevron sign (W1-8), Roundabout Chevron panel (R6-4B), Clearance Markers (W5-52), Mile Markers (D10 series), In Road Object Markers (W5-54) & End of Road Markers (W5-56) shall be mounted at a height of 4"-3" (±).

* 6 feet from edge of a paved shoulder or 12 feet from the edge of pavement (edge line location) or 2 feet from outside edge of gravel, whichever is greater unless directed by project engineer.

** The existence of curb and gutter does not in itself mandate the vertical clearance illustrated. That height is typically measured where there is sidewalk adjacent to the roadway or parking is permitted. In the absence of sidewalk vertical clearance is measured from the top of the curb. Offset of signs is measured from the flow line.

*** See A4-3 sign plate for signs 4' or less in width and less than 20 S.F. in area.

POST EMBEDMENT DEPTH

Area of Sign Installation (Sq. Ft.)	D (Min)
20 or Less	4'
Greater than 20	5'

TYPICAL INSTALLATION OF TYPE II SIGNS ON MULTIPLE POSTS

WISCONSIN DEPT OF TRANSPORTATION

APPROVED Matthew R Rauch
For State Traffic Engineer

DATE 8/21/17 PLATE NO. A4-4.15

7

7

PROJECT NO:	HWY:	COUNTY:		SHEET NO: 38	E

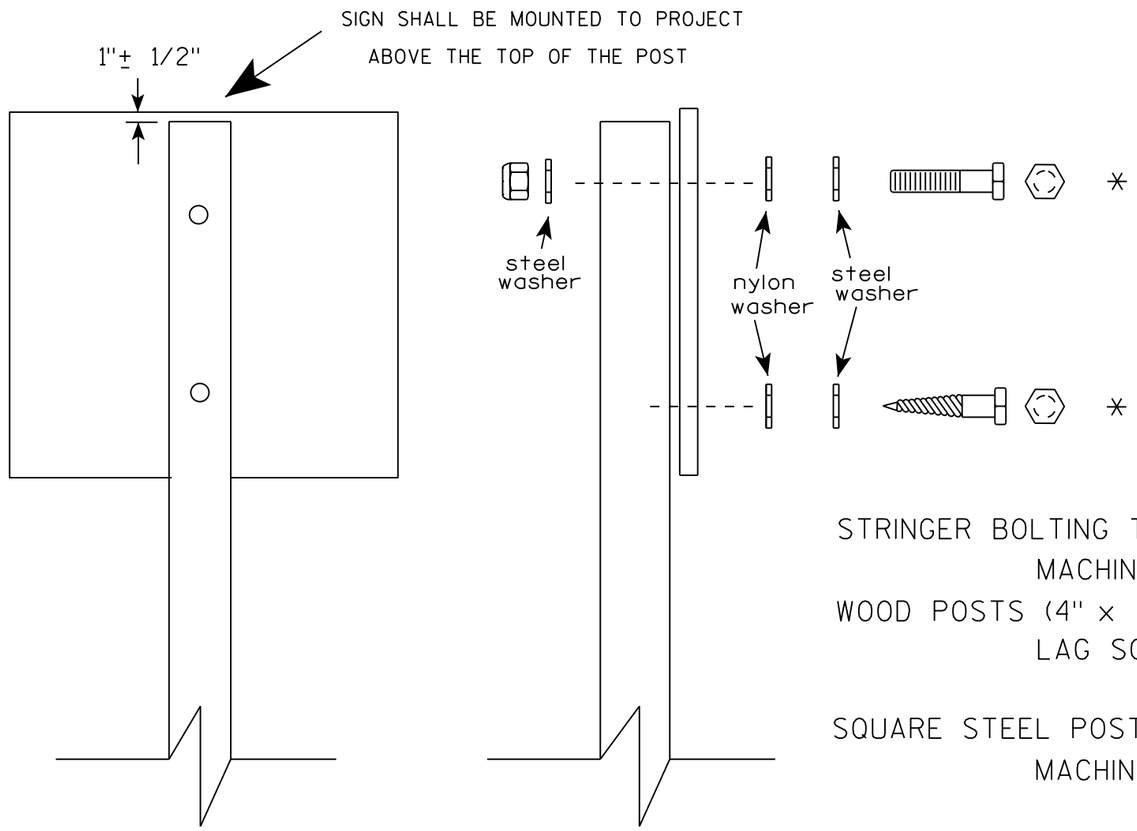

Nuts, bolts and lags used for mounting signs shall have hexagonal heads and shall be either :

a. Hot dip galvanized in accordance with ASTM Designation: A 153, Class D, or SC 3

b. Electro-galvanized in accordance with ASTM Designation : B 633, TYPE III, SC 3.

Threads on bolts and nuts shall be manufactured with sufficient allowance for the cadmium plate or galvanized coating to permit the nuts to run freely on the bolts.

STRINGER BOLTING TO ALUMINUM SIGNS (SEE SIGN PLATE A4-18)

MACHINE BOLTS - 5/16" X 1-3/4" Length w/ lock nuts

WOOD POSTS (4" x 4" or 4" x 6")

LAG SCREWS - 3/8" X 3" (NO STRINGERS ON BACK OF SIGN)

3/8" X 4" (STRINGERS ON BACK OF SIGN)

SQUARE STEEL POSTS (2" x 2")

MACHINE BOLTS - 3/8" X 3-1/4" Length w/ nuts (NO STRINGER ON BACK OF SIGN)

3/8" X 5" Length w/ nuts (STRINGERS ON BACK OF SIGN)

RIVETS - 9/32 " (6605-9-6) BULB-TITE, TRI-FOLD, ALUMINUM BODY/MANDREL

O.D. FLANGE .720-.765 INCH, GRIP RANGE .042-.375 INCH

WASHERS (ALL POSTS) -

1-1/4" O.D. X 3/8" I.D. X 1/16" STEEL

1-1/4" O.D. X 3/8" I.D. X .080 NYLON

* Two different fastening systems are shown for illustration purposes. On any individual sign, either one or the other system shall be used. Actual number of fasteners per sign varies with the sign area, but normally there are two. For a single post installation, all signs greater than 9 sq. ft. require the use of 3 fasteners.

ATTACHMENT OF SIGNS TO POSTS

WISCONSIN DEPT OF TRANSPORTATION

APPROVED Matthew R Rauch
for State Traffic Engineer

DATE 8/11/16 PLATE NO. A4-8.8

PROJECT NO: SHEET NO: E

TELESCOPIC TUBING ANCHORS
TWO PIECE SYSTEM

2 1/4 " SQUARE
12 GAUGE
PERFORATED
GALVANIZED FINISH

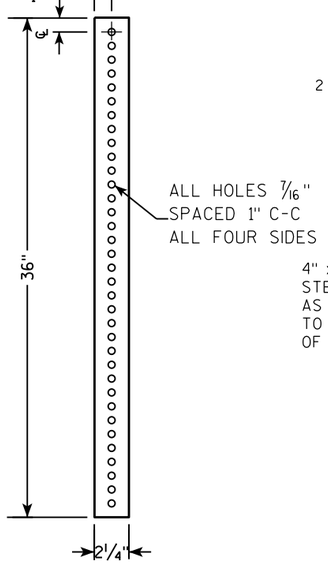

2 1/2 " SQUARE
12 GAUGE
OMNI-DIRECTIONAL
PERFORATED
SOIL STABILIZING SLEEVE
GALVANIZED FINISH

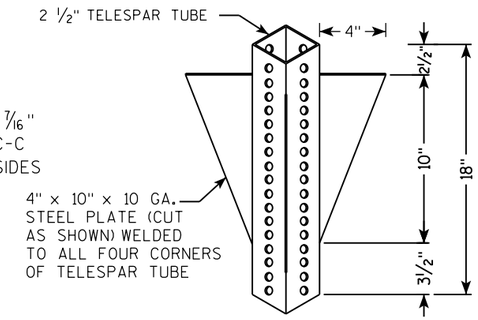

DETAIL OF TUBULAR STEEL SIGN POST
(IN POURED CONCRETE OR ASPHALT)

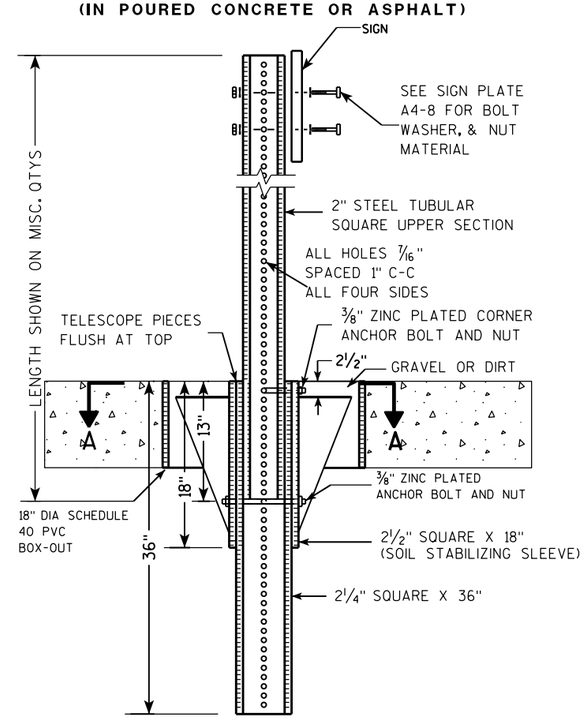

DETAIL OF TUBULAR STEEL SIGN POST
(IN LOCATIONS OTHER THAN POURED CONCRETE OR ASPHALT)

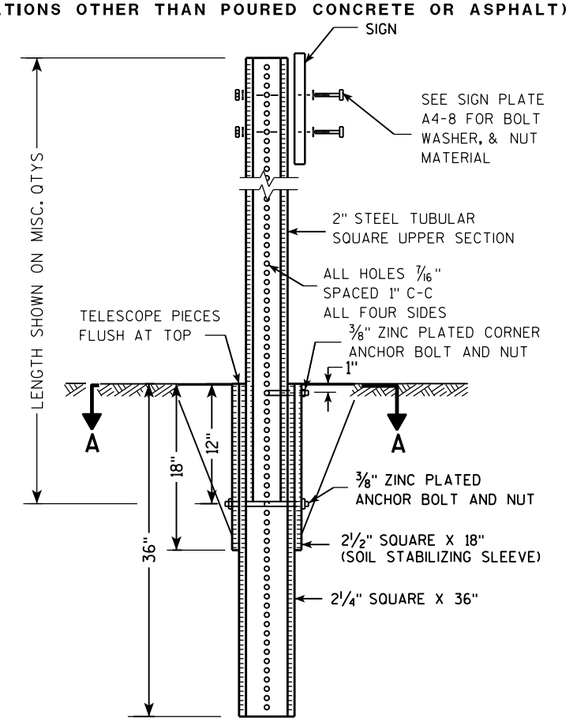

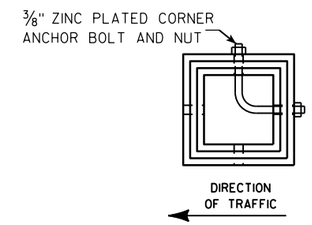

SECTION A-A

Area of Sign Installation (Sq. Ft.)	Number of Required Posts
9 or less	1
Greater than 9 less than or equal to 18	2
Greater than 18 less than or equal to 27	3

Signs wider than 3 feet or larger than 9 sq. ft shall be mounted on multiple posts (see above table).

TUBULAR STEEL
SIGN POST
A4-9

WISCONSIN DEPT OF TRANSPORTATION

APPROVED Matthew R Rauch
for State Traffic Engineer

DATE 2/05/15 PLATE A4-9.9

7 7

PROJECT NO:	HWY:	COUNTY:		SHEET NO:	E

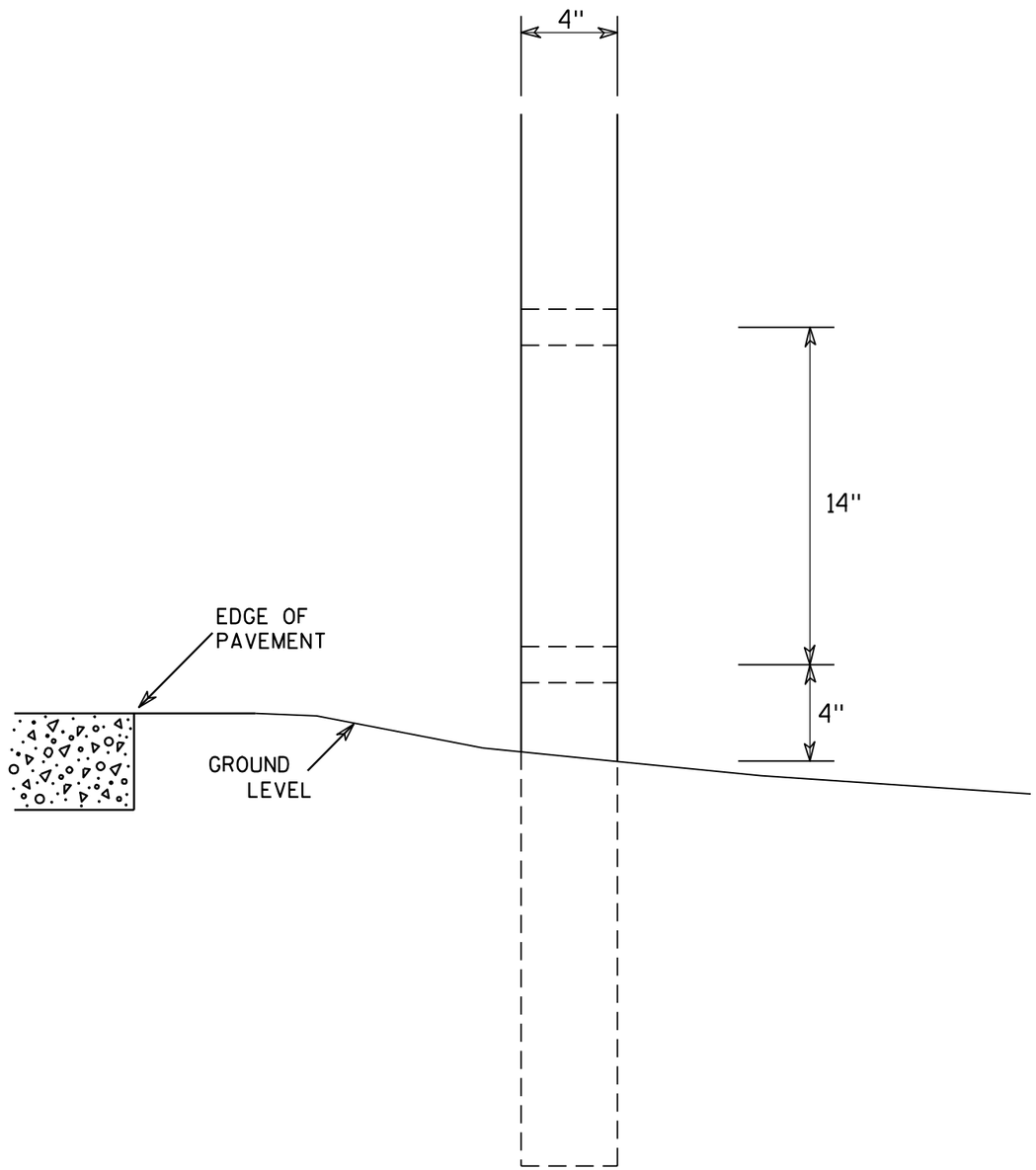

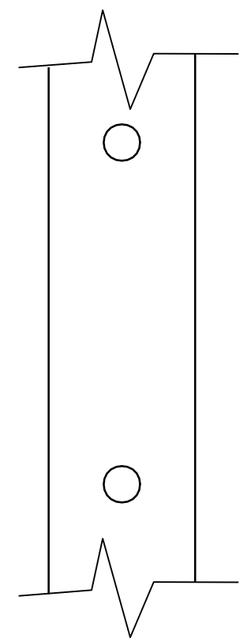

SIDE VIEW

GENERAL NOTES

1. All 4 x 6 Wood Posts shall be modified by having two 1½" diameter holes drilled perpendicular to the roadway centerline.

7

7

4 X 6 WOOD POST MODIFICATIONS

WISCONSIN DEPT OF TRANSPORTATION

APPROVED Chester J Spang for State Traffic Engineer

DATE 3/27/97 PLATE NO. A4-11.2

PROJECT NO:	HWY:	COUNTY:		SHEET NO: 41	E

BANDING

SINGLE SIGN

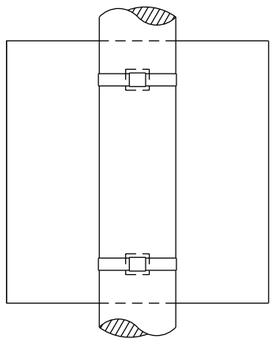

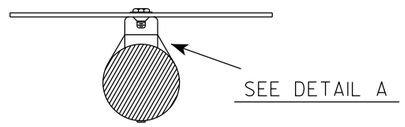

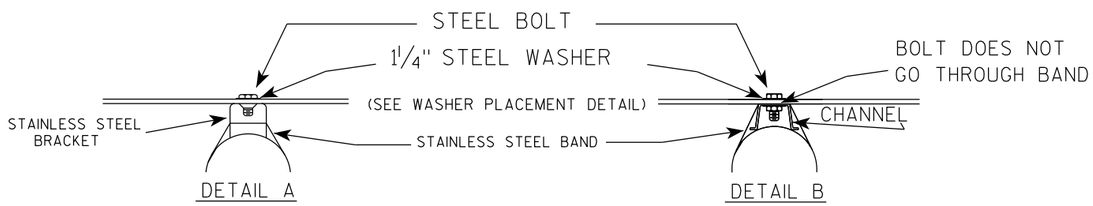

WASHER PLACEMENT

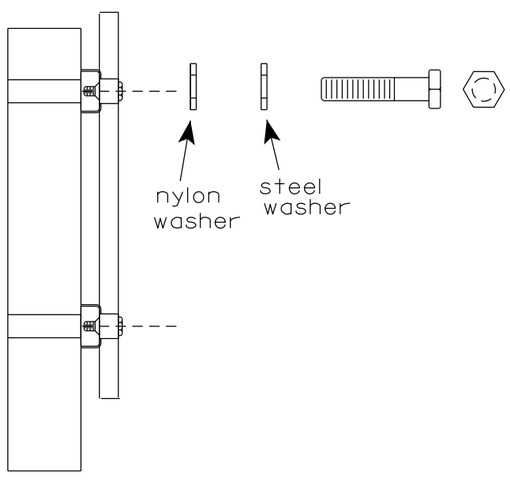

WASHERS (ALL POSTS) -
1-1/4" O.D. X 3/8" I.D. X 1/16" STEEL
1-1/4" O.D. X 3/8" I.D. X .080 NYLON
FOR ALL TYPE H SIGNS

GENERAL NOTES

1. Any sign over 3 feet in width shall use the V-Block banding method. See A5-10 standard plate.
2. Signs 3 feet or greater in height shall have three bracket bands installed. Signs less than 3 feet in height shall have two bracket bands installed.
3. Banding and assembly bracket shall be stainless steel. All bands shall be ¾" in width and 0.025" thickness.
4. ALL SIGN MOUNTING BOLTS AND WASHERS SHALL BE EITHER:
   a. Hot dip or mechanically galvanized in accordance with ASTM Designation: A 153, Class D
   b. Electro-galvanized in accordance with ASTM designation: B 633, Type III, SC 3

"J" ASSEMBLY

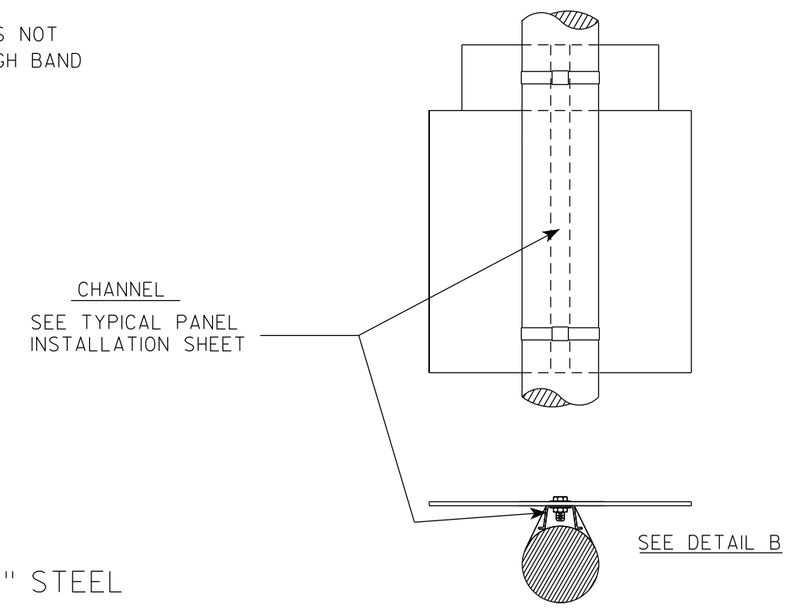

STANDARD SIGN
SIGN BANDING DETAILS

WISCONSIN DEPT OF TRANSPORTATION

APPROVED Matthew R Rauch for State Traffic Engineer

DATE 6/10/19 PLATE NO. A5-9.4

PROJECT NO:	HWY:	COUNTY:		SHEET NO: 42	E

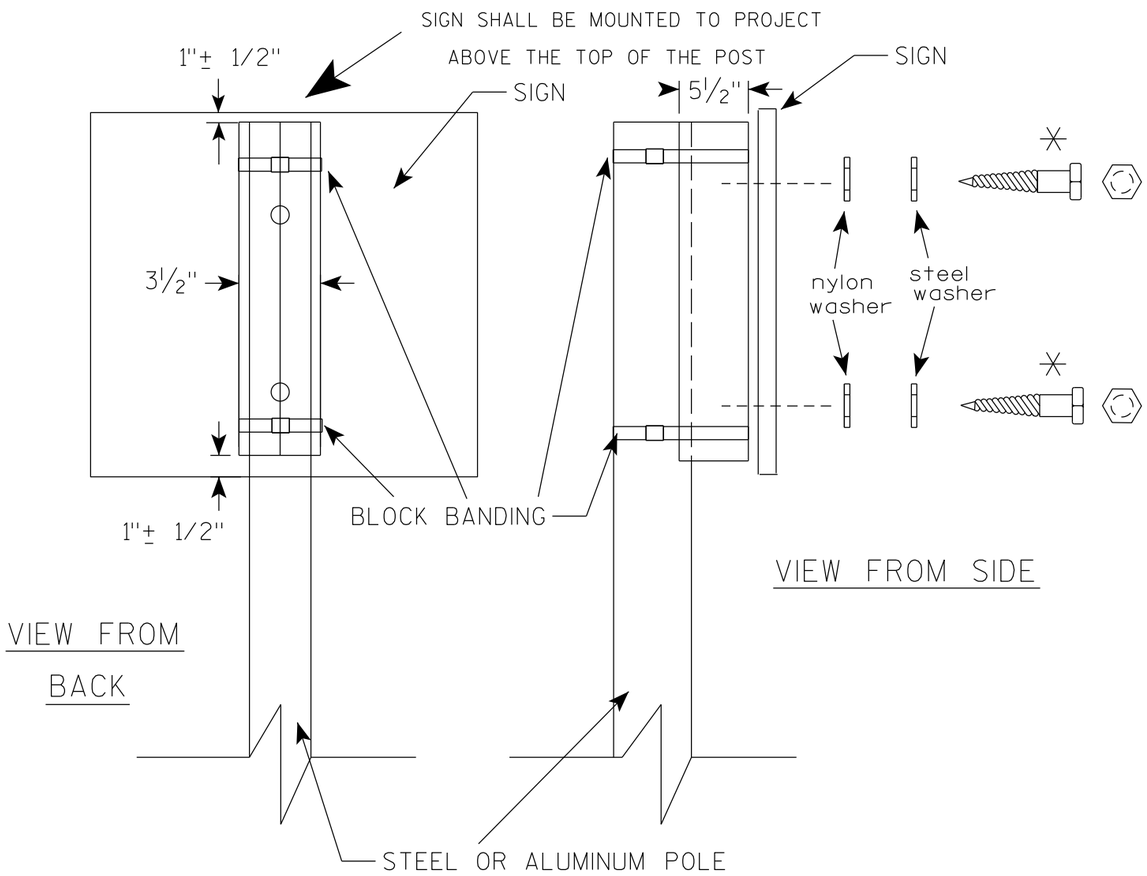

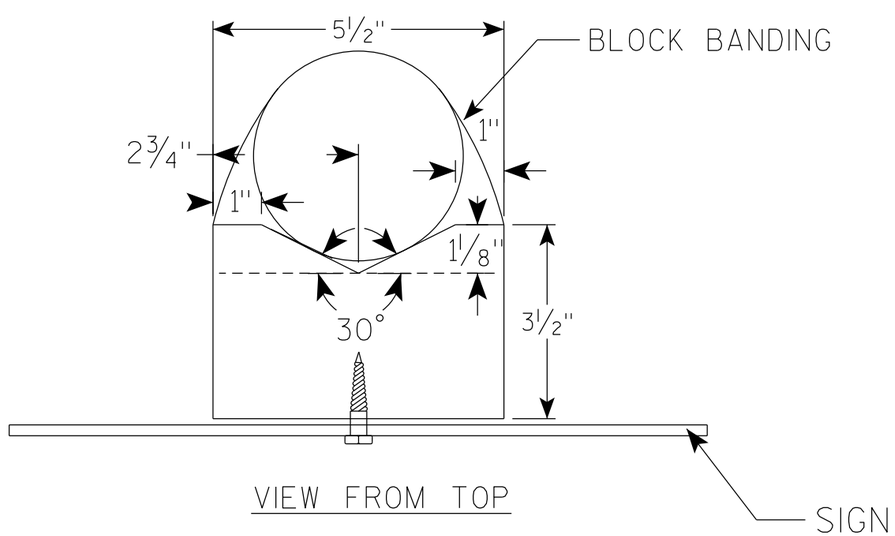

GENERAL NOTES

1. WOOD 4"X6" POST MATERIAL SHALL CONFORM TO 507.2.2 OF THE WisDOT STANDARD SPECIFICATIONS
2. BLOCK BANDING AND CLIPS SHALL BE STAINLESS STEEL, ¾" WIDTH AND 0.025" THICKNESS
3. SIGNS 3' OR GREATER IN HEIGHT SHALL UTILIZE 3 BLOCK BANDS. SIGNS UNDER 3' IN HEIGHT SHALL UTILIZE 2 BLOCK BANDS
4. ACTUAL NUMBER OF FASTENERS PER SIGN VARIES WITH THE SIGN AREA, BUT NORNALLY THERE ARE TWO. FOR SIGNS GREATER THAN 9 S.F. 3 FASTENERS SHALL BE USED.
5. ALL SIGN MOUNTING BOLTS AND WASHERS SHALL BE EITHER:
   a. Hot dip or mechanically galvanized in accordance with ASTM Designation: A 153, Class D
   b. Electro-galvanized in accordance with ASTM Designation : B 633, TYPE III, SC 3
6. ALL BOLTS SHALL HAVE HEXAGONAL HEADS.
7. STEEL WASHERS SHALL BE 1¼" O.D. X ⅜" I.D. X 1/16"
8. NYLON WASHERS SHALL BE 1¼" O.D. X ⅜" I.D. X .080 FOR TYPE H OR TYPE F FACE SIGN

✳ LAG BOLTS SHALL BE ⅜" X 2½"

BLOCK BANDING DETAIL
(V-BLOCK OPTION)

WISCONSIN DEPT OF TRANSPORTATION

APPROVED Matthew R Rauch
For State Traffic Engineer

DATE 6/10/19 PLATE NO. A5-10.2

PROJECT NO:				SHEET NO: 43	E

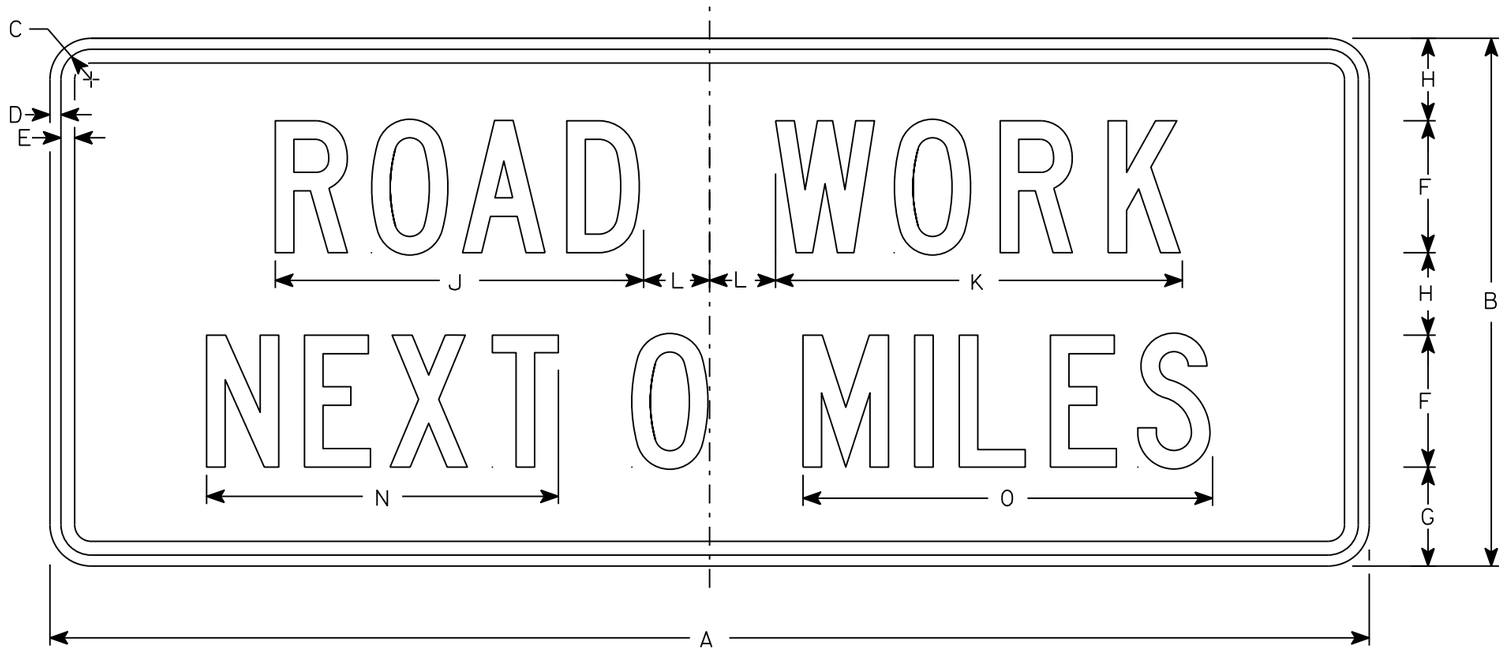

G20-1

NOTES

1. Sign is Type II - Type F Reflective
2. Color:
   Background - Orange
   Message - Black
3. Message Series - C
4. Corners may be square or rounded when base material is plywood but borders shall be rounded as shown. When base material is metal, the corners and borders shall be rounded.
5. Round distance to nearest whole Mile and substitute appropriate numerals and optically adjust spacing to achieve proper balance

SIZE	A	B	C	D	E	F	G	H	I	J	K	L	M	N	O	P	Q	R	S	T	U	V	W	X	Y	Z	Area sq. ft.
1																											
2	60	24	1 3/8	1/2	5/8	6	4 1/2	3 3/4		16 3/4	18 1/2	3		16	18 5/8												10
3																											
4	60	24	1 3/8	1/2	5/8	6	4 1/2	3 3/4		16 3/4	18 1/2	3		16	18 5/8												10
5																											

STANDARD SIGN
G20-1

WISCONSIN DEPT OF TRANSPORTATION

APPROVED Matthew R Rauch
for State Traffic Engineer
DATE 3/14/17 PLATE NO. G20-1.8

PROJECT NO: | HWY: | COUNTY: | SHEET NO: 44 | E

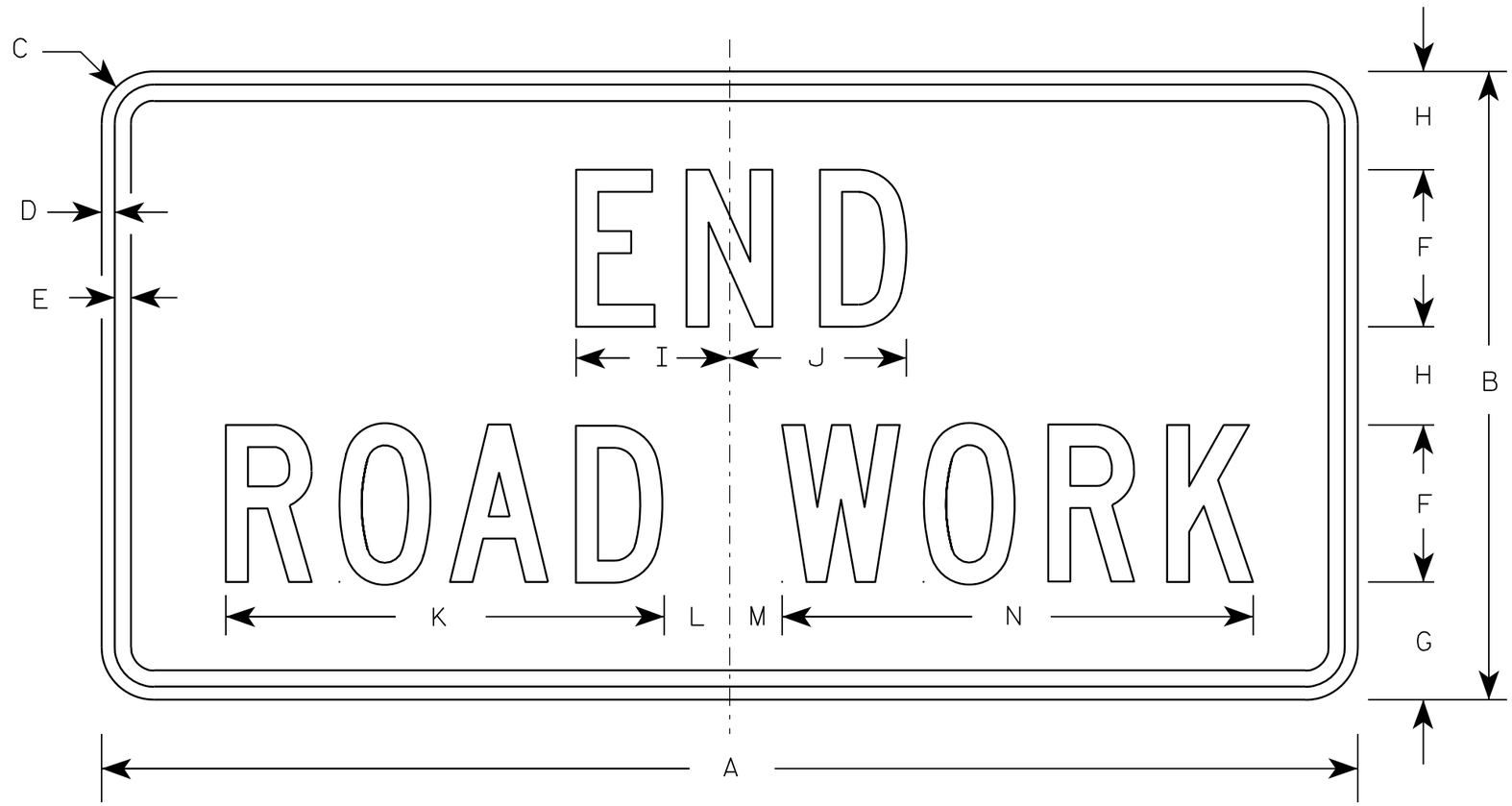

G20-2A

NOTES

1. Sign is Type II - Type F Reflective - reference WIS DOT Standard Specification for HIGHWAY and STRUCTURE CONSTRUCTION latest edition.
2. Color:
   Background - Orange
   Message - Black
3. Message Series - C
4. Corners may be square or rounded when base material is plywood but borders shall be rounded as shown. When base material is metal, the corners and borders shall be rounded.

Metric equivalent for this sign is:

SIZE	
1	900 mm X 450 mm
2	1200 mm X 600 mm
3	1200 mm X 600 mm
4	1200 mm X 600 mm
5	1200 mm X 600 mm

SIZE	A	B	C	D	E	F	G	H	I	J	K	L	M	N	O	P	Q	R	S	T	U	V	W	X	Y	Z	Area sq. ft.	Area m2
1	36	18	1 1/8	3/8	1/2	4	3 3/4	2 1/2	4 1/8	4 1/8	11 1/8	2	1	12 1/8													4.5	0.41
2	48	24	1 1/2	1/2	5/8	6	4 1/2	3 3/4	5 7/8	6 3/4	16 3/4	2 1/2	1 3/4	18 1/2													8.0	0.72
3	48	24	1 1/2	1/2	5/8	6	4 1/2	3 3/4	5 7/8	6 3/4	16 3/4	2 1/2	1 3/4	18 1/2													8.0	0.72
4	48	24	1 1/2	1/2	5/8	6	4 1/2	3 3/4	5 7/8	6 3/4	16 3/4	2 1/2	1 3/4	18 1/2													8.0	0.72
5	48	24	1 1/2	1/2	5/8	6	4 1/2	3 3/4	5 7/8	6 3/4	16 3/4	2 1/2	1 3/4	18 1/2													8.0	0.72

STANDARD SIGN

G20-2A

WISCONSIN DEPT OF TRANSPORTATION

APPROVED Matthew R Rauch
for State Traffic Engineer

DATE 9/30/09 PLATE NO. G20-2A.8

PROJECT NO:	HWY:	COUNTY:		SHEET NO: 45	E

NOTES

1. Sign is Type II - Type F Reflective
2. Color:
   Background - Orange
   Message - Black
3. Message Series - D
4. Substitute appropriate numeral and adjust spacing to achieve proper balance.

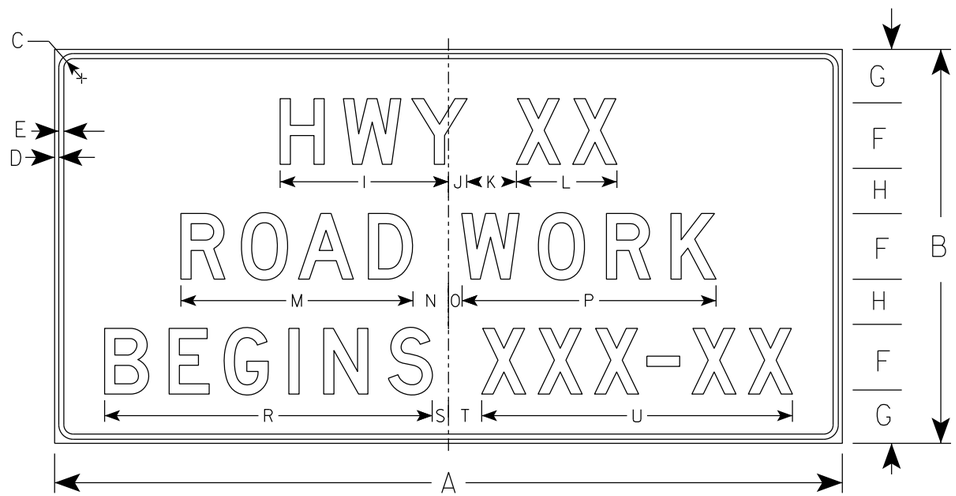

G20-57

SIZE	A	B	C	D	E	F	G	H	I	J	K	L	M	N	O	P	Q	R	S	T	U	V	W	X	Y	Z	Area sq. ft.
1																											
2																											
3	72	36	1 1/8	1/2	5/8	6	5	4	15 5/8	1 5/8	5	9 1/4	21 1/4	3 1/2	1 1/2	23 1/4		29 7/8	1 3/4	3 1/4	28 1/2						18.0
4	96	48	2 1/4	3/4	1	8	6 1/2	5 1/2	20 5/8	2 1/4	6	12 1/4	28 1/4	4 3/8	1 5/8	31		39 1/4	2	4	37 7/8						32.0
5																											

STANDARD SIGN
G20-57

WISCONSIN DEPT OF TRANSPORTATION

APPROVED Matthew R Rauch
For State Traffic Engineer

DATE 1/22/19 PLATE NO. G20-57.3

PROJECT NO: | HWY: | COUNTY: | SHEET NO: 46 | E

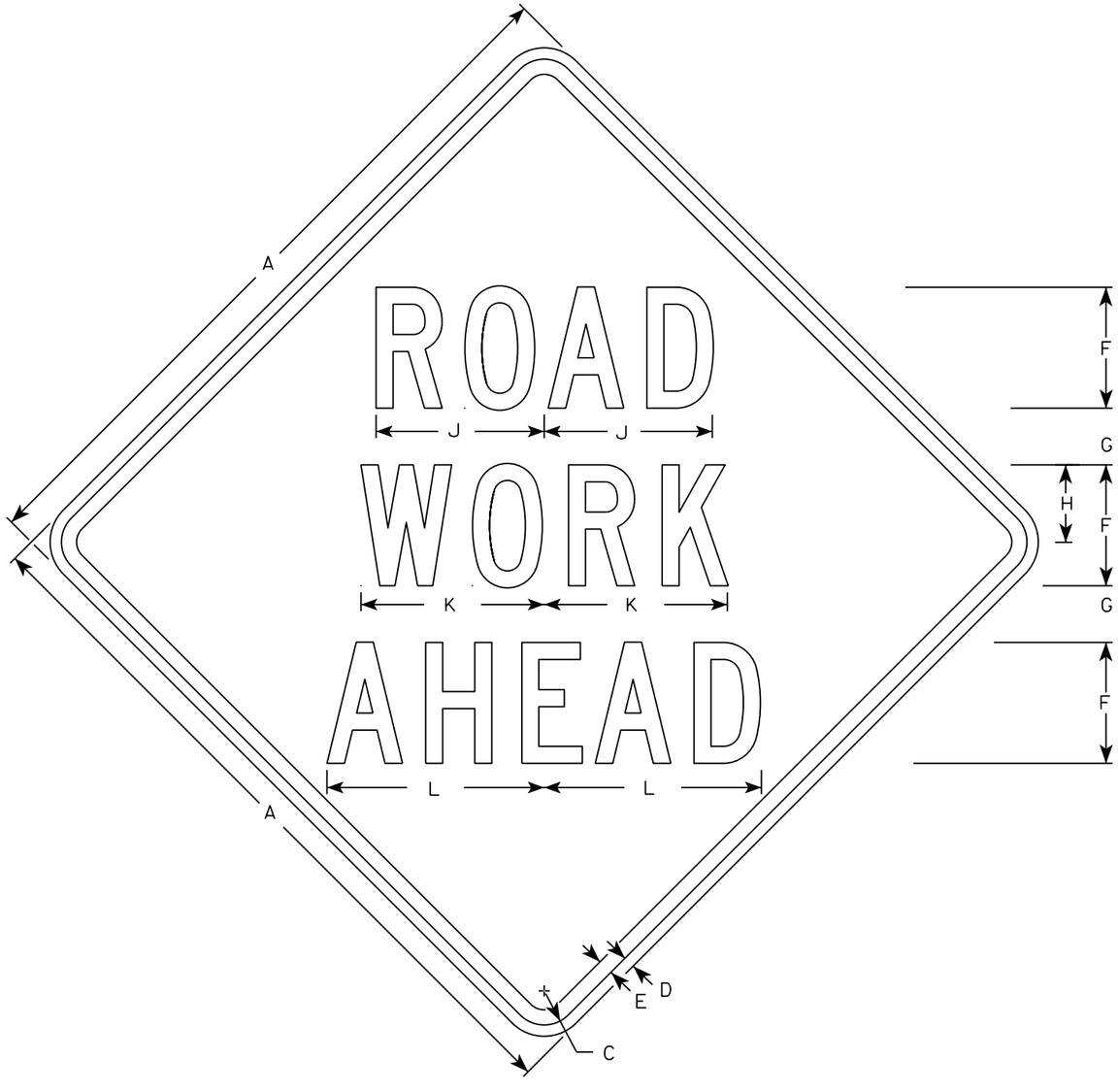

W20-1A

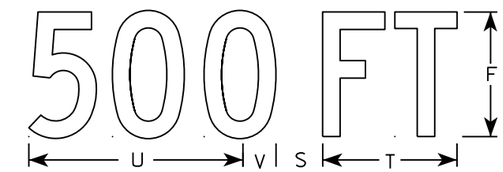

W20-1D

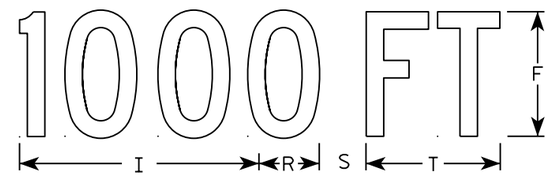

W20-1C

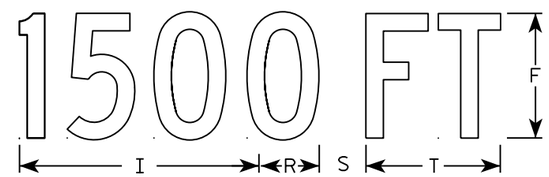

W20-1B

W20-1G

W20-1F

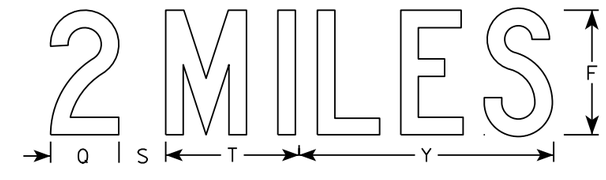

W20-1E

NOTES

1. Sign is Type II - Type F Reflective
2. Color:
   Background - Orange
   Message - Black
3. Message Series - C
4. Corners may be square or rounded when base material is plywood but borders shall be rounded as shown. When base material is metal, the corners and borders shall be rounded.

SIZE	A	B	C	D	E	F	G	H	I	J	K	L	M	N	O	P	Q	R	S	T	U	V	W	X	Y	Z	Area sq. ft.
1	36		1 3/8	1/2	5/8	5	2 5/8	3 1/4	10 1/8	7	7 5/8	8 7/8	1 1/8	4 1/2	3 1/2	9		2 1/2	2 1/4	5 5/8	9	1 3/8	8	1 3/4	10 3/4	6	9.0
2S	48		2 1/4	3/4	1	8	3 3/4	5 1/8	15 3/8	11 1/8	12 1/8	14 3/8	1 5/8	6 7/8	5 3/8	13 7/8	4 3/8	3 7/8	3	8 5/8	13 3/4	2 1/8	11 7/8	2 3/4	16 3/8	9	16.0
2M	48		2 1/4	3/4	1	8	3 3/4	5 1/8	15 3/8	11 1/8	12 1/8	14 3/8	1 5/8	6 7/8	5 3/8	13 7/8	4 3/8	3 7/8	3	8 5/8	13 3/4	2 1/8	11 7/8	2 3/4	16 3/8	9	16.0
3	48		2 1/4	3/4	1	8	3 3/4	5 1/8	15 3/8	11 1/8	12 1/8	14 3/8	1 5/8	6 7/8	5 3/8	13 7/8	4 3/8	3 7/8	3	8 5/8	13 3/4	2 1/8	11 7/8	2 3/4	16 3/8	9	16.0
4	48		2 1/4	3/4	1	8	3 3/4	5 1/8	15 3/8	11 1/8	12 1/8	14 3/8	1 5/8	6 7/8	5 3/8	13 7/8	4 3/8	3 7/8	3	8 5/8	13 3/4	2 1/8	11 7/8	2 3/4	16 3/8	9	16.0
5	48		2 1/4	3/4	1	8	3 3/4	5 1/8	15 3/8	11 1/8	12 1/8	14 3/8	1 5/8	6 7/8	5 3/8	13 7/8	4 3/8	3 7/8	3	8 5/8	13 3/4	2 1/8	11 7/8	2 3/4	16 3/8	9	16.0

STANDARD SIGN
W20-1A, B, C, D, F & G

WISCONSIN DEPT OF TRANSPORTATION

APPROVED Matthew R Rauch
for State Traffic Engineer

DATE 5/07/15 PLATE NO. W20-1.10

PROJECT NO:

SHEET NO: E

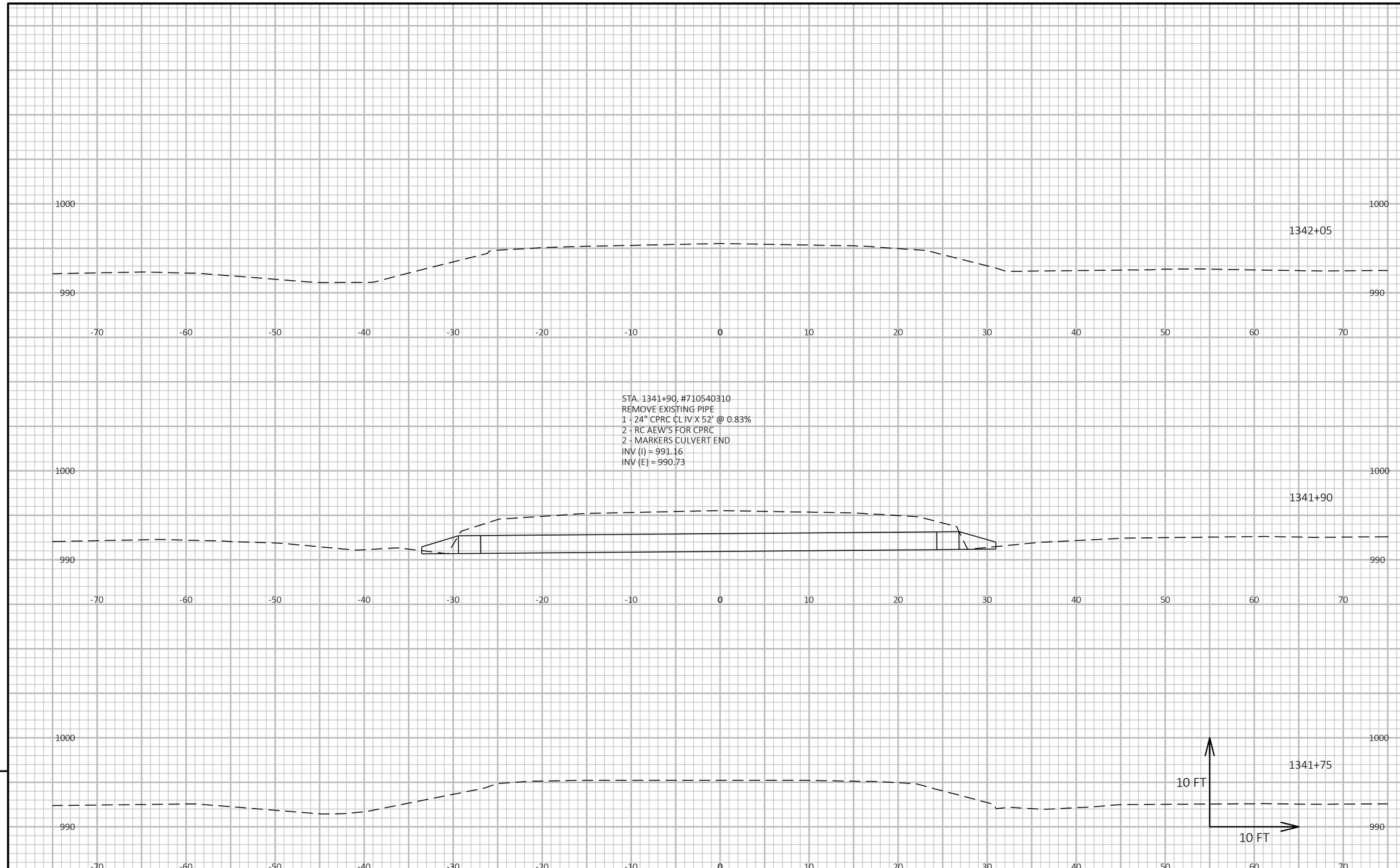

9

9

PROJECT NO: 1620-00-63	HWY: STH 80	COUNTY: WOOD	CROSS SECTIONS: STH 80	SHEET 48	E

FILE NAME : P:\90S\93\00093433\CADD\SHEETSPLAN -75\090201-XS.DWG
LAYOUT NAME - FINAL PIPES 1

PLOT DATE : 1/21/2019 10:51 AM PLOT BY : BOBBI MAXWELL PLOT NAME : PLOT SCALE : 1 IN:10 FT HORZ. / 1 IN:10 FT VERT.

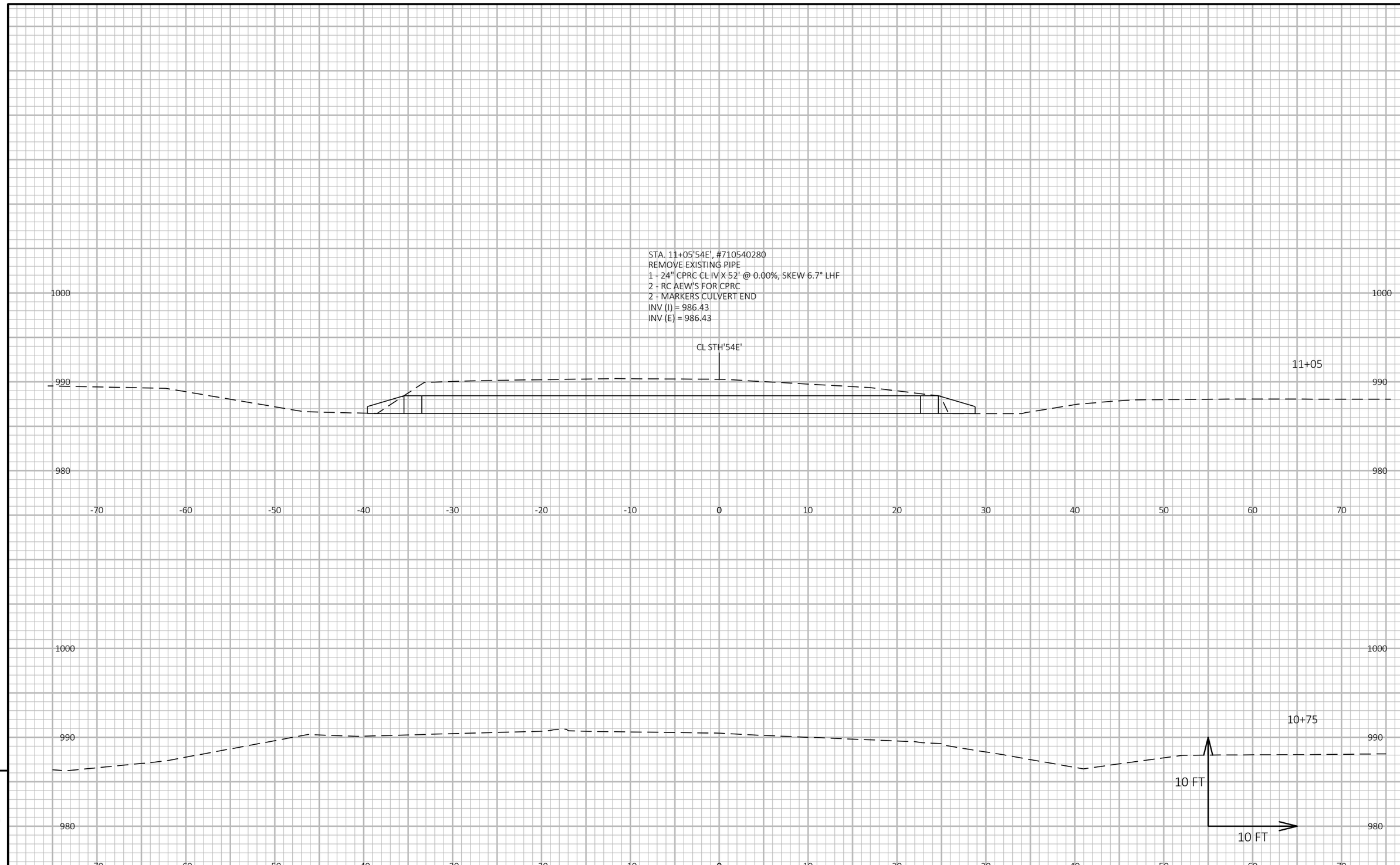

9

9

PROJECT NO: 1620-00-63	HWY: STH 80	COUNTY: WOOD	CROSS SECTIONS: STH 54 EAST	SHEET 49	E

FILE NAME : P:\90S\93\00093433\CADD\SHEETSPLAN -75\090201-XS.DWG
LAYOUT NAME - 54 PIPE- (1)
PLOT DATE : 1/21/2019 10:51 AM
PLOT BY : BOBBI MAXWELL
PLOT NAME :
PLOT SCALE : 1 IN:10 FT HORZ. / 1 IN:10 FT VERT.
WISDOT/CADDS SHEET 49

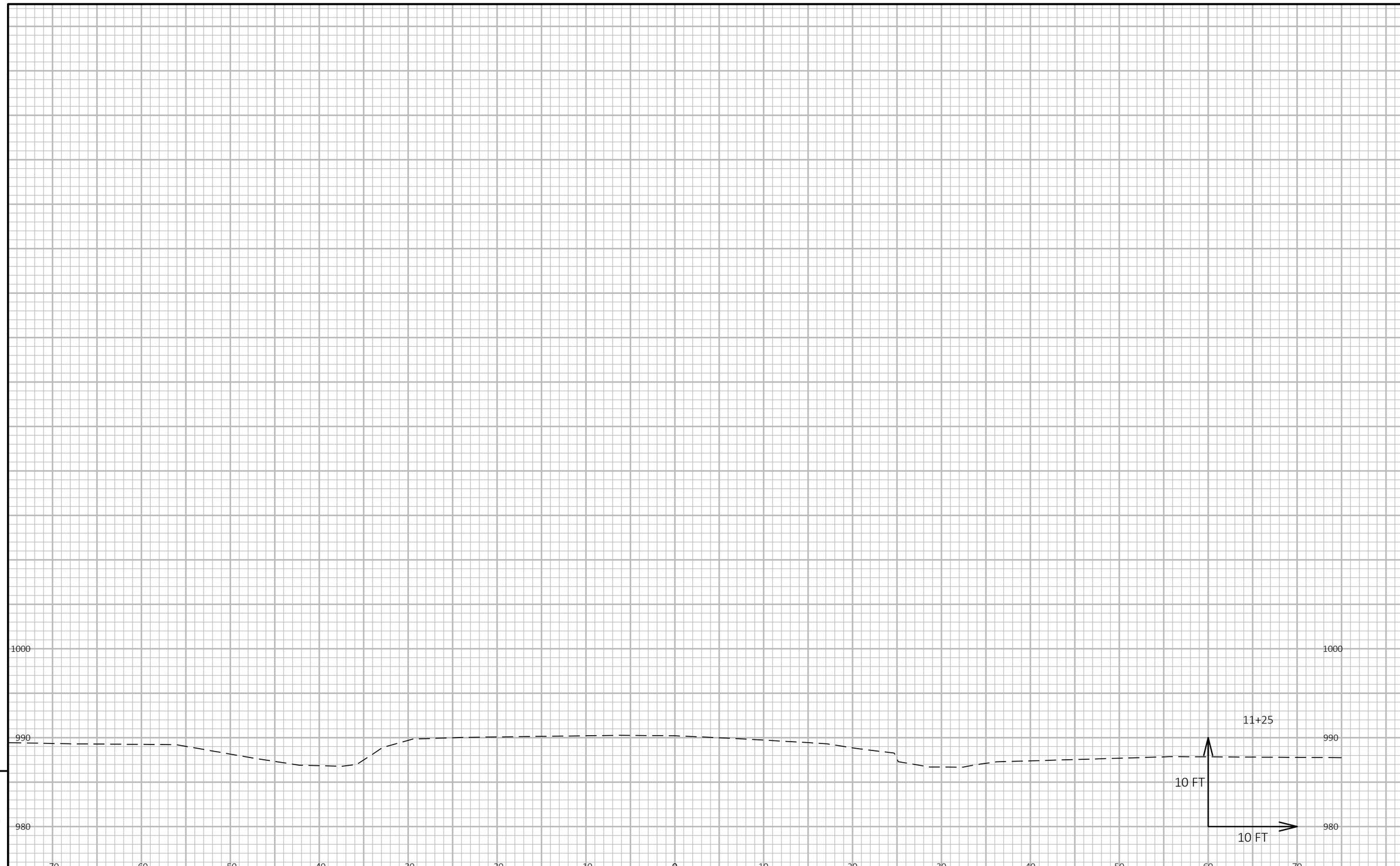

9

9

PROJECT NO: 1620-00-63	HWY: STH 80	COUNTY: WOOD	CROSS SECTIONS: STH 54 '54E'	SHEET 50	E

FILE NAME : P:\90S\93\00093433\CADD\SHEETSPLAN -75\090201-XS.DWG
LAYOUT NAME - 54 PIPE- (2)

PLOT DATE : 1/21/2019 10:51 AM PLOT BY : BOBBI MAXWELL PLOT NAME : PLOT SCALE : 1 IN:10 FT HORZ. / 1 IN:10 FT VERT.

Notes

Wisconsin Department of Transportation

Dedicated people creating transportation solutions through innovation and exceptional service.

http://www.dot.wisconsin.gov

WIS AUGUST 20119

PROJECT ID: 1620-03-75

WITH: 1620-00-63

COUNTY: WOOD

ORDER OF SHEETS

TOTAL SHEETS = 164

STATE OF WISCONSIN
DEPARTMENT OF TRANSPORTATION

PLAN OF PROPOSED IMPROVEMENT

BABCOCK - PITTSVILLE

STH 173 NB TO POPLAR STREET

STH 80

WOOD COUNTY

STATE PROJECT	FEDERAL PROJECT	
	PROJECT	CONTRACT
1620-03-75	WISC 2019586	1

STATE PROJECT NUMBER
1620-03-75

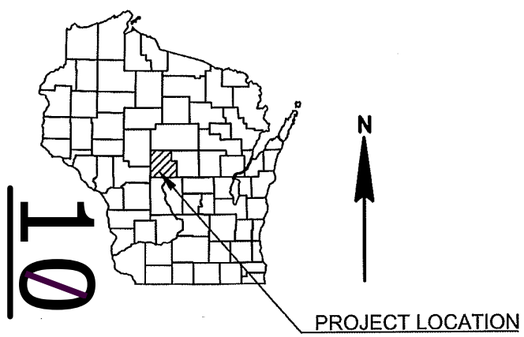

DESIGN DESIGNATION

A.A.D.T.	2019	=	3100
A.A.D.T.	2039	=	3800
D.H.V.		=	437
D.D.		=	60/40
T.		=	34.5%
DESIGN SPEED		=	55 MPH
ESALS		=	897,900

CONVENTIONAL SYMBOLS

PLAN

CORPORATE LIMITS
PROPERTY LINE
LOT LINE
LIMITED HIGHWAY EASEMENT
EXISTING RIGHT OF WAY
PROPOSED OR NEW R/W LINE
SLOPE INTERCEPT
REFERENCE LINE (30'EB')
EXISTING CULVERT
PROPOSED CULVERT (Box or Pipe)
COMBUSTIBLE FLUIDS (CAUTION)
MARSH AREA
WOODED OR SHRUB AREA

PROFILE

GRADE LINE
ORIGINAL GROUND
MARSH OR ROCK PROFILE (To be noted as such) (ROCK)
SPECIAL DITCH (LABEL)
GRADE ELEVATION (95.36)
CULVERT (Profile View)

UTILITIES

ELECTRIC — E —
FIBER OPTIC — FO —
GAS — G —
SANITARY SEWER — SAN —
STORM SEWER — SS —
TELEPHONE — T —
WATER — W —
UTILITY PEDESTAL
POWER POLE
TELEPHONE POLE

BEGIN PROJECT
STA 1096+00
X = 654,965.4942
Y = 422,119.7255

END PROJECT
STA 1564+93
X =650,775.0716
Y = 467,005.2503

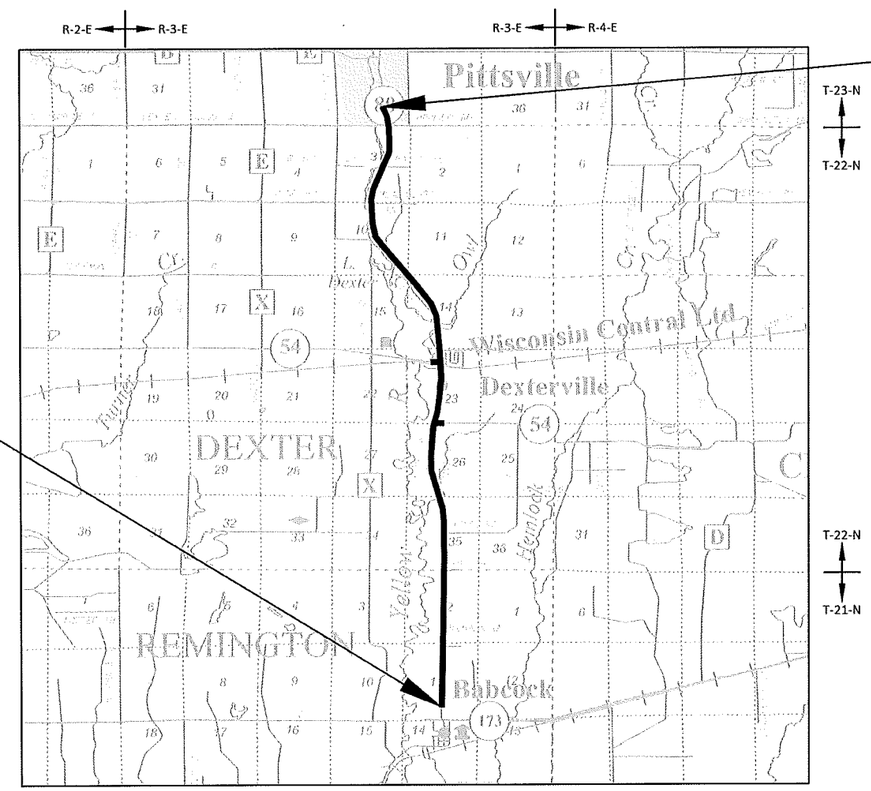

LAYOUT

SCALE 0 — 2 MI

TOTAL NET LENGTH OF CENTERLINE = 8.881

HORIZONTAL POSITIONS SHOWN ON THIS PLAN ARE WISCONSIN COUNTY COORDINATES, WOOD COUNTY, NAD83 (2011), IN U.S. SURVEY FEET. VALUES ARE GRID COORDINATES, GRID BEARINGS, AND GRID DISTANCES. GRID DISTANCES MAY BE USED AS GROUND DISTANCES. ELEVATIONS SHOWN ON THIS PLAN ARE REFERENCED TO USGS NAVD88.

ORIGINAL PLANS PREPARED BY

MSA
146 North Central Ave., Marshfield, WI 54449
715-384-2133 1-877-204-0572 Fax: 715-384-9787

WISCONSIN SEAN M. SPROMBERG E-37771-008 SCHOFIELD, WI PROFESSIONAL ENGINEER

DATE: 1/18/19 (Professional Engineer Signature)

STATE OF WISCONSIN
DEPARTMENT OF TRANSPORTATION

PREPARED BY

Surveyor	MSA PROFESSIONAL SERVICES
Designer	MSA PROFESSIONAL SERVICES
Project Manager	DANIEL HOLLOWAY, P.E.
Regional Examiner	CHERYL SIMON
Regional Supervisor	NICHOLE LYSNE

APPROVED FOR THE DEPARTMENT

DATE: 1/18/19 (Signature)

E

GENERAL NOTES

THE LOCATIONS OF EXISTING AND PROPOSED UTILITY INSTALLATIONS AS SHOWN ON THE PLANS ARE APPROXIMATE. THERE MAY BE OTHER UTILITY INSTALLATIONS WITHIN THE PROJECT AREA THAT ARE NOT SHOWN.

SECTION 2 ORDER OF SHEETS

AS-BUILTS

ID 1620-02-60 BABCOCK - PITTSVILLE (OWL CREEK BRIDGE B-17-0017) 2015
ID 1620-02-61 BABCOCK - PITTSVILLE (DEXTERVILLE DITCH BRIDGE B-17-0016) 2015
ID 1628-00-73 BABCOCK - PITTSVILLE (NORTH JCT. 173 - POPLAR ROAD) 1998
ID 1624-03-71 STH 173 - STH 13 ROAD (YELLOW RIVER - LONESOME ROAD) 1981

RUNOFF COEFFICIENT TABLE

	HYDROLOGIC SOIL GROUP											
	A			B			C			D		
	SLOPE RANGE (PERCENT)			SLOPE RANGE (PERCENT)			SLOPE RANGE (PERCENT)			SLOPE RANGE (PERCENT)		
LAND USE:	0-2	2-6	6 & OVER	0-2	2-6	6 & OVER		2-6	6 & OVER	0-2	2-6	6 & OVER
MEDIAN STRIP TURF	0.19	0.20	0.24	0.19	0.22	0.26	0.20	0.23	0.30	0.20	0.25 0.32	0.30 0.40
SIDE SLOPE TURF			0.25			0.27			0.28			0.30 0.38
PAVEMENT:	0.40 - 0.60											
ASPHALT:	0.70 - 0.95											
CONCRETE:	0.80 - 0.95											
BRICK:	0.70 - 0.80											
DRIVES, WALKS:	0.75 - 0.85											
ROOFS:	0.75 - 0.95											
GRAVEL ROADS, SHOULDERS	0.40 - 0.60											

TOTAL PROJECT AREA = 43 ACRES
TOTAL AREA EXPECTED TO BE DISTURBED BY CONSTRUCTION ACTIVITIES - 48 ACRES

UTILITIES

RAILROAD:
WISCONSIN CENTRAL LTD.
ATTN: JACKIE MACEWICZ
1625 DEPOT STREET
STEVENS POINT, WI 54481
OFFICE: 715-345-2503
EMAIL: JACKIE.MACEWICZ@CN.CA

RAILROAD:
WISCONSIN CENTRAL LTD.
CALL BEFORE YOU DIG LINE
OFFICE: 715-783-4533
* RAILROAD IS NOT PART OF DIGGERS HOTLINE

ELECTRIC:
ALLIANT ENERGY
ATTN: MATTHEW HOSLER
2710 JEFFERSON ST.
WISCONSIN RAPIDS, WI 54495
OFFICE: 608-963-3655
EMAIL: MATTHEWHOSLER@ALLIANTENERGY.COM

COMMUNICATION:
WE ENERGIES - GAS
ATTN: RYAN MIENTKE
1921 8TH STREET SOUTH
WISCONSIN RAPIDS, WI 54494
OFFICE: 715-421-7249
MOBILE: 715-421-9293
EMAIL: RYAN.MIENTKE@WE-ENERGIES.COM

ELECTRIC:
OAKDALE ELECTRIC COOPERATIVE
ATTN: ROY BOYLES
PO BOX 40
OAKDALE, WI 54649
OFFICE: 608-372-4131
CELL: 608-343-3871
EMAIL: RBOYLES@OAKDALEREC.COM

COMMUNICATION:
TDS TELECOM
ATTN: STEVE JAKUBIEC
10 COLLEGE AVE., SUITE 218A
APPLETON, WI 54911
OFFICE: 920-882-4166
MOBILE: 920-562-7221
EMAIL: STEVE.JAKUBIEC@TDSTELECOM.COM

COMMUNICATION:
PACKERLAND BROADBAND
ATTN: ANDY HEIGL
PO BOX 885
IRON MOUNTAIN, MI 49801
OFFICE: 906-776-2609
MOBILE: 906-221-7536
EMAIL: ANDY.HEIGL@PLBB.NET

*WATER:
CITY OF PITTSVILLE
ATTN: PETE PETERSON
5388A 4TH AVE.
PO BOX 100
PITTSVILLE, WI 54466
OFFICE: 715-884-2474
EMAIL: PITTSWRANDSR@TDS.NET

*SEWER:
PITTSVILLE WATER AND SEWER DEPT WWFT
ATTN: PETE PETERSON
5388A 4TH AVE.
PO BOX 100
PITTSVILLE, WI 54466
OFFICE: 715-884-2474
EMAIL: PITTSWRANDSR@TDS.NET

* NOT A DIGGERS HOTLINE MEMBER

DIGGERS HOTLINE
Dial 811 or (800)242-8511
www.DiggersHotline.com

DNR LIAISON

WISCONSIN DEPARMENT OF NATURAL RESOURCES
ATTN: BRAD BETTHAUSER
ENVIRONMENTAL ANALYSIS & REVIEW SPECIALIST-ADV
NORTH CENTRAL REGION
473 GRIFFITH AVE.
WISCONSIN RAPIDS, WI 54494
OFFICE: 715-421-7851
EMAIL: BRADLEY.BETTHAUSER@WISCONSIN.GOV

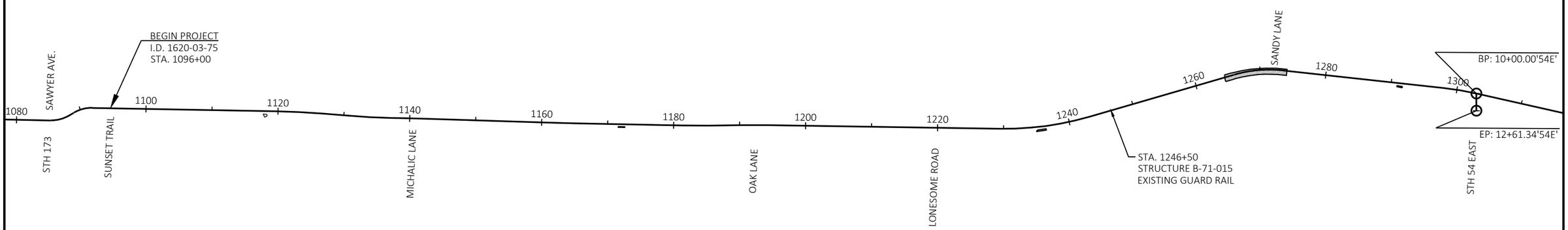

LEGEND

SENSITIVE AREA

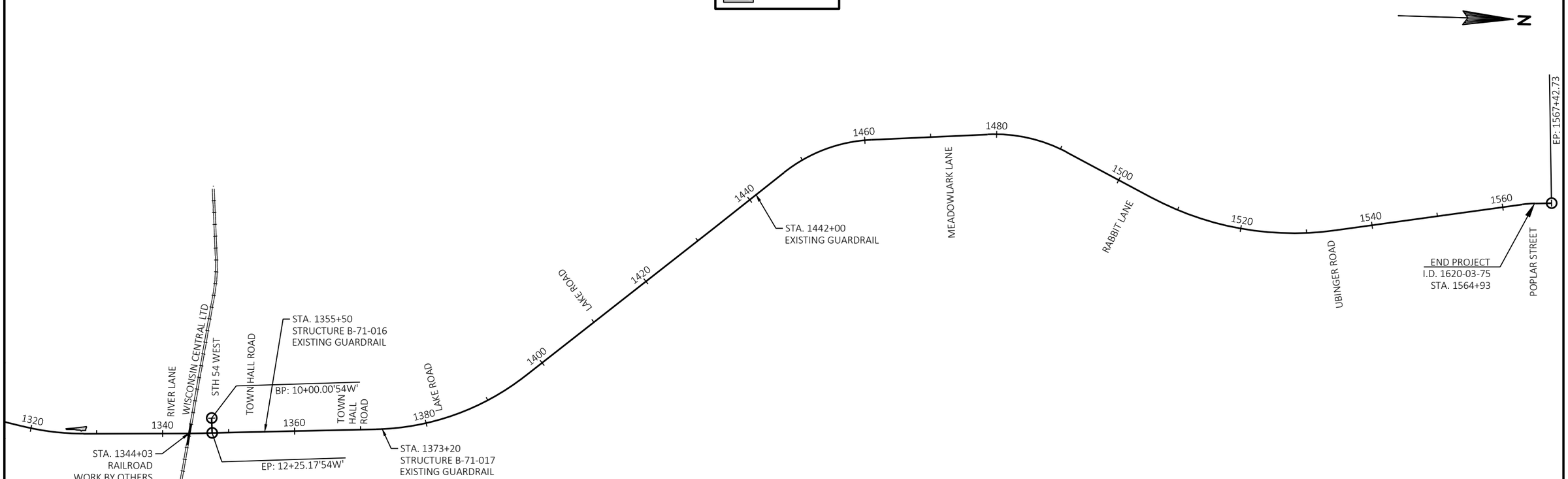

PROJECT NO: 1620-03-75	HWY: STH 80	COUNTY: WOOD	PROJECT OVERVIEW	SHEET 3	E

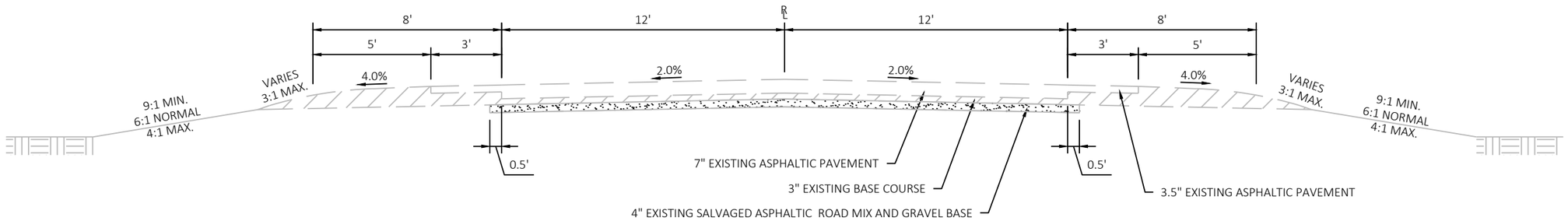

EXISTING TYPICAL SECTION

STH 80
STA 1096+00 - STA 1227+81

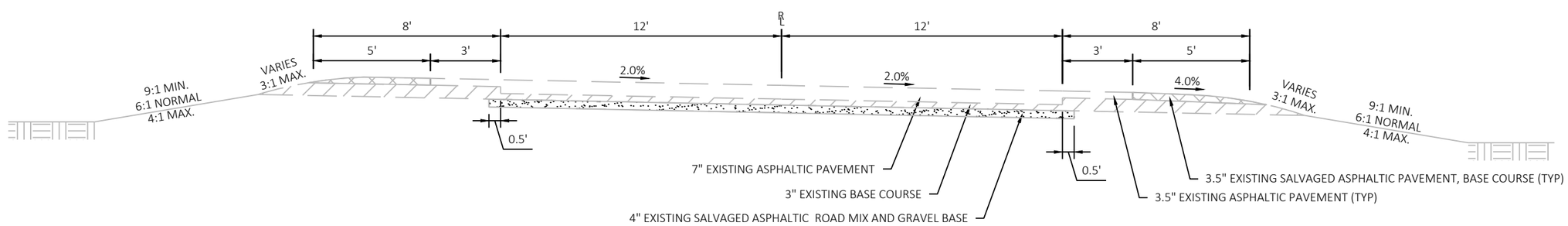

SHOWN AS CURVE RIGHT

EXISTING SUPERELEVATED TYPICAL SECTION

STH 80
STA 1119+59 - STA 1126+79, RT
STA 1130+52 - STA 1137+44, LT
STA 1181+28 - STA 1185+22, LT
STA 1190+70 - STA 1194+03, RT

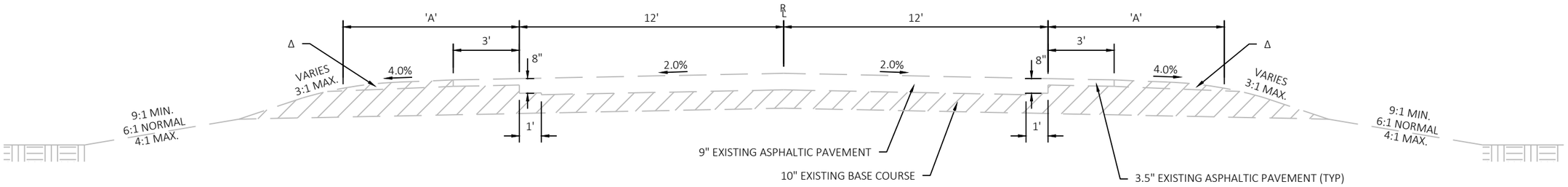

EXISTING TYPICAL SECTION

STH 80
STA 1227+81 - STA 1564+93

STATION TO STATION	SHOULDER WIDTH 'A'
1227+81 - 1254+37	7'
1254+37 - 1309+92	6' (EXCEPT BYPASS LANE & TURN LANE)
1309+92 - 1564+93	7' (EXCEPT BYPASS LANE & TURN LANE)

Δ SALVAGED ASPHALTIC PAVEMENT, BASE COURSE
STA 1244+36 - 1263+69 LT & RT
STA 1274+15 - 1296+20 LT & RT
STA 1304+52 - 1317+11 LT & RT

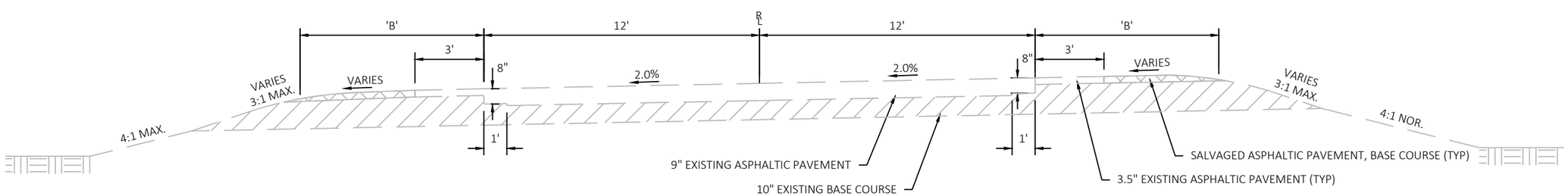

SHOWN AS CUVRE LEFT

EXISTING SUPERELEVATED TYPICAL SECTION

STH 80

STATION TO STATION	SHOULDER WIDTH 'B'
1229+54 - 1243+20, LT	7'
1265+99 - 1273+47, RT	6'
1297+93 - 1303+08, RT	6'
1318+60 - 1328+00, LT	7'
1372+34 - 1396+77, LT	7'
1446+65 - 1460+95, RT	7'
1478+63 - 1491+10, RT	7'
1505+51 - 1534+44, LT	7'
1562+99 - 1564+97, RT	7'

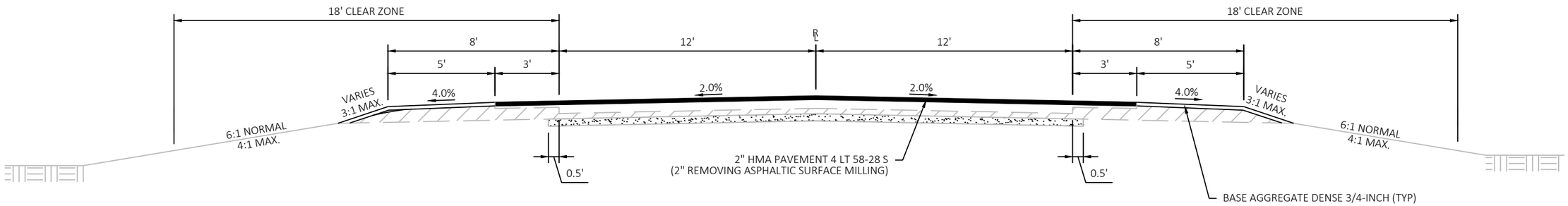

FINISHED TYPICAL SECTION

STH 80
STA 1096+00 - STA 1119+59
STA 1126+79 - STA 1130+52
STA 1137+44 - STA 1181+28
STA 1185+22 - STA 1190+70
STA 1194+03 - STA 1227+81

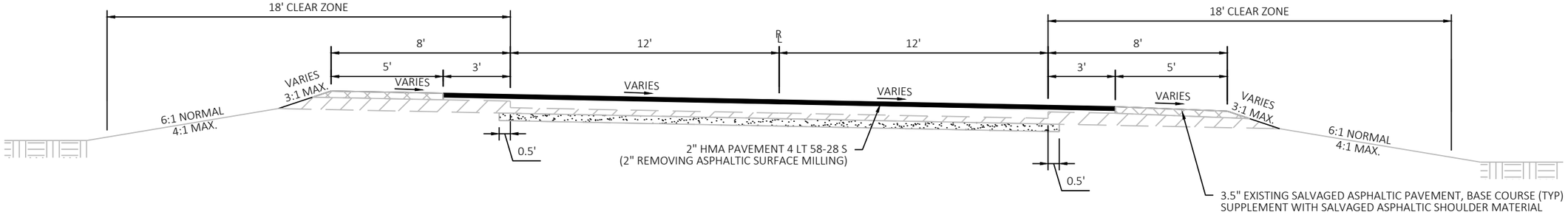

SHOWN AS CURVE RIGHT

FINISHED SUPERELEVATED TYPICAL SECTION

STH 80
STA 1119+59 - STA 1126+79, RT
STA 1130+52 - STA 1137+44, LT
STA 1181+28 - STA 1185+22, LT
STA 1190+70 - STA 1194+03, RT

MATCH EXISTING SUPERELEVATION AND TRANSITION RUN OUT

NOTE:
- IN AREAS OF GUARDRAIL SEED #70A AND FERTILIZER WILL BE USED FROM THE SHOULDER POINT OUT TO THE SLOPE INTERCEPT. TOPSOIL & MULCH WILL BE USED FROM THE SUBGRADE POINT OUT TO THE SLOPE INTERCEPT.

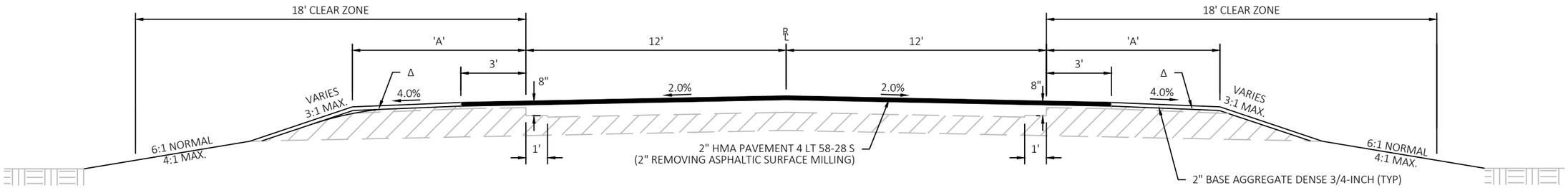

STATION TO STATION	SHOULDER WIDTH 'A'
1227+81 - 1254+37	7'
1254+37 - 1309+92	6' (EXCEPT BYPASS LANE & TURN LANE)
1309+92 - 1564+93	7' (EXCEPT BYPASS LANE & TURN LANE)

FINISHED TYPICAL SECTION

STH 80
STA 1227+81 - STA 1229+54
STA 1243+20 - STA 1265+99
STA 1273+47 - STA 1297+93
STA 1303+08 - STA 1318+60
STA 1328+00 - STA 1343+53
STA 1344+52 - STA 1372+34
STA 1396+77 - STA 1446+65
STA 1460+95 - STA 1478+63
STA 1491+10 - STA 1505+51
STA 1534+44 - STA 1562+99

Δ 3.5" EXISTING SALVAGED ASPHALTIC PAVEMENT, BASE COURSE
(SUPPLEMENT WITH SALVAGED ASPHALTIC SHOULDER MATERIAL)
STA 1244+36 - 1263+69 LT & RT
STA 1274+15 - 1296+20 LT & RT
STA 1304+52 - 1317+11 LT & RT

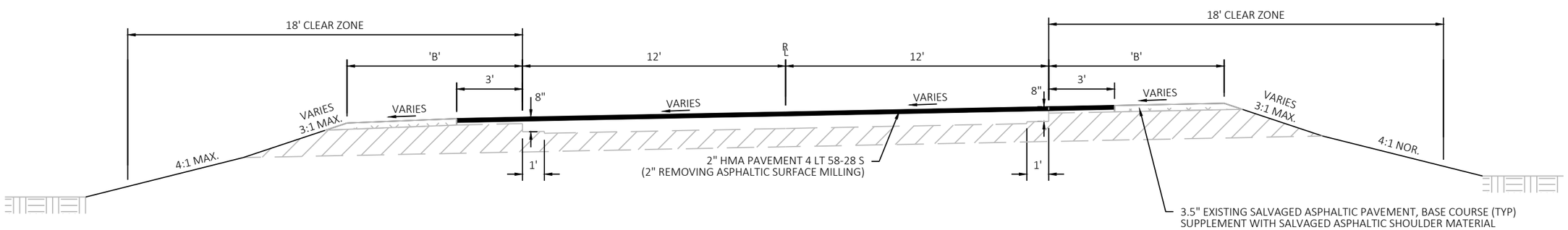

SHOWN AS CURVE LEFT

FINISHED SUPERELEVATED TYPICAL SECTION

STH 80

STATION TO STATION	SHOULDER WIDTH 'B'
1229+54 - 1243+20, LT	7'
1265+99 - 1273+47, RT	6'
1297+93 - 1303+08, RT	6'
1318+60 - 1328+00, LT	7'
1372+34 - 1396+77, LT	7'
1446+65 - 1460+95, RT	7'
1478+63 - 1491+10, RT	7'
1505+51 - 1534+44, LT	7'
1562+99 - 1564+97, RT	7'

MATCH EXISTING SUPERELEVATION AND TRANSITION RUN OUT

NOTE:
- IN AREAS OF GUARDRAIL SEED #70A AND FERTILIZER WILL BE USED FROM THE SHOULDER POINT OUT TO THE SLOPE INTERCEPT. TOPSOIL & MULCH WILL BE USED FROM THE SUBGRADE POINT OUT TO THE SLOPE INTERCEPT.

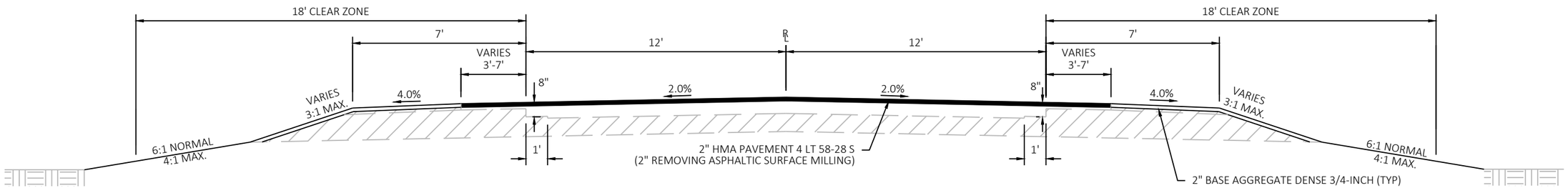

FINISHED TYPICAL SECTION

STH 80 AT RAILROAD CROSSING
STA 1343+53 - STA 1344+52

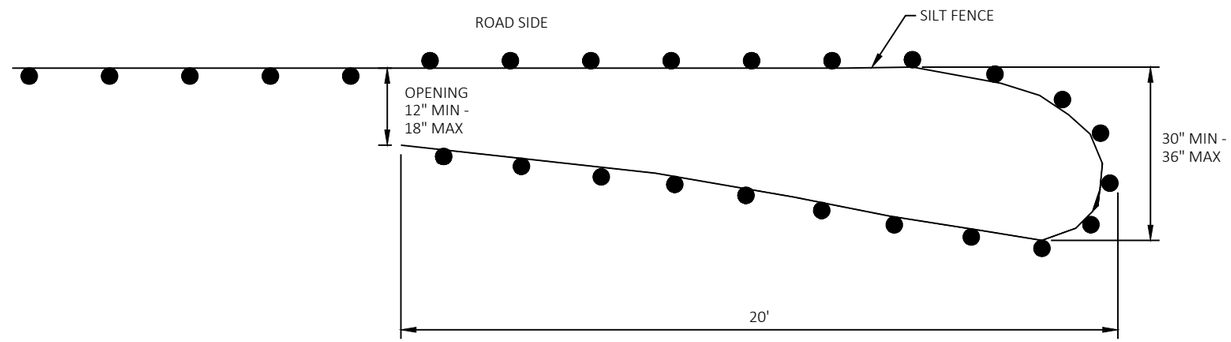

PLAN VIEW

GENERAL NOTES:

SILT FENCE POSTS FOR THE TURN-AROUND SHOULD BE ON THE OUTSIDE OF THE TURN-AROUND. AND TRENCHED IN ACCORDING TO SILT FENCE REQUIREMENTS.

TEMPORARY SMALL ANIMAL TURN-AROUND

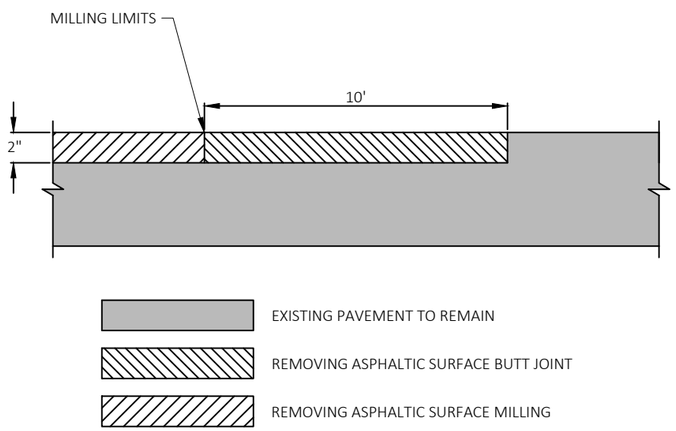

BUTT JOINT DETAIL

NOT TO SCALE
USE WHERE MILLING ABUTS PAVEMENT TO BE LEFT IN PLACE

STH 80 PROJECT ENDS
STH 54 LIMITS
LONESOME RD
PINE LN
RIVER LN
PINE DR
TOWN HALL RD
LAKE RD
MEADOWLARK RD
UBINGER RD

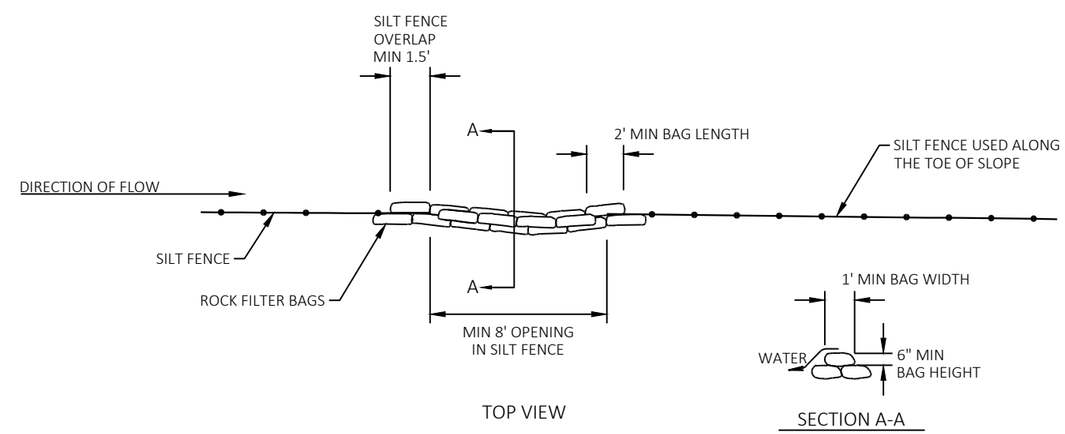

TOP VIEW

SECTION A-A

ROCK BAGS USED FOR SILT FENCE RELIEF

2

2

SIDE ROAD DETAIL - NO CURB & GUTTER

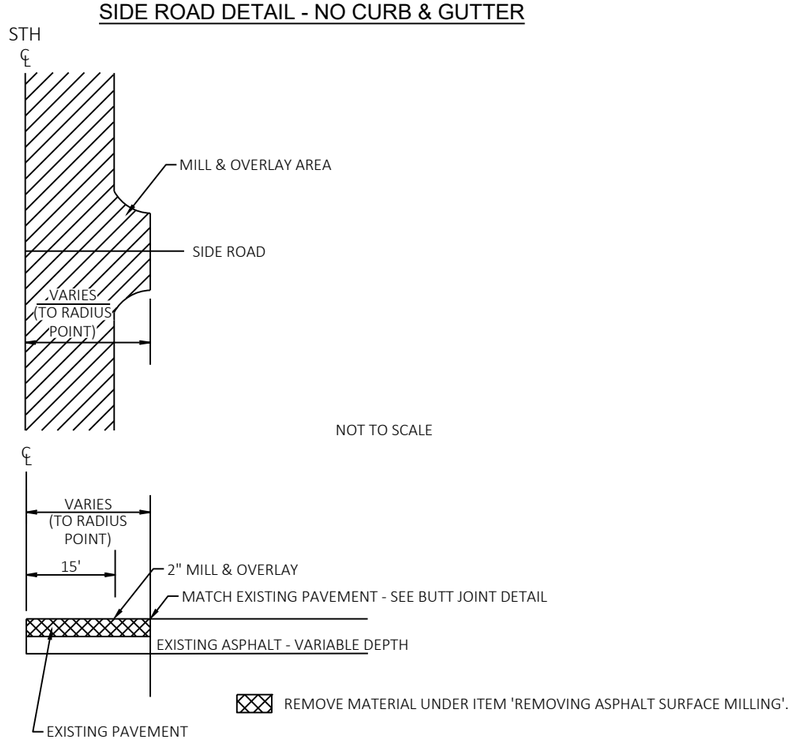

NOTE: ANY SAWCUT USED WILL BE CONSIDERED INCIDENTAL
TO THE ITEM "REMOVING ASPHALTIC SURFACE MILLING".

SIDE ROAD DETAIL - CURB & GUTTER TO REMAIN

NOT TO SCALE

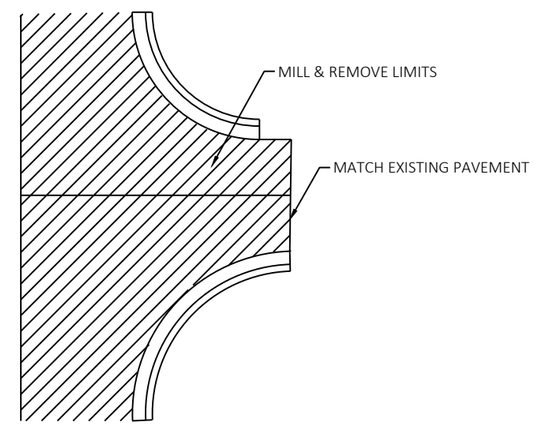

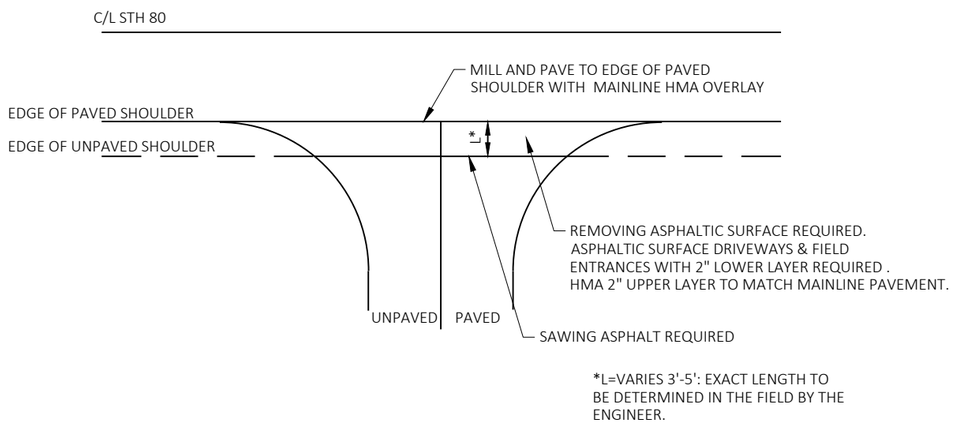

CE DRIVEWAY DETAIL

STA. 1346+19 (EXISTING SHLD GRAVEL)
STA. 1359+55 (EXISTING SHLD GRAVEL)
STA. 1362+50 (EXISTING CE ASPHALT)

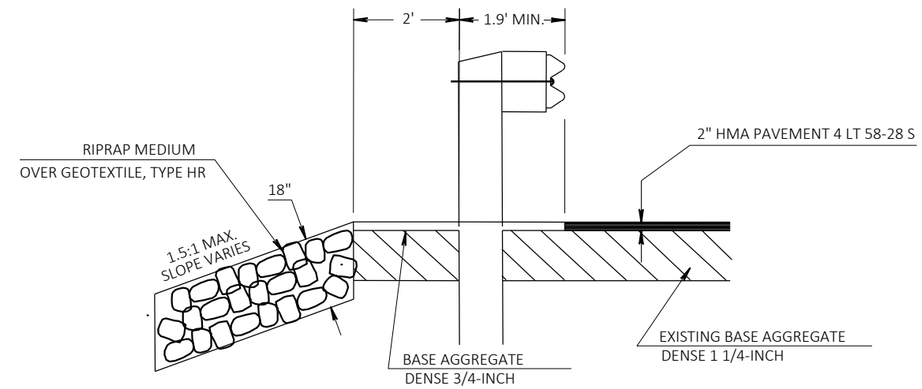

RIPRAP BEHIND THRIE BEAM IN AREAS STEEPER THAN 2.5:1

PERCENT WITHIN LIMITS (PWL) MIXTURE USE TABLE

							QMP MANAGEMENT PROGRAM TO BE USED FOR:	
LOCATION	STATION	MIXTURE USE:	UNDERLYING SURFACE	BID ITEM	TONS	THICKNESS	MIXTURE ACCEPTANCE	DENSITY ACCEPTANCE
12 FOOT DRIVING LANE	1096+00 - 1246+37, 1246+61 - 1355+32, 1355+74 - 1372+99, 1373+42 - 1564+93, 10+12'54E' - 12+17'54E', 11+07'54W' - 12+13'54W'	SINGLE LAYER	MILLED EXISTING SURFACE	4 LT 58-28 S	13815	2"	PWL INCENTIVE AIR VOIDS HMA PAVEMENT 460.2010	INCENTIVE DENSITY PWL HMA PAVEMENT 460.2005
3 FOOT SHOULDER & TURNING LANES	1096+00 - 1246+37, 1246+61 - 1355+32, 1355+74 - 1372+99, 1373+42 - 1564+93, 10+12'54E' - 12+17'54E', 11+07'54W' - 12+13'54W'	SINGLE LAYER	MILLED EXISTING SURFACE	4 LT 58-28 S	3892	2"	PWL INCENTIVE AIR VOIDS HMA PAVEMENT 460.2010	ACCEPTANCE TESTING BY THE DEPARTMENT; NOT ELIGIBLE FOR INCENTIVE

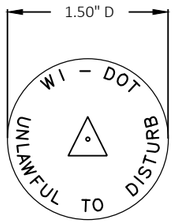

WIS DOT MONUMENT CAP MARKER LOGO (SSDR130)

CONTRACTOR TO ORDER LANDMARK REFERENCE MONUMENTS WITH THE ABOVE STAMPING

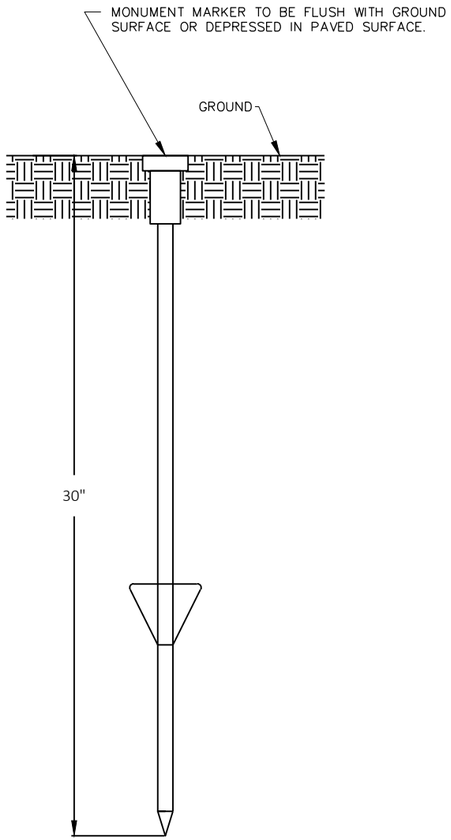

(FRONT VIEW)

BERNSTEN DRIVABLE MONUMENT SSDR130

LANDMARK REFERENCE MONUMENT (TIES ONLY)

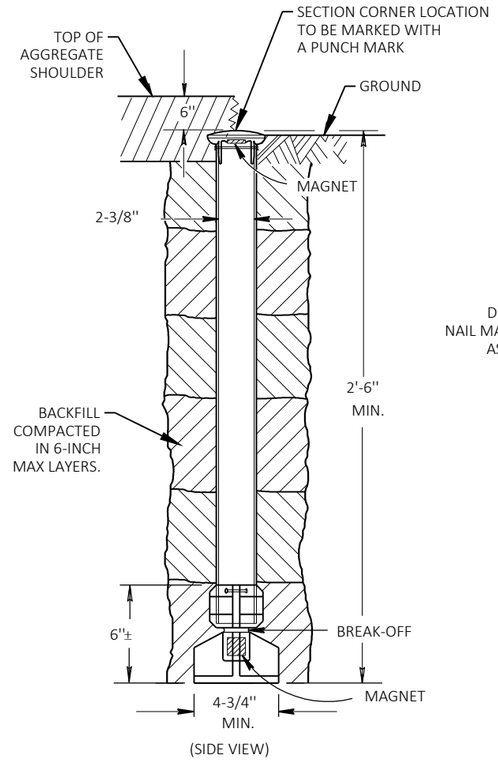

(SIDE VIEW)

OUTSIDE OF PAVEMENT

BERNTSEN A1BR30 ALUMINUM BREAK-OFF MONUMENT

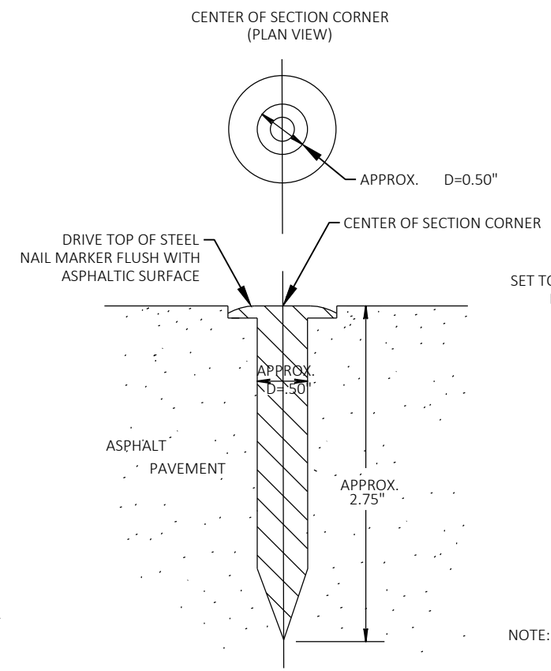

(SIDE VIEW)

IN ASPHALTIC PAVEMENT

BERNTSEN SNM1 STEEL NAIL MARKER

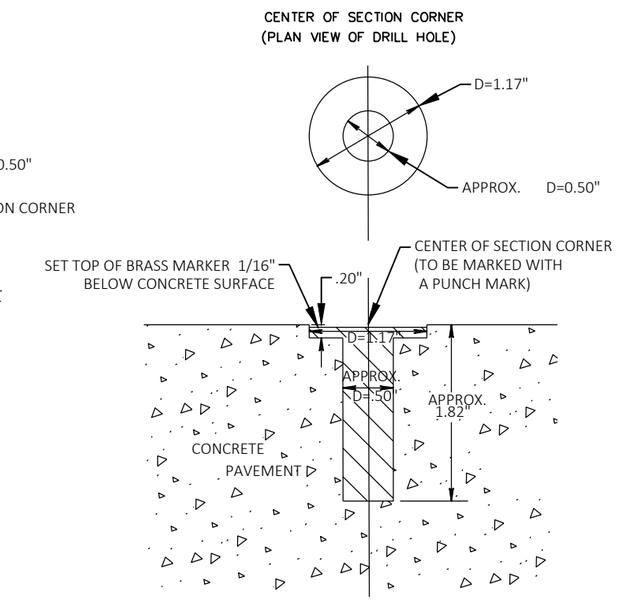

NOTE: TO DRILL HOLE, USE A "SURVEY MARKER COUNTERSINK DRILL BIT" ITEM #BPMDRL, AVAILABLE FROM BERNTSEN INTERNATIONAL INC.

(SIDE VIEW OF DRILL HOLE)

IN CONCRETE PAVEMENT

BERNTSEN BP - 1 BRASS MARKER WITH ANCHOR PLUG

SECTION CORNER MONUMENTS

GENERAL NOTES

DETAILS OF CONSTRUCTION, MATERIALS AND WORKMANSHIP NOT SHOWN ON THIS DRAWING SHALL CONFORM TO THE PERTINENT REQUIREMENTS OF THE STANDARD SPECIFICATIONS AND THE APPLICABLE SPECIAL PROVISIONS.

LOCATE LANDMARK REFERENCE MONUMENTS OUTSIDE THE CONSTRUCTION LIMITS AND WITHIN WISDOT RIGHT OF WAY. LOCATION TO BE APPROVED BY THE ENGINEER.

CONTRACTOR WILL SUPPLY ALL REQUIRED SURVEY MONUMENTS.

SECTION CORNER MONUMENT AND LANDMARK REFERENCE MONUMENT DETAIL

2

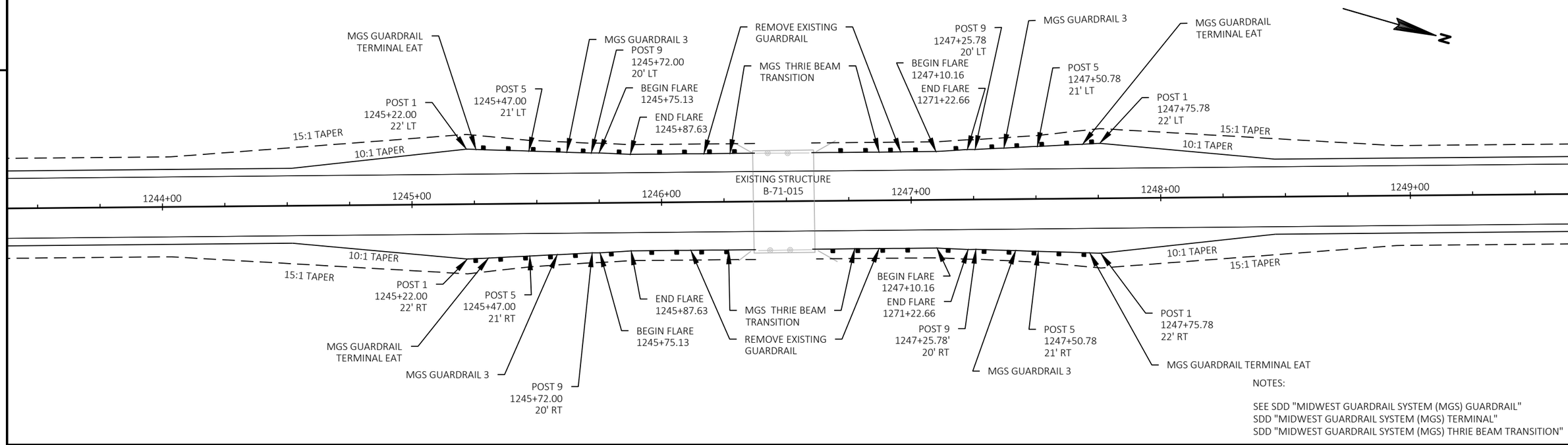

NOTES:

SEE SDD "MIDWEST GUARDRAIL SYSTEM (MGS) GUARDRAIL"
SDD "MIDWEST GUARDRAIL SYSTEM (MGS) TERMINAL"
SDD "MIDWEST GUARDRAIL SYSTEM (MGS) THRIE BEAM TRANSITION"

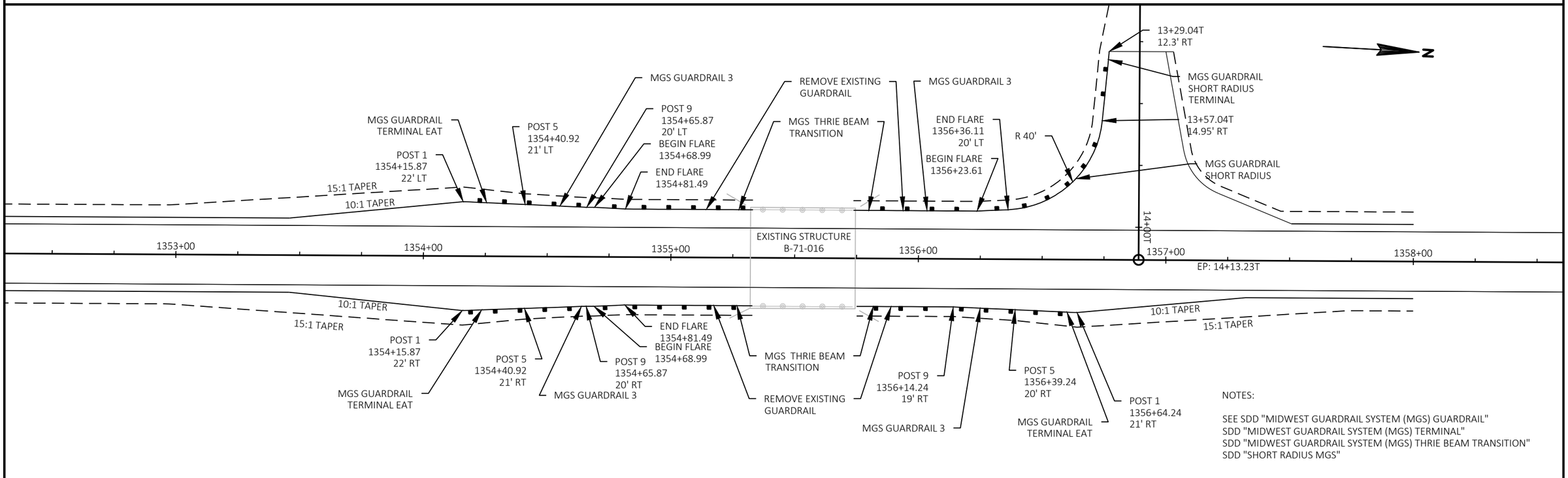

NOTES:

SEE SDD "MIDWEST GUARDRAIL SYSTEM (MGS) GUARDRAIL"
SDD "MIDWEST GUARDRAIL SYSTEM (MGS) TERMINAL"
SDD "MIDWEST GUARDRAIL SYSTEM (MGS) THRIE BEAM TRANSITION"
SDD "SHORT RADIUS MGS"

PROJECT NO: 1620-03-75	HWY: STH 80	COUNTY: WOOD	CONSTRUCTION DETAILS: GUARDRAIL DETAILS	SHEET 13	E

2

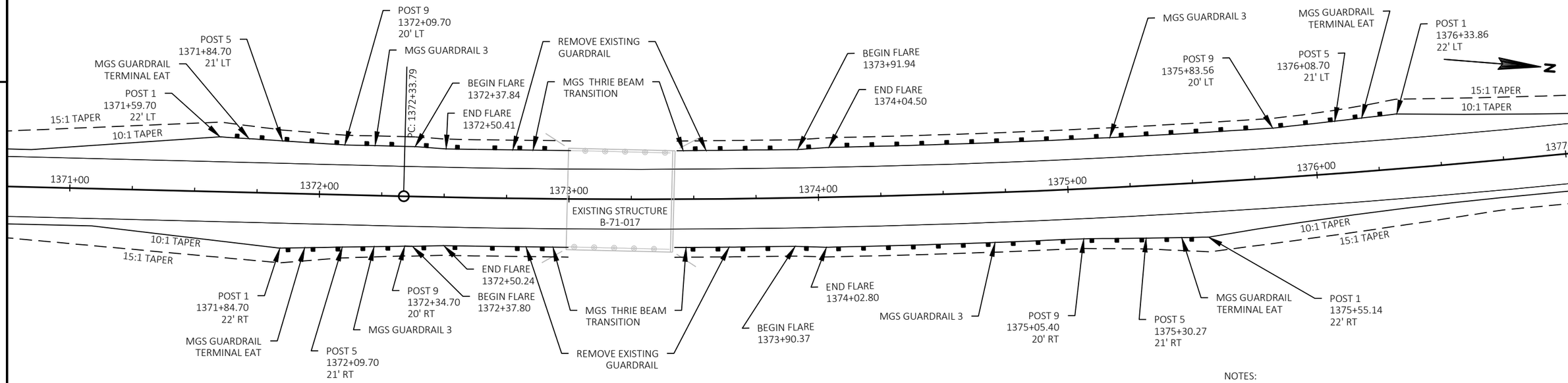

NOTES:

SEE SDD "MIDWEST GUARDRAIL SYSTEM (MGS) GUARDRAIL"
SDD "MIDWEST GUARDRAIL SYSTEM (MGS) TERMINAL"
SDD "MIDWEST GUARDRAIL SYSTEM (MGS) THRIE BEAM TRANSITION"

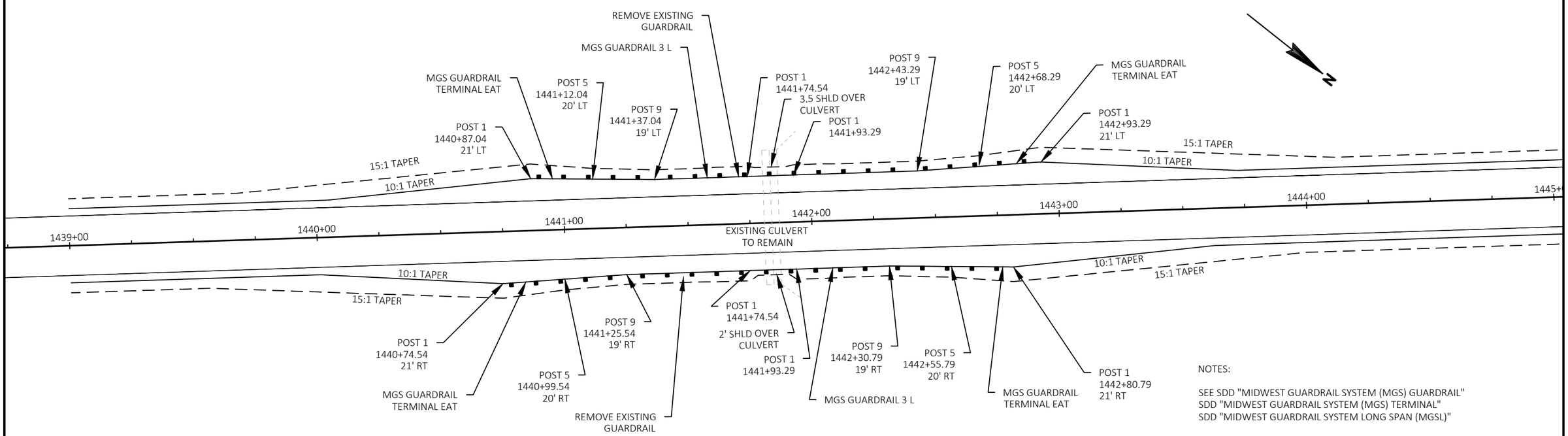

NOTES:

SEE SDD "MIDWEST GUARDRAIL SYSTEM (MGS) GUARDRAIL"
SDD "MIDWEST GUARDRAIL SYSTEM (MGS) TERMINAL"
SDD "MIDWEST GUARDRAIL SYSTEM LONG SPAN (MGSL)"

PROJECT NO: 1620-03-75	HWY: STH 80	COUNTY: WOOD	CONSTRUCTION DETAILS: GUARDRAIL DETAILS	SHEET 14	E

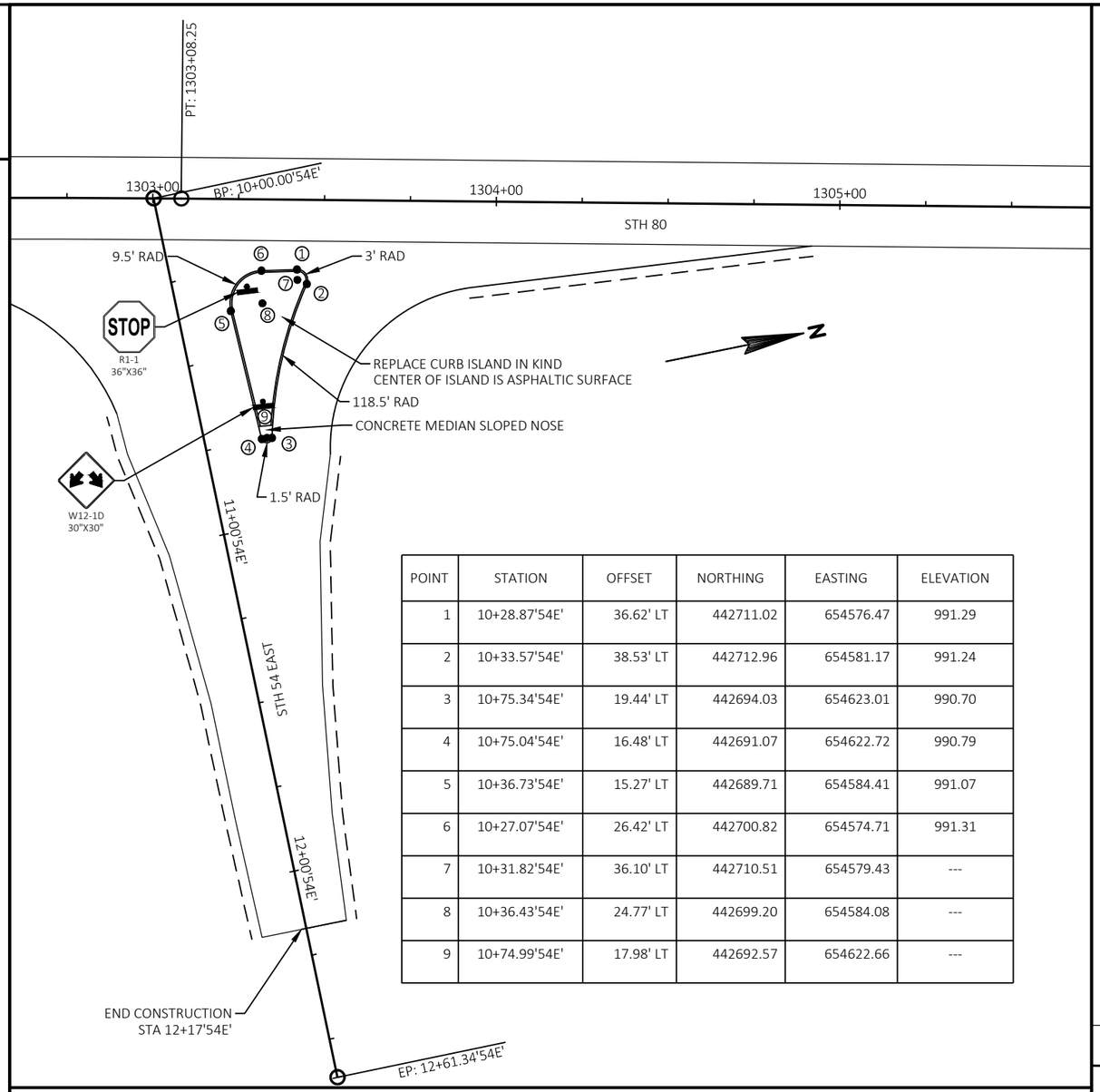

POINT	STATION	OFFSET	NORTHING	EASTING	ELEVATION
1	10+28.87'54E'	36.62' LT	442711.02	654576.47	991.29
2	10+33.57'54E'	38.53' LT	442712.96	654581.17	991.24
3	10+75.34'54E'	19.44' LT	442694.03	654623.01	990.70
4	10+75.04'54E'	16.48' LT	442691.07	654622.72	990.79
5	10+36.73'54E'	15.27' LT	442689.71	654584.41	991.07
6	10+27.07'54E'	26.42' LT	442700.82	654574.71	991.31
7	10+31.82'54E'	36.10' LT	442710.51	654579.43	---
8	10+36.43'54E'	24.77' LT	442699.20	654584.08	---
9	10+74.99'54E'	17.98' LT	442692.57	654622.66	---

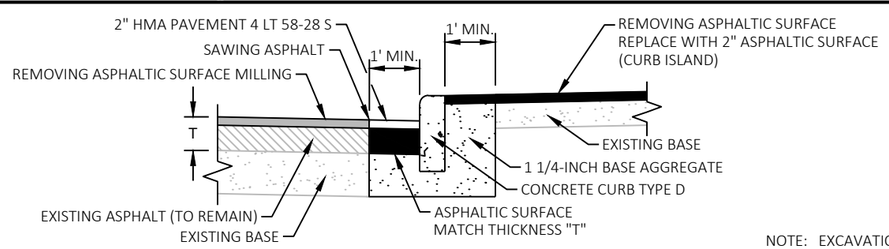

CONCRETE CURB AT ISLANDS DETAIL

NOTE: EXCAVATION IS INCIDENTAL TO CURB REPLACEMENT

POINT	STATION	OFFSET	NORTHING	EASTING	ELEVATION
1	12+04.87'54W'	33.49' RT	447046.85	654868.76	995.82
2	11+99.38'54W'	36.69' RT	447043.31	654863.48	995.71
3	11+65.88'54W'	16.24' RT	447061.62	654828.76	995.37
4	11+66.98'54W'	12.48' RT	447065.44	654829.63	995.30
5	11+96.12'54W'	15.03' RT	447064.72	654858.88	995.67
6	12+03.84'54W'	22.70' RT	447057.55	654867.06	995.89
7	12+01.38'54W'	33.82' RT	447046.30	654865.30	---
8	11+95.38'54W'	23.50' RT	447056.22	654858.67	---
9	11+66.81'54W'	14.47' RT	447063.44	654829.59	---

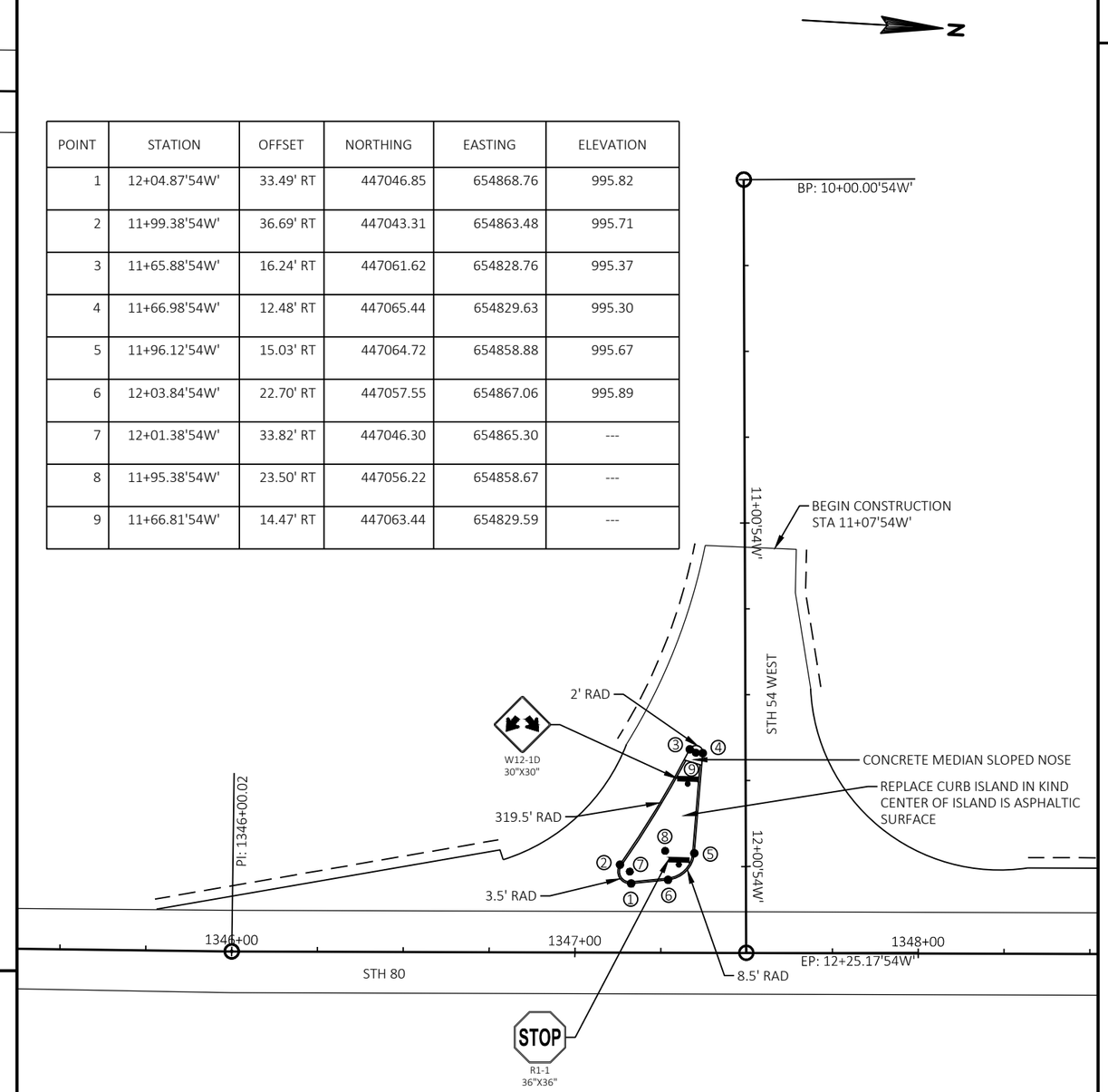

NOTE:

ELEVATIONS ARE TO FLOW LINE ALONG THE CURB.

2

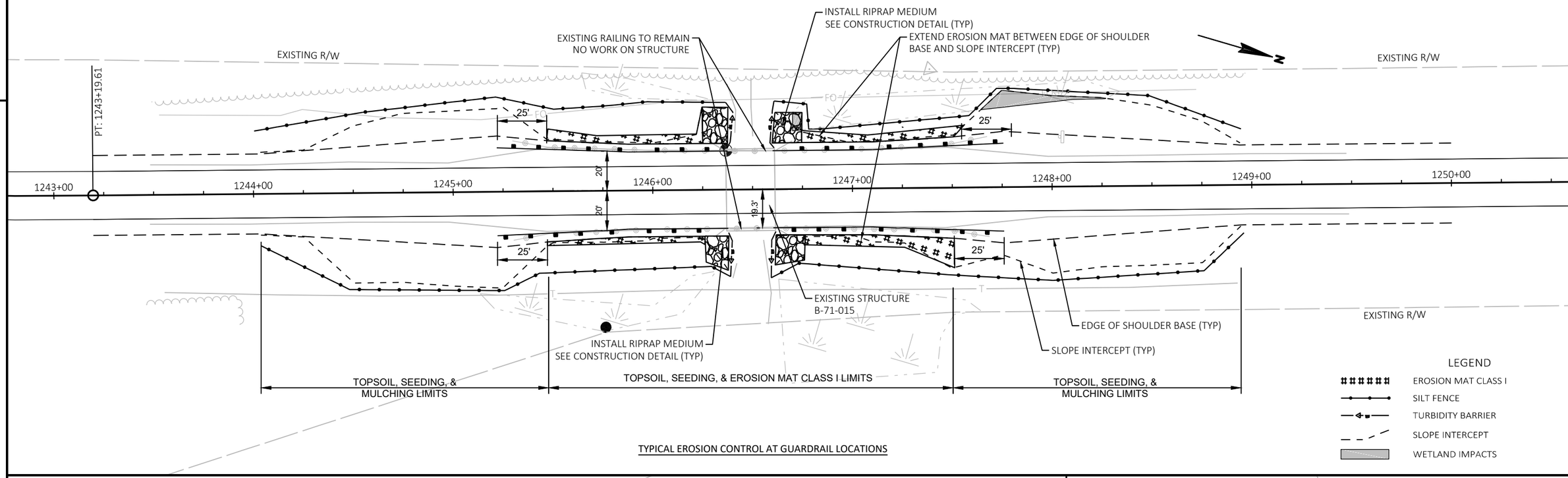

TYPICAL EROSION CONTROL AT GUARDRAIL LOCATIONS

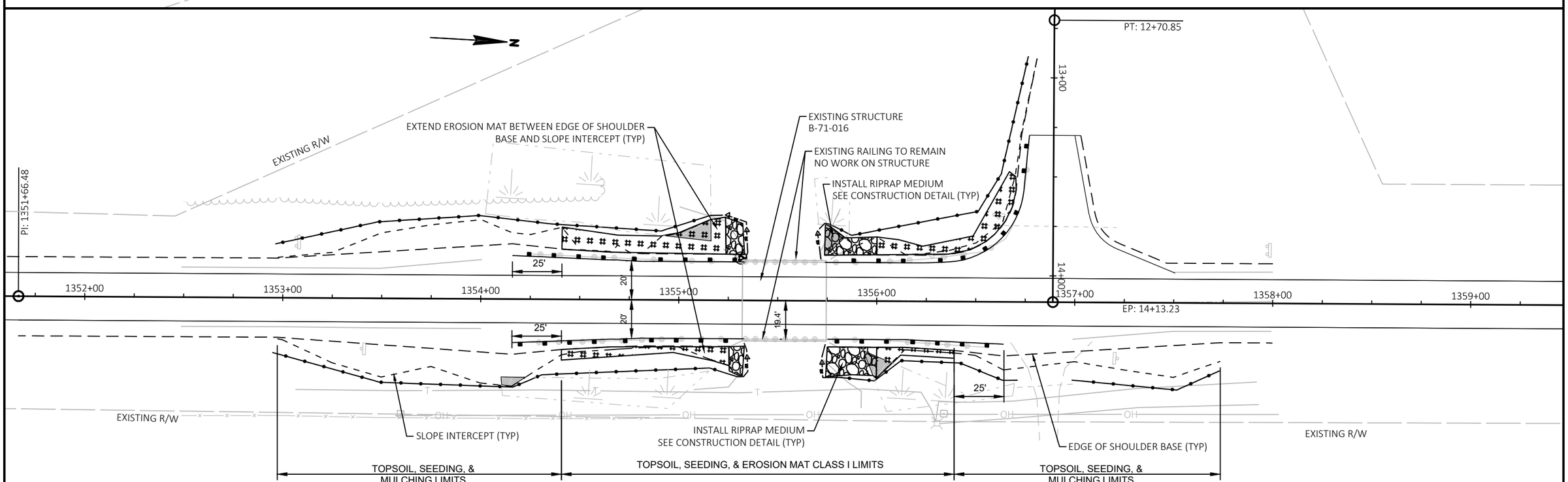

PROJECT NO: 1620-03-75	HWY: STH 80	COUNTY: WOOD	EROSION CONTROL	SHEET 16	E

2

TYPICAL EROSION CONTROL AT GUARDRAIL LOCATIONS

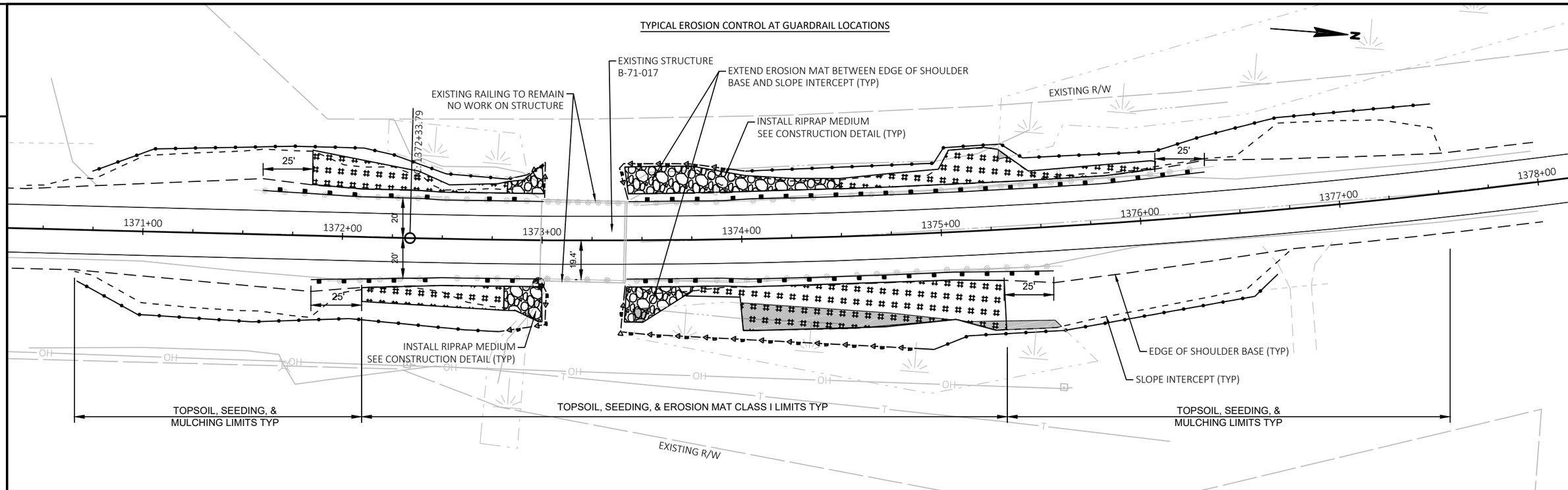

PROJECT NO: 1620-03-75	HWY: STH 80	COUNTY: WOOD	EROSION CONTROL	SHEET 17	E

FILE NAME : P:\90S\93\00093433\CADD\SHEETSPLAN -75\022001-EC.DWG
LAYOUT NAME - 02
PLOT DATE : 1/16/2019 11:45 AM
PLOT BY : BOBBI MAXWELL
PLOT NAME :
PLOT SCALE : ##########
WISDOT/CADDS SHEET 44

TRAFFIC CONTROL

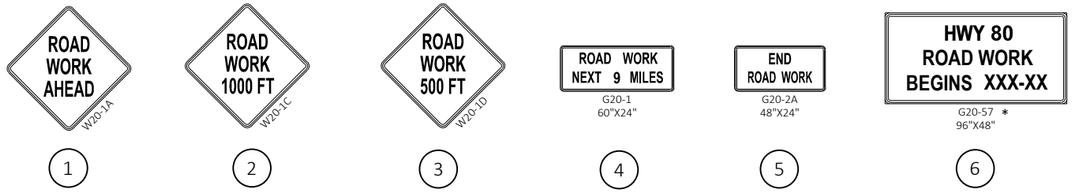

NOTE:

THE EXACT NUMBER, LOCATION, AND SPACING OF DEVICES SHALL BE ADJUSTED TO FIT FIELD CONDITIONS AS DIRECTED BY THE ENGINEER. FURTHER INFORMATION AVAILABLE IN SDD "TRAFFIC CONTROL, ADVANCE WARNING SIGNS 45 MPH OR GREATER TWO-WAY UNDIVIDED ROAD OPEN TO TRAFFIC."

ALL "W" AND "WO" SIGNS SHALL BE 48" X 48" UNLESS OTHERWISE NOTED.

* THIS SIGN TO BE REMOVED AT START OF CONSTRUCTION.

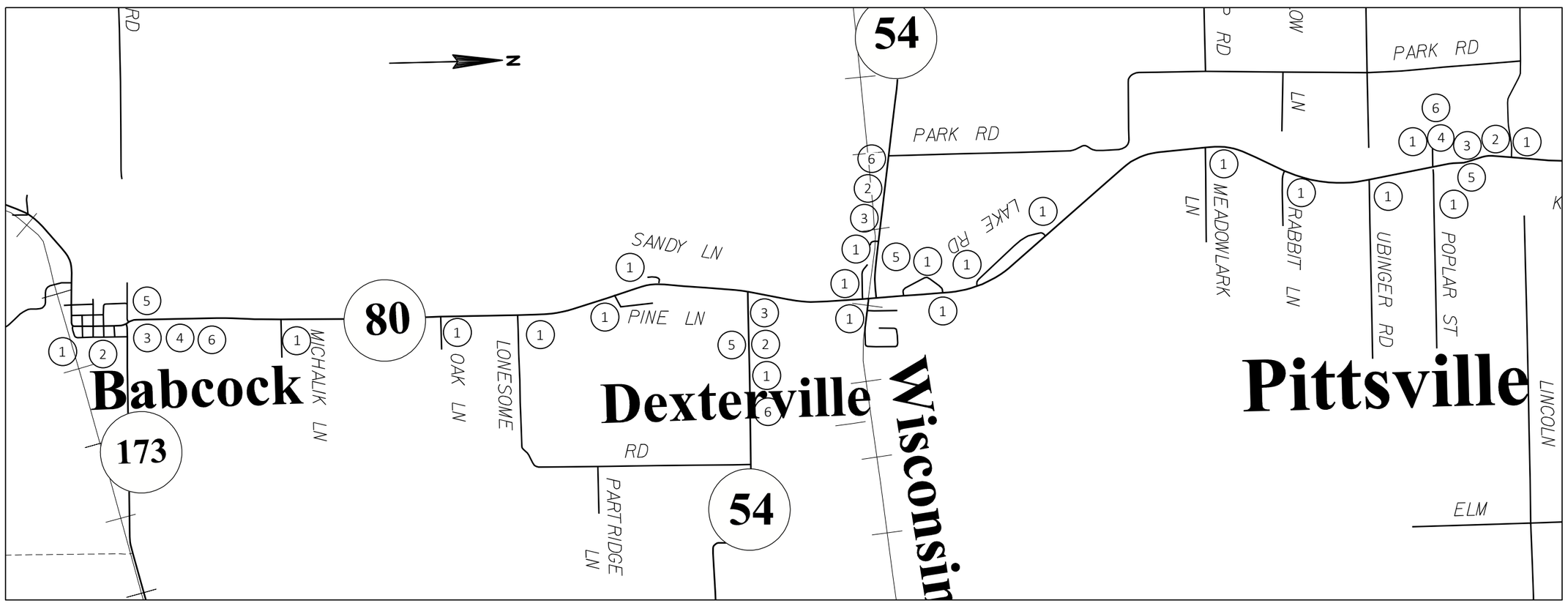

1620-03-75

Line	Item	Item Description	Unit	Total	Qty
0008	204.0110	Removing Asphaltic Surface	SY	143.000	143.000
0010	204.0115	Removing Asphaltic Surface Butt Joints	SY	787.000	787.000
0012	204.0120	Removing Asphaltic Surface Milling	SY	159,822.000	159,822.000
0014	204.0130	Removing Curb	LF	235.000	235.000
0016	204.0165	Removing Guardrail	LF	2,000.000	2,000.000
0018	204.0170	Removing Fence	LF	50.000	50.000
0022	205.0100	Excavation Common	CY	108.000	108.000
0024	208.0100	Borrow	CY	1,311.000	1,311.000
0026	211.0100	Prepare Foundation for Asphaltic Paving (project) 01. 1620-03-75	LS	1.000	1.000
0030	213.0100	Finishing Roadway (project) 02. 1620-03-75	EACH	1.000	1.000
0032	305.0110	Base Aggregate Dense 3/4-Inch	TON	6,878.000	6,878.000
0034	305.0120	Base Aggregate Dense 1 1/4-Inch	TON	49.000	49.000
0036	455.0605	Tack Coat	GAL	11,554.000	11,554.000
0038	460.0105.S	HMA Percent Within Limits (PWL) Test Strip Volumetrics	EACH	1.000	1.000
0040	460.0110.S	HMA Percent Within Limits (PWL) Test Strip Density	EACH	1.000	1.000
0042	460.2005	Incentive Density PWL HMA Pavement	DOL	14,069.000	14,069.000
0044	460.2010	Incentive Air Voids HMA Pavement	DOL	17,536.000	17,536.000
0046	460.5224	HMA Pavement 4 LT 58-28 S	TON	18,137.000	18,137.000
0048	465.0105	Asphaltic Surface	TON	20.000	20.000
0050	465.0110	Asphaltic Surface Patching	TON	300.000	300.000
0052	465.0120	Asphaltic Surface Driveways and Field Entrances	TON	9.000	9.000
0054	465.0475	Asphalt Centerline Rumble Strips 2-Lane Rural	LF	43,074.000	43,074.000
0064	601.0110	Concrete Curb Type D	LF	230.000	230.000
0066	606.0200	Riprap Medium	CY	242.000	242.000
0070	614.2300	MGS Guardrail 3	LF	575.000	575.000
0072	614.2340	MGS Guardrail 3 L	LF	200.000	200.000
0074	614.2350	MGS Guardrail Short Radius	LF	57.000	57.000
0076	614.2500	MGS Thrie Beam Transition	LF	449.760	449.760
0078	614.2610	MGS Guardrail Terminal EAT	EACH	15.000	15.000
0080	614.2630	MGS Guardrail Short Radius Terminal	EACH	1.000	1.000
0082	616.0700.S	Fence Safety	LF	3,421.000	3,421.000
0086	618.0100	Maintenance And Repair of Haul Roads (project) 02. 1620-03-75	EACH	1.000	1.000
0088	619.1000	Mobilization	EACH	0.930	0.930
0090	620.0300	Concrete Median Sloped Nose	SF	37.000	37.000
0092	621.0100	Landmark Reference Monuments	EACH	12.000	12.000
0094	624.0100	Water	MGAL	150.000	150.000
0096	625.0100	Topsoil	SY	4,018.000	4,018.000
0098	627.0200	Mulching	SY	3,279.000	3,279.000

1620-03-75

Line	Item	Item Description	Unit	Total	Qty
0100	628.1504	Silt Fence	LF	5,202.000	5,202.000
0102	628.1520	Silt Fence Maintenance	LF	5,202.000	5,202.000
0104	628.1905	Mobilizations Erosion Control	EACH	3.000	3.000
0106	628.1910	Mobilizations Emergency Erosion Control	EACH	3.000	3.000
0108	628.2008	Erosion Mat Urban Class I Type B	SY	1,463.000	1,463.000
0110	628.6005	Turbidity Barriers	SY	695.000	695.000
0112	628.7504	Temporary Ditch Checks	LF	50.000	50.000
0116	628.7570	Rock Bags	EACH	36.000	36.000
0118	629.0210	Fertilizer Type B	CWT	3.300	3.300
0120	630.0171	Seeding Mixture No. 70A	LB	141.000	141.000
0124	634.0612	Posts Wood 4x6-Inch X 12-FT	EACH	2.000	2.000
0126	634.0616	Posts Wood 4x6-Inch X 16-FT	EACH	7.000	7.000
0128	637.2210	Signs Type II Reflective H	SF	14.920	14.920
0130	637.2230	Signs Type II Reflective F	SF	12.500	12.500
0132	638.2102	Moving Signs Type II	EACH	10.000	10.000
0134	638.2602	Removing Signs Type II	EACH	3.000	3.000
0136	638.3000	Removing Small Sign Supports	EACH	4.000	4.000
0138	638.4000	Moving Small Sign Supports	EACH	10.000	10.000
0142	643.0300	Traffic Control Drums	DAY	1,340.000	1,340.000
0146	643.0310.S	Temporary Portable Rumble Strips 02. 1620-03-75	LS	1.000	1.000
0148	643.0900	Traffic Control Signs	DAY	2,080.000	2,080.000
0152	643.5000	Traffic Control	EACH	0.930	0.930
0154	645.0120	Geotextile Type HR	SY	665.000	665.000
0156	646.1020	Marking Line Epoxy 4-Inch	LF	52,370.000	52,370.000
0158	646.1040	Marking Line Grooved Wet Ref Epoxy 4-Inch	LF	93,120.000	93,120.000
0160	646.3020	Marking Line Epoxy 8-Inch	LF	455.000	455.000
0162	646.4520	Marking Line Same Day Epoxy 4-Inch	LF	52,370.000	52,370.000
0164	646.5320	Marking Railroad Crossings Epoxy	EACH	2.000	2.000
0166	646.6120	Marking Stop Line Epoxy 18-Inch	LF	75.000	75.000
0168	646.8120	Marking Curb Epoxy	LF	230.000	230.000
0170	648.0100	Locating No-Passing Zones	MI	8.880	8.880
0172	649.0105	Temporary Marking Line Paint 4-Inch	LF	3,752.000	3,752.000
0174	650.4500	Construction Staking Subgrade	LF	2,027.000	2,027.000
0176	650.5000	Construction Staking Base	LF	252.000	252.000
0178	650.5500	Construction Staking Curb Gutter and Curb & Gutter	LF	230.000	230.000
0182	650.8000	Construction Staking Resurfacing Reference	LF	47,053.000	47,053.000
0186	650.9910	Construction Staking Supplemental Control (project) 02. 1620-03-75	LS	1.000	1.000
0188	650.9920	Construction Staking Slope Stakes	LF	2,027.000	2,027.000
0190	690.0150	Sawing Asphalt	LF	307.000	307.000

1620-03-75

Line	Item	Item Description	Unit	Total	Qty
0192	740.0440	Incentive IRI Ride	DOL	35,442.000	35,442.000
0194	ASP.1T0A	On-the-Job Training Apprentice at $5.00/HR	HRS	2,000.000	2,000.000
0196	ASP.1T0G	On-the-Job Training Graduate at $5.00/HR	HRS	1,260.000	1,260.000
0202	SPV.0060	Special 03. Reestablish Section Corner Monuments	EACH	3.000	3.000
0206	SPV.0195	Special 01. Salvaged Asphaltic Shoulder Material	TON	1,162.000	1,162.000

3

CATEGORY	STATION - STATION	MILLING ** 204.0110 REMOVING ASPHALTIC SURFACE SY	204.0115 REMOVING ASPHALTIC SURFACE BUTT JOINTS SY	204.0120 REMOVING ASPHALTIC SURFACE MILLING SY	650.8000 CONSTRUCTION STAKING RESURFACING REFERENCE LF
0010	1096+00 - 1096+10	---	33	---	10
	1096+10 - 1246+27	---	---	50,057	15,017
	1246+27 - 1246+37	---	43	---	10
	1246+61 - 1246+71	---	43	---	10
	1246+71 - 1343+88	---	---	32,328	9,717
	1343+88 - 1343+98	---	37	---	10
	1344+09 - 1344+19	---	43	---	10
	1344+19 - 1355+22	---	---	5,060	1,103
	1355+22 - 1355+32	---	43	---	10
	1355+74 - 1355+84	---	43	---	10
	1355+84 - 1372+89	---	---	5,983	1,705
	1372+89 - 1372+99	---	43	---	---
	1373+42 - 1373+52	---	43	---	---
	1373+52 - 1564+83	---	---	61,892	19,151
	1564+83 - 1564+93	---	42	---	---
	MICHALIK LANE	---	---	253	---
	OAK LANE	---	---	260	---
	LONESOME ROAD	---	35	233	---
	PINE	---	26	156	---
	SANDY LANE	---	---	71	---
	STH 54 EAST	---	28	958	195
	RIVER LANE	---	41	299	---
	PINE DRIVE	---	23	41	---
	STH 54 WEST	---	31	510	95
	TOWN HALL ROAD SOUTH	---	27	149	---
	TOWN HALL ROAD NORTH	---	43	154	---
	LAKE ROAD SOUTH	---	26	312	---
	LAKE ROAD NORTH	---	25	240	---
	MEADOWLARK LANE	---	22	321	---
	RABBIT LANE	---	---	233	---
	UBINGER ROAD	---	47	310	---
	1362+50, CE DRIVEWAY	33	---	---	---
	TOTAL PROJECT 1620-03-75	33	787	159,822	47,053

**ADDITIONAL QUANTITIES LISTED ELSEWHERE

REMOVING CURB

CATEGORY	STATION - STATION	LOCATION	204.0130 REMOVING CURB LF	** 204.0110 REMOVING ASPHALTIC SURFACE SY
0010	STH 54 EAST ISLAND	1303+25	125	60
	STH 54 WEST ISLAND	1347+25	110	50
	TOTAL PROJECT 1620-03-75		235	110

**ADDITIONAL QUANTITIES LISTED ELSEWHERE

REMOVING FENCE

CATEGORY	STATION - STATION	LOCATION	204.0170 REMOVING FENCE LF
0010	1442+50 - 1443+00	RT	50
	TOTAL PROJECT 1620-03-75		50

REMOVING ROADWAY BARRIER ITEMS

CATEGORY	STATION - STATION	LOCATION	204.0165 REMOVING GUARDRAIL LF
0010	1245+30 - 1246+36	RT	100
	1245+30 - 1246+36	LT	100
	1246+61 - 1247+68	LT	112.5
	1246+61 - 1247+68	RT	112.5
	1354+25 - 1355+34	LT	100
	1354+25 - 1355+34	RT	100
	1355+74 - 1356+57	RT	87.5
	1355+74 - 13+23T	LT	137.5
	1371+55 - 1373+00	LT	150
	1371+93 - 1372+99	RT	112
	1373+42 - 1376+39	LT	300
	1373+41 - 1375+60	RT	212.5
	1440+89 - 1442+45	RT	162.5
	1440+89 - 1442+79	LT	212.5
	TOTAL PROJECT 1620-03-75		2,000

BASE AGGREGATE ITEMS

CATEGORY	STATION	-	STATION	LOCATION	305.0110 BASE AGGREGATE DENSE 3/4-INCH TON	305.0120 BASE AGGREGATE DENSE 1 1/4-INCH TON	624.0100 WATER MGAL	SPV.0195.01 SALVAGED ASPHALTIC SHOULDER MATERIAL TON
0010	1096+00	-	1119+59	MAINLINE	484	---	---	---
	1119+59	-	1126+79	MAINLINE	---	---	---	46
	1126+79	-	1130+52	MAINLINE	77	---	---	---
	1130+52	-	1137+44	MAINLINE	---	---	---	44
	1137+44	-	1181+28	MAINLINE	900	---	---	---
	1181+28	-	1185+22	MAINLINE	---	---	---	25
	1185+22	-	1190+70	MAINLINE	113	---	---	---
	1190+70	-	1194+03	MAINLINE	---	---	---	21
	1194+03	-	1227+81	MAINLINE	694	---	---	---
	1227+81	-	1229+54	MAINLINE	31	---	---	---
	1229+54	-	1243+20	MAINLINE	---	---	---	71
	1243+20	-	1244+36	MAINLINE	21	---	---	---
	1244+36	-	1254+37	MAINLINE	---	---	---	52
	1254+37	-	1263+69	MAINLINE	---	---	---	37
	1263+69	-	1265+99	MAINLINE	36	---	---	---
	1265+99	-	1273+47	MAINLINE	---	---	---	30
	1273+47	-	1274+15	MAINLINE	11	---	---	---
	1274+15	-	1296+20	MAINLINE	---	---	---	88
	1296+20	-	1297+93	MAINLINE	27	---	---	---
	1297+93	-	1303+08	MAINLINE	---	---	---	21
	1303+08	-	1304+52	MAINLINE	23	---	---	---
	1304+52	-	1309+92	MAINLINE	---	---	---	22
	1309+92	-	1317+11	MAINLINE	---	---	---	37
	1317+11	-	1318+60	MAINLINE	27	---	---	---
	1318+60	-	1328+00	MAINLINE	---	---	---	49
	1328+00	-	1372+34	MAINLINE	807	---	---	---
	1372+34	-	1396+77	MAINLINE	---	---	---	127
	1396+77	-	1446+65	MAINLINE	908	---	---	---
	1446+65	-	1460+95	MAINLINE	---	---	---	74
	1460+95	-	1478+63	MAINLINE	322	---	---	---
	1478+63	-	1491+10	MAINLINE	---	---	---	65
	1491+10	-	1505+51	MAINLINE	262	---	---	---
	1505+51	-	1534+44	MAINLINE	---	---	---	150
	1534+44	-	1562+99	MAINLINE	520	---	---	---
	1562+99	-	1564+93	MAINLINE	---	---	---	10
	STH 54 EAST			ISLAND	---	22	---	---
	STH 54 WEST			ISLAND	---	19	---	---
	UNDISTRIBUTED				1,616	8	150	194
	TOTAL PROJECT 1620-03-75				6,878	49	150	1,162

3

3

EARTHWORK

Division	From/To Station	Location	205.0100 Common Excavation (1) Cut (2)	205.0100 Common Excavation (1) EBS Excavation (3)	Salvaged/Unusable Pavement Material (4)	Available Material (5)	Unexpanded Fill	Expanded Fill (13) Factor 1.25	Mass Ordinate +/- (14)	Waste	208.0100 Borrow	Comment:
Division 1												
EWKDetail-B-71-015.xml	1244+04-1245+98 - 1352+97-1357+74	GUARDRAIL	33	0	0	33	239	299	-266	0	266	
EWKDetail-B-71-016.xml	1352+97 - 1357+74	GUARDRAIL	26	0	0	26	165	206	-180	0	180	
EWKDetail-B-71-017.xml	1370+41 - 1377+53	GUARDRAIL	32	0	0	32	502	627	-596	0	596	
EWKDetail-BG1443.xml	1439+56 - 1444+12	GUARDRAIL	16	0	0	16	228	285	-269	0	269	
EWKDetail-TownHall.xml	12+90T - 13+73T	GUARDRAIL	2	0	0	2	0	0	2	2	0	
Division 1 Subtotal			108	0	0	108	1,134	1,418	-1,309	2	1,311	
Grand Total			108	0	0	108	1,134	1,418	-1,309	2	1,311	
Total Common Exc			108									

Notes:
(1) Common Excavation is the sum of the Cut and EBS Excavation columns. Item number 205.0100
(2) Salvaged/Unsuable Pavement Material is included in Cut.
(4) Salvaged/Unusable Pavement Material
5) Available Material = Cut - Salvaged/Unusuable Pavement Material
(13) Expanded Fill Factor = 1.25
Expanded Fill = Unexpanded Fill * Fill Factor
(14) The Mass Ordinate + or - Qty calculated for the Division. Plus quantity indicates an excess of material within the Division. Minus indicates a shortage of material within the Division.

ASPHALT PAVEMENT ITEMS

CATEGORY	STATION - STATION	LOCATION	THICKNESS INCHES	455.0605 TACK COAT GAL	465.0105 ASPHALTIC SURFACE TON	460.5224 HMA PAVEMENT 4 LT 58-28 S TON	465.0120 ASPHALTIC SURFACE DRIVEWAYS AND FIELD ENTRANCES TON	465.0110 ASPHALTIC SURFACE PATCHING TON
0010	1096+00 - 1246+37	MAINLINE	2	3,522	—	5,534	—	—
	1246+61 - 1355+32	MAINLINE	2	2,698	—	4,239	—	—
	1355+74 - 1372+99	MAINLINE	2	425	—	667	—	—
	1373+42 - 1564+93	MAINLINE	2	4,516	—	7,096	—	—
	MICHALIK LANE		2	18	—	28	—	—
	OAK LANE		2	19	—	29	—	—
	LONESOME ROAD		2	19	—	30	—	—
	PINE		2	13	—	20	—	—
	SANDY LANE		2	5	—	8	—	—
	10+12'54E' - 12+17'54E'	STH 54 EAST	2	79	—	125	—	—
	RIVER LANE		2	24	—	38	—	—
	PINE DRIVE		2	5	—	8	—	—
	11+07'54W' - 12+13'54W'	STH 54 WEST	2	51	—	79	—	—
	TOWN HALL ROAD SOUTH		2	24	—	38	—	—
	TOWN HALL ROAD NORTH		2	14	—	22	—	—
	LAKE ROAD SOUTH		2	24	—	38	—	—
	LAKE ROAD NORTH		2	19	—	30	—	—
	MEADOWLARK LANE		2	24	—	38	—	—
	RABBIT LANE		2	17	—	26	—	—
	UBINGER ROAD		2	22	—	35	—	—
	1346+19, DRIVEWAY RT	FULL WIDTH SHLD	2	2	—	2	2	—
	1359+55, DRIVEWAY RT	FULL WIDTH SHLD	2	2	—	3	3	—
	1362+50, DRIVEWAY RT	FULL WIDTH SHLD	2	3	—	4	4	—
	STH 54 EAST	ISLAND	2	5	7	—	—	—
	STH 54 WEST	ISLAND	2	4	6	—	—	—
	STH 54 EAST	1' FILL	5	—	4	—	—	—
	STH 54 WEST	1' FILL	5	—	3	—	—	—
	UNDISTRIBUTED			—	—	—	—	300
	TOTAL PROJECT 1620-03-75			11,554	20	18,137	9	300

HMA PERCENT WITHIN LIMITS (PWL) TEST STRIP

CATEGORY	STATION - STATION	LOCATION	460.0105 HMA PERCENT WITHIN LIMITS (PWL) TEST STRIP VOLUMETRICS EACH	460.011 HMA PERCENT WITHIN LIMITS (PWL) TEST STRIP DENSITY EACH
0010	1096+00 - 1564+93	UPPER LAYER MAINLINE	1	1
	TOTAL PROJECT 1620-03-75		1	1

RUMBLE STRIPS

CATEGORY	STATION - STATION	LOCATION	465.0475 ASPHALTIC CENTERLINE RUMBLE STRIPS 2-LANE RURAL LF
0010	1096+00 - 1140+28	STH 80	4,428
	1142+28 - 1195+07	STH 80	5,279
	1197+07 - 1221+41	STH 80	2,434
	1223+41 - 1246+12	STH 80	2,271
	1246+86 - 1263+18	STH 80	1,632
	1265+18 - 1273+45	STH 80	827
	1275+45 - 1301+00	STH 80	2,555
	1305+00 - 1341+80	STH 80	3,680
	1349+50 - 1355+07	STH 80	557
	1357+90 - 1369+43	STH 80	1,153
	1371+43 - 1372+75	STH 80	132
	1373+67 - 1381+64	STH 80	797
	1383+64 - 1410+85	STH 80	2,721
	1412+85 - 1476+05	STH 80	6,320
	1478+05 - 1504+85	STH 80	2,680
	1506+85 - 1534+51	STH 80	2,766
	1536+51 - 1564+93	STH 80	2,842
	TOTAL PROJECT 1620-03-75		43,074

3

CURB

CATEGORY	STATION - STATION	LOCATION	601.0110 CONCRETE CURB TYPE D LF	650.5500 CONSTRUCTION STAKING CURB GUTTER AND CURB & GUTTER LF
0010	STH 54 EAST	ISLAND	125	125
	STH 54 WEST	ISLAND	105	105
	TOTAL PROJECT 1620-03-75		230	230

SECTION CORNERS

CATEGORY	STATION - STATION	LOCATION	621.0100 REFERENCE MONUMENTS EACH	SPV.0060.03 REESTABLISH SECTION CORNER MONUMENTS EACH	TYPE	REMARKS
0010	1196+07	AT INTERSECTION	4	1	BERNTSEN SNM1 STEEL NAIL MARKER	SOUTH 1/4 SEC 35 T22N R3E
	1222+41	AT INTERSECTION	4	1	BERNTSEN SNM1 STEEL NAIL MARKER	CENTER 1/4 SEC 35 T22N R3E
	1477+05	AT INTERSECTION	4	1	BERNTSEN SNM1 STEEL NAIL MARKER	SOUTH 1/4 SEC 3 T22N R3E
	TOTAL PROJECT 1620-03-75		12	3		

3

GUARDRAIL

CATEGORY	STATION - STATION	LOCATION	614.2300 MGS GUARDRAIL 3 LF	614.2340 MGS GUARDRAIL 3 L LF	614.2350 MGS GUARDRAIL SHORT RADIUS LF	614.2500 MGS THRIE BEAM TRANSITION LF	614.2610 MGS GUARDRAIL TERMINAL EAT EACH	614.2630 MGS GUARDRAIL SHORT RADIUS TERMINAL EACH
0010	1245+22 - 1245+75	RT	---	---	---	---	1	---
	1245+75 - 1246+00	RT	25	---	---	---	---	---
	1246+00 - 1246+38	RT	---	---	---	37.48	---	---
	1245+22 - 1245+75	LT	---	---	---	---	1	---
	1245+75 - 1246+00	LT	25	---	---	---	---	---
	1246+00 - 1246+38	LT	---	---	---	37.48	---	---
	1246+60 - 1246+98	RT	---	---	---	37.48	---	---
	1246+98 - 1247+23	RT	25	---	---	---	---	---
	1247+23 - 1247+76	RT	---	---	---	---	1	---
	1246+60 - 1246+98	LT	---	---	---	37.48	---	---
	1246+98 - 1247+23	LT	25	---	---	---	---	---
	1247+23 - 1247+76	LT	---	---	---	---	1	---
	1354+16 - 1354+69	RT	---	---	---	---	1	---
	1354+69 - 1354+94	RT	25	---	---	---	---	---
	1354+94 - 1355+33	RT	---	---	---	37.48	---	---
	1354+16 - 1354+69	LT	---	---	---	---	1	---
	1354+69 - 1354+94	LT	25	---	---	---	---	---
	1354+94 - 1355+33	LT	---	---	---	37.48	---	---
	1355+74 - 1356+11	LT	---	---	---	37.48	---	---
	1356+11 - 1356+36	LT	25	---	---	---	---	---
	1356+36 - 13+57T	LT	---	---	57	---	---	---
	13+29T - 13+57T	RT	---	---	---	---	---	1
	1355+74 - 1356+11	RT	---	---	---	37.48	---	---
	1356+11 - 1356+64	RT	---	---	---	---	1	---
	1371+85 - 1372+38	RT	---	---	---	---	1	---
	1372+38 - 1372+63	RT	25	---	---	---	---	---
	1372+63 - 1373+00	RT	---	---	---	37.48	---	---
	1371+60 - 1372+13	LT	---	---	---	---	1	---
	1372+13 - 1372+63	LT	50	---	---	---	---	---
	1372+63 - 1373+01	LT	---	---	---	37.48	---	---
	1373+41 - 1373+79	LT	---	---	---	37.48	---	---
	1373+79 - 1375+80	LT	200	---	---	---	---	---
	1375+80 - 1376+34	LT	---	---	---	---	1	---
	1373+40 - 1373+78	RT	---	---	---	37.48	---	---
	1373+78 - 1375+02	RT	125	---	---	---	---	---
	1375+02 - 1375+55	RT	---	---	---	---	1	---
	1440+75 - 1441+28	RT	---	---	---	---	1	---
	1441+28 - 1442+28	RT	---	100	---	---	---	---
	1442+28 - 1442+81	RT	---	---	---	---	1	---
	1440+87 - 1441+40	LT	---	---	---	---	1	---
	1441+40 - 1442+40	LT	---	100	---	---	---	---
	1442+40 - 1442+93	LT	---	---	---	---	1	---
	TOTAL FOR PROJECT 1620-03-75		575	200	57	449.76	15	1

RIPRAP

CATEGORY	STATION	LOCATION	606.0200 RIPRAP MEDIUM CY	645.0120 GEOTEXTILE TYPE HR SY
0010	1246+25 - 1246+38	RT	10	29
	1246+25 - 1246+38	LT	13	36
	1246+60 - 1246+75	LT	12	34
	1246+61 - 1246+75	RT	12	32
	1355+25 - 1355+33	LT	9	26
	1355+25 - 1355+33	RT	6	18
	1355+74 - 1356+00	RT	21	54
	1355+73 - 1356+00	LT	15	44
	1372+85 - 1373+00	LT	15	42
	1372+84 - 1373+00	RT	9	27
	1373+41 - 1373+75	RT	23	60
	1373+41 - 1374+50	LT	57	152
	UNDISTRIBUTED	---	40	111
	TOTAL PROJECT 1620-03-75		242	665

SAFETY FENCE

CATEGORY	STATION	LOCATION	616.0700.S.01 FENCE SAFETY LF
0010	1117+00 - 1118+60	RT	160
	1234+50 - 1237+00	RT	250
	1264+00 - 1274+00	LT	1,000
	1264+50 - 1274+00	RT	950
	1290+00 - 1292+50	RT	250
	1324+50 - 1329+50	LT	500
	UNDISTRIBUTED	---	311
	TOTAL PROJECT 1620-03-75		3,421

3

CONCRETE MEDIAN

CATEGORY	STATION	LOCATION	620.0300 CONCRETE MEDIAN SLOPED NOSE SF
0010	10+73'54E'	ISLAND	16
	11+70'54W'	ISLAND	21
	TOTAL PROJECT 1620-03-75		37

RESTORATION ITEMS

CATEGORY	STATION - STATION	LOCATION	625.0100 TOPSOIL SY	627.0200 MULCHING SY	629.0210 FERTILIZER TYPE B CWT	630.0171 SEEDING MIXTURE NO. 70A LB
0010	1244+04 - 1246+25	RT	199	232	0.2	7
	1244+04 - 1246+25	LT	126	125	0.1	6
	1246+75 - 1248+94	LT	218	199	0.2	8
	1246+75 - 1248+94	RT	223	221	0.2	7
	1352+97 - 1355+25	LT	152	98	0.1	6
	1352+97 - 1355+25	RT	199	198	0.2	7
	1356+00 - 1357+76	RT	108	111	0.1	4
	1356+00 - 12+90T	LT	56	19	0.1	2
	1370+75 - 1372+82	LT	206	161	0.2	7
	1370+66 - 1372+81	RT	194	191	0.2	7
	1374+50 - 1377+53	LT	267	161	0.2	9
	1373+72 - 1376+73	RT	536	282	0.4	17
	1439+56 - 1444+00	RT	532	443	0.4	17
	1439+69 - 1444+18	LT	333	292	0.3	12
	UNDISTRIBUTED		670	546	1	23
	TOTAL PROJECT 1620-03-75		4,018	3,279	3.3	141

SILT FENCE

CATEGORY	STATION - STATION	LOCATION	628.1504 SILT FENCE LF	628.1520 SILT FENCE MAINTENANCE LF	628.7570 ROCK BAGS EACH	REMARKS
0010	1244+04 - 1246+38	RT	245	245	—	—
	1244+04 - 1246+38	LT	240	240	—	—
	1244+04 - 1246+38	RT & LT	100	100	—	TURTLE TURN-AROUNDS
	1246+62 - 1248+94	LT	255	255	—	—
	1246+61 - 1248+94	RT	250	250	—	—
	1246+61 - 1248+94	RT & LT	100	100	—	TURTLE TURN-AROUNDS
	1352+97 - 1355+33	LT	225	225	—	—
	1352+97 - 1355+33	RT	240	240	—	—
	1352+97 - 1355+33	RT & LT	100	100	—	TURTLE TURN-AROUNDS
	1355+75 - 1357+76	RT	175	175	—	—
	1355+75 - 12+90T	LT	165	165	—	—
	1355+75 - 1357+76	RT & LT	100	100	—	TURTLE TURN-AROUNDS
	1370+66 - 1373+00	LT	225	225	—	—
	1370+66 - 1373+00	RT	215	215	—	—
	1370+66 - 1373+00	RT & LT	100	100	—	TURTLE TURN-AROUNDS
	1374+00 - 1377+53	LT	355	355	18	—
	1374+94 - 1376+73	RT	180	180	—	—
	1373+43 - 1376+73	RT & LT	100	100	—	TURTLE TURN-AROUNDS
	1439+56 - 1443+99	RT	435	435	—	—
	1439+68 - 1444+11	LT	430	430	—	—
	1439+69 - 1444+18	RT & LT	100	100	—	TURTLE TURN-AROUNDS
	UNDISTRIBUTED		867	867	18	—
	TOTAL PROJECT 1620-03-75		5,202	5,202	36	

EROSION CONTROL ITEMS

CATEGORY	STATION - STATION	LOCATION	628.2008 EROSION MAT URBAN CLASS I TYPE B SY	628.7504 TEMPORARY DITCH CHECKS LF
0010	1245+47 - 1246+26	RT	25	---
	1245+47 - 1246+25	LT	42	---
	1246+75 - 1247+56	LT	40	---
	1246+75 - 1247+51	RT	59	---
	1354+41 - 1355+25	LT	102	---
	1354+41 - 1355+25	RT	47	---
	1356+00 - 1356+39	RT	25	---
	1356+00 - 13+49T	LT	72	---
	1371+85 - 1372+82	LT	107	---
	1372+10 - 1372+81	RT	78	---
	1374+50 - 1376+10	LT	144	---
	1373+72 - 1375+30	RT	337	---
	1441+00 - 1442+56	RT	76	---
	1441+12 - 1442+68	LT	66	---
	UNDISTRIBUTED		244	50
	TOTAL PROJECT 1620-03-75		1,463	50

TURBIDITY BARRIER

CATEGORY	STATION - STATION	LOCATION	628.6005 TURBIDITY BARRIERS SY
0010	1246+37	LT	14
	1246+38	RT	13
	1246+61	RT	13
	1246+61	LT	13
	1355+33	LT	42
	1355+33	RT	23
	1355+74	RT	28
	1355+72	LT	22
	1372+92 - 1373+01	LT	32
	1372+79 - 1373+00	RT	50
	1373+42 - 1374+94	RT	202
	1373+43 - 1374+02	LT	89
	1441+73 - 1441+80	LT	8
	1441+73 - 1441+80	RT	11
	1441+88 - 1442+00	RT	11
	1441+88 - 1441+97	LT	7
	UNDISTRIBUTED		116
	TOTAL PROJECT 1620-03-75		695

3

3

PERMANENT SIGNING

CATEGORY	STATION	SIGN CODE	SIGN SIZE IN X IN			637.2210 SIGNS TYPE II REFLECTIVE H SF	637.2230 SIGNS TYPE II REFLECTIVE F SF	634.0612 4X6 INCH 12 FT EACH	** 634.0616 4X6 INCH 16 FT EACH	MESSAGE
0010	10+30'54E'	R1-1	36	X	36	7.46	—	—	1	STOP
	10+67'54'E'	W12-1D	30	X	30	—	6.25	1	—	DOUBLE ARROWS DOWN, 2' MOUNTING HEIGHT
	11+75'54W'	W12-1D	30	X	30	—	6.25	1	—	DOUBLE ARROWS DOWN, 2' MOUNTING HEIGHT
	11+98'54W'	R1-1	36	X	36	7.46	—	—	1	STOP
TOTAL PROJECT 1620-03-75						14.92	12.5	2	2	

** ADDITIONAL QUANTITIES LISTED ELSEWHERE

MOVING SIGNS

CATEGORY	STATION	638.2102 MOVING SIGNS TYPE II EACH	638.2602 REMOVING SIGNS TYPE II EACH	638.3000 REMOVING SMALL SIGN SUPPORTS EACH	638.4000 MOVING SMALL SIGN SUPPORTS EACH	** 634.0616 4X6 INCH 16 FT EACH
0010	10+30'54E'	—	1	1	—	—
	10+67'54'E'	—	1	1	—	—
	11+75'54W'	—	—	1	—	—
	11+98'54W'	—	1	1	—	—
	UNDISTRIBUTED	10	—	—	10	5
TOTAL PROJECT 1620-03-75		10	3	4	10	5

** ADDITIONAL QUANTITIES LISTED

3

TRAFFIC CONTROL ITEMS

CATEGORY	STATION	LOCATION	DAYS	TRAFFIC CONTROL DRUMS EACH	643.0300 TRAFFIC CONTROL DRUMS DAY	643.0310.S.02 (1620-03-75) TEMPORARY PORTABLE RUMBLE STRIPS LS
0010	1246+50	B-71-015 GUARD RAIL	10	17	170	---
	1355+50	B-71-016 GUARD RAIL	10	20	200	---
	1373+25	B-71-017 GUARD RAIL	10	20	200	---
	1441+90	GUARD RAIL	10	17	170	---
	10+50'54E'	STH 54 EAST ISLAND	5	10	50	---
	11+75'54W'	STH 54 WEST ISLAND	5	10	50	---
	UNDISTRIBUTED		10	50	500	1
		TOTAL PROJECT 1620-03-75			1,340	1

* UTILIZE SDD "TRAFFIC CONTROL, WORK ON SHOULDER OR PARKING LANE, UNDIVIDED ROADWAY" FOR WORK AT GUARD RAIL LOCATIONS

TRAFFIC CONTROL SIGNS

CATEGORY	LOCATION	DAYS	TRAFFIC CONTROL SIGNS EACH	643.0900 TRAFFIC CONTROL SIGNS DAY	MESSAGE
0010	BEGINNING OF PROJECT STH 80 1620-03-75	60	5	300	---
	MICHALIK LN	60	1	60	---
	OAK LN	60	1	60	---
	LONESOME RD	60	1	60	---
	PINE LN	60	1	60	---
	SANDY LN	60	1	60	---
	STH 54	60	4	240	---
	RIVER LN	60	1	60	---
	PINE DR	60	1	60	---
	STH 54	60	4	240	---
	TOWN HALL RD	60	2	120	---
	LAKE RD	60	2	120	---
	MEADOW LARK LN	60	1	60	---
	RABBIT LN	60	1	60	---
	UBINGER LANE	60	1	60	---
	POPLAR ST	60	2	120	---
	END OF PROJECT STH 80 1620-03-75	60	5	300	---
	B-71-015 GUARD RAIL	10	1	10	SHOULDER WORK
	B-71-016 GUARD RAIL	10	1	10	SHOULDER WORK
	B-71-017 GUARD RAIL	10	1	10	SHOULDER WORK
	GUARD RAIL 1441+90	10	1	10	SHOULDER WORK
	TOTAL PROJECT 1620-03-75			2,080	

3

NO PASSING ZONES

CATEGORY	STATION	648.0100 LOCATING NO PASSING ZONES MI
0010	1096+00 - 1564+93	8.88
	TOTAL PROJECT 1620-03-75	8.88

PAVEMENT MARKING

CATEGORY	STATION - STATION	LOCATION	646.1040 MARKING LINE GROOVED WET REF EPOXY 4-INCH WHITE LF	646.1020 MARKING LINE EPOXY 4-INCH YELLOW LF	646.3020 MARKING LINE EPOXY 8-INCH WHITE LF	646.5320 MARKING RAILROAD CROSSING EPOXY EACH	646.6120 MARKING STOP LINE EPOXY 18-INCH WHITE LF	646.8120 MARKING CURB EPOXY YELLOW LF	646.4520 MARKING LINE SAME DAY EPOXY 4-INCH YELLOW LF	649.0105 TEMPORARY MARKING LINE PAINT 4-INCH YELLOW LF
0010	1096+00 - 1564+93	RT/LT EDGELINE	92,562	—	—	—	—	—	—	—
	1096+00 - 1104+00	SB SOLID/NB SKIPS	—	1,000	—	—	—	—	1,000	—
	1104+00 - 1220+36	SKIPS	—	2,909	—	—	—	—	2,909	—
	1220+36 - 1234+00	NB SOLID/SB SKIPS	—	1,705	—	—	—	—	1,705	—
	1234+00 - 1238+10	DOUBLE YELLOW	—	820	—	—	—	—	820	—
	1238+10 - 1254+20	SB SOLID/NB SKIPS	—	2,013	—	—	—	—	2,013	—
	1254+20 - 1267+00	NB SOLID/SB SKIPS	—	1,600	—	—	—	—	1,600	—
	1267+00 - 1271+00	DOUBLE YELLOW	—	800	—	—	—	—	800	—
	1271+00 - 1284+22	SB SOLID/NB SKIPS	—	1,653	—	—	—	—	1,653	—
	1284+22 - 1287+71	SKIPS	—	88	—	—	—	—	88	—
	1287+71 - 1301+09	NB SOLID/SB SKIPS	—	1,673	—	—	—	—	1,673	—
	1301+09 - 1302+75	DOUBLE YELLOW	—	332	—	—	—	—	332	—
	1302+00 - 1304+50	BYPASS LANE	63	—	—	—	—	—	—	—
	1303+23 - 1326+00	DOUBLE YELLOW	—	6,554	—	—	—	—	6,554	—
	1326+00 - 1330+22	NB SKIPS/SB SOLID	—	528	—	—	—	—	528	—
	1330+22 - 1338+66	SKIPS	—	211	—	—	—	—	211	—
	1338+66 - 1344+03	NB SOLID/SB SKIPS	—	672	—	—	—	—	672	—
	1344+03 - 1347+34	DOUBLE YELLOW	—	662	—	—	—	—	662	—
	1345+13 - 1348+50	BYPASS LANE	85	—	—	—	—	—	—	—
	1347+81 - 1353+07	NB SKIPS/SB SOLID	—	658	—	—	—	—	658	—
	1353+07 - 1363+32	SKIPS	—	256	—	—	—	—	256	—
	1363+32 - 1377+50	NB SOLID/SB SKIPS	—	1,773	—	—	—	—	1,773	—
	1377+50 - 1392+00	DOUBLE YELLOW	—	2,900	—	—	—	—	2,900	—
	1392+00 - 1407+53	NB SKIPS/SB SOLID	—	1,941	—	—	—	—	1,941	—
	1407+53 - 1432+88	SKIPS	—	634	—	—	—	—	634	—
	1432+88 - 1449+00	NB SOLID/SB SKIPS	—	2,015	—	—	—	—	2,015	—
	1449+00 - 1458+00	DOUBLE YELLOW	—	1,800	—	—	—	—	1,800	—
	1458+00 - 1467+68	NB SKIPS/SB SOLID	—	2,335	—	—	—	—	2,335	—
	1467+68 - 1471+75	DOUBLE YELLOW	—	814	—	—	—	—	814	—
	1471+75 - 1481+50	NB SOLID/SB SKIPS	—	1219	—	—	—	—	1,219	—
	1481+50 - 1528+00	DOUBLE YELLOW	—	9300	—	—	—	—	9,300	—
	1528+00 - 1544+06	NB SKIPS/SB SOLID	—	2,008	—	—	—	—	2,008	—
	1544+06 - 1559+58	SKIPS	—	388	—	—	—	—	388	—
	1559+58 - 1564+93	NB SOLID/SB SKIPS	—	669	—	—	—	—	669	—
	1301+32 - 1302+32	RT TURN LANE	—	—	100	—	—	—	—	—
	1348+32 - 1350+32	RT TURN LANE	—	—	200	—	—	—	—	—
	1343+75	NB	—	—	—	1	—	—	—	—
	1344+30	SB	—	—	—	1	—	—	—	—
	1303+35	ISLAND	—	—	80	—	45	125	—	—
	1347+25	ISLAND	—	—	75	—	30	105	—	—
	10+60'54E' - 12+17'54E'	EDGELINE	300	—	—	—	—	—	—	—
	10+30'54E' - 12+17'54'E	CENTERLINE & SKIPS	—	240	—	—	—	—	240	—
	11+07'54W' - 11+68'54W'	EDGELINE	110	—	—	—	—	—	—	—
	11+07'54W' - 12+00'54W'	CENTERLINE	—	200	—	—	—	—	200	—
	1096+00 - 1564+93	SKIPS	—	—	—	—	—	—	—	3,752
	TOTAL PROJECT 1620-03-75		93,120	52,370	455	2	75	230	52,370	3,752

CONSTRUCTION STAKING

CATEGORY	STATION - STATION	LOCATION	650.5000 CONSTRUCTION STAKING BASE LF	650.4500 CONSTRUCTION STAKING SUBGRADE LF	650.9920 CONSTRUCTION STAKING SLOPE STAKES LF
0010	1244+04 - 1246+37	LT & RT	—	233	233
	1246+61 - 1248+94	LT & RT	—	233	233
	1352+97 - 1355+32	LT & RT	—	235	235
	1355+74 - 1357+74	LT & RT	—	200	200
	1370+41 - 1373+00	LT & RT	—	259	259
	1373+42 - 1377+53	LT & RT	—	411	411
	1439+56 - 1444+12	LT & RT	—	456	456
	STH 54 EAST	ISLAND	135	—	—
	STH 54 WEST	ISLAND	117	—	—
	TOTAL PROJECT 1620-03-75		252	2,027	2,027

SAWING PAVEMENT

CATEGORY	STATION	LOCATION	690.0150 SAWING ASPHALT LF
0010	1362+50	DRIVEWAY RT	62
	10+50'54E'	ISLAND	130
	11+80'54W'	ISLAND	115
	TOTAL PROJECT 1620-03-75		307

3

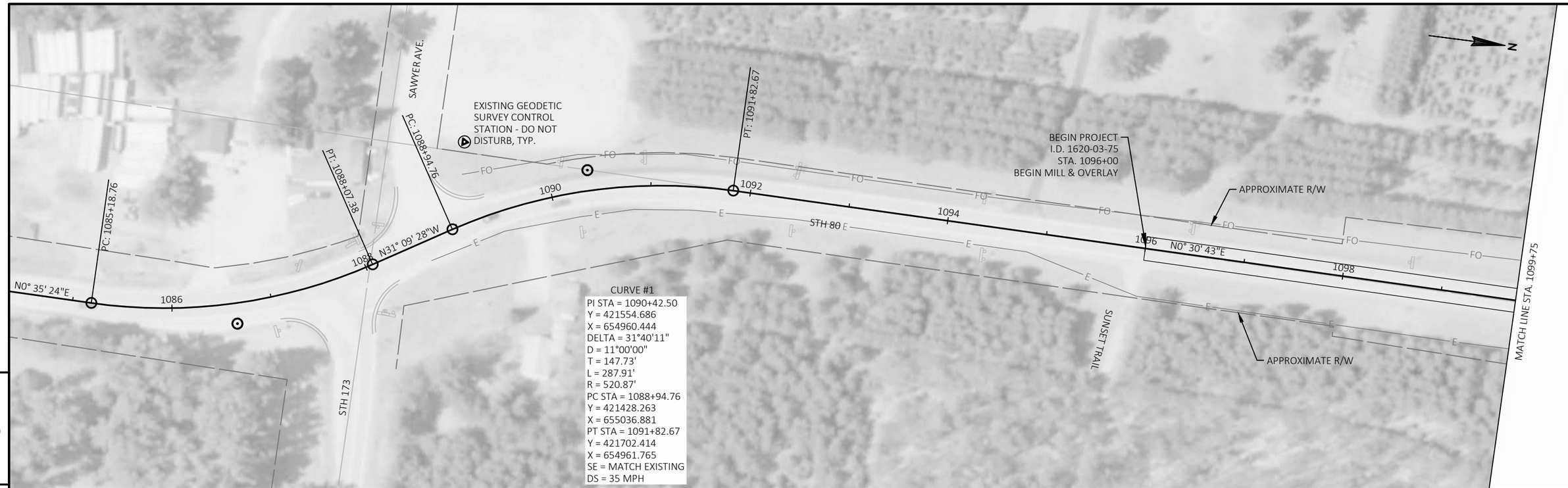

CURVE #1
PI STA = 1090+42.50
Y = 421554.686
X = 654960.444
DELTA = 31°40'11"
D = 11°00'00"
T = 147.73'
L = 287.91'
R = 520.87'
PC STA = 1088+94.76
Y = 421428.263
X = 655036.881
PT STA = 1091+82.67
Y = 421702.414
X = 654961.765
SE = MATCH EXISTING
DS = 35 MPH

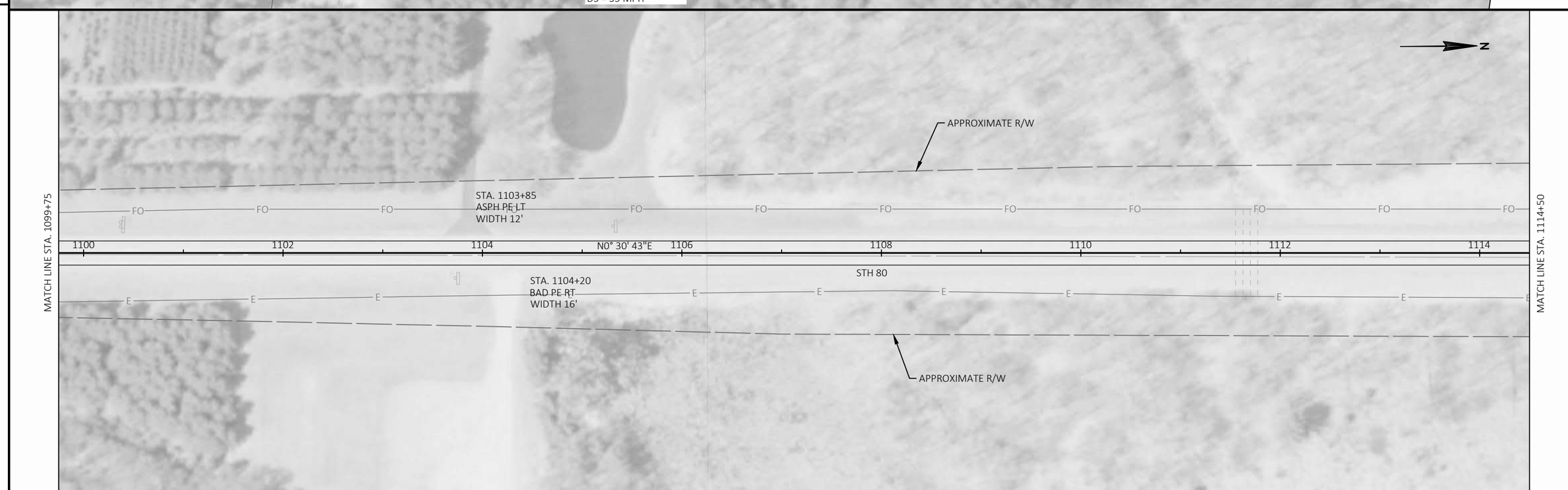

PROJECT NO: 1620-03-75	HWY: STH 80	COUNTY: WOOD	PLAN DETAILS	SHEET 29	E

FILE NAME : P:\90S\93\00093433\CADD\SHEETSPLAN -75\050201-PN.DWG
LAYOUT NAME - 01
PLOT DATE : 1/18/2019 7:30 PM
PLOT BY : BOBBI MAXWELL
PLOT NAME :
PLOT SCALE : 1 IN: 100 FT

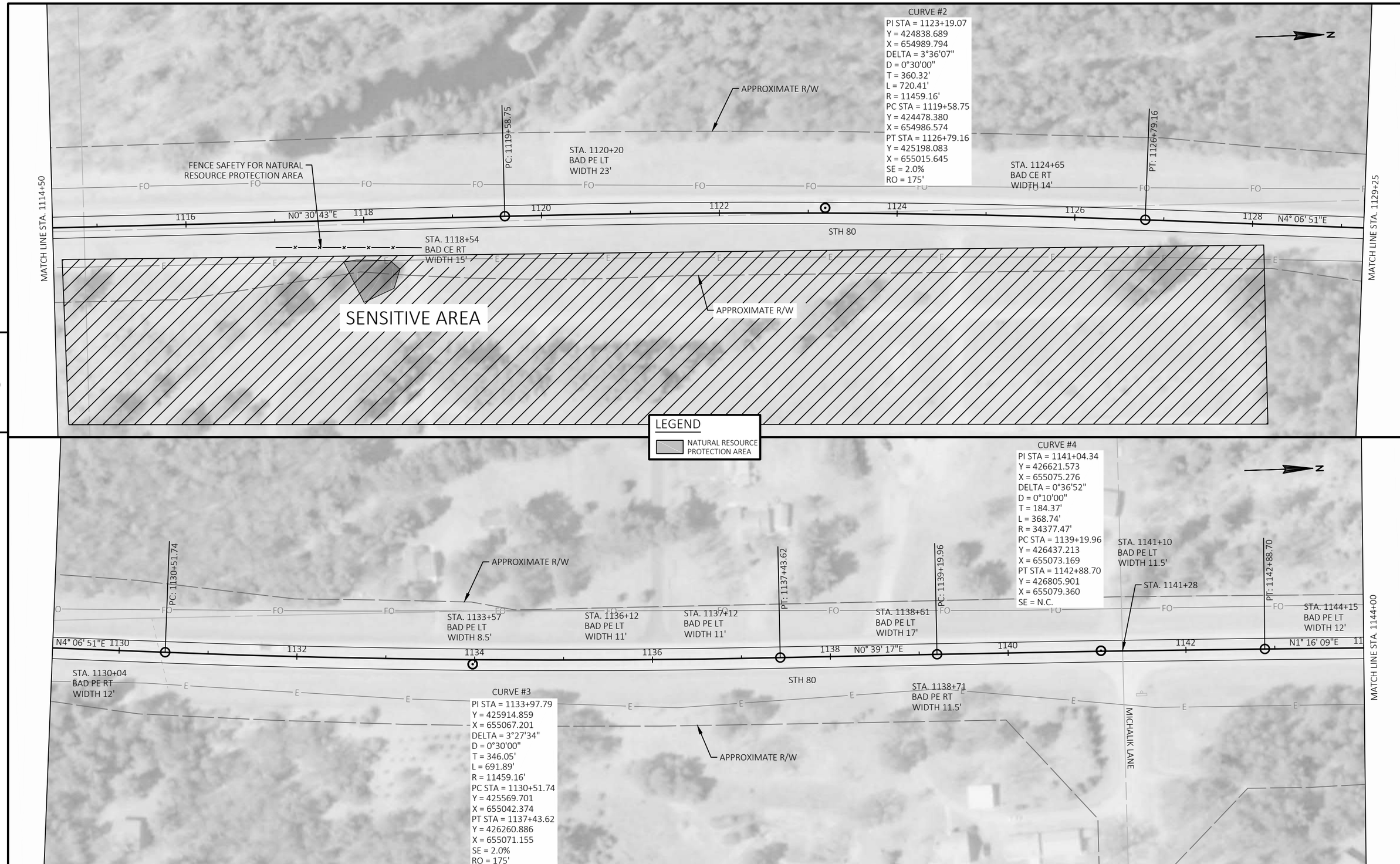

PROJECT NO: 1620-03-75	HWY: STH 80	COUNTY: WOOD	PLAN DETAILS	SHEET 30	E

FILE NAME : P:\90S\93\00093433\CADD\SHEETSPLAN -75\050201-PN.DWG
LAYOUT NAME - 02
PLOT DATE : 1/18/2019 7:30 PM
PLOT BY : BOBBI MAXWELL
PLOT NAME :
PLOT SCALE : 1 IN: 100 FT
WISDOT/CADDS SHEET 44

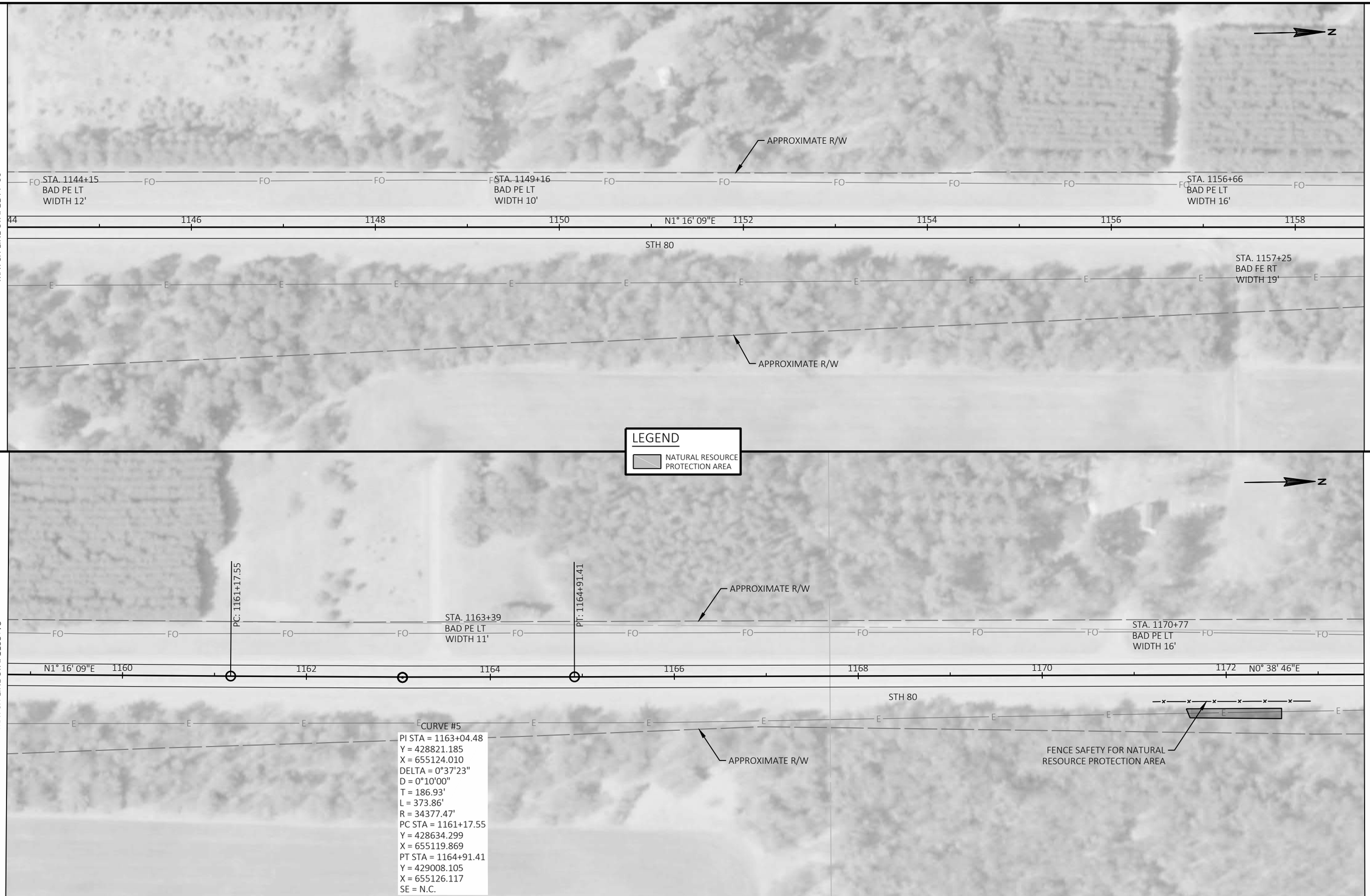

5

5

PROJECT NO: 1620-03-75	HWY: STH 80	COUNTY: WOOD	PLAN DETAILS	SHEET 31	E

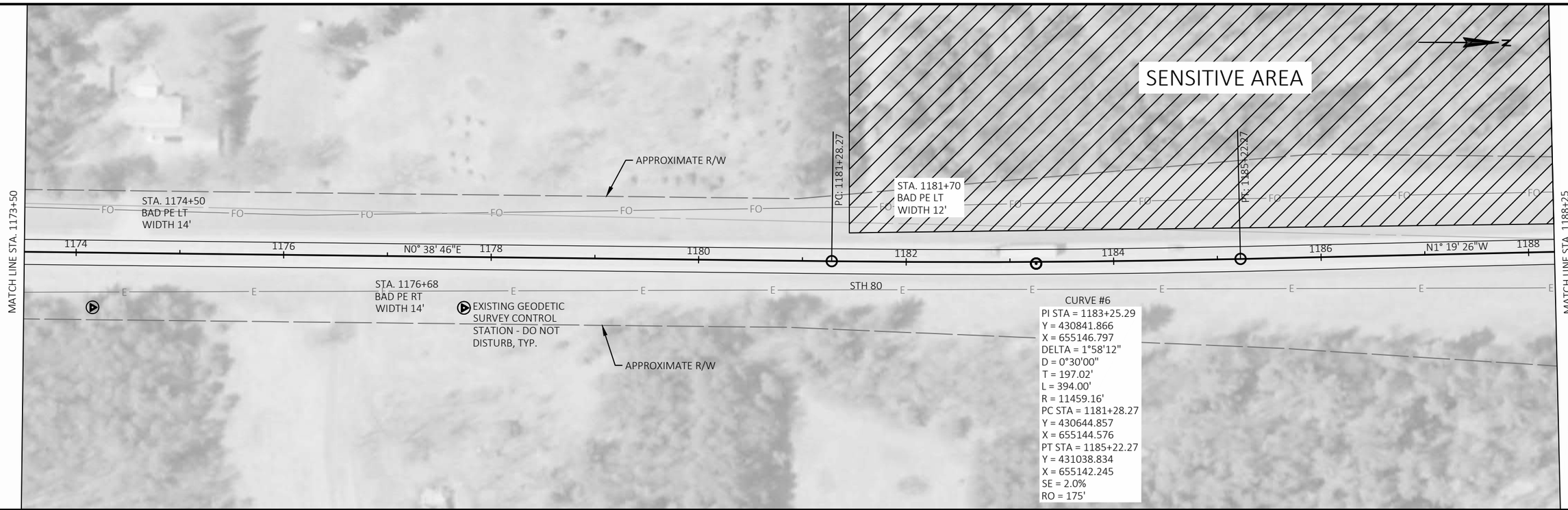

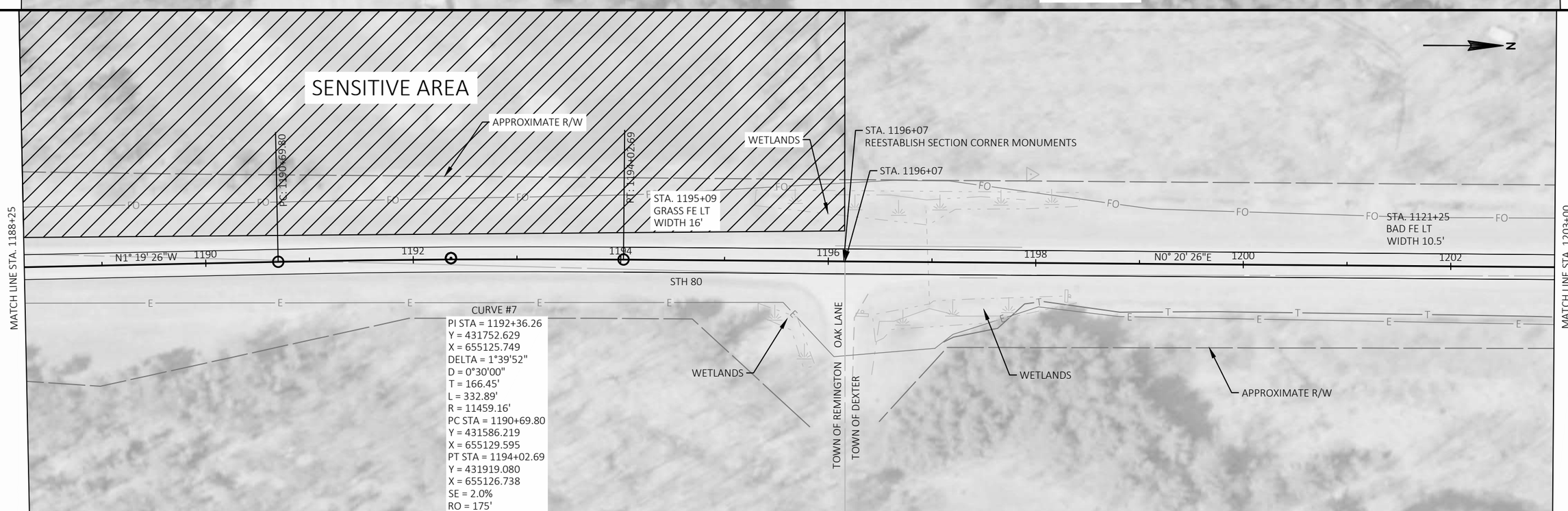

PROJECT NO: 1620-03-75	HWY: STH 80	COUNTY: WOOD	PLAN DETAILS	SHEET 32	E

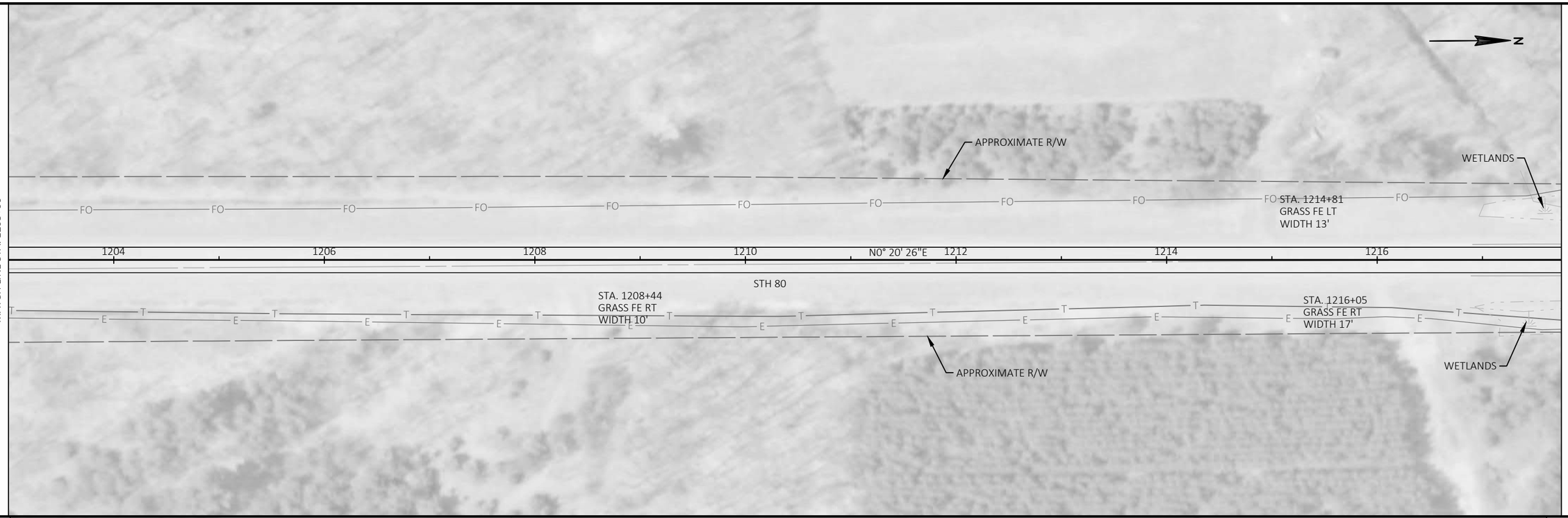

5

5

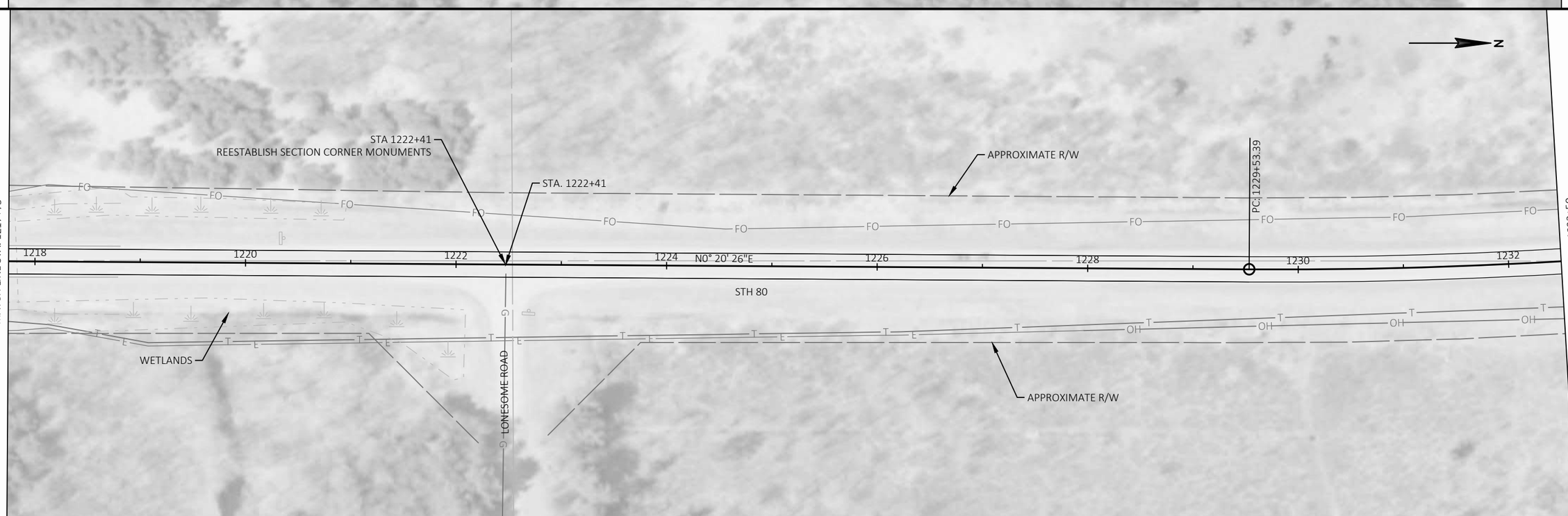

PROJECT NO: 1620-03-75	HWY: STH 80	COUNTY: WOOD	PLAN DETAILS	SHEET 33	E

FILE NAME : P:\90S\93\00093433\CADD\SHEETSPLAN -75\050201-PN.DWG
LAYOUT NAME - 05
PLOT DATE : 1/18/2019 7:30 PM
PLOT BY : BOBBI MAXWELL
PLOT NAME :
PLOT SCALE : 1 IN: 100 FT

BENCHMARKS			
NO.	STATION	ELEV.	DESCRIPTION
1155	1246+37, LT 19.7'	983.73	DISK ON STRUCTURE B-71-015

CURVE #8
PI STA = 1236+41.60
Y = 436157.922
X = 655151.931
DELTA = 17°04'40"
D = 1°15'00"
T = 688.21'
L = 1366.22'
R = 4583.66'
PC STA = 1229+53.39
Y = 435469.722
X = 655147.841
PT STA = 1243+19.61
Y = 436816.979
X = 654953.738
SE = 4.0%
RO = 180'

MATCH LINE STA. 1232+50

STA. 1234+85
GRASS FE LT
WIDTH 12'

APPROXIMATE R/W

STA. 1238+32
BAD PE LT
WIDTH 16'

TDS TELECOM

SLOPE INTERCEPT (TYP)

PT: 1243+19.61

MGS GUARDRAIL 3

MGS GUARDRAIL
TERMINAL EAT

REMOVE EXISTING GUARDRAIL

EXISITING STRUCTURE
B-71-015

MGS THRIE BEAM
TRANSITION

BM 1155

MATCH LINE STA. 1247+25

1234 1236 1238 1240 1242 1244 1246

N16° 44' 14"W

STA. 1234+85
BAD PE RT
WIDTH 12'

FENCE SAFETY FOR NATURAL
RESOURCE PROTECTION AREA

STH 80

STA. 1238+12
BAD PE RT
WIDTH 13'

STA. 1241+60
BAD PE RT
WIDTH 16'

TDS TELECOM

OAKDALE ELECTRIC

MGS GUARDRAIL
TERMINAL EAT

MGS GUARDRAIL 3

MGS THRIE BEAM
TRANSITION

EXISTING GEODETIC
SURVEY CONTROL
STATION - DO NOT
DISTURB, TYP.

REMOVE EXISTING GUARDRAIL

WETLANDS

APPROXIMATE R/W

5

5

LEGEND

NATURAL RESOURCE
PROTECTION AREA

WETLANDS

MGS GUARDRAIL 3

MGS GUARDRAIL
TERMINAL EAT

APPROXIMATE R/W

STA. 1252+73
BAD PE LT
WIDTH 16'

STA. 1254+94
BAD PE LT
WIDTH 16'

MATCH LINE STA. 1247+25

MATCH LINE STA. 1262+00

1248 1250 1252 1254 1256 1258 1260

N16° 44' 14"W

STA. 1252+73
BAD PE RT
WIDTH 20'

STH 80

STA. 1254+73
GRASS FE RT
WIDTH 15'

MGS GUARDRAIL
TERMINAL EAT

MGS GUARDRAIL 3

WETLANDS

APPROXIMATE R/W

PROJECT NO: 1620-03-75	HWY: STH 80	COUNTY: WOOD	PLAN DETAILS	SHEET 34	E

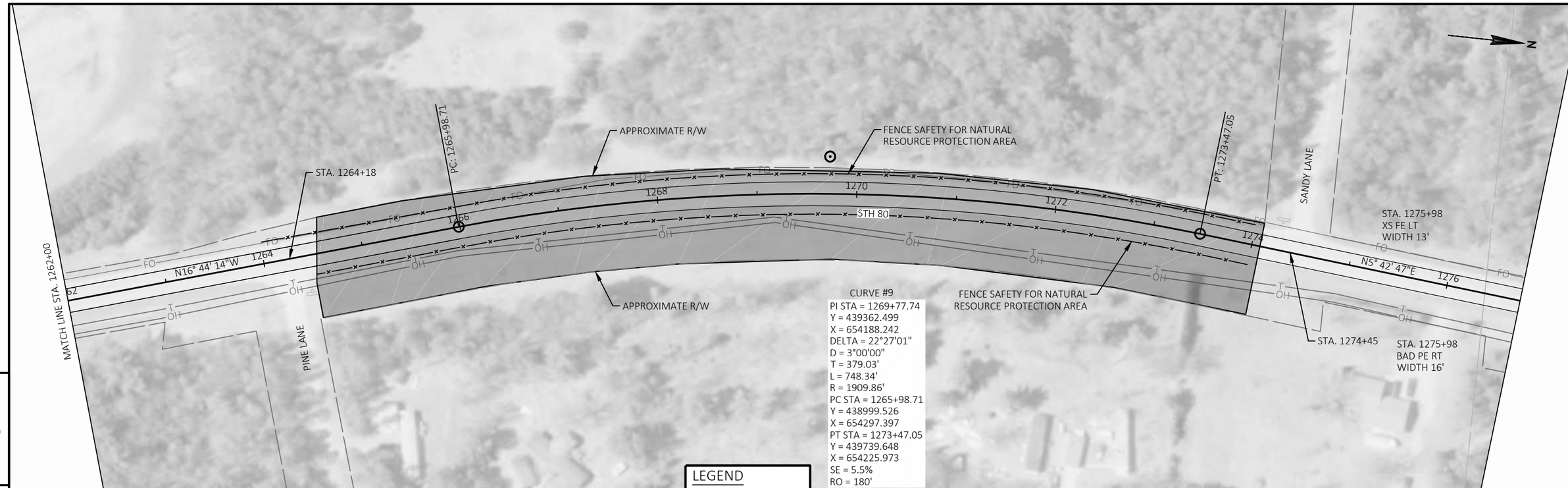

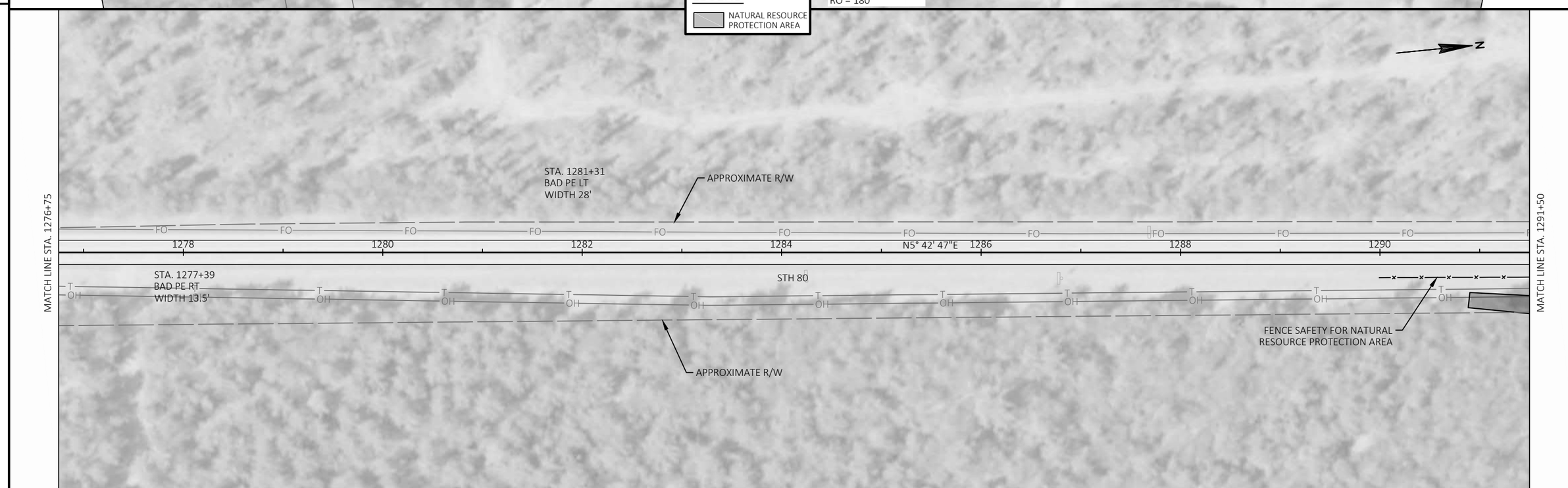

PROJECT NO: 1620-03-75	HWY: STH 80	COUNTY: WOOD	PLAN DETAILS	SHEET 35	E

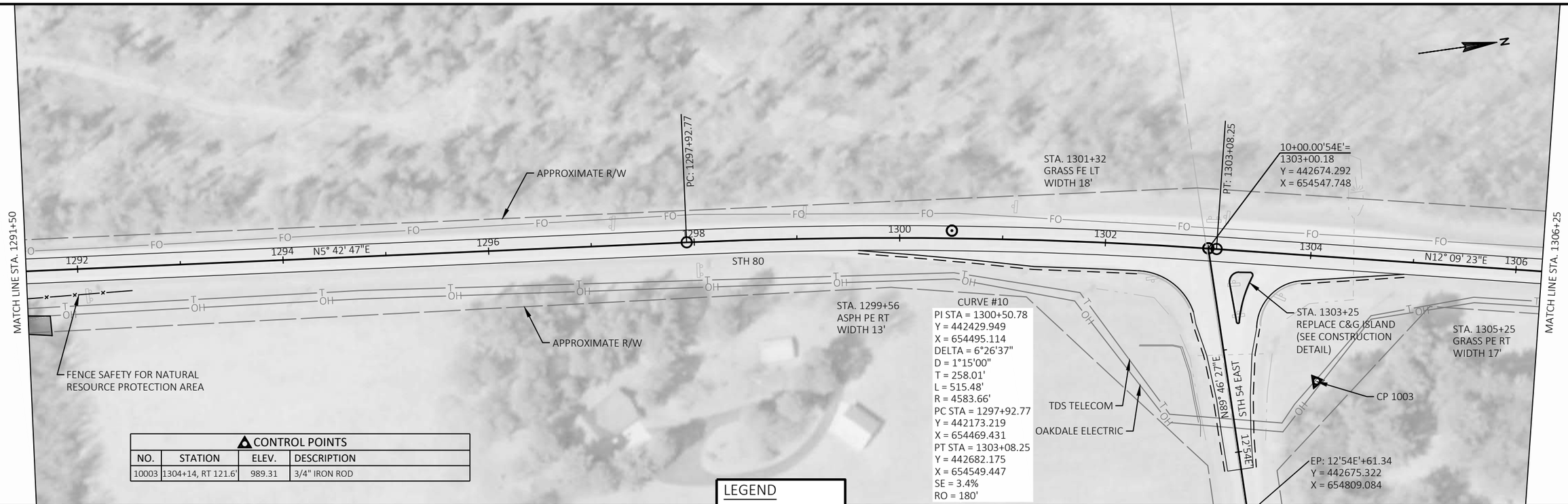

CONTROL POINTS			
NO.	STATION	ELEV.	DESCRIPTION
10003	1304+14, RT 121.6'	989.31	3/4" IRON ROD

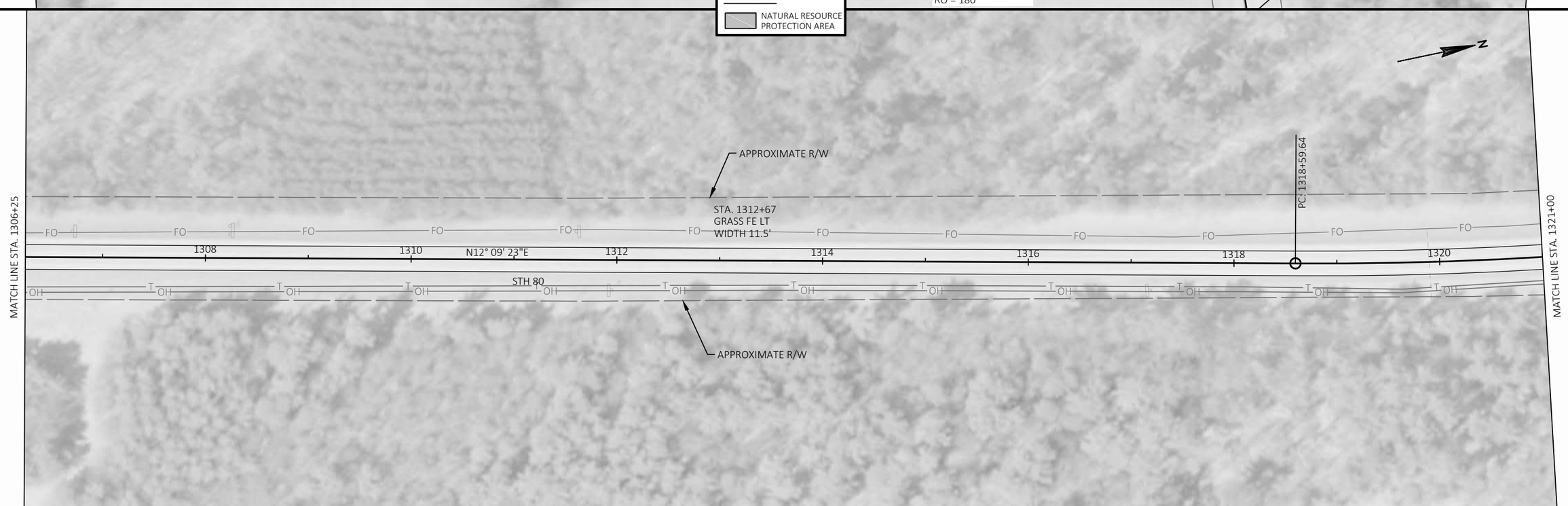

PROJECT NO: 1620-03-75	HWY: STH 80	COUNTY: WOOD	PLAN DETAILS	SHEET 36	E

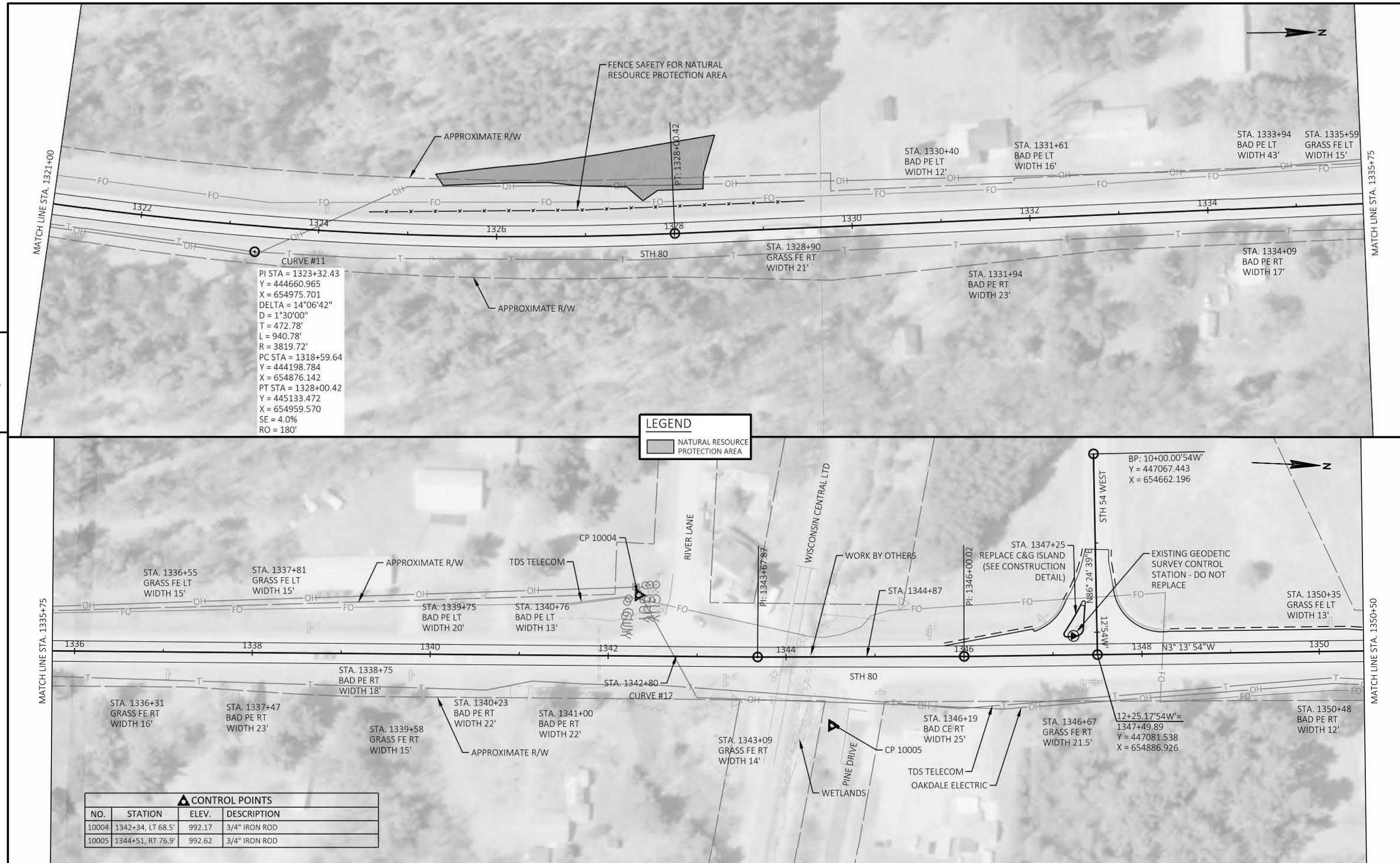

CONTROL POINTS

NO.	STATION	ELEV.	DESCRIPTION
10004	1342+34, LT 68.5'	992.17	3/4" IRON ROD
10005	1344+51, RT 76.9'	992.62	3/4" IRON ROD

PROJECT NO: 1620-03-75	HWY: STH 80	COUNTY: WOOD	PLAN DETAILS	SHEET 37	E

FILE NAME : P:\90S\93\00093433\CADD\SHEETSPLAN -75\050201-PN.DWG
LAYOUT NAME - 09
PLOT DATE : 5/24/2019 1:32 PM PLOT BY : BOBBI MAXWELL PLOT NAME : PLOT SCALE : 1 IN: 100 FT

BENCHMARKS			
NO.	STATION	ELEV.	DESCRIPTION
2322	1355+31, LT 21.3'	995.55	DISK ON STRUCTURE B-71-016

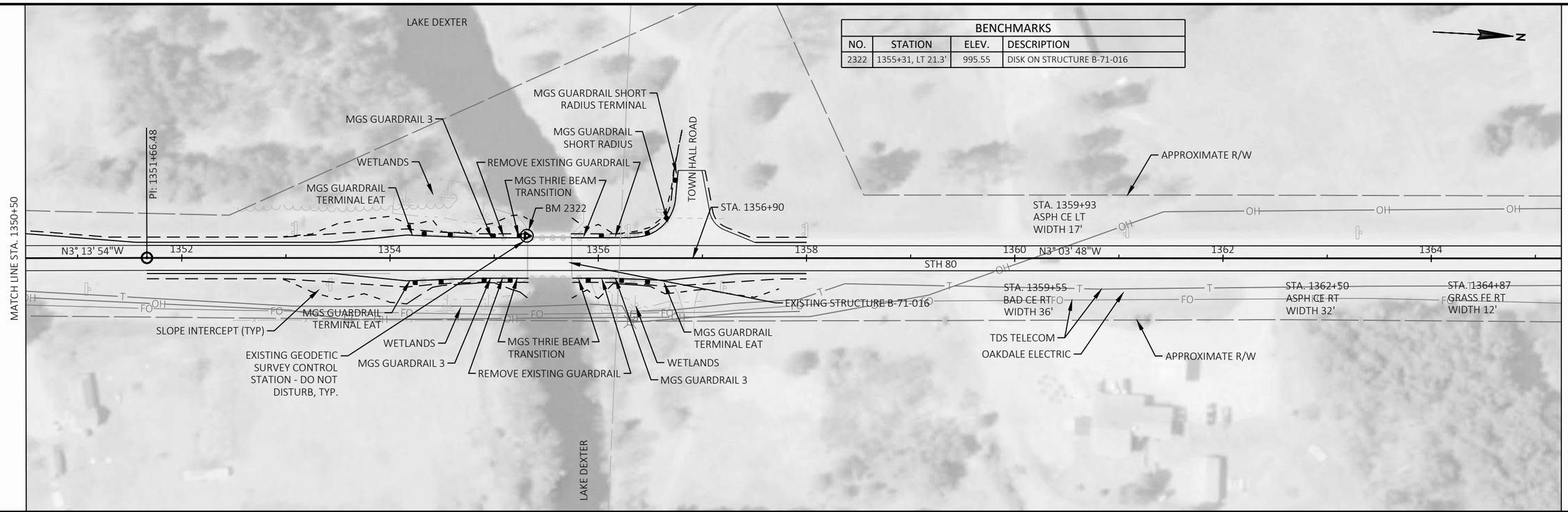

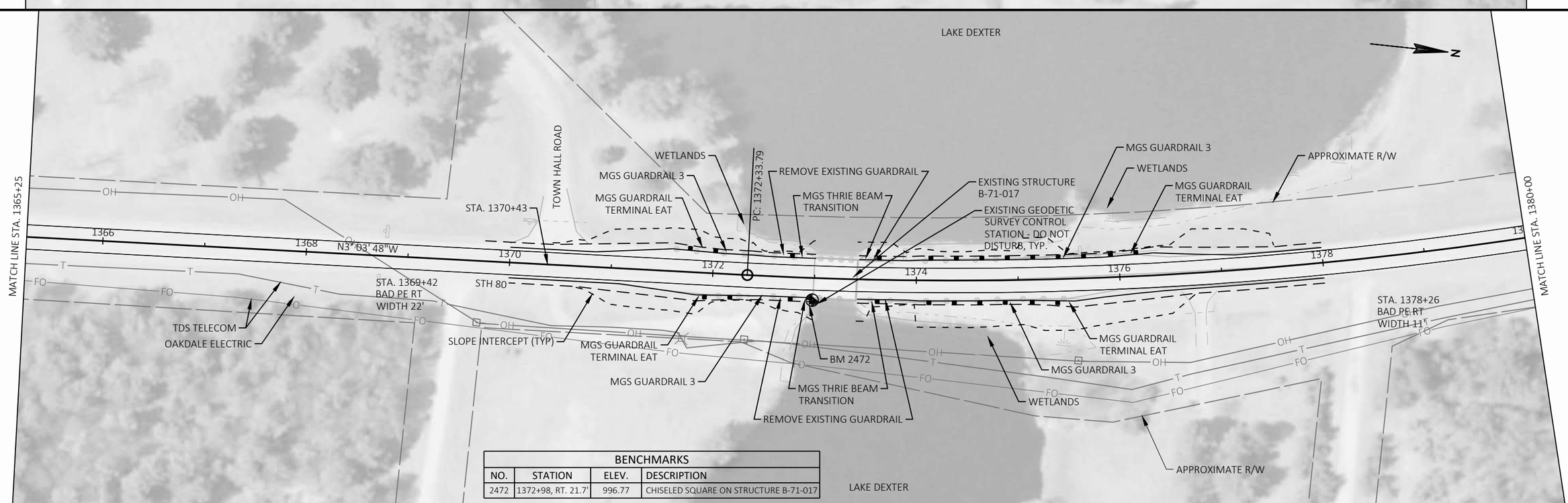

BENCHMARKS			
NO.	STATION	ELEV.	DESCRIPTION
2472	1372+98, RT. 21.7'	996.77	CHISELED SQUARE ON STRUCTURE B-71-017

5

5

PROJECT NO: 1620-03-75	HWY: STH 80	COUNTY: WOOD	PLAN DETAILS	SHEET 38	E

FILE NAME : P:\90S\93\00093433\CADD\SHEETSPLAN -75\050201-PN.DWG
LAYOUT NAME - 10
PLOT DATE : 1/18/2019 7:30 PM
PLOT BY : BOBBI MAXWELL
PLOT NAME :
PLOT SCALE : 1 IN: 100 FT
WISDOT/CADDS SHEET 44

5

5

PROJECT NO: 1620-03-75	HWY: STH 80	COUNTY: WOOD	PLAN DETAILS	SHEET 39	E

FILE NAME : P:\90S\93\00093433\CADD\SHEETSPLAN -75\050201-PN.DWG
LAYOUT NAME - 11
PLOT DATE : 1/18/2019 7:30 PM
PLOT BY : BOBBI MAXWELL
PLOT NAME :
PLOT SCALE : 1 IN: 100 FT

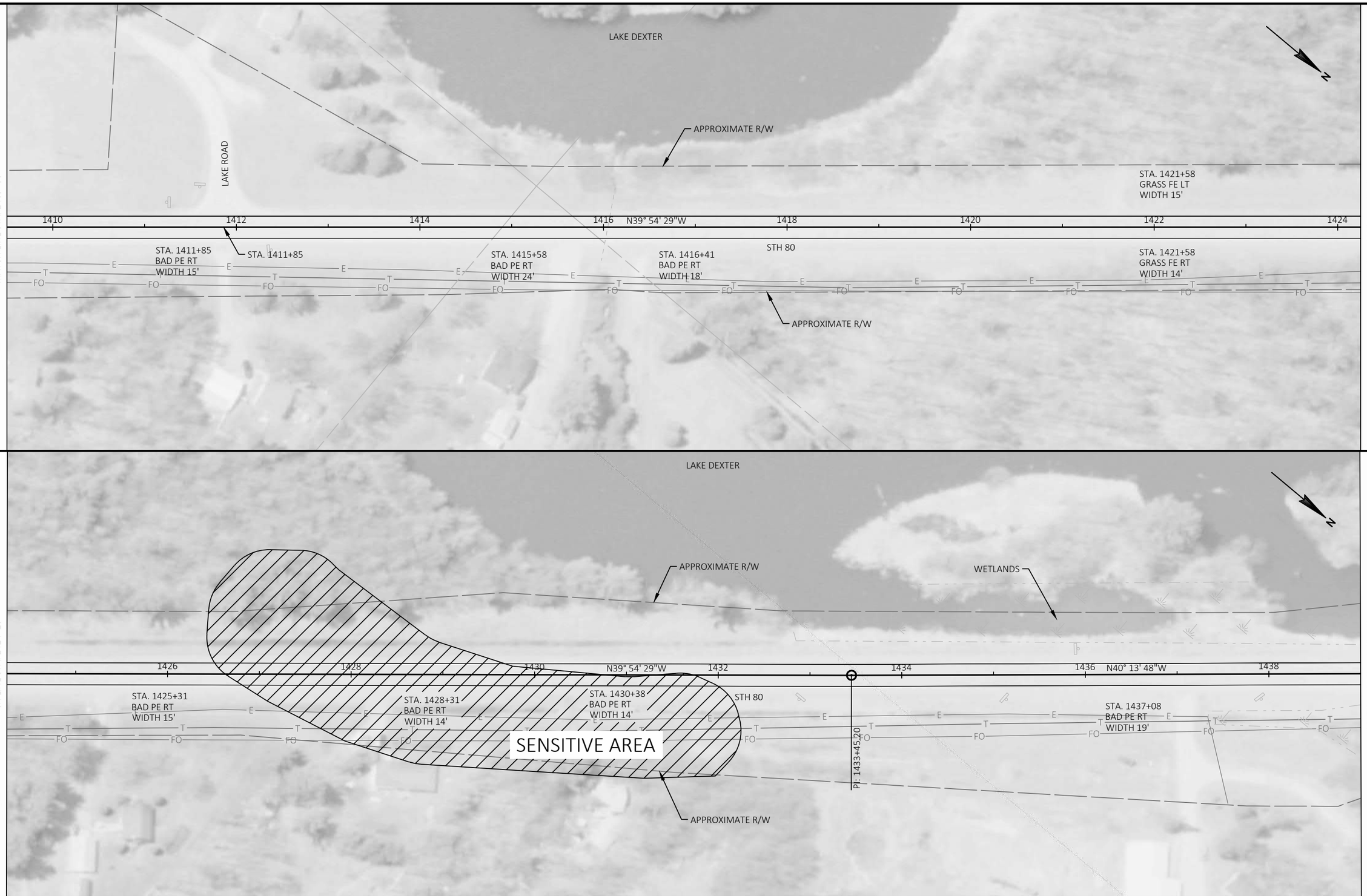

5

5

PROJECT NO: 1620-03-75	HWY: STH 80	COUNTY: WOOD	PLAN DETAILS	SHEET 40	E

FILE NAME : P:\90S\93\00093433\CADD\SHEETSPLAN -75\050201-PN.DWG
LAYOUT NAME - 12
PLOT DATE : 1/18/2019 7:31 PM
PLOT BY : BOBBI MAXWELL
PLOT NAME :
PLOT SCALE : 1 IN: 100 FT

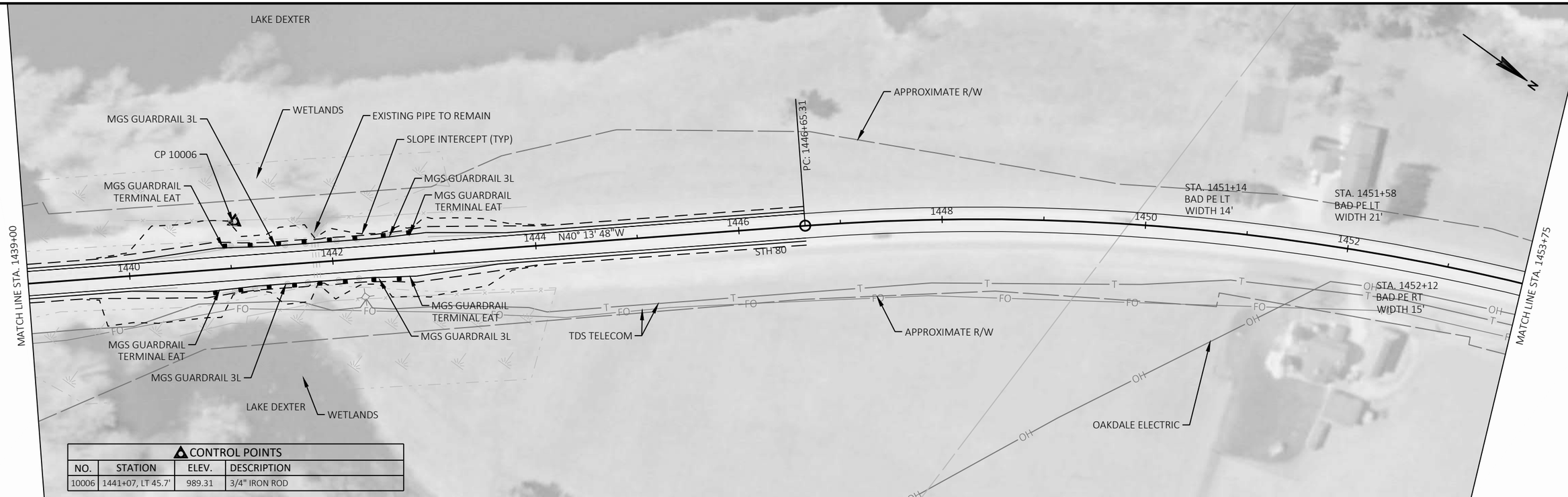

CONTROL POINTS			
NO.	STATION	ELEV.	DESCRIPTION
10006	1441+07, LT 45.7'	989.31	3/4" IRON ROD

5

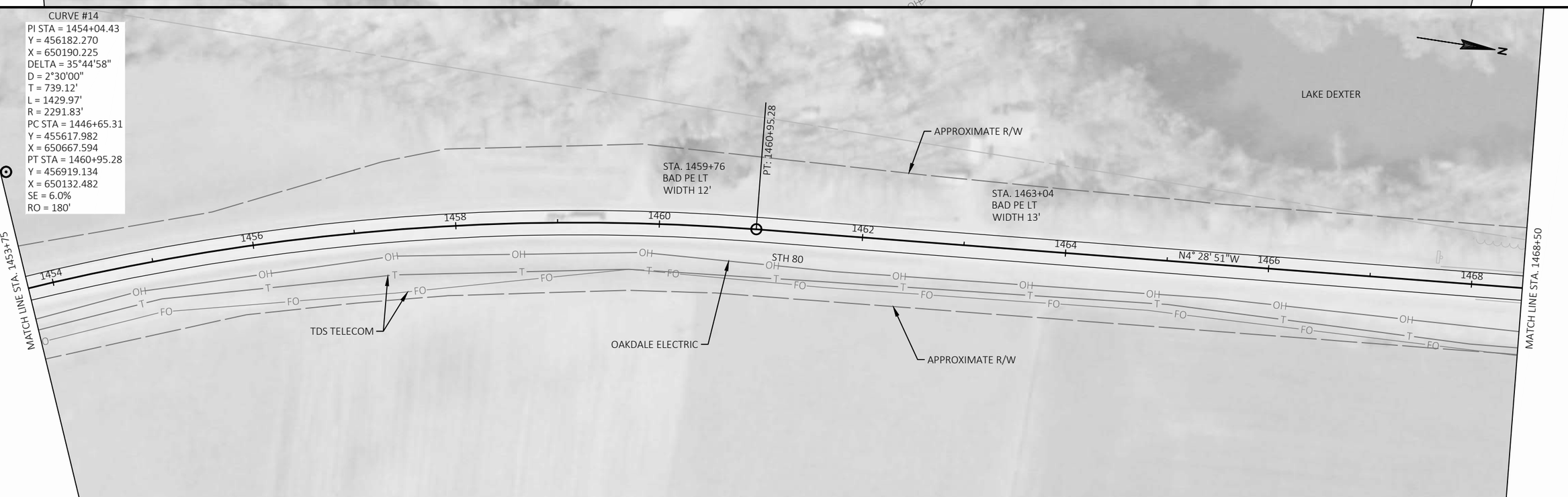

5

PROJECT NO: 1620-03-75	HWY: STH 80	COUNTY: WOOD	PLAN DETAILS	SHEET 41	E

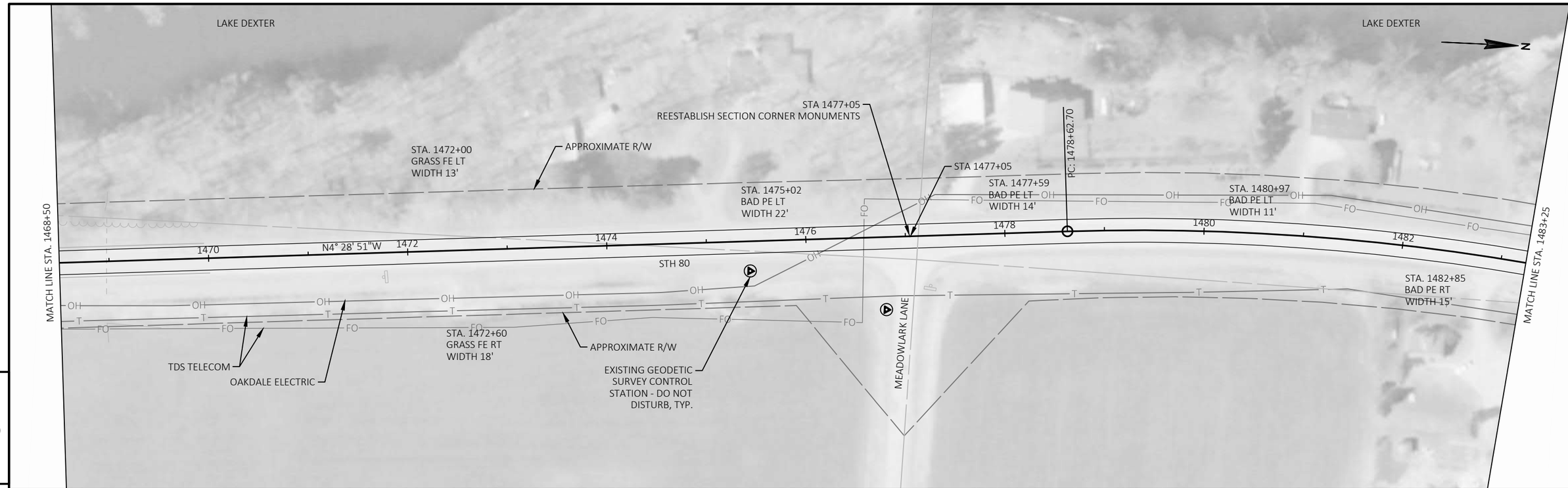

5

5

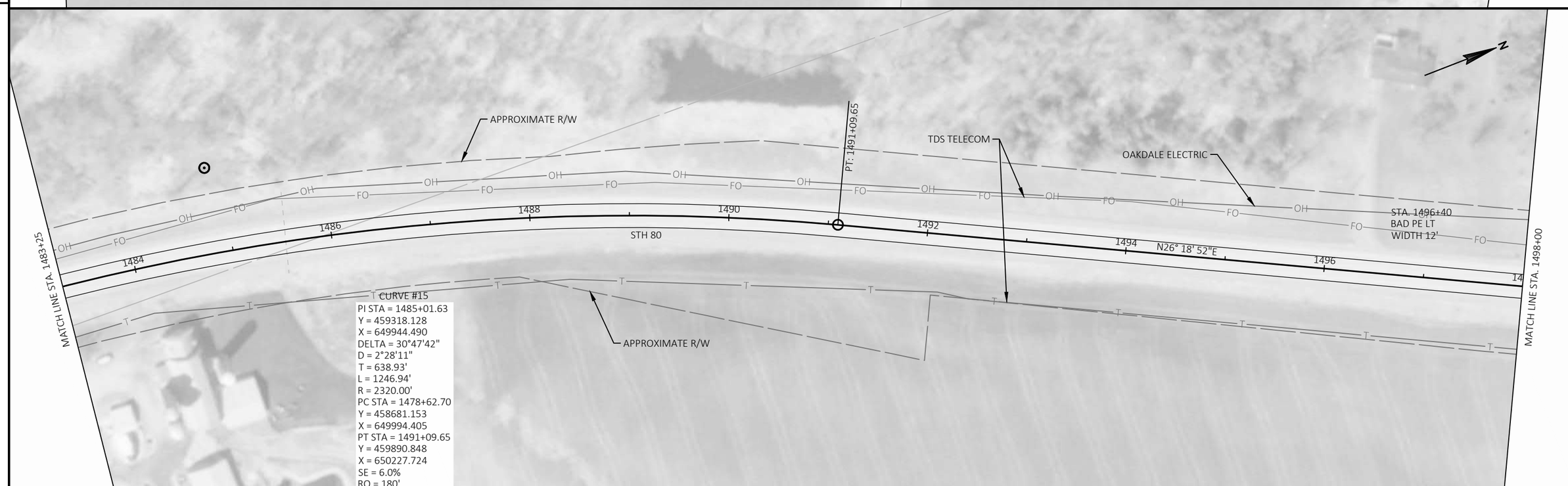

PROJECT NO: 1620-03-75	HWY: STH 80	COUNTY: WOOD	PLAN DETAILS	SHEET 42	E

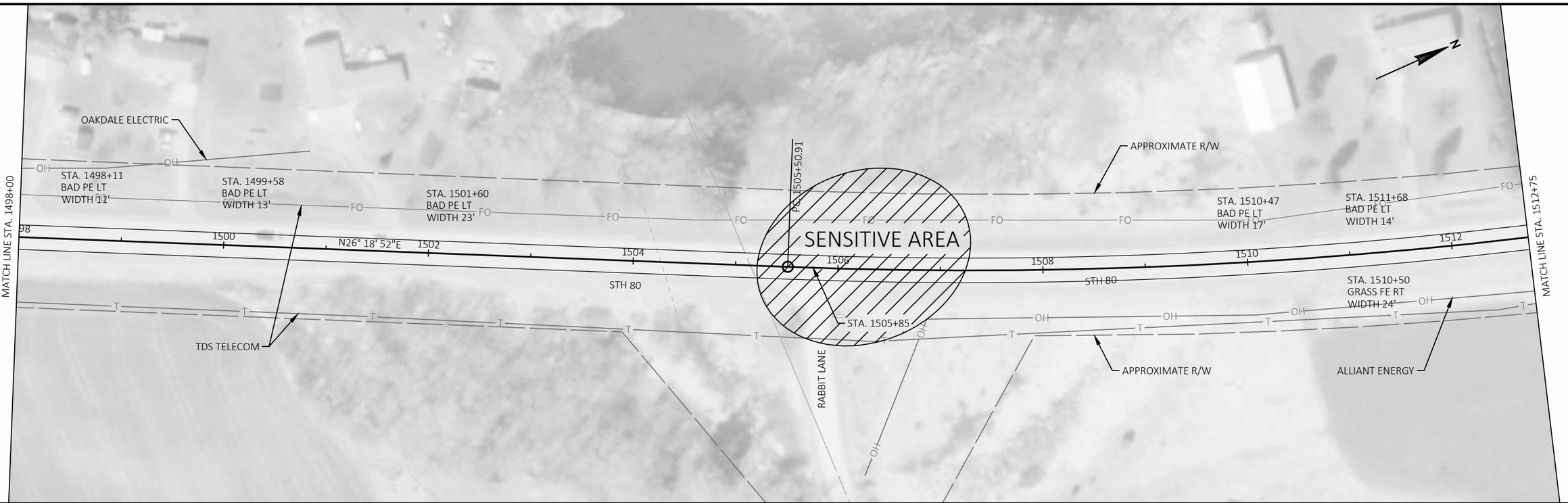

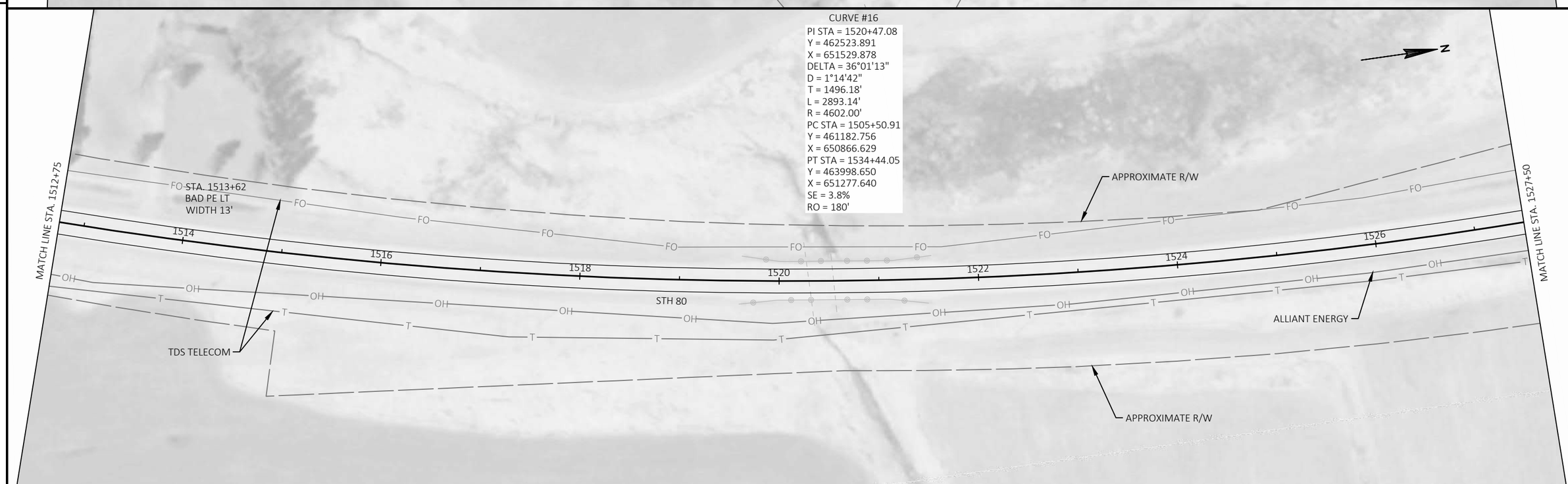

PROJECT NO: 1620-03-75	HWY: STH 80	COUNTY: WOOD	PLAN DETAILS	SHEET 43	E

FILE NAME : P:\90S\93\00093433\CADD\SHEETSPLAN -75\050201-PN.DWG
LAYOUT NAME - 15
PLOT DATE : 1/18/2019 7:31 PM
PLOT BY : BOBBI MAXWELL
PLOT NAME :
PLOT SCALE : 1 IN: 100 FT
WISDOT/CADDS SHEET 44

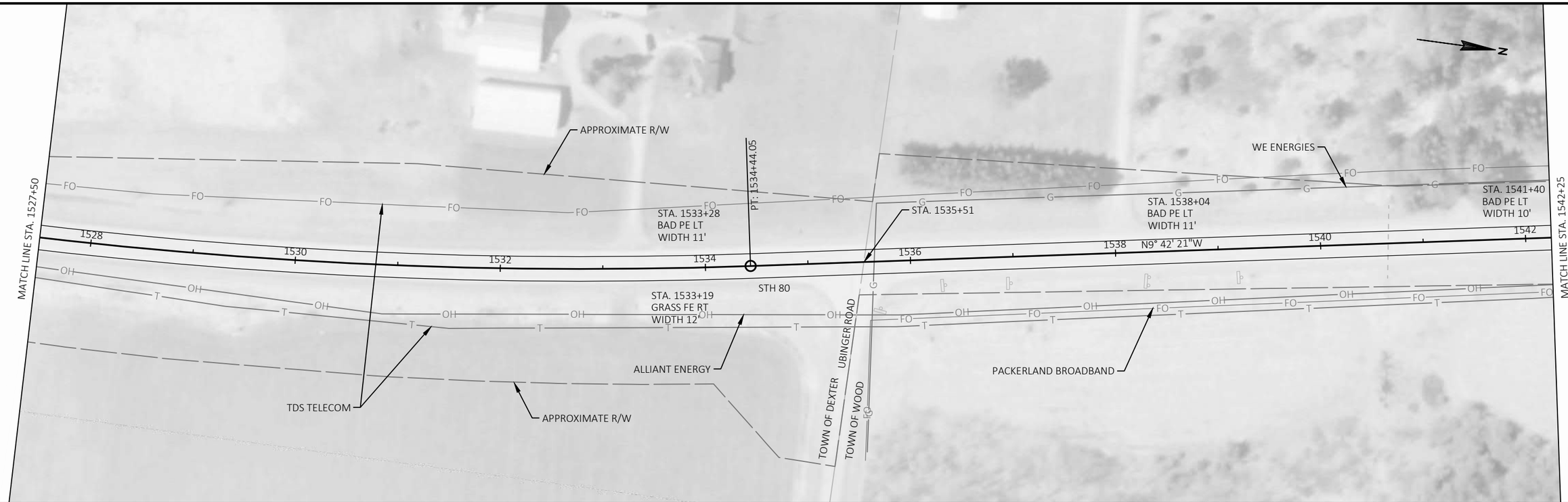

5

5

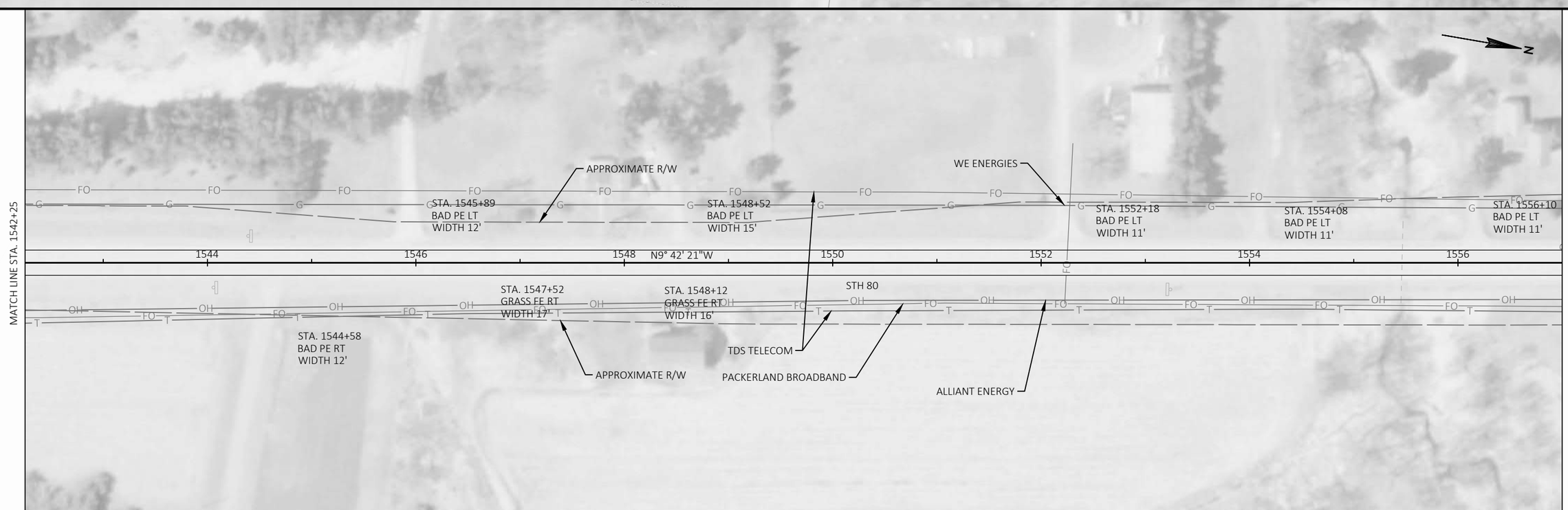

PROJECT NO: 1620-03-75	HWY: STH 80	COUNTY: WOOD	PLAN DETAILS	SHEET 44	E

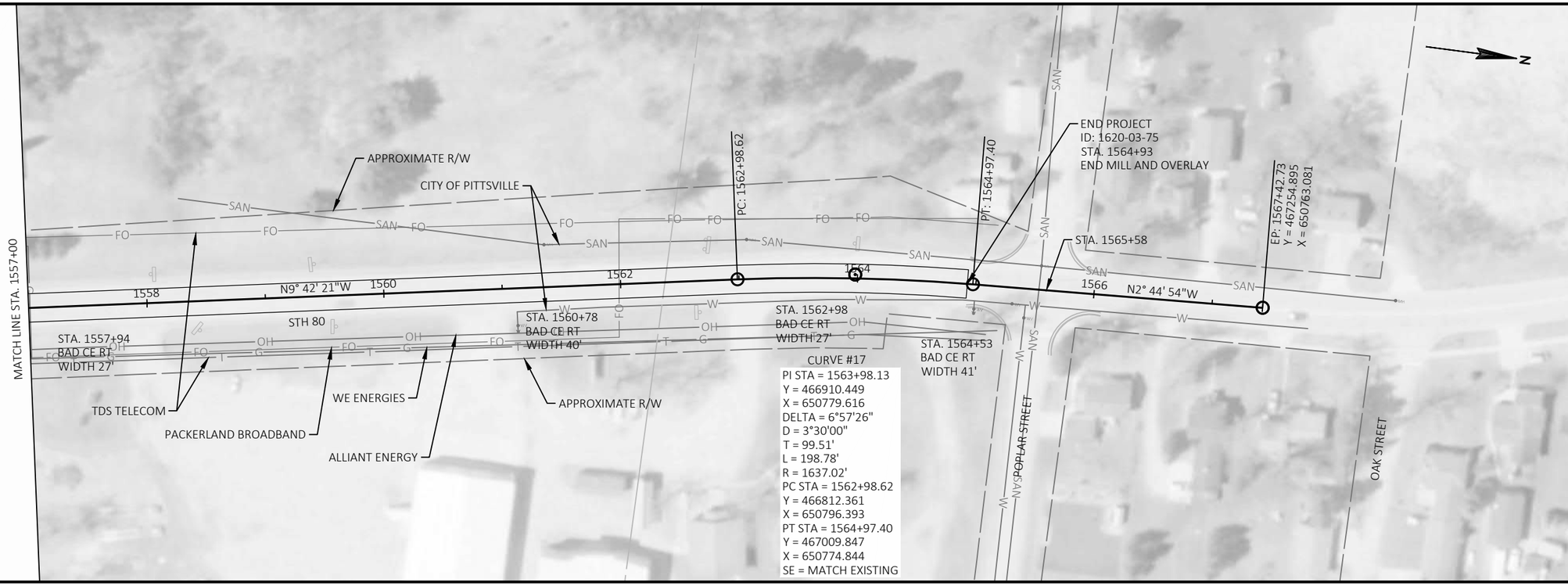

5

5

PROJECT NO: 1620-03-75	HWY: STH 80	COUNTY: WOOD	PLAN DETAILS	SHEET 45	E

FILE NAME : P:\90S\93\00093433\CADD\SHEETSPLAN -75\050201-PN.DWG
LAYOUT NAME - 17
PLOT DATE : 1/18/2019 7:31 PM
PLOT BY : BOBBI MAXWELL
PLOT NAME :
PLOT SCALE : 1 IN: 100 FT

Standard Detail Drawing List

08D01-20A	CONCRETE CURB & GUTTER
08D01-20B	CONCRETE CURB, TIES AND CURB AND GUTTER APPLICATIONS
08E08-03	TYPICAL INSTALLATIONS OF EROSION BALES / TEMPORARY DITCH CHECKS
08E09-06	SILT FENCE
08E11-02	TURBIDITY BARRIER
11B02-02	CONCRETE MEDIAN NOSE
13A11-03A	2-LANE RURAL CENTER LINE RUMBLE STRIP, MILLING
13A11-03B	2-LANE RURAL CENTER LINE RUMBLE STRIP, MILLING
13B01-10	PAVEMENT DETAILS FOR RAILROAD APPROACH
14B42-06A	MIDWEST GUARDRAIL SYSTEM (MGS) GUARDRAIL
14B42-06B	MIDWEST GUARDRAIL SYSTEM (MGS) GUARDRAIL
14B42-06C	MIDWEST GUARDRAIL SYSTEM (MGS) GUARDRAIL
14B42-06D	MIDWEST GUARDRAIL SYSTEM (MGS) GUARDRAIL
14B43-04A	MIDWEST GUARDRAIL SYSTEM LONG SPAN MGS (L)
14B43-04B	MIDWEST GUARDRAIL SYSTEM LONG SPAN MGS (L)
14B43-04C	MIDWEST GUARDRAIL SYSTEM LONG SPAN MGS (L)
14B44-04A	MIDWEST GUARDRAIL SYSTEM ENERGY ABSORBING TERMINAL (MGS)
14B44-04B	MIDWEST GUARDRAIL SYSTEM ENERGY ABSORBING TERMINAL (MGS)
14B44-04C	MIDWEST GUARDRAIL SYSTEM ENERGY ABSORBING TERMINAL (MGS)
14B45-05A	MIDWEST GUARDRAIL SYSTEM THRIE BEAM TRANSITION (MGS)
14B45-05B	MIDWEST GUARDRAIL SYSTEM THRIE BEAM TRANSITION (MGS)
14B45-05C	MIDWEST GUARDRAIL SYSTEM THRIE BEAM TRANSITION (MGS)
14B45-05D	MIDWEST GUARDRAIL SYSTEM THRIE BEAM TRANSITION (MGS)
14B45-05G	MIDWEST GUARDRAIL SYSTEM THRIE BEAM TRANSITION (MGS)
14B53-01A	SHORT RADIUS BEAM GUARD (MGS) SHORT RADIUS TERMINAL (MGS)
14B53-01B	SHORT RADIUS BEAM GUARD (MGS) SHORT RADIUS TERMINAL (MGS)
14B53-01C	SHORT RADIUS BEAM GUARD (MGS) SHORT RADIUS TERMINAL (MGS)
14B53-01D	SHORT RADIUS BEAM GUARD (MGS) SHORT RADIUS TERMINAL (MGS)
14B53-01E	SHORT RADIUS BEAM GUARD (MGS) SHORT RADIUS TERMINAL (MGS)
14B53-01F	SHORT RADIUS BEAM GUARD (MGS) SHORT RADIUS TERMINAL (MGS)
14B53-01G	SHORT RADIUS BEAM GUARD (MGS) SHORT RADIUS TERMINAL (MGS)
14B53-01H	SHORT RADIUS BEAM GUARD (MGS) SHORT RADIUS TERMINAL (MGS)
14B53-01I	SHORT RADIUS BEAM GUARD (MGS) SHORT RADIUS TERMINAL (MGS)
15C04-05	TRAFFIC CONTROL, ADVANCE WARNING SIGNS 45 M.P.H. OR GREATER TWO-WAY UNDIVIDED ROAD OPEN TO TRAFFIC
15C08-19A	LONGITUDINAL MARKING (MAINLINE)
15C08-19B	PAVEMENT MARKING (TURN LANES)
15C08-19C	PAVEMENT MARKING (TURN LANES)
15C09-11A	SIGNING AND PAVEMENT MARKING DETAILS FOR RAILROAD-HIGHWAY GRADE CROSSINGS
15C11-07B	CHANNELIZING DEVICES DRUMS, CONES, BARRICADES AND VERTICAL PANELS
15C12-06	TRAFFIC CONTROL FOR LANE CLOSURE WITH FLAGGING OPERATION
15C18-04	MEDIAN ISLAND MARKING
15C27-03A	DOUBLE ARROW WARNING SIGN PLACEMENT
15C27-03B	PAVEMENT MARKING (ISLANDS)
15C33-03	STOP LINE AND CROSSWALK PAVEMENT MARKING
15C35-03A	PAVEMENT MARKING (INTERSECTIONS)
15D27-03	TRAFFIC CONTROL, SHOULDER CLOSURE ON DIVIDED ROADWAY, SPEEDS GREATER THAN 40 MPH
15D28-03	TRAFFIC CONTROL, WORK ON SHOULDER OR PARKING LANE, UNDIVIDED ROADWAY
15D38-02A	TEMPORARY TRAFFIC CONTROL SIGN MOUNTING
15D38-02B	ATTACHMENT OF SIGNS TO POSTS

6

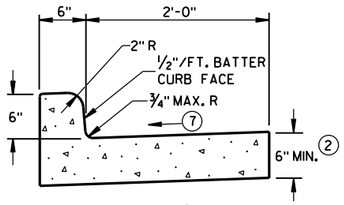

TYPES A[1] & D

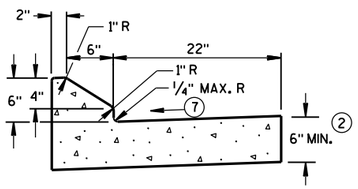

6" SLOPED CURB TYPES G[1] & J

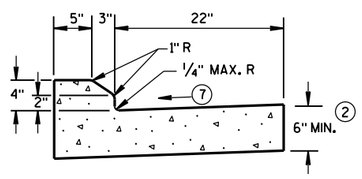

4" SLOPED CURB TYPES G[1] & J

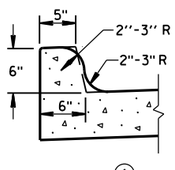

TYPES K[1] & L
(OPTIONAL CURB SHAPE)

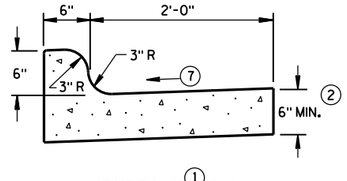

TYPES K[1] & L

CONCRETE CURB & GUTTER 30"

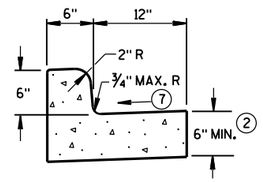

TYPES A[1] & D

CONCRETE CURB & GUTTER 18"

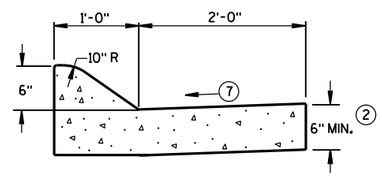

6" SLOPED CURB TYPES A[1] & D

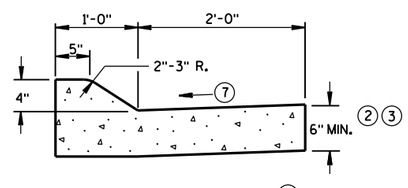

4" SLOPED CURB TYPES A[1] & D

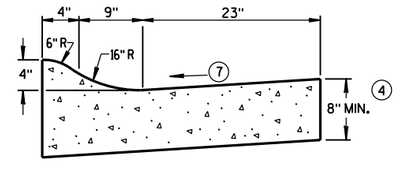

4" SLOPED CURB TYPES R[1] & T[5]

CONCRETE CURB & GUTTER 36"

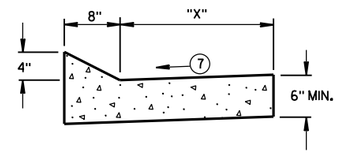

TYPES TBT & TBTT[1]

CONCRETE CURB & GUTTER

TBT & TBTT	"X"
30"	22"
36"	28"

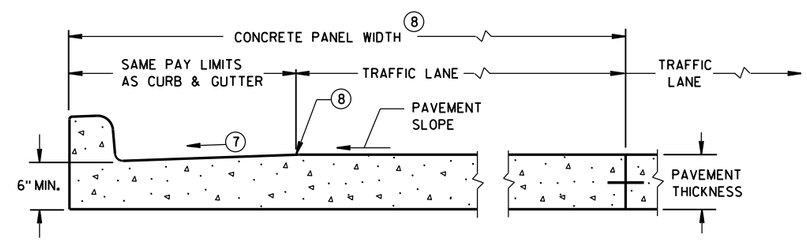

PARTIAL SECTION OF PAVEMENT*
WITH INTEGRAL CURB & GUTTER

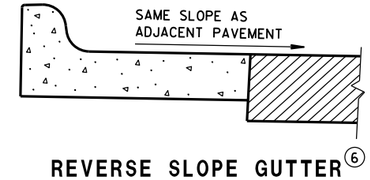

REVERSE SLOPE GUTTER[6]
(TYPICAL FOR ALL CURB & GUTTER TYPES)

GENERAL NOTES

DETAILS OF CONSTRUCTION, MATERIALS AND WORKMANSHIP NOT SHOWN ON THIS DRAWING SHALL CONFORM TO THE PERTINENT REQUIREMENTS OF THE CONTRACT.

PAVEMENT TIES AND TIE BARS SHALL BE EPOXY COATED IN CONFORMANCE WITH SUBSECTION 505.2.6.2 OF THE STANDARD SPECIFICATIONS.

INTEGRAL CURB & GUTTER SHALL CONFORM TO THE DETAILS SHOWN FOR CONCRETE CURB & GUTTER INCLUDING THE TRANSVERSE GUTTER SLOPE.

WHERE THE TRANSVERSE JOINTS IN THE PAVEMENT ARE REQUIRED TO BE SEALED, THE JOINTS IN THE INTEGRAL CURB AND GUTTER SHALL BE SEALED TO THE FACE OF CURB WITH THE SAME TYPE OF SEALANT. THE COST OF FURNISHING AND INSTALLING THIS SEALANT SHALL BE INCIDENTAL TO THE ITEM CONCRETE CURB AND GUTTER.

UNLESS OTHERWISE SHOWN ON THE TYPICAL CROSS SECTIONS, THE BASE AGGREGATE AND COMMON EXCAVATION LIMITS ARE 2'-0" BEHIND THE BACK OF CURBS.

1. TIE BARS ARE REQUIRED FOR CURB AND GUTTER TYPES A, G, K, R AND TBTT.
2. THE BOTTOM OF CURB AND GUTTER MAY BE CONSTRUCTED EITHER LEVEL OR PARALLEL TO THE SLOPE OF THE SUBGRADE OR BASE AGGREGATE PROVIDED A 6" MINIMUM GUTTER THICKNESS IS MAINTAINED.
3. USE 8" MINIMUM GUTTER THICKNESS WHEN USED WITH AN ADJACENT CONCRETE TRUCK APRON PLACED BEHIND BACK OF CURB.
4. THE BOTTOM OF CURB AND GUTTER MAY BE CONSTRUCTED EITHER LEVEL OR PARALLEL TO THE SLOPE OF THE SUBGRADE OR BASE AGGREGATE PROVIDED A 8" MINIMUM GUTTER THICKNESS IS MAINTAINED.
5. THE FACE OF CURB IS 6" FROM THE BACK OF CURB.
6. WHEN REVERSE SLOPE GUTTER IS REQUIRED, THE LOCATION(S) WILL BE SHOWN ELSEWHERE IN THE PLAN.
7. USE 4% GUTTER CROSS SLOPE UNLESS OTHERWISE NOTED IN THE PLANS.
8. INCLUDE LONGITUDINAL JOINT AND TIE BARS ALONG LANE EDGE WHEN CONCRETE PANEL WIDTH EXCEEDS THE MAXIMUM WIDTH PER TABLE BELOW. LONGITUDINAL JOINT(S) ARE NOT ALLOWED WITHIN TRAFFIC LANES AND BIKE LANES. LONGITUDINAL JOINT MAY BE SAWED.

PAVEMENT THICKNESS AND MAXIMUM CONCRETE PANEL WIDTH TABLE

PAVEMENT THICKNESS	MAXIMUM PANEL WIDTH
LESS THAN 10"	12'
10" & ABOVE	15'

* BIKE LANE IS NOT SHOWN.

CONCRETE CURB & GUTTER

STATE OF WISCONSIN
DEPARTMENT OF TRANSPORTATION

GENERAL NOTES

DETAILS OF CONSTRUCTION, MATERIALS AND WORKMANSHIP NOT SHOWN ON THIS DRAWING SHALL CONFORM TO THE PERTINENT REQUIREMENTS OF THE CONTRACT.

PAVEMENT TIES AND TIE BARS SHALL BE EPOXY COATED IN CONFORMANCE WITH SUBSECTION 505.2.6.2 OF THE STANDARD SPECIFICATIONS.

UNLESS OTHERWISE SHOWN ON THE TYPICAL CROSS SECTIONS, THE BASE AGGREGATE AND COMMON EXCAVATION LIMITS ARE 2'-0" BEHIND THE BACK OF CURBS.

(1) TIE BARS ARE REQUIRED FOR CURB AND GUTTER TYPES A, G, K, R AND TBTT.

(2) THE BOTTOM OF CURB AND GUTTER MAY BE CONSTRUCTED EITHER LEVEL OR PARALLEL TO THE SLOPE OF THE SUBGRADE OR BASE AGGREGATE PROVIDED A 6" MINIMUM GUTTER THICKNESS IS MAINTAINED.

(9) REFER TO SDD 8D18 AND SDD 8D19 FOR ADDITIONAL DRIVEWAY ENTRANCE CURB DETAILS.

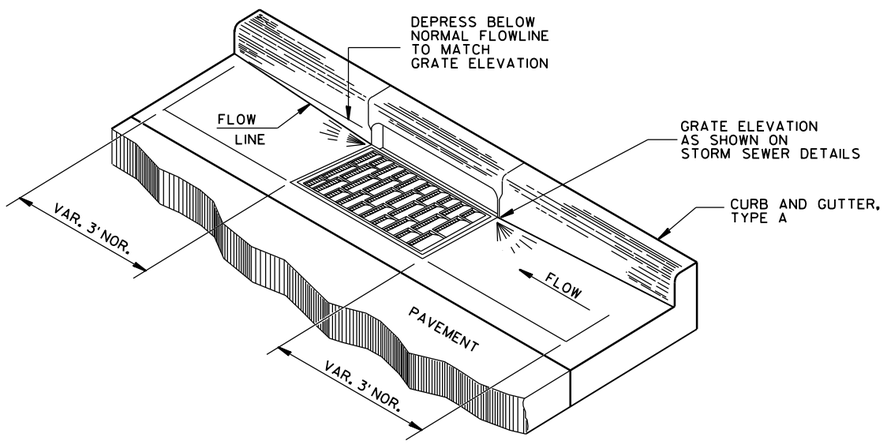

DETAIL OF CURB AND GUTTER AT INLETS

(TYPE H INLET COVER SHOWN)

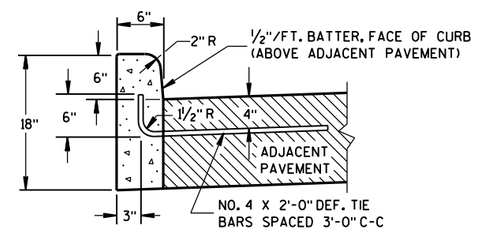

TYPES A(1) & D

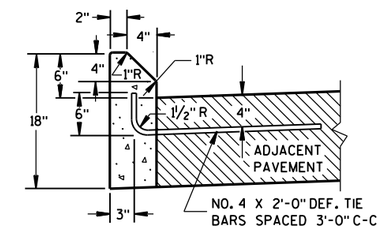

TYPES G(1) & J

CONCRETE CURB

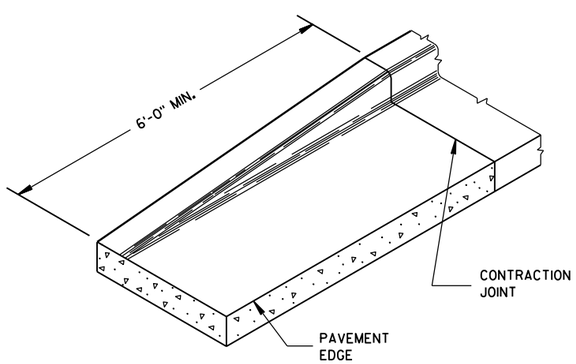

END SECTION CURB & GUTTER

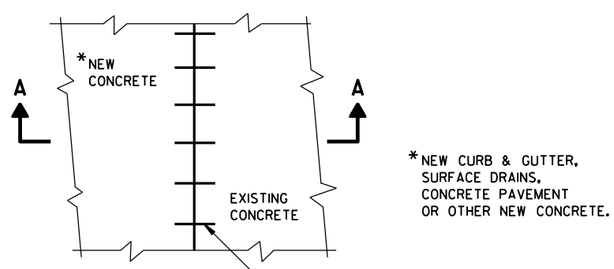

PLAN VIEW

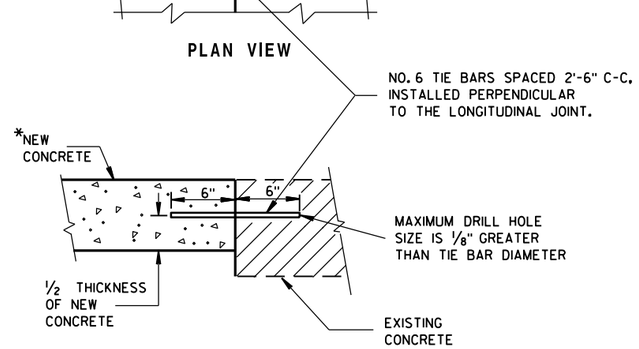

SECTION A-A

TIE BARS DRILLED INTO EXISTING PAVEMENT

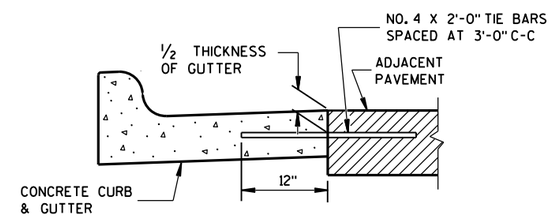

TYPICAL TIE BAR LOCATION (1)

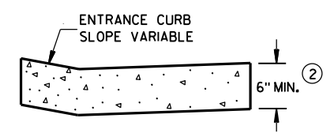

DRIVEWAY ENTRANCE CURB (9)

(WHEN DIRECTED BY THE ENGINEER)

CONCRETE CURB, TIES AND CURB AND GUTTER APPLICATIONS

STATE OF WISCONSIN
DEPARTMENT OF TRANSPORTATION

APPROVED
June, 2017 — DATE
/S/ Rodney Taylor — ROADWAY STANDARDS UNIT SUPERVISOR
ENT
FHWA

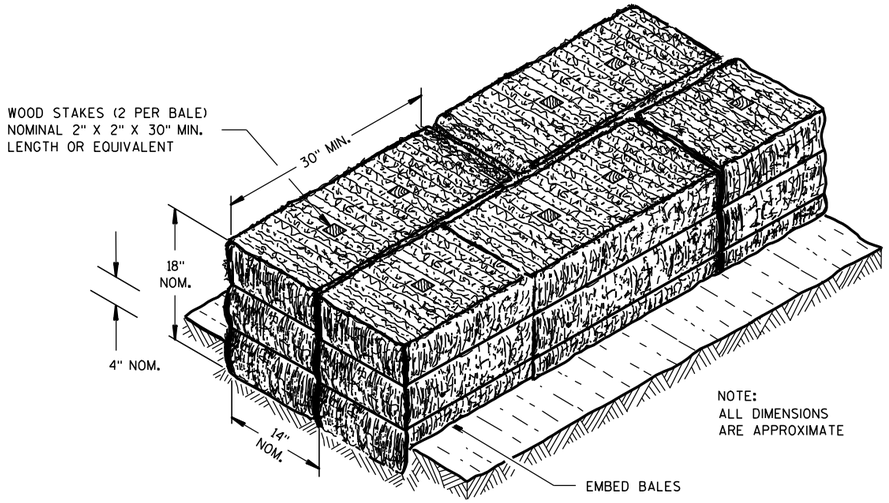

SECTION A-A

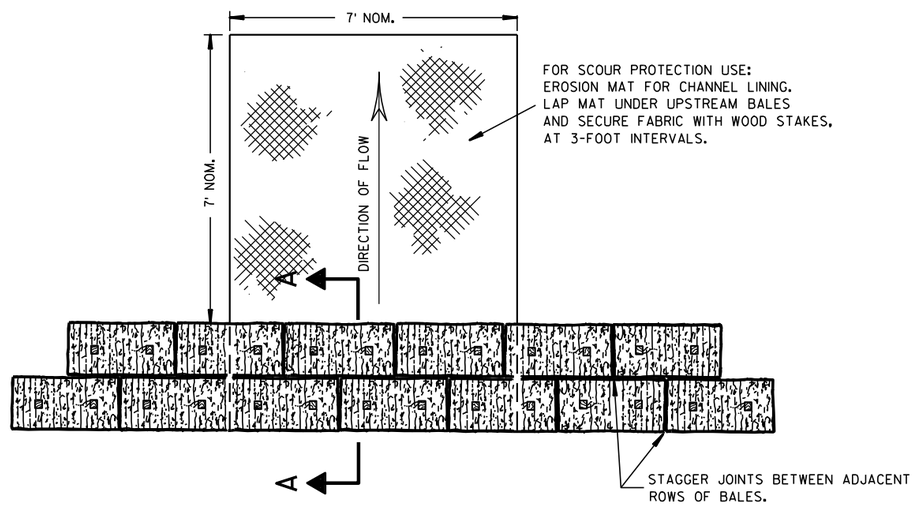

PLAN VIEW

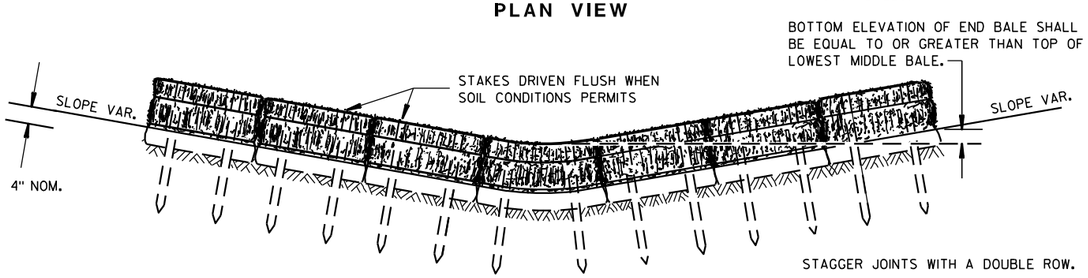

FRONT ELEVATION

TEMPORARY DITCH CHECK USING EROSION BALES ①

GENERAL NOTES

DETAILS OF CONSTRUCTION, MATERIALS AND WORKMANSHIP NOT SHOWN ON THIS DRAWING SHALL CONFORM TO THE PERTINENT REQUIREMENTS OF THE STANDARD SPECIFICATIONS AND THE APPLICABLE SPECIAL PROVISIONS.

① TEMPORARY DITCH CHECKS EITHER EROSION BALES OR MANUFACTURED SHALL BE PAID FOR UNDER THE BID ITEM OF TEMPORARY DITCH CHECK. THE DEPARTMENT WILL NOT PAY FOR TEMPORARY DITCH CHECKS CONSTRUCTED OF A SINGLE ROW OF EROSION BALES.

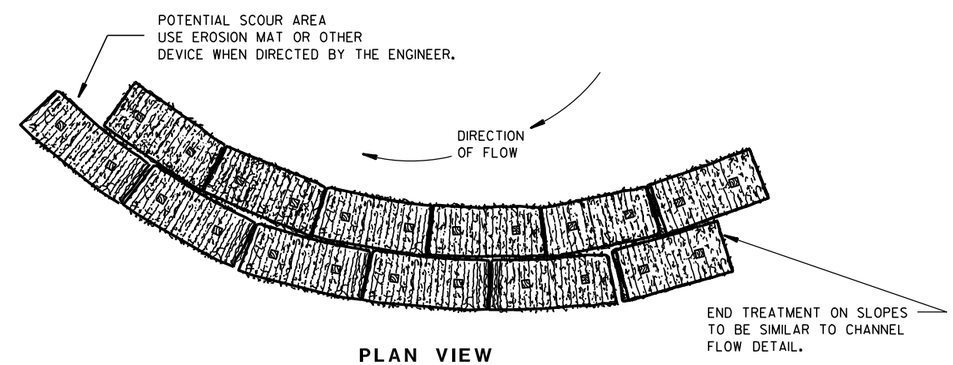

PLAN VIEW

WHEN ALTERING THE DIRECTION OF FLOW

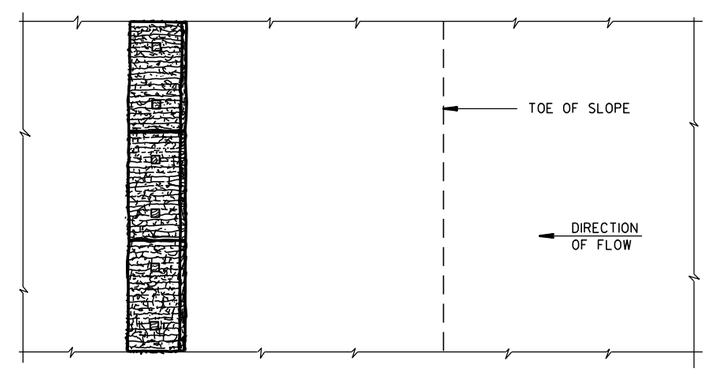

PLAN VIEW

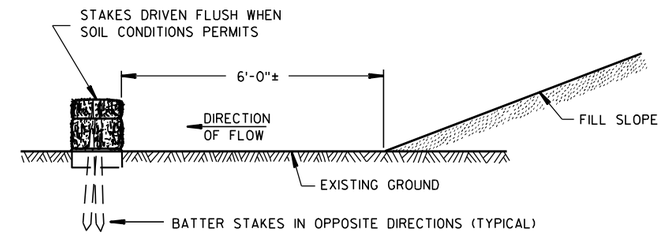

FRONT ELEVATION

WHEN EXISTING GROUND SLOPES AWAY FROM FILL SLOPE

EROSION BALES FOR SHEET FLOW

TYPICAL INSTALLATIONS OF EROSION BALES / TEMPORARY DITCH CHECKS

STATE OF WISCONSIN
DEPARTMENT OF TRANSPORTATION

APPROVED
6/04/02 — /S/ Beth Cann[illegible] — [illegible]
DATE — CHIEF ROADWAY DEVELOP[illegible] — [illegible]INEER
FHWA

6
S.D.D. 8 E 8-3

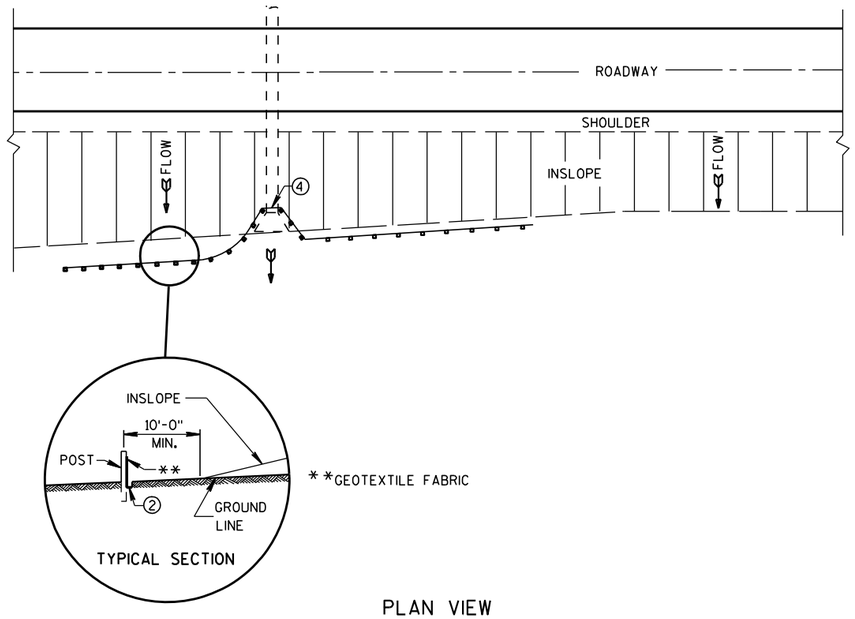

PLAN VIEW

TYPICAL APPLICATION OF SILT FENCE

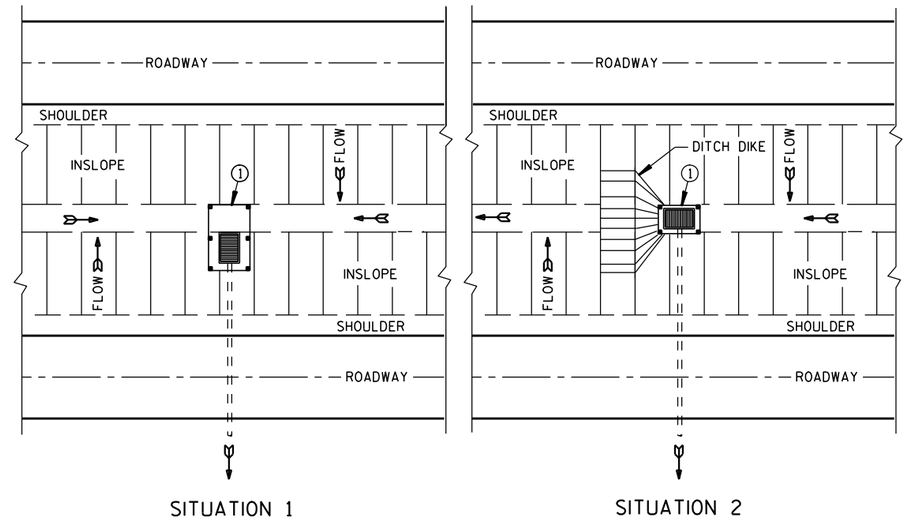

PLAN VIEW

SILT FENCE AT MEDIAN SURFACE DRAINS

GENERAL NOTES

DETAILS OF CONSTRUCTION NOT SHOWN ON THIS DRAWING SHALL CONFORM TO THE PERTINENT REQUIREMENTS OF THE STANDARD SPECIFICATIONS AND APPLICABLE SPECIAL PROVISIONS.

① HORIZONTAL BRACE REQUIRED WITH 2" X 4" WOODEN FRAME OR EQUIVALENT AT TOP OF POSTS.

② FOR MANUAL INSTALLATIONS THE TRENCH SHALL BE A MINIMUM OF 4" WIDE & 6" DEEP TO BURY AND ANCHOR THE GEOTEXTILE FABRIC. FOLD MATERIAL TO FIT TRENCH AND BACKFILL & COMPACT TRENCH WITH EXCAVATED SOIL.

③ WOOD POSTS SHALL BE A MINIMUM SIZE OF 1⅛" X 1⅛" OF OAK OR HICKORY.

④ SILT FENCE TO EXTEND ACROSS THE TOP OF THE PIPE.

⑤ CONSTRUCT SILT FENCE FROM A CONTINUOUS ROLL IF POSSIBLE BY CUTTING LENGTHS TO AVOID JOINTS. IF A JOINT IS NECESSARY USE ONE OF THE FOLLOWING TWO METHODS; A) OVERLAP THE END POSTS AND TWIST, OR ROTATE, AT LEAST 180 DEGREES. B) HOOK THE END OF EACH SILT FENCE LENGTH.

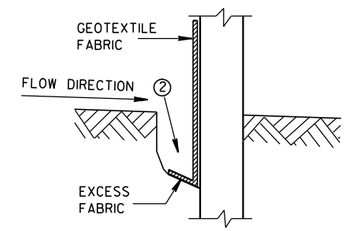

TRENCH DETAIL

NOTE: ADDITIONAL POST DEPTH OR TIE BACKS MAY BE REQUIRED IN UNSTABLE SOILS

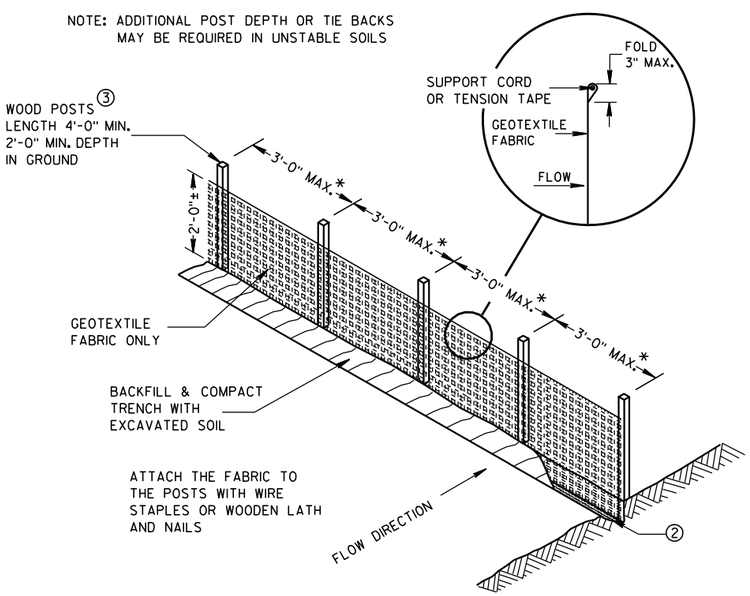

*NOTE: 8'-0" POST SPACING ALLOWED IF A WOVEN GEOTEXTILE FABRIC IS USED.

SILT FENCE

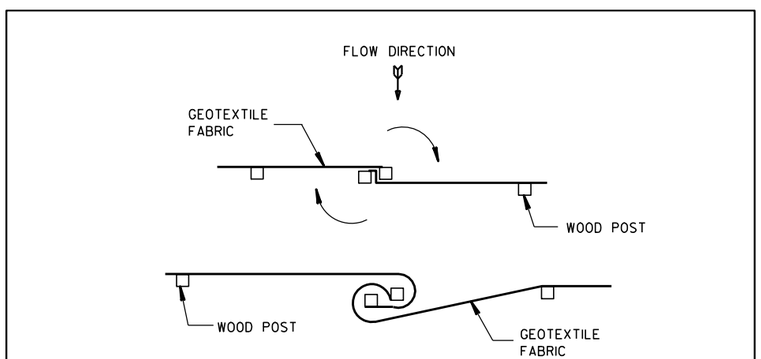

TWIST METHOD

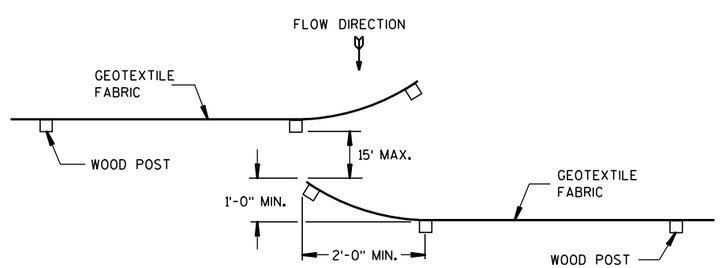

HOOK METHOD

JOINING TWO LENGTHS OF SILT FENCE ⑤

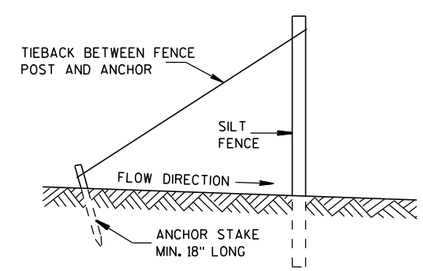

SILT FENCE TIE BACK

(WHEN REQUIRED BY THE ENGINEER)

SILT FENCE
STATE OF WISCONSIN DEPARTMENT OF TRANSPORTATION
APPROVED 4-29-05 /S/ Beth Cann----- DATE CHIEF ROADWAY DEVELOP ENGINEER FHWA

6

6

S.D.D. 8 E 9-6

S.D.D. 8 E 9-6

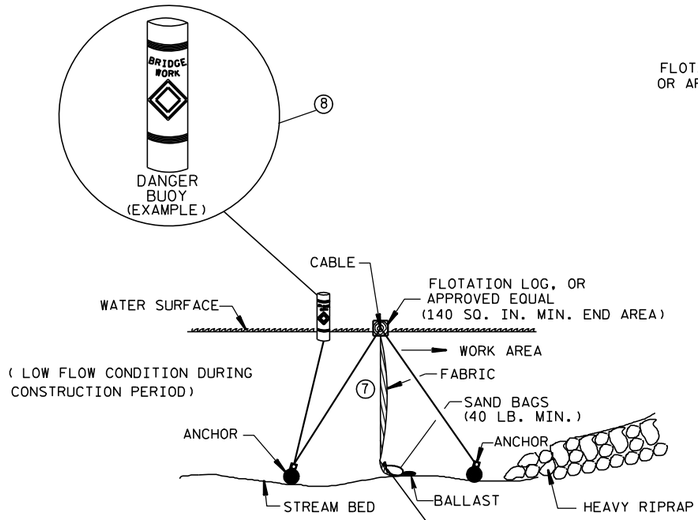

SECTION B-B

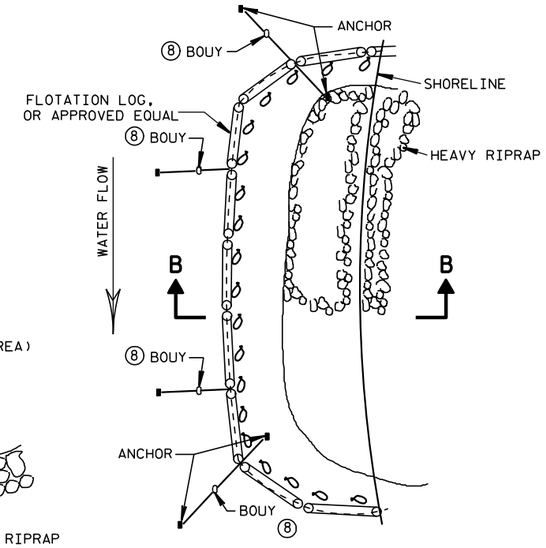

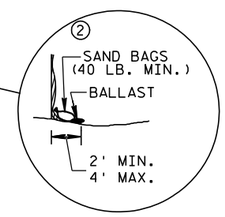

TURBIDITY BARRIER FLOAT ALTERNATIVE
CAUTION - SEE NOTE 6

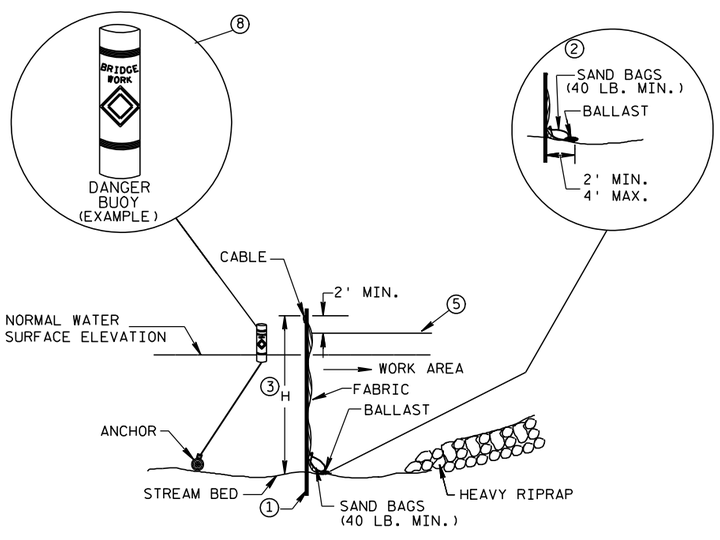

SECTION A-A

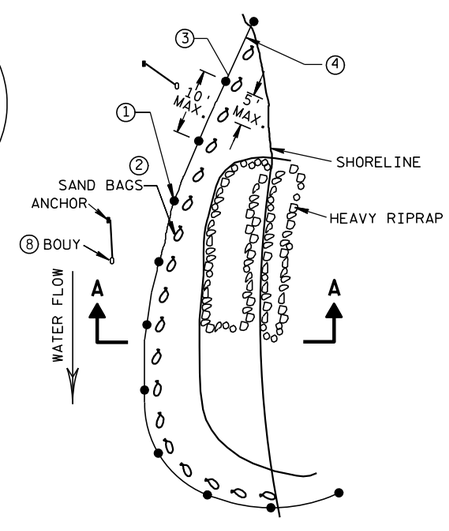

PLAN VIEW

TURBIDITY BARRIER STANDARD POST INSTALLATION

TURBIDITY BARRIER PLACEMENT DETAILS

GENERAL NOTES

DETAILS OF CONSTRUCTION, MATERIALS AND WORKMANSHIP NOT SHOWN ON THIS DRAWING SHALL CONFORM TO THE PERTINENT REQUIREMENTS OF THE STANDARD SPECIFICATIONS AND THE APPLICABLE SPECIAL PROVISIONS.

TURBIDITY BARRIER MAY BE REMOVED AT THE ENGINEERS DISCRETION, WHEN PERMANENT EROSION CONTROL MEASURES HAVE BEEN ESTABLISHED.

① DRIVEN STEEL POSTS, PIPES, OR CHANNELS. LENGTH SHALL BE SUFFICIENT TO SECURELY SUPPORT BARRIER AT HIGH WATER ELEVATIONS.

② SANDBAGS TO BE USED AS ADDITIONAL BALLAST WHEN ORDERED BY THE ENGINEER TO MEET ADVERSE FIELD CONDITIONS. SPACE AS APPROPRIATE FOR SITE CONDITIONS.

③ WHEN BARRIER HEIGHT, H, EXCEEDS 8 FT., POST SPACING MAY NEED TO BE DECREASED.

④ IN WATERWAYS SUBJECT TO FLUCTUATING WATER ELEVATIONS, PROVISIONS SHOULD BE MADE TO ALLOW THE WATER TO EQUALIZE ON EACH SIDE OF THE BARRIER. THIS MAY BE ACCOMPLISHED BY LEAVING A PORTION OF THE BARRIER OPEN ON THE UPSTREAM END.

⑤ ESTIMATED HIGH WATER ELEVATION DURING CONSTRUCTION PERIOD. MIMIMUM BARRIER HEIGHT SHALL BE 2'GREATER THAN EITHER THE Q2 ELEVATION OR THE ESTIMATED HIGH WATER ELEVATION DURING CONSTRUCTION, WICHEVER IS GREATER.

⑥ FLOAT ALTERNATIVE WILL ONLY BE ALLOWED WITH WRITTEN APPROVAL OF THE ENGINEER, AND IS MEANT FOR LOCATIONS WHERE BED ROCK PREVENTS THE INSTALLATION OF POSTS.

⑦ ALLOW SUFFICIENT SLACK VERTICALLY AND HORIZONTALLY SO THAT SEDIMENT BUILD UP WILL NOT SEPARATE OR LOWER THE TURBIDITY BARRIER.

⑧ USE AS DIRECTED BY COAST GUARD OR DNR PERMIT WHEN WORKING IN NAVIGABLE WATERWAYS.

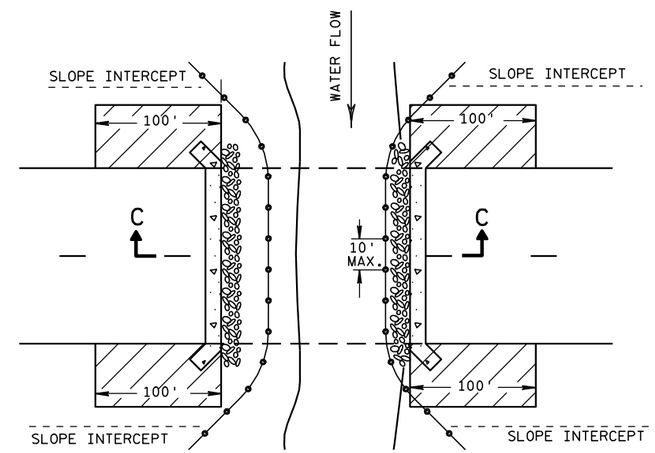

PLAN VIEW

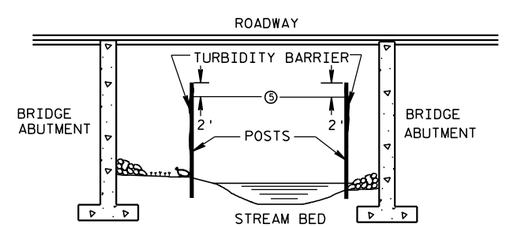

SECTION C-C

TURBIDITY BARRIER DETAIL SHOWING TYPICAL PLACEMENT AT STRUCTURES

TURBIDITY BARRIER	
STATE OF WISCONSIN DEPARTMENT OF TRANSPORTATION	
APPROVED	
6/04/02 DATE	/S/ Beth Cann CHIEF ROADWAY DEVELOPMENT ENGINEER
FHWA	

6

S.D.D. 8 E 11-2

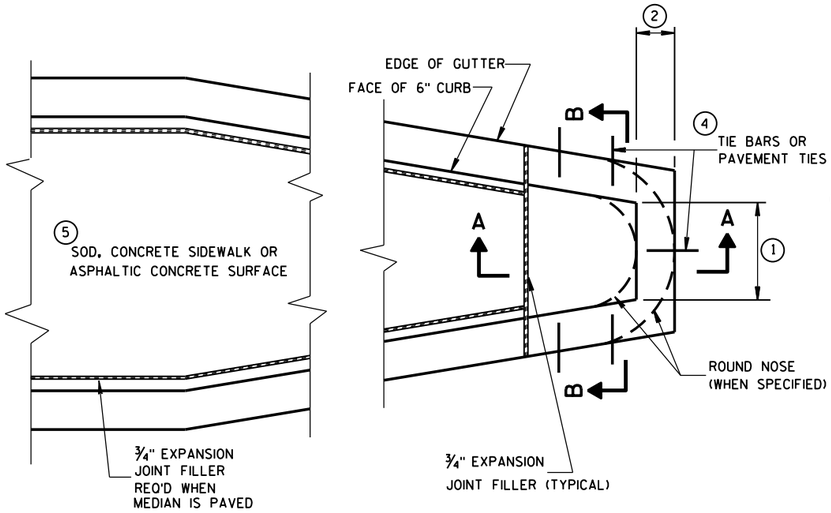

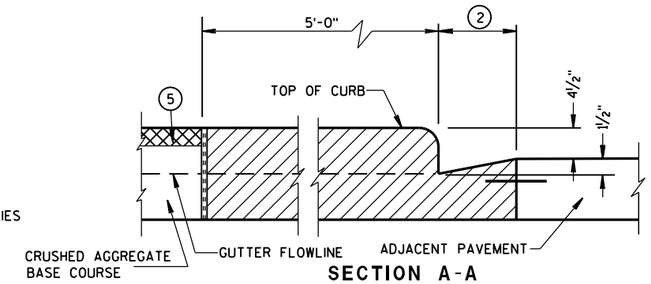

SECTION A-A

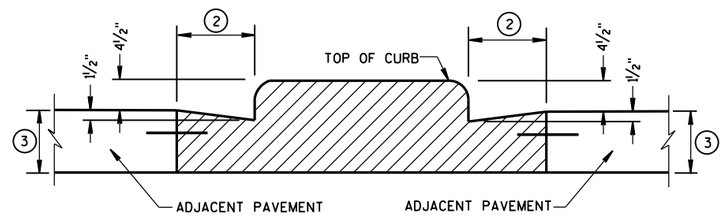

SECTION B-B

CONCRETE MEDIAN BLUNT NOSE DETAIL

GENERAL NOTES

DETAILS OF CONSTRUCTION, MATERIALS AND WORKMANSHIP NOT SHOWN ON THIS DRAWING SHALL CONFORM TO THE PERTINENT REQUIREMENTS OF THE STANDARD SPECIFICATIONS AND THE APPLICABLE SPECIAL PROVISIONS.

1. SEE PLAN FOR MEDIAN NOSE WIDTH AND RADIUS (FOR ROUND NOSE ALTERNATE).
2. WIDTH OF GUTTER TO MATCH EXISTING ADJACENT GUTTER OR AS SPECIFIED ELSEWHERE IN THE PLAN.
3. DEPTH EQUAL TO ADJACENT PAVEMENT. ADJACENT PAVEMENT STRUCTURE DETAILS ARE SHOWN ON THE PLAN. TYPICAL OPTIONS ARE:
   (1) NEW OR EXISTING CONCRETE PAVEMENT.
   (2) ASPHALTIC CONCRETE PAVEMENT OVER NEW OR EXISTING CONCRETE BASE COURSE.
   (3) ASPHALTIC CONCRETE PAVEMENT OVER CRUSHED AGGREGATE BASE COURSE.
4. TIE BARS OR PAVEMENT TIES REQUIRED IN NEW CONCRETE PAVEMENT OR CONCRETE BASE COURSE. TIE BARS SHALL BE NO. 4 X 2'-0" SPACED AT 2'-0" C-C.

   PAVEMENT TIES REQUIRED IN EXISTING CONCRETE BASE COURSE. PAVEMENT TIES SHALL BE NO. 6 X 1'-0" SPACED AT 3'-0" C-C INSTALLED ON A HORIZONTAL SKEW OF 6:1. THE DIRECTION OF SKEW SHALL ALTERNATE AFTER EVERY ONE OR TWO BARS.
5. SURFACE TYPE AND DETAILS ARE SHOWN ELSEWHERE IN THE PLAN.

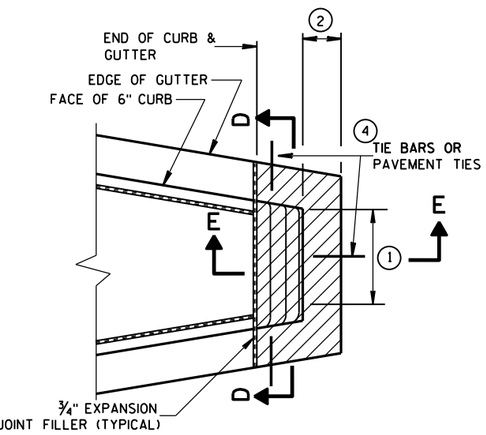

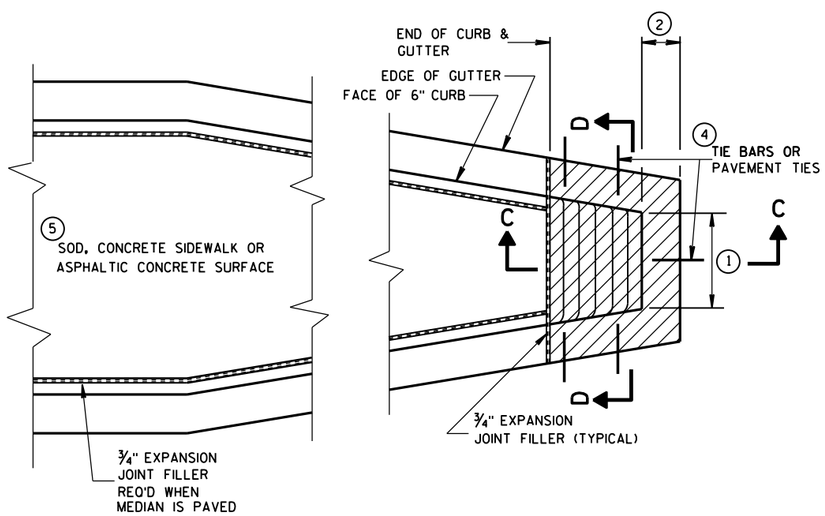

CONCRETE MEDIAN SLOPED NOSE TYPE 1

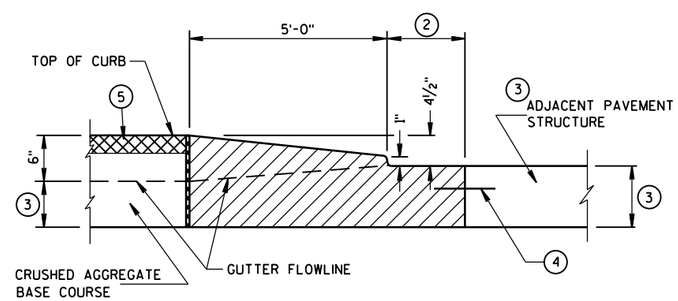

SECTION C-C

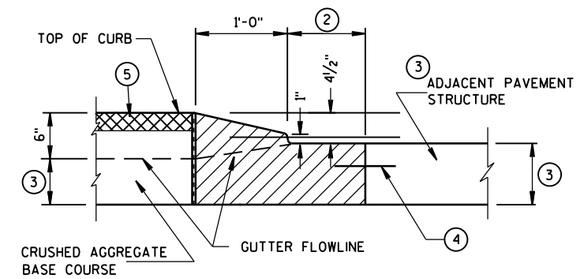

SECTION E-E

CONCRETE MEDIAN SLOPED NOSE TYPE 2

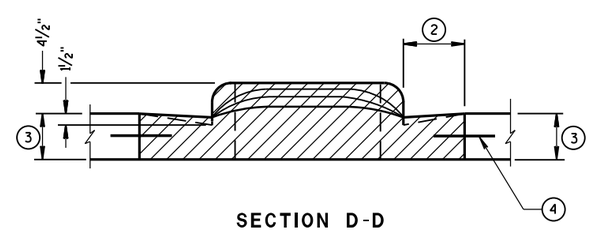

SECTION D-D

CONCRETE MEDIAN NOSE	
STATE OF WISCONSIN DEPARTMENT OF TRANSPORTATION	
APPROVED 6/8/2006 DATE	/S/ Jerry H. Zogg ROADWAY STANDARDS DEVELOPMENT ENGINEER
FHWA	

GENERAL NOTES

DETAILS OF CONSTRUCTION NO SHOWN ON THIS DRAWING SHALL CONFORM TO THE PERTINENT REQUIREMENTS OF THE STANDARD SPECIFICATIONS AND APPLICABLE SPECIAL PROVISIONS.

DO NOT MILL CENTERLINE GROOVES THROUGH ANY INTERSECTION, MARKED CROSSWALK, NON-MOTORIZED PATH CROSSING, OR SNOWMOBILE CROSSING.

INSTALL PAVEMENT MARKING AFTER THE GROOVES ARE INSTALLED.

SEE SIGNING PLAN FOR SIGN REQUIREMENTS THAT MAY BE NEEDED.

(1) CENTERLINE GROOVES MAY BE OMITTED IN AREAS WITH HIGH CONCENTRATIONS OF DRIVEWAYS. WHEN DIRECTED BY THE ENGINEER.

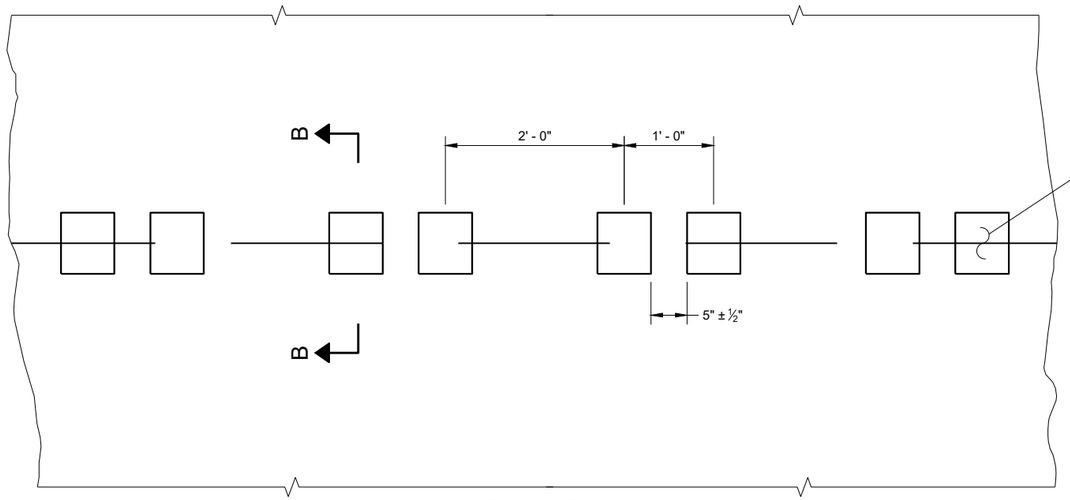

PLAN VIEW
SHOULDER WITH GROOVES

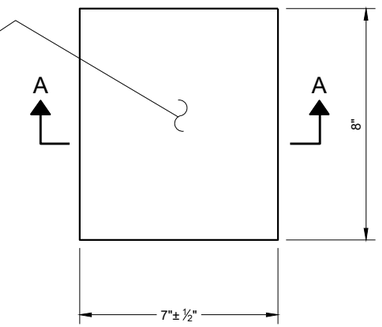

PLAN VIEW
(SINGLE GROOVE)

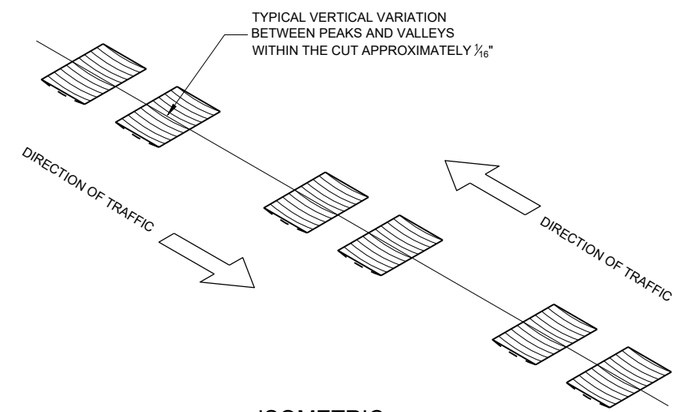

ISOMETRIC

PLACEMENT DETAIL FOR TYPE 1 MILLED RUMBLE STRIP

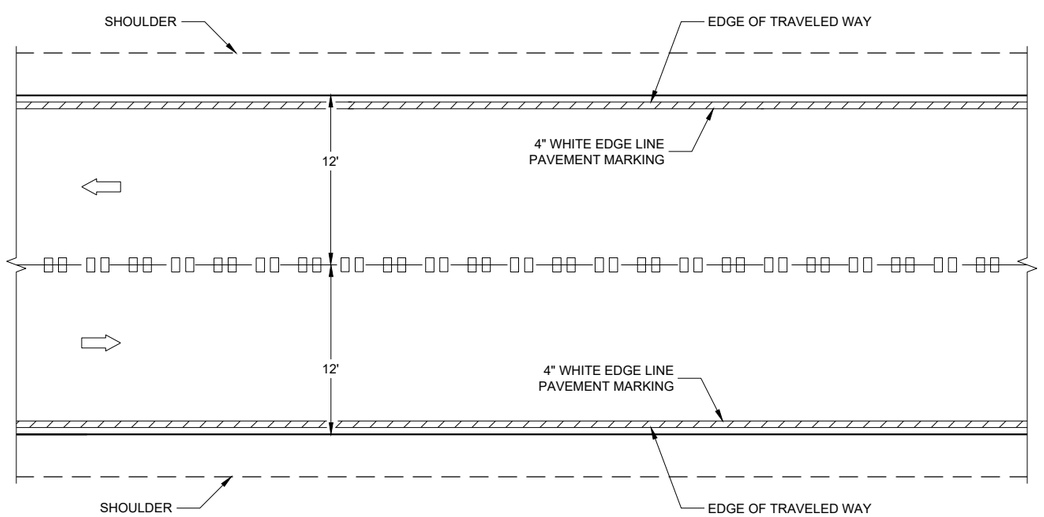

CENTERLINE GROOVES ON TWO-WAY ROADWAYS

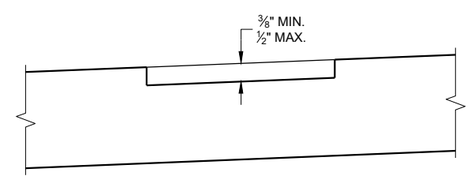

SECTION B - B
SUPERELEVATED ROADWAY

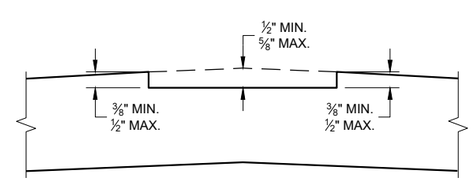

SECTION B - B
CROWNED ROADWAY

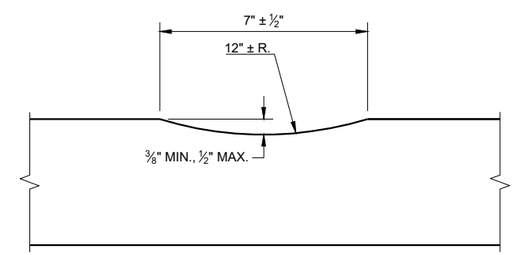

SECTION A - A

2-LANE RURAL
CENTER LINE RUMBLE STRIP, MILLING

STATE OF WISCONSIN
DEPARTMENT OF TRANSPORTATION

6

6

SDD 13A11 - 03a

SDD 13A11 - 03a

GENERAL NOTES

1. CENTERLINE GROOVES MAY BE OMITTED IN AREAS WITH HIGH CONCENTRATIONS OF DRIVEWAYS. WHEN DIRECTED BY THE ENGINEER.

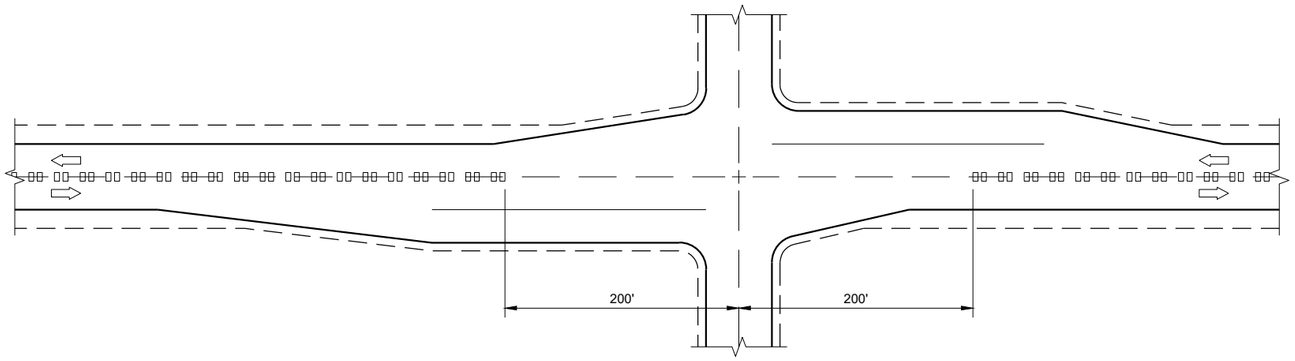

CENTERLINE GROOVES AT INTERSECTIONS

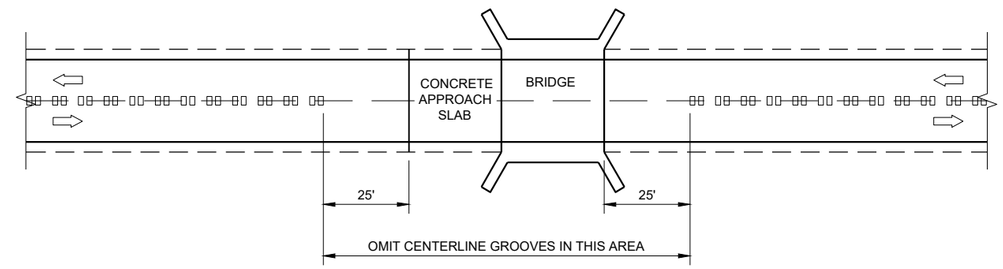

CENTERLINE GROOVES AT BRIDGES

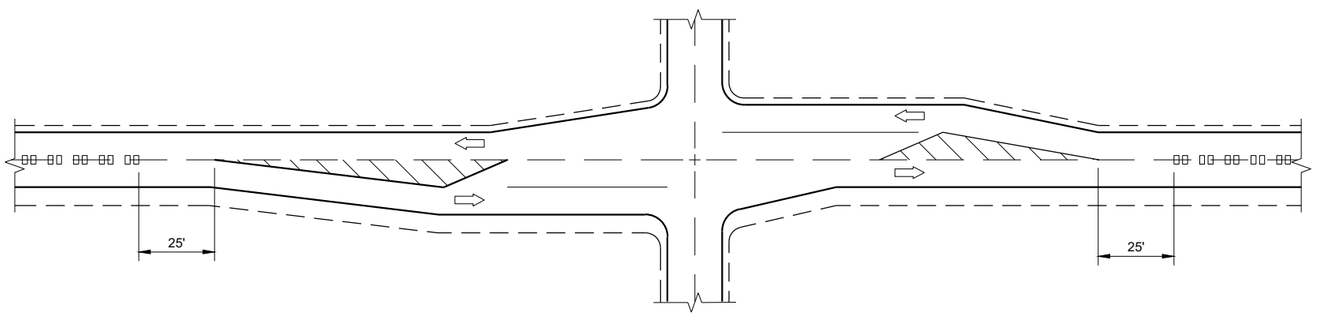

CENTERLINE GROOVES AT INTERSECTIONS (WITH LEFT TURN LANES)

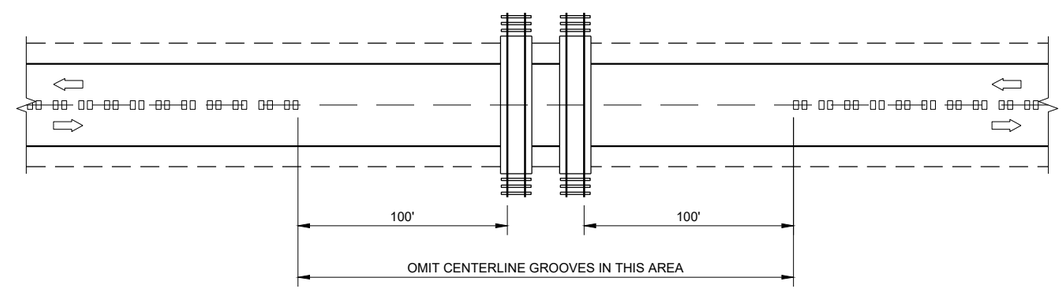

CENTERLINE GROOVES AT RAILROADS

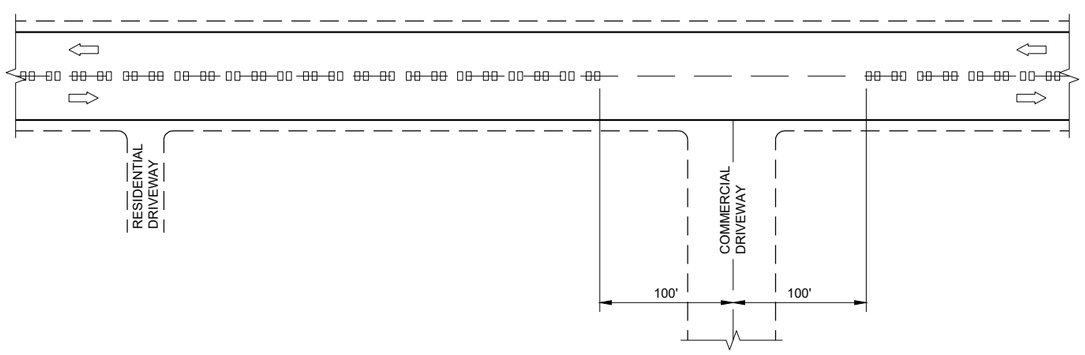

CENTERLINE GROOVES AT DRIVEWAYS (1)

2-LANE RURAL CENTERLINE RUMBLE STRIP, MILLING

STATE OF WISCONSIN
DEPARTMENT OF TRANSPORTATION

APPROVED
7/2018 — DATE
/S/ Rodney Taylor — ROADWAY STANDARDS DEVE ENGINEER
FHWA

6

SDD 13A11 - 03b

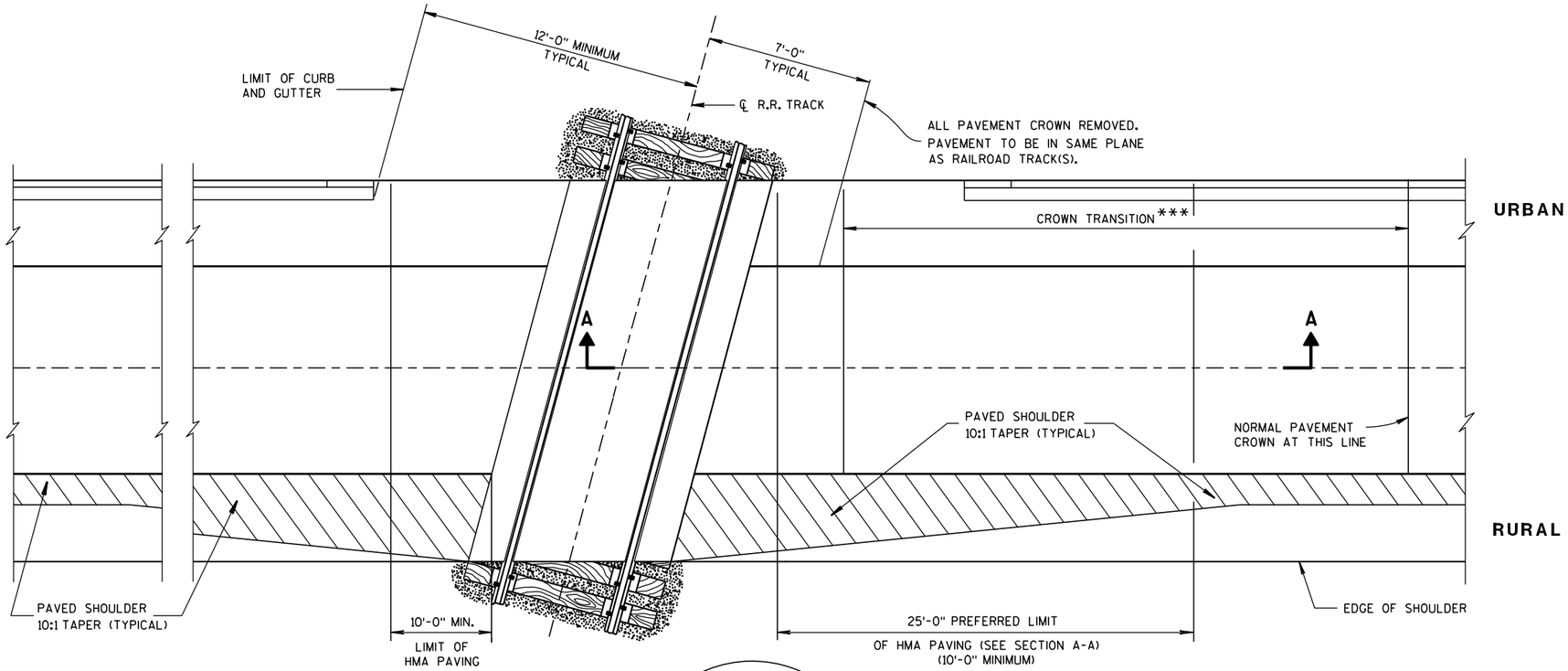

GENERAL NOTES

DETAILS OF CONSTRUCTION, MATERIALS AND WORKMANSHIP NOT SHOWN ON THIS DRAWING SHALL CONFORM TO THE PERTINENT REQUIREMENTS OF THE STANDARD SPECIFICATIONS AND THE APPLICABLE SPECIAL PROVISIONS.

TIMBER, CONCRETE OR RUBBER CROSSING SURFACE MATERIAL, RAILS, TIES, BALLAST, GEOTEXTILE FABRIC AND CROSSING DRAINAGE SYSTEM BY OTHERS UNLESS OTHERWISE PROVIDED.

HMA PAVEMENT APPROACHES AND HMA PAVEMET CROSSING SURFACES TO BE PLACED BY CONTRACTOR UNLESS OTHERWISE PROVIDED.

HMA FLANGEWAY AND FIELD FILLERS TO BE PLACED AND THOROUGHLY HAND COMPACTED BY THE CONTRACTOR WHEN NOT PROVIDED BY OTHERS. SEE DETAIL B. HMA FILLERS NOT REQUIRED WHEN RUBBER FILLERS ARE PROVIDED.

HMA PAVEMENT SHALL BE ROLLED PARALLEL TO THE TRACK.

** CROSSING SURFACE MAY BE TIMBER, RUBBER, CONCRETE, HMA PAVEMENT OR A COMBINATION OF SUCH MATERIALS.

*** CROWN TRANSITION LENGTH SHOWN ELSEWHERE IN THE PLAN.

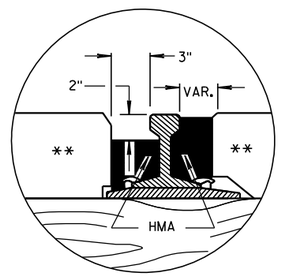

DETAIL B

HMA FLANGEWAY AND FIELD FILLERS

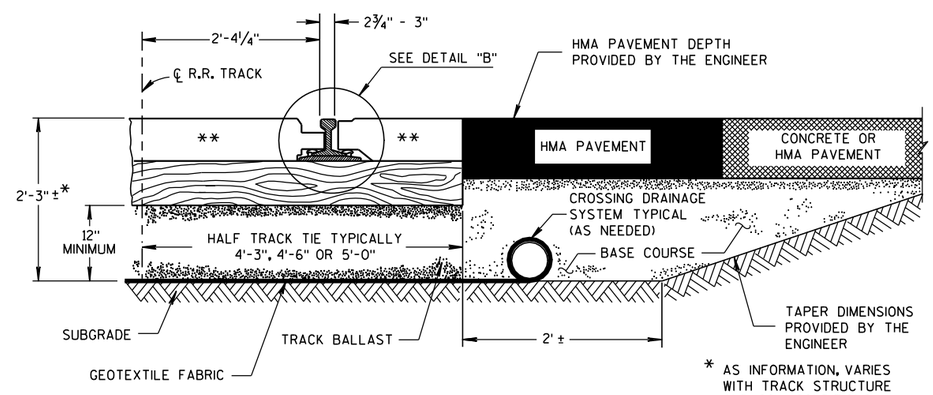

* AS INFORMATION, VARIES WITH TRACK STRUCTURE AND SOIL CONDITIONS

TYPICAL HALF SECTION

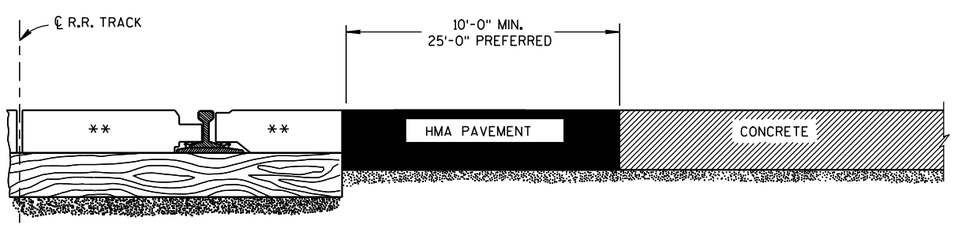

SECTION A-A

CONCRETE PAVEMENT APPROACH

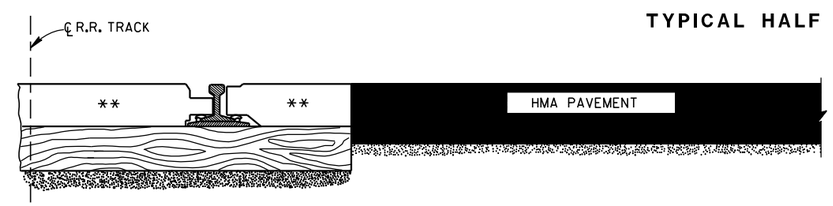

SECTION A-A

HMA PAVEMENT APPROACH

EXAMPLES OF PAVEMENT APPROACHES

PAVEMENT DETAILS FOR RAILROAD APPROACH

STATE OF WISCONSIN
DEPARTMENT OF TRANSPORTATION

APPROVED
8-28-09 /S/ Ronald E. Adams
DATE CHIEF, RAILROADS & HAF 55 CTION
FHWA

6

S.D.D. 13 B 1-10

6

S.D.D. 13 B 1-10

1. WOOD OR STEEL POSTS (w6X9 OR w6X8.5) MAY BE USED. DO NOT INTERMIX WOOD AND STEEL POSTS. INSTALL STEEL POSTS WITH HOLES ON APPROACHING TRAFFIC SIDE.
2. USE WOOD OR APPROVED PLASTIC BLOCKOUTS. WOOD BLOCKOUTS MAY BE CONSTRUCTED OUT OF TWO OR MORE WOOD BLOCKOUTS. SEE ALTERNATE WOOD BLOCKOUT DETAIL. DIMENSIONS OF APPROVED PLASTIC BLOCKOUTS MAY VARY.
3. IF ROCK IS ENCOUNTERED DURING EXCAVATION, PROVIDE A HOLE 12 INCHES IN DIAMETER EXTENDING 20 INCHES DEEP INTO THE ROCK. PLACE APPROXIMATELY 2 1/2" INCHES OF GRANULAR MATERIAL IN THE BOTTOM OF THE HOLE. CUT THE POSTS THE TO LENGTH AMD INSTALL. BACKFILL WITH EXCAVATED MATERIAL AND COMPACT. BACKFILL IS TO BE FREE OF LARGE ROCKS.
4. WHEN THE DISTANCE FROM BACK OF POST TO SHOULDER HINGE POINT IS LESS THAN 2 FEET INSTALL LONGER POST AT HALF POST SPACING (K).
5. FOR NEW MGS INSTALLATION TOP OF W-BEAM RAIL TOLERANCE IS ±1". FOR EXISTING MGS INSTALLATION TOP OF W-BEAM IS BETWEEN 27 ¾" TO 32".
6. WHEN USING STEEL POST AND WOOD BLOCKOUTS INSTALL FOUR 16D GALVANIZED NAILS. INSTALL NAILS AT THE BACK CORNERS OF THE BLOCK AND BEND THE NAILS OVER THE FLANGE OF THE STEEL POST.
7. TOTAL POST LENGTH FOR TYPE K IS 7' - 0".
   TOTAL POST LENGTH FOR OTHER MGS TYPES IS 6' - 0".

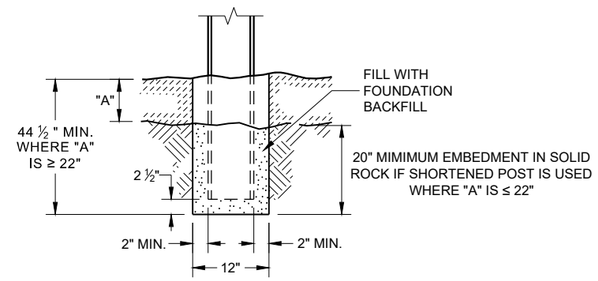

END VIEW
SETTING STEEL OR WOOD POST IN ROCK (3)

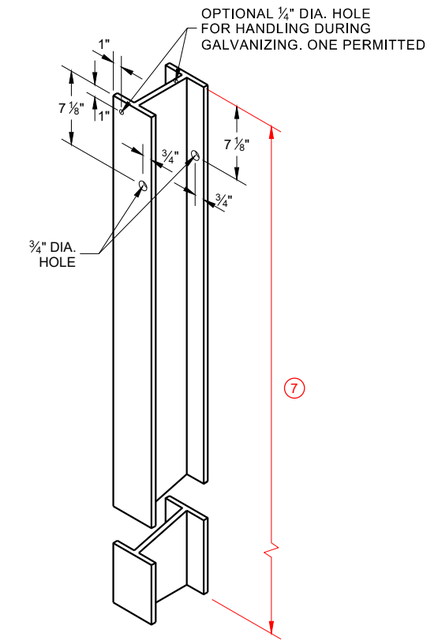

STEEL POST & HOLE PUNCHING DETAIL (W 6 X 9) (1)

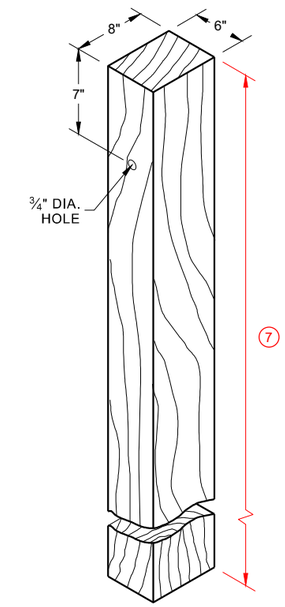

WOOD POST (6" X 8") NOMINAL (1)

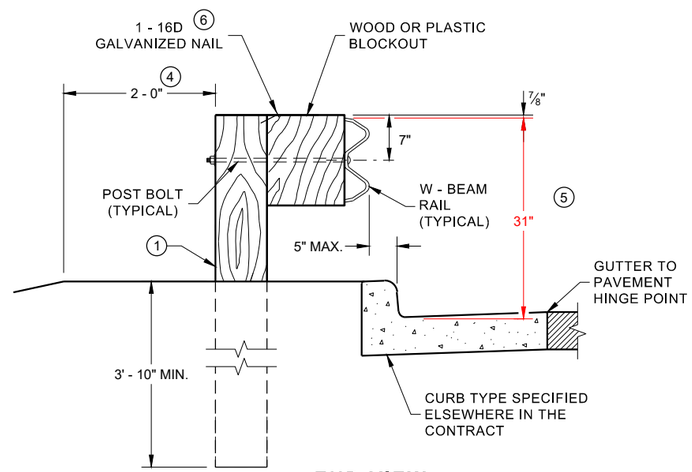

END VIEW
LOCATED ALONG A CURBED ROADWAY

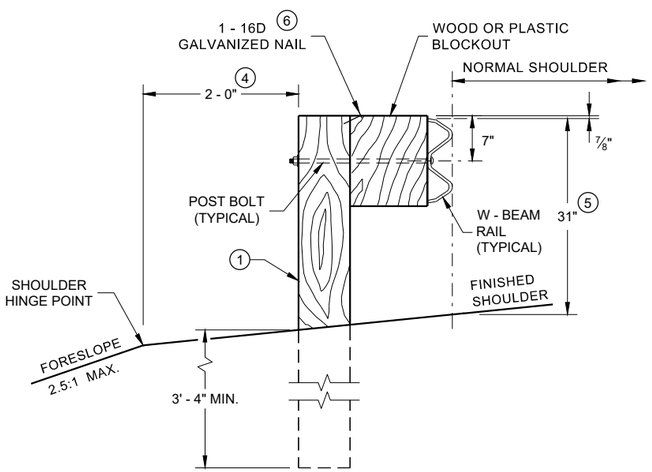

END VIEW
LOCATED ALONG A ROADWAY SHOULDER STANDARD INSTALLATION

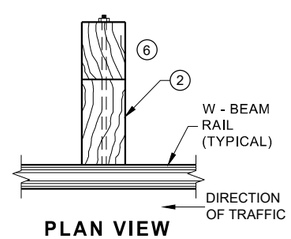

PLAN VIEW
WOOD POST, BLOCKOUT & BEAM

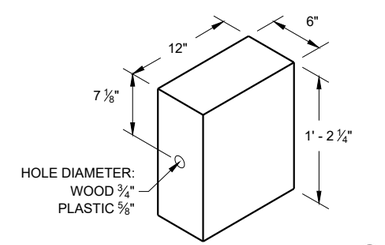

WOOD OR PLASTIC BLOCKOUT (2)

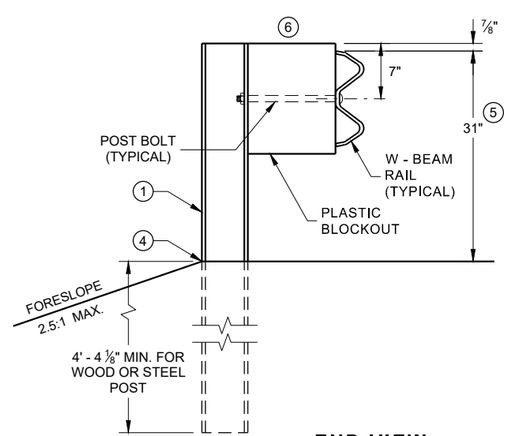

END VIEW
MGS LONGER POST AT HALFPOST SPACING W BEAM (K)

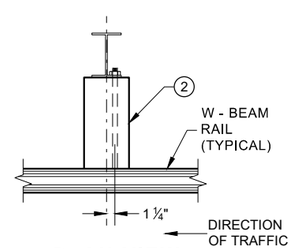

PLAN VIEW
STEEL POST, PLASTIC BLOCKOUT & BEAM

MIDWEST GUARDRAIL SYSTEM (MGS) GUARDRAIL

STATE OF WISCONSIN
DEPARTMENT OF TRANSPORTA

6

SDD 14B42 - 06a

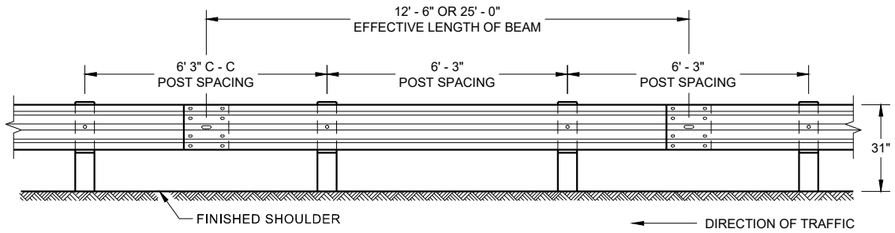

FRONT VIEW
POST SPACING STANDARD INSTALLATION

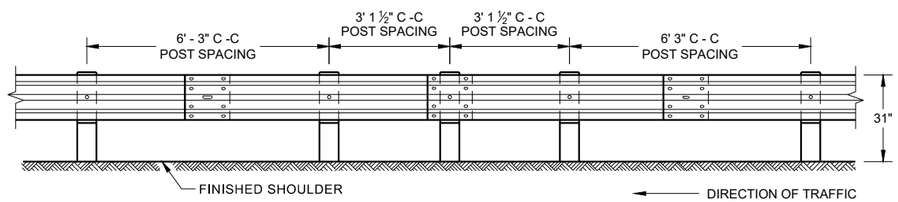

FRONT VIEW
HALF POST SPACING (HS) AND HALF POST SPACING WITH LONGER POSTS (K)

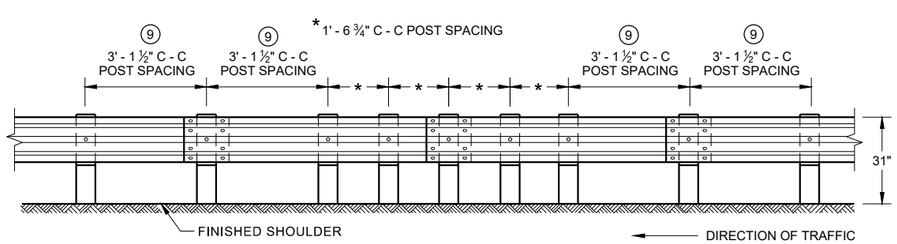

FRONT VIEW
QUARTER POST SPACING (QS)

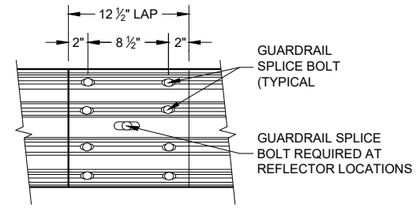

FRONT VIEW
MID-SPAN BEAM SPLICE

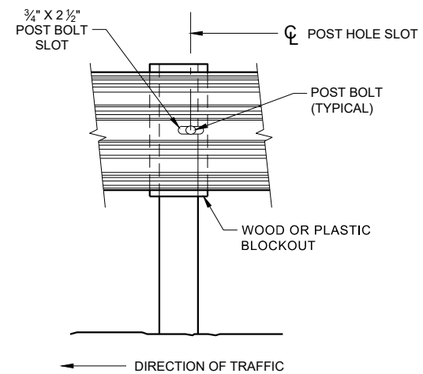

FRONT VIEW AT STEEL POST

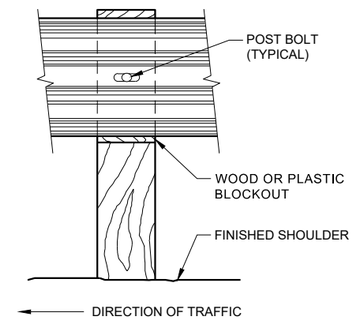

FRONT VIEW AT WOOD POST

GENERAL NOTES

(8) DO NOT INSTALL REFLECTORS ON THE FIRST 50 FEET OF THE APPROACH END OF THE ENERGY ABSORBING TERMINAL. RAIL SPLICE LOCATIONS ARE THE ONLY ACCEPTABLE LOCATIONS FOR REFLECTORS.

(9) 25 FEET OF HALF POST SPACING IS REQUIRED ON APPROACH AND DEPARTURE ENDS OF QUARTER POST SPACING.

POST BOLTS ARE A ⅝" DIAMETER ASTM A307 GUARDRAIL BOLT. A POST BOLT REQUIRES ⅝" DIAMETER A563A DOUBLE RECESSED (DR) HEAVY HEX NUT AND ⅝" DIAMETER F844 FLAT WASHER. POST BOLTS MAY BE LONGER IF MULTIPLE BLOCKOUTS ARE BEING USED.

GUARD RAIL SPLICE BOLTS ARE A ⅝" DIAMETER ASTM A307 GUARDRAIL HEAD BOLT. A GUARDRAIL SPLICE BOLT REQUIRES ⅝" DIAMETER A563A DOUBLE RECESSED (DR) HEAVY HEX NUT.

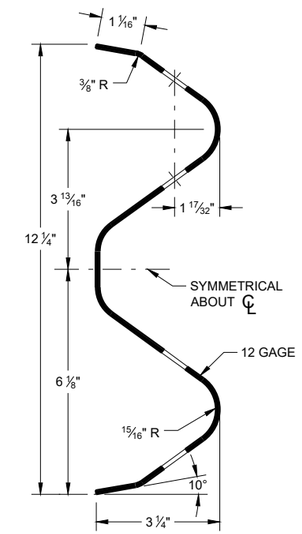

SECTION THRU W-BEAM RAIL

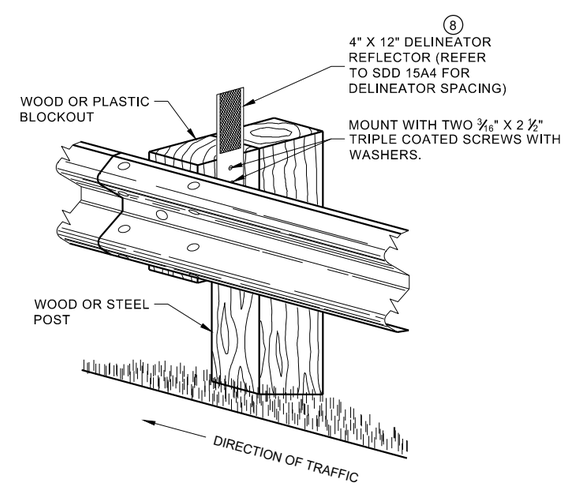

ONE SIDED REFLECTOR DETAIL AND TYPICAL INSTALLATION

MIDWEST GUARDRAIL SYSTEM (MGS) GUARDRAIL

STATE OF WISCONSIN
DEPARTMENT OF TRANSPORTA

6

SDD 14B42 - 06b

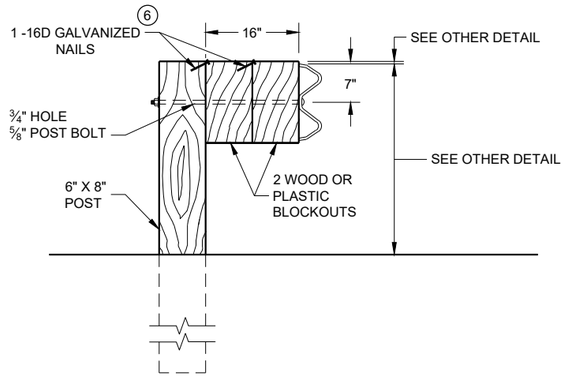

DETAIL FOR 16" BLOCKOUT DEPTH

IT IS ACCEPTABLE TO USE BLOCKOUTS UP TO 16" DEEP TO INCREASE THE POST OFFSET TO AVOID UNDERGROUND OBSTACLES. THERE IS NO LIMIT TO THE NUMBER OF POSTS THAT CAN HAVE ADDITIONAL BLOCKOUTS UP TO 16" DEEP.

NOTE:

1. ALL FILLETS SHALL HAVE A MINIMUM RADIUS OF 3/16".
2. IF THE BOLT EXTENDS MORE THAN ¼" FROM THE NUT THE BOLT SHOULD BE TRIMMED BACK.

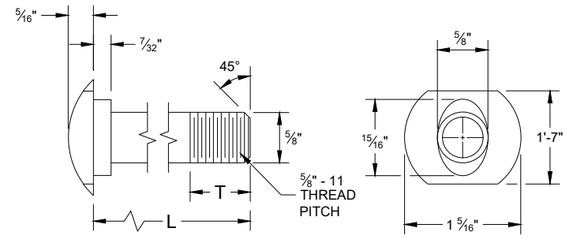

POST BOLT TABLE

L	T (MIN.)
1 ¼"	1 ⅛"
2"	1 ¾"
10"	4"
14"	4 1/16"
18"	4"
21"	4 1/16"
25"	4"

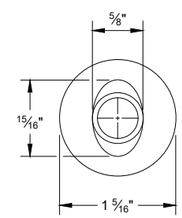

ALTERNATE BOLT HEAD

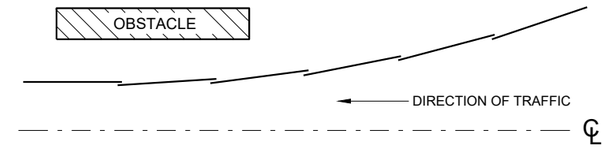

PLAN VIEW
BEAM LAPPING DETAIL

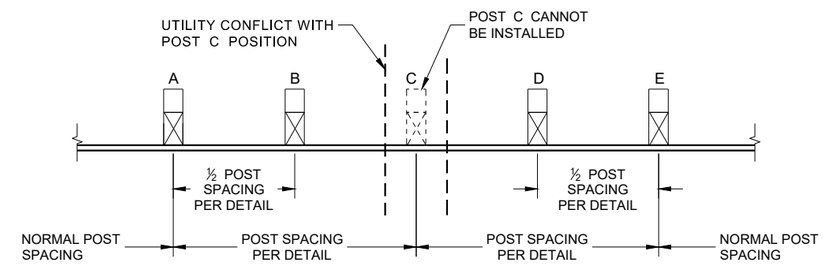

POST DRIVING FOR CONTINUOUS UNDERGROUND OBSTRUCTION

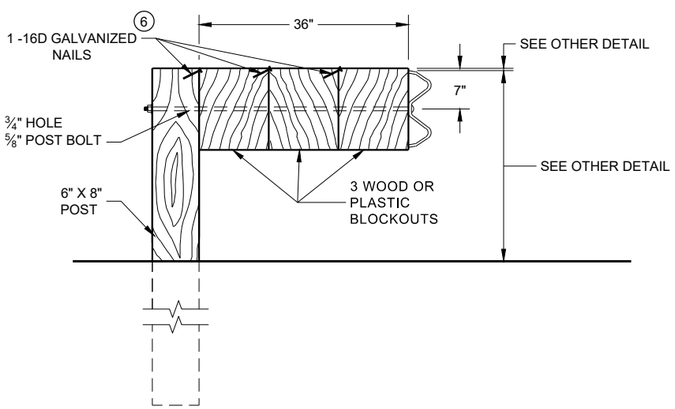

DETAIL FOR 36" BLOCKOUT DEPTH

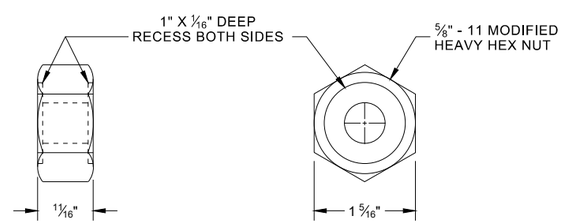

POST BOLT, SPLICE BOLT AND RECESS NUT

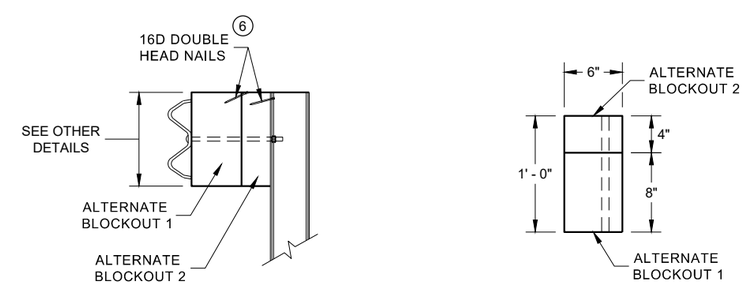

SIDE VIEW

PLAN VIEW

ALTERNATE WOOD BLOCKOUT DETAIL

NOTES: UNDER SPECIAL CIRCUMSTANCES, SUCH AS AVOIDING OBSTACLES THAT ARE NOT RELOCATED, IT IS ACCEPTABLE TO INSTALL ADDITIONAL BLOCKOUTS TO OBTAIN UP TO 36" DEPTH FOR ONE OR TWO POSTS IN A SECTION OF GUARDRAIL.

DO NOT USE 16" OR 36" BLOCKOUTS IF IT CAUSES THE POST TO BE DRIVEN BEYOND SHOULDER HINGE POINT OR CAUSES A FIXED OBJECT TO BE WITHIN THE DEFLECTION DISTANCE OF THE BARRIER.

(6) WHEN USING STEEL POST AD WOOD BLOCKOUTS, INSTALL FOUR 16D GALVANIZED NAILS. INSTALL NAILS AT THE BACK CORNERS OF THE BLOCK AND BEND THE NAILS OVER THE FLANGE OF THE STEEL POST.

MIDWEST GUARDRAIL SYSTEM (MGS) GUARDRAIL

STATE OF WISCONSIN
DEPARTMENT OF TRANSPORTA

6

SDD 14B42 - 06c

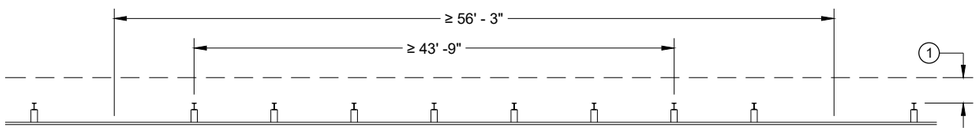

MISSING POST IN NORMAL BEAM GUARD RUN

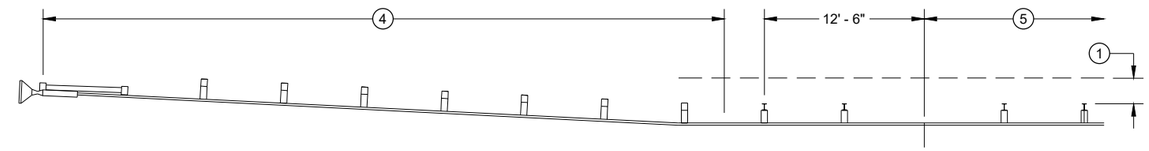

MISSING POST IN NORMAL BEAM GUARD RUN NEAR EAT

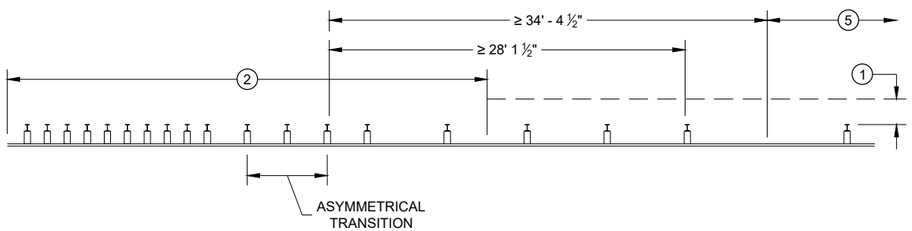

MISSING POST NEAR APPROACH THRIE BEAM TRANSITION

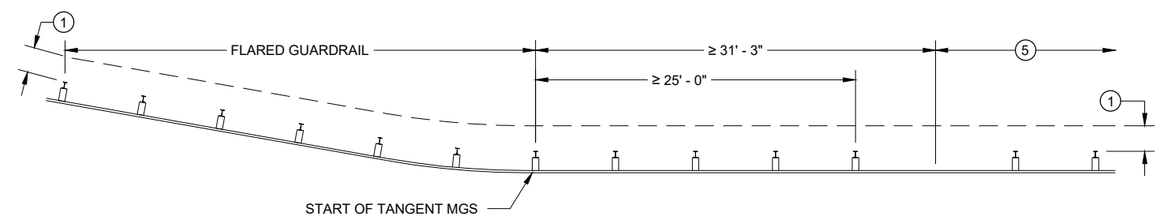

MISSING POST IN NORMAL BEAM GUARD RUN NEAR FLARED BEAM GUARD

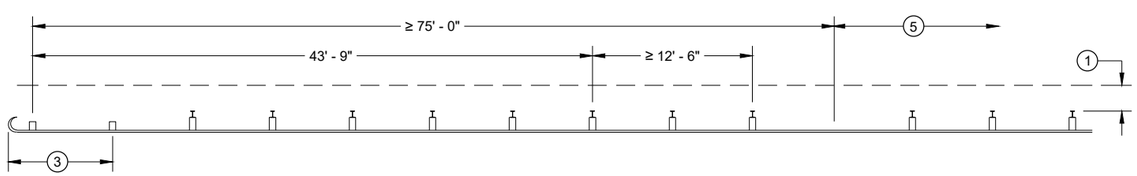

MISSING POST IN NORMAL BEAM GUARD RUN NEAR TYPE 2 TERMINAL

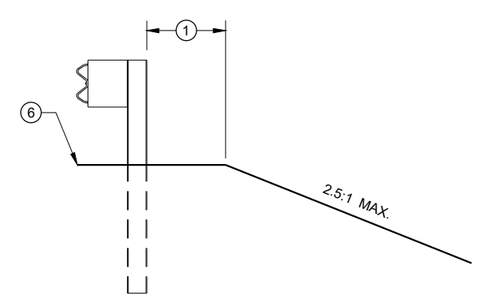

CROSS SECTION VIEW

1. MINIMUM OF 2 FEET OF GRADING BEHIND POST.
2. SEE SDD 14B45 FOR MORE DETAILS.
3. SEE SDD 14B47 FOR MORE DETAILS.
4. SEE SDD 14B44 FOR MORE DETAILS.
5. SEE MISSING POST IN NORMAL BEAM GUARD RUN FOR DISTANCE TO NEXT MISSING POST AND AREA FOR WELL DRAINED, COMPACTED SOILS.
6. SEE PLAN FOR SHOULDER DESIGN.

MIDWEST GUARDRAIL SYSTEM (MGS) GUARDRAIL

STATE OF WISCONSIN
DEPARTMENT OF TRANSPORTATION

APPROVED
7/2018 — DATE
/S/ Rodney Taylor — ROADWAY STANDARDS DEVE UNIT SUPERVISOR
FHWA

6

SDD 14B42 - 06d

GENERAL NOTES

POSTS 1 THROUGH 3 ARE CRT POSTS.
ALL OTHER POSTS SHALL BE WOOD OR STEEL.

SEE SDD 14 B 42 FOR MORE DETAILS.

(A) FLARE FOR MGS EAT SHOWN. IF INSTALLING MGS NO FLARE NEEDED.

(B) VALUES SHOWN ON DRAWING REPRESENT THE MAXIMUM LENGTH. SHORTER DIMENSIONS ARE POSSIBLE. SEE OTHER SECTION OF PLAN FOR MORE INFORMATION.

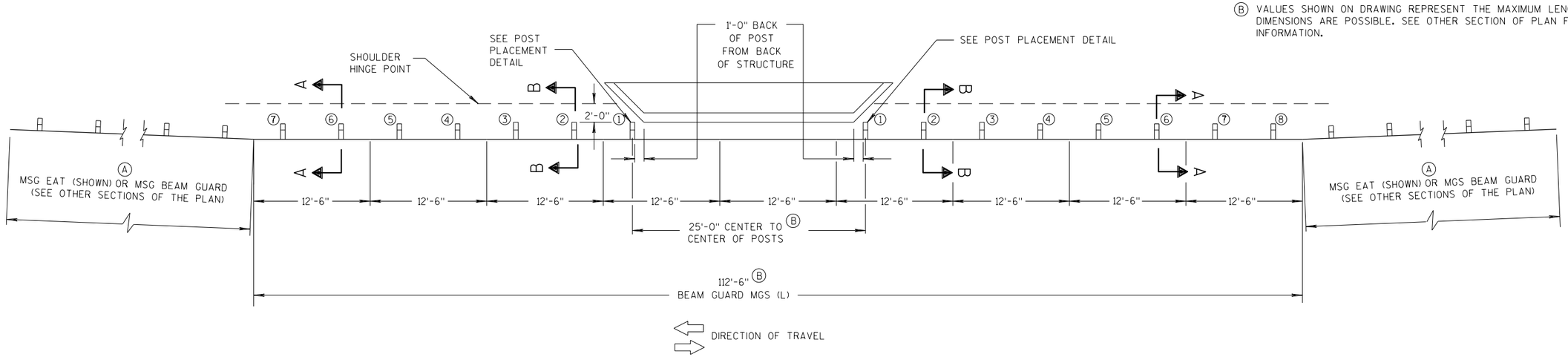

PLAN VIEW

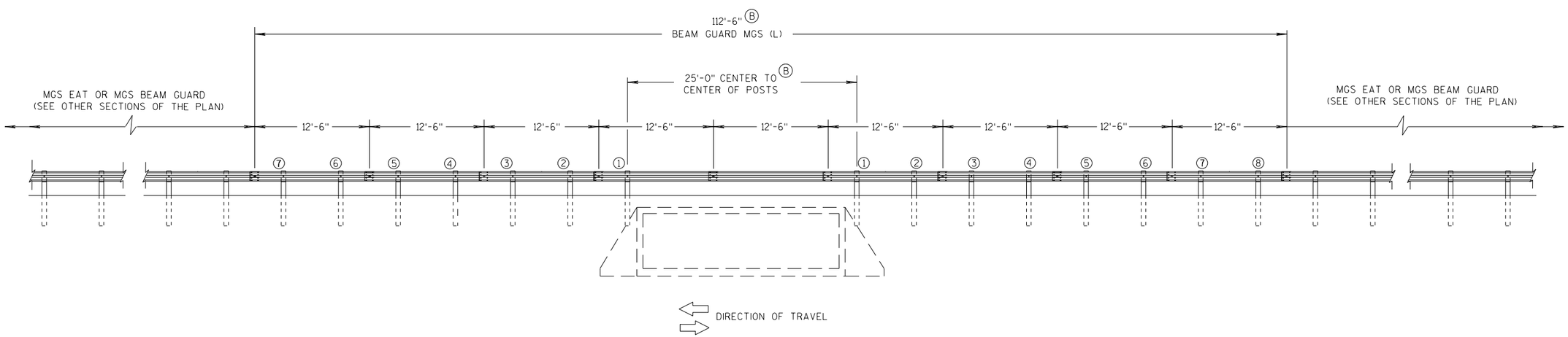

ELEVATION VIEW

MIDWEST GUARDRAIL SYSTEM LONG SPAN MGS (L) TWO-WAY TRAFFIC

MIDWEST GUARDRAIL SYSTEM LONG SPAN MGS (L)

STATE OF WISCONSIN
DEPARTMENT OF TRANSPORTATION

6
S.D.D. 14 B 43-4a

GENERAL NOTES

POSTS 1 THROUGH 3 ARE CRT POSTS.
ALL OTHER POSTS SHALL BE WOOD OR STEEL.

SEE SDD 14 B 42 FOR MORE DETAILS.

(A) FLARE FOR MGS EAT SHOWN. IF INSTALLING MGS NO FLARE NEEDED.

(B) VALUES SHOWN ON DRAWING REPRESENT THE MAXIMUM LENGTH. SHORTER DIMENSIONS ARE POSSIBLE. SEE OTHER SECTION OF PLAN FOR MORE INFORMATION.

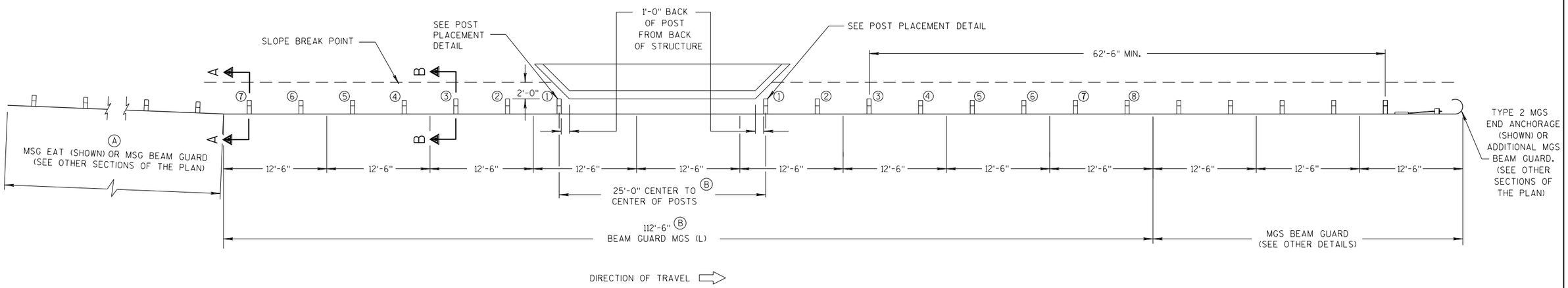

PLAN VIEW

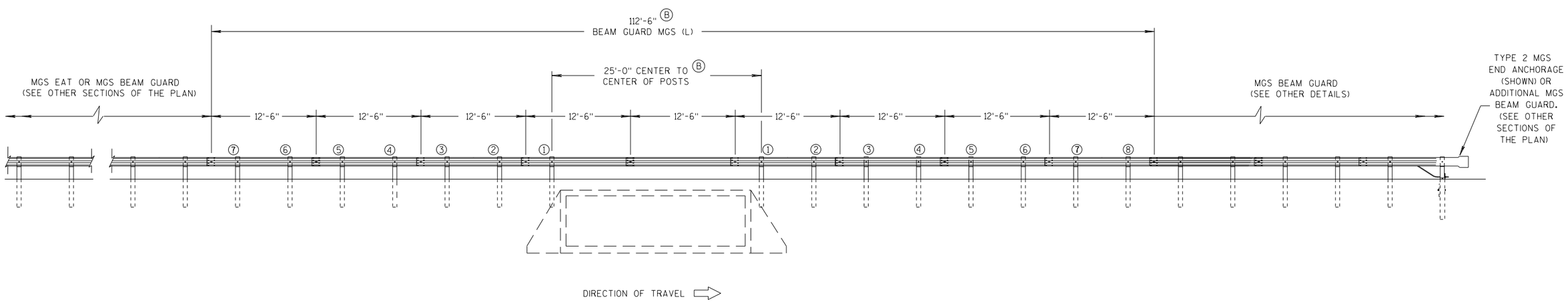

ELEVATION VIEW

MIDWEST GUARDRAIL SYSTEM LONG SPAN MGS (L) ONE-WAY TRAFFIC

MIDWEST GUARDRAIL SYSTEM LONG SPAN MGS (L)

STATE OF WISCONSIN
DEPARTMENT OF TRANSPORTATION

6

S.D.D. 14 B 43-4b

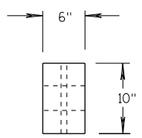

PLAN VIEW

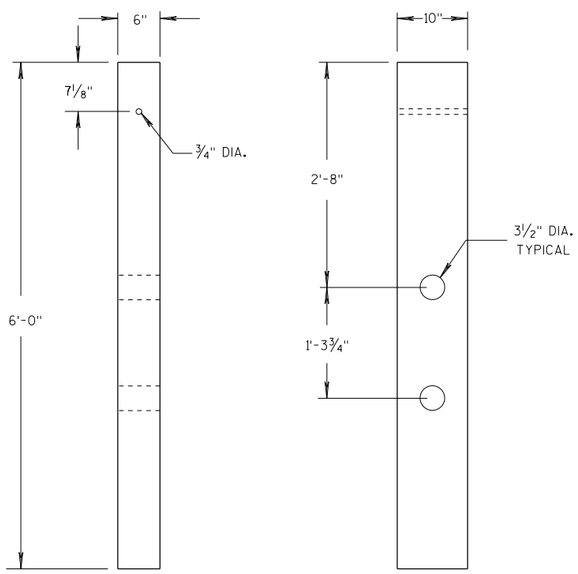

FRONT VIEW **SIDE VIEW**

CRT WOOD POST

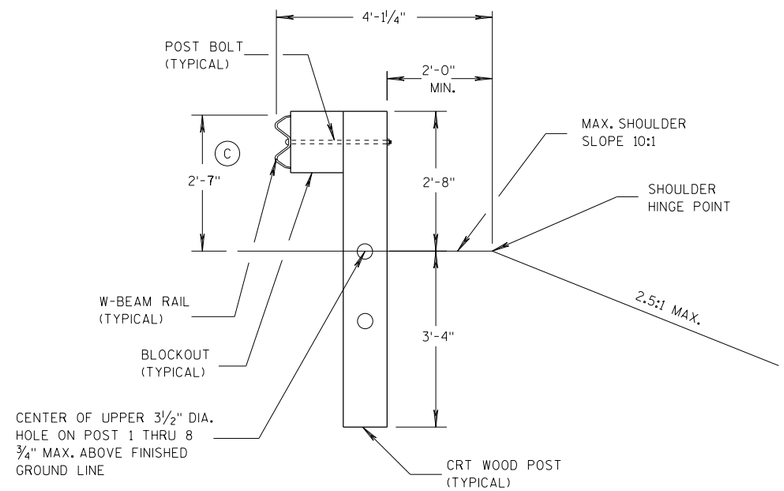

SECTION B-B

POSTS NO. 1-3

SEE OTHER DETAILS

GENERAL NOTES

(C) TOLERANCE FOR TOP OF W-BEAM RAIL IS ± 1".

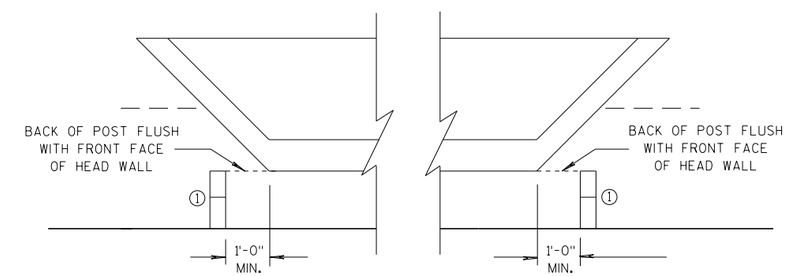

POST PLACEMENT DETAIL

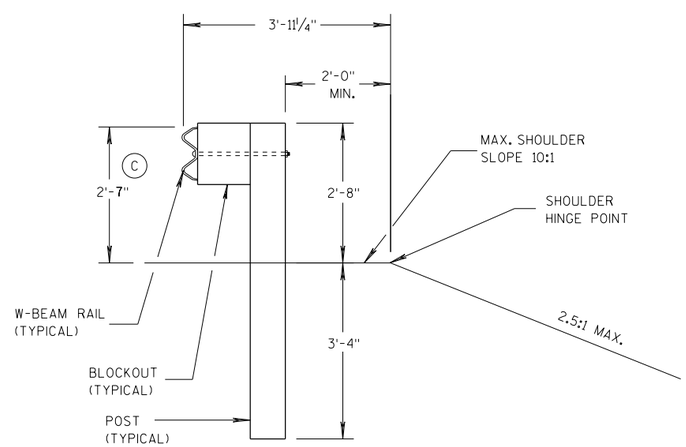

SECTION A-A

POSTS NO. 4-8

SEE OTHER DETAILS

MIDWEST GUARDRAIL SYSTEM
LONG SPAN MGS (L)

STATE OF WISCONSIN
DEPARTMENT OF TRANSPORTATION

APPROVED
07/2018
DATE
FHWA

/S/ Rodney Taylor
ROADWAY STANDARDS DEVELOPMENT ENGINEER

NT

6

6

S.D.D. 14 B 43-4c

S.D.D. 14 B 43-4c

GENERAL NOTES

(A) THE SLOPE IN THE AREA BOUNDED BY THE GRADELINE, THE HINGE POINT LINE (HPL) AND THE CLEAR ZONE LIMITS (CZL) SHALL BE 4:1 OR FLATTER.

(B) AFTER FINAL ASSEMBLY, RECHECK CABLE TO BE SURE IT IS TAUT AND HAS NOT RELAXED

(C) DIFFERENT MANUFACTURERS REQUIRE DIFFERENT PERFORATED W - BEAM RAIL END PANELS. SEE MANUFACTURER'S INFORMATION.

(D) ATTACH ALUMINUM SHEET TO E.A.T. HEAD USING 4 STAINLESS STEEL SELF - TAPPING SCREWS. ONE SCREW PER CORNER.

(E) HARDWARE MAY VARY BETWEEN MANUFACTURER. SEE MANUFACTURER'S DRAWING FOR INFORMATION.

DIMENSIONS MAY VARY, MANUFACTURER'S INFORMATION.

SEE SDD 14B42 FOR MORE INFORMATION.

* DO NOT ATTACH BLOCKOUTS TO POST 1 AND 2.

DO NOT INSTALL REFLECTORS ON THE FIRST 50 FEET OF THE APPROACH END OF THE ENERGY ABSORBING TERMINAL.

SEE MANUFACTURER'S DRAWING FOR SPLICE LOCATION, HARDWARE DIMENSIONS AND INSTALLATION INSTRUCTIONS.

THE CENTER OF THE UPPER 3 ½" DIAMETER HOLE ON POST NUMBER 3 THROUGH POST 9 IS TO BE FLUSH WITH THE GROUND LINE UP TO A MAXIMUM OF 2" ABOVE GROUND LINE. WOOD BLOCKS ON POSTS NUMBERED 3 THROUGH 9 MAY BE ADJUSTED UP TO 3" ABOVE THE TOP OF POST.

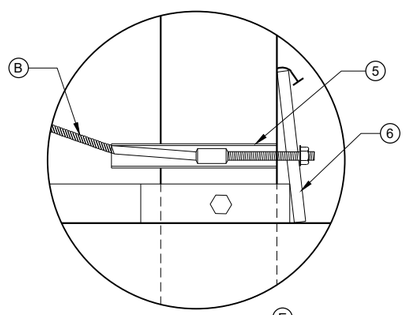

DETAIL "A" (E)

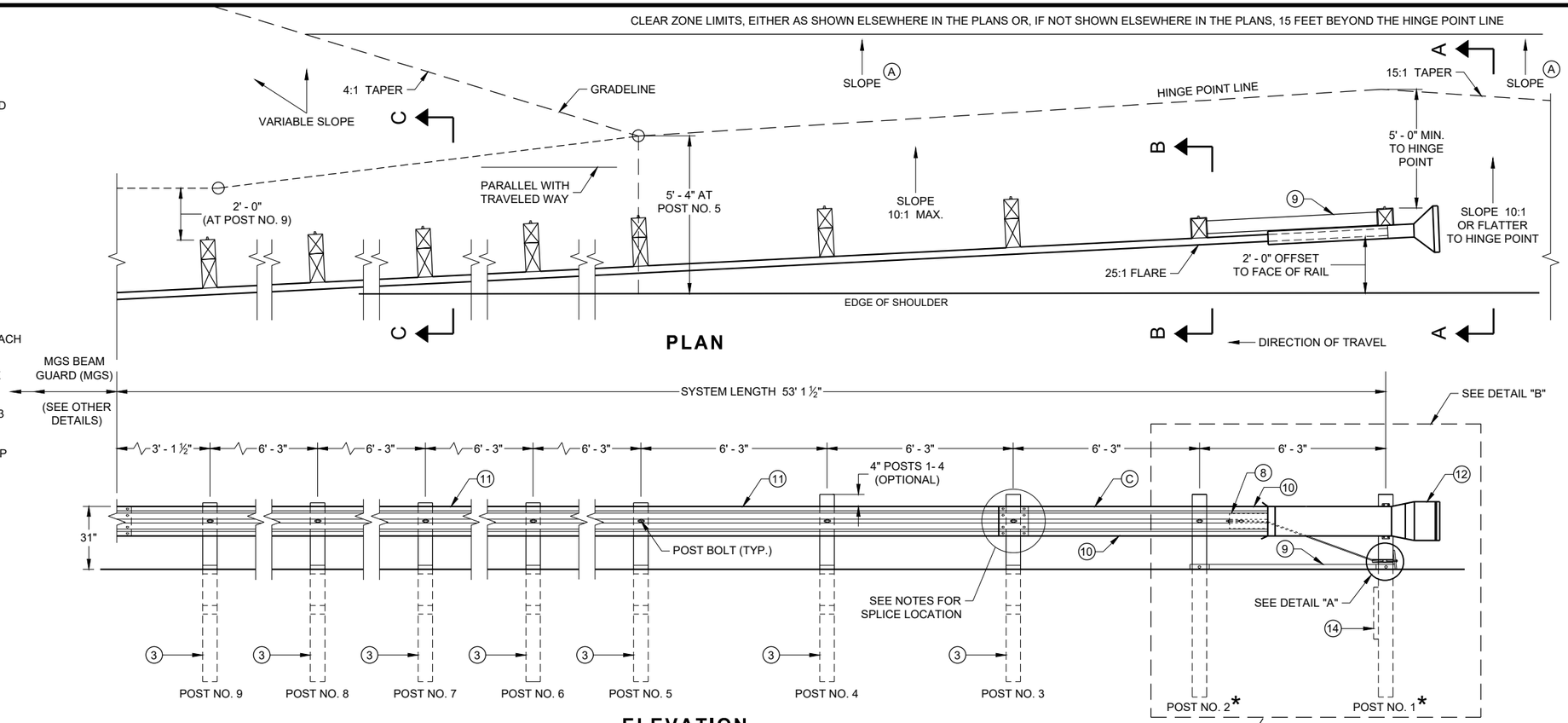

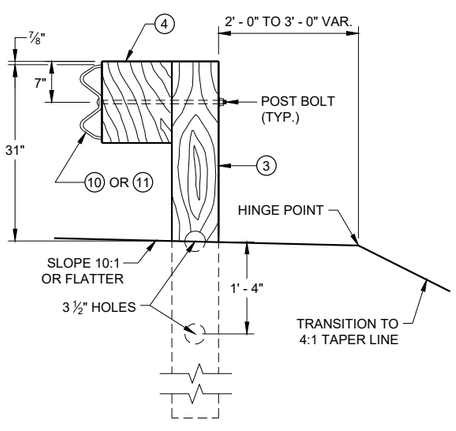

SECTION C - C
TYPICAL AT POST NOS. 3 - 9

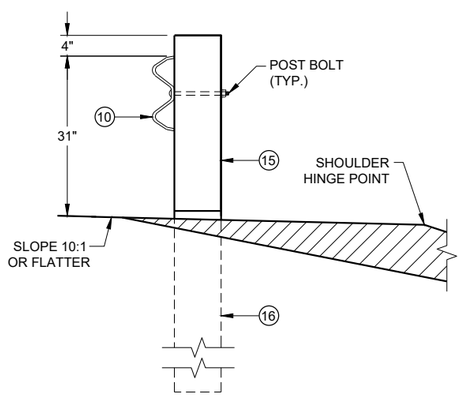

SECTION B - B
TYPICAL AT POST NO. 2*

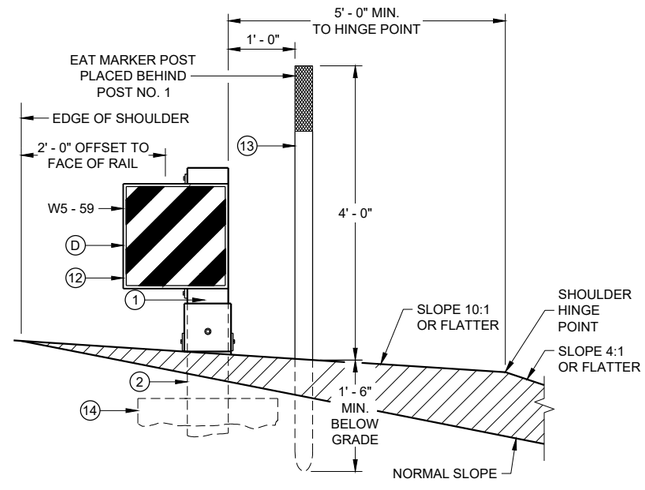

SECTION A - A
TYPICAL AT POST NO. 1*

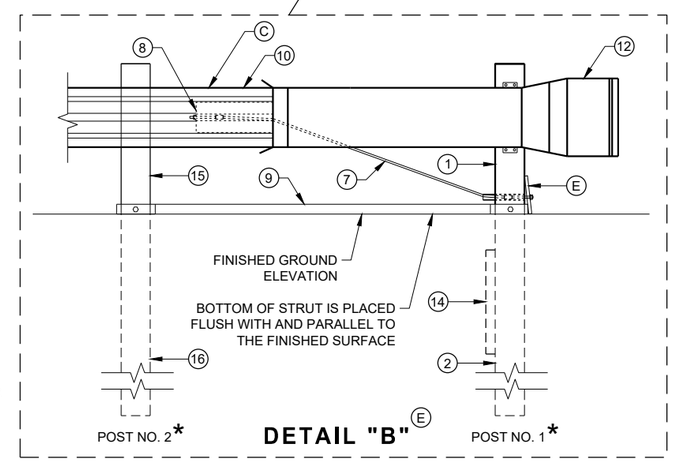

DETAIL "B" (E)

MIDWEST GUARDRAIL SYSTEM ENERGY ABSORBING TERMINAL (MGS)

STATE OF WISCONSIN
DEPARTMENT OF TRANSPORTATION

6

6

SDD 14B44 - 04a

SDD 14B44 - 04a

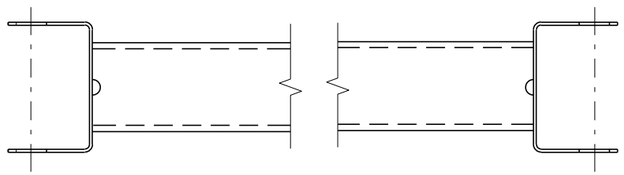

GENERIC GROUND STRUT 9 E

BILL OF MATERIALS

PART NO.	DESCRIPTION MATERIALS PROVIDED BY MGS EAT MANUFACTURER. SEE MANUGACTURER'S DETAILS FOR MORE INFORMATION.
1	UPPER POST NO. 1 6" X 6" TUBE
2	LOWER POST NO. 1
3	WOOD CRT
4	WOOD BLOCKOUT
5	PIPE SLEEVE
6	BEARING PLATE
7	BCT CABLE ASSEMBLY
8	ANCHOR CABLE BOX
9	GROUND STRUT
10	PERFORATED W-BEAM RAIL END PANEL, 12'-6" LONG.
11	STANDARD W-BEAM RAIL. MULTIPLE SECTIONS REQUIRED. SECTIONS VARY IN LENGTH.
12	IMPACT HEAD
13	EAT MARKER POST - YELLOW (SEE APPROVED PRODUCTS LIST)
14	SOIL PLATE
15	UPPER POST NO. 2
16	LOWER POST NO. 2

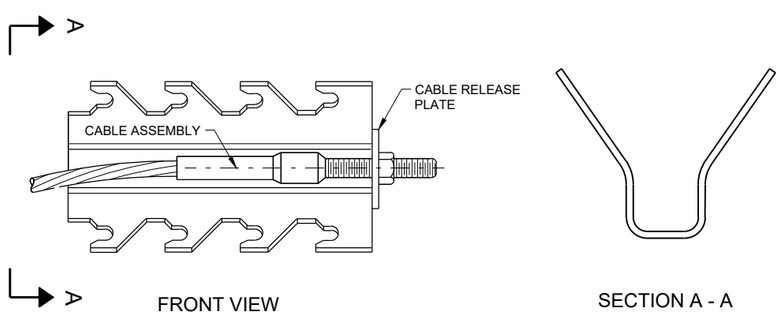

GENERIC ANCHOR CABLE BOX 9 E

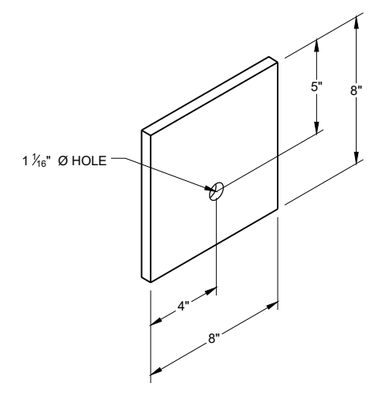

BEARING PLATE 6 E

6

6

SDD 14B44 - 04b

SDD 14B44 - 04b

MIDWEST GUARDRAIL SYSTEM ENERGY ABSORBING TERMINAL (MGS)

STATE OF WISCONSIN
DEPARTMENT OF TRANSPORTAT

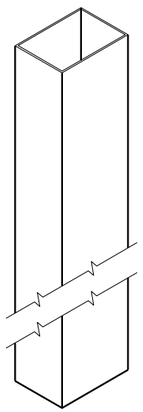

UPPER POST NO. 1 (1) (E)

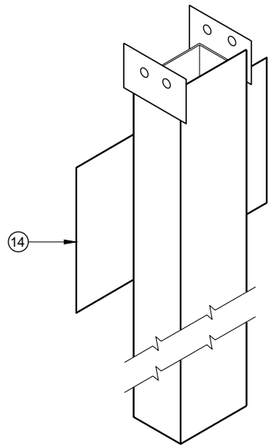

LOWER POST NO. 1 (2) (E)

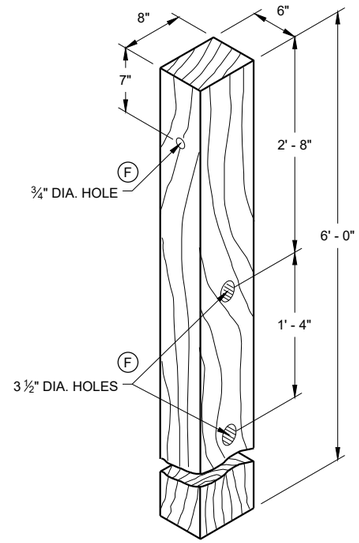

WOOD CRT POST (3) (E)
POSTS NUMBER 3-9

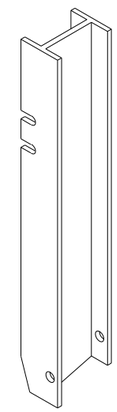

UPPER POST NO. 2 (15) (E)

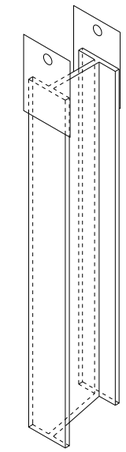

LOWER POST NO. 2 (16) (E)

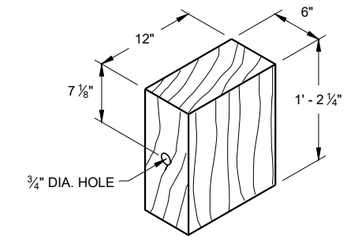

WOOD BLOCKOUT (4)
REQ'D. AT ALL POSTS EXCEPT POST NO'S 1 & 2

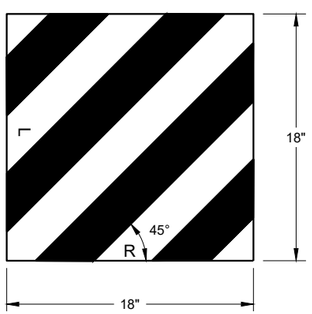

W5 - 59

REFLECTIVE SHEETING DETAIL (E)

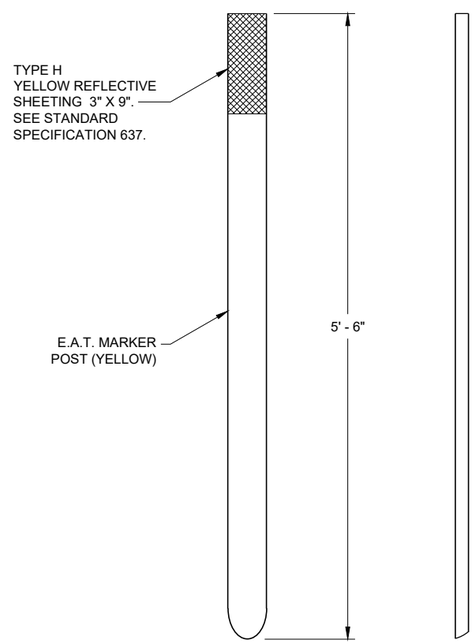

FRONT VIEW SIDE VIEW

E.A.T. MARKER POST (13)

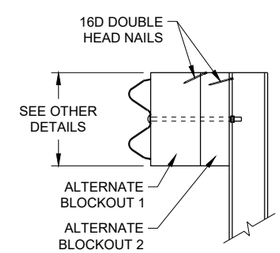

SIDE VIEW

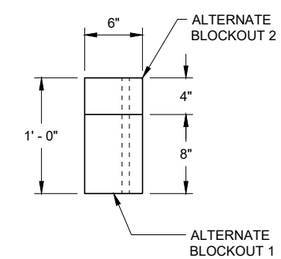

TOP VIEW

ALTERNATE WOOD BLOCKOUT DETAIL

MIDWEST GUARDRAIL SYSTEM ENERGY ABSORBING TERMINAL (MGS)

STATE OF WISCONSIN
DEPARTMENT OF TRANSPORTATION

APPROVED
7/2018 — DATE
/S/ Rodney Taylor — ROADWAY STANDARDS DEVE UNIT SUPERVISOR
FHWA

6
SDD 14B44 - 04c

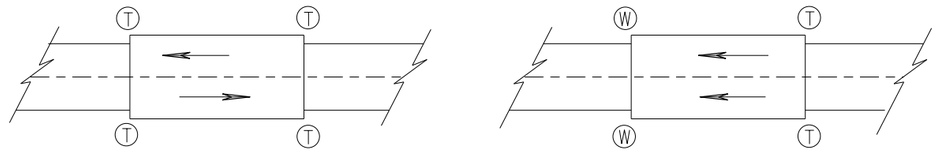

TWO WAY TRAFFIC **ONE WAY TRAFFIC**

(T) THRIE BEAM CONNECTION

(W) W-BEAM CONNECTION WHEN REQUIRED

TYPICAL LOCATIONS OF THRIE BEAM AND W-BEAM CONNECTIONS TO BRIDGE

GENERAL NOTES

IF ROCK IS ENCOUNTERED, REMOVE ROCK TO FULL DEPTH OF POST PLUS 2½", AND 12" DIAMETER AROUND POST. SEE 14B42 FOR MORE DETAILS.

TRANSITION USES STEEL POSTS ONLY.

SEE STANDARD DETAIL DRAWING 14 B 42 FOR MORE INFORMATION.

POST 2 THROUGH 17 USES STEEL POST ONLY

(1) BRIDGE RAILING TYPE "W" DOES NOT REQUIRE A TERMINAL CONNECTOR.

(2) OPTIONAL CURB AND GUTTER OR DRAINAGE FEATURE SEE PLAN FOR INFORMATION.

(13) STEEL OR WOOD POST IS ACCEPTABLE AT POST 1. SEE SDD14B42

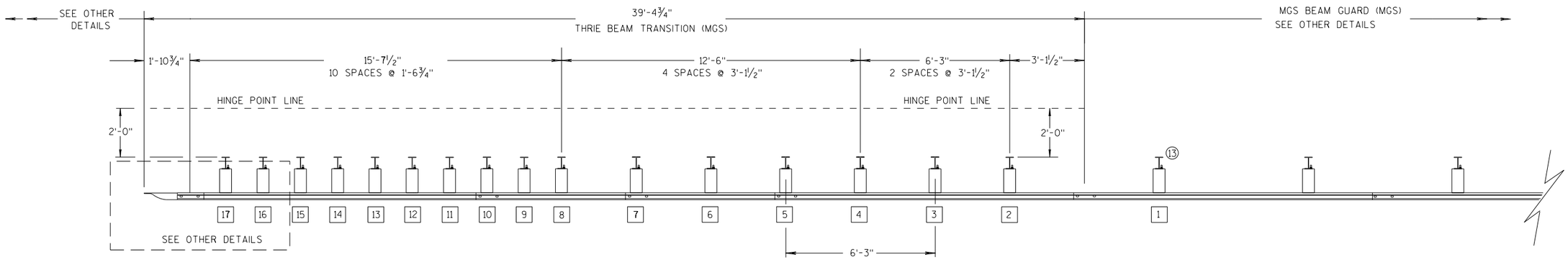

PLAN VIEW

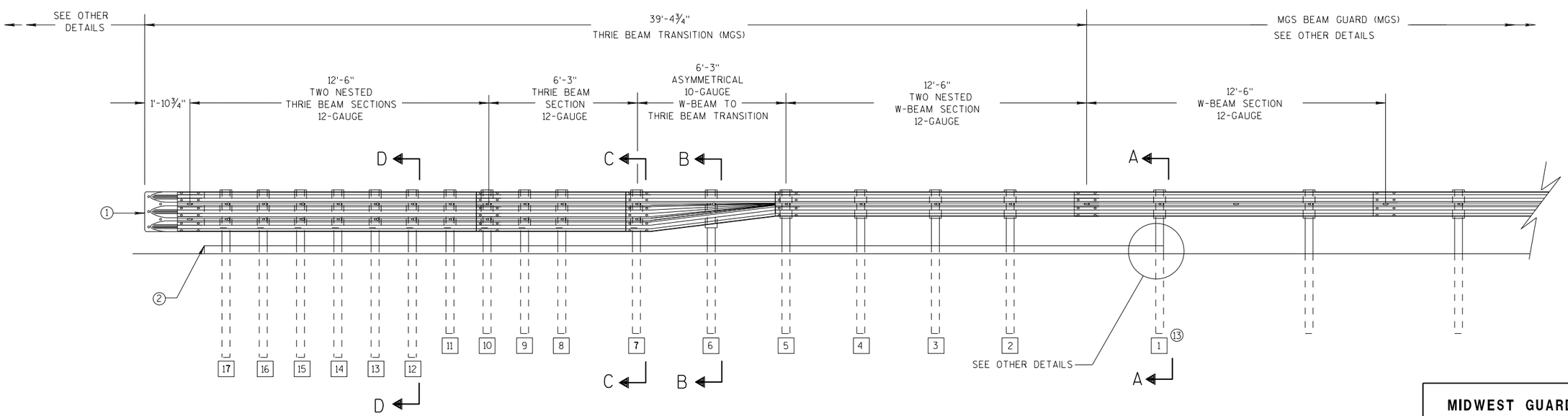

ELEVATION VIEW

MIDWEST GUARDRAIL SYSTEM THRIE BEAM TRANSITION

MIDWEST GUARDRAIL SYSTEM
THRIE BEAM TRANSITION (MGS)

STATE OF WISCONSIN
DEPARTMENT OF TRANSPOR

6

S.D.D. 14 B 45-5a

GENERAL NOTES

(2) OPTIONAL CURB AND GUTTER OR DRAINAGE FEATURE SEE PLAN FOR INFORMATION.

(3) WHEN USING STEEL POSTS AND WOOD BLOCKOUTS INSTALL FOUR 10D GALVANIZED NAILS. INSTALL NAILS AT THE BACK CORNERS OF THE BLOCK AND BEND THE NAILS OVER THE FLANGE OF THE STEEL POST.

(4) TOLERANCE FOR TOP OF W-BEAM RAIL IS ± 1".

(13) STEEL OR WOOD POST IS ACCEPTABLE AT POST 1. SEE SDD 14B42

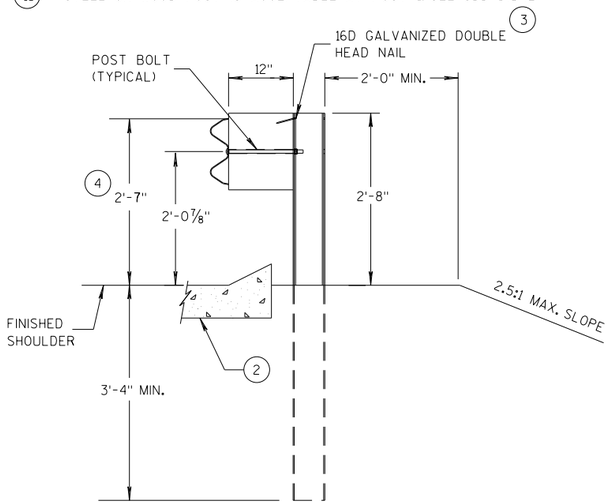

SECTION A-A (13)

POSTS 1-5

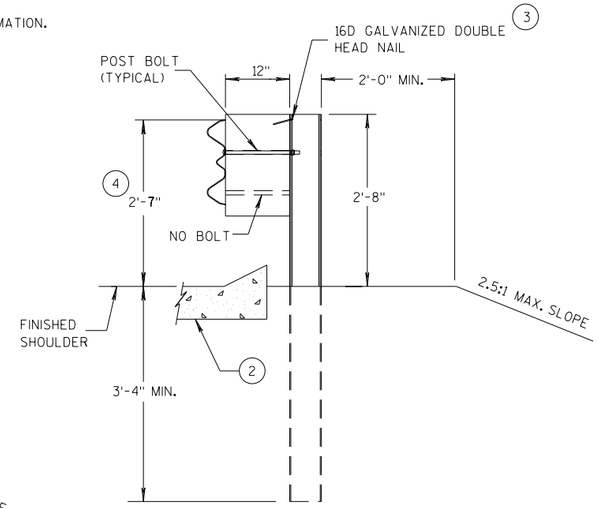

SECTION B-B

POST 6

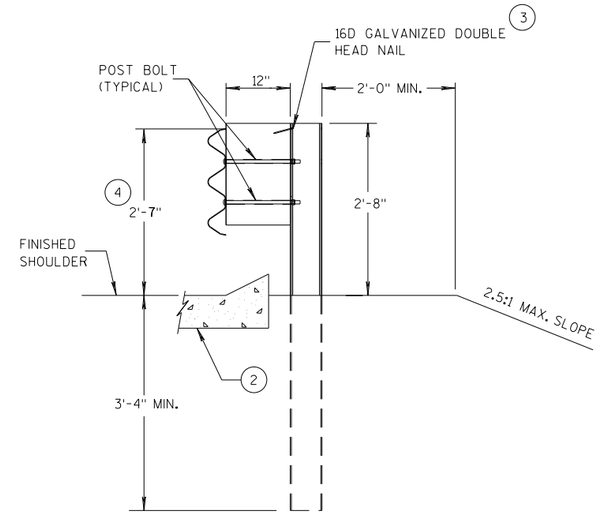

SECTION C-C

POSTS 7-11

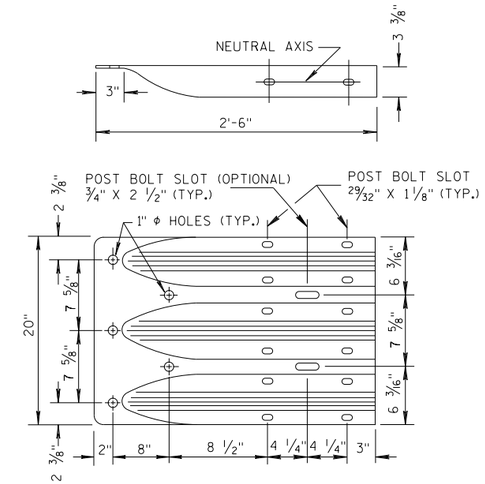

THRIE BEAM TERMINAL CONNECTOR

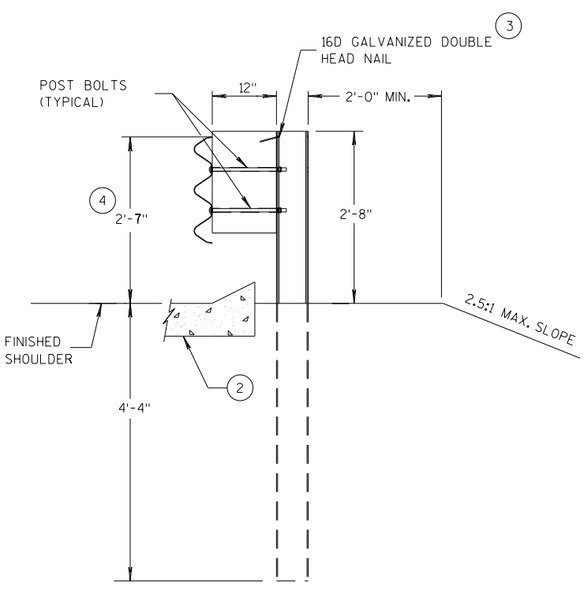

SECTION D-D

POSTS 12-17

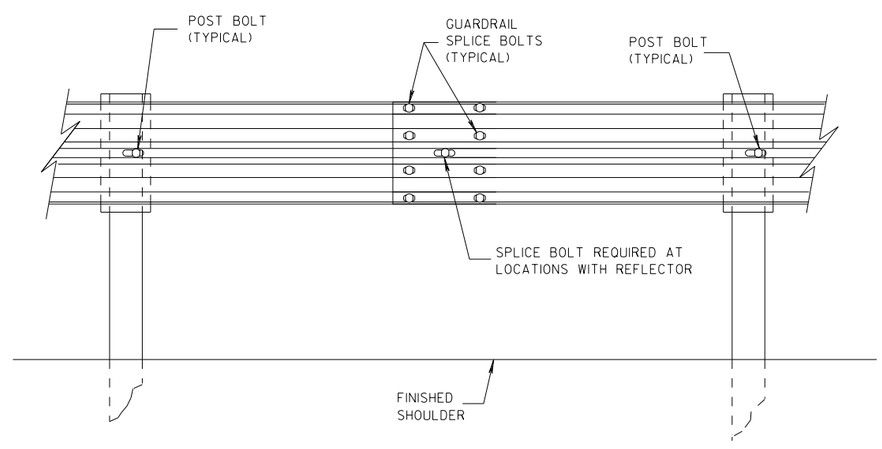

SPLICE DETAIL

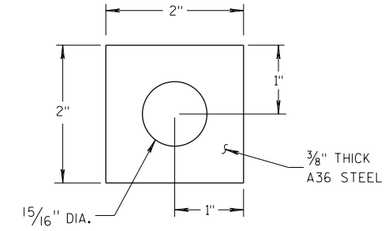

PLATE WASHER DETAIL

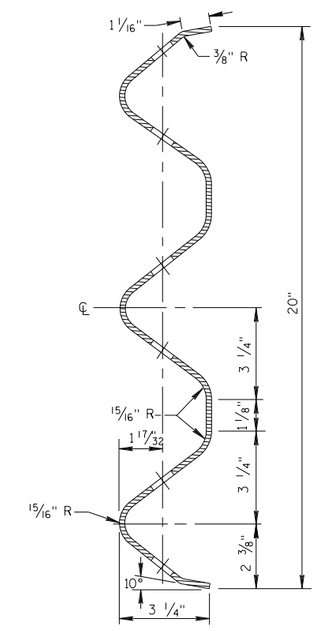

SECTION THRU THRIE BEAM RAIL ELEMENT

MIDWEST GUARDRAIL SYSTEM
THRIE BEAM TRANSITION (MGS)

STATE OF WISCONSIN
DEPARTMENT OF TRANSPORT

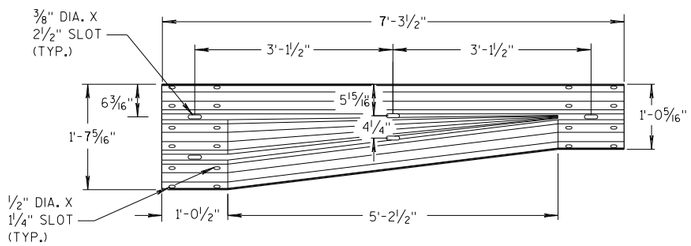

W-BEAM TO THRIE BEAM TRANSITION SECTION

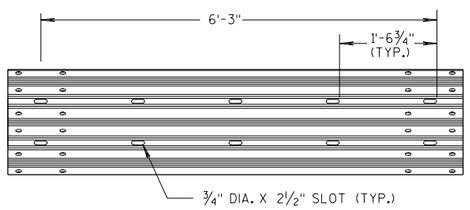

6'-3" THRIE BEAM SECTION

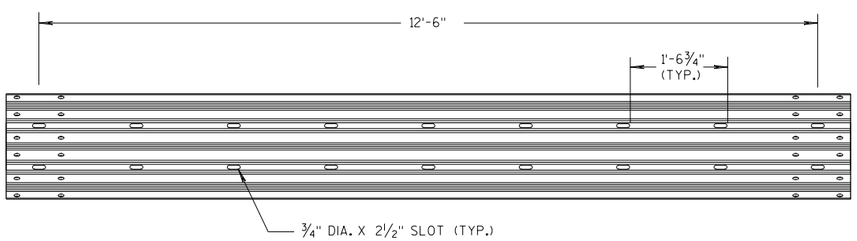

12'-6" THRIE BEAM SECTION

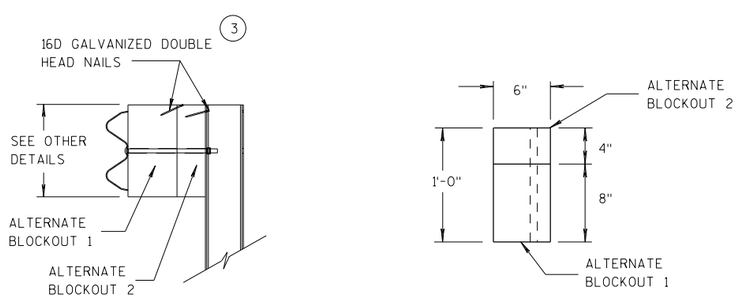

SIDE VIEW TOP VIEW

ALTERNATE WOOD BLOCKOUT DETAIL

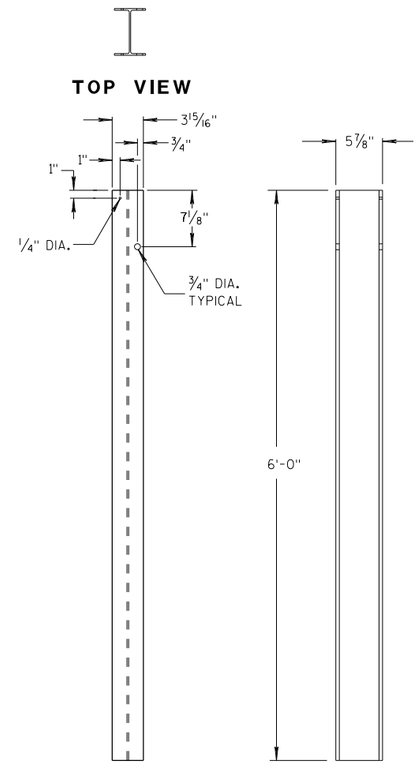

STEEL POSTS 1-5 (13)

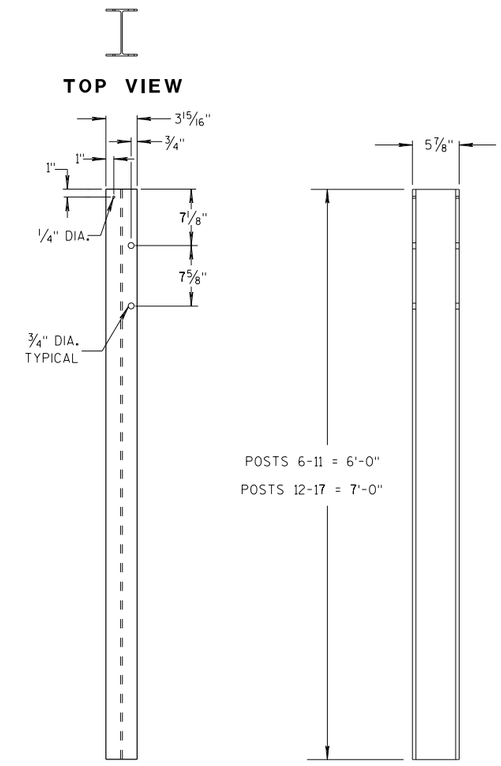

STEEL POSTS 6-17

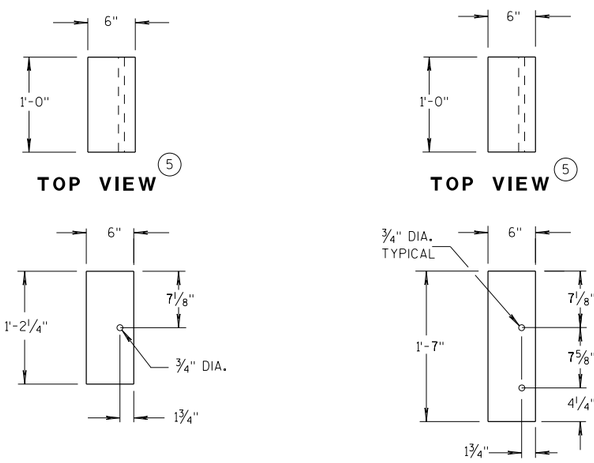

BLOCKOUT POSTS 1-5

BLOCKOUT POSTS 6-17

GENERAL NOTES

STEEL POSTS ARE W6X9 OR W6X8.5.

BOLT HOLES FOR POST ARE ON FRONT AND OF SIDE OF POST.

(3) WHEN USING STEEL POSTS AND WOOD BLOCKOUTS INSTALL FOUR 16D GALVANIZED NAILS. INSTALL NAILS AT THE BACK CORNERS OF THE BLOCK AND BEND THE NAILS OVER THE FLANGE OF THE STEEL POST.

(5) WOOD BLOCKS MAY BE CONSTRUCTED OUT OF 2 WOOD BLOCKS. SEE ALTERNATE WOOD BLOCK DETAIL.

(13) STEEL OR WOOD POST IS ACCEPTABLE AT POST 1. SEE SDD 14B42.

MIDWEST GUARDRAIL SYSTEM THRIE BEAM TRANSITION (MGS)

STATE OF WISCONSIN
DEPARTMENT OF TRANSPOR

6

S.D.D. 14 B 45-5c

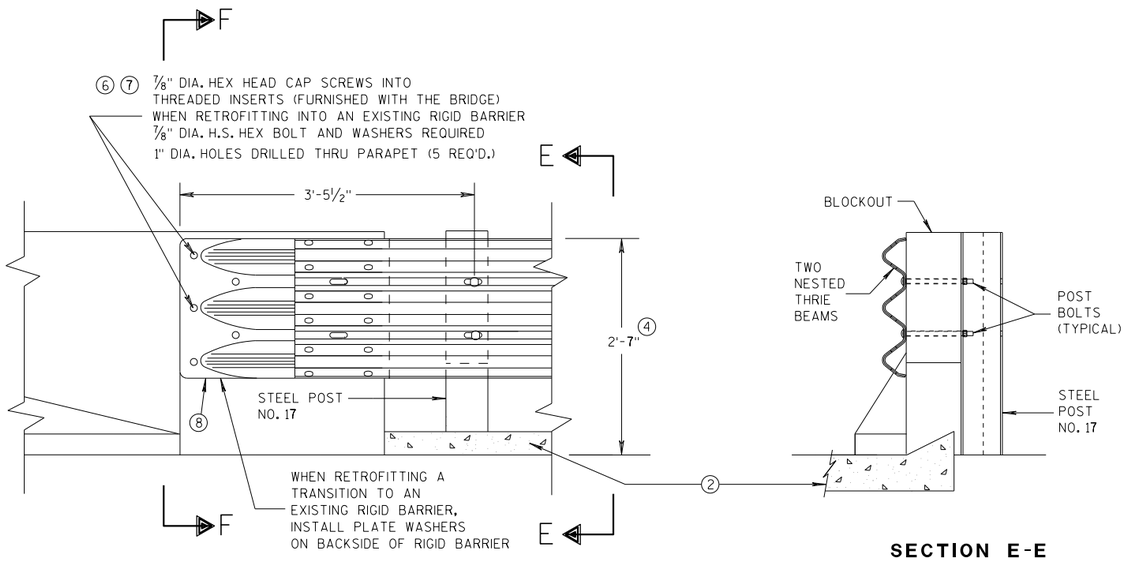

FRONT VIEW

SECTION E-E

THRIE BEAM CONNECTION TO BRIDGE PARAPET WITH SQUARE ENDS

GENERAL NOTES

THESE ARE TYPICAL CONNECTION DETAILS. ADJUST THE POSTION OF CONNECTIONS TO EXISTING BRIDGES TO FIT THE ACTUAL BRIDGE AND SITE DIMENSIONS.

② OPTIONAL CURB AND GUTTER OR DRAINAGE FEATURE SEE PLAN FOR INFORMATION.

④ TOLERANCE FOR TOP OF BEAM IS ± 1".

⑥ DRILLING BOLT HOLES THROUGH THE PARAPET, BOLTS, NUTS, WASHERS AND REPAIRING DAMAGED CONCRETE ARE INCIDENTAL TO THE CONTRACT.

⑦ BOLTS MAY BE A325 BOLTS OR A449 BOLTS. BOLT LENGTH AND THREADING LENGTH ARE TO ALLOW FOR A TIGHT CONNECTION BETWEEN RIGID BARRIER AND THRIE BEAM CONNECTION PLATE. CONTRACTOR IS TO FIELD VERIFY BOLT LENGTH AND THREAD LENGTH. ONE ROUND WASHER REQUIRED BETWEEN BOLT HEAD AND THRIE BEAM CONNECTOR PLATE. BOLTS THAT EXTEND THROUGH THE PARAPET AND OUT THE BACK FACE REQUIRE A HARDENED ROUND STEEL WASHER THAT IS 2" O.D. X 5/8" THICK AND ONE PLATE WASHER. REPAIR ANY DAMAGED CONCRETE FROM BOLT INSTALLATION.

⑧ THE RECESS FOR A W-BEAM CONNECTION, WHICH EXISTS ON SOME PARAPETS OF THIS TYPE, SHALL BE FILLED WITH A TREATED TIMBER BLOCKOUT. BLOCKOUT SIZE IS 1'-6" X 2'-0" X 3 1/2".

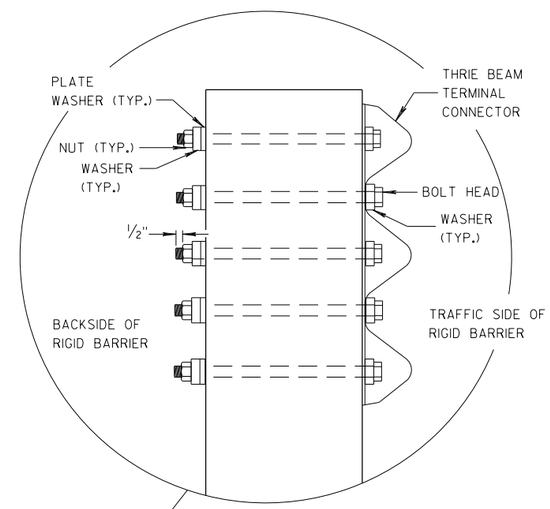

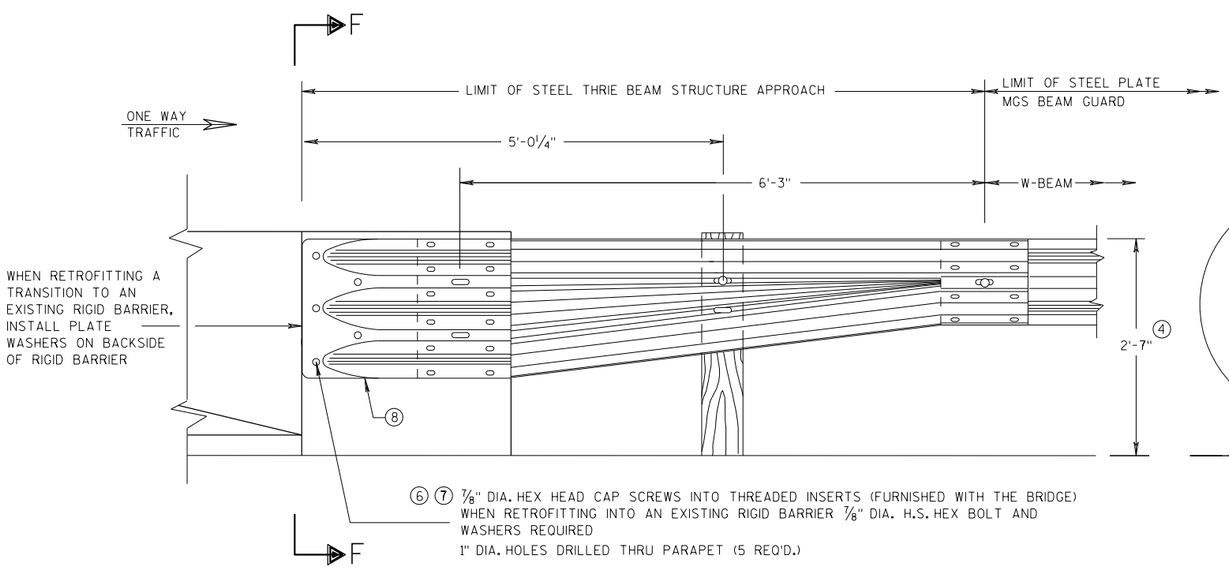

FRONT VIEW

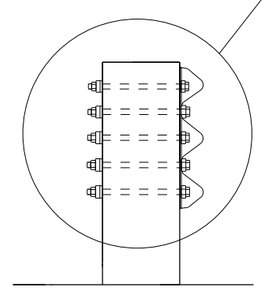

SECTION F-F

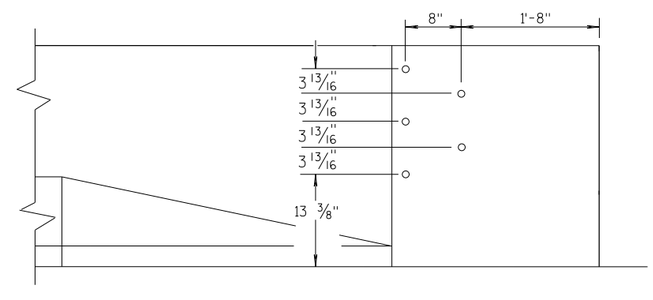

DRILL HOLE LOCATION

W BEAM TRANSITION AND CONNECTION TO BRIDGE PARAPETS WITH SQUARE ENDS

(USE ONLY ON THE TRAFFIC EXIT END OF ONE WAY BRIDGES)

MIDWEST GUARDRAIL SYSTEM THRIE BEAM TRANSITION (MGS)

STATE OF WISCONSIN
DEPARTMENT OF TRANSPORTATION

APPROVED
07/2018 — DATE
/S/ Rodney Taylor — ROADWAY STANDARDS D[illegible] UNIT SUPERVI[illegible]
FHWA

6

S.D.D. 14 B 45-5d

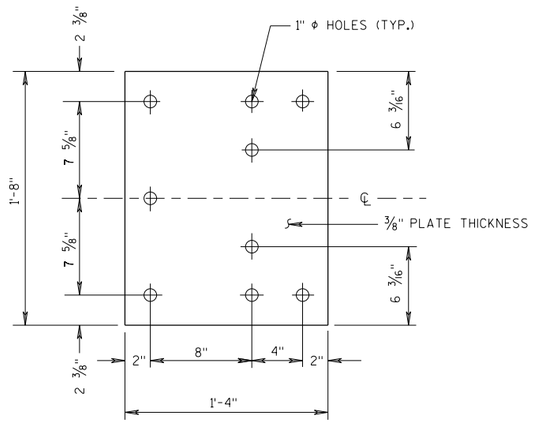

BACK-UP PLATE DETAIL

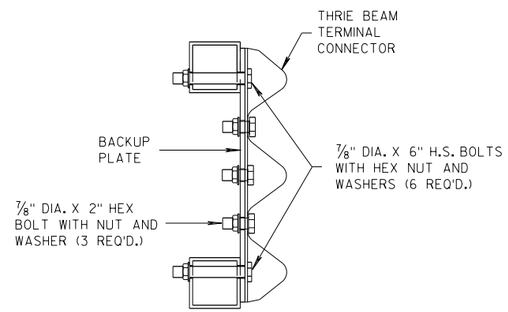

SECTION J-J

GENERAL NOTES

(4) TOLERANCE FOR TOP OF BEAM IS ± 1".

(6) DRILLING HOLES THROUGH THE PAPRPET, BOLTS, NUTS, WASHERS AND REPAIRING DAMAGED CONCRETE ARE INCIDENTAL TO THE CONTRACT.

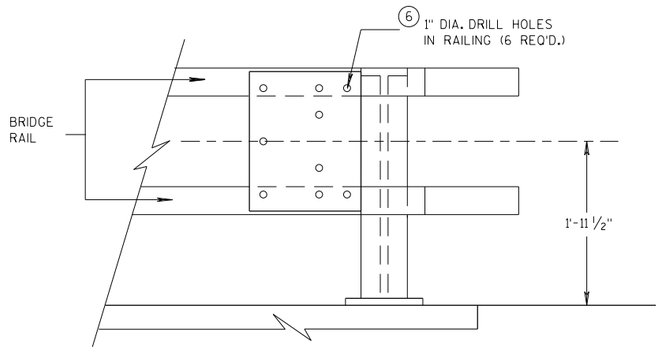

BACK-UP PLATE MOUNTING ONTO BRIDGE RAILING

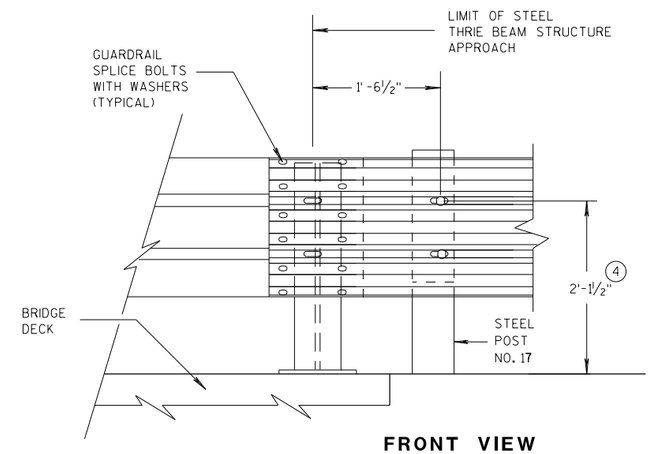

FRONT VIEW

THRIE BEAM CONNECTION TO STEEL RAILING TYPE "W"

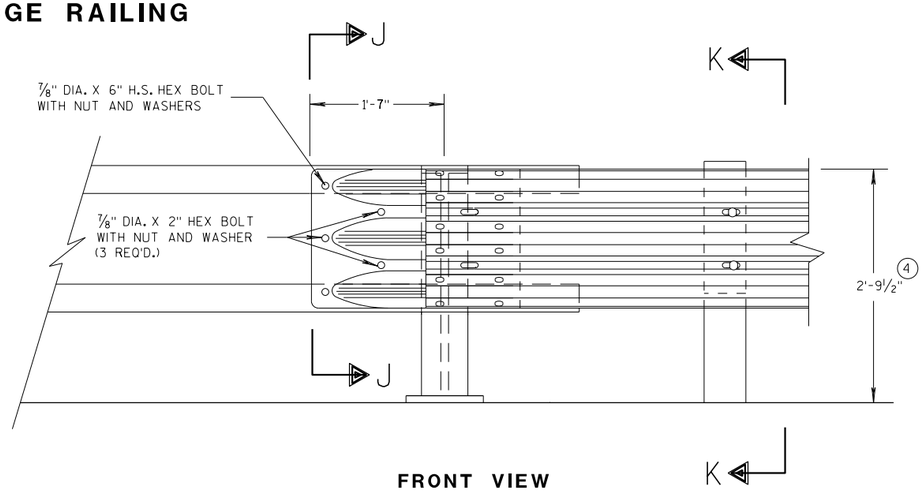

FRONT VIEW

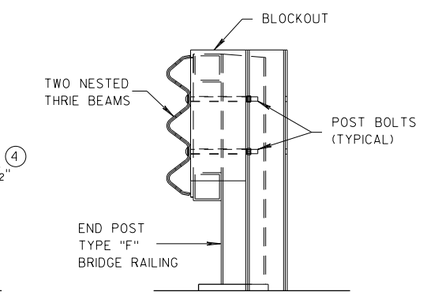

SECTION K-K

THRIE BEAM CONNECTION TO TUBULAR RAILING TYPE "F"

MIDWEST GUARDRAIL SYSTEM THRIE BEAM TRANSITION (MGS)

STATE OF WISCONSIN
DEPARTMENT OF TRANSPORTATION

APPROVED 07/2018 — DATE — FHWA

/S/ Rodney Taylor — ROADWAY STANDARDS DEVELOPMENT UNIT SUPERVISOR

6

S.D.D. 14 B 45-5g

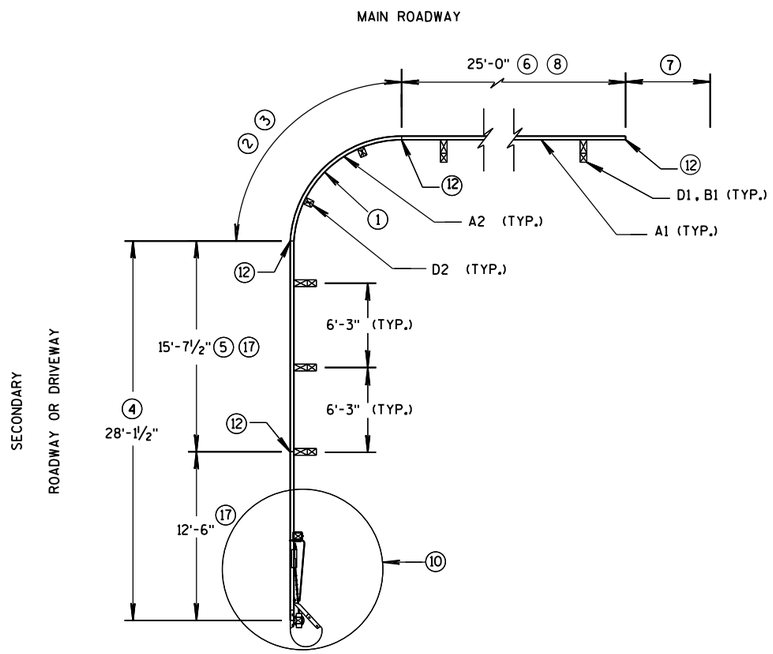

SHORT RADIUS BEAM GUARD WITH SHORT RADIUS TERMINAL ON SECONDARY ROAD OR DRIVEWAY PLAN VIEW

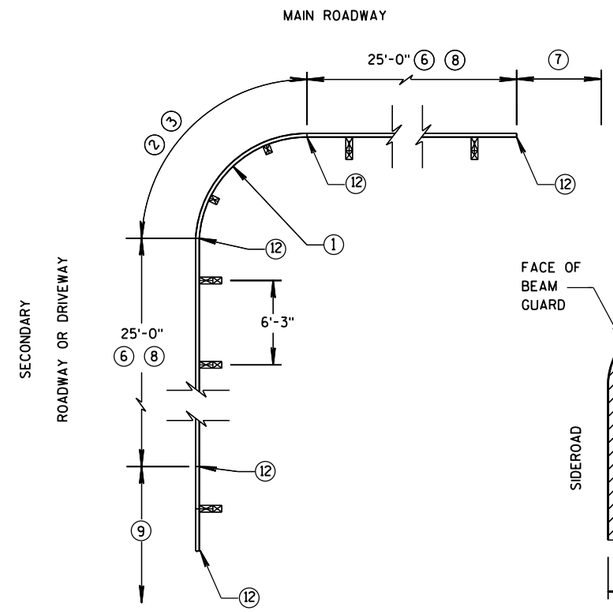

SHORT RADIUS BEAM GUARD WITH EAT, ADDITIONAL BEAM GUARD OR TRANSITION TO RIGID BARRIER ON SECONDARY ROAD OR DRIVEWAY PLAN VIEW

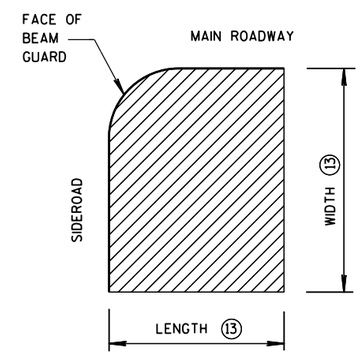

AREA FREE OF FIXED OBJECTS FOR RADIUS 32' AND LESS 16

TABLE FOR RADIUS OF 32' AND LESS

RADIUS FT	LENGTH FT	WIDTH FT
8	25	15
16	30	15
24	40	20
32	50	30

GENERAL NOTES

SEE PLANS FOR OTHER BARRIER SYSTEM AND LOCATION SPECIFICS.

SEE 14B42 FOR MORE INFORMATION ON BEAM GUARD INSTALLATION, PARTS, MATERIALS, AND INSTALLATION INFORMATION.

GALVANIZE PARTS AFTER FABRICATION.

WELDING IS TO FOLLOW CURRENT REQUIREMENTS OF THE AMERICAN WELDING SOCIETY STRUCTURAL WELDING CODE ANSI/AWS D1.1

UNLESS NOTED OTHERWISE, ALL PLATES ARE FLAT AND FREE OF WARP.

UNLESS NOTED OTHERWISE, ALL EDGES ARE SMOOTH, STRAIGHT AND VERITCAL.

ALL CUTS AND HOLES, EXCEPT IN BEAM GUARD RAIL ARE TO BE MACHINED OR MACHINE FLAME CUTS.

UNLESS NOTED OTHERWISE CUT OR PROVIDE BOLTS THAT ARE ¼" TO ½" BEYOND THE NUT

DRAWINGS ARE NOT TO SCALE.

1. RADIUS MEASURE FROM INSIDE OF RAIL. LENGTH OF BEAM GUARD SHORT RADIUS GUARD MEASURED ALONG TRAFFIC SIDE OF RAIL. RADIUS BETWEEN 8 FEET TO 150 FEET. SEE PLAN FOR REQUIRED RADIUS. BEAM GUARD RAIL IN RADIUS IS SHOP BENT. ODD RAIL LENGTH OR FIELD CUTS MAY BE REQUIRED.
2. CONTROLLED RELEASE TERMINAL (CRT) POSTS ARE USED IN THE RADIUS. CONTROLLED RELEASE TERMINAL (CRT) POSTS ARE SPACED 6'-3". SEE PLAN FOR NUMBER OF CONTROLLED RELEASE TERMINAL (CRT) POSTS.
3. WITHIN RADIUS BEAM GUARD RAILS ARE NOT BOLTED TO POSTS. BEAM GUARD RAILS RESTED ON TOP OF LAG SCREW.
4. MINIMUM LENGTH OF BEAM GUARD ALONG SIDE ROAD OR DRIVEWAY TO INSTALL SHORT RADIUS TERMINAL. BEAM GUARD IS PAID FOR WITH BEAM GUARD ITEM.
5. ODD LENGTH OF BEAM GUARD REQUIRED TO INSTALL SHORT RADIUS TERMINAL.
6. MINIMUM AMOUNT OF BEAM GUARD TO BE INSTALLED PRIOR TRANSITION TO RIGID BARRIER, ADDITIONAL BEAM GUARD, OR EAT. BEAM GUARD PAID FOR WITH BEAM GUARD ITEM. SEE PLANS FOR MORE DETAIL.
7. BEAM GUARD, EAT OR TRANSITION TO RIGID BARRIER. SEE PLAN.
8. TOP OF BEAM GUARD BY THE RADIUS IS 27". HEIGHT OF BEAM GUARD IS 31" BY TRANSITION TO RIGID BARRIER, ADDITIONAL BEAM GUARD OR EAT.
9. ADDITIONAL BEAM GUARD, EAT OR TRANSITION TO RIGID BARRIER. BEAM GUARD SHOWN. SEE PLAN FOR DETAILS.
10. SHORT RADIUS TERMINAL (SEE OTHER DETAILS)
11. HEIGHT VARIES. SEE NOTE 8 AND 17.
12. BEAM GUARD RAIL SPLICE LOCATION. SPLICE LOCATION REQUIRE PART F1 AND F2. SEE SDD 14B42 FOR DETAILS.
13. SEE TABLE FOR VALUES.
14. MAXIMUM HEIGHT FOR CENTER OF HOLE IS ¾" ABOVE FINISHED GROUND ±1".
15. DRILL 15/64" DIA. PILOT HOLE. DO NOT HAMMER LAG SCREW INTO POST.
16. SMALL SIGNS ON BREAKAWAY HARDWARE ARE ACCEPTABLE.
17. TOP OF RAIL HEIGHT IS 27" WHEN USING A SHORT RADIUS TERMINAL.

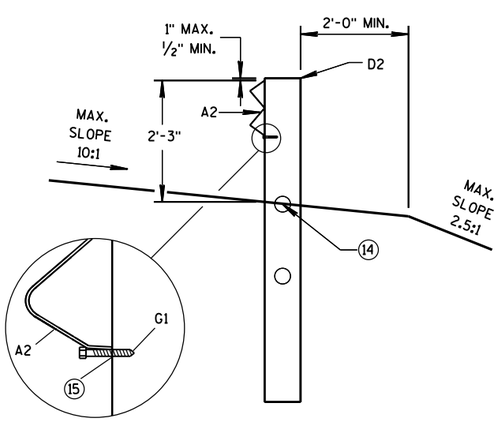

CONTROLLED RELEASE TERMINAL POST (CRT) IN RADIUS

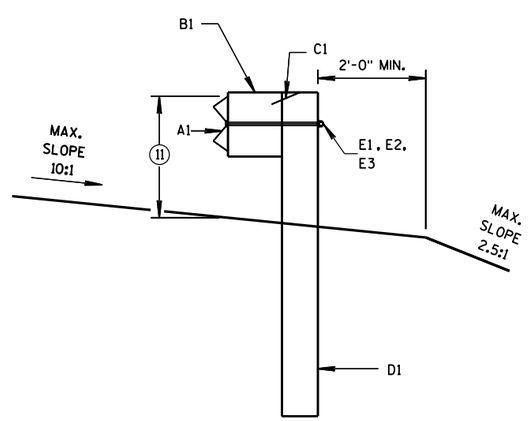

BEAM GUARD POSTS IN HEIGHT TRANSITION

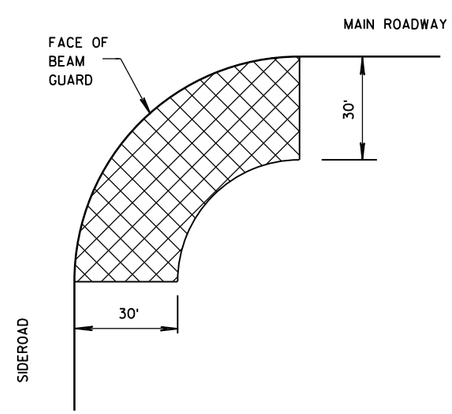

AREA FREE OF FIXED OBJECTS 16 RADIUS GREATER THAN 32'

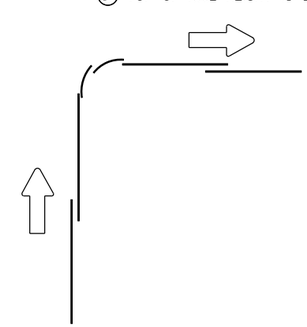

LAP SPLICE DETAIL

SHORT RADIUS BEAM GUARD (MGS) SHORT RADIUS TERMINAL (MGS)

STATE OF WISCONSIN
DEPARTMENT OF TRANSPOR

6

S.D.D. 14 B 53-1a

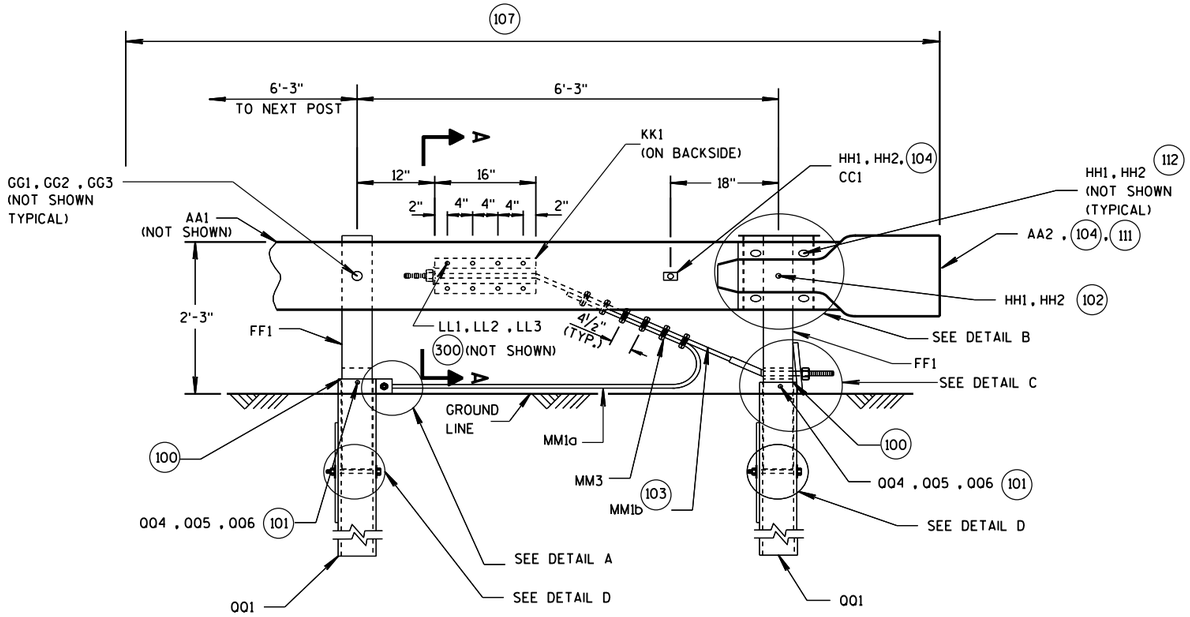

SHORT RADIUS TERMINAL
PROFILE VIEW

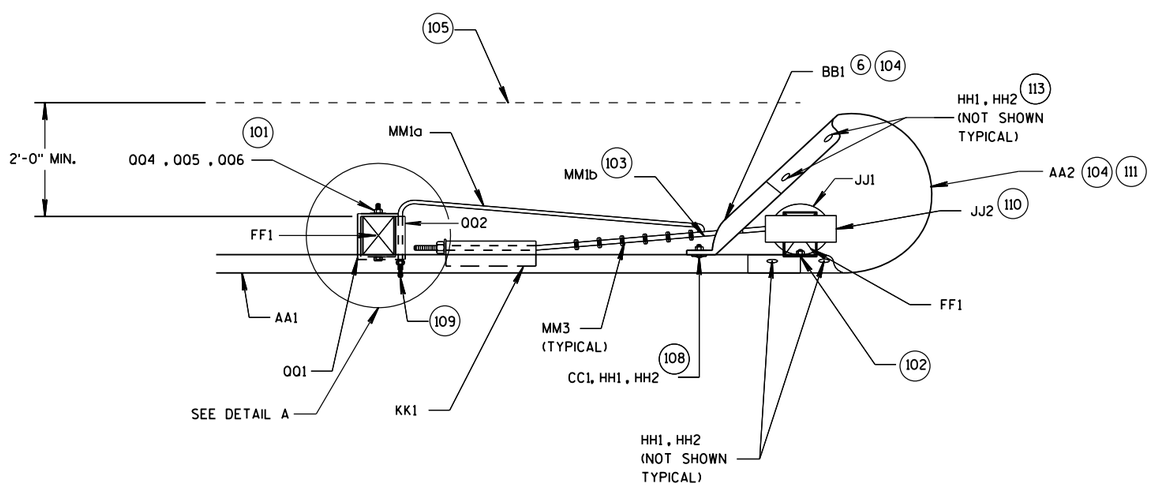

SHORT RADIUS TERMINAL
TOP VIEW

100 TOP OF FOUNDATION TUBE 2 INCHES MAXIMUM ABOVE FINISHED GROUND.

101 WASHERS REQUIRED BETWEEN BOLT HEAD AND FOUNDATION TUBE AND BETWEEN NUT AND FOUNDATION TUBE.

102 SPLICE BOLT AND NUT CONNECTS BEAM GUARD RAIL, W-BEAM END SECTION BUFFER, AND STEEL PIPE ASSEMBLY. NO WASHER REQUIRED. SEE DETAIL B.

103 CABLE IS TAUT.

104 ADJUST AA2 AND BB1 TO FIT.

105 BREAK POINT OF SHOULDER.

106 TACK WELD CABLE CONNECTOR TUBE PLATE TO CABLE CONNECTION TUBE. SEE DETAIL A PROFILE VIEW.

107 PAY LIMIT FOR BEAM GUARD.

108 SQUARE WASHER BETWEEN HEAD OF BOLT AND TRAFFIC FACE OF BEAM GUARD. ROUND WASHER REQUIRED BETWEEN NUT AND BB1.

109 CUT OR PROVIDE THREADED STUD THAT IS FLUSH WITH FACE OF BEAM GUARD RAIL KK1 (PLUS OR MINUS 1/2" TOLERANCE). DEBURR AFTER CUTTING.

110 SEE STEEL PIPE ASSEMBLY DETAILS.

111 ATTACH UU2 WITH UU3. SHOP APPLY UU1 TO UU2.

112 FOUR HH1 AND HH2 REQUIRED TO ATTACH AA1 TO AA2.

113 FOUR HH1 AND HH2 REQUIRED TO ATTACH AA2 TO BB1.

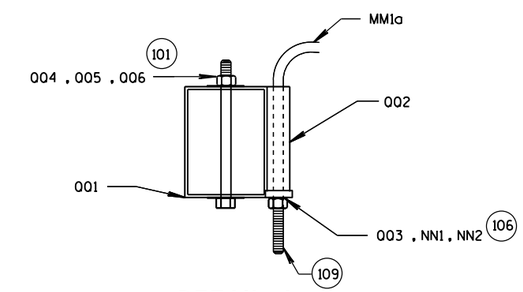

DETAIL A
TOP VIEW
(WOOD BREAKAWAY AND BEAM
GUARD RAIL POSTS NOT SHOWN)

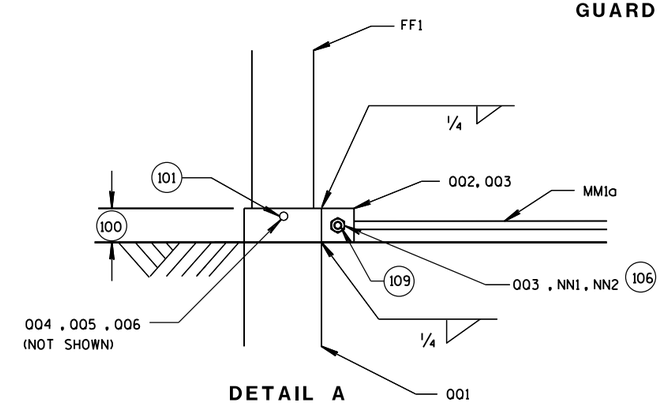

DETAIL A
PROFILE VIEW

STEEL PLATE BEAM GUARD
SHORT RADIUS TERMINAL
MGS

STATE OF WISCONSIN
DEPARTMENT OF TRANSPOR

6

S.D.D. 14 B 53-1b

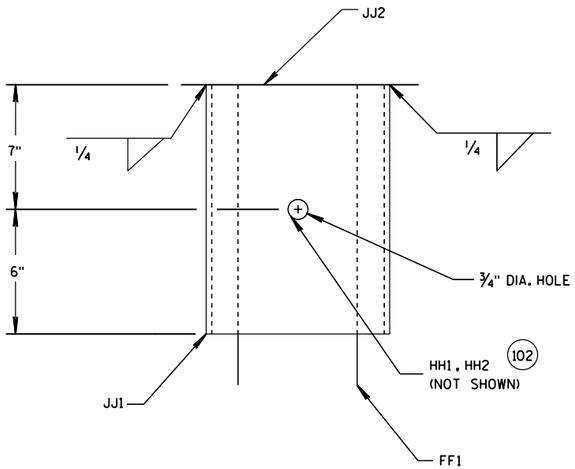

DETAIL B
PROFILE VIEW OF STEEL PIPE ASSEMBLY
(BEAM GUARD AND W-BEAM
END SECTION NOT SHOWN)

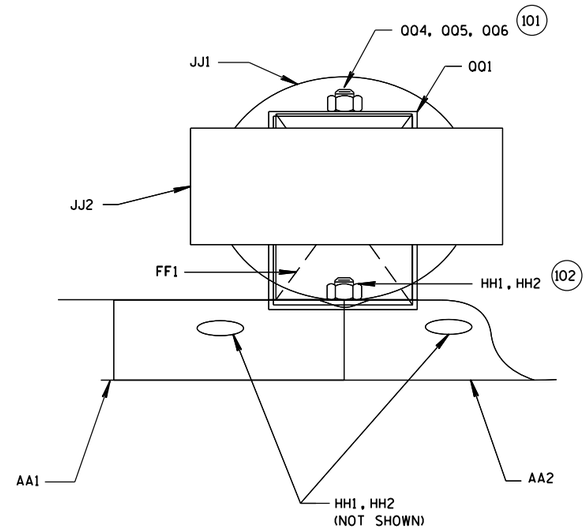

DETAIL B
PLAN VIEW OF STEEL PIPE ASSEMBLY

200 2 NAILS SPACED 4 INCHES CENTER TO CENTER.

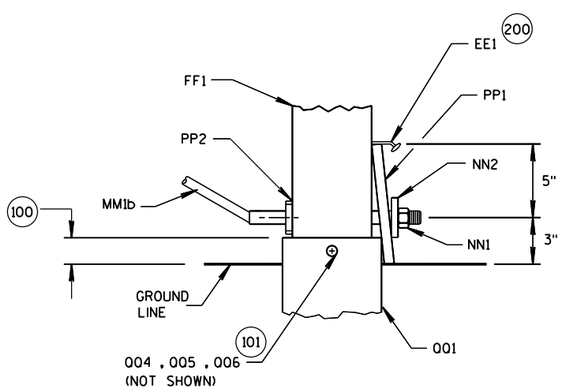

DETAIL C
PROFILE VIEW

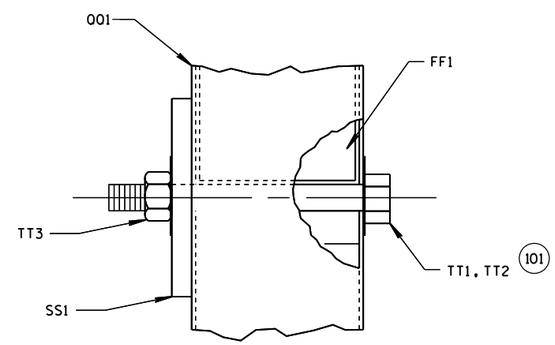

DETAIL D
PROFILE VIEW

SHORT RADIUS BEAM GUARD (MGS) SHORT RADIUS TERMINAL (MGS)

STATE OF WISCONSIN
DEPARTMENT OF TRANSPOR

6

S.D.D. 14 B 53-1c

300 WASHERS REQUIRED BETWEEN BOLT HEAD AND BEAM GUARD RAIL AND BETWEEN NUT AND ANCHOR BRACKET. EIGHT LL1 AND LL3 REQUIRED. SIXTEEN LL2 REQUIRED.

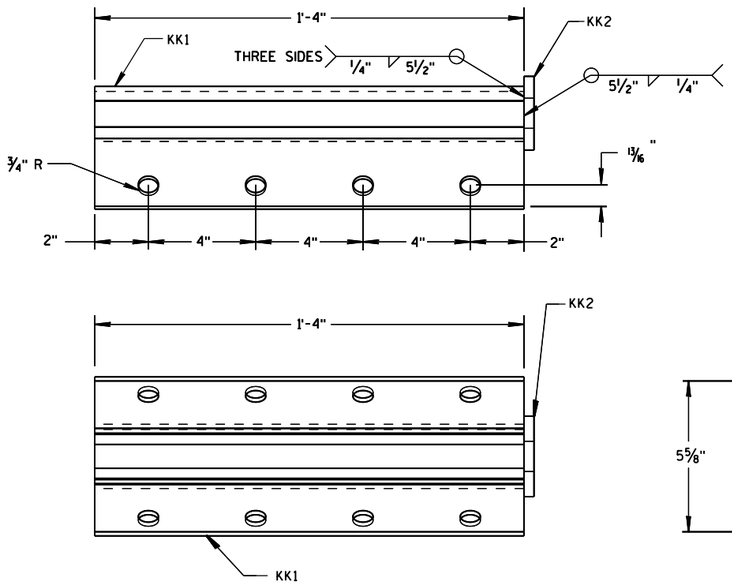

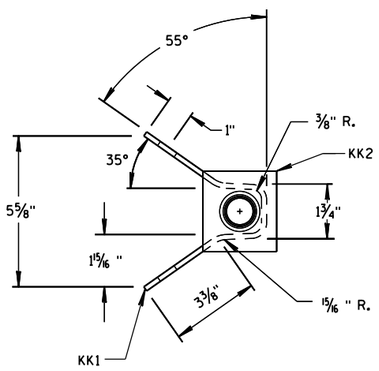

ANCHOR BRACKET (KK1, KK2)

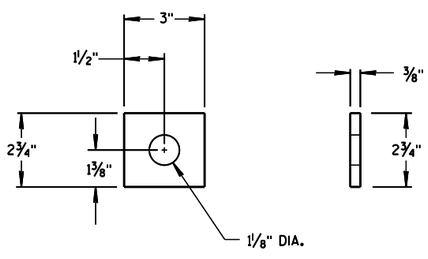

ANCHOR BRACKET BEARING PLATE (KK2)

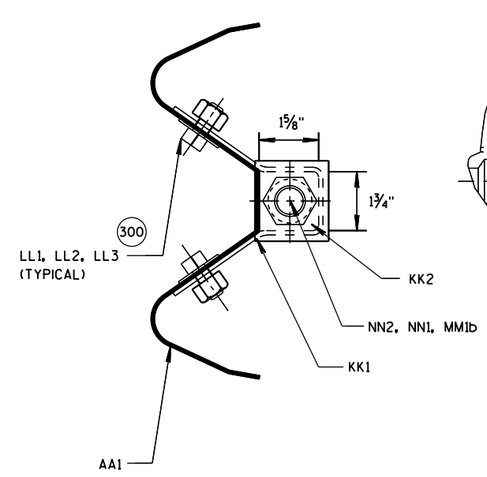

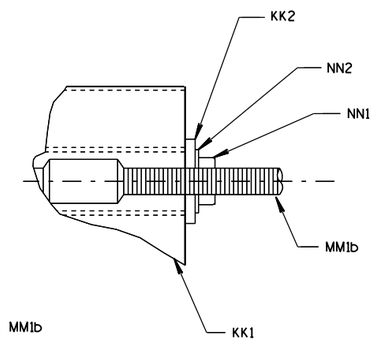

SECTION A-A

SHORT RADIUS BEAM GUARD
(MGS) SHORT RADIUS
TERMINAL (MGS)

STATE OF WISCONSIN
DEPARTMENT OF TRANSPOI

6
S.D.D. 14 B 53-1d

400 CROSS SECTON OF PART IS TO FIT OVER AA1.

401 CROSS SECTON OF PART IS TO FIT OVER OR UNDER AA1.

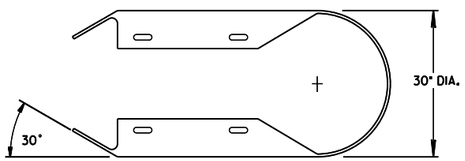

TOP VIEW

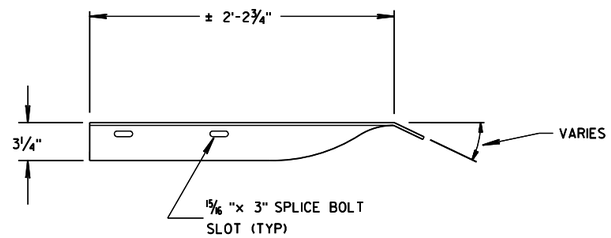

TOP VIEW

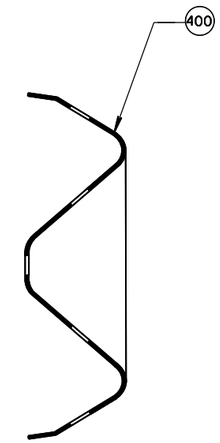

SECTION B-B

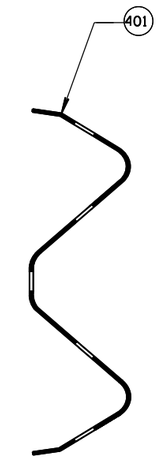

SECTION C-C

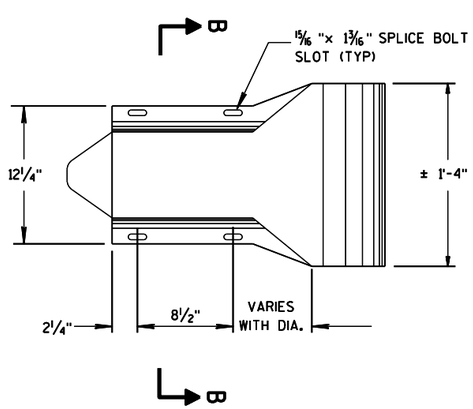

W-BEAM
END SECTION BUFFER (AA2)

PROFILE VIEW

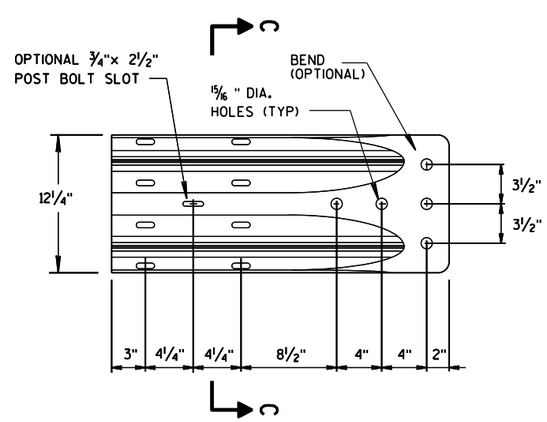

W-BEAM
TERMINAL CONNECTOR (BB1)

PROFILE VIEW

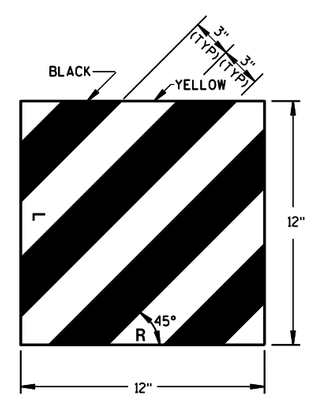

REFLECTIVE SHEETING
(UU1, UU2)

SHORT RADIUS BEAM GUARD
(MGS) SHORT RADIUS
TERMINAL (MGS)

STATE OF WISCONSIN
DEPARTMENT OF TRANSPOR

6

S.D.D. 14 B 53-1e

(500) SEE DETAIL "D" FOR LOCATION AND ATTACHING SS1.

(501) FOR MM1a THREADED STUD ONLY REQUIRED ON ONE END. SWAGED FITTING REQUIRED.

(502) LOCATE HOLES ON THE CENTERLINE OF THE SIDE OF THE POST.

(503) MM1a MAY HAVE ONE THREADED STUD 4 INCHES LONG. SEE NOTE (109).

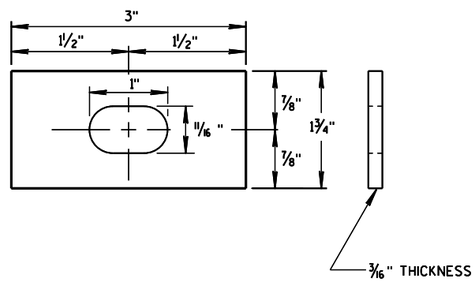

RECTANGULAR PLATE WASHER (CC1)

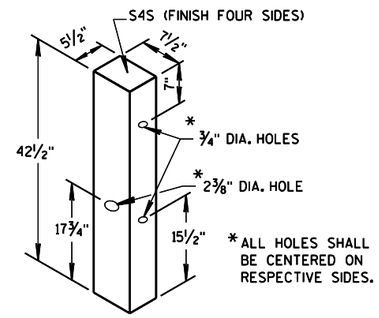

WOOD BREAKAWAY POST (FF1)

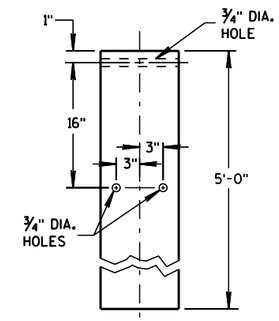

FOUNDATION TUBE (QQ1) (500)

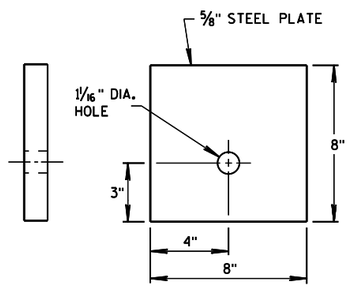

BEARING PLATE (PP1)

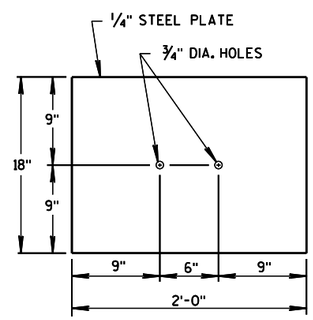

SOIL PLATE (SS1)

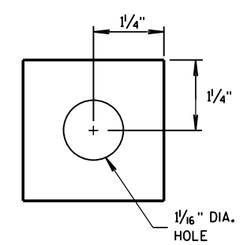

TUBE END PLATE (QQ3)

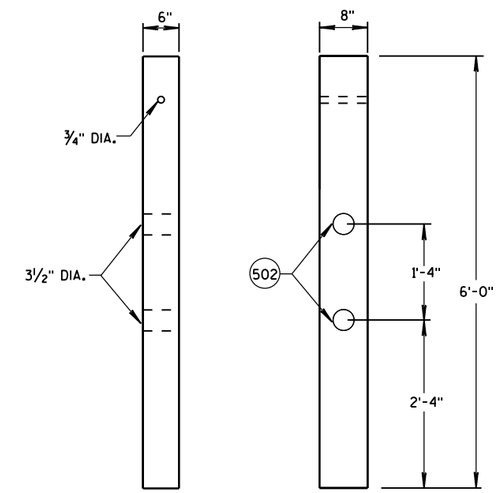

FRONT VIEW SIDE VIEW

CONTROLLED RELEASE TERMINAL POST (CRT) (D2)

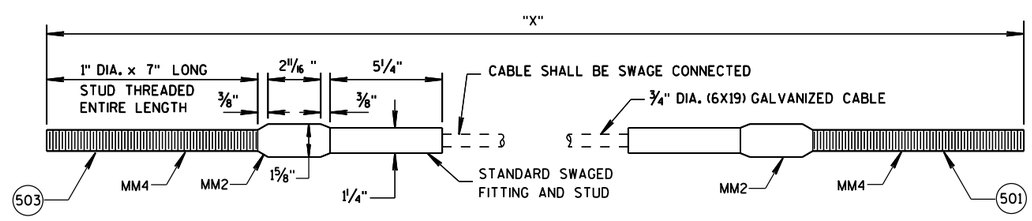

"X" LENGTH	
MM1a	9'-0"
MM1b	6'-8"

CABLE ASSEMBLY (MM1a , MM1b)

SHORT RADIUS BEAM GUARD (MGS) SHORT RADIUS TERMINAL (MGS)

STATE OF WISCONSIN
DEPARTMENT OF TRANSPOR

6

S.D.D. 14 B 53-1f

BILL OF MATERIALS - SHORT RADIUS BEAM GUARD (MGS)

PART	DESCRIPTION	MATERIALS SPECIFICATIONS	NOTES
A1	BEAM GUARD RAIL	AASHTO M180, CLASS A, TYPE 2	
		APPROVED PRODUCER	
A2	BEAM GUARD RAIL - SHOP BENT	INDICATE ON BACK OF RAIL RADIUS THAT RAIL WAS BENT TO. SHOP BEND RADIUS IS TO THE NEAREST FOOT. FOLLOW AASHTO M180 ON HOW TO MARK RADIUS INFORMATION.	
		AASHTO M180, CLASS A, TYPE 2	
		APPROVED PRODUCER	
B1	BLOCK - WOOD	WISDOT SPEC. 614	SEE SDD 14B42
C1	NAIL	ASTM A153 HOT DIP CLASS D	
		ASTM F1667 TYPE 1 STYLE 12 (16 DOUBLE HEAD)	
D1	POST-STRONG POST-WOOD	WISDOT SPEC. 614	SEE SDD 14B42
D2	POST-CRT-WOOD	WISDOT SPEC. 614	
E1	POST BOLT	ASTM A307 GRADE A OR SAE J429 GRADE 2	5/8" DIA. SEE SDD 14B42 FOR BOLT GEOMETRY
		AASHTO M180	
		GALV. HOT DIP TO AASHTO M232 CLASS C/ASTM A153 CLASS C/ASTM F2329 OR GALV. MECHANICALLY TO AASHTO M298 CLASS 50, TYPE 1/ASTM B695 CLASS 50, TYPE 1	
		UNC	
E2	POST BOLT-WASHER	ASTM F436 TYPE 1 (HARDEN TYPICALLY USED WITH STEEL) OR ASTM F844 (UNHARDENED TYPICALLY WITH WOOD)	5/8" DIA.
		GALV. AASHTO M111/ASTM A 123 OR GALV. HOT DIP. TO AASHTO M232 CLASS C/ASTM A153 CLASS C/ASTM F2329	
E3	POST BOLT - NUT		5/8" DIA. SEE SDD 14B42 FOR GEOMETRY
		AASHTO M180 DOUBLE RECESSED HEAVY HEX HEAD	
		GALV. HOT DIP TO AASHTO M232 CLASS C/ASTM A153 CLASS C/ASTM F2329 OR GALV. MECHANICALLY TO AASHTO M298 CLASS 50, TYPE 1/ASTM B695 CLASS 50, TYPE 1	
		UNC	
		OVER TAPPED NUTS OVER-SIZE AS SPECIFIED IN AASHTO 291/ ASTM A 563	
		ASTM A563 GRADE A HEAVY HEX HEAD	
F1	SPLICE BOLT	GALV. HOT DIP TO AASHTO M232 CLASS C/ASTM A153 CLASS C/ASTM F2329 OR GALV. MECHANICALLY TO AASHTO M298 CLASS 50, TYPE 1/ASTM B695 CLASS 50, TYPE 1	5/8" DIA. SEE SDD 14B42 FOR GEOMETRY AND OTHER INFORMATION
		ASTM A307 GRADE A OR SAE J429 GRADE 2	
		UNC	
		AASHTO M180	

PART	DESCRIPTION	MATERIALS SPECIFICATIONS	NOTES
F2	SPLICE BOLT - NUT	ASTM A563 GRADE A	5/8" DIA. SEE SDD 14B42 FOR GEOMETRY
		AASHTO M180 DOUBLE RECESSED HEAVY HEX HEAD	
		GALV. HOT DIP TO AASHTO M232 CLASS C/ASTM A153 CLASS C/ASTM F2329 OR GALV. MECHANICALLY TO AASHTO M298 CLASS 50, TYPE 1/ASTM B695 CLASS 50, TYPE 1	
		OVER TAPPED NUTS OVER-SIZE AS SPECIFIED IN AASHTO 291/ ASTM A 563	
		UNC	
G1	LAG SCREW	ASTM A308 GRADE A ASTM A153 CLASS D	3/8" DIA. 3" LONG
H1	DELINEATOR - BEAM GUARD		SEE SDD 14B42 FOR MORE INFORMATION
H2	DELINEATION - SHEETING	YELLOW OR WHITE	
		WISDOT SPEC 637 TYPE SH	
		APPROVED PRODUCT LIST	
J1	FOUNDATION BACKFILL	STANDARD SPEC. 614	
AA1	BEAM GUARD RAIL - PUNCHED	AASHTO M180, CLASS A, TYPE 2	
		APPROVED PRODUCER	
AA2	BEAM GUARD RAIL - END SECTION BUFFER	AASHTO M180, CLASS A, TYPE 2	
		APPROVED PRODUCER	
BB1	BEAM GUARD RAIL - TERMINAL CONNECTOR MODIFIED	AASHTO M180, CLASS A, TYPE 2	
		APPROVED PRODUCER	
CC1	SHORT RADIUS - SQUARE WASHER	AASHTO M180	
		GALV. AASHTO M111 / ASTM A123	
EE1	NAIL	ASTM A153 HOT DIP CLASS D	
		ASTM F1667 TYPE 1 STYLE 12 (16 DOUBLE HEADED)	
FF1	POST - BCT - WOOD	S4S FINISH ON 4 SIDES	
		WISDOT SPEC. 614	
GG1	POST BOLT	ASTM A307 GRADE A OR SAE J429 GRADE 2	3/8" DIA. SEE SDD 14B42 FOR GEOMETRY
		AASHTO M180	
		GALV. HOT DIP TO AASHTO M232 CLASS C/ASTM A153 CLASS C / ASTM F2329 OR GALV. MECHANICALLY TO AASHTO M298 CLASS 50, TYPE 1/ASTM B695 CLASS 50, TYPE 1	
		UNC	
GG2	POST BOLT - WASHER	ASTM F436 TYPE 1 (HARDEN TYPICALLY USED WITH STEEL) OR ASTM F844 (UNHARDENED TYPICALLY WITH WOOD)	3/8" DIA.
		GALV. AASHTO M111 / ASTM A123 OR5 GALV. HOT DIP TO AASHTO M232 CLASS C / ASTM A153 CLASS C / ASTM F2329	

SHORT RADIUS BEAM GUARD (MGS) SHORT RADIUS TERMINAL (MGS)

STATE OF WISCONSIN
DEPARTMENT OF TRANSPO

6

S.D.D. 14 B 53-1g

BILL OF MATERIALS - SHORT RADIUS BEAM GUARD (MGS)

PART	DESCRIPTION	MATERIALS SPECIFICATIONS	NOTES
GG3	POST BOLT - NUT	ASTM A563 GRADE A	3/8" DIA.
		AASHTO M180 DOUBLE RECESSED HEAVY HEX HEAD	SEE 14B42 FOR GEOMETRY
		GALV. HOT DIP TO AASHTO M232 CLASS C/ASTM A153 CLASS C / ASTM F2329 OR GALV. MECHANICALLY TO AASHTO M298 CLASS 50, TYPE 1/ASTM B695 CLASS 50, TYPE 1	
		UNC	
		OVER TAPPED NUTS OVER-SIZE AS SPECIFIED IN AASHTO 291 / ASTM A 563	
		ASTM A563 GRADE A HEAVY HEX HEAD	
HH1	SPLICE BOLT	GALV. HOT DIP TO AASHTO M232 CLASS C/ASTM A153 CLASS C / ASTM F2329 OR GALV. MECHANICALLY TO AASHTO M298 CLASS 50, TYPE 1/ASTM B695 CLASS 50, TYPE 1	3/8" DIA. SEE 14B42 FOR GEOMETRY
		ASTM A307 GRADE A OR SAE J429 GRADE 2	
		UNC	
		AASHTO M180 HEAD GEOMETRY	
HH2	SPLICE BOLT - NUT	ASTM A563 GRADE A	3/8" DIA.
		AASHTO M180 DOUBLE RECESSED HEAVY HEX HEAD	
		GALV. HOT DIP TO AASHTO M232 CLASS C/ASTM A153 CLASS C / ASTM F2329 OR GALV. MECHANICALLY TO AASHTO M298 CLASS 50, TYPE 1/ASTM B695 CLASS 50, TYPE 1	SEE 14B42 FOR GEOMETRY
		OVER TAPPED NUTS OVER-SIZE AS SPECIFIED IN AASHTO 291 / ASTM A 563	
		UNC	
JJ1	PIPE - STEEL	ASTM A53 GALVANIZED GRADE B SCHEDULE 40	10" O.D.
JJ2	TOP PLATE	ASTM A36 MIN STRENGTH 36 KSI, OR ASTM A529 MAX. STRENGTH 50 KSI, OR ASTM A572 MAX STRENGTH 50 KSI OR ASTM A709 MAX STRENGTH 50 KSI OR ASTM A992 MAX STRENGTH 50 KSI	DIMENSIONS 3/8" X 4" X 1'-0"
		GALV. AASHTO M111 / ASTM A123	
KK1	ANCHOR BRACKET	ASTM A36 MIN STRENGTH 36 KSI, OR ASTM A529 MAX. STRENGTH 50 KSI, OR ASTM A572 MAX STRENGTH 50 KSI OR ASTM A709 MAX STRENGTH 50 KSI OR ASTM A992 MAX STRENGTH 50 KSI	
		GALV. AASHTO M111 / ASTM A123	
KK2	ANCHOR BRACKET - BEARING PLATE	ASTM A36 MIN STRENGTH 36 KSI, OR ASTM A529 MAX. STRENGTH 50 KSI, OR ASTM A572 MAX STRENGTH 50 KSI OR ASTM A709 MAX STRENGTH 50 KSI OR ASTM A992 MAX STRENGTH 50 KSI	
		GALV. AASHTO M111 / ASTM A123	
LL1	ANCHOR BRACKET - BOLT	ASTM A307 GRADE B HEAVY HEX HEAD OR SAE J429 GRADE 2 HEAVY HEX HEAD	5/8" DIA.
		GALV. HOT DIP TO AASHTO M232 CLASS C/ASTM A153 CLASS C / ASTM F2329 OR GALV. MECHANICALLY TO AASHTO M298 CLASS 50, TYPE 1/ASTM B695 CLASS 50, TYPE 1	
		UNC	
LL2	ANCHOR BRACKET - WASHER	ASTM F436 TYPE 1 (HARDEN WASHER ONLY)	5/8" DIA.
		GALV. AASHTO M111 / ASTM A123 OR5 GALV. HOT DIP TO AASHTO M232 CLASS C / ASTM A153 CLASS C / ASTM F2329	
LL3	ANCHOR BRACKET - NUT	ASTM A563 GRADE A	5/8" DIA.
		GALV. HOT DIP TO AASHTO M232 CLASS C/ASTM A153 CLASS C / ASTM F2329 OR GALV. MECHANICALLY TO AASHTO M298 CLASS 50, TYPE 1/ASTM B695 CLASS 50, TYPE 1	
		OVER TAPPED NUTS OVER-SIZE AS SPECIFIED IN AASHTO 291 / ASTM A563	
		UNC	

PART	DESCRIPTION	MATERIALS SPECIFICATIONS	NOTES
MM1a	ANCHOR CABLE	AASHTO M30 / ASTM A741 INDEPENDENT WIRE CORE (IWRC) OR WIRE STRAND CORE (WCS), IMPROVED PLOW STEEL (IPS), 6X19, TYPE II OR IIc CLASS C ZINC COATED	
MM1b	ANCHOR CABLE	AASHTO M30 / ASTM A741 INDEPENDENT WIRE CORE (IWRC) OR WIRE STRAND CORE (WCS), IMPROVED PLOW STEEL (IPS), 6X19, TYPE II OR IIc CLASS C ZINC COATED	
MM2	ANCHOR CABLE - SWAGE FITTING	ASTM A576 GRADE 1035	
		SWAGE FITTINGS ARE TO BE FACTORY SWEDGED. WITH A BREAKING STRENGTH 40,000 LBS.	
		GALV. AASHTO M111 / ASTM A123	
		ASME B30.26 FORGED, CAST, OR DIE STAMPED WITH THE FOLLOWING INTO CONNECTION: NAME OF MANUFACTURER OR TRADEMARK OF CONNECTION'S MANUFACTURER, SIZE OR RATED LOAD, GRADE.	
MM3	WIRE ROPE CABLE CLAMPS	FF-C-450D TYPE 1 CLASS 1	3/4"
		ASTM A153 HOT DIP CLASS D	
MM4	ANCHOR CABLE - SWAGE FITTING - STUD	ASTM F3125 GRADE A325 TYPE 1 OR SAE GRADE 5 OR ASTM A449 TYPE 1 HEAVY HEX HEAD	
		GALV. HOT DIP TO AASHTO M232 CLASS C/ASTM A153 CLASS C / ASTM F2329 OR GALV. MECHANICALLY TO AASHTO M298 CLASS 50, TYPE 1/ASTM B695 CLASS 50, TYPE 1	
		UNC	
NN1	ANCHOR CABLE - NUT	ASTM A563 GRADE A	1" DIA.
		AASHTO M180 DOUBLE RECESSED HEAVY HEX HEAD	
		GALV. HOT DIP TO AASHTO M232 CLASS C/ASTM A153 CLASS C / ASTM F2329 OR GALV. MECHANICALLY TO AASHTO M298 CLASS 50, TYPE 1/ASTM B695 CLASS 50, TYPE 1	
		OVER TAPPED NUTS OVER-SIZE AS SPECIFIED IN AASHTO 291 / ASTM A563	
		UNC	
NN2	ANCHOR CABLE - NUT - WASHER	ASTM F436 TYPE 1 (HARDEN WASHER ONLY)	1" DIA.
		GALV. AASHTO M111 / ASTM A123 OR5 GALV. HOT DIP TO AASHTO M232 CLASS C / ASTM A153 CLASS C / ASTM F2329	
PP1	BEARING PLATE AT POST	ASTM A36 MIN STRENGTH 36 KSI, OR ASTM A529 MAX. STRENGTH 50 KSI, OR ASTM A572 MAX STRENGTH 50 KSI OR ASTM A709 MAX STRENGTH 50 KSI OR ASTM A992 MAX STRENGTH 50 KSI	
		GALV. AASHTO M111 / ASTM A123	
PP2	PIPE - STEEL	ASTM A53 GALVANIZED GRADE B SCHEDULE 40	2" DIA. x 6" LONG
OO1	FOUNDATION TUBE	ASTM A500 GRADE B	8" X 6" X 3/16"
		GALV. AASHTO M111 / ASTM A123	
OO2	SHORT RADIUS - FOUNDATION TUBE - ANCHOR CABLE - TUBE	ASTM A500 GRADE B	DIMENSIONS 2 1/2" X 2 1/4" X 1/4" X 8"
		GALV. AASHTO M111 / ASTM A123	

6

S.D.D. 14 B 53-1h

SHORT RADIUS BEAM GUARD (MGS) SHORT RADIUS TERMINAL (MGS)

STATE OF WISCONSIN
DEPARTMENT OF TRANSPOI

6

S.D.D. 14 B 53-1h

BILL OF MATERIALS - SHORT RADIUS BEAM GUARD (MGS)

PART	DESCRIPTION	MATERIALS SPECIFICATIONS	NOTES
003	SHORT RADIUS - SOIL TUBE - ANCHOR CABLE - TUBE - END PLATE	ASTM A36 MIN STRENGTH 36 KSI, OR ASTM A529 MAX. STRENGTH 50 KSI, OR ASTM A572 MAX STRENGTH 50 KSI OR ASTM A709 MAX STRENGTH 50 KSI OR ASTM A992 MAX STRENGTH 50 KSI	DIMENSIONS 2½" X 2½" X ¼"
		GALV. AASHTO M111 / ASTM A123	
004	GROUND STRUT AND YOKE - BOLT	GALV. HOT DIP TO AASHTO M232 CLASS C/ASTM A153 CLASS C / ASTM F2329 OR GALV. MECHANICALLY TO AASHTO M298 CLASS 50, TYPE 1 / ASTM B695 CLASS 50, TYPE 1	⅝" DIA.
		ASTM A307 GRADE B HEAVY HEX HEAD OR SAE J429 GRADE 2 HEAVY HEX HEAD	
		UNC	
005	GROUND PLATE AND YOKE - WASHER	ASTM F436 TYPE 1 (HARDEN WASHER ONLY)	⅝" DIA.
		GALV. AASHTO M111 / ASTM A123 OR5 GALV. HOT DIP TO AASHTO M232 CLASS C / ASTM A153 CLASS C / ASTM F2329	
006	GROUND STRUT AND YOKE - NUT	HEAVY HEX	⅝" DIA.
		UNC	
		ASTM A563 GRADE A	
		OVER TAPPED NUTS AS SPECIFIED IN AASHTO 291 / ASTM A 563	
		GALV. HOT DIP TO AASHTO M232 CLASS C/ASTM A153 CLASS C / ASTM F2329 OR GALV. MECHANICALLY TO AASHTO M298 CLASS 50, TYPE 1 / ASTM B695 CLASS 50, TYPE 1	
SS1	SOIL PLATE	ASTM A36 MIN STRENGTH 36 KSI, OR ASTM A529 MAX. STRENGTH 50 KSI, OR ASTM A572 MAX STRENGTH 50 KSI OR ASTM A709 MAX STRENGTH 50 KSI OR ASTM A992 MAX STRENGTH 50 KSI	
		GALV. AASHTO M111 / ASTM A123	
TT1	SOIL PLATE - BOLT	ASTM A307 GRADE B HEAVY HEX HEAD OR SAE J429 GRADE 2 HEAVY HEX HEAD	⅝" DIA.
		GALV. HOT DIP TO AASHTO M232 CLASS C/ASTM A153 CLASS C / ASTM F2329 OR GALV. MECHANICALLY TO AASHTO M298 CLASS 50, TYPE 1/ASTM B695 CLASS 50, TYPE 1	
		UNC	
TT2	SOIL PLATE - WASHER	ASTM F436 TYPE 1 (HARDEN WASHER ONLY)	⅝" DIA.
		GALV. AASHTO M111 / ASTM A123 OR5 GALV. HOT DIP TO AASHTO M232 CLASS C / ASTM A153 CLASS C / ASTM F2329	
TT3	SOIL PLATE - NUT	GALV. HOT DIP TO AASHTO M232 CLASS C/ASTM A153 CLASS C / ASTM F2329 OR GALV. MECHANICALLY TO AASHTO M298 CLASS 50, TYPE 1 / ASTM B695 CLASS 50, TYPE 1	⅝" DIA.
UU1	OBJECT MARKER - SHEETING	MUTCD / WISDOT OBJECT MARKER TYPE 3	PATTERN AND COLOR FOR SHEETING SHEETING TYPE FOR MARKER
		WISDOT SPEC 637 TYPE F	
		APPROVED PRODUCT LIST	
UU2	OBJECT MARKER - ALUMINUM PLATE	WISDOT SPEC 637 ALUMINUM PLATE	MATERIAL AND THICKNESS OF MATERIALS
UU3	OBJECT MARKER - SCREWS	STAINLESS SELF-TAPPING SCREWS	
VV1	FOUNDATION BACKFILL	WISDOT SPEC 614	

SHORT RADIUS BEAM GUARD (MGS) SHORT RADIUS TERMINAL (MGS)

STATE OF WISCONSIN
DEPARTMENT OF TRANSPORTATION

APPROVED
June 2017 — DATE
/S/ Rodney Taylor — ROADWAY STANDARDS DEVELOPMENT UNIT SUPERVISOR
FHWA

TYPICAL SIDEROAD APPROACH WARNING SIGN DETAIL

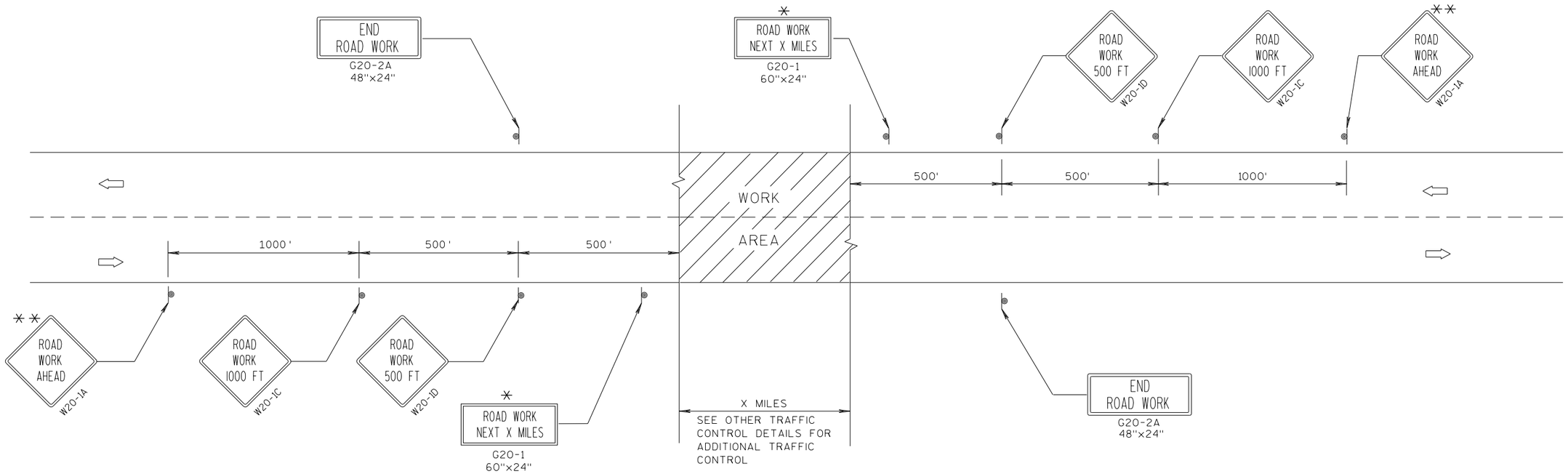

GENERAL NOTES

THE EXACT NUMBER, LOCATION, AND SPACING OF ALL SIGNS AND DEVICES SHALL BE ADJUSTED TO FIT FIELD CONDITIONS.

THE SPACING BETWEEN TRAFFIC CONTROL SIGNS SHOULD BE ADJUSTED TO NOT CONFLICT WITH AND SHOULD PROVIDE A MINIMUM OF 200 FEET (500 FEET DESIRABLE) CLEARANCE TO EXISTING SIGNS THAT WILL REMAIN IN PLACE.

ALL SIGNS ARE 48"x48" UNLESS OTHERWISE NOTED.

SIGNS THAT WILL BE IN PLACE LESS THAN 7 CONTINUOUS DAYS AND NIGHTS MAY BE MOUNTED ON PORTABLE SUPPORTS.

IF A "STOP" SIGN MUST BE REMOVED FOR A WORK OPERATION, A TEMPORARY "STOP" SIGN SHALL BE PLACED PRIOR TO THE SIGN REMOVAL, OR A FLAGGER SHALL BE PROVIDED UNTIL THE SIGN IS RE-ESTABLISHED.

* OMIT G20-1 SIGNS IF LENGTH OF WORK AREA IS 2 MILES OR LESS.

** PLACE ADDITIONAL W20-1A "ROAD WORK AHEAD" SIGN IF WORK AREA WITHIN THE PROJECT IS SEPARATED BY MORE THAN 2 MILES FROM PREVIOUS WORK AREA.

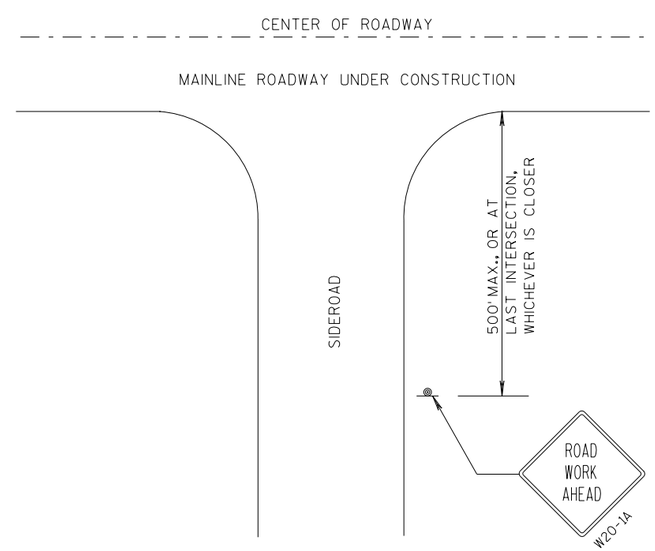

LEGEND

- SIGN ON PERMANENT SUPPORT
- DIRECTION OF TRAFFIC
- WORK AREA

TRAFFIC CONTROL, ADVANCE WARNING SIGNS 45 M.P.H. OR GREATER TWO-WAY UNDIVIDED ROAD OPEN TO TRAFFIC

STATE OF WISCONSIN
DEPARTMENT OF TRANSPORTATION

APPROVED
7/2018 — DATE
/S/ Andrew Heldtke — WORK ZONE ENGI
FHWA

6

S.D.D. 15 C 4-5

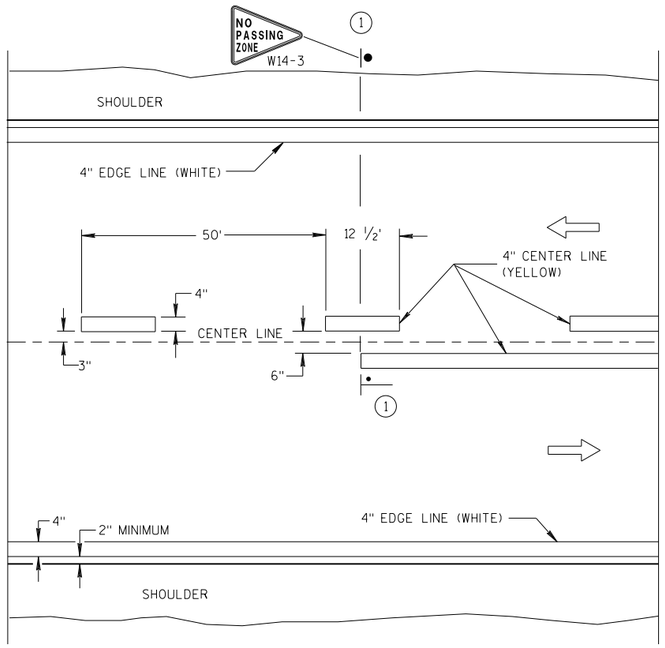

TWO WAY TRAFFIC

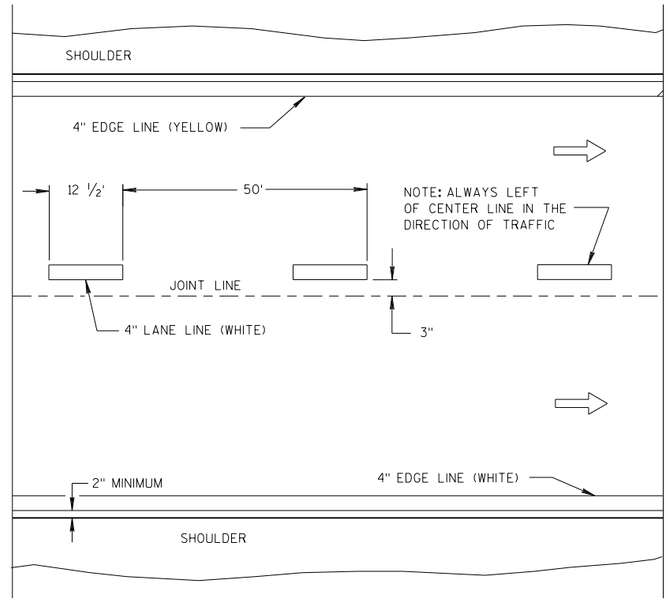

ONE WAY TRAFFIC

PERMANENT PAVEMENT MARKING

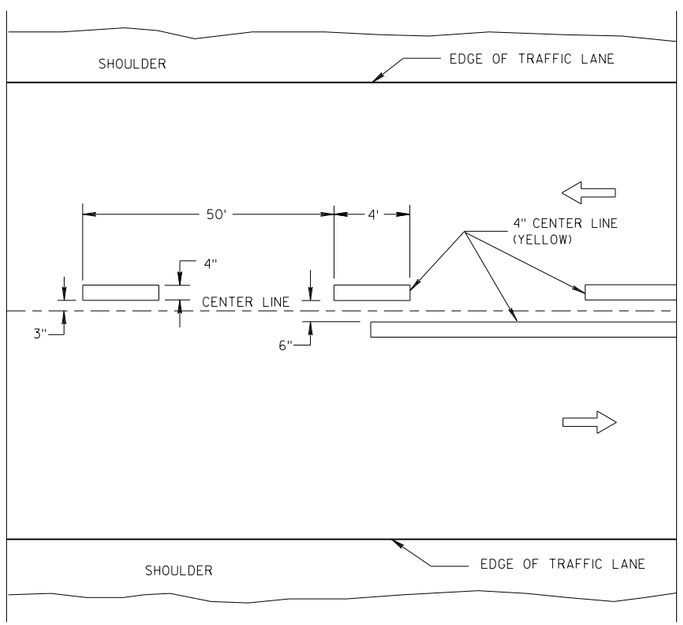

TWO WAY TRAFFIC

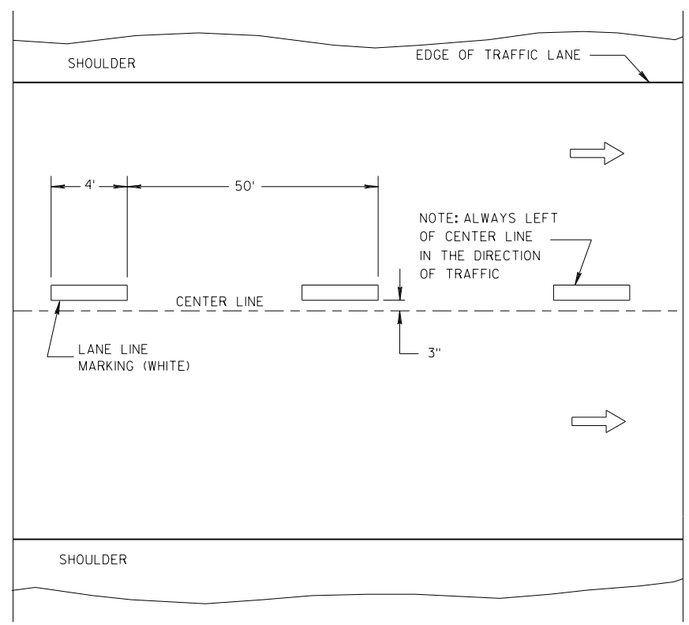

ONE WAY TRAFFIC

TEMPORARY PAVEMENT MARKING

GENERAL NOTES

DETAILS OF CONSTRUCTION NOT SHOWN ON THIS DRAWING SHALL CONFORM TO STANDARD SPECIFICATIONS AND SPECIAL PROVISIONS.

(1) LOCATE THE NO PASSING ZONE W14-3 SIGN WITHIN 50 FEET OF THE "T" MARKING.

NOTE

ARROW SYMBOL (⇨) SHOWS DIRECTION OF TRAVEL

LEGEND

"T" MARKING

POST MOUNTED SIGN

LONGITUDINAL MARKING (MAINLINE)

STATE OF WISCONSIN
DEPARTMENT OF TRANSPORTATION

APPROVED

7/2018 — DATE

/S/ Matthew R. Rauch — STATE SIGNING AND MAR INEER

FHWA

GENERAL NOTES

1. A SET OF ARROWS IS REQUIRED EVERY 400 FEET OR NEAR INTERSECTIONS OR DRIVEWAYS WITH TURNING TRAFFIC.
2. 8" WHITE
3. TURN BAY LENGTH OF LESS THAN 48' DOES NOT REQUIRE PAVEMENT ARROWS OR TEXT

⇨ DIRECTION OF TRAFFIC

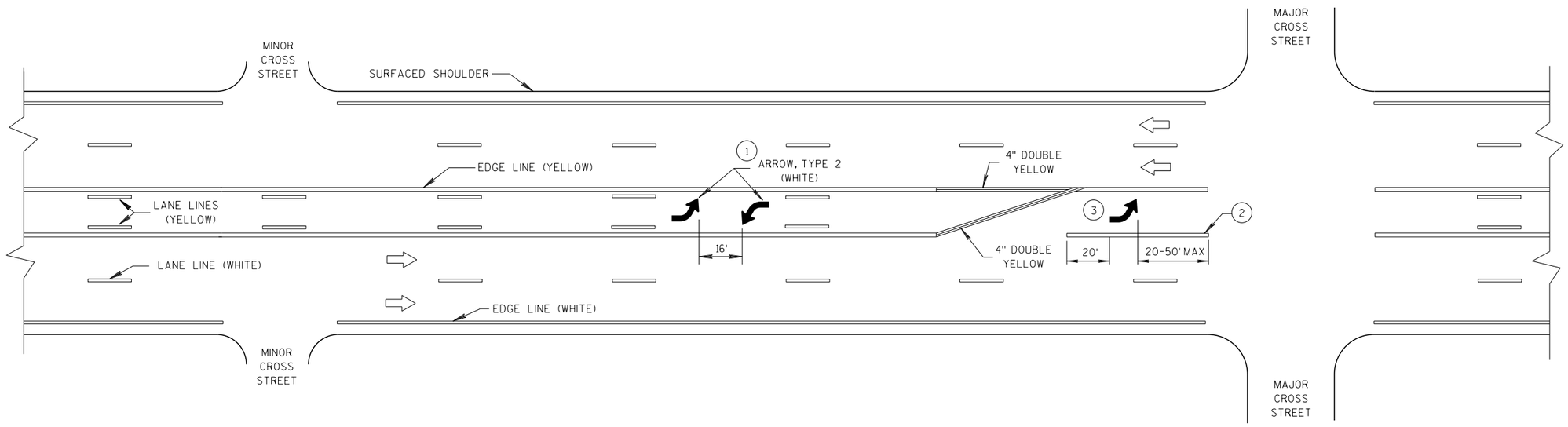

TWO WAY LEFT TURN LANE

PAVEMENT MARKING (TURN LANES)

STATE OF WISCONSIN
DEPARTMENT OF TRANSPORTATION

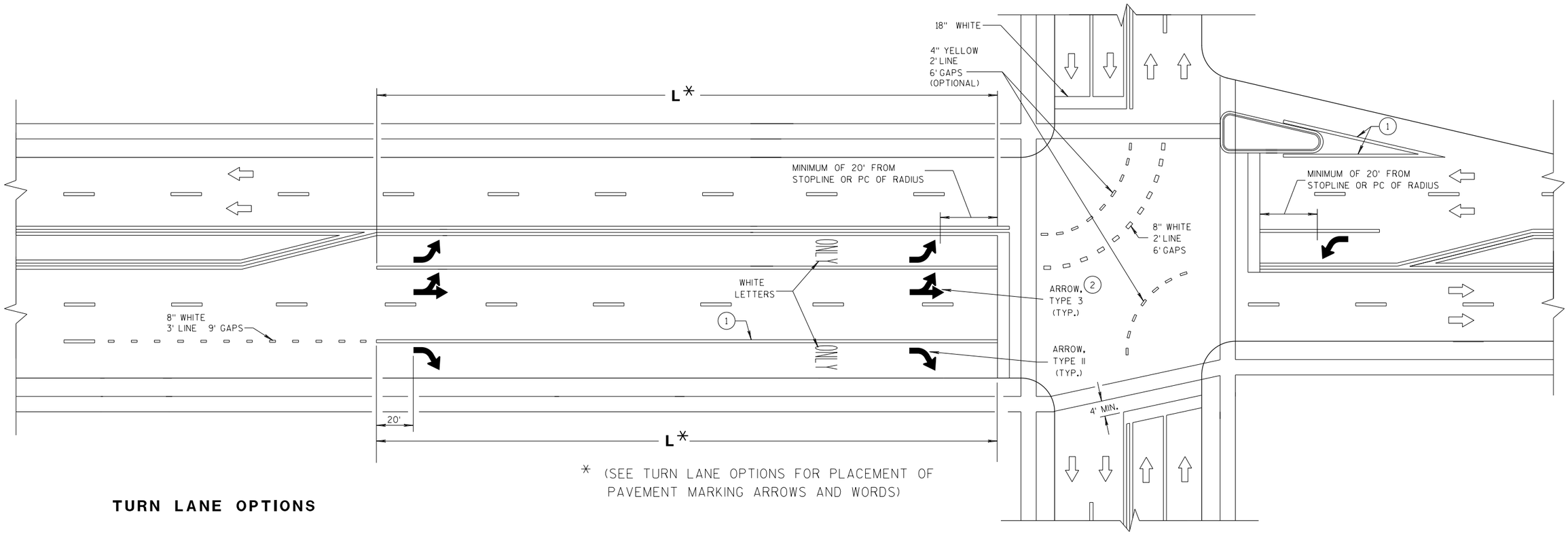

* (SEE TURN LANE OPTIONS FOR PLACEMENT OF PAVEMENT MARKING ARROWS AND WORDS)

TURN LANE OPTIONS

LENGTH OF TURN BAY (**L**) OF 0-47' DOES NOT REQUIRE PAVEMENT MARKING ARROWS OR WORDS

L = 48-87'

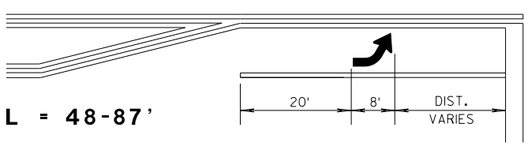

L = 88-166'

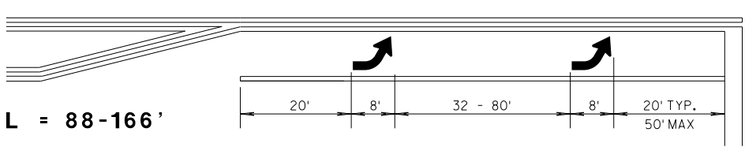

L = >166'

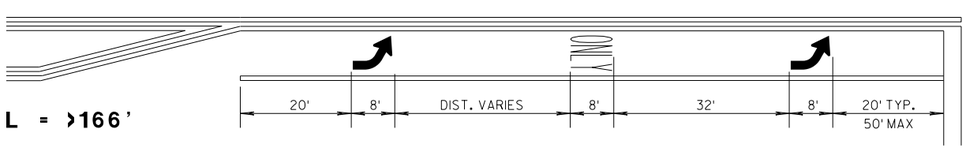

GENERAL NOTES

(1) 8" WHITE

(2) QUANTITY AND LOCATION OF TYPE 3 ARROW ARE THE SAME AS THE TYPE II ARROWS IN THE ADJACENT TURN LANE. FOR TURN LANES WITH A PHYSICAL SEPARATION, THE ARROWS AND ONLY MARKING ARE ELIMINATED.

⇨ DIRECTION OF TRAFFIC

L = LENGTH OF TURN BAY

PAVEMENT MARKING (TURN LANES)

STATE OF WISCONSIN
DEPARTMENT OF TRANSPORT

6

S.D.D. 15 C 8-19c

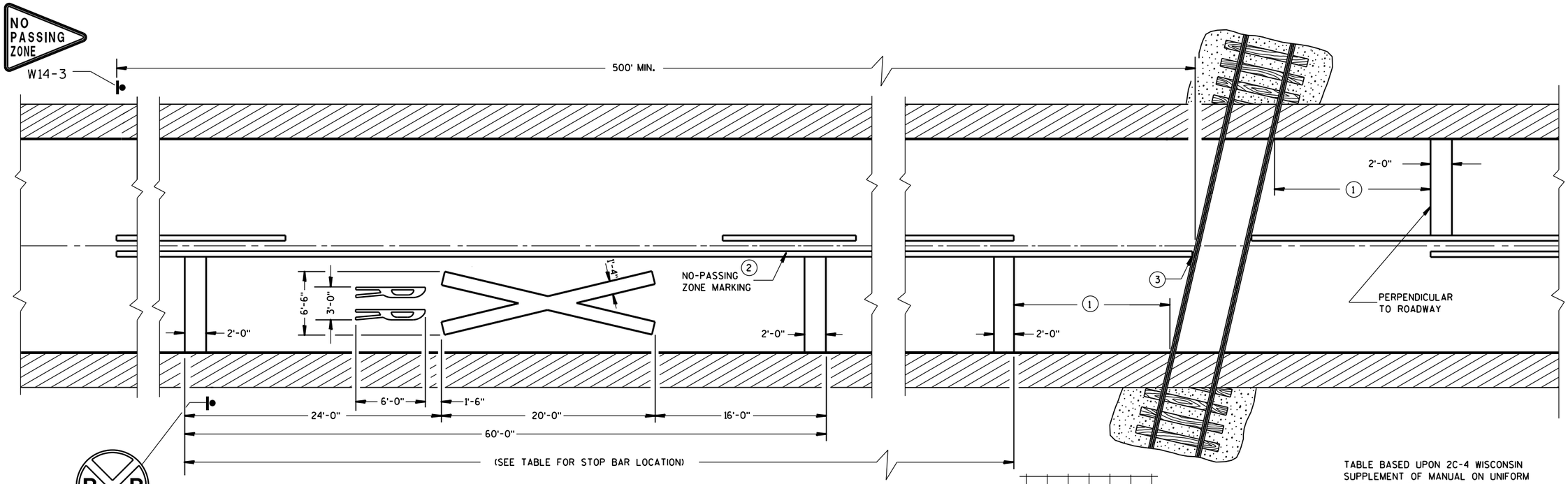

PAVEMENT MARKING

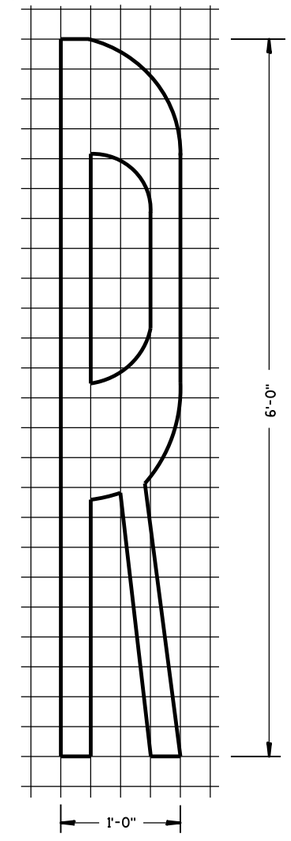

TABLE BASED UPON 2C-4 WISCONSIN SUPPLEMENT OF MANUAL ON UNIFORM TRAFFIC CONTROL DEVICES.

Posted Speed (M.P.H.)	Dimension Range (Feet)
25	150*- 250
30	200*- 300
35	250*- 450
40	300*- 500
45	400*- 650
50	550*- 800
55	750*- 1000
60	1000*- 1250
65	1000*- 1250

* THE MINIMUM DISTANCES IN THE TABLE ARE DESIRABLE AND SHOULD BE USED. THE DISTANCES MAY BE INCREASED UP TO THE MAXIMUM TO ALLOW FOR FIELD CONDITIONS SUCH AS THE CLOSE PROXIMITY OF DRIVEWAYS, BRIDGES, SIDEROADS OR OTHER FEATURES THAT WOULD PROHIBIT THE MINIMUM DISTANCES FROM BEING USED.

GENERAL NOTES

DETAILS OF CONSTRUCTION, MATERIALS, AND WORKMANSHIP NOT SHOWN ON THIS DRAWING SHALL CONFORM TO THE PERTINENT REQUIREMENTS OF THE STANDARD SPECIFICATIONS AND THE APPLICABLE SPECIAL PROVISIONS.

ON MULTI-LANE ROADS THE TRANSVERSE BANDS SHOULD EXTEND ACROSS ALL APPROACH LANES, AND INDIVIDUAL R X R SYMBOLS SHOULD BE USED IN EACH APPROACH LANE.

CENTER OR LANE LINES AND NO-PASSING ZONE MARKINGS SHOWN ON THIS DRAWING ARE REQUIRED AND PAID FOR UNDER OTHER ITEMS IN THE CONTRACT.

RETRACE EXISTING SYMBOL WHERE EXISTING SYMBOLS ARE PLACED.

1. MINIMUM 8' FROM ANY RAILROAD WARNING DEVICES (SIGNALS, GATES, ETC.) OR 25' FROM THE NEAREST RAIL, WHICHEVER DISTANCE IS GREATER.
2. 500' MINIMUM. MARKING LIMITS MAY BE EXTENDED AS DIRECTED BY THE ENGINEER TO MEET ADJACENT NO-PASSING ZONE MARKINGS.
3. FOR MULTIPLE TRACK CROSSINGS, THE BARRIER LINE SHALL EXTEND TO THE NEAR RAIL OF THE FURTHEST TRACK IN THE DIRECTION OF HIGHWAY TRAVEL.

SIGNING AND PAVEMENT MARKING DETAILS FOR RAILROAD-HIGHWAY GRADE CROSSINGS

STATE OF WISCONSIN
DEPARTMENT OF TRANSPORTATION

APPROVED

Sept., 2017 — /S/ Matthew R. Rauch
DATE — STATE SIGNING AND MAI[illegible] [illegible]GINEER

FHWA

6

S.D.D. 15 C 9-11a

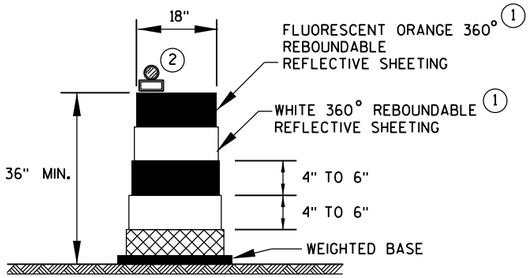

DRUM

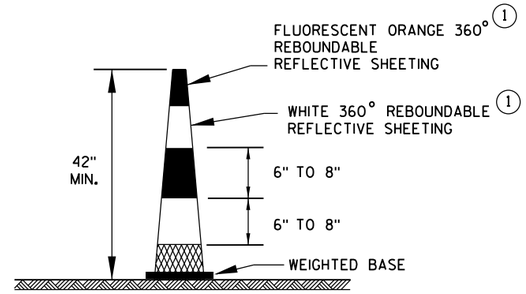

42" CONE

DO NOT USE IN TAPERS
½ SPACING OF DRUMS

GENERAL NOTES

1. REFLECTIVE SHEETING SHALL FOLLOW THE REQUIREMENTS IN THE APPROVED PRODUCTS LISTING FOR SIGN SHEETING.
2. LOCATION OF WARNING LIGHTS WHEN SHOWN ON THE PLAN.

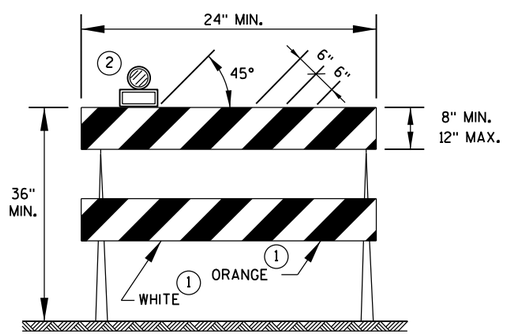

TYPE 2 BARRICADE

FOR RAILS LESS THAN 36" LONG, 4" WIDE STRIPES MAY BE USED. ALL STRIPES SHALL SLOPE DOWNWARD TO THE TRAFFIC SIDE FOR CHANNELIZATION.

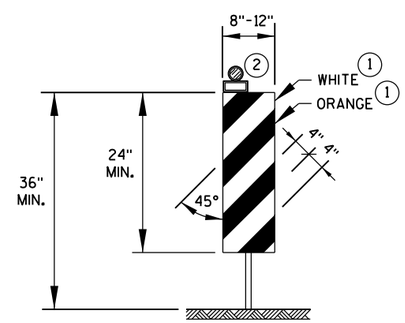

VERTICAL PANEL

THE STRIPES SHALL SLOPE DOWNWARD TO THE TRAFFIC SIDE FOR CHANNELIZATION.

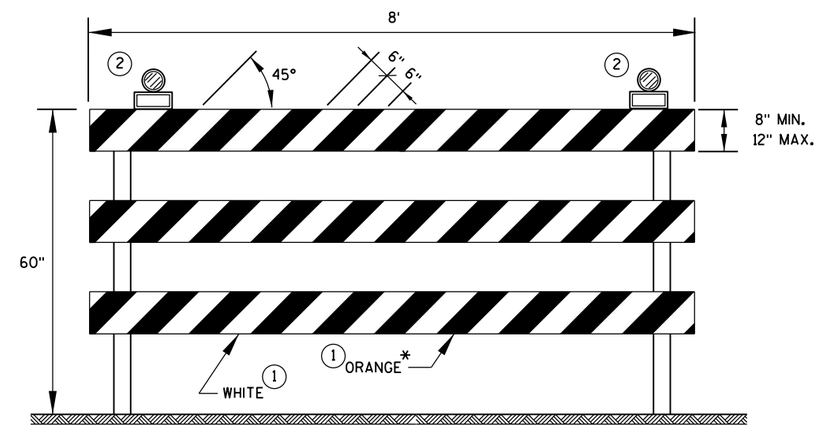

TYPE 3 BARRICADE

IF SIGN MOUNTED, DO NOT COVER MORE THAN 50% OF THE TOP TWO RAILS OR 33% OF THE TOTAL AREA OF THE THREE RAILS.

* IF USED FOR A PERMANENT APPLICATION, USE RED SHEETING.

CHANNELIZING DEVICES DRUMS, CONES, BARRICADES AND VERTICAL PANELS	
STATE OF WISCONSIN DEPARTMENT OF TRANSPORTATION	
APPROVED	
June 2017	/S/ Andrew Heldtke
DATE	WORK ZONE ENG
FHWA	

LEGEND

- SIGN ON PORTABLE OR PERMANENT SUPPORT
- DIRECTION OF TRAFFIC
- WORK AREA
- FLAGGER, EQUIPPED WITH STOP/SLOW PADDLE FASTENED ON SUPPORT STAFF

SIGN AND TEMPORARY RUMBLE STRIP ARRAY SPACING TABLE

SPEED LIMIT	SPACING A
25-35 MPH	200'
35-40 MPH	350'
45-55 MPH	500'

USE OF THE "BE PREPARED TO STOP" SIGN IS OPTIONAL. WHEN USED, THIS SIGN SHALL BE LOCATED BETWEEN THE W20-7A AND W20-4A SIGNS, USING SPACING A.

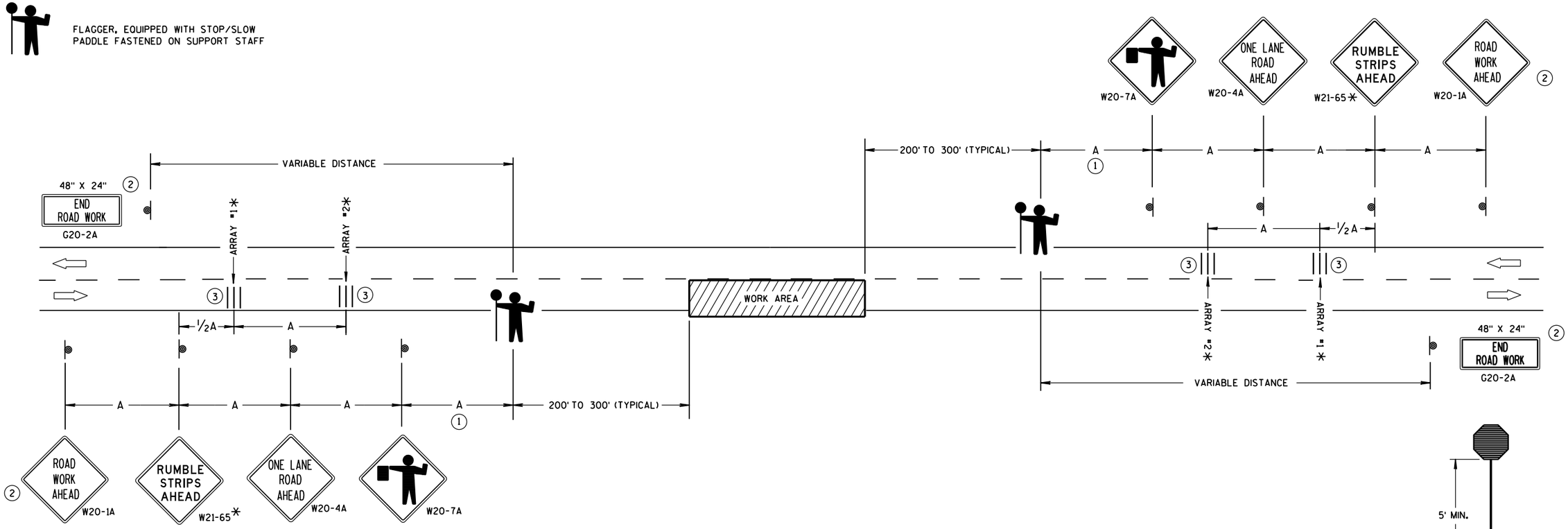

TRAFFIC CONTROL FOR LANE CLOSURE WITH FLAGGING OPERATION

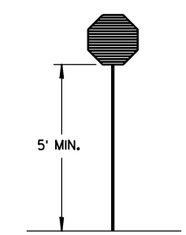

STOP/SLOW PADDLE ON SUPPORT STAFF

GENERAL NOTES

DETAILS OF TRAFFIC CONTROL DEVICES AND INSTALLATION NOT SHOWN ON THIS DRAWING SHALL CONFORM TO THE PERTINENT REQUIREMENTS OF THE STANDARD SPECIFICATIONS, THE SPECIAL PROVISIONS, AND THE MANUAL ON UNIFORM TRAFFIC CONTROL DEVICES.

THE EXACT NUMBER, LOCATION AND SPACING OF ALL SIGNS AND DEVICES (AND THE LOCATION OF ALL FLAGGERS) SHALL BE ADJUSTED TO FIT FIELD CONDITIONS AS APPROVED BY THE ENGINEER.

THE FIRST ADVANCE WARNING SIGN SHOULD TYPICALLY BE LOCATED IN ADVANCE OF THE ANTICIPATED TRAFFIC BACKUP OR QUEUE.

"WO" SIGNS ARE THE SAME AS "W" SIGNS EXCEPT THE BACKGROUND IS ORANGE.

WHEN A SIDE ROAD OR RAMP INTERSECTS THE FACILITY ON WHICH THE WORK IS BEING PERFORMED, ADDITIONAL TRAFFIC CONTROLS SHALL BE PROVIDED AS SPECIFIED IN THE PLANS AND/OR THE SPECIAL PROVISIONS OR AS APPROVED BY THE ENGINEER.

INSTALL TEMPORARY RUMBLE STRIPS PER MANUFACTURER'S RECOMMENDATIONS.

PLACE ADVANCE SIGNING PRIOR TO INSTALLING TEMPORARY RUMBLE STRIPS.

ALL SIGNS ARE 48" X 48" UNLESS OTHERWISE NOTED.

FLAGGERS SHALL BE IN SIGHT OF EACH OTHER OR IN DIRECT COMMUNICATION AT ALL TIMES. THEY SHALL BE EQUIPPED WITH STOP/SLOW PADDLES FASTENED ON SUPPORT STAFFS. WHEN THE FLAGGING OPERATION IS NOT IN EFFECT, REMOVE TEMPORARY RUMBLE STRIPS PRIOR TO COVERING OR REMOVING ALL ADVANCE SIGNING.

* UTILIZE TEMPORARY RUMBLE STRIPS WHEN FLAGGING OPERATION IS ANTICIPATED TO BE STATIONARY IN EXCESS OF TWO HOURS.

1. FOR A MOVING WORK OPERATION, SIGNING AND TEMPORARY RUMBLE STRIPS (IF USED) SHALL BE REESTABLISHED (AS SIMULTANEOUSLY AS PRACTICAL) AT APPROXIMATELY 3,500 FOOT INTERVALS IN THE MOVING WORK OPERATION OR AS APPROVED BY THE ENGINEER.
2. SIGN NOT REQUIRED IF FLAGGING OPERATION OCCURS WITHIN A SIGNED ROAD WORK ZONE AREA.
3. EACH TEMPORARY RUMBLE STRIP ARRAY CONSISTS OF THREE RUMBLE STRIPS SPACED ACCORDING TO MANUFACTURER'S RECOMMENDATION, PLACED TRANSVERSE ACROSS THE LANE AT LOCATIONS SHOWN.

TRAFFIC CONTROL FOR LANE CLOSURE WITH FLAGGING OPERATION

STATE OF WISCONSIN
DEPARTMENT OF TRANSPORTATION

APPROVED
June 2017 — DATE
/S/ Andrew Heldtke — WORK ZONE ENG
FHWA

6

S.D.D. 15 C 12-6

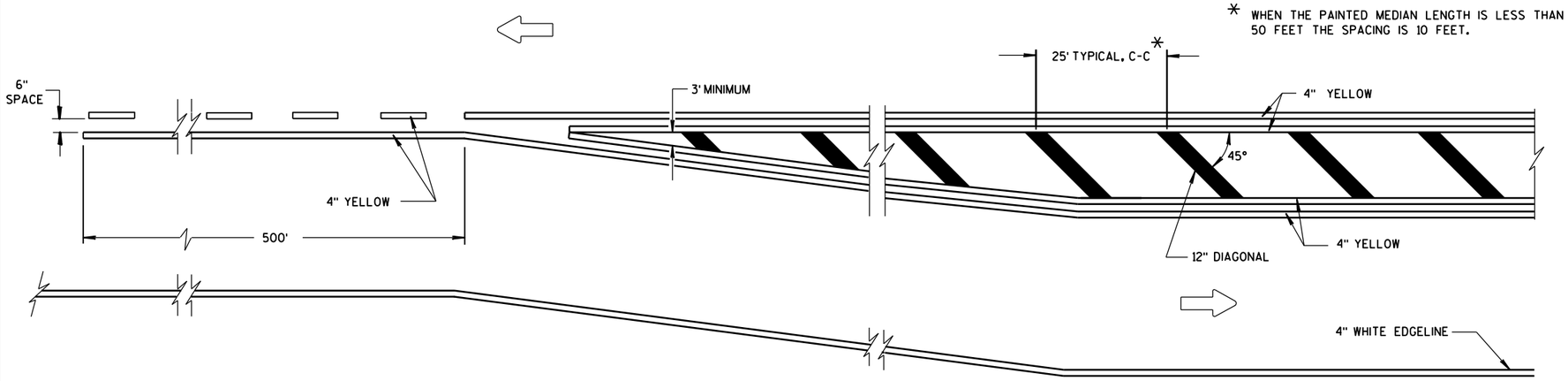

MEDIAN ISLAND DETAIL

GENERAL NOTE

DIAGONALS ARE OPTIONAL WHEN PAINTED ISLAND IS LESS THAN 6 FEET AT WIDEST POINT.

DIRECTION OF TRAVEL

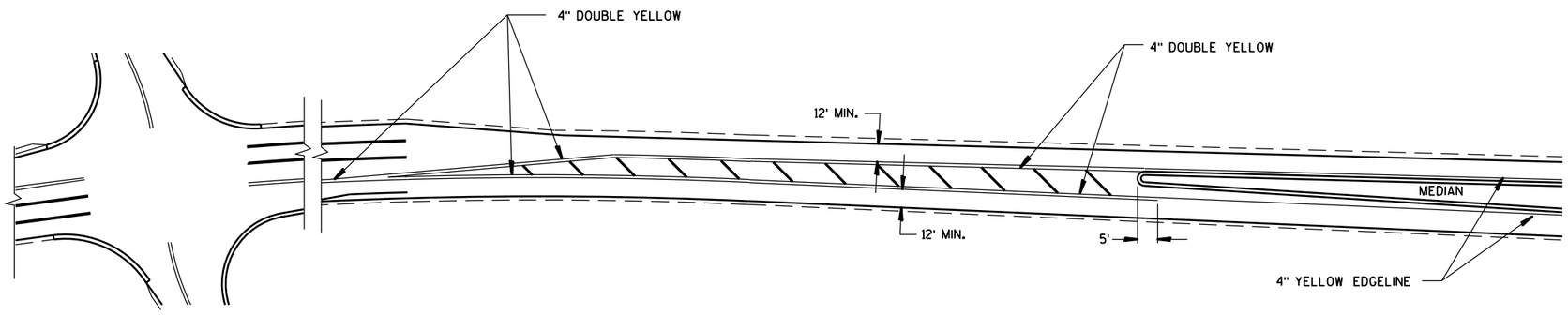

APPROACH MARKINGS FOR OTHER MEDIAN TYPES

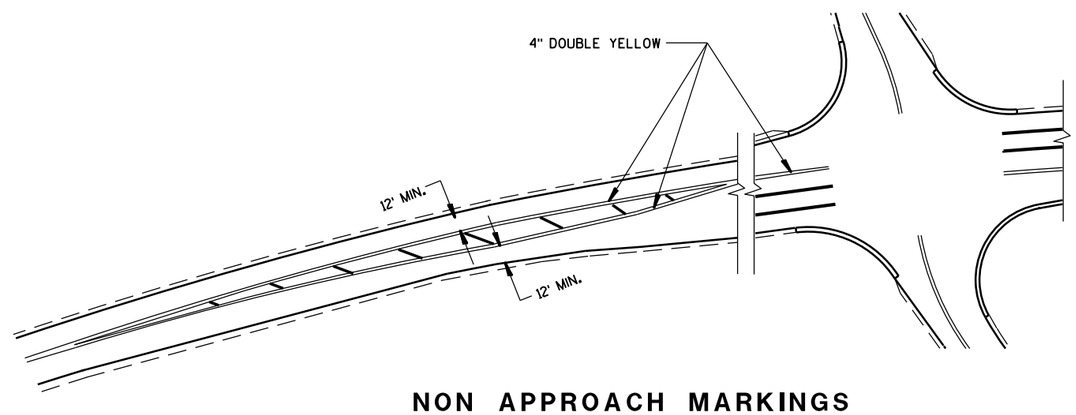

NON APPROACH MARKINGS

MEDIAN ISLAND MARKING

STATE OF WISCONSIN
DEPARTMENT OF TRANSPORTATION

APPROVED
June 2017 /S/ Matthew Rauch
DATE STATE SIGNING AND MARK ER
FHWA

6

6

S.D.D. 15 C 18-4

S.D.D. 15 C 18-4

REQUIREMENTS FOR EDGE LINES		
POSTED SPEED	IS THERE CONTINUOUS LIGHTING?	
	YES	NO
≤ 30 MPH	NO	OPTIONAL
35 OR 40 MPH	OPTIONAL	RECOMMENDED
≥ 45 MPH	RECOMMENDED	REQUIRED

GENERAL NOTES

APPLIES TO ISLANDS AT LEFT TURNS AT ONE WAY ROADWAYS AS WELL.

SEE MISCELLANEOUS QUANTITIES FOR SIGN SIZE.

1. MARK CURB NOSES YELLOW.
2. MARK ACCORDING TO TABLE.

DIRECTION OF TRAVEL

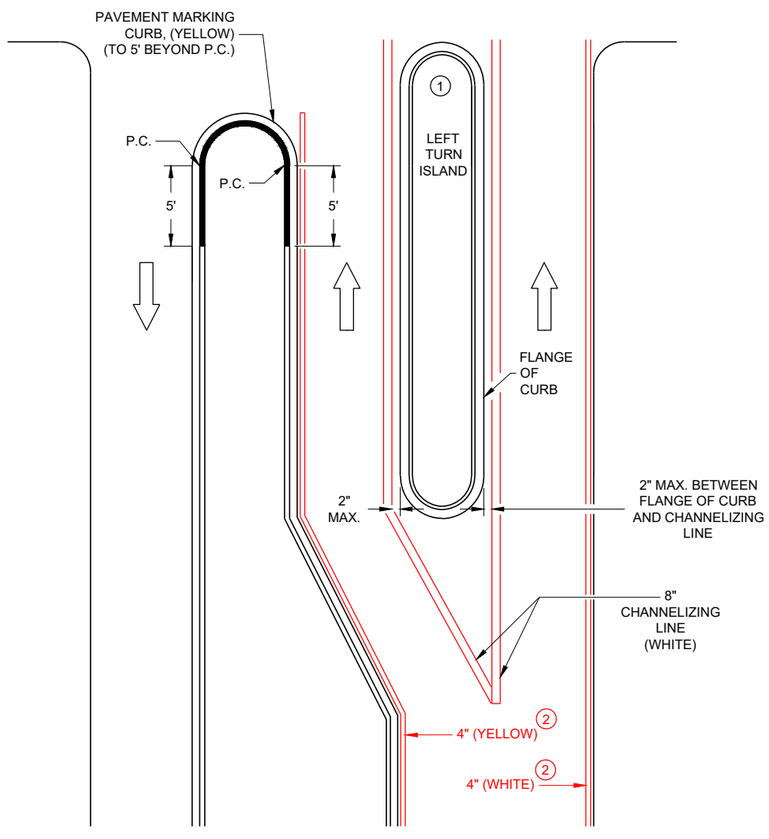

LEFT TURN & MEDIAN ISLAND

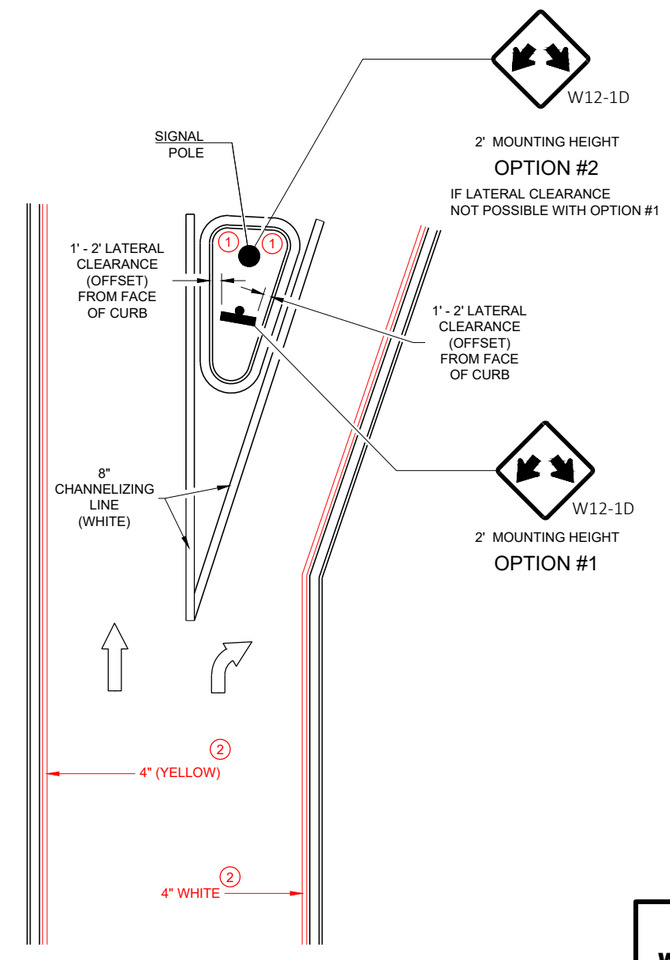

RIGHT TURN ISLAND

DOUBLE ARROW WARNING SIGN PLACEMENT

STATE OF WISCONSIN
DEPARTMENT OF TRANSPORTATION

APPROVED
7/2018 — DATE
/S/ Matthew R. Rauch — STATE SIGNING AND MAF ENGINEER
FHWA

6

SDD 15C27 - 03a

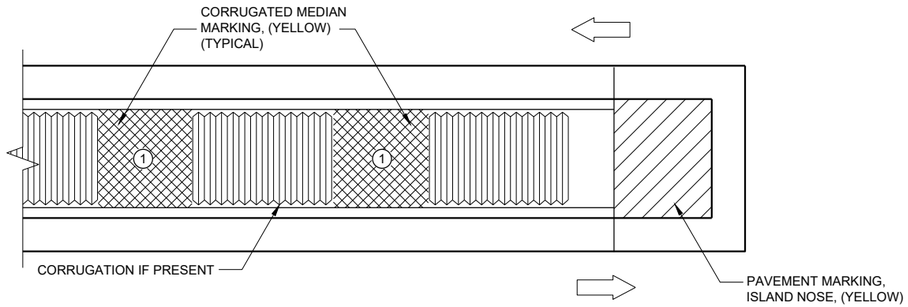

MEDIAN ISLAND WITH SQUARE BLUNT NOSE

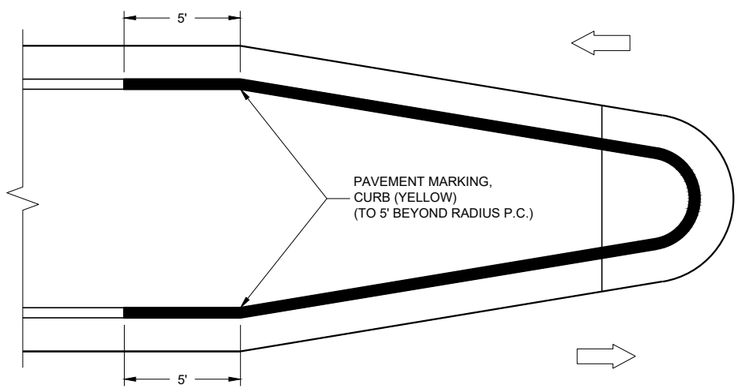

MEDIAN ISLAND WITH ROUND BLUNT NOSE

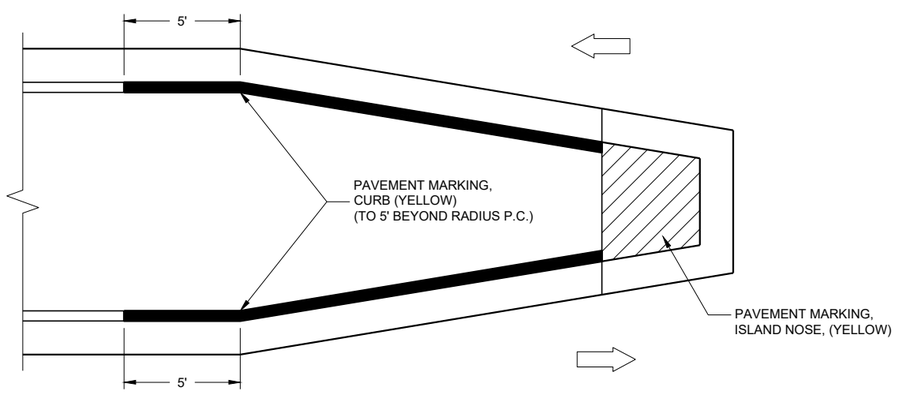

MEDIAN ISLAND WITH SLOPED NOSE

TYPICAL PLACEMENT OF
PAVEMENT MARKING ON MEDIAN ISLANDS

GENERAL NOTES

WHEN CONCRETE CORRUGATED MEDIAN IS CONSTRUCTED TO SEPARATE TRAFFIC OPERATING IN THE OPPOSING DIRECTION, YELLOW PAVEMENT MARKING SHALL BE APPLIED TO THE FLAT PORTION OF THE CONCRETE CORRUGATED MEDIAN. THE ITEM OF PAVEMENT MARKING, CONCRETE CORRUGATED MEDIAN, WILL BE MEASURED IN PLACE AND ACCEPTED IN ACCORDANCE WITH THE CONTRACT AND PAID FOR AT THE CONTRACT UNIT PRICE PER SQUARE FOOT.

ISLAND NOSE MARKING

CURB MARKING

CORRUGATED MEDIAN MARKING

DIRECTION OF TRAVEL

PAVEMENT MARKINGS
(ISLANDS)

STATE OF WISCONSIN
DEPARTMENT OF TRANSPORTATION

APPROVED
7/2018 — DATE
/S/ Matthew R. Rauch — STATE SIGNING AND MAR ENGINEER
FHWA

6

6

SDD 15C27 - 03b

SDD 15C27 - 03b

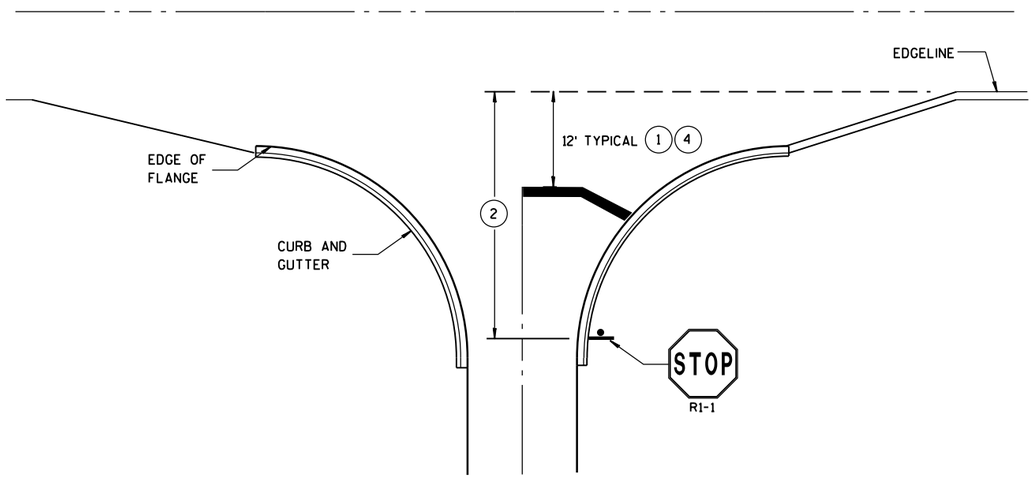

TYPICAL STOP LINE PAVEMENT MARKING WITH CURB AND GUTTER

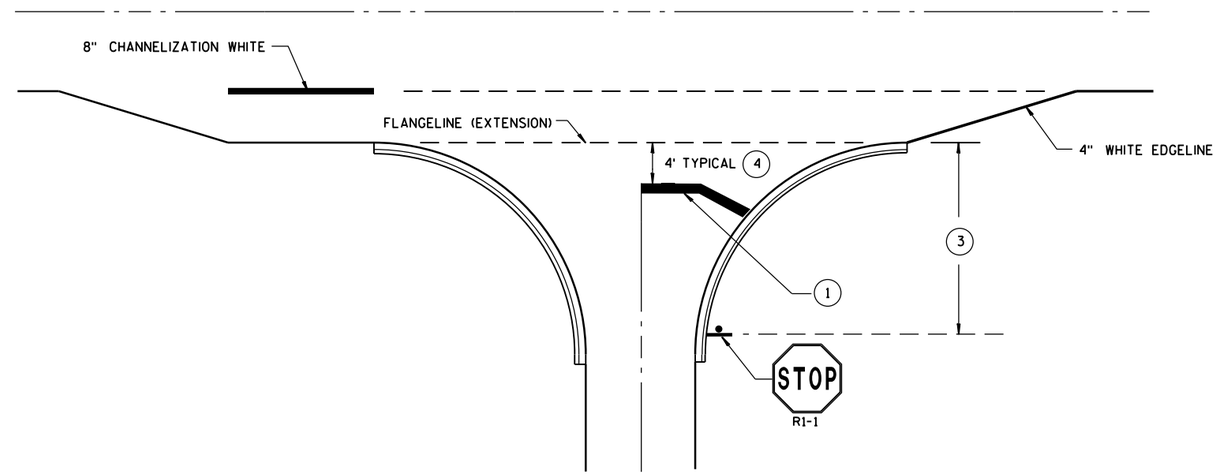

TYPICAL STOP LINE PAVEMENT MARKING FOR SIDEROADS WITH RIGHT TURN LANE

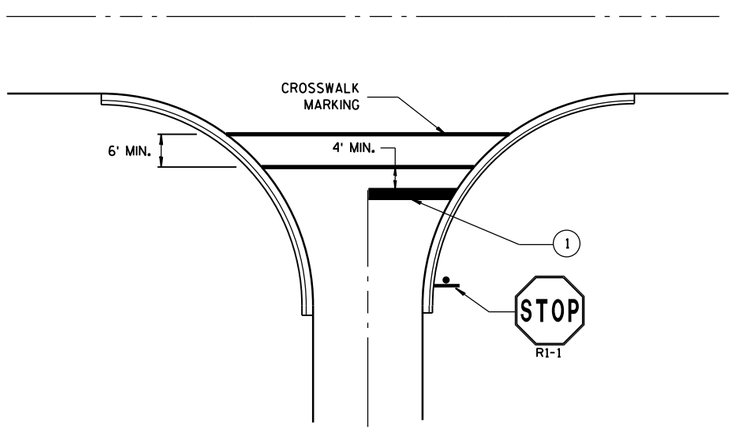

TYPICAL STOP LINE PAVEMENT MARKING FOR SIDEROADS WITH CROSSWALK MARKING

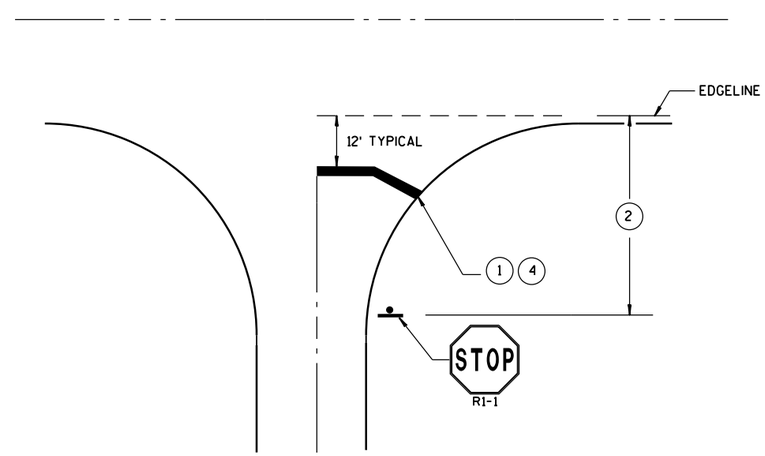

TYPICAL STOP LINE PAVEMENT MARKING WITHOUT CURB AND GUTTER

GENERAL NOTES

STOP SIGN SHALL BE PLACED A MINIMUM OF 6 FEET TO A MAXIMUM OF 50 FEET FROM THE EDGELINE LOCATION.

1. 18-INCH STOP LINES MAY BE DELETED OR ADDED BY THE PROJECT ENGINEER BASED ON VISIBILITY AND SIGHT LINES.
2. IF STOP SIGN IS LESS THAN OR EQUAL TO 40 FEET FROM THE EDGELINE THAN NO STOP LINE IS REQUIRED.
3. IF STOP SIGN IS LESS THAN OR EQUAL TO 30 FEET FROM THE FLANGELINE EXTENSION THAN NO STOP LINE IS REQUIRED.
4. MOVE CLOSER TO EDGE OF TRAVEL LANE AS NEEDED FOR VISIBILITY AND SIGHT LINES. (NO CLOSER THAN 4 FEET).

STOP LINE AND CROSSWALK PAVEMENT MARKING

STATE OF WISCONSIN
DEPARTMENT OF TRANSPORTATION

APPROVED

Sept., 2017	/S/ Matthew R. Rauch
DATE	STATE SIGNING AND MAR[illegible]NEER

FHWA

6

S.D.D. 15 C 33-3

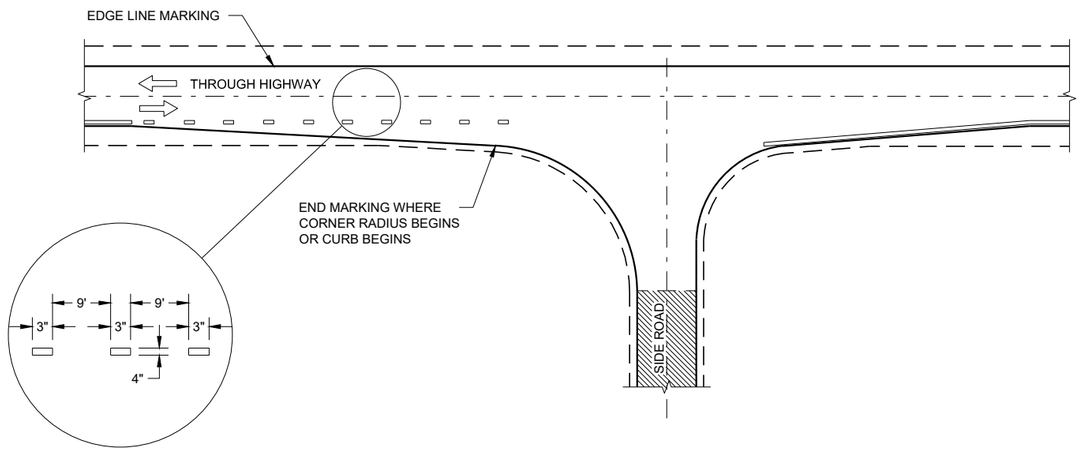

MINOR INTERSECTION

GENERAL NOTES

OMIT EDGE LINES THROUGH INTERSECTIONS. CONTINUE EDGE LINES THROUGH DRIVEWAYS.

1. WHEN DISTANCE "A" IS LESS THAN 250 FEET, OMIT LANE LINE.
2. WHEN DISTANCE "B" IS LESS THAN 100 FEET, OMIT CHANNELIZING LANE LINE.
3. BARRIER LINE ENDS AT SIDE ROAD PAVEMENT / SURFACE EDGE EXTENSION.
4. BARRIER LINE STARTS 500 FEET PRIOR TO THE BYPASS TAPER

ARROW SYMBOL (⇨) SHOWS DIRECTION OF TRAVEL

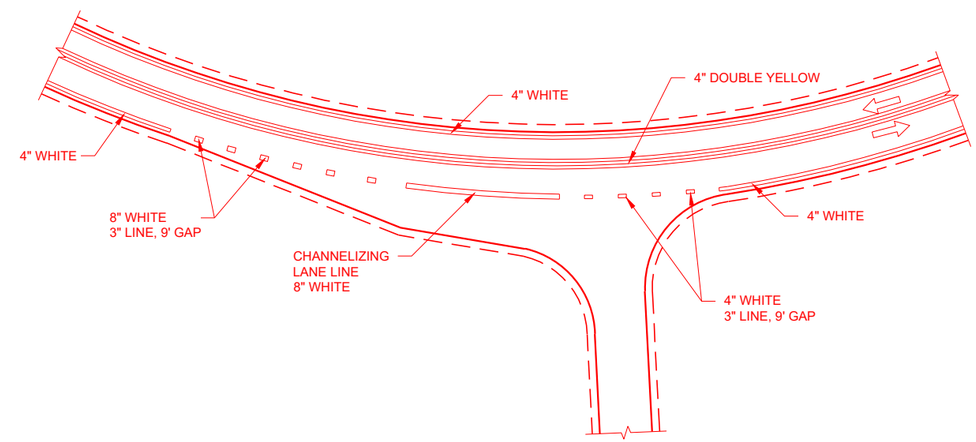

INTERSECTION ON OUTSIDE OF CURVE

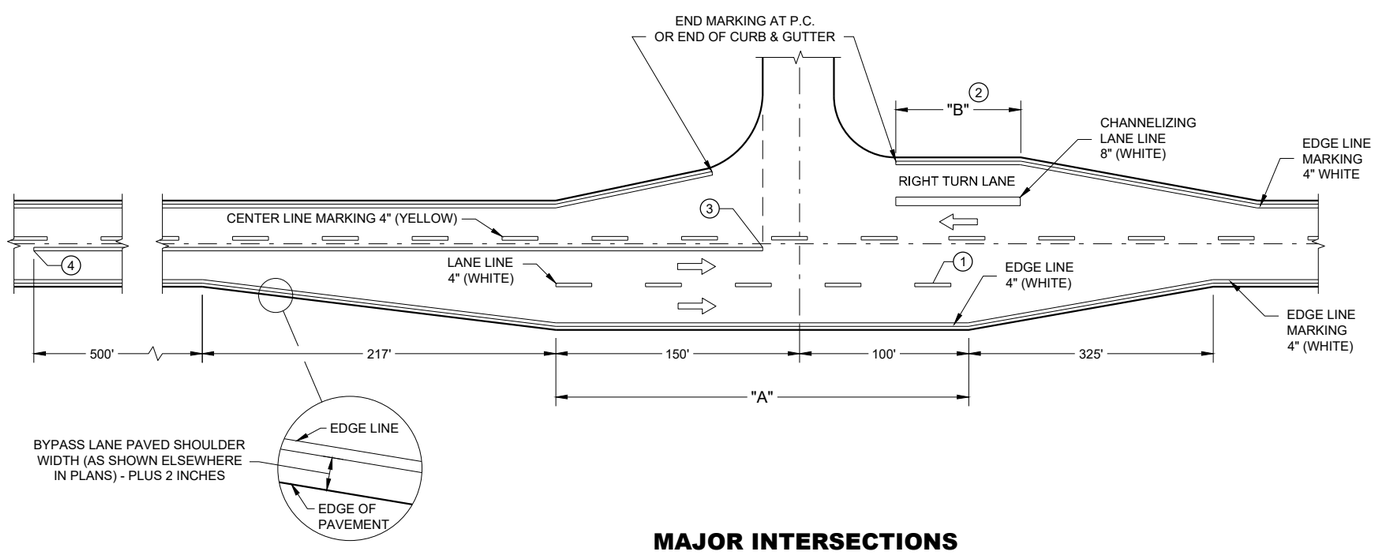

MAJOR INTERSECTIONS

(INTERSECTION WITH FULL RIGHT TURN LANE OR BYPASS LANE)

6

6

SDD 15C35 - 03a

SDD 15C35 - 03a

PAVEMENT MARKING (INTERSECTIONS)

STATE OF WISCONSIN
DEPARTMENT OF TRANSPORTAT

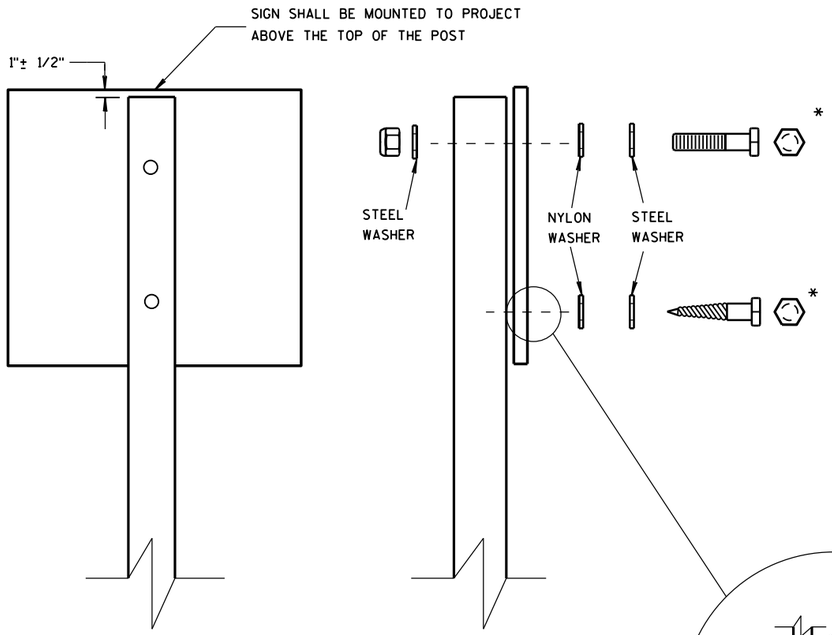

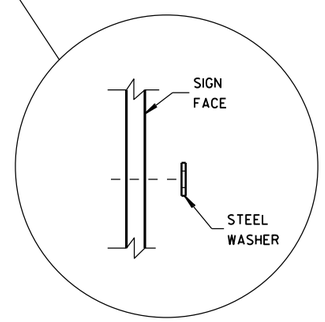

WASHER PLACEMENT WHEN SIGN HAS OTHER THAN TYPE H OR TYPE F FACE

NUTS, BOLTS AND LAGS USED FOR MOUNTING SIGNS SHALL HAVE HEXAGONAL HEADS AND SHALL BE EITHER:

A. HOT DIP GALVANIZED IN ACCORDANCE WITH ASTM DESIGNATION: A 153, CLASS D, OR SC 3

B. ELECTRO-GALVANIZED IN ACCORDANCE WITH ASTM DESIGNATION: B 633, TYPE III, SC 3

THREADS ON BOLTS AND NUTS SHALL BE MANUFACTURED WITH SUFFICIENT ALLOWANCE FOR THE CADMIUM PLATE OR GALVANIZED COATING TO PERMIT THE NUTS TO RUN FREELY ON THE BOLTS.

WOOD POSTS (4" x 4" or 4" x 6")

LAG SCREWS - 3/8" X 3"

MACHINE BOLTS - 5/16" X 6-1/2" OR 7" LENGTH W/ NUTS

SQUARE STEEL POSTS (2" x 2")

MACHINE BOLTS - 3/8" X 3-1/4" LENGTH W/ NUTS

RIVETS - 9/32" (6605-9-6) BULB-TITE, TRI-FOLD, ALUMINUM BODY/MANDREL O.D. FLANGE .720-.765 INCH, GRIP RANGE .042-.375 INCH

WASHERS (ALL POSTS) -

1-1/4" O.D. X 3/8" I.D. X 1/16" STEEL

1-1/4" O.D. X 3/8" I.D. X .080 NYLON FOR ALL TYPE H SIGNS

* TWO DIFFERENT FASTENING SYSTEMS ARE SHOWN FOR ILLUSTRATION PURPOSES. ON ANY INDIVIDUAL SIGN, EITHER ONE OR THE OTHER SYSTEM SHALL BE USED. ACTUAL NUMBER OF FASTENERS PER SIGN VARIES WITH THE SIGN AREA. FOR A SINGLE POST INSTALLATION, ALL SIGNS GREATER THAN 9 SQ. FT. REQUIRE THE USE OF 3 FASTENERS.

6

6

S.D.D. 15 D 38-2b

S.D.D. 15 D 38-2b

ATTACHMENT OF SIGNS TO POSTS

STATE OF WISCONSIN
DEPARTMENT OF TRANSPORTATION

APPROVED

June 2017 — /S/ Andrew Heldtke
DATE — WORK ZONE ENG

FHWA

URBAN AREA

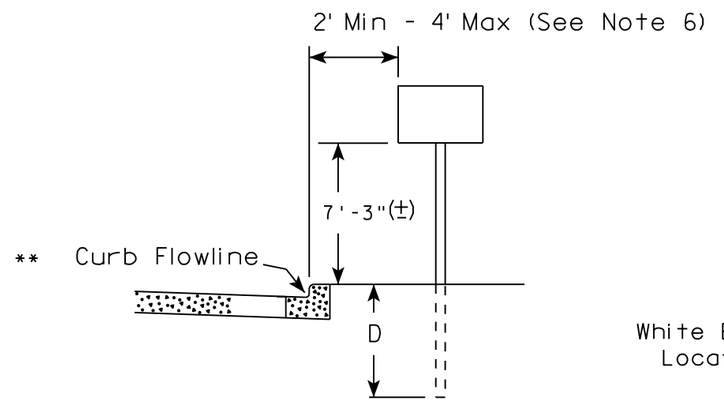

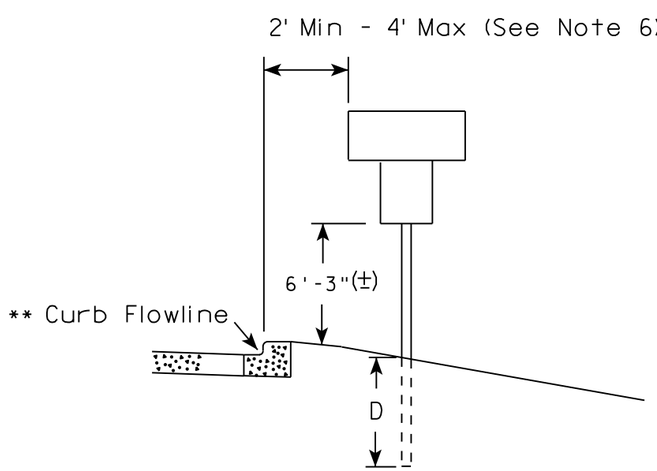

RURAL AREA (See Note 2)

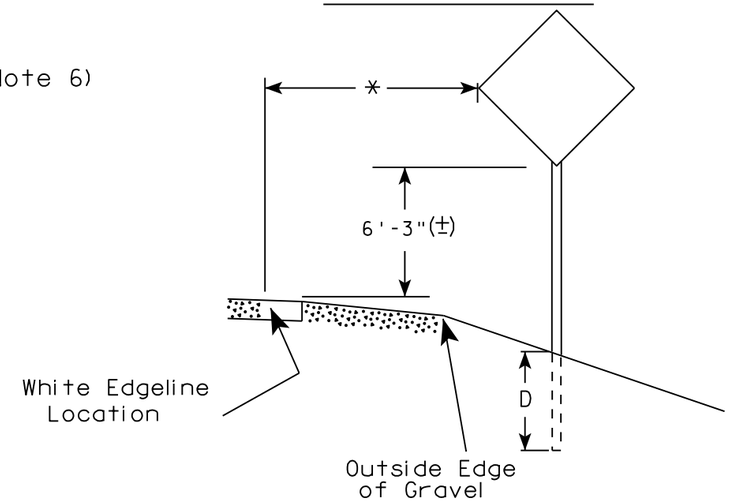

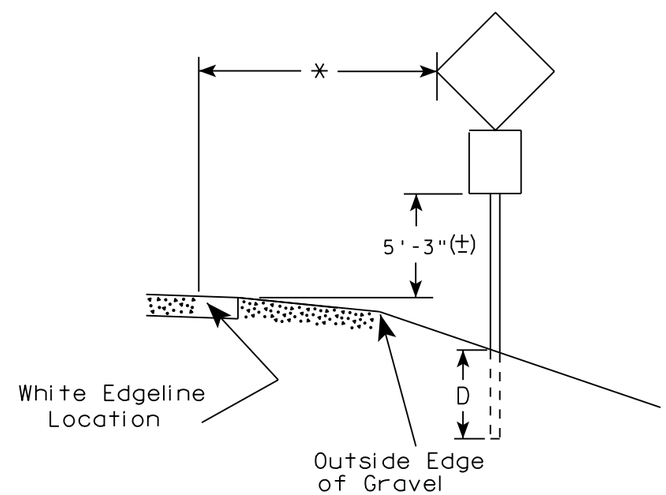

** The existence of curb and gutter does not in itself mandate the vertical clearance illustrated. That height is typically measured where there is sidewalk adjacent to the roadway or parking is permitted. In the absence of sidewalk vertical clearance is measured from the top of the curb. Offset of signs is measured from the flow line.

* 6 feet from edge of a paved shoulder or 12 feet from the edge of pavement (edge line location) or 2 feet from outside edge of gravel, whichever is greater unless directed by project engineer.

GENERAL NOTES

1. Signs wider than 4 feet or 20 sq.ft or larger, shall be mounted on multiple posts. Refer to plate A4-4.
2. If signs are mounted on barrier wall, see A4-10 sign plate.
3. For expressways and freeways, mounting height is 7'- 3" (±) or 6'-3" (±) depending upon existence of a sub-sign.
4. J-Assemblies are considered to be one sign for mounting height.
5. Minimum mounting height for signs mounted on traffic signal poles is 5'- 3" (±).
6. Offset distance shall be consistent with existing signs or consistent throughout length of project.
7. The (±) tolerance for mounting height is 3 inches.
8. Folding signs shall be mounted at a height of 5'-3" (±) or as directd by the Engineer.
9. The Double Arrow sign (W12-1) shall be mounted at a height of 2'-3" (±). The Chevron sign (W1-8), Roundabout Chevron panel (R6-4B), Enhanced Reference Markers, Clearance Markers (W5-52), Mile Markers (D10 series), In Road Object Markers (W5-54) & End of Road Markers (W5-56) shall be mounted at a height of 4'-3" (±).

POST EMBEDMENT DEPTH

Area of Sign Installation (Sq. Ft.)	D (Min)
20 or Less	4'
Greater than 20	5'

TYPICAL INSTALLATION OF PERMANENT TYPE II SIGNS ON SINGLE POSTS

WISCONSIN DEPT OF TRANSPORTATION

APPROVED Matthew R Rauch for State Traffic Engineer

DATE 8/21/17 PLATE NO. A4-3.21

7 7

PROJECT NO:	HWY:	COUNTY:		SHEET NO: 93	E

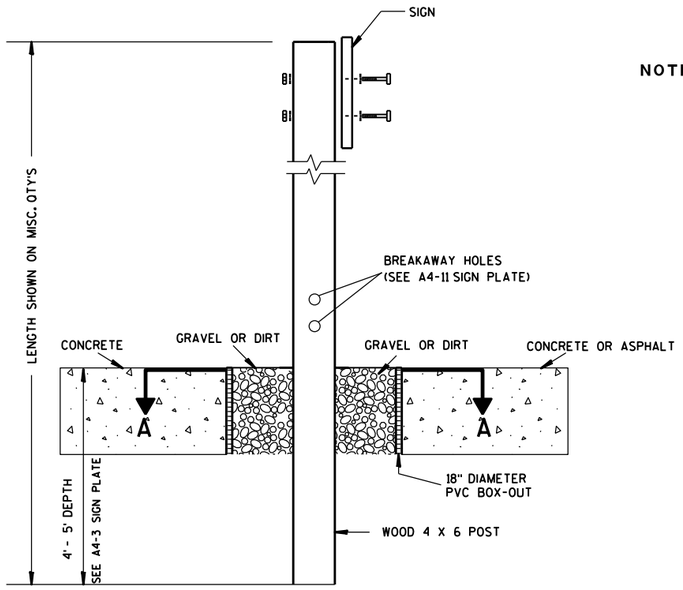

ELEVATION VIEW

DETAIL OF WOOD 4 X 6 SIGN POST IN BOX-OUT

NOTES:
1. ALL MATERIAL TO BE APPROVED BY ENGINEER PRIOR TO INSTALLATION
2. SEE SIGN PLATE A4-8 FOR SIGN HARDWARE REQUIREMENTS
3. 18 INCH X 18 INCH SQUARE BOX-OUTS MAY BE USED FOR INSTALLATIONS IN EXISTING CONCRETE OR ASPHALT LOCATIONS.

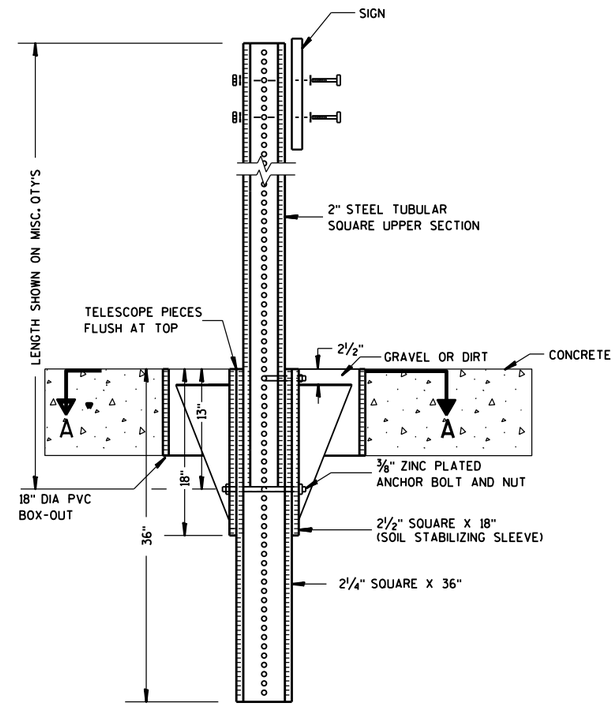

ELEVATION VIEW

DETAIL OF STEEL 2 X 2 SIGN POST IN BOX-OUT

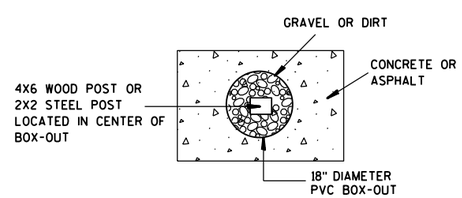

PLAN VIEW

FOR NEW CONCRETE/ASPHALT INSTALLATIONS

SIGN POST
BOX-OUTS
A4-3B

WISCONSIN DEPT OF TRANSPORTATION

APPROVED Matthew R Rauch
for State Traffic Engineer

DATE 1/27/14 PLATE NO. A4-3B.1

PROJECT NO:	HWY:	COUNTY:		SHEET NO:	E

URBAN AREA

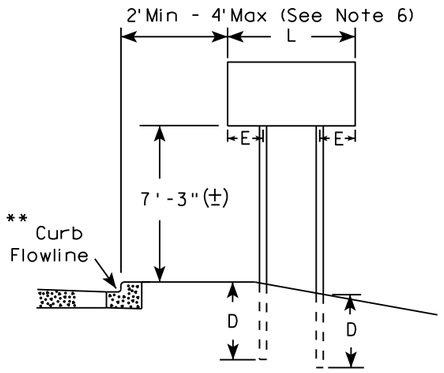

RURAL AREA (See Note 3)

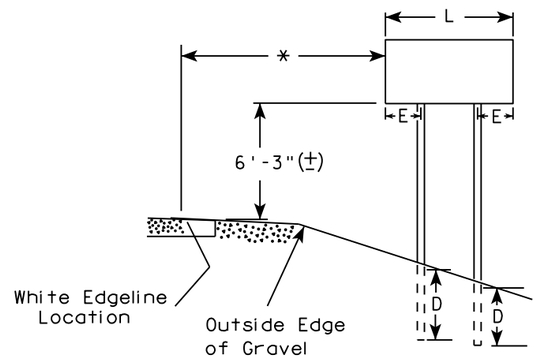

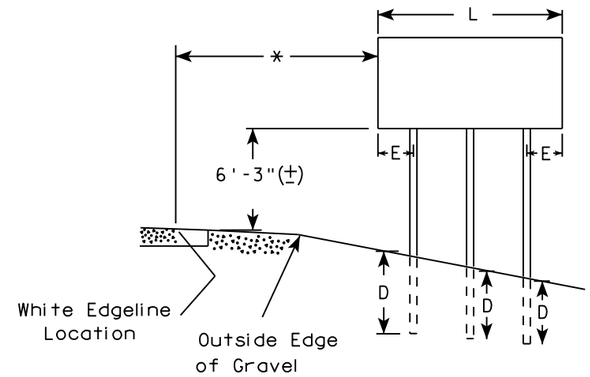

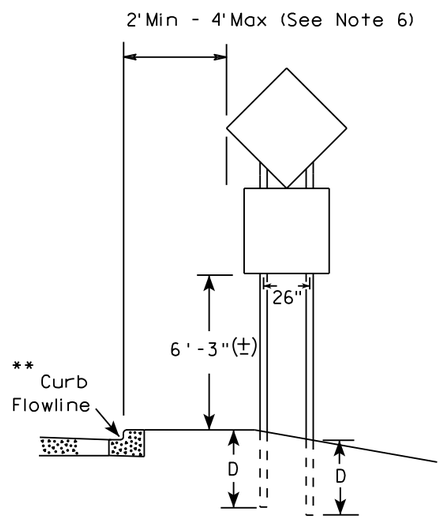

48" DIAMOND WARNING SIGN

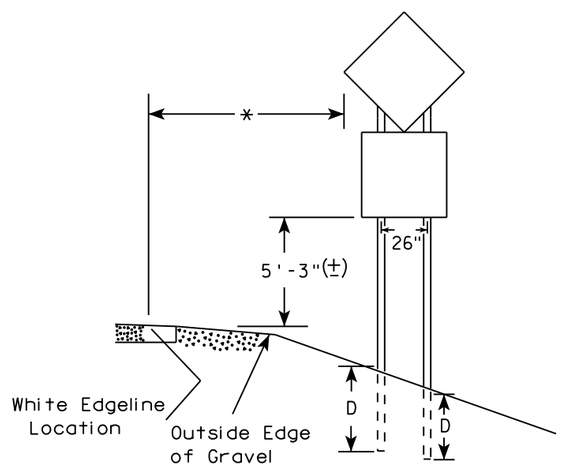

48" DIAMOND WARNING SIGN

SIGN SHAPE OTHER THAN DIAMOND (TWO POSTS REQUIRED)	
L	E
*** Greater than 48" Less than 60"	12"
60" to 108"	L/5

SIGN SHAPE OTHER THAN DIAMOND (THREE POSTS REQUIRED)	
L	E
Greater than 108" to 144"	12"

GENERAL NOTES

1. For 3 or 4 post installations, individual post spacing shall be greater than 3'-6".
2. See tables below for required number of posts.
3. For expressways and freeways, mounting height is 7'-3" (±) or 6'-3" (±) depending upon existence of sub-sign.
4. The (±) tolerance for mounting height is 3 inches.
5. J-Assemblies are considered to be one sign for mounting height.
6. Offset distance shall be consistent with existing signs or consistent throughout length of project.
7. Folding signs shall be mounted at a height of 5'-3" (±) or as directed by the engineer.
8. The Double Arrow sign (W12-1) shall be mounted at a height of 2'-3" (±). The Chevron sign (W1-8), Roundabout Chevron panel (R6-4B), Clearance Markers (W5-52), Mile Markers (D10 series), In Road Object Markers (W5-54) & End of Road Markers (W5-56) shall be mounted at a height of 4"-3" (±).

* 6 feet from edge of a paved shoulder or 12 feet from the edge of pavement (edge line location) or 2 feet from outside edge of gravel, whichever is greater unless directed by project engineer.

** The existence of curb and gutter does not in itself mandate the vertical clearance illustrated. That height is typically measured where there is sidewalk adjacent to the roadway or parking is permitted. In the absence of sidewalk vertical clearance is measured from the top of the curb. Offset of signs is measured from the flow line.

*** See A4-3 sign plate for signs 4' or less in width and less than 20 S.F. in area.

POST EMBEDMENT DEPTH

Area of Sign Installation (Sq. Ft.)	D (Min)
20 or Less	4'
Greater than 20	5'

TYPICAL INSTALLATION OF TYPE II SIGNS ON MULTIPLE POSTS

WISCONSIN DEPT OF TRANSPORTATION

APPROVED Matthew R Rauch
For State Traffic Engineer

DATE 8/21/17 PLATE NO. A4-4.15

7

7

PROJECT NO:	HWY:	COUNTY:		SHEET NO: 95	E

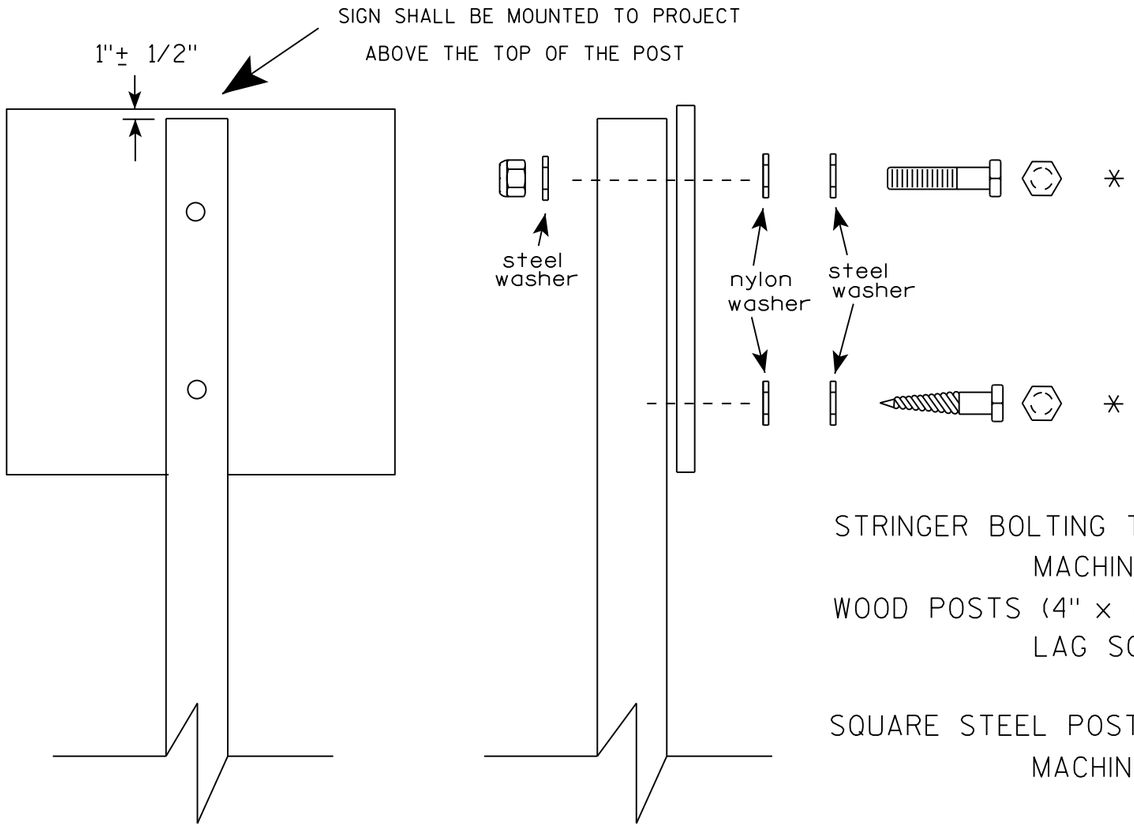

Nuts, bolts and lags used for mounting signs shall have hexagonal heads and shall be either :

a. Hot dip galvanized in accordance with ASTM Designation: A 153, Class D, or SC 3

b. Electro-galvanized in accordance with ASTM Designation : B 633, TYPE III, SC 3.

Threads on bolts and nuts shall be manufactured with sufficient allowance for the cadmium plate or galvanized coating to permit the nuts to run freely on the bolts.

STRINGER BOLTING TO ALUMINUM SIGNS (SEE SIGN PLATE A4-18)

MACHINE BOLTS - 5/16" X 1-3/4" Length w/ lock nuts

WOOD POSTS (4" x 4" or 4" x 6")

LAG SCREWS - 3/8" X 3" (NO STRINGERS ON BACK OF SIGN)

3/8" X 4" (STRINGERS ON BACK OF SIGN)

SQUARE STEEL POSTS (2" x 2")

MACHINE BOLTS - 3/8" X 3-1/4" Length w/ nuts (NO STRINGER ON BACK OF SIGN)

3/8" X 5" Length w/ nuts (STRINGERS ON BACK OF SIGN)

RIVETS - 9/32 " (6605-9-6) BULB-TITE, TRI-FOLD, ALUMINUM BODY/MANDREL

O.D. FLANGE .720-.765 INCH, GRIP RANGE .042-.375 INCH

WASHERS (ALL POSTS) -

1-1/4" O.D. X 3/8" I.D. X 1/16" STEEL

1-1/4" O.D. X 3/8" I.D. X .080 NYLON

* Two different fastening systems are shown for illustration purposes. On any individual sign, either one or the other system shall be used. Actual number of fasteners per sign varies with the sign area, but normally there are two. For a single post installation, all signs greater than 9 sq. ft. require the use of 3 fasteners.

ATTACHMENT OF SIGNS TO POSTS

WISCONSIN DEPT OF TRANSPORTATION

APPROVED Matthew R Rauch
for State Traffic Engineer

DATE 8/11/16 PLATE NO. A4-8.8

PROJECT NO:

SHEET NO: E

TELESCOPIC TUBING ANCHORS
TWO PIECE SYSTEM

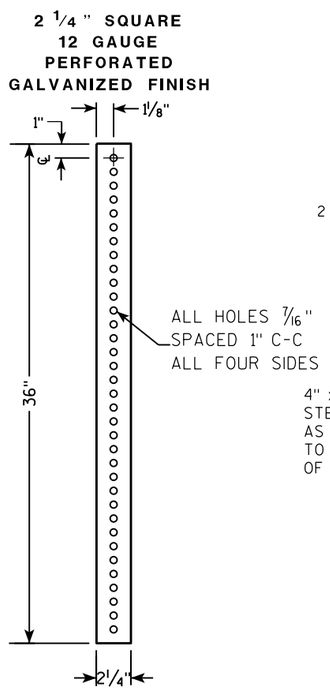

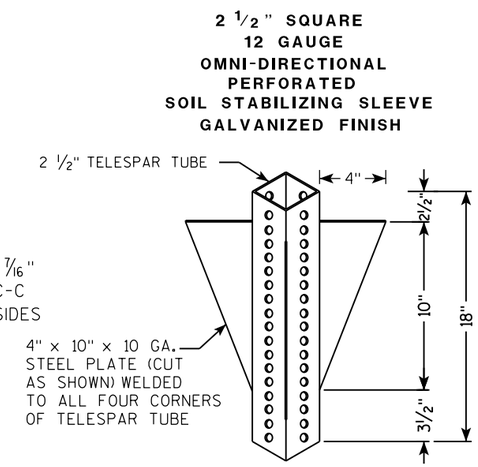

DETAIL OF TUBULAR STEEL SIGN POST
(IN POURED CONCRETE OR ASPHALT)

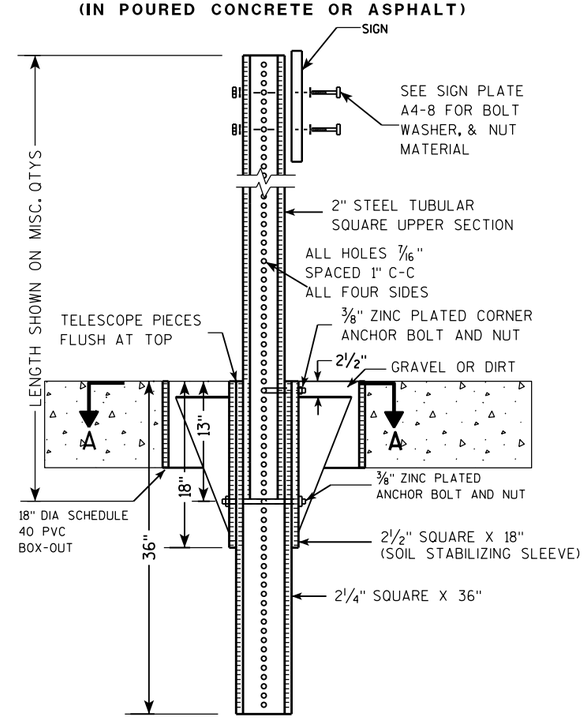

DETAIL OF TUBULAR STEEL SIGN POST
(IN LOCATIONS OTHER THAN POURED CONCRETE OR ASPHALT)

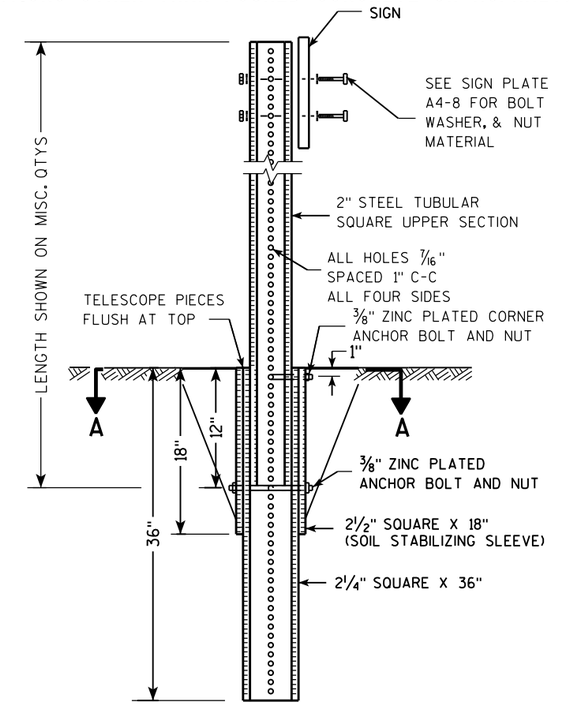

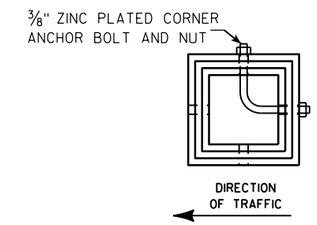

SECTION A-A

Area of Sign Installation (Sq. Ft.)	Number of Required Posts
9 or less	1
Greater than 9 less than or equal to 18	2
Greater than 18 less than or equal to 27	3

Signs wider than 3 feet or larger than 9 sq. ft shall be mounted on multiple posts (see above table).

TUBULAR STEEL
SIGN POST
A4-9

WISCONSIN DEPT OF TRANSPORTATION

APPROVED Matthew R Rauch
for State Traffic Engineer

DATE 2/05/15 PLATE A4-9.9

7

7

PROJECT NO:	HWY:	COUNTY:		SHEET NO:	E

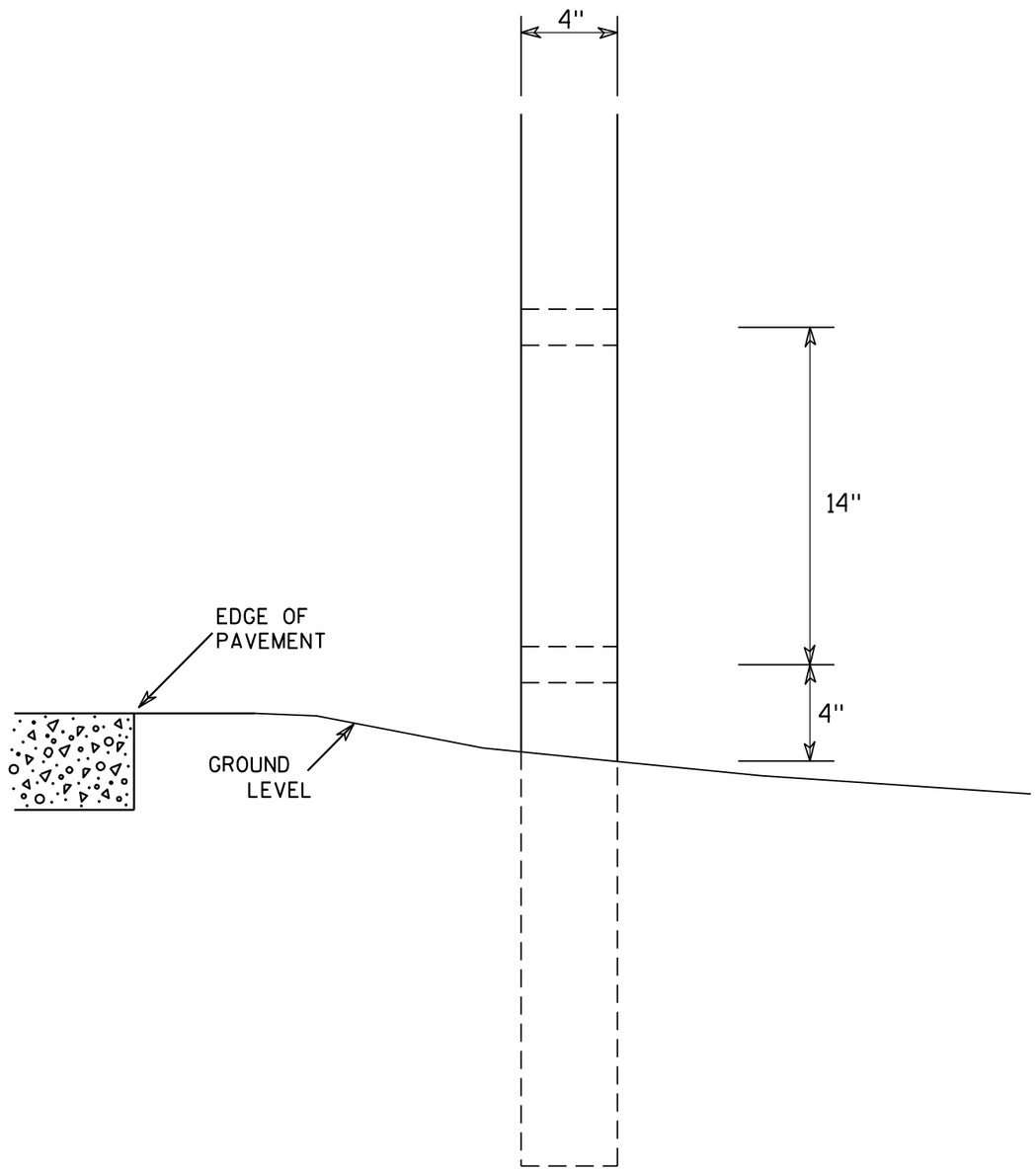

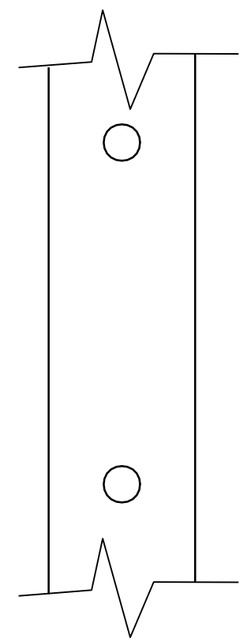

SIDE VIEW

GENERAL NOTES

1. All 4 x 6 Wood Posts shall be modified by having two 1½" diameter holes drilled perpendicular to the roadway centerline.

7

7

4 X 6 WOOD POST MODIFICATIONS

WISCONSIN DEPT OF TRANSPORTATION

APPROVED Chester J Spang for State Traffic Engineer

DATE 3/27/97 PLATE NO. A4-11.2

PROJECT NO:	HWY:	COUNTY:		SHEET NO: 98	E

BANDING

SINGLE SIGN

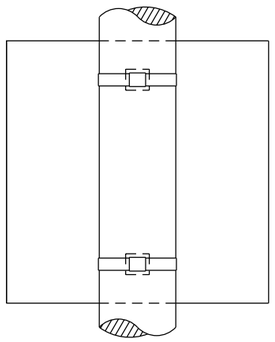

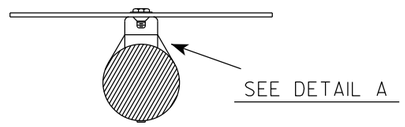

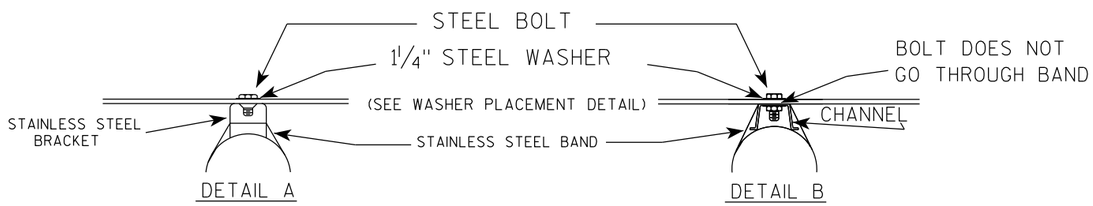

WASHER PLACEMENT

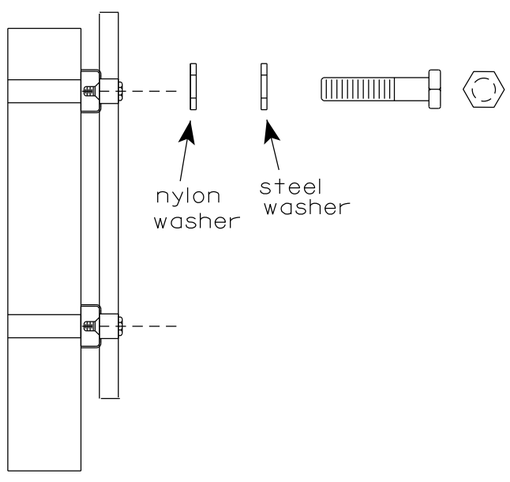

WASHERS (ALL POSTS) -
1-1/4" O.D. X 3/8" I.D. X 1/16" STEEL
1-1/4" O.D. X 3/8" I.D. X .080 NYLON
FOR ALL TYPE H SIGNS

GENERAL NOTES

1. Any sign over 3 feet in width shall use the V-Block banding method. See A5-10 standard plate.
2. Signs 3 feet or greater in height shall have three bracket bands installed. Signs less than 3 feet in height shall have two bracket bands installed.
3. Banding and assembly bracket shall be stainless steel. All bands shall be ¾" in width and 0.025" thickness.
4. ALL SIGN MOUNTING BOLTS AND WASHERS SHALL BE EITHER:
   a. Hot dip or mechanically galvanized in accordance with ASTM Designation: A 153, Class D
   b. Electro-galvanized in accordance with ASTM designation: B 633, Type III, SC 3

"J" ASSEMBLY

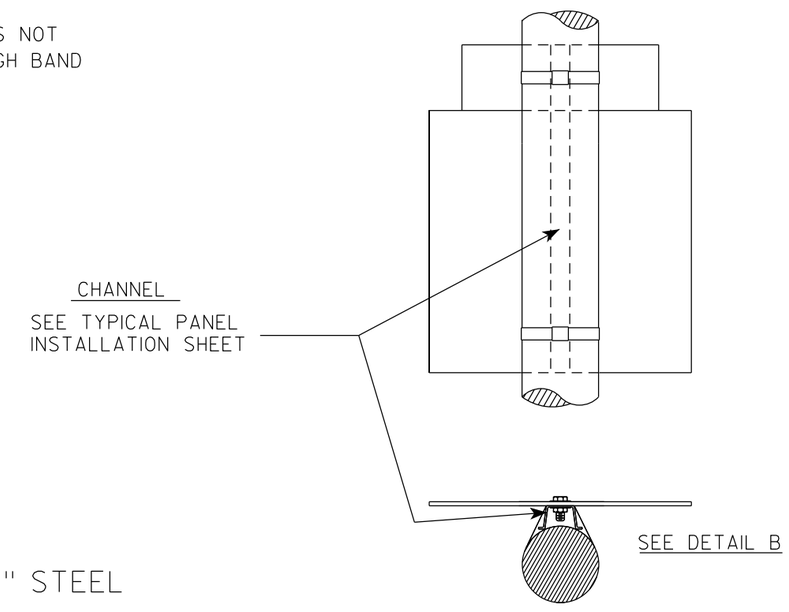

STANDARD SIGN
SIGN BANDING DETAILS

WISCONSIN DEPT OF TRANSPORTATION

APPROVED Matthew R Rauch for State Traffic Engineer

DATE 6/10/19 PLATE NO. A5-9.4

PROJECT NO:	HWY:	COUNTY:		SHEET NO: 99	E

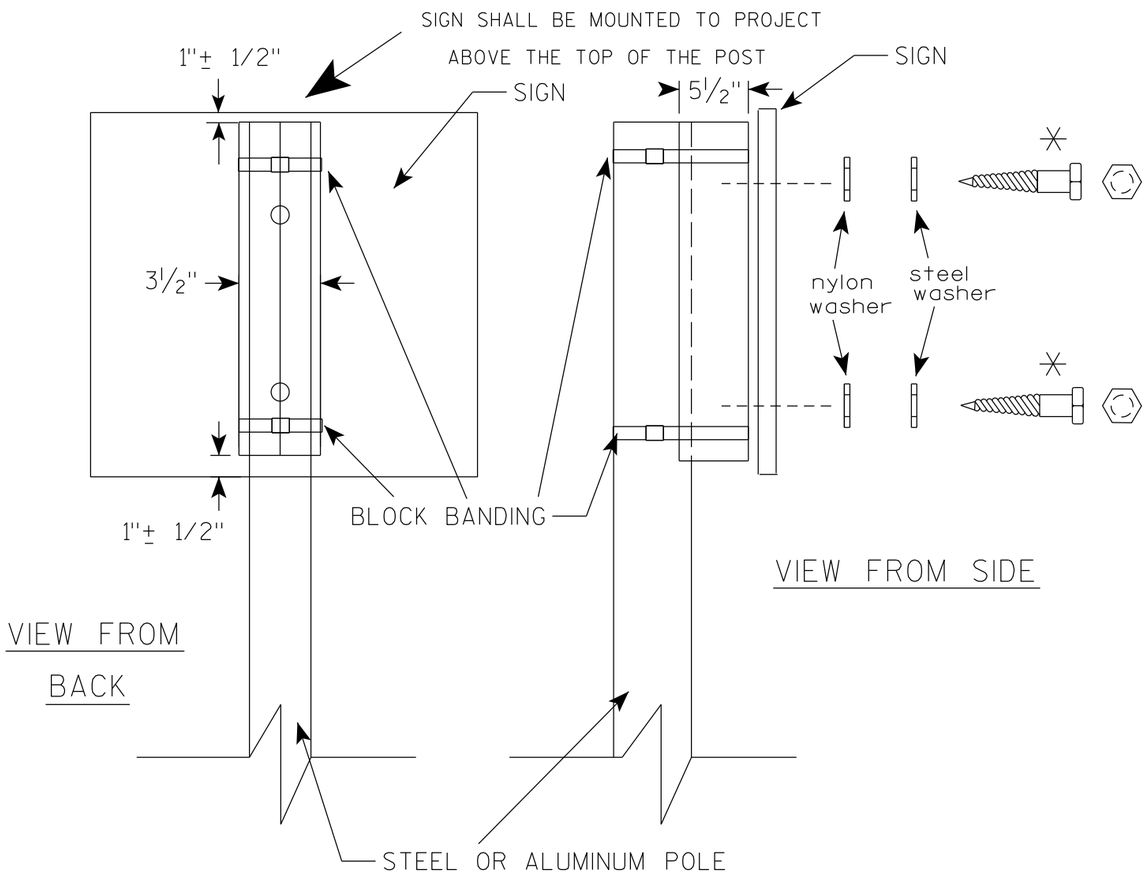

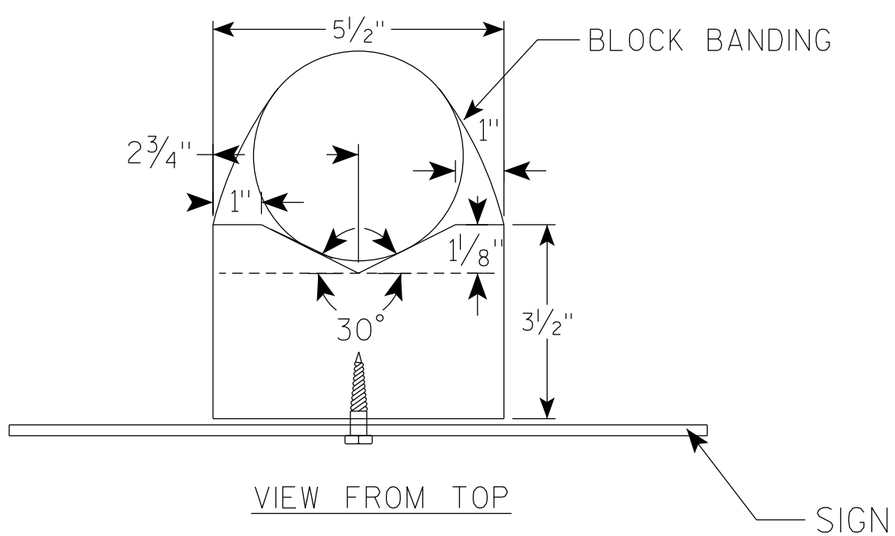

GENERAL NOTES

1. WOOD 4"X6" POST MATERIAL SHALL CONFORM TO 507.2.2 OF THE WisDOT STANDARD SPECIFICATIONS
2. BLOCK BANDING AND CLIPS SHALL BE STAINLESS STEEL, 3/4" WIDTH AND 0.025" THICKNESS
3. SIGNS 3' OR GREATER IN HEIGHT SHALL UTILIZE 3 BLOCK BANDS. SIGNS UNDER 3' IN HEIGHT SHALL UTILIZE 2 BLOCK BANDS
4. ACTUAL NUMBER OF FASTENERS PER SIGN VARIES WITH THE SIGN AREA, BUT NORNALLY THERE ARE TWO. FOR SIGNS GREATER THAN 9 S.F. 3 FASTENERS SHALL BE USED.
5. ALL SIGN MOUNTING BOLTS AND WASHERS SHALL BE EITHER:
   a. Hot dip or mechanically galvanized in accordance with ASTM Designation: A 153, Class D
   b. Electro-galvanized in accordance with ASTM Designation : B 633, TYPE III, SC 3
6. ALL BOLTS SHALL HAVE HEXAGONAL HEADS.
7. STEEL WASHERS SHALL BE 1 1/4" O.D. X 3/8" I.D. X 1/16"
8. NYLON WASHERS SHALL BE 1 1/4" O.D. X 3/8" I.D. X .080 FOR TYPE H OR TYPE F FACE SIGN

✳ LAG BOLTS SHALL BE 3/8" X 2 1/2"

BLOCK BANDING DETAIL
(V-BLOCK OPTION)

WISCONSIN DEPT OF TRANSPORTATION

APPROVED Matthew R Rauch
For State Traffic Engineer

DATE 6/10/19 PLATE NO. A5-10.2

PROJECT NO:				SHEET NO: 100	E

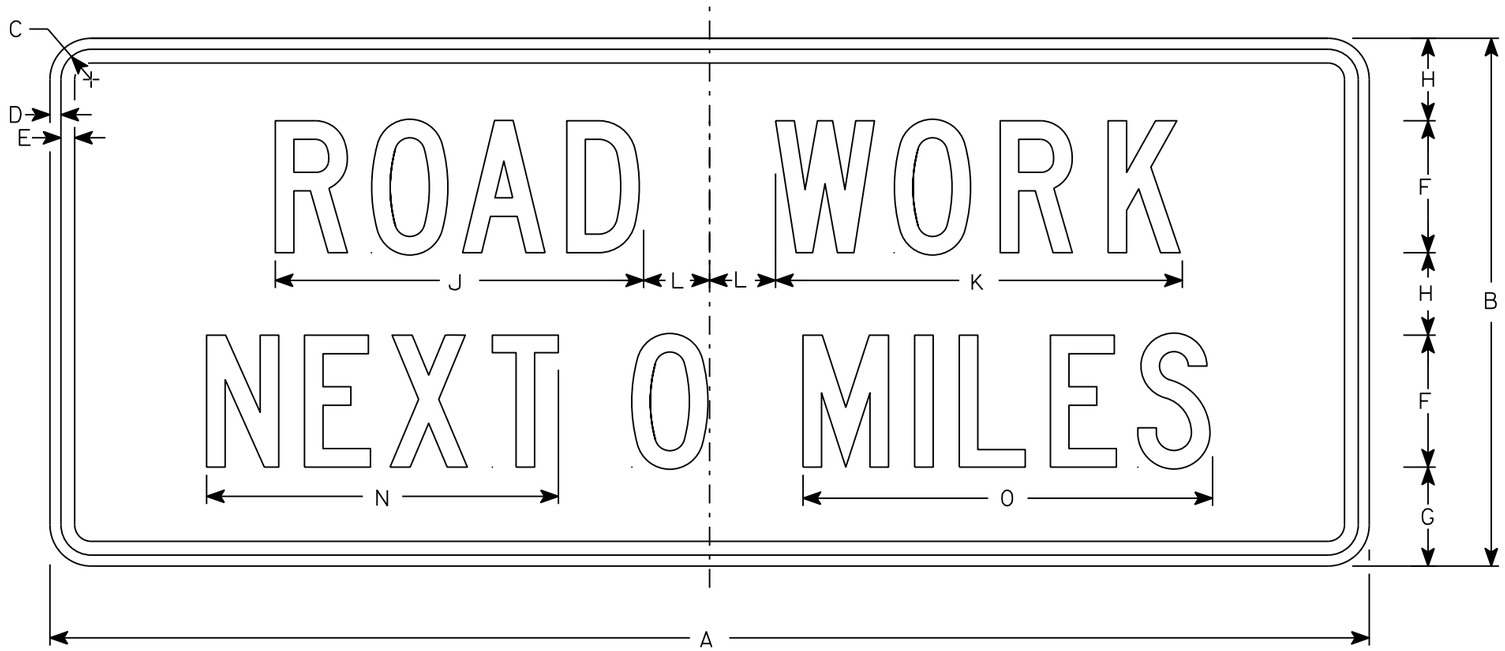

G20-1

NOTES

1. Sign is Type II - Type F Reflective
2. Color:
   Background - Orange
   Message - Black
3. Message Series - C
4. Corners may be square or rounded when base material is plywood but borders shall be rounded as shown. When base material is metal, the corners and borders shall be rounded.
5. Round distance to nearest whole Mile and substitute appropriate numerals and optically adjust spacing to achieve proper balance

SIZE	A	B	C	D	E	F	G	H	I	J	K	L	M	N	O	P	Q	R	S	T	U	V	W	X	Y	Z	Area sq. ft.
1																											
2	60	24	1 3/8	1/2	5/8	6	4 1/2	3 3/4		16 3/4	18 1/2	3		16	18 5/8												10
3																											
4	60	24	1 3/8	1/2	5/8	6	4 1/2	3 3/4		16 3/4	18 1/2	3		16	18 5/8												10
5																											

STANDARD SIGN
G20-1

WISCONSIN DEPT OF TRANSPORTATION

APPROVED Matthew R Rauch
for State Traffic Engineer
DATE 3/14/17 PLATE NO. G20-1.8

PROJECT NO: | HWY: | COUNTY: | SHEET NO: 101 | E

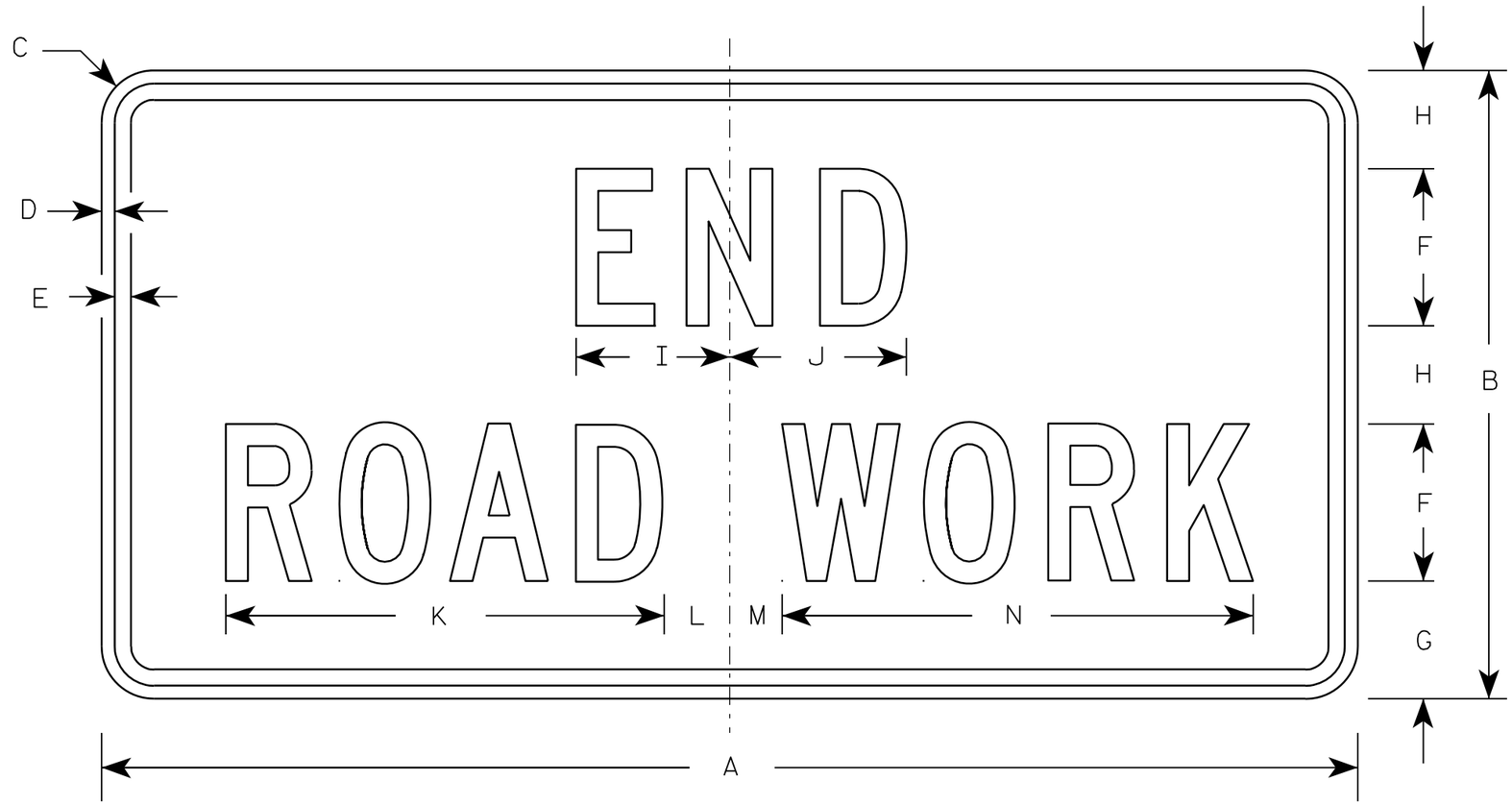

G20-2A

NOTES

1. Sign is Type II - Type F Reflective - reference WIS DOT Standard Specification for HIGHWAY and STRUCTURE CONSTRUCTION latest edition.
2. Color:
   Background - Orange
   Message - Black
3. Message Series - C
4. Corners may be square or rounded when base material is plywood but borders shall be rounded as shown. When base material is metal, the corners and borders shall be rounded.

Metric equivalent for this sign is:

SIZE	
1	900 mm X 450 mm
2	1200 mm X 600 mm
3	1200 mm X 600 mm
4	1200 mm X 600 mm
5	1200 mm X 600 mm

SIZE	A	B	C	D	E	F	G	H	I	J	K	L	M	N	O	P	Q	R	S	T	U	V	W	X	Y	Z	Area sq. ft.	Area m2
1	36	18	1 1/8	3/8	1/2	4	3 3/4	2 1/2	4 1/8	4 1/8	11 1/8	2	1	12 1/8													4.5	0.41
2	48	24	1 1/2	1/2	5/8	6	4 1/2	3 3/4	5 7/8	6 3/4	16 3/4	2 1/2	1 3/4	18 1/2													8.0	0.72
3	48	24	1 1/2	1/2	5/8	6	4 1/2	3 3/4	5 7/8	6 3/4	16 3/4	2 1/2	1 3/4	18 1/2													8.0	0.72
4	48	24	1 1/2	1/2	5/8	6	4 1/2	3 3/4	5 7/8	6 3/4	16 3/4	2 1/2	1 3/4	18 1/2													8.0	0.72
5	48	24	1 1/2	1/2	5/8	6	4 1/2	3 3/4	5 7/8	6 3/4	16 3/4	2 1/2	1 3/4	18 1/2													8.0	0.72

STANDARD SIGN

G20-2A

WISCONSIN DEPT OF TRANSPORTATION

APPROVED Matthew R Rauch
for State Traffic Engineer

DATE 9/30/09 PLATE NO. G20-2A.8

PROJECT NO:	HWY:	COUNTY:		SHEET NO: 102	E

NOTES

1. Sign is Type II - Type F Reflective
2. Color:
   Background - Orange
   Message - Black
3. Message Series - D
4. Substitute appropriate numeral and adjust spacing to achieve proper balance.

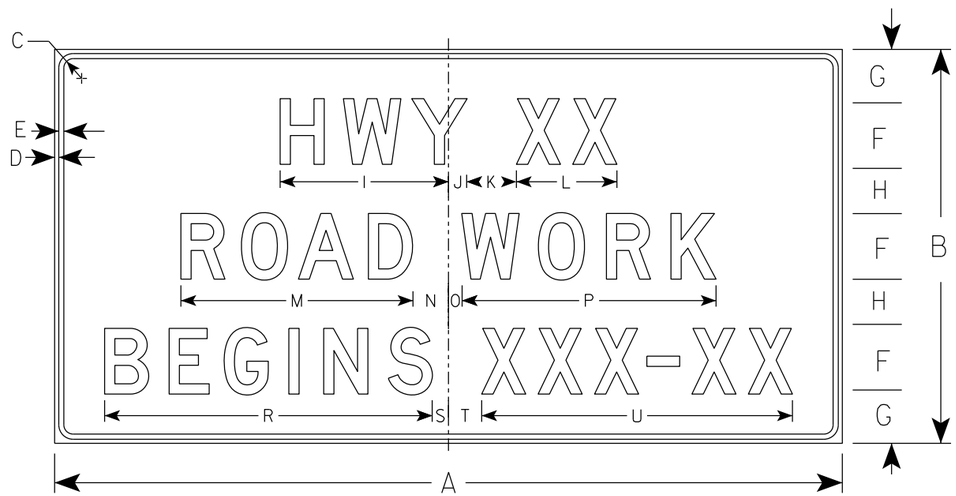

G20-57

SIZE	A	B	C	D	E	F	G	H	I	J	K	L	M	N	O	P	Q	R	S	T	U	V	W	X	Y	Z	Area sq. ft.
1																											
2																											
3	72	36	1 1/8	1/2	5/8	6	5	4	15 5/8	1 5/8	5	9 1/4	21 1/4	3 1/2	1 1/2	23 1/4		29 7/8	1 3/4	3 1/4	28 1/2						18.0
4	96	48	2 1/4	3/4	1	8	6 1/2	5 1/2	20 5/8	2 1/4	6	12 1/4	28 1/4	4 3/8	1 5/8	31		39 1/4	2	4	37 7/8						32.0
5																											

STANDARD SIGN
G20-57

WISCONSIN DEPT OF TRANSPORTATION

APPROVED Matthew R Rauch
For State Traffic Engineer

DATE 1/22/19 PLATE NO. G20-57.3

PROJECT NO: | HWY: | COUNTY: | SHEET NO: 103 | E

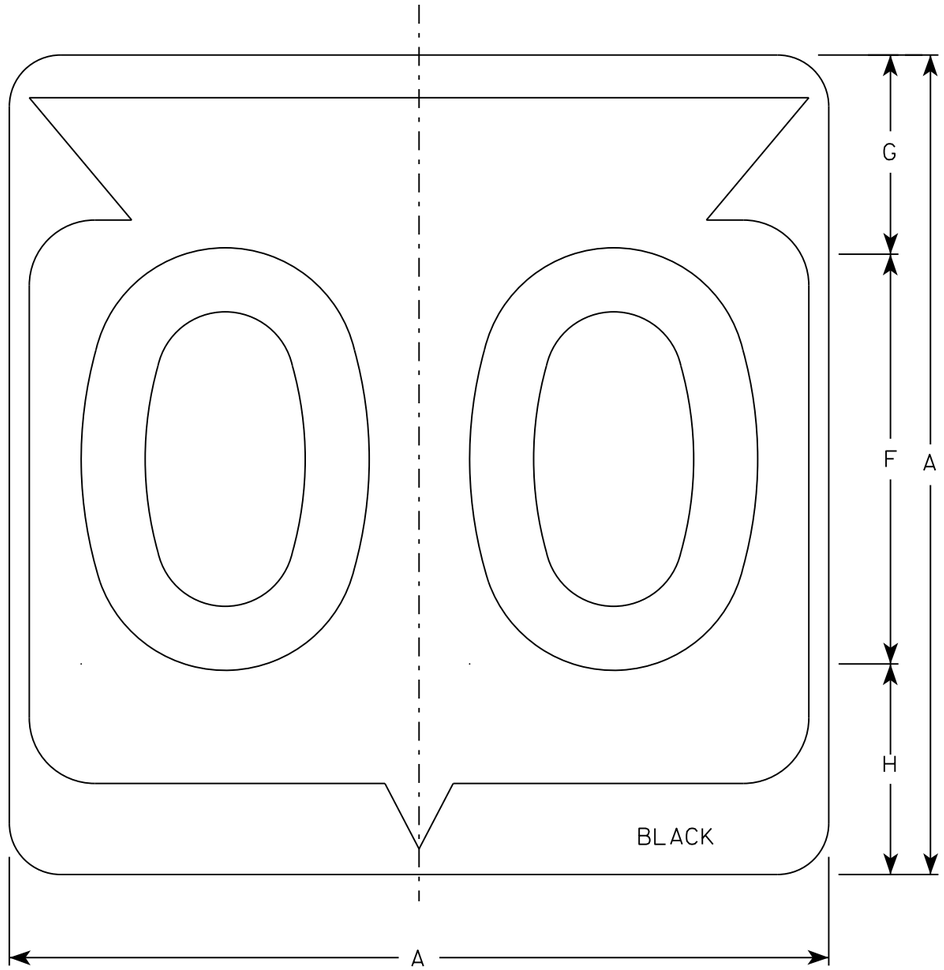

M1-6

NOTES

1. Sign is Type II - Type H Reflective
2. Color:
   Background - White
   Message - Black
3. Message Series - D except 3 number signs Series C
4. Corners may be square or rounded when base material is plywood but borders shall be rounded as shown. When base material is metal, the corners and borders shall be rounded.

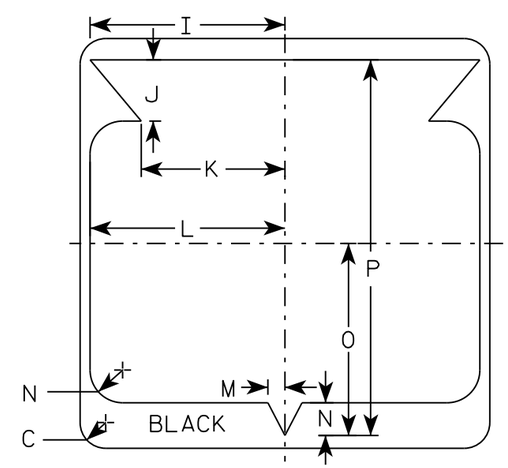

SIZE	A	B	C	D	E	F	G	H	I	J	K	L	M	N	O	P	Q	R	S	T	U	V	W	X	Y	Z	Area sq. ft.
1																											
2	24		1 1/2			12	5 1/2	6 1/2	10 1/4	2 1/2	8 7/8	11 1/2	1	1 7/8	11 1/4	21 7/8											4.0
3	36		2 1/4			18	8 3/4	9 1/4	15 3/8	5 3/8	12 5/8	17 1/8	1 1/2	2 7/8	16 7/8	33											9.0
4	36		2 1/4			18	8 3/4	9 1/4	15 3/8	5 3/8	12 5/8	17 1/8	1 1/2	2 7/8	16 7/8	33											9.0
5	36		2 1/4			18	8 3/4	9 1/4	15 3/8	5 3/8	12 5/8	17 1/8	1 1/2	2 7/8	16 7/8	33											9.0

STATE ROUTE MARKER
M1-6 FOR ASSEMBLIES

WISCONSIN DEPT OF TRANSPORTATION

APPROVED Matthew R Rauch
for State Traffic Engineer

DATE 3/16/18 PLATE NO. M1-6.10

PROJECT NO: | HWY: | COUNTY: | SHEET NO: 104 | E

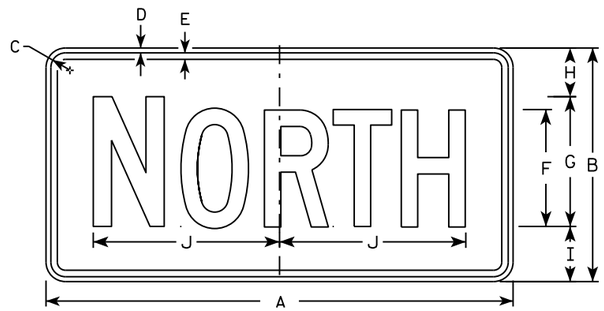

M3-1
MM3-1
MP3-1

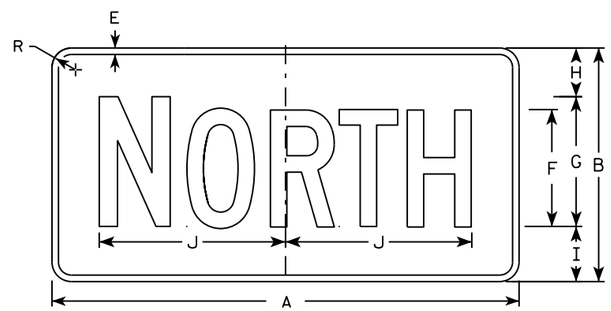

MB3-1
MK3-1
MN3-1

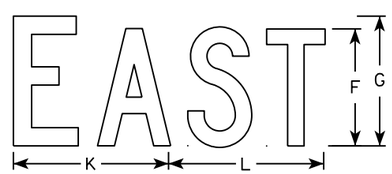

M3-2
MM3-2
MP3-2

MB3-2
MK3-2
MN3-2

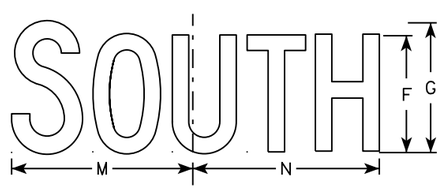

M3-3
MM3-3
MP3-3

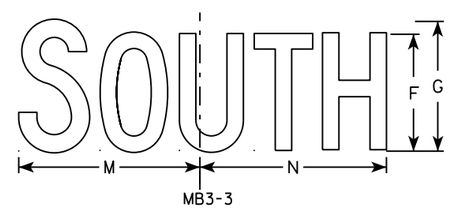

MB3-3
MK3-3
MN3-3

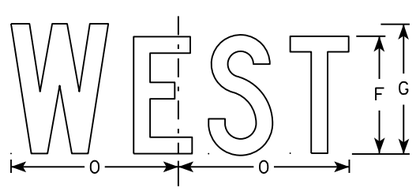

M3-4
MM3-4
MP3-4

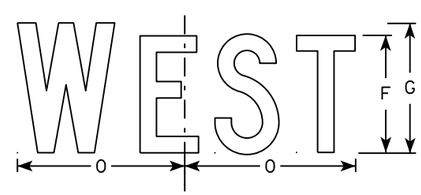

MB3-4
MK3-4
MN3-4

NOTES

1. All Signs Type II - Type H
2. Color:
   Background - See note 5
   Message - See note 5
3. Message Series - C
4. Corners may be square or rounded when base material is plywood but borders shall be rounded as shown. When base material is metal, the corners and borders shall be rounded.
5. M3-1 thru M3-4 Background - White
   Message - Black
   MB3-1 thru MB3-4 Background - Blue
   Message - White
   MK3-1 thru MK3-4 Background - Green
   Message - White
   MM3-1 thru MM3-4 Background - White
   Message - Green
   MN3-1 thru MN3-4 Background - Brown
   Message - White
   MP3-1 thru MP3-4 Background - White
   Message - Blue
6. Note the first letter of each direction is larger than the remainder of the message.

SIZE	A	B	C	D	E	F	G	H	I	J	K	L	M	N	O	P	Q	R	S	T	U	V	W	X	Y	Z	Area sq. ft.
1																											
2	24	12	1 1/8	3/8	3/8	6	7	2 1/4	2 3/4	10 1/4	7 7/8	8 3/8	10 1/4	9 3/4	8 3/4			1 1/2									2.00
3	36	18	1 1/8	3/8	1/2	9	10	3 3/4	4 1/4	14 3/8	12	12 1/8	14	14 1/8	13			1 1/2									4.5
4	36	18	1 1/8	3/8	1/2	9	10	3 3/4	4 1/4	14 3/8	12	12 1/8	14	14 1/8	13			1 1/2									4.5
5	36	18	1 1/8	3/8	1/2	9	10	3 3/4	4 1/4	14 3/8	12	12 1/8	14	14 1/8	13			1 1/2									4.5

STANDARD SIGNS
M3-1 thur M3-4
SERIES

WISCONSIN DEPT OF TRANSPORTATION

APPROVED Matthew R Rauch
for State Traffic Engineer

DATE 10/15/15 PLATE NO M3-1.14

PROJECT NO: | HWY: | COUNTY: | SHEET NO: | E

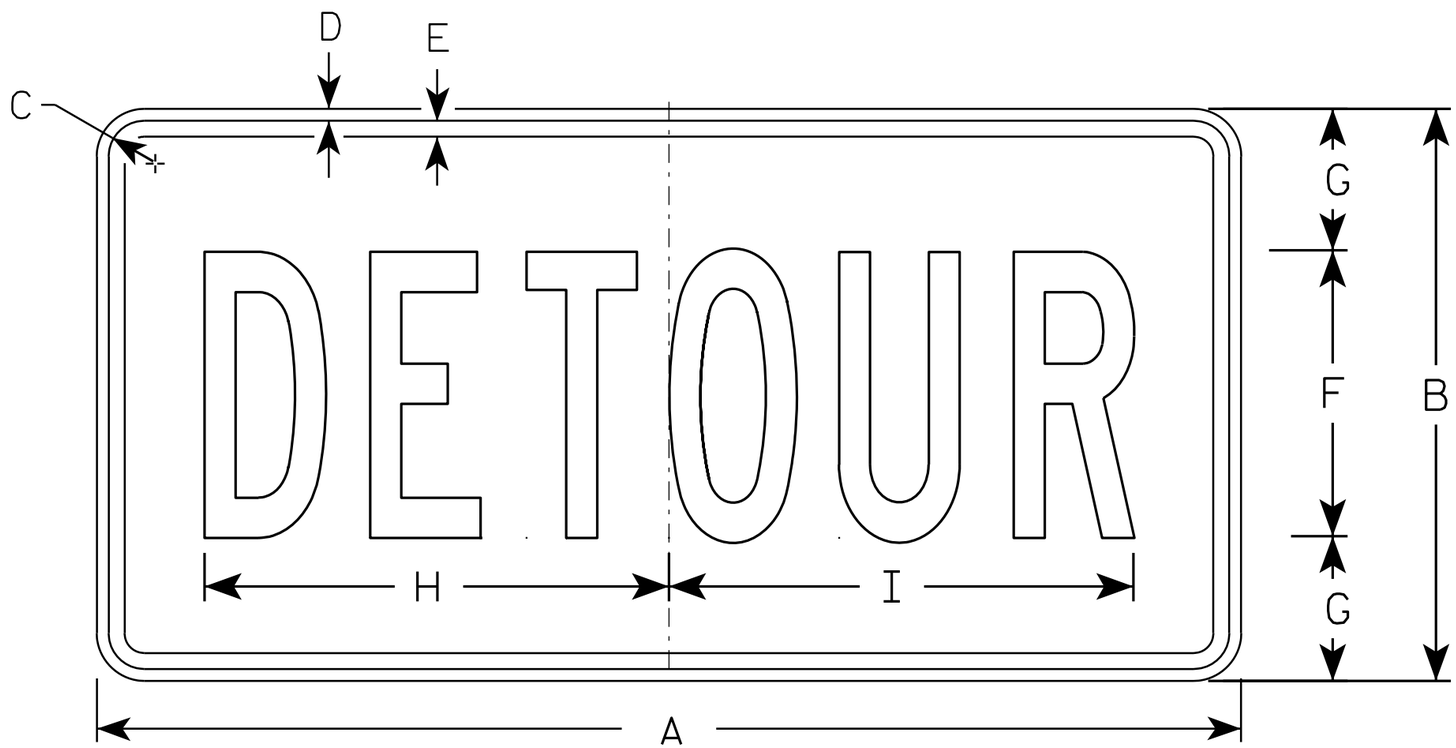

M4-8

NOTES

1. Sign is Type II - Type F Reflective - reference WIS DOT Standard Specification for HIGHWAY and STRUCTURE CONSTRUCTION latest edition.
2. Color:
   Background - Orange
   Message - Black
3. Message Series - B
4. Corners may be square or rounded when base material is plywood but borders shall be rounded as shown. When base material is metal, the corners and borders shall be rounded.

SIZE	A	B	C	D	E	F	G	H	I	J	K	L	M	N	O	P	Q	R	S	T	U	V	W	X	Y	Z	Area sq. ft.
1																											
2	24	12	1 1/8	3/8	3/8	6	3	10	10 1/4																		2.0
3	36	18	1 1/8	3/8	1/2	9	4 1/2	14 5/8	14 1/2																		4.5
4																											
5																											

STANDARD SIGN
M4-8

WISCONSIN DEPT OF TRANSPORTATION

APPROVED Matthew R Rauch
for State Traffic Engineer

DATE 11/10/10 PLATE NO. M4-8.2

PROJECT NO: | HWY: | COUNTY: | SHEET NO: 106 | E

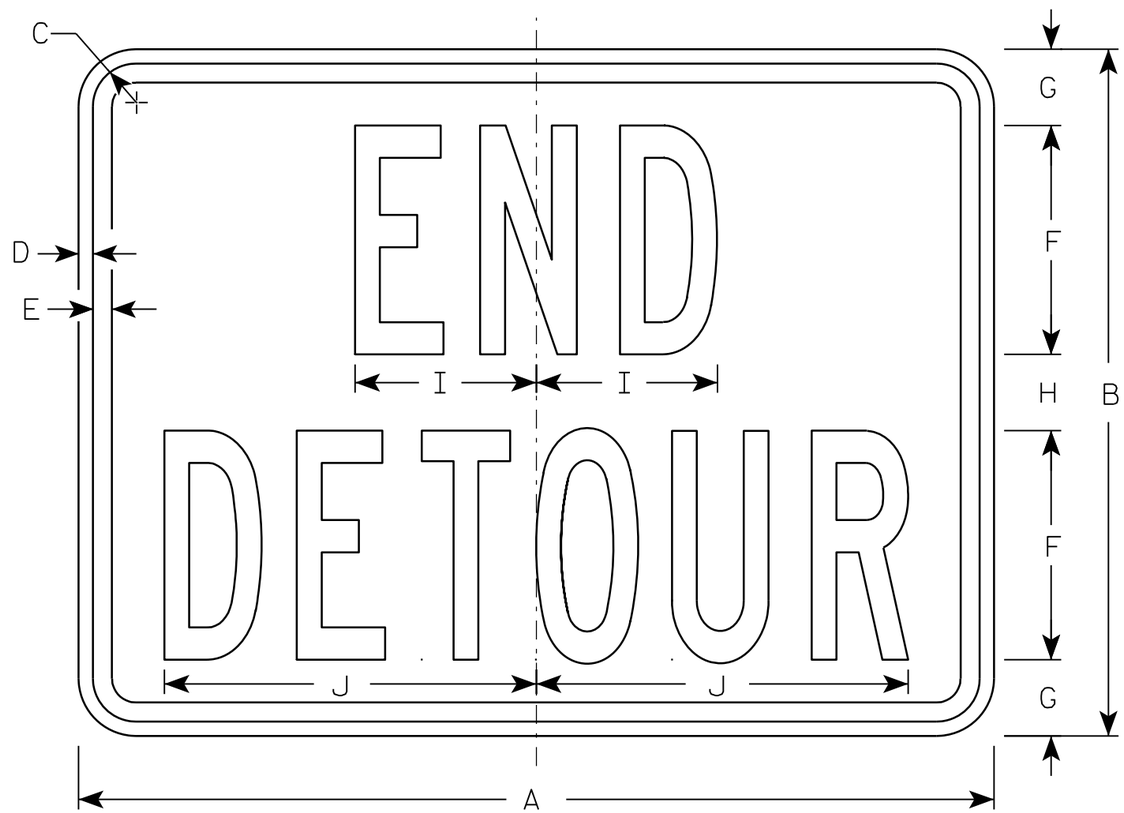

M4-8A

NOTES

1. Sign is Type II - Type F Reflective - reference WIS DOT Standard Specification for HIGHWAY and STRUCTURE CONSTRUCTION latest edition.
2. Color:
   Background - Orange
   Message - Black
3. Message Series - B
4. Corners may be square or rounded when base material is plywood but borders shall be rounded as shown. When base material is metal, the corners and borders shall be rounded.

SIZE	A	B	C	D	E	F	G	H	I	J	K	L	M	N	O	P	Q	R	S	T	U	V	W	X	Y	Z	Area sq. ft.
1																											
2	24	18	1 1/8	3/8	1/2	6	2	2	4 3/4	9 3/4																	3.0
3	30	24	1 1/8	3/8	1/2	8	2 1/2	3	6 3/4	13																	5.0
4																											
5																											

STANDARD SIGN
M4-8A

WISCONSIN DEPT OF TRANSPORTATION

APPROVED Matthew R Rauch
for State Traffic Engineer

DATE 3/9/11 PLATE NO. M4-8A.2

PROJECT NO: | HWY: | COUNTY: | SHEET NO: 107 | E

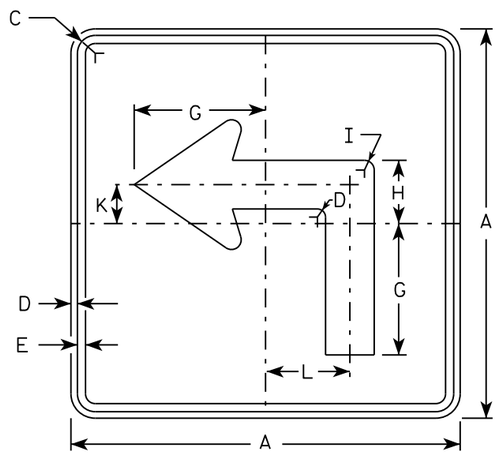

M5-1L
MM5-1L
MO5-1L
MP5-1L

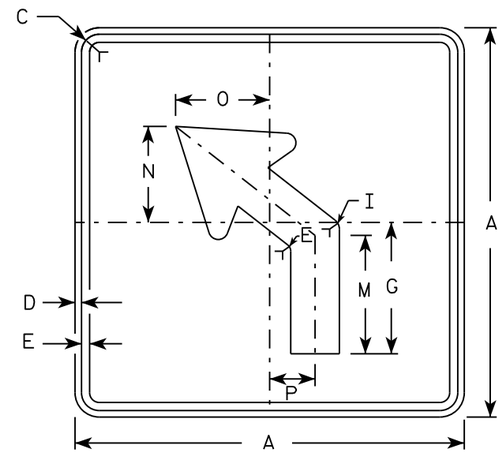

M5-2L
MM5-2L
MO5-2L
MP5-2L

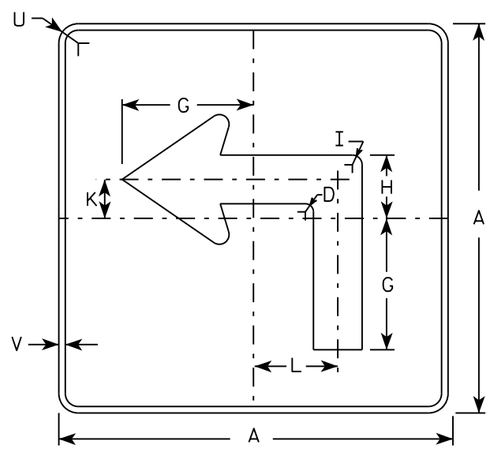

MB5-1L
MK5-1L
MN5-1L
MR5-1L

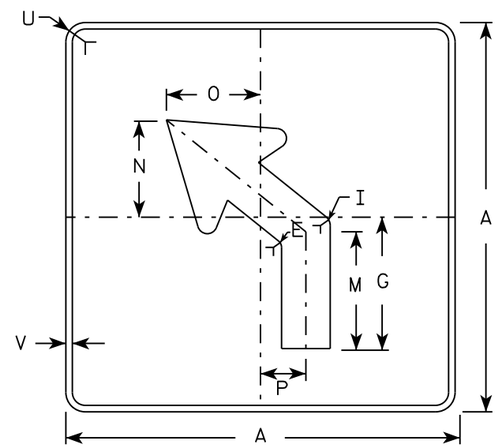

MB5-2L
MK5-2L
MN5-2L
MR5-2L

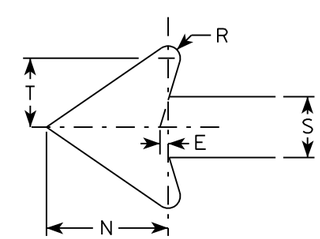

NOTES

1. Signs are Type II - Type H reflective except as shown
2. Color:
   Background - See note 4
   Message - See note 4
3. Corners may be square or rounded when base material is plywood but borders shall be rounded as shown. When base material is metal, the corners and borders shall be rounded.
4. M5-1 and M5-2 Background - White
   Message - Black
   MB5-1 and MB5-2 Background - Blue
   Message - White
   MK5-1 and MK5-2 Background - Green
   Message - White
   MM5-1 and MM5-2 Background - White
   Message - Green
   MN5-1 and MN5-2 Background - Brown
   Message - White
   MO5-1 and MO5-2 Background - Orange - Type F Reflective
   Message - Black
   MP5-1 and MP5-2 Background - White - Type H Reflective
   Message - Blue
   MR5-1 and MR5-2 Background - Brown
   Message - Yellow
5. M5-1R same as M5-1L except arrow points right.
6. M5-2R same as M5-2L except arrow tilts right.

SIZE	A	B	C	D	E	F	G	H	I	J	K	L	M	N	O	P	Q	R	S	T	U	V	W	X	Y	Z	Area sq. ft.
1																											
2	21		1 1/8	3/8	3/8		7	3 3/8	5/8		2 1/8	4 1/2	6 3/8	5 1/4	5	2 1/2		1/2	2 5/8	3	1 1/2	1/2					3.06
3	30		1 3/8	1/2	5/8		10 1/8	4 7/8	7/8		3	6 1/2	9 1/8	7 1/2	7 1/4	3 1/2		3/4	3 3/4	4 1/4	1 7/8	1/2					6.25
4	30		1 3/8	1/2	5/8		10 1/8	4 7/8	7/8		3	6 1/2	9 1/8	7 1/2	7 1/4	3 1/2		3/4	3 3/4	4 1/4	1 7/8	1/2					6.25
5	30		1 3/8	1/2	5/8		10 1/8	4 7/8	7/8		3	6 1/2	9 1/8	7 1/2	7 1/4	3 1/2		3/4	3 3/4	4 1/4	1 7/8	1/2					6.25

STANDARD SIGN
M5-1 & M5-2

WISCONSIN DEPT OF TRANSPORTATION

APPROVED Matthew R Rauch
for State Traffic Engineer

DATE 10/15/15 PLATE NO. M5-1.13

PROJECT NO:	HWY:	COUNTY:		SHEET NO:	E

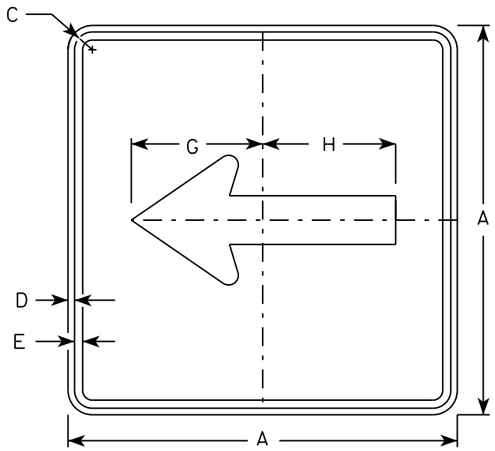

M6-1
MM6-1
MO6-1
MP6-1

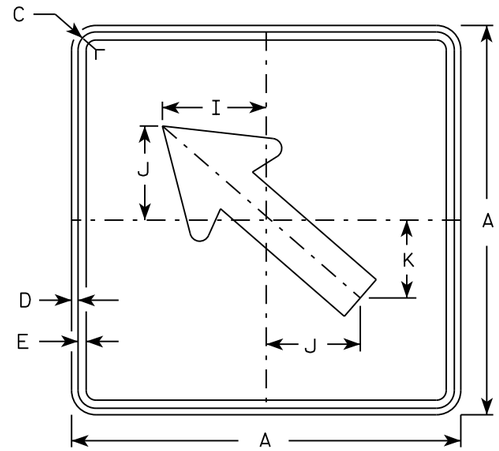

M6-2
MM6-2
MO6-2
MP6-2

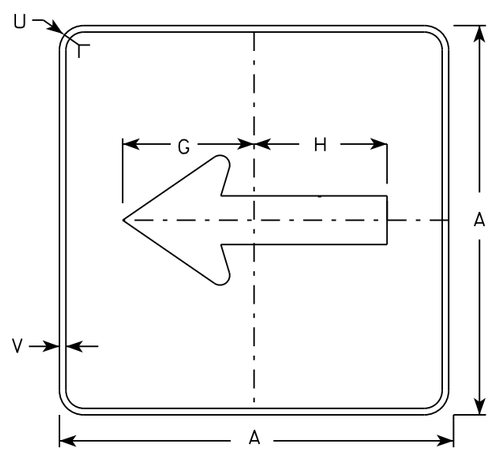

MB6-1
MK6-1
MN6-1
MR6-1

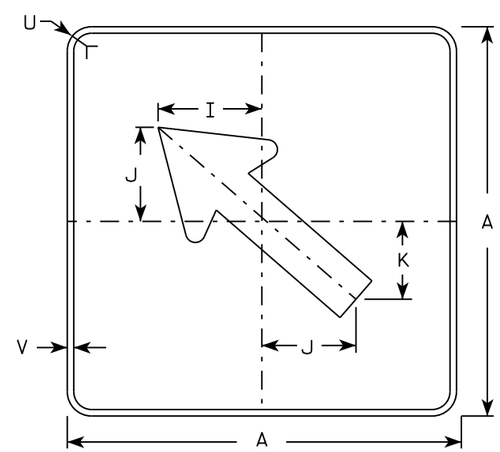

MB6-2
MK6-2
MN6-2
MR6-2

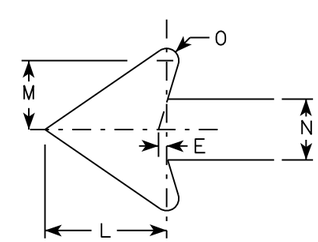

NOTES

1. Signs are Type II - Type H except as Shown
2. Color:
   Background - See note 4
   Message - See note 4
3. Corners may be square or rounded when base material is plywood but borders shall be rounded as shown. When base material is metal, the corners and borders shall be rounded.
4. M6-1 and M6-2 Background - White
   Message - Black
   MB6-1 and MB6-2 Background - Blue
   Message - White
   MK6-1 and MK6-2 Background - Green
   Message - White
   MM6-1 and MM6-2 Background - White
   Message - Green
   MN6-1 and MN6-2 Background - Brown
   Message - White
   MO6-1 and MO6-2 Background - Orange - Type F Reflective
   Message - Black
   MP6-1 and MP6-2 Background - White
   Message - Blue
   MR6-1 and MR6-2 Background - Brown
   Message - Yellow

SIZE	A	B	C	D	E	F	G	H	I	J	K	L	M	N	O	P	Q	R	S	T	U	V	W	X	Y	Z	Area sq. ft.
1																											
2	21		1 1/8	3/8	3/8		7 1/2	7 1/8	5 5/8	5	4 1/4	5 1/4	3	2 5/8	1/2						1 1/2	1/2					3.06
3	30		1 3/8	1/2	5/8		10 3/4	10 1/4	8	7 1/4	6	7 1/2	4 1/4	3 3/4	3/4						1 7/8	1/2					6.25
4	30		1 3/8	1/2	5/8		10 3/4	10 1/4	8	7 1/4	6	7 1/2	4 1/4	3 3/4	3/4						1 7/8	1/2					6.25
5	30		1 3/8	1/2	5/8		10 3/4	10 1/4	8	7 1/4	6	7 1/2	4 1/4	3 3/4	3/4						1 7/8	1/2					6.25

STANDARD SIGN
M6-1 & M6-2
SERIES

WISCONSIN DEPT OF TRANSPORTATION

APPROVED Matthew R Rauch
for State Traffic Engineer

DATE 10/15/15 PLATE 109 M6-1.15

PROJECT NO: | HWY: | COUNTY: | SHEET NO: | E

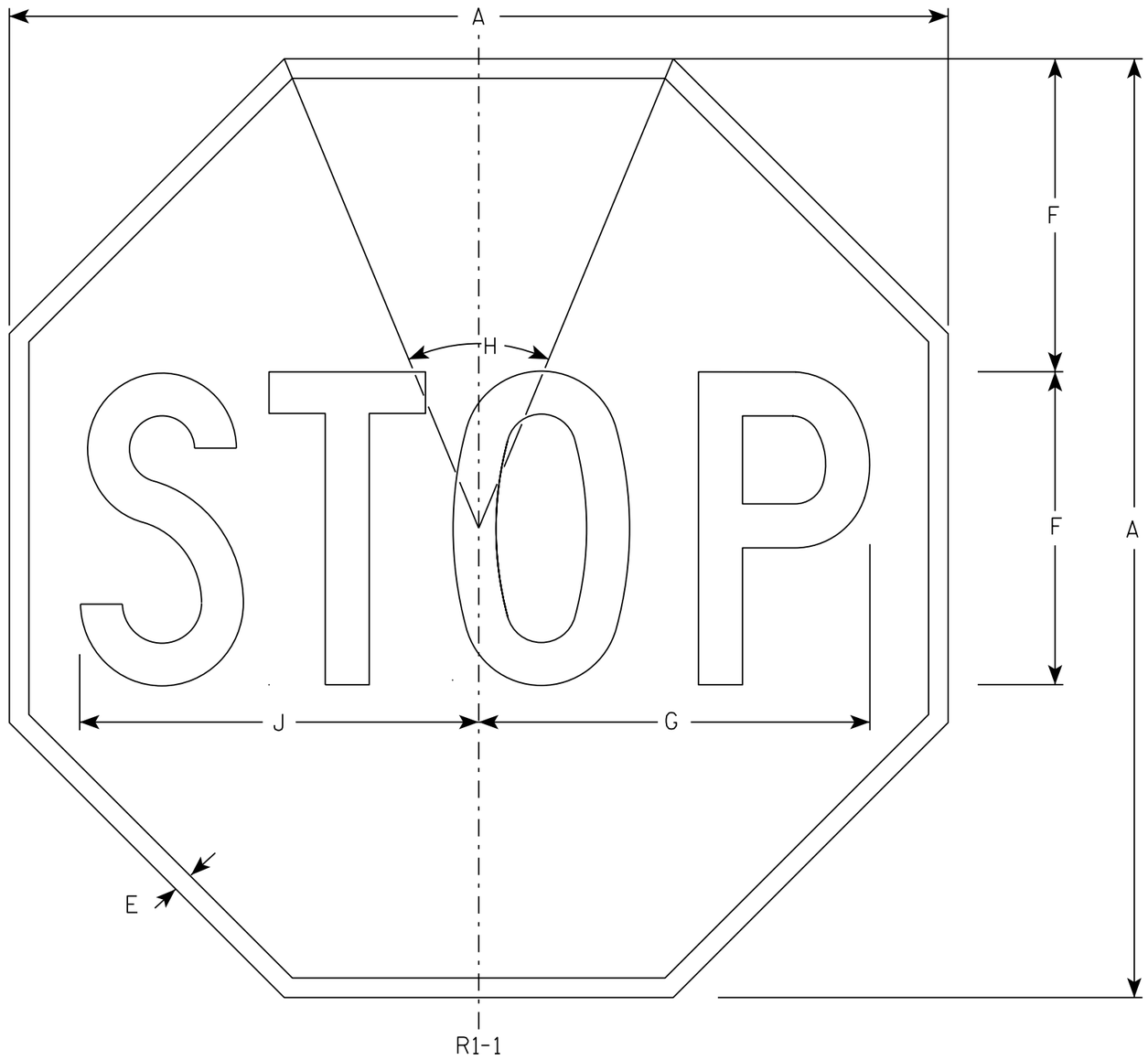

NOTES

1. Sign is Type II - Type H Reflective - reference WIS DOT Standard Specification for HIGHWAY and STRUCTURE CONSTRUCTION latest edition.
2. Color:
   Background - Red
   Message - White
3. Message Series - C

SIZE	A	B	C	D	E	F	G	H	I	J	K	L	M	N	O	P	Q	R	S	T	U	V	W	X	Y	Z	Area sq. ft.
1	30				5/8	10	12 1/2	45°		12 3/4																	5.18
2S	30				5/8	10	12 1/2	45°		12 3/4																	5.18
2M	36				3/4	12	15	45°		15 3/8																	7.46
3	36				3/4	12	15	45°		15 3/8																	7.46
4	48				1	16	20	45°		20 1/2																	13.25
5	48				1	16	20	45°		20 1/2																	13.25
6	18				3/8	6	7 3/4	45°		7 3/4																	1.86
7	12				1/4	4	5	45°		5 1/8																	0.78

STANDARD SIGN
R1-1

WISCONSIN DEPT OF TRANSPORTATION

APPROVED Matthew R Rauch
for State Traffic Engineer

DATE 11/12/15 PLATE NO. R1-1.13

PROJECT NO: | HWY: | COUNTY: | SHEET NO: 110 | E

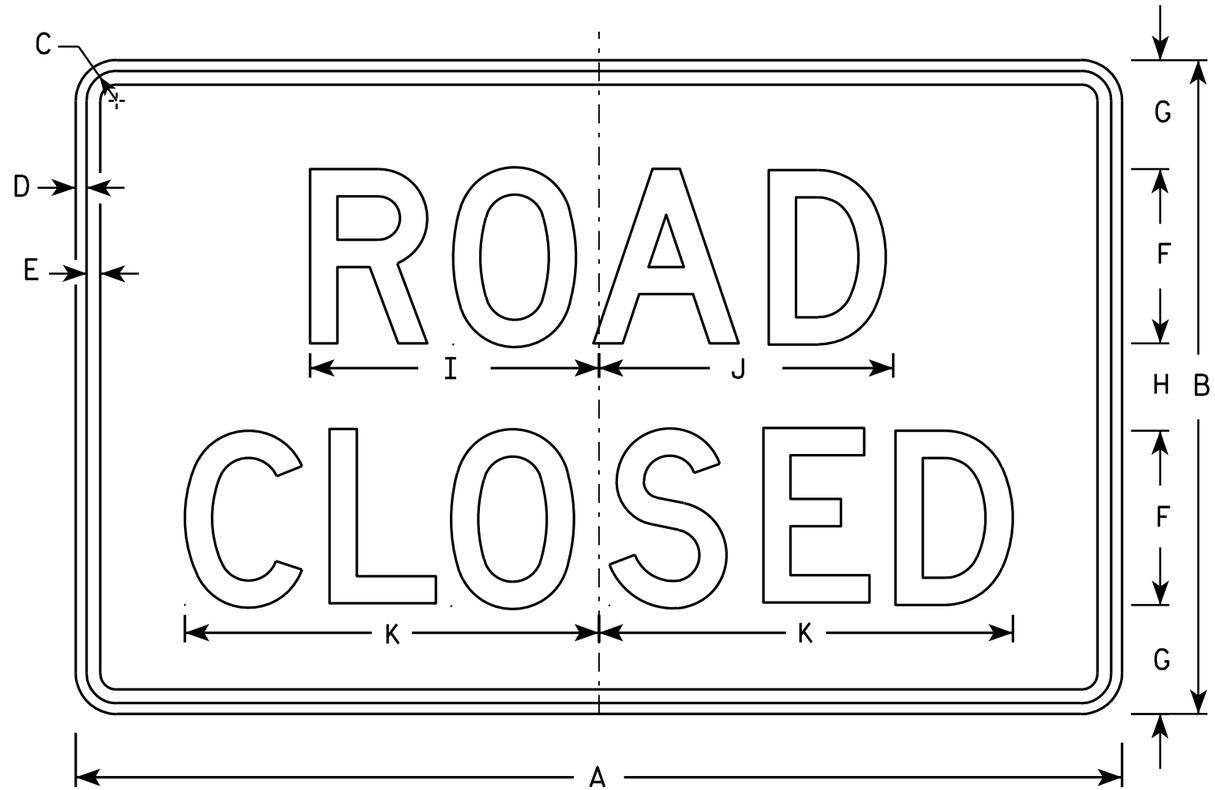

R11-2

NOTES

1. Sign is Type II - Type H Reflective - reference WIS DOT Standard Specification for HIGHWAY and STRUCTURE CONSTRUCTION latest edition.
2. Color:
   Background - White
   Message - Black
3. Message Series - D
4. Corners may be square or rounded when base material is plywood but borders shall be rounded as shown. When base material is metal, the corners and borders shall be rounded.
5. Modify the message as required.

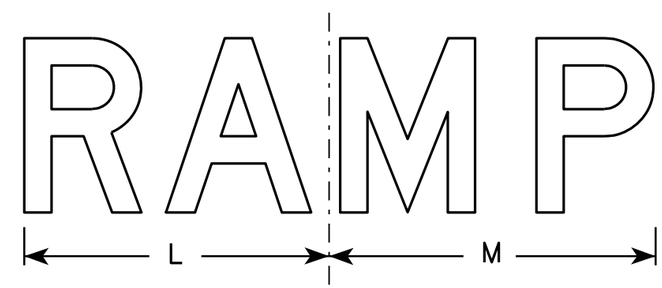

R11-2R

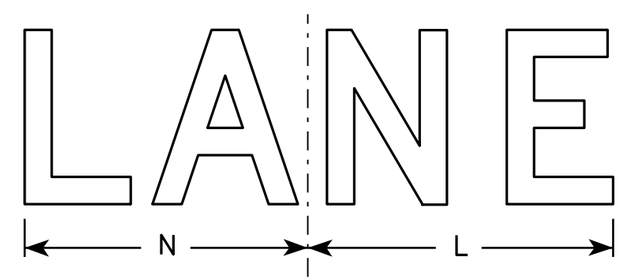

R11-2L

SIZE	A	B	C	D	E	F	G	H	I	J	K	L	M	N	O	P	Q	R	S	T	U	V	W	X	Y	Z	Area sq. ft.
1																											
2S	48	30	1 3/8	1/2	5/8	8	5	4	13 1/4	13 1/2	19	14	15	13													10.0
2M	48	30	1 3/8	1/2	5/8	8	5	4	13 1/4	13 1/2	19	14	15	13													10.0
3	48	30	1 3/8	1/2	5/8	8	5	4	13 1/4	13 1/2	19	14	15	13													10.0
4	48	30	1 3/8	1/2	5/8	8	5	4	13 1/4	13 1/2	19	14	15	13													10.0
5	48	30	1 3/8	1/2	5/8	8	5	4	13 1/4	13 1/2	19	14	15	13													10.0

STANDARD SIGN
R11-2

WISCONSIN DEPT OF TRANSPORTATION

APPROVED Matthew R Rauch
for State Traffic Engineer

DATE 4/1/11 PLATE NO. R11-2.10

PROJECT NO:	HWY:	COUNTY:		SHEET NO: 111	E

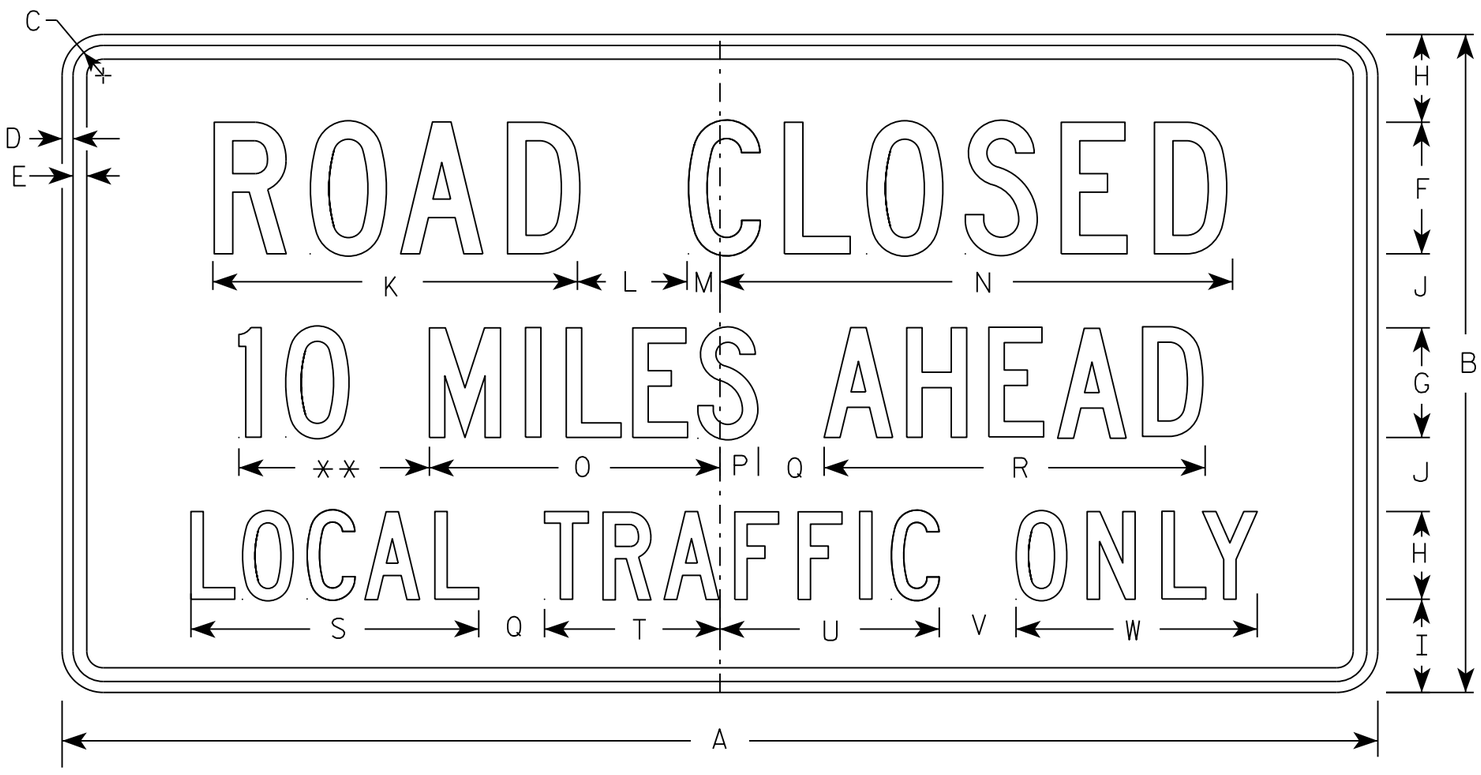

R11-3

** See Note 5

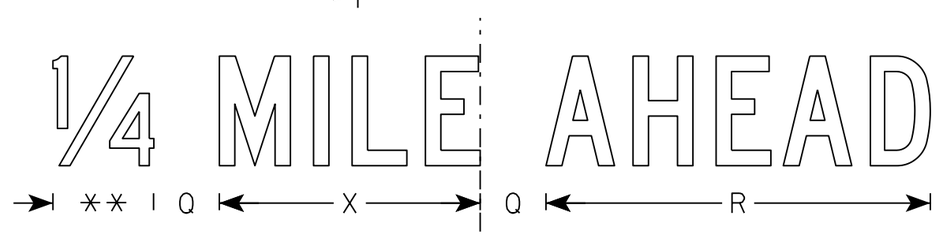

NOTES

1. Sign is Type II - Type H Reflective
2. Color:
   Background - White
   Message - Black
3. Message Series - C
4. Corners may be square or rounded when base material is plywood but borders shall be rounded as shown. When base material is metal, the corners and borders shall be rounded.
5. Substitute appropriate numerals to nearest quarter mile and optically adjust spacing to achieve proper balance.

SIZE	A	B	C	D	E	F	G	H	I	J	K	L	M	N	O	P	Q	R	S	T	U	V	W	X	Y	Z	Area sq. ft.
1	36	18	1 3/8	1/2	5/8	4	3	2 1/2	2	2	11 1/8	3	1 1/8	15 1/4	8	1 1/2	2	10 3/4	8 3/8	4 3/4	6 1/2	2	6 3/4	7 1/8			4.5
2S	60	30	1 3/8	1/2	5/8	6	5	4	4 1/4	3 3/8	16 5/8	5	1 1/2	23	13 1/4	1 3/4	3	17 3/8	13 1/8	8	10	3 1/2	11	11 7/8			12.5
2M	60	30	1 3/8	1/2	5/8	6	5	4	4 1/4	3 3/8	16 5/8	5	1 1/2	23	13 1/4	1 3/4	3	17 3/8	13 1/8	8	10	3 1/2	11	11 7/8			12.5
3																											
4																											
5																											

STANDARD SIGN
R11-3

WISCONSIN DEPT OF TRANSPORTATION

APPROVED Matthew R Rauch
for State Traffic Engineer

DATE 3/15/17 PLATE NO. R11-3.8

PROJECT NO: | HWY: | COUNTY: | SHEET NO: 112 | E

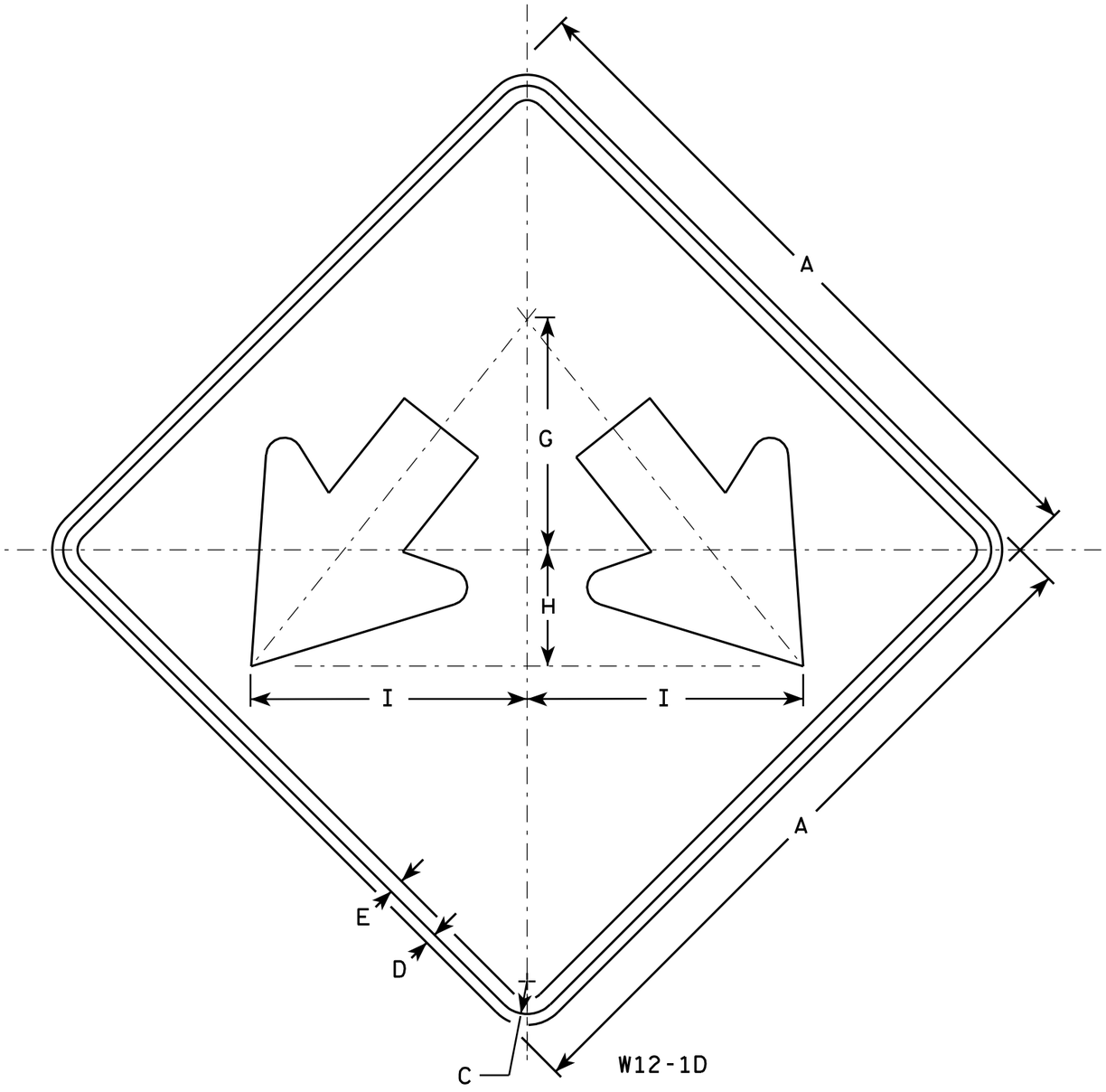

NOTES

1. Sign is Type II - Type F Reflective - reference WIS DOT Standard Specification for HIGHWAY and STRUCTURE CONSTRUCTION latest edition.
2. Color:
   Background - Yellow
   Message - Black
3. Corners may be square or rounded when base material is plywood but borders shall be rounded as shown. When base material is metal, the corners and borders shall be rounded.

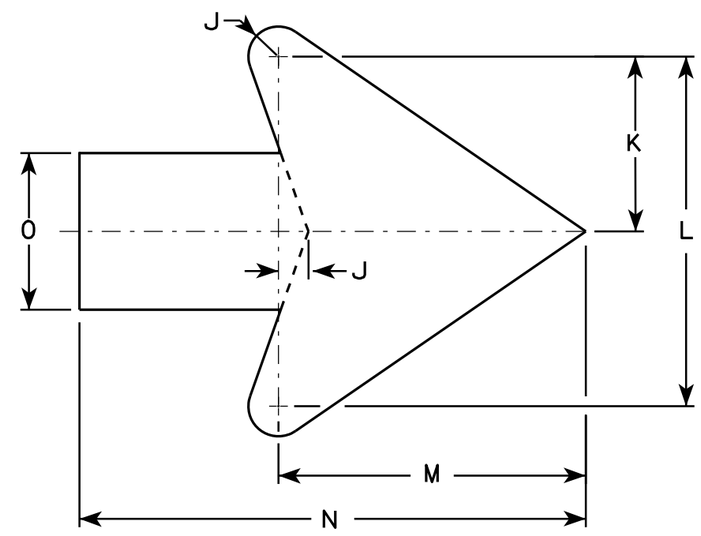

Arrow Detail

SIZE	A	B	C	D	E	F	G	H	I	J	K	L	M	N	O	P	Q	R	S	T	U	V	W	X	Y	Z	Area sq. ft.
1																											
2S	24		1 1/8	1/2	3/8		8	4	9 1/2	3/8	3 3/8	7 1/4	6 3/8	10 3/8	3 1/4												4.0
2M	24		1 1/8	1/2	3/8		8	4	9 1/2	3/8	3 3/8	7 1/4	6 3/8	10 3/8	3 1/4												4.0
3	30		1 3/8	1/2	5/8		10	5	11 7/8	3/4	4 1/2	9	7 7/8	13	4												6.25
4	36		1 3/8	1/2	5/8		12	6	14 1/4	1	5 1/2	10 7/8	9 5/8	15 3/4	4 3/4												9.0
5	48		2 1/4	3/4	1		16	8	19	1 1/4	7 1/4	14 1/2	12 3/4	21	6 1/4												16.0

STANDARD SIGN
W12-1D

WISCONSIN DEPT OF TRANSPORTATION

APPROVED Matthew R Rauch
for State Traffic Engineer

DATE 3/13/13 PLATE NO. W12-1D.15

PROJECT NO: | HWY: | COUNTY: | SHEET NO: 113 | E

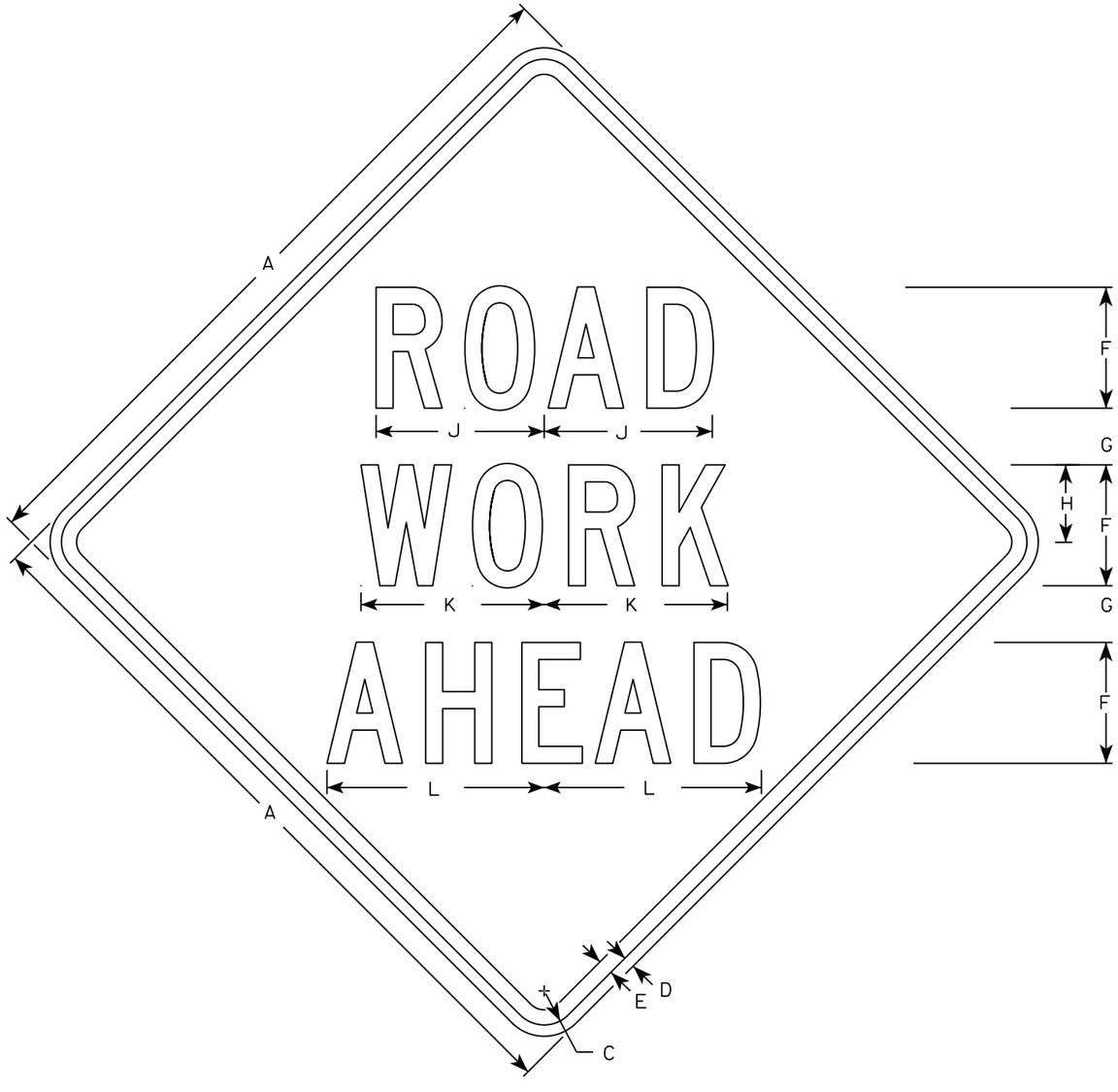

W20-1A

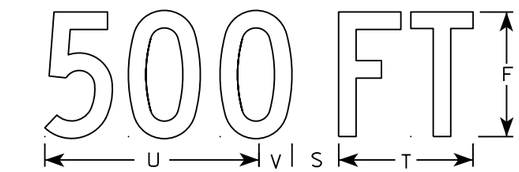

W20-1D

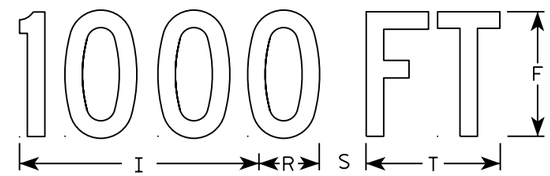

W20-1C

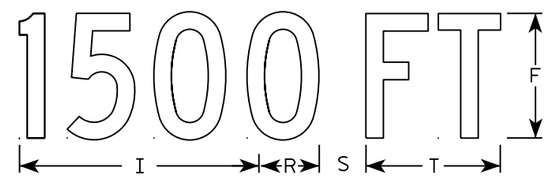

W20-1B

W20-1G

W20-1F

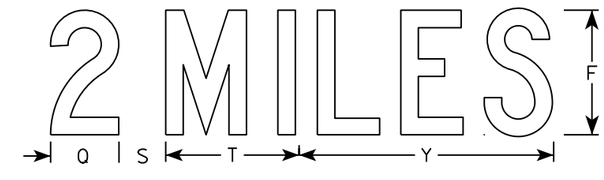

W20-1E

NOTES

1. Sign is Type II - Type F Reflective
2. Color:
   Background - Orange
   Message - Black
3. Message Series - C
4. Corners may be square or rounded when base material is plywood but borders shall be rounded as shown. When base material is metal, the corners and borders shall be rounded.

SIZE	A	B	C	D	E	F	G	H	I	J	K	L	M	N	O	P	Q	R	S	T	U	V	W	X	Y	Z	Area sq. ft.
1	36		1 3/8	1/2	5/8	5	2 5/8	3 1/4	10 1/8	7	7 5/8	8 7/8	1 1/8	4 1/2	3 1/2	9		2 1/2	2 1/4	5 5/8	9	1 3/8	8	1 3/4	10 3/4	6	9.0
2S	48		2 1/4	3/4	1	8	3 3/4	5 1/8	15 3/8	11 1/8	12 1/8	14 3/8	1 5/8	6 7/8	5 3/8	13 7/8	4 3/8	3 7/8	3	8 5/8	13 3/4	2 1/8	11 7/8	2 3/4	16 3/8	9	16.0
2M	48		2 1/4	3/4	1	8	3 3/4	5 1/8	15 3/8	11 1/8	12 1/8	14 3/8	1 5/8	6 7/8	5 3/8	13 7/8	4 3/8	3 7/8	3	8 5/8	13 3/4	2 1/8	11 7/8	2 3/4	16 3/8	9	16.0
3	48		2 1/4	3/4	1	8	3 3/4	5 1/8	15 3/8	11 1/8	12 1/8	14 3/8	1 5/8	6 7/8	5 3/8	13 7/8	4 3/8	3 7/8	3	8 5/8	13 3/4	2 1/8	11 7/8	2 3/4	16 3/8	9	16.0
4	48		2 1/4	3/4	1	8	3 3/4	5 1/8	15 3/8	11 1/8	12 1/8	14 3/8	1 5/8	6 7/8	5 3/8	13 7/8	4 3/8	3 7/8	3	8 5/8	13 3/4	2 1/8	11 7/8	2 3/4	16 3/8	9	16.0
5	48		2 1/4	3/4	1	8	3 3/4	5 1/8	15 3/8	11 1/8	12 1/8	14 3/8	1 5/8	6 7/8	5 3/8	13 7/8	4 3/8	3 7/8	3	8 5/8	13 3/4	2 1/8	11 7/8	2 3/4	16 3/8	9	16.0

STANDARD SIGN
W20-1A, B, C, D, F & G

WISCONSIN DEPT OF TRANSPORTATION

APPROVED Matthew R Rauch
for State Traffic Engineer

DATE 5/07/15 PLATE NO. W20-1.10

PROJECT NO:

SHEET NO: E

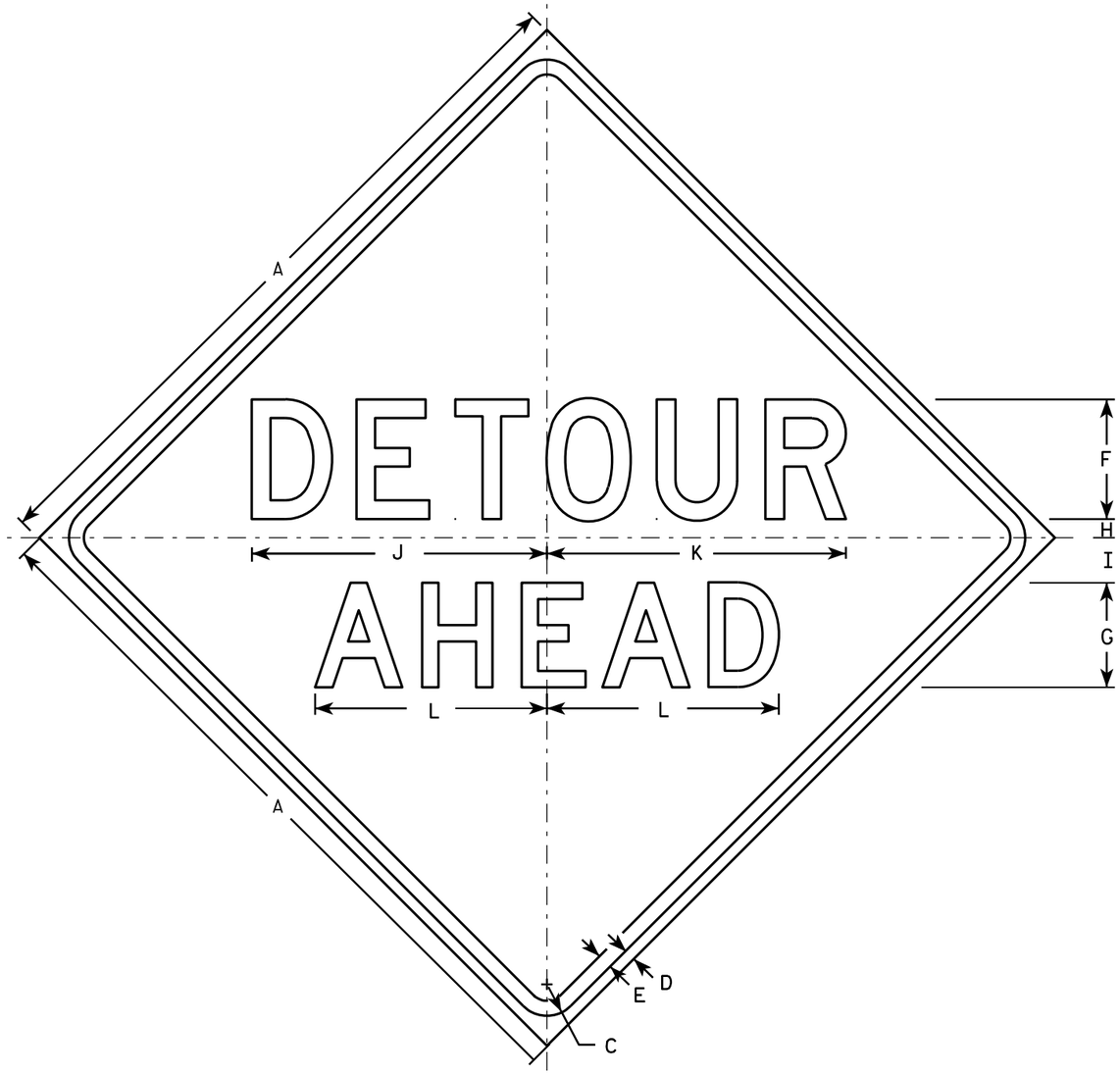

W20-2A

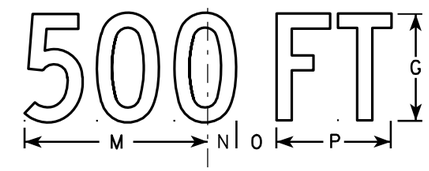

W20-2D

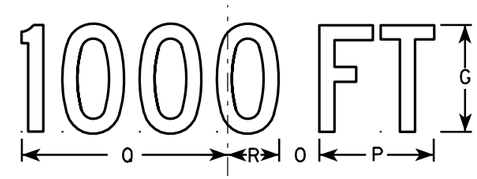

W20-2C

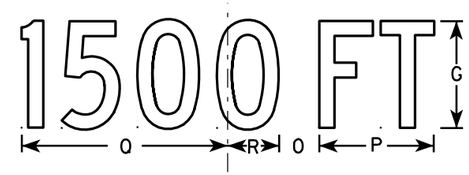

W20-2B

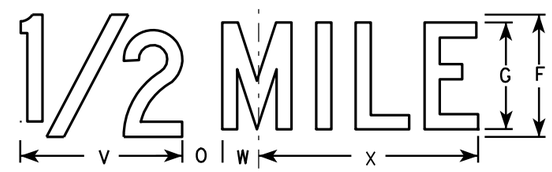

W20-2G

W20-2F

NOTES

1. Sign is Type II - Type F Reflective - reference WIS DOT Standard Specification for HIGHWAY and STRUCTURE CONSTRUCTION latest edition.
2. Color:
   Background - Orange
   Message - Black
3. Message Series - See note 5
4. Corners may be square or rounded when base material is plywood but borders shall be rounded as shown. When base material is metal, the corners and borders shall be rounded.
5. Line 1 is Series D.
   Line 2 is Series D for AHEAD and Series C for all other distances.

SIZE	A	B	C	D	E	F	G	H	I	J	K	L	M	N	O	P	Q	R	S	T	U	V	W	X	Y	Z	Area sq. ft.
1	36		1 5/8	5/8	3/4	6	5	1	2 1/4	14 3/4	15	11 5/8	9	1 3/8	1 7/8	5 5/8	10 1/8	2 1/2	1 1/8	4 1/2	3 1/2	8	1 3/4	10 3/4			9.0
2S	48		2 1/4	3/4	1	8	7	1 1/4	3	19 3/4	20	15 1/2	12	1 7/8	2 5/8	7 1/2	13 1/2	3 3/8	1 1/2	6	4 5/8	10 5/8	2 3/8	14 3/8			16.0
2M	48		2 1/4	3/4	1	8	7	1 1/4	3	19 3/4	20	15 1/2	12	1 7/8	2 5/8	7 1/2	13 1/2	3 3/8	1 1/2	6	4 5/8	10 5/8	2 3/8	14 3/8			16.0
3	48		2 1/4	3/4	1	8	7	1 1/4	3	19 3/4	20	15 1/2	12	1 7/8	2 5/8	7 1/2	13 1/2	3 3/8	1 1/2	6	4 5/8	10 5/8	2 3/8	14 3/8			16.0
4	48		2 1/4	3/4	1	8	7	1 1/4	3	19 3/4	20	15 1/2	12	1 7/8	2 5/8	7 1/2	13 1/2	3 3/8	1 1/2	6	4 5/8	10 5/8	2 3/8	14 3/8			16.0
5	48		2 1/4	3/4	1	8	7	1 1/4	3	19 3/4	20	15 1/2	12	1 7/8	2 5/8	7 1/2	13 1/2	3 3/8	1 1/2	6	4 5/8	10 5/8	2 3/8	14 3/8			16.0

STANDARD SIGN
W20-2A,B,C,D,F & G

WISCONSIN DEPT OF TRANSPORTATION

APPROVED Matthew R Rauch
for State Traffic Engineer
DATE 3/18/11 PLATE NO. W20-2.6

7

7

PROJECT NO: | HWY: | COUNTY: | SHEET NO: 115 | E

Division 1 - STH 80

STATION	Real Station	Distance	AREA (SF) Cut	AREA (SF) Salvaged/Unusable Pavement Material	AREA (SF) Fill	Incremental Vol (CY) (Unadjusted) Cut	Incremental Vol (CY) (Unadjusted) Salvaged/Unusable Pavement Material	Incremental Vol (CY) (Unadjusted) Fill	Cumulative Vol (CY) Expanded Cut 1.00	Cumulative Vol (CY) Expanded Fill 1.25	Cumulative Vol (CY) Mass Ordinate
1244+03.55	124403.55	0.00	0.42	0.00	0.22	0	0	0	0	0	0
1244+50	124450.00	46.45	2.04	0.00	21.77	4	0	37	4	47	-43
1245+00	124500.00	50.00	2.22	0.00	35.70	4	0	66	8	129	-122
1245+21.94	124521.94	21.94	1.30	0.00	32.77	1	0	28	9	164	-155
1245+47	124547.00	25.06	3.87	0.00	0.00	4	0	0	13	164	-152
1245+72	124572.00	25.00	2.58	0.00	0.00	2	0	0	15	164	-149
1245+75.24	124575.24	3.23	2.60	0.00	0.00	0	0	0	15	164	-149
1245+87.74	124587.74	12.50	2.95	0.00	0.00	1	0	0	17	164	-148
1245+97	124597.00	9.27	3.00	0.00	0.00	1	0	0	18	164	-147
1246+22	124622.00	25.00	0.07	0.00	1.73	0	0	2	18	166	-149
1246+36.07	124636.07	14.06	0.77	0.00	22.44	0	0	12	18	181	-163
STRUCTURE B-71-015											
1246+61.48	124661.48	0.00	1.09	0.00	27.04	0	0	0	18	181	-163
1246+75.78	124675.78	14.31	0.20	0.00	2.40	0	0	1	18	182	-164
1247+00.78	124700.78	25.00	1.17	0.00	0.00	1	0	0	19	182	-163
1247+10.16	124710.16	9.38	1.17	0.00	0.12	0	0	0	20	182	-163
1247+22.66	124722.66	12.50	1.72	0.00	1.00	1	0	0	20	183	-162
1247+25.78	124725.78	3.13	2.00	0.00	1.20	0	0	0	21	183	-162
1247+50.78	124750.78	25.00	2.90	0.00	11.08	3	0	10	23	196	-172
1247+75.78	124775.78	25.00	2.07	0.00	16.00	2	0	15	25	214	-189
1248+00	124800.00	24.22	1.50	0.00	42.70	2	0	26	27	247	-220
1248+50	124850.00	50.00	1.87	0.00	22.30	3	0	41	30	299	-269
1248+94.28	124894.28	44.28	1.46	0.00	0.11	2	0	0	33	299	-266
						33	0	239			

Division 1 - STH 80

STATION	Real Station	Distance	AREA (SF) Cut	AREA (SF) Salvaged/Unusable Pavement Material	AREA (SF) Fill	Incremental Vol (CY) (Unadjusted) Cut	Incremental Vol (CY) (Unadjusted) Salvaged/Unusable Pavement Material	Incremental Vol (CY) (Unadjusted) Fill	Cumulative Vol (CY) Expanded Cut 1.00	Cumulative Vol (CY) Expanded Fill 1.25	Cumulative Vol (CY) Mass Ordinate
1352+97	135297.00	0.00	2.00	0.00	0.20	0	0	0	0	0	0
1353+50	135350.00	53.00	1.64	0.00	22.60	3	0	44	3	55	-52
1354+15.87	135415.87	65.87	0.81	0.00	24.50	2	0	60	5	130	-125
1354+40.87	135440.87	25.00	2.20	0.00	6.50	2	0	6	7	138	-130
1354+65.87	135465.87	25.00	1.70	0.00	0.00	2	0	0	9	138	-129
1354+69.08	135469.08	3.22	1.50	0.00	0.00	0	0	0	9	138	-129
1354+81.58	135481.58	12.50	1.40	0.00	0.01	1	0	0	10	138	-128
1354+90.87	135490.87	9.28	0.98	0.00	2.50	0	0	0	10	138	-128
1355+15.87	135515.87	25.00	0.09	0.00	16.65	0	0	15	10	158	-147
1355+31.49	135531.49	15.63	0.80	0.00	23.05	0	0	13	11	174	-164
STRUCTURE B-71-016											
1355+75.18	135575.18	0.00	0.50	0.00	41.28	0	0	0	0	0	-164
1355+89.24	135589.24	14.06	0.30	0.00	4.60	0	0	12	0	15	-178
1356+14.24	135614.24	25.00	1.23	0.00	0.28	1	0	0	1	15	-178
1356+23.61	135623.61	9.38	1.00	0.00	0.30	0	0	0	1	15	-178
1356+36.11	135636.11	12.50	1.10	0.00	0.30	0	0	0	2	16	-177
1356+39.24	135639.24	3.13	1.10	0.00	0.30	0	0	0	2	16	-177
1356+64.24	135664.24	25.00	8.90	0.00	1.60	5	0	1	7	17	-174
1357+00	135700.00	35.76	1.30	0.00	0.10	7	0	1	13	19	-169
1357+73.68	135773.68	73.68	0.45	0.00	3.90	2	0	11	16	32	-180
						26	0	165			

Division 1 - STH 80

STATION	Real Station	Distance	AREA (SF) Cut	AREA (SF) Salvaged/Unusable Pavement Material	AREA (SF) Fill	Incremental Vol (CY) (Unadjusted) Cut	Incremental Vol (CY) (Unadjusted) Salvaged/Unusable Pavement Material	Incremental Vol (CY) (Unadjusted) Fill	Cumulative Vol (CY) Cut 1.00	Cumulative Vol (CY) Expanded Fill 1.25	Cumulative Vol (CY) Mass Ordinate
1370+41	137041.00	0.00	2.39	0.00	0.00	0	0	0	0	0	0
1370+66.2	137066.20	25.20	3.00	0.00	0.00	3	0	0	3	0	3
1371+60	137160.00	93.81	3.95	0.00	24.90	14	0	87	17	108	-92
1371+84.7	137184.70	24.69	1.60	0.00	24.50	1	0	22	18	136	-118
1372+09.7	137209.70	25.00	1.20	0.00	5.33	1	0	5	19	142	-123
1372+34.7	137234.70	25.00	0.83	0.00	2.00	1	0	2	20	145	-125
1372+37.8	137237.80	3.11	1.13	0.00	2.52	0	0	0	20	145	-125
1372+50.41	137250.41	12.60	0.80	0.00	0.60	0	0	0	20	145	-125
1372+84.44	137284.44	34.03	0.12	0.00	11.98	0	0	15	21	164	-144
1372+98.43	137298.43	13.99	0.80	0.00	54.44	0	0	28	21	199	-179
1372+99.09	137299.09	0.66	0.40	0.00	60.90	0	0	1	21	201	-180
B-71-017											
1373+41.5	137341.50	0.00	0.17	0.00	58.80	0	0	0	0	0	-180
1373+43.24	137343.24	1.74	0.37	0.00	51.66	0	0	4	0	4	-185
1373+56.17	137356.17	12.93	0.34	0.00	2.38	0	0	1	0	6	-186
1373+57.39	137357.39	1.22	0.20	0.00	1.95	0	0	0	0	6	-186
1373+90.27	137390.27	32.89	1.12	0.00	0.10	1	0	0	2	6	-185
1373+91.84	137391.84	1.57	0.90	0.00	0.10	0	0	0	2	6	-185
1374+02.71	137402.71	10.87	1.09	0.00	23.39	0	0	9	2	18	-196
1374+04.51	137404.51	1.79	0.73	0.00	23.57	0	0	2	2	20	-198
1375+05.4	137505.40	100.89	0.57	0.00	27.90	2	0	104	4	150	-326
1375+30.27	137530.27	24.87	0.68	0.00	48.80	1	0	45	5	206	-382
1375+55.14	137555.14	24.87	0.28	0.00	48.23	0	0	44	5	262	-437
1375+83.56	137583.56	28.43	0.94	0.00	41.30	1	0	43	6	316	-490
1376+00	137600.00	16.44	0.27	0.00	40.30	0	0	25	6	347	-521
1376+08.69	137608.69	8.69	0.63	0.00	34.47	0	0	12	7	362	-536
1376+33.83	137633.83	25.14	0.37	0.00	21.20	0	0	20	7	387	-560
1376+72.73	137672.73	38.90	1.49	0.00	13.78	2	0	20	9	412	-583
1377+00	137700.00	27.27	0.44	0.00	11.18	0	0	11	10	426	-597
1377+53.2	137753.20	53.20	0.54	0.00	0.00	1	0	0	11	426	-596
						32	0	502			

Division 1 - STH 80

STATION	Real Station	Distance	AREA (SF) Cut	AREA (SF) Salvaged/Unusable Pavement Material	AREA (SF) Fill	Incremental Vol (CY) (Unadjusted) Cut	Incremental Vol (CY) (Unadjusted) Salvaged/Unusable Pavement Material	Incremental Vol (CY) (Unadjusted) Fill	Cumulative Vol (CY) Cut 1.00	Cumulative Vol (CY) Expanded Fill 1.25	Cumulative Vol (CY) Mass Ordinate
1439+56.04	143956.04	0.00	0.92	0.00	0.00	0	0	0	0	0	0
1439+68.54	143968.54	12.50	0.57	0.00	0.30	0	0	0	0	0	0
1440+00	144000.00	31.46	0.55	0.00	28.70	1	0	17	1	21	-20
1440+74.54	144074.54	74.54	1.21	0.00	50.70	2	0	110	3	158	-155
1440+87.04	144087.04	12.50	0.50	0.00	43.29	0	0	22	4	185	-182
1441+00	144100.00	12.96	0.69	0.00	15.50	0	0	14	4	203	-199
1441+12.04	144112.04	12.04	0.97	0.00	4.67	0	0	4	4	209	-204
1441+24.54	144124.54	12.50	1.30	0.00	4.33	1	0	2	5	211	-206
1441+25	144125.00	0.46	1.23	0.00	4.33	0	0	0	5	211	-206
1441+37.04	144137.04	12.04	1.45	0.00	3.89	1	0	2	6	214	-208
1441+50	144150.00	12.96	0.46	0.00	0.64	0	0	1	6	215	-209
1441+75	144175.00	25.00	0.91	0.00	6.41	1	0	3	7	219	-212
1441+84	144184.00	9.00	0.81	0.00	0.09	0	0	1	7	220	-213
1442+00	144200.00	16.00	0.78	0.00	0.74	0	0	0	7	221	-213
1442+30.79	144230.79	30.79	1.45	0.00	0.33	1	0	1	9	222	-213
1442+43.29	144243.29	12.50	1.30	0.00	0.30	1	0	0	9	222	-212
1442+55.79	144255.79	12.50	2.12	0.00	6.01	1	0	1	10	224	-213
1442+68.29	144268.29	12.50	1.80	0.00	8.70	1	0	3	11	228	-217
1442+80.79	144280.79	12.50	1.01	0.00	10.57	1	0	4	12	233	-222
1442+93.29	144293.29	12.50	1.18	0.00	17.20	1	0	6	12	241	-229
1443+50	144350.00	56.71	0.60	0.00	8.50	2	0	27	14	275	-261
1444+00	144400.00	50.00	0.92	0.00	0.00	1	0	8	16	285	-269
1444+11.79	144411.79	11.79	0.80	0.00	0.00	0	0	0	16	285	-269
						16	0	228			

Division 1 - Town Hall Rd 'T'

STATION	Real Station	Distance	AREA (SF) Cut	AREA (SF) Salvaged/Unusable Pavement Material	AREA (SF) Fill	Incremental Vol (CY) (Unadjusted) Cut	Incremental Vol (CY) (Unadjusted) Salvaged/Unusable Pavement Material	Incremental Vol (CY) (Unadjusted) Fill	Cumulative Vol (CY) Cut 1.00	Cumulative Vol (CY) Expanded Fill 1.25	Cumulative Vol (CY) Mass Ordinate
13+29.04	1329.04	0.00	0.91	0.00	0.00	0	0	0	0	0	0
13+35.26	1335.26	6.22	0.81	0.00	0.00	0	0	0	0	0	0
13+57.04	1357.04	21.78	1.29	0.00	0.00	1	0	0	0	0	1
13+72.8	1372.80	15.76	1.31	0.00	0.00	1	0	0	0	0	2
						2	0	0			

9

9

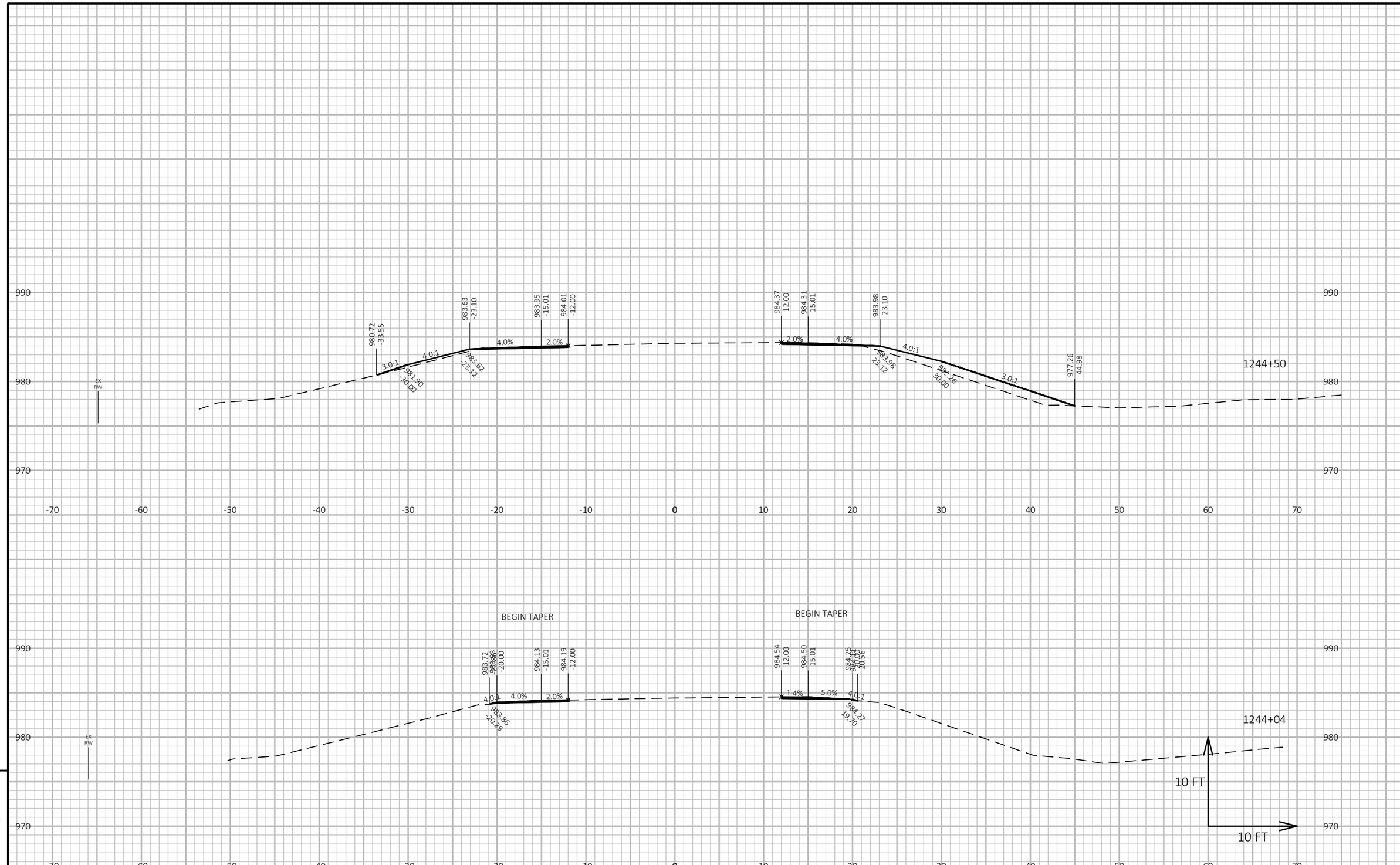

9

9

PROJECT NO: 1620-03-75	HWY: STH 80	COUNTY: WOOD	CROSS SECTIONS: STH 80	SHEET 119	E

FILE NAME : P:\90S\93\00093433\CADD\SHEETSPLAN -75\090201-XS.DWG
LAYOUT NAME - (20)
PLOT DATE : 1/16/2019 11:02 AM
PLOT BY : BOBBI MAXWELL
PLOT NAME :
PLOT SCALE : 1 IN:10 FT HORZ. / 1 IN:10 FT VERT.

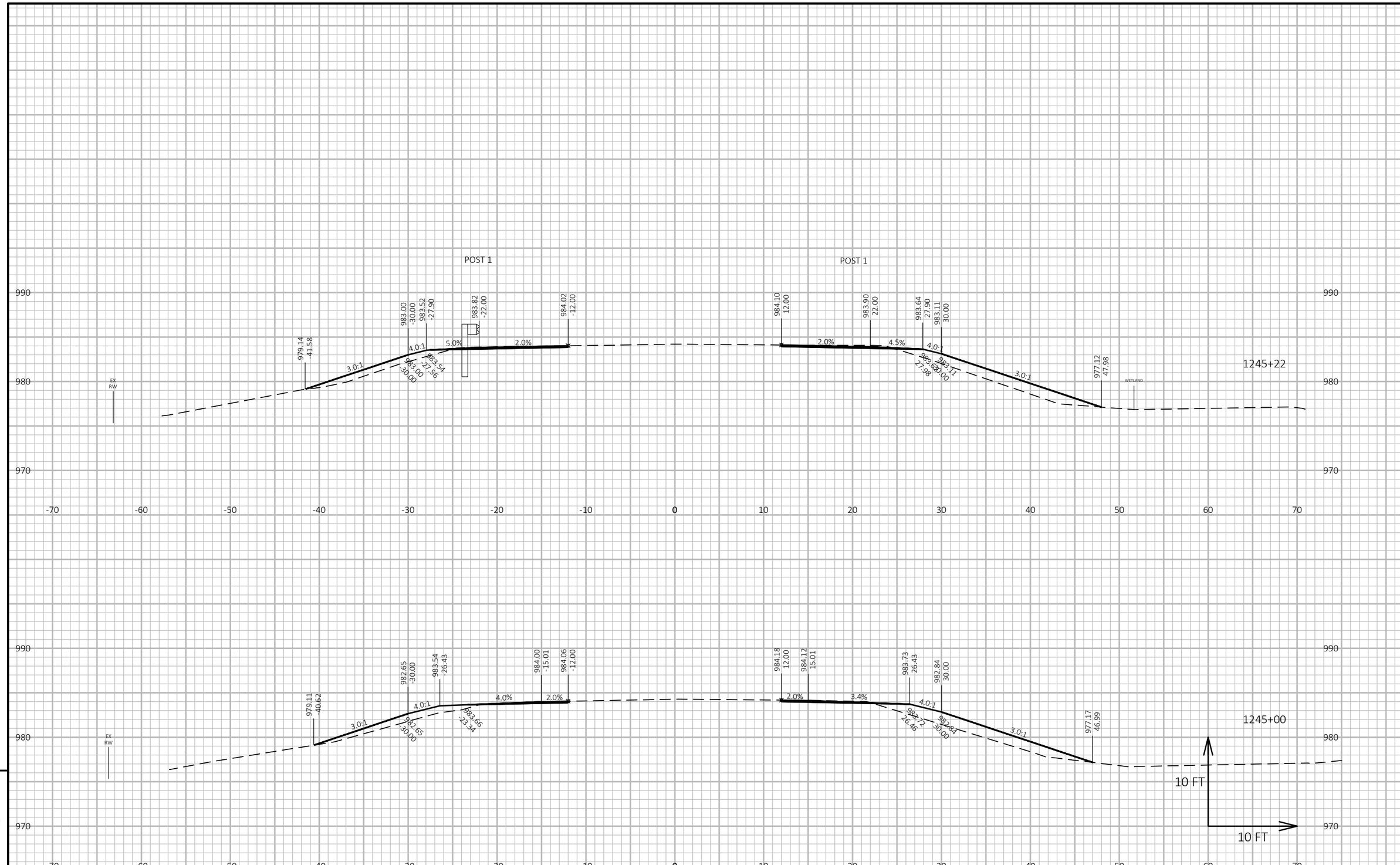

PROJECT NO: 1620-03-75	HWY: STH 80	COUNTY: WOOD	CROSS SECTIONS: STH 80	SHEET 120	E

FILE NAME : P:\90S\93\00093433\CADD\SHEETSPLAN -75\090201-XS.DWG
LAYOUT NAME - (21)
PLOT DATE : 1/16/2019 11:02 AM
PLOT BY : BOBBI MAXWELL
PLOT NAME :
PLOT SCALE : 1 IN:10 FT HORZ. / 1 IN:10 FT VERT.
WISDOT/CADDS SHEET 49

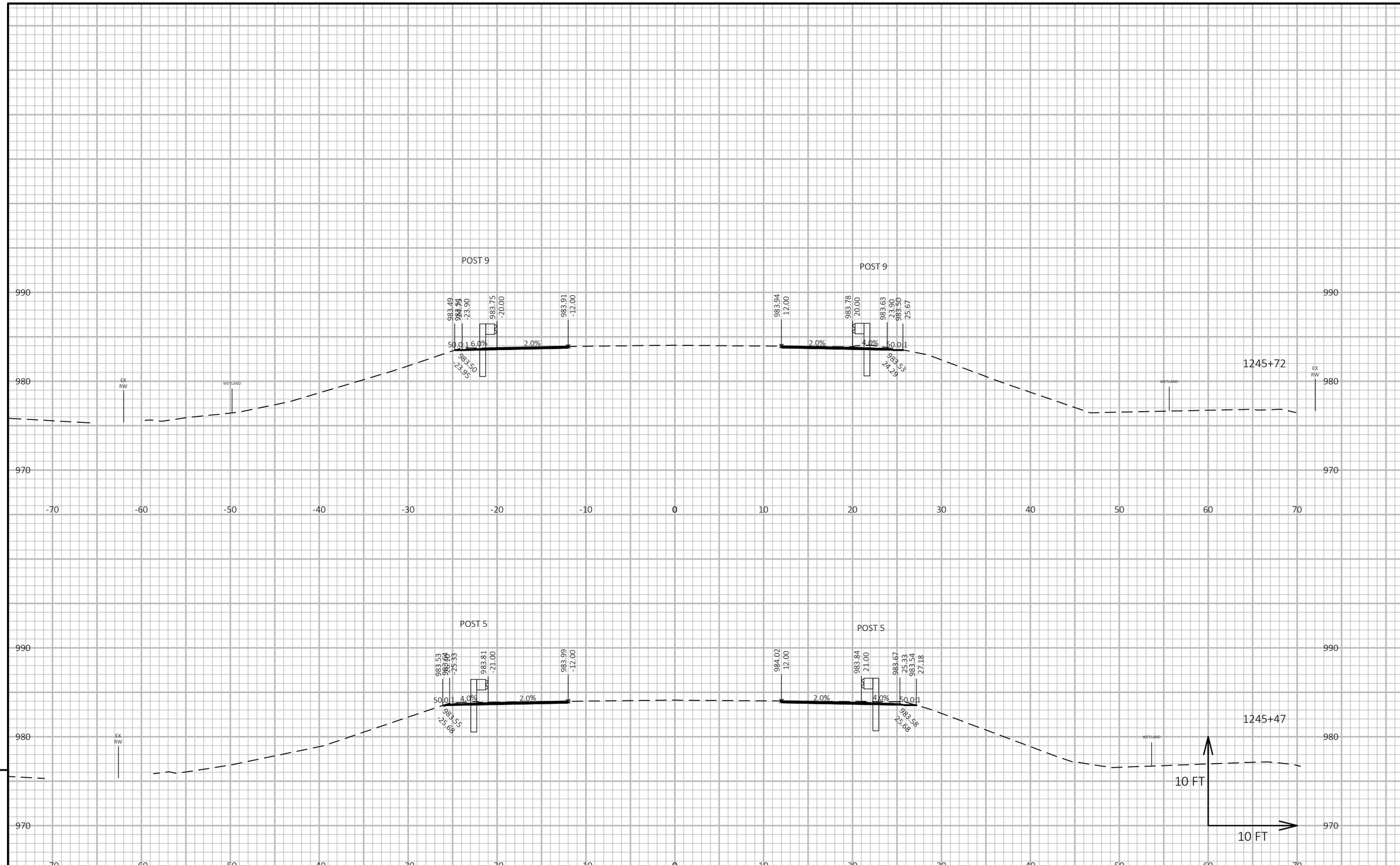

9

9

PROJECT NO: 1620-03-75	HWY: STH 80	COUNTY: WOOD	CROSS SECTIONS: STH 80	SHEET 121	E

FILE NAME : P:\90S\93\00093433\CADD\SHEETSPLAN -75\090201-XS.DWG
LAYOUT NAME - (22)
PLOT DATE : 1/16/2019 11:02 AM
PLOT BY : BOBBI MAXWELL
PLOT NAME :
PLOT SCALE : 1 IN:10 FT HORZ. / 1 IN:10 FT VERT.
WISDOT/CADDS SHEET 49

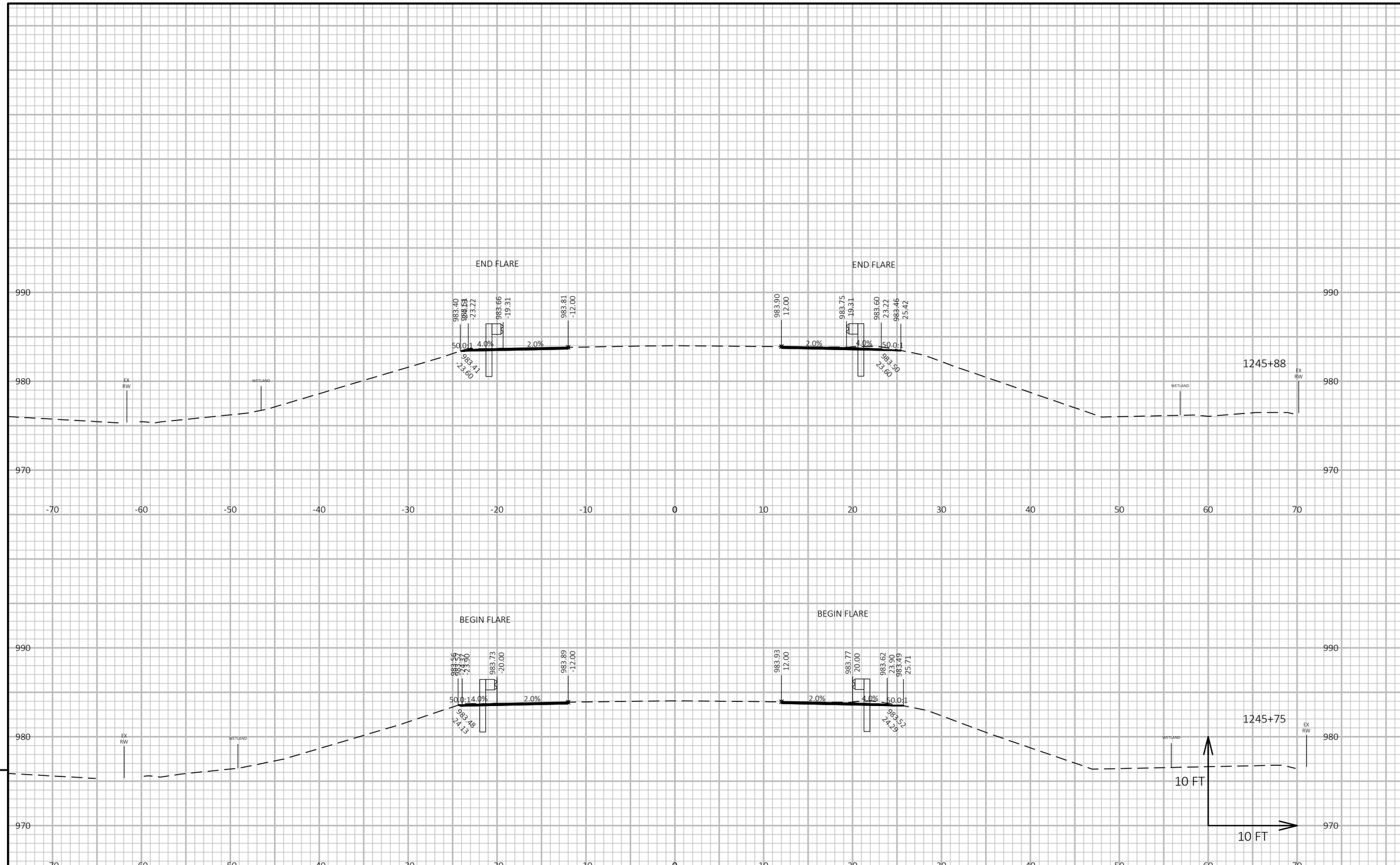

9

9

PROJECT NO: 1620-03-75	HWY: STH 80	COUNTY: WOOD	CROSS SECTIONS: STH 80	SHEET 122	E

FILE NAME : P:\90S\93\00093433\CADD\SHEETSPLAN -75\090201-XS.DWG
LAYOUT NAME - (23)
PLOT DATE : 1/16/2019 11:02 AM
PLOT BY : BOBBI MAXWELL
PLOT NAME :
PLOT SCALE : 1 IN:10 FT HORZ. / 1 IN:10 FT VERT.

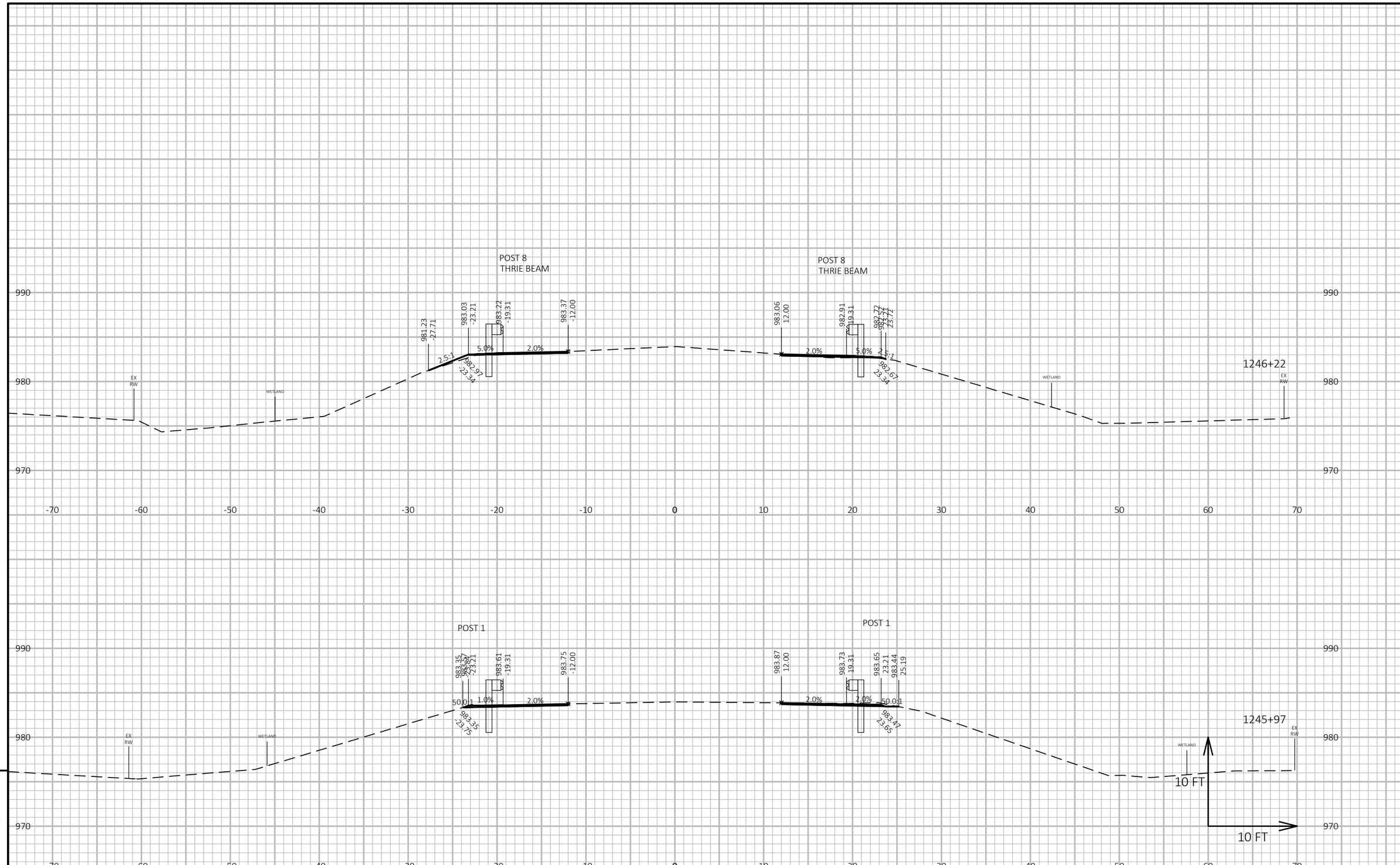

PROJECT NO: 1620-03-75	HWY: STH 80	COUNTY: WOOD	CROSS SECTIONS: STH 80	SHEET 123	E

FILE NAME : P:\90S\93\00093433\CADD\SHEETSPLAN -75\090201-XS.DWG
LAYOUT NAME - (24)
PLOT DATE : 1/16/2019 11:02 AM
PLOT BY : BOBBI MAXWELL
PLOT NAME :
PLOT SCALE : 1 IN:10 FT HORZ. / 1 IN:10 FT VERT.
WISDOT/CADDS SHEET 49

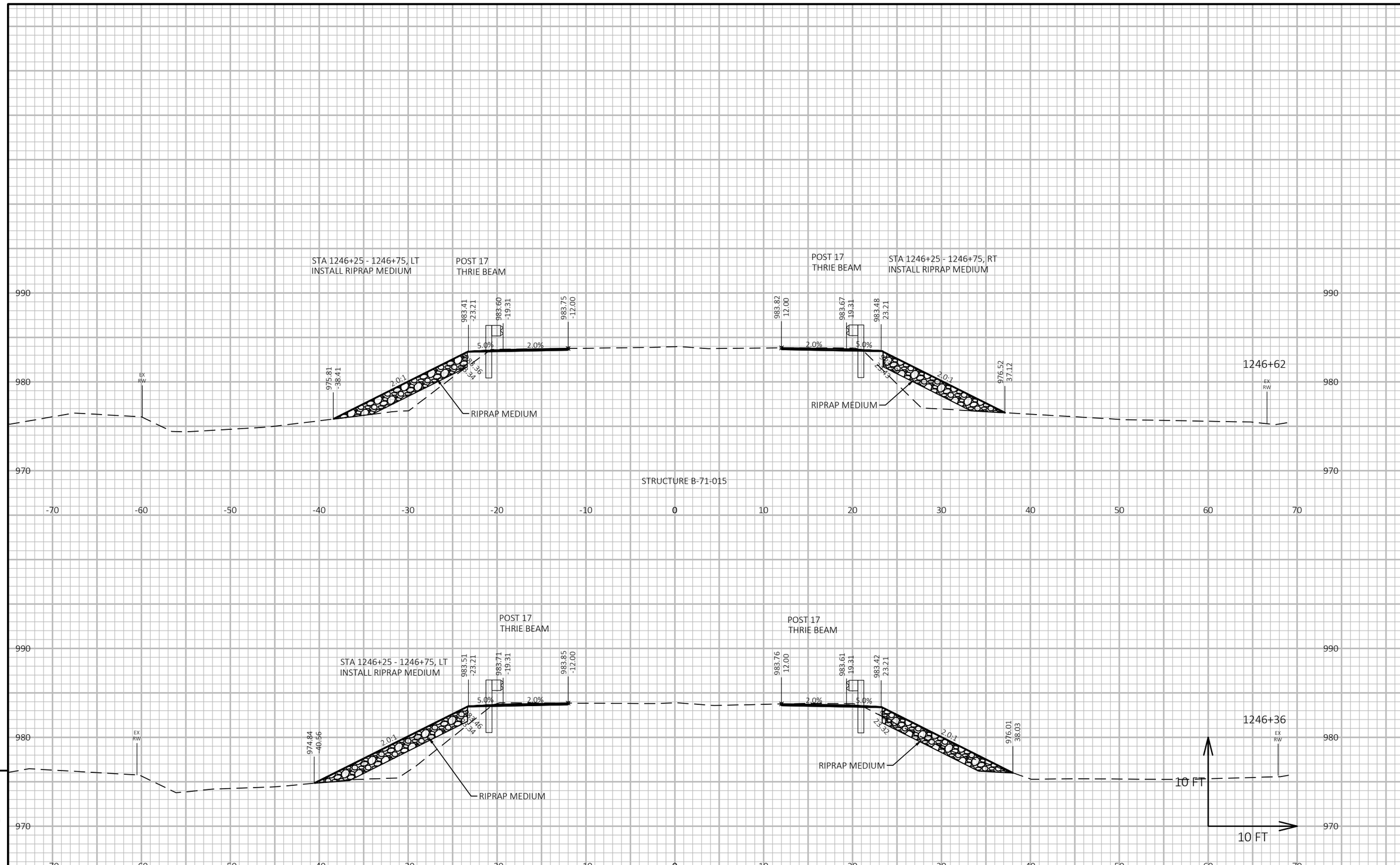

PROJECT NO: 1620-03-75	HWY: STH 80	COUNTY: WOOD	CROSS SECTIONS: STH 80	SHEET 124	E

FILE NAME : P:\90S\93\00093433\CADD\SHEETSPLAN -75\090201-XS.DWG
LAYOUT NAME - (25)
PLOT DATE : 1/16/2019 11:02 AM
PLOT BY : BOBBI MAXWELL
PLOT NAME :
PLOT SCALE : 1 IN:10 FT HORZ. / 1 IN:10 FT VERT.

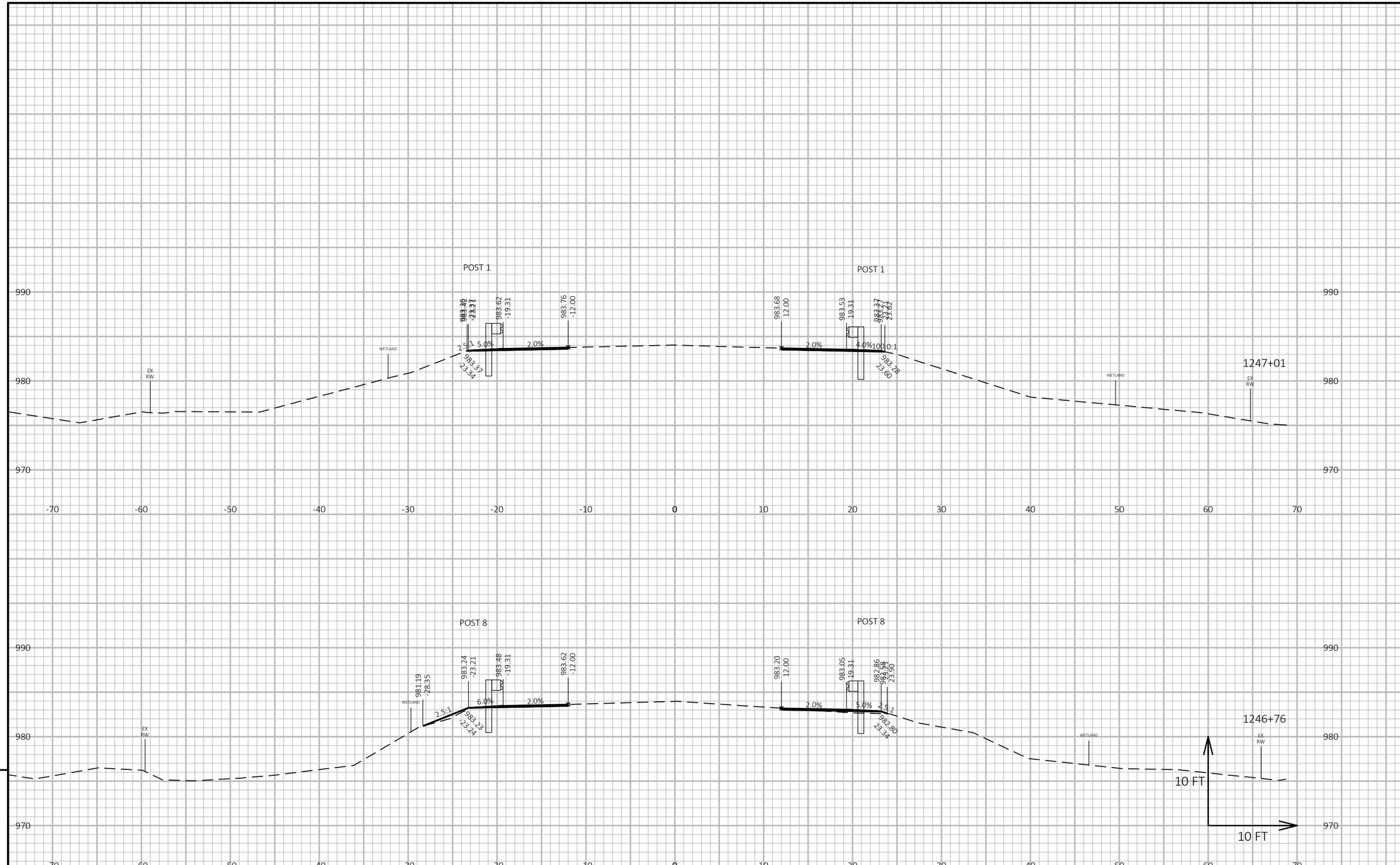

9

9

PROJECT NO: 1620-03-75	HWY: STH 80	COUNTY: WOOD	CROSS SECTIONS: STH 80	SHEET 125	E

FILE NAME : P:\90S\93\00093433\CADD\SHEETSPLAN -75\090201-XS.DWG
LAYOUT NAME - (26)
PLOT DATE : 1/16/2019 11:02 AM
PLOT BY : BOBBI MAXWELL
PLOT NAME :
PLOT SCALE : 1 IN:10 FT HORZ. / 1 IN:10 FT VERT.

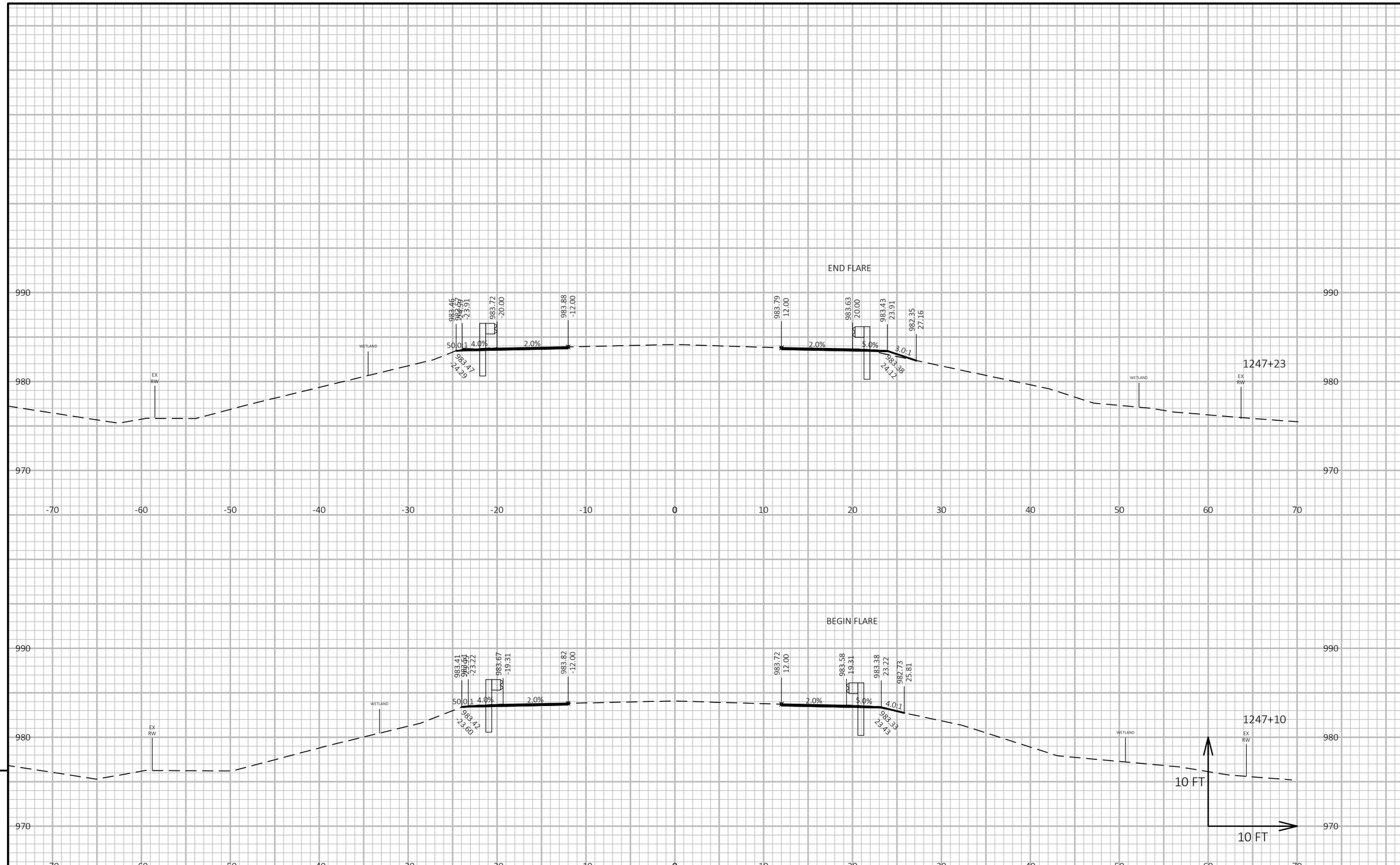

9

9

PROJECT NO: 1620-03-75	HWY: STH 80	COUNTY: WOOD	CROSS SECTIONS: STH 80	SHEET 126	E

FILE NAME : P:\90S\93\00093433\CADD\SHEETSPLAN -75\090201-XS.DWG
LAYOUT NAME - (27)
PLOT DATE : 1/16/2019 11:02 AM
PLOT BY : BOBBI MAXWELL
PLOT NAME :
PLOT SCALE : 1 IN:10 FT HORZ. / 1 IN:10 FT VERT.

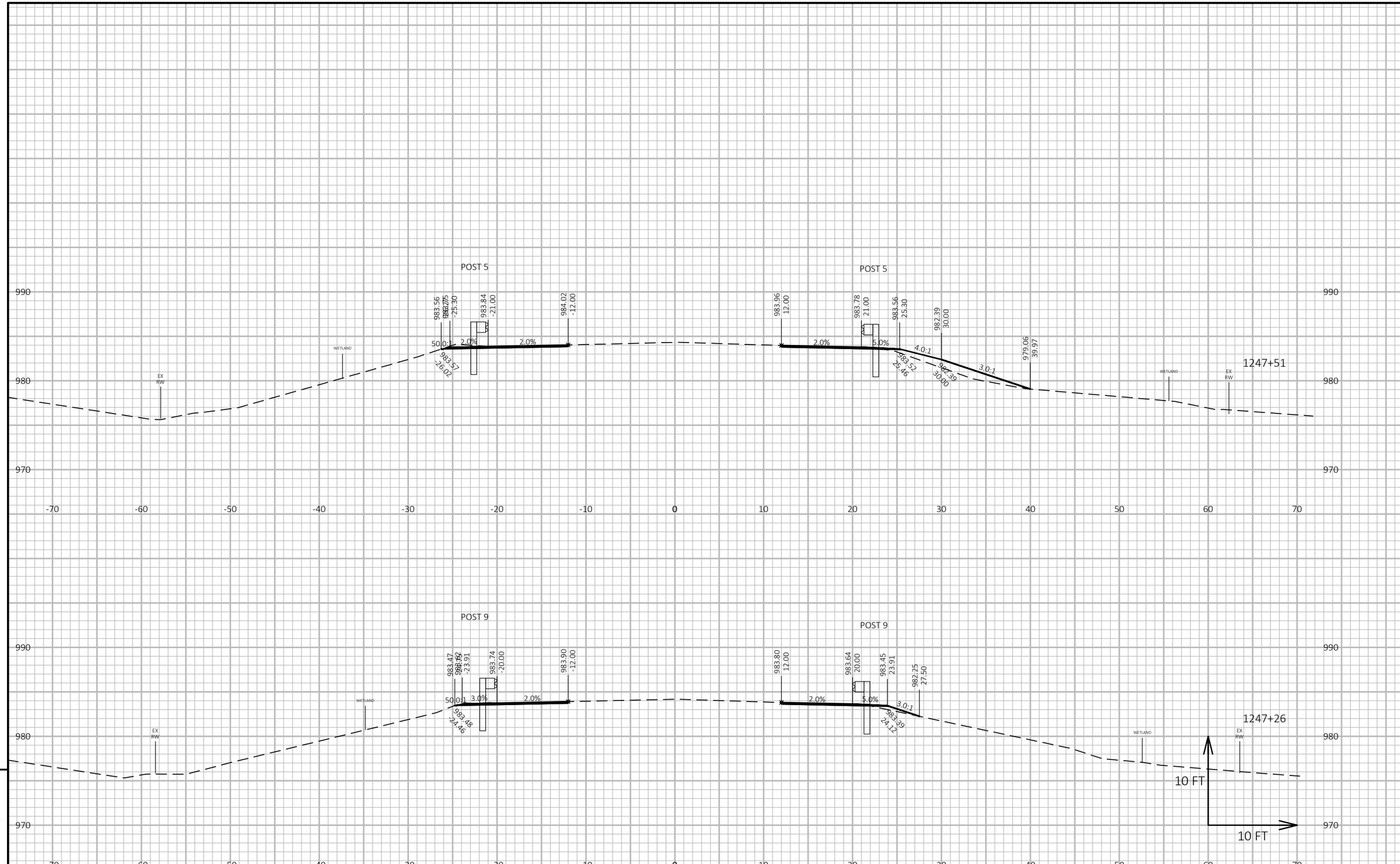

9

9

PROJECT NO: 1620-03-75	HWY: STH 80	COUNTY: WOOD	CROSS SECTIONS: STH 80	SHEET 127	E

FILE NAME : P:\90S\93\00093433\CADD\SHEETSPLAN -75\090201-XS.DWG
LAYOUT NAME - (28)
PLOT DATE : 1/16/2019 11:02 AM
PLOT BY : BOBBI MAXWELL
PLOT NAME :
PLOT SCALE : 1 IN:10 FT HORZ. / 1 IN:10 FT VERT.
WISDOT/CADDS SHEET 49

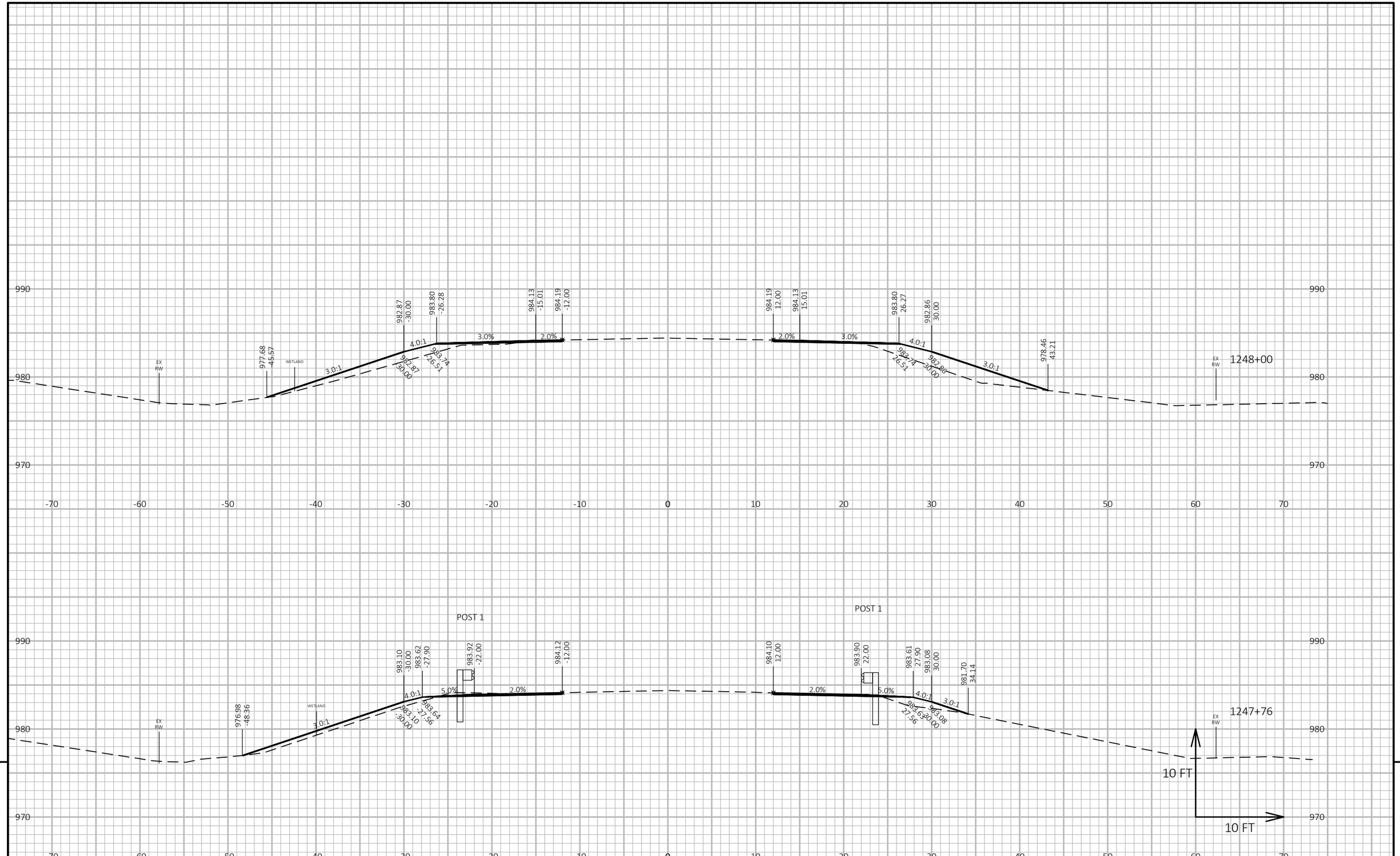

9

9

PROJECT NO: 1620-03-75	HWY: STH 80	COUNTY: WOOD	CROSS SECTIONS: STH 80	SHEET 128	E

FILE NAME : P:\90S\93\00093433\CADD\SHEETSPLAN -75\090201-XS.DWG
LAYOUT NAME - (29)
PLOT DATE : 1/16/2019 11:02 AM
PLOT BY : BOBBI MAXWELL
PLOT NAME :
PLOT SCALE : 1 IN:10 FT HORZ. / 1 IN:10 FT VERT.
WISDOT/CADDS SHEET 49

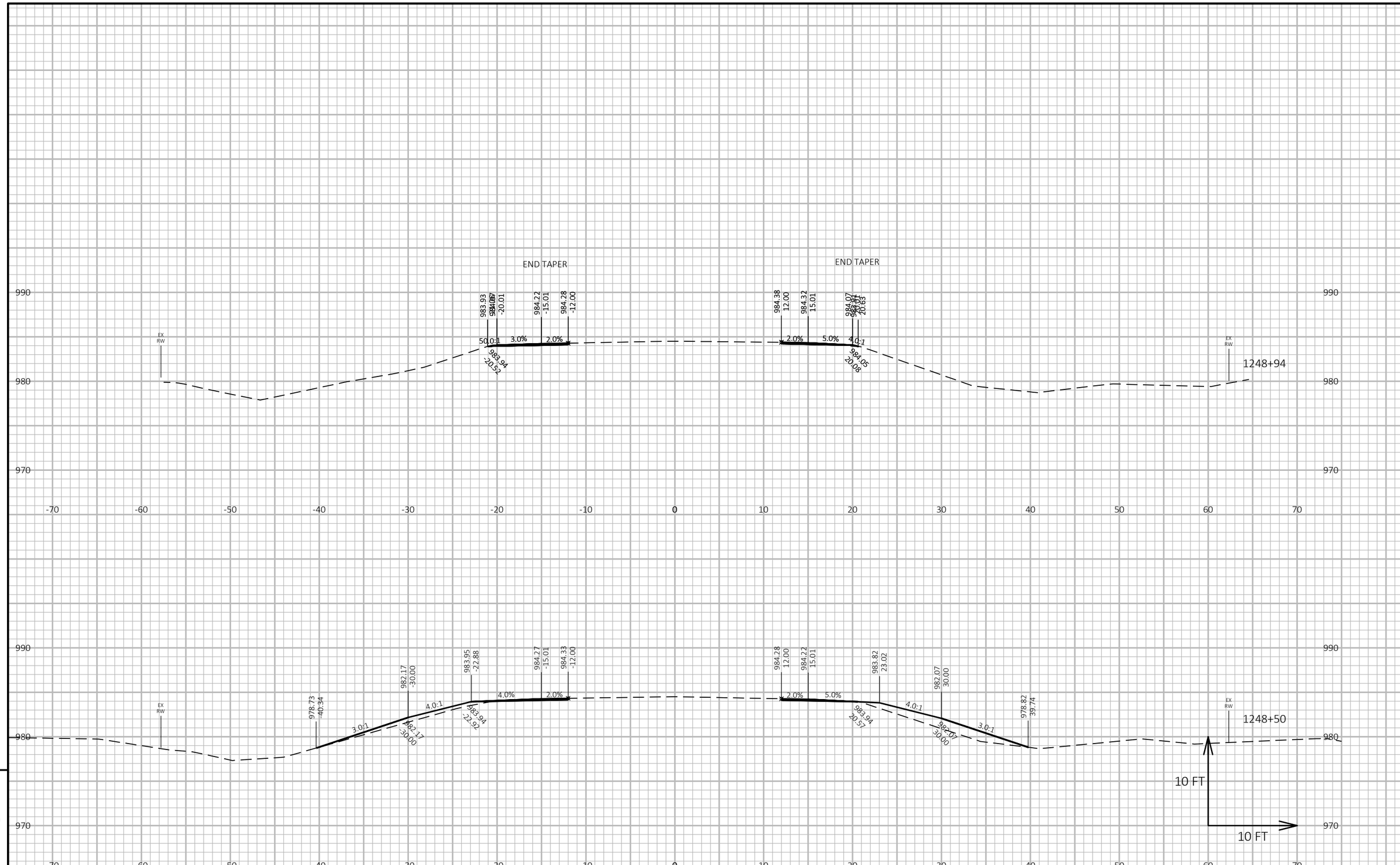

PROJECT NO: 1620-03-75	HWY: STH 80	COUNTY: WOOD	CROSS SECTIONS: STH 80	SHEET 129	E

FILE NAME : P:\90S\93\00093433\CADD\SHEETSPLAN -75\090201-XS.DWG
LAYOUT NAME - (30)
PLOT DATE : 1/16/2019 11:02 AM
PLOT BY : BOBBI MAXWELL
PLOT NAME :
PLOT SCALE : 1 IN:10 FT HORZ. / 1 IN:10 FT VERT.

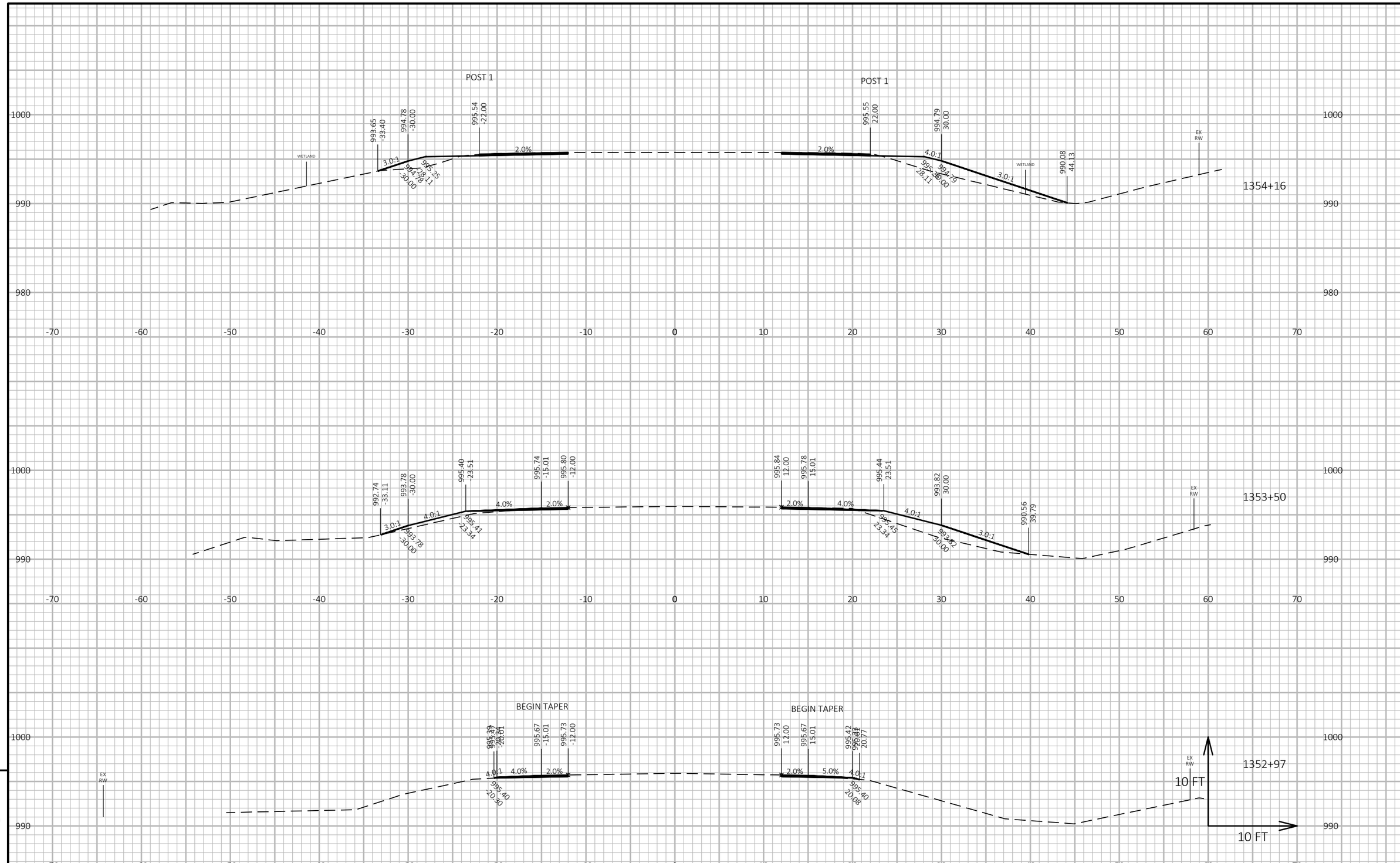

PROJECT NO: 1620-03-75	HWY: STH 80	COUNTY: WOOD	CROSS SECTIONS: STH 80	SHEET 130	E

FILE NAME : P:\90S\93\00093433\CADD\SHEETSPLAN -75\090201-XS.DWG
LAYOUT NAME - (31)
PLOT DATE : 1/16/2019 11:02 AM
PLOT BY : BOBBI MAXWELL
PLOT NAME :
PLOT SCALE : 1 IN:10 FT HORZ. / 1 IN:10 FT VERT.
WISDOT/CADDS SHEET 49

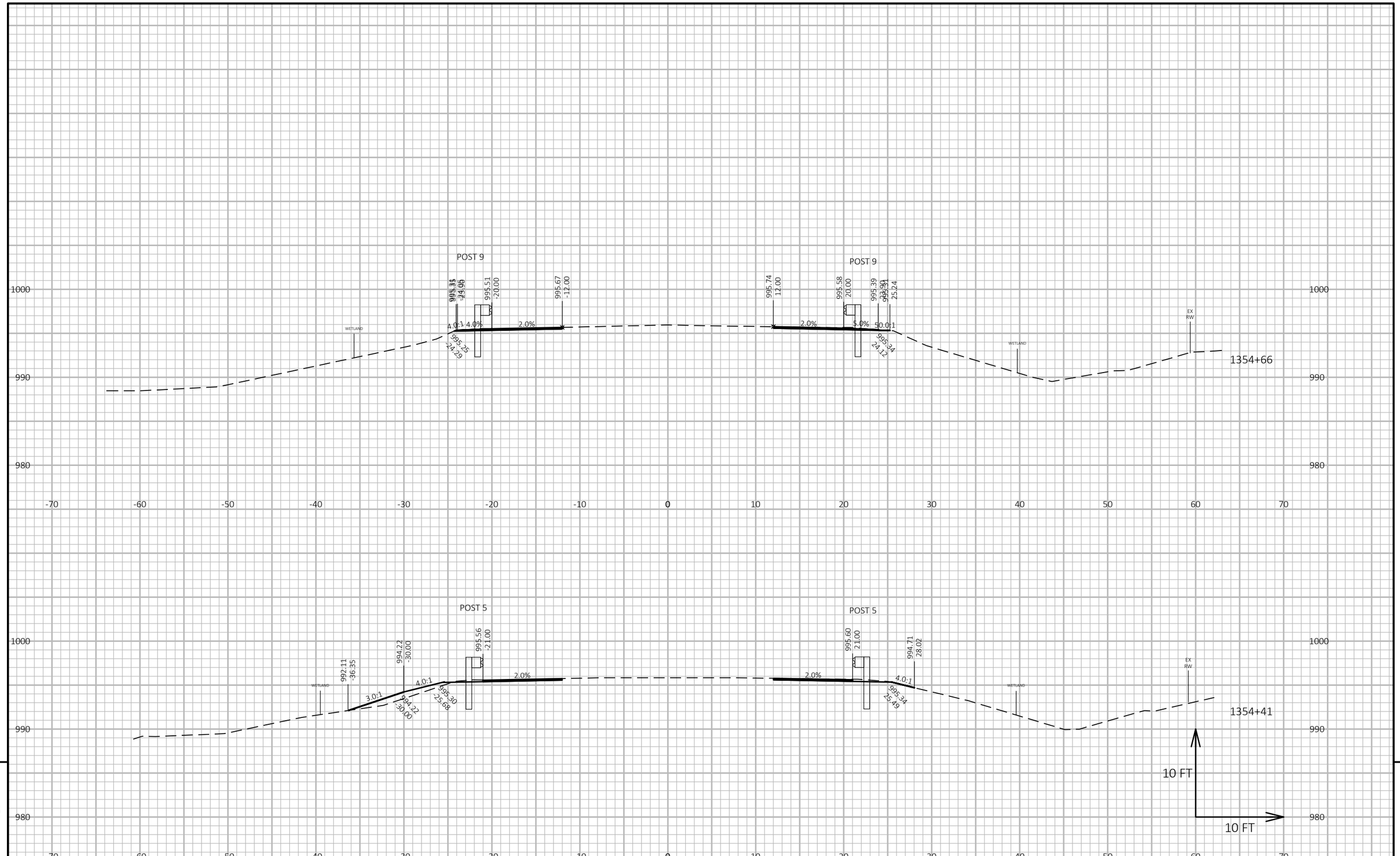

PROJECT NO: 1620-03-75	HWY: STH 80	COUNTY: WOOD	CROSS SECTIONS: STH 80	SHEET 131	E

FILE NAME : P:\90S\93\00093433\CADD\SHEETSPLAN -75\090201-XS.DWG
LAYOUT NAME - (32)
PLOT DATE : 1/16/2019 11:02 AM
PLOT BY : BOBBI MAXWELL
PLOT NAME :
PLOT SCALE : 1 IN:10 FT HORZ. / 1 IN:10 FT VERT.
WISDOT/CADDS SHEET 49

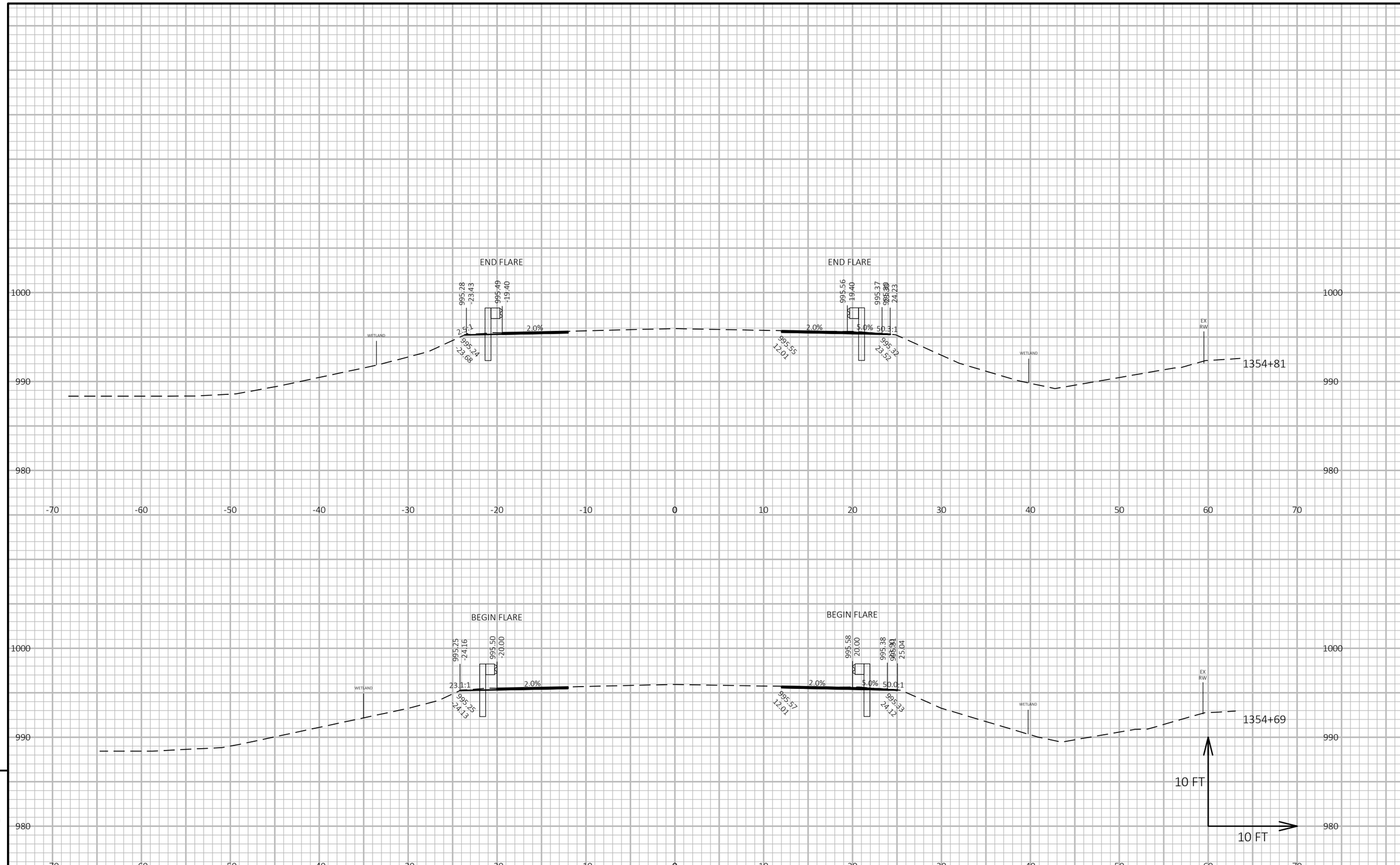

9

9

PROJECT NO: 1620-03-75	HWY: STH 80	COUNTY: WOOD	CROSS SECTIONS: STH 80	SHEET 132	E

FILE NAME : P:\90S\93\00093433\CADD\SHEETSPLAN -75\090201-XS.DWG
LAYOUT NAME - (33)
PLOT DATE : 1/16/2019 11:02 AM
PLOT BY : BOBBI MAXWELL
PLOT NAME :
PLOT SCALE : 1 IN:10 FT HORZ. / 1 IN:10 FT VERT.
WISDOT/CADDS SHEET 49

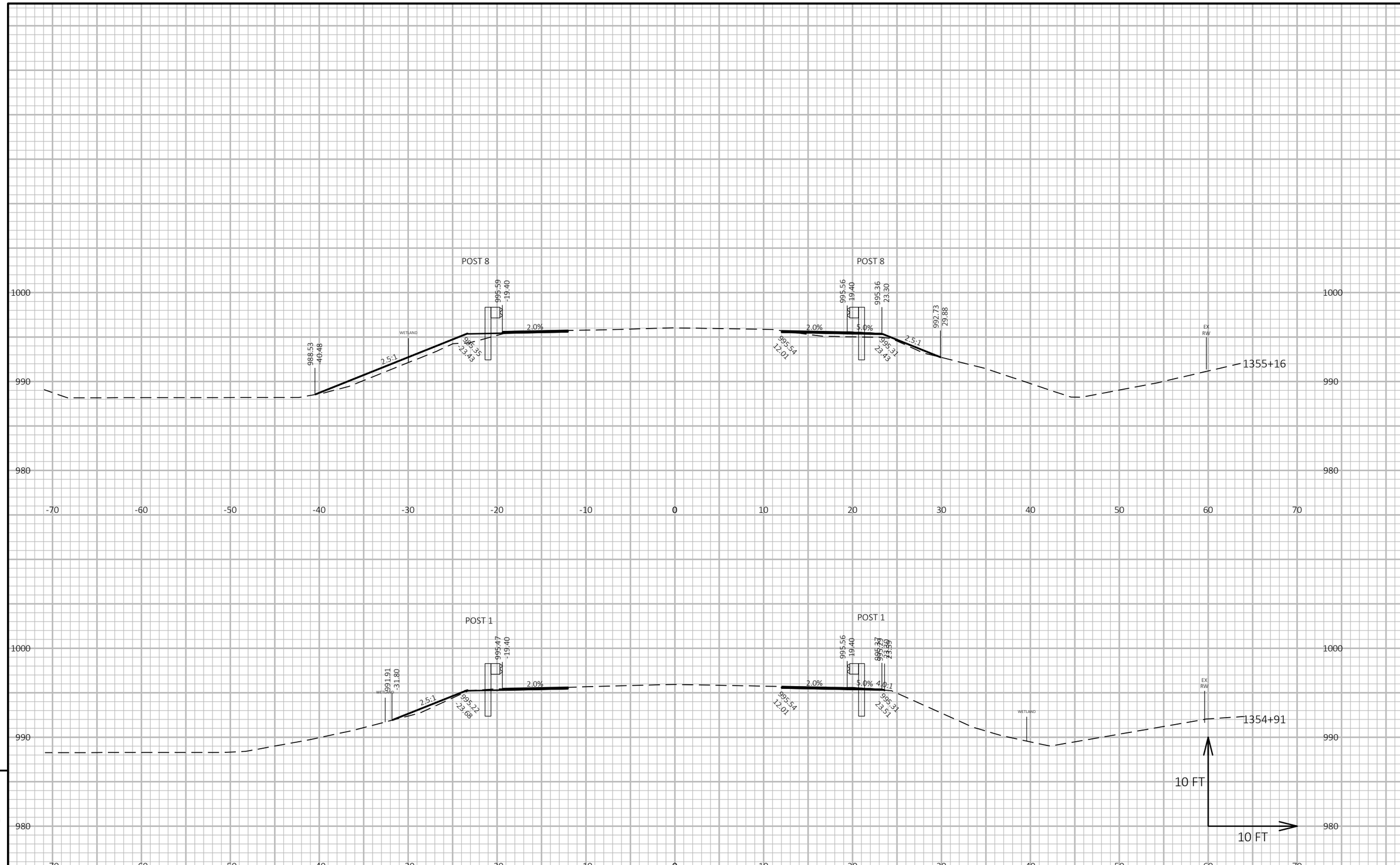

9

9

PROJECT NO: 1620-03-75	HWY: STH 80	COUNTY: WOOD	CROSS SECTIONS: STH 80	SHEET 133	E

FILE NAME : P:\90S\93\00093433\CADD\SHEETSPLAN -75\090201-XS.DWG
LAYOUT NAME - (34)
PLOT DATE : 1/16/2019 11:03 AM
PLOT BY : BOBBI MAXWELL
PLOT NAME :
PLOT SCALE : 1 IN:10 FT HORZ. / 1 IN:10 FT VERT.

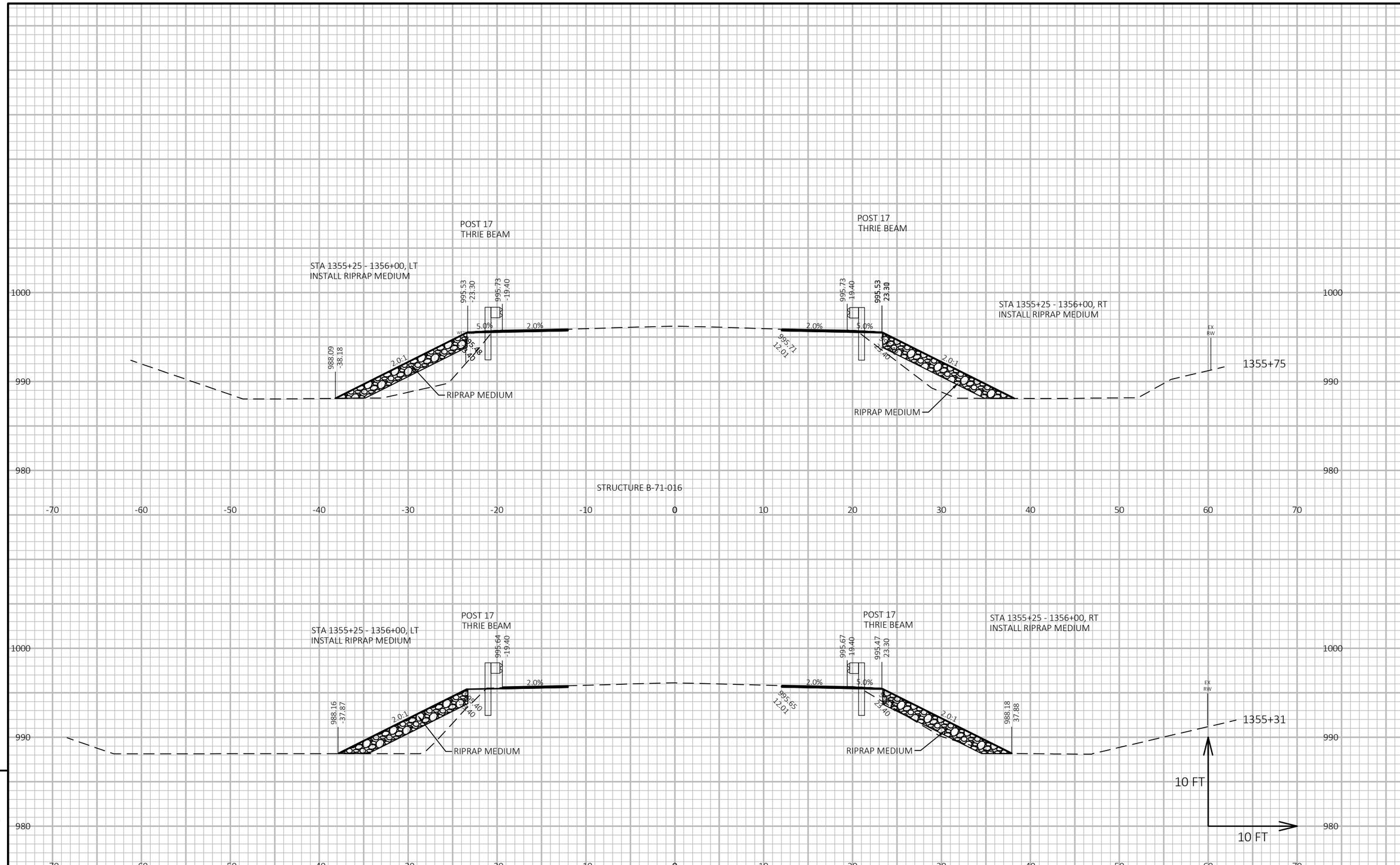

PROJECT NO: 1620-03-75	HWY: STH 80	COUNTY: WOOD	CROSS SECTIONS: STH 80	SHEET 134	E

FILE NAME : P:\90S\93\00093433\CADD\SHEETSPLAN -75\090201-XS.DWG
LAYOUT NAME - (35)
PLOT DATE : 1/16/2019 11:03 AM
PLOT BY : BOBBI MAXWELL
PLOT NAME :
PLOT SCALE : 1 IN:10 FT HORZ. / 1 IN:10 FT VERT.
WISDOT/CADDS SHEET 49

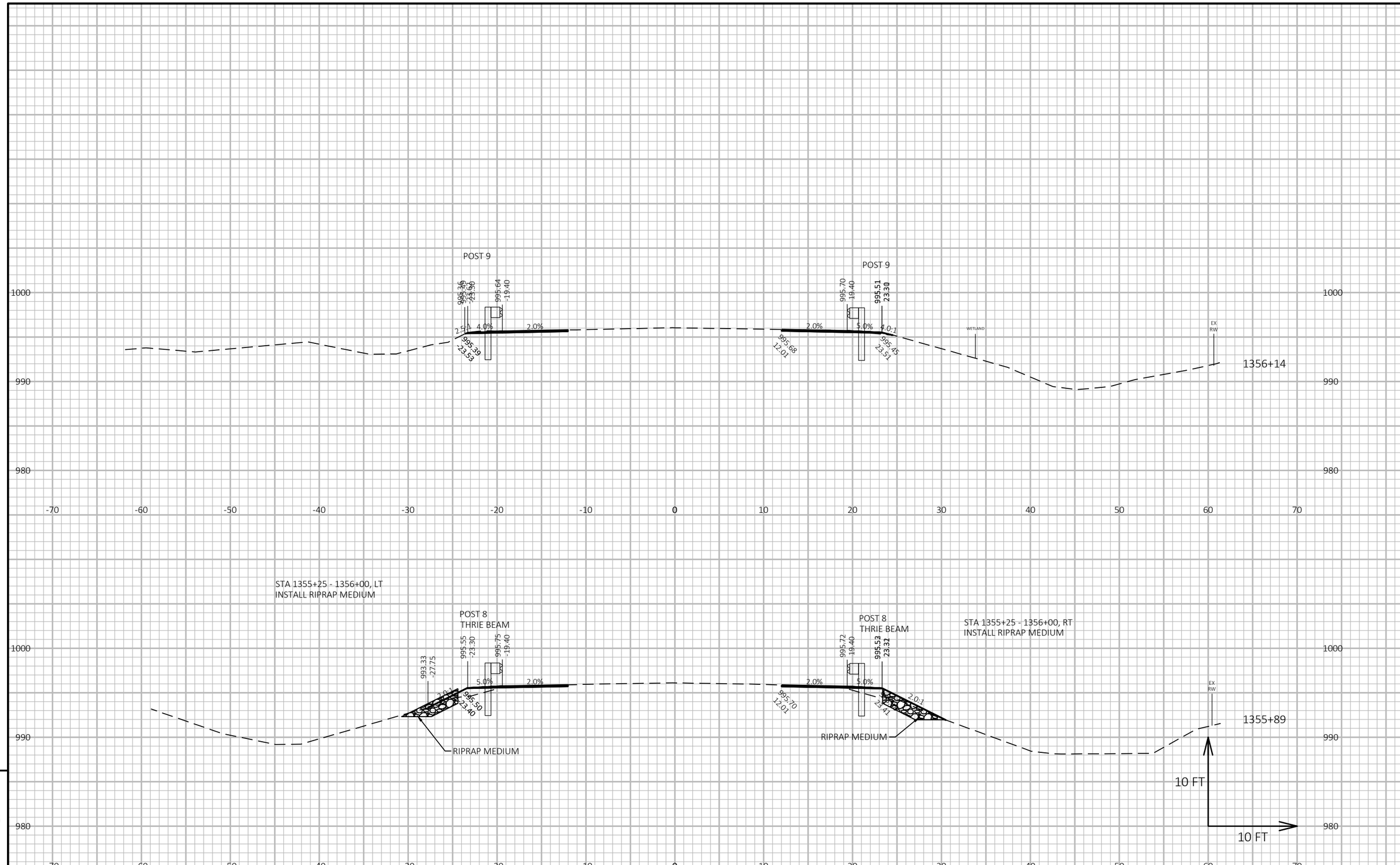

9

9

PROJECT NO: 1620-03-75	HWY: STH 80	COUNTY: WOOD	CROSS SECTIONS: STH 80	SHEET 135	E

FILE NAME : P:\90S\93\00093433\CADD\SHEETSPLAN -75\090201-XS.DWG
LAYOUT NAME - (36)
PLOT DATE : 1/16/2019 11:03 AM
PLOT BY : BOBBI MAXWELL
PLOT NAME :
PLOT SCALE : 1 IN:10 FT HORZ. / 1 IN:10 FT VERT.
WISDOT/CADDS SHEET 49

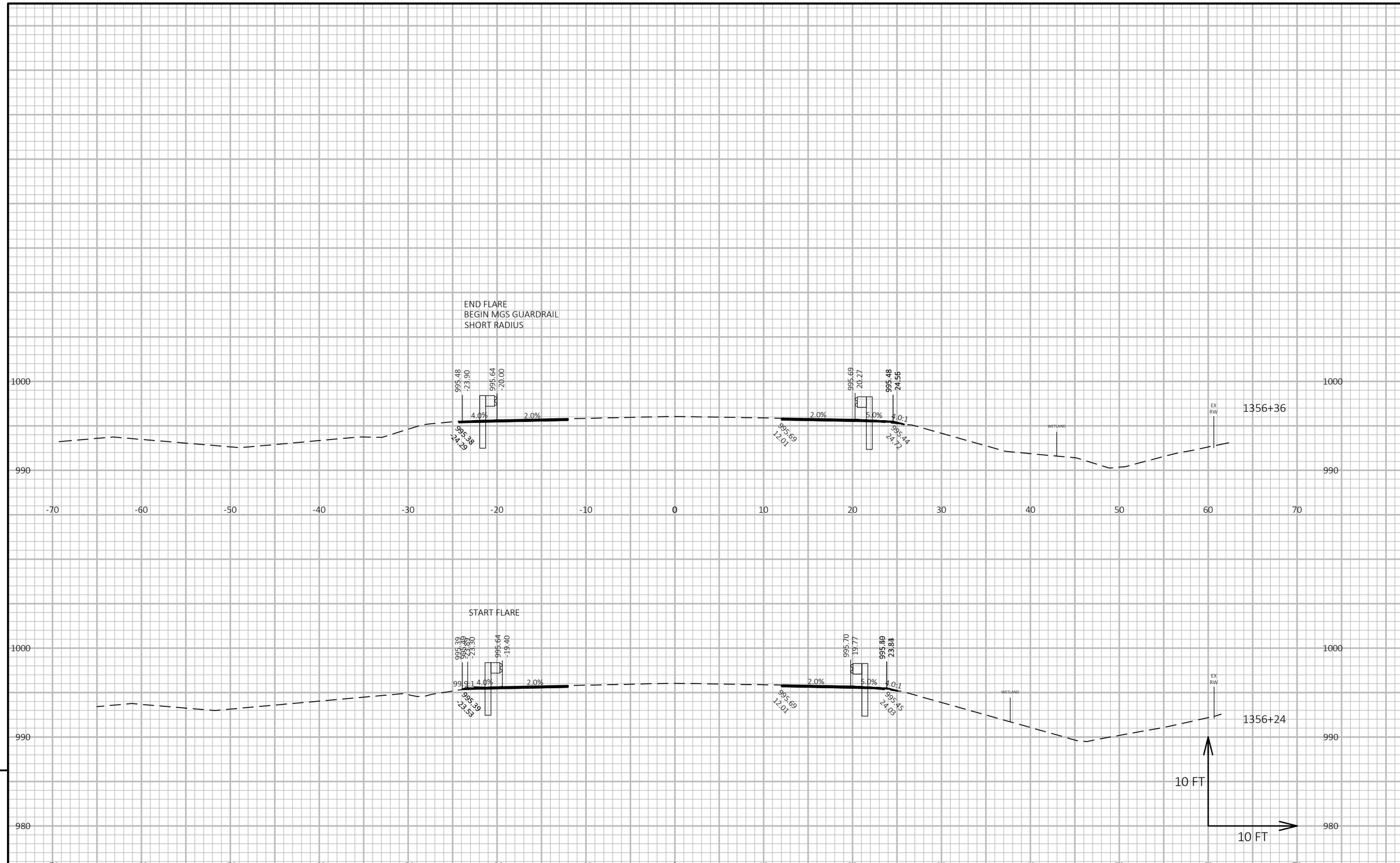

9

9

PROJECT NO: 1620-03-75	HWY: STH 80	COUNTY: WOOD	CROSS SECTIONS: STH 80	SHEET 136	E

FILE NAME : P:\90S\93\00093433\CADD\SHEETSPLAN -75\090201-XS.DWG
LAYOUT NAME - (37)
PLOT DATE : 1/16/2019 11:03 AM
PLOT BY : BOBBI MAXWELL
PLOT NAME :
PLOT SCALE : 1 IN:10 FT HORZ. / 1 IN:10 FT VERT.
WISDOT/CADDS SHEET 49

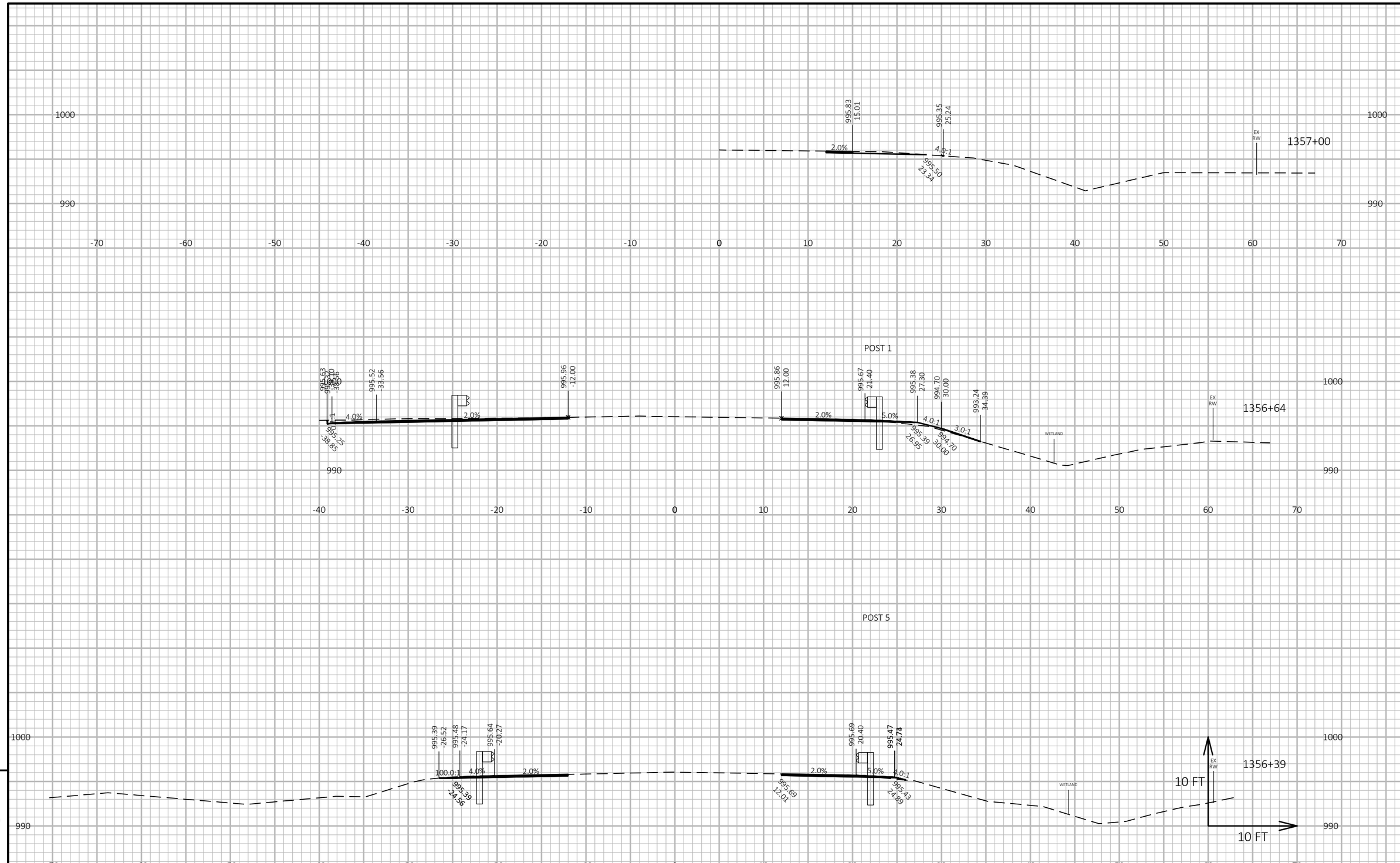

9

9

PROJECT NO: 1620-03-75	HWY: STH 80	COUNTY: WOOD	CROSS SECTIONS: STH 80	SHEET 137	E

FILE NAME : P:\90S\93\00093433\CADD\SHEETSPLAN -75\090201-XS.DWG
LAYOUT NAME - (38)
PLOT DATE : 1/16/2019 11:03 AM
PLOT BY : BOBBI MAXWELL
PLOT NAME :
PLOT SCALE : 1 IN:10 FT HORZ. / 1 IN:10 FT VERT.
WISDOT/CADDS SHEET 49

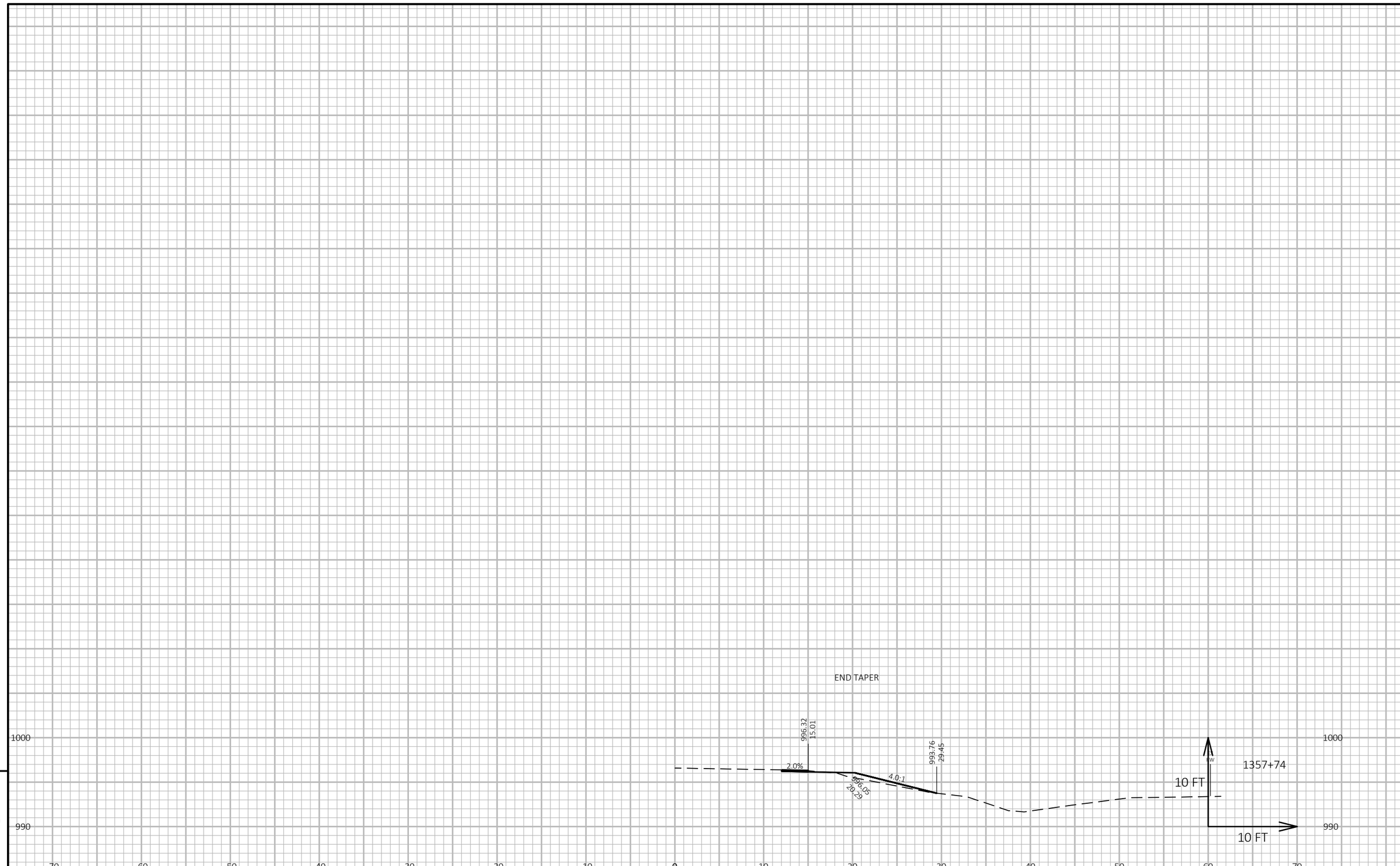

PROJECT NO: 1620-03-75	HWY: STH 80	COUNTY: WOOD	CROSS SECTIONS: STH 80	SHEET 138	E

FILE NAME : P:\90S\93\00093433\CADD\SHEETSPLAN -75\090201-XS.DWG
LAYOUT NAME - (39)
PLOT DATE : 1/16/2019 11:03 AM
PLOT BY : BOBBI MAXWELL
PLOT NAME :
PLOT SCALE : 1 IN:10 FT HORZ. / 1 IN:10 FT VERT.
WISDOT/CADDS SHEET 49

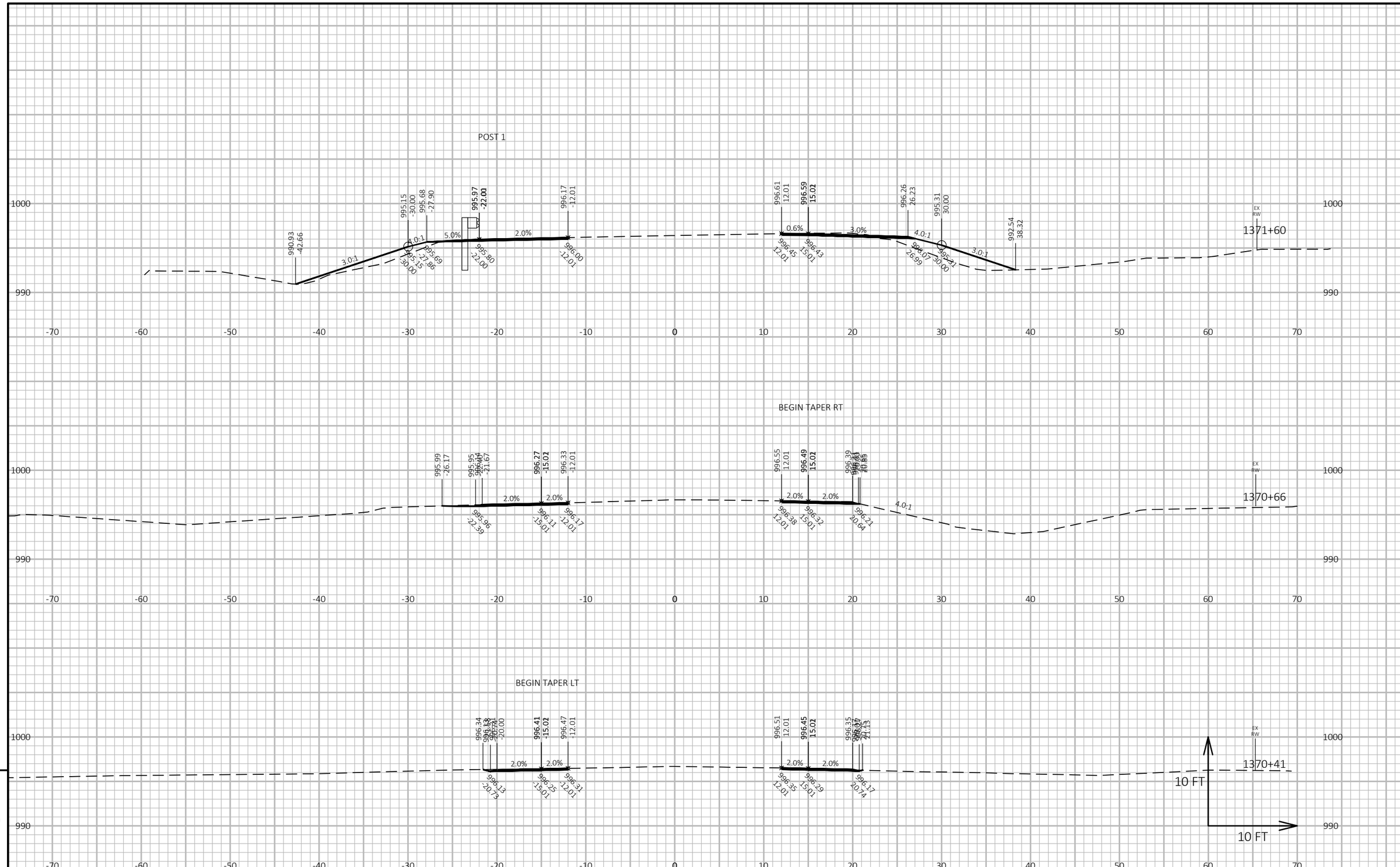

PROJECT NO: 1620-03-75	HWY: STH 80	COUNTY: WOOD	CROSS SECTIONS: STH 80	SHEET 139	E

FILE NAME : P:\90S\93\00093433\CADD\SHEETSPLAN -75\090202-XS.DWG
LAYOUT NAME - (1)
PLOT DATE : 1/16/2019 11:33 AM
PLOT BY : BOBBI MAXWELL
PLOT NAME :
PLOT SCALE : 1 IN:10 FT HORZ. / 1 IN:10 FT VERT.

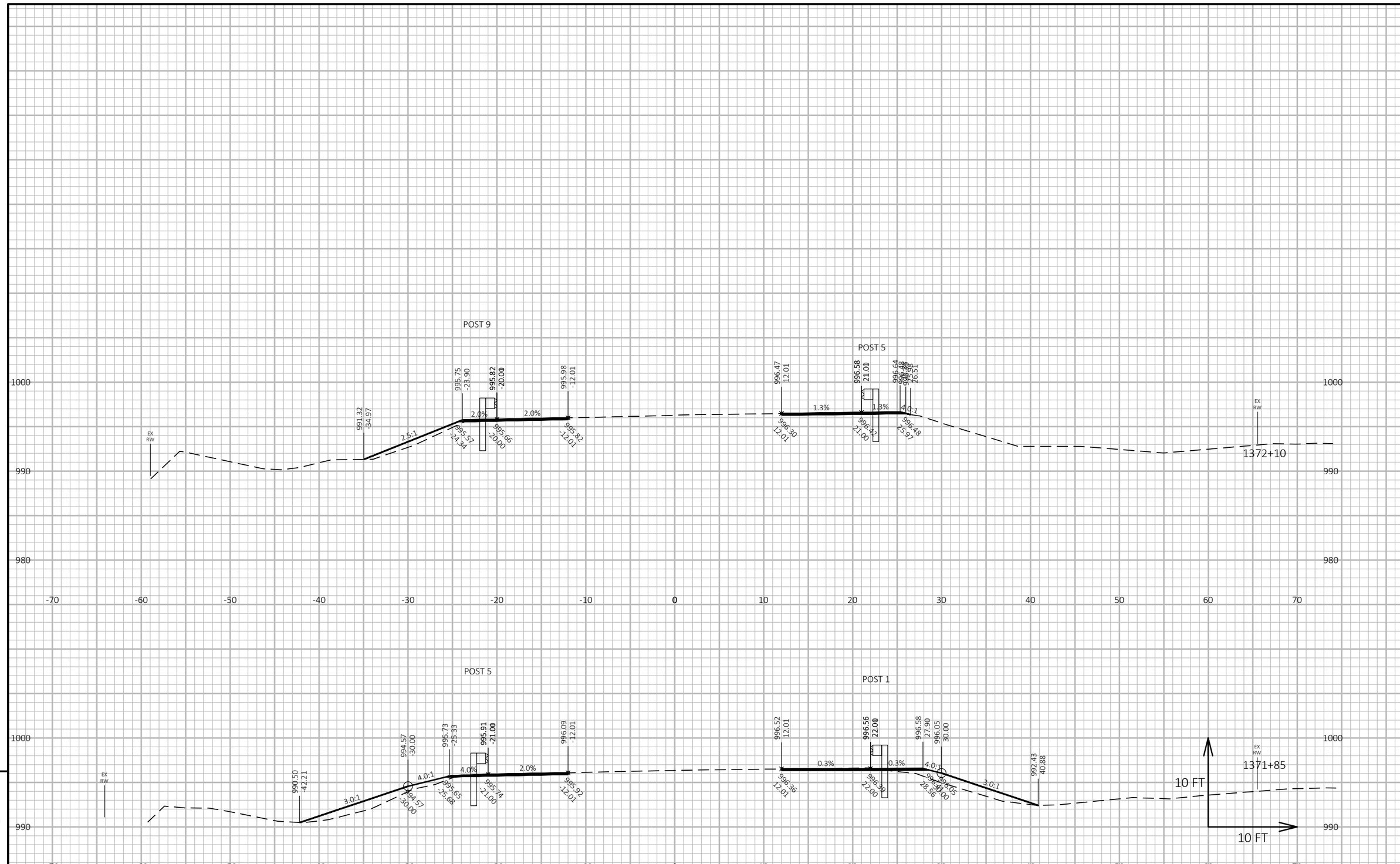

9

9

PROJECT NO: 1620-03-75	HWY: STH 80	COUNTY: WOOD	CROSS SECTIONS: STH 80	SHEET 140	E

FILE NAME : P:\90S\93\00093433\CADD\SHEETSPLAN -75\090202-XS.DWG
LAYOUT NAME - (2)
PLOT DATE : 1/16/2019 11:33 AM
PLOT BY : BOBBI MAXWELL
PLOT NAME :
PLOT SCALE : 1 IN:10 FT HORZ. / 1 IN:10 FT VERT.

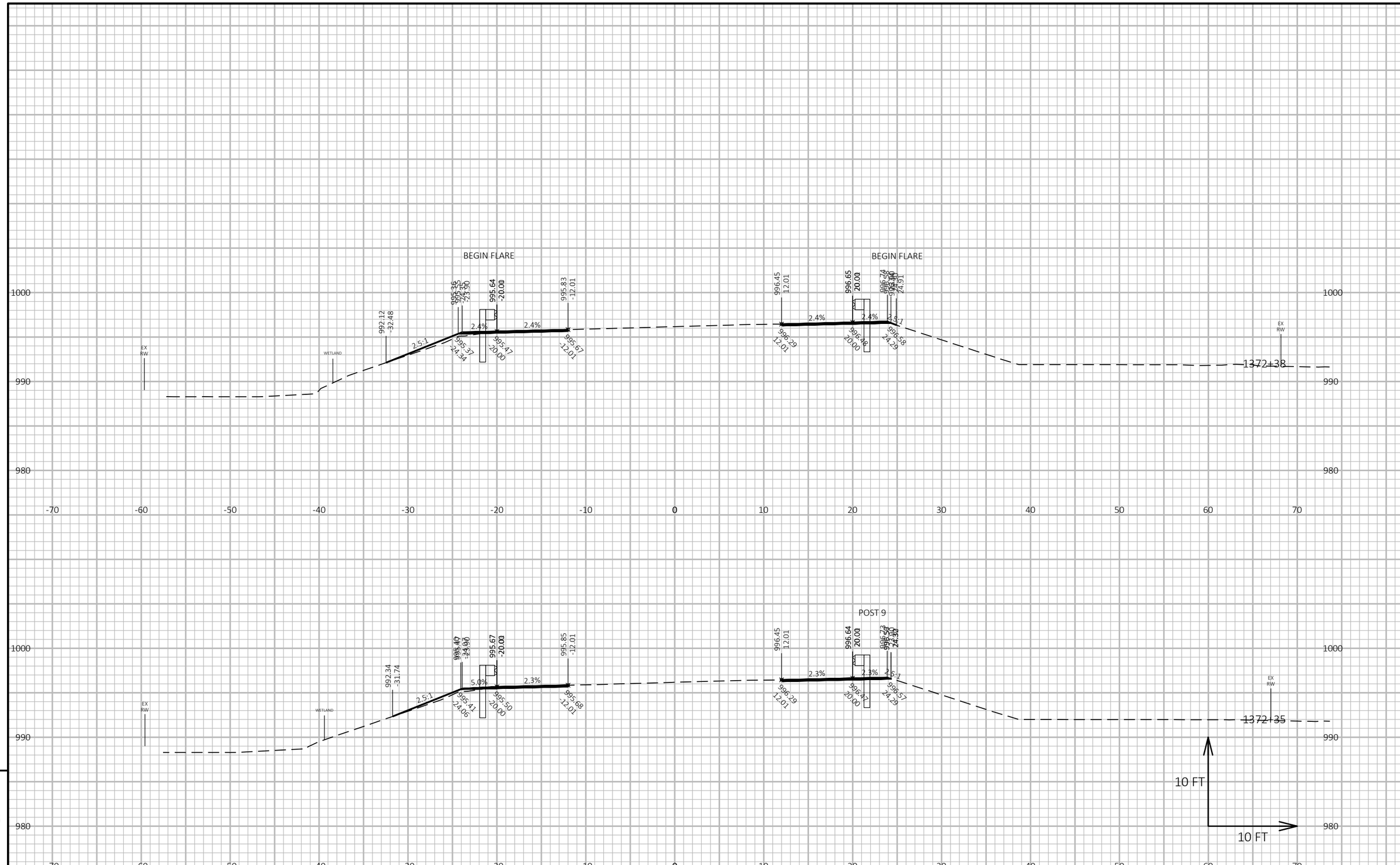

PROJECT NO: 1620-03-75	HWY: STH 80	COUNTY: WOOD	CROSS SECTIONS: STH 80	SHEET 141	E

FILE NAME : P:\90S\93\00093433\CADD\SHEETSPLAN -75\090202-XS.DWG
LAYOUT NAME - (3)
PLOT DATE : 1/16/2019 11:34 AM
PLOT BY : BOBBI MAXWELL
PLOT NAME :
PLOT SCALE : 1 IN:10 FT HORZ. / 1 IN:10 FT VERT.

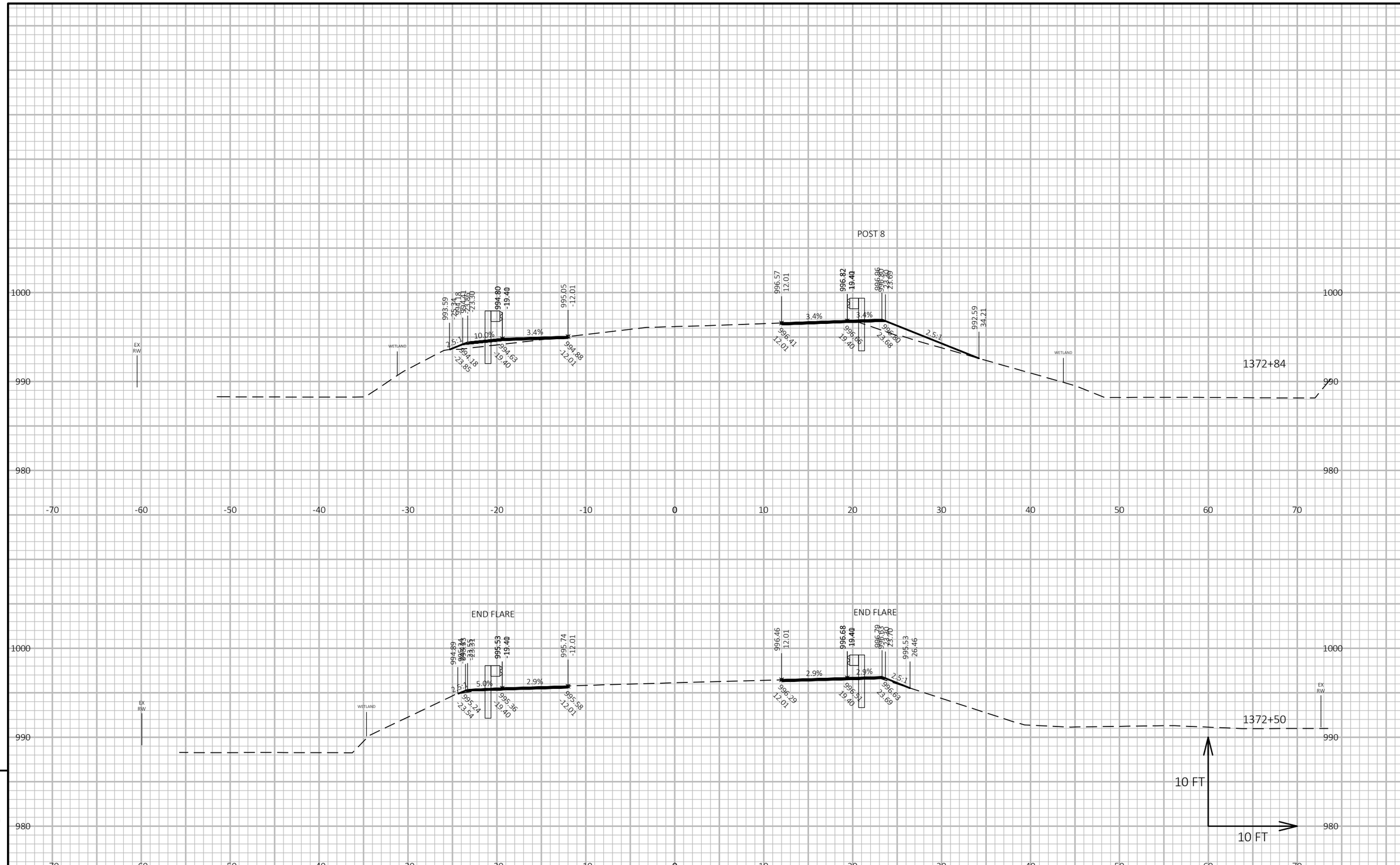

9

9

PROJECT NO: 1620-03-75	HWY: STH 80	COUNTY: WOOD	CROSS SECTIONS: STH 80	SHEET 142	E

FILE NAME : P:\90S\93\00093433\CADD\SHEETSPLAN -75\090202-XS.DWG
LAYOUT NAME - (4)
PLOT DATE : 1/16/2019 11:34 AM
PLOT BY : BOBBI MAXWELL
PLOT NAME :
PLOT SCALE : 1 IN:10 FT HORZ. / 1 IN:10 FT VERT.

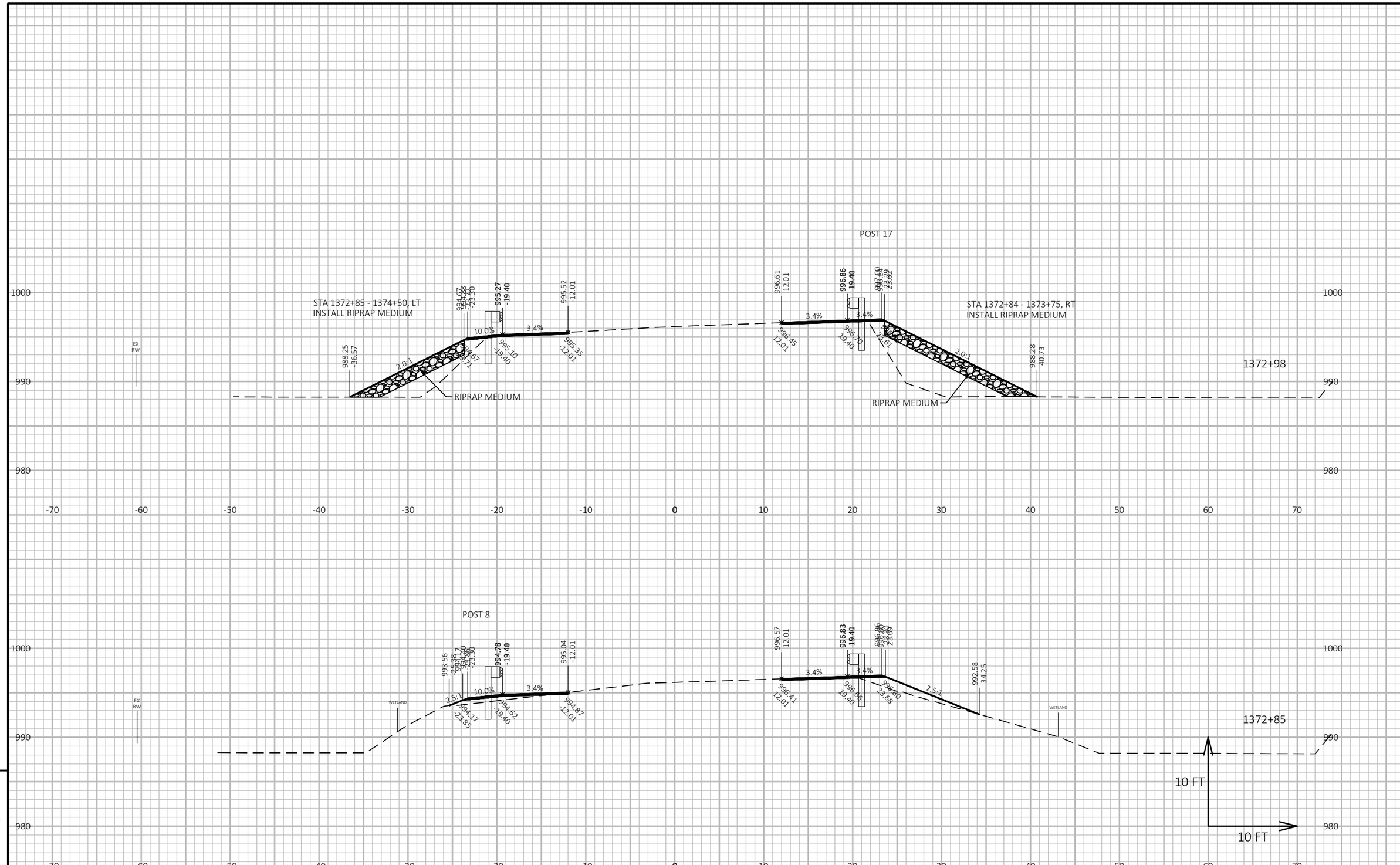

PROJECT NO: 1620-03-75	HWY: STH 80	COUNTY: WOOD	CROSS SECTIONS: STH 80	SHEET 143	E

FILE NAME : P:\90S\93\00093433\CADD\SHEETSPLAN -75\090202-XS.DWG
LAYOUT NAME - (5)
PLOT DATE : 1/16/2019 11:34 AM
PLOT BY : BOBBI MAXWELL
PLOT NAME :
PLOT SCALE : 1 IN:10 FT HORZ. / 1 IN:10 FT VERT.

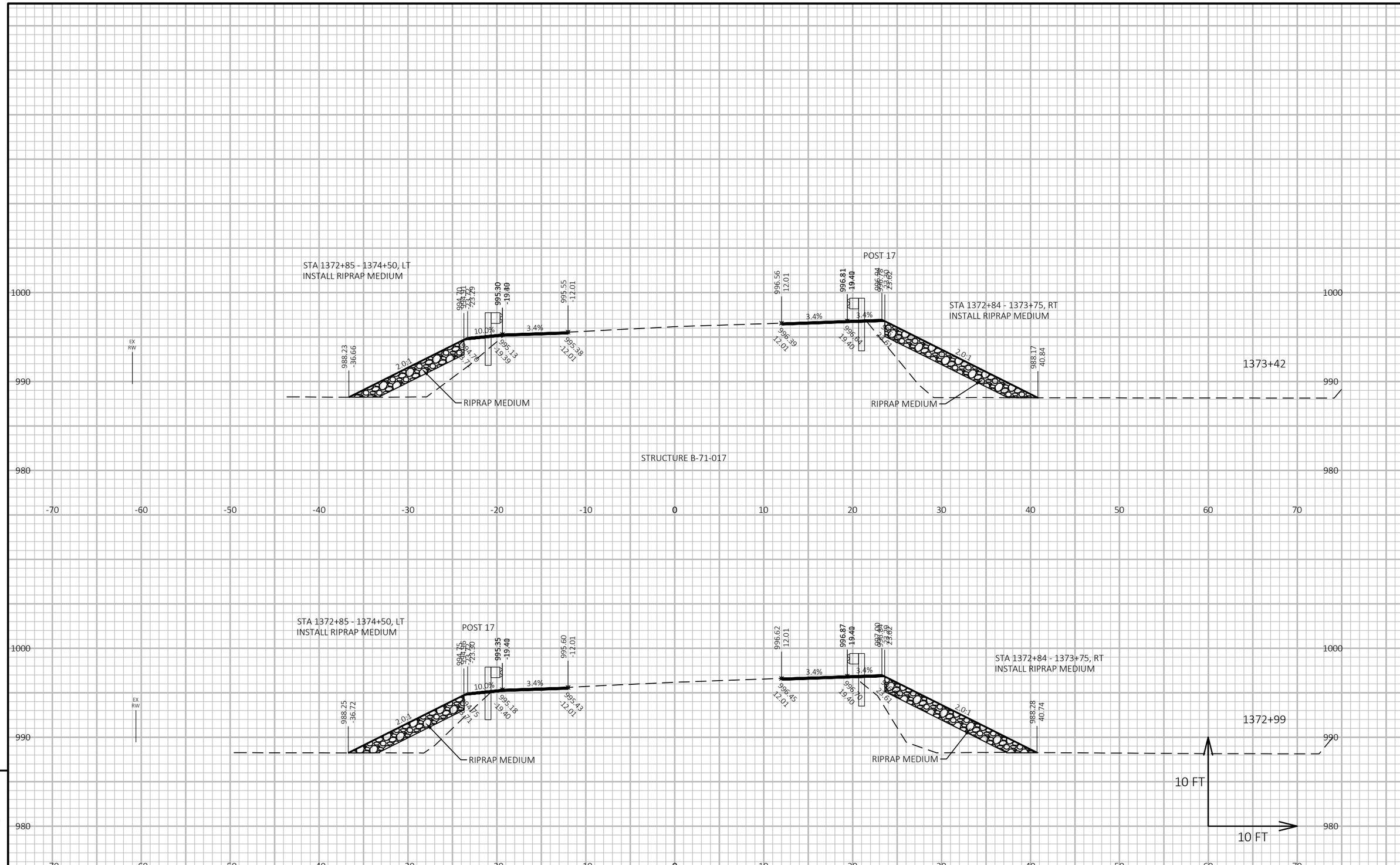

PROJECT NO: 1620-03-75	HWY: STH 80	COUNTY: WOOD	CROSS SECTIONS: STH 80	SHEET 144	E

FILE NAME : P:\90S\93\00093433\CADD\SHEETSPLAN -75\090202-XS.DWG
LAYOUT NAME - (6)
PLOT DATE : 1/16/2019 11:34 AM
PLOT BY : BOBBI MAXWELL
PLOT NAME :
PLOT SCALE : 1 IN:10 FT HORZ. / 1 IN:10 FT VERT.
WISDOT/CADDS SHEET 49

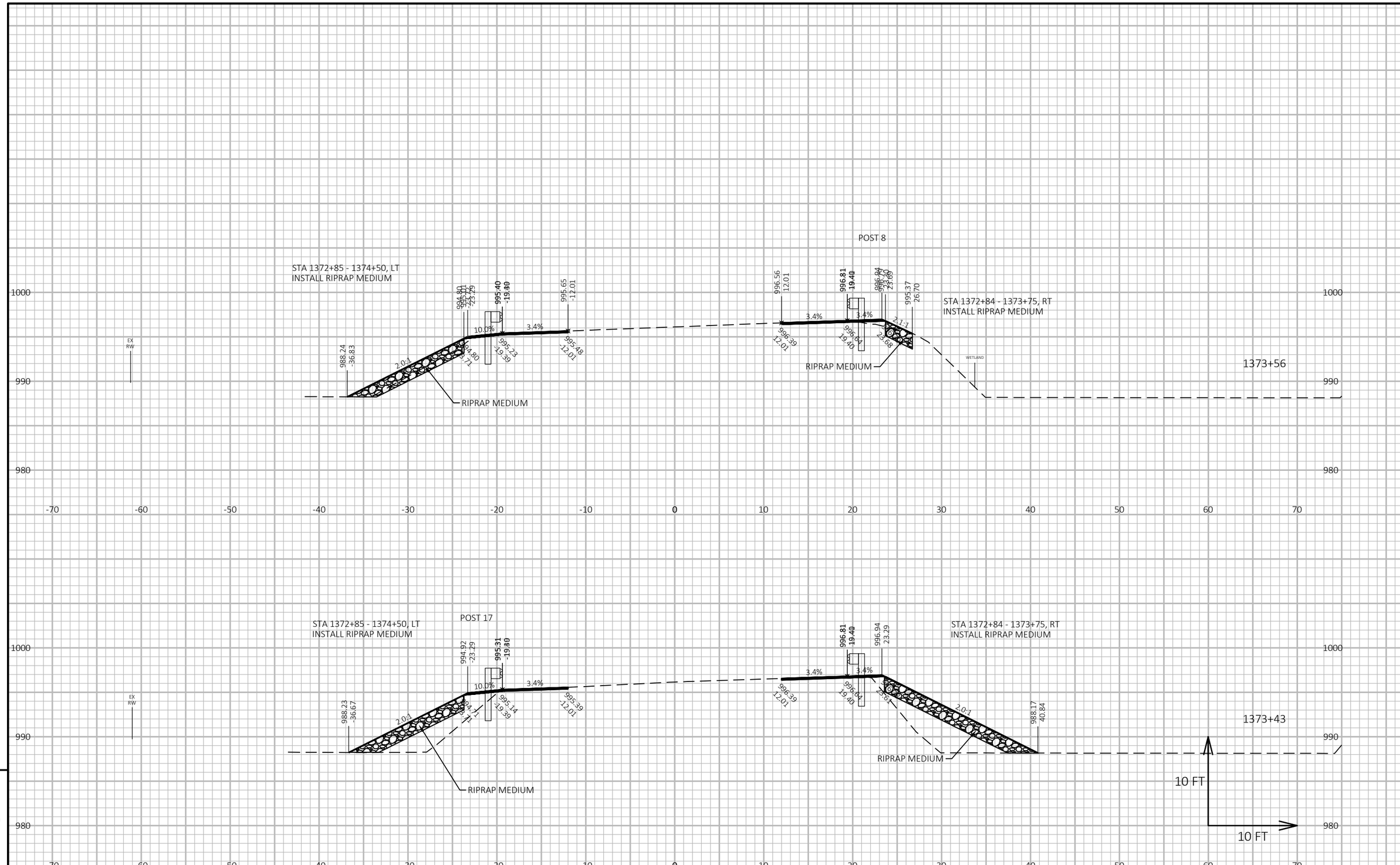

PROJECT NO: 1620-03-75	HWY: STH 80	COUNTY: WOOD	CROSS SECTIONS: STH 80	SHEET 145	E

FILE NAME : P:\90S\93\00093433\CADD\SHEETSPLAN -75\090202-XS.DWG
LAYOUT NAME - (7)
PLOT DATE : 1/16/2019 11:34 AM
PLOT BY : BOBBI MAXWELL
PLOT NAME :
PLOT SCALE : 1 IN:10 FT HORZ. / 1 IN:10 FT VERT.

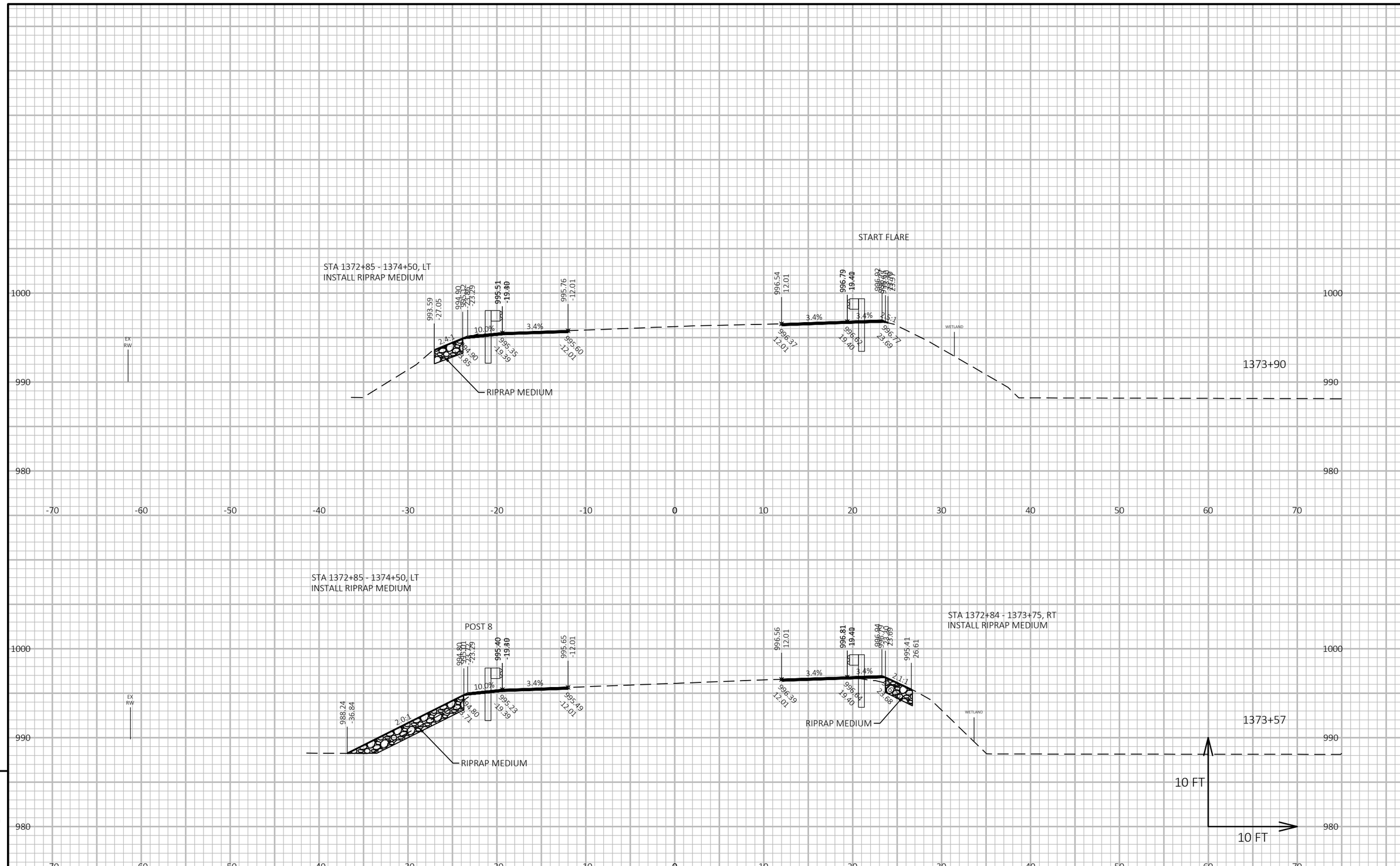

PROJECT NO: 1620-03-75	HWY: STH 80	COUNTY: WOOD	CROSS SECTIONS: STH 80	SHEET 146	E

FILE NAME : P:\90S\93\00093433\CADD\SHEETSPLAN -75\090202-XS.DWG
LAYOUT NAME - (8)
PLOT DATE : 1/16/2019 11:34 AM
PLOT BY : BOBBI MAXWELL
PLOT NAME :
PLOT SCALE : 1 IN:10 FT HORZ. / 1 IN:10 FT VERT.
WISDOT/CADDS SHEET 49

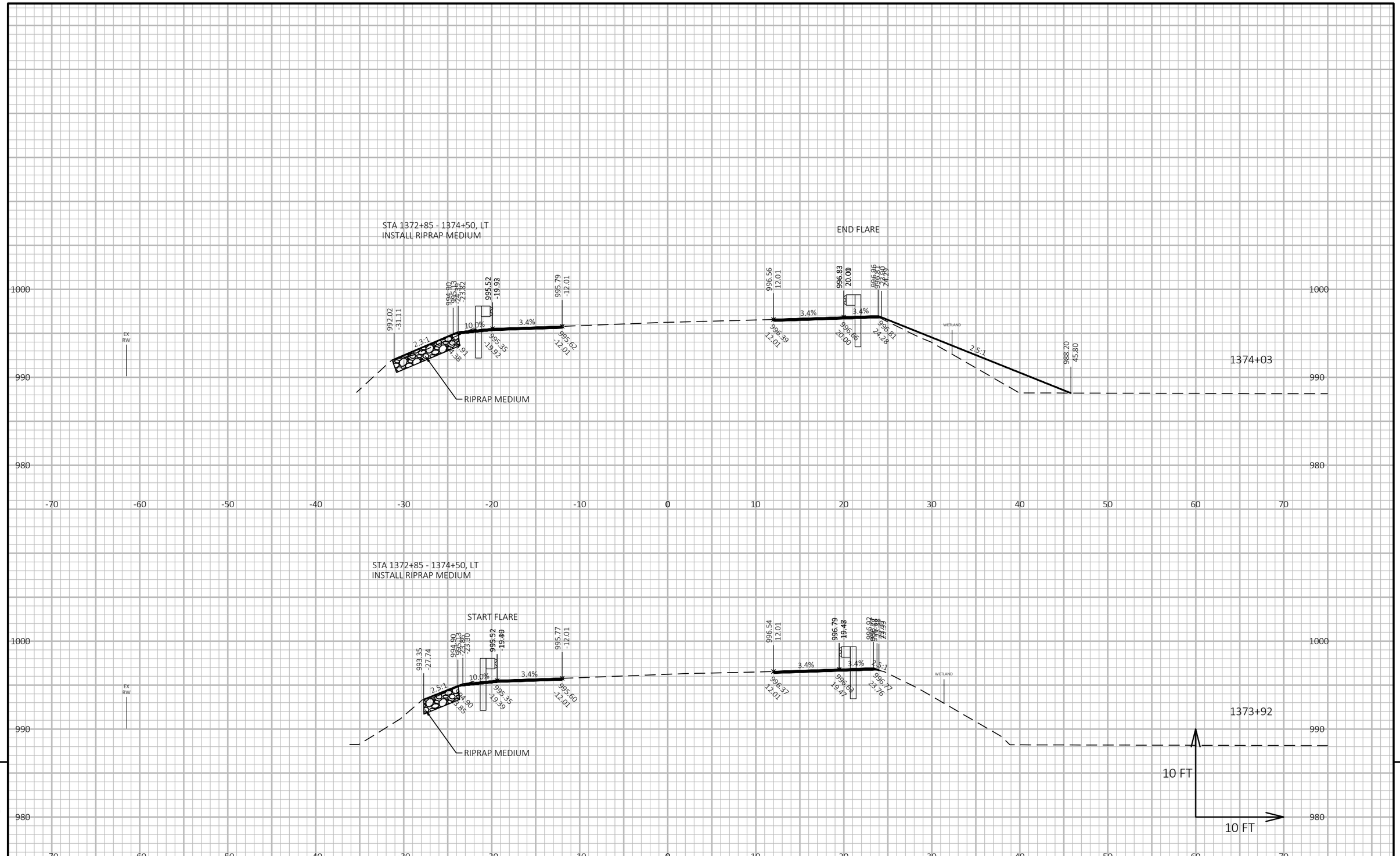

9

9

PROJECT NO: 1620-03-75	HWY: STH 80	COUNTY: WOOD	CROSS SECTIONS: STH 80	SHEET 147	E

FILE NAME : P:\90S\93\00093433\CADD\SHEETSPLAN -75\090202-XS.DWG
LAYOUT NAME - (9)
PLOT DATE : 1/16/2019 11:34 AM
PLOT BY : BOBBI MAXWELL
PLOT NAME :
PLOT SCALE : 1 IN:10 FT HORZ. / 1 IN:10 FT VERT.

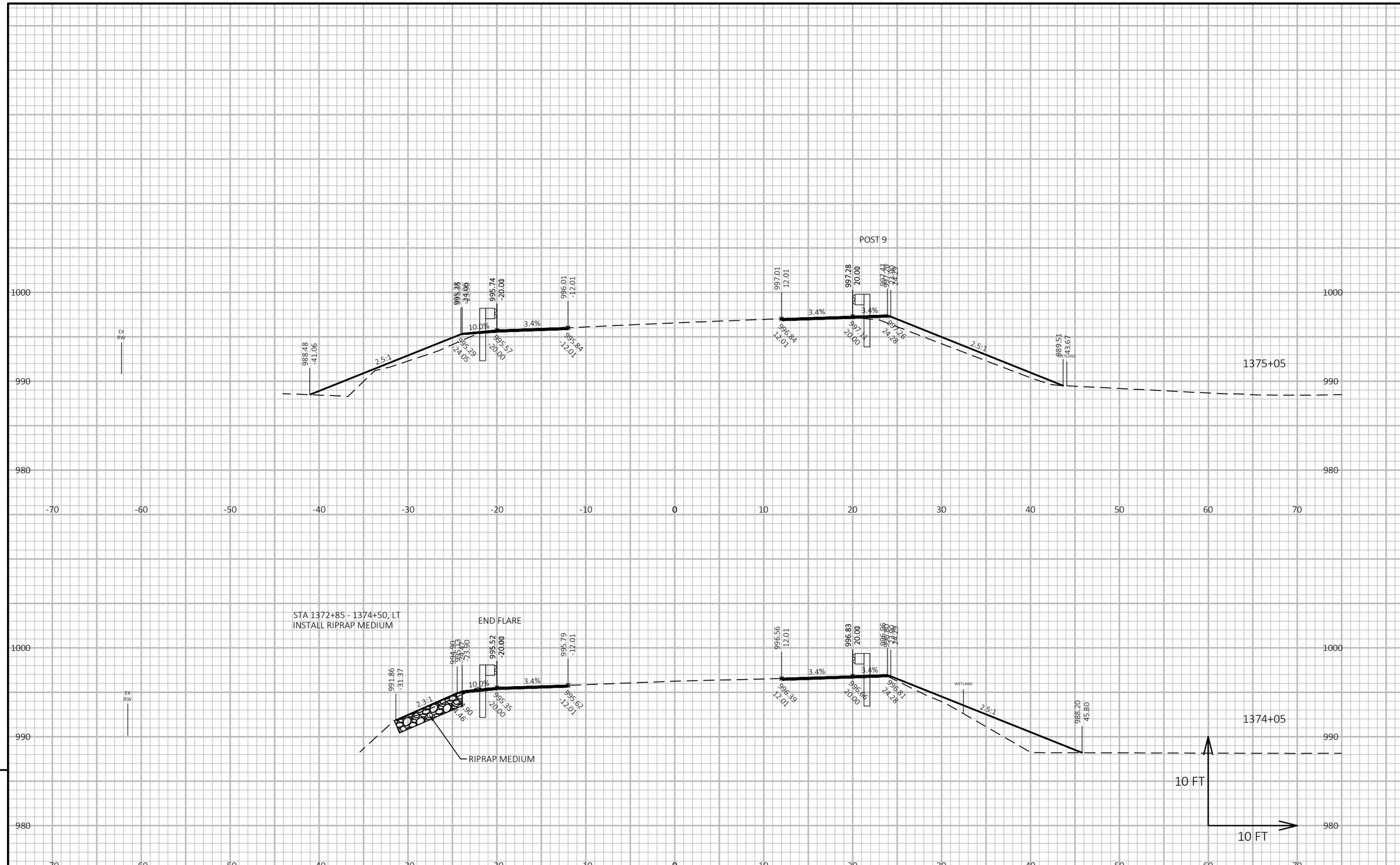

9

9

PROJECT NO: 1620-03-75	HWY: STH 80	COUNTY: WOOD	CROSS SECTIONS: STH 80	SHEET 148	E

FILE NAME : P:\90S\93\00093433\CADD\SHEETSPLAN -75\090202-XS.DWG
LAYOUT NAME - (10)
PLOT DATE : 1/16/2019 11:34 AM
PLOT BY : BOBBI MAXWELL
PLOT NAME :
PLOT SCALE : 1 IN:10 FT HORZ. / 1 IN:10 FT VERT.

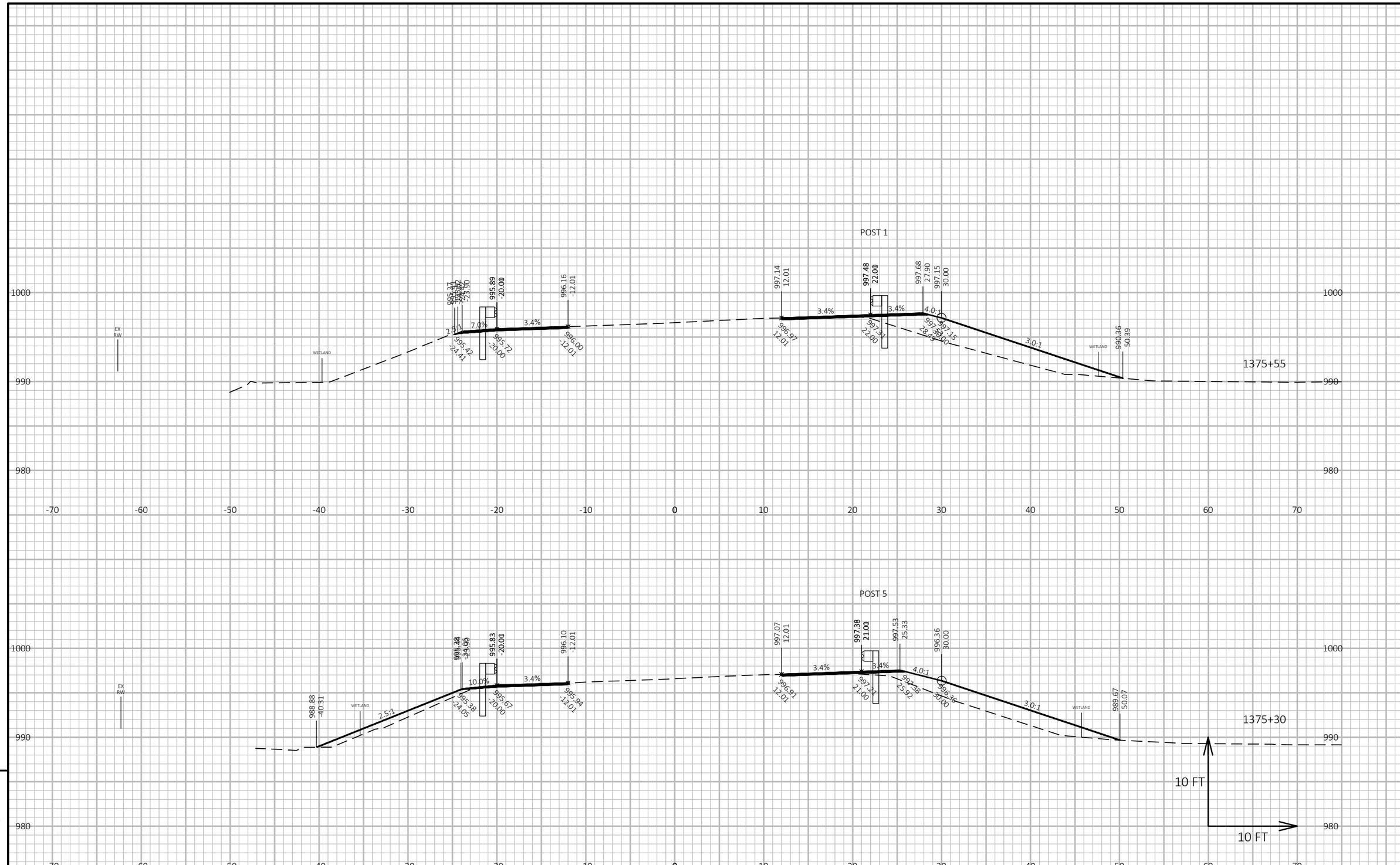

PROJECT NO: 1620-03-75	HWY: STH 80	COUNTY: WOOD	CROSS SECTIONS: STH 80	SHEET 149	E

FILE NAME : P:\90S\93\00093433\CADD\SHEETSPLAN -75\090202-XS.DWG
LAYOUT NAME - (11)
PLOT DATE : 1/16/2019 11:34 AM
PLOT BY : BOBBI MAXWELL
PLOT NAME :
PLOT SCALE : 1 IN:10 FT HORZ. / 1 IN:10 FT VERT.

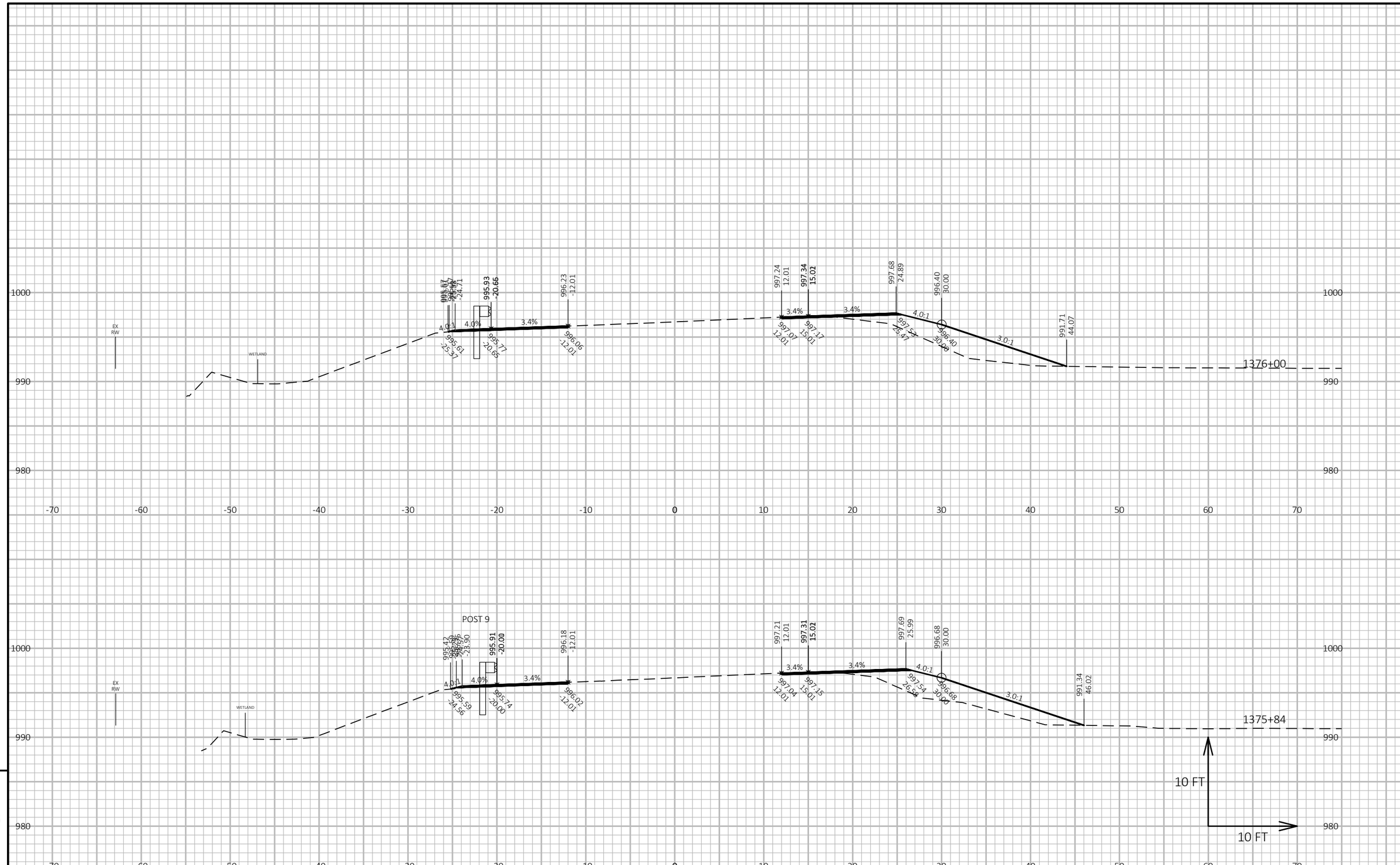

PROJECT NO: 1620-03-75	HWY: STH 80	COUNTY: WOOD	CROSS SECTIONS: STH 80	SHEET 150	E

FILE NAME : P:\90S\93\00093433\CADD\SHEETSPLAN -75\090202-XS.DWG
LAYOUT NAME - (12)
PLOT DATE : 1/16/2019 11:34 AM
PLOT BY : BOBBI MAXWELL
PLOT NAME :
PLOT SCALE : 1 IN:10 FT HORZ. / 1 IN:10 FT VERT.
WISDOT/CADDS SHEET 49

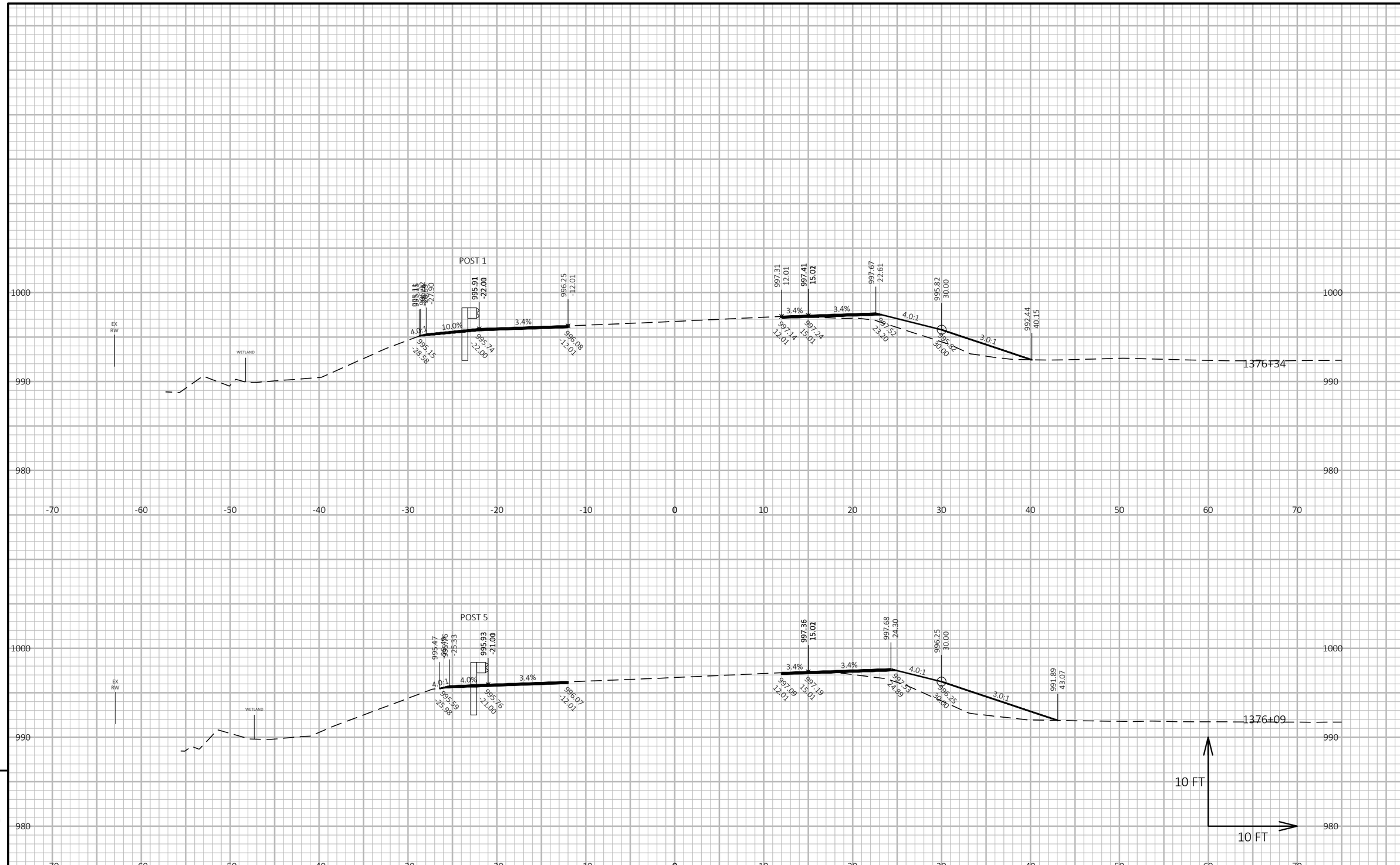

PROJECT NO: 1620-03-75	HWY: STH 80	COUNTY: WOOD	CROSS SECTIONS: STH 80	SHEET 151	E

FILE NAME : P:\90S\93\00093433\CADD\SHEETSPLAN -75\090202-XS.DWG
LAYOUT NAME - (13)
PLOT DATE : 1/16/2019 11:34 AM
PLOT BY : BOBBI MAXWELL
PLOT NAME :
PLOT SCALE : 1 IN:10 FT HORZ. / 1 IN:10 FT VERT.
WISDOT/CADDS SHEET 49

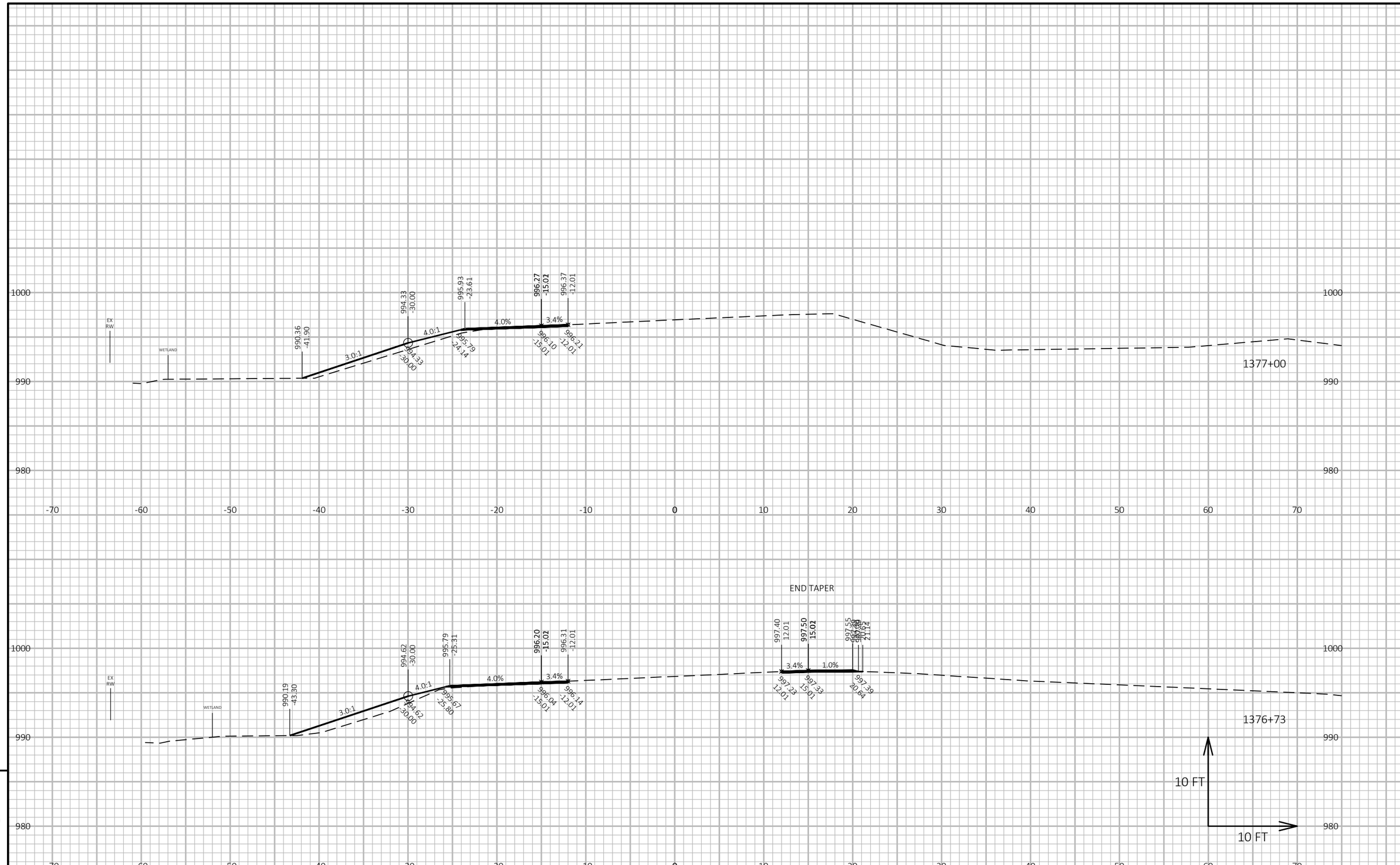

9

9

PROJECT NO: 1620-03-75	HWY: STH 80	COUNTY: WOOD	CROSS SECTIONS: STH 80	SHEET 152	E

FILE NAME : P:\90S\93\00093433\CADD\SHEETSPLAN -75\090202-XS.DWG
LAYOUT NAME - (14)
PLOT DATE : 1/16/2019 11:34 AM
PLOT BY : BOBBI MAXWELL
PLOT NAME :
PLOT SCALE : 1 IN:10 FT HORZ. / 1 IN:10 FT VERT.
WISDOT/CADDS SHEET 49

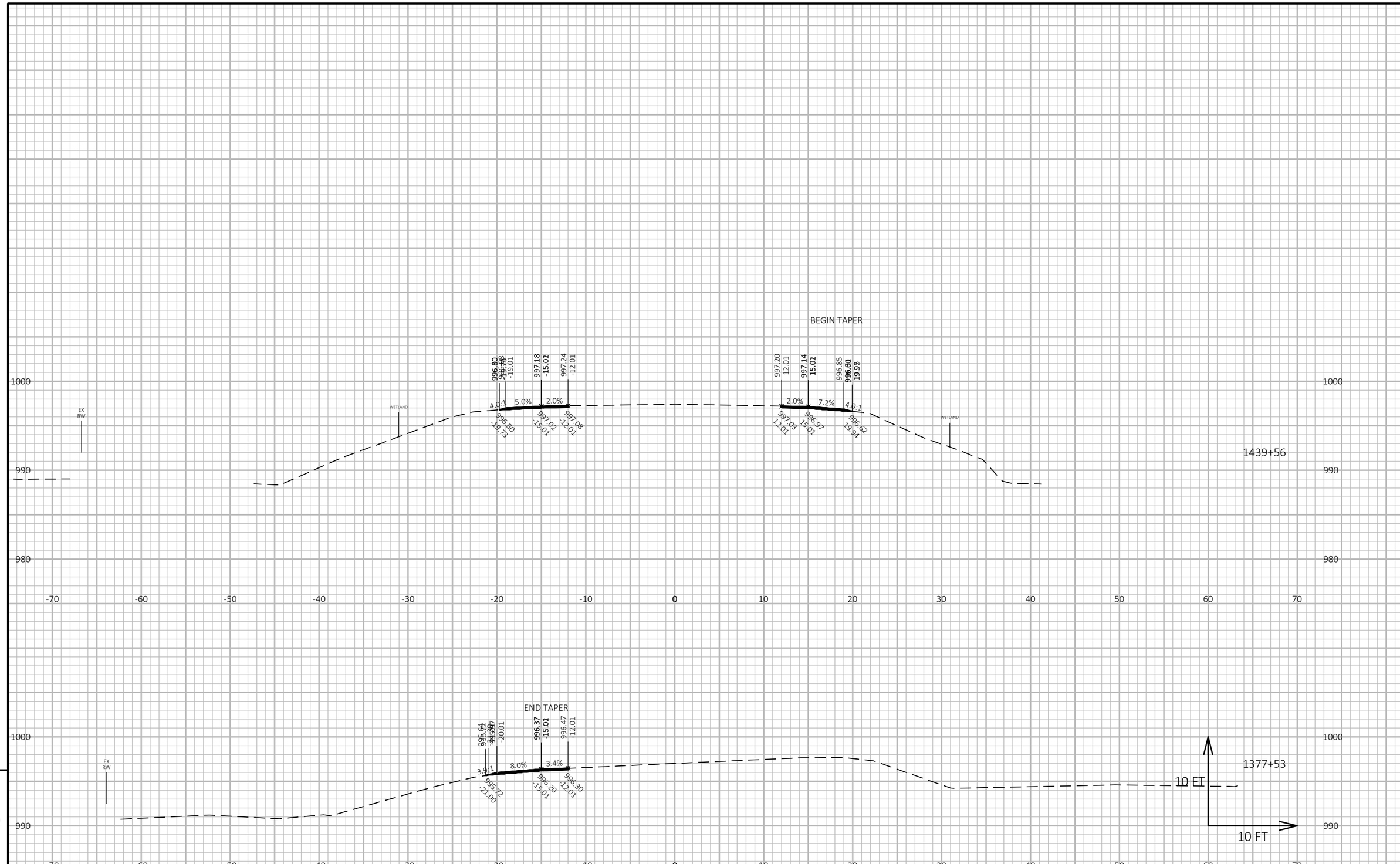

9

9

PROJECT NO: 1620-03-75	HWY: STH 80	COUNTY: WOOD	CROSS SECTIONS: STH 80	SHEET 153	E

FILE NAME : P:\90S\93\00093433\CADD\SHEETSPLAN -75\090202-XS.DWG
LAYOUT NAME - (15)
PLOT DATE : 1/16/2019 11:34 AM
PLOT BY : BOBBI MAXWELL
PLOT NAME :
PLOT SCALE : 1 IN:10 FT HORZ. / 1 IN:10 FT VERT.
WISDOT/CADDS SHEET 49

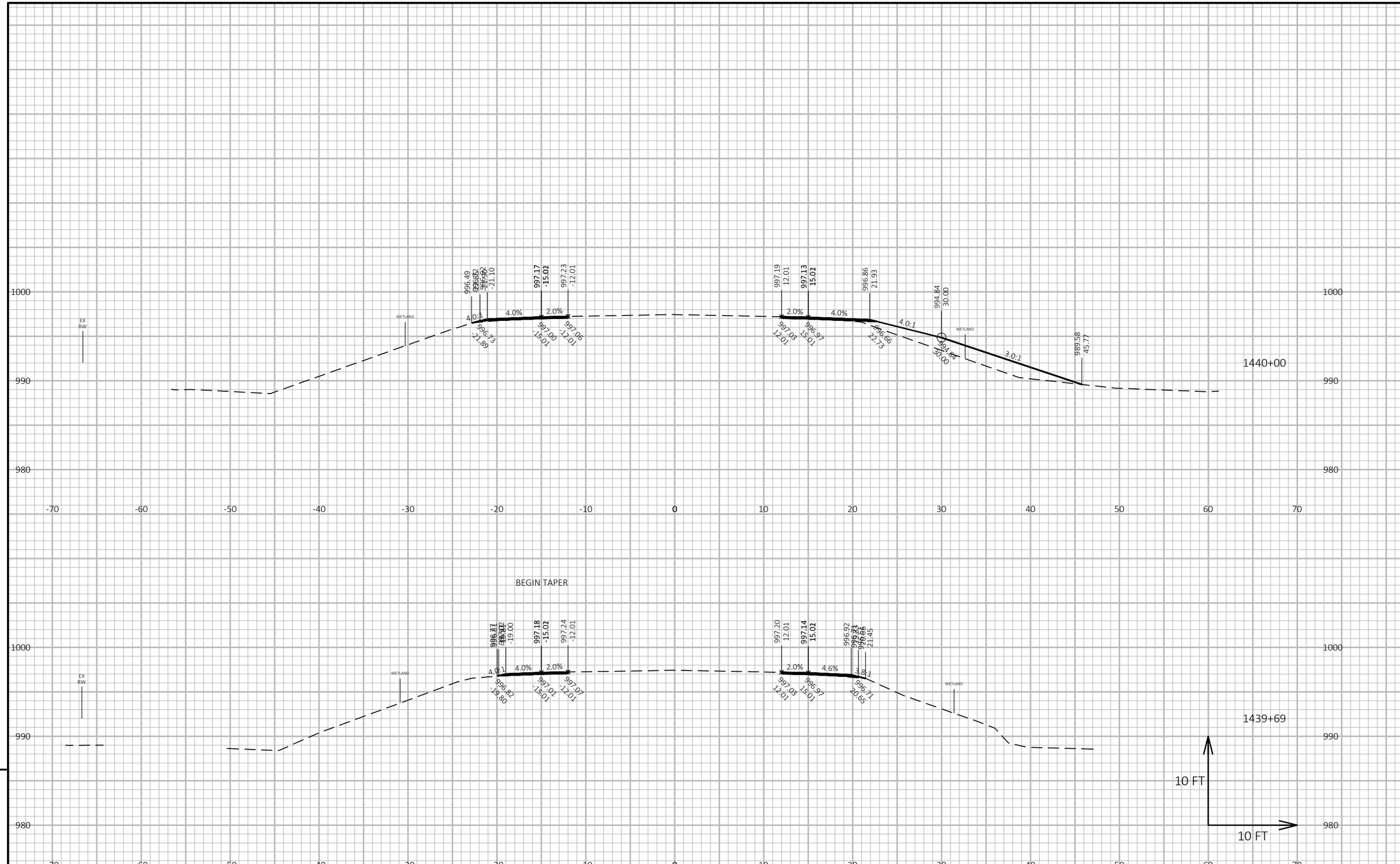

9

9

PROJECT NO: 1620-03-75	HWY: STH 80	COUNTY: WOOD	CROSS SECTIONS: STH 80	SHEET 154	E

FILE NAME : P:\90S\93\00093433\CADD\SHEETSPLAN -75\090202-XS.DWG
LAYOUT NAME - (16)
PLOT DATE : 1/16/2019 11:34 AM
PLOT BY : BOBBI MAXWELL
PLOT NAME :
PLOT SCALE : 1 IN:10 FT HORZ. / 1 IN:10 FT VERT.
WISDOT/CADDS SHEET 49

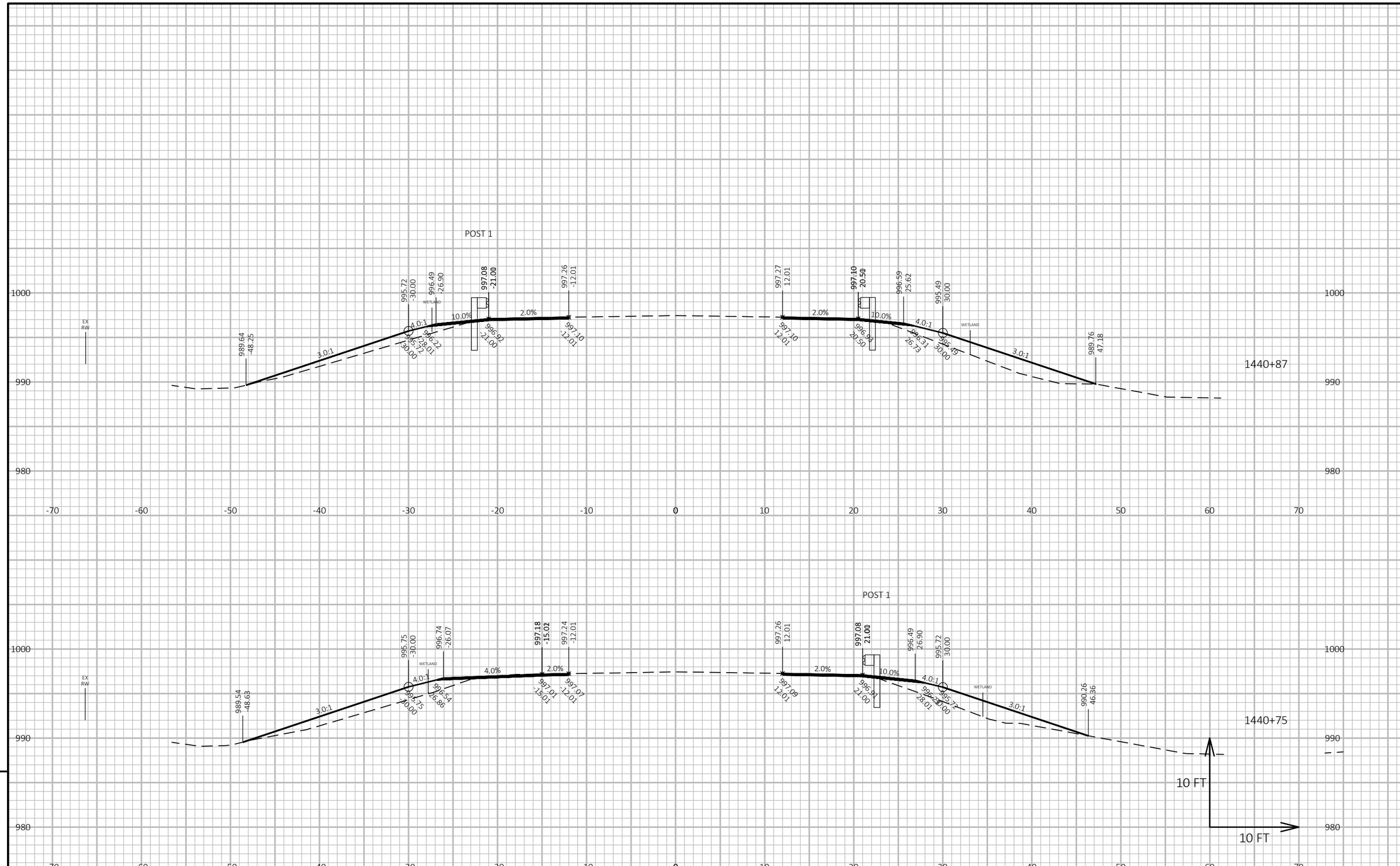

PROJECT NO: 1620-03-75	HWY: STH 80	COUNTY: WOOD	CROSS SECTIONS: STH 80	SHEET 155	E

FILE NAME : P:\90S\93\00093433\CADD\SHEETSPLAN -75\090202-XS.DWG
LAYOUT NAME - (17)
PLOT DATE : 1/16/2019 11:34 AM
PLOT BY : BOBBI MAXWELL
PLOT NAME :
PLOT SCALE : 1 IN:10 FT HORZ. / 1 IN:10 FT VERT.
WISDOT/CADDS SHEET 49

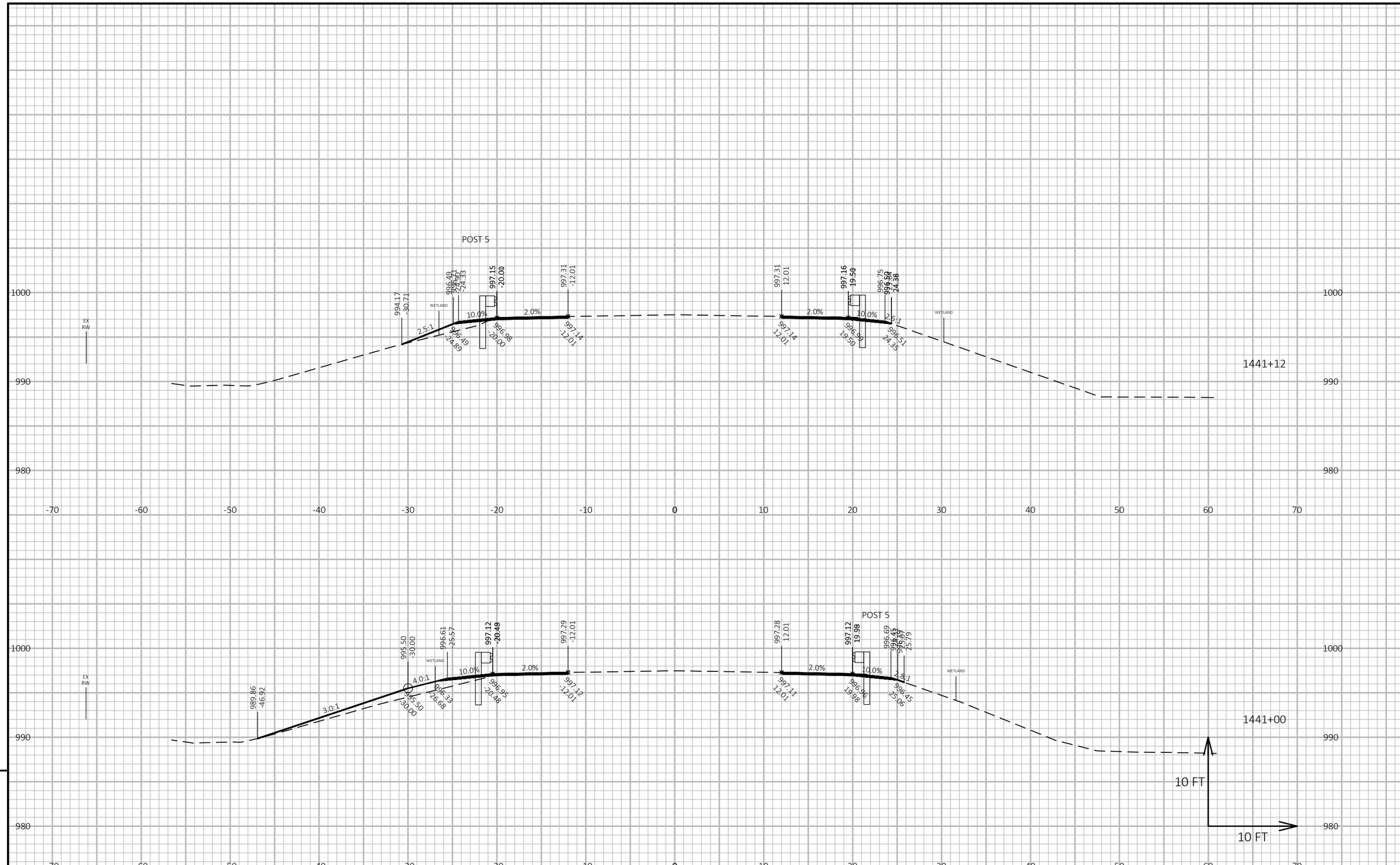

PROJECT NO: 1620-03-75	HWY: STH 80	COUNTY: WOOD	CROSS SECTIONS: STH 80	SHEET 156	E

FILE NAME : P:\90S\93\00093433\CADD\SHEETSPLAN -75\090202-XS.DWG
LAYOUT NAME - (18)
PLOT DATE : 1/16/2019 11:34 AM
PLOT BY : BOBBI MAXWELL
PLOT NAME :
PLOT SCALE : 1 IN:10 FT HORZ. / 1 IN:10 FT VERT.

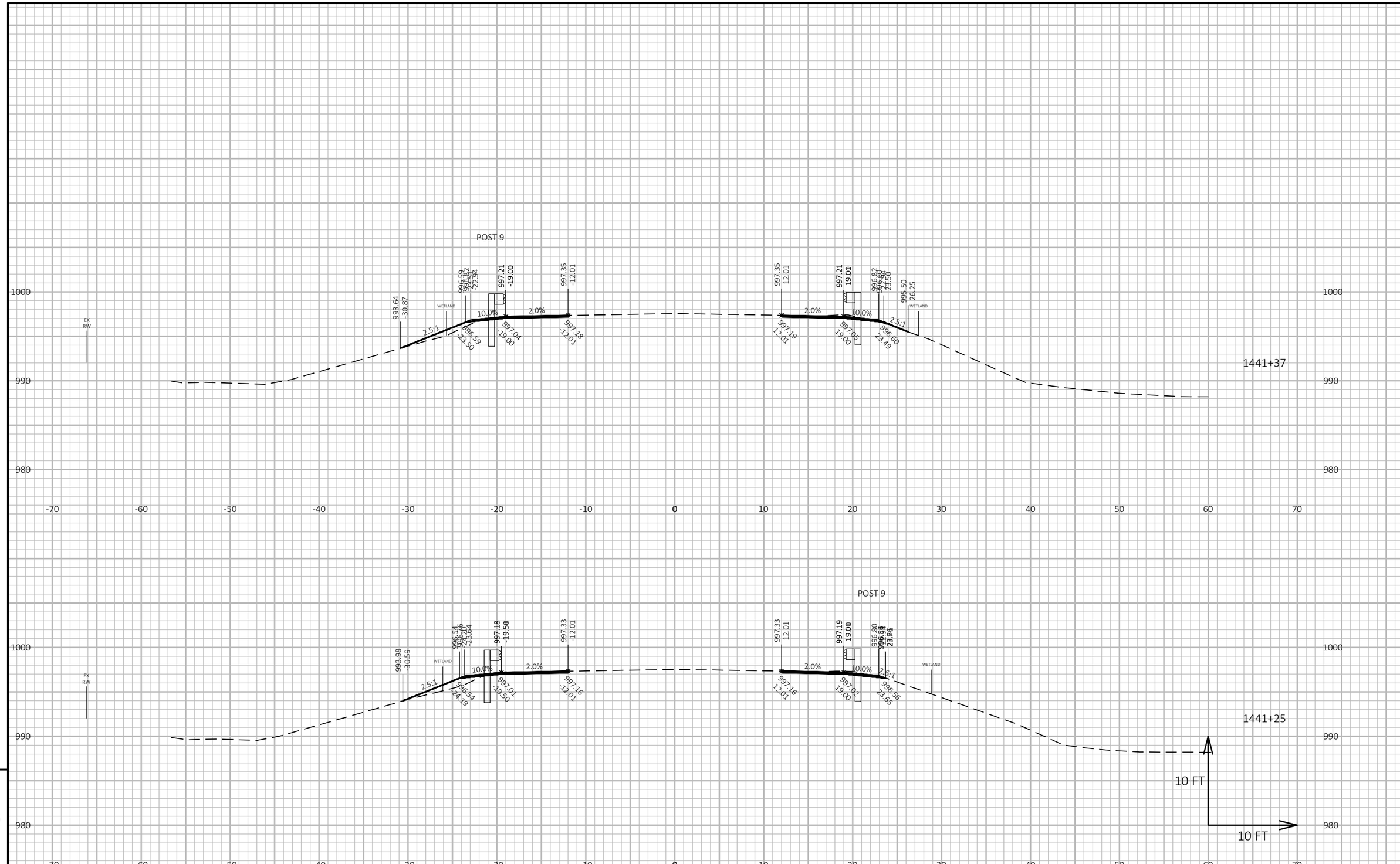

PROJECT NO: 1620-03-75	HWY: STH 80	COUNTY: WOOD	CROSS SECTIONS: STH 80	SHEET 157	E

FILE NAME : P:\90S\93\00093433\CADD\SHEETSPLAN -75\090202-XS.DWG
LAYOUT NAME - (19)
PLOT DATE : 1/16/2019 11:34 AM
PLOT BY : BOBBI MAXWELL
PLOT NAME :
PLOT SCALE : 1 IN:10 FT HORZ. / 1 IN:10 FT VERT.
WISDOT/CADDS SHEET 49

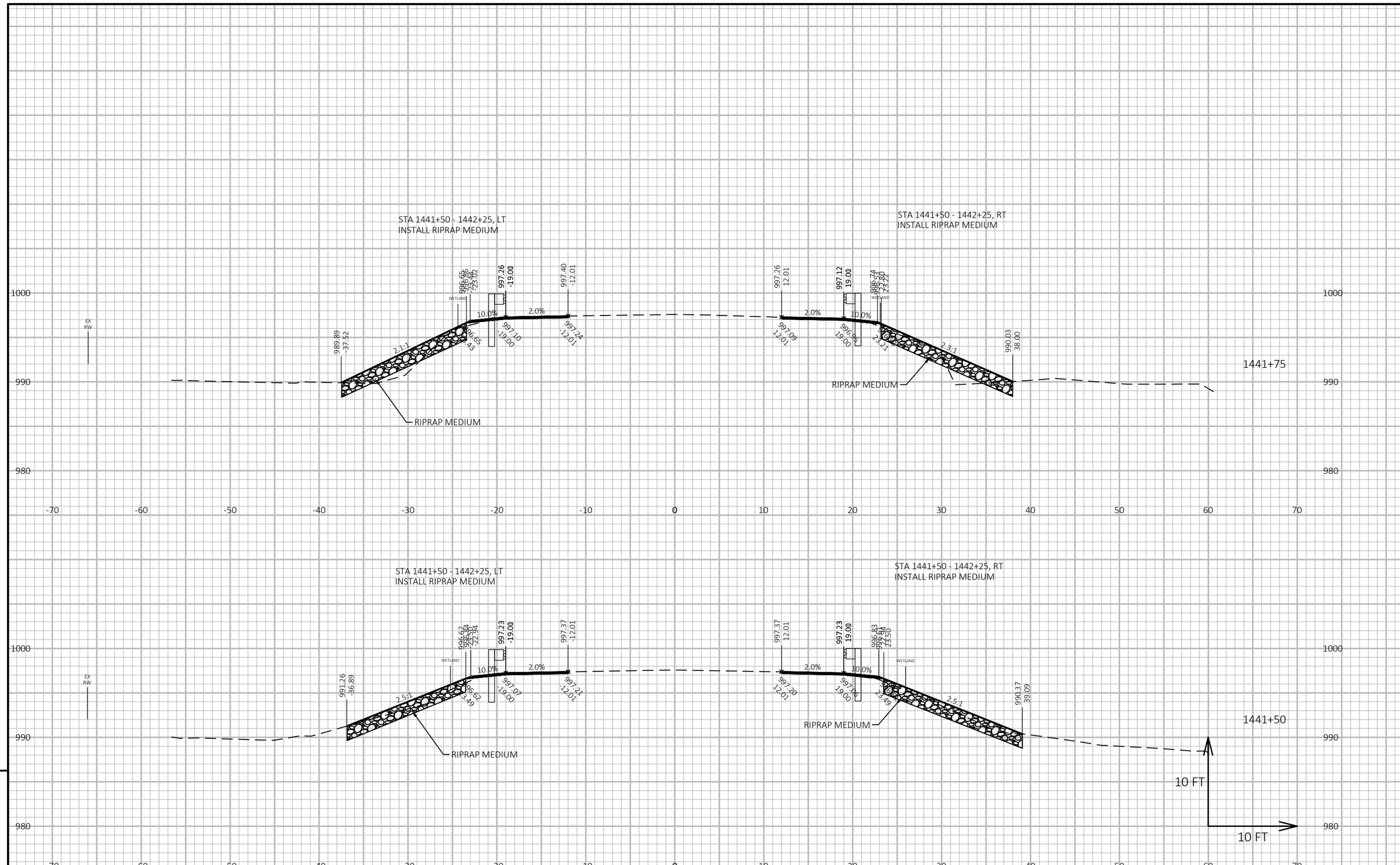

PROJECT NO: 1620-03-75	HWY: STH 80	COUNTY: WOOD	CROSS SECTIONS: STH 80	SHEET 158	E

FILE NAME : P:\90S\93\00093433\CADD\SHEETSPLAN -75\090202-XS.DWG
LAYOUT NAME - (20)
PLOT DATE : 1/16/2019 11:34 AM
PLOT BY : BOBBI MAXWELL
PLOT NAME :
PLOT SCALE : 1 IN:10 FT HORZ. / 1 IN:10 FT VERT.

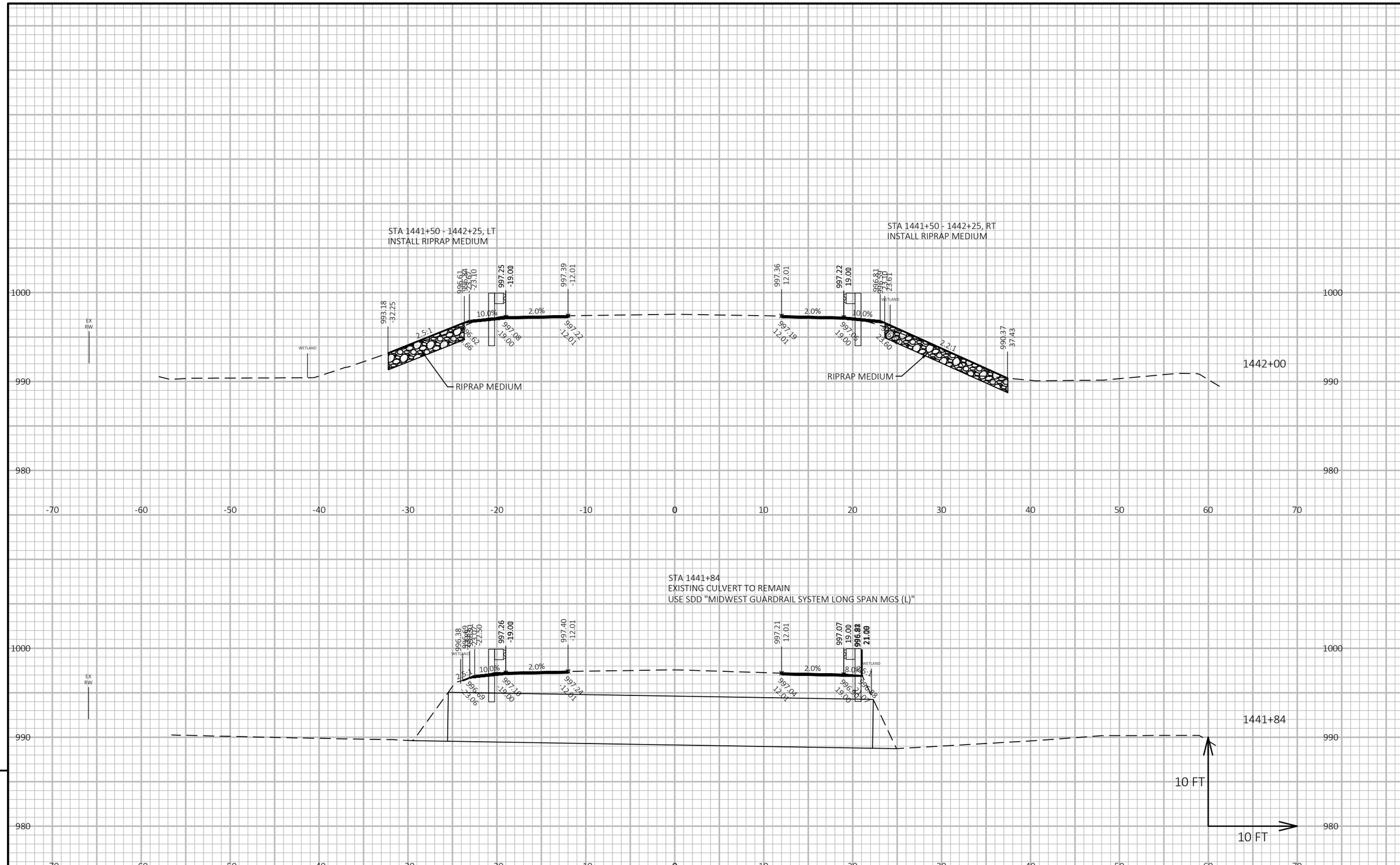

PROJECT NO: 1620-03-75	HWY: STH 80	COUNTY: WOOD	CROSS SECTIONS: STH 80	SHEET 159	E

FILE NAME : P:\90S\93\00093433\CADD\SHEETSPLAN -75\090202-XS.DWG
LAYOUT NAME - (21)
PLOT DATE : 1/16/2019 11:34 AM
PLOT BY : BOBBI MAXWELL
PLOT NAME :
PLOT SCALE : 1 IN:10 FT HORZ. / 1 IN:10 FT VERT.

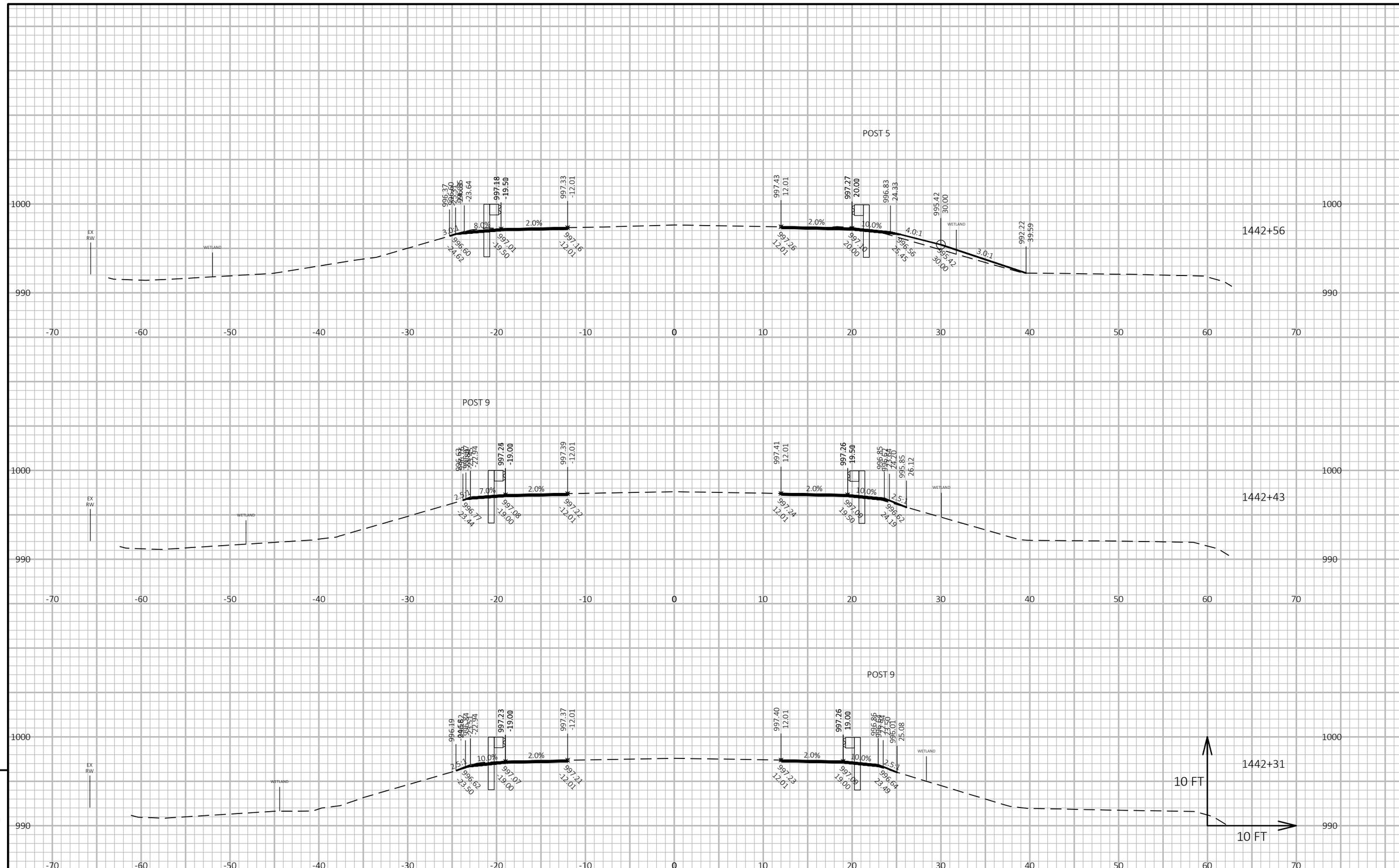

PROJECT NO: 1620-03-75	HWY: STH 80	COUNTY: WOOD	CROSS SECTIONS: STH 80	SHEET 160	E

FILE NAME : P:\90S\93\00093433\CADD\SHEETSPLAN -75\090202-XS.DWG
LAYOUT NAME - (22)
PLOT DATE : 1/16/2019 11:34 AM
PLOT BY : BOBBI MAXWELL
PLOT NAME :
PLOT SCALE : 1 IN:10 FT HORZ. / 1 IN:10 FT VERT.

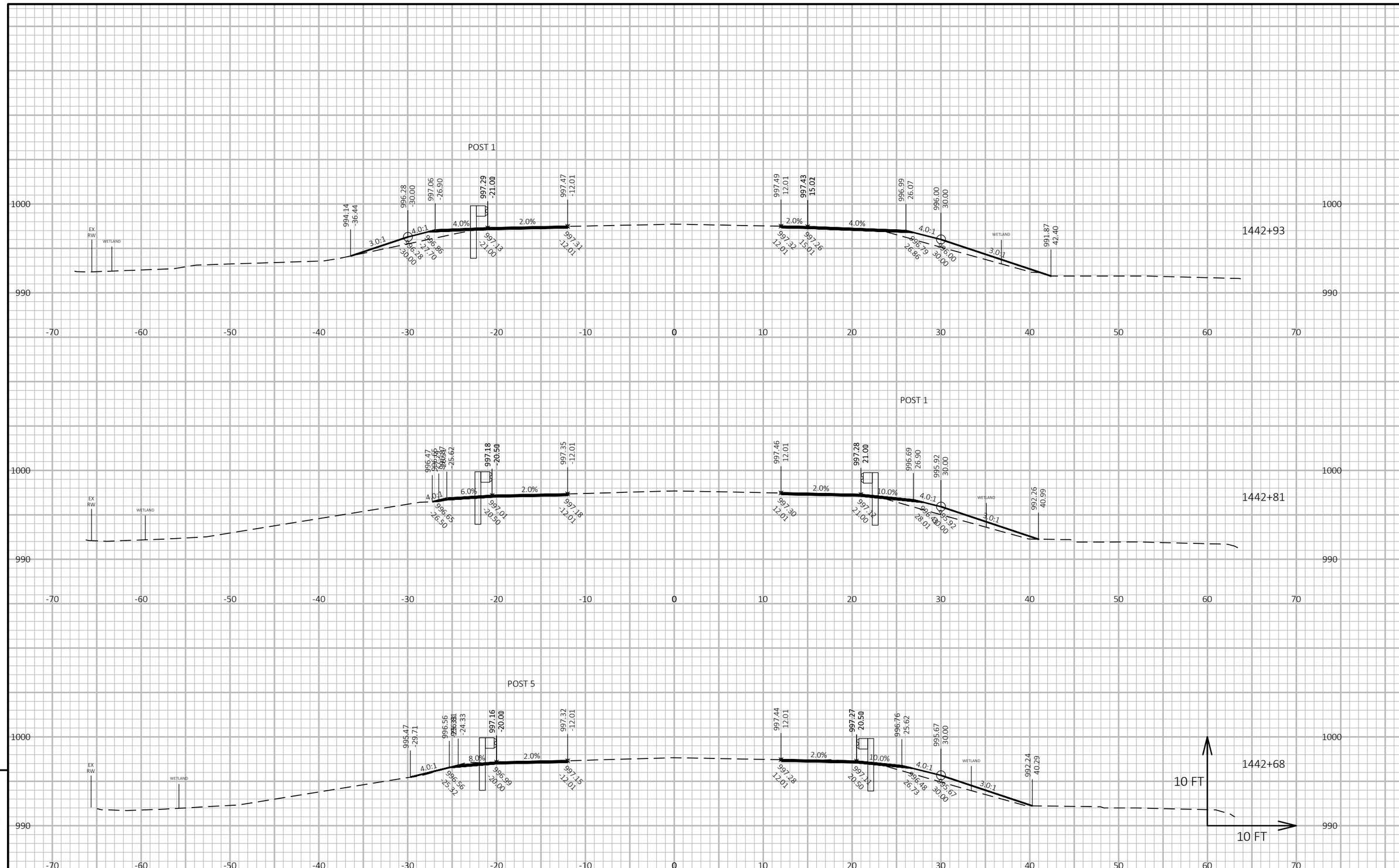

9

9

PROJECT NO: 1620-03-75	HWY: STH 80	COUNTY: WOOD	CROSS SECTIONS: STH 80	SHEET 161	E

FILE NAME : P:\90S\93\00093433\CADD\SHEETSPLAN -75\090202-XS.DWG
LAYOUT NAME - (23)
PLOT DATE : 1/16/2019 11:34 AM
PLOT BY : BOBBI MAXWELL
PLOT NAME :
PLOT SCALE : 1 IN:10 FT HORZ. / 1 IN:10 FT VERT.

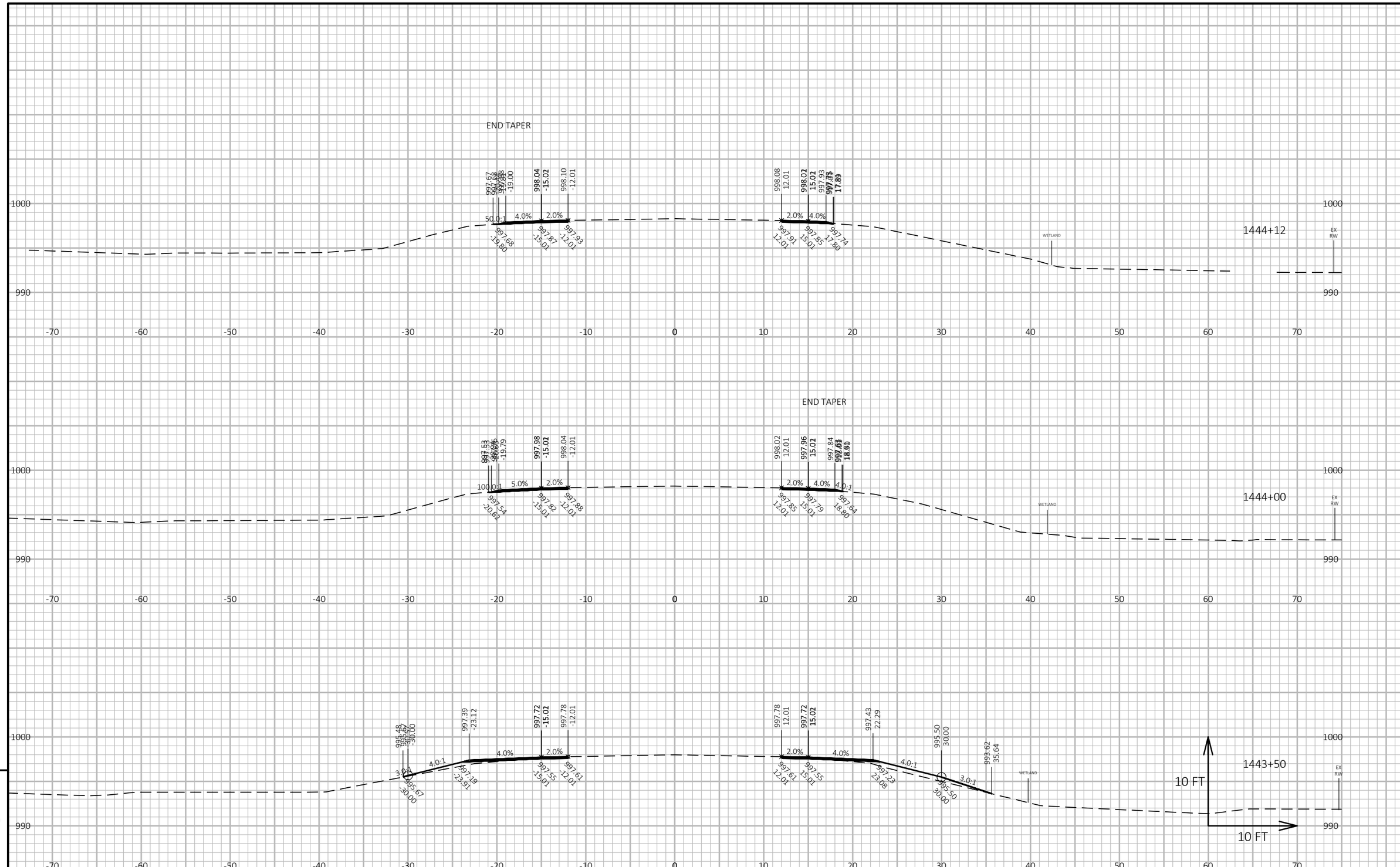

9

9

PROJECT NO: 1620-03-75	HWY: STH 80	COUNTY: WOOD	CROSS SECTIONS: STH 80	SHEET 162	E

FILE NAME : P:\90S\93\00093433\CADD\SHEETSPLAN -75\090202-XS.DWG
LAYOUT NAME - (24)
PLOT DATE : 1/16/2019 11:35 AM
PLOT BY : BOBBI MAXWELL
PLOT NAME :
PLOT SCALE : 1 IN:10 FT HORZ. / 1 IN:10 FT VERT.

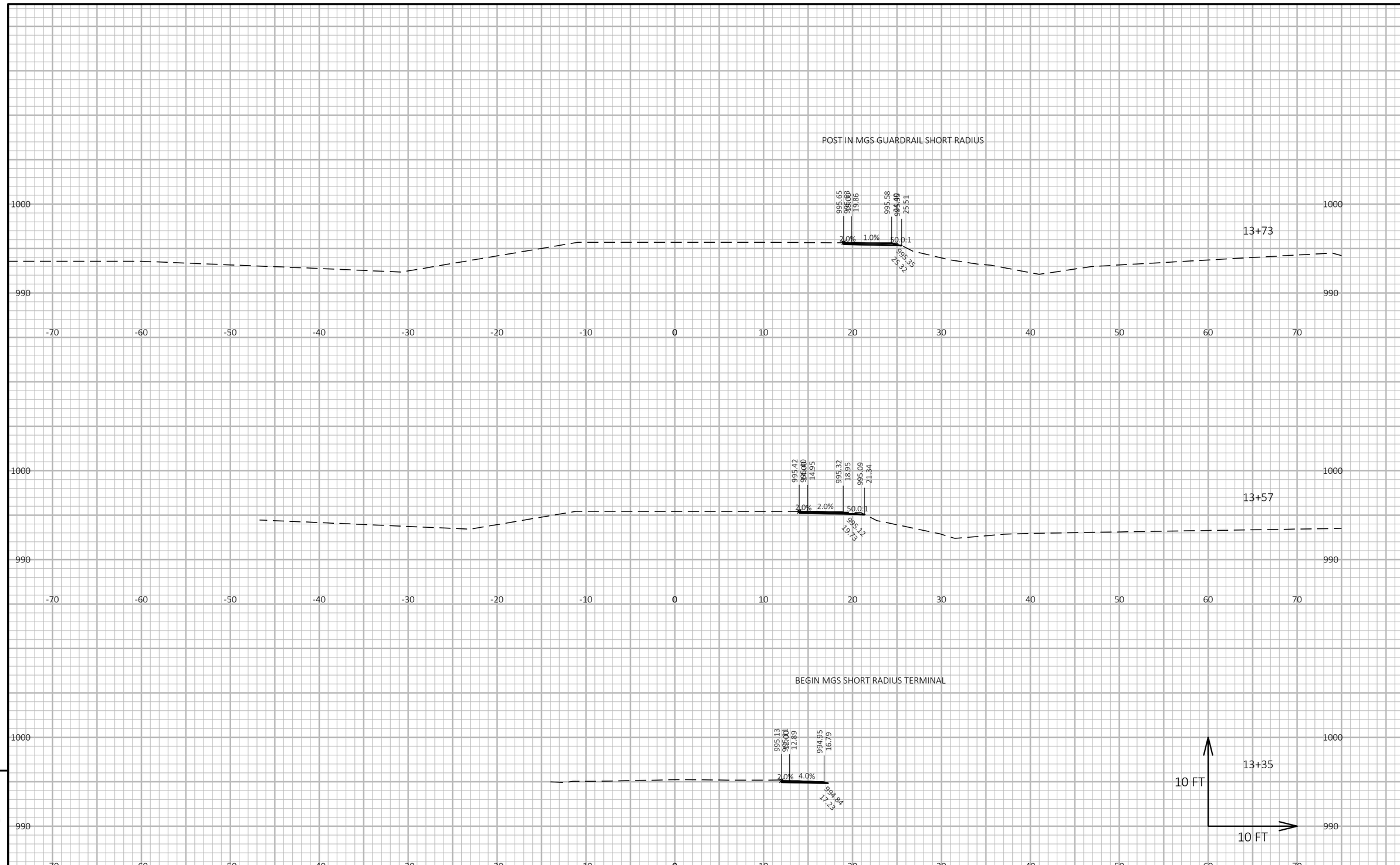

9

9

PROJECT NO: 1620-03-75	HWY: STH 80	COUNTY: WOOD	CROSS SECTIONS: TOWN HALL ROAD 'T'	SHEET 163	E

FILE NAME : P:\90S\93\00093433\CADD\SHEETSPLAN -75\090201-XS.DWG
LAYOUT NAME - T(1)
PLOT DATE : 1/16/2019 11:03 AM
PLOT BY : BOBBI MAXWELL
PLOT NAME :
PLOT SCALE : 1 IN:10 FT HORZ. / 1 IN:10 FT VERT.

Wisconsin Department of Transportation

Dedicated people creating transportation solutions through innovation and exceptional service.

http://www.dot.wisconsin.gov